WORKSHOP MANUAL

US VERSION

RIGHT HAND MODEL

EXP UBS

ISUZU

PubNo. RV99_02-01.E

TOP

WORKSHOP MANUAL

1998/1999

UBS

2000

UBS

2002

UBS

PAGE NEXT

THIS MALUAL INCLUDES THE FOLLOWING SECTIONS:

SECTION No.	CONTRNTS
0A	General Information
0B	Maintenance and Lubrication

THIS MALUAL INCLUDES THE FOLLOWING SECTIONS:

SECTION No.	CONTRNTS
00	SERVICE INFORMATION
1A	HEATING AND VENTILATION
1B	AIR CONDITIONING
1D	COMPRESSOR OVERHAUL

THIS MALUAL INCLUDES THE FOLLOWING SECTIONS:

SECTION No.	CONTRNTS
00	SERVICE INFORMATION
2A	FRONT END ALIGNMENT

THIS MALUAL INCLUDES THE FOLLOWING SECTIONS:

SECTION No.	CONTRNTS
3C	FRONT SUSPENSION
3D	REAR SUSPENSION; COIL SPRING
3E	WHEELS AND TIRES

THIS MALUAL INCLUDES THE FOLLOWING SECTIONS:

SECTION No.	CONTRNTS
4A1	DIFFERENTIAL (FRONT)
4A2A	DIFFERENTIAL (Rear 220mm)
4A2B	DIFFERENTIAL (REAR 244mm)
4B1	DRIVELINE CONTROL SYSTEM (SHIFT ON THE FLY)
4B2	DRIVELINE CONTROL SYSTEM (TOD)
4C	DRIVE SHAFT SYSTEM
4D1	TRANSFER CASE (STANDARD TYPE)
4D2	TRANSFER CASE (TOD)

THIS MALUAL INCLUDES THE FOLLOWING SECTIONS:

SECTION No.	CONTRNTS
5A	BRAKE CONTROL SYSTEM
5B	ANTI-LOCK BRAKE SYSTEM
5C	POWER ASSISTED BRAKE SYSTEM
5D	PARKING BRAKES

THIS MALUAL INCLUDES THE FOLLOWING SECTIONS:

6VD1 / 6VE1

SECTION No.	CONTRNTS
6A	ENGINE MECHANICAL
6B	ENGINE COOLING
6C	ENGINE FUEL
6D1	ENGINE ELECTRICAL
6D2	IGNITION SYSTEM
6D3	STARTING AND CHARGING SYSTEM
6E	ENGINE DRIVEABILITY AND EMISSIONS
6F	ENGINE EXHAUST
6G	ENGINE LUBRICATION
6H	ENGINE SPEED CONTROL SYSTEM
6J	INDUCTION

4JG2

SECTION No.	CONTRNTS
00	SERVICE INFORMATION
6A	ENGINE MECHANICAL
6A2	4JG2-NA / 4JG2-TURBO ENGINE
6B	ENGINE COOLING
6C	FUEL SYSTEM
6D	ENGINE ELECTRICAL
6E	-
6F	EXHAUST
6G	-

4JX1

SECTION No.	CONTRNTS
6A	ENGINE MECHANICAL
6B	ENGINE COOLING
6C	ENGINE FUEL
6D	ENGINE ELECTRICAL
6E	ENGINE DRIVEABILITY AND EMISSIONS
6F	ENGINE EXHAUST
6G	ENGINE LUBRICATION
6H	ENGINE SPEED CONTROL
6J	INDUCTION

THIS MALUAL INCLUDES THE FOLLOWING SECTIONS:

SECTION No.	CONTRNTS
7A	AUTOMATIC TRANSMISSION (4L30-E)
7A1	TRANSMISSION CONTROL SYSTEM (4L30-E)
7B	MANUAL TRANSMISSION (AR-5)
7B	MANUAL TRANSMISSION (MUA)
7C	CLUTCH

THIS MALUAL INCLUDES THE FOLLOWING SECTIONS:

SECTION No.	CONTRNTS
8A	LIGHTING SYSTEM
8B	WIPER / WASHER SYSTEM
8C	ENTERTAINMENT
8D	WIRING SYSTEM
8E	METER AND GAUGE
8F	BODY STRUCTURE
8G	SEATS
8H	SECURITY AND LOCKS
8I	SUN ROOF/CONVERTIBLE TOP
8J	EXTERIOR / INTERIOR TRIM

THIS MALUAL INCLUDES THE FOLLOWING SECTIONS:

SECTION No.	CONTRNTS
9A	SEAT BELT SYSTEM
9J	SUPPLEMENTAL RESTRAINT SYSTEM (SRS)
9J1	RESTRAINT CONTROL SYSTEM

PAGE BACK

THIS MALUAL INCLUDES THE FOLLOWING SECTIONS:

SECTION No.	CONTRNTS
10A	CRUISE CONTROL SYSTEM

SECTION 0A

GENERAL INFORMATION

CONTENTS

PAGE

General Repair Instructions 0A– 2
How To Use This Manual 0A– 3
Identification 0A– 6
Lifting Instructions 0A– 8
Torque Specifications 0A–10
Recommended Liquid Gasket 0A–11
Recommended Thread Locking Agents 0A–11
Abbreviations Charts 0A–12

Service Precaution

WARNING: THIS VEHICLE HAS A SUPPLEMENTAL RESTRAINT SYSTEM (SRS). REFER TO THE SRS COMPONENT AND WIRING LOCATION VIEW IN ORDER TO DETERMINE WHETHER YOU ARE PERFORMING SERVICE ON OR NEAR THE SRS COMPONENTS OR THE SRS WIRING. WHEN YOU ARE PERFORMING SERVICE ON OR NEAR THE SRS COMPONENTS OR THE SRS WIRING, REFER TO THE SRS SERVICE INFORMATION. FAILURE TO FOLLOW WARNINGS COULD RESULT IN POSSIBLE AIR BAG DEPLOYMENT, PERSONAL INJURY, OR OTHERWISE UNNEEDED SRS SYSTEM REPAIRS.

CAUTION: Always use the correct fastener in the proper location. When you replace a fastener, use ONLY the exact part number for that application. ISUZU will call out those fasteners that require a replacement after removal. ISUZU will also call out the fasteners that require thread lockers or thread sealant. UNLESS OTHERWISE SPECIFIED, do not use supplemental coatings (Paints, greases, or other corrosion inhibitors) on threaded fasteners or fasteners joint interfaces. Generally, such coatings adversely affect the fastener torque and the joint clamping force, and may damage the fastener. When you install fasteners, use the correct tightening sequence and specification. Following these instructions can help you avoid damage to parts and systems.

GENERAL REPAIR INSTRUCTIONS

1. Park the vehicle on level ground and chock the front or rear wheels before lifting the vehicle.
2. Use covers on the vehicle body, seats, and floor to prevent damage and/or contaminations.
3. Disconnect the grounding cable from the battery before performing service operations. This will prevent cable damage or burning due to shortcircuiting.
4. Raise the vehicle with a jack set against the recommended lifting points (see “Lifting instructions” in this section).
5. Support the vehicle on chassis stands.
6. Handle brake fluid and antifreeze solution with great care.
   Spilling these liquids on painted surfaces will damage the paint.
7. The use of the proper tool(s) and special tool(s) where specified is essential to efficient, reliable, and safe service operations.
8. Always use genuine ISUZU replacement parts.
9. Discard used cotter pins, gasket, plastic clips, O-rings, oil seals, lock washers, and self-locking nuts at disassembly.
   Normal function of these parts cannot be guaranteed if they are reused.
10. Keep the disassembled parts neatly in groups. This will facilitate smooth and correct reassembly.
11. Keep fixing nuts and bolts separate.
    Fixing nuts and bolts vary in hardness and design according to installation positions.
12. Clean all parts before inspection or reassembly.
13. Clean the oil ports and other openings with compressed air to make certain that they are free of dirt and obstructions.
14. Lubricate the rotating and sliding faces of all moving parts with oil or grease before installation.
15. Use the recommended liquid gasket to prevent leakage.
16. Carefully observe all nut and bolt torque specifications.
17. When service operation is completed, make a final check to be sure service has been done properly and problem has been corrected.
18. When removing or replacing parts that require refrigerant to be discharged from the air conditioning system, be sure to use the following tools to recover and recycle the Refrigerant-134a (R-134a).

    For 134a:
    Use the R-134a Refrigerant Recovery/Recovery/Recycling/Recharging/System (ACR^4) or its equivalent to prevent the discharge of refrigerant into the air.

HOW TO USE THIS MANUAL

1. Find the applicable section by referring to the table of contents on the introduction page of each manual.
2. In “Service Information”, an opening section of each manual, the troubleshooting, maintenance servicing, service data and/or information on special tools required for the service operations described in the next subsequent sections are arranged and compiled so concisely that you can see at a first glance.
3. Each section except the Service Information section is basically arranged in the following order of headings:
   General description
   On-vehicle service
   Unit repair
4. The service operations are in two groups: one is the “On-vehicle service” where operations can be directly performed on the vehicle, and the other is the “Unit repair” where the operations are done on the work bench after removing the unit from the vehicle.
5. Each service operation section begins with a disassembled view of unit or equipment, which is useful to find relative components, service procedure, availability and contents of repair kits, etc.

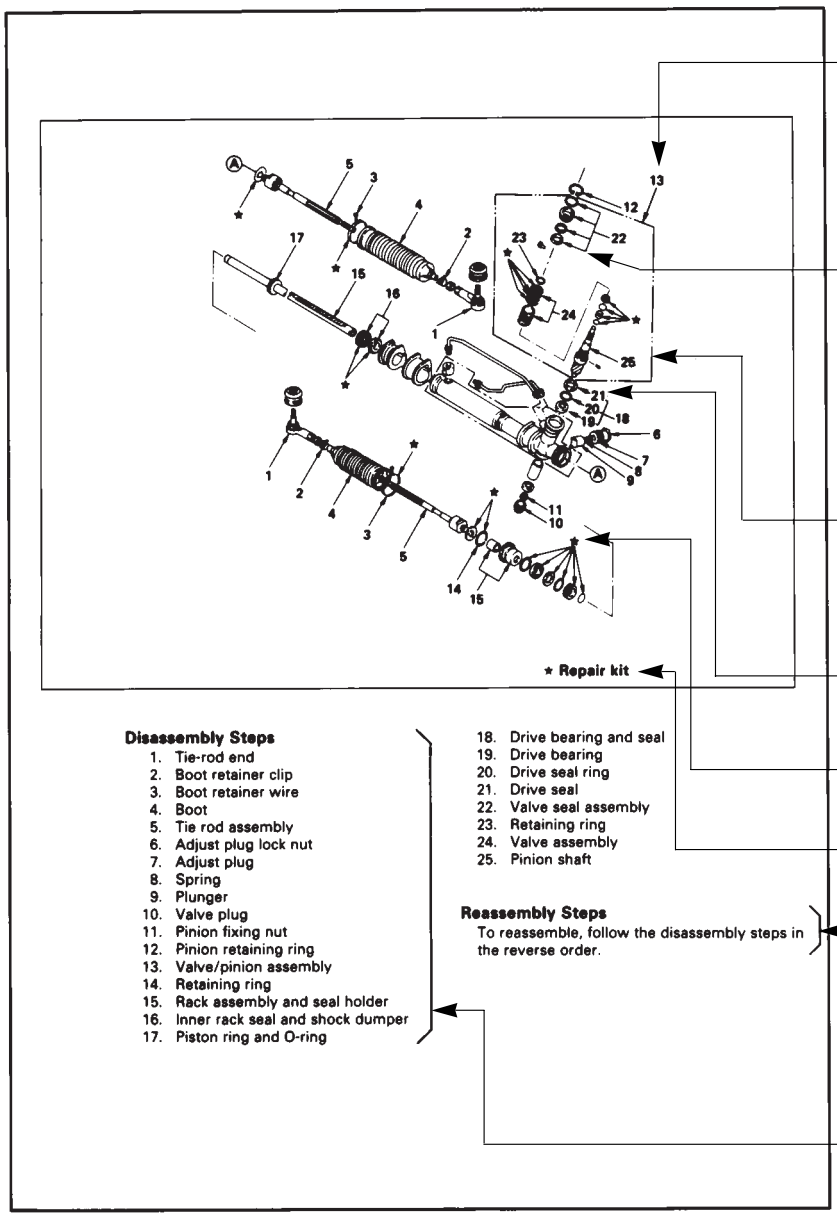

The number represents sequence of removal or disassembly
Removal of unnumbered the parts (excluding bolts, nuts, washers, gaskets, cotter pins, etc.) is unnecessary unless replacement is needed. Where parts replacement requires specific information, instructions are given in “Inspection and Repair”.
This frame is to be removed as a large disassembly with all the parts assembled in the frame. Each one of the parts in the frame is removed as a small disassembly.
Parts to be removed or installed as a unit.
★ Parts contained in repair kit.
★ Indicates repair kit availability.
When the installation (reassembly) procedure is the reverse order of the removal (disassembly) procedure, the sequence of service operation and the parts names will be omitted.
Name of parts listed in sequence of service operation.

For illustrations where there are few items to be performed:

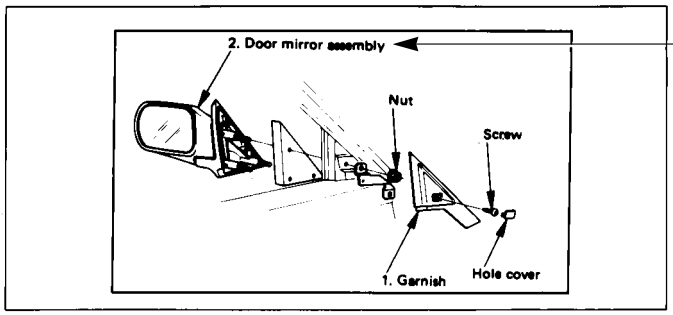

The sequence of removal (disassembly) and the parts names will be given.

6. After the illustration, the details of each operation are shown in the order the operations are carried out in the illustration. Refer to the explanations when checking important information such as the notes in each operation, and places where special tools are to be used and their usage, and the specified service data.

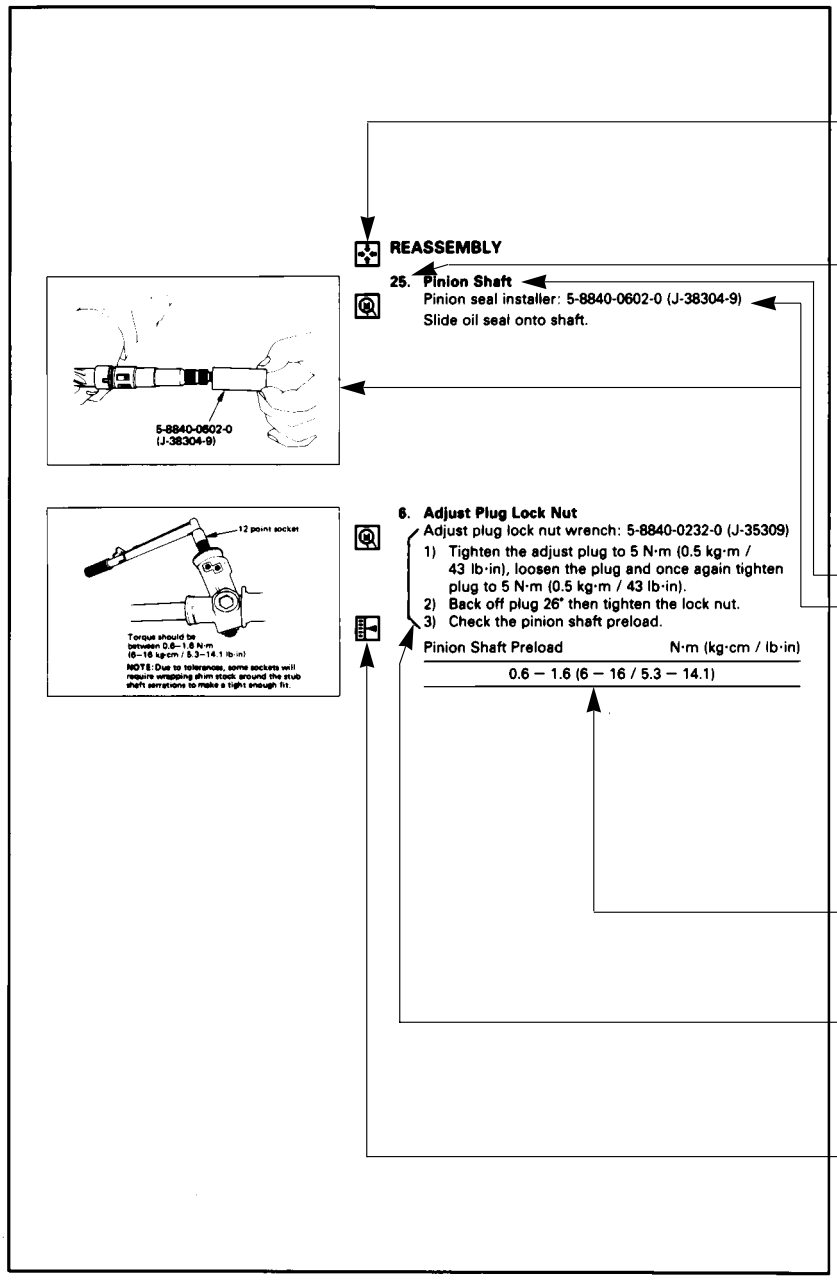

The symbol mark attached to the title indicates the action to be taken in the operations of each title.
Example for this case;
1st step – Reassemble pinion shaft

The numbers given to the installation (assembly) procedure are the same as those given in the removal (disassembly) procedure in the illustration. Therefore, start with the larger number during reassembly.

The titles of operations done in the illustration are given in bold letters. They are described in the order of the procedure of the operations.

Special tools are identified with tool name and/or tool number.
The drawing illustrates how the tool is used.

Service data and specifications are listed in table.

Important note.

The action symbol indicates the step of service to be followed.
Refer to the following paragraph for the meaning of each symbol.

7. In this manual, the following action symbols are used to indicate the type of service operations to be performed.

. . . Remove or disconnect

. . . Install or connect

. . . Disassemble

. . . Reassemble

. . . Align the marks

. . . Correct direction

. . . Inspect

. . . Take measurement

. . . Adjust

. . . Clean

. . . Pay close attention - Important

. . . Tighten to specified torque

. . . Use special tool(s)

. . . Lubricate with oil

. . . Lubricate with grease

. . . Use liquid gasket

8. The service standard is indicated in terms of “Standard” and “Limit”.
   The “Standard” means the assembly standard and standard range within which the parts are considered serviceable.
   “Limit” indicates the limit value (Correction or replacement is necessary when measurement is beyond this limit.)

IDENTIFICATION

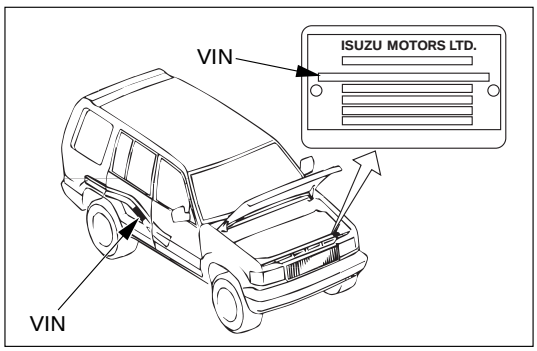

VEHICLE IDENTIFICATION NUMBER (VIN)

This is the legal identification of the vehicle.
It appears on the manufacturer's Plate attached to the left of the engine compartment front end. VIN number is also stamped on the rear right side of the frame.

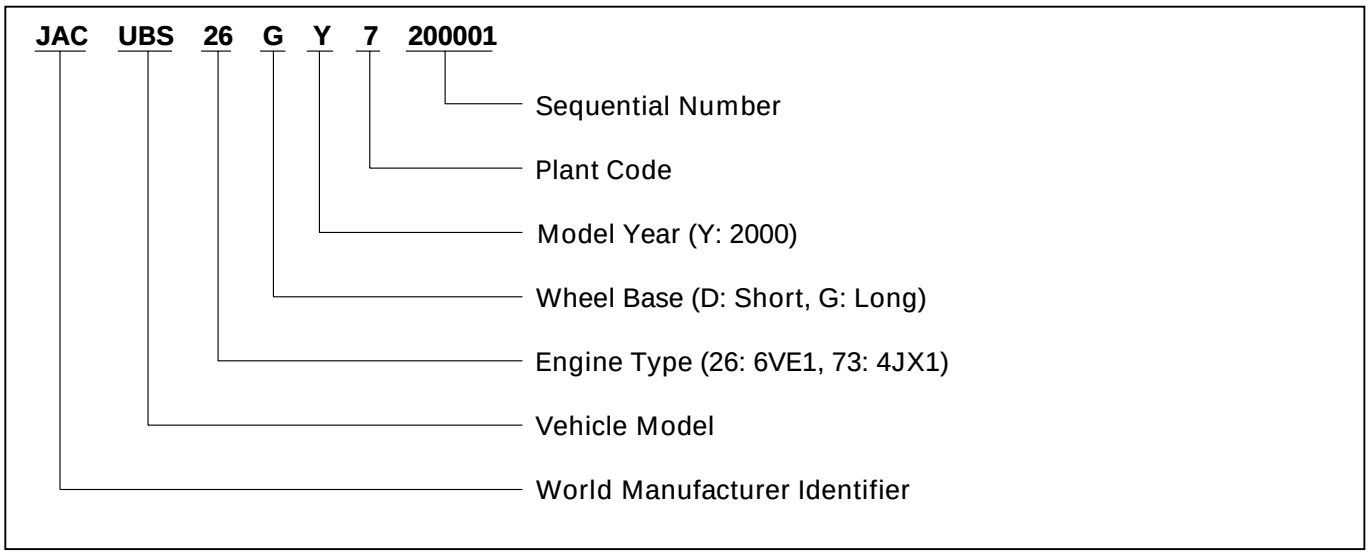

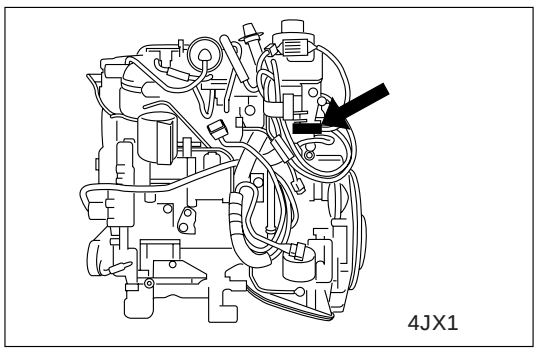

905RW014

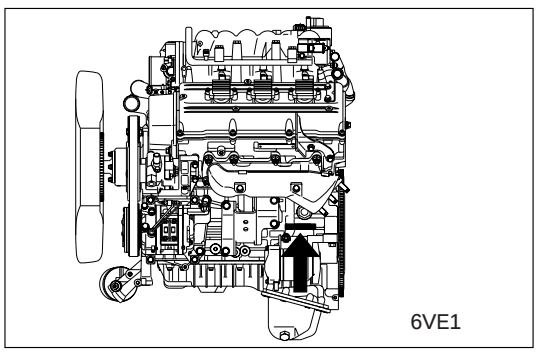

905RW016

ENGINE SERIAL NUMBER

The engine serial number is stamped on the left rear lower area of the cylinder block above the starter.

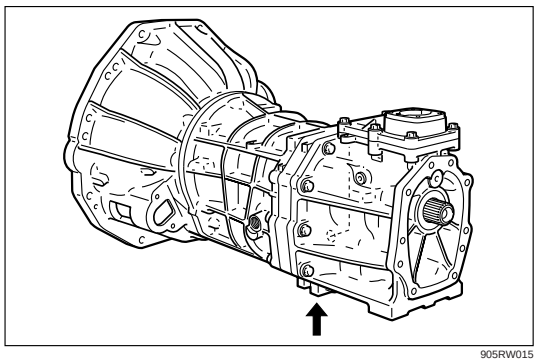

905RW015

TRANSMISSION SERIAL NUMBER

Manual: Stamped on the left side of the transmission intermediate plate.

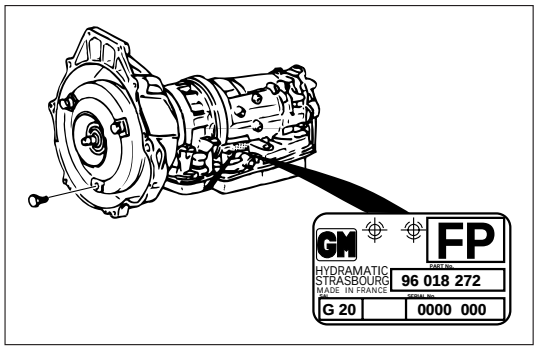

905RW018

Automatic: Stamped on the identification plate, located on the left side of the transmission above the mode switch.

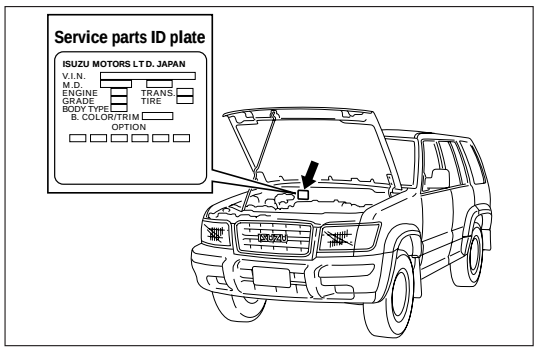

905RW007

SERVICE PARTS IDENTIFICATION PLATE

The Vehicle Information Plate (Service Parts ID plate) is provided on all vehicle models.
It is located on the center dash wall inside the engine compartment. The plate lists the VIN (Vehicle Identification Number), paint information and all production options and special equipment on the vehicle when it was shipped from the factory.

LIFTING INSTRUCTIONS

CAUTION:

- **If a lifting device other than the original jack is used, it is most important that the device be applied only to the correct lifting points. Raising the vehicle from any other point may result in serious damage.**
- **When jacking or lifting a vehicle at the frame side rail or other prescribed lift points, be certain that lift pads do not contact the catalytic converter, brake pipes or cables, or fuel lines. Such contact may result in damage or unsatisfactory vehicle performance.**

LIFTING POINTS AND SUPPORTABLE POINT LOCATIONS

Long wheel Base Model

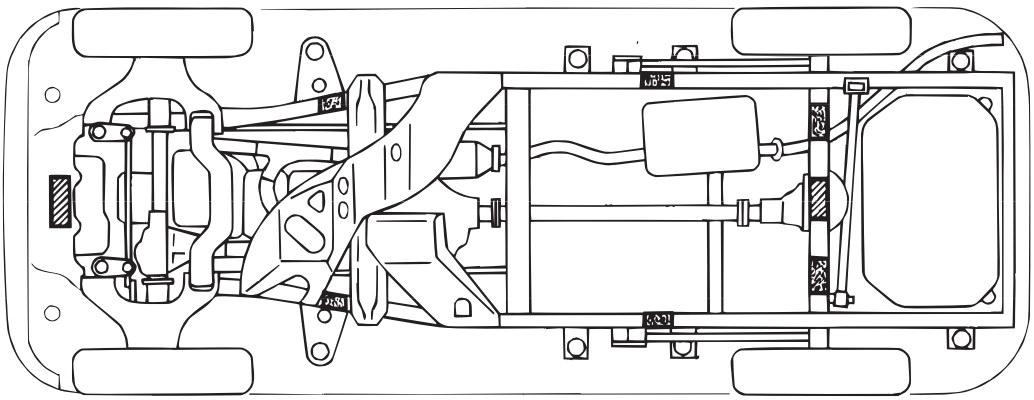

Short Wheel Base Model

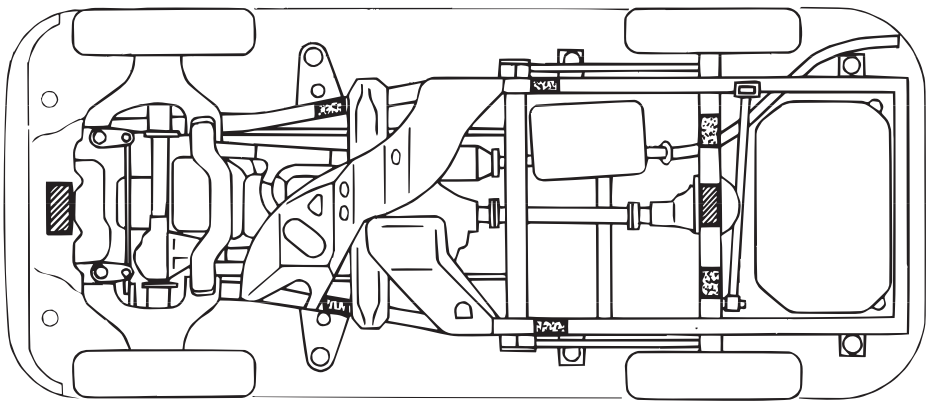

Lifting point

Supportable point

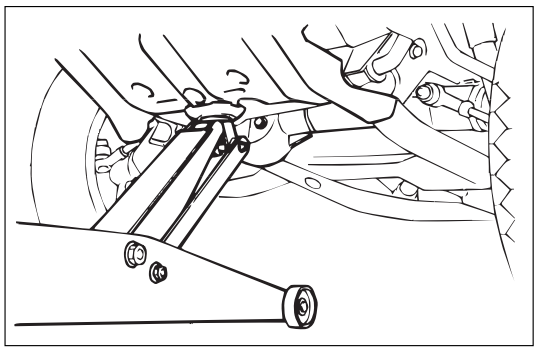

LIFTING POINT; FRONT

When using floor jack, lift on the center of the skid plate.

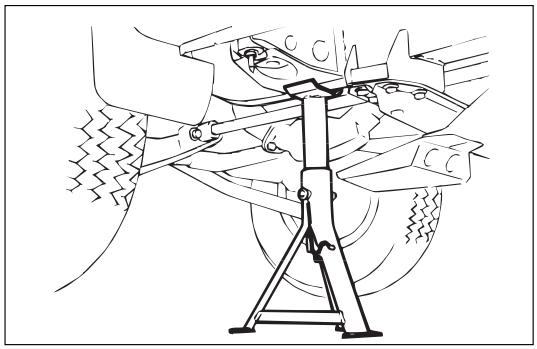

SUPPORTABLE POINT; FRONT

Position the chassis stands at the bottom of the frame sidemember, backward of front wheel.

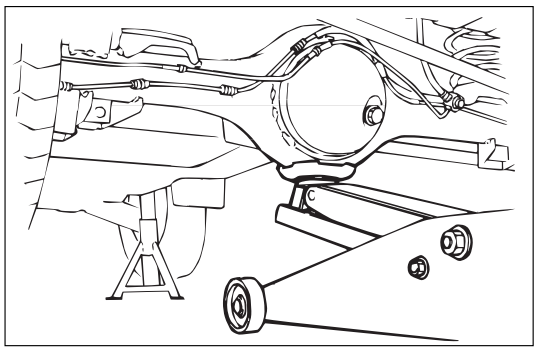

LIFTING POINT; REAR

Position the floor jack at the center of the rear axle case when lifting the vehicle.

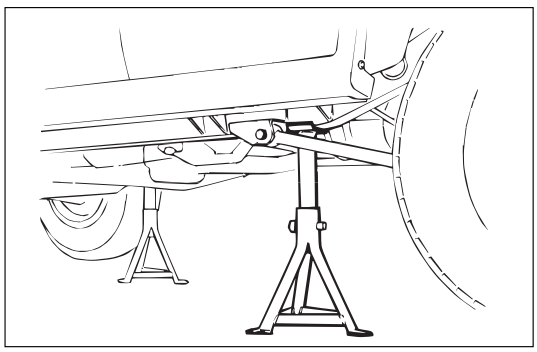

SUPPORTABLE POINT; REAR

Position the chassis stands at the bottom of the frame sidemember, just behind of the trailing link bracket.

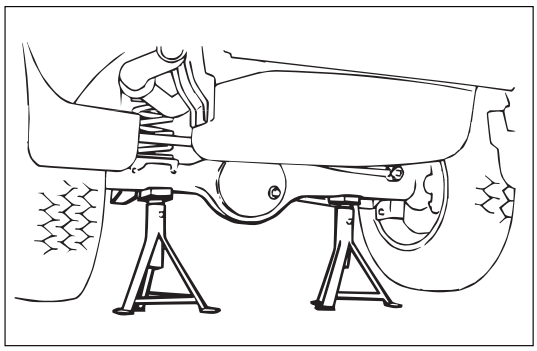

SUPPORTABLE POINT; REAR

Position the chassis stands at the bottom of the rear axle case.

TORQUE SPECIFICATIONS

STANDARD BOLTS

The torque values given in the following table should be applied where a particular torque is not specified.

N·m (kg·m / lb·ft)
N·m kg·cm / lb·in

Strength Class	4.8	8.8		9.8
		Refined	Non-Refined	
Bolt Identification	4	8	.8	9
Bolt Diameter x Pitch (mm)	No mark			
M 6x1.0	6 60 / 52	7 75 / 65		–
M 8x1.25	13 130 / 113	17 175 / 152		24 240 / 208
M10x1.25	27 (2.8 / 20)	37 (3.8 / 27)		50 (5.1 / 37)
M12x1.25	61 (6.3 / 45)	76 (7.8 / 56)		95 (9.7 / 70)
M14x1.5	96 (9.8 / 71)	116 (11.9 / 86)		142 (14.5 / 105)
M16x1.5	130 (13.3 / 96)	170 (17.3 / 125)		200 (20.4 / 148)
M18x1.5	188 (19.2 / 139)	244 (24.9 / 180)		287 (29.3 / 212)
M20x1.5	258 (26.3 / 190)	337 (34.4 / 249)		396 (40.4 / 292)
M22x1.5	332 (33.9 / 245)	453 (46.3 / 335)		530 (54.1 / 391)
M24x2.0	449 (45.8 / 331)	570 (58.2 / 421)		692 (70.6 / 511)
*M10x1.5	26 (2.7 / 20)	36 (3.7 / 27)		48 (4.9 / 35)
*M12x1.5	57 (5.8 / 42)	71 (7.2 / 52)		89 (9.1 / 66)
*M14x2.0	89 (9.1 / 66)	110 (11.2 / 81)		133 (13.6 / 98)
*M16x2.0	124 (12.7 / 92)	162 (16.5 / 119)		191 (19.5 / 141)

The asterisk * indicates that the bolts are used for female-threaded parts that are made of soft materials such as casting, etc.

FLARE NUTS

N·m (kg·m / lb·ft)

Pipe diameter mm (in)	Torque	Pipe diameter mm (in)	Torque
4.76 (0.187)	16 (1.6 / 12)	10.00 (0.394)	54 (5.5 / 40)
6.35 (0.250)	26 (2.7 / 20)	12.00 (0.472)	88 (9.0 / 65)
8.00 (0.315)	44 (4.5 / 33)	15.00 (0.591)	106 (10.8 / 78)

RECOMMENDED LIQUID GASKET

Type	Brand Name	Manufacturer	Remarks
RTV* Silicon Base	Three Bond 1207B Three Bond 1207C Three Bond 1215 Three Bond 1280	Three Bond Three Bond Three Bond Three Bond	For Engine Repairs For Axle Case Repairs. T/M
Water Base	Three Bond 1141E	Three Bond	For Engine Repairs
Solvent	Three Bond 1104 Belco Bond 4 Belco Bond 401 Belco Bond 402	Three Bond Isuzu Isuzu Isuzu	For Engine Repairs
Anaerobic	LOCTITE 515 LOCTITE 518	Loctite Loctite	All

* RTV: Room Temperature Vulcanizer

NOTE:

1. It is very important that the liquid gaskets listed above or their exact equivalent be used on the vehicle.
2. Be careful to use the specified amount of liquid gasket.
   Follow the manufacturer's instructions at all times.
3. Be absolutely sure to remove all lubricants and moisture from the connecting surfaces before applying the liquid gasket.
   The connecting surfaces must be perfectly dry.
4. Do not apply LOCTITE 515 and LOCTITE 518 between two metal surfaces having a clearance of greater than 0.25 mm (0.01 in). Poor adhesion will result.

RECOMMENDED THREAD LOCKING AGENTS

LOCTITE Type	LOCTITE Color	Application Steps
LOCTITE 242	Blue	1. Completely remove all lubricant and moisture from the bolts and the female threaded surfaces of the parts to be joined. The surfaces must be perfectly dry. 2. Apply LOCTITE to the bolts. 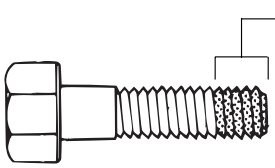 Apply LOCTITE to at least 1/3 of the bolt's threaded area
LOCTITE 262	Red	
LOCTITE 270	Green	
LOCTITE 271	Red	3. Tighten the bolts to the specified torque. After tightening, be sure to keep the bolts free from vibration and torque for at least an hour until LOCTITE hardens.

NOTE: When the application procedures are specified in this manual, follow them.

ABBREVIATIONS CHARTS

LIST OF AUTOMOTIVE ABBREVIATIONS WHICH MAY BE USED IN THIS MANUAL

A – Ampere(s)
ABS – Antilock Brake System
A/C – Air Conditioning
ACCEL – Accelerator
ACC – Accessary
Adj – Adjust
A/F – Air Fuel Ratio
AIR – Air Injection Reaction System
ALDL – Assembly Line Diagnostic Link
Alt – Altitude
AMP – Ampere(s)
ANT – Antenna
APS – Absolute Pressure Sensor
ASM – Assembly
A/T – Automatic Transmission/Transaxle
ATDC – After Top Dead Center
Auth – Authority
Auto – Automatic
BARO – Barometic
Bat – Battery
Bat+ – Battery Positive Terminal
Bbl – Barrel
BCM – Body Control Module
BHP – Brake Horsepower
BP – Back Pressure
BTDC – Before Top Dead Center
°C –Degrees Celsius
Cat. Conv. – Catalytic Converter
cc – Cubic Centimeter
CCC – Computer Command Control
CCOT – Cycling Clutch Orifice Tube
CCP – Controlled Canister Purge
CID – Cubic Inch Displacement
CL – Closed Loop
CLCC – Closed Loop Carburetor Control
CO – Carbon Monoxide
Coax – Coaxial
Conn – Connector
Conv – Converter
CP – Canister Purge
CPS – Central Power Supply
Crank – Crankshaft
CTS – Coolant Temperature Sensor
Cu.In. – Cubic Inch
CV – Constant Velocity
Cyl – Cylinder(s)
C^3I – Computer Controlled Coil Ignition
DBM – Dual Bed Monolith
Diff – Differential
DIS – Direct Ignition System
Dist –Distributor
DOHC – Double Overhead Camshaft
DVM – Digital Voltmeter (10 meg.)
DVOM – Digital Volt Ohmmeter
DVDV – Differential Vacuum Delay Valve
EAC –Electric Air Control
EAS – Electric Air Switching
EBCM – Electronic Brake Control Module
ECC – Electronic Climate Control
ECM – Electronic Control Module
ECU – Electronic Control Unit
– Engine Calibration Unit (PROM)
EECS – Evaporative Emission Control System
EFE – Early Fuel Evaporation
EFI – Electronic Fuel Injection
EGR – Exhaust Gas Recirculation
EGR/TVS – Exhaust Gas Recirculation/Thermostatic Vacuum Switch
ELC – Electronic Level Control
ESC – Electronic Spark Control
EST – Electronic Spark Control
ETR – Electronically Tuned Receiver
EVRV – Electronic Vacuum Regulator Valve (EGR)
Exh – Exhaust
°F – Degrees Fahrenheit
FF – Front Drive Front Engine
FL – Fusible Link
FLW – Fusible Link Wire
FRT –Front
FWD – Front Wheel Drive
4WD – Four Wheel Drive
4x4 – Four Wheel Drive
4 A/T – Four Speed Automatic Transmission/Transaxle
Gal – Gallon
Gen – Generator
Gov – Governor
g – Gram
Harn – Harness
HC – Hydrocarbons
HD –Heavy Duty
HEI – High Energy Ignition
Hg – Mercury
HiAlt – High Altitude
HVAC – Heater-Vent-Air Conditioning
IAC – Idle Air Control
IC – Integrated Circuit
ID – Identification
– Inside Diameter
IDI – Integrated Direct Ignition
IGN – Ignition
ILC – Idle Load Compensator
INJ –Injection
IP – Instrument Panel
IPC – Instrument Panel Cluster
INT – Intake
J/B – Junction Block
km – Kilometers
km/h – Kilometer per Hour
kPa – KiloPascals
KV – Kilovolts (thousands of volts)
KW – Kilowatts

L – Liter
lb·ft – Foot Pounds
lb·in – Inch Pounds
LF – Left Front
LH – Left Hand
LR – Left Rear
LS – Left Side
LWB – Long Wheel Base
L-4 – In-line Four Cylinder Engine
MAF – Mass Air Flow
MAN – Manual
MAP – Manifold Absolute Pressure
MAT – Manifold Air Temperature
MEM-CAL – Memory and Calibration Unit
Max – Maximum
M/C – Mixture Control
Min – Minimum
mm – Millimeter
MPFI – Multi-Port Fuel Injection
MPG – Miles per Gallon
MPH – Miles per Hour
M/T – Manual Transmission/Transaxle
MV – Millivolt
NA – Natural Aspirated
NC – Normally Closed
N·m – Newton Meters
NO – Normally Open
NOx – Nitrogen, Oxides of
OD – Outside Diameter
O/D – Over Drive
OHC – Overhead Camshaft
OL – Open Loop
O_2 – Oxygen
PAIR – Pulse Air Injection Reactor System
P/B – Power Brakes
PCV – Positive Crankcase Ventilation
PFI – Port Fuel Injection
PRESS – Pressure
PROM – Programmable Read Only Memory
P/N – Park/Neutral
P/S – Power Steering
PSI – Pounds per Square Inch
Pt. – Pint
Pri – Primary
PWM – Pulse Width Modulated
Qt – Quart
REF – Reference
RF – Right Front
RFI – Radio Frequency Interference
RH – Right Hand
RPM – Revolutions per Minute
RPO – Regular Production Option
RR – Right Rear
RS – Right Side
RTV – Room Temperature Vulcanizing
RVB – Rear Vacuum Brake
RVR – Response Vacuum Reducer
RWAL – Rear Wheel Antilock Brake
RWD - Rear Wheel Drive
SAE – Society of Automotive Engineers
Sec – Secondary
SFI – Sequential-port Fuel Injection
SI – System International
SIR – Supplemental Inflatable Restraint System
SOHC – Single Overhead Camshaft
Sol – Solenoid
SPEC – Specification
Speedo – Speedometer
SRS – Supplemental Restraint System
ST – Start
Sw – Switch
SWB – Short Wheel Base
SYN – Synchronize
TAC – Thermostatic Air Cleaner
Tach – Tachometer
TBI – Throttle Body Injection
TCC – Transmission/Transaxle Converter Clutch
TCM – Transmission/Transaxle Control Module
TDC – Top Dead Center
Term – Terminal
TEMP – Temperature
TPS – Throttle Position Sensor
TRANS – Transmission/Transaxle
TURBO – Turbocharger
TV – Throttle Valve
TVRS – Television & Radio Suppression
TVS – Thermal Vacuum Switch
3 A/T – Three Speed Automatic Transmission/ Transaxle
2WD – Two Wheel Drive
4x2 – Two wheel Drive
U-joint – Universal Joint
V – Volt(s)
VAC – Vacuum
VIN – Vehicle Identification Number
VRRRE – Vehicle Refrigerant Recovery and Recycling Equipment
V-ref – ECM Reference Voltage
VRV – Vacuum Reducer Valve
VSS – Vehicle Speed Sensor
VSV – Vacuum Switching Valve
V-6 – Six Cylinder “V” Engine
V-8 – Eight Cylinder “V” Engine
W – Watt(s)
w/ – With
w/b – Wheel Base
w/o – Without
WOT – Wide Open Throttle

SECTION 0B

MAINTENANCE AND LUBRICATION

CONTENTS

PAGE

Maintenance Schedule 0B– 2

Recommended Fluids, Lubricants and Fuels 0B– 7

Oil Viscosity Chart. 0B–10

Service Precaution

WARNING: THIS VEHICLE HAS A SUPPLEMENTAL RESTRAINT SYSTEM (SRS). REFER TO THE SRS COMPONENT AND WIRING LOCATION VIEW IN ORDER TO DETERMINE WHETHER YOU ARE PERFORMING SERVICE ON OR NEAR THE SRS COMPONENTS OR THE SRS WIRING. WHEN YOU ARE PERFORMING SERVICE ON OR NEAR THE SRS COMPONENTS OR THE SRS WIRING, REFER TO THE SRS SERVICE INFORMATION. FAILURE TO FOLLOW WARNINGS COULD RESULT IN POSSIBLE AIR BAG DEPLOYMENT, PERSONAL INJURY, OR OTHERWISE UNNEEDED SRS SYSTEM REPAIRS.

CAUTION: Always use the correct fastener in the proper location. When you replace a fastener, use ONLY the exact part number for that application. ISUZU will call out those fasteners that require a replacement after removal. ISUZU will also call out the fasteners that require thread lockers or thread sealant. UNLESS OTHERWISE SPECIFIED, do not use supplemental coatings (Paints, greases, or other corrosion inhibitors) on threaded fasteners or fasteners joint interfaces. Generally, such coatings adversely affect the fastener torque and the joint clamping force, and may damage the fastener. When you install fasteners, use the correct tightening sequence and specification. Following these instructions can help you avoid damage to parts and systems.

MAINTENANCE SCHEDULE

GASOLINE ENGINE MODEL

I: Inspect and correct or replace as necessary A: Adjust
R: Replace or change T: Tighten to specified torque L: Lubricate

SERVICE INTERVAL: (Use odometer reading or months whichever comes first)	x 1,000 km	5	10	15	20	25	30	35	40	45	50	55	60	65	70	75	80	85	90	95	100
	x 1,000 miles	3	6	9	12	15	18	21	24	27	30	33	36	39	42	45	48	51	54	57	60
	or months	6	12	18	24	30	36	42	48	54	60	66	72	78	84	90	96	102	108	114	120
GASOLINE ENGINE																					
* Engine oil		-	-	R	-	-	R	-	-	R	-	-	R	-	-	R	-	-	R	-	-
* Engine oil filter		-	-	R	-	-	R	-	-	R	-	-	R	-	-	R	-	-	R	-	-
Oil leakage and contamination		-	-	R	-	-	I	-	-	I	-	-	I	-	-	I	-	-	I	-	-
* Timing belt		(Replace every 165,000 km or 100,000 miles)																			
Spark plugs (For leaded fuel use)		-	-	-	-	-	-	-	R	-	-	-	-	-	-	-	R	-	-	-	-
Spark plugs (Forunleaded fuel use)		(Replace every 165,000 km or 100,000 miles)																			
Exhaust system		-	-	I	-	-	I	-	-	I	-	-	I	-	-	I	-	-	I	-	-
Radiator coolant concentration		-	-	I	-	-	I	-	-	I	-	-	I	-	-	I	-	-	I	-	-
Cooling system for water leakage		-	-	I	-	-	I	-	-	I	-	-	I	-	-	I	-	-	I	-	-
All hoses and pipes in engine compartment for clog or damage		-	-	I	-	-	I	-	-	I	-	-	I	-	-	I	-	-	I	-	-
Fuel filter		-	-	-	-	-	R	-	-	-	-	-	R	-	-	-	-	-	R	-	-
Fuel leakage		-	-	I	-	-	I	-	-	I	-	-	I	-	-	I	-	-	I	-	-
Fuel tank		-	-	I	-	-	I	-	-	I	-	-	I	-	-	I	-	-	I	-	-
* Air cleaner element		-	-	I	-	-	I	-	-	R	-	-	I	-	-	I	-	-	R	-	-
Pre air cleaner		-	-	I	-	-	I	-	-	I	-	-	I	-	-	I	-	-	I	-	-
Engine drive belt		-	-	-	-	-	I	-	-	-	-	-	I	-	-	-	-	-	I	-	-
Valve clearance		(Check and adjust if necessary every 100,000 km or 60,000 miles)																			
O_2 Sensor (For leaded fuel use)		-	-	-	-	-	-	-	-	-	R	-	-	-	-	-	-	-	-	-	R
O_2 Sensor (For unleaded fuel use)		(Replace every 150,000 km or 90,000 miles)																			
CLUTCH																					
Clutch fluid		-	-	I	-	-	I	-	-	I	-	-	I	-	-	I	-	-	I	-	-
Clutch pedal travel and free play		-	-	I	-	-	I	-	-	I	-	-	I	-	-	I	-	-	I	-	-
TRANSMISSION OR TRANSMISSION WITH TRANSFER CASE																					
* Manual transmission with transfer case oil		-	-	R	-	-	I	-	-	R	-	-	I	-	-	R	-	-	I	-	I
* AT Automatic transmission fluid leakage		-	-	I	-	-	I	-	-	I	-	-	I	-	-	I	-	-	I	-	-
*(1) AT Automatic transmission fluid		-	-	-	-	-	-	-	-	-	-	-	-	-	-	-	-	-	-	-	I
* AT Transfer case oil		-	-	R	-	-	I	-	-	R	-	-	I	-	-	R	-	-	I	-	I
PROPELLER SHAFT																					
Loose connections		-	-	I	-	-	I	-	-	I	-	-	I	-	-	I	-	-	I	-	-
* Universal joints and splines for wear		-	-	I	-	-	I	-	-	I	-	-	I	-	-	I	-	-	I	-	-
Universal joints and sliding sleeve (front and rear)		-	-	L	-	-	L	-	-	L	-	-	L	-	-	L	-	-	L	-	-
FRONT AND REAR AXLE																					
* Differential gear oil (Front and rear)		-	-	R	-	-	I	-	-	R	-	-	I	-	-	R	-	-	I	-	I
Shift on the fly system gear oil		-	-	I	-	-	I	-	-	I	-	-	I	-	-	I	-	-	I	-	-
Front axle shaft rubber boot for damage		-	-	I	-	-	I	-	-	I	-	-	I	-	-	I	-	-	I	-	-
Axle case for distortion or damage		-	-	I	-	-	I	-	-	I	-	-	I	-	-	I	-	-	I	-	-
Axle shafts for distortion or damage		-	-	I	-	-	I	-	-	I	-	-	I	-	-	I	-	-	I	-	-
STEERING																					
* Power steering fluid		-	-	I	-	-	I	-	-	R	-	-	I	-	-	I	-	-	R	-	-
Oil leakage		-	-	I	-	-	I	-	-	I	-	-	I	-	-	I	-	-	I	-	-
* Steering system for looseness or damage		-	-	I	-	-	I	-	-	I	-	-	I	-	-	I	-	-	I	-	-
Power steering hose		-	-	I	-	-	I	-	-	I	-	-	I	-	-	R	-	-	I	-	-
Steering wheel play		-	-	I	-	-	I	-	-	I	-	-	I	-	-	I	-	-	I	-	-
Steering function		-	-	I	-	-	I	-	-	I	-	-	I	-	-	I	-	-	I	-	-
Right and left turning radius		-	-	-	-	-	I	-	-	-	-	-	I	-	-	-	-	-	I	-	-
Wheel alignment		-	-	-	-	-	I	-	-	-	-	-	I	-	-	-	-	-	I	-	-
Joint ball for oil leakage or damage		-	-	I	-	-	I	-	-	I	-	-	I	-	-	I	-	-	I	-	-
Joint ball rubber boot for damage		-	-	I	-	-	I	-	-	I	-	-	I	-	-	I	-	-	I	-	-
SERVICE BRAKES																					
Brake fluid		-	-	I	-	-	I	-	-	R	-	-	I	-	-	I	-	-	R	-	-
Brake system for fluid leakage		-	-	I	-	-	I	-	-	I	-	-	I	-	-	I	-	-	I	-	-
Brake function		-	-	I	-	-	I	-	-	I	-	-	I	-	-	I	-	-	I	-	-
* Disc brake pads and discs wear		-	-	I	-	-	I	-	-	I	-	-	I	-	-	I	-	-	I	-	-
Brake pedal travel and free play		-	-	I	-	-	I	-	-	I	-	-	I	-	-	I	-	-	I	-	-
Pipes and hoses for loose connections or damage		-	-	I	-	-	I	-	-	I	-	-	I	-	-	I	-	-	I	-	-

(1): Adjust or change automatic transmission fluid.
*Marks: Under severe driving conditions, additional maintenance is required.
Refer to "Maintenance schedule under severe driving conditions".

GASOLINE ENGINE MODEL

I: Inspect and correct or replace as necessary A: Adjust
R: Replace or change T: Tighten to specified torque L: Lubricate

SERVICE INTERVAL:	x 1,000 km	5	10	15	20	25	30	35	40	45	50	55	60	65	70	75	80	85	90	95	100
(Use odometer reading	x 1,000 miles	3	6	9	12	15	18	21	24	27	30	33	36	39	42	45	48	51	54	57	60
or months whichever comes first)	or months	6	12	18	24	30	36	42	48	54	60	66	72	78	84	90	96	102	108	114	120
PARKING BRAKE																					
Parking brake function		-	-	I	-	-	I	-	-	I	-	-	I	-	-	I	-	-	I	-	-
Parking brake lever travel		-	-	I	-	-	I	-	-	I	-	-	I	-	-	I	-	-	I	-	-
Cables for looseness or damage and guide for damage		-	-	I	-	-	I	-	-	I	-	-	I	-	-	I	-	-	I	-	-
Ratchet for wear or damage		-	-	I	-	-	I	-	-	I	-	-	I	-	-	I	-	-	I	-	-
SUSPENSION																					
Spring leaves for damage		-	-	I	-	-	I	-	-	I	-	-	I	-	-	I	-	-	I	-	-
Mount for looseness or damage		-	-	I	-	-	I	-	-	I	-	-	I	-	-	I	-	-	I	-	-
Shock absorbers for oil leakage		-	-	I	-	-	I	-	-	I	-	-	I	-	-	I	-	-	I	-	-
Shock absorbers mount for looseness		-	-	I	-	-	I	-	-	I	-	-	I	-	-	I	-	-	I	-	-
Rubber bushes of suspension wear or damage		-	-	I	-	-	I	-	-	I	-	-	I	-	-	I	-	-	I	-	-
Spring action for loss of balance due to weakening		-	-	I	-	-	I	-	-	I	-	-	I	-	-	I	-	-	I	-	-
Joint ball rubber boot for damage		-	-	I	-	-	I	-	-	I	-	-	I	-	-	I	-	-	I	-	-
WHEELS																					
Wheel pins		-	-	T	-	-	T	-	-	T	-	-	T	-	-	T	-	-	T	-	-
Wheel disc for damage		-	-	I	-	-	I	-	-	I	-	-	I	-	-	I	-	-	I	-	-
Hub bearinggrease		-	-	-	-	-	R	-	-	-	-	-	R	-	-	-	-	-	R	-	-
Front and rear hub bearings for looseness		-	-	I	-	-	I	-	-	I	-	-	I	-	-	I	-	-	I	-	-
Tire pressure and damage		-	-	I	-	-	I	-	-	I	-	-	I	-	-	I	-	-	I	-	-
Tire rotation		(Rotate as required)																			
OTHERS																					
Bolts and nuts on chassis and body		-	-	I	-	-	I	-	-	I	-	-	I	-	-	I	-	-	I	-	-
Lube front free-wheeling hubs		-	-	-	-	-	L	-	-	-	-	-	L	-	-	-	-	-	L	-	-

*Marks: Under severe driving conditions, additional maintenance is required.
Refer to "Maintenance schedule under severe driving conditions".

DIESEL ENGINE MODEL

I: Inspect and correct or replace as necessary A: Adjust
R: Replace or change T: Tighten to specified torque L: Lubricate

SERVICE INTERVAL:	x 1,000 km	5	10	15	20	25	30	35	40	45	50	55	60	65	70	75	80	85	90	95	100
(Use odometer reading	x 1,000 miles	3	6	9	12	15	18	21	24	27	30	33	36	39	42	45	48	51	54	57	60
or months whichever comes first)	or months	6	12	18	24	30	36	42	48	54	60	66	72	78	84	90	96	102	108	114	120
DIESEL ENGINE																					
* Engine oil		-	R	-	R	-	R	-	R	-	R	-	R	-	R	-	R	-	R	-	R
* Engine oil filter		-	R	-	R	-	R	-	R	-	R	-	R	-	R	-	R	-	R	-	R
Oil leakage and contamination		-	I	-	I	-	I	-	I	-	I	-	I	-	I	-	I	-	I	-	I
Idling speed and acceleration		-	I	-	I	-	I	-	I	-	I	-	I	-	I	-	I	-	I	-	I
Fan belt tension and damage		-	I	-	I	-	I	-	I	-	I	-	I	-	I	-	I	-	I	-	I
Timing belt		(Replace every 200,000 km or 125,000 miles)																			
Exhaust system		-	I	-	I	-	I	-	I	-	I	-	I	-	I	-	I	-	I	-	I
All hoses and pipes in engine compartment for clog or damage		-	I	-	I	-	I	-	I	-	I	-	I	-	I	-	I	-	I	-	I
Valve clearance		-	-	-	A	-	-	-	-	-	A	-	-	-	-	-	A	-	-	-	-
* Air cleaner element		-	-	-	-	-	-	-	-	-	-	-	-	-	-	-	R	-	-	-	-
Fuel filter		-	-	-	-	-	-	-	-	-	-	-	-	-	-	-	R	-	-	-	-
Radiator coolant concentration		-	I	-	I	-	I	-	I	-	I	-	I	-	I	-	I	-	I	-	I
Cooling system for water leakage		-	I	-	I	-	I	-	I	-	I	-	I	-	I	-	I	-	I	-	I
CLUTCH																					
Clutch fluid		-	I	-	I	-	I	-	I	-	I	-	I	-	I	-	I	-	I	-	I
Clutch pedal travel and free play		-	I	-	I	-	I	-	I	-	I	-	I	-	I	-	I	-	I	-	I
TRANSMISSION OR TRANSMISSION WITH TRANSFER CASE																					
* Manual transmission with transfer case oil		-	R	-	I	-	-	-	R	-	-	-	I	-	-	-	R	-	-	-	I
* AT Automatic transmission fluid		-	-	-	I	-	-	-	I	-	-	-	I	-	-	-	I	-	-	-	I
* AT Transfer case oil		-	R	-	I	-	-	-	R	-	-	-	I	-	-	-	R	-	-	-	I
PROPELLER SHAFT																					
Loose connections		-	I	-	I	-	I	-	I	-	I	-	I	-	I	-	I	-	I	-	I
* Universal joints and splines for wear		-	I	-	I	-	I	-	I	-	I	-	I	-	I	-	I	-	I	-	I
Universal joints and sliding sleeve (front and rear)		-	L	-	L	-	L	-	L	-	L	-	L	-	L	-	L	-	L	-	L
FRONT AND REAR AXLE																					
* Differential gear oil (Front and rear)		-	R	-	I	-	-	-	R	-	-	-	I	-	-	-	R	-	-	-	I
Shift on the fly system gear oil		-	-	-	I	-	-	-	I	-	-	-	I	-	-	-	I	-	-	-	I
Front axle shaft rubber boot for damage		-	-	-	I	-	-	-	I	-	-	-	I	-	-	-	I	-	-	-	I
Axle case for distortion or damage		-	-	-	I	-	-	-	I	-	-	-	I	-	-	-	I	-	-	-	I
Axle shafts for distortion or damage		-	-	-	I	-	-	-	I	-	-	-	I	-	-	-	I	-	-	-	I
STEERING																					
* Power steering fluid		-	I	-	I	-	I	-	R	-	I	-	I	-	I	-	R	-	I	-	I
Oil leakage		-	I	-	I	-	I	-	I	-	I	-	I	-	I	-	I	-	I	-	I
* Steering system for looseness or damage		-	I	-	I	-	I	-	I	-	I	-	I	-	I	-	I	-	I	-	I
Power steering hose		-	I	-	I	-	I	-	I	-	I	-	I	-	R	-	I	-	I	-	I
Steering wheel play		-	I	-	I	-	I	-	I	-	I	-	I	-	I	-	I	-	I	-	I
Steering function		-	I	-	I	-	I	-	I	-	I	-	I	-	I	-	I	-	I	-	I
Right and left turning radius		-	-	-	I	-	-	-	I	-	-	-	I	-	-	-	I	-	-	-	I
Wheel alignment		-	-	-	I	-	-	-	I	-	-	-	I	-	-	-	I	-	-	-	I
Joint ball for oil leakage or damage		-	I	-	I	-	I	-	I	-	I	-	I	-	I	-	I	-	I	-	I
Joint ball rubber boot for damage		-	I	-	I	-	I	-	I	-	I	-	I	-	I	-	I	-	I	-	I
SERVICE BRAKES																					
Brake fluid		-	-	-	I	-	-	-	R	-	-	-	I	-	-	-	R	-	-	-	I
Brake system for fluid leakage		-	I	-	I	-	I	-	I	-	I	-	I	-	I	-	I	-	I	-	I
Brake function		-	I	-	I	-	I	-	I	-	I	-	I	-	I	-	I	-	I	-	I
* Disc brake pads and discs wear		-	I	-	I	-	I	-	I	-	I	-	I	-	I	-	I	-	I	-	I
Brake pedal travel and free play		-	I	-	I	-	I	-	I	-	I	-	I	-	I	-	I	-	I	-	I
Pipes and hoses for loose connections or damage		-	I	-	I	-	I	-	I	-	I	-	I	-	I	-	I	-	I	-	I

NOTE: In the 4JXI-TC diesel engine, there is provided sub (2nd) oil filter for fuel injection at the upper part of crank case on the left side of the engine. This oil filter maintenance-free and does not need a periodic replacement. See reverse side the (back) cover for installation location of the sub (2nd) oil filter.

*Marks: Under severe driving conditions, additional maintenance is required.
Refer to "Maintenance schedule under severe driving conditions".

DIESEL ENGINE MODEL

I: Inspect and correct or replace as necessary A: Adjust
R: Replace or change T: Tighten to specified torque L: Lubricate

SERVICE INTERVAL:	x 1,000 km	5	10	15	20	25	30	35	40	45	50	55	60	65	70	75	80	85	90	95	100
(Use odometer reading	x 1,000 miles	3	6	9	12	15	18	21	24	27	30	33	36	39	42	45	48	51	54	57	60
or months whichever comes first)	or months	6	12	18	24	30	36	42	48	54	60	66	72	78	84	90	96	102	108	114	120
PARKING BRAKE																					
Parking brake function		-	-	-	I	-	-	-	I	-	-	-	I	-	-	-	I	-	-	-	I
Parking brake lever travel		-	-	-	I	-	-	-	I	-	-	-	I	-	-	-	I	-	-	-	I
Cables for looseness or damage and guide for damage		-	-	-	I	-	-	-	I	-	-	-	I	-	-	-	I	-	-	-	I
Ratchet for wear or damage		-	-	-	I	-	-	-	I	-	-	-	I	-	-	-	I	-	-	-	I
SUSPENSION																					
Spring leaves for damage		-	I	-	I	-	I	-	I	-	I	-	I	-	I	-	I	-	I	-	I
Mount for looseness or damage		-	I	-	I	-	I	-	I	-	I	-	I	-	I	-	I	-	I	-	I
Shock absorbers for oil leakage		-	I	-	I	-	I	-	I	-	I	-	I	-	I	-	I	-	I	-	I
Shock absorbers mount for looseness		-	I	-	I	-	I	-	I	-	I	-	I	-	I	-	I	-	I	-	I
Rubber bushes of suspension wear or damage		-	I	-	I	-	I	-	I	-	I	-	I	-	I	-	I	-	I	-	I
Spring action for loss of balance due to weakening		-	-	-	I	-	-	-	I	-	-	-	I	-	-	-	I	-	-	-	I
Joint ball rubber boot for damage		-	I	-	I	-	I	-	I	-	I	-	I	-	I	-	I	-	I	-	I
WHEELS																					
Wheel pins		-	T	-	T	-	T	-	T	-	T	-	T	-	T	-	T	-	T	-	T
Wheel disc for damage		-	I	-	I	-	I	-	I	-	I	-	I	-	I	-	I	-	I	-	I
Hub bearing grease		-	-	-	-	-	R	-	-	-	-	-	R	-	-	-	-	-	R	-	-
Front and rear hub bearings for looseness		-	I	-	I	-	I	-	I	-	I	-	I	-	I	-	I	-	I	-	I
Tire pressure and damage		-	I	-	I	-	I	-	I	-	I	-	I	-	I	-	I	-	I	-	I
Tire rotation		(Rotate as required)																			
OTHERS																					
Bolts and nuts on chassis and body		-	I	-	I	-	I	-	I	-	I	-	I	-	I	-	I	-	I	-	I
Lube front free-wheeling hubs		-	-	-	-	-	L	-	-	-	-	-	L	-	-	-	-	-	L	-	-

*Marks: Under severe driving conditions, additional maintenance is required.
Refer to "Maintenance schedule under severe driving conditions".

MAINTENANCE SCHEDULE UNDER SEVERE DRIVING CONDITIONS

Severe driving conditions
- A: Repeated short trips
- B: Driving on rough roads
- C: Driving on dusty roads
- D: Driving in extremely cold weather and/or salted roads

Item	Interval		Condition				
			A	B	C	D	A+D
Engine oil	G	: Change every 5,000 km (3,000 miles)			●		●
	D	: Change every 5,000 km (3,000 miles)					
Engine oil filter	G	: Replace every 10,000 km (6,000 miles)			●		●
	D	: Replace every 5,000 km (3,000 miles)					
Air cleaner element	G	: Replace every 20,000 km (12,000 miles)			●		
	D	: Replace every 40,000 km (25,000 miles)					
Power steering fluid	Replace every 50,000 km (30,000 miles)			●	●		
Steering system for looseness or damage	Inspect every 5,000 km (3,000 miles)			●			
Universal joints and sleeves	Inspect for wear and lubricate every 7,500 km (4,500 miles)			●	●		
Transmission with transfer case oil	MT	Change every 20,000 km (12,000 miles) after changing at initial 10,000 km (6,000 miles)		●			
	AT	Transmission : Change every 32,000 km (20,000 miles)	●	●	●		●
	TF	Transfer: Change every 20,000 km (12,000 miles) after changing at initial 10,000 km (6,000 miles)		●			
Differential oil	Change every 20,000 km (12,000 miles) after changing at initial 5,000 km (3,000 miles)			●			
Disc brake pads and discs	Inspect every 5,000 km (3,000 miles)		●	●	●		
Timing belt	G	: Replace every 120,000 km (75,000 miles)			●		●

EXPLANATION OF COMPLETE VEHICLE MAINTENANCE SCHEDULE

Explanations of the services listed in the proceeding Maintenance Scheduled are presented in “Service Information” section of each manual.

Replace all questionable parts and note any necessary repairs as you perform these maintenance procedures.

RECOMMENDED FLUIDS, LUBRICANTS AND FUELS

In order to obtain maximum performance and longest service life from your ISUZU vehicles, it is very important to select and use correctly best lubricants and diesel fuels.

When lubricating, be sure to use ISUZU genuine lubricants or recommended lubricants listed below, according to the maintenance schedule for each vehicle model.

The lubrication intervals in the maintenance schedule and the coverage and period of new vehicle warranty are based on the use of ISUZU genuine lubricants or recommended lubricants as given in the chart which will serve as a guide for selecting lubricants of proper brand name.

LUBRICATION	MAKE	BRAND / TYPE	GRADE	
			API	ACEA
Diesel engine crankcase	**ISUZU GENUINE**	**BESCO MULTI – Z TYPE CE (10W-30)**	**CE**	
	ISUZU GENUINE	**BESCO MULTI – Z (10W-30)**	**CD**	
	ISUZU GENUINE	**BESCO MULTI – Z SUV (5W-30)**	**CD**	
	ISUZU GENUINE	**BESCO S – 3 (10W, 20W, 30, 40)**	**CD**	
	EXXON / ESSO	ESSOLUBE XD-3+ (15W-40)	CG4/CF	E2/B2
	EXXON / ESSO	ESSOLUBE XT331 (15W-40)	CG-4/CF	E2/B2
	MOBIL	DELVAC HP (15W-40, 20, 30, 40)	CF/CE	
	CALTEX / CHEVRON	DELO CXJ (15W-40, 30, 40)	CF	
	SHELL	RIMURA D (15W-40, 30, 40	CD/CF	
	ELF	PERFORMANCE TROPHY (15W-40)	CE	E3
	TOTAL	RUBIA XT (15W-40)	CF-4	E2
Gasoline engine crankcase	**ISUZU GENUINE**	**BESCO RACING ACE (7.5W-30)**	**SG**	
	ISUZU GENUINE	**BESCO MULTI ACE (7.5W-30)**	**SF**	
	ISUZU GENUINE	**BESCO ACE (10W-30)**	**SE**	
	EXXON / ESSO	ESSO SUPERFLO (15W-40, 15W-50, 20W-50)	SJ	A2
	EXXON / ESSO	ESSO UNIFLO (15W-40, 15W-50, 20W-50)	SJ	A2
	MOBIL	MOBIL SUPER XHP (15W-40, 15W-50, 20W-50)	SJ	A3
	CALTEX / TEXACO	HAVOLINE FORMULA-3 (15W-40, 20W-50)	SJ	
	SHELL	HELIX SUPER (10W-30)	SJ	
	ELF	SUPER SPORTI S (15W-40)	SG	
	TOTAL	QUARTZ 5000 (15W-40, 20W-50)	SJ	A2
Manual transmission Transfer case	**ISUZU GENUINE**	**BESCO GEAR OIL TRANSAXLE (5W-30)**	**SG**	
	EXXON / ESSO	ESSOLUBE XD-3+ (15W-40)	CG-4/CF	E2/B2
	EXXON / ESSO	ESSOLUBE XT331 (15W-40)	CG-4/CF	E2/B2
	MOBIL	MOBIL SUPER (10W-30)	SH	
	CALTEX / TEXACO	HAVOLINE FORMULA-3 (15W-40, 20W-50)	SH	
	SHELL	RIMURA D (15W-40)	CD/CF	
	ELF	SUPER SPORTI S (15W-40)	SG/CD	
	TOTAL	QUARTZ 5000 (15W-40, 20W-50)	SJ/CF	A2/B2
Differential Shift on the fly system (GL-5 only)	**ISUZU GENUINE**	**BESCO GEAR OIL SH (80W-90, 90, 140)**	**GL-5**	
	ISUZU GENUINE	**BESCO SHIFT ON THE FLY (75W-90)**	**GL-5**	
	EXXON / ESSO	GEAR OIL GX (85W-90)	GL-5	
	MOBIL	MOBILUBE HD (80W-90, 85W-140)	GL-5	
	CALTEX	THURBAN GL-5 EP (80W-90, 85W-140)	GL-5	
	SHELL	SPIRAX HD (90, 140)	GL-5	
	ELF	TRANSELF TYPE B (80W-90, 85W-140)	GL-5	
	TOTAL	TRANSMISSION TM (80W-90, 85W-140)	GL-5	
Differential (Limited Slip Differential)	**ISUZU GENUINE**	**BESCO GEAR OIL LSD (140)**	**GL-5**	
	EXXON / ESSO	GEAR OIL LSA (90)	GL-5	
	MOBIL	MOBILUBE HD LS (80W-90)	GL-5	
	CALTEX	GEAR OIL LSD (90)	GL-5	
	ELF	TRANSELF TYPE BLS (90)	GL-5	
	TOTAL	TRANSMISSION DA (85W-90)	GL-5	

LUBRICATION	MAKE	BRAND / TYPE	GRADE	
			API	ACEA
Automatic transmission Power steering	**ISUZU GENUINE** EXXON / ESSO MOBIL CALTEX SHELL ELF TOTAL	**BESCO ATF II, ATF III** ESSO ATF D (DEXRON® II-D) MOBIL ATF (DEXRON® III) ATF HD (DEXRON® II) SHELL DONAX TA (DEXRON® II-D) ELFMATIC G3 (DEXRON® III) TOTAL FLUID IID (DEXRON® II-D)		
Propeller shaft sliding yoke, Universal joint Grease fitting (General purpose grease)	**ISUZU GENUINE** EXXON / ESSO MOBIL CALTEX / TEXACO SHELL TOTAL	**BESCO L-2 GREASE (No.2), L-3 GREASE (No.3)** RONEX MP (No.2) MOBILGREASE HP 222 (No.2) STARPLEX-2 (No.2) SHELL RETINAX A (No.2) MULTIS EP2, EP3 (No.2, No.3)		
Propeller shaft sliding yoke Universal joint (General purpose grease in Molybdenum)	**ISUZU GENUINE** EXXON / ESSO EXXON / ESSO CALTEX TOTAL	**ONE LUBER MO GREASE** BEACON Q2 (No.2) MULTIPURPOSE GREASE (Moly) (No.2) MOLYTEX GREASE EP2 (No.2) TOTAL MULTIS MS2 (No.2)		
Engine cooling system	**ISUZU GENUINE** TEXACO / CALTEX	**BESCO LLC SUPER TYPE E** HAVOLINE EXTENDED LIFE ANTIFREEZE COOLANT HAVOLINE XLC EXTENDED LIFE COOLANT 6280		

FLUID	TYPE
Clutch and brake fluid reservoir	Besco brake fluid (For light duty) Hydraulic brake fluid SAE J1703 FMVSS 116 DOT.3 grade

NOTE:
When the recommended lubricants are specified in the workshop manual, follow them.

DIESEL FUEL/APPLICABLE STANDARD	
JIS (JAPANESE INDUSTRIAL STANDARD)	Based on K2204 GAS OIL
DIN (DEUTSCHE INDUSTRIE NORMEN)	Based on EN590 : 1997
SAE (SOCIETY OF AUTOMOTIVE ENGINEERS)	Based on SAE J-313C
BS (BRITISH STANDARD)	Based on BS EN590 : 1997

NOTE:
Use the applicable standard or equivalent for diesel fuels.

OIL VISCOSITY CHART

Lubricants should be carefully selected according to the lubrication chart. It is also important to select viscosity of lubricants according to the ambient temperature by referring to the following table.

OIL VISCOSITY CHART FOR GASOLINE ENGINE

APPLY GASOLINE ENGINE OIL

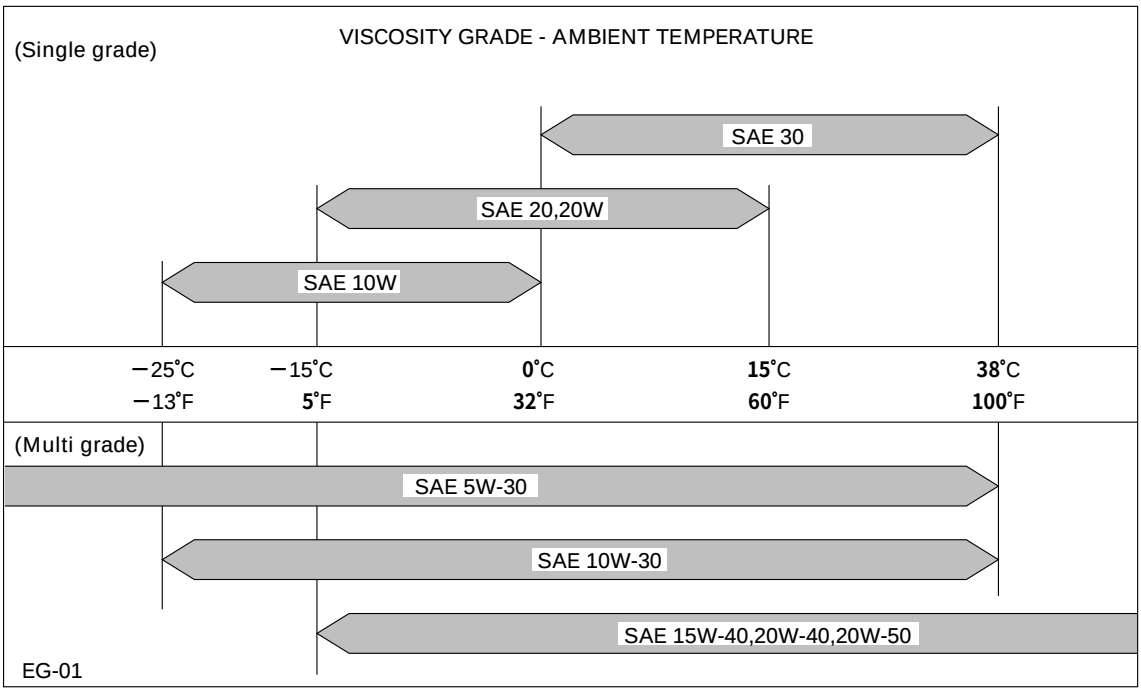

OIL VISCOSITY CHART FOR DIESEL ENGINE

APPLY DIESEL ENGINE OIL

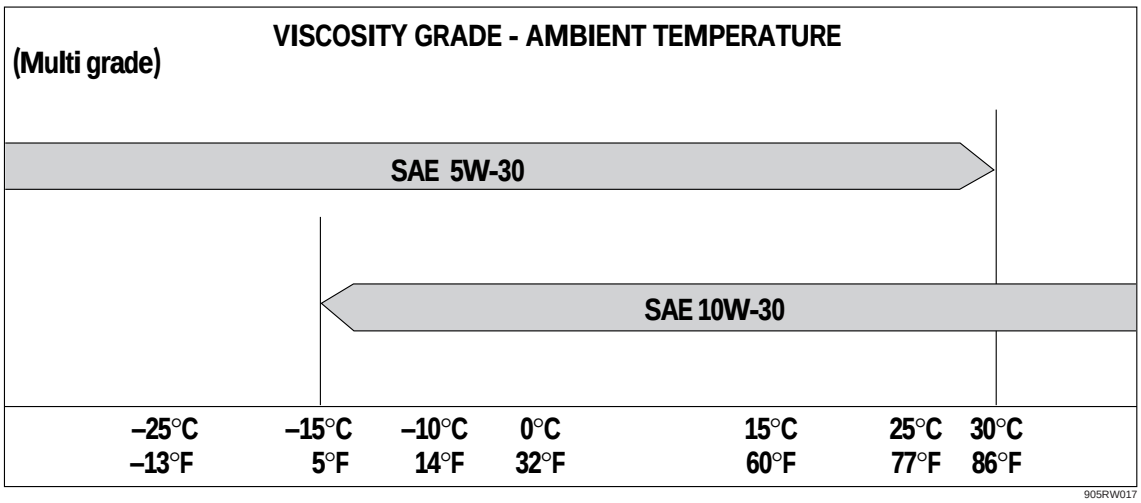

OIL VISCOSITY CHART FOR MANUAL TRANSMISSION AND TRANSFER CASE

APPLY ENGINE OIL

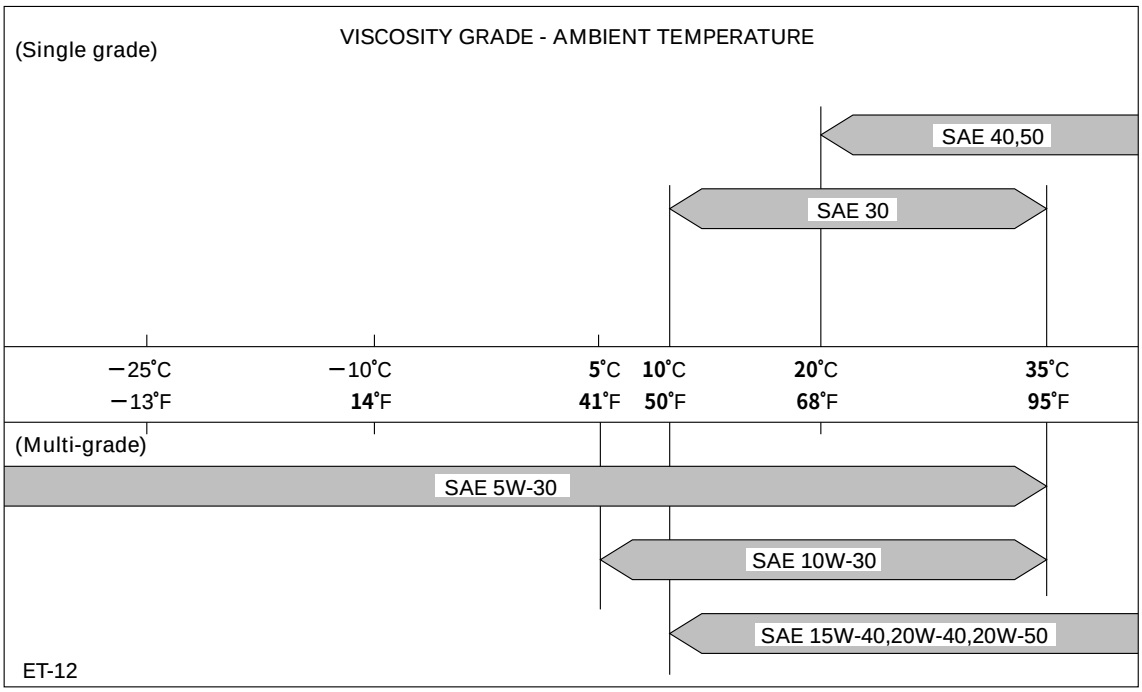

OIL VISCOSITY CHART FOR FRONT AXLE (Manual and Auto locking hub model) AND REAR AXLE

APPLY GEAR OIL

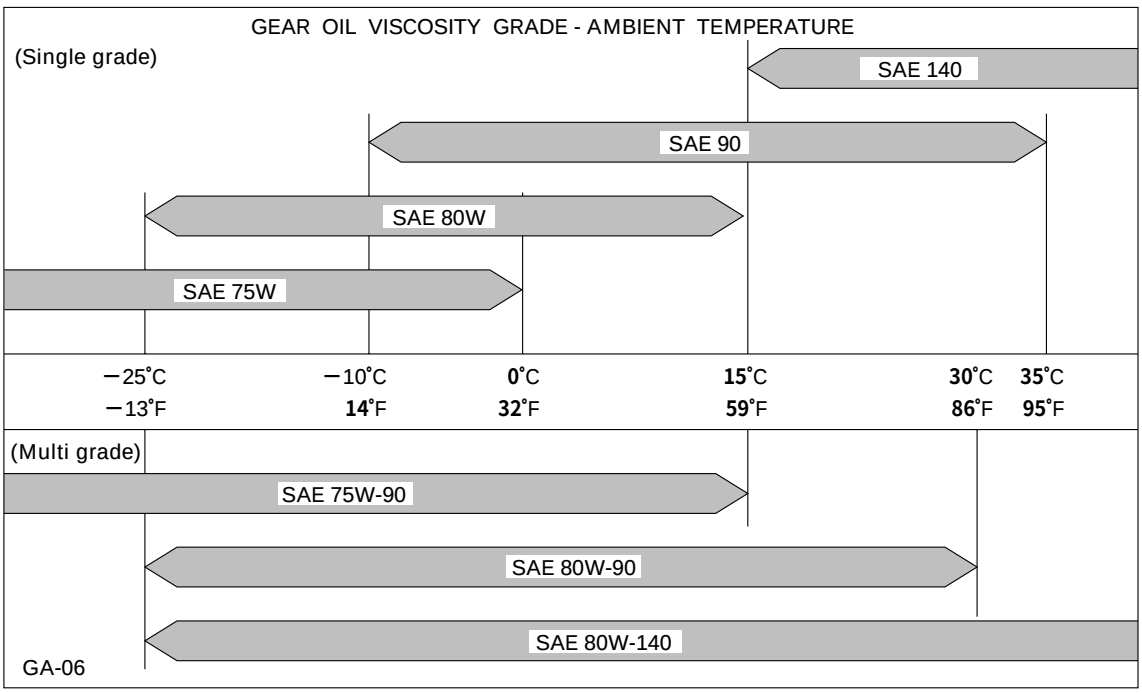

OIL VISCOSITY CHART FOR FRONT AXLE (Shift on the fly model)

APPLY GEAR OIL

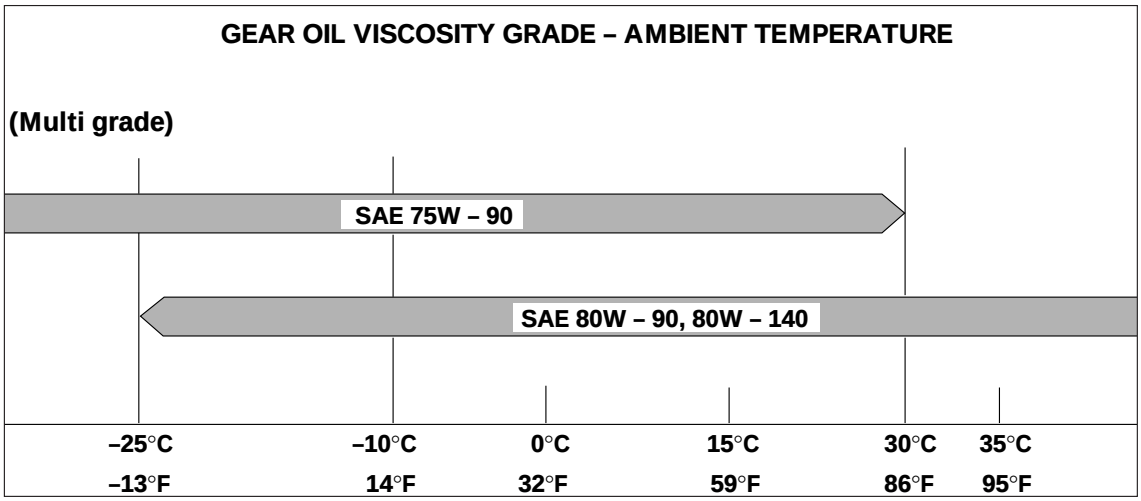

SECTION 00
SERVICE INFORMATION

CONTENTS

PAGE
Troubleshooting 00– 3
Main Data and Specifications 00–45
Fixing Torque. 00–48
Special Tools 00–52

MEMO

TROUBLESHOOTING

CONTENTS

PAGE

Circuit Diagram 00– 4
Heating Cycle Troubleshooting 00–16
Fan Control Knob (Fan Switch) 00–17
Blower Motor Does Not Run 00–18
Blower Motor Does Not Run In Certain Position. 00–19
Blower Motor Does Not Stop at “OFF” Position. 00–19
Ceramic Heater 00–20
Ceramic Heater Does Not Operate 00–21
Ceramic Heater Does Not Stop 00–22
Air Conditioning Cycle Troubleshooting. 00–23
Checking Refrigerant System with Manifold Gauge. 00–24
Magnetic Clutch 00–27
6VD1/6VE1 Engine 00–27
4JG2 Engine 00–31
4JX1 Engine. 00–34
Condenser Fan. 00–37
Condenser Fan Does Not Run 00–38
Condenser Fan Does Not Stop 00–39
Compressor Troubleshooting 00–40
Individual Inspection. 00–41

CIRCUIT DIAGRAM

6VD1/6VE1 (RHD)

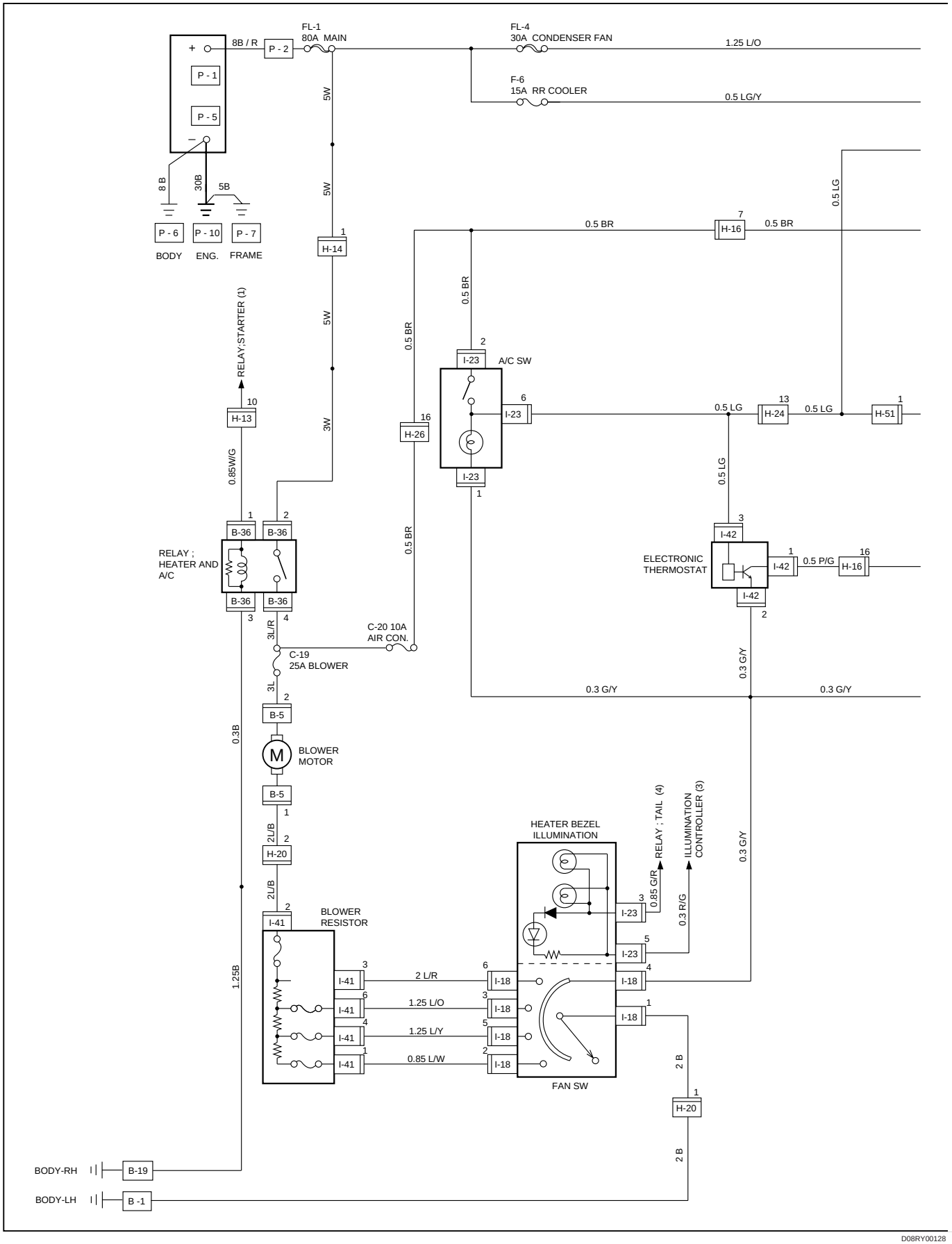

D08RY00128

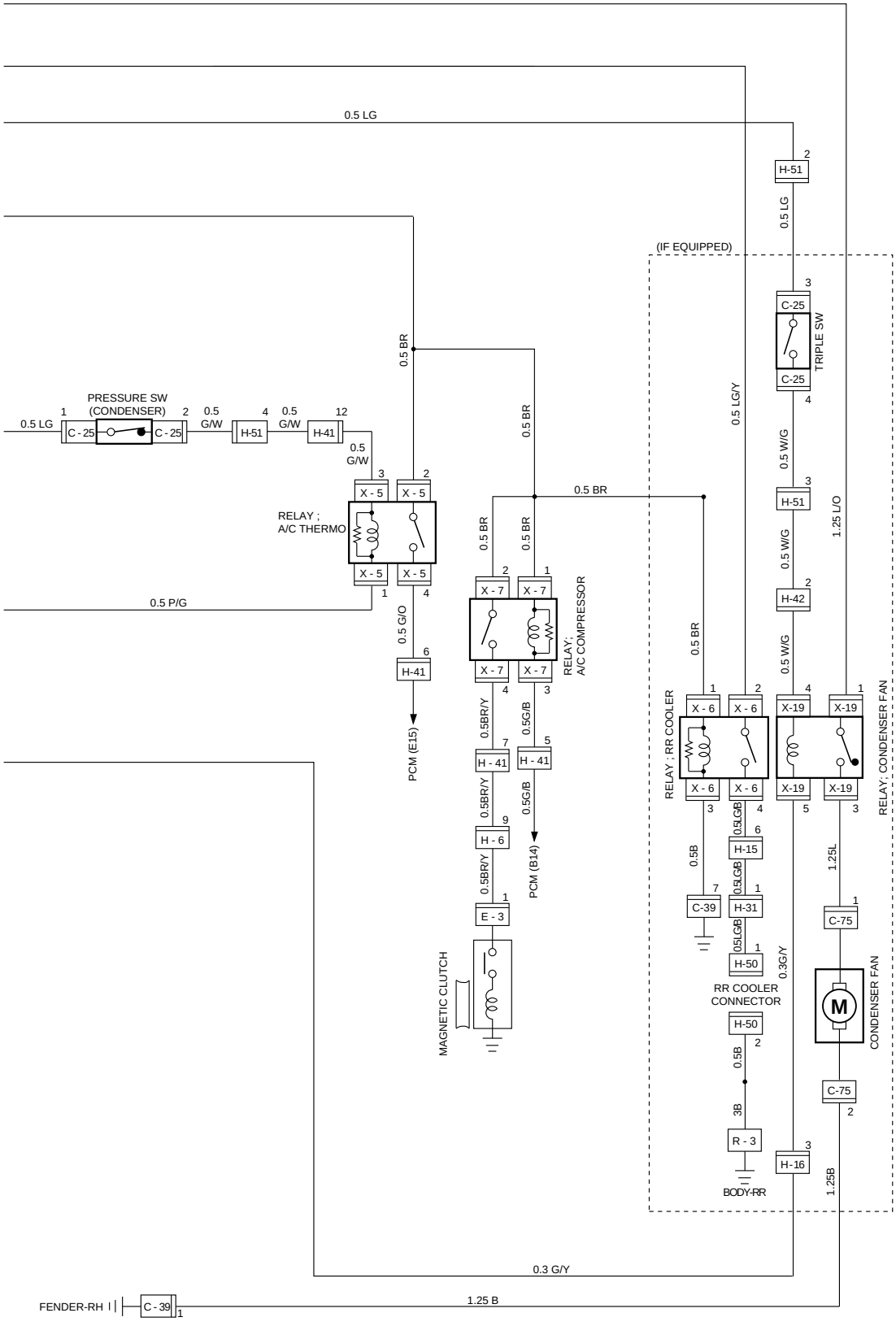
0.5 LG
H-51
0.5 LG
(IF EQUIPPED)
C-25
TRIPLE SW
C-25
0.5 LG/Y
0.5 W/G
H-51
1.25 L/O
0.5 W/G
H-42
0.5 W/G
PRESSURE SW
(CONDENSER)
0.5 LG
C - 25
C - 25
0.5 G/W
H-51
0.5 G/W
H-41
0.5 G/W
0.5 BR
0.5 BR
0.5 BR
X - 5
X - 5
RELAY ;
A/C THERMO
X - 5
X - 5
0.5 P/G
0.5 G/O
H-41
PCM (E15)
0.5 BR
0.5 BR
X - 7
X - 7
RELAY;
A/C COMPRESSOR
X - 7
X - 7
0.5BR/Y
0.5G/B
H - 41
H - 41
0.5BR/Y
0.5G/B
H - 6
PCM (B14)
0.5BR/Y
E - 3
MAGNETIC CLUTCH
0.5 BR
X - 6
X - 6
RELAY ; RR COOLER
X - 6
X - 6
X-19
X-19
RELAY; CONDENSER FAN
X-19
X-19
0.5B
C-39
0.5LGB
H-15
0.5LGB
H-31
0.5LGB
H-50
RR COOLER
CONNECTOR
H-50
0.5B
3B
R - 3
BODY-RR
0.3G/Y
H-16
1.25L
C-75
M
CONDENSER FAN
C-75
1.25B
0.3 G/Y
FENDER-RH
C - 39
1.25 B

6VD1/6VE1-(LHD)

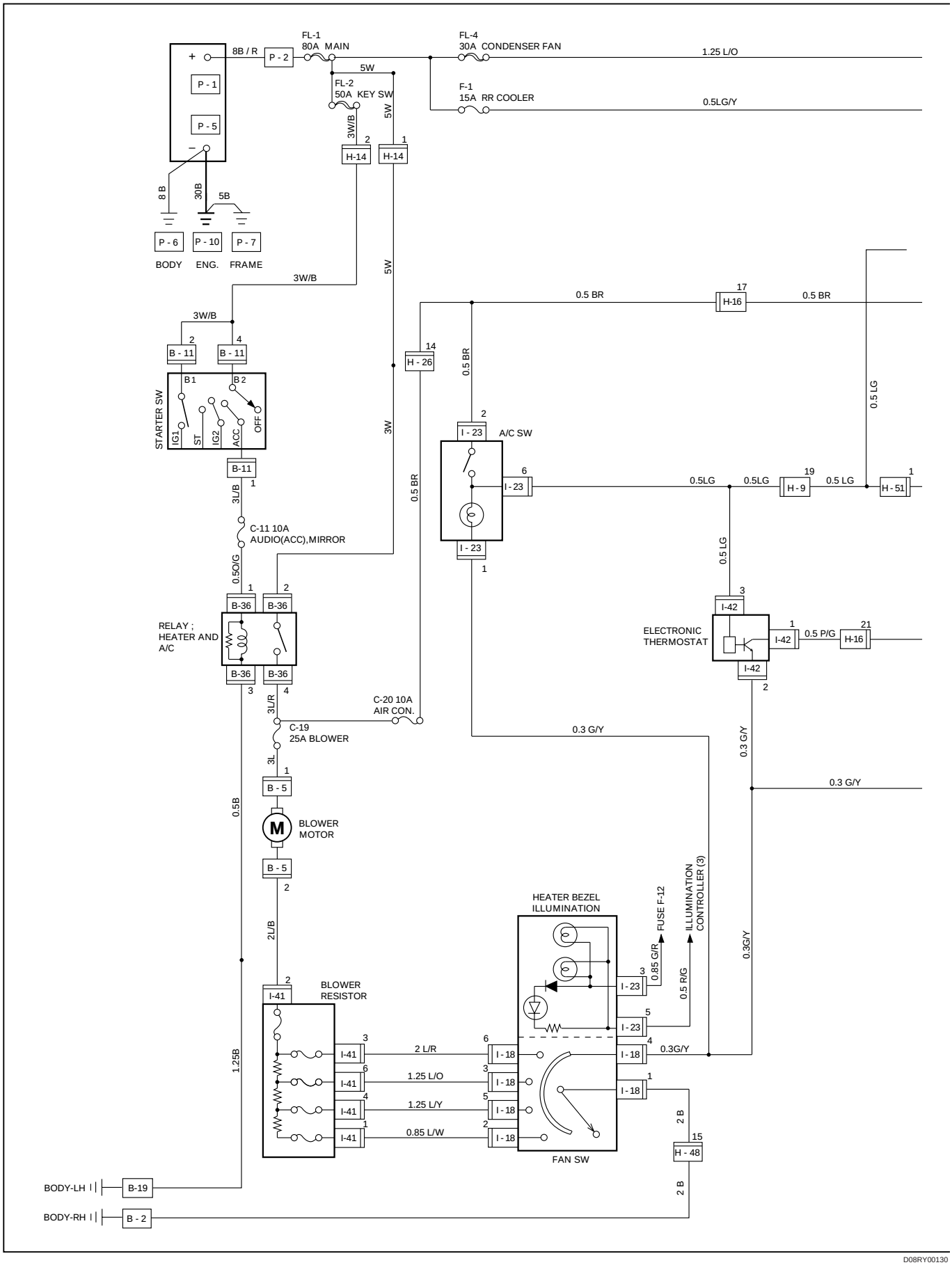

D08RY00130

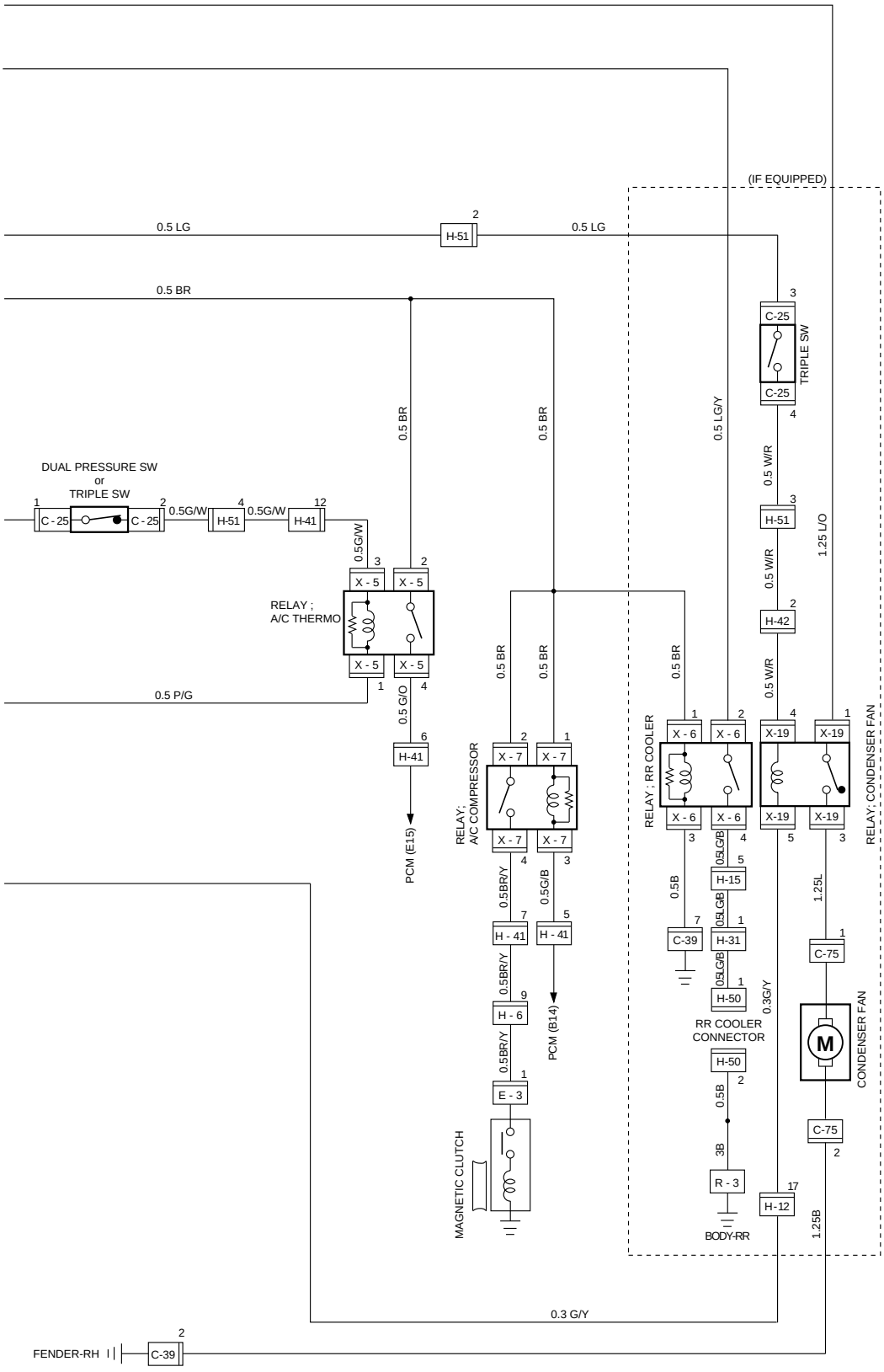
(IF EQUIPPED)
0.5 LG
H-51
0.5 LG
0.5 BR
C-25
TRIPLE SW
C-25
0.5 BR
0.5 BR
0.5 LG/Y
0.5 W/R
DUAL PRESSURE SW
or
TRIPLE SW
C - 25
C - 25
0.5G/W
H-51
0.5G/W
H-41
H-51
1.25 L/O
0.5 W/R
0.5G/W
X - 5
X - 5
H-42
RELAY ;
A/C THERMO
X - 5
X - 5
0.5 BR
0.5 BR
0.5 BR
0.5 W/R
0.5 P/G
0.5 G/O
X - 6
X - 6
X-19
X-19
H-41
RELAY ; RR COOLER
RELAY; CONDENSER FAN
X - 7
X - 7
RELAY;
A/C COMPRESSOR
X - 6
X - 6
X-19
X-19
PCM (E15)
0.5LG/B
H-15
0.5B
1.25L
0.5BR/Y
0.5G/B
0.5LG/B
H-31
C-39
C-75
H - 41
H - 41
0.5BR/Y
0.5LG/B
H-50
0.3G/Y
H - 6
PCM (B14)
RR COOLER
CONNECTOR
M
CONDENSER FAN
0.5BR/Y
H-50
E - 3
0.5B
C-75
3B
R - 3
H-12
MAGNETIC CLUTCH
BODY-RR
1.25B
0.3 G/Y
FENDER-RH
C-39

4JG2 (RHD)

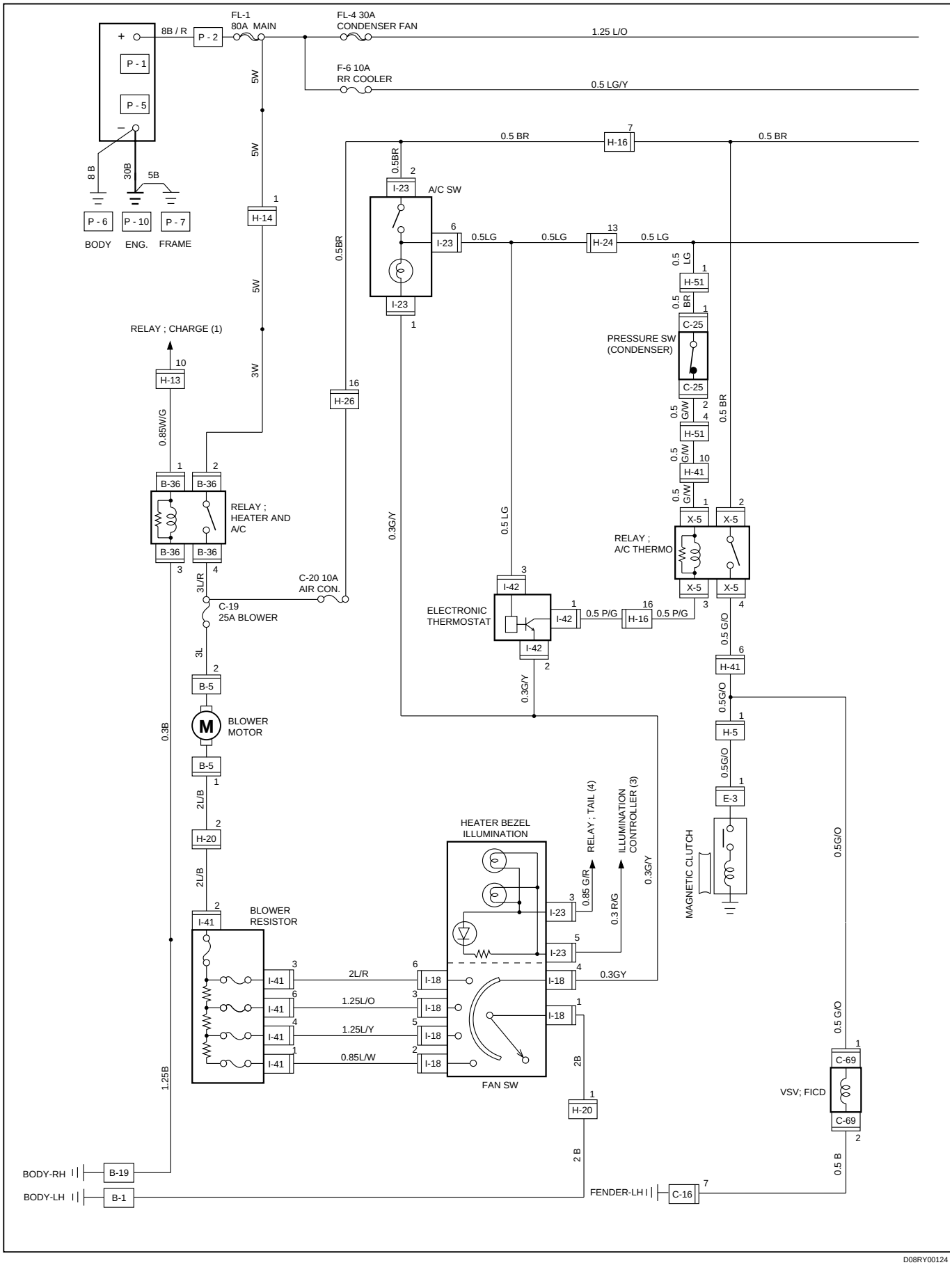

D08RY00124

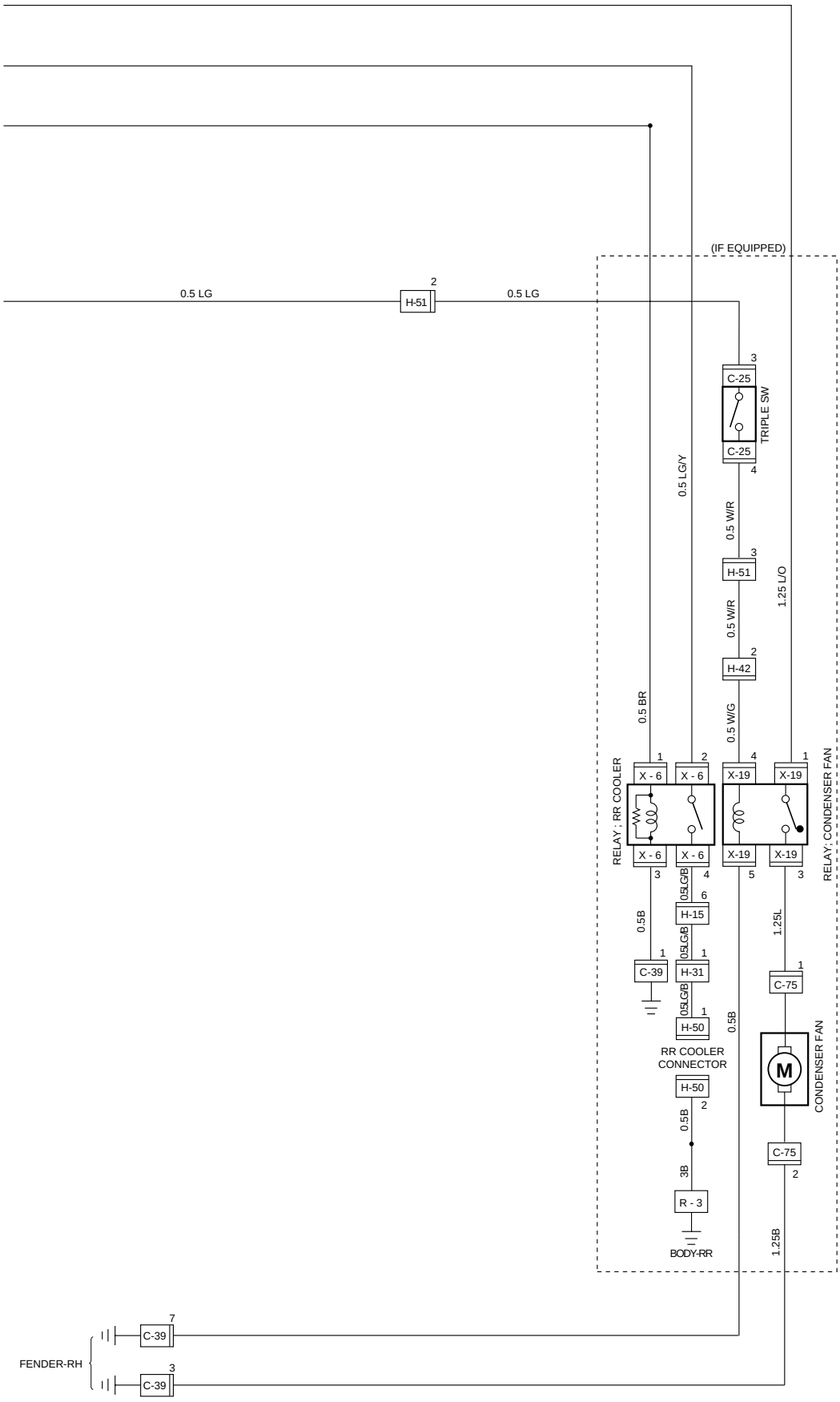
(IF EQUIPPED)
0.5 LG
H-51
2
0.5 LG
C-25
3
TRIPLE SW
C-25
4
0.5 LG/Y
0.5 W/R
H-51
3
1.25 L/O
0.5 W/R
H-42
2
0.5 BR
0.5 W/G
RELAY : RR COOLER
X - 6
1
X - 6
2
X-19
4
X-19
1
RELAY: CONDENSER FAN
X - 6
3
X - 6
4
X-19
5
X-19
3
0.5LG/B
6
H-15
0.5B
0.5LG/B
1
C-39
1
H-31
1
1.25L
C-75
1
0.5LG/B
1
H-50
0.5B
RR COOLER
CONNECTOR
M
CONDENSER FAN
H-50
2
0.5B
C-75
2
3B
R - 3
BODY-RR
1.25B
7
C-39
FENDER-RH
3
C-39

4JG2 (LHD)

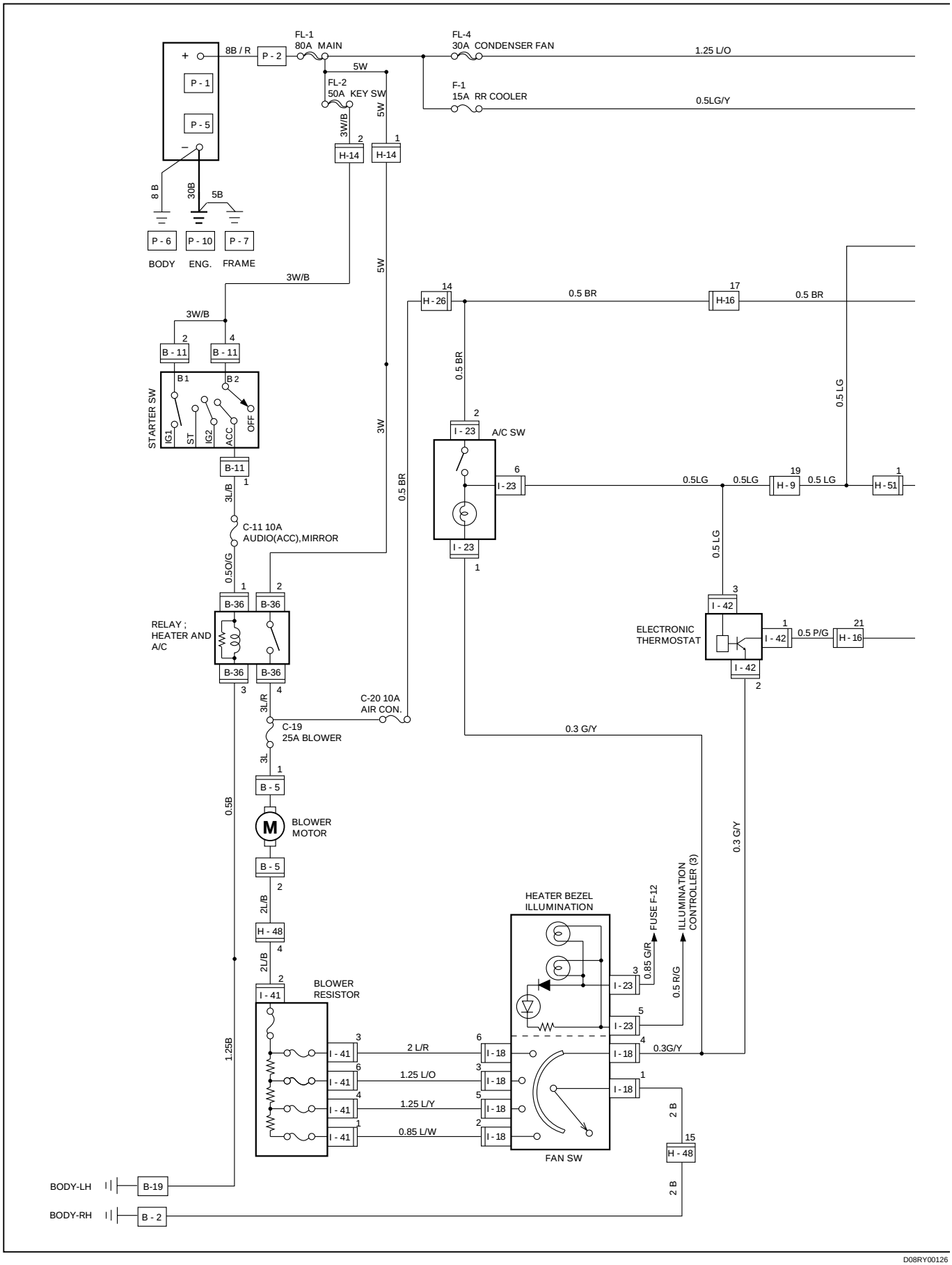

D08RY00126

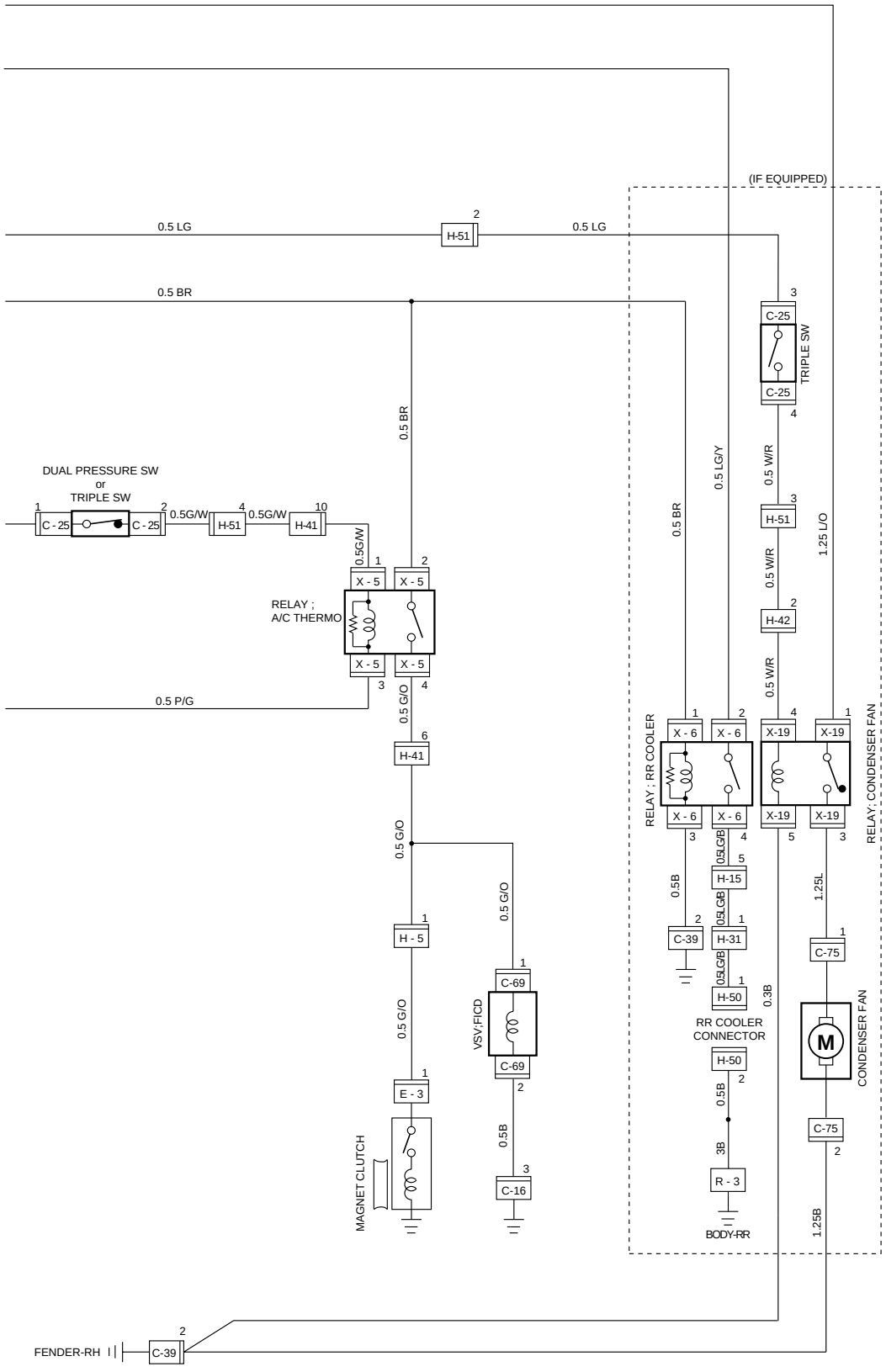
(IF EQUIPPED)
0.5 LG
H-51
0.5 LG
0.5 BR
C-25
TRIPLE SW
C-25
0.5 BR
0.5 LG/Y
0.5 W/R
H-51
1.25 L/O
0.5 W/R
H-42
0.5 W/R
DUAL PRESSURE SW
or
TRIPLE SW
C - 25
C - 25
0.5G/W
H-51
0.5G/W
H-41
0.5G/W
X - 5
X - 5
RELAY ;
A/C THERMO
X - 5
X - 5
0.5 P/G
0.5 G/O
H-41
0.5 G/O
H - 5
0.5 G/O
E - 3
MAGNET CLUTCH
0.5 G/O
C-69
VSV;FICD
C-69
0.5B
C-16
RELAY ; RR COOLER
X - 6
X - 6
X - 6
X - 6
0.5B
C-39
0.5LG/B
H-15
0.5LG/B
H-31
0.5LG/B
H-50
0.3B
RR COOLER
CONNECTOR
H-50
0.5B
3B
R - 3
BODY-RR
RELAY ; CONDENSER FAN
X-19
X-19
X-19
X-19
1.25L
C-75
M
CONDENSER FAN
C-75
1.25B
FENDER-RH
C-39

4JX1 (RHD)

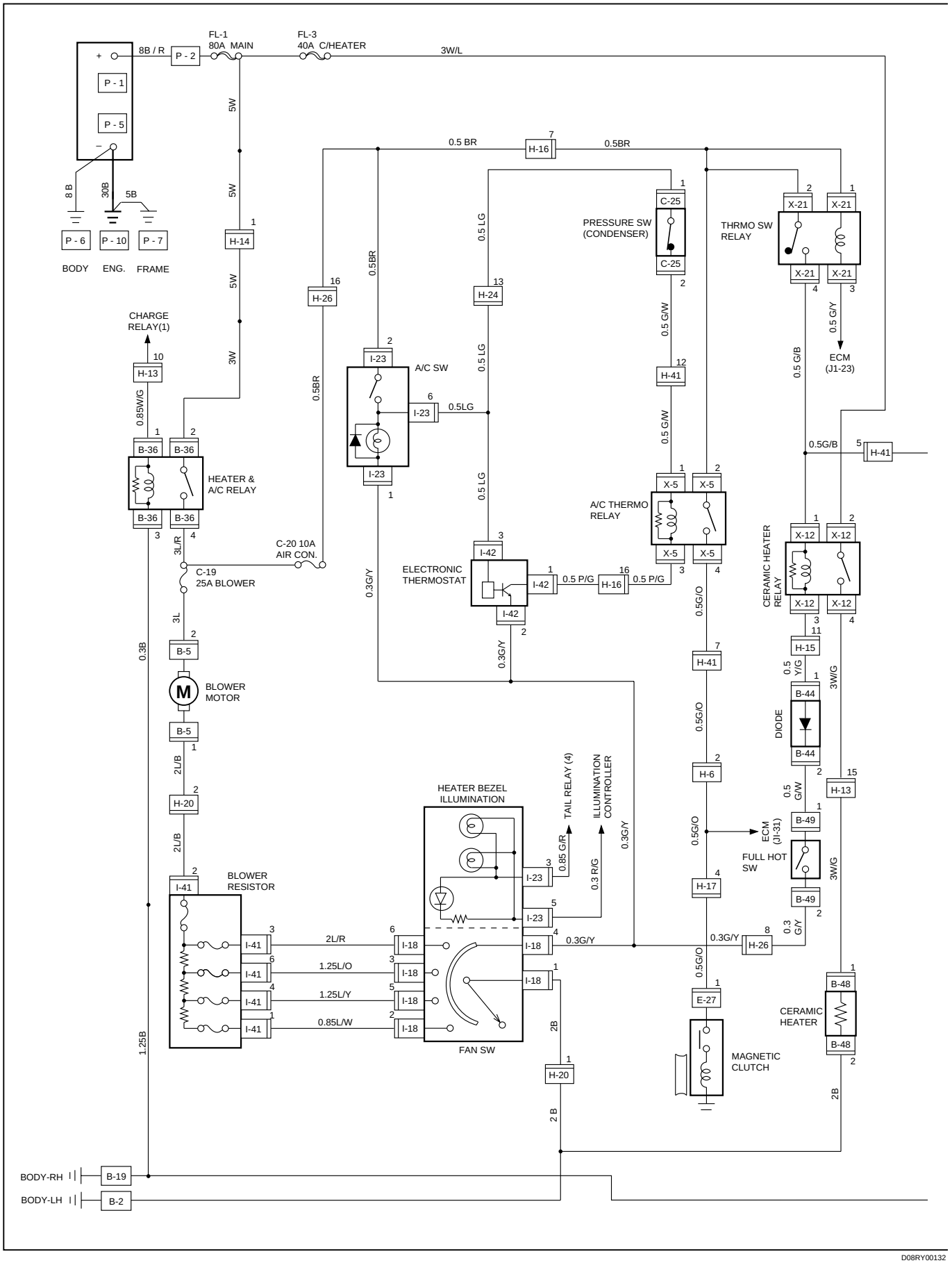
FL-1
80A MAIN
FL-3
40A C/HEATER
8B / R
P - 2
3W/L
P - 1
P - 5
5W
0.5 BR
H-16
0.5BR
8 B
30B
5B
P - 6
P - 10
P - 7
BODY
ENG.
FRAME
H-14
PRESSURE SW
(CONDENSER)
C-25
THRMO SW
RELAY
X-21
0.5 LG
0.5BR
H-26
H-24
0.5 G/W
0.5 G/Y
ECM
(J1-23)
CHARGE
RELAY(1)
H-13
3W
I-23
A/C SW
H-41
0.5G/B
0.85W/G
0.5LG
B-36
HEATER &
A/C RELAY
A/C THERMO
RELAY
X-5
X-12
CERAMIC HEATER
RELAY
C-20 10A
AIR CON.
3L/R
C-19
25A BLOWER
ELECTRONIC
THERMOSTAT
I-42
0.5 P/G
0.3G/Y
0.5G/O
H-15
0.5
Y/G
3W/G
B-44
DIODE
3L
B-5
0.3B
BLOWER
MOTOR
M
2L/B
H-20
H-6
0.5
G/W
B-49
H-13
HEATER BEZEL
ILLUMINATION
TAIL RELAY (4)
ILLUMINATION
CONTROLLER
0.85 G/R
0.3 R/G
ECM
(JI-31)
FULL HOT
SW
H-17
0.3
G/Y
I-41
BLOWER
RESISTOR
2L/R
1.25L/O
1.25L/Y
0.85L/W
I-18
FAN SW
H-26
E-27
B-48
CERAMIC
HEATER
MAGNETIC
CLUTCH
2B
1.25B
BODY-RH
BODY-LH
B-19
B-2
D08RY00132

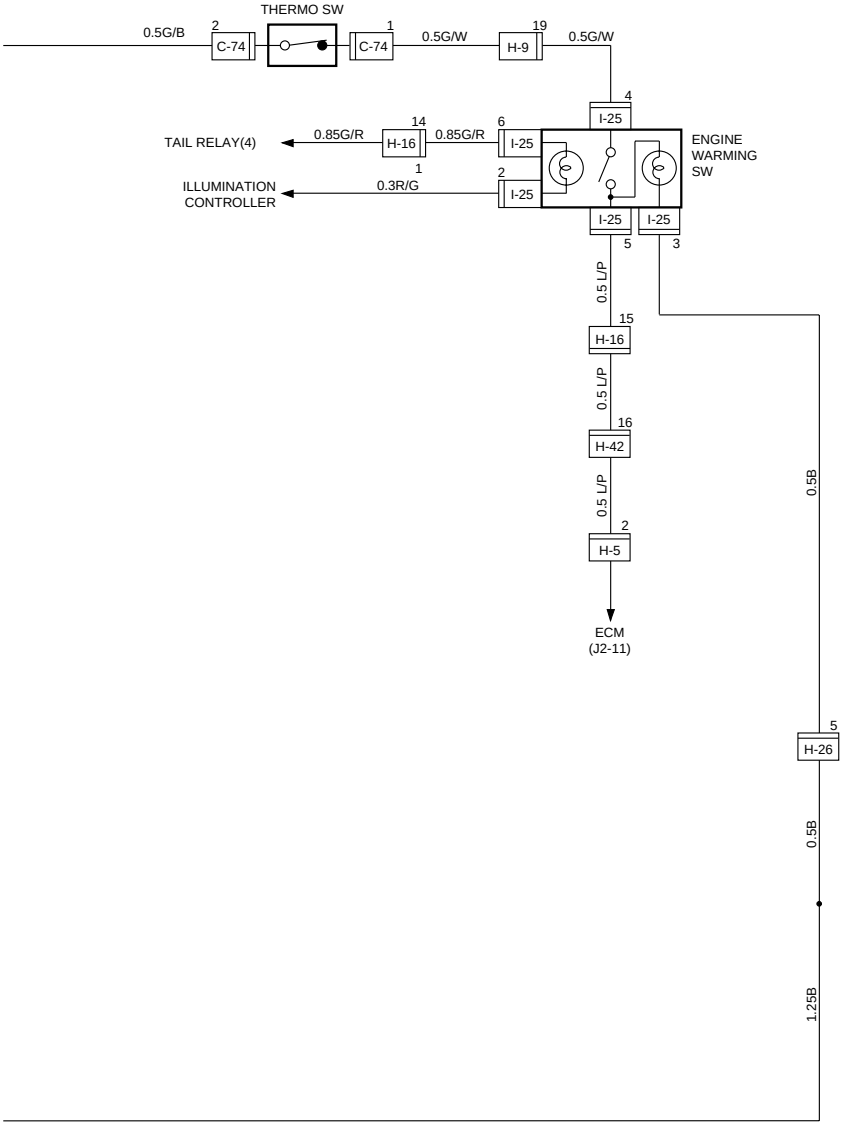
THERMO SW
0.5G/B
2
C-74
1
C-74
0.5G/W
19
H-9
0.5G/W
4
I-25
TAIL RELAY(4)
0.85G/R
14
H-16
1
0.85G/R
6
I-25
ENGINE
WARMING
SW
ILLUMINATION
CONTROLLER
0.3R/G
2
I-25
I-25
5
I-25
3
0.5 L/P
15
H-16
0.5 L/P
16
H-42
0.5 L/P
2
H-5
ECM
(J2-11)
0.5B
5
H-26
0.5B
1.25B

4JX1 (LHD)

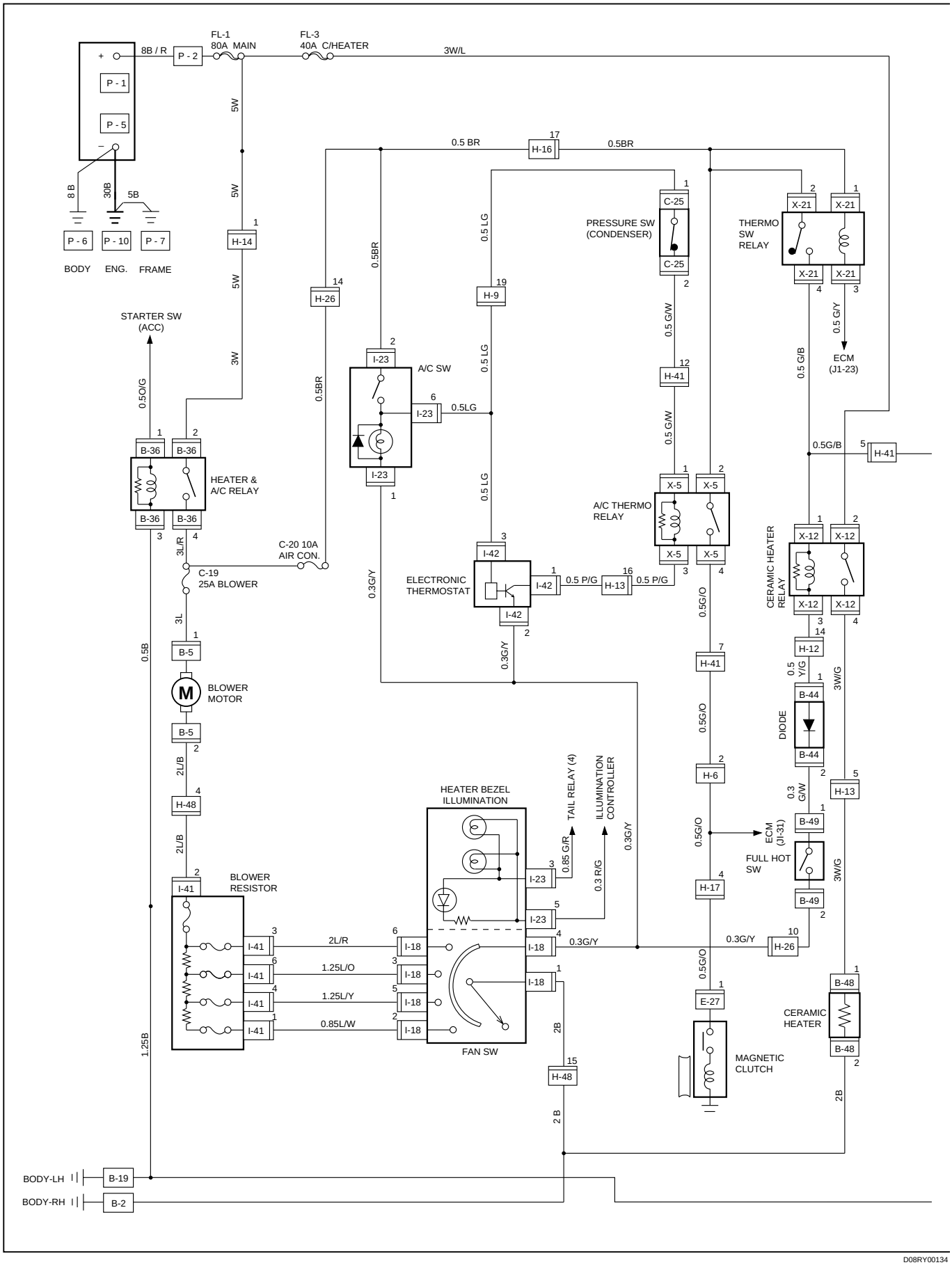
FL-1
80A MAIN
FL-3
40A C/HEATER
8B / R
3W/L
P - 1
P - 2
P - 5
5W
0.5 BR
H-16
0.5BR
8 B
30B
5B
P - 6
P - 10
P - 7
BODY
ENG.
FRAME
H-14
H-26
H-9
C-25
PRESSURE SW
(CONDENSER)
THERMO
SW
RELAY
X-21
0.5 G/Y
ECM
(J1-23)
0.5 G/B
STARTER SW
(ACC)
0.5O/G
3W
0.5 LG
0.5 G/W
H-41
I-23
A/C SW
0.5LG
0.5G/B
B-36
HEATER &
A/C RELAY
A/C THERMO
RELAY
X-5
C-20 10A
AIR CON.
C-19
25A BLOWER
3L/R
3L
0.3G/Y
I-42
ELECTRONIC
THERMOSTAT
0.5 P/G
H-13
0.5G/O
CERAMIC HEATER
RELAY
X-12
H-12
0.5
Y/G
3W/G
B-5
0.5B
BLOWER
MOTOR
M
B-44
DIODE
2L/B
H-48
0.3
G/W
B-49
FULL HOT
SW
ECM
(J1-31)
HEATER BEZEL
ILLUMINATION
TAIL RELAY (4)
ILLUMINATION
CONTROLLER
0.85 G/R
0.3 R/G
H-6
H-17
BLOWER
RESISTOR
I-41
2L/R
1.25L/O
1.25L/Y
0.85L/W
I-18
FAN SW
0.3G/Y
H-26
E-27
B-48
CERAMIC
HEATER
MAGNETIC
CLUTCH
2B
1.25B
2 B
BODY-LH
BODY-RH
B-19
B-2
D08RY00134

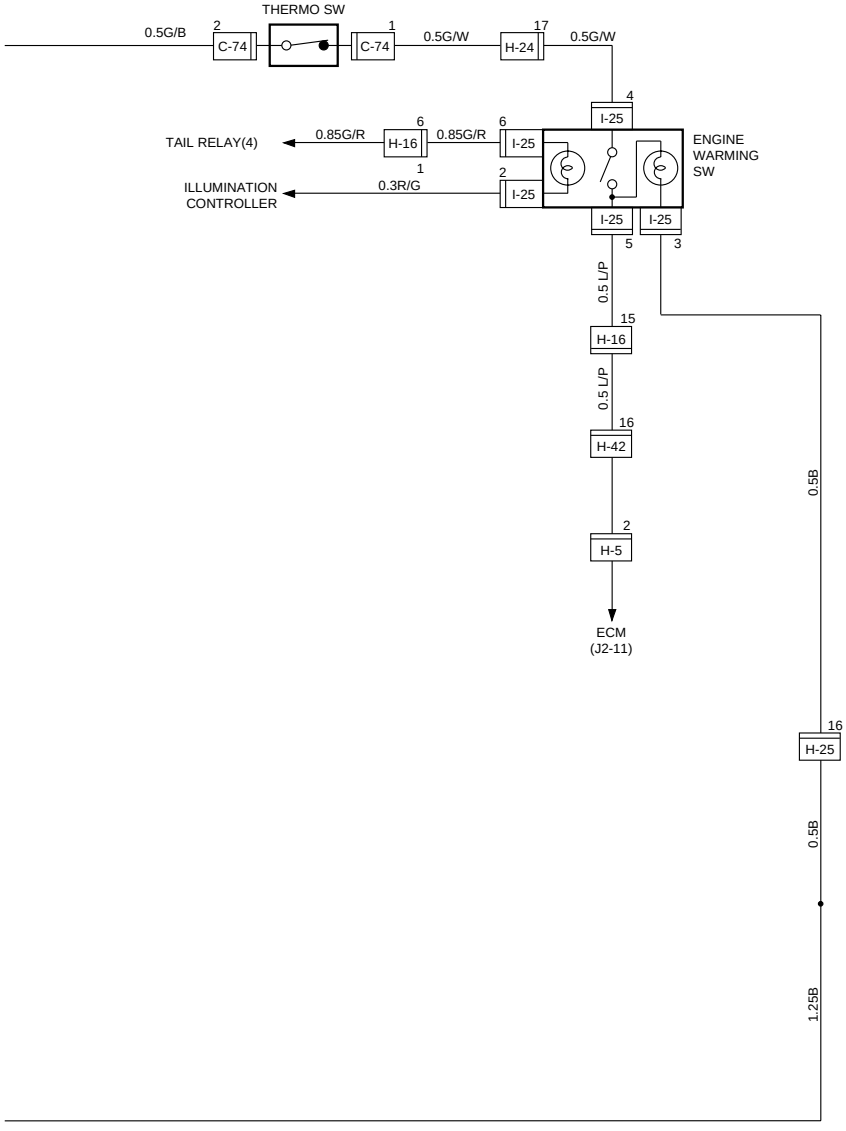
THERMO SW
0.5G/B
2
C-74
1
C-74
0.5G/W
17
H-24
0.5G/W
4
I-25
TAIL RELAY(4)
0.85G/R
6
H-16
1
0.85G/R
6
I-25
ENGINE
WARMING
SW
ILLUMINATION
CONTROLLER
0.3R/G
2
I-25
I-25
5
I-25
3
0.5 L/P
15
H-16
0.5 L/P
16
H-42
2
H-5
ECM
(J2-11)
0.5B
16
H-25
0.5B
1.25B

HEATING CYCLE TROUBLESHOOTING

TROUBLE	POSSIBLE CAUSE	CORRECTION
No heating or Insufficient heating.	1. Blower motor does not run, or runs improperly. 2. Engine coolant temperature is low. 3. Insufficient engine coolant. 4. Circulation volume of engine coolant is insufficient. 5. Heater core clogged or collapsed. 6. The heater core is not provided with air sent from the blower motor. 7. Duct connections defective or unsealing. 8. Ceramic heater defective.	• Refer to “FAN CONTROL KNOB (FAN SWITCH)” Troubleshooting. • Check the engine coolant temperature after warming up the engine and check the thermostat. Replace as necessary. • Add engine coolant as required. • Check if the water hose to the heater core is clogged, collapsed or twisted. Repair or replace as necessary. • Check water pump function. Repair or replace as necessary. • Clean or replace as necessary. • Repair the temperature control link unit or mode doors. • Repair or adjust the control cables. • Repair or replace as necessary. • Refer to “CERAMIC HEATER” Troubleshooting.
Control knob moves but mode door does not operate.	1. Cable attaching clip is not correct. 2. Link unit of heater unit or blower assembly defective.	• Repair. • Repair.
The mode door cannot be set to the mode selected.	1. Link unit of heater unit or blower assembly defective 2. Control cable is not adjusted.	• Repair. • Adjust.

FAN CONTROL KNOB (FAN SWITCH)

Current flows to the blower motor through the Heater & A/C relay (B-36) to activate the rotation of the blower motor by turning “ON” the fan control knob (fan switch). Blower motor speed is controlled in stages by the resistor, by operating the switch from “LOW” to “HIGH.”

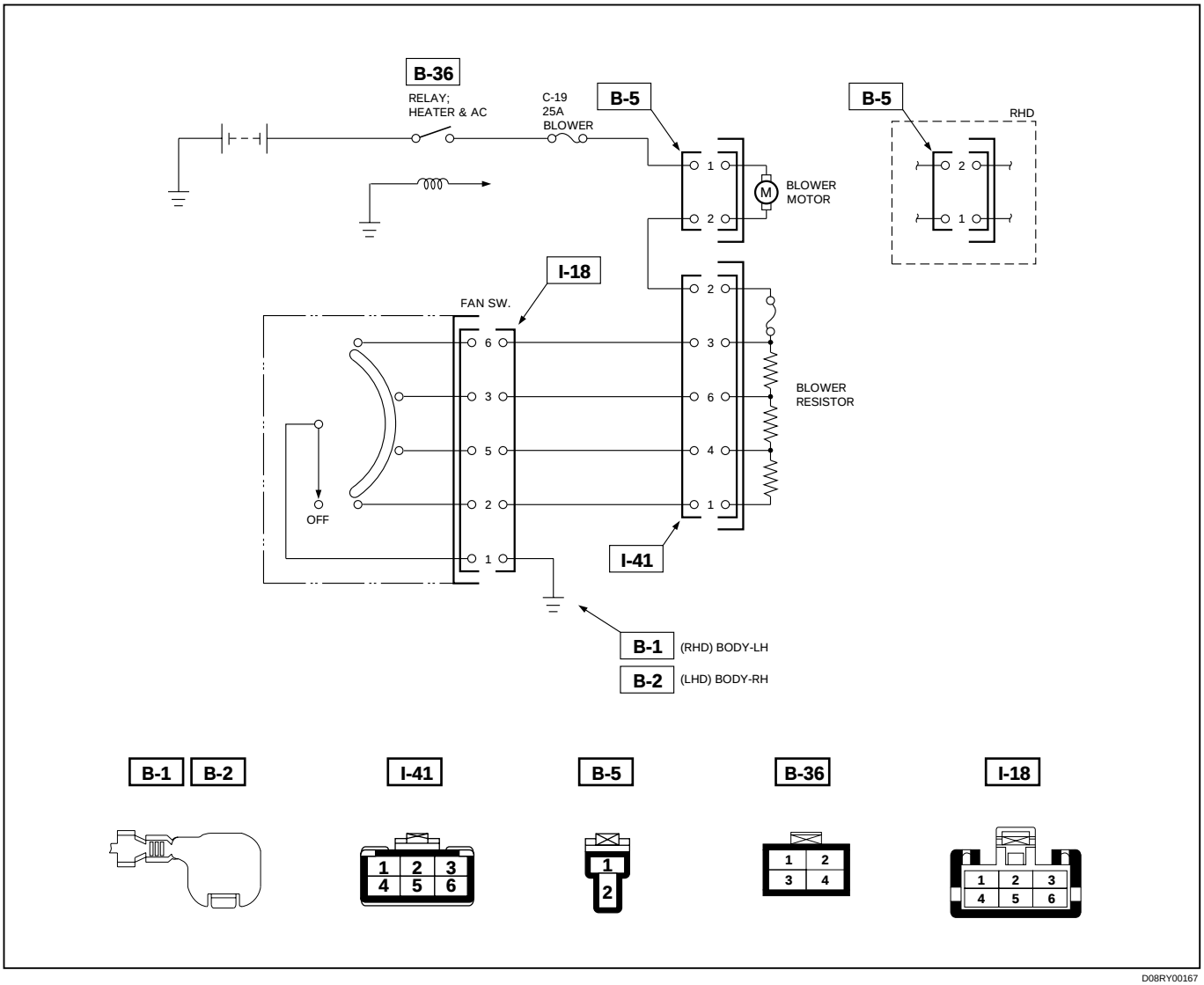

D08RY00167

BLOWER MOTOR DOES NOT RUN

- IS BLOWER RELAY (B-36) OK?
  - NO → REPLACE
  - YES ↓
- IS NO. C-19 (25A) FUSE OK?
  - NO → REPLACE
  - YES ↓
- IS RESISTOR OK?
  - NO → REPLACE
  - YES ↓
- IS FAN CONTROL KNOB (FAN SWITCH) OK?
  - NO → REPLACE
  - YES ↓
- IS BLOWER MOTOR OK?
  - NO → REPLACE CONTROL LEVER ASSEMBLY
  - YES ↓
- TURN THE IGNITION SWITCH “ON” (ENGINE IS RUNNING)
- FAN CONTROL KNOB (FAN SWITCH) “ON”
- CHECK TO SEE IF BATTERY VOLTAGE IS PRESENT AT CHASSIS SIDE CONNECTOR TERMINAL NO. B5-1 (NO. B5-2; RHD)
  - NO → REPLACE
  - YES ↓
- POOR GROUND OR OPEN CIRCUIT EITHER BETWEEN CHASSIS SIDE CONNECTOR TERMINAL NO. B5-2 (NO. B5-1; RHD) AND NO. I-41-2 OR NO. I18-1 AND BODY GROUND NO. B-2 (NO. B-1; RHD)
- NO → OPEN CIRCUIT BETWEEN NO. C-19 (25A) FUSE AND NO. B5-1 (NO. B5-2; RHD)

BLOWER MOTOR DOES NOT RUN IN CERTAIN POSITION

BLOWER MOTOR DOES NOT RUN AT
Ⓐ 1 : (LOW)
Ⓑ 2 : (MEDIUM LOW)
Ⓒ 3 : (MEDIUM HI)
Ⓓ 4 : (HIGH)
POSITION

* CHECKING IS PERFORMED ONLY WHEN IN THE MALFUNCTION MODE.

- IS RESISTOR OK?

YES

- IS FAN CONTROL KNOB (FAN SWITCH) OK?

YES

Ⓐ CONDITION:
- OPEN CIRCUIT BETWEEN CHASSIS SIDE CONNECTOR TERMINAL NO. I41-1 AND NO. I18-2

Ⓑ CONDITION:
- OPEN CIRCUIT BETWEEN CHASSIS SIDE CONNECTOR TERMINAL NO. I41-4 AND NO. I18-5

Ⓒ CONDITION:
- OPEN CIRCUIT BETWEEN CHASSIS SIDE CONNECTOR TERMINAL NO. I41-6 AND NO. I18-3

Ⓓ CONDITION:
- OPEN CIRCUIT BETWEEN CHASSIS SIDE CONNECTOR TERMINAL NO. I41-3 AND NO. I18-6

NO

REPLACE CONTROL LEVER ASSEMBLY

NO

REPLACE

BLOWER MOTOR DOES NOT STOP AT “OFF” POSITION

- IS FAN CONTROL KNOB (FAN SWITCH) OK?

YES

SHORT CIRCUIT BETWEEN CHASSIS SIDE CONNECTOR TERMINAL
- NO. B5-2 (NO. B5-1 : RHD) AND NO. I41-2
  (OR)
- NO. I41-3 AND NO. I18-6
  (OR)
- NO. I41-6 AND NO. I18-3
  (OR)
- NO. I41-4 AND NO. I18-5
  (OR)
- NO. I41-1 AND NO. I18-2

NO

REPLACE CONTROL LEVER ASSEMBLY

CERAMIC HEATER

When the fan control knob (fan switch) turns on with the temperature control knob set to “FULL HOT” (full hot switch “ON”), the ceramic heater in the heater unit turns on and the blow temperature goes up. When the ceramic heater turns on, FICD starts to operate at the same time. When either one of the fan switch, the full hot switch or the thermo switch (which turns on when the coolant temperature gets below 80°C (176°F) turns off, the ceramic heater also turns off.

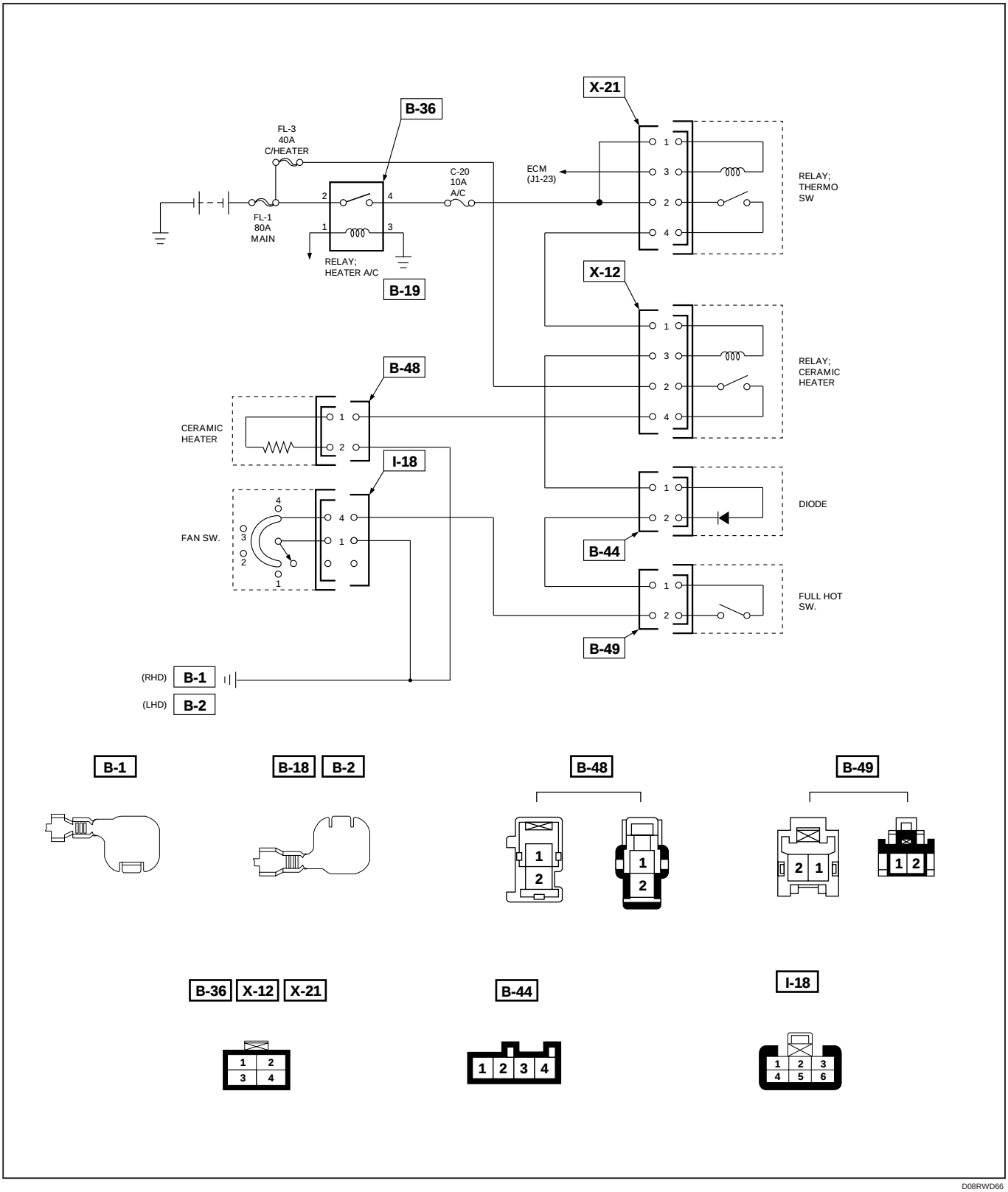

CERAMIC HEATER DOES NOT OPERATE

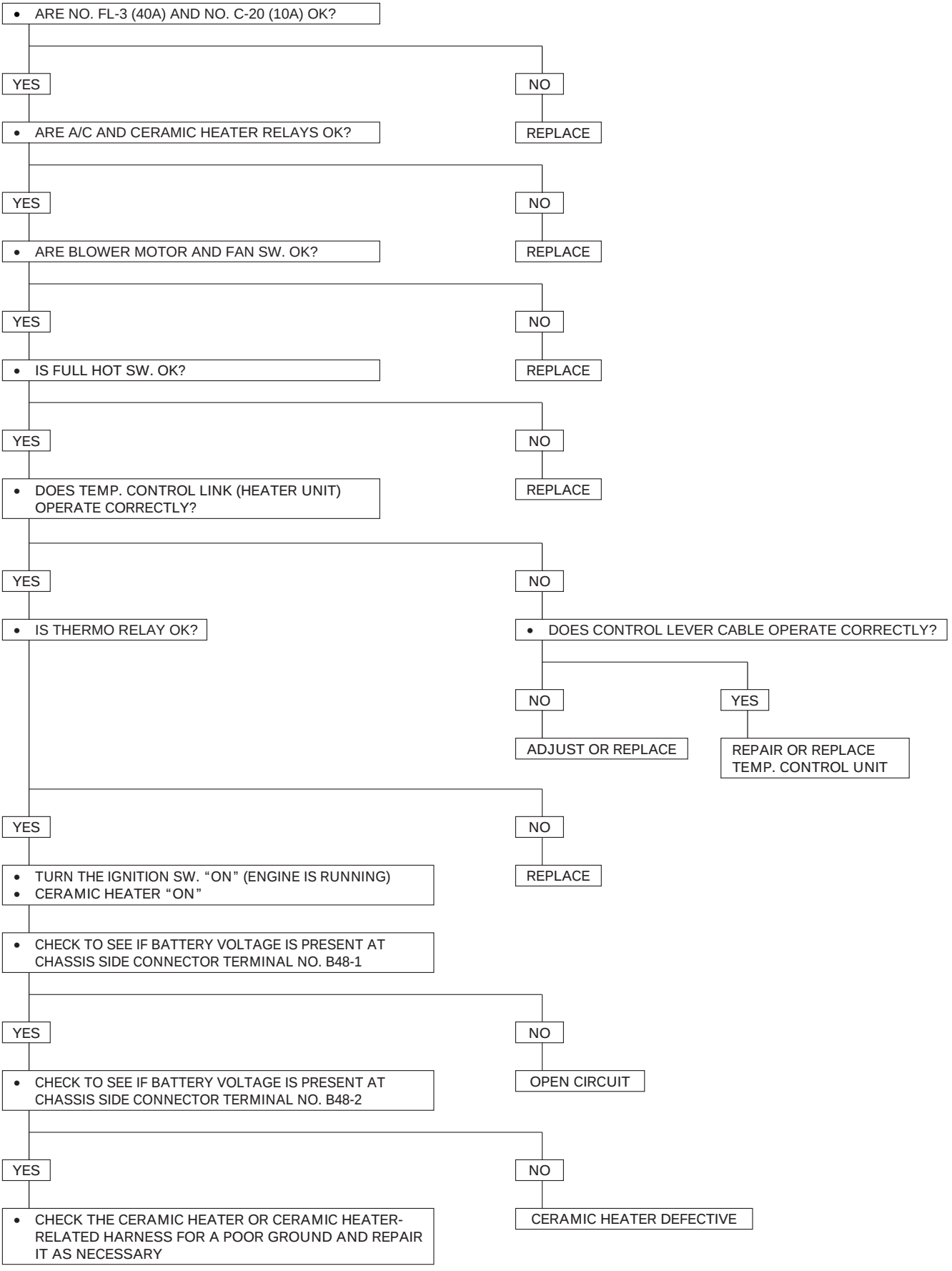

CERAMIC HEATER DOES NOT STOP

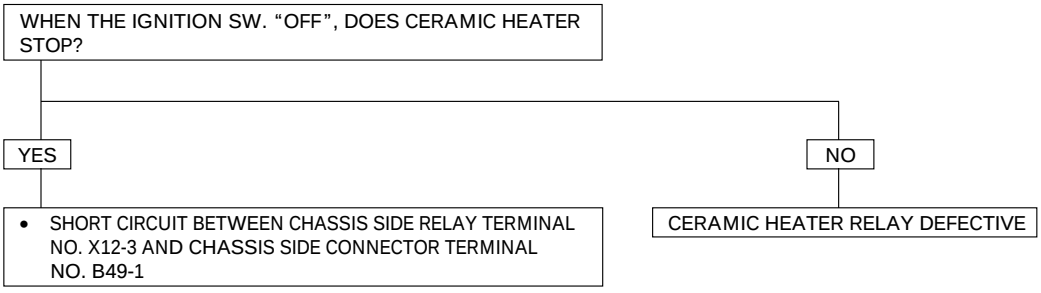

AIR CONDITIONING CYCLE TROUBLESHOOTING

TROUBLE	POSSIBLE CAUSE	CORRECTION
No cooling or insufficient cooling	1. Magnetic clutch does not run	• Refer to "MAGNETIC CLUTCH" troubleshooting
	2. Compressor is not rotating properly	
	• Drive belt loosened or broken	• Adjust the drive belt to the specified tension or replace the drive belt
	• Magnetic clutch face is not clean and slips	• Clean the magnetic clutch face or replace
	• Incorrect clearance between magnetic drive plate and pulley	• Adjust the clearance (Refer to Section 1D "COMPRESSOR OVERHAUL"
	• Compressor oil leaks from shaft seal or shell	• Replace the compressor
	• Compressor seized	• Replace the compressor
	3. Insufficient or excessive charge of refrigerant	• Discharge and recover refrigerant. Recharge to specified amount.
	4. Leaks in the refrigerant system	• Check refrigerant system for leaks and repair as necessary Discharge and recover refrigerant. Recharge to specified amount.
	5. Condenser clogged or insufficient radiation	• Clean the condenser or replace as necessary • Check radiator or condenser fan function
	6. Temperature control link unit of the heater unit defective	• Repair the link unit
	7. Unsteady operation due to foreign substance in expansion valve	• Replace the expansion valve
	8. Poor operation of electronic thermostat	• Check electronic thermostat and replace as necessary
Insufficient velocity of cooling air	1. Evaporator clogged or frosted	• Check evaporator core and replace or clean the core
	2. Air leaking from cooling unit or air duct	• Check evaporator and duct connection, then repair as necessary
	3. Blower motor does not rotate properly	• Refer to Section 00 for "FAN CONTROL KNOB (FAN SWITCH)" troubleshooting

* For the execution of the charging and discharging operation in the table above, refer to the "RECOVERY, RECYCLING, EVACUATING AND CHARGING" in section 1B.

CHECKING REFRIGERANT SYSTEM WITH MANIFOLD GAUGE

Conditions;

- Ambient temperature at approx. 25 ~ 30°C (77 ~ 86°F)
- Run the engine at Idling
- A/C switch is “ON”
- Run the blower motor at “4” (high) position
- Temperature control knob sets at “MAX COLD”
- Air source selector lever at “CIRC”
- Close the all doors

Normal pressures kpa (kg·cm^2 / PSI);

Low-pressure side:

Approx. 147 – 294 (1.5 – 3.0 / 21 – 43)

High-pressure side:

Approx. 1373 – 1863 (14 – 19 / 199 – 270)

Connect the manifold gauge

Low-pressure hose (LOW)~Suction side

High-pressure hose (HI)~Discharge side

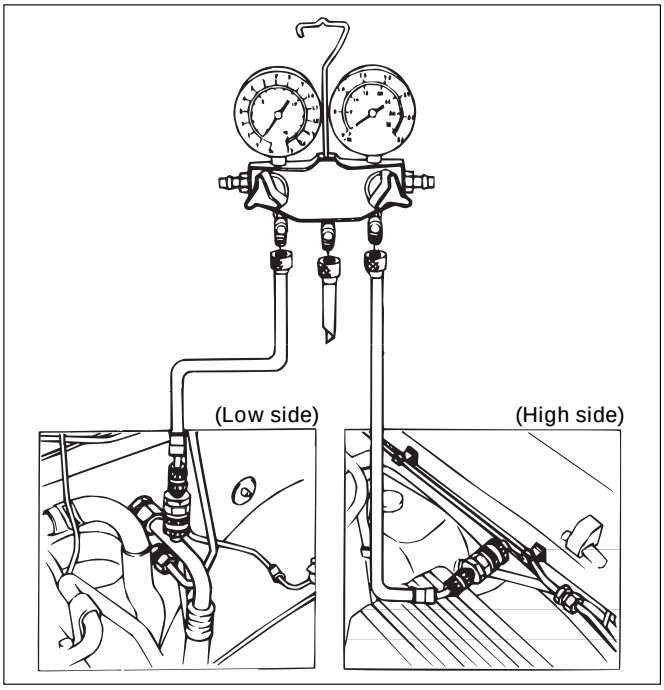

RESULT	SYMPTOM	TROUBLE CAUSE	CORRECTION
Discharge (High) pressure gauge abnormally high	Reduced or no air flow through the condenser	• Condenser clogged or dirty • Radiator (condenser) fan does not operate properly	• Clean • Check cooling fan operation
	No bubbles in sight glass when condenser is cooled by water (Insufficient cooling)	• Excessive refrigerant in system	• Check sight glass. (See "Reading Sight Glass") • Discharge and recover refrigerant. Recharge to specified amount
	After stopping air conditioning, pressure drops approx. 196 kPa (28 PSI) quickly	• Air in system	• Evacuate and charge refrigerant system
Discharge (High) pressure gauge abnormally low	Insufficient cooling and excessive bubbles in the sight glass	• Insufficient refrigerant in system	• Check sight glass. (See "Reading Sight Glass") • Check for leaks • Discharge and recover refrigerant. Recharge to specified amount
	Low pressure gauge indicates vacuum	• Clogged or defective expansion valve	• Replace the expansion valve
	Frost or dew on refrigerant line before and after receiver/ drier or expansion valve, and low pressure gauge indicates vacuum	• Restriction caused by debris or moisture in receiver/drier	• Check system for restriction and replace receiver/drier
	After turning off air conditioning, high and low pressure gauge balanced quickly	• Compressor seal defective • Poor compression due to defective compressor gasket	• Replace or repair compressor
Suction (Low) pressure gauge abnormally high	Low pressure gauge is lowered after condenser is cooled by water	• Excessive refrigerant in system	• Discharge and recover refrigerant Recharge to specified amount
	Low pressure hose temperature around the compressor refrigerant line connector is lower than around evaporator	• Unsatisfactory valve operation due to defective temperature sensor of expansion valve • Expansion valve opens too long	• Replace the expansion valve
	After turning off air conditioning, high and low pressure gauge is balanced quickly	• Compressor gasket is defective	• Replace
	Air conditioning turns off before passenger compartment is sufficiently cool	• Electronic thermostat defective	• Check the electronic thermostat and replace as necessary

* For the charging and discharging operations in the table above, refer to "RECOVERY, RECYCLING, EVACUATION AND CHARGING" in this section.

RESULT	SYMPTOM	TROUBLE CAUSE	CORRECTION
Suction (Low) pressure abnormally low	Condenser is not hot and excessive bubble in sight glass	• Insufficient refrigerant	• Check sight glass.(See "Reading Sight Glass") • Check for leaks • Discharge and recover refrigerant. Recharge to specified amount
	Frost on the expansion valve inlet line	• Expansion valve clogged	• Replace the expansion valve
	A distinct difference in temperature between the inlet and outlet refrigerant lines of the receiver/drier	• Receiver/drier clogged	• Replace the receiver/drier
	Expansion valve outlet refrigerant line is not cold and low-pressure gauge indicates vacuum	• The temperature sensor of the expansion valve is defective, and the valve cannot regulate the correct flow of the refrigerant	• Replace the expansion valve
	Discharge temperature is low and air flow from vents is restricted	• Frozen evaporator core fins	• Check electronic thermostat and replace as necessary
	Low-pressure gauge reading is low, or a vacuum reading may be shown	• Clogged or blocked refrigerant line	• Replace refrigerant line
Suction (Low) and Discharge (High) pressure abnormally high	No bubbles in sight glass after condenser is cooled by water (Insufficient cooling)	• Excessive refrigerant in system	• Check sight glass.(See "Reading Sight Glass") • Discharge and recover refrigerant. Recharge to specified amount
	Reduce air flow through condenser	• Condenser clogged • Radiator (condenser) fan does not rotate properly	• Clean • Check cooling fan operation
	Suction (Low) pressure hose is not cold	• Air in system	• Evacuate and charge refrigerant
Suction (Low) and Discharge (High) pressure abnormally low	Insufficient cooling and excessive bubbles in the sight glass	• Insufficient refrigerant in system	• Check sight glass. (See "Reading Sight Glass") • Check for leaks • Discharge and recover refrigerant. Recharge to specified amount

MAGNETIC CLUTCH

When the A/C switch and the fan control knob (fan switch) are turned on with the engine running, current flows through the thermostat and the compressor relay to activate the magnetic clutch.
The air conditioning can be stopped by turning off the A/C switch or the fan control knob (fan switch). However, even when the air conditioning is in operation, the electronic thermostat, the pressure switch or the PCM (6VD1/6VE1 Engine) is used to stop the air conditioning temporarily by turning off the magnetic clutch in the prearranged conditions to reduce the engine load which is being caused by the rise in the engine coolant temperature, and the acceleration of the vehicle, etc.

6VD1/6VE1 ENGINE

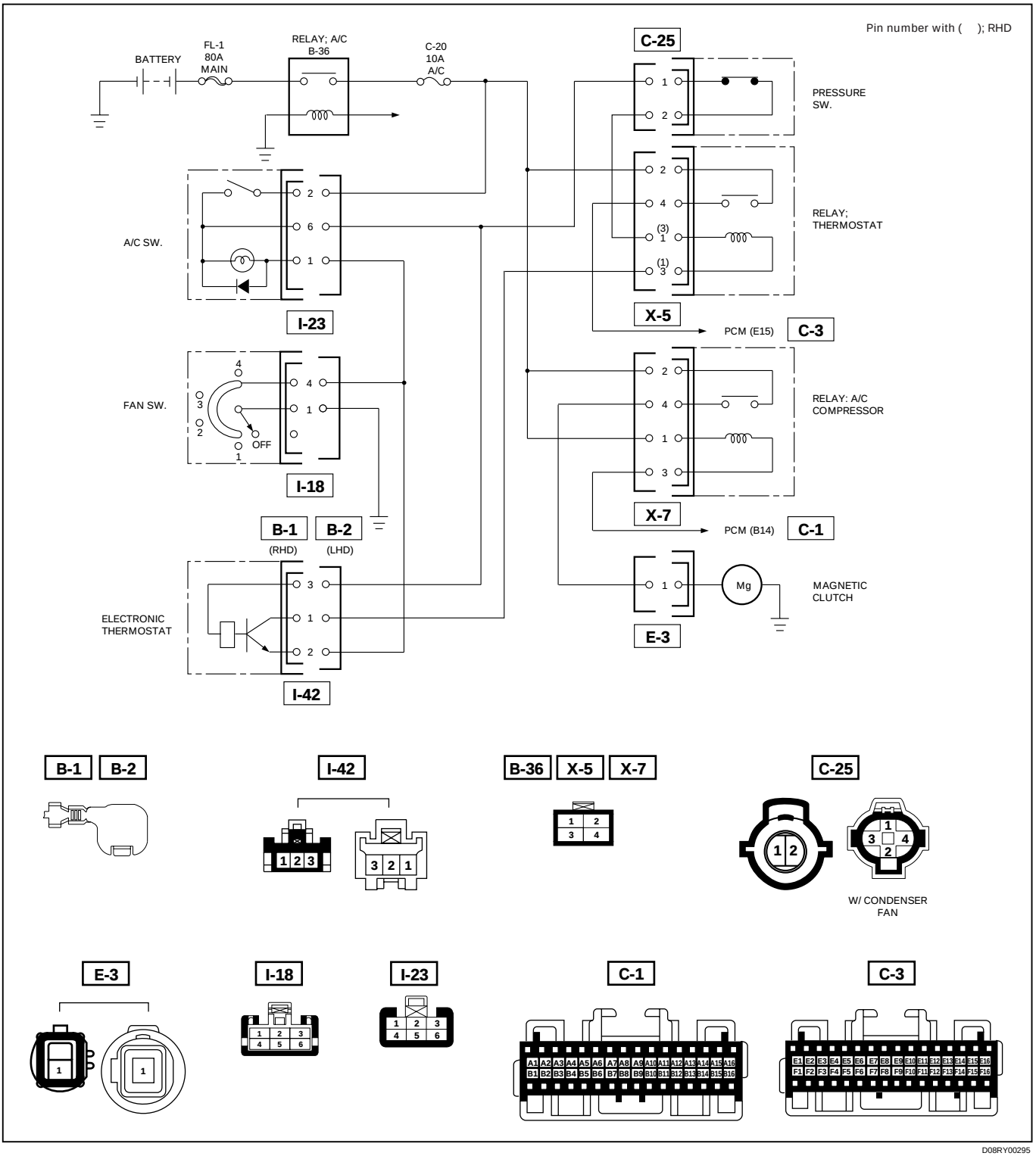

D08RY00295

MAGNETIC CLUTCH DOES NOT RUN

- TURN THE STARTER SWITCH ON AND START THE ENGINE.
- TURN THE FAN SWITCH ON.
- DOES THE BLOWER MOTOR RUN?

YES

- IS THE FUSE C-20 (10A) NORMAL?

NO

REFER TO THE DIAGNOSIS PROCEDURE FOR “BLOWER MOTOR DOES NOT RUN”.

YES

- DISCONNECT THE A/C SWITCH CONNECTOR AND REMOVE THE A/C SWITCH.
- IS THE A/C SWITCH NORMAL?

NO

REPLACE THE FUSE.

YES

- IS THE BATTERY VOLTAGE APPLIED AT HARNESS SIDE CONNECTOR I23-2?

NO

REPAIR OR REPLACE THE SWITCH.

YES

- REINSTALL THE A/C SWITCH AND DISCONNECT THE DUAL PRESSURE SWITCH (OR TRIPLE PRESSURE SWITCH) CONNECTOR C25.
- TURN THE A/C SWITCH ON.
- IS THE BATTERY VOLTAGE APPLIED AT HARNESS SIDE CONNECTOR C25-1?

NO

REPAIR AN OPEN CIRCUIT BETWEEN THE FUSE C-20 AND I23-2.

YES

- IS THE DUAL PRESSURE SWITCH (OR TRIPLE PRESSURE SWITCH) NORMAL?

NO

REPAIR AN OPEN CIRCUIT BETWEEN I23-6 AND C25-1.

YES

- RECONNECT THE CONNECTOR C25 AND DISCONNECT THE A/C THERMO RELAY CONNECTOR X5.
- IS THERE CONTINUITY BETWEEN HARNESS SIDE CONNECTOR C25-2 AND X5-1?

NO

REPLACE THE SWITCH.

YES

NO

- IS THE BATTERY VOLTAGE APPLIED AT HARNESS SIDE CONNECTOR X5-2?

NO → REPAIR AN OPEN CIRCUIT.

YES

- IS THE A/C THERMO RELAY NORMAL?

NO → REPAIR AN OPEN CIRCUIT BETWEEN THE FUSE C-20 AND X5-2.

YES

- DISCONNECT THE ELECTRONIC THERMOSTAT CONNECTOR I42.
- IS THE BATTERY VOLTAGE APPLIED AT HARNESS SIDE CONNECTOR I42-3?

NO → REPLACE THE RELAY.

YES

- IS THERE CONTINUITY BETWEEN HARNESS SIDE CONNECTOR X5-3 AND I42-1?

NO → REPAIR AN OPEN CIRCUIT BETWEEN I23-6 AND I42-3.

YES

- IS THERE CONTINUITY BETWEEN HARNESS SIDE CONNECTOR I42-2 AND THE GROUND?

NO → REPAIR AN OPEN CIRCUIT.

YES

- DISCONNECT THE PCM CONNECTORS.
- IS THERE CONTINUITY BETWEEN HARNESS SIDE CONNECTOR X5-4 AND PCM C3-E15?

NO → REPAIR AN OPEN CIRCUIT.

YES

- RECONNECT X5 AND I42.
- IS THE BATTERY VOLTAGE APPLIED AT HARNESS SIDE CONNECTOR PCM C3-E15?

NO → REPAIR AN OPEN CIRCUIT.

YES

- DISCONNECT THE A/C COMPRESSOR RELAY CONNECTOR X7.
- IS THE BATTERY VOLTAGE APPLIED AT HARNESS SIDE CONNECTOR X7-1 AND X7-2?

NO → REPLACE THE ELECTRONIC THERMOSTAT.

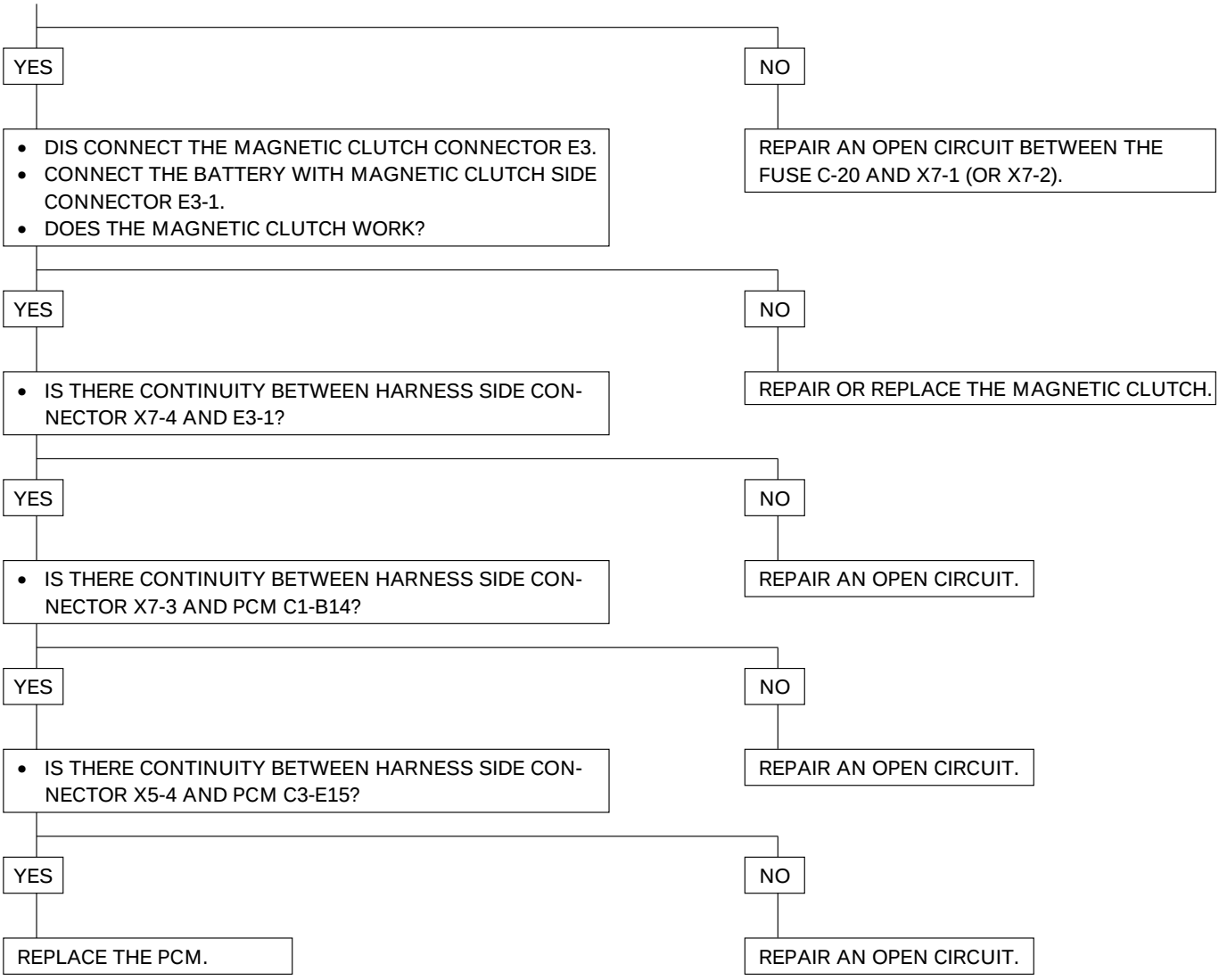
YES
NO
• DIS CONNECT THE MAGNETIC CLUTCH CONNECTOR E3.
• CONNECT THE BATTERY WITH MAGNETIC CLUTCH SIDE CONNECTOR E3-1.
• DOES THE MAGNETIC CLUTCH WORK?
REPAIR AN OPEN CIRCUIT BETWEEN THE FUSE C-20 AND X7-1 (OR X7-2).
YES
NO
• IS THERE CONTINUITY BETWEEN HARNESS SIDE CONNECTOR X7-4 AND E3-1?
REPAIR OR REPLACE THE MAGNETIC CLUTCH.
YES
NO
• IS THERE CONTINUITY BETWEEN HARNESS SIDE CONNECTOR X7-3 AND PCM C1-B14?
REPAIR AN OPEN CIRCUIT.
YES
NO
• IS THERE CONTINUITY BETWEEN HARNESS SIDE CONNECTOR X5-4 AND PCM C3-E15?
REPAIR AN OPEN CIRCUIT.
YES
NO
REPLACE THE PCM.
REPAIR AN OPEN CIRCUIT.

4JG2 ENGINE

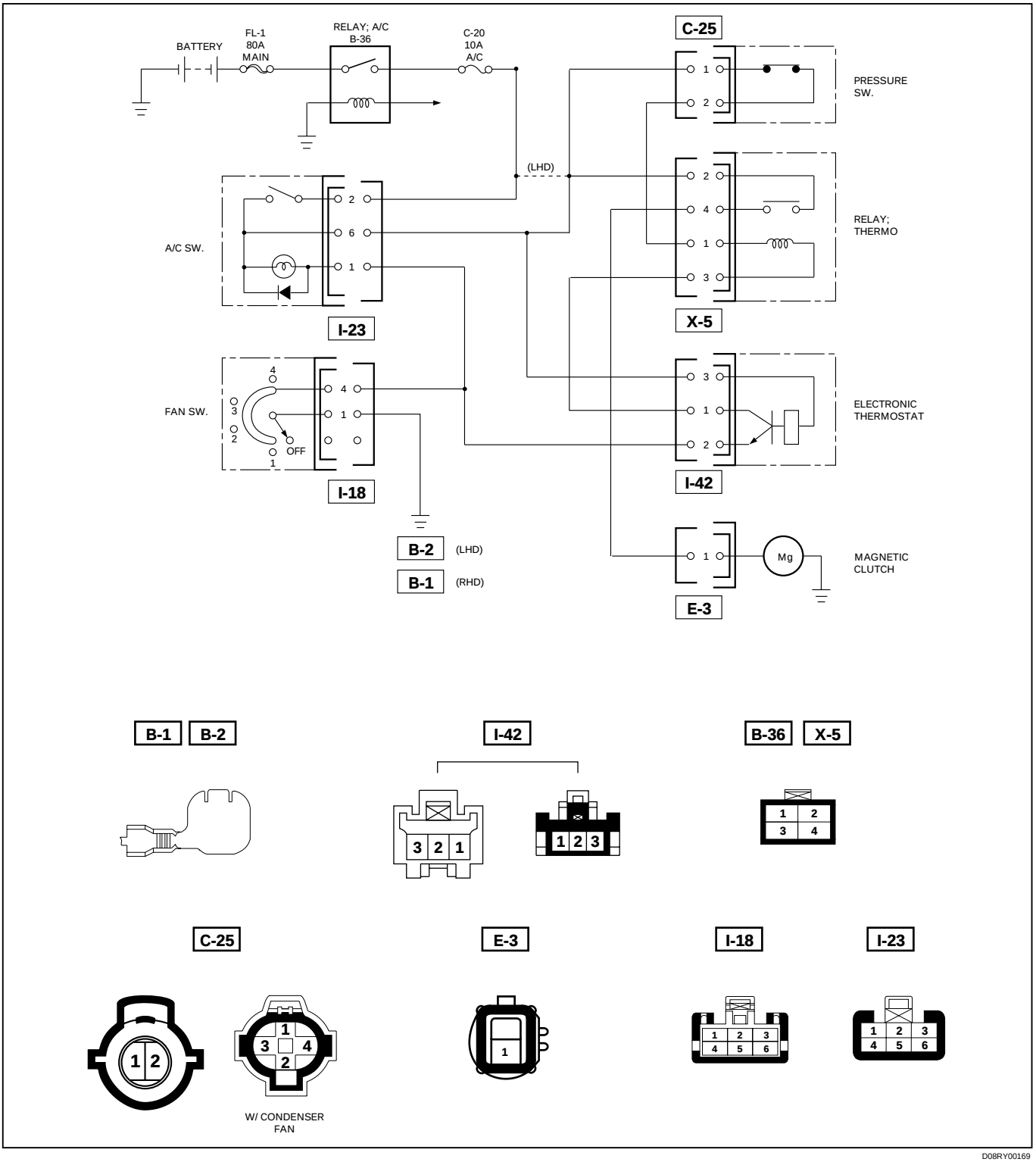

D08RY00169

MAGNETIC CLUTCH DOES NOT RUN

- ARE NO. C-20 (10A) FUSE AND NO. C-19 (25A) FUSES OK?

YES

- ARE HEATER & A/C (B-36) AND THERMOSTAT (X-5) RELAYS OK?

NO → REPLACE

YES

- IS PRESSURE SWITCH (DUAL PRESSURE SWITCH) OK?

NO → REPLACE

YES

- ARE A/C SWITCH AND FAN CONTROL KNOB (FAN SWITCH) OK?

NO → SWITCH DEFECTIVE OR INSUFFICIENT REFRIGERANT

YES

- TURN THE IGNITION SWITCH “ON” (ENGINE IS RUNNING)
- A/C SWITCH AND FAN CONTROL KNOB (FAN SWITCH “ON”

NO → REPLACE

- CHECK TO SEE IF BATTERY VOLTAGE IS PRESENT AT CHASSIS SIDE CONNECTOR TERMINAL NO. E3-1

YES → MAGNETIC CLUTCH DEFECTIVE

NO

- CHECK TO SEE IF BATTERY VOLTAGE IS PRESENT AT CHASSIS SIDE CONNECTOR TERMINAL NO. C25-1

NO → OPEN CIRCUIT BETWEEN NO. C-20 (10A) FUSE AND NO. C25-1

YES

- DISCONNECT THERMO RELAY (X-5)
- CHECK TO SEE IF BATTERY VOLTAGE IS PRESENT AT CHASSIS SIDE RELAY TERMINAL NO. X5-2

NO → OPEN CIRCUIT BETWEEN NO. C25-2 AND NO. X5-2

YES

- CHECK TO SEE IF VOLTAGE (APPROX. 10V) IS PRESENT CHASSIS SIDE RELAY TERMINAL NO. X5-1 AND NO. X5-3

CONTINUED NEXT PAGE

CONTINUED PREVIOUS PAGE

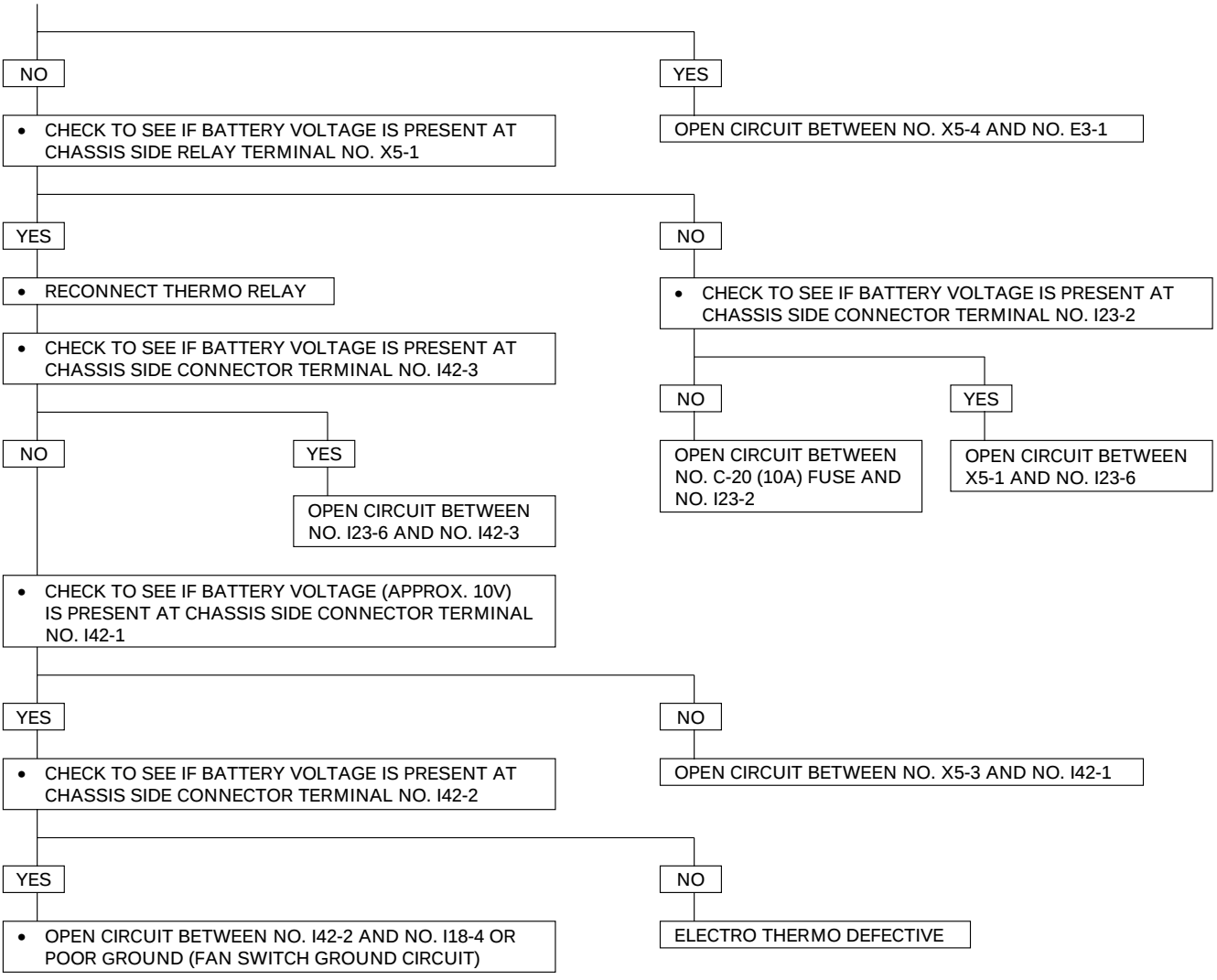

4JX1 ENGINE

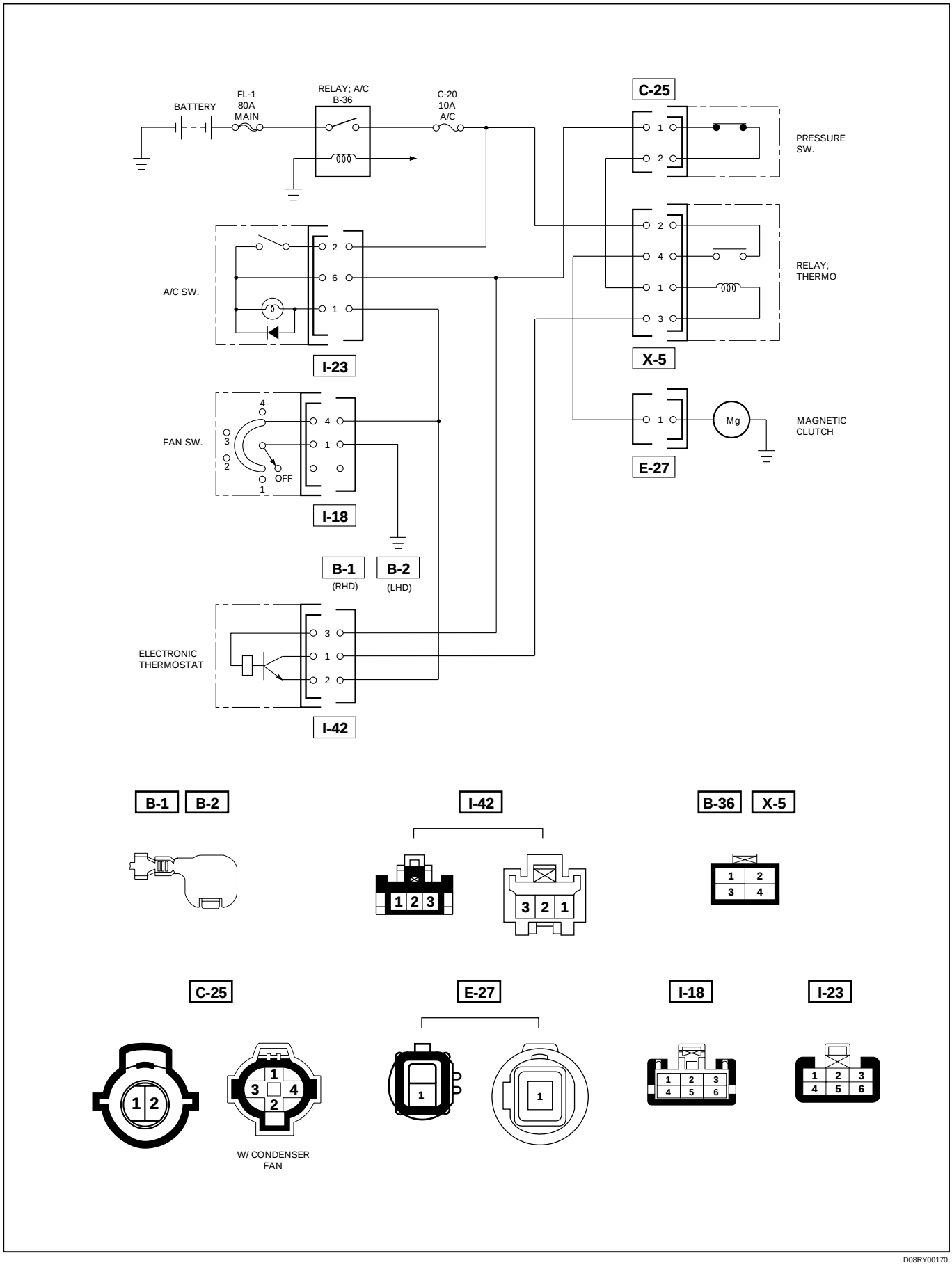

D08RY00170

MAGNETIC CLUTCH DOES NOT RUN

- TURN THE STARTER SWITCH ON AND START THE ENGINE.
- TURN THE FAN SWITCH ON.
- DOES THE BLOWER MOTOR RUN?

YES

- IS THE FUSE C-20 (10A) NORMAL?

NO

REFER TO THE DIAGNOSIS PROCEDURE FOR “BLOWER MOTOR DOES NOT RUN”.

YES

- DISCONNECT THE A/C SWITCH CONNECTOR AND REMOVE THE A/C SWITCH.
- IS THE A/C SWITCH NORMAL?

NO

REPLACE THE FUSE.

YES

- IS THE BATTERY VOLTAGE APPLIED AT HARNESS SIDE CONNECTOR I23-2?

NO

REPAIR OR REPLACE THE SWITCH.

YES

- REINSTALL THE A/C SWITCH AND DISCONNECT THE DUAL PRESSURE SWITCH (OR TRIPLE PRESSURE SWITCH) CONNECTOR C25.
- TURN THE A/C SWITCH ON.
- IS THE BATTERY VOLTAGE APPLIED AT HARNESS SIDE CONNECTOR C25-1?

NO

REPAIR AN OPEN CIRCUIT BETWEEN THE FUSE C-20 AND I23-2.

YES

- IS THE DUAL PRESSURE SWITCH (OR TRIPLE PRESSURE SWITCH) NORMAL?

NO

REPAIR AN OPEN CIRCUIT BETWEEN I23-6 AND C25-1.

YES

- RECONNECT THE CONNECTOR C25 AND DISCONNECT THE A/C THERMO RELAY CONNECTOR X5.
- IS THERE CONTINUITY BETWEEN HARNESS SIDE CONNECTOR C25-2 AND X5-1?

NO

REPLACE THE SWITCH.

YES

NO

- IS THE BATTERY VOLTAGE APPLIED AT HARNESS SIDE CONNECTOR X5-2?

NO → REPAIR AN OPEN CIRCUIT.

YES

- IS THE A/C THERMO RELAY NORMAL?

NO → REPAIR AN OPEN CIRCUIT BETWEEN THE FUSE C-20 AND X5-2.

YES

- DISCONNECT THE ELECTRONIC THERMOSTAT CONNECTOR I42.
- IS THE BATTERY VOLTAGE APPLIED AT HARNESS SIDE CONNECTOR I42-3?

NO → REPLACE THE RELAY.

YES

- IS THERE CONTINUITY BETWEEN HARNESS SIDE CONNECTOR X5-3 AND I42-1?

NO → REPAIR AN OPEN CIRCUIT BETWEEN I23-6 AND I42-3.

YES

- IS THERE CONTINUITY BETWEEN HARNESS SIDE CONNECTOR I42-2 AND THE GROUND?

NO → REPAIR AN OPEN CIRCUIT.

YES

- DIS CONNECT THE MAGNETIC CLUTCH CONNECTOR E27.
- CONNECT THE BATTERY WITH MAGNETIC CLUTCH SIDE CONNECTOR E27-1.
- DOES THE MAGNETIC CLUTCH.

NO → REPAIR AN OPEN CIRCUIT.

YES

- REPAIR AN OPEN CIRCUIT BETWEEN X5-4 AND E27-1.

NO → REPAIR OR REPLACE THE MAGNETIC CLUTCH.

CONDENSER FAN

When the cycling switch, which controls the condenser fan of the triple pressure switch while the A/C switch is on, senses the refrigerant pressure and the condenser fan turns on, the motor operates via the condenser fan relay.

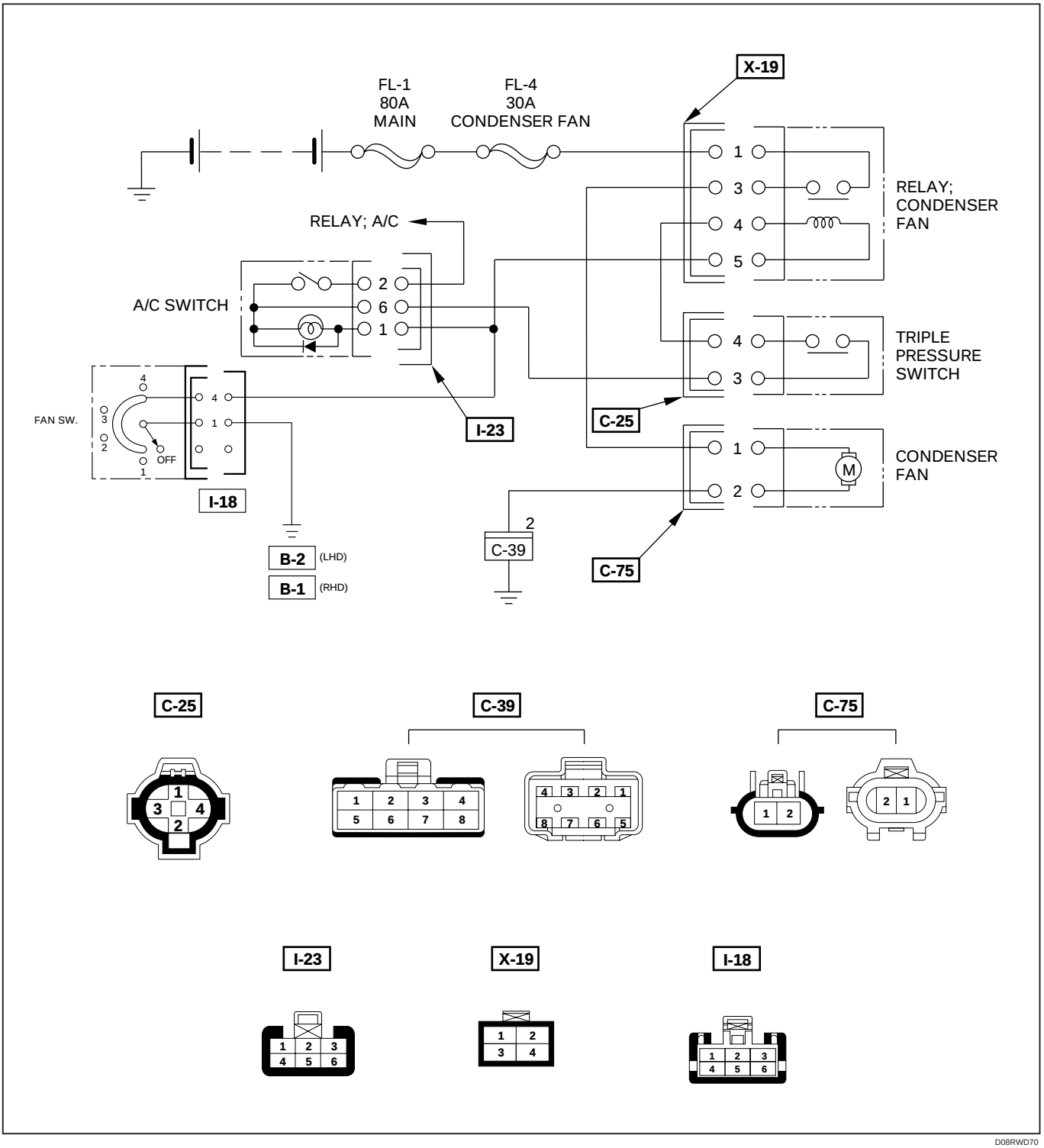

D08RWD70

CONDENSER FAN DOES NOT RUN

- DOES A/C SYSTEM OPERATE CORRECTLY?
  - YES → IS FL-4 (30A) FUSE OK?
  - NO → CHECK A/C SYSTEM AND REPAIR AS NECESSARY
- IS FL-4 (30A) FUSE OK?
  - YES → IS CONDENSER FAN RELAY (X-19) OK?
  - NO → REPLACE
- IS CONDENSER FAN RELAY (X-19) OK?
  - YES → IS TRIPLE PRESSURE SWITCH (CYCLING SWITCH SIDE) OK?
  - NO → REPLACE
- IS TRIPLE PRESSURE SWITCH (CYCLING SWITCH SIDE) OK?
  - YES → IS CONDENSER FAN MOTOR OK?
  - NO → REPLACE
- IS CONDENSER FAN MOTOR OK?
  - YES → CHECK TO SEE IF CONTINUITY BETWEEN FL-4 (30A) FUSE AND CHASSIS SIDE RELAY TERMINAL NO. X19-1.
  - NO → REPLACE
- CHECK TO SEE IF CONTINUITY BETWEEN FL-4 (30A) FUSE AND CHASSIS SIDE RELAY TERMINAL NO. X19-1.
  - YES → CHECK TO SEE IF CONTINUITY BETWEEN CHASSIS SIDE CONNECTOR TERMINAL NO. I23-6 AND NO. C25-3.
  - NO → REPLACE
- CHECK TO SEE IF CONTINUITY BETWEEN CHASSIS SIDE CONNECTOR TERMINAL NO. I23-6 AND NO. C25-3.
  - YES → CHECK TO SEE IF CONTINUITY BETWEEN CHASSIS SIDE CONNECTOR TERMINAL NO. C25-4 AND CHASSIS SIDE RELAY TERMINAL NO. X19-4.
  - NO → OPEN CIRCUIT
- CHECK TO SEE IF CONTINUITY BETWEEN CHASSIS SIDE CONNECTOR TERMINAL NO. C25-4 AND CHASSIS SIDE RELAY TERMINAL NO. X19-4.
  - YES → CHECK TO SEE IF CONTINUITY BETWEEN CHASSIS SIDE RELAY TERMINAL NO. X19-5 AND CHASSIS SIDE CONNECTOR TERMINAL NO. I18-4.
  - NO → OPEN CIRCUIT
- CHECK TO SEE IF CONTINUITY BETWEEN CHASSIS SIDE RELAY TERMINAL NO. X19-5 AND CHASSIS SIDE CONNECTOR TERMINAL NO. I18-4.
  - YES → (end)
  - NO → OPEN CIRCUIT

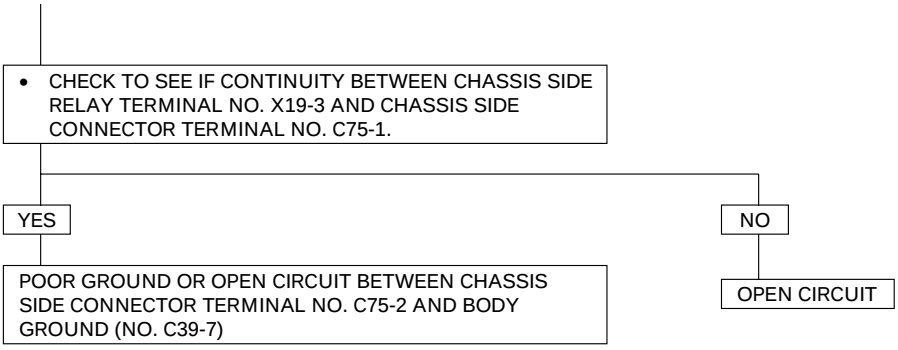

CONDENSER FAN DOES NOT STOP

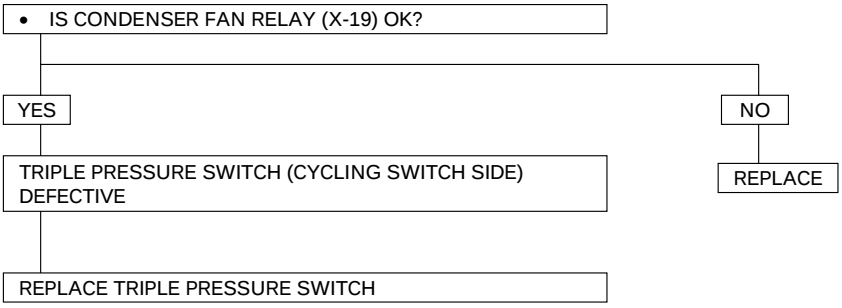

COMPRESSOR TROUBLESHOOTING

ITEM	PROBLEM	POSSIBLE CAUSES	CORRECTION
1	Noise from compressor	1. Defective rotor/piston 2. Defective bearing (DKS-15CH) 3. Defective shaft	Replace compressor/cylinder and shaft assembly Replace cylinder and shaft assembly Replace compressor/cylinder and shaft assembly
2	Noise from magnetic clutch face	1. Defective bearing 2. Defective clutch 3. Clearance between drive plate and pulley not standard	Replace magnetic clutch Replace magnetic clutch Adjust the clearance or replace magnetic clutch
3	Insufficient cooling	1. Defective gasket 2. Defective rotor/reed valve 3. Defective trigger valve/suction valve	Replace compressor/gasket Replace compressor/valve plate Replace compressor/suction valve
4	Not rotating	1. Defective rotor/piston 2. Defective shaft 3. Rotating parts seized due to insufficient oil	Replace compressor/cylinder and shaft assembly Replace compressor/cylinder and shaft assembly Replace compressor
5	Oil and/or gas leakage	1. Defective seal 2. Defective O-ring	Replace compressor/shaft seal Replace

INDIVIDUAL INSPECTION

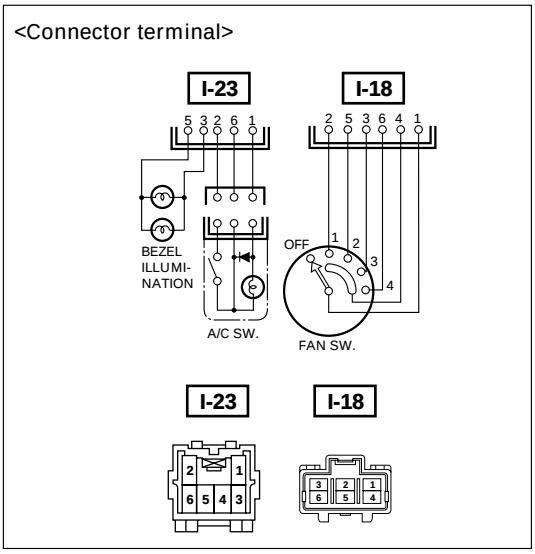

FAN CONTROL KNOB (FAN SWITCH) AND A/C SWITCH

Check for continuity between fan switch and A/C switch side connector terminals.

		I-18						I-23		
	SW. position \ Terminal No.	1	2	3	4	5	6	1	2	6
FAN SW.	OFF									
	1	○	○		○					
	2	○			○	○				
	3	○		○	○					
	4	○			○		○			
A/C SW.	OFF							○		○
	ON							○	○	○

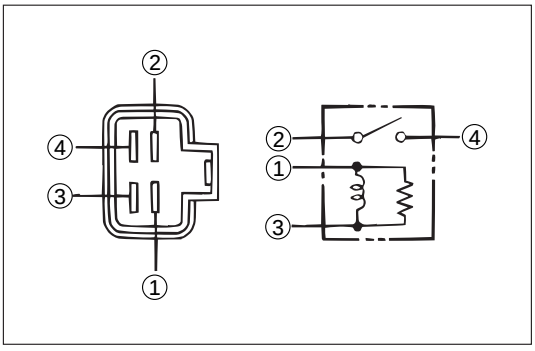

HEATER & A/C, THERMOSTAT, COMPRESSOR, CONDENSER FAN AND CERAMIC HEATER RELAY

Check for continuity between the relay terminals.

② – ④ ..... No continuity

(When battery voltage is applied between ① – ③)

② – ④ ..... Continuity

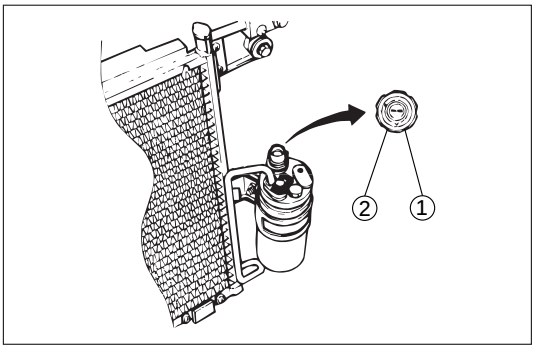

DUAL PRESSURE SWITCH

Disconnect pressure switch connector and check for continuity between pressure switch side connector terminals.

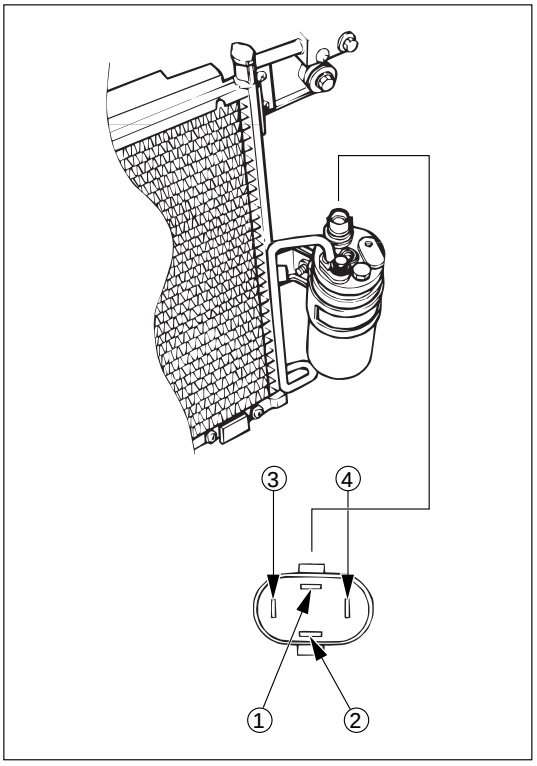

TRIPLE PRESSURE SWITCH (W/CONDENSER FAN)

1) Disconnect the connector and check for continuity between pressure switch side connector terminal.
2) Reconnect the connector to activate the A/C switch, and check to see if there is continuity between the chassis side connectors and the fan operates.

[A/C OFF]

Terminal No.	Control	Continuity
① - ②	Magnetic Clutch	Continuity
③ - ④	Condenser Fan	No Continuity

[A/C ON]

Refrigerant Pressure	Terminal No.	Continuity	Fan
1079±98 kPa (11.0±1.0 kg·cm^2 / 156±14 psi)	③ - ④	No Continuity	OFF
1471±98 kPa (15.0±1.0 kg·cm^2 / 213±14 psi)		Continuity	ON

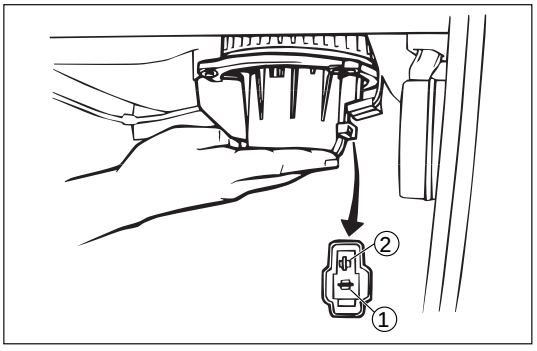

BLOWER MOTOR

1) Disconnect the blower motor (B-5) connector from the blower motor.
2) Connect the battery positive terminal to the No. 1 (NO.2; RHD) terminal of the blower motor and negative to the No. 2 (NO. 1; RHD).
3) Be sure to check to see if the blower motor operates correctly.

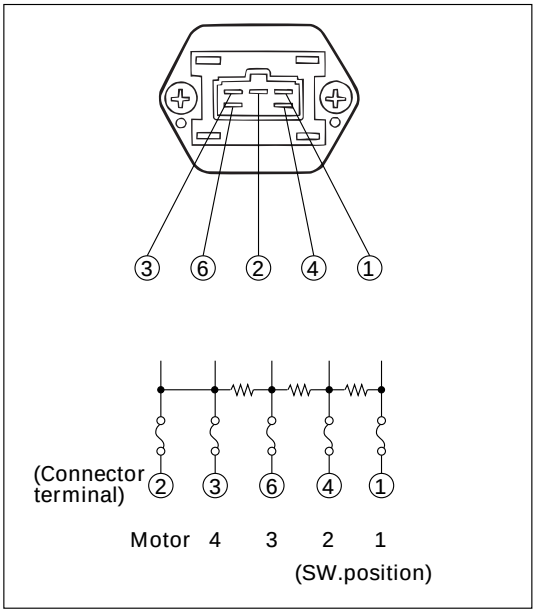

RESISTOR

1) Disconnect resistor (I-41) connector.
2) Check for continuity and resistance between the terminals of the resistor.

SW. position \ Terminal No.	1	2	3	4	6	Normal Operating Resistance
1	○—○					2.4Ω
2		○—○		○		0.90Ω
3		○			○	0.28Ω
4		○—○				–

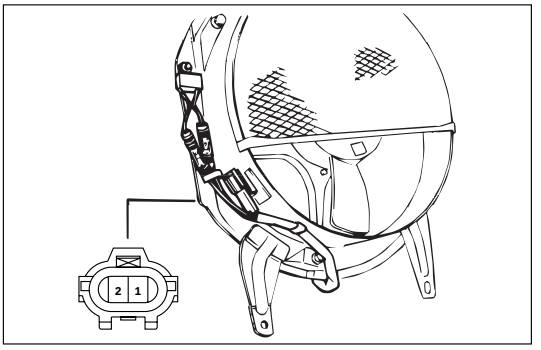

CONDENSER FAN

1) Disconnect the condenser fan connector (C-75).
2) Connect the battery positive terminal to the No. 1 terminal and negative to No. 2.
3) Be sure to check to see if condenser fan operates correctly.

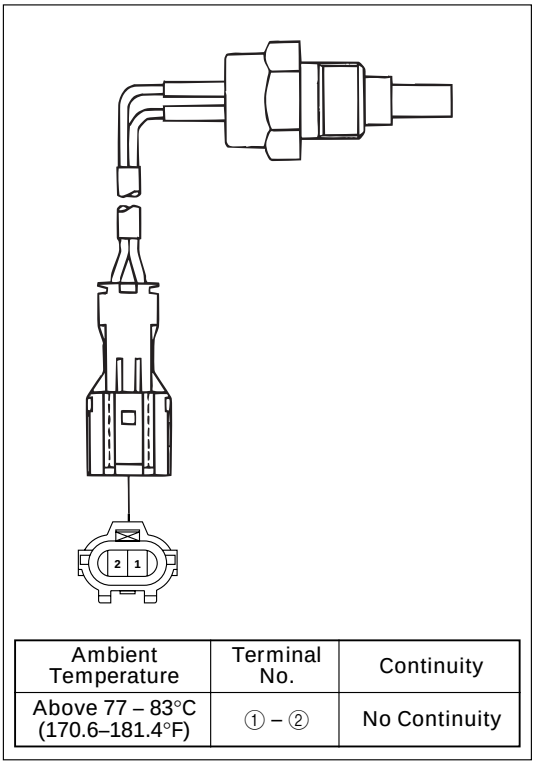

Ambient Temperature	Terminal No.	Continuity
Above 77 – 83°C (170.6–181.4°F)	① – ②	No Continuity

THERMO SWITCH (ENGINE)

With the environmental temperature of the switch set to the following conditions, check to see if there is any continuity between the switch side connector terminals.

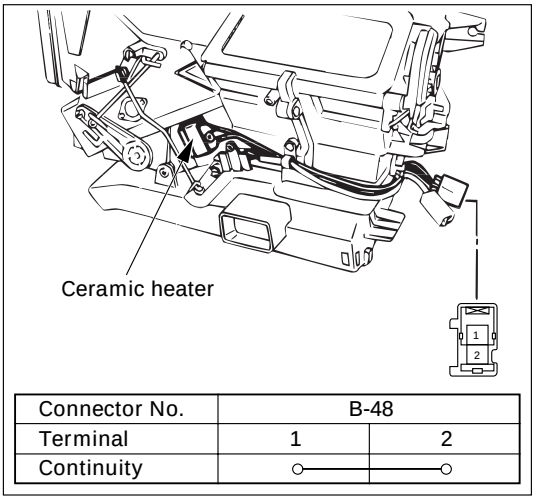

Connector No.	B-48	
Terminal	1	2
Continuity	○———	———○

CERAMIC HEATER

Disconnect the ceramic heater connector and check for continuity between ceramic heater side connector terminals.

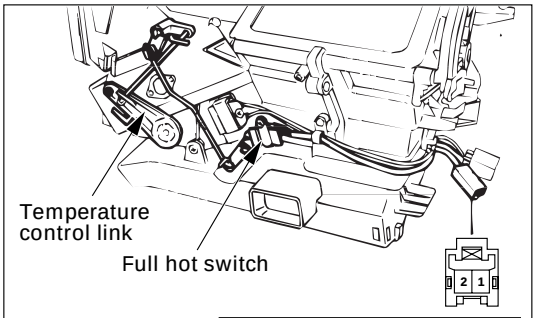

Terminal No. / Full hot switch	B-49	
	1	2
FREE		
CONTACT	○———	———○

FULL HOT SWITCH

1) With the temperature control knob set to the full hot position, check to see visually if the temperature control link of the heater unit operate correctly and if the link contacts securely with the full hot switch.
2) Disconnect the full hot switch connector.
3) With the full hot switch contacted, check to see if there is any continuity between the switch side connector terminals.

MAIN DATA AND SPECIFICATIONS

HEATER UNIT		
Temperature control		Reheat air mix system
Capacity	(Kcal./hr.)	3,700
Air flow	(m^3/hr.)	280
HEATER CORE		
Type		Fin & tube type
Element dimension	mm (in.)	161 (6.3) × 163 (6.4) × 45 (1.8)
Radiating area	m^2	Approx. 2.1
EVAPORATOR ASSEMBLY		
Capacity	(Kcal./hr.)	4,200
Air flow	(m^3/hr.)	470
EVAPORATOR CORE		
Type		Al-laminate louver fin type
Element dimension	mm (in.)	235 (9.3) × 224 (8.8) × 74 (2.9)
EXPANSION VALVE		
Type		External pressure equalizer type
THERMOSTAT SWITCH		
Type		Electronic thermostat
	°C (F)	OFF: 3.5 ± 0.5 (38.3 ± 0.9) ON: 5.0 ± 0.5 (41.0 ± 0.9)
CONDENSER		
Type		Parallel flow
Radiation performance	(Kcal./hr.)	11,500
RECEIVER/DRIER		
Type		Assembly includes sight glass with dual (triple) pressure switch
Internal volume	cc (Imp. fl oz)	300 (8.5)
PRESSURE SWITCH		
Type		Dual pressure switch
	kPa (kg·cm^2 / PSI)	• Low pressure control ON: 205.9 ± 30 (2.1 ± 0.3 / 29.9 ± 4) (Except 6VD1 / 6VE1, LHD model) 186 ± 30 (1.9 ± 0.3 / 27 ± 4) (only for 6VD1/ 6VE1, LHD model) OFF: 176 ± 20 (1.8 ± 0.2 / 26 ± 3) • High pressure control ON: 2354 ± 196 (24.0 ± 2.0 / 341 ± 28) OFF: 2942 ± 196 (30.0 ± 2.0 / 427 ± 28) Triple pressure switch (W/Condenser fan) • Low pressure control ON: 186 ± 30 (1.9 ± 0.3 / 27 ± 4) OFF: 176 ± 20 (1.8 ± 0.2 / 26 ± 3) • Medium pressure control ON: 1471 ± 98 (15.0 ± 1.0 / 213 ± 14) OFF: 1079 ± 98 (11.0 ± 1.0 / 156 ± 14) • High pressure control ON: 2354 ± 196 (24.0 ± 2.0 / 341 ± 28) OFF: 2942 ± 196 (30.0 ± 2.0 / 427 ± 28)
REFRIGERANT		
Type/Specified amount	g (lbs)	HFC-134a / 750 (1.65)

6VD1/6VE1 (RHD) & 6VD1 (LHD) (SAUDI/PHILIPPINE)

COMPRESSOR		
Model		DKV-14D
Type		Vane rotary (Invariable)
Number of vanes		5
Rotor diameter	mm (in.)	64 (2.52)
Stroke	mm (in.)	8.75 (0.34)
Displacement	cc (Imp fl oz)	140 (3.9)
Maximum speed	(rpm)	7,000 (up to 8,400)
Direction of rotation		Clockwise (Front-side view)
Lubrication system		Pressure differential type
Lubricant	cc (Imp fl oz)	ZXL-200PG, 150 (4.2) ISUZU PART NO. 8-97101-336-0
Refrigerant	g (lbs.)	HFC-134a, 750 (1.65)
Shaft seal		Lip type
Weight	kg (lbs.)	3.6 (7.94)
MAGNETIC CLUTCH		
Type		Electromagnetic single-plate dry clutch
Rated voltage		12 Volts D.C.
Current consumption	(A)	3.7
Starting torque	N·m (kg·m / lb·ft)	39 (4.0 / 30)
Direction of rotation		Clockwise (Front-side view)
Weight	kg (lbs.)	2.2 (4.9)

6VD1/6VE1 (LHD) Except SAUDI/PHILIPPINE

COMPRESSOR		
Model		HD6
Type		Vane rotary (Invariable)
Number of vanes		6
Rotor diameter	mm (in.)	64 (2.52)
Stroke	mm (in.)	24 (0.94)
Displacement	cc (Imp fl oz)	164 (4.59)
Maximum speed	(rpm)	9,000
Direction of rotation		Clockwise (Front-side view)
Lubrication system		Pressure differential type
Lubricant	cc (Imp fl oz)	SD2-231, 150 (4.2)
Refrigerant	g (lbs.)	R-134a, 750 (1.65)
Shaft seal		Lip type
Weight	kg (lbs.)	6.8 (14.99)
MAGNETIC CLUTCH		
Type		Electromagnetic single-plate dry clutch
Rated voltage		12 Volts D.C.
Current consumption	(A)	3.7
Starting torque	N·m (kg·m / lb·ft)	39 (4.0 / 30)
Direction of rotation		Clockwise (Front-side view)
Weight	kg (lbs.)	2.2 (4.9)

4JG2/4JX1

COMPRESSOR		
Model		DKS-15CH
Type		Swash plate type
Number of cylinder		6
Bore	mm (in.)	36 (1.4)
Stroke	mm (in.)	24 (0.94)
Displacement	cc (Imp fl oz)	147 (4.1)
Maximum speed	(rpm)	7,000 (up to 8,400)
Direction of rotation		Clockwise (Front-side view)
Lubrication system		Pressure differential type
Lubricant	cc (Imp fl oz)	ZXL-100PG, 150 (4.2) ISUZU PART NO. 8-97101-338-0
Refrigerant	g (lbs.)	HFC-134a, 750 (1.65)
Shaft seal		Lip type
Weight	kg (lbs.)	4.1 (9.0)
MAGNETIC CLUTCH		
Type		Electromagnetic single-plate dry clutch
Rated voltage		12 Volts D.C.
Current consumption	(A)	3.7
Starting torque	N·m (kg·m / lb·ft)	49 (5.0 / 36)
Direction of rotation		Clockwise (Front-side view)
Weight	kg (lbs.)	2.3 (5.1)

FIXING TORQUE

N·m (kg·m / lb·ft)

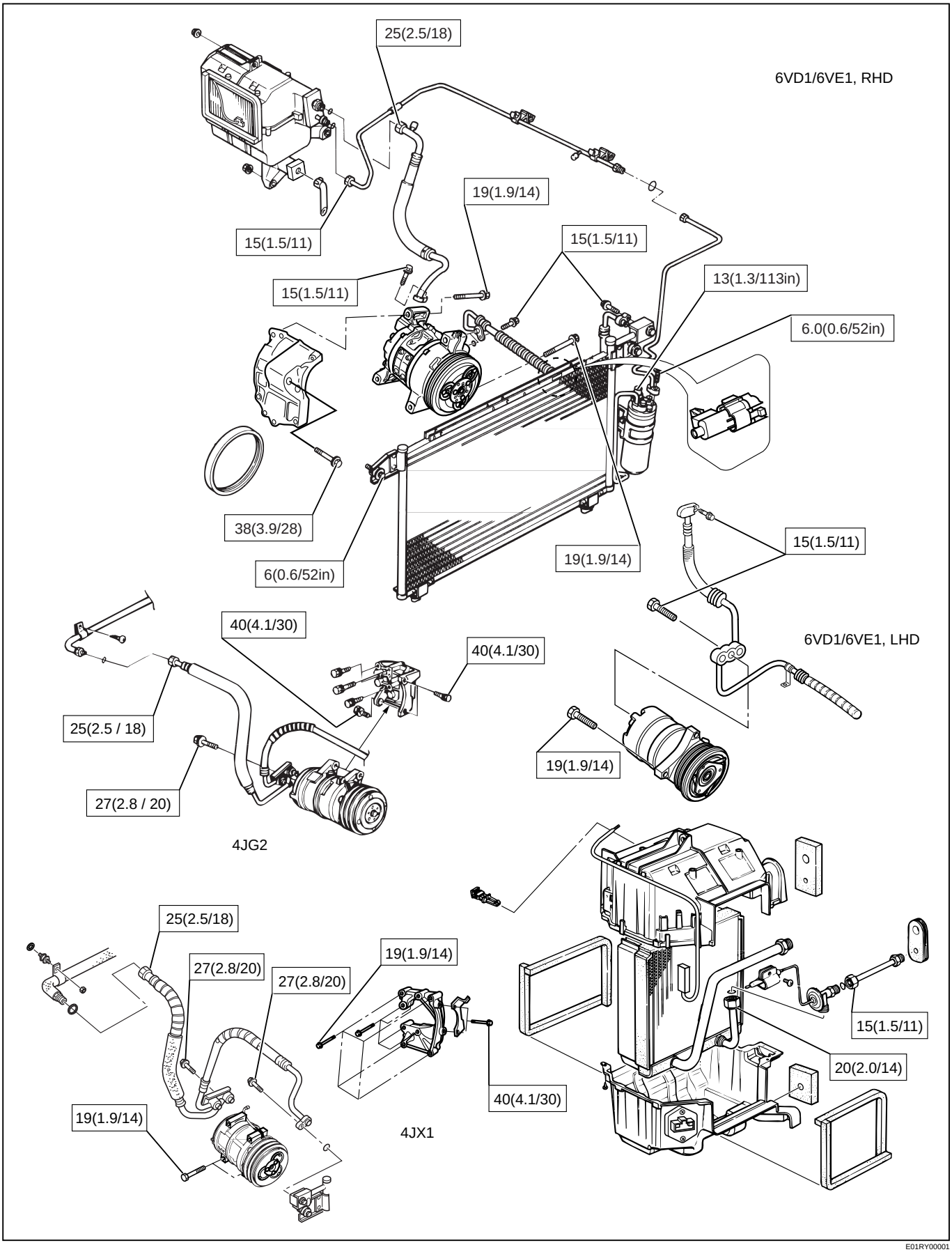

E01RY00001

DKV-14D TYPE

N·m (kg·m / lb·in)

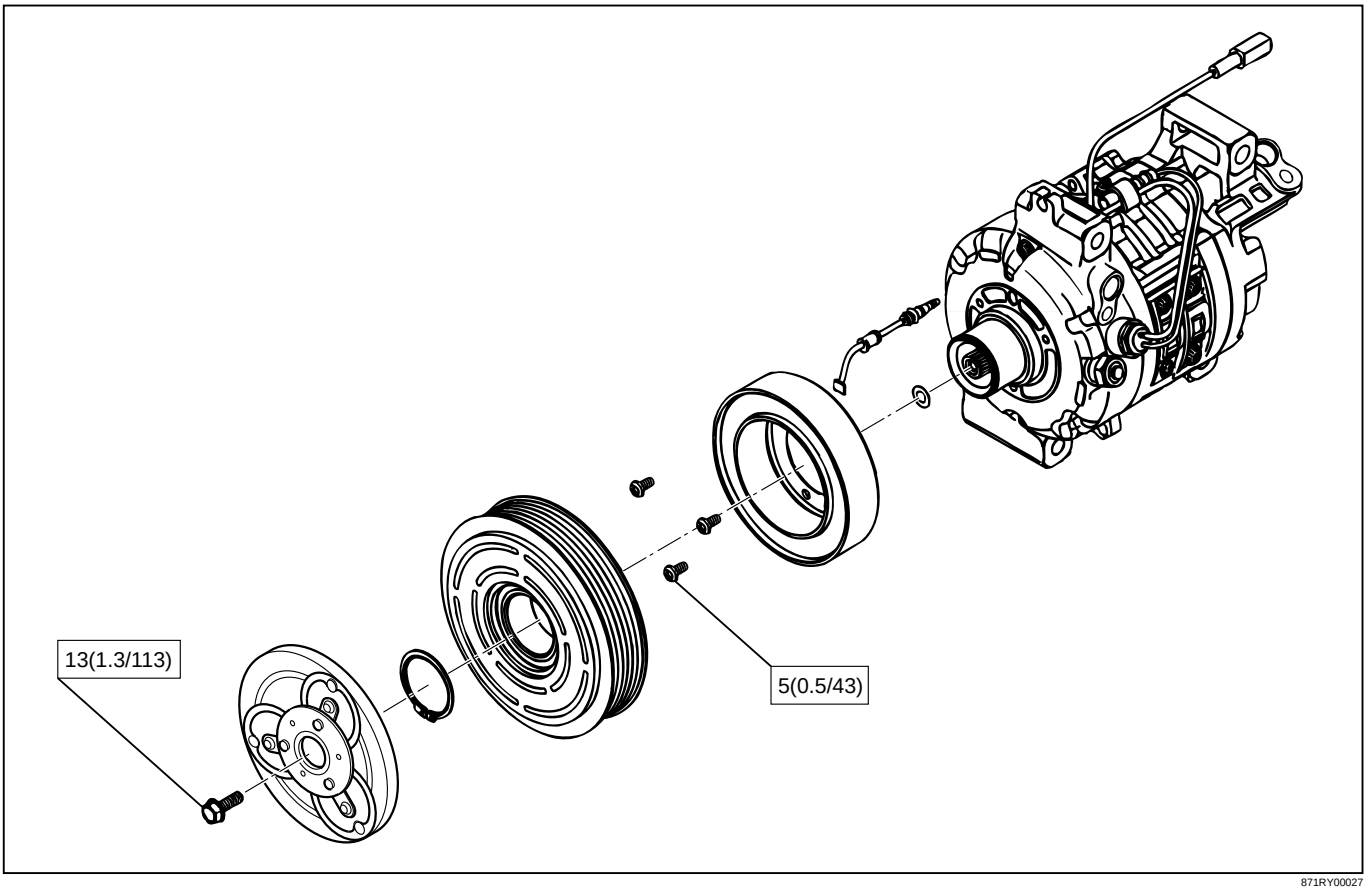

871RY00027

DKS-15CH TYPE

N·m (kg·m / lb·ft)

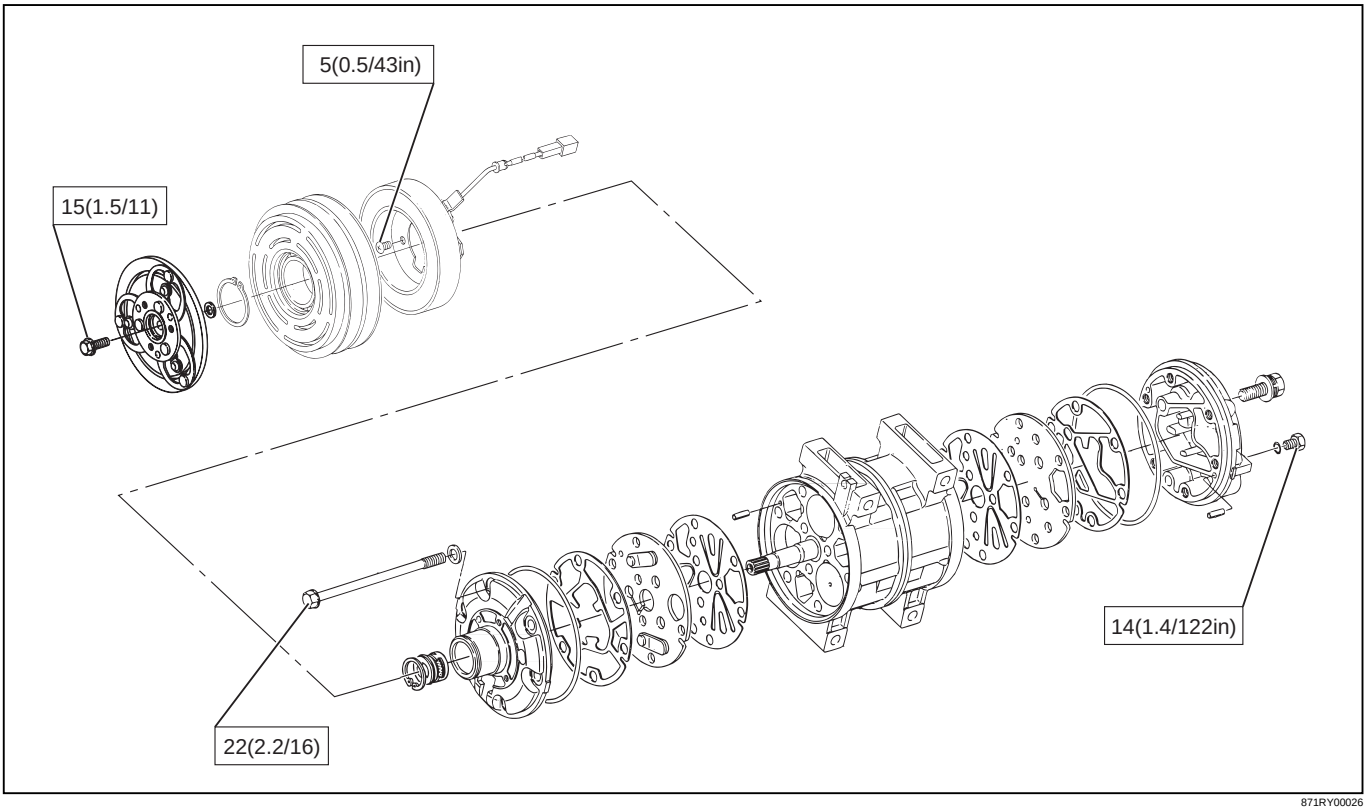

871RY00026

HEATING, VENTILATION AND AIR CONDITIONING(HVAC)

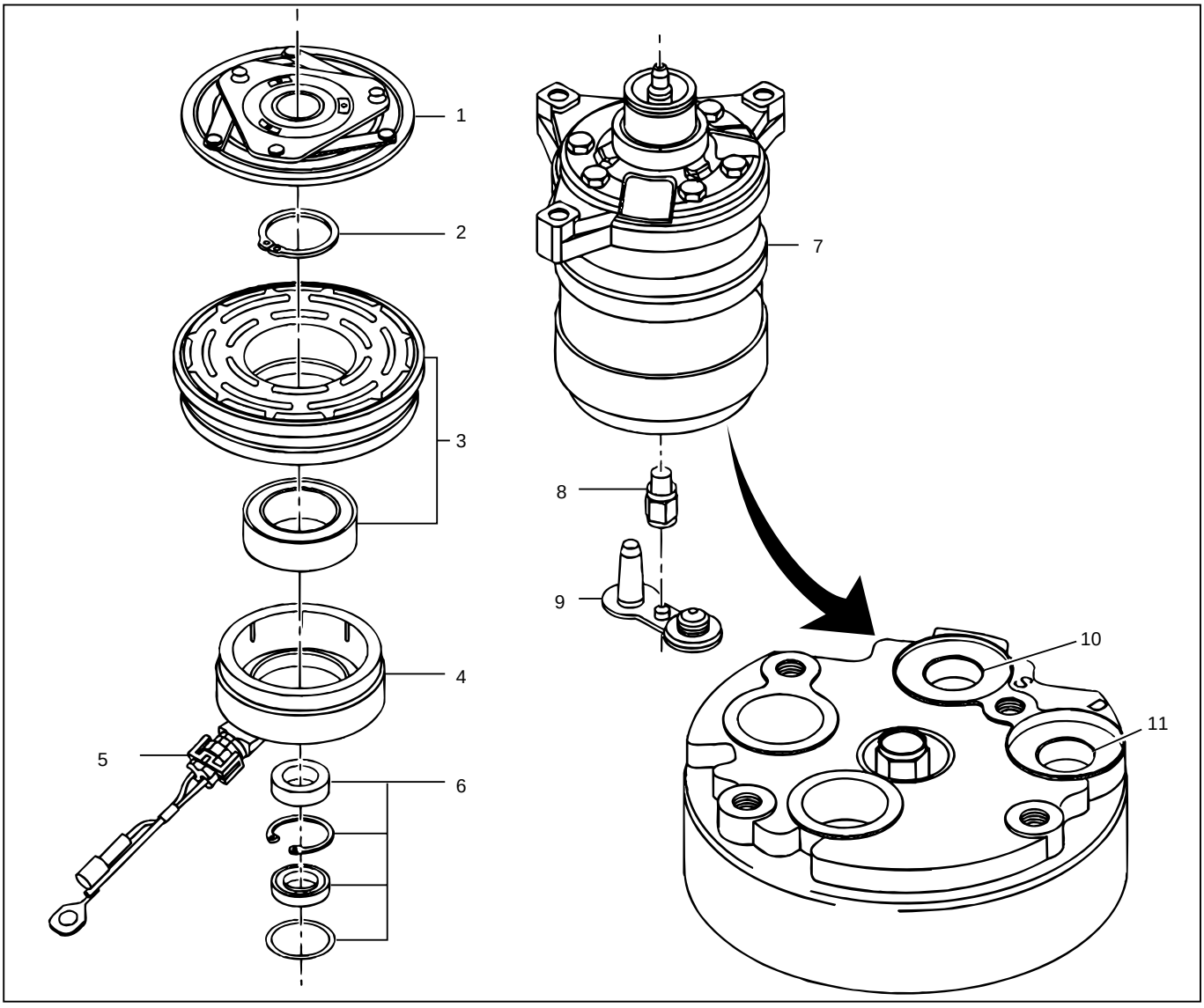

Legend

1. Clutch Driver
2. Rotor Bearing Retainer
3. Pulley Rotor and Bearing Assembly
4. Clutch Coil Assembly
5. Connector
6. Shaft Seal Parts
7. Pump Assembly
8. High Pressure Relief Valve
9. Shipping Cap
10. Special 134a Suction Port
11. Special 134a Discharge Port

Caution

The operations described below are based on bench overhaul with the compressor removed from the vehicle, except as noted. They have been prepared in order of accessibility of the components. When a compressor is removed from the vehicle for servicing, the amount of PAG lubricant remaining in the compressor should be drained, measured and recorded. This PAG lubricant should then be discarded and an equal amount of new PAG lubricant added to the compressor.

The service compressor is shipped without PAG oil. When service procedures require, use only Isuzu approved PAG oil.

Metric Thread Size Information

Compressor to mounting bracket bolts(Front)
M10×1.5 – 6H
Compressor to mounting bracket bolts(Rear)
M8×1.25 – 6H
Suction-discharge port screw
M10×1.5 – 6H
Compressor shaft
M9×1.25 – 6H
Internal hub-clutch drive assembly
M22×1.5 – 6H

SPECIAL TOOLS

ILLUSTRATION	PARTS NO.	PARTS NAME
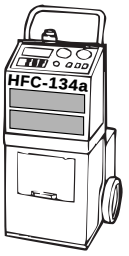	5-8840-0629-0 (J-39500-A)	ACR^4 (115V 60Hz)
	5-8840-0630-0 (J-39500-220A)	ACR^4 (220-240V 50/60Hz)
	5-8840-0631-0 (J-39500-220ANZ)	ACR^4 (220-240V 50/60Hz Australian model)
		ACR^4 : HFC-134a Refrigerant Recovery / Recycling /Recharging / System

DKV-14D TYPE

ILLUSTRATION	PARTS NO.	PARTS NAME
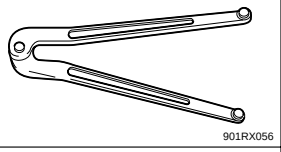 901RX056	5-8840-2007-0 (J-7624)	Drive plate holder
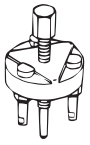	5-8840-0122-0 (J-33944-A)	Drive plate puller
	5-8840-0621-0 (J-33944-4)	Forcing screw
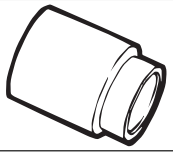	5-8840-0620-0 (J-38424)	Pulley puller pilot
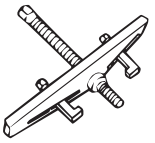	5-8840-0111-0 (J-8433)	Pulley puller
	5-8840-0622-0 (J-24092-2)	Pulley puller leg
	5-8840-0118-0 (J-33940)	Pulley installer
	5-8840-0007-0 (J-8092)	Drive handle

DKS-15CH TYPE

ILLUSTRATION	PARTS NO.	PARTS NAME
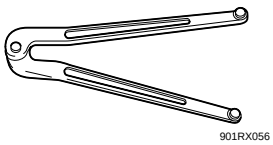 901RX056	5-8840-2007-0 (J-7624)	Drive plate holder
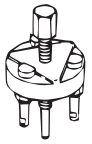	5-8840-0122-0 (J-33944-A)	Drive plate puller
	5-8840-0621-0 (J-33944-4)	Forcing screw
	5-8840-0121-0 (J-33943)	Pulley puller pilot
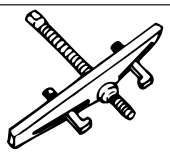	5-8840-0111-0 (J-8433)	Pulley puller
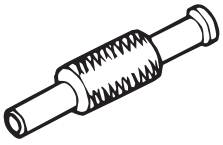	5-8840-120-0 (J-33942)	Shaft seal remover and installer
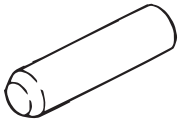	5-8840-0368-0 (J-34614)	Shaft seal guide
	5-8840-0118-0 (J-33940)	Pulley installer
	5-8840-0007-0 (J-8092)	Drive handle

DELPHI Harrison HD6/HDT6 Special Tools

ILLUSTRATION	TOOL NO.	TOOL NAME
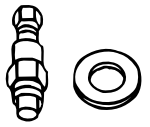 901RW012	5-8840-2610-0 (J-33013-B)	Hub and Clutch Drive Plate Asm. remover
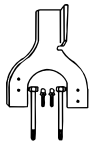 901RW013	5-8840-2615-0 (J-33026)	Compressor Holding Fixture
901RW015	5-8840-2612-0 (J-33023-A)	Puller Pilot
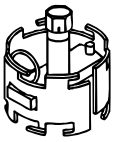 901RW016	5-8840-2617-0 (J-41552)	Pulley Puller
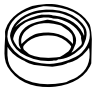 901RW017	5-8840-2611-0 (J-33017)	Pulley and Bearing Assembly Installer
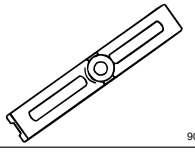 901RW018	5-8840-0111-0 (J-8433-1)	Puller Bar
901RW019	5-8840-0111-0 (J-8433-3)	Forcing Screw
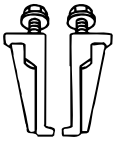 901RW020	5-8840-2614-0 (J-33025)	Clutch Coil Installer Adapter
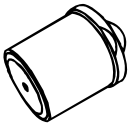 901RW021	5-8840-2613-0 (J-33024)	Clutch Coil Installer Adapter
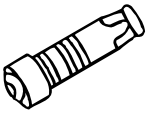 901RW024	5-8840-2629-0 (J-23128-A)	Seal Seat Remover and Installer
901RW025	5-8840-2630-0 (J-9553-01)	O-Ring Remover

ILLUSTRATION	TOOL NO.	TOOL NAME
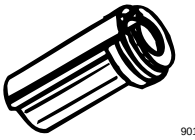 901RW026	5-8840-2609-0 (J-33011)	O-Ring Installer
901RW027	5-8840-0368-0 (J-34614)	Shaft Seal Protector
901RW032	5-8840-2616-0 (J-39893)	Pressure Testing Connector

SECTION 1A

HEATING AND VENTILATION

CAUTION
When fasteners are removed, always reinstall them at the same location from which they were removed. If a fastener needs to be replaced, use the correct part number fastener for that application. If the correct part number fastener is not available, a fastener of equal size and strength (or stronger) may be used.

Fasteners that are not reused, and those requiring thread locking compound, will be called out. The correct torque values must be used when installing fasteners that require it. If the above conditions are not followed, parts or system damage could result.

CONTENTS

PAGE
General Description 1A– 2
Heater 1A– 2
Control Lever Assembly 1A– 3
Ventilation 1A– 3
Air Select Knob 1A– 4
Air Source Select Lever 1A– 4
Fan Control Knob 1A– 4
Temperature Control Knob 1A– 4
Ceramic Heater 1A– 5
On-Vehicle Service 1A– 6
Heater Unit 1A– 6
Heater Core and/or Mode Door 1A– 8
Heater Mode Control Link Unit 1A–10
Heater Temperature Control Link Unit 1A–12
Blower Assembly 1A–14
Blower Link Unit and/or Mode Door 1A–16
Blower Motor 1A–18
Rear Heater Duct, Defroster Nozzle and Ventilation Duct 1A–20
Center and/or Side Vent 1A–22
Control Lever Assembly and/or Control Cables 1A–24
Control Panel Illumination Bulb 1A–27
Resistor 1A–28
Ceramic Heater and/or Full Hot Switch 1A–30

GENERAL DESCRIPTION

HEATER

When the engine warming up, the warmed engine coolant is sent out into the heater core. The heater system supplies warm air into the passenger compartment to warm it up.
Outside air is circulated through the heater core of the heater unit and then back into the passenger compartment. By controlling the mixture of outside air and heater core air, the most comfortable passenger compartment temperature can be selected and maintained.
The temperature of warm air sent to the passenger compartment is controlled by the temperature control knob. This knob acts to open and close the air mix door, thus controlling the amount of air passed through the heater core.

The air select knob, with its different modes, also allows you to select and maintain the most comfortable passenger compartment temperature. The air source select lever is used to select either “FRESH” for the introduction of the outside air, or “CIRC” for the circulation of the inside air. When the lever is set to “FRESH”, the outside air is always taken into the passenger compartment. When setting the lever to “CIRC” position, the circulation of air is restricted only to the inside air with no introduction of the outside air and the air in the passenger compartment gets warm quickened. However, the lever is normally set to “FRESH” to prevent the windshield from clouding.

This illustration is based on LHD

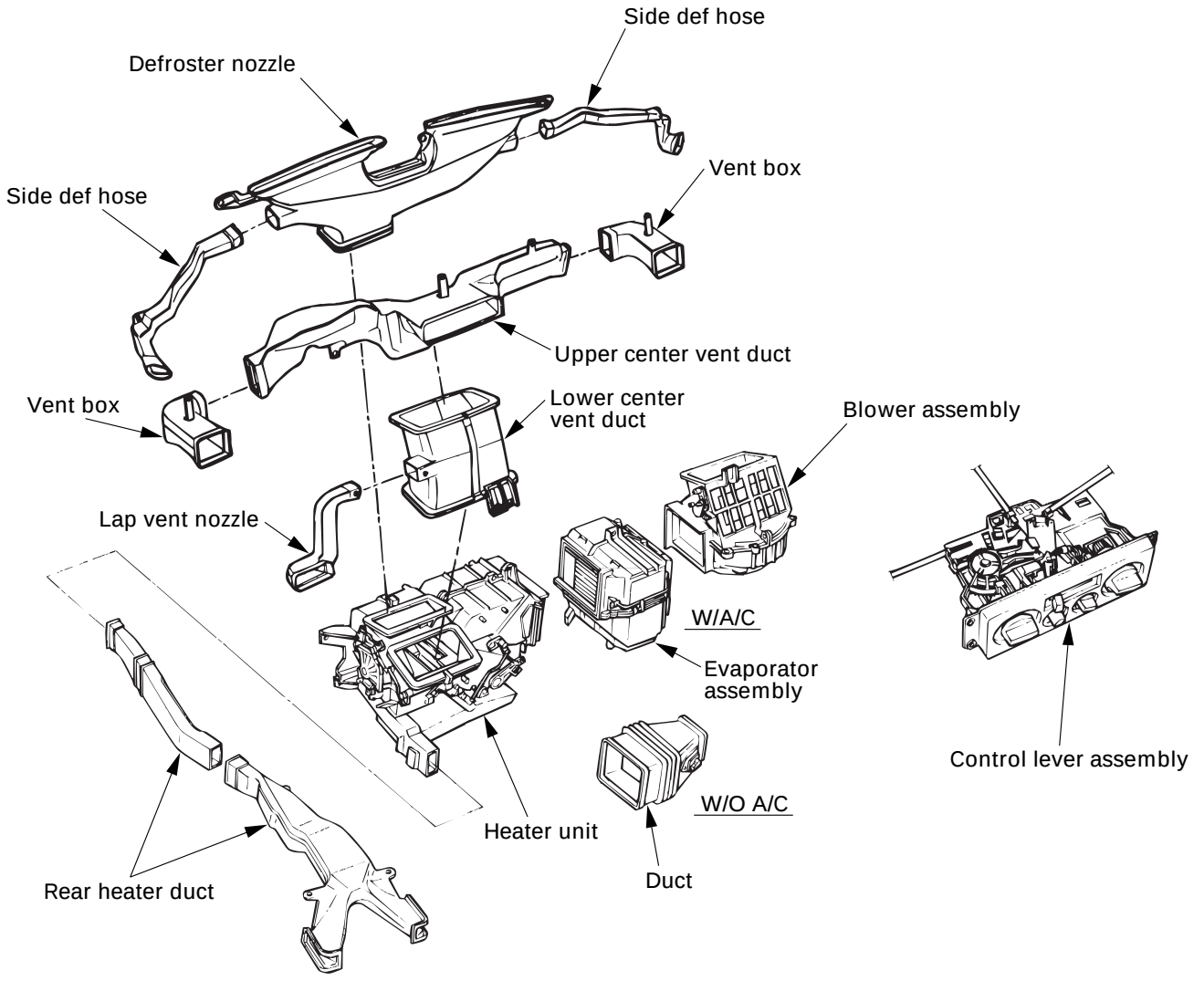

A/C - Air Conditioning

CONTROL LEVER ASSEMBLY

The vehicle has cable-control-type to control by cable the mode and temperature of the heater unit and the mode door for the air source of the blower assembly.

The fan control is used to control the amount of air sent out by the resistor at four levels from “LOW” to “HIGH”.

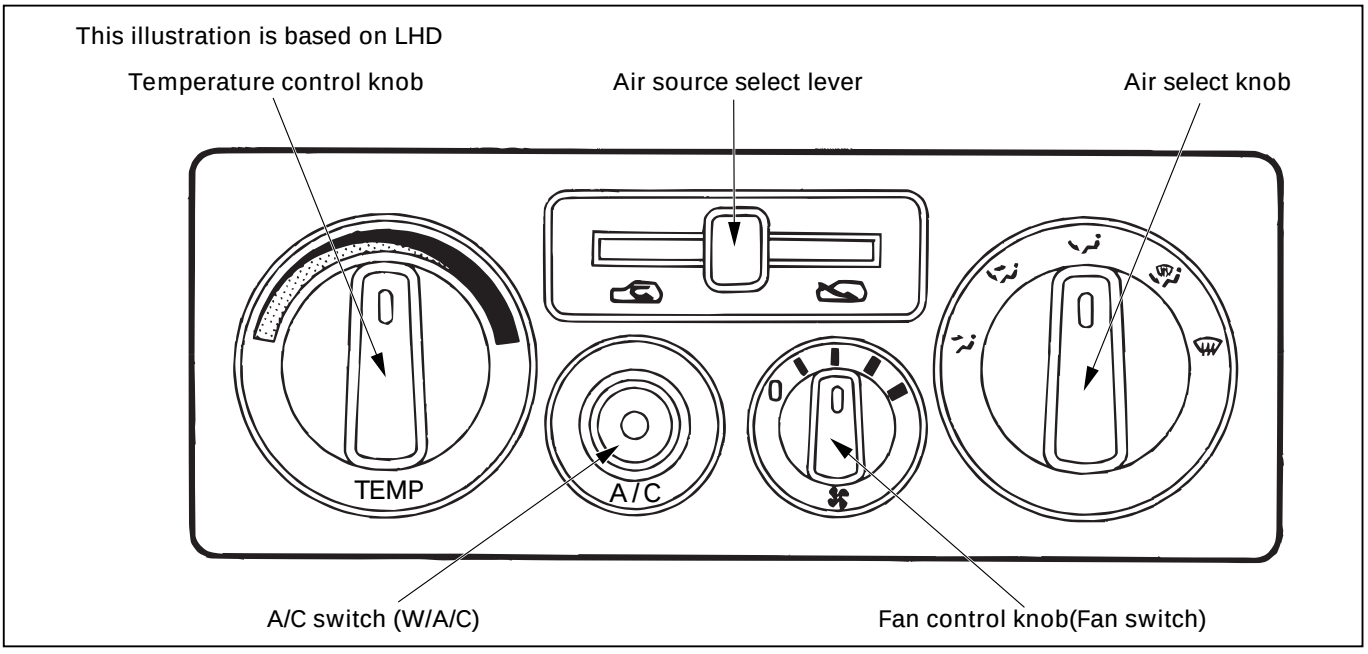

VENTILATION

Set “AIR SOURCE SELECT LEVER” to “FRESH” position and turn on the blower fan. Heating can be done in this lever position, sending in fresh air from outside.

The blower fan also serves to deliver fresh outside air to the vehicle interior to assure adequate ventilation.

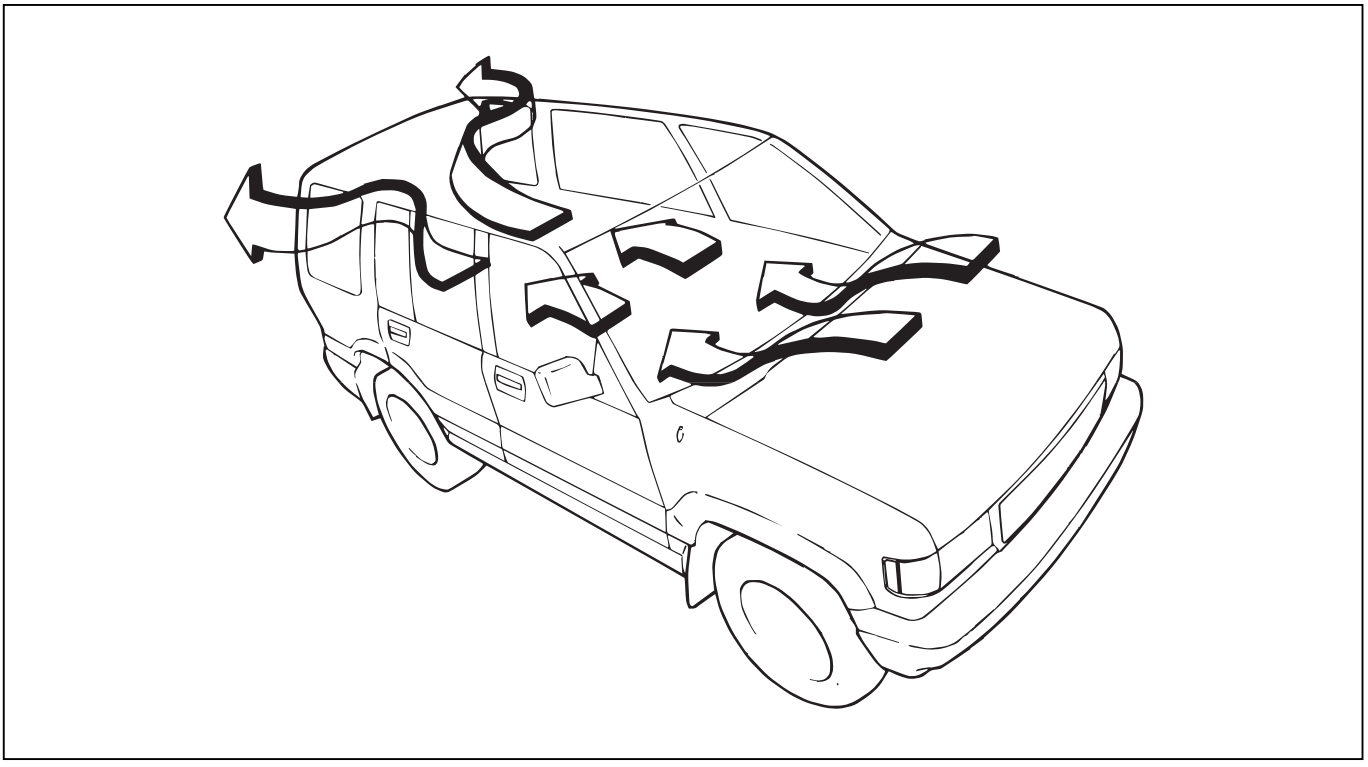

AIR SELECT KNOB

The air selector knob allows you to direct heated air into the passenger compartment through different outlets.

1. **Vent** - In this position, air is discharged from the upper air outlet. Air quantity is controlled by the fan control knob.
2. **Bi-Level** - In this position, air flow is divided between the upper air outlets and the foot air outlets, with warmer air delivered to the floor outlets than the air delivered to the upper air outlets.
3. **Foot** - In this position, air flow is delivered to the foot while sending approx. 30% of total amount of air to the windshield
4. **Def/Foot** - In this position, air flow is delivered to the foot, while sending approx. 40% of total amount of air to the windshield.
5. **Defrost** - In this position, most of the air is delivered to the windshield and a small amount is delivered to the side windows.

Moving the air source select lever to the “CIRC” position provides quickest heat delivery by closing the blower assembly mode door. In this position, outside air is not delivered to the passenger compartment.

AIR SOURCE SELECT LEVER

The intake of outside air and the circulation of inside air are controlled by sliding this lever left or right.

FAN CONTROL KNOB

This knob controls the blower motor speed to regulate the amount of air delivered to the defrost, foot, and ventilation ducts:

1. Low
2. Medium Low
3. Medium High
4. High

TEMPERATURE CONTROL KNOB

When the temperature control knob is in the “COLD” position, the air mix door closes to block the flow of air to the heater core.

When the temperature control knob is in the “HOT” position, the air mix door opens to allow air to pass through the heater core and heat the passenger compartment.

Placing the knob in an intermediate position will cause a lesser or greater amount of air to reach the heater core. In this mode the passenger compartment temperature can be regulated.

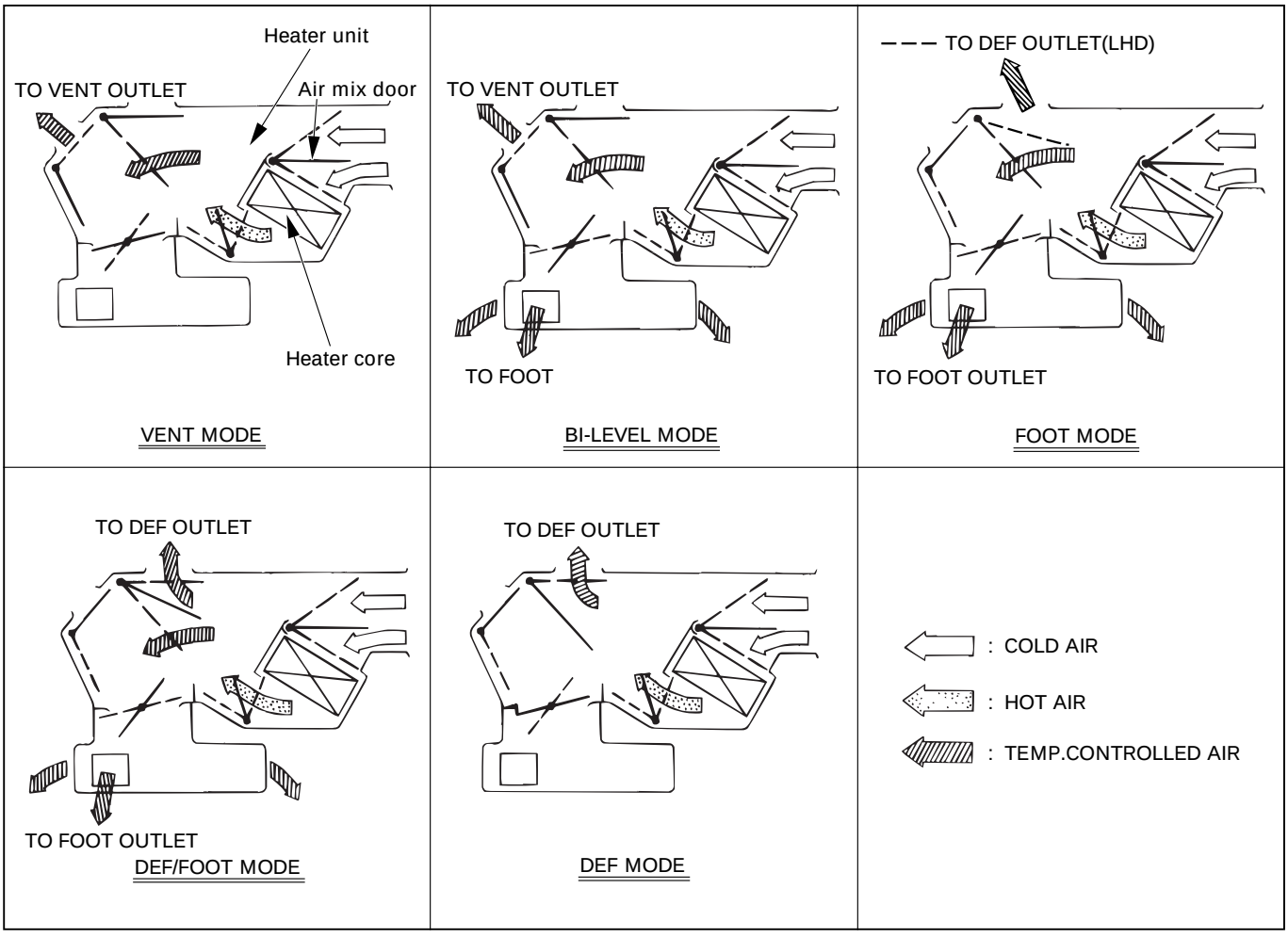

CERAMIC HEATER

When the fan control knob (fan switch) turns on with the temperature control knob set to “FULL HOT” (full hot switch “ON”), the ceramic heater in the heater unit gets hot, thus causing the heater blow temperature of diesel vehicle to get high to improve the heating performance (Since the engine coolant temperature of diesel vehicle is low, its blow temperature is also low.).

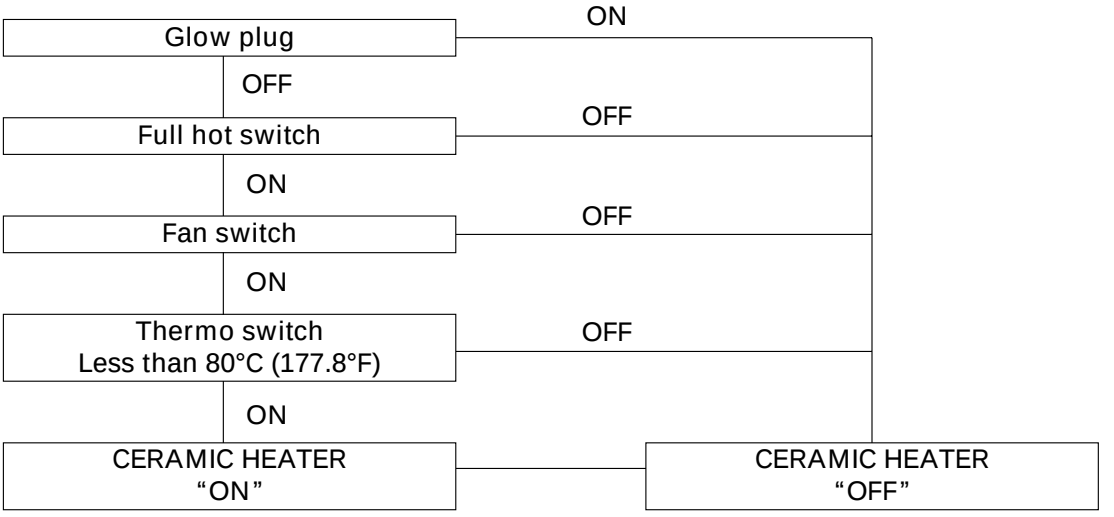

This illustration is based on RHD

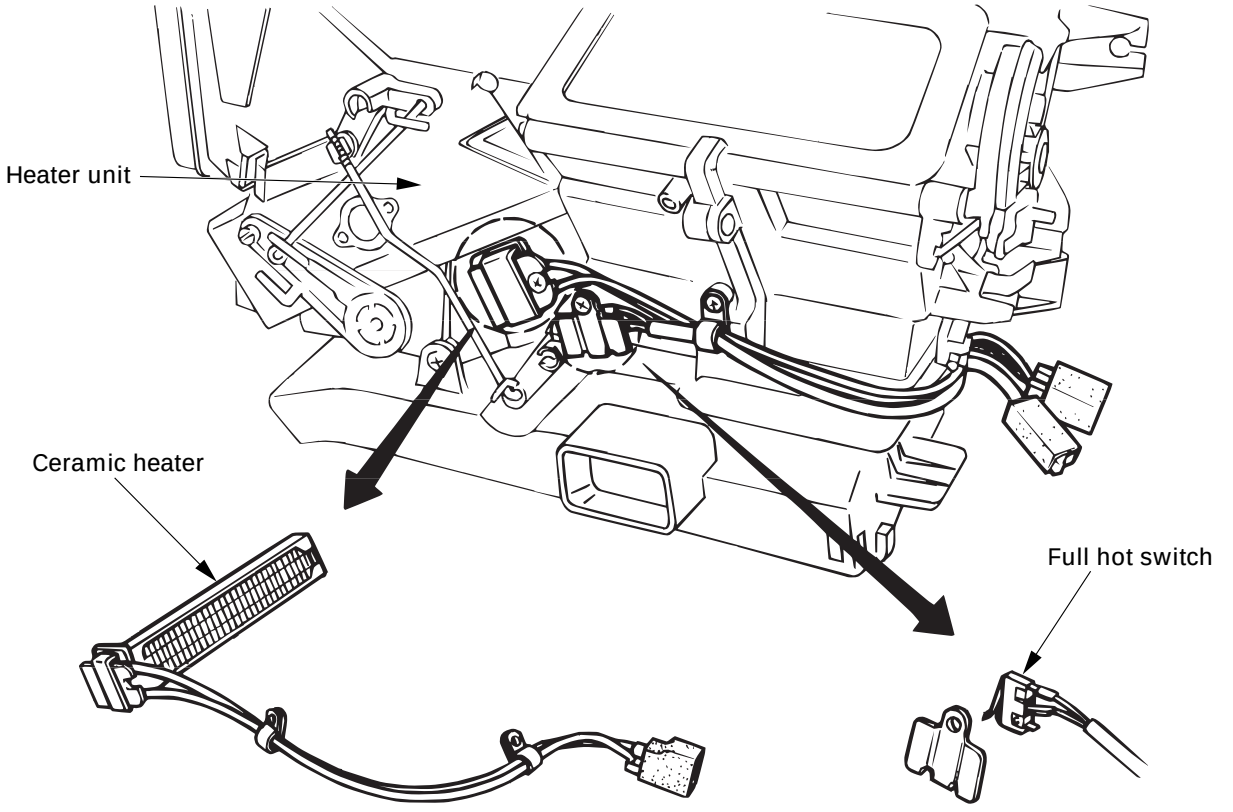

ON-VEHICLE SERVICE

HEATER UNIT

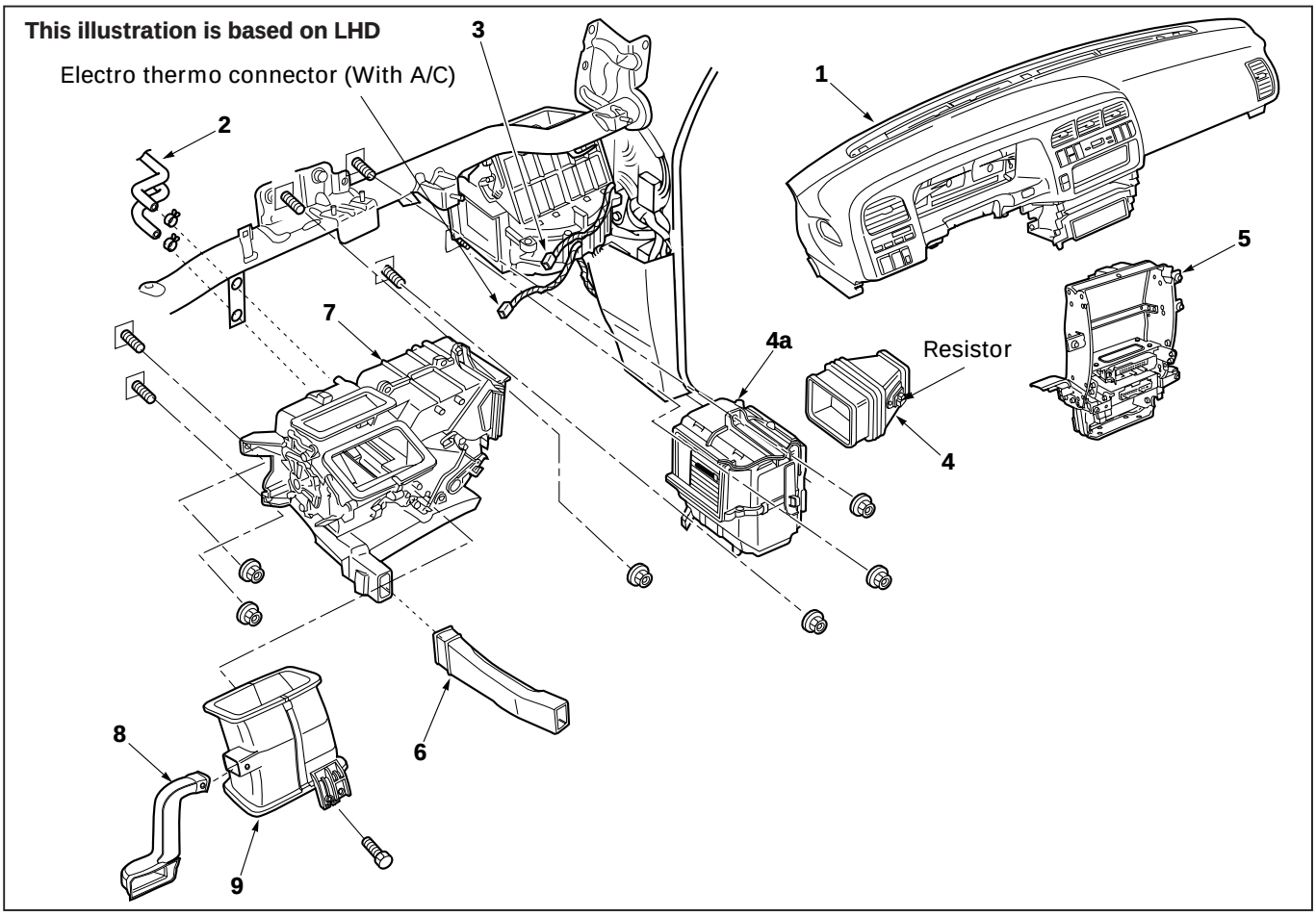

Removal Steps

1. Instrument panel assembly
2. Water hose
3. Resistor connector
4. Duct

4a. Evaporator assembly (A/C only)

5. Instrument panel center bracket
6. Rear heater duct
7. Heater unit
8. Lap vent nozzle
9. Center ventilation lower duct

Installation Steps

To install, follow the removal steps in the reverse order

REMOVAL

Preparation:

- Disconnect the battery ground cable
- Drain engine coolant
- Discharge and recover refrigerant (W/A/C)
  (Refer to Section 1B “REFRIGERANT RECOVERY”)

1. **Instrument Panel Assembly**
   Refer to Section 10 “BODY” for INSTRUMENT PANEL ASSEMBLY removal procedure.
2. **Water Hose**
   Disconnect water hoses at heater unit.
3. **Resistor Connector**
4. **Duct**

4a. **Evaporator Assembly**
   Refer to Section 1B “AIR CONDITIONING” for Evaporator Assembly removal procedure.

5. **Instrument panel center bracket**
6. **Rear Heater Duct**
7. **Heater Unit**
8. **Lap vent nozzle**
9. **Center ventilation lower duct**

INSTALLATION

To install, follow the removal steps in the reverse order, noting the following points:

1. When handling the ECM and the control unit, be careful not to make any improper connection of the connectors.
2. Adjust control lever assembly cables.
   Refer to “CONTROL LEVER ASSEMBLY” installation steps in this section.
3. When installing the heater unit, defroster nozzle and center vent duct, be sure that proper seal is made, without any gap between then.

HEATER CORE AND/OR MODE DOOR

This illustration is based on LHD

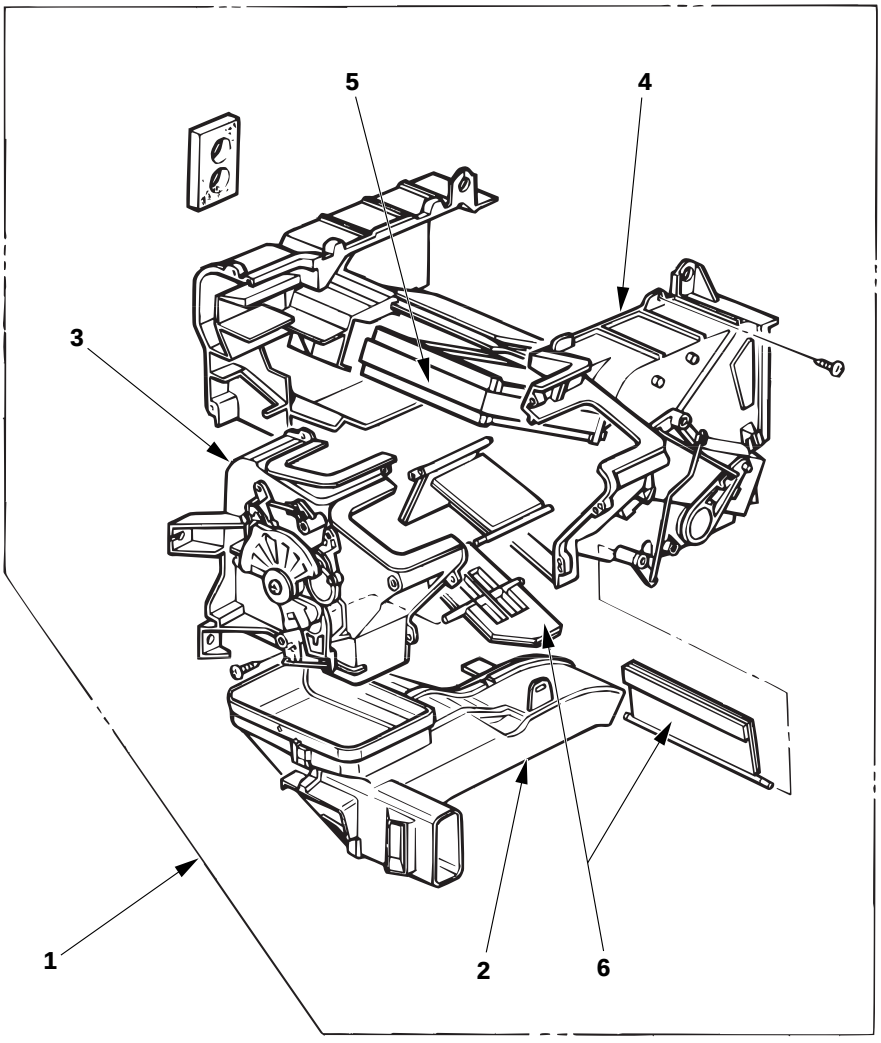

Removal Steps

1. Heater unit
2. Duct
3. Case (Mode control)
4. Case (Temperature control)
5. Heater core
6. Mode door

Installation Steps

To install, follow the removal steps in the reverse order.

REMOVAL

Preparation:

- Disconnect the battery ground cable
- Drain engine coolant

1. **Heater Unit**
   Refer to “HEATER UNIT” removal procedure in this section.
2. **Duct**
3. **Case (Mode Control)**
   Do not remove link unit at this step.
4. **Case (Temperature Control)**
   Separate two halves of core case.

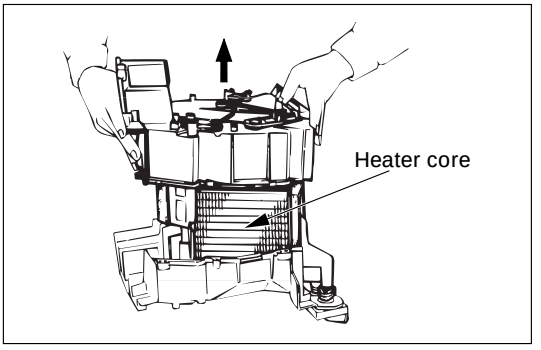

5. **Heater Core**

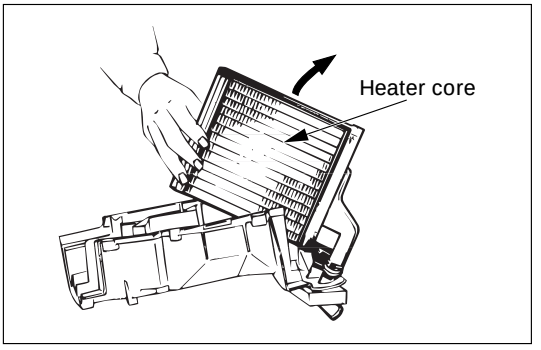

6. **Mode Door**
   Pull out the mode door while raising up the catch of the door lever.

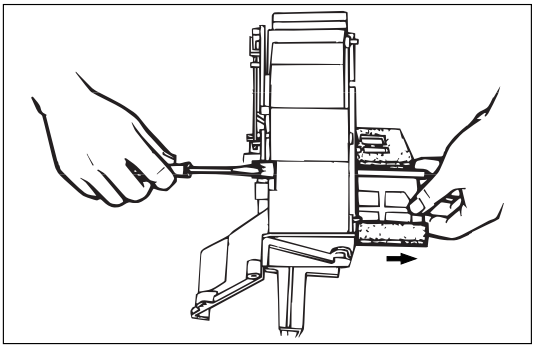

INSTALLATION

To install, follow the removal steps in the reverse order, noting the following point:

1. Check that each mode door operates properly.

HEATER MODE CONTROL LINK UNIT

This illustration is based on LHD

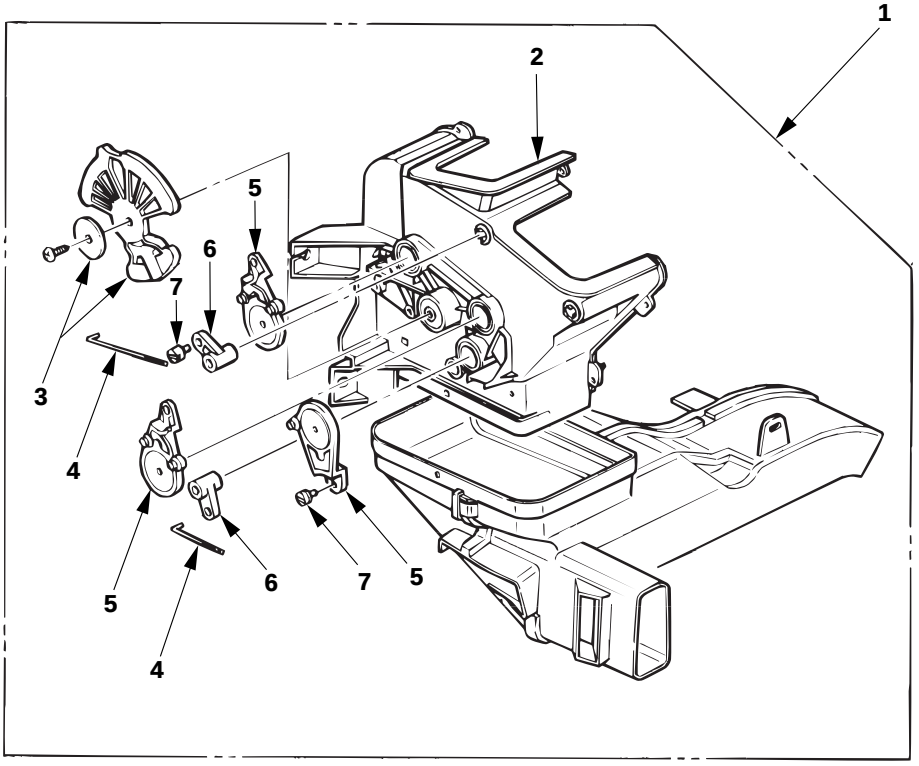

Removal Steps

1. Heater unit
2. Case (Mode control)
3. Washer and mode main lever
4. Rod
5. Mode sub-lever
6. Door lever
7. Clip

Installation Steps

To install, follow the removal steps in the reverse order.

REMOVAL

Preparation:

- Disconnect the battery ground cable
- Drain engine coolant

1. **Heater Unit**
   Refer to “HEATER UNIT” removal procedure in this section.
2. **Case (Mode Control)**
   Remove the case (Mode control) from heater unit.
3. **Washer and Mode Main Lever**
4. **Rod**
5. **Mode Sub-Lever**
   Press the tab of the sub-lever inward, and take out the sub-lever.

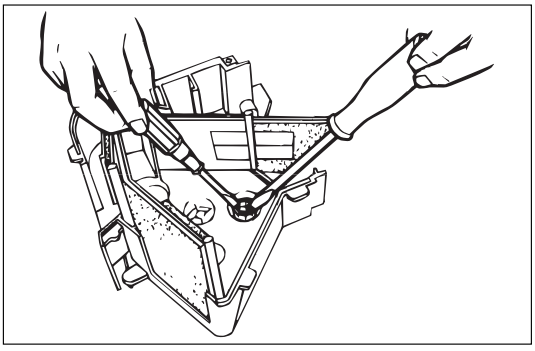

6. **Door Lever**
   Pull out the door lever while raising up the catch of the door lever.

INSTALLATION

To install, follow the removal steps in the reverse order, noting the following points:

1. Apply grease to mode sub-lever and to the abrasive surface of the heater unit.
2. After installing the link unit, check to see if the link unit operates correctly.

HEATER TEMPERATURE CONTROL LINK UNIT

This illustration is based on LHD

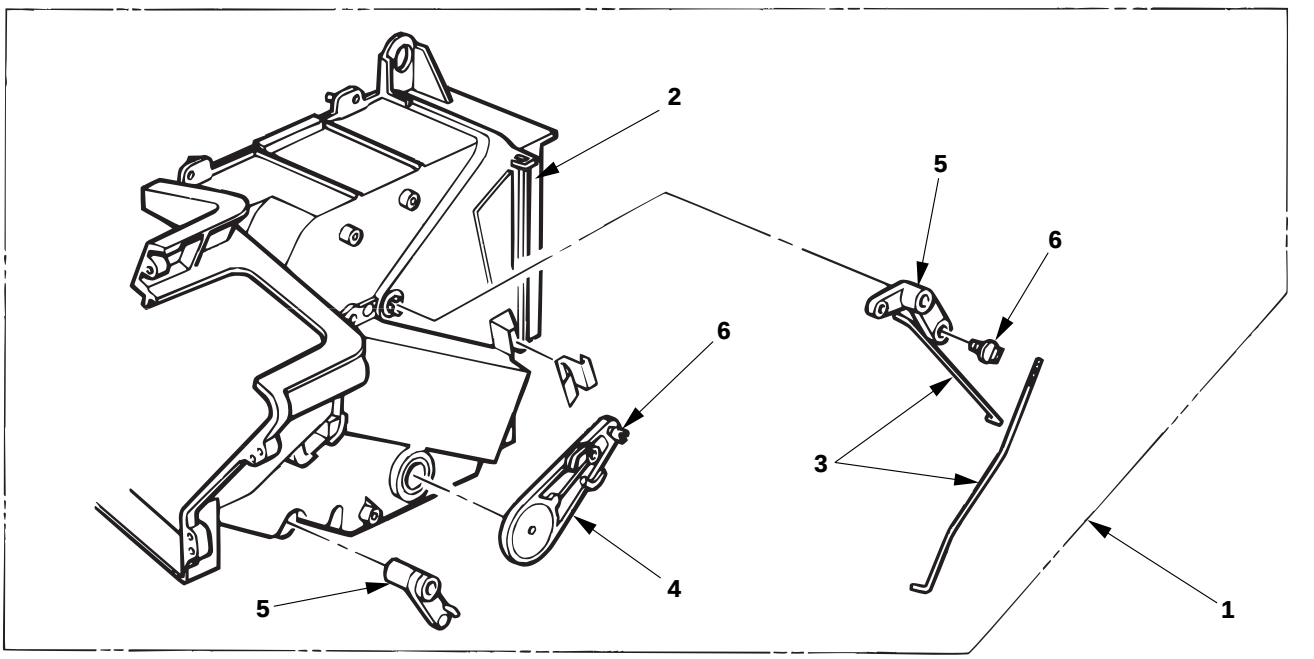

Removal Steps

1. Heater unit
2. Case (Temperature control)
3. Rod
4. Sub-lever
5. Door lever
6. Clip

Installation Steps

To install, follow the removal steps in the reverse order.

REMOVAL

Preparation:

- Disconnect the battery ground cable
- Drain engine coolant

1. **Heater Unit**
   Refer to “HEATER UNIT” removal procedure in this section.
2. **Case (Temperature Control)**
   Remove the case (Temperature control) from the heater unit.
3. **Rod**
4. **Sub-Lever**
5. **Door Lever**
   Pull out the door lever while raising up the catch of the door lever.
6. **Clip**

INSTALLATION

To install, follow the removal steps in the reverse order, noting the following points:

1. Apply grease to sub-lever and to the abrasive surface of the heater unit.
2. After installing the link unit, check to see if the link unit operates correctly.

BLOWER ASSEMBLY

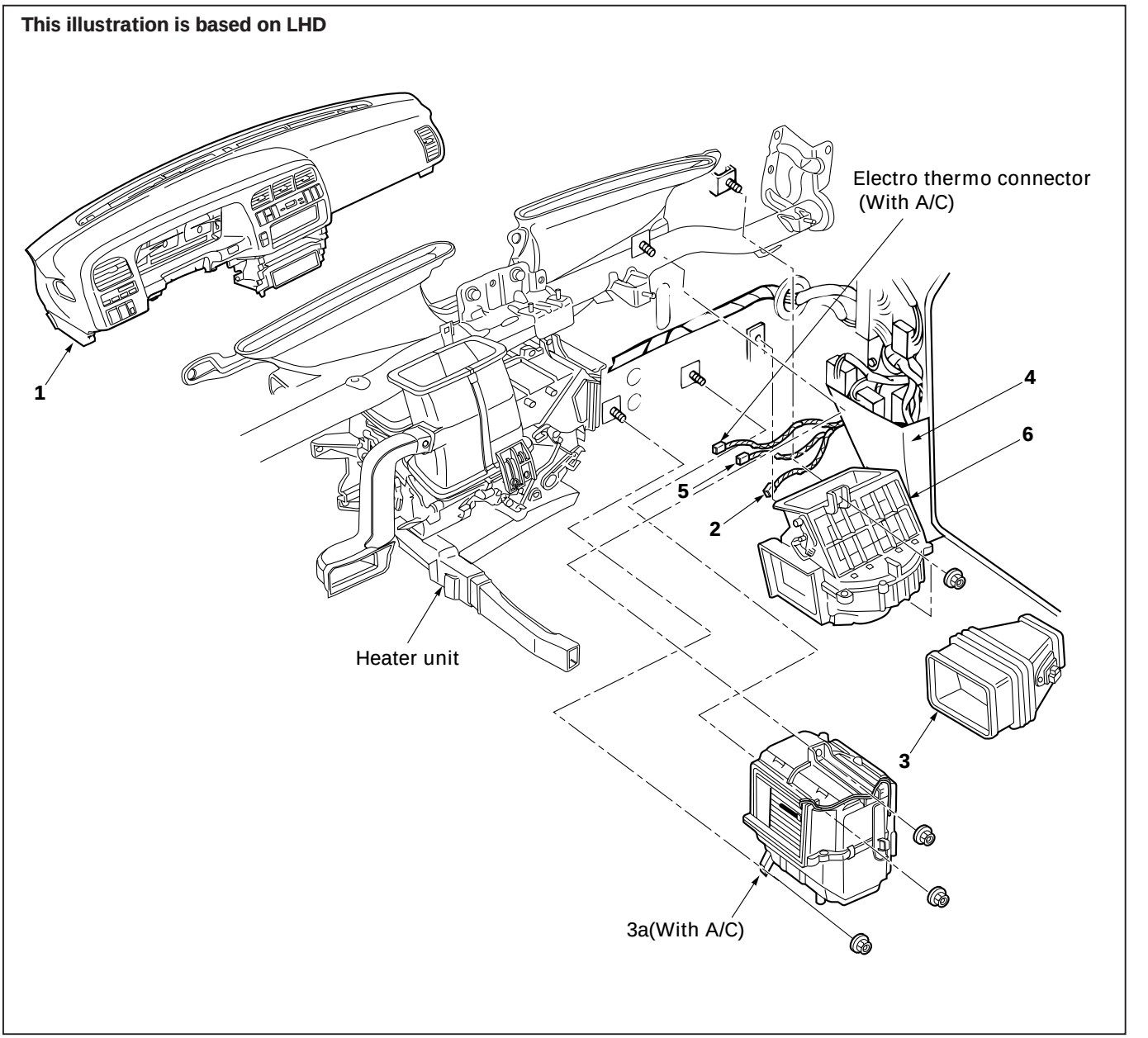

Removal Steps

1. Instrument panel assembly
2. Resistor connector
3. Duct

3a. Evaporator assembly (A/C only)

4. Kick panel
5. Blower motor connector
6. Blower assembly

Installation Steps

To install, follow the removal steps in the reverse order.

REMOVAL

Preparation:

- Disconnect the battery ground cable
- Discharge and recover refrigerant (W/A/C)
  (Refer to Section 1B "REFRIGERANT RECOVERY")

1. **Instrument Panel Assembly**
   Refer to Section 10 "BODY" for INSTRUMENT PANEL ASSEMBLY removal procedure.
2. **Resistor Connector**
3. **Duct**

3a. **Evaporator Assembly (A/C only)**
   Refer to Section 1B "AIR CONDITIONING" for EVAPORATOR ASSEMBLY removal procedure.

4. **Kick panel**
5. **Blower Motor Connector**
6. **Blower Assembly**

INSTALLATION

To install, follow the removal steps in the reverse order, noting the following point:

1. **Adjust Control Lever Assembly Cables**
   Refer to "CONTROL LEVER ASSEMBLY" installation procedure in this section.

BLOWER LINK UNIT AND/OR MODE DOOR

This illustration is based on LHD

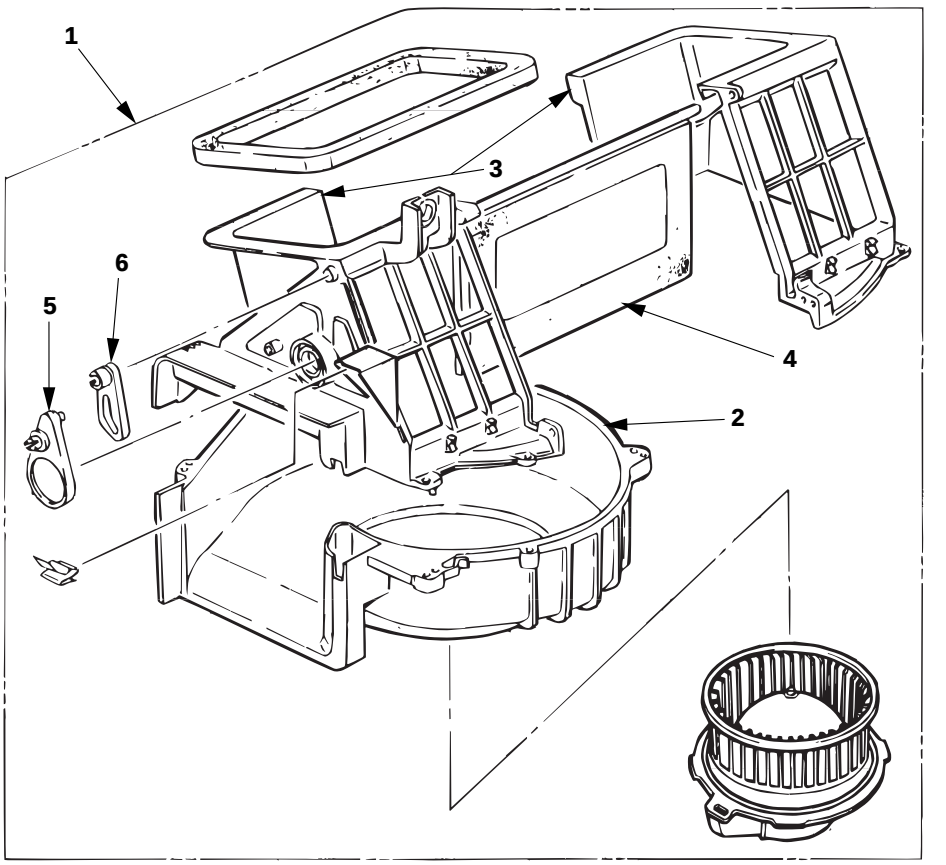

Removal Steps

1. Blower assembly
2. Lower case
3. Upper case
4. Mode door
5. Sub-lever
6. Door lever

Installation Steps

To install, follow the removal steps in the reverse order.

REMOVAL

Preparation:

Disconnect the battery ground cable

1. **Blower Assembly**
   Refer to “BLOWER ASSEMBLY” removal procedure in this section.
2. **Lower Case**
3. **Upper Case**
   Separate upper case and slit the lining parting face with a knife.

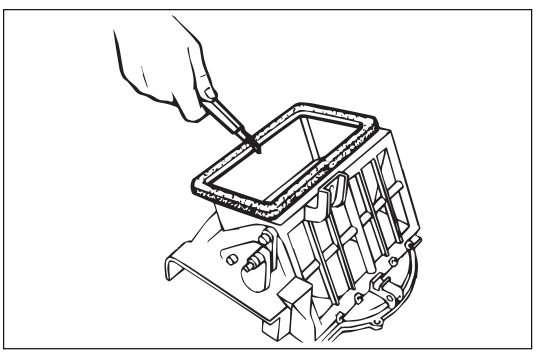

INSTALLATION

To install, follow the removal steps in the reverse order, noting the following points:

1. Apply grease to the door lever and to the abrasive surface of the upper case.
2. Apply an adhesive to parting face of lining when assembling upper case.

BLOWER MOTOR

This illustration is based on LHD

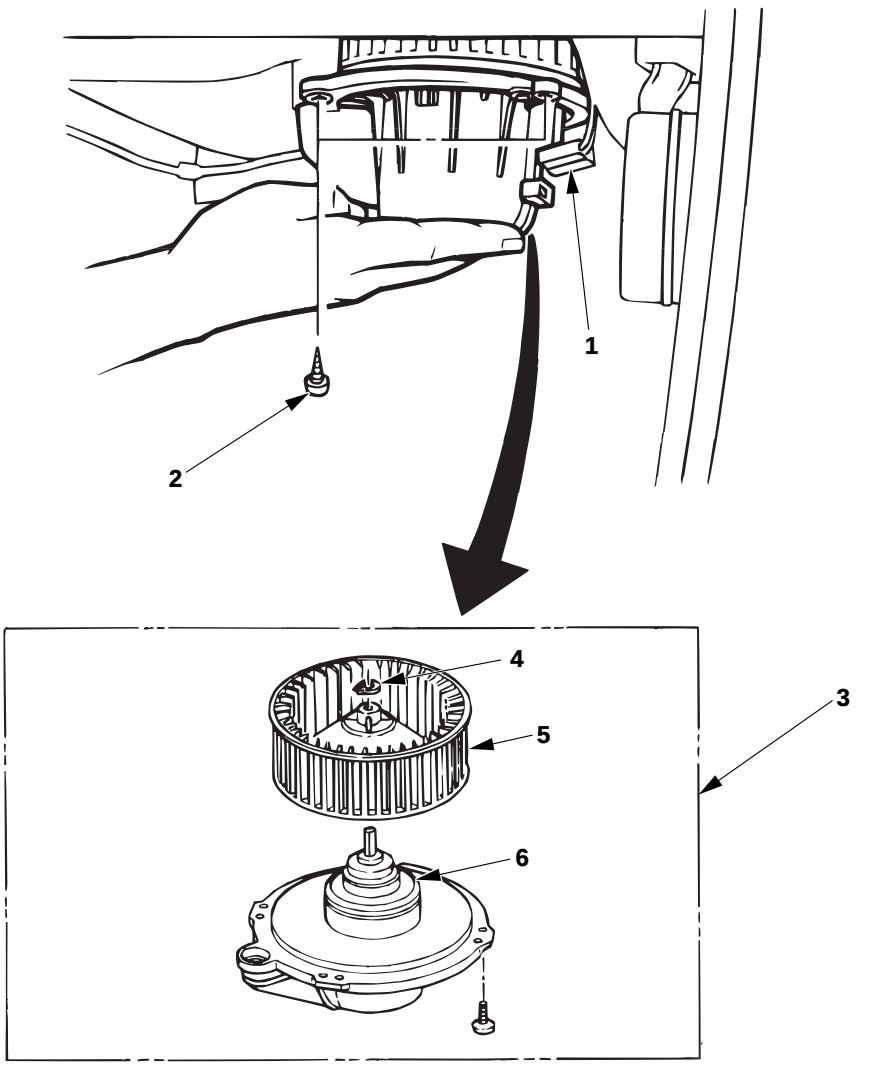

Removal Steps

1. Blower motor connector
2. Attaching screw
3. Blower motor assembly
4. Clip
5. Fan
6. Blower motor

Installation Steps

To install, follow the removal steps in the reverse order.

REMOVAL

Preparation:

Disconnect the battery ground cable

1. **Blower Motor Connector**
2. **Attaching Screw**
3. **Blower Motor Assembly**
4. **Clip**
5. **Fan**
6. **Blower Motor**

INSTALLATION

To install, follow the removal steps in the reverse order.

REAR HEATER DUCT, DEFROSTER NOZZLE AND VENTILATION DUCT

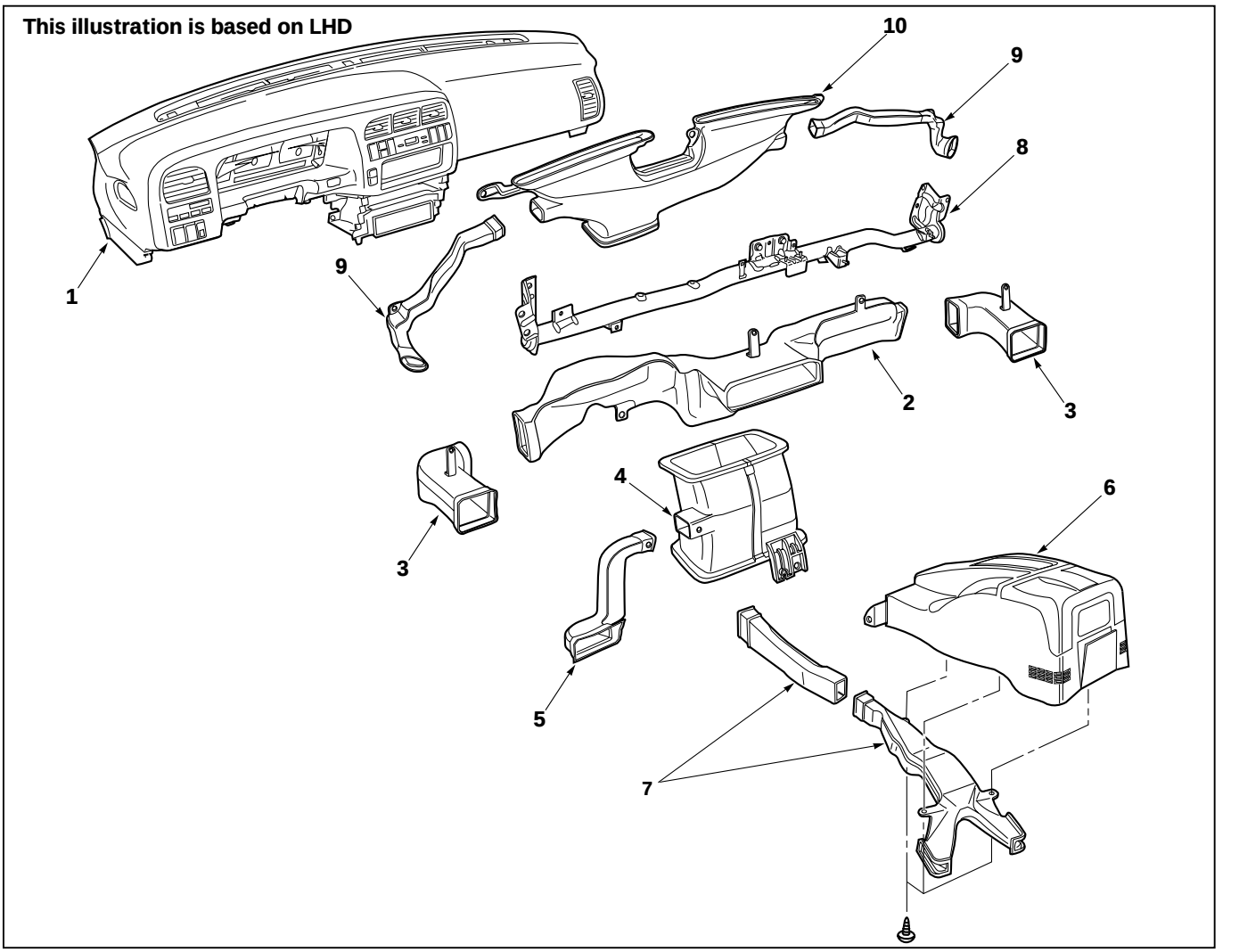

Removal Steps

1. Instrument panel assembly
2. Center ventilation upper duct
3. Side ventilation duct
4. Center ventilation lower duct
5. Driver lap duct
6. Center console
7. Rear heater duct
8. Cross beam assembly
9. Side defroster nozzle
10. Center defroster nozzle

Installation Steps

To install, follow the removal steps in the reverse order.

REMOVAL

Preparation:

Disconnect the battery ground cable

1. **Instrument panel assembly**
   - Refer to Section 10 “BODY” for INSTRUMENT PANEL ASSEMBLY removal procedure.
2. **Center ventilation upper duct**
3. **Side ventilation duct**
4. **Center ventilation lower duct**
5. **Driver lap duct**
6. **Center console**
7. **Rear heater duct**
   - Refer to Section 10 “BODY” for CONSOLES removal procedure.
8. **Cross beam assembly**
   - Refer to Section 10 “BODY” for CROSS BEAM ASSEMBLY removal procedure.
9. **Side defroster nozzle**
10. **Center defroster nozzle**

INSTALLATION

To install, follow the removal steps in the reverse order, noting the following point:

1. Connect each duct and nozzle securely leaving no clearance between them and making no improper matching.

CENTER AND/OR SIDE VENT

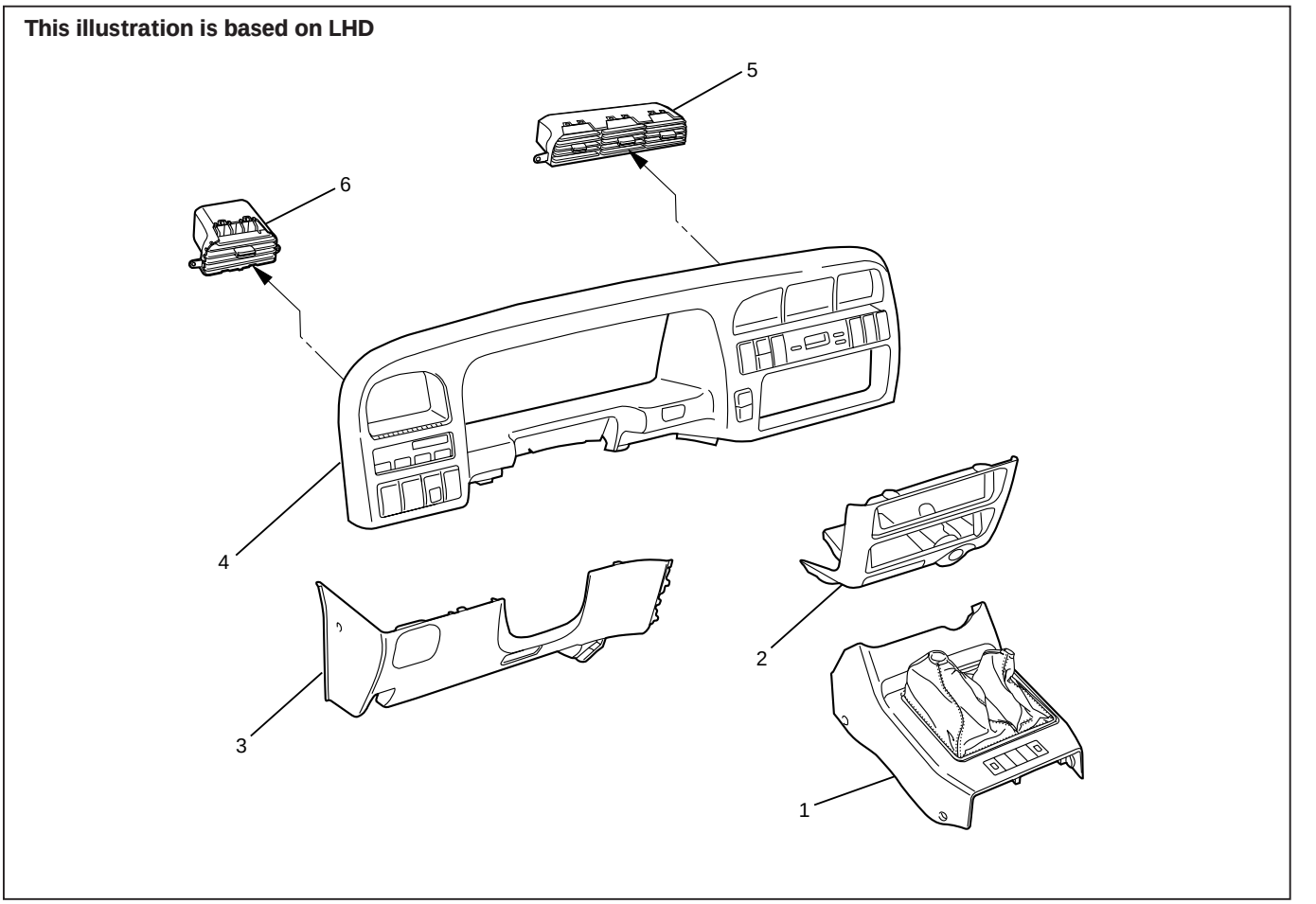

Removal Steps

1. Front console assembly
2. Lower cluster assembly
3. Instrument panel driver lower cover assembly
4. Meter cluster assembly
5. Center vent
6. Side vent

Installation Steps

To install, follow the removal steps in the reverse order.

REMOVAL

1. **Front console assembly**
2. **Lower cluster assembly**
3. **Instrument panel driver lower cover assembly**
4. **Meter cluster assembly**
   - Refer to Section 10 “BODY” for INSTRUMENT PANEL ASSEMBLY removal procedure.
5. **Center vent**
   - Remove screws and the center vent from center cluster while prying up the center vent catch portions.
6. **Side vent**
   - Remove screws and the side vent from center cluster while prying up the side vent catch portions.

INSTALLATION

To install, follow the removal steps in the reverse order.

CONTROL LEVER ASSEMBLY AND/OR CONTROL CABLES

This illustration is based on LHD

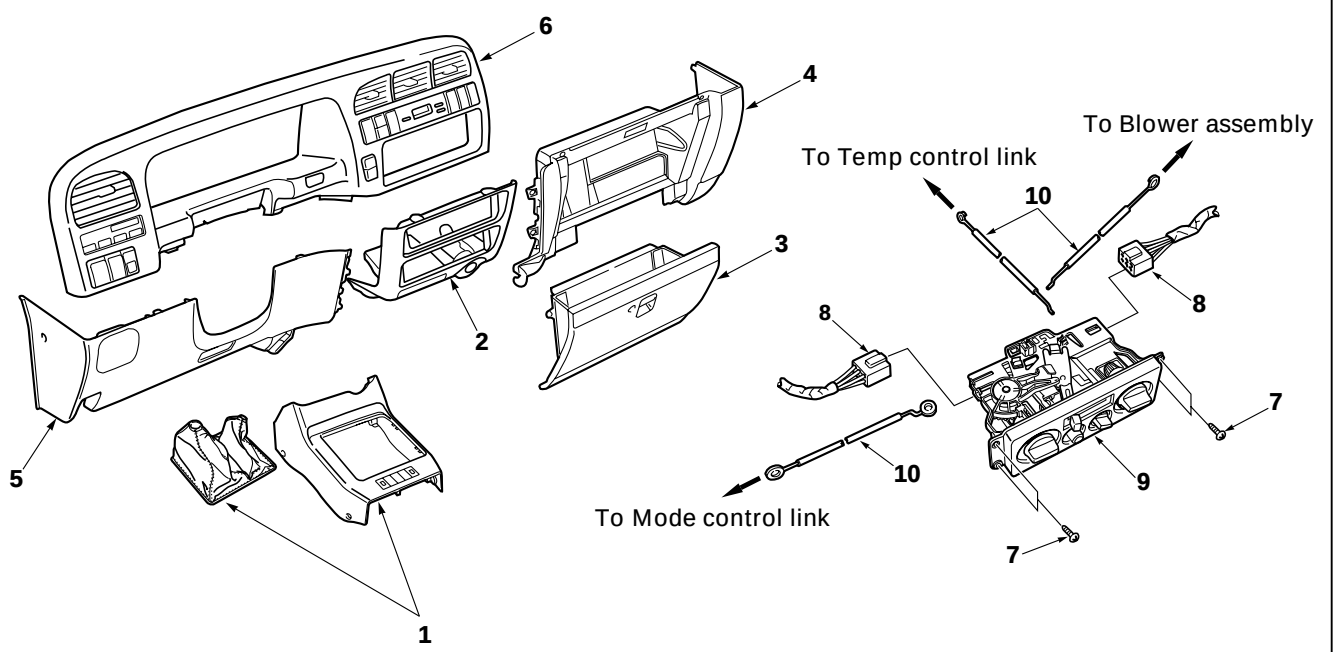

Removal Steps

1. Center console assembly
2. Lower cluster assembly
3. Glove box
4. Instrument panel passenger lower cover assembly
5. Instrument panel driver lower cover assembly
6. Meter cluster assembly
7. Attaching screws
8. Fan switch and air conditioning switch connector
9. Control lever assembly
10. Control cable

Installation Steps

To install, follow the removal steps in the reverse order.

REMOVAL

Preparation:

Disconnect the battery ground cable

1. **Front console assembly**
2. **Lower cluster assembly**
3. **Glove box**
4. **Instrument panel passenger lower cover**
5. **Instrument panel driver lower cover**
6. **Meter cluster assembly**
   Refer to Section 10 “BODY” for INSTRUMENT PANEL ASSEMBLY removal procedure.
7. **Attaching Screws**
   Remove the 4 attaching screws and disconnect the control lever cables at heater unit and blower assembly.

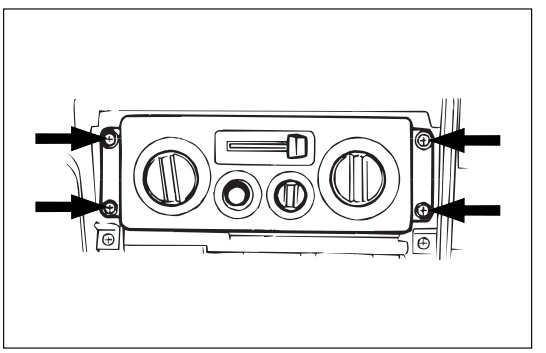

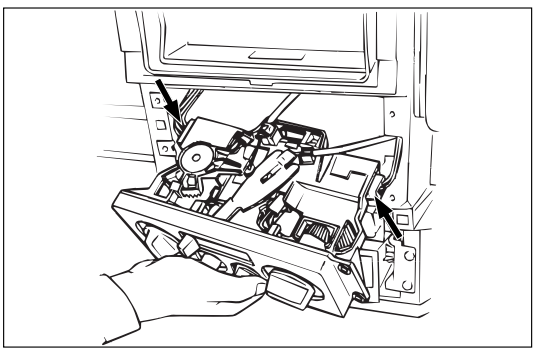

8. **Fan Switch and A/C Switch Connector**
   Pull the control lever assembly out and disconnect the connectors.
9. **Control Lever Assembly**
10. **Control Cable**

INSTALLATION

To install, follow the removal steps in the reverse order, noting the following points:

1. Adjust the control cables
   Air source control cable
   1) Slide the control lever to the left (“CIRC” position).
   2) Connect the control cable at the “CIRC” position of the link unit of blower assembly and fix it with the clip.
   Temperature control cable
   1) Turn the control knob to the left (“MAX COLD” position).
   2) Connect the control cable at the “COLD” position of the temperature control link of the heater unit and fix it with the clip.
   Air select control cable
   1) Turn the control knob to the right (“DEFROST” position).
   2) Connect the control cable at the “DEFROST” position of the mode control link of the heater unit and fix it with the clip.
2. Check control cable operation.

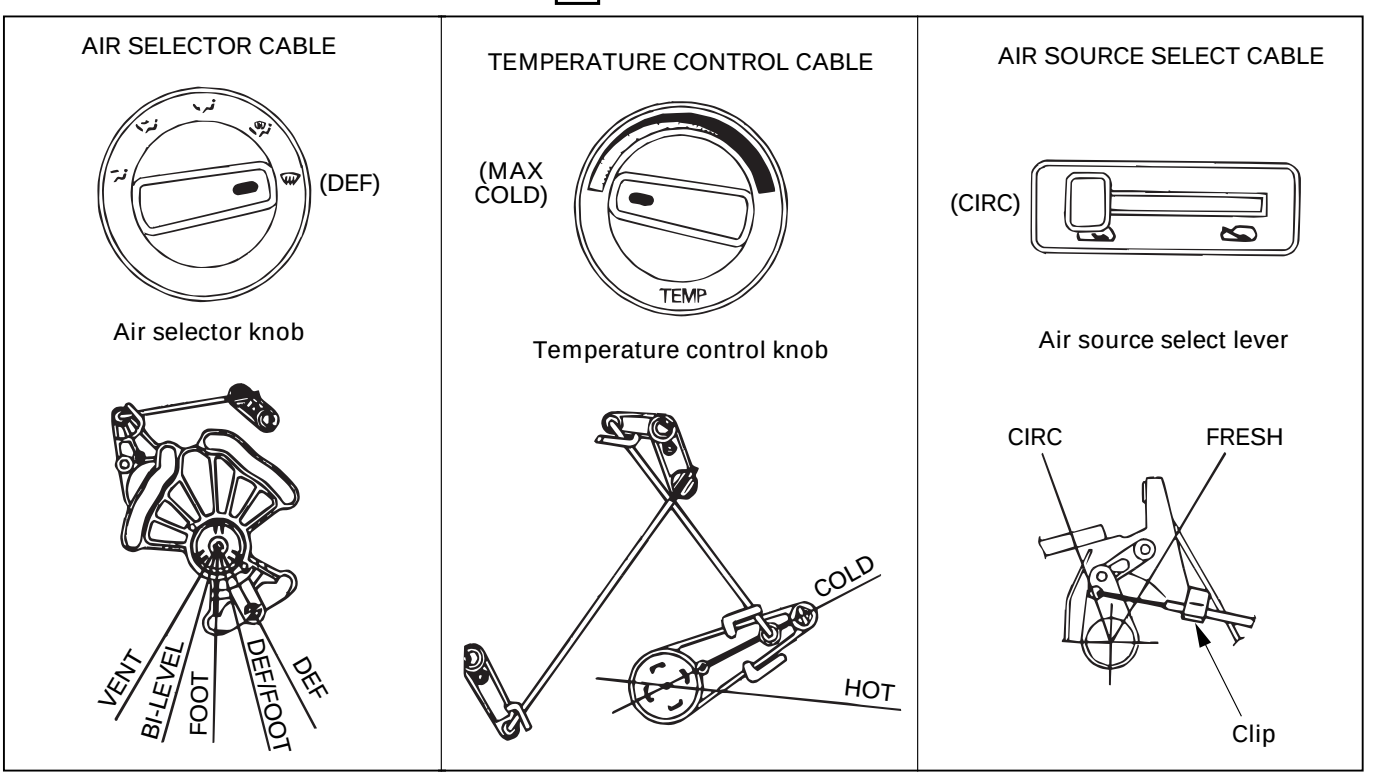

CONTROL PANEL ILLUMINATION BULB

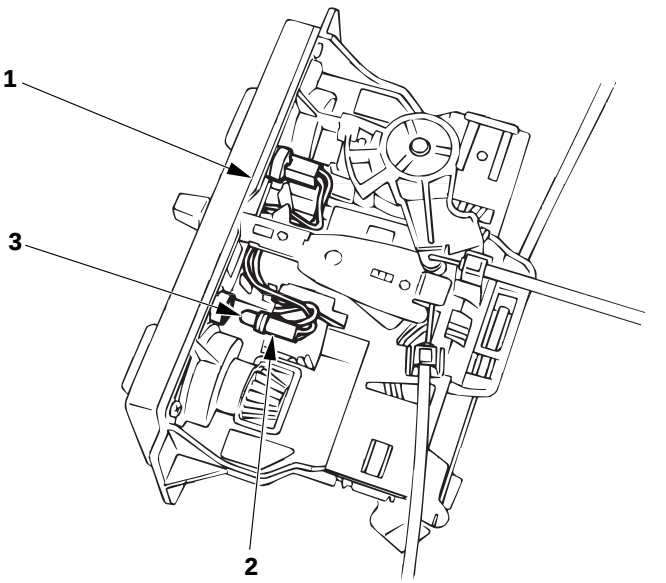

Removal Steps

1. Control lever assembly
2. Bulb socket
3. Illumination bulb

Installation Steps

To install, follow the removal steps in the reverse order.

REMOVAL

Preparation:

Disconnect the battery ground cable

1. **Control Lever Assembly**
   Refer to “CONTROL LEVER ASSEMBLY” removal procedure in this section.
2. **Bulb Socket**
   Pull out the socket from the panel by turning it counterclockwise.
3. **Illumination Bulb**
   Pull the illumination bulb from socket.

INSTALLATION

To install, follow the removal steps in the reverse order.

RESISTOR

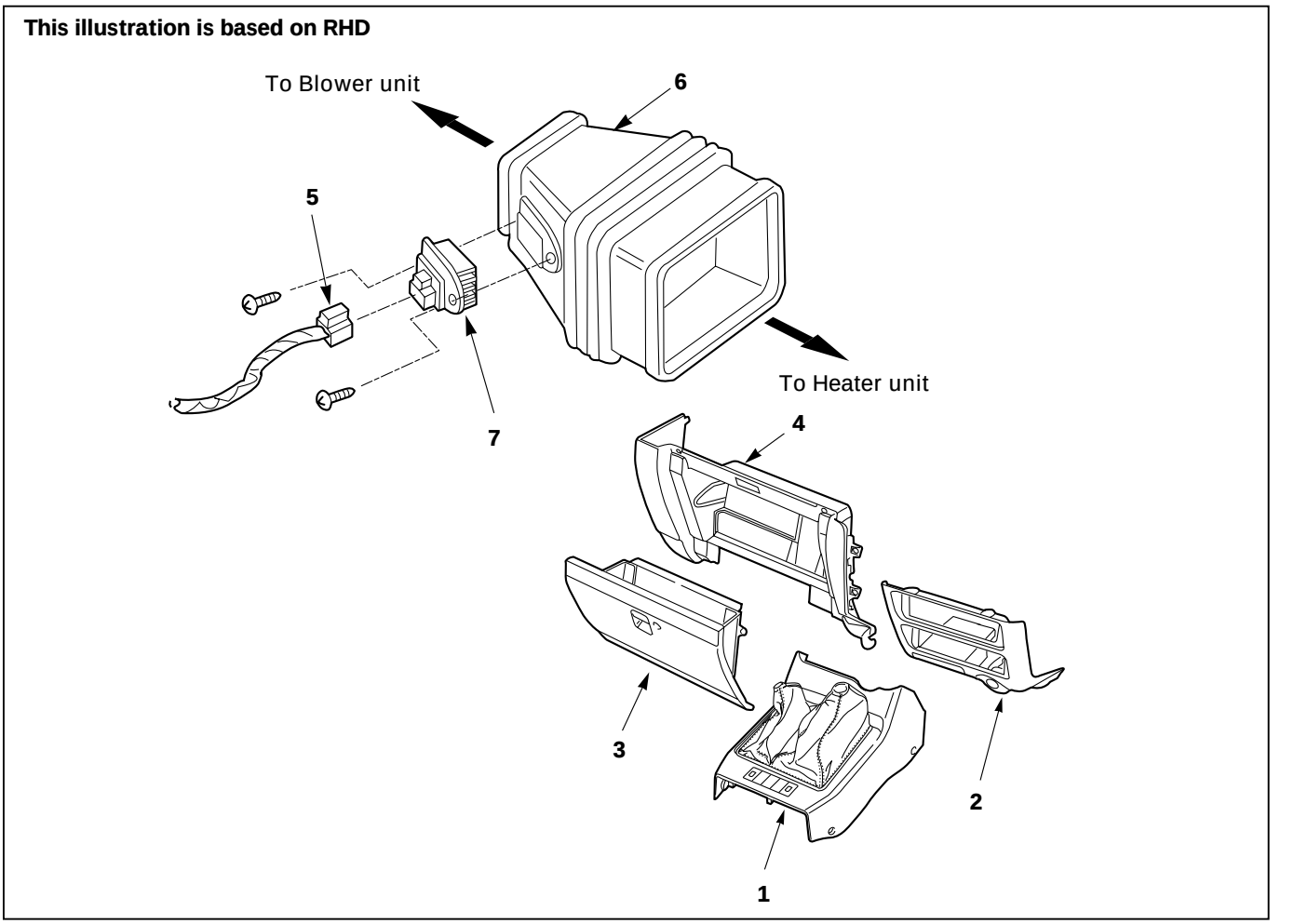

Removal Steps

1. Front console assembly
2. Lower cluster assembly
3. Glove box
4. Instrument panel passenger lower cover
5. Resistor connector
6. Duct (Heater only)
7. Resistor

Installation Steps

To install, follow the removal steps in the reverse order.

REMOVAL

Preparation:

Disconnect the battery ground cable

1. **Front console assembly**
2. **Lower cluster assembly**
3. **Glove box**
4. **Instrument panel passenger lower cover**
   Refer to Section 10 “BODY” for INSTRUMENT PANEL ASSEMBLY removal procedure.
5. **Resistor connector**
6. **Duct (Heater only)**
7. **Resistor**

INSTALLATION

To install, follow the removal steps in the reverse order.

CERAMIC HEATER AND/OR FULL HOT SWITCH

This illustration is based on RHD

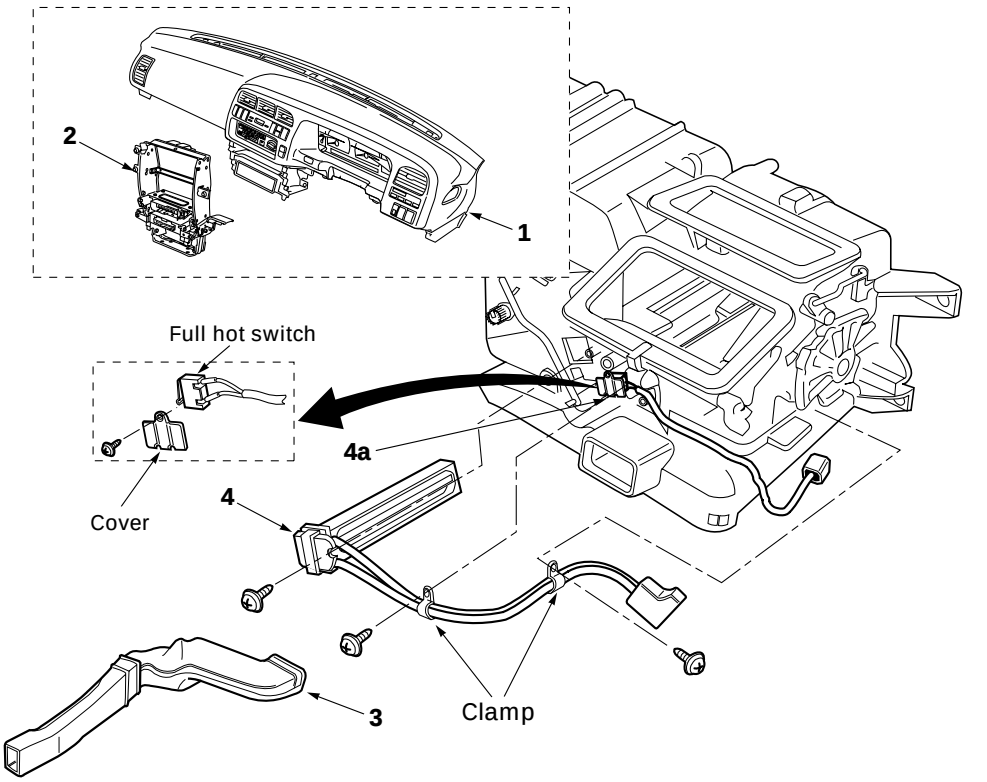

Removal Steps

1. Instrument panel assembly
2. Instrument panel center bracket
3. Rear heater duct
4. Ceramic heater assembly

4a. Full hot switch

Installation Steps

To install, follow the removal steps in the reverse order.

REMOVAL

Preparation:

Disconnect the battery ground cable

1. **Instrument panel assembly**
   Refer to Section 10 “BODY” for “INSTRUMENT PANEL ASSEMBLY” removal procedure.
2. **Instrument panel center bracket**
   Refer to Section 10 “CROSS BEAM ASSEMBLY” removal procedure.
3. **Rear heater duct**
4. **Ceramic heater**
   1) Disconnect the connector and remove the heater fixing screw and heater harness fixing clamps.
   2) Pull the ceramic heater out from heater unit.

4a. **Full hot switch**
   Disconnect the switch connector and remove the switch fixing screw and switch harness fixing clamp.

INSTALLATION

To install, follow the removal steps in the reverse order, noting the following points.

1. The installation should be made with care so that there is continuity between the switch side connector terminals when the knob is set to the “Full Hot” position.
2. Be sure to handle the EGR and the ABS control unit with care to avoid the disengagement of connectors.

SECTION 1B

AIR CONDITIONING

CAUTION
When fasteners are removed, always reinstall them at the same location from which they were removed. If a fastener needs to be replaced, use the correct part number fastener for that application. If the correct part number fastener is not available, a fastener of equal size and strength (or stronger) may be used.

Fasteners that are not reused, and those requiring thread locking compound, will be called out. The correct torque values must be used when installing fasteners that require it. If the above conditions are not followed, parts or system damage could result.

CONTENTS

PAGE
General Description 1B– 3
Air Conditioning Refrigerant Cycle Construction 1B– 3
Compressor 1B– 4
Magnetic Clutch 1B– 5
Receiver/Drier 1B– 5
Dual Pressure Switch 1B– 6
Triple Pressure Switch 1B– 6
Expansion Valve 1B– 6
Evaporator 1B– 7
Electronic Thermostat 1B– 7
Refrigerant Line 1B– 7
Service Charge Valve 1B– 7
Air Conditioning Parts 1B– 8
On-Vehicle Service 1B– 13
Precautions For Replacement or Repair of Air Conditioning Parts 1B– 13
Compressor Assembly and Associated Parts 1B– 23
Condenser Assembly (LHD V6 without Condenser Fan) 1B– 33
Condenser Fan Motor 1B– 35
Receiver/Drier 1B– 37
Pressure Switch 1B– 39
Evaporator Assembly 1B– 42
Evaporator Core and/or Expansion Valve 1B– 44
Electronic Thermostat 1B– 47
A/C Switch and Illumination Bulb 1B– 48
Refrigerant Line 1B– 49
Rear Cooler Parts 1B– 51

Full Automatic Air Conditioning System 1B– 60
General Description 1B– 60
Full Automatic Air Conditioner Part Configuration 1B– 60
Circuit Diagram 1B– 62
Function and Features 1B– 74
Full Automatic Air Conditioner Block Diagram 1B– 75
Air Conditioning Parts 1B– 76
Control Panel Layout 1B– 80
Air Control Functions 1B– 81
Operation and Function of Control Panel Switches 1B– 82
Overview of Construction, Movement and Control of Major Parts of Full Automatic Air Conditioner System 1B– 84
Overview of Automatic Control of Full Automatic Air Conditioner 1B– 88
Troubleshooting 1B– 92
Troubleshooting, Its Overview and Procedures 1B– 92
Performance and Movement Checklist for Automatic Air Conditioner Related Parts 1B– 95
Troubleshooting with Self-Diagnosis Function 1B– 97
Inspection by Failed Location 1B–100
Inspection of the Sensors 1B–100
Inspection of the Intake Actuator System 1B–104
Inspection of the Mix Actuator System 1B–107
Inspection of the Mode Actuator System 1B–110
Inspection of the Fan Motor System 1B–113
Inspection of the Magnet Clutch System 1B–118
Inspection of the Air Conditioner Room Temperature Setup System 1B–123
Individual Inspection 1B–124
On-Vehicle Service 1B–126
Power Transistor 1B–126
Automatic Air Conditioner Control Unit 1B–126
In Car Sensor 1B–127
Ambient Sensor 1B–127
Sun Sensor 1B–128
Electronic Thermostat 1B–128
Mode Actuator 1B–129
Mix Actuator 1B–129
Intake Actuator 1B–130

GENERAL DESCRIPTION

AIR CONDITIONING REFRIGERANT CYCLE CONSTRUCTION

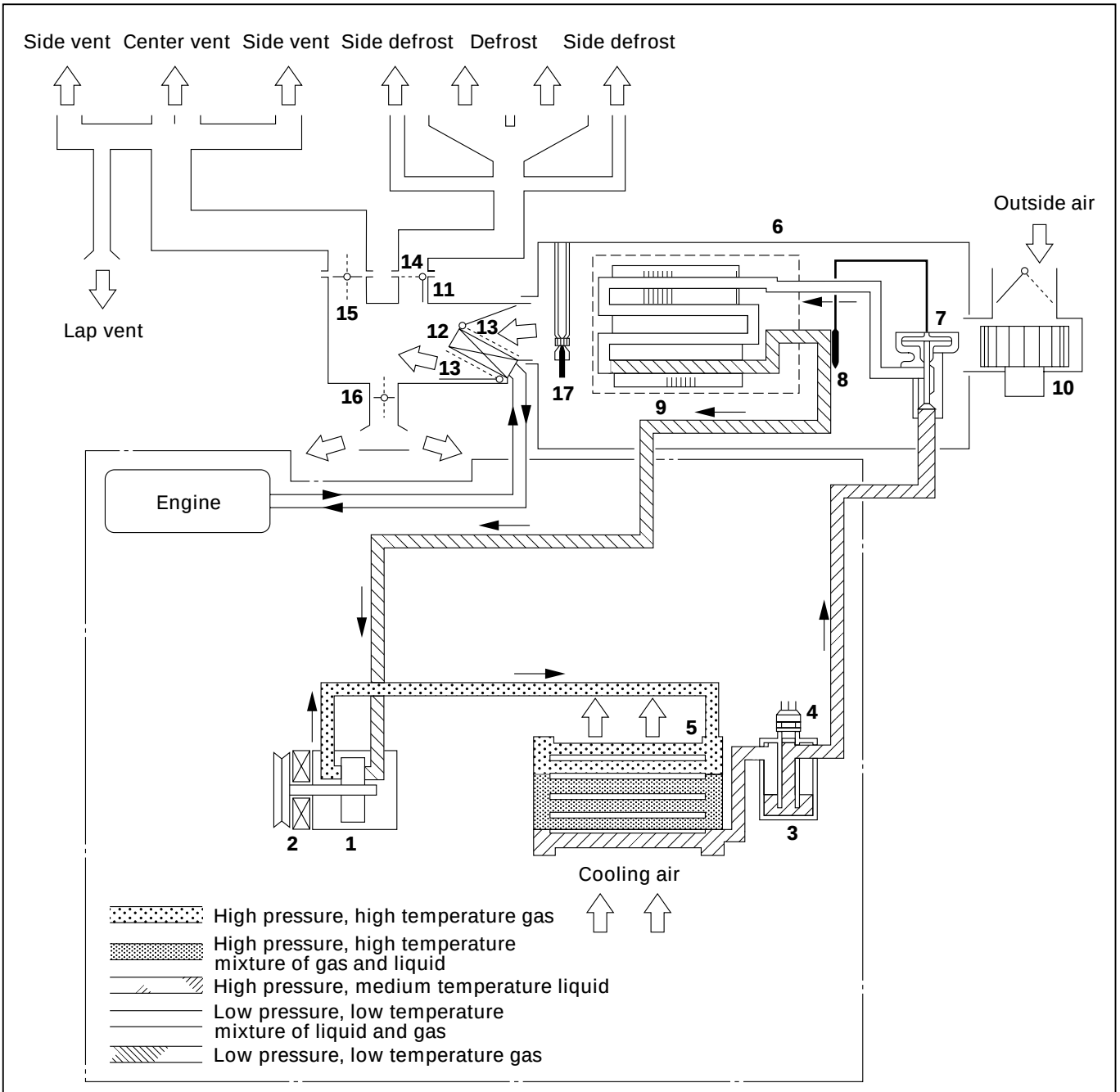

1. Compressor
2. Magnetic clutch
3. Receiver/Drier
4. Dual pressure switch
5. Condenser
6. Evaporator assembly
7. Expansion valve
8. Temperature sensor
9. Evaporator core
10. Blower motor
11. Heater unit
12. Heater core
13. Temp. control door (Air mix door)
14. Mode (DEF) control door
15. Mode (VENT) control door
16. Mode (HEAT) control door
17. Electronic thermostat

The refrigeration cycle includes the following four processes as the refrigerant changes repeatedly from liquid to gas and back to liquid while circulating.

EVAPORATION

The refrigerant is changed from a liquid to a gas inside the evaporator. The refrigerant mist that enters the evaporator vaporizes readily. The liquid refrigerant removes the required quantity of heat (latent heat of vaporization) from the air around the evaporator core cooling fins and rapidly vaporizes. Removing the heat cools the air, which is then radiated from the fins and lowers the temperature of the air inside the vehicle.
The refrigerant liquid sent from the expansion valve and the vaporized refrigerant gas are both present inside the evaporator and the liquid is converted to gas.
With this change from liquid to gas, the pressure inside the evaporator must be kept low enough for vaporization to occur at a lower temperature. Because of that, the vaporized refrigerant is sucked into the compressor.

COMPRESSION

The refrigerant is compressed by the compressor until it is easily liquefied at normal temperature. The vaporized refrigerant in the evaporator is sucked into the compressor. This action maintains the refrigerant inside the evaporator at a low pressure so that it can easily vaporize, even at low temperatures close to 0°C (32°F).
Also, the refrigerant sucked into the compressor is compressed inside the cylinder to increase the pressure and temperature to values such that the refrigerant can easily liquefy at normal ambient temperatures.

CONDENSATION

The refrigerant inside the condenser is cooled by the outside air and changes from gas to liquid.
The high temperature, high pressure gas coming from the compressor is cooled and liquefied by the condenser with outside air and accumulated in the receiver/drier. The heat radiated to the outside air by the high temperature, high pressure gas in the compressor is called heat of condensation. This is the total quantity of heat (heat of vaporization) the refrigerant removes from the vehicle interior via the evaporator and the work (calculated as the quantity of heat) performed for compression.

EXPANSION

The expansion valve lowers the pressure of the refrigerant liquid so that it can easily vaporize.
The process of lowering the pressure to encourage vaporization before the liquefied refrigerant is sent to the evaporator is called expansion. In addition, the expansion valve controls the flow rate of the refrigerant liquid while decreasing the pressure. That is, the quantity of refrigerant liquid vaporized inside the evaporator is determined by the quantity of heat which must be removed at a prescribed vaporization temperature. It is important that the quantity of refrigerant be controlled to exactly the right value.

COMPRESSOR

The compressor performs two main functions:
It compresses low-pressure and low-temperature refrigerant vapor from the evaporator into high-pressure and high-temperature refrigerant vapor to the condenser. And it pumps refrigerant and refrigerant oil through the A/C system.
6VD1/6VE1 engine on RHD model is equipped with an invariable capacity five-vane rotary compressor (DKV-14D Type).
The compressor sucks and compresses refrigerant by the rotation of the vane installed to the shaft, and always discharges a fixed amount of refrigerant independent of the load of refrigerant.
The thermo sensor is installed to the front head of the compressor to protect it by stopping its operation when the refrigerant gas is insufficient or when the temperature is abnormally high.

- OFF ..... 160 ± 5°C (320.0 ± 41°F)
- ON ..... 135 ± 5°C (275.0 ± 41°F)

Diesel Engine models and 6VD1/6VE1 engine on LHD model are equipped with a swash plate type compressor
Swash plate compressors have a swash (slanted) plate mounted on the shaft. When the shaft turns, the rotation of the swash plate is converted to reciprocating piston motion which sucks in and compresses the refrigerant gas.
Shaft seal (Lip type) is installed between the valve plate and shaft & cylinder head to prevent refrigerant gas leaks. A specified amount of compressor oil is contained in the oil pan.
This oil is supplied to the cylinders, bearings, etc., by an oil pump which is connected to the swash plate shaft.

With some compressors the differential between the intake pressure and discharge pressure generated while the compressor is operating is used for lubrication instead of an oil pump.
The specified amount of the DKV-14D, DKS-15CH and HD6 compressors oil is 150cc (4.2 Imp fl oz). Also, compressor oil to be used varies according to the compressor model. Be sure to avoid mixing two or more different types of oil.
If the wrong oil is used, lubrication will be poor and the compressor will seize or malfunction.
The magnetic clutch connector is a waterproof type.

MAGNETIC CLUTCH

The compressor is driven by the drive belt from the crank pulley of the engine. If the compressor is activated each time the engine is started, this causes too much load to the engine. The magnetic clutch transmits the power from the engine to the compressor and activates it when the air conditioning is “ON”. Also, it cuts off the power from the engine to the compressor when the air conditioning is “OFF”. (Magnetic clutch repair procedure can be found in Section 1D.)

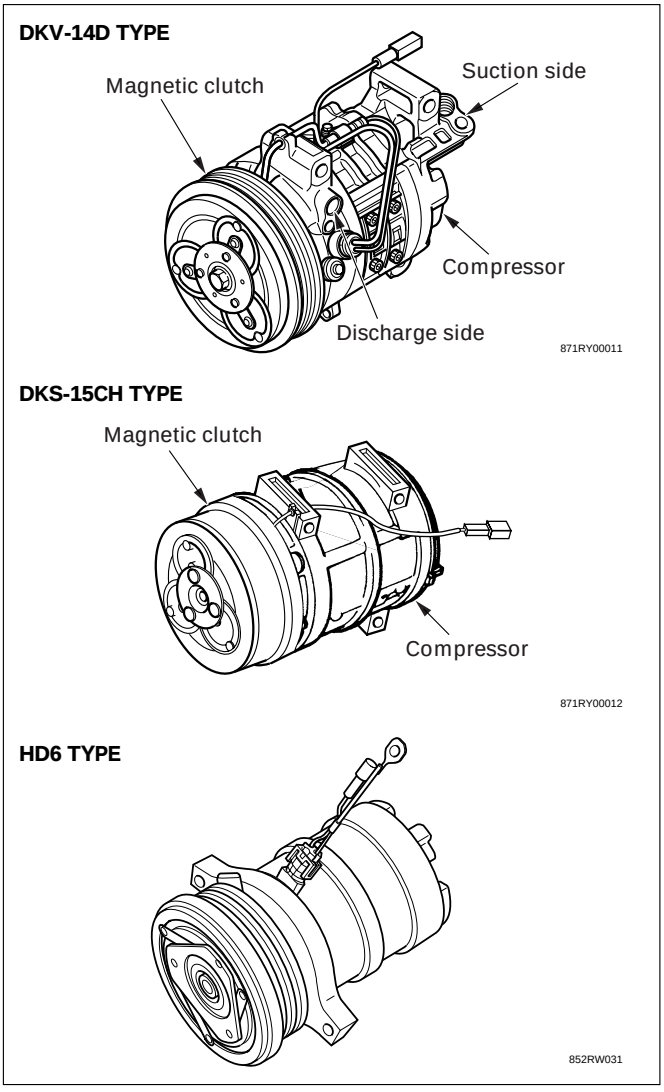

CONDENSER

The condenser assembly in front of the radiator, which carry the refrigerant and cooling fins to provide rapid transfer of heat.
Also, it functions to cool and liquefy the high-pressure and high-temperature vapor sent from the compressor by the radiator fan or outside air.
A condenser may malfunction in two ways: it may leak, or it may be restricted. A condenser restriction will result in excessive compressor discharge pressure. If a partial restriction is present, the refrigerant expands after passing through the restriction.
Thus, ice or frost may from immediately after the restriction. If air flow through the condenser or radiator is blocked, high discharge pressures will result. During normal condenser operation, the refrigerant outlet line will be slightly cooler than the inlet line.
The vehicle is equipped with the condenser of the parallel flow type condenser. A larger thermal transmission area on the inner surface of the tube allows the radiant heat to increase and the ventilation resistance to decrease.
The refrigerant line connection has a bolt at the block joint, for easy servicing.

RECEIVER/DRIER

The receiver/drier performs four functions;

- As the quantity of refrigerant circulated varies depending on the refrigeration cycle conditions, sufficient refrigerant is stored for the refrigeration cycle to operate smoothly in accordance with fluctuations in the quantity circulated.
- The liquefied refrigerant from the condenser is mixed with refrigerant gas containing air bubbles. If refrigerant containing air bubbles is sent to the expansion valve, the cooling capacity will decrease considerably. Therefore, the liquid and air bubbles are separated and only the liquid is sent to the expansion valve.
- The receiver/drier utilizes a filter and dryer to remove the dirt and water mixed in the cycling refrigerant.
- The sight glass, installed atop the receiver/drier, show the state of the refrigerant.

A receiver/drier may fail due to a restriction inside the body of the unit. A restriction at the inlet to the receiver/drier will cause high pressures.
Outlet restrictions will be indicated by low pressure and little or no cooling. An excessively cold receiver/ drier outlet may indicate a restriction.
The receiver/drier of this vehicle is made of aluminum with a smaller tank. It has 300 cc (8.5 Imp fl oz) refrigerant capacity.
The refrigerant line connection has a bolt at the block joint, for easy servicing.

DUAL PRESSURE SWITCH

The dual pressure switch is installed on the upper part of the receiver/drier, to detect excessively high pressure (high pressure switch) and prevent compressor seizure due to the refrigerant leaking (low pressure switch), switching the compressor "ON" or "OFF" as required.
The pressure switch connector is waterproof type.

- Low-pressure control kpa (kg·cm^2 / PSI)
  Compressor
  ON: 205.9 ± 30 (2.1 ± 0.3 / 30 ± 4)
  (Except 6VD1 / 6VE1, LHD model)
  186 ± 30 (1.9 ± 0.3 / 27 ± 4)
  (only for 6VD1 / 6VE1, LHD model)
  OFF: 176 ± 20 (1.8 ± 0.2 / 26 ± 3)
- High-pressure control
  Compressor
  ON: 2354 ± 196 (24.0 ± 2.0 / 341 ± 28)
  OFF: 2942 ± 196 (30.0 ± 2.0 / 427 ± 28)

TRIPLE PRESSURE SWITCH

Triple pressure switch is installed atop the receiver/drier. This switch is constructed with a unitized type of two switches. One of them is a low and high pressure switch (Dual pressure switch) to switch "ON" or "OFF" the magnetic clutch as a result of irregularly high-pressure or low-pressure of the refrigerant. The other one is a medium pressure switch (Cycling switch) to switch "ON" or "OFF" the condenser fan sensing the condenser high side pressure.

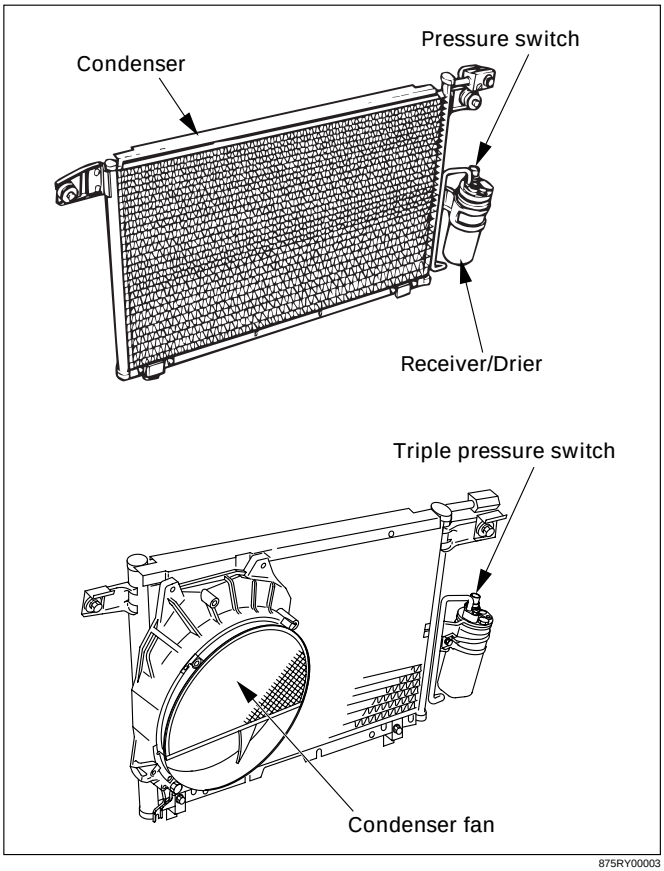

875RY00003

- Low-pressure control kpa (kg·cm^2/PSI)
  Compressor
  ON: 186 ± 30 (1.9 ± 0.3 / 27 ± 4)
  OFF: 176 ± 20 (1.8 ± 0.2 / 26 ± 3)
- Medium-pressure control
  Condenser fan
  ON: 1471 ± 98 (15.0 ± 1.0 / 213 ± 14)
  OFF: 1079 ± 98 (11.0 ± 1.0 / 156 ± 14)
- High-pressure control
  Compressor
  ON: 2354 ± 196 (24.0 ± 2.0 / 341 ± 28)
  OFF: 2942 ± 196 (30.0 ± 2.0 / 427 ± 28)

EXPANSION VALVE

This expansion valve (1) is internal pressure type and it is installed at the evaporator intake port.
The expansion valve converts the high pressure liquid refrigerant sent from the receiver/drier to a low pressure liquid refrigerant by forcing it through a tiny port before sending it to the evaporator (2).
This type of expansion valve consists of a temperature sensor, diaphragm, ball valve, ball seat, spring adjustment screw, etc.
The temperature sensor contacts the evaporator outlet pipe, and converts changes in temperature to pressure. It then transmits these to the top chamber of the diaphragm.
The refrigerant pressure is transmitted to the diaphragms bottom chamber through the external equalizing pressure tube.
The ball valve is connected to the diaphragm. The opening angle of the expansion valve is determined by the force acting on the diaphragm and the spring pressure.
The expansion valve regulates the flow rate of the refrigerant. Accordingly, when a malfunction occurs to this expansion valve, both discharge and suction pressures get low, resulting in insufficient cooling capacity of the evaporator.

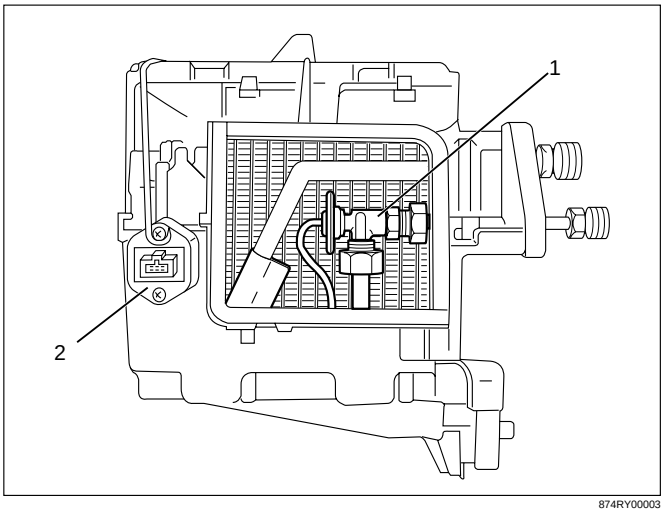

874RY00003

EVAPORATOR

The evaporator cools and dehumidifies the air before the air enters the vehicle. High-pressure liquid refrigerant flows through the expansion valve (1) into the low-pressure area of the evaporator (2). The heat in the air passing through the evaporator core is lost to the cooler surface of the core, thereby cooling the air.
As heat is lost between the air and the evaporator core surface, moisture in the vehicle condenses on the outside surface of the evaporator core and is drained off as water.
When the evaporator malfunctions, the trouble will show up as inadequate supply of cool air. The cause is typically a partially plugged core due to dirt, or a malfunctioning blower motor.
The evaporator core with a laminate louver fin is a single-sided tank type where only one tank is provided under the core.

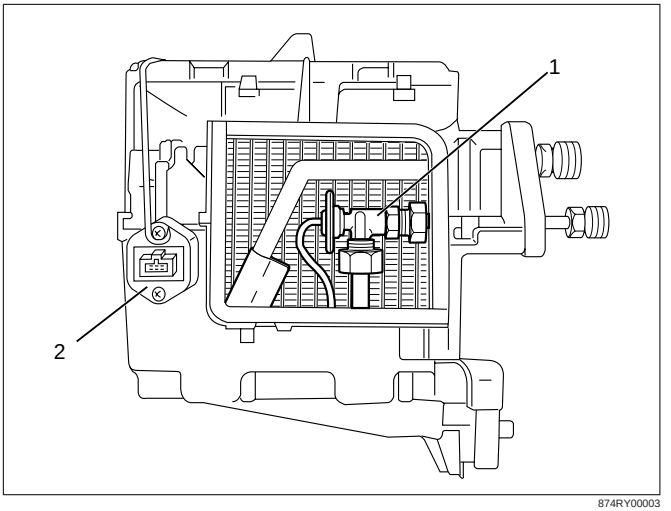

874RY00003

ELECTRONIC THERMOSTAT

The thermostat consists of the thermosensor (1) and thermostat unit (4) which functions electrically to reduce the noises being generated while the system is in operation.
The electronic thermosensor (1) is mounted at the evaporator core (2) outlet and senses the temperature of the cool air from the evaporator (3). Temperature signals are input to the thermostat unit. This information is compared by the thermo unit and the results in output to operate the A/C Thermostat relay and turn the magnetic clutch “ON” or “OFF” to prevent evaporator freeze-up.
A characteristic of the sensor is that the resistance decreases as the temperature increases and the resistance increases as the temperature decreases.

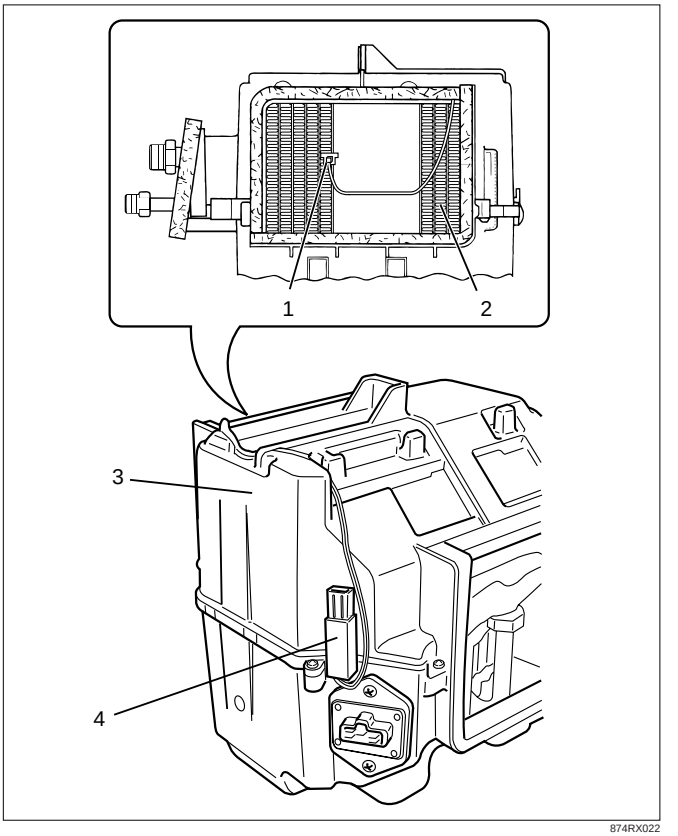

874RX022

REFRIGERANT LINE

Restrictions in the refrigerant line will be indicated by:

1. Suction line; A restricted suction line will cause low suction pressure at the compressor, low discharge pressure and little or not cooling.
2. Discharge line; A restriction in the discharge line generally will cause the discharge line to leak.
3. Liquid line; A liquid line restriction will be evidenced by low discharge and suction pressure and insufficient cooling.

Refrigerant flexible hoses that have a low permeability to refrigerant and moisture are used. These low permeability hoses have a special nylon layer on the inside.

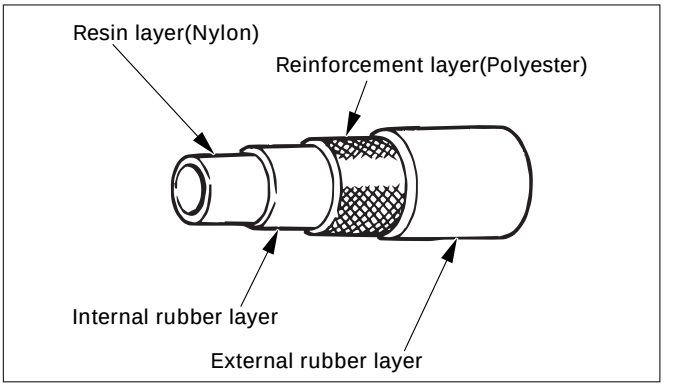

SERVICE CHARGE VALVES

The charging hoses have a quick-joint type fitting, to reduce refrigerant loss during removal and installation.

AIR CONDITIONING PARTS

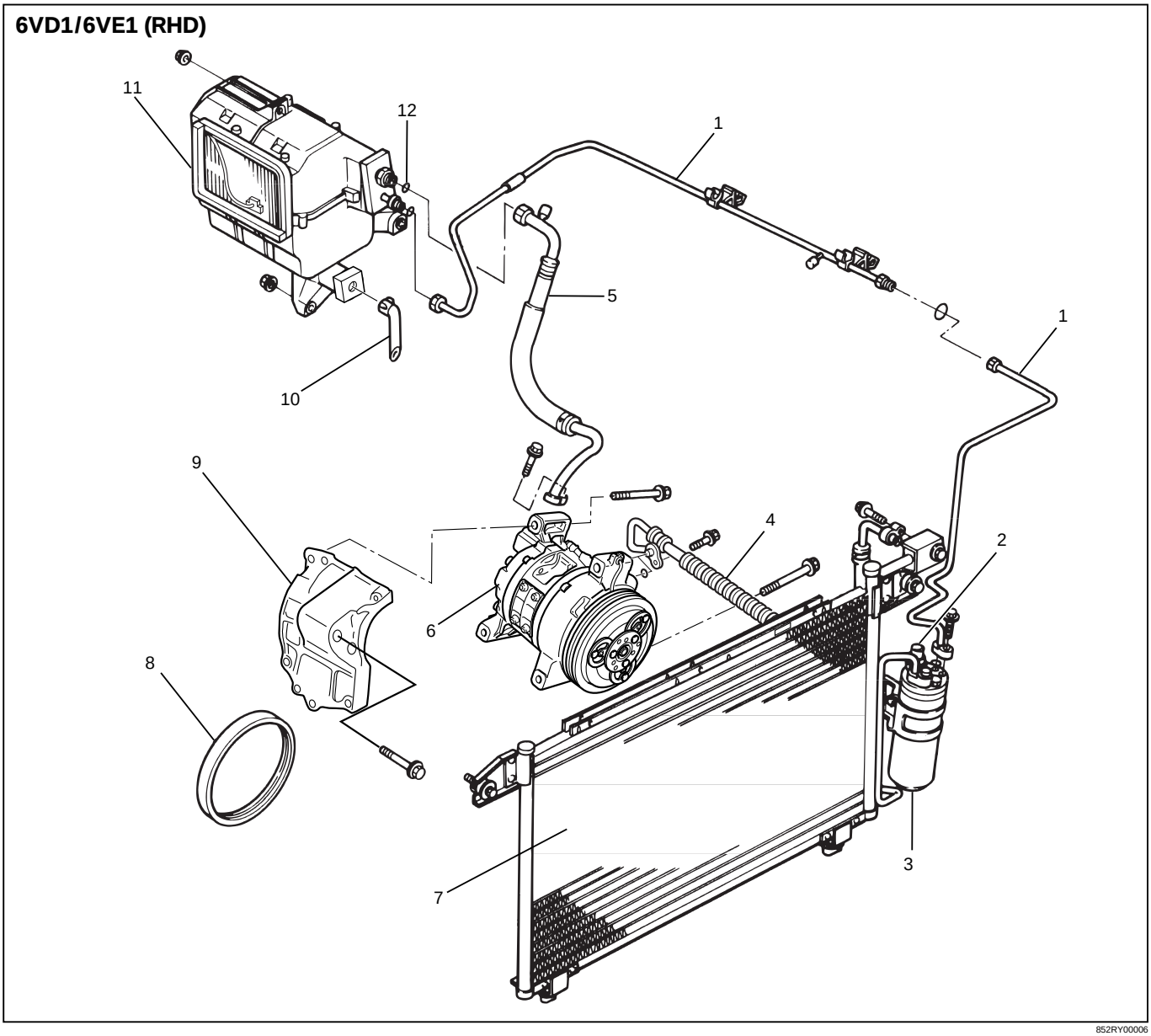

Legend

(1) Liquid Line (High-Pressure Pipe)
(2) Pressure Switch
(3) Receiver Drier
(4) Discharge Line (High-Pressure Hose)
(5) Suction Line (Low-Pressure Hose)
(6) Compressor
(7) Condenser Assembly
(8) Serpentine Belt
(9) Compressor Bracket
(10) Drain Hose
(11) Evaporator Assembly
(12) O-ring

4JG2 (R/LHD)

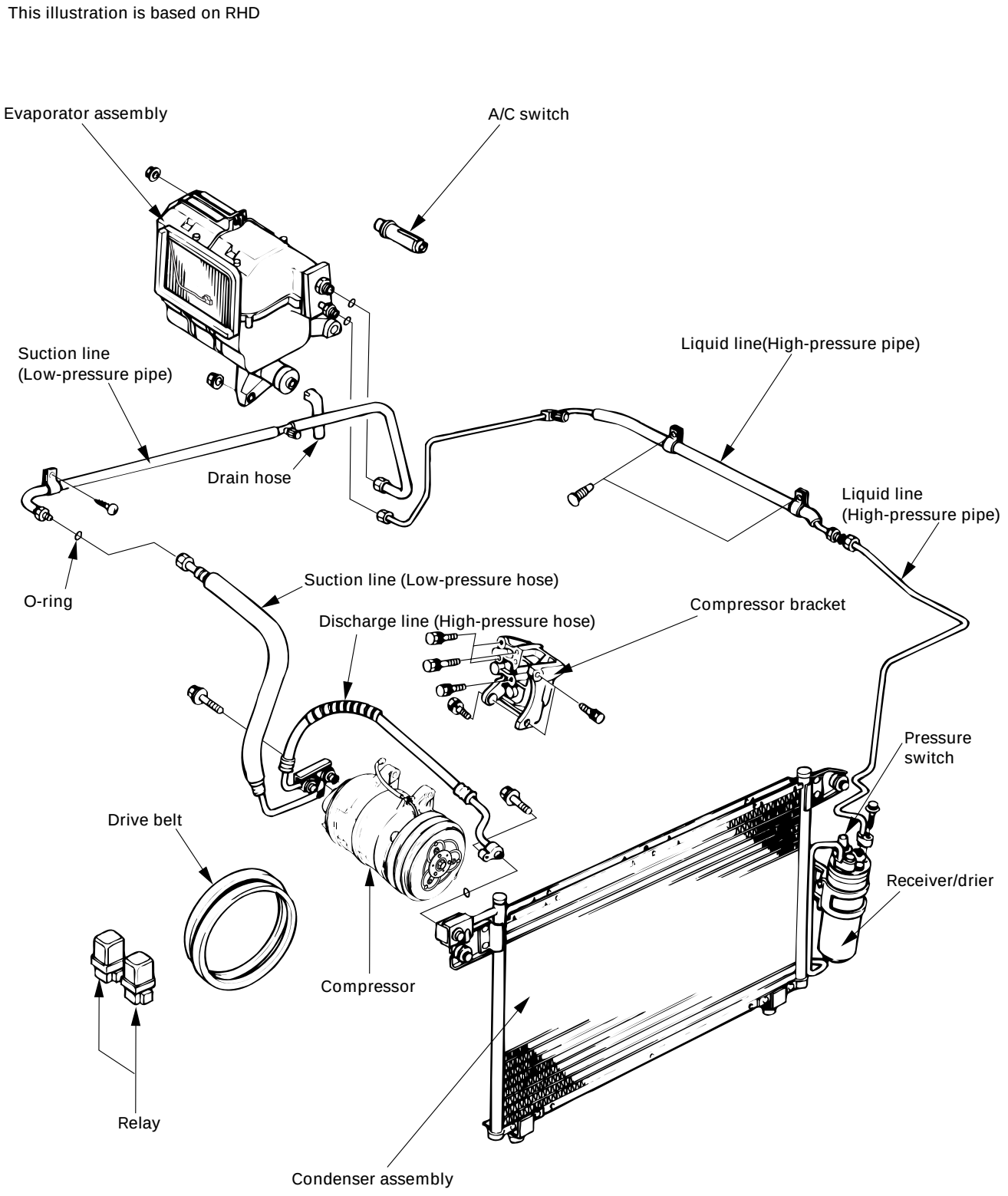

852RY00008

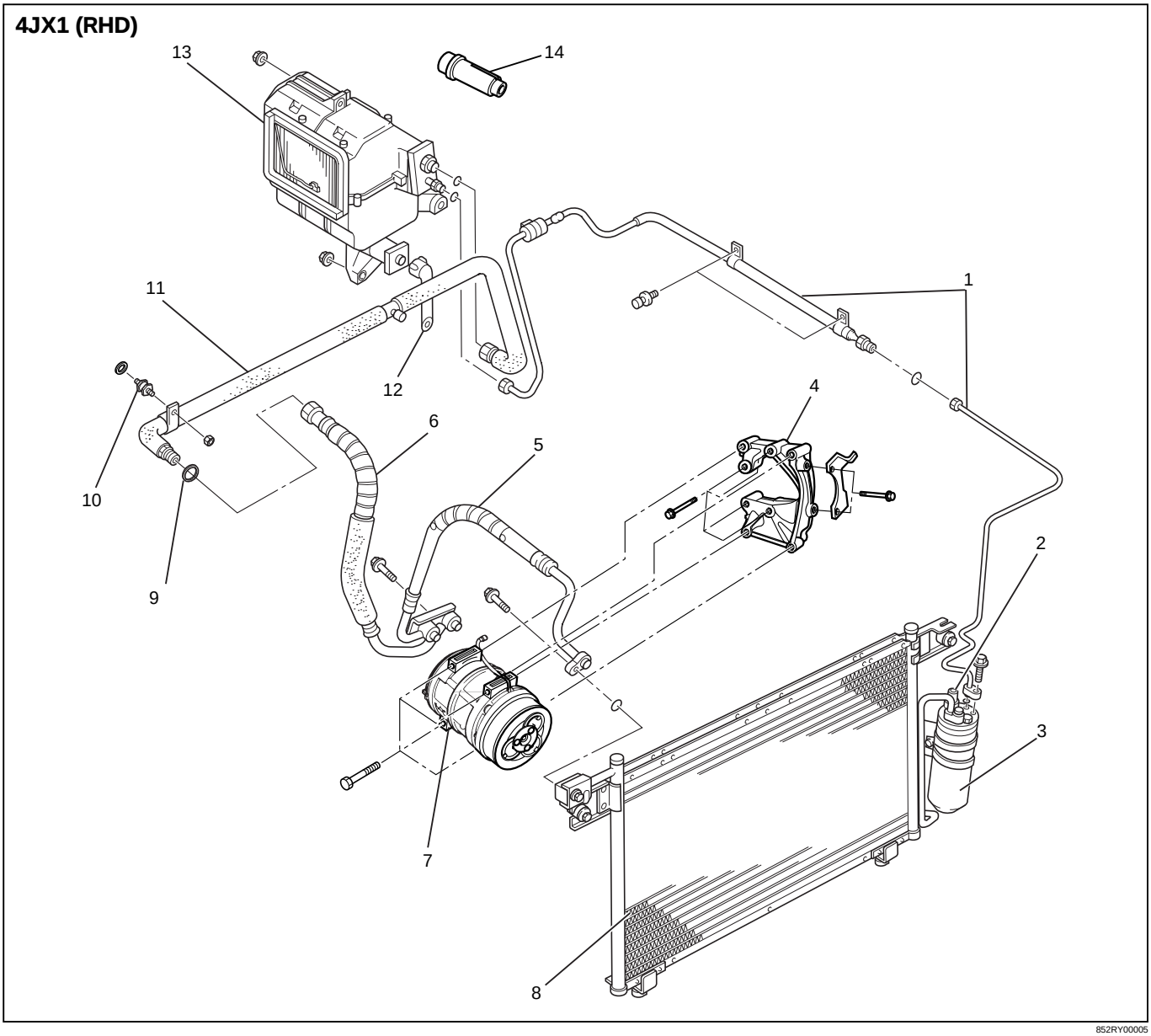

Legend

(1) Liquid Line (High- Pressure Pipe)
(2) Pressure Switch
(3) Receiver Drier
(4) Compressor Bracket
(5) Discharge Line (High-Pressure Hose)
(6) Suction Line (Low-Pressure Hose)
(7) Compressor
(8) Condenser Assembly
(9) O-ring
(10) Insulator Pipe
(11) Suction Line (Low Pressure Pipe)
(12) Drain Hose
(13) Evaporator Assembly
(14) A/C Switch

6VD1/6VE1 (LHD)

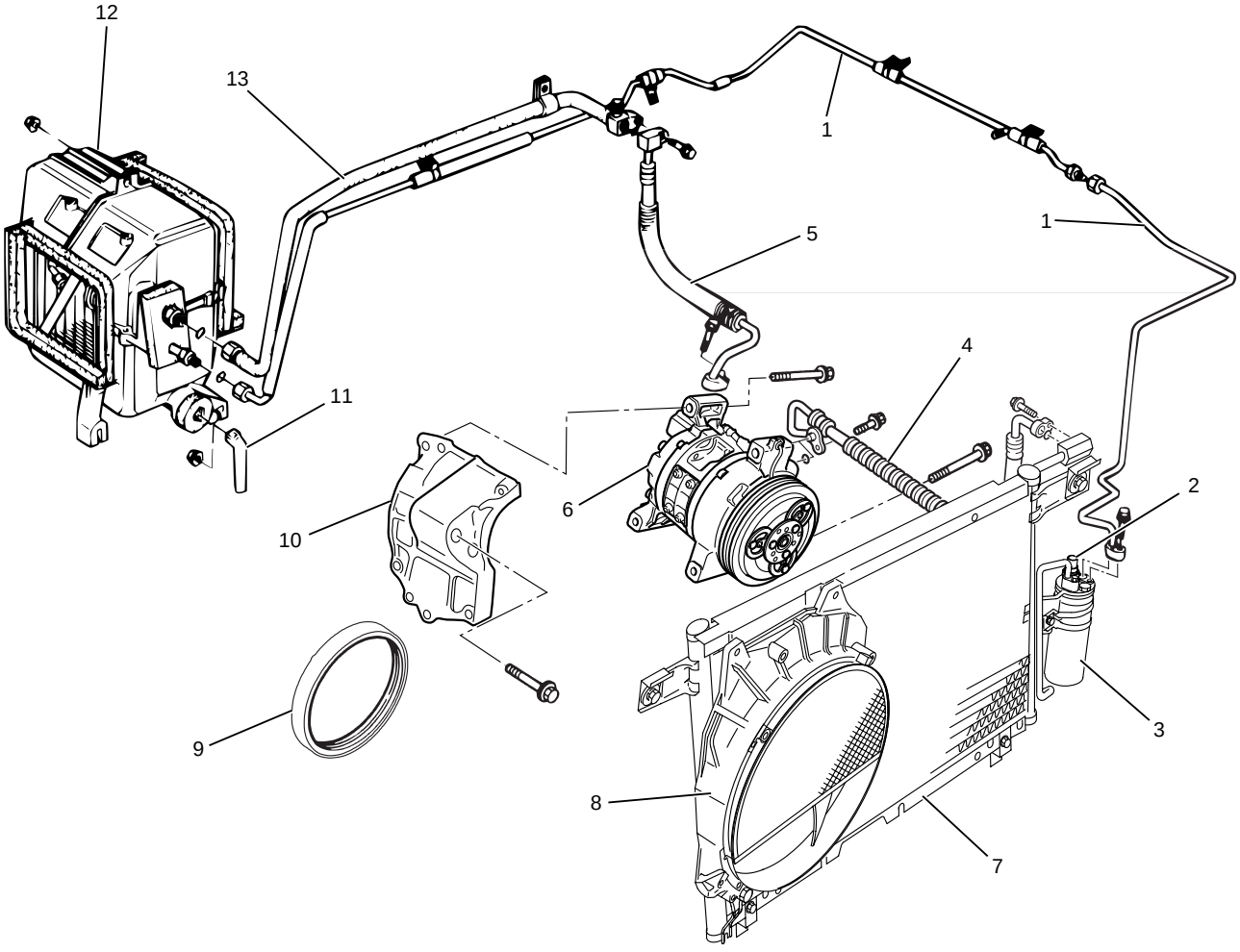

852RY00012

Legend

(1) Liquid Line (High-Pressure Pipe)
(2) Pressure Switch
(3) Receiver Drier
(4) Discharge line (High-Pressure Hose)
(5) Suction Line (Low-Pressure Hose)
(6) Compressor
(7) Condenser Assembly
(8) Condenser Fan
(9) Serpentine Belt
(10) Compressor Bracket
(11) Drain Hose
(12) Evaporator Assembly
(13) Suction Line (Low-Pressure Pipe)

Delphi Harrison (LHD·V6)

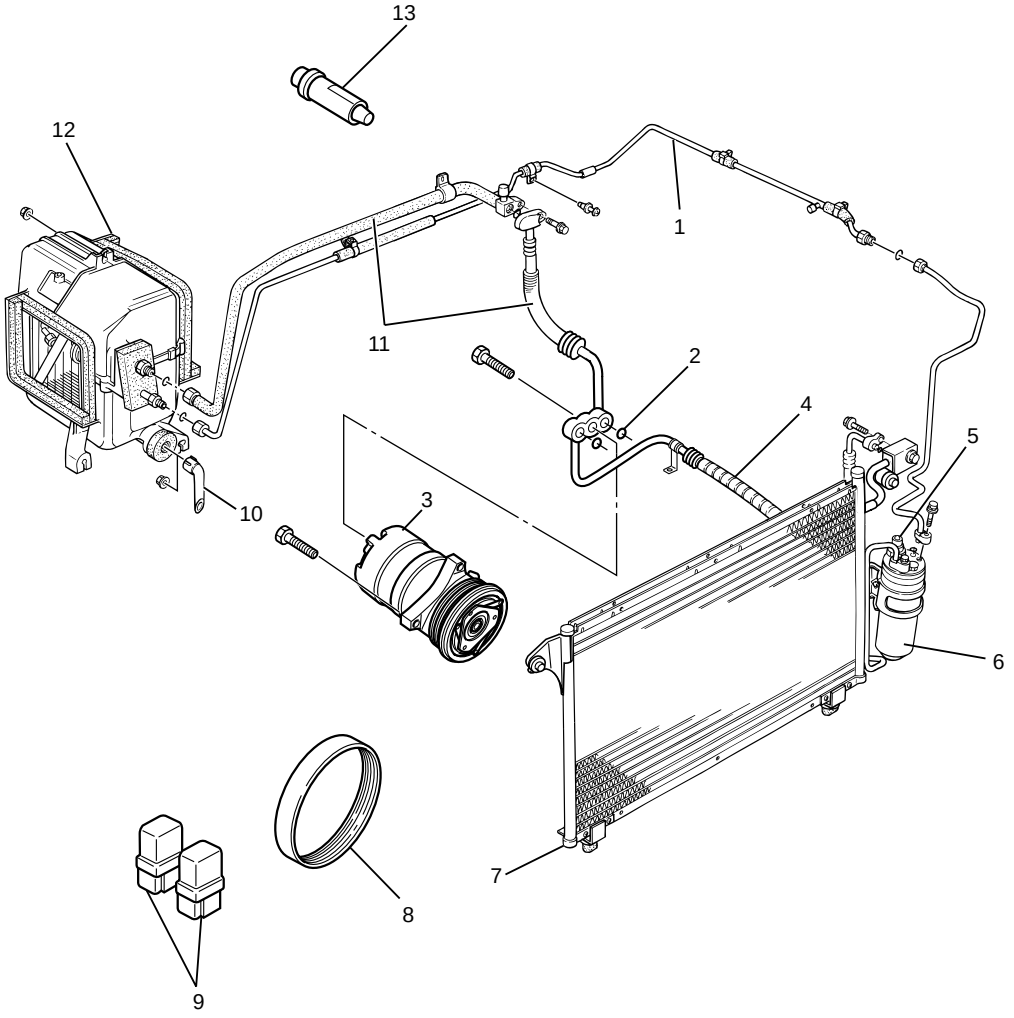

852RW009

Legend

(1) Liquid Line (High-Pressure Pipe)
(2) O-ring
(3) Compressor
(4) Discharge line (High-Pressure Hose)
(5) Pressure Switch
(6) Receiver Drier
(7) Condenser Assembly
(8) Serpentine Belt
(9) Relay
(10) Drain Hose
(11) Suction Line (Low-pressure Hose)
(12) Evaporator Assembly
(13) A/C Switch

ON-VEHICLE SERVICE

PRECAUTIONS FOR REPLACEMENT OR REPAIR OF AIR CONDITIONING PARTS

There are certain procedure, practices and precautions that should be followed when servicing air conditioning systems:

- Keep your work area clean.
- Always wear safety goggle and protective gloves when working on refrigerant systems.
- Beware of the danger of carbon monoxide fumes caused by running the engine.
- Beware of discharged refrigerant in enclosed or improperly ventilated garages.
- Always disconnect the negative battery cable and discharge and recover the refrigerant whenever repairing the air conditioning system.
- When discharging and recovering the refrigerant, do not allow refrigerant to discharge too fast; it will draw compressor oil out of the system.
- Keep moisture and contaminants out of the system. When disconnecting or removing any lines or parts, use plugs or caps to close the fittings immediately. Never remove the caps or plugs until the lines or parts are reconnected or installed.
- When disconnecting or reconnecting the lines, use two wrenches to support the line fitting, to prevent from twisting or other damage.
- Always install new O-rings whenever a connection is disassembled.
- Before connecting any hoses or lines, apply new specified compressor oil to the O-rings.
- When removing and replacing any parts which require discharging the refrigerant circuit, the operations described in this section must be performed in the following sequence:

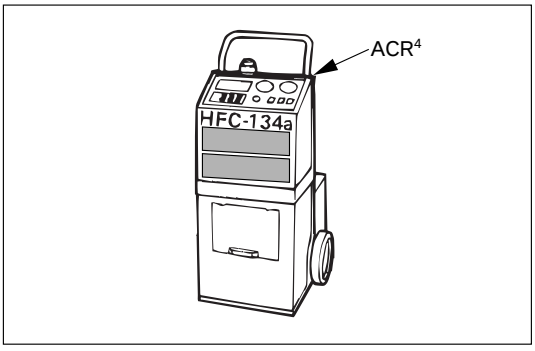

1) Using the ACR^4 (HFC-134a Refrigerant Recovery/ Recycling/ Recharging/ System) or equivalent to thoroughly discharge and recover the refrigerant.

ACR^4 (115V 60Hz) : 5-8840-0629-0 (J-39500-A)
ACR^4 (220-240V 50/60Hz)
: 5-8840-0630-0 (J-39500-220A)
ACR^4 (220-240V 50/60Hz Australian model)
: 5-8840-0631-0 (J-39500-220ANZ)

2) Remove and replace the defective part.

3) After evacuation, charge the air conditioning system and check for leaks.

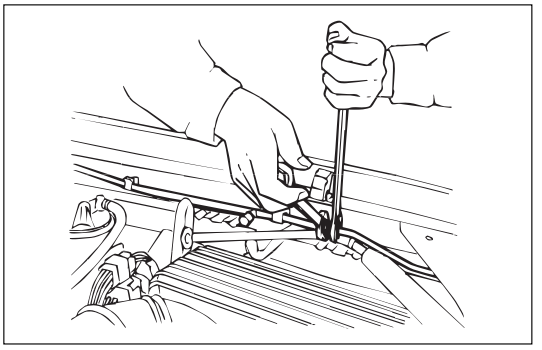

REPAIR OF REFRIGERANT LEAKS

Refrigerant Line Connections

Install new O-rings, if required. When disconnecting or connecting lines, use two wrenches to prevent the connecting portion from twisting or becoming damaged.

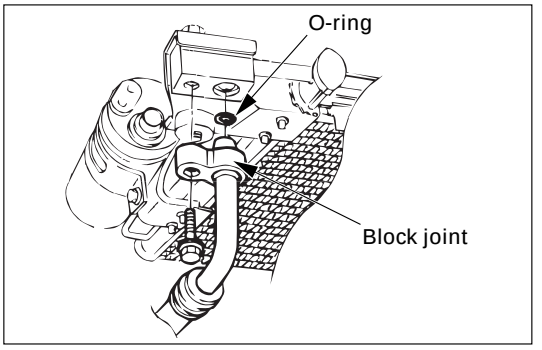

When connecting the refrigerant line at the block joint, securely insert the projecting portion of the joint portion into the connecting hole on the unit side and secure with a bolt.

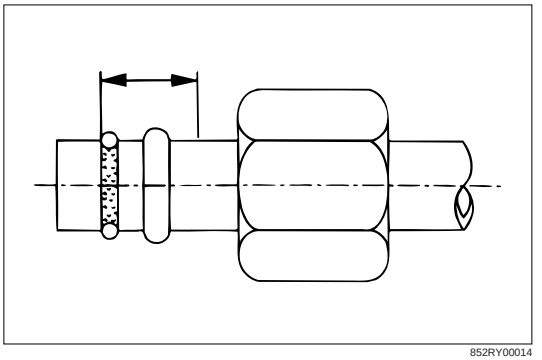

852RY00014

Apply specified compressor oil to the O-rings prior to connecting.

CAUTION:

Compressor (PAG) oil to be used varies according to compressor model. Be sure to apply oil specified for the model of compressor.

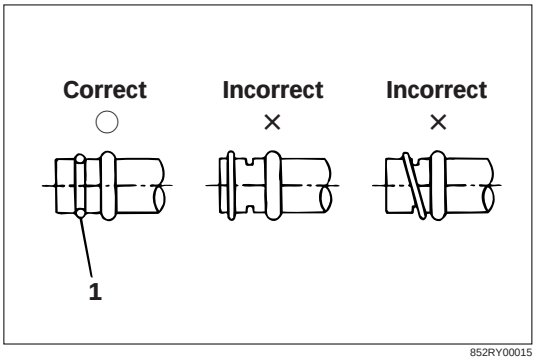

852RY00015

O-rings must be closely aligned with raised portion of refrigerant line.

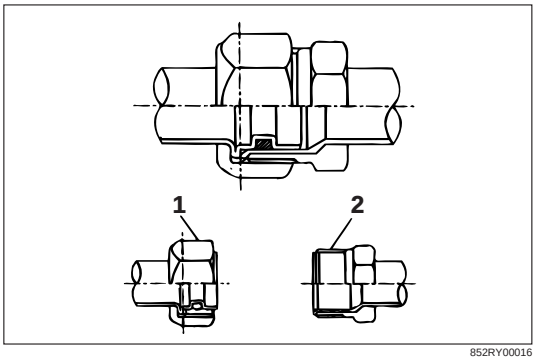

852RY00016

Insert nut into union. First tighten nut by hand as much as possible. Then, tighten nut to specified torque.

(Refer to “SERVICE INFORMATION” for Fixing Torque in section 00)

LEAK AT REFRIGERANT LINE CONNECTIONS

1) Check the torque on the refrigerant line fitting and, if too loose, tighten to the specified torque.
   - Use two wrenches to prevent twisting and damage to the Line.
   - Do not over tighten.
2) Perform a leak test on the refrigerant line fitting.
3) If the leak is still present, discharge and recover the refrigerant from the system.
4) Replace the O-rings.
   - O-rings cannot be reused. Always replace with new ones.
   - Be sure to apply specified compressor oil to the new O-rings.
5) Retighten the refrigerant line fitting to the specified torque.
   - Use two wrenches to prevent twisting and damage to the line.
6) Evacuate, charge and retest the system.

LEAK IN THE HOSE

If the compressor inlet or outlet hose is leaking, the entire hose must be replaced. Refrigerant hose must not be cut or spliced for repair.

1) Locate the leak.
2) Discharge and recover the refrigerant.
3) Remove the hose assembly.
   - Cap the open connections at once.
4) Connect the new hose assembly.
   - Use two wrenches to prevent twisting or damage to the hose fitting.
   - Tighten the hose fitting to the specified torque.
5) Evacuate, charge and test the system.

COMPRESSOR LEAKS

If leaks are located around the compressor shaft seal or shell, replace or repair the compressor.

RECOVERY, RECYCLING, EVACUATION AND CHARGING

Handling Refrigerant-134a (HFC-134a)

Air conditioning systems contain HFC-134a.
This is a chemical mixture which requires special handling procedures to avoid personal injury.

- Always wear safety goggles and protective gloves.
- Always work in a well-ventilated area. Do not weld or steam clean on or near any vehicle-installed air conditioning lines or components.
- If HFC-134a should come in contact with any part of the body, flush the exposed area with cold water and immediately seek medical help.
- If it is necessary to transport or carry any container of HFC-134a in a vehicle, do not carry it in the passenger compartment.
- If it is necessary to fill a small HFC-134a container from a large one, never fill the container completely. Space should always be allowed above the liquid for expansion.
- Keep HFC-134a containers stored below 40 °C (104°F).

WARNING

- **SHOULD HFC-134a CONTACT YOUR EYE(S), CONSULT A DOCTOR IMMEDIATELY.**
- **DO NOT RUB THE AFFECTED EYE(S). INSTEAD, SPLASH QUANTITIES OF FRESH COLD WATER OVER THE AFFECTED AREA TO GRADUALLY RAISE THE TEMPERATURE OF THE REFRIGERANT ABOVE THE FREEZING POINT.**
- **OBTAIN PROPER MEDICAL TREATMENT AS SOON AS POSSIBLE. SHOULD THE HFC-134a TOUCH THE SKIN, THE INJURY MUST BE TREATED THE SAME AS SKIN WHICH HAS BEEN FROSTBITTEN OR FROZEN.**

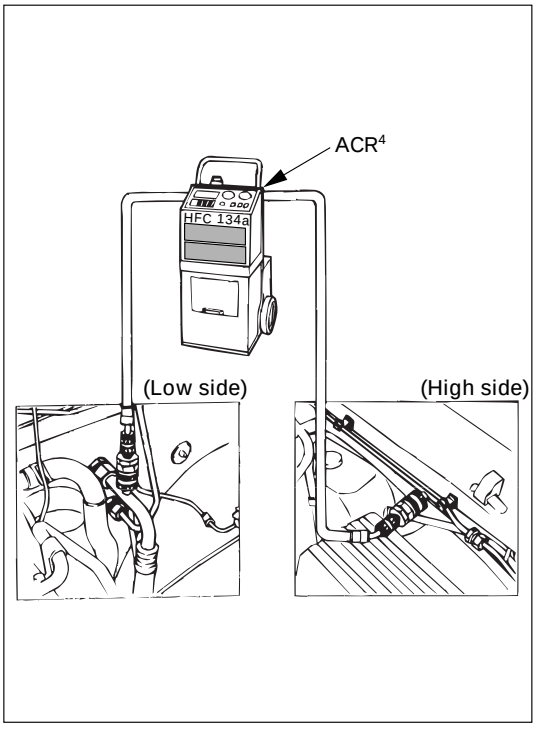

REFRIGERANT RECOVERY

The refrigerant must be discharged and recovered by using ACR4 (HFC-134a Refrigerant Recovery/ Recycling/ Recharging/ System) or equivalent before removing or mounting air conditioning parts.

ACR4 (115V 60Hz) : 5-8840-0629-0 (J-39500-A)
ACR4 (220-240V 50/60Hz)
: 5-8840-0630-0 (J-39500-220A)
ACR4 (220-240V 50/60Hz Australian model)
: 5-8840-0631-0 (J-39500-220ANZ)

1) Connect the high and low charging hoses of the ACR4 (or equivalent) as shown
2) Recover the refrigerant by following the ACR4 Manufacture's Instructions.
3) When a part is removed, put a cap or a plug on the connecting portion so that dust, dirt or moisture cannot get into it.

REFRIGERANT RECYCLING

Recycle the refrigerant recovered by ACR4 or equivalent. For the details of the actual operation, follow the steps in the ACR4 Manufacture's Instructions.

ACR4 (115V 60Hz) : 5-8840-0629-0 (J-39500-A)
ACR4 (220-240V 50/60Hz)
: 5-8840-0630-0 (J-39500-220A)
ACR4 (220-240V 50/60Hz Australian model)
: 5-8840-0631-0 (J-39500-220ANZ)

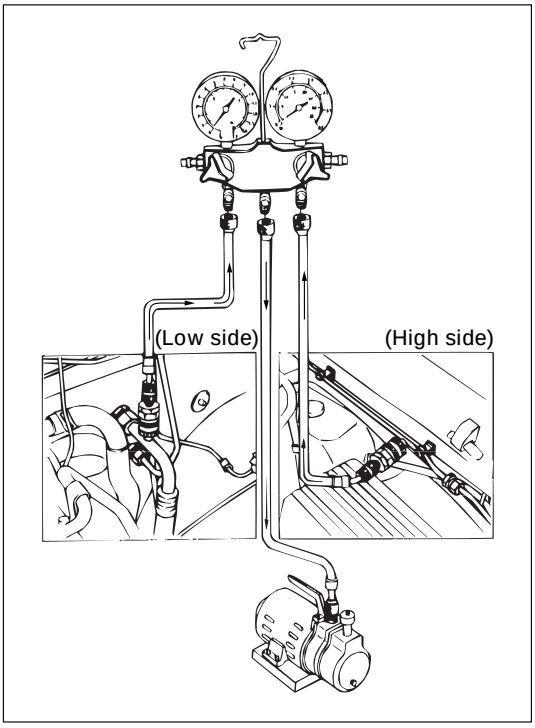

EVACUATION OF THE REFRIGERANT SYSTEM

NOTE:

Explained below is a method using a vacuum pump. Refer to ACR^4 (or equivalent) manufacture's instructions when evacuating the system with ACR^4 (or equivalent)

Air and moisture in the refrigerant will cause problems in the air conditioning system.
Therefore, before charging the refrigerant, be sure to evacuate air and moisture thoroughly from the system.

1) Connect the gauge manifold.
   - High-pressure valve (HI) – Discharge-side
   - Low-pressure valve (LOW) – Suction-side
2) Discharge and recover the refrigerant.
3) Connect the center hose of the gauge manifold set to the vacuum pump inlet.
4) Operate the vacuum pump, open shutoff valve and then open both hand valves.
5) When the low-pressure gauge indicates approx. 750 mmHg (30 inHg), continue the evacuation for 5 minutes or more.
6) Close both hand valves and stop the vacuum pump.
7) Check to ensure that the pressure does not change after 10 minutes or more.
   - If the pressure changes, check the system for leaks.
   - If leaks occur, retighten the refrigerant line connections and repeat the evacuation steps.
8) If no leaks are found, again operate the vacuum pump for 20 minutes or more, After confirming that the gauge manifold pressure is at 750 mmHg(30 inHg), close both hand valves.
9) Close positive shutoff valve.
   Stop the vacuum pump and disconnect the center hose from the vacuum pump.

CHARGING THE REFRIGERANT SYSTEM

There are various methods of charging refrigerant into the air conditioning system.
These include using ACR^4 (HFC-134a Refrigerant Recovery/ Recycling/ Recharging/ System) or equivalent and direct charging with a manifold gauge charging station.

ACR^4 (115V 60Hz) : 5-8840-0629-0 (J-39500-A)
ACR^4 (220-240V 50/60Hz)
: 5-8840-0630-0 (J-39500-220A)
ACR^4 (220-240V 50/60Hz Australian model)
: 5-8840-0631-0 (J-39500-220ANZ)

Charging procedure

- **ACR^4 (or equivalent) method**

For the charging of refrigerant recovery by ACR^4, follow the manufacture's instruction.

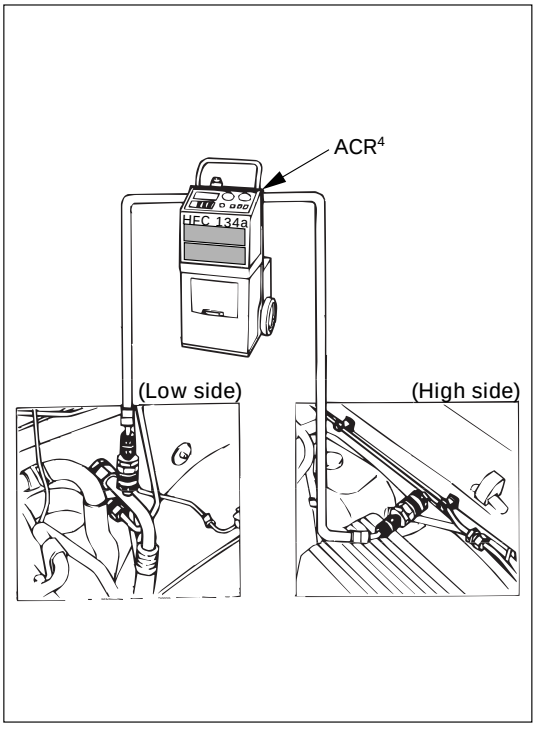

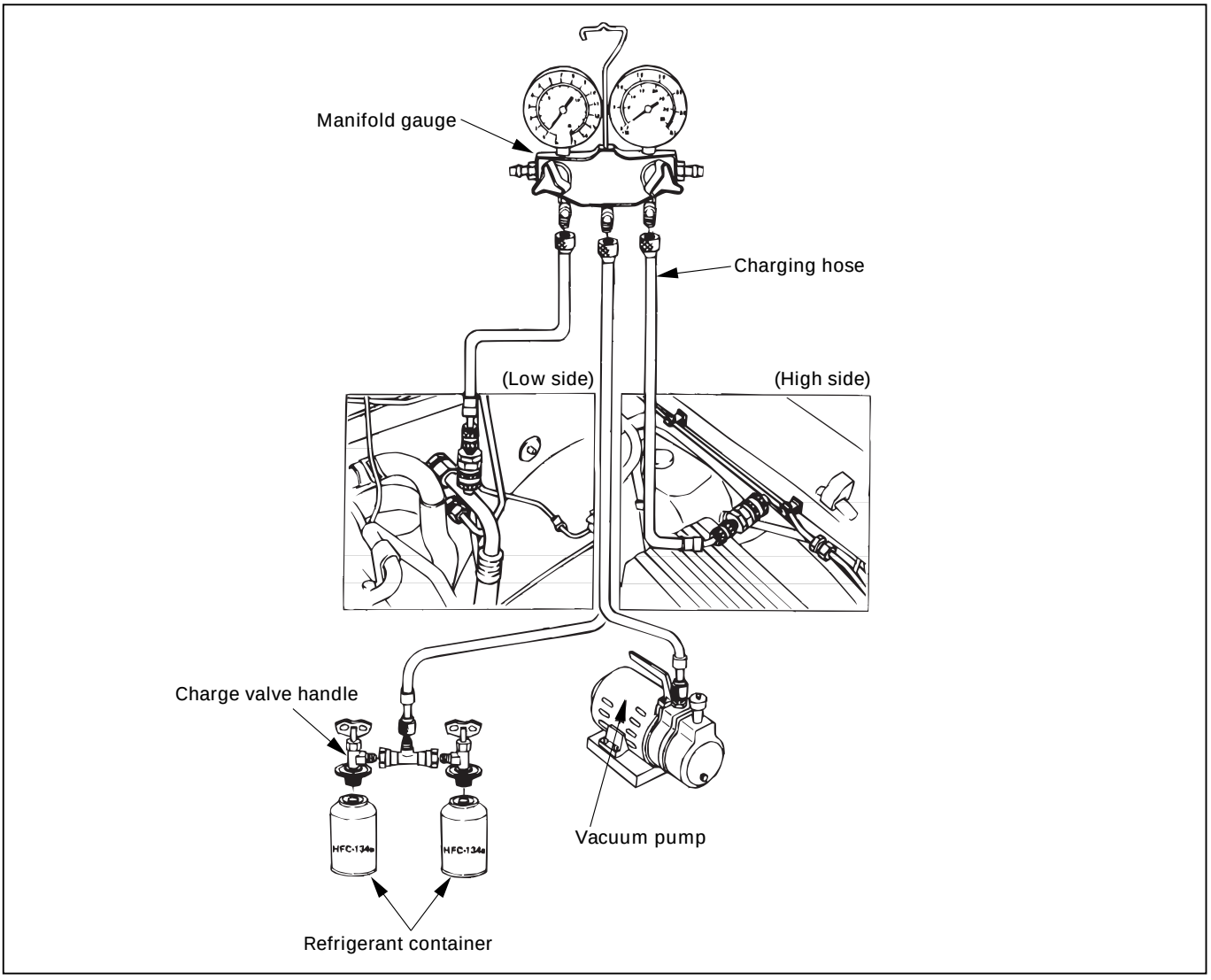

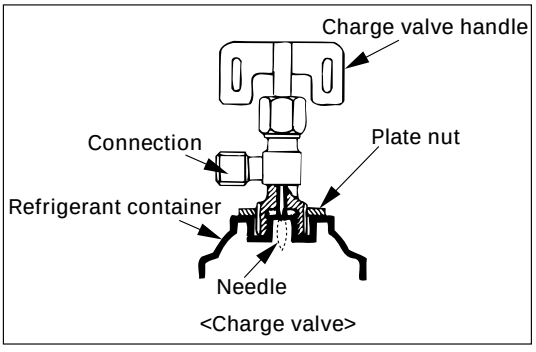

<Charge valve>

- **Direct charging with a manifold gauge charging station method**

Handling the charging valve handle when installing refrigerant container.

1) Before attaching the charge valve to the refrigerant container, turn the charge valve handle counterclockwise until the needle is fully retracted.
2) Turn the plate nut counterclockwise until it reaches its highest position relative to the charge valve.
3) Install the charge valve onto the refrigerant container.
4) Turn the plate nut clockwise and connect the center hose of the manifold gauge to the charge valve.
5) Tighten the plate nut sufficiently by hand. Then turn the charge valve handle clockwise to lower the needle and bore a hole in the refrigerant container.
6) Turn the charge valve handle counterclockwise to raise the needle. The refrigerant in the refrigerant container is charged into the air conditioning system by the operation of the manifold gauge.
   - Be absolutely sure not to reuse the emptied refrigerant container.

1) Make sure the evacuation process is correctly completed.
2) Connect the center-hose of the manifold gauge to the refrigerant container.
   - Turn the charge valve handle counterclockwise to purge the charging line and purge any air existing in the center-hose of the manifold gauge.
3) Open the low-pressure hand valve and charge the refrigerant about 200 g(0.44 lbs.).
   - Make sure the high-pressure hand valve is closed.
   - Avoid charging the refrigerant by turning the refrigerant container upside down.
4) Close the low-pressure hand valve of the manifold gauge.
   - Check to ensure that the degree of pressure does not charge.
5) Check the refrigerant leaks by using a HFC-134a leak detector.
   - If a leak occurs, repair the leak connection, and start all over again from the first step of evacuation.
6) If no leaks are found, open the low-pressure hand valve of the manifold gauge.Then continue charging refrigerant to the system.
   - When charging the system becomes difficult:
     (1) Run the engine at Idling and close the all vehicle doors.
     (2) A/C switch is “ON”.
     (3) Set the fan control knob (fan switch) to its highest position.

WARNING

BE ABSOLUTELY SURE NOT TO OPEN THE HIGH-PRESSURE HAND VALVE. SHOULD THE HIGH-PRESSURE HAND VALVE BE OPENED, THE HIGH-PRESSURE REFRIGERANT GAS WOULD FLOW BACKWARD, AND THIS MAY CAUSE THE REFRIGERANT CONTAINER TO BURST.

7) When the refrigerant container is emptied, use the following procedure to replace it with a new refrigerant container.
   (1) Close the low pressure hand valve.
   (2) Raise the needle upward and remove the charge valve.
   (3) Reinstall the charge valve to the new refrigerant container.
   (4) Purge any air existing in the center hose of the manifold gauge.

8) Charge the system to the specified amount and then close the low-pressure hand valve.

Refrigerant Amount	g(lbs.)
750 (1.65)	

DELPH1HD6/HT6	g(lbs.)
600 (1.32)	

- A fully charged system is indicated by the sight glass on the receiver/driver being free of any. bubbles(Refer to “Reading Sight Glass”).
- Check the high and low pressure value of the manifold gauge.
- Check for refrigerant leaks by using a HFC-134a leak detector.

Immediately after charging refrigerant, both high and low pressures are slightly high and to the left of the gauge, but they settle down to the guide pressure valves as shown below:

- Ambient temperature; 25 ~ 30°C (77 ~ 86°F)
- Guide pressure
  High-pressure side;
  Approx. 1373 – 1863 kPa (14 – 19 kg·cm^2 / 199 – 270 PSI)
  Low-pressure side;
  Approx. 147 – 294 kPa (1.4 – 3.0 kg·cm^2 / 21 – 43 PSI)

9) Close the low pressure hand valve and charge valve of the refrigerant container.
10) Stop the air conditioning and the engine.
11) Disconnect the high and low pressure hoses from the manifold gauge fittings.

Reading Sight Glass

High and low pressure pipe temperature	The high pressure pipe is hot and the low pressure pipe is cold. There is a distinct difference in temperature between them.	The high pressure pipe is warm and the low pressure pipe is cool. There is no great difference in temperature between them.	There is little difference in temperature between the high pressure pipe and the low pressure pipe.	The high pressure pipe is hot and the low pressure pipe is slightly warm. There is a difference in temperature between them.
Sight glass condition	Almost transparent. A flow of bubbles can be seen, but they disappear when the throttle is opened. 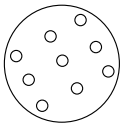	A flow of bubbles always can be seen. It appears sometimes transparent, and sometimes frothy. 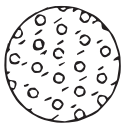	Something like fog faintly can be seen. 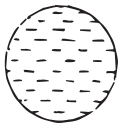	Even at idle with the fan at “HI” (with the window fully open), the bubbles cannot be seen. 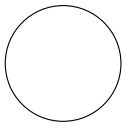
Air conditioner cycle condition	OK	NG (Not enough refrigerant)	NG (Almost no refrigerant)	NG (Too much refrigerant)

The sight glass provides accurate diagnosis only under the following conditions.
If the vehicle can be tested under these conditions, check the sight glass appearance and compare to the chart.

* Engine speed Idling
* A/C switch “ON”
* Blower fan operating at highest speed
* Air source selector lever at “RECIRC”
* Temperature control knob at coldest position
* Ambient temperature below 30°C (86°F) and humidity below 70% (See NOTE 1)
* High side pressure less than 1863 kPa (19 kg·cm^2 / 270 PSI) (See NOTE 2)

NOTE 1

If the vehicle cannot be moved to a testing location that meets these specifications, then the sight glass cannot be used for diagnosis. You must discharge and recover the refrigerant, then recharge the system with the specified amount of refrigerant. Then continue checking the system performance.

NOTE 2

If the high side pressure is greater than stated, the sight glass cannot be used for diagnosis. You must discharge and recover the refrigerant, then recharge the system with the specified amount of refrigerant. Then continue checking system performance.

Compressor Assembly and Associated Parts

6VD1/6VE1 (LHD)

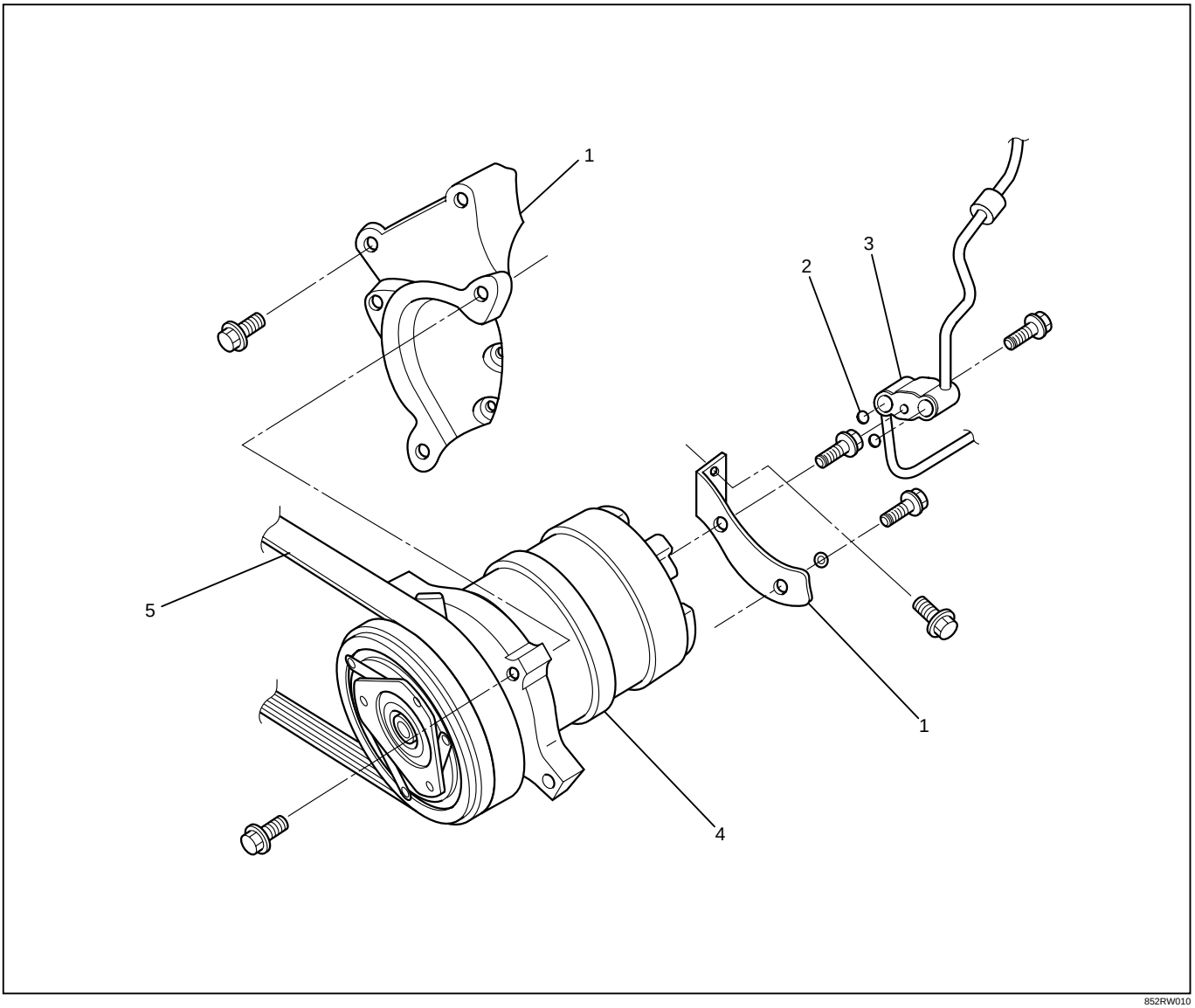

852RW010

Legend

1. Compressor Bracket
2. Seal Washer
3. Refrigerant Line Connector
4. Compressor
5. Serpentine Belt

Removal

1. Disconnect the battery ground cable.
2. Discharge and recover refrigerant
   - Refer to Refrigerant Recovery in this section.
3. Disconnect magnetic clutch harness connector.

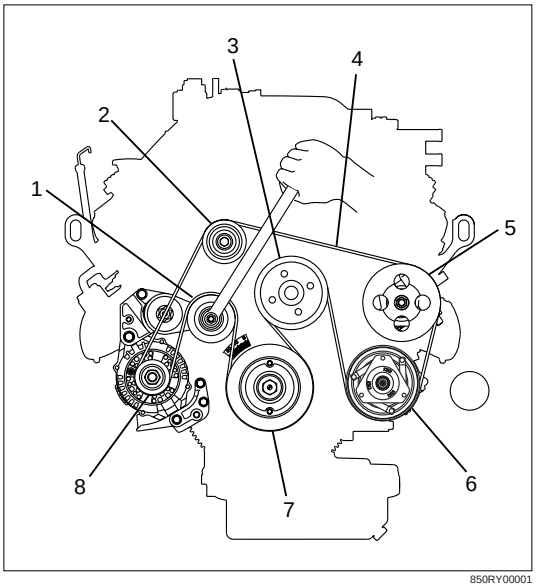

Legend

(1) Tensioner
(2) Idle Pulley
(3) Cooling Fun Pulley
(4) Serpentine Belt
(5) Power Steering Oil Pump
(6) Air Conditioner Compressor
(7) Crankshaft Pulley
(8) Generator

4. Remove serpentine belt.
   - Move serpentine belt tensioner to loose side using wrench then remove serpentine belt.
5. Disconnect refrigerant line connector.
   - When removing the line connector, the connecting part should immediately be plugged or capped to prevent foreign matter from being mixed into the line
6. Remove compressor.

Installation

1) Install compressor.
   - Tighten the compressor fixing bolts to the specified torque.

Compressor Fixing Torque	N·m (kg·m / lb·ft)
19 (1.9 / 14)	

2) Connect refrigerant line connector.
   - Tighten the refrigerant line connector fixing bolts to the specified torque

Refrigerant Line Bolt Torque	N·m (kg·m / lb·ft)
15 (1.5 / 11)	

   - O-rings cannot be reused. Always replace with new ones.
   - Be sure to apply new compressor oil to the O-rings when connecting refrigerant lines.
3) Install serpentine belt.
   - Move serpentine belt tensioner to loose side using wrench, then install serpentine belt to normal position.

COMPRESSOR

6VD1/6VE1 (RHD) & 6VD1 (LHD SAUDI/PHILIPPIN)

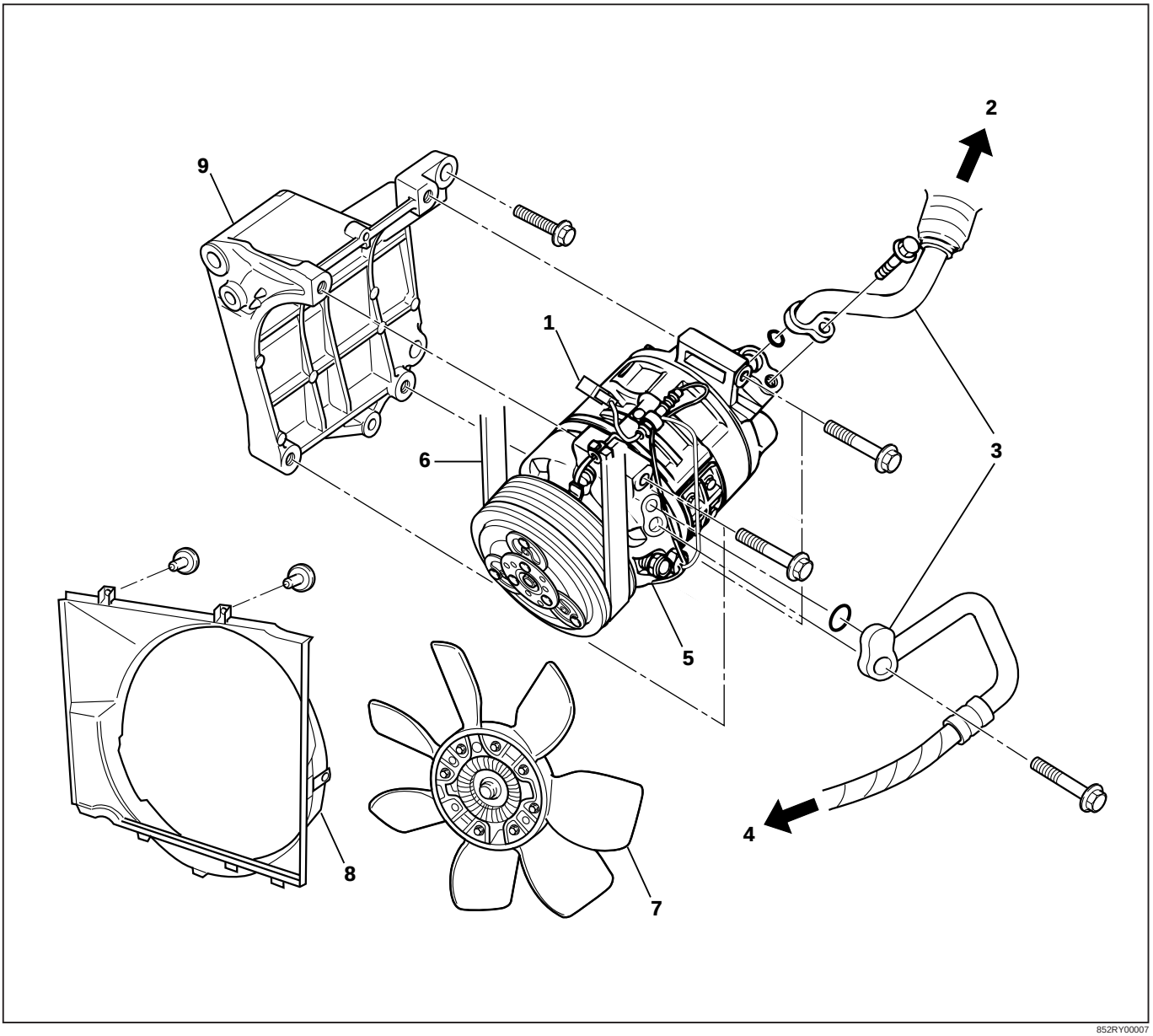

852RY00007

Legend

(1) Magnetic Clutch Harness Connector
(2) To Evaporator
(3) Refrigerant Line Connector
(4) To Condenser
(5) Compressor
(6) Serpentine Belt
(7) Radiator Fan
(8) Radiator Fan Shroud
(9) Compressor Bracket

Removal

1. Disconnect the battery ground cable.
2. Discharge and recover refrigerant.
   - Refer to Refrigerant Recovery in this section.
3. Disconnect magnetic clutch harness connector.
4. Remove radiator fan shroud.
5. Remove radiator fan.
   - When the fan is removed, be sure to tighten the fan fixing nuts temporarily to their original positions.
6. Remove serpentine belt.
   - Move serpentine belt tensioner to loose side using wrench, then remove serpentine belt.

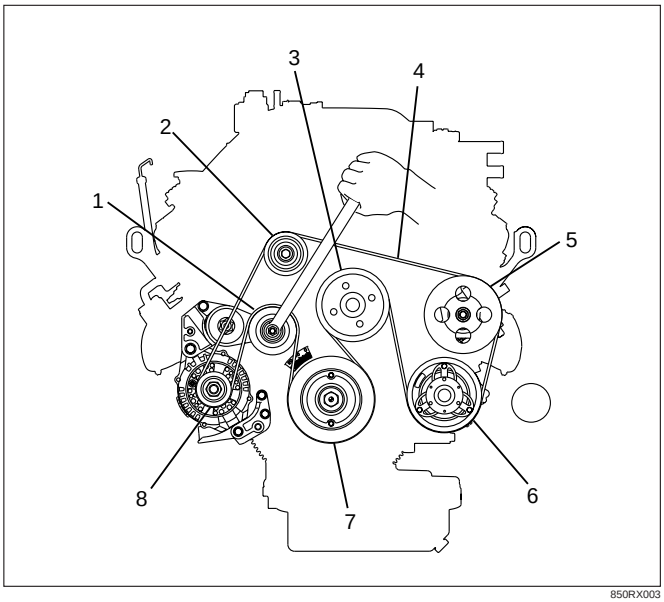

850RX003

Legend

(1) Tensioner
(2) Idle Pulley
(3) Cooling Fan Pulley
(4) Serpentine Belt
(5) Power Steering Oil Pump
(6) Air Conditioner Compressor
(7) Crankshaft Pulley
(8) Generator

7. Disconnect refrigerant line connector.
   - When removing the line connector, the connecting part should immediately be plugged or capped to prevent foreign matter from being mixed into the line.
8. Remove compressor.

Installation

1. Install compressor.
   - Tighten the compressor fixing bolts to the specified torque.

Compressor Fixing Torque	N·m (kg·m / lb·ft)
19 (1.9 / 14)	

2. Connect refrigerant line connector.
   - Tighten the refrigerant line connector fixing bolts to the specified torque.

Refrigerant Line Bolt Torque	N·m (kg·m / lb·ft)
15 (1.5 / 11)	

   - O-rings cannot be reused. Always replace with new ones.
   - Be sure to apply new compressor oil to the O-rings when connecting refrigerant lines.
3. Install serpentine belt.
   - Move serpentine belt tensioner to loose side using wrench, then install serpentine belt to normal position.
4. Install radiator fan.
5. Install radiator fan shroud.
6. Connect magnetic clutch harness connector.

4JG2 ENGINE

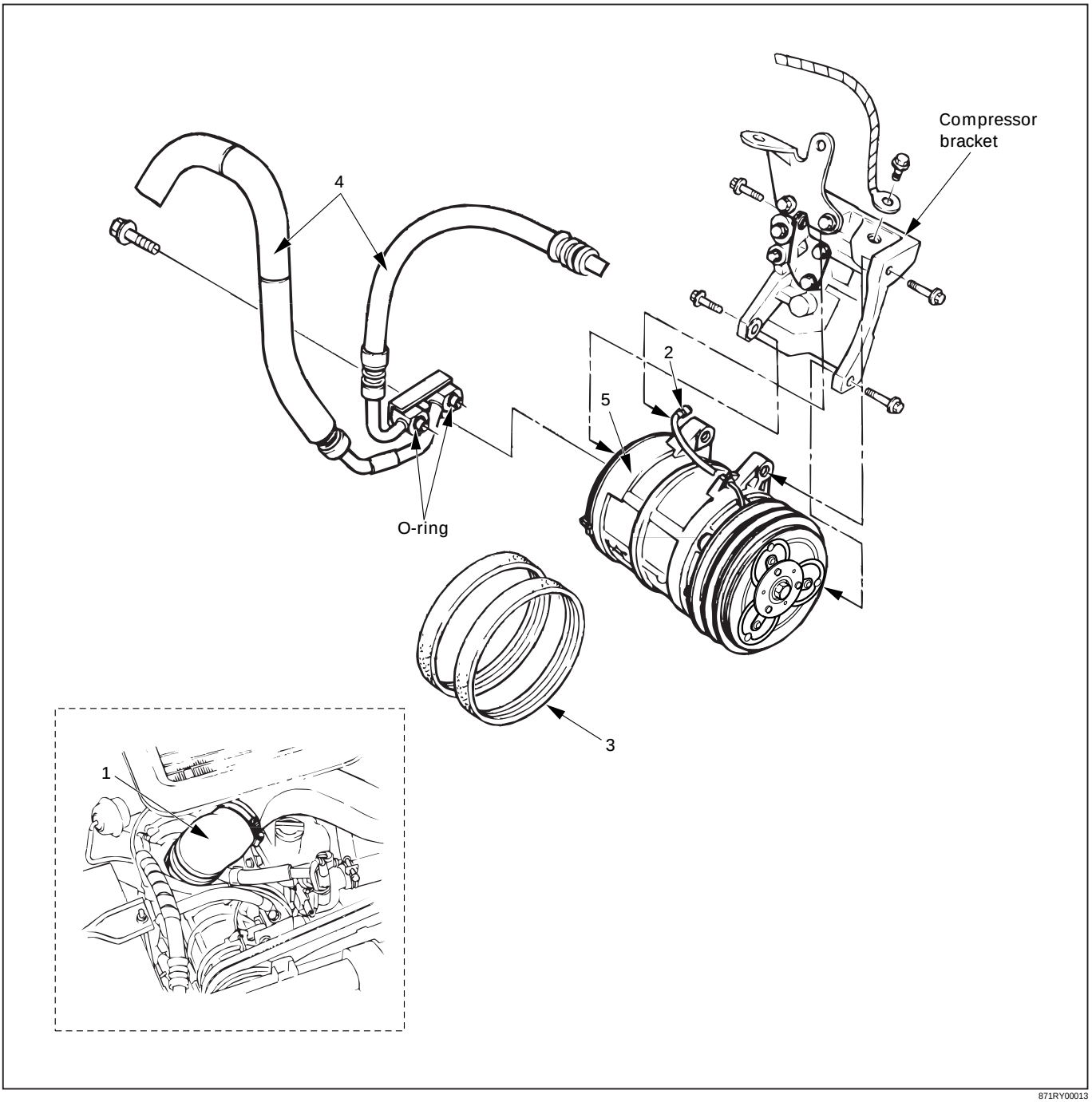

871RY00013

Removal Steps

1. Air duct
2. Magnetic clutch harness connector
3. Drive belt
4. Refrigerant line connector
5. Compressor

Installation Steps

To install, follow the removal steps in the reverse order.

REMOVAL

Preparation:

- Battery ground cable
- Discharge and recover refrigerant (Refer to "REFRIGERANT RECOVERY" in this section)

1. **Air Duct (Turbo to air cleaner)**
   Cover up the air duct connecting portion to prevent foreign materials from getting into the turbo and the air cleaner.
2. **Magnetic Clutch Harness Connector**
3. **Drive Belt**
   Loosen the power steering pump unit fixing bolts, then loosen the drive belt adjustment bolt and remove the drive belt.

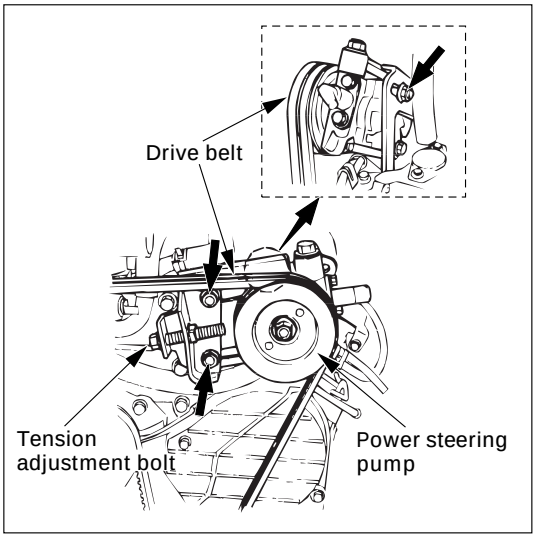

4. **Refrigerant Line Connector**
5. **Compressor**

INSTALLATION

5. **Compressor**
   Tighten the compressor fixing bolts to the specified torque.

Compressor Bolt Torque	N·m (kg·m / lb·ft)
40 (4.1 / 30)	

4. **Refrigerant Line Connector**
   - O-rings cannot be reused. Always replace with new ones.
   - Be sure to apply new compressor oil to the O-rings when connecting refrigerant lines.
   - Tighten the refrigerant line connector to the specified torque.

Refrigerant Line Bolt Torque	N·m (kg·m / lb·ft)
27 (2.8 / 20)	

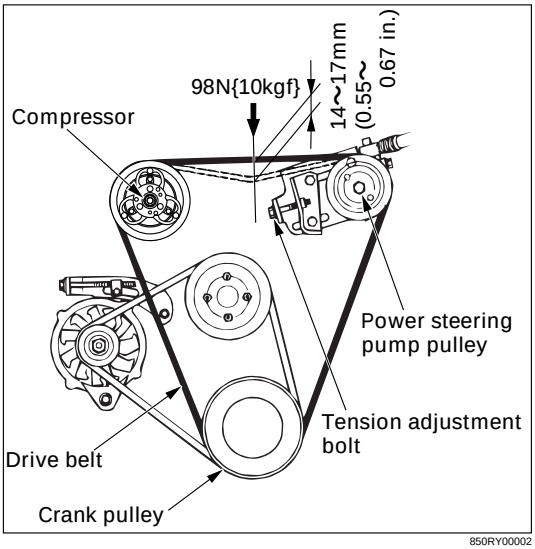

3. Drive Belt

1) Temporary tighten the power steering pump unit fixing bolts.
2) Push the drive belt when the force of 98N {10kgf}., and adjust the drive belt tension by tightening drive belt tension adjustment bolt, till the 14 ~ 17 mm (0.55 ~ 0.67 in) of deflection of the belt is obtained. Then tighten the power steering pump fixing bolts.

2. Magnetic Clutch Harness Connector

1. Air Duct (Turbo to air cleaner)

4JX1 ENGINE

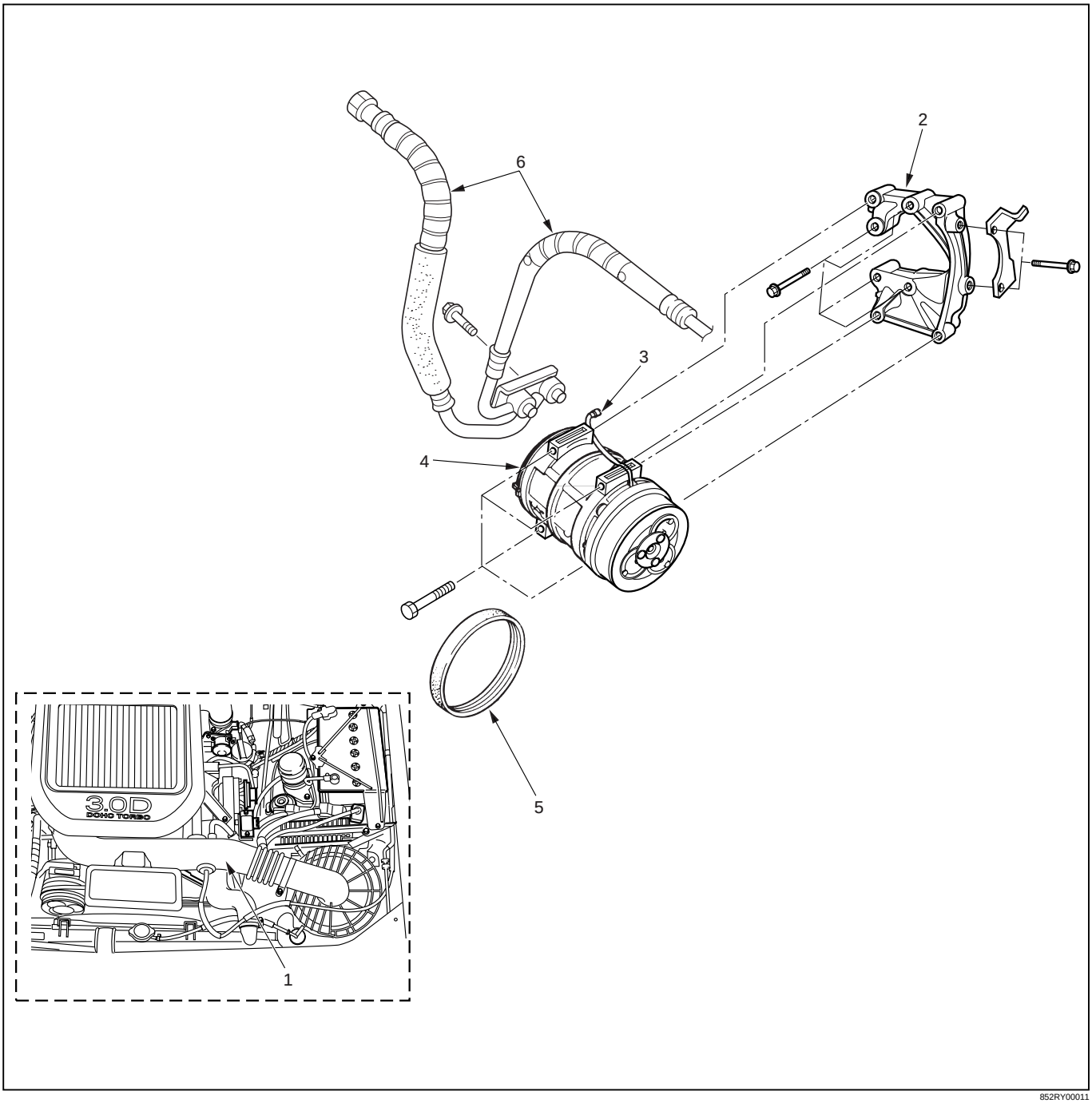

852RY00011

Removal Steps

1. Air duct
2. Compressor bracket
3. Magnetic clutch harness connector
4. Compressor
5. Drive belt
6. Refrigerant line connector

Installation Steps

To install, follow the removal steps in the reverse order.

REMOVAL

Preparation:

- Battery ground cable
- Discharge and recover refrigerant (Refer to "REFRIGERANT RECOVERY" in this section)

1. **Air Duct (Turbo to air cleaner)**
   Cover up the air duct connecting portion to prevent foreign materials from getting into the turbo and the air cleaner.
2. **Magnetic Clutch Harness Connector**
3. **Drive Belt**
   Loosen the power steering pump unit fixing bolts, then loosen the drive belt adjustment bolt and remove the drive belt.

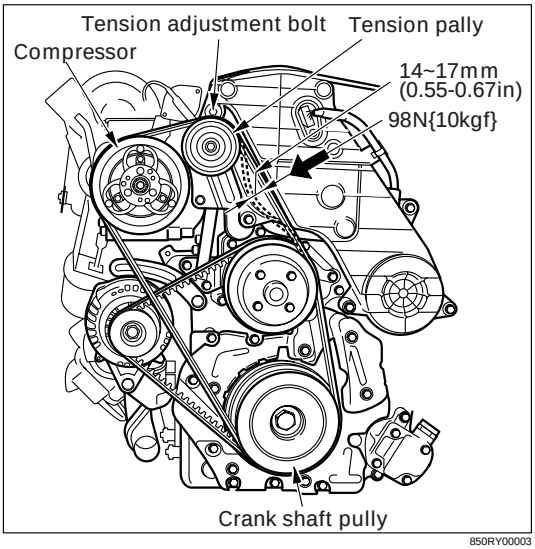

4. **Refrigerant Line Connector**
5. **Compressor**

INSTALLATION

5. **Compressor**
   Tighten the compressor fixing bolts to the specified torque.

Compressor Bolt Torque	N·m (kg·m / lb·ft)
40 (4.1 / 30)	

4. **Refrigerant Line Connector**
   - O-rings cannot be reused. Always replace with new ones.
   - Be sure to apply new compressor oil to the O-rings when connecting refrigerant lines.
   - Tighten the refrigerant line connector to the specified torque.

Refrigerant Line Bolt Torque	N·m (kg·m / lb·ft)
27 (2.8 / 20)	

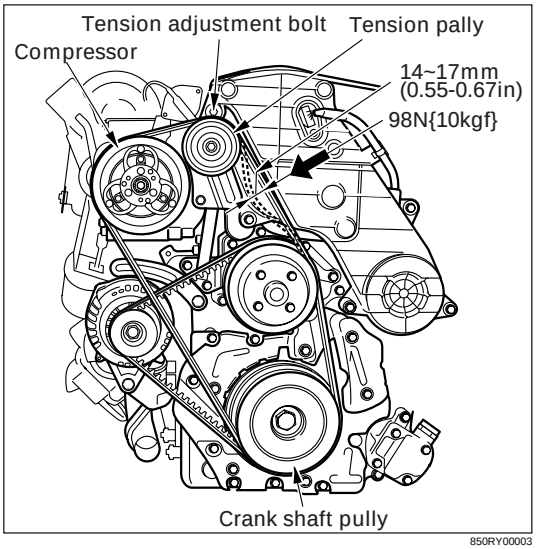

3. Drive Belt

1) Temporary tighten the power steering pump unit fixing bolts.
2) Push the drive belt when the force of 98N {10kgf}., and adjust the drive belt tension by tightening drive belt tension adjustment bolt, till the 14 ~ 17 mm (0.55 ~ 0.67 in) of deflection of the belt is obtained. Then tighten the power steering pump fixing bolts.

2. Magnetic Clutch Harness Connector

1. Air Duct (Turbo to air cleaner)

CONDENSER ASSEMBLY (LHD V6 WITHOUT CONDENSER FAN)

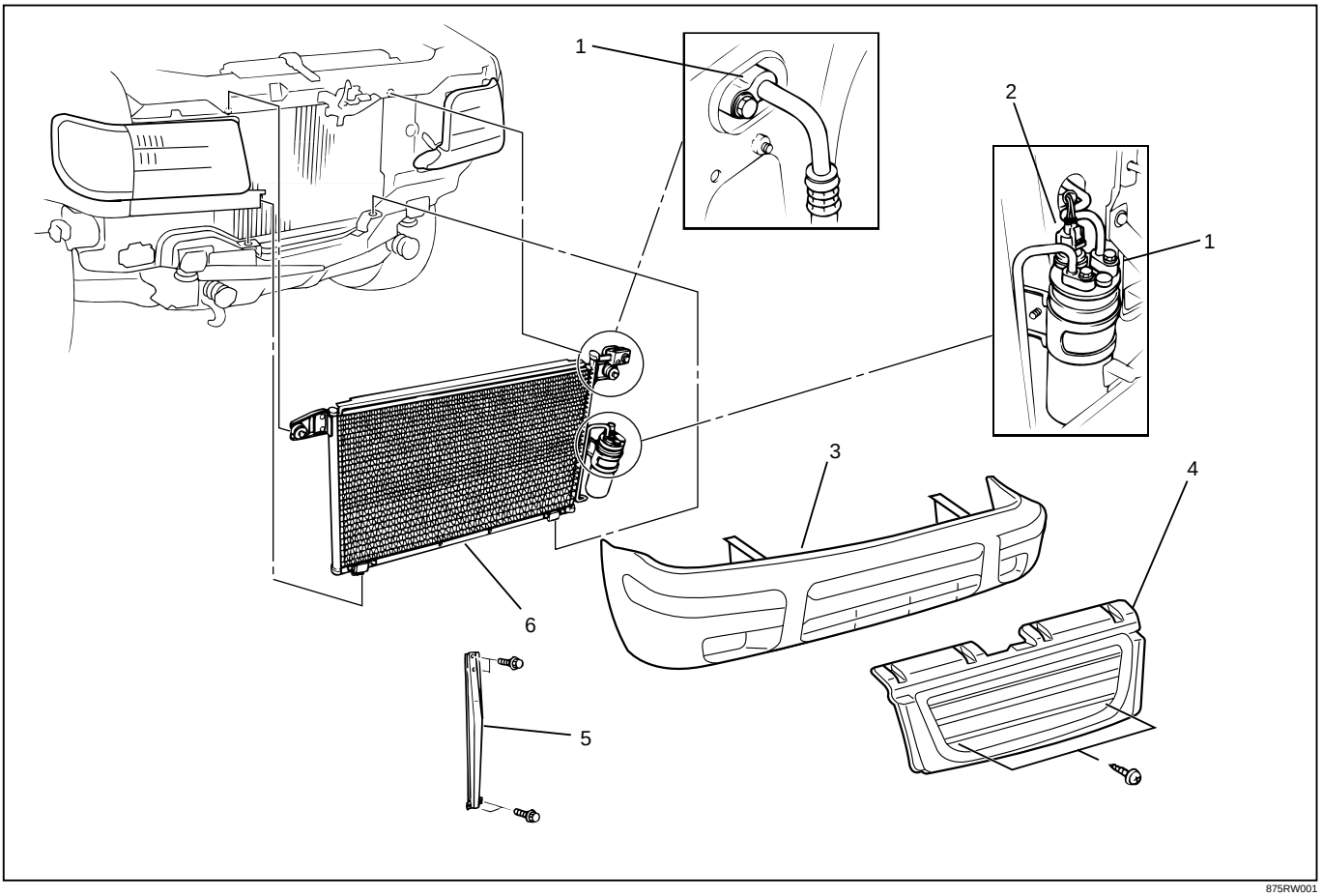

875RW001

Legend

(1) Refrigerant Line
(2) Pressure Switch Connector
(3) Front Bumper Assembly
(4) Radiator Grille
(5) Engine Hood Front End Stay
(6) Condenser Assembly

REMOVAL

1. Disconnect the battery ground cable.
2. Discharge and recover refrigerant.
   - Refer to Refrigerant Recovery in this section.
3. Remove radiator grille.
4. Remove front bumper assembly.
   - Refer to Bumpers in Body and Accessories section.
5. Remove engine hood front end stay.
6. Disconnect pressure switch connector.
7. Disconnect refrigerant line.
   - When removing the line connector, the connecting part should immediately be plugged or capped to prevent foreign matter from being mixed into the line.
8. Remove condenser assembly.
   - Handle with care to prevent damaging the condenser or radiator fin.
   - Be sure to apply new compressor oil to the O-rings when connecting the refrigerant line.

INSTALLATION

1. Install condenser assembly.
   - If installing a new condenser, be sure to add 30cc (1.0 fl. oz.) of new compressor oil to a new one.
   - Tighten the condenser fixing bolts to the specified torque.

Condenser Fixing Torque	N·m (kg·m / lb·in)
6 (0.6 / 52)	

2. Connect refrigerant line.
   - Tighten the inlet line connector fixing bolt to the specified torque.

Inlet Line Torque	N·m (kg·m / lb·ft)
15 (1.5 / 11)	

- Tighten the outlet line connector fixing bolt to the specified torque.

Outlet Line Torque	N·m (kg·m / lb·in)
6 (0.6 / 52)	

- O-rings cannot be reused. Always replace with new ones.
  - Be sure to apply new compressor oil to the O-rings when connecting the refrigerant line..
3. Connect pressure switch connector.
4. Install engine hood front end stay.
5. Install front bumper assembly.
6. Install radiator grille.

CONDENSER FAN MOTOR

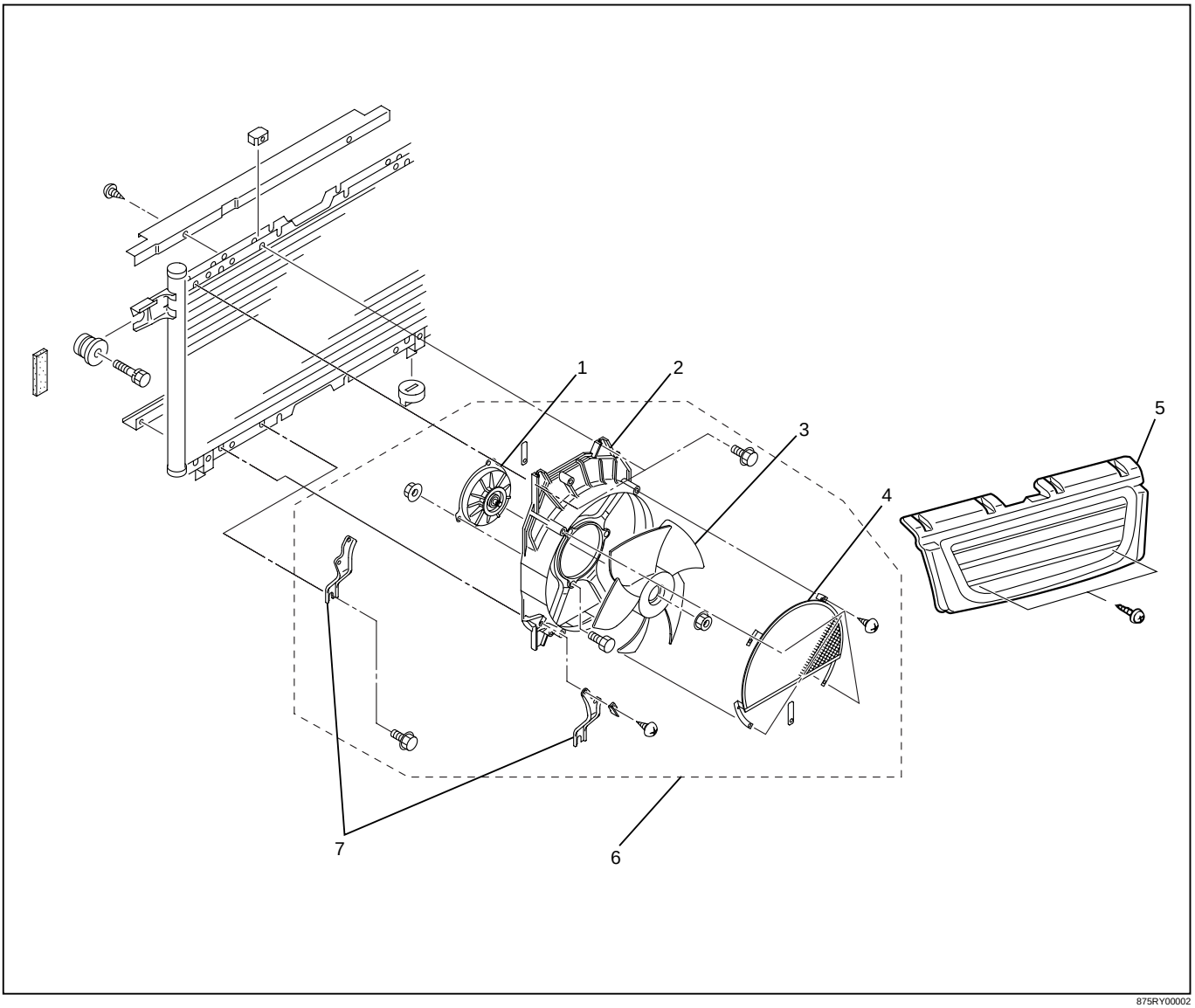

875RY00002

Removal Steps

(1) Condenser Fan Motor
(2) Fan Motor Shroud
(3) Motor Fan
(4) Condenser Unit Net
(5) Radiator Grille
(6) Condenser Fan Assembly
(7) Shroud Bracket

Removal

1. Disconnect the battery ground cable.
2. Discharge and recover refrigerant.
   - Refer to Refrigerant Recovery in this section.
3. Remove radiator grille.
4. Remove condenser fan assembly.
   - Disconnect the fan motor connector and remove the 4 fixing bolts.
5. Remove condenser unit net.
   - Remove the 4 fixing screws.
6. Remove motor fan.
7. Remove condenser fan motor.

Installation

To install, follow the removal steps in the reverse order, noting the following point.

1. Route the fan motor harness in its previous position and fix it securely with clip and bracket.

RECEIVER/DRIER

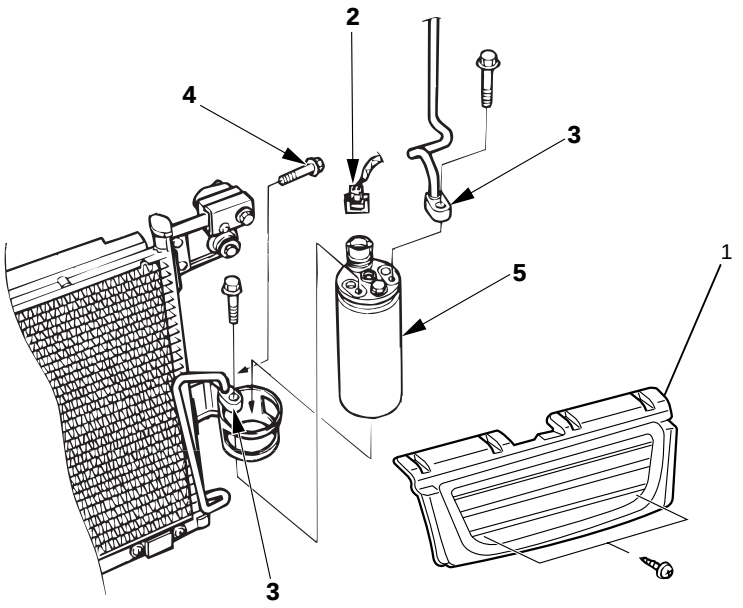

Removal Steps

1. Radiator grille
2. Pressure switch connector
3. Refrigerant line
4. Bracket bolt
5. Receiver/drier

Installation Steps

To install, follow the removal steps in the reverse order.

REMOVAL

Preparation:

- Disconnect the battery ground cable
- Discharge and recover refrigerant (Refer to "REFRIGERANT RECOVERY" in this section.)

1. **Radiator Grille**
2. **Pressure Switch Connector**
3. **Refrigerant Line**
   When removing the line connected part, the connecting part should immediately be plugged or capped to prevent foreign matter from being mixed into the line.
4. **Bracket Bolt**
5. **Receiver/Drier**
   Loosen the bolt, then, using care not to touch or bend the refrigerant line, carefully pull out the receiver/drier.

INSTALLATION

To install, follow the removal steps in the reverse order, noting the following points:

1. If installing a new receiver/drier, be sure to add 30 cc (0.8 Imp fl oz) of new compressor oil to a new one.
2. Put the receiver/drier in the bracket, and connect with the refrigerant line. Check that no excessive force is imposed on the line. Fasten the bracket bolt to the receiver/drier.
3. Tighten the line to the specified torque.

Refrigerant Line Bolt Torque	N·m (kg·m / lb·in)
6 (0.6 / 52)	

4. O-rings cannot be reused. Always replace with new ones.
5. Be sure to apply new compressor oil to the O-rings when connecting refrigerant line.

PRESSURE SWITCH

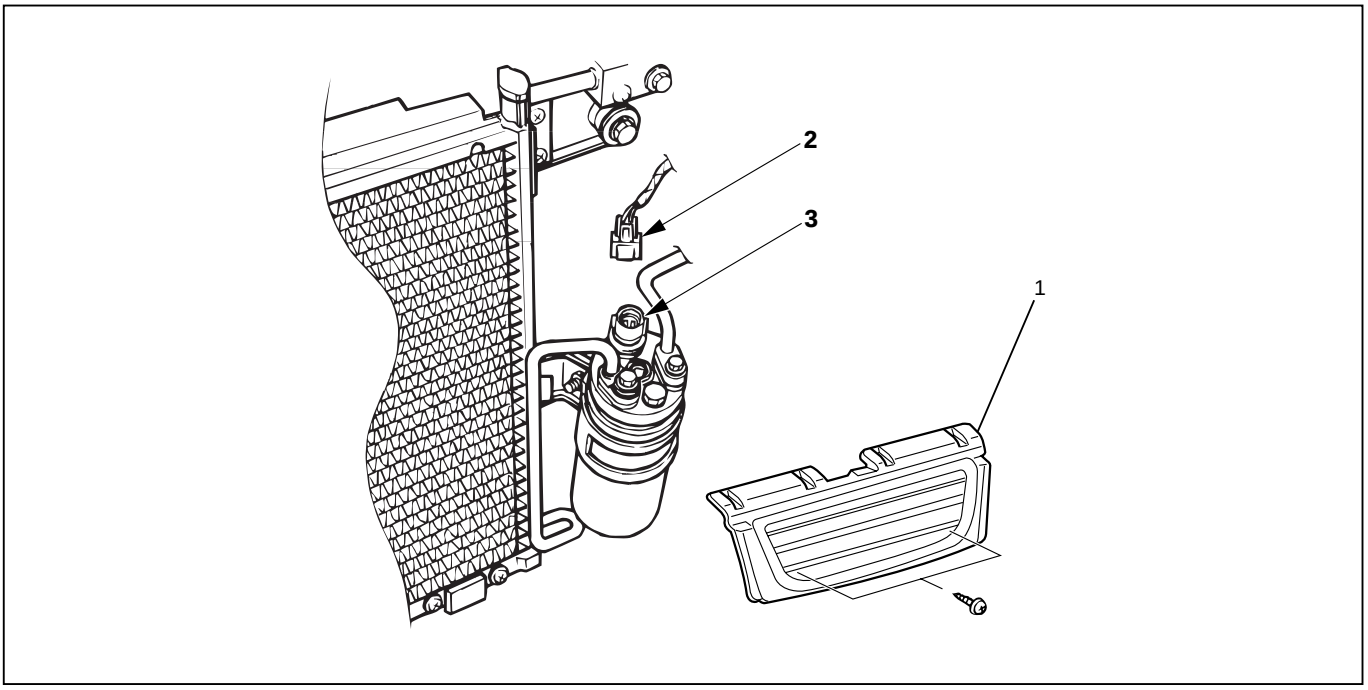

Removal Steps

1. Radiator grille
2. Pressure switch connector
3. Pressure switch

Installation Steps

To install, follow the removal steps in the reverse order.

REMOVAL

Preparation:

- Disconnect the battery ground cable
- Discharge and recover refrigerant (Refer to "REFRIGERANT RECOVERY" in this section.)

1. **Radiator Grille**
2. **Pressure Switch Connector**
3. **Pressure Switch**
   When removing the switch connected part, the connecting part should immediately be plugged or capped to prevent foreign matter from being mixed into the line.

INSTALLATION

To install, follow the removal steps in the reverse order, noting the following points:

1. O-ring cannot be reused. Always replace with a new one.
2. Be sure to apply new compressor oil to the O-ring when connecting pressure switch.
3. Tighten the pressure switch to the specified torque.

Pressure Switch Torque	N·m (kg·m / lb·in)
13 (1.3 / 113)	

Receiver/Drier and Associated Parts (LHD V6 without Condenser Fan)

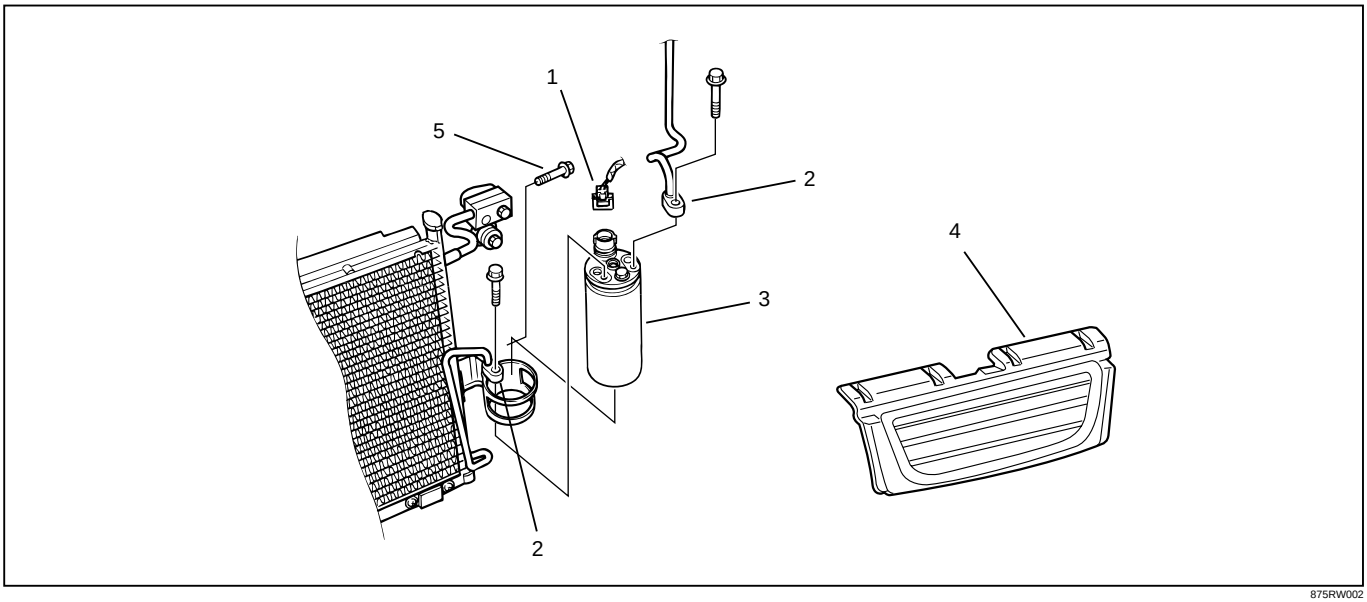

875RW002

Legend

1. Pressure Switch Connector
2. Refrigerant Line
3. Receiver / Drier
4. Radiator Grille
5. Bracket Bolt

REMOVAL

1. Disconnect the battery ground cable
2. Discharge and recover refrigerant
   - Refer to “REFRIGERANT RECOVERY” in this section.
3. Remove radiator grille.
4. Disconnect pressure switch connector.
5. Disconnect refrigerant line.
   - When removing the line connected part, the connecting part should immediately be plugged or capped to prevent foreign matter form being mixed in to line.
6. Remove bracket bolt.
7. Remove receiver/drier.
   - Loosen the bolt, then, using care not to touch or bend the refrigerant line, carefully pull out the receiver/drier.

INSTALLATION

To install, follow the removal steps in the reverse order, noting the following points:

1. If installing a new receiver/drier, be sure to add 30cc(1.0 fl. oz.) of new compressor oil to a new one.
2. Put the receiver/drier in the bracket and connect with the refrigerant line. Check that no excessive force is imposed on the line. Fasten the bracket bolt to the receiver/drier.
3. Tighten the refrigerant line to the specified torque.

Refrigerant Line Blot Torque	N·m (kg·m / lb·in)
6 (0.6 / 52)	

4. O-rings cannot be reused. Always replace with new ones.
5. Be sure to apply new compressor oil to the O-rings when connecting the refrigerant line.

Pressure Switch and Associated Parts

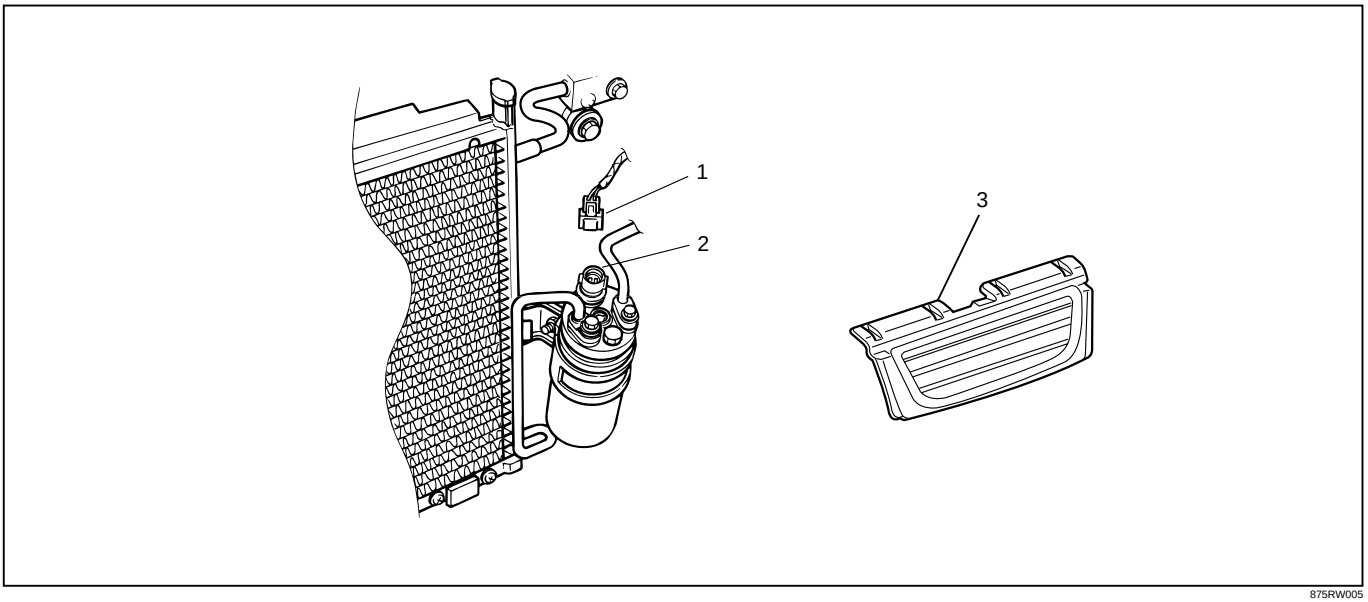

875RW005

Legend

1. Pressure switch connector
2. Pressure switch
3. Radiator Grille

REMOVAL

Preparation:

- Disconnect the battery ground cable
- Discharge and recover refrigerant (Refer to "REFRIGERANT RECOVERY" in this section.)

1. **Radiator Grille**
2. **Pressure Switch Connector**
3. **Pressure Switch**
   When removing the switch connected part, the connecting part should immediately be plugged or capped to prevent foreign matter from being mixed into the line.

INSTALLATION

To install, follow the removal steps in the reverse order, noting the following points:

1. O-ring cannot be reused. Always replace with a new one.
2. Be sure to apply new compressor oil to the O-ring when connecting pressure switch.
3. Tighten the pressure switch to the specified torque.

Pressure Switch Torque	N·m (kg·m / lb·in)
	13 (1.3 / 113)

EVAPORATOR ASSEMBLY

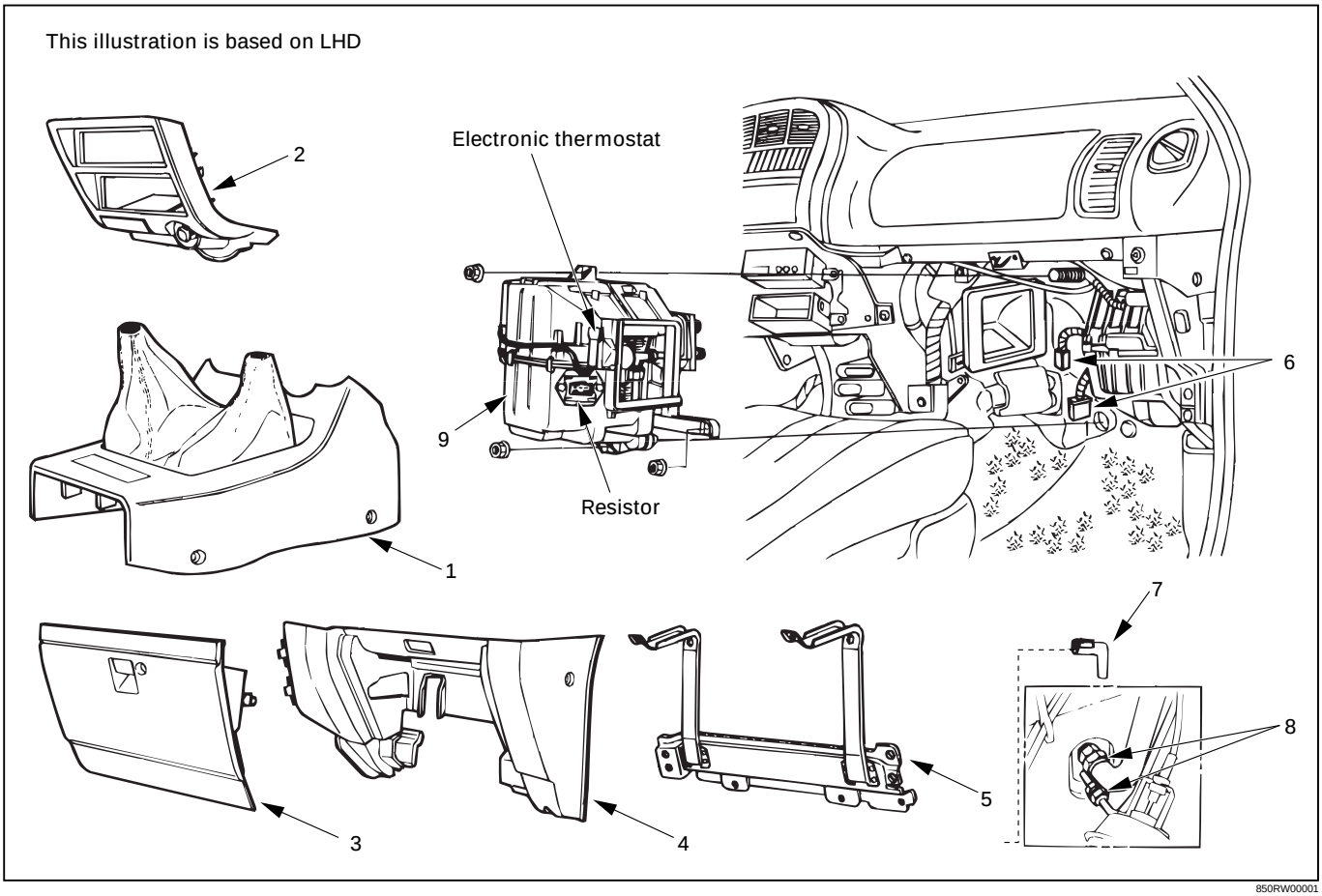

850RW00001

Removal Steps

1. Front console assembly
2. Lower cluster assembly
3. Glove box
4. Instrument panel passenger lower cover assembly
5. Passenger knee bolster reinforcement assembly
6. Resistor and electronic thermostat connector
7. Drain hose
8. Refrigerant line
9. Evaporator assembly

Installation Steps

To install, follow the removal steps in the reverse order.

REMOVAL

Preparation:

- Disconnect the battery ground cable
- Discharge and recover refrigerant (Refer to "REFRIGERANT RECOVERY" in this section.)

1. **Front Console Assembly**
2. **Lower Cluster Assembly**
3. **Glove Box**
4. **Instrument Panel Passenger Lower Cover Assembly**
5. **Passenger Knee Bolster Reinforcement Assembly**
   - Refer to Section 10 "BODY" for INSTRUMENT PANEL ASSEMBLY removal procedure.
6. **Resistor and Electronic Thermostat Connector**

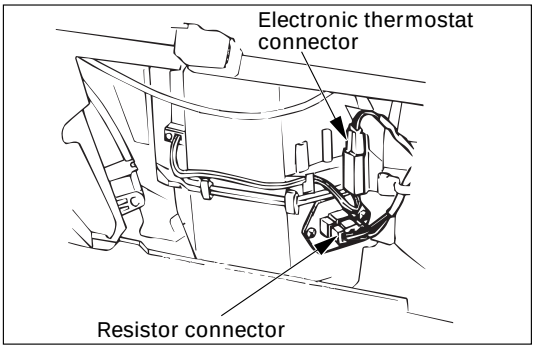

7. **Drain Hose**
8. **Refrigerant Line**
   - Use a back-up wrench when disconnecting and reconnecting the refrigerant lines.
   - When removing the refrigerant line connected part, the connecting part should immediately be plugged or capped to prevent foreign matter from being mixed into the line.
9. **Evaporator Assembly**

INSTALLATION

To install, follow the removal steps in the reverse order, noting the following points:

1. To install a new evaporator assembly, add 50cc (1.4 Imp fl oz) of new compressor oil to a new core.
2. Tighten the refrigerant outlet line to the specified torque.

Outlet Line Torque	N·m (kg·m / lb·ft)
25 (2.5 / 18)	

3. Tighten the refrigerant inlet line to the specified torque.

Inlet Line Torque	N·m (kg·m / lb·ft)
15 (1.5 / 11)	

4. O-rings cannot be reused. Always replace with new ones.
5. Be sure to apply new compressor oil to the O-rings when connecting lines.

EVAPORATOR CORE AND/OR EXPANSION VALVE

This illustration is based on LHD

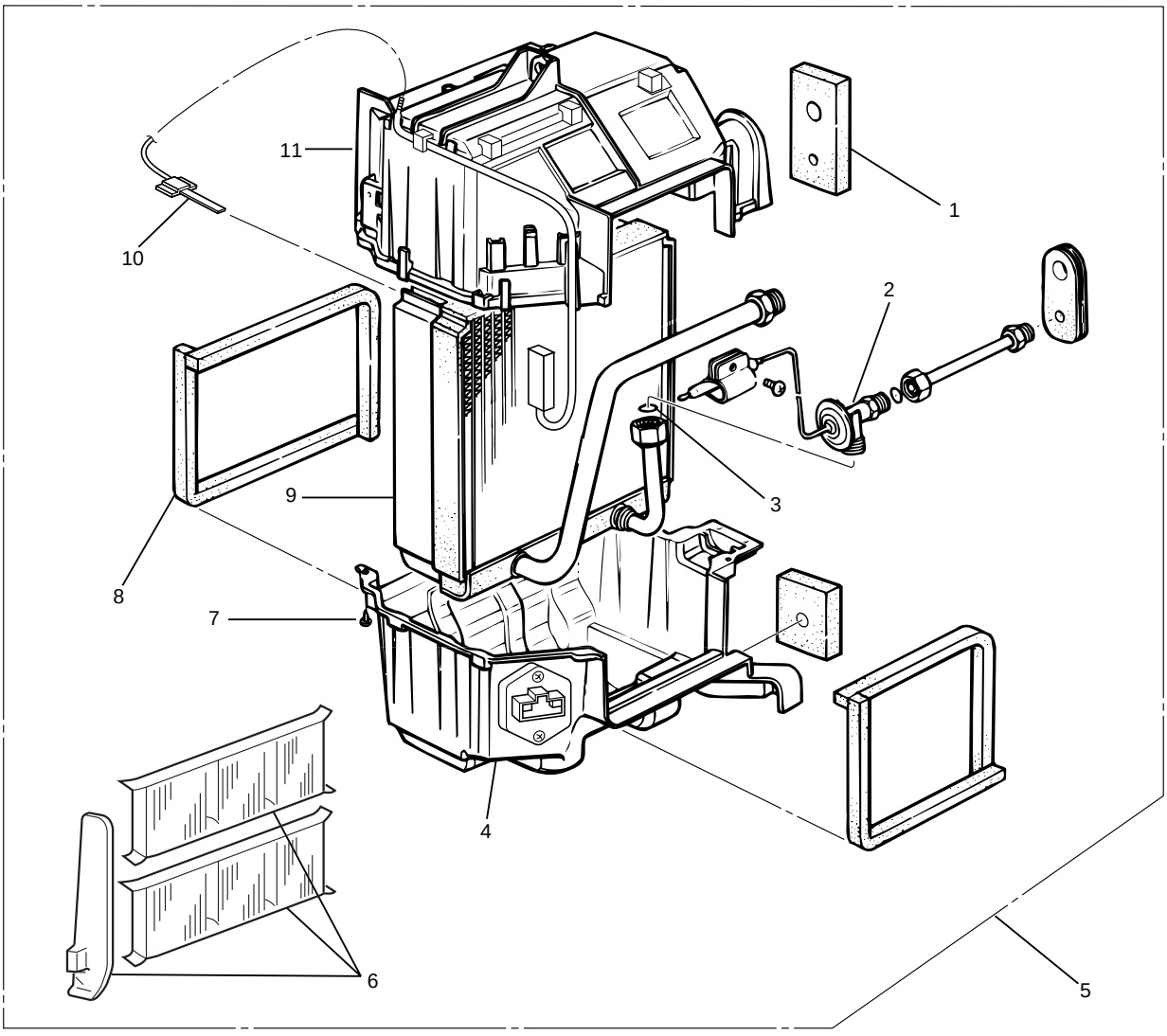

874RY00012

Legend

(1) Lining
(2) Expansion Valve
(3) O-ring
(4) Lower Case
(5) Evaporator Assembly
(6) Pollen Filter
(7) Attaching Screw
(8) Lining
(9) Evaporator Core
(10) Electronic Thermostat
(11) Upper Case

Removal

1. Disconnect the battery ground cable.
2. Discharge and recover refrigerant.
   - Refer to Refrigerant Recovery in this section.
3. Remove evaporator assembly.
   - Refer to Evaporator Assembly in this section.
4. Remove pollen filter.
5. Pull the sensor from the evaporator assembly.
6. Remove attaching screw.
7. Remove upper case.
8. Remove lower case.
   - Slit the case parting face with a knife since the lining is separated when removing the evaporator.

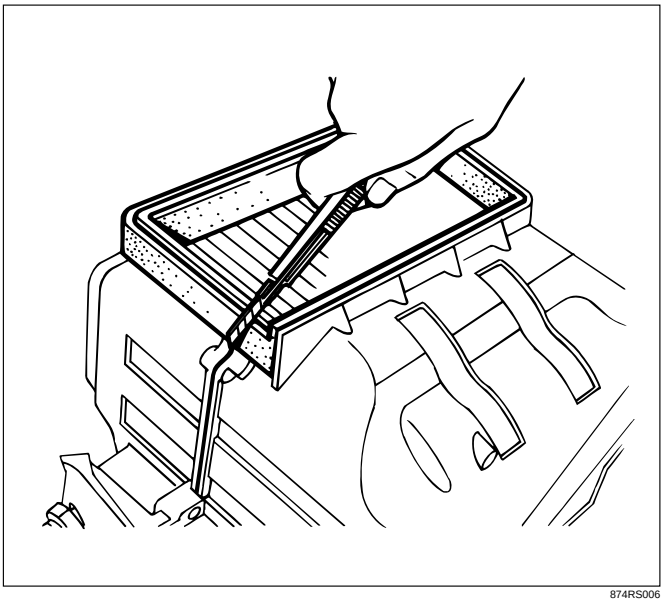

874RS006

- Lift to remove the upper case.

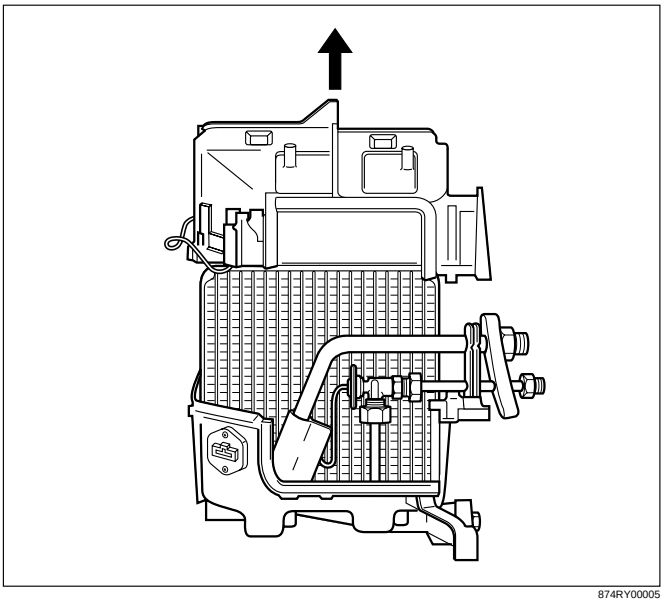

874RY00005

9. Remove evaporator core.

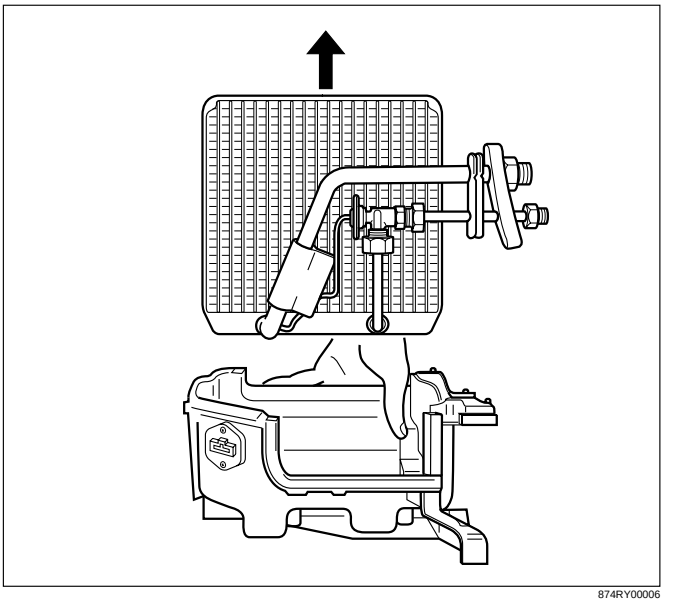

874RY00006

10. Remove expansion valve.
    - Tear off the insulator carefully.
    - Use a back-up wrench when disconnecting all refrigerant pipes.

Installation

To install, follow the removal steps in the reverse order, noting the following points:

1. The sensor is installed on the core with the clip.
2. The sensor must not interfere with the evaporator core.
3. When installing the new evaporator core, install the thermo sensor (2) to the evaporator core (1) specified position with the clip in the illustration.

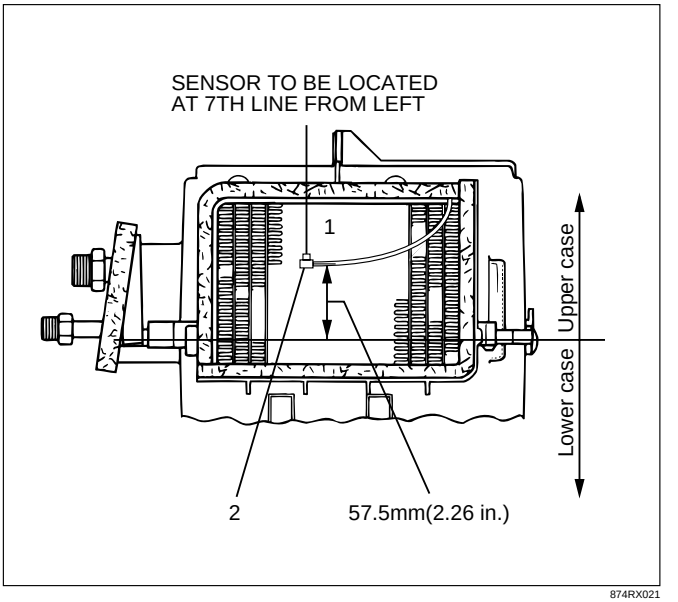

874RX021

4. O-rings cannot be reused, Always replace with new ones.
5. Be sure to apply new compressor oil to the O-rings when connecting lines.
6. Be sure to install the sensor and the insulator on the place where they were before.
7. To install a new evaporator core, add 50cc (1.7 fl. oz.) of new compressor oil to the new core.
8. Tighten the refrigerant lines to the specified torque. Refer to Main Data and Specifications for Torque Specifications in this section.
9. Apply an adhesive to the parting face of the lining when assembling the evaporator assembly.

ELECTRONIC THERMOSTAT

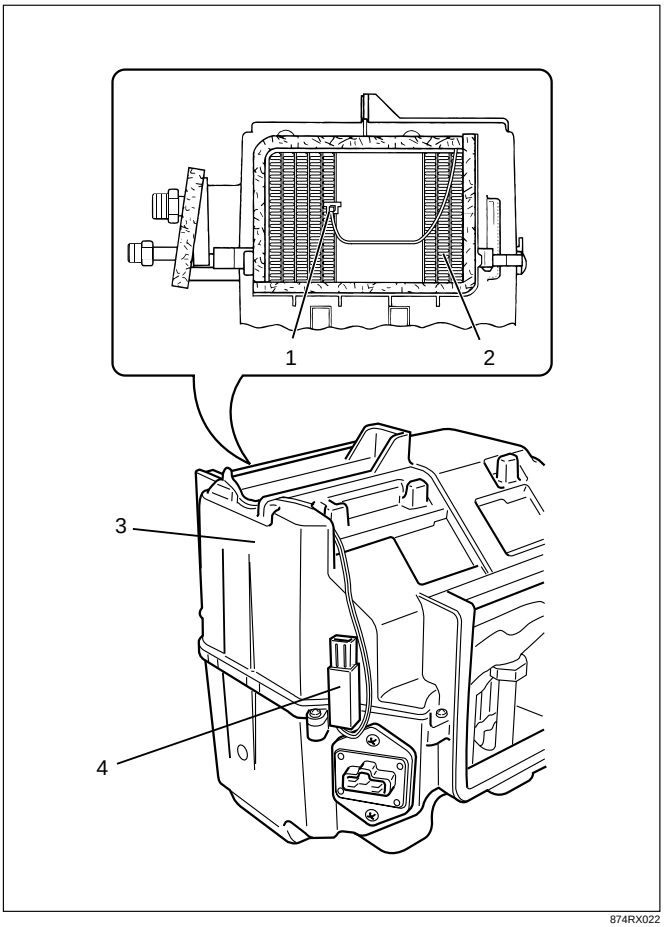

Legend

(1) Thermo Sensor
(2) Evaporator Core
(3) Evaporator
(4) Thermostat Unit

Removal

1. Disconnect the battery ground cable.
2. Discharge and recover refrigerant.
   - Refer to Refrigerant Recovery in this section.
3. Remove evaporator assembly.
   - Refer to Evaporator Assembly removal procedure in this section.
4. Remove electronic thermostat.
   - Pull the sensor from the evaporator assembly.

Installation

To install, follow the removal steps in the reverse order, noting the following points.

1. Install the thermostat sensor to the evaporator core specified position with the clip.
2. The sensor is installed on the core with the clip and it must not interfere with the core.

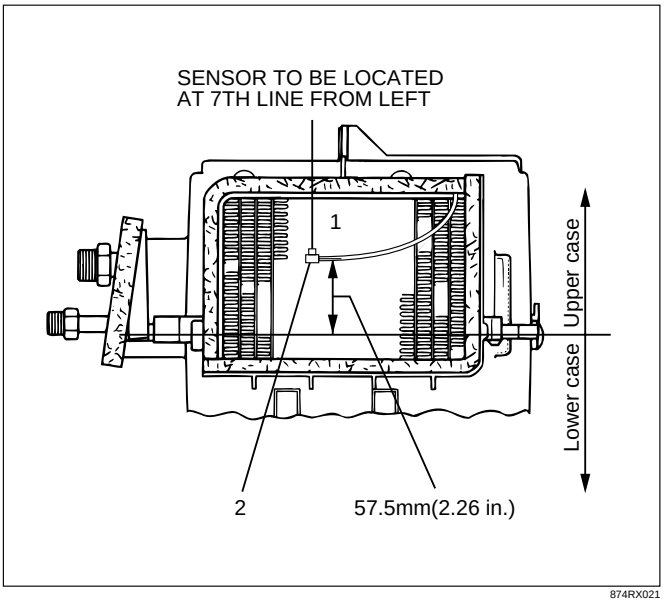

A/C SWITCH AND ILLUMINATION BULB

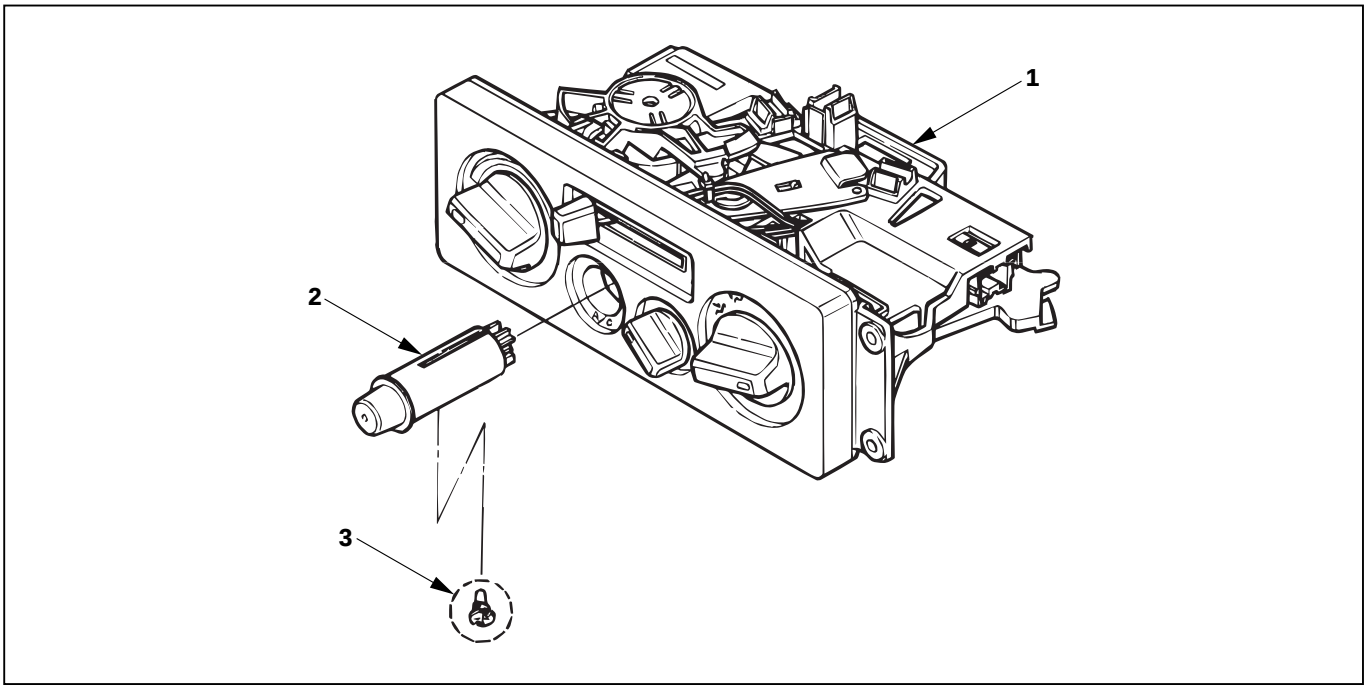

Removal Steps

1. Control lever assembly
2. A/C switch
3. Illumination bulb

Installation Steps

To install, follow the removal steps in the reverse order.

REMOVAL

Preparation:

Disconnect the battery ground cable

1. **Control Lever Assembly**
   Refer to Section 1A “CONTROL LEVER ASSEMBLY” removal procedure.
2. **A/C Switch**
   Raise up the catch portion of the switch and remove the switch while pushing it toward the outside.

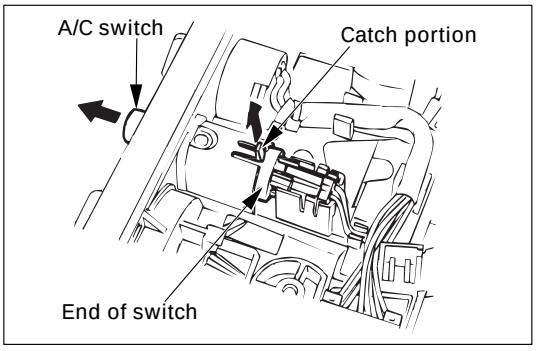

3. **Illumination Bulb**
   Turn the illumination bulb counterclockwise to remove.

INSTALLATION

To install, follow the removal steps in the reverse order.

REFRIGERANT LINE

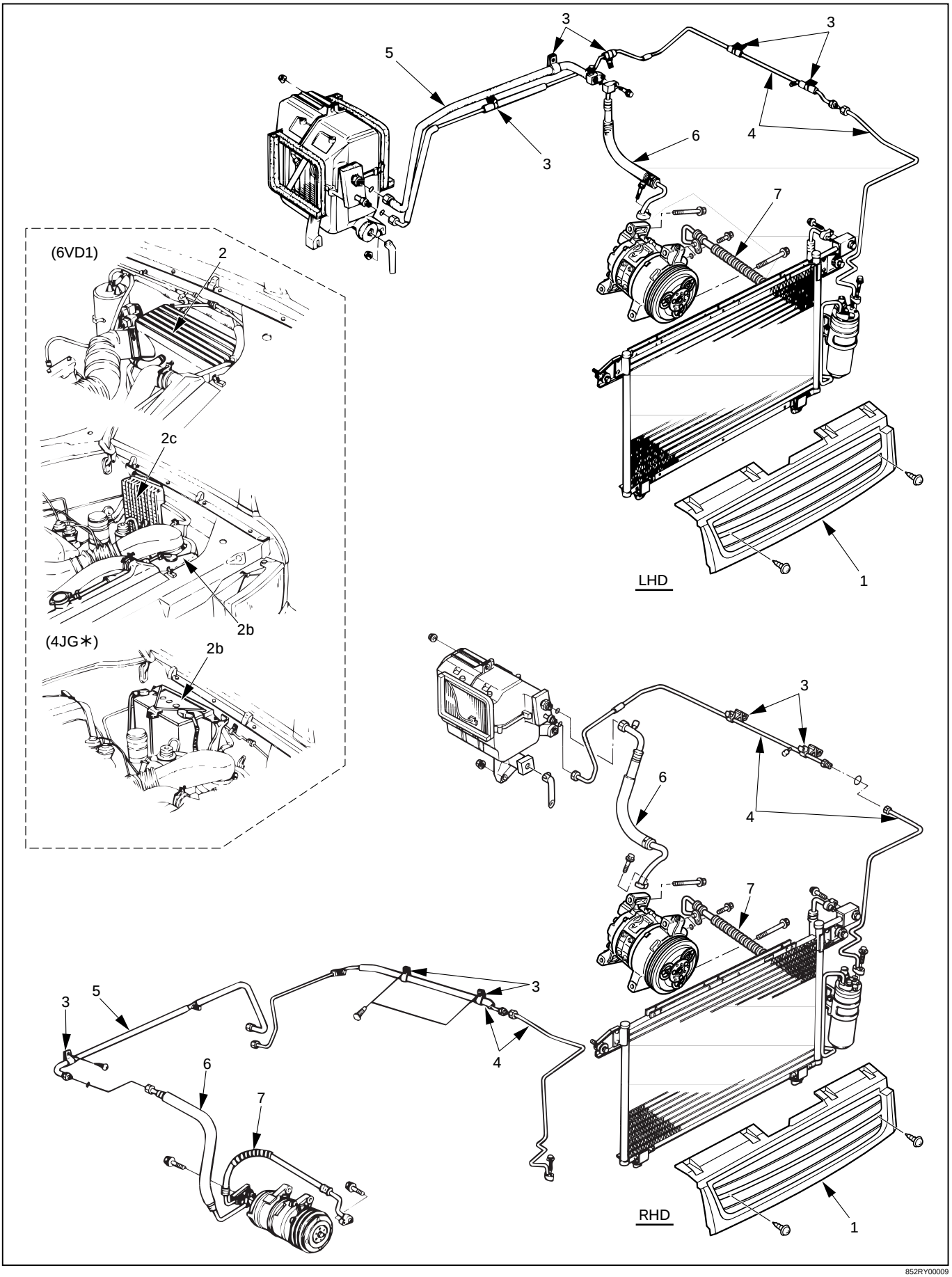

852RY00009

Removal Steps

1. Radiator grille
2. Air cleaner
2a. Dust
2b. Battery and reserver tank
2c. Air cleaner cover
3. Clip and clamp
4. Liquid line (High-pressure pipe)
5. Suction line (Low-pressure pipe)
6. Suction line (Low-pressure hose)
7. Discharge line (High-pressure hose)

Installation Steps

To install, follow the removal steps in the reverse order.

REMOVAL

Preparation:

- Disconnect the battery ground cable
- Discharge and recover refrigerant (Refer to "REFRIGERANT RECOVERY" in this section.)

1. Radiator Grille

2. Air Cleaner

2a. Duct

2b. Battery and Reserver Tank

2c. Air Cleaner Cover

3. Clip and Clamp

4. Liquid Line (High-pressure pipe)

5. Suction Line (Low-pressure pipe)

6. Suction Line (Low-pressure hose)

7. Discharge Line (High-pressure hose)

- Use a back-up wrench when disconnecting and reconnecting the refrigerant lines.
- When removing the refrigerant line connecting part, the connecting part should immediately be plugged or capped to prevent foreign matter from being mixed into the line.

INSTALLATION

To install, follow the removal steps in the reverse order, noting the following points:

1. O-rings cannot be reused. Always replace new ones.
2. Be sure to apply compressor oil to the O-rings when connecting refrigerant lines.
3. Tighten the refrigerant line to the specified torque. (Refer to "SERVICE INFORMATION" for FIXING TORQUE in section 00.)

REAR COOLER PARTS

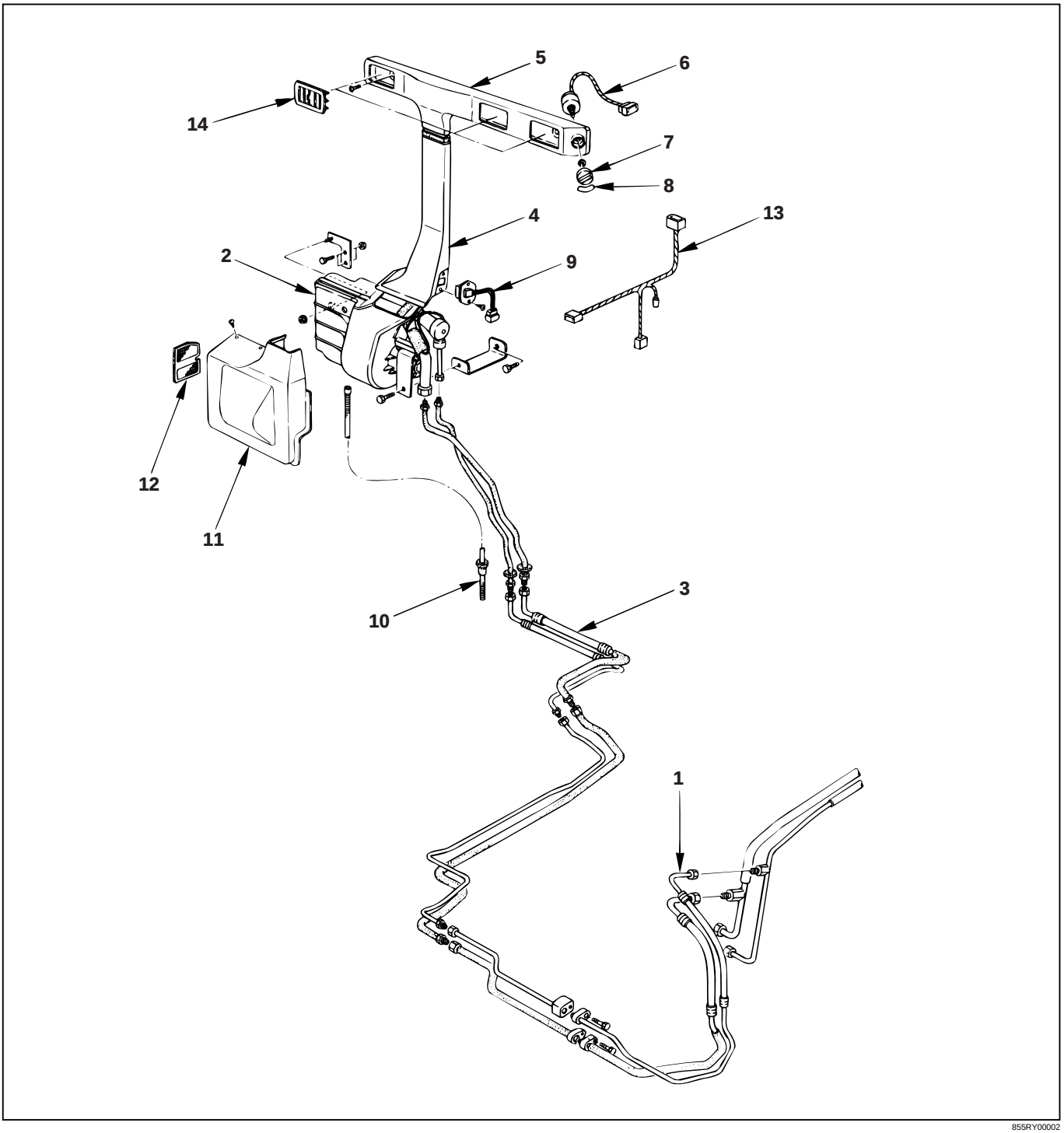

855RY00002

Legend

(1) Liquid Line (high pressure pipe)
(2) Cooling Unit
(3) Suction Line (low pressure pipe)
(4) Duct Assembly
(5) Duct Assembly
(6) Switch
(7) Knob
(8) Panel
(9) Resistor
(10) Drain Hose
(11) Cover Assembly
(12) Filter
(13) Wire Harness
(14) Grille Assembly

REAR COOLER PARTS (ROOF DUCT TYPE)

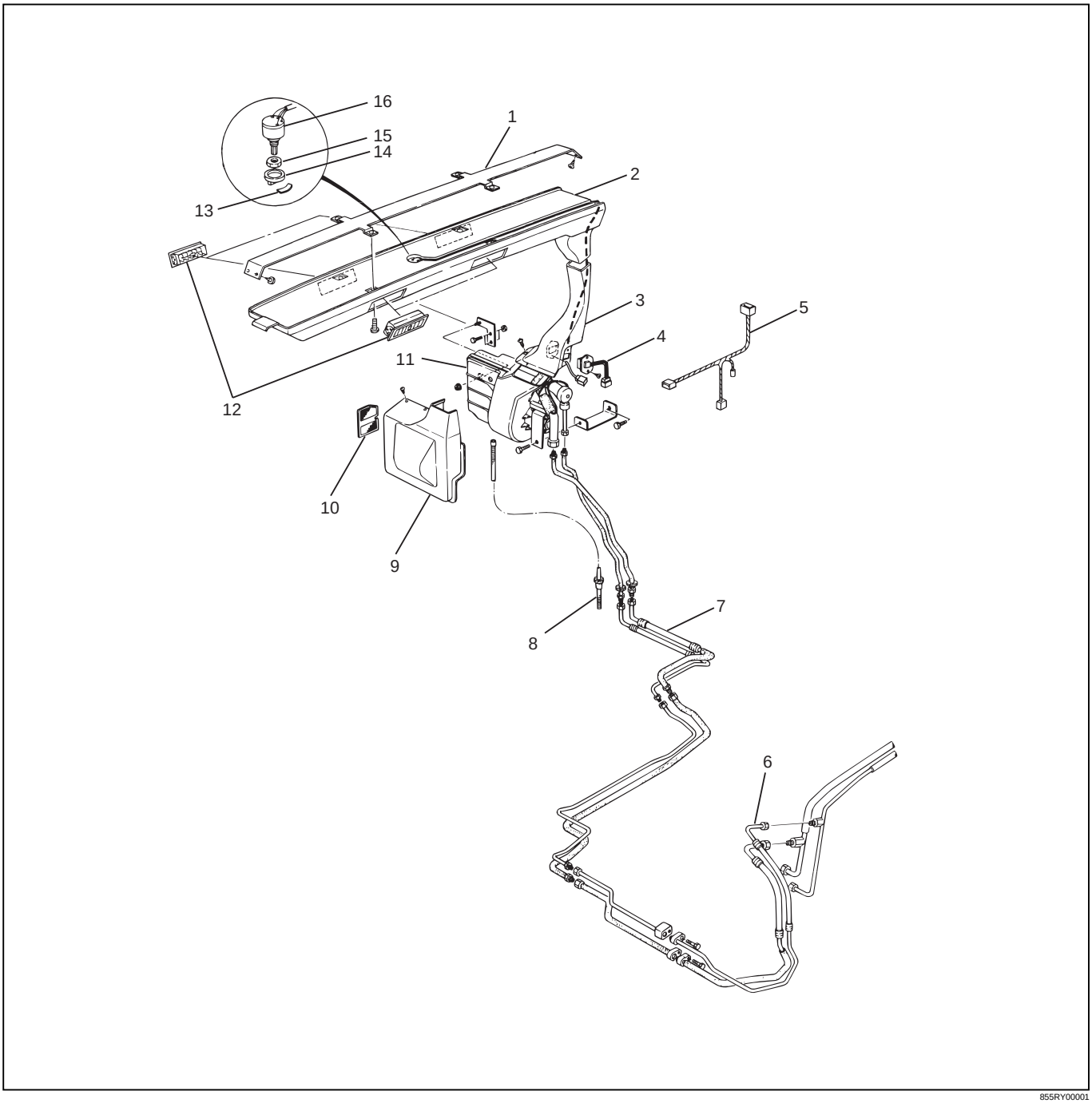

855RY00001

Legend

(1) Roof Duct Bracket
(2) Roof Duct
(3) Lower Duct
(4) Resistor
(5) Wire Harness
(6) Liquid Line (high pressure pipe)
(7) Suction Line (low pressure pipe)
(8) Drain Hose
(9) Cover Assembly
(10) Filter
(11) Cooling Unit
(12) Grille Assembly
(13) Panel
(14) Knob
(15) Nut
(16) Fan Control Switch

WIRING DIAGRAM

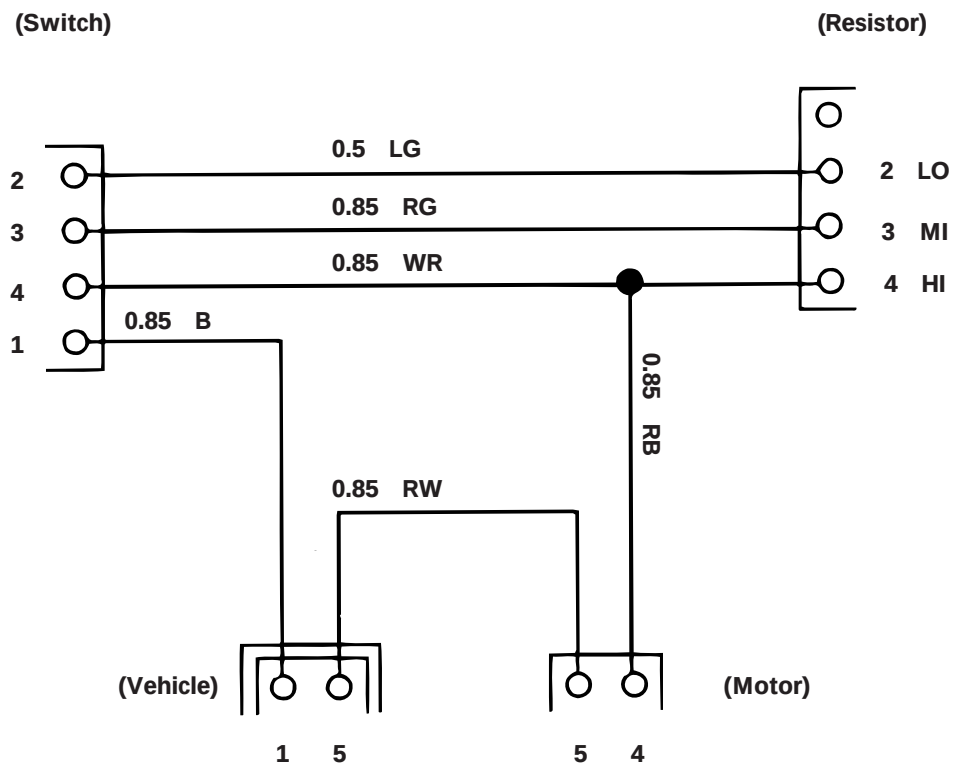

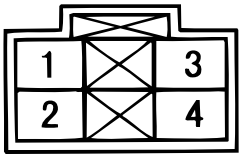

Switch

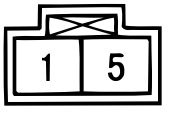

Vehicle

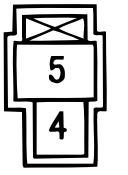

Motor

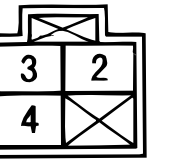

Resistor

D08RY00303

TORQUE SPECIFICATIONS

N·m (kg·m/ib·ft)

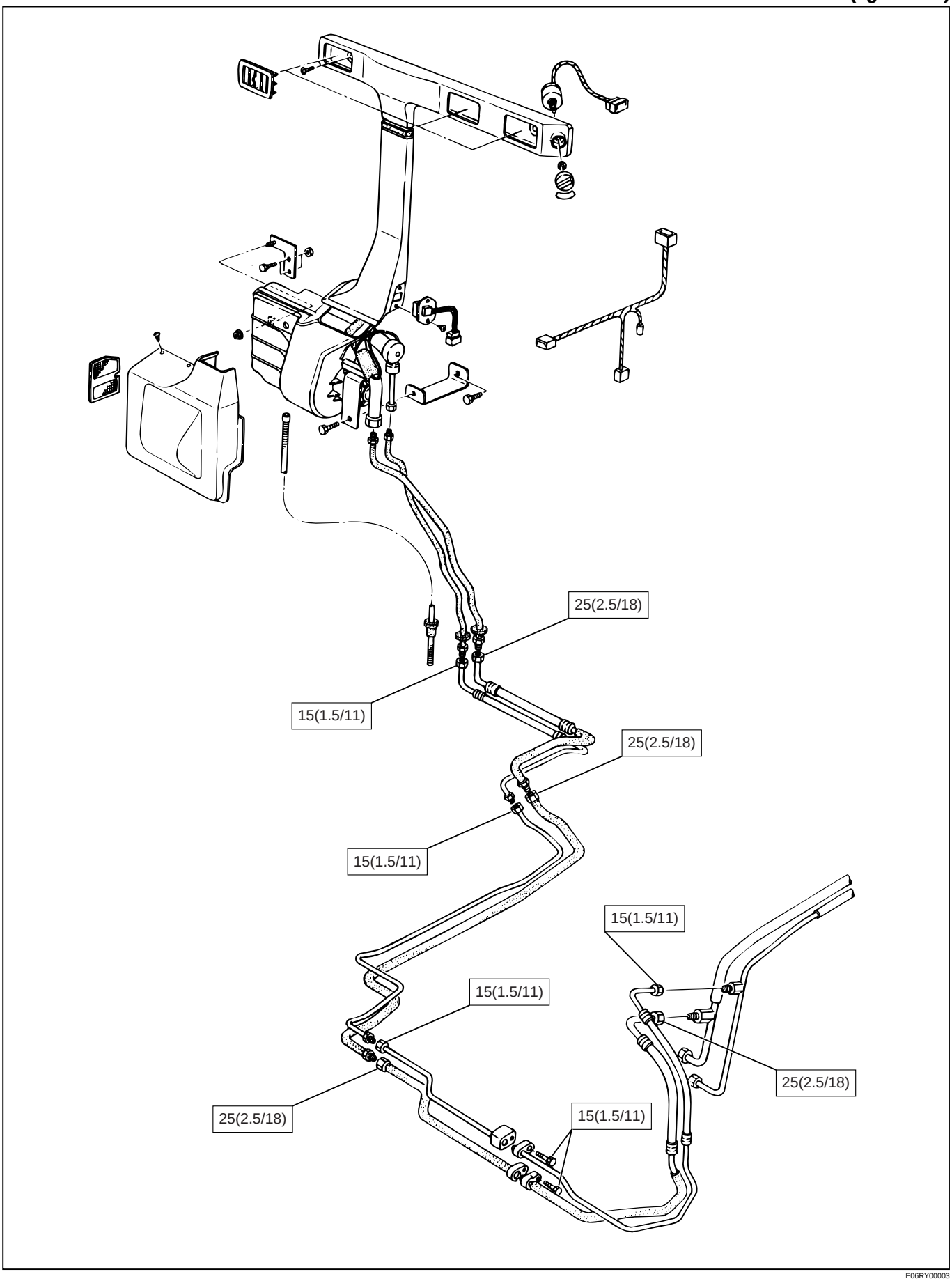

E06RY00003

TORQUE SPECIFICATIONS (ROOF DUCT TYPE)

N·m (kg·m/ib·ft)

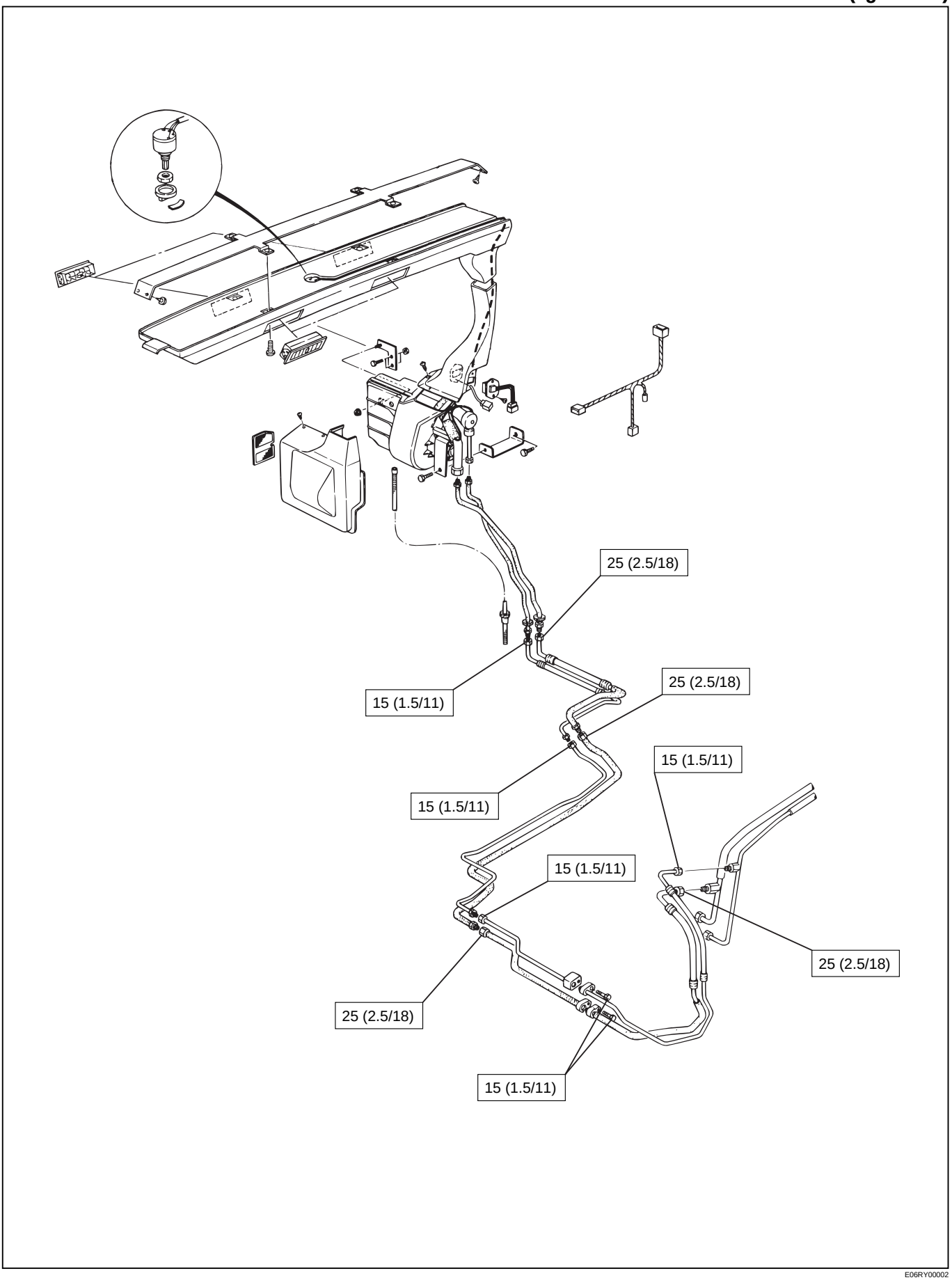

E06RY00002

DIAGNOSIS

Rear Air Conditioning Cycle Diagnosis

Condition	Possible Cause	Correction
No cooling or insufficient cooling	Front air conditioner not switched on.	Switch front A/C switch ON.
	Other	See front air conditioner workshop manual.
Insufficient velocity of cooling air	Clogged filter	Clean or replace cooling unit filter.
	Other	See front air conditioner workshop manual.

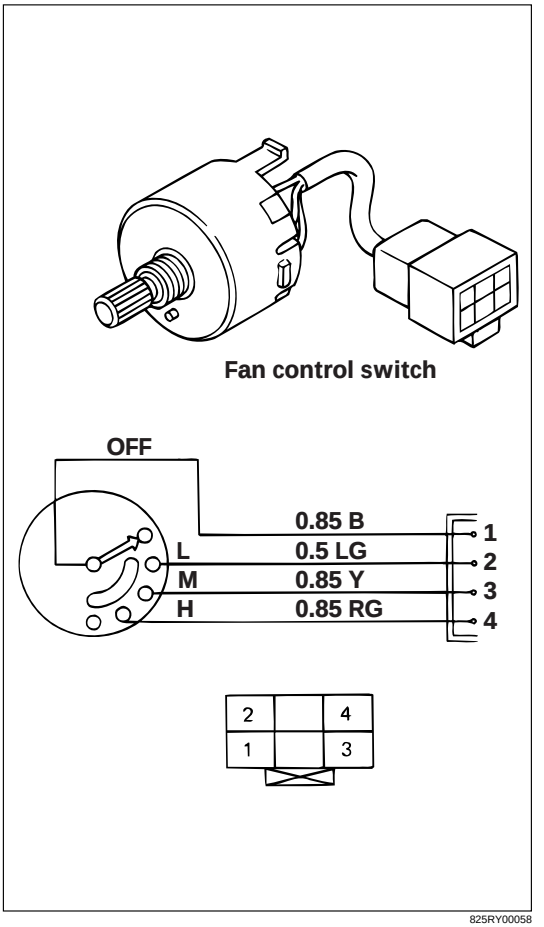

825RY00058

FAN CONTROL SWITCH

Inspection

Using an electric circuit tester, check continuity between terminals.
If not as specified, replace the switch.

	1	2	3	4
OFF				
LOW	○	○		
MEDIUM	○		○	
HIGH	○			○

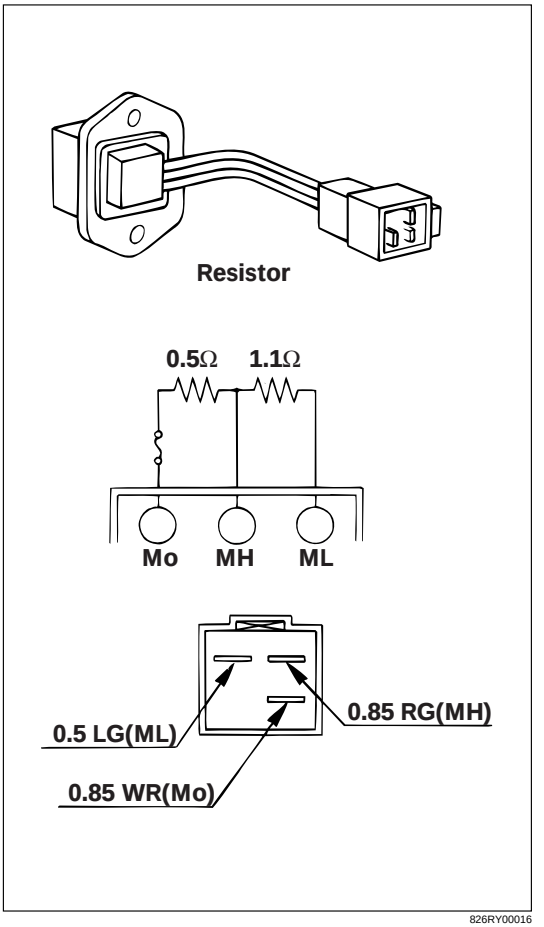

826RY00016

RESISTOR

Inspection

Using an electric circuit tester, check the resistance between the terminals specified below.
If the resistances are not as specified, replace the resistor.

Terminal	Resistance (Ω)
Mo ~ MH	0.5
Mo ~ ML	1.6

COOLING UNIT

Main Components

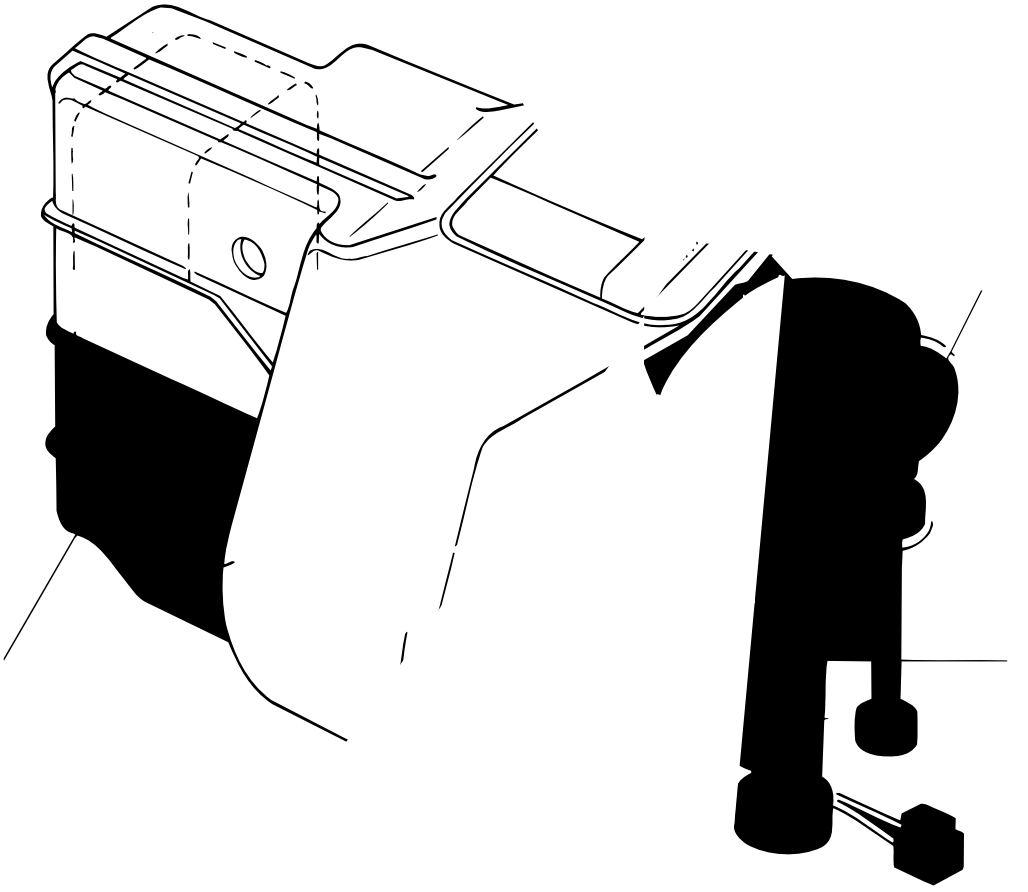

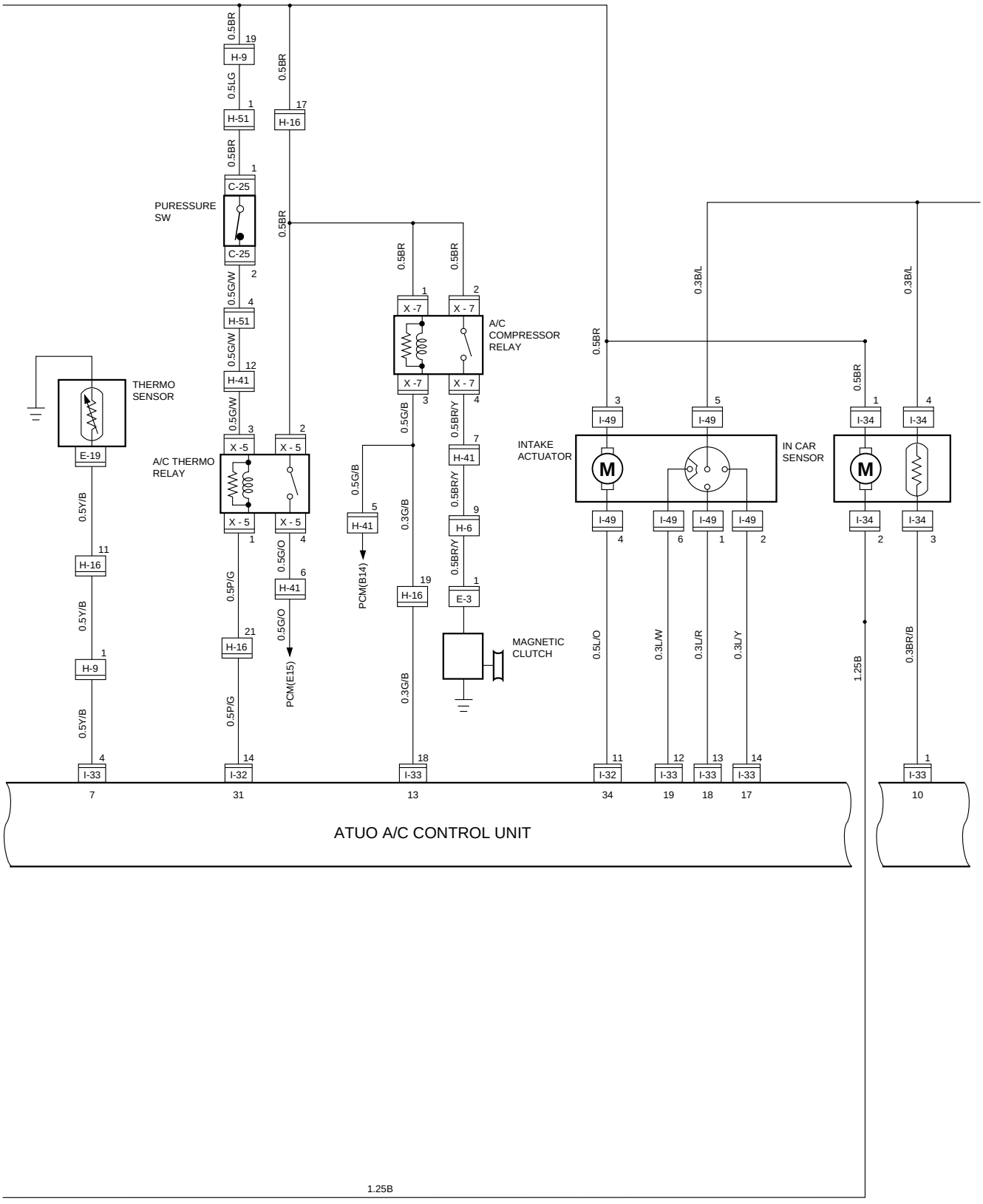
PURESSURE SW
THERMO SENSOR
A/C THERMO RELAY
A/C COMPRESSOR RELAY
INTAKE ACTUATOR
IN CAR SENSOR
MAGNETIC CLUTCH
PCM(B14)
PCM(E15)
ATUO A/C CONTROL UNIT
0.5BR
0.5LG
0.5G/W
0.5Y/B
0.5P/G
0.5G/O
0.5G/B
0.5BR/Y
0.3G/B
0.3B/L
0.5L/O
0.3L/W
0.3L/R
0.3L/Y
0.3BR/B
1.25B
H-9
H-51
C-25
H-41
H-16
X -7
X - 7
X -5
X - 5
E-19
E-3
H-6
I-49
I-34
I-33
I-32
M

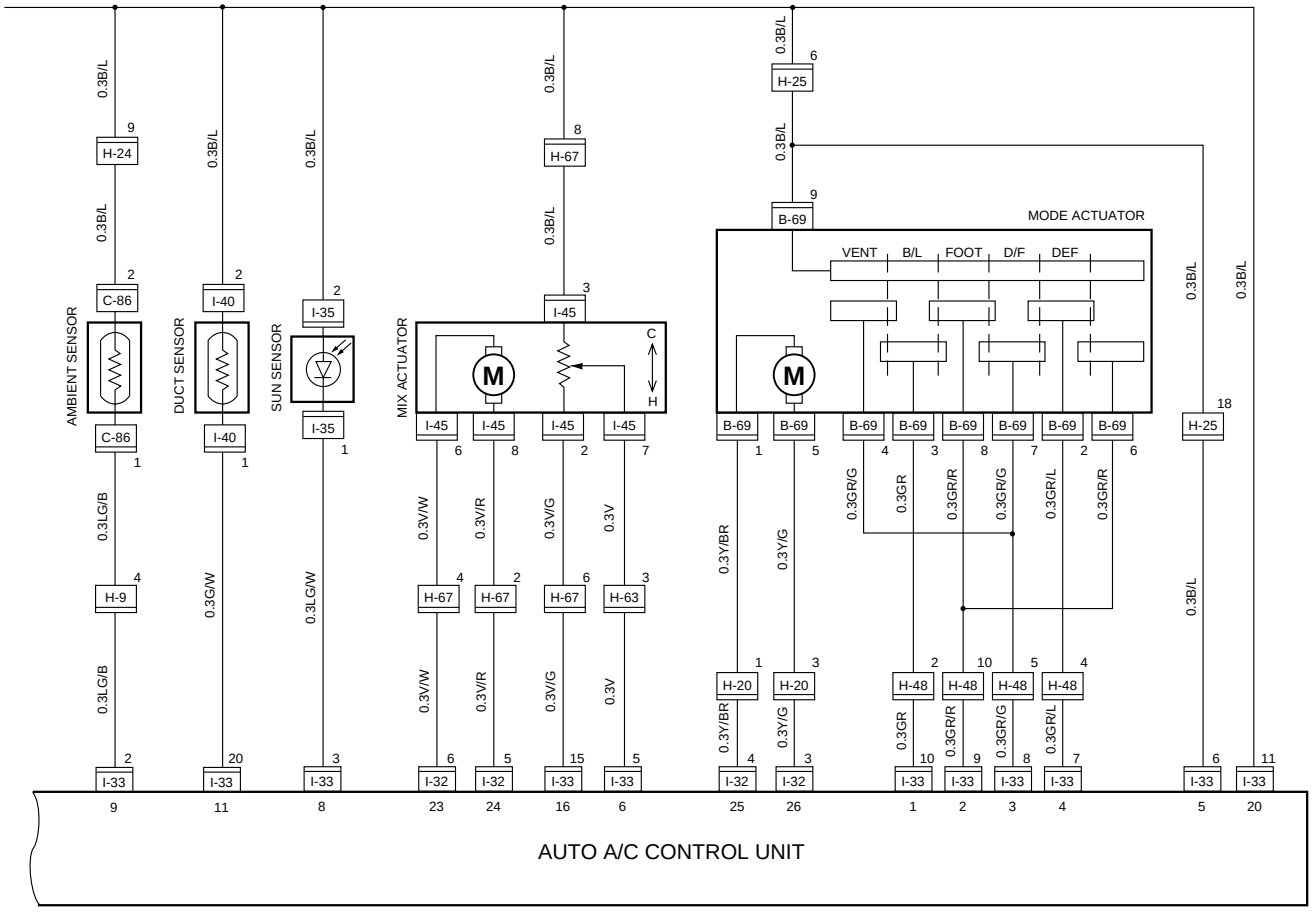
AMBIENT SENSOR
DUCT SENSOR
SUN SENSOR
MIX ACTUATOR
MODE ACTUATOR
VENT
B/L
FOOT
D/F
DEF
C
H
M
AUTO A/C CONTROL UNIT

MEMO

4JX1 (RHD)

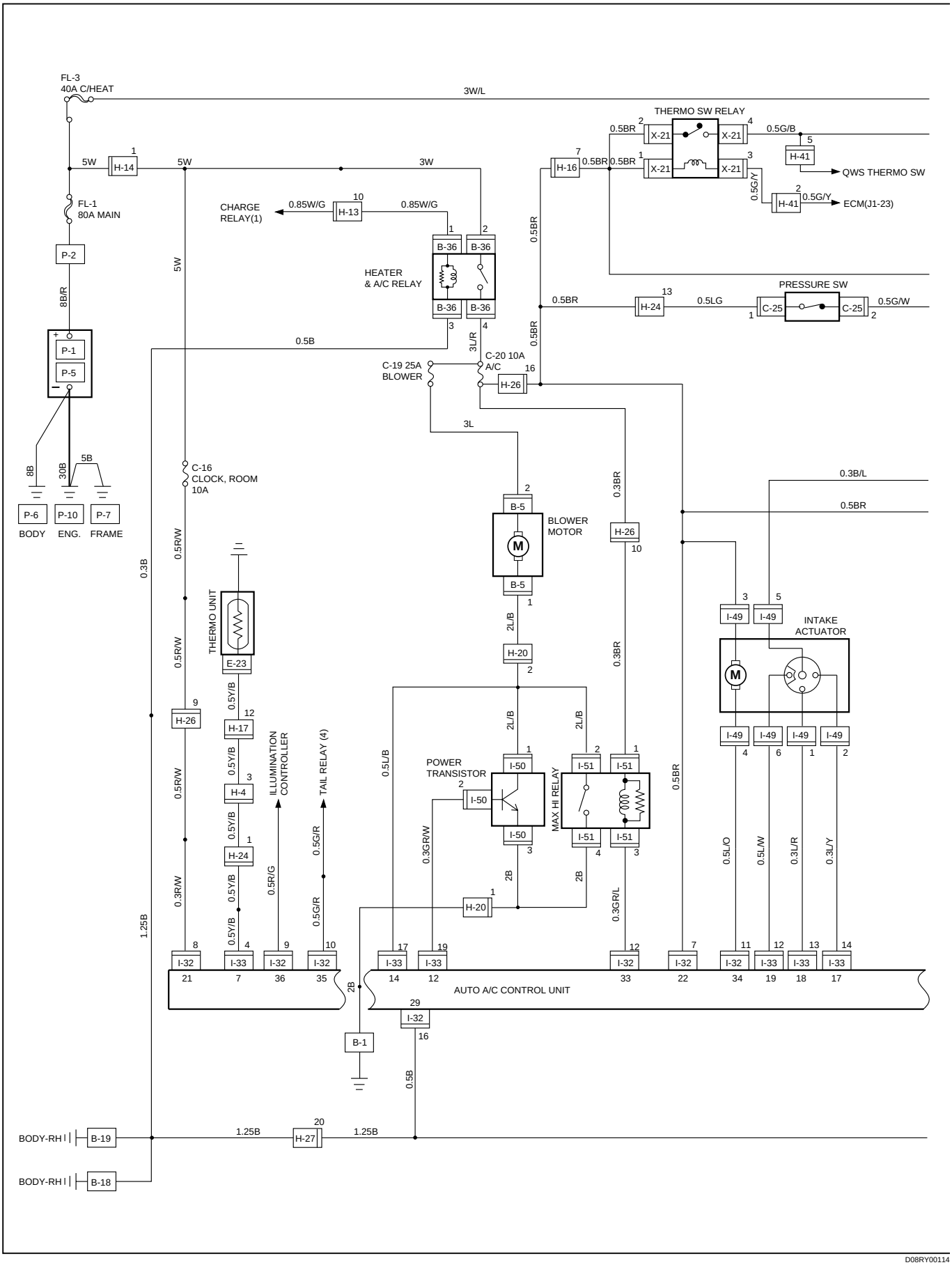

D08RY00114

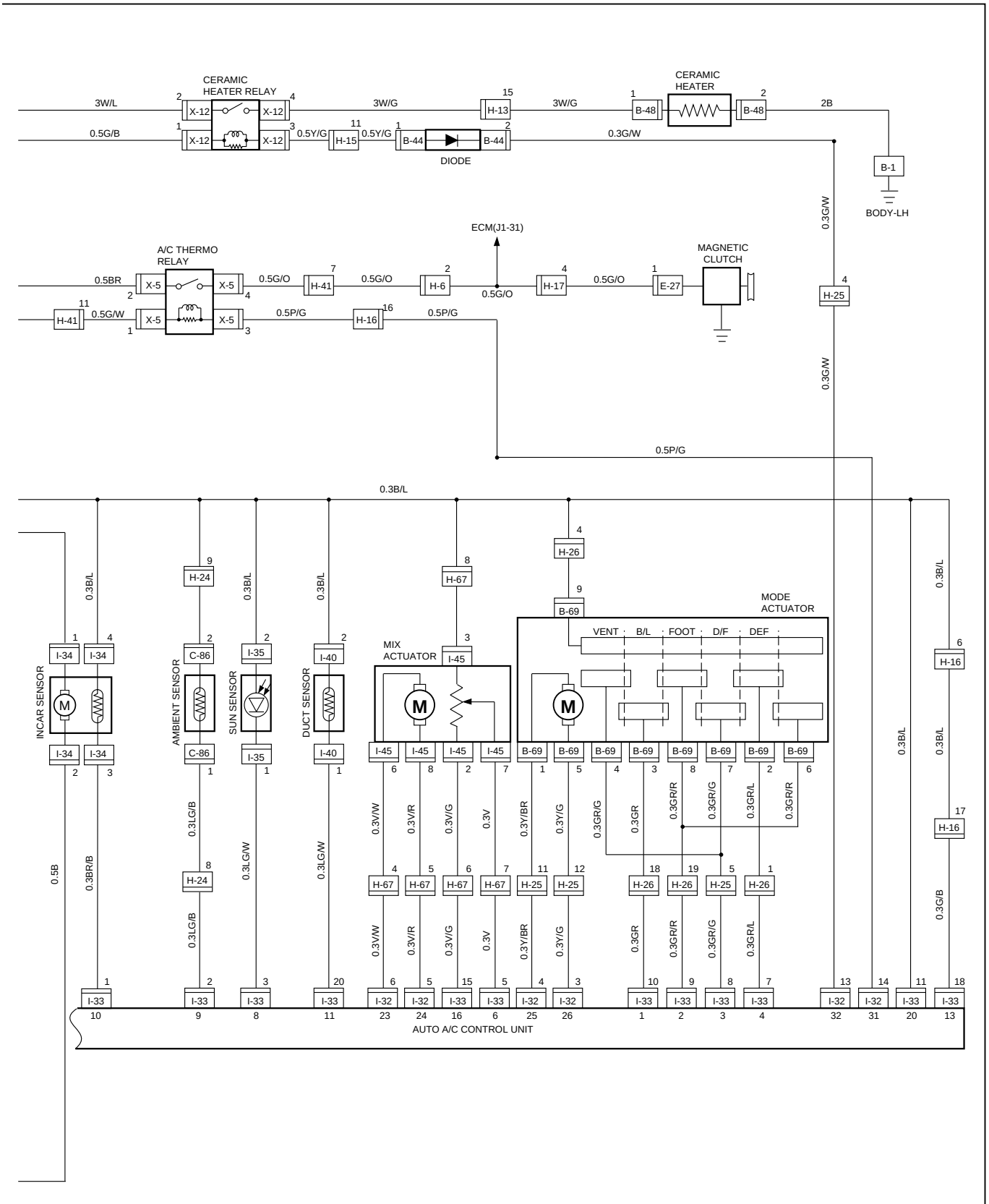
CERAMIC HEATER RELAY
CERAMIC HEATER
DIODE
BODY-LH
ECM(J1-31)
A/C THERMO RELAY
MAGNETIC CLUTCH
MIX ACTUATOR
MODE ACTUATOR
VENT
B/L
FOOT
D/F
DEF
INCAR SENSOR
AMBIENT SENSOR
SUN SENSOR
DUCT SENSOR
AUTO A/C CONTROL UNIT
3W/L
0.5G/B
3W/G
0.5Y/G
3W/G
2B
0.3G/W
0.5BR
0.5G/O
0.5G/W
0.5P/G
0.3B/L
0.3G/W
0.5B
0.3BR/B
0.3LG/B
0.3LG/W
0.3V/W
0.3V/R
0.3V/G
0.3V
0.3Y/BR
0.3Y/G
0.3GR/G
0.3GR
0.3GR/R
0.3GR/L
0.3G/B

4JX1 (LHD)

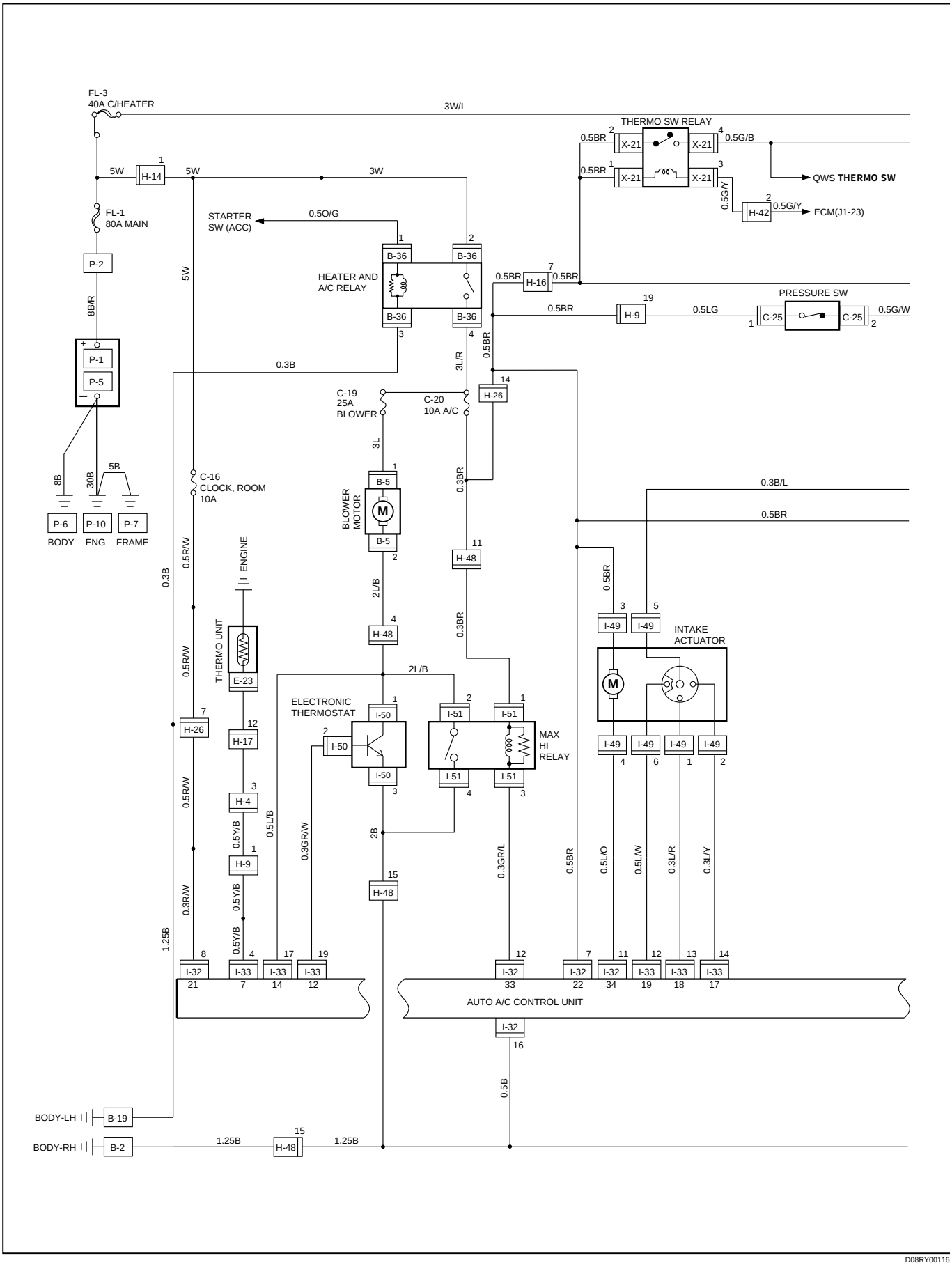

D08RY00116

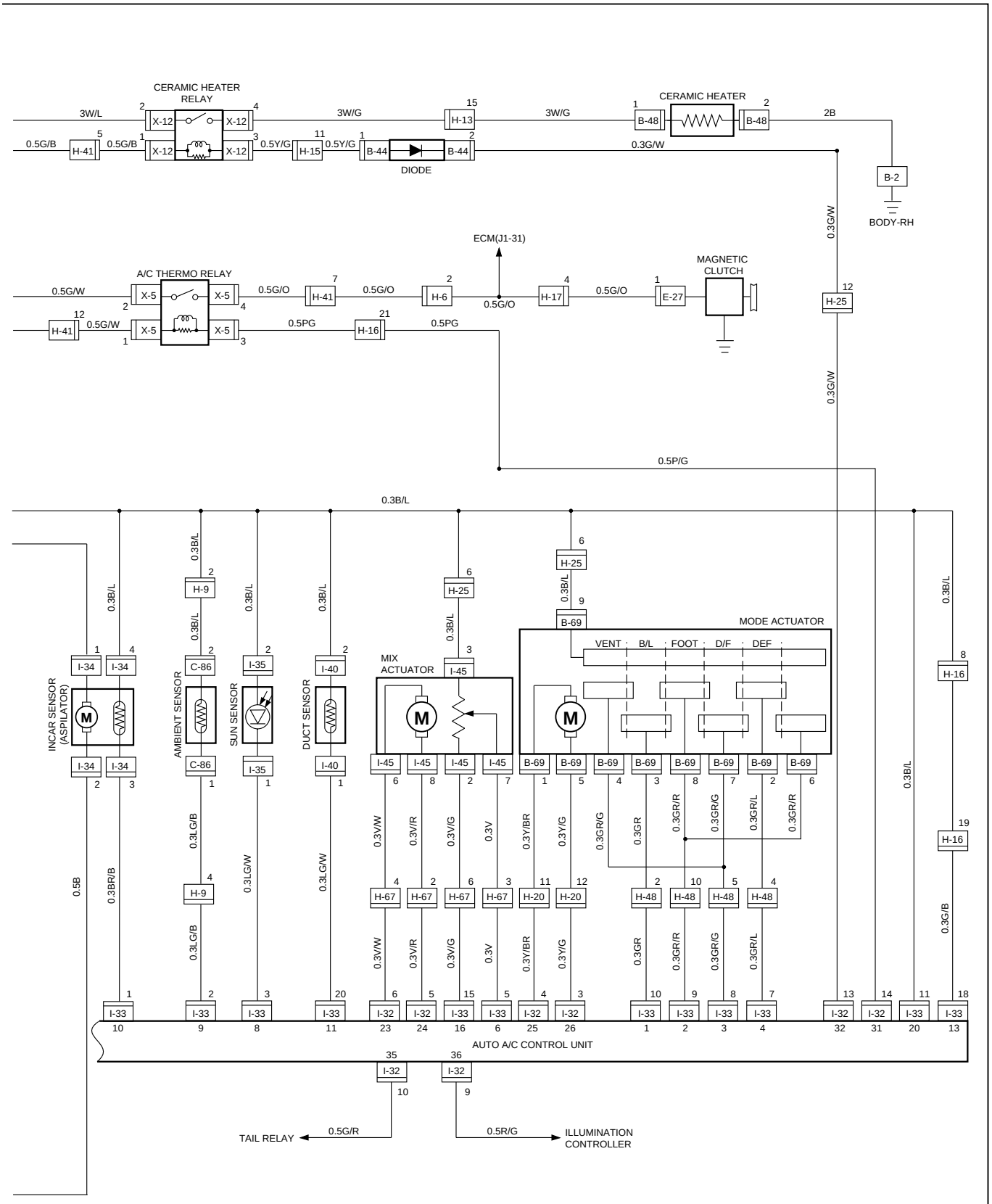
CERAMIC HEATER RELAY
CERAMIC HEATER
DIODE
BODY-RH
ECM(J1-31)
A/C THERMO RELAY
MAGNETIC CLUTCH
MODE ACTUATOR
VENT
B/L
FOOT
D/F
DEF
MIX ACTUATOR
INCAR SENSOR (ASPILATOR)
AMBIENT SENSOR
SUN SENSOR
DUCT SENSOR
AUTO A/C CONTROL UNIT
TAIL RELAY
ILLUMINATION CONTROLLER

FUNCTIONS AND FEATURES

- Automatic interior temperature control

  This function enables to maintain the interior temperature at the level specified from the temperature control switch despite of changes in factors such as vehicle speeds, outside air temperature and number of passengers.

- Maximum cooling and heating function

  You can select FC (Full cool, namely maximum cooling temperature) or FH (Full heat, maximum heating temperature) from the temperature control lever.

- Automatic air flow control

  Air flow is automatically and consecutively fine tuned according to the specified interior temperature and changes in aperture of the heater unit mix door.

- Mode (blow port) control

  This function automatically selects either one of the VENT, BI-LEVEL, FOOT or DEP mode for the blow port according to changes of temperature on the blow port. Using the mode switch allows you to select a desired blow port manually.

- Intake (switching between the fresh air intake and circulation of interior air) control

  The intake (switching between fresh air intake and circulation of interior air) mode automatically selects either FRESH (fresh air intake), MIX or RECIRC (interior air circulation) according to changes of the blow port temperature. Using the intake switch allows you to select a desired intake port manually (in the manual operation, FRESH and RECIRC modes alone are available). Pressing the DEF (defrost) mode switch selects the FRESH (fresh air intake).

- Cooler start-up timing control

  This function is used for maintaining the air flow at "LOW" level until the evaporator is sufficiently cooled down. It is intended to prevent a large volume of hot air being blowing into inside of a vehicle when the cooler is turned on in hot summer season.

- Heater start-up timing control

  This function is used for maintained the air flow at "LOW" level and also for maintaining the defrost mode until temperature of coolant in the heater core is sufficiently heated. It is intended to prevent a large volume of cool air being blown into inside of a vehicle when the heater is turned on in cold winter season.

- Solar radiation quantity offset control

  The photodiode on the solar radiation sensor determines solar radiation quantity accurately to offset interior temperature quickly.

- Switch position storing function

  This function is used for storing switch positions being selected in the immediately preceding operation, namely the last time the ignition has been turned off. It simplifies the setup procedures when restarting the system.

- Self-diagnosis function

  The self-diagnosis function turned on from the panel switch makes your troubleshooting easier (for detail of this function, refer to the section titled "Self-Diagnosis").

FULL AUTOMATIC AIR CONDITIONER BLOCK DIAGRAM

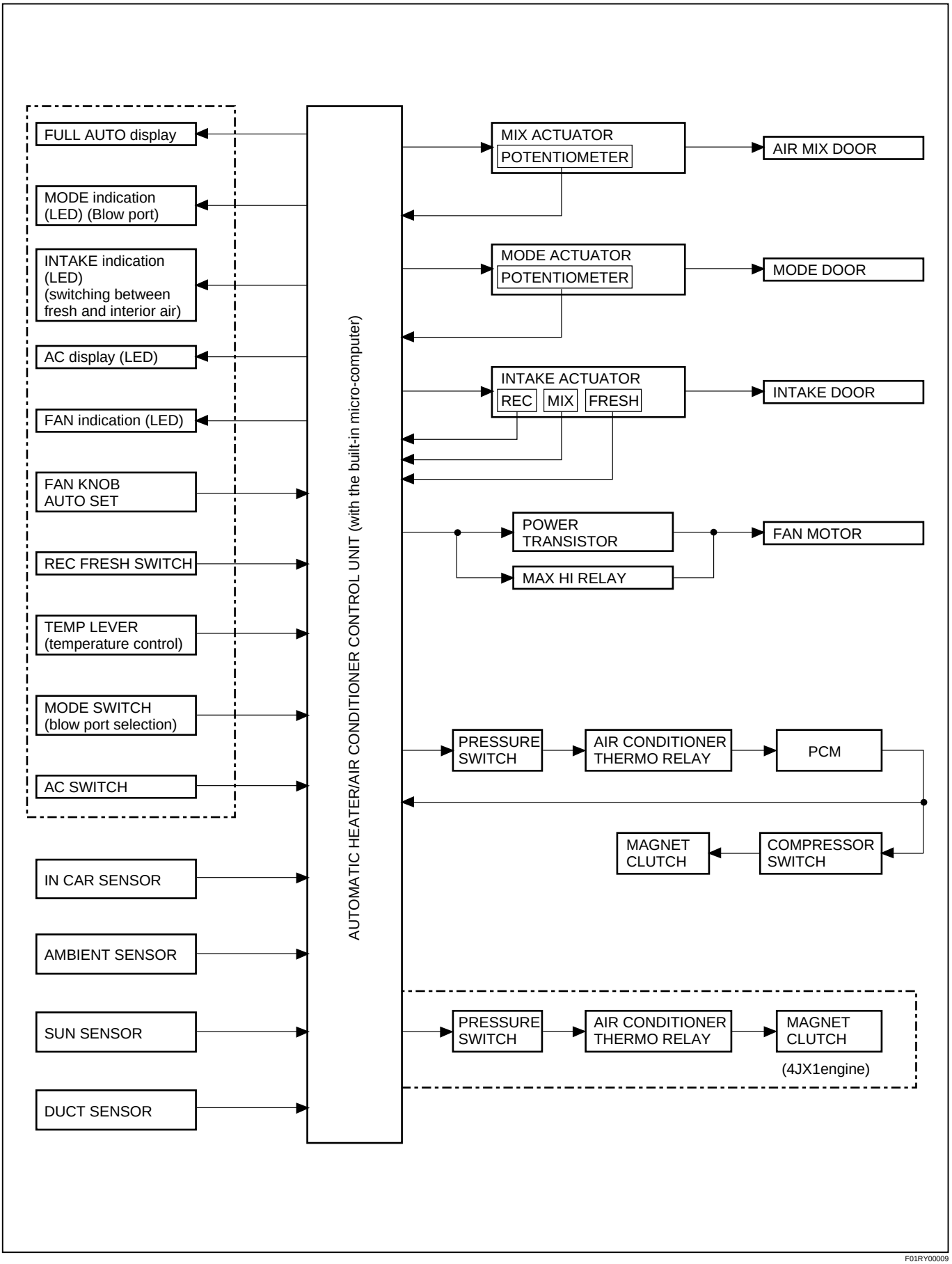

F01RY00009

AIR CONDITIONING PARTS

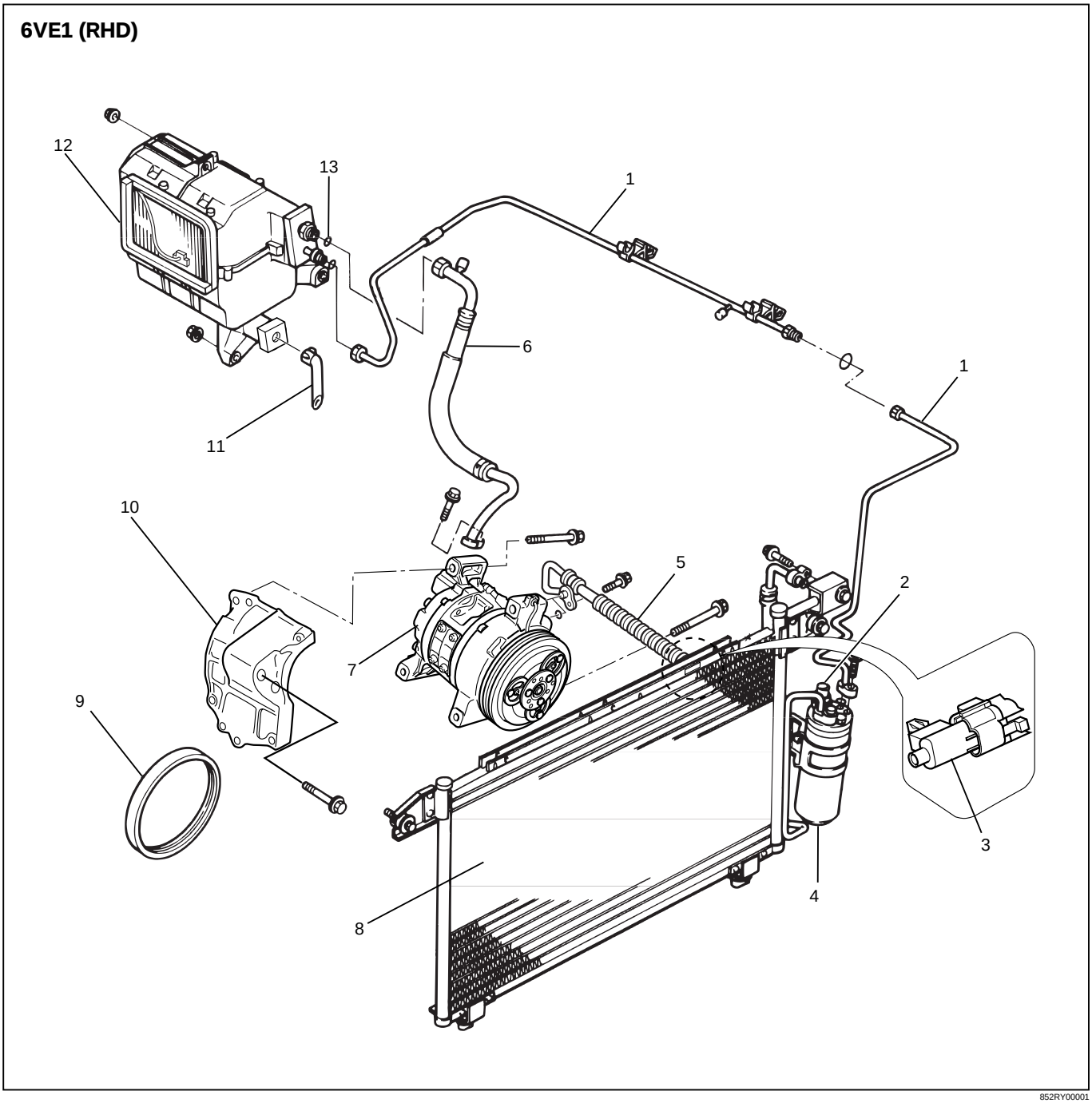

Legend

(1) Liquid Line (High Pressure Pipe)
(2) Pressure Switch
(3) Ambient Sensor
(4) Receiver Drier
(5) Discharge Line (High Pressure Hose)
(6) Suction Line (Low Pressure Hose)
(7) Compressor
(8) Condenser Assembly
(9) Drive Belt
(10) Compressor Bracket
(11) Drain Hose
(12) Evaporator Assembly
(13) O-ring

6VE1 (LHD)

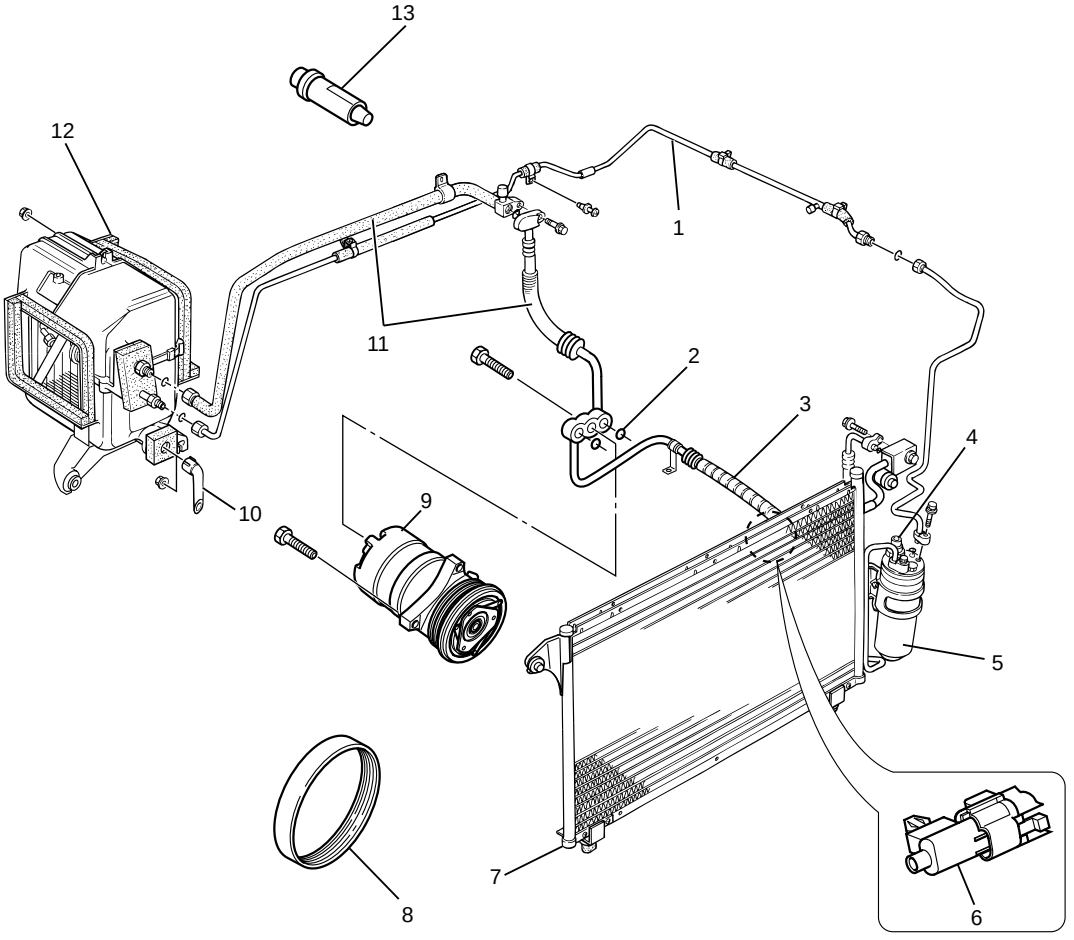

852RY00002

Legend

(1) Liquid Line (High-Pressure Pipe)
(2) O-ring
(3) Discharge Line (High-Pressure Hose)
(4) Pressure Switch
(5) Receiver Drier
(6) Ambient Sensor
(7) Condenser Assembly
(8) Drive Belt
(9) Compressor
(10) Drain Hose
(11) Suction Line (Low-Pressure Hose)
(12) Evaporator Assembly
(13) A/C Switch

4JX1 (RHD)

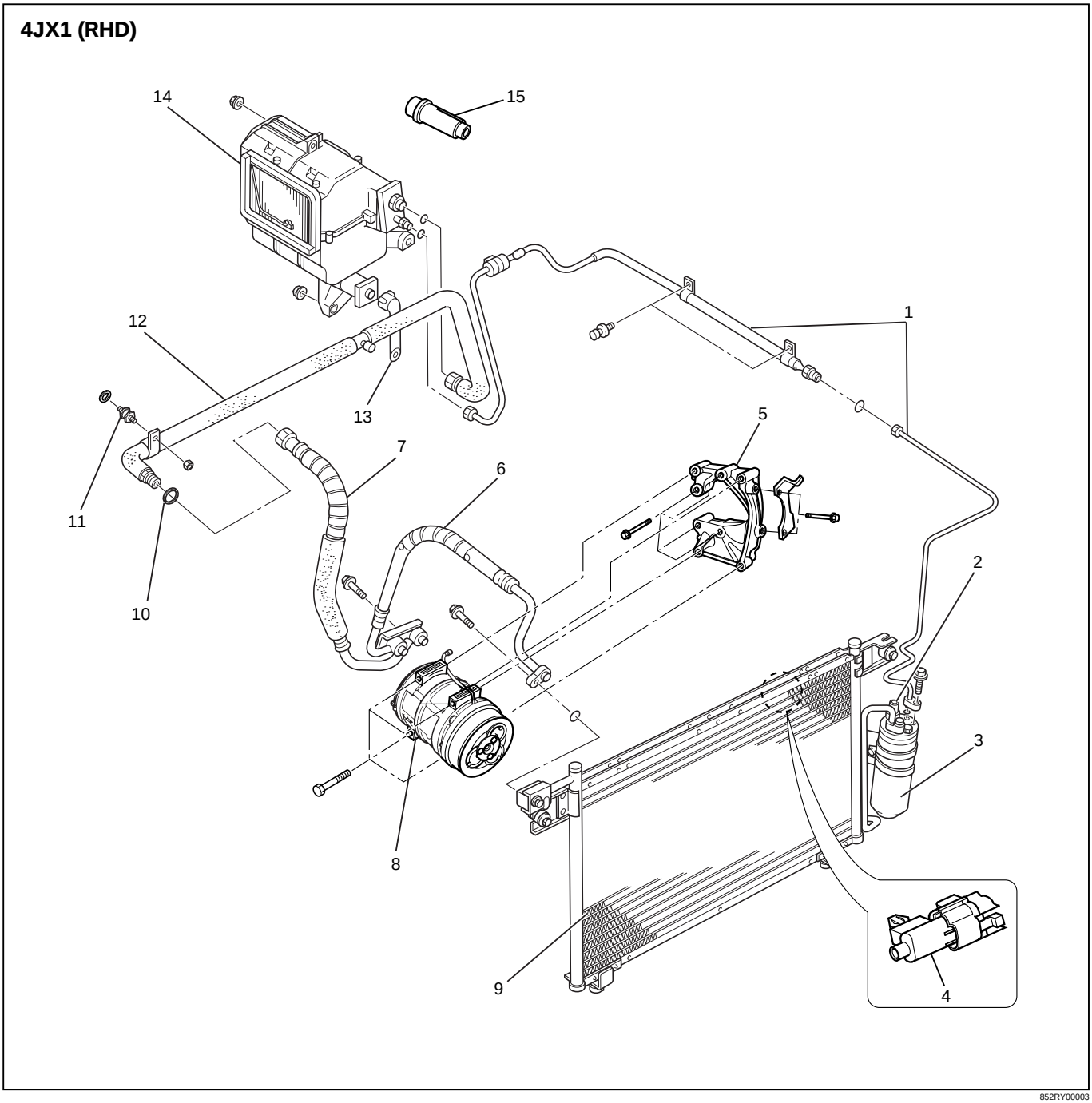

852RY00003

Legend

(1) Liquid Line (High-Pressure Pipe)
(2) Pressure Switch
(3) Receiver Drier
(4) Ambient Sensor
(5) Compressor Bracket
(6) Discharge Line (High-Pressure Hose)
(7) Suction Line (Low-Pressure Hose)
(8) Compressor
(9) Condenser Assembly
(10) O-ring
(11) Insulator Pipe
(12) Suction Line (Low-Pressure Pipe)
(13) Drain Hose
(14) Evaporator Assembly
(15) A/C Switch

4JX1 (LHD)

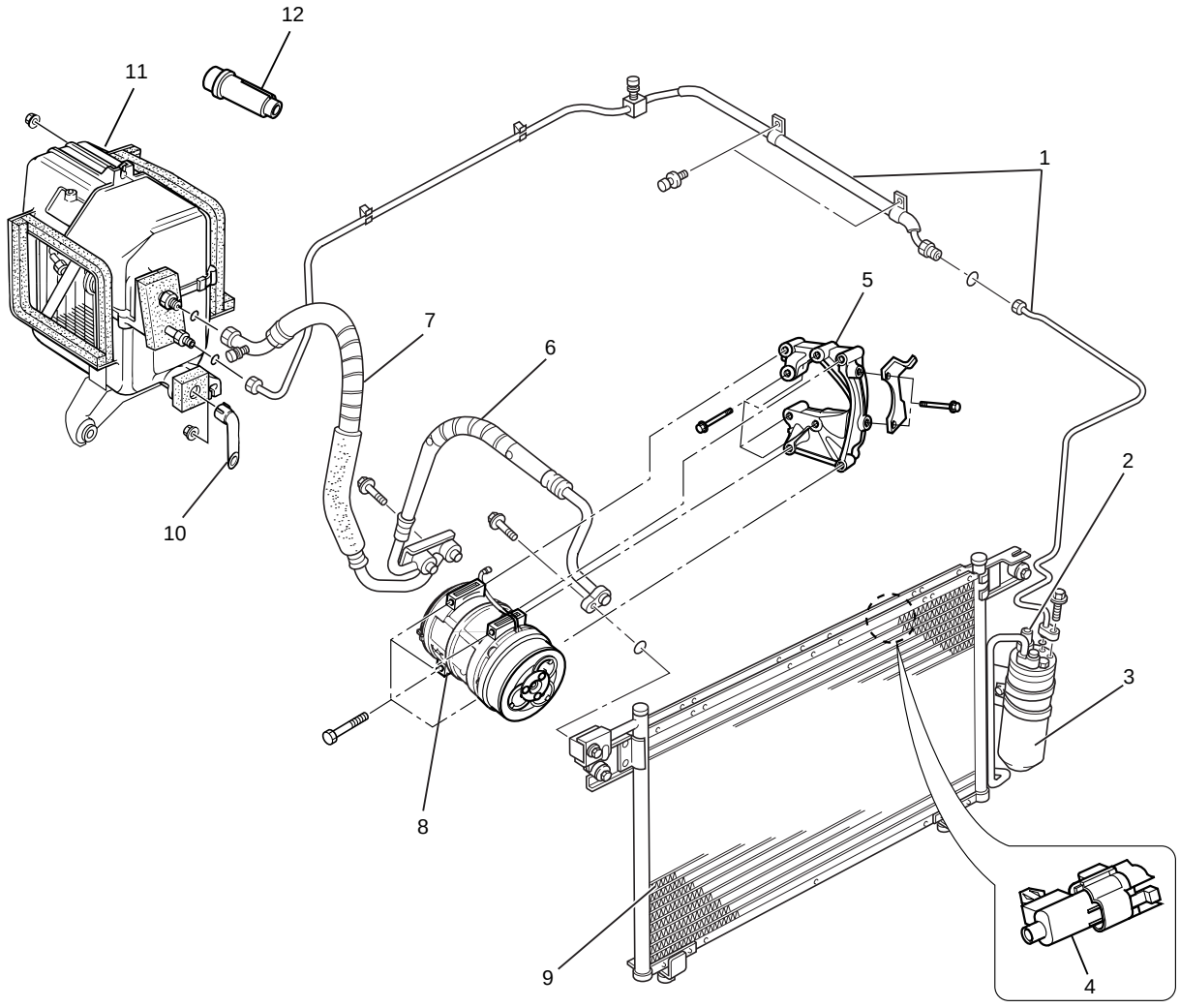

852RY00004

Legend

(1) Liquid Line (High-Pressure Pipe)
(2) Pressure Switch
(3) Receiver Drier
(4) Ambient Sensor
(5) Compressor Bracket
(6) Discharge Line (High-Pressure Hose)
(7) Suction Line (Low-Pressure Hose)
(8) Compressor
(9) Condenser Assembly
(10) Drain Hose
(11) Evaporator Assembly
(12) A/C Switch

Control Panel Layout

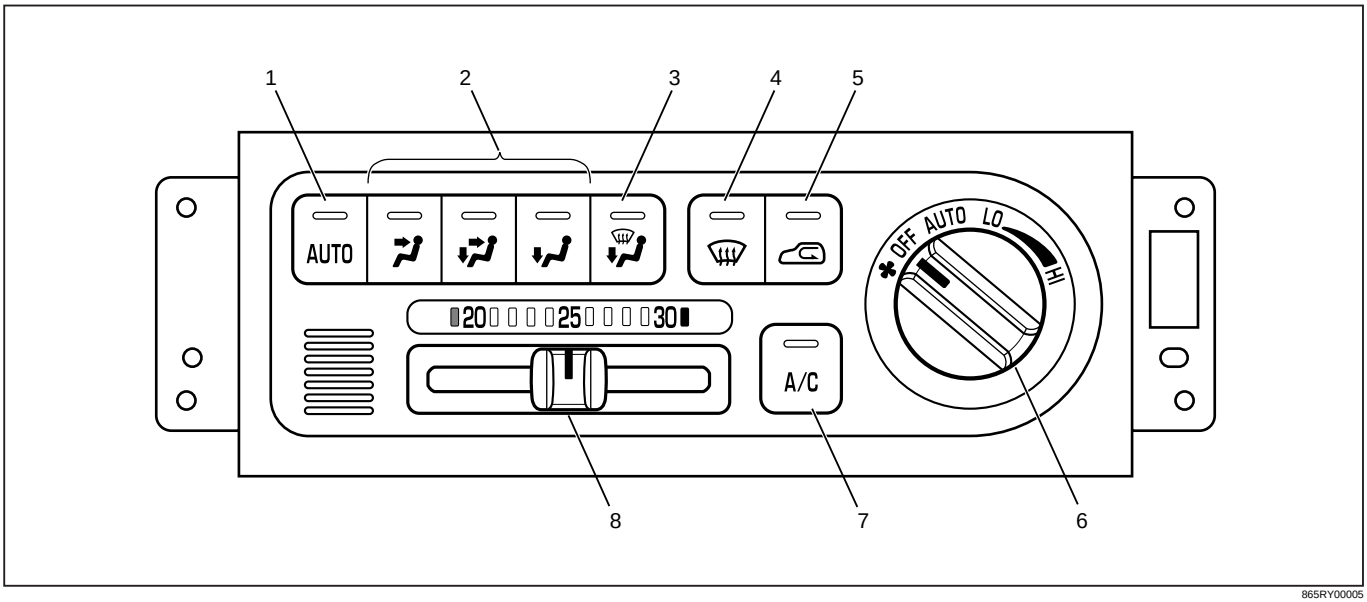

865RY00005

Legend

(1) Auto Switch
(2) Mode Switch
(3) DEF/FOOT Switch
(4) DEF Switch
(5) Intake Switch
(6) Fan Switch
(7) Air Conditioning Switch
(8) Temperature Control Knob

Air Control Functions

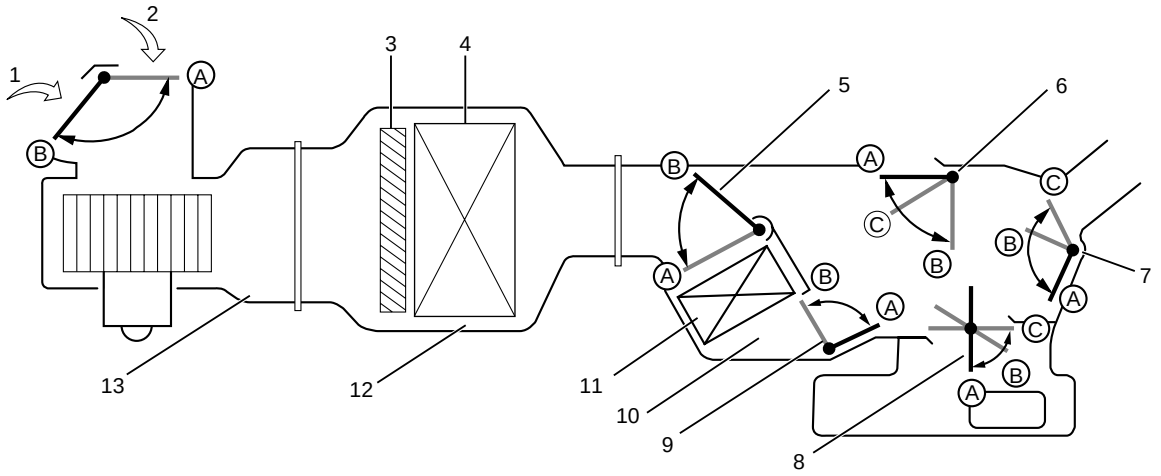

	Mode Position					Display of Intake Status		Set Temperature		
	VENT	BI-LEVEL	FOOT	DEF/FOOT	DEF	ON	OFF	Blue FULL COLD	White 20~30℃	Red FULL HOT
Vent Door	Ⓐ	Ⓑ	Ⓒ	Ⓒ	Ⓒ	—	—	—	—	—
Foot Door	Ⓒ	Ⓑ	Ⓐ	Ⓑ	Ⓒ	—	—	—	—	—
DEF Door	Ⓐ	Ⓐ	Ⓐ	Ⓒ	Ⓑ	—	—	—	—	—
Intake Door	—	—	—	—	—	Ⓐ	Ⓑ	—	—	—
Air Mix Door	—	—	—	—	—	—	—	Ⓐ	Ⓐ～Ⓑ	Ⓑ
Sub Air Mix Door	—	—	—	—	—	—	—	Ⓑ	Ⓑ～Ⓐ	Ⓐ

C01RY00001

Legend

(1) Interior Air Intake
(2) Fresh Air Intake
(3) Pollen Filter
(4) Evaporator Core
(5) Air Mix Door
(6) DEF Door
(7) Vent Door
(8) Foot Door
(9) Sub Air Mix Door
(10) Heater Unit
(11) Heater Core
(12) Evaporator Unit
(13) Blower Unit

OPERATION AND FUNCTIONS OF CONTROL PANEL SWITCHES

1. Auto Switch

(1) Pressing this switch turns on the automatic control mode. It resets all manual switches except that for the fan control. However, when the Manual REC is selected for the intake or the Manual Open is selected for the C/V, these modes are maintained.

(2) It causes the A/C (air conditioner) to the ON mode (this function, however, available only when the fan is turned on and also the compressor is turned on because of the given outside air temperature level).

<Indication>

- The AUTO LED comes on.
- Currently selected mode for the Mode and Intake are respectively indicated.

2. Mode Switch

<Indication>

(1) Pressing the VENT, B/L or FOOT switch selects the corresponding mode.

(2) When the Auto is selected for the Mode and Intake, pressing the mode switch fixes the Intake to the immediately preceding status.

<Indication>

- Turns off the Auto LED.
- Currently selected blow port is indicated.

3. DEF Switch

Press this switch to select the DEF mode.

Blow port	Intake port	A/C	MIX
DEF	Auto FRESH *1	ON mode *2	Auto

<Indication>

*1: When the manual REC is selected for the Intake, the manual REC is maintained.

*2: The ON mode is enabled only when the fun is turned on, and also the compressor is turned on because of the given outside air temperature level.

<Indication>

- The Auto LED is turned off.
- DEF is indicated for the blow port, A/C LED comes on (only when the fan is turned on), and status display is provided for the Intake.

Example 1:

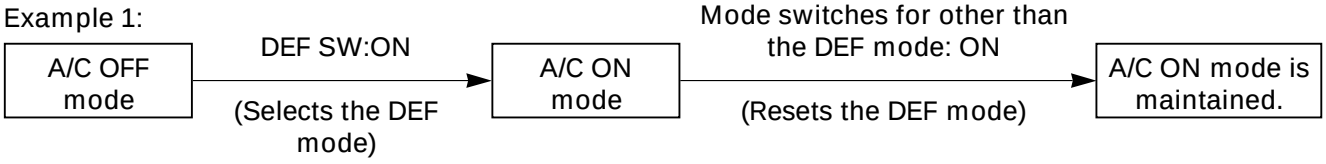

4. Intake Switch

Pressing this switch sequentially selects a different intake port in the following order.

Example 1:

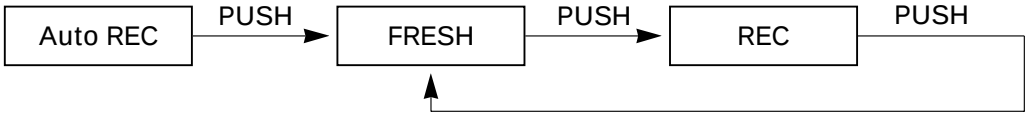

Example 2:

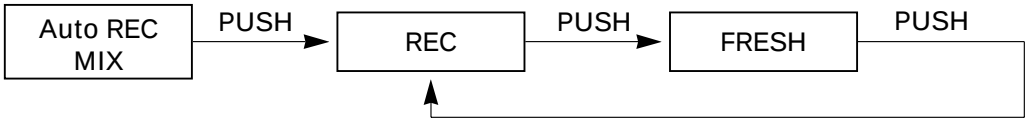

<Indication>

- The Auto LED maintains unaffected.
- Currently selected intake port is indicated.

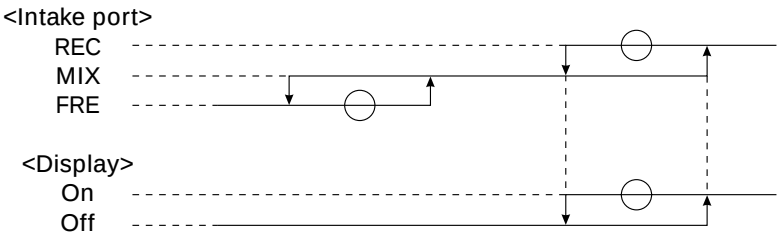

5. Fan Switch

(1) Sets the fan to the specified mode.
(2) Even when the fan switch is turned off, status display for the Model and Intake is maintained.

6. Temperature Control Knob

(1) This knob is operable only when the fan is turned on. It may be used for the MAX control of each block except the fan.
(2) When the manual mode is selected for the fan control, this manual mode is maintained.

<MAX Control>

	Mix	Fan	Mode	Intake	A/C
MAX/COOL	Full cool	MAX/HI	VENT	REC*1	ON mode*2
MAX/HEAT	Full hot	AUTO/HI	FOOT*3	FRESH	Current status is maintained

*1: In the A/C: OFF mode, FRESH shall be selected.
*2: The ON mode is available only when ON is selected for the fan as well as for the cold outside air ON/OFF selection.
*3: When the MAX control is selected from the DEF mode, this DEF mode shall be maintained.

Example 1:

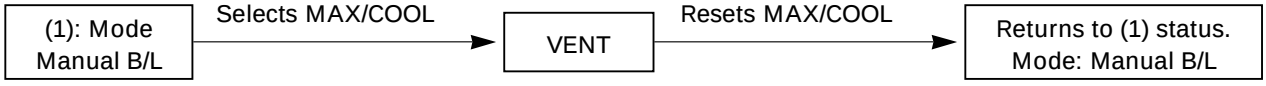

Example 2:

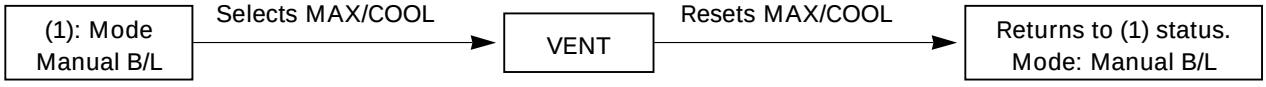

<Indication>

- As long as the MAX control is selected, the immediately preceding indication shall be maintained for the AUTO.
- Status display is provided for others.

7. Air Conditioning Switch

Pressing this switch turns on or off the A/C (air conditioning) control. (The compressor remains turned off if the fan is turned off and also the compressor has been turned off because of the given outside air temperature level.)

<Indication>

(1) The A/C LED remains turned on even if the compressor has been turned off because of the given outside air temperature level. In this case, however, the AUTO or DEF switch must be turned on and the A/C ON mode must also be turned on (by the MAX/C mode).
(2) Pressing the A/C switch from the above state (1) turns off the A/C LED.

OVERVIEW OF CONSTRUCTION, MOVEMENT AND CONTROL OF MAJOR PARTS OF FULL AUTOMATIC AIR CONDITIONER SYSTEM

Automatic Heater/Air Conditioner Control Unit

Equipped with the built-in micro-computer, this control unit operates on signals from sensors and input signals from switches to offer total control of the blower fan, and actuators used for the mode door, intake door and air mix door.
Its self-diagnosis function enables quicker access to a failed part and its more accurate troubleshooting.

In Car Sensor

It is a sensor used for detecting room temperature of a vehicle. This sensor converts a given room temperature into a resistance value before entering the data to the automatic heater/air conditioner control unit.
This in car sensor unites the power driven aspirator and the motor fan so that a small amount of room air may be constantly fed to the sensor.
This sensor is provided on the control panel.

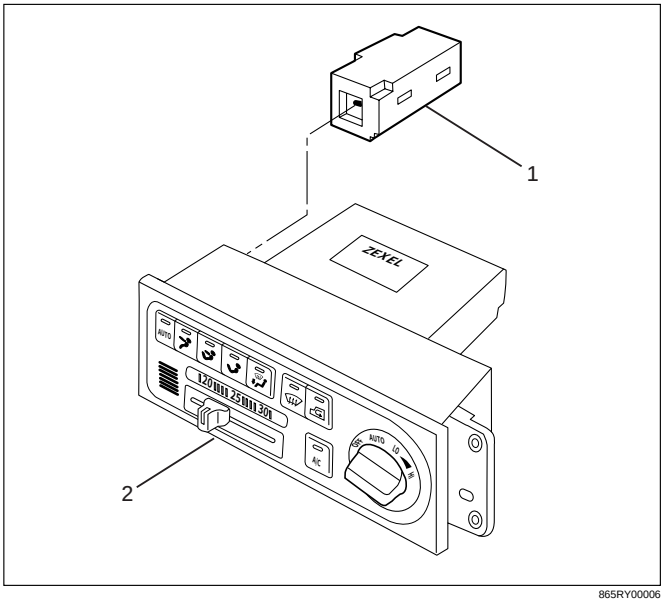

865RY00006

Legend
(1) In Car Sensor
(2) Full Automatic Air Conditioner Control Unit

Ambient Sensor

This sensor is used for detecting temperature outside the vehicle. It converts a given outside air temperature into a resistance value before entering the data to the automatic heater/air conditioner control unit.
Thermal effects from the condenser and radiator during idling after a run can be measured and offset the automatic amplifier.
This sensor is provided on the side plate situated at upper right side of the condenser.

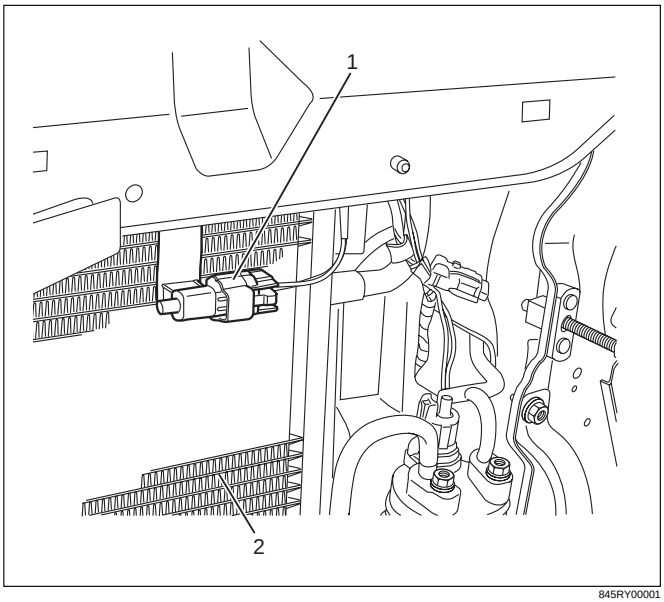

845RY00001

Legend
(1) Ambient Sensor
(2) Condenser Assembly

- **Duct Sensor**
  The sensor is the sensor to detect temperature change of the side of evaporator blower coming by fresh recirculation of intake door or "on" "off" of compressor.
  The temperature is converted to resistant rate.
  And it works as thermostat to control to prevent freezing of evaporator.
  This sensor is installed in the upper case of evaporator.

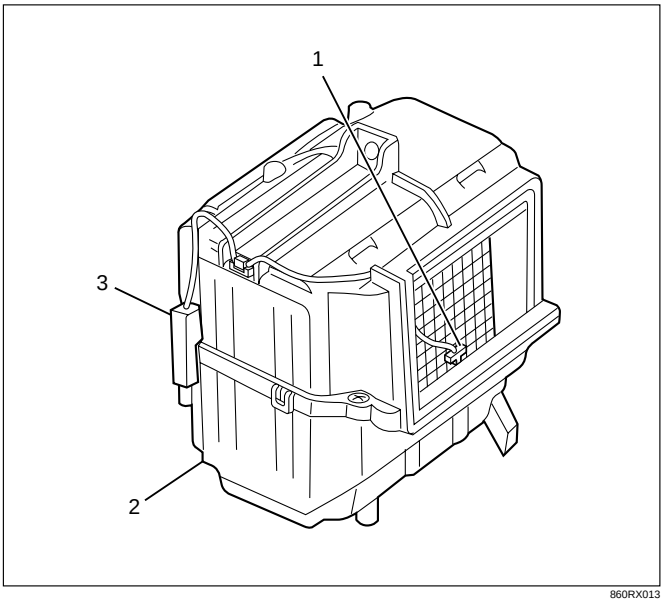

860RX013

Legend

(1) Duct Sensor
(2) Evaporator Assembly
(3) Amplifierblock

In Car Sensor

It is a photodiode used for detecting quantity of solar radiation. This sensor converts the offset signal generated by changes in the interior temperature (which results from fluctuations in solar radiation) into photoelectric current to enter into the automatic heater/air conditioner control unit.
This sensor is provided at top of the defroster grill.

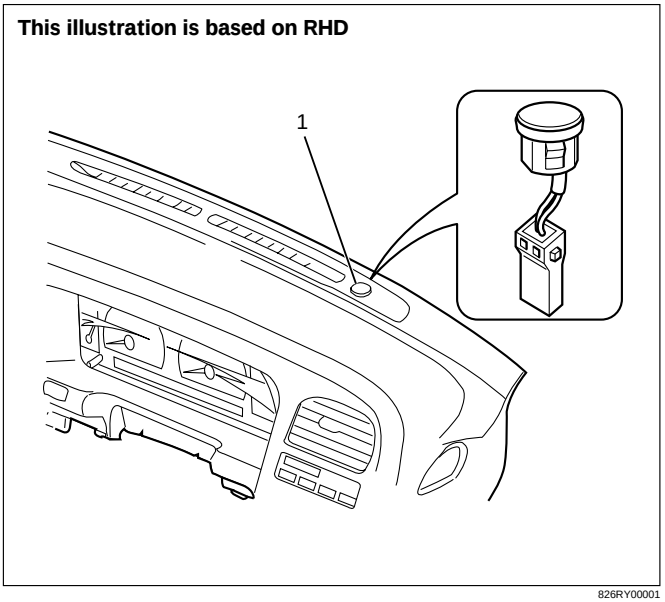

826RY00001

Legend

(1) Sun Sensor

Actuator

The actuators are power driven type containing a small motor. Receiving output current from the automatic heater/air conditioner control unit, actuators drive the heater and blower unit mode doors.
Actuators consist of the mode actuator used for switching the mode (blow port selection), the mix actuator used for changing aperture of the air mix door, the intake actuator used for switching the intake mode(fresh air/interior air).

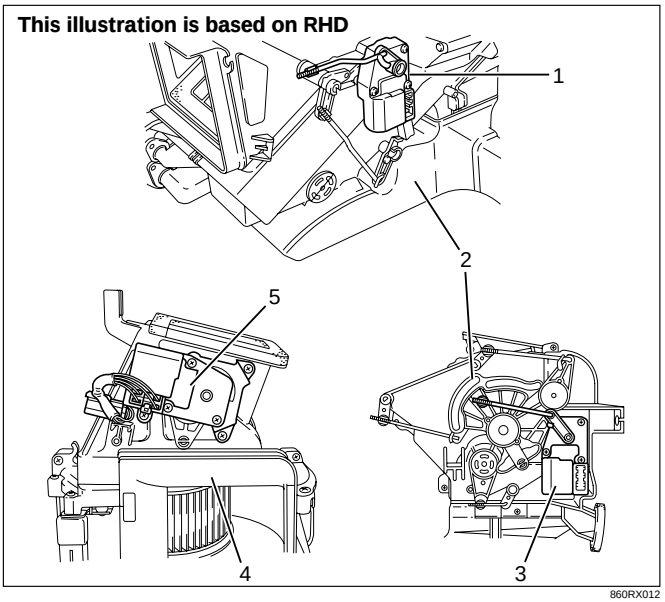

860RX012

Legend

(1) Mix Actuator
(2) Heater Unit
(3) Mode Actuator
(4) Blower Unit
(5) Intake Actuator

The actuator changes the motor speed using the gear and drives each door rotating the output axis united with the sliding contact.

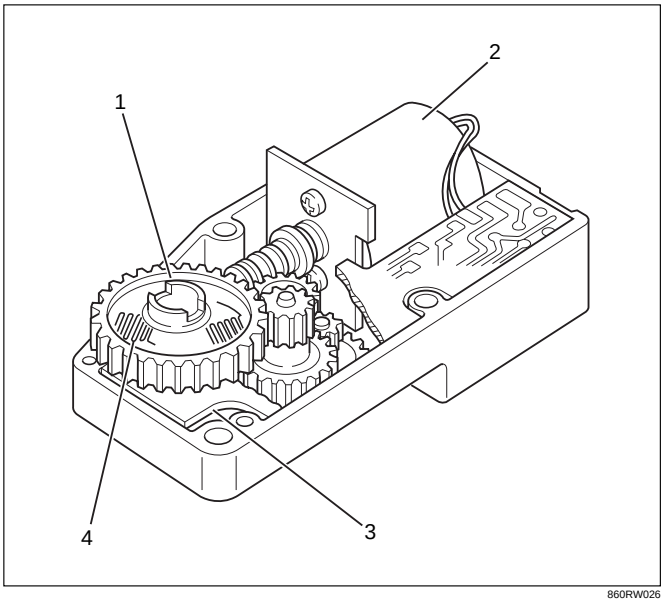

860RW026

Legend

(1) Out put Axis
(2) Motor
(3) Printed Circuit Board
(4) Sliding Contact

The mode and mix actuators are common actuators with the built-in potentiometer. For the intake actuator, the contact switch type is selected.
The potentiometer is a register assembled to the printed circuit board of the mix and mode actuators. It detects the air mix door position specified by rotation of the output axis as a ratio of the variable terminal (VM) voltage against the reference voltage (VDD: 5V), then signals the value to the automatic heater/air conditioner control unit.

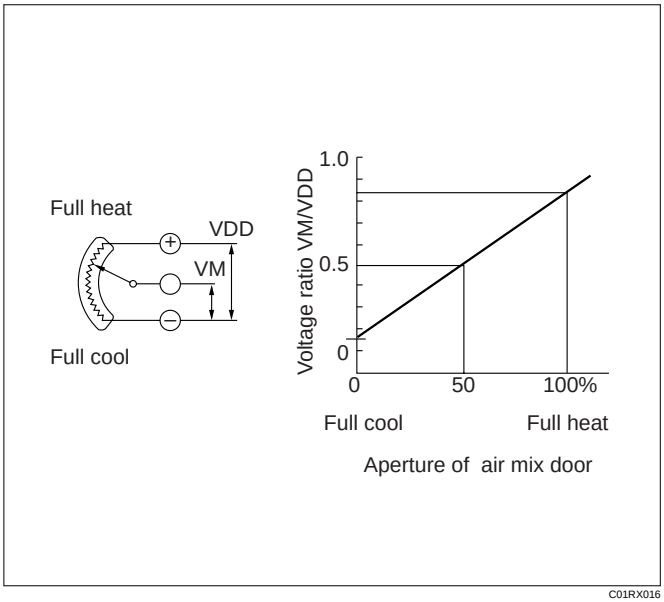

C01RX016

- **Movement of Mix Actuator**

  Position of the air mix door is determined by the controller on the automatic heater/air conditioner control unit.
  As the heat or cool side of the controller is grounded, the transistor on the driver is activated and, thus, the motor rotation is turned on. The sliding contact connected to the motor sends the position detection signal from the potentiometer to the automatic heater/air conditioner control unit. As the set temperature and interior temperature are balanced, the controller returns to the neutral and the motor rotation is stopped.

I-45		Rotation direction	Remarks
(+) side	(–) side		
8	6	Clockwise	Full heat side
6	8	Counter clockwise	Full cool side

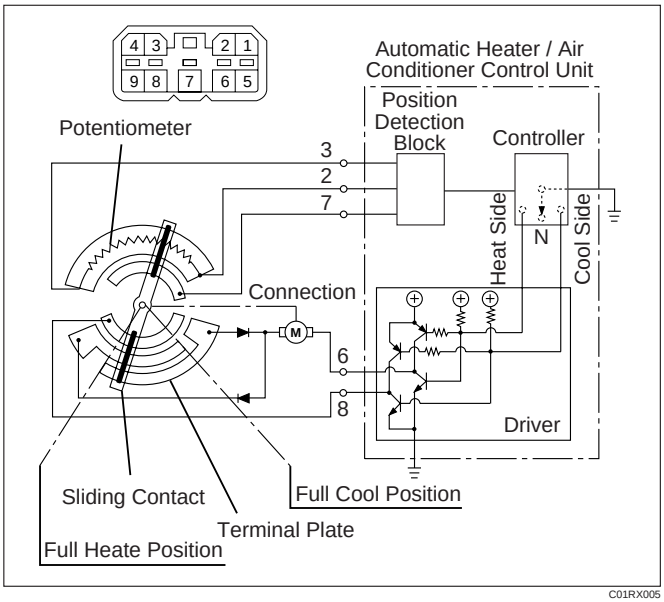

C01RX005

- **Movement of Mode Actuator**

  As target position of the mode door is decided on the controller of the control unit, the control unit reads the position detection signal from the actuator to select the clockwise or counter clockwise motor rotation direction.
  Grounding the controller VENT or DEF side after the direction selection activates the transistor on the driver, thus turning on the motor rotation. Accompanying the motor rotation, the sliding contact rotates, too. When the target position is reached, the controller on the control unit returns to the neutral and the motor stops.

Conducting pin		Rotation direction	Remarks
(+) side	(–) side		
5	1	Clockwise	VENT to DEF direction
1	5	Counter clockwise	DEF to VENT diction

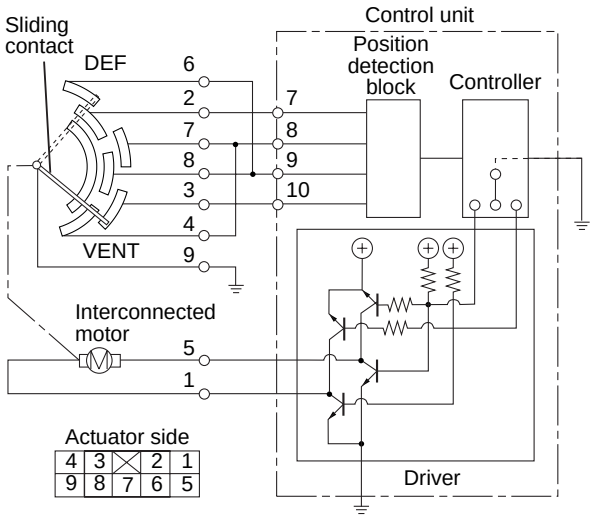

	7	8	9	10
VENT	H	L	H	L
Mid point between VENT - B/L	H	H	H	L
B/L	H	H	L	L
Mid point between B/L - FOOT	H	H	L	H
FOOT	H	L	L	H
Mid point between FOOT - D/F	H	L	H	H
D/F	L	L	H	H
Mid point between D/F - DEF	L	H	H	H
DEF	L	H	L	H

C01RX017

- **Movement of Intake Actuator**

  The controller on the automatic heater/air conditioner control unit selects an intake mode to be used.
  As the Terminal No.5 I-49 is grounded via the sliding contact on the terminal plate, the transistor on the driver is activated, thus turning on the motor rotation. Then, accompanying move of the motor, the sliding contact rotates until grounding of the Terminal No.5 I-49 is removed, thus stopping the motor.

Grounding terminal	Rotation direction	Remarks
No.5 I-49	Clockwise	RE-CIRCULATION→MIX →FRESH

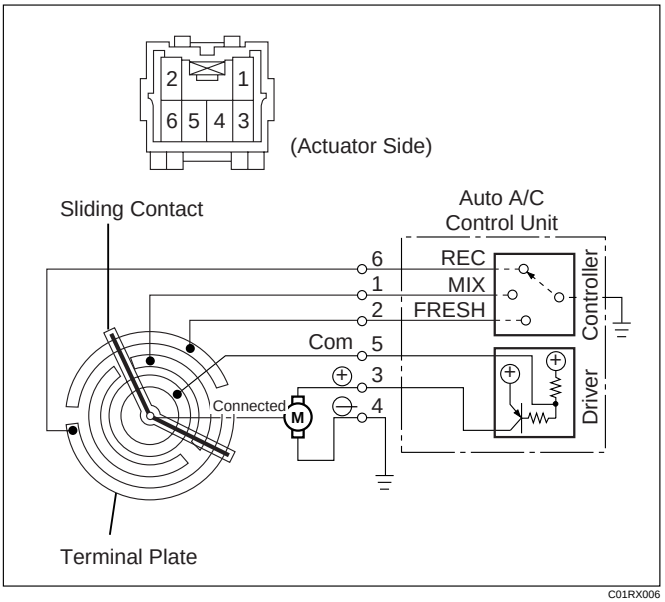

C01RX006

OVERVIEW OF AUTOMATIC CONTROL OF FULL AUTOMATIC AIR CONDITIONER

The full automatic heater and air conditioner on this vehicle has the following features:

- Interior temperature control.
- Air flow control.
- Mode (blow port) control.
- Intake (switching between fresh air and interior air) control.
- Heater start timing control.
- Cooler start timing control.
- Evaporator anti-freeze control.

1. Interior Temperature Control

The automatic heater/air conditioner control unit operates on the setup temperature signal from the temperature control switch and other sensor signals to derive the total signal. Then, the control unit compares this signal against the signal from the potentiometer to determine rotation direction of the mix actuator. The mix actuator moves the air mix door to the aperture specified by the total signal so that the specified interior temperature is achieved.

If the compressor is turned off in the A/C (air conditioning) mode, aperture of the air mix door is offset according to the outside air temperature or the specified interior temperature. This function removes the difference in the blowing temperature in this state and that of when the compressor is turned on.

When FH or FC is selected for the setup temperature, the air mix door is accordingly fixed to the Full Heat or Full Cool mode.

When the VENT mode is selected, aperture of the air mix door is controlled so that excessively heated air may not be blown from the VENT blow port.

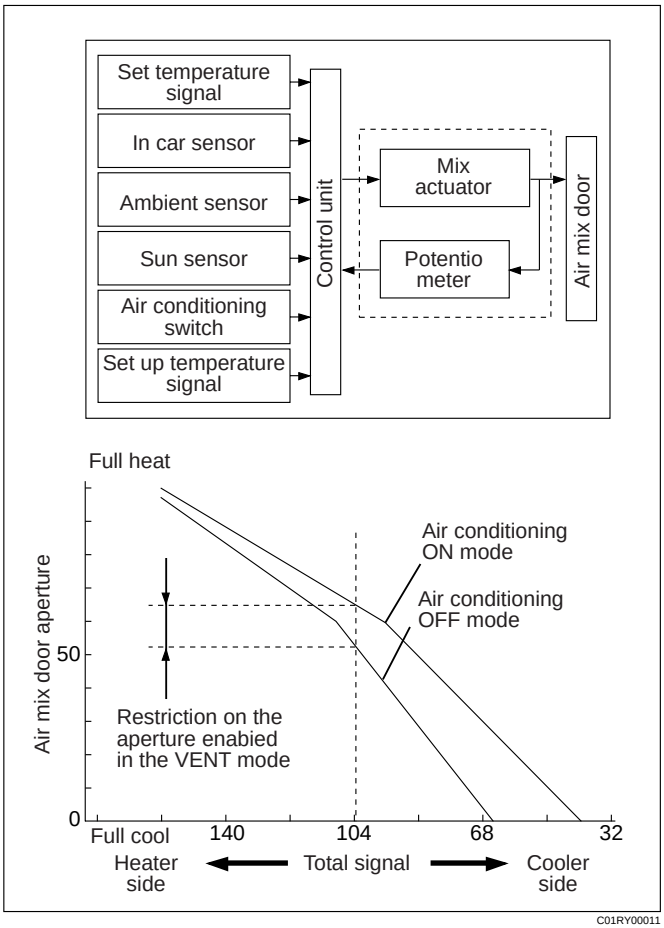

C01RY00011

2. Air Flow Control

- In the Auto Mode
  The automatic heater/air conditioner control unit operates on the setup temperature signal and other sensor signals to derive the total signal. Then, the control unit adjusts base potential of the power transistor to match it to the voltage pattern of the target fan so that stage-less fan speed control can be achieved.
  When solar radiation quantity is detected in the VENT or B/L mode, the control unit increases the minimum fan voltage to offset.
  When FH or FC is selected from the temperature control switch, air flow is accordingly fixed to MAX HI or AUTO HI.
- In the Manual Mode
  Air flow specified from the fan switch is entered to the automatic heater/air conditioner control unit as the manual signal. The signal modifies the air flow to the level specified from the fan switch so that the required fan voltage is attained.

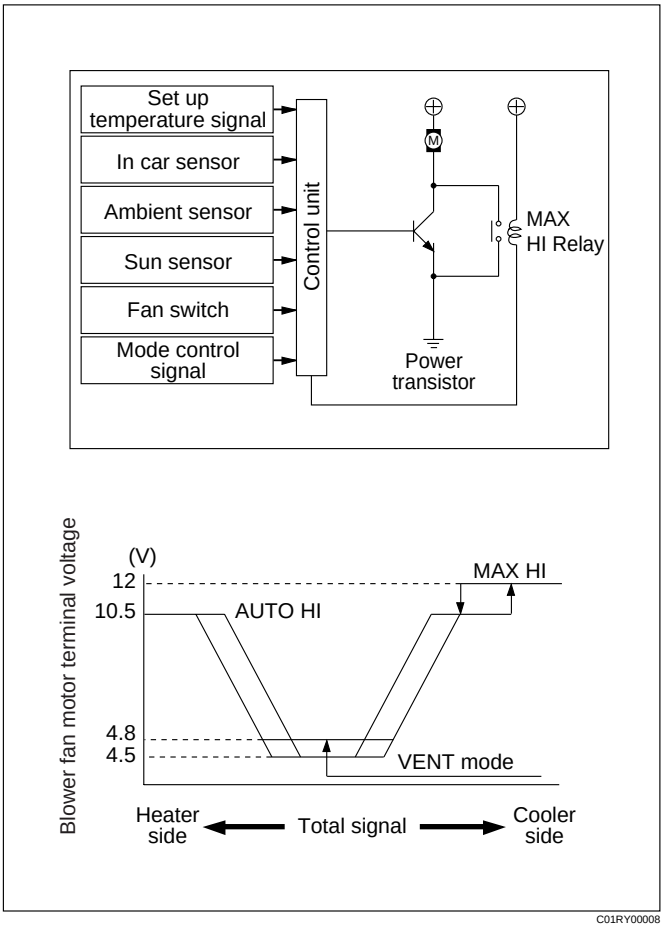

3. Mode (Blow Port) Control

The automatic heater/air conditioner control unit operates on the setup temperature from the control switch, and temperature and solar radiation quantify from the sensors to determine the total mode control signal. According to the pattern specified by this signal, the control unit selects either one of the VENT, BI-LEVEL, FOOT or DEF/FOOT mode.
The mode actuator determines the rotation direction comparing the target position against the current position being determined by the position detection signal.
When FH or FC is selected for the temperature from the temperature control switch, mode is accordingly fixed to the VENT or FOOT.

- In the manual operation of the mode switch, you can select a desired blow port mode pressing the corresponding mode switch.
- Operating the DEF mode switch selects the DEF for the blow port mode.

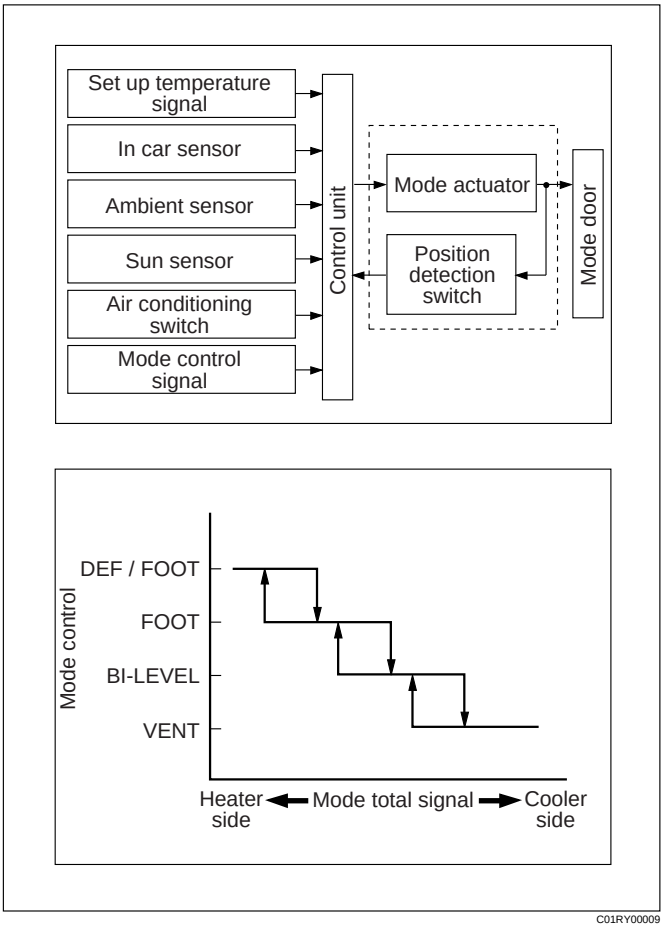

4. Intake (Fresh air/interior air switching) Control

In the Full Auto mode, the automatic heater/air conditioner control unit operates on the setup temperature signal and other sensor input signals to derive the total signal. According to the pattern specified by this signal, the control unit provides the intake control.

When the fan is turned off or the A/C (air conditioning) is turned off, the intake is fixed to the FRESH mode.

When FC or FH is selected from the control switch, the intake mode is accordingly fixed to the RECIRC or FRESH.

- In the Manual Operation
  Pressing the FRESH (fresh air intake) or the RECIRC (room air circulation) accordingly selects the FRESH or RECIRC mode.
- When the DEF Mode Switch is depressed
  The intake mode is fixed to the FRESH. When the MANU REC is selected, however, the mode is fixed the RECIRC.
- When the Mode Switch is depressed
  If the automatic intake control is selected, the intake is fixed to the currently selected mode.

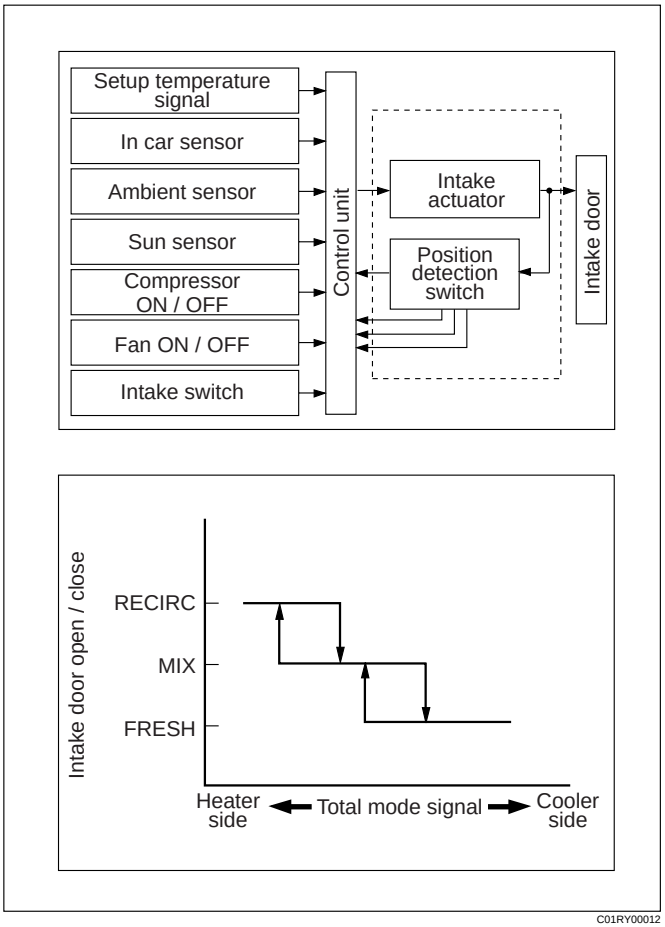

C01RY00012

5. Compressor Control

In the automatic control mode, the automatic heater/air conditioner control unit turns on or off the compressor with the evaporator anti-freeze mechanism using the duct sensor. And, when outside air is detected to be low through the ambient sensor signal, the control unit turns off the compressor using the compressor control function.

- Manual Control
  In the automatic control mode, pressing the A/C (air conditioning) switch turns off the compressor.
- Pressing the DEF mode switch automatically turns on the compressor.

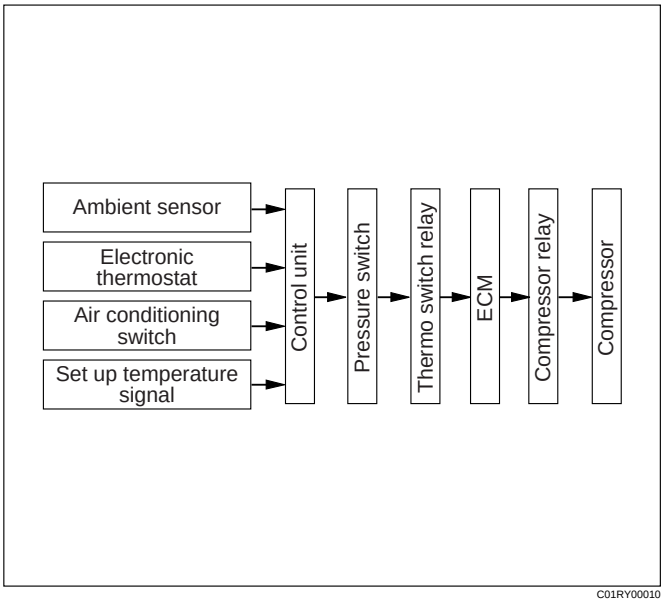

C01RY00010

6. Heating Start Timing Control

When the automatic heater/air conditioner is started, heating is turned on under following conditions.

- The detected temperature of thermo unit is 136°F or less.
- The temperature setting signal and the total signal by each sensor meet the condition of heating.

When the detected temperature by the coolant temperature sensor is 136°F or less the blower fan motor is set to work at low speed and the "DEF" mode is selected.

When the detected temperature by the coolant temperature sensor is 77°F or more, the blow mode changes automatic control. And the blower fan speed is controlled to be lineally up from "LO" to "MAX HI".

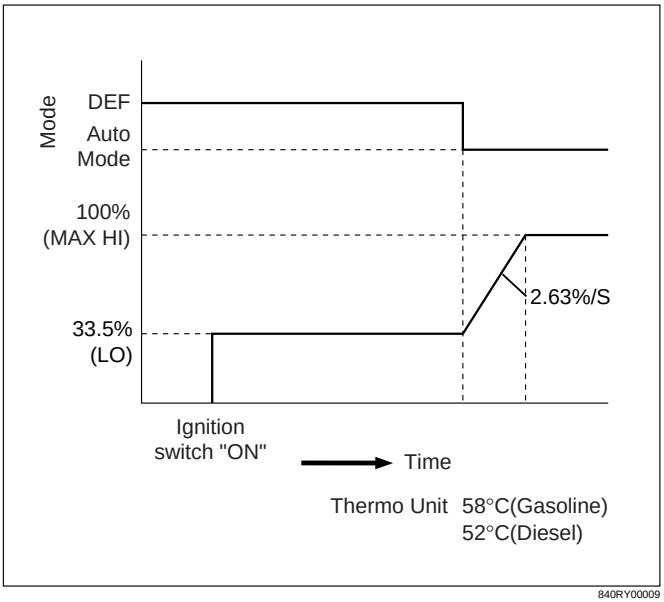

840RY00009

7. Cooling Start Timing Control

When the automatic heater/air conditioner is started, cooling is turned on under following conditions.

- The in car sensor is 86°F or more.
- The temperature setting signal and the signals from each sensor meet the specified condition.

The blower fan speed is set to "LO" for maximum 7 seconds when cooling start conditions meet, and then, is controlled to be lineally up to "MAX HI" by 5.32%/S.

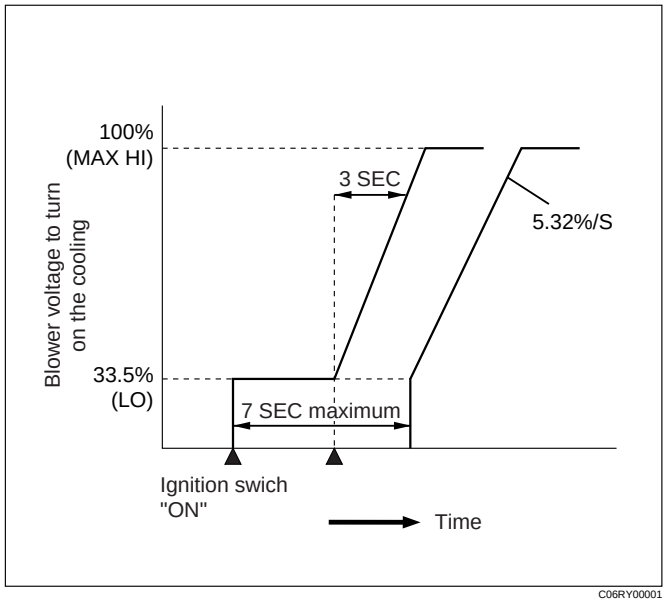

C06RY00001

TROUBLESHOOTING

Troubleshooting, Its Overview and Procedures

The full automatic heater and air conditioner equips with the "Self-Diagnosis Function" to check its major components.
This function makes access to the sensors, actuators and blower fan motor system easier when checking them up and, when a failed part is located, this function restores its original performance.
When implementing the troubleshooting, this self-diagnosis function narrows the range to be searched at the first step, then check relevant parts one by one according to the "Checking Procedures by Failed Location" As for a location this function is unappreciable, the system accurately determines characteristics of a given trouble and checks relevant parts according to the "Checking Procedures by Failed Location".
The following illustrates basic troubleshooting flow.

1. Basic Troubleshooting Flow

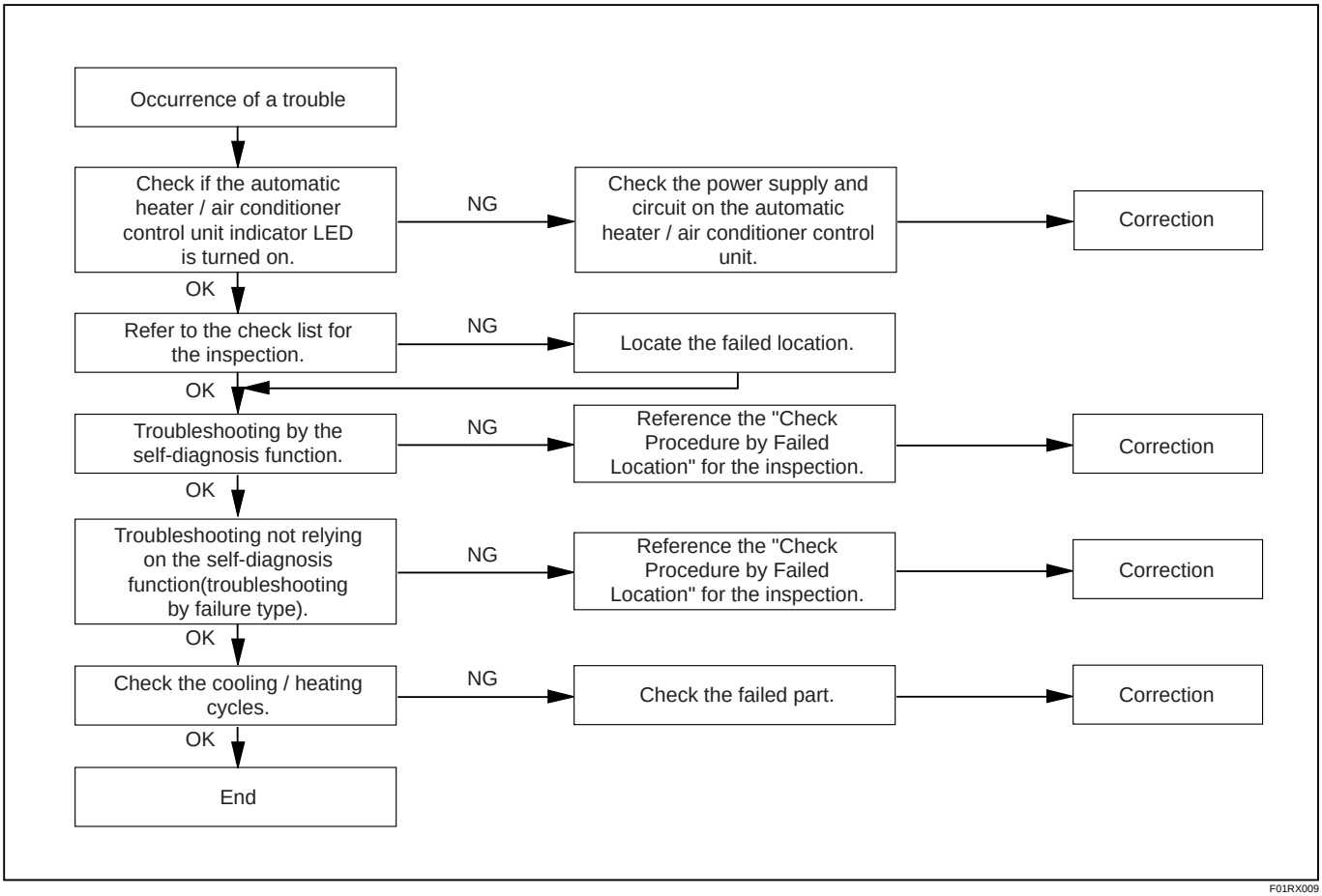

F01RX009

Check of Auto Amplifier (Automatic air conditioner control unit) Power Supply System

- This check is required because a trouble on the auto amplifier (control unit) power supply circuit or grounding circuit prevents accurate troubleshooting.

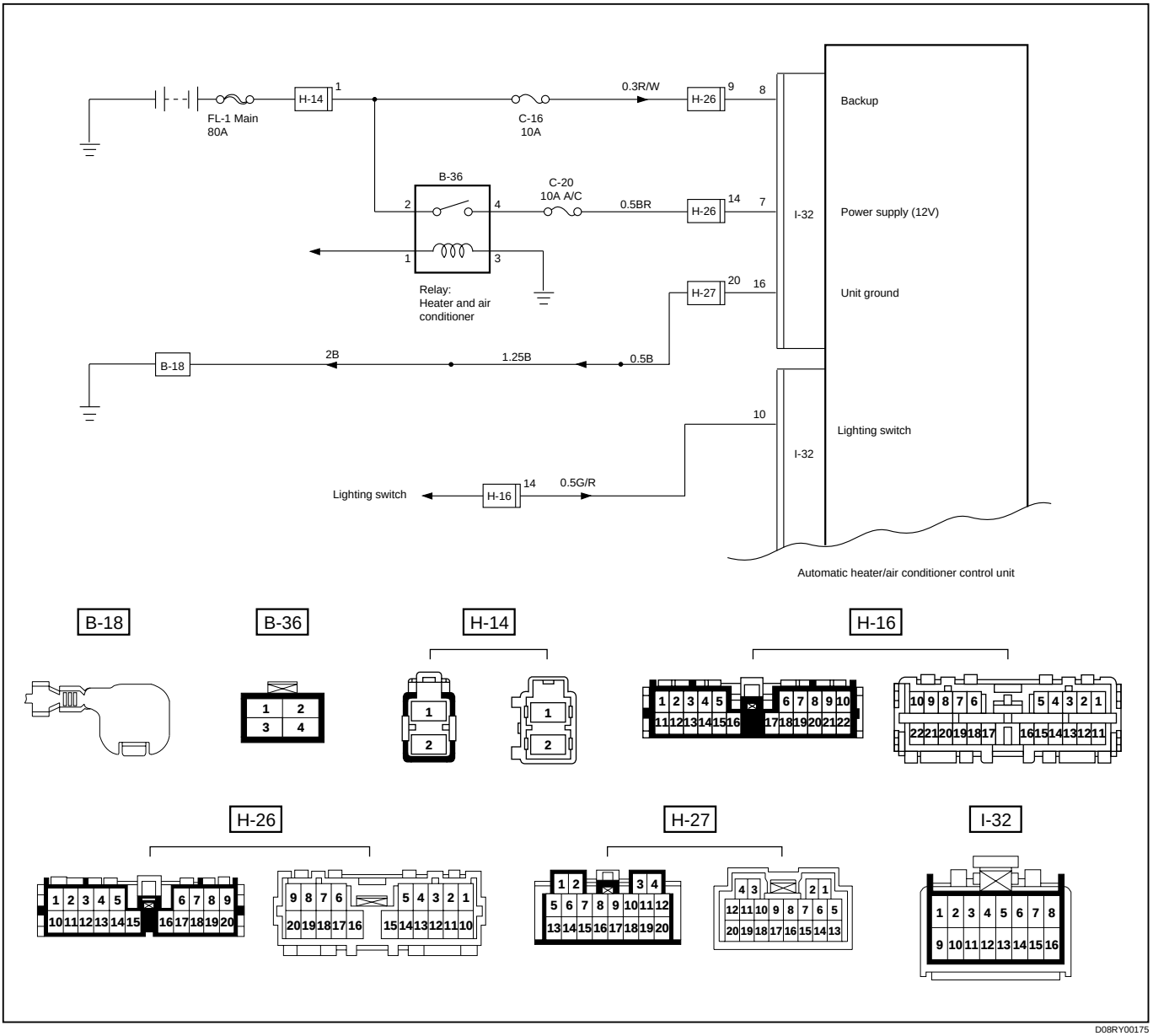

D08RY00175

Check of auto amplifier power supply circuit and grounding circuit.

Chart A

Chart "A" : Check of Auto Amplifier Power Supply System

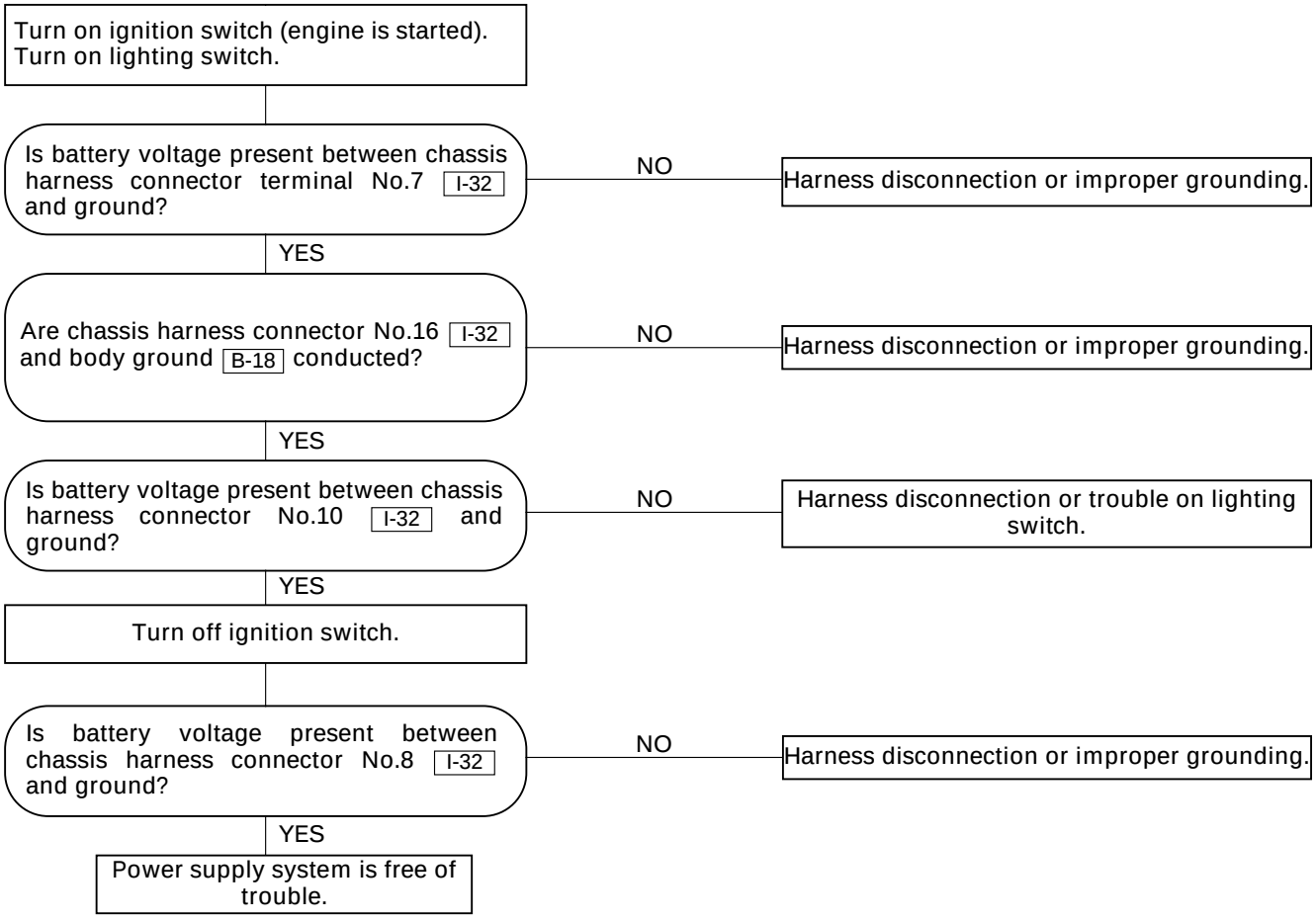

Performance and Movement checklist for Automatic Air Conditioner Related Parts

Start the engine, and when the engine coolant reached 60°C check performance and movement of the related parts according the following checklist.

1. Performance Check Using the Manual Switch

No.	Item	Checking Approach		Acceptance criteria
		Condition	Operation	
1	Blowing temperature (check movement of air mix door)	Auto switch must be turned on (FAN-AUTO MODE-AUTO)	(1) Select FC for the setup temperature. (2) Select FH for the setup temperature. → Then, select the MAX Control.	(1) Cold air shall be blown out. (2) Hot air shall be blown out.
2	Airflow volume (check movement of the mode door)	Set temperature to 25.0°C.	(1) Turn the fan knob off. (2) Turn the fan knob from LOW to HI.	(1) The fan shall be stopped, thus stopping air blow, too. (2) Airflow volume shall change from LOW to HI.
3	Blowing temperature (check movement of the mode door)	Set temperature to 25.0°C. Set the fan knob to HI.	Press the mode switch to change the blow port mode sequentially from the VENT through BI-LEVEL, FOOT up to DEF.	LED corresponding to each mode shall be turned on and the blow port mode shall be switched smoothly.
4	The interior/outside air switching mode (check movement of intake door)	Set temperature to 25.0°C.	Turn the LED off using the interior/outside air switch (this introduces the outside air intake mode). Then, the set fan knob to HI and press the interior/outside switch to turn on the LED.	The LED indication shall be switched from OFF to ON accompanying a change in air blowing sound.
5	Compressor	Set the temperature to FC. (Outside air temperature is 0C or above and interior temperature at ordinary temperature.)	Press the "OFF" switch. (1) Press the Auto switch. (2) Press the Air Conditioner switch.	(1) As the fan knob is set to the Auto position, the A/C switch LED shall come on and the compressor shall be turned on. (2) As the A/C LED comes off, the compressor shall be turned off.

2. Check of Full Auto Function

No.	Item	Checking Approach		Acceptance criteria
		Condition	Operation	
1	Full Auto function	FAN KNOB “AUTO” MODE SW “AUTO”	Select FC for the temperature.	The LED shall come on. Cold air shall be blown out. The following LEDs shall come on: • Blow port mode : F01RX002 • Intake mode • Fan speed : MAX Hi • A/C
			Change the temperature gradually starting with 20°C up to 30°C.	The following phenomena shall be recognized. • Temperature of blown air: Cold air is changed to hot air. • Change in the air flow volume. • The blow port mode LED indication changes in the following sequence: (VENT) (BI-LEVEL) (FOOT) F01RX003
			Select FH for the temperature.	Cold air shall be blown out. The following LEDs shall come on. • Blow port mode : F01RX004 • Fan speed: Max Hi

TROUBLESHOOTING WITH SELF-DIAGNOSIS FUNCTION

1. Overview of Self-Diagnosis Function

The self-diagnosis is implemented in 3 steps for each target. For detail of check procedure contained in each step, refer to the relevant section of "Check Procedure by Failed Location" listed in the Self-Diagnosis Operation Procedure.

For turning on the self-diagnosis function and switching of the check step, refer to the flow chart given below. You can reset the self-diagnosis function by turning the ignition switch off or turning the DEF switch on for 3 seconds.

2. Self-Diagnosis Operation Procedure

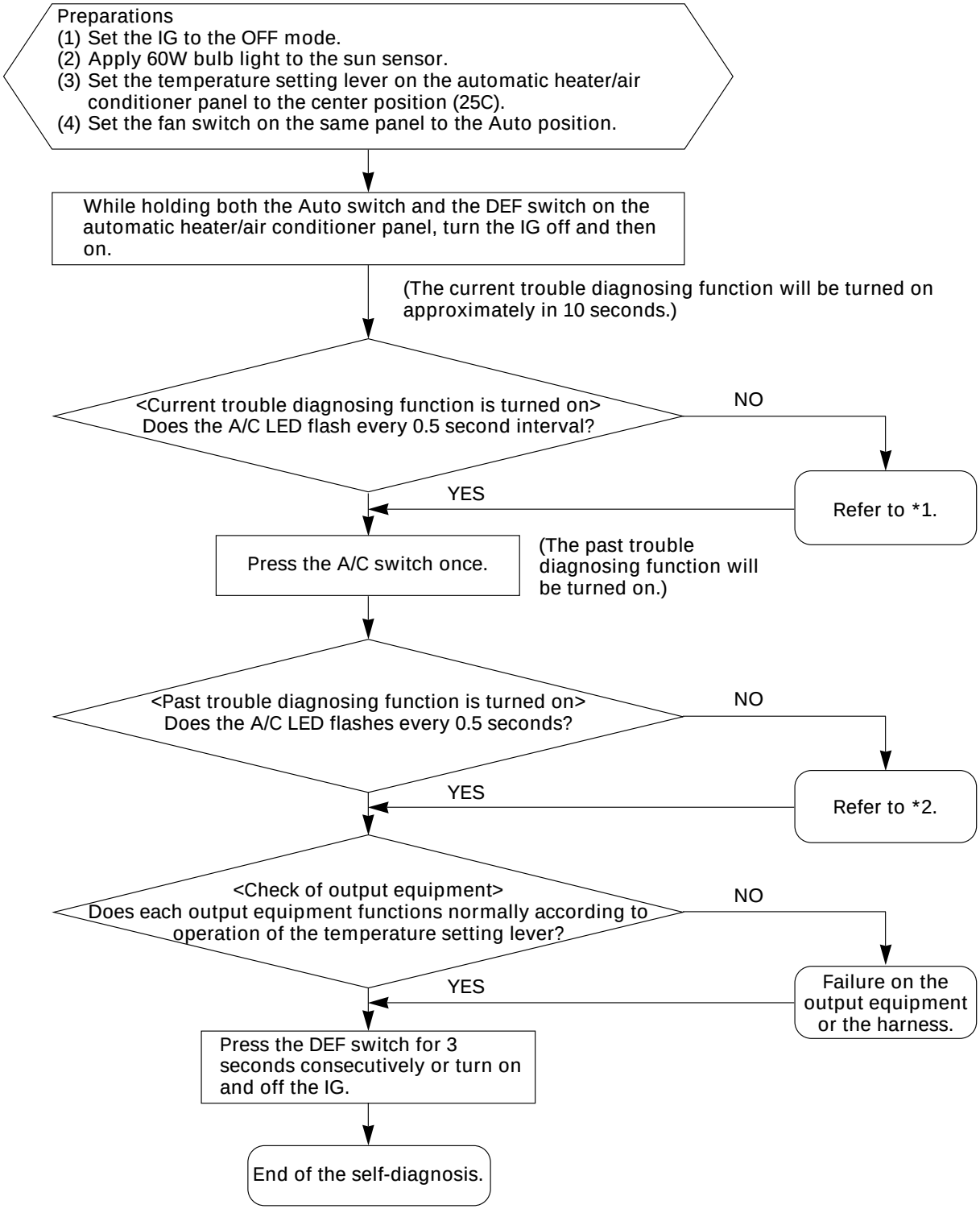

*1. Displaying the Current Trouble Diagnosing Table

Start the engine while holding down both the Auto switch and the DEF switch on the control panel, and the table will appear in approximately 10 seconds to the indicator lamp (LED) of the air conditioning switch. Result of the diagnosis along the following 9 items will be shown one by one in 0.5 second interval irrespective of presence or absence of a trouble for a given item. When the display 9 items is completed, it is repeated with 3 seconds of interval in between. A failed item is indicated by flashing of the LED that is repeated 3 times within 0.5 seconds. If a trouble is indicated, you can locate the failed section by knowing when in the total sequence it has been displayed.

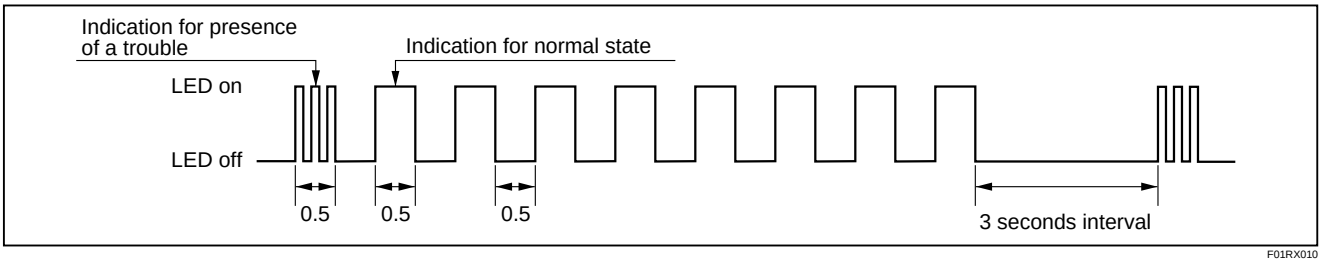

F01RX010

Items for Current Trouble Diagnosis

Display pattern	Failed part
ON / OFF	Normal pattern
	In car sensor
	Ambient sensor
	Sun sensor (Note 1)
	Duct sensor
	Temperature control lever (Note 2)
	Fan switch (Note 3)
	Mix actuator
	Mode (blow port) control
	Intake (fresh air/interior air switching) control

F01RY00008

As shown above, display of result along nine items is repeated with 3-second interval in between.

Note 1: When checking the solar radiation sensor, apply sufficient light using a 60W bulb. Otherwise, it can be diagnosed as failed.

Note 2: If the temperature setting lever is set on both ends (one set to 18°C, blue scale = Full cool and the other to 31°C, red scale = Full hot), they can be diagnosed as failed.

Note 3: Likewise, the fan switch can be diagnosed as failed if set on both ends.

*2. Displaying the Past Trouble Diagnosing Table

The past trouble diagnosis displays only the items on which trouble has recurred 16 times in the past. If you press the air conditioning switch once while the current trouble diagnosis is taking place, display of the past trouble diagnosis will appear on the indicator lamp (LED) of the air conditioning switch. Results of the diagnosis along the following five items are displayed one by one in 0.5 second interval irrespective of presence or absence of a trouble. A failed item is indicated by flashing of the LED that is repeated 3 times within 0.5 seconds. You can locate the failed section by counting in what sequence it has been displayed.

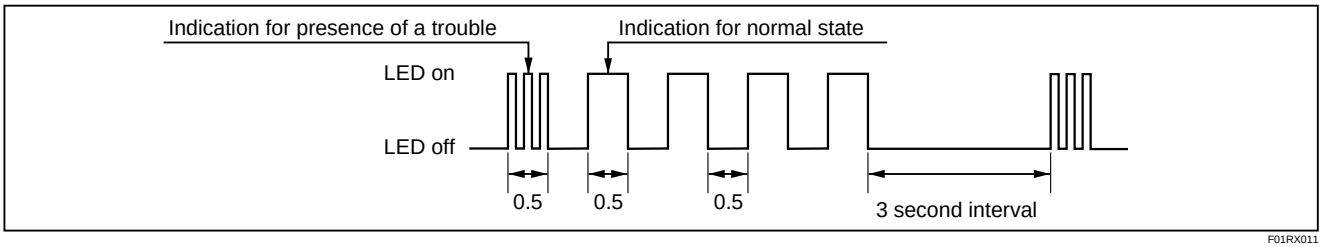

F01RX011

Items for Past Trouble Diagnosis

Display pattern	Failed part
ON / OFF	Normal pattern
	In car sensor
	Ambient sensor
	Sun sensor
	Duct sensor
	Mix actuator

F01RY00007

*3. Check of Output Equipment

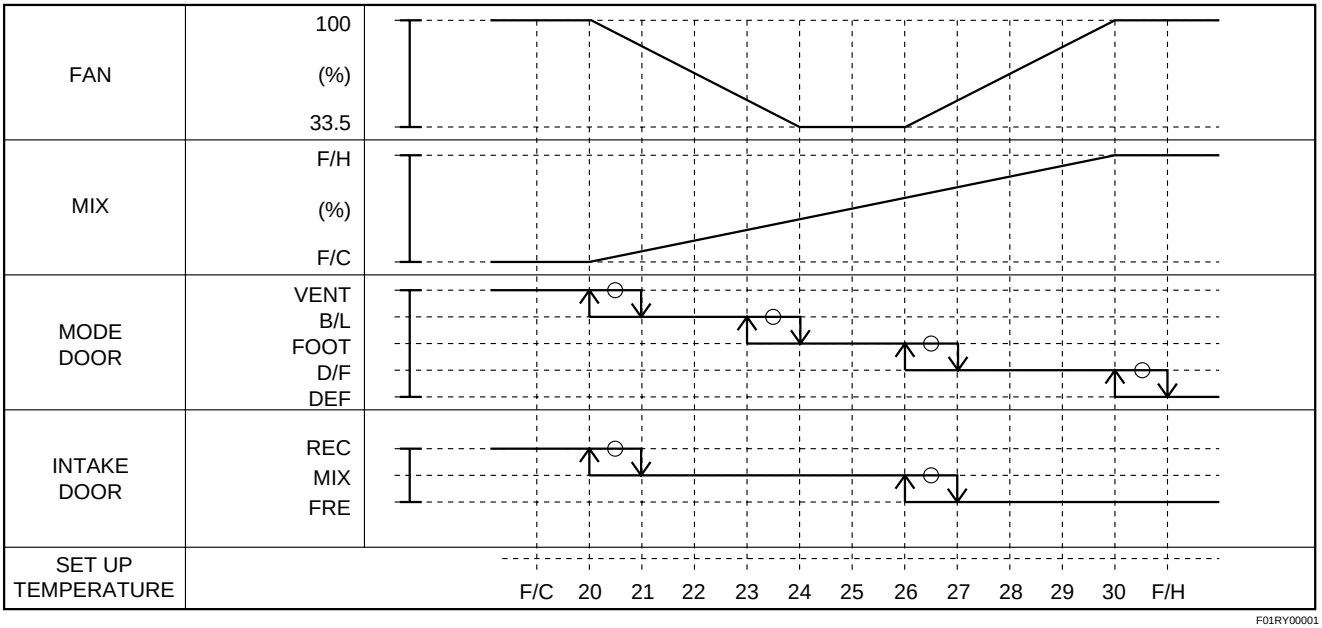

F01RY00001

INSPECTION BY FAILED LOCATION

Inspection of the Sensors

When the self-diagnosis function has determined that trouble is present on the sensors, check them according to the following flow chart.

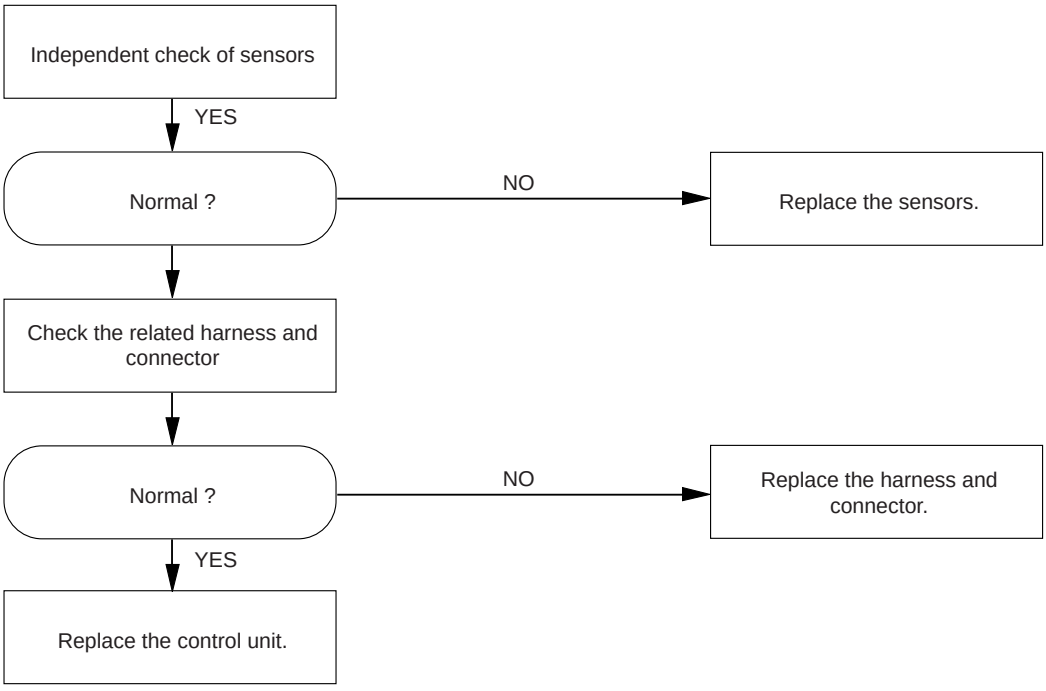

Sensors	Allowable range	Check method
In car sensor	Refer to the sensor resistance curve.	Chart 1
Ambient sensor	Refer to the sensor resistance curve.	Chart 2
Sun sensor	100 ohms maximum in forward and 0.02 mA minimum when exposed to 60W incandescent lamp.	Chart 3

F01RY00005

Chart 1: In Car Sensor

Disconnect the in car sensor connector (I-34).

Is the sensor performance normal? (refer to the later section on "Check Up")

- NO → Replace the sensor.
- YES ↓

Are conduction provided between the following connector terminals on chassis harness side?:
No.3 I-34 and No.1 I-33.
No.4 I-34 and No.11 I-33.

- NO → Disconnection of the harness.
- YES ↓

Failure on the automatic heater/air conditioner control unit.

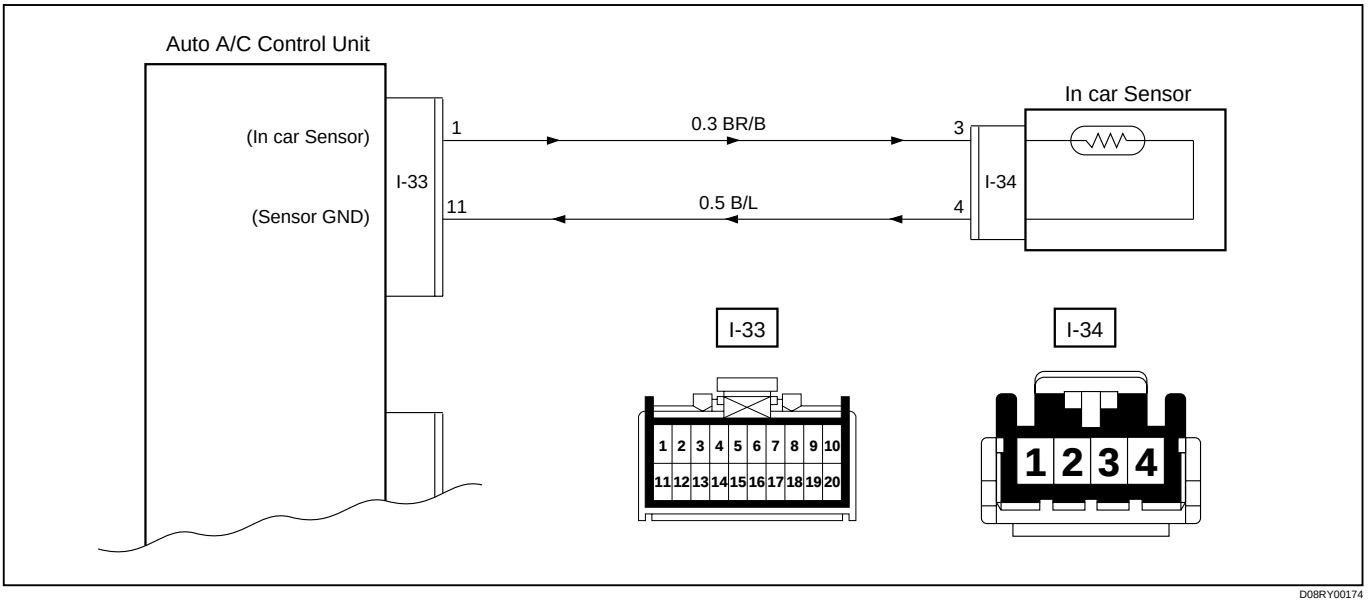

D08RY00174

Chart 2: Ambient Sensor

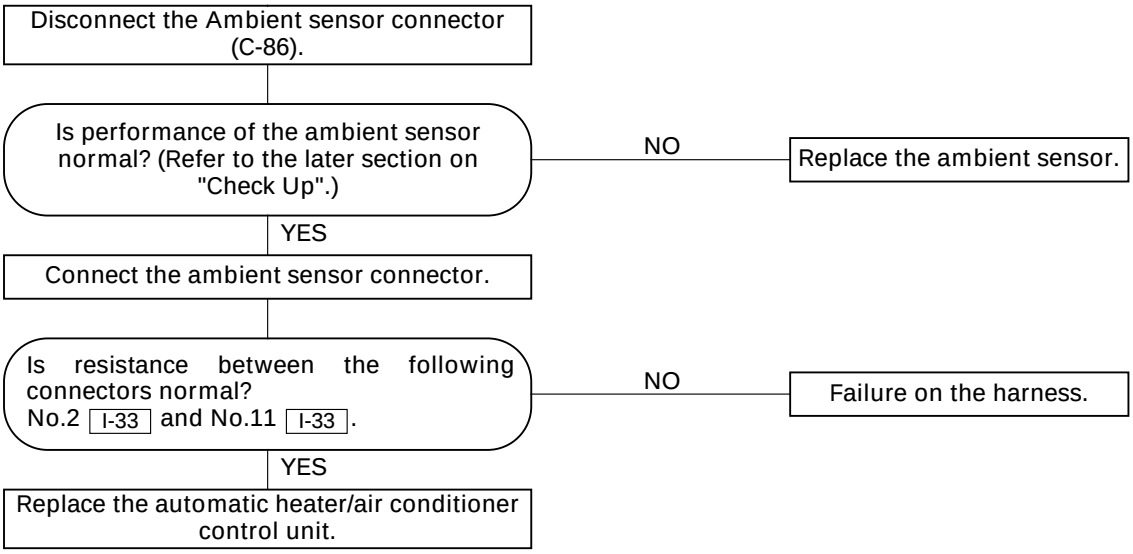

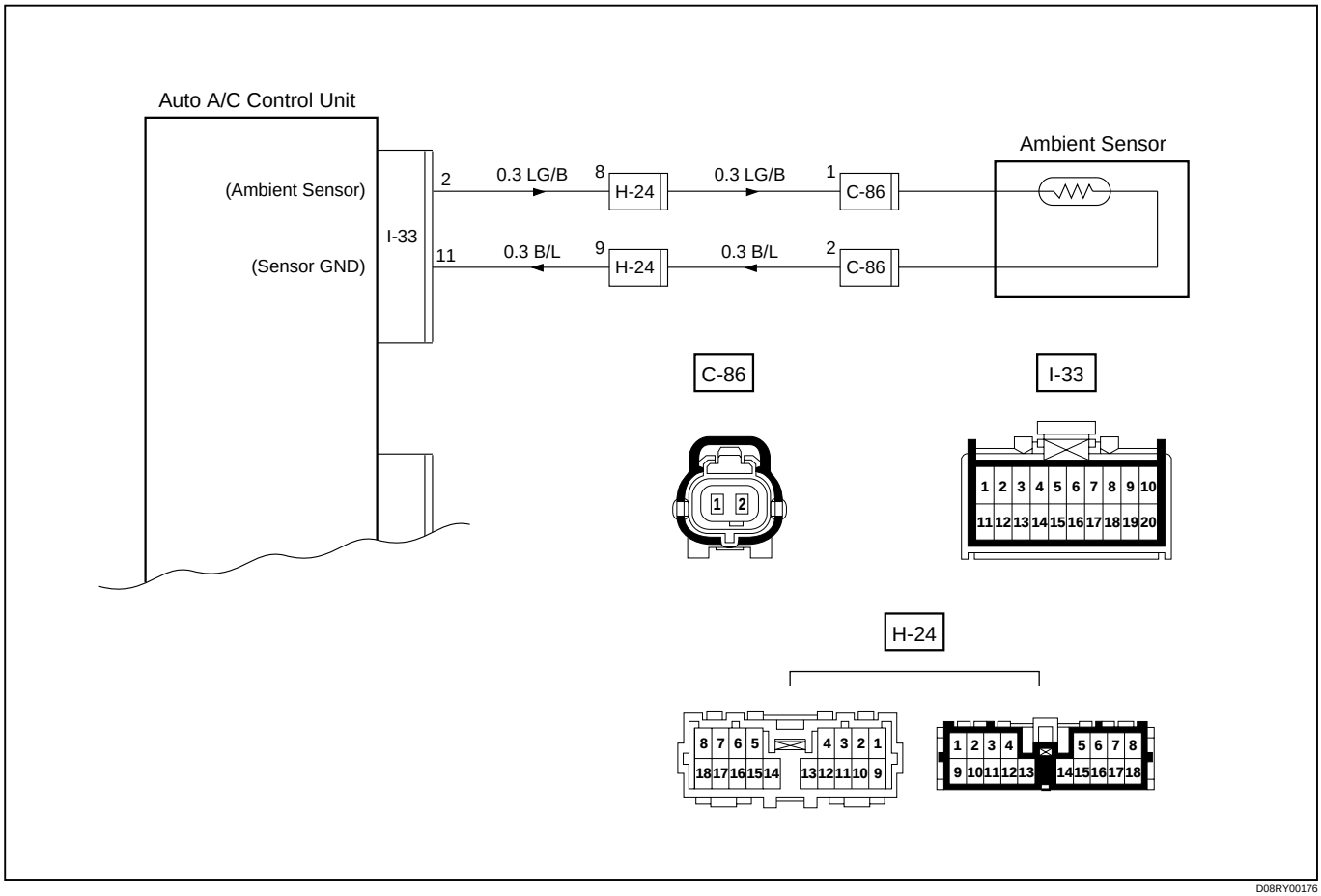

Chart 3: Sun Sensor

Disconnect the sun sensor connector (I-35).

Is performance of the sun sensor normal? (Refer to the later section on "Check Up".)

- NO → Replace the sun sensor.
- YES ↓

Is the conduction provided between the following chassis harness side connector terminals?
No.3 I-33 and No.1 I-35.
No.11 I-33 and No.2 I-35.

- NO → Replace the harness.
- YES ↓

Replace the automatic heater/air conditioner control unit.

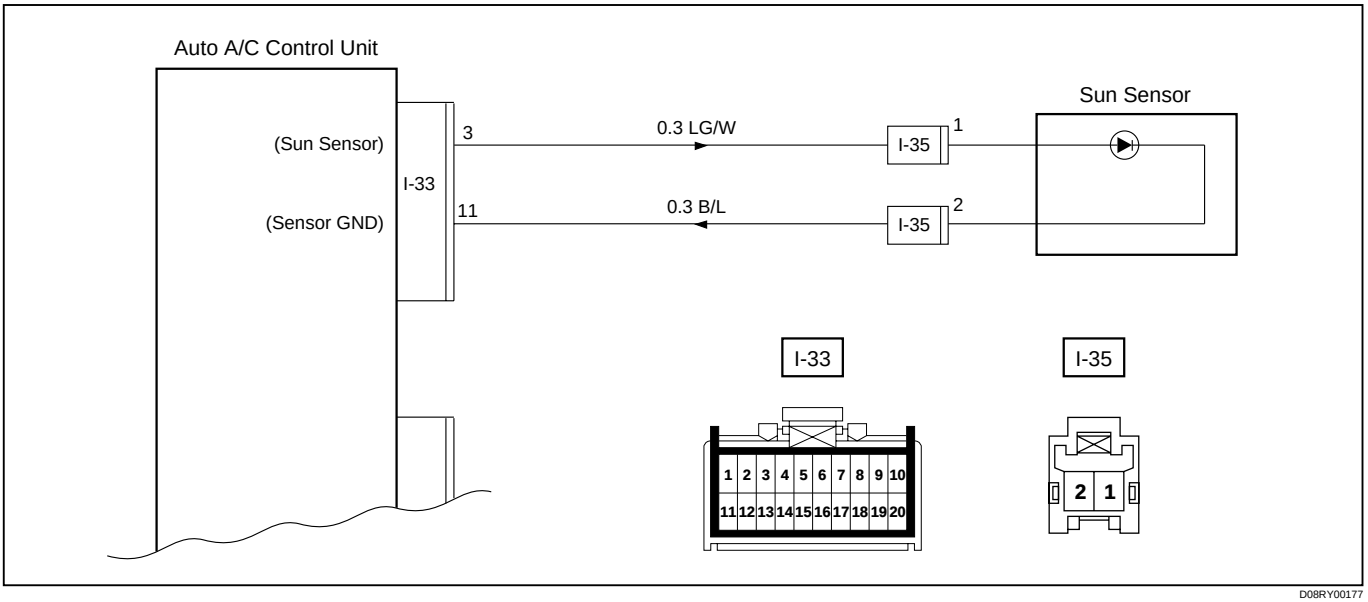

D08RY00177

Inspection of the Intake Actuator System

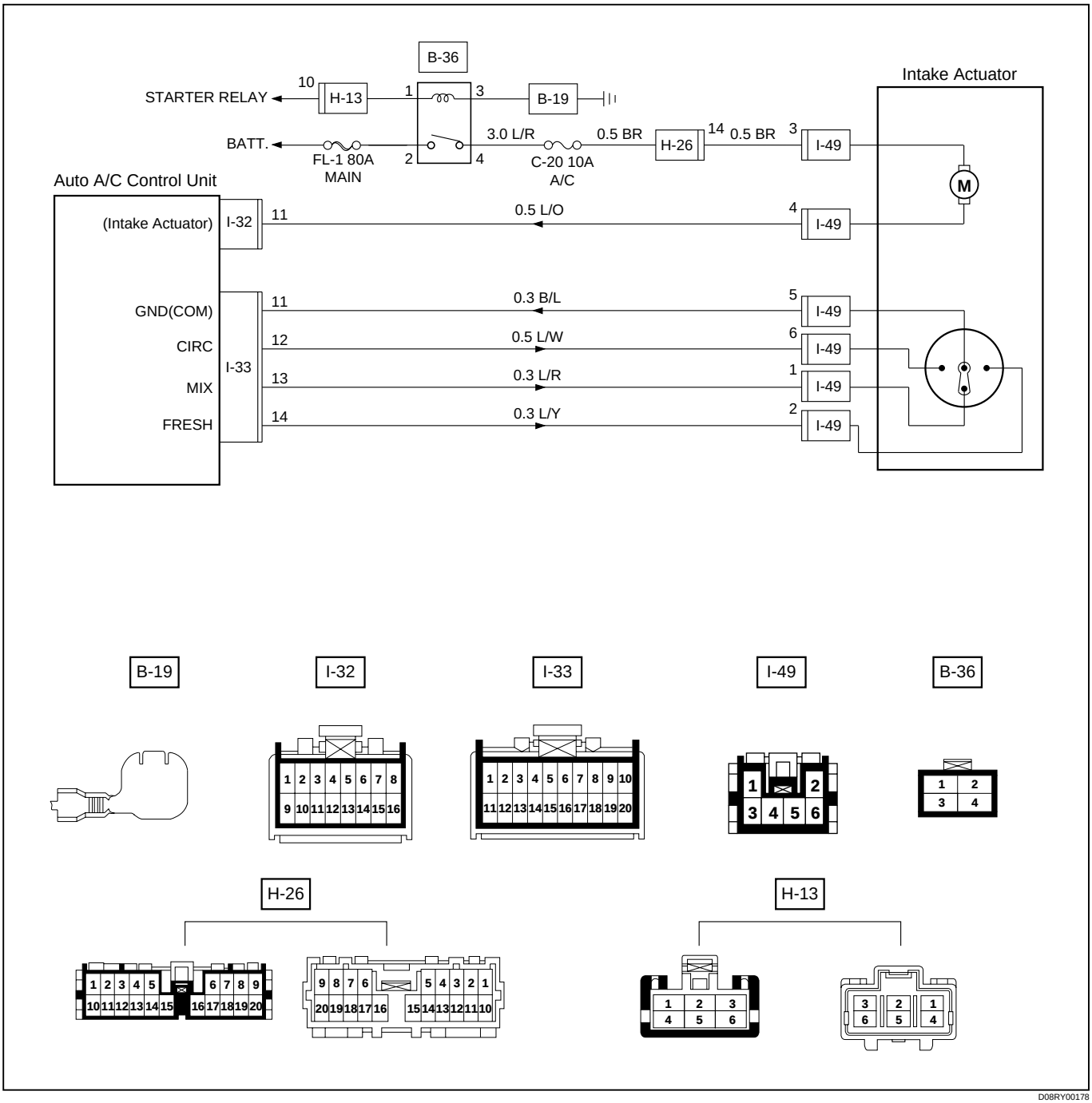

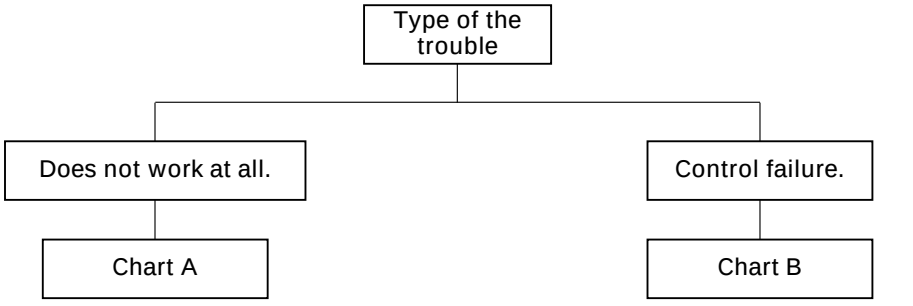

Chart A: Does Not Work At All

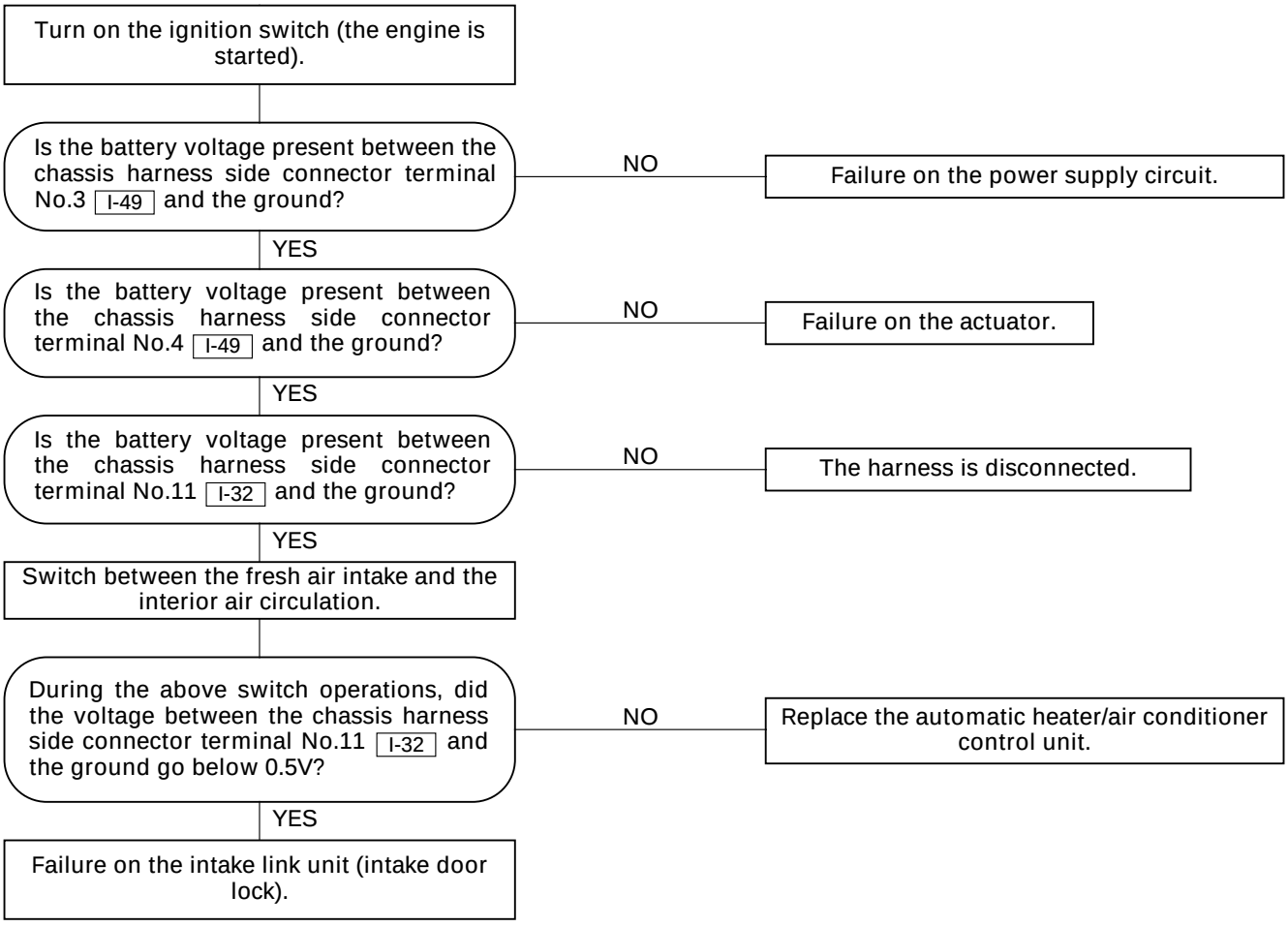

Chart B: Failure on the Intake Control

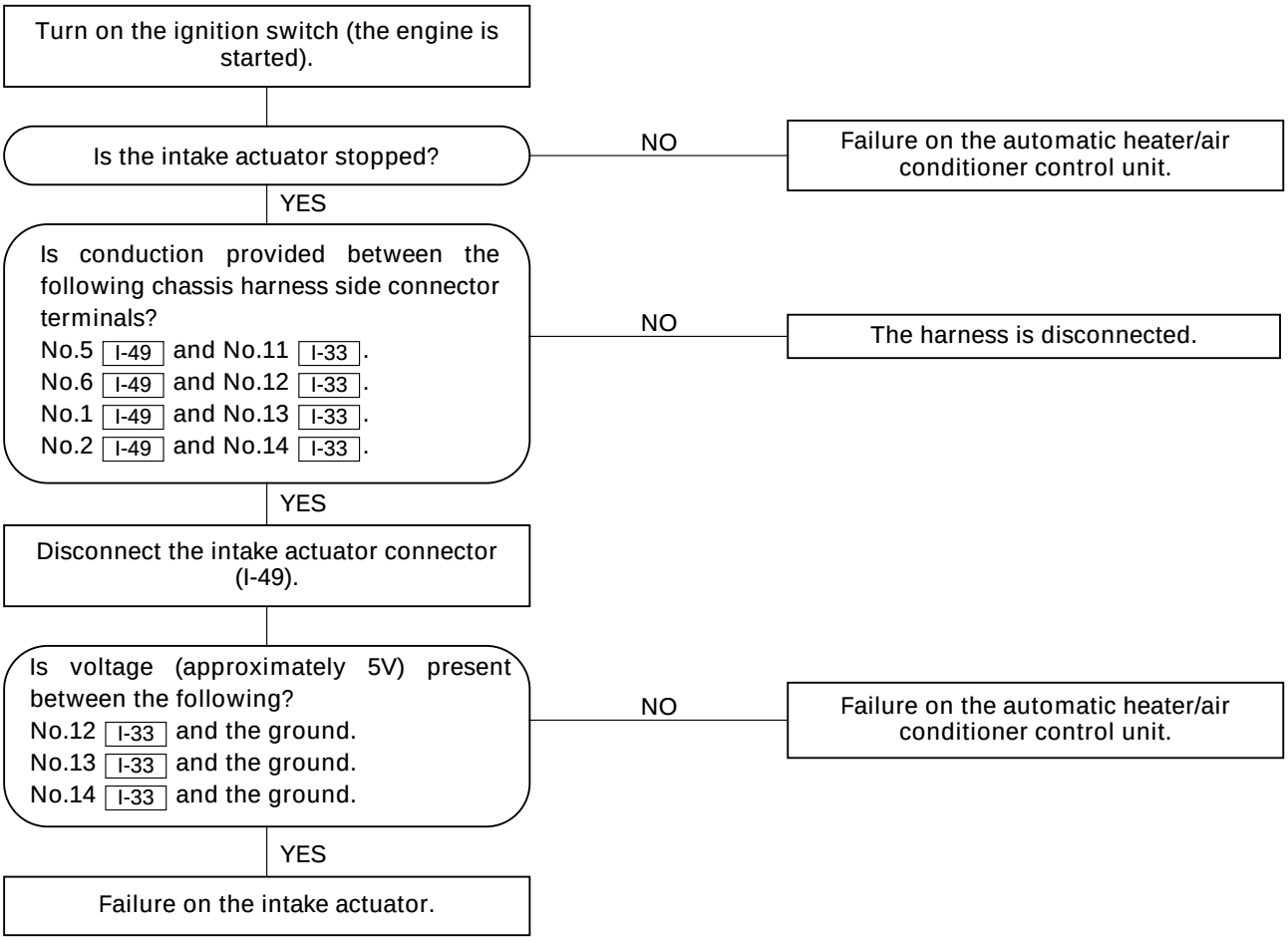

Inspection of the Mix Actuator System

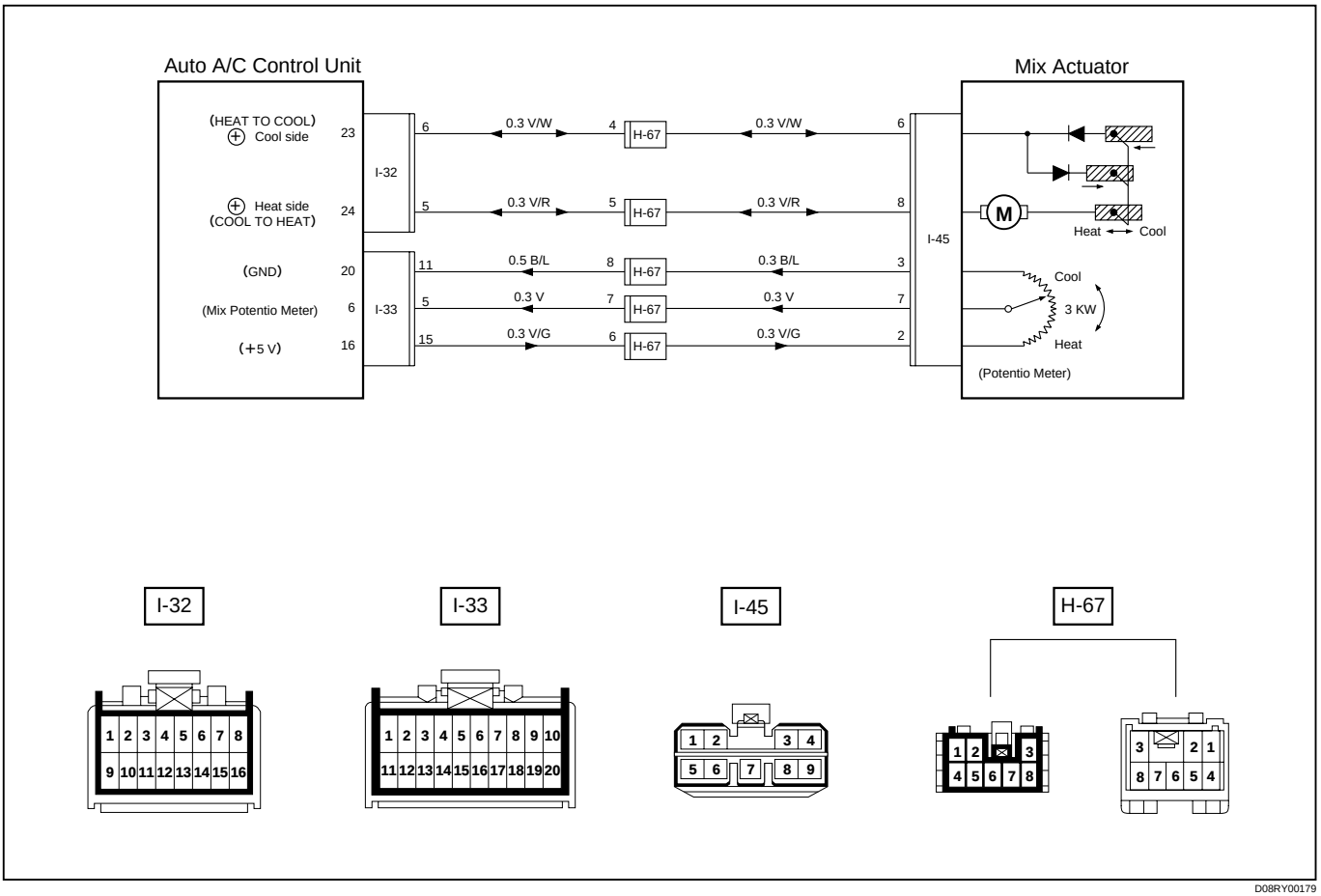

D08RY00179

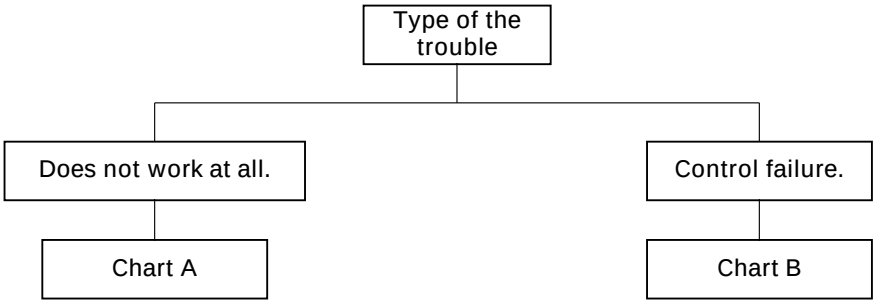

Chart A: Does Not work At All

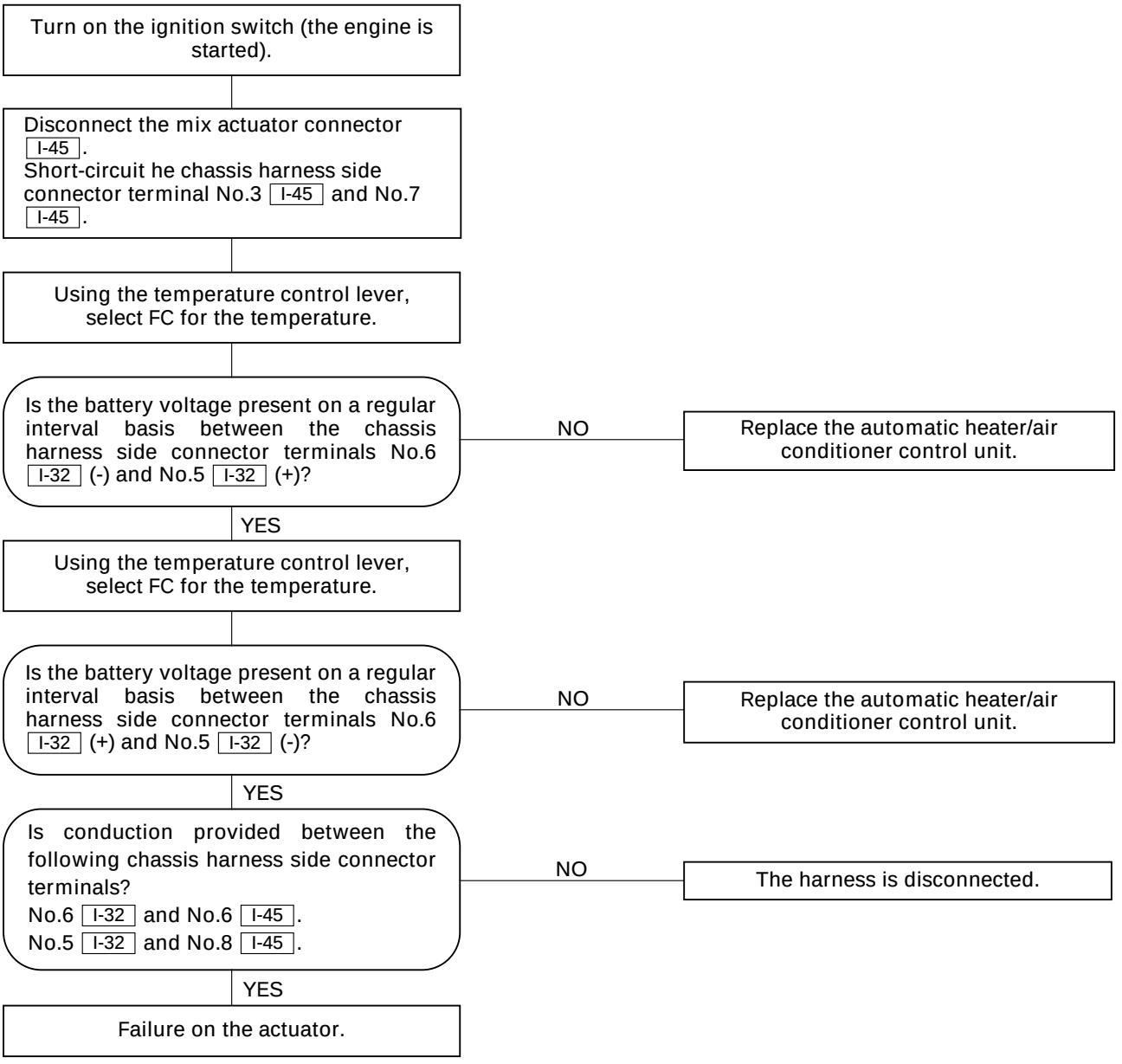

Chart B: Mix Actuator Control Failure

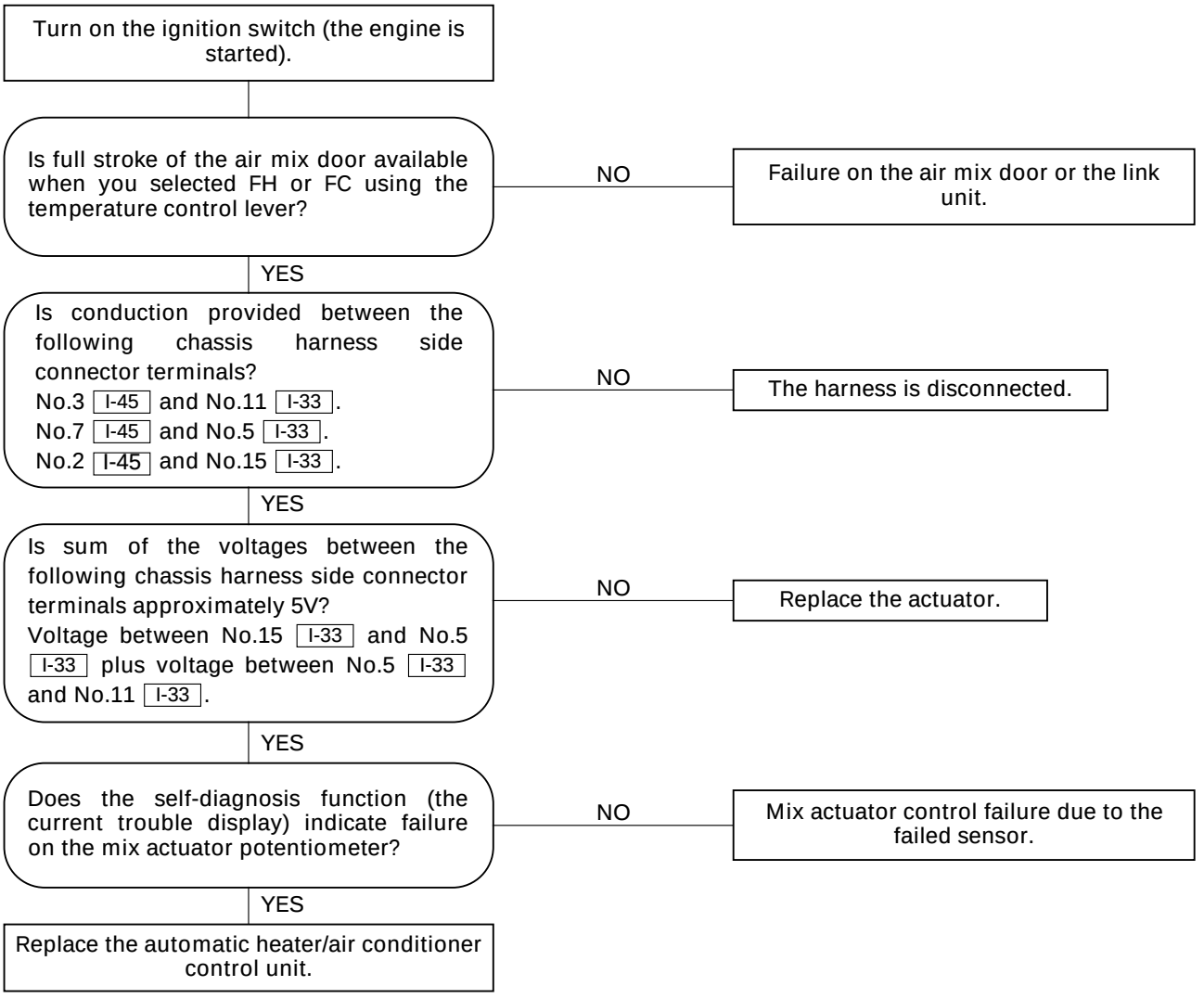

Inspection of the Mode Actuator System

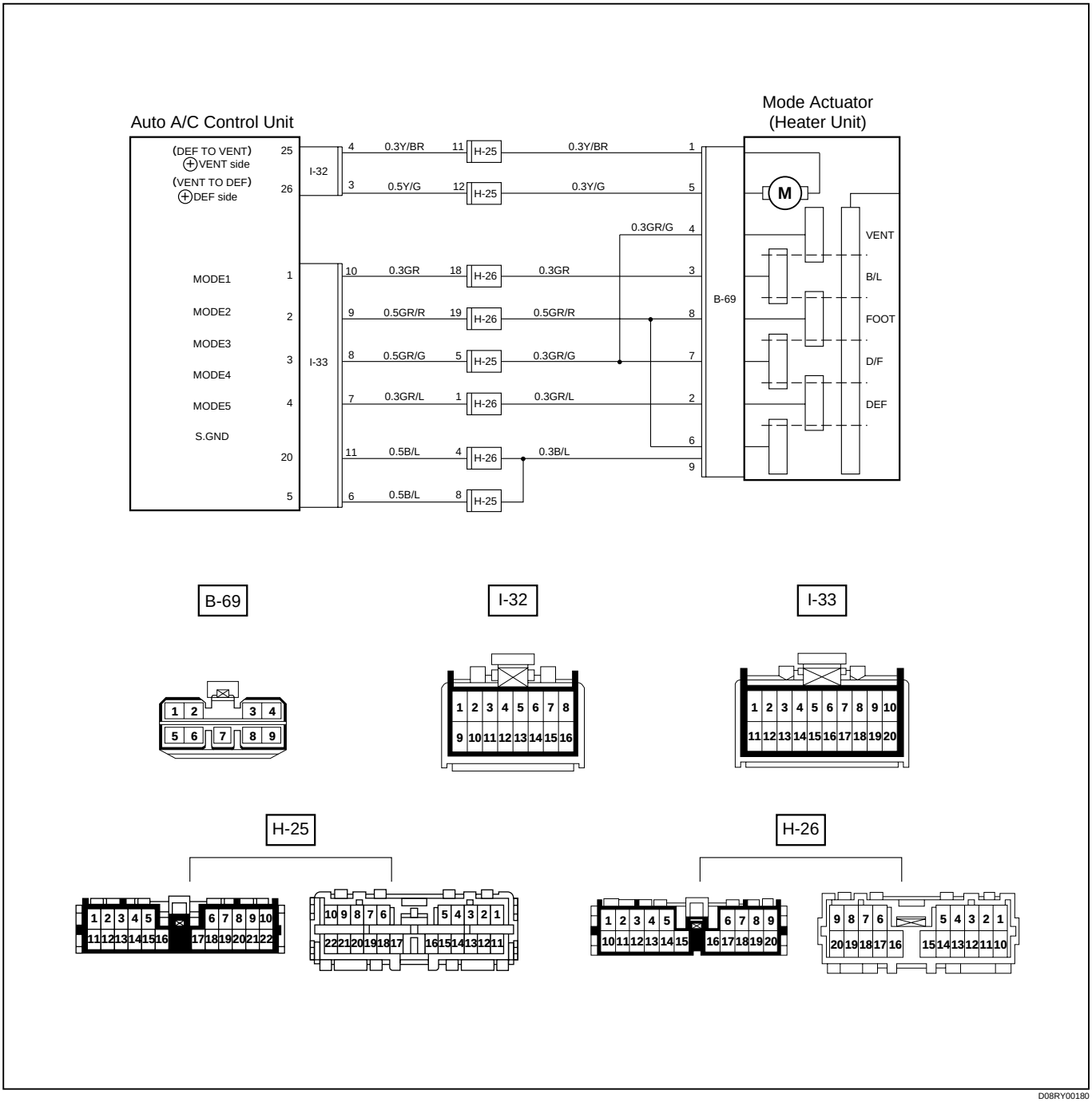

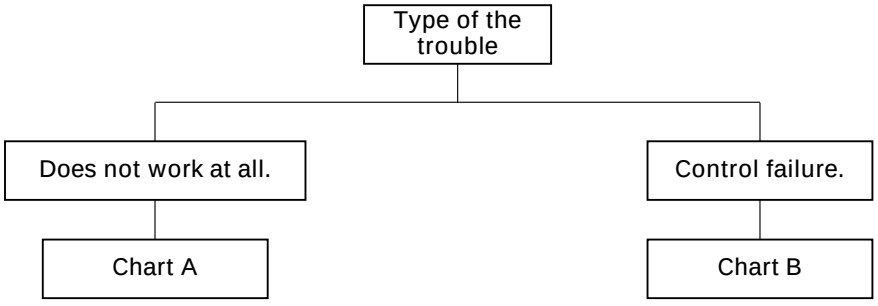

Chart A: Does Not Work At All

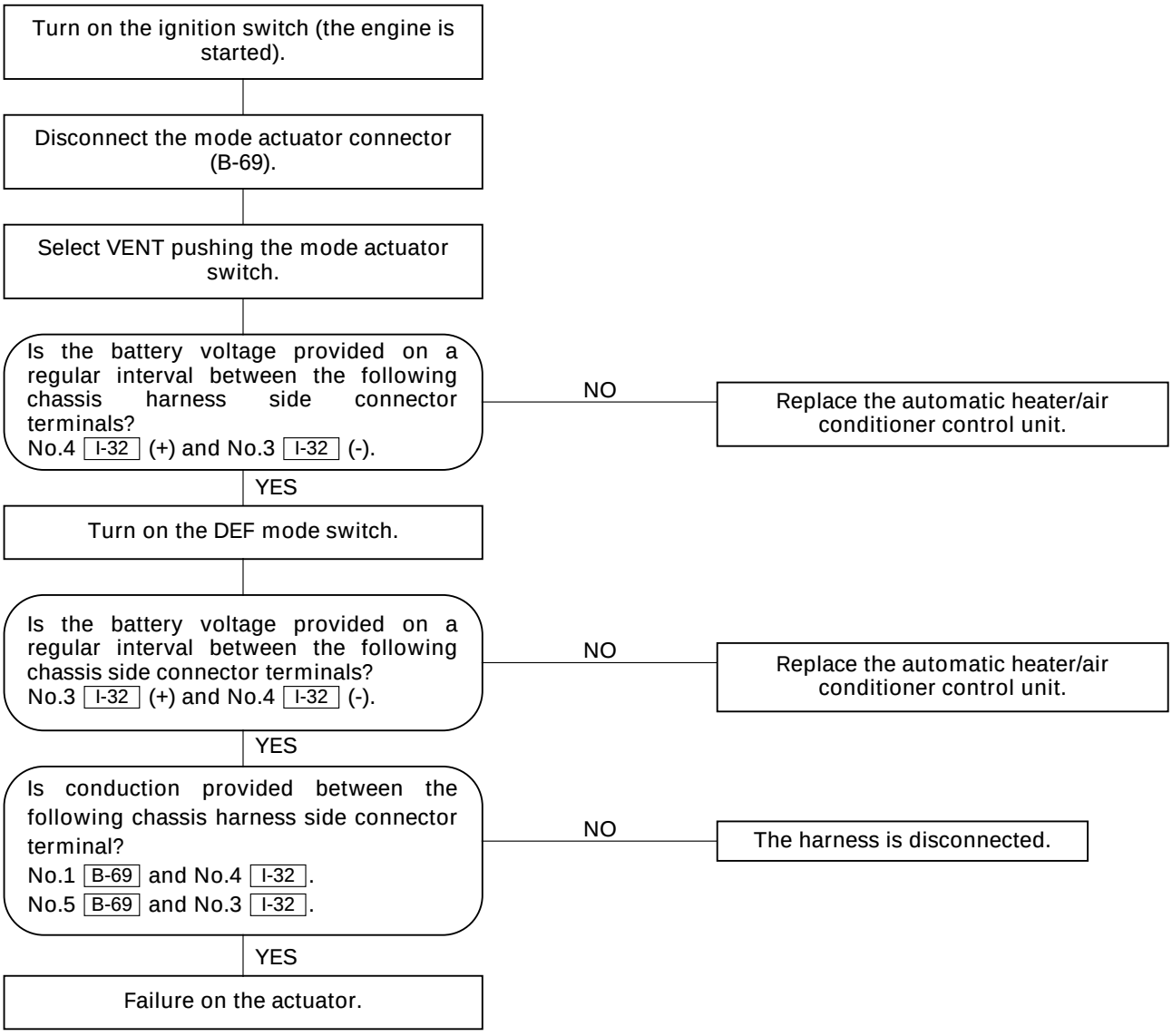

Chart B: Mode Actuator Control Failure

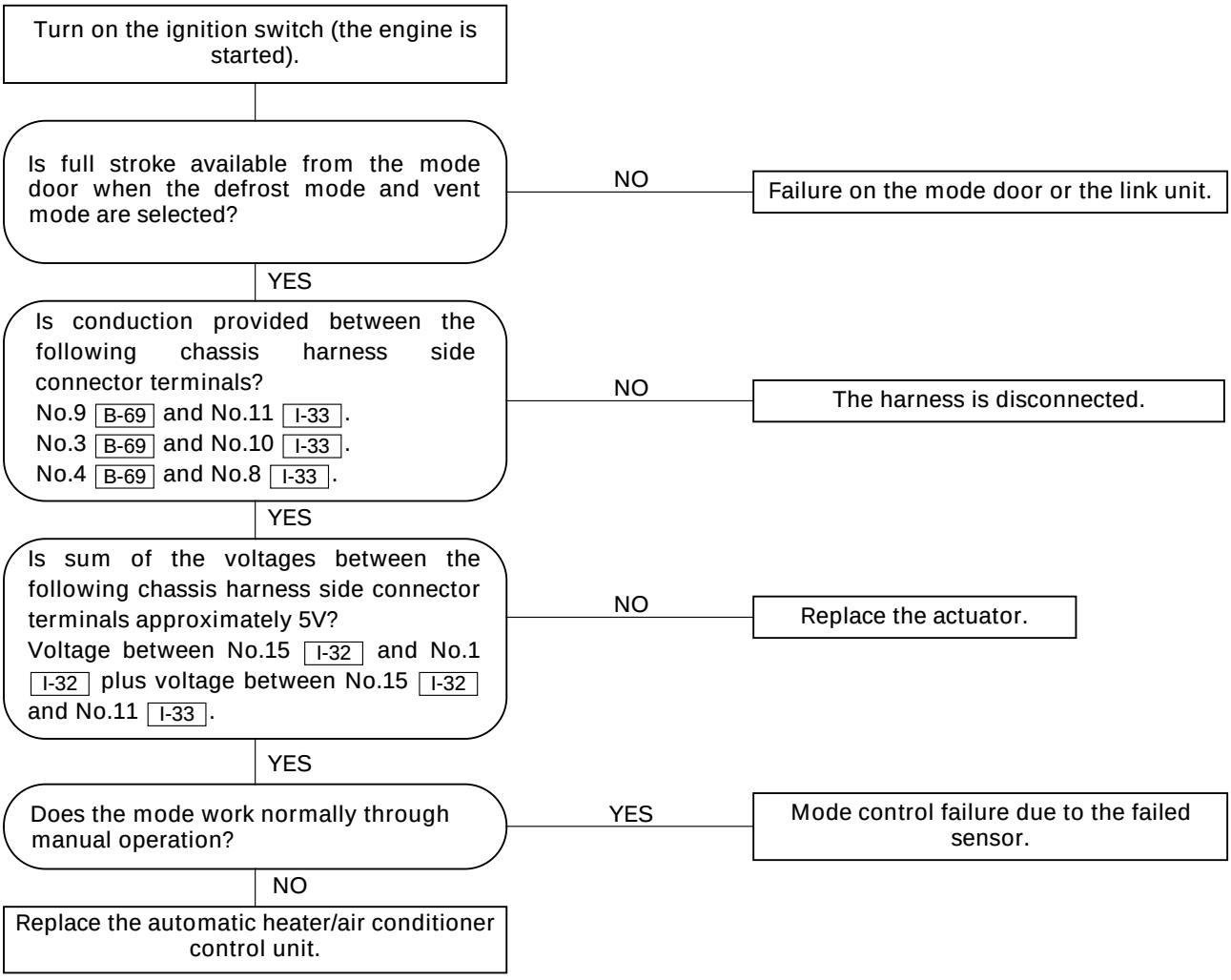

Inspection of the Fan Motor System

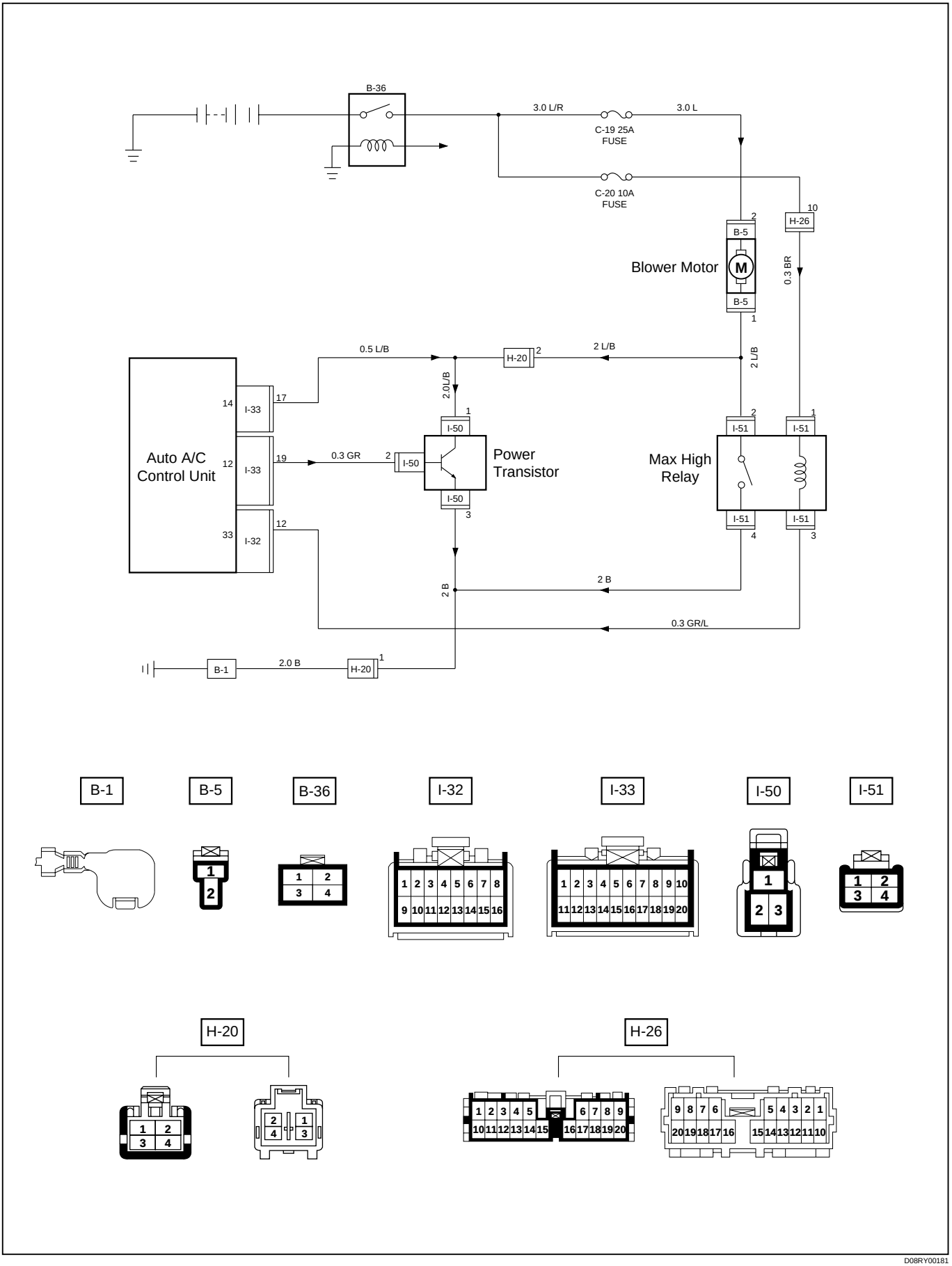

D08RY00181

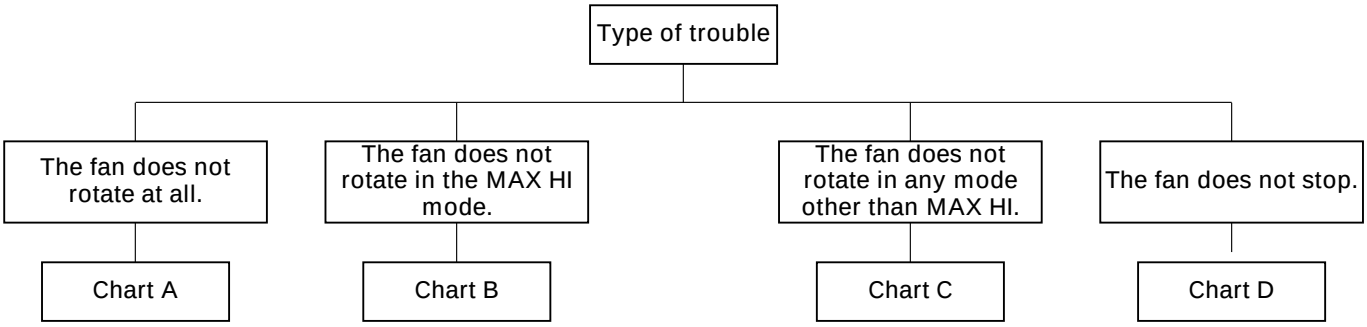

Chart A: Fan Does Not Rotate At All

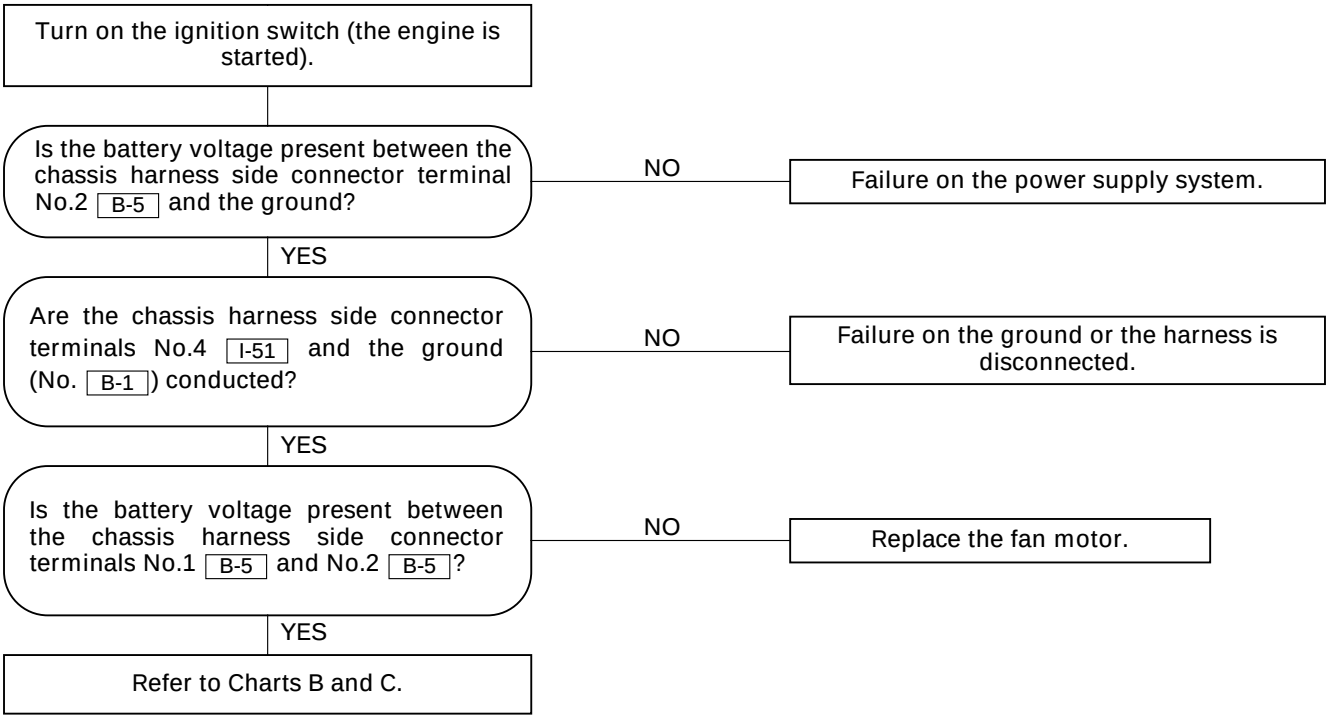

Chart B: Fan Does Not Rotate in MAX HI Mode

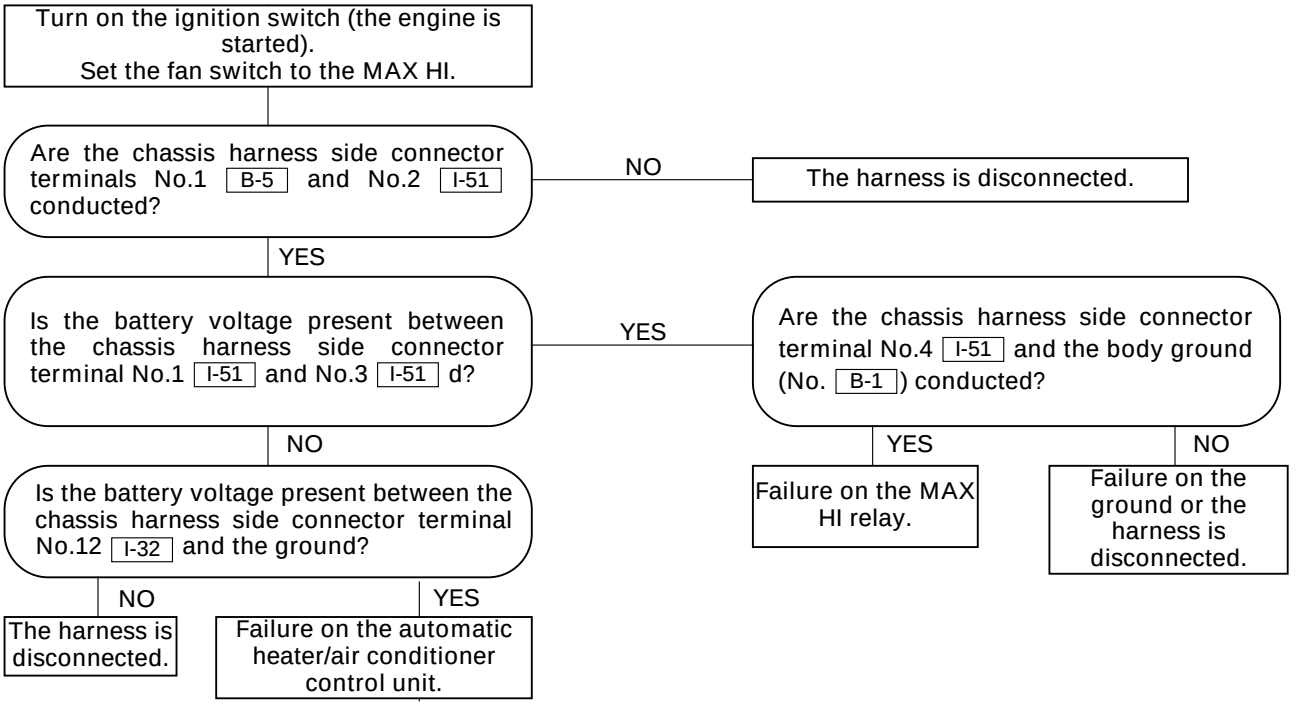

Chart C: Fan Does Not Rotate In Any Mode Other Than MAX HI

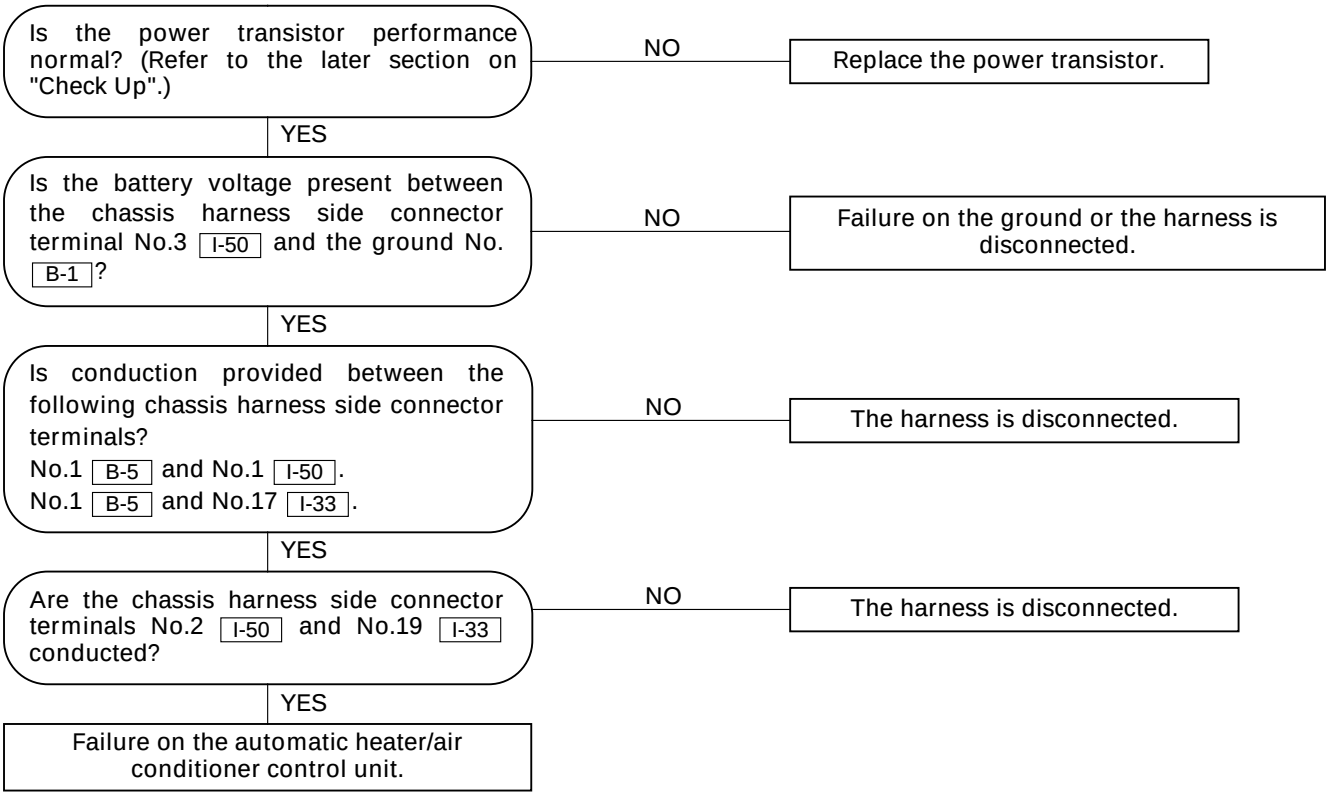

Chart D: Fan Does Not Stop

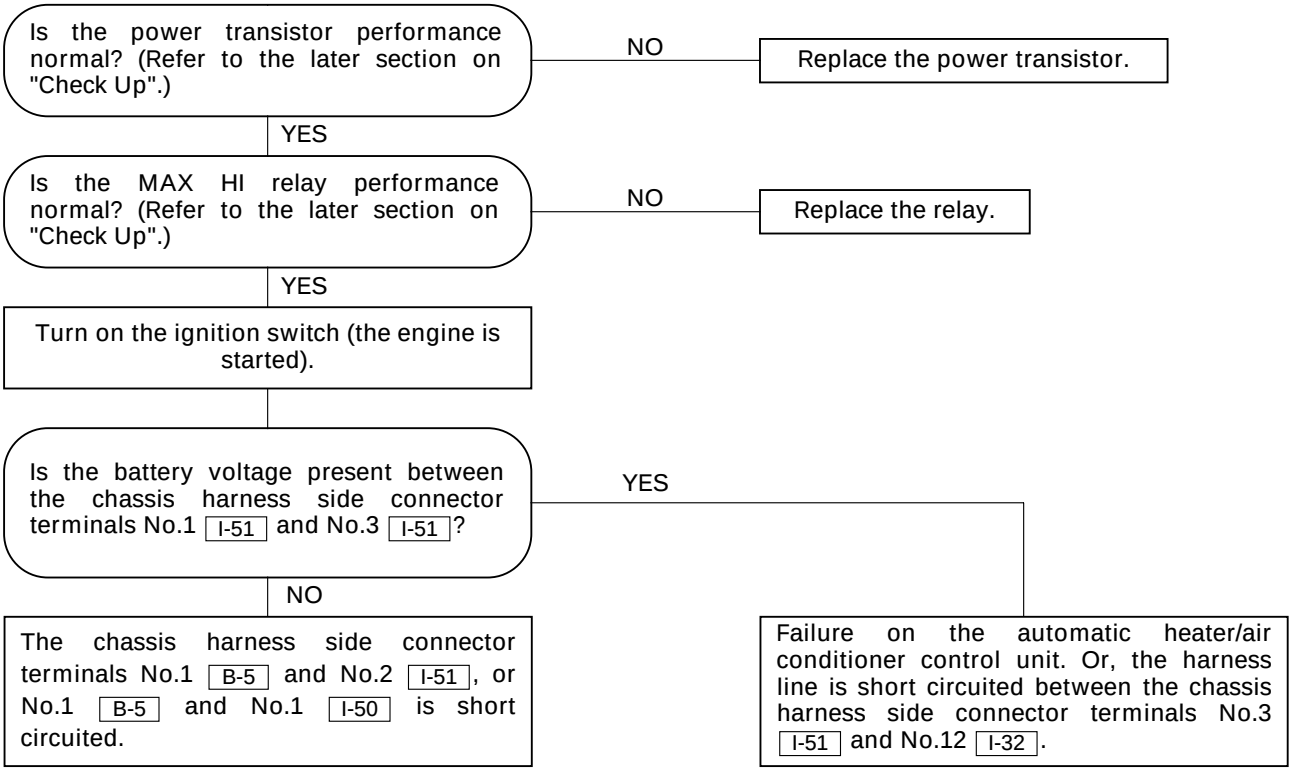

Inspection of the Magnet Clutch System

6VE1 Engine

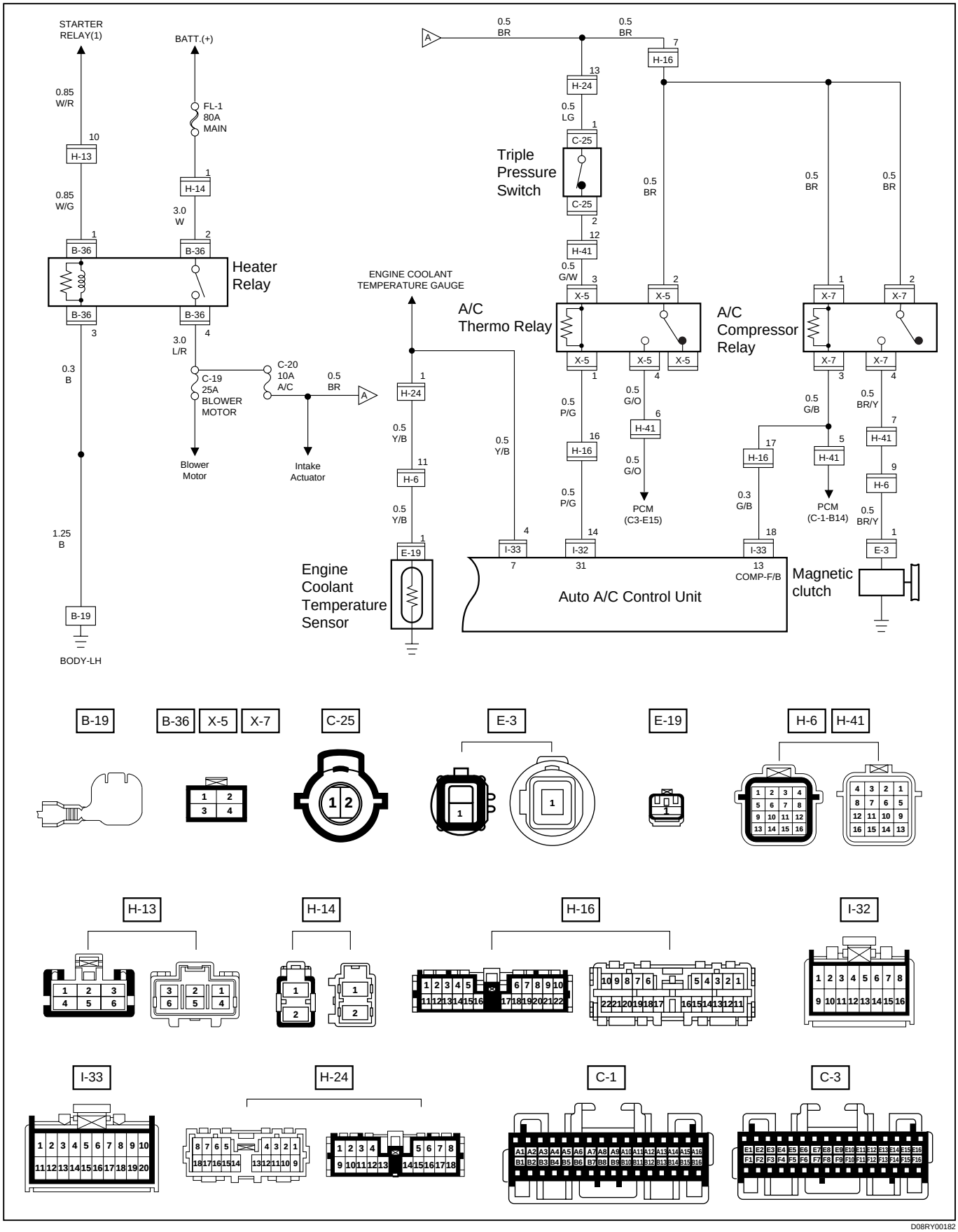

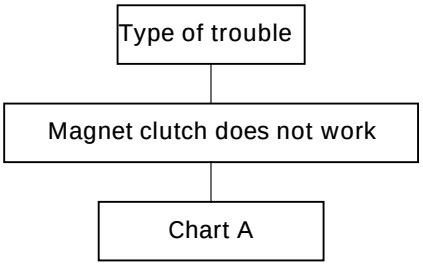

Chart A: Magnet Clutch Does Not work

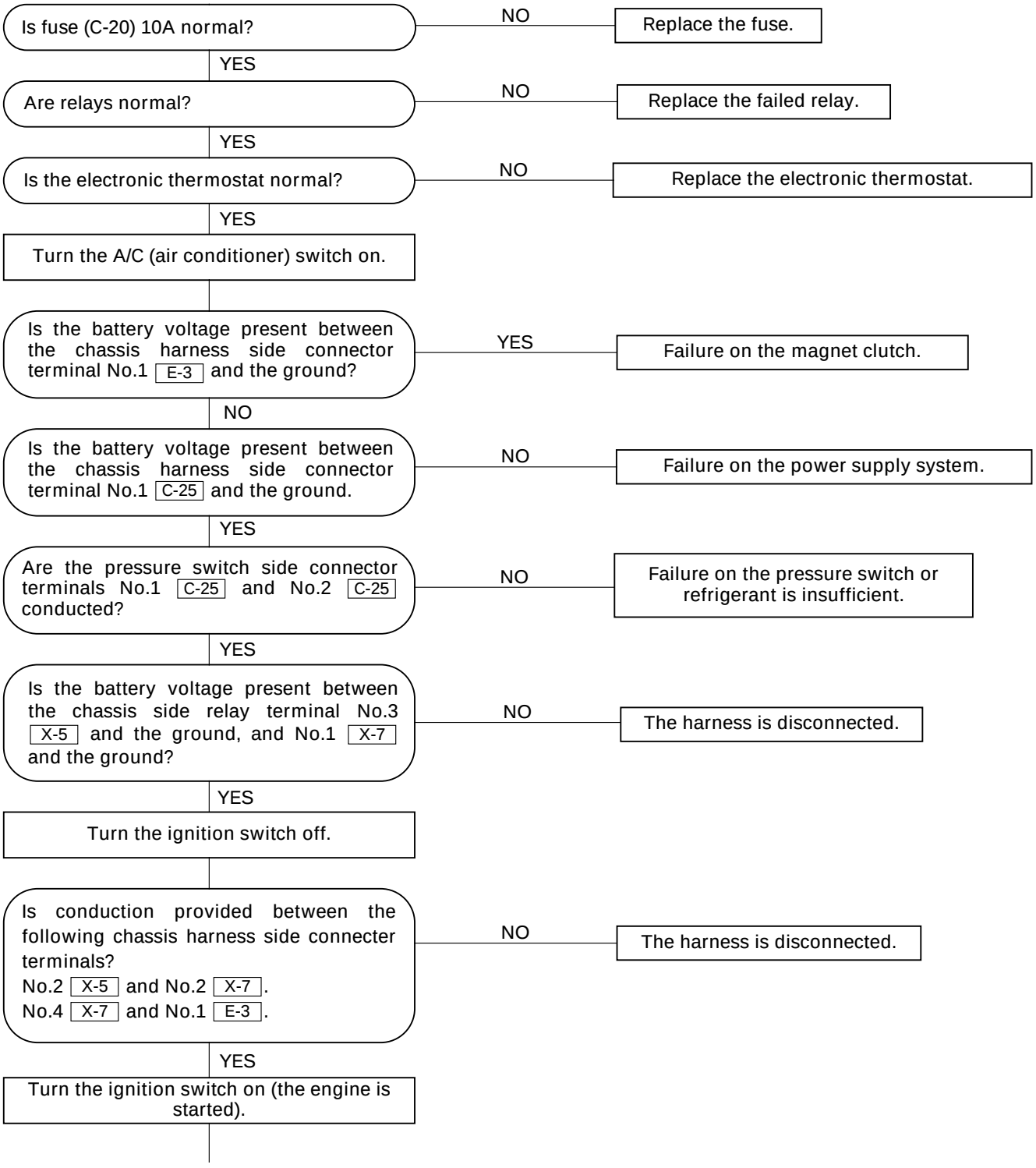

When you turned on the "Auto" switch, does the battery voltage appear between the chassis harness connector terminal No.14 [I-32] and the ground?

YES → Failure on the automatic heater/air conditioner control unit.

NO → Disconnect the connector [I-32] on the automatic heater/air conditioner control unit.

Is the battery voltage present between the chassis harness side connector terminal No.14 [I-32] and the ground?

NO → The harness is disconnected between No.1 [X-5] and No.14 [I-32].

YES → Is conduction provided between the following chassis harness side connector terminals?
No.B14 [C-1] and No.3 [X-7].
No.E15 [C-3] and No.4 [X-5].

NO → The harness is disconnected.

YES → Failure on PCM (see Chapter 6E for A/C control with PCM).

4JX1 Engine

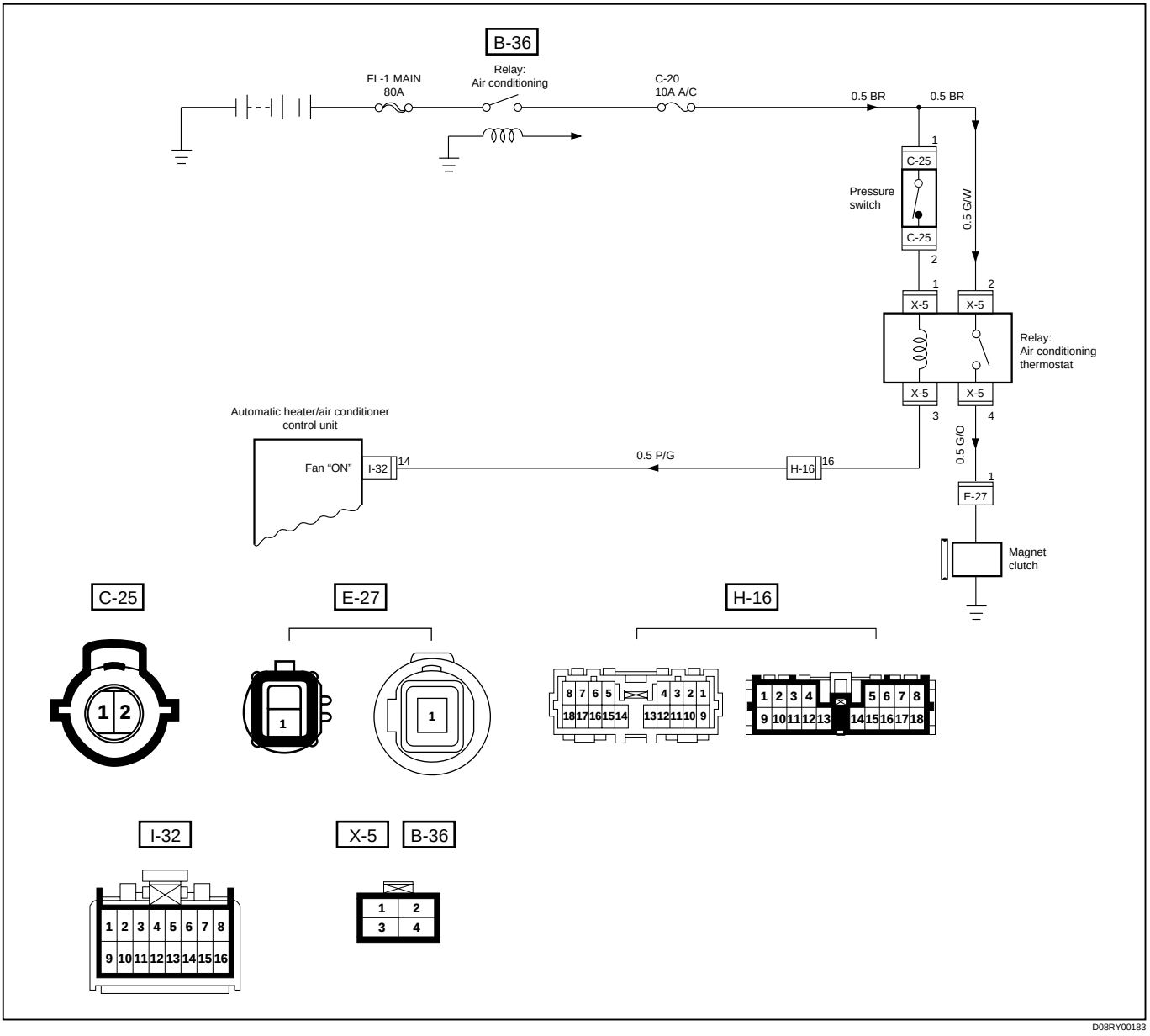

D08RY00183

Type of trouble

Magnet clutch does not work.

Chart A

Chart A: Magnet Clutch Does Not Work

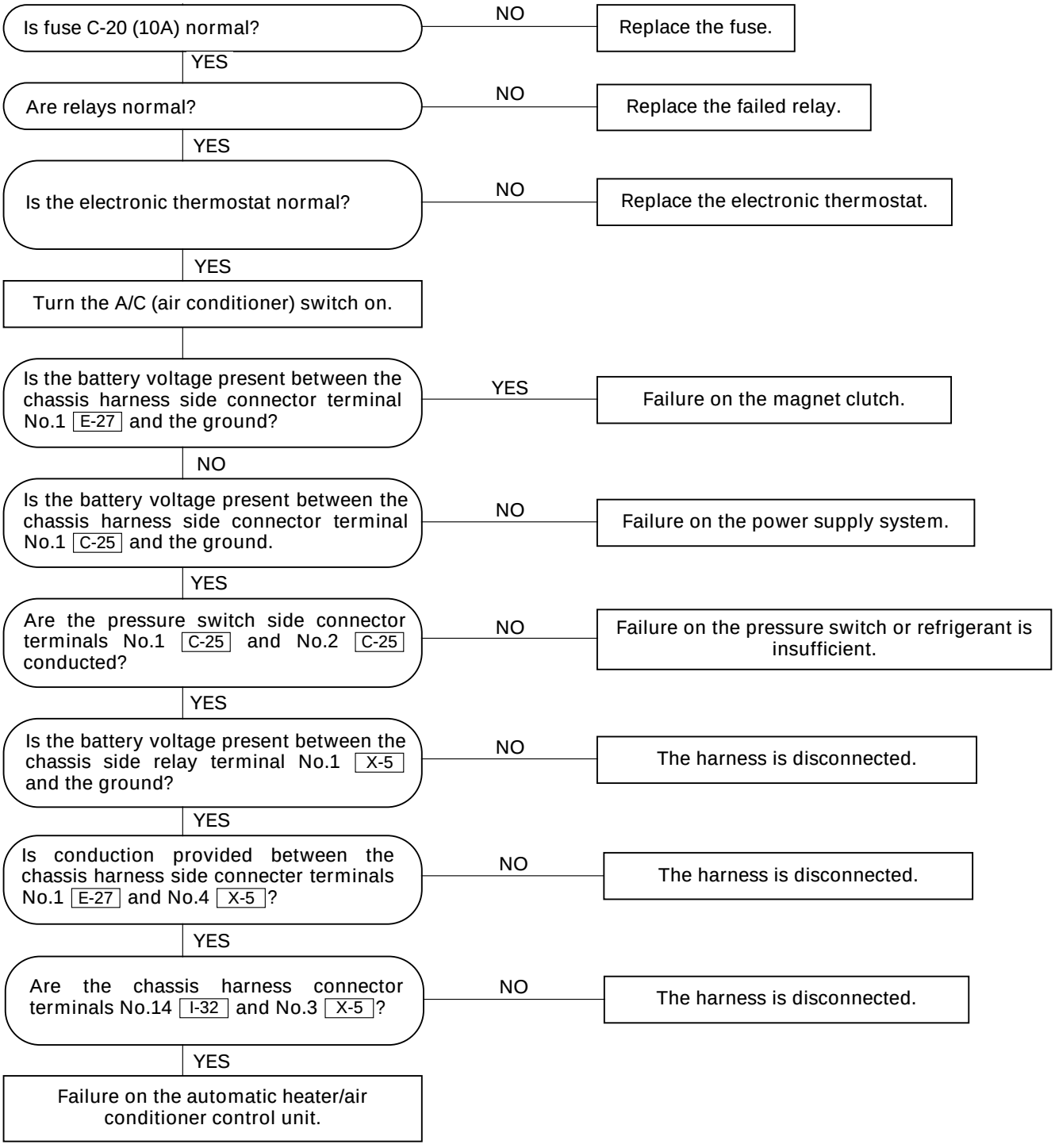

Inspection of the Air Conditioner Room Temperature Setup System

• Conflicts Between the Set Temperature and Actual Room Temperature

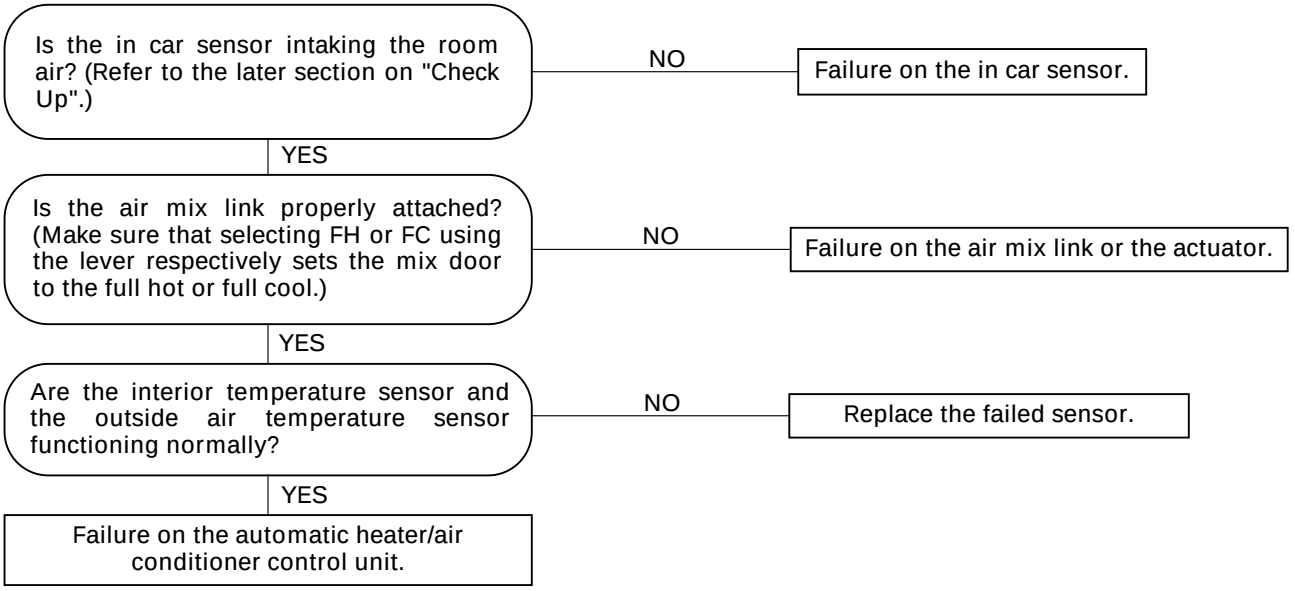

INDIVIDUAL INSPECTION

In Car Sensor

1. Disconnect the in car sensor connector (I-34).
2. Measure resistance between the in car sensor side terminal No.3 I-34 and No.4 I-34.

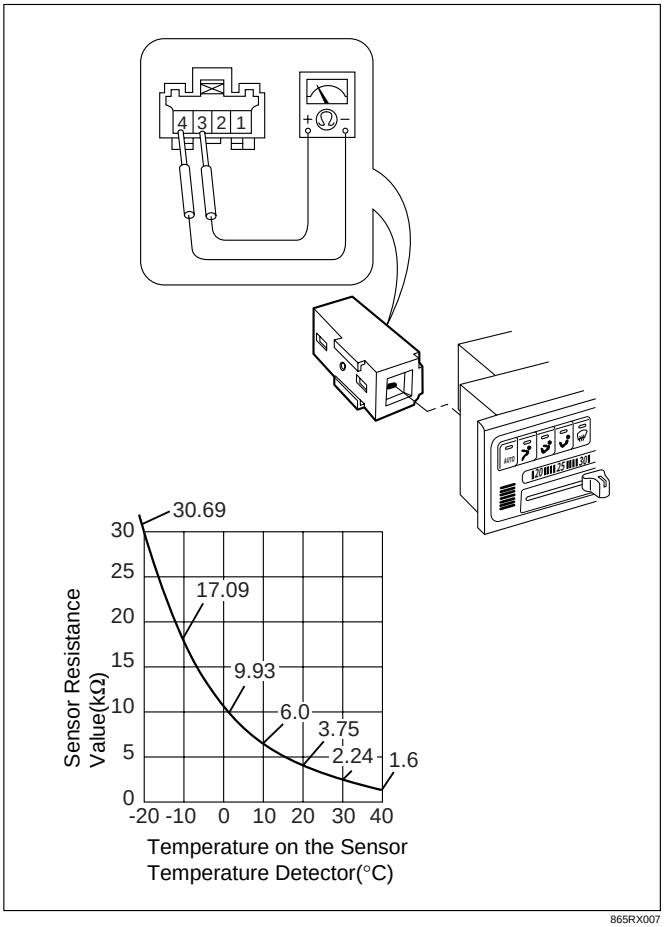

865RX007

Sun Sensor

1. Disconnect the sun sensor connector (I-35).
2. Measure the current value on the sun sensor when placed it approximately 15 cm away from 60W incandescent lamp.

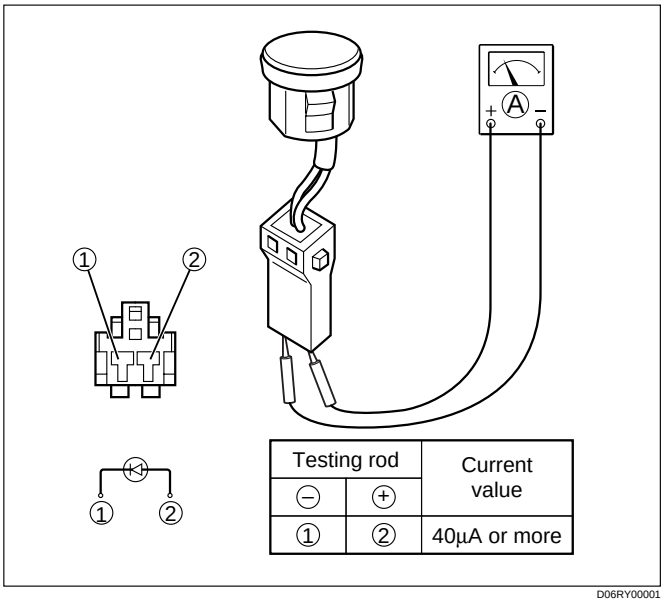

Testing rod		Current value
⊖	⊕	
1	2	40μA or more

D06RY00001

Ambient Sensor

1. Disconnect the connector (C-86) on the ambient sensor.
2. Measure resistance between the ambient sensor side terminals.

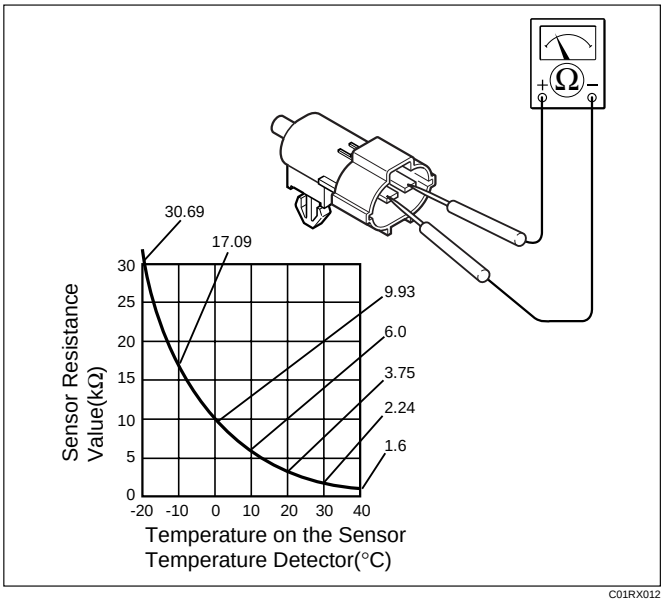

C01RX012

Power Transistor

1. Remove the power transistor connector (I-47) from the evaporator assembly.
2. Check the conduction between the power transistor side terminals.

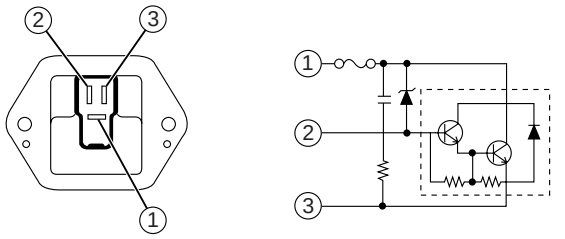

Terminal No.	1	2	3	Conduction
Testing rod	⊖	⊕		Conducted (50Ω maximum)
	⊖		⊕	Conducted (100Ω maximum)
	⊕	⊖		Not conducted
	⊕	⊖		Conducted (220Ω maximum)
		⊖	⊕	Not conducted

C01RY00002

MAX HI Relay

1. Remove the MAX HI relay connector (B-64) from the blower assembly.
2. Check the conduction between the MAX HI relay side terminals.

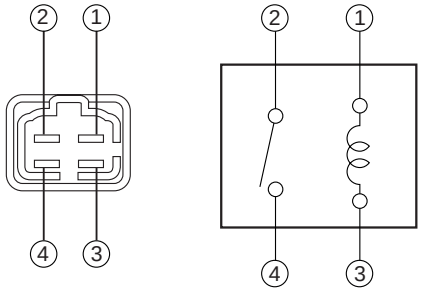

No continuity between terminals (2) and (4).
Continuity between terminal (2) and (4) when battery voltage is applied between (1) and (3).

C01RY00003

In Car Sensor

1. Turn on the ignition switch (the engine is started). Start the air conditioner in "Full Auto".
2. Make sure that the in car sensor suctions cigarette smokes and such.
3. Dismount the in car sensor from the automatic heater/air conditioner control unit. Connect (+) end and (-) end of the battery to the aspirator motor side terminals No.1 I-34 and No.2 I-34, respectively, then check if the motor runs normally.

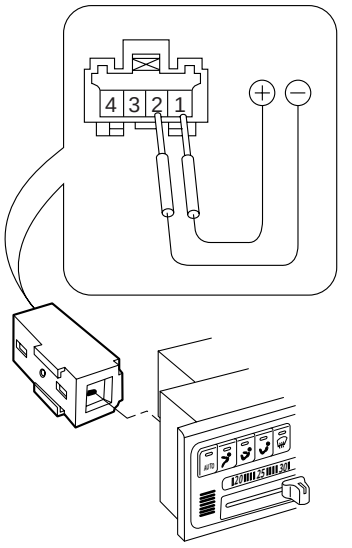

C01RW020

ON-VEHICLE SERVICE

Power Transistor

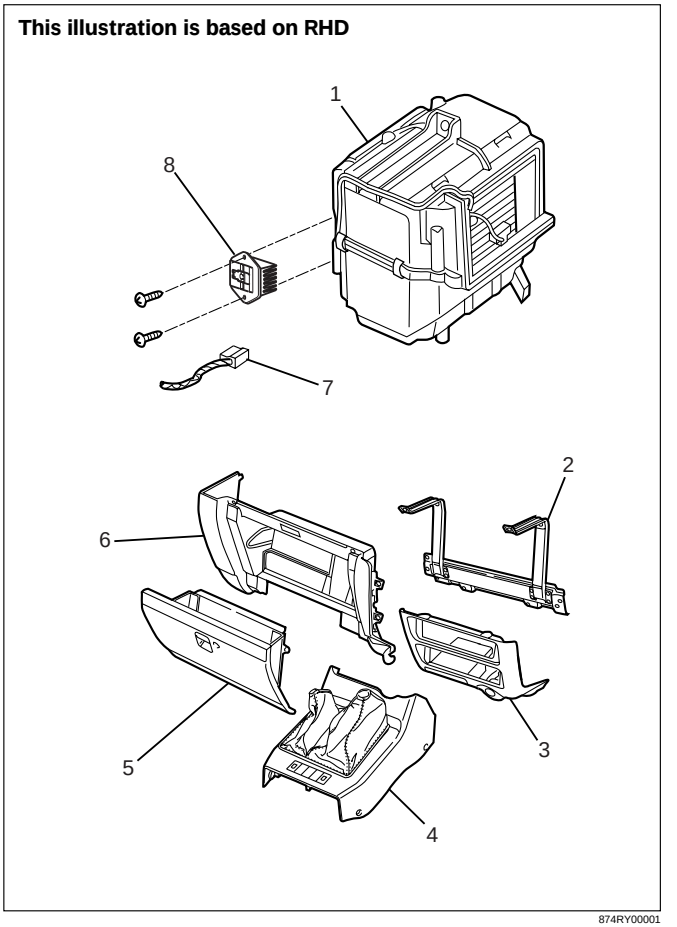

Legend

(1) Evaporator Assembly
(2) Passenger Knee Bolster Reinforcement
(3) Lower Cluster
(4) Front Console
(5) Glove Box
(6) Instrument Panel Passenger Lower Cover
(7) Power Transistor Connector
(8) Power Transistor

Removal

1. Remove front console.
2. Remove lower cluster.
3. Remove glove box.
4. Remove instrument panel passenger lower cover.
5. Remove passenger knee bolster reinforcement.
6. Disconnect the power transistor connector.
7. Remove power transistor.

Installation

To install, follow the removal step in the reverse order.

Automatic Heater/Air Conditioner Control Unit

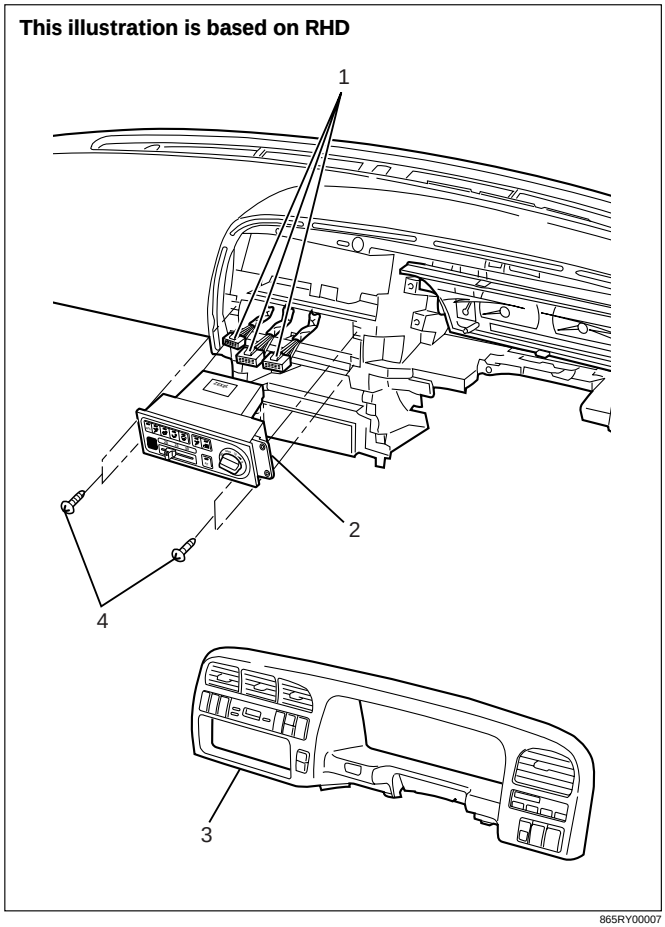

Legend

(1) Connector
(2) Automatic Heater / Air Conditioner Control Unit
(3) Instrument Panel Cluster
(4) Set Screw

Removal

1. Disconnect the battery ground cable.
2. Remove instrument panel cluster.
   - Refer to Instrument Panel Assembly in Body Structure section.
3. Disconnect the automatic heater / air conditioner control unit connector.
4. Remove automatic heater/ air conditioner control unit.

Installation

To install, follow the removal step in the reverse order.

In Car Sensor

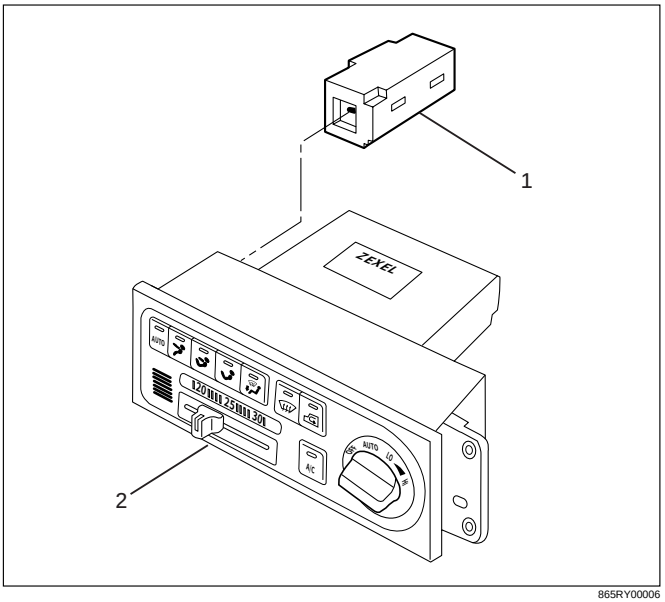

865RY00006

Legend

(1) In Car Sensor
(2) Automatic Heater / Air Conditioner Control Unit

Removal

1. Disconnect the battery ground cable.
2. Remove the automatic heater / air conditioner control unit.
   - Refer to the automatic heater / air conditioner control unit section.
3. Remove in car sensor.

Installation

To install, follow the removal step in the reverse order.

Ambient Sensor

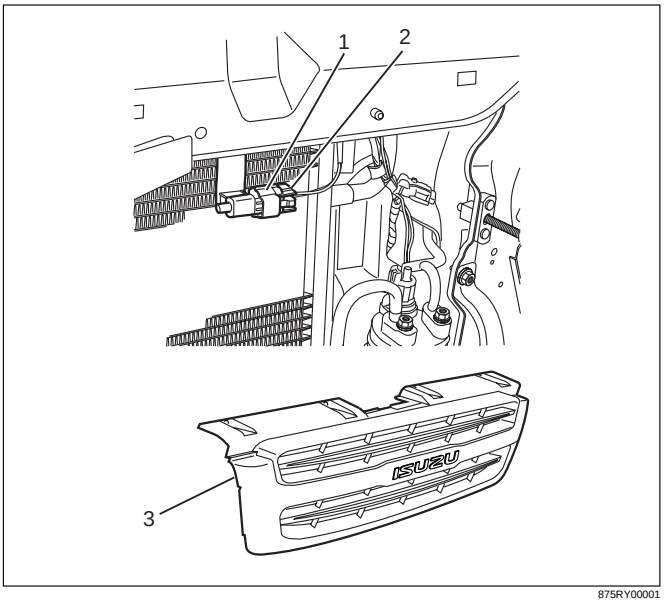

875RY00001

Legend

(1) Ambient Sensor
(2) Sensor Connector
(3) Radiator Grill

Removal

1. Disconnect the battery ground cable.
2. Remove radiator grille.
   - Refer to Radiator Grille in Body Structure section.
3. Disconnect the ambient sensor connector.
4. Remove the ambient sensor.

Installation

To install, follow the removal step in the reverse order.

Sun Sensor

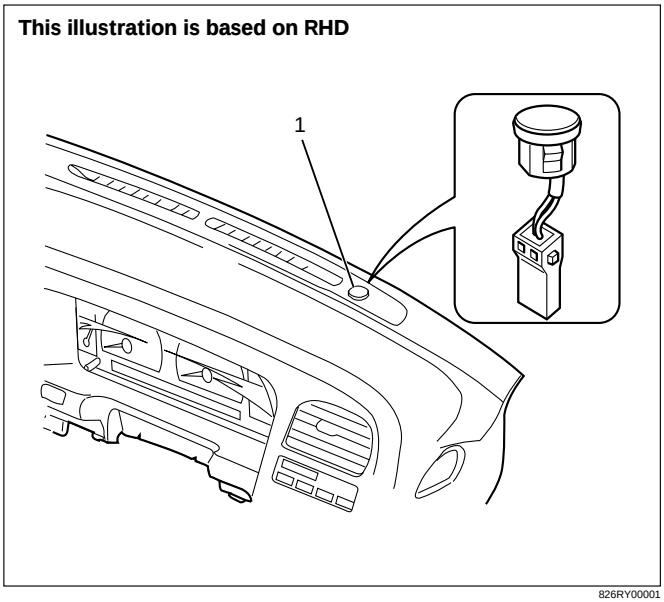

Legend
(1) Sun Sensor

Removal

1. Disconnect the battery ground cable.
2. Remove the sun sensor.
3. Disconnect the sun sensor connector.

Installation

To install, follow the removal step in the reverse order.

Electronic Thermostat

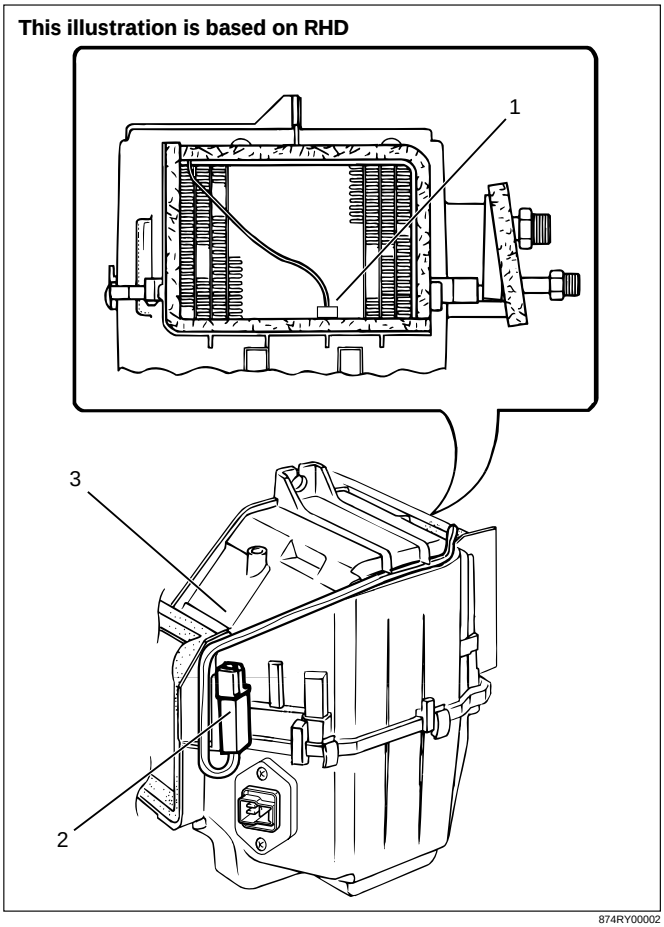

Legend
(1) Duct Sensor
(2) Thermostat Assembly
(3) Evaporator Assembly

Removal

1. Disconnect the battery ground cable.
2. Remove evaporator assembly.
   - Refer to Evaporator Assembly section.
3. Remove electronic thermostat.

Installation

To install, follow the removal step in the reverse order.

Mode Actuator

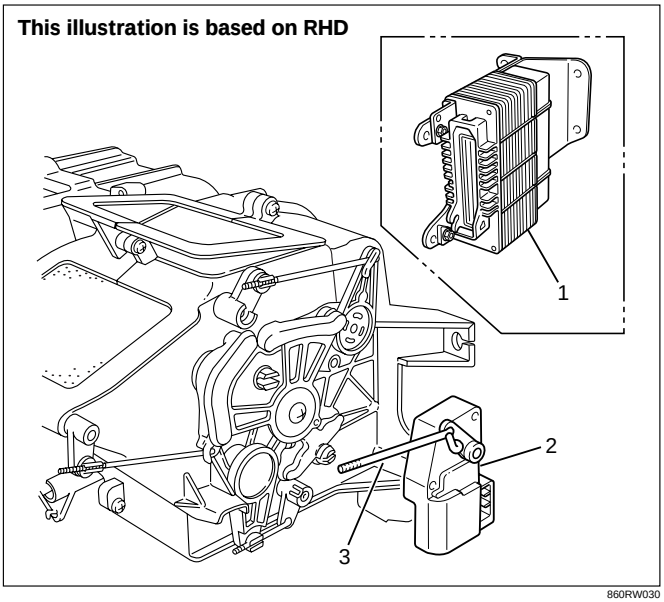

860RW030

Legend

(1) A/T Control Unit
(2) Mode Actuator
(3) Actuator Rod

Removal

1. Disconnect the battery ground cable.
2. Remove the A/T control unit.
   - The connector shall remain connected.
3. Remove the actuator rod.
4. Remove the mode actuator.

Installation

To install, follow the removal step in the reverse order.

MIX Actuator

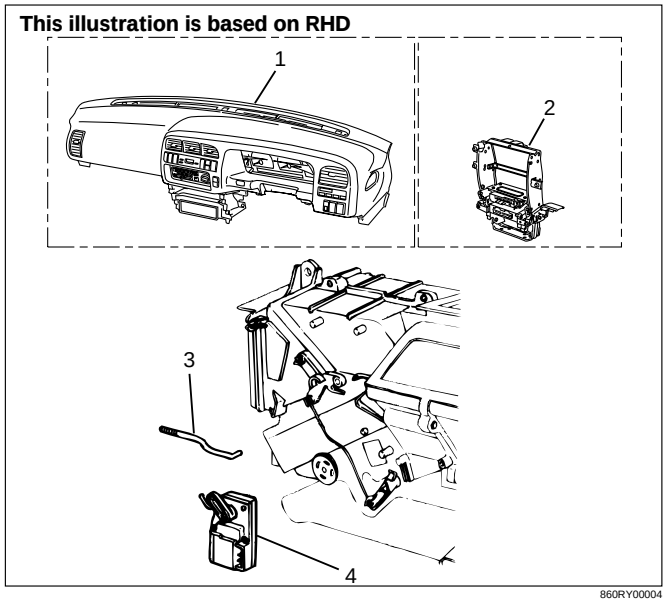

860RY00004

Legend

(1) Instrument Panel Assembly
(2) Instrument Panel Center Bracket
(3) Actuator Rod
(4) Mix Actuator

Removal

1. Disconnect the battery ground cable.
2. Remove the instrument panel assembly.
   - Refer to the Instrument Panel Assembly in Body Structure section.
3. Remove the instrument panel center bracket.
4. Remove the actuator rod.
5. Remove the mix actuator.

Installation

To install, follow the removal step in the reverse order.

Intake Actuator

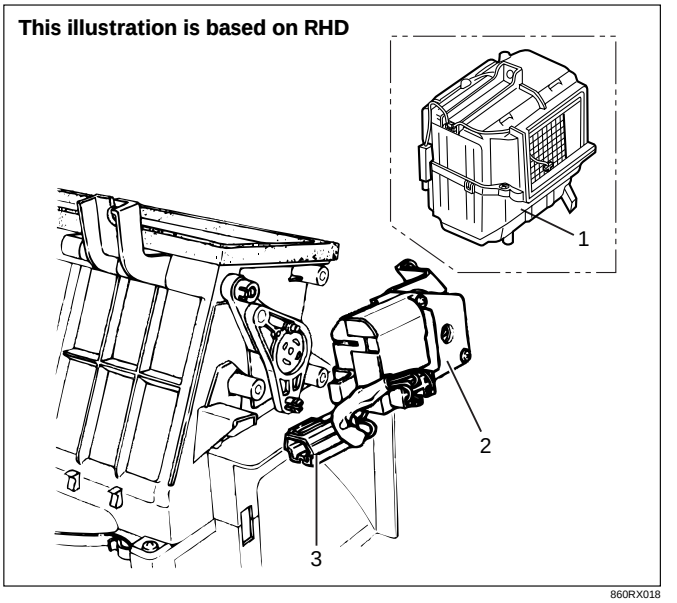

Legend

(1) Evaporator Assembly
(2) Intake Actuator
(3) Intake Actuator Connector

Removal

1. Disconnect the battery ground cable.
2. Discharge and recover refrigerant.
   - Refer to Refrigerant Recovery in this section.
3. Remove the evaporator assembly.
   - Refer to Eevaporator Assembly section.
4. Disconnect the intake actuator connector.
5. Remove the intake actuator.

Installation

To install, follow the removal step in the reverse order.

SECTION 1D
COMPRESSOR OVERHAUL

CAUTION
When fasteners are removed, always reinstall them at the same location from which they were removed. If a fastener needs to be replaced, use the correct part number fastener for that application. If the correct part number fastener is not available, a fastener of equal size and strength (or stronger) may be used.

Fasteners that are not reused, and those requiring thread locking compound, will be called out. The correct torque values must be used when installing fasteners that require it. If the above conditions are not followed, parts or system damage could result.

CONTENTS

PAGE
General Description 1D– 2
General Information 1D– 4
Compressor Oil 1D– 4
Service Procedures 1D– 6
DKV-14D Type Compressor 1D– 6
DKS-15CH Type Compressor 1D–10
HD6 Type Compressor 1D–18

GENERAL DESCRIPTION

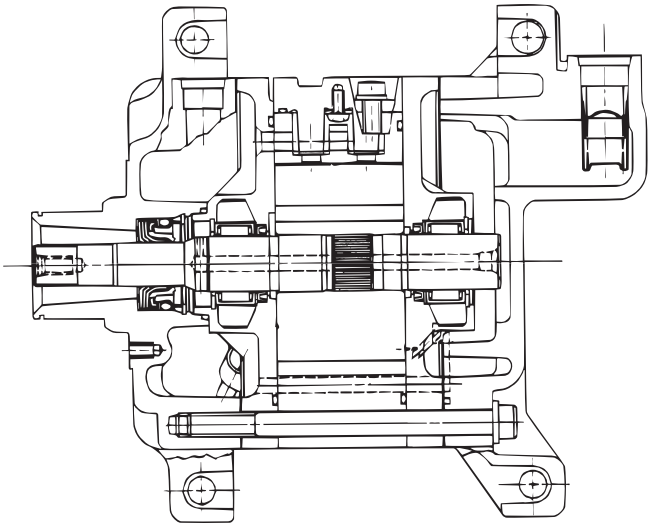

DKV-14D TYPE

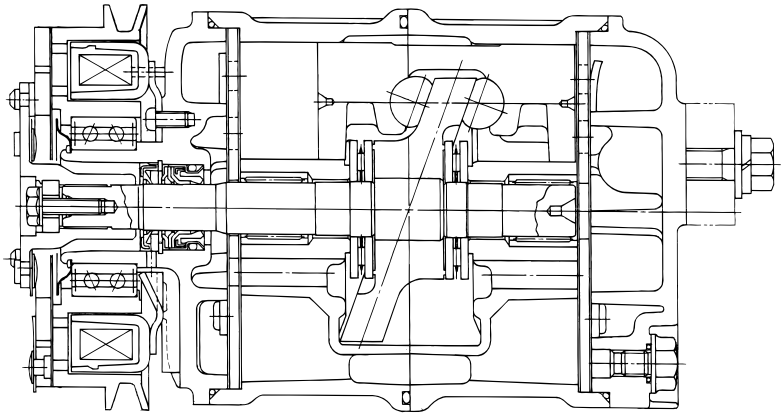

DKS-15CH TYPE

871RY00014

When servicing the compressor, keep dirt or foreign material from getting on or into the compressor parts and system. Clean tools and a clean work area are important for proper service. The compressor connections and the outside of the compressor should be cleaned before any “On-Vehicle” repair, or before removal of the compressor. The parts must be kept clean at all times and any parts to be reassembled should be cleaned with Trichloroethane, naphtha, kerosene, or equivalent

solvent, and dried with dry air. Use only lint free cloths to wipe parts.
The operations described below are based on bench overhaul with compressor removed from the car, except as noted. They have been prepared in order of accessibility of the components. When the compressor is removed from the car for servicing, the oil remaining in the compressor should be discarded and new refrigerant oil added to the compressor.
Magnetic clutch assembly repair procedures require that the system be discharged of refrigerant. (Refer to Section 1B for “REFRIGERANT RECOVERY”.)
Compressor malfunction will appear in one of four ways: noise, seizure, leakage or low discharge pressure. Resonant compressor noises are not cause for alarm; however, irregular noise or rattles may indicate broken parts or excessive clearances due to wear. To check seizure, de-energize the magnetic clutch and check to see if the drive plate can be rotated. If rotation is impossible, the compressor is seized. Low discharge pressure may be due to a faulty internal seal of the compressor, or a restriction in the compressor. Low discharge pressure may also be due to an insufficient refrigerant charge or a restriction elsewhere in the system. These possibilities should be checked prior to servicing the compressor. If the compressor is inoperative, but is not seized, check to see if current is being supplied to the magnetic clutch coil terminals.
The compressor has vanes built into a rotor which is mounted on a shaft.
When the shaft rotates, the vanes built into the cylinder block assembly are opened by centrifugal force.
This changes the volume of the space formed by the rotor and cylinder, resulting in the intake and compression of the refrigerant gas. The discharge valve and the valve stopper, which protects the discharge valve, are built into the cylinder block assembly. There is no suction valve but a shaft seal is installed between the shaft and head; a trigger valve, which applies back pressure to the vanes, is installed in the cylinder block and a refrigerant gas temperature sensor is installed in the front head.
The specified quantity of compressor oil is contained in the compressor to lubricate the various parts using the refrigerant gas discharge pressure.
6VD1 engine is equipped with an invariable capacity five-vane rotary compressor (DKV-14D Type).
The compressor sucks and compresses refrigerant by the rotation of the vane installed to the shaft, and always discharges a fixed amount of refrigerant independent of the load of refrigerant.
The thermo sensor is installed to the front head of the compressor to protect it by stopping its operation when the refrigerant gas is insufficient or when the temperature get abnormally high.

- OFF..... 160 ± 5°C (320.0 ± 9.0°F)
- ON ..... 135 ± 5°C (275.0 ± 9.0°F)

4JG2 Engine are provided with a swash plate type compressor (DKS-15CH Type)
Swash plate compressors have a swash (slanted) plate mounted on the shaft. When the shaft turns, the rotation of the swash plate is converted to reciprocating piston motion which sucks in and compresses the refrigerant gas.
Shaft seal (Lip type) is installed between the valve plate and shaft & cylinder head to prevent refrigerant gas leaks. A specified amount of compressor oil is contained in the oil pan.
This oil is supplied to the cylinders, bearings, etc., by an oil pump which is connected to the swash plate shaft.
With some compressors the differential between the intake pressure and discharge pressure generated while the compressor is operating is used for lubrication instead of an oil pump.
Three pistons are arranged at 120g intervals around the center of the swash plate shaft. These pistons are connected to the ends of the swash plate through shoe disks and balls.
The rotation of the swash plate causes reciprocating movement of the piston inside the cylinders, with each piston operating as two cylinders. Because of that, the compressor operates as though it has 6 cylinders.
The specified amount of the compressors oil is 150cc (4.2 Imp fl oz).
Also, compressor oil to be used varies according to the compressor model. Be sure to avoid mixing two or more different types of oil.
If the wrong oil is used, lubrication will be poor and the compressor will seize or malfunction.

GENERAL INFORMATION

COMPRESSOR OIL

OIL SPECIFICATION

- The HFC-134a system requires a synthetic (PAG) compressor oil.
- Compressor (PAG) oil varies according to compressor model. Be sure to use oil specified for the model of compressor.

DKV-14D : ZXL-200PG (ISUZU PART NO. 8-97101-336-0)

DKS-15CH : ZXL-100PG (ISUZU PART NO. 8-97101-338-0)

HANDLING OF OIL

- The oil should be free from moisture, dust, metal powder, etc.
- Do not mix with other oil
- The water content in the oil increases when exposed to the air. After use, seal oil from air immediately.
- The compressor oil must be stored in steel containers, not in plastic containers.

COMPRESSOR OIL CHECK

The oil used to lubricate the compressor is circulating with the refrigerant.
Whenever replacing any component of the system or a large amount of gas leakage occurs, add oil to maintain the original amount of oil.

Oil Capacity

Capacity total in system	150cc (4.2 Imp fl oz)
Compressor (Service parts) charging amount	150cc (4.2 Imp fl oz)

Checking and Adjusting for Used Compressor

1) Perform Oil return operation.
(Refer to “Oil Return Operation” in this section.)
2) Discharge refrigerant and remove the compressor.
3) Drain the compressor oil and measure the extracted oil with a measuring cylinder.
4) If the amount of oil drained is much less than 90cc (2.5 Imp fl oz), some refrigerant may have leaked out. Conduct leak tests on connections of each system, and if necessary, repair or replace faulty parts.
5) Check the compressor oil for contamination.
(Refer to “Contamination of Compressor Oil” in this section.)

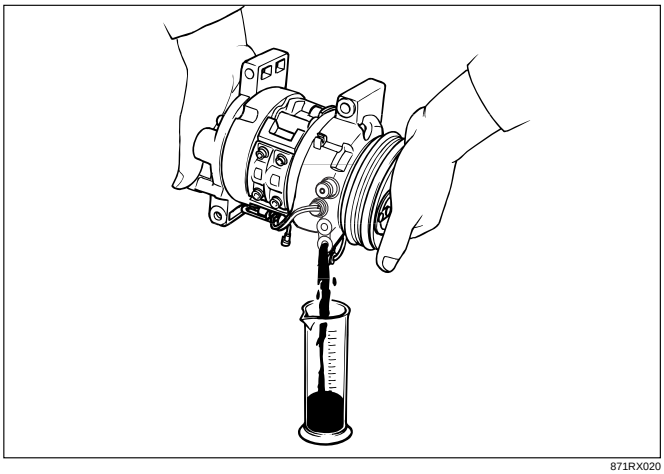

871RX020

6) Adjust oil level following the procedure below.

Collected Amount	Charging Amount
more than 90cc (2.5 Imp fl oz)	same as collected amount
less than 90cc (2.5 Imp fl oz)	90cc (2.5 Imp fl oz)

7) Install the compressor, then evacuate, charge and perform oil return operation.
8) Check system operation.

When it is impossible to perform oil return operation, the compressor oil should be checked in the following order:

1) Discharge refrigerant and remove the compressor.
2) Drain the compressor oil and measure the extracted oil with a measuring cylinder.
3) Check the oil for contamination.
4) If more than 90cc (2.5 Imp fl oz) of oil is extracted from the compressor, supply same amount of oil to the compressor to be installed. If the amount of oil extracted is less than 90cc (2.5 Imp fl oz), recheck the compressor oil in the following order:
5) Supply 90cc (2.5 Imp fl oz) of oil to the compressor and install it onto the vehicle.
6) Perform oil return operation.
7) Remove the compressor and recheck the amount of oil.
8) Adjust the compressor oil, if necessary.

Collected Amount	Charging Amount
more than 90cc (2.5 Imp fl oz)	same as collected amount
less than 90cc (2.5 Imp fl oz)	90cc (2.5 Imp fl oz)

Checking and Adjusting for Compressor Replacement

150cc (4.2 Imp fl oz) of oil is charged in compressor (service parts). So it is necessary to drain the proper amount of oil from the new compressor.

1) Perform oil return operation.
2) Discharge refrigerant and remove the compressor.
3) Drain the compressor oil and measure the extracted oil.
4) Check the compressor oil for contamination.
5) Adjust oil level as required.

Amount of oil drained from used compressor	Draining amount of oil from new compressor
less than 90cc (2.5 Imp fl oz)	Same as drained amount
more than 90cc (2.5 Imp fl oz)	90cc (2.5 Imp fl oz)

6) Evacuate, charge and perform oil return operation.
7) Check system operation.

CONTAMINATION OF COMPRESSOR OIL

Unlike engine oil, no cleaning agent is added to the compressor oil. Even if the compressor runs for a long period of time (approximately 1 season), the oil never becomes contaminated as long as there is nothing wrong with the compressor or its method of use.

Inspect the extracted oil for any of the following conditions:

- The capacity of the oil has increased.
- The oil has changed color to red.
- Foreign substances, metal powder, etc., are present in the oil.

If any of these conditions exists, compressor oil is contaminated. Whenever contaminated compressor oil is discovered, the receiver/drier must be replaced.

OIL RETURN OPERATION

There is close affinity between the oil and the refrigerant. During normal operation, part of the oil recirculates with the refrigerant in the system.

When checking the amount of oil in the system, or replacing any component of the system, the compressor must be run in advance for oil return operation. The procedure is as follows:

1) Open the all doors and engine hood.
2) Start the engine and A/C switch is “ON” and Set the fan control knob at its highest position.
3) Run the compressor for more than 20 minutes between 800 and 1,000 rpm in order to operate the system.
4) Stop the engine.

REPLACEMENT OF COMPONENT PARTS

When replacing system component parts, supply the following amount of oil to the component parts to be installed.

Component parts to be installed	Amount of oil
Evaporator	50cc (1.4 Imp fl oz)
Condenser	30cc (0.8 Imp fl oz)
Receiver/drier	30cc (0.8 Imp fl oz)

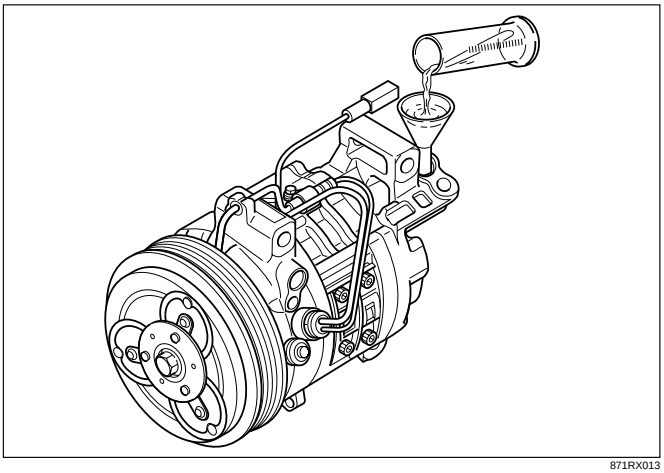

871RX013

SERVICE PROCEDURE

DKV-14D TYPE COMPRESSOR

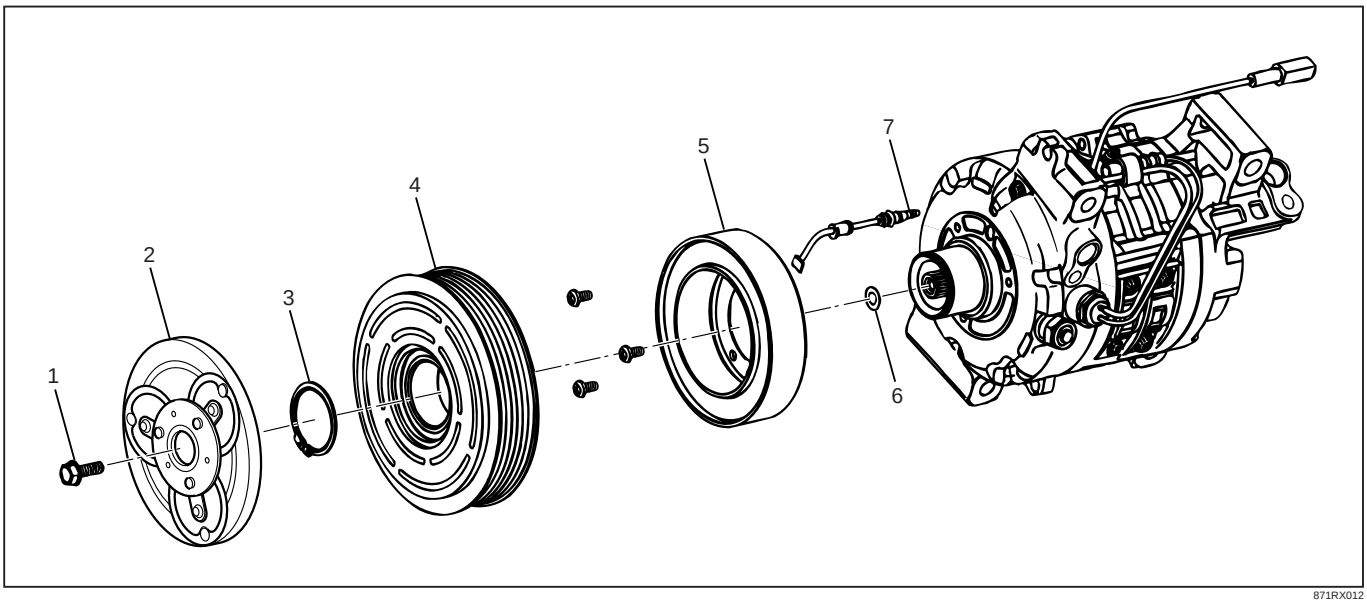

871RX012

Legend

(1) Drive Plate Bolt
(2) Drive Plate
(3) Snap Ring
(4) Pulley Assembly
(5) Field Coil
(6) Shim(s)
(7) Lead Wire

Removal

1. Remove drive plate bolt by using drive plate holder J-7624 (1) to prevent the drive plate from rotating.

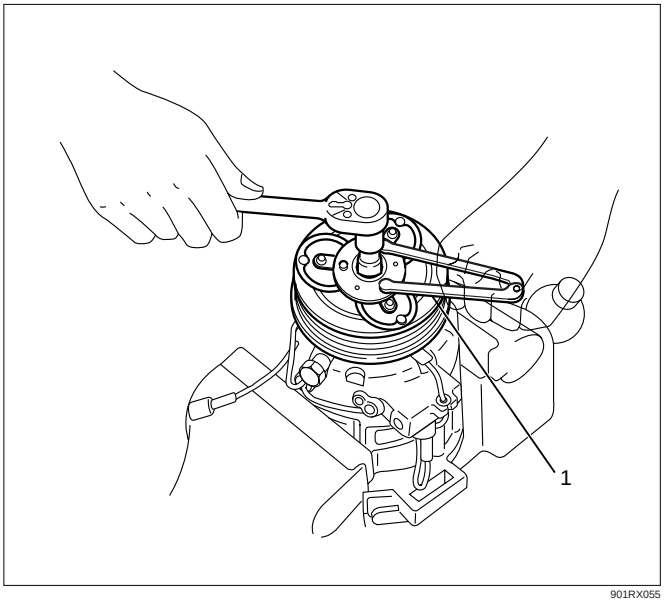

901RX055

2. Remove drive plate by using drive plate puller J-33944-A (2) and forcing screw J-33944-4 (1).

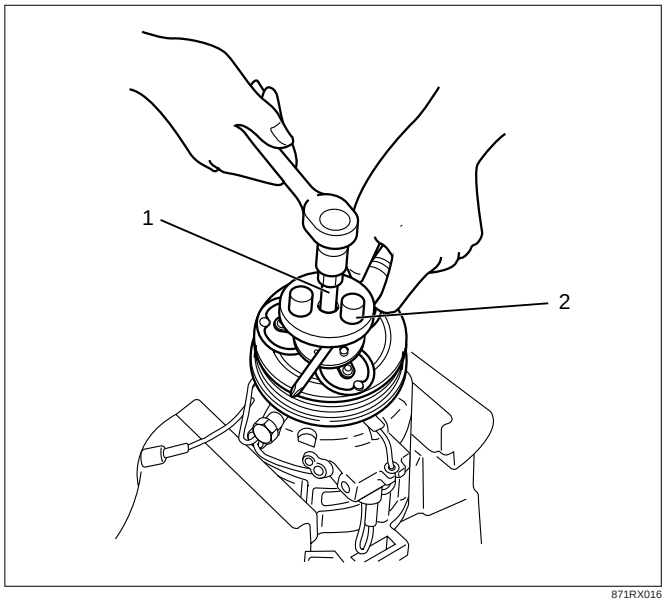

871RX016

3. Remove shim(s).
4. Remove snap ring (1) by using snap ring pliers.

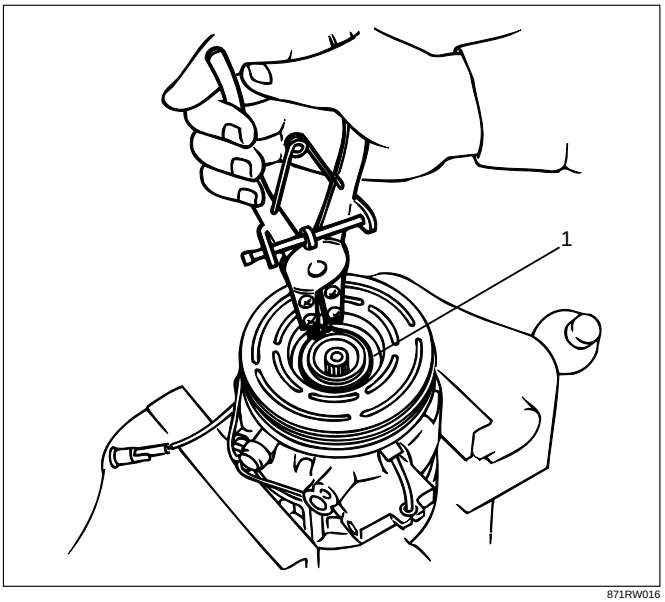

871RW016

5. Remove pulley assembly by using pulley puller pilot J-38424 (2), pulley puller J-8433 (1) and pulley puller leg J-24092-2 (3).

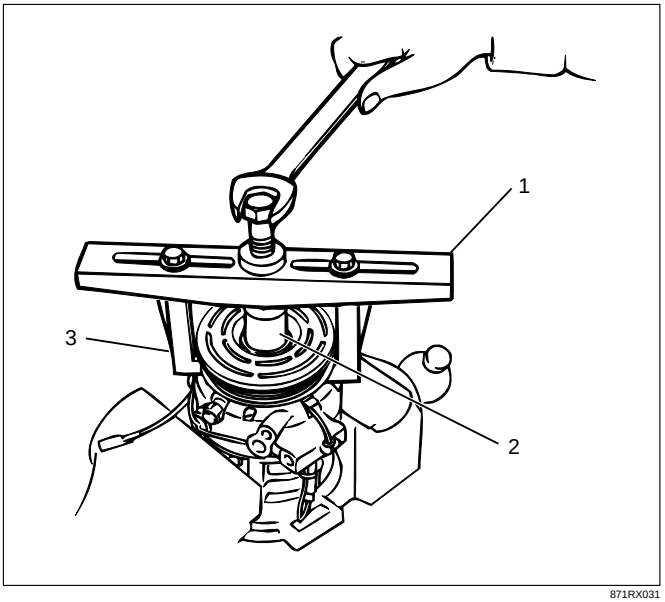

871RX031

6. Loosen screw and disconnect the coil lead wire connector.

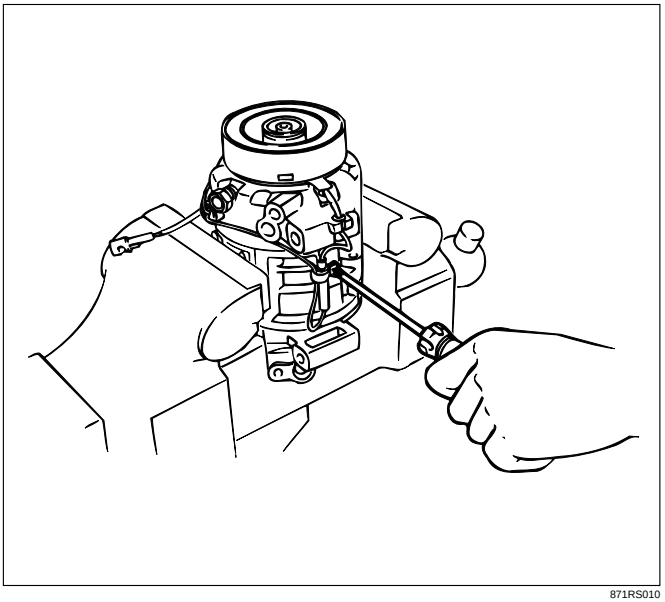

871RS010

7. Loosen three screws and remove the field coil.

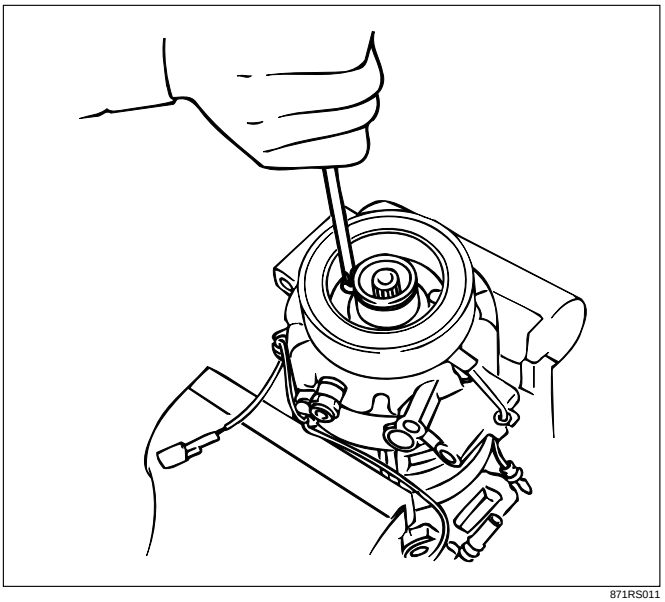

871RS011

Inspection and Repair

Drive Plate

If the frictional surface shows signs of damage due to excessive heat, the drive plate and pulley should be replaced.

Pulley Assembly

Check the appearance of the pulley assembly. If the frictional surface of the pulley shows signs of excessive grooving due to slippage, both the pulley and drive plate should be replaced. The frictional surfaces of the pulley assembly should be cleaned with a suitable solvent before reinstallation.

Coil

Check coil for loose connector or cracked insulation.

Installation

1. Install field coil.
   - Align the located portion (1) of the field coil and compressor.

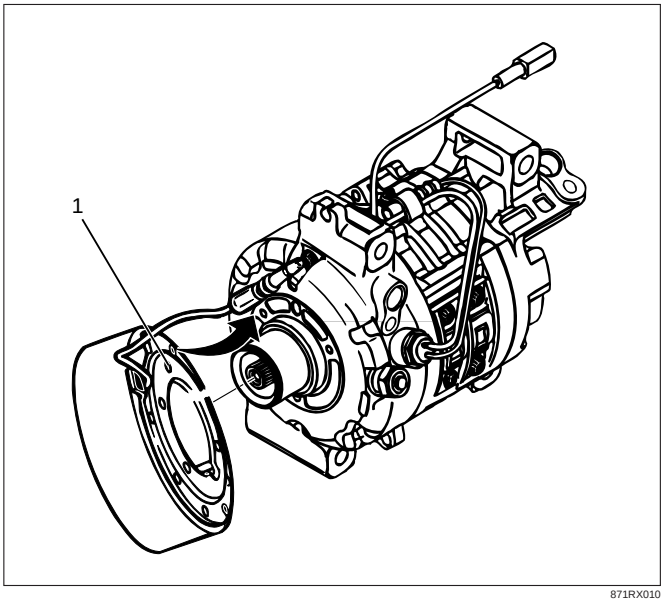

871RX010

   - Tighten the mounting screw to the specified torque.
   Torque: 5N·m (44 lb in)
2. Connect the lead wire connector with the rubber hold and tighten the screw.
3. Install pulley assembly by using pulley installer J-33940-A (2) and drive handle J-8092 (1).

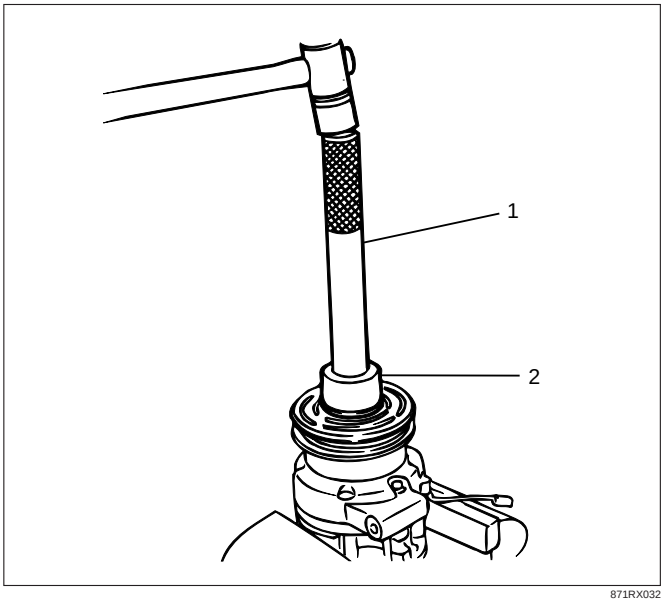

871RX032

4. Install snap ring.
5. Install shim(s).
6. Install the drive plate to the compressor drive shaft together with the original shim(s)(1). Press the drive plate by hand.

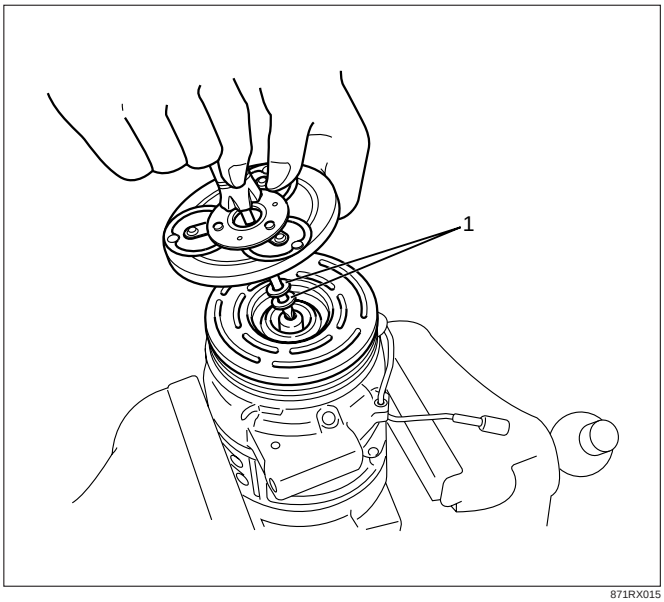

871RX015

7. Install drive plate bolt by using drive plate holder J-7624 (1) to prevent the drive plate from rotating.

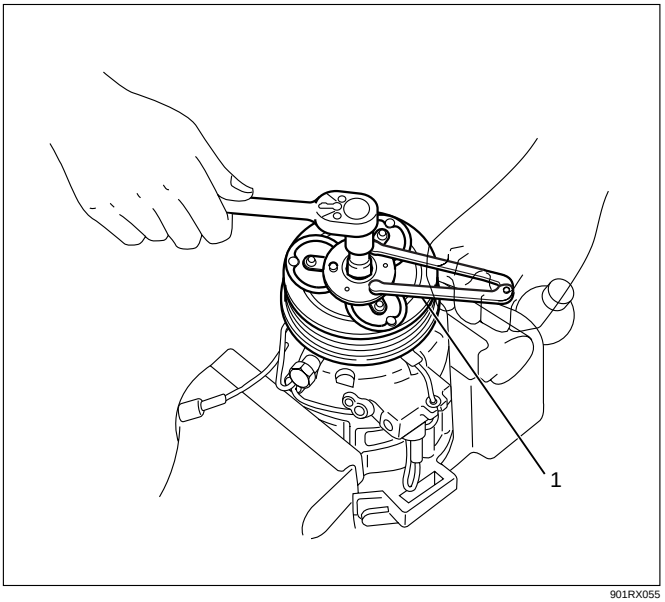

901RX055

- Tighten the drive plate bolt to the specified torque.

Torque: 13 N·m (113 lb in)

- After tightening the drive plate bolt, check to be sure the pulley rotates smoothly.
- Check to be sure that the clutch clearance is between 0.3-0.6 mm (0.01-0.02 in.)

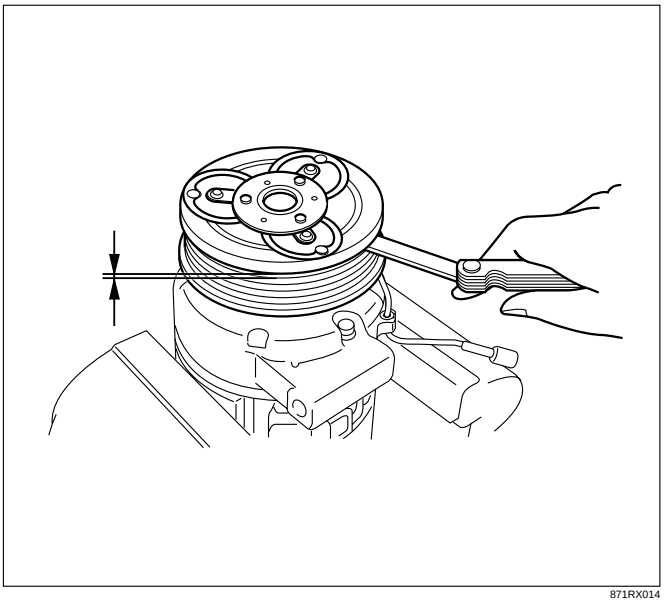

871RX014

- If necessary, install adjusting shim(s).
- Adjusting shims are available in the following thickness.

Thickness

- **0.1 mm (0.0039 in.)**
- **0.3 mm (0.0118 in.)**
- **0.5 mm (0.0197 in.)**

DKS-15CH TYPE COMPRESSOR

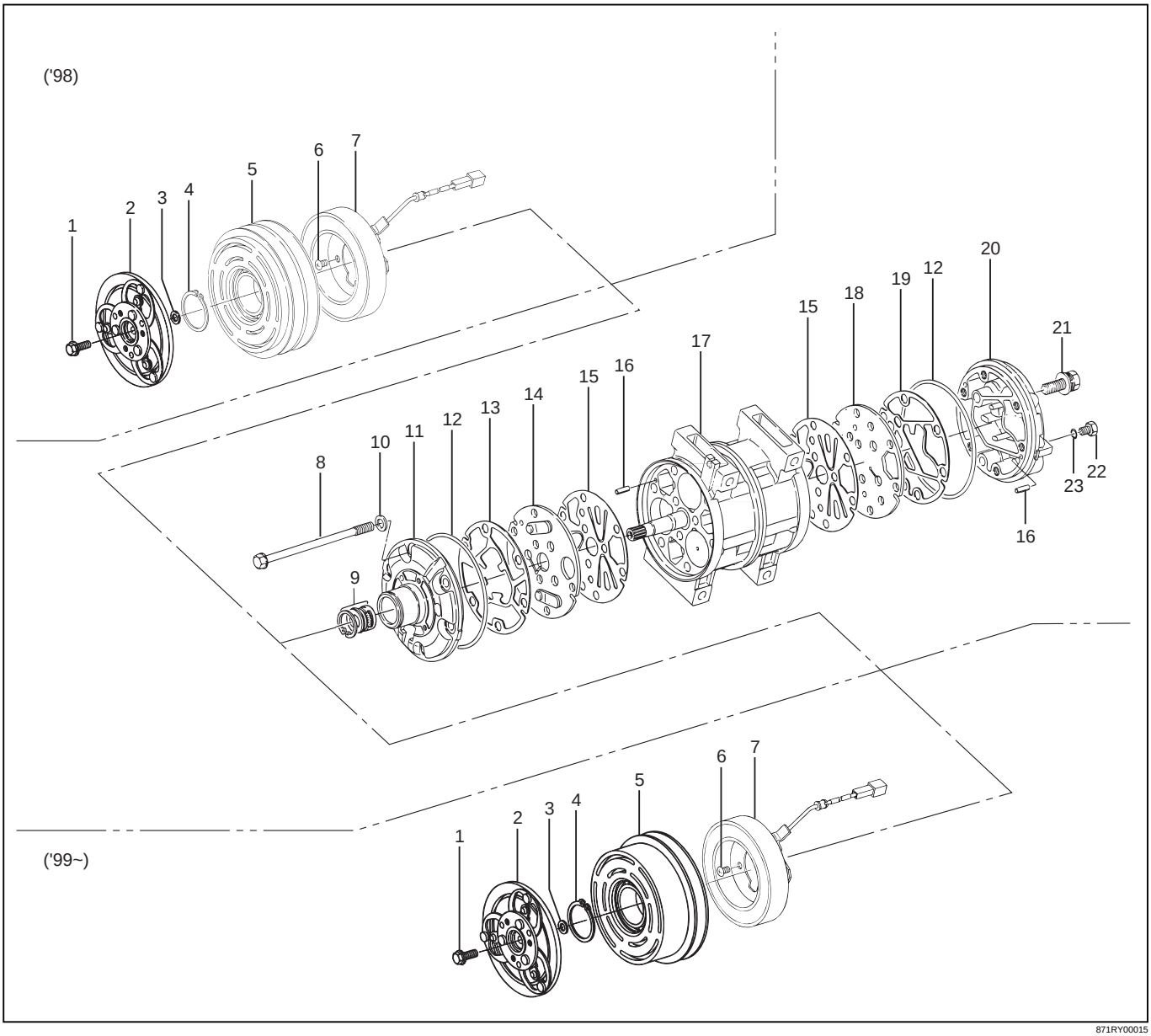

871RY00015

Legend

(1) Drive Plate Bolt
(2) Drive Plate
(3) Shim
(4) Snap Ring
(5) Pulley Assembly
(6) Screw
(7) Field Coil
(8) Through Bolt
(9) Shaft Seal Assembly
(10) Gasket
(11) Front Cylinder Head
(12) O-Ring
(13) Gasket
(14) Front Valve Plate
(15) Front Suction Valve
(16) Pin
(17) Cylinder and Shaft Assembly
(18) Rear Valve Plate
(19) Gasket
(20) Rear Cylinder Head
(21) Bolt
(22) Oil Drain Plug
(23) O-Ring

Removal

1. Remove drive plate bolt by using drive plate holder J-7624 (1) to prevent the drive plate from rotating.

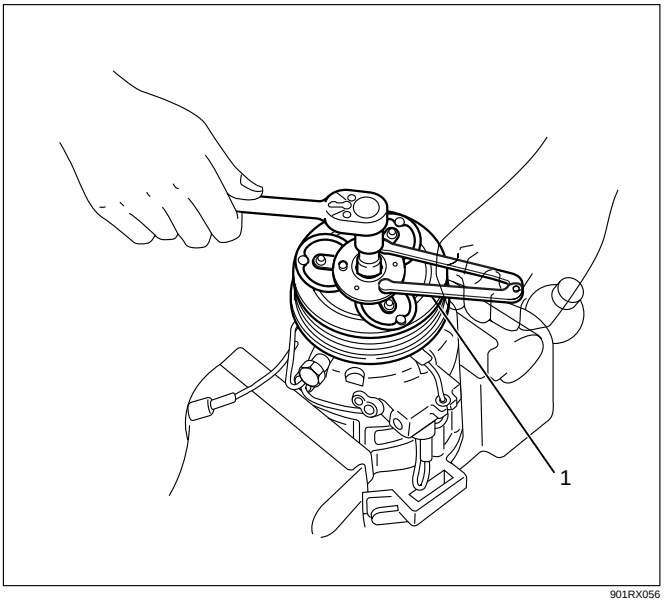

901RX056

2. Remove drive plate by using drive plate puller J-33944-A (2) and forcing screw J-33944-4 (1).

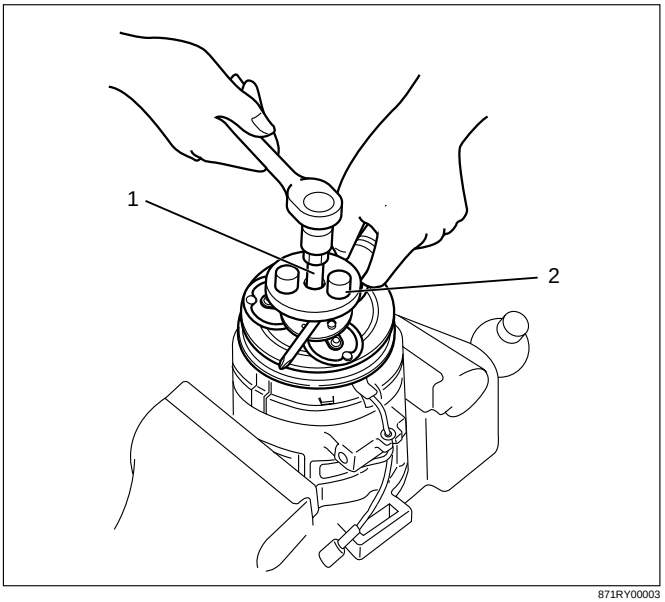

871RY00003

3. Remove shim(s).
4. Remove snap ring (1) by using snap ring pliers.

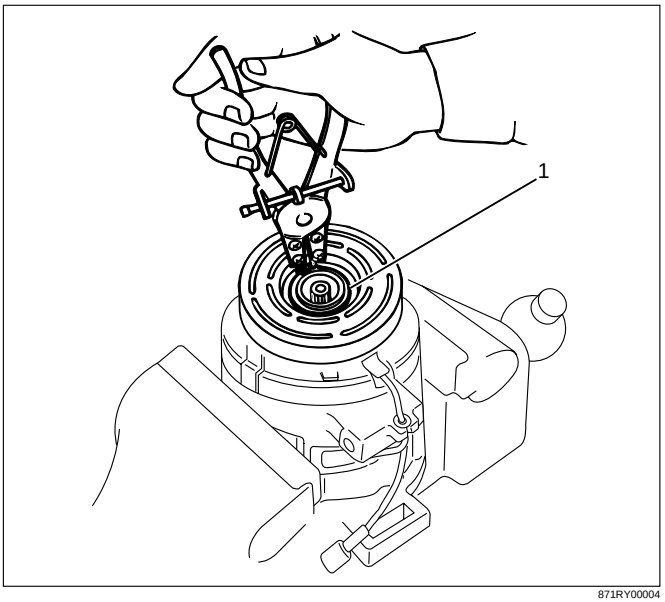

871RY00004

5. Remove pulley assembly by using pulley puller pilot J-38424 (2), pulley puller J-8433 (1) and pulley puller leg J-24092-2 (3).

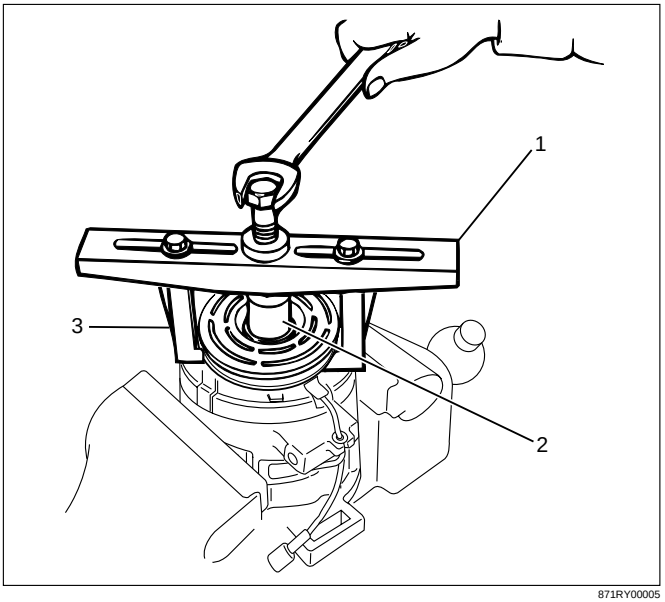

871RY00005

6. Loosen three screws and remove the field coil.

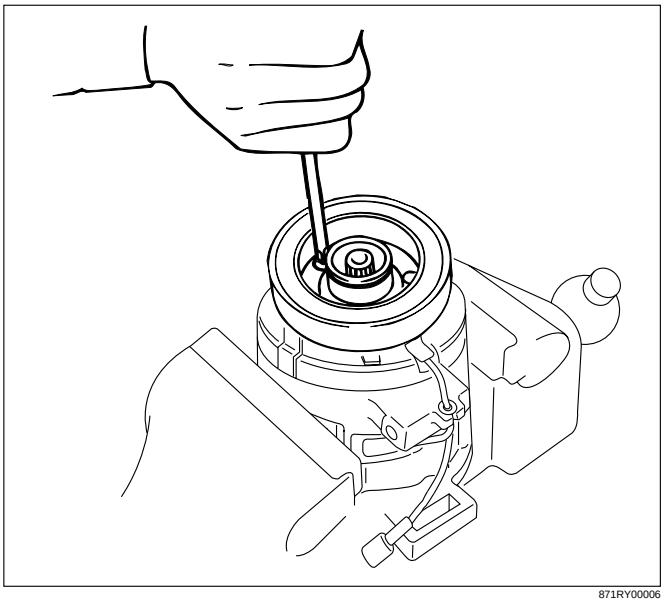

871RY00006

7. Remove snap ring by using snap ring pliers.

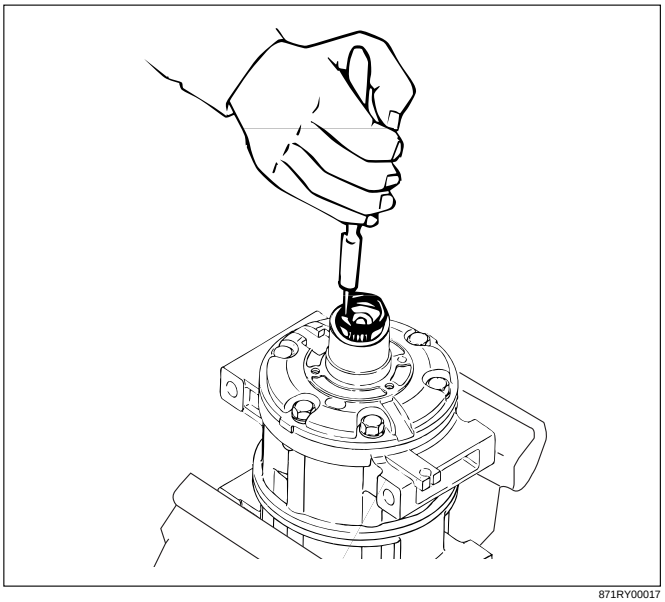

871RY00017

8. Remove shaft seal assembly (2) by using shaft seal remover J-33942 (1).

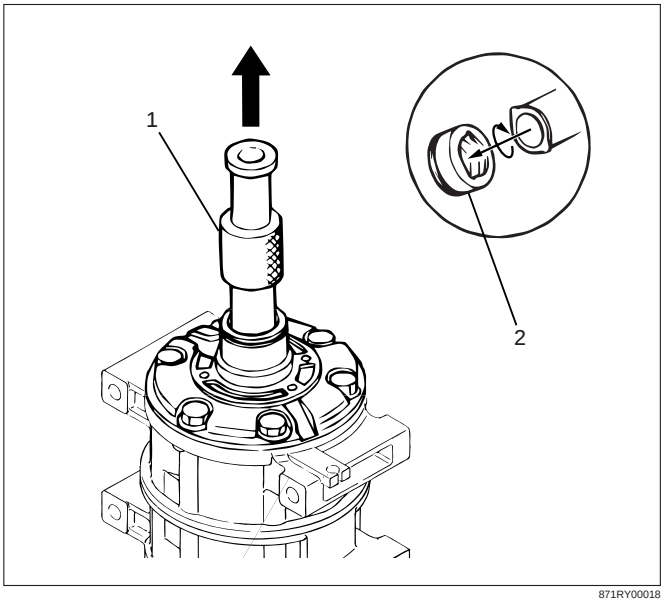

871RY00018

- Engage the remover hook with the shaft seal assembly groove and slowly draw the shaft seal assembly out.

NOTE
The shaft seal is precision-machined and its critical parts are finished to extremely close tolerances. The assembly must be handled with great care, it slips face demanding particularly careful handling.
The shaft seal can not be reused. Install a new shaft seal at reassembly.
Take care not to scratch or otherwise damage the shaft seal face.
Keep the shaft seal free from lint and dirt.

9. Remove through bolt.

10. Remove front cylinder head.

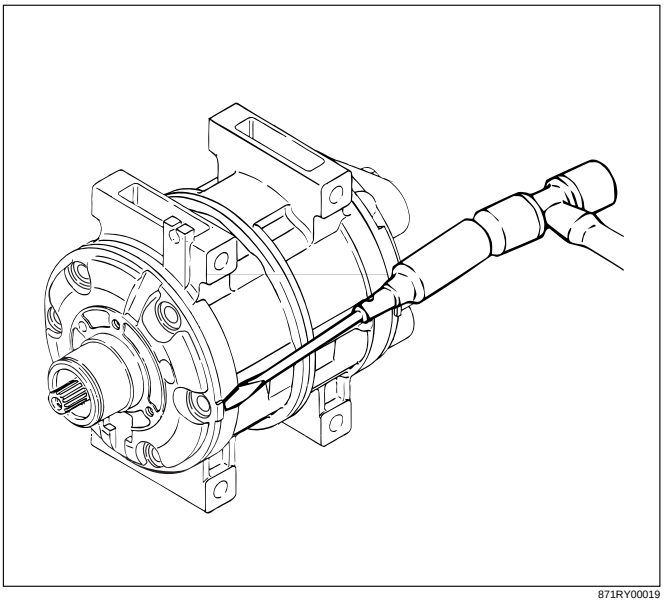

871RY00019

11. Remove o-ring.
    - Alternately tap the projections on the circumference of th front cylinder head with a screwdriver and a plastic hammer to remove the front cylinder head.
12. Remove gasket.
13. Remove front valve plate.
14. Remove front suction valve.

NOTE
Check the front valve plate for scratching and bending.
Check the front valve plate and the front cylinder head for nicks and burrs on the sealing surface.
Buff or replace the valve plate and cylinder head if nicks and burrs are present.
Check that the front valve plate passage is free from obstructions.
Check the front valve plate and the cylinder head for cracks.
Replace the valve plate and cylinder head if cracks are present.

15. Remove rear cylinder head.

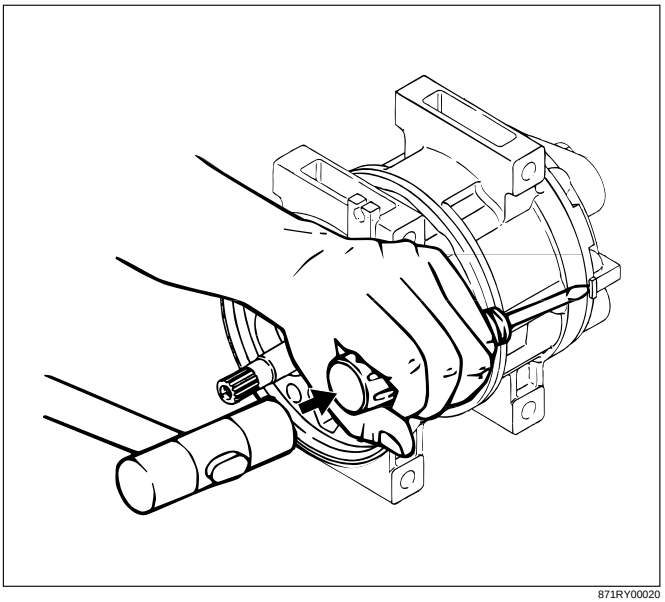

871RY00020

16. Remove o-ring.
    - Alternately tap the projections on the circumference of the rear cylinder head with a screwdriver and a plastic hammer to remove the rear cylinder head.
17. Remove gasket.
18. Remove rear valve plate.
19. Remove rear suction valve.
20. Remove cylinder and shaft assembly.

NOTE
Check the rear valve plate for scratching and bending.
Check the rear valve plate and the rear cylinder head for nicks and burrs on the sealing surface.
Buff or replace the valve plate and cylinder head if nicks and burrs are present.
Check that the rear valve plate passage is free from obstructions.
Check the rear valve plate and the cylinder head for cracks.
Replace the valve plate and cylinder head if cracks are present.

Installation

1. Install cylinder and shaft assembly.
   - Clamp the cylinder shaft assembly in a vise.
     The rear side of the cylinder shaft assembly must be facing up.
2. Install rear suction valve.
   - Apply a coat of new compressor oil to the new suction valve (2).
     Install the suction valve by aligning it with the spring pin and the cylinder valve relief grooves.

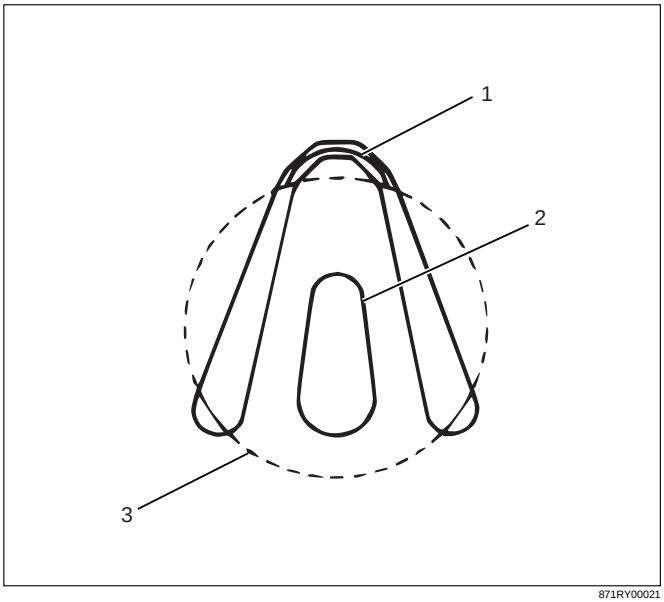

871RY00021

Legend
(1) Escape Groove
(2) Suction Valve
(3) Piston

3. Install rear valve plate.
   - Apply a coat of new compressor oil to the new valve plate.
     Install the valve plate to the suction valve by aligning it with the spring pin.

   NOTE
   Do not mix up the front and rear valve plate.
4. Install gasket.
   - Apply a coat of new compressor oil to the new gasket.
     Install the gasket (3) to the valve plate (4).
5. Install o-ring (2).
6. Install rear cylinder head (1).
   - Apply a coat of new compressor oil to the new o-ring (2).
     Install the o-ring (2) to the rear cylinder head (1).
     Install the rear cylinder head.
     Top the rear cylinder head (1) into place with a plastic hammer.

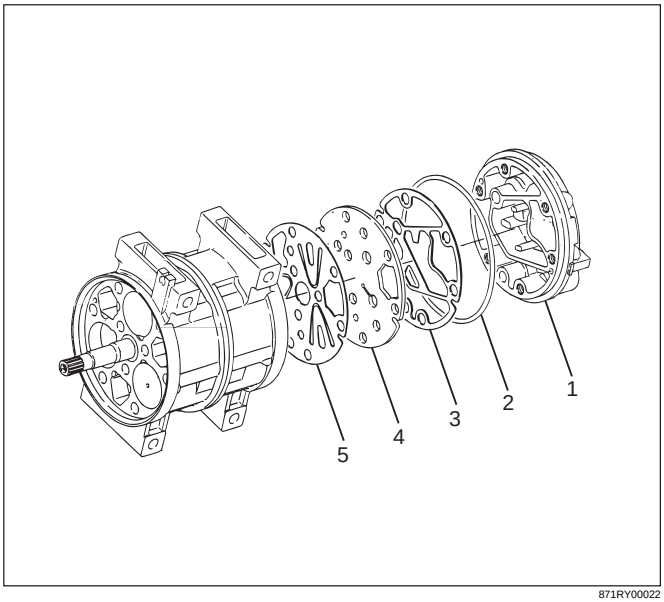

871RY00022

7. Install front suction valve.
   - Set the cylinder shaft assembly with the front side facing up.
     Apply a coat of new compressor oil to the new suction valve (2).
     Install the suction valve (2) by aligning it with the spring pin and the cylinder valve relief grooves.

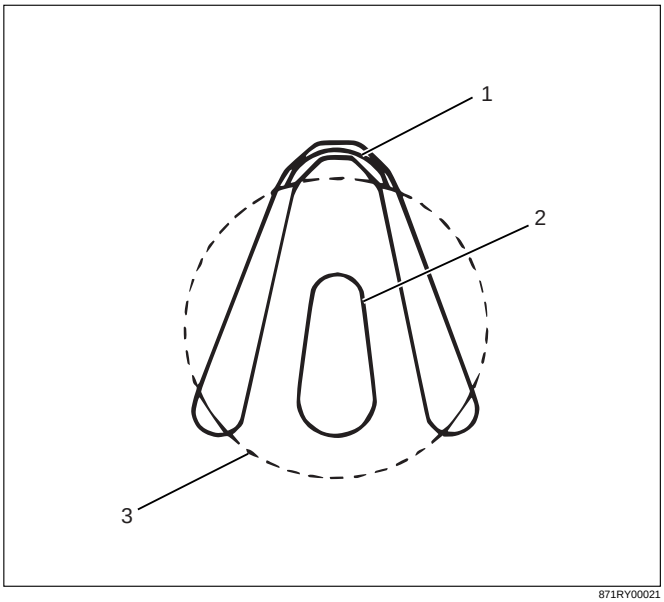

871RY00021

Legend
(1) Escape Groove
(2) Suction Valve
(3) Piston

8. Install front valve plate.
   - Apply a coat of new compressor oil to the new valve plate.
     Install the valve plate to the suction valve by aligning it with the spring pin.

     NOTE
     Do not mix up the front and rear valve plates.
9. Install gasket
   - Apply new compressor oil to the new gasket.
   - Install the gasket to the valve plate by a aligning it with the spring pin.
10. Install o-ring.
11. Install front cylinder head.
    - Apply a coat of new compressor oil to the new O-ring.
      Install the O-ring to the front cylinder head.
      Install the front cylinder head.
      Tap the front cylinder head into place with a plastic hammer.

      NOTE
      When installing the cylinder head, be careful that the end of the drive shaft does not damage the shaft seal assembly surface in the cylinder head.

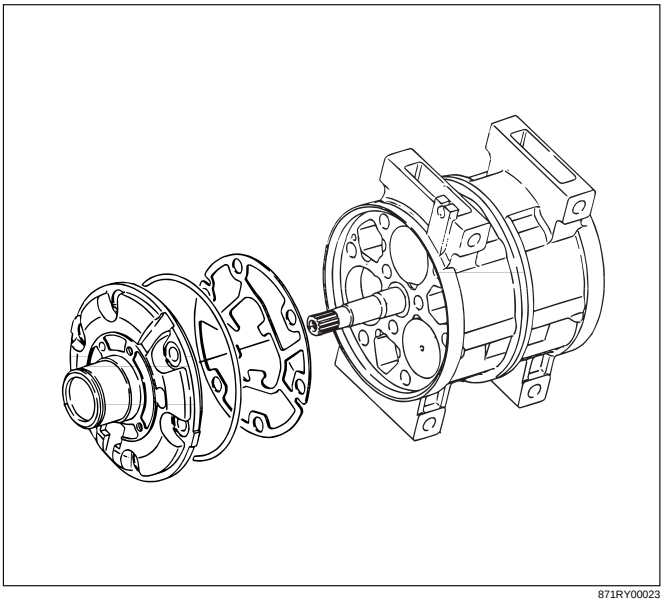

871RY00023

12. Install through bolt.
    - Gaskets cannot reused. Always replace new ones. Tighten the bolts to the specified torque a little at a time in the sequence shown in the illustration.

    Torque: 22N·m (16 lb·ft)

    NOTE
    Rotate the compressor drive shaft two or three times to make sure that it moves smoothly.

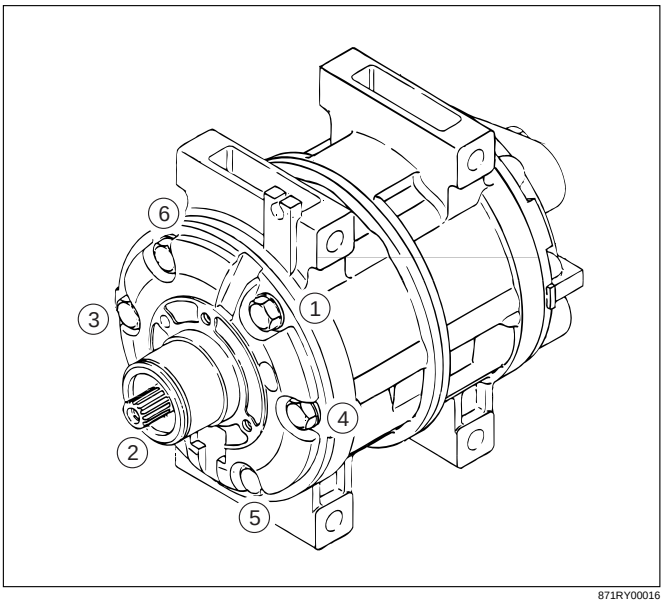

871RY00016

13. Install shaft seal assembly.
    - Clean the sealing portion of the compressor and shaft seal (2).
      Install the shaft seal guide J-34614 (1) onto the end of the drive shaft.
      Apply new compressor oil to the shaft seal guide.
      Install the shaft seal (2) onto the compressor drive shaft head by using shaft seal installer J-33942 (3).

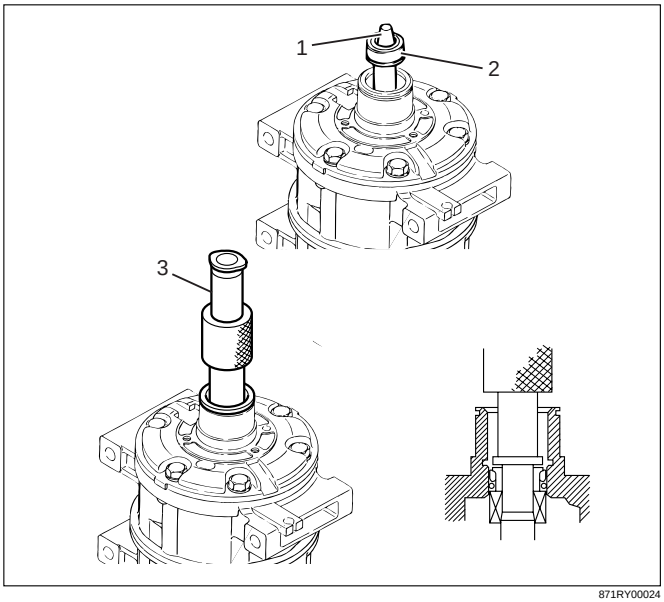

871RY00024

14. Install snap ring.
15. Install field coil.
16. Install lead wire connector.
    - Install the field coil to the compressor.
      Lead wire must be facing up.
      Tighten the field coil fixing screws to the specified torque.

Torque: 5N·m (44 lb·in)

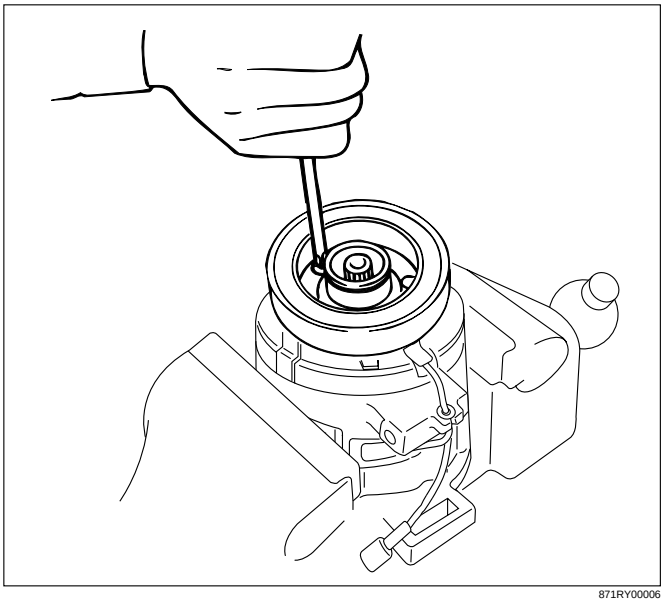

871RY00006

17. Install pulley assembly.
    - Using pulley installer J-33940 (2) and drive handle J-8092 (1) to install the pulley assembly.

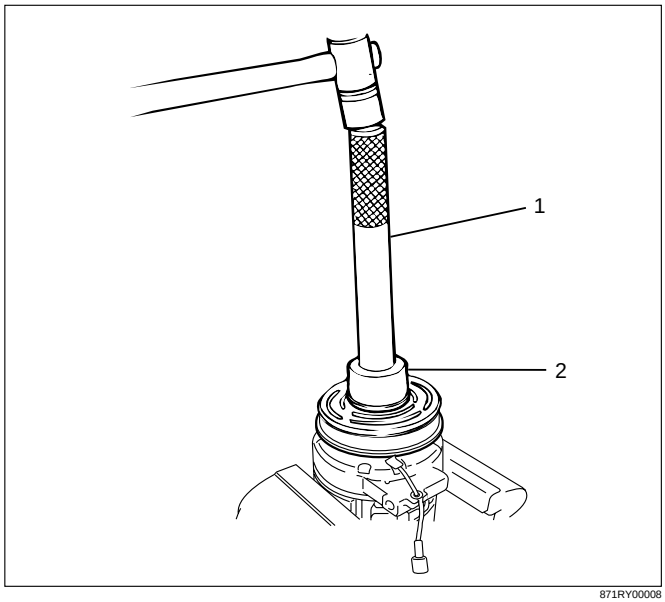

871RY00008

18. Install snap ring.
    - Install the snap ring with the inside indented portion facing out.

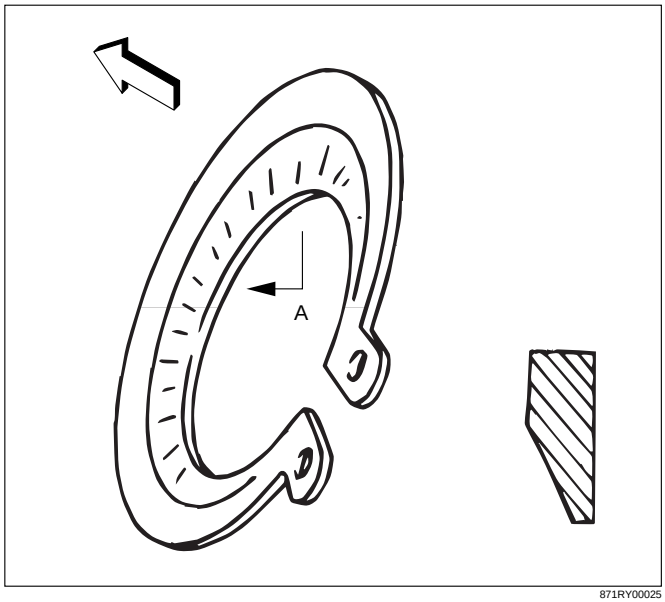

871RY00025

19. Install shim(s).
20. Install drive plate.
    - Install the drive plate to the compressor drive shaft together with the original shim(s)(1) press the drive plate by hand.

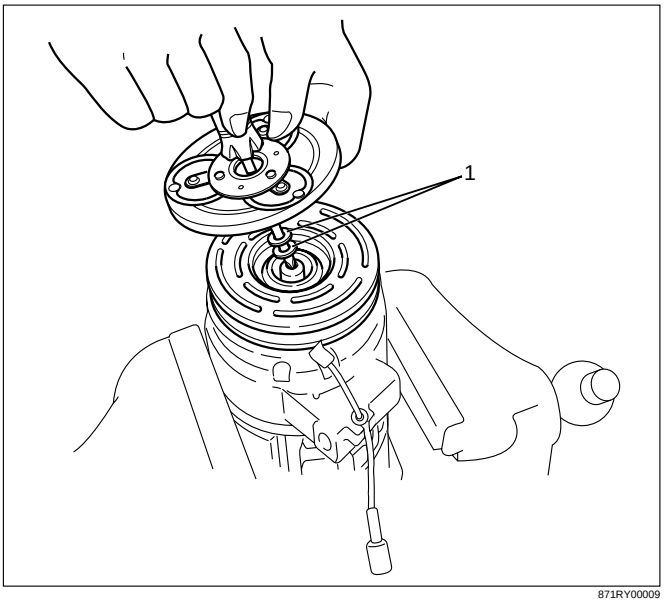

871RY00009

21. Install drive plate bolt by using drive plate holder J-7624 (1) to prevent the drive plate from rotating.
    - Tighten the bolt to the specified torque.

    Torque: 15N·m (11 lb·in)

    NOTE
    After tightening the bolt, check to be sure the pulley rotates smoothly.

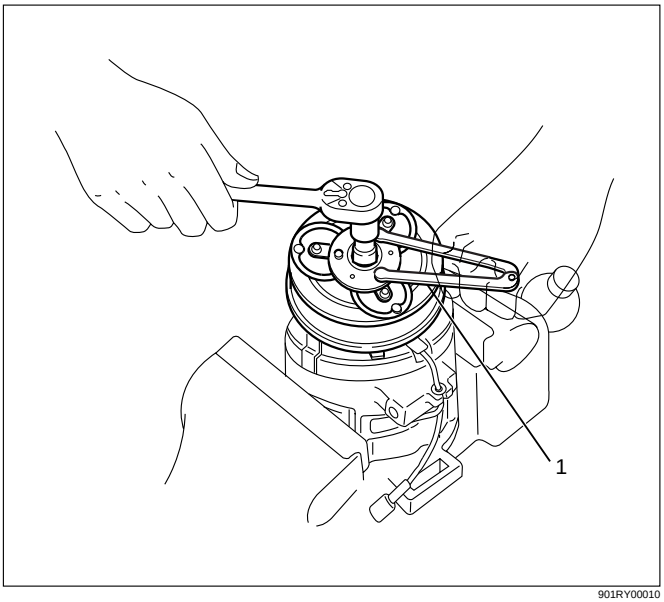

901RY00010

- Check to be sure that the clutch clearance is between 0.3–0.6 mm (0.01–0.02 in.)

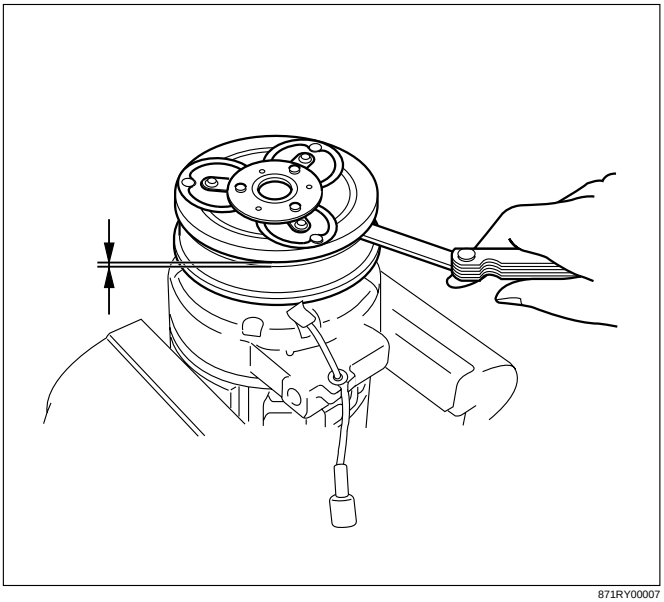

871RY00007

- If necessary, install adjusting shim(s).
- Adjusting shims are available in the following thickness.

Thickness
- **0.1 mm (0.0039 in.)**
- **0.3 mm (0.0118 in.)**
- **0.5 mm (0.0197 in.)**

HD6 TYPE COMPRESSOR

Metric Thread Size Information

Compressor to mounting bracket bolts (Front)
M10 × 1.5 – 6H
Compressor to mounting bracket bolts (Rear)
M8 × 1.25 – 6H
Suction-discharge port screw
M10 × 1.5 – 6H
Compressor shaft
M9 × 1.25 – 6H
Internal hub-clutch drive assembly
M22 × 1.5 – 6H

COMPRESSOR CLUTCH PLATE AND HUB ASSEMBLY

Removal

1. Clamp the holding fixture J-33026 in a vise and attach compressor to holding fixture with thumb screws J-33026-1.
2. With center screw forcing tip in place to thrust against the end of the shaft, thread the Clutch Plate and Hub Assembly Installer-Remover J-33013-B into the hub. Hold the body of the remover with a wrench and turn the center screw into the remover body to remove the clutch plate and hub assembly (1).

CAUTION: Do not drive or pound on the clutch hub or shaft. Internal damage to compressor may result. The forcing tip on J-33013-B remover-installer center screw must be flat or the end of the shaft/axial plate assembly will be damaged.

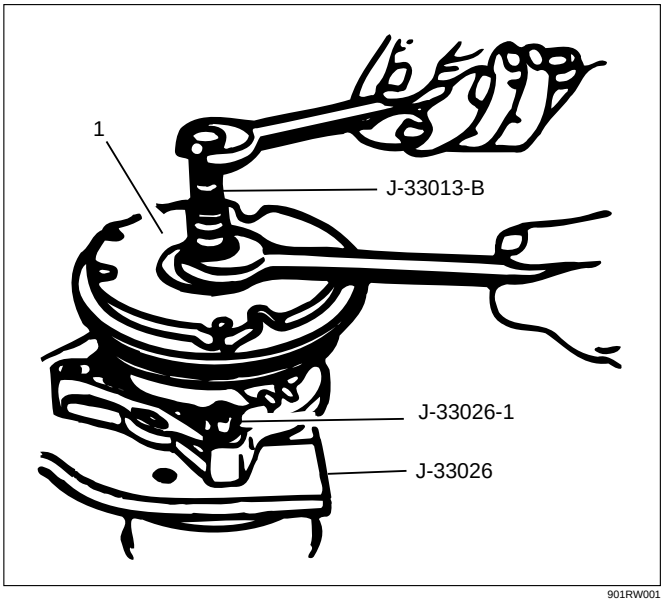

901RW001

3. Remove the shaft key and retain for reassembly.

Installation

1. Install the shaft key into the hub key groove. Allow the key to project approximately 3.2 mm (1/8 in) out of the keyway. The shaft key is curved slightly to provide an interference fit in the hub key groove.
2. Be sure the frictional surface of the clutch plate and the clutch rotor (2) are clean before installing the clutch plate and hub assembly (1).
3. Align the shaft key (4) with the shaft keyway (3) and place the clutch plate and the hub assembly onto the compressor shaft.

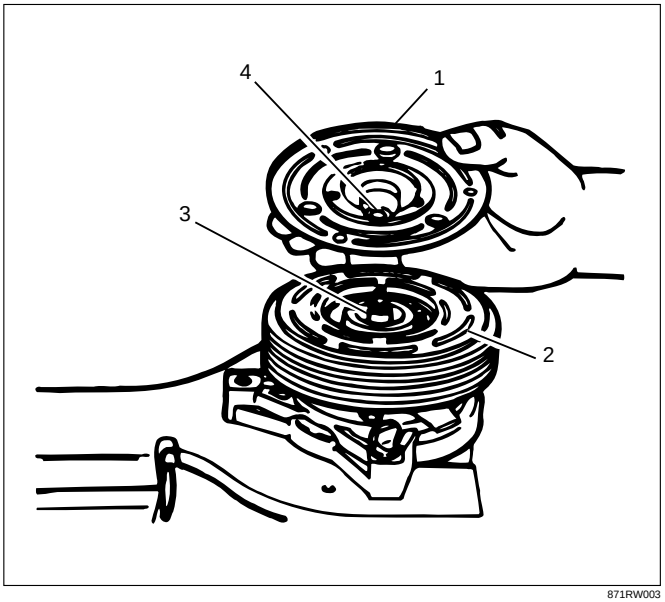

871RW003

4. Remove the forcing tip on J-33013-B clutch plate and hub assembly installer-remover center screw and reverse the body direction on the center screw, as shown in Figure.
5. Install the clutch plate and hub installer-remover J-33013-B with bearing as shown in Figure.
   The body of the J-33013-B installer-remover should be backed off sufficiently to allow the center screw to be threaded onto the end of the compressor shaft.
6. Hold the center screw with a wrench. Tighten the hex portion of the installer-remover J-33013-B body to press the hub onto the shaft. Tighten the body several turns, remove the installer and **check to see that the shaft key is still in place in the keyway before installing the clutch plate and hub assembly to its finial position.** The air gap (2) between frictional surfaces of the clutch plate and clutch rotor should be 0.50–0.76 mm (.020–.030 in).

CAUTION: If the center screw is threaded fully onto the end of the compressor shaft. or if the body of the installer is held and the center screw is rotated, the key will wedge and will break the clutch hub.

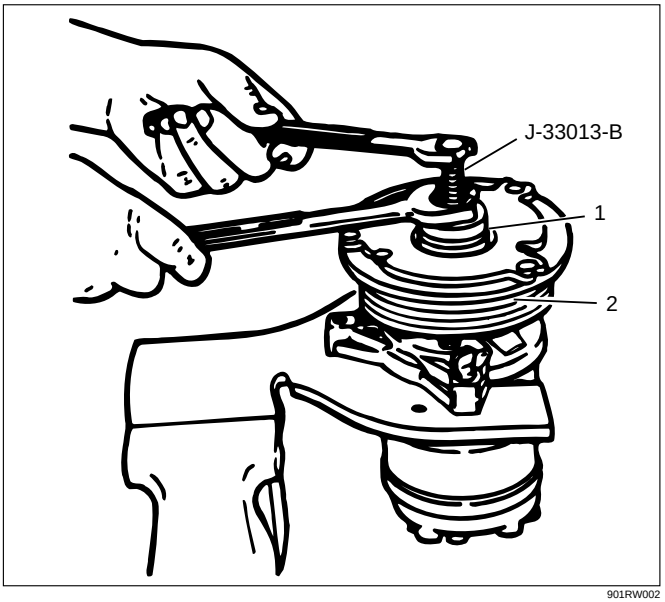

901RW002

7. Remove installer J-33013-B, check for proper positioning of the shaft key (even or slightly above the clutch hub).
8. Spin the pulley rotor by hand to see that the rotor is not rubbing the clutch drive plate.

COMPRESSOR CLUTCH ROTOR AND/OR BEARING

Removal

1. Remove the clutch plate and hub assembly as described previously.
2. Remove rotor (1) and bearing assembly retaining ring (2), using snap ring pliers.

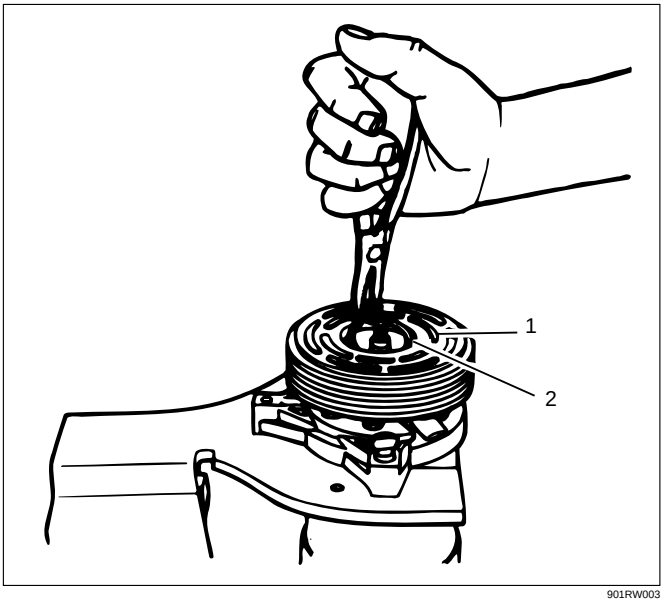

901RW003

3. Install pulley rotor and bearing puller guide J-33023-A to the front head and install J-41552 pulley rotor and bearing puller down into the inner circle of slots (1) in the rotor. Turn the J-41552 puller clockwise in the slots in the rotor.
4. Hold the J-41552 puller in place and tighten the puller screw against the puller guide to remove the pulley rotor and bearing assembly.

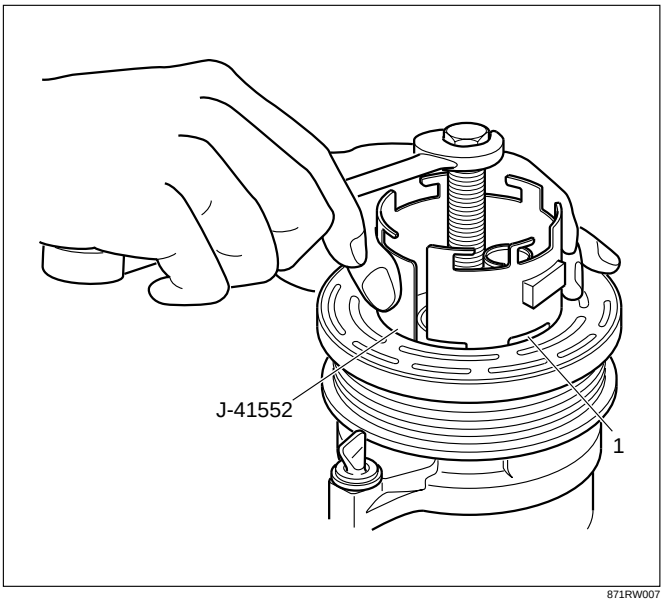

871RW007

Installation

1. With the compressor mounted to the J-34992 holding fixture, position the rotor and bearing assembly on the front head.
2. Position the J-33017 pulley, rotor and bearing installer and J-33023-A puller pilot directly over the inner race of the bearing.

3. Position puller crossbar J-8433-1 on the puller pilot J-33023-A and assemble the two J-33026 through bolts and washers through the puller bar slots and thread them into the J-33026 holding fixture. The thread of the through bolts should engage the full thickness of the holding fixture.
4. Tighten the center screw in the J-8433-1 puller crossbar to force the pulley rotor (1) and bearing assembly onto the compressor front head. Should the J-33017 pulley rotor and bearing installer slip off direct in-line contact with the inner race of the bearing, loosen the J-8433-1 center forcing screw and realign the installer and pilot so that the J-33017 installer will properly clear the front head.

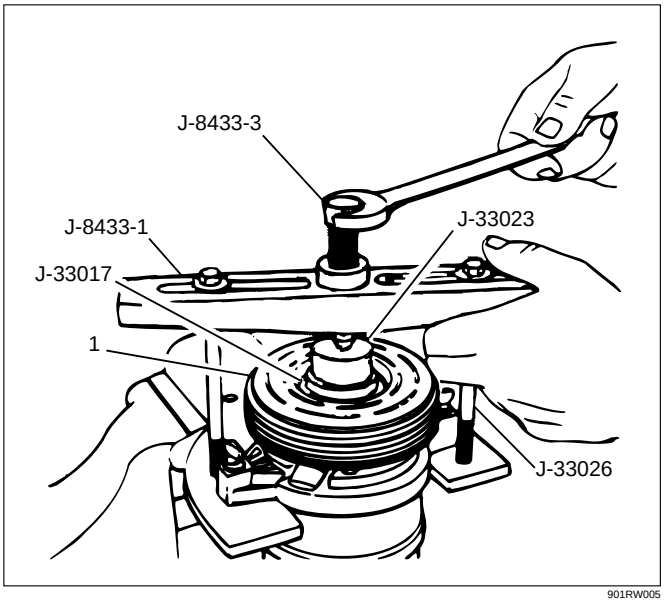

901RW005

5. Install rotor and bearing assembly retainer ring, using snap ring pliers.
6. Reinstall clutch plate and hub assembly as described previously.

COMPRESSOR CLUTCH COIL

Removal

1. Perform Steps 1 through 4 of "Clutch Rotor and/or Bearings" removal procedure. **Mark clutch coil terminal location (1) on compressor front head.**
2. Install J-33023-A puller pilot on front head of compressor. Also install J-8433-1 puller crossbar with J-33025 puller legs as shown in figure.
3. Tighten J-8433-3 forcing screw against the puller pilot to remove the clutch coil (2).

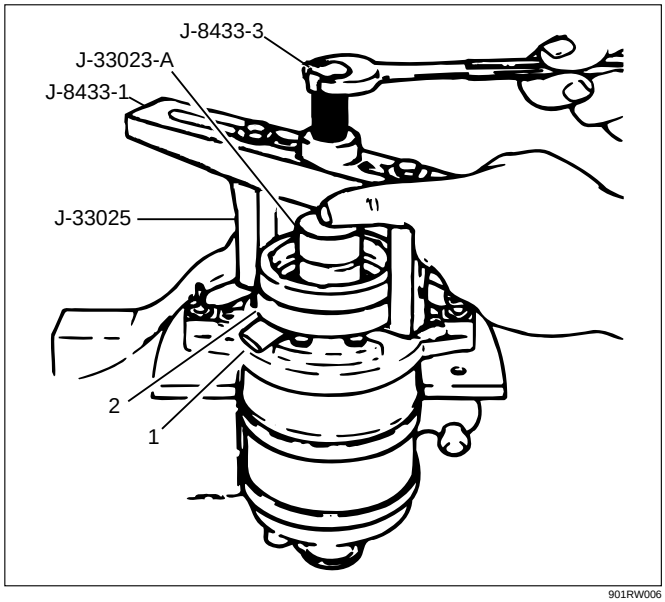

901RW006

Installation

1. Place the clutch coil assembly (1) on the front head with the terminals positioned at the "marked" location.
2. Place the J-33024 clutch coil installer over the internal opening of the clutch coil housing and align installer with the compressor front head.
3. Center the J-8433-1 puller crossbar in the counter-sunk center hole of the J-33024 clutch coil installer. Install the J-33026 through bolts and washers through the crossbar slots and thread them into the holding fixture J-33026 to full fixture thickness.

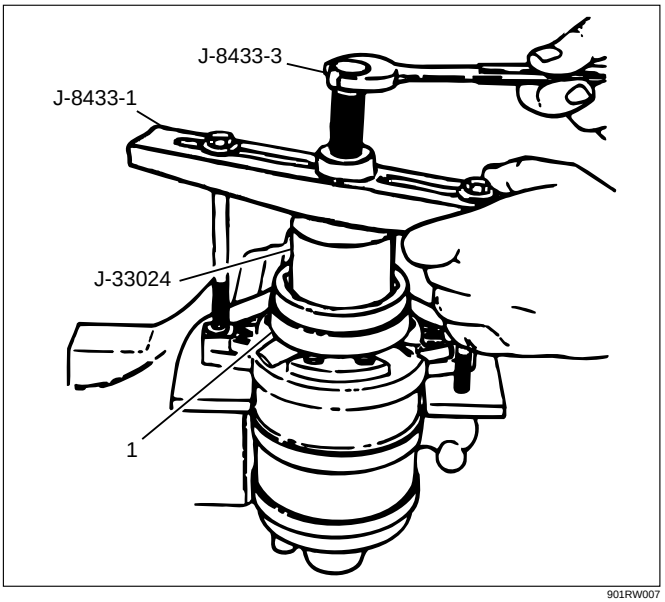

901RW007

4. Turn the center forcing screw of J-8433-1 puller crossbar to force the clutch coil onto the front head. Be sure clutch coil and J-33024 installer stay "in-line" during installation.
5. When coil is fully seated on the front head, use a 1/8 in diameter drift punch (2) and stake the front head at three places 120 degrees apart, to ensure clutch coil (3) remains in position.

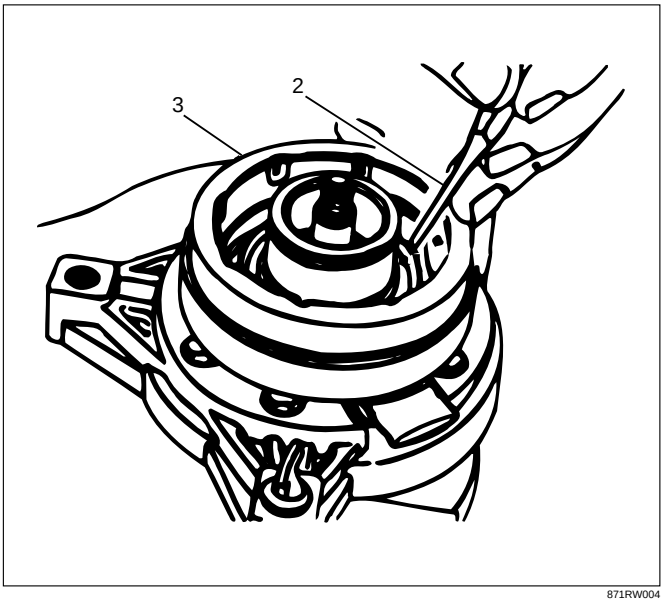

871RW004

- Stake size should be only one-half the area of the punch tip and be only approximately 0.28–0.35 mm (.010–.015 in) deep.

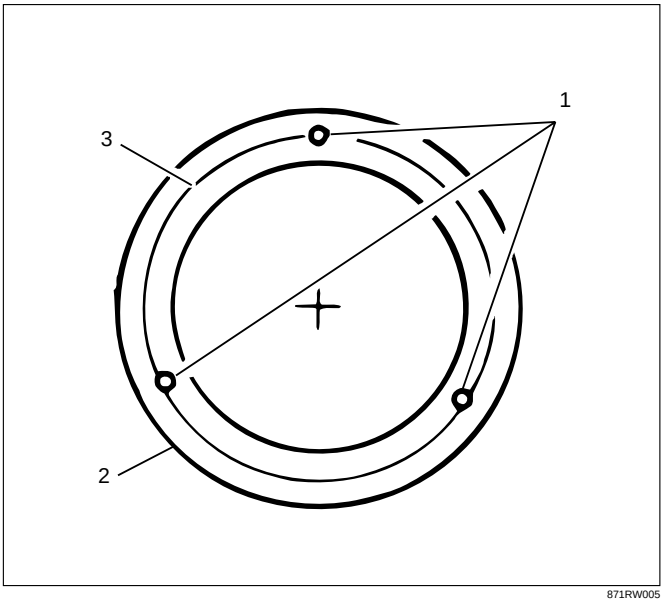

871RW005

Legend

(1) Stake Front Head 0.28–0.35 mm Deep (0.10–015 in)
(2) Clutch Coil Housing
(3) Front Head Surface

6. Install rotor and bearing assembly and the clutch plate and hub assembly as described previously.

COMPRESSOR SHAFT SEAL

Service Precaution

When replacing the shaft seal assembly, pressure relief valve or control switches, it will be necessary to recover the refrigerant. Other than clutch repair procedures, the same holds true for any disassembly of the compressor.
A clean workbench covered with a sheet of clean paper, and a place (clean trays, etc) for all parts being removed and replaced is important, as is the use of proper clean service tools.

CAUTION: Any attempt to use makeshift or inadequate service tools or equipment may result in damage and/or improper compressor operation.

All parts required for servicing the internal compressor are protected by a preservative process and packaged in a manner which will eliminate the necessity of cleaning, washing or flushing of the parts. The parts can be used in the internal assembly just as they are removed from the service package. **Seals and protective packaging should be left intact until just prior to installation.**
If the compressor rear head, front head or cylinder and shaft assembly is to be serviced or replaced, the oil in the compressor must be drained, measured, recorded and replaced.

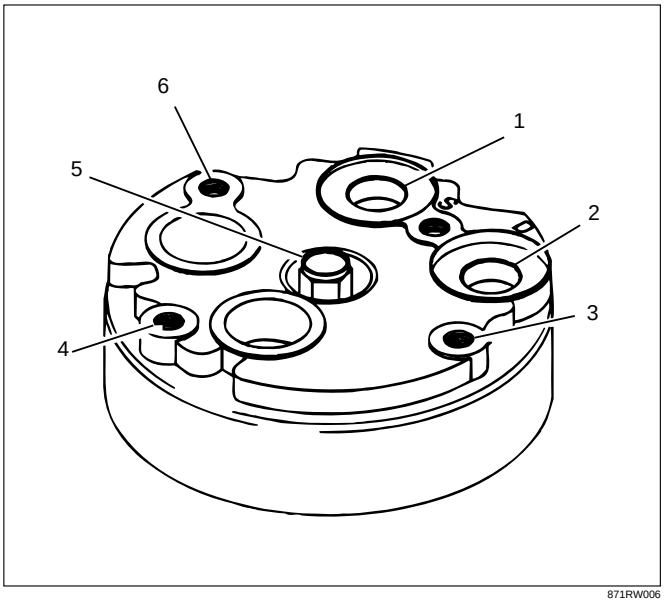

871RW006

Legend
(1) Suction Port
(2) Discharge Port
(3) Mounting Boss
(4) Mounting Boss
(5) Pressure Relief Valve
(6) Mounting Boss

Seal Leak Detection

A shaft seal should not be changed because of small amounts of oil found on an adjacent surface but only after actual refrigerant leakage is found using an approved leak detector.

CAUTION: Handling and care of seal protector is important. If seal protector is nicked or the bottom flared, the new seal may be damaged during installation.

Removal

1. Recover the refrigerant using Refrigerant Recovery System.
2. Loosen and reposition compressor in mounting brackets, if necessary.
3. Remove clutch plate and hub assembly from compressor as described previously.
4. Remove the shaft seal retainer ring, using snap ring pliers.
5. Thoroughly clean inside of compressor neck area surrounding the shaft, the exposed portion of the seal, the retainer ring groove and the shaft itself. Any dirt or foreign material getting into compressor may cause damage.
6. Fully engage the knurled tangs of Seal Remover-Installer J-23128-A into the recessed portion of the Seal (1) by turning the handle clockwise. Remove the Seal from the compressor with a rotary-pulling motion.
   Discard the seal. The handle must be hand-tightened securely. Do not use a wrench or pliers.

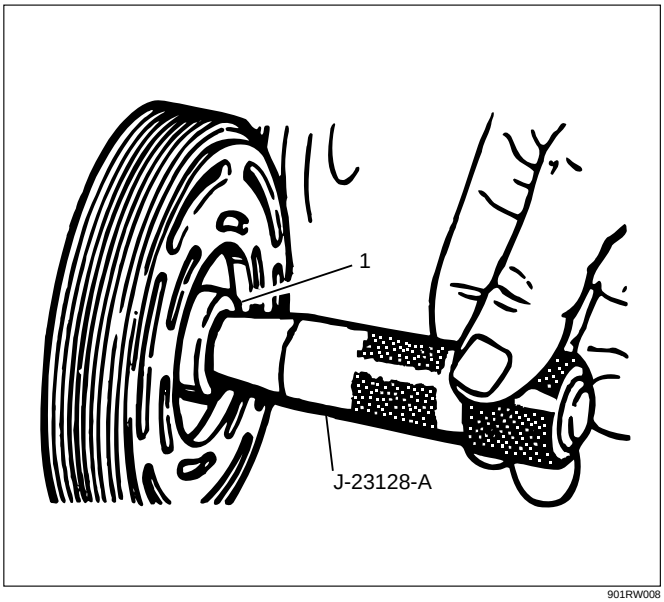

901RW008

7. Remove and discard the seal seat O-ring (2) from the compressor neck using O-ring remover J-9553-01.

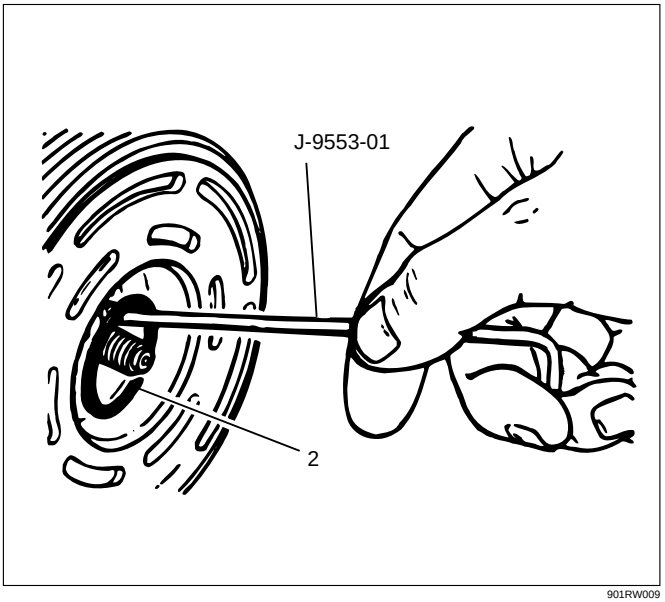

901RW009

8. Recheck the shaft and inside of the compressor neck for dirt or foreign material and be sure these areas are perfectly clean before installing new parts.

Cleaning

Thoroughly clean O-ring seal groove in front head.

CAUTION: Seals should not be re-used. Always use a new specification service seal on rebuild. Be sure that the seal to be installed is not scratched or damaged in anyway. Make sure that the seal seat and seal are free of lint and dirt that could damage the seal surface or prevent sealing.

Installation

1. Dip the new seal seat O-ring (1) in clean 525 viscosity refrigerant oil and assemble onto O-ring installer J-33011.

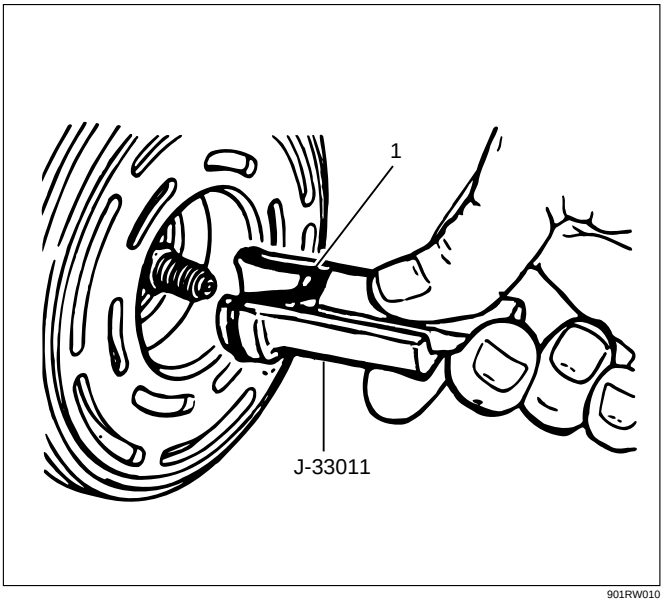

901RW010

2. Insert the O-ring installer J-33011 into the compressor neck until the installer "bottoms". Lower the moveable slide of the O-ring installer to release the O-ring into the seal O-ring lower groove (The compressor neck top groove is for the shaft seal retainer ring.) Rotate the installer to seat the O-ring and remove the installer.
3. Dip the new seal in clean 525 viscosity refrigerant oil and assemble seal to Seal Installer J-23128-A, by turning handle clockwise. The stamped steel case side of the lip seal must be engaged with knurled tangs of installer so that flared-out side of lip seal is facing and installed towards the compressor. Install seal protector J-34614, in the seal lip and place over the compressor shaft, and push the seal in place with a rotary motion or place the seal protector J-34614 over end of compressor shaft, and slide the new seal onto the shaft with a rotary motion until it stops. Take care not to dislodge the O-ring. Be sure the seal (2) makes good contact with the O-ring. Disengage the installer from the seal and remove the installer J-23128-A and the seal protector J-34614.

CAUTION: Handling and care of seal protector is important. If seal protector is nicked or the bottom flared, the new seal may be damaged during installation.

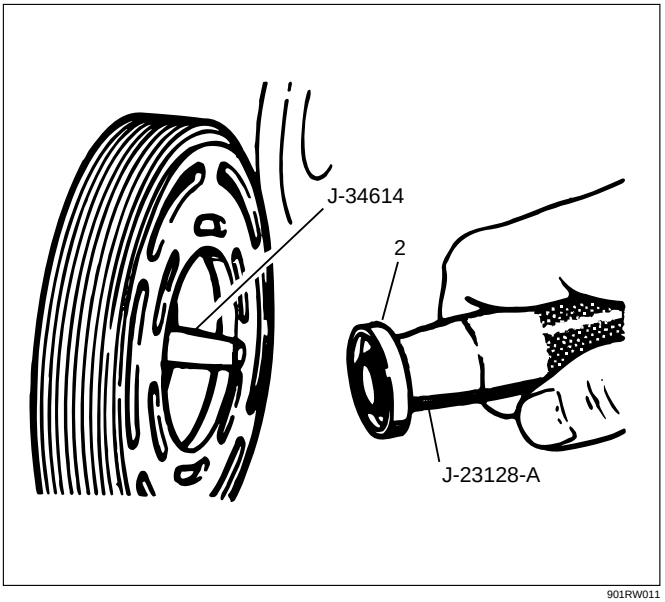

901RW011

4. Install the new seal retainer ring with its flat side against the Seal, using Snap-Ring Pliers. Use the sleeve from O-ring installer J-33011 to press in on the seal retainer ring so that it snaps into its groove.
5. To leak test, install compressor leak test fixture J-39893 on rear head of compressor and connect gage charging lines and Refrigerant Recovery System. Pressurize suction and high-side of compressor with R-134a Refrigerant. Temporarily install (M9 $\times$ 1.25 thread on shaft) nut and, with the compressor in horizontal position, rotate the compressor shaft in normal direction of rotation several times by hand. Leak test the seal area and correct and leak found. Recover the refrigerant. Remove shaft nut.

6. Remove any excess oil resulting from installing the new seal parts from the shaft and inside the compressor neck.
7. Install the clutch plate and hub assembly as described previously.
8. Reinstall compressor belt and tighten bracket.
9. Evacuate and charge the refrigerant system.

COMPRESSOR PRESSURE RELIEF VALVE

Removal

1. Recover the refrigerant using Refrigerant Recovery System.
2. Remove old pressure relief valve.

Installation

1. Clean valve seat area on rear head.
2. Lubricate O-ring of new pressure relief valve and O-ring assembly with new 525 viscosity refrigerant oil. Install new valve and torque in place, 9.0 N·m (6.1 ft lbs)
3. Evacuate and recharge the system.
4. Leak test system.

COMPRESSOR OIL

Compressor Oil Check

The oil used to lubricate the compressor is circulating with the refrigerant.
Whenever replacing any component of the system or a large amount of gas leakage occurs, add oil to maintain the original amount of oil.

(Oil Capacity)	
Capacity total in system	150 cc (5.0 fl.oz)
Compressor (Service parts) charging amount	150 cc (5.0 fl.oz)

Checking and Adjusting Oil Quantity for Used Compressor

1. Perform oil return operation. Refer to Oil Return Operation in this section.
2. Discharge and recover refrigerant and remove the compressor.
3. Drain the compressor oil and measure the extracted oil with a measuring cylinder.
4. If the amount of oil drained is much less than 90 cc (3.0 fl. oz.), some refrigerant may have leaked out. Conduct a leak tests on the connections of each system, and if necessary, repair or replace faulty parts.
5. Check the compressor oil contamination. (Refer to Contamination of Compressor Oil in this section.)
6. Adjust the oil level following the next procedure below.

(Collected Amount)	(Charging Amount)
more than 90 cc (3.0 fl.oz)	same as collected amount
less than 90 cc (3.0 fl.oz)	90 cc (3.0 fl.oz)

7. Install the compressor, then evacuate, charge and perform the oil return operation.
8. Check system operation.

When it is impossible to preform oil return operation, the compressor oil should be checked in the following order:

1. Discharge and recover refrigerant and remove the compressor.
2. Drain the compressor oil and measure the extracted oil with a measuring cylinder.
3. Check the oil for contamination.
4. If more than 90 cc (3.0 fl. oz.) of oil is extracted from the compressor, supply the same amount of oil to the compressor to be installed. If the amount of oil extracted is less than 90 cc (3.0 fl. oz.), recheck the compressor oil in the following order:
5. Supply 90 cc (3.0 fl. oz.) of oil to the compressor and install it onto the vehicle.
6. Evacuate and recharge with the proper amount of refrigerant.
7. Perform the oil return operation.
8. Remove the compressor and recheck the amount of oil.
9. Adjust the compressor oil, if necessary.

(Collected Amount)	(Charging Amount)
more than 90 cc (3.0 fl.oz)	same as collected amount
less than 90 cc (3.0 fl.oz)	90 cc (3.0 fl.oz)

Checking and Adjusting for Compressor Replacement

The oil is not charged in compressor (service parts). So it is necessary to charge the proper amount of oil to the new compressor.

1. Perform oil return operation.
2. Discharge and recover the refrigerant and remove the compressor.
3. Drain the compressor oil and measure the extracted oil.
4. Check the compressor oil for contamination.
5. Adjust the oil level as required.

(Amount of oil drained from used compressor)	(Charging amount of oil to new compressor)
more than 90 cc (3.0 fl.oz)	same as drained amount
less than 90 cc (3.0 fl.oz)	90 cc (3.0 fl.oz)

6. Evacuate, charge and perform the oil return operation.
7. Check the system operation.

Contamination of Compressor Oil

Unlike engine oil, no cleaning agent is added to the compressor oil. Even if the compressor runs for a long period of time (approximately one season), the oil never becomes contaminated as long as there is nothing wrong with the compressor or its method of use.

Inspect the extracted oil for any of the following conditions:

- The capacity of the oil has increased.
- The oil has changed to red.
- Foreign substances, metal powder, etc., are present in the oil.

If any of these conditions exists, the compressor oil is contaminated. Whenever contaminated compressor oil is discovered, the receiver/drier must be replaced.

Oil Return Operation

There is close affinity between the oil and the refrigerant. During normal operation, part of the oil recirculates with the refrigerant in the system. When checking the amount of oil in the system, or replacing any component of the system, the compressor must be run in advance for oil return operation. The procedure is as follows:

1. Open all the doors and the engine hood.
2. Start the engine and air conditioning switch to "ON" and set the fan control knob at its highest position.
3. Run the compressor for more than 20 minutes between 800 and 1,000 rpm in order to operate the system.
4. Stop the engine.

Replacement of Component Parts

When replacing the system component parts, supply the following amount of oil to the component parts to be installed.

(Component parts to be installed)	(Amount of Oil)
Evaporator	50 cc (1.7 fl. oz.)
Condenser	30 cc (1.0 fl. oz.)
Receiver/dryer	30 cc (1.0 fl. oz.)
Refrigerant line (one piece)	10 cc (0.3 fl. oz.)

Compressor Leak Testing (External and Internal)

Bench-Check Procedure

1. Install test plate J-39893 on rear head of compressor.
2. Using Refrigerant Recovery System, attach center hose of manifold gage set on charging station to a refrigerant drum standing in an upright drum.
3. Connect charging station high and low pressure lines to corresponding fittings on test plate J-39893. Suction port (low-side) of compressor has large internal opening. Discharge port (high-side) has smaller internal opening into compressor and deeper recess.
4. Open low pressure control, high pressure control and refrigerant control on charging station to allow refrigerant vapor to flow into compressor.
5. Using a leak detector, check for leaks at pressure relief valve, rear head switch location, compressor front and rear head seals, center cylinder seal, through bolt head gaskets and compressor shaft seal. After checking, shut off low pressure control and high-pressure control on charging station.
6. If an external leak is present, perform the necessary corrective measures and recheck for leaks to make certain the leak has been connected.
7. Recover the refrigerant.
8. Disconnect both hoses from the test plate J-39893.
9. Add 90 ml (3 oz.) new PAG lubricant to the compressor assembly. Rotate the complete compressor assembly (not the crankshaft or drive plate hub) slowly several turns to distribute oil to all cylinder and piston areas.
10. Install a M9 $\times$ 1.25 threaded nut on the compressor crankshaft if the drive plate and clutch assembly are not installed.
11. Using a box-end wrench or socket and handle, rotate the compressor crankshaft or clutch drive plate on the crankshaft several turns to insure piston assembly to cylinder wall lubrication.
12. Using Refrigerant Recovery System, connect the charging station high-pressure line to the test plate J-39893 high-side connector.
13. Using Refrigerant Recovery System, connect the charging station low-pressure line to the low pressure port of the test plate J-39893. Oil will drain out of the compressor suction port if the compressor is positioned with the suction port downward.

14. Attach the compressor to the J-34992 holding fixture and mount the compressor in a vise so that the compressor will be in a horizontal position and the shaft can be turned with a wrench.
15. Using a wrench, rotate the compressor crankshaft or drive plate hub ten complete revolutions at a speed of approximately one-revolution per second turning the compressor at less than one-revolution per second can result in a lower pump-up pressure and disqualify a good pumping compressor.
16. Observe the reading on high-pressure gauge at the completion of the tenth revolution of the compressor. The pressure reading for a good pumping compressor should be 690 kPa (100 psi) or above. A pressure reading of less than 620 kPa (90 psi) would indicate one or more suction and/or discharge valves leaking an internal leak, or an inoperative valve, and the refrigerant must be recovered and the compressor disassembled and checked for cause of leak. Repair as needed, reassemble and repeat the pump-up test. Externally leak test.
17. When the pressure pump-up test is completed, recover the refrigerant from the high-side and remove the test plate J-39893.
18. Tilt the compressor so that the compressor suction and discharge ports are down. Drain the PAG lubricant from the compressor.
19. Allow the compressor to drain for 10 minutes, then refill with the proper amount of PAG lubricant, per oil balance procedure described previously. The PAG lubricant may be poured into the suction port. If further assembly or processing is required, a shipping plate or test plate J-39893 should be installed to keep out air, dirt and moisture until the compressor is installed.

SECTION 00

SERVICE INFORMATION

CONTENTS

PAGE

Troubleshooting ..... 00 – 3
Main Data and Specifications ..... 00 – 11
Service Standard ..... 00 – 12
Servicing ..... 00 – 13
Fixing Torque ..... 00 – 15
Special Tools ..... 00 – 19

MEMO

TROUBLESHOOTING

CONTENTS

PAGE

General Information ..... 00 – 4
General Troubleshooting ..... 00 – 4
Power Steering System ..... 00 – 7
Power Steering Pump ..... 00 – 8
Steering Column ..... 00 – 9

GENERAL INFORMATION

Since the problems in steering, suspension, wheels and tires involve several systems, they must all be considered when diagnosing a complaint. To identify the symptom, always road test the vehicle first.
Proceed with the following preliminary inspections and correct any defects which are found.

1. Inspect tires for proper pressure and uneven wear.
2. Raise vehicle on a hoist and inspect front and rear suspension and steering linkage for loose or damaged parts.
3. Spin front wheels. Inspect for out-of-round tires, out-of-balance tires, loose and/or rough wheel bearings.

GENERAL TROUBLESHOOTING

Problem	Possible Cause	Correction
Vehicle Pulls	1. Mismatched or uneven tires. 2. Tires not adequately inflated. 3. Broken or sagging springs. 4. Radial tire lateral force. 5. Improper wheel alignment. 6. Brake dragging in one wheel. 7. Loose, bent or broken front or rear suspension parts. 8. Faulty shock absorbers.	Replace tire. Adjust tire pressure. Replace spring. Replace tire. Adjust wheel alignment. Repair brake. Tighten or replace the appropriate suspension part(s). Replace shock absorber.
Abnormal or Excessive Tire Wear	1. Sagging or broken spring. 2. Tire out of balance. 3. Improper wheel alignment. 4. Faulty shock absorber. 5. Hard driving. 6. Overloaded vehicle. 7. Tires not rotated periodically. 8. Worn or loose road wheel bearings. 9. Wobbly wheel or tires. 10. Tires not adequately inflated.	Replace spring. Balance or replace tire. Check front end alignment. Replace shock absorber. Replace tire. Replace tire and reduce load. Replace or rotate tire. Replace wheel bearing. Replace wheel or tire. Adjust the pressure.
Shimmy, Shake or Vibration	1. Tire or wheel out of balance. 2. Loose wheel bearings. 3. Worn steering linkage ball joints. 4. Worn upper or lower end ball joints. 5. Excessively upper wheel runout. 6. Blister or bump on tire. 7. Excessive loaded radial run out of tire/wheel assembly. 8. Improper wheel alignment. 9. Loose or worn steering linkage. 10. Loose steering gear. 11. Tires not adequately inflated. 12. Loose, bent or broken front or rear suspension parts. 13. Faulty shock absorber. 14. Hub bearing preload misadjustment.	Balance wheels or replace tire/or wheel. Replace wheel bearing. Replace ball joints. Replace ball joints. Repair or replace wheel and/or tire. Replace tire. Replace tire or wheel. Check wheel alignment. Tighten or replace steering linkage. Tighten housing bolts. Adjust tire pressure. Tighten or replace the appropriate suspension parts. Replace shock absorber. Adjust preload.

GENERAL TROUBLESHOOTING (CONT.)

Problem	Possible Cause	Correction
Wheel Tramp or Hop	1. Blister or bump on tire. 2. Improper shock absorber operation	Replace tire. Replace shock absorber.
Hard Steering	1. Bind in steering linkage ball studs, upper or lower end ball joint. 2. Improper wheel alignment. 3. Steering gear misadjustment. 4. Tire not adequately inflated. 5. Bind in steering column or shaft. 6. Improper power steering system operation.	Replace ball joints. Check wheel alignment. Check and adjust steering gear preload. Inflate tires to proper pressure. Repair or replace. Repair or replace. Refer to "Power steering system troubleshooting."
Too Much Play In Steering	1. Wheel bearings worn. 2. Loose steering gear or linkage. 3. Steering gear misadjustment. 4. Worn or loose steering shaft universal joint. 5. Worn steering linkage ball joints. 6. Worn upper or lower end ball joints.	Replace wheel bearings. Retighten or repair. Inspect and adjust steering gear preload. Retighten or replace steering shaft. Replace ball joints. Replace ball joints.
Poor Steering Wheel Returnability	1. Bind in steering linkage ball joints. 2. Bind in upper or lower end ball joints. 3. Bind in steering column and shaft. 4. Bind in steering gear. 5. Improper wheel alignment. 6. Tires not adequately inflated. 7. Loose steering wheel nut. 8. Worn wheel bearing.	Replace ball joints. Replace ball joints. Repair or replace. Check and repair steering gear. Adjust wheel alignment. Adjust tire pressure. Retighten. Replace.
Abnormal Noise	1. Worn, sticky or loose upper or lower end ball joint, steering linkage ball joints or drive axle joints. 2. Faulty shock absorbers. 3. Worn upper or lower control arm bushing. 4. Loose stabilizer bar. 5. Loose wheel nuts. 6. Loose suspension bolts or nuts. 7. Broken or otherwise damaged wheel bearings. 8. Broken suspension springs. 9. Loose steering gear. 10. Faulty steering gear.	Replace. Replace or repair. Replace. Retighten bolts. Tighten nuts. Check for elongated wheel nut holes. Replace wheel if required. Retighten suspension bolts or nuts. Replace wheel bearing. Replace spring. Retighten mounting bolt. Check and adjust steering gear.

GENERAL TROUBLESHOOTING (CONT.)

Problem	Possible Cause	Correction
Wandering or Poor Steering Stability	1. Mismatched or unevenly worn tires. 2. Loose steering linkage ball joints. 3. Faulty shock absorbers. 4. Loose stabilizer bar. 5. Broken or sagging springs. 6. Steering gear misadjustment. 7. Improper wheel alignment.	Replace tire or inflate tires to proper pressure. Replace ball joints. Replace shock absorber. Tighten or replace stabilizer bar or bushings. Replace spring (pairs). Check or adjust steering gear. Adjust wheel alignment.
Erratic Steering When Bracking	1. Worn wheel bearings. 2. Broken or sagging springs. 3. Leaking caliper. 4. Warped discs. 5. Badly worn brake pads. 6. Tires are inflated unequally.	Replace wheel bearings. Replace spring (pairs). Repair or replace caliper. Replace brake disc. Replace brake pads. Inflate tires to proper pressure.
Low or Uneven Trim Height	1. Broken or sagging springs. 2. Vehicle overloaded. 3. Incorrect springs.	Replace springs (In pairs) Reduce load. Adjust or replace torsion bar.
Suspension Bottoms	1. Vehicle overloaded. 2. Faulty shock absorber. 3. Incorrect, broken or sagging springs.	Reduce load. Replace shock absorber. Replace springs.
Body Leans	1. Loose stabilizer bar. 2. Faulty shock absorbers, struts or mounting. 3. Broken or sagging springs. 4. Vehicle overloaded.	Tighten stabilizer bar bolts or replace bushings. Replace shock absorber. Replace springs (In pairs) Reduce load.
Cupped Tires	1. Worn wheel bearings. 2. Excessive tire or wheel runout. 3. Worn ball joints. 4. Tire out of balance.	Replace wheel bearings. Replace tire or wheel. Replace ball joints. Adjust tire balance.

POWER STEERING SYSTEM

HISSING NOISE

There is some noise in all power steering systems. One of the most common is a hissing sound when the steering wheel is fully turned and the car is not moving. This noise will be most evident when the wheel is operated while the brakes are applied. There is no relationship between this noise and steering performance. Do not replace the valve unless the "hissing" noise is extremely objectionable. A replacement valve will also have a slight noise, and is not always a cure for the condition.

Problem	Possible Cause	Correction
Rattle or Chucking Noise	1. Pressure hose touching other parts of vehicle. 2. Tie rod ends loose. 3. Loose steering gear mounting. 4. Steering gear misadjustment.	Adjust hose position. Do not bend tubing by hand. Tighten or replace tie rod end. Tighten steering gear mounting. Check and adjust steering gear preload.
Poor Return of Steering Wheel to Center	1. Improper front wheel alignment. 2. Wheel bearing worn. 3. Tie rod end binding. 4. Ball joint binding. 5. Tight or frozen steering shaft bearing. 6. Steering gear misadjustment. 7. Sticky or plugged steering gear valve. 8. Entry of air in the power steering system.	Adjust front wheel alignment. Replace front wheel bearing. Replace tie rod end. Replace ball joint. Replace steering assembly. Adjust the steering gear. Repair or replace steering gear valve. Bleed the system.
Momentary Increase in Effort When Turning Wheel Fast to Right or Left	1. High internal leakage. 2. Power steering fluid level low.	Repair steering gear. Replenish fluid.
Steering Wheel Surges or Jerks When Turning Especially During Parking	1. Insufficient pump pressure. 2. Sticky steering gear valve. 3. Power steering fluid level low.	Repair pump assembly. Repair or replace steering gear. Replenish fluid.
Excessive Wheel Kick Back or Loose Steering	1. Air in system. 2. Tie rod end loose. 3. Wheel bearing worn.	Bleed hydraulic system. Tighten tie rod end. Replace wheel bearing.
Hard Steering or Lack of Power Assist	1. Sticky steering gear valve. 2. Insufficient pump pressure. 3. Excessive internal pump leakage. 4. Excessive internal steering gear leakage. 5. Power steering fluid level low.	Repair or replace steering gear valve. Repair pump assembly. Repair pump assembly. Repair steering gear. Replenish fluid.

POWER STEERING PUMP

Foaming milky power steering fluid, low fluid level, and possible low pressure can be caused by air in the fluid, or loss of fluid due to internal pump leakage. Check for leak and correct. Bleed the system. Extremely cold temperatures will cause air bubbles in the system if the fluid level is low. If the fluid level is correct and pump still foams, remove pump from vehicle and check housing for cracks. If housing is cracked, replace pump housing.

Problem	Possible Cause	Correction
Low Pressure Due to Steering Pump	1. Relief valve sticking or inoperative. 2. Side plate not flat against cam ring. 3. Extreme wear of cam ring. 4. Scored side plate or rotor. 5. Vanes sticking in rotor slots. 6. Cracked or broken side plate. 7. High internal leakage.	Replace relief valve. Replace side plate. Replace cam ring. Replace side plate or rotor. Repair or replace vanes and rotor. Replace side plate. Repair internal leakage.
Low Pressure Due to Steering Gear	1. Scored housing bore. 2. Damaged O-ring or seal ring in the ball nut.	Replace housing. Replace O-ring or seal ring.
Growling Noise in Steering Pump	1. Excessive back pressure in hoses or steering unit caused by restriction. 2. Scored side plate or rotor. 3. Worn cam ring.	Repair steering unit or pump. Replace side plate or rotor. Replace cam ring.
Groaning Noise in Steering Pump	1. Air in the fluid. 2. Low fluid level. 3. Pump mounting loose.	Bleed hydraulic system. Replenish fluid. Tighten mounting bolt.
Rattling Noise in Steering Pump	1. Vanes sticking in rotor slots. 2. Vane improperly installed.	Repair or replace vanes and rotor. Repair rotor and vane.
Swishing Noise in Steering Pump	1. Damaged relief valve.	Replace relief valve.
Whining Noise in Steering Pump	1. Scored side plate and vanes. 2. Damaged relief valve.	Replace side plate and vanes. Replace relief valve.

STEERING COLUMN

LOCK SYSTEM

Problem	Possible Cause	Correction
Will Not Unlock	1. Damaged lock cylinder. 2. Damaged sector. 3. Damaged park lock cable.	Replace lock cylinder. Replace lock cylinder. Replace park lock cable.
Will Not Lock	1. Lock spring broken or worn. 2. Damaged lock cylinder. 3. Ignition switch stuck. 4. Park lock cable damaged.	Replace lock cylinder. Replace lock cylinder. Repair or replace ignition switch. Replace park lock cable.
Key Cannot Be Removed in "OFF-LOCK"	1. Ignition switch is not set correctly. 2. Damaged lock cylinder. 3. Faulty shift lock mechanism.	Correct ignition switch. Replace lock cylinder. Repair or replace the shift lock mechanism.

COLUMN

Problem	Possible Cause	Correction
Noise in Column	1. Universal joint loose. 2. Shaft lock snap ring not seated.	Tighten joint. Place snap ring in proper position.

STEERING COLUMN (CONT.)

TURN SIGNAL SWITCH

This troubleshooting covers mechanical problems only. See Section 8 for turn signal switch electrical diagnosis.

Problem	Possible Cause	Correction
Turn Signal Will Not Stay in Turn Position	1. Foreign material or loose parts preventing movement of yoke. 2. Broken or missing detent or canceling spring.	Repair or replace signal switch. Replace signal switch.
Turn Signal Will Not Cancel	1. Loose switch mounting screws. 2. Switch or anchor bosses broken. 3. Broken, missing or out of position detent, return or canceling spring. 4. Worn canceling cam.	Tighten mounting screws. Replace turn signal switch. Replace turn signal switch. Replace turn signal switch.
Turn Signal Difficult to Operate	1. Turn signal switch arm loose. 2. Yoke broken or distorted. 3. Loose or misplaced springs. 4. Foreign parts and/or material. 5. Loose turn signal switch mounting screws.	Tighten arm screw. Replace turn signal switch. Replace turn signal switch. Repair turn signal switch. Tighten mounting screws.
Turn Signal Will Not Indicate Lane Change	1. Broken lane change pressure pad or spring hanger. 2. Broken, missing or misplaced lane change spring. 3. Base of wire damaged.	Replace turn signal switch. Replace turn signal switch. Replace turn signal switch.
Hezard Switch Cannot Be Turned Off	1. Foreign material between hazard switch to turn signal switch body.	Repair or replace hazard switch.
No Turn Signal Lights	1. Electrical failure in chassis harness. 2. Inoperative turn signal flasher unit. 3. Loose chassis harness connector.	Refer to Section 8 “Electrical Troubleshooting”. Replace flasher unit. Repair loose connector.
Front or Rear Turn Signal Lights Not Flashing	1. Burned-out damaged turn signal bulb. 2. High resistance connection to ground at bulb socket. 3. Loose chassis harness connector.	Replace bulb. Repair bulb socket. Repair loose connector.

MAIN DATA AND SPECIFICATIONS

FRONT END ALIGNMENT

Caster		2° 10' ± 45'
Camber		0° ± 30'
King pin inclination		12° 30' ± 30'
Toe-in	mm (in)	0 ± 2 (0 ± 0.08)
Max. steering angle	(inside)	$34°^{+0°}_{-2°}$
	(outside)	32°

POWER STEERING

Steering gear	
Type	Integral, ball screw
Gear ratio	16.3 : 1
Oil pump	
Type	Vane
Operating fluid	ATF DEXRON® - II E or III

SERVICE STANDARD

Items	Service Standard	Service Limit
POWER STEERING GEAR Sector shaft outside diameter mm (in)	32.0 (1.26)	31.7 (1.25)
POWER STEERING PUMP Fluid pressure (When the engine is normal operating temperature, increase engine speed to 1500rpm.) kpa (kg/cm^2/psi)	9300 – 9800 (95 – 100 / 1350 – 1420) (6VD1 6VE1) 9800 – 10300 (100 – 105 / 1420 – 1490) (4JG2 4JX1)	———
STEERING WHEEL Free play mm (in)	0 – 30 (0 – 1.18)	———

SERVICING

STEERING

INSPECTION

Visual check

Check the following parts:

- Oil leakage.
- Steering system for looseness or damage.
- Steering function
- Joint ball for oil leakage or damage.
- Joint ball rubber boot for damage.

MAINTENANCE

The hydraulic system should be kept clean and fluid level in the reservoir should be checked at regular intervals and fluid added when required. Refer to "MAINTENANCE AND LUBRICATION" in section 0B of the manual for type of fluid to be used and intervals for filling.

If the system contains some dirt, flush it as detailed later in this section. If it is exceptionally dirty, both the pump and the gear must be completely disassembled before further usage.

All tubes, hoses, and fittings should be inspected for leakage at regular intervals. Fittings must be tight. Make sure the clips, clamps and supporting tubes and hoses are in place and properly secured.

Power steering hoses and lines must not be twisted, kinked or tightly bent. Air in the system will cause spongy action and noisy operation. When a hose is disconnected or when fluid is lost, for any reason, the system must be bled after refilling. Refer to "Bleeding the Power Steering System" in this section.

FLUID LEVEL

1. Run the engine until the power steering fluid reaches normal operating temperature, about 55°C (130°F), then shut the engine off.
2. Check the level of fluid in the reservoir.
3. If the fluid level is low, add power steering fluid as specified in "MAINTENANCE AND LUBRICATION" in section 0B to the proper level and install the receiver cap.
4. When checking the fluid level after the steering system has been serviced, air must be bled from the system. Refer to "Bleeding the Power Steering System" in this section.

STEERING WHEEL FREE PLAY ADJUSTMENT

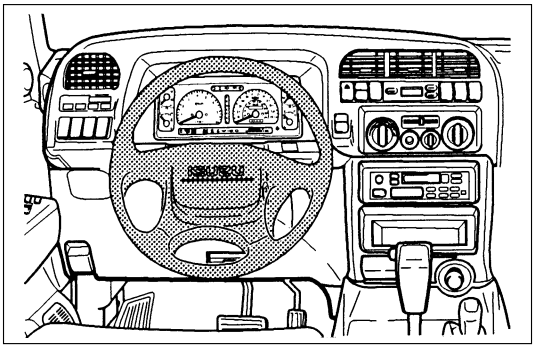

INSPECTION

1. Check the amount of steering wheel play by turning the wheel in both directions until the tires begin to move with the front wheels properly in the straight ahead position.

NOTE:
The wheel free play should be checked with the engine running.

Steering Wheel Free Play	mm (in)
0 – 30 (0 – 1.18)	

2. Also check the steering wheel for play and looseness in mount by moving it back and froth and sideways. While driving, check for hard-steering, steering shimmy and tendency to pull to one side.

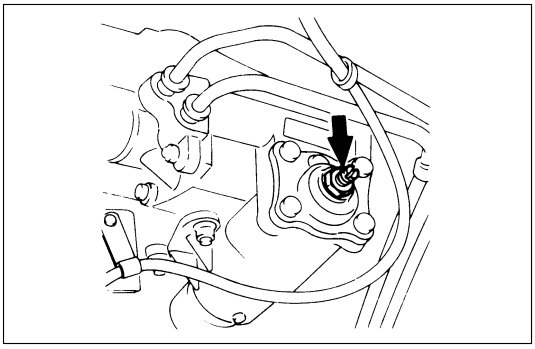

ADJUSTMENT

1. Align the front wheels properly in the straight ahead position.
2. Loosen the lock nut on the adjusting screw of the steering gear.
3. Turn the adjust screw clockwise to decrease free play or counter-clockwise to increase.
4. After check of specified free play, tighten the lock nut to specified torque.

Lock Nut Torque	N·m (kg·m/lb·ft)
41 (4.2 / 30)	

FIXING TORQUE

Power Steering

N·m (kg·m/lb·ft)

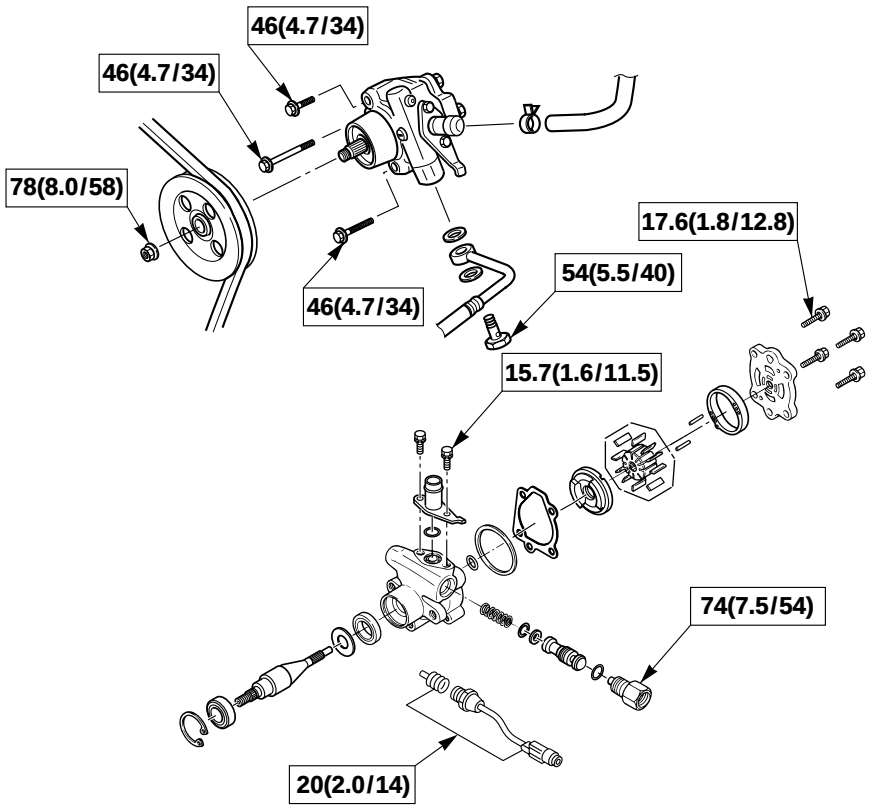

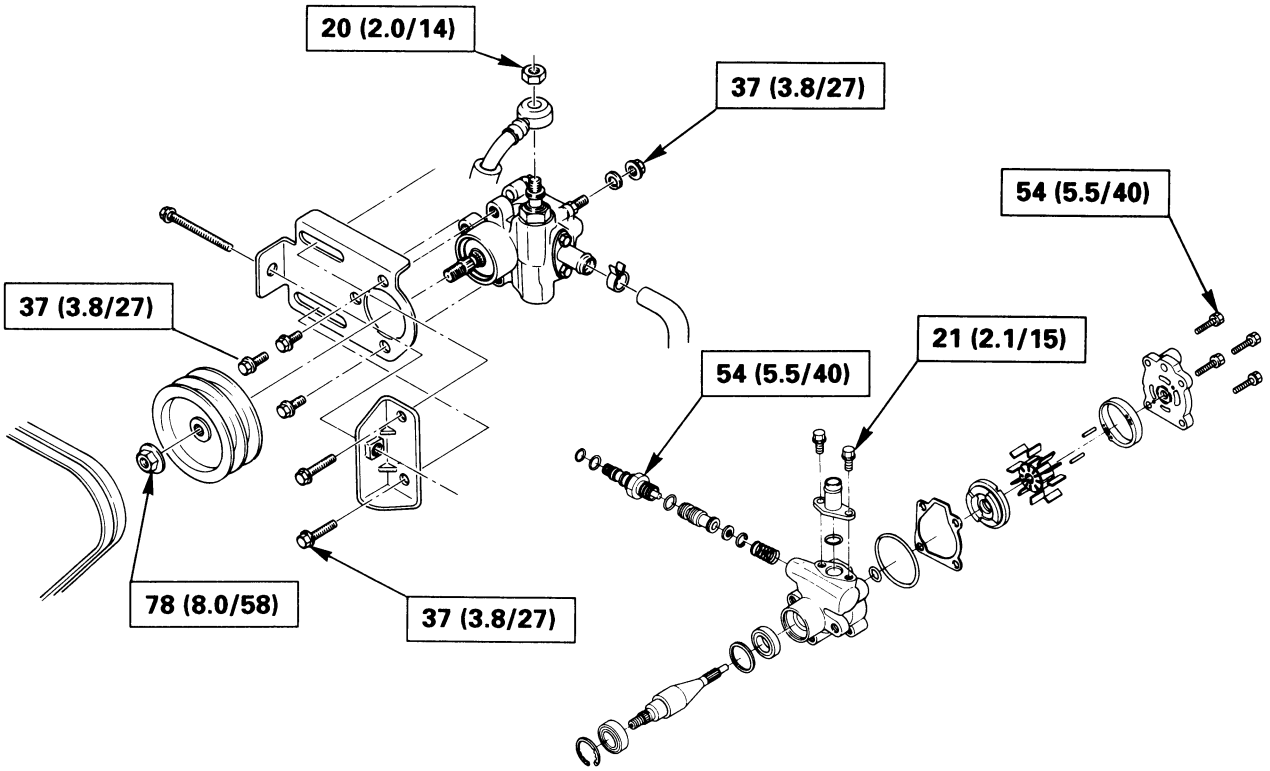

Power Steering (Cont.)

N·m (kg·m/lb·ft)

These illustrations are based on the LHD model.

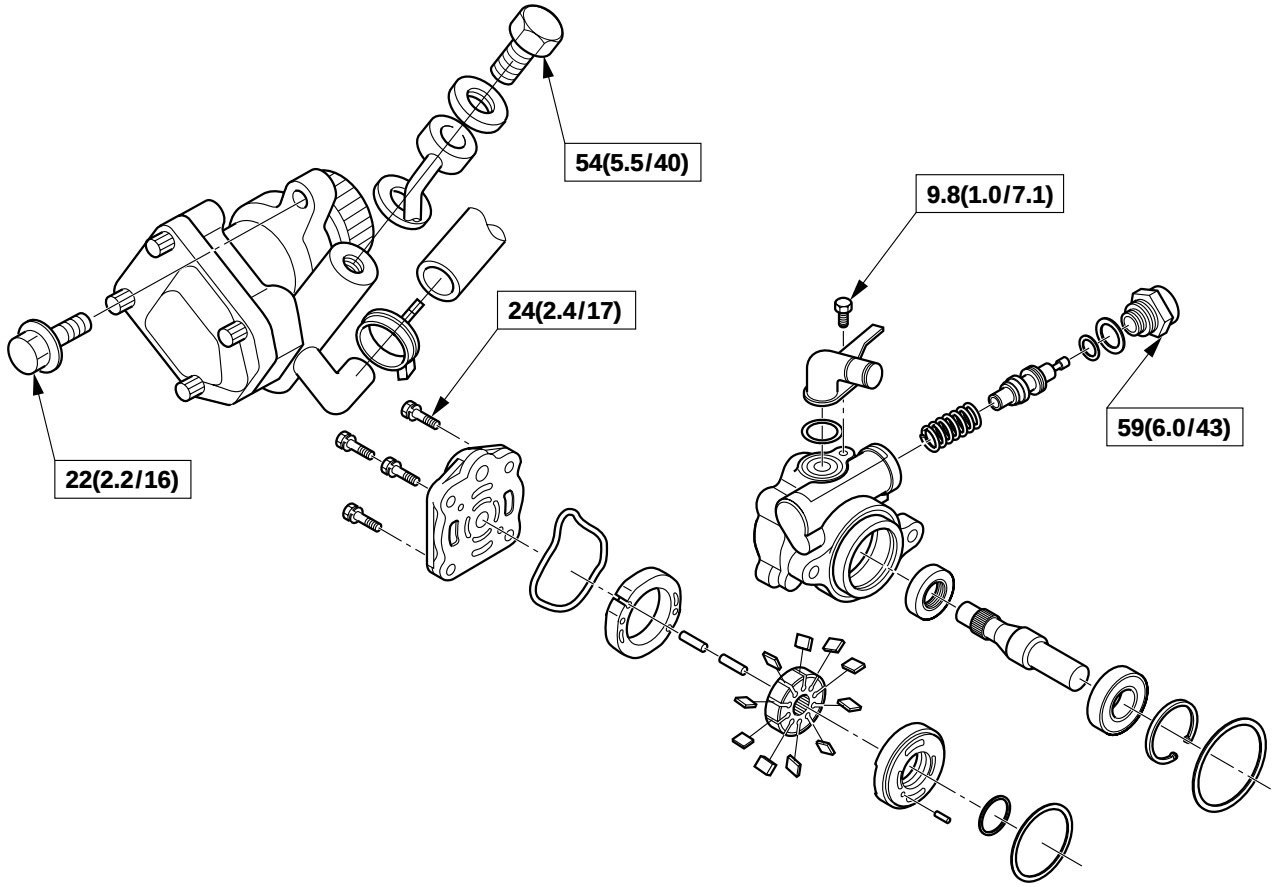

E03RW011

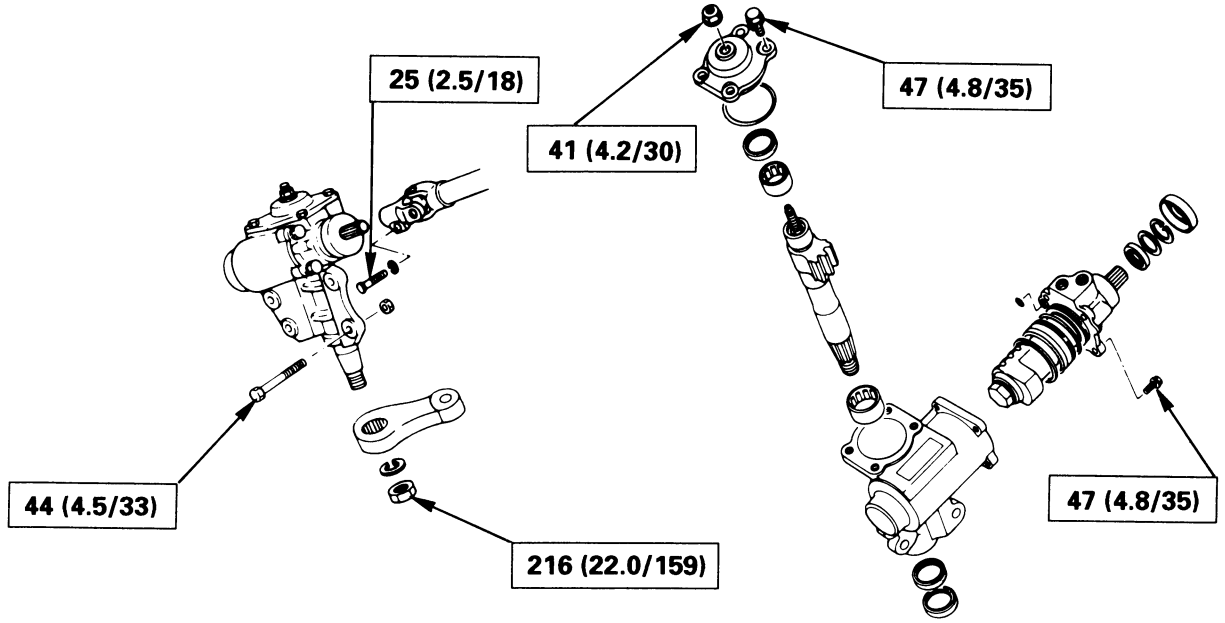

Steering Linkage

N·m (kg·m/lb·ft)

These illustrations are based on the LHD model.

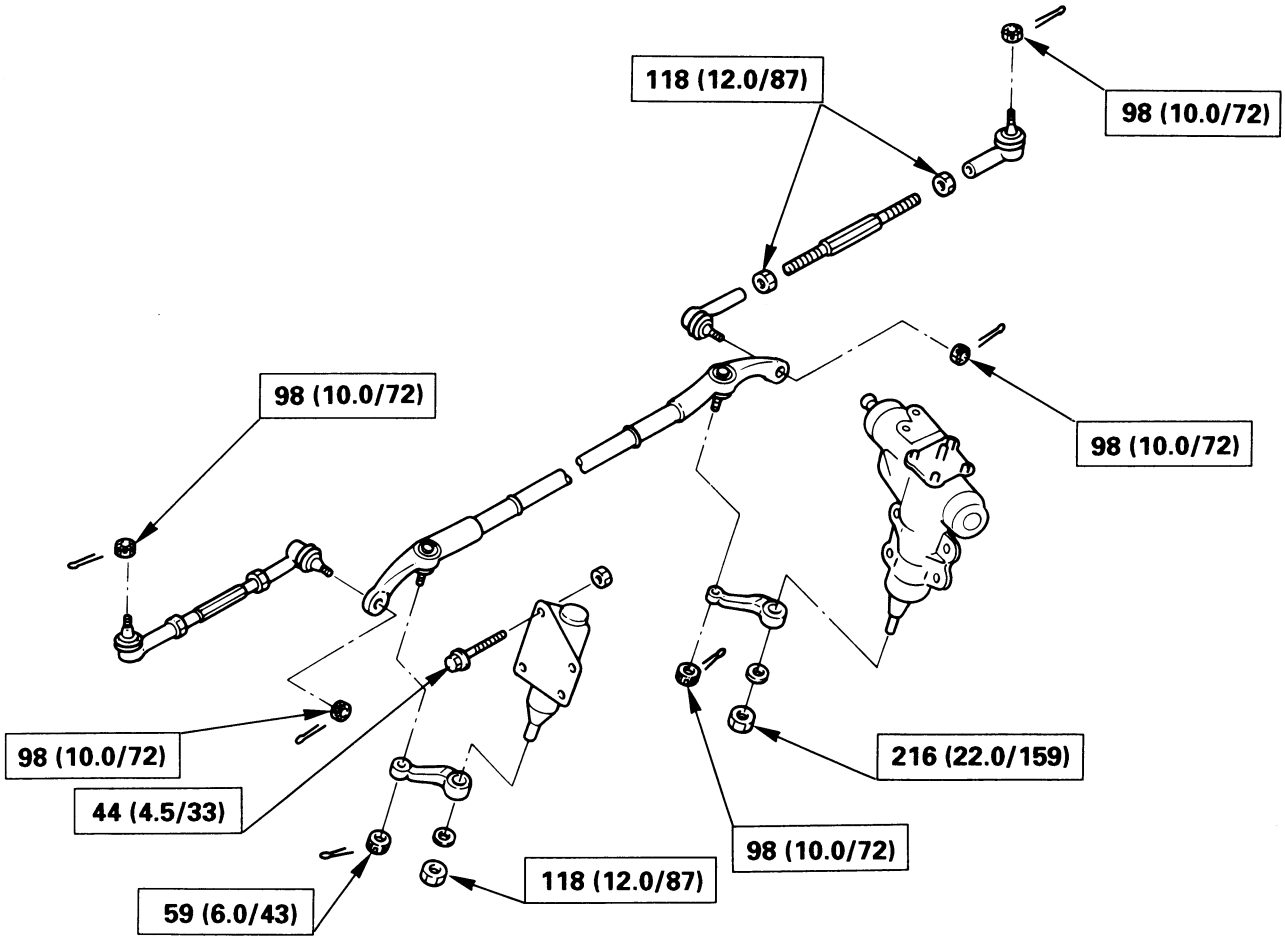

Steering Column

N·m (kg·m/lb·ft)

This illustration is based on the LHD model.

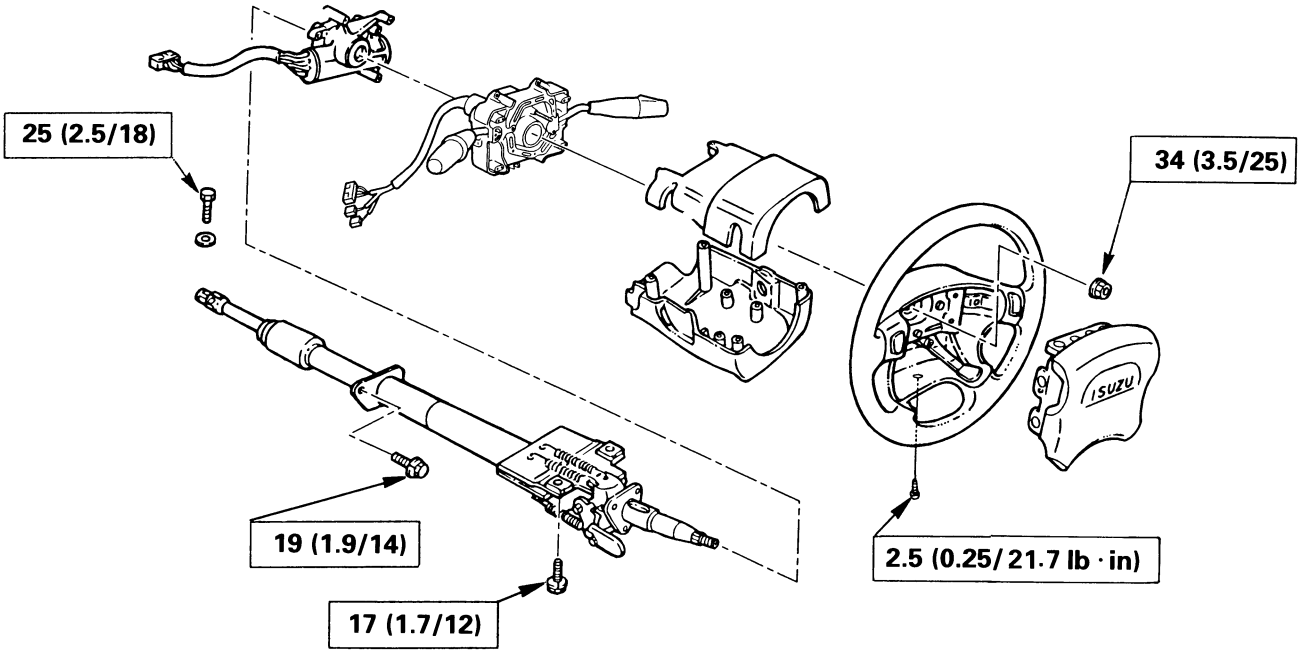

This illustration is based on the LHD model.

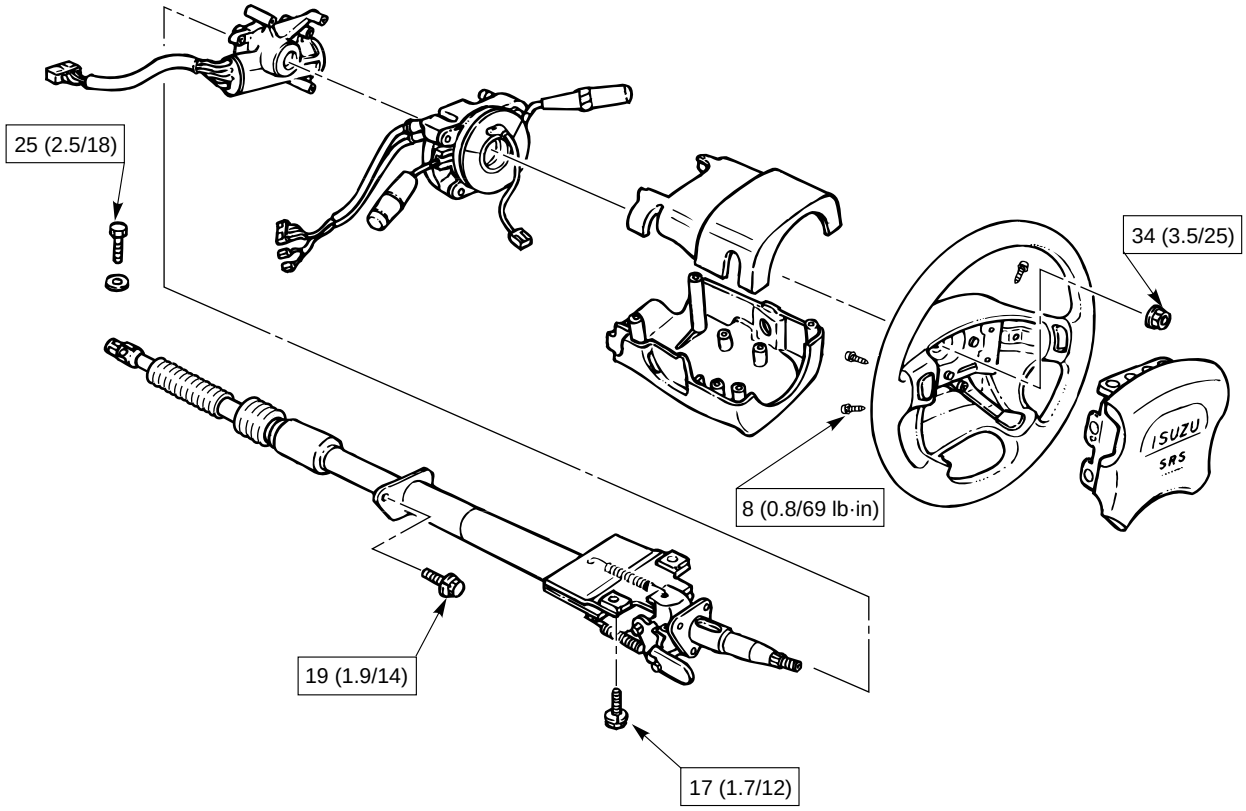

E03RW010

SPECIAL TOOLS

Illustration	Part No.	Part Name
	5–8840–0135–0 (J–29877–A)	Tester: Power steering
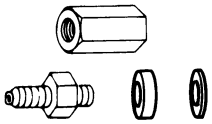	5–8840–2297–0 (J–39213)	Adapter: Power steering tester For 6VD1, 6VE1, 4JX1
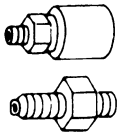	5–8840–0136–0 (J–33996)	Adapter: Power steering tester For 4JG2
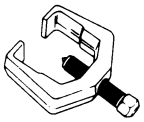	5–8840–2005–0 (J–29107)	Remover: Pitman arm
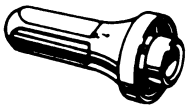	5–8522–0026–0 (J–26508)	Installer: Extension housing oil sael
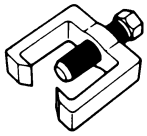	5–8840–2121–0 (J–36831)	Remover: Tie rod end
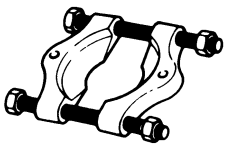	5–8840–0015–0 (J–22912–01)	Remover: Relay lever
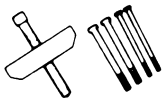	5–8521–0016–0 (J–29752)	Remover: Steering wheel

MEMO

SECTION 2A
FRONT END ALIGNMENT

CONTENTS

PAGE
General Description ..... 2A – 2
Definition of Terms ..... 2A – 2
On-Vehicle Service ..... 2A – 3
Inspection ..... 2A – 3
Trim Height Adjustment ..... 2A – 3
Caster Adjustment ..... 2A – 4
Camber Adjustment ..... 2A – 4
Toe-in Adjustment ..... 2A – 5
Maximum Steering Angle Adjustment ..... 2A – 5

GENERAL DESCRIPTION

"Front End Alignment" refers to the angular relationship between the front wheels, the front suspension attaching parts and the ground.
Proper front end alignment must be maintained in order to insure efficient steering, good directional stability and to prevent abnormal tire wear.
The most important factors of front end alignment are wheel toe-in, wheel camber and axle caster.

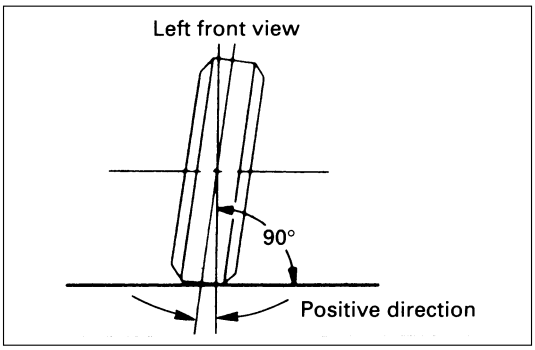

DEFINITION OF TERMS

CAMBER

Camber is the inward or outward tilting of the front wheels from the vertical. When the wheels tilt outward at the top, the camber is positive (+). When the wheels tilt inward at the top, the camber is negative (–). The amount of tilt measured in degrees from the vertical is called the camber angle.
If camber is extreme or unequal between the wheels, improper steering and excessive tire wear will result. Negative camber causes wear on the inside tire, while positive camber causes wear to the outside.

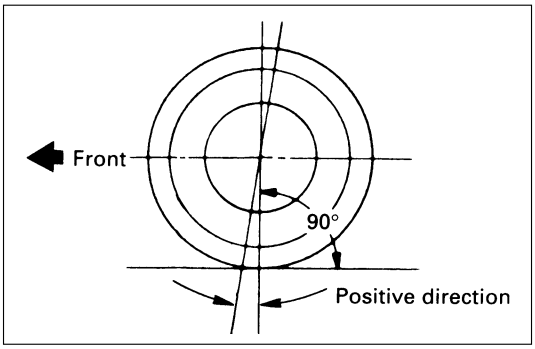

CASTER

Caster is the tilting of the wheel axis either forward or backward from the vertical (when viewed from the side of the vehicle). A backward tilt is positive(+) and a forward tilt is negative(–).
On the short and long arm type suspension you cannot see a caster angle without a special instrument, but if you look straight down from the top of the upper control arm to the ground, the ball joints do not line up (fore and aft) when a caster angle other than 0 degree is present. With a positive angle, the lower ball joint would be slightly ahead (toward the front of the vehicle) of the upper ball joint center line.

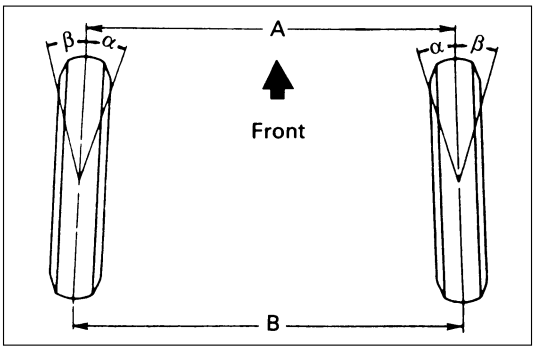

TOE-IN

Toe-in is the turning of the front wheels. The actual amount of toe-in is normally a fraction of a degree. Toe-in is measured from the center of the tire treads or from the inside of the tires. The purpose of toe-in is to insure parallel rolling of the front wheels and to offset any small deflections of the wheel support system which occurs when the vehicle is rolling forward. Incorrect toe-in results in excessive toe-in and unstable steering. Toe-in is the last alignment to be set in the front end alignment procedure.

ON-VEHICLE SERVICE

INSPECTION

Before making any adjustments affecting caster, camber or toe-in, the following front end inspection should be made.

INSPECT

1. Tires for proper inflation pressure. Refer to “Wheels and Tires” in section 3E.
2. Front wheel bearings for proper adjustment. Refer to “Front Wheel Drive” in section 4C.
3. Ball joints, tie rod ends and relay rods. If excessive looseness is noted, correct before adjusting. Refer to “Steering Linkage” in section 2A.
4. Wheel and tires for run-out. Refer to “Wheels and Tires”in section 3E.
5. Trim height. If not within specifications, the correction must be made before adjusting caster.
6. Steering gear for looseness at the frame.
7. Shock absorbers for leaks or any noticeable noise. Refer to “Front Suspension” in section 3C.
8. Control arms or stabilizer bar attachment for looseness. Refer to “Front Suspension“ in section 3C.
9. Alignment equipment. Follow the manufacturer’s instructions.
10. Level of the vehicle. The vehicle must be on a level surface.

TRIM HEIGHT ADJUSTMENT

Adjust the trim height by means of the adjusting bolt on the height control arms.

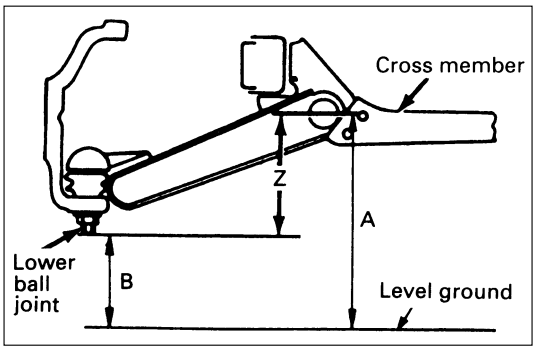

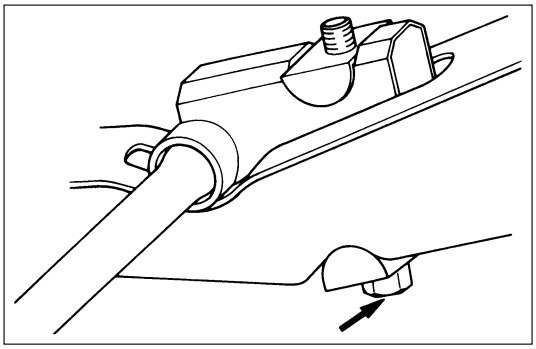

CAUTION:
When adjusting front end alignment, be sure to begin with trim height as trim height adjustment may change other adjusted alignments.

1. Check and adjust the tire inflation pressures.
2. Park the vehicle on a level ground and move the front of the vehicle up and down several times to settle the suspension.
3. Make necessary adjustment with the adjusting bolt on the height control arms.

Trim Height(Z)	mm(in)
139 ± 5 (5.47 ± 0.2)	

CASTER ADJUSTMENT

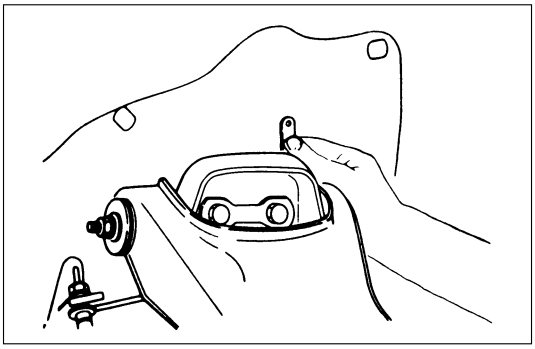

The caster angle can be adjusted by means of the caster shims installed between the chassis frame and fulcrum pins.

Caster Angle
1998 model

2° 10‘ ± 45‘	

2000 model and later

RH	2° 22‘ ± 45‘
LH	2° 10‘ ± 45‘

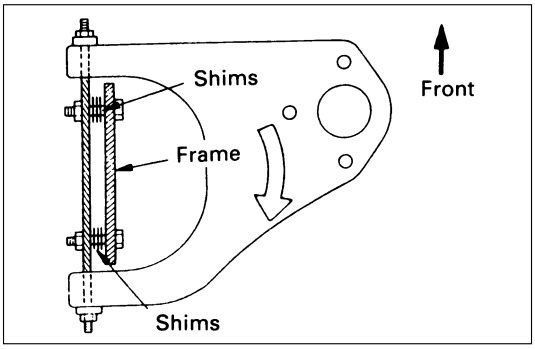

CAUTION:
Left and right side to be equal within 30’

NOTE:
Difference of the caster shim front/rear thickness shall be 3.2 mm (0.126 in) or less. Overall thickness of caster shim and camber shim shall be 10.8 mm (0.425 in) or less.

Tighten the fulcrum pin bolt to the specified torque.

Fulcrum Pin Bolt Torque	N·m (kg·m/lb·ft)
152 (15.5 / 112)	

CAMBER ADJUSTMENT

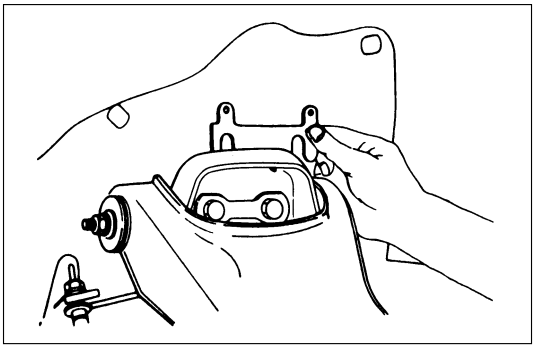

The camber angle can be adjusted by means of the camber shims installed in position between the chassis frame and fulcrum pins.

Wheel Alignment Specification

Camber Angle	0° ± 30‘
King pin inclination	12° 30‘ ± 30‘

CAUTION:
Left and right side to be equal within 30’

NOTE:
Overall thickness of caster shim and camber shim shall be 10.8 mm (0.425 in) or less.

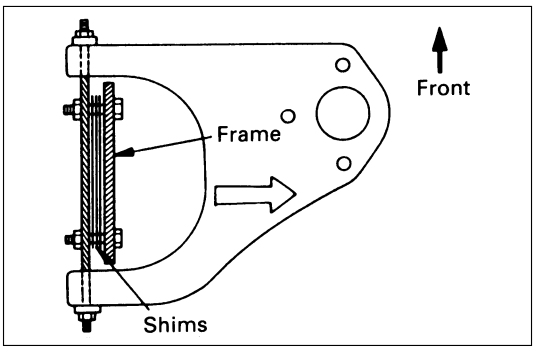

Tighten the fulcrum pin bolt to the specified torque.

Fulcrum Pin Bolt Torque	N·m (kg·m/lb·ft)
152 (15.5 / 112)	

	Position of shim		Camber angle	Caster angle
	Front side	Rear side		
Caster shim	When added	When removed	Decreases	Decreases
	When removed	When added	Increases	Increases
	———	When removed	Unchanged	Decreases
	———	When added	Unchanged	Increases
Camber shim	When added		Decreases	Unchanged
	When removed		Increases	Unchanged

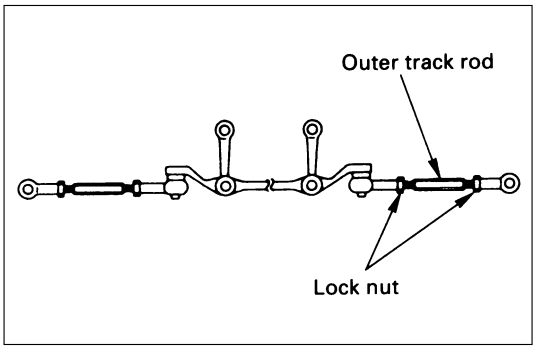

TOE-IN ADJUSTMENT

1. To adjust the toe-in angle, loosen the lock nuts on the outer track rods and turn the outer track rods. Turn both rods the same amount, to keep the steering wheel centered.

Toe-in	mm(in)
0 ± 2 (0 ± 0.08)	

2. Tighten the lock nut to the specified torque.

Lock Nut Torque	N·m (kg·m/lb·ft)
118 (12.0 / 87)	

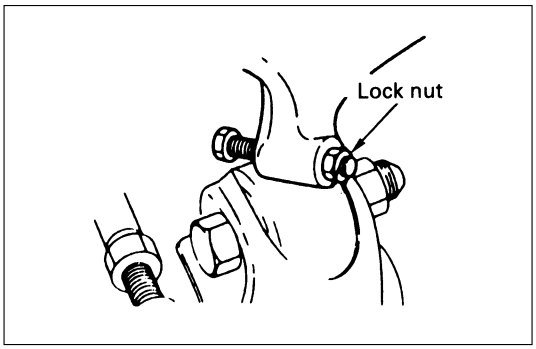

MAXIMUM STEERING ANGLE ADJUSTMENT

The maximum steering angle of the front wheels can be adjusted with the stopper bolts under the frame side members.

1. Position each front wheel on the turning radius gauge in a straight-ahead position.
2. Set the parking brake firmly.
3. Adjust the inside wheel angle of each side with the stopper bolts.

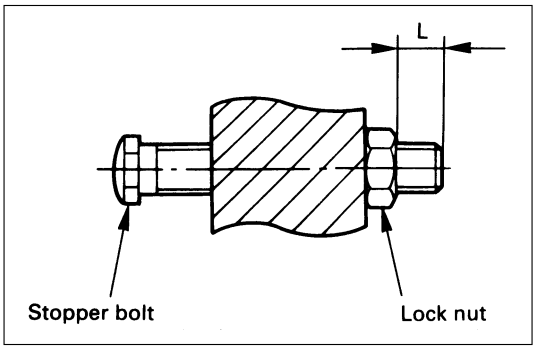

NOTE:
The maximum protruding length (L) of stopper bolt from the lock nut should be 10 mm (0.4 in) or less.

4. Similarly adjust the inside wheel angle of the other side with stopper bolt.

Maximum Steering Angle

Inside wheel	34° $^{+0°}_{-2°}$
Outside wheel	32°

NOTE:
Maximum steering angles should be set after adjusting front wheel alignment.

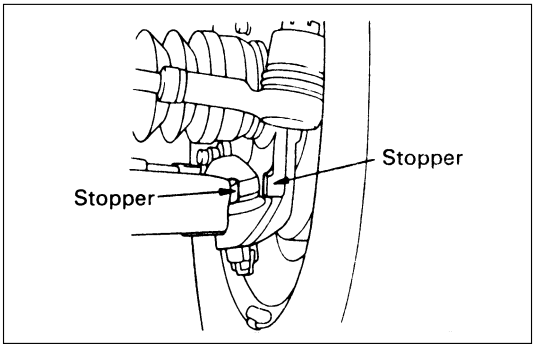

5. If the stop between the lower link end and the knuckle comes ahead of the stopper bolt, adjust the stopper bolt so that inner stopper bolt touches the drop arm (relay lever).

6. Tighten the lock nut to the specified torque.

Lock Nut Torque	N·m (kg·m/lb·ft)
23 (2.3 / 17)	

SECTION 2A
POWER STEERING

CONTENTS

PAGE

General Description ..... 2A – 8
Power Steering Gear ..... 2A – 9
Hydraulic Pump ..... 2A – 9
Pressure Switch (6VD1, 6VE1 Engine) ..... 2A – 9
Power Steering System Test ..... 2A – 10
On-Vehicle Service ..... 2A – 12
Bleeding The Power Steering System ..... 2A – 12
Flushing The Power Steering System ..... 2A – 12
Steering Gear ..... 2A – 13
Power Steering Pump (6VD1, 6VE1 Engine Models) ..... 2A – 16
Power Steering Pump (4JG2 Engine Model) ..... 2A – 18
Power Steering Pump (4JX1 Engine Model) ..... 2A – 20
Unit Repair ..... 2A – 22
Steering Gear ..... 2A – 22
Power Steering Pump (6VD1, 6VE1 Engine Models) ..... 2A – 28
Power Steering Pump (4JG2 Engine Model) ..... 2A – 32
Power Steering Pump (4JX1 Engine Model) ..... 2A – 36

GENERAL DESCRIPTION

This illustration is based on the LHD model.

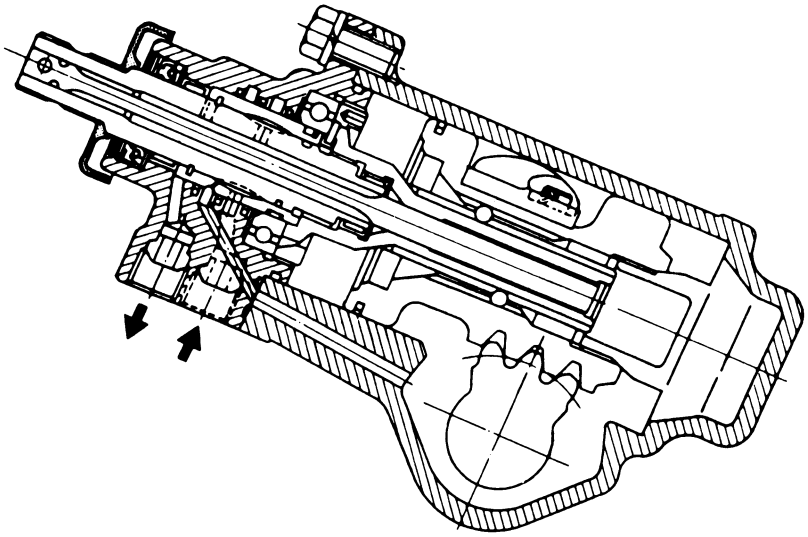

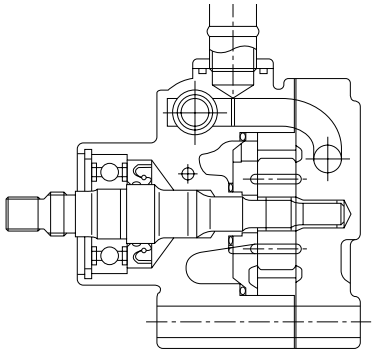

6VD1, 6VE1 Engine Models

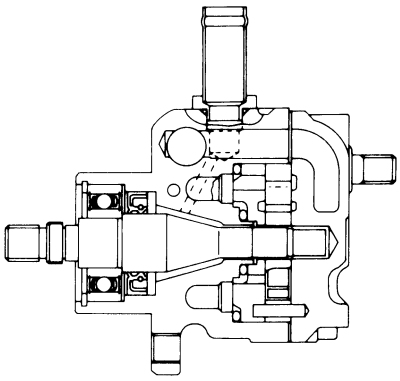

4JG2 Engine Model

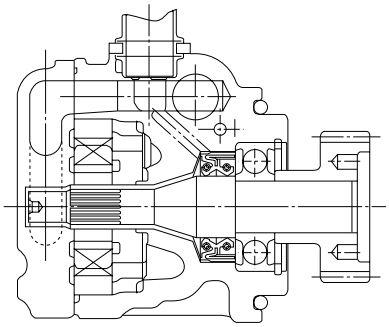

4JX1 Engine Model

The hydraulic power steering system consists of a pump, an oil reservoir, a steering gear, a pressure hose and a return hose.

POWER STEERING GEAR

The power steering gear has a recirculating ball system which acts as a rolling thread between the worm shaft and the rack piston. When the worm shaft is turned right, the rack piston moves up in gear. Turning the worm shaft left moves the rack piston down in gear. The rack piston teeth mesh with the sector, which is part of the sector shaft. Turning the worm shaft turns the sector shaft, which turns the wheels through the steering linkage.

The control valve in the steering gear directs the power steering fluid to either side of the rack piston. The rack piston converts the hydraulic pressure into a mechanical force. If the steering system becomes damaged and loses hydraulic pressure, the vehicle can be controlled manually.

HYDRAULIC PUMP

The hydraulic pump is vane-type design.

There are two bore openings at the rear of the pump housing. The smaller opening contains the pressure line union and flow control valve.

PRESSURE SWITCH (6VD1, 6VE1 Engine)

When hydraulic pressure reaches 3650 ± 350 kPa (530 ± 50 PSI), the pressure switch closes causing ECM to actuate the idle air control valve to prevent the overload-induced engine speed down. The switch opens when hydraulic pressure drops to 3150 ± 350 kPa (460 ± 50PSI).

POWER STEERING SYSTEM TEST

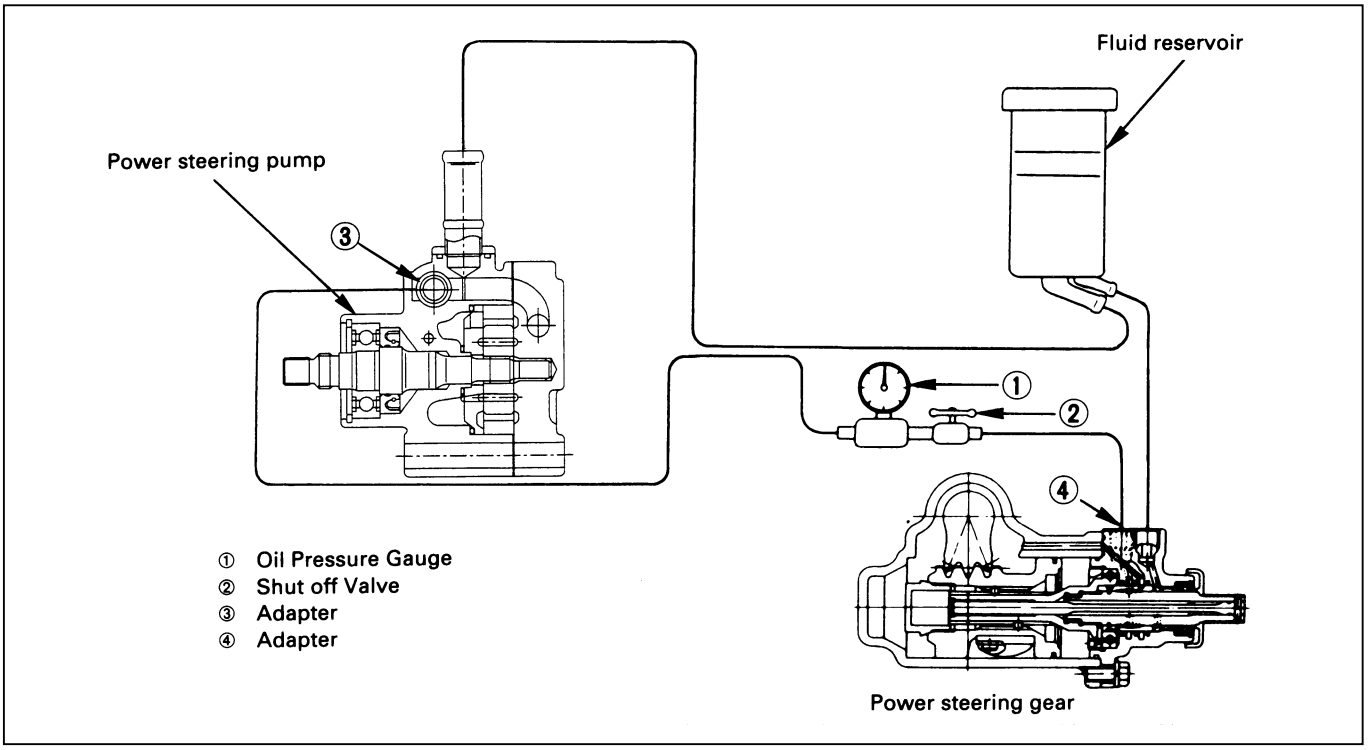

TEST PROCEDURE

Test of fluid pressure in the power steering system is performed to determine whether or not the oil pump and power steering unit are functioning normally.
The power steering system test is method used to identify and isolate hydraulic circuit difficulties.
Prior to performing this test, the following inspections and corrections, if necessary, must be made.

INSPECT

- Pump reservoir for proper fluid level.
- Pump belt for proper tension.
- Pump driver pulley condition.

1. Place a container under the pump to catch the fluid when disconnecting or connecting the hoses.
2. With the engine NOT running , disconnect the pressure hose at the power steering pump and install Power Steering tester.
   The gage must be between the shutoff valve and pump. Open the shutoff valve.

   Tester: 5-8840-0135-0 (J-29877-A)
   Adapter: 5-8840-2297-0 (For 6VD1, 6VE1, 4JX1)
   5-8840-0136-0 (For 4JG2)
3. Check the fluid level. Fill the reservoir with power steering fluid, to the “Full” mark. Start the engine then turn the steering wheel and momentarily hold it against a stop. Turn off and check the connections at tester for leakage.
4. Bleed the system. Refer to “Bleeding the Power Steering System” in this section.
5. Start the engine and check the pump fluid level. Add power steering fluid if required. When the engine is at normal operating temperature, increase engine speed to 1500 rpm.

CAUTION:
Do not leave shutoff valve fully closed for more than 5 seconds, as the pump could become damaged internally.

6. Fully close the shutoff valve. Record the highest pressures.
   - If the pressure recorded is within 9300-9800 kPa (1350-1420 psi) For 6VD1, 6VE1, and 9800-10300 kPa (100-105 kg/cm^2 / 1420-1490 psi) For 4JG2, 4JX1, the pump is functioning within its specifications.
   - If the pressure recorded is higher than 9800 kPa (1420 psi) For 6VD1, 6VE1, and 10300 kPa (105 kg/cm^2 / 1490 psi) For 4JG2, 4JX1, the valve in the pump is defective.

- If the pressure recorded is lower than 9300 kPa (1350 psi) For 6VD1, 6VE1, and 9800 kPa (100 kg/cm^2 / 1420 psi) For 4JG2, 4JX1, the valve or the rotating group in the pump is defective.

7. If the pump pressure are within specifications, leave the valve open and turn (or have someone else turn) the steering wheel fully in both directions. Record the highest pressures and compare with the maximum pump pressure recorded in step 6. If this pressure cannot be built in either (or one) side of the power steering gear, the power steering gear is leaking internally and must be disassembled and repaired.
8. Shut the engine off, remove the testing gage, reconnect the pressure hose, check the fluid level and make the needed repairs.
9. If the problem still exists, the steering and front suspension must be thoroughly examined.

ON-VEHICLE SERVICE

BLEEDING THE POWER STEERING SYSTEM

When a power steering pump or gear has been installed, or an oil line has been disconnected, the air that has entered the system must be bled out before the vehicle is operated. If air is allowed to remain in the power steering fluid system, noisy and unsatisfactory operation of the system may result.

BLEEDING PROCEDURE

When bleeding the system, and any time fluid is added to the power steering system, be sure to use only power steering fluid as specified in "MAINTENANCE AND LUBRICATION" in section 0B.

1. Fill the pump fluid reservoir to the proper level and let the fluid settle for at least two minutes.
2. Start the engine and let it run for a few seconds.
   Do not turn the steering wheel. Then turn the engine off.
3. Add fluid if necessary.
4. Repeat the above procedure until the fluid level remains constant after running the engine.
5. Raise the front end of the vehicle so that the wheels are off the ground.
6. Start the engine. Slowly turn the steering wheel right and left, lightly contacting the wheel stops.
7. Add power steering fluid if necessary.
8. Bring down the vehicle, set the steering wheel at the straight forward position after turning it to its full steer positions 2 or 3 times, and stop the engine.
9. Stop the engine. Check the fluid level and refill as required.
10. If the fluid is extremely foamy, allow the vehicle to stand a few minutes and repeat the above procedure.

INSPECT

- Belt for tightness.
- Pulley for looseness or damage. The pulley should not wobble with the engine running.
- Make sure that hose and pipes are properly fitted.
- Fluid level and fill to the proper level.

FLUSHING THE POWER STEERING SYSTEM

1. Raise the front end of the vehicle off the ground until the wheels are free to turn.
2. Remove the fluid return line at the reservoir inlet connector and plug the connector. Position the line toward a large container to catch the draining fluid.
3. While running the engine at idle, fill the reservoir with new power steering fluid. Turn the steering wheel in both directions. Do not contact wheel stops or hold the wheel in a corner, or fluid will stop and the pump will be in pressure relief mode. A sudden overflow from the reservoir may develop if the wheel is held at a stop.
4. While refilling the reservoir, check the draining fluid for contamination. If foreign material is still evident, replace all lines, disassemble and clean or replace the power steering system components. Do not re-use any drained power steering fluid.
5. Install all the lines and hoses. Fill the system with new power steering fluid and bleed the system as described in "Bleeding The Power Steering System". Operate the engine for about 15 minutes.

STEERING GEAR

These steps are based on the LHD model.

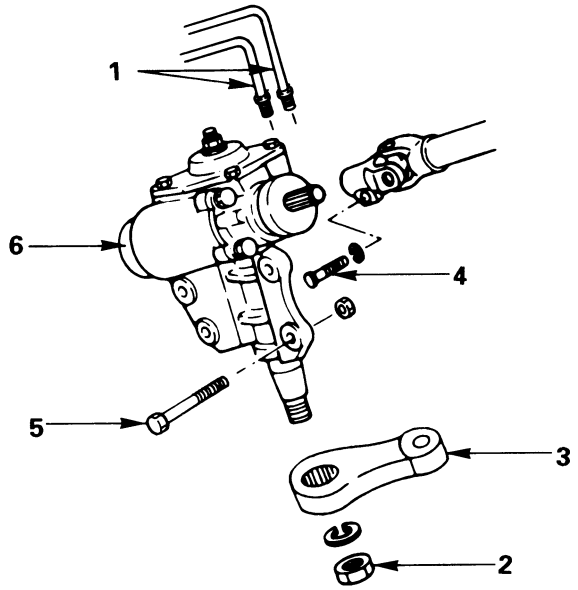

Removal Steps

1. Pipe
2. Nut
3. Pitman arm
4. Universal joint bolt
5. Gear box mounting bolt and nut
6. Gear box

Installation Steps

6. Gear box
5. Gear box mounting bolt and nut
4. Universal joint bolt
3. Pitman arm
2. Nut
1. Pipe

REMOVAL

Preparation:

1) Remove the stone guard.
2) Remove the lower fan shroud. Refer to “Engine cooling” in section 6B1.
3) Disconnect stabilizer bar at the stabilizer links. Loosen stabilizer bracket fixing nuts.

1. Pipe

2. Nut

3. Pitman Arm

Pitman arm remover: 5-8840-2005-0 (J-29107)

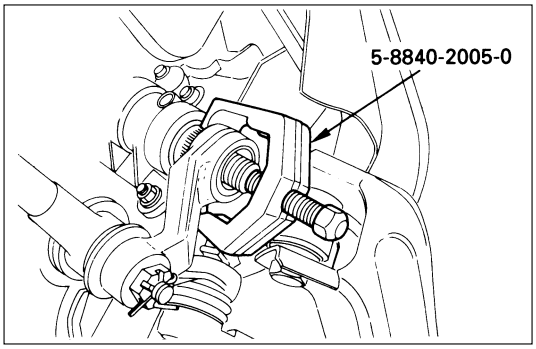

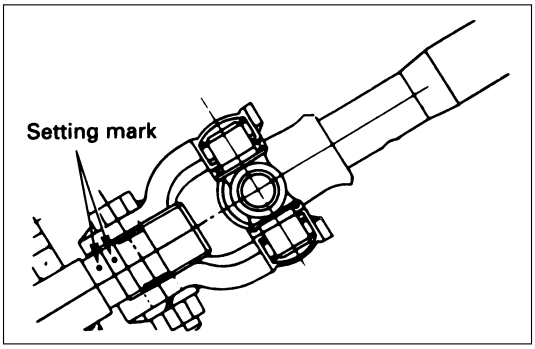

4. Universal Joint Bolt

Make a setting mark across the coupling flange and worm shaft to ensure reassembly of the parts in the original position.

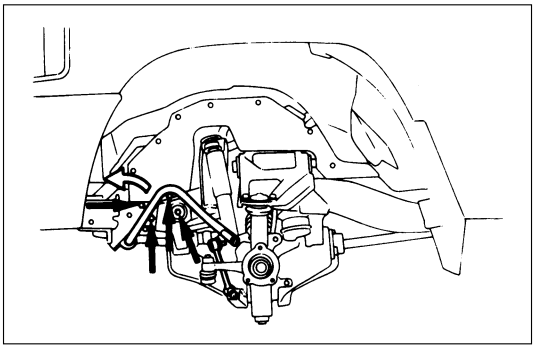

5. Gear Box Mounting Bolt and Nut

Push the stabilizer bar aside and remove the bolts and nuts.

6. Gear Box

INSTALLATION

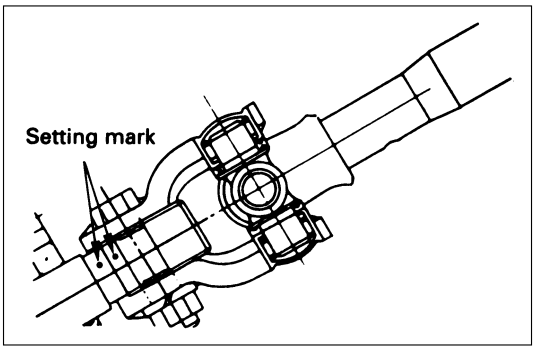

6. Gear Box

Align the setting marks made at removal.

5. Gear Box Mounting Bolt and Nut

Gear Box Mounting

Bolt and Nut Torque	N·m (kg·m/lb·ft)
44 (4.5 / 33)	

4. Universal Joint Bolt

Coupling Clamp Bolt Torque	N·m (kg·m/lb·ft)
25 (2.5 / 18)	

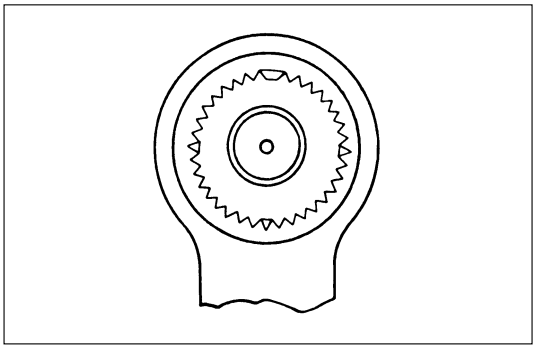

3. Pitman Arm

Align the notched tooth.

2 Nut

Pitman Arm Nut Torque	N·m (kg·m/lb·ft)
216 (22.0 / 159)	

1. Pipe

Pipe Nut Torque	N·m (kg·m/lb·ft)
44 (4.5 / 33)	

POWER STEERING PUMP (6VD1, 6VE1 Engine Models)

436RW006

Removal Steps

1. Drive belt
2. Pulley
3. Hose, suction
4. Hose, flexible
5. Bolt
6. Pump assembly

Installation Steps

6. Pump assembly
5. Bolt
4. Hose, flexible
3. Hose, suction
2. Pulley
1. Drive belt

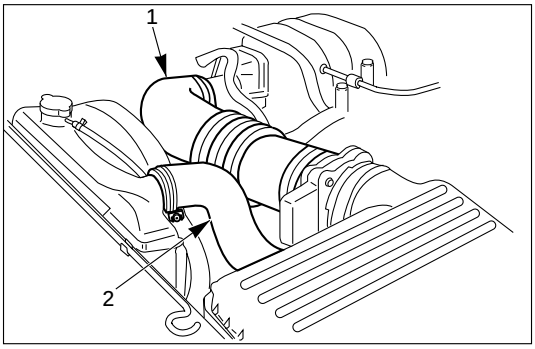

436RW005

REMOVAL

Preparation:

- Drain the engine coolant.
- Place a drain pan below the pump.
- Remove the air cleaner duct (1) and the radiator upper hose (2).

1. **Drive Belt**
2. **Pulley**
3. **Hose, Suction**
4. **Hose, Flexible**
5. **Bolt**
6. **Pump Assembly**

CAUTION:
When removing the pump assembly, be careful not to damage the wiring harness under the pump housing.

INSTALLATION

6. **Pump Assembly**

   Connect the harness under the pump housing.

5. **Bolt**

Pump Bolt Torque	N·m(kg·m/lb·ft)
46 (4.7 / 34)	

4. **Hose, Flexible**

Eye Bolt Torque	N·m (kg·m/lb·ft)
54 (5.5 / 40)	

3. **Hose, Suction**
2. **Pulley**

   Install the pulley onto the power steering pump and tighten the nut to specified torque.

Pulley Nut Torque	N·m (kg·m/lb·ft)
78 (8.0 / 58)	

1. **Drive Belt**
   - Install the air cleaner duct and the radiator upper hose.
   - Refill the engine coolant.
   - Fill and bleed the system. Refer to “Bleeding the Power Steering System” in this section.

POWER STEERING PUMP (4JG2 Engine Model)

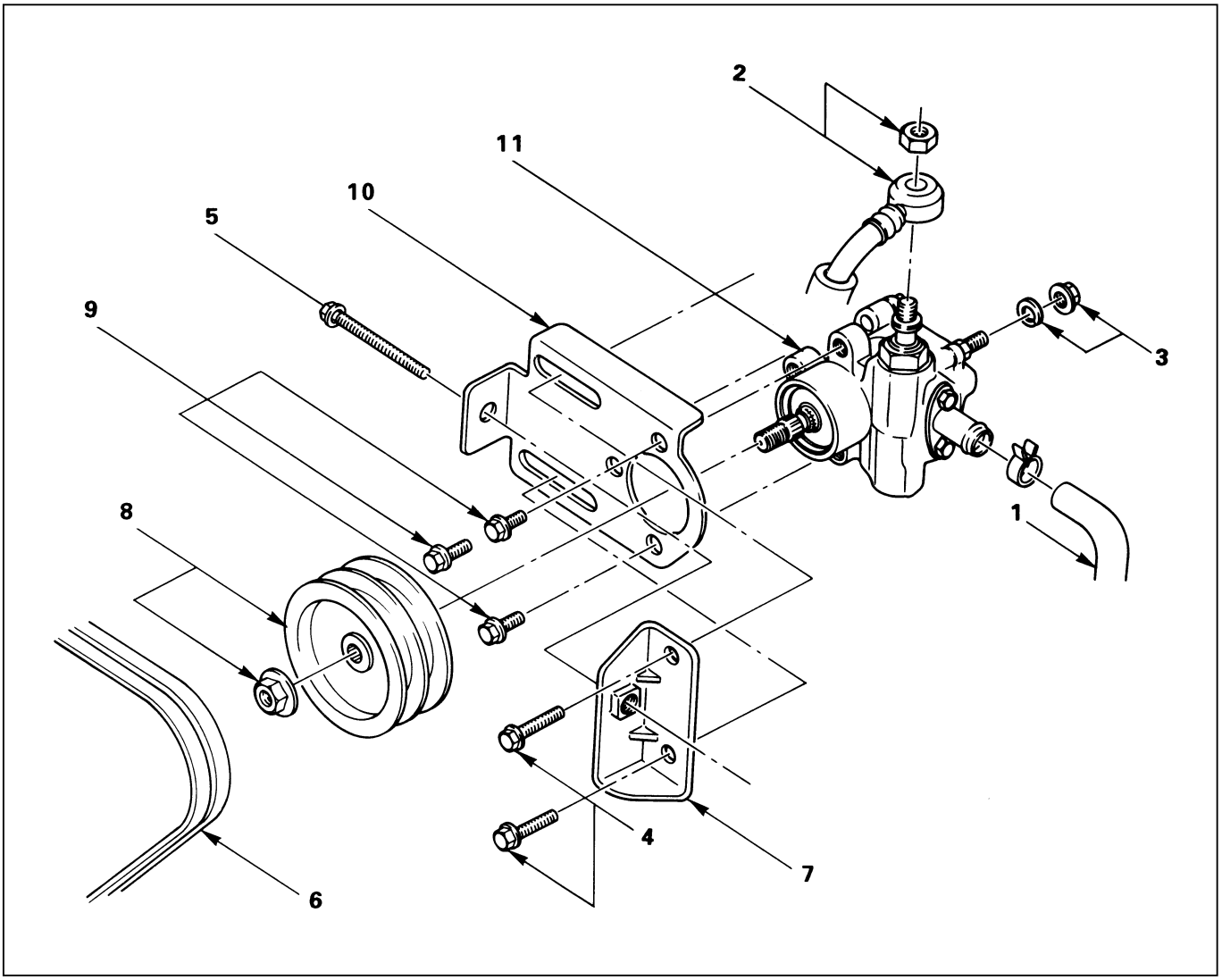

Removal Steps

1. Hose, suction
2. Hose, flexible
3. Adjust nut
4. Bolt
5. Adjust bolt
6. Belt
7. Bracket
8. Pulley
9. Bolt
10. Bracket
11. Pump assembly

Installation Steps

11. Pump assembly
10. Bracket
9. Bolt
8. Pulley
7. Bracket
6. Belt
5. Adjust bolt
4. Bolt
3. Adjust nut
2. Hose, flexible
1. Hose, suction

REMOVAL

Preparation:

- Place a drain pan below the pump.

1. **Hose, Suction**
2. **Hose, Flexible**
3. **Adjust Nut**
4. **Bolt**
5. **Adjust Bolt**
6. **Belt**
7. **Bracket**
8. **Pulley**
9. **Bolt**
10. **Bracket**
11. **Pump Assembly**

INSTALLATION

11. **Pump Assembly**
10. **Bracket**
9. **Bolt**

Pump Bolt Torque	N·m (kg·m/lb·ft)
37 (3.8 / 27)	

8. **Pulley**

Pulley Nut Torque	N·m (kg·m/lb·ft)
78 (8.0 / 58)	

7. **Bracket**
6. **Belt**
5. **Adjust Bolt**
4. **Bolt**
   After adjusting drive belt tension, tighten bolt to specified toque.

Bracket Bolt Torque	N·m (kg·m/lb·ft)
37 (3.8 / 27)	

3. **Adjust Nut**
   After adjusting drive belt tension, tighten bolt to specified toque.

Adjust Nut Torque	N·m (kg·m/lb·ft)
37 (3.8 / 27)	

2. **Hose, Flexible**

Hose Nut Torque	N·m (kg·m/lb·ft)
20 (2.0 / 14)	

1. **Hose, Suction**
   Fill and bleed the system. Refer to “Bleeding the Power Steering System” in this section.

POWER STEERING PUMP (4JX1 Engine Model)

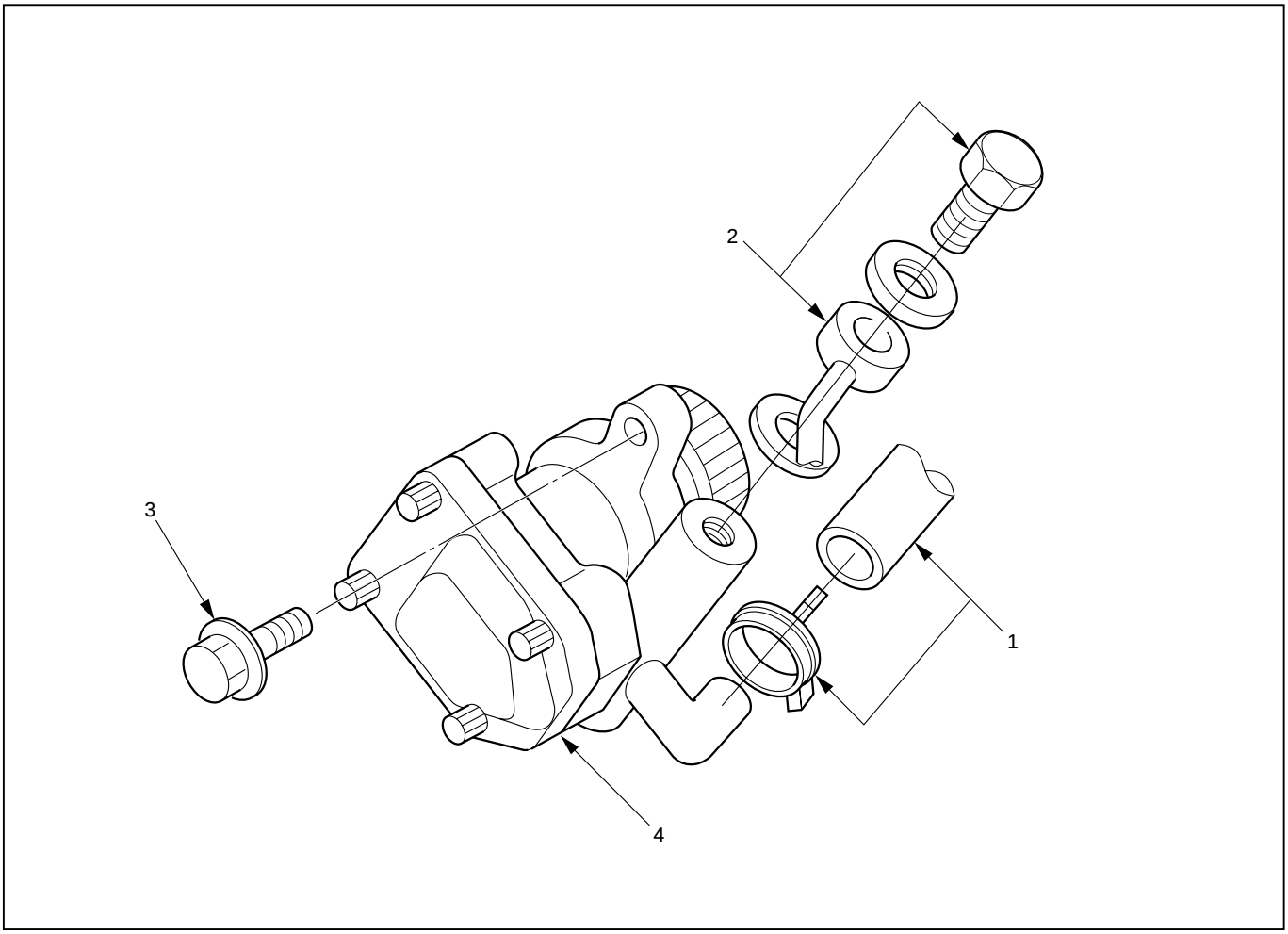

436RW009

Removal Steps

1. Hose, suction
2. Hose, flexible
3. Bolt
4. Pump assembly

Installation Steps

4. Pump assembly
3. Bolt
2. Hose, flexible
1. Hose, suction

REMOVAL

Preparation:

- Place a drain pan below the pump.

1. **Hose, Suction**
2. **Hose, Flexible**
3. **Bolt**
4. **Pump Assembly**

INSTALLATION

4. **Pump Assembly**
3. **Bolt**

Bolt Torque	N·m (kg·m/lb·ft)
22 (2.2 / 16)	

2. **Hose, Flexible**

Hose, Bolt Torque	N·m (kg·m/lb·ft)
54 (5.5 / 40)	

1. **Hose, Suction**
   Fill and bleed the system. Refer to “Bleeding the Power Steering System” in this section.

UNIT REPAIR

STEERING GEAR

These steps are based on the LHD model.

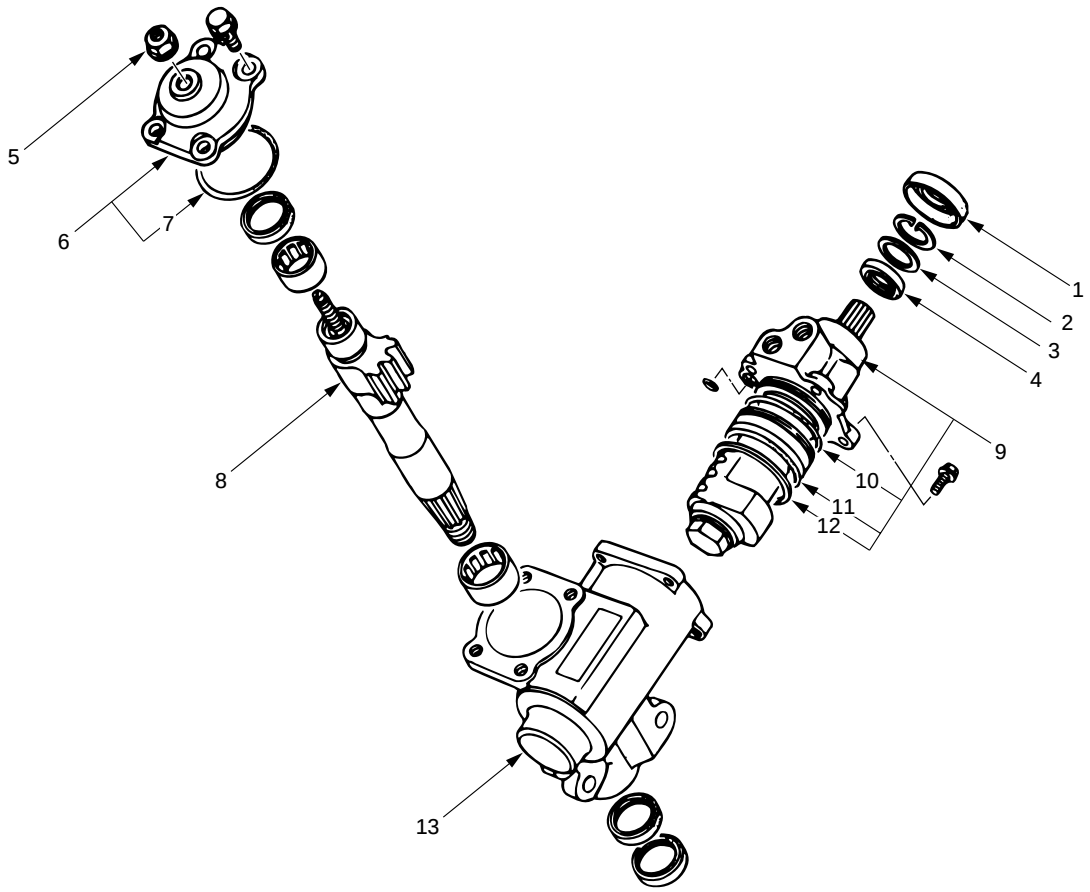

440RW004

Disassembly Steps

1. Dust cover
2. Retaining ring
3. Back up ring
4. Oil seal
5. Lock nut
6. Top cover assembly
7. O-ring
8. Sector shaft
9. Ball-nut and valve housing assembly
10. O-ring
11. Seal ring
12. O-ring
13. Gear box

Reassembly Steps

13. Gear box
12. O-ring
11. Seal ring
10. O-ring
9. Ball-nut and valve housing assembly
8. Sector shaft
7. O-ring
6. Top cover assembly
5. Lock nut
4. Oil seal
3. Back up ring
2. Retaining ring
1. Dust cover

DISASSEMBLY

CAUTION:
Do not clamp the steering gear assembly in a vise by the power cylinder housing.

1. **Dust Cover**
2. **Retaining Ring**
3. **Back up RIng**
4. **Oil Seal**
   1) Clean the faces of the extended stub shaft.
   2) Plug the hose fitting on the inlet side.
   3) Remove the oil seal by blowing compressed air through the hole in the outlet side.

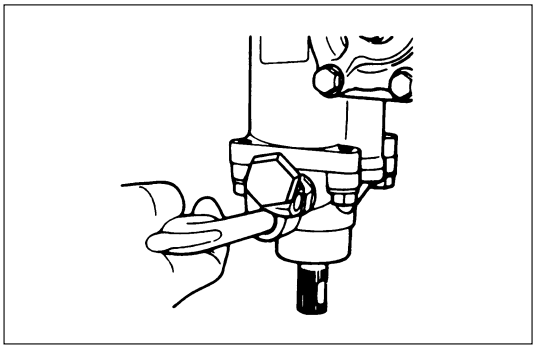

5. **Lock Nut**
   Remove the adjusting screw lock nut and turn the adjusting screw counterclockwise to remove the preload between the sector gear and the rack piston, then remove the top cover bolts.

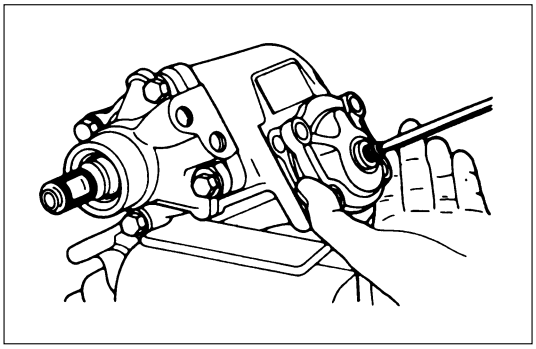

6. **Top Cover Assembly**
   Holding the top cover stationary, turn the adjusting screw clockwise to raise and free to cover, then remove the cover.

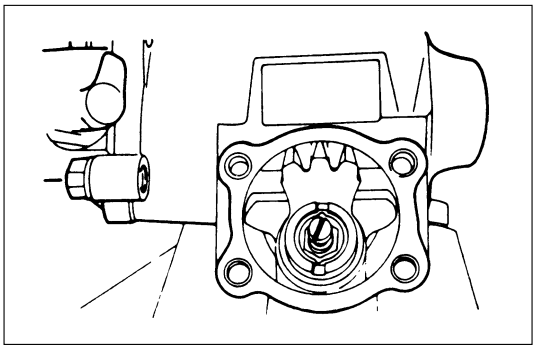

7. **O-ring**
8. **Sector Shaft**
   Bring the stub shaft into straight-ahead position. Do not force the sector shaft off the gear box with a hammer or other impact tools.

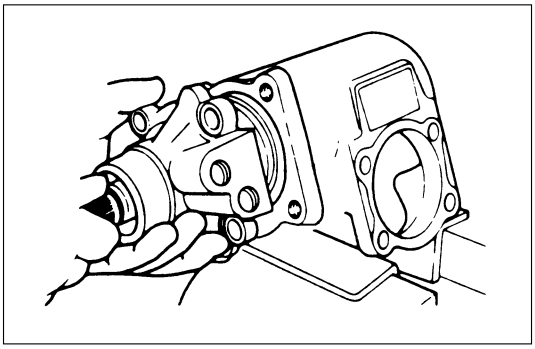

9. Ball-nut and Valve Housing Assembly
It is strongly advisable to always keep the ball nut and valve housing assembly in a horizontal position, or the rack piston will fall off onto the end of the worm, causing the rack piston to slip out of the worm shaft and the balls to fall out.

10. O-ring
11. Seal Ring
12. O-ring
13. Gear Box

INSPECTION AND REPAIR

Inspect the following parts for wear, damage or any other abnormal conditions.

- Bearing
- Ball-nut and valve housing
- Sector shaft
- Top cover
- Gear box
- Needle bearing
- Dust seal
- Seal ring
- Gasket

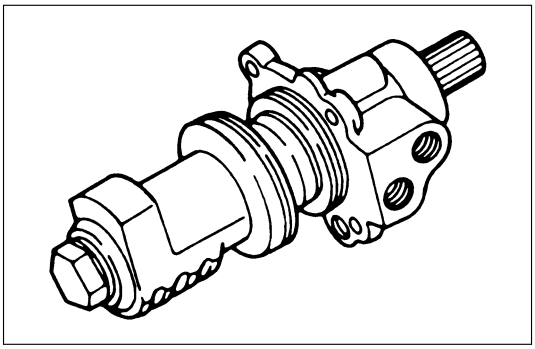

Ball-nut Rotation

Hold the ball nut and valve housing assembly vertically and see if the ball-nut lower by turning smoothly. If the ball-nut does not lower smoothly, check the worm shaft for bending and foreign matter.

NOTE:
When testing the ball nut and valve housing assembly, do not let it travel all the way to the end of worm shaft, or damage to the ball tubes will result.

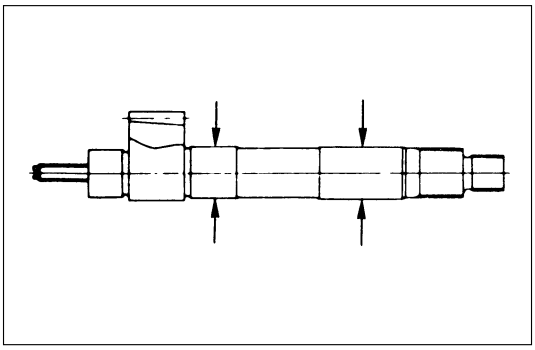

Check sector shaft outside diameter.

Sector Shaft Outside Diameter mm(in)

Standard	Limit
32.0 (1.260)	31.7 (1.248)

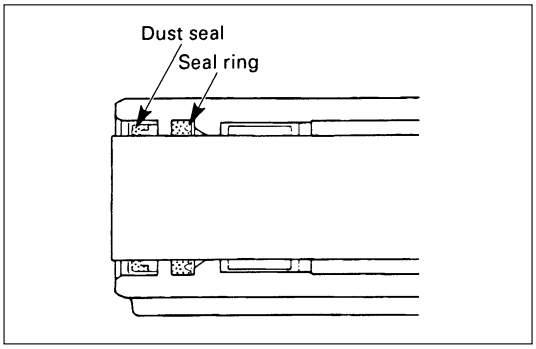

Seal Ring Setting

Note the setting direction. Always install a new part.

Apply a thin coat of power steering fluid to lip of each part.

Dust Seal Setting

Note the setting direction. Always install a new part.

Apply a thin coat of power steering fluid to lip of each part.

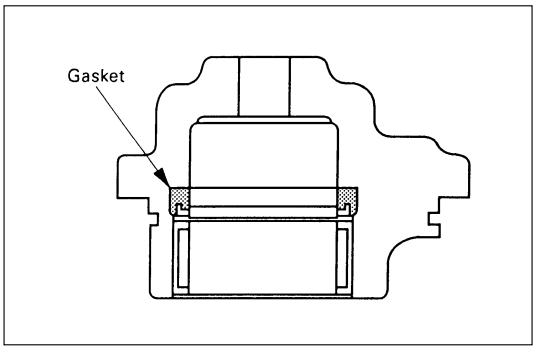

Gasket Setting

Note the setting direction. Always install a new part.

Apply a thin coat of power steering fluid to lip of each part.

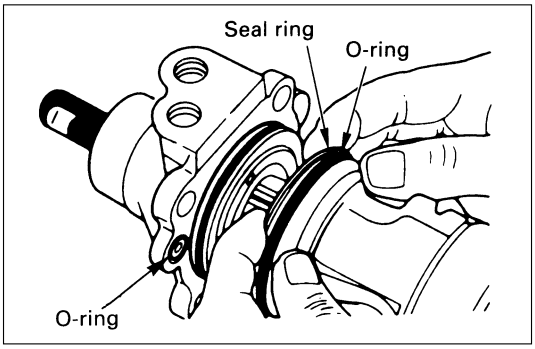

REASSEMBLY

13. Gear Box

12. O-ring
Apply a thin coat of grease.

11. Seal Ring
Apply a thin coat of grease.

10. O-ring
Apply a thin coat of grease.

9. Ball-nut and Valve Housing Assembly

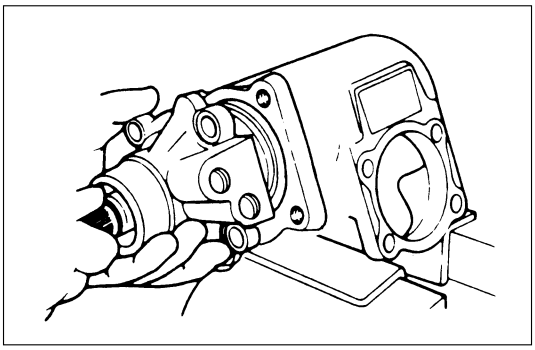

1) It is strongly advisable to always keep the ball screw and valve housing assembly in a horizontal position (avoid holding it vertically), or the rack piston will fall off onto the end of the worm, causing the rack piston to slip out of the worm shaft and ball to fall out.
2) Be careful not to drop the O-ring into the valve housing.
3) Tighten the valve housing bolts to the specified torque.

Valve Housing Bolt Torque	N·m (kg·m/lb·ft)
47 (4.8 / 35)	

8. Sector Shaft

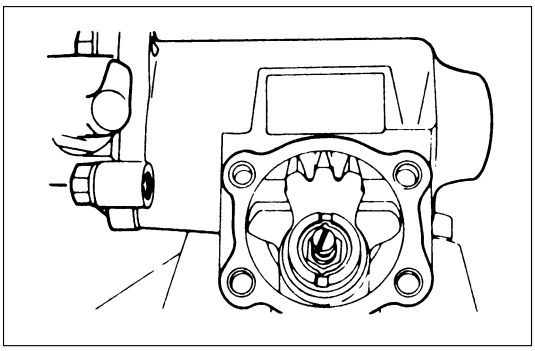

1) Tape the sector shaft serrations to protect the seal ring from damage.
2) Align the center tooth of ball nut with that of the sector shaft.

7. **O-ring**

6. **Top Cover Assembly**

Top Cover Bolt Torque	N·m (kg·m/lb·ft)
47 (4.8 / 35)	

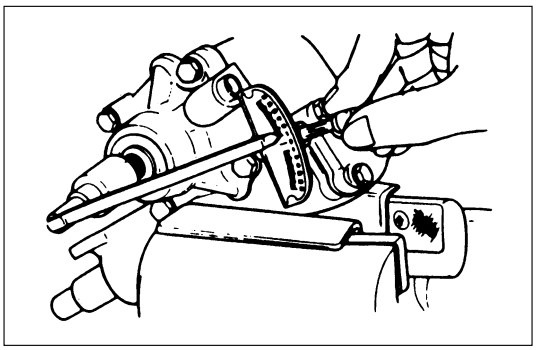

5. **Lock Nut**
Adjust the backlash between the worm gear and the ball nut.

1) With the worm gear rotating, set it to the straight ahead position.
2) Set the worm shaft preload to below 1N·m (10kg·cm / 9 lb·in) with the sector shaft adjusting screw.
3) Measure the worm shaft preload with the worm gear turned 450° both to the right and to the left. The worm gear preload in these positions should be 0.4 - 0.6 N·m (4 - 6 kg·cm / 3.5 - 5.2 lb·in) lower than in the straight ahead position.
4) Lock the sector shaft adjusting screw with the lock nut.

Lock Nut Torque	N·m (kg·m/lb·ft)
41 (4.2 / 30)	

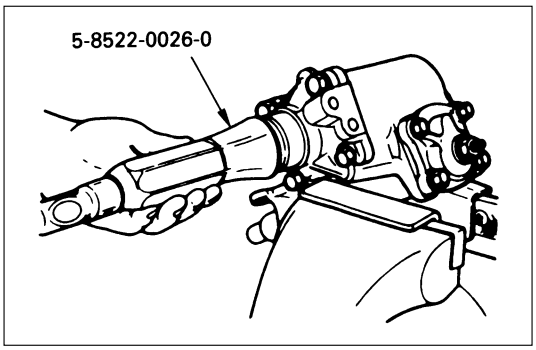

4. **Oil Seal**
Installer: 5-8522-0026-0 (J-26508)

3. **Back up Ring**
Position the chamfered face (outer circumference) towards the oil seal.

2. **Retaining Ring**
position the chamfered face (outer circumference) toward the oil seal.

1. **Dust Cover**

POWER STEERING PUMP (6VD1, 6VE1 Engine Models)

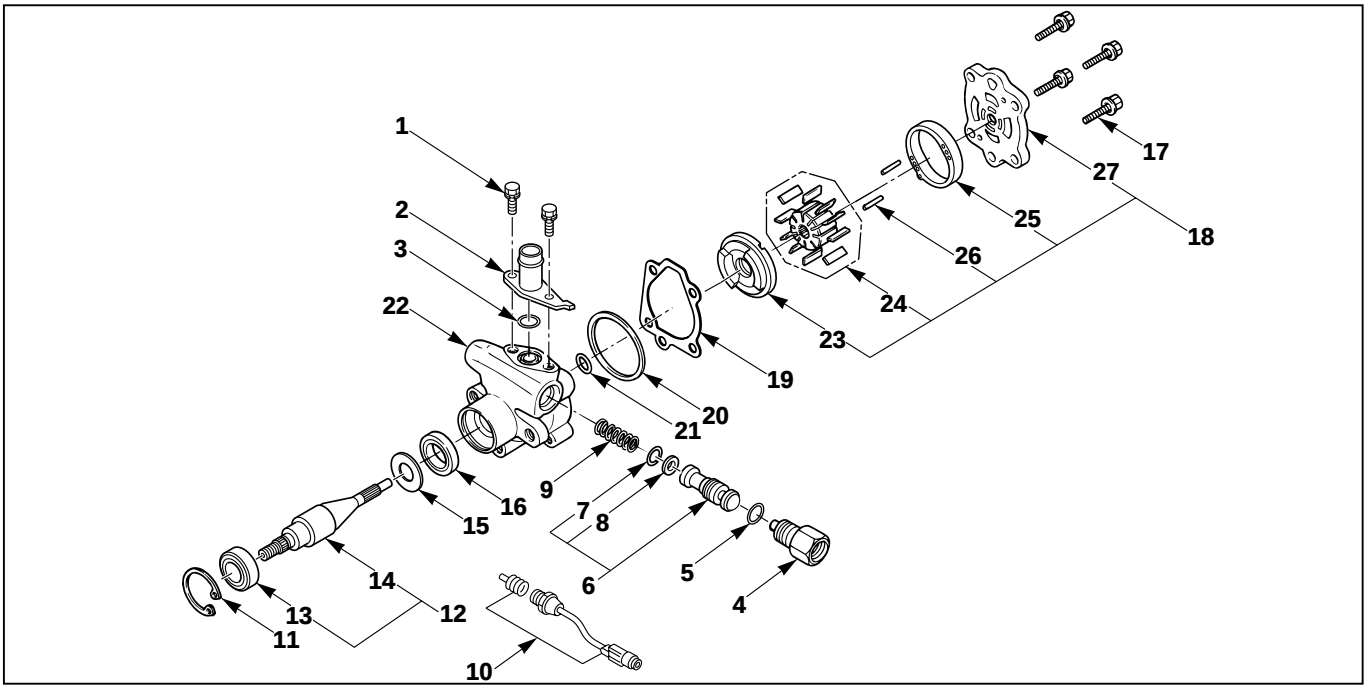

412RW055

Disassembly Steps

1. Bolt
2. Pipe, suction
3. O-ring
4. Connector
5. O-ring
6. Valve
7. Retaining ring
8. Filter
9. Spring
10. Pressure switch
11. Retaining ring
12. Shaft assembly
13. Bearing
14. Shaft
15. Retaining ring
16. Oil seal
17. Bolt
18. Rear housing assembly and pump cartridge
19. Gasket
20. O-ring
21. O-ring
22. Front housing
23. Pressure plate
24. Rotor and vane
25. Cam
26. Pin
27. Rear housing

Reassembly Steps

27. Rear housing
26. Pin
25. Cam
24. Rotor and vane
23. Pressure plate
22. Front housing
21. O-ring
20. O-ring
19. Gasket
18. Rear housing assembly and pump cartridge
17. Bolt
16. Oil seal
15. Retaining ring
14. Shaft
13. Bearing
12. Shaft assembly
11. Retaining ring
10. Pressure switch
9. Spring
8. Filter
7. Retaining ring
6. Valve
5. O-ring
4. Connector
3. O-ring
2. Pipe, suction
1. Bolt

DISASSEMBLY

Preparation:
Clean oil pump with solvent (plug the discharge and suction port, to prevent the entry of solvent). Be careful not to expose the oil seal of shaft assembly to solvent.

1. **Bolt**
2. **Pipe, Suction**
3. **O-ring**
4. **Connector**
5. **O-ring**
6. **Valve Assembly**
7. **Retaining Ring**
8. **Filter**
9. **Spring**
10. **Pressure switch**
11. **Retaining Ring**
12. **Shaft Assembly**
13. **Bearing**
14. **Shaft**
15. **Retaining Ring**
16. **Oil Seal**

CAUTION:
When removing the oil seal, be careful not to damage the housing.

17. **Bolt**
18. **Rear Housing Assembly and Pump Cartridge**
19. **Gasket**
20. **O-ring**
21. **O-ring**
22. **Front Housing**
23. **Pressure Plate**
24. **Rotor and Vane**
25. **Cam**
26. **Pin**
27. **Rear Housing**

INSPECTION AND REPAIR

Make all necessary adjustments, repairs, and part replacements if wear, damage, or other problems are discovered during inspection.

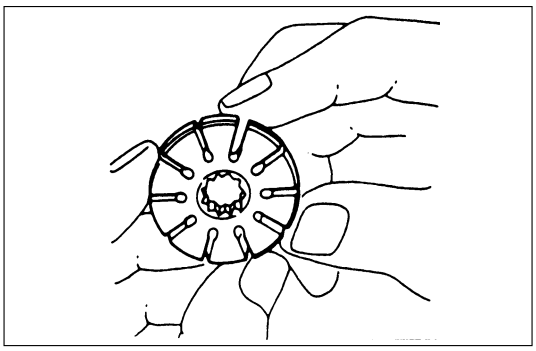

Rotor

Check that the groove in the vane is free from excessive wear and that the vane slides smoothly.
When part replacement becomes necessary, the pump cartridge should be replaced as a subassembly.

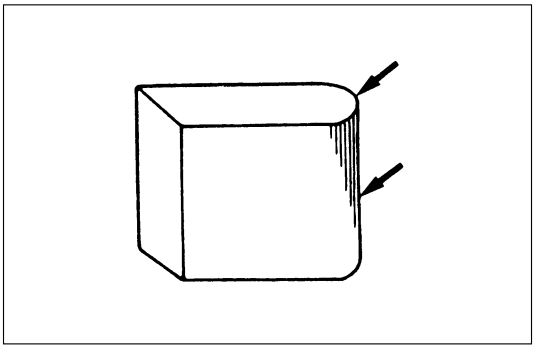

Vane

Sliding faces of the vane should be free from wear. (Particularly the curved face at the tip in contact with the cam should be free from wear and distortion).
When part replacement becomes necessary, the pump cartridge should be replaced as a subassembly.

Cam

The inner face of the arm should have a uniform contact pattern without a sign of step wear.
When part replacement becomes necessary, the pump cartridge should be replaced as a subassembly.

Side plate

The sliding faces of parts must be free from step wear (more than 0.01 mm), which can be felt by the finger nail. The parts with minor scores may be reused after lapping the face.

Valve

The sliding face of the valve must be free from burrs and damage.
The parts with minor scores may be reused after smoothing with emery cloth (#800 or finer).

Shaft

Oil seal sliding faces must be free from a step wear which can be felt by the finger nail.
Bushing face must be free from damage and wear.

O-ring, oil seal, retaining ring

Be sure to discard used parts, and always use new parts for installation. Prior to installation, lubricate all seals and rings with power steering fluid.

REASSEMBLY

27. Rear Housing

26. Pin

25. Cam

24. Rotor and Vane

1. Install the rotor with its punch mark facing the front housing.
2. Install the vanes with curved face in contact with the inner wall of the cam.

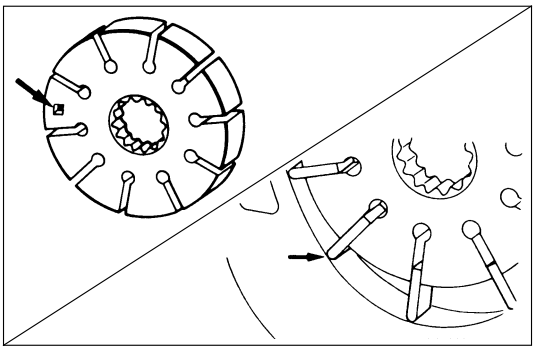

23. Pressure Plate

CAUTION:
When installing side plate, be careful not to damage its inner surface. Damaged side plate may cause poor pump performance, pump seizure or oil leakage.

22. Front Housing
21. O-ring
20. O-ring
Be sure to discard used O-rings, and always use new parts for installation.

19. Gasket
Be sure to discard used parts, and always use new parts for installation.

18. Rear Housing Assembly and Pump Cartridge
17. Bolt

Rear Housing Bolt Torque	N·m (kg·m/lb·ft)
17.6 (1.8 / 12.8)	

16. Oil Seal
Be sure to discard used parts, and always use new parts for installation.

CAUTION:
When installing the oil seal, be careful not to damage the oil seal contacting surface of the housing.

15. Retaining Ring
14. Shaft
13. Bearing
12. Shaft Assembly
11. Retaining Ring
10. Pressure switch

Pressure Switch Torque	N·m (kg·m/lb·ft)
20 (2.0 / 14)	

9. Spring
8. Filter
7. Retaining Ring
6. Valve
5. O-ring
Be sure to discard used parts, and always use new parts for installation.

4. Connector

Connector Torque	N·m (kg·m/lb·ft)
74 (7.5 / 54)	

3. O-ring
Be sure to discard used parts, and always use new parts for installation.

2. Pipe, Suction
1. Bolt

Suction Pipe Bolt Torque	N·m (kg·m/lb·ft)
15.7 (1.6 / 11.5)	

POWER STEERING PUMP (4JG2 Engine Model)

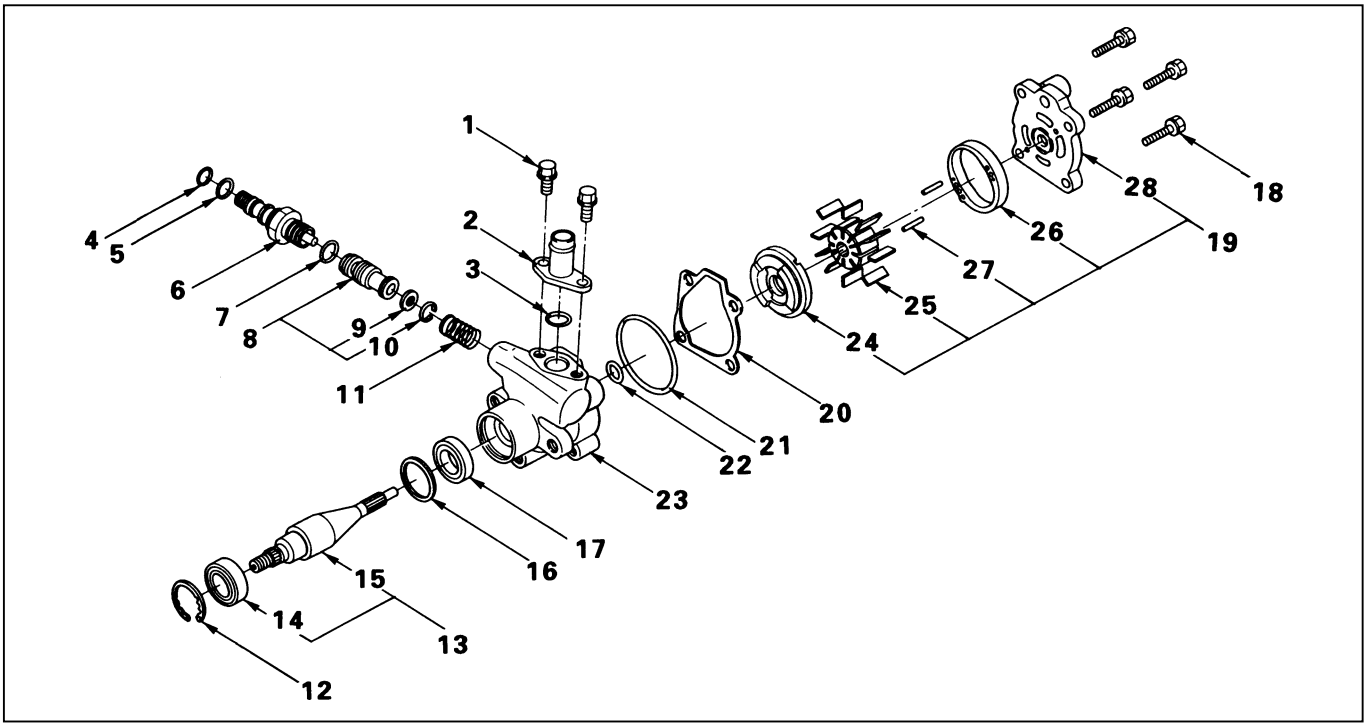

Disassembly Steps

1. Bolt
2. Pipe, suction
3. O-ring
4. O-ring
5. O-ring
6. Connector
7. O-ring
8. Valve
9. Retaining ring
10. Filter
11. Spring
12. Retaining ring
13. Shaft assembly
14. Bearing
15. Shaft
16. Retaining ring
17. Oil seal
18. Bolt
19. Rear housing assembly and pump cartridge
20. Gasket
21. O-ring
22. O-ring
23. Front housing
24. Pressure plate
25. Rotor and vane
26. Cam
27. Pin
28. Rear housing

Reassembly Steps

28. Rear housing
27. Pin
26. Cam
25. Rotor and vane
24. Pressure plate
23. Front housing
22. O-ring
21. O-ring
20. Gasket
19. Rear housing assembly and pump cartridge
18. Bolt
17. Oil seal
16. Retaining ring
15. Shaft
14. Bearing
13. Shaft assembly
12. Retaining ring
11. Spring
10. Filter
9. Retaining ring
8. Valve
7. O-ring
6. Connector
5. O-ring
4. O-ring
3. O-ring
2. Pipe, suction
1. Bolt

DISASSEMBLY

Preparation:
Clean oil pump with solvent (its plug discharge and suction port to prevent the entry of solvent). Be careful not to expose the oil seal of shaft assembly to solvent.

1. **Bolt**
2. **Pipe, Suction**
3. **O-ring**
4. **O-ring**
5. **O-ring**
6. **Connector**
7. **O-ring**
8. **Valve**
9. **Retaining Ring**
10. **Filter**
11. **Spring**
12. **Retaining Ring**
13. **Shaft Assembly**
14. **Bearing**
15. **Shaft**
16. **Retaining Ring**
17. **Oil Seal**

CAUTION:
When removing the oil seal, be careful not to damage the housing.

18. **Bolt**
19. **Rear Housing Assembly and Pump Cartridge**
20. **Gasket**
21. **O-ring**
22. **O-ring**
23. **Front Housing**
24. **Pressure Plate**
25. **Rotor and Vane**
26. **Cam**
27. **Pin**
28. **Rear Housing**

REASSEMBLY

28. Rear Housing

27. Pin

26. Cam

25. Rotor and Vane

Install the rotor with its punch mark facing the front housing.

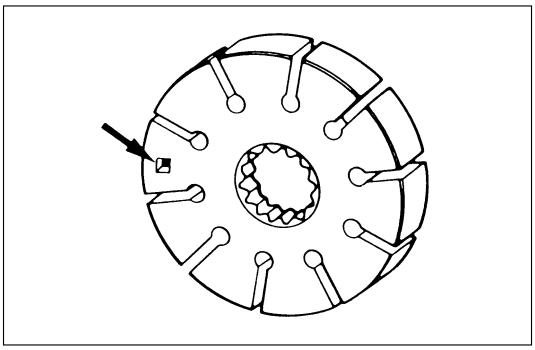

Install the vane with curved face in contact with the inner wall of the cam.

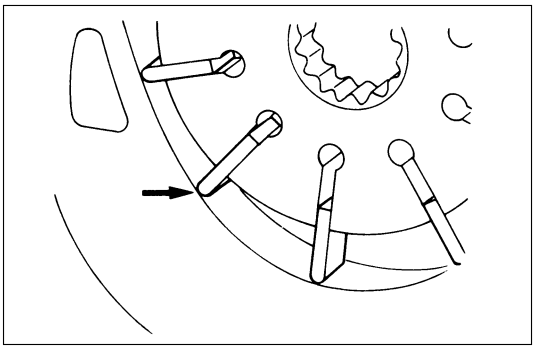

24. Pressure Plate

CAUTION:
When install pressure plate, be careful not to damage its inner surface. Damaged pressure plate may cause poor pump performance, pump seizure or oil leakage.

23. Front Housing

22. O-ring

Be sure to discard used parts, and always used new parts for installation.

21. O-ring

Be sure to discard used parts, and always used new parts for installation.

20. Gasket

Be sure to discard used parts, and always used new parts for installation.

19. Rear Housing Assemble and Pump Cartridge

18. Bolt

Rear Housing Bolt Torque	N·m (kg·m/lb·ft)
54 (5.5 / 40)	

17. O-ring

Be sure to discard used parts, and always used new parts for installation.

CAUTION:
When install pressure plate, be careful not to damage its inner surface. Damaged pressure plate may cause poor pump performance, pump seizure or oil leakage.

16. **Retaining Ring**
15. **Shaft**
14. **Bearing**
13. **Shaft Assembly**
12. **Retaining Ring**
11. **Spring**
10. **Filter**
9. **Retaining Ring**
8. **Valve**
7. **O-ring**
   Be sure to discard used parts, and always used new parts for installation.
6. **Connector**

Connector Torque	N·m (kg·m/lb·ft)
54 (5.5 / 40)	

5. **O-ring**
   Be sure to discard used parts, and always used new parts for installation.
4. **O-ring**
   Be sure to discard used parts, and always used new parts for installation.
3. **O-ring**
   Be sure to discard used parts, and always used new parts for installation.
2. **Pipe, Suction**
1. **Bolt**

Suction Pipe Bolt Torque	N·m (kg·m/lb·ft)
21 (2.1 / 15)	

POWER STEERING PUMP (4JX1 Engine Model)

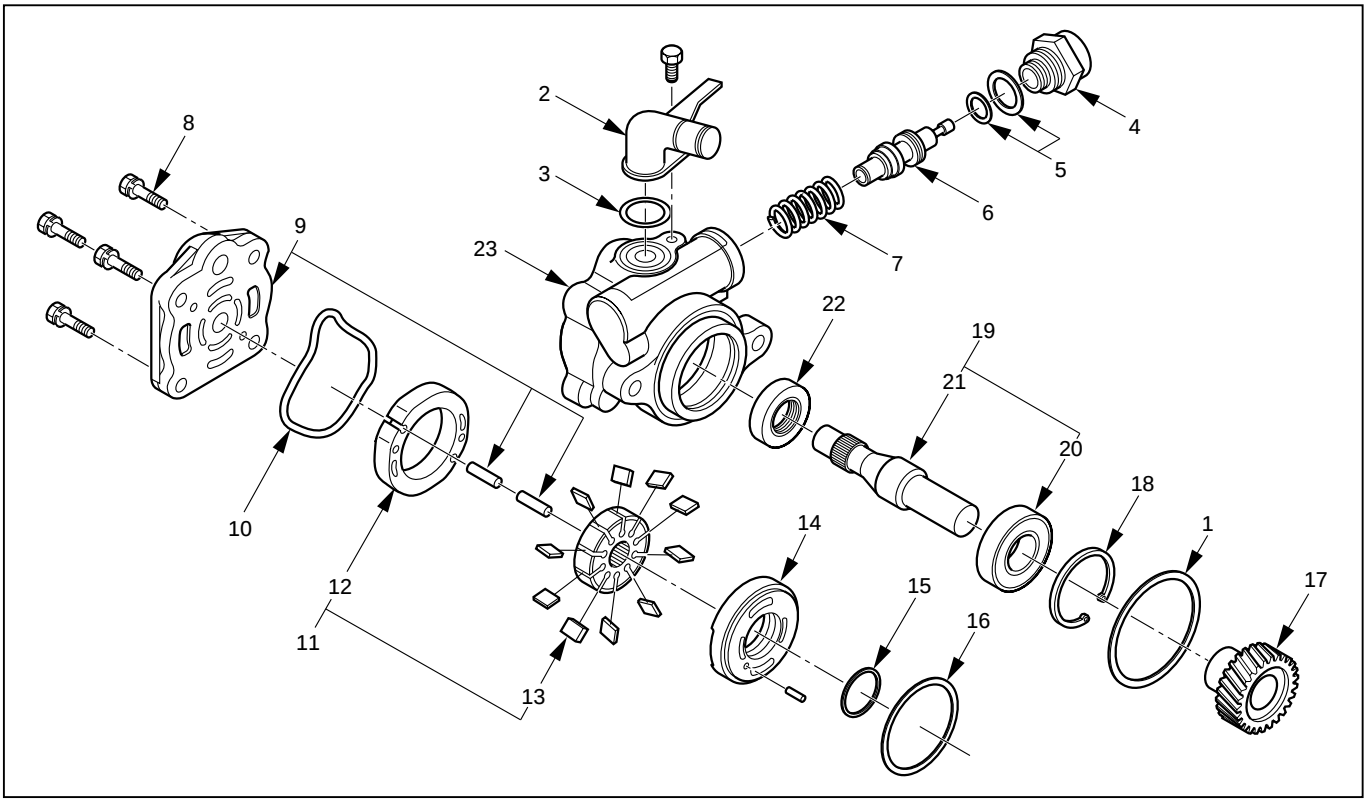

412RW048

Disassembly Steps

1. O-ring
2. Pipe, suction
3. O-ring
4. Connector
5. O-ring
6. Valve
7. Spring
8. Bolt
9. Rear housing assembly
10. O-ring
11. Pump cartridge
12. Cam
13. Rotor and vane
14. Pressure plate
15. O-ring
16. O-ring
17. Gear
18. Retaining ring
19. Shaft assembly
20. Bearing
21. Shaft
22. Oil seal
23. Front housing

Reassembly Steps

23. Front housing
22. Oil seal
21. Shaft
20. Bearing
19. Shaft assembly
18. Retaining ring
17. Gear
16. O-ring
15. O-ring
14. Pressure plate
13. Rotor and vane
12. Cam
11. Pump cartridge
10. O-ring
9. Rear housing assembly
8. Bolt
7. Spring
6. Valve
5. O-ring
4. Connector
3. O-ring
2. Pipe, suction
1. O-ring

DISASSEMBLY

Preparation:
Clean oil pump with solvent (plug the discharge and suction port to prevent the entry of solvent). Be careful not to expose the oil seal of shaft assembly to solvent.

1. **O-ring**
2. **Pipe, Suction**
3. **O-ring**
4. **Connector**
5. **O-ring**
6. **Valve**
7. **Spring**
8. **Bolt**
9. **Rear Housing Assembly**
10. **O-ring**
11. **Pump Cartridge**
12. **Cam**
13. **Rotor and Vane**
14. **Pressure Plate**
15. **O-ring**
16. **O-ring**
17. **Gear**
18. **Retaining Ring**
19. **Shaft Assembly**
20. **Bearing**
21. **Shaft**
22. **Oil seal**

CAUTION:
When removing the oil seal, be careful not to damage the housing.

23. **Front Housing**

REASSEMBLY

23. **Front Housing**
22. **Oil Seal**
    Be sure to discard used parts, and always used new parts for installation.
21. **Shaft**
20. **Bearing**
19. **Shaft Assembly**
18. **Retaining Ring**
17. **Gear**
16. **O-ring**
    Be sure to discard used parts, and always used new parts for installation.
15. **O-ring**
    Be sure to discard used parts, and always used new parts for installation.
14. **Pressure Plate**

CAUTION:
When install pressure plate, be careful not to damage its inner surface. Damaged pressure plate may cause poor pump performance, pump seizure or oil leakage.

13. **Rotor and Vane**
    Install the vane with curved face in contact with the inner wall of the cam.

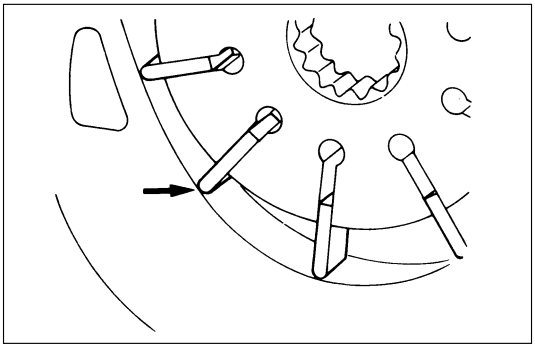

12. **Cam**
11. **Pump Cartridge**
10. **O-ring**
    Be sure to discard used parts, and always used new parts for installation.
9. **Rear Housing Assembly**
8. **Bolt**

Rear Housing Bolt Torque	N·m (kg·m/lb·ft)
24 (2.4 / 17)	

7. **Spring**
6. **Valve**
5. **O-ring**
   Be sure to discard used parts, and always used new parts for installation.
4. **Connector**

Connector Torque	N·m (kg·m/lb·ft)
59 (6.0 / 43)	

3. **O-ring**
   Be sure to discard used parts, and always used new parts for installation.
2. **Pipe, Suction**

Suction Pipe Bolt Torque	N·m (kg·m/lb·ft)
9.8 (1.0 / 7.1)	

1. **O-ring**
   Be sure to discard used parts, and always used new parts for installation.

MEMO

SECTION 2A

STEERING LINKAGE

CONTENTS

PAGE

General Description ..... 2A – 42
On-Vehicle Service ..... 2A – 43
Center Track Rod Assembly ..... 2A – 43
Outer Track Rod Assembly ..... 2A – 46
Relay Lever ..... 2A – 49

GENERAL DESCRIPTION

This illustration is based on the LHD model.

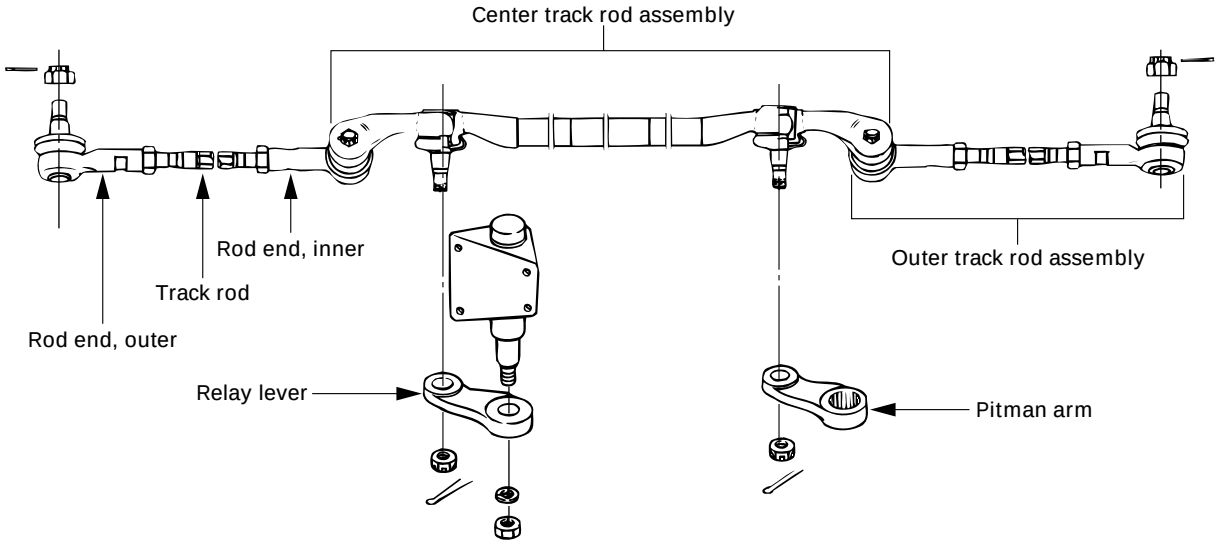

433RW004

The steering linkage consists of a pitman arm, relay lever, center track rod and two adjustable outer track rods.
When the steering wheel is turned, the gear rotates the pitman arm which forces the center track rod to one side. The outer track rods, connected to the center track rod by ball studs, transfer the steering force to the wheels. The outer track rods are adjustable and are used for toe-in adjustments.
The center track rod is supported by the pitman arm and relay lever. The relaylever pivots on a support attached to the frame.

The overall condition of the steering linkage affects steering performance. If parts are bent, damaged, worn or poorly lubricated, improper and possibly dangerous steering action will result.
Whenever any steering linkage components are repaired or replaced, check the steering geometry and front end alignment. Refer to Front End Alignment (Sec. 3A).

ON-VEHICLED SERVICE

CENTER TRACK ROD ASSEMBLY

These steps are based on the LHD model.

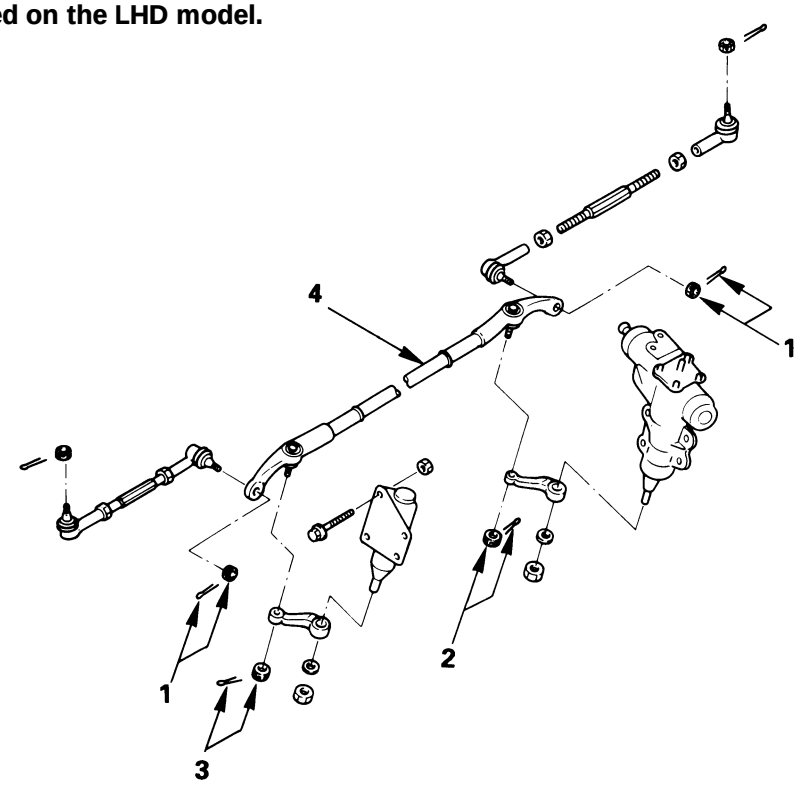

Removal Steps

1. Nut and cotter pin
2. Nut and cotter pin, pitman arm
3. Nut and cotter pin relay lever
4. Center track rod assembly

Installation Steps

4. Center track rod assembly
3. Nut and cotter pin relay lever
2. Nut and cotter pin, pitman arm
1. Nut and cotter pin

REMOVAL

Preparation:
Raise the vehicle and support the frame with suitable safety stands.

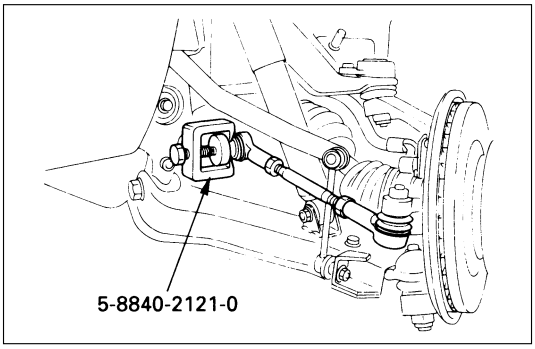

1. **Nut and Cotter Pin**
   Disconnect outer track rod assembly from the center track rod.
   Remover: 5-8840-2121-0 (J-36831)

   CAUTION:
   Be careful not to break the ball joint boot.

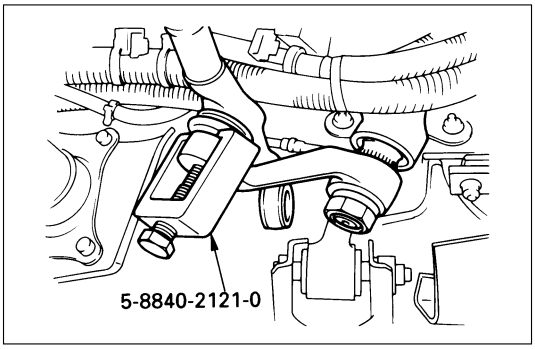

2. **Nut and Cotter Pin, Pitman Arm**
   Remove pitman arm from the center track rod (Fig. 3B3-4)
   Remover: 5-8840-2121-0 (J-36831)

   CAUTION:
   Be careful not to break the ball joint boot.

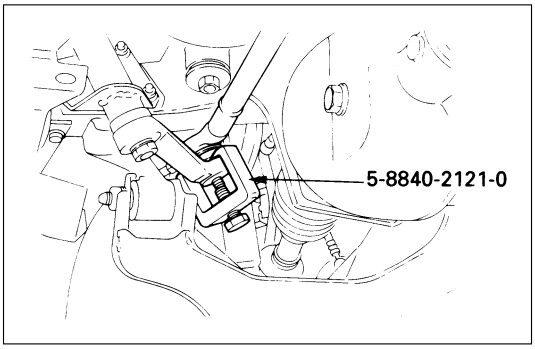

3. **Nut and Cotter Pin, Relay Lever**
   Remove relay lever from the center track rod.
   Remover: 5-8840-2121-0 (J-36831)

   CAUTION:
   Be careful not to break the ball joint boot.

4. **Center Track Rod Assembly**

INSPECTION AND REPAIR

Make necessary correction or parts replacement if wear, damage, corrosion, bending, deteriorations or any other abnormal condition are found through inspection.
Check the following parts.

- Ball joint (Boot, screws and tapered surfaces)

INSTALLATION

4. **Center Track Rod Assembly**

3. **Nut and Cotter Pin, Relay Lever**
Tighten the nut to the specified torque, with just enough additional torque to align cotter pin holes. Install new cotter pin.

Relay Lever Nut Torque	N·m (kg·m/lb·ft)
59 (6.0 / 43)	

2. **Nut and Cotter Pin, Pitman Arm**
Tighten the nut to the specified torque, with just enough additional torque to align cotter pin hole. Install new cotter pin.

Pitman Arm Nut Torque	N·m (kg·m/lb·ft)
98 (10.0 / 72)	

1. **Nut and Cotter Pins**
Tighten the nut to the specified torque, with just enough additional torque to align cotter pin holes. Install new cotter pin.

Center Track Rod Nut Torque	N·m (kg·m/lb·ft)
98 (10.0 / 72)	

OUTER TRACK ROD ASSEMBLY

These steps are based on the LHD model.

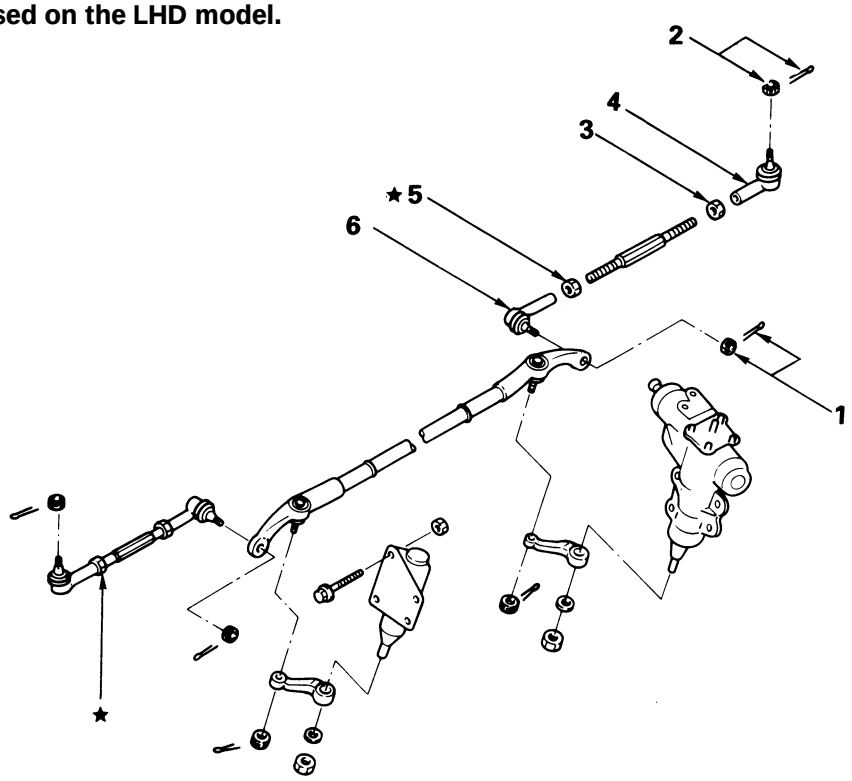

Removal Steps

1. Nut and cotter pin, center track rod
2. Nut and cotter pin, knuckle arm
3. Lock nut, outer
4. Rod end assembly outer
5. Lock nut, inner
6. Rod end assembly, inner

★ The screw is threaded counterclockwise.

Installation Steps

6. Rod end assembly, inner
5. Lock nut, inner
4. Rod end assembly outer
3. Lock nut, outer
2. Nut and cotter pin, knuckle arm
1. Nut and cotter pin, center track rod

REMOVAL

Preparation:
Remove wheel and tire assembly.
Refer to "Wheels and Tires" in section 3E.

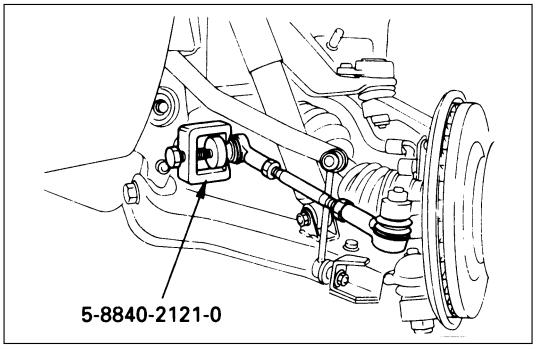

1. **Nut and Cotter Pin, Center Track Rod**
   Disconnect outer track rod assembly at the center track rod.

   Remover: 5-8840-2121-0 (J-36831)

   CAUTION:
   Be careful not to break the ball joint boot.

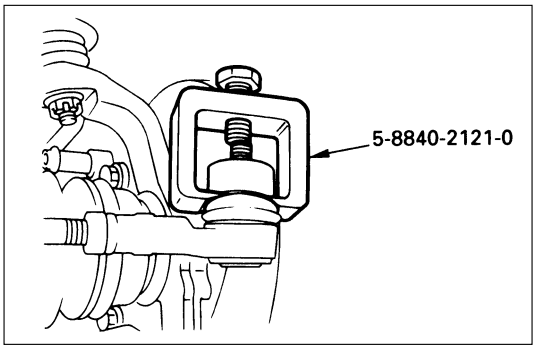

2. **Nut and Cotter Pin, Knuckle Arm**
   Remove outer track rod assembly from the knuckle arm.

   Remover: 5-8840-2121-0 (J-36831)

   CAUTION:
   Be careful not to break the ball joint boot.

3. **Lock Nut, Outer**

   NOTE:
   In either outer rod, the screw on the right side of the vehicle is threaded counterclockwise.

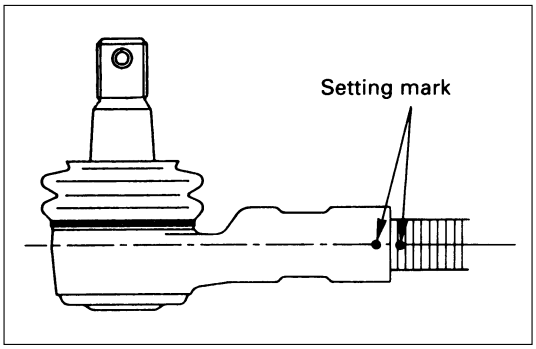

4. **Rod End Assembly, Outer**
   Apply setting marks to ensure reassembly of the parts in their original position.

5. **Lock Nut, Inner**

   NOTE:
   In either outer rod, the screw on the right side of the vehicle is threaded counterclockwise.

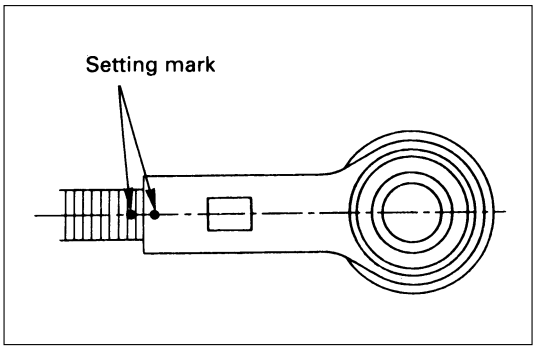

6. **Rod End, Inner**
   Apply setting marks to ensure reassembly of the parts in their original position.

INSPECTION AND REPAIR

Make necessary correction or parts replacement if wear, damage, corrosion, bending, deteriorations or any other abnormal condition are found through inspection.
Check the following parts.

- Rod end assembly
- Ball joint (Boot, screws and tapered surfaces)

INSTALLATION

6. Rod End, Inner
Align the setting marks applied during desassembly.

5. Lock Nut, Inner

Lock Nut Torque	N·m (kg·m/lb·ft)
118 (12.0 / 87)	

NOTE:
In either outer rod, the screw on the right side of the vehicle is threaded counterclockwise.

4. Rod End Assembly, Outer
Align the setting marks applied during disassembly.

3 Lock Nut, Outer

Lock Nut Torque	N·m (kg·m/lb·ft)
118 (12.0 / 87)	

2. Nut and Cotter pin, Knuckle Arm
Tighten the nut to the specified torque, with just enough additional torque to align cotter pin holes. Install new cotter pin.

Knuckle Arm Nut Torque	N·m (kg·m/lb·ft)
98 (10.0 / 72)	

1. Nut and Cotter Pin, Center Track Rod
Tighten the nut to the specified torque, with just enough additional torque to align cotter pin holes. Install new cotter pin.

Track Rod Nut Torque	N·m (kg·m/lb·ft)
98 (10.0 / 72)	

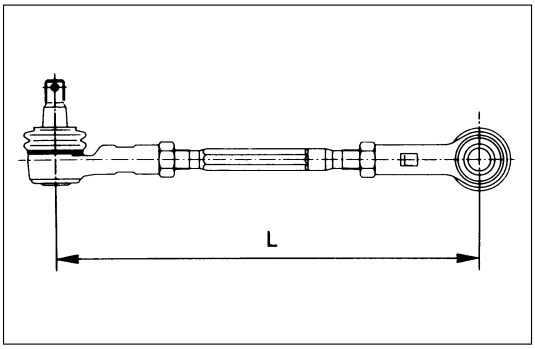

NOTE:
If replacing the track rod, adjust the new track rod length.

Rod Length (L)	mm (in)
328.3 (12.93) : Wide Tread 299 (11.77) : Narrow Tread	

NOTE:
Adjust the toe-in. Refer to “Front End Alignment” in section 3A.

RELAY LEVER

These steps are based on the LHD model.

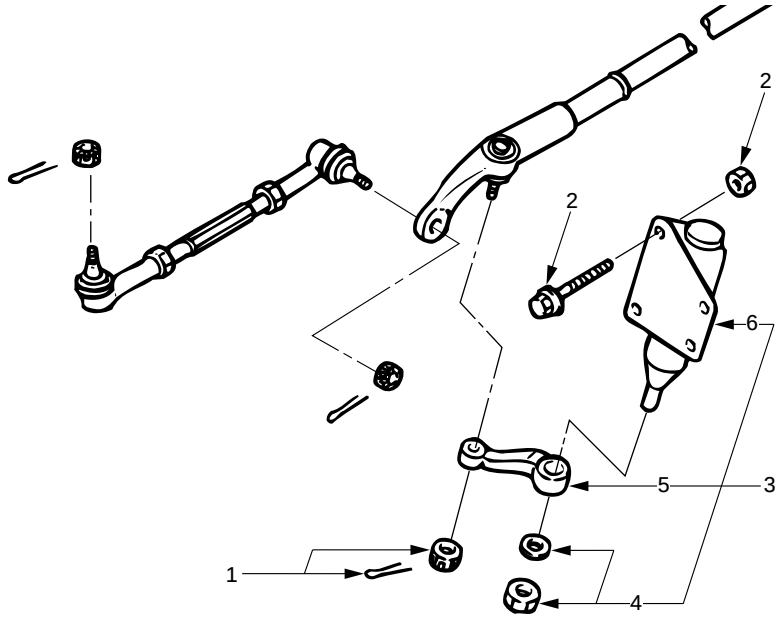

433RW005

Removal Steps

1. Nut and cotter pin
2. Bolt and nut
3. Relay lever and Bracket
4. Nut and washer
5. Relay lever
6. Bracket

Installation Steps

6. Bracket
5. Relay lever
4. Nut and washer
3. Relay lever and bracket
2. Bolt and nut
1. Nut and cotter pin

REMOVAL

Preparation:
Raise the vehicle and support the frame with suitable safety stands.

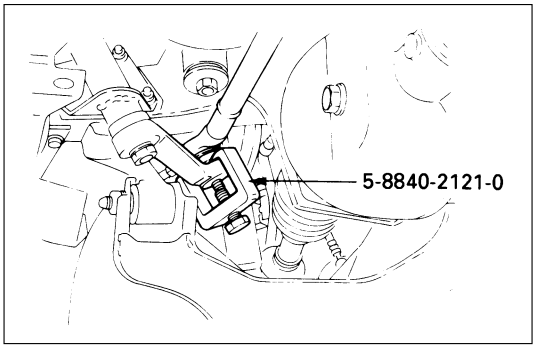

1. **Nut and Cotter pin**
   Disconnect relay lever at the center track rod.
   Remover: 5-8840-2121-0 (J-36831)

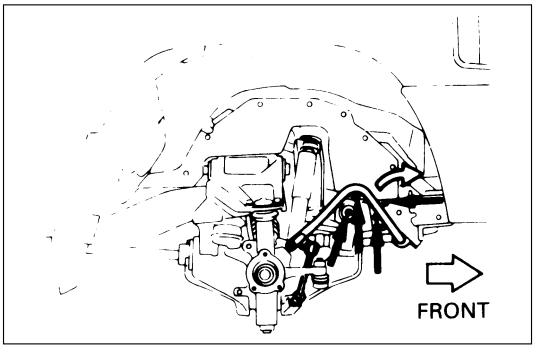

2. **Bolt and Nut**
   Remove stabilizer bar bolts and nuts and push the stabilizer bar aside and remove the bolts and nuts.

3. **Relay Lever and Bracket**
4. **Nut and Washer**
5. **Relay Lever**
   Remove relay lever from the bracket.
   Remover: 5-8840-0015-0 (J-22912-01)

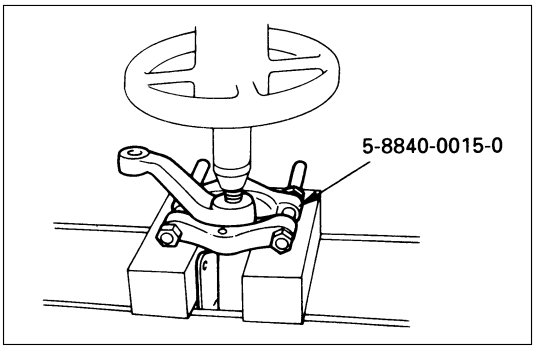

6. **Bracket**

INSTALLATION

6. **Bracket**
5. **Relay Lever**
4. **Nut and Washer**

Relay Lever Nut Torque	N·m (kg·m/lb·ft)
118 (12.0 / 87)	

3. **Relay Lever and Bracket**
2. **Bolt and Nut**

Bracket Nut Torque	N·m (kg·m/lb·ft)
44 (4.5 / 33)	

1. **Nut and Cotter Pin**
   Tighten the nut to the specified torque, with just enough additional torque to align cotter pin holes. Install new cotter pin.

Relay Lever Nut Torque	N·m (kg·m/lb·ft)
59 (6.0 / 43)	

SECTION 2A

SUPPLEMENTAL RESTRAINT SYSTEM STEERING WHEEL & COLUMN

CAUTION:
When fasteners are removed, always reinstall them at the same location from which they were removed. If a fastener needs to be replaced, use the correct part number fastener for that application. If the correct part number fastener is not available, a fastener of equal size and strength (or stronger) may be used. Fasteners that are not reused, and those requiring thread locking compound, will be called out. The correct torque value must be used when installing fasteners that require it. If the above conditions are not followed, parts or system damage could result.

CONTENTS

PAGE

General Description ..... 2A – 52
On-Vehicle Service ..... 2A – 53
SRS Connectors ..... 2A – 53
Inflator Module Replacement ..... 2A – 54
Steering Wheel Replacement ..... 2A – 57
Combination Switch Replacement ..... 2A – 60
Lock Cylinder Replacement ..... 2A – 64
Steering Column Replacement ..... 2A – 69

GENERAL DESCRIPTION

This steering wheel and column repair section covers the Supplemental Restraint System (SRS) steering column. The following repair procedures are specific to SRS Components. When servicing a vehicle equipped with Supplemental Restraint System, pay close attention to all WARNINGS and CAUTIONS.

For detailed explanation about SRS, refer to Section 9J "SUPPLEMENTAL RESTRAINT SYSTEM (SRS)" of manual.

The steering column has three important features in addition to the steering function:

1. The column is energy absorbing, designed to compress in a front-end collision to minimize the possibility of injury to the driver of the vehicle.
2. The ignition switch and lock are mounted conveniently on the column.
3. With the column mounted lock, the ignition and steering operation can be locked to prevent theft of the vehicle.

The column may be disassembled and reassembled. To insure the energy absorbing action, it is important that the specified screws, bolts and nuts be used only as designated and that they are tightened to the specified torque.

When the column is removed from the vehicle, a sharp blow on the end of steering shaft or shift lever, leaning on the column assembly, or dropping the assembly could shear or loosen the fasteners that maintain column rigidity.

WARNING

THIS VEHICLE HAS A SUPPLEMENTAL RESTRAINT SYSTEM (SRS). REFER TO THE SRS COMPONENT AND WIRING LOCATION VIEW IN ORDER TO DETERMINE WHETHER YOU ARE PERFORMING SERVICE ON OR NEAR THE SRS COMPONENTS OR THE SRS WIRING. WHEN YOU ARE PERFORMING SERVICE ON OR NEAR THE SRS COMPONENTS OR THE SRS WIRING, REFER TO THE SRS SERVICE INFORMATION. FAILURE TO FOLLOW WARNINGS COULD RESULT IN POSSIBLE AIR BAG DEPLOYMENT, PERSONAL INJURY, OR OTHERWISE UNNEEDED SRS SYSTEM REPAIRS.

SAFE HANDLING OF INFLATOR MODULES REQUIRES FOLLOWING THE PROCEDURES DESCRIBED BELOW FOR BOTH LIVE AND DEPLOYED MODULES.

SAFETY PRECAUTIONS MUST BE FOLLOWED WHEN HANDLING A DEPLOYED AIR BAG ASSEMBLY (AIR BAG). AFTER DEPLOYMENT, THE AIR BAG ASSEMBLY (AIR BAG) SURFACE MAY CONTAIN A SMALL AMOUNT OF SODIUM HYDROXIDE, A BY-PRODUCT OF THE DEPLOYMENT REACTION, THAT IS IRRITATING TO THE SKIN AND EYES. MOST OF THE POWDER ON THE AIR BAG ASSEMBLY (AIR BAG) IS HARMLESS. AS A PRECAUTION, WEAR GLOVES AND SAFETY GLASSES WHEN HANDLING A DEPLOYED AIR BAG ASSEMBLY, AND WASH YOUR HANDS WITH MILD SOAP AND WATER AFTERWARDS.

WHEN CARRYING A LIVE AIR BAG ASSEMBLY, MAKE SURE THE BAG AND TRIM COVER ARE POINTED AWAY FROM YOU. NEVER CARRY AN AIR BAG ASSEMBLY BY THE WIRES OR CONNECTOR ON THE UNDERSIDE OF MODULE. IN THE CASE OF AN ACCIDENTAL DEPLOYMENT, THE BAG WILL THEN DEPLOY WITH MINIMAL CHANCE OF INJURY. WHEN PLACING A LIVE AIR BAG ASSEMBLY ON A BENCH OR OTHER SURFACE, ALWAYS FACE THE BAG AND TRIM COVER UP, AWAY FROM THE SURFACE. NEVER REST A STEERING COLUMN ASSEMBLY ON THE STEERING WHEEL WITH THE AIR BAG ASSEMBLY FACE DOWN AND COLUMN VERTICAL. THIS IS NECESSARY SO THAT A FREE SPACE IS PROVIDED TO ALLOW THE AIR BAG ASSEMBLY TO EXPAND IN THE UNLIKELY EVENT OF ACCIDENTAL DEPLOYMENT. OTHERWISE, PERSONAL INJURY COULD RESULT.

TO AVOID DEPLOYMENT WHEN TROUBLE SHOOTING THE SRS SYSTEM, DO NOT USE ELECTRICAL TEST EQUIPMENT, SUCH AS BATTERY-POWERED OR A/C-POWERED VOLTMETER, OHMMETER, ETC., OR ANY TYPE OF ELECTRICAL EQUIPMENT OTHER THAN SPECIFIED IN THIS MANUAL. DO NOT USE A NON-POWERED PROBE-TYPE TESTER.

INSTRUCTIONS IN THIS MANUAL MUST BE FOLLOWED CAREFULLY, OTHERWISE PERSONAL INJURY MAY RESULT.

ON-VEHICLE SERVICE

SRS CONNECTORS

CAUTION:
The special yellow color connectors are used for supplemental restraint system-air bag circuit.
When removing the cable harness, do not pull the cables. Otherwise, cable disconnection may occur.
When connect the SRS connector, insert the connector completely. Imperfect locking may cause malfunction of SRS circuit.

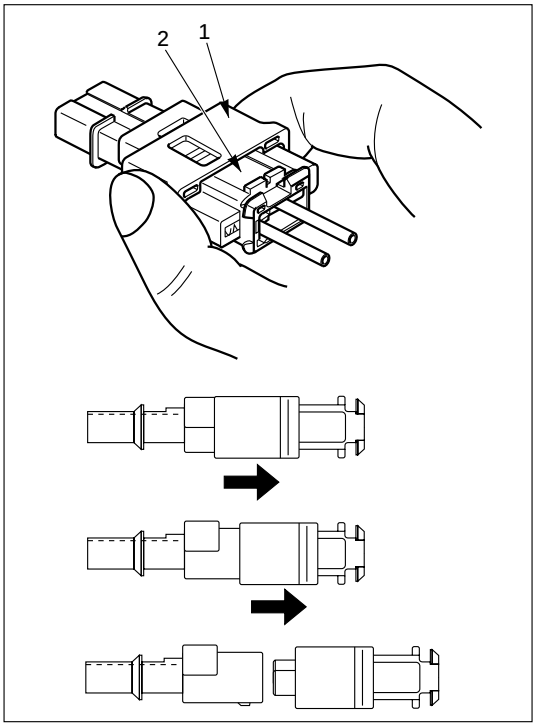

827RW035

REMOVAL

To remove the connector, hold the cover insulator(1) and pull it. The cover insulator slides and lock will be released.

Do not hold the socket insulator(2).

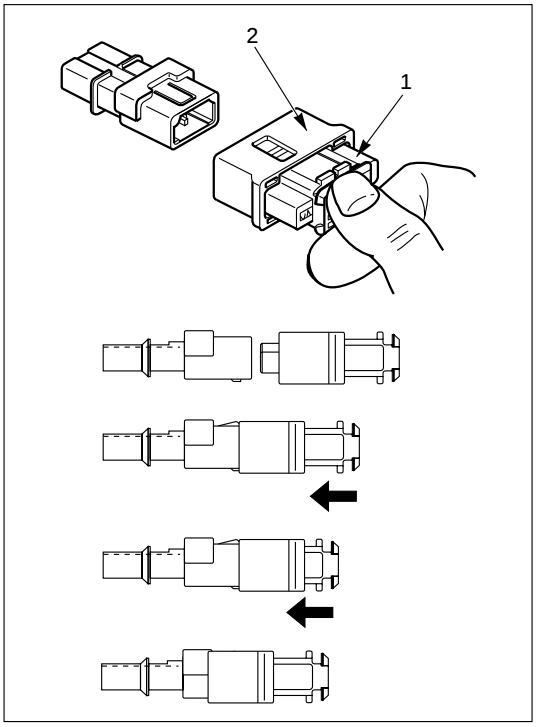

827RW034

INSTALLATION

To install the connector, hold the socket insulator(1) and insert it. The cover insulator slides and connector will be locked.

Do not hold the cover insulator(2).

INFLATOR MODULE REPLACEMENT

These steps are based on the LHD model.

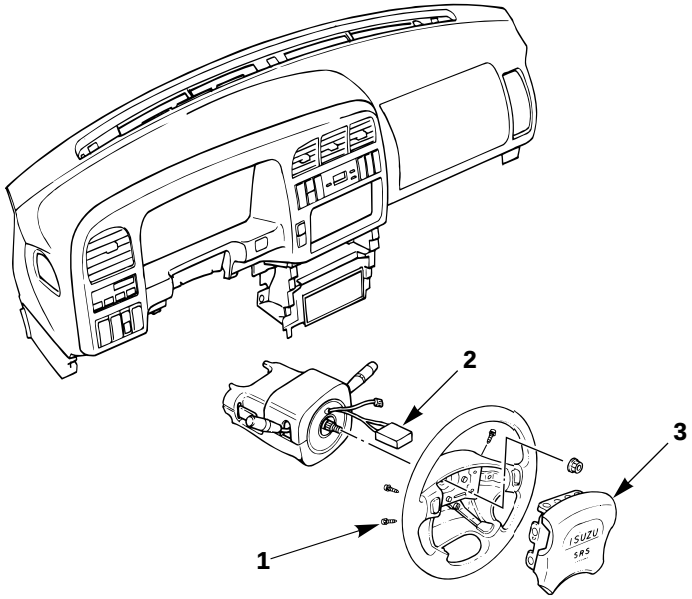

827RS049

Removal Steps

1. Fixing bolt
2. Module connector
3. Inflator module

Installation Steps

3. Inflator module
2. Module connector
1. Fixing bolt

REMOVAL

Preparation:

1) Turn the steering wheel so that the vehicle's wheels are pointing straight ahead.
2) Turn the ignition switch to "LOCK".
3) Disconnect the battery ground cable, and wait at least 5 minutes.
4) Disconnect the yellow 2way SRS connector located under the steering column.

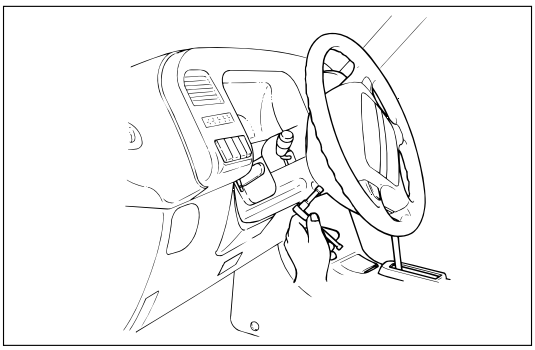

827RS014

1. Fixing Bolt

Loosen the inflator module fixing bolt from behind the steering wheel assembly using a TORX, driver or equivalent until the inflator module can be released from steering assembly.

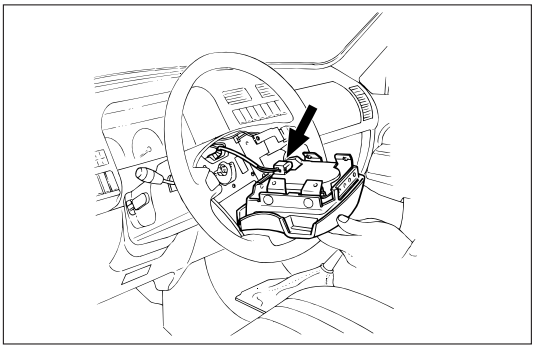

827RS015

2. **Module Connector**

   Disconnect the yellow 2way SRS connector located behind the inflator module.

3. **Inflator Module**

INSPECTION AND REPAIR

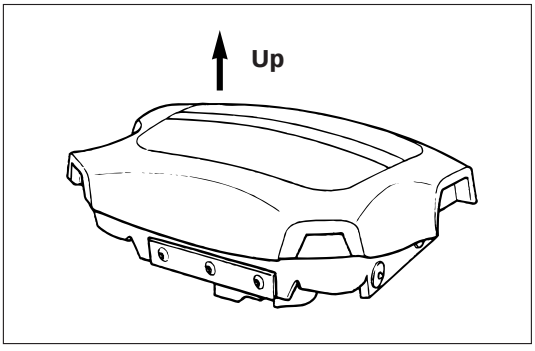

827RS016

WARNING
THE INFLATOR MODULE SHOULD ALWAYS BE CARRIED WITH THE URETHANE COVER AWAY FROM YOUR BODY AND SHOULD ALWAYS BE LAID ON A FLAT SURFACE WITH THE URETHANE SIDE UP. THIS IS NECESSARY BECAUSE A FREE SPACE IS PROVIDED TO ALLOW THE AIR CUSHION TO EXPAND IN THE UNLIKELY EVENT OF ACCIDENTAL DEPLOYMENT. OTHERWISE, PERSONAL INJURY MAY BE RESULT.

The Inflator module consists of a cover, air bag, inflator, and retainer. Inspect the Inflator module mainly for the following:

1) Check for holes, cracks, severe blemishes and deformation on the cover.
2) Check that the retainer is not deformed.
3) Check for defects such as damage and breakage in the lead wire of the squib.

If an abnormality is found as the result of the inspection, replace the Inflator module with a new one.

INSTALLATION

3. **Inflator Module**

CAUTION:
- **Never use the air bag assembly from another vehicle. Use only the air bag assembly for "UBS".**
- **When replace the inflator module, use only same parts number assembly. If different parts number assembly is installed, the air bag system can not function correctly because it has different characteristic.**

2. **Module Connector**

   Support the module and carefully connect the module connector.

   NOTE:
   Pass the lead wire through the tabs on the plastic cover (wire protector) of inflator to prevent lead wire from being pinched.

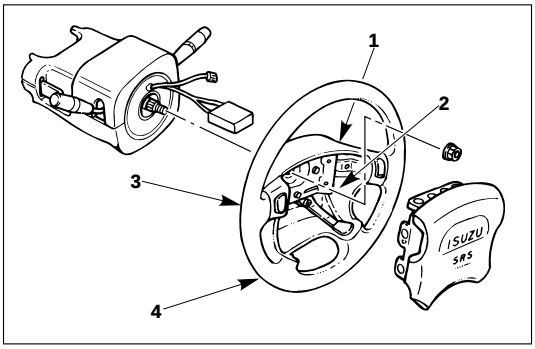

827RS017

1. Fixing Bolt

1) Secure the module with one bolt to relieve weight on the connector wire.
2) Tighten bolts to specified sequence as figure.

N·m (kg·m/lb·in)
8 (0.8 / 69)

3) Connect the yellow 2way SRS connector located under the steering column.
4) Connect the battery ground cable.
5) Set ignition to "ON" while watching warning light. Light should flash 7 times and then go off. If lamp does not operate correctly, refer to Section 9J.

STEERING WHEEL REPLACEMENT

CAUTION:
Once the steering column is removed from the vehicle, the column is extremely suspectible to damage. Dropping the column assembly on its end could collapse the steering shaft or loosen the slide block which maintains column rigidity. Leaning on the column assembly could cause the jacket to bend or deform. Any of the above damage could impair the column's collapsible design. If it is necessary to remove the steering wheel, use only the specified steering wheel puller. Under no conditions should the end of the shaft be hammered upon, as hammering could loosen slide block which maintains column rigidity.

These steps are based on the LHD model.

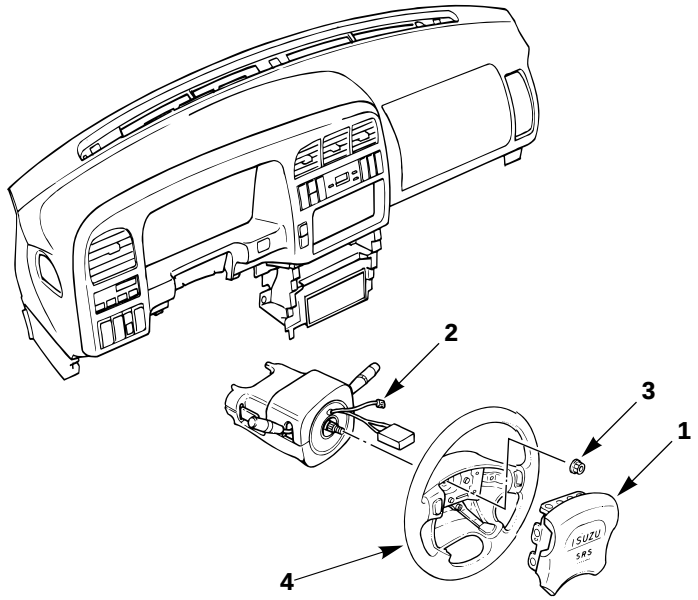

430RS016

Removal Steps

1. Inflator module
2. Horn lead
3. Steering wheel fixing nut
4. Steering wheel

Installation Steps

4. Steering wheel
3. Steering wheel fixing nut
2. Horn lead
1. Inflator module

REMOVAL

Preparation:

1) Turn the steering wheel so that the vehicle's wheels are pointing straight ahead.
2) Turn the ignition switch to "LOCK".
3) Disconnect the battery ground cable, and wait at least 5 minutes.
4) Disconnect the yellow 2way SRS connector located under the steering column.

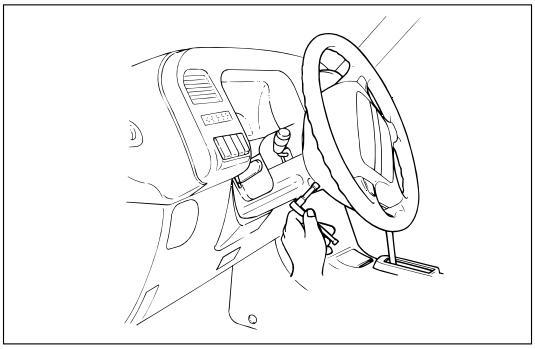

827RS014

1. **Inflator Module**
   1) Loosen the inflator module fixing bolt from behind the steering wheel assembly using a TORX® driver or equivalent until the inflator module can be released from steering assembly.
   2) Disconnect the yellow 2way SRS connector located behind the inflator module.

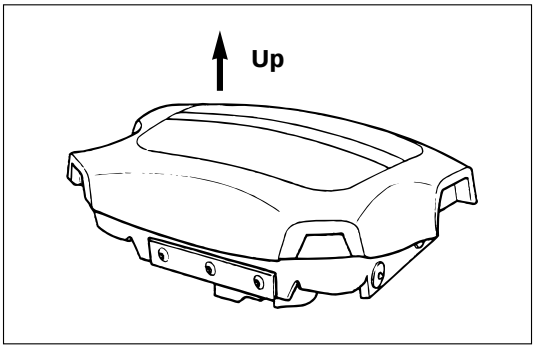

827RS016

WARNING
THE INFLATOR MODULE SHOULD ALWAYS BE CARRIED WITH THE URETHANE COVER AWAY FROM YOUR BODY AND SHOULD ALWAYS BE LAID ON A FLAT SURFACE WITH THE URETHANE SIDE UP. THIS IS NECESSARY BECAUSE A FREE SPACE IS PROVIDED TO ALLOW THE AIR CUSHION TO EXPAND IN THE UNLIKELY EVENT OF ACCIDENTAL DEPLOYMENT. OTHERWISE, PERSONAL INJURY MAY RESULT.

2. **Horn Lead**
3. **Steering Wheel Fixing Nut**
4. **Steering Wheel**
   1) Apply a setting mark across the steering wheel and shaft so parts can be reassembled in their original position.

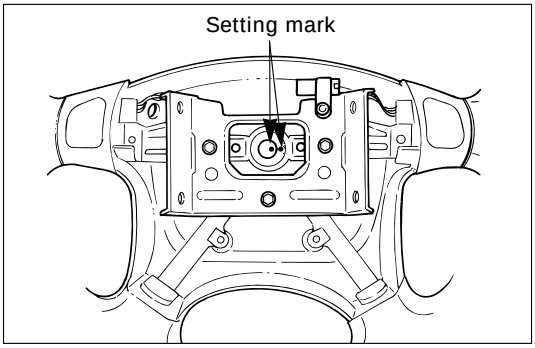

430RS004

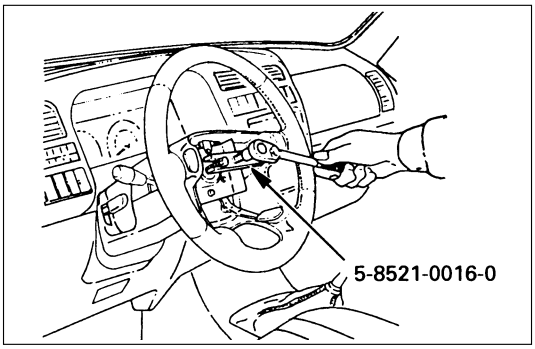

2) Move the front wheels to the straight ahead position and use special tool.

Steering wheel remover: 5-8840-0016-0 (J-29752)

NOTE:
Never apply force to the steering wheel in direction of the shaft by using a hammer or other impact tools in an attempt to remove the steering wheel. The steering shaft is designed as an energy absorbing unit.

INSTALLATION

4. Steering Wheel

Align the setting marks made when removing.

CAUTION:
Never apply force to the setting wheel in direction of the shaft by using a hammer or other impact tools in an attempt to install the steering wheel. The setting shaft is designed as an energy absorbing unit.

3. Steering Wheel Fixing Nut

Steering Wheel Nut Torque	N·m (kg·m/lb·ft)
34 (3.5 / 25)	

2. Horn Lead

1. Inflator Module

1) Support the module and carefully connect the module connector.

CAUTION:
- **Never use the air bag assembly from another vehicle. Use only the air bag assembly for "UBS".**
- **When replace the inflator module, use only same parts number assembly. If different parts number assembly is installed, the air bag system can not function correctly because it has different characteristic.**

NOTE:
Pass the lead wire through the tabs on the plastic cover (wire protector) of inflator to prevent lead wire from being pinches.

2) Secure the module with one bolt to relieve weight on the connector wire.
3) Tighten bolts to specified sequence as figure.

Inflator module Bolt Torque	N·m (kg·m/lb·in)
8 (0.8 / 69)	

4) Connect the yellow 2way SRS connector located under the steering column.
5) Connect the battery ground cable.
6) Set ignition to "ON" while watching warning light. Light should flash 7 times and then go off. If lamp does not operate correctly, refer to Section 9J.

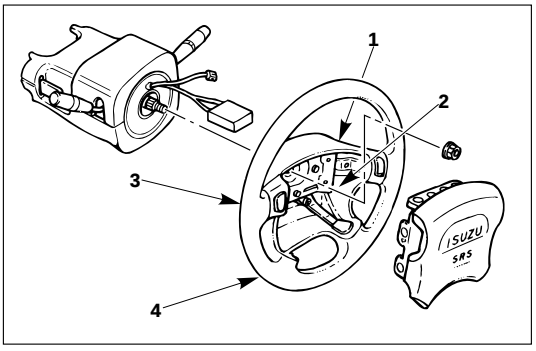

827RS017

COMBINATION SWITCH REPLACEMENT

These steps are based on the LHD model.

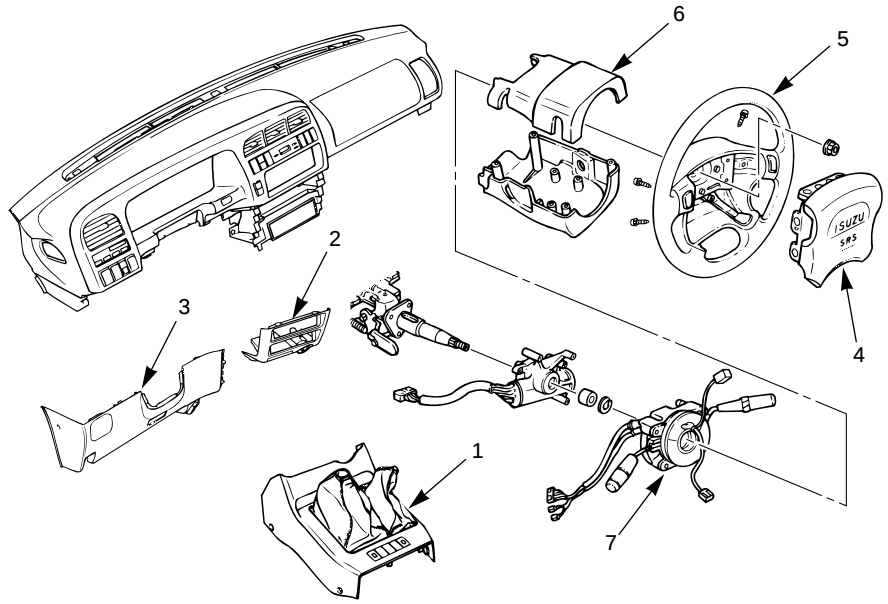

431RT001

Removal Steps

1. Front console assembly
2. Lower cluster assembly
3. Steering lower cover
4. Inflator module
5. Steering wheel
6. Steering column cover
7. Combination switch and SRS coil assembly

Installation Steps

7. Combination switch and SRS coil assembly
6. Steering column cover
5. Steering wheel
4. Inflator module
3. Steering lower cover
2. Lower cluster assembly
1. Front console assembly

REMOVAL

Preparation:

1) Turn the steering wheel so that the vehicle's wheels are pointing straight ahead.
2) Turn the ignition switch to "LOCK".
3) Disconnect the battery ground cable, and wait at least 5 minutes.
4) Disconnect the yellow 2way SRS connector located under the steering column.

CAUTION:
The wheels of the vehicle must be straight ahead and the steering column in the "LOCK" position before disconnecting the steering wheel. Failure to do so will cause the coil assembly to become uncentered which will cause damage to the coil assembly.

1. **Front Console Assembly**
   1) Remove the transmission (for M/T) and transfer control lever knob.
   2) Disconnect the wiring harness connectors.
2. **Lower Cluster Assembly**
3. **Steering Lower Cover**

   Remove the engine hood opening lever.
4. **Inflator Module**
   1) Loosen the inflator module fixing bolt from behind the steering wheel assembly using a TORX® driver or equivalent until the inflator module can be released from steering assembly.

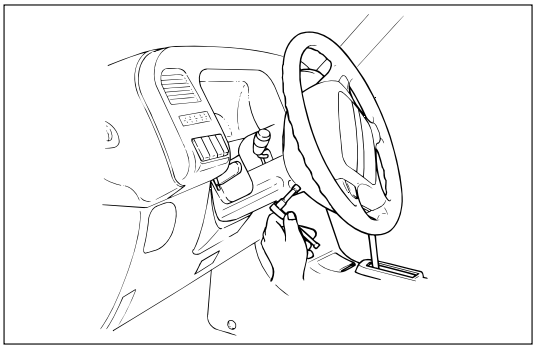

827RS014

   2) Disconnect the yellow 2way SRS connector located behind the inflator module.

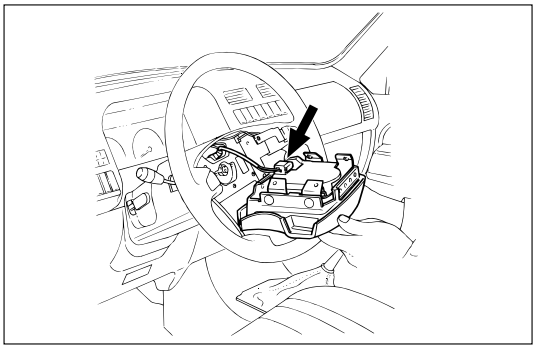

827RS015

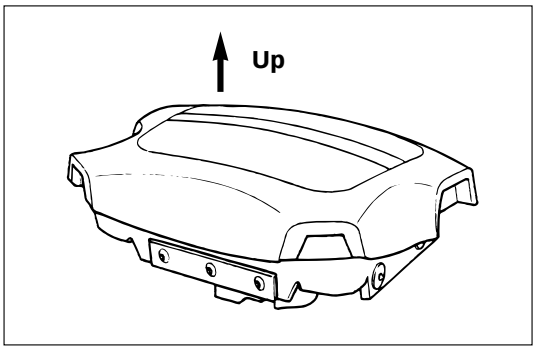

827RS016

WARNING
THE INFLATOR MODULE SHOULD ALWAYS BE CARRIED WITH THE URETHANE COVER AWAY FROM YOUR BODY AND SHOULD ALWAYS BE LAID ON A FLAT SURFACE WITH THE URETHANE SIDE UP. THIS IS NECESSARY BECAUSE A FREE SPACE IS PROVIDED TO ALLOW THE AIR CUSHION TO EXPAND IN THE UNLIKELY EVENT OF A ACCIDENTAL DEPLOYMENT. OTHERWISE, PERSONAL INJURY MAY RESULT.

5. **Steering Wheel**

   Apply a setting mark across the steering wheel and shaft so parts can be reassembled in their original position.

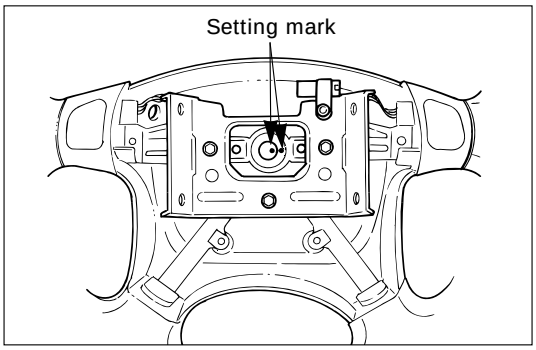

430RS004

Use special tool. Remove the steering wheel. Move the tires to the straight ahead position before removing the steering wheel.

Steering wheel remover: 5-8840-0016-0 (J-29752)

CAUTION:
Never apply force to the steering wheel in direction of the shaft by using a hammer or other impact tools in an attempt to remove the steering wheel. The steering shaft is designed as an energy absorbing unit.

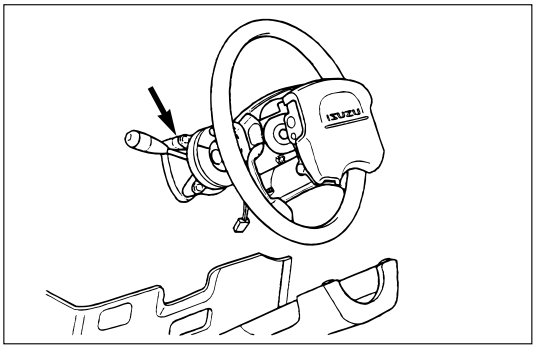

825RS046

6. **Steering Column Cover**
7. **Combination Switch and SRS Coil Assembly**
   1) Disconnect the wiring harness connectors located under the steering column.
   2) Remove the combination switch assembly with SRS coil.

NOTE:
The SRS coil is a part of the combination switch assembly, which can not be replaced separately. Therefore, be sure not to remove the SRS coil from the combination switch assembly.

INSTALLATION

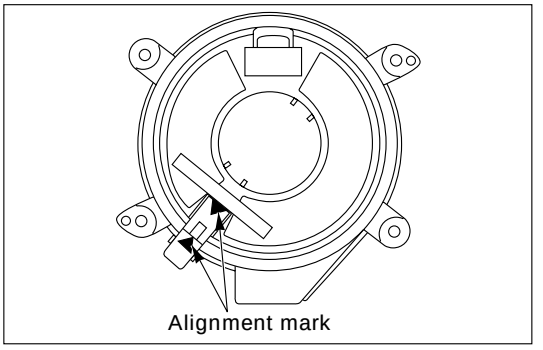

826RW027

7. **Combination Switch and SRS Coil Assembly**
   1) After installation of combination switch assembly, connect the combination switch wiring harness connector and the SRS 2way connector located under the steering column.
   2) Turn the SRS coil counterclockwise to full, return about 3 turns and align the neutral mark.

CAUTION:
When turning the SRS coil counterclockwise to full, stop turning if resistance is felt. Forced further turning may damage to the cable in the SRS coil.

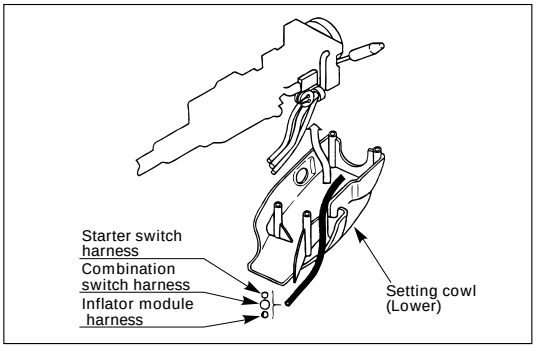

825RS048

6. **Steering Column Cover**

   When installing the steering column cover, be sure to route each wire harness as illustrated so that the harnesses do not catch on any moving parts.

5. Steering Wheel

Align the setting marks made when removing.

CAUTION:
Never apply force to the steering wheel in direction of the shaft by using a hammer or other impact tools in an attempt to remove the steering wheel. The steering shaft is designed as an energy absorbing unit.

Tighten the steering wheel fixing nut to the specified torque.

Steering Wheel Nut Torque	N·m (kg·m/lb·ft)
34 (3.5 / 25)	

4. Inflator Module

1) Support the module and carefully connect the module connector.

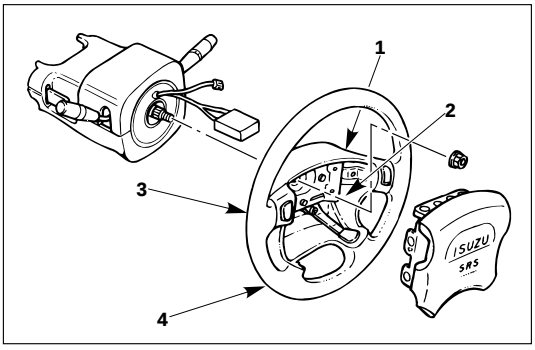

827RS017

CAUTION:
- **Never use the air bag assembly from another vehicle. Use only the air bag assembly for "UBS".**
- **When replace the inflator module, use only same parts number assembly. If different parts number assembly is installed, the air bag system can not function correctly because it has different characteristic.**

NOTE:
Pass the lead wire through the tabs on the plastic cover (wire protector) of inflator to prevent lead wire from being pinched.

2) Secure the module with one bolt to relieve weight on the connector wire.
3) Tighten bolts to specified sequence as figure.

Inflator Module Bolt Torque	N·m (kg·m/lb·in)
8 (0.8 / 69)	

3. Steering Lower Cover

Install the engine hood opening lever.

2. Lower Cluster Assembly

1. Front Console Assembly

1) Install the transmission (for M/T) and transfer control lever knob.
2) Install the wiring harness connectors.

Connect the battery ground cable.

Turn the ignition to "ON" while watching warning light.

Light should flash 7 times and then go off. If lamp does not operate correctly, refer to Section 9J.

LOCK CYLINDER REPLACEMENT

These steps are based on the LHD model.

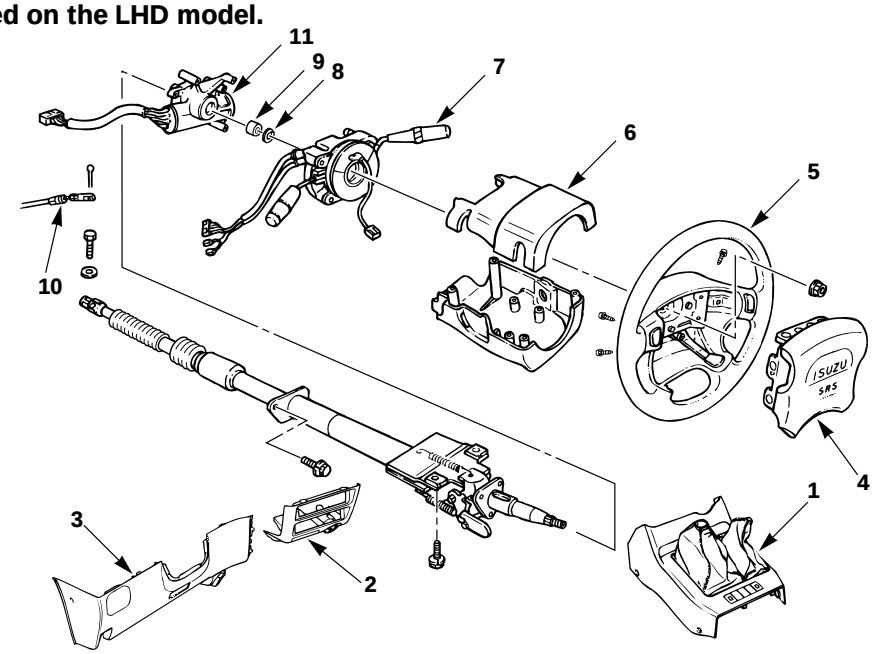

431RT003

Removal Steps

1. Front console assembly
2. Lower cluster assembly
3. Steering lower cover
4. Inflator module
5. Steering wheel
6. Steering column cover
7. Combination switch and SRS coil assembly
8. Snap ring
9. Cushion rubber
10. Shift lock cable (for A/T)
11. Lock cylinder assembly

Installation Steps

11. Lock cylinder assembly
10. Shift lock cable (for A/T)
9. Cushion rubber
8. Snap ring
7. Combination switch and SRS coil assembly
6. Steering column cover
5. Steering wheel
4. Inflator module
3. Steering lower cover
2. Lower cluster assembly
1. Front console assembly

REMOVAL

Preparation:

1) Turn the steering wheel so that the vehicle's wheels are pointing straight ahead.
2) Turn the ignition switch to "LOCK".
3) Disconnect the battery ground cable, and wait at least 5 minutes.
4) Disconnect the yellow 2way SRS connector located under the steering column.

CAUTION:
The wheels of the vehicle must be straight ahead and the steering column in the "LOCK" position before disconnecting the steering wheel. Failure to do so will cause the coil assembly to become uncentered which will cause damage to the coil assembly.

1. **Front Console Assembly**
   1) Remove the transmission (for M/T) and transfer control lever knob.
   2) Disconnect the wiring harness connectors.
2. **Lower Cluster Assembly**
3. **Steering Lower Cover**

   Remove the engine hood opening lever.
4. **Inflator Module**
   1) Loosen the inflator module fixing bolt from behind the steering wheel assembly using a TORX® driver or equivalent until the inflator module can be released from steering assembly.

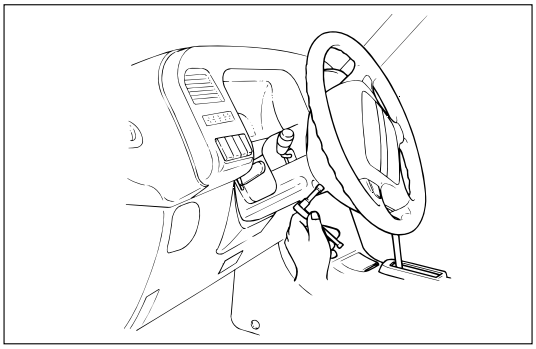

827RS014

   2) Disconnect the yellow 2way SRS connector located behind the inflator module.

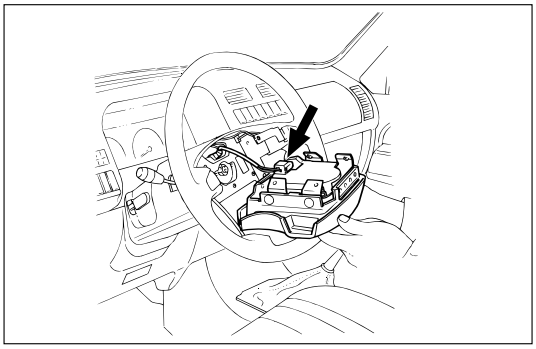

827RS015

WARNING
THE INFLATOR MODULE SHOULD ALWAYS BE CARRIED WITH THE URETHANE COVER AWAY FROM YOUR BODY AND SHOULD ALWAYS BE LAID ON A FLAT SURFACE WITH THE URETHANE SIDE UP. THIS IS NECESSARY BECAUSE A FREE SPACE IS PROVIDED TO ALLOW THE AIR CUSHION TO EXPAND IN THE UNLIKELY EVENT OF A ACCIDENTAL DEPLOYMENT. OTHERWISE, PERSONAL INJURY MAY RESULT.

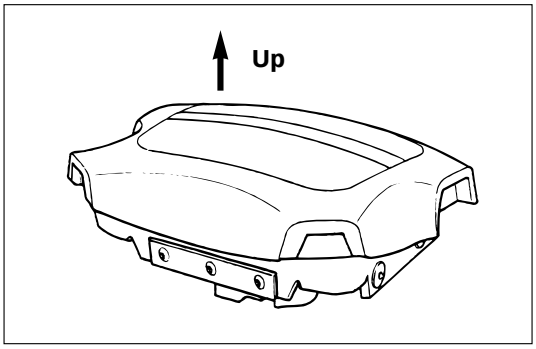

827RS016

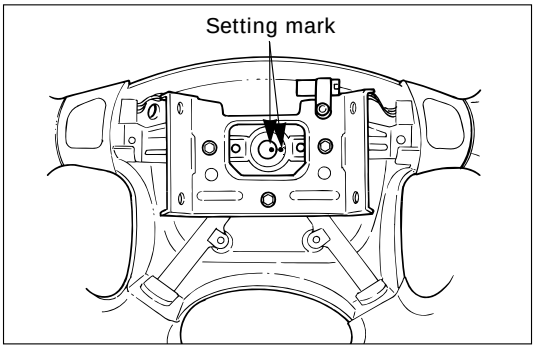

430RS004

5. Steering Wheel

Apply a setting mark across the steering wheel and shaft so parts can be reassembled in their original position.

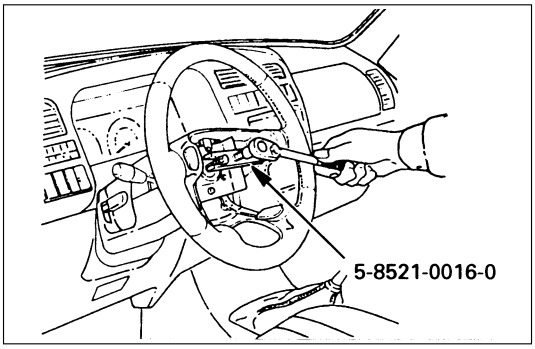

Use special tool. Remove the steering wheel. Move the tires to the straight ahead position before removing the steering wheel.

Steering wheel remover: 5-8840-0016-0 (J-29752)

CAUTION:
Never apply force to the steering wheel in direction of the shaft by using a hammer or other impact tools in an attempt to remove the steering wheel. The steering shaft is designed as an energy absorbing unit.

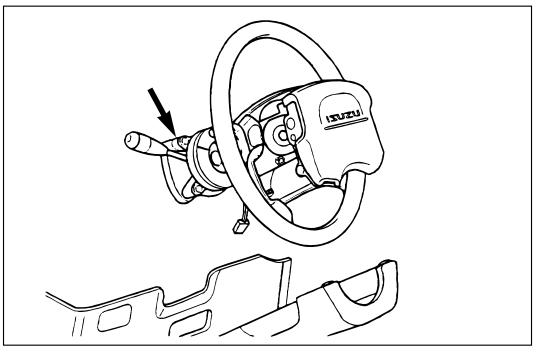

825RS046

6. Steering Column Cover

7. Combination Switch and SRS Coil Assembly

1) Disconnect the wiring harness connectors located under the steering column.
2) Remove the combination switch assembly with SRS coil.

NOTE:
The SRS coil is a part of the combination switch assembly, which can not be replaced separately. Therefore, be sure not to remove the SRS coil from the combination switch assembly.

8. Snap Ring

9. Cushion Rubber

10. Shift Lock Cable (for A/T)

11. Lock Cylinder Assembly

Disconnect the starter switch harness connector located under the steering column.

INSTALLATION

11. **Lock Cylinder Assembly**
10. **Shift Lock Cable (for A/T)**
9. **Cushion rubber**
8. **Snap ring**
7. **Combination Switch and SRS Coil Assembly**
   1) After installation of combination switch assembly, connect the combination switch wiring harness connector and the SRS 2way connector located under the steering column.
   2) Turn the SRS coil counterclockwise to full, return about 3 turns and align the neutral mark.

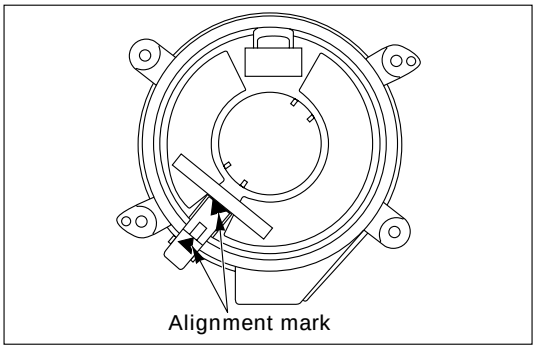

826RW027

CAUTION:
When turning the SRS coil counterclockwise to full, stop turning if resistance is felt. Forced further turning may damage to the cable in the SRS coil.

6. **Steering Column Cover**

   When installing the steering column cover, be sure to route each wire harness as illustrated so that the harnesses do not catch on any moving parts.

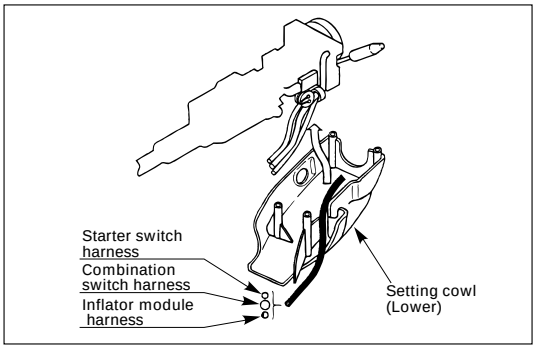

825RS048

5. **Steering Wheel**

   Align the setting marks made when removing.

CAUTION:
Never apply force to the setting wheel in direction of the shaft by using a hammer or other impact tools in an attempt to remove the steering wheel. The steering shaft is designed as an energy absorbing unit.

Tighten the steering wheel fixing nut to the specified torque.

Steering Wheel Nut Torque	N·m (kg·m/lb·ft)
34 (3.5 / 25)	

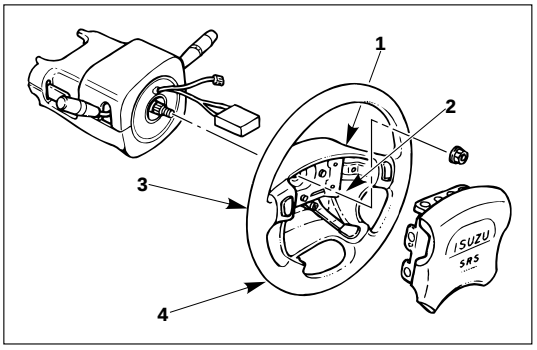

827RS017

4. **Inflator Module**
   1) Support the module and carefully connect the module connector.

CAUTION:
- **Never use the air bag assembly from another vehicle. Use only the air bag assembly for "UBS".**
- **When replace the inflator module, use only same parts number assembly. If different parts number assembly is installed, the air bag system can not function correctly because it has different characteristic.**

NOTE:
Pass the lead wire through the tabs on the plastic cover (wire protector) of inflator to prevent lead wire from being pinched.

   2) Secure the module with one bolt to relieve weight on the connector wire.
   3) Tighten bolts to specified sequence as figure.

Inflator Module Bolt Torque	N·m (kg·m/lb·in)
8 (0.8 / 69)	

3. **Steering Lower Cover**
   Install the engine hood opening lever.
2. **Lower Cluster Assembly**
1. **Front Console Assembly**
   Connect the wiring harness connectors.
   Install the transmission (for M/T) and transfer control lever knob.
   Connect the yellow 2way SRS connector located under the steering column.
   Connect the battery ground cable.

SYSTEM INSPECTION

- Turn the ignition to "ON" while watching warning light.
- Light should flash 7 times and then go off. If lamp does not operate correctly, refer to Section 9J.

STEERING COLUMN REPLACEMENT

These steps are based on the LHD model.

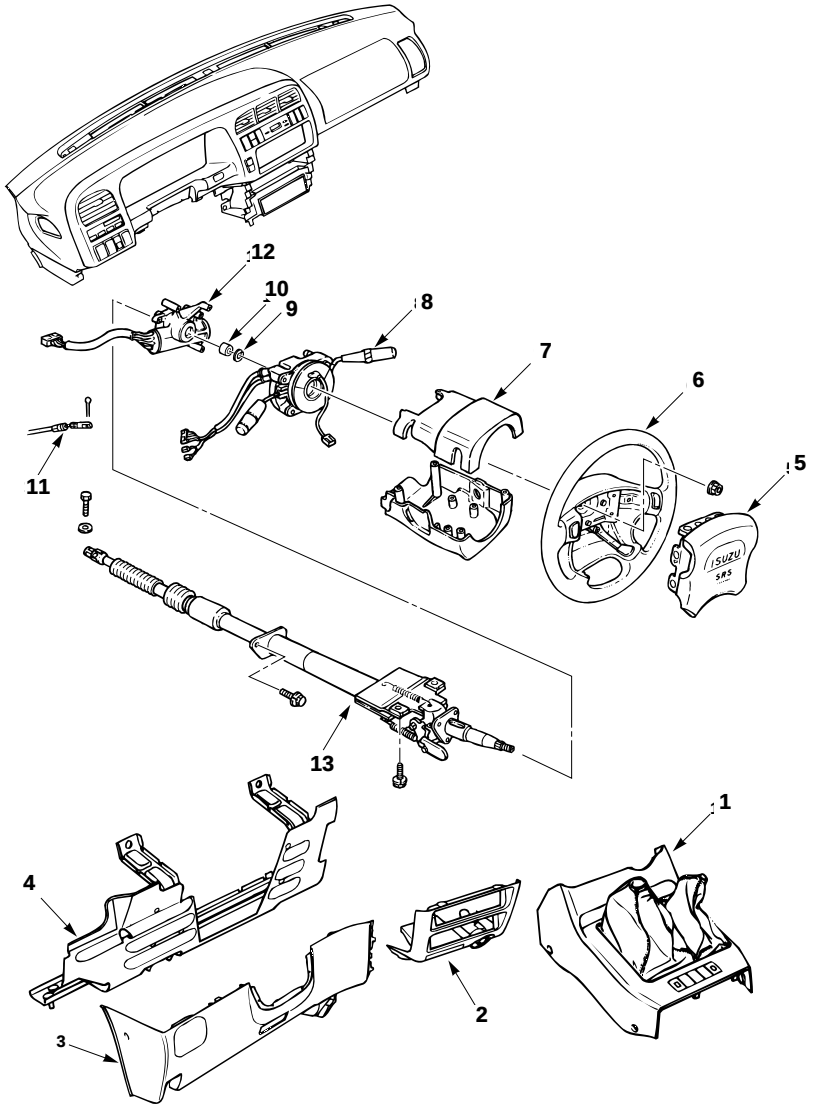

431RT002

Removal Steps

1. Front console assembly
2. Lower cluster assembly
3. Steering lower cover
4. Driver knee bolster (reinforcement)
5. Inflator module
6. Steering wheel
7. Steering column cover
8. Combination switch and SRS coil assembly
9. Snap ring
10. Cushion rubber
11. Shift lock cable (for A/T)
12. Lock cylinder assembly
13. Steering column assembly

Installation Steps

13. Steering column assembly
12. Lock cylinder assembly
11. Shift lock cable (for A/T)
10. Cushion rubber
9. Snap ring
8. Combination switch and SRS coil assembly
7. Steering column cover
6. Steering wheel
5. Inflator module
4. Driver knee bolster (reinforcement)
3. Steering lower cover
2. Lower cluster assembly
1. Front console assembly

REMOVAL

Preparation:

1) Turn the steering wheel so that the vehicle's wheels are pointing straight ahead.
2) Turn the ignition switch to "LOCK".
3) Disconnect the battery ground cable, and wait at least 5 minutes.
4) Disconnect the yellow 2way SRS connector located under the steering column.

CAUTION:
The wheels of the vehicle must be straight ahead and the steering column in the "LOCK" position before disconnecting the steering wheel.
Failure to do so will cause the SRS coil assembly to become uncentered which will cause damage to the SRS coil assembly.

1. **Front Console Assembly**

   Disconnect the transmission (for M/T) and transfer control lever knob.

   Disconnect the wiring harness connectors.
2. **Lower Cluster Assembly**
3. **Steering Lower Cover**

   Remove the engine hood opening lever.
4. **Driver Knee Bolster (Reinforcement)**
5. **Inflator Module**
   1) Loosen the inflator module fixing bolt from behind the steering wheel assembly using a TORX® driver or equivalent until the inflator module can be released from steering assembly.

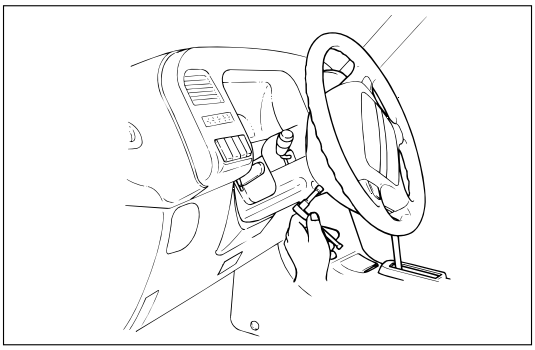

827RS014

   2) Disconnect the yellow 2way SRS connector located behind the inflator module.

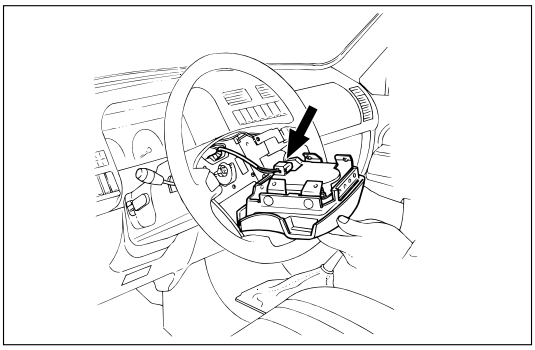

827RS015

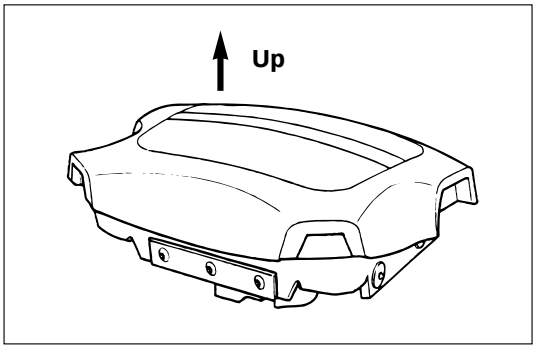

827RS016

WARNING
THE INFLATOR MODULE SHOULD ALWAYS BE CARRIED WITH THE URETHANE COVER AWAY FROM YOUR BODY AND SHOULD ALWAYS BE LAID ON A FLAT SURFACE WITH THE URETHANE SIDE UP. THIS IS NECESSARY BECAUSE A FREE SPACE IS PROVIDED TO ALLOW THE AIR CUSHION TO EXPAND IN THE UNLIKELY EVENT OF A ACCIDENTAL DEPLOYMENT. OTHERWISE, PERSONAL INJURY MAY RESULT.

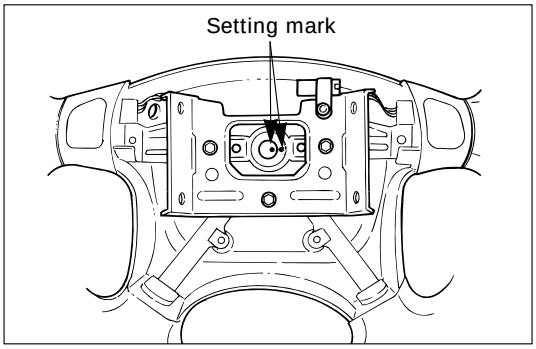

430RS004

6. **Steering Wheel**

   Apply a setting mark across the steering wheel and shaft so parts can be reassembled in their original position.

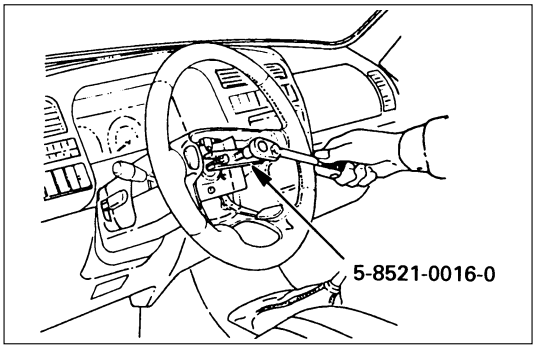

Use special tool. Remove the steering wheel. Move the tires to the straight ahead position before removing the steering wheel.

Steering wheel remover: 5-8840-0016-0 (J-29752)

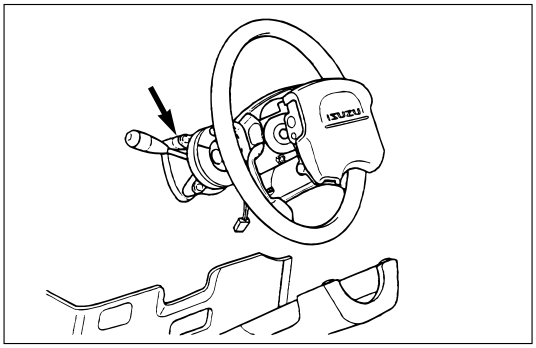

825RS046

7. **Steering Column Cover**
8. **Combination Switch and SRS Coil Assembly**
   1) Disconnect the wiring harness connectors located under the steering column.
   2) Remove the combination switch assembly with SRS coil.

   NOTE:
   The SRS coil is a part of the combination switch assembly, which can not be replaced separately. Therefore, be sure not to remove the SRS coil from the combination switch assembly.

9. **Snap Ring**
10. **Cushion Rubber**
11. **Shift Lock Cable (for A/T)**
12. **Lock Cylinder Assembly**

    Disconnect the starter switch harness connector located under the steering column.

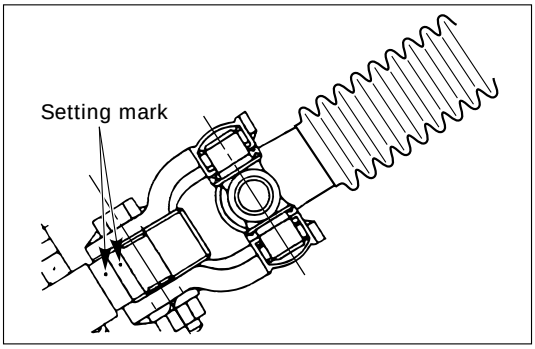

431RV003

13. Steering Column Assembly

Apply a setting mark across the universal joint and steering shaft to reassemble the parts in their original position.

NOTE:
A setting mark can be easily made if the shaft is withdrawn a little by loosening the steering shaft universal joint.

INSTALLATION

13. Steering Column Assembly

Align the setting marks on the universal joint and steering shaft made during removal.

Tighten the steering column fixing bolt (dash panel) to the specified torque.

Steering Column Bolt Torque	N·m (kg·m/lb·ft)
19 (1.9 / 14)	

Tighten the steering column fixing bolt (pedal bracket) to the specified torque.

Steering Column Bolt Torque	N·m (kg·m/lb·ft)
17 (1.7 / 13)	

Tighten the universal joint to the specified torque.

Universal Joint Torque	N·m (kg·m/lb·ft)
25 (2.5 / 18)	

12. Lock Cylinder Assembly

11. Shift Lock Cable (for A/T)

10. Cushion Rubber

9. Snap Ring

8. Combination Switch

1) After installation of combination switch assembly, connect the combination switch wiring harness connector and the SRS 2way connector located under the steering column.
2) Turn the SRS coil counterclockwise to full, return about 3 turns and align the neutral mark.

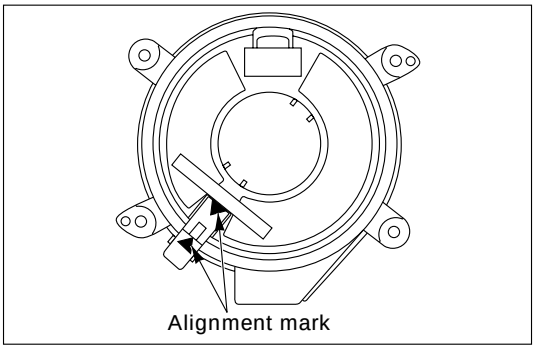

826RW027

CAUTION:
When turning the SRS coil counterclockwise to full, stop turning if resistance is felt. Forced further turning may damage to the cable in the SRS coil.

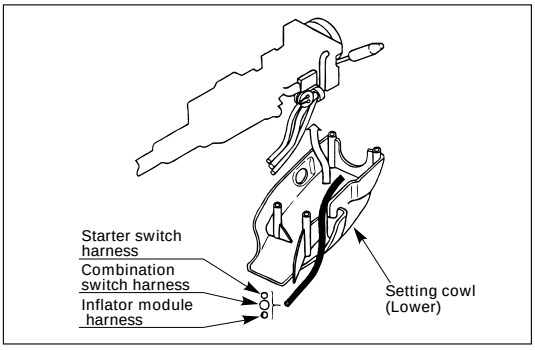

825RS048

7. **Steering Column Cover**

   When installing the steering column cover, be sure to route each wire harness as illustrated so that the harnesses do not catch on any moving parts.

6. **Steering Wheel**

   Align the setting marks made when removing.

CAUTION:
Never apply force to the steering wheel in direction of the shaft by using a hammer or other impact tools in an attempt to remove the steering wheel. The steering shaft if designed as an energy absorbing unit.

Tighten the steering wheel fixing nut to the specified torque.

Steering Wheel Nut Torque	N·m (kg·m/lb·ft)
34 (3.5 / 25)	

5. **Inflator Module**

   1) Support the module and carefully connect the module connector.

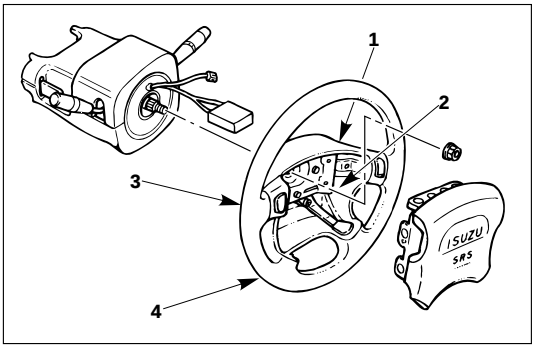

827RS017

CAUTION:
- **Never use the air bag assembly from another vehicle. Use only the air bag assembly for "UBS".**
- **When replace the inflator module, use only same parts number assembly. If different parts number assembly is installed, the air bag system can not function correctly because it has different characteristic.**

NOTE:
Pass the lead wire through the tabs on the plastic cover (wire protector) of inflator to prevent lead wire from being pinched.

   2) Secure the module with one bolt to relieve weight on the connector wire.
   3) Tighten bolts to specified sequence as figure.

Inflator Module Bolt Torque	N·m (kg·m/lb·in)
8 (0.8 / 69)	

4 **Driver Knee Bolster (Reinforcement)**

3. **Steering Lower Cover**

   Install the engine hood opening lever.

2. **Lower Cluster Assembly**

1. **Front Console Assembly**

   Connect the wiring harness connectors.
   Install the transmission (for M/T) and transfer control lever knob.

   Connect the yellow 2way SRS connector located under the steering column.

   Connect the battery ground cable.

SYSTEM INSPECTION

Turn the ignition to "ON" while watching warning light.

Light should flash 7 times and then go off. If lamp does not operate correctly, refer to Section 9J.

SECTION 2A

STEERING COLUMN

CONTENTS

PAGE

General Description ..... 2A – 76
On-Vehicle Service ..... 2A – 77
Steering Wheel Replacement ..... 2A – 77
Combination Switch Replacement ..... 2A – 79
Lock Cylinder Replacement ..... 2A – 81
Steering Column Replacement ..... 2A – 84

GENERAL DESCRIPTION

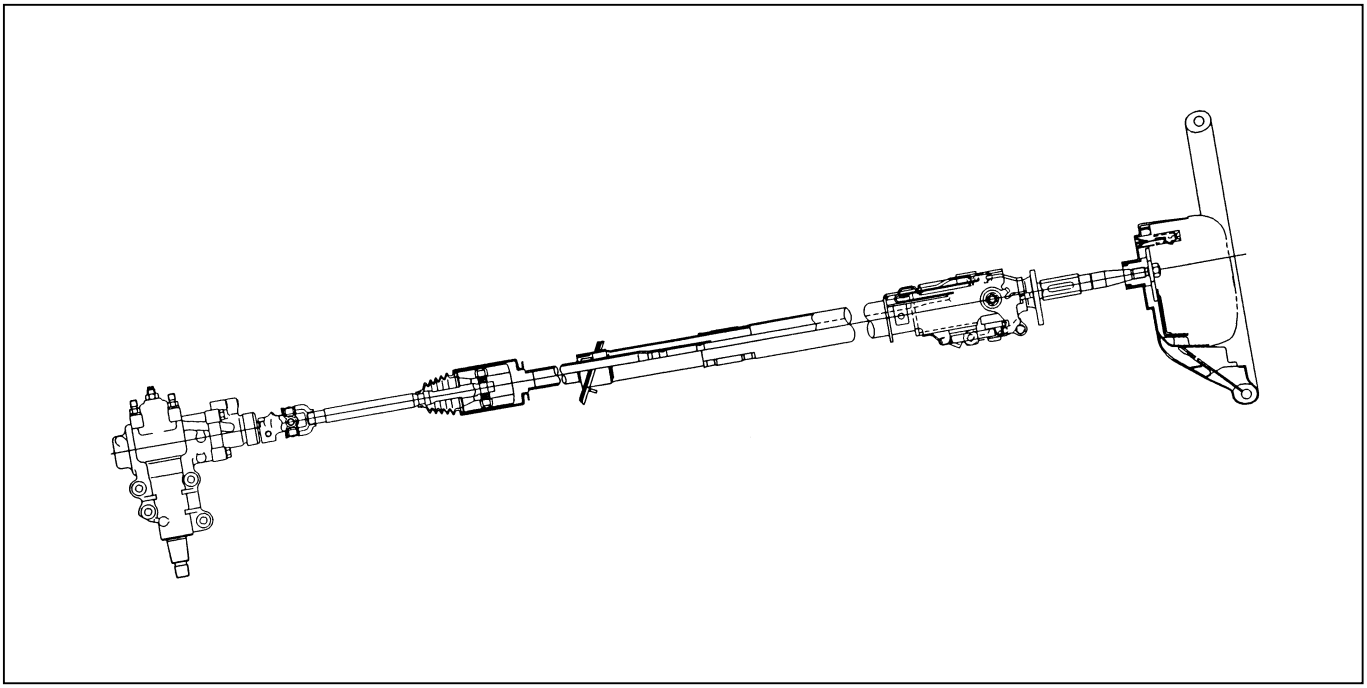

The steering column has three important features in addition to the steering function:

1. The column is energy absorbing, designed to compress in a front-end collision to minimize the possibility of injury to the driver of the vehicle.
2. The ignition switch and lock are mounted conveniently on the column.
3. With the column mounted lock, the ignition and steering operation can be locked to prevent theft of the vehicle.

The column may be disassembled and reassembled. To insure the energy absorbing action, it is important that the specified screws, bolts and nuts be used only as designated and that they are tightened to the specified torque.

When the column is removed from the vehicle, a sharp blow on the end of steering shaft leaning on the column assembly, or dropping the assembly could shear or loosen the fasteners that maintain column rigidity.

ON-VEHICLE SERVICE

STEERING WHEEL REPLACEMENT

These steps are based on the LHD model.

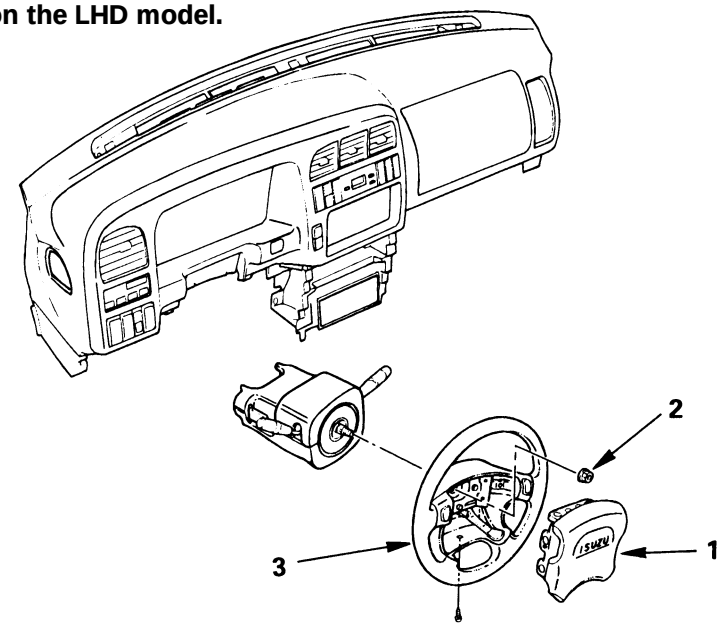

Removal Steps

1. Center pad
2. Nut
3. Steering wheel

Installation Steps

3. Steering wheel
2. Nut
1. Center pad

REMOVAL

1. Center Pad

1) Remove the center pad attaching screw from the steering wheel under side.
2) Disconnect the harness.
3) Remove the center pad from the center of the steering wheel.

2. Nut

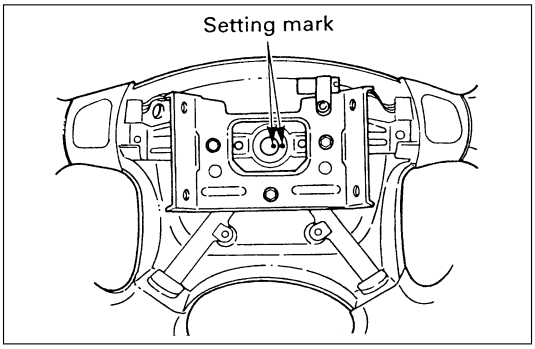

3. Steering Wheel

1) Apply a setting mark across the steering wheel and shaft so parts can be reassembled in their original position.

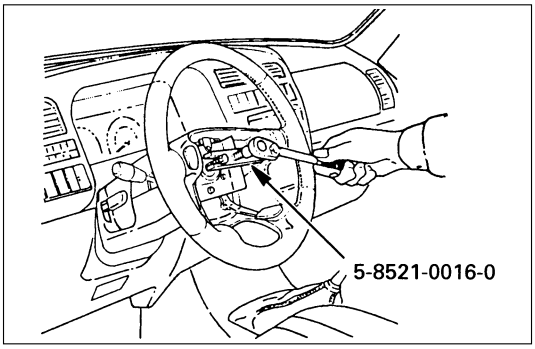

2) Use special tool.

Steering wheel remover:5-8840-0016-0(J-29752)

NOTE:
Never apply force to the steering wheel in direction of the shaft by using a hammer or other impact tools in an attempt to remove the steering wheel. The steering shaft is designed as an energy absorbing unit.

INSTALLATION

3. Steering Wheel

Align the setting marks made when removing.

CAUTION:
Never apply force to the setting wheel in direction of the shaft by using a hammer or other impact tools in an attempt to install the steering wheel. The steering shaft is designed as an energy absorbing unit.

2. Nut

Steering Wheel Nut Torque	N·m (kg·m/lb·ft)
34 (3.5 / 25)	

1. Center pad

Fit four projections of pad in holes on the steering wheel side.
Tighten the screws on the lower side of the pad.

Center Pad Nut Torque	N·m (kg·m/lb·in)
2.5 (0.25 / 21.7)	

COMBINATIONS SWITCH REPLACEMENT

These steps are based on the LHD model.

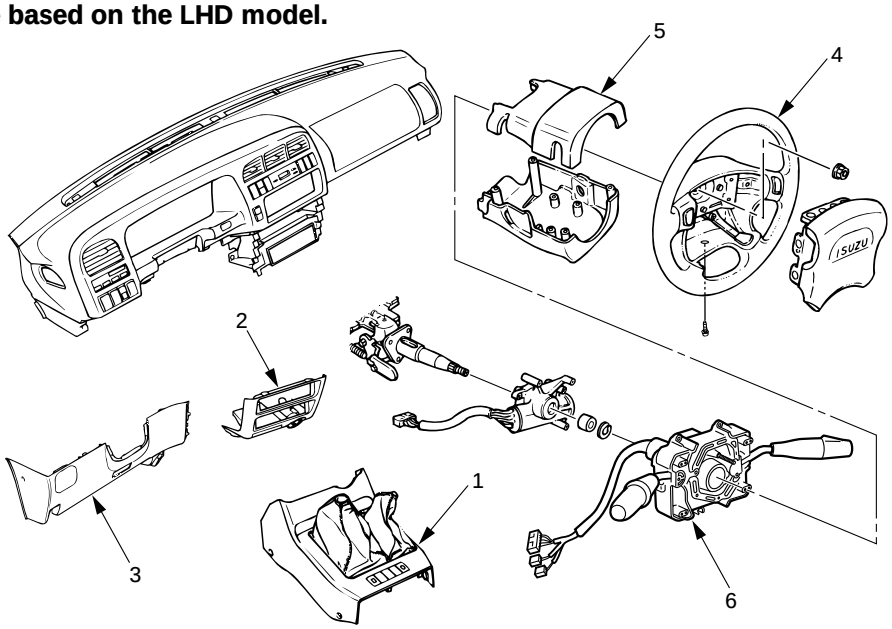

431RW021

Removal Steps

1. Front console assembly
2. Lower cluster assembly
3. Steering lower cover
4. Steering wheel
5. Steering column cover
6. Combination switch

Installation Steps

6. Combination switch
5. Steering column cover
4. Steering wheel
3. Steering lower cover
2. Lower cluster assembly
1. Front console assembly

REMOVAL

1. Front console assembly

1) Remove the transmission (for M/T) and transfer control lever knob.
2) Disconnect the wiring harness connectors.

2. Lower cluster assembly

3. Steering lower cover

Remove the engine hood opening lever.

4. Steering wheel

Apply a setting mark across the steering wheel and shaft so parts can be reassembled in their original position.

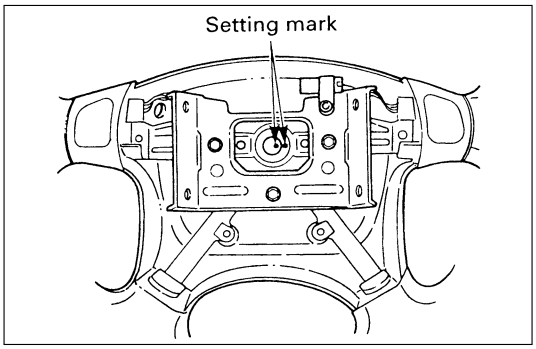

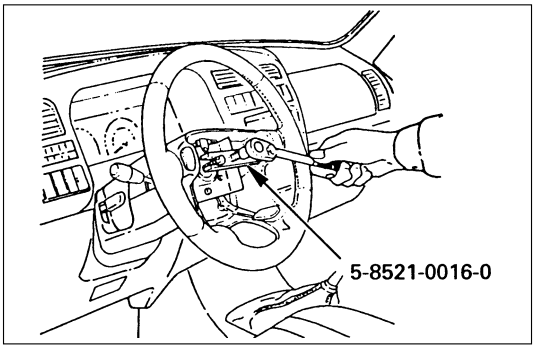

Use special tool. Remove the steering wheel.
Move the tires to the straight ahead positions before removing the steering wheel.

Steering wheel remover:5-8840-0016-0(J-29752)

CAUTION:
Never apply force to the steering wheel in direction of the shaft by using a hammer or other impact tools in an attempt to remove the steering wheel. The steering shaft is designed as an energy absorbing unit.

5. **Steering column cover**
6. **Combination switch**

   Disconnect the wiring harness connector.

INSTALLATION

6. **Combination switch**

   After installations of combinations switch assembly, connect the combination switch wiring harness connector.
5. **Steering column cover**
4. **Steering wheel**

   Align the setting marks made when removing.

CAUTION:
Never apply force to the setting wheel in direction of the shaft by using a hammer or other impact tools in an attempt to remove the steering wheel. The steering shaft is designed as an energy absorbing unit.

Tighten the steering wheel fixing nut to the specified torque.

Steering wheel Nut Torque	N·m (kg·m/lb·ft)
34 (3.5 / 25)	

3. **Steering lower cover**

   Install the engine hood opening lever.
2. **Lower cluster assembly**
1. **Front console assembly**

   Install the transmission (for M/T) and transfer control lever knob.

   Install the wiring harness connectors.

LOCK CYLINDER REPLACEMENT

These steps are based on the LHD model.

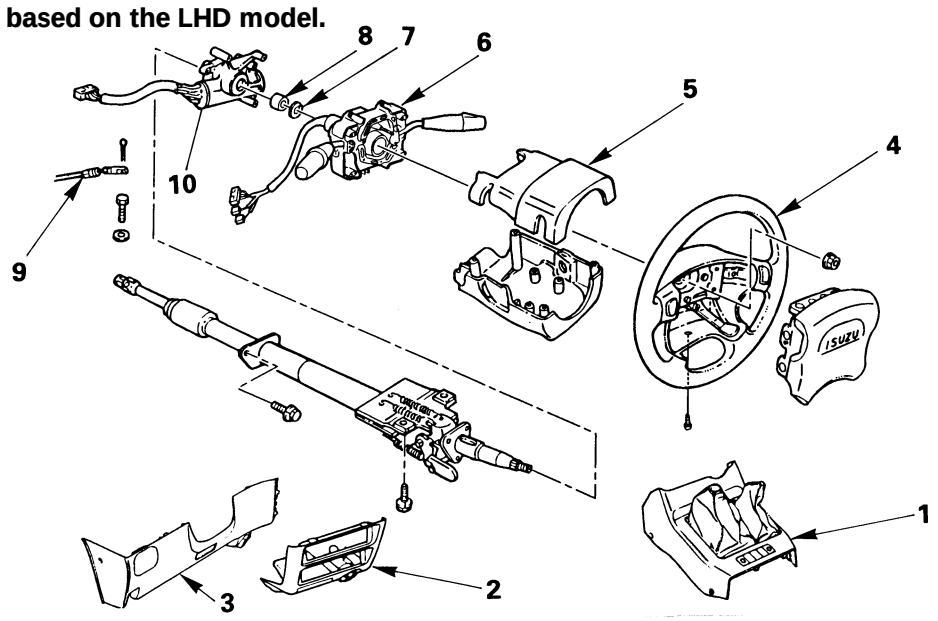

Removal Steps

1. Front console assembly
2. Lower cluster assembly
3. Steering lower cover
4. Steering wheel
5. Steering column cover
6. Combination switch
7. Snap ring
8. Cushion rubber
9. Shift lock cable (for A/T)
10. Lock cylinder assembly

Installation Steps

10. Lock cylinder assembly
9. Shift lock cable (for A/T)
8. Cushion rubber
7. Snap ring
6. Combination switch
5. Steering column cover
4. Steering wheel
3. Steering lower cover
2. Lower cluster assembly
1. Front console assembly

REMOVAL

1. **Front console assembly**
   1) Remove the transmission (for M/T) and transfer control lever knob.
   2) Disconnect the wiring harness connectors.
2. **Lower cluster assembly**
3. **Steering lower cover**

   Remove the engine hood opening lever.

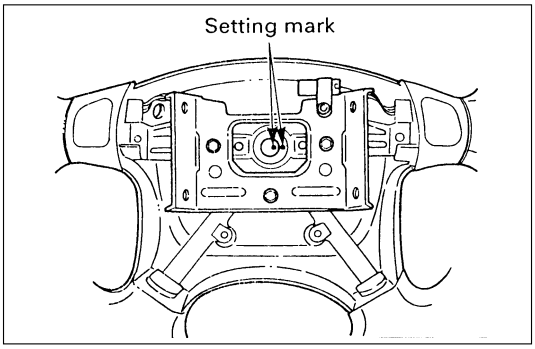

4. **Steering wheel**

   Apply a setting mark across the steering wheel and shaft so parts can be reassembled in their original position.

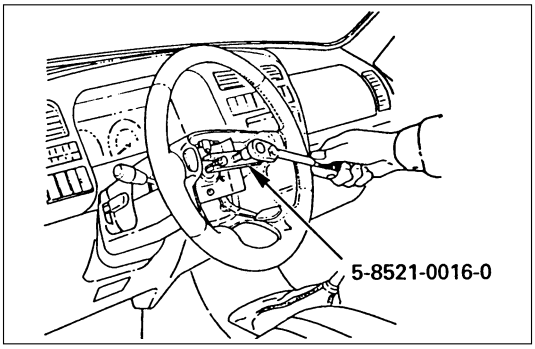

Use special tool. Remove the steering wheel.
Move the tires to the straight ahead positions before removing the steering wheel.

Steering wheel remover:5-8840-0016-0(J-29752)

5. **Steering column cover**
6. **Combination switch**

   Disconnect the wiring harness connectors.
7. **Snap ring**
8. **Cushion rubber**
9. **Shift lock cable (for A/T)**
10. **Lock cylinder assembly**

    Disconnect the starter switch harness connector located under the steering column.

INSTALLATION

10. **Lock cylinder assembly**
9. **Shift lock cable (for A/T)**
8. **Cushion rubber**
7. **Snap ring**
6. **Combination switch**

   After installations of combinations switch assembly, connect the combination switch wiring harness connector.
5. **Steering column cover**
4. **Steering wheel**

   Align the setting marks made when removing.

CAUTION:
Never apply force to the steering wheel in direction of the shaft by using a hammer or other impact tools in an attempt to remove the steering wheel. The steering shaft is designed as an energy absorbing unit.

Tighten the steering wheel fixing nut to the specified torque.

Steering wheel Nut Torque	N·m (kg·m/lb·ft)
34 (3.5 / 25)	

3. **Steering lower cover**

   Install the engine hood opening lever.

2. **Lower cluster assembly**

1. **Front console assembly**

   Connect the wiring harness connectors.

   Install the transmission (for M/T) and transfer control lever knob.

STEERING COLUMN REPLACEMENT

These steps are based on the LHD model.

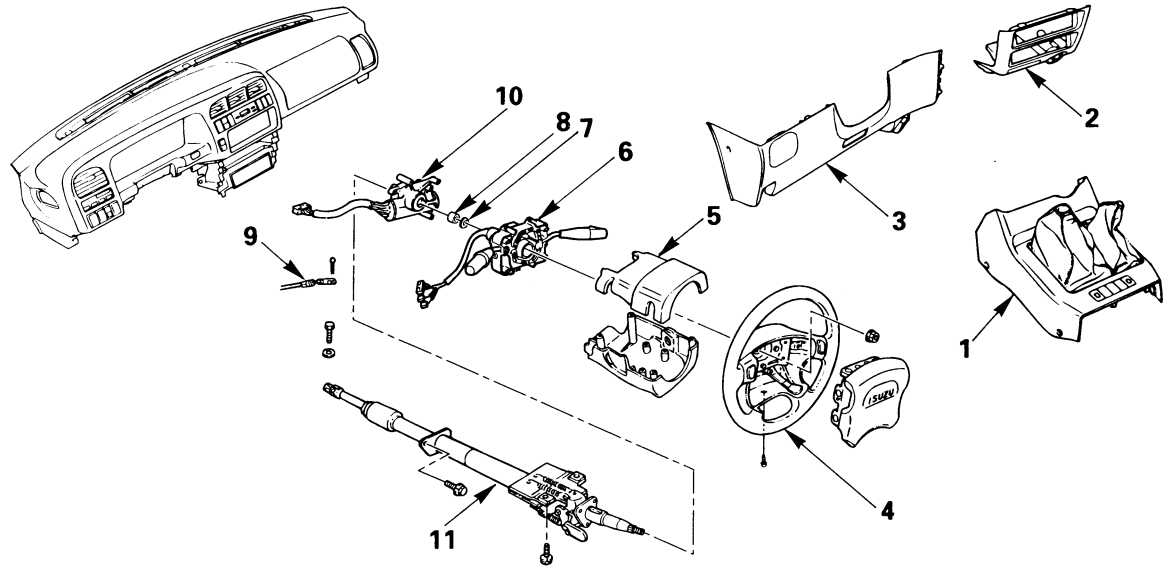

Removal Steps

1. Front console assembly
2. Lower cluster assembly
3. Steering lower cover
4. Steering wheel
5. Steering column cover
6. Combination switch
7. Snap ring
8. Cushion rubber
9. Shift lock cable (for A/T)
10. Lock cylinder assembly
11. Steering column assembly

Installation Steps

11. Steering column assembly
10. Lock cylinder assembly
9. Shift lock cable (for A/T)
8. Cushion rubber
7. Snap ring
6. Combination switch
5. Steering column cover
4. Steering wheel
3. Steering lower cover
2. Lower cluster assembly
1. Front console assembly

REMOVAL

1. **Front console assembly**

   Disconnect the transmission (for M/T) and transfer control lever knob.

   Disconnect the wiring harness connectors.

2. **Lower cluster assembly**

3. **Steering lower cover**

   Remove the engine hood opening lever.

4. **Steering wheel**

   Apply a setting mark across the steering wheel and shaft so parts can be reassembled in their original position.

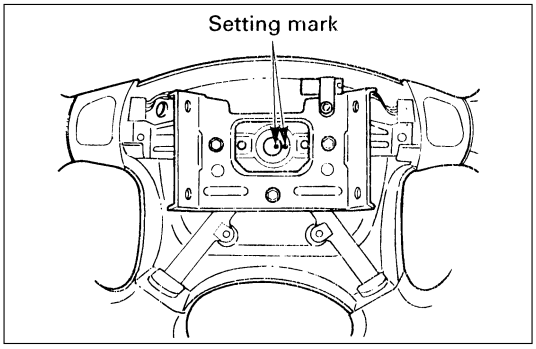

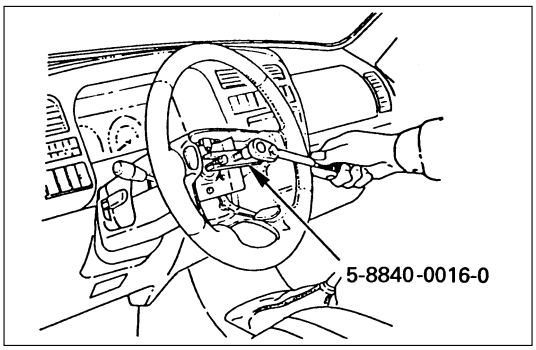

Use special tool. Remove the steering wheel.

Move the tires to the straight ahead positions before removing the steering wheel.

Steering wheel remover:5-8840-0016-0(J-29752)

5. **Steering column cover**
6. **Combination switch**

   Disconnect the wiring harness connectors.

7. **Snap ring**
8. **Cushion rubber**
9. **Shift lock cable (for A/T)**
10. **Lock cylinder assembly**

    Disconnect the starter switch harness connector located under the steering column.

11. **Steering column assembly**

    Apply a setting mark across the universal joint and steering shaft to reassembly the parts in their original position.

    NOTE:
    A setting mark can be easily made if the shaft is withdrawn a little by loosening the steering shaft universal joint.

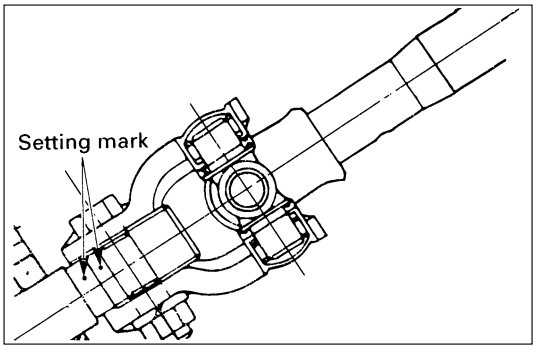

INSTALLATION

11. Steering column assembly

Align the setting marks on the universal joint and steering shaft made during removal.

Tighten the steering column fixing bolt (dash panel) to the specified torque.

Steering Column Bolt Torque	N·m (kg·m/lb·ft)
19 (1.9 / 14)	

Tighten the steering column fixing bolt (pedal bracket) to the specified torque.

Steering Column Bolt Torque	N·m (kg·m/lb·ft)
17 (1.7 / 13)	

Tighten the universal joint to the specified torque.

Universal Joint Torque	N·m (kg·m/lb·ft)
25 (2.5 / 18)	

10. Lock cylinder assembly

9. Shift lock cable (for A/T)

8. Cushion rubber

7. Snap ring

6. Combination switch

After installation of combination switch assembly, connect the combination switch wiring harness connector.

5. Steering column cover

4. Steering wheel

Align the setting marks made when removing.

CAUTION:
Never apply force to the steering wheel in direction of the shaft by using a hammer or other impact tools in an attempt to remove the steering wheel. The steering shaft is designed as an energy absorbing unit.

Tighten the steering wheel fixing nut to the specified torque.

Steering wheel Nut Torque	N·m (kg·m/lb·ft)
34 (3.5 / 25)	

3. Steering lower cover

Install the engine hood opening lever.

2. Lower cluster assembly

1. Front console assembly

Connect the wiring harness connectors.

Install the transmission (for M/T) and transfer control

SECTION 3C

FRONT SUSPENSION

CONTENTS

PAGE

General Description ..... 3C – 2
On-Vehicle Service ..... 3C – 3
Shock Absorber ..... 3C – 3
Stabilizer Bar ..... 3C – 5
Torsion Bar ..... 3C – 7
Knuckle ..... 3C – 10
Upper Control Arm ..... 3C – 14
Lower Control Arm ..... 3C – 18
Upper Ball Joint ..... 3C – 22
Lower Ball Joint ..... 3C – 25

GENERAL DESCRIPTION

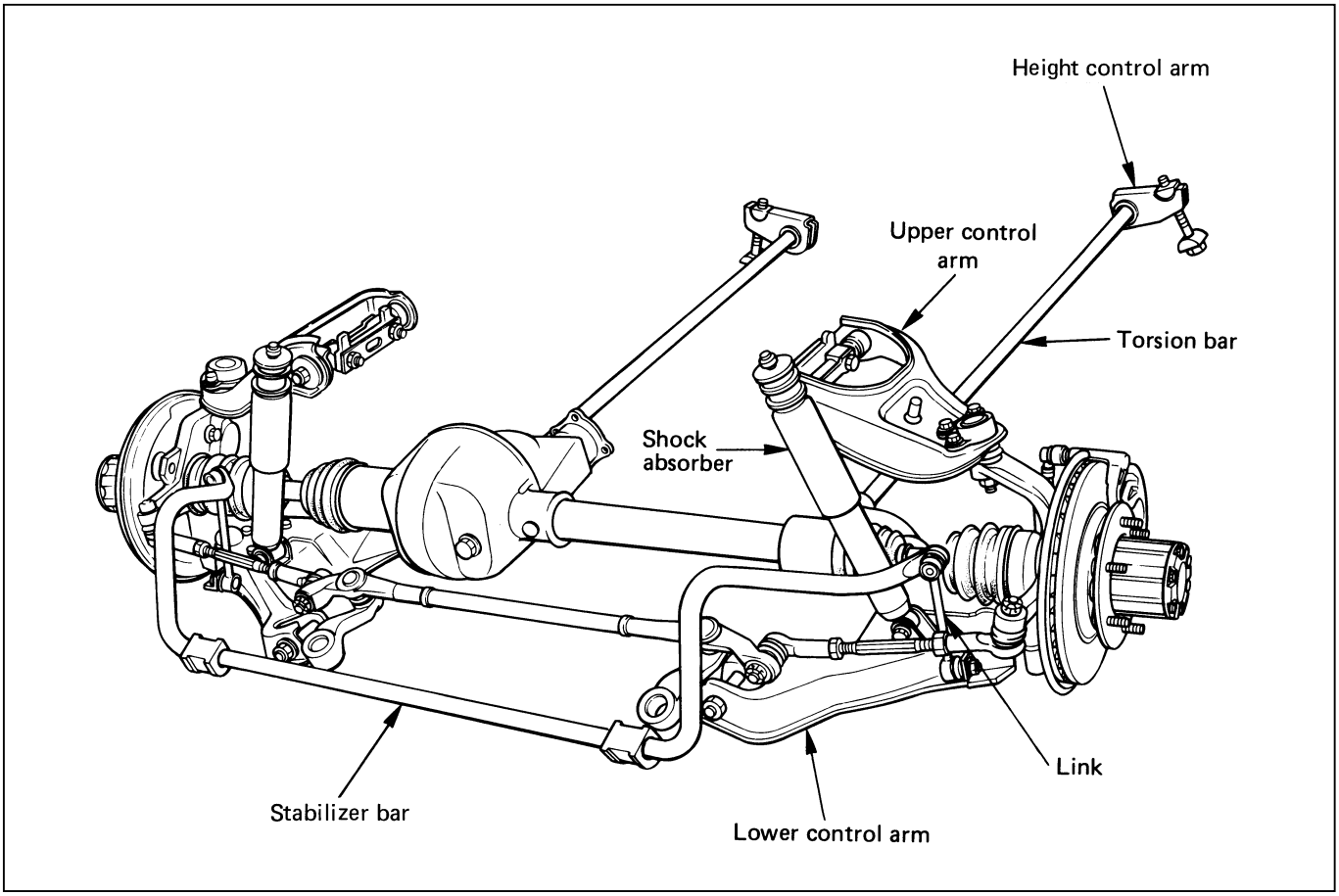

The front suspension is designed to allow each wheel to compensate for changes in the road surface level without greatly affecting the opposite wheel. Each wheel is independently connected to the frame by a steering knuckle, ball joint assemblies, and upper and lower control arms.
The front wheels are held in proper relationship to each other by two outer track rods which are connected to steering arms on the knuckles and to a center track rod.
All models have a front suspension system consisting of control arms, stabilizer bar, shock absorber and a torsion bar. The front end of the torsion bar is attached to the lower control arm.
The rear of the torsion bar is mounted into a height control arm at the crossmember. Vehicle trim height is controlled by adjusting this arm.
Shock absorbers are mounted between the brackets on the frame and the lower control arms.
The lower portion of each shock absorber is attached to the lower control arm by a bolt and nut.
The upper portion of each shock absorber extends through a frame bracket and is secured with two rubber bushings, three retainers and a nut.
Ball joint assemblies are bolted to the outer end of the upper and lower control arm and are attached to the steering knuckle by nuts and cotter pins.
The inner ends of the upper control arm have pressed in bushings. Bolts passing through the bushing, attach the control arm to the frame. The inner ends of the lower control arm are attached to the frame by bolts passing through the bushings, which are pressed in the frame.
Side roll of the front suspension is controlled by a spring steel stabilizer bar. It is mounted in rubber bushings, which are held to the crossmember by brackets. The ends of the stabilizer are connected to the lower control arms by link bolts isolated by rubber bushings.

ON-VEHICLE SERVICE

SHOCK ABSORBER

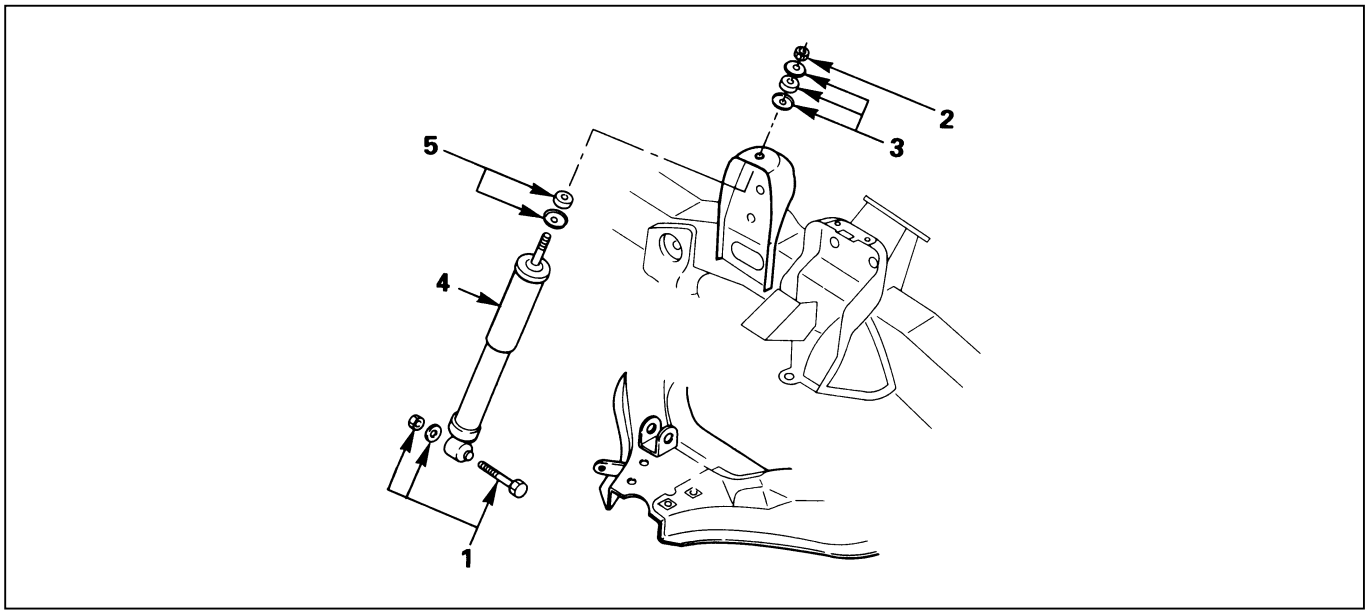

Removal Steps

1. Bolt, nut and washer
2. Nut
3. Rubber bushing and washer
4. Shock absorber
5. Rubber bushing and washer

Installation Steps

5. Rubber bushing and washer
4. Shock absorber
3. Rubber bushing and washer
2. Nut
1. Bolt, nut and washer

REMOVAL

Preparation:

1) Raise the vehicle and support it with suitable safety stands.
2) Remove wheel and tire assembly. Refer to "Wheels and Tires" in section 3E.

1. Bolt, Nut and Washer

2. Nut

3. Rubber Bushing and Washer

4. Shock Absorber

5. Rubber Bushing and Washer

INSPECTION AND REPAIR

Make necessary correction or parts replacement if wear, damage, corrosion or any other abnormal condition are found through inspection.

- Shock absorber
- Rubber bushing

INSTALLATION

5. **Rubber Bushing and Washer**
4. **Shock Absorber**
3. **Rubber Bushing and Washer**
2. **Nut**

Shock Absorber Nut Torque	N·m (kg·m/lb·ft)
20 (2.0 / 14)	

1. **Bolt, Nut and Washer**

Shock Absorber Nut Torque	N·m (kg·m/lb·ft)
82 (8.4 / 61)	

STABILIZER BAR

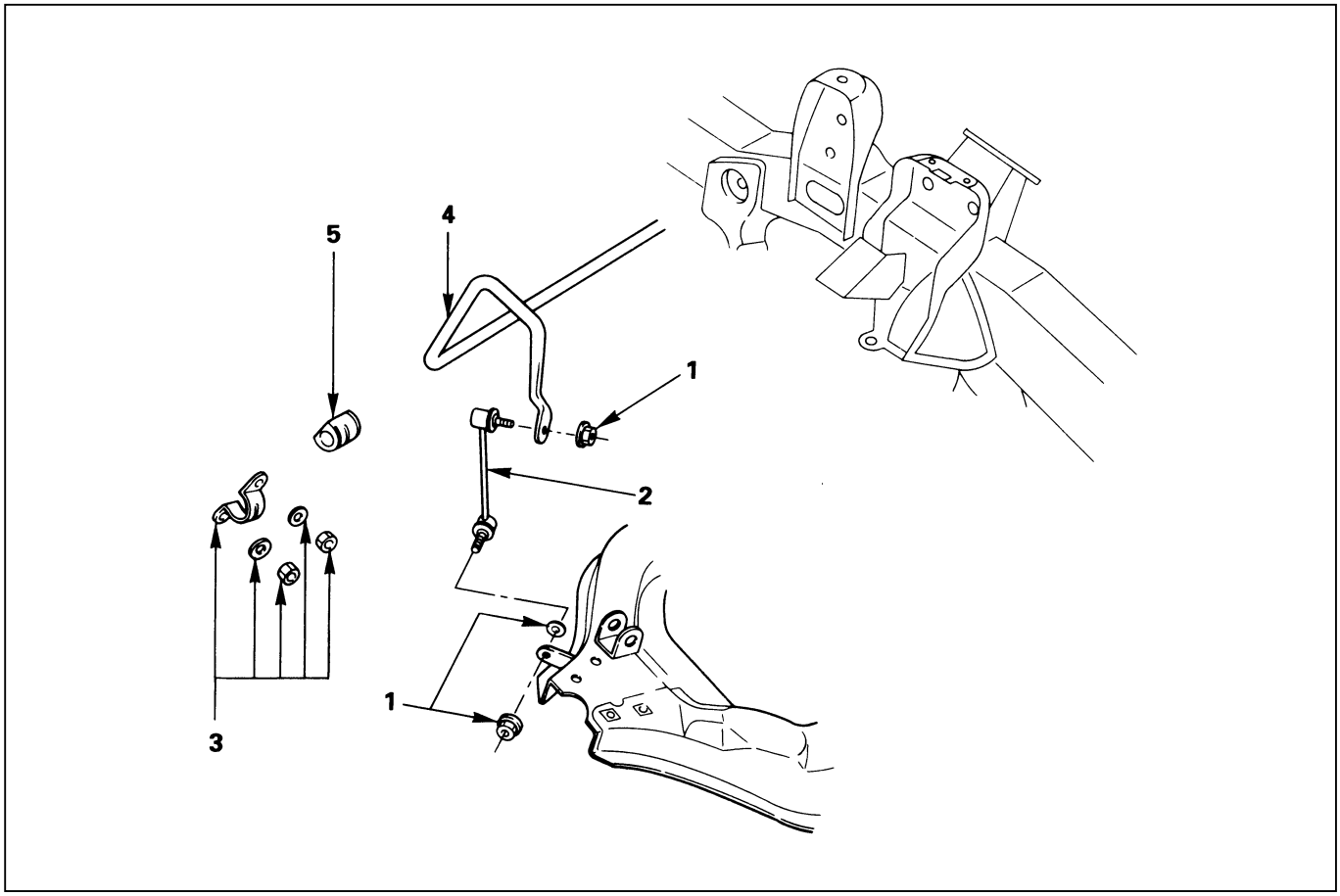

Removal Steps

1. Nut and washer
2. Link
3. Bracket
4. Stabilizer bar
5. Rubber bushing

Installation Steps

5. Rubber bushing
4. Stabilizer bar
3. Bracket
2. Link
1. Nut and washer

REMOVAL

Preparation:

1) Raise the vehicle and support the frame with suitable safety stands.
2) Remove the stone guard.
3) Remove wheel and tire assembly. Refer to “Wheels and Tires” in section 3E.

1. Nut and Washer

CAUTION:
Be careful not to break the ball joint boot.

2. Link

3. Bracket

4. Stabilizer Bar

5. Rubber Bushing

INSPECTION AND REPAIR

Make necessary correction or parts replacement if wear, damage, corrosion or any other abnormal condition are found through inspection.

- Stabilizer bar
- Rubber bushing
- Link ball joint

INSTALLATION

5. **Rubber Bushing**
4. **Stabilizer Bar**
3. **Bracket**

Bracket Nut Torque	N·m (kg·m/lb·ft)
22 (2.2 / 16)	

2. **Link**
1. **Nut and Washer**

Link Nut Torque	N·m (kg·m/lb·ft)
50 (5.1 / 37)	

TORSION BAR

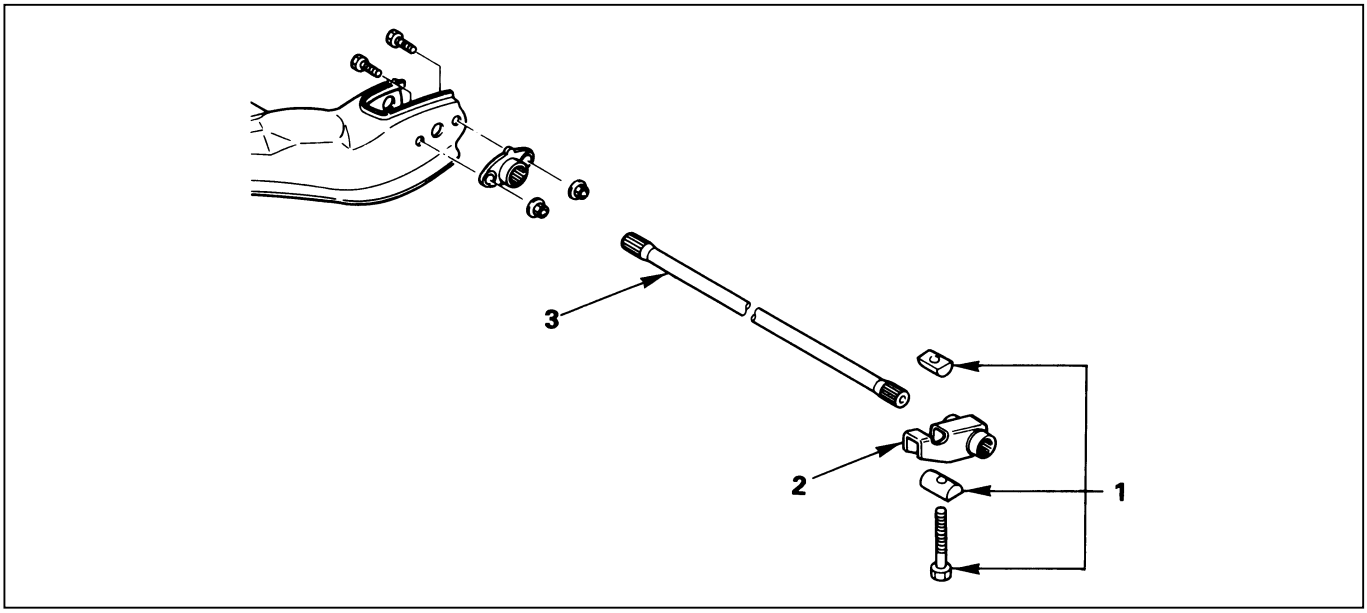

Removal Steps

1. Adjust bolt, end piece and seat
2. Height control arm
3. Torsion bar

Installation Steps

3. Torsion bar
2. Height control arm
1. Adjust bolt, end piece and seat

REMOVAL

Preparation:

Raise the vehicle and support the frame with suitable safety stands.

1. **Adjust Bolt, End Piece and Seat**
   Apply the setting marks to the adjust bolt and end piece.

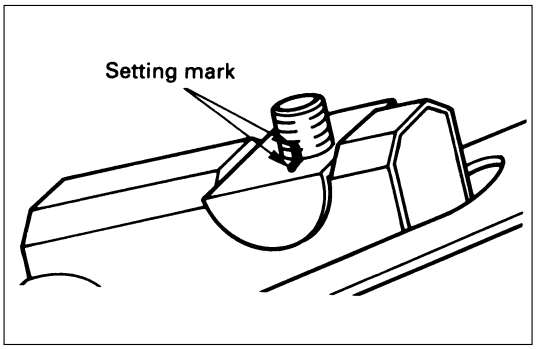

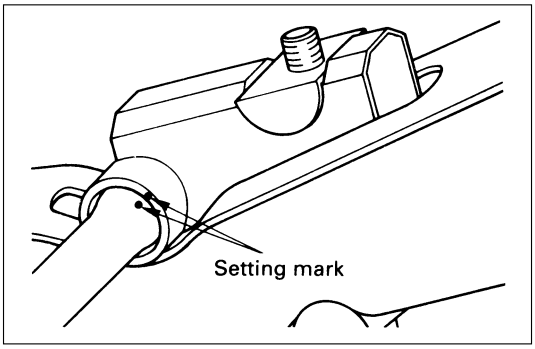

2. Height Control Arm
Apply the setting marks to the height control arm and torsion bar.

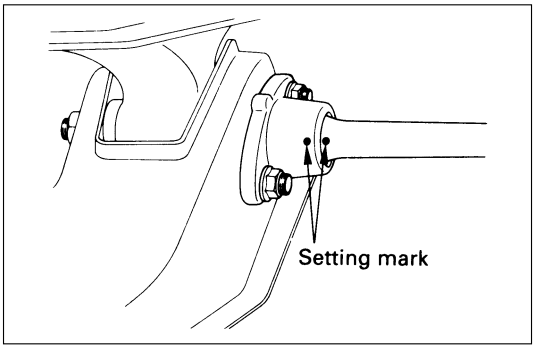

3. Torsion Bar
Apply the setting marks to the torsion bar and lower control arm.

INSPECTION AND REPAIR

Make necessary correction or parts replacement if wear, damage, corrosion or any other abnormal condition are found through inspection.
Check the following parts:

- Torsion bar
- Height control arm
- Adjust bolt
- Rubber seat

INSTALLATION

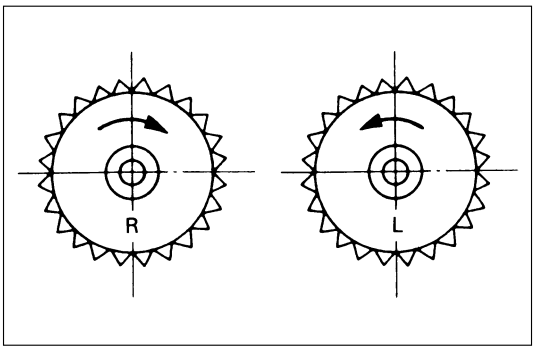

3. Torsion Bar
Make sure the bars are on their correct respective sides.

Apply grease to the serrated portions.

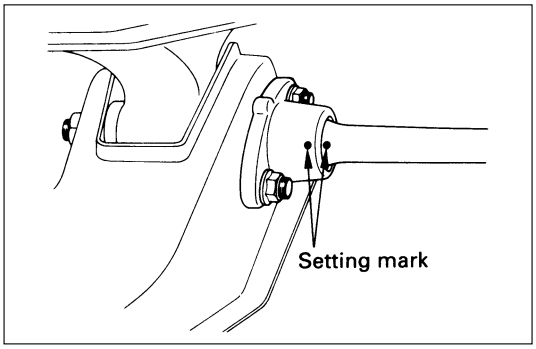

Align the setting marks.

2. Height Control Arm
Apply grease to the portion that fits into the bracket.

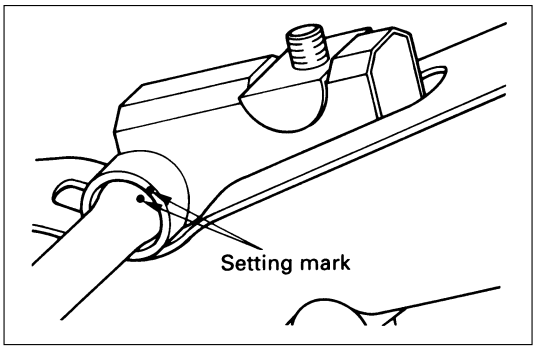

Align the setting marks.

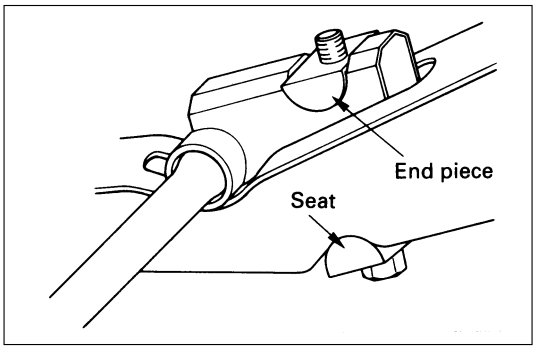

Apply grease to the bolt portion of the end piece.

Apply grease to the portion of the seat that fits into the bracket.

Apply grease to the serrated portions.

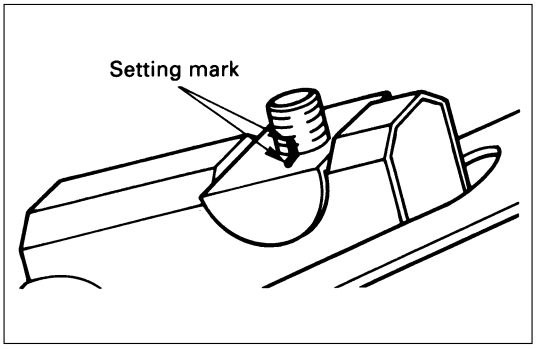

1. Adjust Bolt and Seat
Turn ther adjust bolt to the setting mark applied during disassembly.

NOTE:
Adjust the trim height. Refer to “Front End Alignment” in section 3A.

KNUCKLE

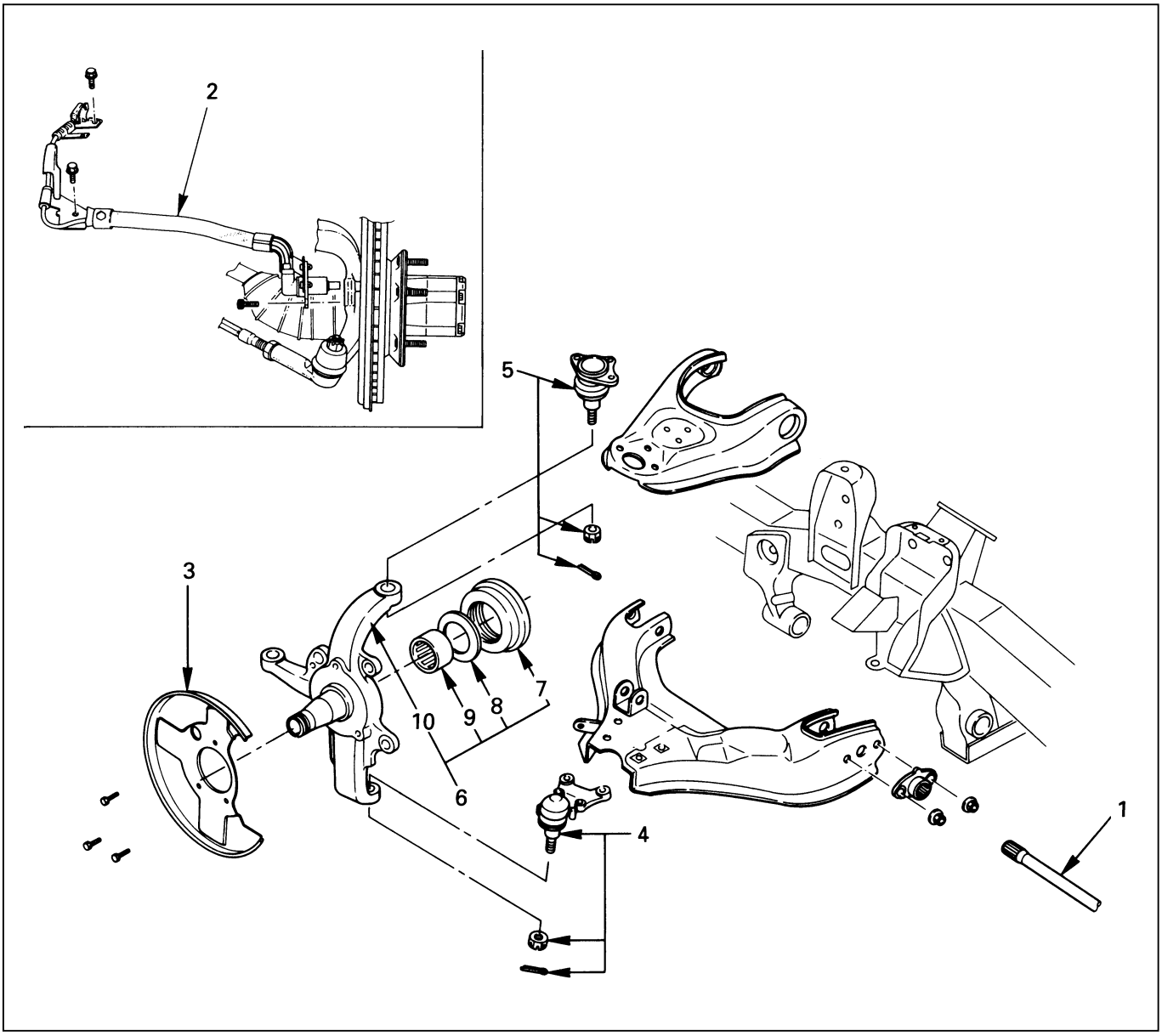

Removal Steps

1. Torsion bar
2. Wheel speed sensor (if equipped with ABS)
3. Back plate
4. Lower ball joint
5. Upper ball joint
6. Knuckle assembly
7. Oil seal
8. Thrust washer
9. Needle bearing
10. Knuckle

Installation Steps

10. Knuckle
9. Needle bearing
8. Thrust washer
7. Oil seal
6. Knuckle assembly
5. Upper ball joint
4. Lower ball joint
3. Back plate
2. Wheel speed sensor (if equipped with ABS)
1. Torsion bar

REMOVAL

Preparation:

1) Raise the vehicle and support the frame with suitable safety stands.
2) Remove wheel and tire assembly. Refer to “Wheels and Tires” in section 3E.
3) Remove the brake caliper. Refer to “Brakes” in section 5.
4) Remove the hub assembly. Refer to “Hub and Disk” in section 4C.
5) Remove outer track rod from the knuckle. Refer to “Steering Linkage” in section 2A.

1. **Torsion Bar**
   Loosen torsion bar by height control arm adjust bolt. Refer to “Torsion bar” in this section.
2. **Wheel speed sensor (if equipped with ABS)**
3. **Back Plate**
4. **Lower Ball Joint**
   Remover: 5-8840-2005-0 (J-29107)

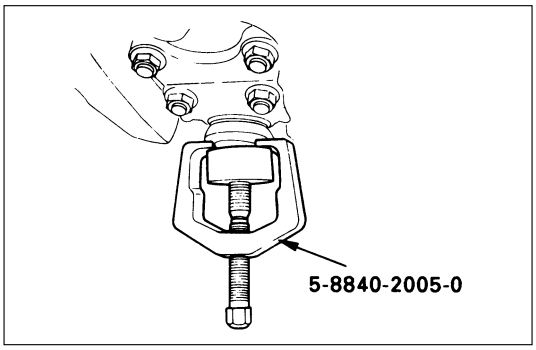

CAUTION:
Be careful not to break the ball joint boot.

5. **Upper Ball Joint**
   Remover: 5-8840-2121-0 (J-36831)

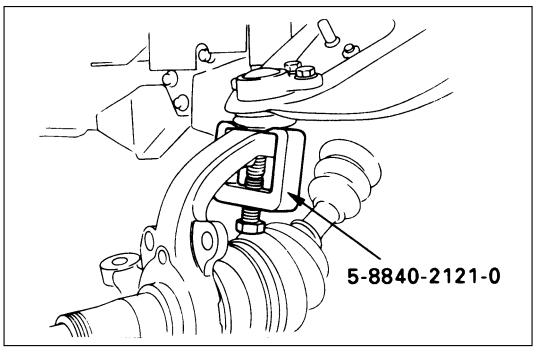

CAUTION:
Be careful not to break the ball joint boot.

6. **Knuckle Assembly**
7. **Oil Seal**
8. **Washer**
9. **Needle Bearing**
   Remover: 5-8840-0019-0 (J-23907)

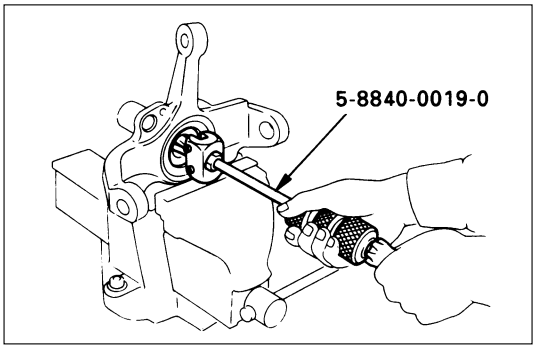

10. Knuckle

INSPECTION AND REPAIR

Make necessary correction or parts replacement if wear, damage, corrosion or any other abnormal condition are found through inspection.
Check the following parts:

- Knuckle
- Needle bearing
- Thrust washer

INSTALLATION

10. Knuckle

9. Needle Bearing

Before installation, apply appropriate amount of multipurpose type grease to the new bearing (Approx. 5 g).
Installer: 5-8840-2128-0 (J-36838) and
5-8840-0007-0 (J-8092)

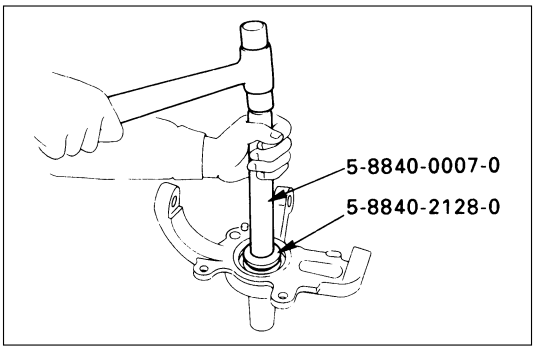

8. Washer

Apply multipurpose type grease to the thrust washer, and install it with chamfered side facing knuckle.

7. Oil Seal

Use a new oil seal, and apply multipurpose type grease to the area surrounded by the lip (approx. 2 g).

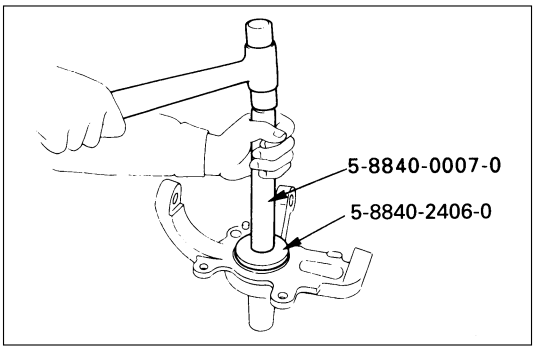

After fitting the oil seal to the installer, drive it to the knuckle using a hammer or bench press until the tool front face contacts with the thrust washer.
Installer: 5-8840-2406-0 (J-41468)and
5-8840-0007-0 (J-8092)

6. Knuckle Assembly

5. Upper Ball Joint

Tighten the nut to the specified torque, with just enough additional torque to align cotter pin holes.
Install new cotter pin.

Upper Ball Joint Nut Torque	N·m (kg·m/lb·ft)
98 (10.0 / 72)	

4. **Lower Ball Joint**
   Tighten the nut to the specified torque, with just enough additional torque to align cotter pin holes. Install new cotter pin.

Lower Ball Joint Nut Torque	N·m (kg·m/lb·ft)
147 (15.0 / 108)	

3. **Back Plate**
2. **Wheel Speed Sensor (if equipped with ABS)**
   Tighten the bolt to the specified torque.

Wheel Speed Sensor Bolt Torque	N·m (kg·m/lb·in)
8 (0.8 / 69)	

1. **Torsion Bar**
   Refer to “Torsion Bar” in this section.

   NOTE:
   Adjust the trim height. Refer to “Front End Alignment” in section 2A.

UPPER CONTROL ARM

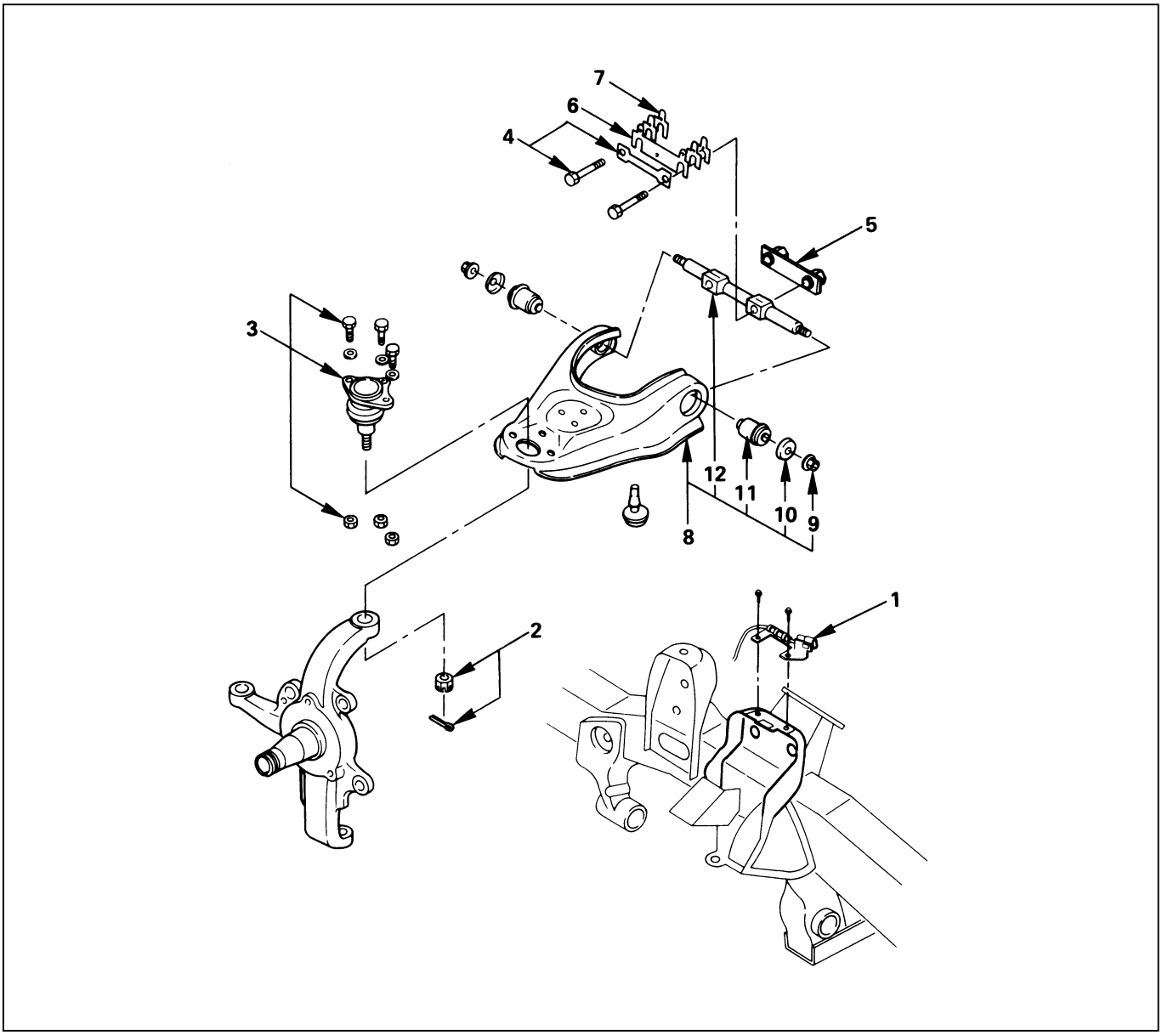

Removal Steps

1. Speed sensor cable (if equipped with ABS)
2. Nut and cotter pin
3. Upper ball joint
4. Bolt and plate
5. Nut assembly
6. Camber shims
7. Caster shims
8. Upper control arm assembly
9. Nut
10. Plate
11. Bushing
12. Fulcrum pin

Installation Steps

12. Fulcrum pin
11. Bushing
10. Plate
9. Nut
8. Upper control arm assembly
7. Caster shims
6. Camber shims
5. Nut assembly
4. Bolt and plate
3. Upper ball joint
2. Nut and cotter pin
1. Speed sensor cable (if equipped with ABS)

REMOVAL

Preparation:

1) Raise the vehicle and support the frame with suitable safety stands.
2) Remove wheel and tire assembly. Refer to “Wheels and Tires” in section 3E.
3) Remove the brake caliper and disconnect flexible hose. Refer to “Brakes” in section 5.
4) Support lower control arm with a jack.

1. **Speed Sensor Cable (if equipped with ABS)**
2. **Nut and Cotter Pin**
   Remove the upper ball joint from the knuckle.
   Remover: 5-8840-2121-0 (J-36831)

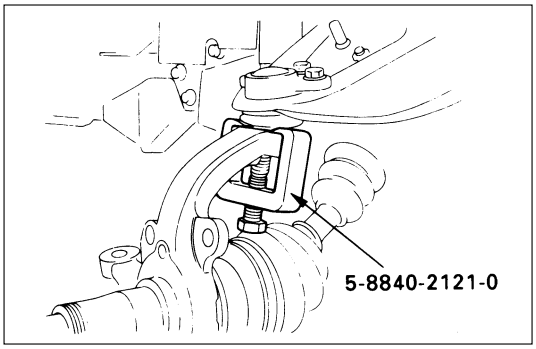

CAUTION:
Be careful not to break the ball joint boot.

3. **Upper Ball Joint**
4. **Bolt and Plate**
5. **Nut Assembly**
6. **Camber Shims**
   Note the positions and number of shims.
7. **Caster Shims**
   Note the positions and number of shims.
8. **Upper Control Arm Assembly**
9. **Nut**
10. **Plate**
11. **Bushing**
    Remover: 5-8840-0256-0 (J-29755)

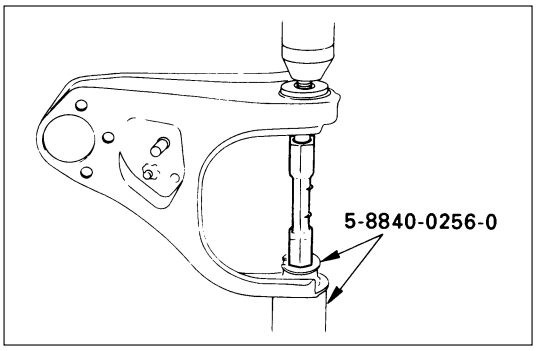

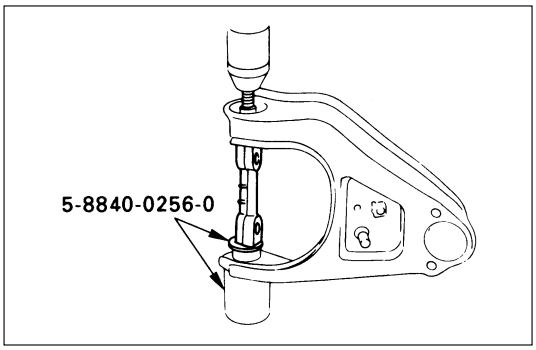

12. **Fulcrum Pin**

INSPECTION AND REPAIR

Make necessary parts replacement if wear, damage, corrosion or any other abnormal conditions are found through inspection.
Check the following parts:

- Upper control arm
- Bushing
- Fulcrum pin

INSTALLATION

12. Fulcrum Pin

11. Bushing

Installer: 5-8840-0256-0 (J-29755) and
5-8840-2307-0 (J-39376)

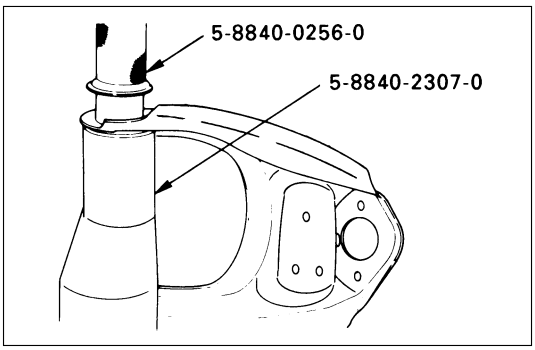

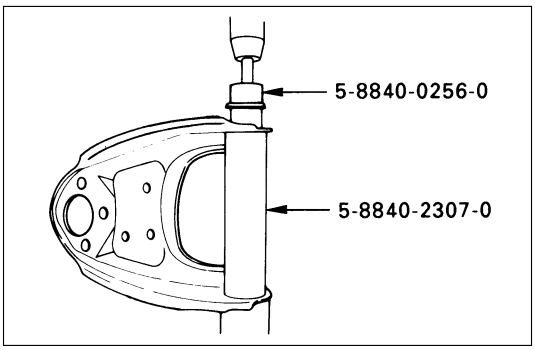

10. Plate

9. Nut

Tighten fulcrum pin nut finger-tight.

NOTE:
Torque fulcrum pin nut after adjusting buffer clearance.

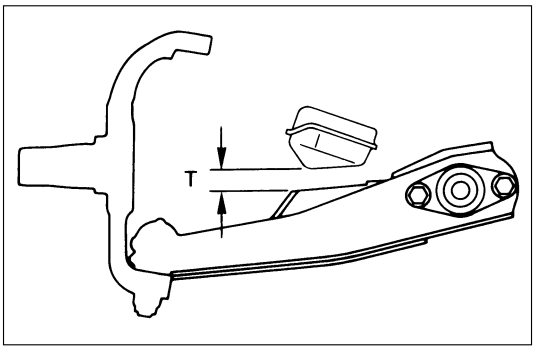

Buffer Clearance (T)	mm (in)
23 (0.91) Wide Tread 24 (0.94) Narrow Tread	

Fulcrum Pin Nut Torque	N·m (kg·m/lb·ft)
108 (11.0 / 80)	

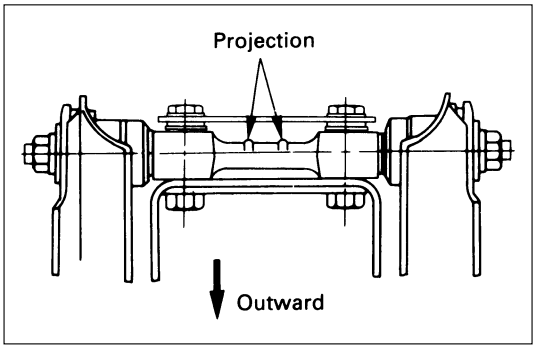

8. Upper Control Arm Assembly
Install upper control arm assembly with the fulcrum pin projections turned inward.

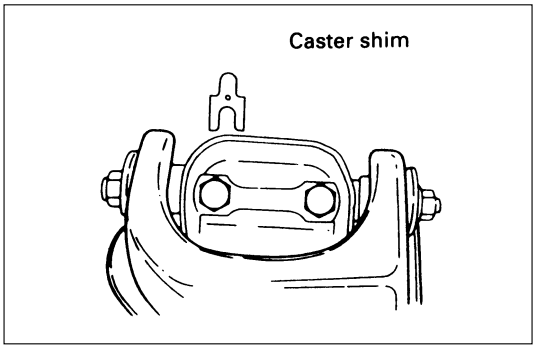

7. Caster Shims
Install the caster shims between the chassis frame and fulcrum pin.

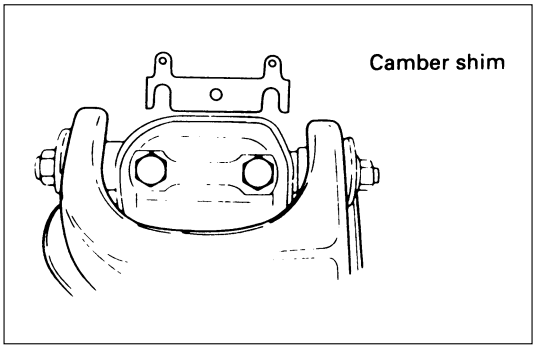

6. Camber Shims
Install the camber shims between the chassis frame and fulcrum pin.

5. Nut Assembly

4. Bolt and Plate

Fulcrum Pin Bolt Torque	N·m (kg·m/lb·ft)
152 (15.2 / 112)	

3. Upper Ball Joint

Upper Ball Joint Nut Torque	N·m (kg·m/lb·ft)
57 (5.8 / 42)	

2. Nut and Cotter Pin
Tighten the nut to the specified torque, with just enough additional torque to align cotter pin holes. Install new cotter pin.

Upper Ball Joint Nut Torque	N·m (kg·m/lb·ft)
98 (10.0 / 72)	

1. Speed Sensor Cable (if equipped with ABS)

LOWER CONTROL ARM

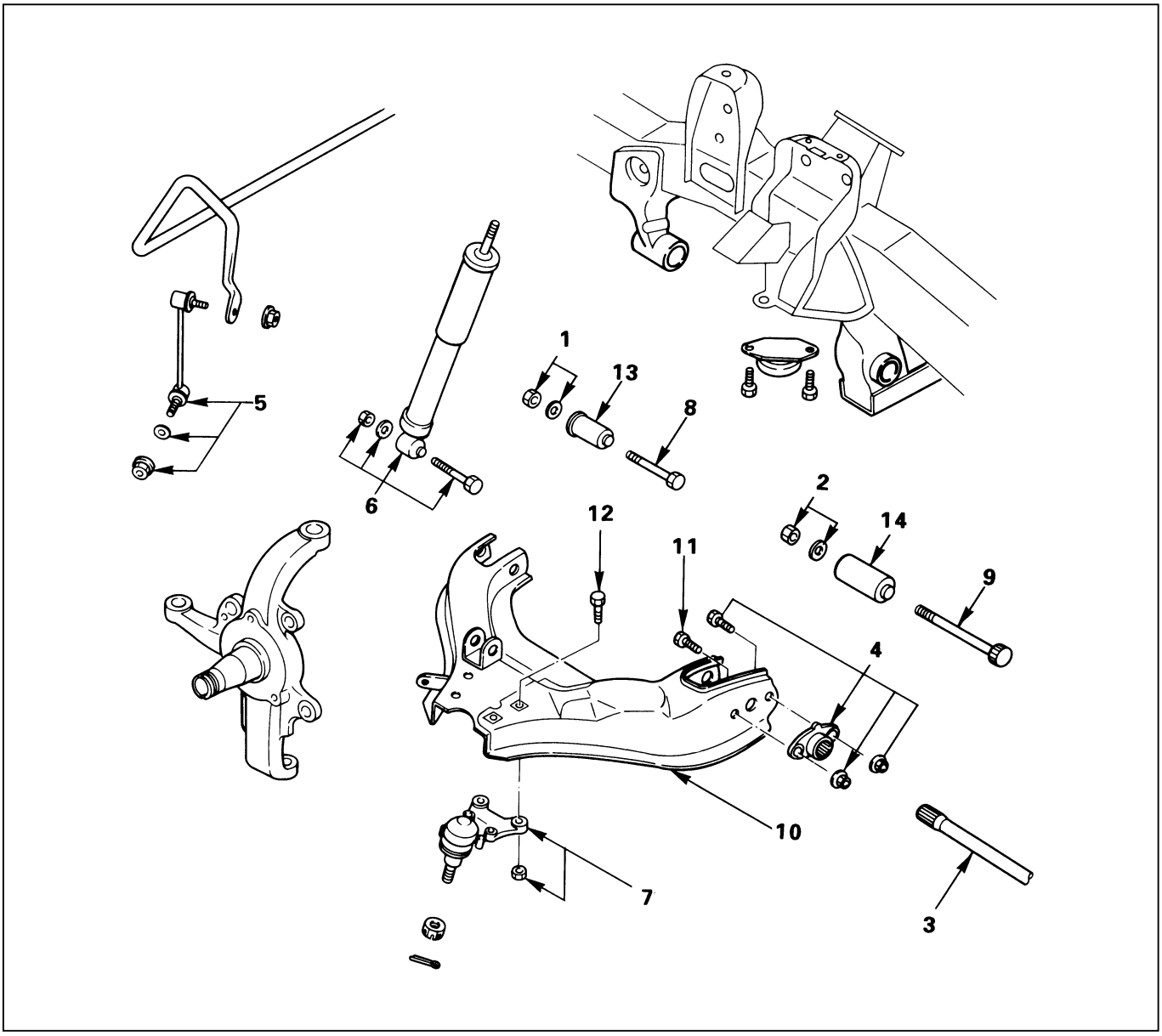

Removal Steps

1. Nut and washer, front
2. Nut and washer, rear
3. Torsion bar
4. Torsion bar arm
5. Stabilizer link
6. Shock absorber
7. Lower ball joint
8. Bolt, front
9. Bolt, rear
10. Lower control arm
11. Bolt, torsion bar arm
12. Bolt, lower ball joint
13. Bushing, front
14. Bushing, rear

Installation Steps

14. Bushing, rear
13. Bushing, front
12. Bolt, lower ball joint
11. Bolt, torsion bar arm
10. Lower control arm
9. Bolt, rear
8. Bolt, front
7. Lower ball joint
6. Shock absorber
5. Stabilizer link
4. Torsion bar arm
3. Torsion bar
2. Nut and washer, rear
1. Nut and washer, front

REMOVAL

Preparation:

1) Raise the vehicle and support the frame with suitable safety stands.
2) Remove wheel and tire assembly. Refer to “Wheels and Tires” in section 3E.
3) Remove the outer track rod from the knuckle. Refer to “Steering Linkage” in section 2A.
4) Remove the retaining ring from the front axle driving shaft to release the shaft from hub. Refer to “Front Axle” in section 4C.
5) Support lower control arm with a jack.

1. **Nut and Washer, Front**
2. **Nut and Washer, Rear**
3. **Torsion Bar**
   Refer to “Torsion Bar” in this section.
4. **Torsion Bar Arm Bracket**
5. **Stabilizer Link**
   Disconnect the link at the lower control arm.
6. **Shock Absorber**
   Remove the shock absorber lower end from the lower control arm.
7. **Lower Ball Joint**
   Remove the lower ball joint from the lower control arm.
8. **Bolt, Front**
9. **Bolt, Rear**
10. **Lower Control Arm**
11. **Bolt, Torsion Bar Arm**
12. **Bolt, Lower Ball Joint**
13. **Bushing, Front**
    Remover: 5-8840-2123-0 (J-36833)

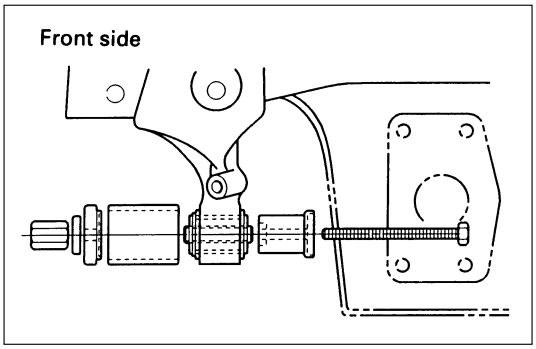

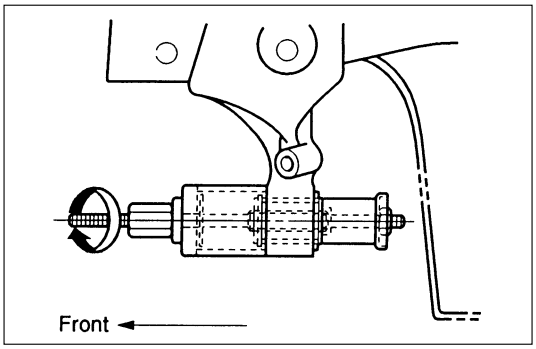

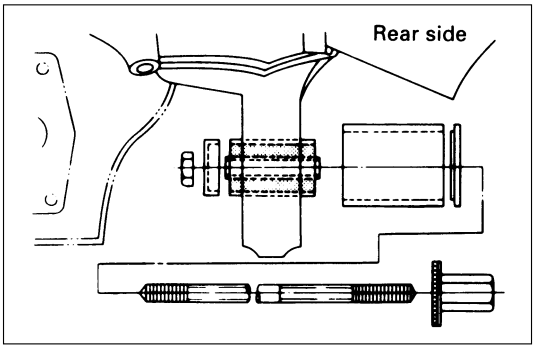

14. Bushing, Rear
Remover: 5-8840-2124-0 (J-36834)

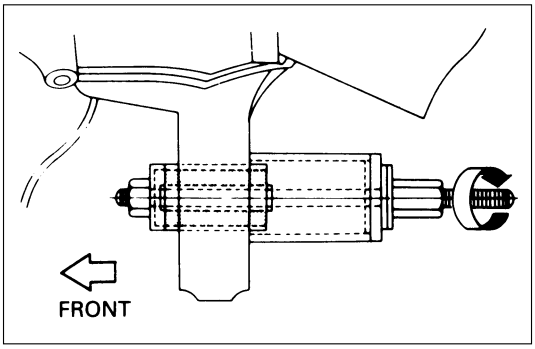

INSPECTION AND REPAIR

Make necessary correction or parts replacement if wear, damage, corrosion or any other abnormal condition are found through inspection.
Check the following parts:

- Lower control arm
- Bushing

INSTALLATION

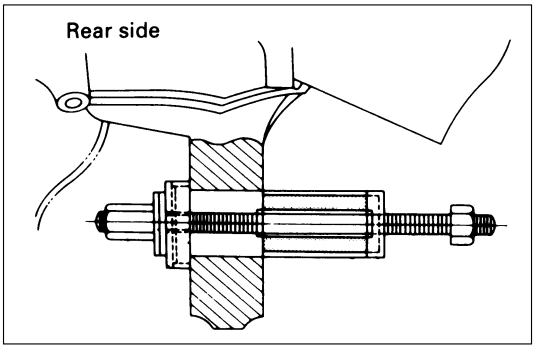

14. Bushing, Rear
Installer: 5-8840-2124-0 (J-36834)

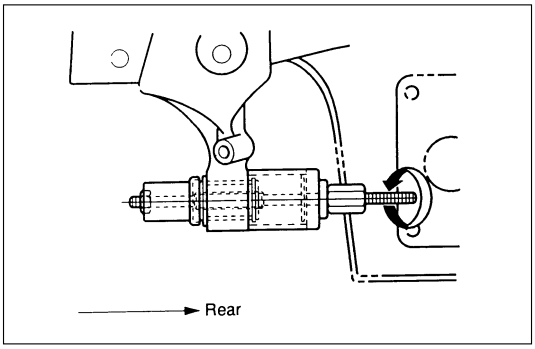

13. Bushing, Front
Installer: 5-8840-2123-0 (J-36833)

12. **Bolt, Lower Ball Joint**
11. **Bolt, Torsion Bar Arm**
10. **Lower Control Arm**
9. **Bolt, Rear**
8. **Bolt, Front**
7. **Lower Ball Joint**

Lower Ball Joint Nut Torque	N·m (kg·m/lb·ft)
103 (10.5 / 76)	

6. **Shock Absorber**

Shock Absorber Nut Torque	N·m (kg·m/lb·ft)
82 (8.4 / 61)	

5. **Stabilizer Link**

Link Nut Torque	N·m (kg·m/lb·ft)
50 (5.1 / 37)	

4. **Torsion Bar Arm Bracket**

Torsion Bar Arm Bracket Nut Torque	N·m (kg·m/lb·ft)
116 (11.8 / 85)	

3. **Torsion Bar**
   Refer to "Torsion Bar" in this section.
2. **Nut and Washer, Rear**
   Tighten lower link nut finger-tight.

NOTE:
Torque lower control arm nut after adjusting buffer clearance.

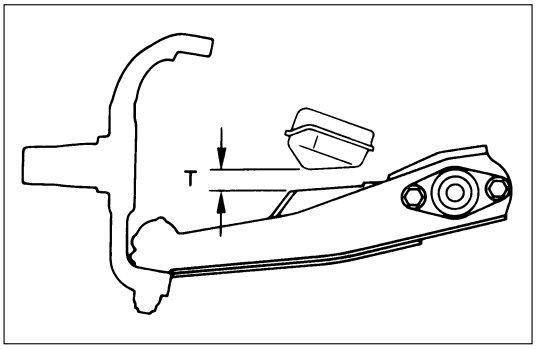

Buffer Clearance (T)	mm (in)
23 (0.91) Wide Tread 24 (0.94) Narrow Tread	

Lower Arm Rear Nut Torque	N·m (kg·m/lb·ft)
196 (20.0 / 145)	

1. **Nut and Washer, Front**
   Tighten lower link nut finger-tight.

NOTE:
Torque lower control arm nut after adjusting buffer clearance.

Buffer Clearance (T)	mm (in)
23 (0.91) Wide Tread 24 (0.94) Narrow Tread	

Lower Arm Front Nut Torque	N·m (kg·m/lb·ft)
157 (16.0 / 116)	

NOTE:
Adjust the trim height. Refer to "Front End Alignment" in section 2A.

UPPER BALL JOINT

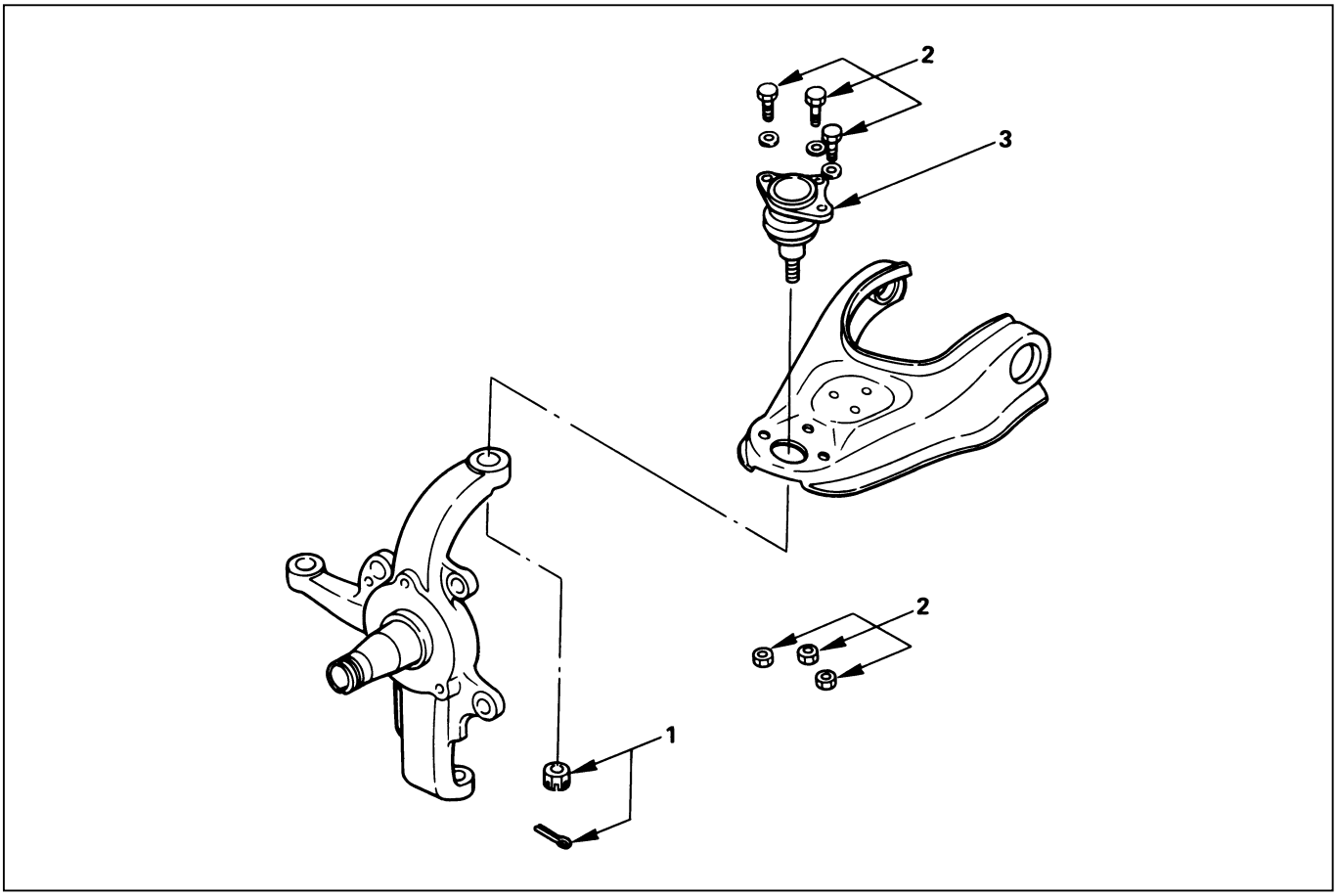

Removal Steps

1. Nut and cotter pin
2. Bolt, nut and washer
3. Upper ball joint

Installation Steps

3. Upper ball joint
2. Bolt, nut and washer
1. Nut and cotter pin

REMOVAL

Preparation:

1) Raise the vehicle and support the frame with suitable safety stands.
2) Remove the speed sensor from the knuckle (If equipped with ABS).

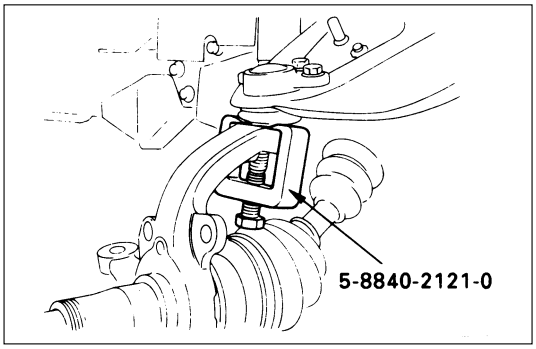

1. **Nut and Cotter Pin**
   Remove the upper ball joint from the knuckle.
   Remover: 5-8840-2121-0 (J-36831)

CAUTION:
Be careful not t o break the ball joint boot.

2. **Bolt, Nut and Washer**
3. **Upper Ball Joint**

INSPECTION AND REPAIR

Make necessary parts replacement if wear, damage, corrosion or any other abnormal conditions are found through inspection.
Inspect the lower end boot for damage or grease leak.
Move the ball joint as shown in the figure to confirm its normal movement.

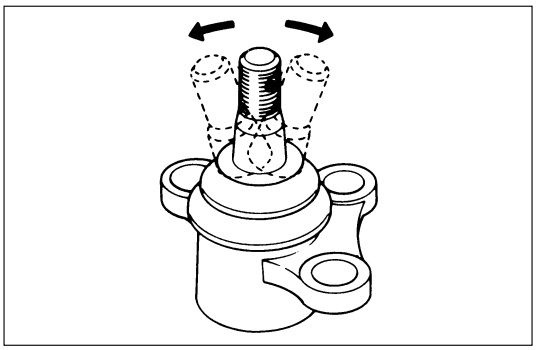

Inspect screw/taper area of ball for flaws.
If any defects are found by the above inspections, replace the ball joint assembly with new one.
After moving the ball joint 4 or 5 times, attach nut then measure the preload.

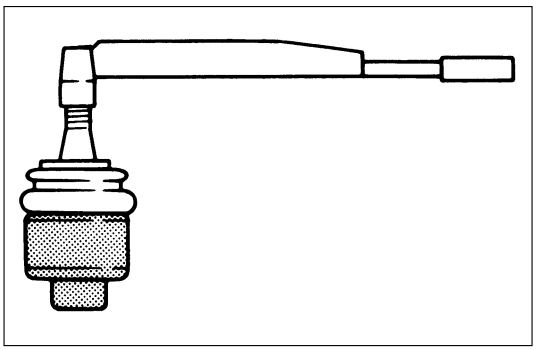

Upper Ball Joint Preload	N·m (kg·m/lb·in)
0.5 – 3.2 (0.05 – 0.33 / 4.3 – 28.6)	

If the above limits specified are exceeded, replace the ball joint assembly.

INSTALLATION

3. **Upper Ball Joint**
2. **Bolt, Nut and Washer**

Upper Ball Joint Bracket Nut Torque	N·m (kg·m/lb·ft)
57 (5.8 / 42)	

1. **Nut and Cotter Pin**
Tighten the nut to the specified torque with just enough additional torque to align cotter pin holes. Install new cotter pin.

Upper Ball Joint Nut Torque	N·m (kg·m/lb·ft)
98 (10.0 / 72)	

LOWER BALL JOINT

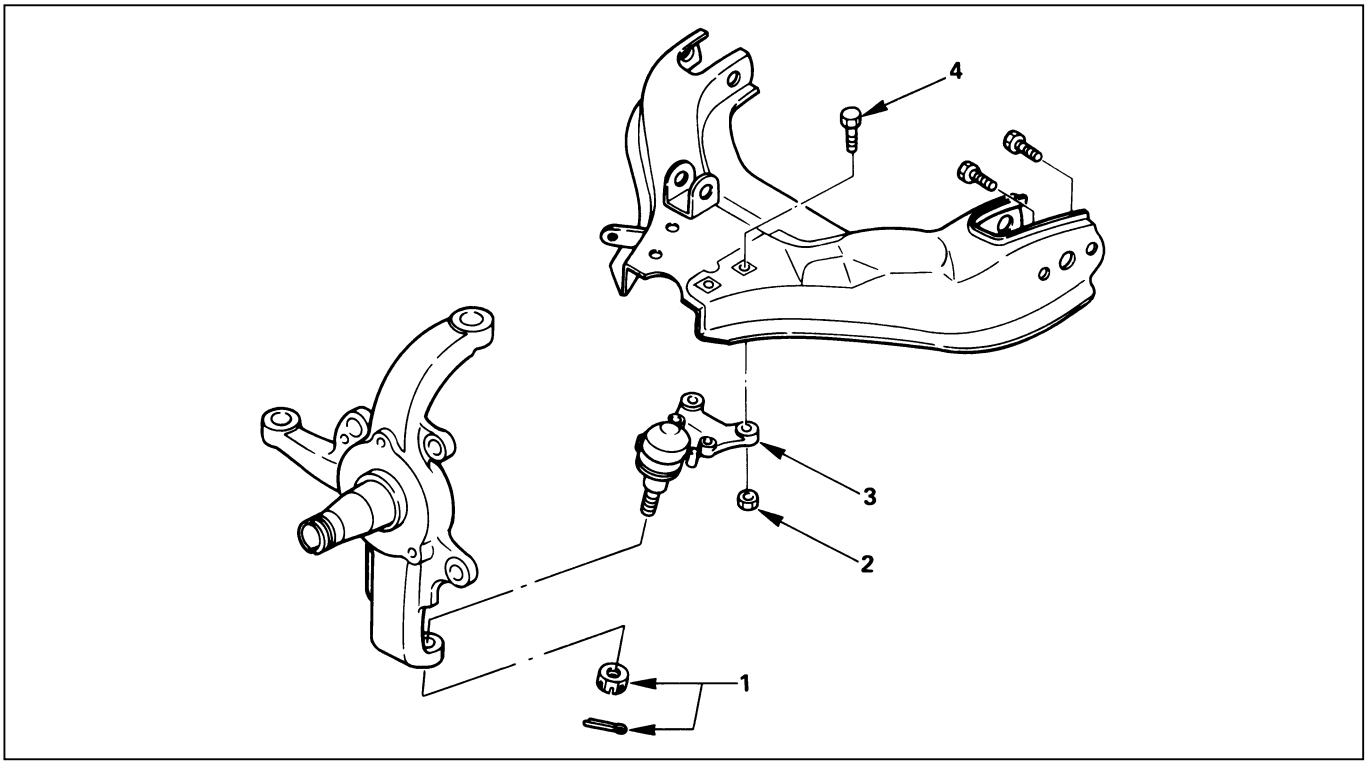

Removal Steps

1. Nut and cotter pin
2. Nut
3. Lower ball joint
4. Bolt

Installation Steps

4. Bolt
3. Lower ball joint
2. Nut
1. Nut and cotter pin

REMOVAL

Preparation:

1) Raise the vehicle and support the frame with suitable safety stands.
2) Remove wheel and tire assembly. Refer to “Wheels and Tires” in section 3E.
3) Remove the outer track rod from the knuckle. Refer to “Steering Linkage” in section 2A.
4) Remove the retaining ring from the front axle driving shaft to release the shaft from hub. Refer to “Front Axle” in section 4C.
5) Support lower control arm with a jack.

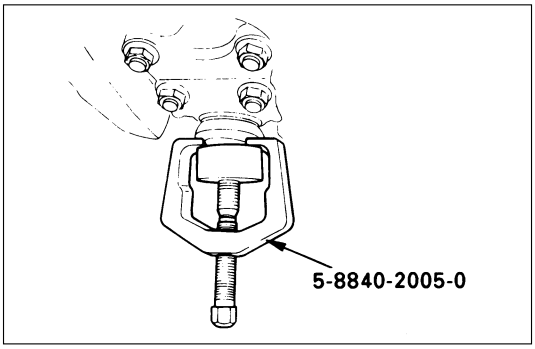

1. **Nut and Cotter Pin**
   Remove the upper ball joint from the knuckle.
   Remover: 5-8840-2005-0 (J-29107)

CAUTION:
Be careful not to break the ball joint boot.

2. **Nut**
3. **Lower Ball Joint**
4. **Bolt**

INSPECTION AND REPAIR

Make necessary parts replacement if wear, damage, corrosion or any other abnormal conditions are found through inspection.
Inspect the lower end boot for damage or grease leak.
Move the ball joint as shown in the figure to confirm its normal movement.

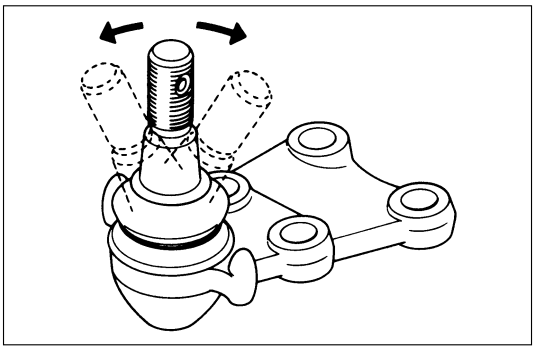

Inspect screw/taper area of ball for flaws.
If any defects are found by the above inspections, replace the ball joint assembly with new one.
After moving the ball joint 4 or 5 times, attach nut then measure the preload.

Lower Ball Joint Preload	N·m (kg·m/lb·in)
0.5 – 6.4 (0.05 – 0.65 / 4.3 – 56.4)	

If the above limits specified are exceeded, replace the ball joint assembly.

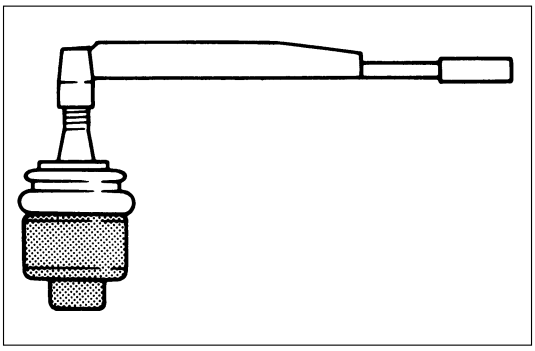

INSTALLATION

4. **Bolt**
3. **Lower Ball Joint**
2. **Nut**

Lower Ball Joint Bracket Nut Torque	N·m (kg·m/lb·ft)
103 (10.5 / 76)	

1. **Nut and Cotter Pin**
   Tighten the nut to the specified torque with just enough additional torque to align cotter pin holes. Install new cotter pin.

Lower Ball Joint Nut Torque	N·m (kg·m/lb·ft)
147 (15.0 / 108)	

SECTION 3D

REAR SUSPENSION; COIL SPRING

CONTENTS

PAGE

General Description ..... 3D – 2
On-Vehicle Service ..... 3D – 3
Coil Spring ..... 3D – 3
Shock Absorber ..... 3D – 6
Trailing Link ..... 3D – 8
Center Link ..... 3D – 10
Lateral Rod ..... 3D – 12
Stabilizer Bar ..... 3D – 15

GENERAL DESCRIPTION

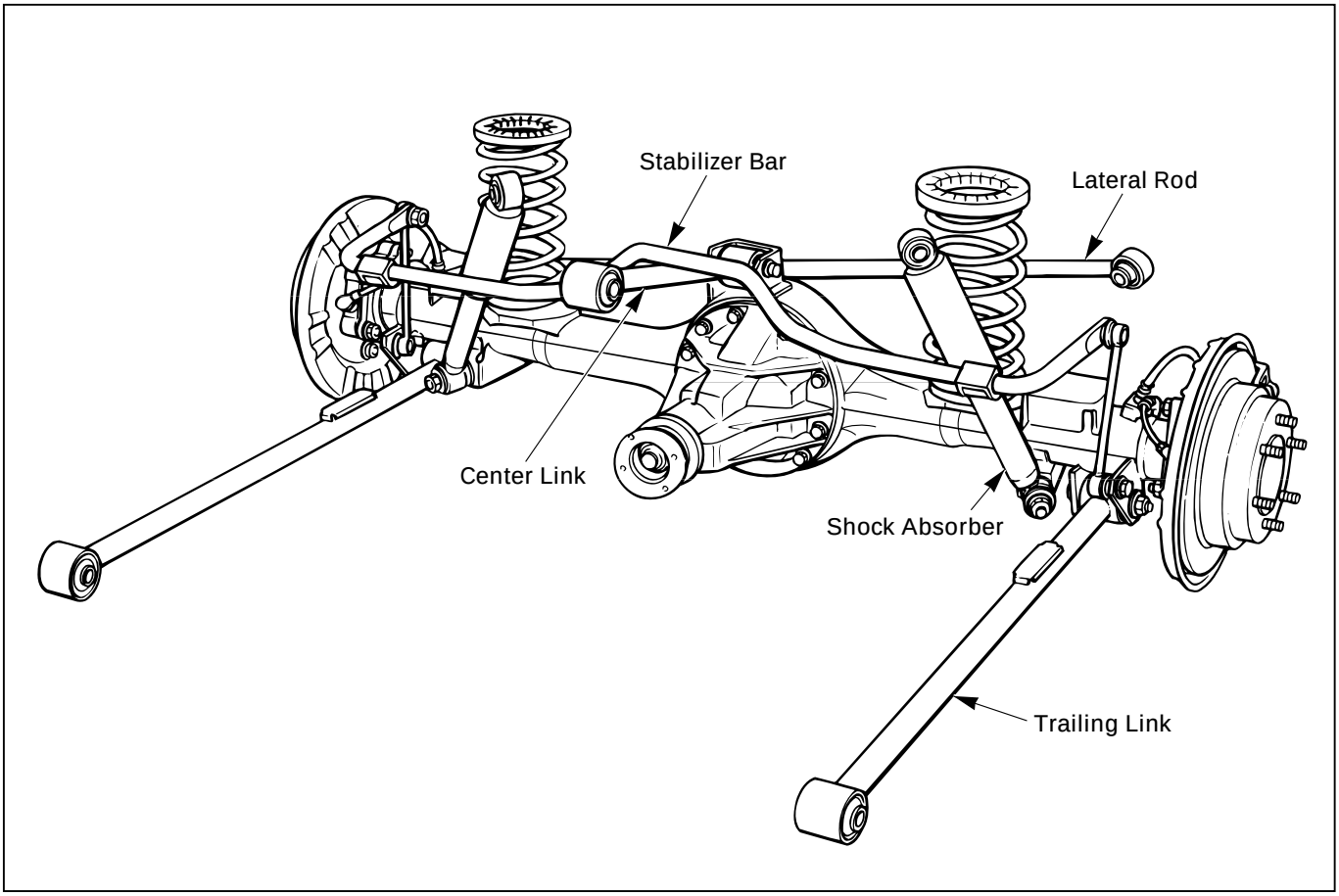

C03RW003

The rear suspension is a 4-link, coil spring type suspension with a stabilizer, consisting of two trailing links, center link, lateral rod, shock absorber, and stabilizer. In this suspension, the links are specially arranged to enable the rear axle to move freely, thereby expanding suspension stroke, reducing friction, and improving lateral rigidity and roll control. All these result in improved stability, riding comfort, and rough road maneuverability.

Each link connects the axle housing with the frame through a rubber bushing. The axle housing is supported by the trailing links and center link longitudinally and by the lateral rod latitudinally.

ON-VEHICLE SERVICE

COIL SPRING

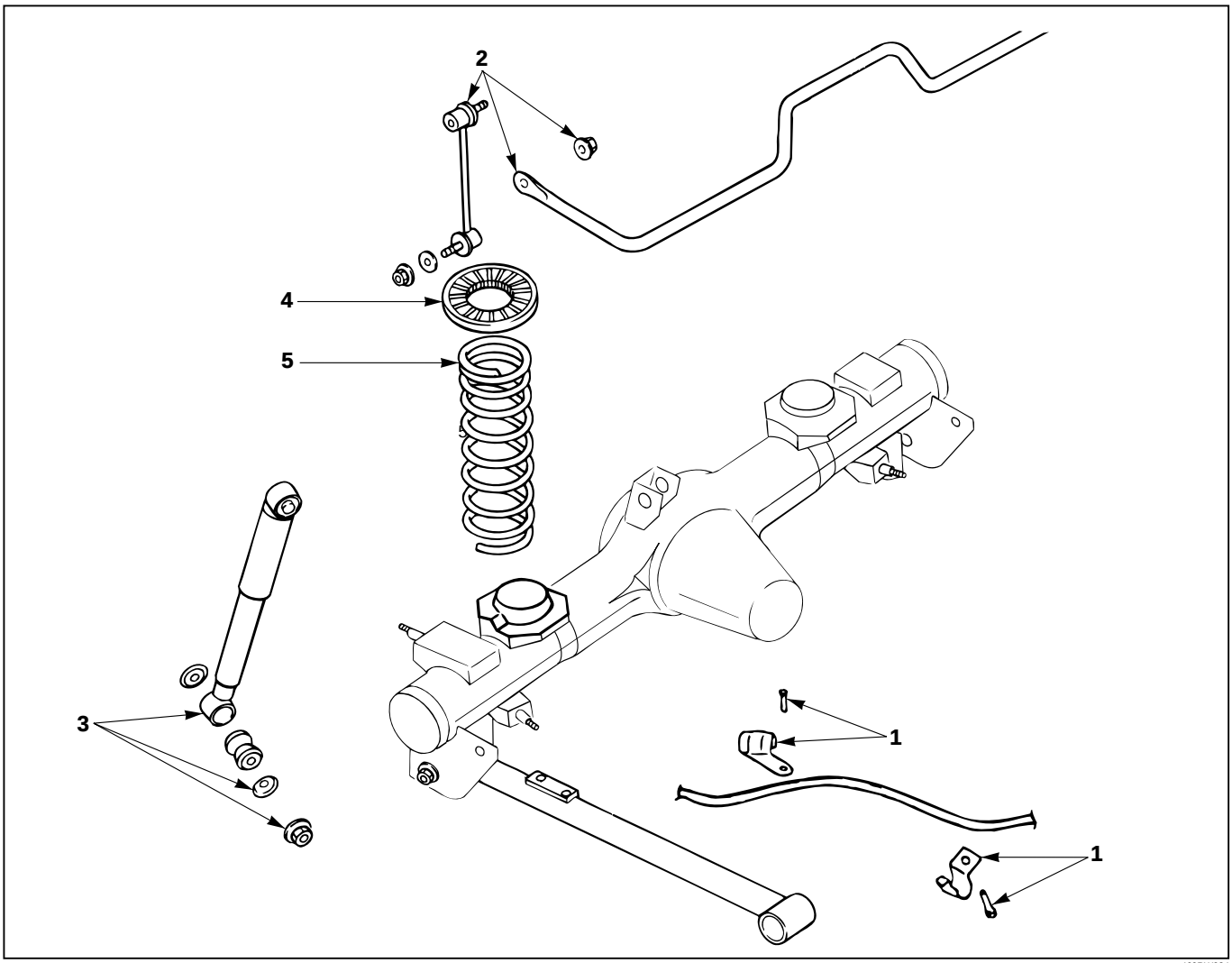

460RW024

Removal Steps

1. Parking brake cable bracket
2. Stabilizer bar
3. Shock absorber
4. Insulator
5. Coil spring

Installation Steps

5. Coil spring
4. Insulator
3. Shock absorber
2. Stabilizer bar
1. Parking brake cable bracket

REMOVAL

Preparation:

1) Raise the vehicle and support the frame with suitable safety stands.
2) Support the rear axle case with a jack.

1. **Parking Brake Cable Bracket**
   Remove the parking brake cable from the trailing link.
2. **Stabilizer Bar**
   Disconnect the stabilizer bar at the stabilizer link.
3. **Shock Absorber**
   Remove the shock absorber from the axle case.
4. **Insulator**
5. **Coil Spring**
   Remove the insulator and coil spring while lowering the rear axle case.

CAUTION:
Be sure not to let the brake hose, parking brake cable, and breather hose extend to their full length.

INSPECTION AND REPAIR

Make necessary correction or parts replacement if wear, damage, corrosion or any other abnormal condition are found through inspection.

- Coil spring
- Insulator

INSTALLATION

5. **Coil Spring**
   Make sure that the coil spring is installed in the proper position.

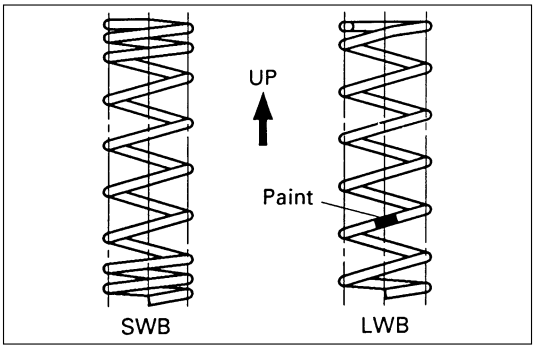

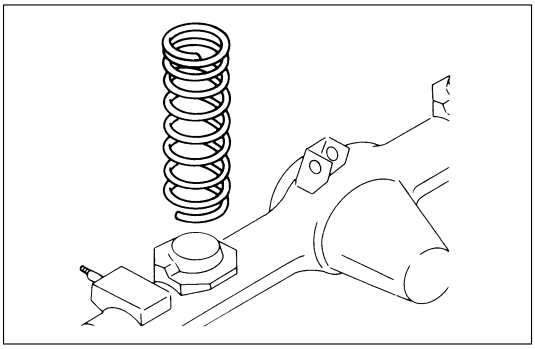

Fit the end of the coil spring to the coil spring seat and mount the coil spring on the rear axle case.

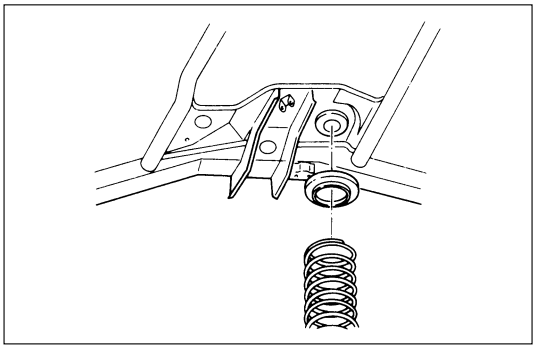

4. Insulator

Install the insulator on the coil spring. Jack up the axle case gently with the top of the coil spring to set the spring seat on the frame side.

3. Shock Absorber

Tighten the nut lightly, and retighten to the specified torque after the vehicle is at curb height.

NOTE:
When mounting shock absorber, be sure not to use grease on bushings or any other nearby part.

Shock Absorber Nut Torque	N·m (kg·m/lb·ft)
78 (8.0 / 58)	

2. Stabilizer Bar

Stabilizer Bar Nut Torque	N·m (kg·m/lb·ft)
50 (5.1 / 37)	

1. Parking Brake Cable Bracket

SHOCK ABSORBER

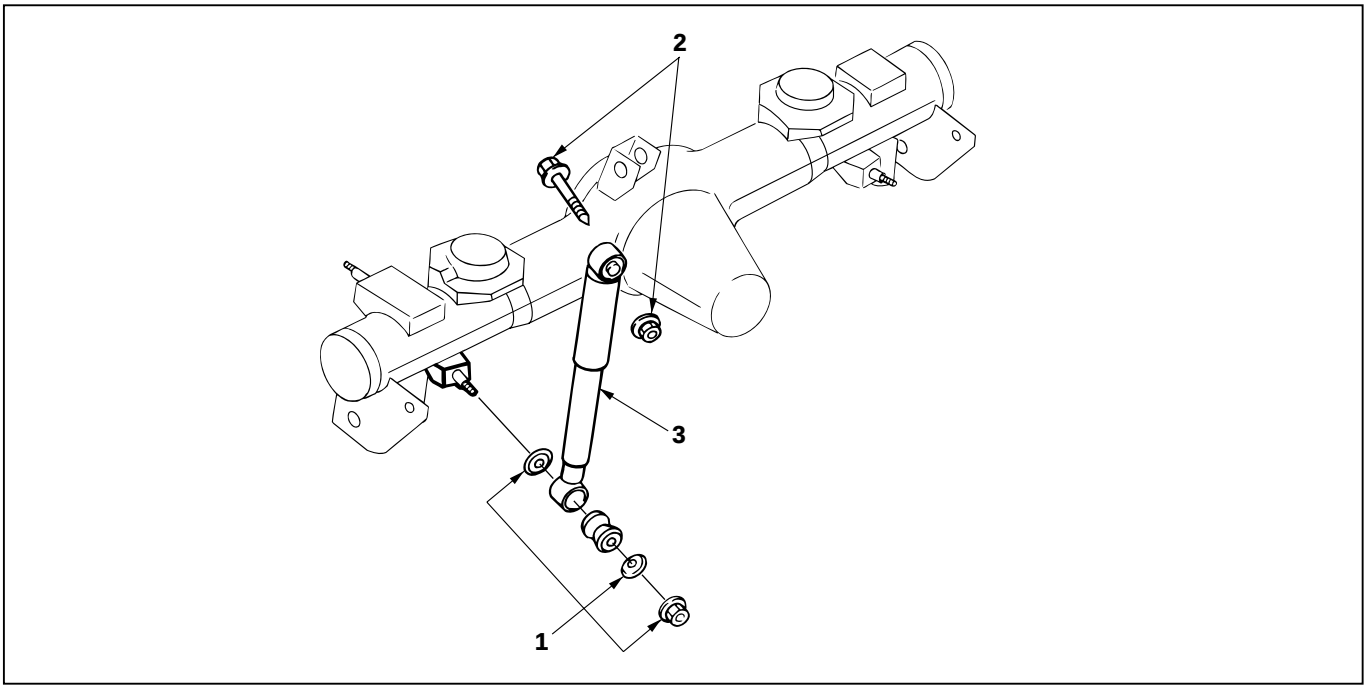

461RW003

Removal Steps

1. Nut and washer
2. Bolt, nut and washer
3. Shock absorber

Installation Steps

3. Shock absorber
2. Bolt, nut and washer
1. Nut and washer

REMOVAL

1. **Nut and Washer**
2. **Bolt, Nut and Washer**
3. **Shock Absorber**

INSPECTION AND REPAIR

Make necessary correction or parts replacement if wear, damage, corrosion or any other abnormal condition are found through inspection.

- Shock absorber
- Rubber bushing (Axle side)

INSTALLATION

3. **Shock Absorber**

   NOTE:
   When mounting rubber bushings, be sure not to use grease on bushings or any other nearby part.

2. **Bolt, Nut and Washer**

   NOTE:
   Tighten the bolt and nut lightly, and retighten to the specified torque after the vehicle is at curb height.

Shock Absorber Nut Torque	N·m (kg·m/lb·ft)
95 (9.7 / 70)	

1. **Nut and Washer**

   NOTE:
   Tighten the bolt and nut lightly, and retighten to the specified torque after the vehicle is at curb height.

Shock Absorber Nut Torque	N·m (kg·m/lb·ft)
78 (8.0 / 58)	

TRAILING LINK

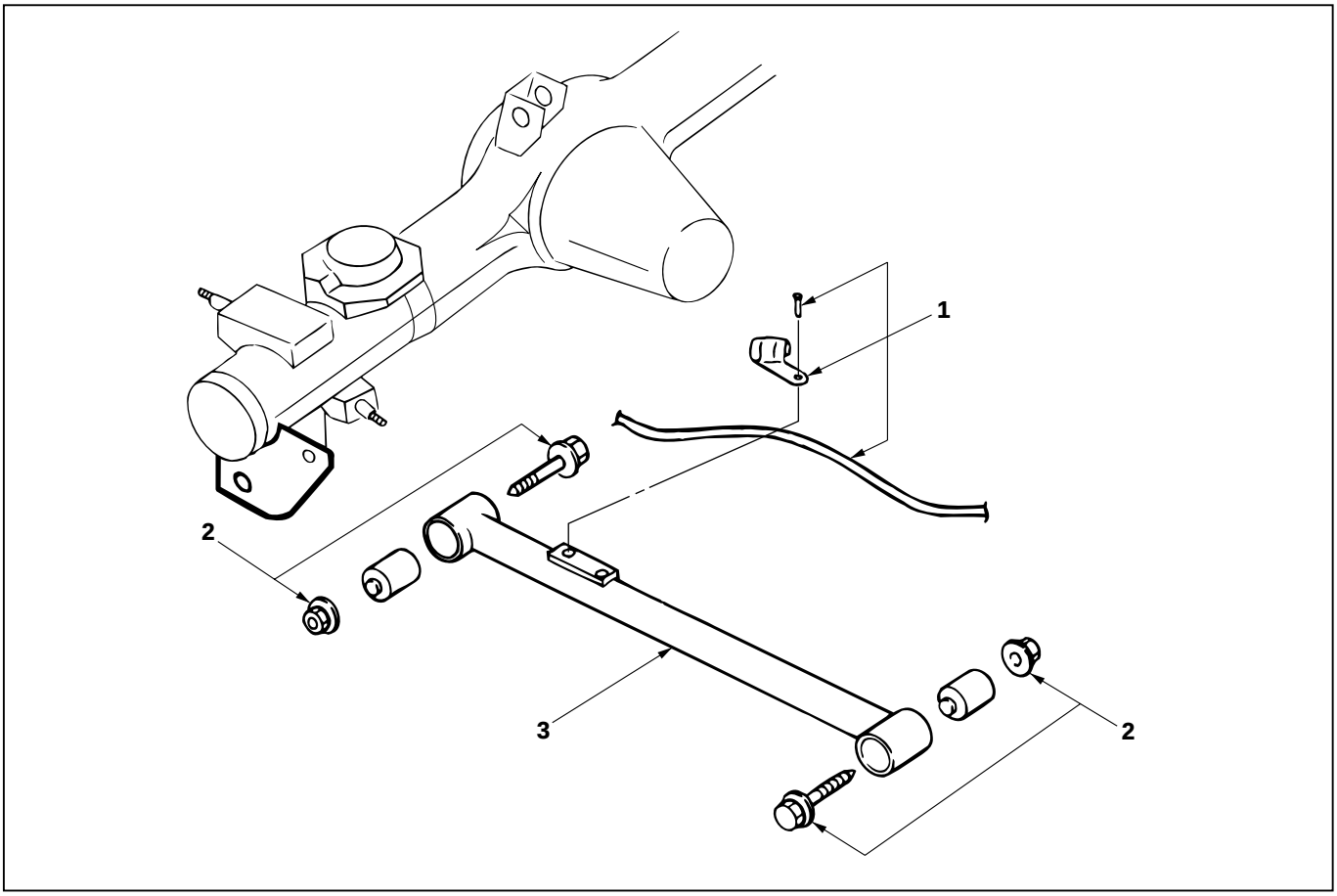

460RW025

Removal Steps

1. Parking brake cable
2. Bolt and nut
3. Trailing link

Installation Steps

3. Trailing link
2. Bolt and nut
1. Parking brake cable

REMOVAL

1. **Parking Brake Cable**
   Remove the parking brake cable from the trailing link.
2. **Bolt and Nut**
3. **Trailing Link**

INSPECTION AND REPAIR

Make necessary correction or parts replacement if wear, damage, corrosion or any other abnormal condition are found through inspection.

1. **Trailing Link**
2. **Rubber Bushing**
   Remove the rubber bushing.
   Remover: 5-8840-2298-0 (J-39214)

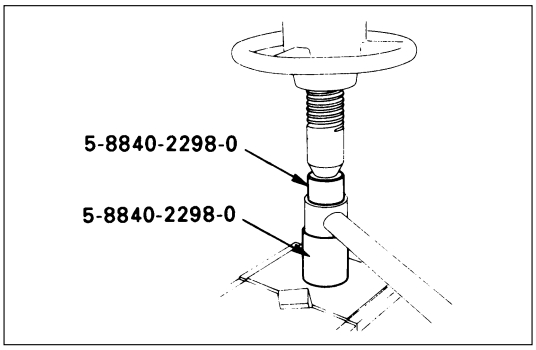

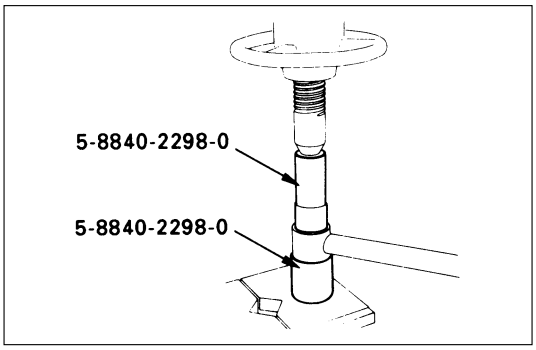

Install the rubber bushing.
Installer: 5-8840-2298-0 (J-39214)

NOTE:
When mounting rubber bushings, be sure not to use grease on bushings or any other nearby part.

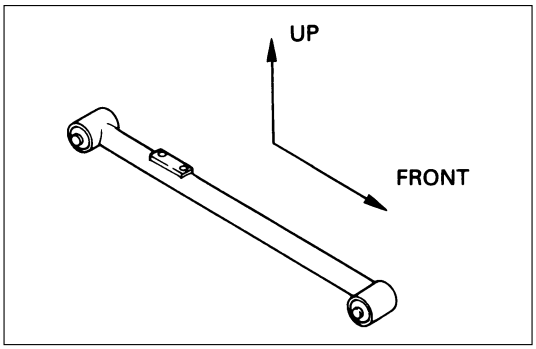

INSTALLATION

3. **Trailing Link**
   Make sure that the trailing link is in its correct position.

   NOTE:
   When mounting trailing link, be sure not to use grease on bushings or any other nearby part.

2. **Bolt and Nut**

   NOTE:
   Tighten the bolts and nuts lightly, and retighten to the specified torque after the vehicle is at curb height.

Trailing Link Nut Torque	N·m (kg·m/lb·ft)
137 (14.0 / 101)	

1. **Parking Brake Cable**

   CAUTION:
   The parking brake cable should not be overstrained or slackened.

CENTER LINK

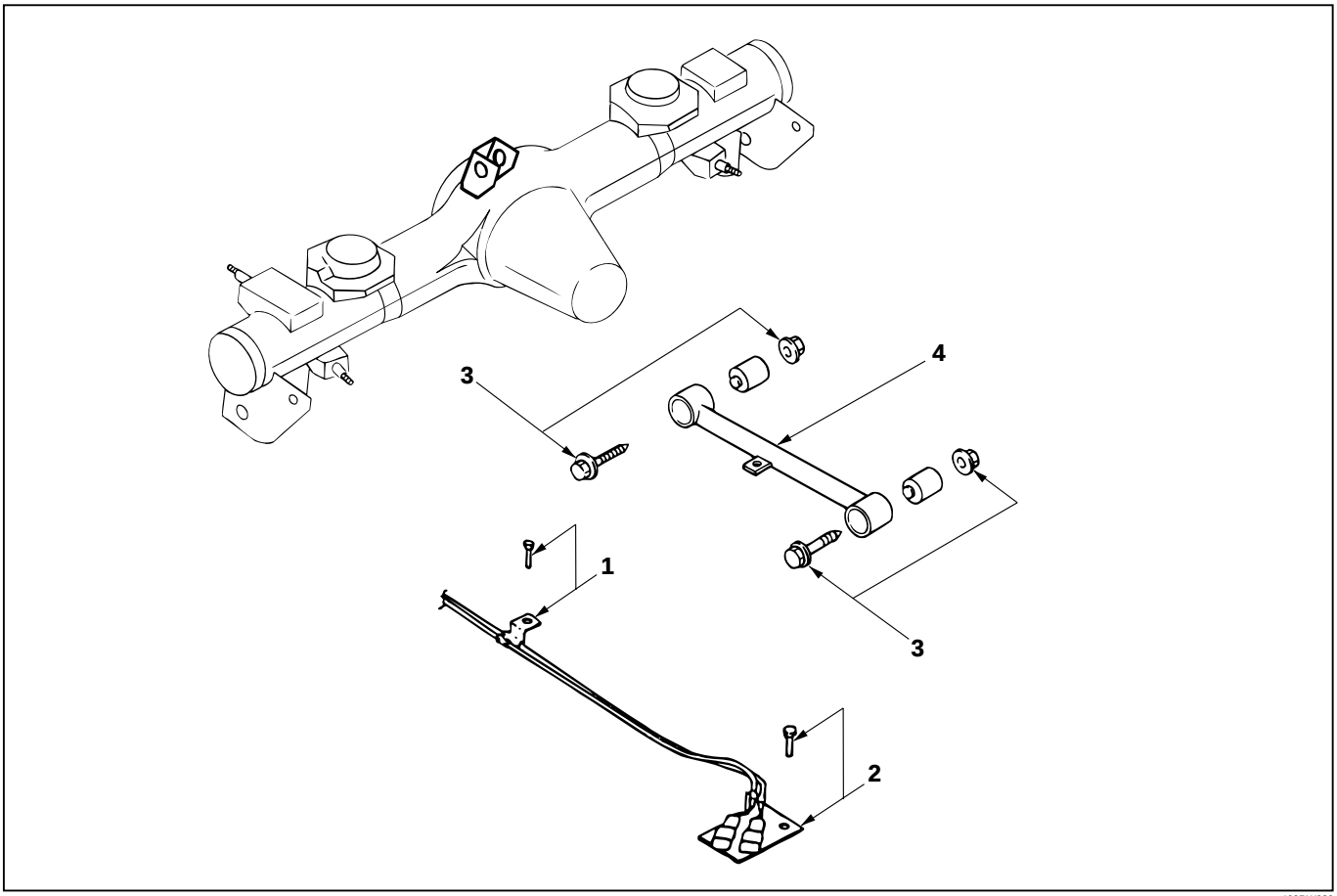

460RW026

Removal Steps

1. Speed sensor cable (If equipped with ABS)
2. Speed sensor cable bracket (If equipped with ABS)
3. Bolt and nut
4. Center link

Installation Steps

4. Center link
3. Bolt and nut
2. Speed sensor cable bracket (If equipped with ABS)
1. Speed sensor cable (If equipped with ABS)

REMOVAL

1. **Speed Sensor Cable (If equipped with ABS)**
   Remove the speed sensor cable from the center link.
2. **Speed Sensor Cable Bracket (If equipped with ABS)**
   Remove the speed sensor cable bracket from the frame.
3. **Bolt and Nut**
4. **Center Link**

INSPECTION AND REPAIR

Make necessary correction or parts replacement if wear, damage, corrosion or any other abnormal condition are found through inspection.

1. **Center Link**
2. **Rubber Bushing**
   Remove the rubber bushing.
   Remover: 5-8840-2298-0 (J-39214)

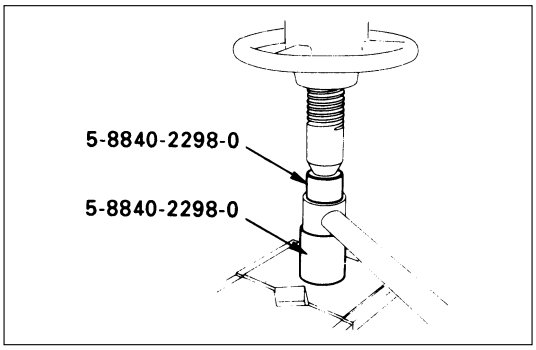

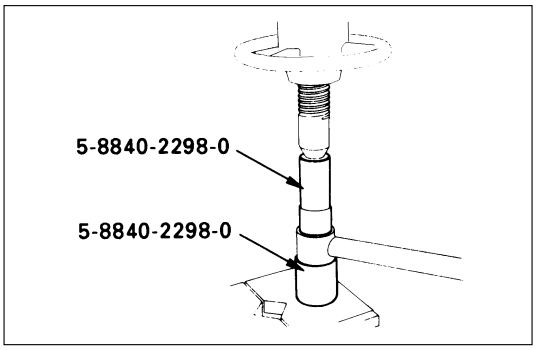

Install the rubber bushing.
Installer: 5-8840-2298-0 (J-39214)

NOTE:
When mounting rubber bushings, be sure not to use grease on bushings or any other nearby part.

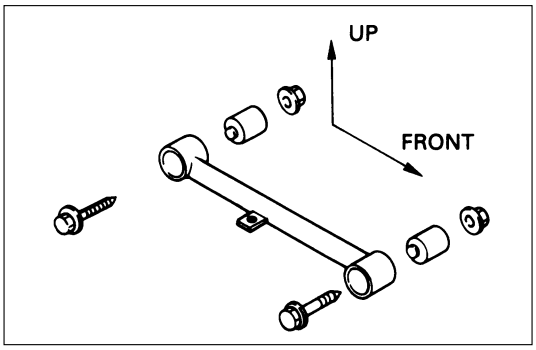

INSTALLATION

4. **Center Link**
   Make sure that the center link is in its correct position.

   NOTE:
   When mounting center link, be sure not to use grease on bushings or any other nearby part.

3. **Bolt and Nut**

   NOTE:
   Tighten the bolts and nuts lightly, and retighten to the specified torque after the vehicle is at curb height.

Center Link Nut Torque	N·m (kg·m/lb·ft)
137 (14.0 / 101)	

2. **Speed Sensor Cable Bracket**
1. **Speed Sensor Cable**

LATERAL ROD

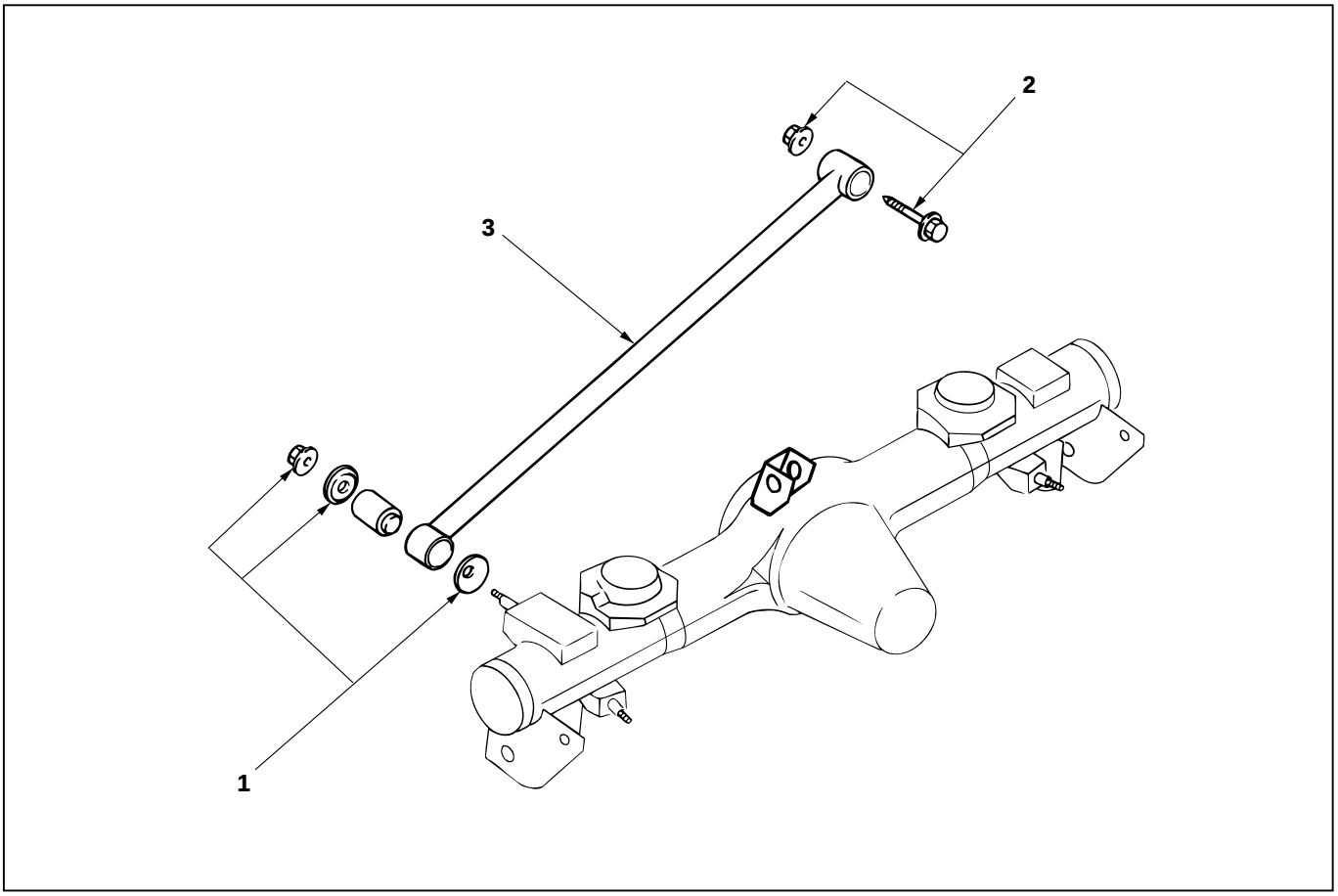

460RW027

Removal Steps

1. Nut and washer
2. Bolt and nut
3. Lateral rod

Installation Steps

3. Lateral rod
2. Bolt and nut
1. Nut and washer

REMOVAL

1. **Nut and Washer**
2. **Bolt and Nut**
3. **Lateral Rod**

INSPECTION AND REPAIR

Make necessary correction or parts replacement if wear, damage, corrosion or any other abnormal condition are found through inspection.

1. **Lateral Rod**

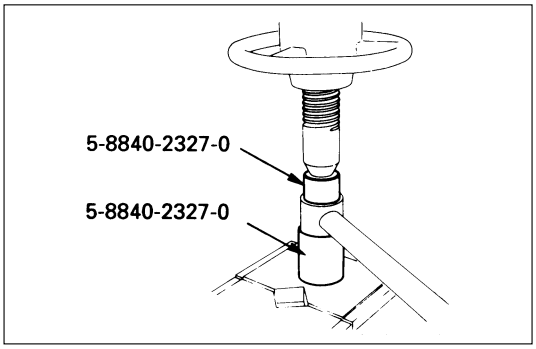

2. Rubber Bushing (Axle side)
Remove the rubber bushing (Axle side).
Remover: 5-8840-2327-0 (J-39792)

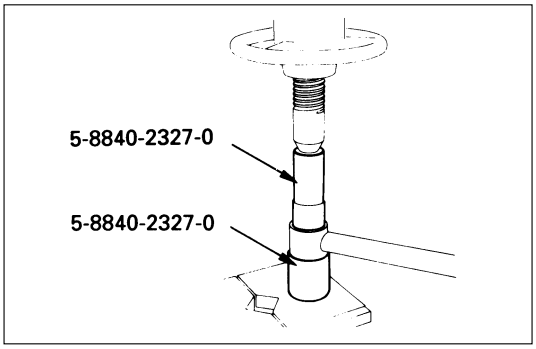

Install the rubber bushing (Axle side).
Installer: 5-8840-2327-0 (J-39792)

NOTE:
When mounting rubber bushings, do not use grease on bushings or any other nearby parts.

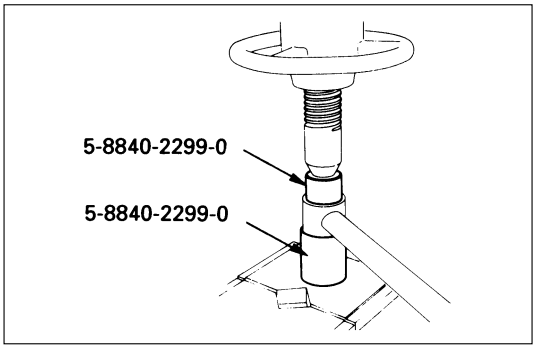

3. Rubber Bushing (Frame side)
Remove the rubber bushing (Frame side).
Remover: 5-8840-2299-0 (J-39215)

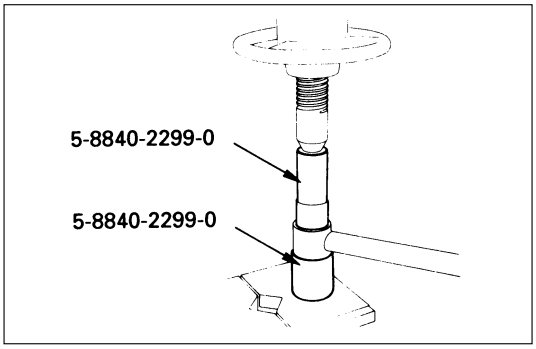

Install the rubber bushing (Frame side).
Installer: 5-8840-2299-0 (J-39215)

NOTE:
When mounting rubber bushings, do not use grease on bushings or any other nearby parts.

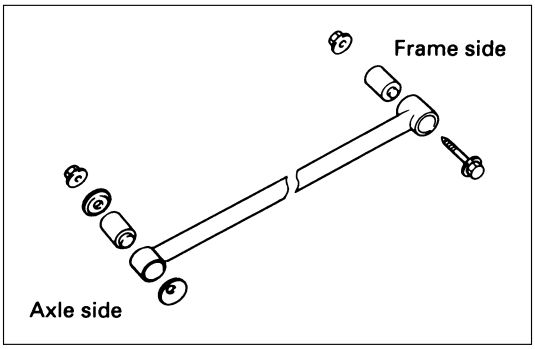

INSTALLATION

3. Lateral Rod

Make sure that the lateral rod is in its correct position.

NOTE:
When mounting lateral rod, be sure not to use grease on bushings or any other nearby part.

2. Bolt and Nut

NOTE:
Tighten the bolt and nut lightly, and retighten to the specified torque after the vehicle is at curb height.

Lateral Rod Nut Torque	N·m (kg·m/lb·ft)
137 (14.0 / 101)	

1. Nut and Washer

NOTE:
Tighten the nut lightly, and retighten to the specified torque after the vehicle is at curb height.

Lateral Rod Nut Torque	N·m (kg·m/lb·ft)
78 (8.0 / 58)	

STABILIZER BAR

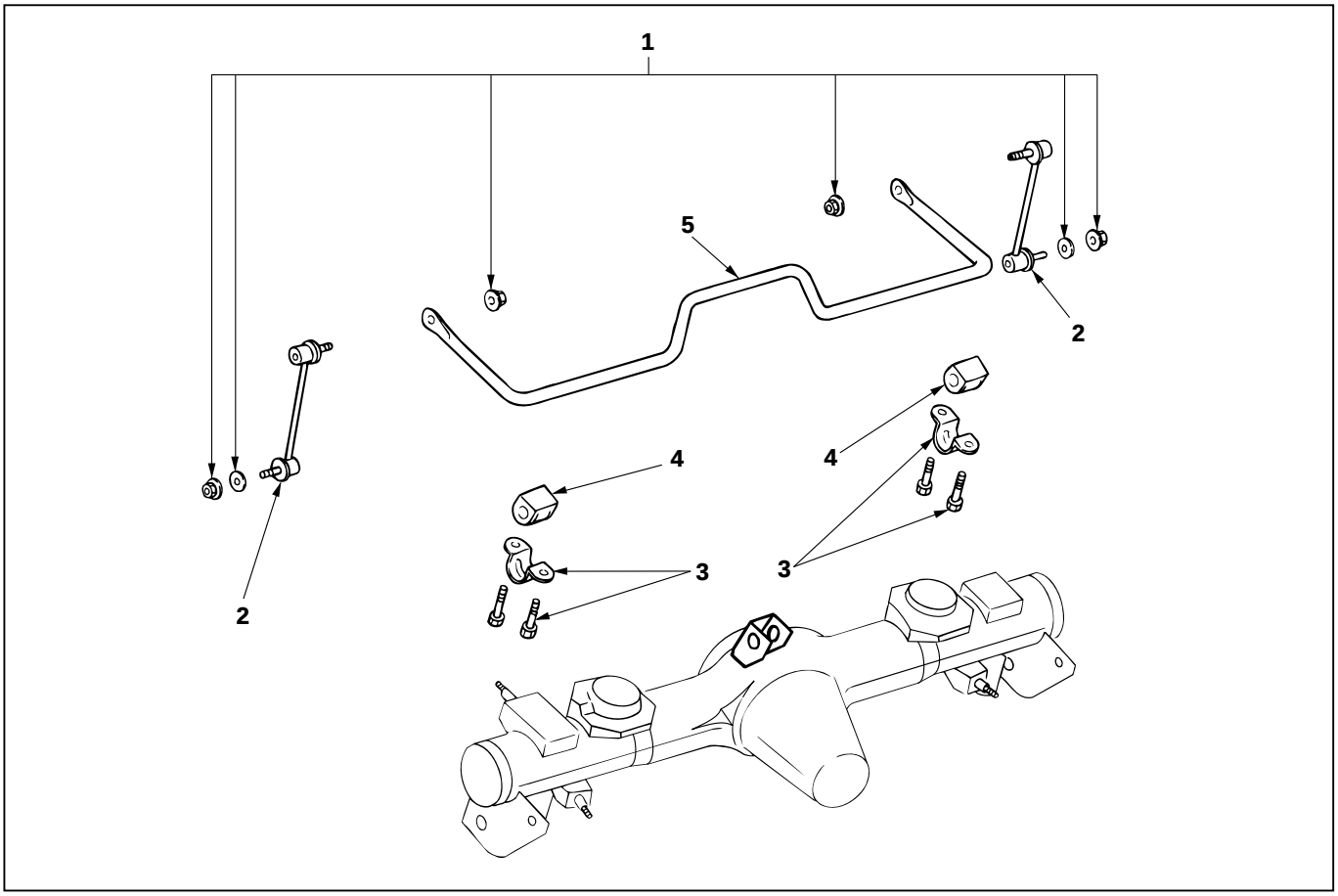

460RW028

Removal Steps

1. Nut and washer
2. Link
3. Bracket
4. Rubber bushing
5. Stabilizer bar

Installation Steps

5. Stabilizer bar
4. Rubber bushing
3. Bracket
2. Link
1. Nut and washer

REMOVAL

Preparation:

1) Raise the vehicle and support the frame with suitable safety stands.
2) Remove wheel and tire assembly.
   Refer to “Wheels and Tires” in section 3E.

1. Nut and Washer

CAUTION:
Be careful not to break the ball joint boot.

2. Link
3. Bracket
4. Rubber Bushing
5. Stabilizer Bar

INSPECTION AND REPAIR

Make necessary correction or parts replacement if wear, damage, corrosion or any other abnormal condition are found through inspection.

- Stabilizer bar
- Rubber bushing
- Link ball joint

INSTALLATION

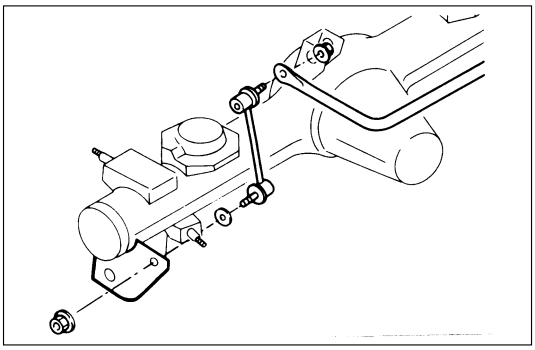

5. Stabilizer Bar

4 Rubber Bushing

3. Bracket

Bracket Bolt Torque	N·m (kg·m/lb·ft)
22 (2.2 / 16)	

2. Link

1. Nut and Washer

Link Nut Torque	N·m (kg·m/lb·ft)
50 (5.1 / 37)	

SECTION 3E

WHEELS AND TIRES

CONTENTS

PAGE

General Description ..... 3E – 2
On-Vehicle Service ..... 3E – 3
Wheels ..... 3E – 3
Unit Repair ..... 3E – 4
Tires ..... 3E – 4
Wheels ..... 3E – 5
General Balance Procedure ..... 3E – 5
Balancing Wheel and Tire ..... 3E – 6

GENERAL DESCRIPTION

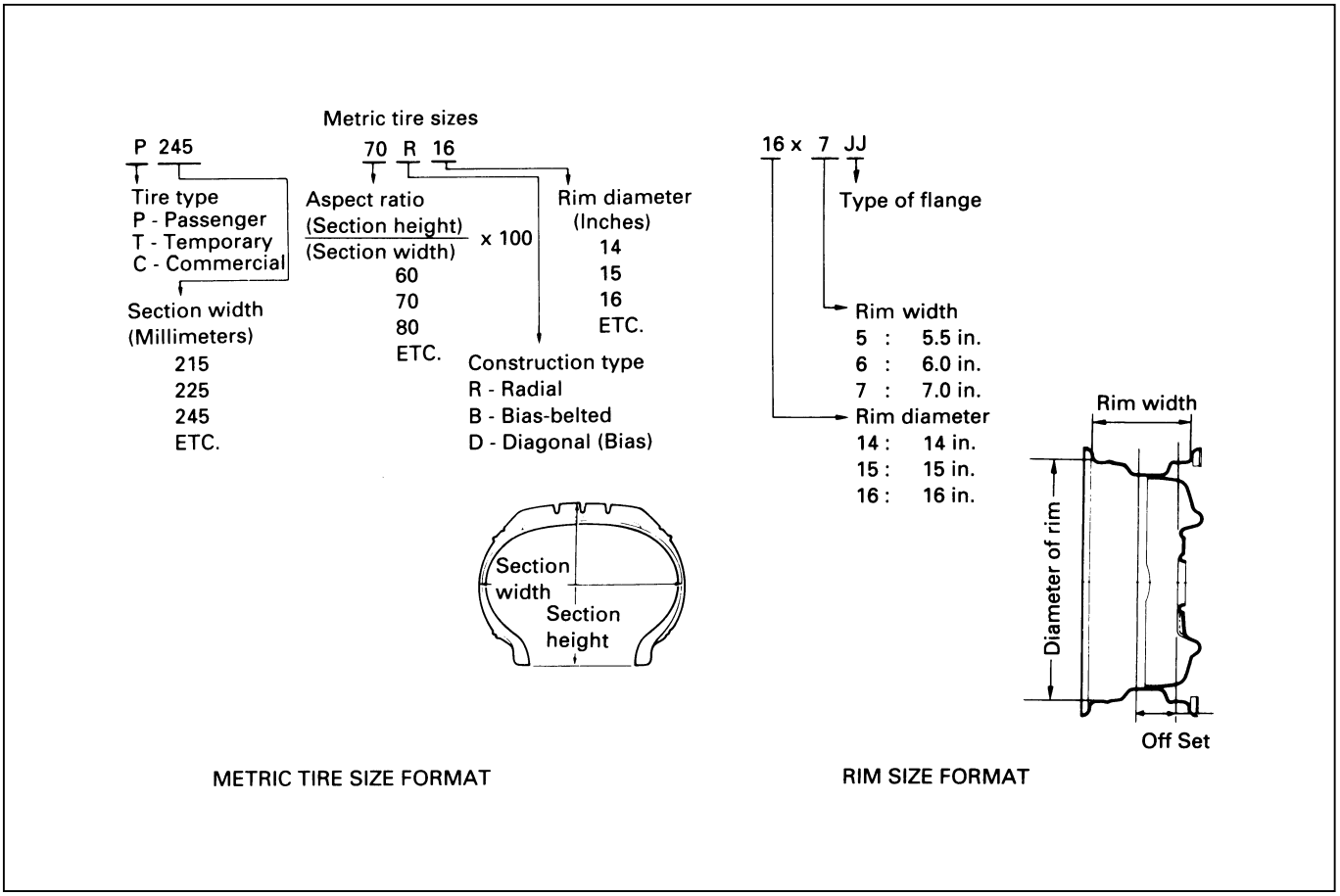

Replacement wheels or tires must be equivalent to the originals in load capacity, specified dimension and mounting configuration. Improper size or type may affect bearing life, brake performance, speedometer/odometer calibration, vehicle ground clearance and tire clearance to the body and chassis.

All models are equipped with metric sized steel belted radial tires. Correct tire pressures and driving habits have an important influence on tire life. Heavy cornering, excessively rapid acceleration and unnecessary sharp braking increase premature and uneven wear.

ON-VEHICLE SERVICE

WHEELS

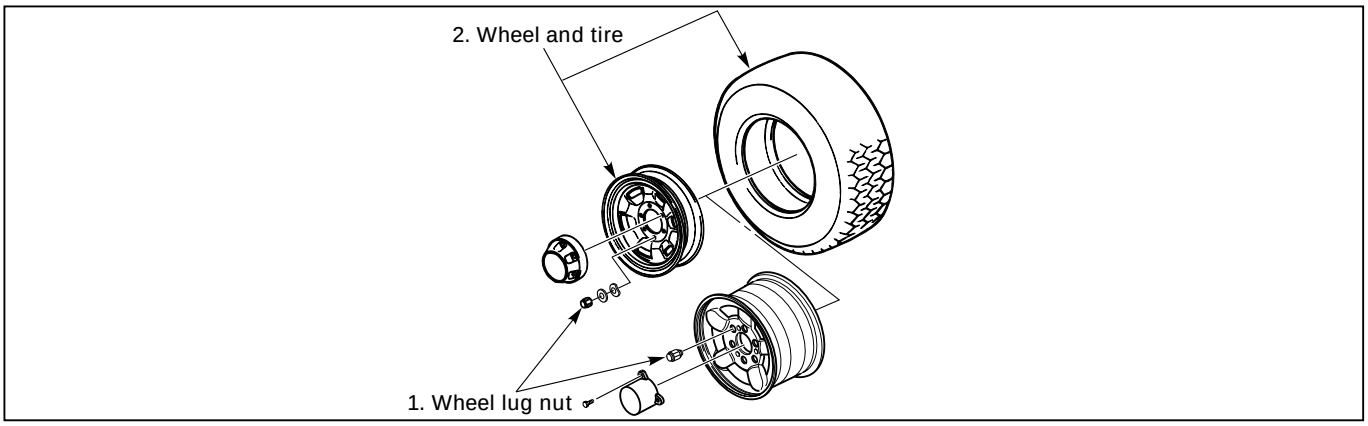

480RV004

Removal Steps

1. Wheel lug nut
2. Wheel and tire

Installation Steps

2. Wheel and tire
1. Wheel lug nut

REMOVAL

1. **Wheel Lug Nut**
   Loosen wheel nut by approximately 180° (half a rotation) and raise the vehicle. Then remove the nuts.
2. **Wheel and Tire**

   NOTE:
   Never use heat to loosen a tight wheel lug nut. The application of heat to the hub can shorten the life of the wheel and may cause damage to wheel bearings.

INSTALLATION

1. **Wheel and Tire**
2. **Wheel Lug Nut**
   Tighten the wheel lug nuts to the specified torque in numerical order.

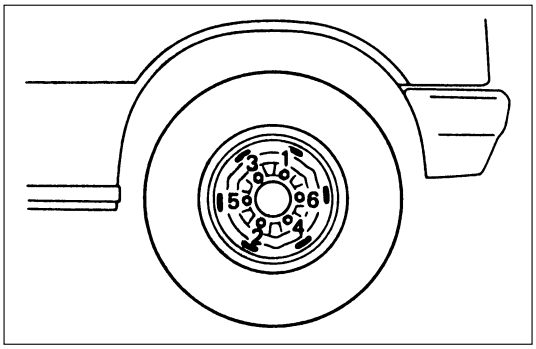

Wheel Lug Nut Torque	N·m (kg·m/lb·ft)
118 (12.0 / 87)	

CAUTION:
Before installing wheels, remove any build-up of corrosion on the wheel mounting surface and brake disc mounting surface by scraping and wire brushing. Installing wheels without good metal-to-metal contact at mounting surfaces can cause wheel nuts to loosen, which can later allow a wheel to come off while the vehicle is moving.

NOTE:
Valve caps should be on the valve stems to keep dust and water out.

UNIT REPAIR

TIRES

REPLACEMENT

When replacement is necessary, the original metric size should be used. Most metric tire sizes do not have exact corresponding alphanumeric tire sizes. It is recommended that new tires be installed in pairs on the same axle. If necessary to replace only one tire, it should be paired with tire having the most tread, to equalize braking traction.

CAUTION:
Do not mix different types of tires such as radial, bias and bias-belted tires except in emergencies, because vehicle handling may be seriously affected and may result in loss of control.

TIRE MOUNTING

Remove valve cap on valve stem and deflate the tire.
Then use a tire changing machine to mount or dismount tires.
Follow the equipment manufacturer's instruction. Do not use hand tools or tire lever alone to change tires as they may damage the tire beads or wheel rim.

TIRE DISMOUNTING

Rim bead seats should be cleaned with a wire brush or coarse steel wool to remove lubricants, and light rust.
Before mounting a tire, the bead area should be well lubricated with an approved tire lubricant.
After mounting, inflate the tire to 196 kPa (28 psi) so that beads are completely seated. Inflate the air to specified pressure and install valve cap to the stem

WARNING:
NEVER STAND OVER TIRE WHEN INFLATING. BEAD MAY BREAK WHEN BEAD SNAPS OVER RIM'S SAFETY HUMP AND CAUSE SERIOUS PERSONAL INJURY.
NEVER EXCEED 240 kPa (35 psi) PRESSURE WHEN INFLATING. IF 240 kPa (35 psi) PRESSURE WILL NOT SEAT BEADS, DEFLATE, RE-LUBRICATE AND RE-INFLATE. OVER INFLATION MAY CAUSE THE BEAD TO BREAK AND CAUSE SERIOUS PERSONAL INJURY.

TIRE REPAIR

There are many different materials on the market used to repair tires.
Manufacturers have published detailed instructions on how and when to repair tires. These instructions can be obtained from the tire manufacturer if they are not included with the repair kit.

WHEELS

REPLACEMENT

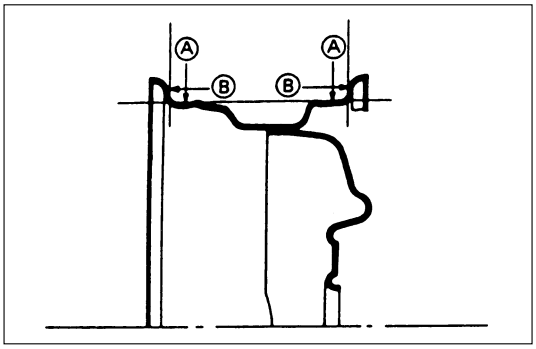

Damaged wheels and wheels with excessive runout must be replaced.
Wheel Runout at Rim (Based on Hub bore.)

	Steel	Aluminum
Ⓐ Vertical play: Less than mm(in)	1.5 (0.059)	0.7 (0.028)
Ⓑ Horizontal play: Less than mm(in)	1.5 (0.059)	0.7 (0.028)

GENERAL BALANCE PROCEDURE

Deposits of mud, etc. must be cleaned from the inside of the rim.
The tire should be inspected for the following: match mount paint marks, bent rims, bulges, irregular tire wear, proper wheel size and inflation pressure. Then balance according to the equipment manufacturer's recommendations.
There are two types of wheel and tire balance.
Static balance is the equal distribution of weight around the wheel.
Assemblies that are statically unbalanced cause a bouncing action called tramp. This condition will eventually cause uneven tire wear.

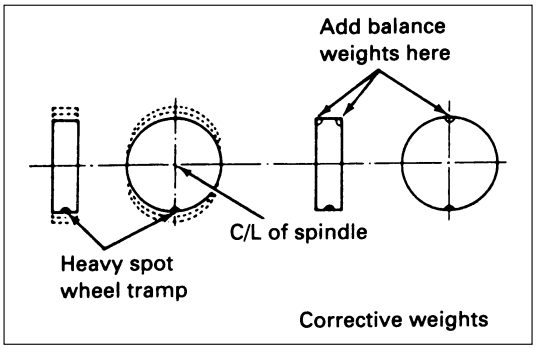

Dynamic balance is the equal distribution of weight on each side of the wheel center-line so that when the tire spins there is not tendency for the assembly to move from side to side. Assemblies that are dynamically unbalanced may cause shimmy.

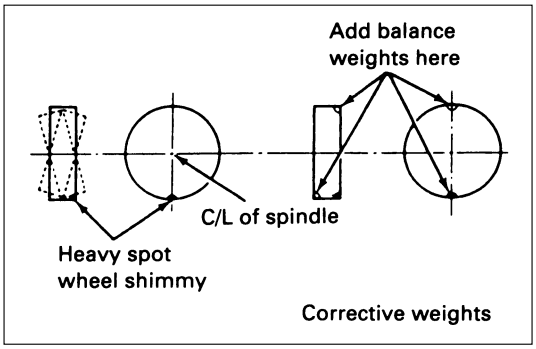

WARNING:
STONES SHOULD BE REMOVED FROM THE TREAD TO AVOID OPERATOR INJURY DURING SPIN BALANCING AND TO OBTAIN A GOOD BALANCE.

BALANCING WHEEL AND TIRE

ON-VEHICLE BALANCING

On-Vehicle balancing methods vary with equipment and tool manufacturers. Be sure to follow each manufacturer's instructions during balancing operation.

OFF-VEHICLE BALANCING

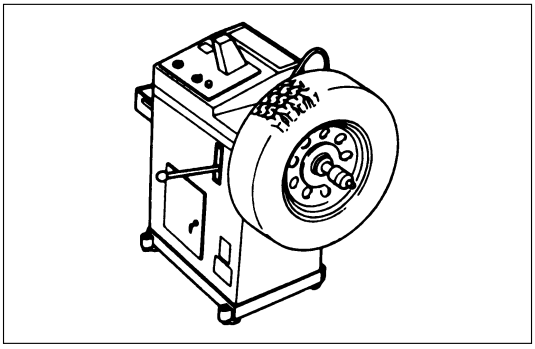

Most electronic off-vehicle balancers are more accurate than the on-vehicle spin balancers. They are easy to use and give a dynamic balance. Although they do not correct for drum or disc unbalance (as on-vehicle spin balancing does), they are very accurate.

DRIVELINE/AXLE

CONTENTS

Differential (Front) 4A1
Differential (Rear/220mm) 4A2A
Differential (Rear/244mm) 4A2B
Driveline Control System (Shift on the Fly) . . 4B1
Driveline Control System (TOD) 4B2
Driveshaft System 4C
Transfer Case (Standard Type) 4D1
Transfer Case (TOD) 4D2

DIFFERENTIAL (FRONT)

CONTENTS

Service Precaution 4A1–1
Front Drive Axle 4A1–2
Diagnosis 4A1–2
Pinion Shaft Oil Seal 4A1–3
Pinion Shaft Oil Seal and Associated Parts 4A1–3
Removal 4A1–3
Inspection and Repair 4A1–4
Installation 4A1–4
Front Drive Axle Assembly 4A1–5
Front Drive Axle Assembly and Associated Parts 4A1–5
Removal 4A1–5
Installation 4A1–7
Differential Assembly 4A1–9
Disassembled View 4A1–9
Disassembly 4A1–9
Reassembly 4A1–12
Differential Cage Assembly 4A1–21
Disassembled View 4A1–21
Disassembly 4A1–21
Inspection and Repair 4A1–22
Reassembly 4A1–23
Main Data and Specifications 4A1–25
Special Tools 4A1–28

Service Precaution

WARNING: IF SO EQUIPPED WITH A SUPPLEMENTAL RESTRAINT SYSTEM (SRS), REFER TO THE SRS COMPONENT AND WIRING LOCATION VIEW IN ORDER TO DETERMINE WHETHER YOU ARE PERFORMING SERVICE ON OR NEAR THE SRS COMPONENTS OR THE SRS WIRING. WHEN YOU ARE REFORMING SERVICE ON OR NEAR THE SRS COMPONENTS OR THE SRS WIRING, REFER TO THE SRS SERVICE INFORMATION. FAILURE TO FOLLOW WARNINGS COULD RESULT IN POSSIBLE AIR BAG DEPLOYMENT, PERSONAL INJURY, OR OTHERWISE UNNEEDED SRS SYSTEM REPAIRS.

CAUTION: Always use the correct fastener in the proper location. When you replace a fastener, use ONLY the exact part number for that application. ISUZU will call out those fasteners that require a replacement after removal. ISUZU will also call out the fasteners that require thread lockers or thread sealant. UNLESS OTHERWISE SPECIFIED , do not use supplemental coatings (Paints, greases, or other corrosion inhibitors) on threaded fasteners or fastener joint interfaces. Generally,such coatings adversely affect the fastener torque and the joint clamping force, and may damage the fastener. When you install fasteners, use the correct tightening sequence and specification. Following these instructions can help you avoid damage to parts and systems.

Front Drive Axle

Diagnosis

Condition	Possible cause	Correction
Oil Leak At Front Axle	Worn or defective oil seal.	Replace the oil seal.
	Front axle housing cracked.	Repair or replace.
Oil Leak At Pinion Shaft	Too much gear oil.	Correct the oil level.
	Oil seal worn or defective.	Replace the oil seal.
	Pinion flange loose or damaged.	Tighten or replace.
Noises In Front Axle Drive Shaft Joint	Broken or worn drive shaft joints and bellows (BJ and DOJ).	Replace the drive shaft joints and bellows.
“Clank” When Accelerating From “Coast”	Loose drive shaft joint to output shaft bolts.	Tighten.
	Damaged inner drive shaft joint.	Replace.
Shudder or Vibration During Acceleration	Excessive drive shaft joint angle.	Repair.
	Worn or damaged drive shaft joints.	Replace.
	Sticking spider assembly (inner drive shaft joint).	Lubricate or replace.
	Sticking joint assembly (outer drive shaft joint).	Lubricate or replace.
Vibration At Highway Speeds	Out of balance or out of round tires.	Balance or replace.
	Front end out of alignment.	Align.
Noises in Front Axle	Insufficient gear oil.	Replenish the gear oil.
	Wrong or poor grade gear oil.	Replace the gear oil.
	Drive pinion to ring gear backlash incorrect.	Adjust the backlash.
	Worn or chipped ring gear, pinion gear or side gear.	Replace the ring gear, pinion gear or side gear.
	Pinion shaft bearing worn.	Replace the pinion shaft bearing.
	Wheel bearing worn.	Replace the wheel bearing.
	Differential bearing loose or worn.	Tighten or replace.
Wanders and Pulls	Wheel bearing preload too tight.	Adjust the wheel bearing preload.
	Incorrect front alignment.	Adjust the front alignment.
	Steering linkage loose or worn.	Tighten or replace.
	Steering gear out of adjustment.	Adjust or replace the steering gear.
	Tire worn or improperly inflated.	Adjust the inflation or replace.
	Front or rear suspension parts loose or broken.	Tighten or replace.
Front Wheel Shimmy	Wheel bearing worn or improperly adjusted.	Adjust or replace.
	Incorrect front alignment.	Adjust the front alignment.
	Worn ball joint or bush.	Replace the ball joint or bush.
	Steering linkage loose or worn.	Tighten or replace.
	Steering gear out of adjustment.	Tighten or replace.
	Tire worn or improperly inflated.	Replace or adjust the inflation.
	Shock absorber worn.	Replace the shock absorber.

Pinion Shaft Oil Seal

Pinion Shaft Oil Seal and Associated Parts

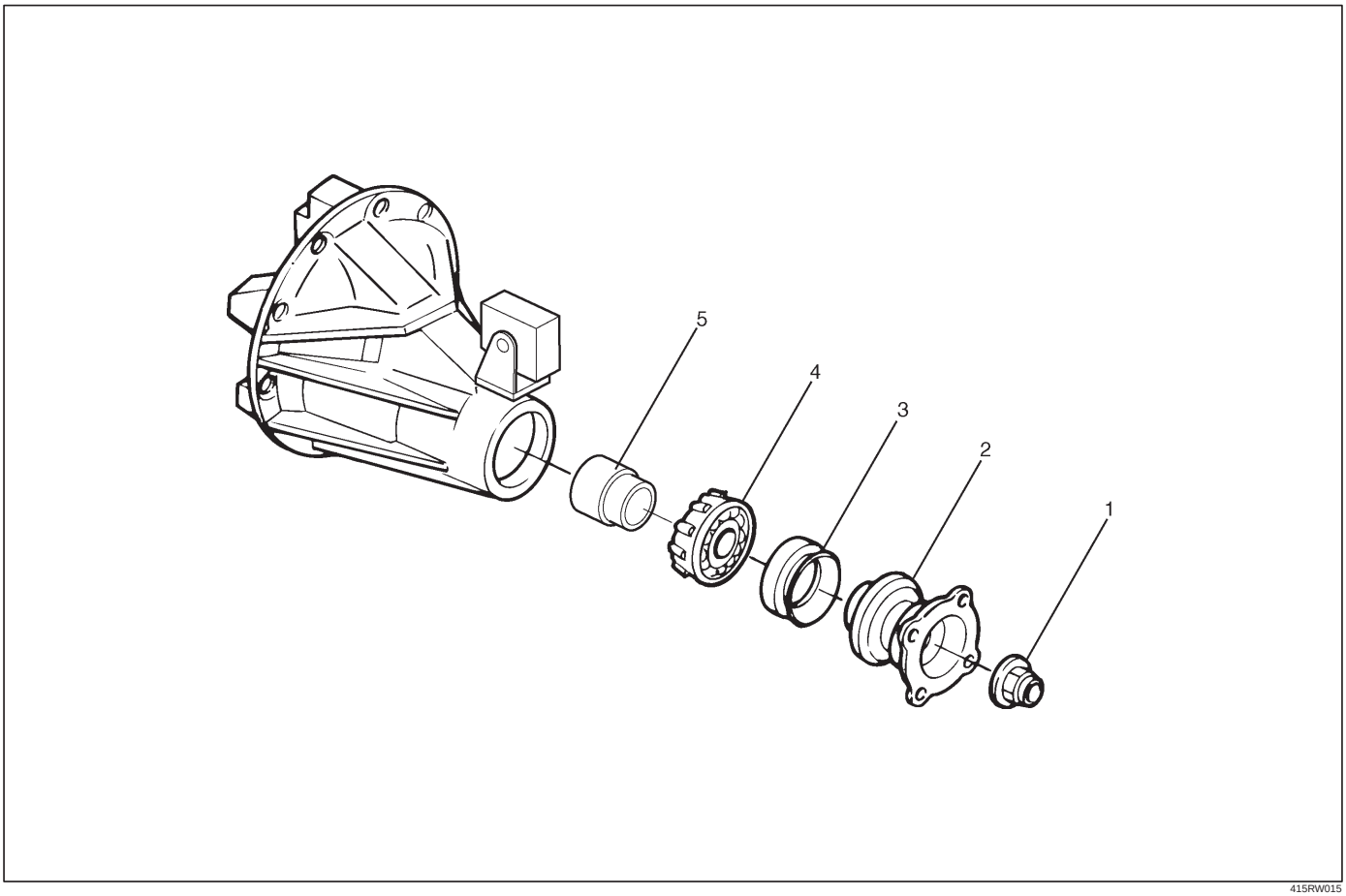

415RW015

Legend

(1) Flange Nut
(2) Flange
(3) Oil Seal
(4) Outer Bearing
(5) Collapsible Spacer

Removal

1. Raise the vehicle and support it at the frame.
   The hoist must remain under the front axle housing.
2. Drain the front axle oil by loosening the drain plug(1).

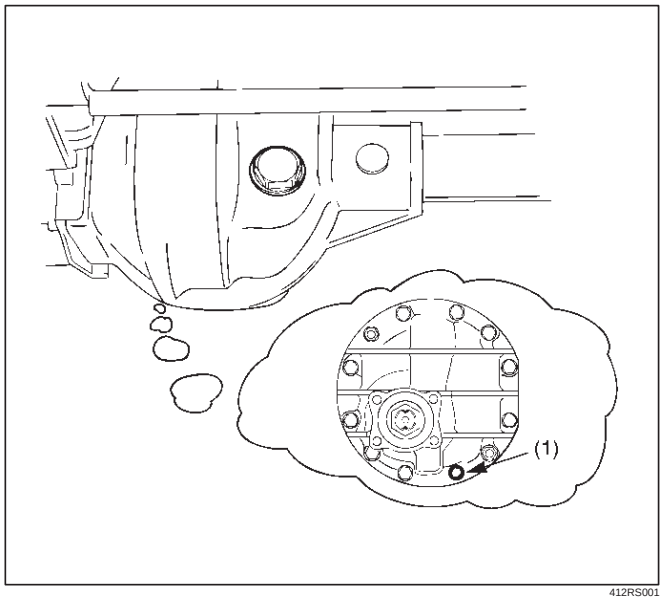

412RS001

3. Remove the front propeller shaft. Refer to Front Propeller Shaft in this section.
4. Remove flange nut by using pinion flange holder 5–8840–2157–0.

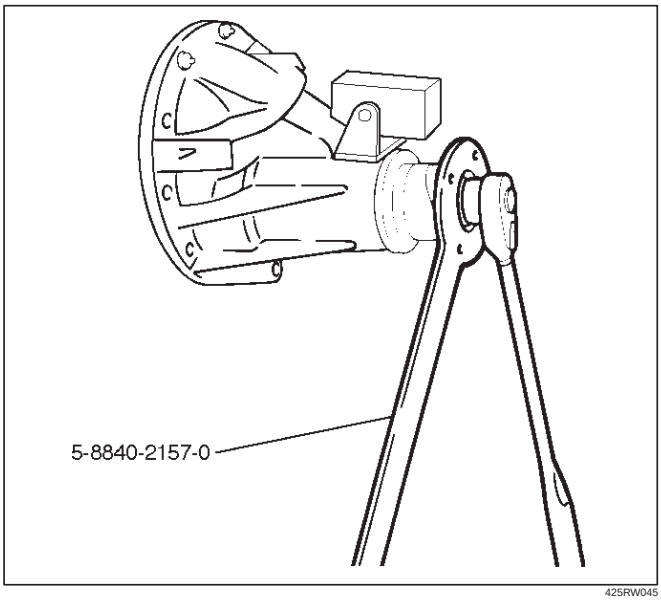

425RW045

5. Remove flange.
6. Remove oil seal.
7. Remove outer bearing by using remover 5–8840–2323–0.

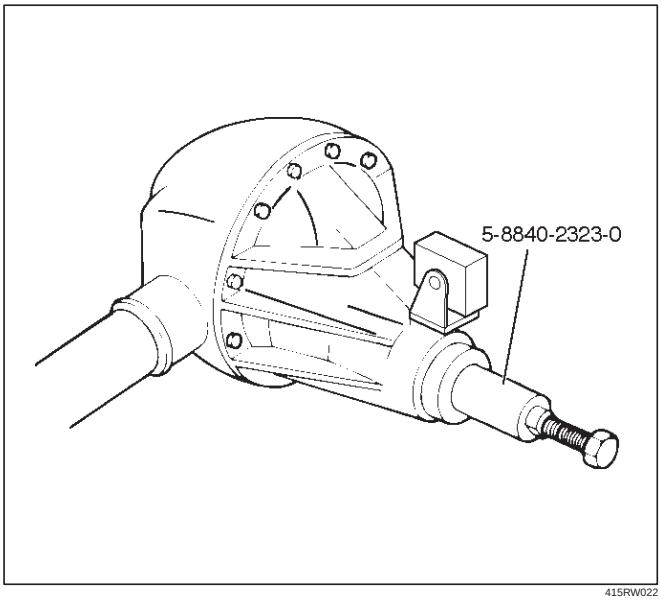

415RW022

8. Remove collapsible spacer.

Inspection and Repair

Make necessary correction or parts replacement if wear, damage, corrosion or any other abnormal conditions are found through inspection.
Check the following parts:

1. Seal surface of the pinion.
2. Cage bore for burns.

Installation

1. Install collapsible spacer. Discard the used collapsible spacer and install a new one.
2. Install outer bearing.

NOTE: Do not drive in, but just temporarily set in the outer bearing by hand, which should be indirectly pressed in finally by tightening the flange nut.

3. Install oil seal, use oil seal installer 9–8522–1275–0 to install a new oil seal that has been soaked in axle lubricant.

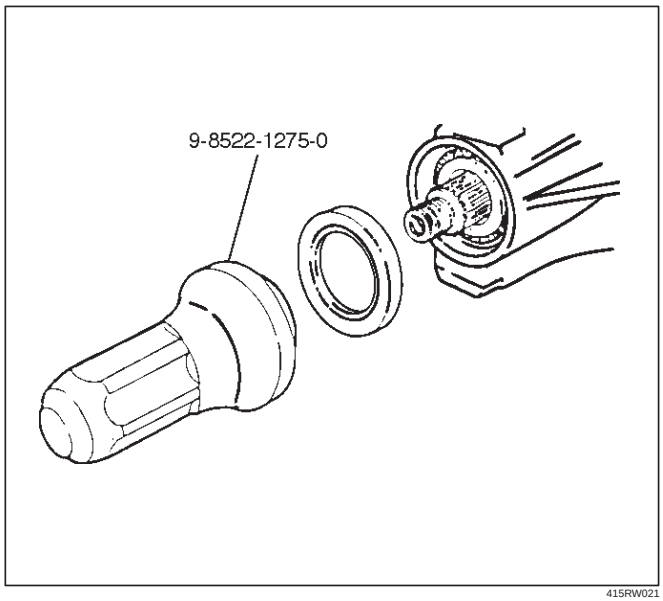

415RW021

4. Install flange.
5. Install flange nut, refer to Differential Assembly for flange nut reassembly in this section.

NOTE: Discard the used nut and install a new one.

Front Drive Axle Assembly

Front Drive Axle Assembly and Associated Parts

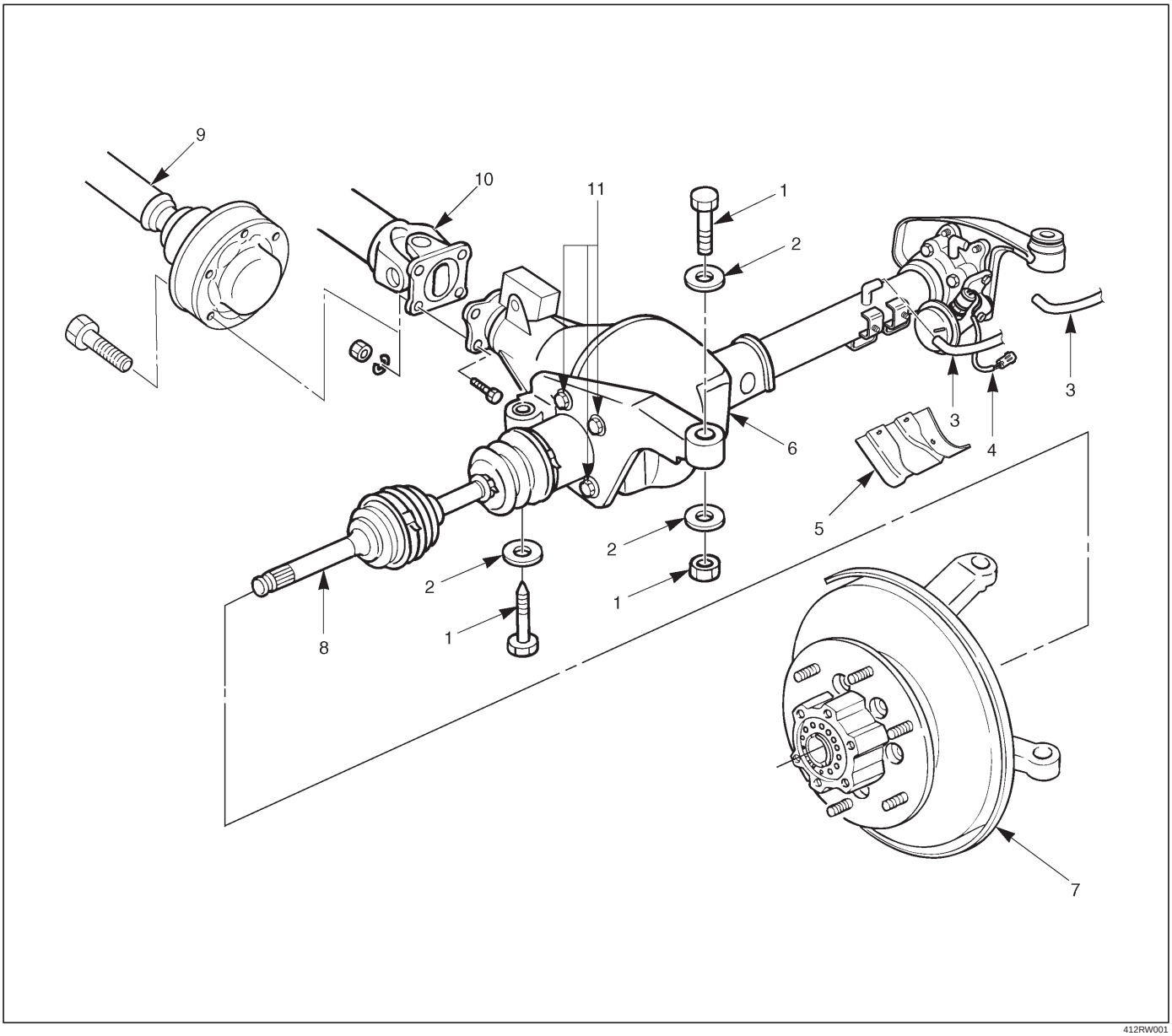

412RW001

Legend

(1) Mounting Bolt and Nut
(2) Washer and Spacer
(3) Breather Hose (with Shift on the Fly)
(4) Shift Switch Connector (with Shift on the Fly)
(5) Protector (with Shift on the Fly)
(6) Front Axle Case Assembly and Front Drive Shaft Assembly (LH side)
(7) Hub Assembly (Disc, Back Plate and Knuckle)
(8) Front Drive Shaft Assembly (RH side)
(9) Propeller Shaft (With TOD)
(10) Propeller Shaft
(11) Bolt

Removal

1. Jack up the vehicle and support it using jack stands.
2. Remove the tire and wheel.

3. Remove the drain bolt to drain differential oil.

NOTE:

a. During the work, be sure that the diff case is supported by the jack.

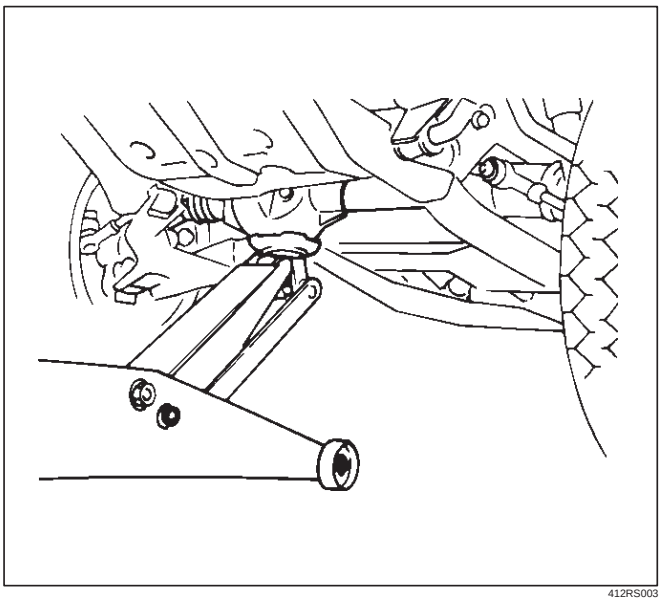

412RS003

b. Remove the brake caliper fixing bolt and hang the caliper. Refer to Front Disc Brake Caliper Assembly in Brake section.

c. Remove the antilock brake system speed sensor (if equipped). Refer to Front Wheel Speed Sensor in Brakes section.

4. Remove the hub assembly (Disc, back plate and knuckle), refer to Front Hub and Disc in this section.
5. Disconnect the knuckle and the suspension arm. Refer to Suspension section.
6. Remove steering link and arm assembly, refer to Steering Linkage in Steering section.
7. Remove suspension crossmember.
8. Remove propeller shaft, refer to Front Propeller Shaft in this section.
9. Remove protector (Shift on the fly model).
10. Remove breather hose (Shift on the fly model).
11. Remove the hose clip (Shift on the fly model).
12. Disconnect breather hose from front drive axle tube and disconnect housing (Shift on the fly model).
13. Disconnect vacuum hose from actuator (Shift on the fly model).
14. Disconnect shift switch connector (Shift on the fly model).

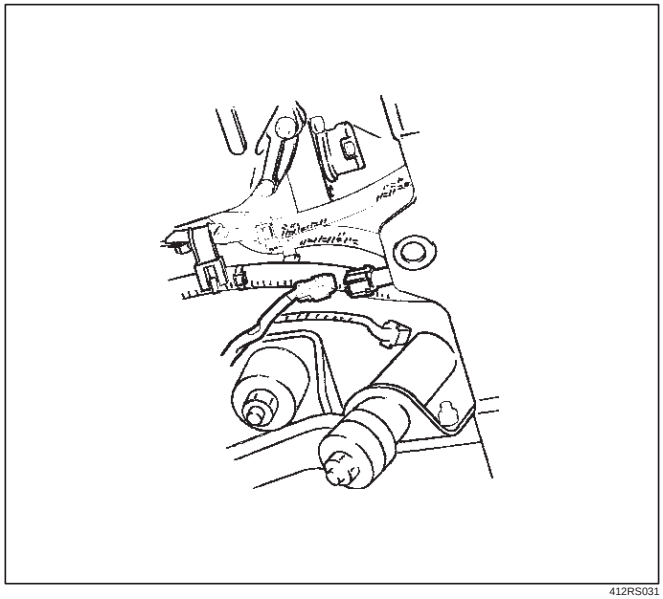

412RS031

15. Remove VSV assembly (1) (Shift on the fly model).

NOTE: Be sure not to remove hose and connector from VSV asm.

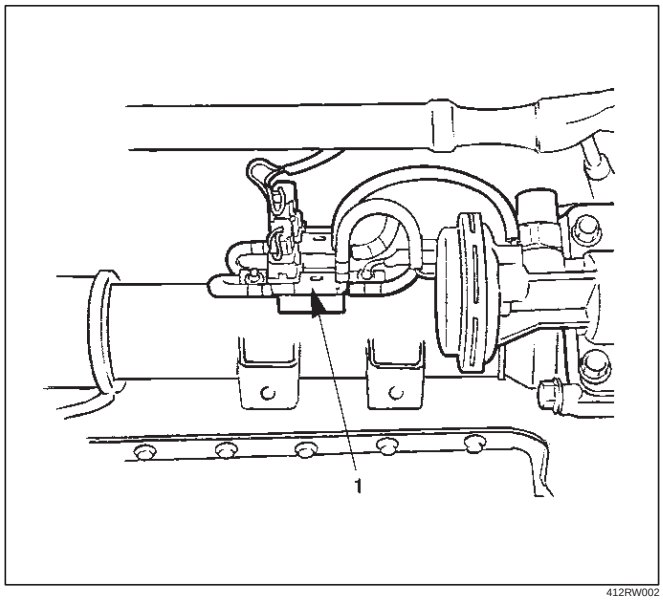

412RW002

16. Remove mounting bolt and nut.

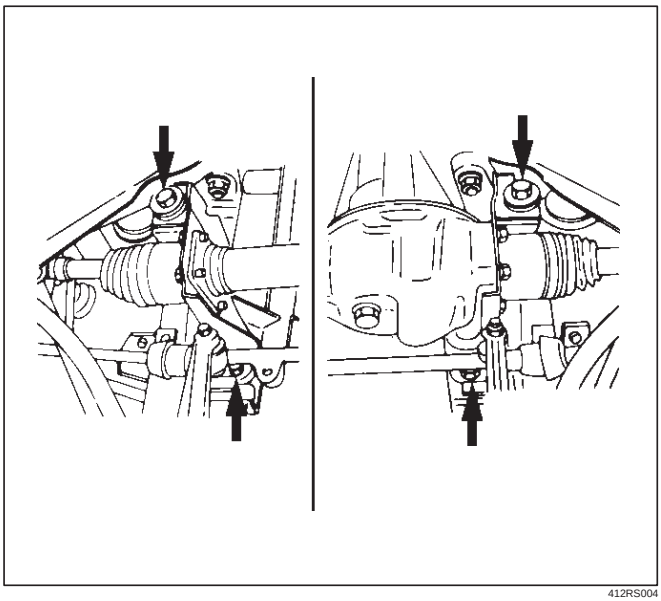

412RS004

17. Remove washer and spacer.
18. Remove the mounting bracket fixing bolt.

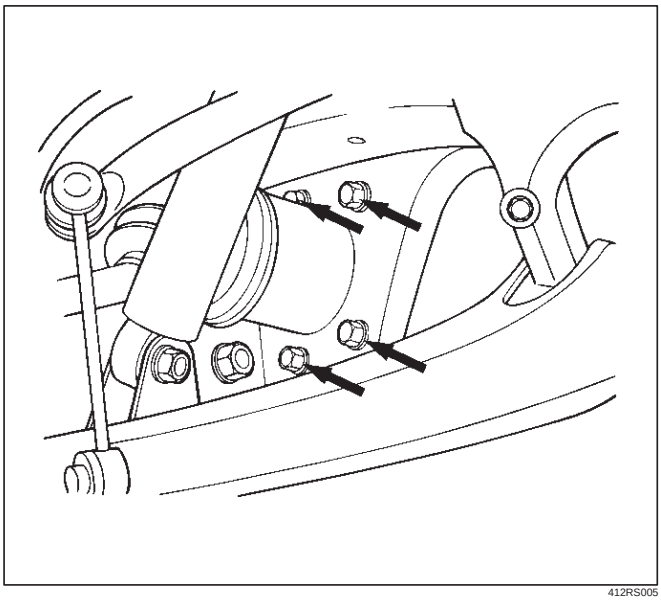

412RS005

19. Lower the vehicle and disconnect the RH front drive shaft assembly, then remove the front axle case assembly and front drive shaft assembly (LH).

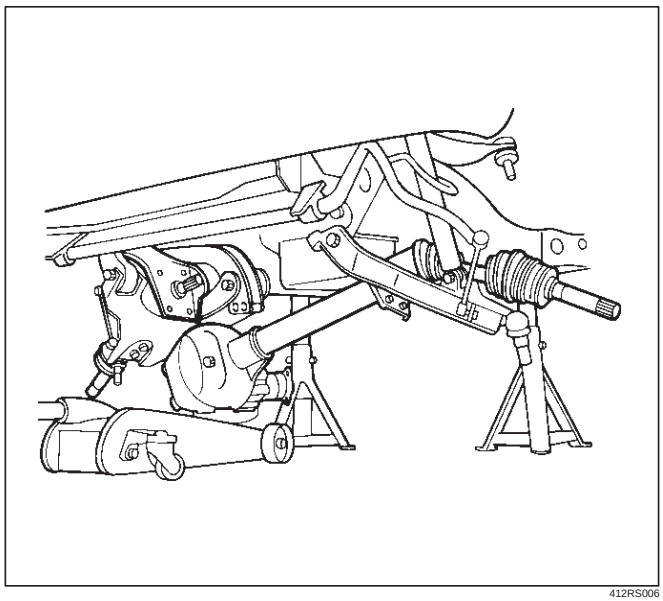

412RS006

20. Remove front drive shaft assembly (RH).

Installation

1. Install front drive shaft assembly (RH) and lay the assembly on the lower arm.
2. Install front axle case assembly and front drive shaft assembly (LH) and place the axle case on the jack, connect to the front drive shaft assembly (RH) before installing to the vehicle.
3. Install bolt and tighten the mounting bracket fixing bolt to the specified torque.

   Torque: 116 N·m (11.8kg·m/85 lb ft)

4. Install washer and spacer.

5. Tighten the mounting bolt and nut to the specified torque.

Torque: 152 N·m (15.5kg·m/112 lb ft)

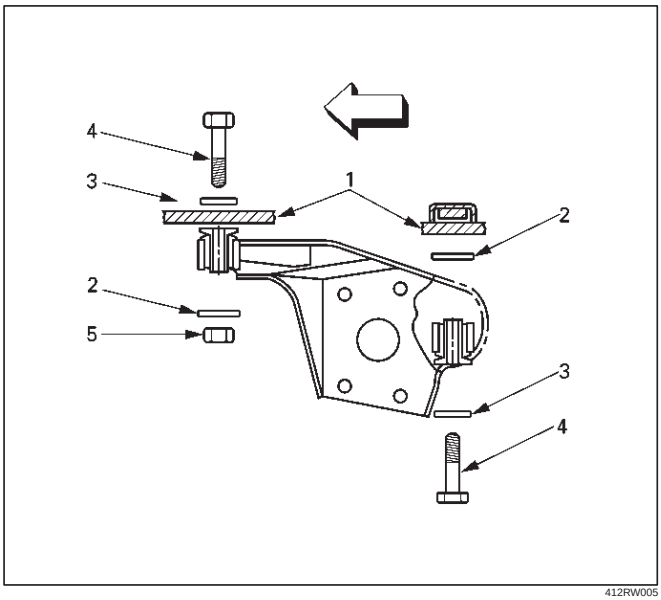

412RW005

Legend

(1) Frame
(2) Spacer
(3) Washer
(4) Bolt
(5) Nut

6. Install VSV assembly and tighten nuts to specified torque (Shift on the fly model).

Torque: 8 N·m (0.8kg·m/69 lb in)

7. Install the shift switch connector (Shift on the fly model).

NOTE: Be careful not to permit the entry of dust into the connector.

8. Install the actuator side of vacuum hose (Shift on the fly model).

NOTE: Be careful not to permit the entry of dust into the hose.

9. Connect breather hose and install the hose clip (Shift on the fly model).
10. Install protector and tighten bolts to specified torque (Shift on the fly model).

Torque: 26 N·m (2.7kg·m/20 lb ft)

11. Install propeller shaft, refer to Front Propeller Shaft in this section.
12. Install suspension crossmember.
13. Steering link and arm assembly, refer to Steering Linkage in Steering section.
14. Install hub assembly (Disc, back plate and knuckle), refer to Front Hub and Disc in this section.

Differential Assembly

Disassembled View

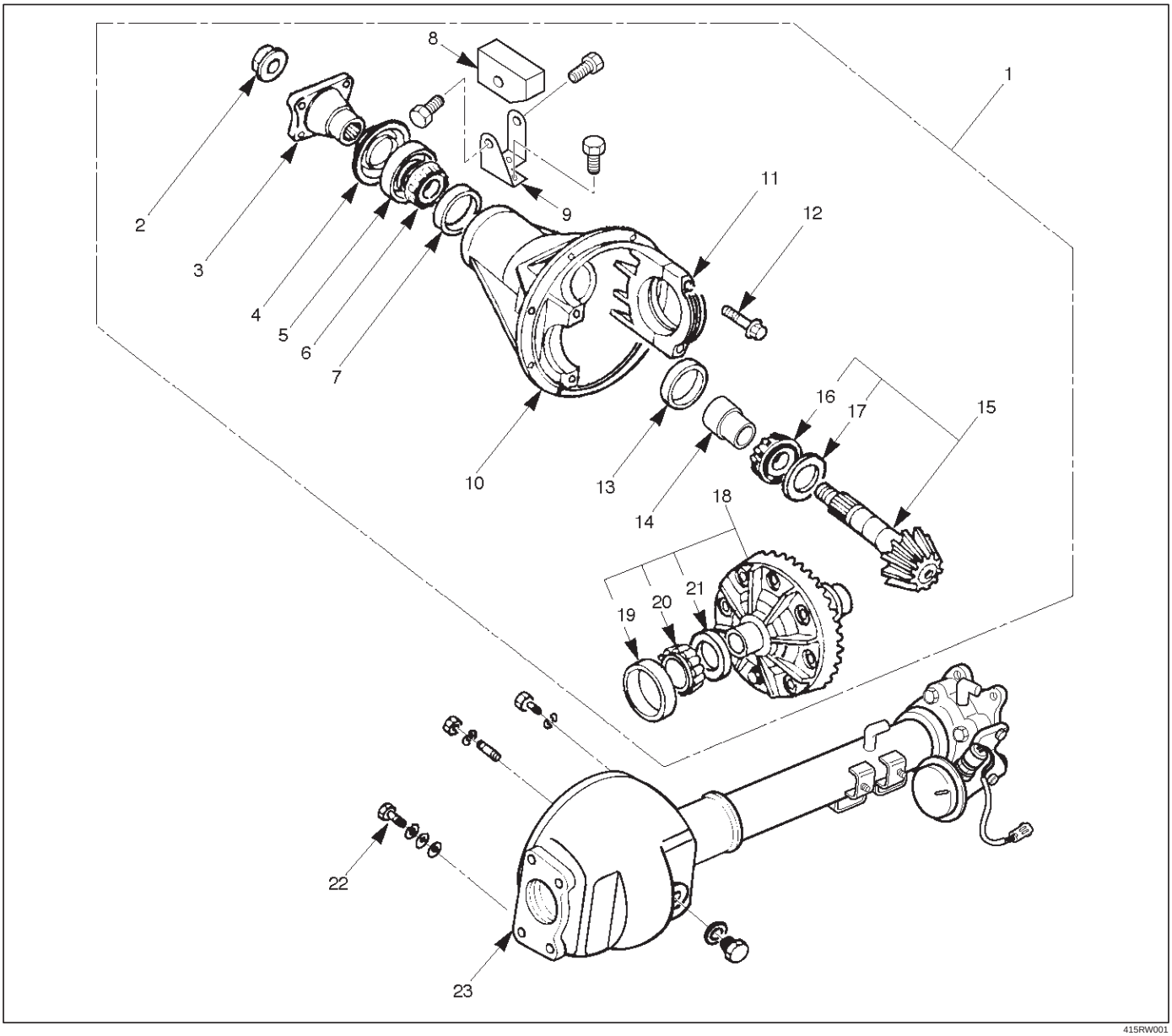

415RW001

Legend

(1) Differential Assembly
(2) Flange Nut
(3) Flange
(4) Dust Cover
(5) Oil Seal
(6) Outer Bearing
(7) Outer Bearing Outer Race
(8) Damper
(9) Bracket
(10) Differential Carrier
(11) Bearing Cap
(12) Bolt
(13) Inner Bearing Outer Race
(14) Collapsible Spacer
(15) Pinion Gear
(16) Inner Bearing
(17) Adjust Shim
(18) Diff Cage Assembly
(19) Side Bearing Outer Race
(20) Side Bearing
(21) Adjust Shim
(22) Bolt
(23) Axle Case

Disassembly

1. Remove differential carrier fixing bolt.
2. Remove differential assembly.

3. Using holding fixture 5–8840–0275–0 and holding fixture base 5–8840–0003–0, fix the differential assembly to the bench.

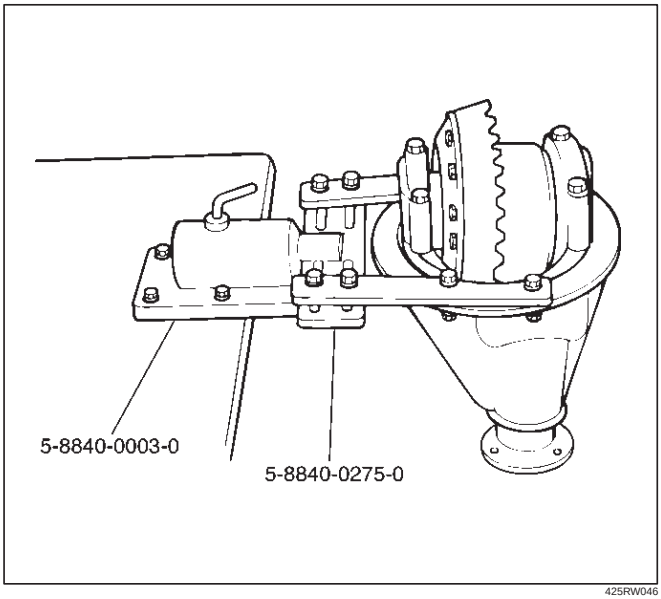

425RW046

4. Remove bearing cap bolt.
5. Apply a setting mark to the side bearing cap and the differential carrier then remove bearing cap.

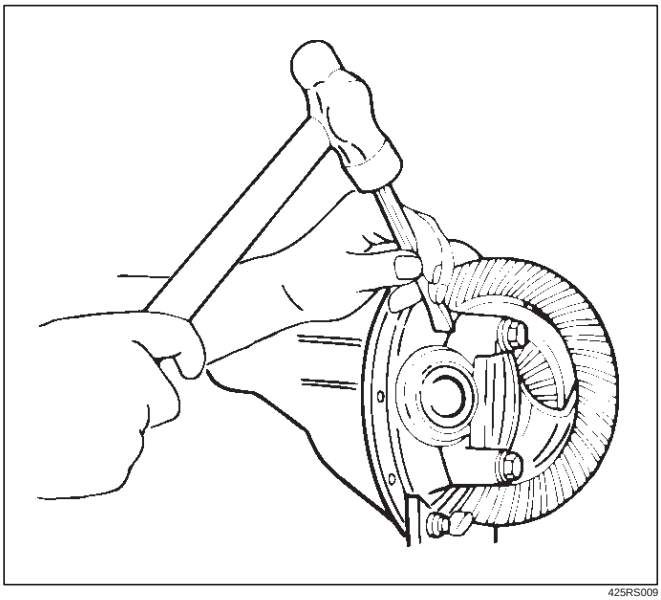

425RS009

6. Remove differential cage assembly.
7. Remove side bearing outer race, after removal, keep the right and left hand side bearing assemblies separate to maintain inner and outer race combinations.
8. Remove side bearing, using remover 5–8840–0013–0, 5–8840–0014–0 and adapter 9–8521–1743–0.

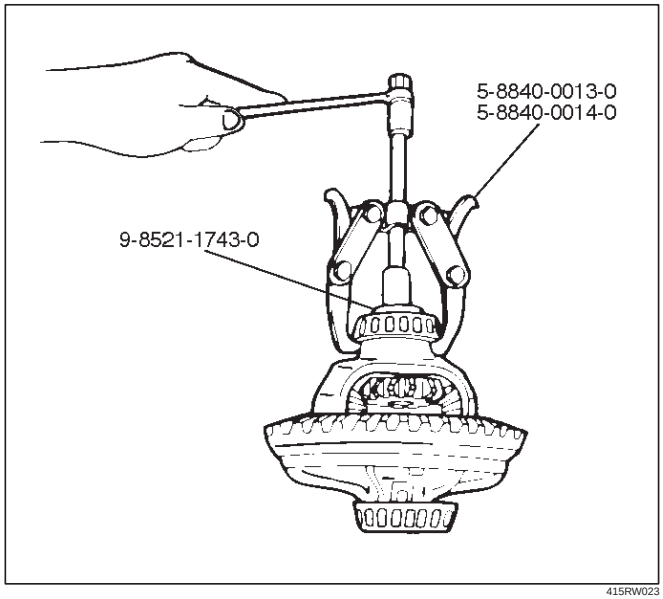

415RW023

9. Remove adjust shim, note the thickness and position of the shims removed.
10. Remove the flange nut using holding wrench 5–8840–2157–0 after raising up its staked parts completely.

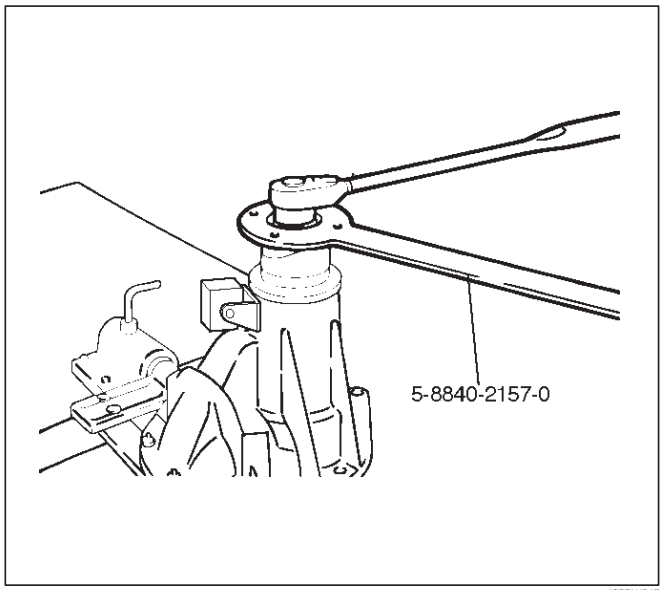

425RW047

11. Remove flange.
12. Remove dust cover.

13. Remove the drive pinion assembly using a soft metal rod and a hammer.

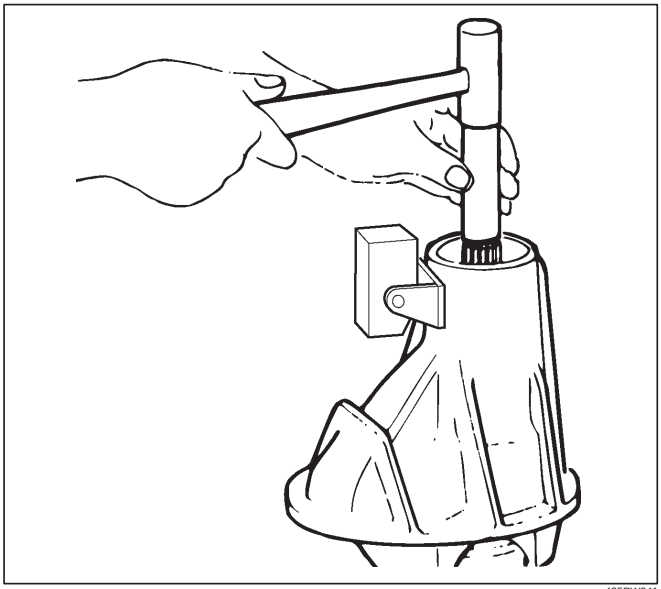

425RW041

14. Remove collapsible spacer.
15. Remove the inner bearing using a separator 5–8840–0015–0 and a press.

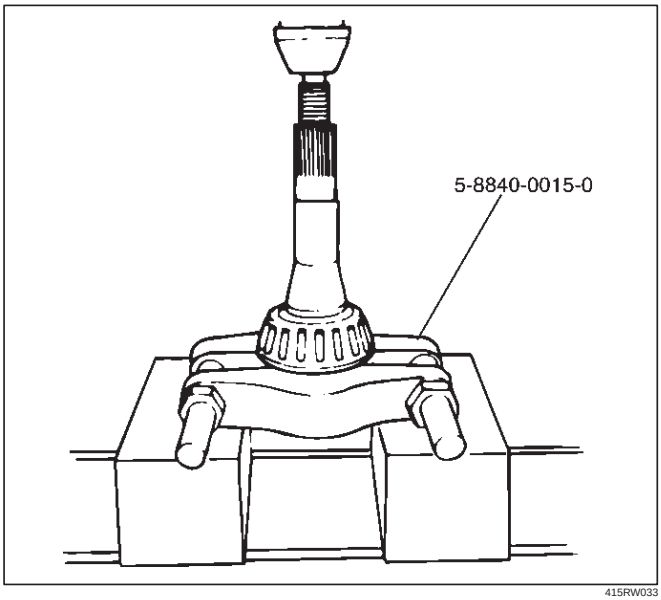

415RW033

16. Remove adjust shim.
17. Remove inner bearing outer race.
18. Remove oil seal.
19. Remove outer bearing.
20. Remove the inner bearing outer race (1) and the outer bearing outer race (2) by using a brass bar and a hammer.

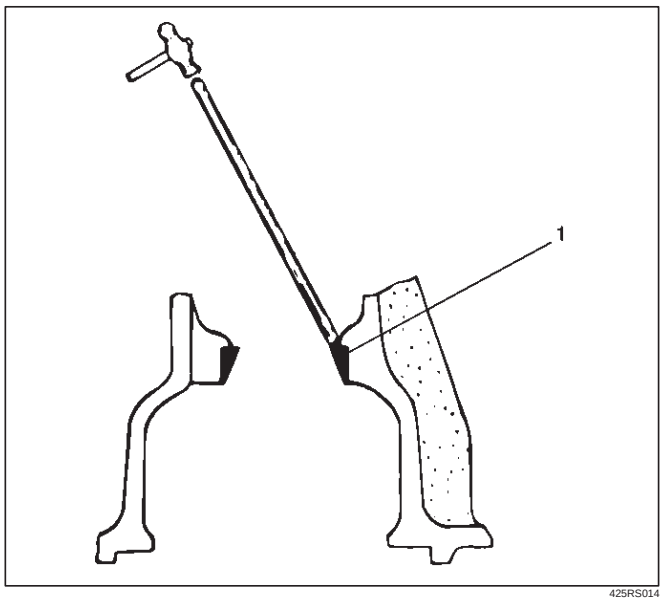

425RS014

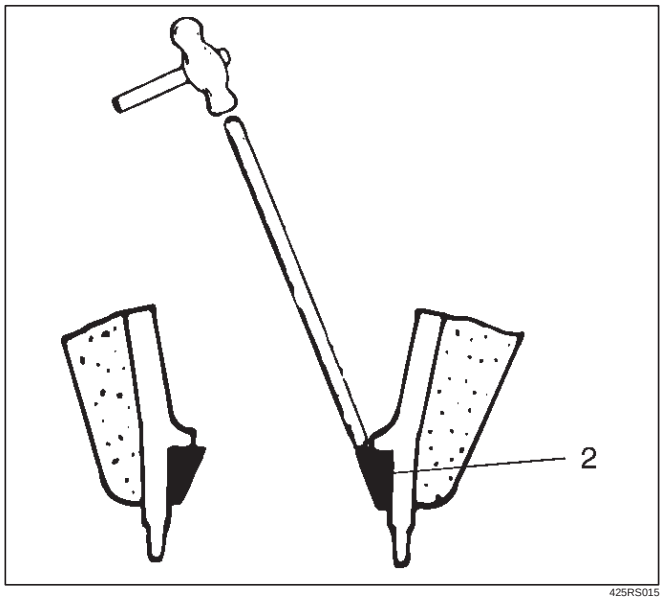

425RS015

21. Remove damper and bracket.

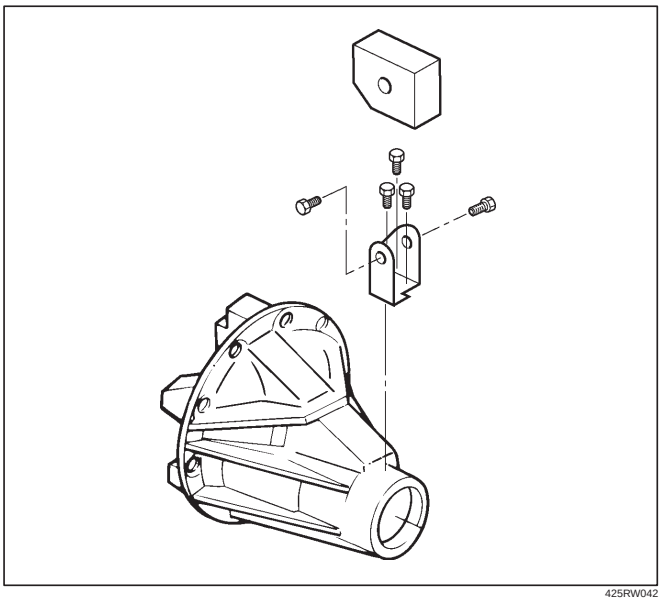

425RW042

Reassembly

1. Using installer 9–8522–1141–0 and grip 5–8840–0007–0, install outer bearing outer race.

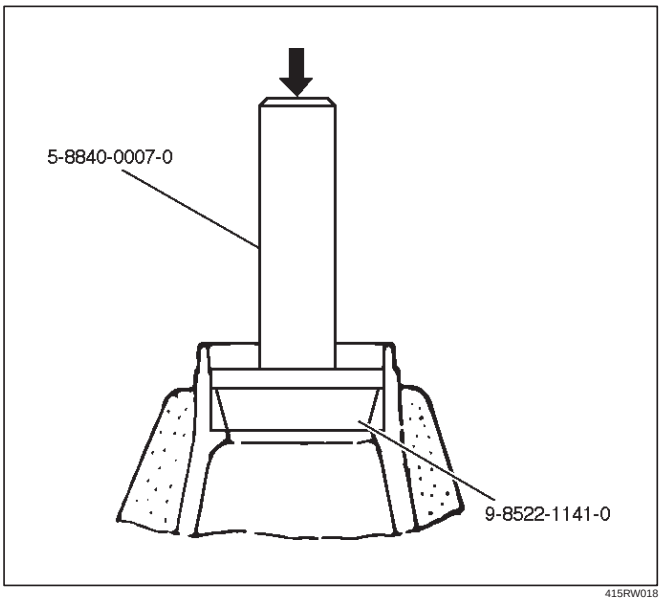

415RW018

2. Using installer 9–8522–1274–0 and grip 5–8840–0007–0, install Inner bearing outer race.

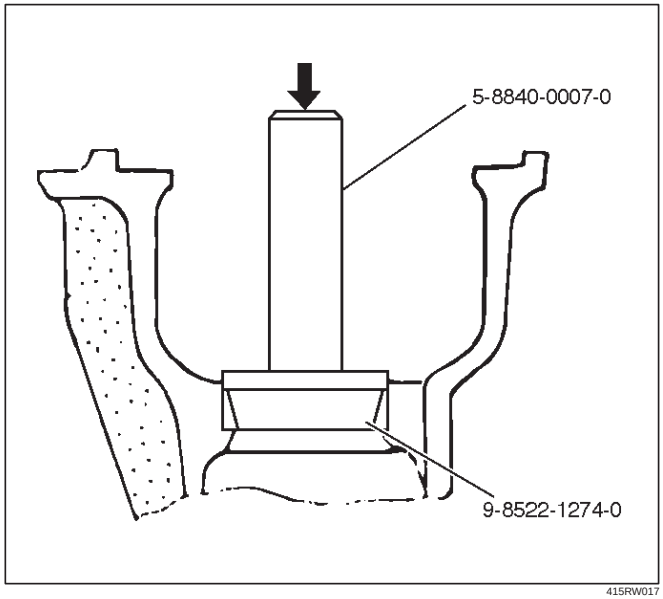

415RW017

3. Install adjust shim and adjust drive pinion mounting distance
   1. Apply gear oil to the inner and outer drive pinion bearing.
      Clean the pinion setting gauge set.
      Then install the gauge set together with the inner and outer bearings.
   2. Tighten the nut to the specified torque.

Torque: 2.3 N·m (0.23kg·m/20 lb in)

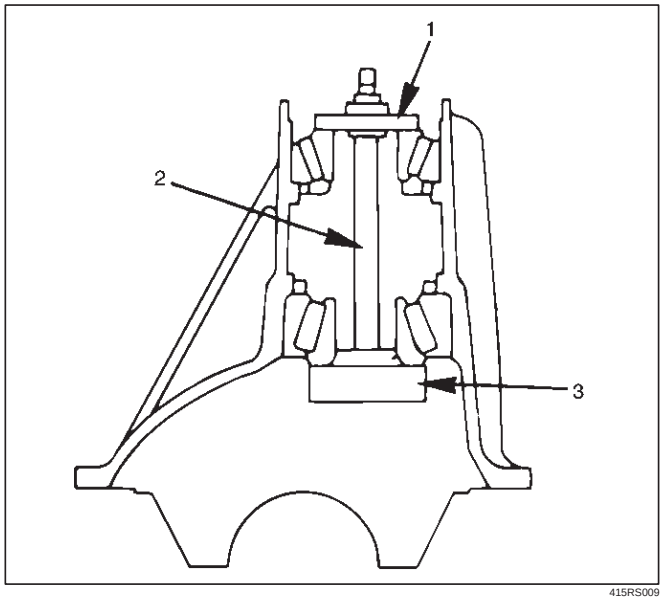

415RS009

Legend

(1) Pilot : 5–8840–2085–0
(2) Nut and Bolt : 5–8840–2089–0
(3) Gauge Plate : 5–8840–2087–0

3. Clean the side bearing bores. Install the dial indicator with the discs and arbor. Install and tighten the bearing caps to the specified torque.

Torque: 98 N·m (10kg·m/72 lb ft)

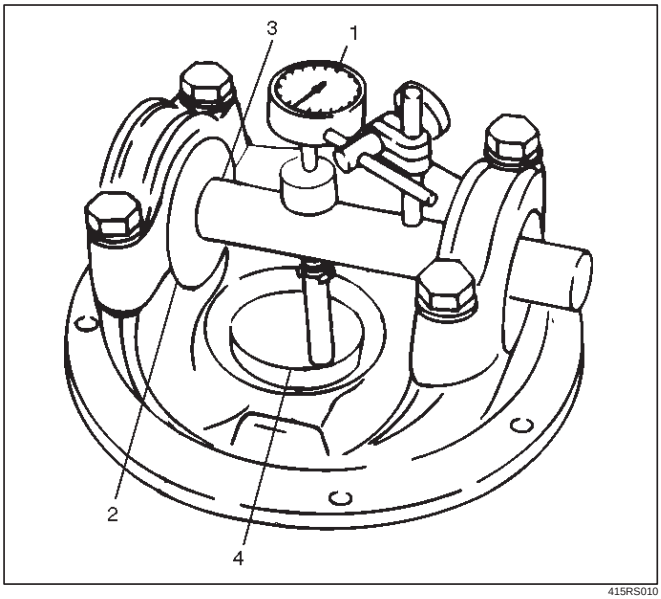

415RS010

Legend

(1) Dial Indicator: 5–8840–0126–0
(2) Disc (2 pcs.): 5-8840-2088-0
(3) Arbor: 5–8840–0128–0
(4) Gauge Plate: 5–8840–2087–0

4. Set the dial indicator to “0”. Place it on the mounting post of the gauging arbor with the contact button touching the indicator pad. Force the dial indicator downward until the needle has made a half turn clockwise. Tighten down the dial indicator in this position.

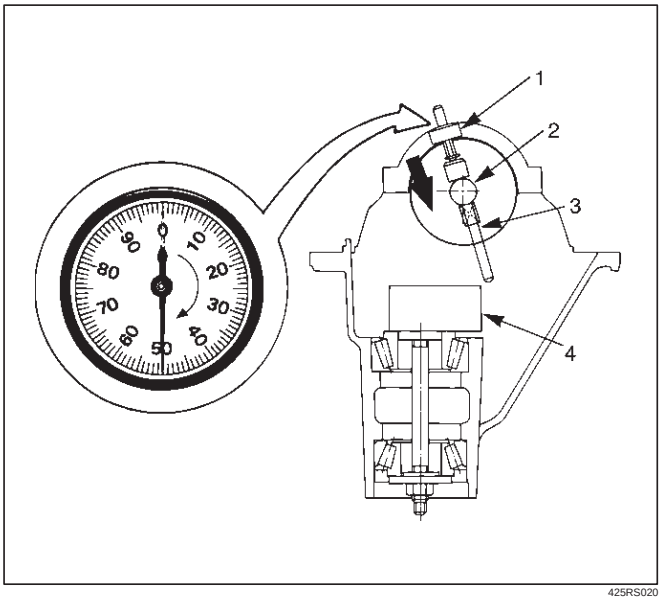

425RS020

Legend

(1) Dial Indicator
(2) Ganging Arbor
(3) Plunger
(4) Gauge Plate

5. Position the plunger on the gauge plate. Move the gauging arbor slowly back and forth and locate the position at which the dial indicator shows the greatest defection. At this point, once again set the dial indicator to “0”.

   Repeat the procedure to verify the “0” setting.

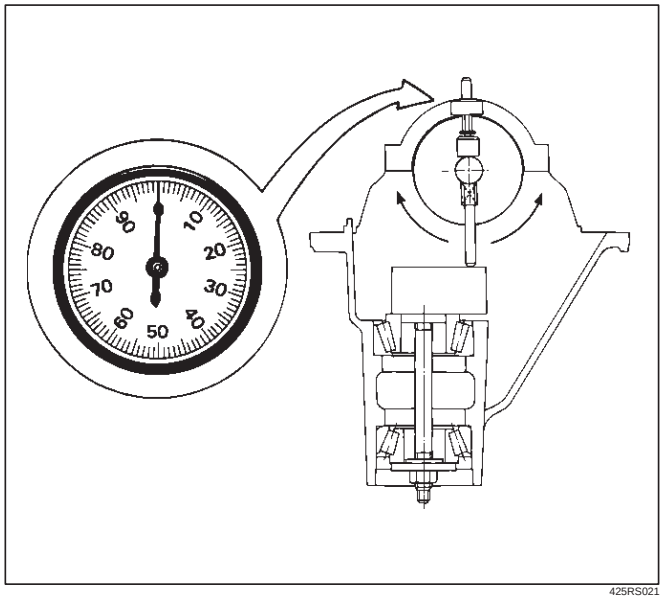

425RS021

6. After the ZERO setting is obtained, rotate the gauging arbor until the dial indicator rod does not touch the gauging plate.

   Record the number the dial indicator needle points to.

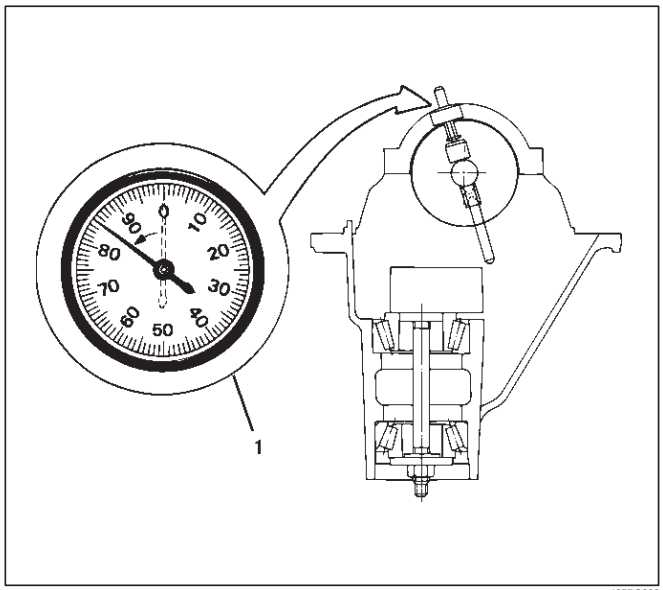

425RS022

Legend

(1) Example=Dial indicator reading of 0.085

7. Record the pinion depth code on the head of the drive pinion.

   The number indicates a necessary change in the pinion mounting distance. A plus number indicates the need for a greater mounting distance (which can be achieved by decreasing the shim thickness). A minus number indicates the need for a smaller mounting distance (which can be achieved by increasing the shim thickness). If examination reveals pinion depth code “0”, the pinion is “nominal”.

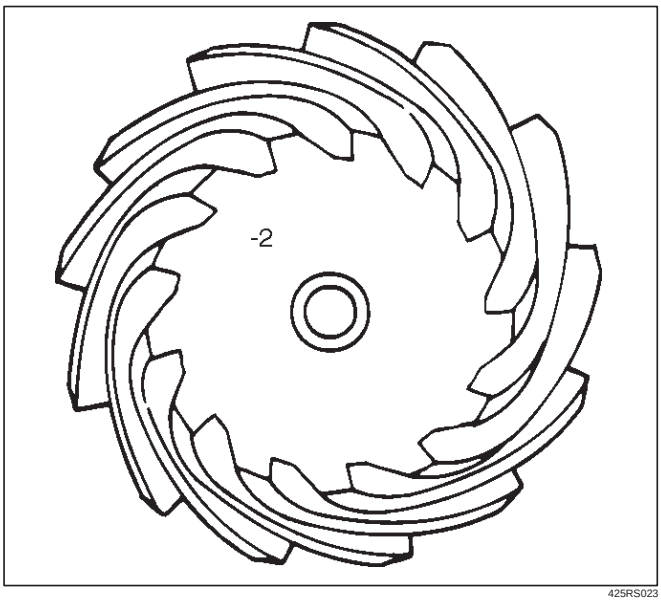

425RS023

8. Select the shim using the chart;

Pinion marking	+10	+8	+6	+4	+2	0	–2	–4	–6	–8	–10
Dial indicator reading (Inches)	mm (Inches)	mm (Inches)	mm (Inches)	mm (Inches)	mm (Inches)	mm (Inches)	mm (Inches)	mm (Inches)	mm (Inches)	mm (Inches)	mm (Inches)
0.081											2.18 (0.0858)
0.082										2.18 (0.0858)	2.20 (0.0866)
0.083									2.18 (0.0858)	2.20 (0.0866)	2.23 (0.0882)
0.084								2.18 (0.0858)	2.20 (0.0866)	2.24 (0.0882)	2.26 (0.0890)
0.085							2.18 (0.0858)	2.20 (0.0866)	2.24 (0.0882)	2.26 (0.0890)	2.28 (0.0898)
0.086						2.18 (0.0858)	2.20 (0.0866)	2.24 (0.0882)	2.26 (0.0890)	2.28 (0.0898)	2.32 (0.0914)
0.087					2.18 (0.0858)	2.20 (0.0866)	2.24 (0.0882)	2.26 (0.0890)	2.28 (0.0898)	2.32 (0.0914)	2.34 (0.0921)
0.088				2.18 (0.0858)	2.20 (0.0866)	2.24 (0.0882)	2.26 (0.0890)	2.28 (0.0898)	2.32 (0.0914)	2.34 (0.0921)	2.36 (0.0929)
0.089			2.18 (0.0858)	2.20 (0.0866)	2.24 (0.0882)	2.26 (0.0890)	2.28 (0.0898)	2.32 (0.0914)	2.34 (0.0921)	2.36 (0.0929)	2.38 (0.0937)
0.090		2.18 (0.0858)	2.20 (0.0866)	2.24 (0.0882)	2.26 (0.0890)	2.28 (0.0898)	2.32 (0.0914)	2.34 (0.0921)	2.36 (0.0929)	2.38 (0.0937)	2.42 (0.0953)
0.091	2.18 (0.0858)	2.20 (0.0866)	2.24 (0.0882)	2.26 (0.0890)	2.28 (0.0898)	2.32 (0.0914)	2.34 (0.0921)	2.36 (0.0929)	2.38 (0.0937)	2.42 (0.0953)	2.44 (0.0961)
0.092	2.20 (0.0866)	2.24 (0.0882)	2.26 (0.0890)	2.28 (0.0898)	2.32 (0.0914)	2.34 (0.0921)	2.36 (0.0929)	2.38 (0.0937)	2.42 (0.0953)	2.44 (0.0961)	2.46 (0.0969)
0.093	2.24 (0.0882)	2.26 (0.0890)	2.28 (0.0898)	2.32 (0.0914)	2.34 (0.0921)	2.36 (0.0929)	2.38 (0.0937)	2.42 (0.0953)	2.44 (0.0961)	2.46 (0.0969)	2.48 (0.0977)
0.094	2.26 (0.0890)	2.28 (0.0898)	2.32 (0.0914)	2.34 (0.0921)	2.36 (0.0929)	2.38 (0.0937)	2.42 (0.0953)	2.44 (0.0961)	2.46 (0.0969)	2.48 (0.0977)	2.52 (0.0992)
0.095	2.28 (0.0898)	2.32 (0.0914)	2.34 (0.0921)	2.36 (0.0929)	2.38 (0.0937)	2.42 (0.0953)	2.44 (0.0961)	2.46 (0.0969)	2.48 (0.0977)	2.52 (0.0992)	2.54 (0.1000)
0.096	2.32 (0.0914)	2.34 (0.0921)	2.36 (0.0929)	2.38 (0.0937)	2.42 (0.0953)	2.44 (0.0961)	2.46 (0.0969)	2.48 (0.0977)	2.52 (0.0992)	2.54 (0.1000)	2.56 (0.1008)
0.097	2.34 (0.0921)	2.36 (0.0929)	2.38 (0.0937)	2.42 (0.0953)	2.44 (0.0961)	2.46 (0.0969)	2.48 (0.0977)	2.52 (0.0992)	2.54 (0.1000)	2.56 (0.1008)	
0.098	2.36 (0.0929)	2.38 (0.0937)	2.42 (0.0953)	2.44 (0.0961)	2.46 (0.0969)	2.48 (0.0977)	2.52 (0.0992)	2.54 (0.1000)	2.56 (0.1008)		
0.099	2.38 (0.0937)	2.42 (0.0953)	2.44 (0.0961)	2.46 (0.0969)	2.48 (0.0977)	2.52 (0.0992)	2.54 (0.1000)	2.56 (0.1008)			
0	2.42 (0.0953)	2.44 (0.0961)	2.46 (0.0969)	2.48 (0.0977)	2.52 (0.0992)	2.54 (0.1000)	2.56 (0.1008)				
0.001	2.44 (0.0961)	2.46 (0.0969)	2.48 (0.0977)	2.52 (0.0992)	2.54 (0.1000)	2.56 (0.1008)					
0.002	2.46 (0.0969)	2.48 (0.0977)	2.52 (0.0992)	2.54 (0.1000)	2.56 (0.1008)						
0.003	2.48 (0.0977)	2.52 (0.0992)	2.54 (0.1000)	2.56 (0.1008)							
0.004	2.52 (0.0992)	2.54 (0.1000)	2.56 (0.1008)								
0.005	2.54 (0.1000)	2.56 (0.1008)									
0.006	2.56 (0.1008)										

NOTE: When ordering shims, find the part number in the parts catalog by using the thickness of shims listed in the above table.

4. Place the shim on the drive pinion, with the chamfered side turned towards the pinion head then install the inner bearing onto the pinion using an installer 9–8522–1165–0 and a press.

NOTE: Do not apply pressure to the roller cage and apply pressure only to the inner race.

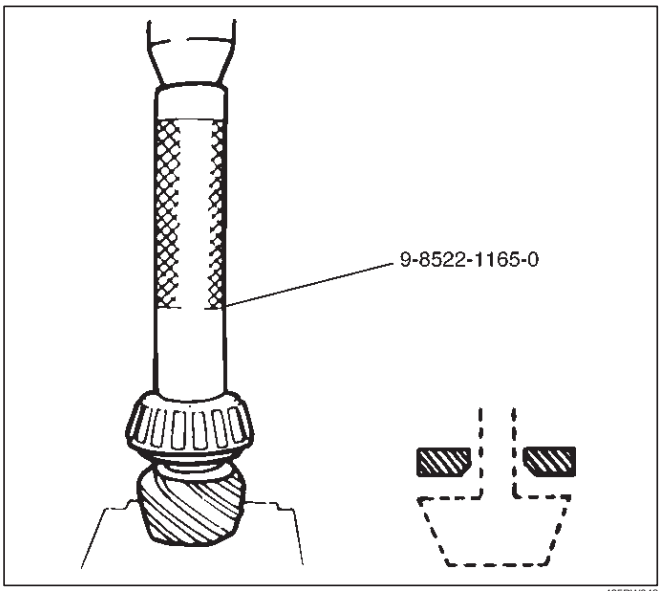

425RW048

5. Discard the used collapsible spacer and install a new one.
6. Install pinion gear.
7. Install outer bearing.
8. Use oil seal installer 9–8522–1275–0 to install a new oil seal that has been soaked in rear axle lubricant.

NOTE: Take care to use a front differential oil seal, NOT the rear differential oil seal.

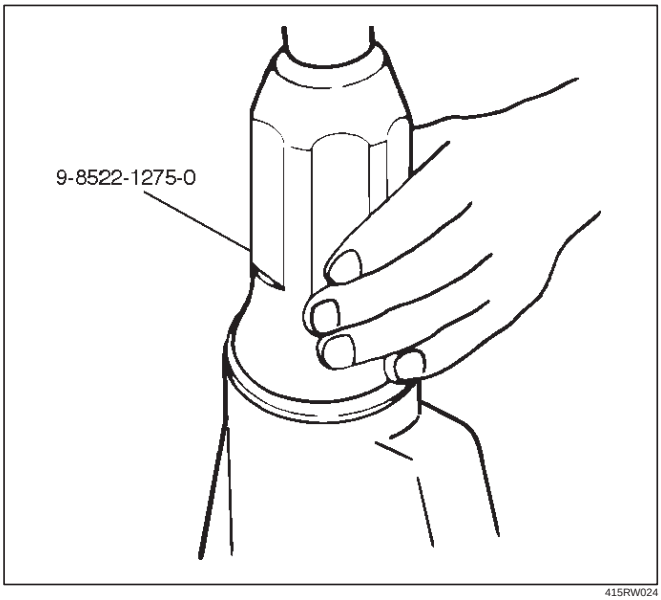

415RW024

9. Install dust cover.
10. Install flange.
11. Install flange nut.
    1. Apply lubricant to the pinion threads.
    2. Tighten the nut to the specified torque using the pinion flange holder 5–8840–2157–0.

Torque: 177–275N·m (18–28kg·m/130–203 lb ft)

NOTE: Discard used flange nut and install new one and do not over tighten the flange nut.

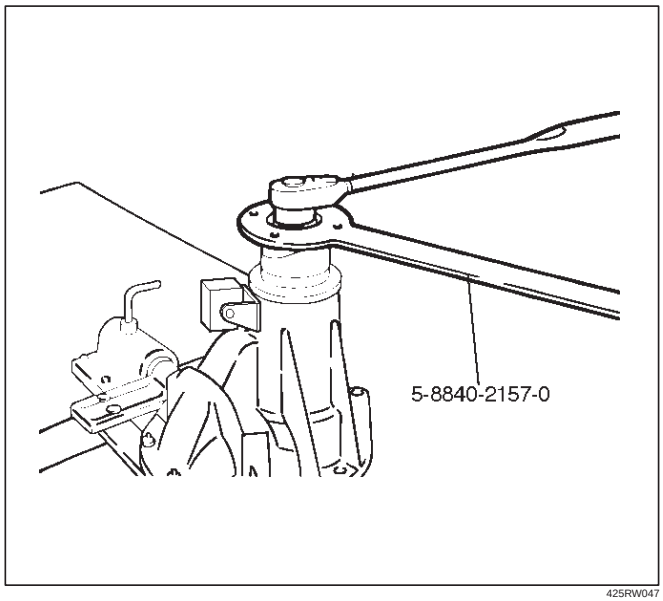

425RW047

3. Adjust pinion bearing preload.
    a. Measure the bearing preload by using a torque meter. Note the scale reading required to rotate the flange.
    b. Continue tightening flange nut until the specified starting torque is obtained.

Starting torque:

New bearing 0.7–1.1 N·m(0.065–0.115kg·m/5.64–9.98 lb in)

Used bearing 0.4–0.5N·m(0.033–0.057kg·m/2.86–4.94 lb in)

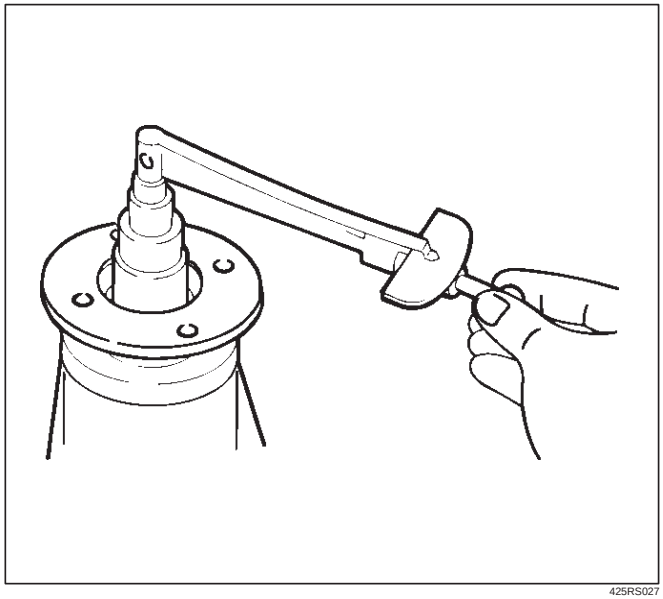

425RS027

4. Using punch 5-8840-2293-0, stake the flange nut at two points.

NOTE: When staking, be sure to turn the nut to insure that there is no change in bearing preload. Make sure of preload again as instructed in 3).

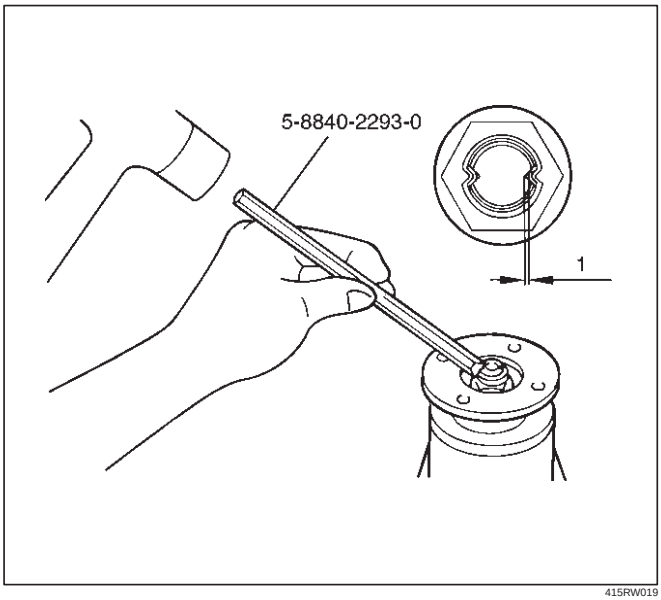

415RW019

Legend

(1) 1.3mm or less

12. Install adjust shim.
    1. Attach the side bearing to the differential assembly without shims. Support the opposite side using a pilot to prevent bearing damage.

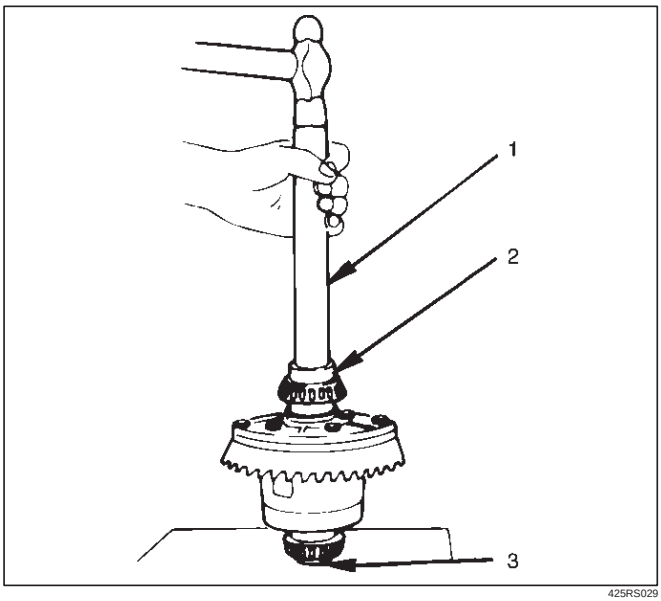

425RS029

Legend

(1) Drive handle:5–8840–0007–0
(2) Installer:9–8522–1164–0
(3) Pilot:9–8521–1743–0

2. Insert the differential cage assembly with bearing outer races into the side bearing bores of the carrier.

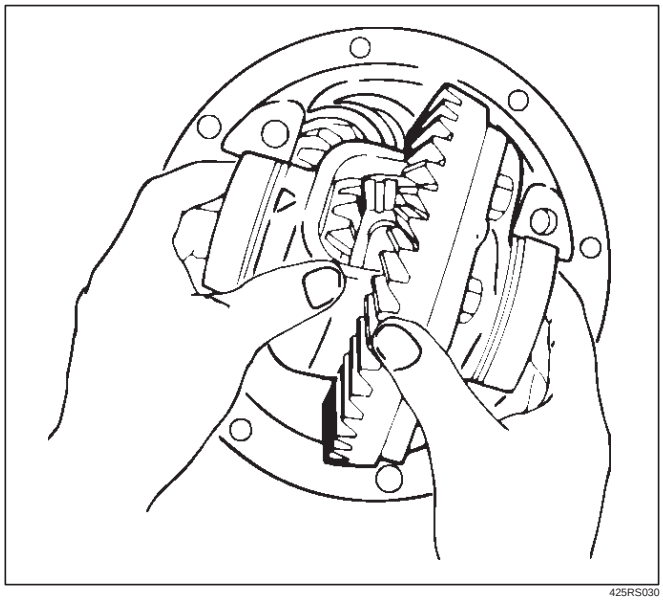

425RS030

3. Using two sets of feeler gauges, insert a feeler stock of sufficient thickness between each bearing outer race and the carrier to remove all end play. Make certain the feeler stock is pushed to the bottom of the bearing bores.

   Mount the dial indicator 5–8840–0126–0 on the carrier so that the indicator stem is at right angles to a tooth on the ring gear.

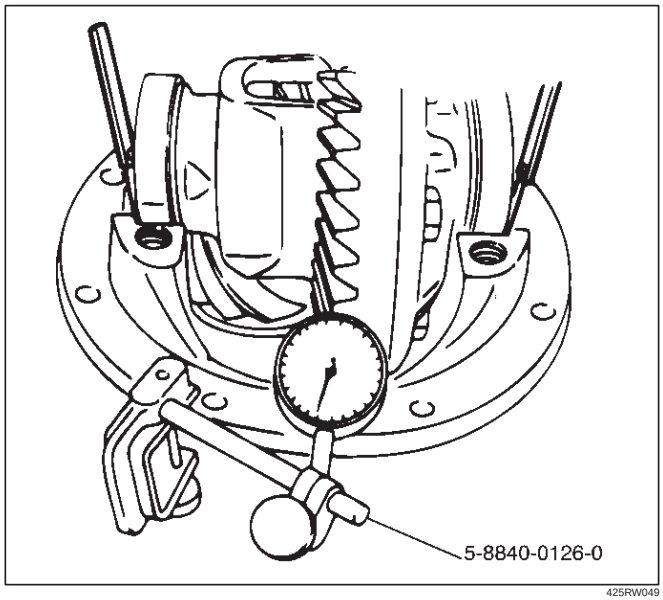

425RW049

4. Adjust feeler gauge thickness from side to side until ring gear backlash is in the specified range.

Backlash: 0.13–0.18 mm(0.005 –0.007 in)

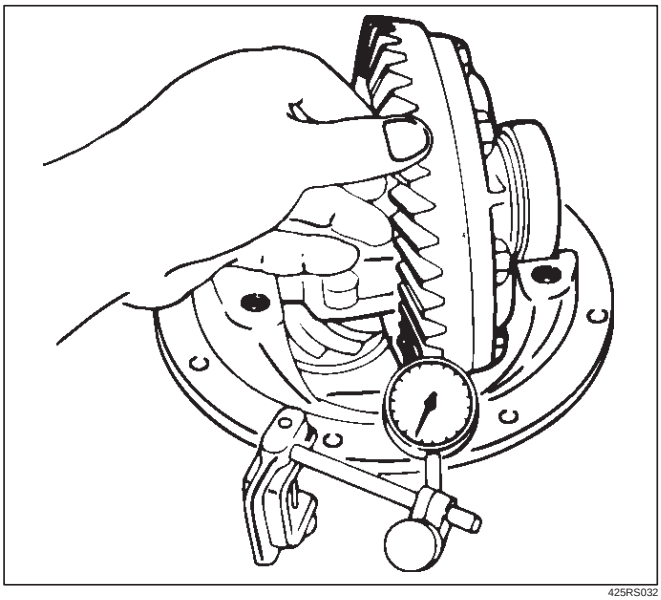

425RS032

With zero end play and correct backlash established, remove the feeler gauge packs, determine the thickness of the shims required and add 0.05 mm (0.002 in) to each shim pack to provide side bearing preload. Always use new shims.

5. Use bearing remover 5–8840–0013–0 and 5–8840–0014–0 and pilot 9–8521–1743–0 to remove side bearing.

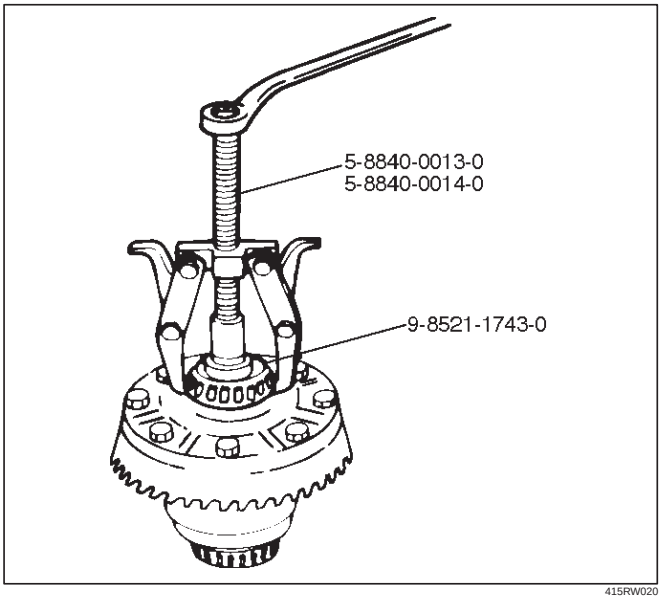

415RW020

13. Install the side bearings together with the selected shims.

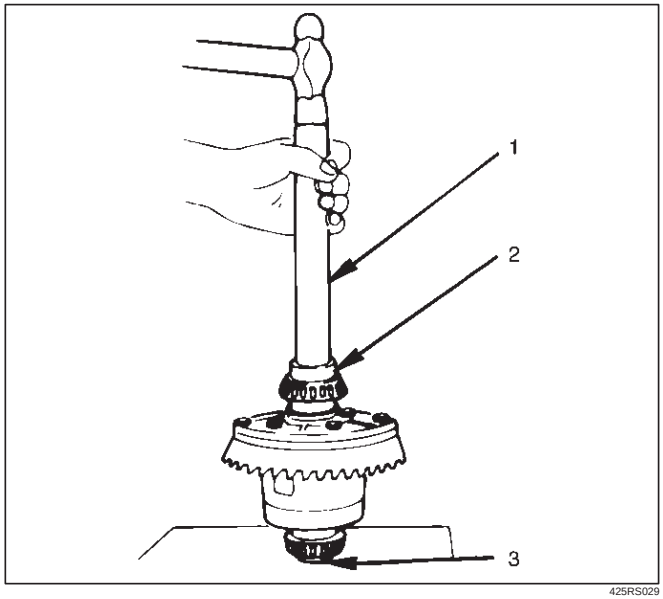

425RS029

Legend

(1) Drive Handle:5–8840–0007–0
(2) Installer: 9–8522–1164–0
(3) Pilot: 9–8521–1743–0

14. Install side bearing outer race.
15. Install differential cage assembly.
16. Install bearing cap then align the setting marks(1) applied at disassembly.

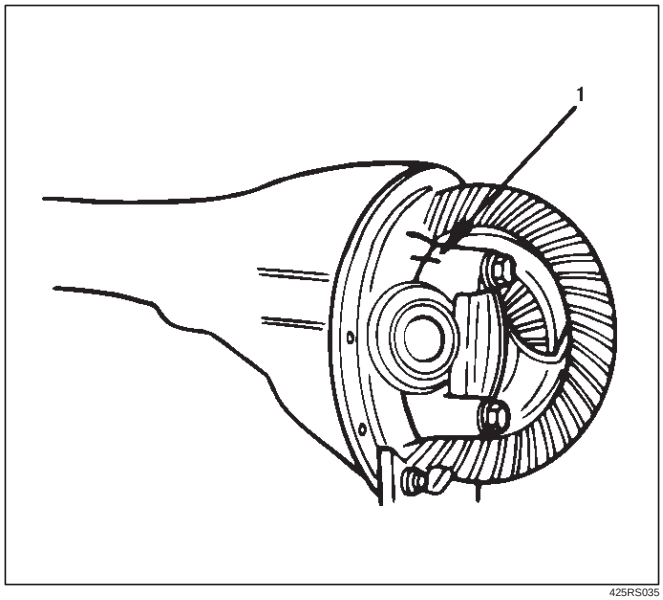

425RS035

17. Tighten the cap bolt to the specified torque.

Torque: 98 N·m (10kg·m/72 lb ft)

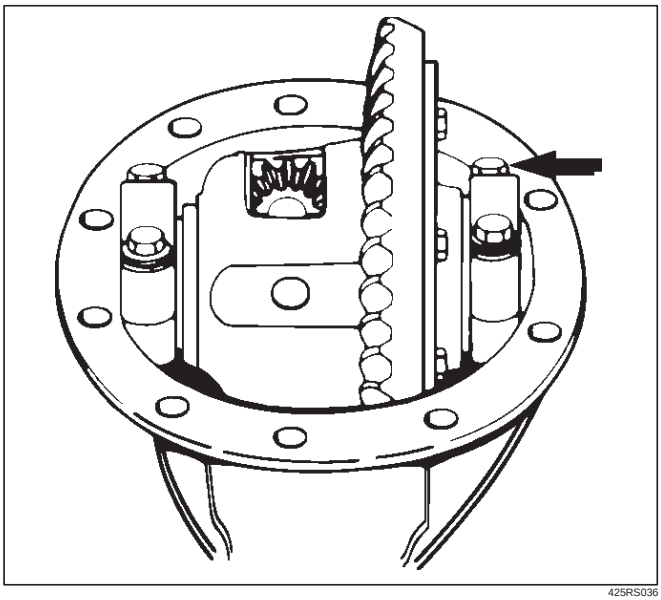

425RS036

1. Measure the amount of run–out of the ring gear at its rear face.

Standard: 0.02 mm (0.001 in)

Limit: 0.05 mm (0.002 in)

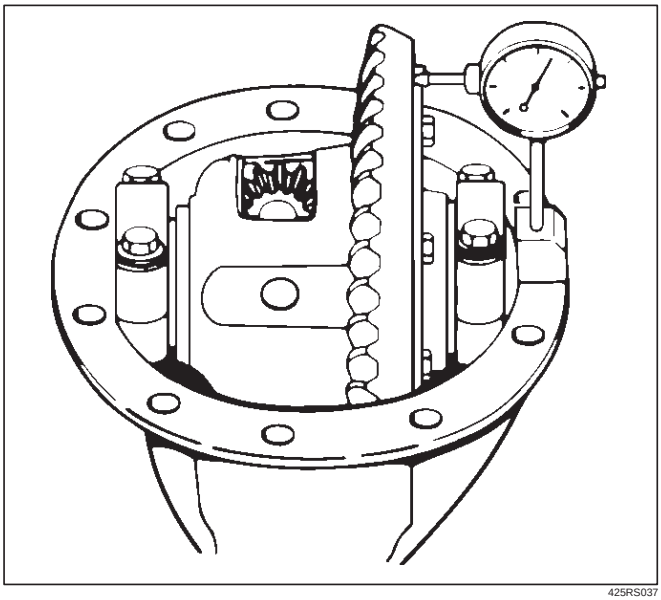

425RS037

Gear Tooth Contact Pattern Check and Adjustment

1. Apply a thin coat of prussian blue or equivalent to the faces of the 7–8 teeth of the ring gear. Check the impression of contact on the ring gear teeth and make necessary adjustment as described in illustration if the contact is abnormal.

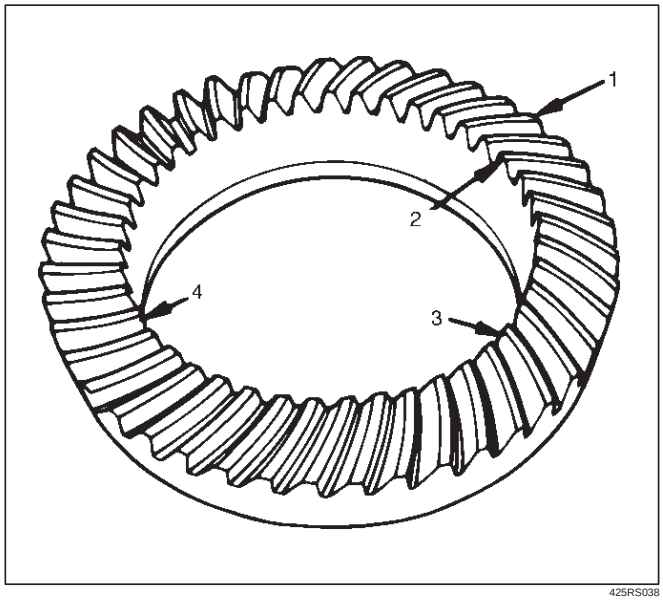

425RS038

Legend

(1) Heel
(2) Toe
(3) Concave Side(Coast)
(4) Convex Side(Drive)

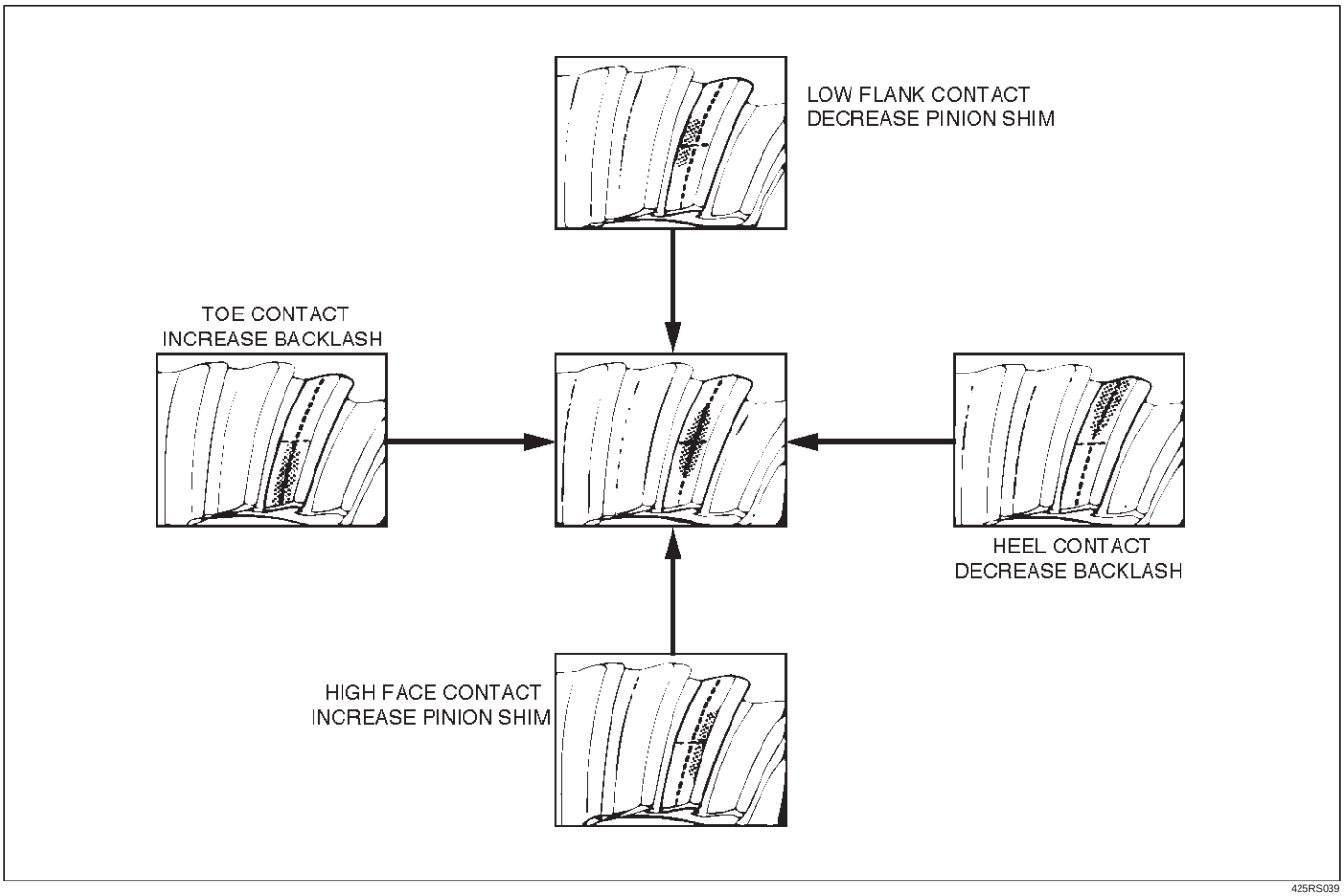

425RS039

18. Install differential assembly.
    1. Clean the faces of the front axle case and differential carrier.
       Apply Three Bond TB1215 or equivalent to the sealing side of the axle case and the carrier.
    2. Attach the differential case and the carrier assembly to the front axle case and tighten the nuts and bolts.

    Torque: 25 N·m (2.5kg·m/19 lb ft)

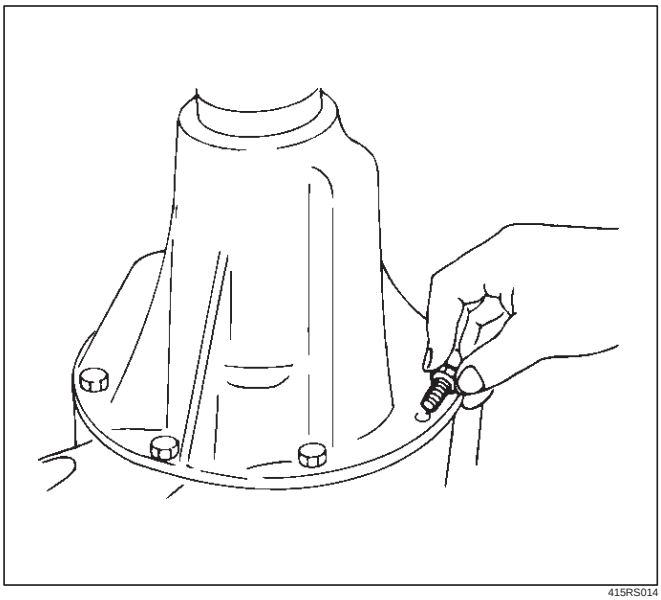

415RS014

    3. Fill the axle case with hypoid gear lubricant, to just below the filler hole.

    Lubricant capacity: 1.4 liter(1.2 Imp qt/1.5 US qt)

19. Install damper.
    1. Clean the faces and bolt thread hole of differential carrier.
    2. Install the bracket with new bolts.
    3. Install the damper to the bracket with new bolts.

    Torque: 25 N·m (2.5kg·m/19 lb ft)

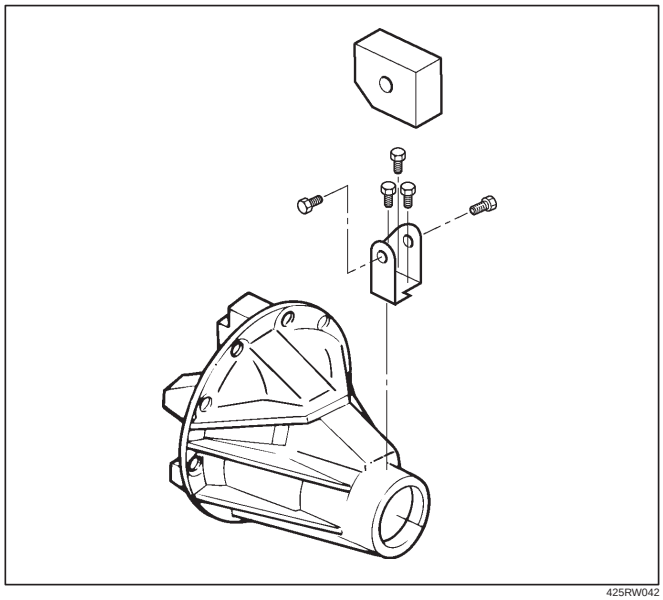

425RW042

Differential Cage Assembly

Disassembled View

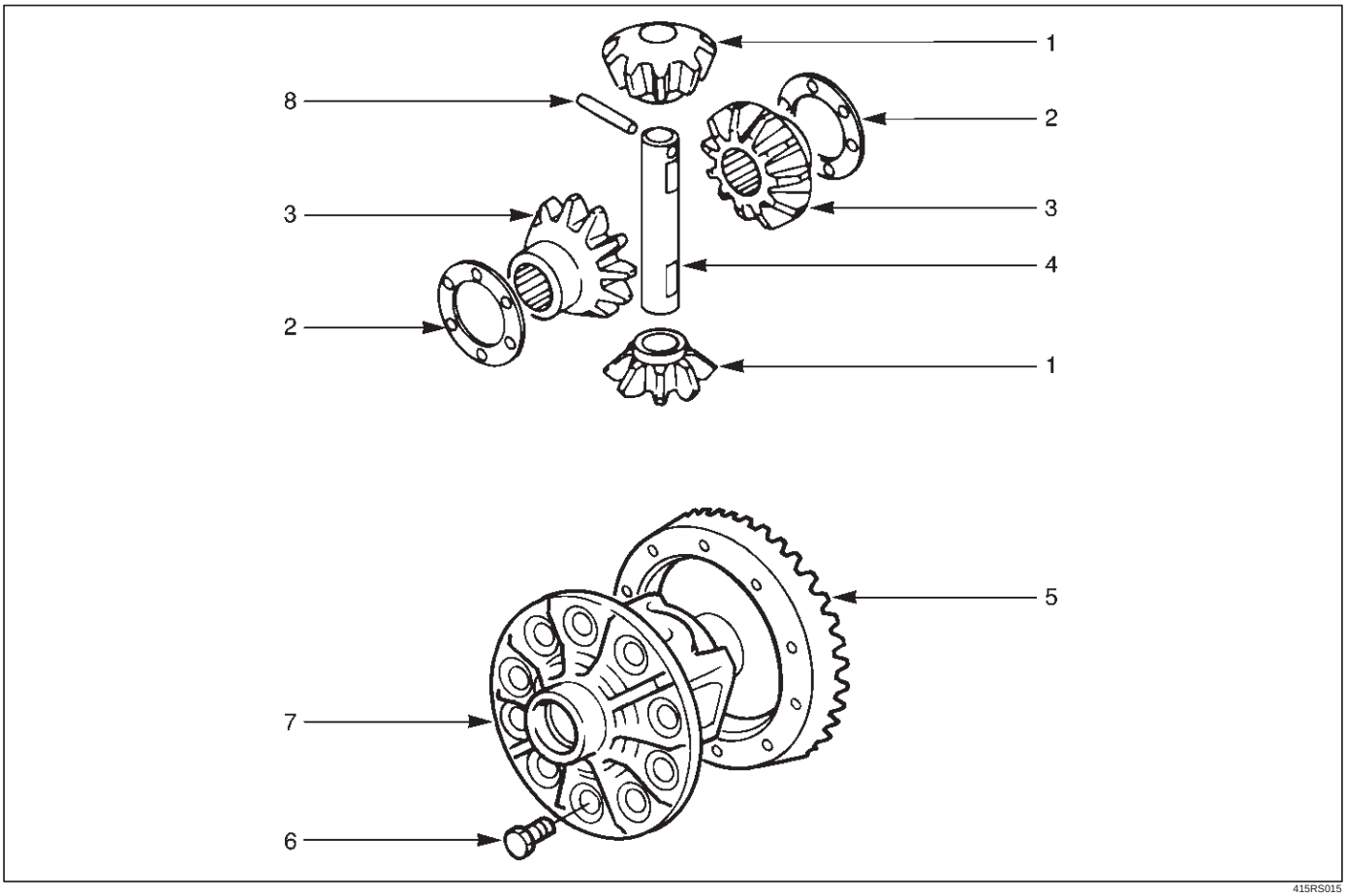

415RS015

Legend

(1) Pinion Gear
(2) Thrust Washer
(3) Side Gear
(4) Cross Pin
(5) Ring Gear
(6) Bolt
(7) Differential Cage
(8) Lock Pin

Disassembly

1. Remove bolt.
2. Remove ring gear.
3. Remove lock pin, break staking on the lock pin, using a 5 mm (0.20 in) diameter drill.

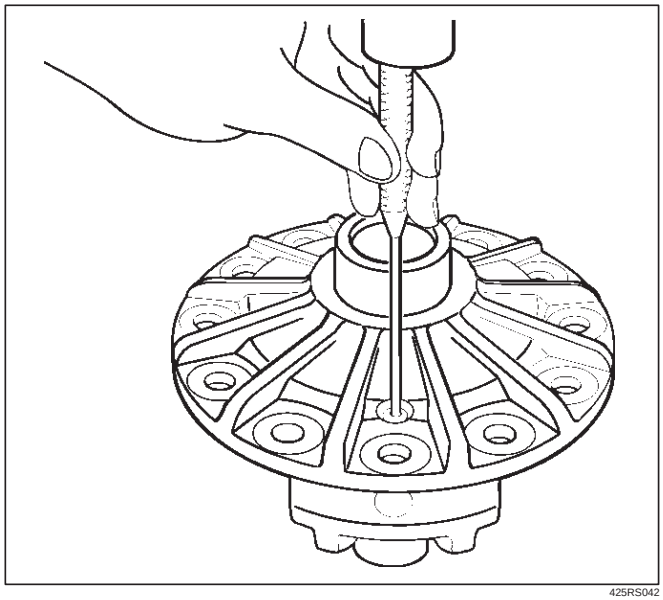

425RS042

4. Remove the cross pin, using a soft metal rod and a hammer.

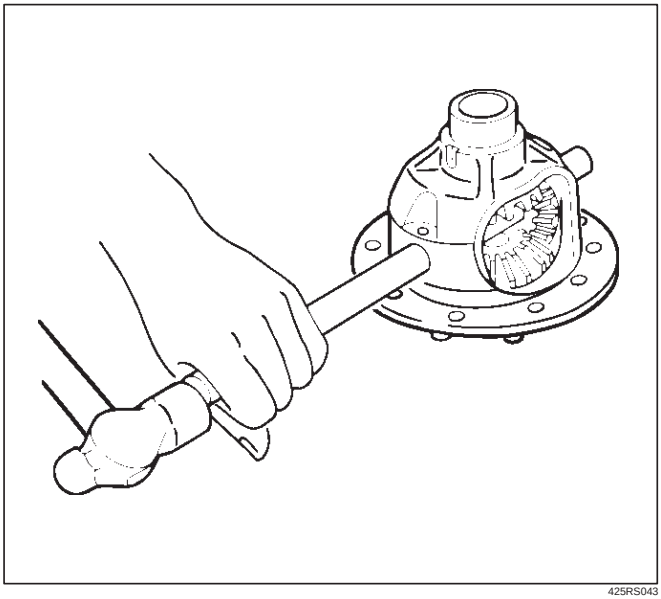

425RS043

5. Remove pinion gear.
6. Remove side gear.
7. Remove thrust washer.

Inspection and Repair

Make necessary correction or parts replacement if wear, damage, corrosion or any other abnormal conditions are found through inspection.
Check the following parts:

1. Ring gear, pinion gear
2. Bearing
3. Side gear, pinion gear, cross pin
4. Differential cage, carrier
5. Thrust washer
6. Oil seal

Ring gear replacement:

1. The ring gear should always be replaced with the drive pinion as a set.
2. Clean the ring gear threaded holes to remove the locking agent.
3. When installing the ring gear, apply LOCTITE 271 or equivalent to all the threaded area and half of the unthreaded area of the bolt.
4. Discard used bolts and install new ones.

Torque: 108 N·m (11kg·m/80 lb ft)

5. Tighten the fixing bolts in a diagonal sequence as illustrated.

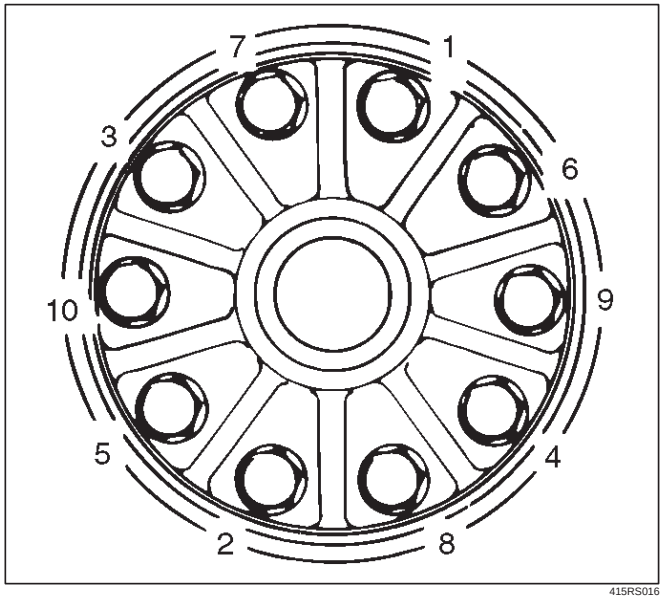

415RS016

Clearance between the differential pinion and the cross pin measurement:

Standard: 0.06 – 0.12 mm (0.002–0.005 in)

Limit: 0.2 mm (0.008 in)

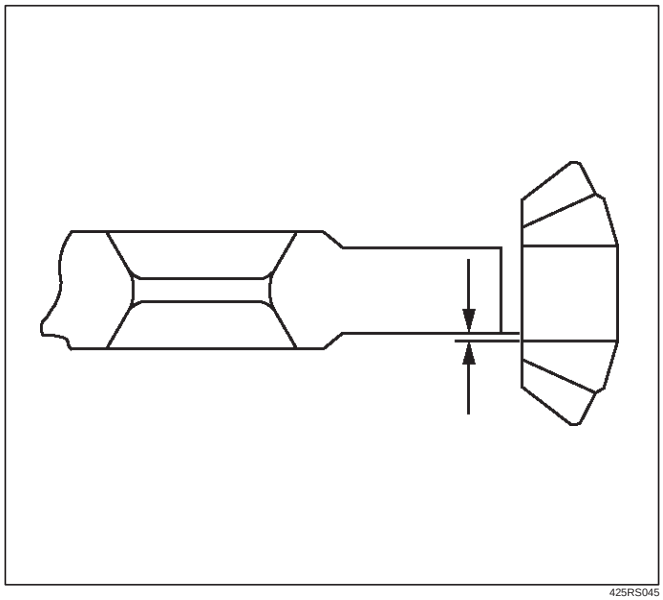

425RS045

Clearance between the side gear and the differential box:

Standard: 0.03–0.10 mm (0.001–0.004 in)

Limit: 0.15 mm(0.006 in)

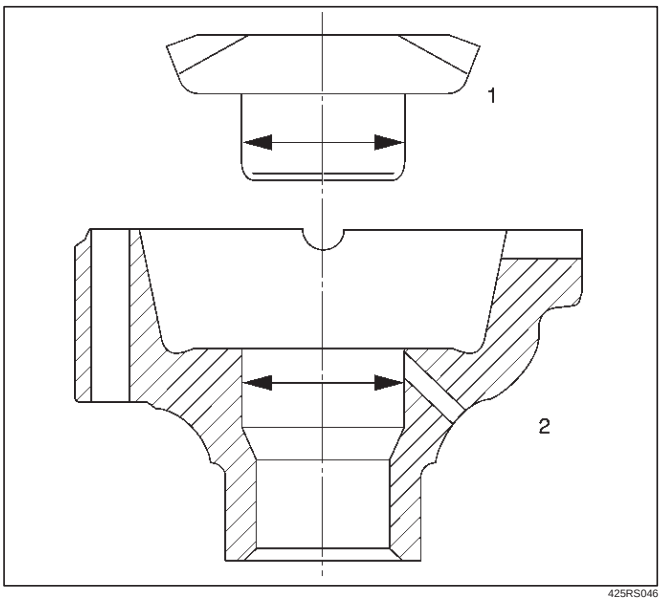

425RS046

Legend

(1) Side Gear
(2) Differential Box

Play in splines between the side gear and the axle shaft:

Standard: 0.08–0.36 mm(0.003 –0.014 in)

Limit:0.5m (0.02 in)

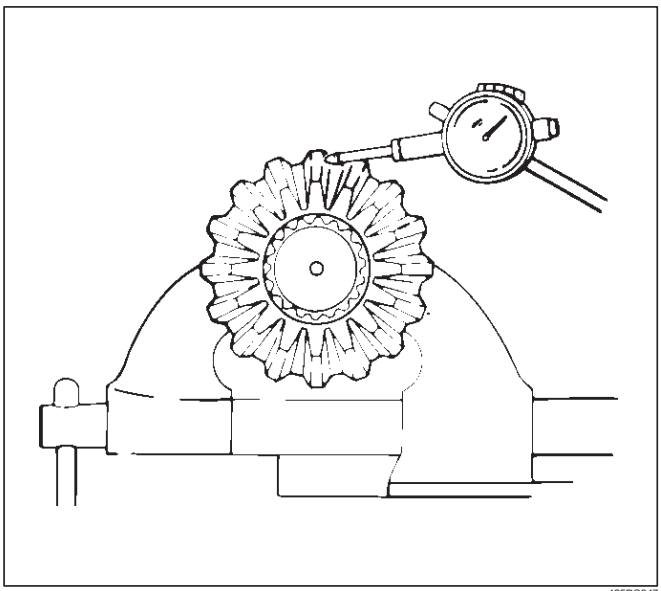

425RS047

Reassembly

1. Install thrust washer.
2. Install side gear.
3. Install the pinion gear by engaging it with the side gears while turning both pinion gears simultaneously in the same direction.

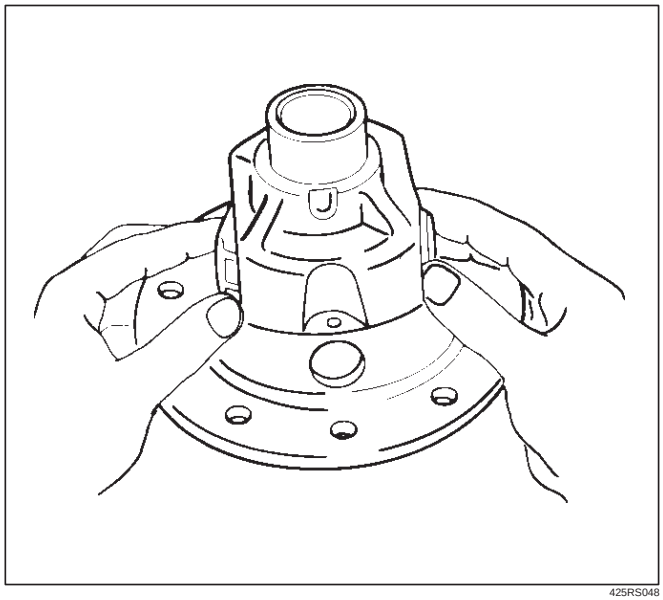

425RS048

4. Install cross pin.
   1. Be sure to install the cross pin so that it is in alignment with the lock pin hole in the differential cage.

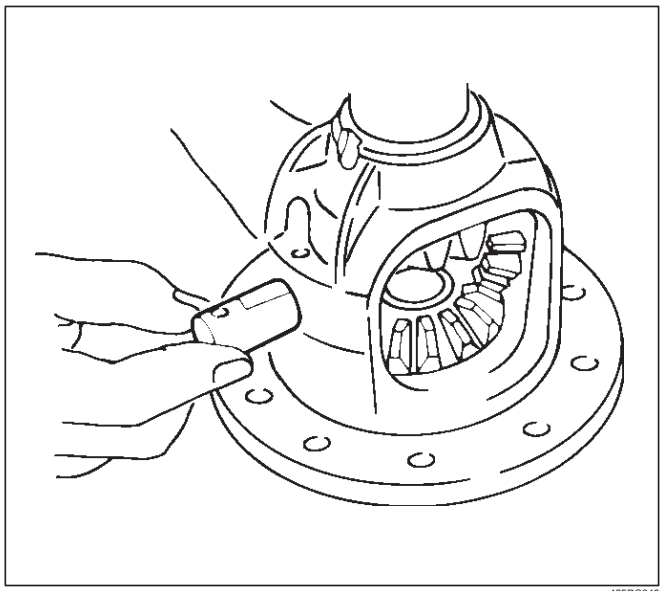

425RS049

   2. Adjust the backlash between the side gear and the pinion gear.

Backlash:0.03 – 0.08 mm (0.001– 0.003 in)

Thickness of thrust washers available:

1.00 mm, 1.05 mm, 1.10 mm (0.039 in, 0.041 in, 0.043 in)

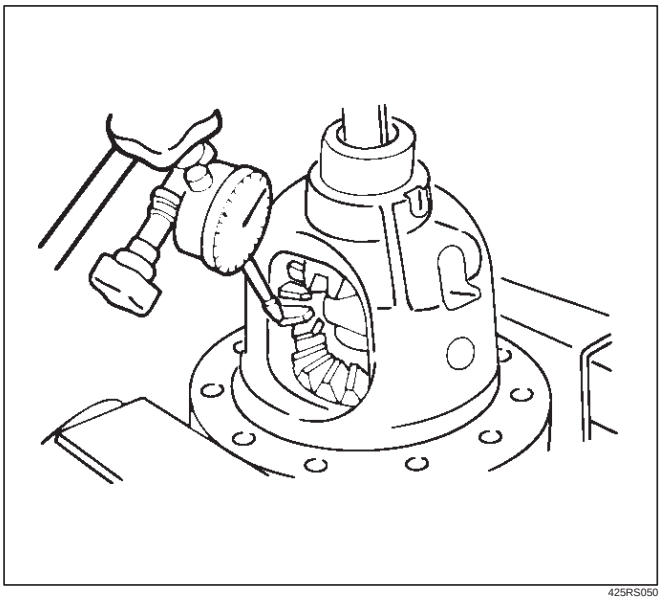

425RS050

5. Install lock pin. After lock pin installation, stake the cage to secure the lock pin.

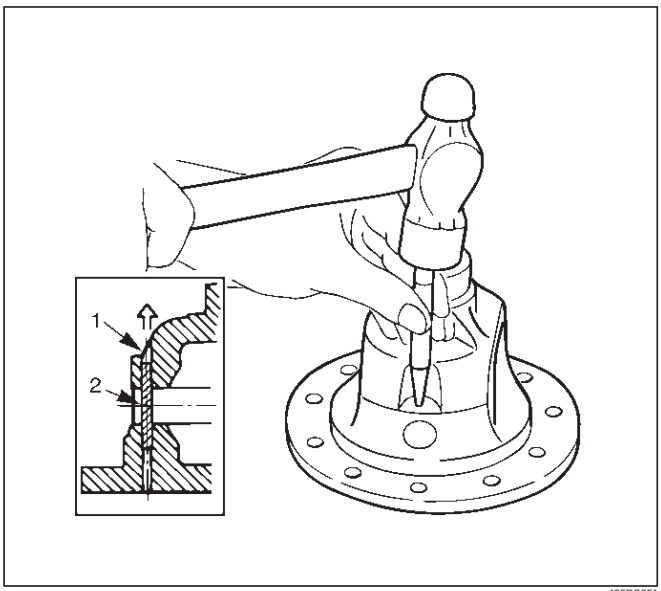

425RS051

Legend

(1) Staked Portion

(2) Lock Pin

6. Clean the ring gear threaded holes to remove the locking agent. When installing the ring gear, apply LOCTITE 271 or equivalent to all the threaded area and half of the unthreaded area of the bolt.

7. Tighten the bolts in diagonal sequence as illustrated.

Torque: 108 N·m (11kg·m/80 lb ft)

NOTE: Discard used bolts and install new ones.

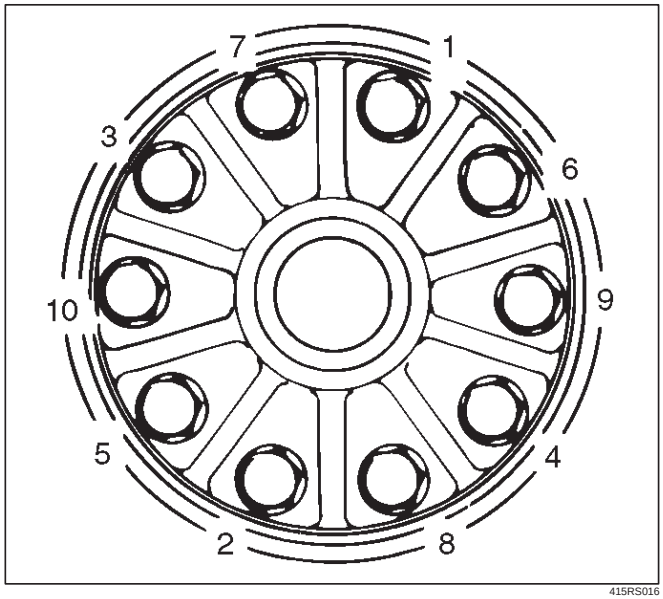

415RS016

Main Data and Specifications

General Specifications

Axle tube Type		It consists of the duct, a cast iron housing and the axle tube.
Gear type		Hypoid
Gear ratio	(to 1)	4.100(6VE1) 4.300(4JX1, 6VE1) 4.555(4JG2–TC, 6VD1) 4.777(4JG2)
Differential type		Two pinion
Oil capacity	liter (Imp qt/US qt)	1.4 (1.2/1.5) (Differential) 0.12 (0.11/0.13) (Actuator Housing: Shift on the fly)
Type of lubricant		75W–90 GL–5 (Multi grade type) Refer to General Information
Axle shaft type		Constant velocity joint (Birfield joint type and double offset joint)

Torque Specifications

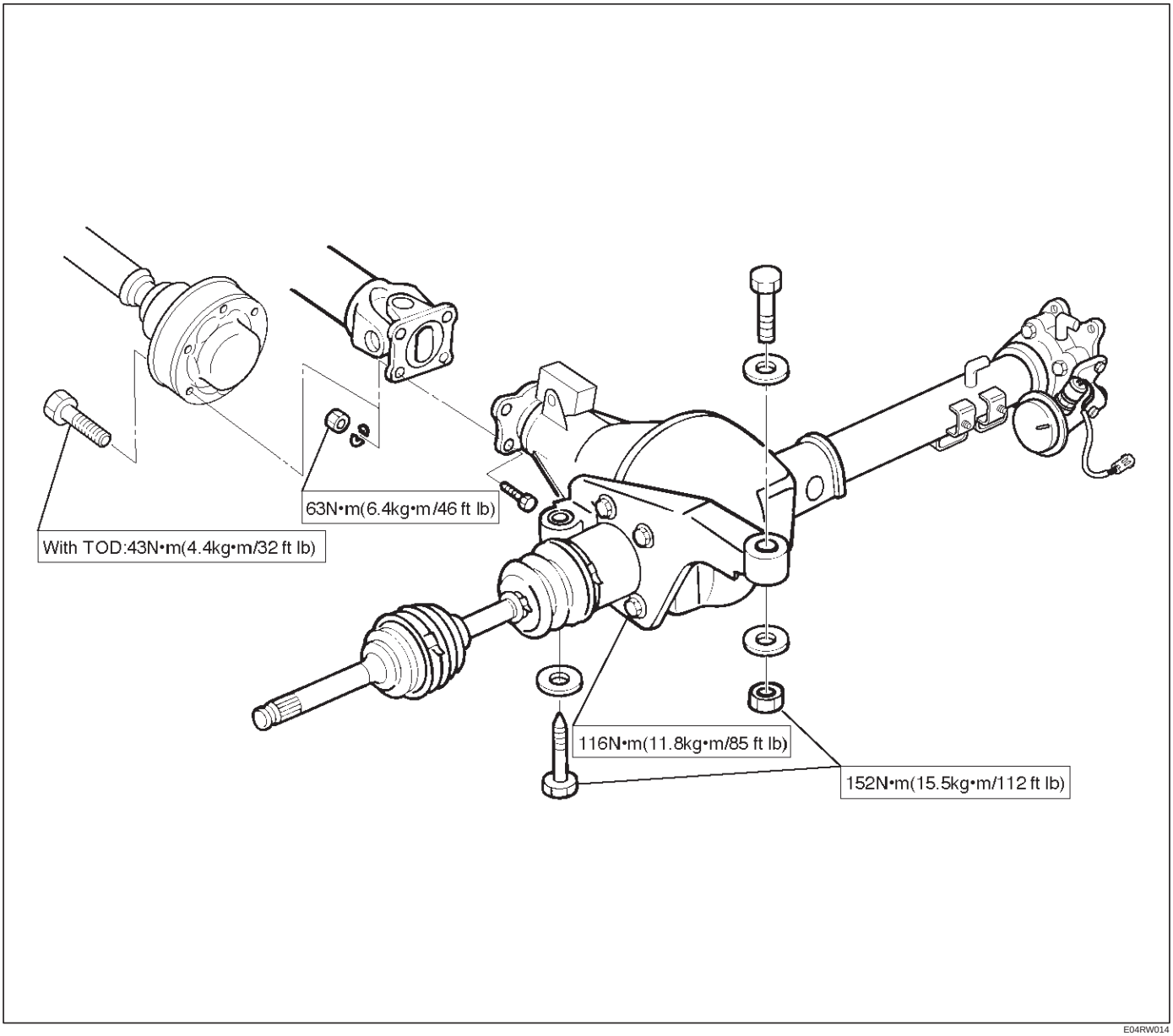

E04RW014

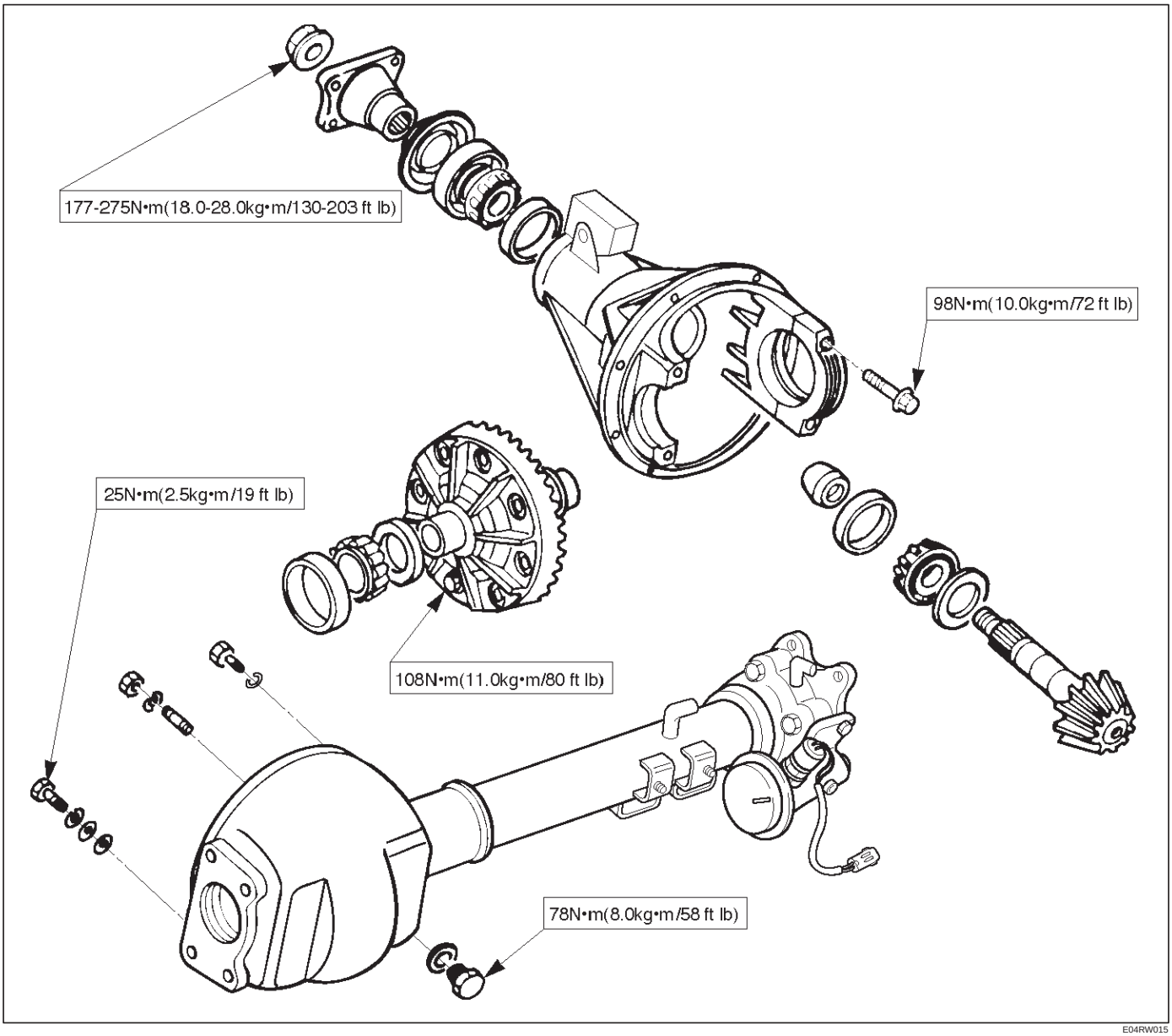
177-275N•m(18.0-28.0kg•m/130-203 ft lb)
98N•m(10.0kg•m/72 ft lb)
25N•m(2.5kg•m/19 ft lb)
108N•m(11.0kg•m/80 ft lb)
78N•m(8.0kg•m/58 ft lb)

E04RW015

Special Tools

ILLUSTRATION	TOOL NO. TOOL NAME
	5–8840–2157–0 **(J–37221)** Holder; Pinion flange
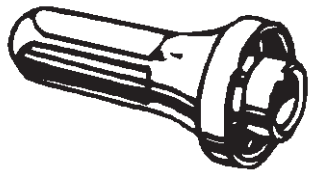	**9–8522–1275–0** **(J–24250)** Installer; Oil seal
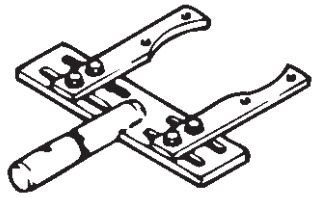	**5–8840–0275–0** **(J–37264)** Differential holding fixture (Use with 5–8840–0003–0 base)
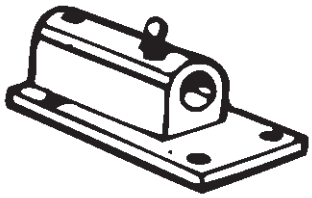	**5–8840–0003–0** **(J–3289–20)** Holding fixture base
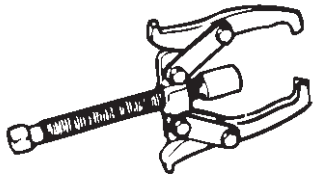	**5–8840–0013–0** **5–8840–0014–0** **(J–22888)** Puller; Side bearing
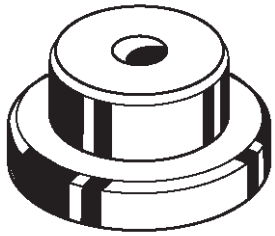	**9–8521–1743–0** **(J–8107–2)** Adapter; Side bearing plug

ILLUSTRATION	TOOL NO. TOOL NAME
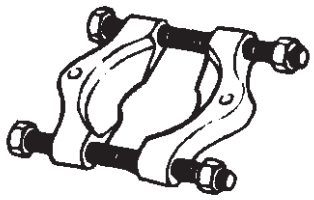	**5–8840–0015–0** **(J–22912–01)** Separator
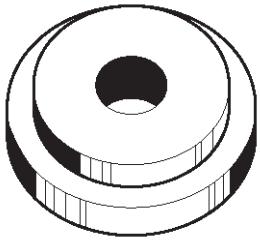	**9–8522–1141–0** **(J–24256)** Installer; Outer bearing outer race
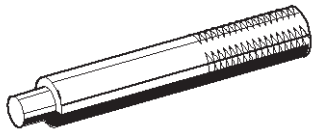	**5–8840–0007–0** **(J–8092)** Driver handle
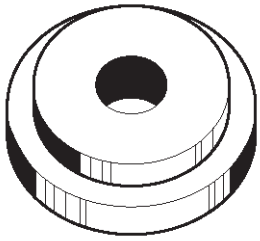	**9–8522–1274–0** **(J–24252)** Installer; Inner bearing outer race
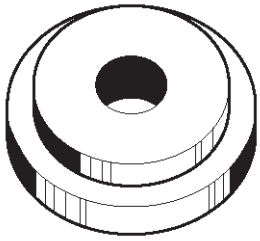	**5–8840–2085–0** **(J–21777–42)** Pilot
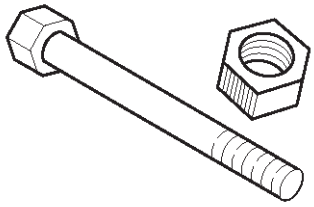	**5–8840–2089–0** **(J–23597–9)** Nut and bolt

ILLUSTRATION	**TOOL NO.** TOOL NAME
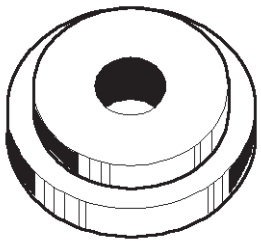 901RS243	**5–8840–2087–0** **(J–23597–7)** Gauge plate
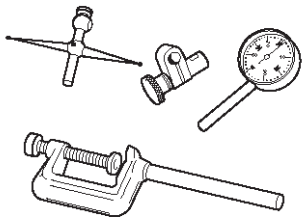 901RS224	**5–8840–0126–0** **(J–8001)** Dial indicator
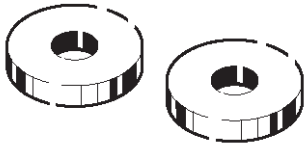 901RS244	**5–8840–2088–0** **(J–23597–8)** Disc
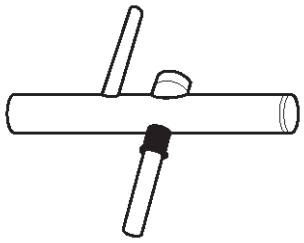 901RS226	**5–8840–0128–0** **(J–23597–1)** Arbor
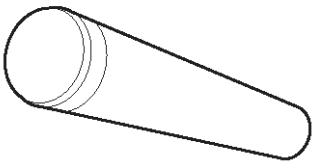 901RS227	**9–8522–1165–0** **(J–6133–01)** Installer; Pinion bearing
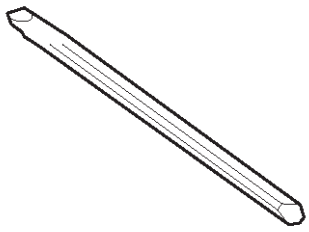 901RS228	**5–8840–2293–0** **(J–39209)** Punch; End nut lock

ILLUSTRATION	**TOOL NO.** TOOL NAME
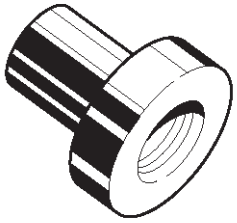 901RS245	**9–8522–1164–0** **(J–24244)** Installer; Side bearing
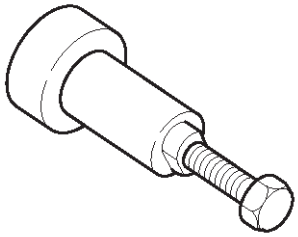 901RS230	**5–8840–2323–0** **(J–39602)** Remover; Outer bearing

MEMO

DRIVELINE/AXLE

DIFFERENTIAL (Rear 220mm)

CONTENTS

Service Precaution 4A2A–1
General Description 4A2A–2
Diagnosis 4A2A–3
Axle Housing 4A2A–4
Axle Housing and Associated Parts 4A2A–4
Removal 4A2A–4
Oil Seal Replacement 4A2A–5
Installation 4A2A–5
Pinion Oil Seal 4A2A–6
Pinion Oil Seal and Associated Parts 4A2A–6
Removal 4A2A–6
Inspection and Repair 4A2A–7
Installation 4A2A–7
Differential Assembly 4A2A–8
Differential Assembly and Associated Parts 4A2A–8
Removal 4A2A–8
Installation 4A2A–9
Disassembled View 4A2A–10
Disassembly 4A2A–11
Reassembly 4A2A–13
Differential Cage Assembly 4A2A–21
Disassembled View 4A2A–21
Disassembly 4A2A–21
Inspection and Repair 4A2A–22
Reassembly 4A2A–23
Limited Slip Differential 4A2A–25
Disassembled View 4A2A–25
Disassembly 4A2A–26
Inspection and Repair 4A2A–26
Reassembly 4A2A–28
Main Data and Specifications 4A2A–32
Special Tools 4A2A–34

Service Precaution

WARNING: IF SO EQUIPPED WITH A SUPPLEMENTAL RESTRAINT SYSTEM (SRS), REFER TO THE SRS COMPONENT AND WIRING LOCATION VIEW IN ORDER TO DETERMINE WHETHER YOU ARE PERFORMING SERVICE ON OR NEAR THE SRS COMPONENTS OR THE SRS WIRING. WHEN YOU ARE REFORMING SERVICE ON OR NEAR THE SRS COMPONENTS OR THE SRS WIRING, REFER TO THE SRS SERVICE INFORMATION. FAILURE TO FOLLOW WARNINGS COULD RESULT IN POSSIBLE AIR BAG DEPLOYMENT, PERSONAL INJURY, OR OTHERWISE UNNEEDED SRS SYSTEM REPAIRS.

CAUTION: Always use the correct fastener in the proper location. When you replace a fastener, use ONLY the exact part number for that application. ISUZU will call out those fasteners that require a replacement after removal. ISUZU will also call out the fasteners that require thread lockers or thread sealant. UNLESS OTHERWISE SPECIFIED , do not use supplemental coatings (Paints, greases, or other corrosion inhibitors) on threaded fasteners or fastener joint interfaces. Generally,such coatings adversely affect the fastener torque and the joint clamping force, and may damage the fastener. When you install fasteners, use the correct tightening sequence and specification. Following these instructions can help you avoid damage to parts and systems.

General Description

The rear axle assembly is of the semi–floating type in which the vehicle weight is carried on the axle housing . The center line of the pinion gear is below the center line of the ring gear (hypoid drive).
All parts necessary to transmit power from the propeller shaft to the rear wheels are enclosed in a banjo type axle housing.
The 8.7 inch ring gear rear axle uses a conventional ring and pinion gear set to transmit the driving force of the engine to the rear wheels. This gear set transfers this driving force at a 90 degree angle from the propeller shaft to the drive shafts.
The axle shafts are supported at the wheel end of the shaft by a roller bearing.
The pinion gear is supported by two tapered roller bearings. The pinion depth is set by a shim pack located between the gear end of the pinion and the roller bearing that is pressed onto the pinion. The pinion bearing preload is set by crushing a collapsible spacer between the bearings in the axle housing.

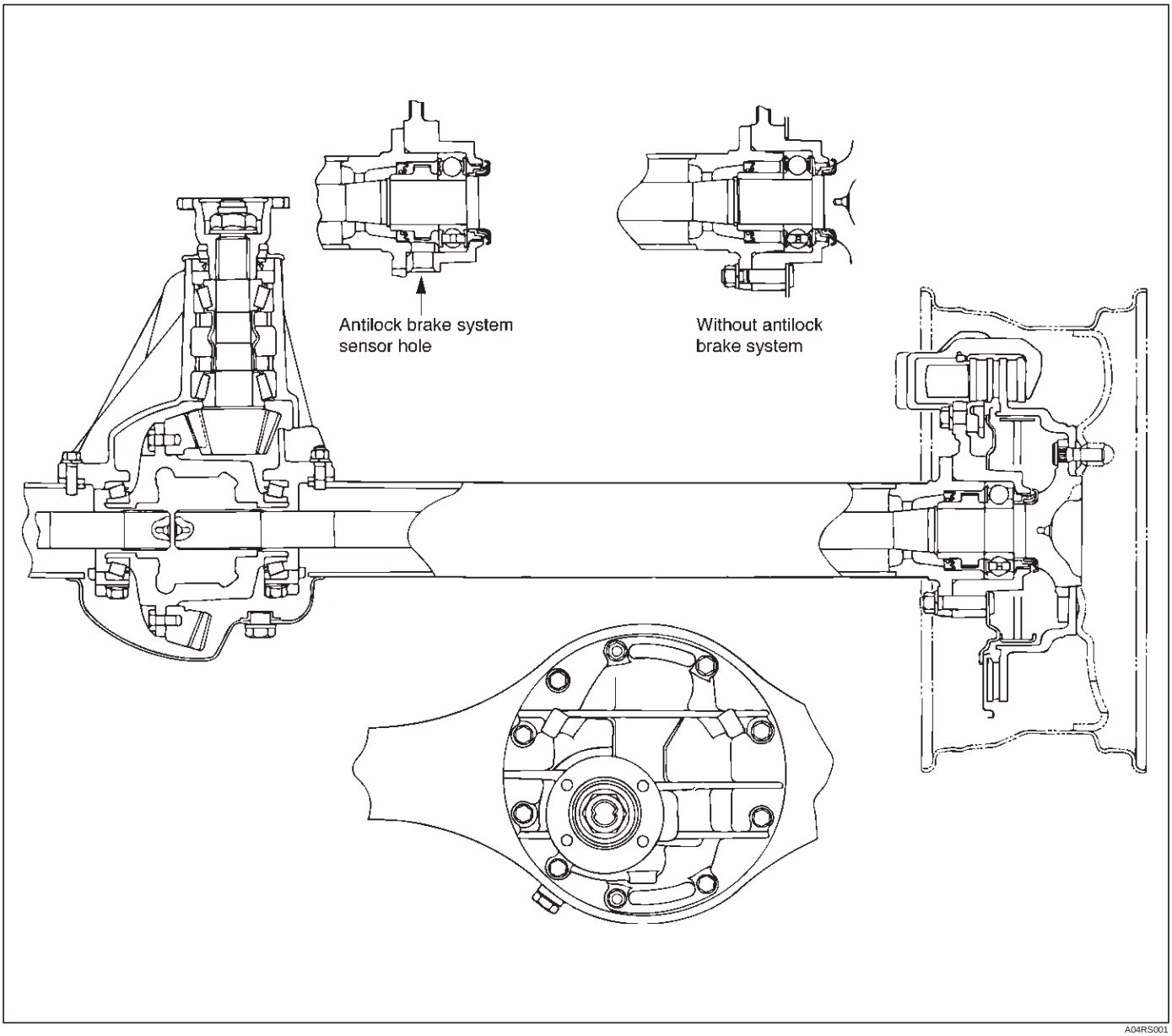

A04RS001

The ring gear is bolted onto the differential cage with 12 bolts.
The differential cage is supported in the axle housing by two tapered roller bearings. The differential and ring gear are located in relationship to the pinion by using selective shims and spacers between the bearing and the axle housing. To move the ring gear, shims are deleted from one side and an equal amount are added to the other side. These shims are also used to preload the bearings which are pressed onto the differential cage. Two bearing caps are used to hold the differential into the rear axle housing.
The differential is used to allow the wheels to turn at different rates of speed while the rear axle continues to transmit the driving force. This prevents tire scuffing when going around corners and prevents premature wear on internal axle parts.
The rear axle is sealed with a pinion seal, a seal at each axle shaft end, and by a liquid gasket between the differential carrier and the axle housing.

Diagnosis

Many noises that seem to come from the rear axle actually originate from other sources such as tires, road surface, wheel bearings, engine, transmission, muffler, or body drumming. Investigate to find the source of the noise before disassembling the rear axle. Rear axles, like any other mechanical device, are not absolutely quiet but should be considered quiet unless some abnormal noise is present.

To make a systematic check for axle noise, observe the following:

1. Select a level asphalt road to reduce tire noise and body drumming.
2. Check rear axle lubricant level to assure correct level, and then drive the vehicle far enough to thoroughly warm up the rear axle lubricant.
3. Note the speed at which noise occurs. Stop the vehicle and put the transmission in neutral. Run the engine speed slowly up and down to determine if the noise is caused by exhaust, muffler noise, or other engine conditions.
4. Tire noise changes with different road surfaces; axle noises do not. Temporarily inflate all tires to 344 kPa (3.5kg/cm^2, 50 psi) (for test purposes only). This will change noise caused by tires but will not affect noise caused by the rear axle.

   Rear axle noise usually stops when coasting at speeds under 48 km/h (30 mph); however, tire noise continues with a lower tone. Rear axle noise usually changes when comparing pull and coast, but tire noise stays about the same.

   Distinguish between tire noise and rear axle noise by noting if the noise changes with various speeds or sudden acceleration and deceleration. Exhaust and axle noise vary under these conditions, while tire noise remains constant and is more pronounced at speeds of 32 to 48 km/h (20 to 30 mph). Further check for tire noise by driving the vehicle over smooth pavements or dirt roads (not gravel) with the tires at normal pressure. If the noise is caused by tires, it will change noticeably with changes in road surface.
5. Loose or rough front wheel bearings will cause noise which may be confused with rear axle noise; however, front wheel bearing noise does not change when comparing drive and coast. Light application of the brake while holding vehicle speed steady will often cause wheel bearing noise to diminish. Front wheel bearings may be checked for noise by jacking up the wheels and spinning them or by shaking the wheels to determine if bearings are loose.
6. Rear suspension rubber bushings and spring insulators dampen out rear axle noise when correctly installed. Check to see that there is no link or rod loosened or metal–to–metal contact.
7. Make sure that there is no metal–to–metal contact between the floor and the frame.

After the noise has been determined to be in the axle, the type of axle noise should be determined, in order to make any necessary repairs.

Gear Noise

Gear noise (whine) is audible from 32 to 89 km/h (20 to 55 mph) under four driving conditions.

1. Driving under acceleration or heavy pull.
2. Driving under load or under constant speed.
3. When using enough throttle to keep the vehicle from driving the engine while the vehicle slows down gradually (engine still pulls slightly).
4. When coasting with the vehicle in gear and the throttle closed. The gear noise is usually more noticeable between 48 and 64 km/h (30 and 40 mph) and 80 and 89 km/h (50 and 55 mph).

Bearing Noise

Bad bearings generally produce a rough growl or grating sound, rather than the whine typical of gear noise. Bearing noise frequently “wow–wows” at bearing rpm, indicating a bad pinion or rear axle side bearing. This noise can be confused with rear wheel bearing noise.

Rear Wheel Bearing Noise

Rear wheel bearing noise continues to be heard while coasting at low speed with transmission in neutral. Noise may diminish by gentle braking. Jack up the rear wheels, spin them by hand and listen for noise at the hubs. Replace any faulty wheel bearings.

Knock At Low Speeds

Low speed knock can be caused by worn universal joints or a side gear hub counter bore in the cage that is worn oversize. Inspect and replace universal joints or cage and side gears as required.

Backlash Clunk

Excessive clunk on acceleration and deceleration can be caused by a worn rear axle pinion shaft, a worn cage, excessive clearance between the axle and the side gear splines, excessive clearance between the side gear hub and the counterbore in the cage, worn pinion and side gear teeth, worn thrust washers, or excessive drive pinion and ring gear backlash. Remove worn parts and replace as required. Select close–fitting parts when possible. Adjust pinion and ring gear backlash.

Axle Housing

Axle Housing and Associated Parts

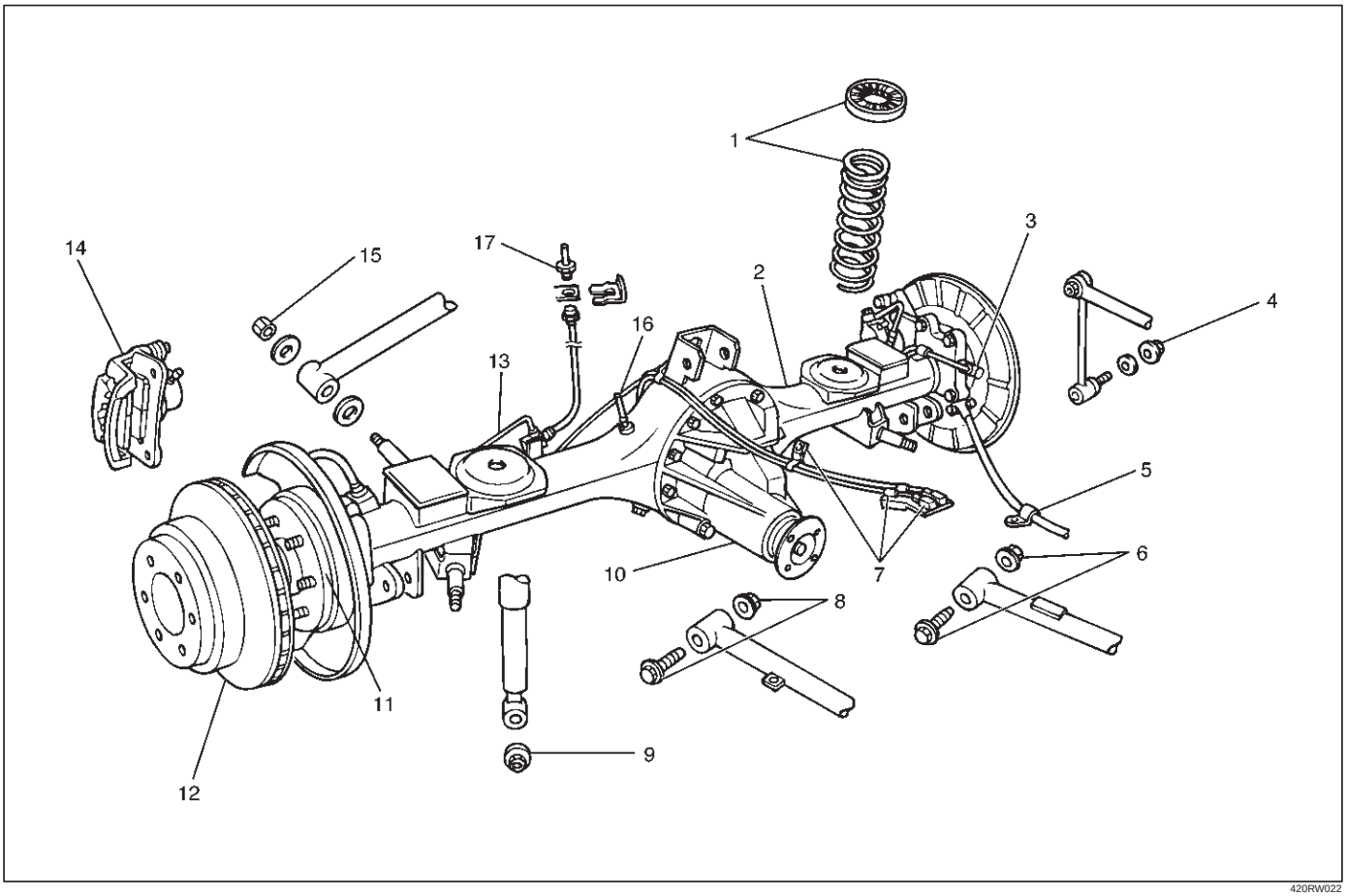

Legend

(1) Coil Spring and Insulator
(2) Axle Housing Assembly
(3) ABS Speed Sensor and Harness(if equipped)
(4) Nut
(5) Parking Brake Cable
(6) Bolt and Nut
(7) Antilock Brake System (ABS) Connector and Bracket (if equipped)
(8) Bolt and Nut
(9) Nut
(10) Differential Assembly
(11) Axle Shaft Assembly
(12) Brake Disc
(13) Brake Pipe
(14) Brake Caliper
(15) Nut
(16) Breather Hose
(17) Flare Nut

Removal

1. Raise the vehicle and support it with suitable safety stands.
   The hoist must remain under the rear axle housing.
2. Drain brake fluid. Refer to Hydraulic Brakes in Brake section.
3. Remove rear wheels and tires. Refer to Wheel in Suspension section.
4. Remove propeller shaft. Refer to Rear Propeller Shaft in this section.
5. Drain the rear axle oil into a proper container.
6. Remove parking brake cable, release the connection between the cable fixing clip equalizer. Refer to Parking Brakes in Brake section.
7. Move the clip aside and pull out the breather hose.

8. Disconnect the ABS connectors (1) and remove the brackets (2) attached to the frame and center link (ABS model only).

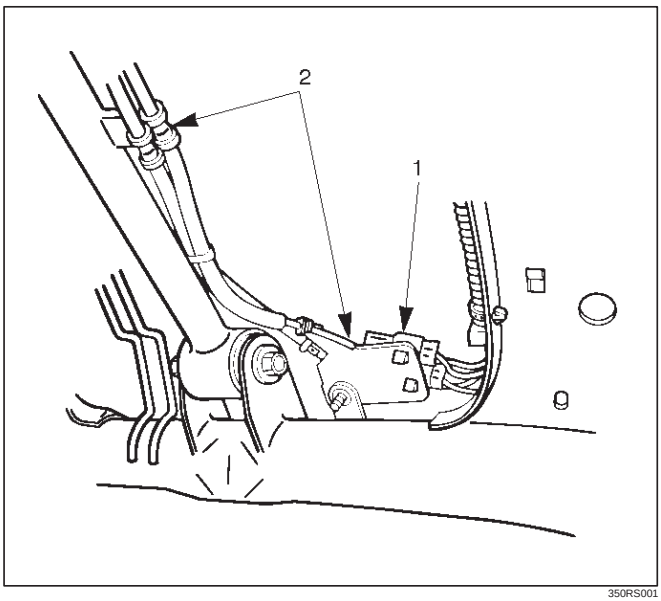

350RS001

9. Loosen the brake tube flare nut, remove the clip and take out the brake tube.
10. Remove the shock absorber fixing nut from the axle housing.
11. Remove the stabilizer linkage mounting nut from the axle housing.
12. Remove the lateral rod fixing nut from the axle housing.
13. Remove the center link mounting bolt and nut from the axle housing.
14. Remove the trailing link fixing bolt and nut from the axle housing.
15. Jack down and remove the coil spring and insulator.
16. Axle housing assembly can be separated from the vehicle on completion of steps 1 – 11.
17. Remove the brake caliper fixing bolt (3), loosen the flare nut (1), release the clip (2) and take out the brake caliper together with the flexible hose.

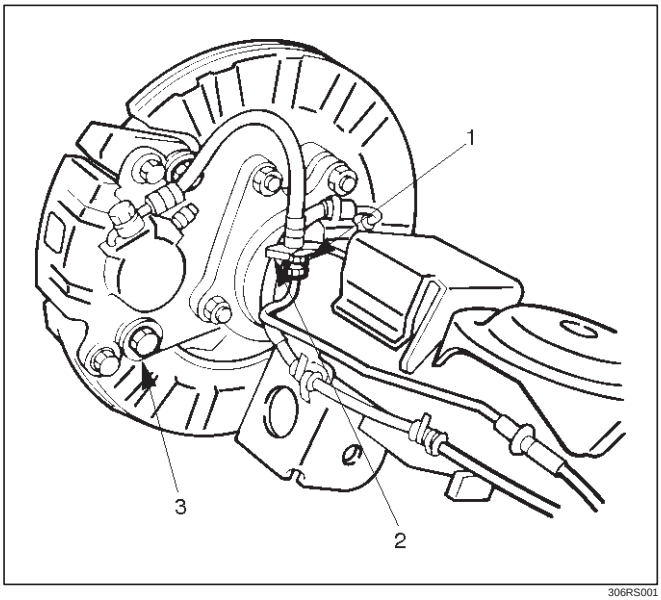

306RS001

18. Remove brake disc.
19. Remove antilock brake system speed sensor fixing bolt and the clip and bracket on the axle housing (ABS model only).
20. Remove the brake pipe clip and fixing bolt on the axle housing and take out the brake pipe.
21. Remove the bearing holder fixing nut and take out the axle shaft assembly, be sure not to damage the oil seal by the spline of the shaft, Refer to Axle Shaft in this section.
22. Remove differential assembly, refer to Differential Assembly in this section.

Oil Seal Replacement

Remove the oil seal, carefully not to damage the housing, and mount new oil seal using oil seal installer 5–8840–2294–0.

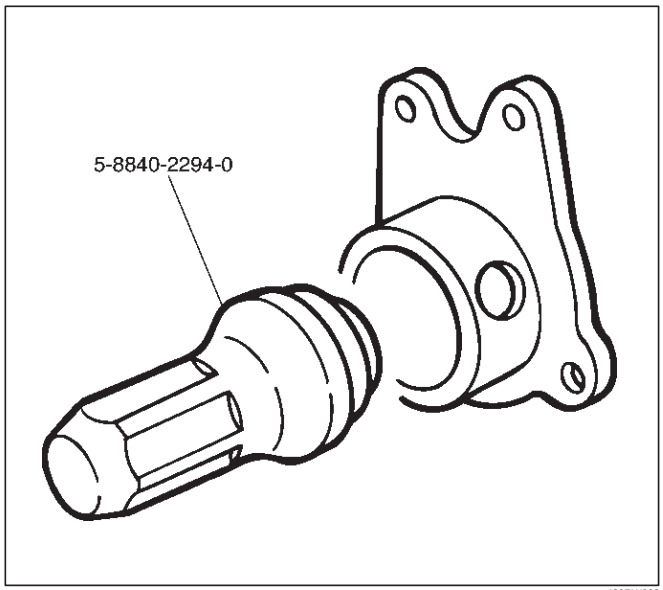

420RW028

Installation

1. Install differential assembly, refer to Differential Assembly in this section.
2. Install axle shaft assembly then tighten the bearing holder mounting nut to the specified torque. Be sure not to damage the oil seal by the spline of the shaft.

   Torque: 74N·m (7.5kg·m/54lb ft)
3. Install brake pipe.
4. Connect antilock brake system (ABS) speed sensor and harness, refer to 4–Wheel Anti–Lock Brake System (ABS) in Brake section (ABS model only).
5. Install brake disc.
6. Install brake caliper. Refer to Disk Brakes in Brake section.
7. Install axle housing assembly.
8. Install coil spring and insulator.
9. Install the trailing link fixing bolt and nut to the axle housing. For the procedures in items 9–13, refer to Suspension section.
10. Install the center link bolt and nut to the axle housing.

11. Install the lateral rod fixing nut to the axle housing.
12. Install the stabilizer linkage mounting nut to the axle housing.
13. Install the shock absorber fixing nut to the axle housing.
14. Install brake tube flare nut, Refer to Disk Brakes in Brake section.
15. Install ABS connector and bracket (ABS model only).
16. Connect breather hose.
17. Install parking brake cable, Refer to Parking Brakes in Brake section.
18. Bleed brakes. Refer to Hydraulic Brakes in Brake section.

Pinion Oil Seal

Pinion Oil Seal and Associated Parts

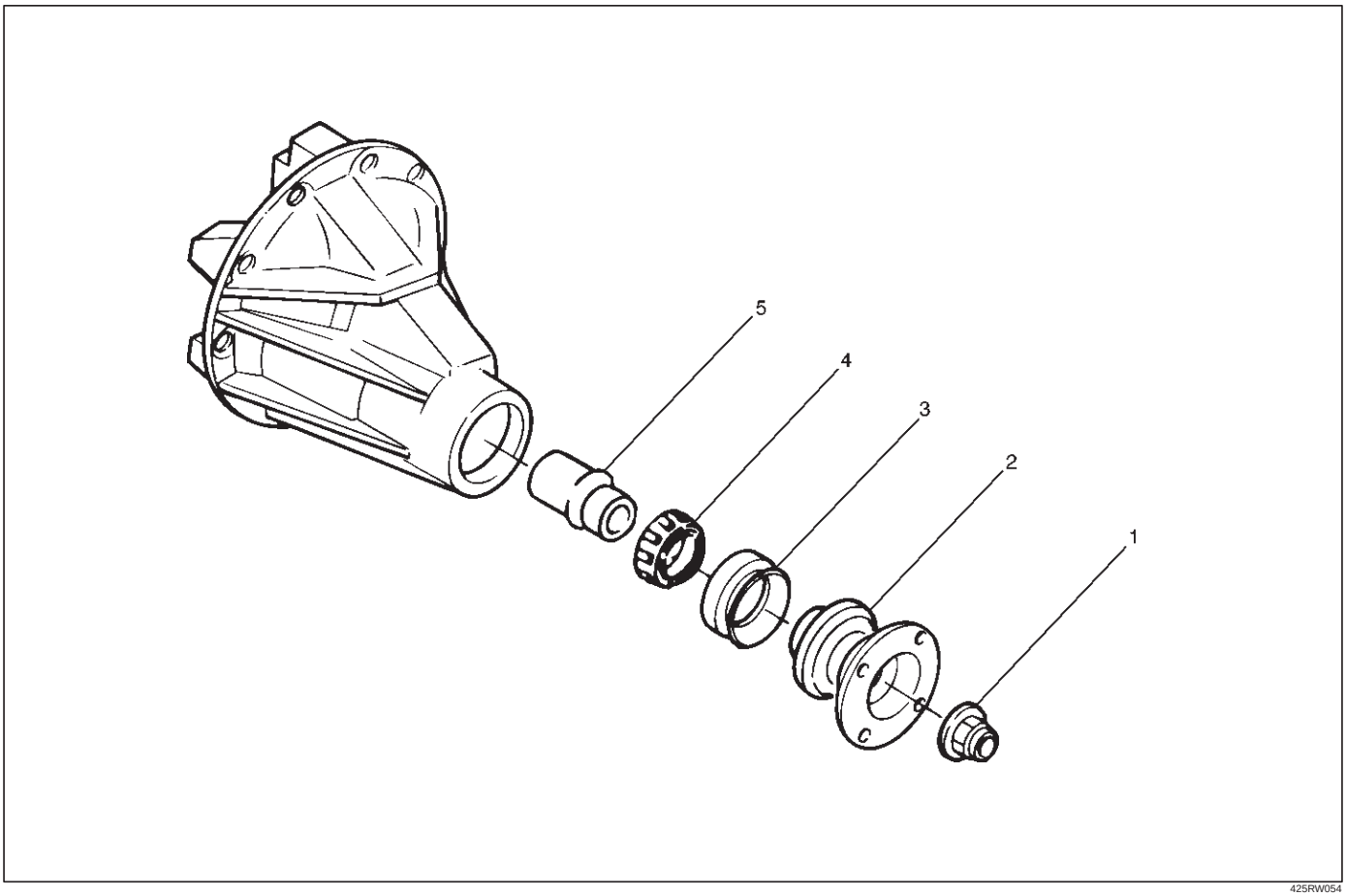

425RW054

Legend

(1) Flange Nut and Washer
(2) Flange
(3) Oil Seal
(4) Outer Bearing
(5) Collapsible Spacer

Removal

1. Remove the rear propeller shaft. Refer to Rear Propeller Shaft in this section.
2. Drain the rear axle oil.

3. Remove flange nut and washer by using pinion flange holder 5–8840–2157–0 after raising up its staked parts completely.

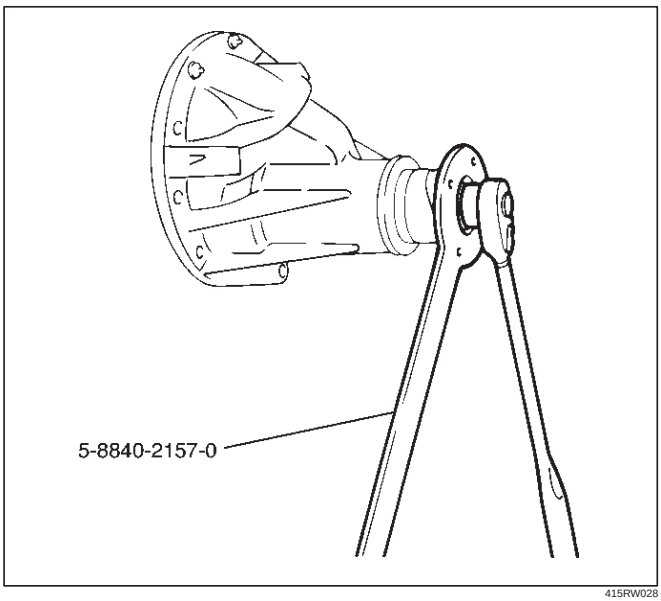

415RW028

4. Remove flange.
5. Remove oil seal.
6. Remove outer bearing by using remover 5–8840–2323–0.

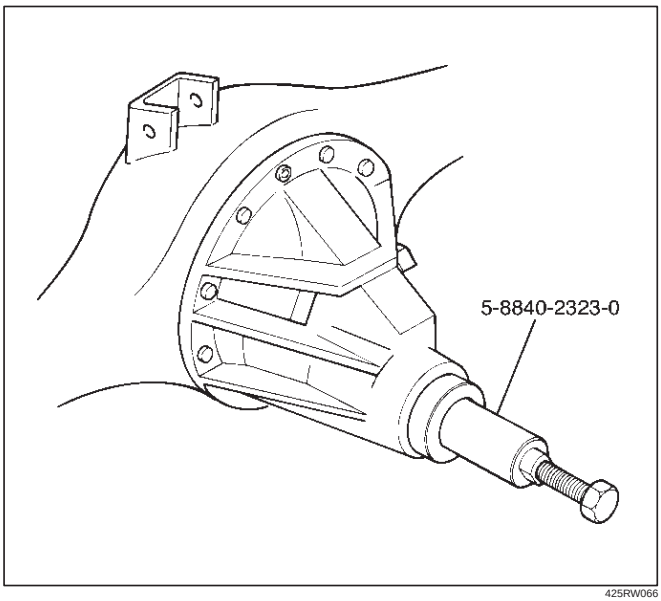

425RW066

7. Remove collapsible spacer.

Inspection and Repair

Make necessary correction or parts replacement if wear, damage, corrosion or any other abnormal conditions are found through inspection.
Check the following parts:

1. Seal surface of the pinion.
2. Cage bore for burns.

Installation

1. Install collapsible spacer, discard the used collapsible spacer and install a new one.
2. Install outer bearing.

NOTE: Do not drive in, but just temporarily set in the outer bearing by hand, which should be indirectly pressed in finally by tightening the flange nut.

3. By using the seal installer 5–8840–2165–0, install a new oil seal (1) that has grease on seal lip.

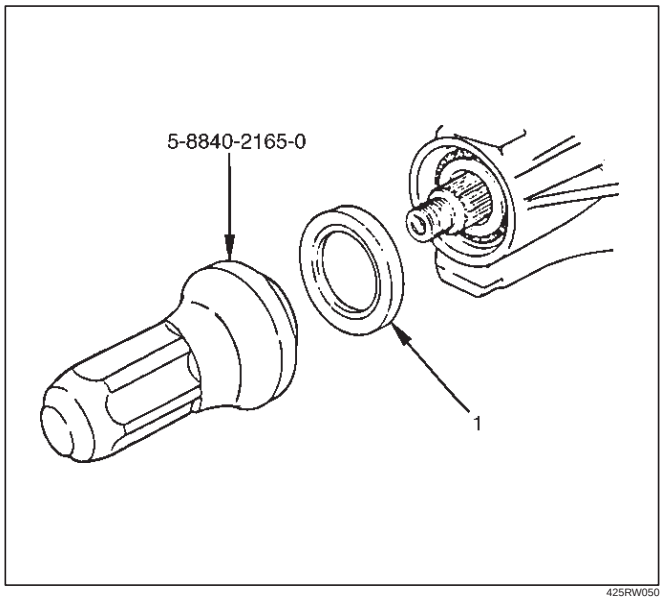

425RW050

4. Install flange.
5. Install flange nut and washer. Refer to Differential Assembly in this section for flange nut reassembly.

NOTE: Discard the used nut and install a new one.

Differential Assembly

Differential Assembly and Associated Parts

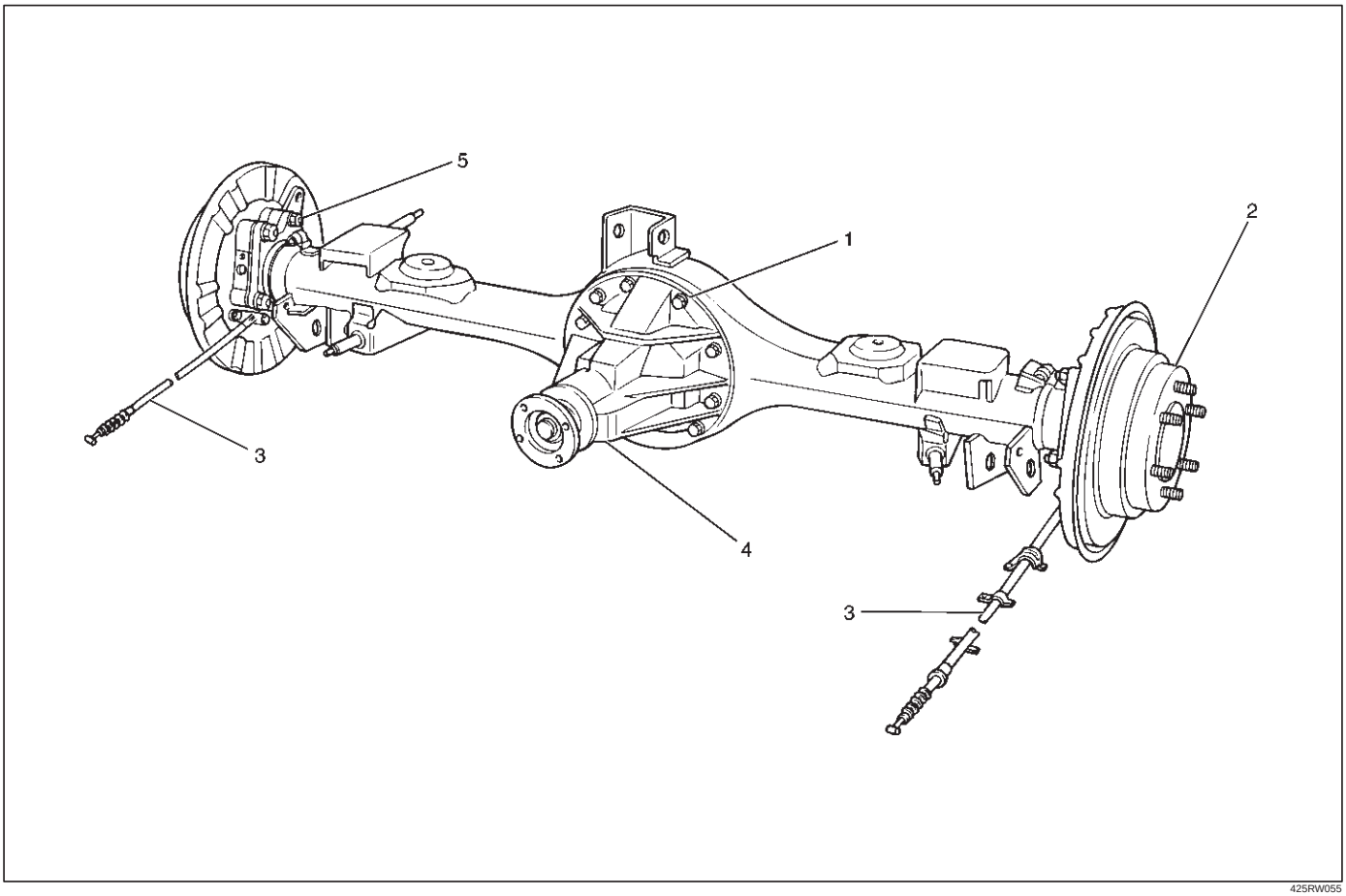

Legend

(1) Bolt and Nut
(2) Axle Shaft Assembly
(3) Parking Brake Cable
(4) Differential Assembly
(5) Nut

Removal

1. Jack up and support the frame with stands.
2. Remove the wheel and tire. Refer to Wheel in Steering section.
3. Drain the differential oil.
4. Remove the propeller shaft. Refer to Rear Propeller Shaft in this section.
5. Remove the ABS speed sensor(ABS model only). Refer to 4–Wheel Anti–lock Brake System (ABS) in Brake section.
6. Remove the parking brake cable fastening clip and disconnect the equalizer section. Refer to Parking Brakes in Brake section.
7. Remove the bearing holder fixing nuts.
8. Remove axle shaft assembly, be sure not to damage the oil seal by axle shaft.
9. Remove differential carrier mounting bolts and nuts.
10. Remove differential assembly.

Installation

1. Clean the contact surfaces of the axle and differential carrier. As shown in the drawing, apply Three Bond TB1215 or equivalent then install differential assembly.

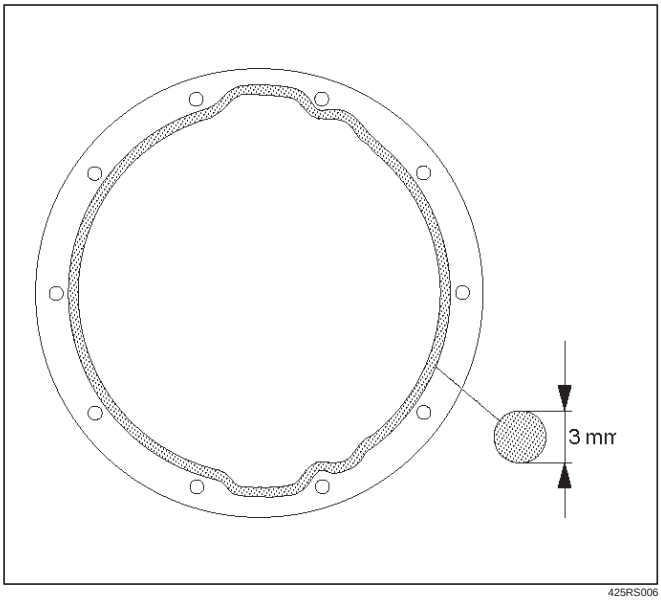

425RS006

2. Install bolt and nut. Tighten the differential carrier mounting bolts and nuts to the specified torque.

   Torque:Nuts 44N·m (4.5kg·m/33lb ft)

   Bolts 66N·m (6.7kg·m/48lb ft)

3. Install axle shaft assembly. Be sure not to damage the oil seal by axle shaft.
4. Install nut, refer to Axle Shaft in this section.
5. Install parking brake cable, refer to Parking Brakes in Brake section.

NOTE: After completing the assembling work, fill the prescribed gear oil to the filler hole.

Lubricant capacity: 1.8 liter (1.6 Imp qt/1.9US qt)

6. Tighten the oil filler plug to the specified torque.

   Torque: 78N·m (8.0kg·m/58lb ft)

Disassembled View

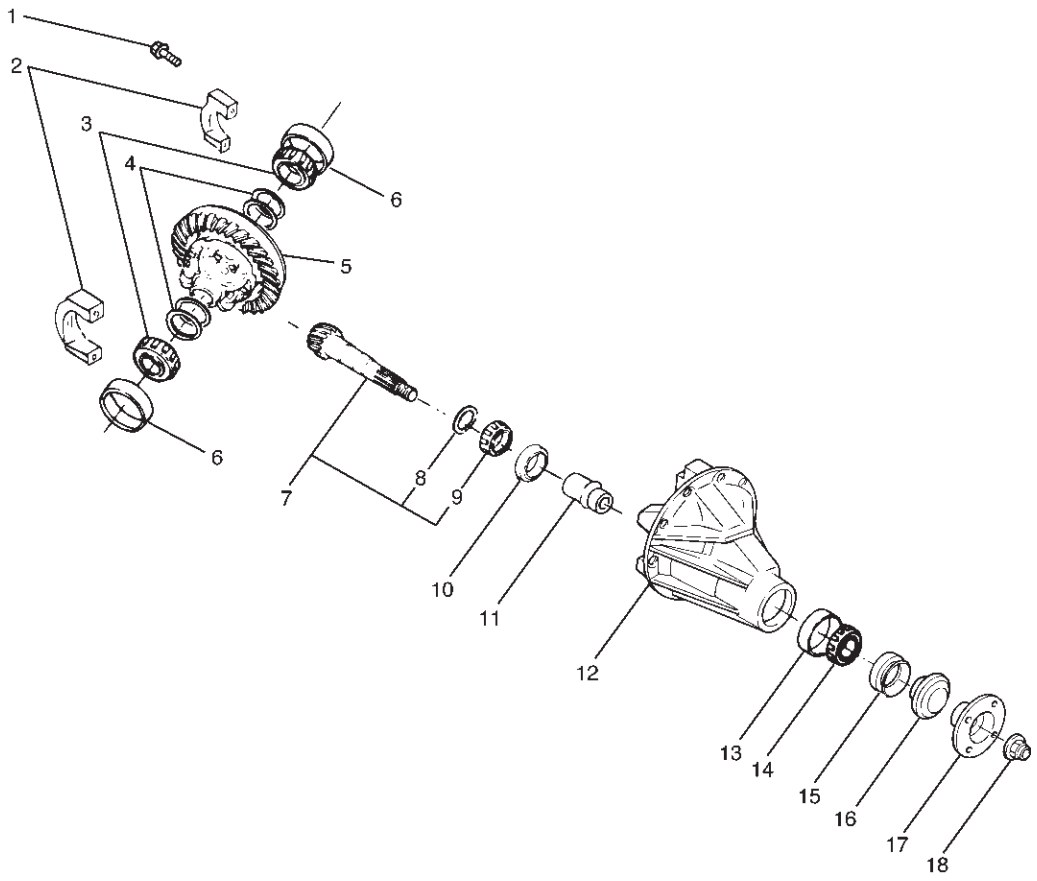

415RW035

Legend

(1) Bolt
(2) Bearing Cap
(3) Side Bearing
(4) Adjust Shim
(5) Diff Cage Assembly
(6) Side Bearing Outer Race
(7) Pinion Gear
(8) Adjust Shim
(9) Inner Bearing
(10) Inner Bearing Outer Race
(11) Collapsible Spacer
(12) Differential Carrier
(13) Outer Bearing Outer Race
(14) Outer Bearing
(15) Oil Seal
(16) Dust Cover
(17) Flange
(18) Flange Nut

Disassembly

1. Using holding fixture 5–8840–0275–0 and holding fixture base 5–8840–0003–0, fix the differential assembly to the bench.

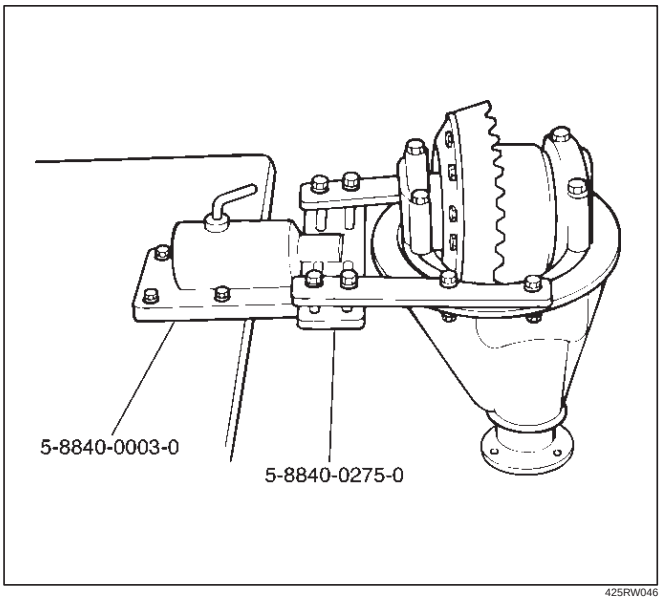

425RW046

2. Remove bearing cap bolt.
3. Apply a setting mark to the side bearing cap and the differential carrier then remove bearing cap.

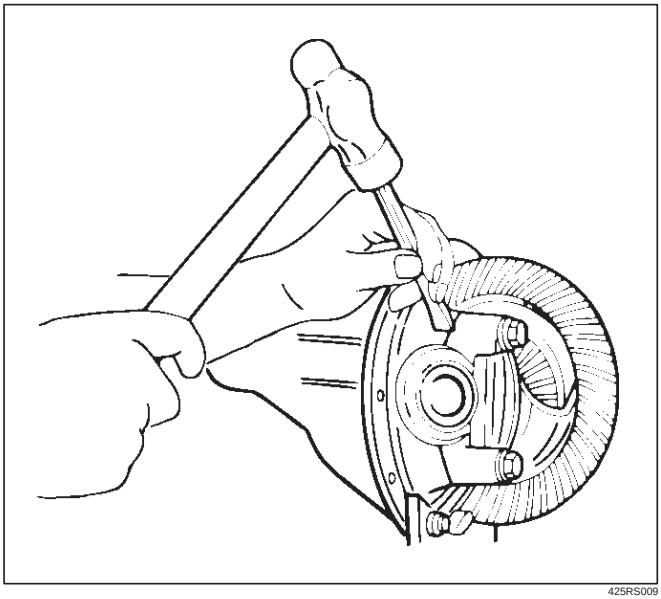

425RS009

4. Remove differential cage assembly.
5. Remove side bearing outer race, after removal, keep the right and left hand side bearing assemblies separate to maintain inner and outer race combinations.
6. Remove side bearing, using remover 5–8840–0013/0014–0 and adapter 5–8840–2196–0.

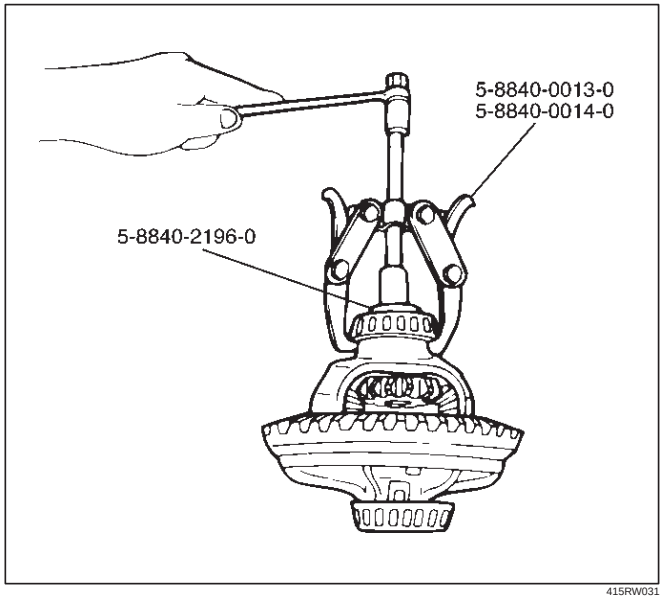

415RW031

7. Remove adjust shim, note the thickness and position of the shims removed.
8. Remove the flange nut using holding wrench 5–8840–2157–0 after raising up its staked parts completely.

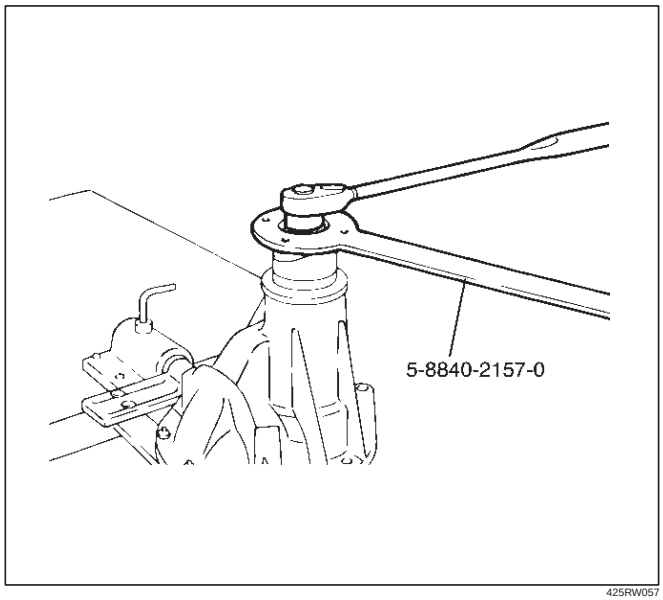

425RW057

9. Remove flange.
10. Remove dust cover.

11. Remove the drive pinion assembly using a soft metal rod and a hammer.

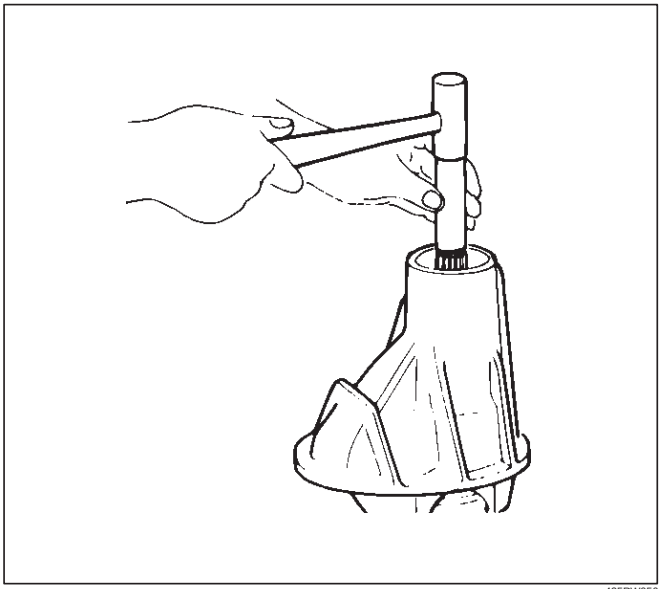

425RW056

12. Remove collapsible spacer.
13. Remove the inner bearing using a separator 5–8840–2197–0 and a press.

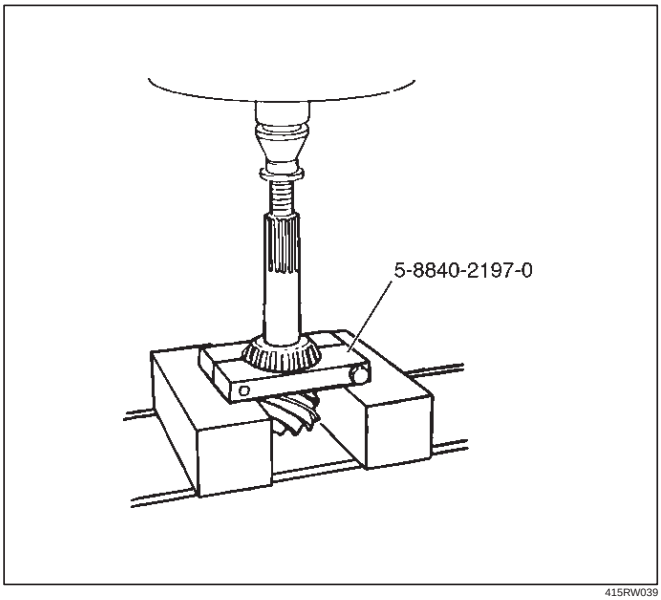

415RW039

14. Remove adjust shim.
15. Remove inner bearing outer race.
16. Remove oil seal.
17. Remove outer bearing.
18. Remove the inner bearing outer race (1) and the outer bearing outer race (2) by using a brass bar and a hammer.

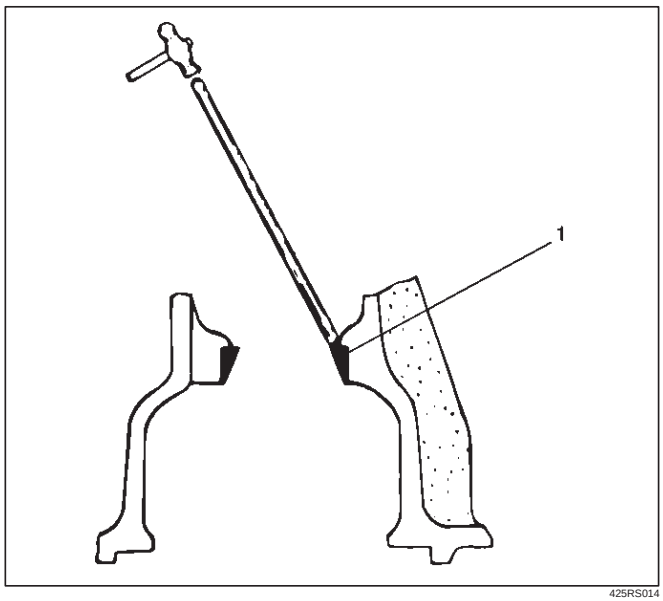

425RS014

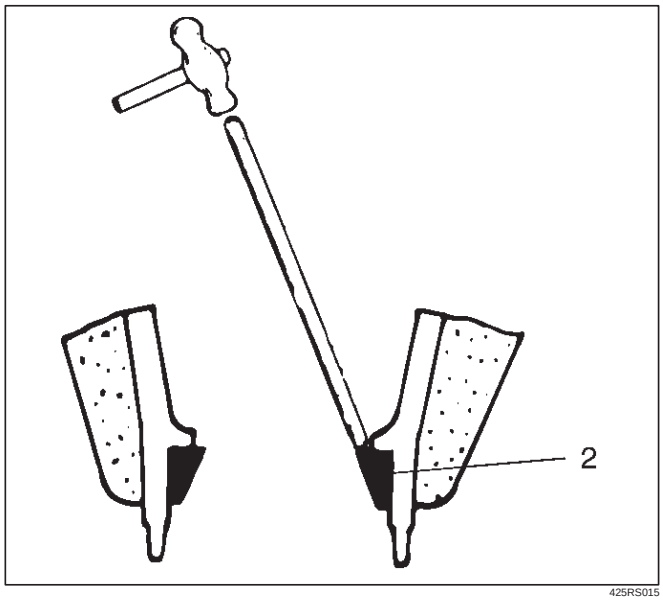

425RS015

Reassembly

1. Using installer 5–8840–2164–0 and grip 5–8840–0007–0, install outer bearing outer race.

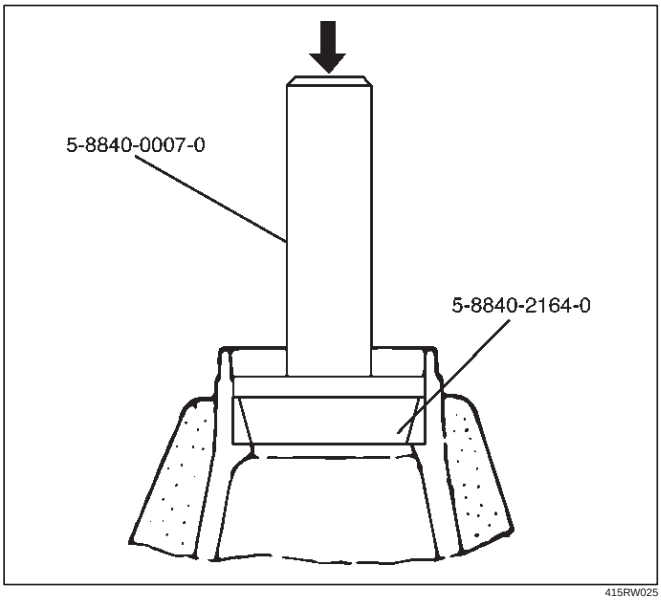

415RW025

2. Using installer 5–8840–2163–0 and grip 5–8840–0007–0, install Inner bearing outer race.

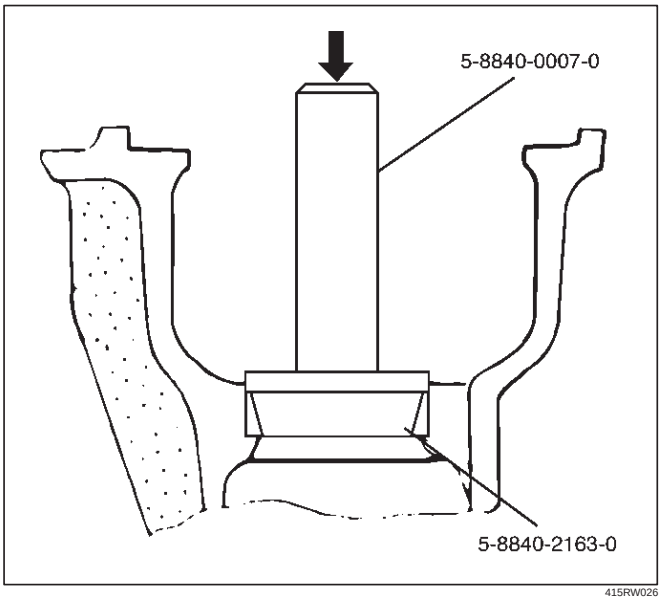

415RW026

3. Install adjust shim and adjust drive pinion mounting distance
   1. Apply gear oil to the inner and outer drive pinion bearing.
      Clean the pinion setting gauge set.
      Then install the gauge set together with the inner and outer bearings.
   2. Tighten the nut to the specified torque.

Torque: 2.3 N·m (0.23kg·m/20 lb in)

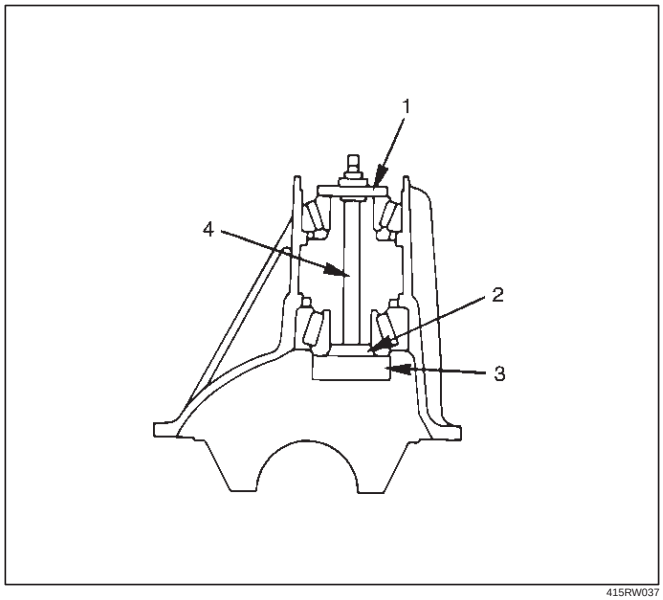

415RW037

Legend

(1) Front Pilot: 5–8840–2085–0
(2) Rear Pilot: 5–8840–0129–0
(3) Gauge Plate: 5–8840–2166–0
(4) Bolt and Nut: 5–8840–0127–0

3. Clean the side bearing bores. Install the dial indicator with the discs and arbor. Install and tighten the bearing caps to the specified torque.

Torque: 108 N·m (11.0kg·m/80 lb ft)

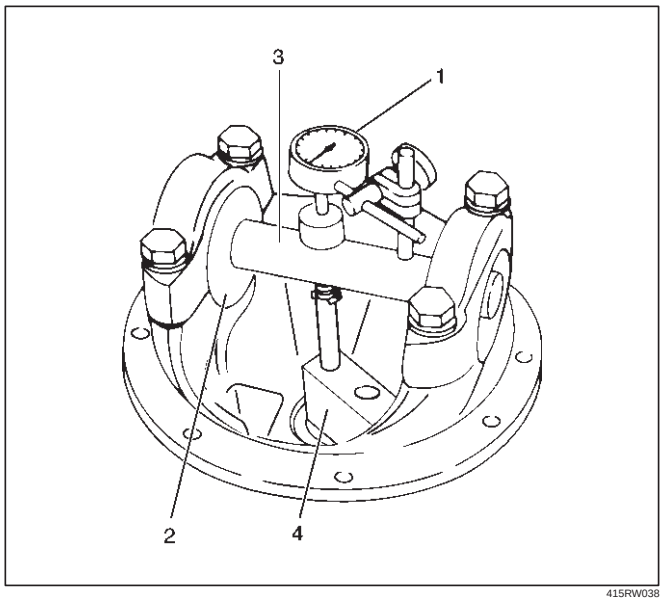

415RW038

Legend

(1) Dial Indicator: 5–8840–0126–0
(2) Disc (2 pcs.): 5–8840–2167–0
(3) Arbor: 5–8840–0128–0
(4) Gauge Plate: 5–8840–2166–0

4. Set the dial indicator to “0”. Place it on the mounting post of the gauging arbor with the contact button touching the indicator pad. Force the dial indicator downward until the needle has made a half turn clockwise. Tighten down the dial indicator in this position.

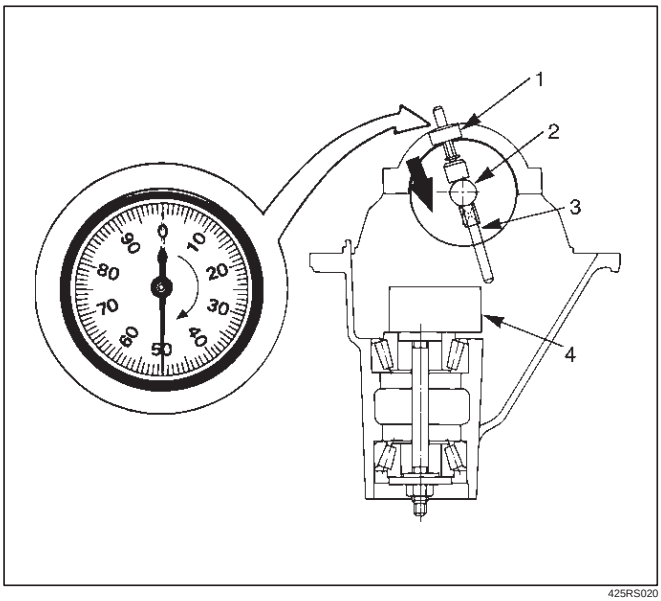

425RS020

Legend

(1) Dial Indicator
(2) Ganging Arbor
(3) Plunger
(4) Gauge Plate

5. Position the plunger on the gauge plate. Move the gauging arbor slowly back and forth and locate the position at which the dial indicator shows the greatest defection. At this point, once again set the dial indicator to “0”.

   Repeat the procedure to verify the “0” setting.

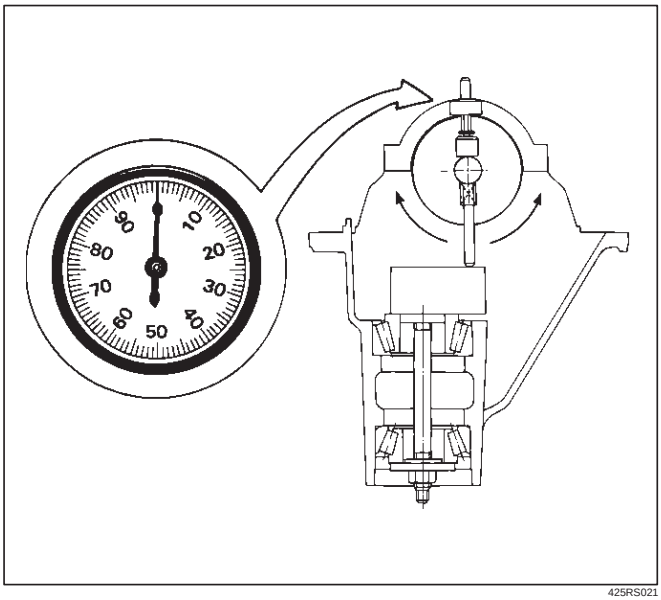

425RS021

6. After the ZERO setting is obtained, rotate the gauging arbor until the dial indicator rod does not touch the gauging plate.

   Record the number the dial indicator needle points to.

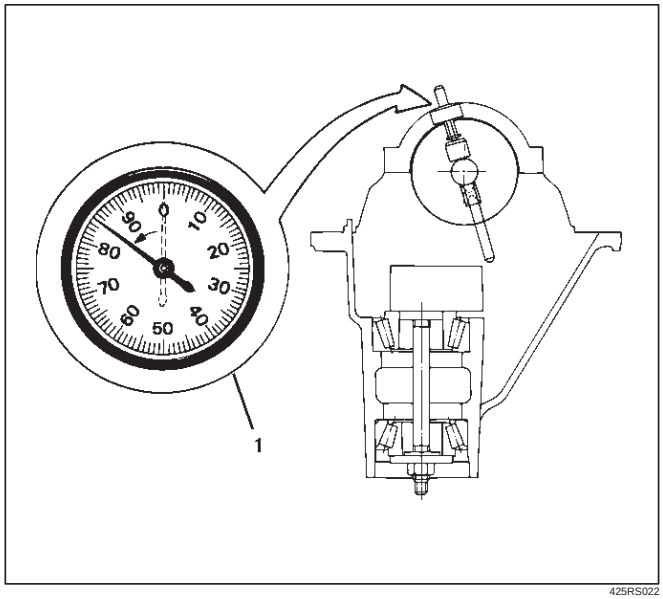

425RS022

Legend

(1) Example=Dial indicator reading of 0.085

7. Record the pinion depth code on the head of the drive pinion.

   The number indicates a necessary change in the pinion mounting distance. A plus number indicates the need for a greater mounting distance (which can be achieved by decreasing the shim thickness). A minus number indicates the need for a smaller mounting distance (which can be achieved by increasing the shim thickness). If examination reveals pinion depth code “0”, the pinion is “nominal”.

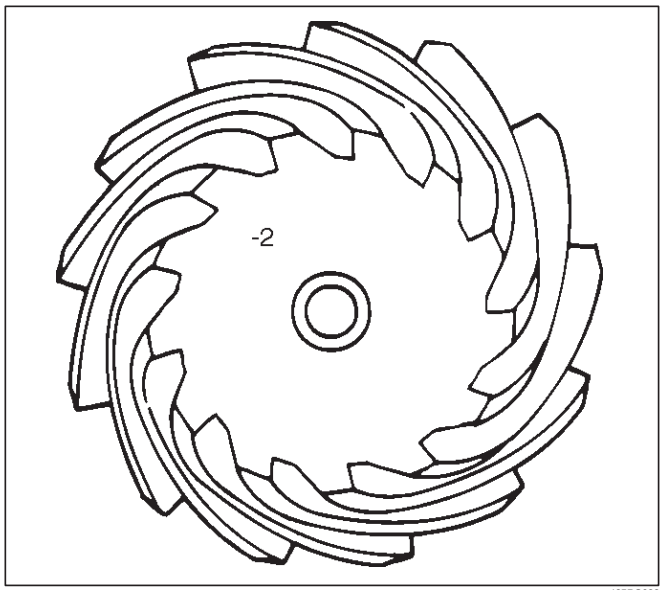

425RS023

8. Select the shim using the chart;

Pinion marking Dial indicator reading (Inches)	+10	+8	+6	+4	+2	0	–2	–4	–6	–8	–10
0.073										1.94 (0.0764)	1.96 (0.0772)
0.074									1.94 (0.0764)	1.96 (0.0772)	1.98 (0.0779)
0.075								1.94 (0.0764)	1.96 (0.0772)	1.98 (0.0779)	2.00 (0.0787)
0.076						1.94 (0.0764)	1.96 (0.0772)	1.98 (0.0779)	2.00 (0.0787)	2.02 (0.0795)	2.04 (0.0803)
0.077						1.96 (0.0772)	1.98 (0.0779)	2.00 (0.0787)	2.02 (0.0795)	2.04 (0.0803)	2.06 (0.0811)
0.078				1.94 (0.0764)	1.96 (0.0772)	1.98 (0.0779)	2.00 (0.0787)	2.02 (0.0795)	2.04 (0.0803)	2.06 (0.0811)	2.08 (0.0819)
0.079			1.94 (0.0764)	1.96 (0.0772)	1.98 (0.0779)	2.00 (0.0787)	2.02 (0.0795)	2.04 (0.0803)	2.06 (0.0811)	2.08 (0.0819)	2.10 (0.0827)
0.080	1.94 (0.0764)	1.96 (0.0772)	1.98 (0.0779)	2.00 (0.0787)	2.02 (0.0795)	2.04 (0.0803)	2.06 (0.0811)	2.08 (0.0819)	2.10 (0.0827)	2.12 (0.0835)	2.14 (0.0842)
0.081	1.96 (0.0772)	1.98 (0.0779)	2.00 (0.0787)	2.02 (0.0795)	2.04 (0.0803)	2.06 (0.0811)	2.08 (0.0819)	2.10 (0.0827)	2.12 (0.0835)	2.14 (0.0842)	2.16 (0.0850)
0.082	1.98 (0.0779)	2.00 (0.0787)	2.02 (0.0795)	2.04 (0.0803)	2.06 (0.0811)	2.08 (0.0819)	2.10 (0.0827)	2.12 (0.0835)	2.14 (0.0842)	2.16 (0.0850)	2.18 (0.0858)
0.083	2.00 (0.0787)	2.02 (0.0795)	2.04 (0.0803)	2.06 (0.0811)	2.08 (0.0819)	2.10 (0.0827)	2.12 (0.0835)	2.14 (0.0842)	2.16 (0.0850)	2.18 (0.0858)	2.20 (0.0866)
0.084	2.04 (0.0803)	2.06 (0.0811)	2.08 (0.0819)	2.10 (0.0827)	2.12 (0.0835)	2.14 (0.0842)	2.16 (0.0850)	2.18 (0.0858)	2.20 (0.0866)	2.22 (0.0874)	2.24 (0.0882)
0.085	2.06 (0.0811)	2.08 (0.0819)	2.10 (0.0827)	2.12 (0.0835)	2.14 (0.0842)	2.16 (0.0850)	2.18 (0.0858)	2.20 (0.0866)	2.22 (0.0874)	2.24 (0.0882)	2.26 (0.0890)
0.086	2.08 (0.0819)	2.10 (0.0827)	2.12 (0.0835)	2.14 (0.0842)	2.16 (0.0850)	2.18 (0.0858)	2.20 (0.0866)	2.22 (0.0874)	2.24 (0.0882)	2.26 (0.0890)	2.28 (0.0898)
0.087	2.12 (0.0835)	2.14 (0.0842)	2.16 (0.0850)	2.18 (0.0858)	2.20 (0.0866)	2.22 (0.0874)	2.24 (0.0882)	2.26 (0.0890)	2.28 (0.0898)	2.30 (0.0906)	2.32 (0.0913)
0.088	2.14 (0.0842)	2.16 (0.0850)	2.18 (0.0858)	2.20 (0.0866)	2.22 (0.0874)	2.24 (0.0882)	2.26 (0.0890)	2.28 (0.0898)	2.30 (0.0906)	2.32 (0.0913)	2.34 (0.0921)
0.089	2.16 (0.0850)	2.18 (0.0858)	2.20 (0.0866)	2.22 (0.0874)	2.24 (0.0882)	2.26 (0.0890)	2.28 (0.0898)	2.30 (0.0906)	2.32 (0.0913)	2.34 (0.0921)	2.36 (0.0929)
0.090	2.18 (0.0858)	2.20 (0.0866)	2.22 (0.0874)	2.24 (0.0882)	2.26 (0.0890)	2.28 (0.0898)	2.30 (0.0906)	2.32 (0.0913)	2.34 (0.0921)	2.36 (0.0929)	
0.091	2.22 (0.0874)	2.24 (0.0882)	2.26 (0.0890)	2.28 (0.0898)	2.30 (0.0906)	2.32 (0.0913)	2.34 (0.0921)	2.36 (0.0929)			
0.092	2.24 (0.0882)	2.26 (0.0890)	2.28 (0.0898)	2.30 (0.0906)	2.32 (0.0913)	2.34 (0.0921)	2.36 (0.0929)				
0.093	2.26 (0.0890)	2.28 (0.0898)	2.30 (0.0906)	2.32 (0.0913)	2.34 (0.0921)	2.36 (0.0929)					
0.094	2.28 (0.0898)	2.30 (0.0906)	2.32 (0.0913)	2.34 (0.0921)	2.36 (0.0929)						
0.095	2.32 (0.0913)	2.34 (0.0921)	2.36 (0.0929)								
0.096	2.34 (0.0921)	2.36 (0.0929)									
0.097	2.36 (0.0929)										

NOTE: When ordering shims, find the part number in the parts catalog by using the thickness of shims listed in the above table.

4. Place the shim on the drive pinion, with the chamfered side turned towards the pinion head then install the inner bearing onto the pinion using an installer 9–8522–1165–0 and a press.

NOTE: Do not apply pressure to the roller cage and apply pressure only to the inner race.

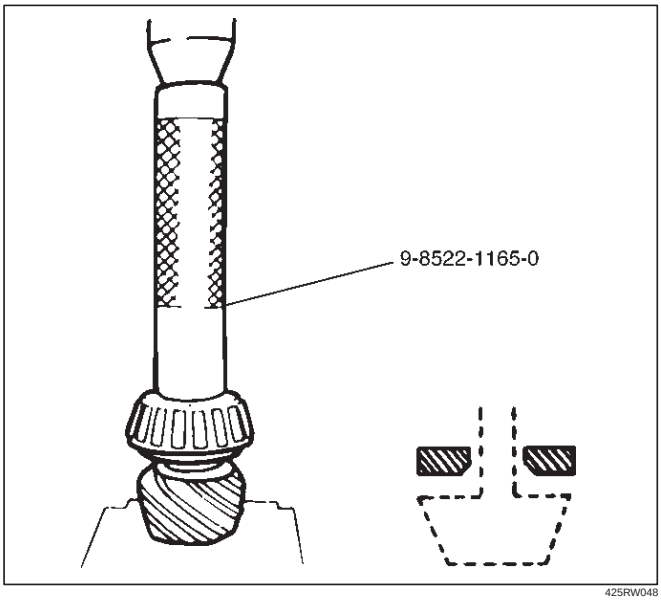

425RW048

5. Discard the used collapsible spacer and install a new one.
6. Install pinion gear.
7. Install outer bearing.
8. Use oil seal installer 5–8840–2165–0 to install a new oil seal that has been soaked in rear axle lubricant.

NOTE: Take care to use a front differential oil seal, NOT the rear differential oil seal.

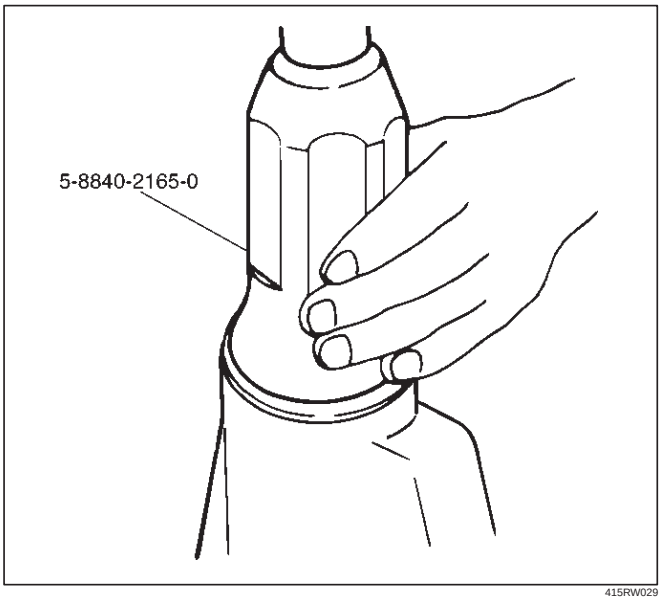

415RW029

9. Install dust cover.
10. Install flange.
11. Install flange nut.
    1. Apply lubricant to the pinion threads.
    2. Tighten the nut to the specified torque using the pinion flange holder 5–8840–2157–0.

Torque: 245–294N·m (25.0–28.0kg·m/181–217 lb f t)

NOTE: Discard used flange nut and install new one and do not over tighten the flange nut.

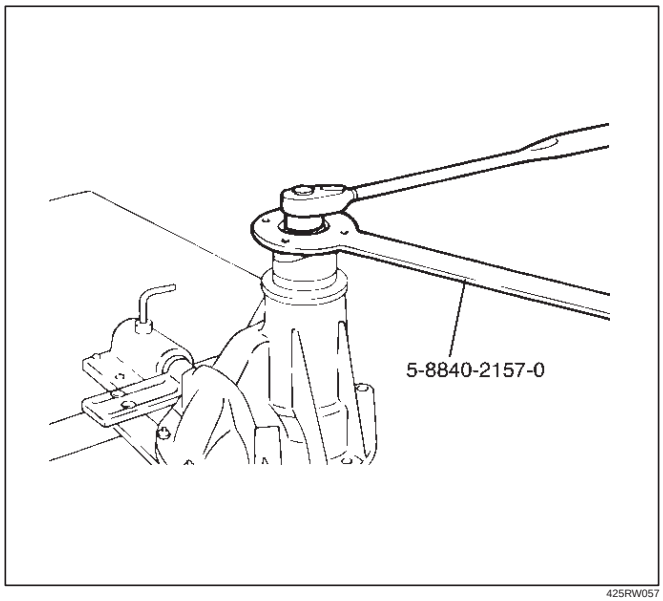

425RW057

3. Adjust pinion bearing preload.
    a. Measure the bearing preload by using a torque meter. Note the scale reading required to rotate the flange.
    b. Continue tightening flange nut until the specified starting torque is obtained.

Starting torque:

New bearing 0.7–1.3 N·m(0.07-0.13kg·m/6.08–11.28 lb in)

Used bearing 0.4–0.6N·m(0.04–0.06kg·m/3.04-5.64 lb in)

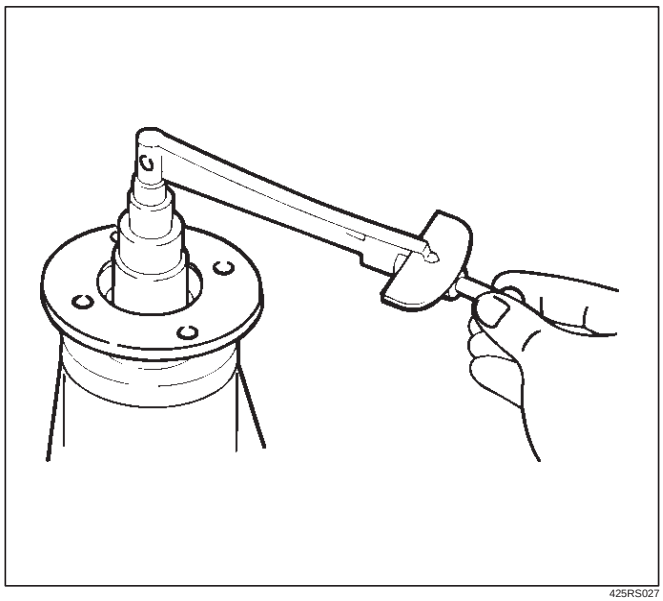

425RS027

4. Using punch 5–8840–2293–0, stake the flange nut at two points.

NOTE: When staking, be sure to turn the nut to insure that there is no change in bearing preload. Make sure of preload again as instructed in 3).

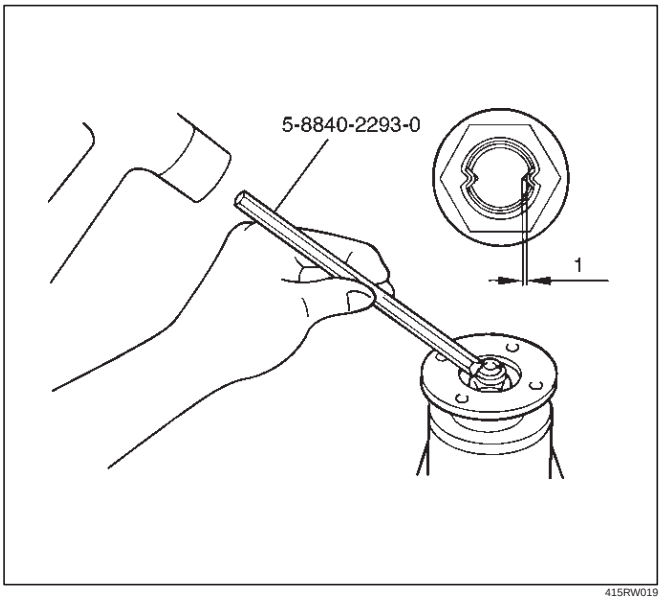

415RW019

Legend

(1) 1.5mm or less

12. Install adjust shim.
    1. Attach the side bearing to the differential assembly without shims. Support the opposite side using a pilot to prevent bearing damage.

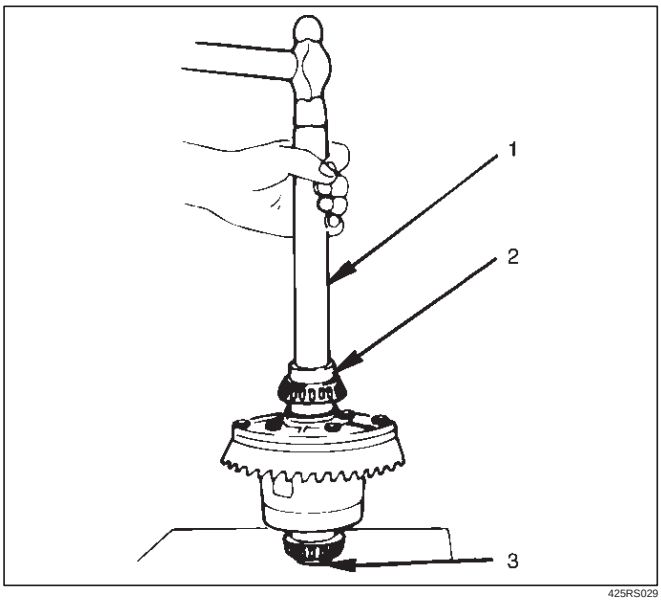

425RS029

Legend

(1) Drive handle: 5–8840–0007–0
(2) Installer: 5–8840–2162–0
(3) Pilot: 5–8840–2196–0

2. Insert the differential cage assembly with bearing outer races into the side bearing bores of the carrier.

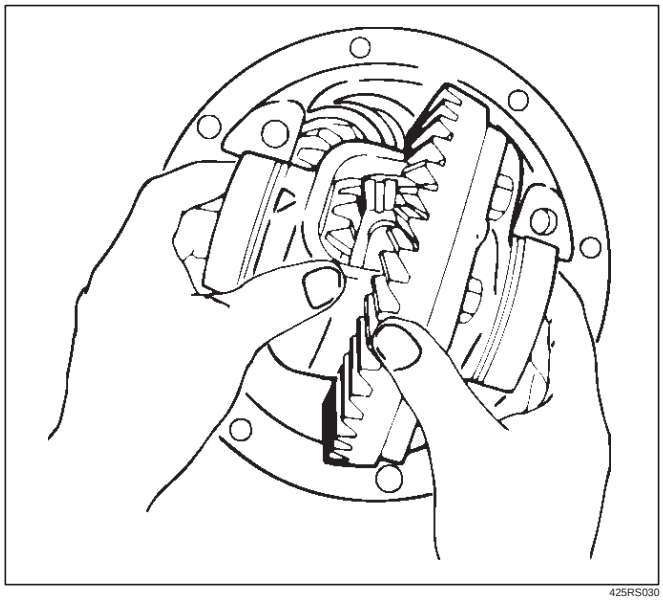

425RS030

3. Using two sets of feeler gauges, insert a feeler stock of sufficient thickness between each bearing outer race and the carrier to remove all end play. Make certain the feeler stock is pushed to the bottom of the bearing bores.

   Mount the dial indicator 5–8840–0126–0 on the carrier so that the indicator stem is at right angles to a tooth on the ring gear.

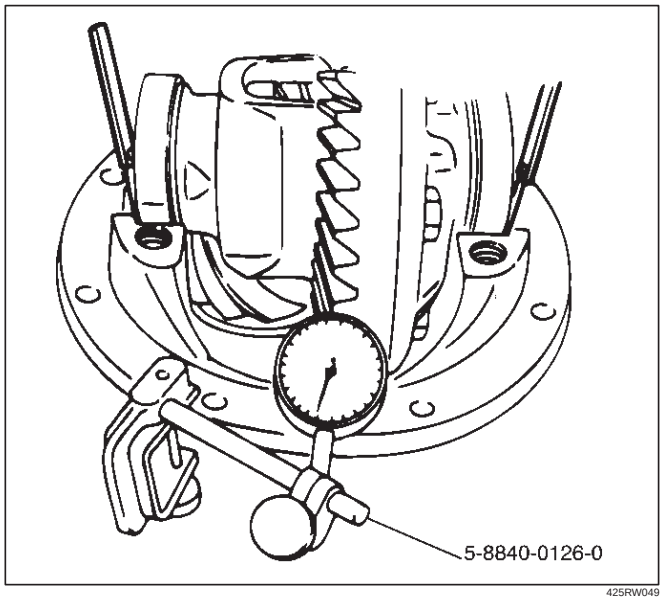

425RW049

4. Adjust feeler gauge thickness from side to side until ring gear backlash is in the specified range.

Backlash: 0.15–0.2 mm(0.006 –0.008 in)

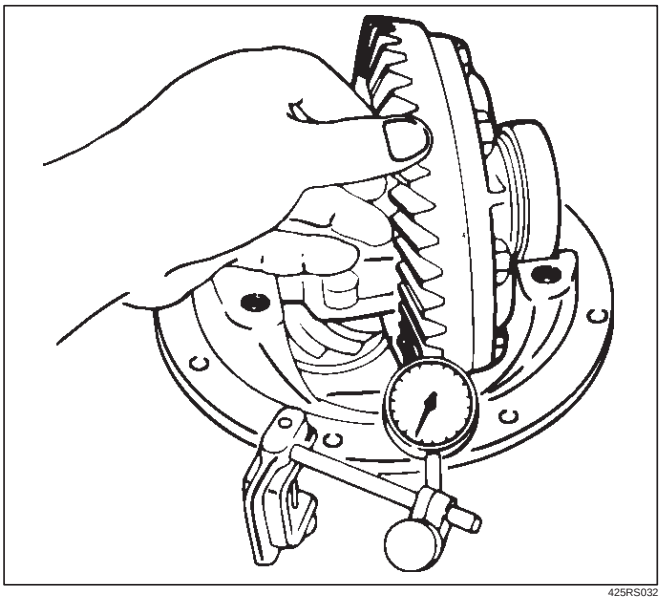

425RS032

With zero end play and correct backlash established, remove the feeler gauge packs, determine the thickness of the shims required and add 0.05 mm (0.002 in) to each shim pack to provide side bearing preload. Always use new shims.

5. Use bearing remover 5–8840–0013/0014–0 and pilot 5–8840–2196–0 to remove side bearing.

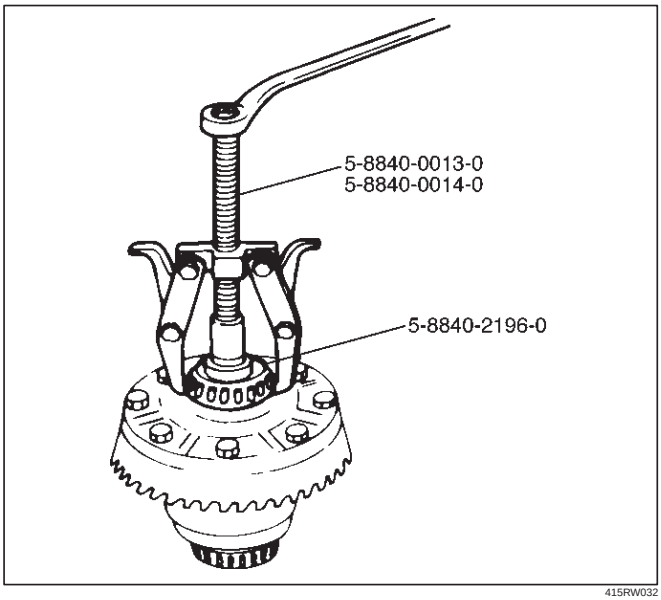

415RW032

13. Install the side bearings together with the selected shims.

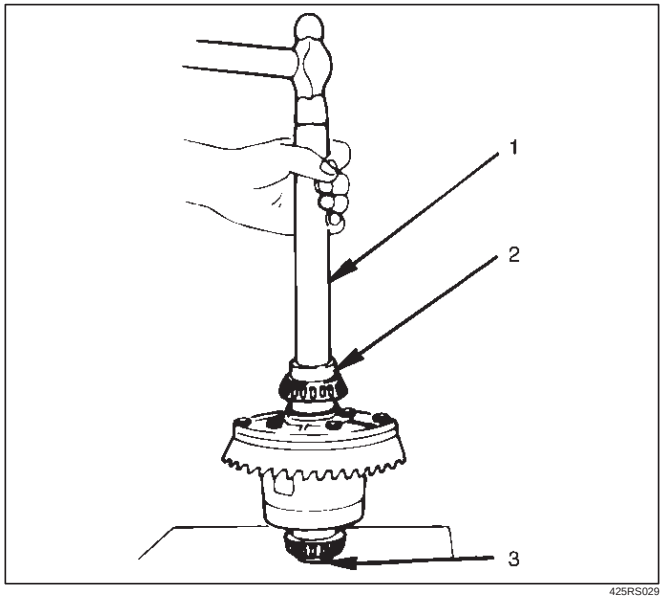

425RS029

Legend

(1) Drive Handle: 5–8840–0007–0
(2) Installer: 5–8840–2162–0
(3) Pilot: 5–8840–2196–0

14. Install side bearing outer race.
15. Install differential cage assembly.
16. Install bearing cap then align the setting marks(1) applied at disassembly.

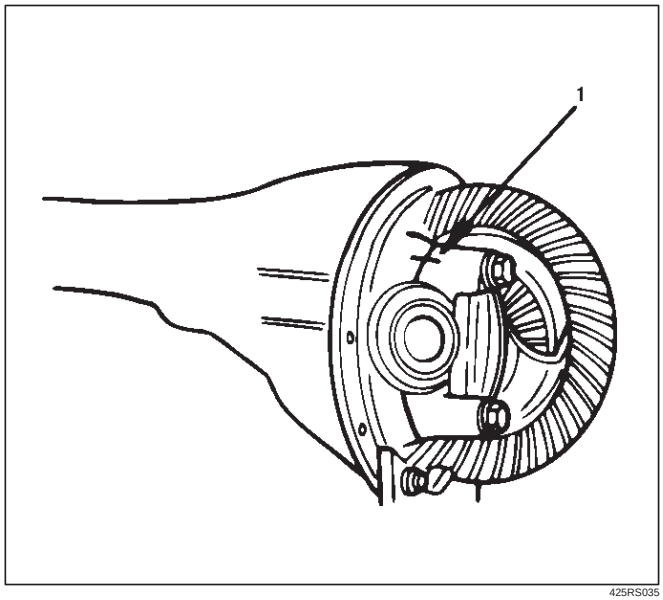

425RS035

17. Tighten the cap bolt to the specified torque.

Torque: 108 N·m (11.0kg·m/80 lb ft)

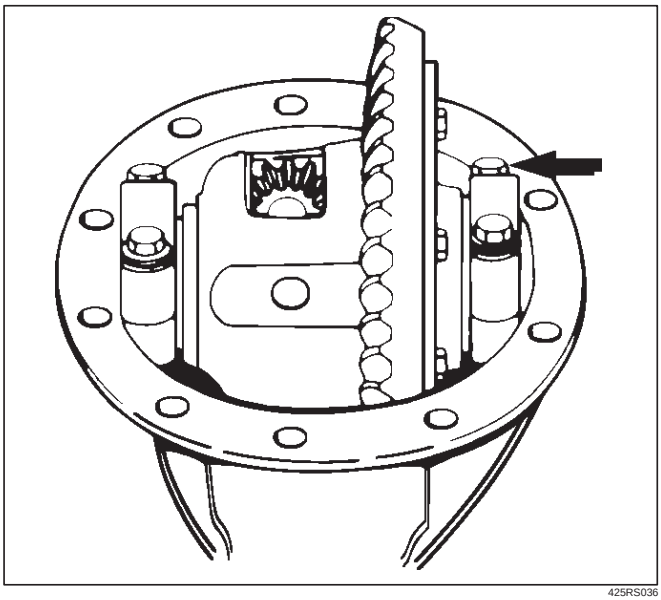

425RS036

1. Measure the amount of run–out of the ring gear at its rear face.

Standard: 0.02 mm (0.001 in)

Limit: 0.05 mm (0.002 in)

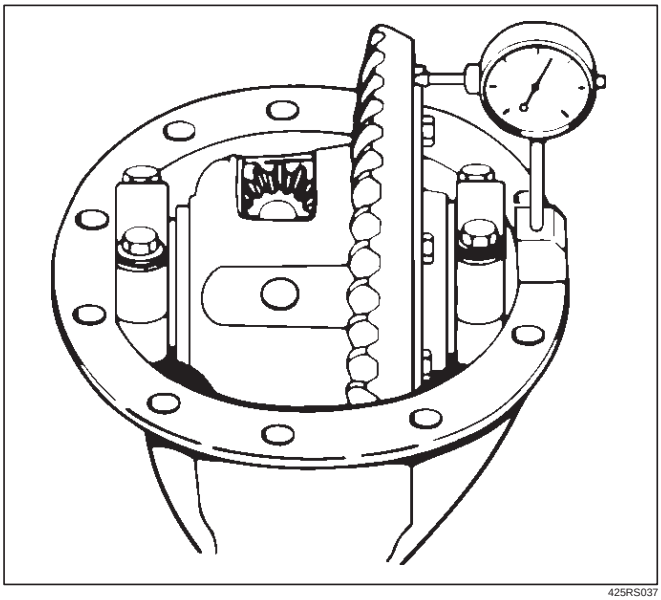

425RS037

Gear Tooth Contact Pattern Check and Adjustment

1. Apply a thin coat of prussian blue or equivalent to the faces of the 7–8 teeth of the ring gear. Check the impression of contact on the ring gear teeth and make necessary adjustment as described in illustration if the contact is abnormal.

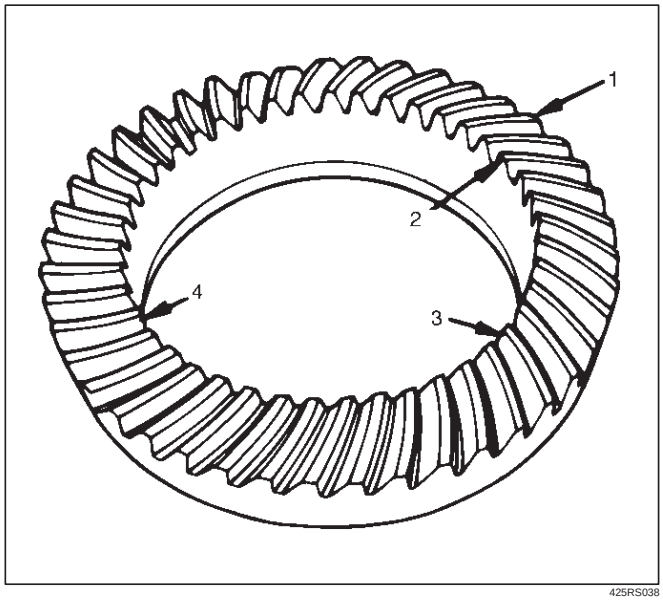

425RS038

Legend

(1) Heel
(2) Toe
(3) Concave Side(Coast)
(4) Convex Side(Drive)

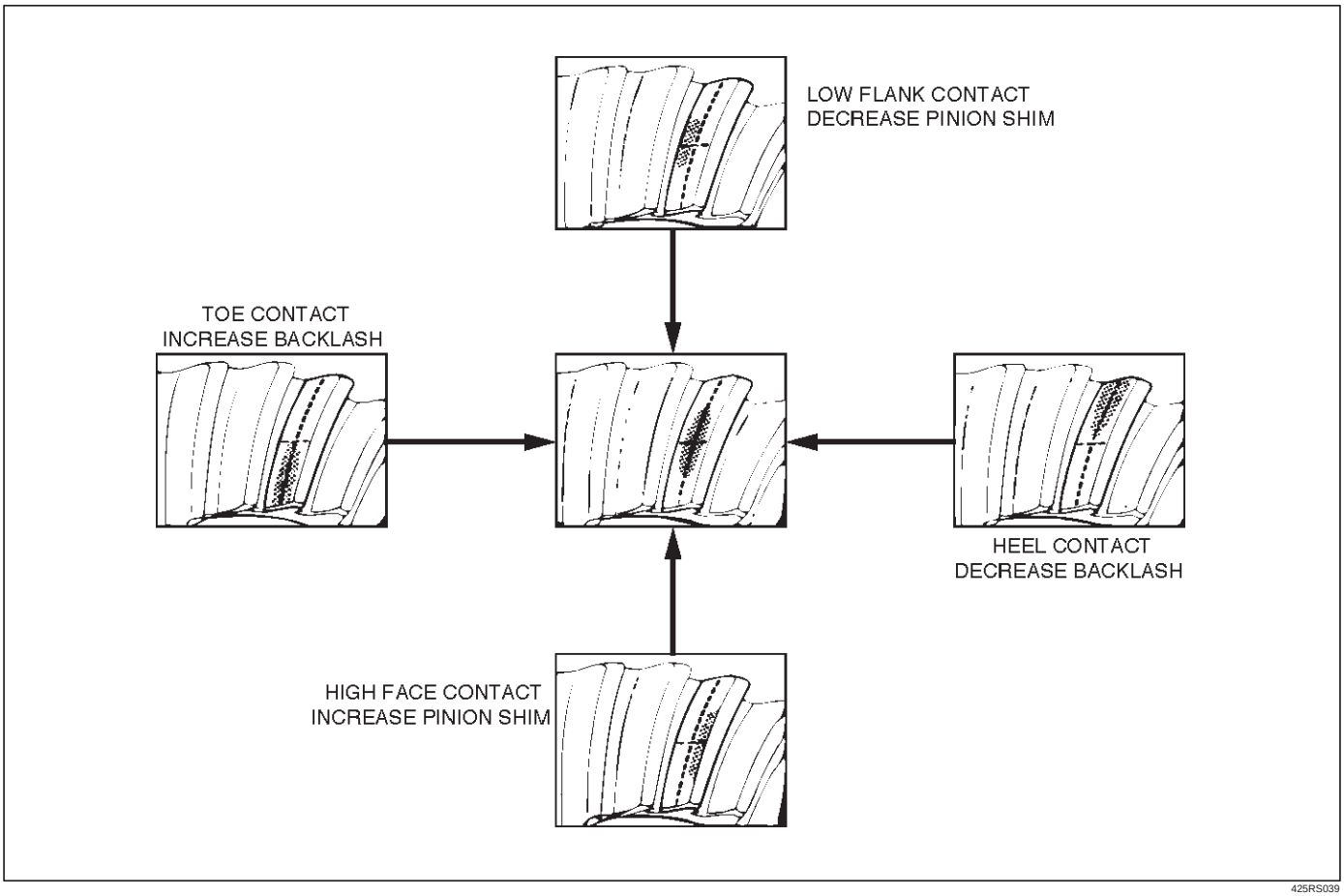
LOW FLANK CONTACT
DECREASE PINION SHIM
TOE CONTACT
INCREASE BACKLASH
HEEL CONTACT
DECREASE BACKLASH
HIGH FACE CONTACT
INCREASE PINION SHIM

425RS039

Differential Cage Assembly

Disassembled View

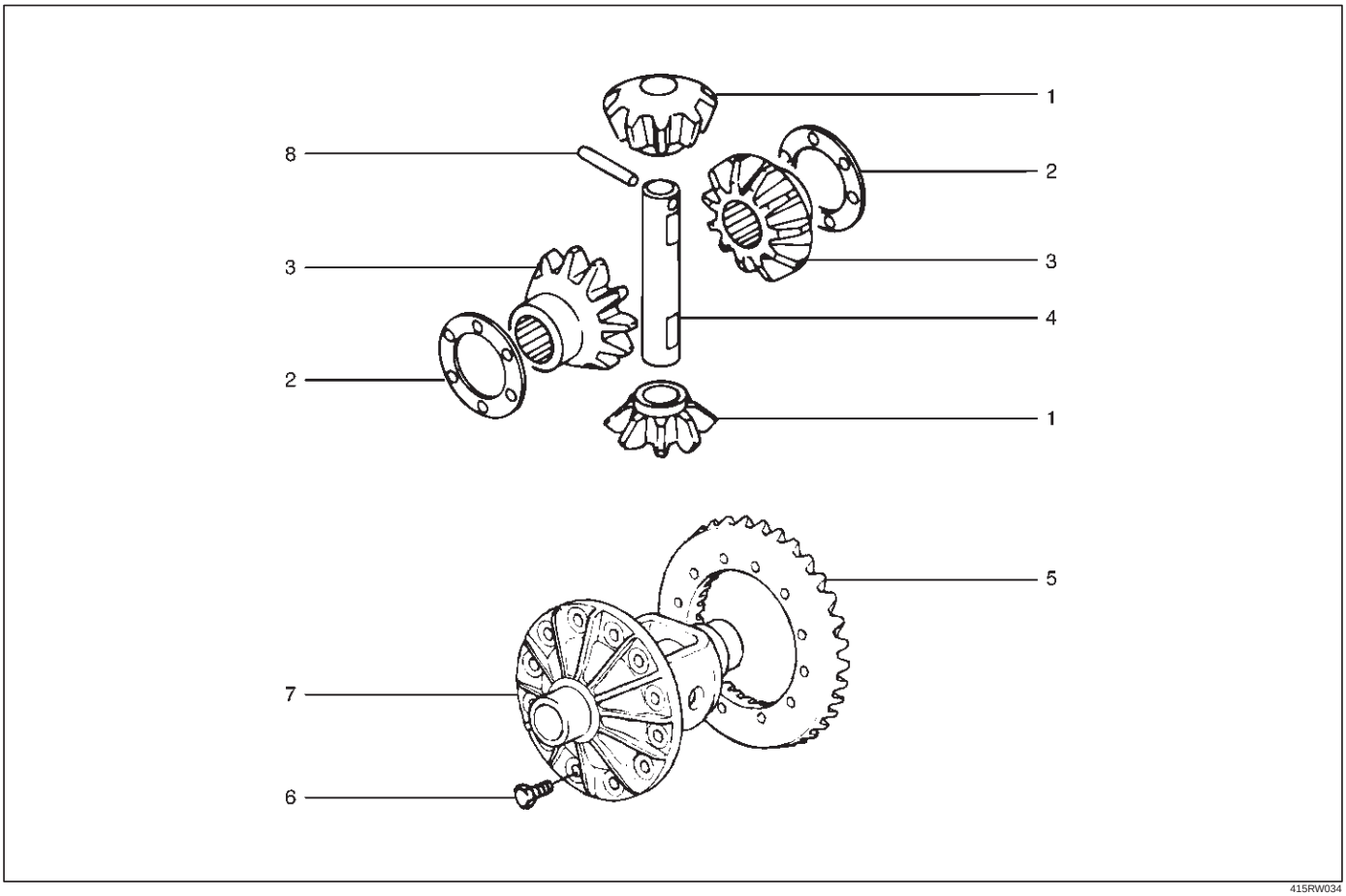

415RW034

Legend

(1) Pinion Gear
(2) Thrust Washer
(3) Side Gear
(4) Cross Pin
(5) Ring Gear
(6) Bolt
(7) Differential Cage
(8) Lock Pin

Disassembly

1. Remove bolt.
2. Remove ring gear.
3. Remove lock pin, break staking on the lock pin, using a 5 mm (0.20 in) diameter drill.

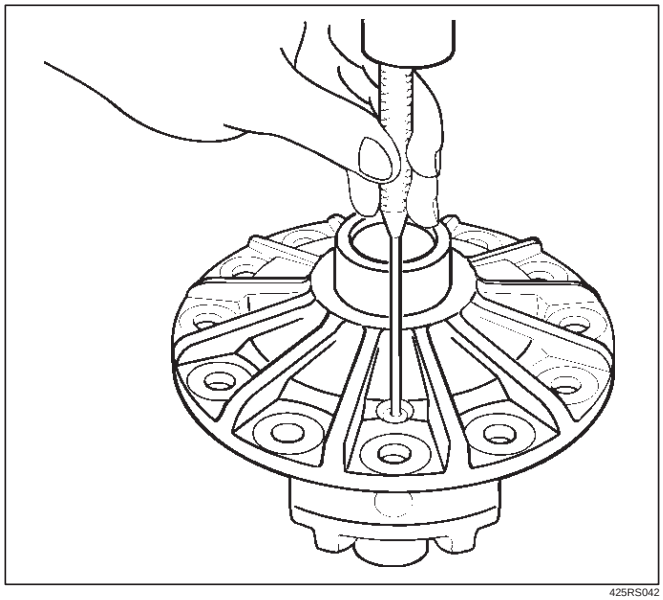

425RS042

4. Remove the cross pin, using a soft metal rod and a hammer.

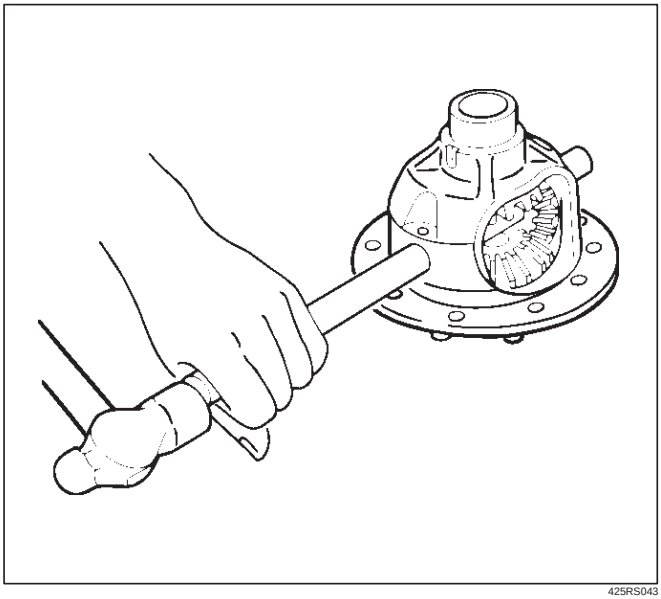

425RS043

5. Remove pinion gear.
6. Remove side gear.
7. Remove thrust washer.

Inspection and Repair

Make necessary correction or parts replacement if wear, damage, corrosion or any other abnormal conditions are found through inspection.
Check the following parts:

1. Ring gear, pinion gear
2. Bearing
3. Side gear, pinion gear, cross pin
4. Differential cage, carrier
5. Thrust washer
6. Oil seal

Ring gear replacement:

1. The ring gear should always be replaced with the drive pinion as a set.
2. Clean the ring gear threaded holes to remove the locking agent.
3. When installing the ring gear, apply LOCTITE 271 or equivalent to all the threaded area and half of the unthreaded area of the bolt.
4. Discard used bolts and install new ones.

Torque: 108 N·m (11.0kg·m/80 lb ft)

5. Tighten the fixing bolts in a diagonal sequence as illustrated.

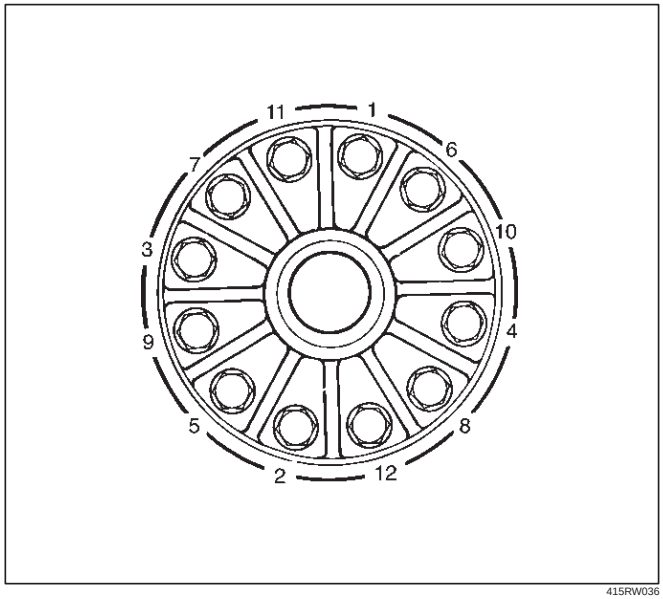

415RW036

Clearance between the differential pinion and the cross pin measurement:

Standard: 0.06 – 0.12 mm (0.002–0.005 in)

Limit: 0.2 mm (0.008 in)

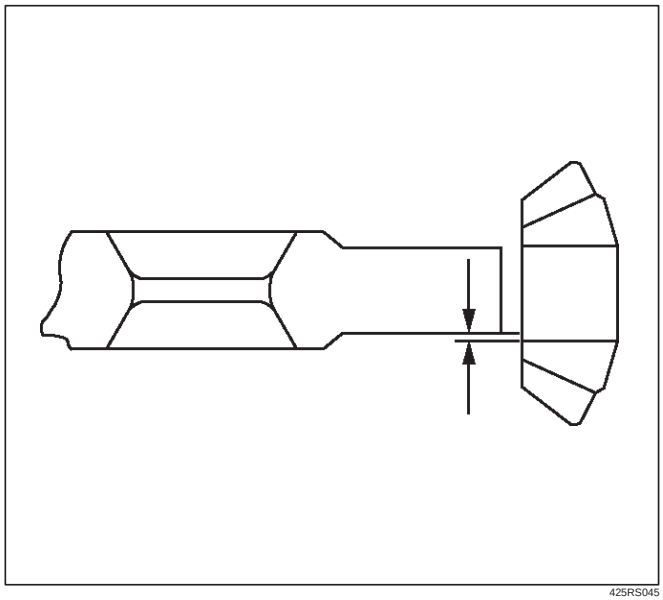

425RS045

Clearance between the side gear and the differential box:

Standard: 0.05–0.12 mm (0.002–0.005 in)

Limit: 0.15 mm(0.006 in)

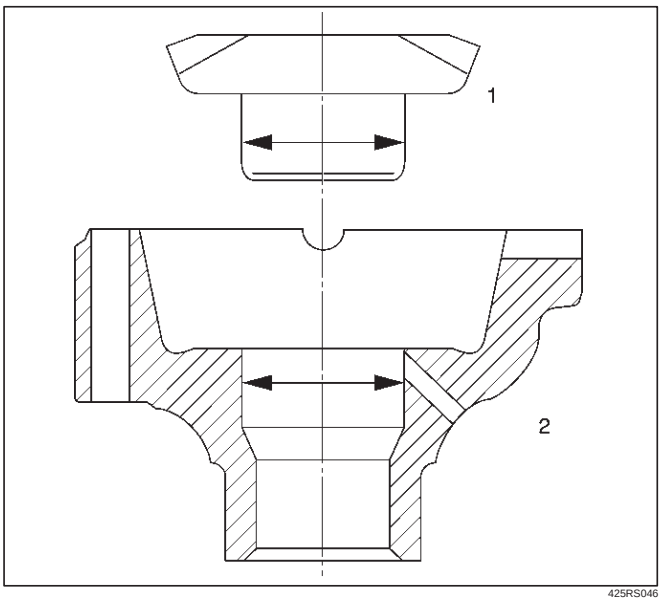

425RS046

Legend

(1) Side Gear
(2) Differential Box

Play in splines between the side gear and the axle shaft:

Standard: 0.07–0.38 mm(0.003 –0.014 in)

Limit:0.5m (0.02 in)

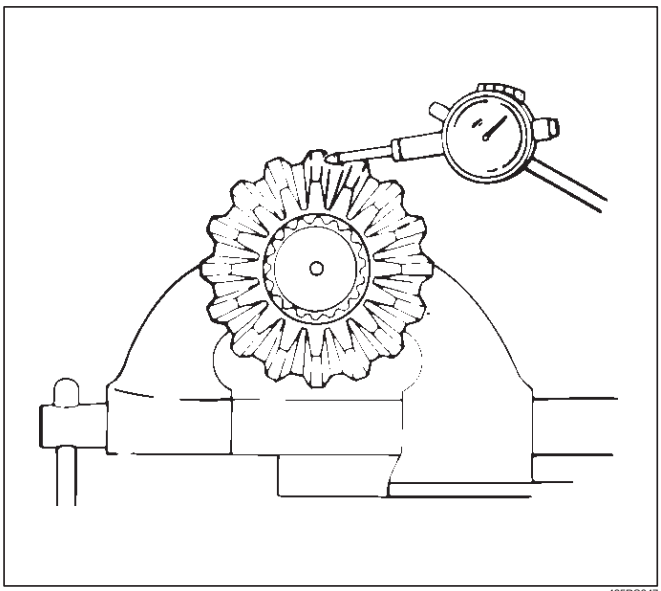

425RS047

Reassembly

1. Install thrust washer.
2. Install side gear.
3. Install the pinion gear by engaging it with the side gears while turning both pinion gears simultaneously in the same direction.

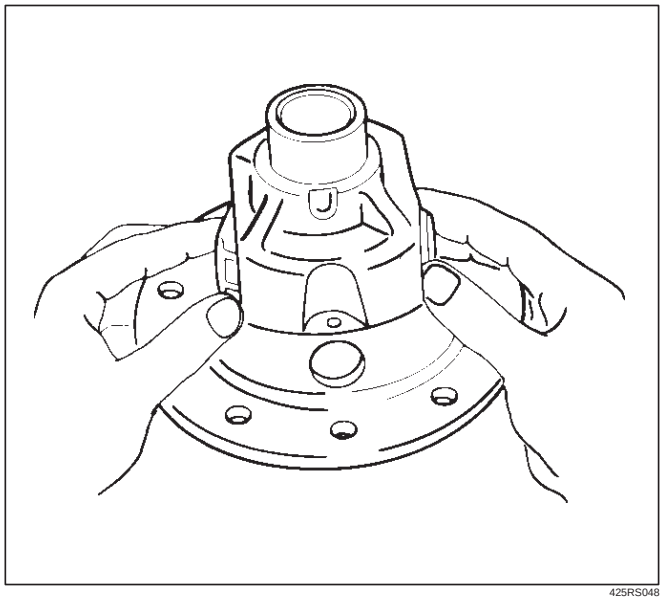

425RS048

4. Install cross pin.
   1. Be sure to install the cross pin so that it is in alignment with the lock pin hole in the differential cage.

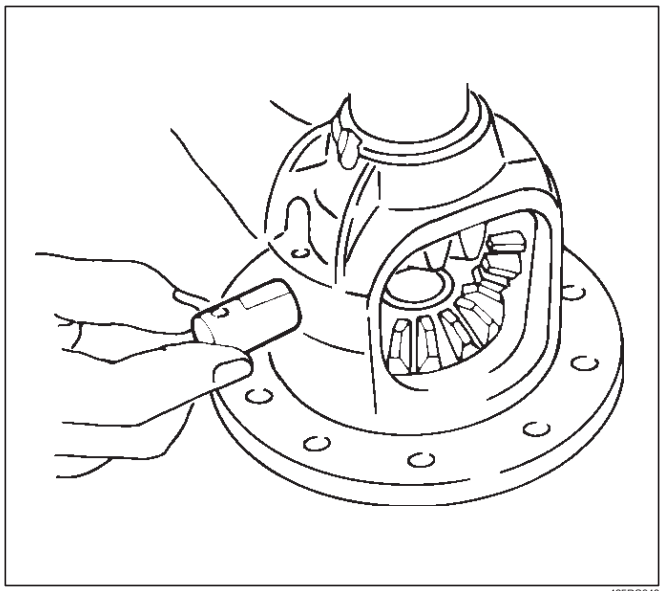

425RS049

   2. Adjust the backlash between the side gear and the pinion gear.

Backlash:0.13 – 0.18 mm (0.005– 0.007 in)

Thickness of thrust washers available:

0.80 mm, 0.90 mm, 1.00 mm 1.10 mm, 1.20 mm, 1.30 mm (0.031 in, 0.035 in, 0.039 in,0.043 in, 0.047 in, 0.051 in)

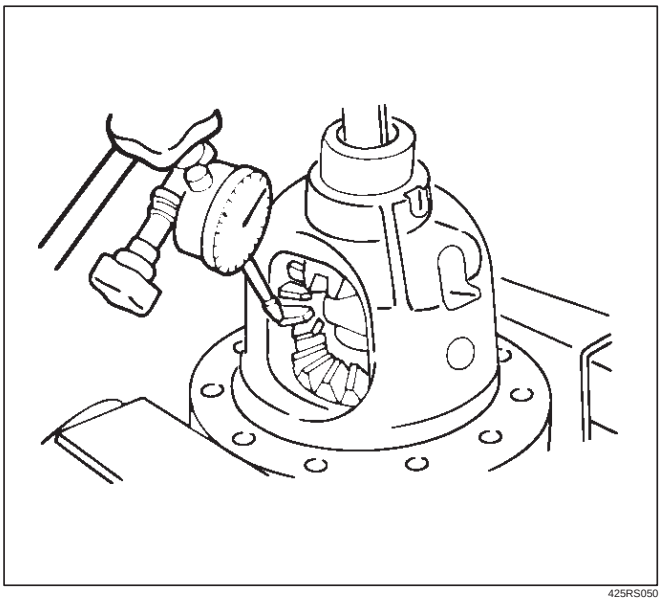

425RS050

5. Install lock pin. After lock pin installation, stake the cage to secure the lock pin.

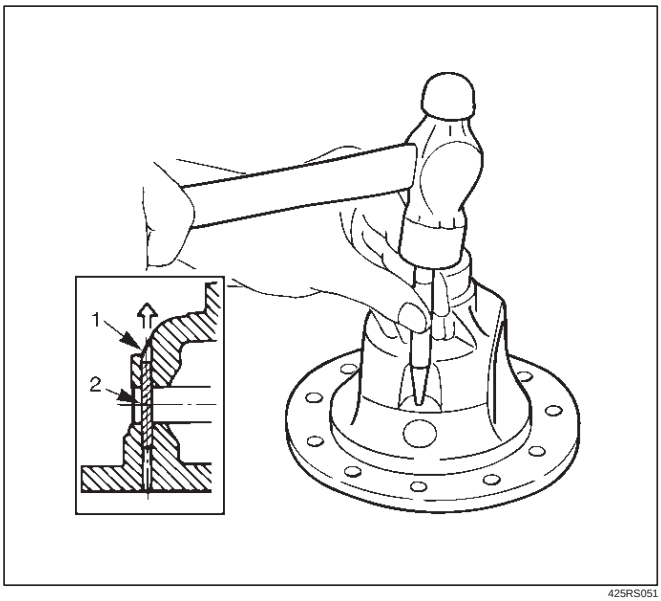

425RS051

Legend

(1) Staked Portion
(2) Lock Pin

6. Clean the ring gear threaded holes to remove the locking agent. When installing the ring gear, apply LOCTITE 271 or equivalent to all the threaded area and half of the unthreaded area of the bolt.

7. Tighten the bolts in diagonal sequence as illustrated.

Torque: 108 N·m (11.0kg·m/80 lb ft)

NOTE: Discard used bolts and install new ones.

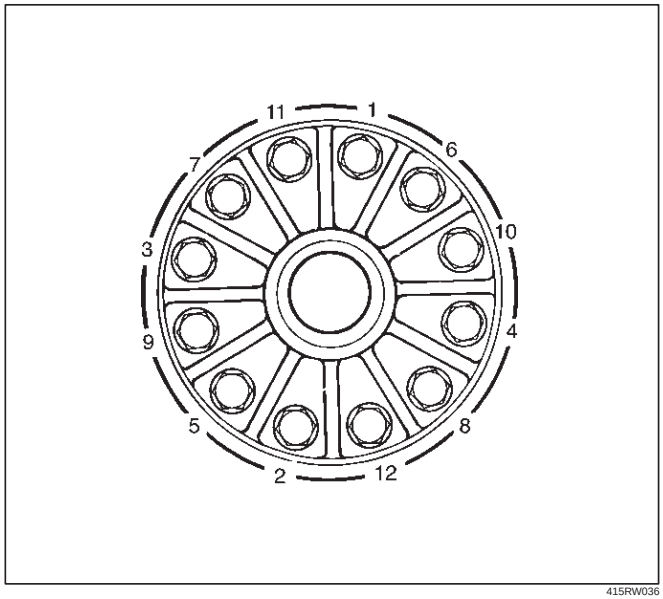

415RW036

Limited Slip Differential

Disassembled View

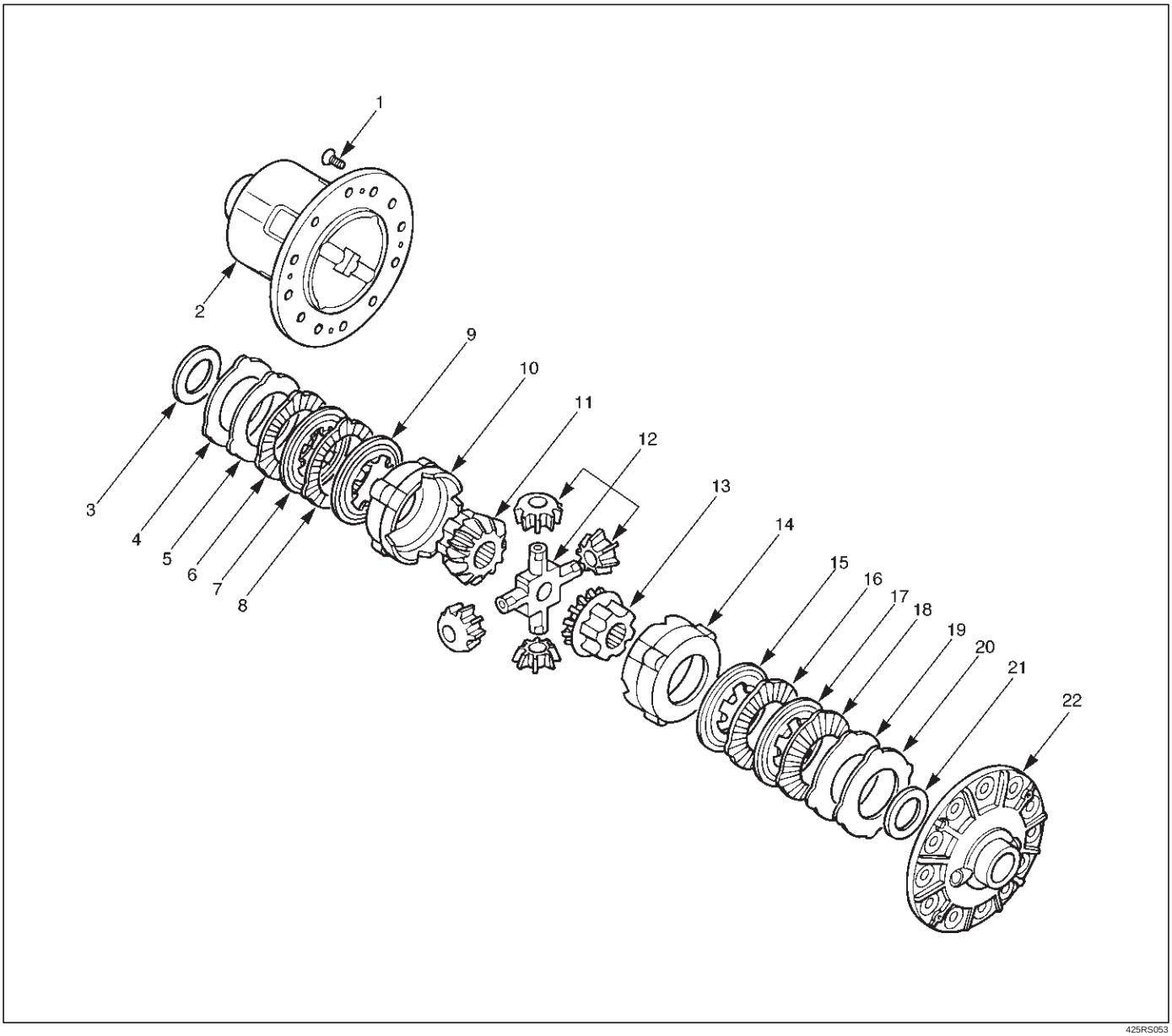

425RS053

Legend

(1) Screw
(2) Differential cage A
(3) Thrust washer
(4) Spring disc
(5) Spring disc
(6) Friction plate
(7) Friction disc
(8) Friction plate
(9) Friction disc
(10) Pressure ring
(11) Side gear
(12) Pinion and pinion shaft
(13) Side gear
(14) Pressure ring
(15) Friction disc
(16) Friction plate
(17) Friction disc
(18) Friction plate
(19) Spring disc
(20) Spring disc
(21) Thrust washer
(22) Differential cage B

Disassembly

1. Using special tool, 5–8840–2381–0, grip it with a vice, and set the differential.

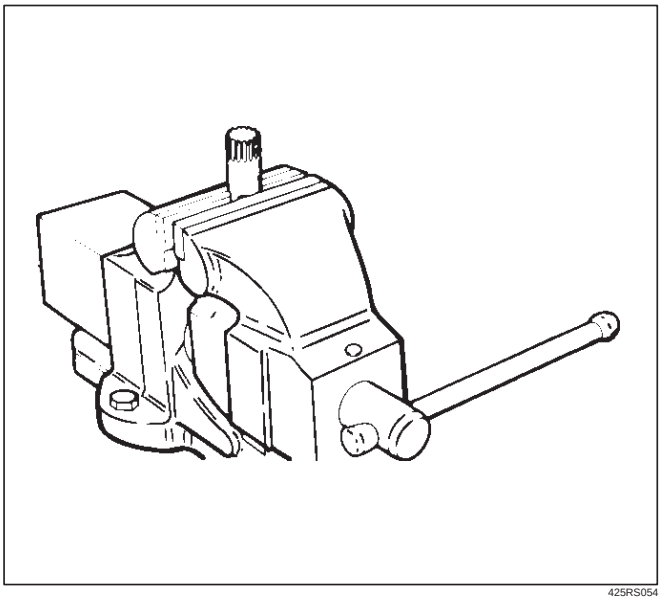

425RS054

2. Gradually and evenly loosen the 4 fixing screws of the differential cages A and B.

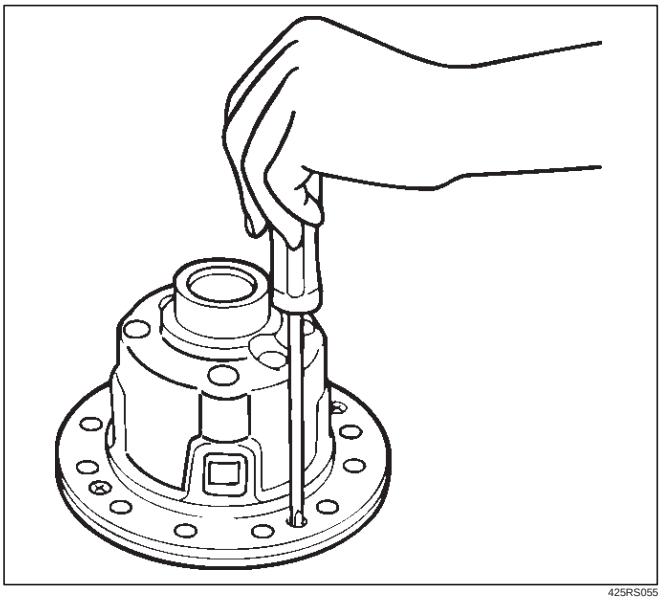

425RS055

3. Remove Differential cage A.
4. Remove Thrust washer.
5. Remove Spring disc.

NOTE: When removing the spring disc, friction disc, and friction plate, place them in order for clear distinction of left and right use.

6. Remove Spring disc.
7. Remove Friction plate.
8. Remove Friction disc.
9. Remove Friction plate.
10. Remove Friction disc.
11. Remove Pressure ring.
12. Remove Side gear.
13. Remove Pinion and pinion shaft.
14. Remove Side gear.
15. Remove Pressure ring.
16. Remove Friction disc.
17. Remove Friction plate.
18. Remove Friction disc.
19. Remove Friciton plate.
20. Remove Spring disc.
21. Remove Spring disc.
22. Remove Thrust washer.
23. Remove Differential cage B.

Inspection and Repair

Make necessary correction or parts replacement if wear, damage, corrosion or any other abnormal condition is found through inspection.

Visual check

Check the following parts for wear, damage, noise or any other abnormal conditions.

- **Friction disc, friction plate and spring disc**

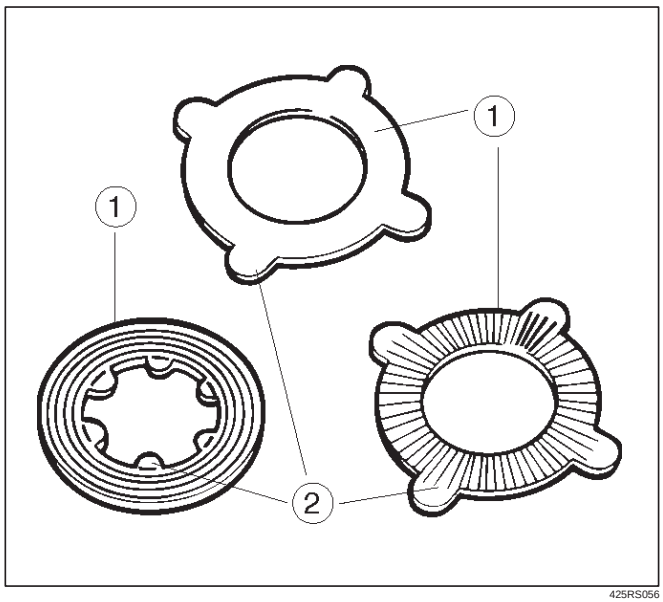

425RS056

Legend

(1) Sliding surfaces
(2) Projections

- **Pressure ring**

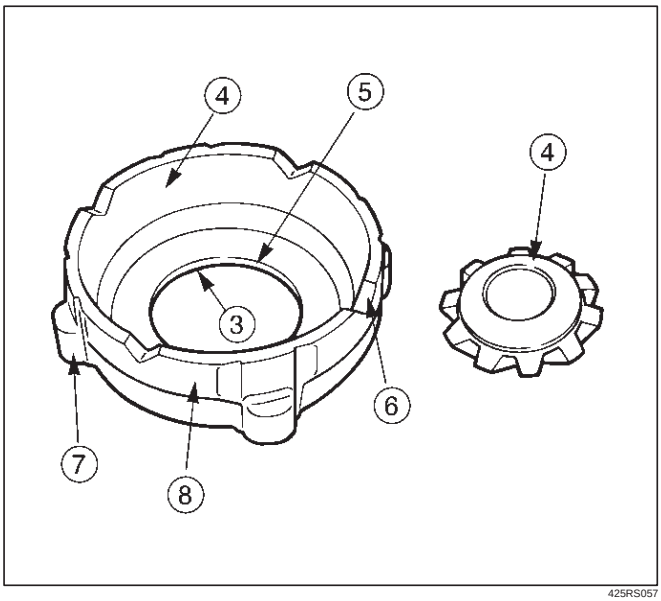

425RS057

Legend

(3) Sliding surface with the friction disc. When nicks or scratches are found, polish with an oil stone and repair on a level block using a compound.
(4) Sliding spherical surface with the pinion gear.
(5) Sliding surface with the side gear.
(6) V–shaped groove of the pressure ring and V –shaped section of the pinion shaft.
(7) Fitting section with the case.
(8) Face contacting the inner surface of the differential case. Repair burrs and nicks using an oil stone.

- **Thrust washer**

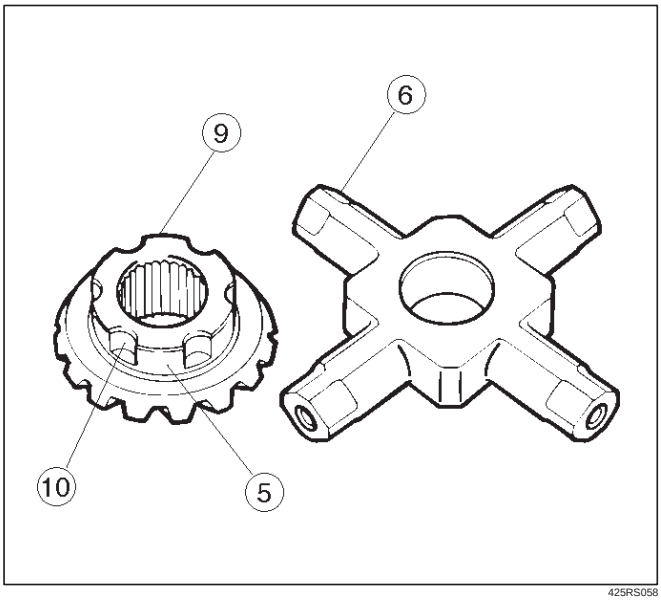

425RS058

Legend

(9) Sliding surface with the side gear or case.
(10) Peripheral groove of the side gear.
Repair light nicks and burrs using an oil stone.

- **Case**

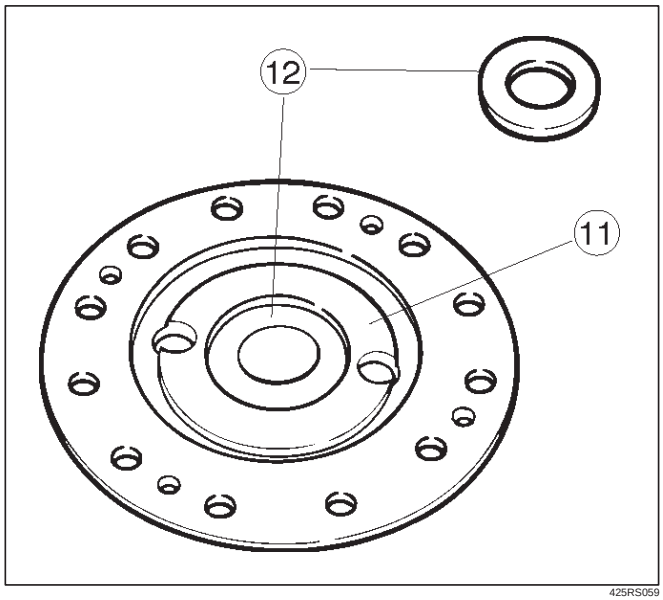

425RS059

Legend

(11) Contact surface with the spring disc.
(12) Inner groove of the differential cage B.
Repair light nicks and burrs using an oil stone.

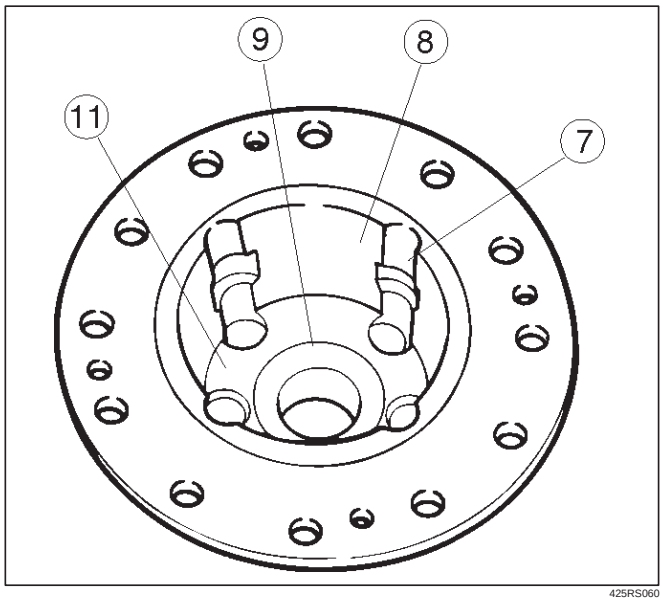

425RS060

Legend

(7) Fitting section with the case.
(8) Face contacting the inner surface of the differential case.
Repair burrs and nicks using an oil stone.
(9) Sliding surface with the side gear or case.
(11) Contact surface with spring disc.

Measure the Deformation of the friction disc & plate.

Limit: 0.08 mm (0.003 in)

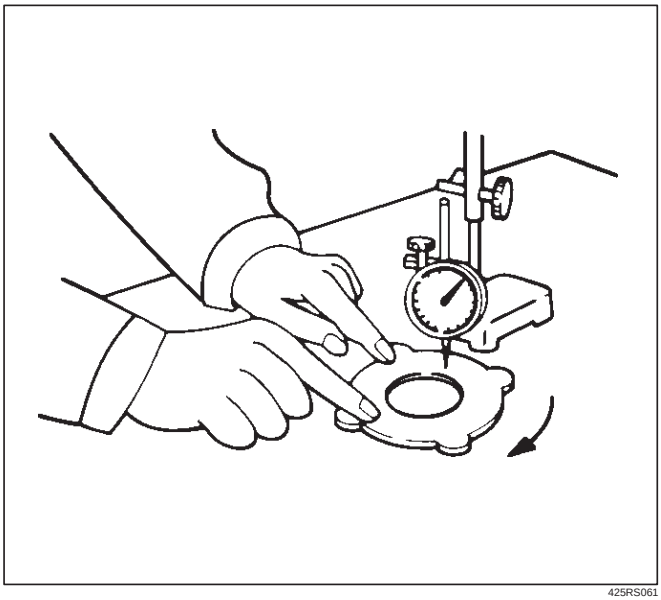

425RS061

Measure the wear of the friction plate & disc

Limit(A–B): 0.1 mm (0.004 in)

Remarks:
A=Inner or outer projections
B=Sliding surface subjected to abrasion

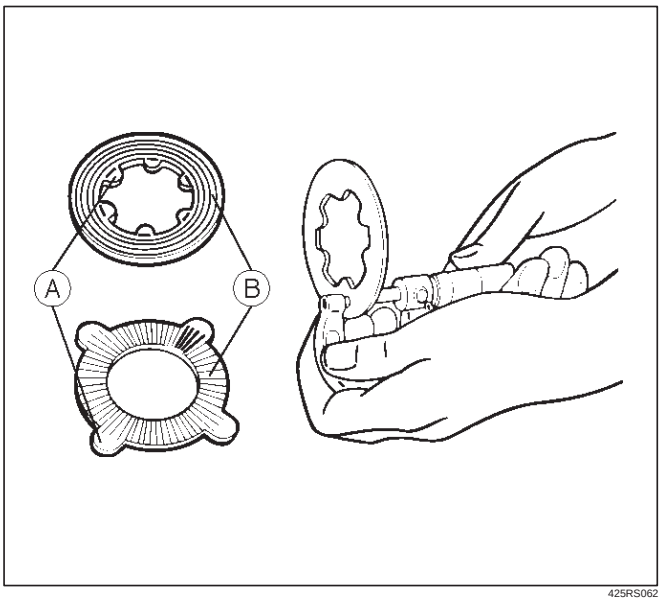

425RS062

Measure the wear of the thrust washer

Limit: 1.3 mm (0.05 in)

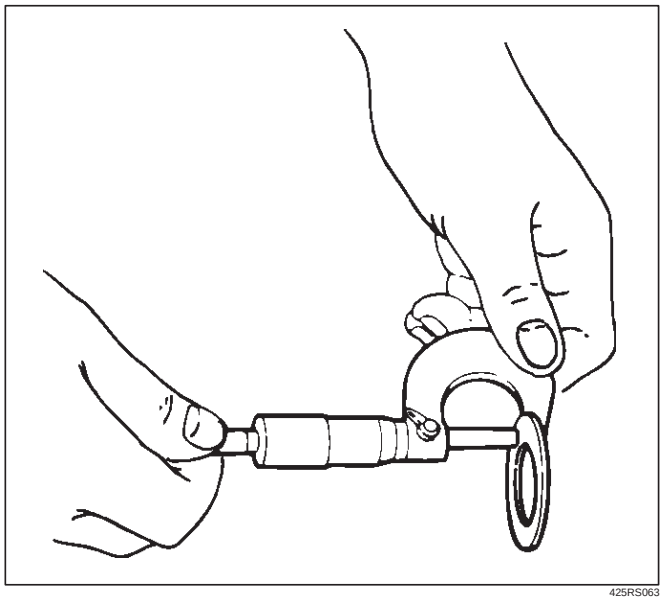

425RS063

Reassembly

Adjust the clearance between the friction disc and plate.

1. Measuring the depth of the differential cage.

Standard (A–B): 80.58 mm (3.17 in)
(C): 10.58 mm (0.41 in)

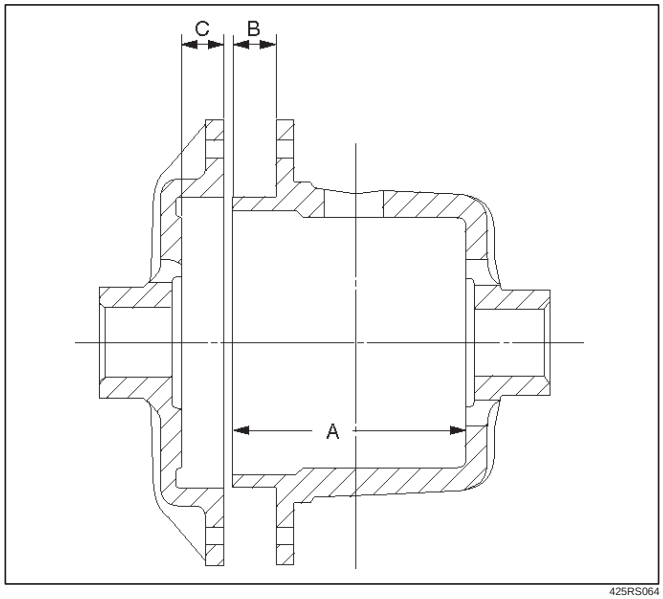

425RS064

2. Measuring the overall length of the pressurering, friction disc and friction plate.
   - Mount the pinion shaft in the pressurering and then install the friction disc & plate.

- Measure the length between the plates over the V–groove. (D)

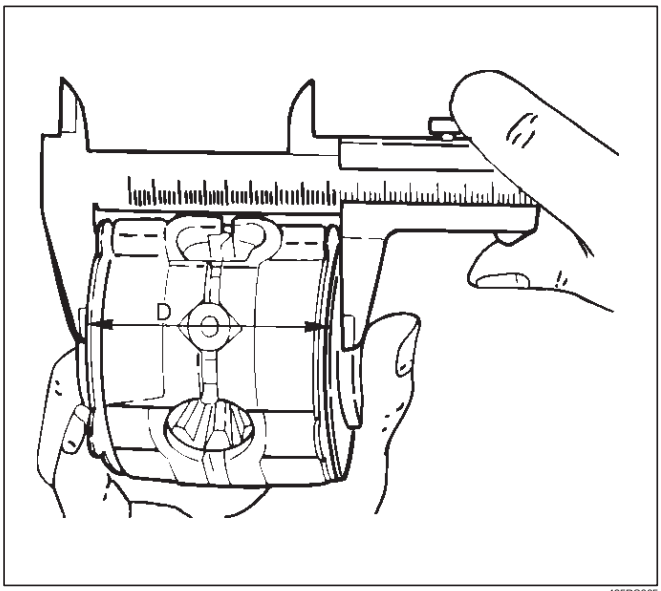

425RS065

3. After measuring dimensions A,B,C and D, make adjustment in the following manner:
   - Measure the thickness (E) of the spring disc.
     1.75mm (0.069in) ×4 discs
4. Select the friction disc & plate so as to satisfy the following equation:
   {(A-B)+C}-(D+E)=0.06-0.20mm (0.002-0.008in)
   Also, the total size difference of the friction disc & plate and spring disc should be 0.05mm (0.02in) or less.

Thickness :1.75–1.85mm(0.069–0.073 in)

Backlash adjustment of the side gear in the direction of the shaft

1. Measuring the depth of the differential cage.

(F–B): 82.03 mm (3.23 in)

(G): 12.03 mm (0.47 in)

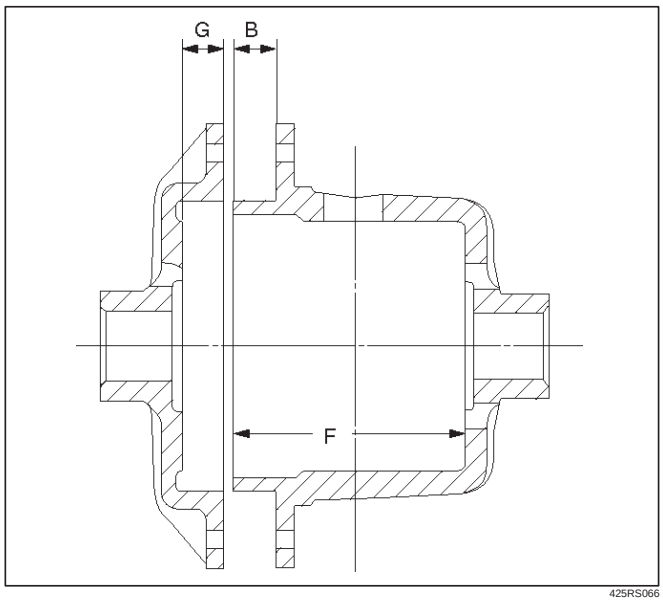

425RS066

2. Measuring the dimension between the thrust washers at both ends.
   - Assemble the side gear, pinion, pinion shaft, pressure ring and thrust washer, and pressing the pressure ring to–the pinion shaft in the direction of the shaft to make the clearance 0.
   - Have the side gear contact to the pinion to make the backlash 0.
   - Measure the dimension (H) between thrust washers at both ends.

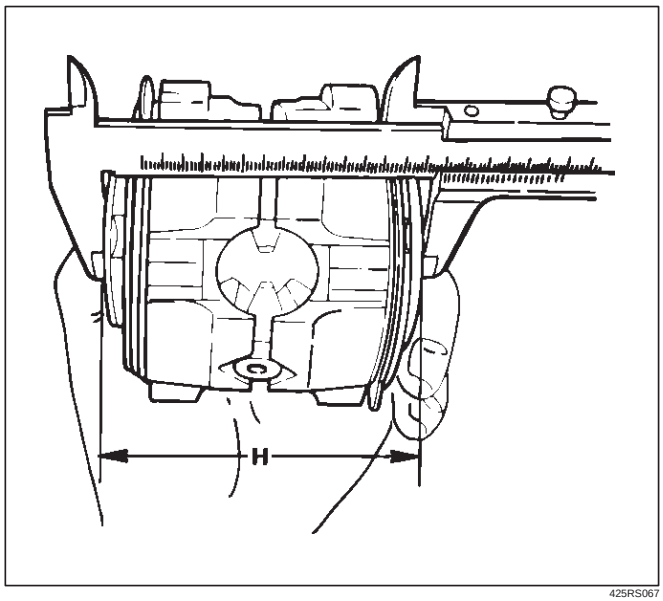

425RS067

3. After measuring dimensions of each of the above sections, proceed with the adjustment in the following manner:
   Adjust the clearance to satisfy the equation below.
   {(F – B) + G – H}=0.05 – 0.20 mm
   Also, select the thrust washers so that the dimensional difference between the back surfaces of the left and right pressure rings to the thrust washers is 0.05mm or less.

Thickness : 1.5mm (0.059 in)
1.6 mm(0.063 in)
1.7 mm(0.067 in)

NOTE: When assembling the parts, apply recommended gear oil sufficiently to each of the parts, especially, to the contact surfaces and sliding surfaces.

1. Install Differential cage B.
2. Install Thrust washer.
3. Install Spring disc.
   - When assembling the spring disc, make sure the mounting direction is correct as shown in figure.

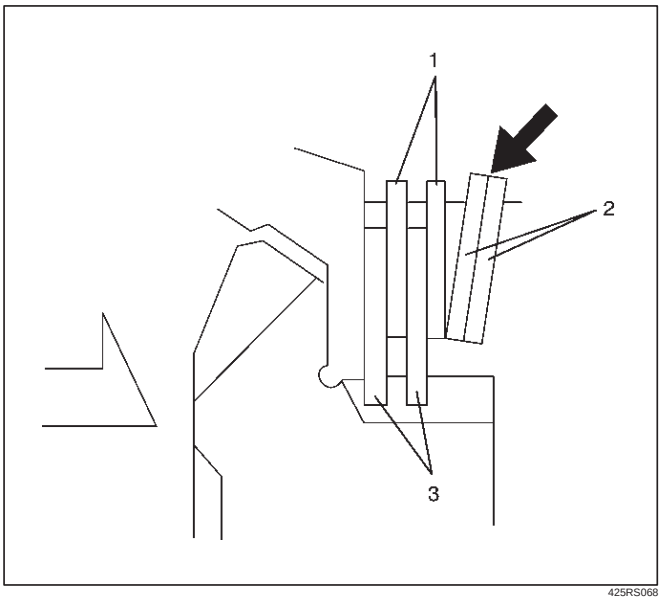

425RS068

Legend
(1) Friction Plate
(2) Spring Disc
(3) Friction Disc

4. Inatall Spring disc.
5. Inatall Friction plate.
6. Inatall Friction disc.
7. Inatall Friction plate.
8. Inatall Friction disc.
9. Inatall Pressure ring.
10. Inatall Side gear.
11. Inatall Pinion and pinion shaft.
12. Inatall Side gear.
13. Inatall Pressure ring.
14. Inatall Friction disc.
15. Inatall Friction plate.
16. Inatall Friction disc.
17. Inatall Friction plate.
18. Inatall Spring disc.
    - When assembling the spring disc, make sure the mounting direction is correct.
19. Inatall Spring disc.
20. Inatall Thrust washer.
21. Inatall Differential cage A.
22. Inatall Screw.
    - Matching the guide marks of the differential cages A and B, tighten the screws evenly in the diagonal order.

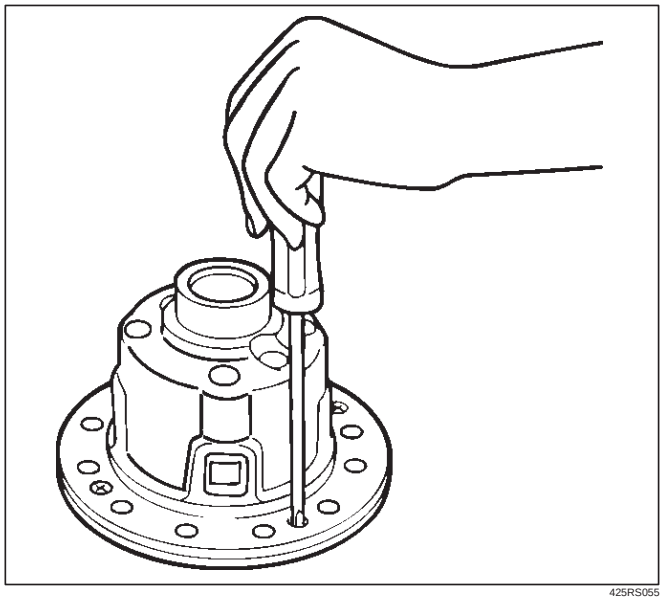
425RS055

23. Check the operation.
   - Measure the starting torque using the side gear holder.

   Starting torque:

   64 – 98 N·m (6.5 – 7.3 kg·m/ 47 – 72lb ft)

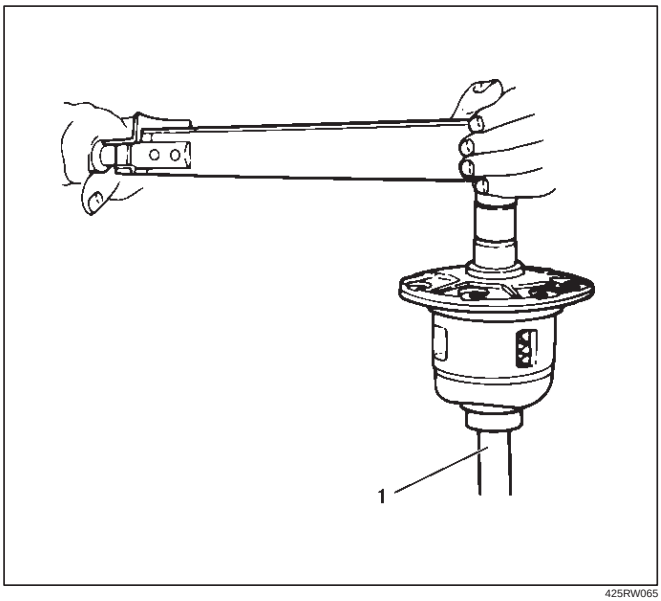

425RW065

Legend

(1) Side Gear Holder : 5–8840–2381–0

Main Data and Specifications

General Specifications

Rear axle	
Type	Banjo, Semi–floating
Rear axle Size	220mm(8.66in)
Gear type	Hypoid
Gear ratio (to 1)	4.555(6VD1,4JG2–TC) 4.777(4JG2)
Differential type	Two pinion
Lubricant Grade	GL–5: (Standard differential)
	GL–5, LSD: (Limited slip differential)
Locking Differential Lubricant	80W90 GL–5 (USE Limited Slip Differential Gear Lubricant or Friction Modifier Organic Additive)
Capacity	1.8liter(1.6 Imp qt/1.9 US qt)

Torque Specifications

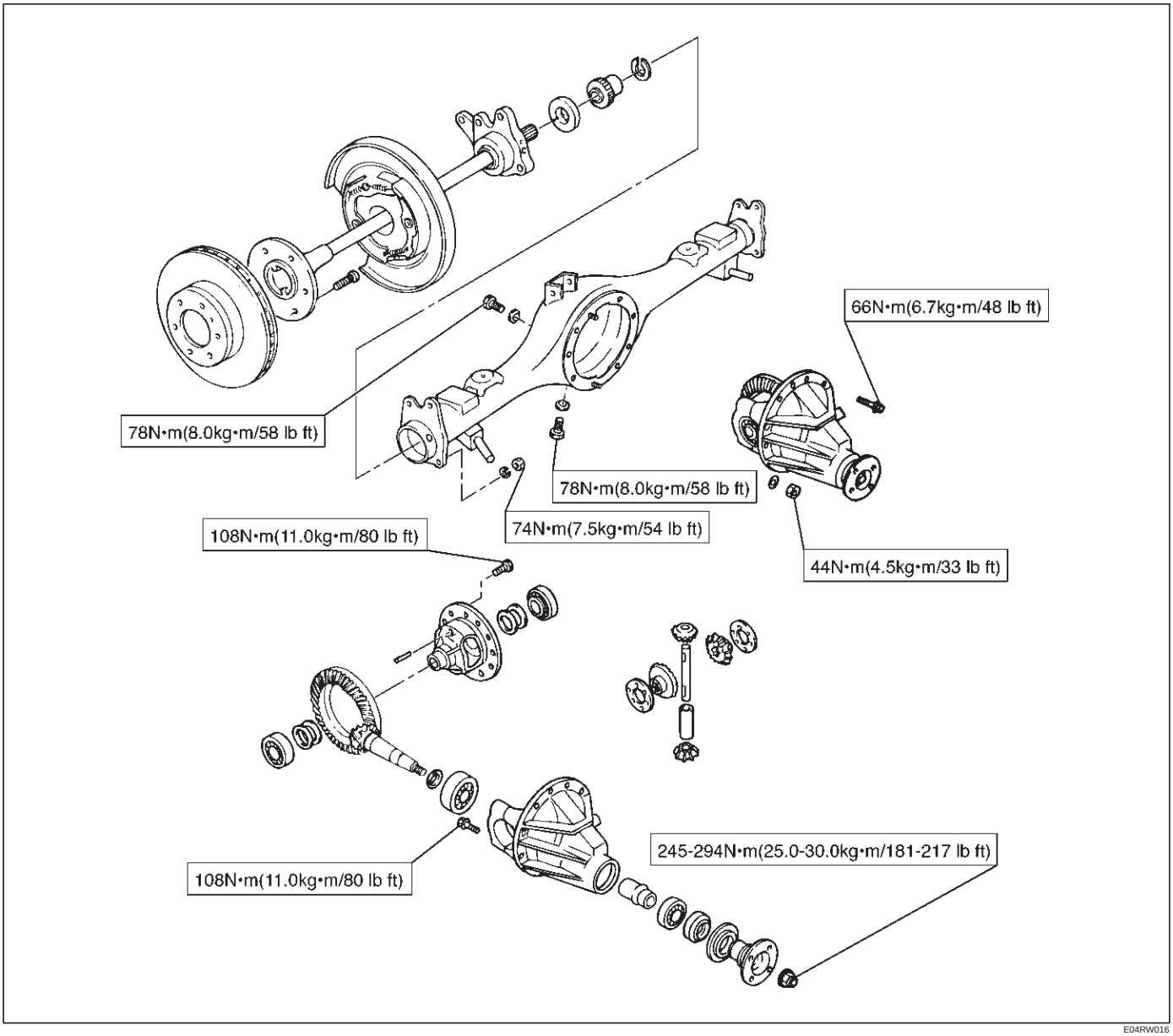

E04RW016

Special Tools

ILLUSTRATION	TOOL NO. TOOL NAME
	5–8840–2157–0 **(J–37221)** Holder; Pinion flange
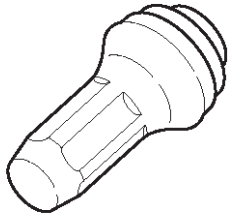	**5–8840–2294–0** **(J–24250)** Installer; Oil seal
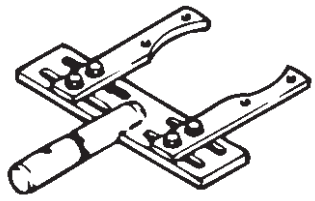	**5–8840–0275–0** **(J–37264)** Differential holding fixture (Use with 5–8840–0003–0)
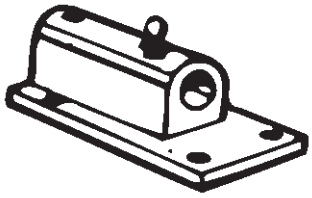	**5–8840–0003–0** **(J–3289–20)** Holding fixture base
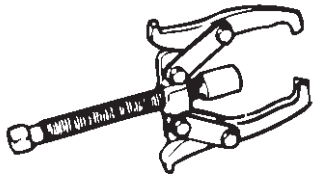	**5–8840–0013–0** **5–8840–0014–0** **(J–22888)** Puller; Side bearing
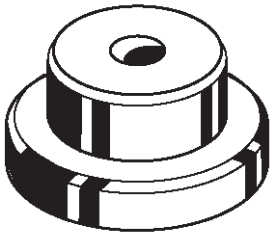	**5–8840–2196–0** **(J–8107–2)** Adapter; Side bearing plug

ILLUSTRATION	TOOL NO. TOOL NAME
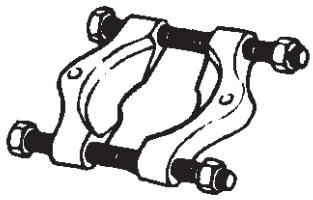	**5–8840–2197–0** **(J–22912–01)** Separator
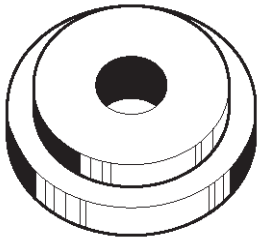	**5–8840–2164–0** **(J–24256)** Installer; Outer bearing outer race
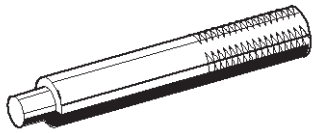	**5–8840–0007–0** **(J–8092)** Driver handle
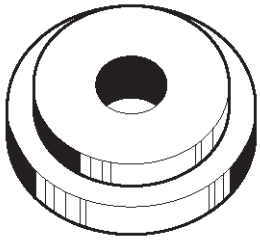	**5–8840–2163–0** **(J–24252)** Installer; Inner bearing outer race
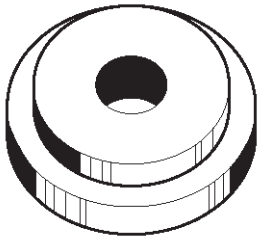	**5–8840–2085–0** **(J–21777–42)** Front Pilot
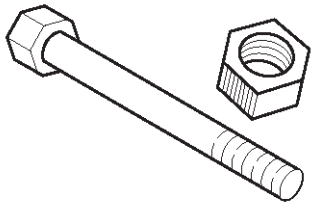	**5–8840–0127–0** **(J–23597–9)** Nut and bolt

ILLUSTRATION	**TOOL NO.** TOOL NAME
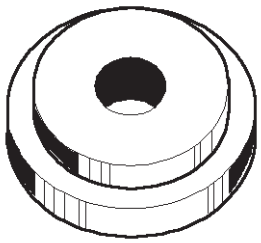 901RS243	**5–8840–2166–0** **(J–23597–7)** Gauge plate
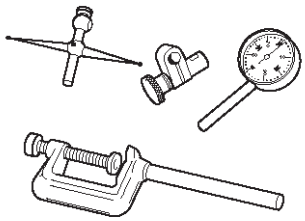 901RS224	**5–8840–0126–0** **(J–8001)** Dial indicator
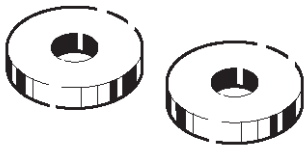 901RS244	**5–8840–2167–0** **(J–23597–8)** Disc
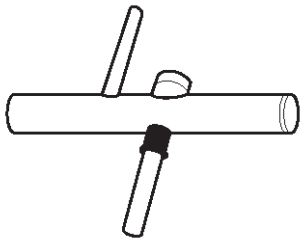 901RS226	**5–8840–0128–0** **(J–23597–1)** Arbor
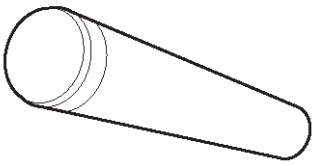 901RS227	**9–8522–1165–0** **(J–6133–01)** Installer; Pinion bearing
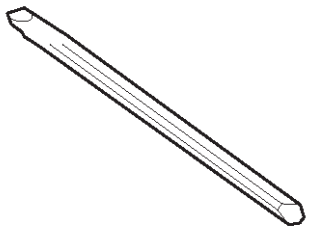 901RS228	**5–8840–2293–0** **(J–39209)** Punch; End nut lock

ILLUSTRATION	**TOOL NO.** TOOL NAME
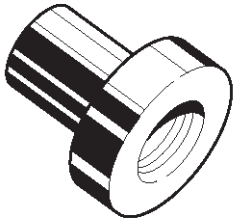 901RS245	**5–8840–2162–0** **(J–24244)** Installer; Side bearing
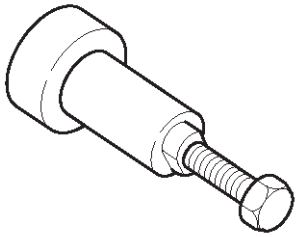 901RS290	**5–8840–2323–0** **(J–39602)** Remover; Outer bearing
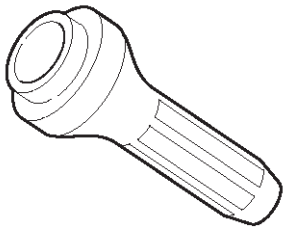 901RS211	**5–8840–2165–0** **(J–37263)** Installer; Pinion oil seal
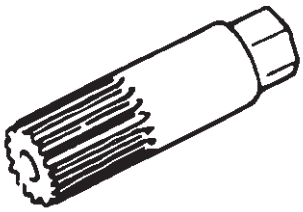 901RW250	**5–8840–2381–0** **(J–41033)** Holder; Side gear
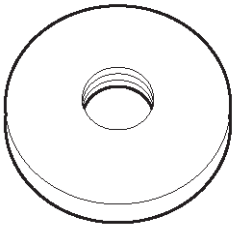 901RS222	**5–8840–0129–0** **(J–23597–12)** Rear pilot

MEMO

DRIVELINE/AXLE

DIFFERENTIAL (REAR 244mm)

CONTENTS

Service Precaution 4A2B–1
General Description 4A2B–2
Diagnosis 4A2B–3
Axle Housing 4A2B–4
Axle Housing and Associated Parts 4A2B–4
Removal 4A2B–4
Oil Seal Replacement 4A2B–5
Installation 4A2B–5
Pinion Oil Seal 4A2B–6
Pinion Oil Seal and Associated Parts 4A2B–6
Removal 4A2B–6
Inspection and Repair 4A2B–7
Installation 4A2B–7
Differential Assembly 4A2B–8
Differential Assembly and Associated Parts 4A2B–8
Removal 4A2B–8
Installation 4A2B–9
Disassembled View 4A2B–10
Disassembly 4A2B–11
Reassembly 4A2B–13
Differential Cage Assembly 4A2B–20
Disassembled View 4A2B–20
Disassembly 4A2B–21
Inspection and Repair 4A2B–21
Reassembly 4A2B–21
Locking Differential Assembly 4A2B–23
Disassembled View 4A2B–23
Disassembly 4A2B–23
Inspection and Repair 4A2B–25
Reassembly 4A2B–25
Main Data and Specifications 4A2B–27
Special Tools 4A2B–29

Service Precaution

WARNING: IF SO EQUIPPED WITH A SUPPLEMENTAL RESTRAINT SYSTEM (SRS), REFER TO THE SRS COMPONENT AND WIRING LOCATION VIEW IN ORDER TO DETERMINE WHETHER YOU ARE PERFORMING SERVICE ON OR NEAR THE SRS COMPONENTS OR THE SRS WIRING. WHEN YOU ARE REFORMING SERVICE ON OR NEAR THE SRS COMPONENTS OR THE SRS WIRING, REFER TO THE SRS SERVICE INFORMATION. FAILURE TO FOLLOW WARNINGS COULD RESULT IN POSSIBLE AIR BAG DEPLOYMENT, PERSONAL INJURY, OR OTHERWISE UNNEEDED SRS SYSTEM REPAIRS.

CAUTION: Always use the correct fastener in the proper location. When you replace a fastener, use ONLY the exact part number for that application. ISUZU will call out those fasteners that require a replacement after removal. ISUZU will also call out the fasteners that require thread lockers or thread sealant. UNLESS OTHERWISE SPECIFIED , do not use supplemental coatings (Paints, greases, or other corrosion inhibitors) on threaded fasteners or fastener joint interfaces. Generally,such coatings adversely affect the fastener torque and the joint clamping force, and may damage the fastener. When you install fasteners, use the correct tightening sequence and specification. Following these instructions can help you avoid damage to parts and systems.

General Description

The rear axle assembly is of the semi–floating type in which the vehicle weight is carried on the axle housing . The center line of the pinion gear is below the center line of the ring gear (hypoid drive).
All parts necessary to transmit power from the propeller shaft to the rear wheels are enclosed in a banjo type axle housing.
The 9.61 inch ring gear rear axle uses a conventional ring and pinion gear set to transmit the driving force of the engine to the rear wheels. This gear set transfers this driving force at a 90 degree angle from the propeller shaft to the drive shafts.
The axle shafts are supported at the wheel end of the shaft by a roller bearing.
The pinion gear is supported by two tapered roller bearings. The pinion depth is set by a shim pack located between the gear end of the pinion and the roller bearing that is pressed onto the pinion. The pinion bearing preload is set by crushing a collapsible spacer between the bearings in the axle housing.

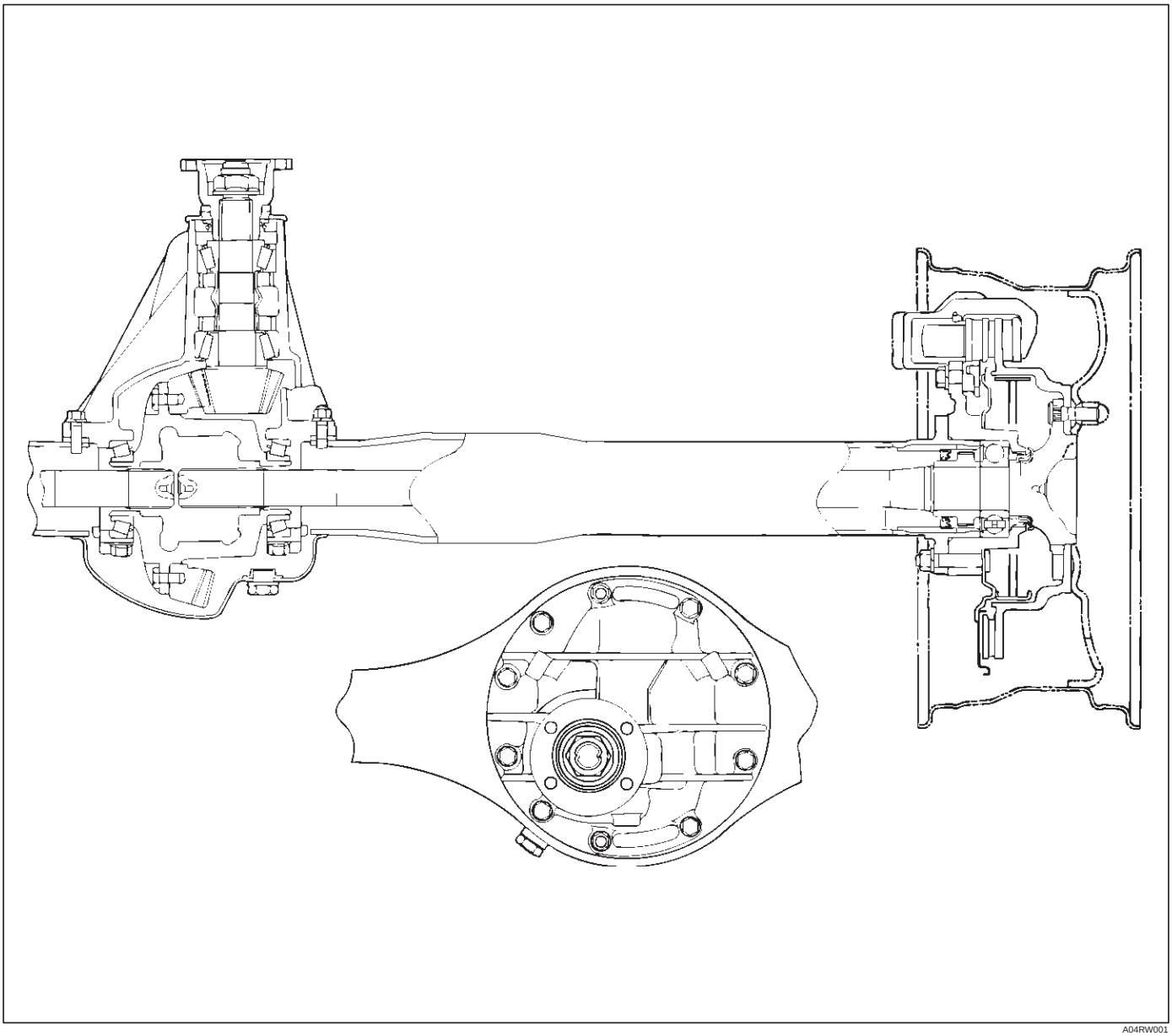

A04RW001

The ring gear is bolted onto the differential cage with 12 bolts.
The differential cage is supported in the axle housing by two tapered roller bearings. The differential and ring gear are located in relationship to the pinion by using selective shims and spacers between the bearing and the axle housing. To move the ring gear, shims are deleted from one side and an equal amount are added to the other side. These shims are also used to preload the bearings which are pressed onto the differential cage. Two bearing caps are used to hold the differential into the rear axle housing.
The differential is used to allow the wheels to turn at different rates of speed while the rear axle continues to transmit the driving force. This prevents tire scuffing when going around corners and prevents premature wear on internal axle parts.
The rear axle is sealed with a pinion seal, a seal at each axle shaft end, and by a liquid gasket between the differential carrier and the axle housing.

Diagnosis

Many noises that seem to come from the rear axle actually originate from other sources such as tires, road surface, wheel bearings, engine, transmission, muffler, or body drumming. Investigate to find the source of the noise before disassembling the rear axle. Rear axles, like any other mechanical device, are not absolutely quiet but should be considered quiet unless some abnormal noise is present.

To make a systematic check for axle noise, observe the following:

1. Select a level asphalt road to reduce tire noise and body drumming.
2. Check rear axle lubricant level to assure correct level, and then drive the vehicle far enough to thoroughly warm up the rear axle lubricant.
3. Note the speed at which noise occurs. Stop the vehicle and put the transmission in neutral. Run the engine speed slowly up and down to determine if the noise is caused by exhaust, muffler noise, or other engine conditions.
4. Tire noise changes with different road surfaces; axle noises do not. Temporarily inflate all tires to 344 kPa (3.5kg/cm^2, 50 psi) (for test purposes only). This will change noise caused by tires but will not affect noise caused by the rear axle.

   Rear axle noise usually stops when coasting at speeds under 48 km/h (30 mph); however, tire noise continues with a lower tone. Rear axle noise usually changes when comparing pull and coast, but tire noise stays about the same.

   Distinguish between tire noise and rear axle noise by noting if the noise changes with various speeds or sudden acceleration and deceleration. Exhaust and axle noise vary under these conditions, while tire noise remains constant and is more pronounced at speeds of 32 to 48 km/h (20 to 30 mph). Further check for tire noise by driving the vehicle over smooth pavements or dirt roads (not gravel) with the tires at normal pressure. If the noise is caused by tires, it will change noticeably with changes in road surface.
5. Loose or rough front wheel bearings will cause noise which may be confused with rear axle noise; however, front wheel bearing noise does not change when comparing drive and coast. Light application of the brake while holding vehicle speed steady will often cause wheel bearing noise to diminish. Front wheel bearings may be checked for noise by jacking up the wheels and spinning them or by shaking the wheels to determine if bearings are loose.
6. Rear suspension rubber bushings and spring insulators dampen out rear axle noise when correctly installed. Check to see that there is no link or rod loosened or metal–to–metal contact.
7. Make sure that there is no metal–to–metal contact between the floor and the frame.

After the noise has been determined to be in the axle, the type of axle noise should be determined, in order to make any necessary repairs.

Gear Noise

Gear noise (whine) is audible from 32 to 89 km/h (20 to 55 mph) under four driving conditions.

1. Driving under acceleration or heavy pull.
2. Driving under load or under constant speed.
3. When using enough throttle to keep the vehicle from driving the engine while the vehicle slows down gradually (engine still pulls slightly).
4. When coasting with the vehicle in gear and the throttle closed. The gear noise is usually more noticeable between 48 and 64 km/h (30 and 40 mph) and 80 and 89 km/h (50 and 55 mph).

Bearing Noise

Bad bearings generally produce a rough growl or grating sound, rather than the whine typical of gear noise. Bearing noise frequently “wow–wows” at bearing rpm, indicating a bad pinion or rear axle side bearing. This noise can be confused with rear wheel bearing noise.

Rear Wheel Bearing Noise

Rear wheel bearing noise continues to be heard while coasting at low speed with transmission in neutral. Noise may diminish by gentle braking. Jack up the rear wheels, spin them by hand and listen for noise at the hubs. Replace any faulty wheel bearings.

Knock At Low Speeds

Low speed knock can be caused by worn universal joints or a side gear hub counter bore in the cage that is worn oversize. Inspect and replace universal joints or cage and side gears as required.

Backlash Clunk

Excessive clunk on acceleration and deceleration can be caused by a worn rear axle pinion shaft, a worn cage, excessive clearance between the axle and the side gear splines, excessive clearance between the side gear hub and the counterbore in the cage, worn pinion and side gear teeth, worn thrust washers, or excessive drive pinion and ring gear backlash. Remove worn parts and replace as required. Select close–fitting parts when possible. Adjust pinion and ring gear backlash.

Axle Housing

Axle Housing and Associated Parts

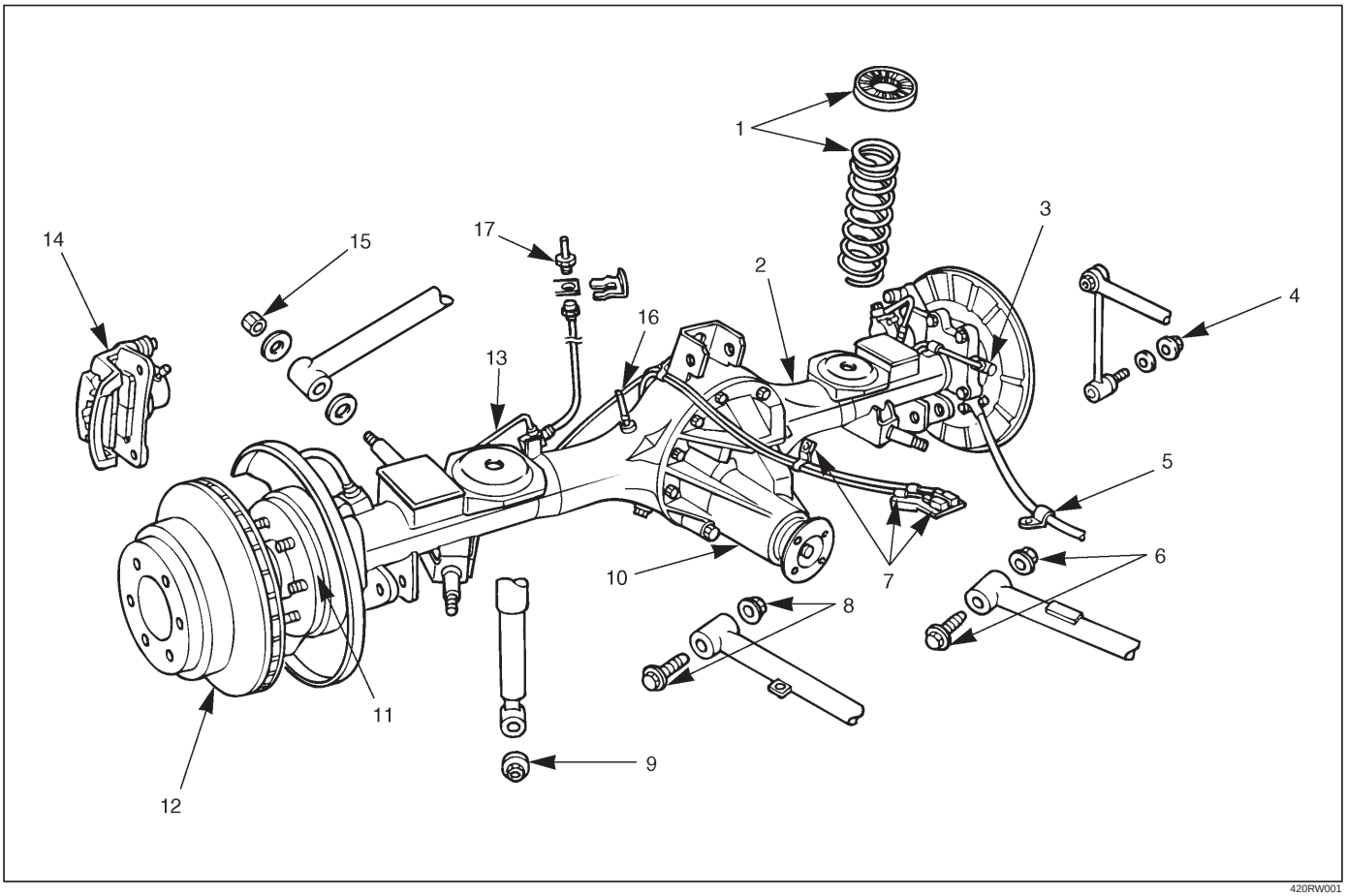

Legend

(1) Coil Spring and Insulator
(2) Axle Housing Assembly
(3) ABS Speed Sensor and Harness (if so equipped)
(4) Nut
(5) Parking Brake Cable
(6) Bolt and Nut
(7) Antilock Brake System (ABS) Connector and Bracket (if so equipped)
(8) Bolt and Nut
(9) Nut
(10) Differential Assembly
(11) Axle Shaft Assembly
(12) Brake Disc
(13) Brake Pipe
(14) Brake Caliper
(15) Nut
(16) Breather Hose
(17) Flare Nut

Removal

1. Raise the vehicle and support it with suitable safety stands.
   The hoist must remain under the rear axle housing.
2. Drain brake fluid. Refer to Hydraulic Brakes in Brakes section.
3. Remove rear wheels and tires. Refer to Wheel in Suspension section.
4. Remove propeller shaft. Refer to Rear Propeller Shaft in this section.
5. Drain the rear axle oil into a proper container.
6. Remove parking brake cable, release the connection between the cable fixing clip equalizer. Refer to Parking Brakes in Brakes section.
7. Move the clip aside and pull out the breather hose.

8. Disconnect the ABS connectors (1) and remove the brackets (2) (if so equipped) attached to the frame and center link.

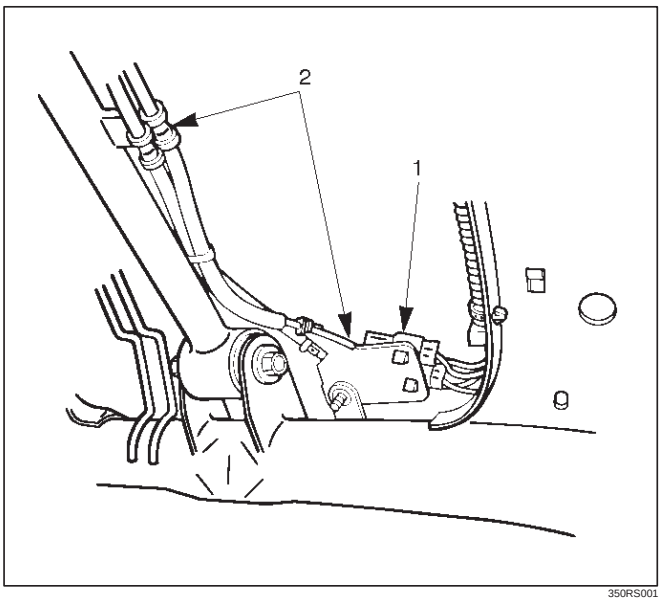

350RS001

9. Loosen the brake tube flare nut, remove the clip and take out the brake tube.
10. Remove the shock absorber fixing nut from the axle housing.
11. Remove the stabilizer linkage mounting nut from the axle housing.
12. Remove the lateral rod fixing nut from the axle housing.
13. Remove the center link mounting bolt and nut from the axle housing.
14. Remove the trailing link fixing bolt and nut from the axle housing.
15. Jack down and remove the coil spring and insulator.
16. Axle housing assembly can be separated from the vehicle on completion of steps 1 – 11.
17. Remove the brake caliper fixing bolt (3), loosen the flare nut (1), release the clip (2) and take out the brake caliper together with the flexible hose.

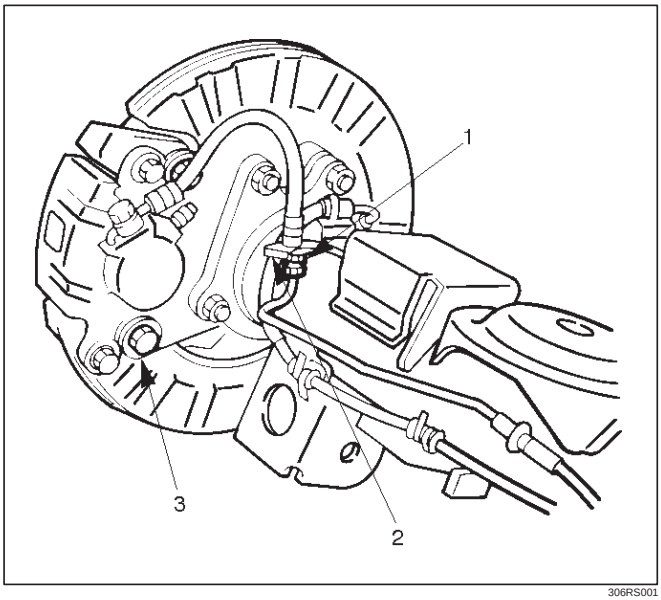

306RS001

18. Remove brake disc.
19. Remove antilock brake system speed sensor fixing bolt and the clip and bracket (if so equipped) on the axle housing.
20. Remove the brake pipe clip and fixing bolt on the axle housing and take out the brake pipe.
21. Remove the bearing holder fixing nut and take out the axle shaft assembly, be sure not to damage the oil seal by the spline of the shaft, Refer to Axle Shaft in this section.
22. Remove differential assembly, refer to Differential Assembly in this section.

Oil Seal Replacement

Remove the oil seal, carefully not to damage the housing, and mount new oil seal using oil seal installer 5–8840–2294–0

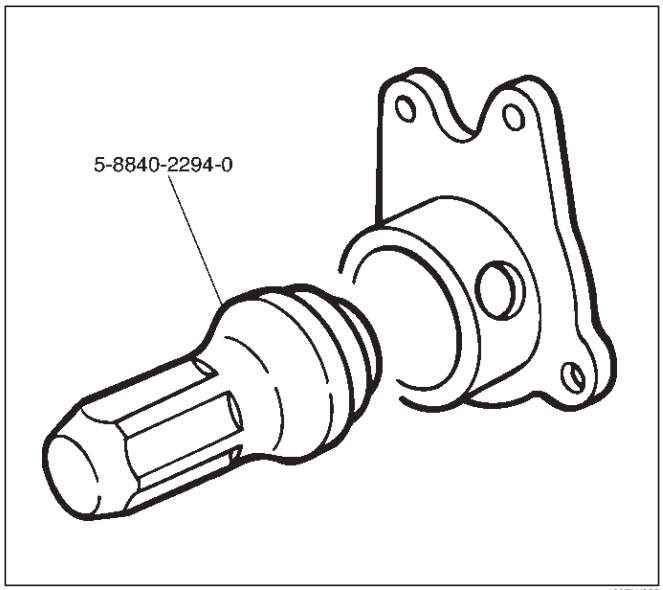

420RW028

Installation

1. Install differential assembly, refer to Differential Assembly in this section.
2. Install axle shaft assembly then tighten the bearing holder mounting nut to the specified torque. Be sure not to damage the oil seal by the spline of the shaft.

   Torque: 74N·m (7.5kg·m/54 lb ft)
3. Install brake pipe.
4. Connect antilock brake system (ABS) speed sensor and harness (if so equipped), refer to Anti–Lock Brake System in Brake section.
5. Install brake disc.
6. Install brake caliper. Refer to Disk Brakes in Brake section.
7. Install axle housing assembly.
8. Install coil spring and insulator.
9. Install the trailing link fixing bolt and nut to the axle housing. For the procedures in items 9–13, refer to Suspension section.
10. Install the center link bolt and nut to the axle housing.

11. Install the lateral rod fixing nut to the axle housing.
12. Install the stabilizer linkage mounting nut to the axle housing.
13. Install the shock absorber fixing nut to the axle housing.
14. Install brake tube flare nut, Refer to Disk Brakes in Brake section.
15. Install ABS connector and bracket (if so equipped).
16. Connect breather hose.
17. Install parking brake cable, Refer to Parking Brakes in Brake section.
18. Bleed brakes. Refer to Hydraulic Brakes in Brake section.

Pinion Oil Seal

Pinion Oil Seal and Associated Parts

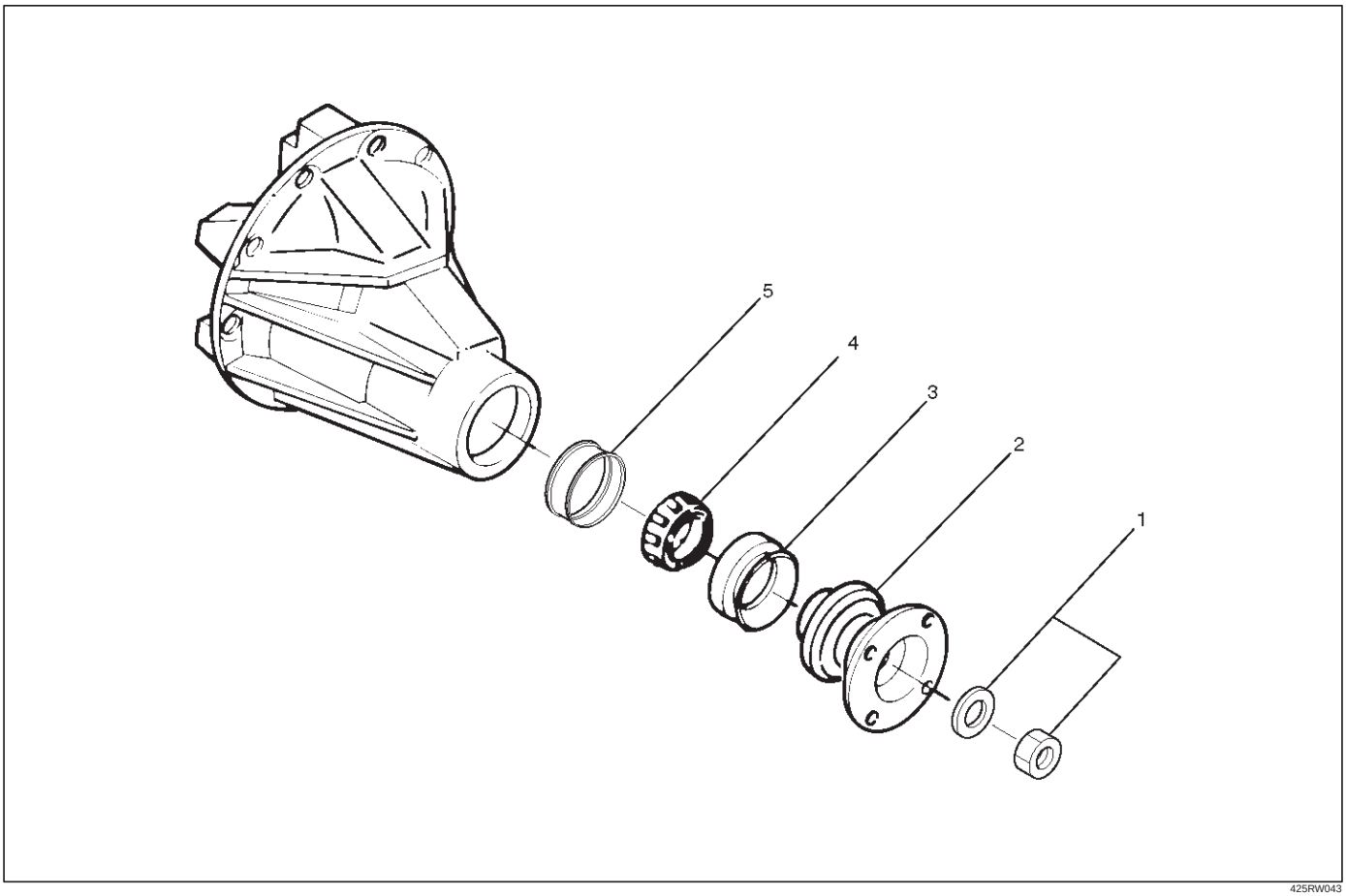

425RW043

Legend

(1) Flange Nut and Washer
(2) Flange
(3) Oil Seal
(4) Outer Bearing
(5) Collapsible Spacer

Removal

1. Remove the rear propeller shaft. Refer to Rear Propeller Shaft in this section.
2. Drain the rear axle oil.

3. Remove flange nut and washer by using pinion flange holder 5–8840–0133–0 after raising up its staked parts completely.

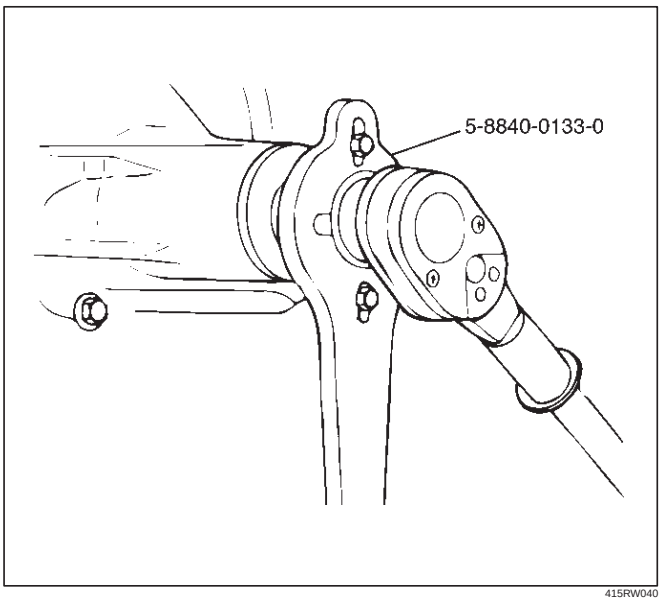

415RW040

4. Remove flange.
5. Remove oil seal.
6. Remove outer bearing by using remover 5–8840–2323–0.

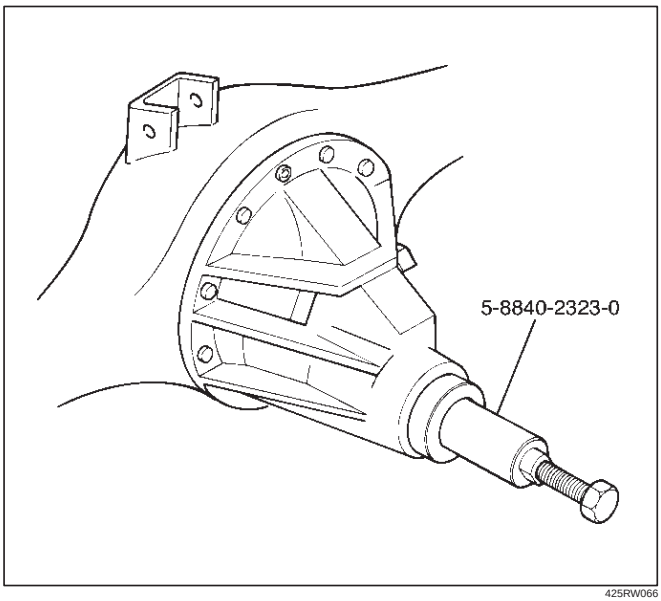

425RW066

7. Remove collapsible spacer.

Inspection and Repair

Make necessary correction or parts replacement if wear, damage, corrosion or any other abnormal conditions are found through inspection.
Check the following parts:

1. Seal surface of the pinion.
2. Cage bore for burns.

Installation

1. Install collapsible spacer, discard the used collapsible spacer and install a new one.
2. Install outer bearing.

NOTE: Do not drive in, but just temporarily set in the outer bearing by hand, which should be indirectly pressed in finally by tightening the flange nut.

3. By using the seal installer 5–8840–2165–0, install a new oil seal (1) that has grease on seal lip.

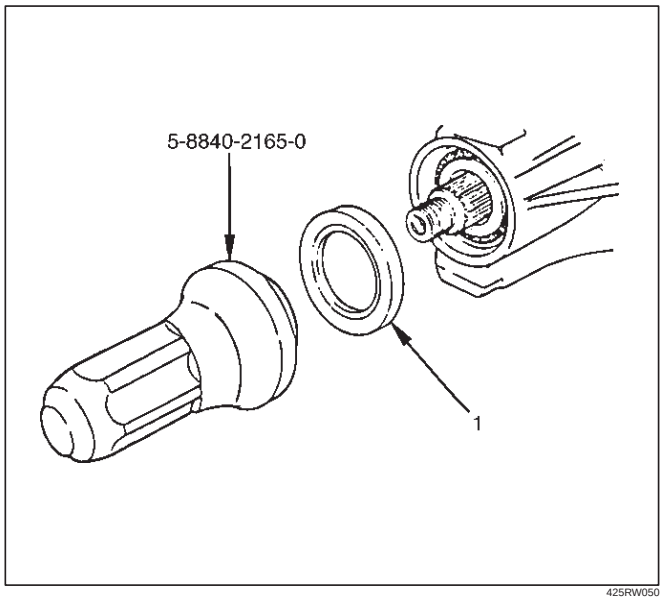

425RW050

4. Install flange.
5. Install flange nut and washer. Refer to Differential Assembly in this section for flange nut reassembly.

NOTE: Discard the used nut and install a new one.

Differential Assembly

Differential Assembly and Associated Parts

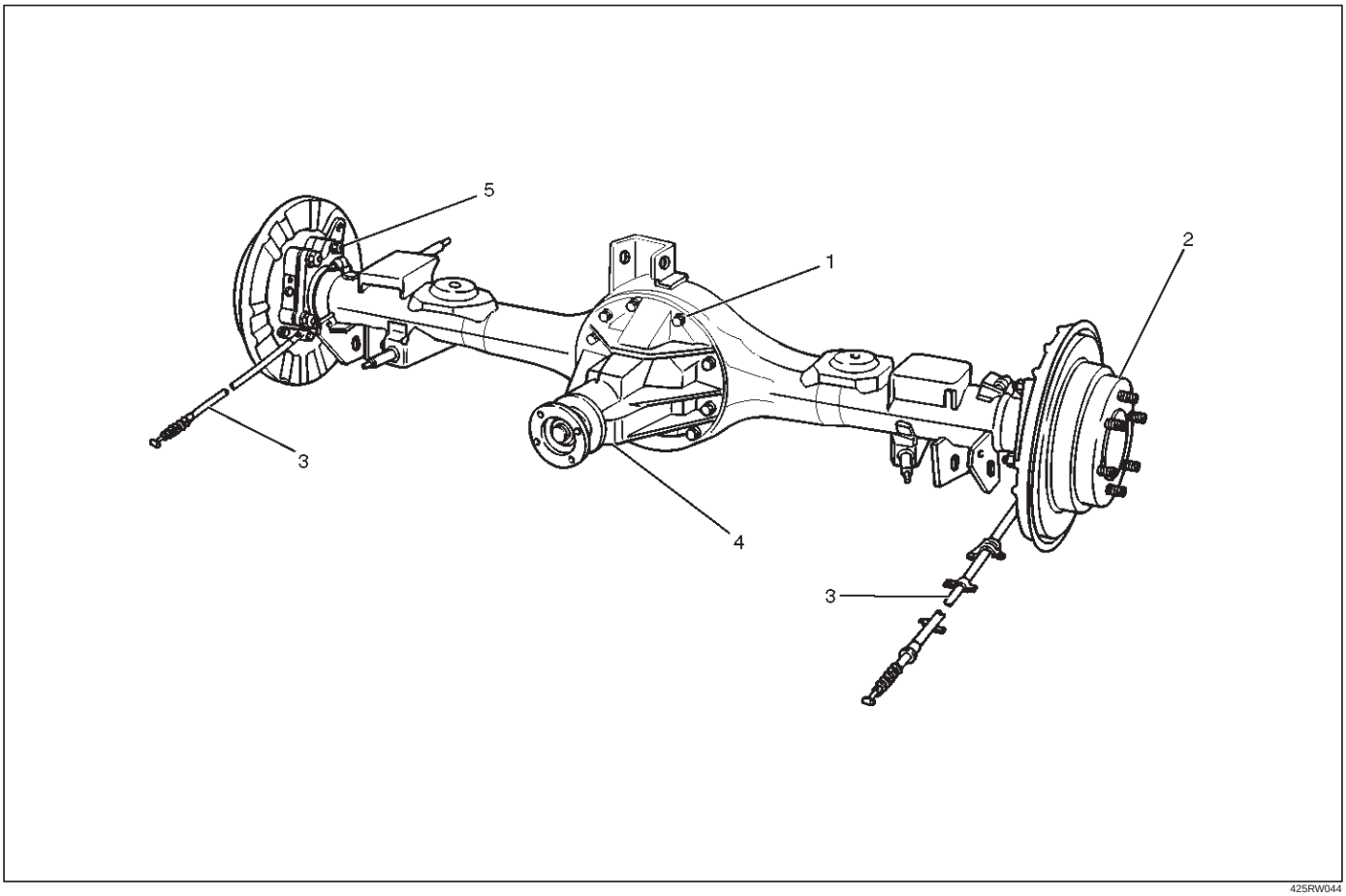

Legend

(1) Bolt and Nut
(2) Axle Shaft Assembly
(3) Parking Brake Cable
(4) Differential Assembly
(5) Nut

Removal

1. Jack up and support the frame with stands.
2. Remove the wheel and tire. Refer to Wheel in Steering section.
3. Drain the differential oil.
4. Remove the propeller shaft. Refer to Rear Propeller Shaft in this section.
5. Remove the ABS speed sensor. Refer to Anti–lock Brake System in Brakes section.
6. Remove the parking brake cable fastening clip and disconnect the equalizer section. Refer to Parking Brakes in Brake section.
7. Remove the bearing holder fixing nuts.
8. Remove axle shaft assembly, be sure not to damage the oil seal by axle shaft.
9. Remove differential carrier mounting bolts and nuts.
10. Remove differential assembly.

Installation

1. Clean the contact surfaces of the axle and differential carrier. As shown in the drawing, apply Three Bond TB1215 or equivalent then install differential assembly.

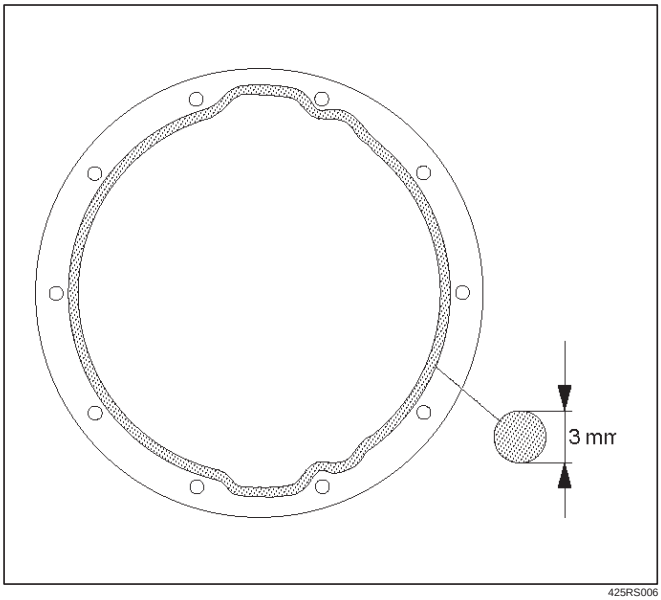

425RS006

2. Install bolt and nut. Tighten the differential carrier mounting bolts and nuts to the specified torque.

   Torque:Nuts 44N·m (4.5kg·m/33 lb ft)

   Bolts 64N·m (6.5kg·m/47 lb ft)

3. Install axle shaft assembly. Be sure not to damage the oil seal by axle shaft.
4. Install nut, refer to Axle Shaft in this section.
5. Install parking brake cable, refer to Parking Brakes in Brake section.

NOTE: After completing the assembling work, fill the prescribed gear oil to the filler hole.

Lubricant capacity: 3.0 liter (2.6 Imp qt/3.2 US qt)

6. Tighten the oil filler plug to the specified torque.

   Torque: 78N·m (8.0kg·m/58 lb ft)

Disassembled View

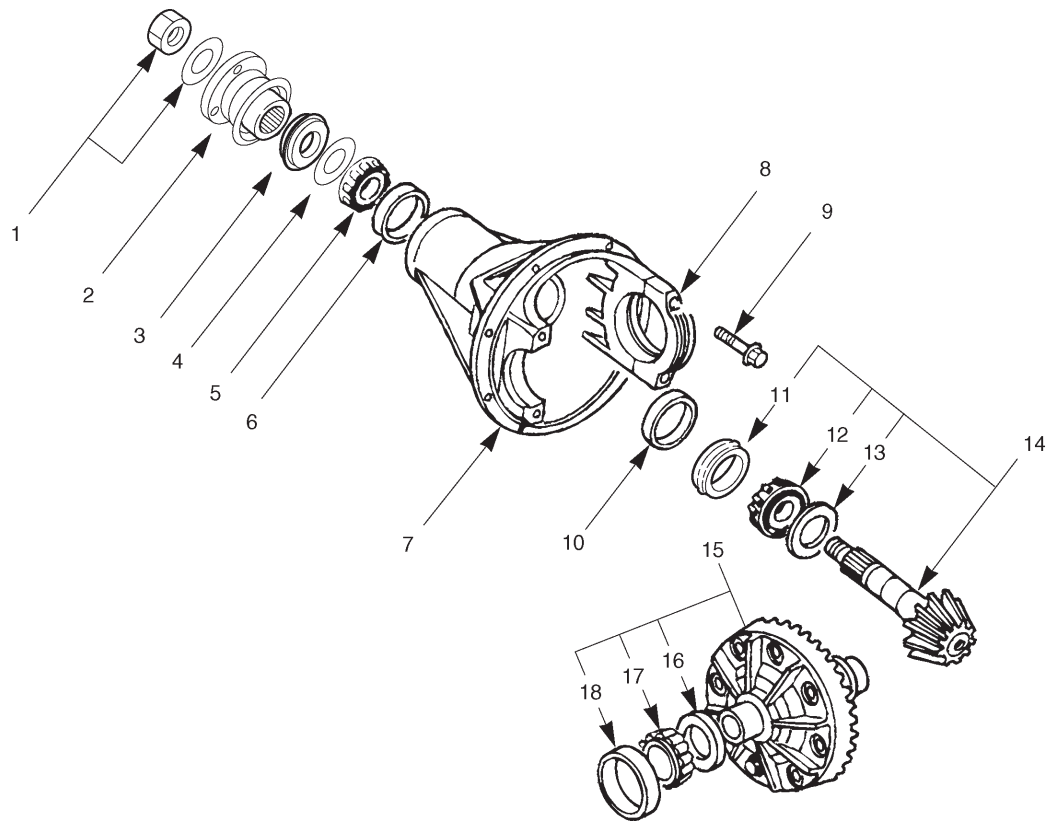

415RW002

Legend

(1) Flange Nut and Washer
(2) Flange
(3) Oil Seal
(4) Oil Seal Slinger
(5) Outer Bearing
(6) Outer Bearing Outer Race
(7) Diff Carrier
(8) Bearing Cap
(9) Bolt
(10) Inner Bearing Outer Race
(11) Collapsible Spacer
(12) Inner Bearing
(13) Adjust Shim (Pinion Position)
(14) Drive Pinion Shaft
(15) Adjust Shim (Diff Cage Assembly)
(16) Diff Preload/Backlash
(17) Side Bearing
(18) Side Bearing Outer Race

Disassembly

1. Using holding fixture 5–8840–2029–0 and holding fixture base 5–8840–0003–0, fix the differential assembly to the bench.

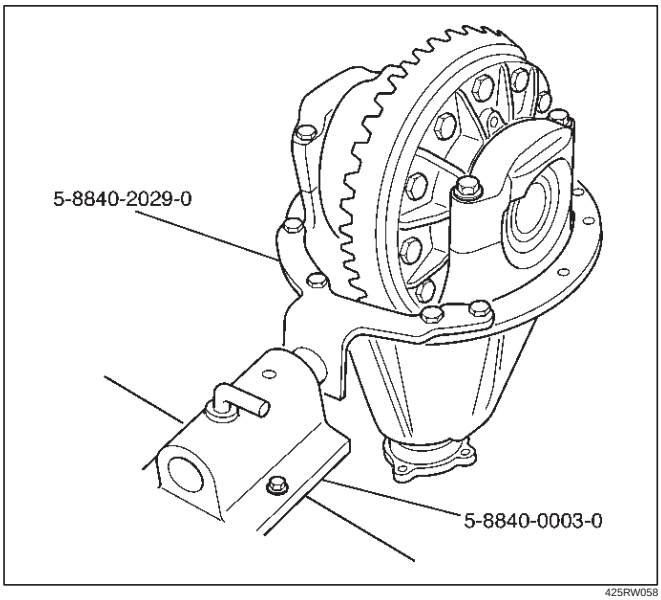

425RW058

2. Apply a setting mark to the side bearing cap and the differential carrier then remove bearing cap.

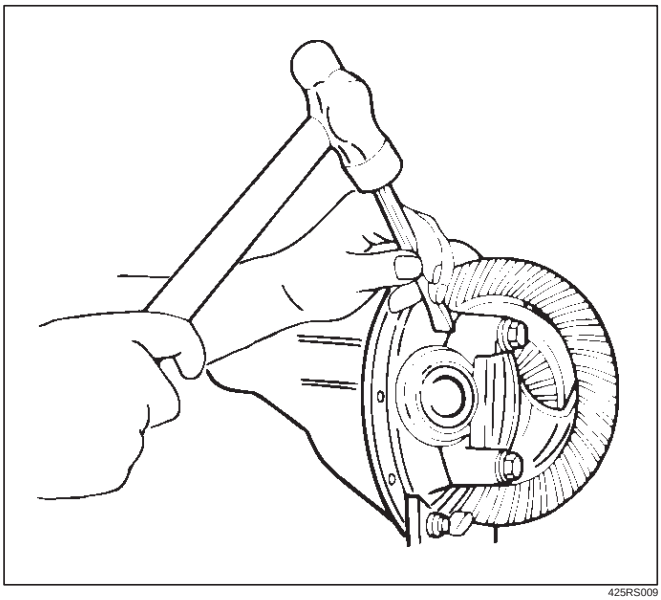

425RS009

3. Remove differential cage assembly.
4. Remove side bearing outer race. After removal, keep the right and left hand side bearing assemblies separate to maintain inner and outer race combinations.
5. Remove side bearing by using remover 5–8840–2587–0 and adapter 5–8840–2576–0. Select collet halves 44803 in remover kit 5–8840–2587–0 for side bearing removal and insert is not required for this operation.

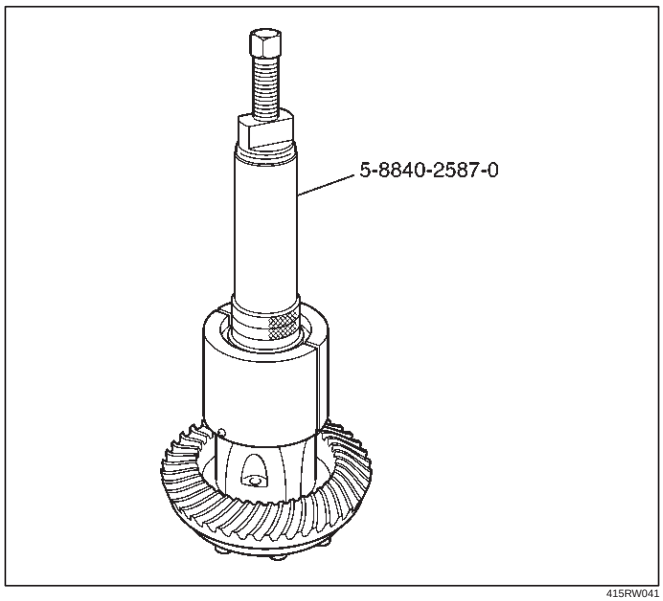

415RW041

6. Note the thickness and position of the shims then remove adjust shim.
7. Remove the flange nut and washer by using pinion flange holder 5–8840–0133–0 after raising up its staked parts completely.

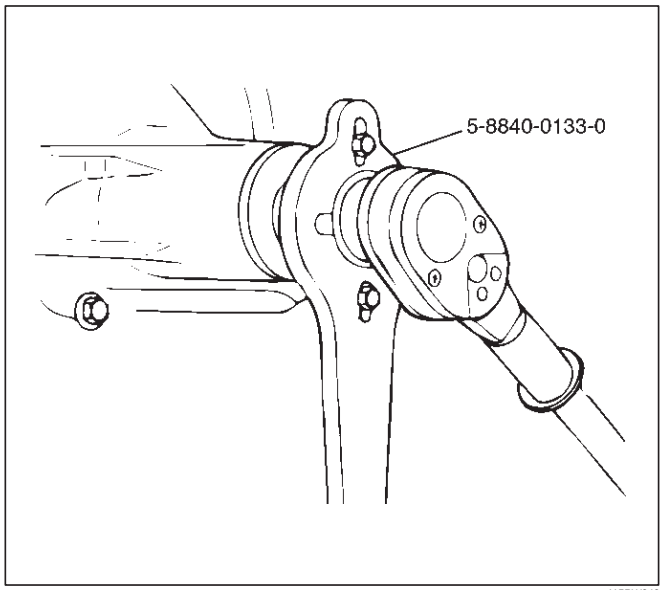

415RW040

8. Removed flange assembly.
9. Remove the drive pinion assembly using a soft metal rod and a hammer.

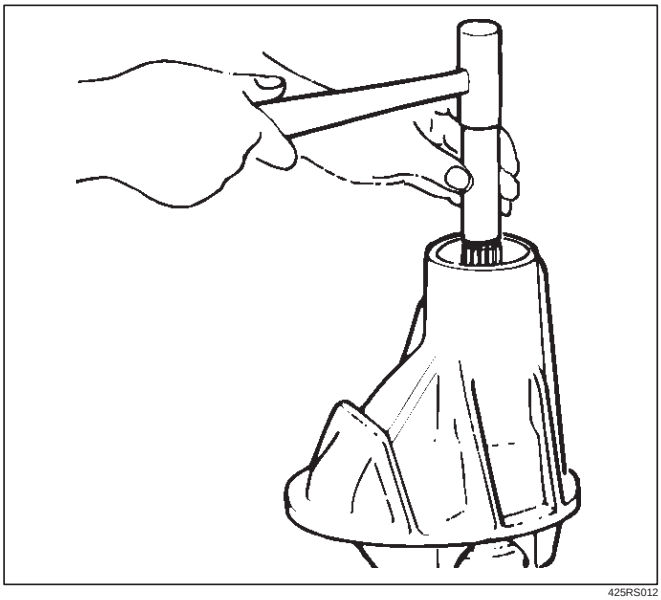

425RS012

10. Remove collapsible spacer.
11. Remove the inner bearing by using remover 5–8840–2587–0. Select insert 303174 and collet halves 44803 in remover kit 5–8840–2587–0 for inner bearing removal.

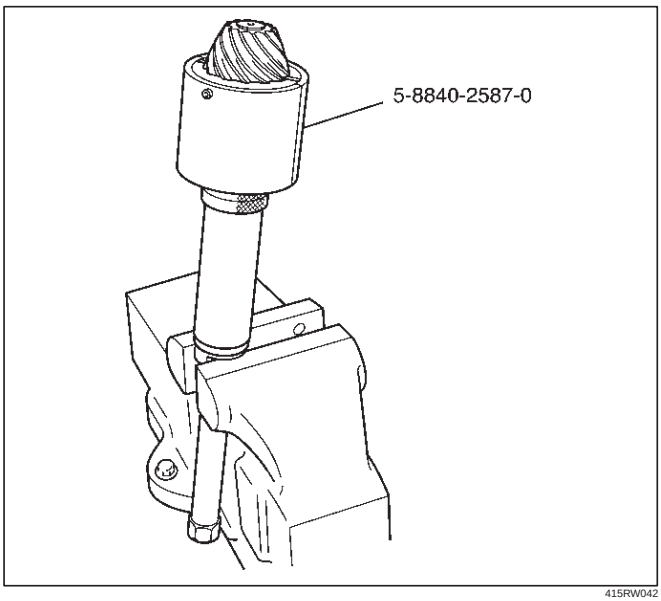

415RW042

12. Remove adjust shim.
13. Remove oil seal.
14. Remove oil seal slinger.
15. Remove outer bearing.
16. Remove the inner bearing outer race (1) and the outer bearing outer race (2) by using a brass bar and a hammer.

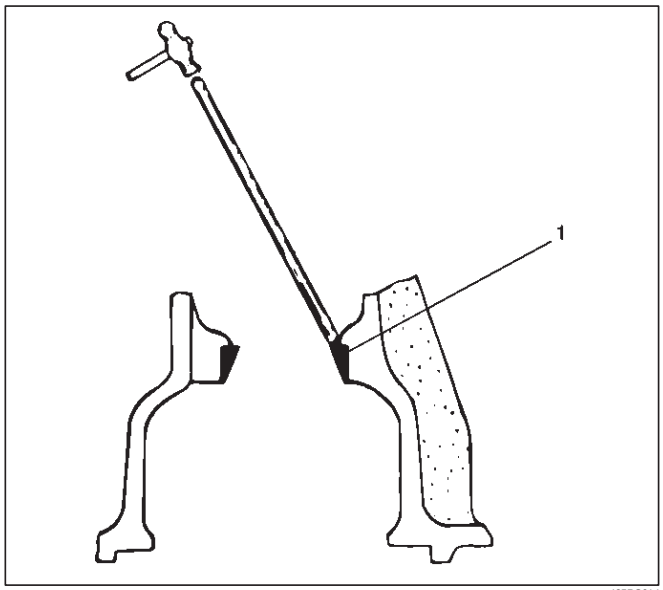

425RS014

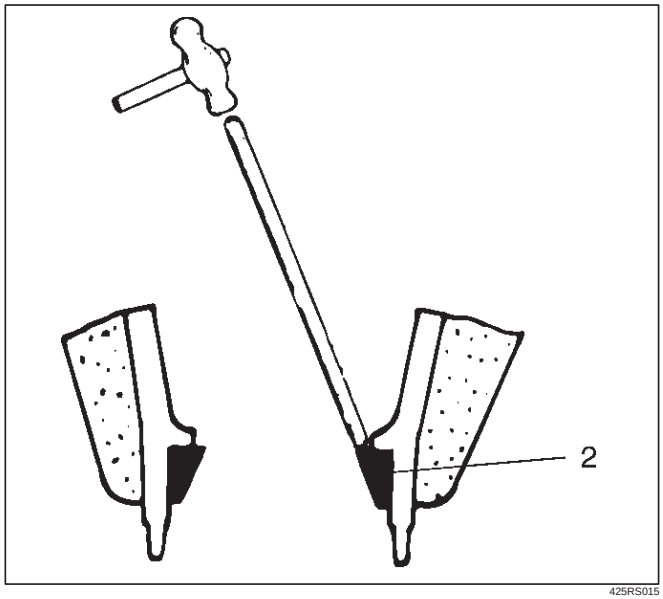

425RS015

Reassembly

1. Install outer bearing outer race by using installer 5–8840–0008–0 and grip 5–8840–0007–0.

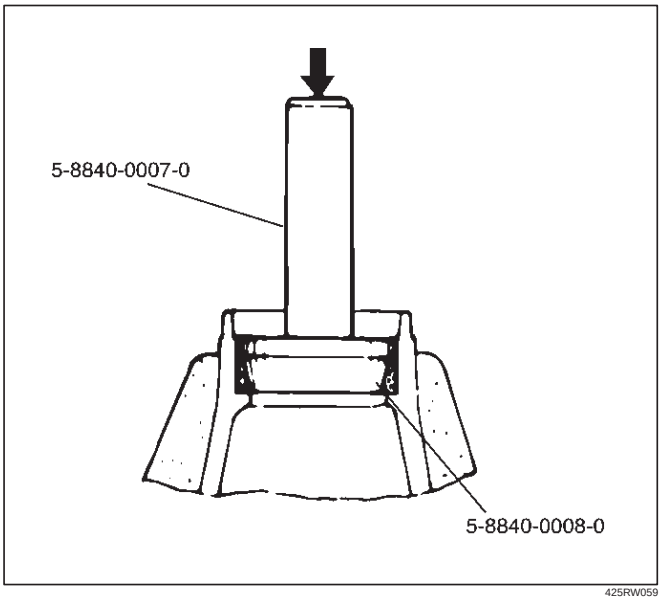

425RW059

2. Install inner bearing outer race by using installer 5–8840–2571–0 and grip 5–8840–0007–0.

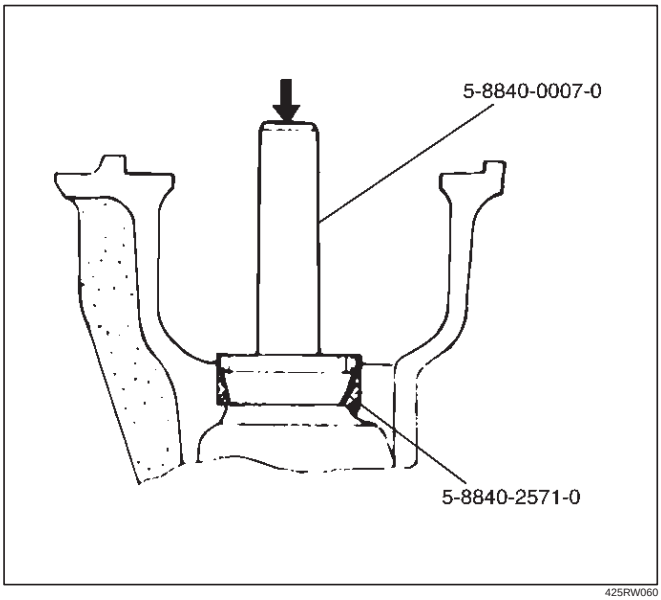

425RW060

3. Adjust the drive pinion mounting distance as follows:
   1. Apply gear oil to the inner and outer drive pinion bearing. Clean the pinion setting gauge set. Then install the gauge set together with the inner and outer bearings.

   Install gauge plate 5–8840–2572–0 (3), inner pilot 5–8840–2573–0 (2) ,stud and nut 5–8840–0127–0 (4) and outer pilot 5–8840–2575–0 (1) through inner and outer bearings.

   2. Tighten the nut to the specified torque.

   Torque: 2.3 N·m (23kg·cm/20 lb in)

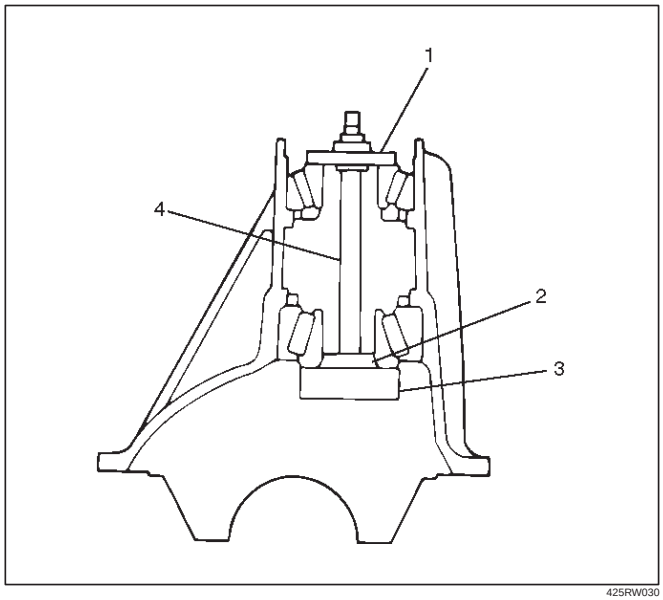

425RW030

   3. Clean the side bearing bores. Place discs and dial indicator on to arbor, and place tool into position in side bearing bores. Install and tighten the bearing caps to the specified torque.

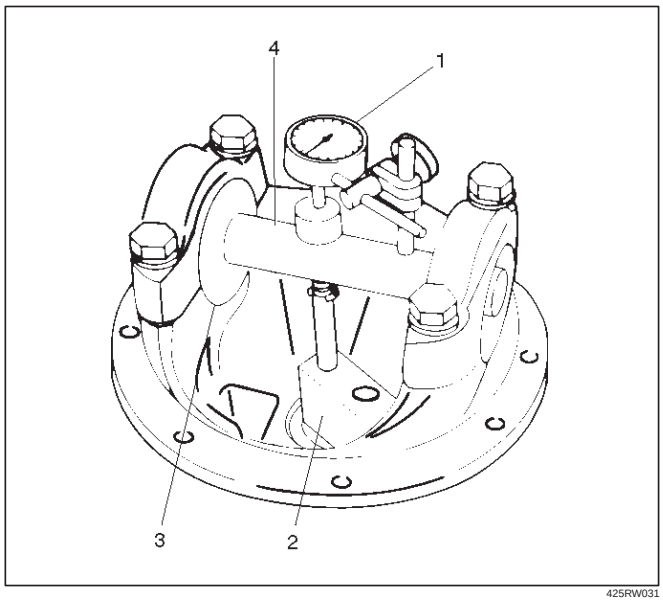

425RW031

Legend

(1) Dial Indicator: 5–8840–0126–0
(2) Gauge Plate: 5–8840–2572–0
(3) Disc (2 pcs.): 5–8840–2577–0
(4) Arbor: 5–8840–0128–0

4. Set the dial indicator 5–8840–0126–0 to “0”. Place it on the mounting post of the gauging arbor with the contact button touching the indicator pad. Force the dial indicator downward until the needle has made a half turn clockwise. Tighten down the dial indicator in this position.

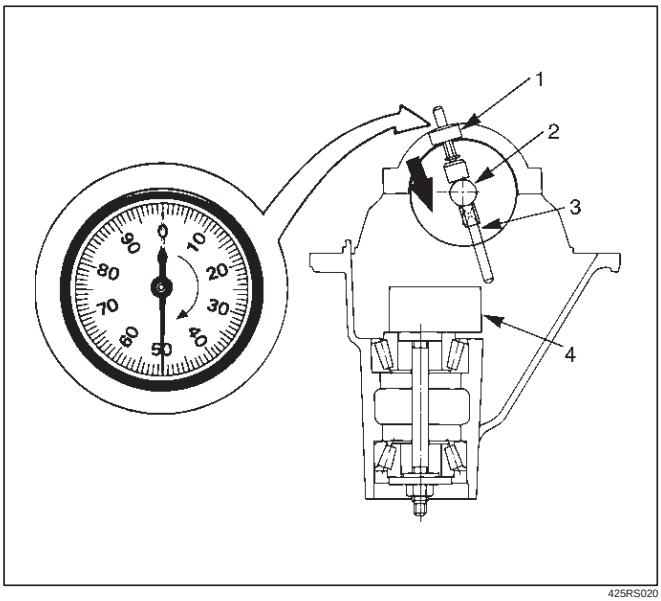

425RS020

Legend

(1) Dial Indicator
(2) Ganging Arbor
(3) Plunger
(4) Gauge Plate

5. Position the plunger on the gauge plate. Move the gauging arbor slowly back and forth and locate the position at which the dial indicator shows the greatest defection. At this point, once again set the dial indicator to “0”. Repeat the procedure to verify the “0” setting.

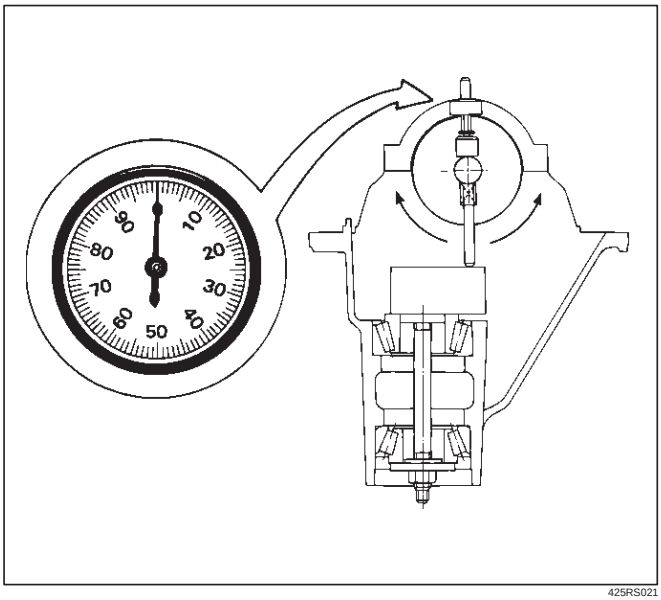

425RS021

6. After the ZERO setting is obtained, rotate the gauging arbor until the dial indicator rod does not touch the gauging plate. Record the number the dial indicator needle points to.

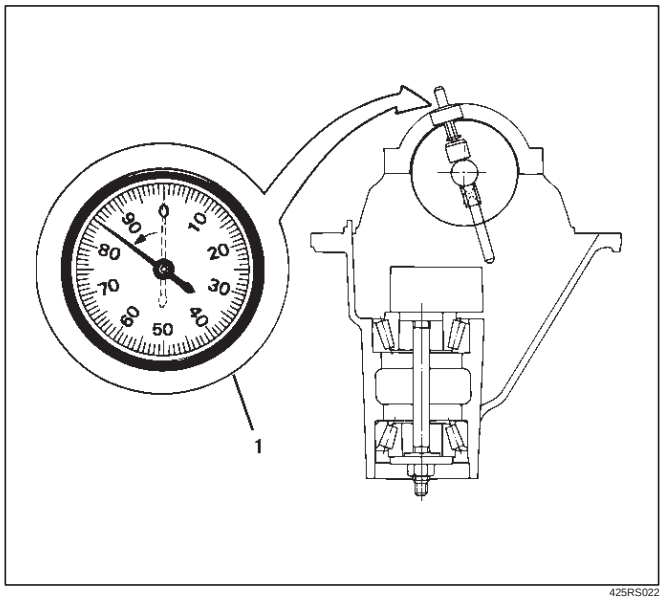

425RS022

Legend

(1) Example=Dial indicator reading od 0.085

7. Record the pinion depth code on the head of the drive pinion. The number indicates a necessary change in the pinion mounting distance. A plus number indicates the need for a greater mounting distance (which can be achieved by decreasing the shim thickness). A minus number indicates the need for a smaller mounting distance (which can be achieved by increasing the shim thickness). If examination reveals pinion depth code “0”, the pinion is “nominal”.

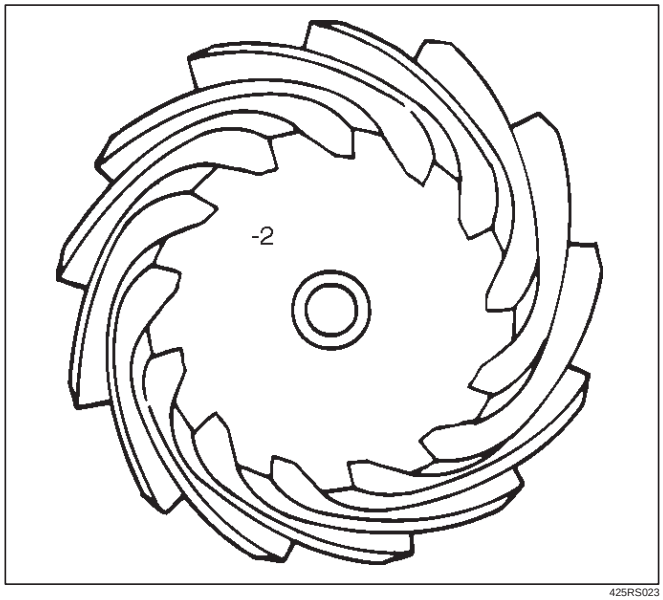

425RS023

8. Select the shim thickness using the chart;

Pinion marking Dial indicator reading (Inches)	+3 (Inches)	+2 (Inches)	+1 (Inches)	0 (Inches)	–1 (Inches)	–2 (Inches)	–3 (Inches)
0.024							0.027
0.025						0.027	0.028
0.026					0.027	0.028	0.029
0.027				0.027	0.028	0.029	0.030
0.028			0.027	0.028	0.029	0.030	0.031
0.029		0.027	0.028	0.029	0.030	0.031	0.032
0.030	0.027	0.028	0.029	0.030	0.031	0.032	0.033
0.031	0.028	0.029	0.030	0.031	0.032	0.033	0.034
0.032	0.029	0.030	0.031	0.032	0.033	0.034	0.035
0.033	0.030	0.031	0.032	0.033	0.034	0.035	0.036
0.034	0.031	0.032	0.033	0.034	0.035	0.036	0.037
0.035	0.032	0.033	0.034	0.035	0.036	0.037	0.038
0.036	0.033	0.034	0.035	0.036	0.037	0.038	0.039
0.037	0.034	0.035	0.036	0.037	0.038	0.039	0.040
0.038	0.035	0.036	0.037	0.038	0.039	0.040	0.041
0.039	0.036	0.037	0.038	0.039	0.040	0.041	0.042
0.040	0.037	0.038	0.039	0.040	0.041	0.042	0.043
0.041	0.038	0.039	0.040	0.041	0.042	0.043	0.044
0.042	0.039	0.040	0.041	0.042	0.043	0.044	0.045
0.043	0.040	0.041	0.042	0.043	0.044	0.045	0.046
0.044	0.041	0.042	0.043	0.044	0.045	0.046	0.047
0.045	0.042	0.043	0.044	0.045	0.046	0.047	0.048
0.046	0.043	0.044	0.045	0.046	0.047	0.048	0.049
0.047	0.044	0.045	0.046	0.047	0.048	0.049	0.050
0.048	0.045	0.046	0.047	0.048	0.049	0.050	0.051
0.049	0.046	0.047	0.048	0.049	0.050	0.051	0.052
0.050	0.047	0.048	0.049	0.050	0.051	0.052	0.053
0.051	0.048	0.049	0.050	0.051	0.052	0.053	0.054
0.052	0.049	0.050	0.051	0.052	0.053	0.054	0.055
0.053	0.050	0.051	0.052	0.053	0.054	0.055	0.056
0.054	0.051	0.052	0.053	0.054	0.055	0.056	0.057
0.055	0.052	0.053	0.054	0.055	0.056	0.057	0.058
0.056	0.053	0.054	0.055	0.056	0.057	0.058	0.059
0.057	0.054	0.055	0.056	0.057	0.058	0.059	0.060
0.058	0.055	0.056	0.057	0.058	0.059	0.060	0.061
0.059	0.056	0.057	0.058	0.059	0.060	0.061	0.062
0.060	0.057	0.058	0.059	0.060	0.061	0.062	0.063
0.061	0.058	0.059	0.060	0.061	0.062	0.063	0.064
0.062	0.059	0.060	0.061	0.062	0.063	0.064	0.065
0.063	0.060	0.061	0.062	0.063	0.064	0.065	
0.064	0.061	0.062	0.063	0.064	0.065		
0.065	0.062	0.063	0.064	0.065			
0.066	0.063	0.064	0.065				
0.067	0.064	0.065					
0.068	0.065						

4. Place the shim (1) on the drive pinion, then install the inner bearing (2) onto the pinion by using installer 5–8840–2574–0 and a press .

NOTE: Do not apply pressure to the roller cage. Apply pressure only to the inner race.

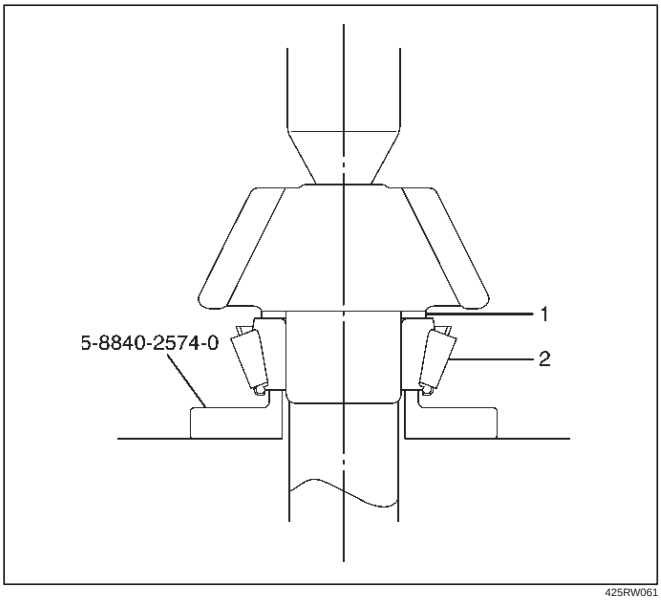

425RW061

5. Install collapsible spacer. Discard the used collapsible spacer and install a new one.
6. Install drive pinion shaft assembly.
7. Install outer bearing and oil seal slinger.
8. Use oil seal installer 5–8840–2165–0 to install a new oil seal that has grease on seal lip.

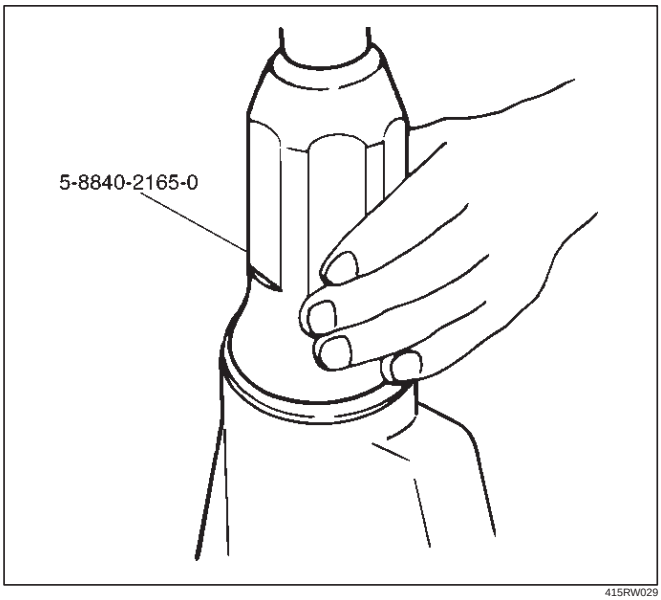

415RW029

9. Install flange assembly.
10. Install flange nut and washer.
    1. Apply lubricant to the pinion threads.
    2. Using the pinion flange holder 5–8840–0133–0, tighten the nut only enough to remove the shaft end play.

NOTE: Discard used flange nut and install new one.

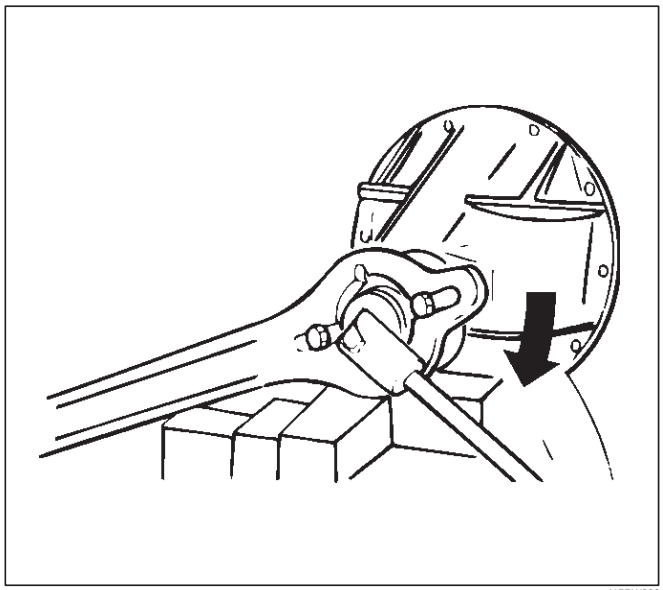

415RW006

3. Adjust pinion bearing preload.
   a. Measure the bearing preload by using a torque meter and note the scale reading required to rotate the flange.
   b. Continue tightening flange nut until the specified starting torque is obtained.

Starting torque: 1.1–1.6 N·m (11–16kg·cm/10–14 lb in)

NOTE:

a. Do not overtighten or loosen and then retighten the nut.
b. Pinion nut torque should be in the range of 298–380 N·m (30.4–38.8kg·m/220–281 lb ft).

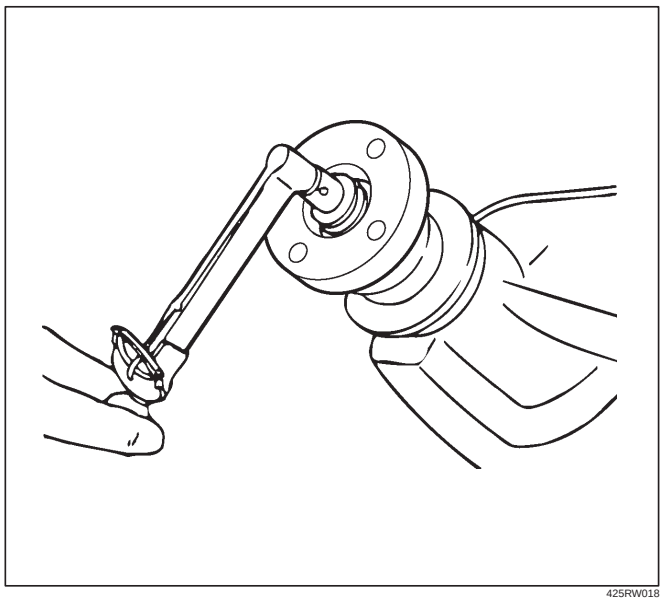

425RW018

4. Using punch 5–8840–2293–0, stake the flange nut at two points.

NOTE: When staking, be sure to turn the nut to ensure that there is no change in bearing preload. Make sure of preload again as instructed in 3).

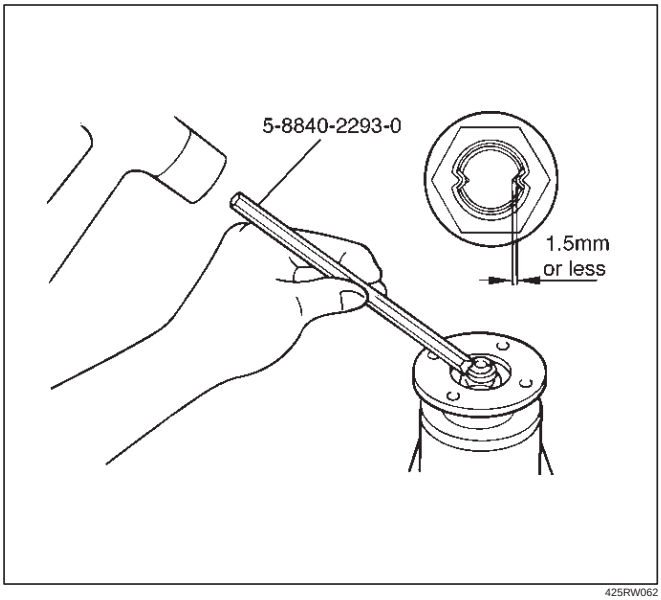

425RW062

11. Adjust ring gear backlash.
    1. Attach the side bearing to the differential assembly without shims by using installer 5–8840–2570–0 and grip 5–8840–0007–0.

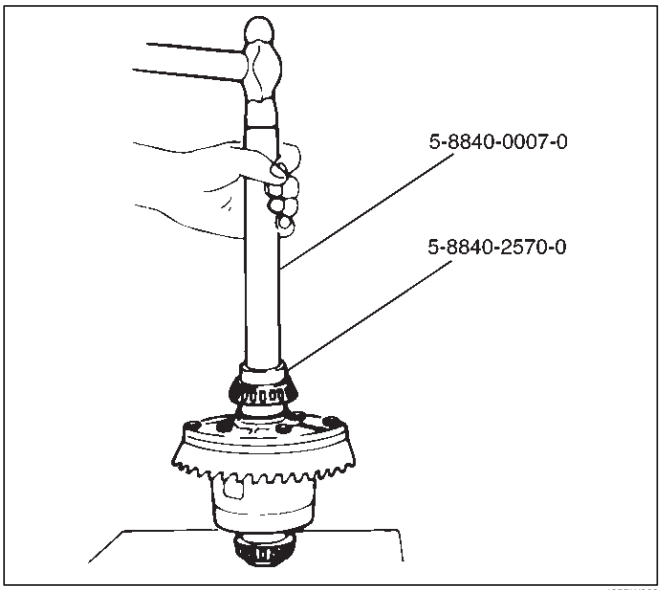

425RW063

2. Insert the differential cage assembly with bearing outer races into the side bearing bores of the carrier.

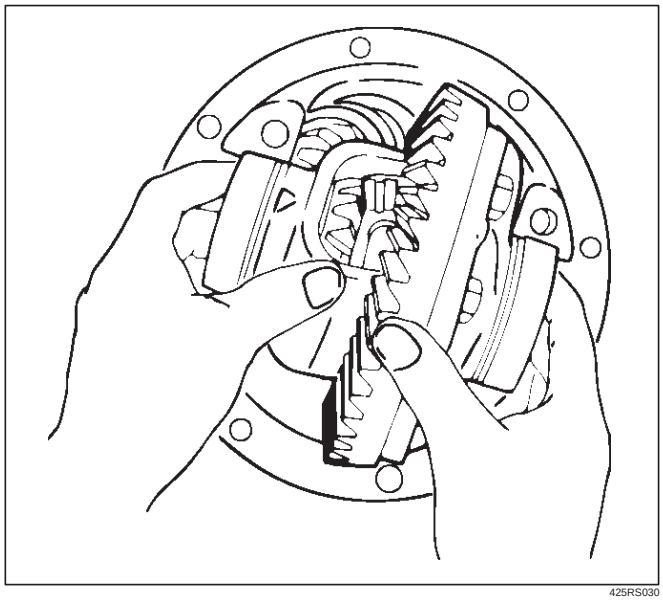

425RS030

3. Using two sets of feeler gauges, insert a feeler stock of sufficient thickness between each bearing outer race and the carrier to remove all end play. Make certain the feeler stock is pushed to the bottom of the bearing bores.

Mount the dial indicator 5–8840–0126–0 on the carrier so that the indicator stem is at right angles to a tooth on the ring gear.

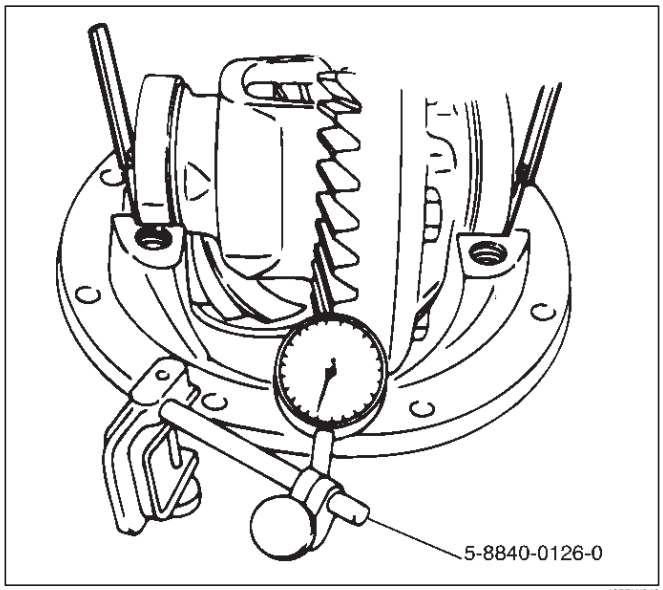

425RW049

4. Adjust feeler gauge thickness from side to side until ring gear backlash is in the specified range.

Backlash: 0.13– 0.2mm (0.005– 0.008in)

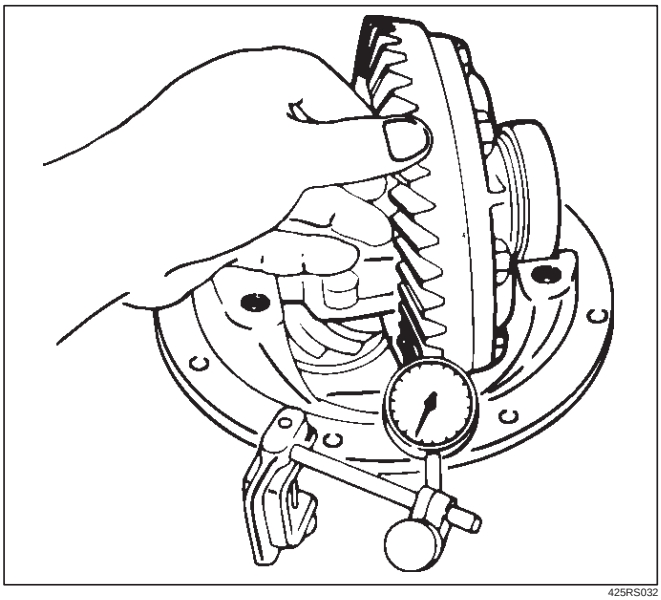

425RS032

With zero end play and correct backlash established, remove the feeler gauge packs, determine the thickness of the shims required and add 0.05 mm (0.002 in) to each shim pack to provide side bearing preload. Always use new shims.

5. Remove side bearing by using remover 5–8840–2587–0 and adapter 5–8840–2576–0.

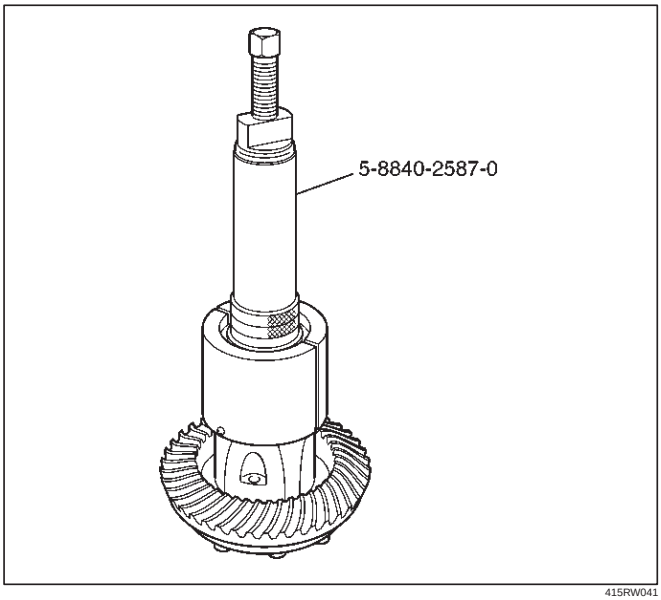

415RW041

12. Install the side bearings together with the selected shims by using installer 5–8840–2570–0 (2) and grip 5–8840–0007–0 (1).

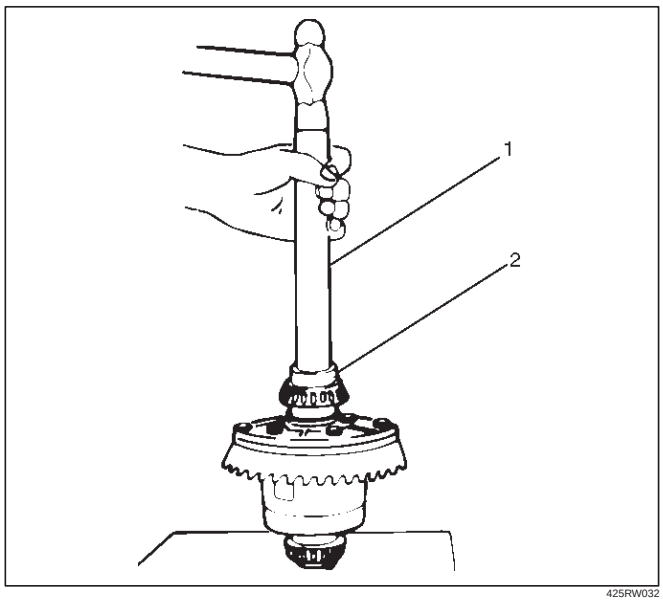

425RW032

13. Install side bearing outer race.
14. Install differential cage assembly.
15. Align the setting marks (1) applied at disassembly then install the bearing cap.

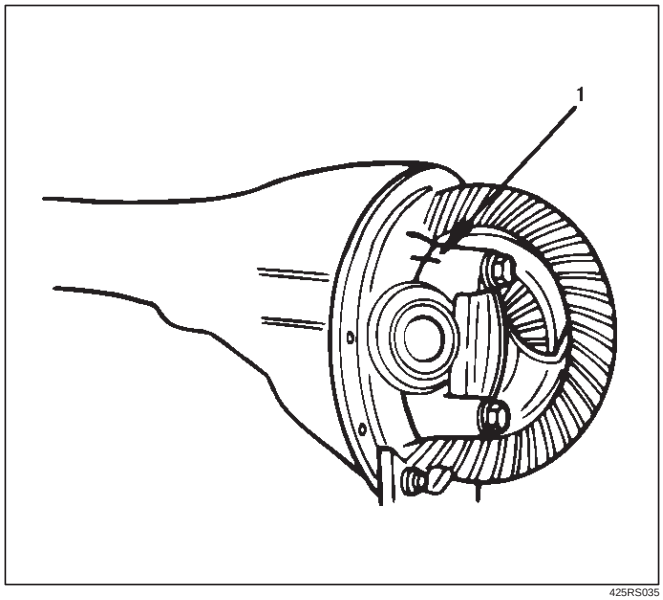

425RS035

16. Tighten the bolt to the specified torque.

Torque:108N·m (11.0kg·m/80 lb ft)

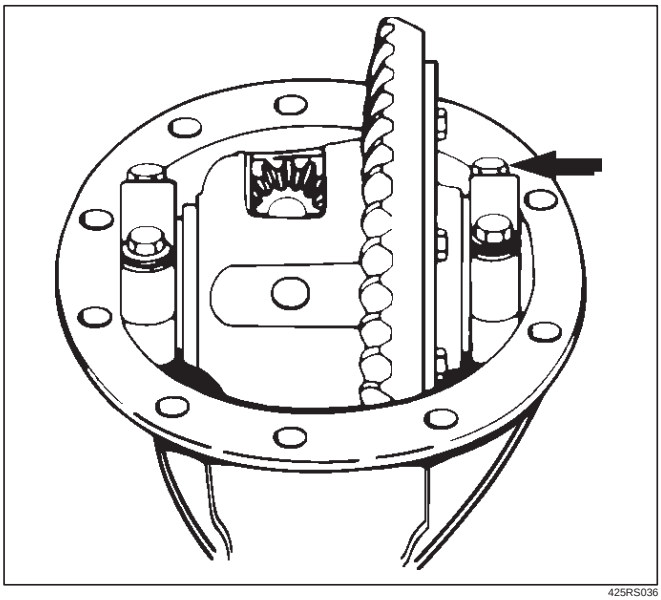

425RS036

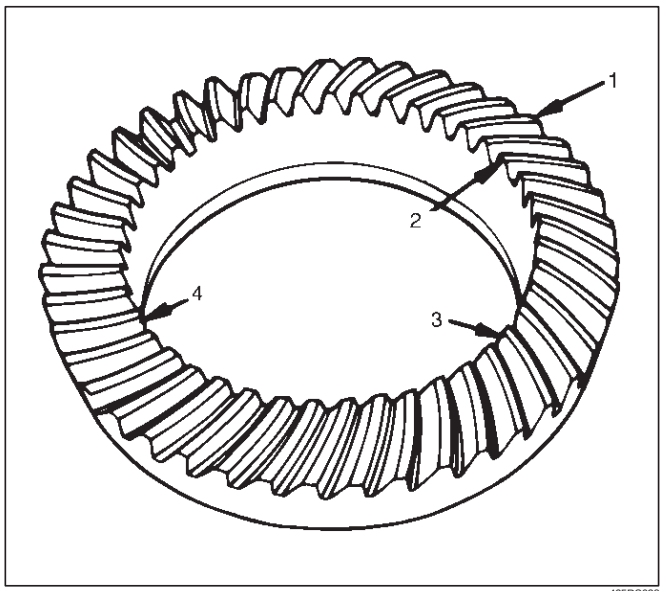

425RS038

Legend

(1) Heel
(2) Toe
(3) Concave Side(Coast)
(4) Convex Side(Drive)

Gear Tooth Contact Pattern Check and Adjustment

1. Apply a thin coat of Prussian blue or equivalent to the faces of the 7–8 teeth of the ring gear. Check the impression of contact on the ring gear teeth and make necessary adjustment as described in illustration if the contact is abnormal.

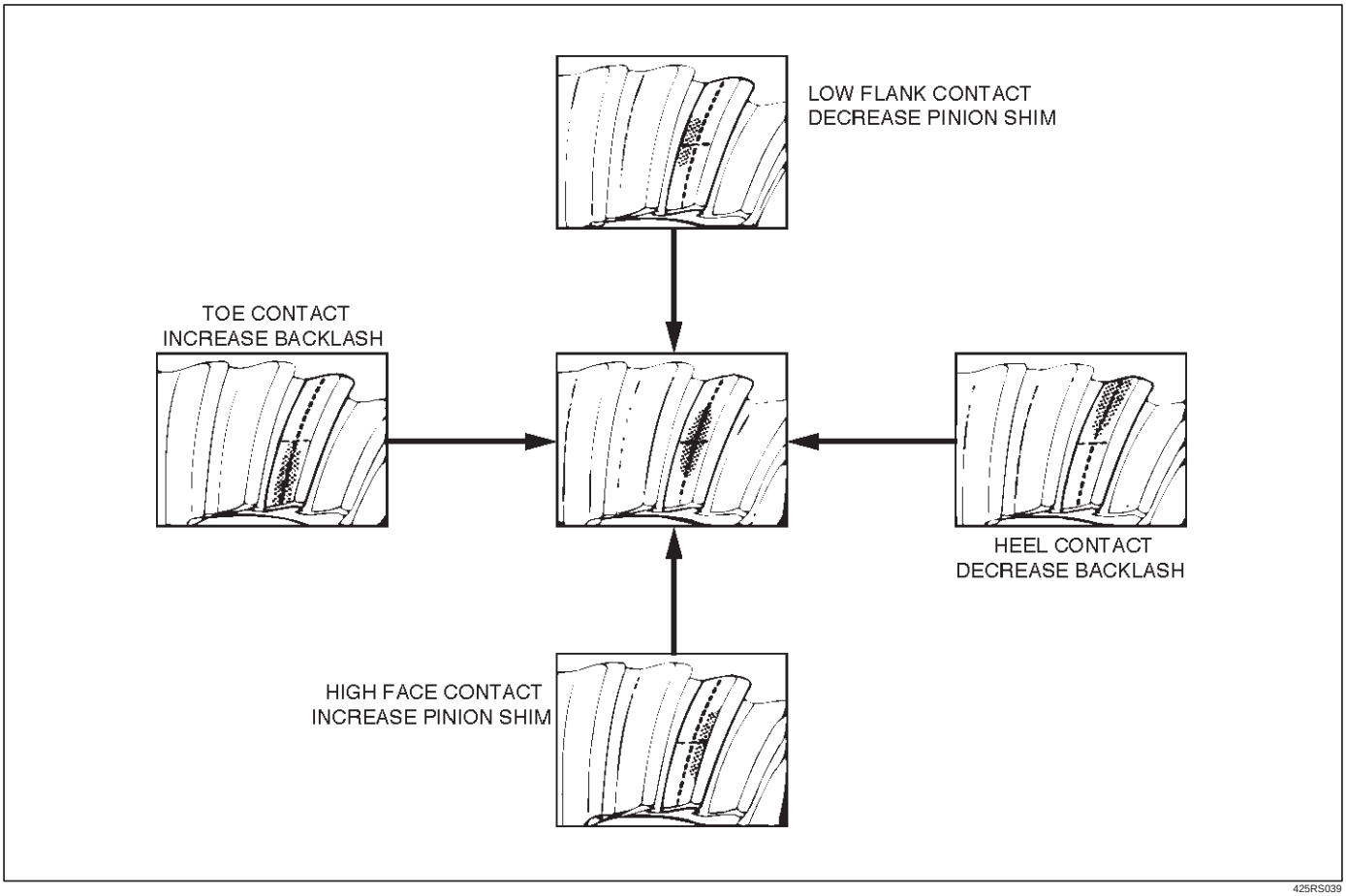

425RS039

Differential Cage Assembly

Disassembled View

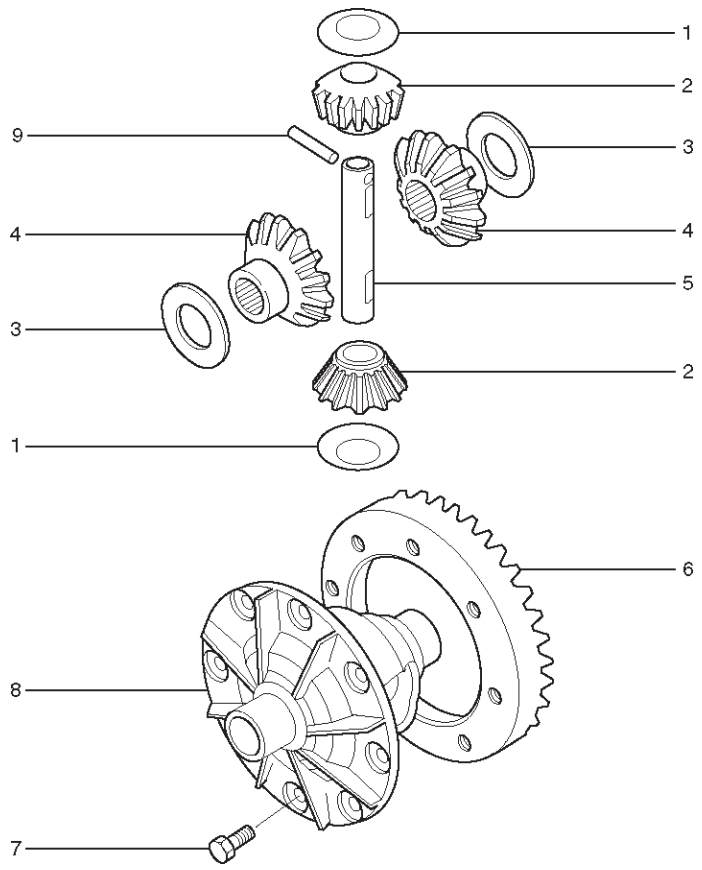

415RW010

Legend

(1) Thrust Washer (for Pinion Gear)
(2) Pinion Mate Gear
(3) Thrust Washer(for Side Gear)
(4) Side Gear
(5) Differential Shaft
(6) Ring Gear
(7) Bolt
(8) Differention Cage
(9) Lock Pin

Disassembly

1. Remove bolt.
2. Remove ring gear.
3. Remove lock pin using a small drift.

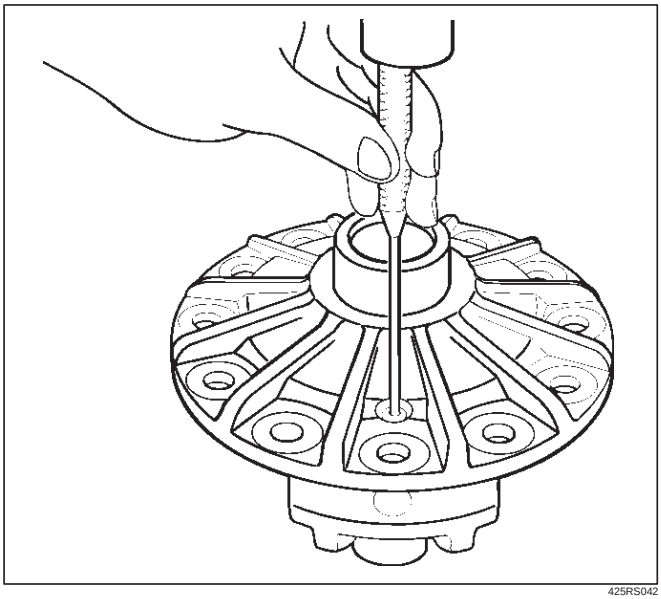

425RS042

4. Remove the differential shaft by using a hard metal rod and a hammer.

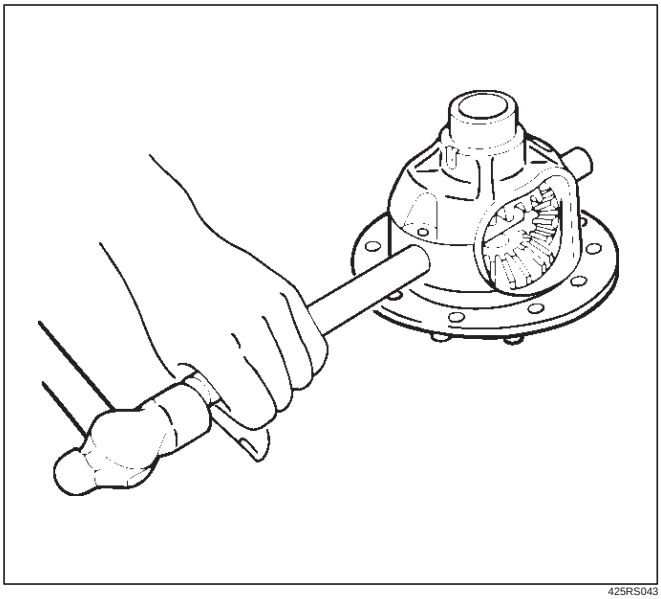

425RS043

5. Remove pinion mate gear and thrust washer.
6. Remove side gear and thrust washer.

Inspection and Repair

Make necessary correction or parts replacement if wear, damage, corrosion or any other abnormal conditions are found through inspection.
Check the following parts:

- Ring gear, pinion gear
- Bearing
- Side gear, pinion mate gear, differential shaft
- Differential cage, carrier
- Thrust washer
- Oil seal

Ring gear replacement:

1. The ring gear should always be replaced with the drive pinion as a set.
2. Discard used bolts and install new ones.
3. Tighten the fixing bolts in a diagonal sequence as illustrated.

Torque: 177N·m (18.0kg·m/130 lb ft)

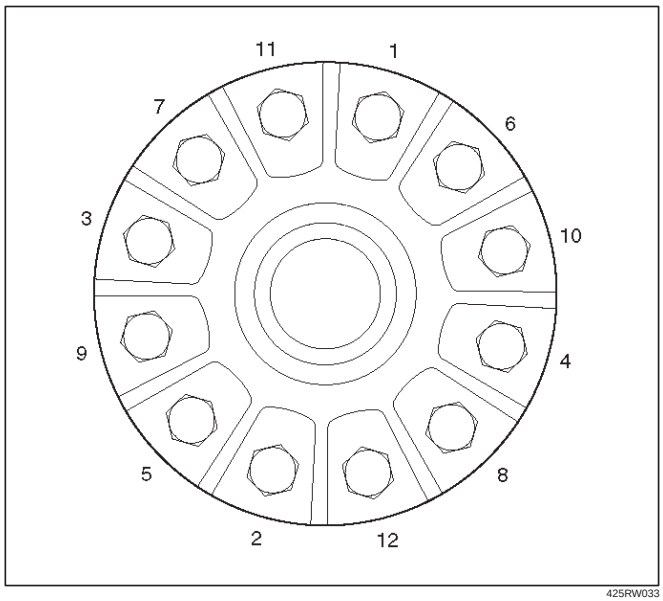

425RW033

Reassembly

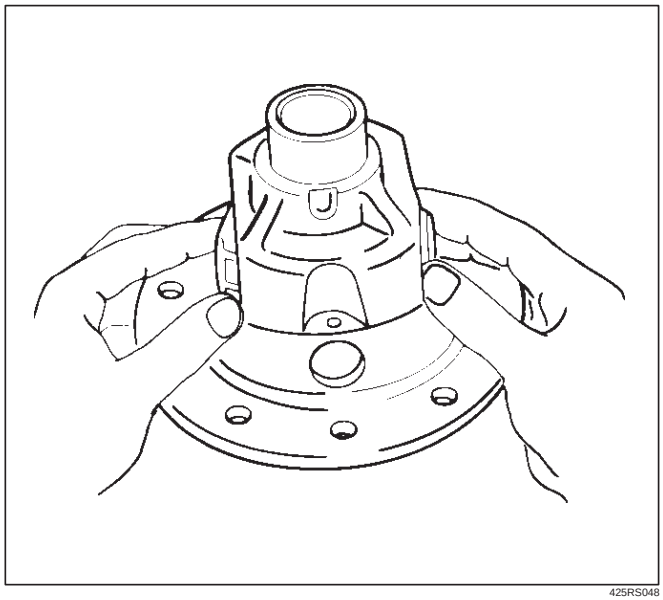

425RS048

1. Install side gear with thrust washer.

2. Install the pinion mate gear with thrust washer by engaging it with the side gears while turning both pinion mate gears simultaneously in the same direction.

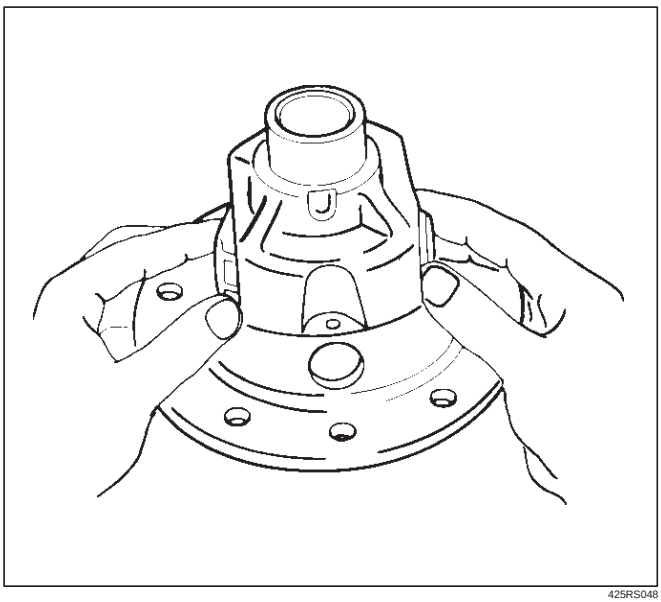

425RS048

3. Install differential shaft.
   1. Be sure to install the differential shaft so that it is in alignment with the lock pin hole in the differential cage.

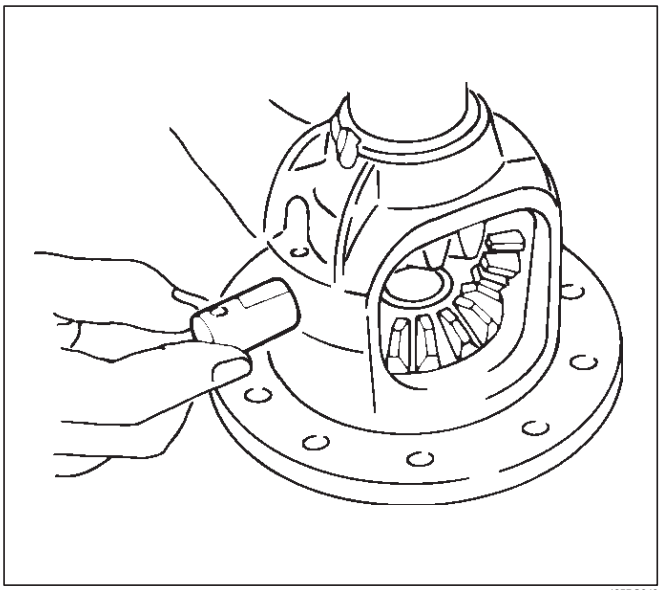

425RS049

4. Install lock pin.
   After lock pin installation, stake the case to secure the lock pin.
5. Install ring gear.
6. Tighten the bolts in diagonal sequence as illustrated.
   Torque: 177N·m (18.0kg·m/130 lb ft)

NOTE: Discard used bolts and install new ones.

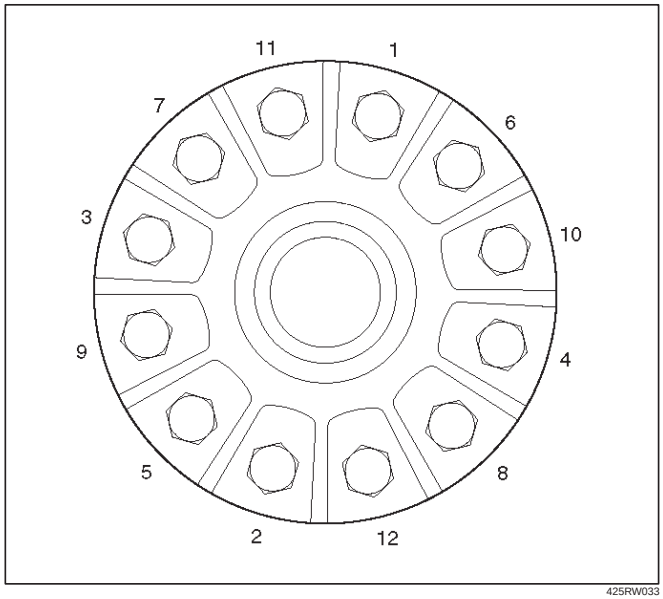

425RW033

Locking Differential Assembly

Disassembled View

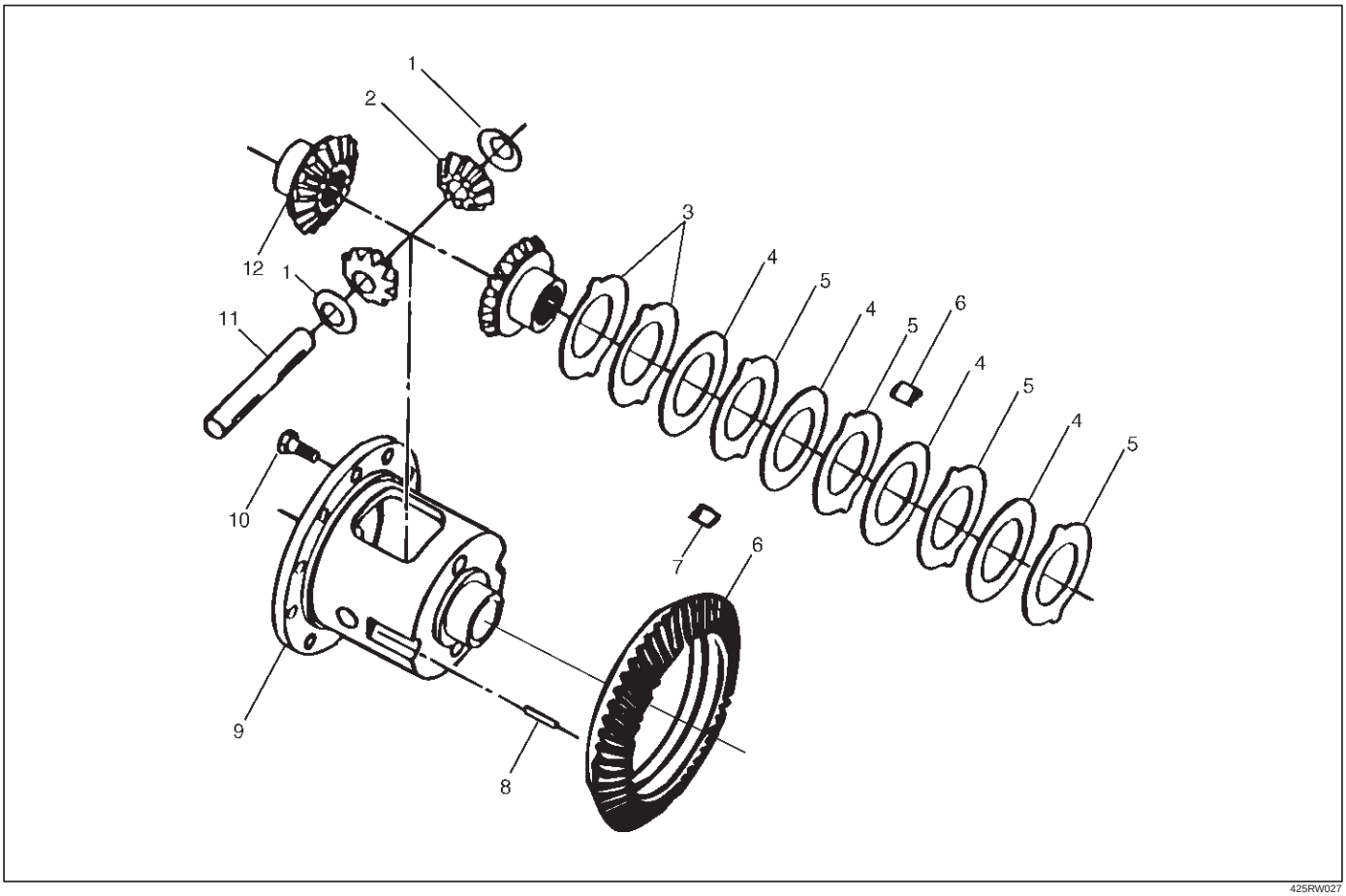

Legend

(1) Thrust Washer–Differential Pinion Mate Gear
(2) Pinion Mate Gear
(3) Dished Spacer
(4) Disc
(5) Plate
(6) Ring Gear
(7) Differential Plate Retainer
(8) Lock Pin
(9) Differential Case
(10) Ring Gear Bolts
(11) Differential Shaft
(12) Differential Side Gear

Disassembly

1. Remove ring gear.
2. Place one of the axle shafts, which was removed from the assembly, into a vise. Tighten shaft in vise firmly. The spline end of the shaft is not to exceed 3 inches (76.2 mm) above the top of the vise.
   Position the differential on the shaft with the ring gear side down.
3. Remove Lock pin (1) from differential shaft using a punch.

4. Remove Differential shaft (2) using hammer and punch.
   Place shop towel behind case to prevent differential shaft from dropping out of case.

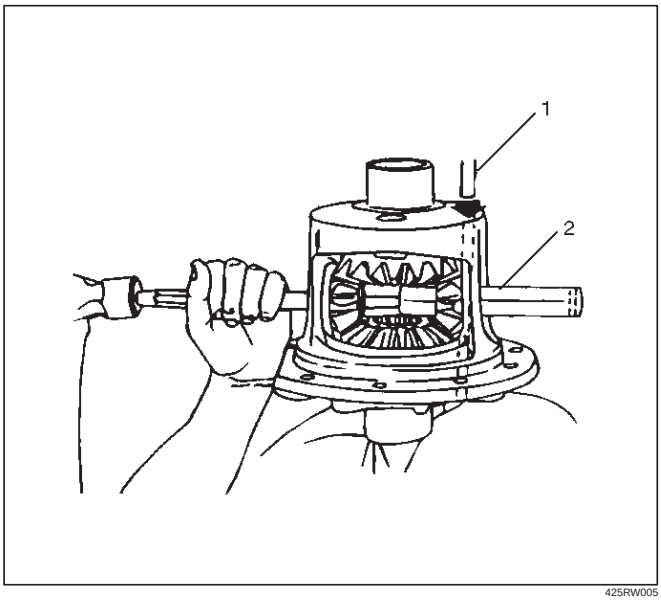

425RW005

5. Assemble clutch pack unloading tool 5–8840–2586–0 .
   a. Install cap (1) to the bottom differential side gear.
   b. Install threaded screw cap (2) to top differential side gear. Thread forcing screws (3) into threaded screw cap until it becomes centered into the bottom cap.

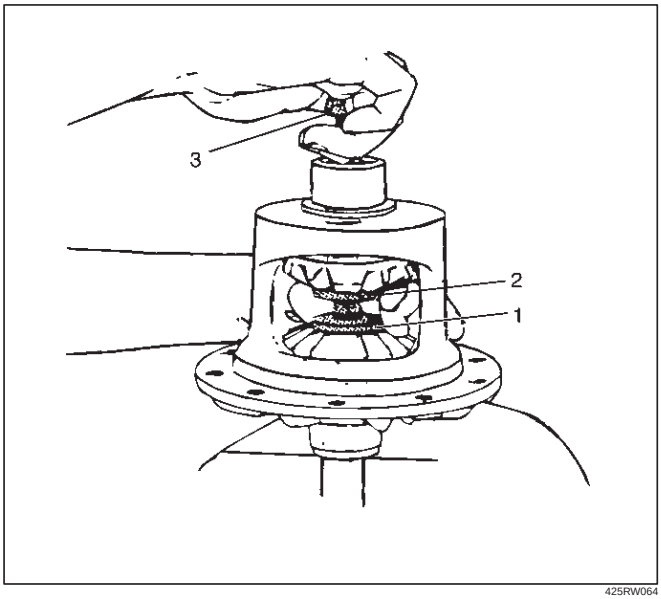

425RW064

   c. Tighten forcing screw until tight enough to collapse dished spacers and allow looseness between side and pinion mate gears.

6. Both pinion mate gear thrust washers using a shim stock (1) of 0.51 mm (0.020 in.) or equivalent tool to push out washers.

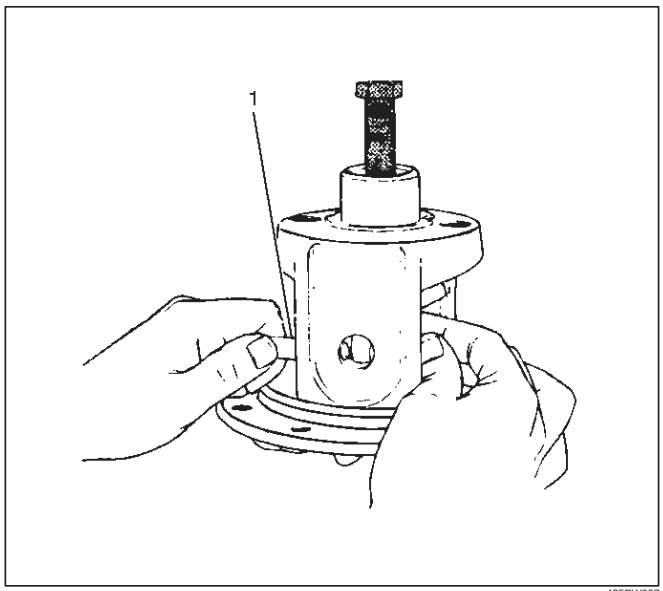

425RW007

7. Relieve tension of dished spacers by loosening forcing screw.

NOTE:

- You may have to adjust the forcing screw slightly to allow the case to rotate.

8. Insert differential shaft into its hole of case. Pull on shaft and rotate case until pinion mate gears can be removed.
9. Remove pinion mate gears.
10. Hold side gear top clutch pack (1) with one hand and remove positraction unloading tools.

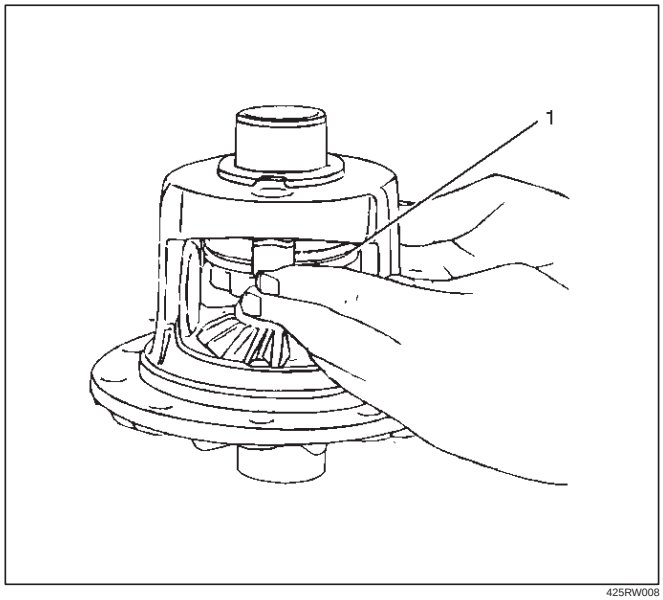

425RW008

11. Remove top side gear and clutch pack.

NOTE:

- Keep the stack of plates and discs intact and in exactly the same position while they are being removed.

12. Remove case from holder. Turn case with flange or ring gear side up to allow side gear and clutch pack to be removed from case.
13. Remove differential plate retainer from both clutch packs to allow separation of the plates and discs.

NOTE:

- Keep the discs and plates in the same order as they were removed.

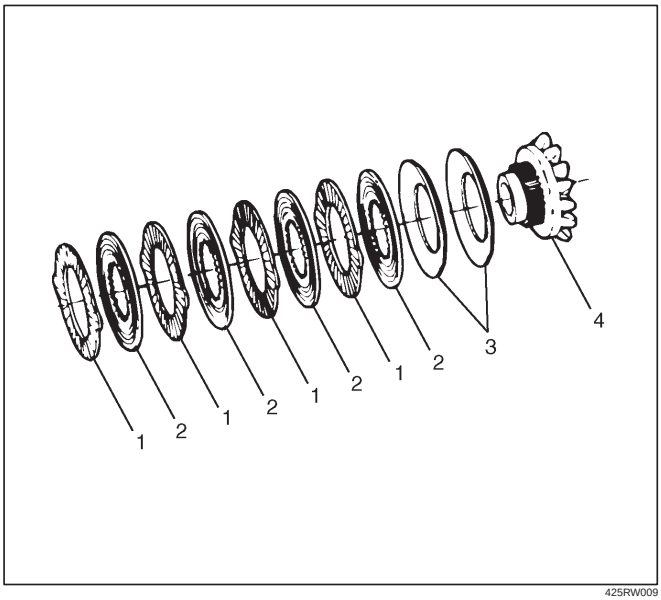

425RW009

Legend

(1) Differential Plate
(2) Differential Disc
(3) Dished Spacer
(4) Side Gear

Inspection and Repair

Cleaning

- All parts with solvent.

Visual Inspection

- Clean all parts with solvent.
- Plates and Discs. If any one disc or plate in either stack shows evidence of excessive wear or scoring, the complete stack is to be replaced on both sides.
- Side Gears and Pinion Mate Gears. The gear teeth of these parts should be checked for extreme wear and possible cracks. The external teeth of the side gear, which retain the concentric groove discs, should also be checked for wear or cracks.
- If replacement of one gear is required due to wear, etc., then both side gears, pinion mate gears, and thrust washers are to be replaced.
- Differential Shaft. If excessive wear is evident, the differential shaft should be replaced.
- Differential Plate Retainers. If wear is evident on any one of the differential plate retainers, all four retainers must be replaced.
- Differential Case. If scoring, wear or metal pickup is evident on the machined surfaces, replacement of the case is necessary.

Reassembly

1. Lubricate thrust face of side gears, plates and discs with the proper limited slip rear axle lubricant.
2. Assemble plates and discs in exactly in the same position as they were removed, regardless of whether they are new or original.
3. Install differential plate retainer to ears of plates.

NOTE:

- Make sure both retainers are completely seated on ears of plates.

4. Install clutch pack and side gear into bottom side gear bore. Make sure clutch pack stays assembled to side gear splines, and that retainers are completely seated into pockets of case.

NOTE:

- To prevent clutch pack from falling out of case, hold clutch pack in place by hand while repositioning case on bench.

5. Install other side gear and clutch pack. Make sure clutch pack stays assembled to side gear splines, and retainers are completely seated into pockets of case.
6. Hold clutch pack in position and assemble special tool 5–8840–2586–0, screw cap (2), cap (1) and forcing screw (3). Tighten forcing screw into bottom cap to hold both clutch packs in position.
7. With tools assembled to case, position case on shaft by aligning splines of side gear with those of shaft. Tighten forcing screw to compress clutch packs in order to provide clearance for pinion mate gears.

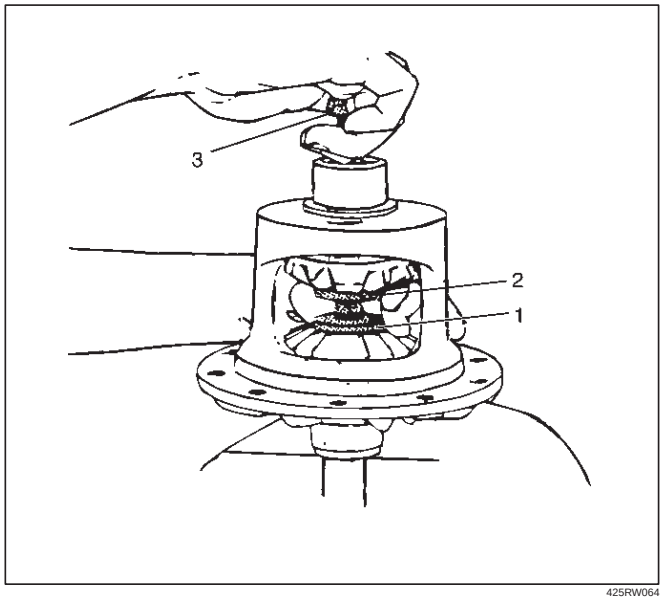

425RW064

8. Install pinion mate gears.
   - Place the pinion mate gears into the differential 180 degrees apart.
9. While holding gears in place, insert differential shaft in its hole of case. Pull on shaft and rotate case, allowing gears to turn. Make sure that holes in pinion mate gears align with holes in case.
   - It may be necessary to adjust tension on forcing screw to rotate case.
10. Tighten forcing screw to compress the clutch packs, to allow installation of tapered washers.
11. Lubricate tapered washers (2), and assemble into case (1). Use a small screw driver to push washers into place. Remove tools.

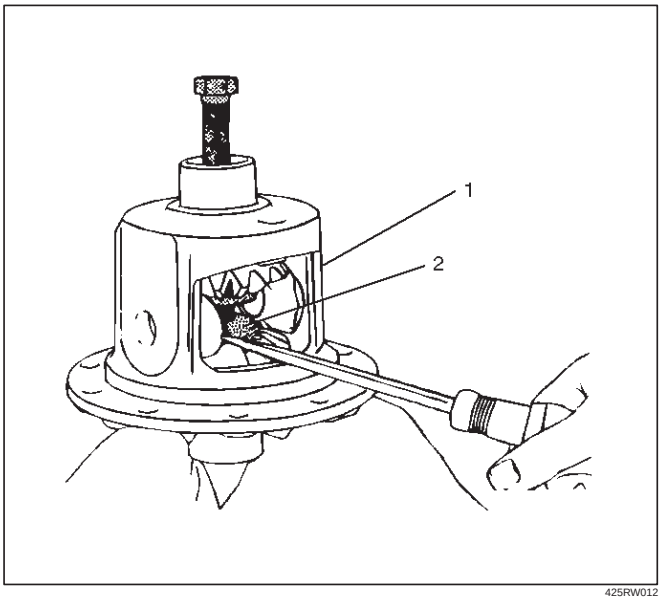

425RW012

12. Position differential shaft in case and drive in with hammer. Be sure lock pin hole of differential shaft (5) is properly aligned to allow installation of lock pin (3). Be sure that thrust washers and differential pinion gears are aligned with the differential case (4). Install new lock pin to proper depth using a punch.

    Stake (peen) metal of case over pin in two places, 180 degrees apart.

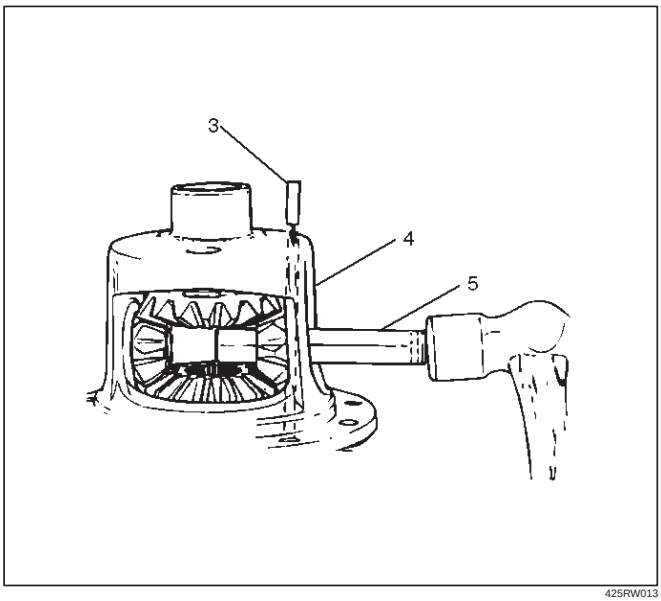

425RW013

13. Install ring gear and tighten the bolts in diagonal sequence as illustrated.

    Torque: 177N·m (18.0kg·m/130 lb ft)

NOTE: Discard used bolts and install new ones.

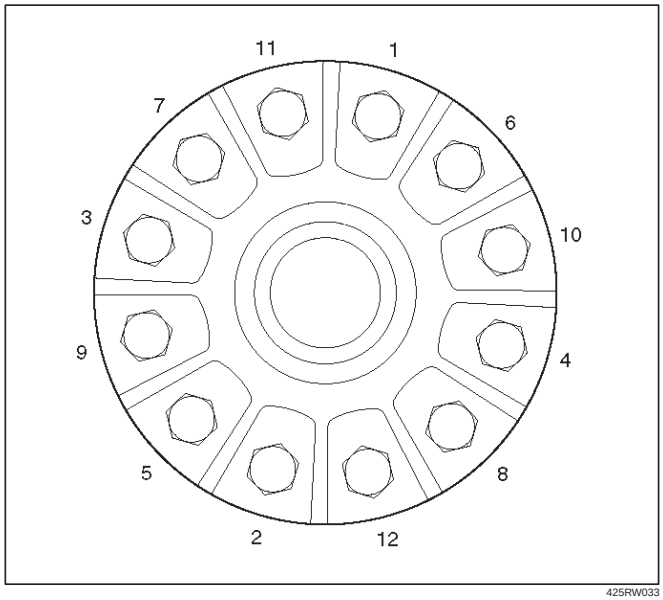

425RW033

Main Data and Specifications

General Specifications

Rear axle	
Type	Banjo, Semi–floating
Rear axle Size	244 mm (9.61 in)
Gear type	Hypoid
Gear ratio (to 1)	4.100(6VE1 with A/T) 4.300(6VE1 with M/T,4JX1)
Differential type	Two pinion
Lubricant Grade	GL–5: (Standard differential)
	GL–5, LSD: (Limited slip differential)
Locking Differential Lubricant	80W90 GL–5 (USE Limited Slip Differential Gear Lubricant or Friction Modifier Organic Additive)
Capacity	3.0 liter (2.6 Imp qt/3.2 US qt)

Torque Specifications

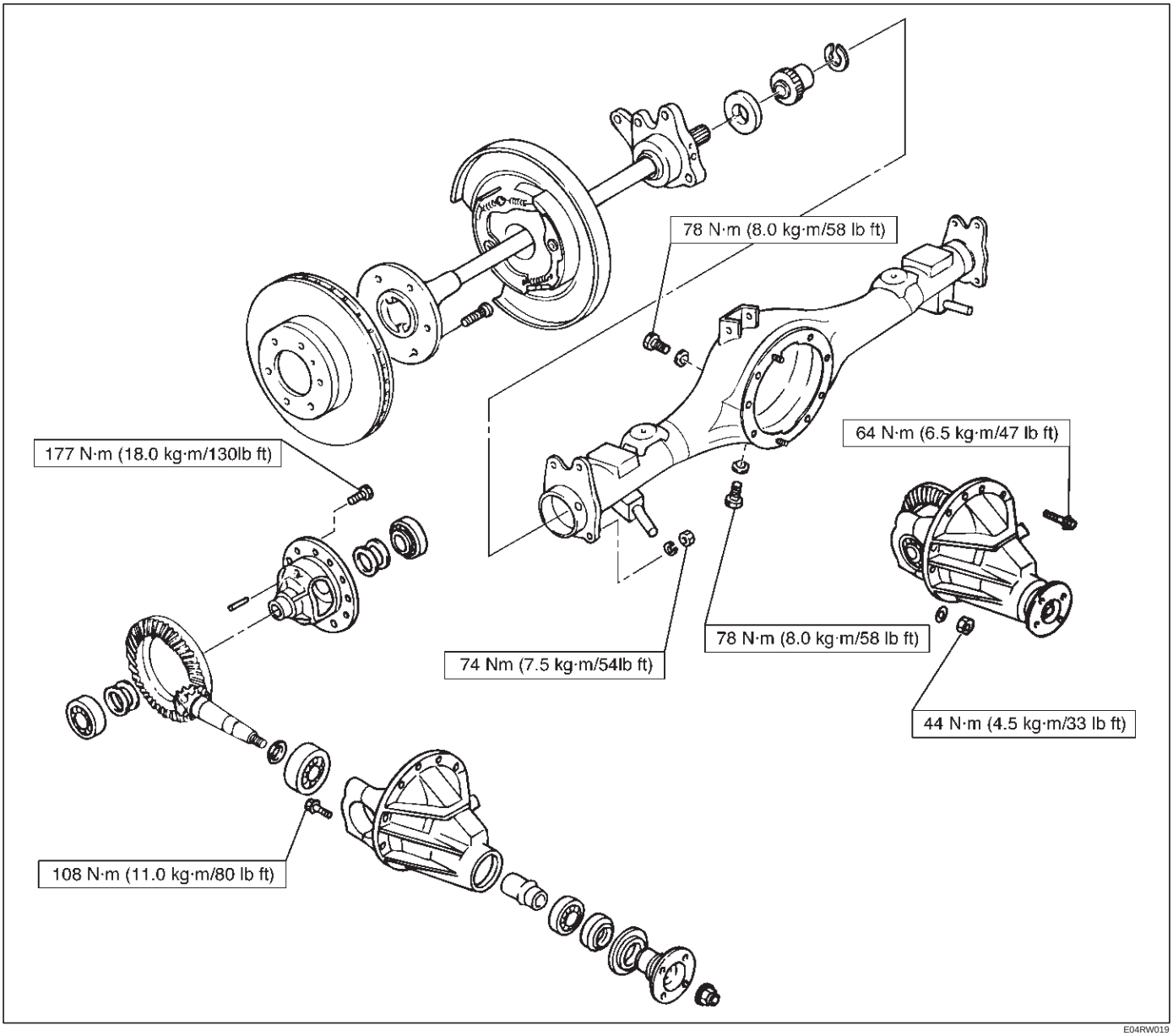

E04RW019

Special Tools

ILLUSTRATION	TOOL NO. TOOL NAME
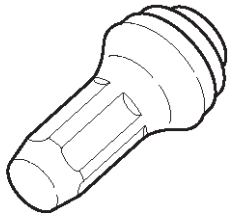 901RS205	**5–8840–2294–0** **(J–39210)** Installer; Axle shaft inner seal
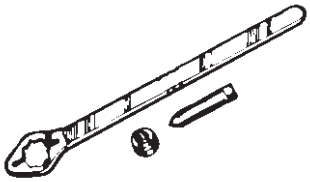 901RW037	**5–8840–0133–0** **(J–8614–01)** Pinion flange holder
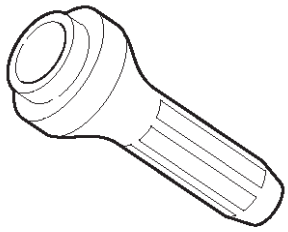 901RS211	**5–8840–2165–0** **(J–37263)** Installer; Pinion oil seal
901RW038	**5–8840–2029–0** **(J–42832)** Holding fixture
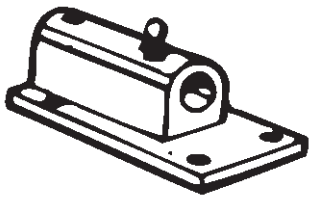 901RS212	**5–8840–0003–0** **(J–3289–20)** Holding fixture base
901RW039	**5–8840–2587–0** **(J–42379)** Remover; Bearing

ILLUSTRATION	TOOL NO. TOOL NAME
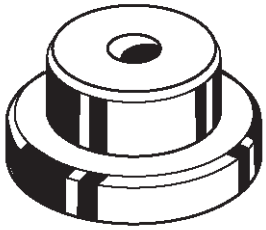 901RS215	**5–8840–2576–0** **(J–8107–3)** Adapter; Side bearing plug
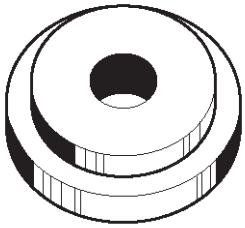 901RS217	**5–8840–0008–0** **(J–8611–01)** Installer; Outer bearing outer race
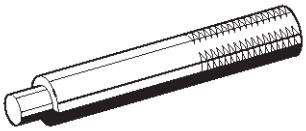 901RS218	**5–8840–0007–0** **(J–8092)** Grip
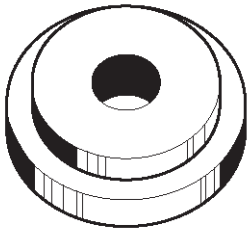 901RS219	**5–8840–2571–0** **(J–42831)** Installer; Inner bearing outer race
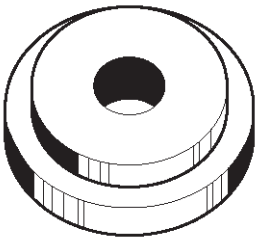 901RS220	**5–8840–2575–0** **(J–42824)** Pilot;Outer
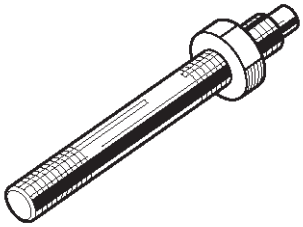 901RS221	**5–8840–0127–0** **(J–21777–43)** Nut & Stud

ILLUSTRATION	**TOOL NO.** TOOL NAME
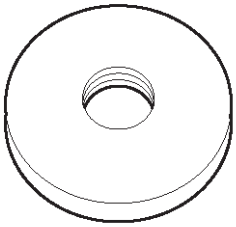 901RS222	**5–8840–2573–0** **(J–42827)** Pilot;Inner
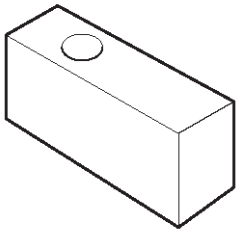 901RS223	**5–8840–2572–0** **(J–42826)** Gage plate
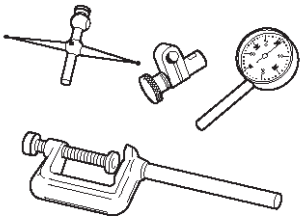 901RS224	**5–8840–0126–0** **(J–8001)** Dial indicator
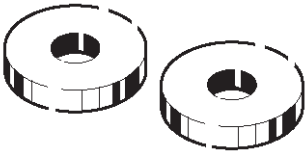 901RS225	**5–8840–2577–0** **(J–42825)** Disc (2 required)
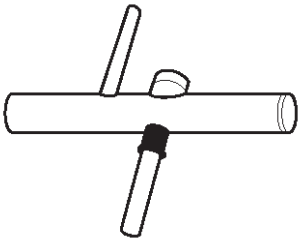 901RS226	**5–8840–0128–0** **(J–23597–1)** Arbor
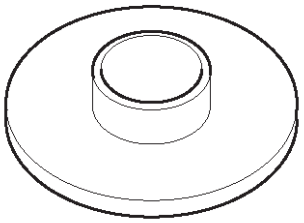 901RS208	**5–8840–2574–0** **(J–42828)** Installer; Pinion bearing

ILLUSTRATION	**TOOL NO.** TOOL NAME
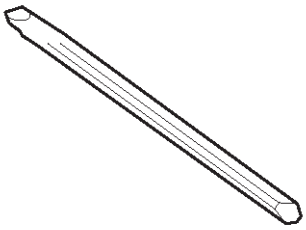 901RS228	**5–8840–2293–0** **(J–39209)** Punch; End nut lock
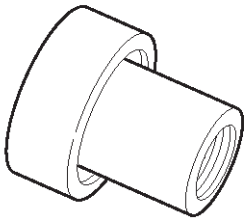 901RS229	**5–8840–2570–0** **(J–42829)** Installer; Side bearing
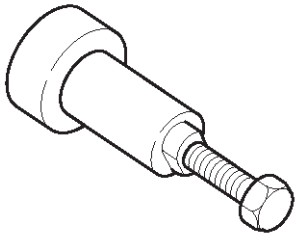 901RS230	**5–8840–2323–0** **(J–39602)** Remover; Outer bearing
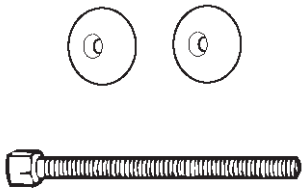 901RW064	**5–8840–2586–0** **(J–39858)** Clutch pack unloading tool kit Includes Screw cap, Cap and Forcing screw

DRIVELINE/AXLE

DRIVELINE CONTROL SYSTEM (SHIFT ON THE FLY)

CONTENTS

Service Precaution 4B1–1
Shift on the Fly System (Lever Type) 4B1–2
Outline of Shift on the Fly System (Lever Type) 4B1–2
Shift on the Fly Vacuum Piping and Electric Equipment (For Lever Control Type) 4B1–3
Vacuum Piping Diagram 4B1–3
Inspection and Repair 4B1–4
Shift on the Fly System (Push Button Type) . 4B1–7
Outline of Shift on the Fly System (Push Button Type) 4B1–7
Functions of Indicator Lamp 4B1–11
Diagnosis 4B1–11
Front Axle Diagnosis 4B1–30
Shift on the Fly Vacuum Piping and Electric Equipment (For Push Button Type) 4B1–32
Vacuum Piping Diagram 4B1–32
Inspection and Repair 4B1–33
4WD Control Unit (For Push Button Type) . . 4B1–36
4WD Control Unit Associated Parts 4B1–36
Removal 4B1–37
Installation 4B1–37

Service Precaution

WARNING: IF SO EQUIPPED WITH A SUPPLEMENTAL RESTRAINT SYSTEM (SRS), REFER TO THE SRS COMPONENT AND WIRING LOCATION VIEW IN ORDER TO DETERMINE WHETHER YOU ARE PERFORMING SERVICE ON OR NEAR THE SRS COMPONENTS OR THE SRS WIRING. WHEN YOU ARE PERFORMING SERVICE ON OR NEAR THE SRS COMPONENTS OR THE SRS WIRING, REFER TO THE SRS SERVICE INFORMATION. FAILURE TO FOLLOW WARNINGS COULD RESULT IN POSSIBLE AIR BAG DEPLOYMENT, PERSONAL INJURY, OR OTHERWISE UNNEEDED SRS SYSTEM REPAIRS.

CAUTION: Always use the correct fastener in the proper location. When you replace a fastener, use ONLY the exact part number for that application. ISUZU will call out those fasteners that require a replacement after removal. ISUZU will also call out the fasteners that require thread lockers or thread sealant. UNLESS OTHERWISE SPECIFIED, do not use supplemental coatings (Paints, greases, or other corrosion inhibitors) on threaded fasteners or fastener joint interfaces. Generally, such coatings adversely affect the fastener torque and the joint clamping force, and may damage the fastener. When you install fasteners, use the correct tightening sequence and specifications. Following these instructions can help you avoid damage to parts and systems.

Shift on the Fly System (Lever Type)

Outline of Shift on the Fly System (Lever Type)

The shift on the fly system (Lever type) switches between 2 wheel drive (2WD) and 4 wheel drive (4WD) by driver's shifting the transfer control lever on the floor.
This system controls below operations.

1. Connecting front wheels to, and disconnecting them from, the front axles by vacuum actuator.
2. Indicator on instrument panel.
3. 4WD signal to Electronic Hydraulic Control Unit for brake system (If anti–lock brake system is equipped).

Shift on the Fly Vacuum Piping and Electric Equipment (For Lever Control Type)

Vacuum Piping Diagram

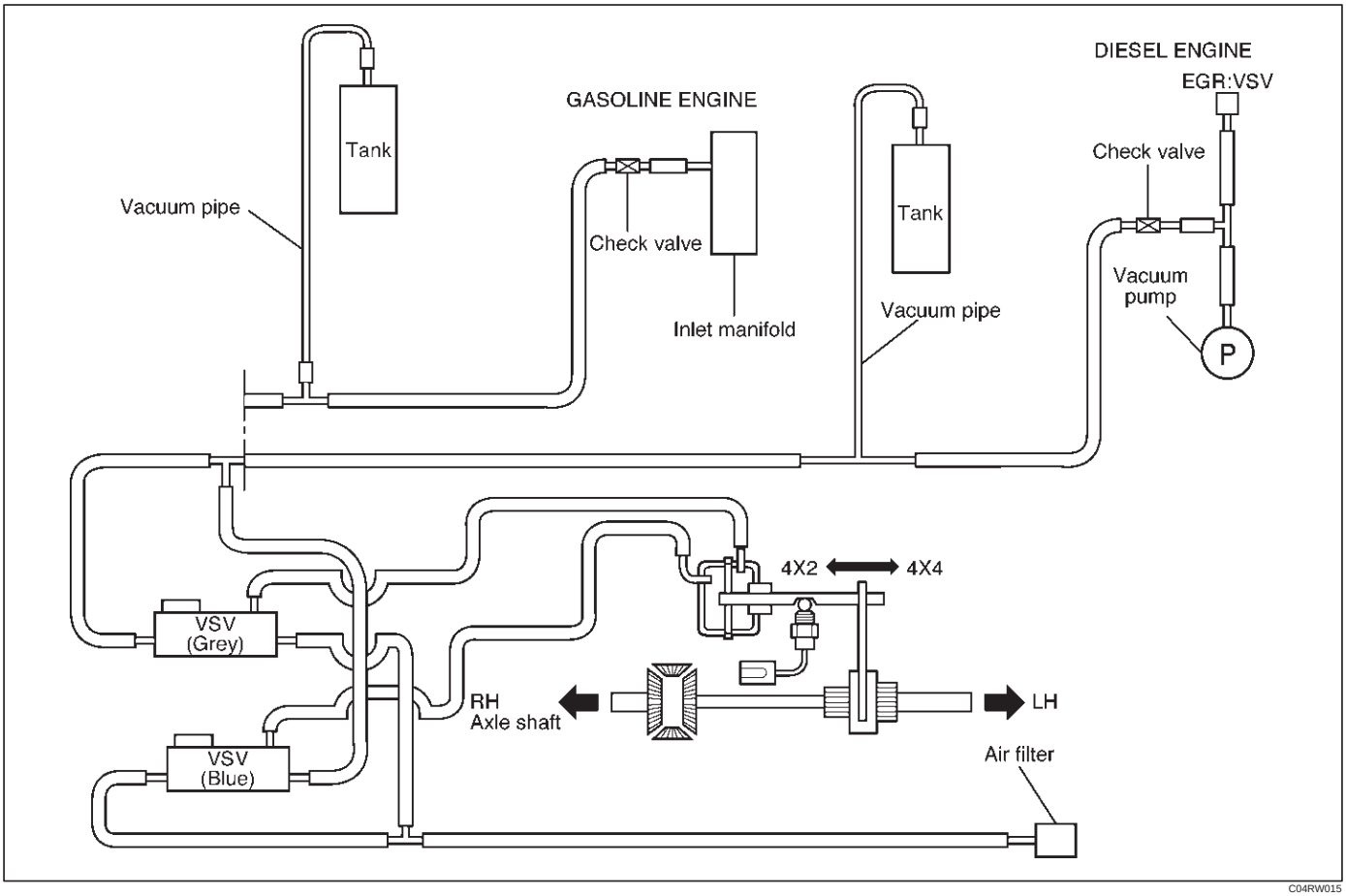

C04RW015

VSV Assembly, Actuator Assembly

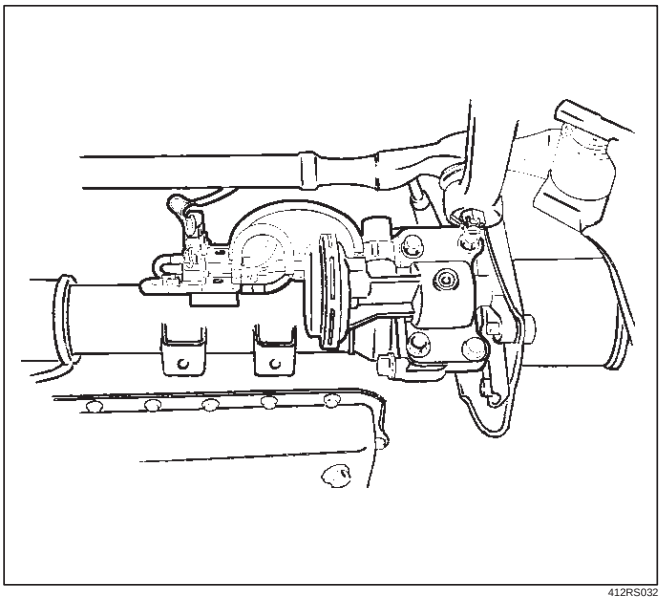

412RS032

Vacuum Tank

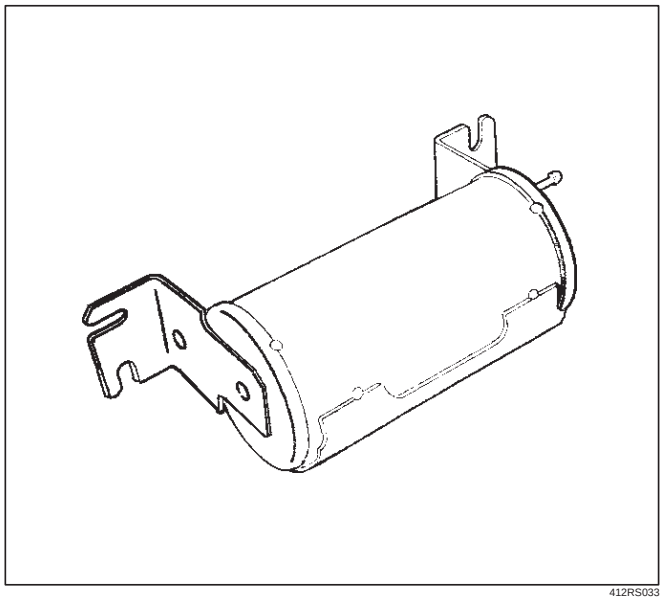

412RS033

Inspection and Repair

Vacuum Piping

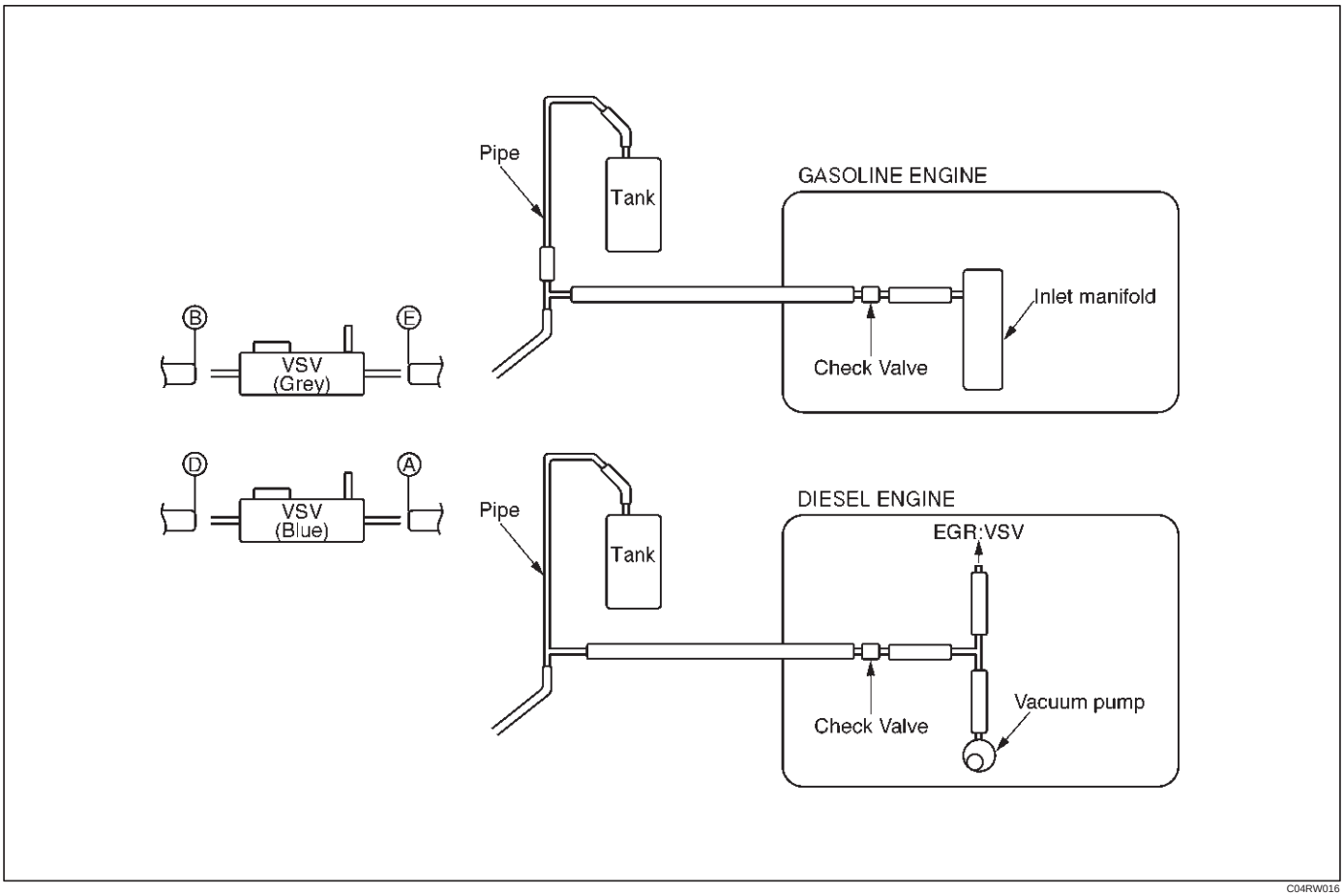

C04RW016

1. Pull out the Hose A in figure and install a vacuum gauge.
2. Plug up Hose B in figure to prevent the leak of vacuum.
3. Start the engine and measure vacuum 2 or 3 minutes afterward.
4. Repeat 1) and 2) but with Hose A plugged and Hose B pulled out.
5. If vacuum measures –400mmHg, or if it shows a sudden drop immediately after engine stop, inspect the hose, tank, and pipe for damage.

NOTE: Be careful not to permit the entry of dust and water during inspection.

6. Pull out Hose D in above illustration.
7. Plug Hose E in above illustration.
8. Make sure that Hose D in above illustration is under atmospheric pressure.
9. Pull out Hose E and plug Hose D, and make sure that Hose E is under atmospheric pressure.
10. If Check 8) or 9) has revealed stoppage, check and see that there is no bend, foreign matter in the hose or in the filter. If there is trouble, repair or replace.

Check Valve

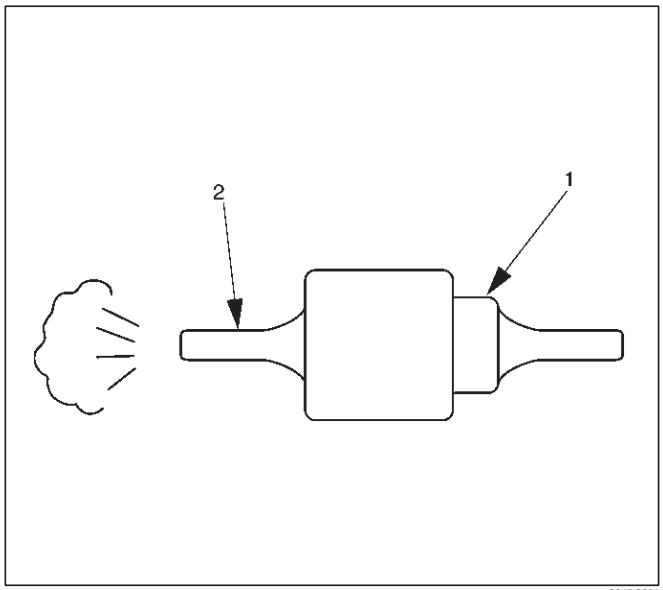

C04RS004

1. Apply vacuum from the orange colored side(1).

   Vacuum:–400mmHg
2. Check leakage of vacuum.
3. Make sure that vacuum cannot be applied from the black colored side(2).

4. If vacuum is not applicable as much as –400mmHg, and if there is resistance on the intake side, replace with a new check valve.

VSV Assembly

Inspect the vehicle side harness as follows:

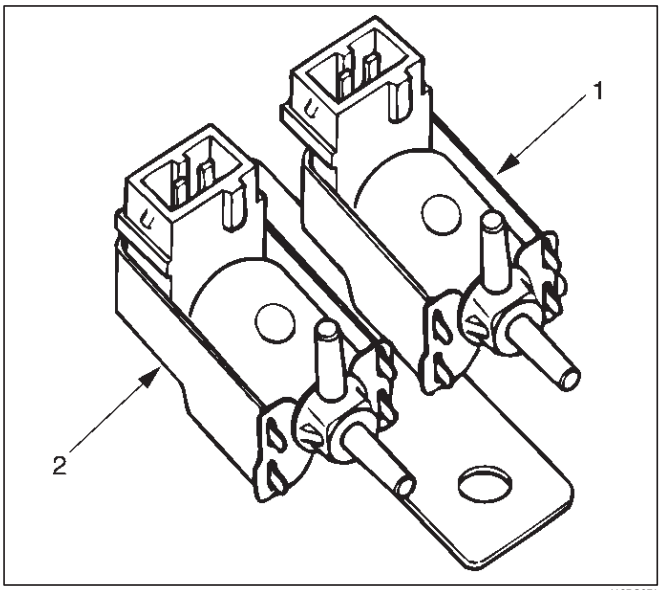

412RS071

Legend
(1) Grey
(2) Blue

1. Remove connector.
2. Shift transfer lever to 2H and start the engine.

NOTE: Do not move the vehicle while inspection.

3. Make sure that there is continuity in the vehicle side of harness. If there is no continuity, check transfer shift switch and wiring.

Inspect both VSVs as follows:

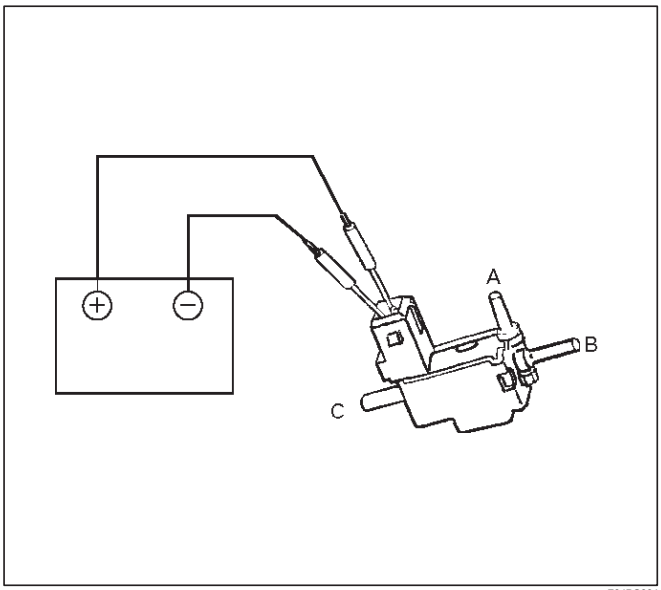

F04RS004

1. With battery not connected (Usual).
   A–C:There is continuity
   B:Closed
2. With battery connected
   A – B:There is continuity
   C:Closed
3. If 1) and 2) fail, replace with a new VSV.

Axle Position Switch

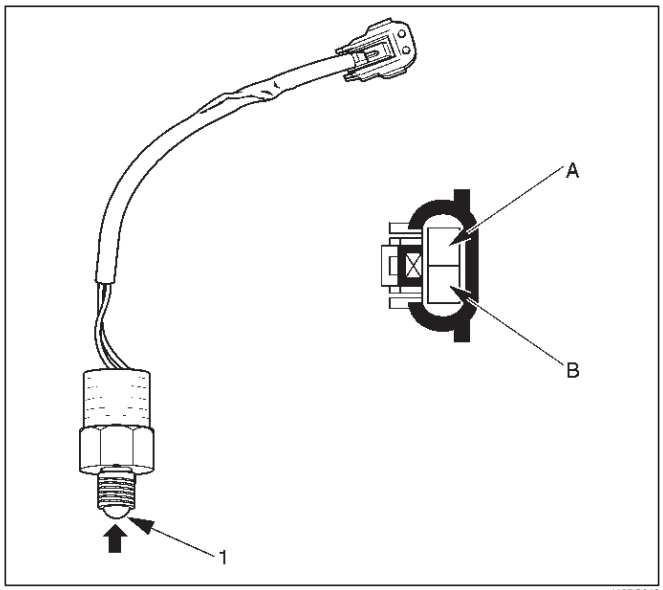

412RS048

1. With ball (1) being free
   A – B:There is continuity
2. With ball forced into the switch
   A – B:No continuity
3. If 1) and 2) fail, replace with a new switch.

Transfer Position Switch

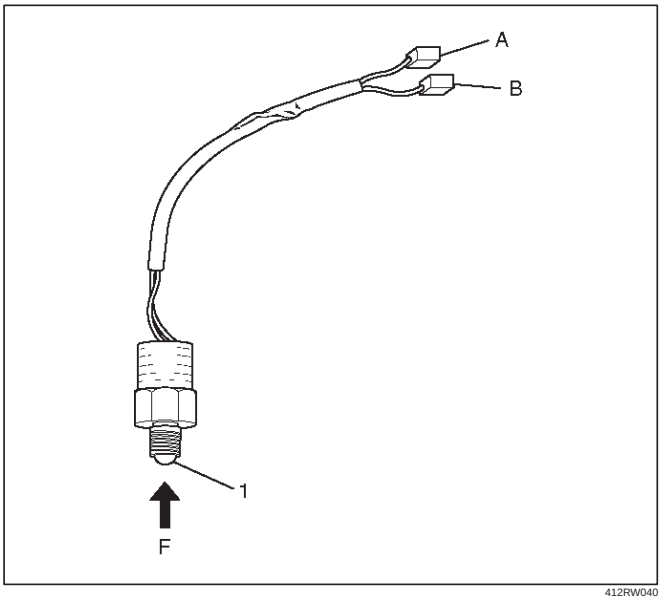

Legend

(1) Ball

1. With ball being free.
   A–B : There is continuity.
2. With ball forced into the switch.
   A–B : No continuity.
3. If 1) and 2) fail, replace with a new switch.

Shift on the Fly System (Push Button Type)

Outline of Shift on the Fly System (Push Button Type)

The shift on the fly system switches between 2 wheel drive (2WD) and 4 wheel drive (4WD) electrically by driver's pressing the 4WD switch (push button type) on instrument panel.
This system controls below operations. (Shifting between "4H" and "4L" must be performed by transfer control lever on the floor.)

1. Shifting the transfer front output gear (Connecting to, and disconnecting from, front propeller shaft by motor actuator).
2. Retrial of shifting the transfer front output gear.
3. Connecting front wheels to, and disconnecting them from, the front axles by vacuum actuator.
4. Indicator on instrument panel.
5. 4WD out signal to other Electronic Hydraulic Control Unit (If anti–lock brake system is equipped).

System Diagrams

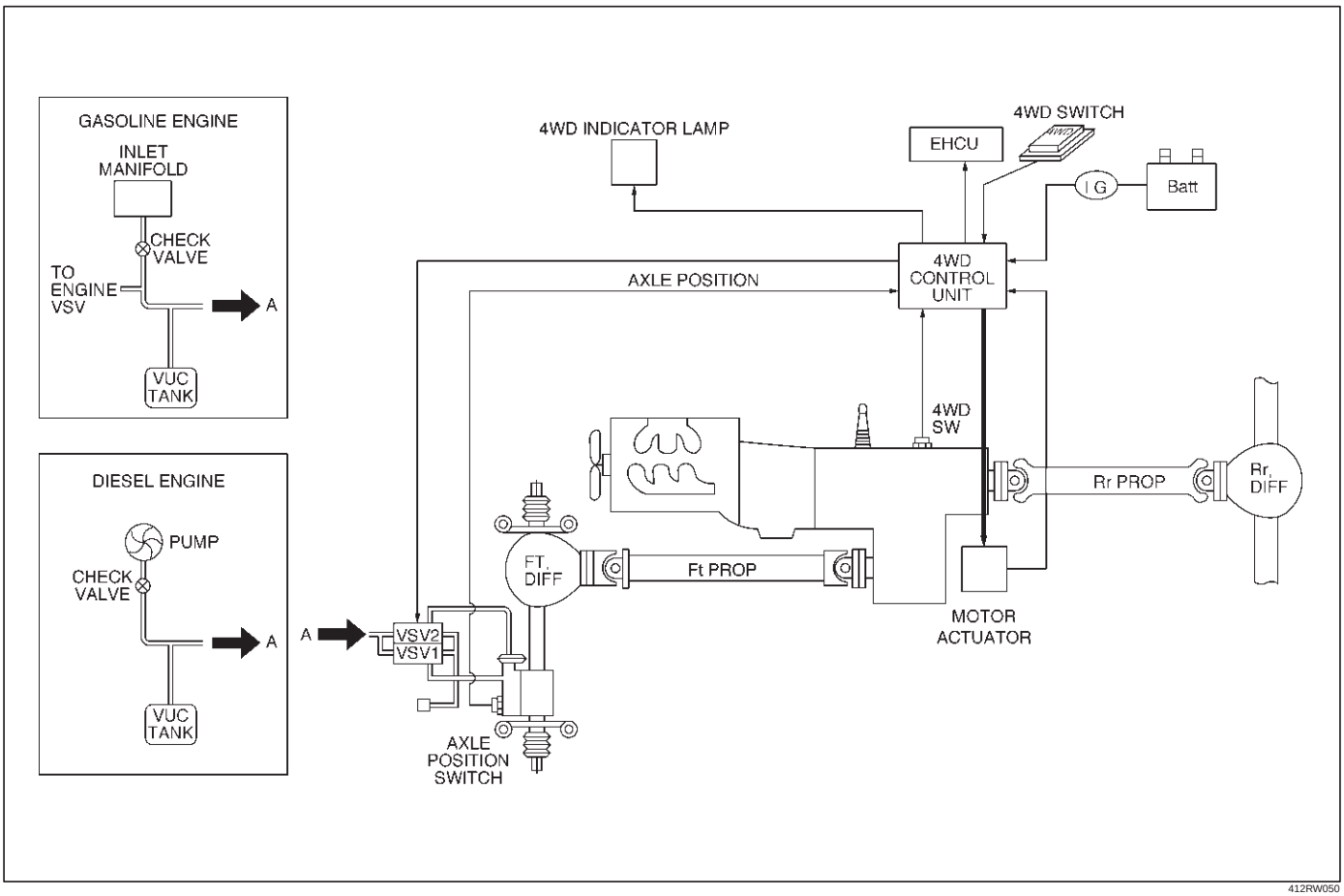

412RW050

Normal Operation

The motor actuator mounted on transfer rear case is driven by signal from 4WD switch on instrument panel. After complete the connecting transfer front output gear to, or disconnecting it from, front propeller shaft, condition of the transfer position switch changes. The vacuum solenoid valve (VSV) is driven by the signal from transfer position switch and the vacuum actuator connects front wheels to, or disconnect them from, front axles.

Time Chart of Shifting Under Normal Condition

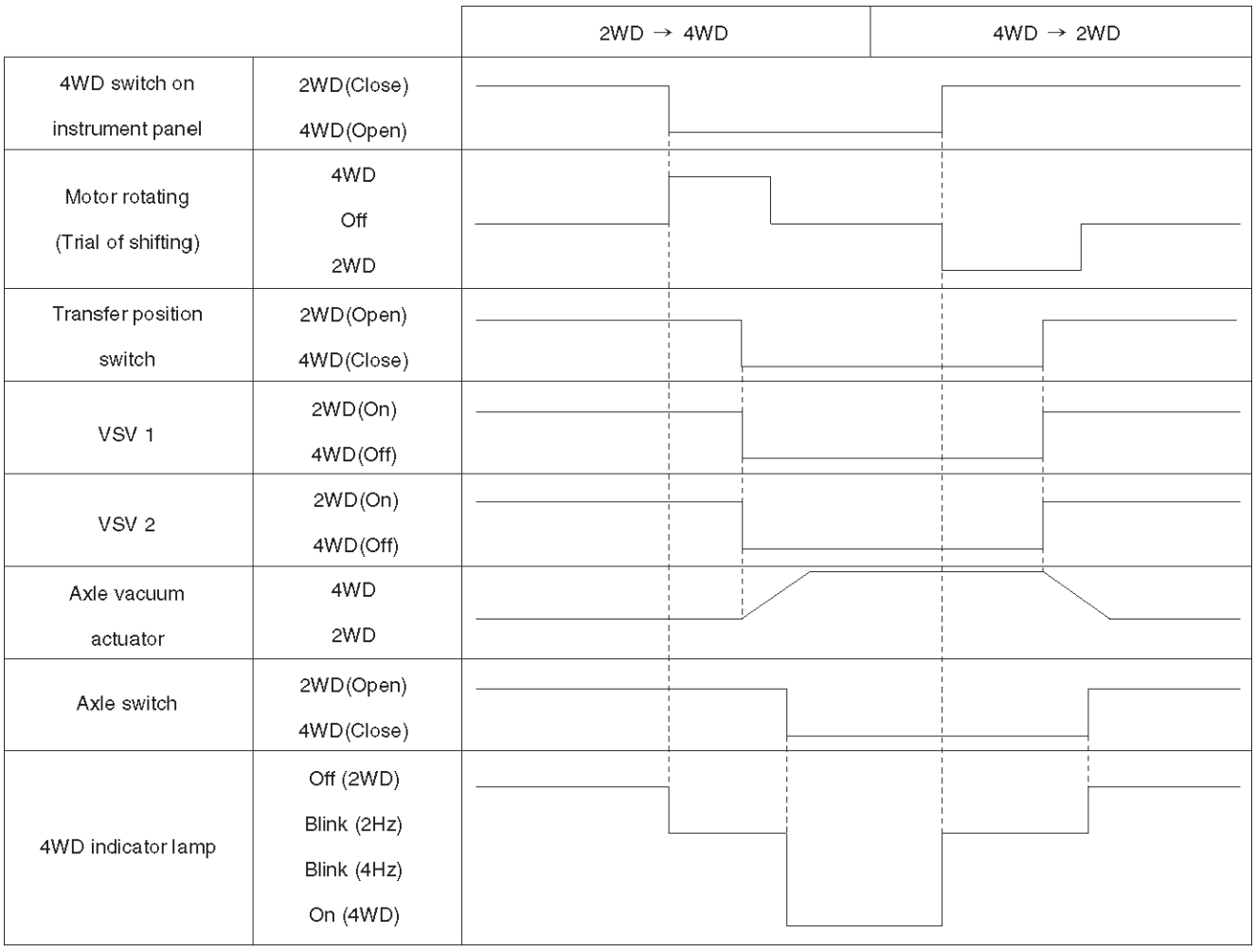

F04RW002

Retrial

The motor actuator starts transfer gear shifting after signal from 4WD switch on instrument panel has been received. But the shifting may be impossible in cold weather or under high speed condition. When 2 seconds have passed since transfer gear shifting started and the transfer position switch dose not turn on (the gear engagement is not completed), the motor reverses its rotation for 1.2 seconds and tries again to shift transfer gear. This procedure is repeated 3 times in maximum. While this procedure, 4WD indicator lamp blinks by 2 Hz. If the transfer position switch does not turn on after aforementioned procedure has been repeated 3 times, the gear shifting is stopped and 4WD indicator lamp's blinking changes from 2Hz to 4Hz to notify driver that the gear shifting is stopped. This blinking of indicator lamp continues until 4WD switch is returned from 4WD to 2WD.

Time Chart of Shifting Under Severe Condition (re-trial)

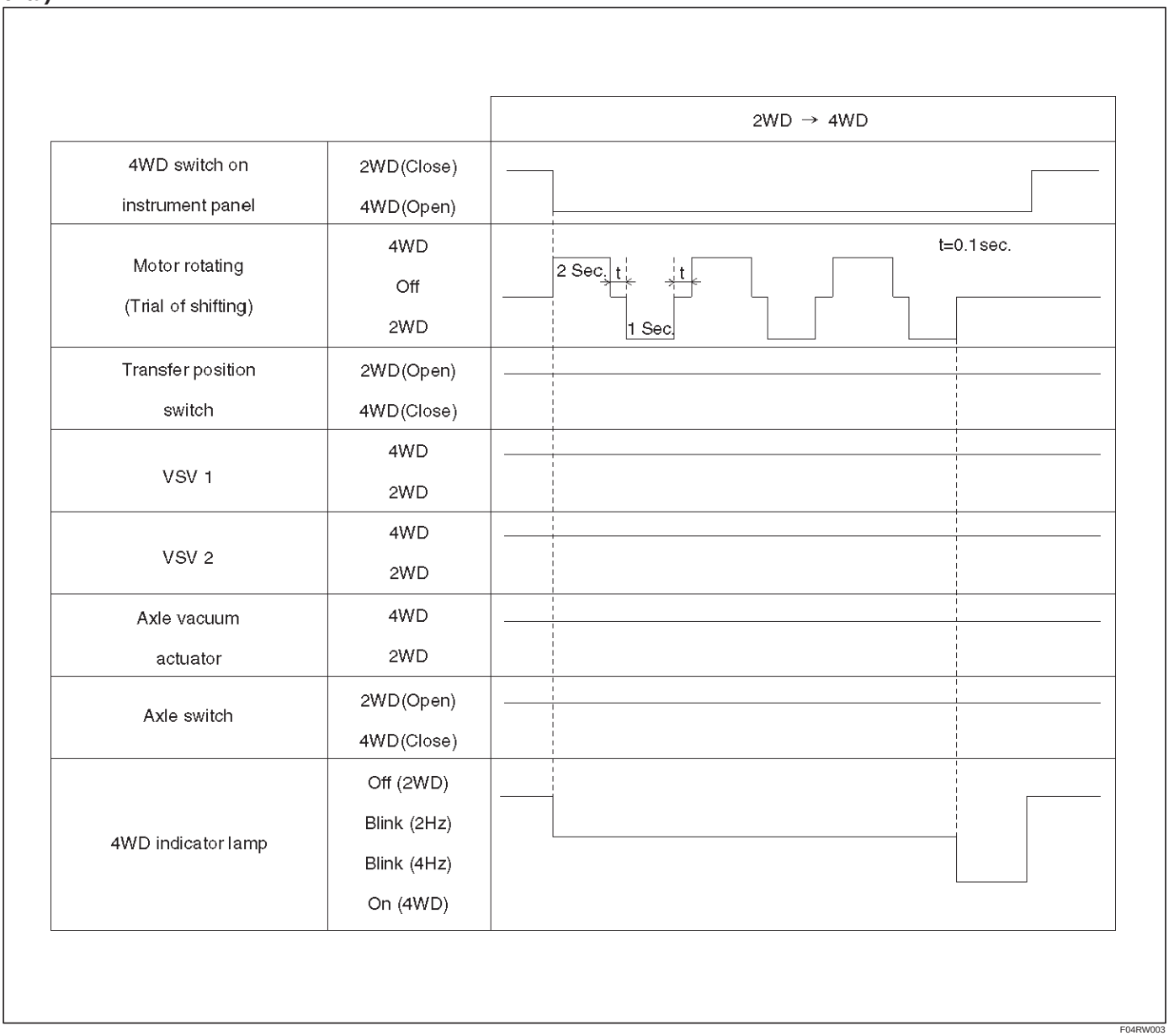

F04RW003

Warning at "4L" position : In view of the shifting mechanism of transfer, the gear shifting from 4WD to 2WD at "4L" condition is impossible. Therefore, the transfer position switch can not be turned off by 4WD switch when vehicle is in "4L" condition. In the case this condition continues for 2 seconds, the shifting to 2WD is stopped and the indicator lamp's blinking changes from 2Hz to 4Hz to notify driver of wrong operation.

Time Chart of Shifting from 4WD to 2WD at "4L" Condition

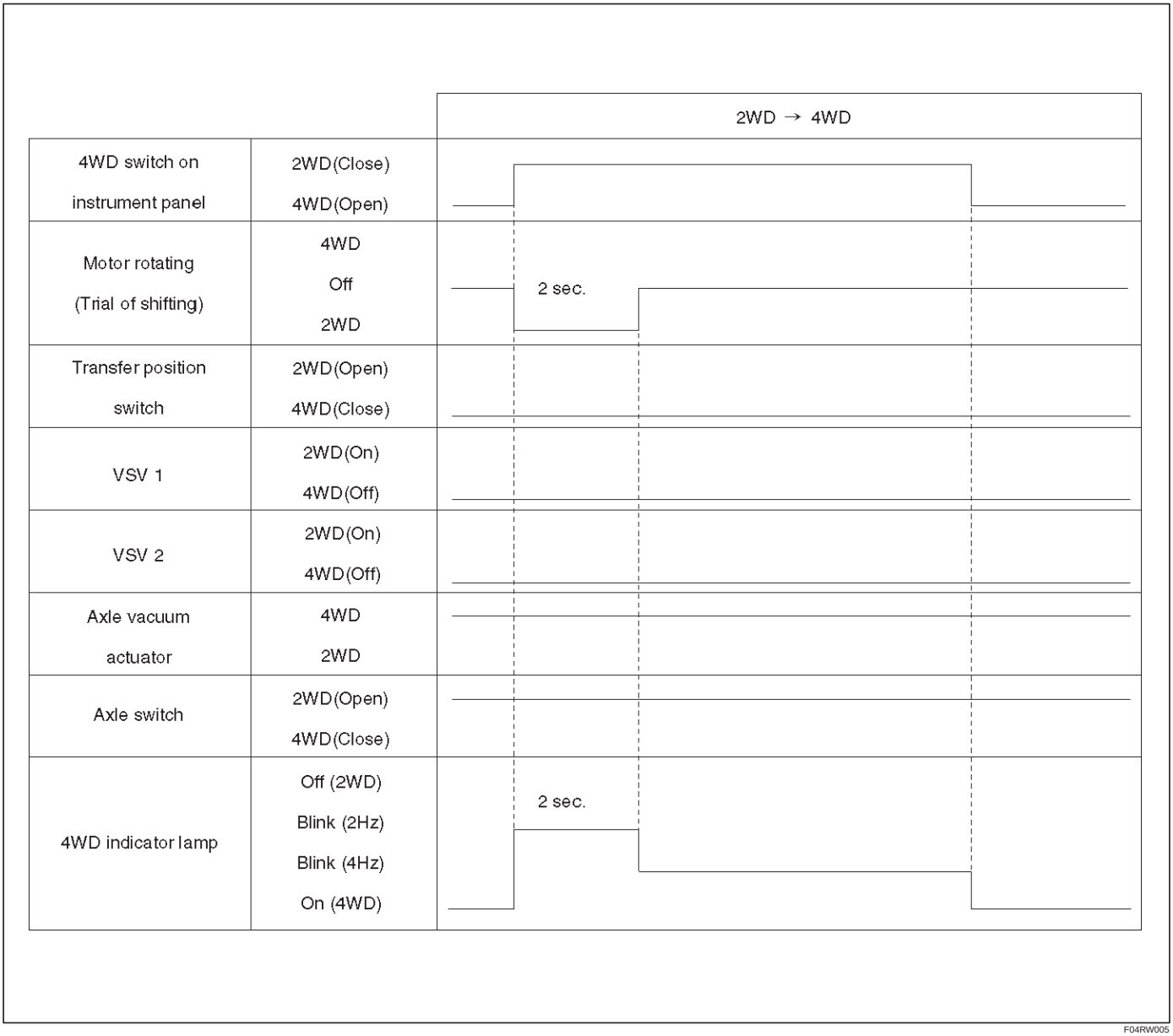

F04RW005

4WD out signal to other Electronic Hydraulic Control Unit : 4WDcontrol unit sends 4WD out signal to other Electronic Hydraulic Control Unit as below.

4WD out signal (Period)	Vehicle Condition	Transfer position switch	Front axle switch
120 ms	2WD	2WD (Open)	2WD (Open)
240 ms	4WD	4WD (Close)	4WD (Close)

Functions of Indicator Lamp

Indication of vehicle condition : Indicator lamp is controlled by 4WD control unit and shows vehicle conditions as below.

Indicator	Vehicle condition	4WD switch	Transfer position switch	Front axle switch
Off	2WD	Off (Close)	2WD (Open)	2WD (Open)
On	4WD	On (Open)	4WD (Close)	4WD (Close)
Blink (2Hz)	Operating	On (Open)	4WD (Close)	2WD (Open)
		Off (Close)	2WD (Open)	4WD (Close)
Blink (4Hz)	Stop operating	On (Open)	2WD (Open)	2WD (Open)
		Off (Close)	4WD (Close)	4WD (Close)

Bulb check : To check the bulb of indicator lamp, the indicator lamp comes on when ignition key is turned on, and goes off when the engine is started.
Retrials from 2WD to 4WD : In cold weather or under high speed condition, the gear shifting (engagement) sometimes does not complete by 3 trials. In such case, the indicator lamp inform driver of this incident as aforementioned chart (shown at Retrial in Outline of shift on the fly system).

Diagnosis

Before Judging That Troubles Occur (Unfaulty mode)

When Switching from 2WD to 4WD

1. **In case that blinking frequency of the 4WD indicator changes from 2Hz to 4Hz.**
   When heavy synchronization load is needed, the motor actuator tries the shifting transfer gear three times including the activation shifting. While the motor actuator tries shifting, the indicator blinks by 2Hz. If the third shifting fails, the indicator's blinking changes from 2Hz to 4Hz at the same time that the motor actuator shifted back to 2WD.
   Heavy synchronization load occurs by:
   - extremely lower temperature.
   - higher speed, rotation difference of wheels during cornering.

   Solution 1: Operate again after stop the vehicle or slow down.
2. **In case that the 4WD indicator continues blinking by 2Hz for more than 11.5 seconds.**
   When there is rotation difference of wheels or there is phase difference between front wheels and axles, it is difficult to connect front wheels to front axles. The blinking by 2Hz shows that shifting the transfer gear or connecting the front wheels is in the middle of operating. In above case, the indicator's blinking by 2Hz shows that connecting the front wheels is not completed (because the indicator's blinking changes to 4Hz when the shifting transfer gear is impossible.). And removal of rotation or phase difference make connecting the front wheels possible.

   Solution 2: When vehicle is running, drive straight ahead while accelerating and decelerating. When vehicle is at a stop, move the vehicle forward and backward from 2 to 3 meters.

When switching from 4WD to 2WD

1. **In case that the 4WD indicator continues blinking by 2Hz .**
   The 4WD indicator continues blinking by 2Hz until both shifting the transfer gear and disconnecting the front wheels are completed when switching 4WD to 2WD. When driveline is loaded with torsional torque, the shifting transfer gear and disconnecting front wheels are impossible. In this case, removal of torsional torque on driveline make the shifting transfer gear and disconnecting front wheels possible.

   Solution 3: When vehicle is running, drive straight ahead while accelerating and decelerating. When vehicle is at a stop, move the vehicle forward and backward from 2 to 3 meters.
2. **In case that the 4WD indicator's blinking changes from 2Hz to 4Hz.**
   Check the position of transfer lever. Is it at "4L" position? In view of the shifting mechanism of transfer, the gear shifting from 4WD to 2WD at "4L" condition is impossible.

   Solution 4: Push the 4WD switch to 4WD, shift the transfer lever to "High" position and re–operate the 4WD switch to 2WD.

Parts Location (LHD / Diesel Engine Model)

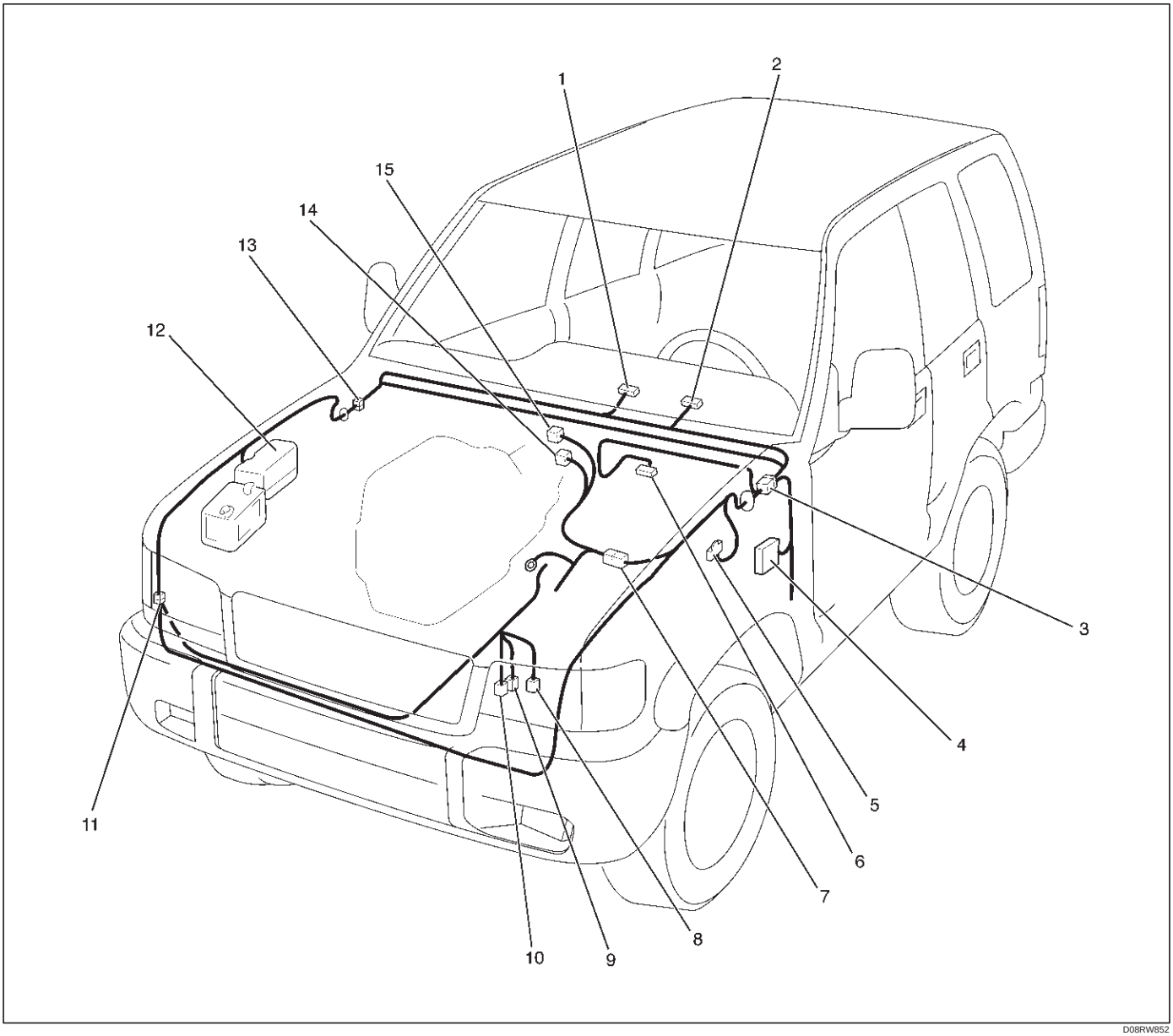

Legend

(1) I–12
(2) I–9
(3) H–7, H–8, H–24, H–25
(4) Fuse Box
(5) C–16
(6) C–94
(7) H–4, H–5
(8) P–17
(9) P–18
(10) P–19
(11) H–60
(12) Relay & Fuse Box
(13) H–12, H–16
(14) E–21
(15) E–45

Parts Location (LHD / Gasoline Engine Model)

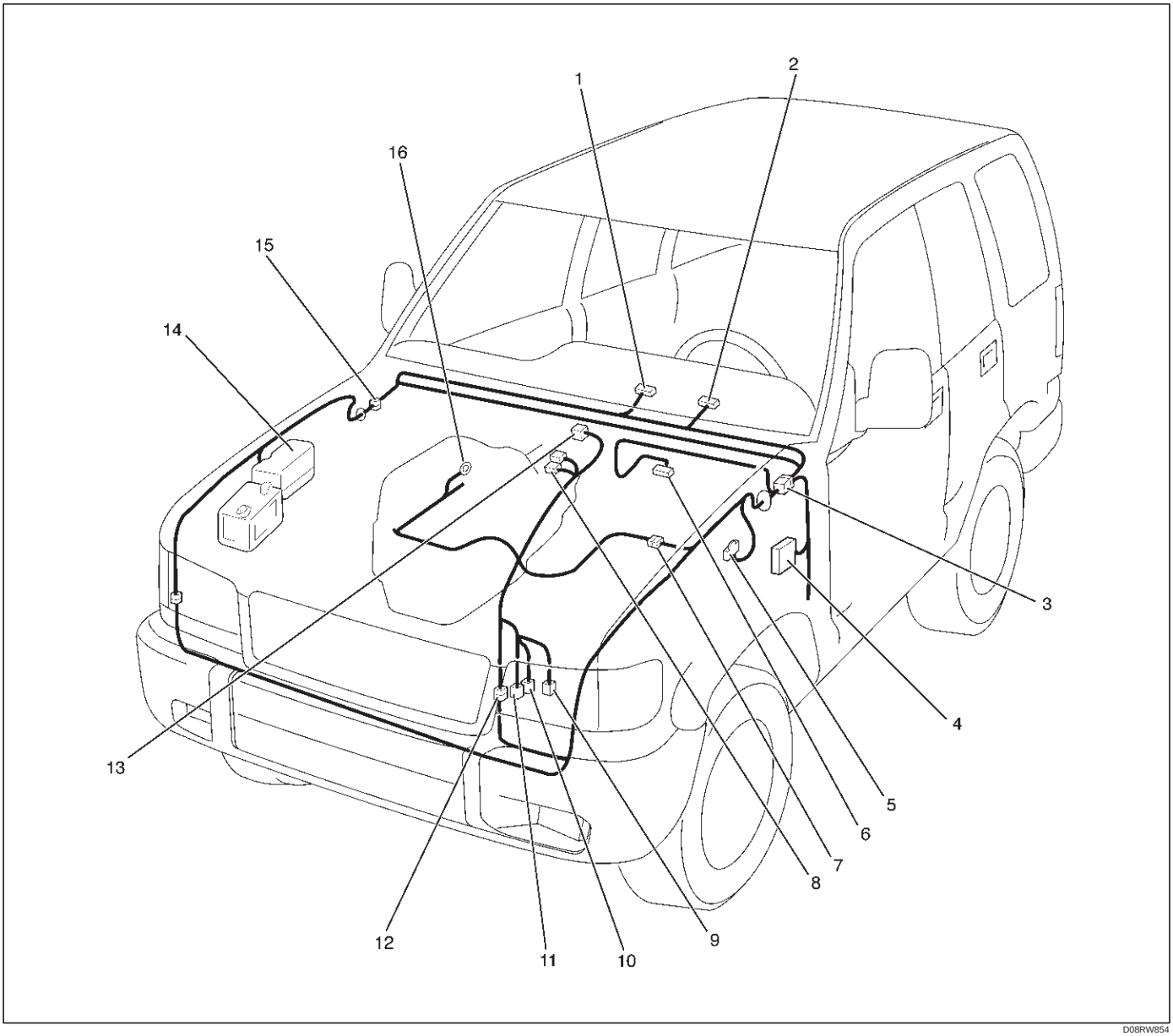

Legend

(1) I–12
(2) I–9
(3) H–7, H–8, H–24, H–25
(4) Fuse Box
(5) C–16
(6) C–94
(7) H–5
(8) M–11, M–12
(9) M–22
(10) M–23
(11) M–24
(12) H–10
(13) M–26
(14) Relay & Fuse Box
(15) H–12, H–16
(16) E–30

Parts Location (RHD / Diesel Engine Model)

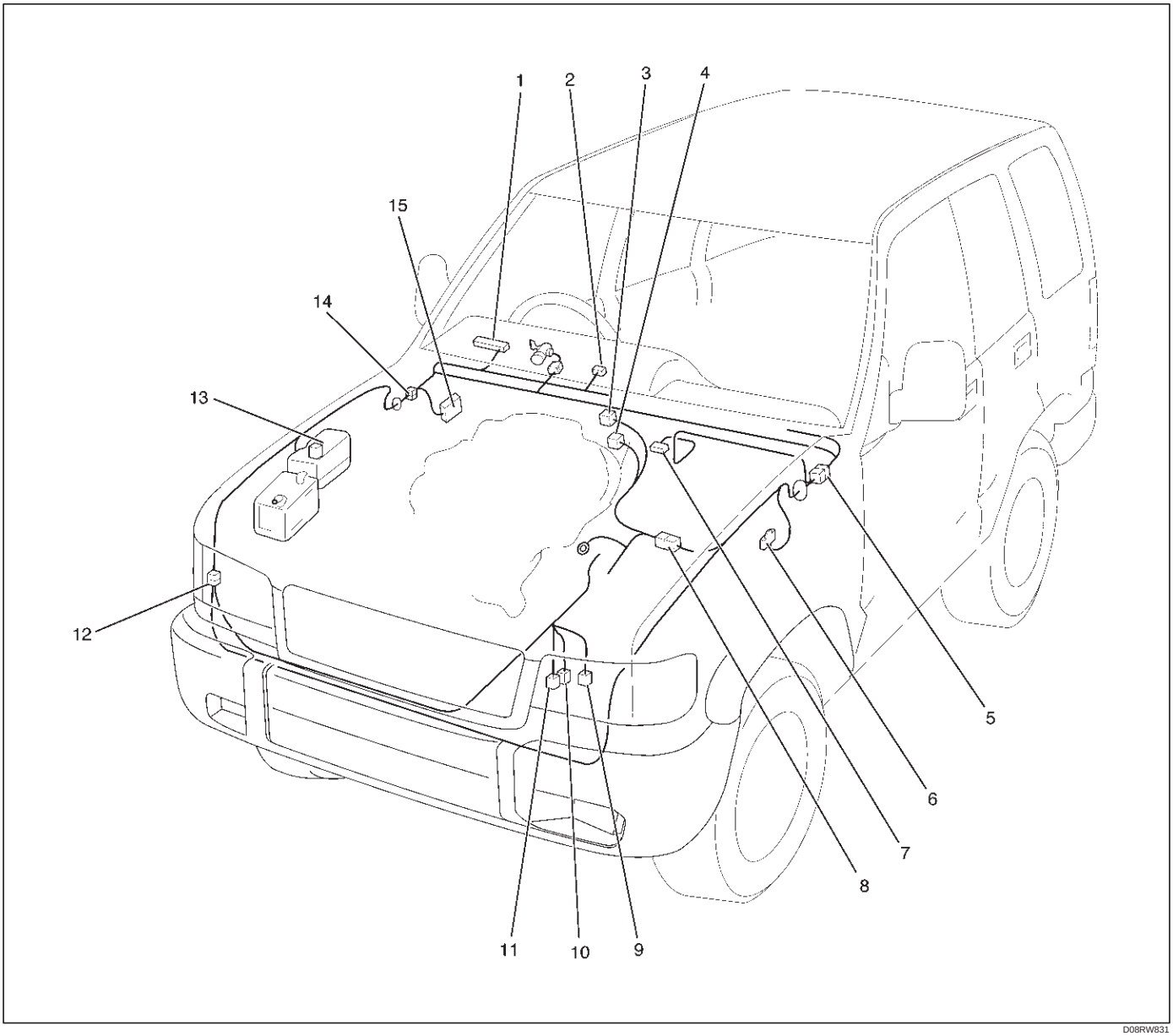

D08RW831

Legend

(1) I–9
(2) I–12
(3) E–45
(4) E–21
(5) H–7, H–9
(6) C–16
(7) C–94
(8) H–4, H–5
(9) P–17
(10) P–18
(11) P–19
(12) H–60
(13) Relay & Fuse Box
(14) H–15, H–16, H–25, H–26, H–27
(15) Fuse Box

Parts Location (RHD / Gasoline Engine Model)

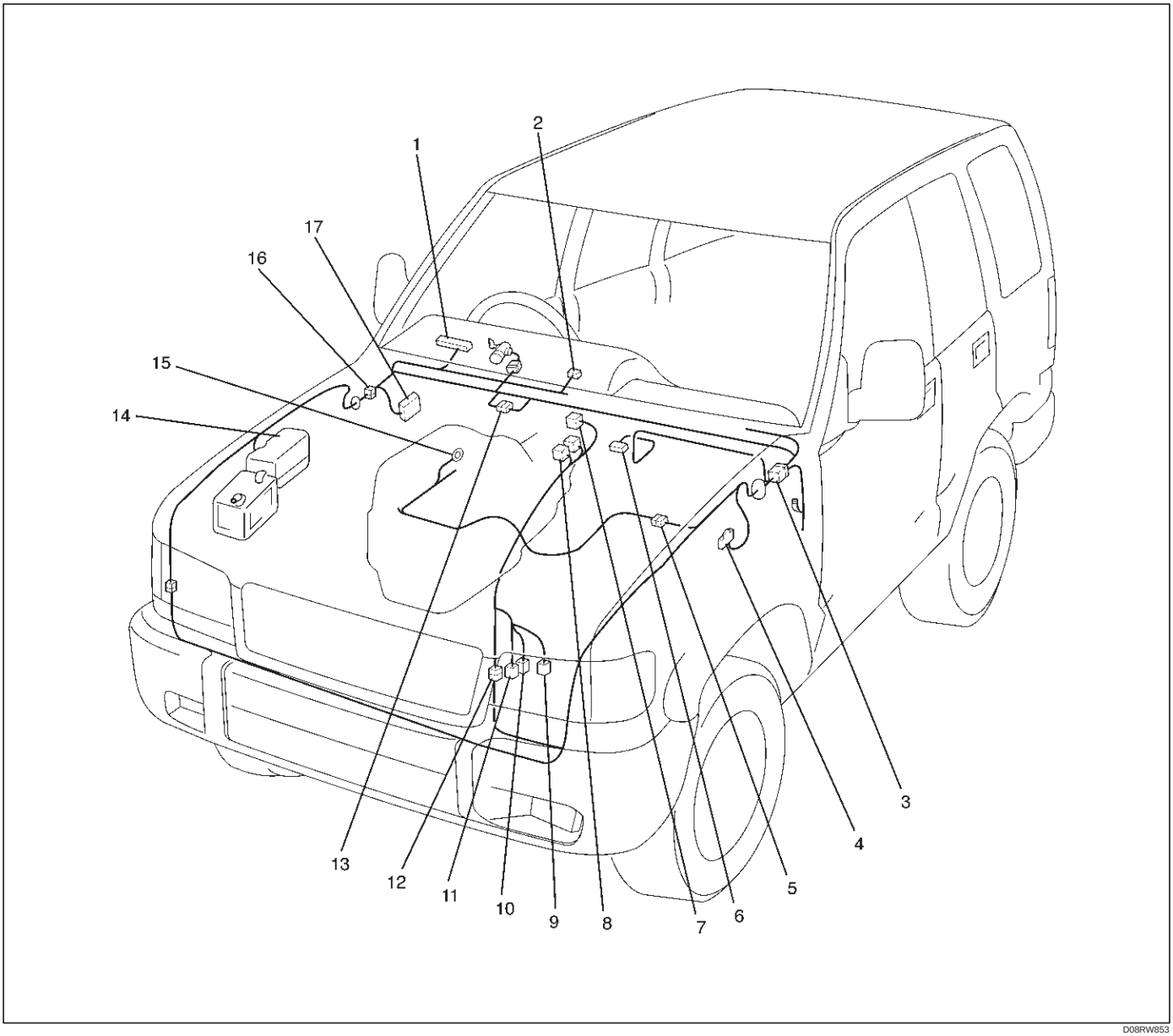

D08RW853

Legend

(1) I–9
(2) I–12
(3) H–7, H–9
(4) C–16
(5) H–5
(6) C–94
(7) M–26
(8) M–11, M–12
(9) M–22
(10) M–23
(11) M–24
(12) H–10
(13) H–12
(14) Relay & Fuse Box
(15) E–30
(16) H–15, H–16, H–25, H–26, H–27
(17) Fuse Box

Wiring Diagram (LHD Model)

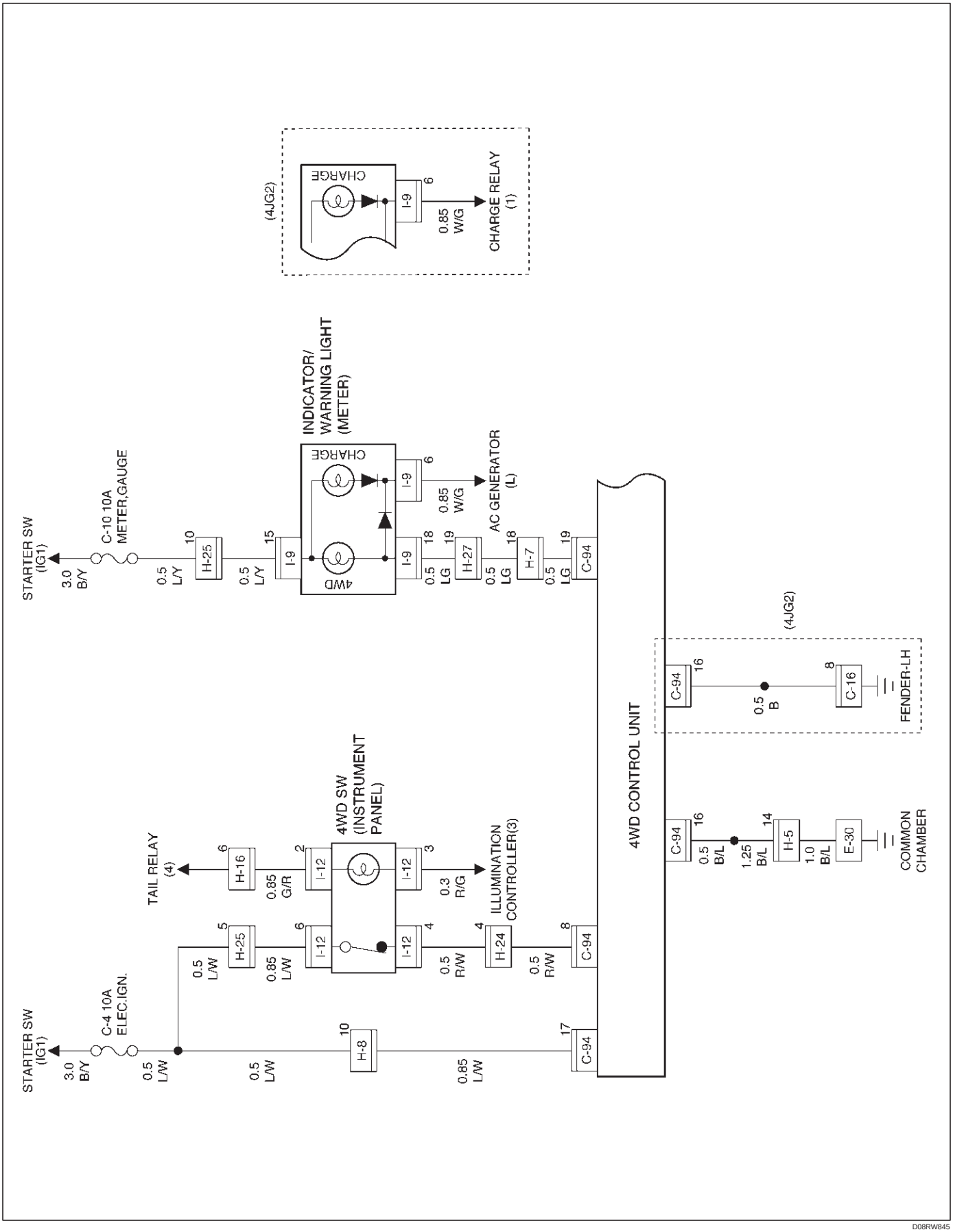

D08RW845

Wiring Diagram (LHD / Diesel Engine Model)

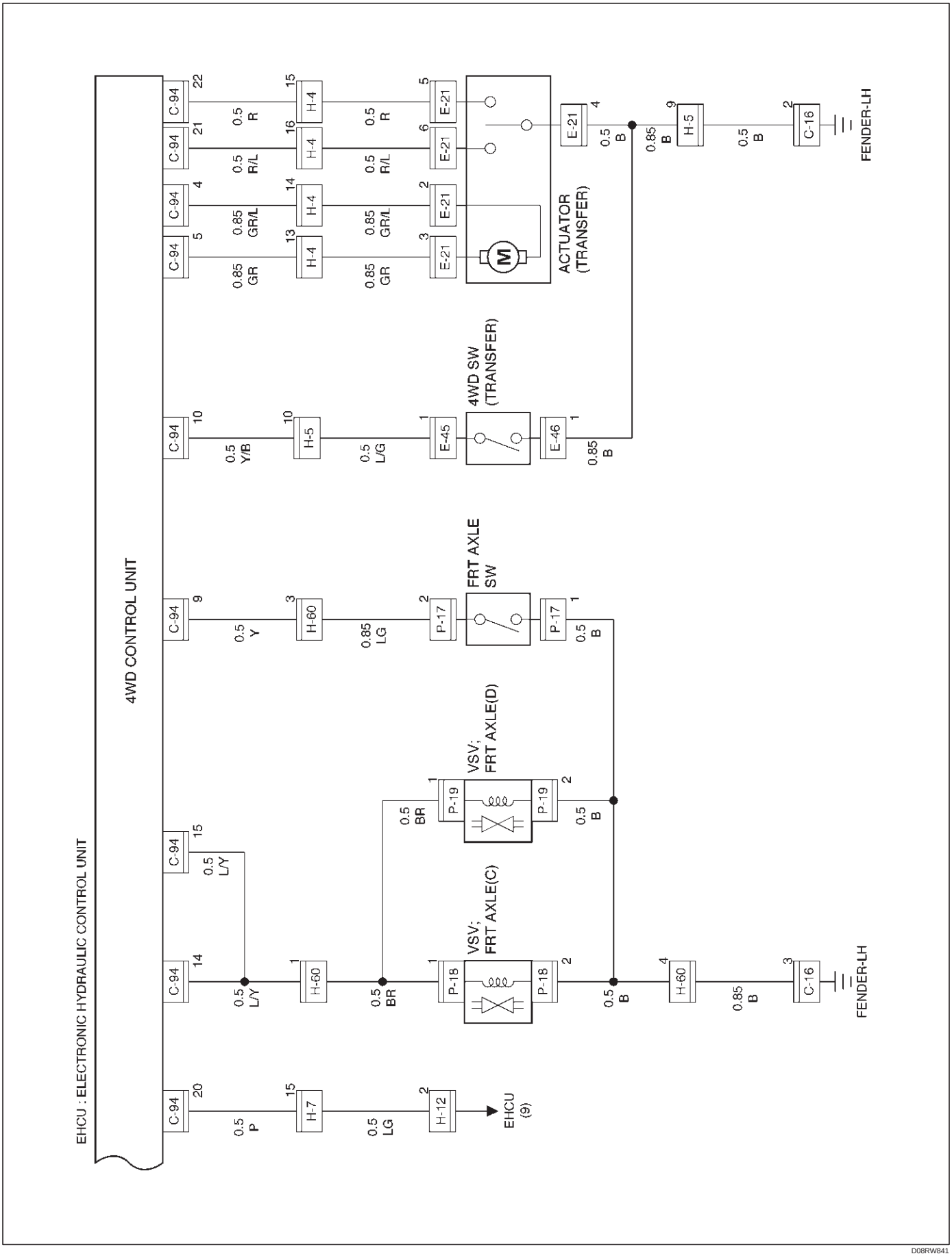

D08RW841

Wiring Diagram (LHD / Gasoline Engine Model)

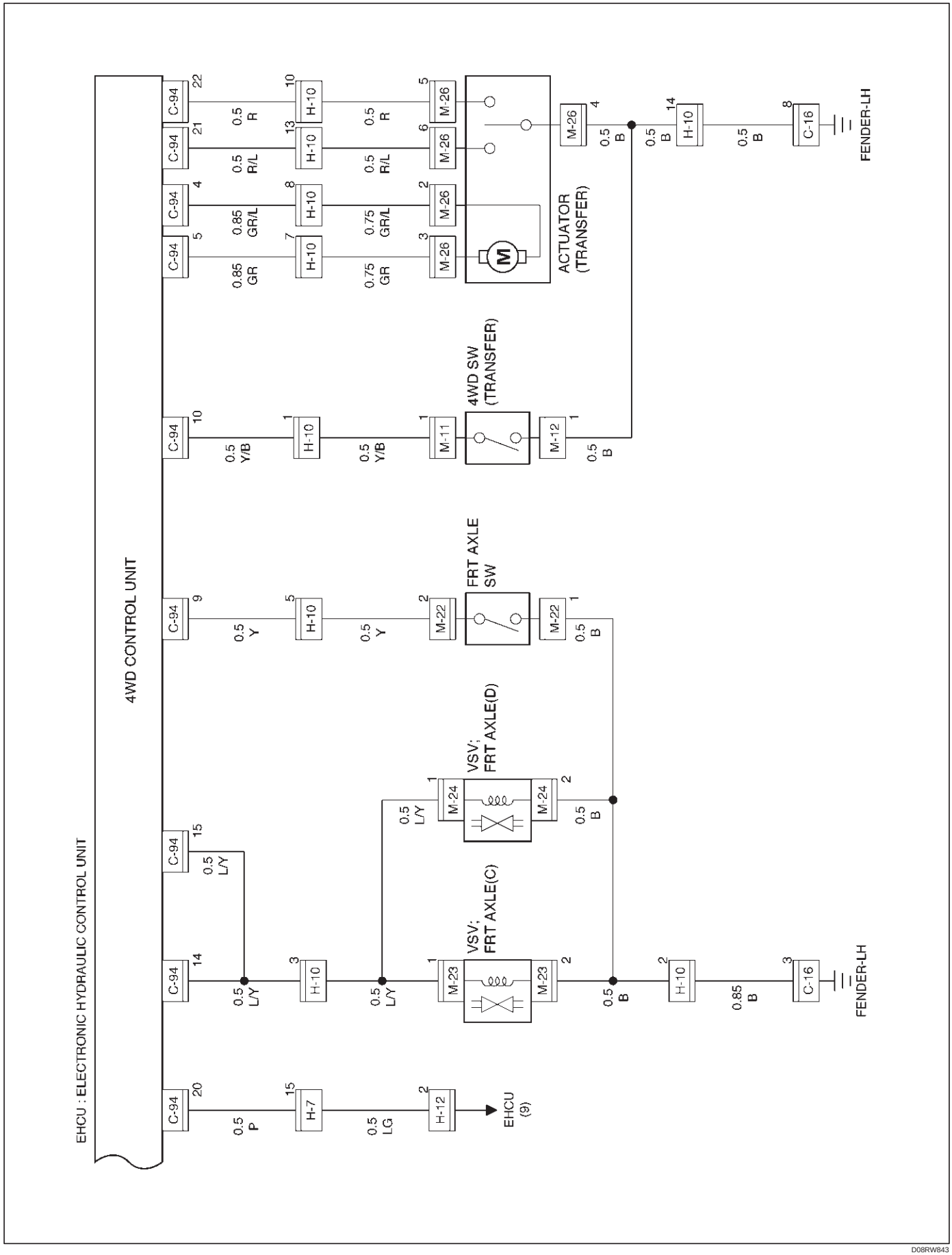

D08RW843

Wiring Diagram (RHD Model)

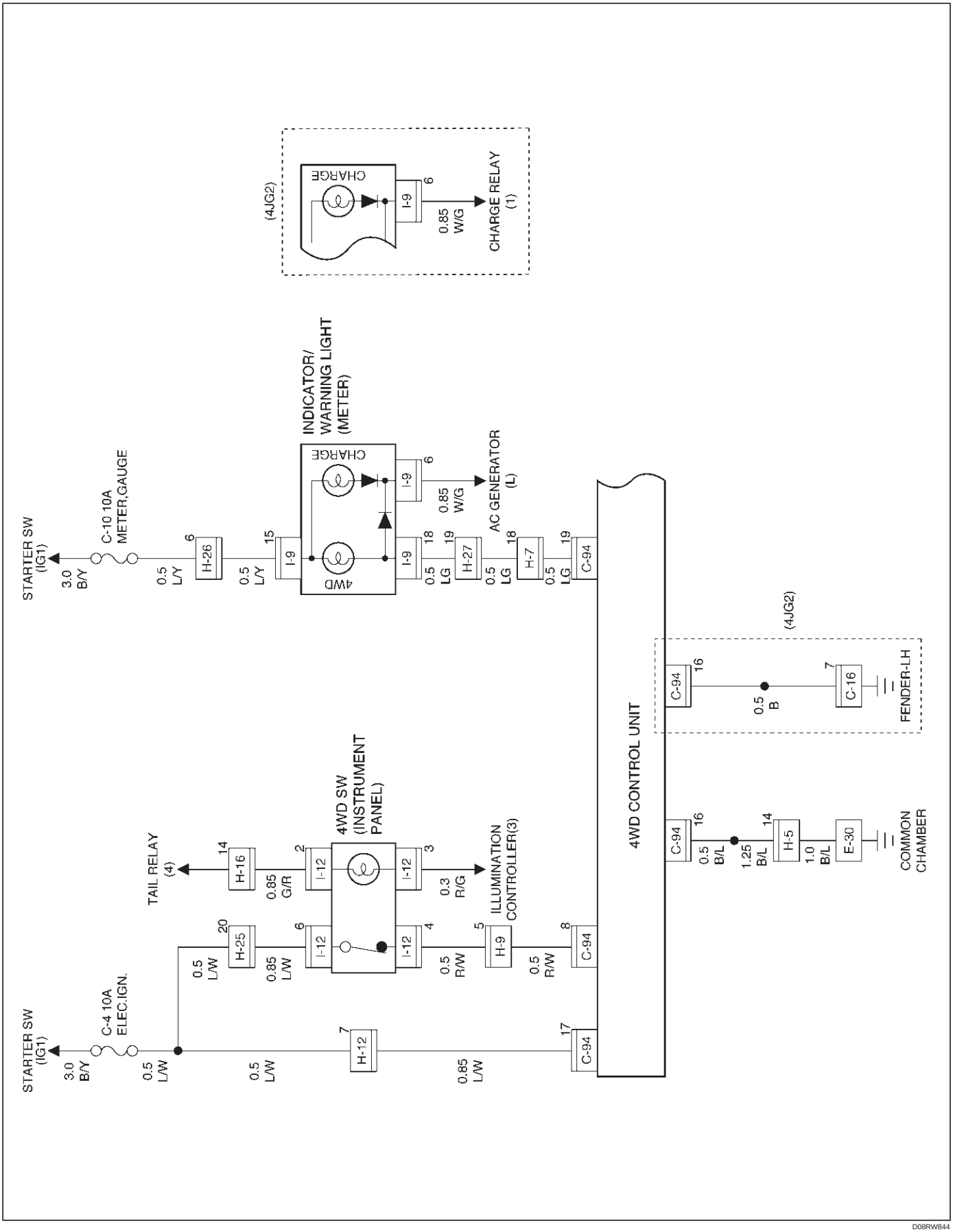

D08RW844

Wiring Diagram (RHD / Diesel Engine Model)

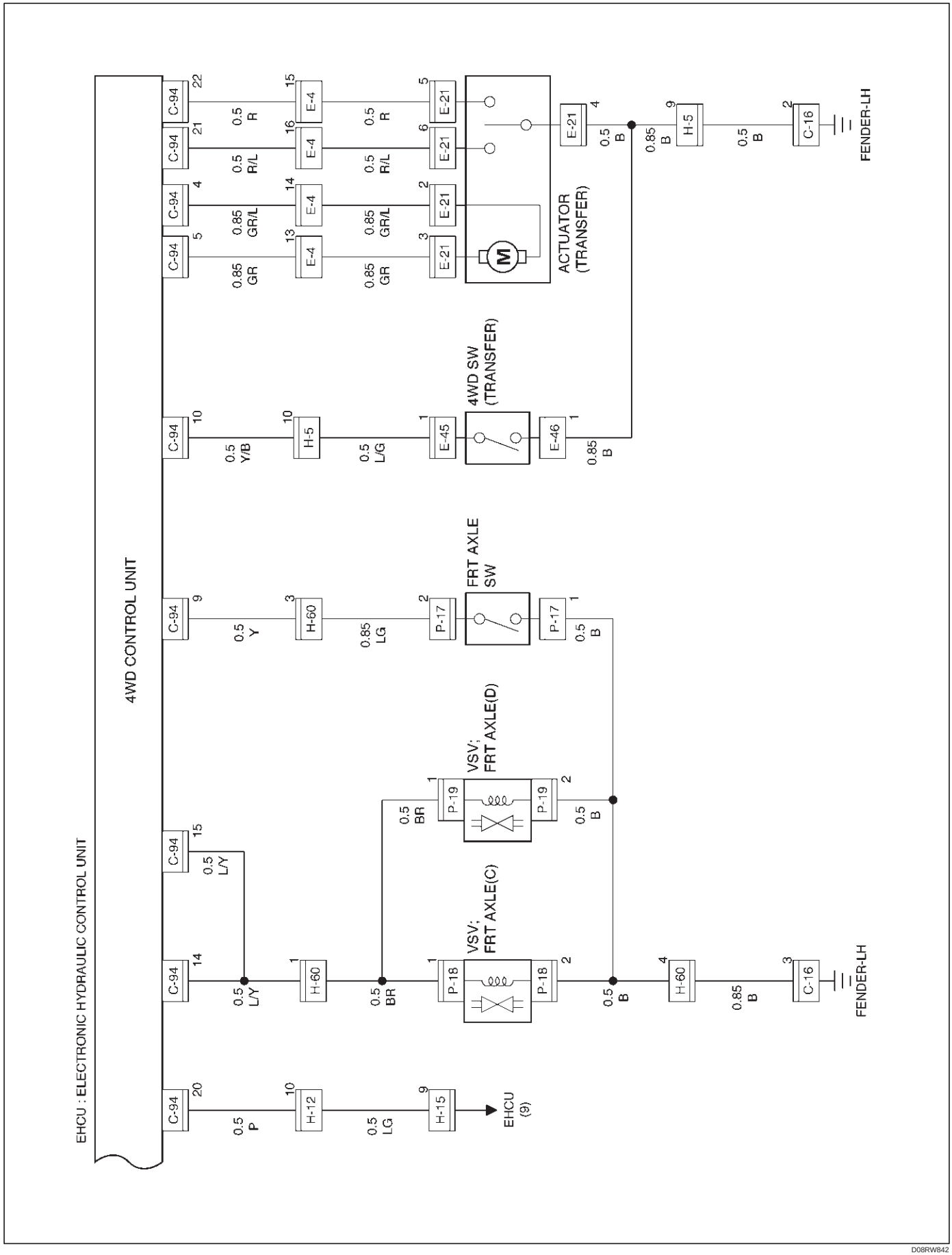

Wiring Diagram (RHD / Gasoline Engine Model)

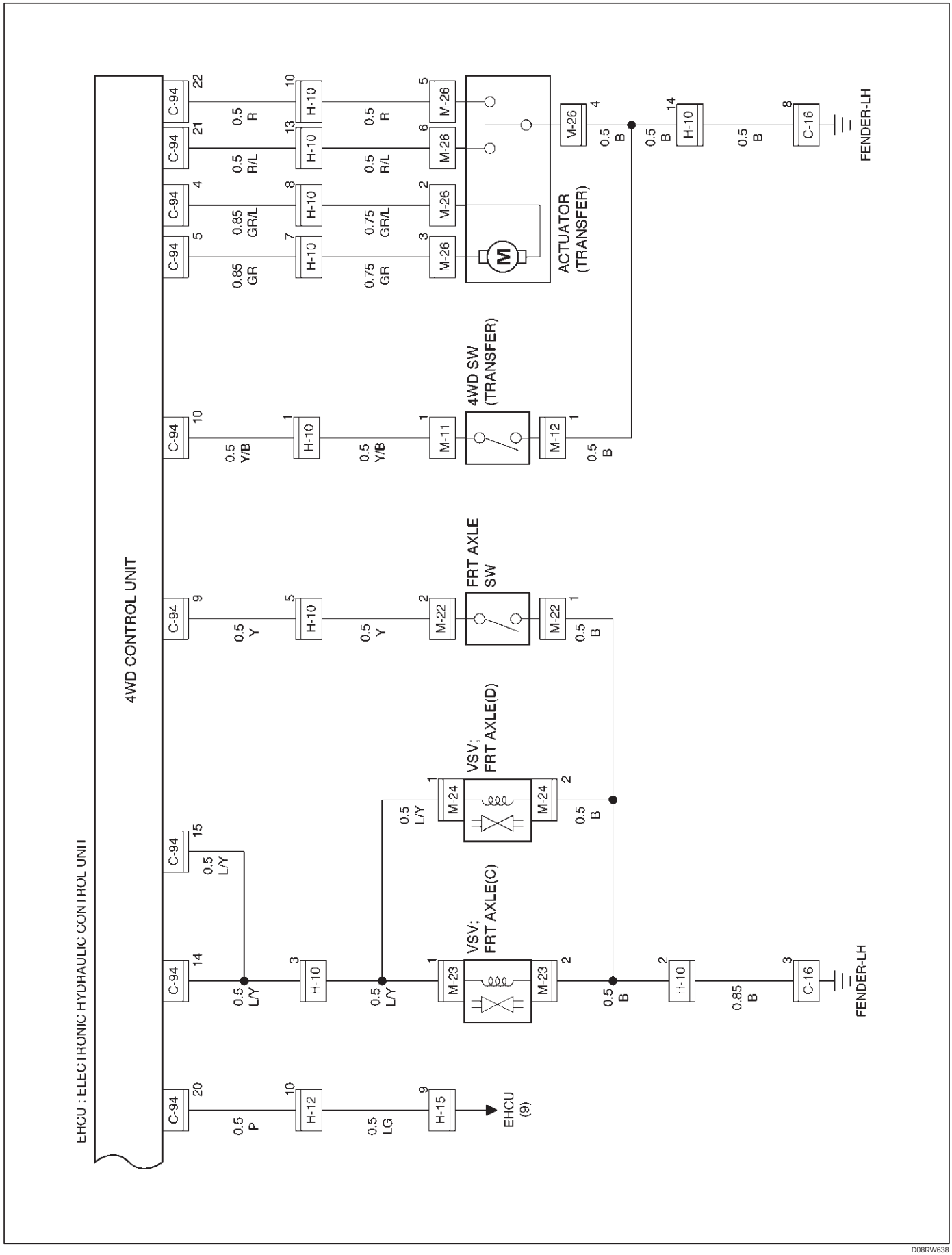

D08RW638

Connector List

No.	Connector face	No.	Connector face
C-16	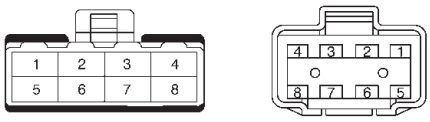	H-8 (LHD)	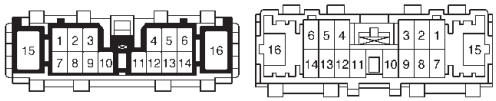
C-94	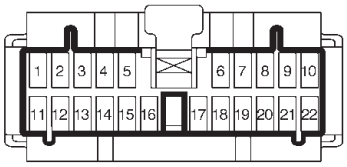	H-8 (RHD)	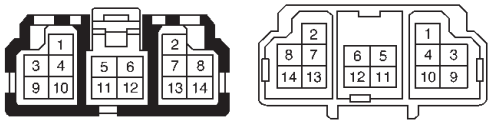
E-21		H-9 (LHD)	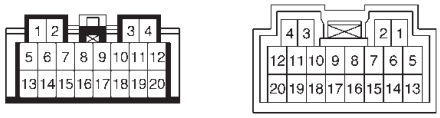
E-30	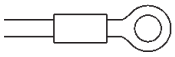	H-9 (RHD)	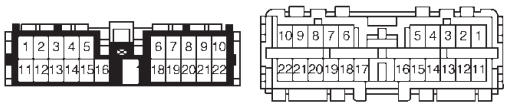
E-45		H-10	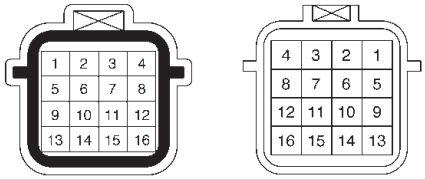
H-4	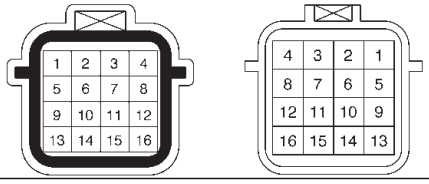	H-12 (LHD)	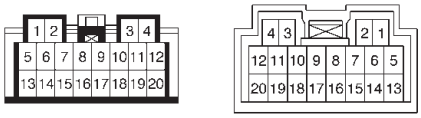
H-5	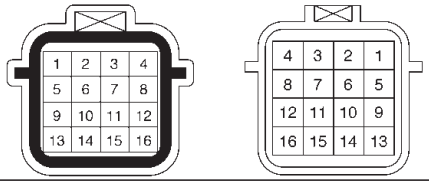	H-12 (RHD)	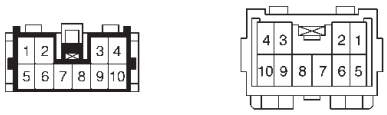
H-7	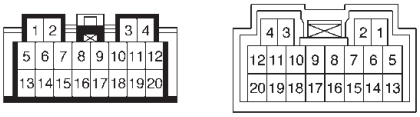	H-15 (LHD)	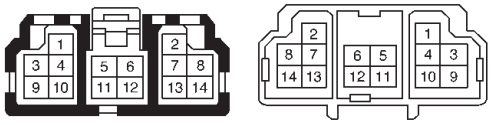

No.	Connector face	No.	Connector face
H-15 (RHD)	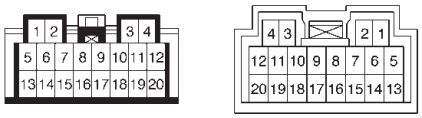	H-60	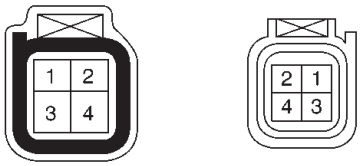
H-16 (LHD)	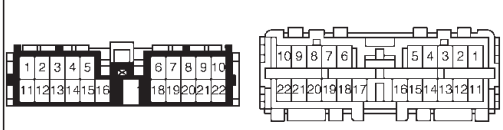	I-9	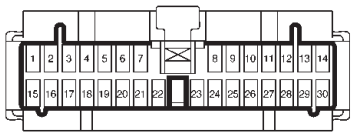
H-16 (RHD)	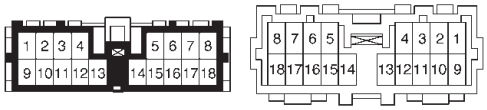	I-12	
H-24 (LHD)	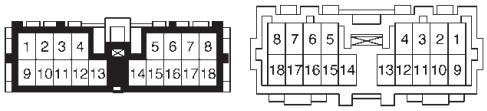	M-11	
H-24 (RHD)	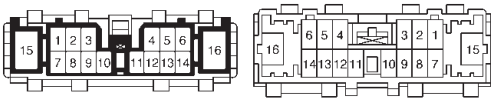	M-12	
H-25	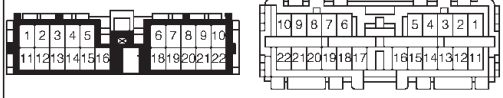	M-22	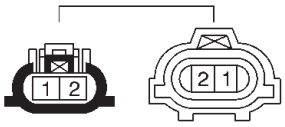
H-26	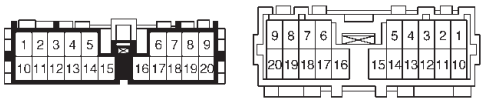	M-23	
H-27	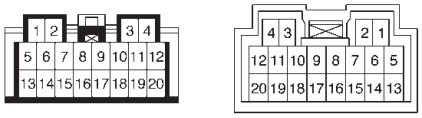	M-24	

No.		No.	Connector face
M-26			
P-17	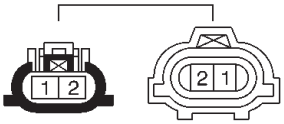		
P-18			
P-19			

Diagnosis of the Faults Based on the Status of 4WD Indicator Lamp, 4WD Switch and T/F Change Lever

Diagnosis charts are shown on below. If troubles can not be solved after every chart was traced, troubles may occur in the 4WD control unit. In this case, replace the 4WD control unit and trace every chart again.

Fault on switching from 2WD to 4WD

1. **In case that 4WD indicator's blinking changes from 2Hz to 4Hz after Solution 1 is carried out.**
   Faults occur in the motor actuator or the transfer case assembly. Remove the motor actuator and check function. If problem was found and it was repaired, try **Solution 1** again. After that, disassemble the transfer case assembly for check and repair or replace. If incident is not improved after above mentioned actions were taken, replace the 4WD control unit.
2. **In case that 4WD indicator does not blink nor light, when switching from 2WD to 4WD.**

Step	Action	Yes	No
1	Is ignition turned on?	Go to Step 2	Turn on the ignition and trace this chart from start.
2	Does the indicator light comes on when the engine is not started?	Go to Step 3	Burning out of indicator lamp or disconnection of harness wire. Trace this chart from the start after repair or replace.
3	Start the engine. Is the 4WD switch turned from 2WD to 4WD?	Short-circuit (body short) on harness of the 4WD switch. Fault of the 4WD switch (holding the closed condition). Trace this chart from the start after repair or replace.	Push the 4WD switch to 4WD.

3. **Case that the indicator keeps blinking by 2Hz after aforementioned Solution 2 is carried out.**

Step	Action	Yes	No
1	Check the air pressure and wear of all tires. Were problems found?	Try **Solution 2** after adjust the air pressure and replace worn tires.	Go to Step 2
2	Can the transfer lever be operated from High to 4L or vice versa?	Go to Step 3	Disconnection of the motor actuator harness wiring. Trace this chart from the start after repair or replace. Faults on the motor actuator. Trace this chart from the start after replace. Internal faults of transfer case. Disassemble the transfer case for check. Trace this chart from the start after repair or replace.
3	Pull out the hoses from vacuum actuator and operate 4WD switch. Is there negative pressure on either of hoses?	Go to Step 4	Faults on the transfer position switch or its harness. Trace this chart from the start after repair or replace. Faults on the VSV main body, its harness or vacuuming system. Trace the front axle diagnosis chart in this section. After that, trace this chart from the start.
4	Check the axle switch. Were problems found?	Internal faults on axle switch. Trace this chart from the start after replace.	Disconnection on the axle harness. Trace this chart from the start after repair or replace. Faults on Front Axle ASM. Trace the front axle diagnosis chart in this section. After that, trace this chart from the start.

Fault on switching from 4WD to 2WD

1. **Case that indicator does not blink nor turn out.**

Step	Action	Yes	No
1	Does the indicator turn out by ignition off?	Go to Step 2	Short circuit of the indicator harness.
2	Is the 4WD switch on 2WD position?	Disconnection on the 4WD switch harness or breakdown of the 4WD switch in open state. Trace this chart from the start after repair or replace.	Turn the 4WD switch to 2WD position. Trace this chart from the start.

2. **Case that indicator keeps 2Hz blinking after aforementioned Solution 3 is carried out.**

Step	Action	Yes	No
1	Check the air pressure and wear of all tires. Were problems found?	Try **Solution 3** after adjust the air pressure and replace worn tires.	Go to Step 2
2	Can the transfer lever be operated from High to 4L or vice versa?	Faults on the harness wiring of motor actuator. Trace this chart from the start after repair or replace. Internal faults on transfer case. Disassemble the transfer case for check. Trace this chart from the start after repair or replace. Faults on the motor actuator. Trace this chart from the start after or replace.	Go to Step 3
3	Pull out the hoses from vacuum actuator and operate 4WD switch. Is there negative pressure on either of hoses?	Go to Step 4	Faults on the transfer position switch or its harness. Trace this chart from the start after repair or replace. Faults on the VSV main body, its harness or vacuuming system. Trace the front axle diagnosis chart in this section. After that, trace this chart from the start.
4	Check the axle switch. Were problems found?	Internal faults on axle switch. Trace this chart from the start after replace. Faults on Front Axle ASM. Trace the front axle diagnosis chart in this section. After that, trace this chart from the start.	Short circuit (body short) or disconnection of the axle harness. Trace this chart from the start after repair or replace.

3. **Case that indicator's blinking changes to 4Hz after aforementioned Solution 4 is carried out.**

Step	Action	Yes	No
1	Can the transfer lever be operated from High to 4L or vice versa?	Faults on the harness wiring of motor actuator. Trace this chart from the start after repair or replace. Faults on the motor actuator. Trace this chart from the start after replace. Internal faults on transfer case. Disassemble the transfer case for check. Trace this chart from the start after repair or replace.	Faults on the 4WD control unit. Trace this chart from the start after replace.

Front Axle Diagnosis

- When the 4WD switch is operated from 4H to 2H, indicator light does not go out.

Step	Action	Yes	No
1	Drive slow 100 — 200m after a few minutes” idling. Has indicator light gone out?	All right.	Go to Step 2
2	Jack up front tires. Does the right side of front wheel rotate when the left side of front wheel is rotated?	Go to Step 4	Go to Step 3
3	1. Check the actuator switch. 2. Check the circuit to indicator. Was a problem found?	Trace this chart from the start after repair or replace.	Disassemble axle ASM for check. Trace this chart from the start after repair or replace.
4	1. Check the VSV valve. 2. Check the circuit to VSV valve. Was a problem found?	Trace this chart from the start after repair or replace.	Go to Step 5
5	Is vacuum piping all right? (tank, hose, & pipe damage or trouble)	Go to Step 6	Trace this chart from the start after repair or replace.
6	Does actuator work all right?	Trace this chart from the start.	Disassemble axle ASM for check. Trace this chart from the start after repair or replace.

- When the 4WD switch is operated from 2H to 4H, indicator light is not actuated.

Step	Action	Yes	No
1	Drive slow 100 — 200m after a few minutes" idling. Has indicator light actuated?	All right.	Go to Step 2
2	Jack up front tires. Does not the right side of front wheel rotate when the left side of front wheel is rotated?	Go to Step 4	Go to Step 3
3	1. Check the actuator switch. 2. Check the circuit to indicator. Was a problem found?	Trace this chart from the start after repair or replace.	Disassemble axle ASM for check. Trace this chart from the start after repair or replace.
4	1. Check the VSV valve. 2. Check the circuit to VSV valve. Was a problem found?	Trace this chart from the start after repair or replace.	Go to Step 5
5	Is vacuum piping all right? (tank, hose, & pipe damage or trouble)	Go to Step 6	Trace this chart from the start after repair or replace.
6	Does actuator work all right?	Trace this chart from the start.	Disassemble axle ASM for check. Trace this chart from the start after repair or replace.

Shift on the Fly Vacuum Piping and Electric Equipment (For Push Button Type)

Vacuum Piping Diagram

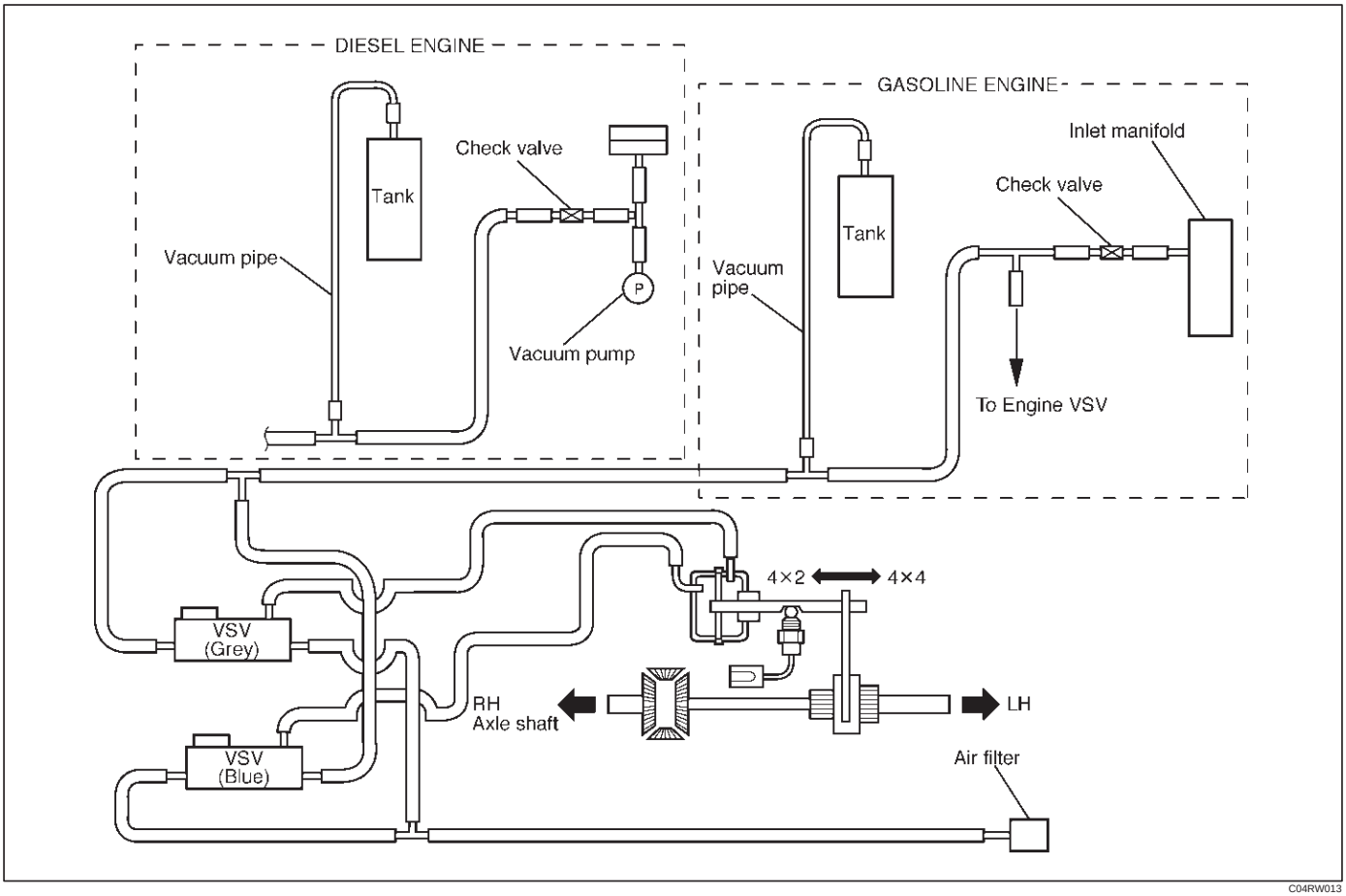

C04RW013

VSV Assembly, Actuator Assembly

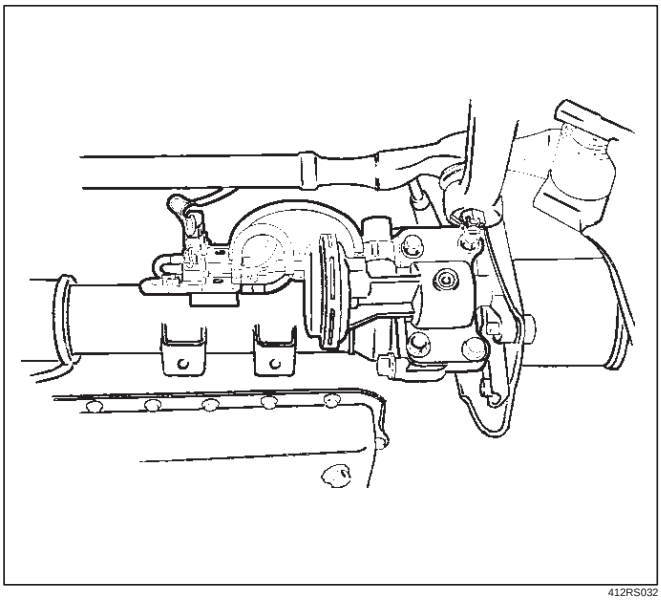

412RS032

Vacuum Tank

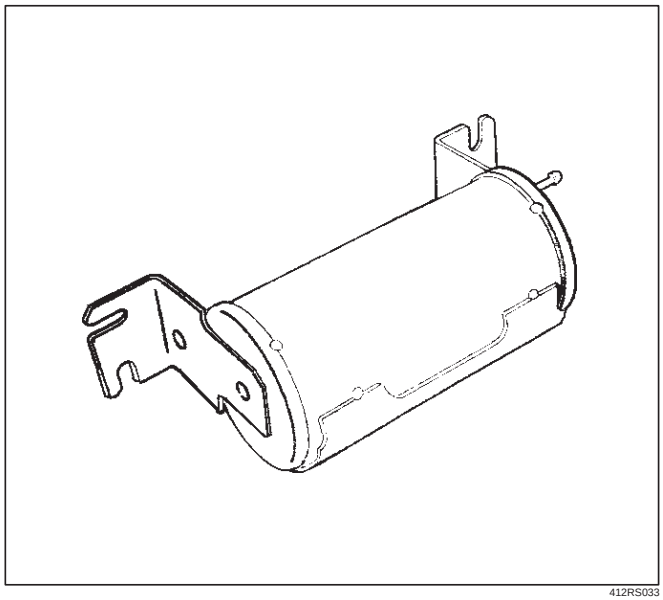

412RS033

Inspection and Repair

Vacuum Piping

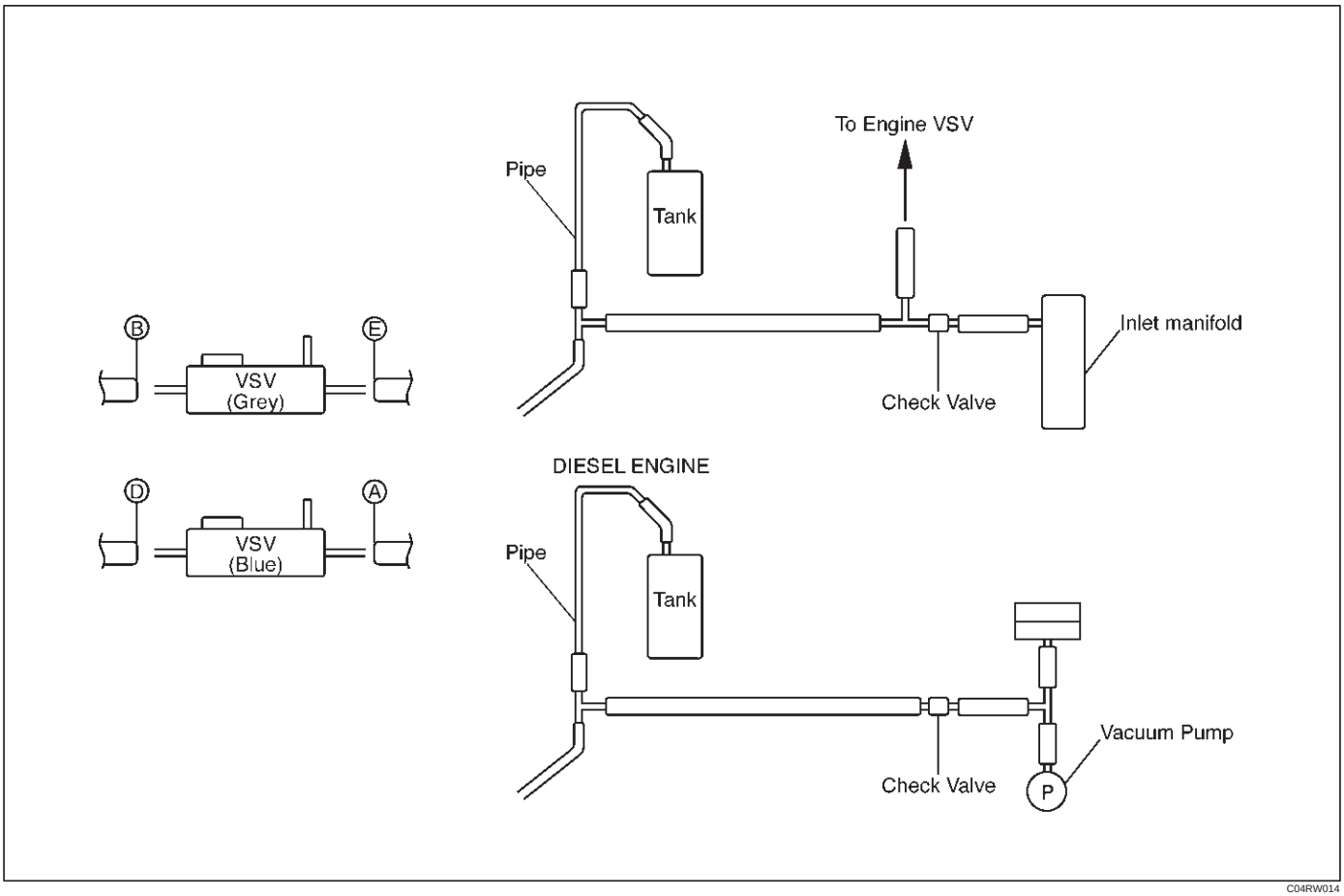

C04RW014

1. Pull out the Hose A in figure and install a vacuum gauge.
2. Plug up Hose B in figure to prevent the leak of vacuum.
3. Start the engine and measure vacuum 2 or 3 minutes afterward.
4. Repeat 1) and 2) but with Hose A plugged and Hose B pulled out.
5. If vacuum measures –400mmHg, or if it shows a sudden drop immediately after engine stop, inspect the hose, tank, and pipe for damage.

NOTE: Be careful not to permit the entry of dust and water during inspection.

6. Pull out Hose D in above illustration.
7. Plug Hose E in above illustration.
8. Make sure that Hose D in above illustration is under atmospheric pressure.
9. Pull out Hose E and plug Hose D, and make sure that Hose E is under atmospheric pressure.
10. If Check 8) or 9) has revealed stoppage, check and see that there is no bend, foreign matter in the hose or in the filter. If there is trouble, repair or replace.

Check Valve

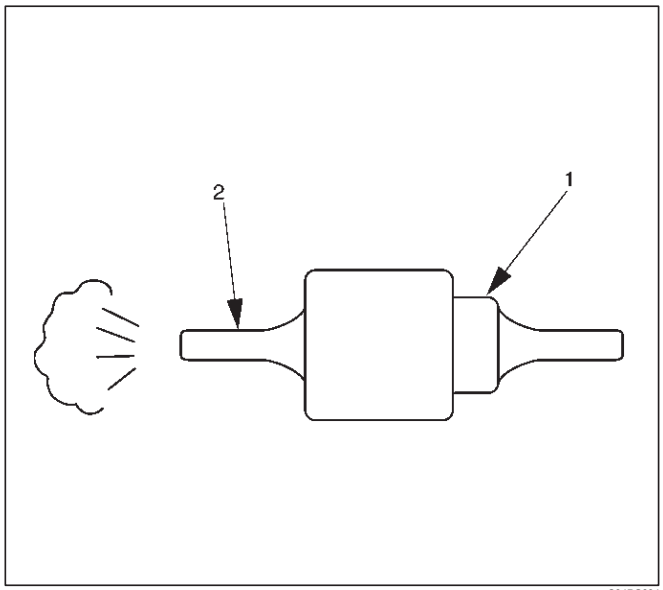

C04RS004

1. Apply vacuum from the orange colored side(1).

   Vacuum:–400mmHg
2. Check leakage of vacuum.
3. Make sure that vacuum cannot be applied from the black colored side(2).

4. If vacuum is not applicable as much as –400mmHg, and if there is resistance on the intake side, replace with a new check valve.

VSV Assembly

Inspect the vehicle side harness as follows:

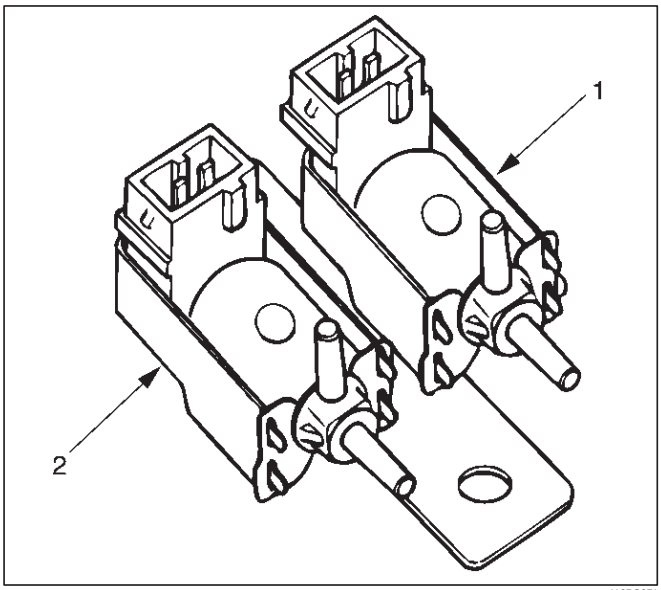

412RS071

Legend
(1) Grey
(2) Blue

1. Remove connector.
2. Shift transfer lever to 2H and start the engine.

NOTE: Do not move the vehicle while inspection.

3. Make sure that there is continuity in the vehicle side of harness. If there is no continuity, check transfer shift switch and wiring.

Inspect both VSVs as follows:

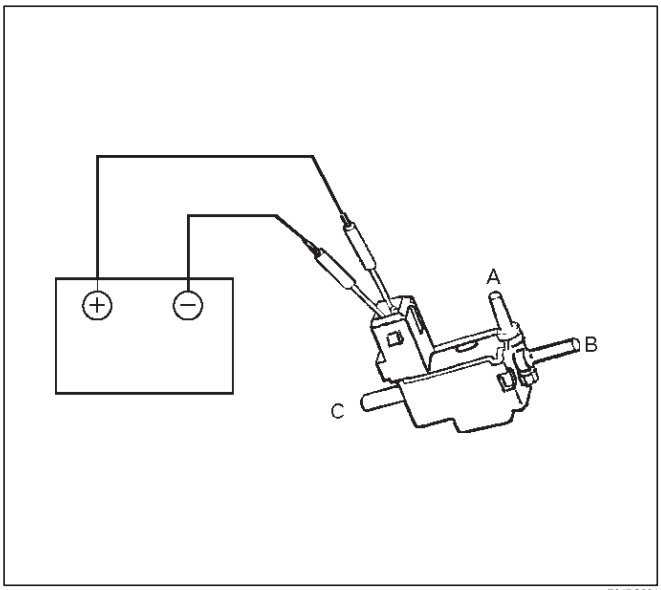

F04RS004

1. With battery not connected (Usual).
   A–C:There is continuity
   B:Closed
2. With battery connected
   A – B:There is continuity
   C:Closed
3. If 1) and 2) fail, replace with a new VSV.

Axle Position Switch

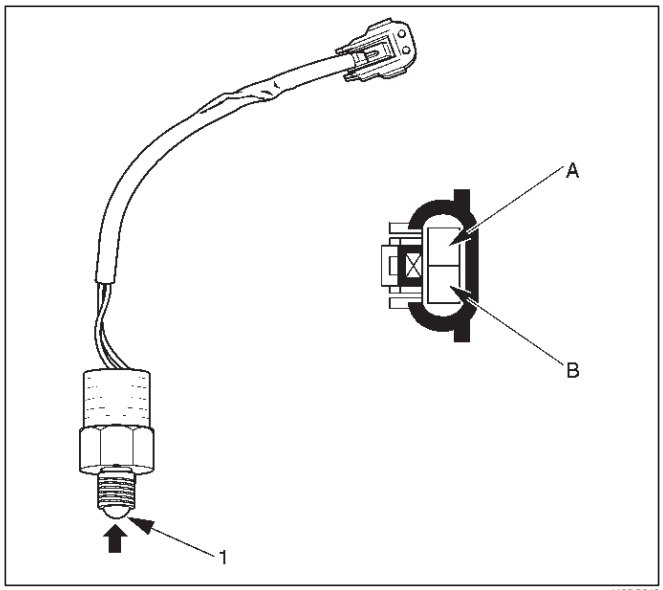

412RS048

1. With ball (1) being free
   A – B:There is continuity
2. With ball forced into the switch
   A – B:No continuity
3. If 1) and 2) fail, replace with a new switch.

Motor Actuator Assembly

Inspect the function of the motor actuator assembly as follows:

1. Disassemble the motor actuator from transfer rear case.

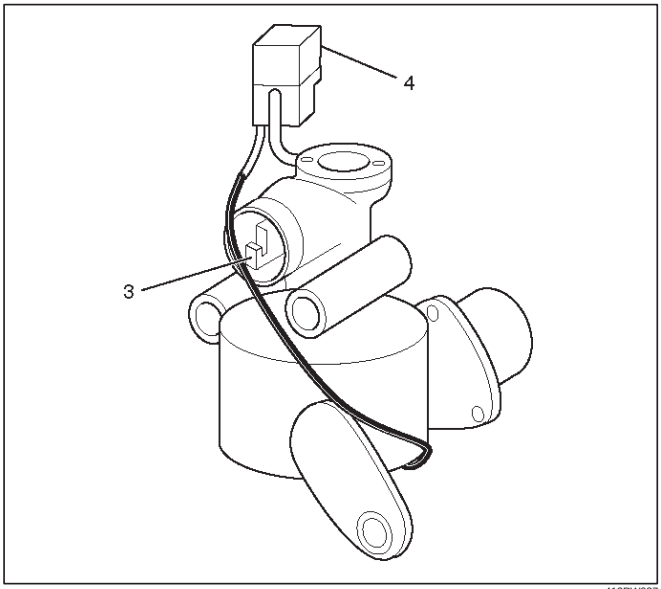

412RW037

Legend
(3) Shift Rod
(4) Connector

2. Connect the terminals as shown in figure.

Shift rod of the motor actuator moves and stops at 4WD position.

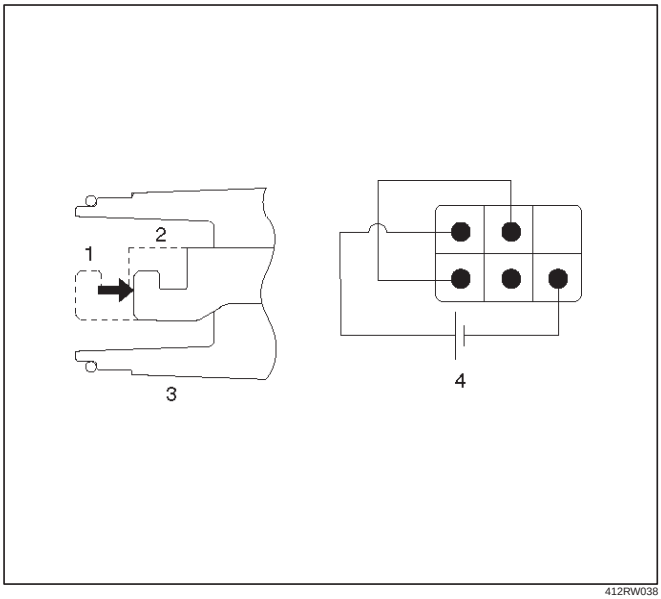

412RW038

Legend
(1) 2WD
(2) 4WD
(3) Shift Rod
(4) Connector

3. Connect the terminals as shown in figure.

Shift rod of the motor actuator moves and stops at 2WD position.

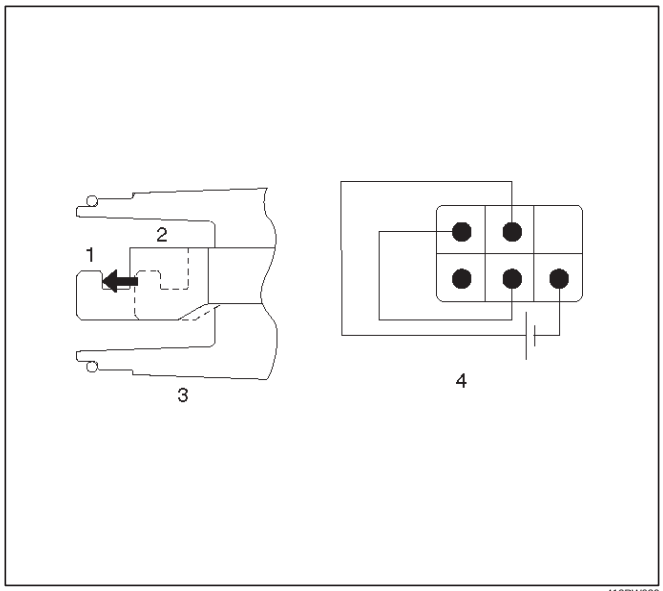

412RW039

Legend
(1) 2WD
(2) 4WD
(3) Shift Rod
(4) Connector

4. If 2) and 3) fail, replace with a new motor actuator.

Transfer Position Switch

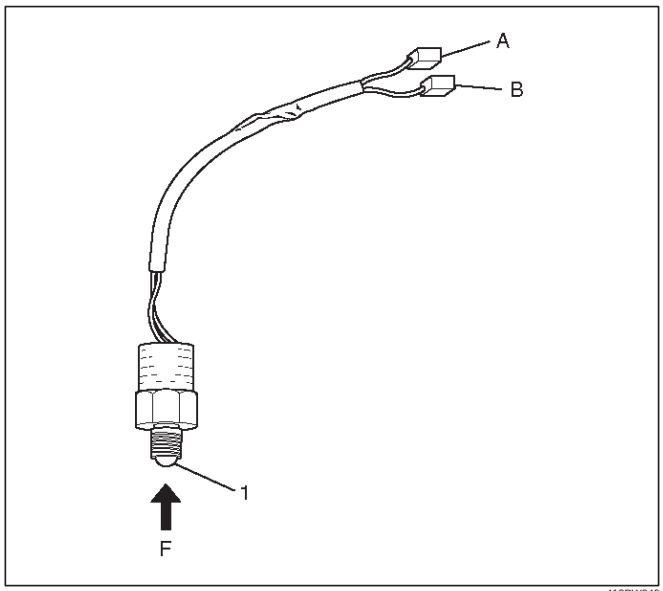

412RW040

Legend
(1) Ball

1. With ball being free.

A–B : There is continuity.

2. With ball forced into the switch.

A–B : No continuity.

3. If 1) and 2) fail, replace with a new switch.

4WD Control Unit (For Push Button Type)

4WD Control Unit Associated Parts

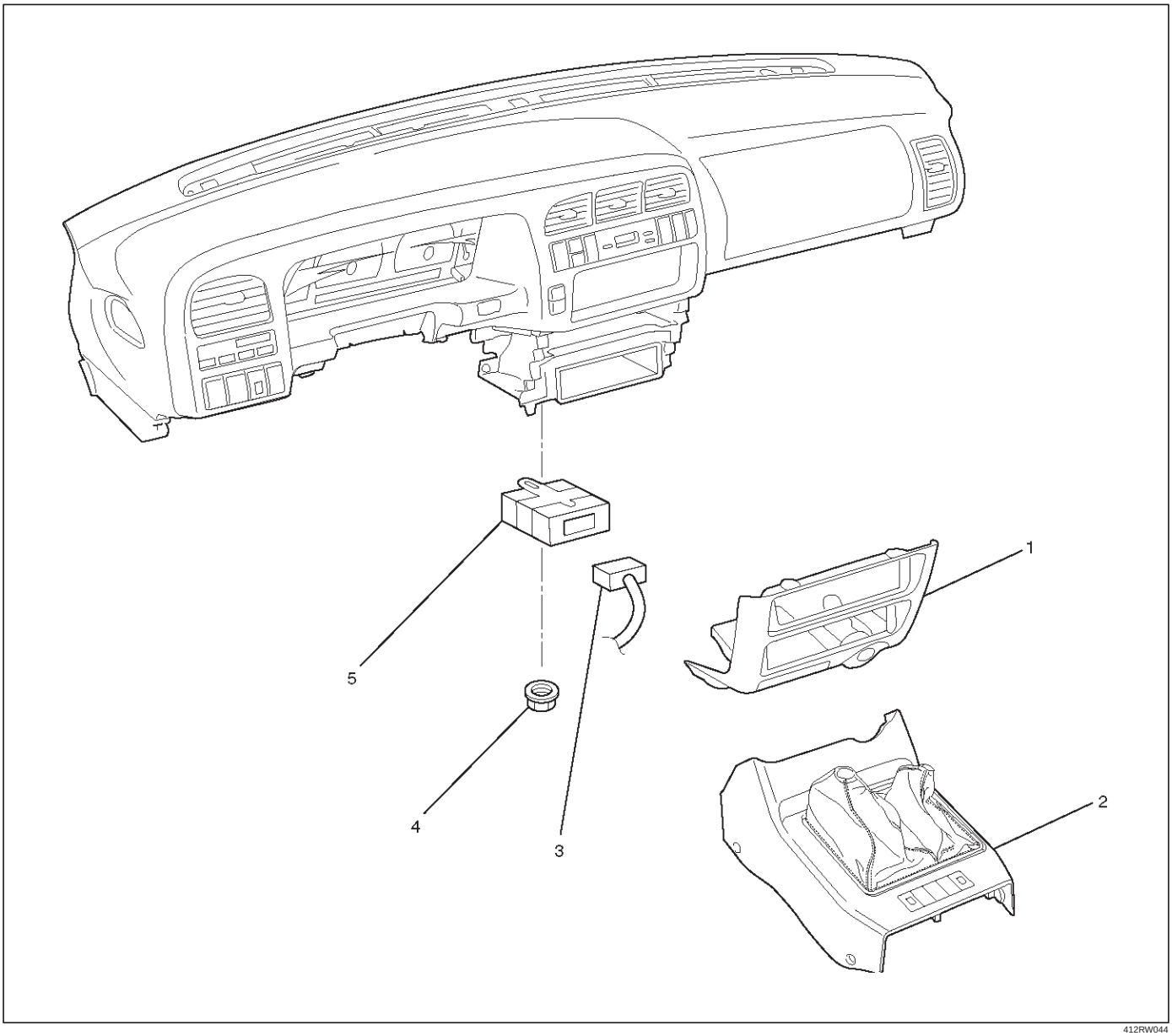

412RW044

Legend

(1) Lower Cluster Assembly
(2) Front Console Assembly
(3) Harness Connector
(4) Nut
(5) 4WD Control Unit

Removal

1. Remove lower cluster assembly and front console assembly.
   Refer to Interior Trim in Body and Accessories section.
2. Remove nut.
3. Remove 4WD control unit.
4. Disconnect harness connector (1).

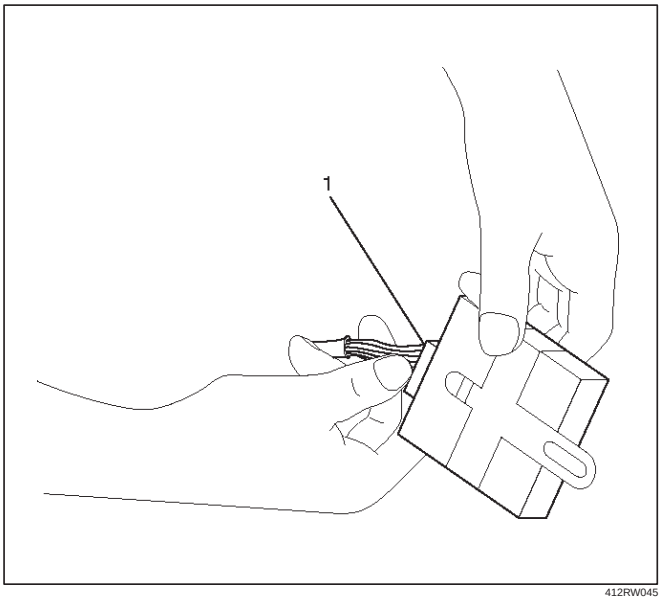

412RW045

Legend

(1) Harness Connector

Installation

1. Connect harness connector, then install 4WD control unit.
2. Install lower cluster assembly and front console assembly.

MEMO

DRIVELINE/AXLE

DRIVELINE CONTROL SYSTEM (TOD)

CONTENTS

Service Precaution 4B2–1
General Description 4B2–2
System Components 4B2–4
Parts Location 4B2–4
Functions of Indicator Lamp 4B2–8
Diagnosis 4B2–12
Basic Diagnostic Flow Chart 4B2–16
Parts Location 4B2–17
Circuit Diagram 4B2–18
Connector List 4B2–21
Checking Failed Pin 4B2–23
Checking Failed TOD Control Unit Pin 4B2–26
Diagnostic Trouble Codes 4B2–30
Diagnosis from Trouble Codes 4B2–31
Trouble Diagnosis Depending on The Status of TOD Indicator 4B2–58
Diagnosis from Symptom 4B2–86

Service Precaution

WARNING: IF SO EQUIPPED WITH A SUPPLEMENTAL RESTRAINT SYSTEM (SRS), REFER TO THE SRS COMPONENT AND WIRING LOCATION VIEW IN ORDER TO DETERMINE WHETHER YOU ARE PERFORMING SERVICE ON OR NEAR THE SRS COMPONENTS OR THE SRS WIRING. WHEN YOU ARE PERFORMING SERVICE ON OR NEAR THE SRS COMPONENTS OR THE SRS WIRING, REFER TO THE SRS SERVICE INFORMATION. FAILURE TO FOLLOW WARNINGS COULD RESULT IN POSSIBLE AIR BAG DEPLOYMENT, PERSONAL INJURY, OR OTHERWISE UNNEEDED SRS SYSTEM REPAIRS.

CAUTION: Always use the correct fastener in the proper location. When you replace a fastener, use ONLY the exact part number for that application. ISUZU will call out those fasteners that require a replacement after removal. ISUZU will also call out the fasteners that require thread lockers or thread sealant. UNLESS OTHERWISE SPECIFIED, do not use supplemental coatings (Paints, greases, or other corrosion inhibitors) on threaded fasteners or fastener joint interfaces. Generally, such coatings adversely affect the fastener torque and the joint clamping force, and may damage the fastener. When you install fasteners, use the correct tightening sequence and specifications. Following these instructions can help you avoid damage to parts and systems.

General Description

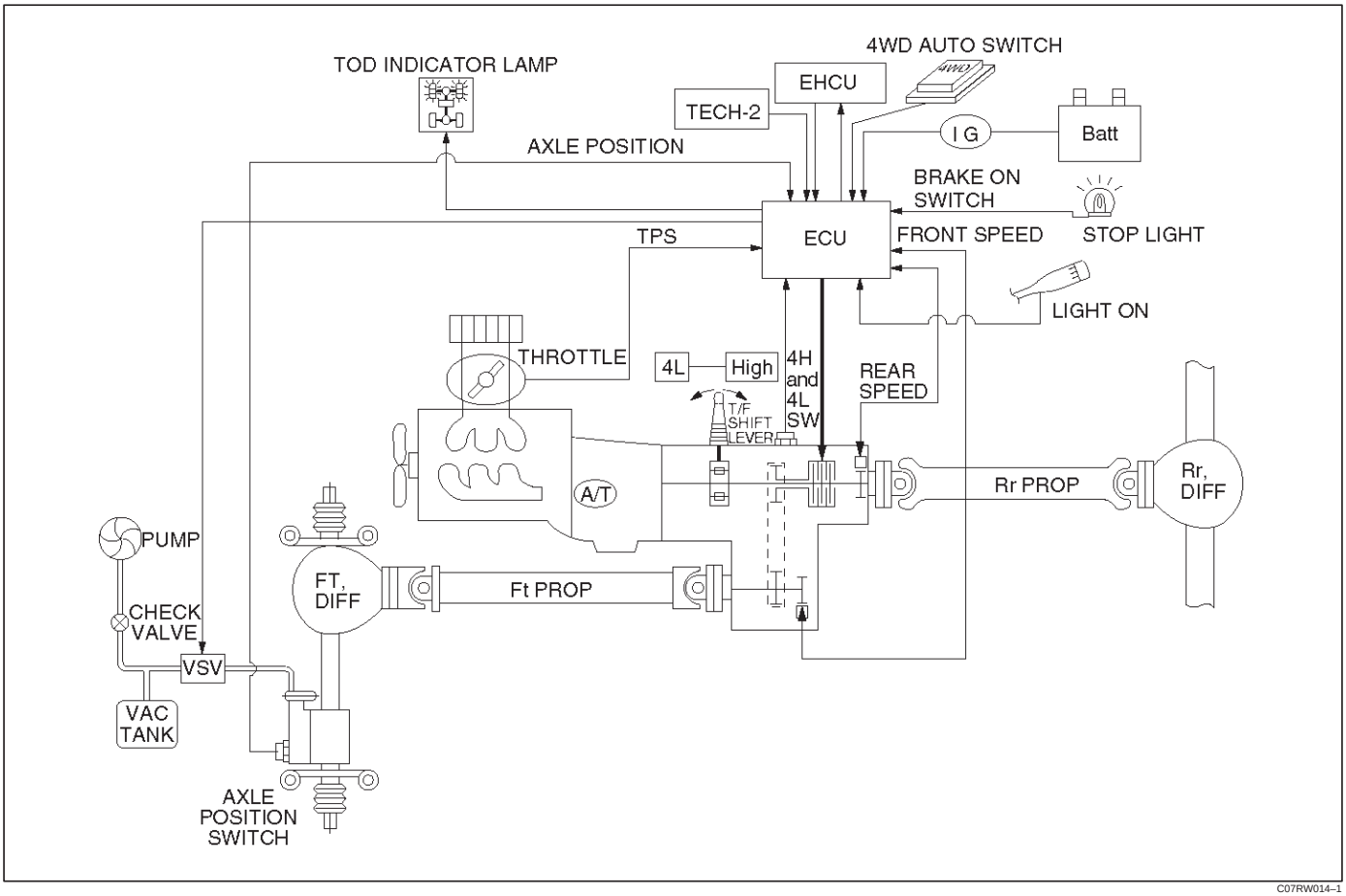

TOD (Torque on Demand) system is traction state control system to vehicle.

Transfer Position and Drive Mode

Three drive modes can be selected through operation of 4WD switch and transfer lever.

Transfer Position	TOD SW	Mode	Drive mode
HIGH	ON (NORMAL)	2H	Rear wheel drive
	OFF (PUSHED)	TOD	Electronically controlled torque split four wheel drive
4L	ON/OFF	4L	Low-speed mechanical lock-up four wheel drive

The electronic control unit (ECU) judges the signals from the transfer lever and controls the transfer drive mode and shift-on-the-fly system status.

TOD Control

The TOD position usually drives the rear wheels, and transmits the torque to the front wheels with the help of electronically controlled torque split mechanism according to running conditions encountered. The driving force is directly transmitted to the rear wheels. This force is split by the transfer and delivered to the front wheels. The magnitude of the torque transmitted to the front wheels is controlled by changing the pressing force of the electromagnetic multi plate disk clutch built in the transfer unit. The pressing force of the clutch is controlled by changing the voltage to the electromagnetic coil mounted to the rear of the clutch. When the clutch is completely disengaged, the rear wheels are driven. When the clutch is completely engaged, a rigid four wheel drive mode is obtained. The torque split status is controlled continuously between the rear wheel and four wheel drive modes. This system includes front and rear speed sensors, and throttle position sensor that monitors the engine output.

The control unit receives signals sent from these sensors and changes the pressing force of the electromagnetic multi plate disk clutch to determine the torque distribution on the front and rear wheels. Therefore, when the slip of the rear wheels is increased against the current torque level in the normal rear wheel drive mode, the control unit

detects the slip condition, determines the optimum torque based on the feedback control logic, and increases the torque to the front wheels.
The control unit uses the signal from the throttle position sensor to predict the future vehicle condition and the intention of the driver with respect to acceleration and deceleration, and determines the initial torque distribution using these data and the information from the speed sensors.
In case of small circle turning in the parking lot, for example, the control unit minimizes the clutch pressing force restrict a braking phenomenon. When the ABS becomes active, the control unit optimizes the clutch pressing force to ensure stable braking.

TOD Indicator Control

The TOD indicator on the instrument panel informs the driver of the current working status of the transfer unit. The information consists of two items: the drive mode (2H, TOD, 4L, transition) and the torque split status of the TOD (torque distribution level). The indicator can display occasional errors and corresponding error codes.

System Components

Parts Location

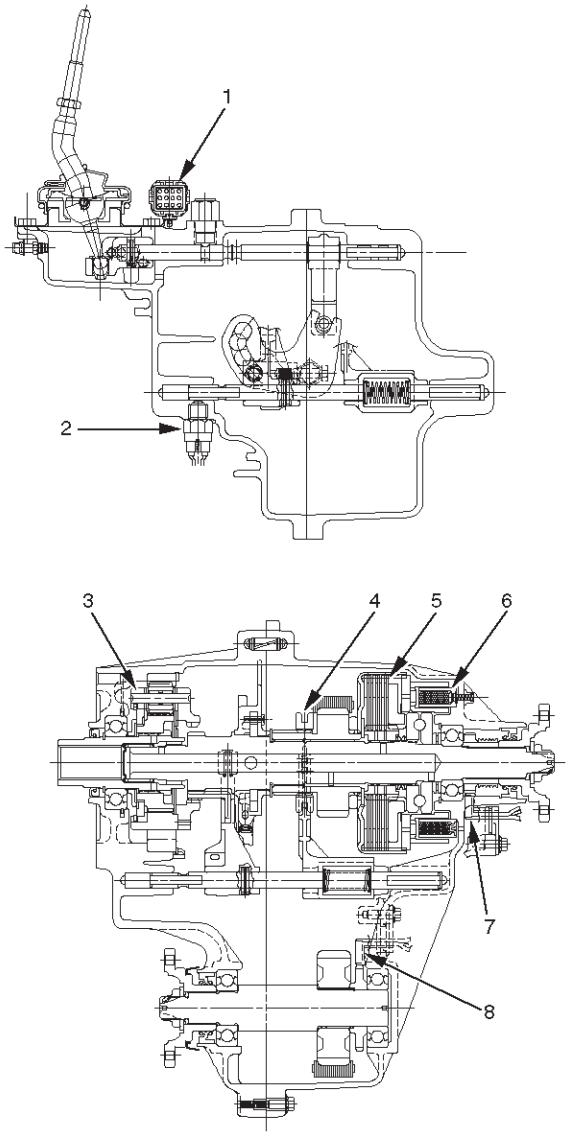

A07RW020

Legend

(1) T/F Connector
(2) 4H Switch and 4L Switch
(3) High-Low Planetary Gear Set
(4) Mechanical Lock
(5) Multi Plate Disk Clutch Pack
(6) Electromagnetic Coil
(7) Rear Speed Sensor
(8) Front Speed Sensor

Front and Rear Speed Sensors

The sensors are built in the transfer case, detect the rotation of rotors directly coupled to the propeller shafts. Thirty rectangular pulses are output per one rotation of the propeller shaft.

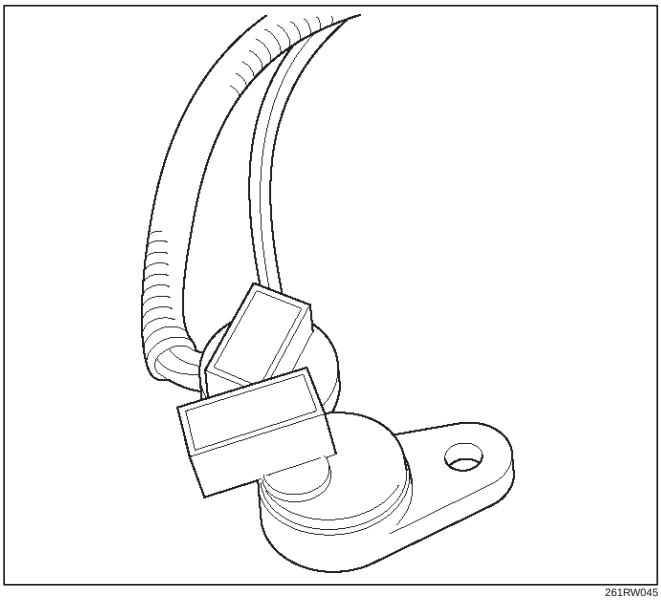

261RW045

Electromagnetic Coil

Receives the duty signals from the TOD control unit and controls the pressing force of the clutch pressure cam.

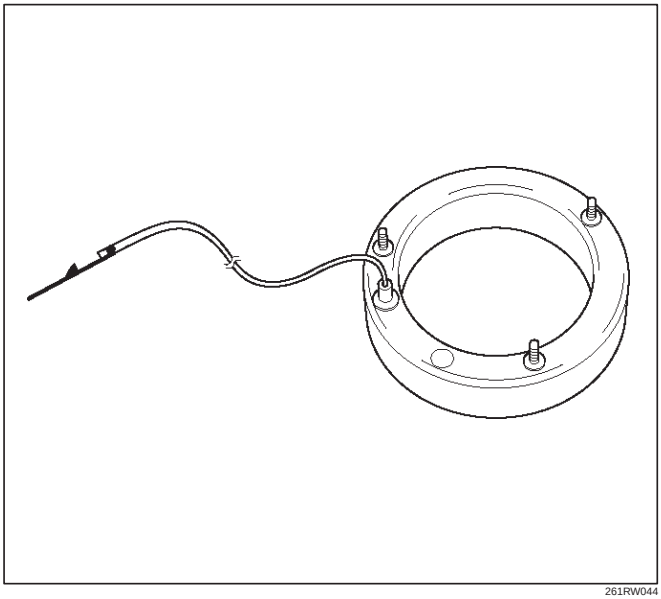

261RW044

Multi Plate Disk Clutch Pack

Transmits the torque determined by the clutch pressing force to the front propeller shaft via the front drive chain.

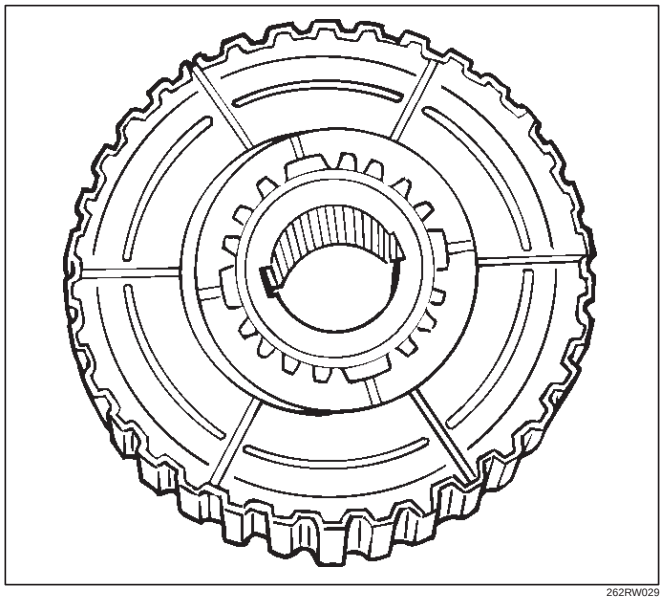

262RW029

Mechanical Lock Sleeve

Couples the front and rear propeller shaft mechanically when the transfer shaft is in the 4L position.

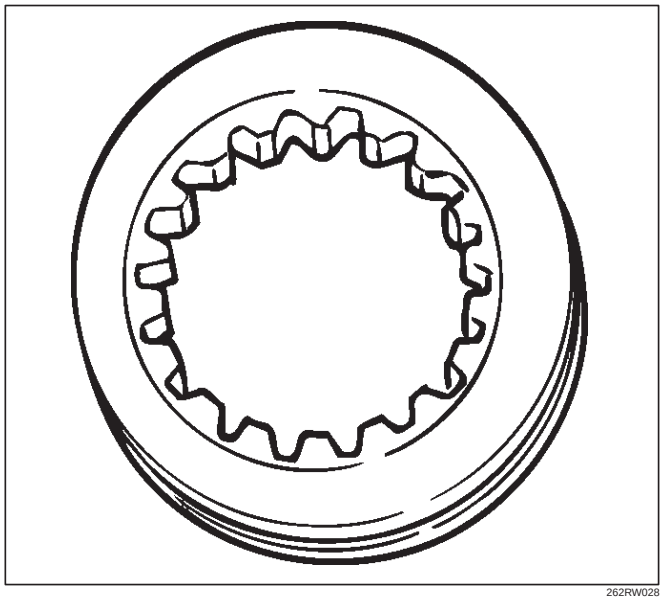

262RW028

High-Low Planetary Gear Set

Establishes an auxiliary transmission mechanism. When the transfer shift lever is set to the 2H or TOD position, the reduction gear ratio is 1.000 and the corresponding driving force is generated. When the transfer shift lever is set to the 4L position, the reduction gear ratio is 2.480 and the corresponding driving force is generated.

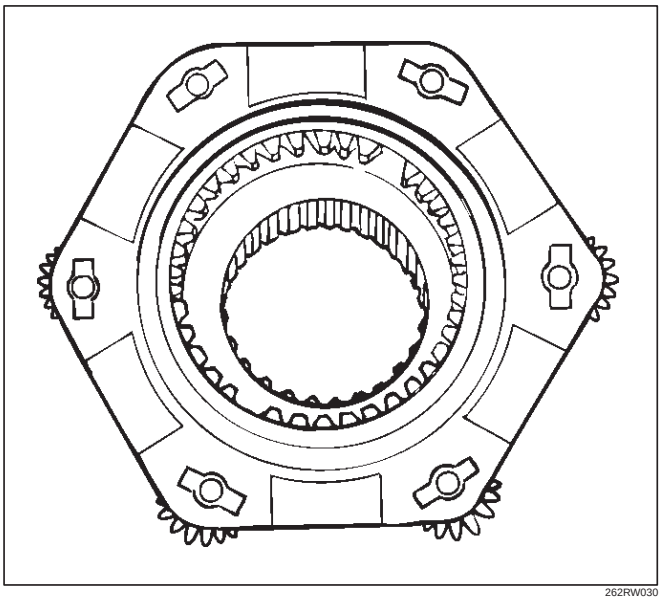

262RW030

4H and 4L Switches

Detects the shift position of the transfer from the movement of the transfer lever and outputs signals to the TOD control unit.

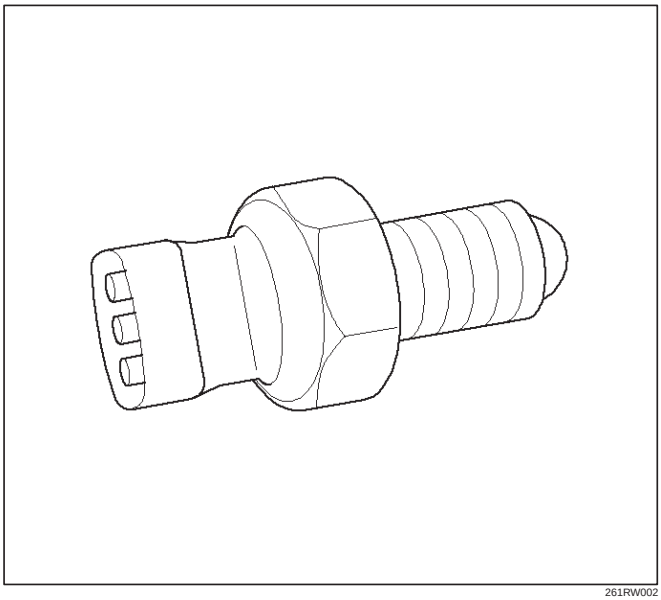

261RW002

Transfer Connector

Transmits the input and output signals of the speed sensors, electromagnetic coil, and 4H and 4L switches to the vehicle harness. A waterproof 12-pin type is used.

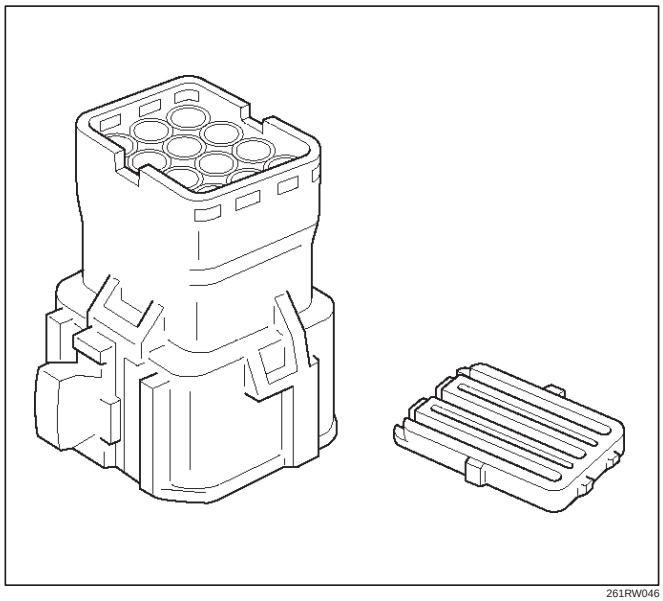

261RW046

TOD Indicator Lamps (on the instrument panel)

Inform the following items.

- Bulb check
- Drive mode
- ABS IN status
- BRAKE ON status

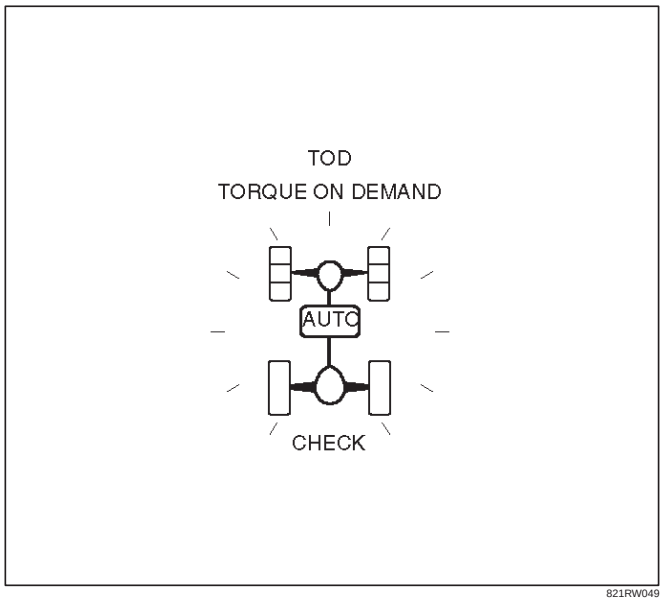

821RW049

Check Lamp

Inform the following items.

- Bulb check
- Fail (fail alarm)
- Trouble code
- Diesel/gasoline MAP

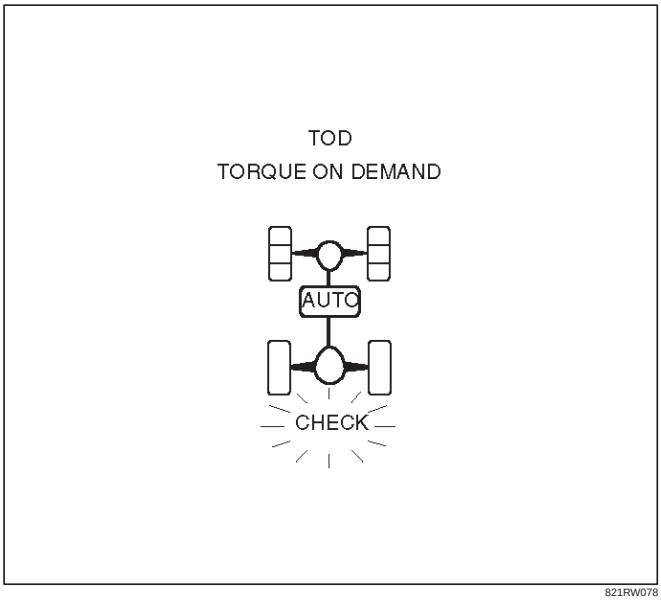

821RW078

TOD ECU

This control unit is mounted to the front right hand seat via a special bracket.

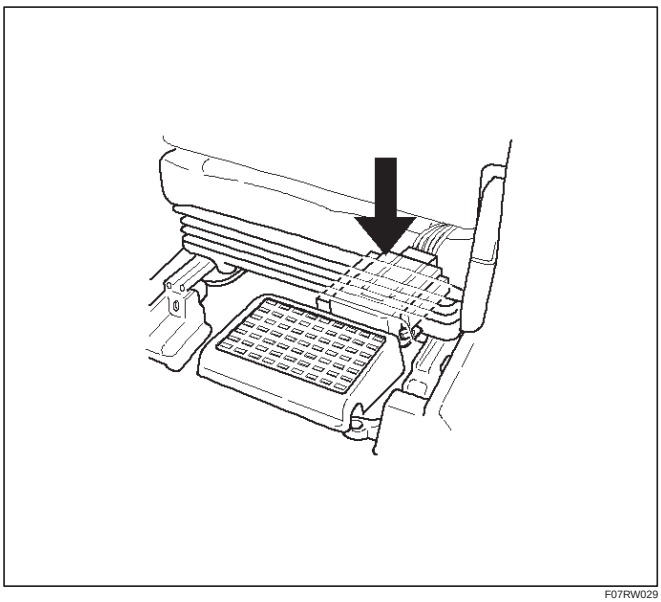

F07RW029

Functions of Indicator Lamp

TOD Indicator Lamps

Output condition					Indicator indicate state	Remark	4WD Auto sw state	Each sw state			
ECU Terminal No.								4WD SW point of contact	4H SW	4L SW	AXLE SW
25	26	27	28	29							
1	1	1	1	0	2H Mode			ON	OFF	OFF	OFF
0	0	0	1	0	4L Mode		ON / OFF	OFF	ON	ON	
1	1	1	1	1	N Mode		ON / OFF	ON	ON	OFF	
1	1	1	0	0	TOD Mode1	Traction distribution about 0:100		OFF	OFF	OFF	ON
1	1	0	0	0	TOD Mode2	Traction distribution about 15:85					
1	0	0	0	0	TOD Mode3	Traction distribution about 30:70					
0	0	0	0	0	TOD Mode4	Traction distribution about 50:50					

1=12V 0=GND

NOTE : Traction distribution is about a standard.

C07RW045

Indication During Transition of Transfer Lever

When the transfer lever is shifted, and the signals from the AXLE switch do not comply with the signal conditions of the 4H and 4L switch, the transfer lever position signals generated by the 4H and 4L switch and the N position signals are repeatedly output at an interval of 0.8 second.

NOTE: After the transfer lever is set to the specified position and the AXLE switch generates compliant signals, the normal output status is returned.

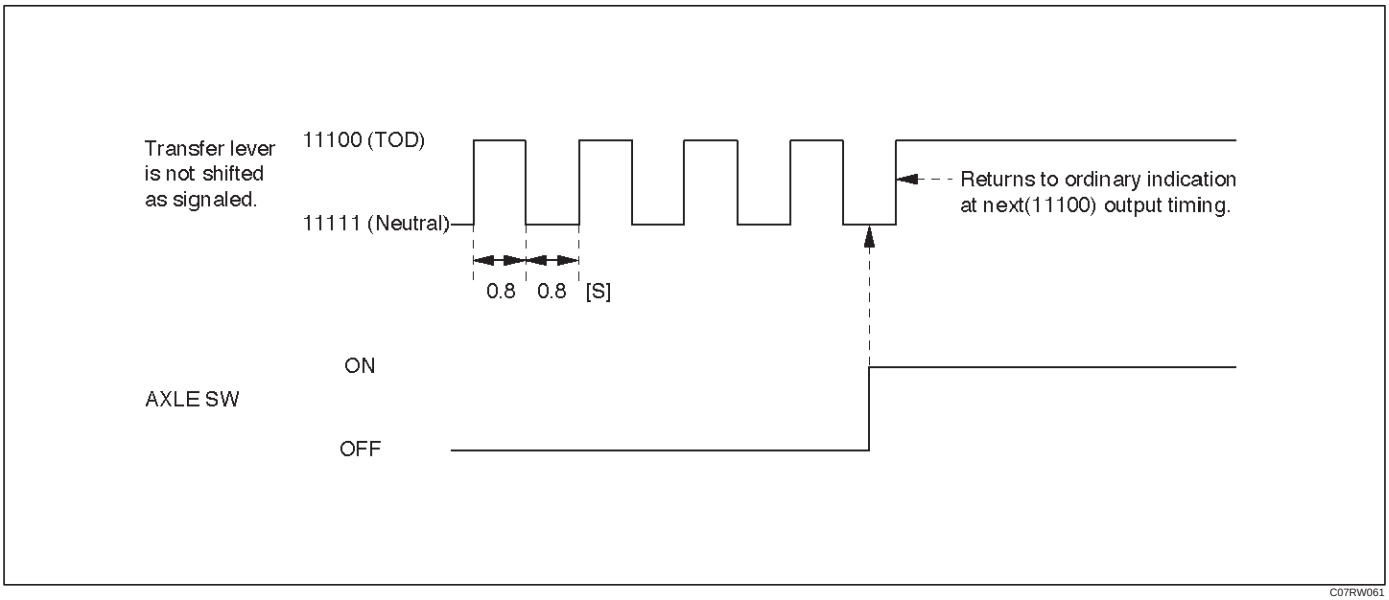

C07RW061

Bulb Check

When the starter switch is turned on, the TOD indicator lamps go on as shown below.

NOTE: Once the starter switch is turned on, all the TOD indicator lamps are lit for two seconds even if the transfer lever is in any position.

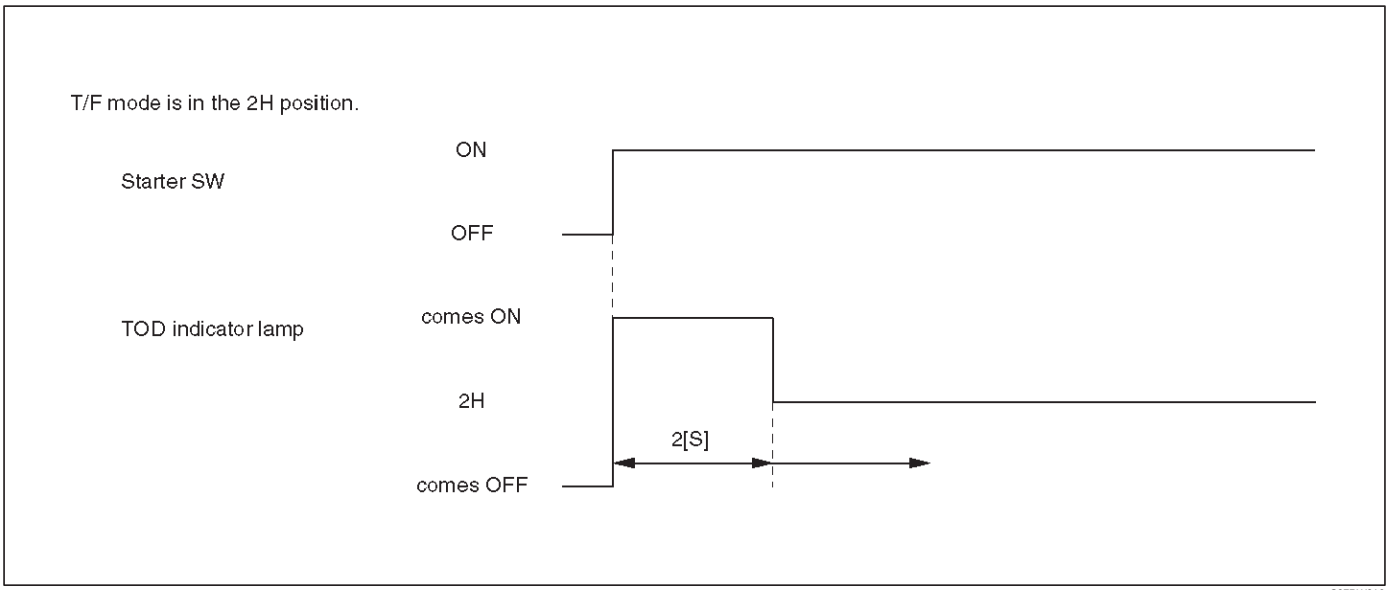

C07RW016

Simplified checking method of ABS IN and BRAKE ON signals:

In the event that any of the signal inputs listed below are observed while the self-diagnostic code is being displayed (the self-diagnostic connector is short-circuited to GND), you can simply check the ABS IN and BRAKE ON signals as shown in the figures below.

1	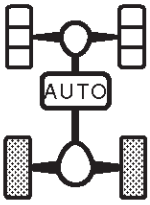	• In case of ABS IN signal being inputted, TOD indicator light is on as illustrated while the signal is inputted.
2	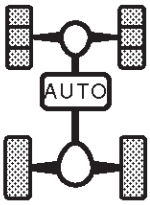	• In case of BRAKE ON signal being inputted, TOD indicator light is on as illustrated while the signal is inputted.
3	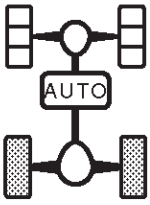	• When “1, 2” signals are inputted simultaneously, signal “1” (ABS IN) is indicated preferentially.
4	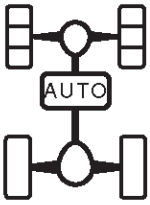	• In cases other than “1, 2, 3”, the indication is always as illustrated. (This is light-off mode) • TOD indicator light returns to usual control (mode) at 12 km/h or more.

C07RW017

Check Lamp

Check Lamp Valve Check

When the starter switch is turned on in the normal state, the control unit turns on the CHECK lamp to check the bulb.

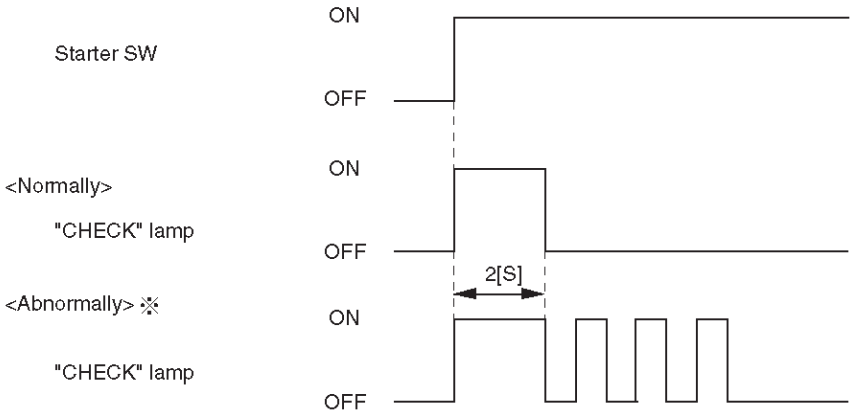

C07RW019

The CHECK lamp also has the following functions.

D-G MAP recognition and display (The control unit displays what type of vehicle, diesel or gasoline vehicle, it recognizes.)

1. Short-circuit the self-diagnostic connector.
2. Turn on the starter switch. (Displays with respect to the self-diagnosis begin to appear.)

NOTE: Do not start the engine.

3. Shift the transfer lever to the neutral position between HIGH and 4L.
4. After all the conditions in 1 through 3 above are met, set the throttle to the WOT (wide open throttle) position (i.e., full open position). The display of the self-diagnosis is temporarily suspended, and the CHECK lamp begins to display that MAP is recognized by the TPS (throttle position sensor) according to the current conditions.

NOTE: If the TPS has failed, this function might not work.

1. When the control unit recognizes the vehicle as gasoline type, the CHECK lamp is turned on for five seconds and this mode is repeated at an interval of 0.3 second.
2. When the control unit recognizes the vehicle as diesel type, the CHECK lamp is turned off for five seconds and this mode is repeated at an interval of 0.3 seconds.
3. Upon completion of step 4, the system resumes the self-diagnosis. (The self-diagnosis is executed from the beginning.)
5. Turn off the starter switch once. When above conditions are met again in the future, the TPS MAP control can be started.

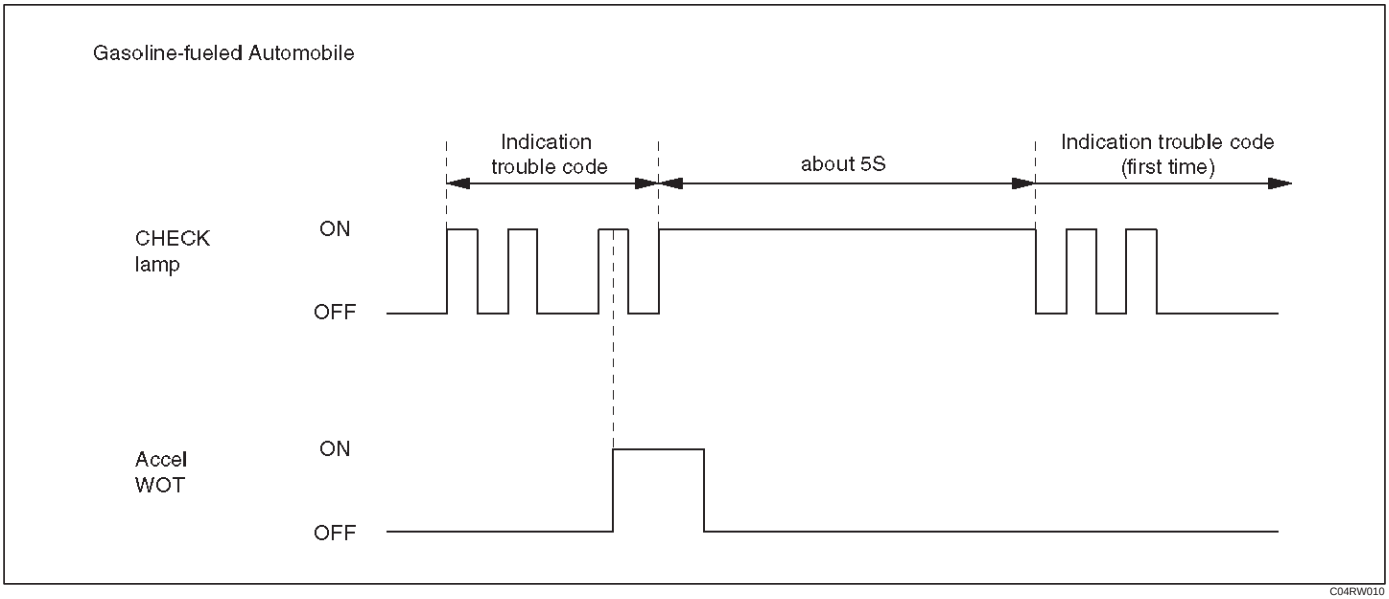

Diagnosis

General Information Diagnosis

The troubles on TOD are classified into the group that can be identified by the lighting status of the TOD indicator lamps and those that can be recognized as abnormal phenomena of the vehicle by the driver.
The troubles that can be identified by the lighting status of the TOD indicator lamps are examined by the procedures "Diagnosis from Trouble Codes" and "Trouble Diagnosis Depending on The Status of TOD indicator". The troubles that can be recognized as abnormal phenomena of the vehicle by the driver are examined by the procedure "Diagnosis from symptom".

Self-diagnosis

The control unit has a function of self-diagnosis. If a trouble occurs in the course of system startup, the control unit blinks the CHECK lamp and saves the trouble code.

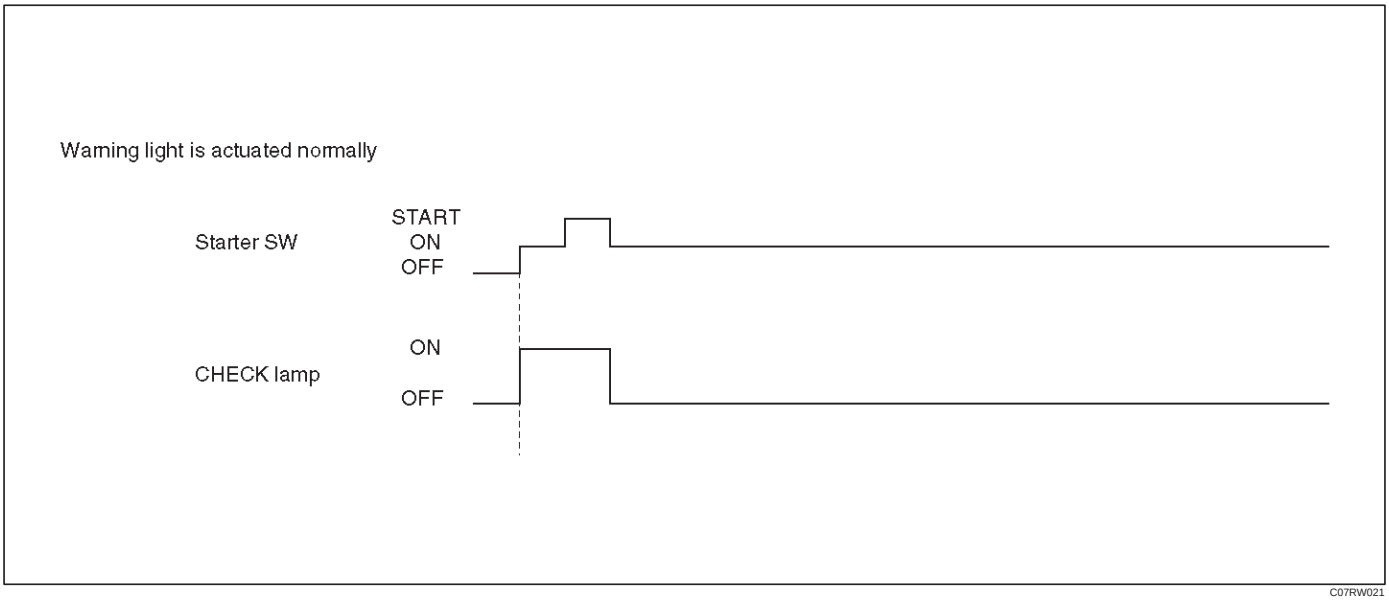

C07RW021

NOTE: If an intermittent fault occurs, the control unit stops blinking upon removal of the fault. The trouble code is saved to the control unit.

Indication Method of Trouble Code

- Short-circuit terminal 8 of the self-diagnostic connector to GND to display the trouble code on the CHECK lamp.

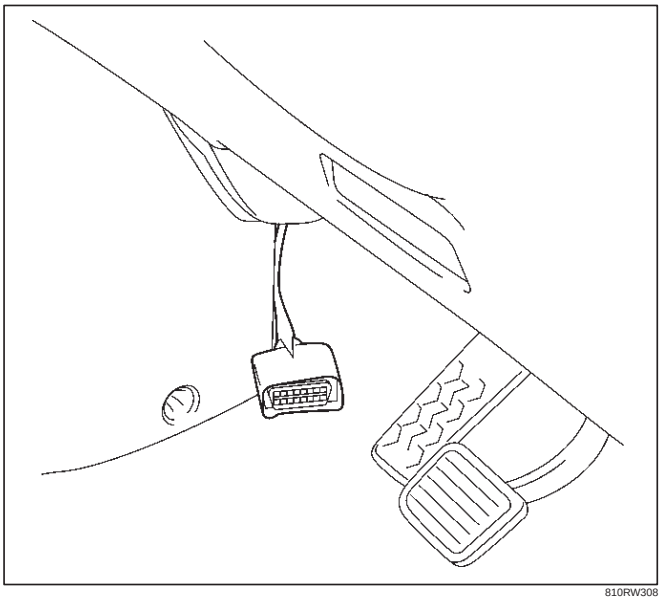

810RW308

- If no trouble codes exist, code “12” is displayed continuously.
- If trouble codes exist, code “12” is displayed three times, and the trouble codes, starting from the smaller code number, are displayed three times respectively.

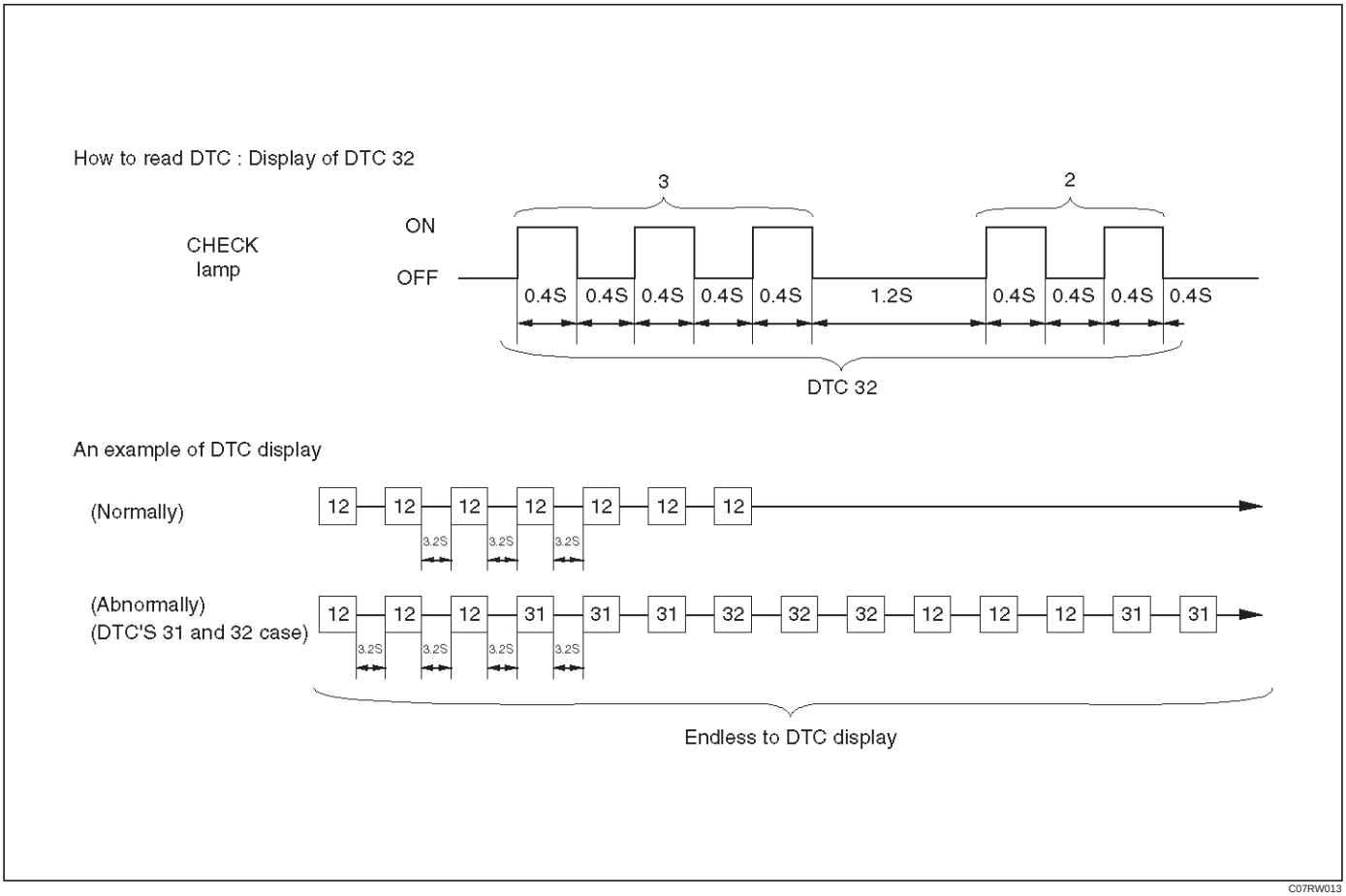

C07RW013

How to Clear The Trouble Code

The trouble codes saved to the control unit can be deleted by the following procedure if the starter switch is being in the OFF position.

1. Shift the transfer lever to the neutral position between HIGH and 4L, and short-circuit the self-diagnostic connector.

NOTE: The neutral position between HIGH and 4L refers to the point that turns off the TOD indicator lamps. (However, be sure to check the position before short-circuiting the self-diagnostic connector.)

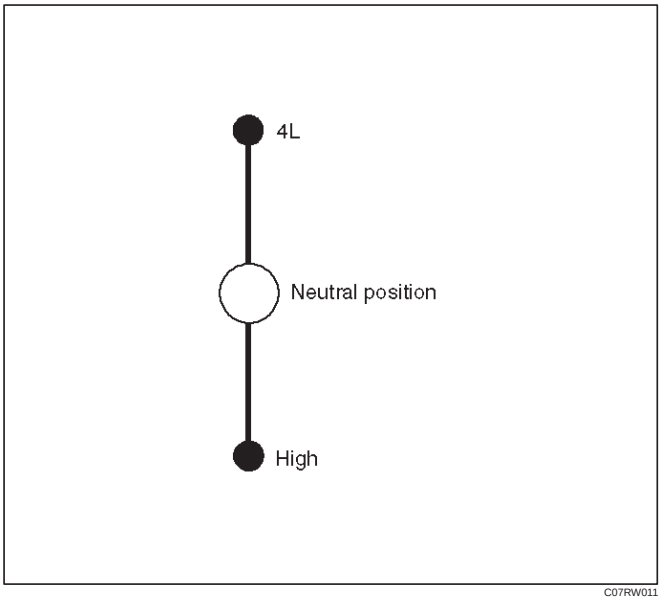

C07RW011

2. Turn on the starter switch while maintaining the state of step 1, and step on the brake pedal five times within five seconds from the first step on. (Note that “five times” includes the first step on). (The TOD indicator lamps display the 4L mode whenever the brake pedal is stepped on.)
3. If the conditions shown in steps 1 and 2 are met, clear the trouble codes saved to the control unit. (After the codes are completely deleted, the code 12 that indicates the normal condition is continuously displayed.)

Precautions on Diagnosis

Replacement of Control Unit

The control unit itself rarely fails. In most cases, the harnesses have failed (e.q. short-circuit) to cause secondary troubles. Other cases include that the cause has been unknown due to intermittent occurrence of troubles and the troubles are removed accidentally along with replacement of control unit, resulting in misjudgment of cause. Therefore, before replacing the control unit, check the connector joints and whether the unspecified current flows in the control unit due to short-circuit between harnesses.

Trouble Intermittently Observed

Troubles intermittently observed are mostly attributable to temporary imperfect connection of harnesses and connectors.

When such troubles are found, check the associated circuit according to the following procedure.

1. Check whether improper connectors are plugged in or connector terminals are completely engaged.
2. Check whether the terminals are deformed or damaged. If yes, remove the deformation or damage and connect the terminals securely.
3. It is likely that wires in the harness are falsely broken. Therefore, in examination of failed harness circuit, shake the harness for check to such extent that the harness will not be damaged.

Test Run of Filed TOD Vehicle

If the TOD indicator lamps experienced faulty operation even once in the past, the failed portion can be identified by use of the procedure “Diagnosis from Trouble Codes” or “Trouble Diagnosis Depending on The Status of TOD Indicator”. If the troubles that are only recognized as abnormal phenomena of the vehicle by the driver are observed, conduct the test run in the following procedure to reproduce the faulty phenomena and diagnose the fault for each phenomenon.

1. Start the engine, and check that the TOD indicator lamps are turned on for about two seconds for initial check; the CHECK lamp goes off; and the TOD indicator lamps display the specified drive mode. (If the CHECK lamp starts blinking, read the trouble codes and identify the failed portion.)
2. While keeping the vehicle standstill, operate the 4WD switch and shift the transfer lever to change the modes: 2H mode→TOD mode→4L mode→TOD mode→2H mode. Check that the TOD indicator lamps correctly display the status whenever the mode is changed. If the transition status is displayed during the shift operation, run the vehicle a little to complete shifting.
3. Slowly start the vehicle in the TOD mode, and add the power to accelerate to at least 40 km/h and maintain the speed for about two minutes. Apply the brake to completely stop the vehicle. Repeat this test pattern at least three times.
4. Turn the steering to the right end (or left end) in the TOD mode, and slowly start the vehicle and make a circle five times. Next, conduct the same test in the 2H mode.
5. Slowly start the vehicle in the TOD mode, and accelerate to at least 40 km/h. Keep the established speed, carefully change the mode in the sequence “TOD mode→2H mode →TOD mode” while checking that the shift is complete in each mode change. After the test, apply the brake to completely stop the vehicle.
6. Slowly start the vehicle in the TOD mode, and accelerate to at least 40 km/h. Apply the brake strongly so that the ABS works, and completely stop the vehicle.

7. Slowly start the vehicle in the 4L mode, and accelerate to at least 20 km/h. Apply the brake to completely stop the vehicle.

If the CHECK lamp starts blinking during the test run, read the trouble codes and give appropriate maintenance according to the fault diagnostic procedure. If the TOD indicator lamps are lit abnormally during the run, check the lighting condition and give appropriate maintenance according to the fault diagnostic procedure. Even if the phenomena are not observed, try to reproduce the abnormal state reported by the customer to the possible extent.

Post-Repair Check

As long as the starter is not turned off, the TOD indicator lamps continue blinking even after the failed control unit is repaired. Therefore, upon completion of repair, be sure to turn off the starter switch once and then turn on it to conduct the test run sequence specified in steps 1 through 6 above and check that the TOD indicator lamps no longer show any faulty status.

Basic Diagnostic Flow Chart

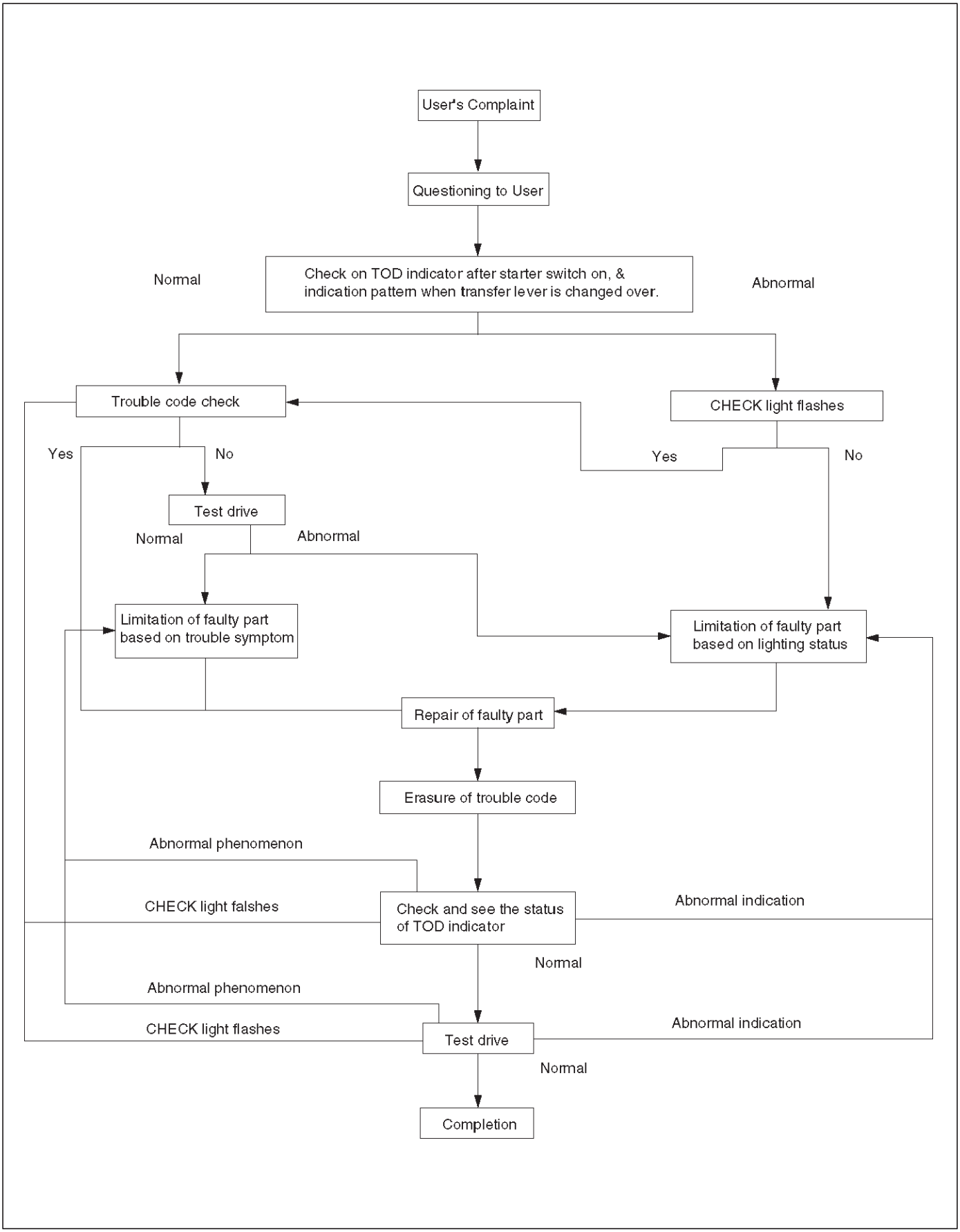

C07RW023

Parts Location

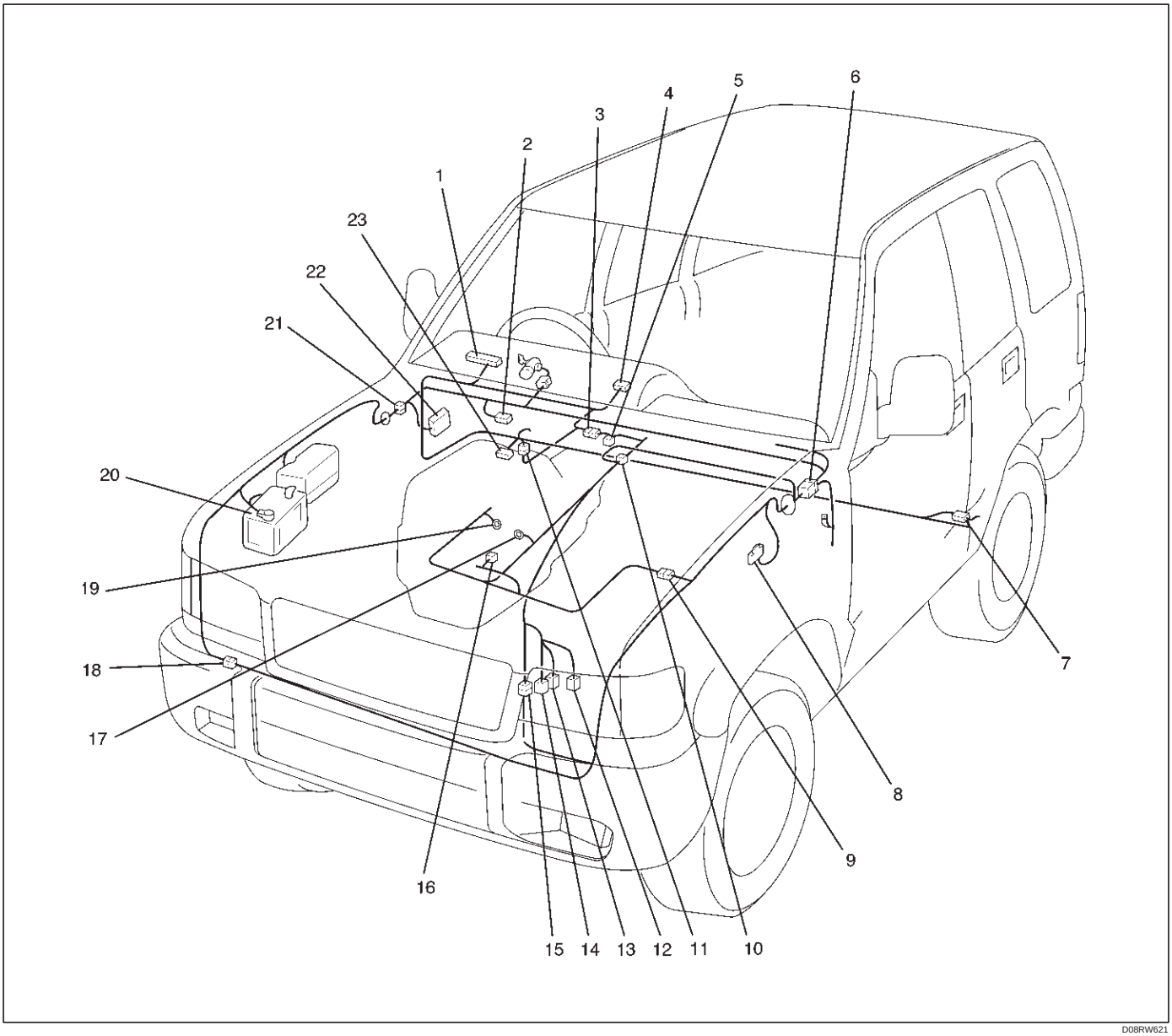

D08RW621

Legend

(1) I–9
(2) B–13 or B–14
(3) H–12
(4) I–12
(5) A–3
(6) H–7, H–8
(7) H–32
(8) C–16
(9) H–5, H–6
(10) C–63
(11) H–49
(12) M–22
(13) M–23
(14) M–24
(15) H–10
(16) E–5
(17) E–29
(18) H–42
(19) E–30
(20) Battery
(21) H–13, H–15, H–26
(22) Fuse Box
(23) B–67, B–68

Circuit Diagram

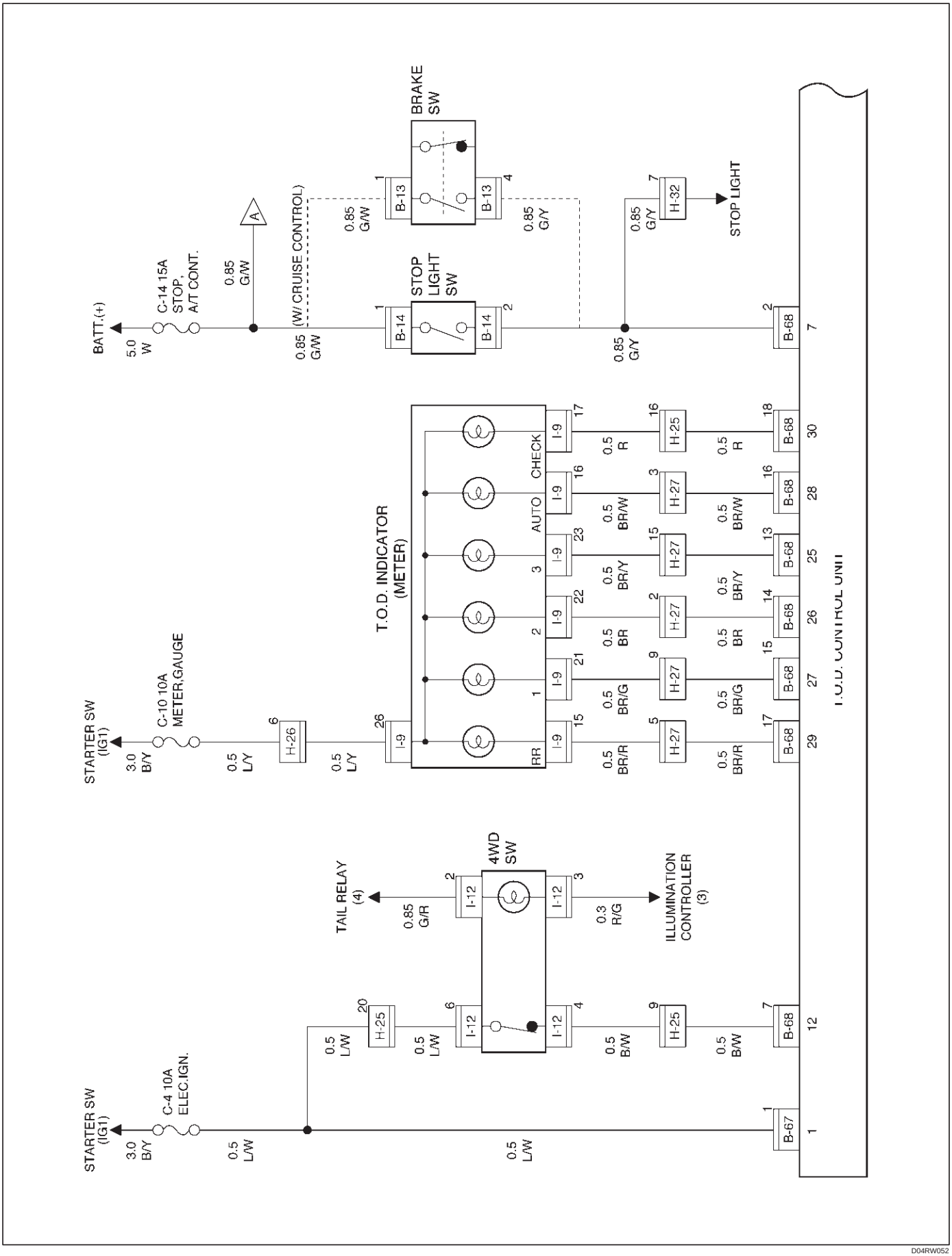

D04RW052

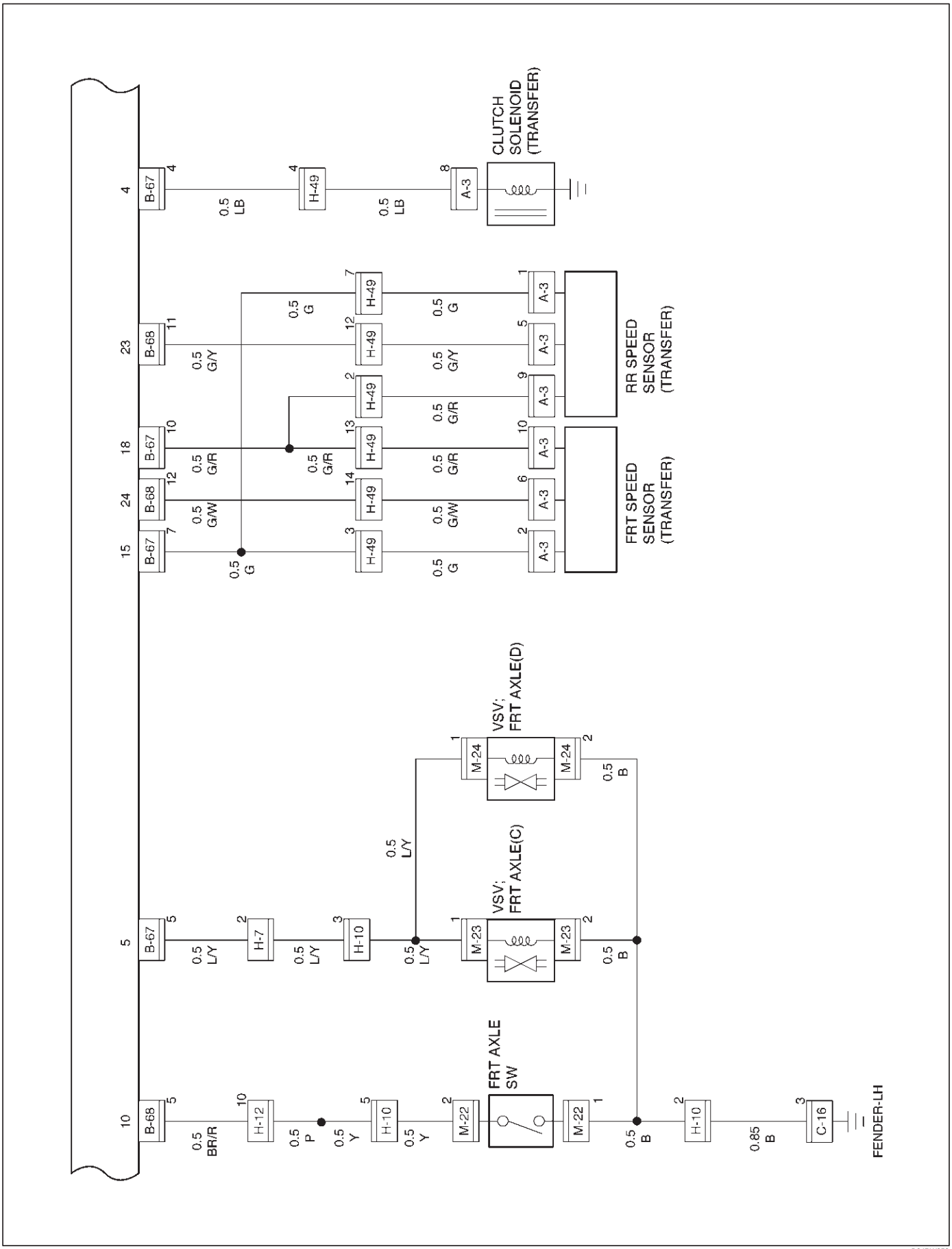
CLUTCH SOLENOID (TRANSFER)
RR SPEED SENSOR (TRANSFER)
FRT SPEED SENSOR (TRANSFER)
VSV; FRT AXLE(D)
VSV; FRT AXLE(C)
FRT AXLE SW
FENDER-LH
B-67
B-68
H-49
A-3
H-7
H-10
H-12
M-22
M-23
M-24
C-16
0.5 LB
0.5 G
0.5 G/Y
0.5 G/R
0.5 G/W
0.5 L/Y
0.5 BR/R
0.5 P
0.5 Y
0.5 B
0.85 B

D04RW053

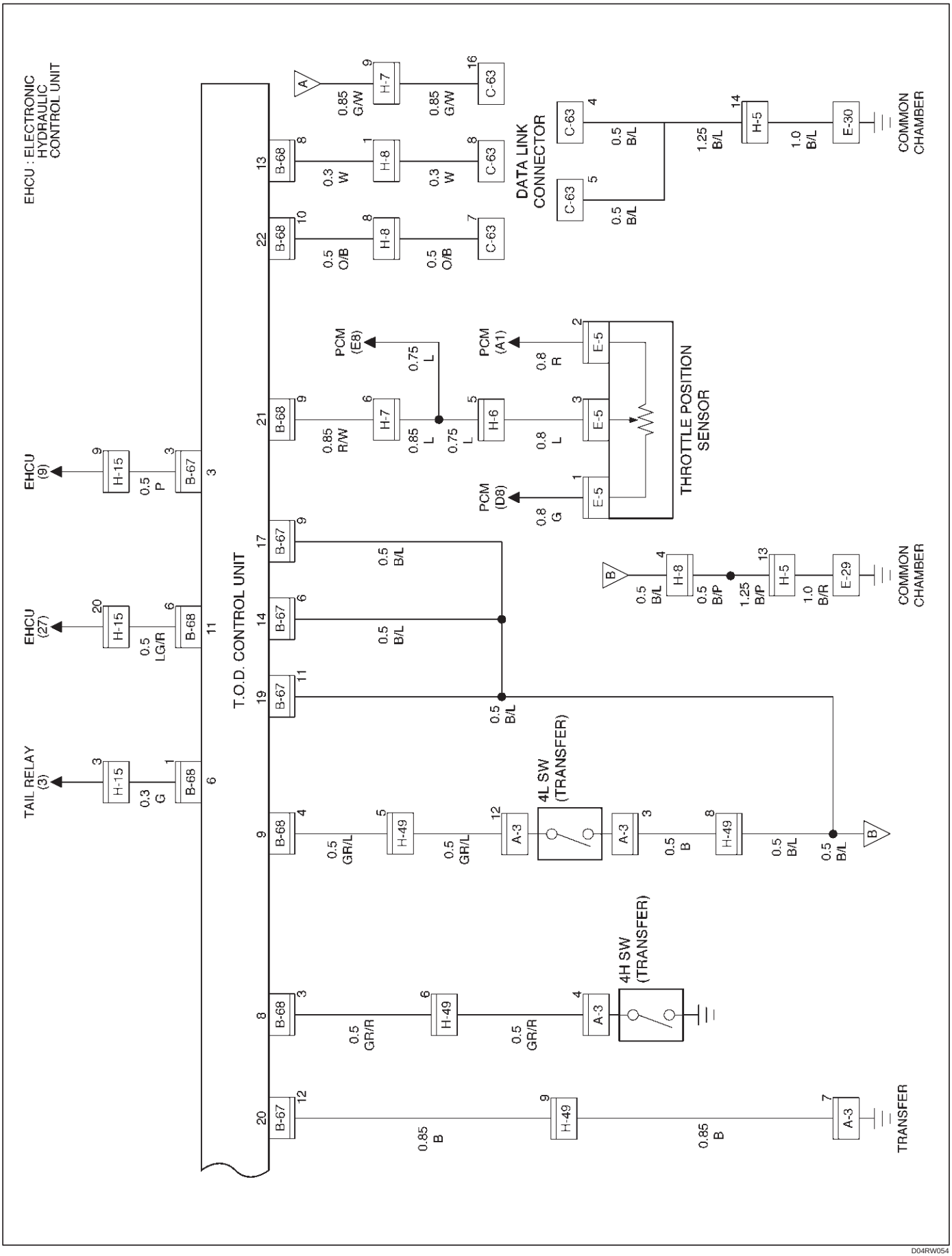
EHCU : ELECTRONIC HYDRAULIC CONTROL UNIT
EHCU (9)
EHCU (27)
TAIL RELAY (3)
T.O.D. CONTROL UNIT
DATA LINK CONNECTOR
PCM (E8)
PCM (A1)
PCM (D8)
THROTTLE POSITION SENSOR
4L SW (TRANSFER)
4H SW (TRANSFER)
COMMON CHAMBER
COMMON CHAMBER
TRANSFER
H-15
B-67
B-68
H-7
H-8
C-63
E-5
H-6
H-5
E-30
E-29
H-49
A-3
0.5 P
0.5 LG/R
0.3 G
0.85 G/W
0.3 W
0.5 O/B
0.85 R/W
0.85 L
0.75 L
0.8 R
0.8 L
0.8 G
0.5 B/L
1.25 B/L
1.0 B/L
0.5 B/P
1.25 B/P
1.0 B/R
0.5 GR/L
0.5 GR/R
0.5 B
0.85 B

D04RW054

Connector List

No.	Connector face	
A-3		
B-13		
B-14		
B-67	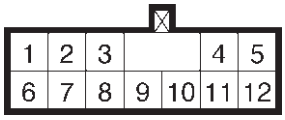	
B-68	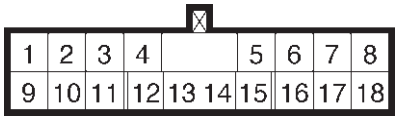	
C-16	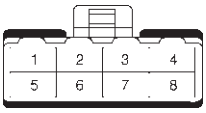	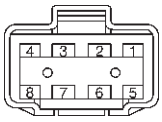
C-63	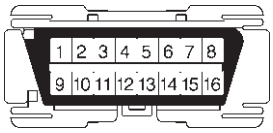	
E-5	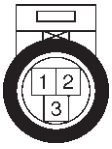	
E-29	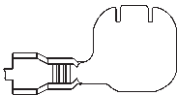	
E-30	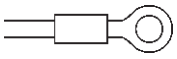	
H-5	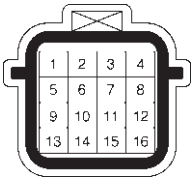	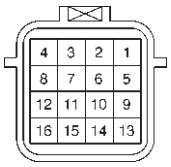
H-6	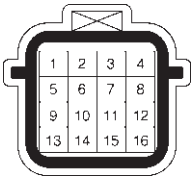	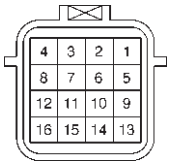
H-7	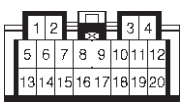	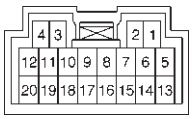

No.	Connector face	
H-8	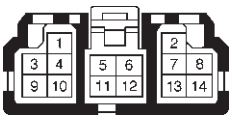	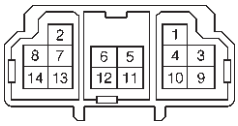
H-10	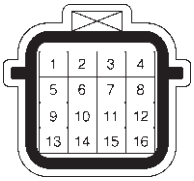	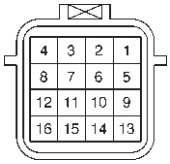
H-12	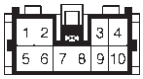	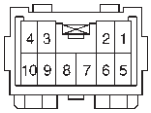
H-15	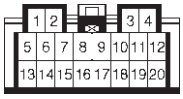	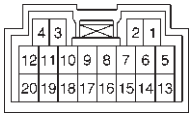
H-25	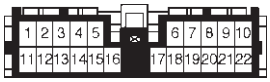	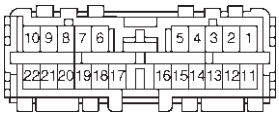
H-26		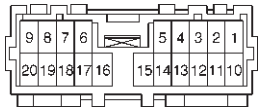
H-27	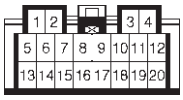	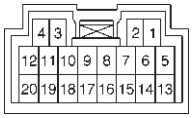
H-32	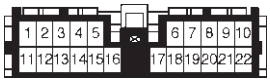	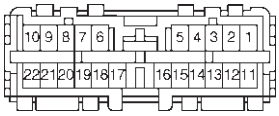
H-49		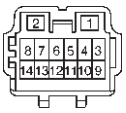
I-9	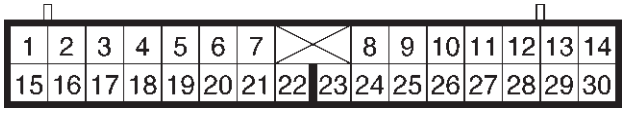	
I-12		
M-22	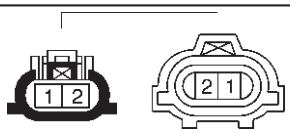	
M-23		
M-24		

Checking Failed Pin

Connector Pin Assignment

- ECU pin assignment

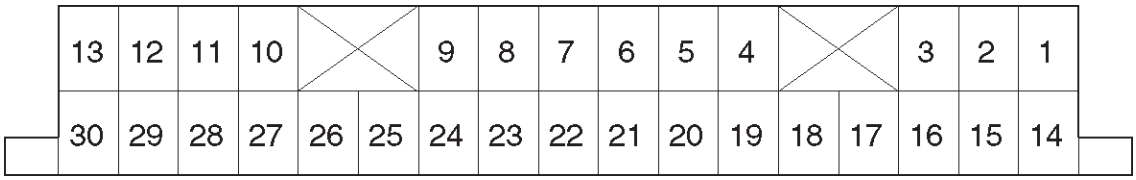

D04RW032

No.	NAME	CONTENTS
1	VIG	Power supply (IG)
2	N.C	Not used
3	4WD OUT	4WD signal output
4	SOL (+)	Electromagnetic solenoid
5	ADC (+)	Axle disconnect output
6	LIGHTING SW	Lighting SW input
7	BRAKE	Brake SW input
8	4H SW	4H SW input
9	4L SW	4L SW input
10	AXEL SW	AXEL SW input
11	ABS IN	Operation signal input
12	TOD SW	TOD SW input
13	DIAG	Self-diagnosis input
14	D-G MAP	D-G MAP recognition input (Only V6 engine)
15	Ref.	Vehicle speed sensor supply
16	N.C	Not used
17	US/JAP	Destination recognition input
18	COM (–)	Vehicle speed sensor GND
19	S-GND	Sensor GND
20	P-GND	Power GND
21	TPS	Throttle position sensor
22	TECH 2	TECH 2 output
23	Rer. Sig	Rear vehicle speed sensor input
24	Frt. Sig	Front vehicle speed sensor input
25	IND.a	4WD disply signal a
26	IND.b	4WD display signal b
27	IND.c	4WD display signal c
28	IND.AUTO	AUTO display output
29	IND Rr	Rear display output
30	CHECK	TOD warning lamp

Reference

- Transfer connector pin assignment (connector on the transfer case)
  for inspection of transfer pins.

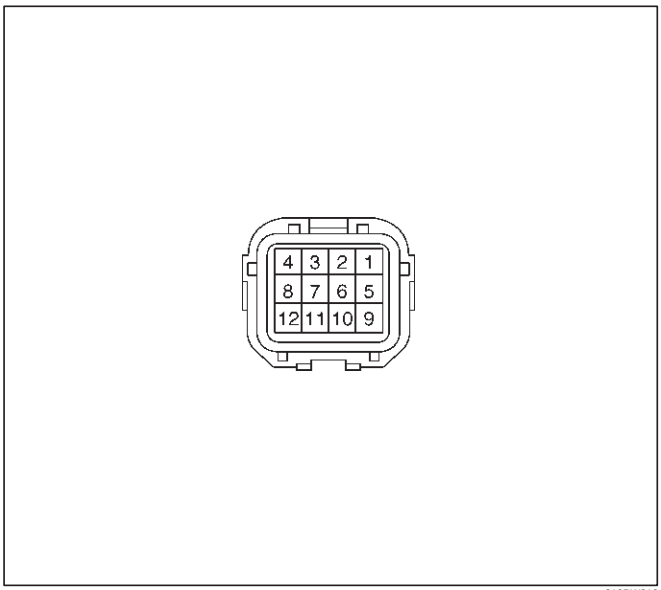

810RW310

No.	NAME	CONTENTS
1	Ref. (Rer.)	Rear speed sensor reference output
2	Ref. (Frt.)	Front speed sensor reference output
3	SW GND	SW GND
4	4H SW (+)	4H SW plus terminal
5	Rer. (+)	Rear speed sensor plus
6	Frt. (+)	Front speed sensor plus
7	POWER GND	Power GND
8	SOL (+)	Electromagnetic solenoid
9	COM (–) (Rer.)	Rear speed sensor GND
10	COM (–) (Frt.)	Front speed sensor GND
11	NC	Not used
12	4L SW (+)	4L SW plus terminal

Checking Failed TOD Control Unit Pin

NOTE:

1. Unplug the ECU connector and the pins, unless otherwise specified.
2. Before removing the ECU, turn off the ignition switch.
3. If the standard values are not observed, check the pins with other testers.

Check Pin No.	Circuit to be tested	Ignition Switch Position	Engine State	Multimeter Scale/ Range	Measure between Pin Number	Standard Valve	Note
14	D-G MAP	OFF	STOP	Ω	14, 19	Continuity : OK (Gasoline)	
20	P-GND	OFF	STOP	Ω	20, 19	Continuity : OK	
19	GND	OFF	STOP	Ω	19, GND	Continuity : OK	
8	4H SW	OFF	STOP	Ω	8, 19	No continuity (high, 4L) and continuity (N) : OK	
9	4L SW	OFF	STOP	Ω	9, 19	No continuity (high) and continuity (4L, N) : OK	
10	AXLE SW	ON	RUN	Ω	10, 19	Continuity : OK	Remove ECU and start the engine. Move the vehicle forth and back to connect axle surely.
13	DIAG	OFF	STOP	Ω	13 (TOD), 8 (DLC Con-nector)	Continuity : OK	DLC connector terminal 8
25	IND.a	ON	STOP	DCV	25 (+), 19 (–)	8.0 ~14.5 V	Lighting SW ON : 0V Lighting SW OFF : 8.0 ~14.5 V
26	IND.b	ON	STOP	DCV	26 (+), 19 (–)	8.0 ~14.5 V	
27	IND.c	ON	STOP	DCV	27 (+), 19 (–)	8.0 ~14.5 V	
30	CHECK LAMP	ON	STOP	DCV	30 (+), 19 (–)	8.0 ~14.5 V	
11	ABS IN	ON	STOP	DCV	11 (+), 19 (–)	11.5 ~14.5 V	
15	Ref.	ON	STOP	DCV	15 (+), 19 (–)	5 ~9 V	Connect ECU
24	Ft.(+)	ON	STOP	DCV	24 (+), 19 (–)	0.7 ~6 V	Connect ECU (off one tooth of speed sensor ring) and move the vehicle making sure of voltage change.
23	Rr.(+)	ON	STOP	DCV	23 (+), 19 (–)	0.7 ~6 V	Connect ECU (off one tooth of speed sensor ring) and move the vehicle making sure of voltage change.
18	COM(-)	ON	STOP	DCV	18 (+), 19 (–)	0V	Connect ECU
1	Vig	ON	STOP	DCV	1 (+), 19 (–)	8 ~14.5 V	
7	BRAKE	OFF	STOP	DCV	7 (+), 19 (–)	8 ~14.5 V	Press brake pedal
21	TPS	ON	STOP	DCV	21 (+), 19 (–)	0.2 ~4.6 V	Step on the accelerator pedal and make sure that voltage changes.
3	4WD OUT	OFF	STOP	Ω	3, 19	7 ~12 kΩ	Disconnect battery GND terminal
5	ADC(+)	OFF	STOP	Ω	5, 19	10 ~30 Ω	Disconnect battery GND terminal
4	SOL(+)	OFF	STOP	Ω	4, 19	1.0 ~5.0 Ω	Disconnect battery GND terminal
12	TOD SW	ON	STOP	DCV	12 (+), 19 (–)	SW OFF : 0 V SW ON : 8.0 ~14.5 V	SW OFF : Contact point open SW ON : Contact point close
6	LIGHTING	ON	STOP	DCV	6 (+), 19 (–)	SW OFF : 8.0 ~14.5 V SW ON : 0 V	
28	AUTO INDI	ON	STOP	DCV	28 (+), 19 (–)	TOD : 0 V 2H & 4L : 8.0 ~14.5 V	Lighting SW ON : 0V Lighting SW OFF : 8.0 ~14.5 V
29	RR INDI	ON	STOP	DCV	29 (+), 19 (–)	0 V	
17	US/JAP	OFF	STOP	Ω	17 (+), 19 (–)	No continuity : OK	

Tech 2 Scan Tool

From 98 MY, Isuzu dealer service departments are recommended to use Tech 2. Please refer to Tech 2 scan tool user guide.

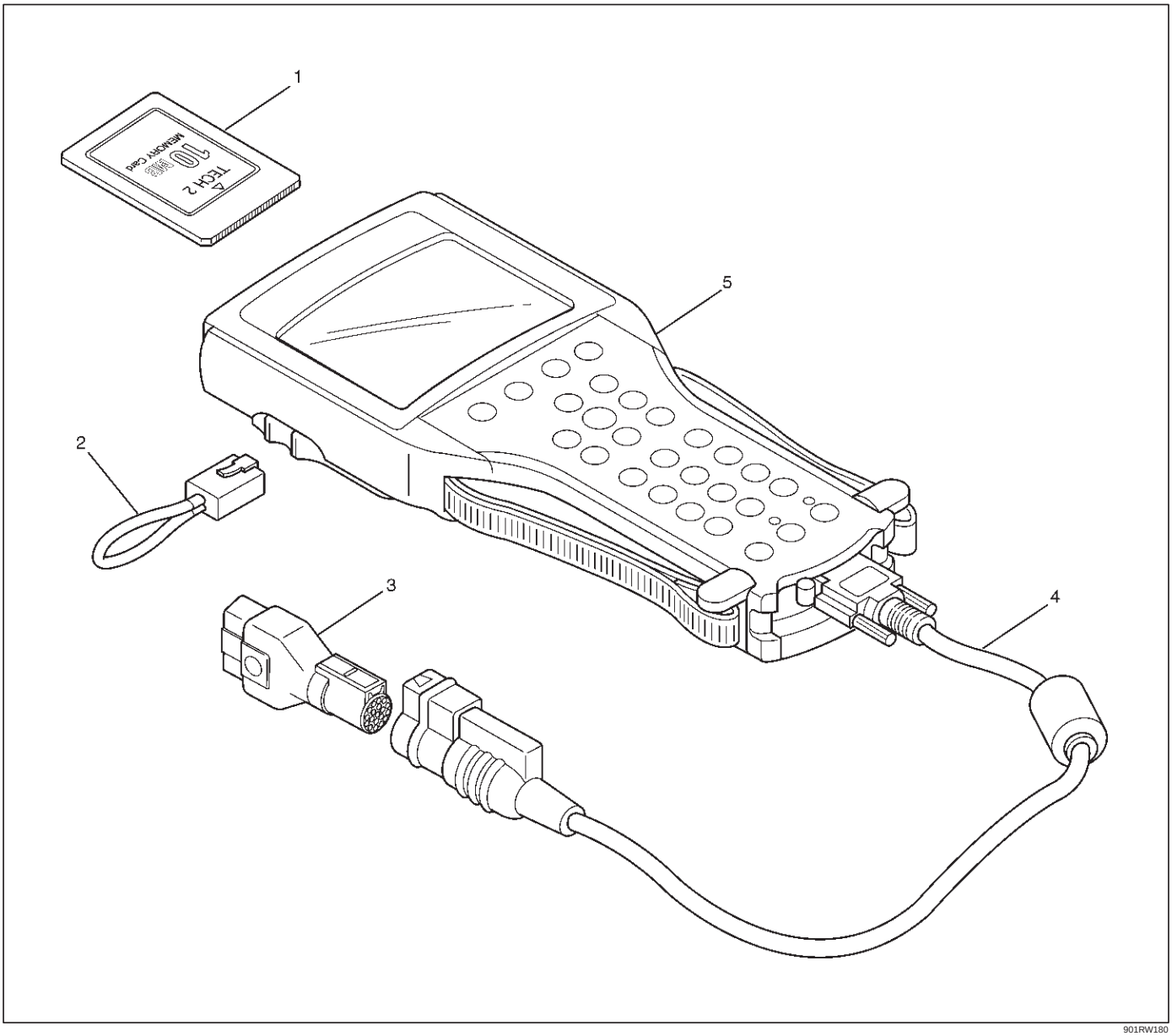

901RW180

Legend

(1) PCMCIA Card
(2) RS 232 Loop Back Connector
(3) SAE 16/19 Adaptor
(4) DLC Cable
(5) Tech–2

Getting Started

- Before operating the Isuzu PCMCIA card with the Tech 2, the following steps must be performed:

1. The Isuzu 98 System PCMCIA card (1) inserts into the Tech 2 (5).
2. Connect the SAE 16/19 adapter (3) to the DLC cable (4).
3. Connect the DLC cable to the Tech 2 (5)
4. Mark sure the vehicle ignition is off.
5. Connect the Tech 2 SAE 16/19 adapter to the vehicle ALDL/DLC connector.

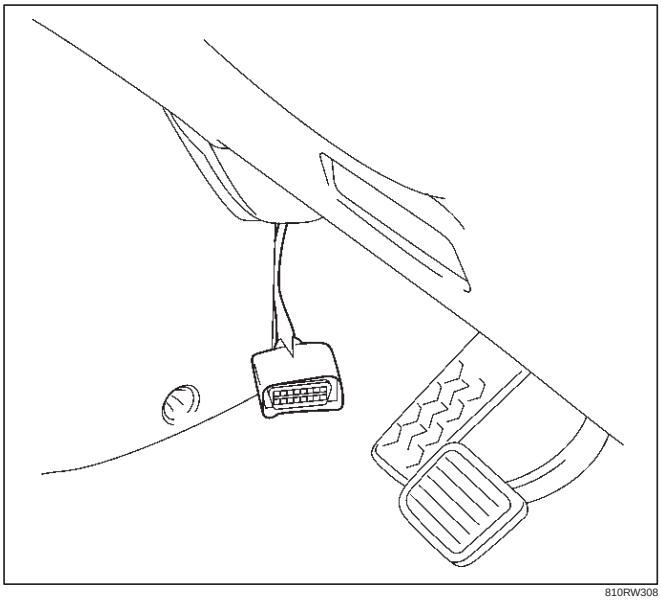

810RW308

6. The vehicle ignition turns on.
7. Verify the Tech 2 power up display.

060RW009

NOTE: The RS232 Loop back connector is only to use for diagnosis of Tech 2 and refer to user guide of the Tech 2.

Operating Procedure

The power up screen is displayed when you power up the tester with the Isuzu systems PCMCIA card. Follow the operating procedure below.

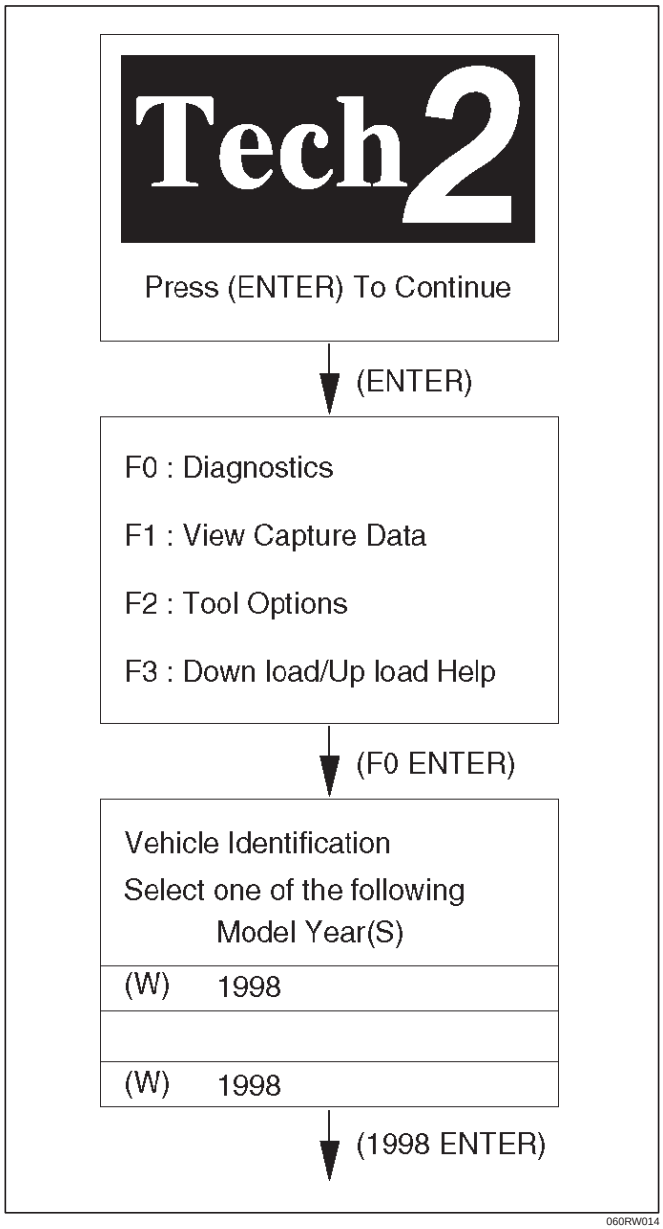

060RW014

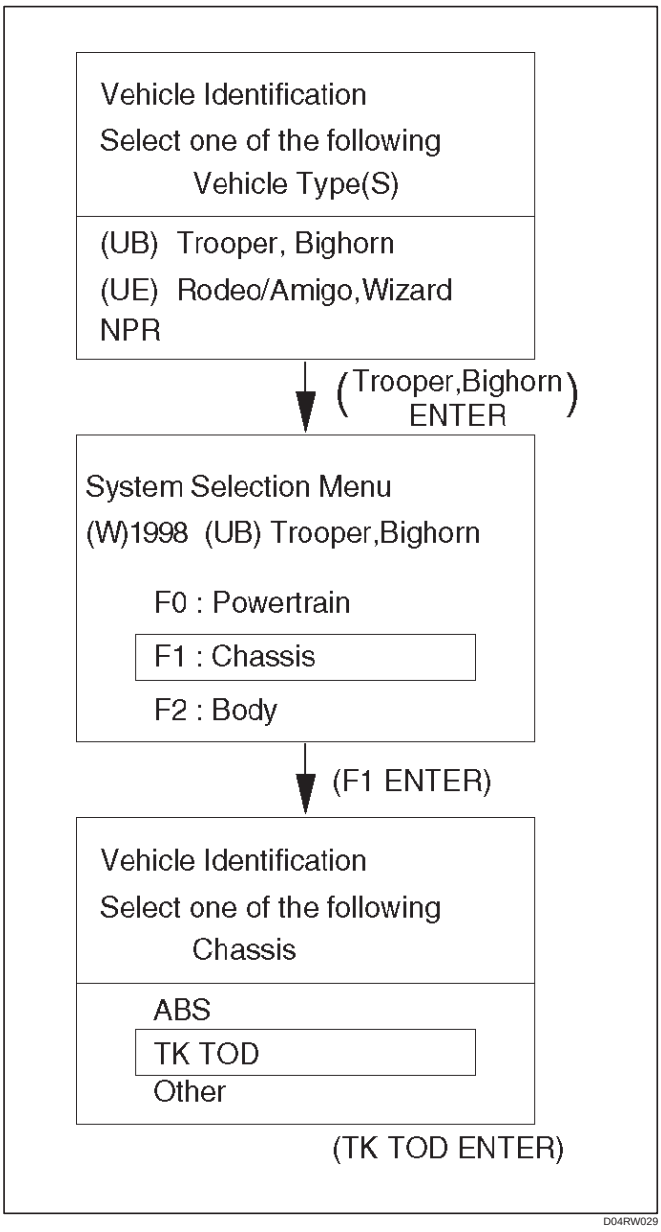
Vehicle Identification
Select one of the following
Vehicle Type(S)
(UB) Trooper, Bighorn
(UE) Rodeo/Amigo,Wizard
NPR
(Trooper,Bighorn ENTER)
System Selection Menu
(W)1998 (UB) Trooper,Bighorn
F0 : Powertrain
F1 : Chassis
F2 : Body
(F1 ENTER)
Vehicle Identification
Select one of the following
Chassis
ABS
TK TOD
Other
(TK TOD ENTER)
D04RW029

Diagnostic Trouble Codes

Code	Item	Diagnosis	Check flow No.
12	Start code	Normal	—
13	Ref	Shorted GND	6
14	Front speed sensor	Input abnormality (open, sig or com)	2
15	Ref	Shorted V_B	6
16	Front speed sensor	Input abnormality	3
21	TPS	Shorted or disconnected wiring, abnormality in input	7
23	ECU	CPU abnormality	1
24	Rear speed sensor	Input abnormality (open, sig or com)	5
25	CHECK lamp	Shorted	14
26	EMC (+)	Shorted GND	10
27	Rear speed sensor	Input abnormality	4
28	ADC (+) & AXLE SW	Output abnormality	11
31	EMC (+)	Shorted or disconnected coil/wiring	9
32	ADC (+)	Shorted or disconnected coil/wiring	12
33	ADC (+)	Shorted GND	13
34	D-G MAP	Input abnormality	8
35	CHECK lamp	Shorted or disconnected wiring	14
36	ECU	CPU abnormality	1
37	ECU	CPU abnormality	1
38	ECU	CPU abnormality	1

TPS : Throttle Position Sensor
EMC : Electromagnetic coil
ADC : Shift on the fly (Axle Dis Connect)
D-G MAP : Discrimination engine type

Diagnosis from Trouble Codes

- Diagnose the TOD based on the fault that has been saved to the control unit according to the system self-diagnostic function.

Check flow	Trouble code	Phenomenon	Standard
1	23, 36, 37, 38	The ECU is failed.	—

Step	Action	Yes	No
1	Turn on the starter switch. Is the trouble reproduced?	Replace the ECU and conduct the test run. Go to Step 3	Go to Step 2
2	1. Clear the trouble codes. 2. Conduct the test run. Is the trouble reproduced during the test run?	Replace the ECU and conduct the test run. Go to Step 3	The trouble is not reproduced. Refer to “Troubles intermittently observed”. Go to Step 3
3	1. Check that all the parts are mounted. 2. Clear the trouble codes. Is this step complete?	Repeat the “Diagnosis Flow”.	Return to Step 3

Check flow	Trouble code	Phenomenon	Standard
2	14	Front speed sensor signal open or GND short, speed sensor com open.	0.3 > sensor voltage

NOTE: The following procedure shows the case that the front or rear sensor reference or common grounding line is broken.

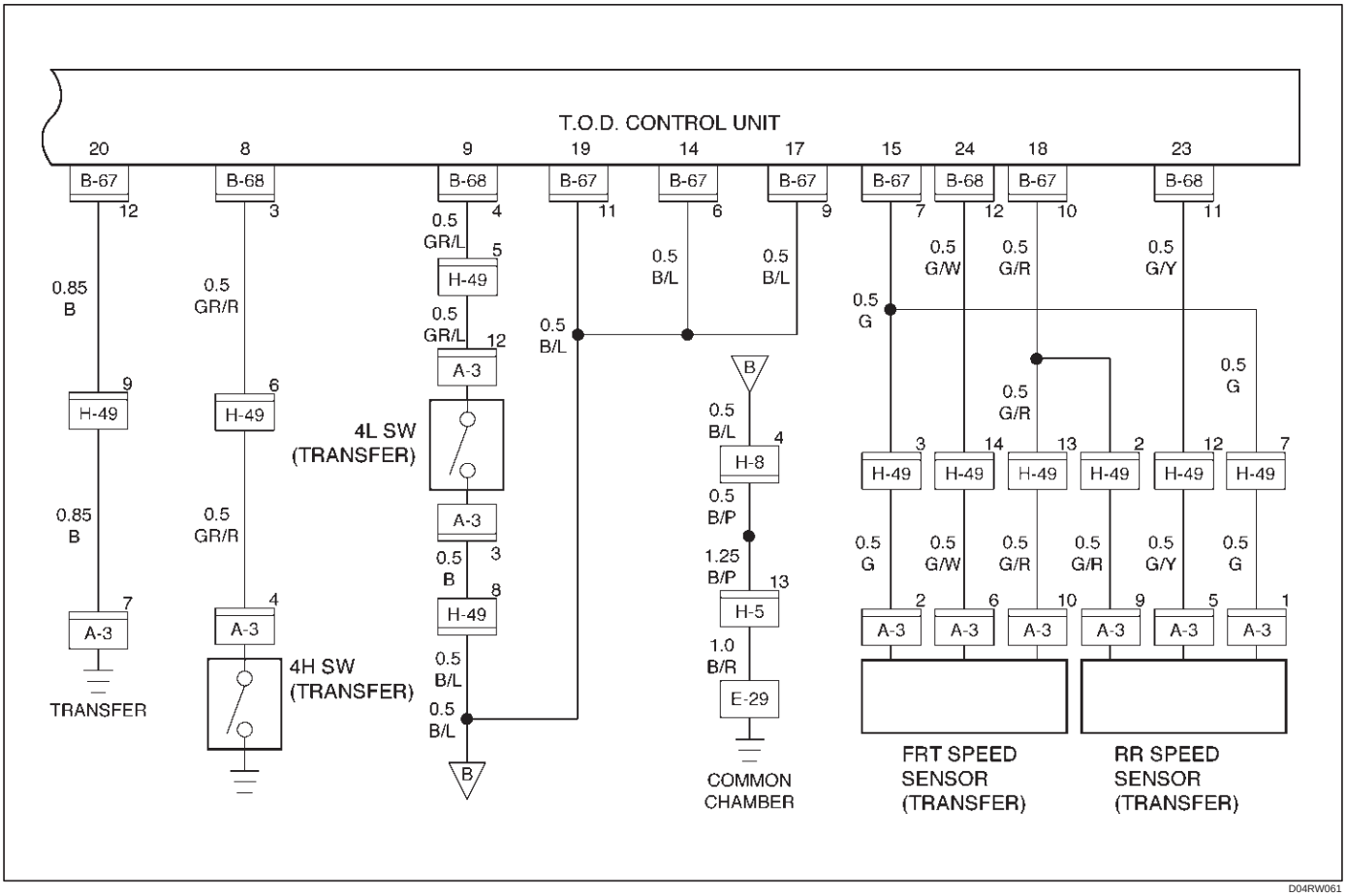

Step	Action	Yes	No
1	1. Start the engine. 2. Select 4H (TOD) mode. Is the memory except DTC 14?	Go to Step 3	Go to Step 2
2	Is the continuity harness of terminal 24 (vehicle side terminal of the front speed sensor)?	Replace speed sensor. Go to Step 6	Repair the circuit. Go to Step 6
3	Is the memory DTC 24?	Go to Step 4	Refer to other trouble check flow. Go to Step 2
4	Is the continuity between harness of terminal 23 and 24 (vehicle side terminal of the front and rear speed sensor)?	Go to Step 5	Repair the circuit. Go to Step 6
5	Is the continuity between harness of terminal 18 and 15 (vehicle side terminal of the speed sensor COM and ref)?	Replace front and rear speed sensor. Go to Step 6	Repair the circuit. Go to Step 6
6	1. Check that all the parts are mounted. 2. Clear the trouble code. Is the step complete?	Repeat the “Diagnosis Flow”.	The trouble is not reproduced. Refer to “Troubles intermittently observed”. Return to Step 6

Check flow	Trouble code	Phenomenon	Standard
3	16	The front speed sensor no pulse.	Hi level : 4.5 ~ 6.0 V Lo level : 0.7 ~ 2.0 V Frequency (F) = GAS: 832 Hz (at 50 km/h)

NOTE: Find the trouble in which the pulse corresponding to the running speed is not input.

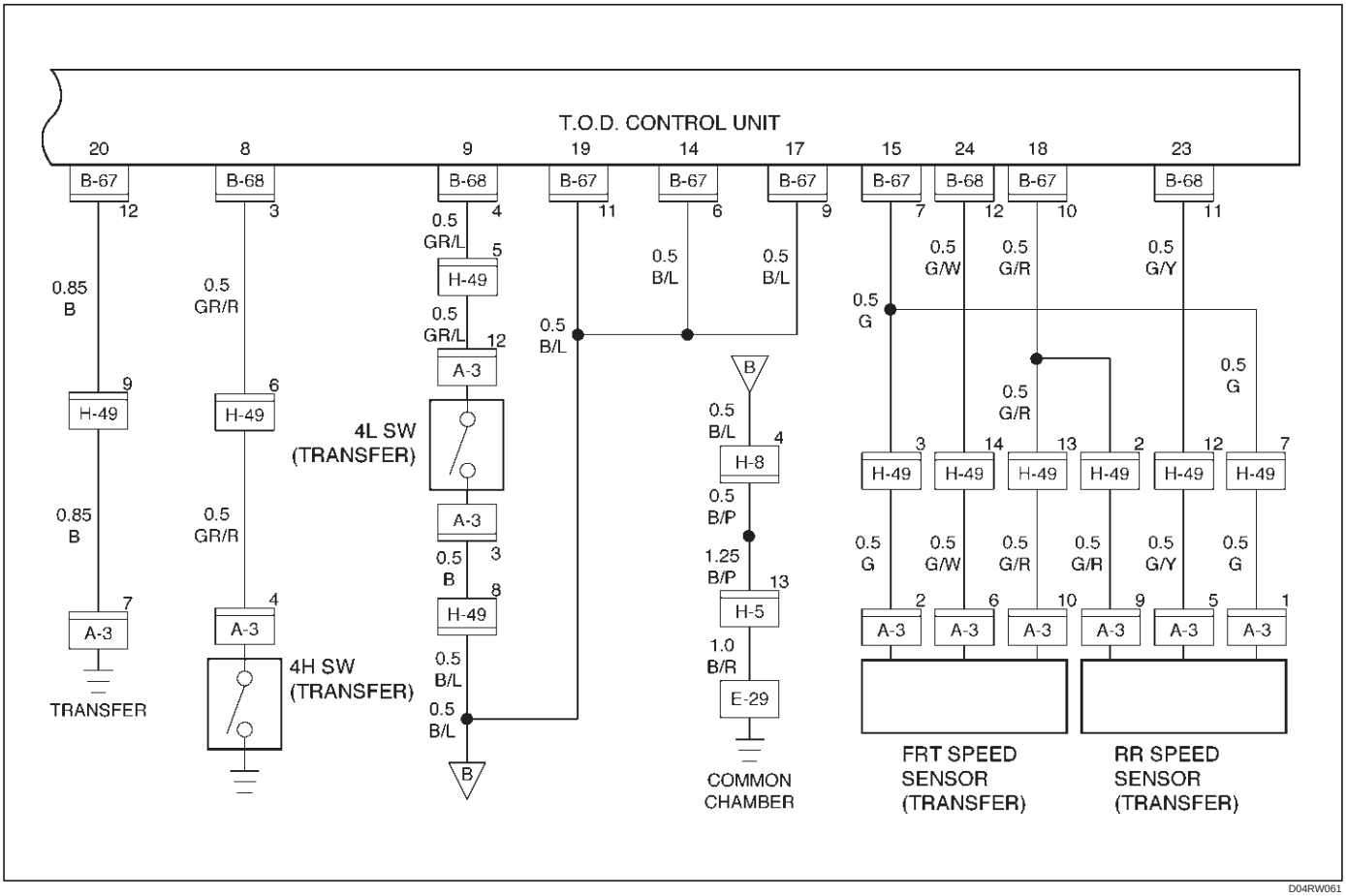

Step	Action	Yes	No
1	1. Connect TECH 2. While running in TOD mode, does TECH–2's front speed sensor indication change with vehicle speed?	Go to Step 2	Repair and inspection front speed sensor tone wheel. Go to Step 4
2	Is the continuity harness of terminal 24 (vehicle side terminal of the front speed sensor)?	Replace speed sensor. Go to Step 3	Repair the circuit. Go to Step 3
3	1. Clear the trouble code. While running at 40 kph in TOD mode for 30 consecutive sec, is trouble code reissued?	Replace ECU. Go to Step 4	Go to Step 4
4	1. Check that all the parts are mounted. 2. Clear the trouble code. Is this step complete?	Repeat the "Diagnosis Flow".	The trouble is not reproduced. Refer to "Troubles intermittently observed". Return to Step 4

Check flow	Trouble code	Phenomenon	Standard
4	27	The rear speed sensor no pulse.	Hi level : 4.5 ~ 6.0 V Lo level : 0.7 ~ 2.0 V Frequency (F) = 832 Hz (at 50 km/h)

NOTE: Find the trouble in which the pulse corresponding to the running speed is not input.

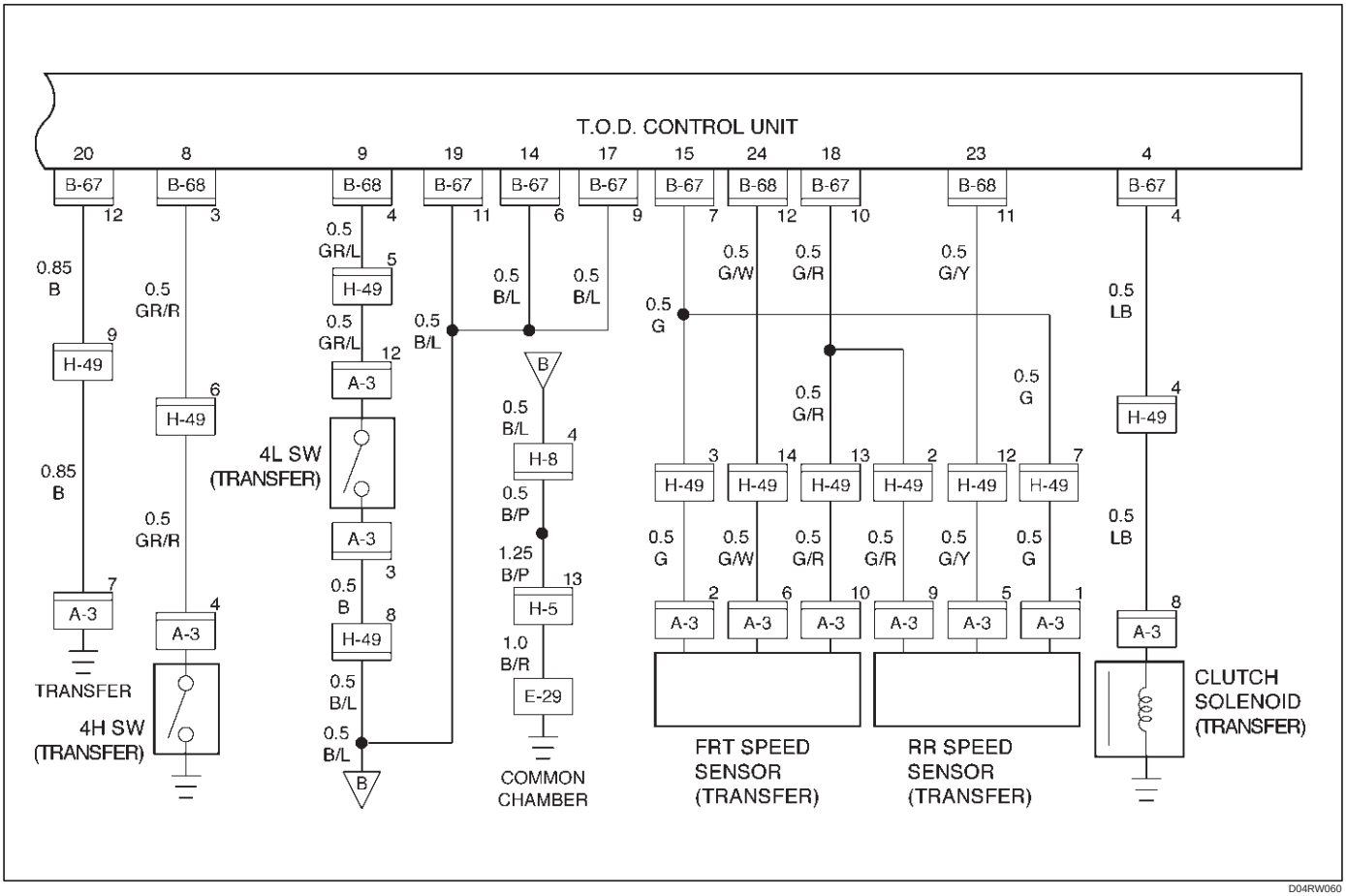

D04RW060

Step	Action	Yes	No
1	1. Connect TECH 2. While running in TOD mode, does TECH–2's rear speed sensor indication change with vehicle speed?	Go to Step 2	Repair and inspection rear speed sensor tone wheel. Go to Step 4
2	Is the continuity harness of terminal 23 (vehicle side terminal of the rear speed sensor)?	Replace speed sensor. Go to Step 3	Repair the circuit. Go to Step 3
3	1. Clear the trouble code. While running at 40 kph in TOD mode for 30 consecutive sec, is trouble code reissued?	Replace EUC. Go to Step 4	Go to Step 4
4	1. Check that all the parts are mounted. 2. Clear the trouble code. Is this step complete?	Repeat the "Diagnosis Flow".	The trouble is not reproduced. Refer to "Troubles intermittently observed". Return to Step 4

Check flow	Trouble code	Phenomenon	Standard
5	24	Rear speed sensor signal open or GND short, speed sensor COM open.	0.3 > sensor voltage

NOTE: The following procedure shows the case that the front or rear sensor reference or common grounding line is broken.

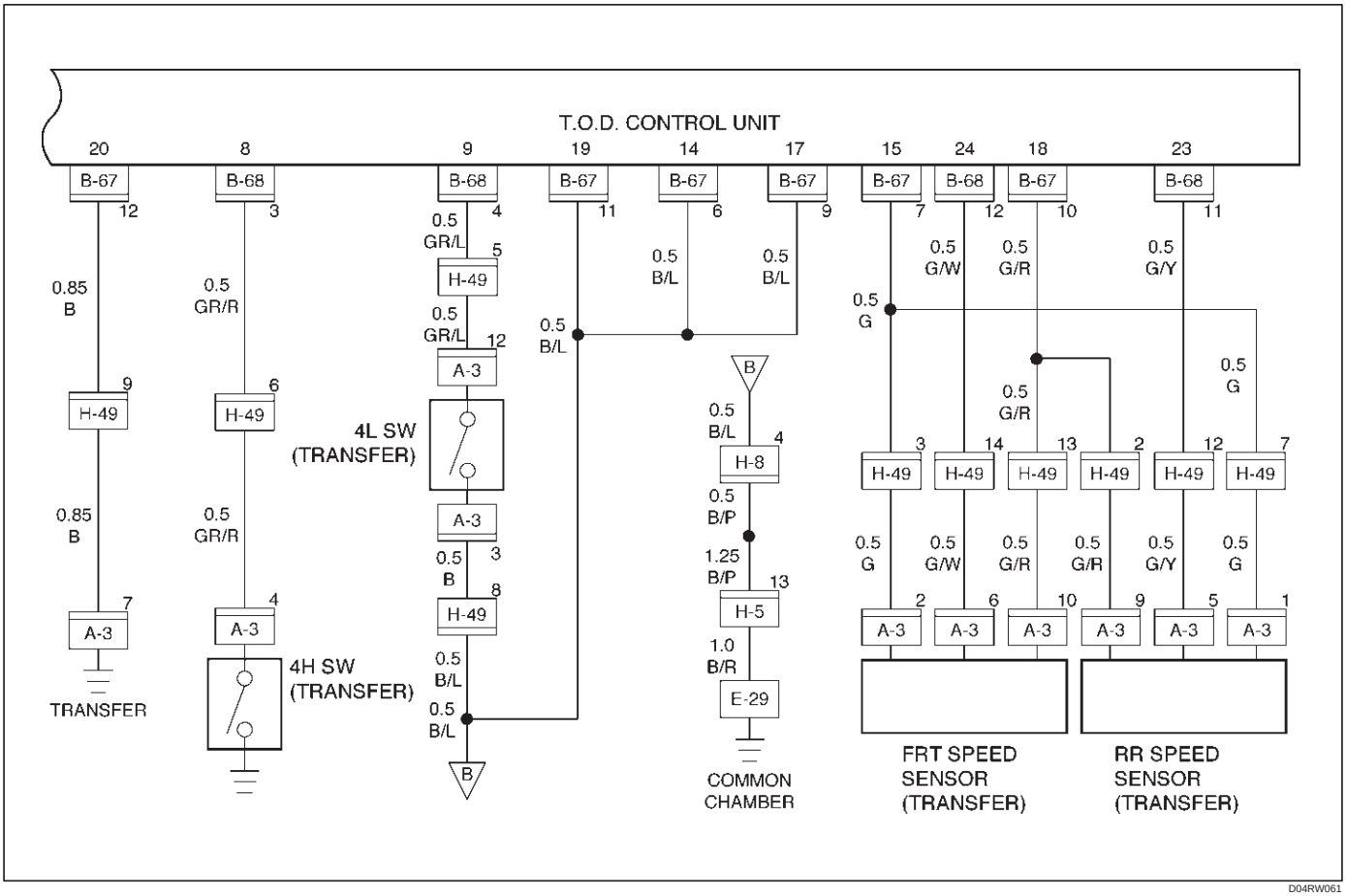

Step	Action	Yes	No
1	1. Start the engine. 2. Select 4H (TOD) mode. Is the memory except DTC 24?	Go to Step 3	Go to Step 2
2	Is the continuity harness of terminal 23 (vehicle side terminal of the rear speed sensor)?	Replace speed sensor. Go to Step 6	Repair the circuit. Go to Step 6
3	Is the memory DTC 14?	Go to Step 4	Refer to other trouble cheek flow. Go to Step 2
4	Is the continuity between harness of terminal 23 and 24 (vehicle side terminal of the front and rear speed sensor)?	Go to Step 5	Repair the circuit Go to Step 6
5	Is the continuity between harness of terminal 15 and 18 (vehicle side terminal of the speed sensor COM and ref)?	Replace front and rear speed sensor. Go to Step 6	Repair the circuit. Go to Step 6
6	1. Check that all the parts are mounted. 2. Clear the trouble code. Is the step complete?	Repeat the “Diagnosis Flow”.	The trouble is not reproduced. Refer to “Troubles intermittently observed”. Return to Step 6

Check flow	Trouble code	Phenomenon	Standard
6	13	The reference is short-circuited to GND.	Reference ≃ 5 V
	15	The reference Vb is short-circuited.	

If the reference wire (15) is short-circuited to GND, the speed signal is not generated. If the wire is short-circuited to the battery voltage, the signal level becomes faulty.

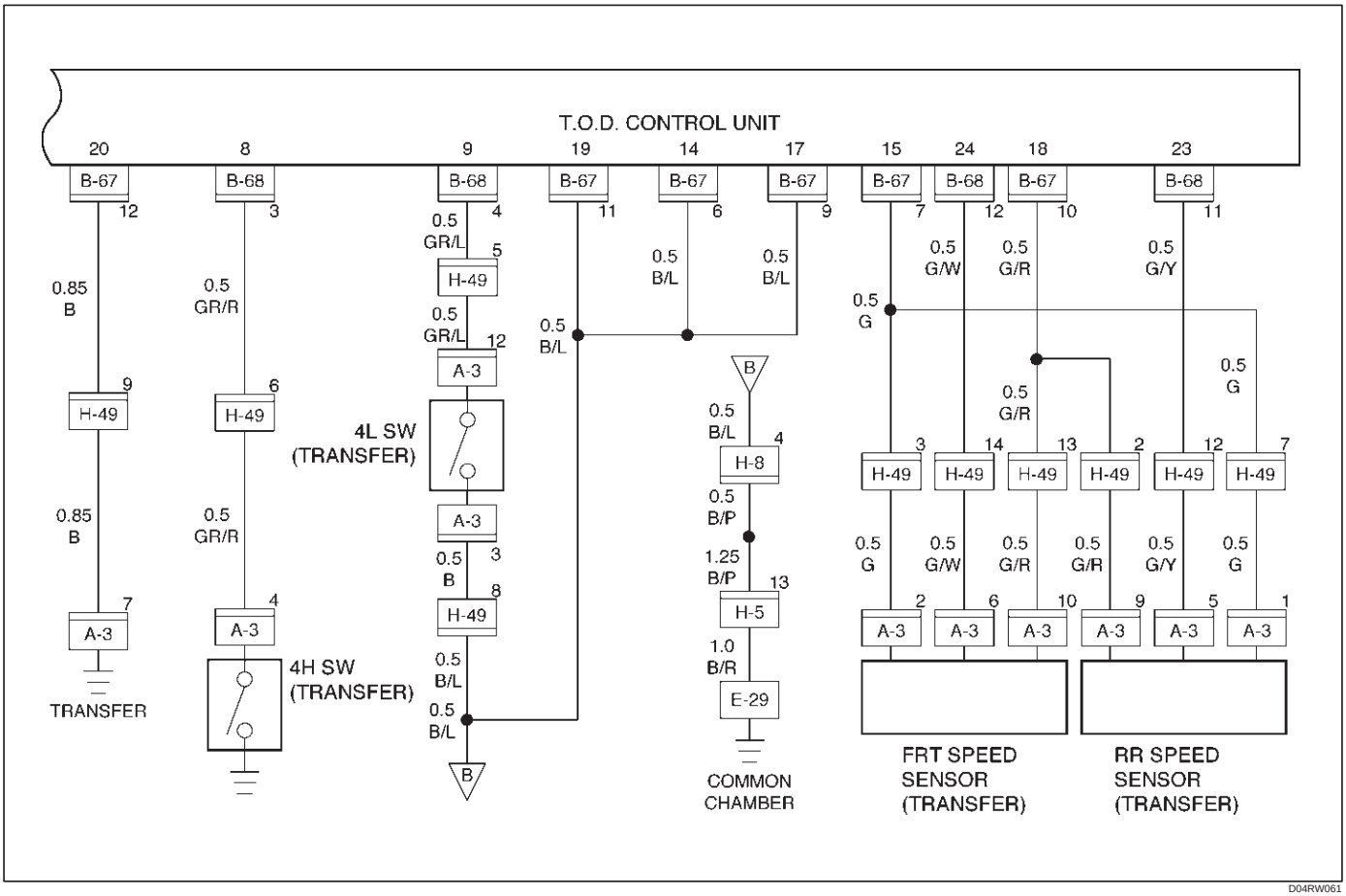

Step	Action	Yes	No
1	1. Start the engine. Does the voltage between terminals 15 and 19 meet the standard 5V?	Go to Step 8	Go to Step 2
2	Is the voltage below the standard?	Go to Step 3	Go to Step 7
3	1. Turn off the starter switch. 2. Disconnect the ECU connector. Is the continuity established between vehicle harness terminals (B–67)7 and (B–67)11?	Go to Step 4	The ECU is failed. Replace the ECU. Go to Step 8
4	1. Disconnect the H-49 connector. Is the continuity established between floor harness connector terminals (H-49)3 and (H-49)9?	Go to Step 5	Go to Step 6
5	1. Disconnect the A–3 connector. Is the continuity established between transfer harness connector terminals (A–3)2 and (A–3)7?	Replace the front speed sensor. Go to Step 8	The reference harness for the front speed sensor is short–circuited to GND. Repair the circuit. Go to Step 8
6	1. Disconnect the A–3 connector. Is the continuity established between transfer harness connector terminals (A–3)1 and (A–3)7?	Replace the rear speed sensor. Go to Step 8	The reference harness for the rear speed sensor is short–circuited to GND. Repair the circuit. Go to Step 8
7	1. Turn off the starter switch. 2. Disconnect the ECU connector. 3. Turn on the starter switch. Is the battery voltage observed between harness connector terminals (B–67)7 and (B–67)11?	Repair the harness circuit. Go to Step 8	The ECU has failed. Replace the ECU. Go to Step 8
8	1. Check that all the parts are mounted. 2. Clear the trouble code. Is this step complete?	Repeat the “Diagnosis Flow”	Go to Step 8

Check flow	Trouble code	Phenomenon	Standard
7	21	The voltage of the throttle position sensor (TPS) is faulty.	V Gasoline Idling: 0.44 ~ 0.87 Wide open throttle (WOT): 3.7 ~ 4.6

The signal voltage from the TPS deviates from the standard range.

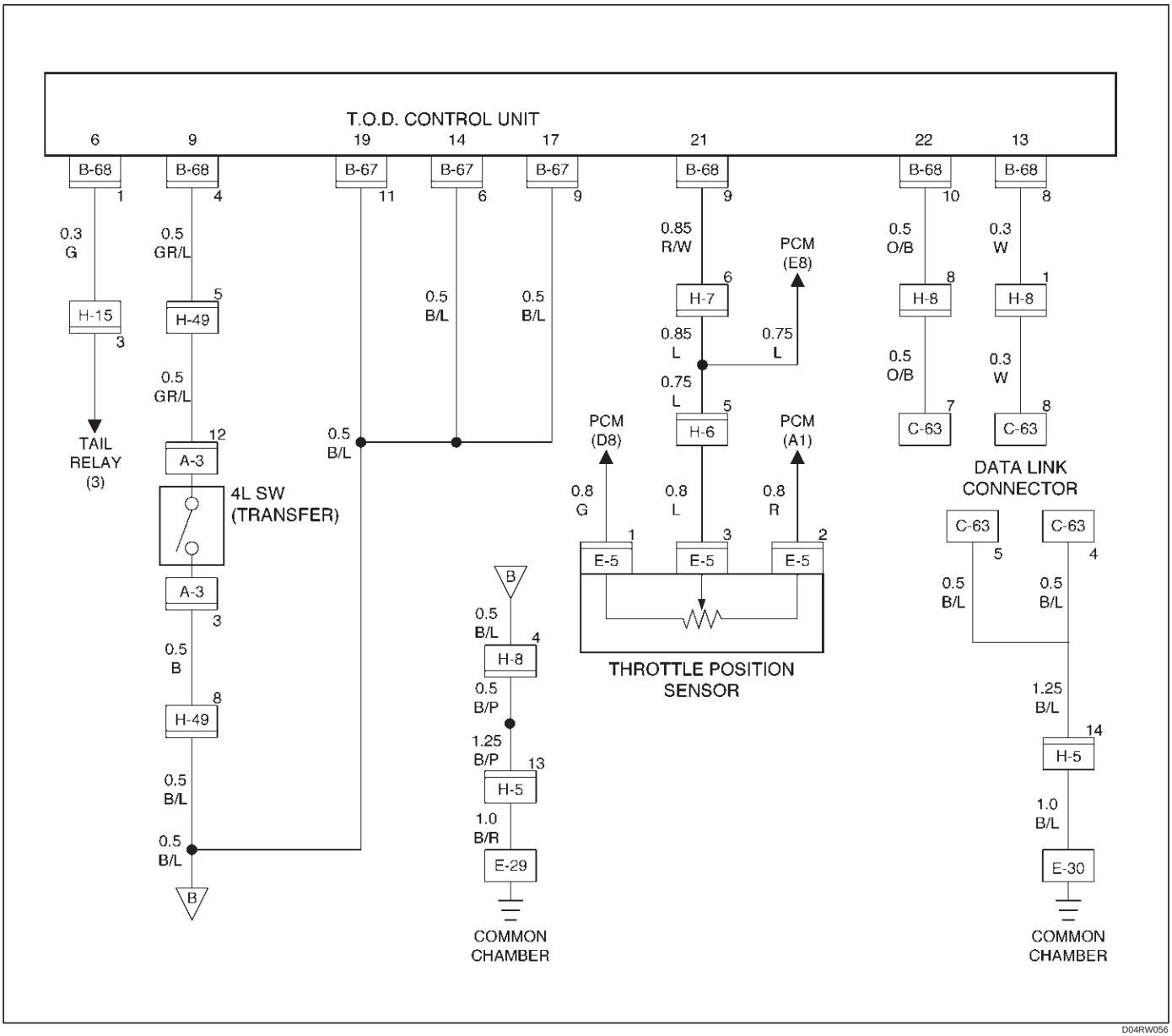

Step	Action	Yes	No
1	1. Turn off the starter switch. Is the battery voltage normal?	Go to Step 2	Charge or replace the battery. Go to Step 6
2	1. Turn on the starter switch. Does the voltage between terminals 21 and 19 fall within the standard range above?	Go to Step 6	Go to Step 3
3	1. Turn off the starter switch. 2. Disconnect the ECU connector. 3. Turn on the starter switch. Does the voltage between terminals (B–68)9 and (B–67)11 fall within the standard range above?	The ECU has failed. Replace the ECU. Go to Step 6	Go to Step 4
4	Is the harness healthy?	Go to Step 5	Repair the harness. Go to Step 6
5	Is the TPS healthy?	Go to Step 6	Replace the TPS. Go to Step 6
6	1. Check that all the parts are mounted. 2. Clear the trouble code. Is this step complete?	Repeat the “Diagnosis Flow”.	Go to Step 6

Check flow	Trouble code	Phenomenon	Standard
8	34	The diesel/gasoline engine identification signal is faulty.	Gasoline: Continuity established

The engine identification signals of 6VE1 and 4JX1 are changed each other.

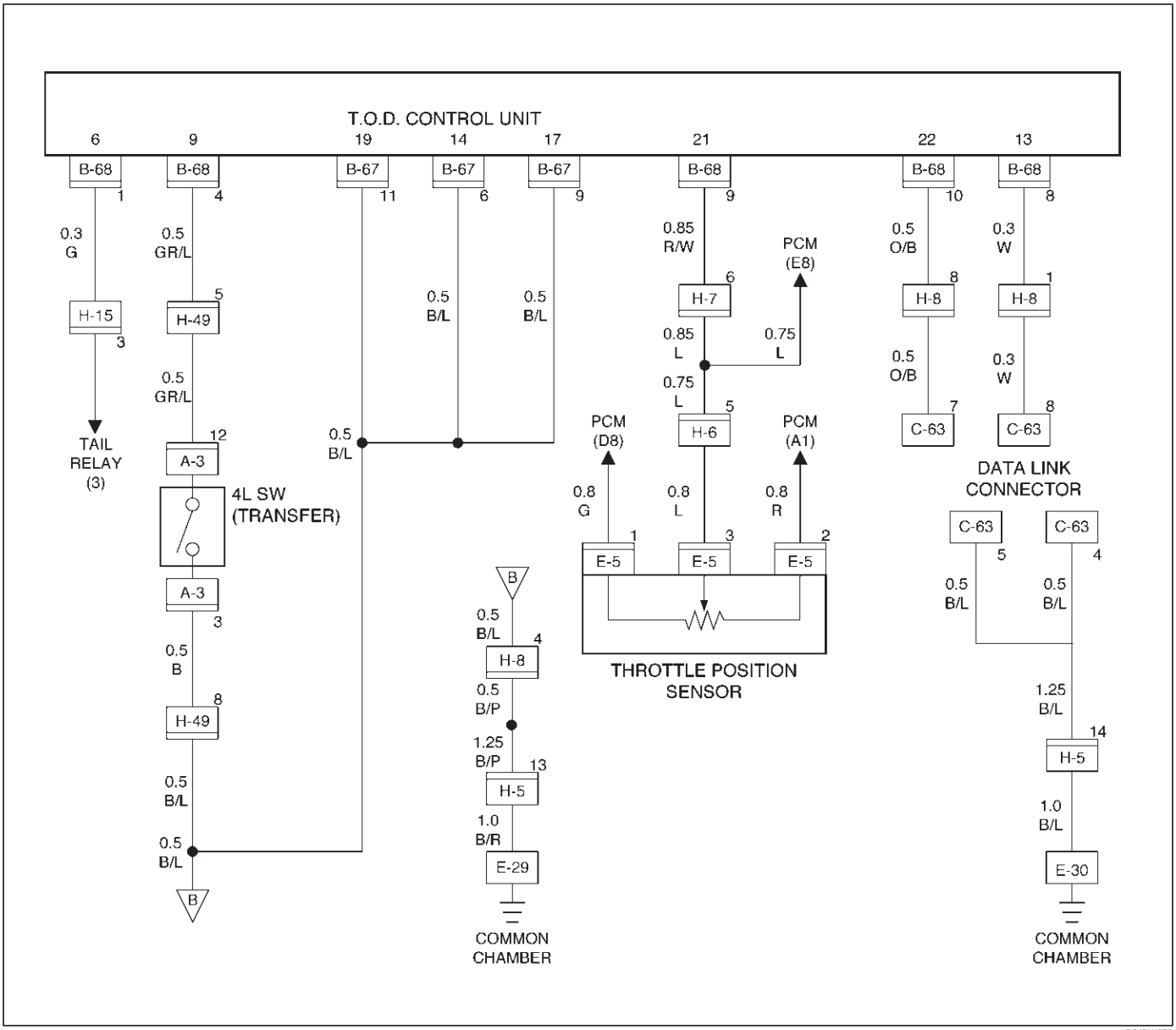

D04RW056

6VE1

Step	Action	Yes	No
1	1. Turn off the starter switch. Is the continuity established between terminals 14 and 19?	Go to Step 2	The harness is broken. Repair the circuit. Go to Step 3
2	1. Turn on the starter switch. Does the voltage between terminals 14 and 19 indicate 0V?	The phenomenon is not reproduced. Refer to “Troubles intermittently observed” Go to Step 3	The ECU has failed. Replace the ECU. Go to Step 3
3	1. Check that all the parts are mounted. 2. Clear the trouble code. Is this step complete?	Repeat the “Diagnosis Flow”.	Return to Step 3

Check flow	Trouble code	Phenomenon	Standard
9	31	The electromagnetic coil is broken.	—

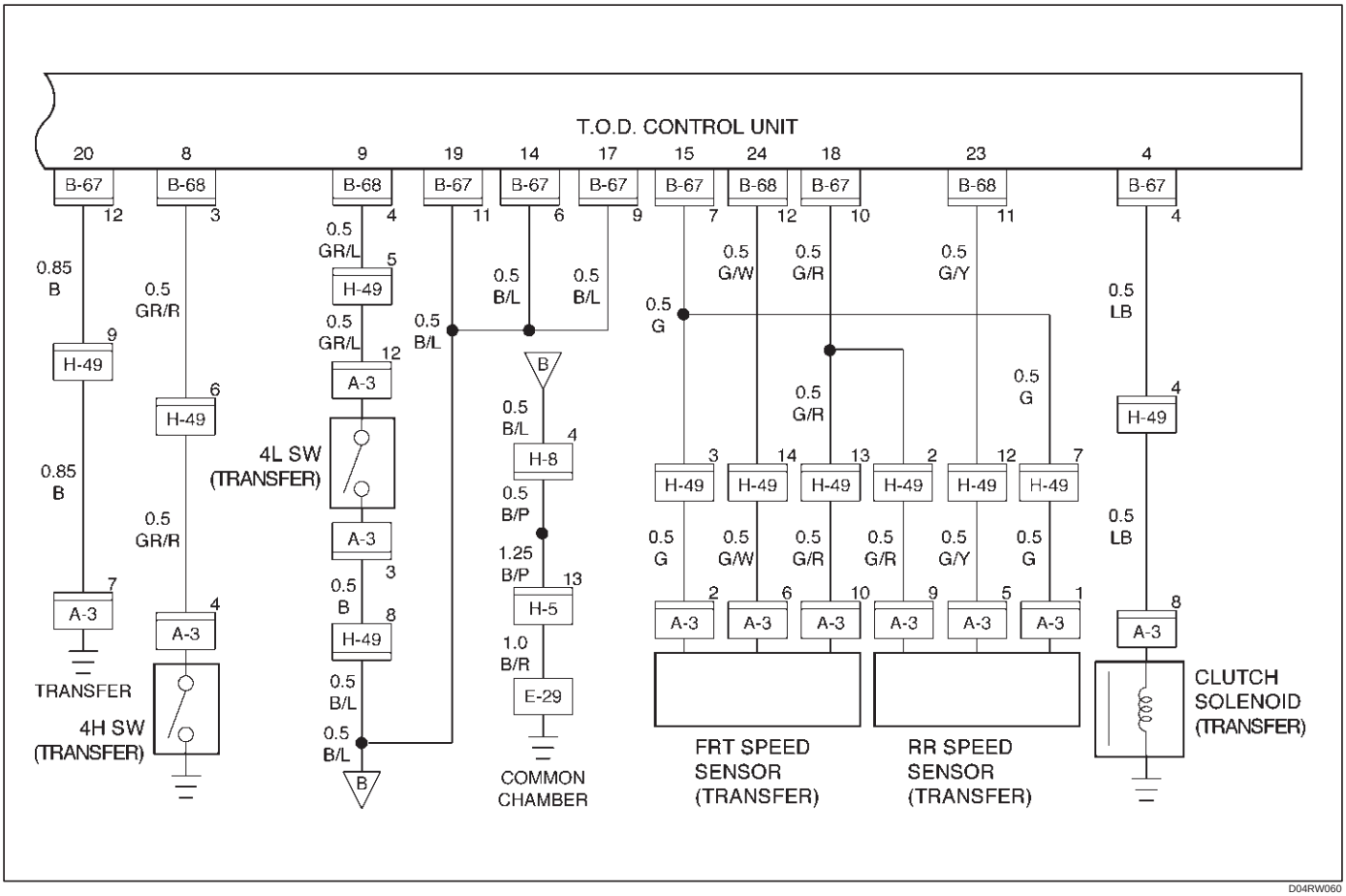

Step	Action	Yes	No
1	1. Turn off the starter switch. 2. Disconnect the ECU connector from ECU. Is the continuity established between terminals (B–67)4 and (B–67)12?	Go to Step 2	Go to Step 4
2	1. Connect the ECU connector. 2. Start the engine. 3. Set the TOD mode. Does the voltage between terminals 4 and 20 indicate at least 0.4V?	Go to Step 3	The ECU has failed. Replace the ECU. Go to Step 5
3	Is the battery voltage always observed between terminals 4 and 20?	The harness is short–circuited on the battery. Repair the circuit. Go to Step 5	The phenomenon is not reproduced. Refer to “Troubles intermittently observed”. Go to Step 5
4	1. Disconnect the M–27 connector. Is the continuity established between transfer connector terminals (A–3)8 and (A–3)7?	The harness is broken. Repair the circuit. Go to Step 5	Replace the transfer electromagnetic coil (solenoid clutch). Go to Step 5
5	1. Check that all the parts are mounted. 2. Clear the trouble code. Is this step complete?	Repeat the “Diagnosis Flow”.	Return to Step 5

Check flow	Trouble code	Phenomenon	Standard
10	26	The electromagnetic coil GND is short-circuited.	Resistance: 1.0 to 5.0 ohm (at ordinary temperature)

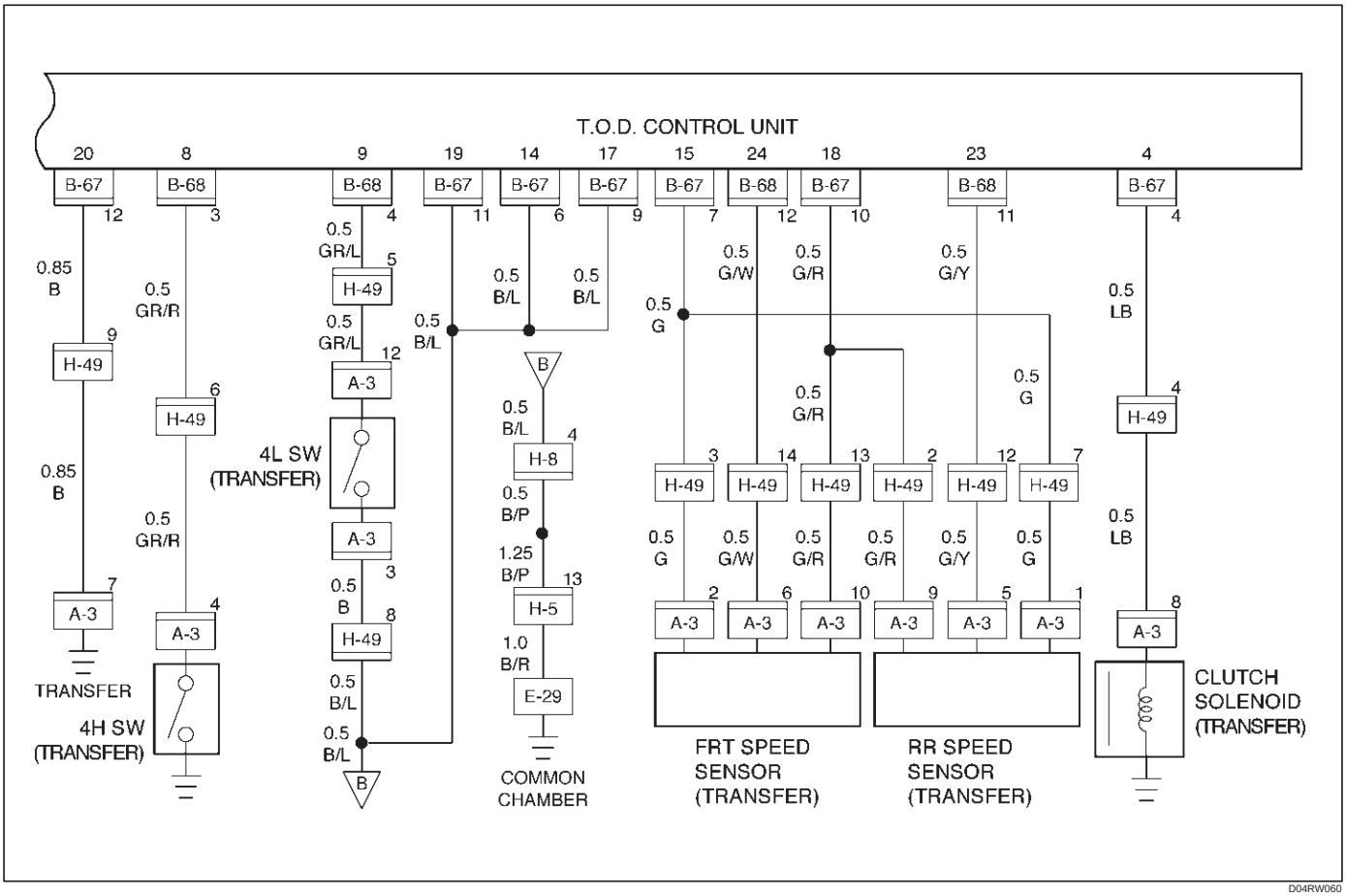

Step	Action	Yes	No
1	1. Turn off the starter switch. 2. Disconnect the ECU connector from ECU. Does the resistance between terminals (B–67)4 and (B–67)12? indicate 1.0 to 5.0 ohm?	Go to Step 2	Go to Step 3
2	1. Connect the ECU connector. 2. Start the engine. 3. Set the TOD mode. When the throttle is operated between full close and full open positions, does the voltage between terminals 4 and 20 indicate at least 0.1 to 1.0 V?	The phenomenon is not reproduced. Refer to “Troubles intermittently observed”. Go to Step 4	The ECU has failed. Replace the ECU. Go to Step 4
3	Does the resistance between transfer connector terminals (A–3)8 and (A–3)7 indicate 1.0 to 5.0ohm?	The harness is broken. Repair the circuit. Go to Step 4	Replace the transfer electromagnetic coil. Go to Step 4
4	1. Check that all the parts are mounted. 2. Clear the trouble code. Is this step complete?	Repeat the “Diagnosis Flow”.	Return to Step 4

Check flow	Trouble code	Phenomenon	Standard
11	28	The shift on the fly system (front hub) works incorrectly.	—

NOTE: The shift on the fly system is not changed between 2WD and 4WD modes normally.

CAUTION: If code 32 or 33 is also observed, remove the trouble associated with code 32 or 33 first.

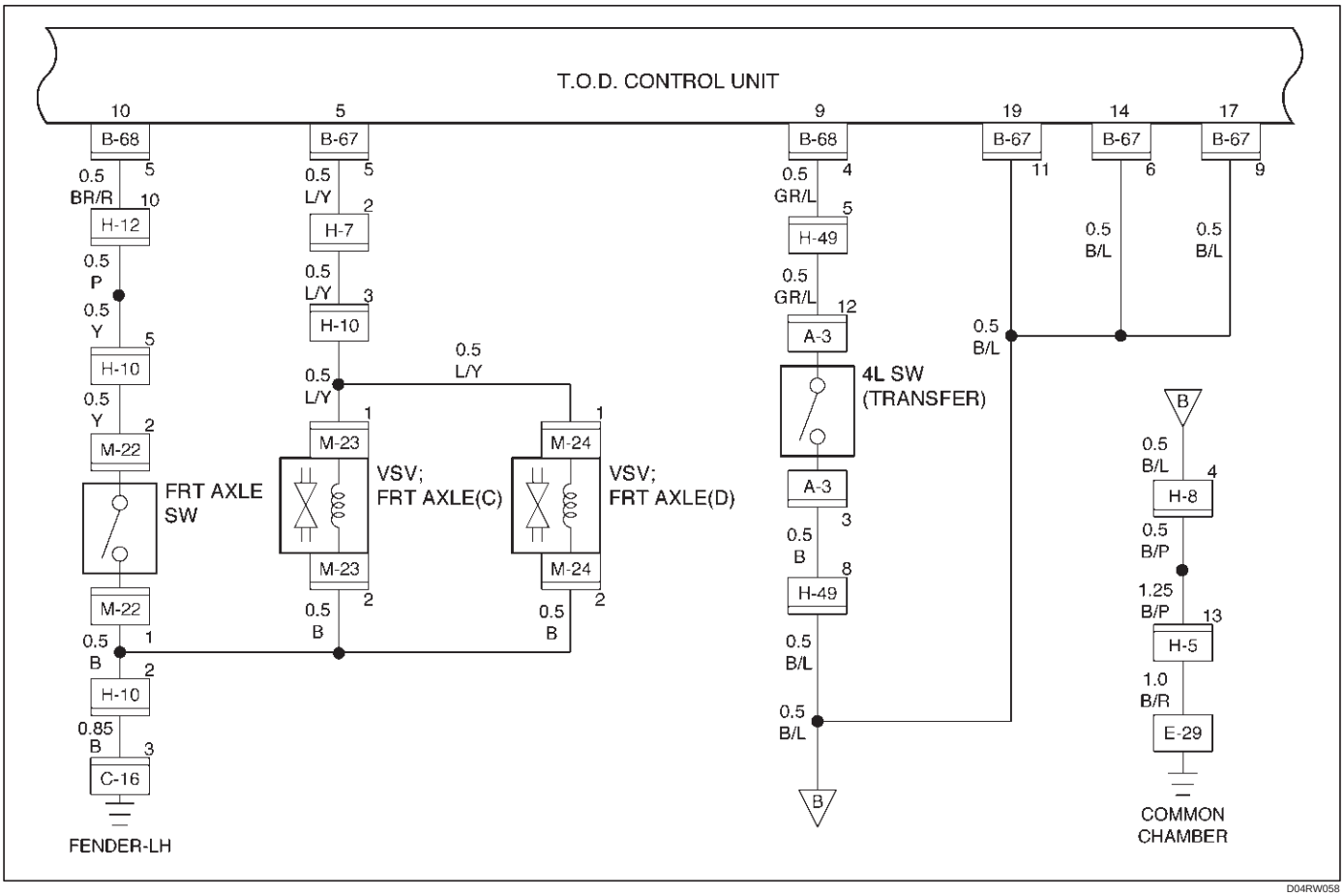

Step	Action	Yes	No
1	1. Turn on the starter switch. 2. Set the transfer to the 2H mode. Is the battery voltage observed between terminals 5 and 19?	Go to Step 2	Go to Step 5
2	Is the battery voltage observed between terminals 10 and 19?	Go to Step 3	Go to Step 6
3	1. Set the transfer to the high (TOD) mode. Does the voltage between terminals 5 and 19 indicate 0V?	Go to Step 4	The ECU has failed. Replace the ECU. Go to Step 7
4	Does the voltage between terminals 10 and 19 indicate 0V?	The phenomenon is not reproduced. Refer to “Troubles intermittently observed”. Go to Step 7	The shift on the fly system is failed (refer to Section 4C “Front Axle” of Chassis Repair Manual). Go to Step 7
5	Does the TOD indicator show the 2H mode?	The ECU has failed. Replace the ECU. Go to Step 7	See “Trouble Diagnosis Depending on The Status of TOD Indicator”. Go to Step 7
6	Set the transfer to the high (TOD) mode. Does the voltage between terminals 5 and 19 indicate 0V?	The shift on the fly system has failed (refer to Section 4C “Front Axle” of Chassis Repair Manual). Go to Step 7	The ECU has failed. Replace the ECU. Go to Step 7
7	1. Check that all the parts are mounted. 2. Clear the trouble code. Is this step complete?	Repeat the “Diagnosis Flow”.	Return to Step 7

Check flow	Trouble code	Phenomenon	Standard
12	32	The on/off signal (ADC) line of the shift on the fly system (front hub) is broken, or the line is short-circuited to the battery.	—

NOTE: The on/off signal line of the shift on the fly system is broken, or the line is short–circuited to the battery.

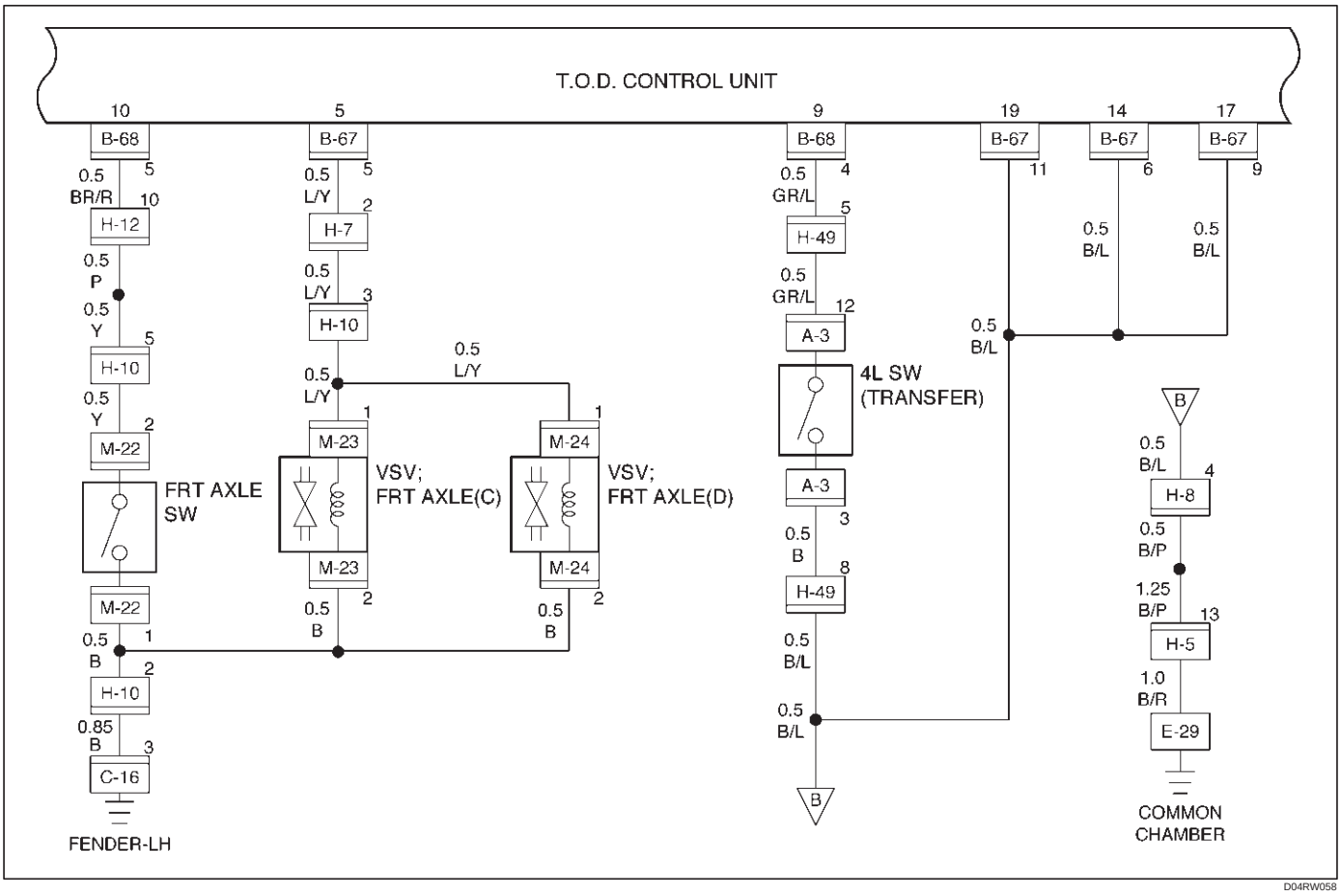

Step	Action	Yes	No
1	1. Turn off the starter switch. 2. Disconnect the ECU connector from ECU. Is the continuity established between terminals (B–67)5 and (B–67)11?	Go to Step 2	The harness is broken. Repair the circuit. Go to Step 3
2	Does the voltage between terminals 5 and 19 indicate 0V?	Go to Step 3	The battery is short-circuited. Repair the circuit. Go to Step 4
3	1. Turn off the starter switch. 2. Connect ECU connector. 3. Turn on the starter switch. 4. Set the transfer to the 2H mode. Is the battery voltage observed between terminals 5 and 19?	The phenomenon is not reproduced Refer to “Troubles intermittently observed”. Go to Step 4	The ECU has failed. Replace the ECU. Go to Step 4
4	1. Check that all the parts are mounted. 2. Clear the trouble code. Is this step complete?	Repeat the “Diagnosis Flow”.	Return to Step 4

Check flow	Trouble code	Phenomenon	Standard
13	33	The ADC line is short-circuited to GND.	—

NOTE:

- The on/off signal line of the shift on the fly system is short–circuited to GND.
- The system enters into the fail-safe mode because of fusing or system protection.

  (If a short–circuit is observed on GND, the output to the on/off signal line becomes 0V.)

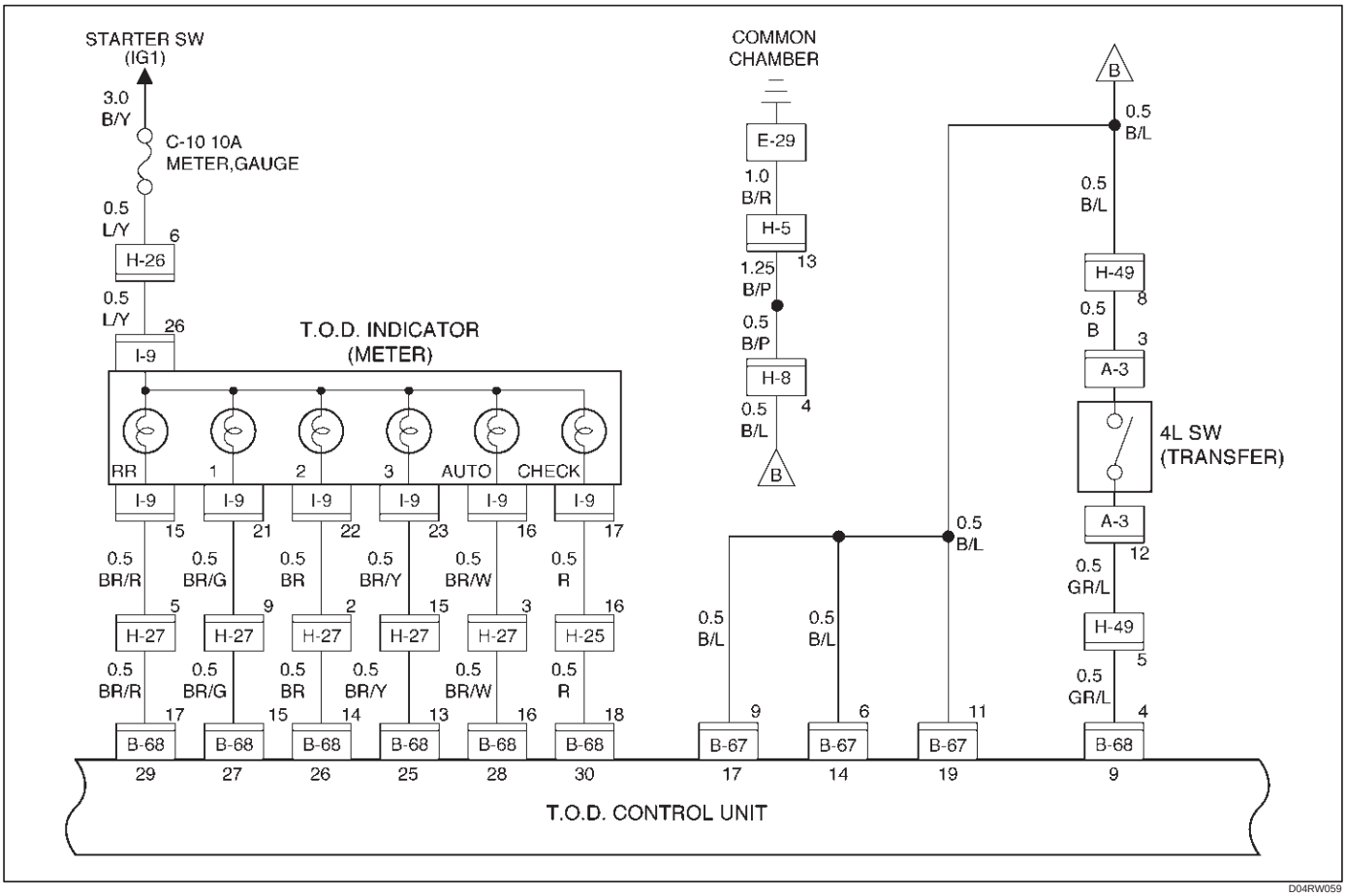

Step	Action	Yes	No
1	1. Turn off the starter switch. 2. Disconnect the ECU connector from ECU. Does the resistance between terminals 5 and 19 meet the standard, R = 21 ± 4 ohms?	The phenomenon is not reproduced. Refer to “Troubles intermittently observed”. Go to Step 4	Go to Step 2
2	Is the resistance between terminals 5 and 19 R<2 ohms?	The signal line circuit of the shift on the fly system is short-circuited to GND. Repair the circuit. Go to Step 3	Go to Step 3
3	Is the resistance between terminals 5 and 19 R= 9±7ohms?	The signal line circuit of the shift on the fly system is layer short-circuited*. Replace the valve (VSV). Go to Step 3	Go to Step 4
4	1. Check that all the parts are mounted. 2. Clear the trouble code. Is this step complete?	Repeat the “Diagnosis Flow”.	Return to Step 4

*Layer short-circuit : The coil is damaged by overcurrent.

Check flow	Trouble code	Phenomenon	Standard
14	25	The CHECK lamp indicator line is short–circuited to the battery.	—
	35	The line is broken or short–circuited to GND.	—

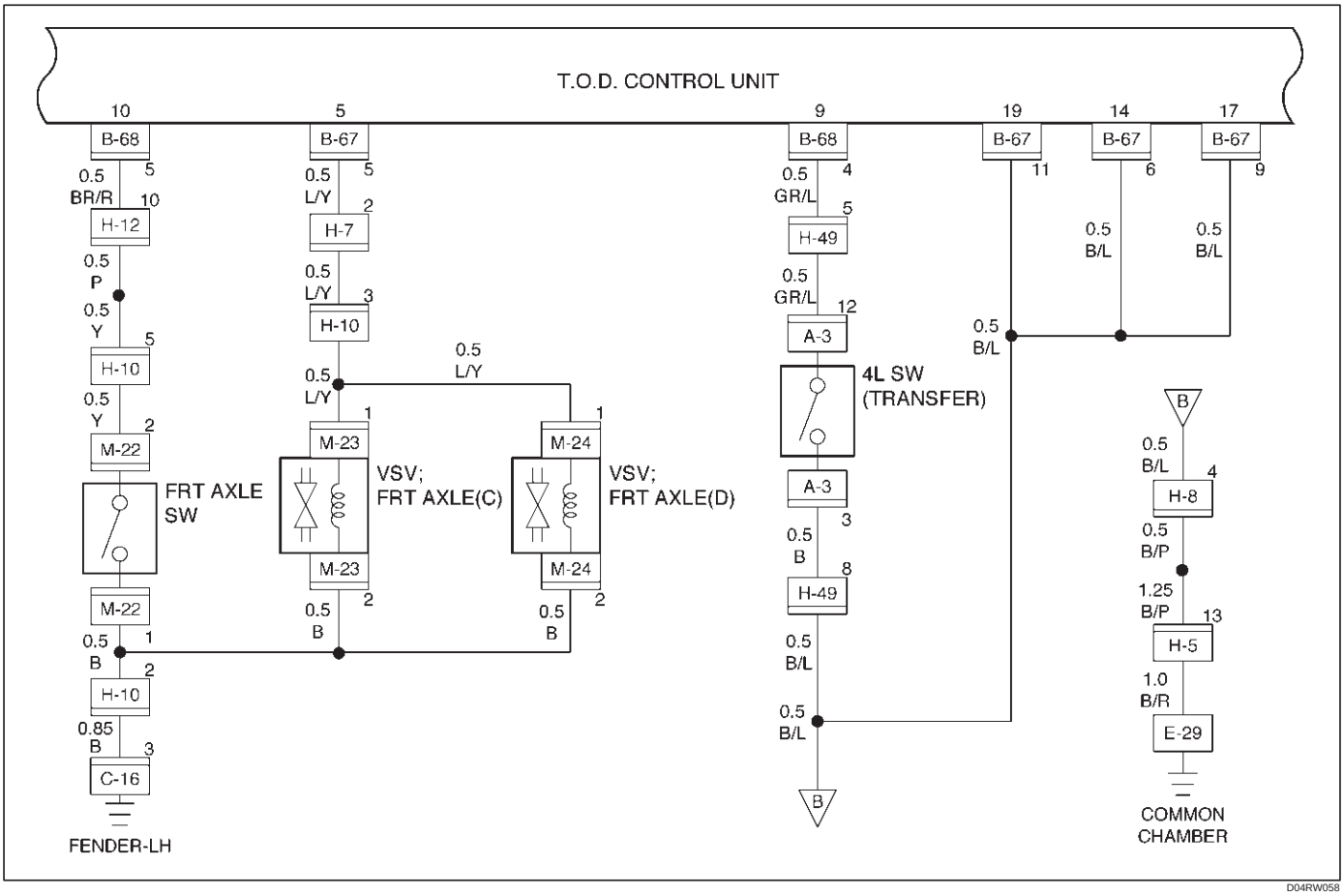

Step	Action	Yes	No
1	1. Turn on the starter switch. Is the CHECK lamp always turned on?	Go to Step 2	Go to Step 3
2	1. Turn off the starter switch. 2. Disconnect the ECU connector. 3. Turn on the starter switch. Is the CHECK lamp always turned on?	The CHECK circuit is short-circuited to GND. Repair the circuit. Go to Step 7	The ECU has failed. Replace the ECU. Go to Step 7
3	Turn on the starter switch. Is the CHECK lamp always turned off?	Go to Step 4	Go to Step 6
4	Turn on the starter switch. Is the battery voltage observed between terminals 30 and 19?	Go to Step 5	The CHECK circuit wires are broken or the CHECK lamp is failed. Repair the circuit. Go to Step 7
5	Turn off the starter switch. Is the battery voltage observed between terminals 30 and 19?	The battery is short–circuited. Repair the CHECK lamp circuit. Go to Step 7	The ECU has failed. Replace the ECU. Go to Step 7
6	Turn on the starter switch. Does the CHECK lamp go off two seconds after?	The phenomenon is not reproduced Refer to “Troubles intermittently observed”. Go to Step 7	Go to Step 7
7	1. Check that all the parts are mounted. 2. Clear the trouble code. Is this step complete?	Repeat the “Diagnosis Flow”.	Return to Step 7

Trouble Diagnosis Depending on The Status of TOD Indicator

Functional check with TOD indicator light is conducted prior to check on Charts A–H.

- After the starter is switched on, check and see if the status has become as tabulated below.

ECU Terminal 25	ECU Terminal 26	ECU Terminal 27	ECU Terminal 28	ECU Terminal 29	TOD Indicator indicate state
Short to terminal 20	Short to terminal 20	Short to terminal 20	Short to terminal 20	Short to terminal 20	
Open	Open	Open	Open	Open	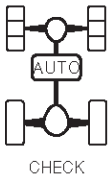

C07RW012

- If the status is as tabulated above, there is no problem. If not as tabulated above, inspect the harness.

Chart A	Indicator drive circuit	
Function of circuit	The circuit informs the indicator of the working condition of the ECU.	
Fail condition	All the TOD indicator lamps and CHECK lamp are lit, and go off momentarily at an interval of about two seconds.	
Indicator lamp status	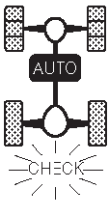	—
Transfer position	TOD, 4L	—

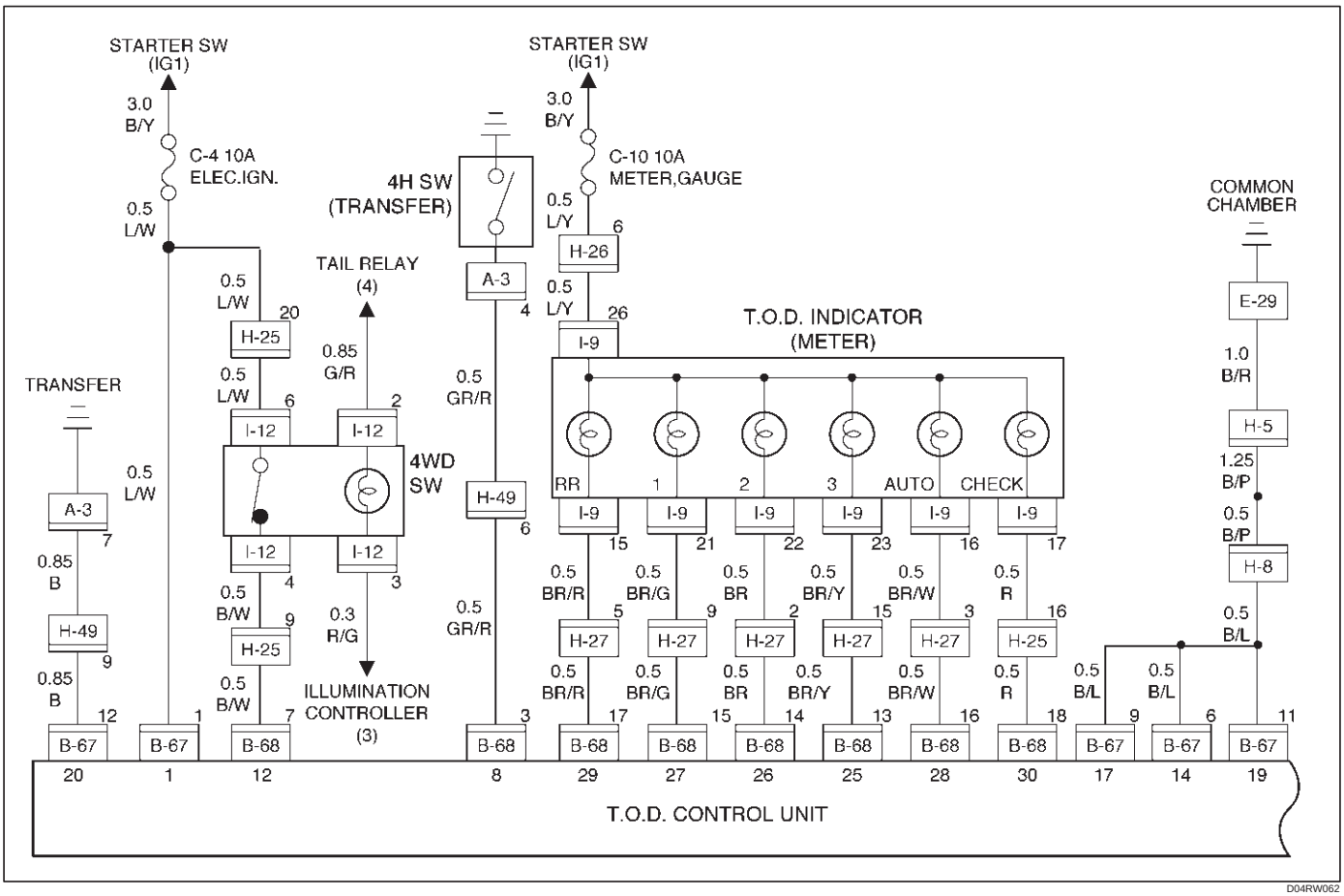

Step	Action	Yes	No
1	Turn on the starter switch. Is the battery voltage observed between terminals 1 and 19?	The ECU has failed. Replace the ECU. Go to Step 2	Check the battery circuit. Go to Step 2
2	Check that all the parts are mounted. Is this step complete?	Repeat the “Diagnosis Flow”.	Go to Step 2

Chart B–1	The 4WD switch circuit wires are broken or short-circuited to the GND	
Function of circuit	—	
Fail condition	Even after the transfer mode is selected from TOD to 2H, the indicator lamp status is not changed.	
Indicator lamp status	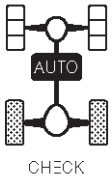	—
Transfer position	2H	—

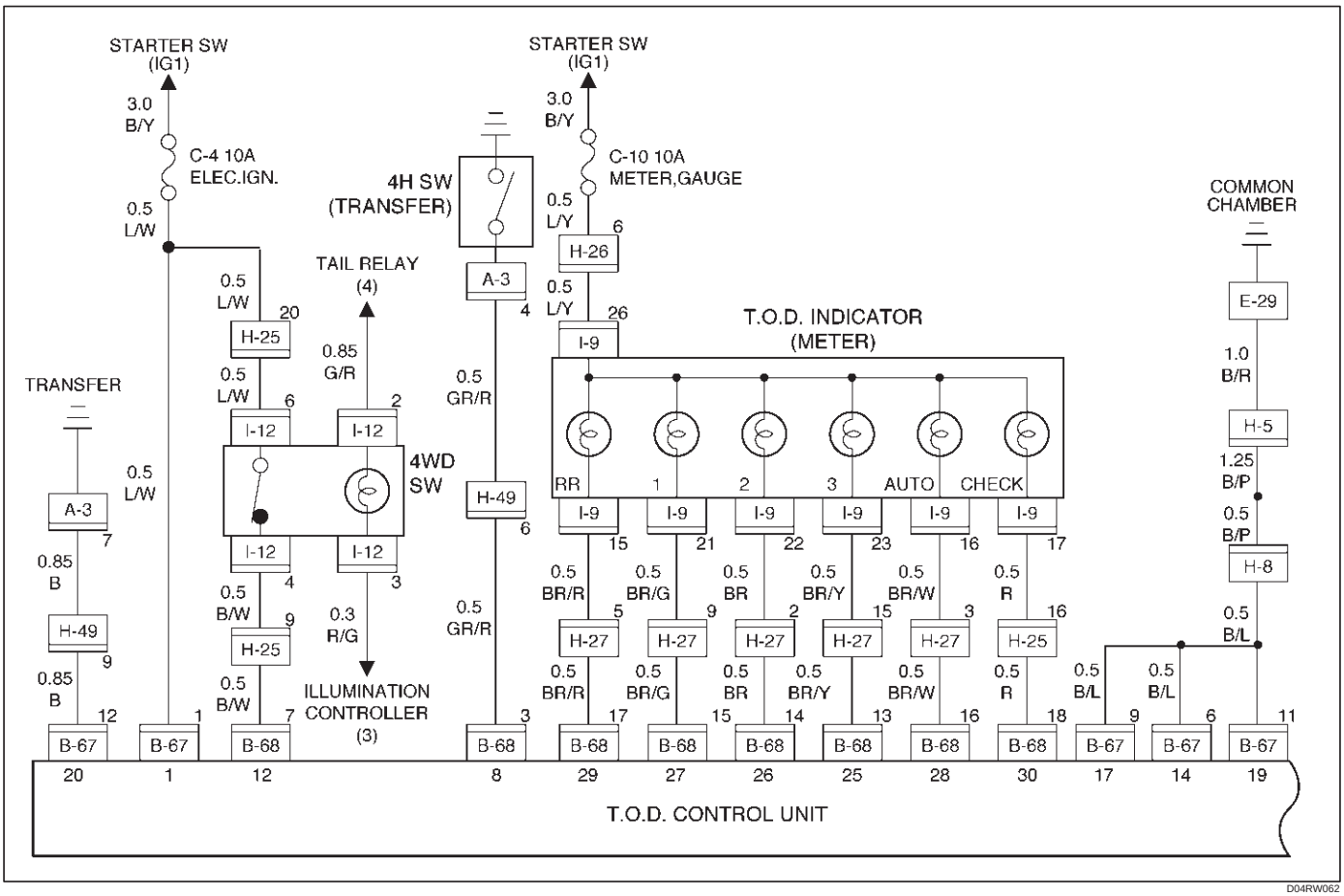

Step	Action	Yes	No
1	1. Turn on the starter switch. When the 4WD SW is selected to the 4WD position, is 0 V observed between terminal 12 and 19?	Go to Step 2	Repair the 4WD SW circuit. Go to Step 4
2	When the 4WD SW is selected to the 2WD position, is 12 V observed between terminals 12 and 19?	Go to Step 3	Repair the 4WD SW circuit. Go to Step 4
3	When the transfer lever is shifted to the 4L position, is battery boltage observed between terminals 28 and 19?	The phenomenon is not reproduced. Refer to “Troubles intermittently observed”. Go to Step 4	Replace the ECU. Go to Step 4
4	Check that all the parts are mounted. Is this step complete?	Repeat the “Diagnosis Flow”.	Return to Step 4

Chart B–2	The 4WD switch circuit is short to battery.
Function of circuit	—
Fail condition	Even after the transfer mode is selected from 2H to TOD, the indicator lamp status dose not change.
Indicator lamp status	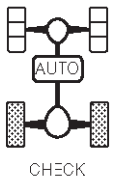
Transfer position	TOD

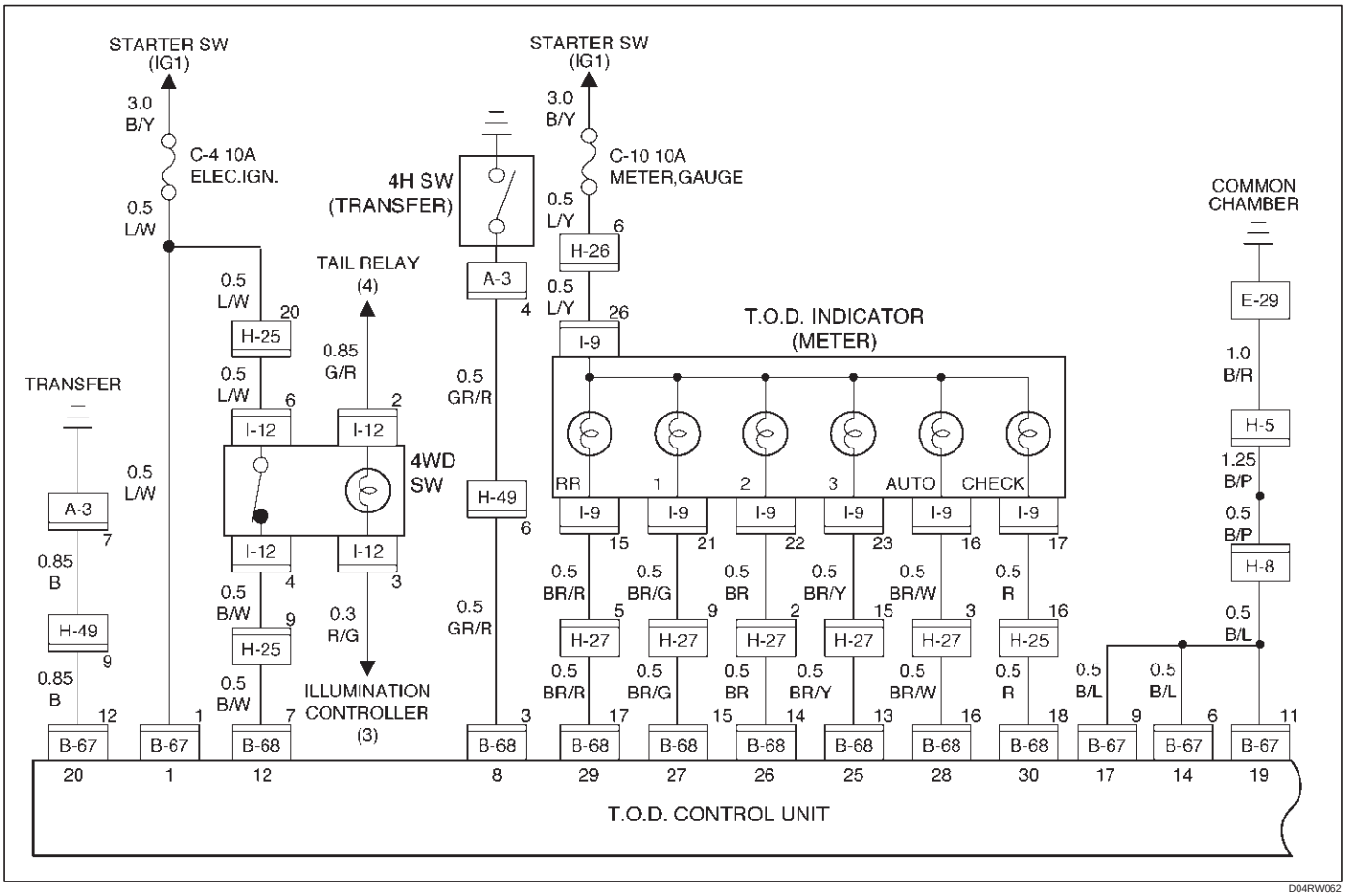

Step	Action	Yes	No
1	When the 4WD SW is selected to the 4WD position, is 0 V observed between terminal 12 and 19?	Go to Step 2	Repair the 4WD SW circuit. Go to Step 7
2	When the 4WD SW is selected to the 2WD position, is 12 V observed between terminals 12 and 19?	Go to Step 3	Repair the 4WD SW circuit. Go to Step 7
3	1. Disconnect the ECU connector. Is the continuity established between terminals (B–67)1 and (B–68)13?	Go to Step 4	Replace TOD indicator lamp bulb. Go to Step 7
4	Is the continuity established between terminals (B–67)1 and (B–68)14?	Go to Step 5	Replace TOD indicator lamp bulb. Go to Step 7
5	Is the continuity established between terminals (B–67)1 and (B–68)15?	Go to Step 6	Replace TOD indicator lamp bulb. Go to Step 7
6	Is the continuity established between terminals (B–67)1 and (B–68)16?	Replace ECU. Go to Step 7	Replace TOD indicator lamp bulb. Go to Step 7
7	Check that all the parts are mounted. Is this step complete?	Repeat the “Diagnosis Flow”.	Return to Step 7

Chart C–1	4H switch circuit wires are broken or the battery is short-circuited.
Function of circuit	—
Fail condition	When the 4WD SW is 4WD mode. When the lever is shifted from 4L to HIGH, the 4L mode remains on the indicator and the TOD mode is displayed without turning off the previous mode.
Indicator lamp status	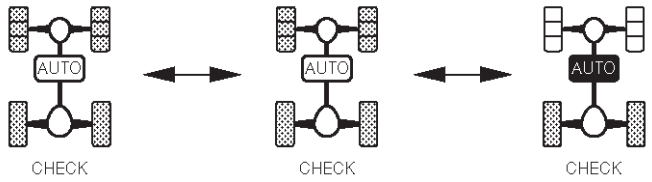
Transfer position	4L <——> Neutral <——> TOD

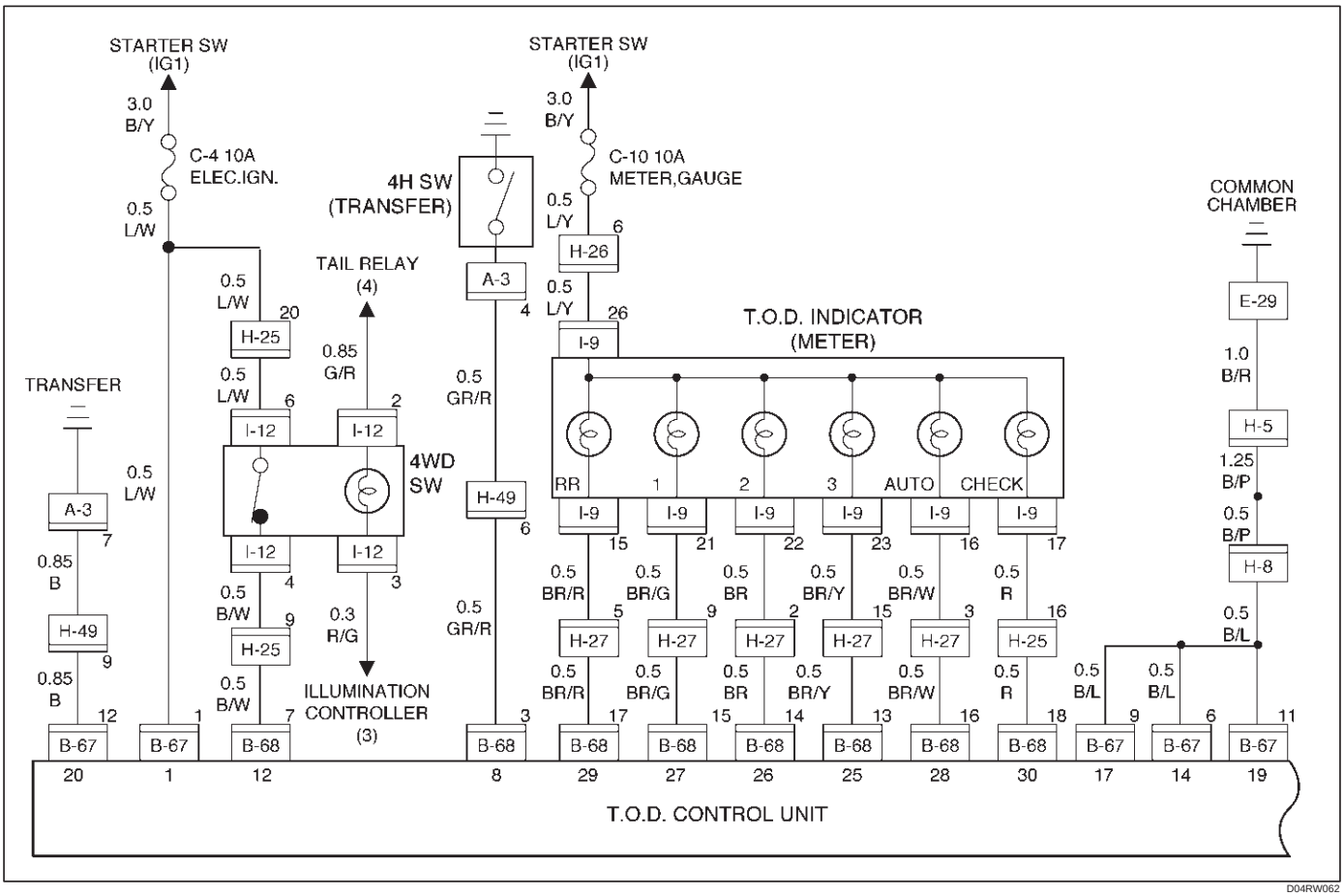

Step	Action	Yes	No
1	1. Turn on the starter switch. When the transfer lever is shifted to the high position, is 5V observed between terminals 8 and 19 (4H switch)?	Go to Step 2	Go to Step 4
2	When the transfer lever is shifted to the 4L position, is 5V observed between terminals 8 and 19 (4H switch)?	Go to Step 3	Go to Step 4
3	When the transfer lever is shifted to the neutral position, is 0V observed between terminals 8 and 19 (4H switch)?	Replace the ECU. Go to Step 4	Go to Step 4
4	1. Turn off the starter switch. 2. Disconnect the ECU connector. 3. Turn on the starter switch. When the transfer lever is shifted to the high position, is 12V observed between terminals 8 and 19 (4H switch)?	Go to Step 5	Go to Step 7
5	When the transfer lever is shifted to the neutral position, is 0V observed between terminals 8 and 19 (4H switch)?	Go to Step 6	Go to Step 7
6	When the transfer lever is shifted to the 4L position, is 12V observed between terminals 8 and 19 (4H switch)?	The 4H switch circuit battery is short-circuited between ECU and transfer. Repair the circuit. Go to Step 14	Go to Step 7
7	Turn off the starter switch. When the transfer lever is shifted to the neutral position, is the continuity established between terminals 8 and 19 (4H switch)?	Go to Step 8	Go to Step 10
8	When the transfer lever is shifted to the high position, is the continuity established between terminals 8 and 19?	Go to Step 10	Go to Step 9
9	When the transfer lever is shifted to the 4L position, is the continuity established between terminals 8 and 19?	Go to Step 14	The phenomenon is not reproduced. Refer to “Troubles intermittently observed”. Go to Step 10
10	When the transfer lever is shifted to the neutral position, is the continuity established between terminals (A–3)4 and (A–3)7?	Go to Step 11	Repair the transfer assembly. Go to Step 14
11	When the transfer lever is shifted to the high position, is the continuity established between transfer connector terminals (A–3)4 and (A–3)7?	Repair the transfer assembly. Go to Step 14	Go to Step 12
12	When the transfer lever is shifted to the 4L position, is the continuity established between transfer connector terminals (B–68)3 and (A–3)4?	Repair the transfer assembly. Go to Step 14	Go to Step 13

Step	Action	Yes	No
13	Is the continuity established between transfer terminals (A–3)4 and body?	The ECU has failed. Replace the ECU. Go to Step 14	The harness is broken between terminal (A–3)4 and GND. Repair the circuit. Go to Step 14
14	Check that all the parts are mounted. Is this step complete?	Repeat the “Diagnosis Flow”.	Return to Step 14

Chart C–2	The 4H switch circuit is short-circuited to GND.	
Function of circuit	—	
Fail condition	When the transfer lever is shifted to 4L, the indicator lamp status is not changed. When the transfer lever is shifted to High, the indicator lamp blinks at TOD mode.	
Indicator lamp status	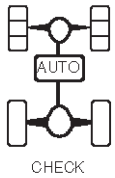	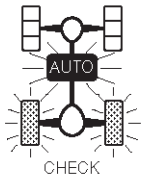 Blinking
Transfer position	4L	High (TOD)

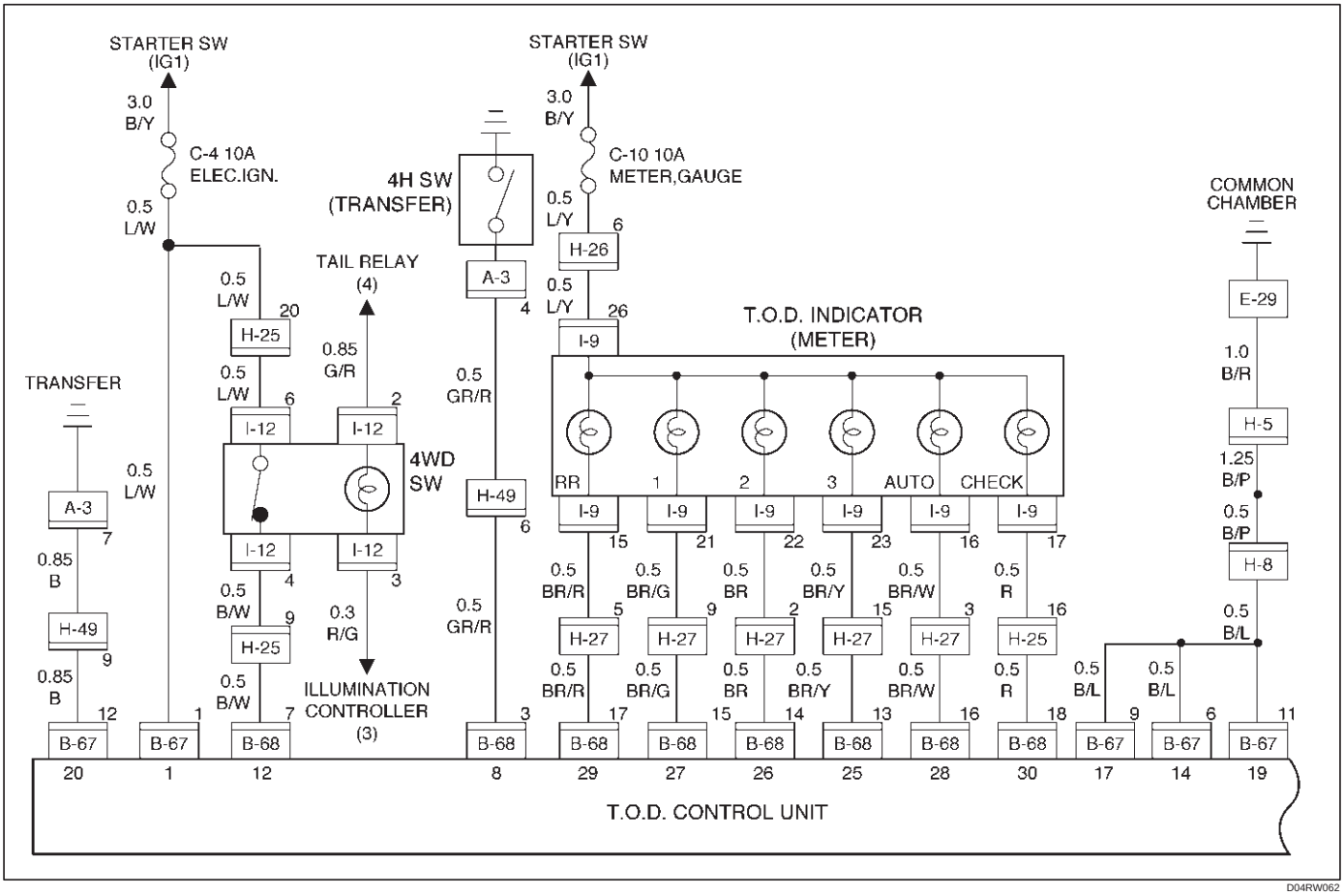

Step	Action	Yes	No
1	When the transfer lever is shifted to the High position, is 5V observed between terminals 8 and 19 (4H switch)?	Go to Step 2	Go to Step 14
2	When the transfer lever is shifted to the neutral position, is 0V observed between terminals 8 and 19 (4H switch)?	Go to Step 3	Go to Step 14
3	When the transfer lever is shifted to the 4L position, is 5V observed between terminals 8 and 19 (4H switch)?	Go to Step 4	Go to Step 14
4	1. Turn off the starter switch. Is the continuity established between terminals 1 and 25?	Go to Step 5	Replace TOD indcator lamp bulb. Go to Step 23
5	Is the continuity established between terminals 1 and 26?	Go to Step 6	Replace TOD indicator lamp bulb. Go to Step 23
6	Is the continuity established between terminals 1 and 27?	Go to Step 7	Replace TOD indicator lamp bulb. Go to Step 23
7	Is the continuity established between terminals 1 and 28?	Go to Step 8	Replace TOD indicator lamp bulb. Go to Step 23
8	Is the continuity established between terminals 1 and 29?	Go to Step 9	Replace TOD indicator lamp bulb. Go to Step 23
9	1. Turn on the starter switch. 2. Shift the transfer lever is shifted to the 4L position. Is 0 V observed between terminals 25 and 20?	Go to Step 10	The ECU has failed. Replace the ECU. Go to Step 23
10	Is 0 V observed between terminals 26 and 20?	Go to Step 11	The ECU has failed. Replace the ECU. Go to Step 23
11	Is 0 V observed between terminals 27 and 20?	Go to Step 12	The ECU has failed. Replace the ECU. Go to Step 23
12	Is 12 V observed between terminals 28 and 20?	Go to Step 13	The ECU has failed. Replace the ECU. Go to Step 23
13	Is 0 V observed between terminals 29 and 20?	The phenomenon is not reproduced. Refer to “Troubles intermittently observed”. Go to Step 23	The ECU has failed. Replace the ECU. Go to Step 23

Step	Action	Yes	No
14	1. Turn off the starter switch. 2. Disconnect the ECU connector. When the transfer lever is shifted to the neutral position, is the continuity established between terminals (B–68)3 and (B–67)11 (4H switch)?	Go to Step 15	Go to Step 17
15	When the transfer lever is shifted to the high position, is the continuity established between terminals (B–68)3 and (B–67)11?	Go to Step 17	Go to Step 16
16	When the transfer lever is shifted to the 4L position, is the continuity established between terminals (B–68)3 and (B–67)11?	The ECU has failed. Replace the ECU. Go to Step 23	Go to Step 17
17	1. Disconnect the H–49 connector. When the transfer lever is shifted to the neutral position between high and 4L, is the continuity established between terminals (H-49)6 and (B-68)3?	Go to Step 18	Go to Step 20
18	When the transfer lever is shifted to the high position, is the continuity established between transfer connector terminals (H-49)6 and (B-68)3?	Go to Step 20	Go to Step 19
19	When the transfer lever is shifted to the 4L position, is the continuity established between transfer connector terminals (H-49)6 and (B-68)3?	Go to Step 20	GND is short-circuited between terminals (B-68)3 and (H-49)6. Repair the circuit. Go to Step 23
20	1. Disconnect the A–3 connector. When the transfer lever is shifted to the neutral position between high and 4L, is the continuity established between terminals (A-3)4 and (B-68)3?	Go to Step 21	Repair the transfer assembly. Go to Step 23
21	When the transfer lever is shifted to the high position, is the continuity established between terminals (A-3)4 and (B-68)3?	Repair the transfer assembly. Go to Step 23	Go to Step 22
22	When the transfer lever is shifted to the 4L position, is the continuity established between terminals (A-3)4 and (B-68)3?	Repair the transfer assembly. Go to Step 23	GND is short-circuited between terminals (B-68)3 and (A–3)4. Repair the circuit. Go to Step 23
23	Check that all the parts are mounted. Is this step complete?	Repeat the “Diagnosis Flow”.	Return to Step 23

Chart D–1	4L switch circuit wires are broken or the battery is short-circuited.	
Function of circuit	—	
Fail condition	The TOD mode is displayed in the neutral position between high and 4L. When the lever is shifted to the 4L position, the TOD mode is displayed.	
Indicator lamp status	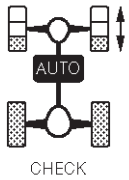	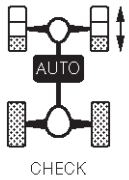
Transfer position	4L	Neutral

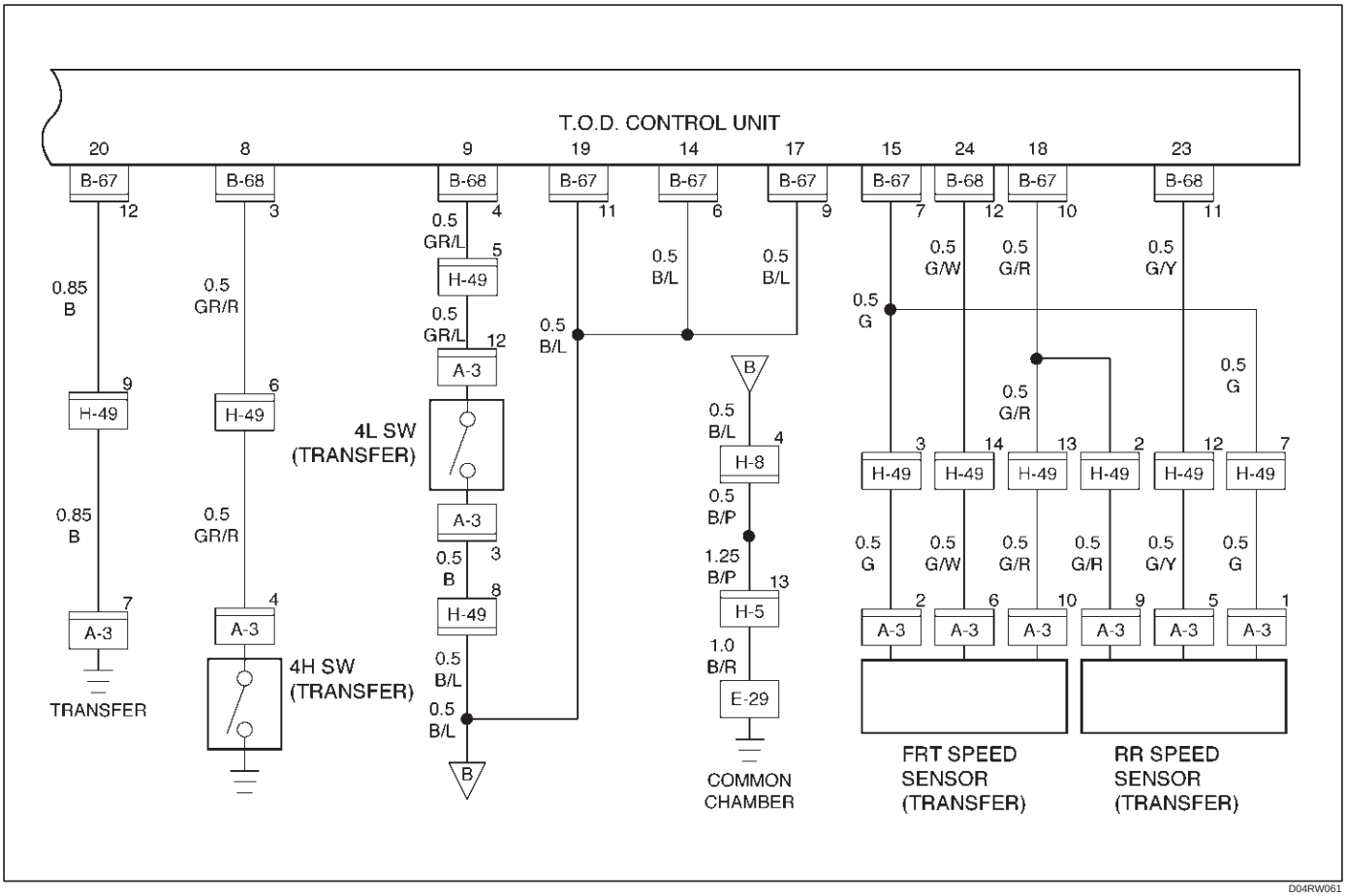

D04RW061

Step	Action	Yes	No
1	Turn on the starter switch. When the transfer lever is shifted to the high position, is 5V observed between terminals 9 and 19 (4L switch)?	Go to Step 2	Go to Step 4
2	When the transfer lever is shifted to the neutral position, is 0V observed between terminals 9 and 19 (4L switch)?	Go to Step 3	Go to Step 4
3	When the transfer lever is shifted to the 4L position, is 0V observed between terminals 9 and 19 (4L switch)?	The ECU has failed. Replace the ECU. Go to Step 4	Go to Step 4
4	1. Turn off the starter switch. 2. Disconnect the ECU connector. 3. Turn on the starter switch. When the transfer lever is shifted to the high position, is 12V observed between terminals (B–68)4 and (B–67)11?	Go to Step 5	Go to Step 7
5	When the transfer lever is shifted to the neutral position, is 0V observed between terminals (B–68)4 and (B–67)11?	Go to Step 6	Go to Step 7
6	When the transfer lever is shifted to the 4L position, is 0V observed between terminals (B–68)4 and (B–67)11?	The 4L switch circuit battery is short-circuited between ECU and transfer. Repair the circuit Go to Step 13	Go to Step 7
7	Turn off the starter switch. When the transfer lever is shifted to the high position, is the continuity established between terminals (B–68)3 and (B–67)11?	Go to Step 10	Go to Step 8
8	When the transfer lever is shifted to the neutral position between high and 4L, is the continuity established between terminals (B–68)4 and (B–67)11?	Go to Step 9	Go to Step 10
9	When the transfer lever is shifted to the 4L position, is the continuity established between terminals (B–68)4 and (B–67)11?	The phenomenon is not reproduced. Refer to “Troubles intermittently observed”. Go to Step 13	Go to Step 10
10	1. Disconnect the A–3 connector. When the transfer lever is shifted to the neutral position between high and 4L, is the continuity established between transfer connector terminals (A–3)12 and GND?	Wires are broken between transfer connector (A–3) and floor connector (H-49). Repair the circuit. Go to Step 11	Repair the transfer assembly. Go to Step 13
11	When the transfer lever is shifted to the 4L position, is the continuity established between transfer connector terminals (A–3)12 and GND?	Go to Step 12	Repair the transfer assembly. Go to Step 13
12	When the transfer lever is shifted to the high position, is the continuity established between transfer connector terminals (A–3)12 and GND?	Repair the transfer assembly. Go to Step 13	Go to Step 13
13	Check that all the parts are mounted. Is this step complete?	Repeat the “Diagnosis Flow”.	Return to Step 13

Chart D–2	The 4L switch circuit is short-circuited to GND.
Function of circuit	—
Fail condition	The 4L mode is displayed even in the 2H or TOD.
Indicator lamp status	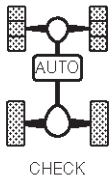
Transfer position	HIGH (2H or TOD)

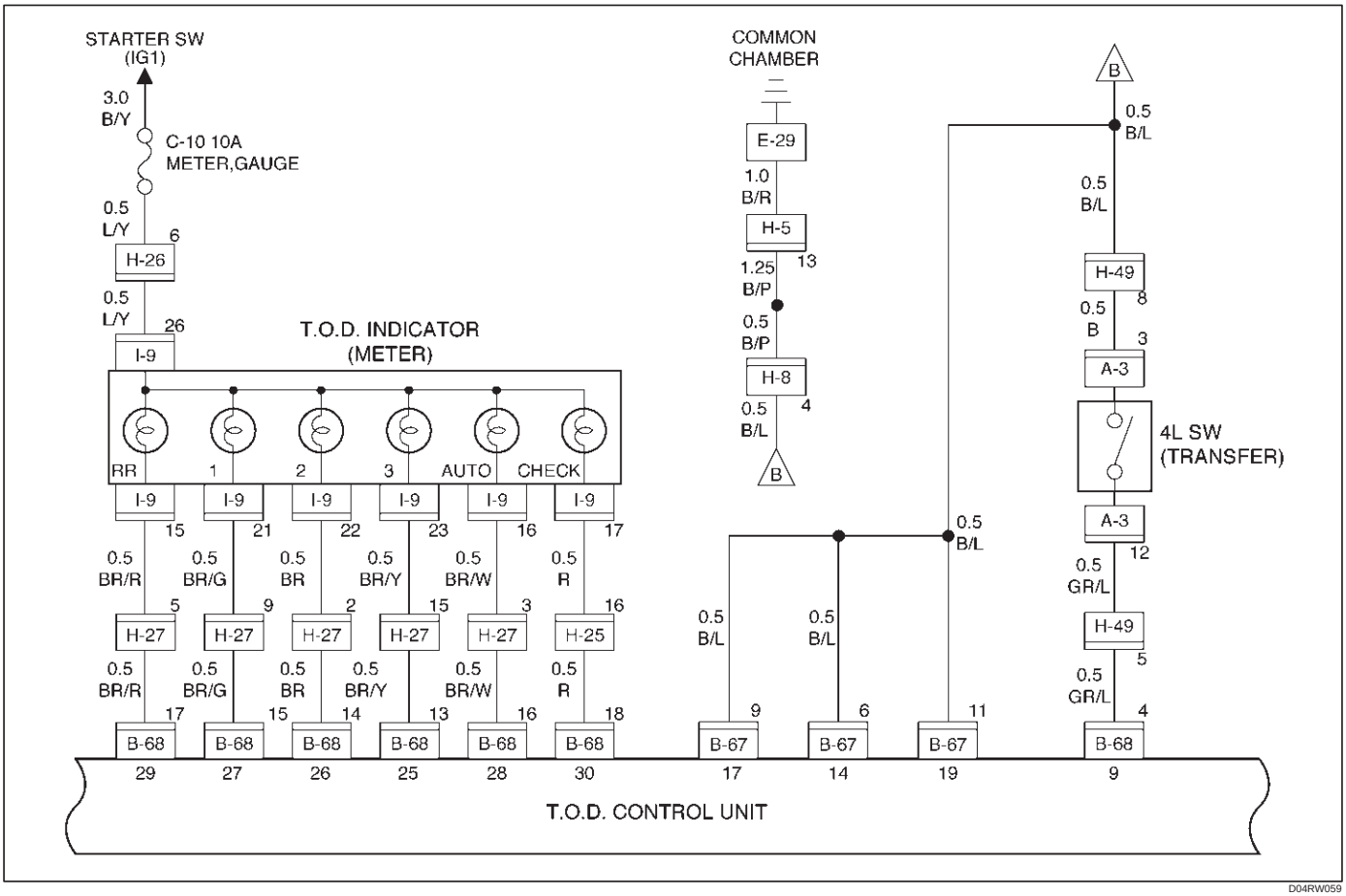

D04RW059

Step	Action	Yes	No
1	When the transfer lever is shifted to the high position, is 5V observed between terminals 9 and 19 (4L switch)?	Go to Step 2	Go to Step 7
2	When the transfer lever is shifted to the neutral position, is 0V observed between terminals 9 and 19 (4L switch)?	Go to Step 3	Go to Step 7
3	When the transfer lever is shifted to the 4L position, is 0V observed between terminals 9 and 19 (4L switch)?	Go to Step 4	Go to Step 7
4	1. Shift the 4WD SW to the 2H position. Is 12V observed between terminals 25 and 19?	Go to Step 5	The ECU has failed. Replace the ECU. Go to Step 16
5	Is 12V observed between terminals 26 and 19?	Go to Step 6	The ECU has failed. Replace the ECU. Go to Step 16
6	Is 12V observed between terminals 27 and 19?	The phenomenon is not reproduced. Refer to “Troubles intermittently observed”. Go to Step 16	The ECU has failed. Replace the ECU. Go to Step 16
7	1. Turn off the starter switch. 2. Disconnect the ECU connector. When the transfer lever is shifted to the neutral position between High and 4L, is the continuity established between terminals (B–68)4 and (B–67)11?	Go to Step 8	Go to Step 10
8	When the transfer lever is shifted to the 4L position, is the continuity established between terminals (B–68)4 and (B–67)11?	Go to Step 9	Go to Step 10
9	When the transfer lever is shifted to the high position, is the continuity established between terminals (B–68)4 and (B–67)11?	Go to Step 10	The ECU has failed. Replace the ECU. Go to Step 16
10	1. Disconnect the H-49 connector. When the transfer lever is shifted to the neutral position between high and 4L, is the continuity established between terminals (H-49)5 and (B-67)11?	Go to Step 11	Go to Step 13
11	When the transfer lever is shifted to the 4L position, is the continuity established between transfer connector terminals (H-49)5 and (B-67)11?	Go to Step 12	Go to Step 13
12	When the transfer lever is shifted to the high position, is the continuity established between terminals (H-49)5 and (B-67)11?	Go to Step 13	GND is short-circuited between terminals (B–68)4 and (H-49)5. Repair the circuit. Go to Step 16
13	1. Disconnect the A-3 connector. When the transfer lever is shifted to the neutral position between high and 4L, is the continuity established between terminals (A-3)12 and GND?	Go to Step 14	Repair the transfer assembly. Go to Step 16

Step	Action	Yes	No
14	When the transfer lever is shifted to the 4L position, is the continuity established between terminals (A-3)12 and GND?	Go to Step 15	Repair the transfer assembly. Go to Step 16
15	When the transfer lever is shifted to the high position, is the continuity established between terminals (A-3)12 and GND?	Repair the transfer assembly. Go to Step 16	GND is short-circuited between terminals (H–49)5 and (A-3)12. Repair the circuit. Go to Step 16
16	Check that all the parts are mounted. Is this step complete?	Repeat the “Diagnosis Flow”.	Return to Step 16

Chart E–1	AXLE switch circuit wires are broken.	
Function of circuit	—	
Fail condition	Both the TOD and 4L modes are disabled. (The transition status is not removed.)	
Indicator lamp status	AUTO CHECK Blinking	AUTO CHECK Blinking
Transfer position	TOD	4L

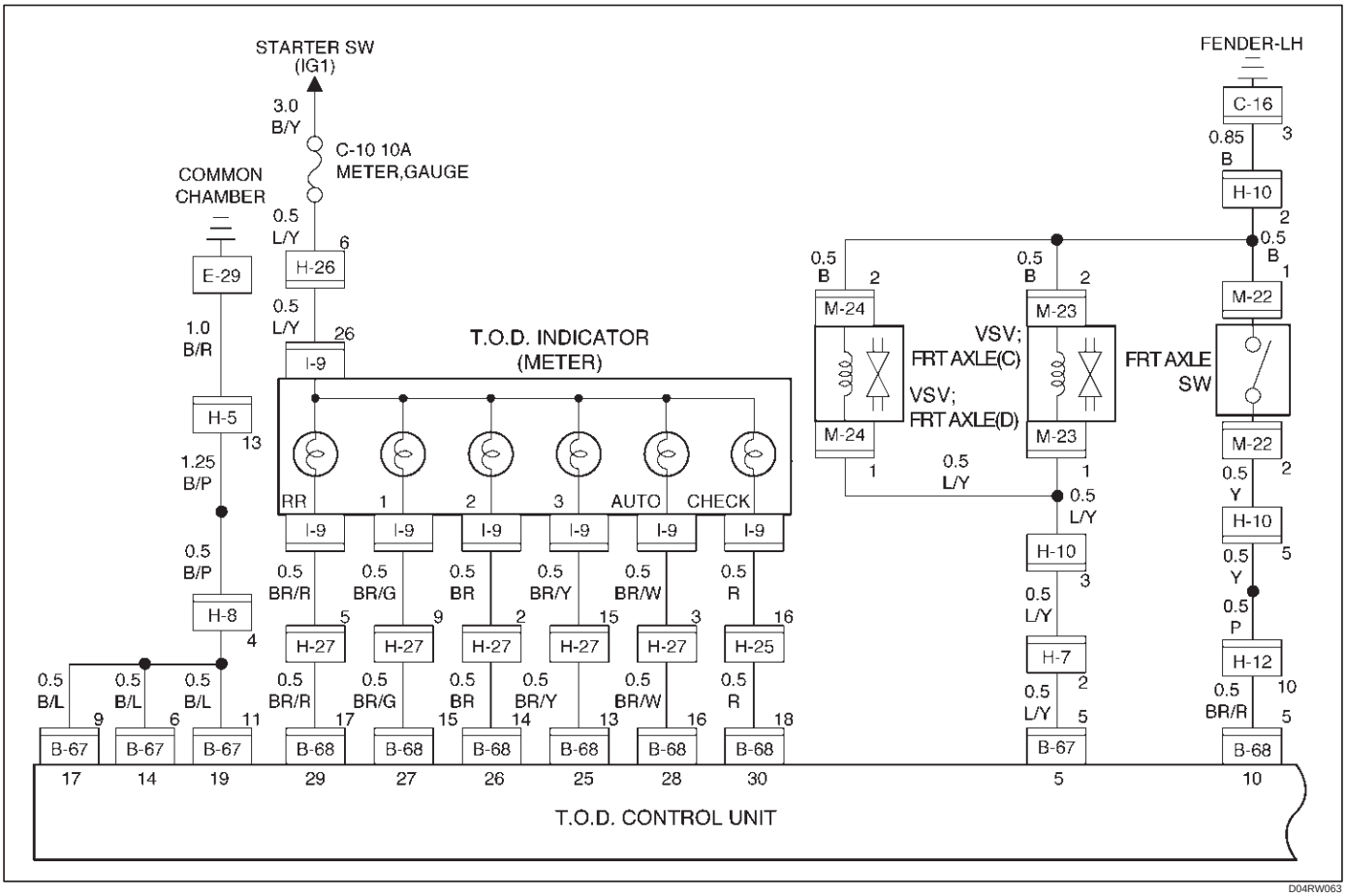

D04RW063

Step	Action	Yes	No
1	Start the engine. When the transfer lever is shifted to the neutral position between high and 4L, is 5V observed between terminals 10 and 19?	Go to Step 2	Go to Step 7
2	When the transfer lever is shifted to the high position and 4WD switch shifted to 4WD position, is 0V observed between terminals 10 and 19?	Go to Step 3	Go to Step 7
3	When the transfer lever is shifted to the 4L position, is 0V observed between terminals 10 and 19?	The ECU has failed. Replace the ECU. Go to Step 4	Go to Step 7
4	Shift the transfer lever to the 4L position. Is 0V observed between terminals 25 and 19?	Go to Step 5	The ECU has failed. Replace the ECU. Go to Step 19
5	Is 0V observed between terminals 26 and 19?	Go to Step 6	The ECU has failed. Replace the ECU. Go to Step 19
6	Is 0V observed between terminals 27 and 19?	The phenomenon is not reproduced. Refer to “Troubles intermittently observed”. Go to Step 19	The ECU has failed. Replace the ECU. Go to Step 19
7	When the transfer lever is shifted to the 2H position, is the battery voltage observed between terminals 5 and 19?	Go to Step 8	Go to Step 11
8	When the transfer lever is shifted to the neutral position between high and 4L, is the battery voltage observed between terminals 5 and 19?	Go to Step 9	Go to Step 11
9	When the transfer lever is shifted to the high position (TOD mode), is 0V observed between terminals 5 and 19?	Go to Step 10	Go to Step 11
10	When the transfer lever is shifted to the 4L position, is 0V observed between terminals 5 and 19?	Go to Step 12	Go to Step 11
11	Is any of the trouble codes 28, 32 and 33 recorded?	Examine the trouble based on “Diagnosis from Trouble Codes”. Go to Step 19	The ECU has failed. Replace the ECU. Go to Step 19
12	1. Turn off the starter switch. 2. Disconnect the ECU connector. Does the resistance between terminals (B–67)5 and (B–67)11 meet the standard, 17< R < 25 ohm?	Go to Step 13	Repair the circuit or replace the VSV. Go to Step 16
13	1. Turn on the starter switch. When the 4WD SW is selected to the 2WD position, is the battery voltage supplied to each VSV?	Go to Step 14	Repair the circuit or replace the VSV. Go to Step 16
14	When the transfer lever is shifted to the neutral position between high and 4L, is the battery voltage supplied to each VSV?	Go to Step 15	Repair the circuit or replace the VSV. Go to Step 19

Step	Action	Yes	No
15	When the transfer lever is shifted to the high position and 4WD switch shifted to 4WD position, is 0V observed on each VSV?	Go to Step 16	Repair the circuit or replace the VSV. Go to Step 19
16	When the transfer lever is shifted to the 4L position, is 0V observed on each VSV?	Go to Step 17	Repair the circuit or replace the VSV. Go to Step 19
17	Is the vacuum pressure supplied to the VSV?	Go to Step 18	Repair the vacuum system. Go to Step 19
18	Can the single AXLE switch enable and disable the continuity?	Repair the shift on the fly system (refer to Section 4C “Front Axle”. Go to Step 19	Replace the AXLE switch (refer to Section 4C “Drive Shaft System” of Chassis Repair Manual). Go to Step 19
19	Check that all the parts are mounted. Is this step complete?	Repeat the “Diagnosis Flow”.	Return to Step 19

Chart E–2	The AXLE switch circuit is short-circuited to GND.
Function of circuit	—
Fail condition	Even after the 4WD SW is select to the 2WD position, the 2WD mode is not enabled. (The transition status is not removed.)
Indicator lamp status	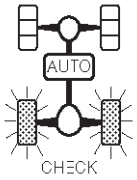
Transfer position	2H

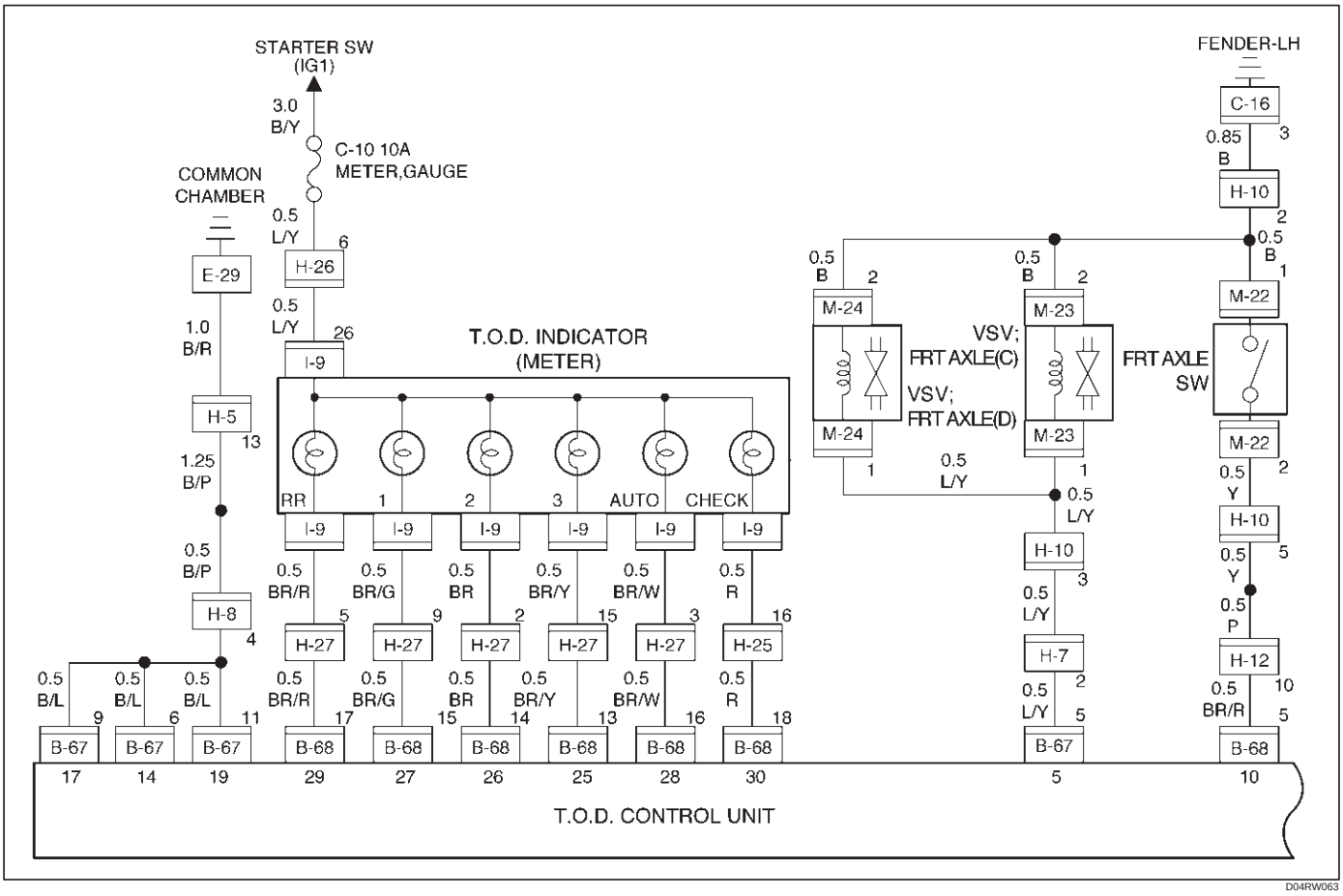

Step	Action	Yes	No
1	Start the engine. When the transfer lever is shifted to the neutral position between high and 4L, is 5V observed between terminals 10 and 19?	Go to Step 2	Go to Step 7
2	When the transfer lever is shifted to the high position and 4WD switch shifted to 4WD position, is 0V observed between terminals 10 and 19?	Go to Step 3	Go to Step 7
3	When the transfer lever is shifted to the 4L position, is 0V observed between terminals 10 and 19?	Go to Step 4	Go to Step 7
4	Select the 4WD SW to the 2WD position. Is 12V observed between terminals 25 and 19?	Go to Step 5	Go to Step 19
5	Is 12V observed between terminals 26 and 19?	Go to Step 6	Go to Step 19
6	Is 12V observed between terminals 27 and 19?	The phenomenon is not reproduced. Refer to “Troubles intermittently observed”. Go to Step 19	The ECU has failed. Replace the ECU. Go to Step 19
7	When the 4WD SW is select to the 2WD position, is the battery voltage observed between terminals 5 and 19?	Go to Step 8	Go to Step 11
8	When the transfer lever is shifted to the neutral position between high and 4L, is the battery voltage observed between terminals 5 and 19?	Go to Step 9	Go to Step 11
9	When the transfer lever is shifted to the high position and 4WD switch shifted to 4WD position, is 0V observed between terminals 5 and 19?	Go to Step 10	Go to Step 11
10	When the transfer lever is shifted to the 4L position, is 0V observed between terminals 5 and 19?	Go to Step 12	Go to Step 11
11	Is any of the trouble codes 28, 32 and 33 recorded?	Examine the trouble based on “Diagnosis from Trouble Codes”. Go to Step 19	The ECU has failed. Replace the ECU. Go to Step 19
12	1. Turn off the starter switch. 2. Disconnect the ECU connector. Does the resistance between terminals (B–67)5 and (B–67)11 meet the standard, 17< R < 25 ohm?	Go to Step 13	Repair the circuit or replace the VSV. Go to Step 19
13	1. Connect the ECU connector. 2. Turn on the starter switch. When the 4WD SW is select to the 2WD position, is the battery voltage supplied to each VSV?	Go to Step 14	Repair the circuit or replace the VSV. Go to Step 19
14	When the transfer lever is shifted to the neutral position between high and 4L, is the battery voltage supplied to each VSV?	Go to Step 15	Repair the circuit or replace the VSV. Go to Step 19
15	When the transfer lever is shifted to the high position and 4WD switch shifted to 4WD position, is 0V observed on each VSV?	Go to Step 16	Repair the circuit or replace the VSV. Go to Step 19

Step	Action	Yes	No
16	When the transfer lever is shifted to the 4L position, is 0V observed on each VSV?	Go to Step 17	Repair the circuit or replace the VSV. Go to Step 19
17	Is the vacuum pressure supplied to the VSV?	Go to Step 18	Repair the vacuum system. Go to Step 19
18	Can the single AXLE switch enable and disable the continuity?	Repair the shift on the fly system Refer to Section 4C “Front Axle”. Go to Step 19	Replace the AXLE switch Refer to Section 4C “Drive Shaft System”. Go to Step 19
19	Check that all the parts are mounted. Is this step complete?	Repeat the “Diagnosis Flow”.	Return to Step 19

Chart G	The trouble codes are displayed.
Function of circuit	—
Fail condition	The CHECK lamp continues blinking irregularly. 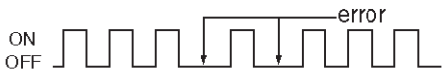
Indicator lamp status	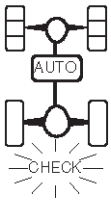
Transfer position	—

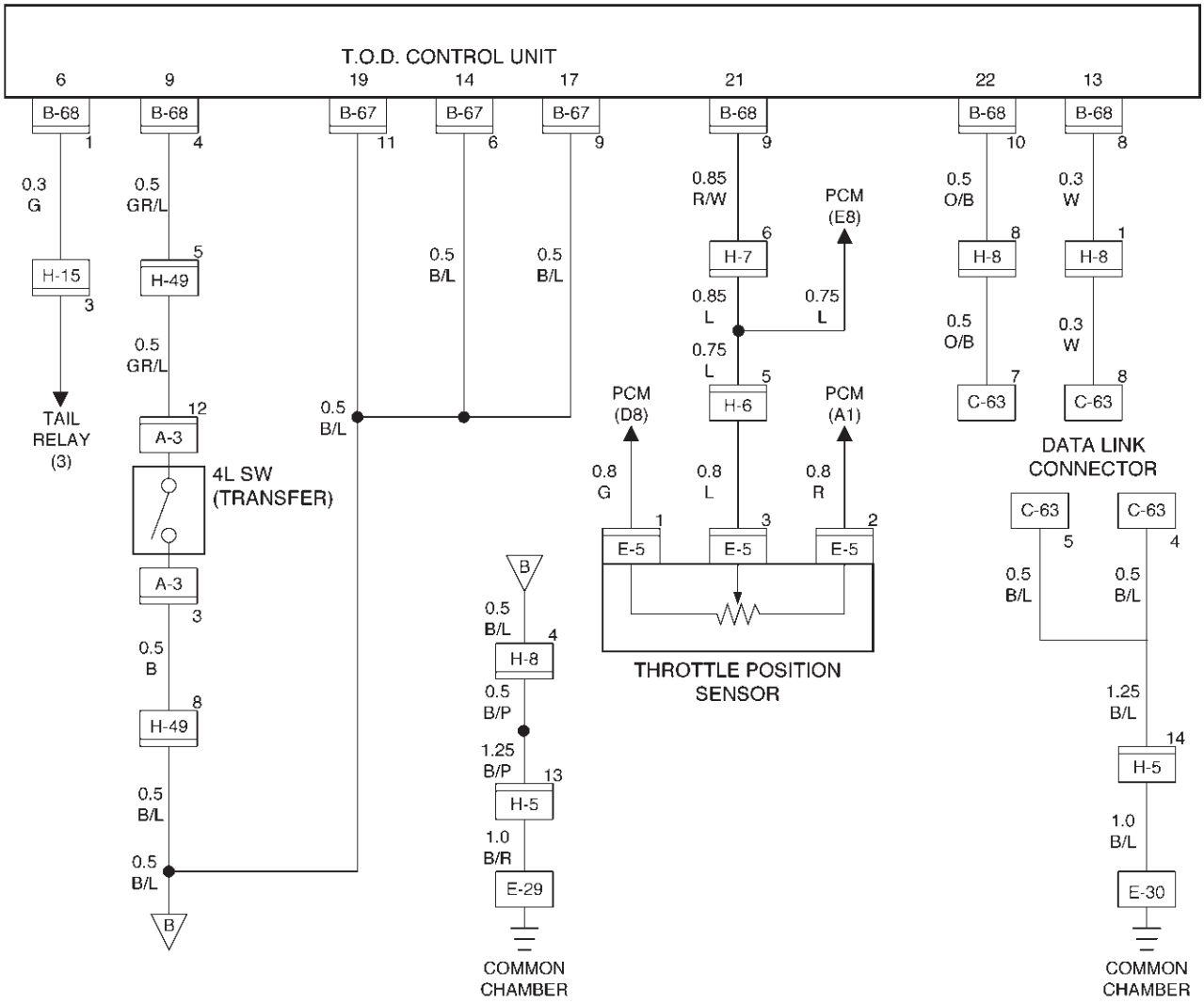

D04RW056

Step	Action	Yes	No
1	Disconnect the ECU connector from ECU. Is the continuity established between terminals (B–68)8 and (B–67)11?	Go to Step 2	The ECU has failed. Replace the ECU. Go to Step 3
2	Is the self-diagnostic connector short-circuited?	Go to Step 3	Open the self-diagnostic connector. Go to Step 3
3	1. Check that all the parts are mounted. 2. Clear the trouble codes. Is this step complete?	Repeat the “Diagnosis Flow”.	Go to Step 3

Chart H	lighting switch circuit
Function of circuit	Reads in the status of lighting switch and reduces the indicator brightness at night.
Fail condition	Even if the lighting switch is pressed on and off, brightness does not change.
Indicator lamp status	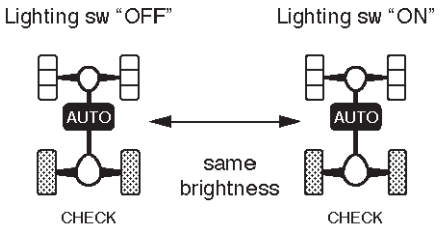
Transfer position	All position (example TOD mode)

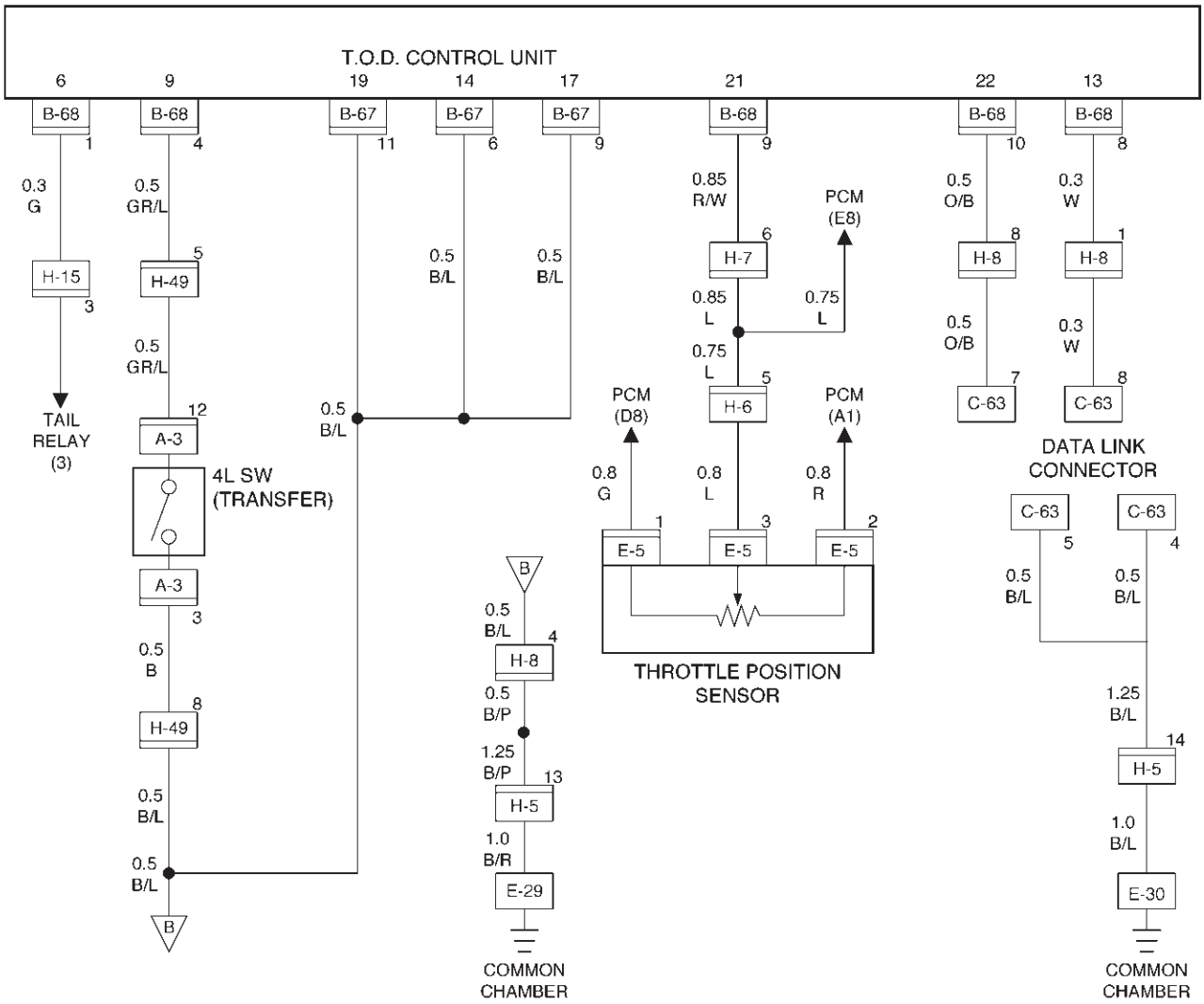

Step	Action	Yes	No
1	1. Disconnect ECU terminal. 2. Turn on the starter switch. Is battery voltage observed between ECU terminals (B–68)1 and (B–67)11?	Go to Step 2	Wirers are broken lighting SW circuit. Repair the circuit. Go to Step 4
2	Turn lighting SW “ON”. Is 0 V observed between ECU terminal (B–68)1 and (B–67)11?	Go to Step 3	Lighting SW circuit battery short. Repair the circuit. Go to Step 4
3	Connect ECU terminal. While the lighting switch is pressed on and off, does the brightness of the indicator change?	The phenomenon is not reproduced. Refer to “Troubles intermittently observed” Go to Step 4	The ECU has failed. Replace the ECU. Go to Step 4
4	Check that all the parts are mounted. Is this step complete?	Repeat the “Diagnosis Flow”.	Return to Step 4

Diagnosis from Symptom

Troubles that are not indicated by the warning lamp are listed in the table below. These troubles are caused by the faults that cannot be detected by the self-diagnostic function of the control unit.
If this type of trouble is observed, interview the customer and conduct test runs to reproduce the trouble, cross-check the reported trouble with the listed phenomena, and diagnose and analyze the trouble on the item by item basis.

	Phenomena	Major cause	Corrective action
1	The tight corner braking is observed when the vehicle is subject to full steering.	● The standard tires are not used. ● The tire pressure is incorrect. ● The tires are worn inuniformity. ● The transfer or wiring is imperfect. ● The limited slip differential is failed.	Check and recondition the vehicle according to Chart 1.
2	Even if the 4WD SW is select to the 4WD position, the 4WD mode is not active, resulting in remarkable rear wheel spin.	● The transfer or wiring is imperfect. ● The shift on the fly system is failed.	Check and recondition the vehicle according to Chart 2.
3	● When the 4WD SW is select to the 4WD position, the drive resistance of the 4WD system is too large to get sufficient running speed. ● Noised drive line.	● The standard tires are not used. ● The tire pressure is incorrect. ● The tires are worn inuniformity. ● The transfer or wiring is imperfect. ● The limited slip differential is	Check and recondition the vehicle according to Chart 1.
4	The shift on the fly system (front axle) generates gear noises.	● The wiring is imperfect. ● The full automatic free wheel hub is failed.	Check and recondition the vehicle according to Chart 3.
5	The braking distance gets long even when the ABS is active.	● The wiring is imperfect. ● The ABS is failed.	Check and recondition the vehicle according to Chart 4.

Chart 1	The tight corner braking is observed.
Function of circuit	—
Fail condition	When the vehicle is subject to full steering in the TOD mode, the drive resistance gets large or the judder occurs. Otherwise, the above phenomenon is observed only when the brake is applied.

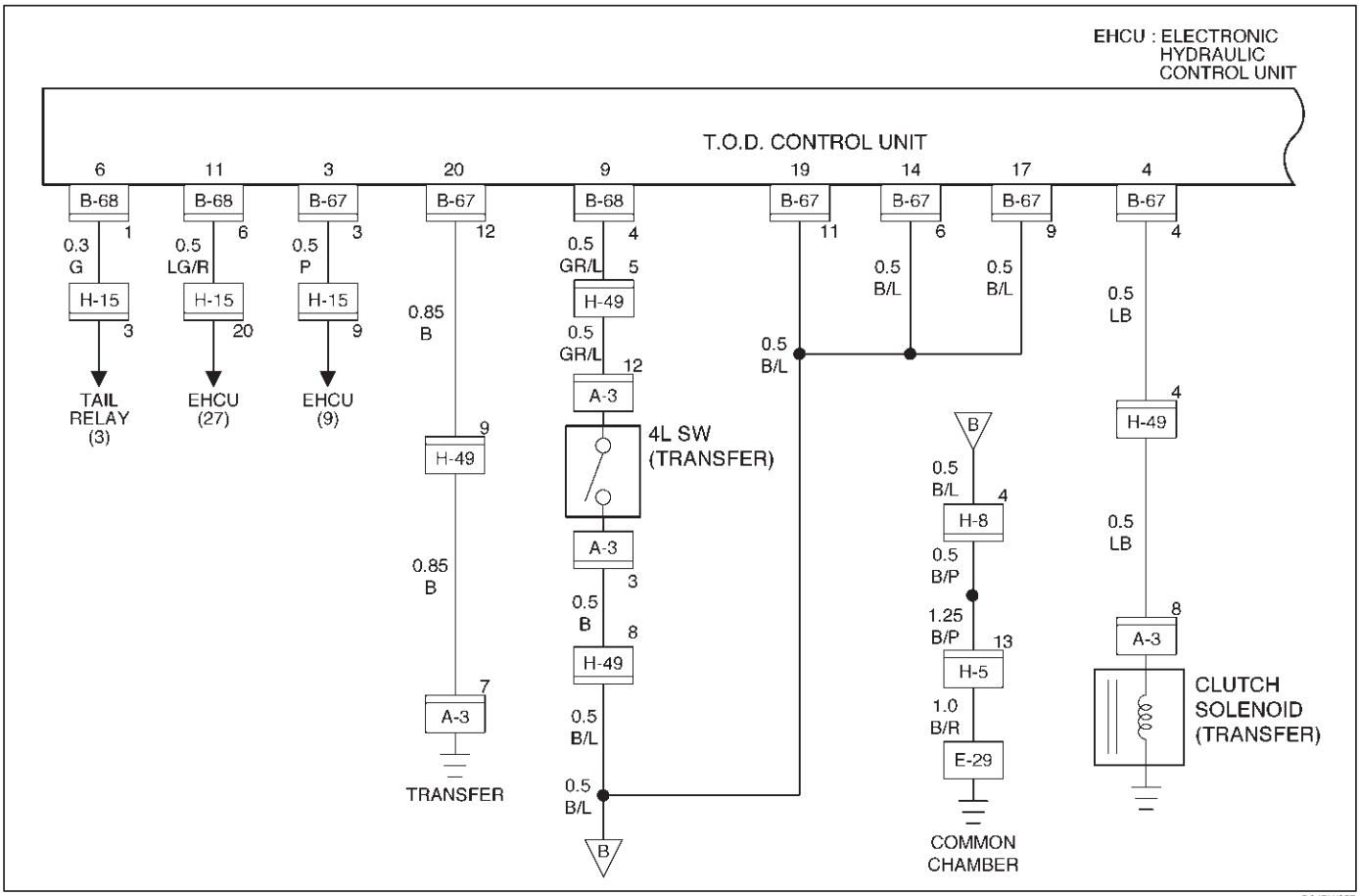

Step	Action	Yes	No
1	Are the front and rear tires in specified size?	Go to Step 2	Replace the tires with specified ones, and service the new tires. Go to Step 16
2	Is the tire pressure correct?	Go to Step 3	Replace the tires with specified ones, and service the new tires. Go to Step 16
3	Are the tires free from abnormal wear?	Go to Step 4	Replace the tires with specified ones, and service the new tires. Go to Step 16
4	Are different types of tires used?	Go to Step 5	Replace the tires with specified ones, and service the new tires. Go to Step 16
5	1. Start the engine. 2. Shift the transfer lever to the high (TOD) position. 3. Fully turn the steering to the left (or right) end, and select the D range and start the creep run. Does the tight corner braking occur? Is the judder with chug-chug sound observed? * Use caution on the operation.	Go to Step 6	Go to Step 11
6	1. Shift the transfer lever to the 2H position. 2. Fully turn the steering to the left (or right) end, and select the D range and start the creep run. Does the tight corner braking occur? Is the judder with chug-chug sound observed? * Use caution on the operation.	Go to Step 7	Go to Step 14
7	Is an LSD mounted to the rear differential?	Go to Step 8	Go to Step 9
8	Is the genuine LSD oil used in the rear differential?	Go to Step 9	Replace the differential oil. Go to Step 16
9	Does the engine output the power correctly?	Go to Step 10	Check the engine. Go to Step 16
10	Do the speed sensors work correctly? (Check trouble codes.)	The ECU has failed. Replace the ECU. Go to Step 16	Replace the speed sensors. Go to Step 16
11	Is the tight corner braking observed only when the brake is applied?	Go to Step 12	Conduct full steering under WOT. Go to Step 5
12	1. Turn off the starter switch. 2. Disconnect the ECU connector. Is the battery voltage observed between terminals (B–68)6 and (B–67)11?	Go to Step 13	Repair the circuit of terminal 6 (ABS IN). Go to Step 16

Step	Action	Yes	No
13	1. Apply the brake and fully turn the steering to the left (or right) end, and start the creep run. Does the voltage between terminals 4 and 20 range between 0.1 and 1.0V?	Repair the transfer assembly. Go to Step 16	The ECU has failed. Replace the ECU. Go to Step 16
14	1. Shift the transfer lever to the high (TOD) position. 2. Fully turn the steering to the left (or right) end, and select the D range and start the creep run. Does the voltage between terminals 4 and 20 range between 0.1 and 1.0V?	Go to Step 15	Go to Step 13
15	1. Select the 4WD SW to the 2WD position. 2. Jack up the right front wheel. Does the front tire rotate smoothly?	Repair the transfer assembly. Go to Step 16	The phenomenon is not reproduced. Refer to “Troubles intermittently observed”. Go to Step 16
16	Check that all the parts are mounted. Is this step complete?	Repeat the “Diagnosis Flow”.	Return to Step 16

*NOTE: Before checking this item, run the vehicle more than 10 meters with the steering wheel in straight position so that the 4L mechanical lock sleeve can be released certainly.

Chart 2	The 4WD mode is not active.
Function of circuit	—
Fail condition	The rear wheels spin in the TOD mode, so the driving torque is not transmitted to the front wheels. The indicator lamps will not show the 4L and TOD status.

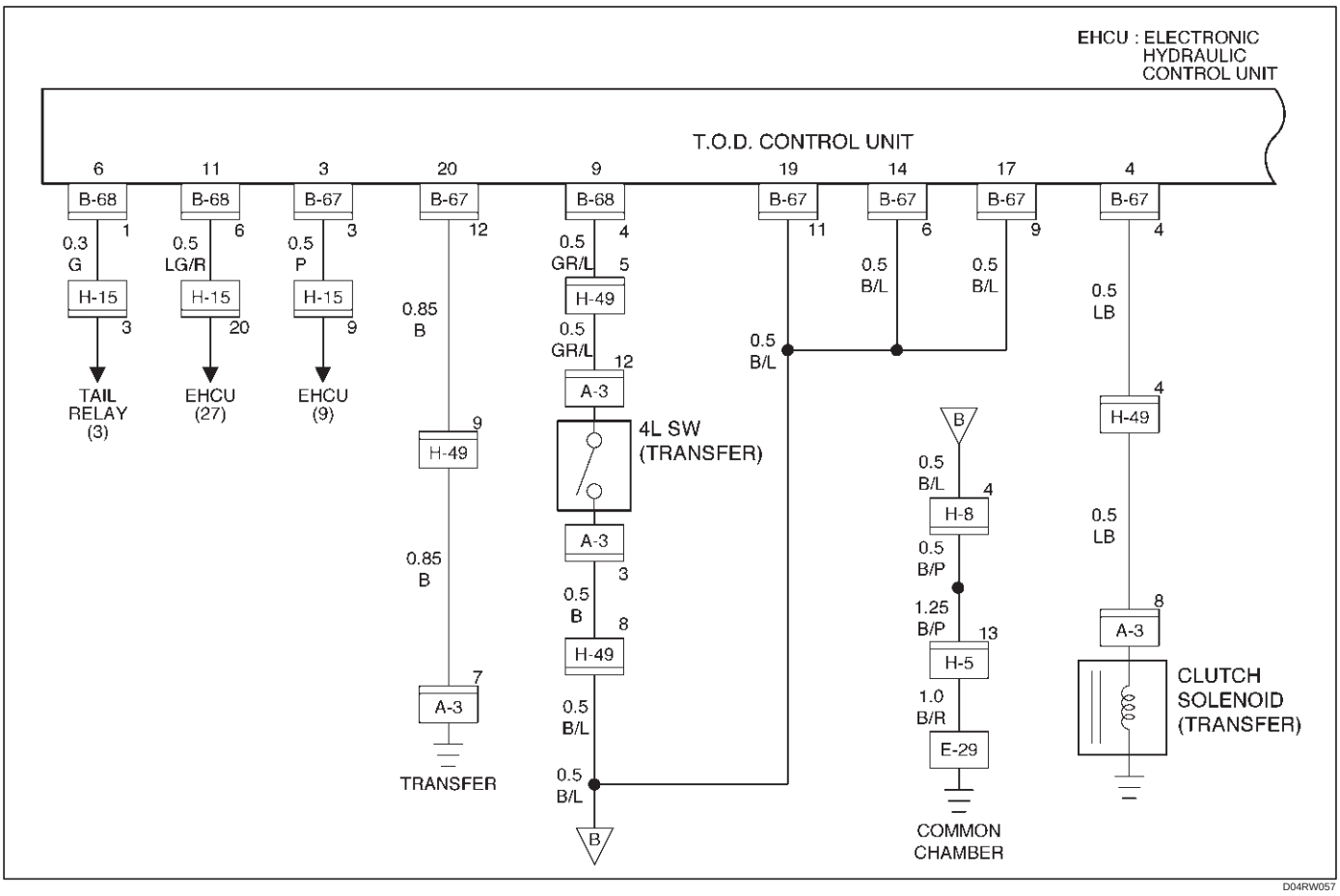

Step	Action	Yes	No
1	Is the trouble code 31 or 26 recorded?	Examine the trouble based on “Diagnosis from Trouble Codes”. Go to Step 7	Go to Step 2
2	Is any of the trouble codes 28, 32 and 33 recorded?	Examine the trouble based on “Diagnosis from Trouble Codes”. Go to Step 7	Go to Step 3
3	When the transfer lever is in the specified position, do the TOD indicator lamps show the correct status?	Go to Step 4	Examine the trouble based on “Trouble Diagnosis Depending on The Status of TOD Indicator”. Go to Step 7
4	Shift the transfer lever to the 4L position, fully turn the steering to the left (or right) end, and start the creep run. Does the tight corner braking occur?	Go to Step 5	Repair the transfer assembly. Go to Step 7
5	1. Shift the transfer lever to the high (TOD) position. 2. Turn on the starter switch. Does the voltage between terminals 4 and 20 indicate at least 0.1V while the throttle is completely open?	Go to Step 6	The ECU has failed. Replace the ECU. Go to Step 7
6	Does the voltage between terminals 4 and 20 indicate at least 3V while the throttle is completely closed?	The TOD clutch is worn. Repair the transfer assembly. Go to Step 7	The ECU has failed. Replace the ECU. Go to Step 7
7	Check that all the parts are mounted. Is this step complete?	Repeat the “Diagnosis Flow”.	Return to Step 7

Chart 3	The shift on the fly system generates gear noises. (The fuel economy is bad in the 2H mode.)
Function of circuit	—
Fail condition	When the vehicle is run in the 2H mode, the shift on the fly system generates gear noises or the front wheel gears are engaged to generate a shock.

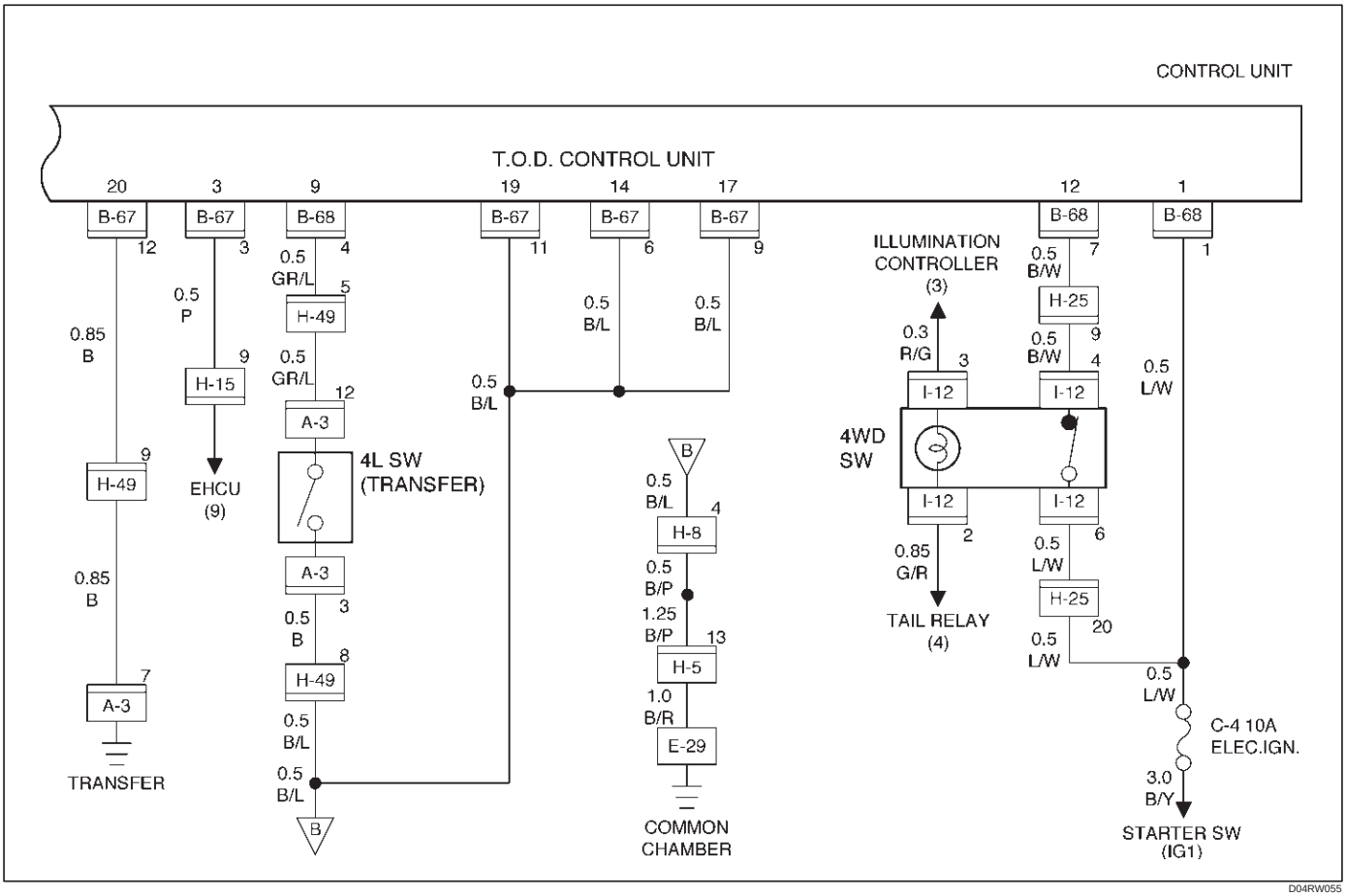

Step	Action	Yes	No
1	Do the indicator lamps show the correct status?	Go to Step 2	Examine the trouble based on “Diagnosis from Trouble Codes”. Go to Step 2
2	Is any of the trouble codes 28, 32 and 33 recorded?	Examine the trouble based on “Diagnosis from Trouble Codes”. Go to Step 6	Go to Step 3
3	Turn on the starter switch. Is the battery voltage observed between terminals 1 and 20?	Go to Step 4	Go to Step 5
4	When the 4WD SW is select to the 2WD position, are the front axle gears correctly disengaged (and when the left front tire is jacked up and turned, is the front propeller shaft standstill)?	The phenomenon is not reproduced. Refer to “Troubles intermittently observed”. Go to Step 6	The shift on the fly system is failed (refer to Section 4C “Drive Shaft System”. Go to Step 6
5	Does the battery voltage maintain the correct level?	Repair the battery circuit. Go to Step 6	Repair the battery and charging system. Go to Step 6
6	Check that all the parts are mounted. Is this step complete?	Repeat the “Diagnosis Flow”.	Return to Step 6

Chart 4	The braking distance gets long even when the ABS is active.
Function of circuit	—
Fail condition	Enough deceleration is not obtained and the braking distance gets long even when the ABS is active in the 2H mode.

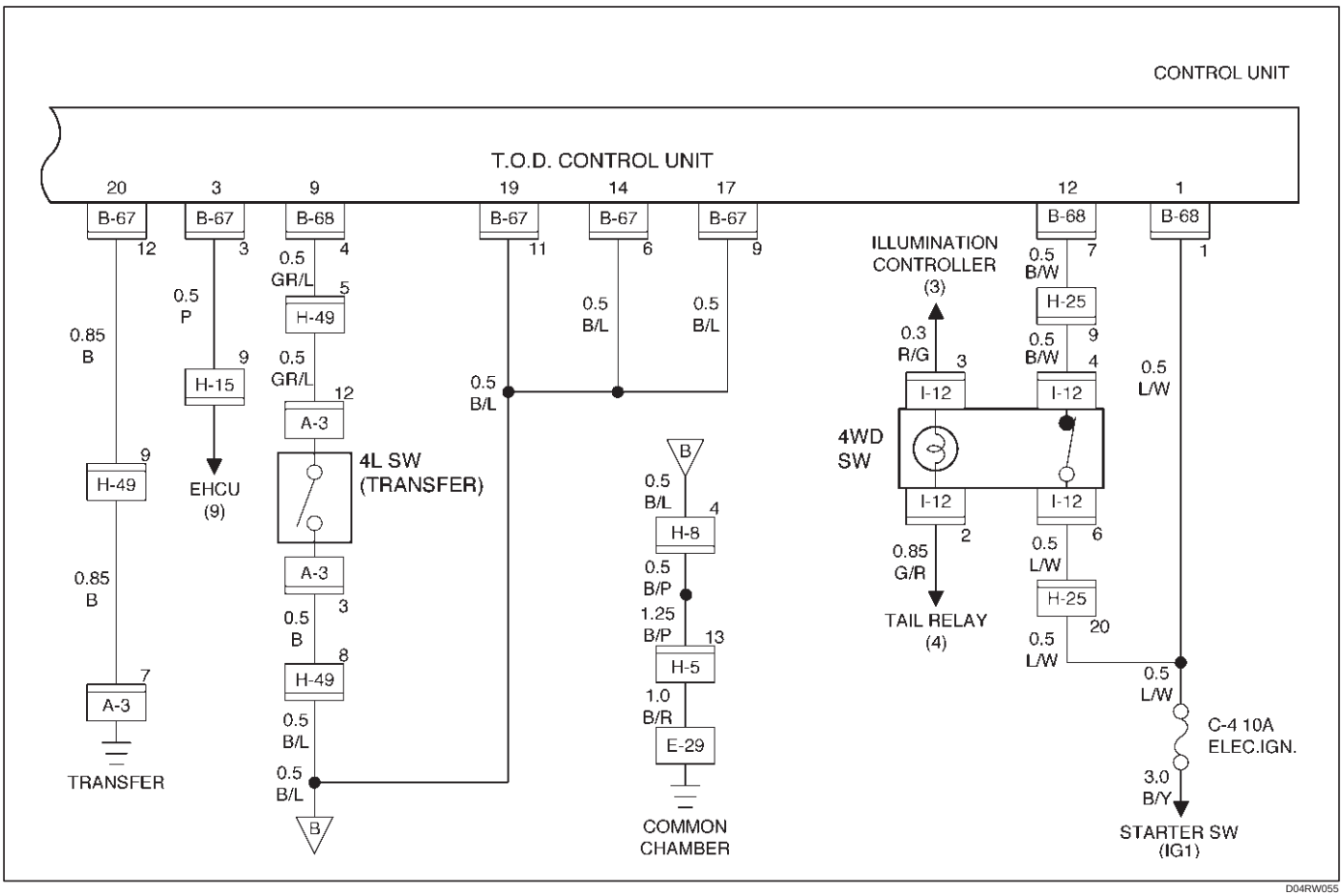

Step	Action	Yes	No
1	Are the brake and ABS systems healthy?	Go to Step 2	Repair the brake and ABS. Go to Step 4
2	Turn on the starter switch. Is the battery voltage observed between terminals 1 and 20?	Go to Step 3	Repair the battery system. Go to Step 4
3	1. Select the 4WD SW to the 2WD position. 2. The voltage between terminals 3 and 19 range between 7.5 and 16V (0.24 seconds make a cycle) 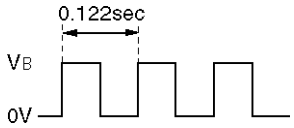 Does the voltage within the range specified?	Examine the trouble based on “Diagnosis from Trouble Codes". Go to Step 4	The ECU has failed. Replace the ECU. Go to Step 4
4	Check that all the parts are mounted. Is this step complete?	Repeat the “Diagnosis Flow".	Return to Step 4

DRIVELINE/AXLE

DRIVE SHAFT SYSTEM

CONTENTS

Service Precaution 4C–2
General Description 4C–2
Diagnosis 4C–3
Rear Axle Shaft 4C–4
Rear Axle Shaft and Associated Parts 4C–4
Removal 4C–4
Inspection and Repair 4C–5
Oil Seal Replacement 4C–6
Installation 4C–6
Special Tools 4C–8
Front Hub and Disc (with Shift on the Fly) . . 4C–9
Disassembled View 4C–9
Disassembly 4C–9
Inspection and Repair 4C–10
Reassembly 4C–11
Front Hub and Disc with Manual Locking Hub 4C–14
Disassembled View 4C–14
Disassembly 4C–14
Inspection and Repair 4C–16
Reassembly 4C–16
Main Data and Specifications 4C–20
Special Tools 4C–21
Front Drive Shaft Joint 4C–22
Front Drive Shaft Joints Replacement 4C–22
Front Axle Drive Shaft 4C–23
Front Axle Drive Shaft and Associated Parts 4C–23
Disassembly 4C–24
Inspection and Repair 4C–25
Bushing Replacement 4C–25
Reassembly 4C–26
Shift On The Fly System 4C–28
Shift On The Fly System and Associated Parts 4C–28
Disassembly 4C–28
Inspection and Repair 4C–30
Main Data and Specifications 4C–35
Special Tools 4C–36
Front Propeller Shaft 4C–37
General Description 4C–37
Front Propeller Shaft and Associated Parts 4C–38
Removal 4C–38
Installation 4C–39
Disassembly (Except TOD 4×4) 4C–40
Universal Joint Disassembly 4C–41
Inspection and Repair 4C–42
Universal Joint Reassembly 4C–45
Reassembly (Except TOD 4×4) 4C–46
Main Data and Specifications 4C–47
Rear Propeller Shaft 4C–48
General Description 4C–48
Rear Propeller Shaft and Associated Parts 4C–48
Removal 4C–49
Installation 4C–49
Disassembly 4C–50
Universal Joint Disassembly 4C–51
Inspection and Repair 4C–52
Universal Joint Reassembly 4C–53
Reassembly 4C–54
Main Data and Specifications 4C–55

Service Precaution

WARNING: IF SO EQUIPPED WITH A SUPPLEMENTAL RESTRAINT SYSTEM (SRS), REFER TO THE SRS COMPONENT AND WIRING LOCATION VIEW IN ORDER TO DETERMINE WHETHER YOU ARE PERFORMING SERVICE ON OR NEAR THE SRS COMPONENTS OR THE SRS WIRING. WHEN YOU ARE PERFORMING SERVICE ON OR NEAR THE SRS COMPONENTS OR THE SRS WIRING, REFER TO THE SRS SERVICE INFORMATION. FAILURE TO FOLLOW WARNINGS COULD RESULT IN POSSIBLE AIR BAG DEPLOYMENT, PERSONAL INJURY, OR OTHERWISE UNNEEDED SRS SYSTEM REPAIRS.

CAUTION: Always use the correct fastener in the proper location. When you replace a fastener, use ONLY the exact part number for that application. ISUZU will call out those fasteners that require a replacement after removal. ISUZU will also call out the fasteners that require thread lockers or thread sealant. UNLESS OTHERWISE SPECIFIED , do not use supplemental coatings (Paints, greases, or other corrosion inhibitors) on threaded fasteners or fastener joint interfaces. Generally, such coatings adversely affect the fastener torque and the joint clamping force, and may damage the fastener. When you install fasteners, use the correct tightening sequence and specifications. Following these instructions can help you avoid damage to parts and systems.

General Description

This publication contains essential removal, installation, adjustment and maintenance procedures.
The front axle utilizes a central disconnect type front axle/transfer case system.
The drive axles are completely flexible assemblies, consisting of inner and outer constant velocity (CV) drive shaft joints connected by an axle shaft.
For description of propeller shaft and universal joint, refer to Front/Rear Propeller Shaft in this section.

Diagnosis

Condition	Possible cause	Correction
Oil Leak At Front Axle	Worn or defective oil seal.	Replace the oil seal.
	Front axle housing cracked.	Repair or replace.
Oil Leak At Pinion Shaft	Too much gear oil.	Correct the oil level.
	Oil seal worn or defective.	Replace the oil seal.
	Pinion flange loose or damaged.	Tighten or replace.
Noises In Front Axle Drive Shaft Joint	Broken or worn drive shaft joints and bellows (BJ and DOJ).	Replace the drive shaft joints and bellows.
“Clank” When Accelerating From “Coast”	Loose drive shaft joint to output shaft bolts.	Tighten.
	Damaged inner drive shaft joint.	Replace.
Shudder or Vibration During Acceleration	Excessive drive shaft joint angle.	Repair.
	Worn or damaged drive shaft joints.	Replace.
	Sticking spider assembly (inner drive shaft joint).	Lubricate or replace.
	Sticking joint assembly (outer drive shaft joint).	Lubricate or replace.
Vibration At Highway Speeds	Out of balance or out of round tires.	Balance or replace.
	Front end out of alignment.	Align.
Noises in Front Axle	Insufficient gear oil.	Replenish the gear oil.
	Wrong or poor grade gear oil.	Replace the gear oil.
	Drive pinion to ring gear backlash incorrect.	Adjust the backlash.
	Worn or chipped ring gear, pinion gear or side gear.	Replace the ring gear, pinion gear or side gear.
	Pinion shaft bearing worn.	Replace the pinion shaft bearing.
	Wheel bearing worn.	Replace the wheel bearing.
	Differential bearing loose or worn.	Tighten or replace.
Wanders and Pulls	Wheel bearing preload too tight.	Adjust the wheel bearing preload.
	Incorrect front alignment.	Adjust the front alignment.
	Steering linkage loose or worn.	Tighten or replace.
	Steering gear out of adjustment.	Adjust or replace the steering gear.
	Tire worn or improperly inflated.	Adjust the inflation or replace.
	Front or rear suspension parts loose or broken.	Tighten or replace.
Front Wheel Shimmy	Wheel bearing worn or improperly adjusted.	Adjust or replace.
	Incorrect front alignment.	Adjust the front alignment.
	Worn ball joint or bush.	Replace the ball joint or bush.
	Steering linkage loose or worn.	Tighten or replace.
	Steering gear out of adjustment.	Tighten or replace.
	Tire worn or improperly inflated.	Replace or adjust the inflation.
	Shock absorber worn.	Replace the shock absorber.

Rear Axle Shaft

Rear Axle Shaft and Associated Parts

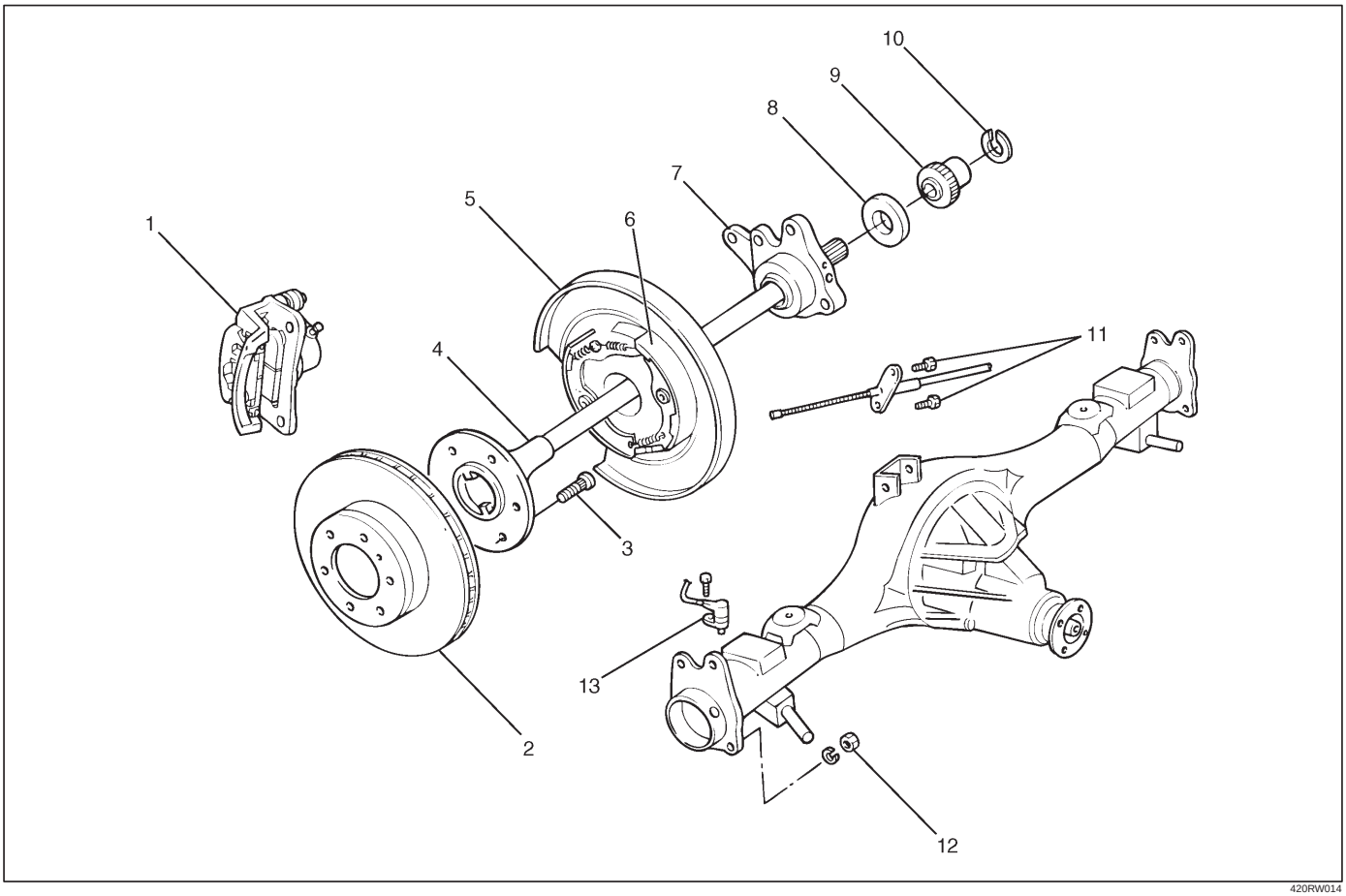

420RW014

Legend

(1) Brake Caliper
(2) Brake Disc
(3) Wheel Pin
(4) Axle Shaft Assembly
(5) Back Plate
(6) Parking Brake Assembly
(7) Bearing Holder
(8) Bearing
(9) Retainer
(10) Snap Ring
(11) Bolt
(12) Nut
(13) Antilock Brake System (ABS) Speed Sensor (if so equipped)

Removal

1. Raise the vehicle.
2. Remove tires and wheels. Refer to Wheel in Steering section.
3. Remove brake caliper. Use a wire to attach the brake caliper to the frame. Refer to Disk Brakes in Brake section.
4. Remove brake disc.
5. Remove ABS sensor (if so equipped).
6. Remove Parking brake assembly. Refer to Parking Brakes in Brake section.

7. Remove the parking brake cable mounting bolts(Behind the back plate)(1).

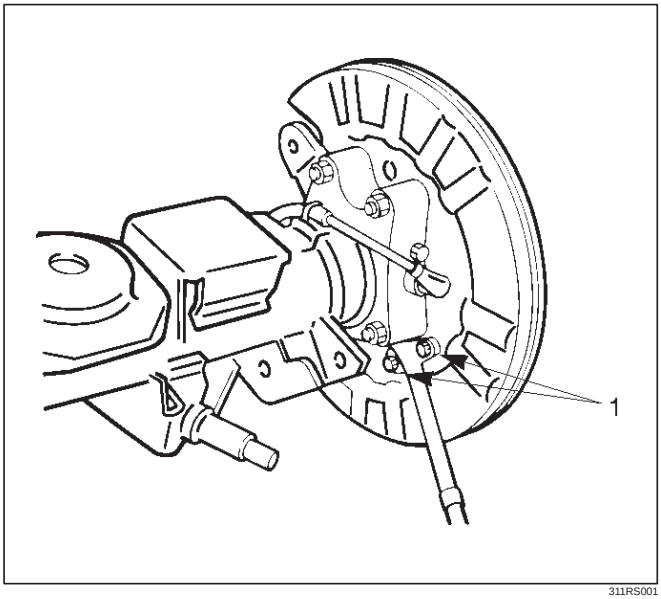

311RS001

8. Remove the bearing holder mounting nuts.
9. Remove axle shaft assembly.

NOTE: Be sure not to damage the oil seal.

10. Remove snap ring.
11. Using a bearing remover 5–8840–2295–0 and press, remove retainer together with the bearing holder.

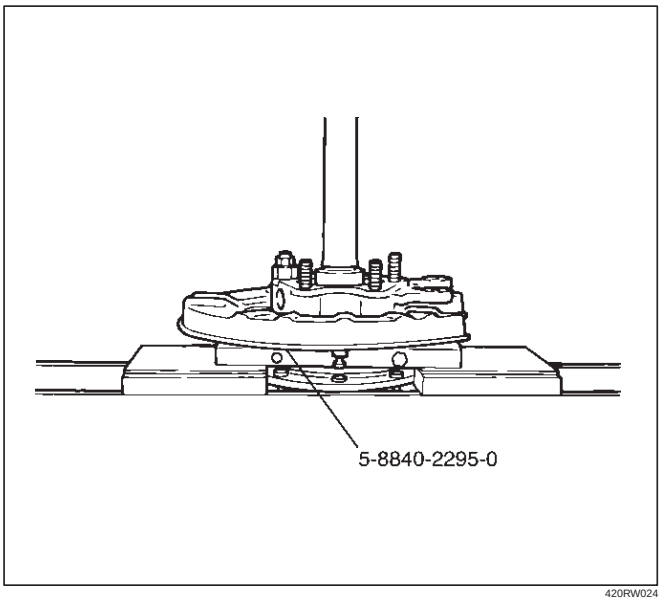

420RW024

12. Remove bearing.
13. Remove bearing holder.
14. Remove back plate.
15. Remove the wheel pins using a remover 5–8840–0079–0.

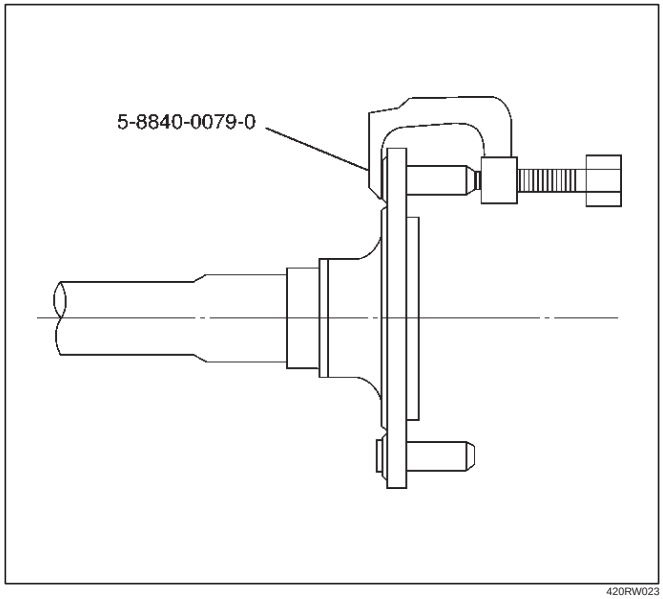

420RW023

Inspection and Repair

Make necessary correction or parts replacement if wear, corrosion or any other abnormal conditions are found through inspection.

Visual Check:

Check the following parts for wear, damage, noise or any other abnormal conditions:

1. Axle shaft
2. Bearing

When checking the axle shaft, pay special attention to the splined portions and replace the shaft if distortion or step wear is noticeable. Correct slight step wear with a grinder.

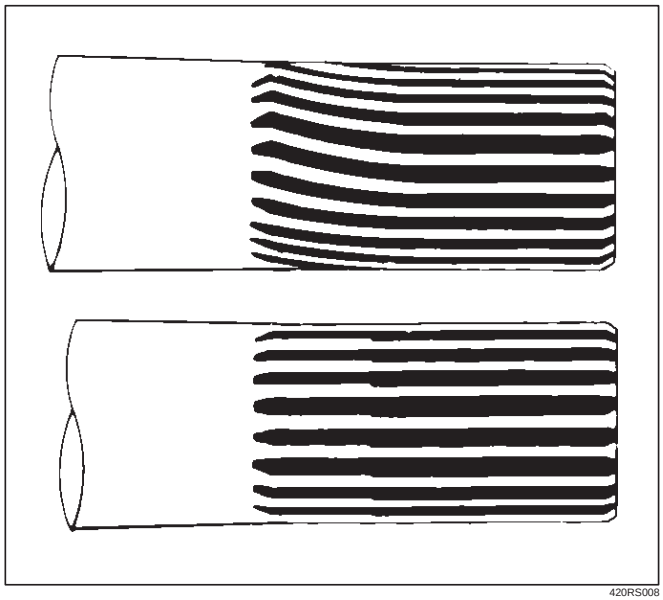

420RS008

Axle Shaft Run–out

Limit: 1.0 mm (0.039 in)

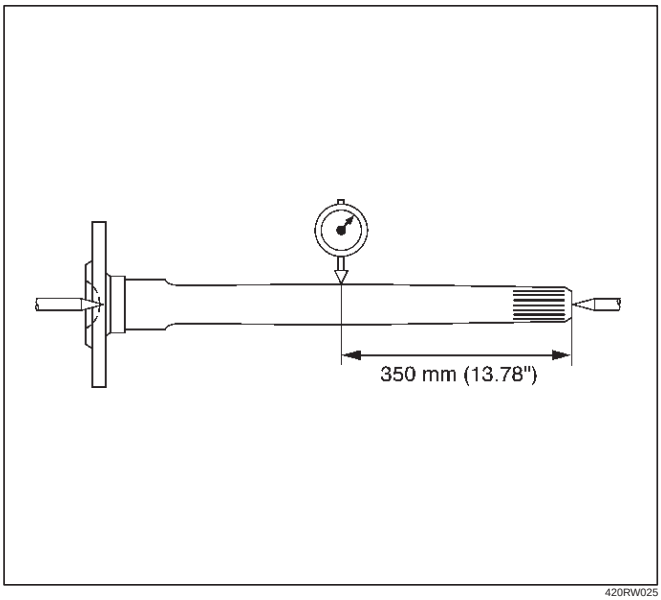

420RW025

Axle Shaft Flange Run–out

Limit: 0.08 mm (0.003 in)

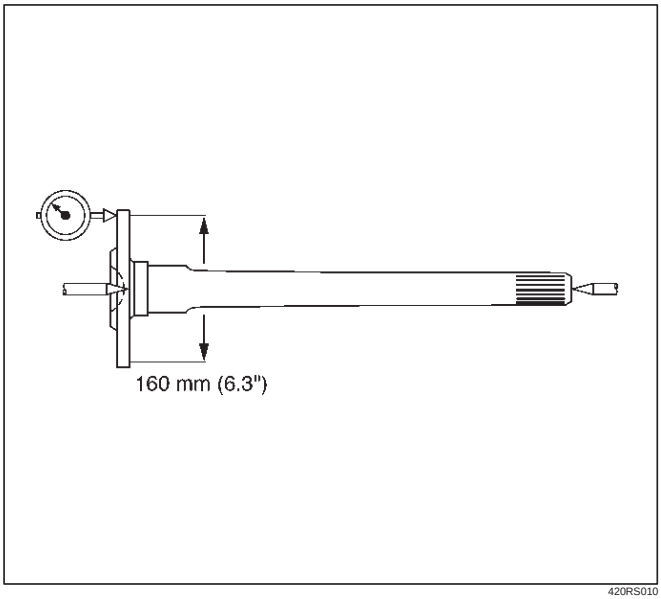

420RS010

Oil Seal Replacement

Remove the oil seal carefully not to damage the bearing holder bore .
When installing, use oil seal installer 5–8840–2310–0.

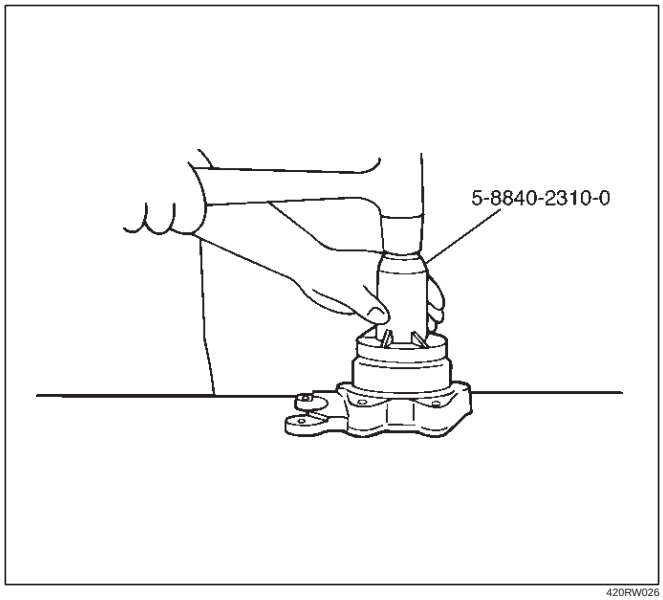

420RW026

Installation

1. Install wheel pin.
2. Install back plate.
3. Install bearing holder.
4. Install bearing.
5. Install retainer by using a bearing installer 5–8840–2296–0, press fit together with the bearing.

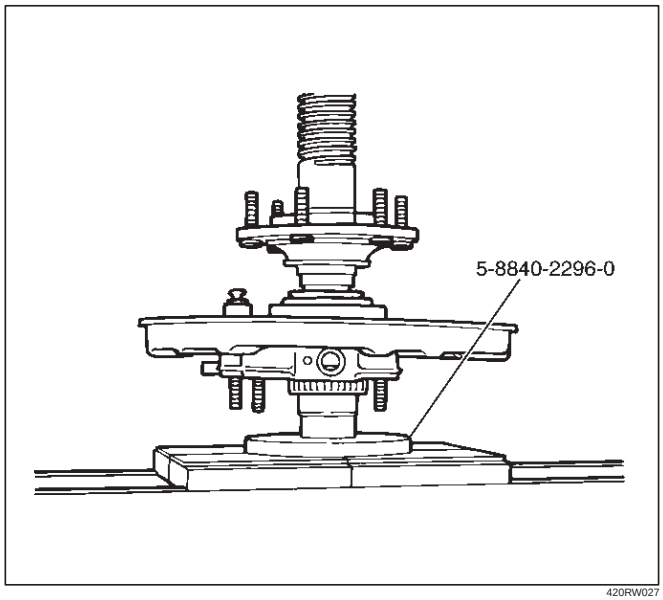

420RW027

6. Install snap ring.
7. Install axle shaft assembly.

NOTE: Be sure not to damage the oil seal.

8. Tighten the bearing holder mounting nut to the specified torque.

   Torque: 74N·m (7.5kg·m/54 lb ft)

9. Fix the parking brake cable mounting bolt (Behind the back plate).
10. Install parking brake assembly, refer to Parking Brakes in Brake section.
11. Install antilock brake system sensor (if so equipped).
12. Install brake disc.
13. Install brake caliper, refer to Disk Brakes in Brake section.

Special Tools

ILLUSTRATION	**TOOL NO.** TOOL NAME
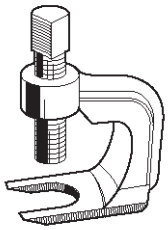 901RS206	**5–8840–0079–0** **(J–6627–A)** Wheel pin remover
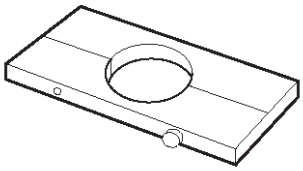 901RS207	**5–8840–2295–0** **(J–39211)** Remover; Axle shaft bearing
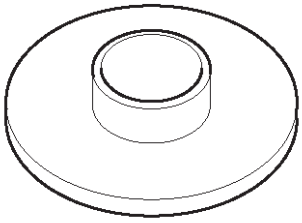 901RS208	**5–8840–2296–0** **(J–39212)** Installer; Axle shaft bearing
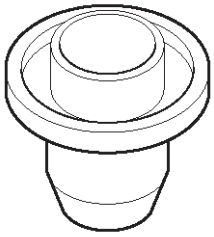 901RS209	**5–8840–2310–0** **(J–39379)** Installer; Outer axle seal

Front Hub and Disc (with Shift on the Fly)

Disassembled View

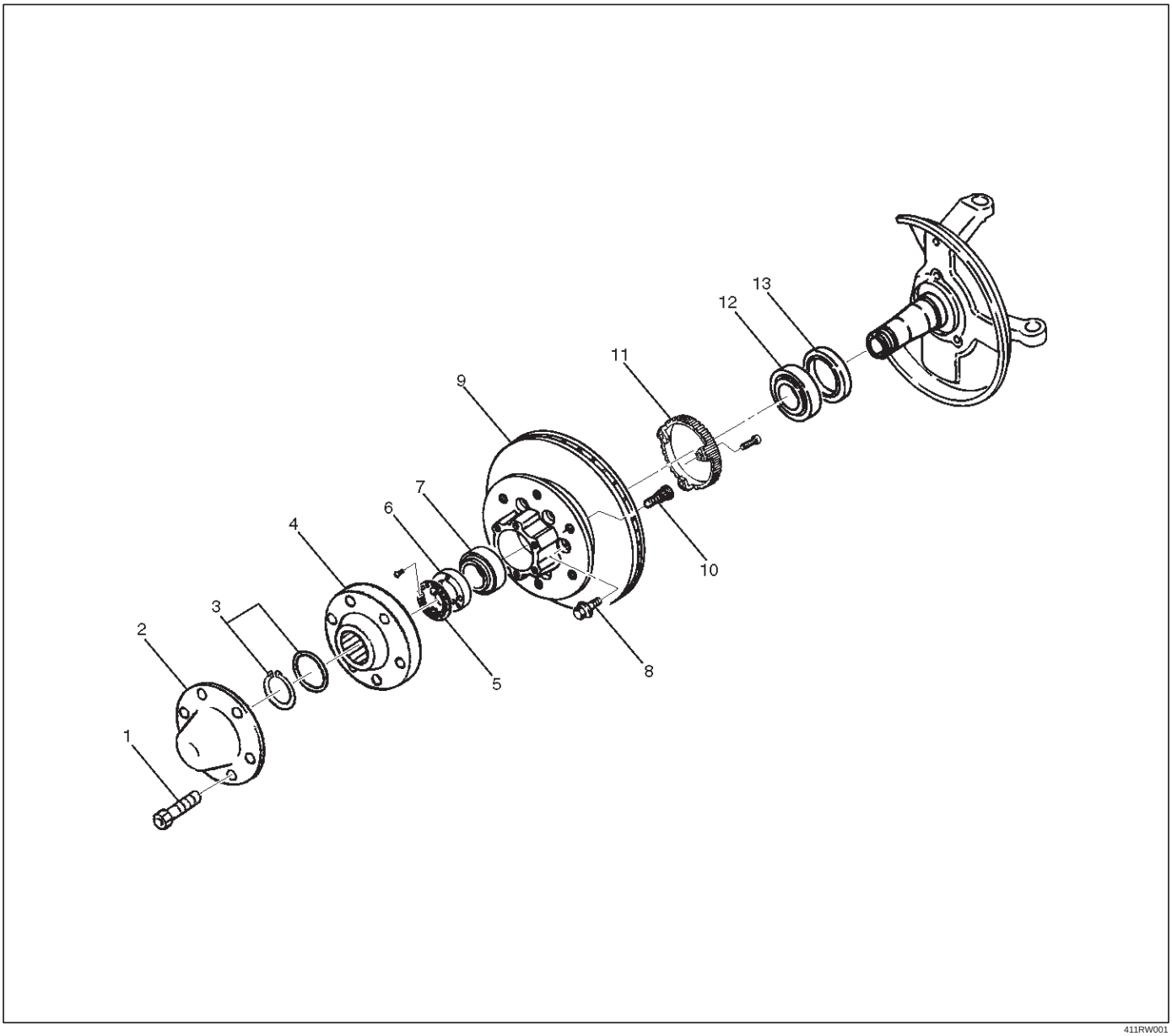

411RW001

Legend

(1) Bolt
(2) Cap
(3) Snap Ring and Shim
(4) Hub Flange
(5) Lock Washer and Lock Screw
(6) Hub Nut
(7) Outer Bearing
(8) Bolt
(9) Hub and Disc Assembly
(10) Wheel Pin
(11) ABS Sensor Ring (If equipped)
(12) Inner Bearing
(13) Oil Seal

Disassembly

1. Before disassembly, select the 2WD position.
2. Jack up the front of vehicle and support frame with jack stands.
3. Remove the disc brake caliper assembly and hang it on the frame with wires. Refer to Front Disc Brake Caliper Assembly in Brakes section.
4. Remove bolt.
5. Remove cap.
6. Remove snap ring and shim.
7. Remove hub flange.

8. Remove lock washer and lock screw.
9. Use wrench 5–8840–2117–0, remove hub nut.

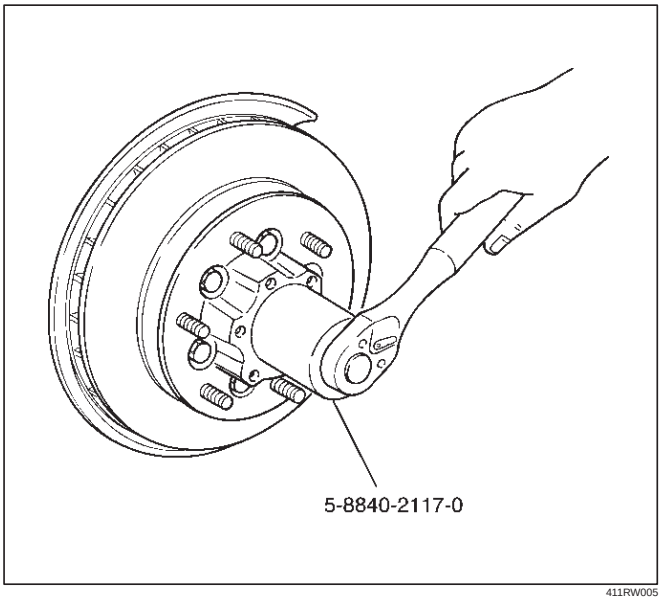

411RW005

10. Remove hub and disc assembly.
11. Remove ABS sensor ring (If equipped).
12. Remove outer bearing.
13. Remove oil seal.
14. Remove inner bearing.
15. Remove bolt , if necessary, replace the wheel pin in the following manner.
    - Apply a scribe mark(1) to disc to hub.
    - Clamp the hub and disc assembly in a vise, using protective pads. Remove the 6 disc–to–hub retaining bolts.

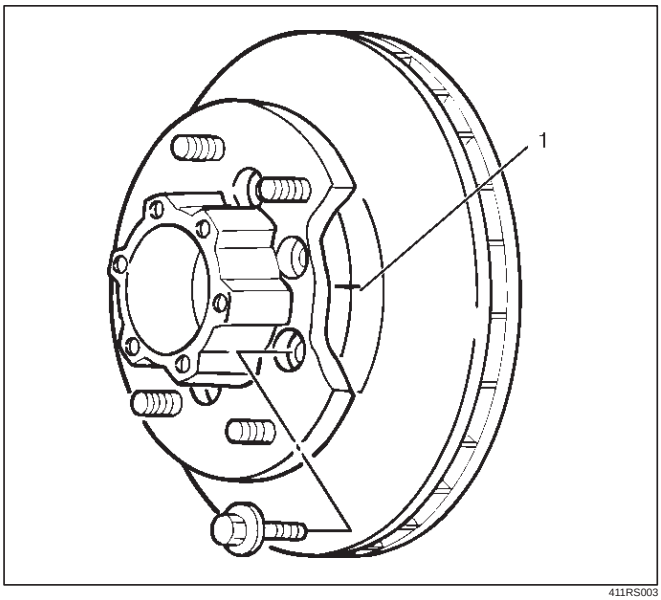

411RS003

- Place hub on a suitable work surface and remove the studs by using a hammer.

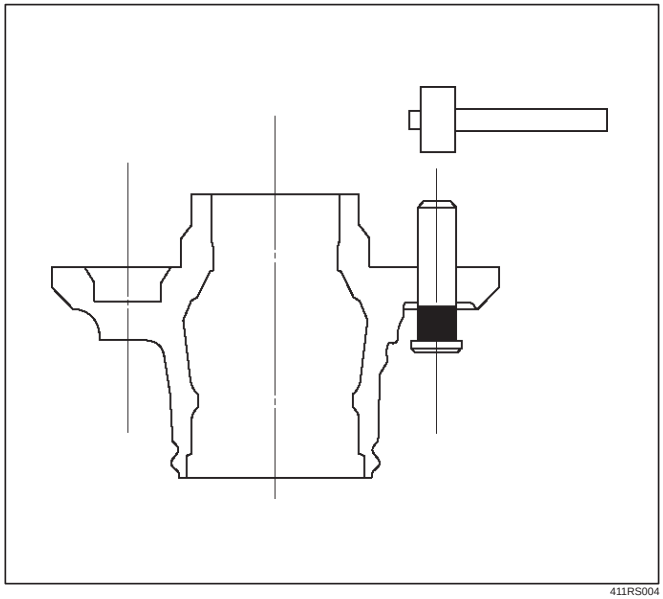

411RS004

Inspection and Repair

Make necessary correction or parts replacement if wear, damage, corrosion or any other abnormal conditions are found through inspection.
Check the following parts:

- Hub
- Hub bearing oil seal
- Knuckle spindle
- Disc
- Caliper
- Shift on the fly system parts (Cap, Hub flange, Shim, Snap ring)
- ABS sensor ring (If equipped)

For inspection and servicing of disc caliper and related parts, refer to Brakes section.

Reassembly

1. Install wheel pin.
   - Place the hub on a wood workbench or a block of wood approx. 6” by 6” to protect the wheel stud ends and threads.
   - Insert a wheel stud using a hammer.

     Be sure the wheel stud is started squarely and seats completely.

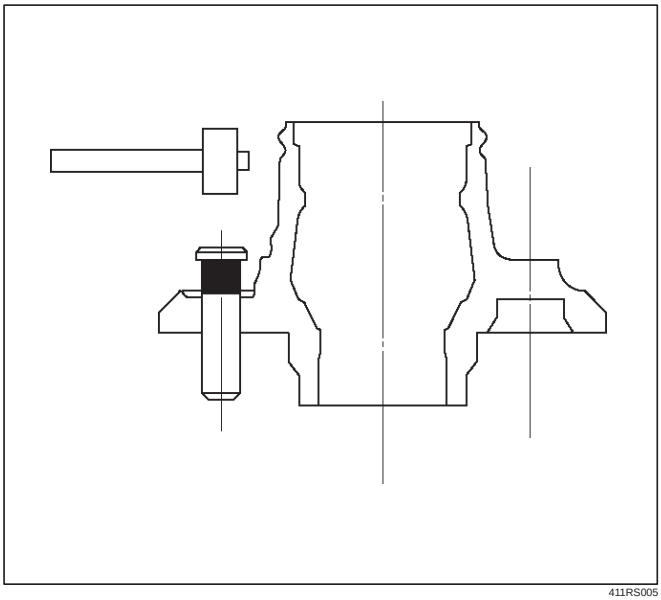

411RS005

2. Align scribe marks(1) and attach the hub to the disc, then tighten the bolts to the specified torque.

   Torque: 103 N·m (10.5 kg·m/76 lb ft)

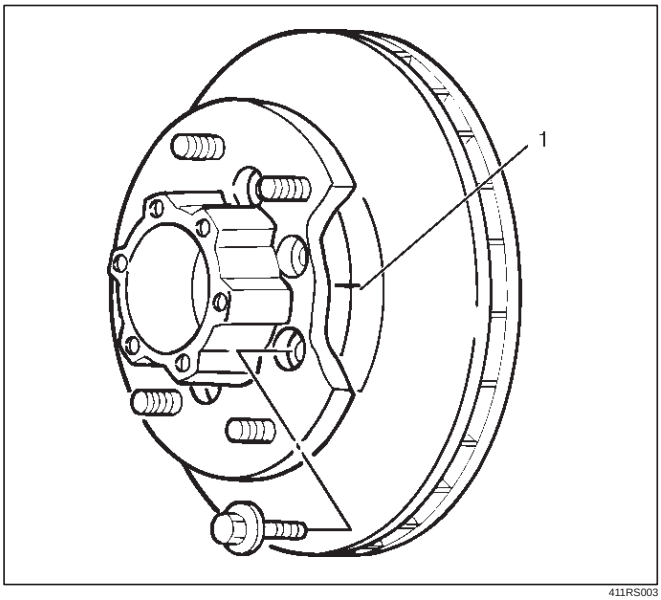

411RS003

3. Use installer 5–8840–2119–0 and grip 5–8840–0007–0, then install the inner bearing by driving it into the hub.

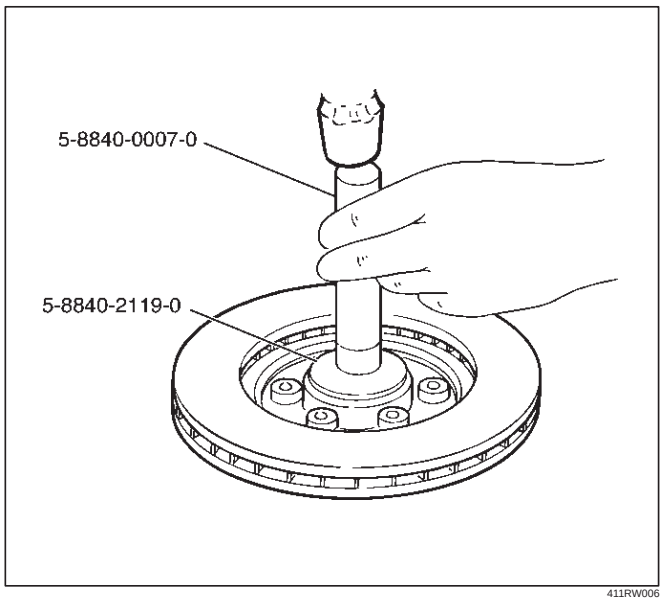

411RW006

4. Use installer 5–8840–2118–0 and grip 5–8840–0007–0, then install the outer bearing by driving it into the hub.

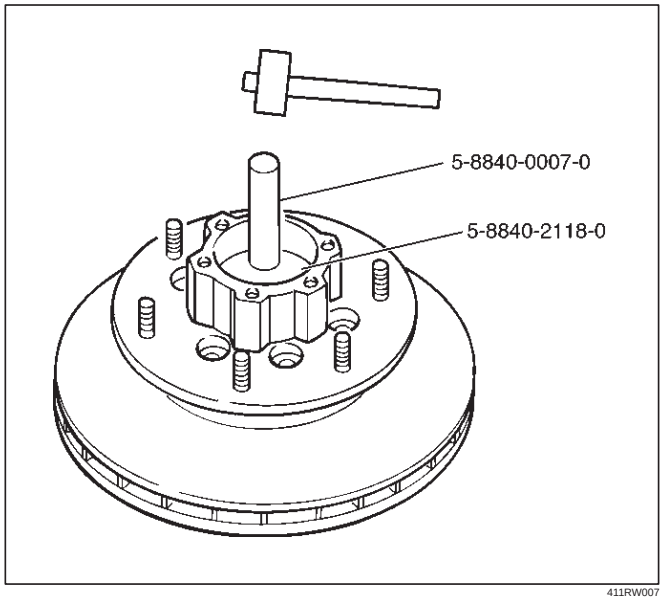

411RW007

5. Apply grease (NLGI No.2 or equivalent) to the lip portion, then install oil seal by using installer 5–8840–2120–0 and grip 5–8840–0007–0.

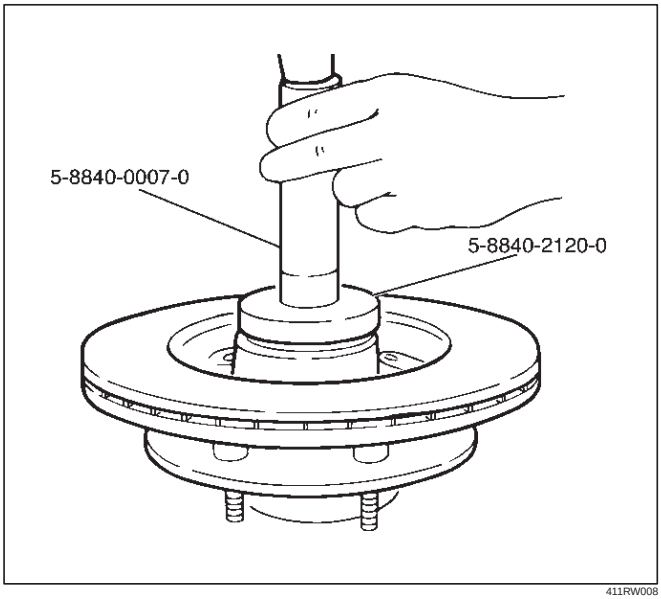

411RW008

6. Install ABS sensor ring, then tighten the bolts to the specified torque.

Torque: 18 N·m (1.8 kg·m/13 lb ft)

7. Install hub and disc assembly.
   - Apply grease in the hub.
   - Apply wheel bearing type grease NLGI No. 2 or equivalent to the outer and inner bearing.

Grease Amount

Hub: 35 g (1.23 oz)

Outer bearing: 10 g (0.35 oz)

Inner bearing: 15 g (0.53 oz)

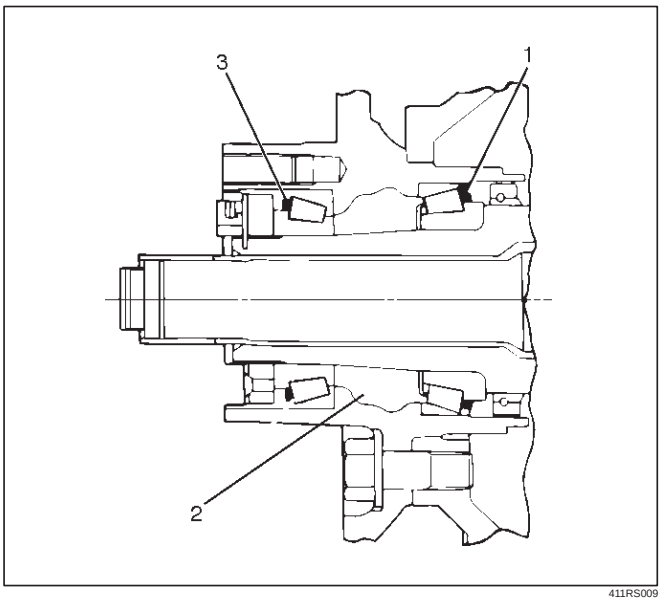

411RS009

Legend

(1) Inner Bearing
(2) Hub
(3) Outer Bearing

8. Install hub nut. Turn the place where there is a chamfer in the tapped hole to the outer side, then attach the nut by using front hub nut wrench 5–8840–2117–0.

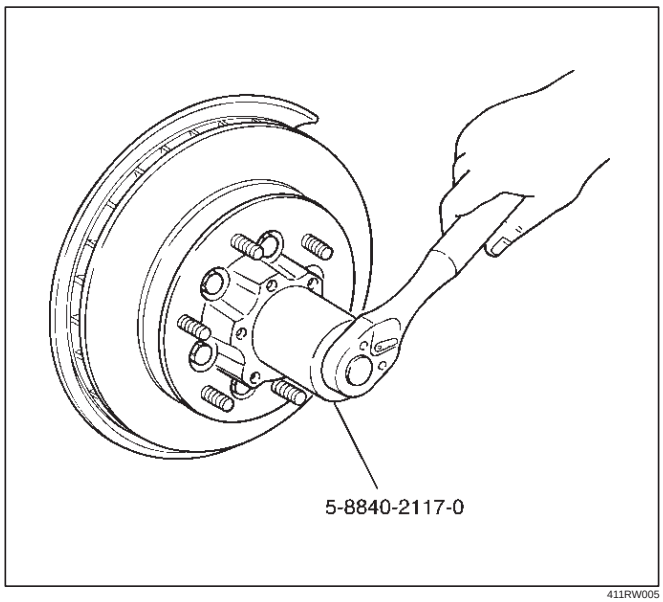

411RW005

Preload Adjustment

1. Tighten the hub nut to 29 N·m (3.0 kg·m/22 lb ft), then fully loosen the nut.
2. Tighten the hub nut to the value given below, using a spring scale on the wheel pin.

New bearing and New oil seal

Bearing Preload: 20 – 25 N (2.0–2.5 kg/4.4 – 5.5 lb)

Used bearing and New oil seal

Bearing Preload: 12 – 18 N (1.2–1.8 kg/2.6 – 4.0 lb)

If the measured bearing preload is outside the specifications, adjust it by loosening or tightening the bearing nut.

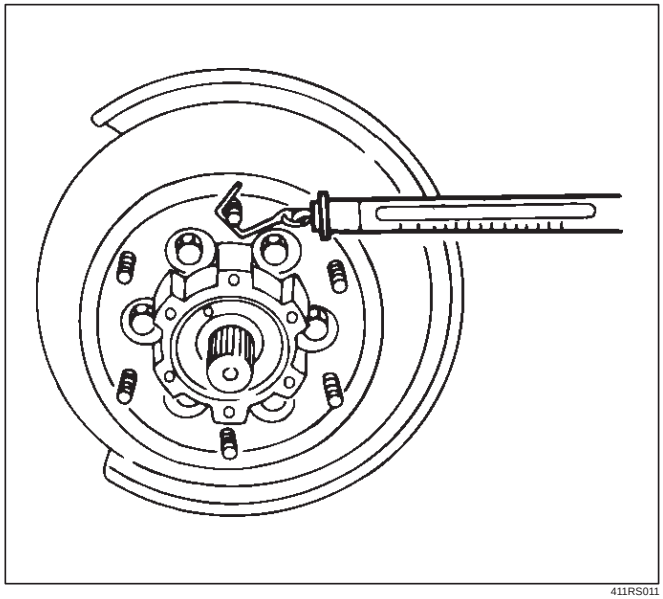

411RS011

9. Install lock washer and lock screw in the following manner.
   - Turn the side with larger diameter of the tapered bore to the vehicle outer side, then attach the washer.
   - If the bolt holes in the lock plate are not aligned with the corresponding holes in the nut, reverse the lock plate.
   - If the bolt holes are still out of alignment, turn in the nut just enough to obtain alignment.
   - Screw is to be fastened tightly so its head may come lower than the surface of the washer.

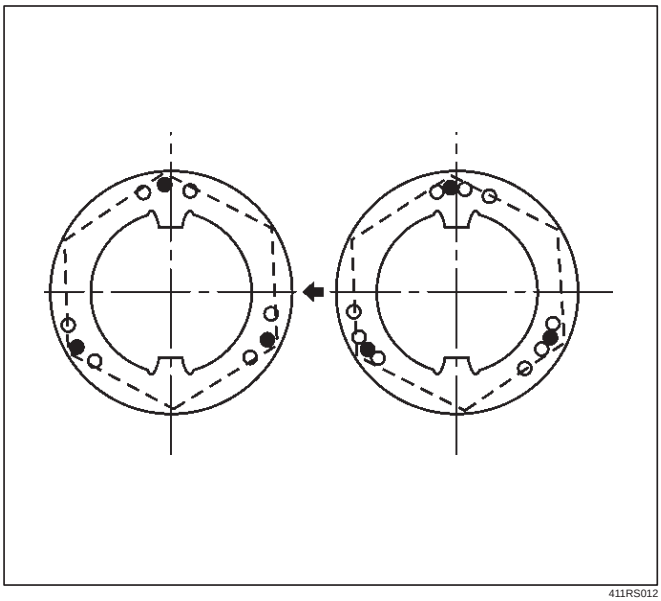

411RS012

10. Apply adhesive (LOCTITE 515 or equivalent) to both joining flange faces then install hub flange.
11. Install snap ring and shim.
    - Adjust the clearance between the free wheeling hub body and the snap ring.

    Clearance: 0 mm–0.3 mm (0 in–0.012 in)

    Shims Available: 0.2 mm, 0.3 mm, 0.5 mm, 1.0 mm (0.008 in, 0.012 in, 0.020 in, 0.039 in)

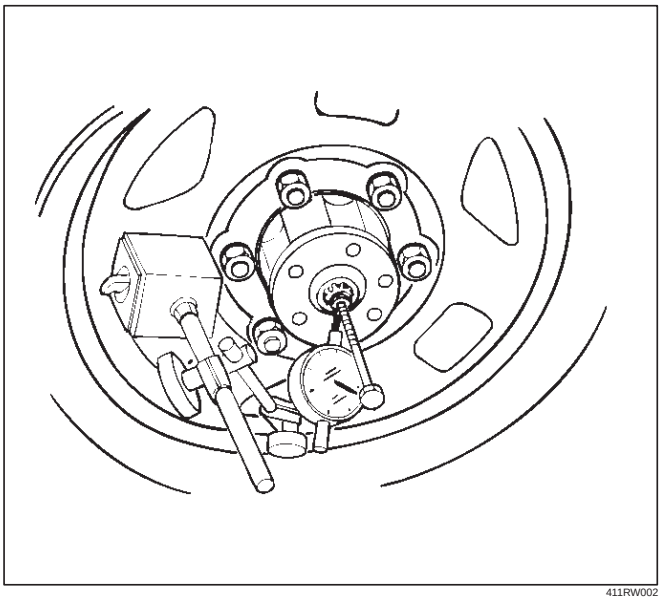

411RW002

12. Install hub cap.
13. Tighten the bolts to the specified torque.

    Torque: 59 N·m (6.0 kg·m/43 lb ft)

Front Hub and Disc with Manual Locking Hub

Disassembled View

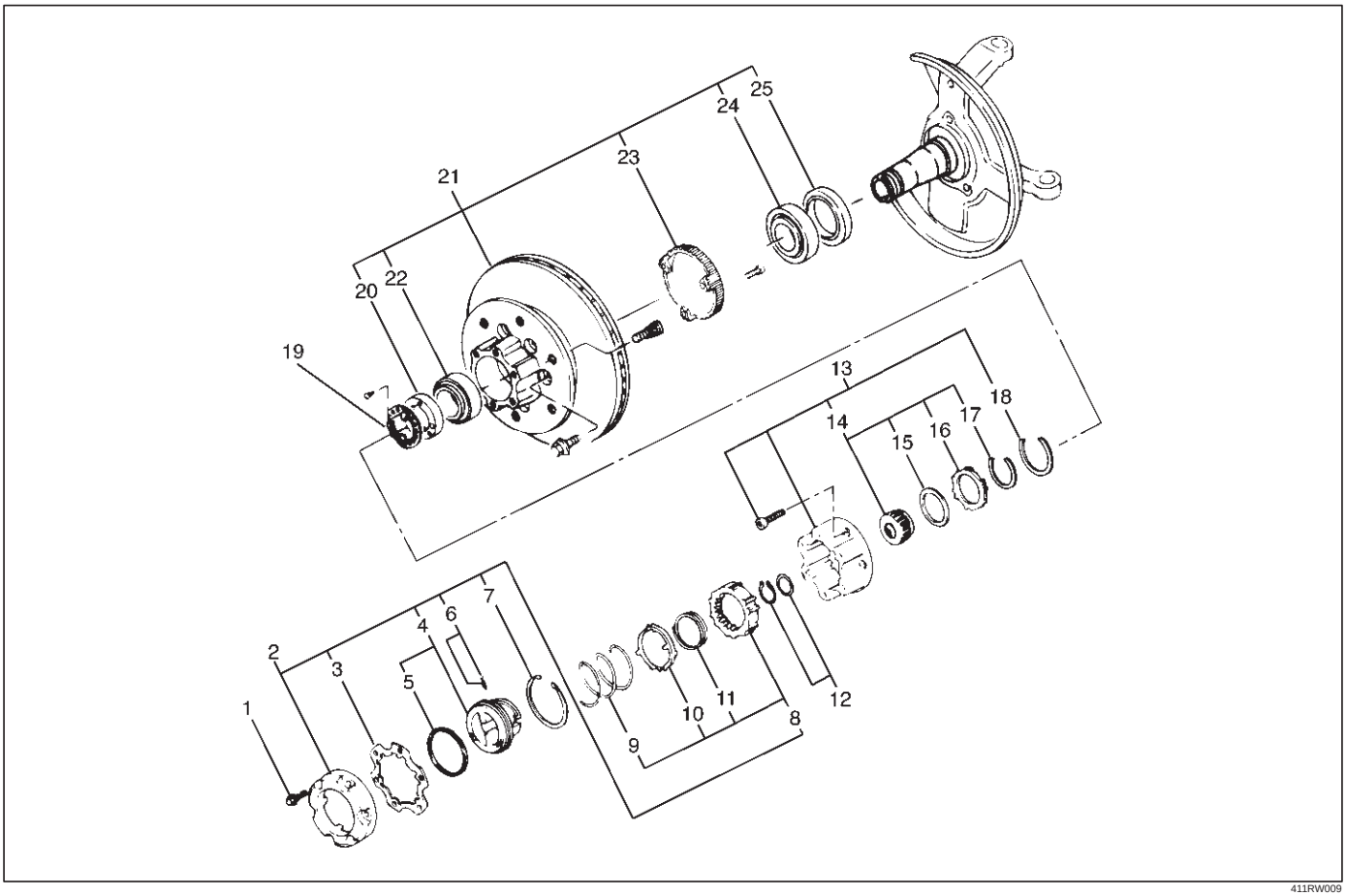

Legend

(1) Bolt
(2) Cover Assembly
(3) Gasket
(4) Knob
(5) X–ring
(6) Detent Ball and Spring
(7) Snap Ring
(8) Clutch Assembly
(9) Compression Spring
(10) Follower
(11) Retaining Spring
(12) Snap Ring and Shim
(13) Body Assembly
(14) Inner Assembly
(15) Spacer
(16) Ring
(17) Snap Ring
(18) Snap Ring
(19) Lock Washer and Lock Screw
(20) Hub Nut
(21) Hub and Disc Assembly
(22) Outer Bearing Outer Race
(23) ABS Sensor Ring (if so equipped)
(24) Inner Bearing Outer Race
(25) Oil Seal

Disassembly

1. Before disassembly, jack up the front of vehicle and support frame with jack stands.
2. Remove the disc brake caliper assembly and hang it on the frame with wires. Refer to Front Disk Brake Caliper Assembly in Brakes section.

3. Remove bolt.
   Before removal, shift transfer lever into “2H” position, set free wheeling hub knob into “FREE” position (1), and run the vehicle about 50m (160 ft).

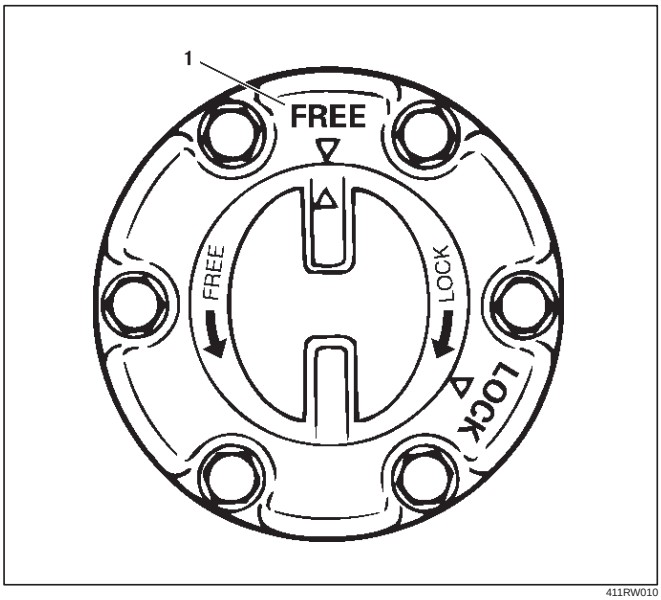

411RW010

4. Remove cover assembly.
5. Remove snap ring and shim.
6. Remove body assembly.
7. Remove lock washer and lock screw.
8. Remove hub nut by using wrench 5–8840–2117–0.

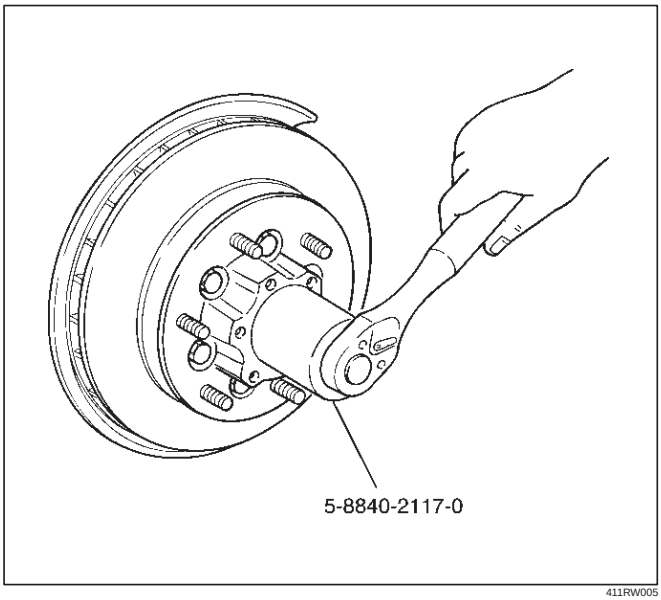

411RW005

9. Remove hub and disc assembly.
10. Remove ABS sensor ring (If equipped).
11. Remove outer bearing outer race.
12. Remove oil seal.
13. Remove inner bearing outer race.
14. While pushing follower knob against cover, turn clutch assembly clockwise and then remove clutch assembly from knob.

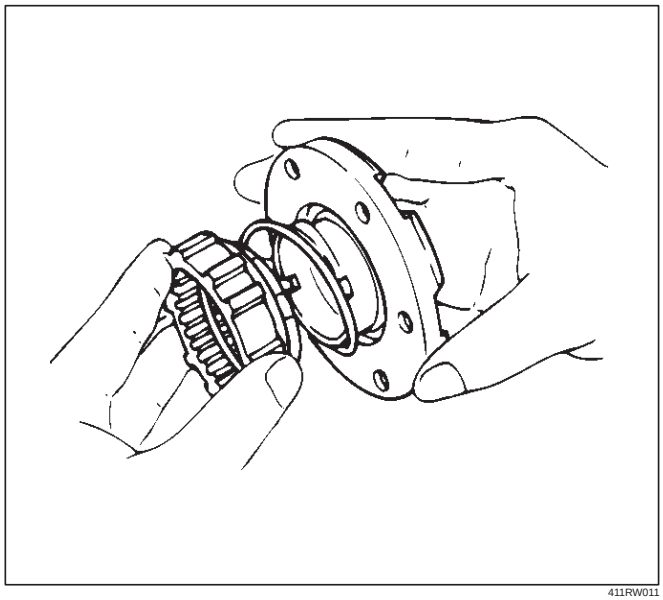

411RW011

15. Remove gasket.
16. Remove snap ring.
17. Remove knob.
18. Remove compression spring.
19. Remove follower.
20. Remove retaining spring from clutch assembly by turning it counterclockwise.

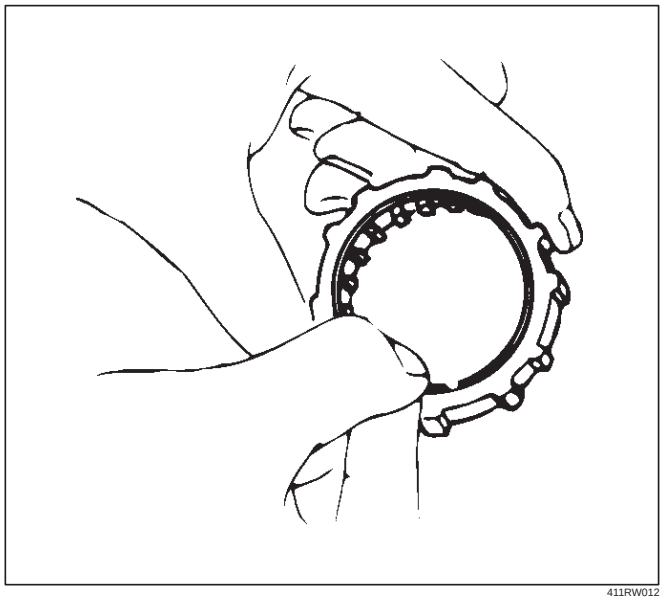

411RW012

21. Remove dedent ball and spring.
22. Remove X–ring.
23. Remove snap ring.
24. Remove inner assembly.
25. Remove snap ring.
26. Remove ring.
27. Remove spacer.

Inspection and Repair

Make necessary correction or parts replacement if wear, damage, corrosion or any other abnormal condition are found through inspection.
Check the following parts.

- Hub
- Hub bearing, oil seal
- Knuckle spindle
- Disc
- Caliper
- Free wheeling hub parts (Clutch, knob, follower, inner, ring and spring)
- ABS sensor ring (if so equipped)

For inspection and servicing of disc caliper, and relative parts, refer to Brakes section.

Reassembly

1. Install spacer.
   Apply about 1 g wheel bearing grease to both face of spacer.
2. Install ring.
   Apply about 3 g wheel bearing grease to inside face of ring.
3. Install snap ring
   Assembly with grease surplus being left unwiped up as illustrated.

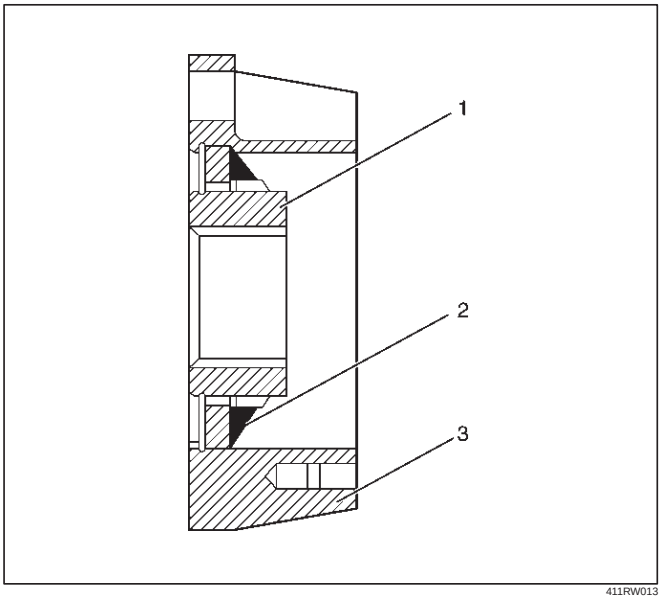

411RW013

Legend

(1) Inner Assembly
(2) Apply Grease
(3) Body

4. Install inner assembly.
   Apply grease to splined portion of body.
5. Install snap ring.
6. Install X–ring.
   Apply wheel bearing grease to hub lock ring and fit it in knob paying attention to mounting direction.

NOTE: After fitting, make sure that the hub lock ring is not twisted.

7. Apply wheel bearing grease to ball and spring and fit them in knob.
8. Install knob.
   1. Apply grease to outer circumference of knob and inner circumference of cover.
   2. Align detent ball (1) to a groove cut in the cover.

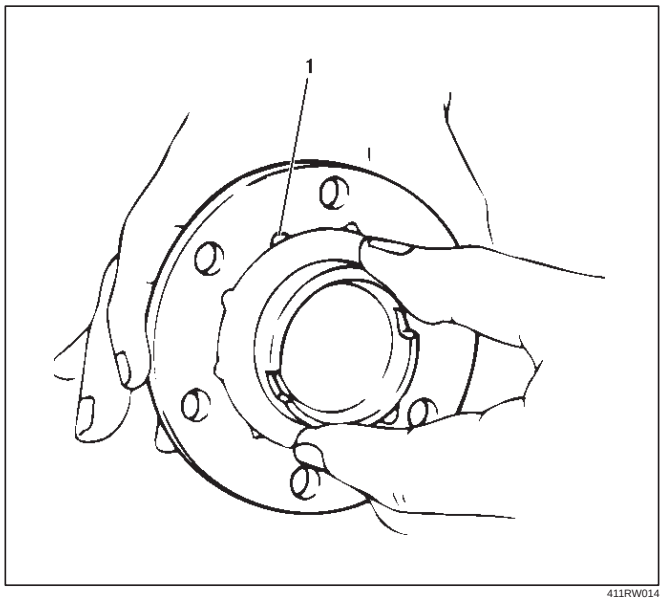

411RW014

9. Install snap ring.
   Turn the smoother face to knob side.
10. Align the end of retaining spring (1) with clutch spring groove (2) and fit in the spring.

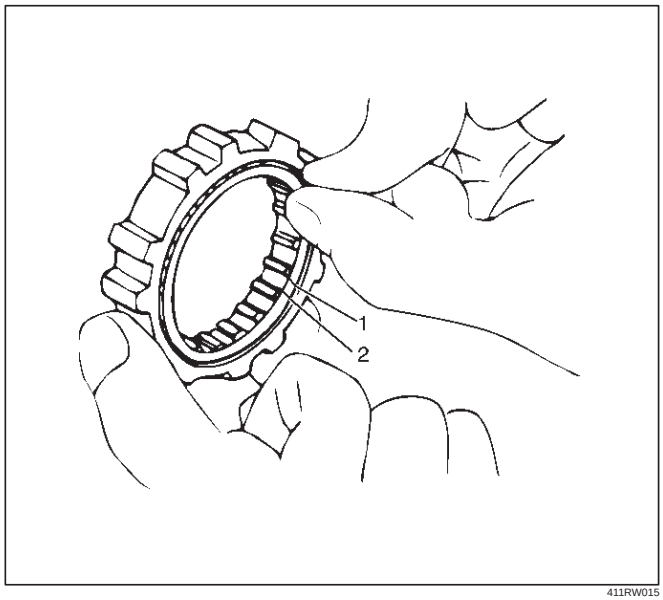

411RW015

11. Install follower to clutch so that follower nails (large) (1) will come closer to the bent portion of retaining spring by aligning follower stopper nail with outer teeth of clutch. Then, fit in with follower's nails (small) (2) caught in spring.

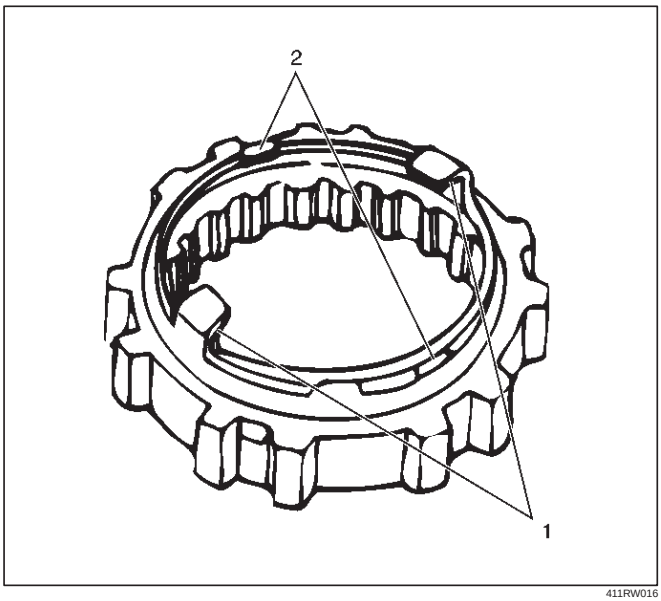

411RW016

12. Install compression ring.
    Turn the smaller diameter side toward follower and fit spring in clutch.
13. Align follower nail (1) to handle groose (2). and then assemble clutch with knob by pushing and turning clutch counterclockwise to knob.

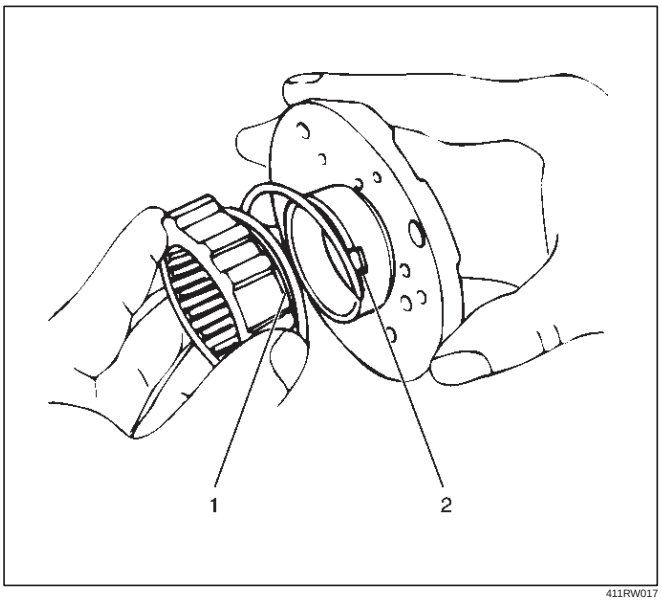

411RW017

14. Install gasket.
    Make sure that there is no breakage, etc.
15. Install outer bearing outer race by driving it into the hub, by using installer 5–8522–2118–0 and grip 5–8840–0007–0.

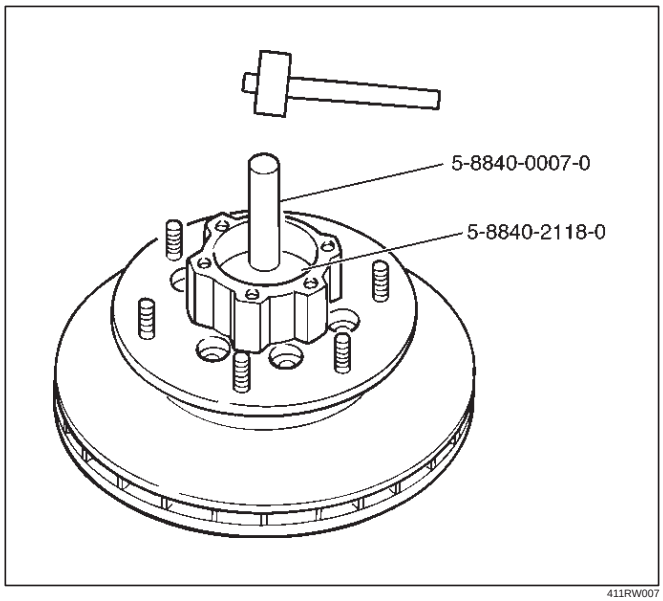

411RW007

16. Install inner bearing outer race by driving it into the hub, by using installer 5–8840–2119–0 and grip 5–8840–0007–0.

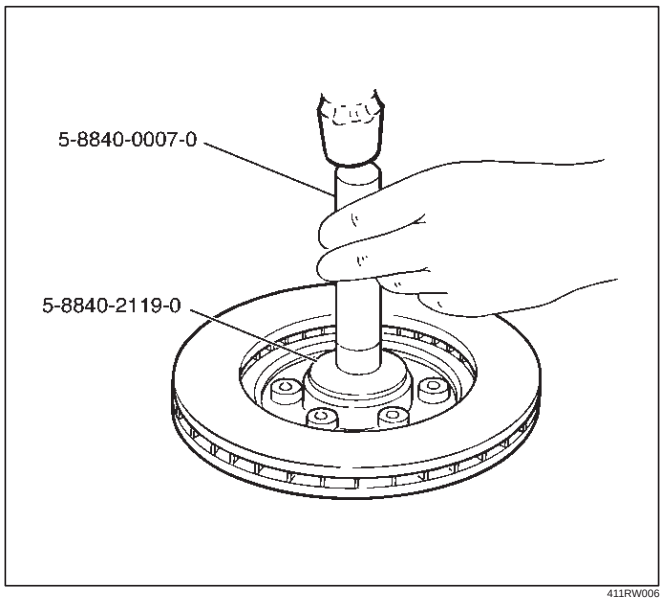

411RW006

17. Install oil seal by using installer 5–8840–2120–0 and grip 5–8840–0007–0.
    Apply grease (NLGI No.2 or equivalent) to the lip portion.

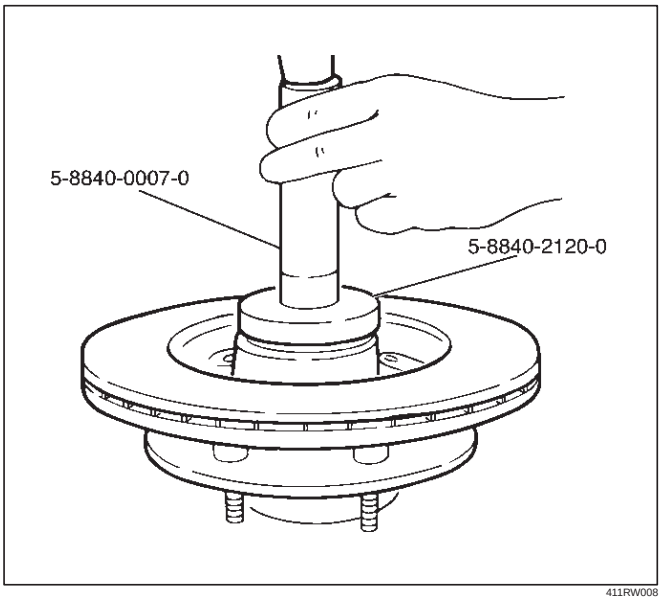

411RW008

18. Install ABS sensor ring (if so equipped).
    Tighten the bolts to the specified torque.

    Torque: 18 N·m (1.8 kg·m/13 lb ft)

19. Install hub and disc assembly.
    1. Apply grease in the hub.
    2. Apply wheel bearing type grease NLGI No.2 or equivalent to the outer and inner bearing.

    Grease Amount

    Hub: 35 g (1.23 oz)

    Outer bearing: 10 g (0.35 oz)

    Inner bearing: 15 g (0.53 oz)

20. Install hub nut.
    1. Turn the place where there is a chamfer in the tapped hole to the outer side, and attach the nut by using wrench 5–8840–2117–0.

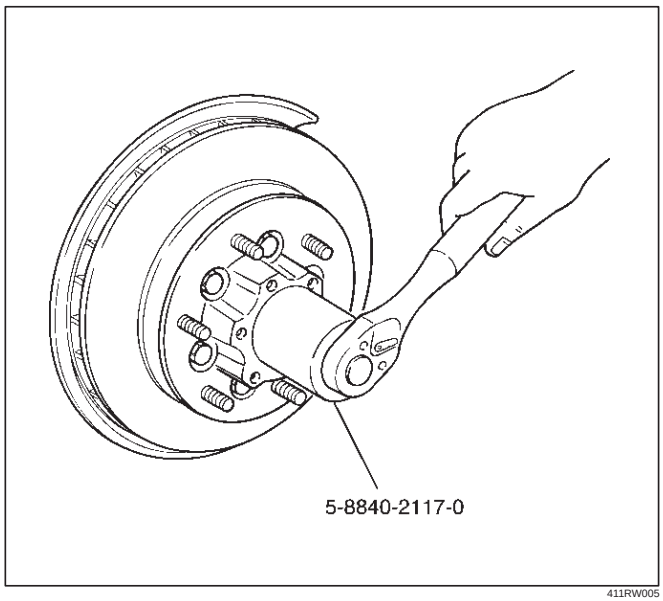

411RW005

Preload Adjustment

Tighten the hub nut to 29 N·m (3.0 kg·m/22 lb·ft), then fully loosen the nut.

Tighten the hub nut to the value given below, using a spring scale on the wheel pin.

Bearing Preload

New bearing and New oil seal:
20-25N (2-2.5 kg/4.4-5.5 lb)

Used bearing and New oil seal:
12-18N (1.2-1.8 kg/2.6-4.0 lb)

If the measured bearing preload is outside the specifications, adjust it by loosening or tightening the bearing nut.

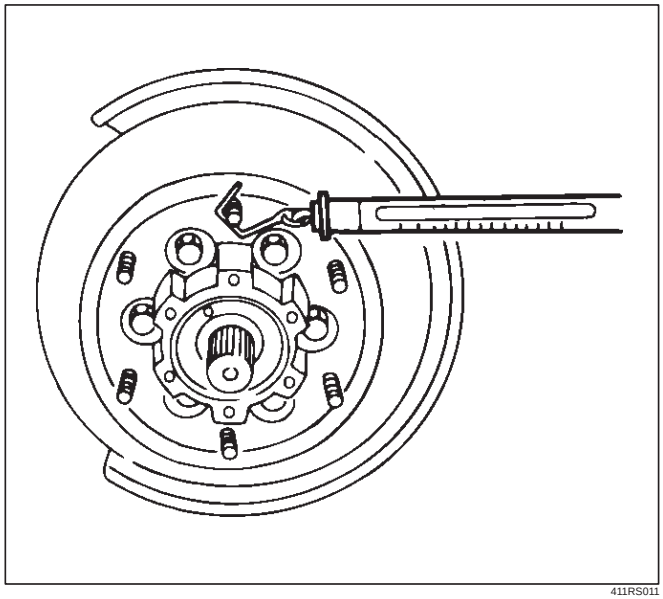

411RS011

21. Install lock washer and lock screw in the following manner.
    - Turn the side with larger diameter of the tapered bore to the vehicle outer side, and attach the washer.
    - If the bolt holes in the lock plate are not aligned with the corresponding holes in the nut, reverse the lock plate.
    - If the bolt holes are still out of alignment, trun in the nut just enough to obtain alignment.
    - Screw is to be fastened tightly so its head may come lower than the surface of the washer.

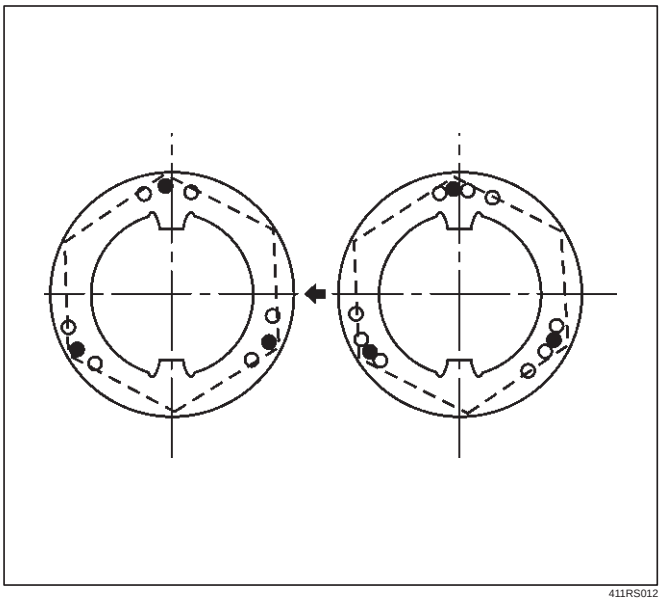

411RS012

22. Install body assembly.
    - Apply adhesive (LOCTITE 515 or equivalent) to both joining faces.
    - Tighten the bolts to the specified torque.

    Torque: 59 N·m (6.0 kg·m/43 lb ft)

23. Install snap ring and shim.
    Adjust the clearance between the free wheeling hub body and the snap ring.

    Clearance:
    0-0.3mm (0-0.012in)

    Shims Available:
    0.2mm, 0.3mm, 0.5mm, 1.0mm, (0.008in, 0.012in, 0.020in, 0.039in)

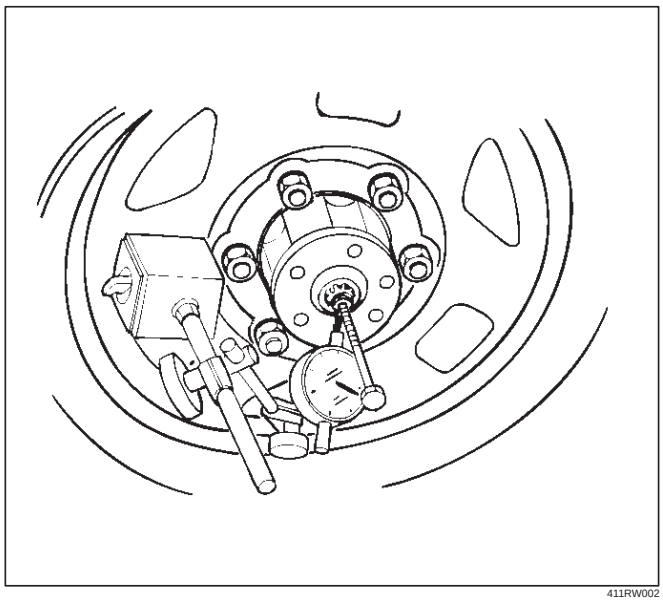

411RW002

24. Install cover assembly.
    Align stopper nails (1) to grooves of body (2).

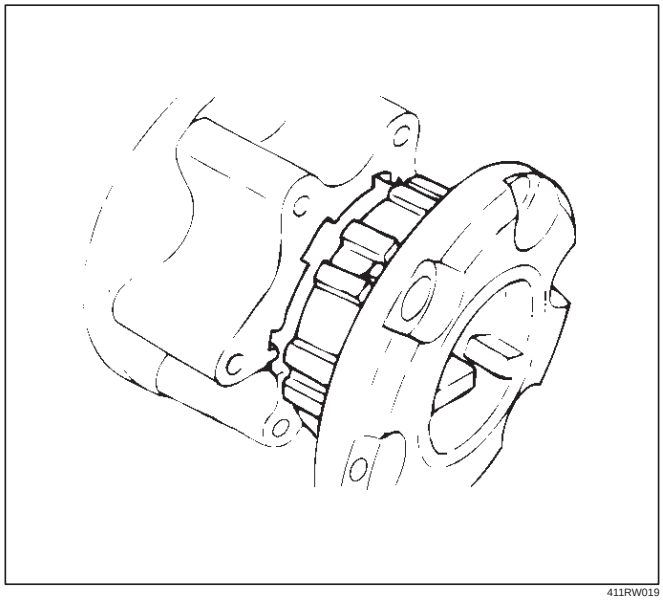

411RW019

25. Tighten the cover bolts to the specified torque.

    Torque: 12 N·m (1.2 kg·m/104 lb in)

Main Data and Specifications

Torque Specifications

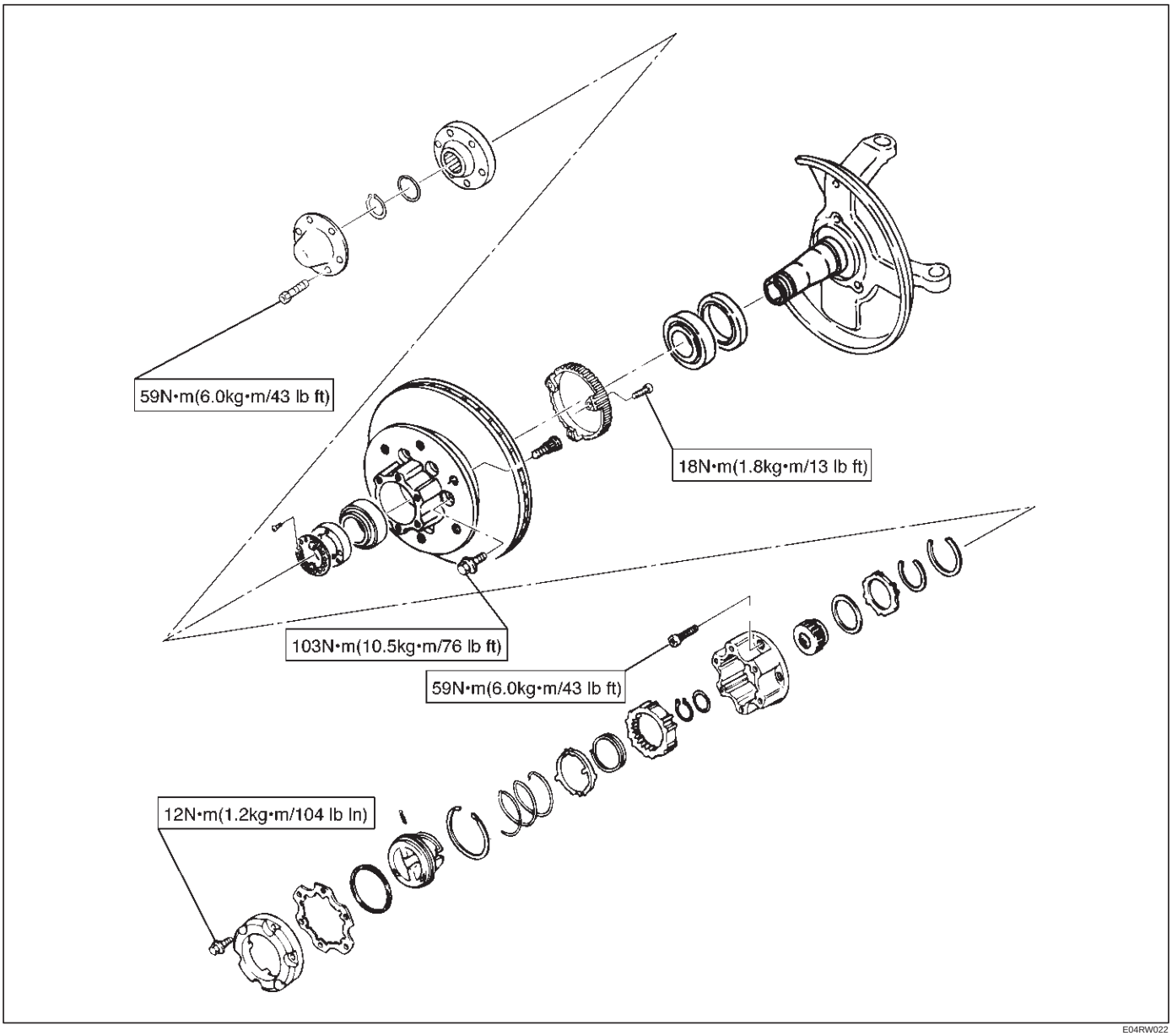

E04RW022

Special Tools

ILLUSTRATION	**TOOL NO.** TOOL NAME
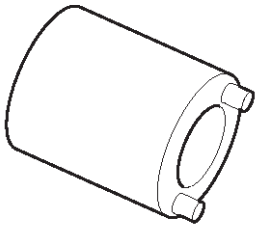 901RS246	**5–8840–2117–0** **(J–36827)** Wrench; Hub nut
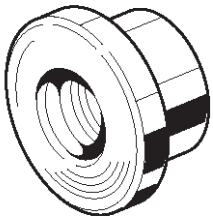 901RS247	**5–8840–2119–0** **(J–36829)** Installer; Inner bearing
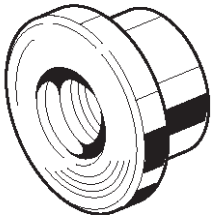 901RS248	**5–8840–2118–0** **(J–36828)** Installer; Outer bearing
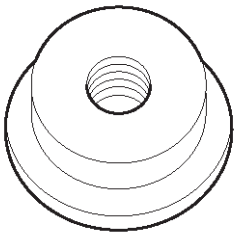 901RS249	**5–8840–2120–0** **(J–36830)** Installer; Oil seal
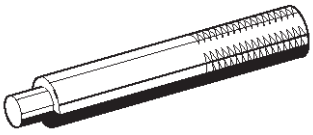 901RS241	**5–8840–0007–0** **(J–8092)** Grip

Front Drive Shaft Joint

Front Drive Shaft Joints Replacement

- Refer to Front Drive Axle Assembly Replacement in this section, and refer to Front Hub and Disc in Suspension section.

Front Hub Bearing Preload Check

Check the hub bearing preload at the wheel pin.

New bearing and New oil seal

Preload: 20 – 25 N (2.0 – 2.5 kg/4.4–5.5 lb)

New bearing and New oil seal

Preload: 12 –18 N (1.2 – 1.8 kg/2.6–4.0 lb)

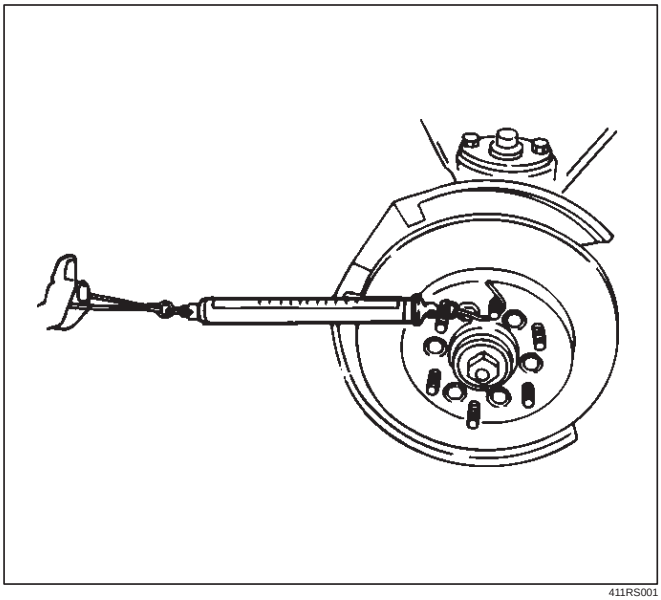

411RS001

Inspection Of Shift On The Fly System Gear Oil

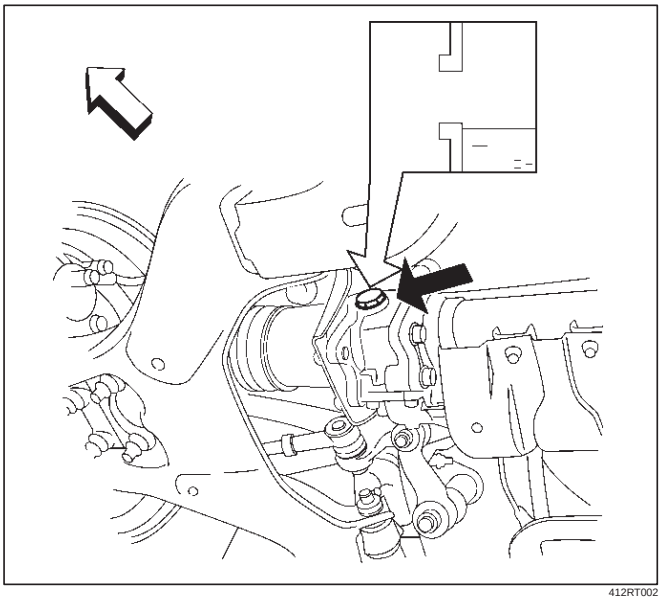

412RT002

1. Open filler plug and make sure that the oil is up to the plug port.
   If the level oil is low, replenish with gear oil GL–5 grade.
2. Tighten the filler plug to specified torque.

Torque: 7.8 N·m (7.9 kg·cm/58 lb in)

Front Axle Drive Shaft

Front Axle Drive Shaft and Associated Parts

This illustration is based on the model equipped with shift on the fly system.

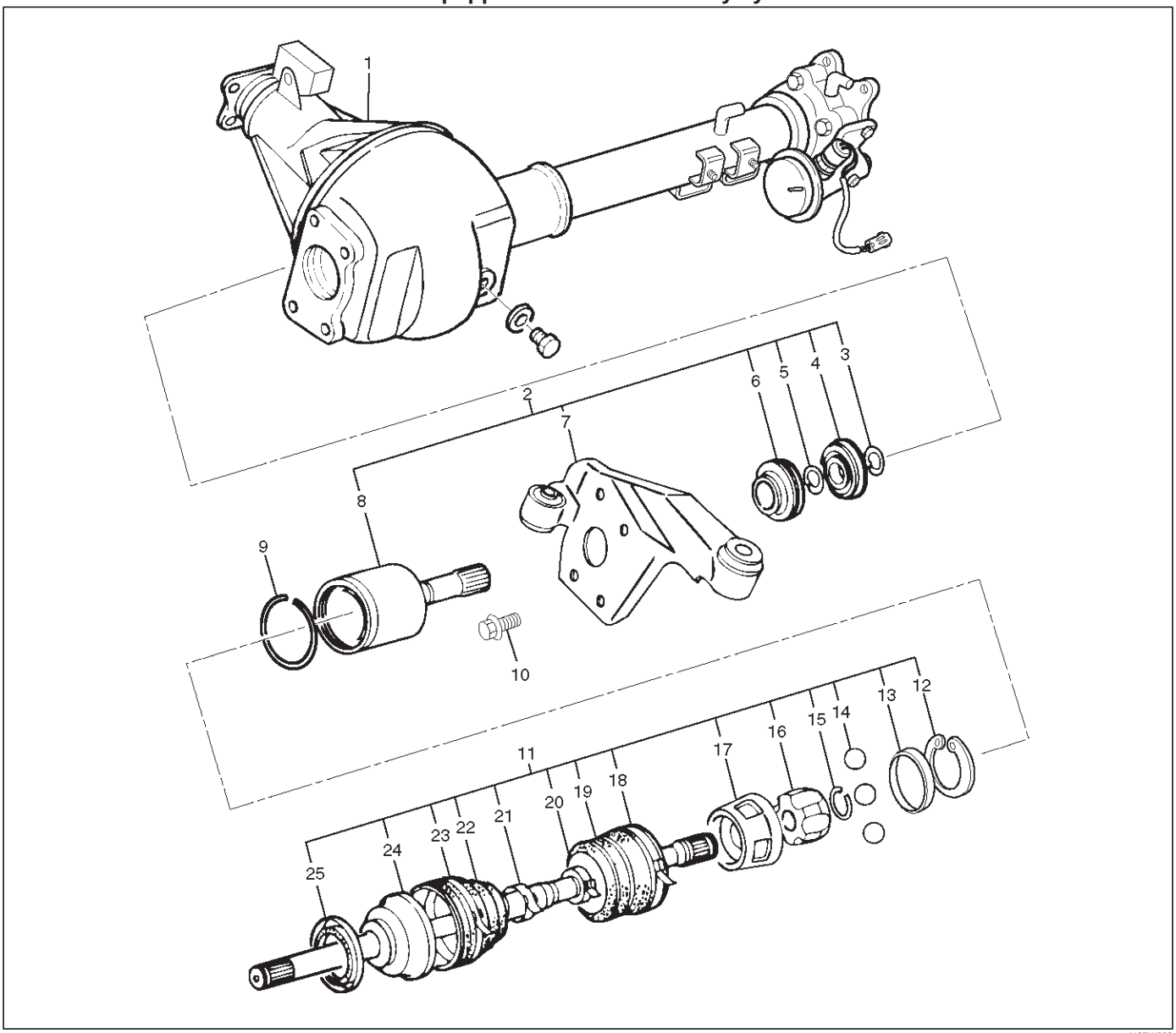

412RW003

Legend

(1) Axle Case and Differential
(2) DOJ Case Assembly
(3) Snap Ring
(4) Bearing
(5) Snap Ring
(6) Oil Seal
(7) Bracket
(8) DOJ Case
(9) Circlip
(10) Bolt
(11) Drive Shaft Joint Assembly
(12) Snap Ring
(13) Spacer
(14) Ball
(15) Snap Ring
(16) Ball Retainer
(17) Ball Guide
(18) Band
(19) Bellows
(20) Band
(21) Band
(22) Bellows
(23) Band
(24) BJ Shaft
(25) Dust Seal

Disassembly

NOTE: For the left side, follow the same steps as right side.

1. Raise the hooked end of the band (1) with a screwdriver or equivalent.

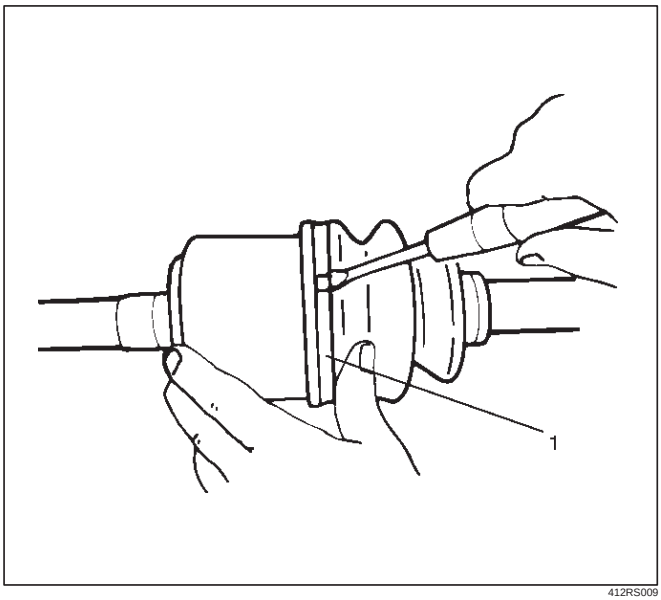

412RS009

2. Remove band.
3. Pry off circlip (1) with a screwdriver or equivalent.

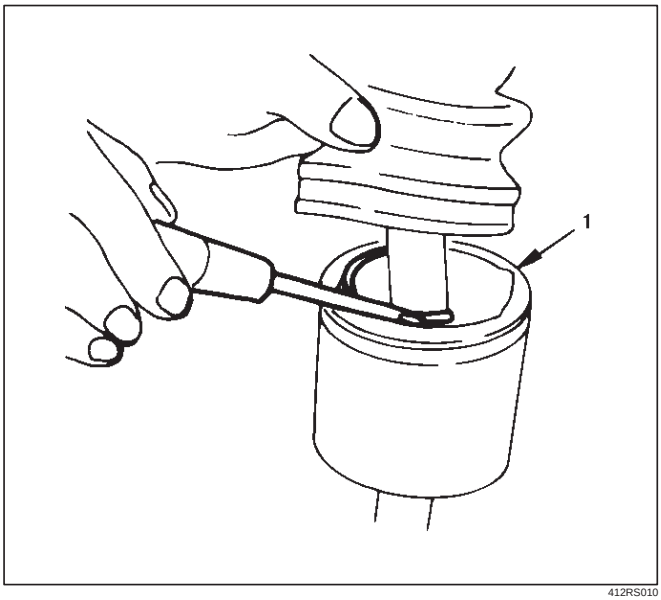

412RS010

4. Remove drive shaft joint assembly.
5. Using snap ring pliers, remove the snap ring.

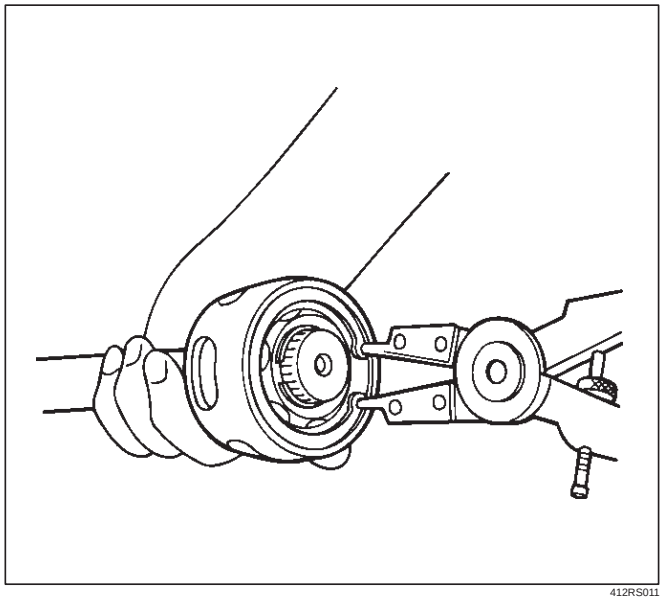

412RS011

6. Remove spacer.
7. Remove the six balls (1) with a screwdriver or equivalent.

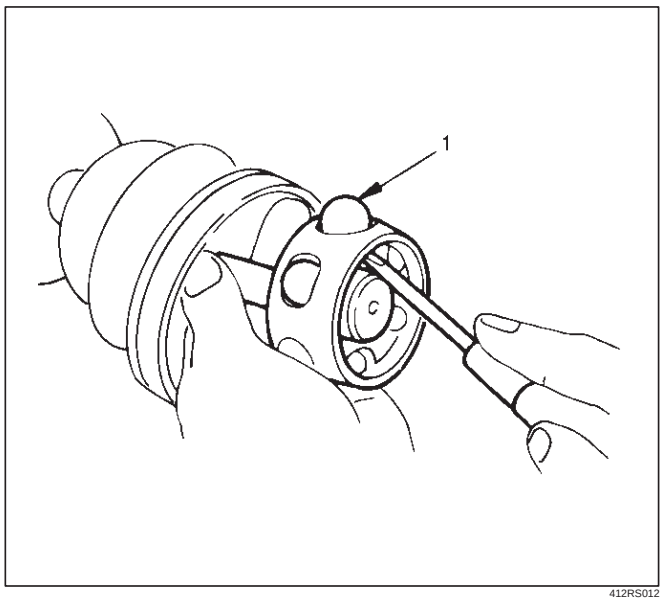

412RS012

8. Using snap ring pliers, remove the snap ring (1) fastening the ball retainer to the center shaft.

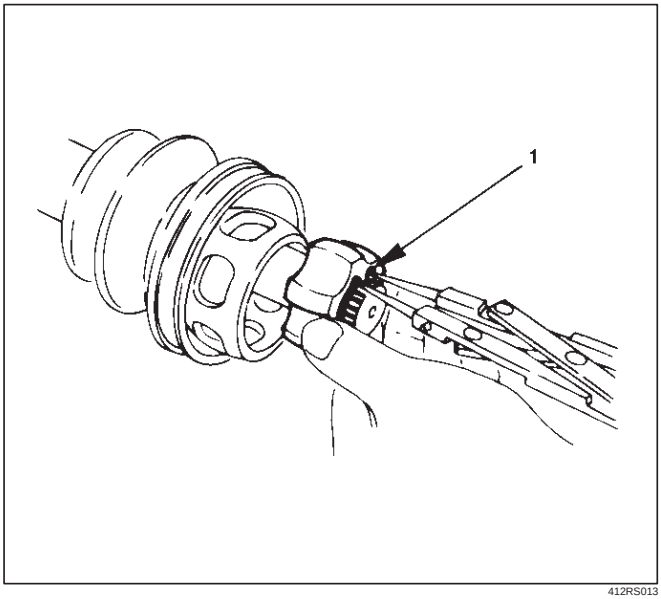

412RS013

9. Remove ball retainer, ball guide and bellows.
10. Raise the hooked end of the band (1) with a screwdriver or equivalent.

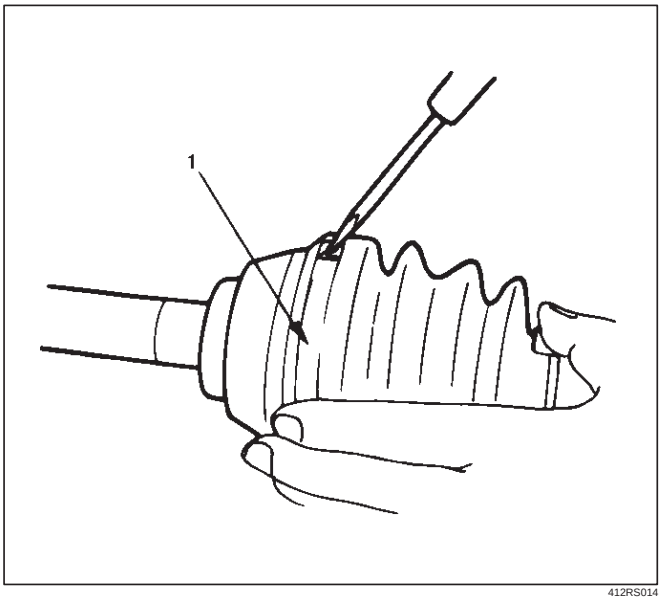

412RS014

11. Remove band.
12. Remove bellows.
13. Remove dust seal.
14. Remove BJ shaft assembly.
15. Remove the mounting bracket fixing bolts, and then remove DOJ case assembly from the axle case.
16. Remove snap ring and bearing.
17. Remove snap ring and oil seal.
18. Remove bracket.

Inspection and Repair

Make necessary correction or parts replacement if wear, damage, corrosion or any other abnormal conditions are found through inspection.
Check the following parts:

1. Drive shaft joint assembly
2. DOJ case, ball, ball guide, ball retainer
3. Bellows
4. Bearing
5. Dust seal, oil seal

Bushing Replacement

- Remove the bushings using a remover 5–8840–2309–0 and hammer.

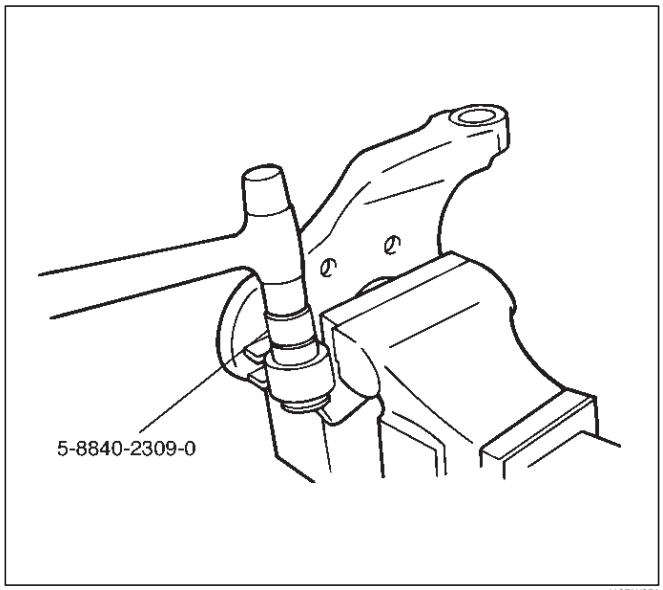

412RW051

- By using installer and base 5–8840–2309–0, press fit the bushings into the bracket.

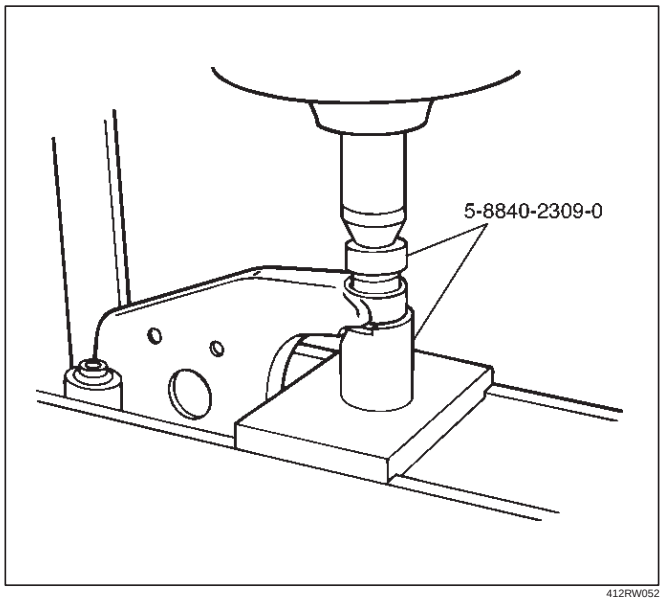

412RW052

Reassembly

1. Install DOJ case to bracket.
2. Install oil seal and fix snap ring.
3. Install bearing and fix snap ring.
4. Install bracket to axle case. Tighten the bracket bolt to the specified torque.

   Torque: 116 N·m (11.8 kg·m/85 lb ft)
5. Apply 150g of the specified grease in BJ .
6. Install dust seal .
7. Apply a thin coat of grease to the shaft for smooth installation then install bellows.
8. Install band. Note the setting direction. After installation, check that the bellows is free from distortion.

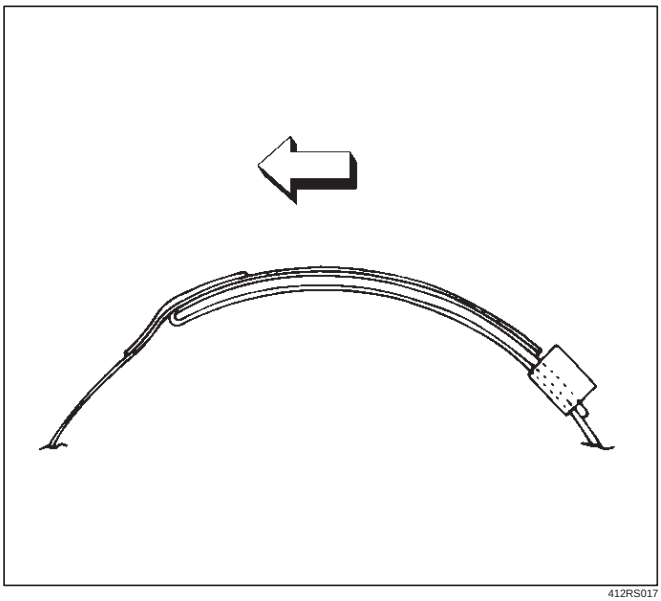

412RS017

9. Install another bellows and fix band.
10. Install the ball guide with the smaller diameter side ahead onto the shaft.
11. Install ball retainer.
12. Using snap ring pliers, install the snap ring (1) securing the ball retainer to the shaft.

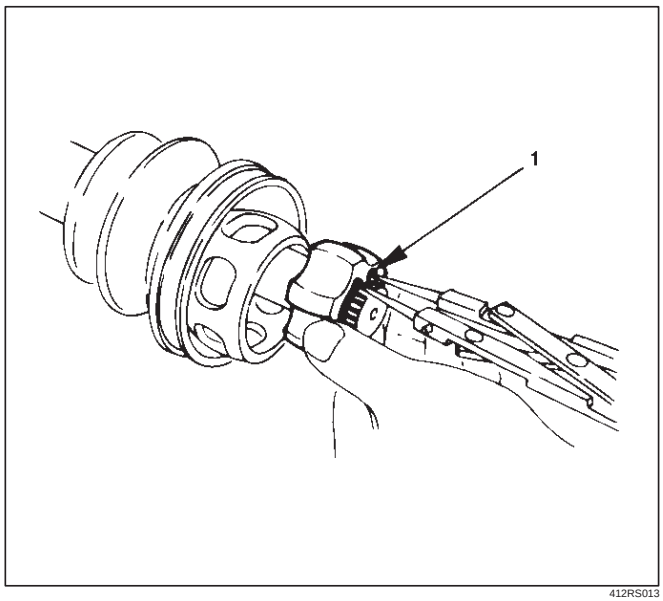

412RS013

13. Align the track on the ball (1) retainer with the window in the cage, and install the six balls into position.

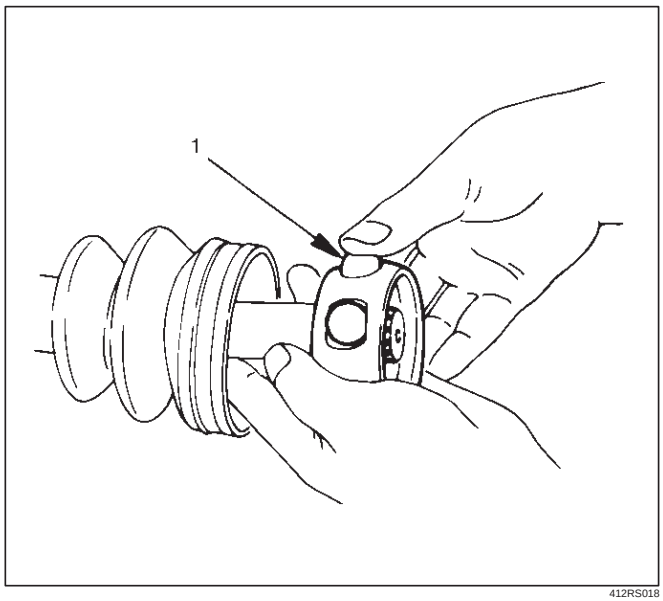

412RS018

14. Install spacer.
15. Install snap ring.
16. Enclose 150g of the specified grease in DOJ case, then install drive shaft joint assembly. After reassembly, move the DOJ longitudinally several times to get to fit.
17. Install the circlip (1) so that open ends are positioned away from the ball groove.

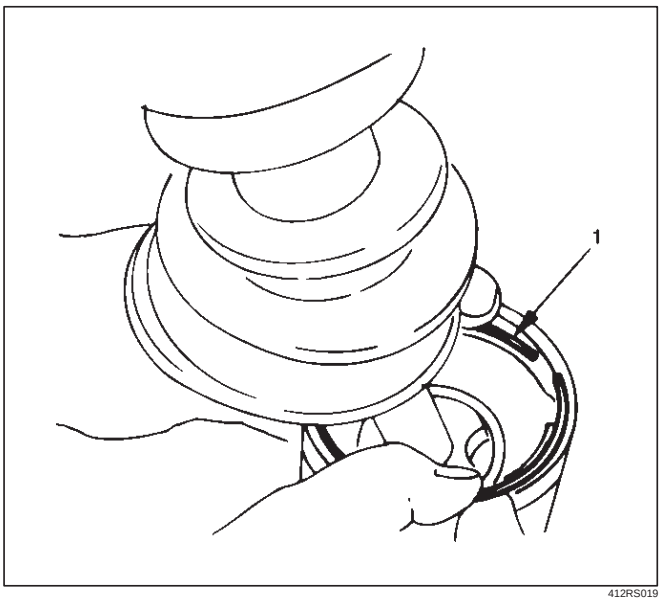

412RS019

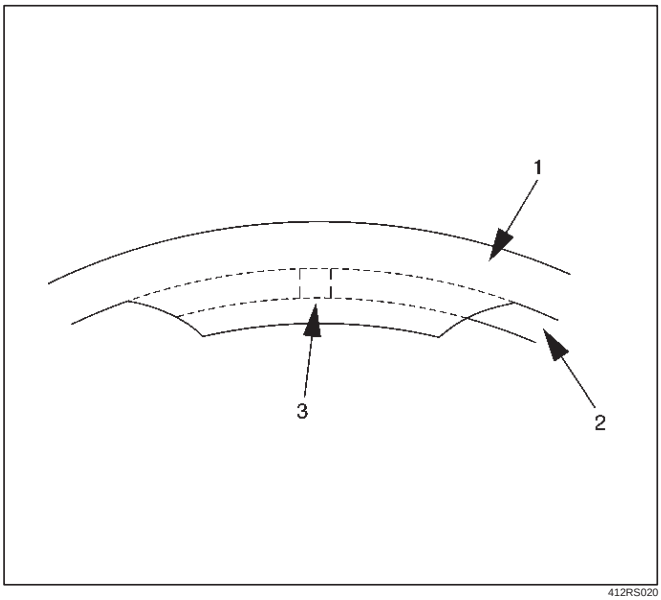

412RS020

Legend

(1) Outer Case
(2) Circlip
(3) Open Ends

18. Install bellows. Adjust the air pressure within the bellows by inserting a screwdriver or equivalent, so that it equals atmospheric pressure.

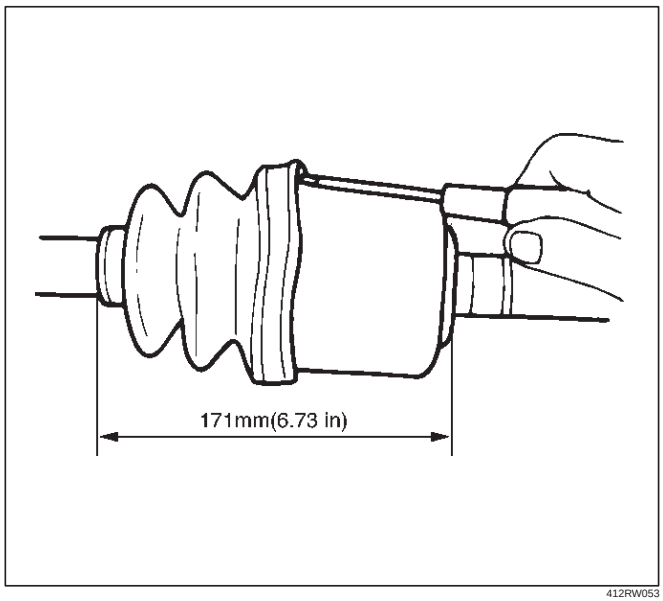

412RW053

19. Install Band. After installation, check that the bellows is free from distortion.

Shift On The Fly System

Shift On The Fly System and Associated Parts

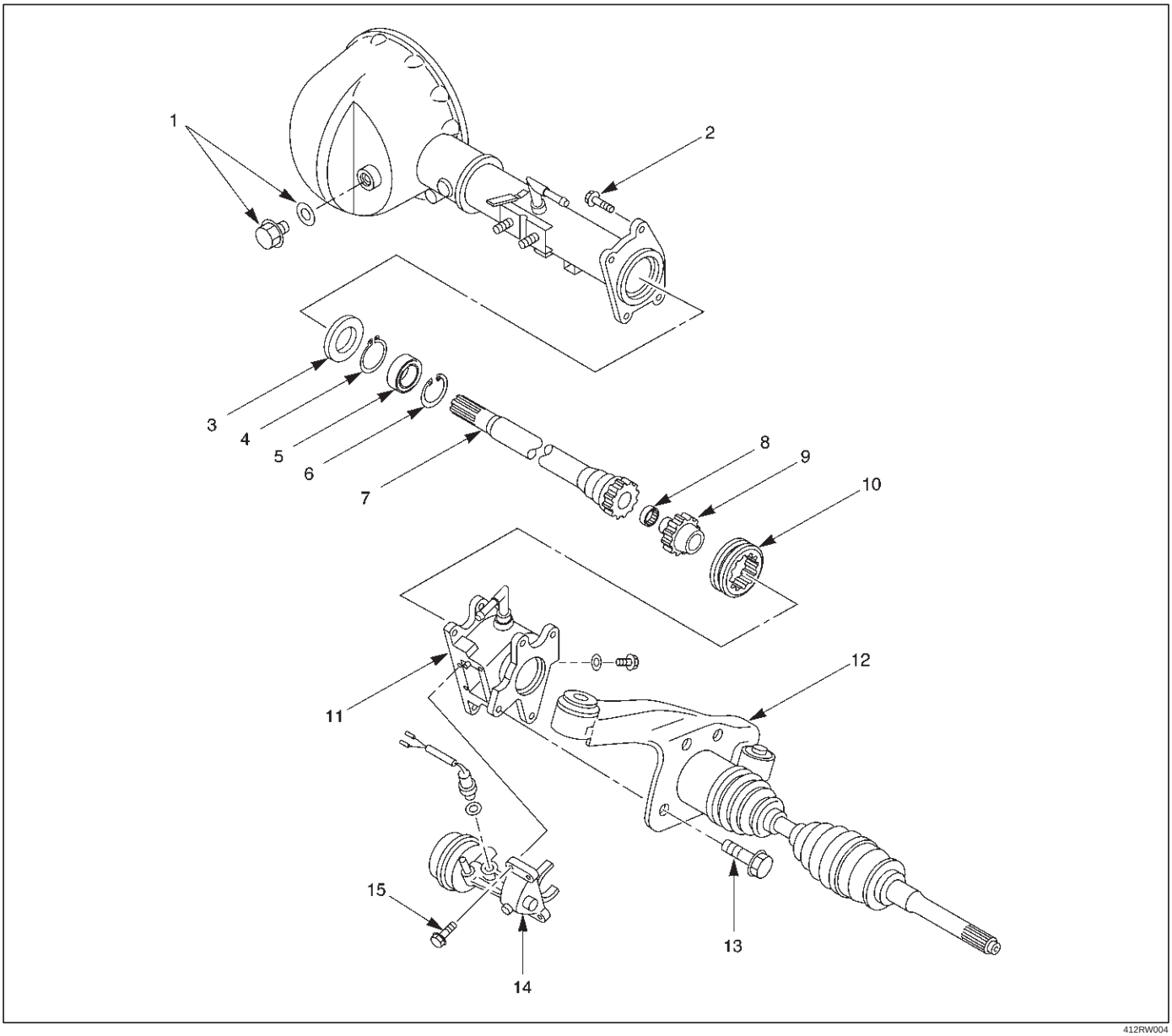

Legend

(1) Filler Plug
(2) Bolt
(3) Oil Seal
(4) Snap Ring(External)
(5) Inner Shaft Bearing
(6) Snap Ring(Internal)
(7) Inner Shaft
(8) Needle Bearing
(9) Clutch Gear
(10) Sleeve
(11) Housing
(12) Front Axle Drive Shaft (LH side)with Bracket
(13) Bolt
(14) Actuator Assembly
(15) Bolt

Disassembly

1. Remove filler plug and gasket, drain oil.
2. Loosen mounting bracket fitting bolts and remove front axle drive shaft from front axle case.
3. Remove Actuator Assembly and draw out actuator ASM.
4. Remove housing.
5. Remove sleeve.
6. Remove clutch gear.

7. Remove snap ring from front axle case by using snap ring pliers.

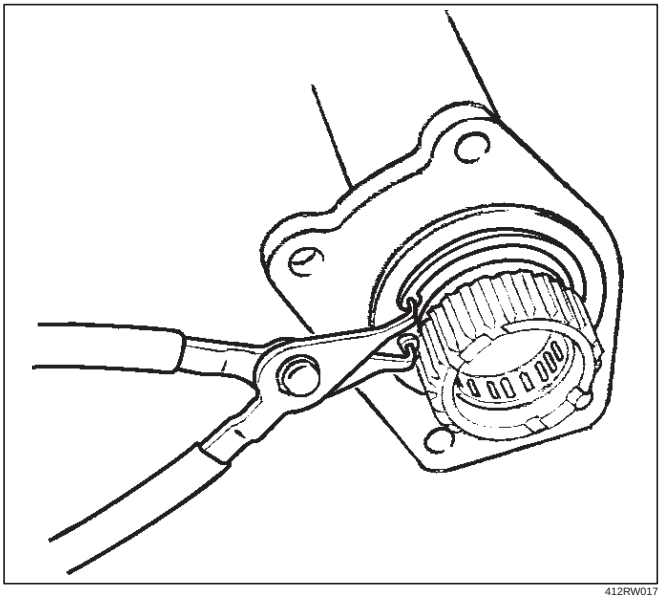

412RW017

8. Take out inner shaft from front axle case.
9. Remove snap ring from inner shaft by using snap ring pliers.

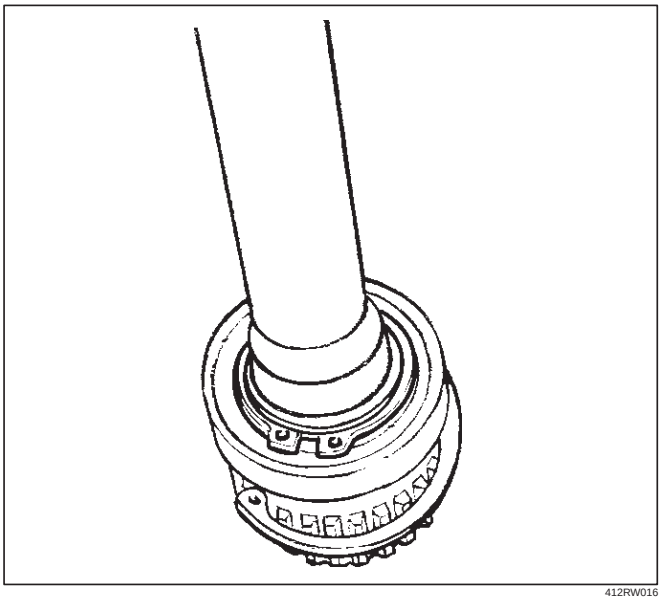

412RW016

10. Remove inner shaft bearing by using a remover 5–8840–2197–0 and press.

NOTE: Be careful not to damage the shaft.

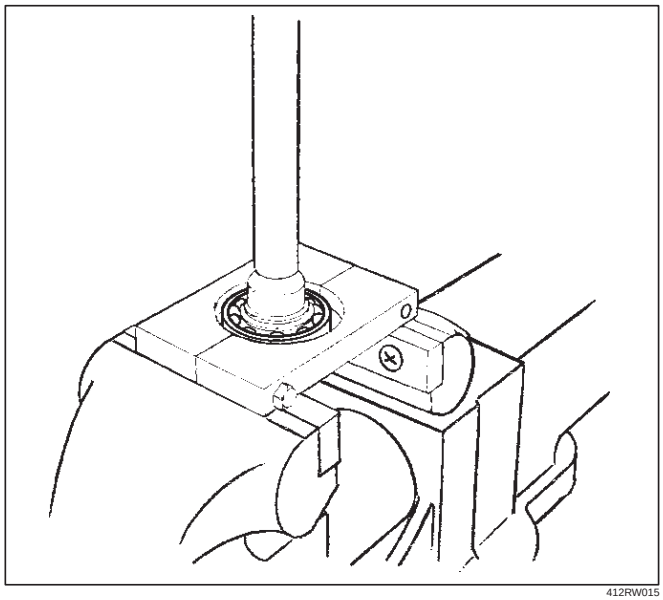

412RW015

11. Remove needle bearing from inner shaft by using a remover 5–8840–0027–0 and sliding hammer 5–8840–0084–0.

NOTE: Be careful not to damage the shaft.

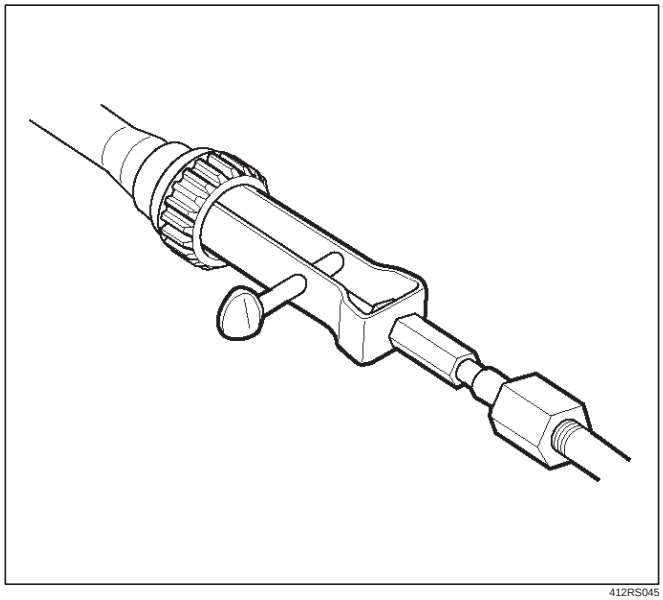

412RS045

12. Remove oil seal from front axle case.

NOTE: Be careful not to damage the front axle case.

Inspection and Repair

Inspect the removed parts. If there are abnormalities such as wear and damage, take corrective action or replace.

Visual Check

1. Check and see if the inner shaft has any abnormalities such as wear and damage.

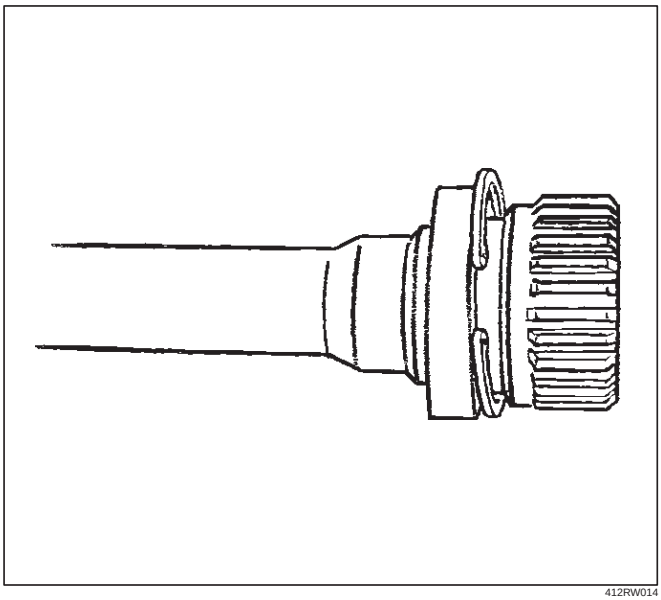

412RW014

2. When inspecting the inner shaft, be sure to check and see if its splined part is twisted, worn, or cracked. If so, replace with a new shaft. In case of an abnormality in its gear part (a slide with sleeve), replace the shaft.

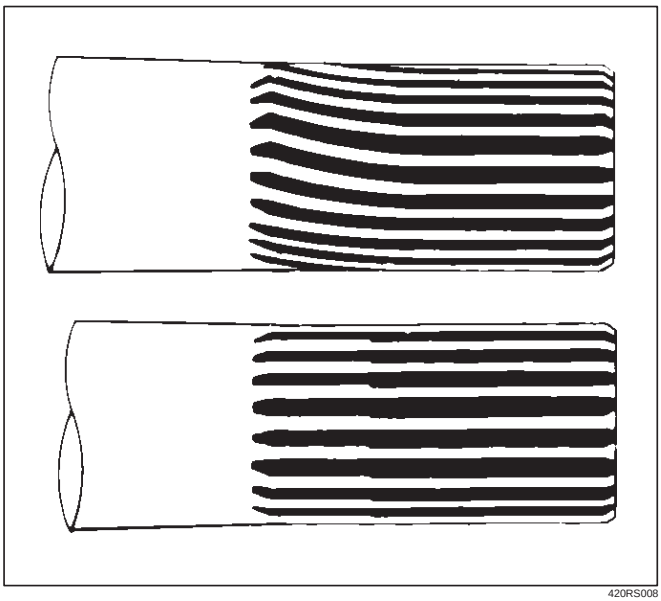

420RS008

Inner Shaft Run–Out

With both end centers supported, rotate the shaft slowly and measure deflection with a dial gauge.

Limit: 0.5 mm (0.02 in)max.

NOTE: Do not heat the shaft to correct its bend.

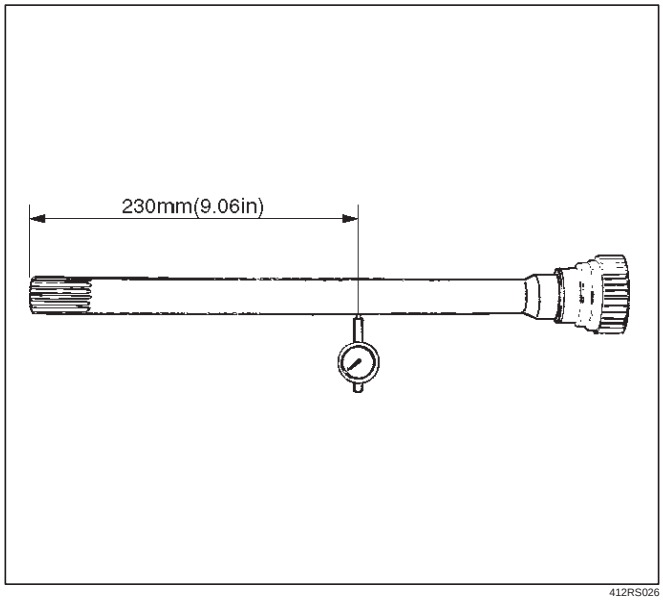

412RS026

Inner Shaft Bearing

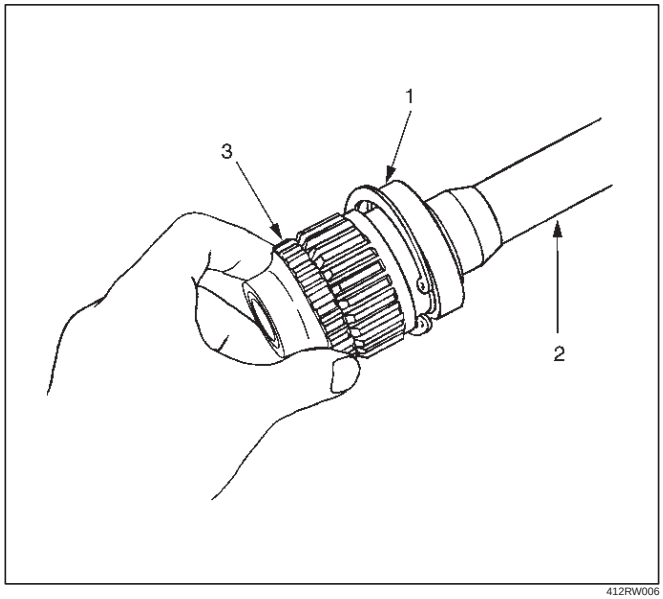

412RW006

Legend

(1) Inner Shaft Bearing
(2) Inner Shaft
(3) Clutch Gear

1. Inspect the state of inner shaft bearing. If any abnormality such as roughness is found, replace with a new inner shaft bearing.
2. Insert a clutch gear and check the state of needle bearing.
3. If there is an abnormality such as roughness, replace the needle bearing.

Sleeve Condition

Check and see that there is no wear, damage, or cracking in the sleeve.

NOTE: Close inspection of the groove and inner gear are required because those are important parts.

Sleeve Function

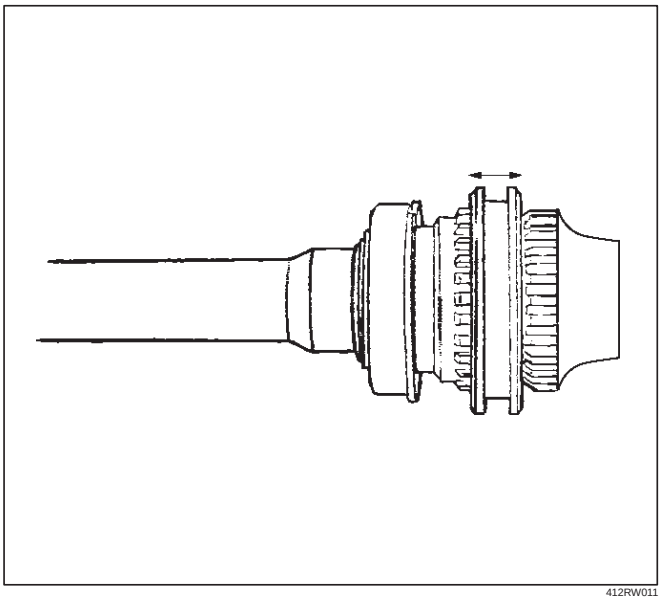

412RW011

Operate the sleeve with the inner shaft combined with the clutch gear. If roughness is felt, replace the sleeve.

NOTE: Gear oil should be applied to the contact surface of gear.

Check the width of sleeve center groove.

Limit: 7.1 mm (0.28 in) max.

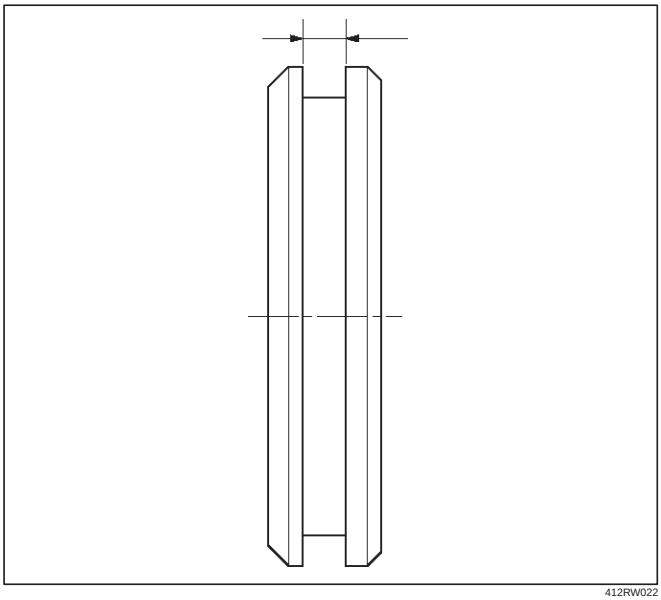

412RW022

Clutch Gear Condition

Check and see that there is no wear, damage, cracking, or any other abnormality in the clutch gear.

Clutch Gear Function

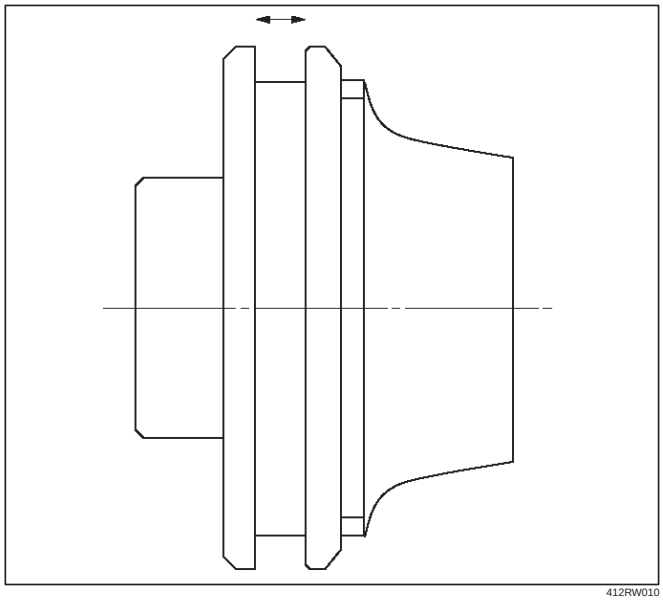

412RW010

If there is an abnormality such as roughness when operated in combination with sleeve, replace the clutch gear.

NOTE: When inspecting, gear oil should be applied to the contact surface of gear.

Clutch Gear Journal Diameter

Make sure of the size illustrated.

Limit: 36.98 mm (1.456 in) min.

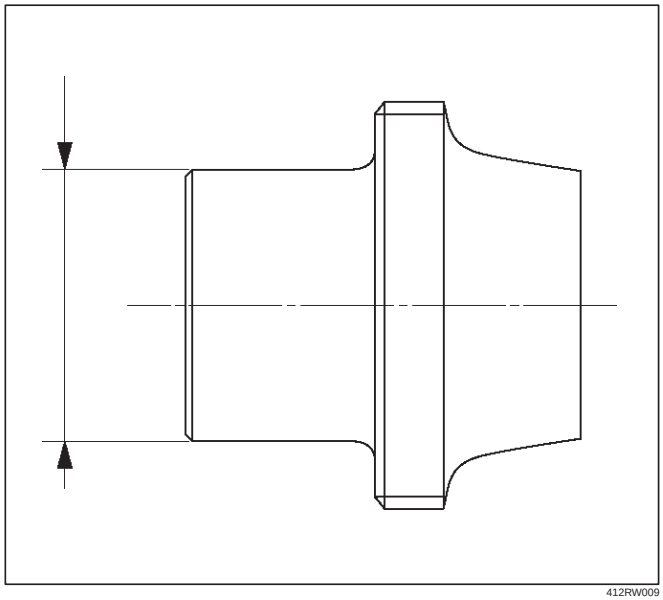

412RW009

Actuator

Check and see that there is no damage, cracking, or other abnormality.

Functional Check

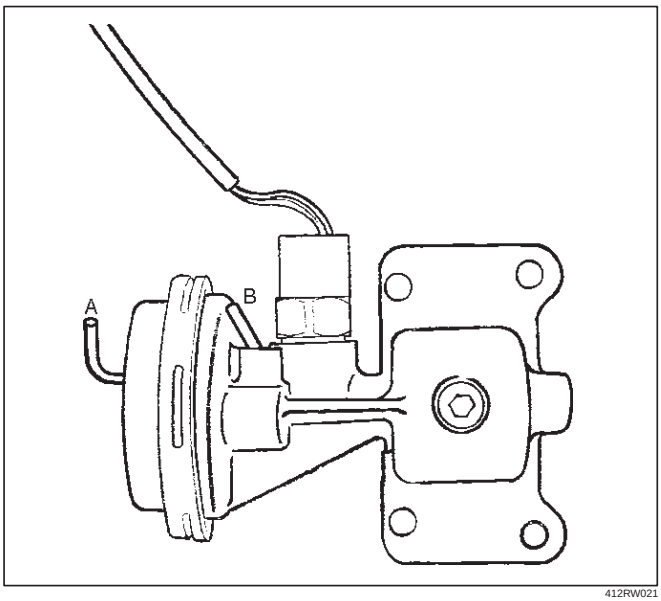

412RW021

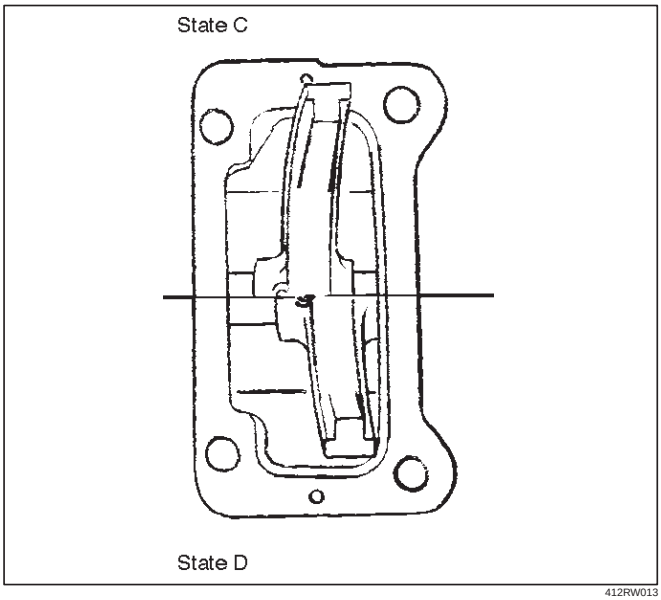

412RW013

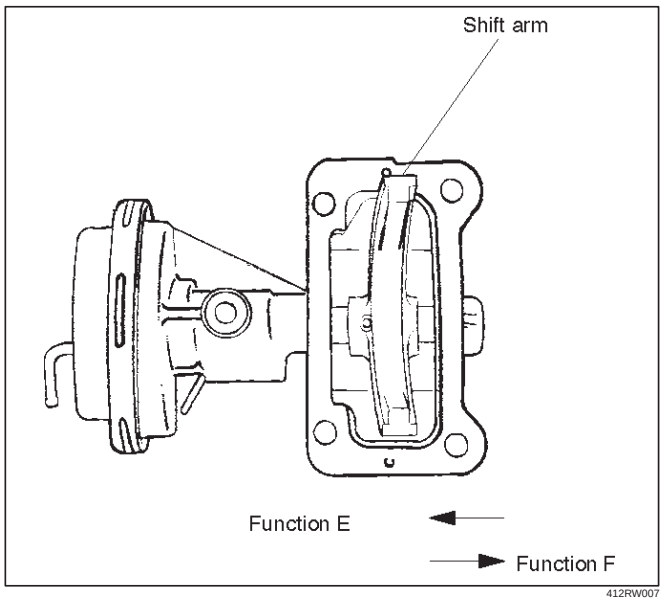

412RW007

Disconnect the shift position switch and make sure of function with a vacuum of –400 mmHg applied to Ports A and B, in accordance with the table below.

State	Port A	Port B	Function
C	–400 mmHg	A/P	E
D	A/P	–400 mmHg	F

If there is an abnormality, replace the actuator as an assembly.

NOTE:

1. If the actuator works under –400mmHg or less, there is no functional problem.
2. Be careful not to permit the entry of water or dust into the ports of the actuator.

Dimensional Check

Measure illustrated sizes 1, 2, and 3.

Limit

1=64.3 mm (2.53 in) max.

2=6.7 mm (0.26 in) min.

3=6.7 mm (0.26 in) min.

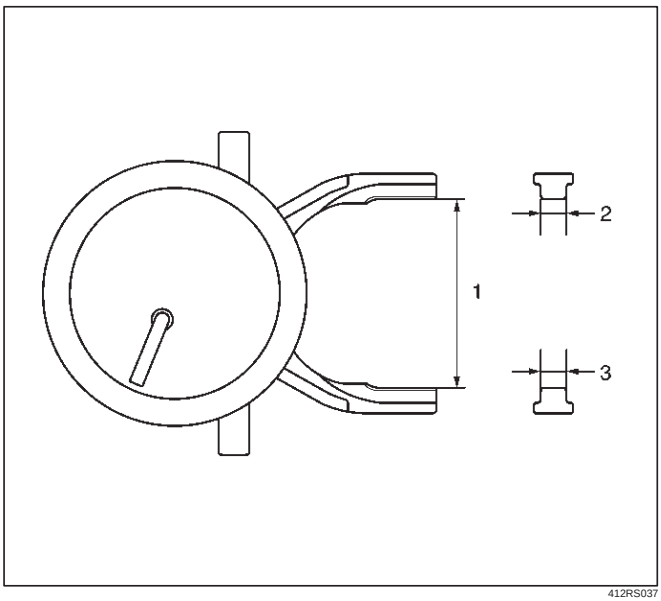

412RS037

Reassembly

1. Install the new oil seal which has been immersed in differential gear oil, by using an oil seal installer 5–8840–2407–0 and grip 5–8840–0007–0.

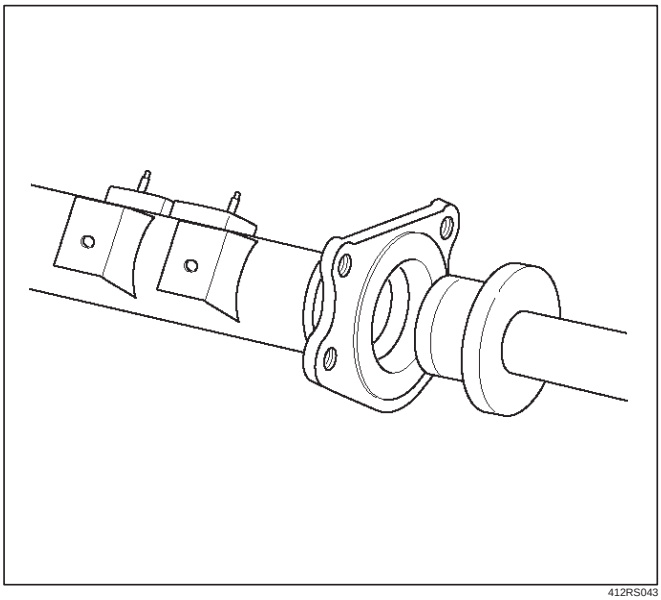

412RS043

2. Force a new needle bearing into inner shaft by using a installer 5–8840–2408–0 and grip 5–8840–0007–0.

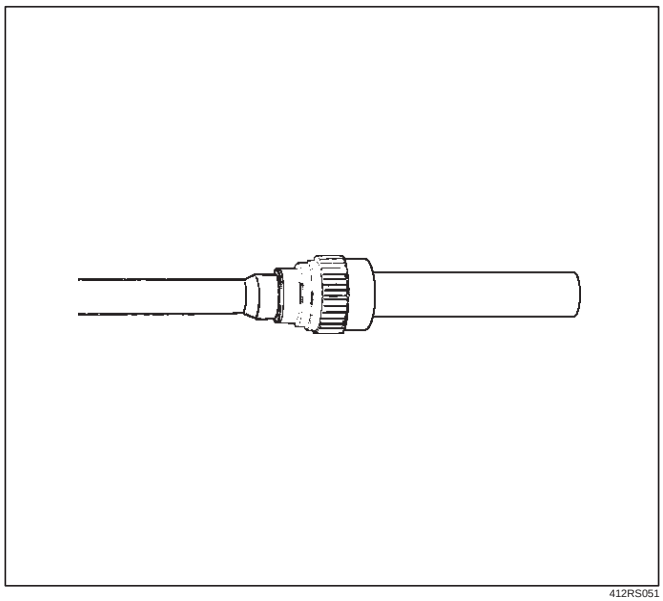

412RS051

3. Place a new snap ring(internal) in inner shaft.
   Force a new inner shaft bearing into the inner shaft by using a installer 5–8840–2197–0 and press.

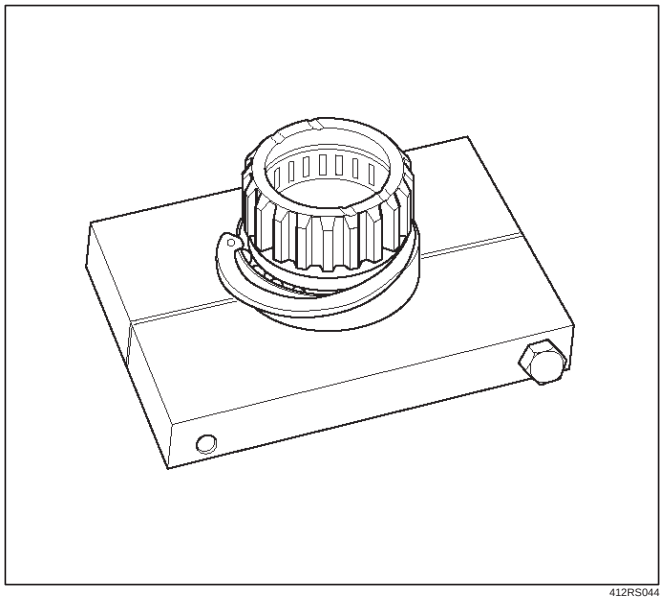

412RS044

4. Install snap ring(external).

NOTE: Be careful not to damage the inner shaft.

5. Clean the housing contact surface of the front axle case and insert inner shaft assembly into the front axle case.

NOTE: Be careful not to damage seal.

6. Install snap ring (internal) in the groove of front axle case.

NOTE: Be sure to install the snap ring properly.

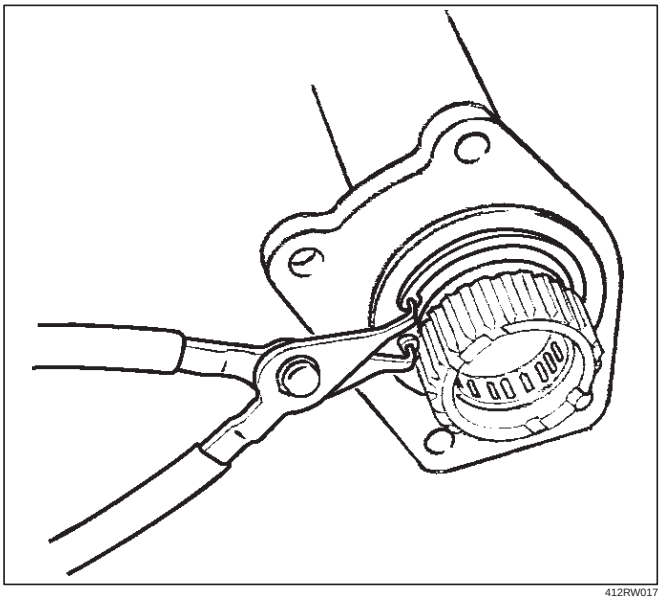

412RW017

7. Apply differential gear oil to clutch gear, then install clutch gear.
8. Apply differential gear oil to sleeve, then install sleeve.
9. Clean contact surface with the front axle and actuator mounting surface. Apply liquid gasket to the contact surface on the front axle case, then install in the housing.

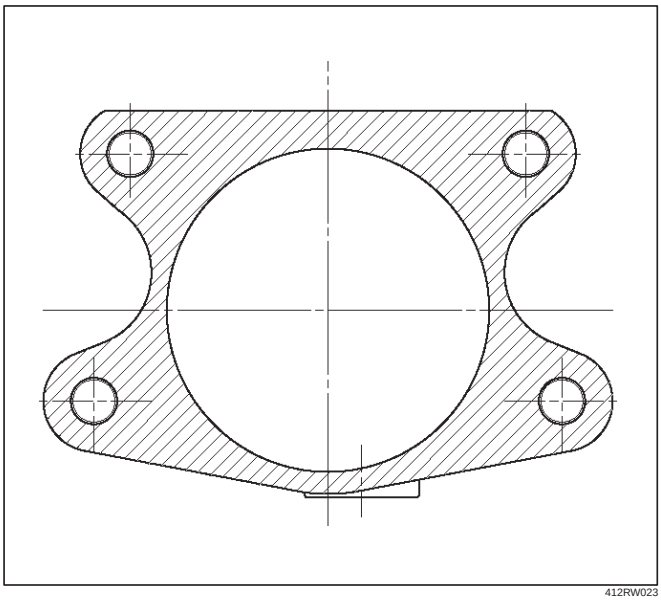

412RW023

10. Tighten bolts to specified torque.

    Torque: 116N·m (11.8 kg·m/85 lb ft)

11. Clean the actuator contact surface with the housing then Install and tighten shift position switch to specified torque.

    Torque: 39N·m (4.0 kg·m/29 lb ft)

12. Apply liquid gasket to the contact surface on the actuator side.

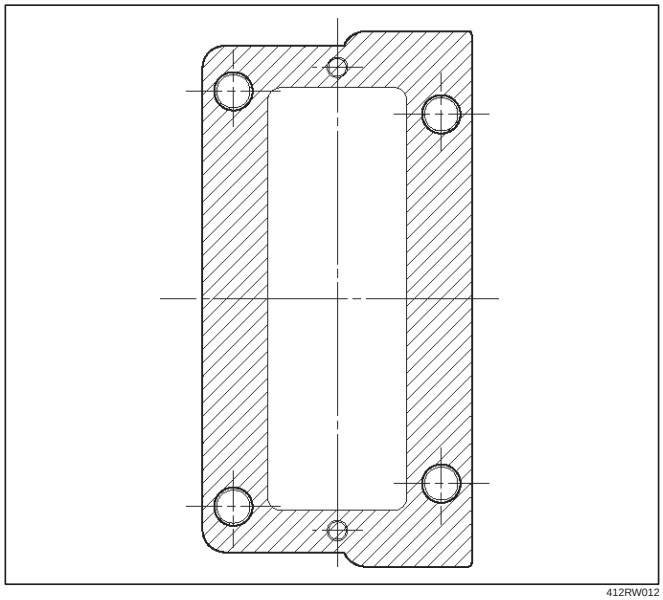

412RW012

13. Align shift arm with the groove of sleeve and install the actuator.
14. Tighten bolts to specified torque.

    Torque: 13N·m (1.3 kg·m/113 lb in)

15. Install front axle drive shaft and mounting bracket. Tighten fitting bolts to specified torque.

    Torque: 116N·m (11.8 kg·m/85 lb ft)

16. Pour specified amount of differential gear oil to filler plug.

    Front Differential

    Oil Capacity: 1.4lit (1.23 Imp qt/1.48 US qt)

    Actuator Housing

    Oil Capacity: 0.12lit (0.10 Imp qt/0.13 US qt)

17. Install filler plug through gasket and tighten to specified torque.

    Torque: 78N·m (58lb ft)

Main Data and Specifications

General Specifications

Front drive axle oil capacity	1.4 liter (1.23 Imp qt/1.48 US qt)(Differential)
	0.12 liter (0.10 Imp qt/0.13 US qt)(Actuator Housing:Shift on the fly)
Type of lubricant	GL–5 (Multi grade type) Refer to chart in General Information
Axle shaft type	Constant velocity joint(Birfield joint type and double offset joint)

Torque Specifications

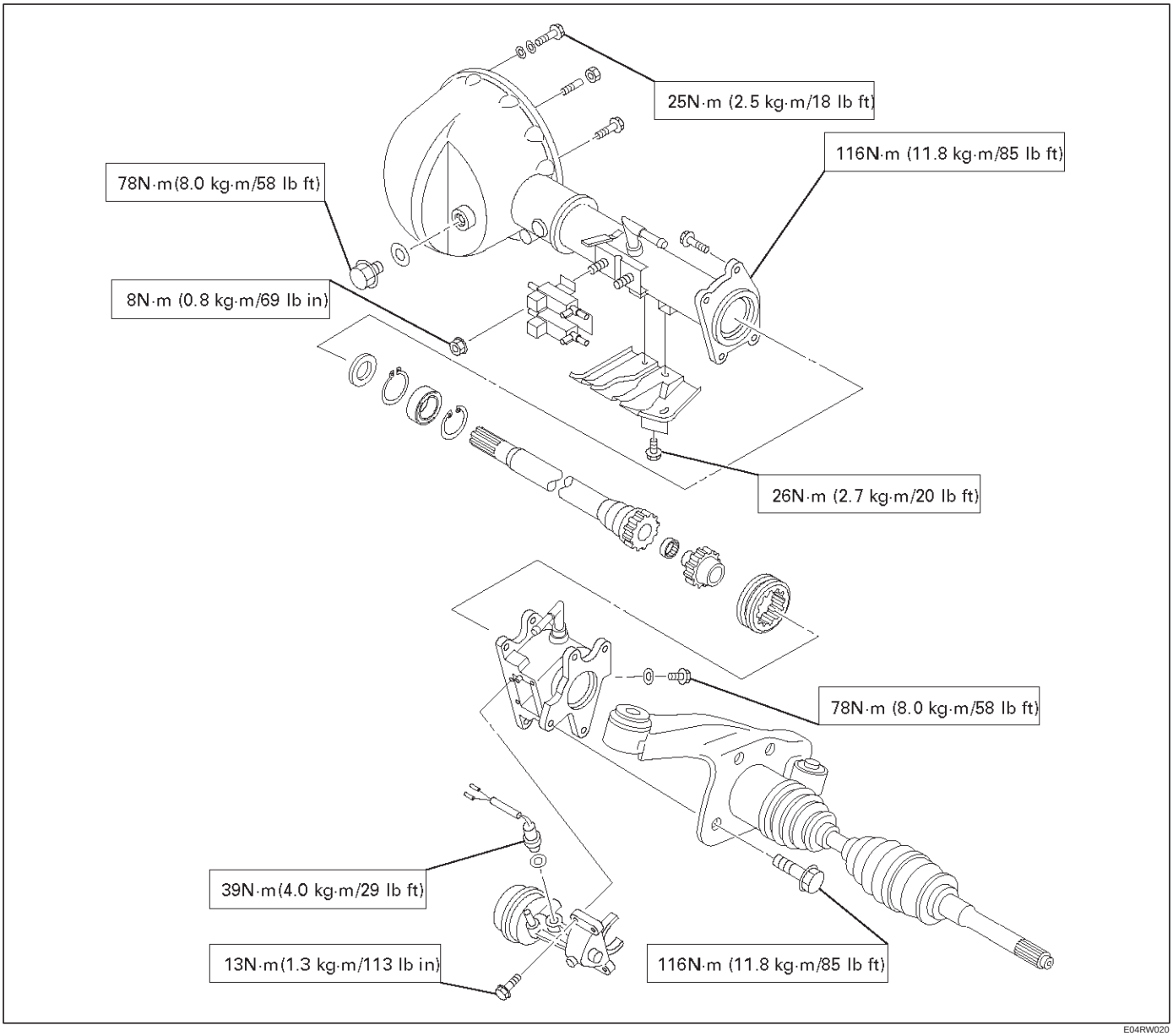

E04RW020

Special Tools

ILLUSTRATION	**TOOL NO.** TOOL NAME
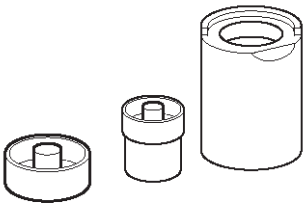 901RS233	**5–8840–2309–0** **(J–39378)** Remover and Installer; Front Axle mount bushing
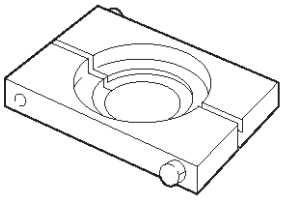 901RS216	**5–8840–2197–0** **(J–37452)** Remover and Installer; Inner shaft bearing
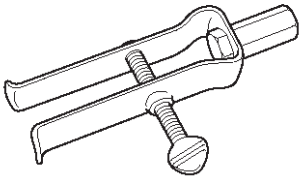 901RS234	**5–8840–0027–0 (J–26941)** Remover;Bearing needle
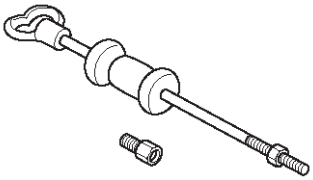 901RS235	**5–8840–0084–0** **(J–2619–01)** Hammer; Sliding
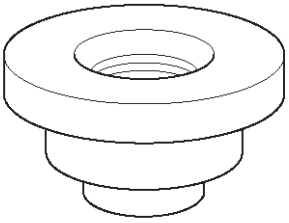 901RS236	**5–8840–2407–0** **(J–41693)** Installer; Oil seal
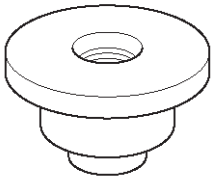 901RS177	**5–8840–2408–0** **(J–41694)** Installer; Bearing needle

ILLUSTRATION	**TOOL NO.** TOOL NAME
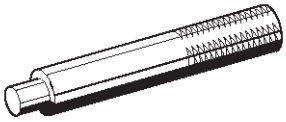 901RS285	**5–8840–0007–0** **(J–8092)** Grip

Front Propeller Shaft

General Description

Since the propeller shaft is balanced carefully, welding or any other modifications are not permitted.

Alignment marks should be applied to each propeller shaft before removal.

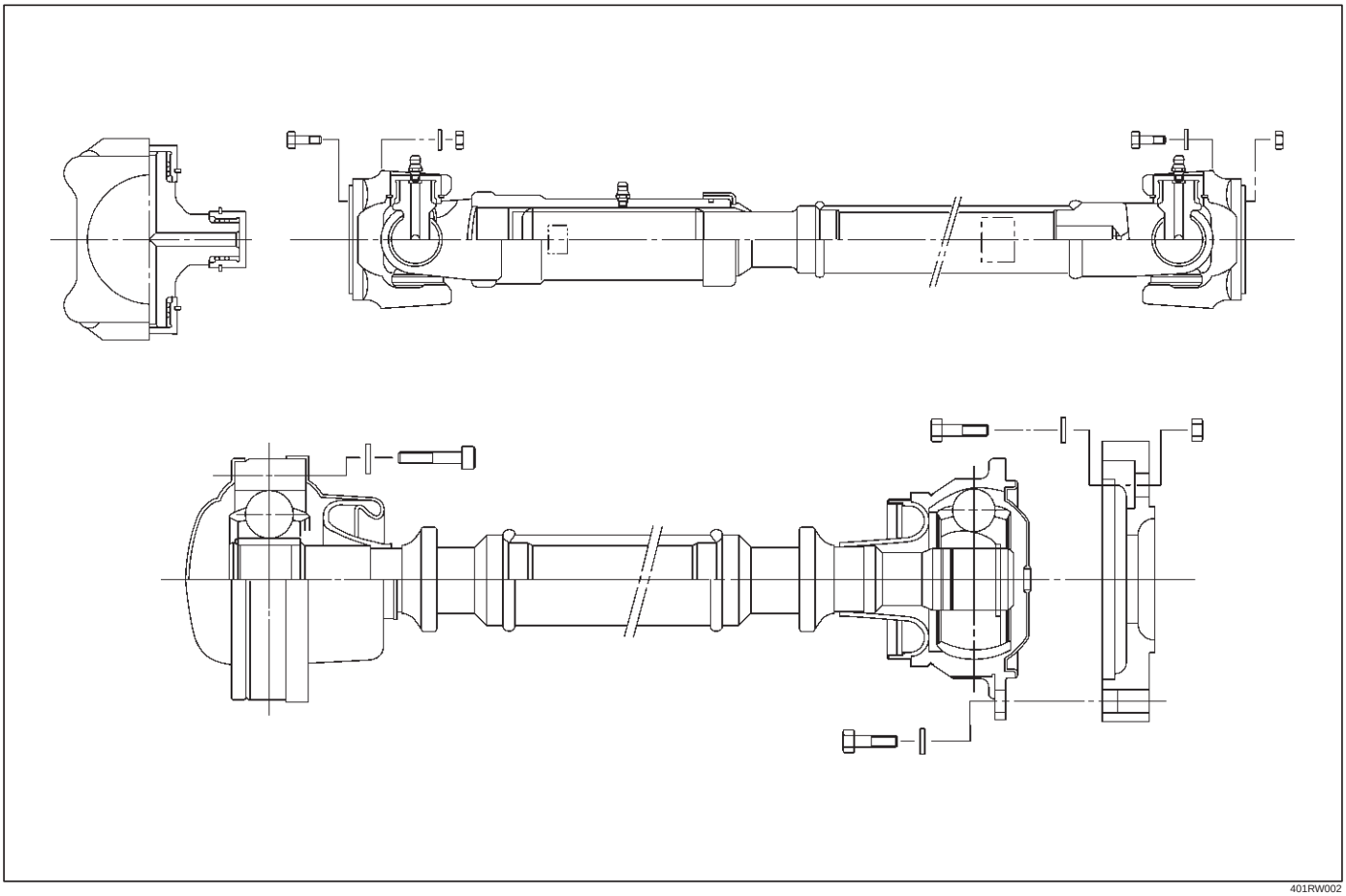

401RW002

Front Propeller Shaft and Associated Parts

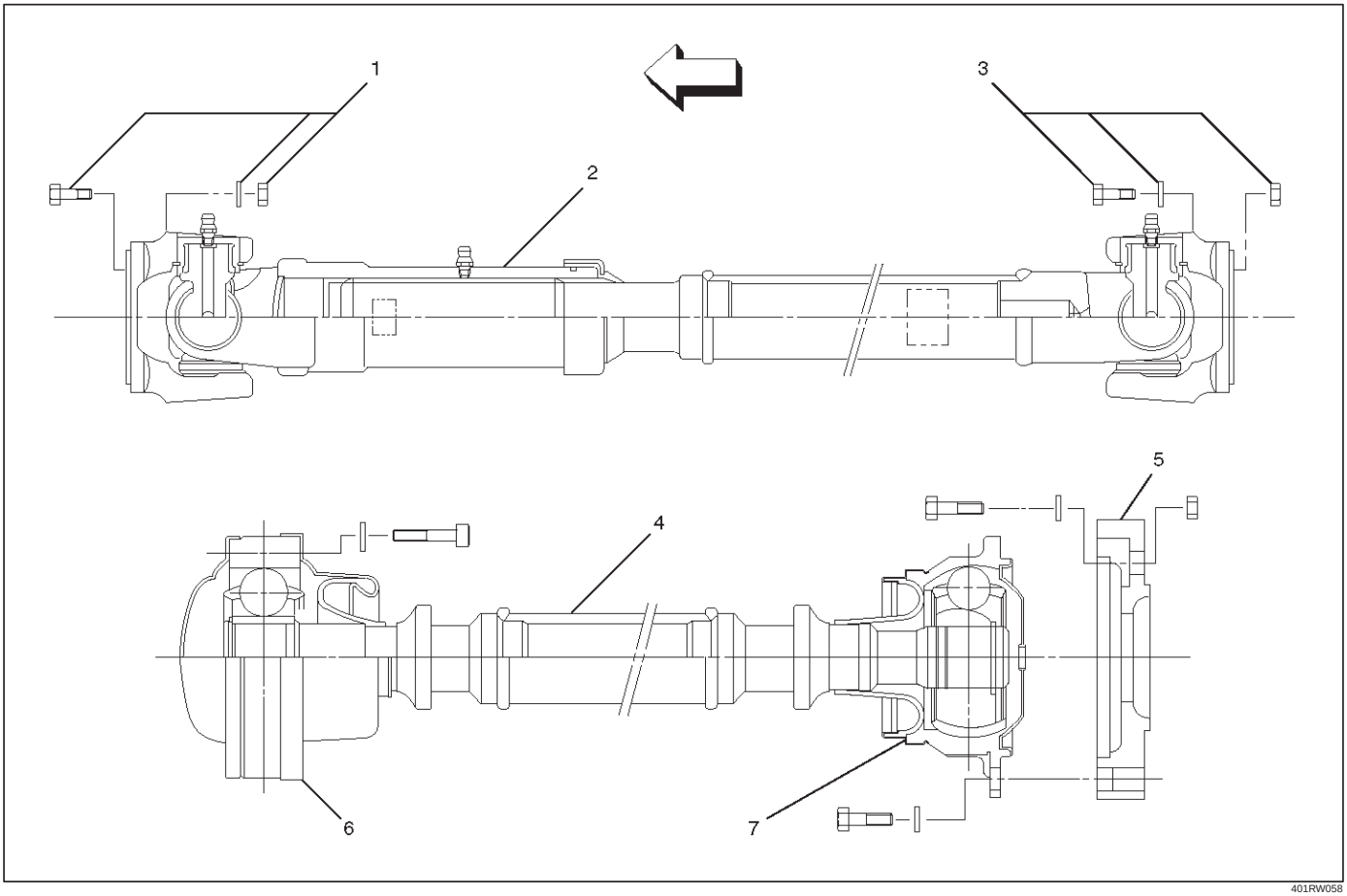

401RW058

Legend

(1) Bolt, Nut and Washer (Front Axle Side)
(2) Front Propeller Shaft
(3) Bolt, Nut and Washer (Transfer Side)
(4) Front Propeller Shaft (with TOD)
(5) Coupling
(6) LJ Constant Velocity Joint
(7) BJ Constant Velocity Joint

Removal

1. Jack up the vehicle and support it on the chassis stands.
2. Gear shift lever should be placed in neutral position and parking brake released.
3. Remove the exhaust and transfer protectors.

NOTE: Apply alignment marks on the flange at the front propeller shaft both front and rear side.

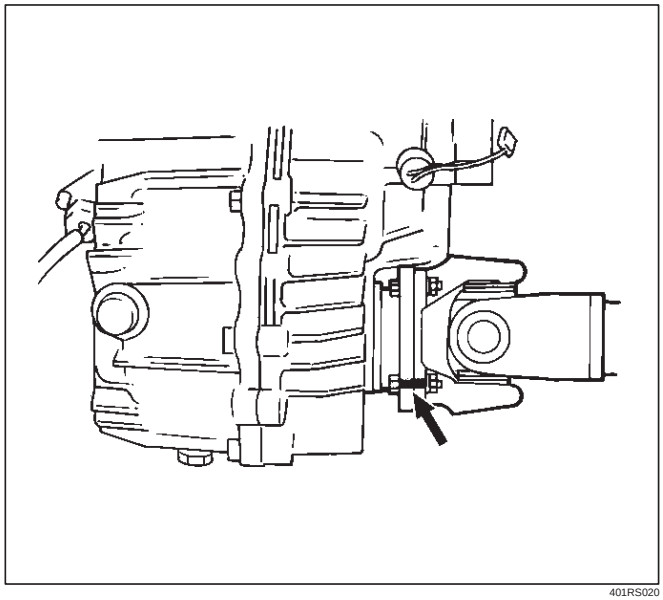

401RS020

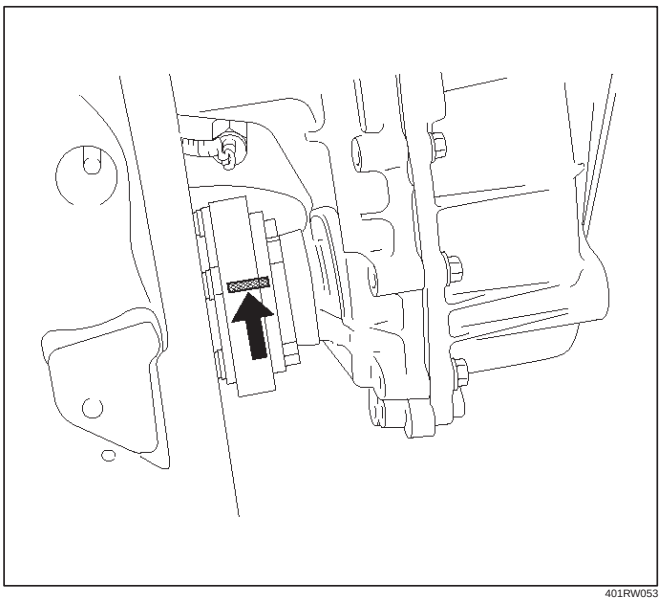

401RW053

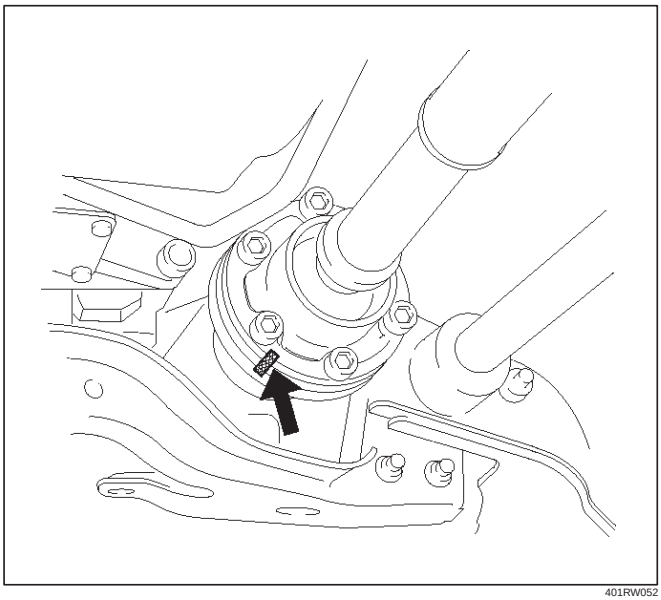

401RW052

4. Remove bolt, nut and washer (Front axle side).
5. Remove bolt, nut and washer (Transfer side).
6. Remove front propeller shaft.

NOTE: If equipped with torque on demand (TOD), when removing, installing or carring for front propeller shaft, be sure to wind a piece of cloth round the part of the boot with which fittings may interfere so that the boot can be protected. The boot may be damaged if bending force is applied to the constant velocity joint of the shaft.

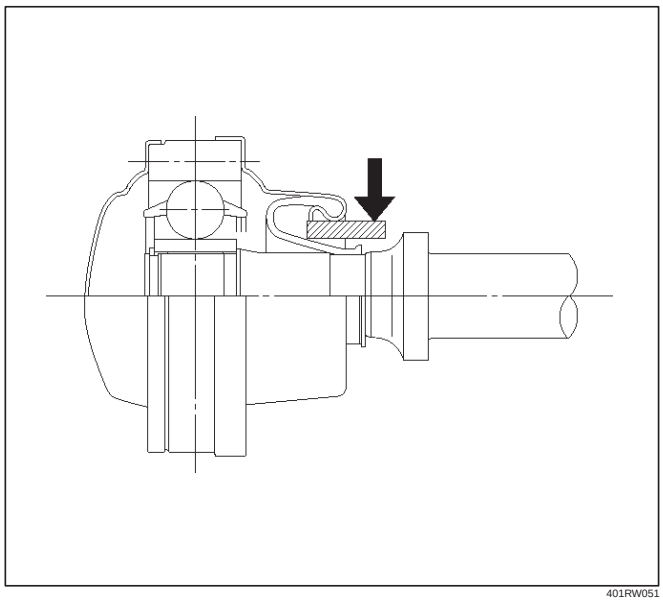

401RW051

Installation

NOTE: Never install the shaft assembly backwards. Completely remove the black paint from the connecting surface of flange coupling on each end of propeller shaft. Clean so that no foreign matter will be caught in between.

1. Align the mark which was applied at removal. Install front propeller shaft and tighten the bolts to the specified torque.

   Torque: 63 N·m (6.4 kg·m/46 lb ft)

2. Install the exhaust and transfer protectors.
3. After installing the propeller shaft, be sure to apply black paint (1) to exposed area (other than connecting surface) of the entire surface of flange coupling .

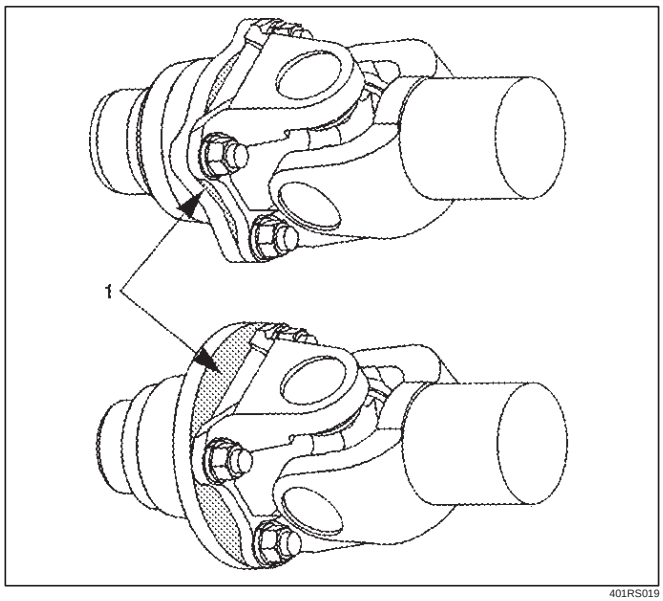

401RS019

Disassembly (Except TOD 4×4)

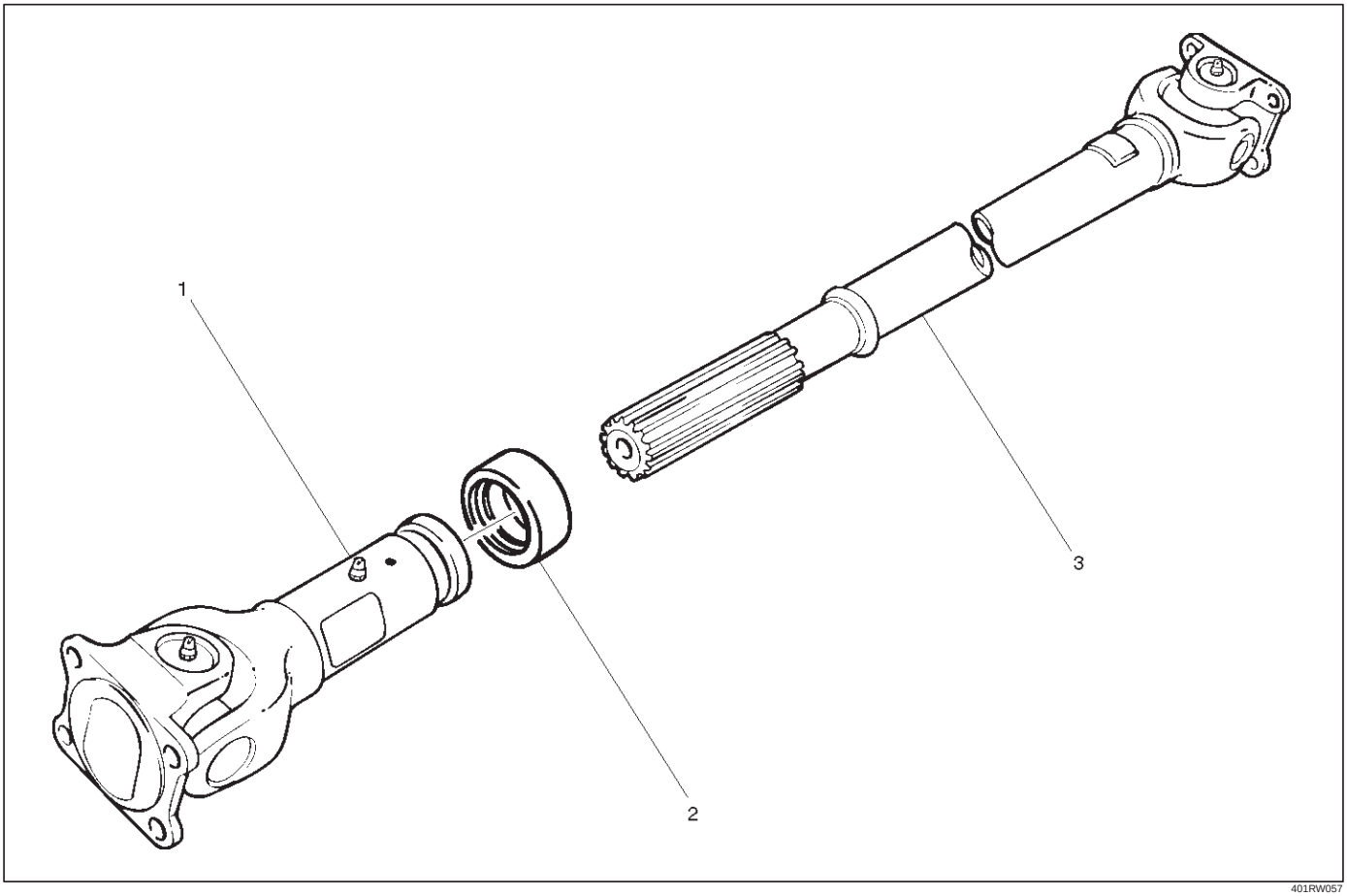

401RW057

Legend

(1) Sleeve Yoke
(2) Seal
(3) Tube Assembly

1. Apply alignment marks (1) on the sleeve yoke and tube assembly then remove sleeve yoke.

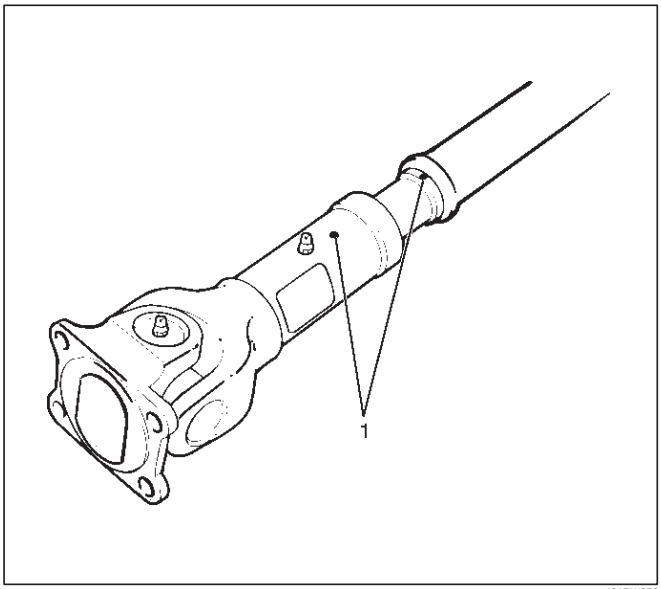

401RW056

2. Remove seal.
3. Remove tube assembly.

Universal Joint Disassembly

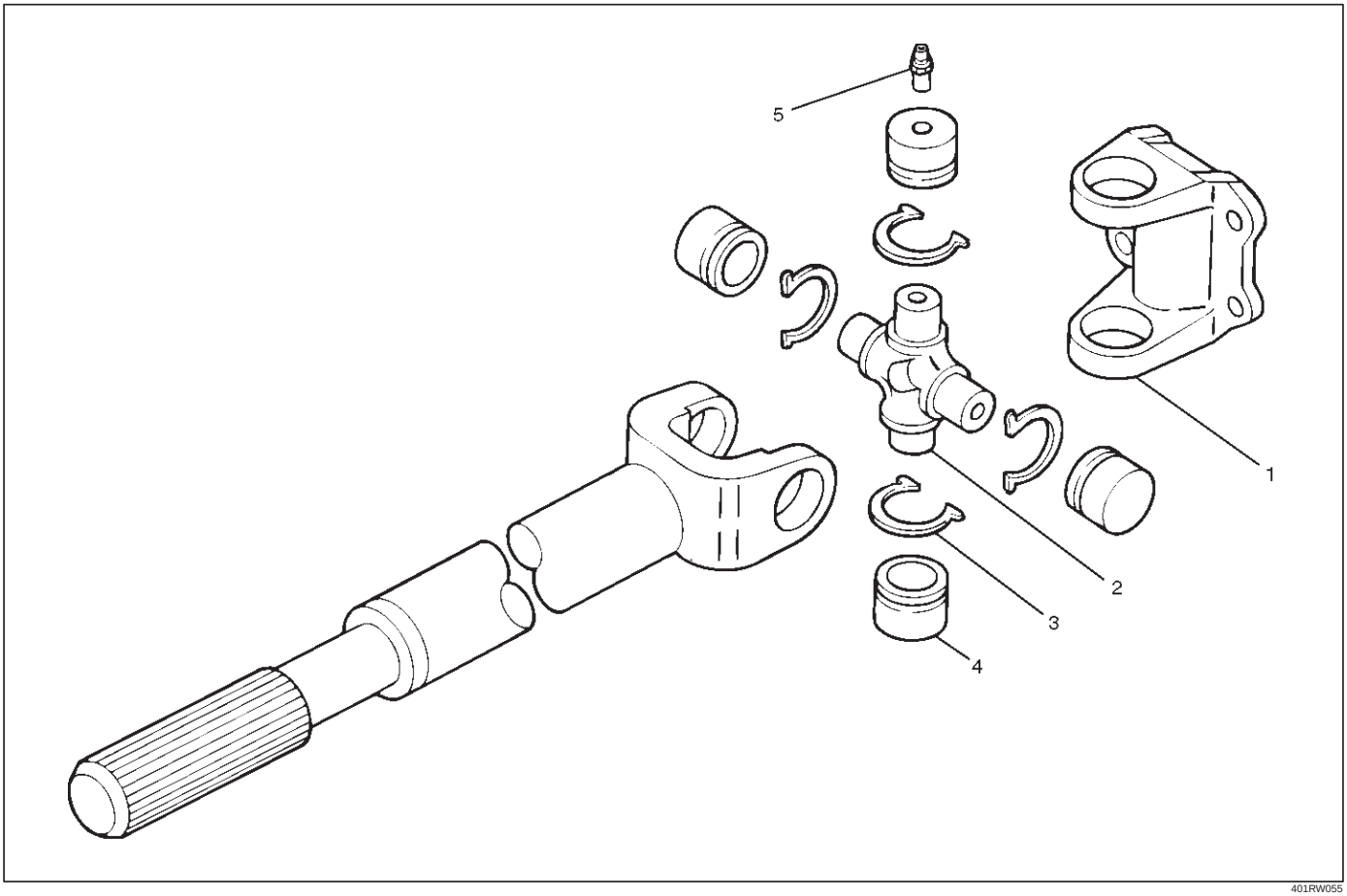

401RW055

Legend

(1) Flange Yoke
(2) Spider
(3) Snap Ring
(4) Needle Roller Bearing
(5) Grease Fitting

1. Apply alignment marks (1) on the yokes of the universal joint, then remove snap ring.

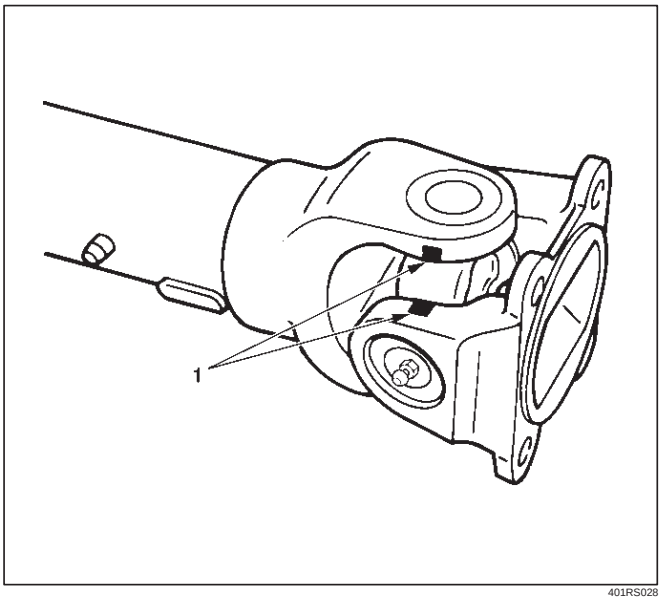

401RS028

2. Tap out the needle roller bearing by gently striking the shoulder of the yoke, using a mallet or a copper hammer.

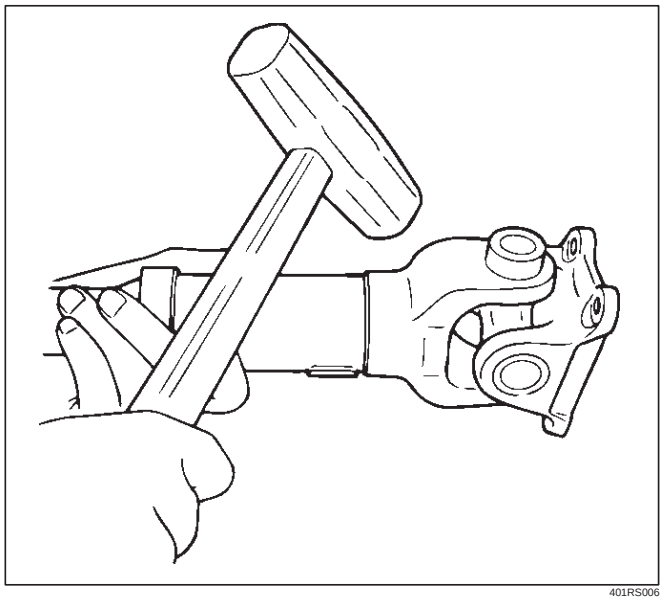

401RS006

3. Make sure of proper position for reinstallation by applying setting marks, then remove spider .

Inspection and Repair

Make necessary correction or parts replacement if wear, damage, corrosion or any other abnormal condition is found through inspection.

NOTE: When any part of the journal assembly (spider, needle roller bearing) requires replacement, be sure to replace the entire assembly.

Check the following parts for wear, damage, noise or any other abnormal conditions:

1. Spider
2. Needle roller bearing
3. Yoke
4. Flange
5. Constant velocity joint

Outside Diameter of Spider Pin

Standard: 17.00 mm (0.669 in)

Limit: 16.90 mm (0.665 in)

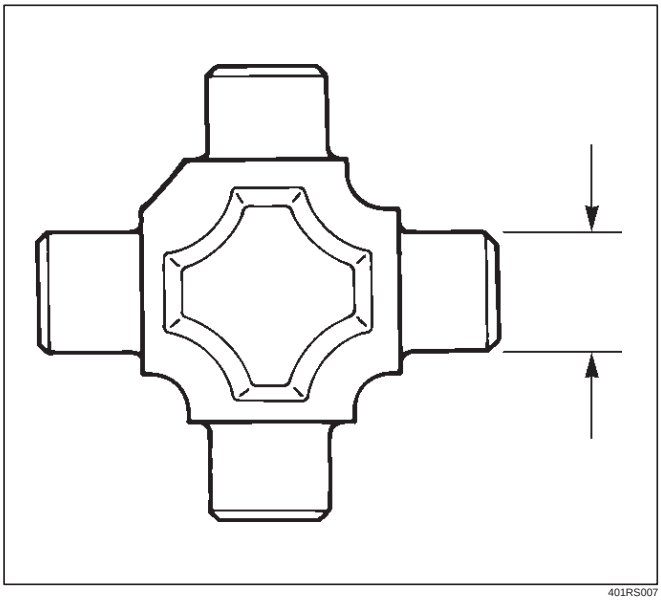

401RS007

Propeller Shaft Run–out

Support the ends of the propeller shaft on V-blocks (2) and check for run–out by holding the probe of a dial indicator (1) in contact with the center part of the shaft. If the amount of run–out is beyond the standard value for assembly, correct with a bench press or replace the shaft with a new propeller shaft assembly.

Standard: 0.3 mm (0.012 in)

Limit: 0.5 mm (0.02 in)

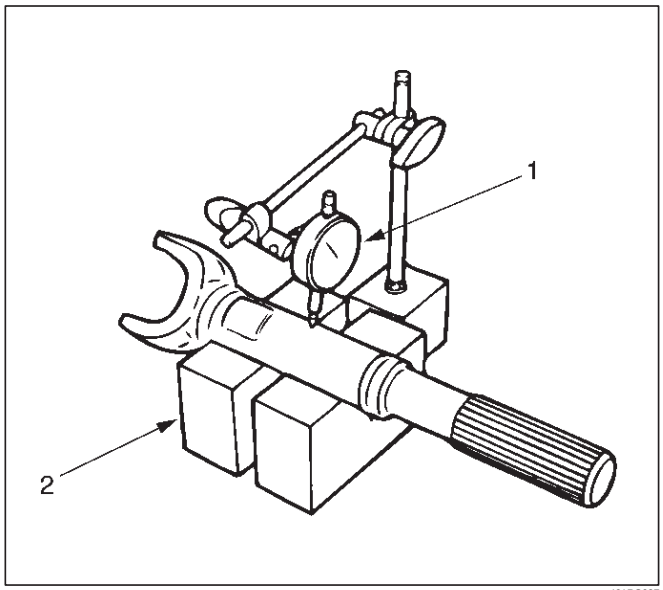

401RS027

Play in Splines in Normal Direction of Rotation

Check the amount of play between the sleeve yoke (1) and the propeller shaft spline (2) in the direction of rotation, using a pointed feeler gauge.

Standard: 0.073 – 0.156 mm (0.003 – 0.006 in)

Limit: 0.3 mm (0.012 in)

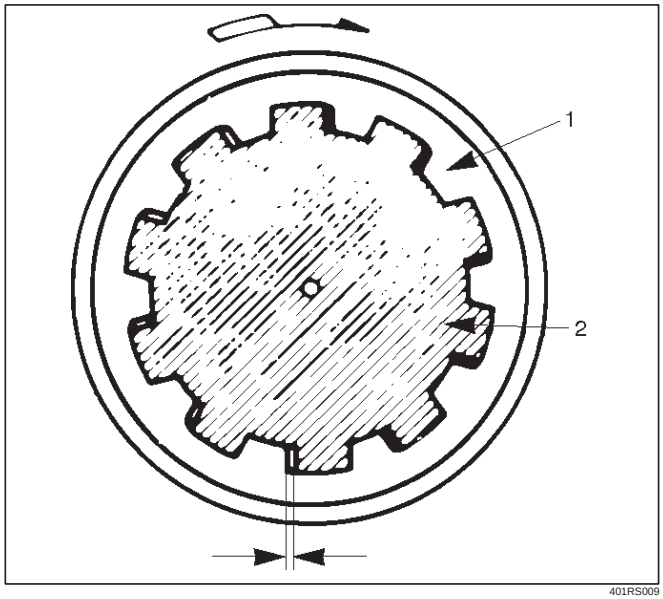

401RS009

Play in Universal Joint

Limit: Less than 0.1 mm (0.004 in)

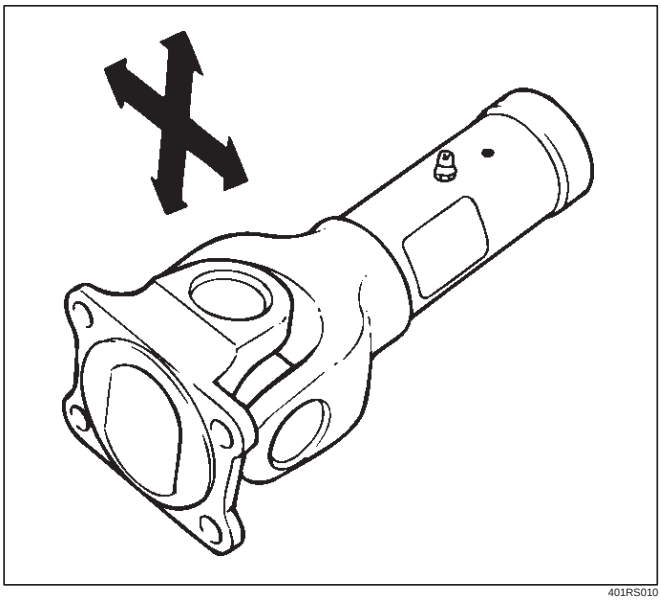

401RS010

Constant Velocity Joint

NOTE: LJ and BJ constant velocity joints are unremovable types. Check the joint for play and the boot for damage, wear, and leak of grease. If abnormality is found, replace propeller shaft as an assembly.

Play in Constant Velocity Joint

Fix the shaft in a vise throrgh pieces of wood, and try to move the joint vertically, right and left, and back and forth to make sure of smooth motions and no remarkable play.

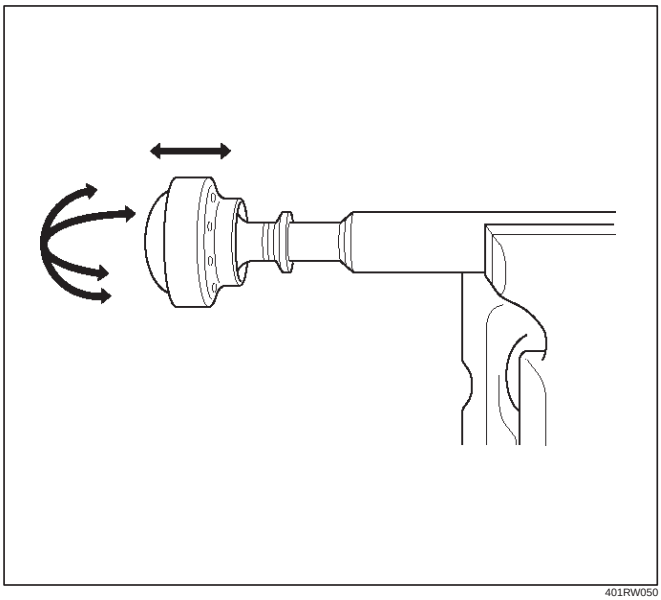

401RW050

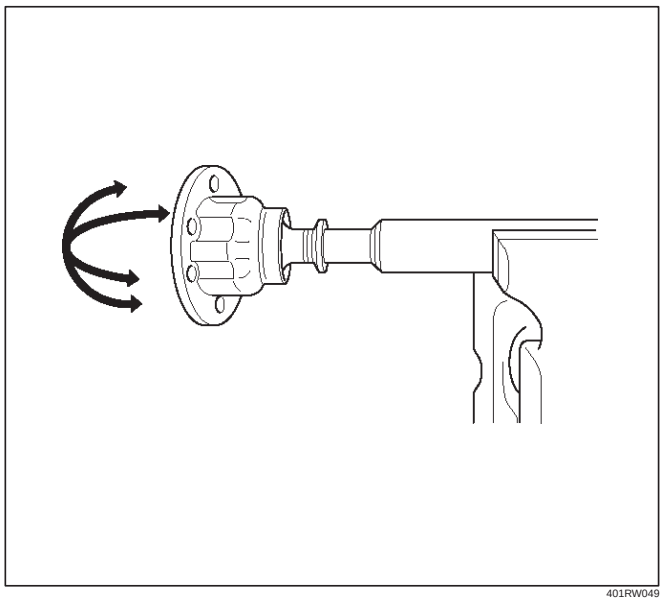

401RW049

Boot of Constant Velocity Joint

Check the boot (2) for crack, damage and grease leak, and the boot band (1) for loosening and damage. Check the both sides of the joint and make sure that there is no leak of grease from the cover press-in parts(3).

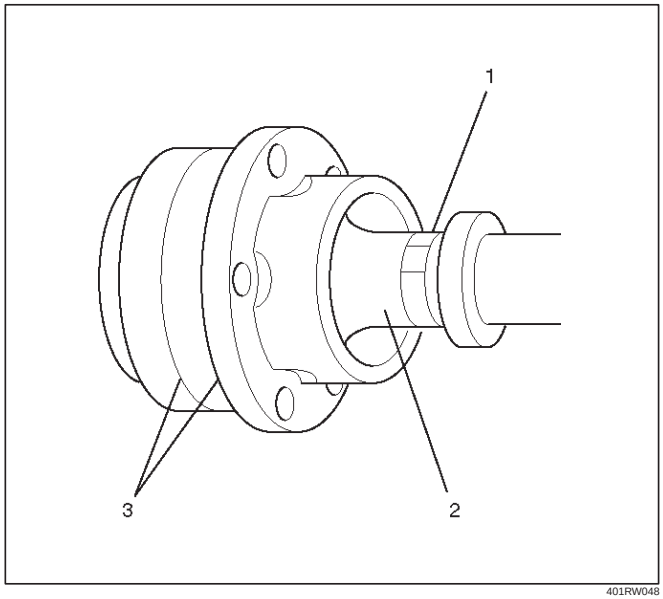

401RW048

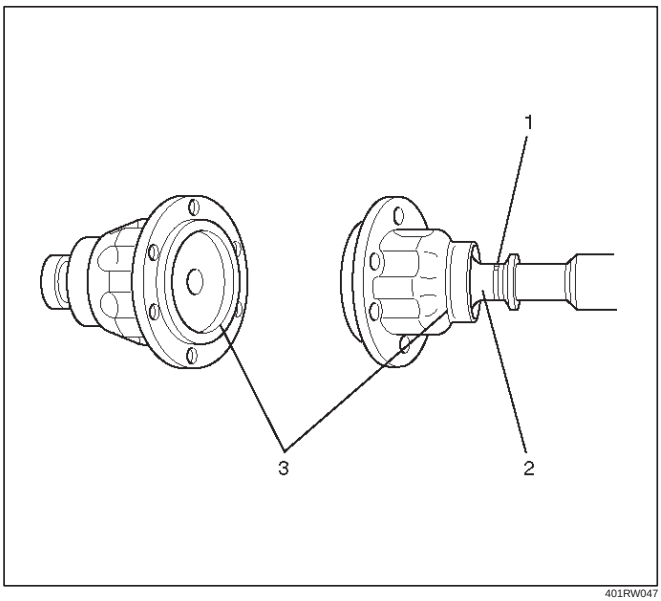

401RW047

Front Axle Flange Run-out

1. Set a dial gage at right angle near the outer circumference of the flange face and check the run-out of the flange face.

Limit: 0.15 mm (0.006 in)

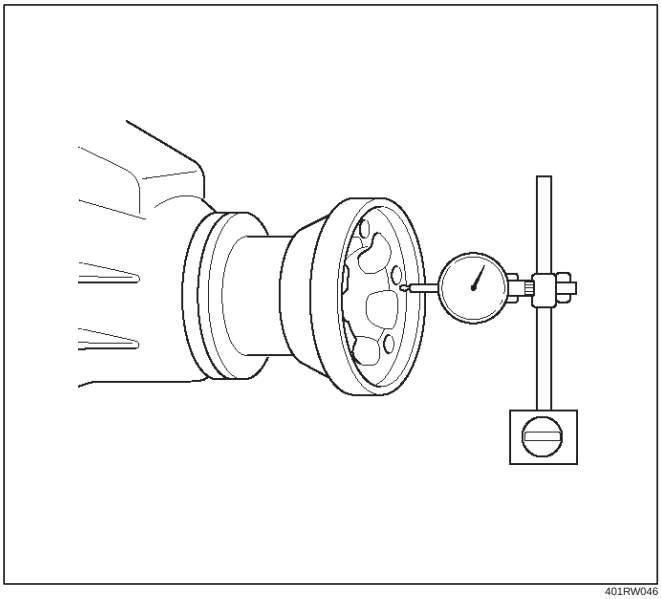

401RW046

2. Set a dial gage at right angle near the inner circumference and check the run-out of the flange.

Limit: 0.15 mm (0.006 in)

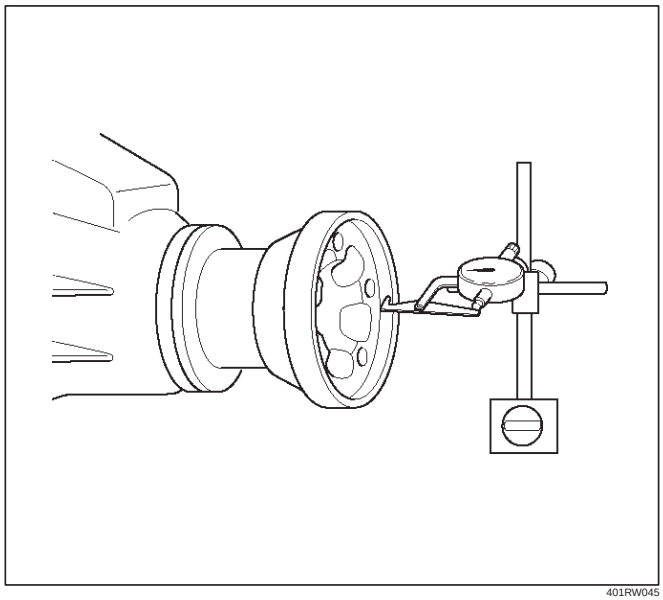

401RW045

3. If vibration is felt during the 4H AUTO drive, disconnct the propeller shaft at the front axle. Reinstall the propeller shaft at 60˚, 120˚, 180˚, 240˚, and 300˚ and conduct test drive in each position and check if there is vibration.

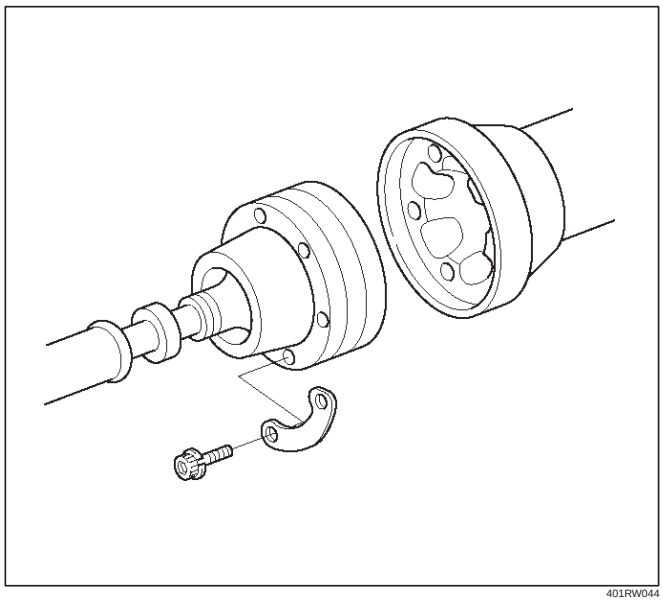

401RW044

Universal Joint Reassembly

1. Install spider to flange yoke. Be sure to install the spider by aligning the setting marks made during disassembly.
2. Apply a molybdenum–disulfide grease or a multi–purpose type grease NLGI No. 2 to inside of the bearing cap.

Grease Amount: Approx. 1.2 g (0.042 oz)

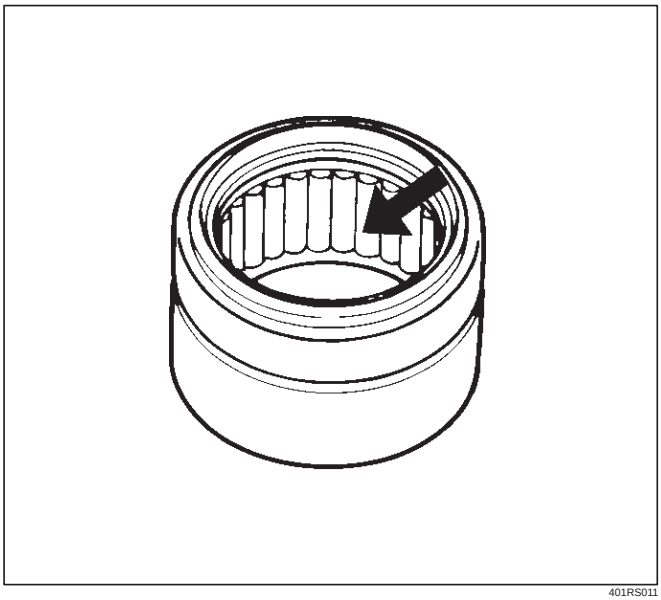

401RS011

3. Using either a mallet (or copper hammer) or a press, install the needle roller bearing into the yoke so that the snap ring can be installed in its groove.

CAUTION: The needle roller bearing cannot be installed smoothly if it is set at an incorrect angle with the flange and excessive hammering will damage the needle roller bearing.

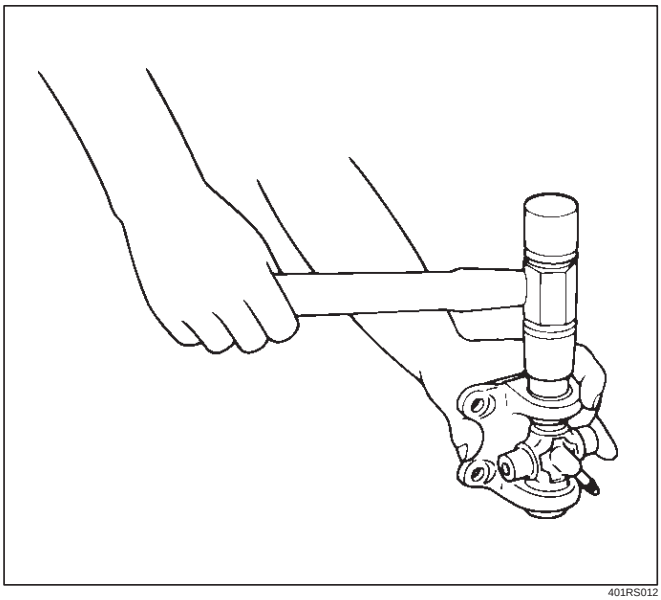

401RS012

4. Align setting marks (1) and join the yokes.

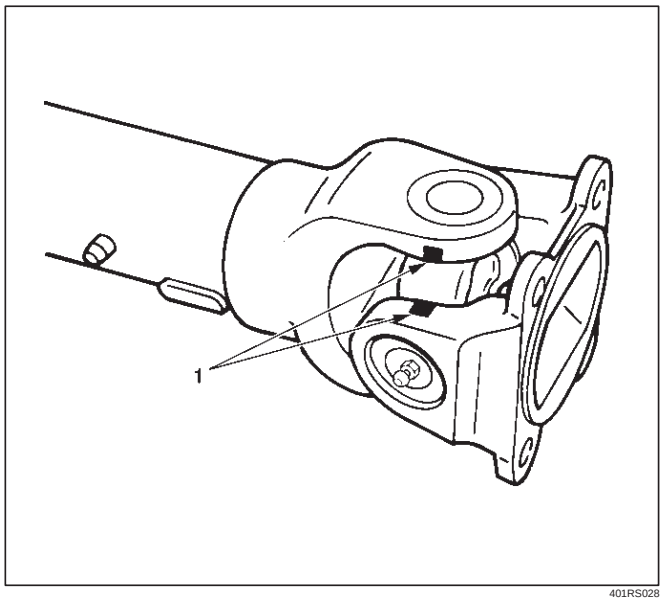

401RS028

5. Install snap ring.

NOTE: Discard used snap rings and install new ones.

When the bearing cap is in position, select and attach a snap ring of suitable thickness so that the end play of the spider pin is held within 0.1 mm (0.004 in).

Snap ring thickness and Identification color

1.5 mm (0.059 in); Blue

1.53 mm (0.060 in); White

1.59 mm (0.063 in); Yellow

1.62 mm (0.064 in); Green

1.68 mm (0.066 in); Not colored

NOTE: Be sure to use snap rings of the same thickness on both sides.

Reassembly (Except TOD 4×4)

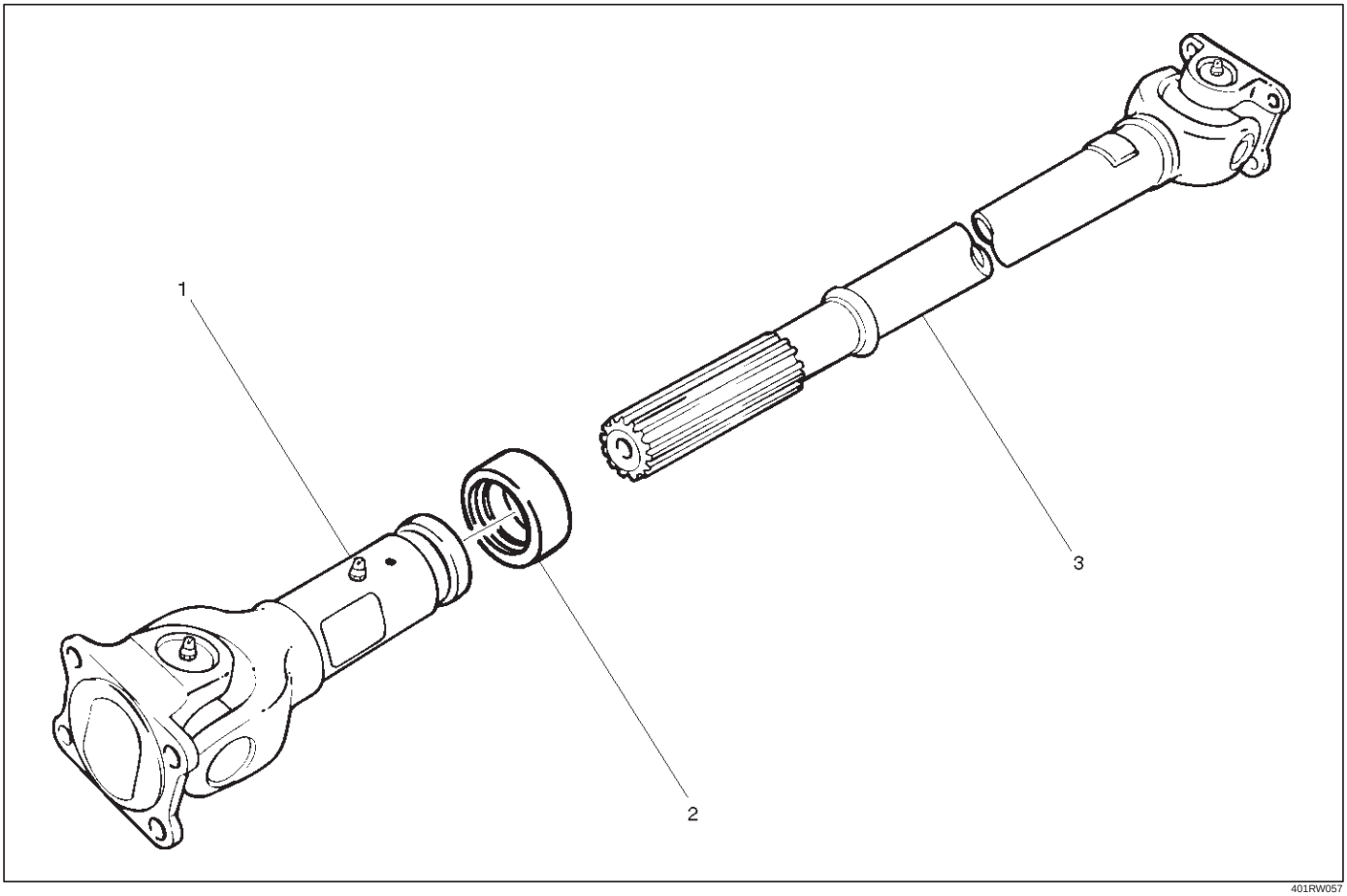

401RW057

Legend

(1) Sleeve Yoke
(2) Seal
(3) Tube Assembly

1. Discard used seal and install new one.
2. Align the alignment marks and install tube assembly to sleeve yoke.

Main Data and Specifications

General Specifications

Engine	6VE1 (3.5L)			6VD1 (3.2L)			4JX1 (3.0L)		4JG2 (3.1L)	
Transmission	M/T	A/T	A/T with TOD	M/T	A/T	A/T with TOD	M/T	A/T	M/T	A/T
Construction	Hollow steel tube with yoke and spider type universal joint		Hollow steel tube with constant velocity joints	Hollow steel tube with yoke and spider type universal joint		Hollow steel tube with constant velocity joints	Hollow steel tube with yoke and spider type universal joint			
Outside diameter	40.0mm (1.57 in)									
Length	559mm (22.01in)	559mm (22.01in)	577mm (22.72in)	393mm (15.47in)	559mm (22.01in)	577mm (22.72in)	627mm (24.69in)	627mm (24.69in)	421mm (16.57in)	627mm (24.69in)

Torque Specifications

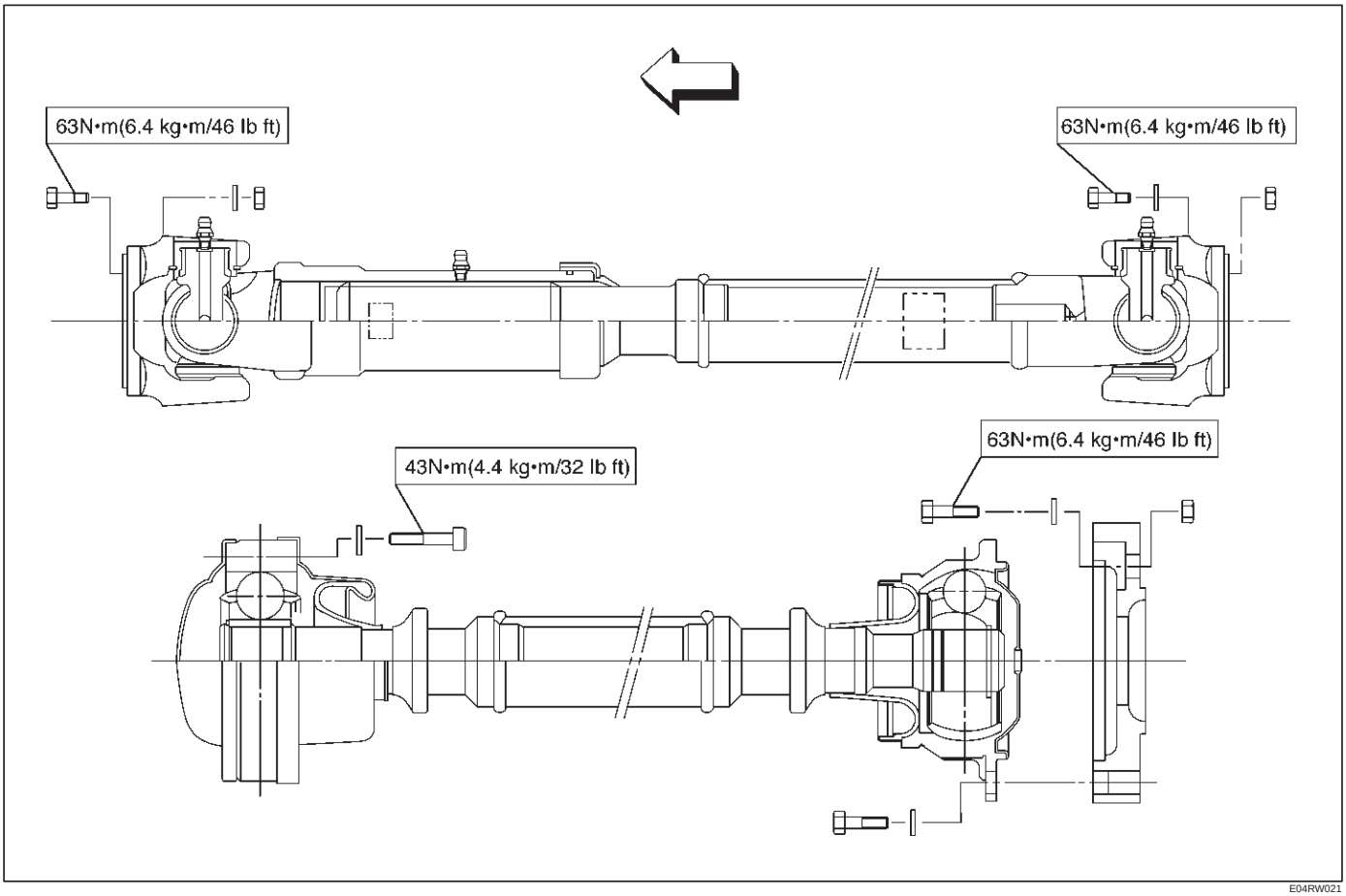

E04RW021

Rear Propeller Shaft

General Description

Since the propeller shaft is balanced carefully, welding or any other modifications are not permitted.

Alignment marks should be applied to each propeller shaft before removal.

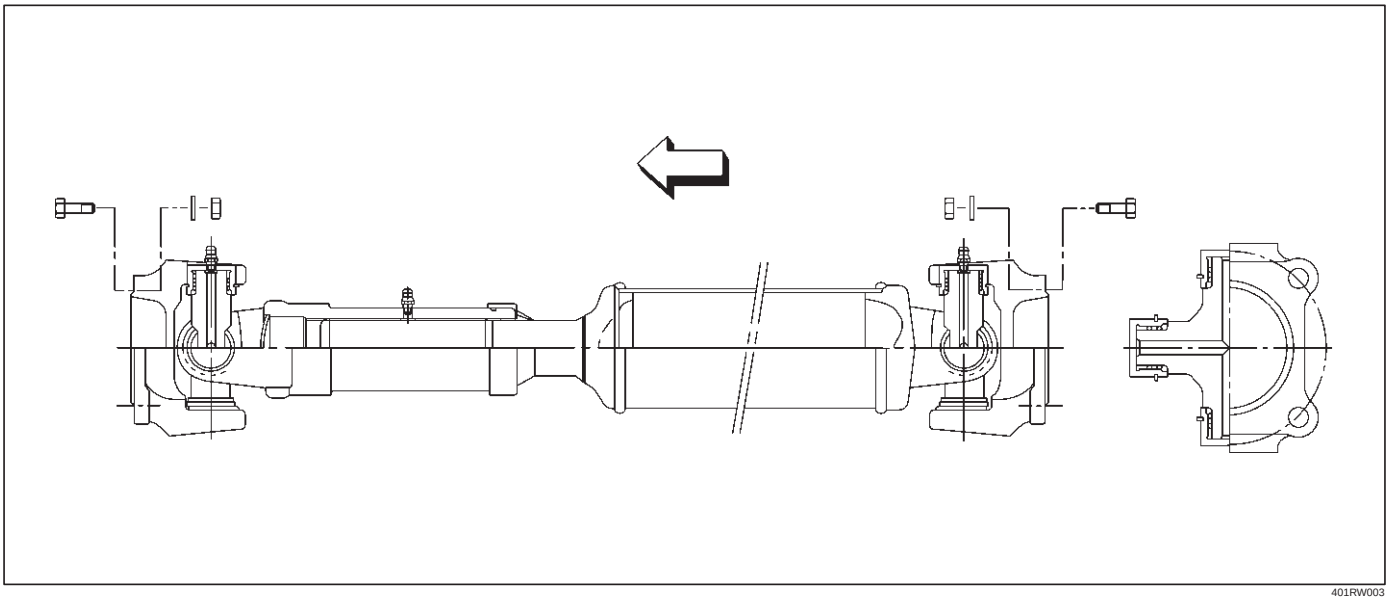

401RW003

Rear Propeller Shaft and Associated Parts

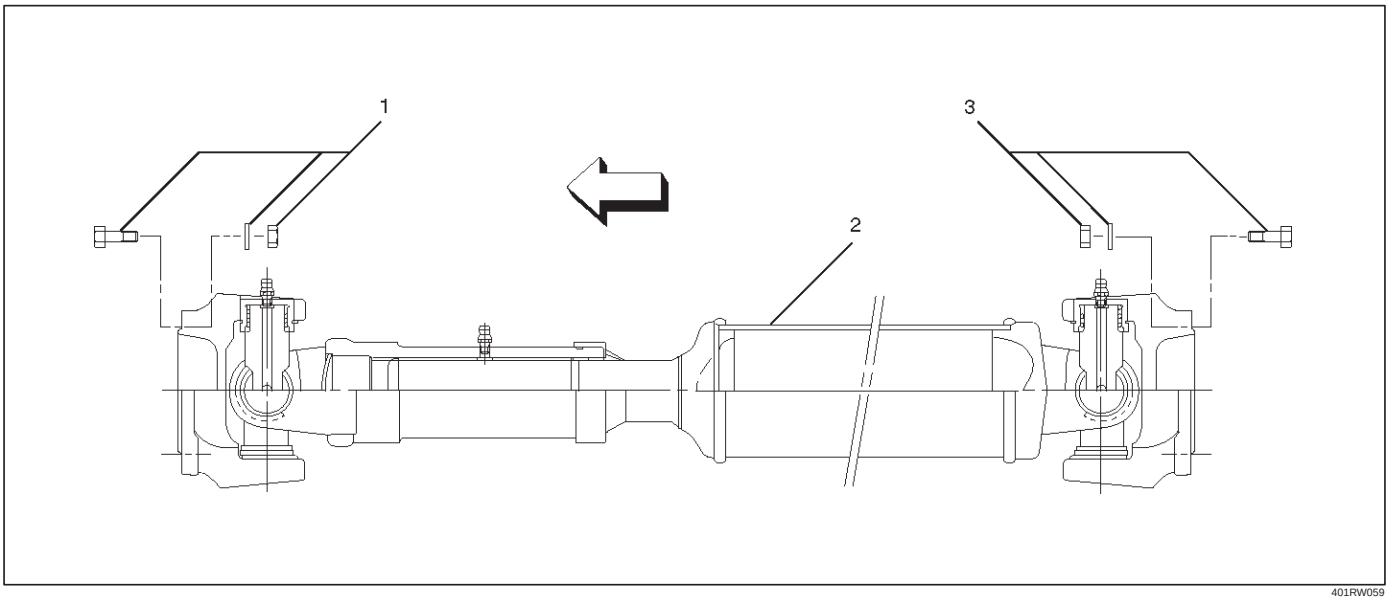

401RW059

Legend

(1) Bolt, Nut and Washer
(2) Rear Propeller Shaft
(3) Bolt, Nut and Washer

Removal

1. Jack up the vehicle and support it on the chassis stands.
2. Gear shift lever should be placed in neutral position and parking brake released.

NOTE: Apply alignment marks on the flange at the rear propeller shaft both front and rear side.

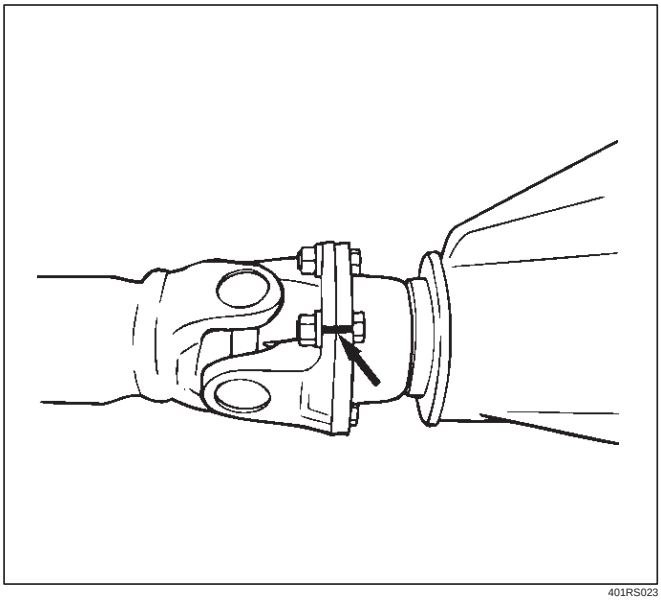

401RS023

3. Remove bolt, nut and washer (Rear axle side).
4. Remove bolt, nut and washer (Transfer side).
5. Remove rear propeller shaft.

Installation

NOTE: Never install the shaft assembly backwards.

1. Completely remove the black paint from the connecting surface of flange coupling on each end of propeller shaft. Clean so that no foreign matter will be caught in between.
2. Align the mark which is applied at removal .
   Install rear propeller shaft and tighten the bolts to the specified torque.

   Torque: 63 N·m (6.4 kg·m/46 lb ft)

3. After installing the propeller shaft, be sure to apply black paint (1) to exposed area (other than connecting surface) of the entire surface of flange coupling .

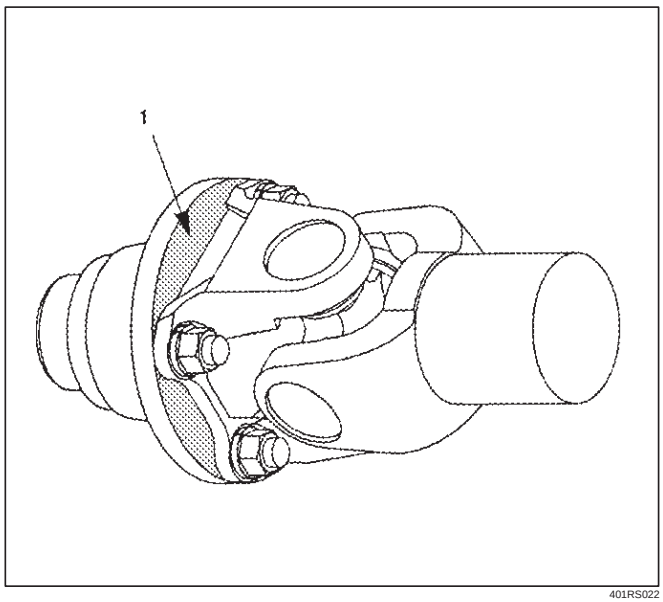

401RS022

Disassembly

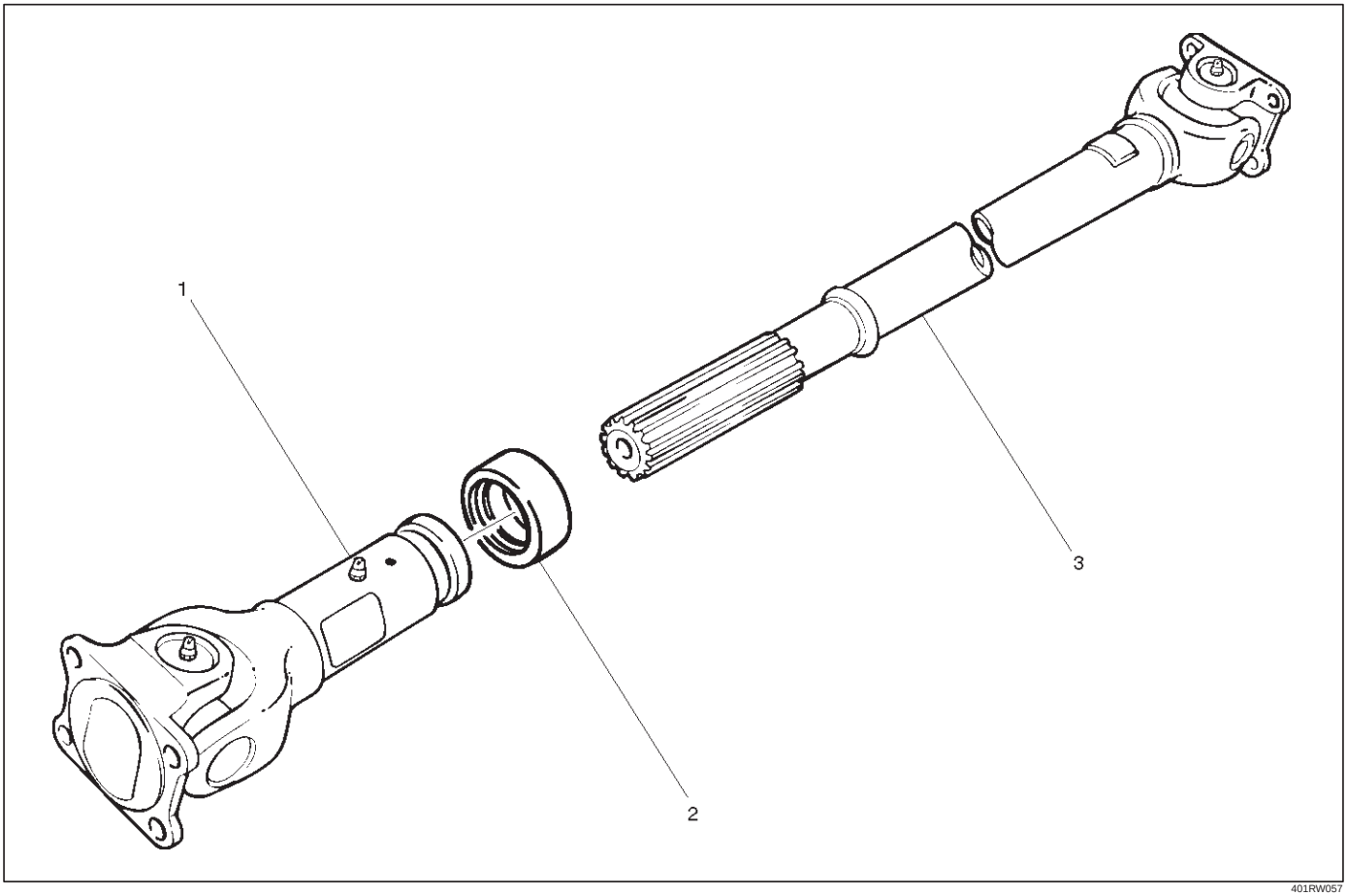

401RW057

Legend

(1) Sleeve Yoke
(2) Seal
(3) Tube Assembly

1. Apply alignment marks (1) on the sleeve yoke and tube assembly then remove sleeve yoke.

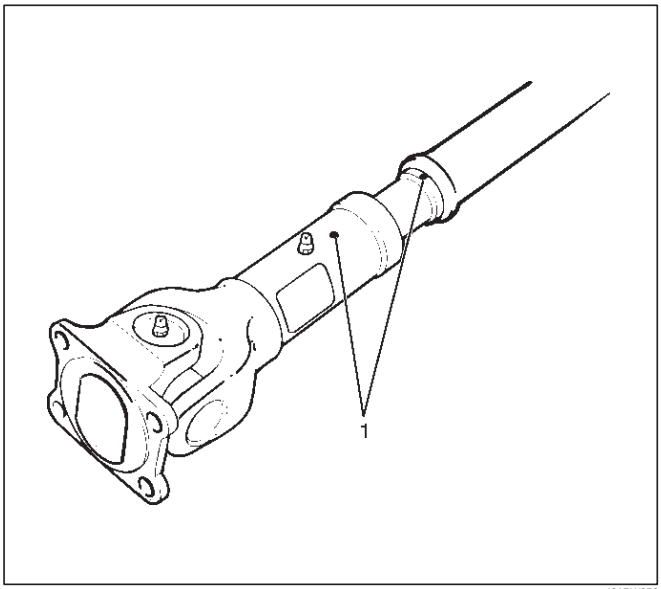

401RW056

2. Remove seal.
3. Remove tube assembly.

Universal Joint Disassembly

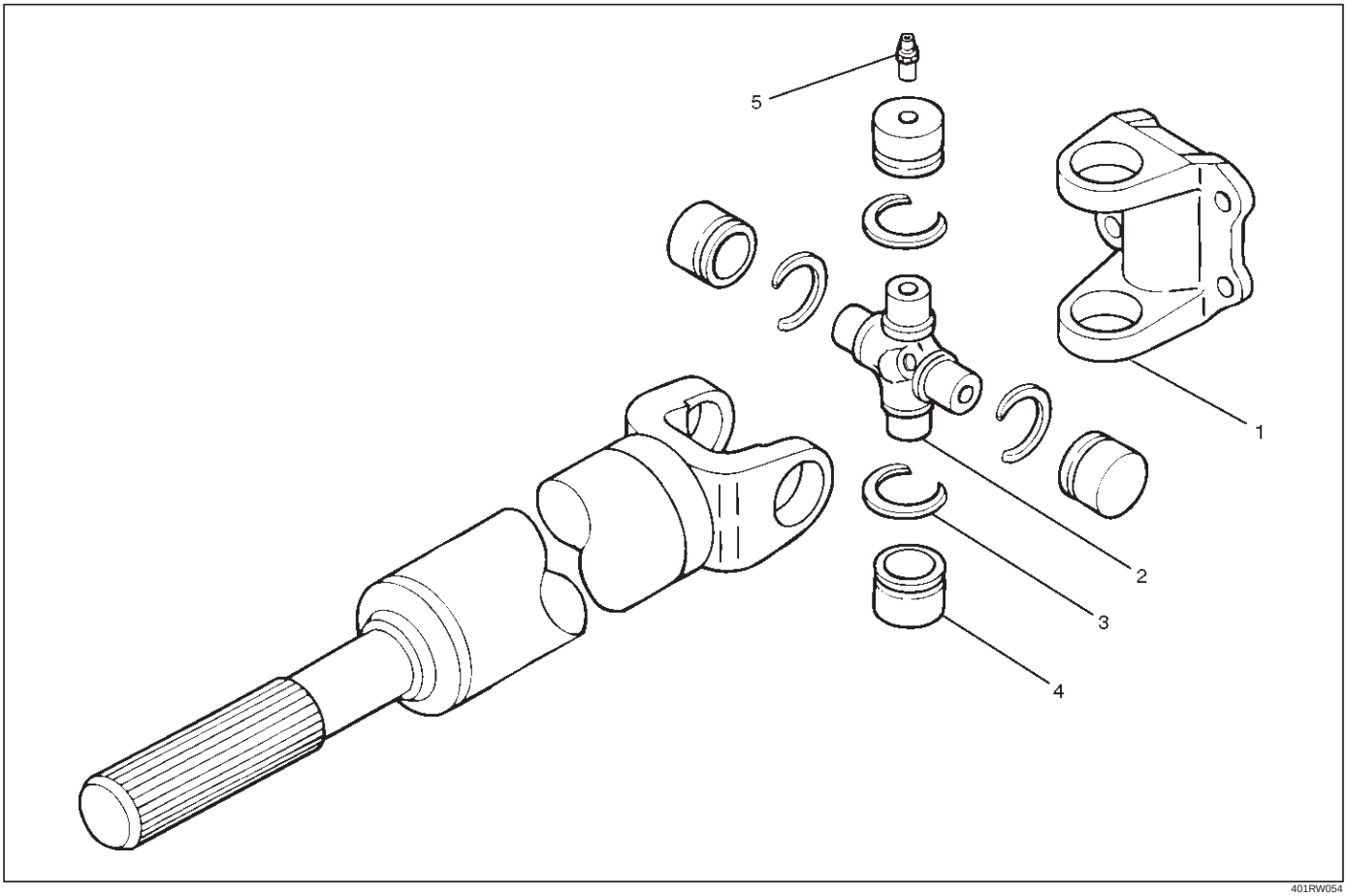

401RW054

Legend

(1) Flange Yoke
(2) Spider with Grease Fitting
(3) Snap Ring
(4) Needle Roller Bearing
(5) Grease Fitting

1. Apply alignment marks (1) on the yokes of the universal joint, then remove snap ring.

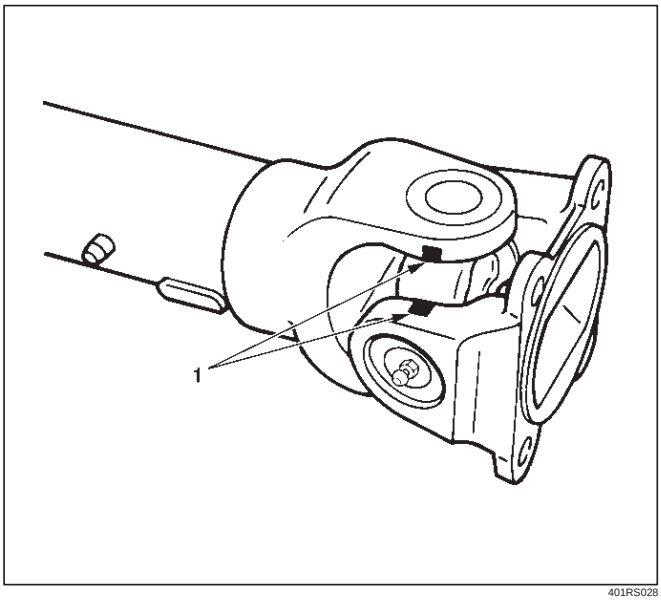

401RS028

2. Tap out the needle roller bearing by gently striking the shoulder of the yoke, using a mallet or a copper hammer.

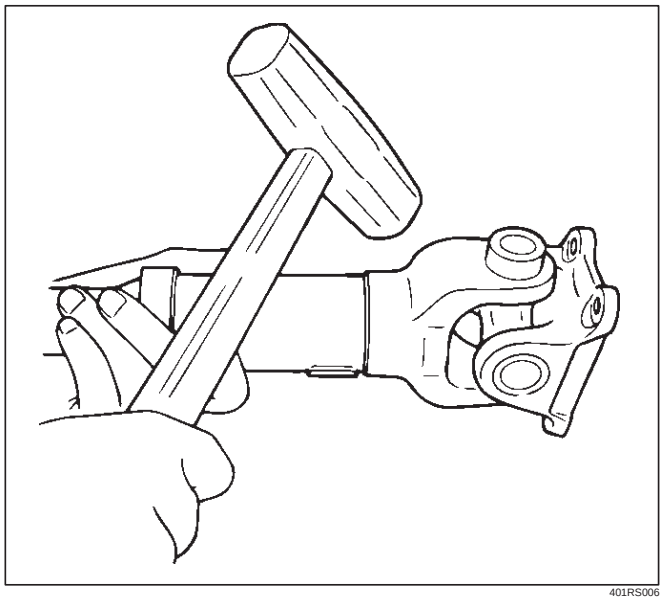

401RS006

3. Make sure of proper position for reinstallation by applying setting marks, then remove spider with grease fitting.

Inspection and Repair

Make necessary correction or parts replacement if wear, damage, corrosion or any other abnormal condition is found through inspection.

NOTE: When any part of the journal assembly (spider, needle roller bearing, grease fitting) requires replacement, be sure to replace the entire assembly.

Check the following parts for wear, damage, noise or any other abnormal conditions:

1. Spider
2. Needle roller bearing
3. Yoke
4. Flange

Outside Diameter of Spider Pin

Standard: 17.00 mm (0.669 in)

Limit: 16.90 mm (0.665 in)

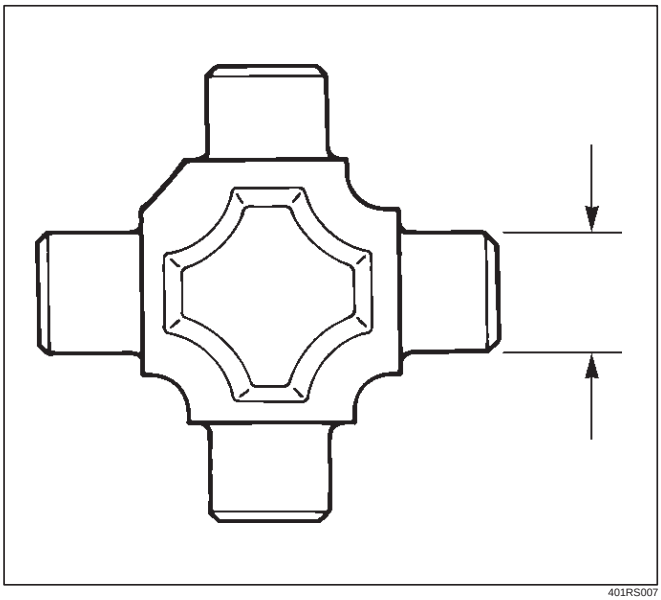

401RS007

Propeller Shaft Run-out

Support the ends of the propeller shaft on V-blocks (2) and check for run-out by holding the probe of a dial indicator (1) in contact with the center part of the shaft. If the amount of run-out is beyond the standard value for assembly, correct with a bench press or replace the shaft with a new propeller shaft assembly .

Standard: 0.3 mm (0.012 in)

Limit: 0.5 mm (0.02 in)

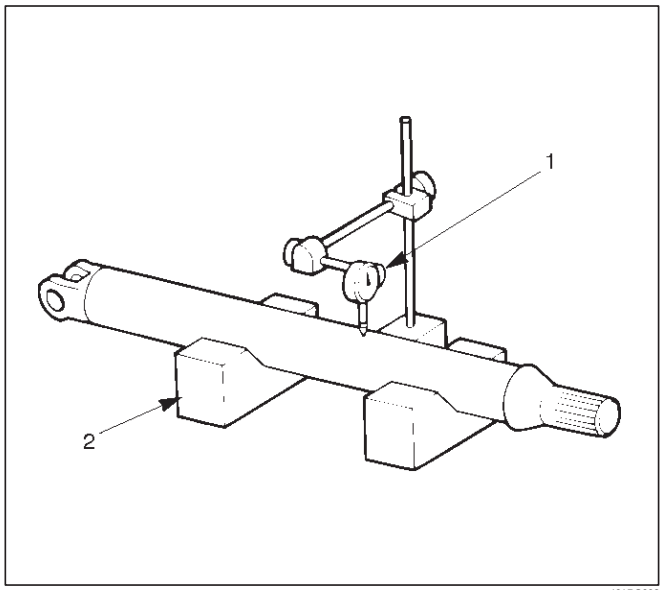

401RS008

Play in Splines in Normal Direction of Rotation

Check the amount of play between the sleeve yoke (1) and the propeller shaft spline (2) in the direction of rotation, using a pointed feeler gauge.

Standard: 0.073 – 0.156 mm (0.003 – 0.006 in)

Limit: 0.3 mm (0.012 in)

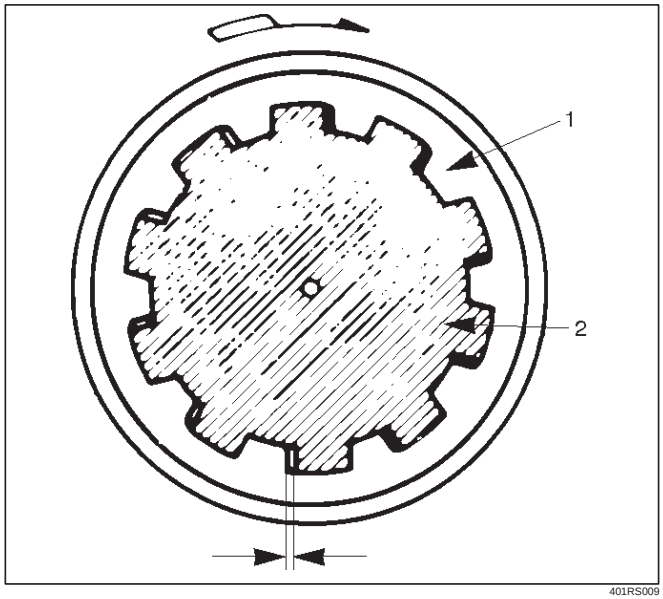

401RS009

Play in Universal Joint

Limit: Less than 0.1 mm (0.004 in)

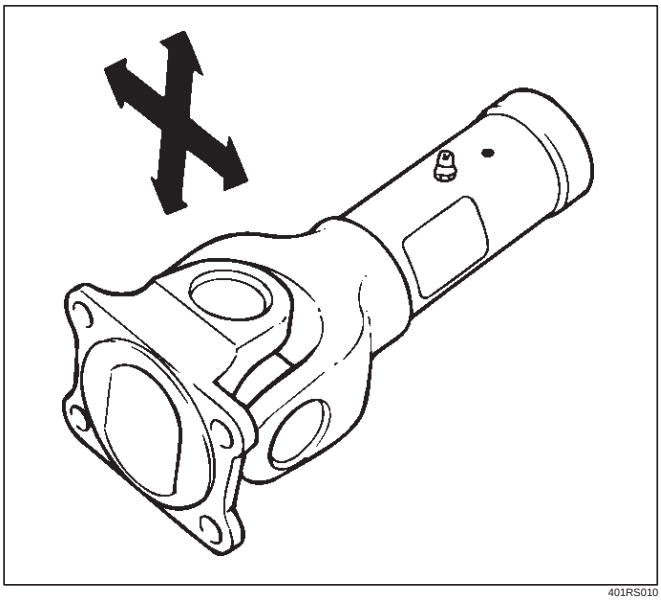

401RS010

Universal Joint Reassembly

1. Install spider to flange yoke. Be sure to install the spider by aligning the setting marks made during disassembly.
2. Before installing needle roller bearing, apply a molybdenum–disulfide grease or a multi–purpose type grease NLGI No. 2 to inside of the bearing cap.

Grease Amount: Approx. 1.2 g (0.042 oz)

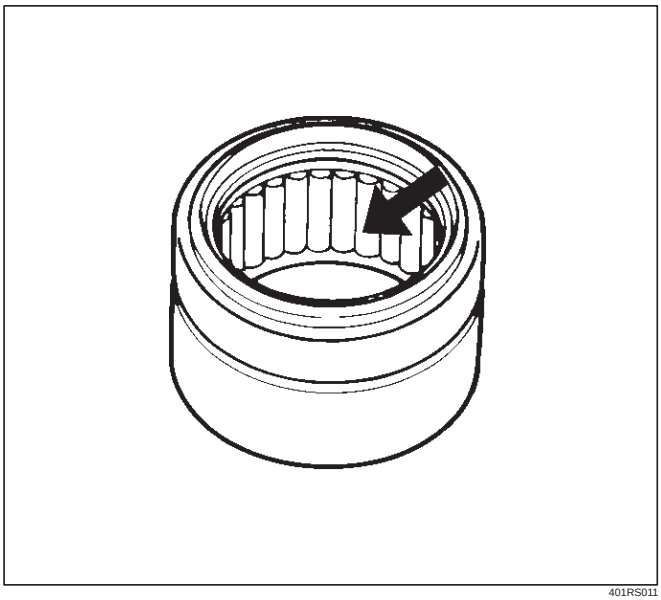

401RS011

3. Using either a mallet (or copper hammer) or a press, install the needle roller bearing into the yoke so that the snap ring can be installed in its groove.

CAUTION: The needle roller bearing cannot be installed smoothly if it is set at an incorrect angle with the flange and excessive hammering will damage the needle roller bearing.

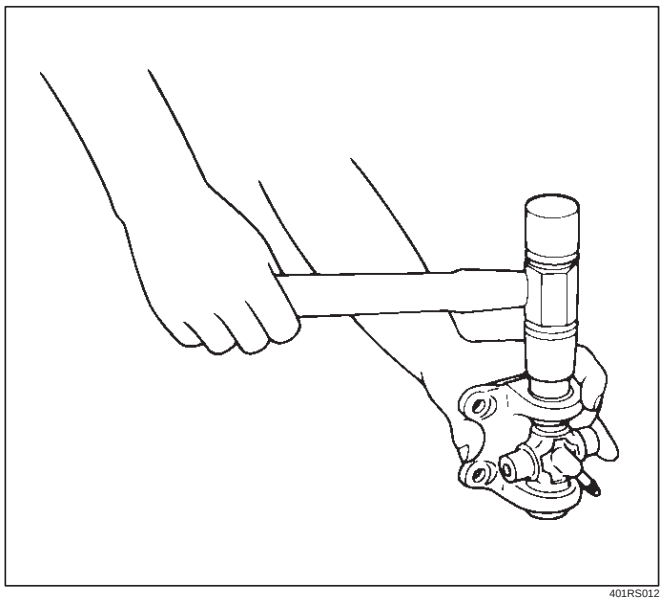

401RS012

4. Align setting marks (1) and join the yokes.

NOTE: Assemble the spider and spline yoke so that their grease fittings are arranged on the same side.

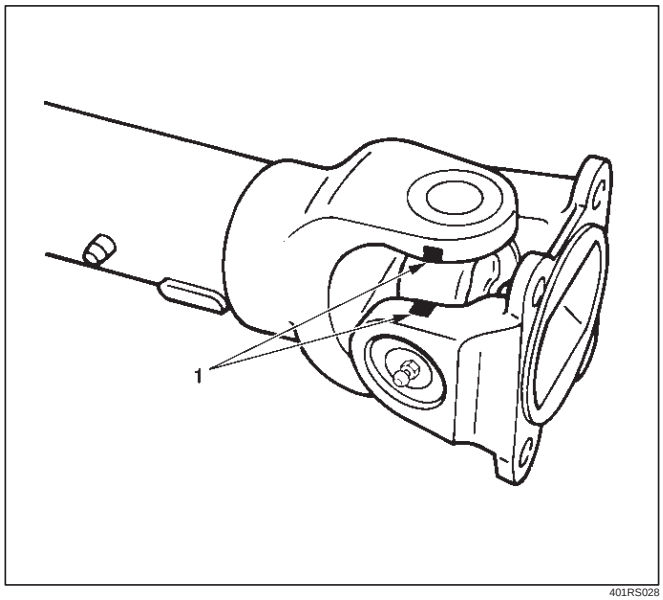

401RS028

5. Install snap ring.

NOTE: Discard used snap rings and install new ones.

When the bearing cap is in position, select and attach a snap ring of suitable thickness so that the end play of the spider pin is held within 0.1 mm (0.004 in).

Snap ring thickness and identification color

1.5 mm (0.059 in): Blue

1.545 mm (0.061 in): White

1.59 mm (0.063 in): Yellow

1.635 mm (0.064 in): Green

1.68 mm (0.066 in): Not colored

NOTE: Be sure to use snap rings of the same thickness on both sides.

Reassembly

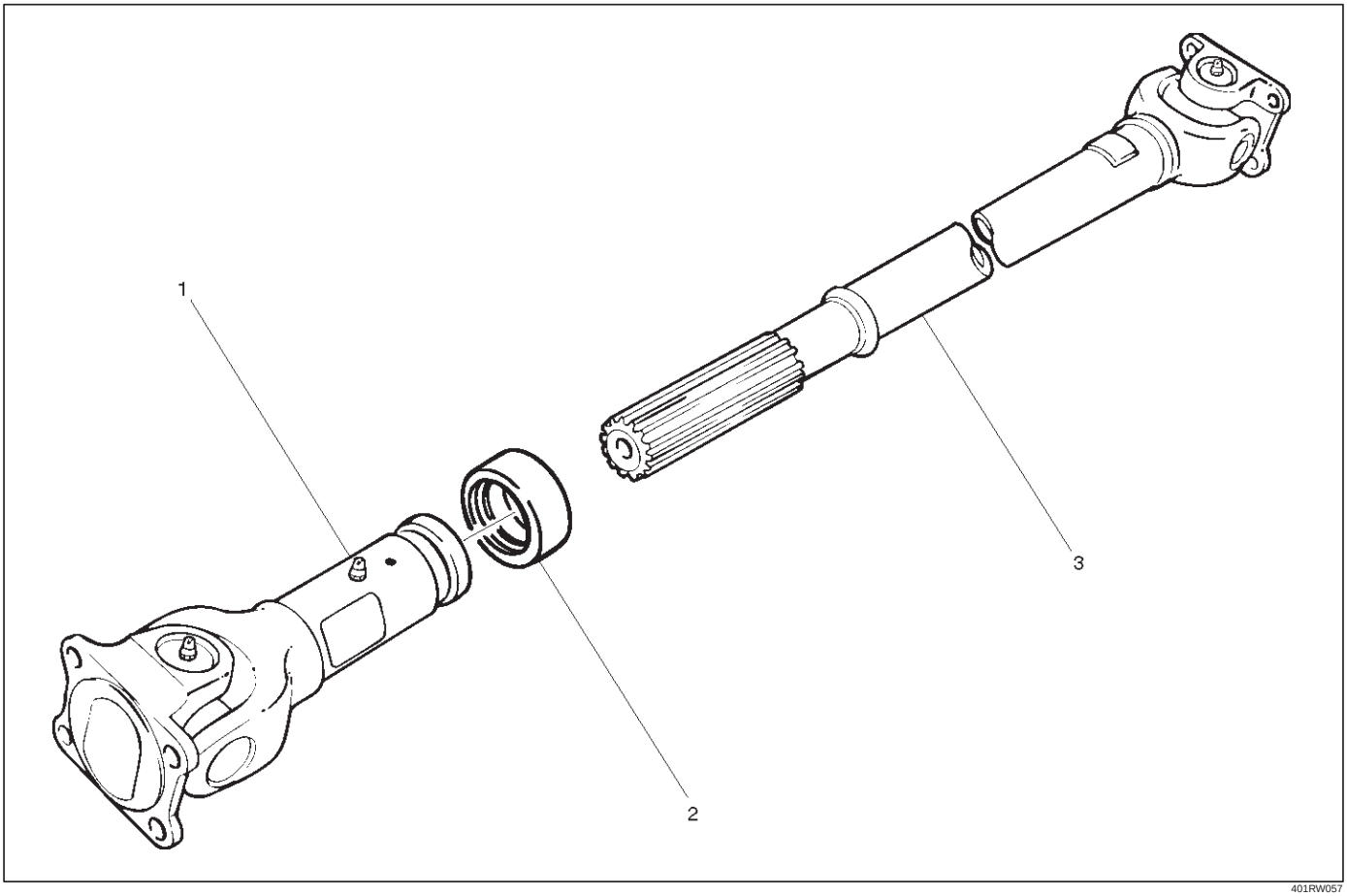

401RW057

Legend

(1) Sleeve Yoke
(2) Seal
(3) Tube Assembly

1. Discard used seal and install new one.
2. Align the alignment marks and install tube assembly to sleeve yoke.

Main Data and Specifications

General Specifications

Engine		6VE1 (3.5L)			6VD1 (3.2L)			4JX1 (3.0L)		4JG2 (3.1L)	
Transmission		M/T	A/T	A/T with TOD	M/T	A/T	A/T with TOD	M/T	A/T	M/T	A/T
Construction		Hollow steel tube with yoke and spider type universal joint									
Length	SWB	668mm (26.30in)		—	846mm (33.31in)	678mm (26.69in)	—	604mm (23.78in)		810mm (31.89in)	—
	LWB	1093mm (43.03in)		1075mm (42.32in)	1271mm (50.04in)	1103mm (43.43in)	1083mm (42.64in)	1029mm (40.51in)		1236mm (48.66in)	1037mm (40.83in)
Outside diamter	SWB	68.9mm (2.71in)		—	68.9mm (2.71in)		—	68.9mm (2.71in)			—
	LWB	68.9mm (2.71in)			82.6mm (3.25in)	68.9mm (2.71in)				82.6mm (3.25in)	68.9mm (2.71in)

Torque Specifications

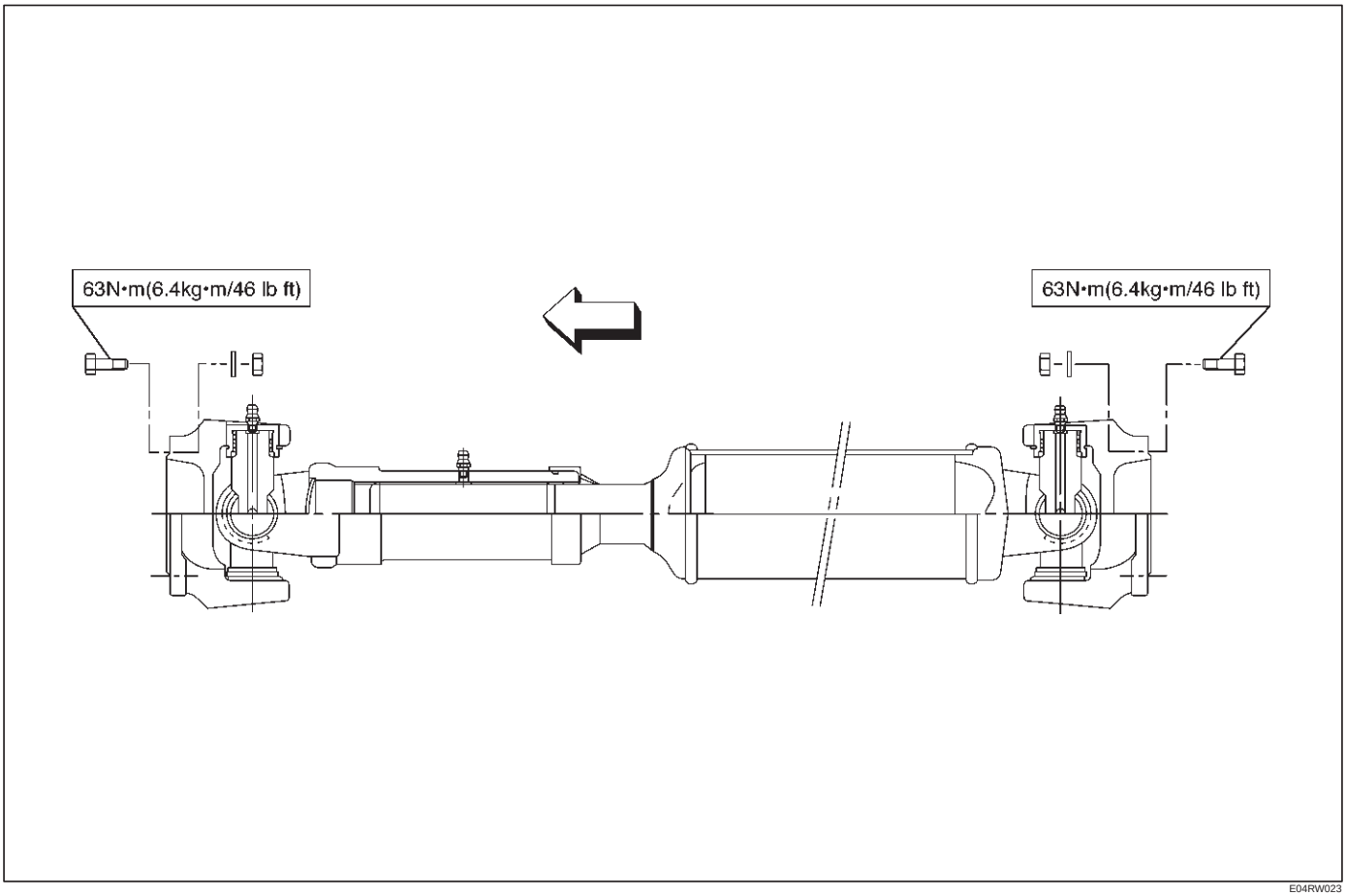

E04RW023

DRIVELINE/AXLE

TRANSFER CASE (STANDARD TYPE)

CONTENTS

Service Precaution 4D1–1
General Description 4D1–2
Transfer Rear Oil Seal 4D1–8
Removal 4D1–8
Installation 4D1–8
Transfer Case Assembly 4D1–9
Removal 4D1–9
Installation 4D1–10
Transfer Rear Cover Assembly (4WD Switch Model) 4D1–11
Transfer Rear Cover Assembly and Associated Parts 4D1–11
Removal 4D1–12
Installation 4D1–13
Disassembly 4D1–16
Inspection and Repair 4D1–17
Reassembly 4D1–17
Transfer Rear Cover Assembly (Except 4WD Switch Model) 4D1–19
Transfer Rear Cover Assembly and Associated Parts 4D1–19
Removal 4D1–20
Installation 4D1–20
Disassembly 4D1–23
Inspection and Repair 4D1–24
Reassembly 4D1–24
Detent, Shift Arm, and Interlock Pin 4D1–26
Disassembled View 4D1–26
Disassembly 4D1–26
Inspection and Repair 4D1–28
Reassembly 4D1–28
Transfer Case Assembly 4D1–30
Disassembled View 4D1–30
Disassembly 4D1–31
Inspection and Repair 4D1–33
Reassembly 4D1–37
Main Data and Specifications 4D1–43
Special Tools 4D1–46

Service Precaution

WARNING: THIS VEHICLE HAS A SUPPLEMENTAL RESTRAINT SYSTEM (SRS). REFER TO THE SRS COMPONENT AND WIRING LOCATION VIEW IN ORDER TO DETERMINE WHETHER YOU ARE PERFORMING SERVICE ON OR NEAR THE SRS COMPONENTS OR THE SRS WIRING. WHEN YOU ARE PERFORMING SERVICE ON OR NEAR THE SRS COMPONENTS OR THE SRS WIRING, REFER TO THE SRS SERVICE INFORMATION. FAILURE TO FOLLOW WARNINGS COULD RESULT IN POSSIBLE AIR BAG DEPLOYMENT, PERSONAL INJURY, OR OTHERWISE UNNEEDED SRS SYSTEM REPAIRS.

CAUTION: Always use the correct fastener in the proper location. When you replace a fastener, use ONLY the exact part number for that application. ISUZU will call out those fasteners that require a replacement after removal. ISUZU will also call out the fasteners that require thread lockers or thread sealant. UNLESS OTHERWISE SPECIFIED, do not use supplemental coatings (Paints, greases, or other corrosion inhibitors) on threaded fasteners or fastener joint interfaces. Generally, such coatings adversely affect the fastener torque and the joint clamping force, and may damage the fastener. When you install fasteners, use the correct tightening sequence and specifications. Following these instructions can help you avoid damage to parts and systems.

General Description

M/T, W/Shift On The Fly, W/4WD Switch, model

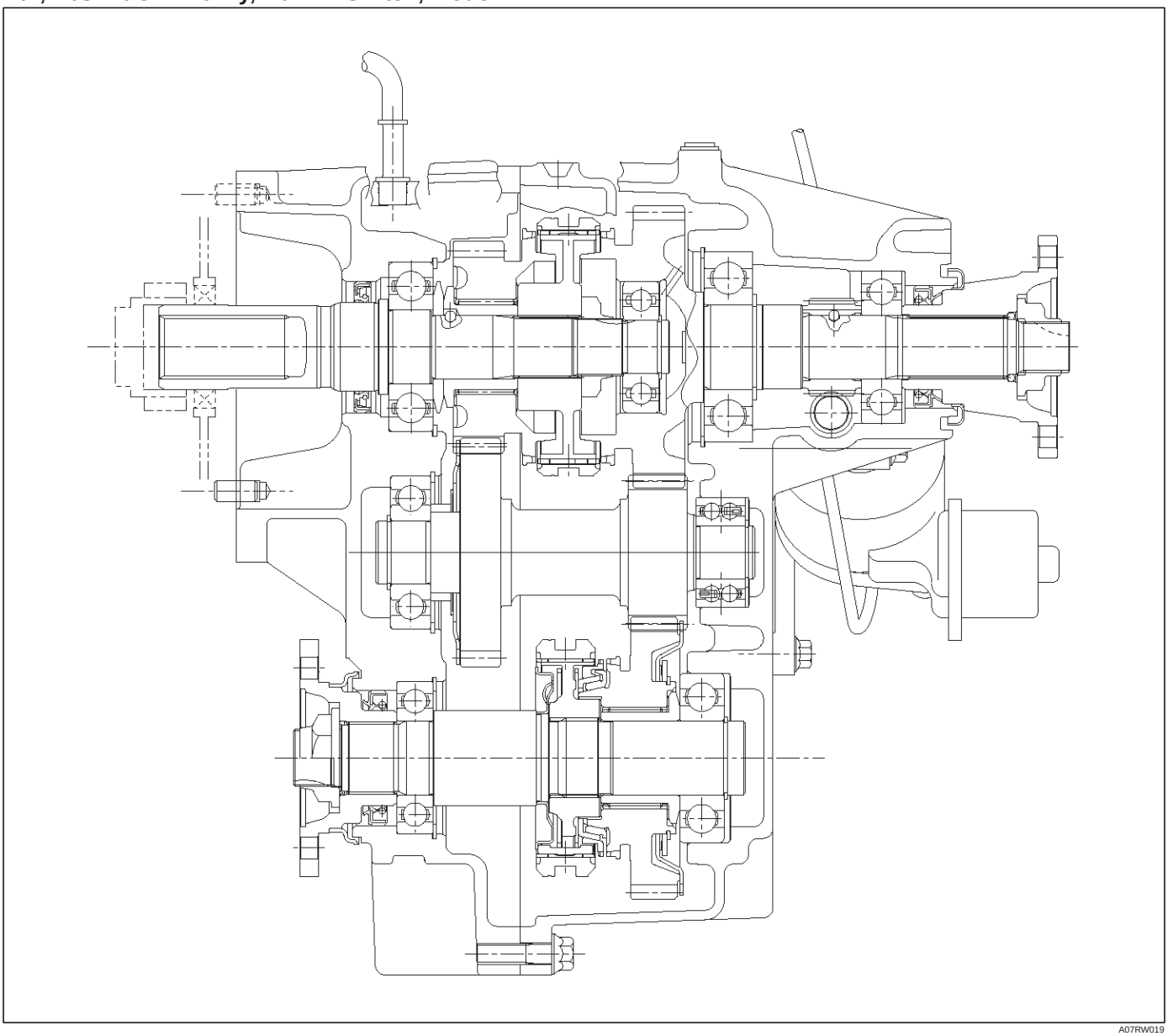

A07RW019

M/T, W/Shift On The Fly, WO/4WD Switch, model

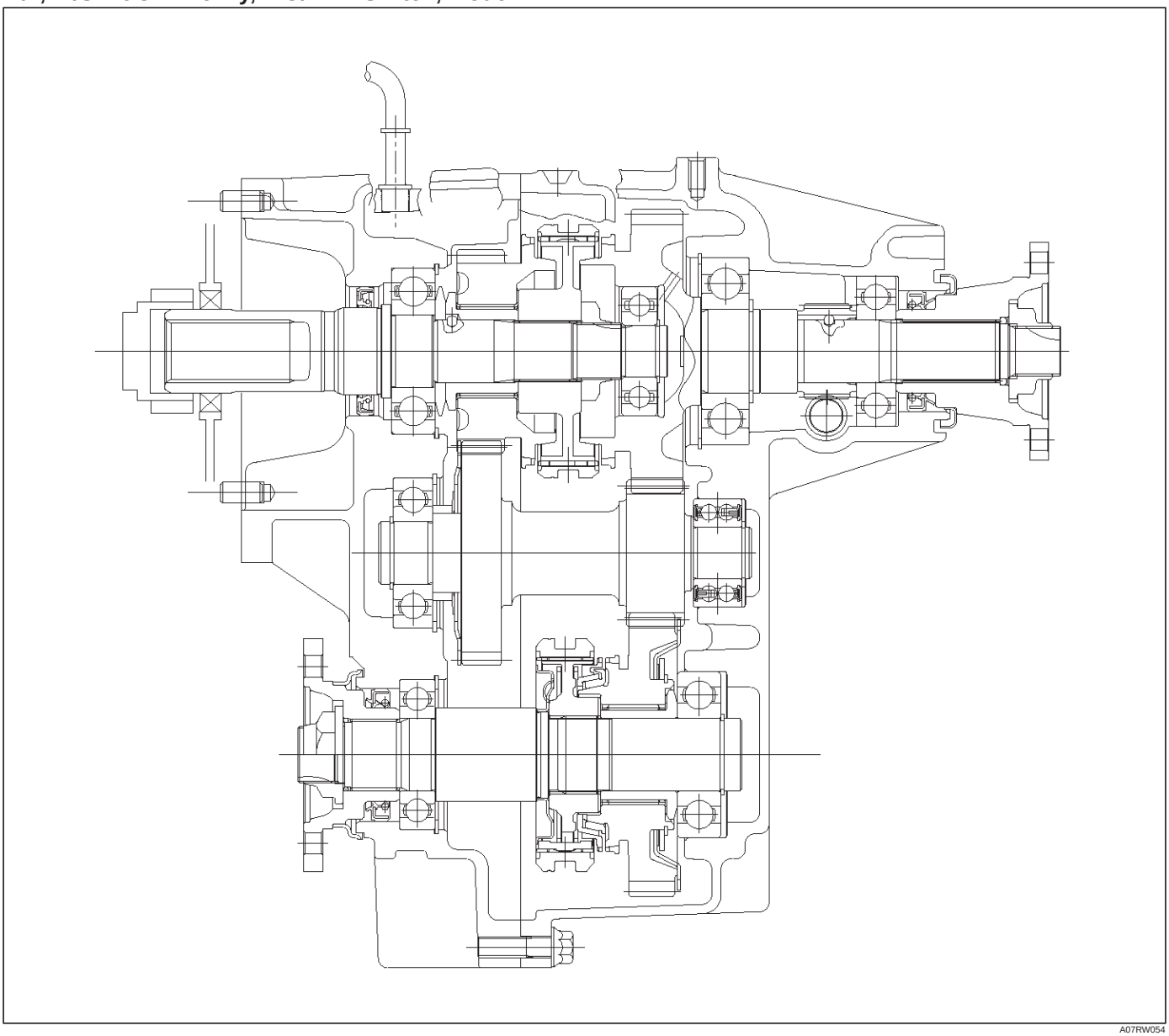

A07RW054

M/T, WO/Shift On The Fly, WO/4WD Switch, model

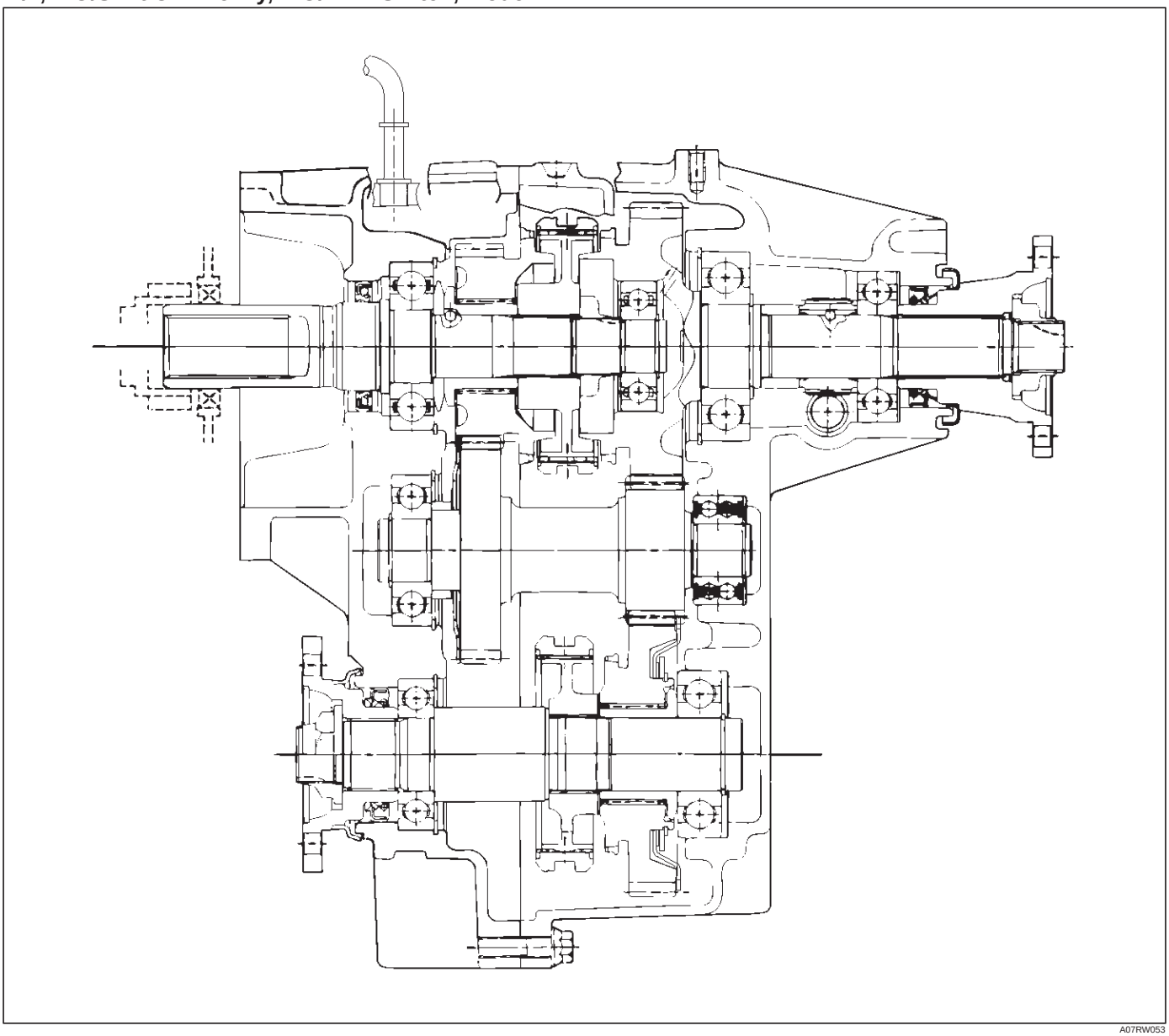

A07RW053

A/T, W/Shift On The Fly, W/4WD Switch, model

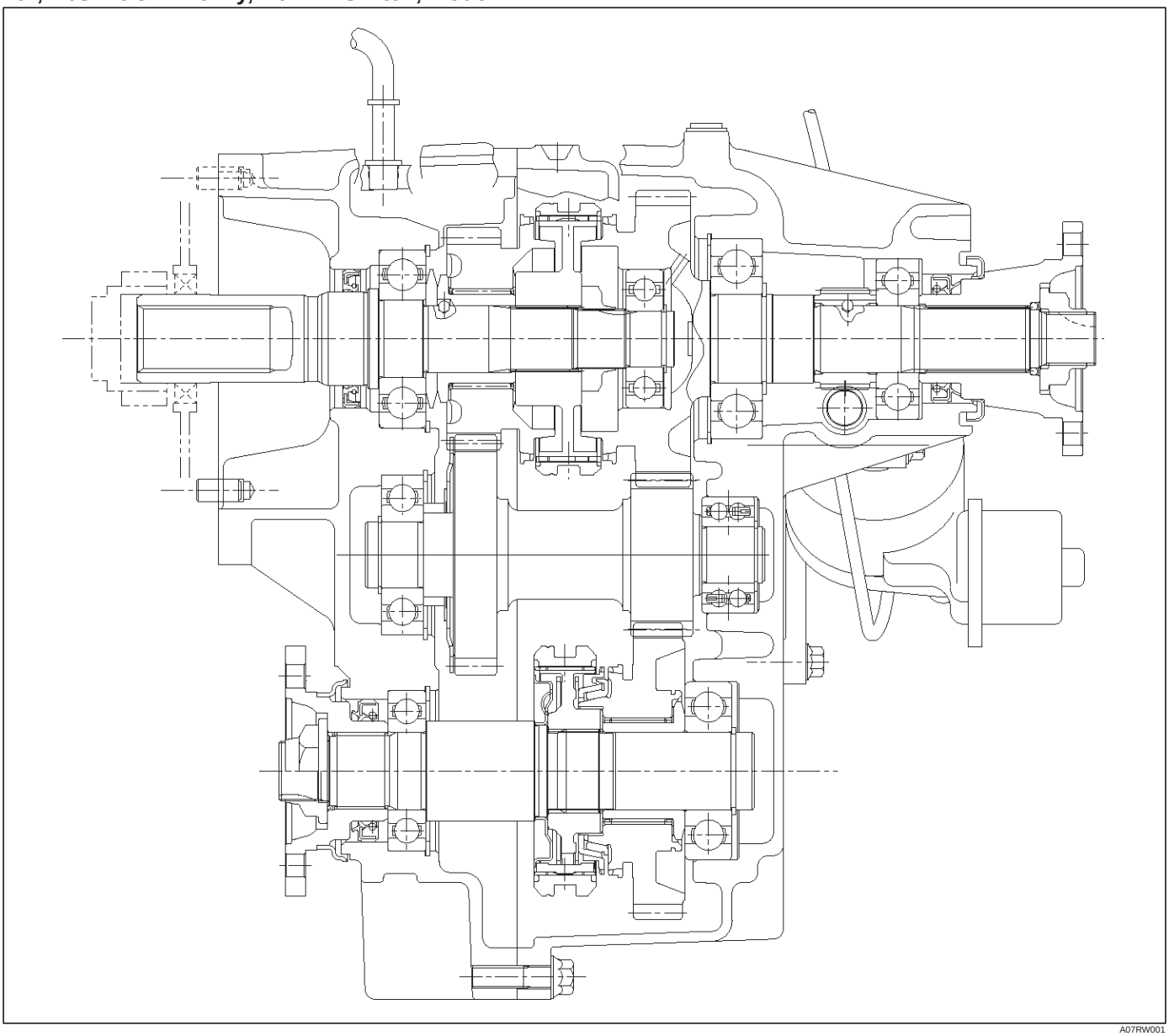

A07RW001

A/T, W/Shift On The Fly, WO/4WD Switch, model

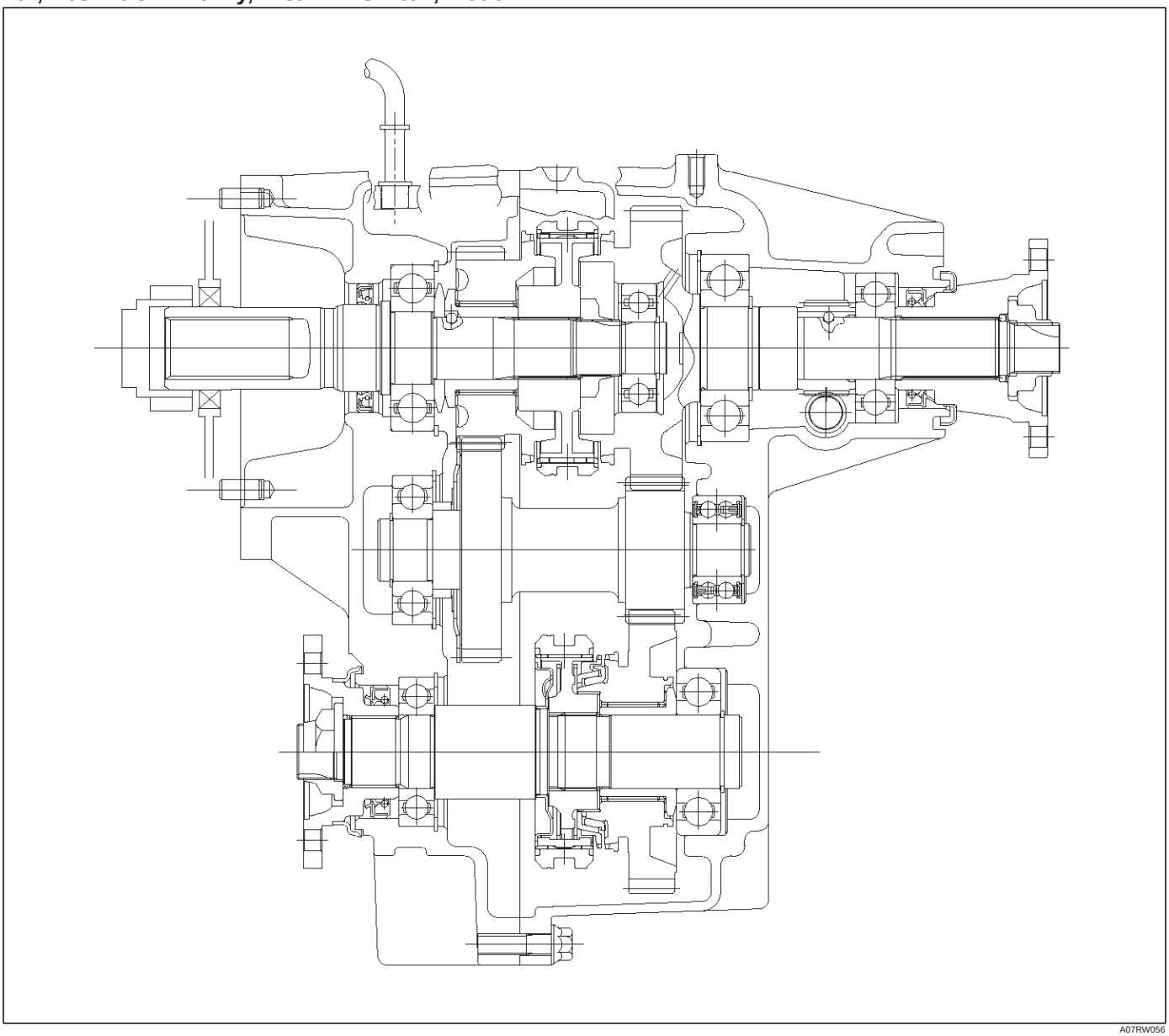

A07RW056

A/T, WO/Shift On The Fly, WO/4WD Switch, model

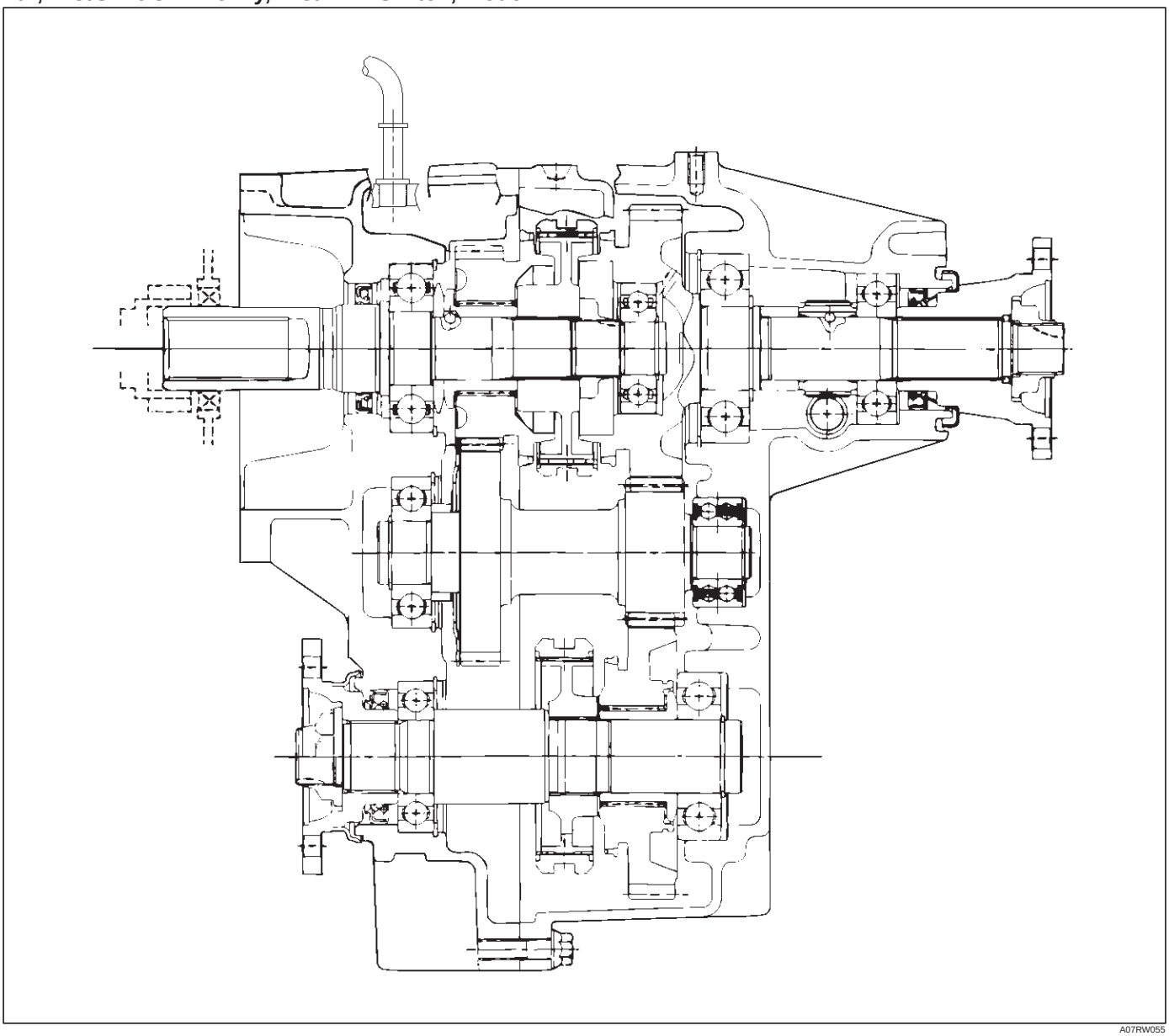

A07RW055

The transfer case is used to provide a means of providing power flow to the front axle. The transfer case also provides a means of disconnecting the front axle, providing better fuel economy and quieter operation when the vehicle is driven on improved roads where four wheel drive is not required. In addition, the transfer case provides an additional gear reduction when placed in low range, which is useful when difficult off–road conditions are encountered.

A floor mounted shift lever is used to select the high–low range. When four wheel drive switch has been turned on, the four wheel drive indicator light is designed to come on when the front axle has been engaged.

Transfer Rear Oil Seal

Removal

1. Disconnect the rear propeller shaft from the transfer case side.
2. Remove end nut and rear companion flange, using the companion flange holder 5–8840–0133–0 (J–8614–11).

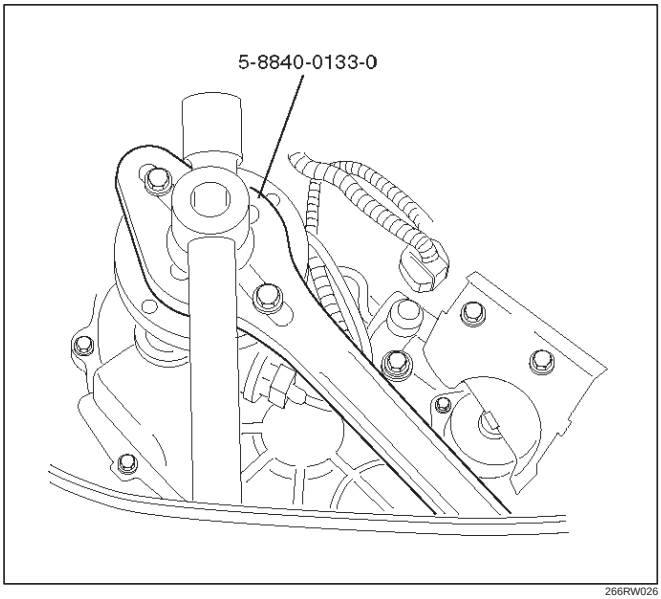

266RW026

3. Use the universal puller to remove the rear companion flange and O–ring.
4. Remove the oil seal from the transfer case.

Installation

To install, follow the removal steps in the reverse order, noting the following points:

1. Install oil seal and apply engine oil to the oil seal outer surfaces.
2. Apply the recommended grease (BESCO L2) or equivalent to the oil seal lip.
3. Use the oil seal installer 5–8840–2292–0 (J–39208) to install the rear seal to the transfer rear case.

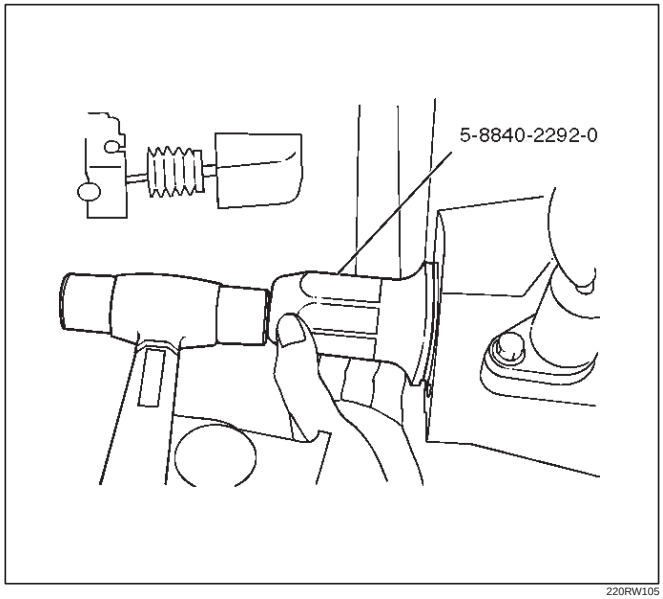

220RW105

4. Install the rear companion flange and O–ring.
5. Use the companion flange holder 5–8840–0133–0 (J–8614–11) to install a new end nut and tighten to the specified torque.

   Torque: 167 N·m (17.0kg·m/123 lb ft)

6. Use the punch 5–8840–2293–0 (J–39209) to stake the end nut at two spots.

NOTE: Be sure to confirm that there is no crack at the staked portion of the end nut after staking.

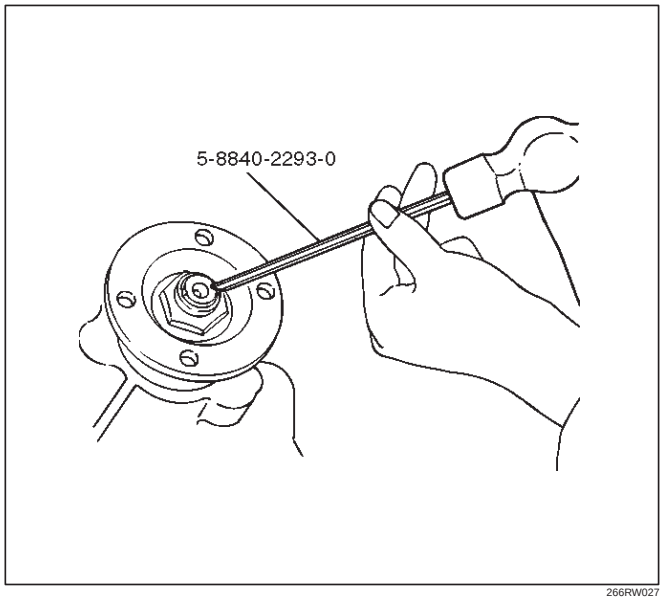

266RW027

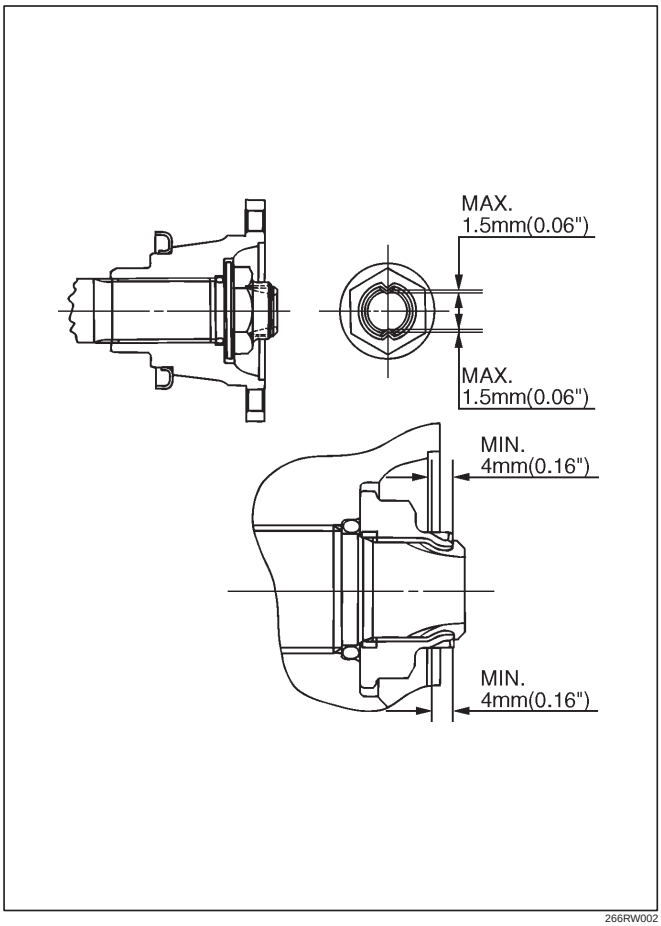

266RW002

7. Connect the rear propeller shaft to the transfer case and tighten to the specified torque.

Torque: 63 N·m (6.4kg·m/46 lb ft)

Transfer Case Assembly

Removal

NOTE: Before removing the transmission & transfer assembly from the vehicle, change the transfer mode to 2WD by pushing button switch on dash panel. (4WD Switch Model)

1. Disconnect the battery ground cable.
2. Drain the transfer case fluid, if overhauling the transter case assembly.
3. Remove the exhaust and transfer protectors.
4. Remove the rear and front propeller shafts from the transfer case side.
5. Remove the transfer control lever knob.
6. Disconnect the harness connectors and remove the front console.
7. Remove the selector lever assembly. Refer to Selector Lever in the Section 7A.
8. Remove the transfer control lever.
9. Disconnect the 4WD switch connector, speed sensor harness connector and 2WD–4WD actuator harness connector (4WD Switch Model) from the transmission harness.
10. Support the transfer case with a transmission jack.
11. Remove the transmission–transfer bolts and the nut (M/T).
12. Remove the transfer case assembly from the vehicle.

Installation

To install, follow the removal steps in the reverse order, noting the following points:

1. Apply a thin coat of molybdenum disulfide grease to the input shaft spline and install the transter case assembly to the vehicle.

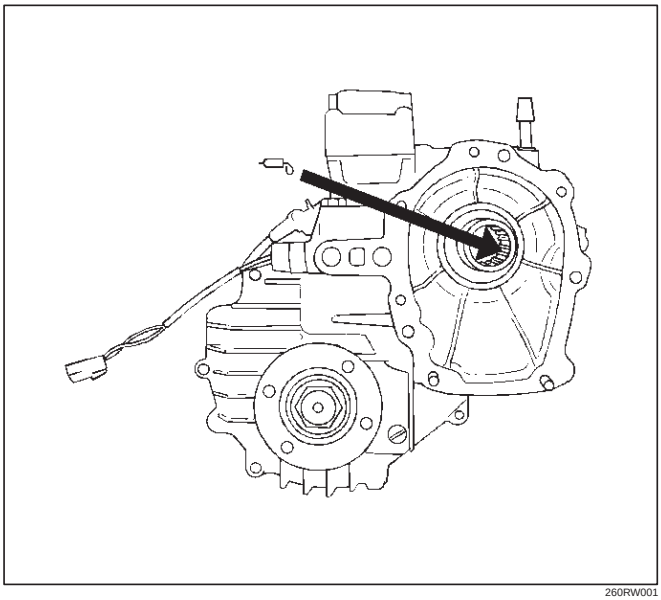

260RW001

2. Tighten the transmission–transfer bolts and the nut (M/T) to the specified torque.

   Torque: 46 N·m (4.7kg·m/34 lb ft)

3. Tighten the propeller shaft bolts to the specified torque.

   Torque: 63 N·m (6.4kg·m/46 lb ft)

4. Tighten the transfer protector bolts to the specified torque.

   Torque: 37 N·m (3.8kg·m/27 lb ft)

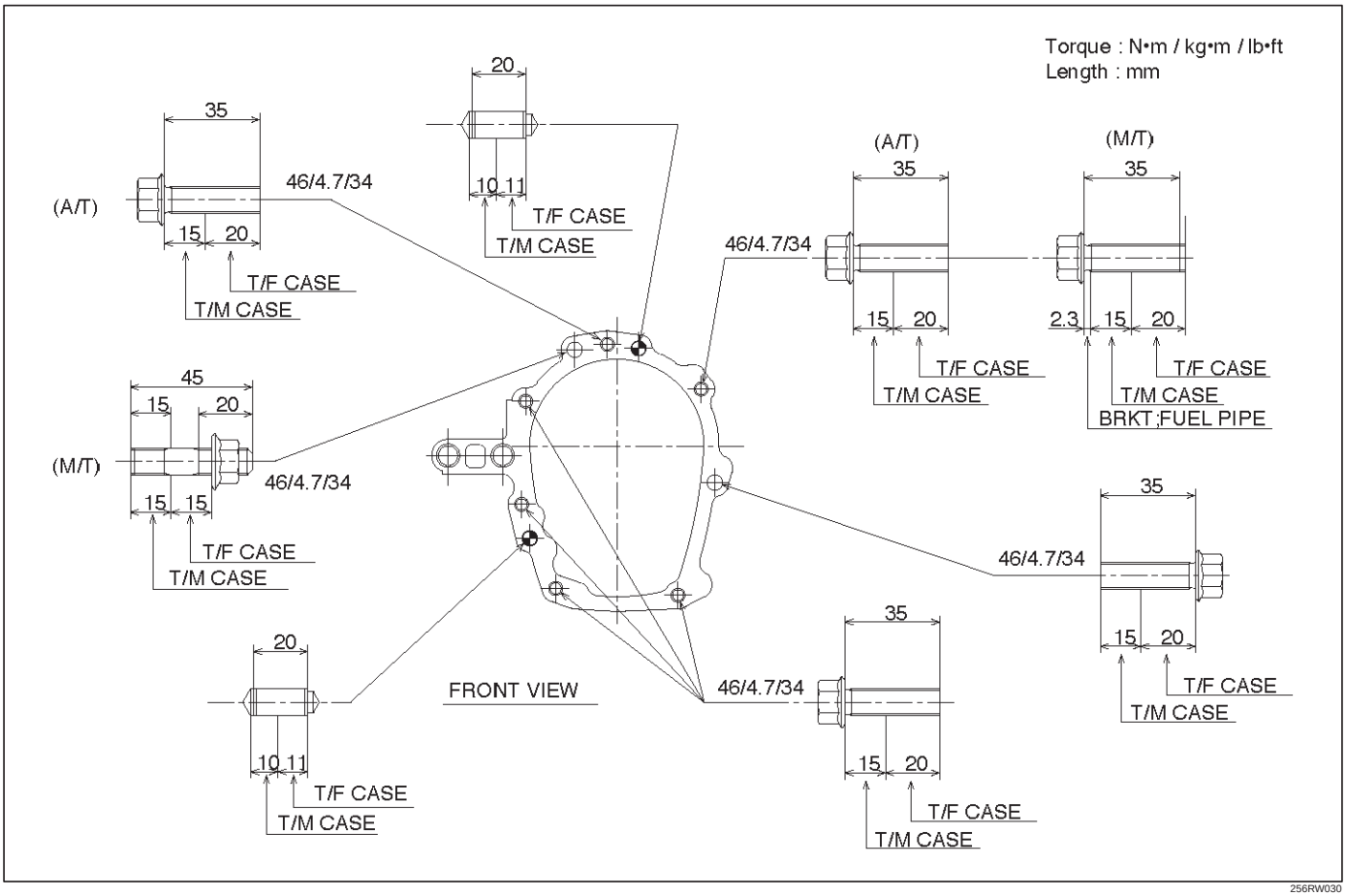

256RW030

Transfer Rear Cover Assembly (4WD Switch Model)

Transfer Rear Cover Assembly and Associated Parts

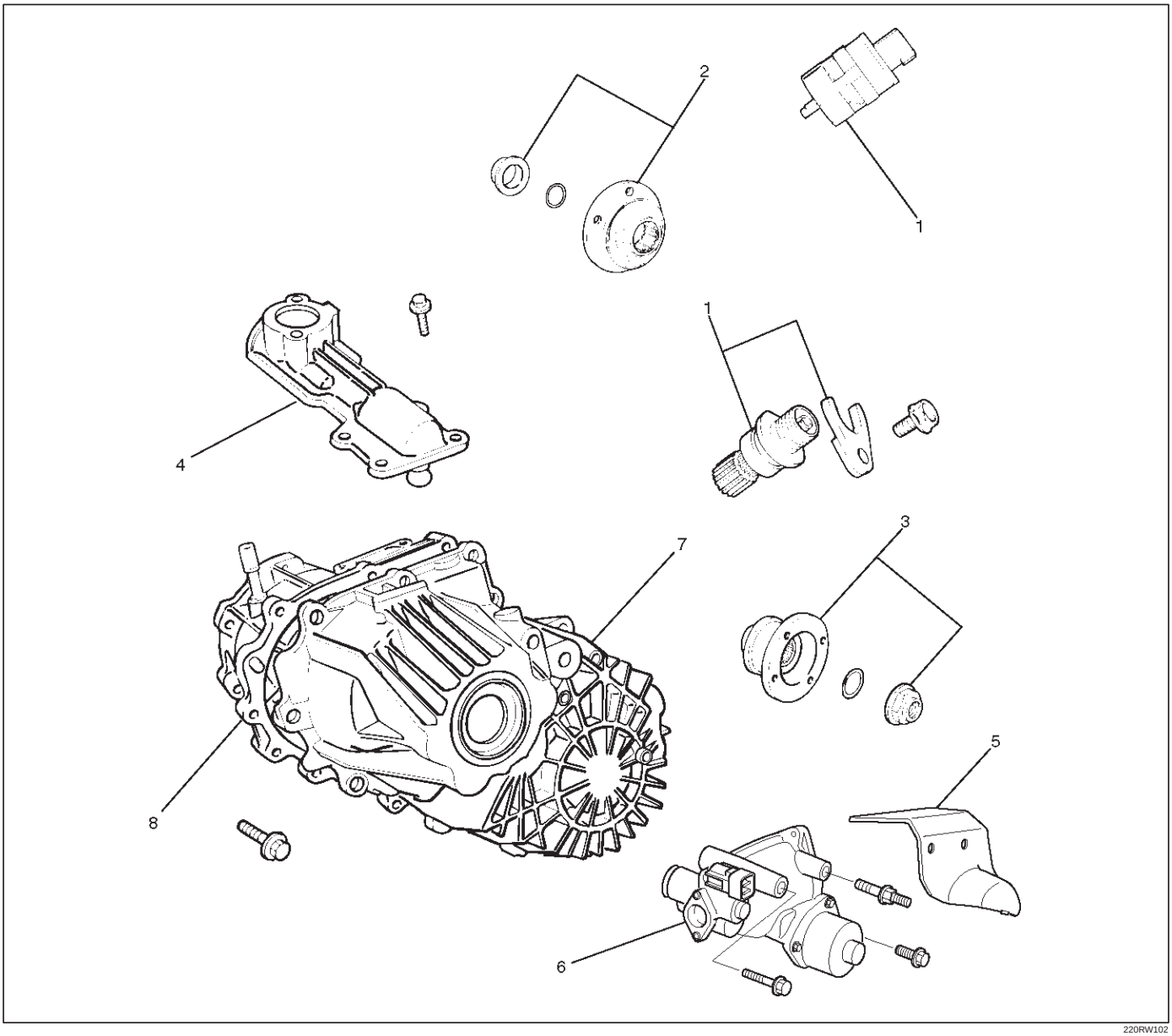

Legend

(1) Speedometer Sensor, Speedometer Driven Gear and Plate
(2) Front Companion Flange
(3) Rear Companion Flange
(4) Control Box Assembly
(5) 2WD–4WD Actuator Heat Protector
(6) 2WD–4WD Actuator Assembly
(7) Transfer Rear Cover Assembly
(8) Transfer Case Assembly

Removal

1. Remove the speedometer sensor.
2. Remove the plate.
3. Remove the speedometer driven gear bushing and driven gear.

NOTE: Apply a reference mark to the driven gear bushing before removal.

4. Remove the front companion flange and the rear companion flange, using the flange companion holder 5–8840–0133–0 (J–8614–11) to remove the end nuts.

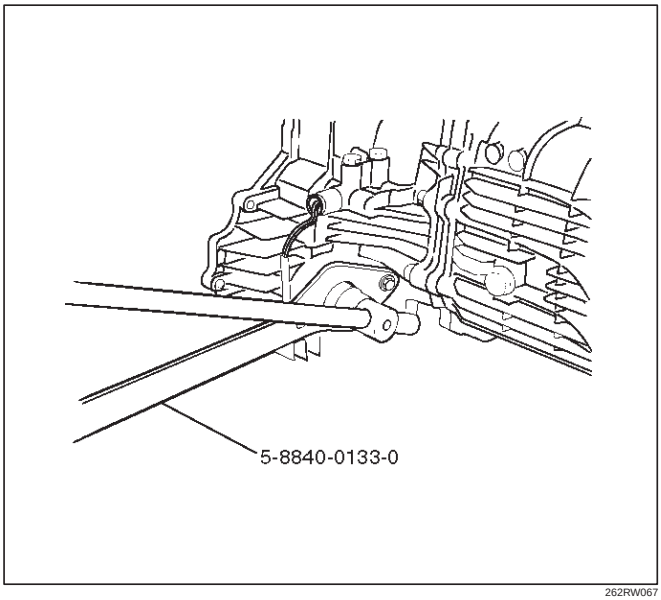

262RW067

NOTE: Use a universal puller to remove the rear companion flange.

5. Disconnect the actuator breather hose and the transfer breather hose from the control box.
6. Remove the control box assembly.
7. Disconnect the actuator breather hose and remove the 2WD–4WD actuator heat protector from the 2WD–4WD actuator assembly.

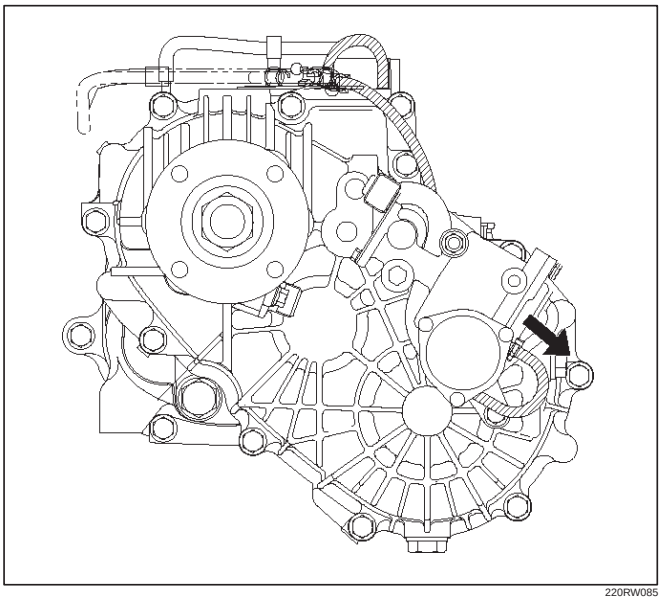

220RW085

8. Remove the 2WD–4WD actuator assembly bolts.
9. Pull the 2WD–4WD actuator assembly with 2WD–4WD shift rod.

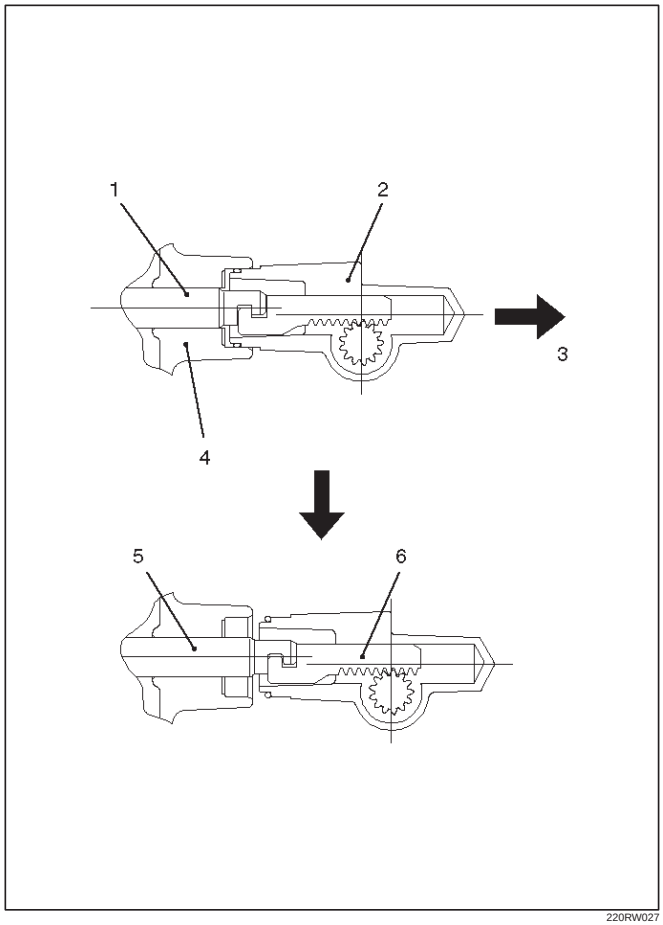

220RW027

Legend

(1) Shift Rod: 2WD–4WD (Position: 2WD)
(2) 2WD–4WD Actuator Assembly
(3) Pull Cover
(4) Rear Cover Assembly
(5) Position: 4WD
(6) Mode: 2WD

10. Offset the actuator assembly.

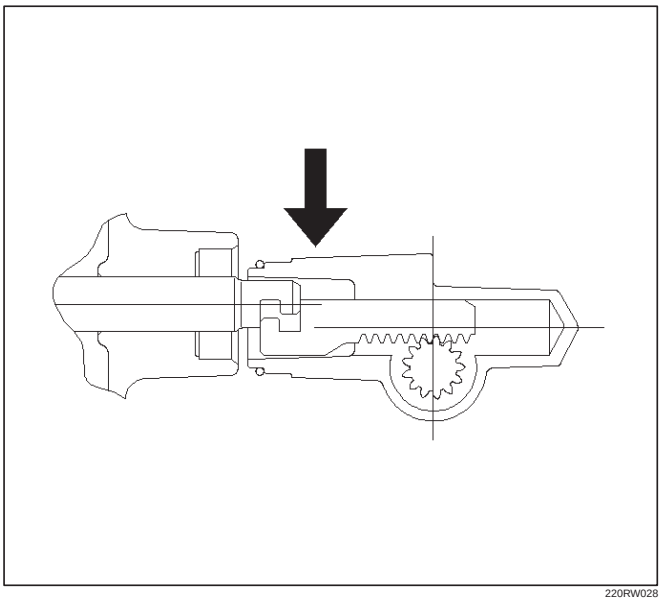

220RW028

11. Remove the actuator assembly.

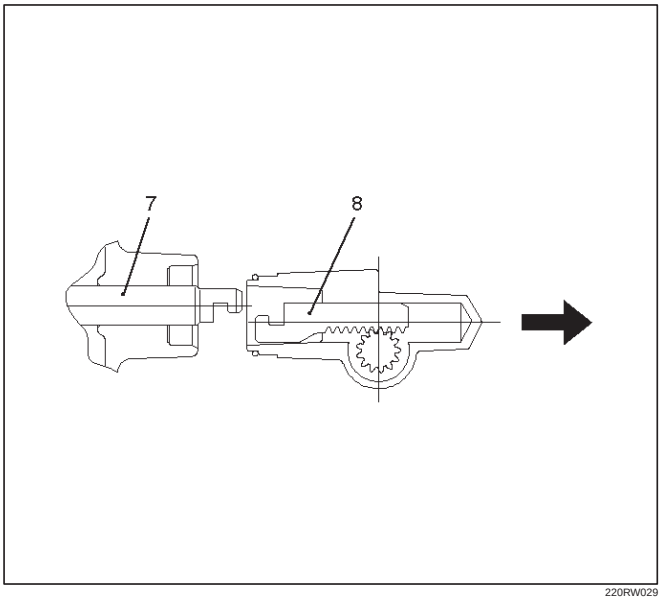

220RW029

Legend

(7) Position: 4WD
(8) Mode: 2WD

12. Remove the transfer rear cover assembly from the transfer case assembly.

Installation

1. Apply the recommended liquid gasket (LOCTITE 17430) or its equivalent to the transfer rear cover fitting faces.

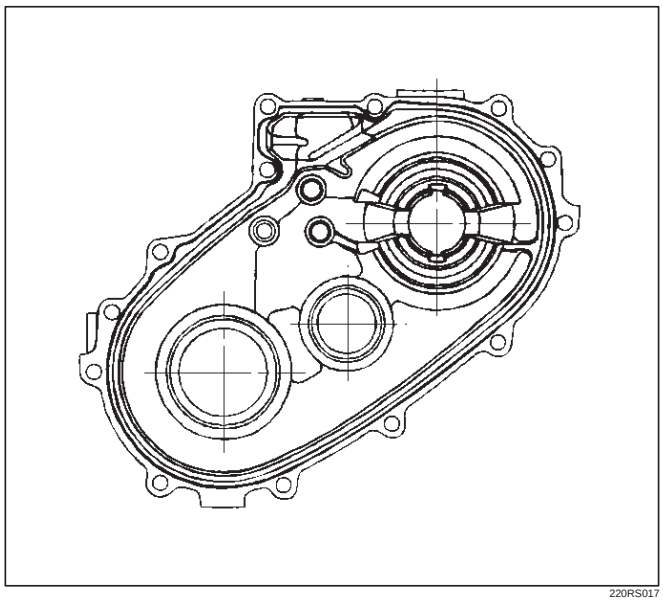

220RS017

2. Install the transfer rear cover assembly to the transfer case assembly.
3. Perform the following steps before fitting the transfer rear case:
   1. Shift the high–low shift rod to the 4H side.
   2. The cut–away portion of the select rod head (9) should align with that of the rear case hole's stopper (10).

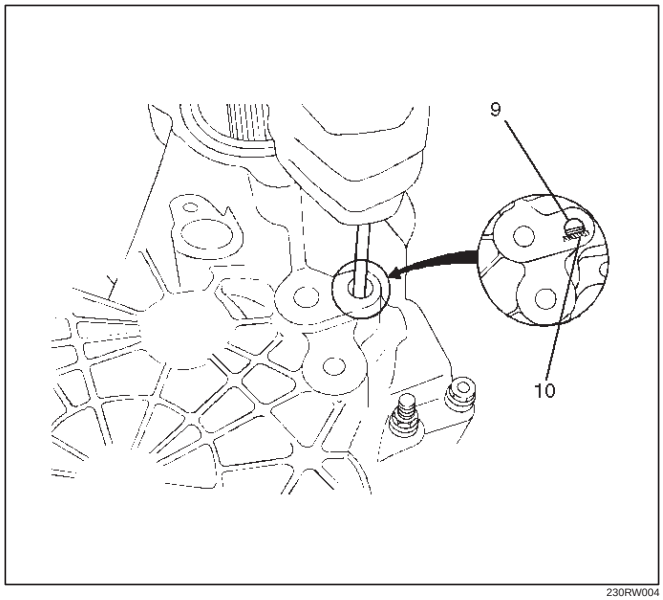

230RW004

4. Tighten the transfer rear case bolts to the specified torque.

   Torque: 37 N·m (3.8kg·m/27 lb ft)

5. Shift the 2WD–4WD shift rod (11) to the 4WD side.

6. Join the rod grooves of 2WD–4WD actuator assembly (12) and shift rod (11).

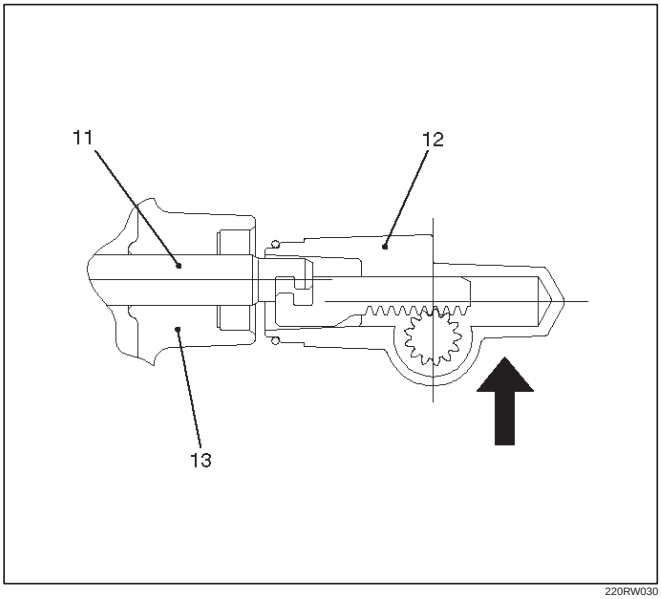

220RW030

Legend

(11) Shift Rod: 2WD–4WD (Position: 4WD)
(12) 2WD–4WD Actuator Assembly (Mode: 2WD)
(13) Rear Cover Assembly

7. Push the 2WD–4WD actuator assembly (12) with 2WD–4WD shift rod (11) till the shift rod (11) reaches the 2WD position.

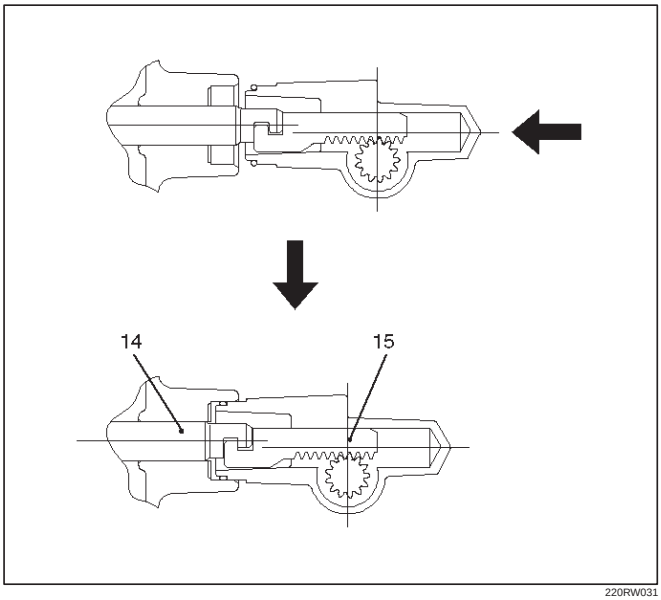

220RW031

Legend

(14) Position: 2WD
(15) Mode: 2WD

8. Tighten the 2WD–4WD actuator bolts to the specified torque.

   Torque: 19 N·m (1.9kg·m/14 lb ft)

9. Install the actuator heat protector.
10. Connect the actuator breather hose to the actuator.
11. Install the control box assembly.

    Torque: 19 N·m (1.9kg·m/14 lb ft)

12. Connect the breather hoses to the control box.
13. Install the rear companion flange and front companion flange, using the companion flange holder 5–8840–0133–0 (J–8614–11) to tighten the flange nuts to the transfer case.

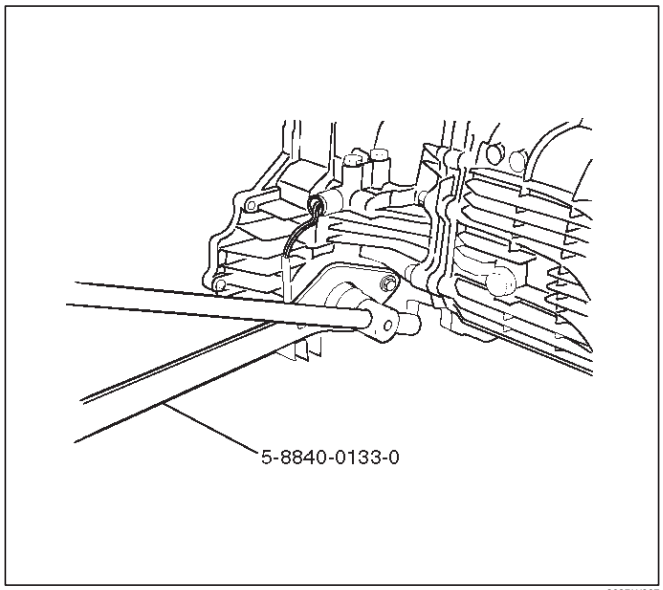

262RW067

14. Tighten the new transfer flange nuts to the specified torque.

    Torque

    Rear companion flange: 167 N·m (17.0kg·m/123 lb ft)

    Front companion flange: 137 N·m (14.0kg·m/101 lb ft)

15. Use the punch 5–8840–2293–0 (J–39209) to stake the rear companion flange nut at two spots.

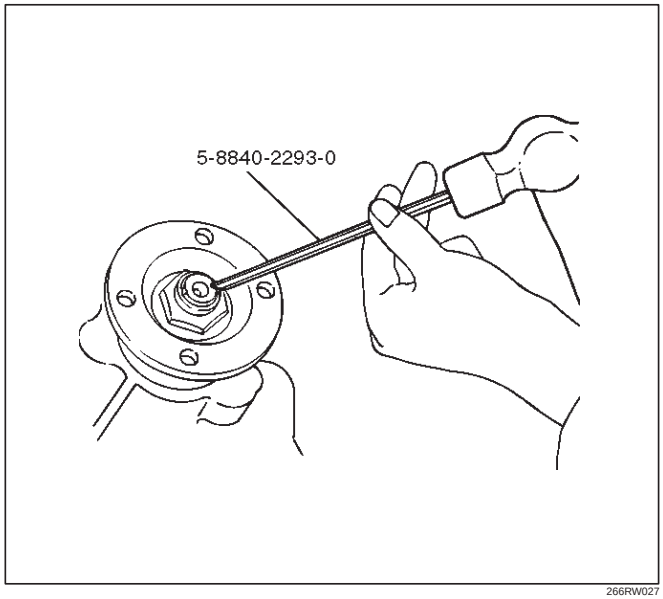

266RW027

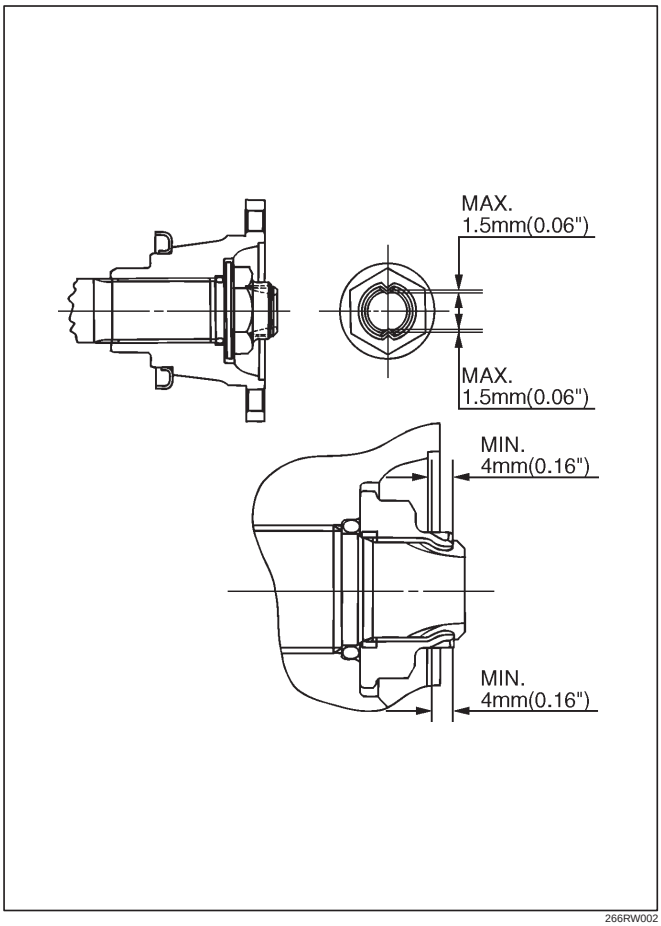

266RW002

16. Stake the front companion flange nut at one spot.

NOTE: Be sure to confirm that there is no crack at the staked portion of the flange nut after staking.

17. Install the O–ring (8) to the speedometer driven gear bushing (7).
18. Install the driven gear to the speedometer driven gear bushing (7).
19. Install the speedometer driven gear assembly to the transfer rear cover.
20. Install the plate (6) to the transfer rear case and tighten to the specified torque.

    Torque: 15 N·m (1.5kg·m/11 lb ft)

21. Install the speedometer sensor and tighten to the specified torque.

    Torque: 27 N·m (2.8kg·m/20 lb ft)

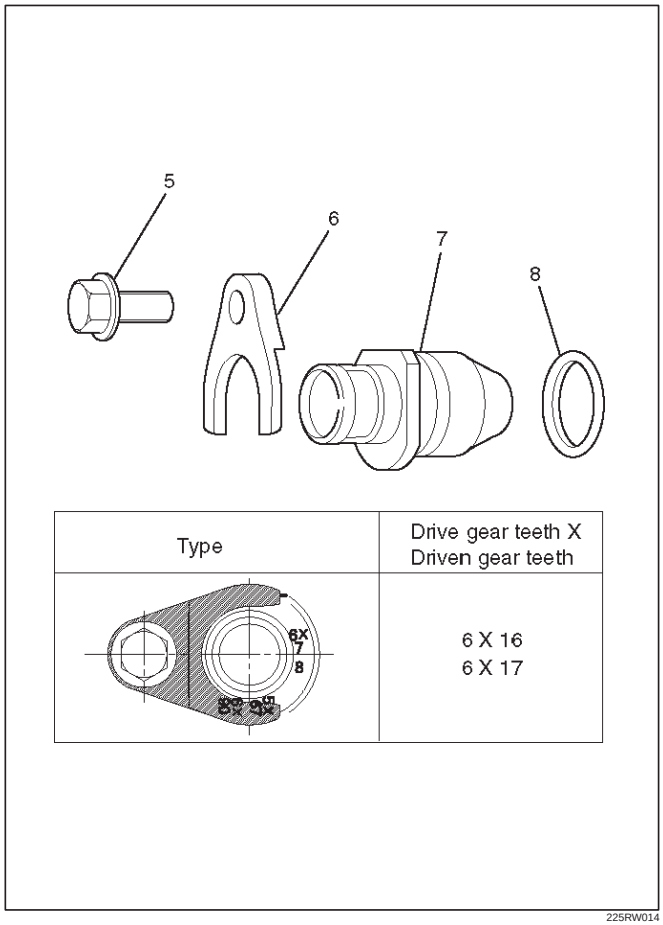

225RW014

Disassembly

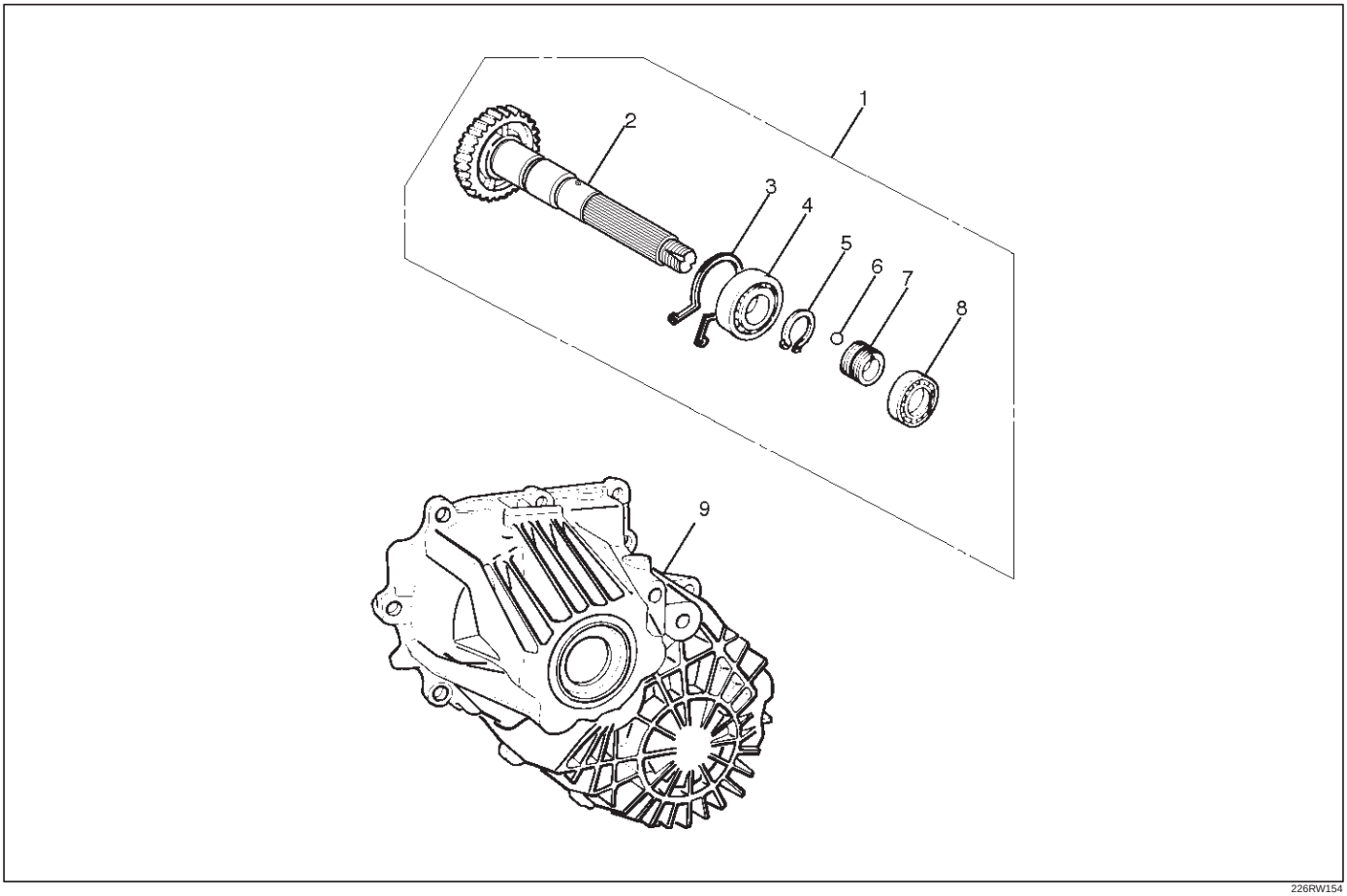

226RW154

Legend

(1) Rear Output Shaft Assembly
(2) Rear Output Shaft
(3) Bearing Snap Ring
(4) Ball Bearing
(5) Bearing Snap Ring
(6) Ball
(7) Speedometer Drive Gear
(8) Ball Bearing
(9) Transfer Rear Cover (with oil seal)

1. Remove the bearing snap ring (3), using a pair of snap ring pliers.

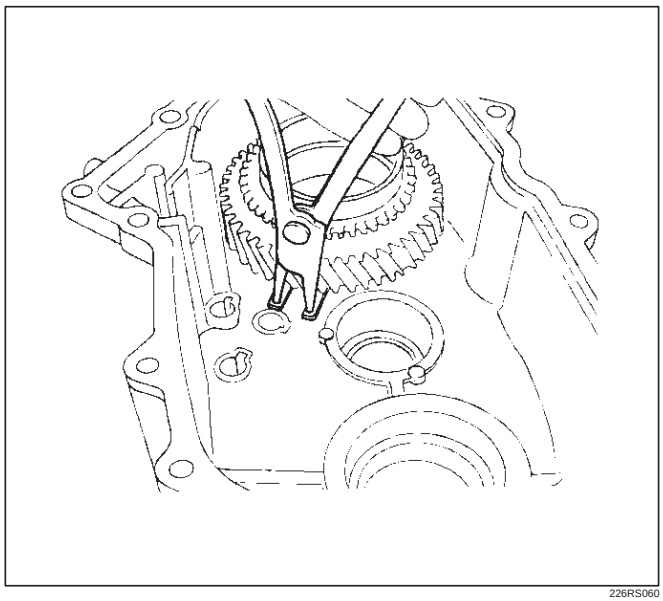

226RS060

2. Remove the rear output shaft assembly (1) from the transfer rear cover (with oil seal).
3. Remove ball bearing (8), using a bench press and the bearing remover 5–8840–0015–0 (J–22912–01) .

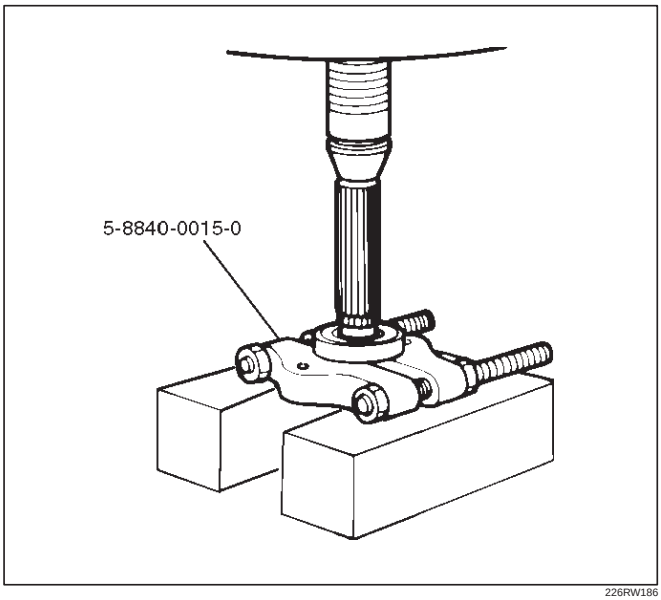

226RW186

4. Remove the speedometer drive gear (7).
5. Remove the ball (6).
6. Remove the bearing snap ring (5), using a pair of snap ring pliers.
7. Remove the ball bearing (4) from the rear output shaft, using a bench press and the bearing remover 5–8840–0015–0 (J–22912–01).

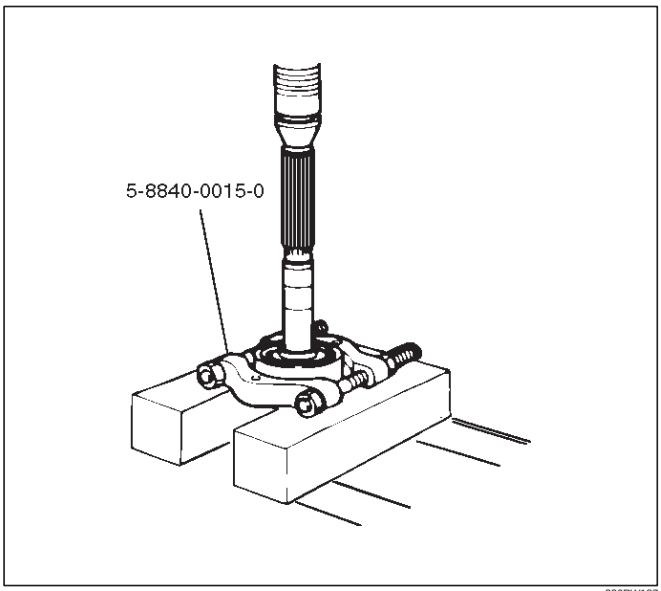

226RW187

Inspection and Repair

Refer to “TRANSFER CASE ASSEMBLY” in this section for inspection and repair.

Reassembly

1. Install transfer rear cover (with oil seal).
   Oil seal replacement
   - Remove the oil seal from the transfer rear cover.
   - Apply engine oil to the oil seal outer surfaces.
   - Fill in recommended grease (BESCO L2) or equivalent in the oil seal lip.
   - Use the oil seal installer 5–8840–2292–0 (J–39208) to install the rear oil seal to the transfer rear cover.

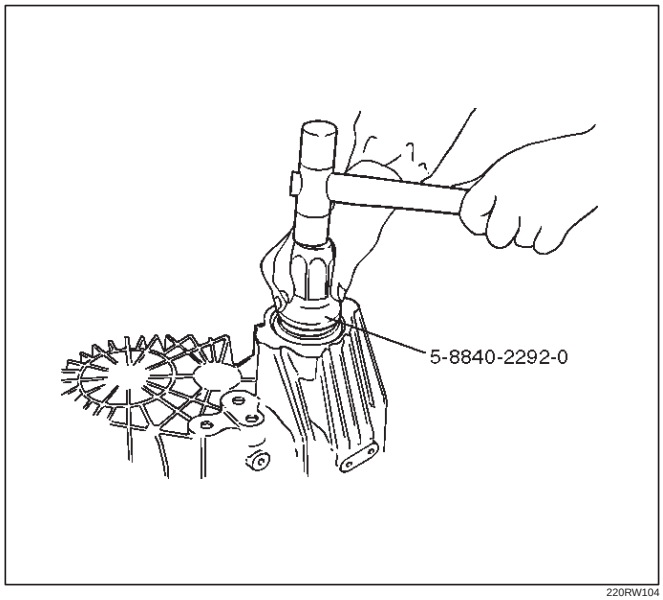

220RW104

2. Set the snap ring (3), and install ball bearing (4) to the rear output shaft (2), using the ball bearing installer 5–8840–2159–0 (J–37223) and the adapter 5–8840–2192–1 (J–37486–A).

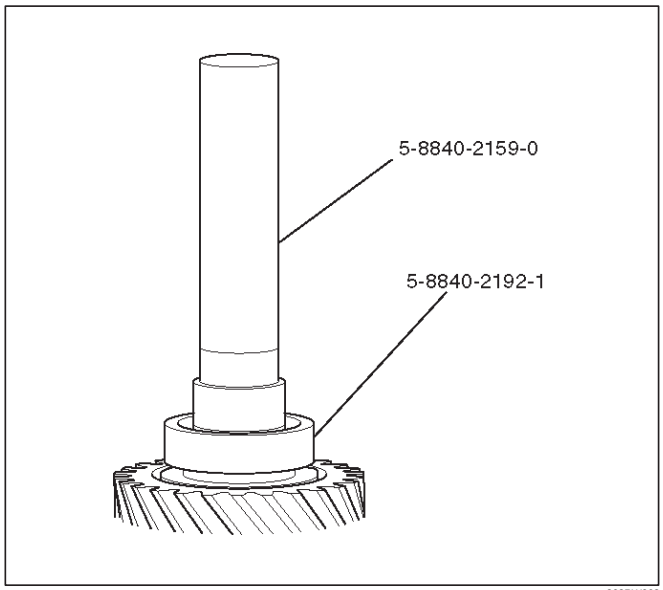

262RW068

3. Install the bearing snap ring (5).
4. Install the ball (6).
5. Install the speedometer drive gear (7).

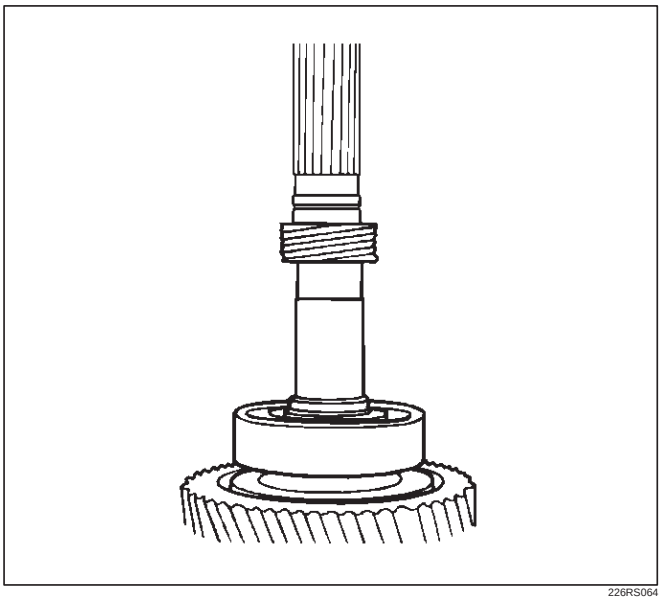

226RS064

6. Install ball bearing (8), using the ball bearing installer 5–8840–2159–0 (J–37223).

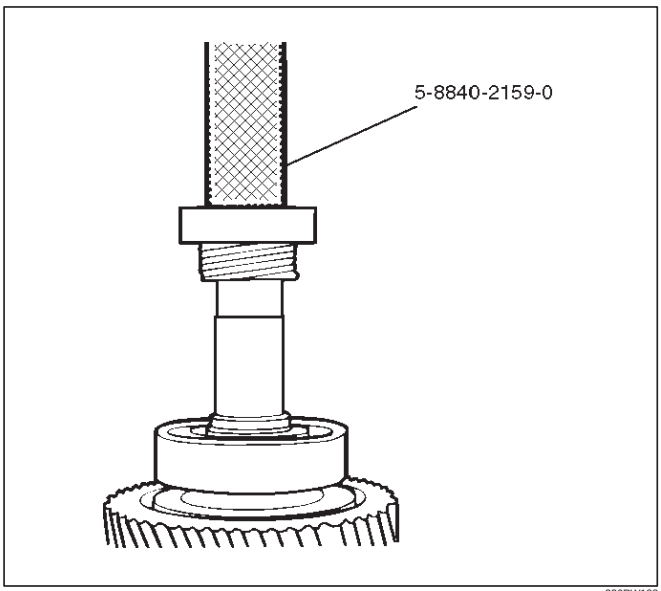

226RW188

7. Install the rear output shaft assembly (1) to the transfer rear cover.
8. Install the bearing snap ring (3).

NOTE: The snap ring must be fully inserted into the transfer rear case snap ring groove.

Transfer Rear Cover Assembly (Except 4WD Switch Model)

Transfer Rear Cover Assembly and Associated Parts

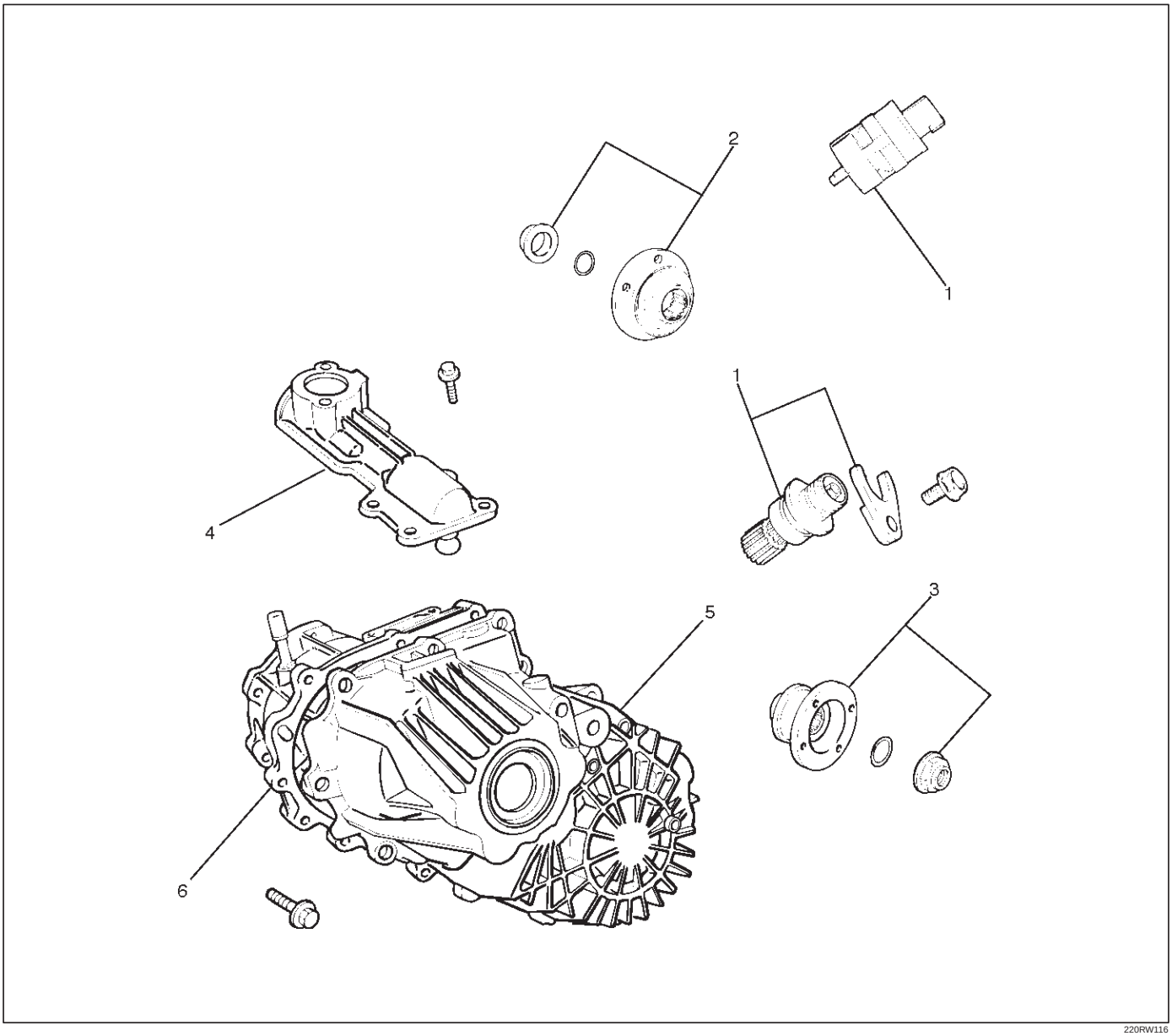

220RW116

Legend

(1) Speedometer Sensor, Speedometer Driven Gear and Plate
(2) Front Companion Flange
(3) Rear Companion Flange
(4) Control Box Assembly
(5) Transfer Rear Cover Assembly
(6) Transfer Case Assembly

Removal

1. Remove the speedometer sensor.
2. Remove the plate.
3. Remove the speedometer driven gear bushing and driven gear.

NOTE: Apply a reference mark to the driven gear bushing before removal.

4. Remove the front companion flange and the rear companion flange, using the flange companion holder 5–8840–0133–0 (J–8614–11) to remove the end nuts.

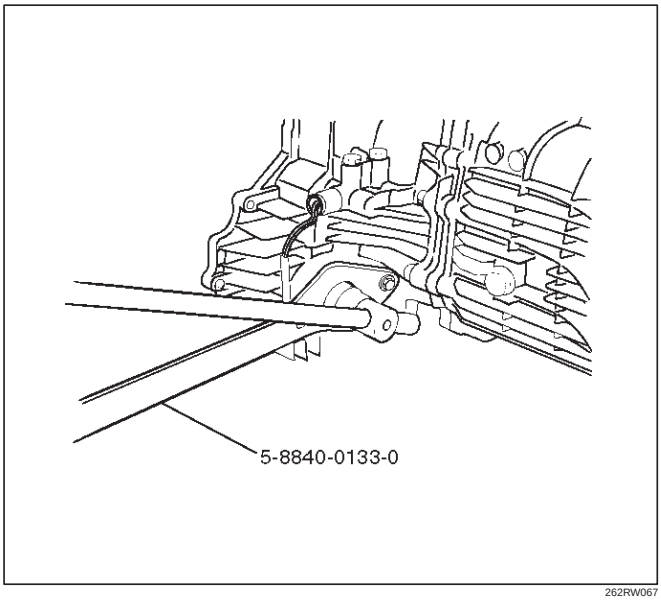

262RW067

NOTE: Use a universal puller to remove the rear companion flange.

5. Disconnect the transfer breather hose from the control box.
6. Remove the control box assembly.
7. Remove the transfer rear cover assembly from the transfer case assembly.

Installation

1. Apply the recommended liquid gasket (LOCTITE 17430) or its equivalent to the transfer rear cover fitting faces.

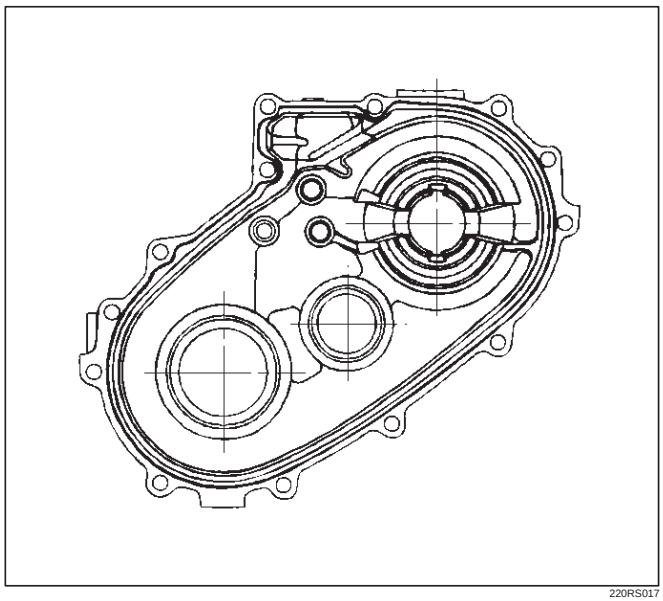

220RS017

2. Install the transfer rear cover assembly to the transfer case assembly.
3. Perform the following steps before fitting the transfer rear case:
   1. Shift the high–low shift rod to the 4H side.
   2. Turn the select rod counterclockwise so that the select block projection may enter into the 2WD–4WD shift block.
   3. The cut–away portion of the select rod head (9) should align with that of the rear case hole's stopper (10).

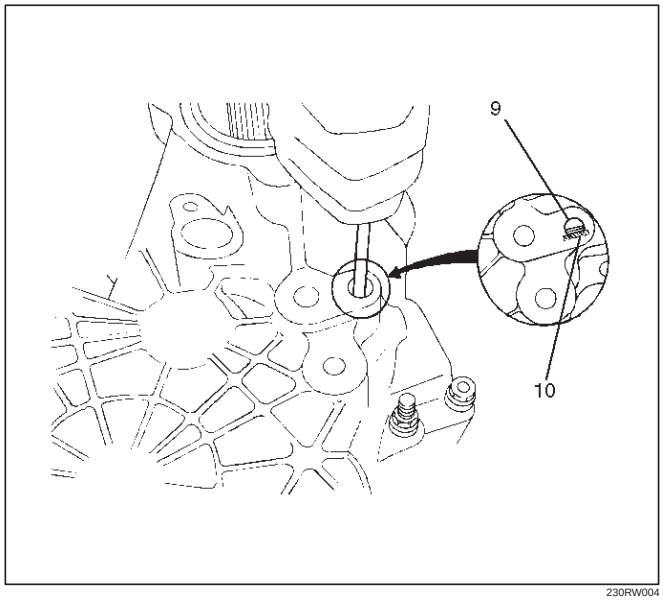

230RW004

4. Tighten the transfer rear case bolts to the specified torque.

Torque: 37 N·m (3.8kg·m/27 lb ft)

5. Install the control box assembly.

   Torque: 19 N·m (1.9kg·m/14 lb ft)

6. Connect the breather hoses to the control box.
7. Install the rear companion flange and front companion flange, using the companion flange holder 5–8840–0133–0 (J–8614–11) to tighten the flange nuts to the transfer case.

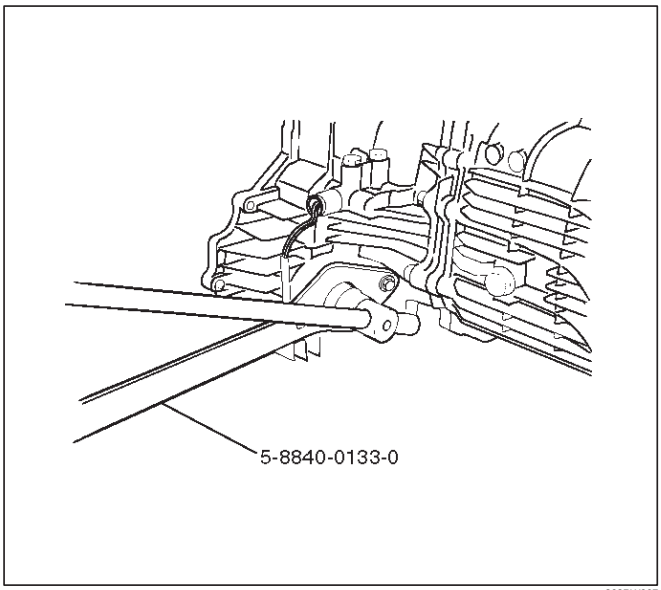

262RW067

8. Tighten the new transfer flange nuts to the specified torque.

   Torque

   Rear companion flange: 167 N·m (17.0kg·m/123 lb ft)

   Front companion flange: 137 N·m (14.0kg·m/101 lb ft)

9. Use the punch 5–8840–2293–0 (J–39209) to stake the rear companion flange nut at two spots.

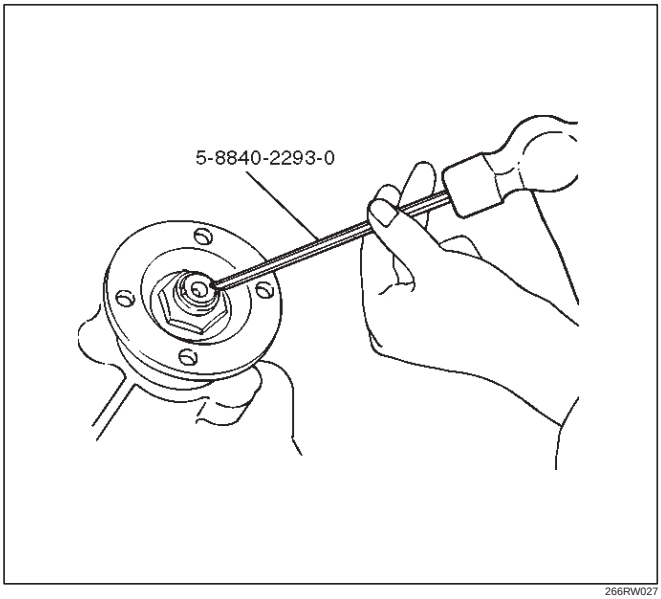

266RW027

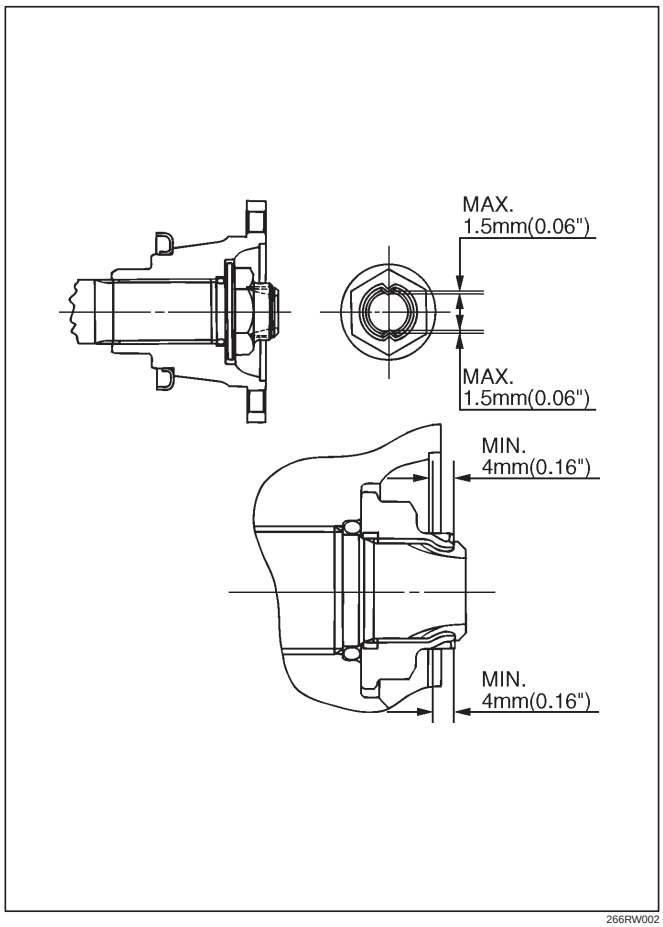

266RW002

10. Stake the front companion flange nut at one spot.

NOTE: Be sure to confirm that there is no crack at the staked portion of the flange nut after staking.

11. Install the O–ring (8) to the speedometer driven gear bushing (7).
12. Install the driven gear to the speedometer driven gear bushing (7).
13. Install the speedometer driven gear assembly to the transfer rear cover.
14. Install the plate (6) to the transfer rear case and tighten to the specified torque.

    Torque: 15 N·m (1.5kg·m/11 lb ft)

15. Install the speedometer sensor and tighten to the specified torque.

Torque: 27 N·m (2.8kg·m/20 lb ft)

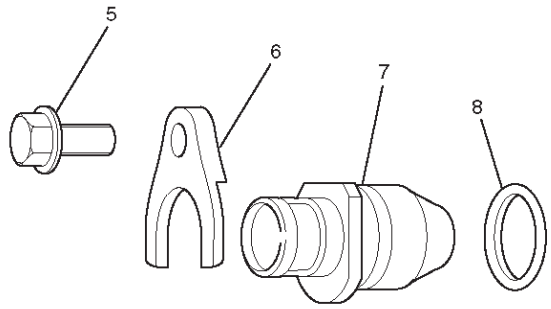

Type	Drive gear teeth X Driven gear teeth
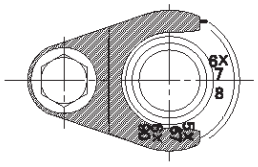	6 X 16 6 X 17

225RW014

Disassembly

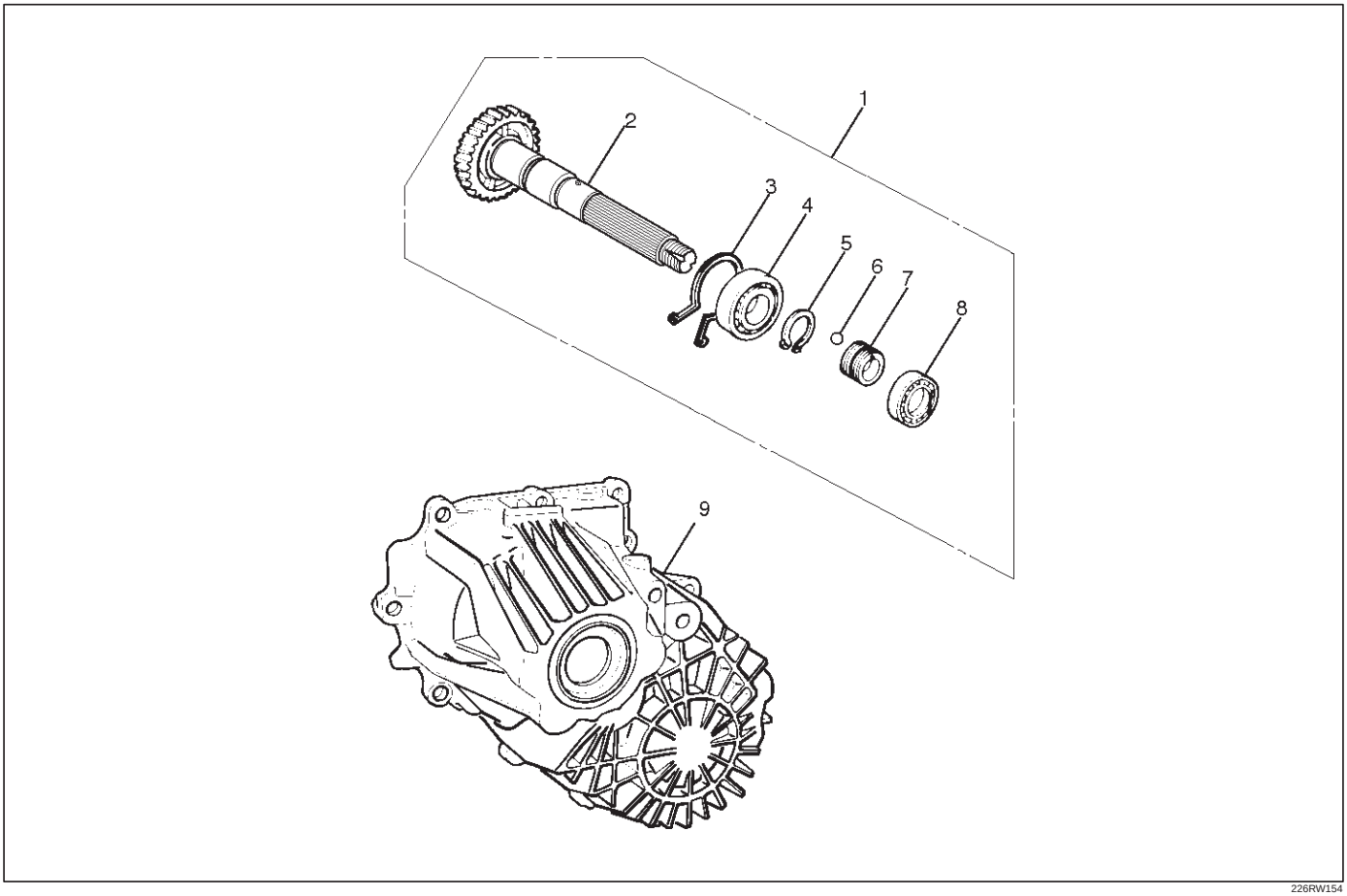

226RW154

Legend

(1) Rear Output Shaft Assembly
(2) Rear Output Shaft
(3) Bearing Snap Ring
(4) Ball Bearing
(5) Bearing Snap Ring
(6) Ball
(7) Speedometer Drive Gear
(8) Ball Bearing
(9) Transfer Rear Cover (with oil seal)

1. Remove the bearing snap ring (3), using a pair of snap ring pliers.

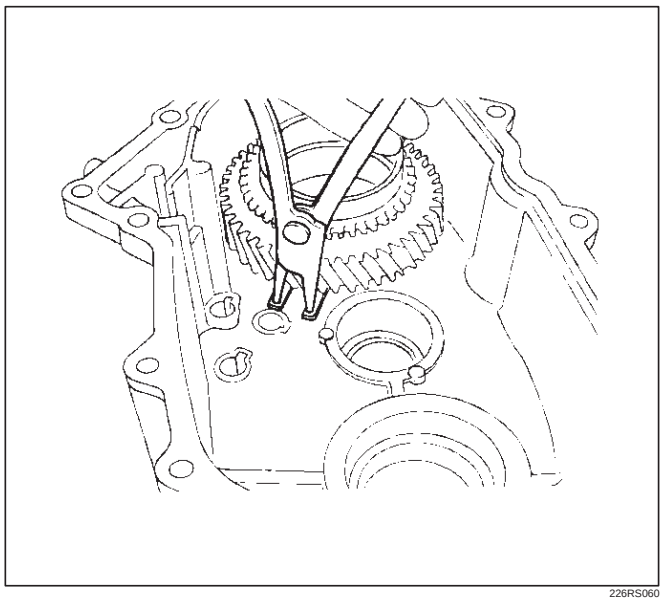

226RS060

2. Remove the rear output shaft assembly (1) from the transfer rear cover (with oil seal).
3. Remove ball bearing (8), using a bench press and the bearing remover 5–8840–0015–0 (J–22912–01) .

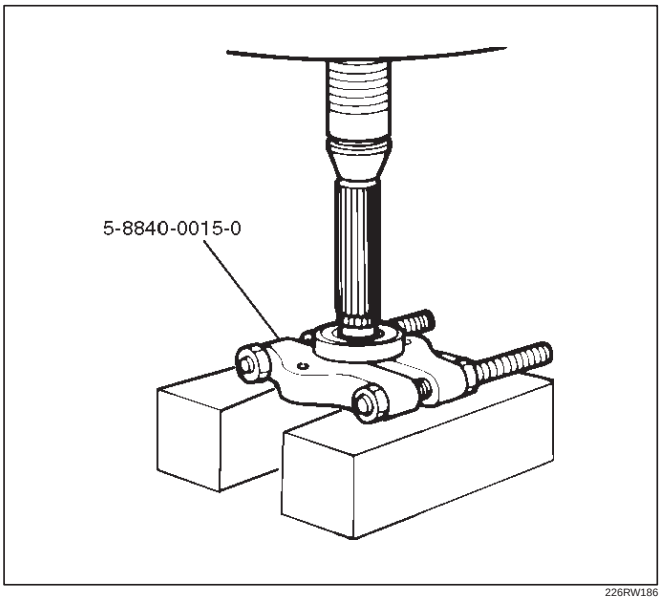

226RW186

4. Remove the speedometer drive gear (7).
5. Remove the ball (6).
6. Remove the bearing snap ring (5), using a pair of snap ring pliers.
7. Remove the ball bearing (4) from the rear output shaft, using a bench press and the bearing remover 5–8840–0015–0 (J–22912–01).

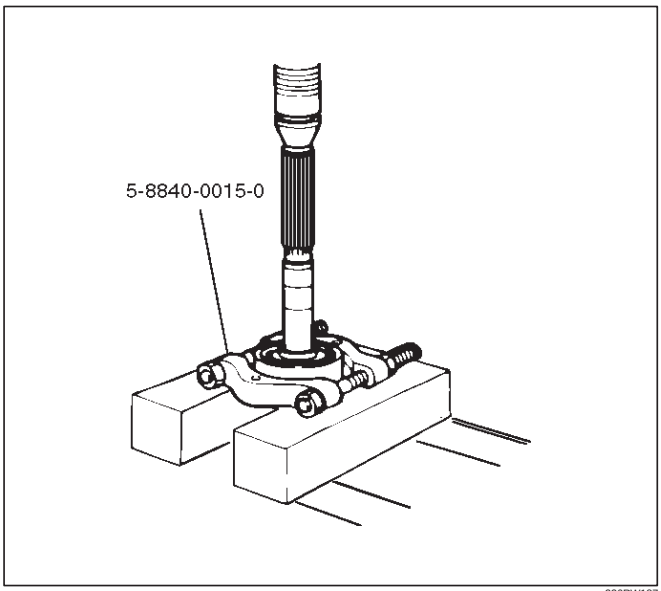

226RW187

Inspection and Repair

Refer to “TRANSFER CASE ASSEMBLY” in this section for inspection and repair.

Reassembly

1. Install transfer rear cover (with oil seal).
   Oil seal replacement
   - Remove the oil seal from the transfer rear cover.
   - Apply engine oil to the oil seal outer surfaces.
   - Fill in recommended grease (BESCO L2) or equivalent in the oil seal lip.
   - Use the oil seal installer 5–8840–2292–0 (J–39208) to install the rear oil seal to the transfer rear cover.

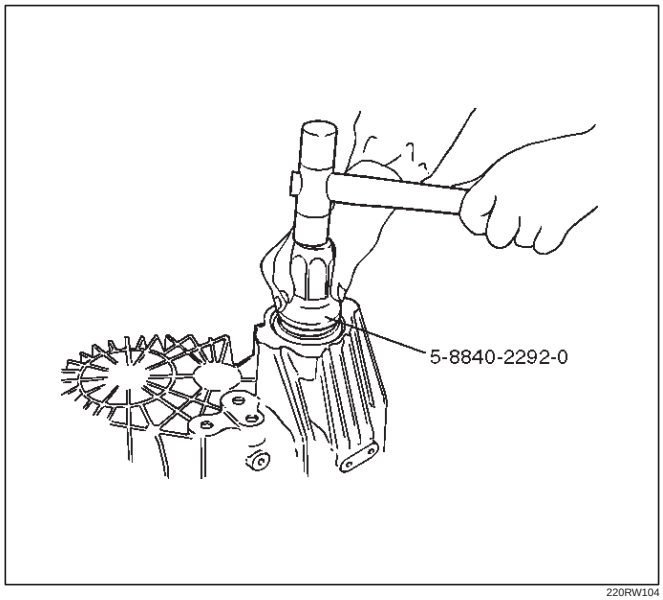

220RW104

2. Set the snap ring (3), and install ball bearing (4) to the rear output shaft (2), using the ball bearing installer 5–8840–2159–0 (J–37223) and the adapter 5–8840–2192–1 (J–37486–A).

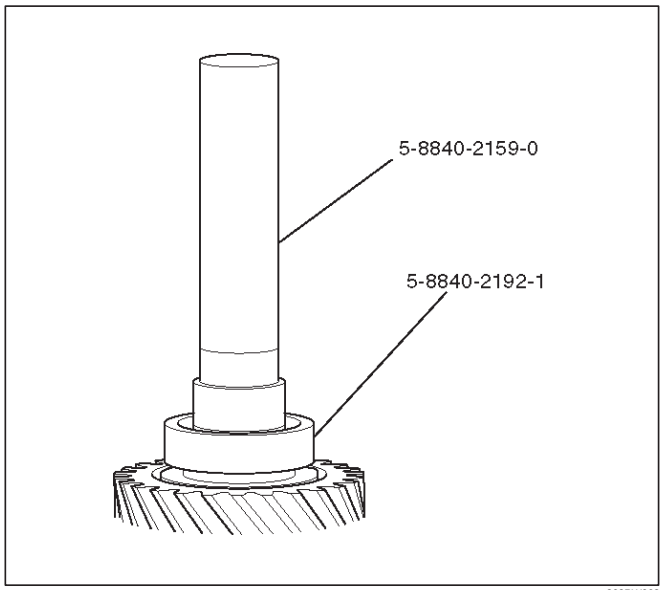

262RW068

3. Install the bearing snap ring (5).
4. Install the ball (6).
5. Install the speedometer drive gear (7).

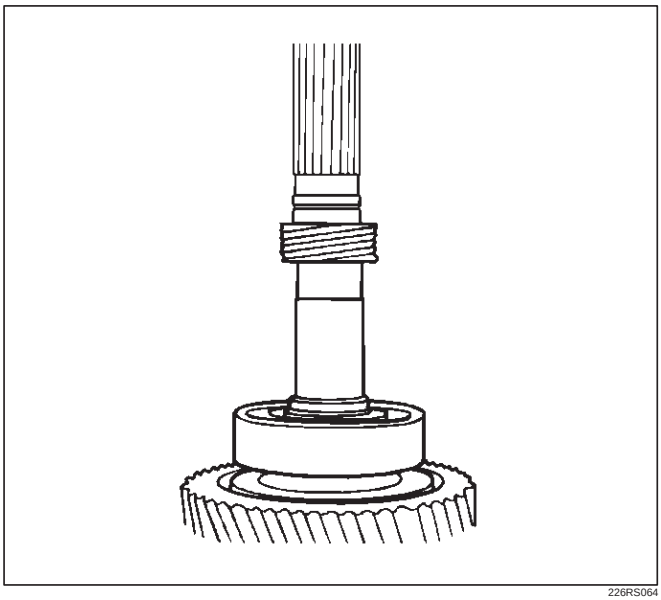

226RS064

6. Install ball bearing (8), using the ball bearing installer 5–8840–2159–0 (J–37223).

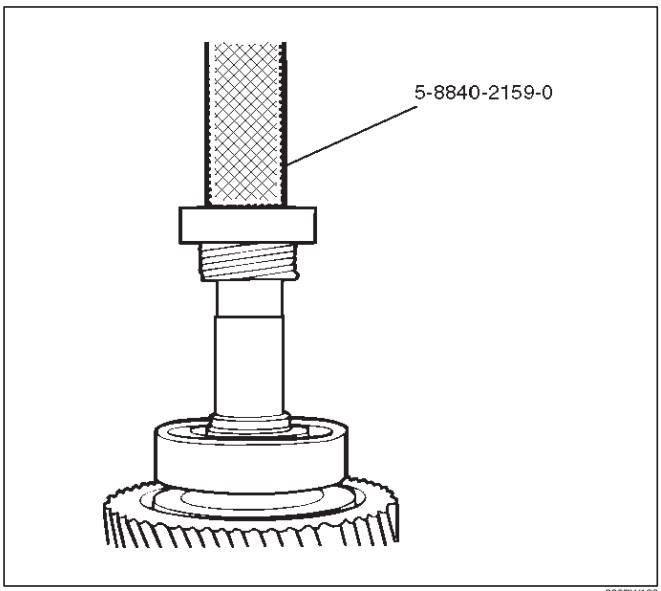

226RW188

7. Install the rear output shaft assembly (1) to the transfer rear cover.
8. Install the bearing snap ring (3).

NOTE: The snap ring must be fully inserted into the transfer rear case snap ring groove.

Detent, Shift Arm, and Interlock Pin

Disassembled View

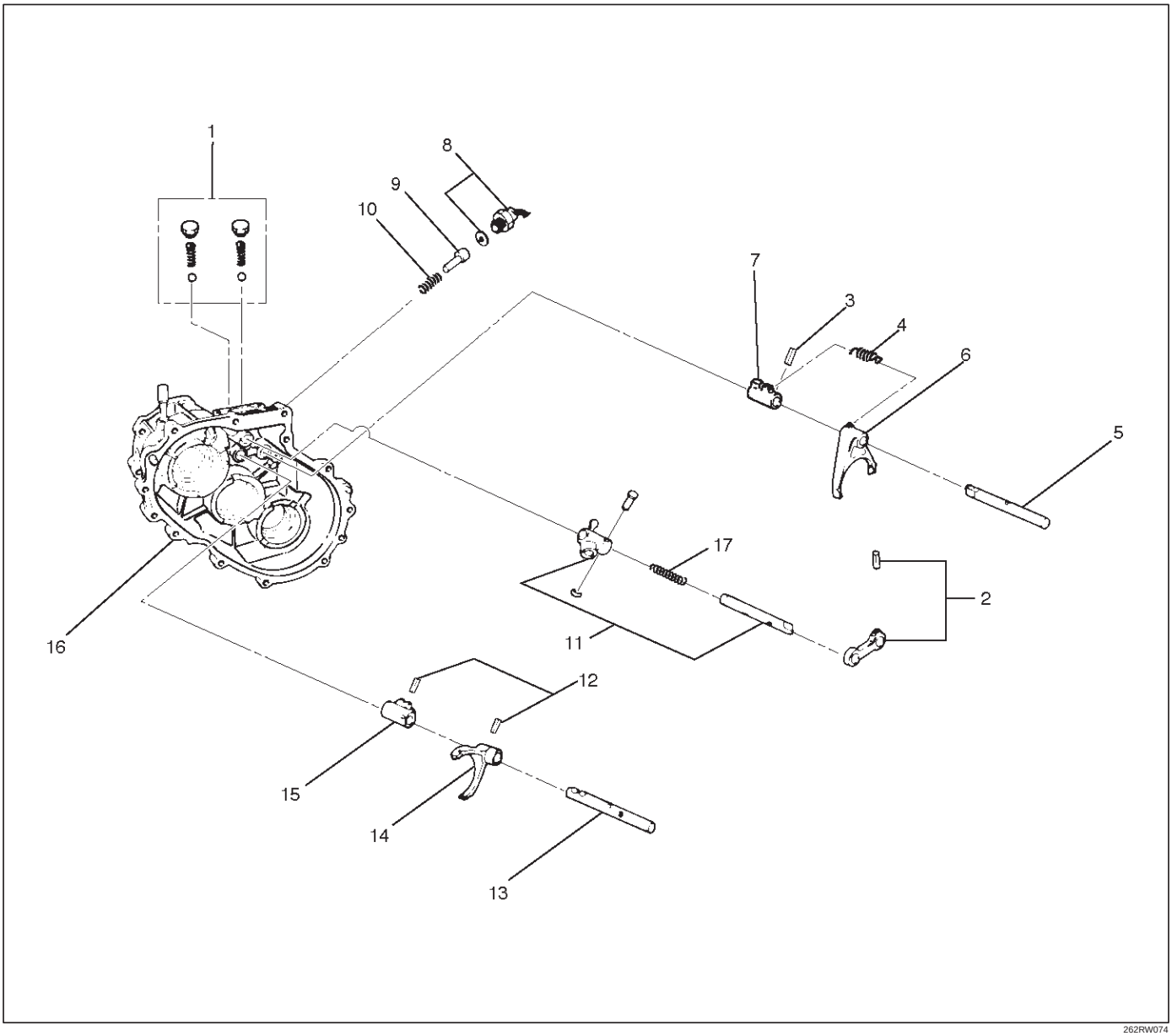

262RW074

Legend

(1) Detent Ball, Spring and Plug
(2) Spring Pin and Bridge
(3) Spring Pin
(4) Spring
(5) 2WD–4WD Shift Rod
(6) Shift Arm
(7) Shift Block
(8) 4WD Indicator Switch
(9) Interlock Pin
(10) Spring
(11) Select Rod Assembly
(12) Spring Pin
(13) High–Low Shift Rod
(14) Shift Arm
(15) Shift Block
(16) Transfer Case
(17) Spring (Except Shift On The Fly Model)

Disassembly

1. Remove the detent ball, spring and plug (1).

2. Use a spring pin remover to remove the spring pin (2) from the bridge (2).

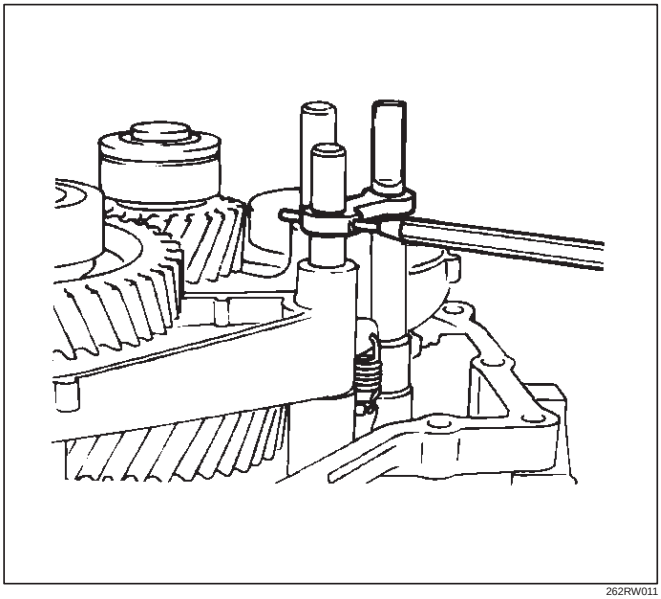

262RW011

3. Remove the spring (4).
4. Engage the 2WD–4WD sleeve with the front output gear. Remove the spring pin (3) from the block (7). Remove the 2WD–4WD shift rod (5).

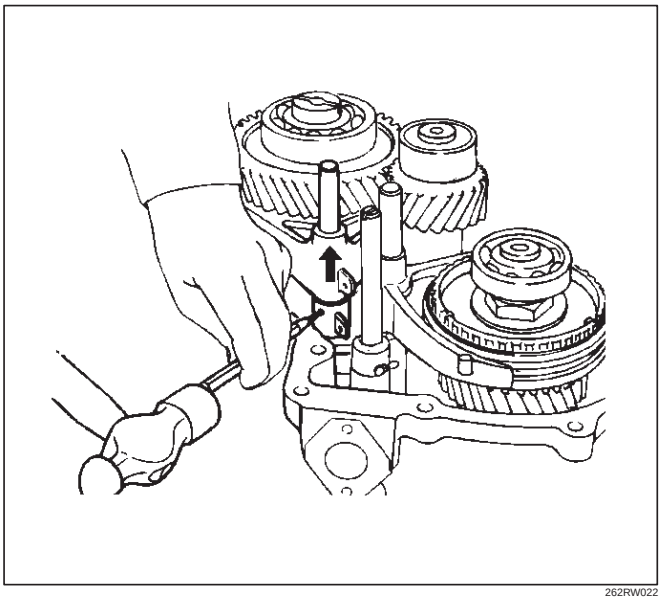

262RW022

5. Remove the shift arm (6).
6. Remove the shift block (7).
7. Remove the 4WD indicator switch (8).
8. Use a magnetic tool to remove the interlock pin (9) and spring (10) from the transfer case (16).

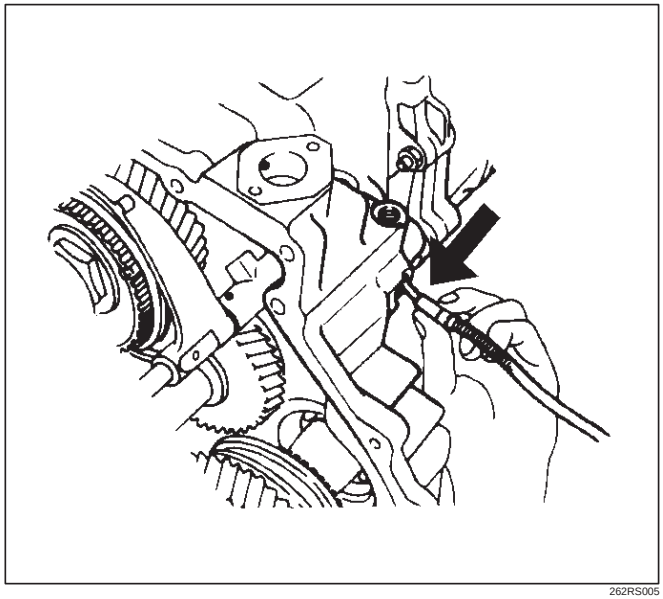

262RS005

9. Remove the select rod assembly (11).
10. Use a spring pin remover to remove the shift arm spring pins (12) from the shift arm (14) and shift block (15). Remove the high–low shift rod (13) from the transfer case (16).

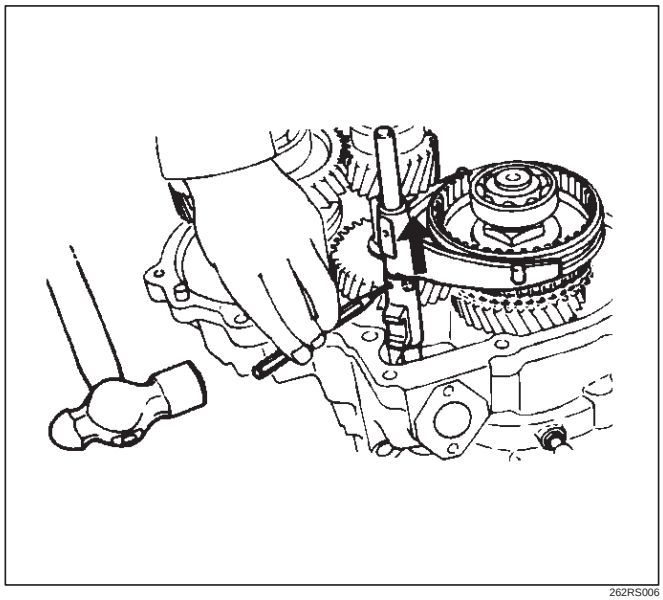

262RS006

11. Remove the shift arm (14).
12. Remove the shift block (15) from the transfer case (16).

Inspection and Repair

Refer to “TRANSFER CASE ASSEMBLY” in this section for inspection and repair.

Reassembly

1. Place the shift block (15) in the transfer case (16).
2. Set the shift arm (14) on the High–Low sleeve.
3. Push the High–Low shift rod (13) through the shift arm (14) and block (14).
4. Engage the High–Low sleeve with the 4H (1) side.
5. Install the spring pins (12) to the shift block (15) and shift arm (14).

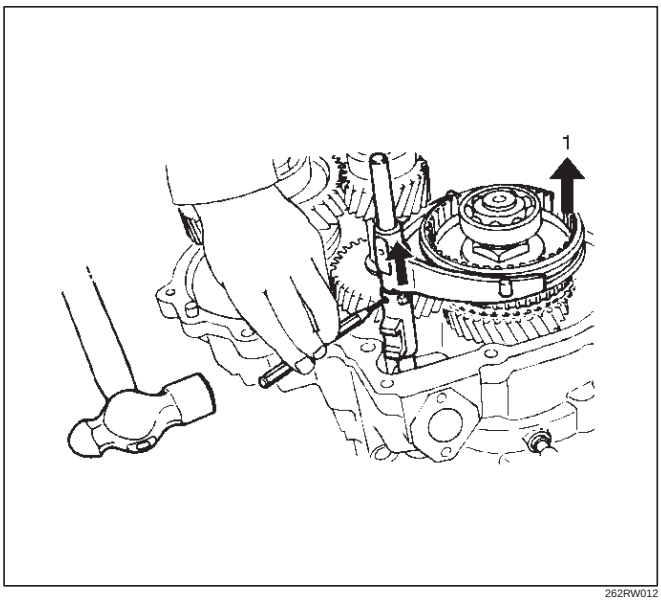

262RW012

6. Install the select rod assembly (11), joining its lever to the shift block groove.
7. Engage the High–Low sleeve with the 4H side and install the the interlock pin (9) and spring (10) in the proper direction.
8. Place the 2WD–4WD shift block (7) in the transfer case (16).
9. Set the 2WD–4WD shift arm (6) on the 2WD–4WD sleeve.
10. Push the 2WD–4WD shift rod (5) through the 2WD–4WD shift arm (6) and 2WD–4WD shift block (7).
11. Install the 2WD–4WD shift rod (5) with the interlock pin pushed in.

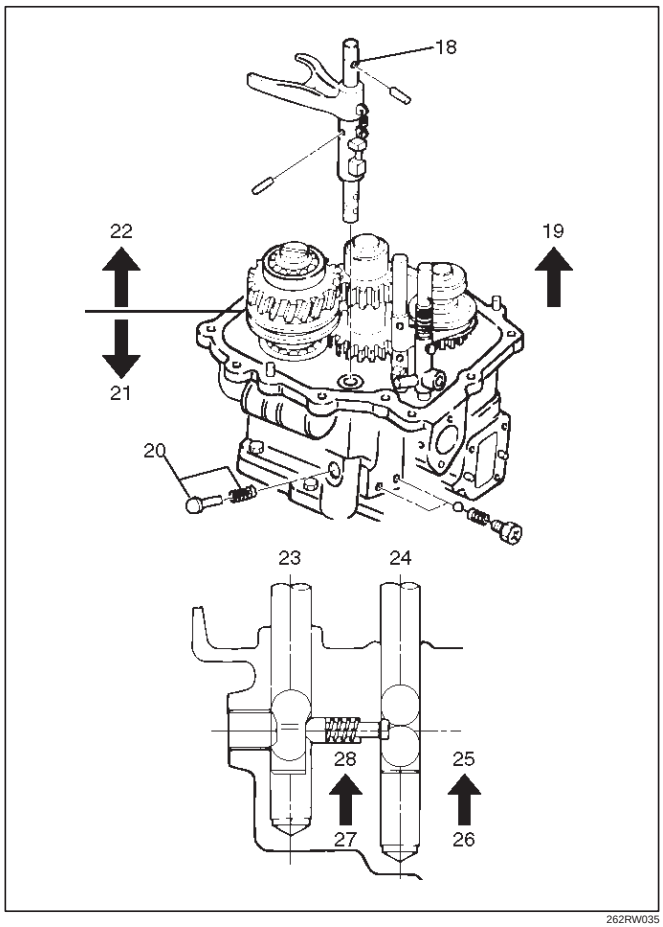

262RW035

Legend

(18) 2WD–4WD
(19) 4H Side
(20) Interlock pin
(21) 2WD
(22) 4WD
(23) Rod: 2–4
(24) Rod: H–L
(25) 4H
(26) 4L
(27) 4×2
(28) 4×4

12. Install the 4WD indicator switch and gasket (8). Tighten to the specified torque.

    Torque: 39 N·m (4.0kg·m/29 lb ft)

13. Install the spring (4).

14. Engage the 2WD–4WD sleeve with the 4WD side and install the spring pin (3).

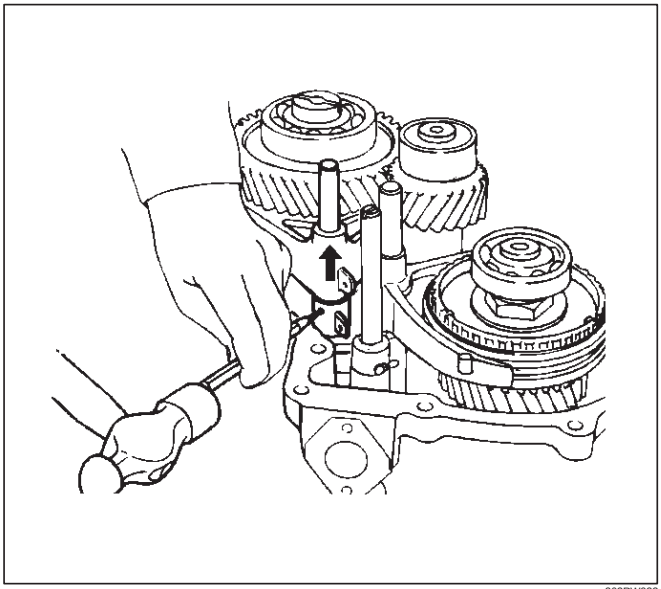

262RW022

15. Install the spring pin and bridge (2).
16. Install the detent ball, spring and plug and tighten the plug (1) to the specified torque.

Torque: 25 N·m (2.5kg·m/18 lb ft)

Transfer Case Assembly

Disassembled View

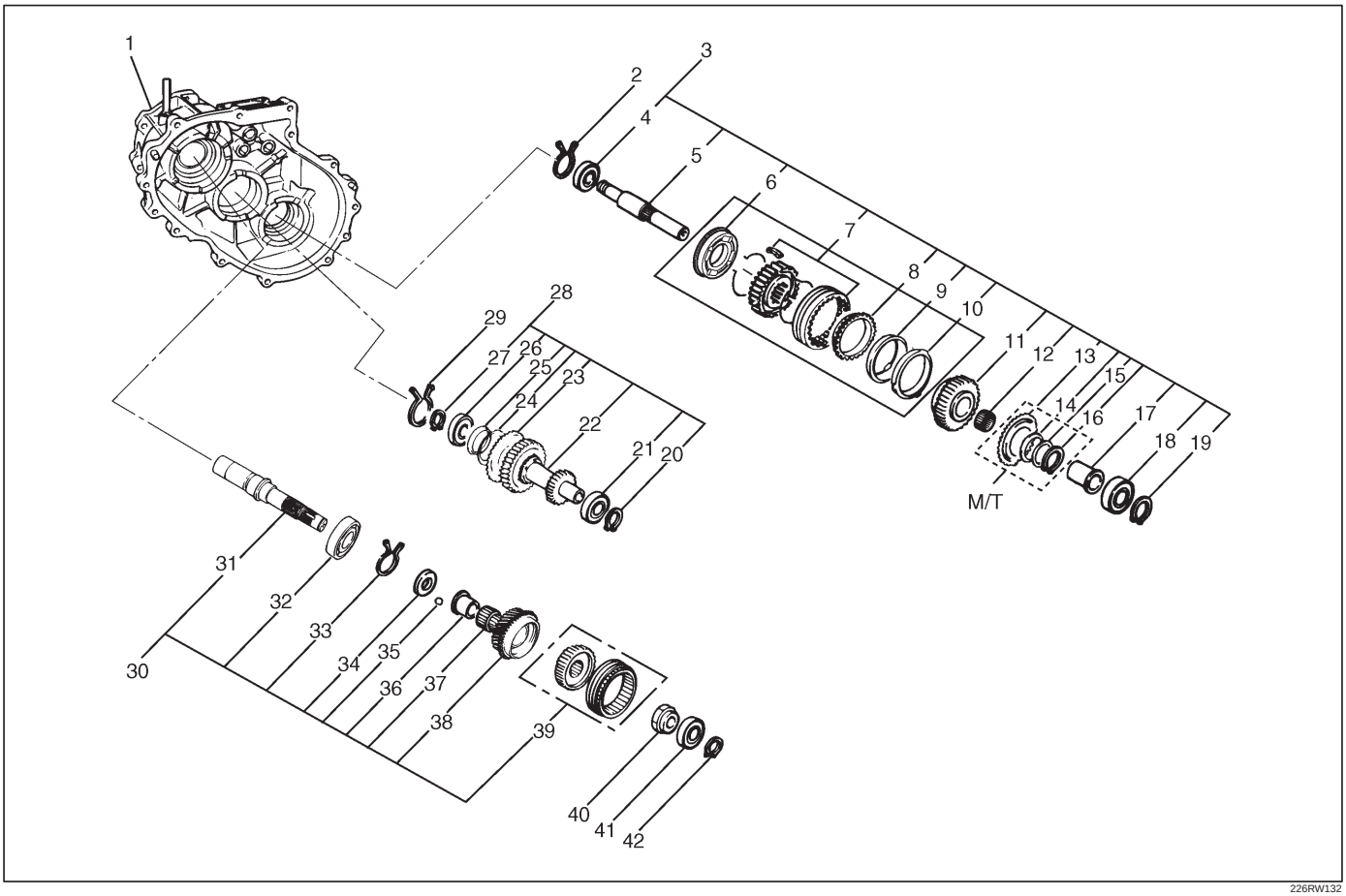

226RW132

Legend

(1) Transfer Case (with oil seal)
(2) Bearing Snap Ring
(3) Front Output Gear Assembly
(4) Ball Bearing
(5) Front Output Shaft
(6) Stopper Plate (Shift On The Fly model)
(7) 2WD–4WD Clutch Hub and Sleeve Assembly
(8) Block Ring (Shift On The Fly model)
(9) Outside Ring (Shift On The Fly model)
(10) Inside Ring (Shift On The Fly model)
(11) Front Output Gear
(12) Needle Bearing
(13) Sub–Gear (anti–lash plate) (M/T)
(14) Belleville Spring (M/T)
(15) Spacer (M/T)
(16) Sub–Gear Snap Ring (M/T)
(17) Bearing Collar
(18) Ball Bearing
(19) Bearing Snap Ring
(20) Snap Ring
(21) Ball Bearing
(22) Counter Gear
(23) Sub–Gear (anti–lash plate)
(24) Belleville Spring
(25) Spacer
(26) Ball Bearing
(27) Snap Ring
(28) Counter Gear Assembly
(29) Bearing Snap Ring
(30) Input Shaft Assembly
(31) Input Shaft
(32) Ball Bearing
(33) Snap Ring
(34) Plate
(35) Ball
(36) Bearing Collar
(37) Needle Bearing
(38) Transfer Input Gear
(39) High–Low Clutch Hub and Sleeve Assembly
(40) Lock Nut
(41) Ball Bearing
(42) Bearing Snap Ring

Disassembly

1. Use a pair of snap ring pliers to remove the snap ring (42).
2. Use a bearing remover 5–8840–2155–0 (J–37217) and puller 5–8840–2027–0 (J–37487) to remove the ball bearing (41).

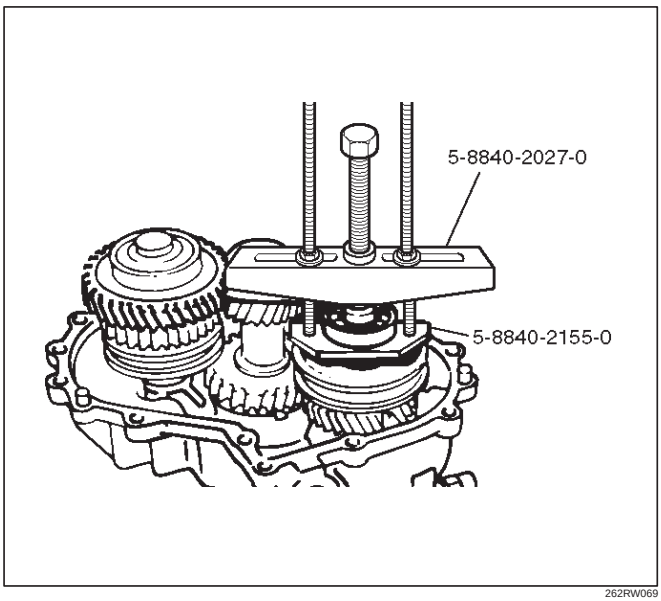

262RW069

3. Install the front companion flange temporarily.
4. Use the Companion flange holder 5–8840–0133–0 (J–8614–11) and lock nut wrench 5–8840–2156–0 (J–37219) to remove the lock nut (40).

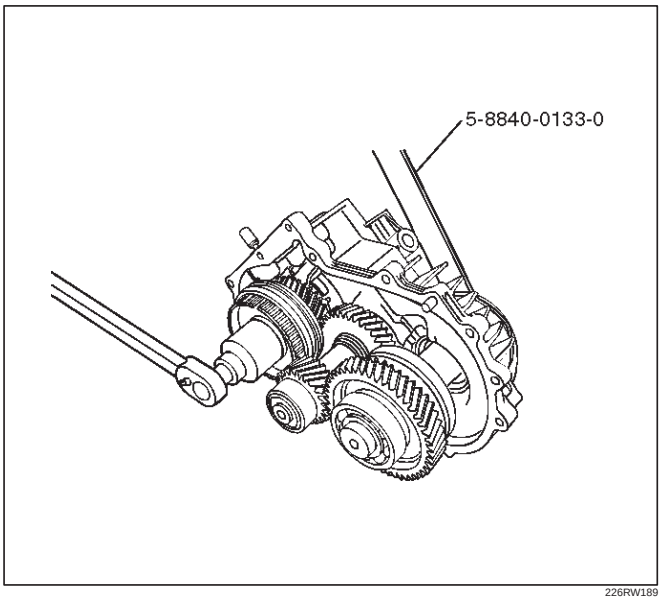

226RW189

5. Remove the front companion flange.
6. Remove the snap ring (33) from the transfer case (1).
7. Remove the input shaft assembly (30) from the transfer case.

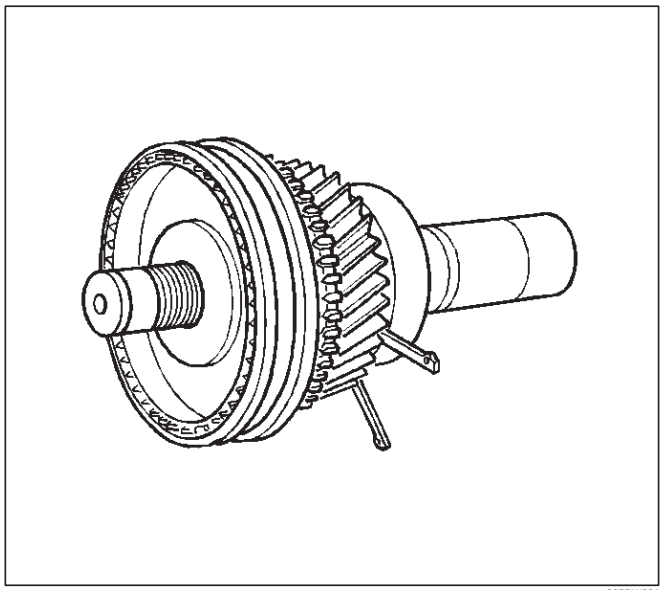

265RW001

8. Use a universal puller to remove the high–low clutch hub and sleeve (39), and transfer input gear (38).

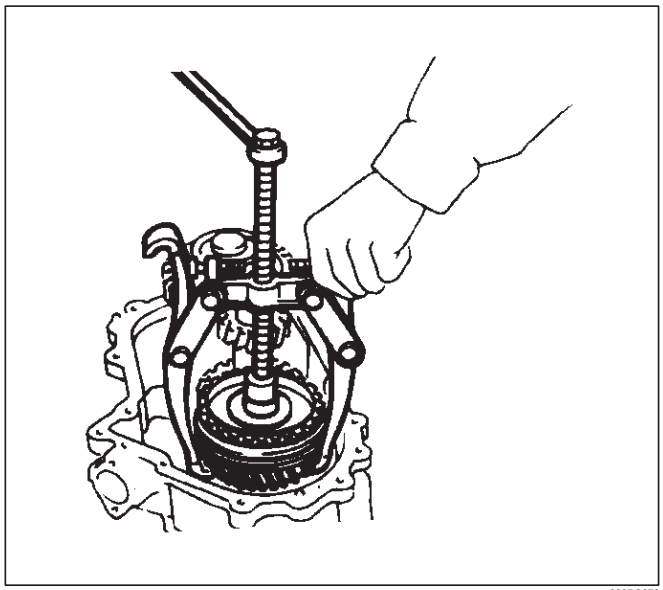

226RS070

9. Remove needle bearing (37).

10. Remove the bearing collar (36).

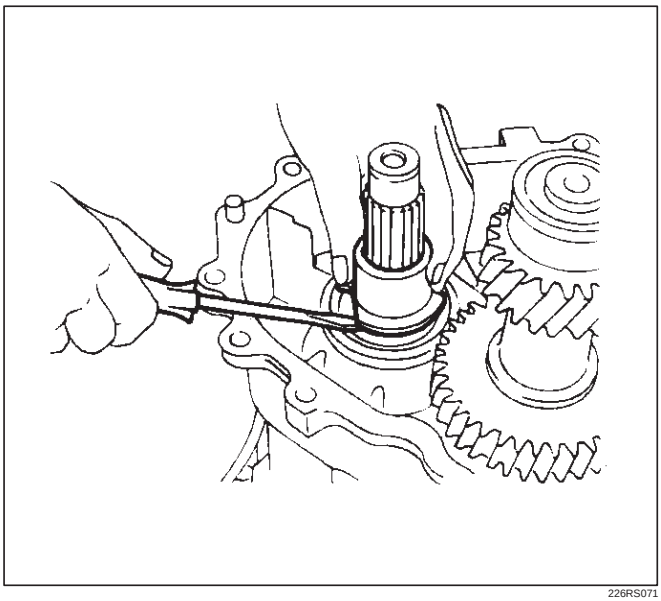

226RS071

11. Remove the ball (35).
12. Remove the plate (34).
13. Use a bench press and the ball bearing remover 5–8840–0015–0 (J–22912–01) to remove the ball bearing (32) from input shaft (31).

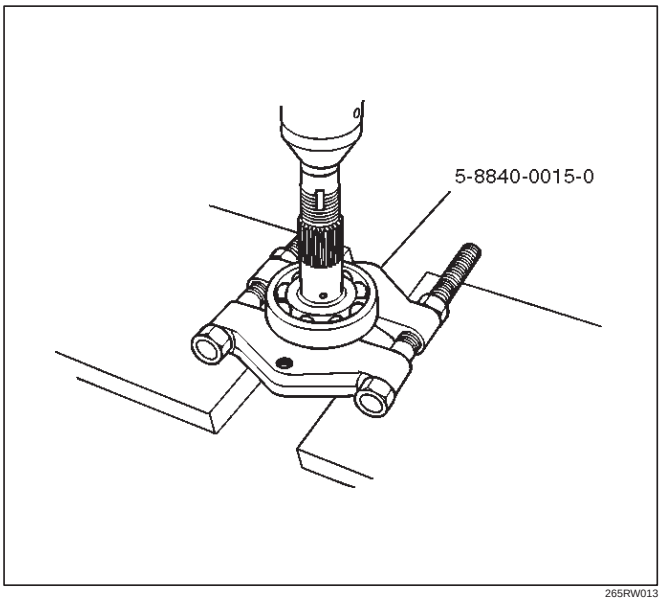

265RW013

14. Remove the bearing snap ring (2) from the transfer case, using a pair of snap ring pliers.
15. Use a plastic hammer to tap the front output gear assembly (3) free.

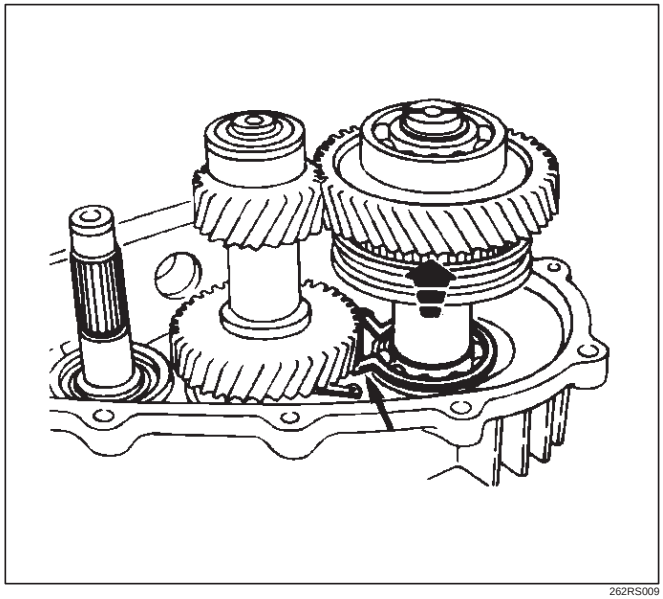

262RS009

16. Remove the bearing snap ring (19). Remove the ball bearing (18) and bearing collar (17) together with front output gear assembly: including following parts.
17. Use a bench press and the bearing remover 5–8840–0015–0 (J–22912–01) to remove the following parts.
18. Remove the sub–gear snap ring (16), spacer (15), belleville spring (14), and sub–gear (anti–lash plate) (13).(M/T)
19. Remove the front output gear (11) and needle bearing (12).

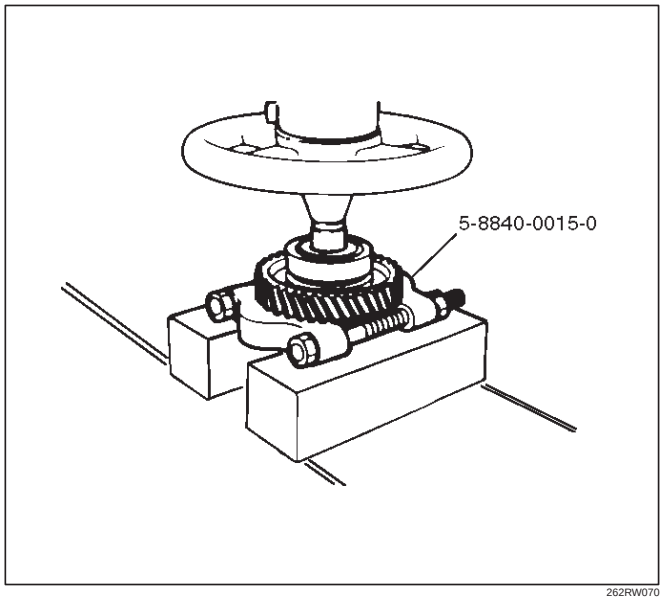

262RW070

20. Remove the inside ring (10). (Shift On The Fly model)
21. Remove the outside ring (9). (Shift On The Fly model)
22. Remove the block ring (8). (Shift On The Fly model)
23. Use a bench press and bearing remover 5–8840–0015–0 (J–22912–01) to remove the 2WD–4WD clutch hub and sleeve assembly (7) and stopper plate (6). (Shift On The Fly model)

NOTE: Do not reuse the stopper plate. (Shift On The Fly model)

24. Disassemble the 2WD–4WD clutch hub and sleeve assembly.
    - Springs (1) (Shift On The Fly model)
    - Inserts (2) (Shift On The Fly model)
    - Clutch Hub (3)
    - Sleeve (4)

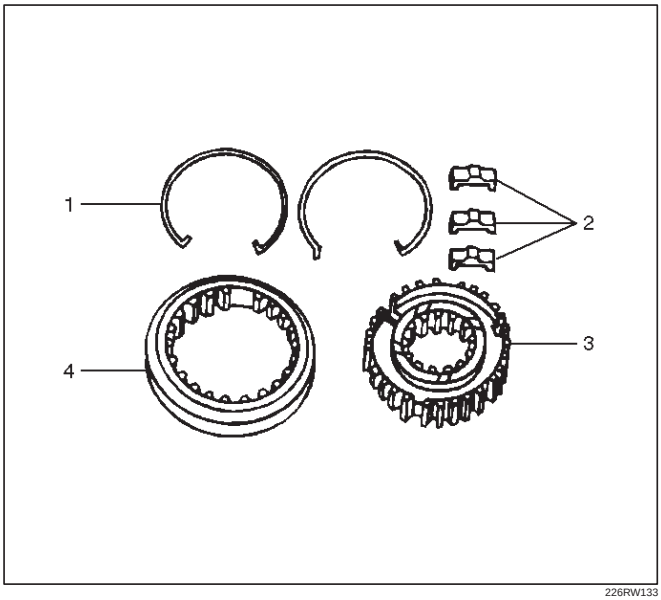

226RW133

25. Use a bench press and the ball bearing remover 5–8840–0015–0 (J–22912–01) to remove the ball bearing (4) from front output shaft (5).

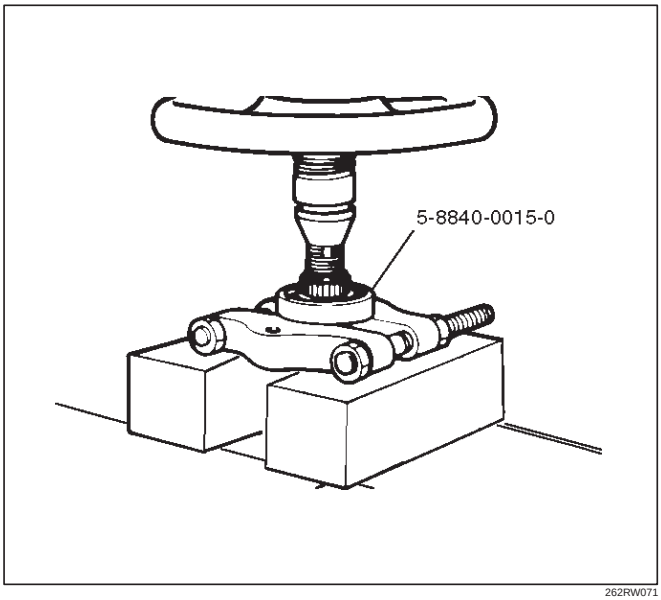

262RW071

26. Remove bearing snap ring (29) from transfer case.
27. Remove the counter gear assembly (28) from the transfer case (1).
28. Use a pair of snap ring pliers to remove the snap ring (20).
29. Use a bench press and the bearing remover 5–8840–0015–0 (J–22912–01) to remove the ball bearing (21).
30. Use a pair of snap ring pliers to remove the snap ring (27).
31. Use a bench press and the bearing remover 5–8840–0015–0 (J–22912–01) to remove the ball bearing (26).

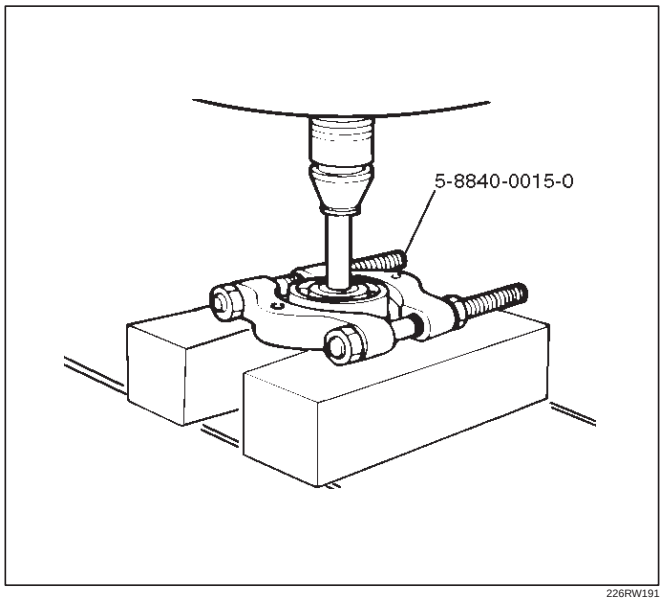

226RW191

32. Remove the spacer (25).
33. Remove the belleville spring (24).
34. Remove the sub–gear (anti–lash plate) (23) from the counter gear (22).

Inspection and Repair

1. Make the necessary repair or parts replacement if wear, damage or any other abnormal conditions are found during inspection.
2. Wash all parts thoroughly in clean solvent. Be sure all old lubricant, metallic particles, dirt, or foreign material are removed from the surfaces of every part. Apply compressed air to each oil feed port and channel in each case half to remove any obstructions or cleaning solvent residue.

Gears

1. Inspect all the gear teeth for signs of excessive wear or damage and check all the gear splines for burrs, nicks, wear or damage. Remove the minor nicks or scratches on an oil stone. Replace any part exhibiting excessive wear or damage.

Front Output Gear Inside Diameter

1. Use an inside dial indicator to measure the gear inside diameter.

2. If the measured value exceeds the specified limit, the gear must be replaced.

Gear inside diameter

Standard : 48.000–48.013 mm (1.8898–1.8903 in)

Limit : 48.10 mm (1.894 in)

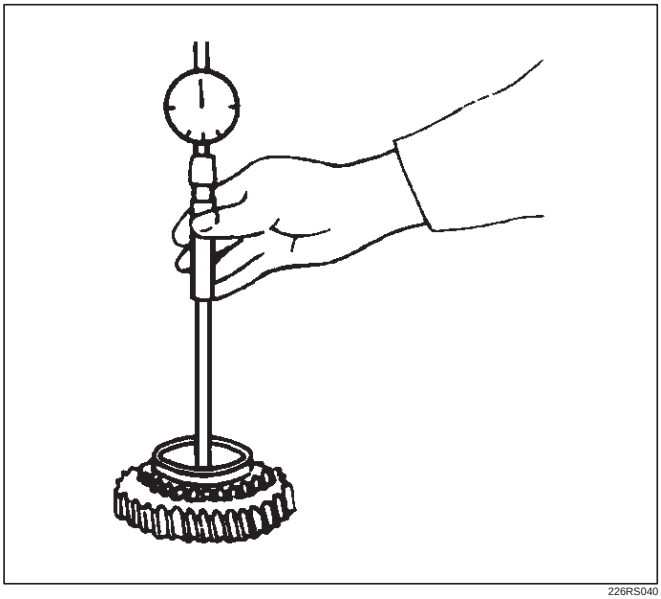

226RS040

Clutch Hub Spline Play

1. Set a dial indicator to the clutch hub to measured.
2. Move the clutch hub as far as possible to both the right and the left.
   Note the dial indicator reading.
3. If the measured value exceeds the specified limit, the clutch hub must be replaced.

Clutch hub spline play

Standard : 0–0.1 mm (0–0.004 in)

Limit : 0.2 mm (0.008 in)

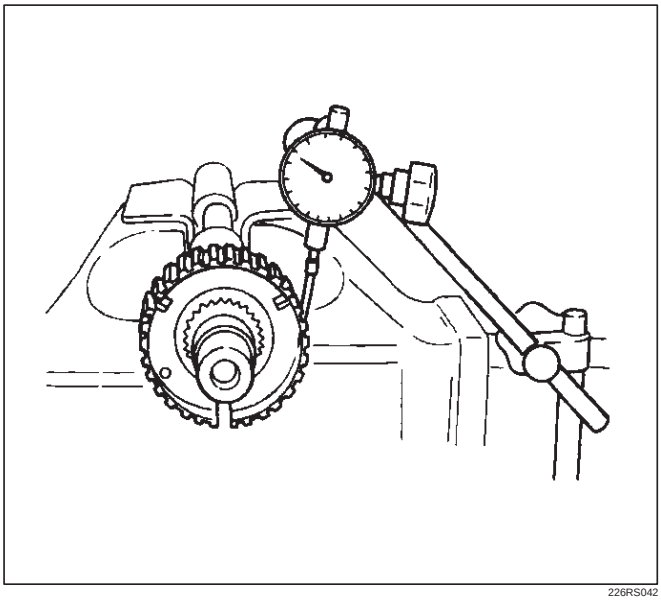

226RS042

Bearings

1. Inspect the condition of all the needles and ball bearings. Wash bearings thoroughly in a cleaning solvent. Apply compressed air to the bearings.

NOTE: Do not allow the bearings to spin. Turn them slowly by hand. Spinning bearings may damage the rollers.

2. Lubricate the bearings with a light oil and check them for roughness by slowly turning the race by hand.

Ball Bearing Play

1. Use a dial indicator to measure the ball bearing play.
2. If the measured value exceeds the specified limit, the ball bearing must be replaced.

Limit : 0.2 mm (0.008 in)

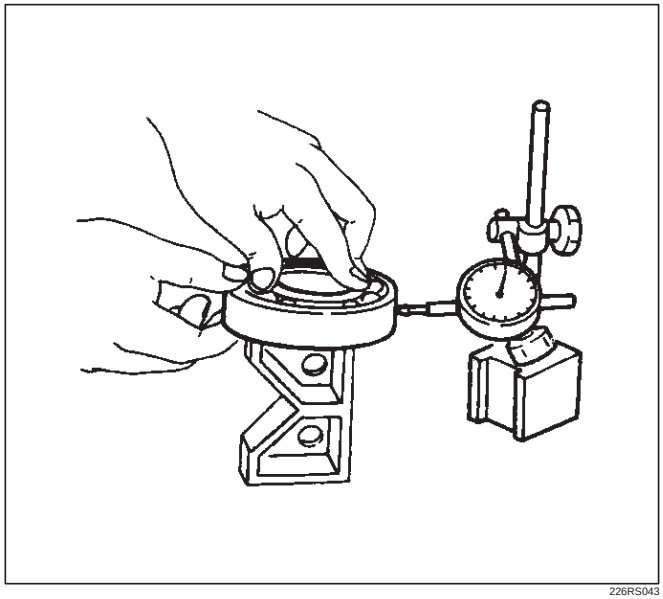

226RS043

Synchronizers

The synchronizer hubs and sliding sleeves are a selected assembly and should be kept together as originally assembled.
Clean synchronizer components with clean solvent and air dry.
Inspect the components for the following:

- Teeth for wear, scuffs, nicks, burrs or breaks.
- Keys and springs for wear, cracks or distortion, replace if these conditions are present.
- If scuffed, nicked or burred conditions cannot be corrected with a soft stone or crocus cloth, replace the component.

Block Ring and Insert Clearance

1. Use a vernier caliper to measure the clearance between the block ring and the insert.
2. If the measured value exceeds the specified limit, the block ring and the insert must be replaced.

Block ring and insert clearance

Standard : 2.46–2.74 mm (0.097–0.108 in)

Limit : 3.0 mm (0.118 in)

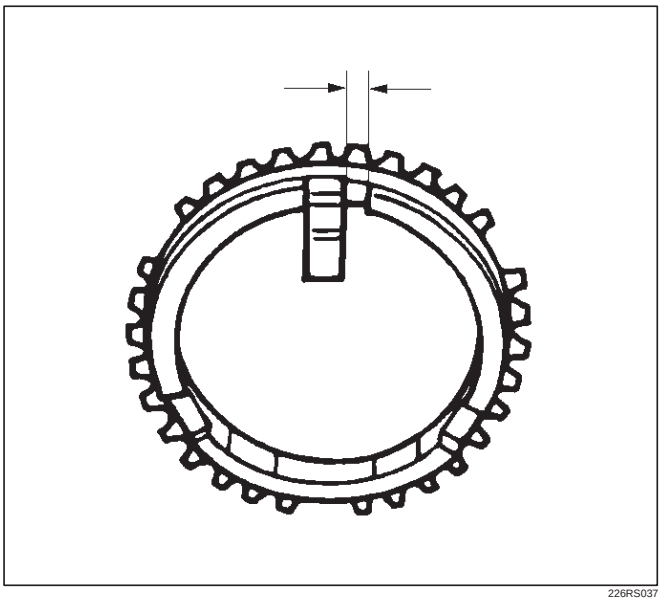

226RS037

2WD–4WD 3–Cone Synchronizer (Shift On The Fly model)

1. Use a thickness gauge to measure the clearance between the block ring and the dog teeth.
2. If the measured value exceeds the specified limit, the 2WD–4WD synchronizer assembly must be replaced.

Block ring and insert clearance

Standard : 1.5 mm (0.059 in)

Limit : 0.8 mm (0.031 in)

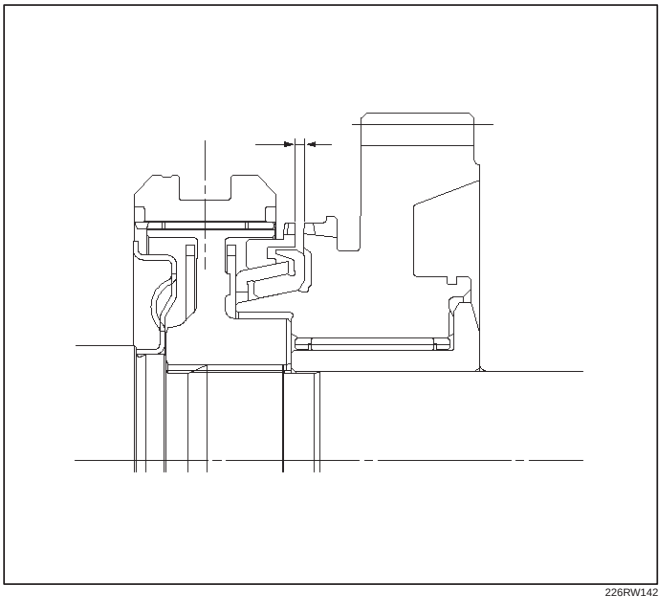

226RW142

Clutch Hub and Insert Clearance

1. Use a thickness gauge to measure the clearance between the clutch hub and the insert.
2. If the measured value exceeds the specified limit, the clutch hub and the insert must be replaced.

Clutch hub and insert clearance

Standard : 0.01–0.19 mm (0.0004–0.0075 in)

Limit : 0.3 mm (0.012 in)

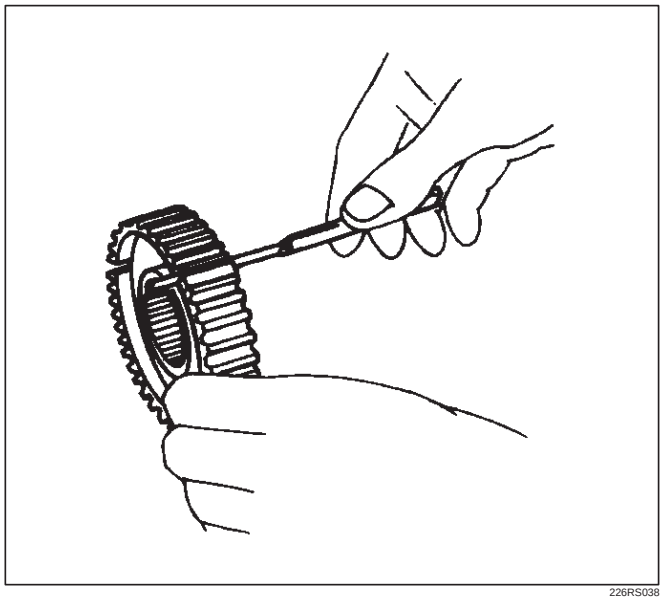

226RS038

Detent Springs

1. Inspect the springs for distortion, cracks or wear. Replace if these conditions are present.

Detent Spring Free Length

1. Use a vernier caliper to measure the detent spring free length.

2. If the measured value is less than the specified limit, the detent spring must be replaced.

Detent spring free length

Detent ball

Standard : 23.4 mm (0.921 in)

Limit : 22.8 mm (0.898 in)

Interlock pin

Standard : 1.59 mm (0.063 in)

Limit : 1.53 mm (0.060 in)

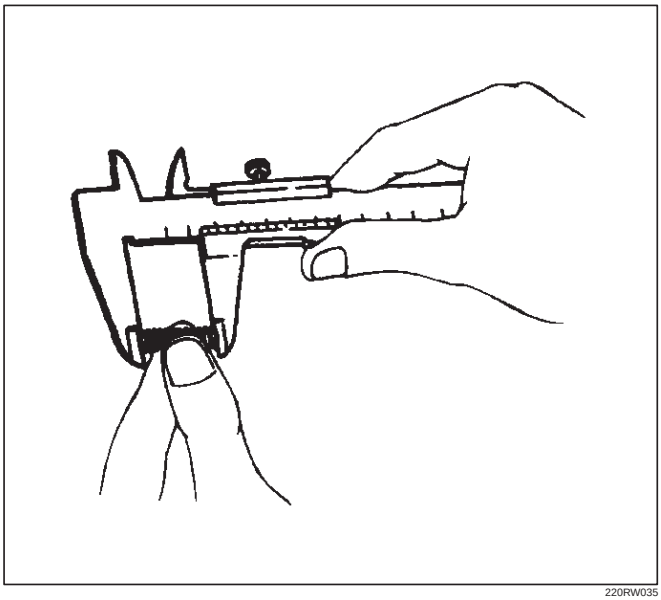

220RW035

Detent Spring Tension

1. Use a spring tester to measure the detent spring tension.
2. If the measured value is less than the specified limit, the detent spring must be replaced.

Detent spring free length

Detent ball

Compressed height : 18.7 mm (0.736 in)

Standard : 68.6–88.2 N (7.0–9.0kg/15.4–19.8 lb)

Interlock pin

Compressed height : 11.5 mm (0.453 in)

Standard : 9.8 N (1.0kg/2.2 lb)

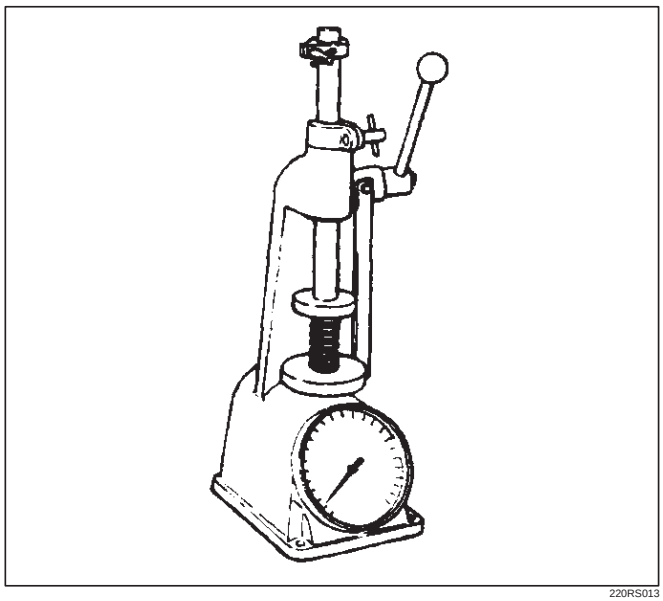

220RS013

Shift Arm

1. Inspect the shift arms for wear, distortion or scoring. Replace if these conditions are present.

Shift Arm Thickness

1. Use a micrometer to measure the shift arm thickness.
2. If the measured value is less than the specified limit, the shift arm must be replaced.

Shift arm thickness

Standard : 9.60–9.85 mm (0.378–0.388 in)

Limit : 9.0 mm (0.354 in)

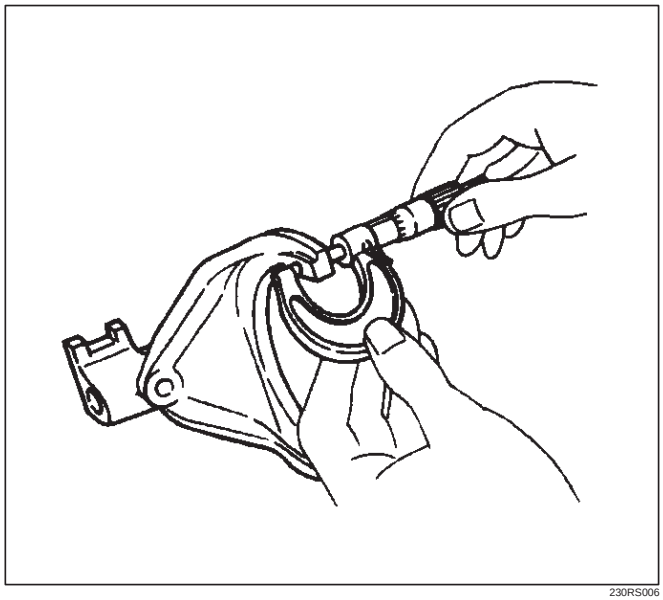

230RS006

Reassembly

1. Put the transfer case (with oil seal) as the following illustration.

Input shaft oil seal (1) replacement

1. Remove the oil seal from the transfer case.
2. Apply engine oil to the oil seal outer surfaces.
3. Apply recommended grease (BESCO L2) or equivalent to the oil seal lip.
4. Use the oil seal installer 5–8840–2279–0 (J–38592) to install the oil seal to the transfer case.

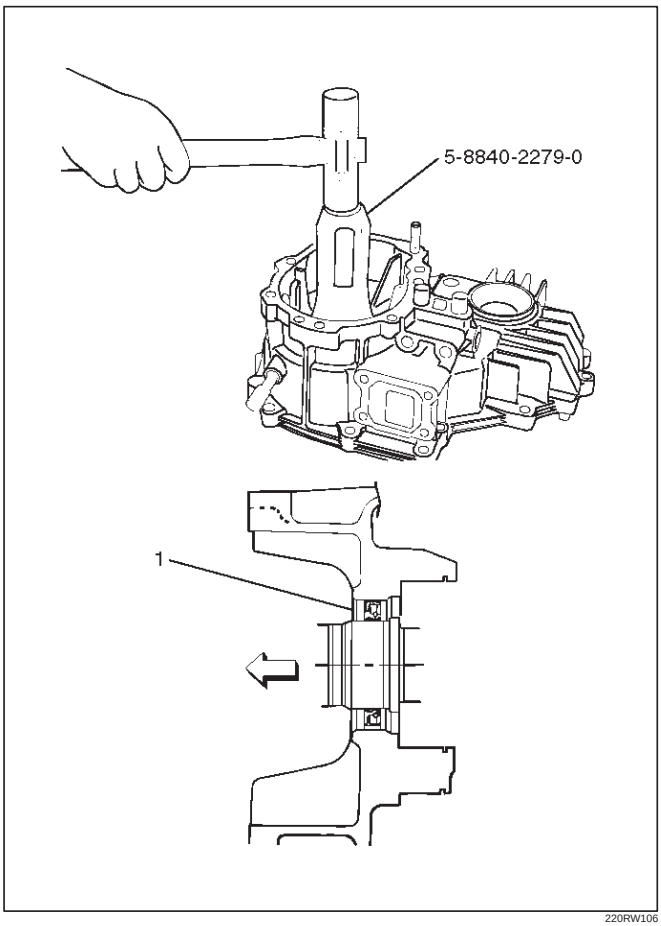

220RW106

Front output shaft oil seal (2) replacement

1. Remove the oil seal from the transfer case.
2. Apply engine oil to the oil seal outer surfaces.
3. Apply recommended grease (BESCO L2) or equivalent to the oil seal lip.
4. Use the oil seal installer 5–8840–2281–0 (J–38594) to install the oil seal to the transfer case.

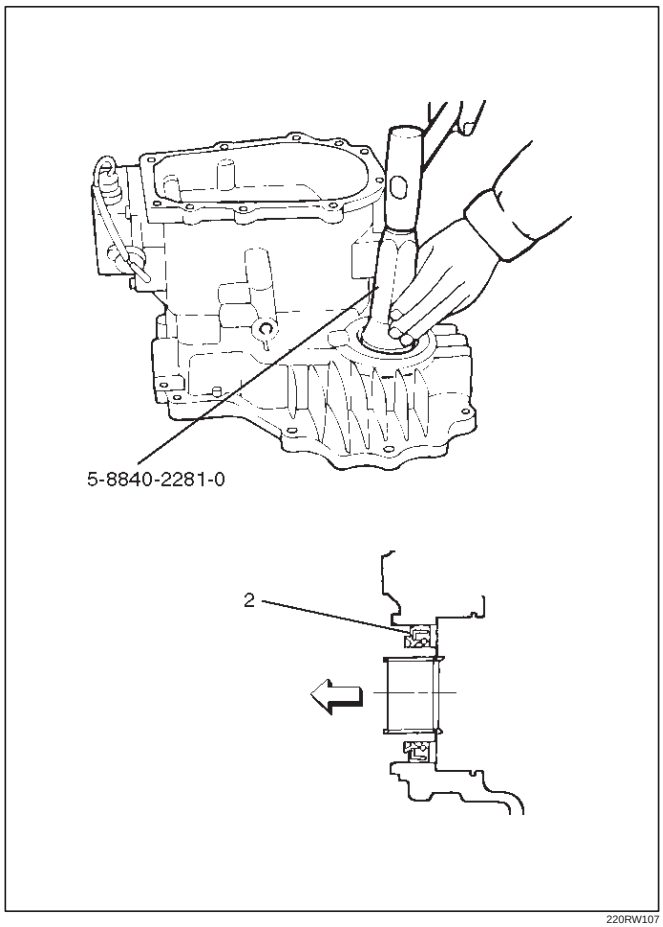

220RW107

Legend

(2) Front output shaft oil seal

2. Apply chassis grease (3) to the sub–gear (23) and the counter gear (22) thrust surfaces.

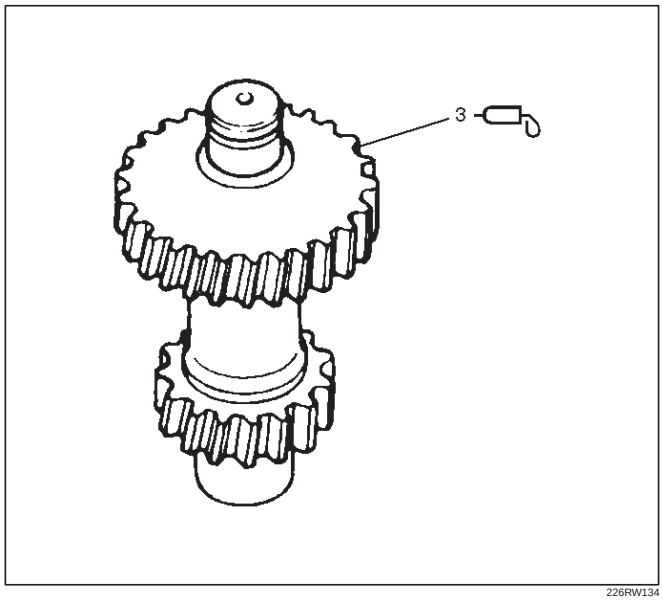

226RW134

3. Install the sub–gear (23) to the counter gear (22).
4. Install the belleville spring (24).
5. Install the spacer (25) and put the snap ring (29) on the sub–gear (23).
6. Install the ball bearing (26), using a bench press.
7. Select a snap ring that will allow the minimum axial play.

Clearance : 0–0.1 mm (0–0.004 in)

Snap ring availability:	
Thickness	Color–coding
1.50 mm (0.059 in)	White
1.55 mm (0.061 in)	Yellow
1.60 mm (0.063 in)	Blue

8. Use a pair of snap ring pliers to install the snap ring (27) to the counter gear (22).

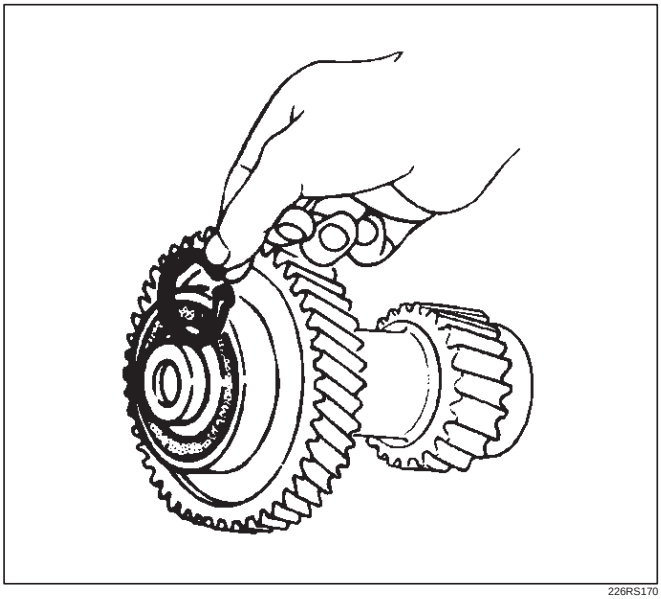

226RS170

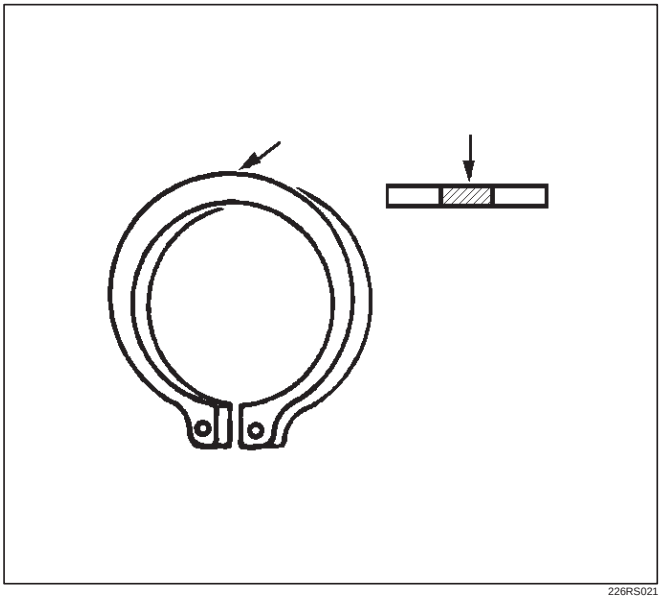

226RS021

Sub–Gear (anti–lash plate) Preload

1. Hook a length of piano wire (4) over one of the sub–gear (5) teeth.
2. Attach the other end of the piano wire (4) to a spring balancer.
3. Measure the sub–gear preload.

Preload : 59–98 N (6.0–10kg/13–22 lb)

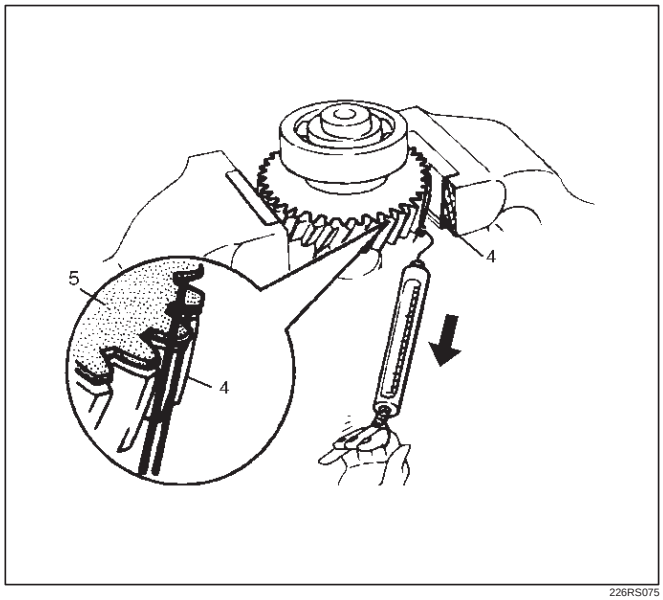

226RS075

9. Install ball bearing (21), using a bench press.
10. Install snap ring (20).
11. Install the counter gear assembly (28) to the transfer case (1).
12. Use a pair of snap ring pliers to install the snap ring (29) to the transfer case (1).

NOTE: The snap ring must be fully inserted into the transfer case snap ring groove.

13. Use a bench press to install the ball bearing (4) to the front output shaft (5).

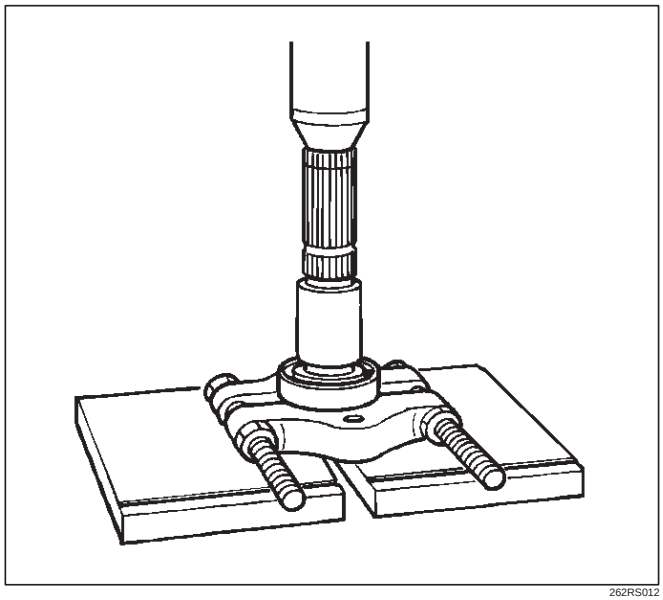

262RS012

14. Assemble the 2WD–4WD clutch hub and sleeve assembly (7).

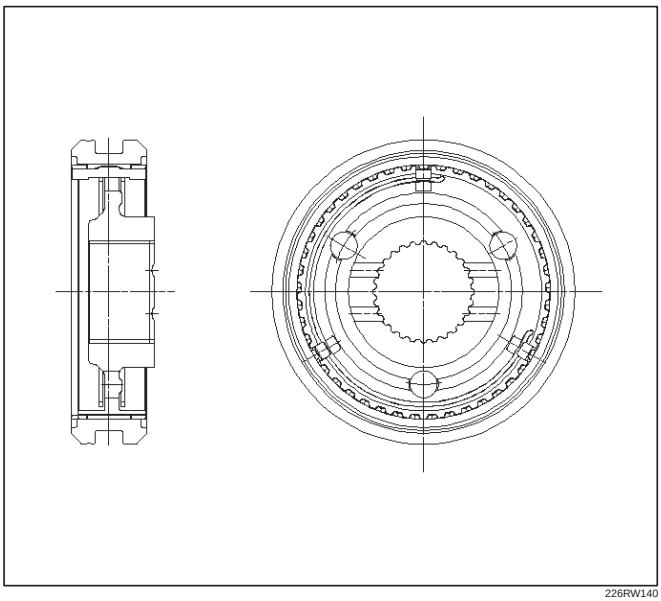

226RW140

15. Engage the springs in the same insert with the open ends away from each other. (Shift On The Fly model)

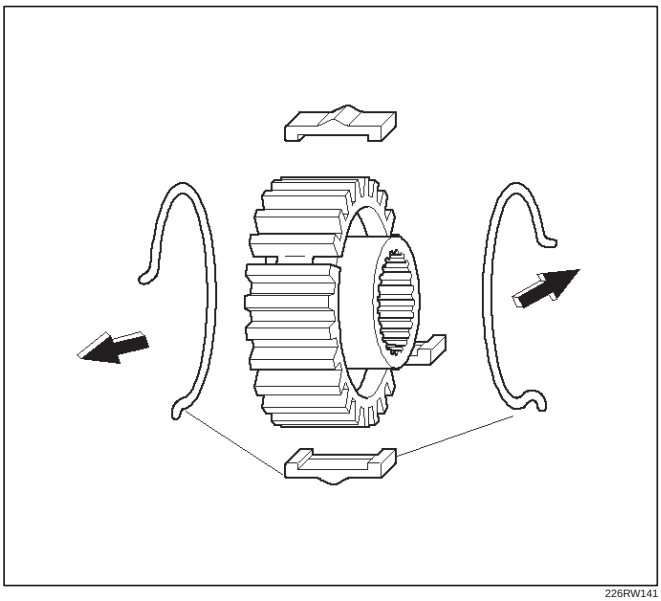

226RW141

16. Place the snap ring (2), a new stopper plate (6) (Shift On The Fly model) and the clutch sleeve and hub assembly (7) on the front output shaft (5).

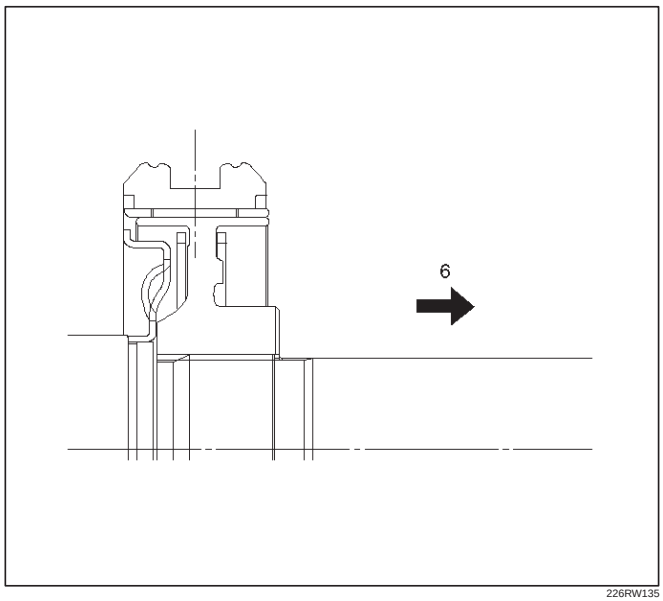

226RW135

Legend

(6) Front Output Gear

17. The clutch hub face (with the heavy boss) must be facing the front output gear side.
18. Use a bench press to slowly force the clutch hub and sleeve assembly (7) together with the stopper plate (6) (Shift On The Fly model) into place.
19. Align the inserts with the block ring insert grooves. Install the block ring (8) (Shift On The Fly model) to the clutch sleeve and hub assembly (7).
20. Install the outside ring (9) (Shift On The Fly model), inside ring (10) (Shift On The Fly model) and needle bearing (12) to the front output gear (11) and bearing collar (17).

NOTE: Coat all parts with transmission oil before installing them.

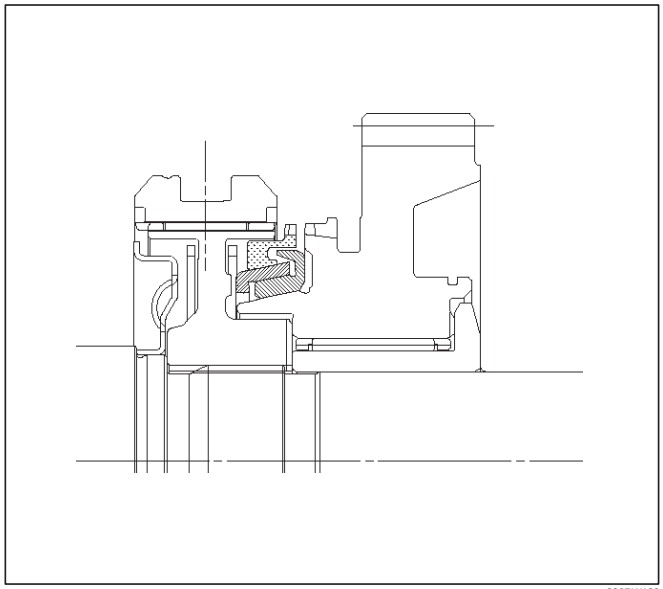

226RW139

21. Apply engine oil to the thrust surfaces of the sub–gear (13), the belleville spring (14), and the spacer (15). (M/T)

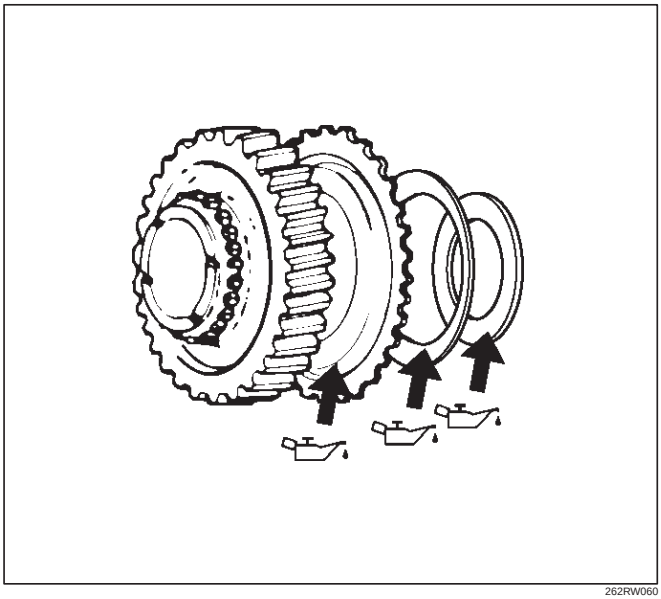

262RW060

22. Install the sub–gear (anti–lash plate) (13), belleville spring (14), and spacer (15) to the front output gear (11).(M/T)
23. Install the sub–gear snap ring (16). (M/T)
24. Use a bench press to install the needle bearing collar (17) together with the front output gear, aligning inside ring claw with block ring groove.

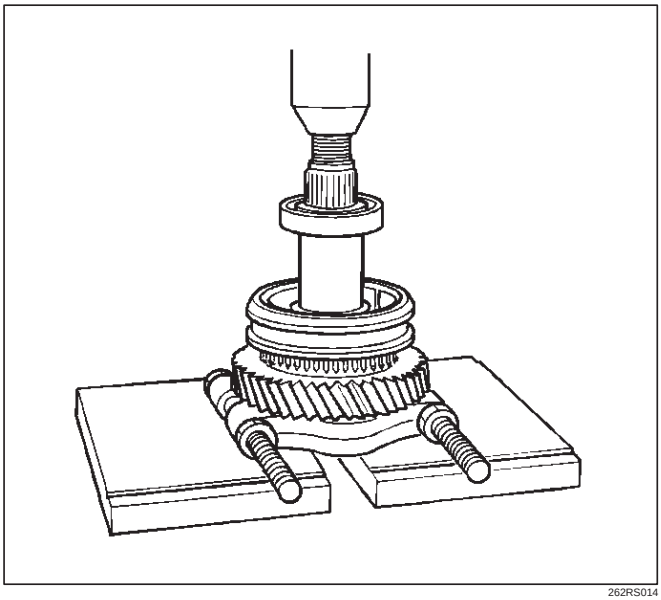

262RS014

25. Install ball bearing (18), using a bench press.
26. Select a snap ring that will allow the minimum axial play.

Clearance : 0–0.1 mm (0–0.004 in)

Snap ring availability:	
Snap ring thickness	Color coding
1.55 mm (0.061 in)	White
1.60 mm (0.063 in)	Yellow
1.65 mm (0.065 in)	Blue
1.70 mm (0.067 in)	Pink
1.75 mm (0.069 in)	Green
1.80 mm (0.071 in)	Brown
1.85 mm (0.073 in)	Red
1.90 mm (0.075 in)	Orange

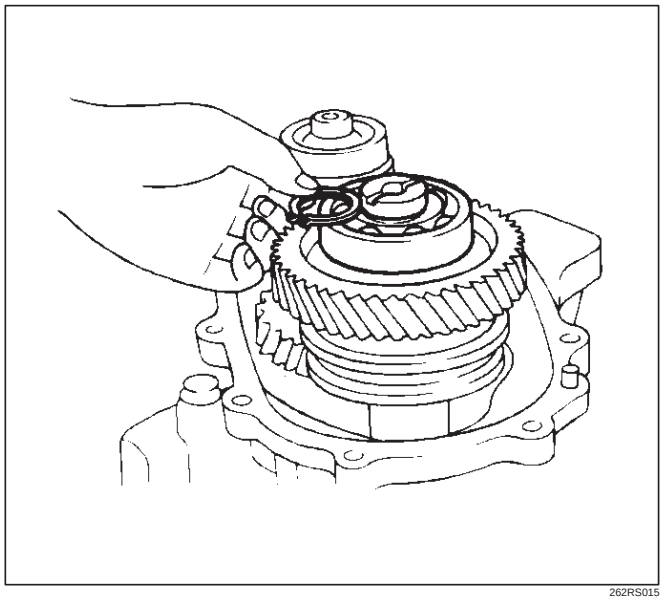

262RS015

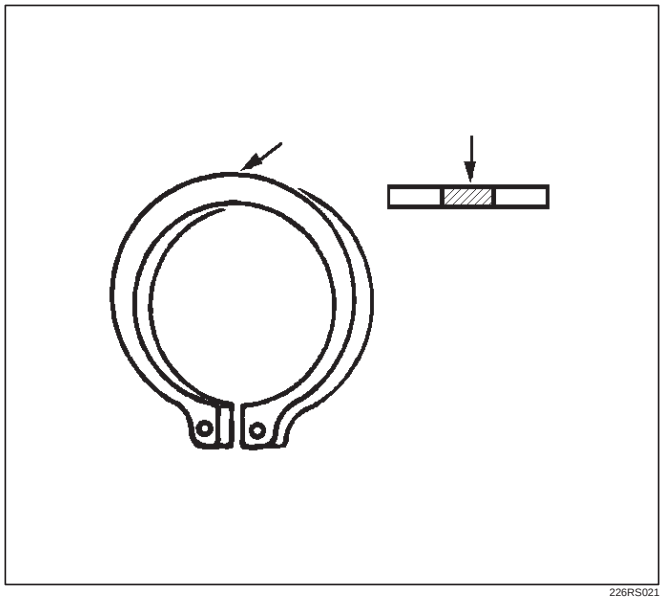

226RS021

27. Use a pair of snap ring pliers to install the snap ring (19) to the output shaft (5).

Sub gear (anti lash plate) preload (M/T)

1. Hook a length of piano wire (4) over one of the sub–gear (5) teeth.
2. Attach the other end of the piano wire to (4) a spring balancer.
3. Measure the sub–gear preload.

Preload: 59–98 N (6.0–10.0kg/13–22 lb)

(M/T)

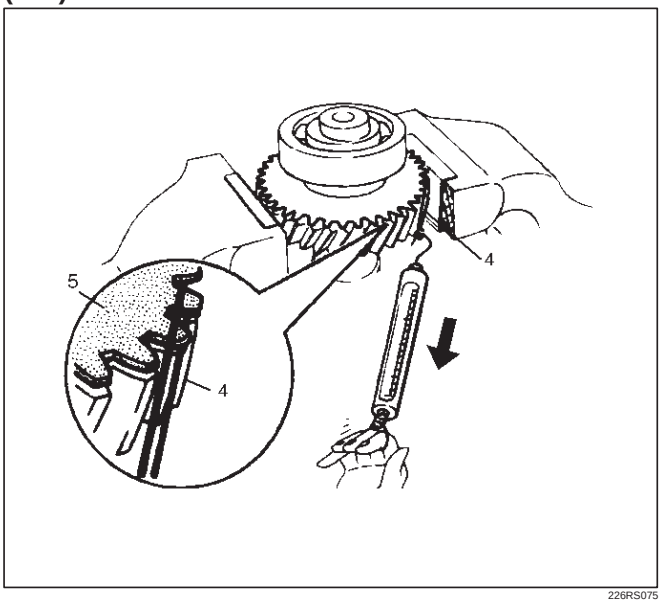

226RS075

28. Install front output gear assembly (3) to the transfer case (1).
29. Use a pair of snap ring pliers to install the snap ring (2) to the transfer case (1).

NOTE: The snap ring must be fully inserted into the transfer case snap ring groove.

30. Use a bench press to install the ball bearing (32) to the input shaft (31).

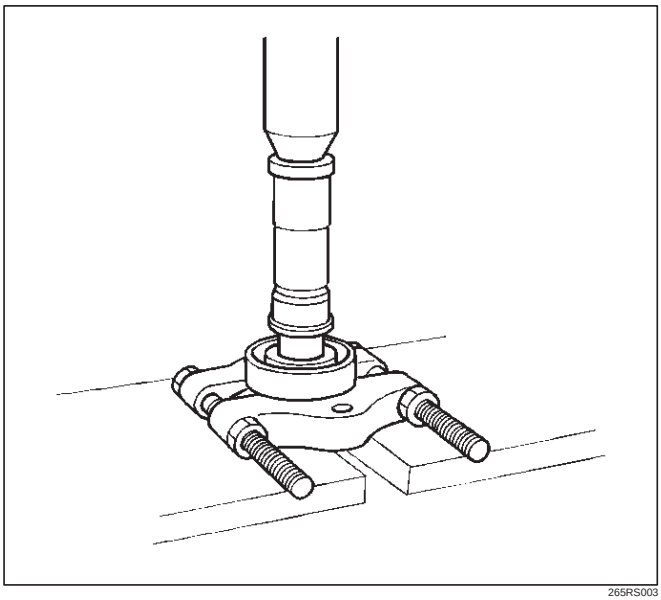

265RS003

31. Install the plate (34), ball (35), and bearing collar (36) and place the snap ring (33).
32. Install the needle bearing (37) and input gear (38).
33. The clutch hub face (with the heavy boss) must be facing the transfer input gear side (7).

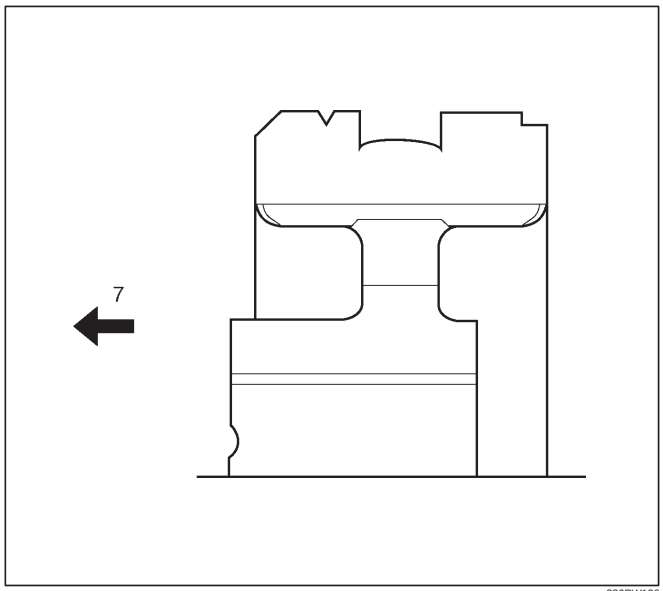

226RW136

34. Install the high–low clutch hub and sleeve (39), using a bench press.
35. Install the input shaft assembly (30) to the transfer case (1).
36. Install the snap ring (33) to the transfer case (1).

NOTE: The snap ring must be fully inserted into the transfer case snap ring groove.

37. Install the front companion flange temporarily and use the flange holder 5–8840–0133–0 (J–8614–11) and lock nut wrench 5–8840–2156–0 (J–37219) to install the lock nut (40).

Torque: 137 N·m (14.0kg·m/101 lb ft)

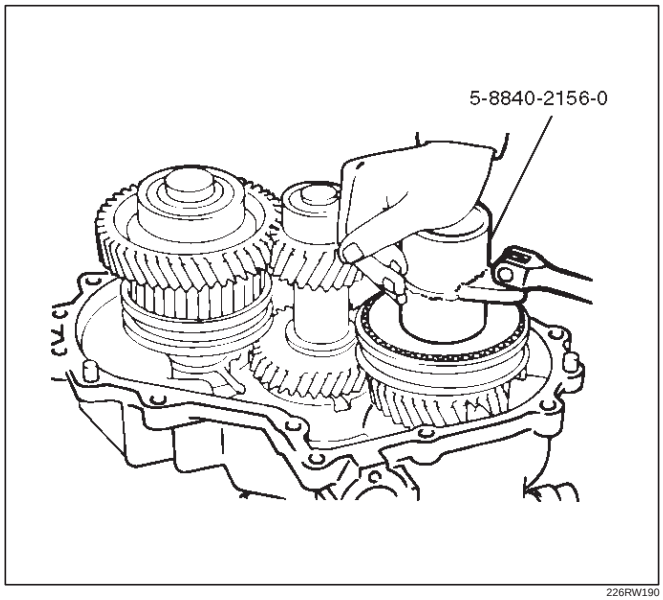

226RW190

38. Use the punch to stake the lock nut (40) at one spot.

39. Use a suitable drift and hammer to install the ball bearing (41).

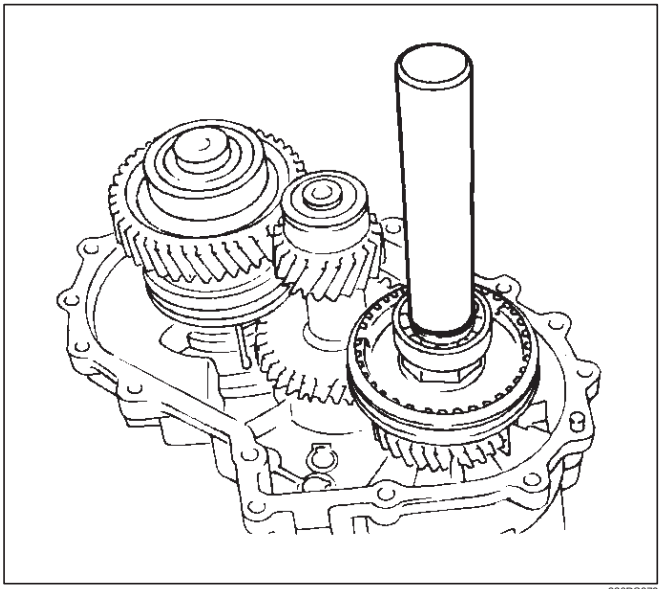

226RS079

40. Install the bearing snap ring (42).

Main Data and Specifications

General Specifications

Type	W/Shift On The Fly System model Synchronized type gears shifting between the 2 and 4 wheel drive mode. Constant mesh type gears shifting between “low” and “high”. WO/Shift On The Fly System model Constant mesh type gears shifting between the 2 and 4 wheel drive mode, and between “low” and “high”.
Control method	W/4WD Switch model Electric control with the button switch on the instrument panel for gear shifting between the 2 and 4 wheel drive mode. Remote control with the gear shift lever on the floor for gear shifting between “low and high” . WO/4WD Switch model Remote control with the gear shift lever on the floor for gear shifting.
Gear ratio	High; 1.000 Low; 2.050
Oil capacity	1.45 lit. (1.53 U.S. quart)
Type of lubricant	Engine oil Refer to chart in Section 0

Torque Specifications

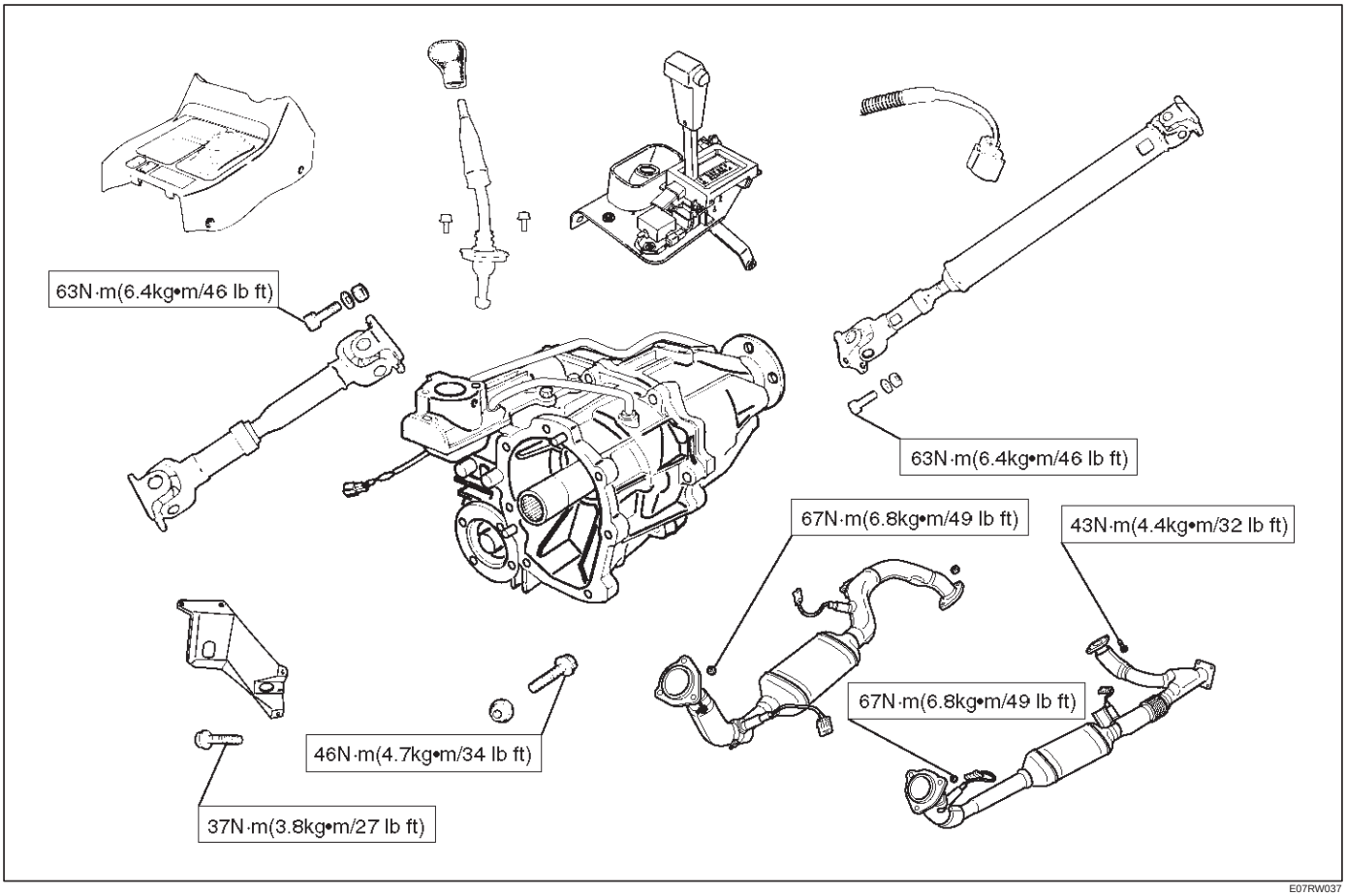

E07RW037

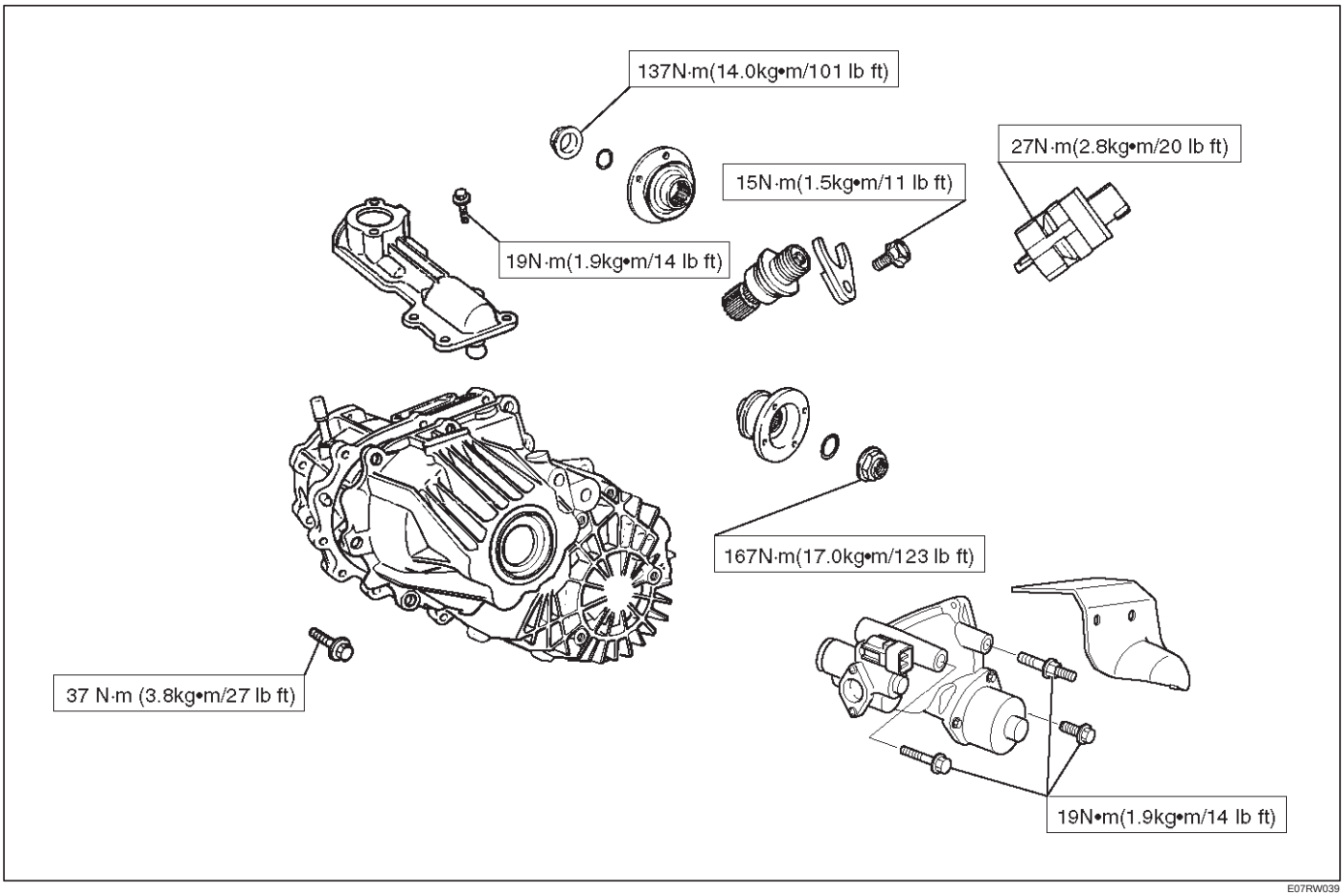
137N·m(14.0kg•m/101 lb ft)
27N·m(2.8kg•m/20 lb ft)
15N·m(1.5kg•m/11 lb ft)
19N·m(1.9kg•m/14 lb ft)
167N·m(17.0kg•m/123 lb ft)
37 N·m (3.8kg•m/27 lb ft)
19N•m(1.9kg•m/14 lb ft)

E07RW039

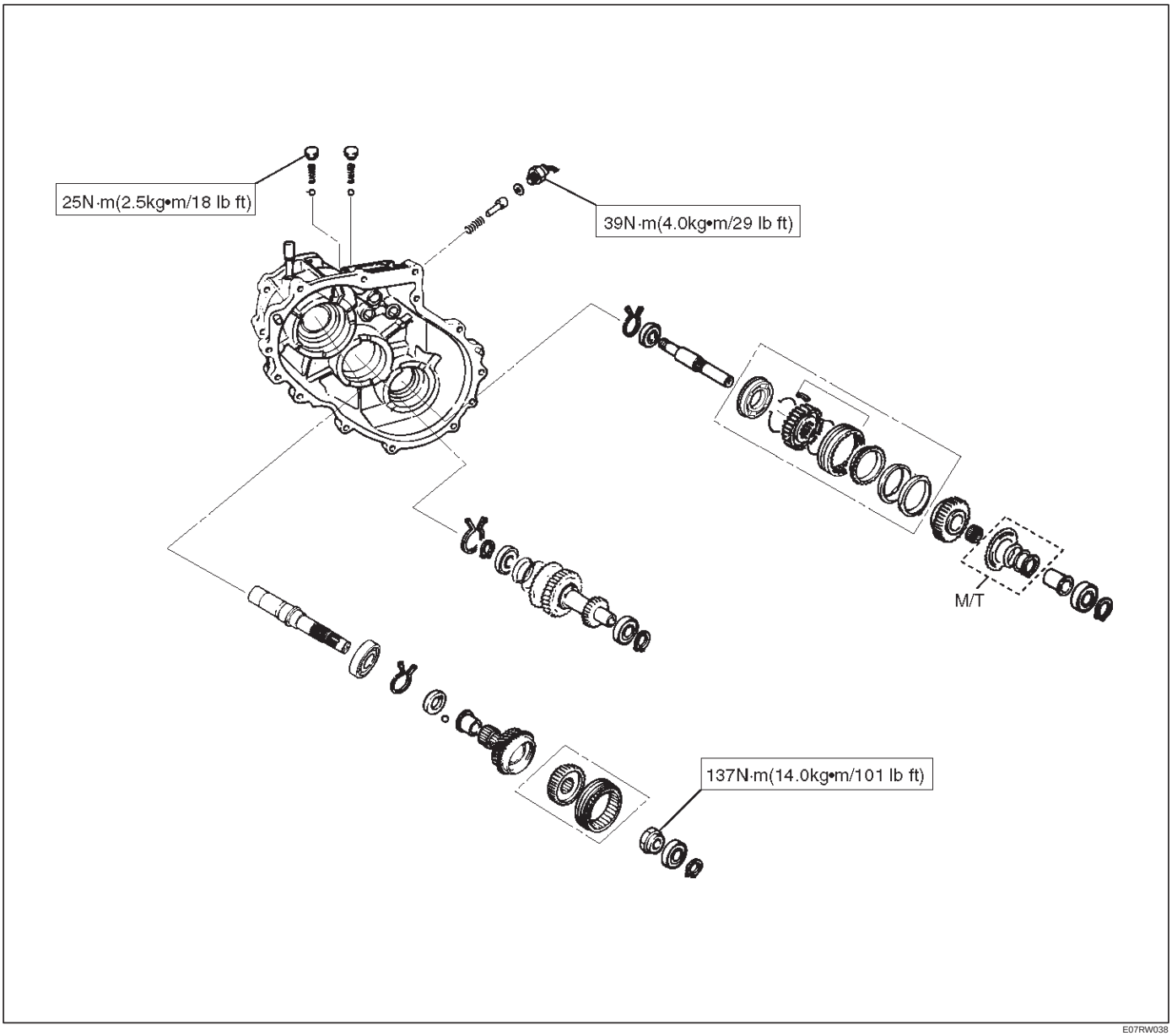
25N·m(2.5kg•m/18 lb ft)
39N·m(4.0kg•m/29 lb ft)
M/T
137N·m(14.0kg•m/101 lb ft)

E07RW038

Special Tools

ILLUSTRATION	PART NO. PART NAME
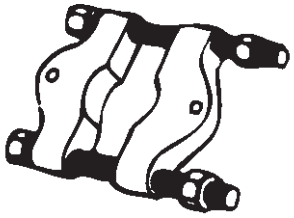 901RS258	**5–8840–0015–0** **(J–22912–01)** Bearing remover/installer
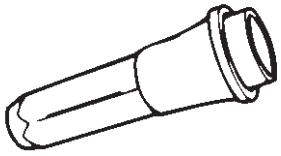 901RS269	**5–8840–2279–0** **(J–38592)** Transfer case oil seal installer
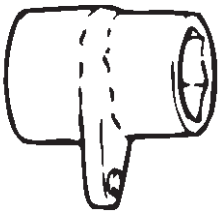 901RS255	**5–8840–2156–0** **(J–37219)** Mainshaft nut wrench
901RS257	**5–8840–2159–0** **(J–37223)** Rear output shaft and bearing installer
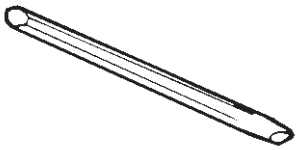 901RS263	**5–8840–2293–0** **(J–39209)** Punch, end nut
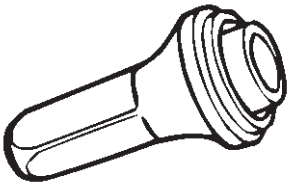 901RS271	**5–8840–2281–0** **(J–38594)** Front output shaft oil seal installer

ILLUSTRATION	PART NO. PART NAME
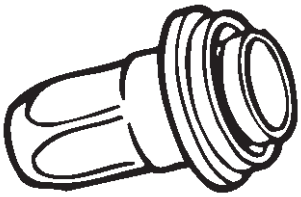 901RS272	**5–8840–2292–0** **(J–39208)** Rear oil seal installer
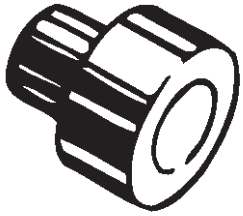 901RS273	**5–8840–2192–1** **(J–37486–A)** Bearing installer adapter
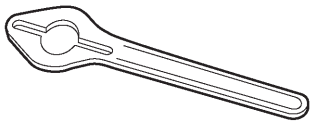 901RW071	**5–8840–0133–0** **(J–8614–11)** Flange holder
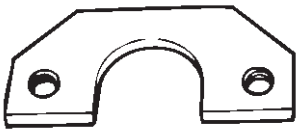 901RS274	**5–8840–2155–0** **(J–37217)** Mainshaft end bearing remover
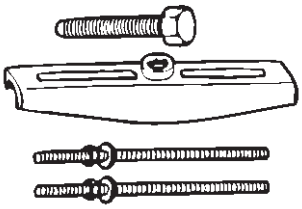 901RS252	**5–8840–2027–0** **(J–37487)** Puller
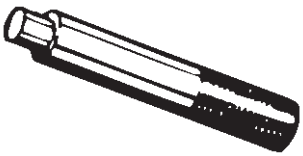 901RS268	**5–8840–0007–0** **(J–8092)** Driver handle

DRIVELINE/AXLE

TRANSFER CASE (TOD)

CONTENTS

Service Precaution 4D2–1
Transfer Case Assembly 4D2–2
Removal 4D2–2
Installation 4D2–3
Transfer Rear Oil Seal 4D2–5
Transfer Rear Oil Seal and Associated Parts 4D2–5
Removal 4D2–5
Installation 4D2–5
TOD ECU 4D2–7
Removal 4D2–7
Installation 4D2–7
Unit Repair 4D2–8
Inspection 4D2–8
Transfer Case 4D2–9
Disassembled View 4D2–9
Disassembly 4D2–9
Reassembly 4D2–10
Transfer Cover Assembly 4D2–12
Disassembled View 4D2–12
Disassembly 4D2–12
Reassembly 4D2–14
Transfer Case Assembly Clutch Pack and Clutch Cam 4D2–16
Disassembled View 4D2–16
Disassembly 4D2–16
Sprocket and Mechanical Lock 4D2–18
Disassembled View 4D2–18
Disassembly 4D2–18
Output Shafts and Shift Control Shaft 4D2–20
Disassembled View 4D2–20
Disassembly 4D2–21
Transfer Case 4D2–23
Disassembled View 4D2–23
Disassembly 4D2–24
Inspection and Repair 4D2–26
Transfer Case 4D2–30
Disassembled View 4D2–30
Reassembly 4D2–30
Output Shafts and Shift Control Shaft 4D2–34
Disassembled View 4D2–34
Reassembly 4D2–34
Sprocket and Mechanical Lock 4D2–37
Disassembled View 4D2–37
Reassembly 4D2–37
Clutch Pack and Clutch Cam 4D2–39
Disassembled View 4D2–39
Reassembly 4D2–39
Main Data and Specifications 4D2–41
Special Tools 4D2–43

Service Precaution

WARNING: IF SO EQUIPPED WITH A SUPPLEMENTAL RESTRAINT SYSTEM (SRS), REFER TO THE SRS COMPONENT AND WIRING LOCATION VIEW IN ORDER TO DETERMINE WHETHER YOU ARE PERFORMING SERVICE ON OR NEAR THE SRS COMPONENTS OR THE SRS WIRING. WHEN YOU ARE PERFORMING SERVICE ON OR NEAR THE SRS COMPONENTS OR THE SRS WIRING, REFER TO THE SRS SERVICE INFORMATION. FAILURE TO FOLLOW WARNINGS COULD RESULT IN POSSIBLE AIR BAG DEPLOYMENT, PERSONAL INJURY, OR OTHERWISE UNNEEDED SRS SYSTEM REPAIRS.

CAUTION: Always use the correct fastener in the proper location. When you replace a fastener, use ONLY the exact part number for that application. ISUZU will call out those fasteners that require a replacement after removal. ISUZU will also call out the fasteners that require thread lockers or thread sealant. UNLESS OTHERWISE SPECIFIED, do not use supplemental coatings (Paints, greases, or other corrosion inhibitors) on threaded fasteners or fastener joint interfaces. Generally, such coatings adversely affect the fastener torque and the joint clamping force, and may damage the fastener. When you install fasteners, use the correct tightening sequence and specifications. Following these instructions can help you avoid damage to parts and systems.

Transfer Case Assembly

Removal

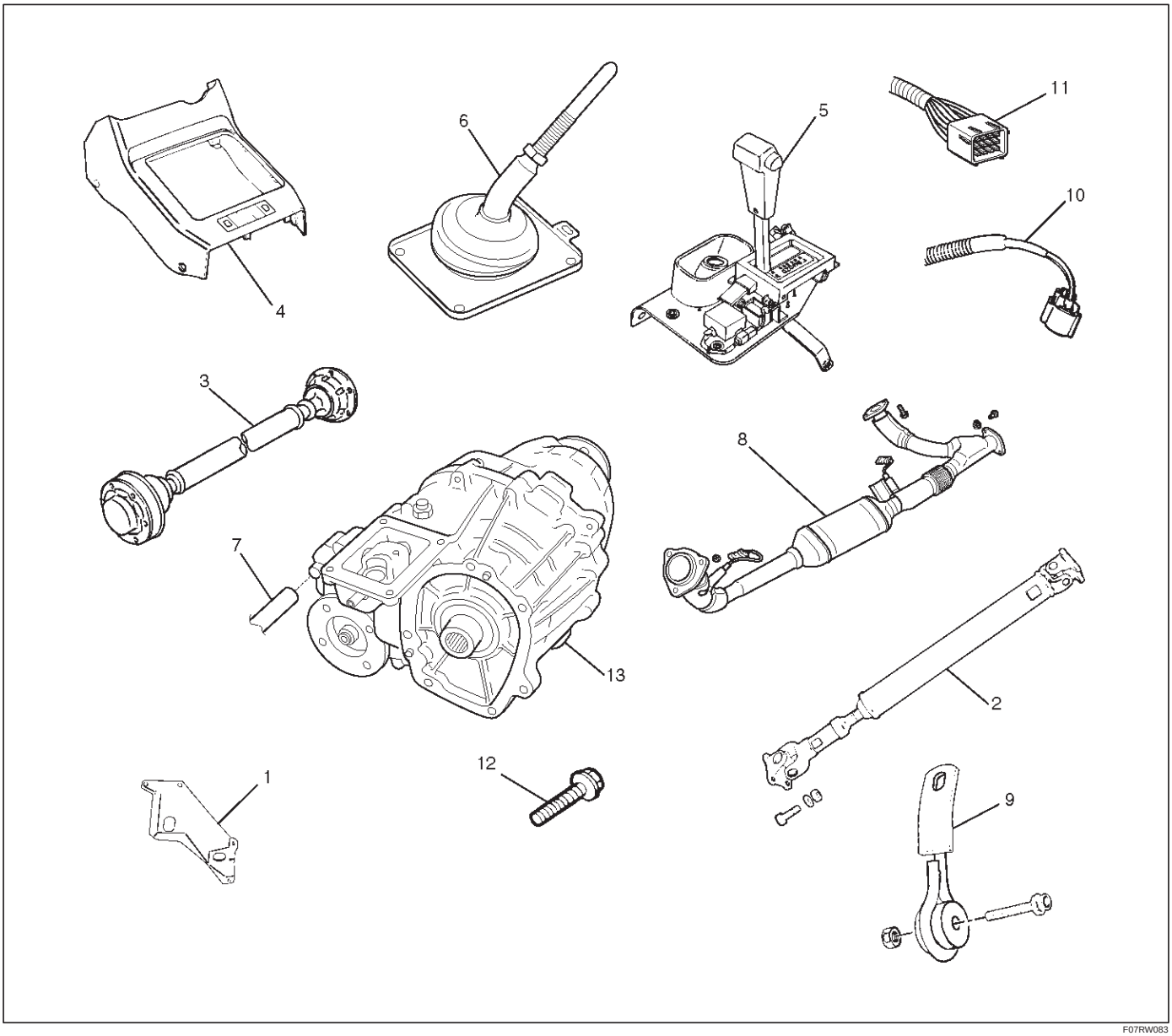

F07RW083

Legend

(1) Front Propeller Shaft
(2) Front Console
(3) Transfer Control Lever
(4) Selector Lever Assembly
(5) Transfer Connector
(6) Wiring Harness Connector
(7) Exhaust Pipe
(8) Rear Propeller Shaft
(9) Seat Belt Tension Rod
(10) Transfer Case Bolt
(11) Transfer Protector
(12) Breather Hose
(13) Transfer Case

1. Disconnect the ground cable.
2. Remove the transfer protector.
3. Remove the rear propeller shaft from the transfer case.
4. Remove the front propeller shaft from the transfer case.
5. Remove the shift control rod from the select lever assembly.

6. Disconnect the wiring harness connector and shift lock cable and then remove the front console.
7. Remove the selector lever assembly and put it aside.
8. Remove the transfer control lever.
9. Disconnect the breather hose.
10. Remove the left front exhaust pipe fixing bolts and nuts, and put the exhaust pipe aside.
11. Remove the left seat belt tension rod and put the rear proper shaft aside.

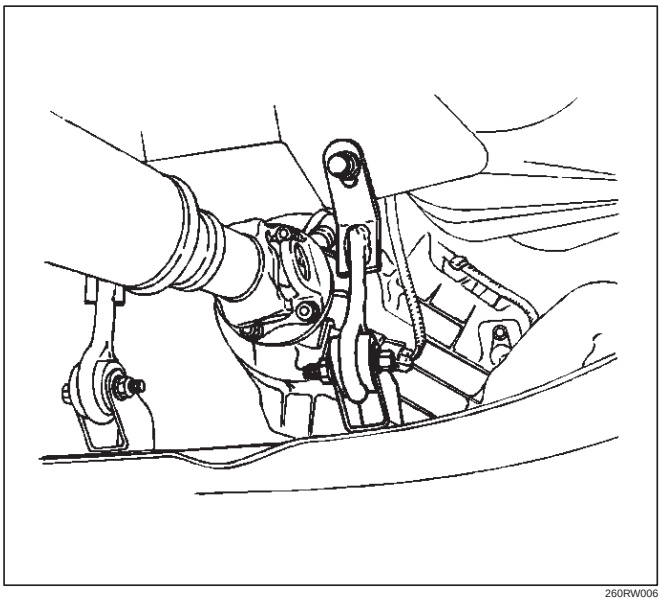

260RW006

12. Remove the silencer.
13. Disconnect the transfer connector from the top of the transfer case.
14. Disconnect the speed sensor harness connector.
15. Remove the fuel pipe clip fixing bolt on the transfer case.
16. Support the transmission with a jack.
17. Remove the seven bolts from the transfer case.
18. Remove transfer case assembly.

Installation

To install, follow the removal steps in the reverse order, nothing the following points:

1. Apply a thin coat of grease (Besco L2) or equivalent to the input shaft spline.

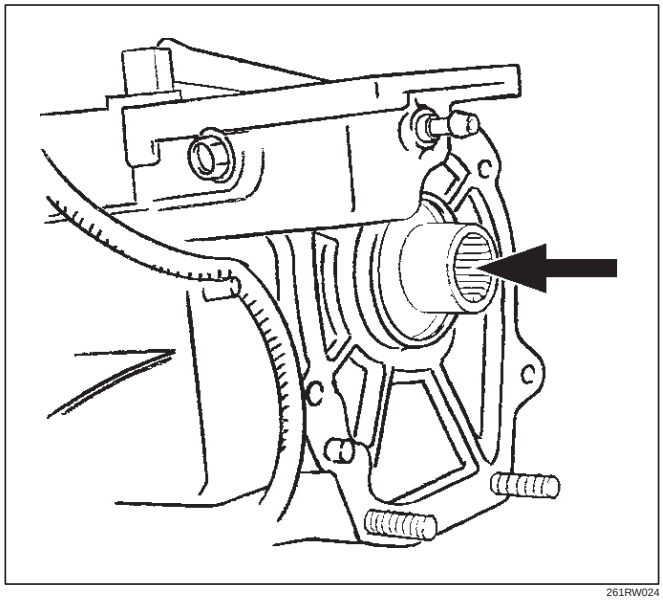

261RW024

2. Mount the transfer case.

3. Tighten the transfer case bolts (see the figure below).

Torque : 46 N·m (4.7 kg·m/34 lb ft)

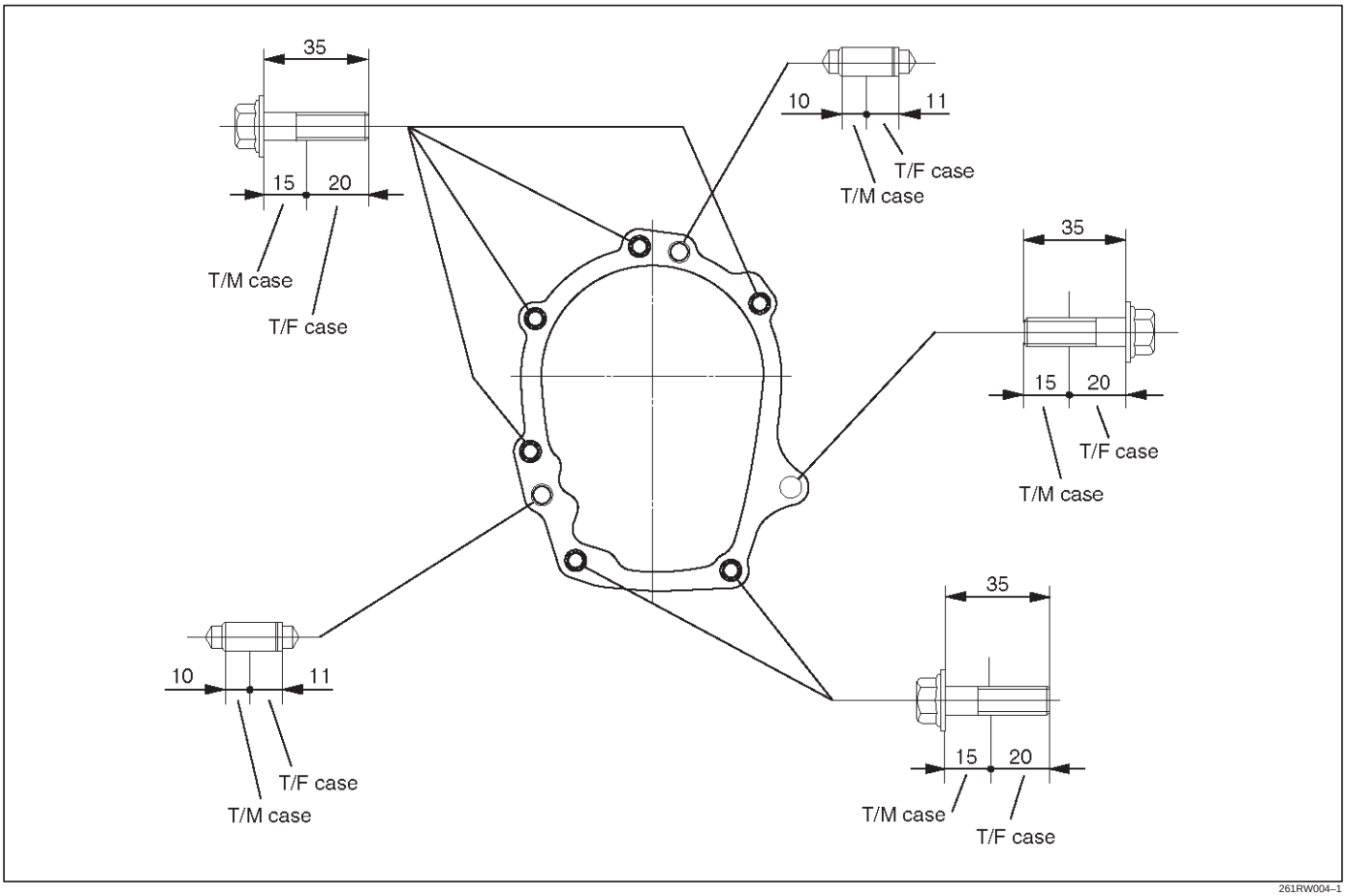

261RW004–1

4. Tighten the propeller shaft bolts.

Torque : 63 N·m (6.4 kg·m/46 lb ft)

Transfer Rear Oil Seal

Transfer Rear Oil Seal and Associated Parts

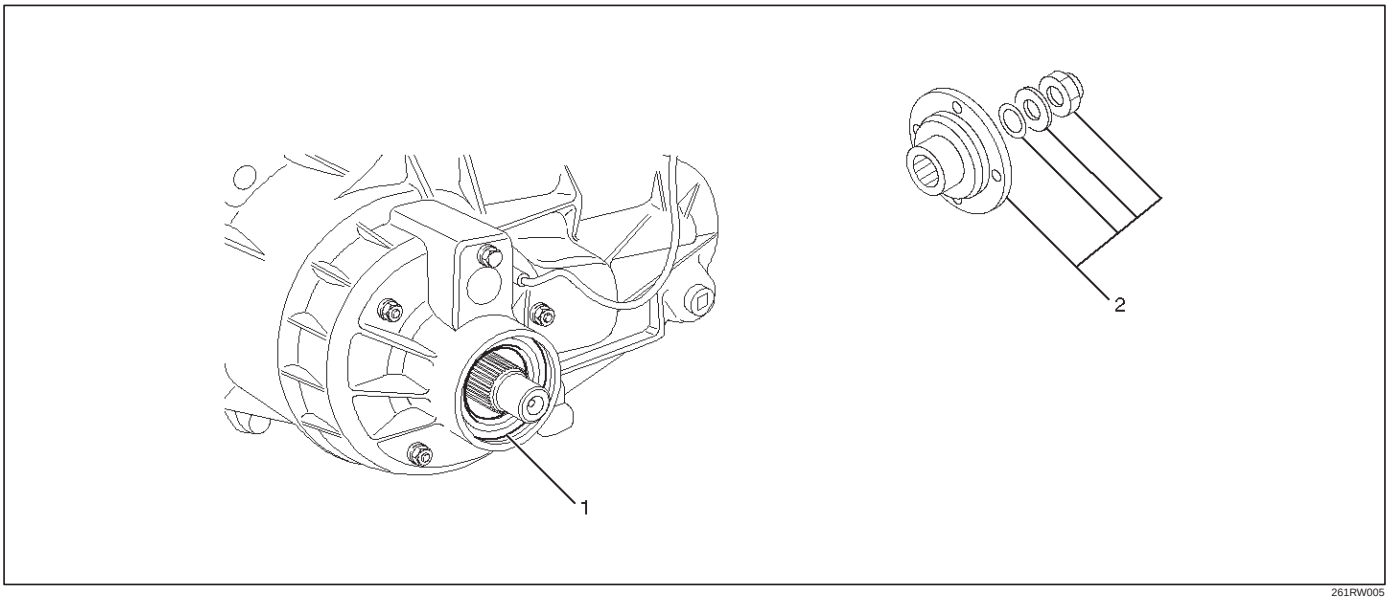

261RW005

Legend
(1) Oil Seal
(2) End Nut and Rear Companion Flange

Removal

1. Remove the rear propeller shaft from the transfer case.
2. Using the flange holder 5-8840-0133-0 (J-8614-11), remove the end nut.
3. Using the universal puller, remove the rear companion flange, washer and O-ring.
4. Remove the oil seal from the transfer rear case.

Installation

1. Apply engine oil to the oil seal outer surfaces. Fill the oil seal lip with grease (Besco L2).

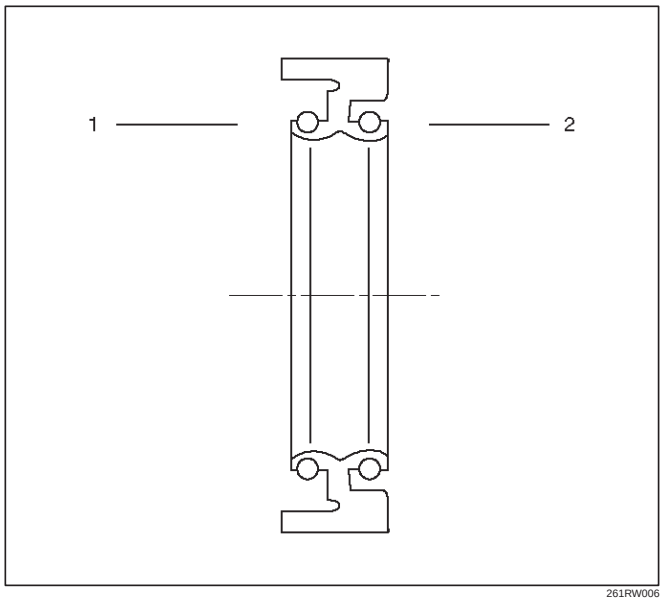

261RW006

Legend
(1) Inside
(2) Outside

2. Using the oil seal installer 5-8840-2412-0 (J-42804), install the oil seal.

NOTE: When installing the oil seal, pay attention to the direction.

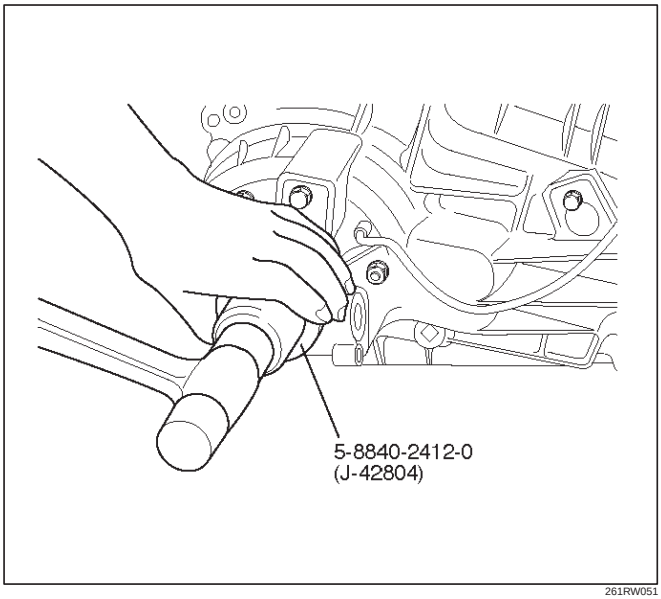

261RW051

Rear Output Shaft Oil Seal

Distance between the transfer case end and oil seal.

NOTE: When installing the oil seal to the specified dimension, be careful not to damage it.

Distance : 9.85 — 10.35mm (0.39 — 0.41 in)

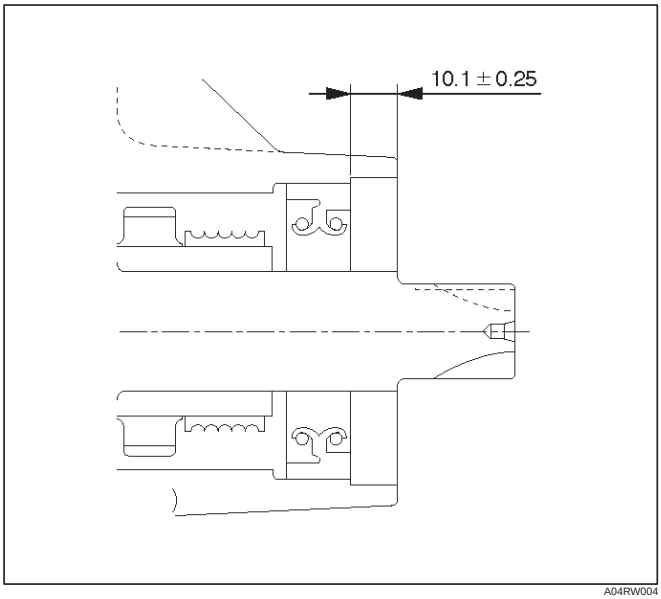

A04RW004

3. Mount the rear companion flange, O-ring , washer, and nut to the transfer case in this order.
4. Using the flange holder 5-8840-0133-0 (J-8614-11), install a new end nut.

Torque : 167 N·m (17 kg·m /123 lb ft)

5. Using the punch 5-8840-2293-0 (J-39209), stake the end nut at two spots.

NOTE: Check the staked end nut is free from cracks.

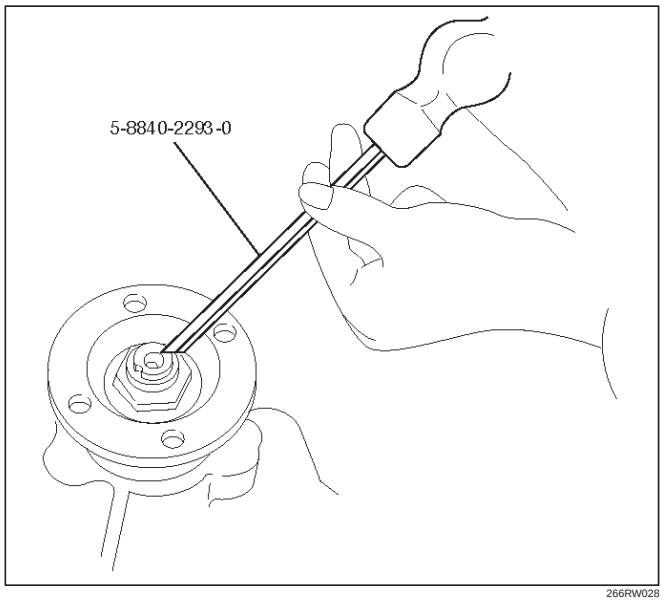

266RW028

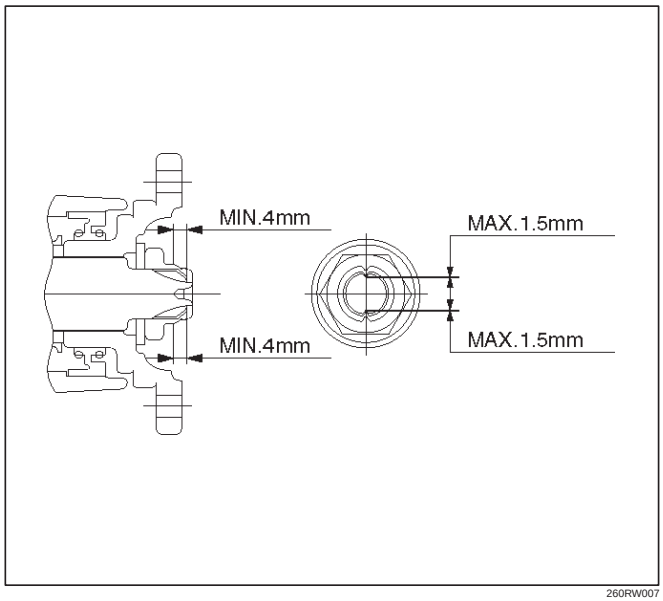

260RW007

6. Install the rear propeller shaft to the transfer case and tighten to the specified torque.

Torque : 63 N·m (6.4 kg·m /46 lb ft)

TOD ECU

Removal

1. Disconnect the ground cable.
2. Move the right-hand seat forward and remove the second seat foot rest (1).
3. Disconnect the connector from the ECU (2).
4. Remove the bolts and detach the ECU (2) from the bracket.

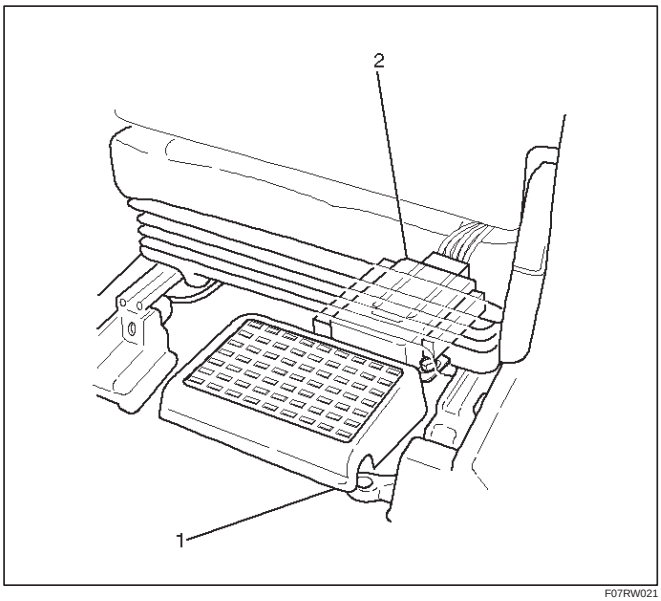

F07RW021

Installation

1. Perform the removal step in reverse order.

Unit Repair

Inspection

Before disassembling and after assembling, check the following items on the transfer connector terminals.

No.	NAME	CONTENTS
1	Ref . (Ref .)	Rear speed sensor reference output
2	Ref . (Frt .)	Front speed sensor reference output
3	SW GND	SW GND
4	4H SW (+)	4H SW plus terminal
5	Rer . (+)	Rear speed sensor plus
6	Frt . (+)	Front speed sensor plus
7	POWER GND	Power GND
8	SOL (+)	Electromagnetic solenoid
9	COM (–) (Ref .)	Rear speed sensor GND
10	COM (–) (Frt .)	Front speed sensor GND
11	NC	
12	4L SW (+)	4L SW plus terminal

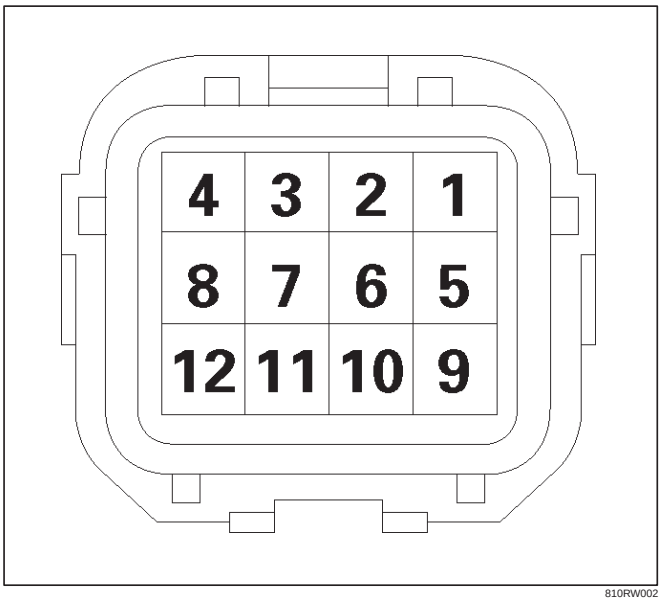

810RW002

4H and 4L switches

Check whether the 4H switch (terminals 4 and 7) and 4L switch (terminals 12 and 3) work as specified in the table below. If yes, the continuity is established on these switches. If not, check the switches, shift rails, transfer case, and rear cover, and replace the failed parts.

SHIFT POSITION	PIN 4 (4 to 7)	PIN 12 (3 to 12)
HIGH	OFF	OFF
(NEUTRAL)	ON	ON
4L	OFF	ON

Power GND

Check that there is a continuity between the power GND pin (terminal 7) and transfer case. If not, replace the grounding wire.

Resistance of electromagnetic coil

Check the resistance between electromagnetic clutch solenoid (terminal 8) and power GND (terminal 7). If not, replace the electromagnetic coil.

Standard : 1.4 ~ 2.0Ω

Allowable : 1.0 ~ 5.0Ω

Transfer Case

Disassembled View

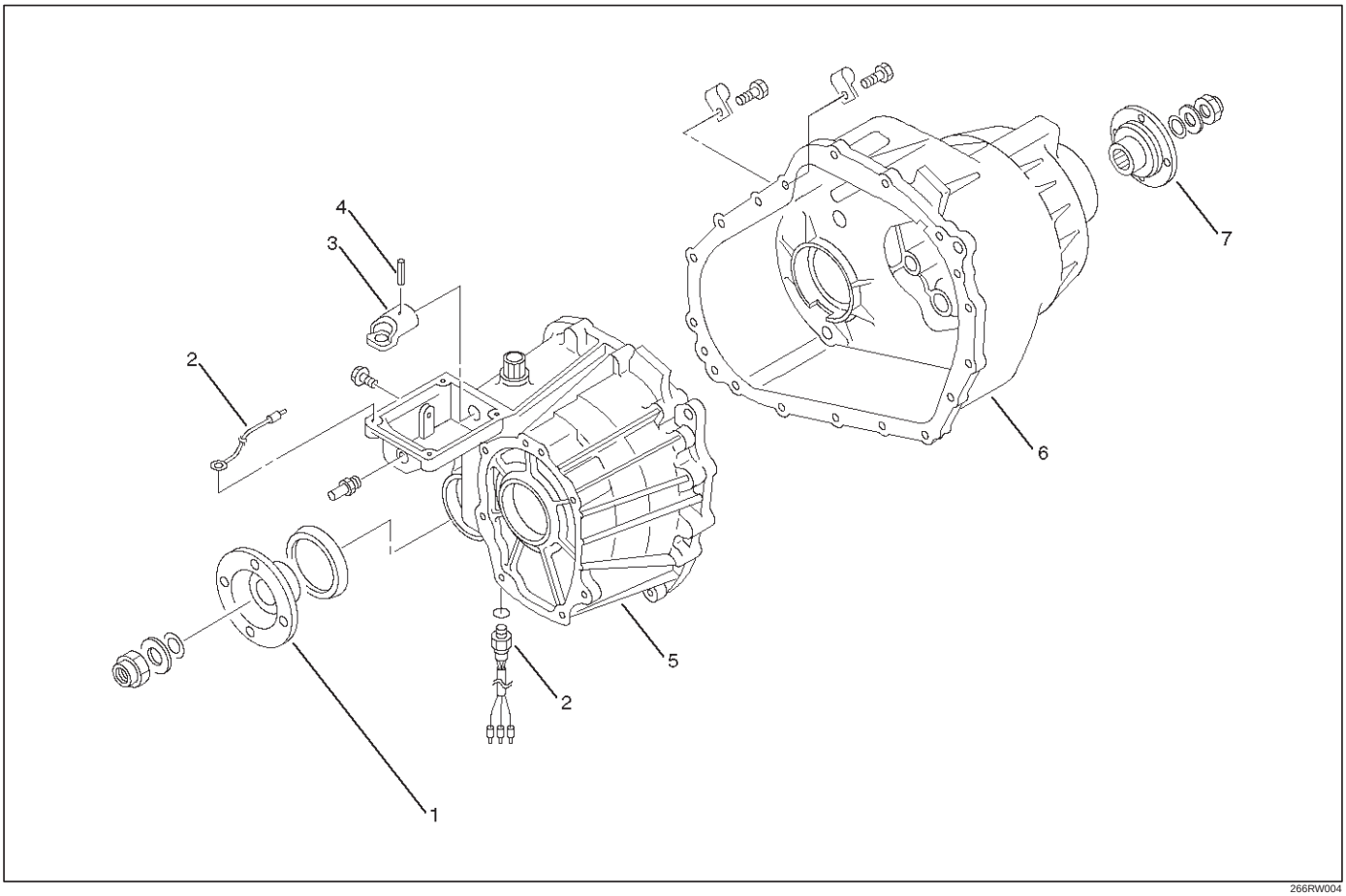

266RW004

Legend

(1) Front Companion Flange
(2) 4H and 4L Switch, Ground Cable, and Center Connector
(3) Offset Lever
(4) Spring Pin
(5) Transfer Case Assembly
(6) Transfer Cover Assembly
(7) Rear Companion Flange

Disassembly

1. Remove the drain plug from the transfer case and drain the oil.
2. Disconnect the 4H and 4L switch and ground cable.
3. Remove the clip fixing the harness.
4. Using the flange holder 5-8840-0133-0 (J-8614-11), remove the flange nut, and remove front companion flange.
5. Using the flange folder 5-8840-0133-0 (J-8614-11), remove the flange nut, and remove rear companion flange.

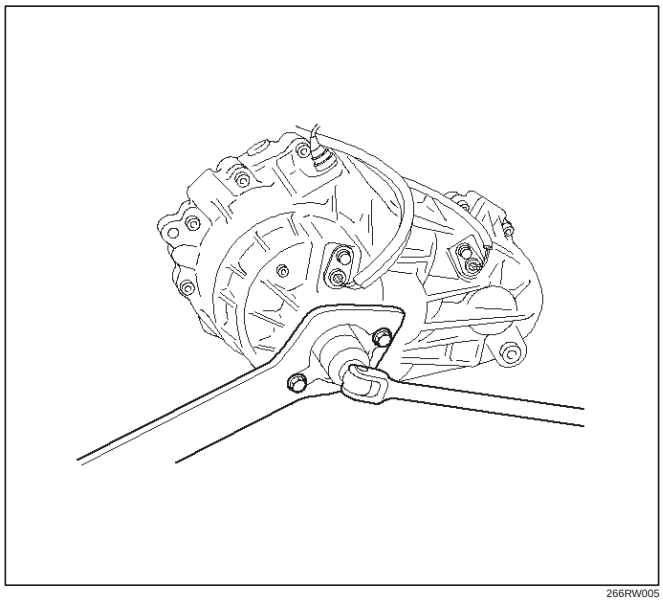

266RW005

6. Remove the offset lever set bolt on the right side.

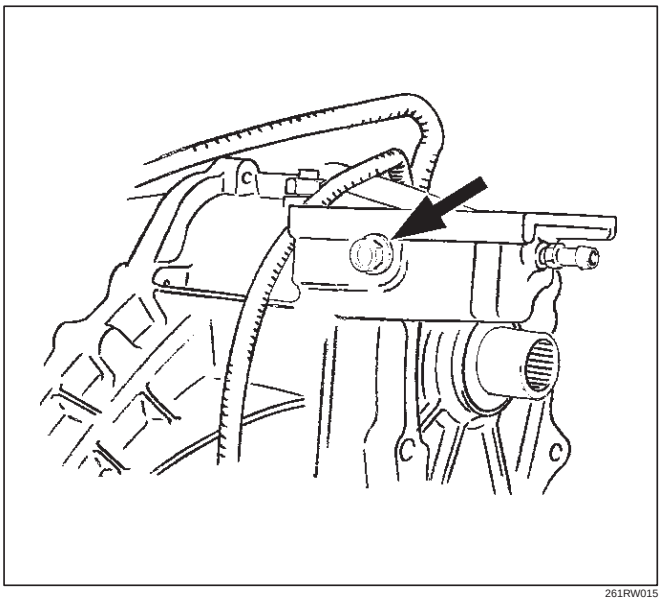

261RW015

7. Remove the offset lever lock spring pin.

NOTE: When removing the spring pin, note the recess position of the pin.

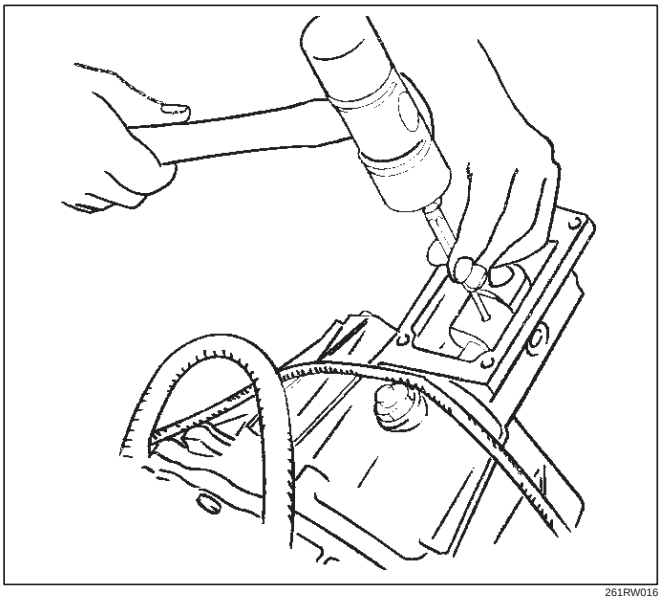

261RW016

8. Remove the offset lever.

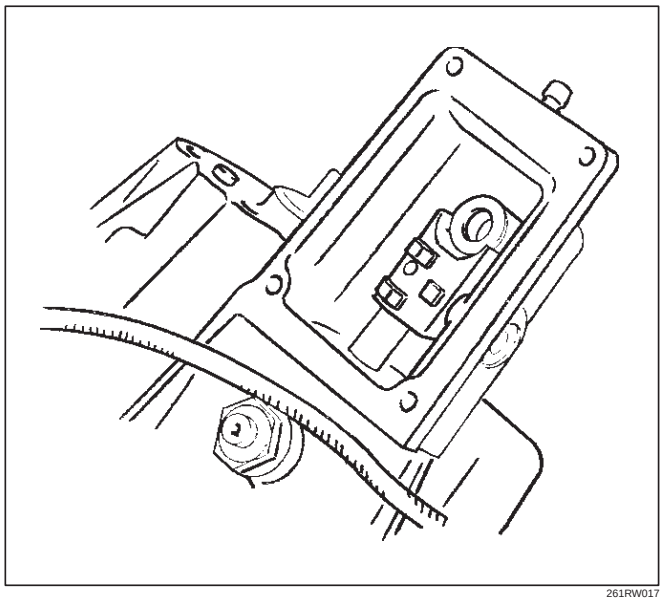

261RW017

9. Remove the sixteen bolts and detach the transfer cover assembly from the transfer case assembly.

NOTE: When removing the transfer cover assembly, be careful not to damage the oil seal.

Reassembly

1. Apply liquid gasket (Loctite 598 or equivalent) uniformly to the mating face that contacts the transfer case.

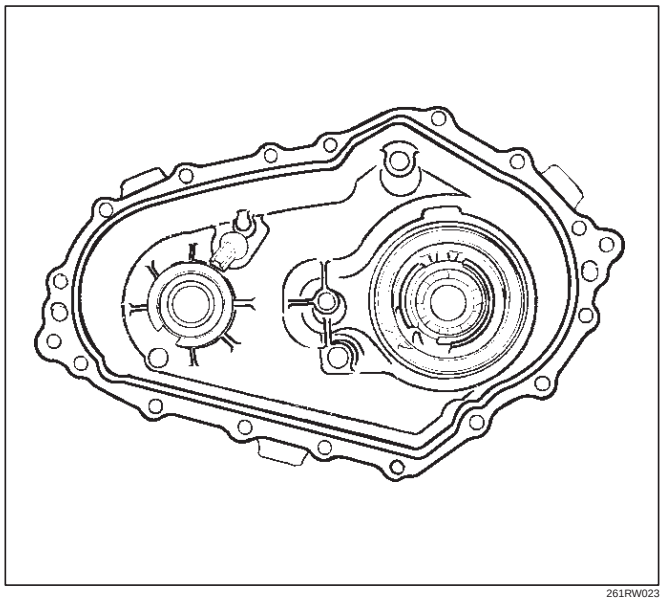

261RW023

2. Tighten the sixteen bolts to the specified torque.

   Torque : 31 N·m (3.2 kg·m/23 lb ft)

3. Wind the sealing tape around the drain plug thread and tighten the plug to the specified torque.

   Torque : 25 N·m (2.5 kg·m/18 lb ft)

4. Mount the offset lever to the transfer shift and install the spring pin.

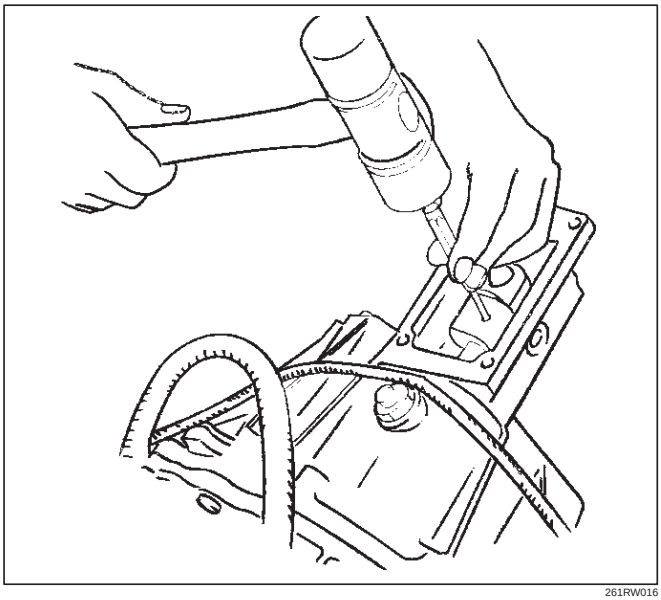

261RW016

5. Attach the O-ring and washer to the companion flange.

NOTE: Securely push the O-ring to the hollow of the companion flange, and then attach the washer.

6. Use the flange holder 5-8840-0133-0 (J-8614-11) to tighten the flange nut.
7. Tighten the flange nut to the specified torque.

   Torque : 167 N·m (17.0 kg·m/123 lb ft)

8. Using the punch 5-8840-2293-0 (J-39209), securely stake the flange nut at two spots.

NOTE: Check the staked flange nut is free from cracks.

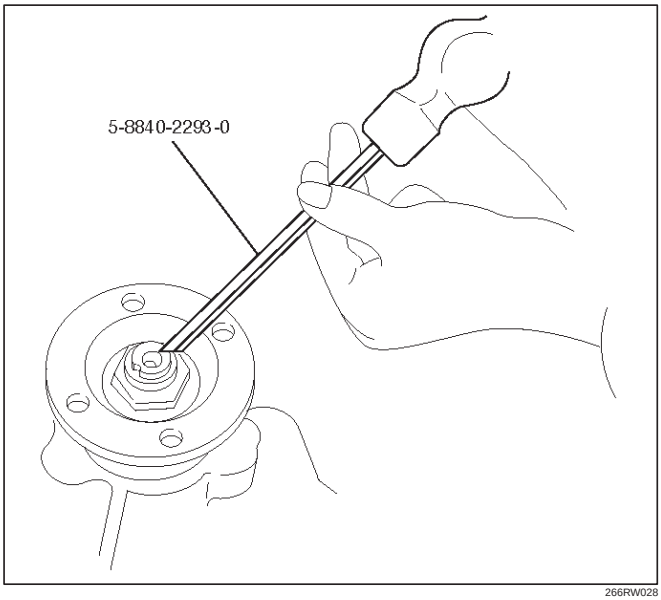

266RW028

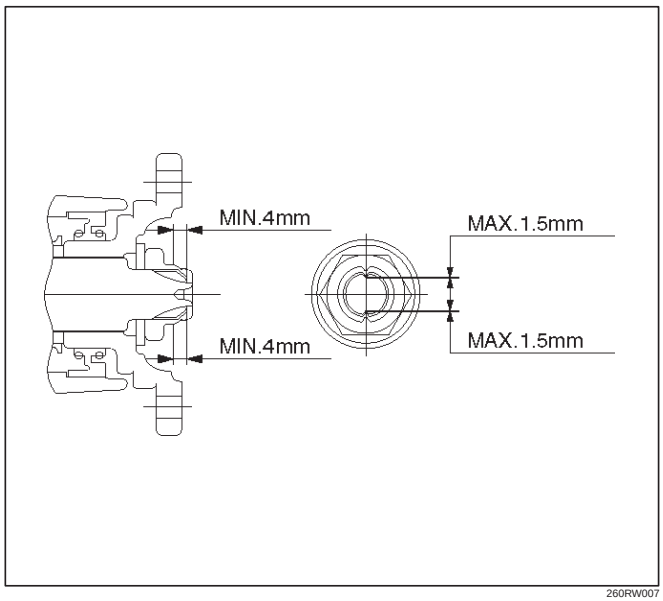

260RW007

9. Fix the harness with the clip.
10. Tighten the 4L and 4H switch to the specified torque.

    Torque : 24 N·m (2.4 kg·m/17 lb ft)

11. Fill the transfer case with ATF II or III (1.9 liters).
12. Wind the sealing tape around the filler plug thread and tighten the plug to the specified torque.

    Torque : 25 N·m (2.5 kg·m/18 lb ft)

Transfer Cover Assembly

Disassembled View

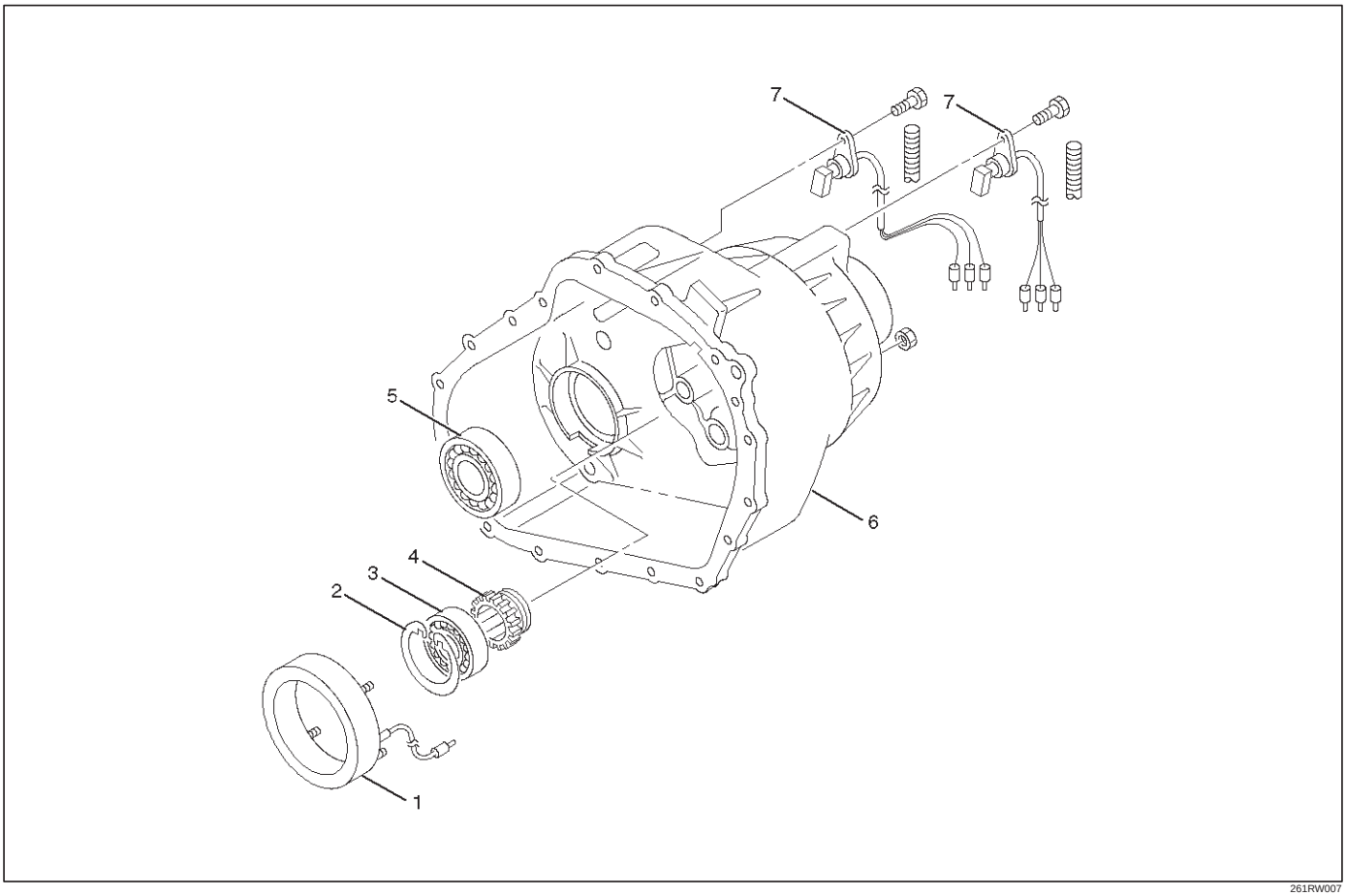

261RW007

Legend

(1) Coil Assembly
(2) Snap Ring
(3) Ball Bearing
(4) Speed Gear and Tone Wheel
(5) Ball Bearing
(6) Transfer Cover Assembly
(7) Front and Rear Speed Sensors

Disassembly

1. Using snap ring pliers, remove the snap ring.

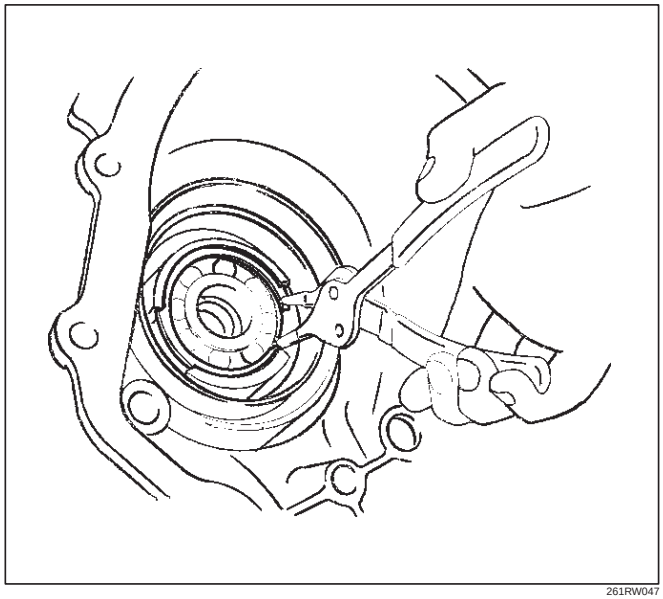

261RW047

2. Strike the speed gear and tone wheel with a rod or other appropriate tool from the outside of the transfer cover assembly, and remove the ball bearing and speed gear and tone wheel.

NOTE: Be careful not to damage the speed gear teeth.

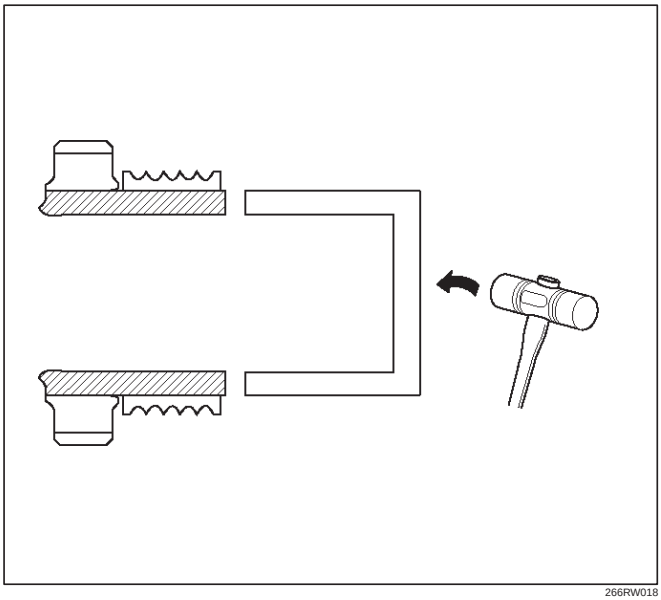

266RW018

3. Remove the stopper plate on the back with a precision screwdriver or other appropriate tool starting from the small lock of the plate.

NOTE: Be careful not to damage the stopper plate during the work.

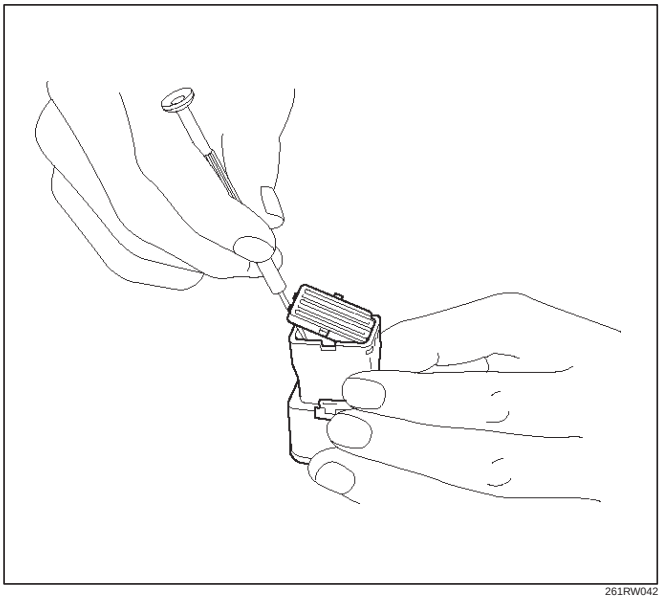

261RW042

4. Using a terminal pull-out tool or an equivalent tool, push down the lock to unlatch the terminal for the coil assembly, and pull the terminal out.

NOTE: Be careful not to damage other terminals.

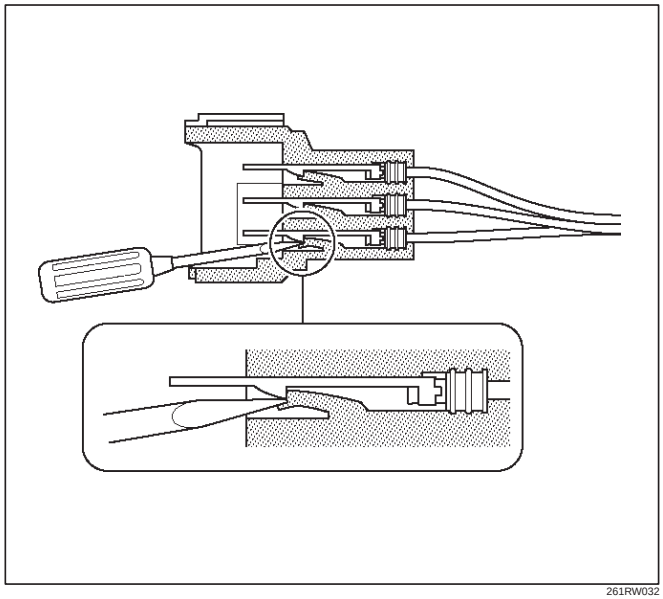

261RW032

5. Remove the fixing nuts of the coil assembly from the outside of the transfer cover assembly. Remove the coil assembly from the transfer cover.

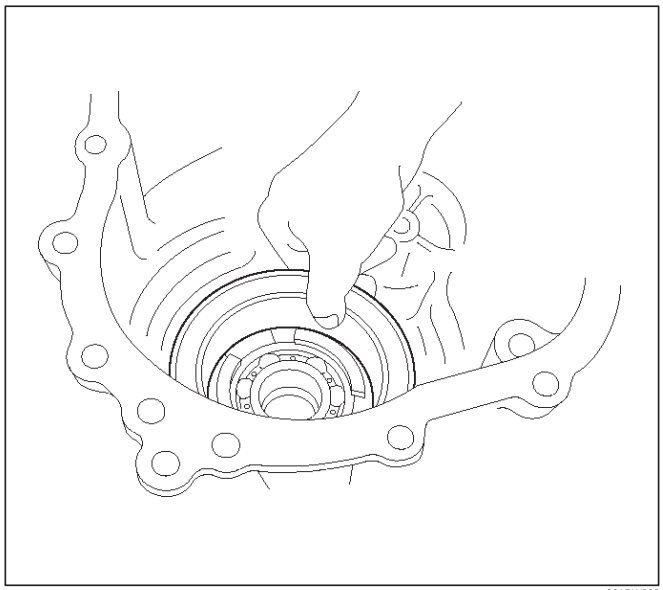

261RW030

6. Using the bearing remover 5-8840-2409-0 (J-42805) and slide hammer 5-8840-0084-0 (J-2619-01), remove the ball bearing for the front output shaft.

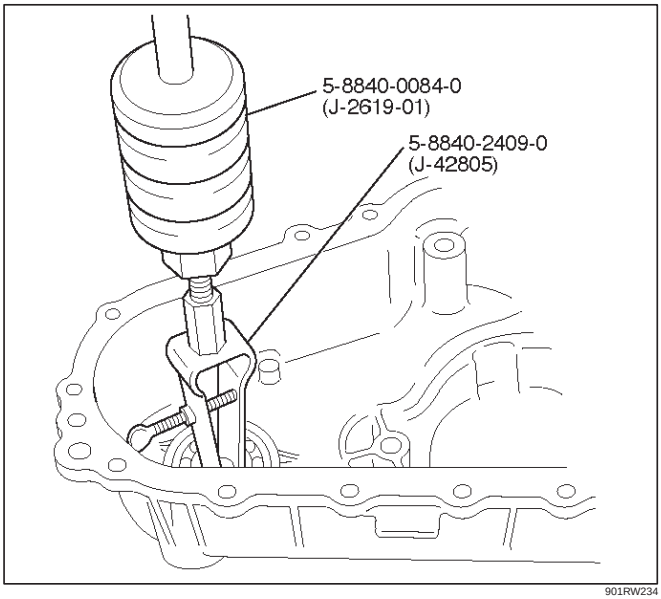

901RW234

7. Remove the bolts and front and rear speed sensors.

NOTE: Be careful not to damage the speed sensors during the work.

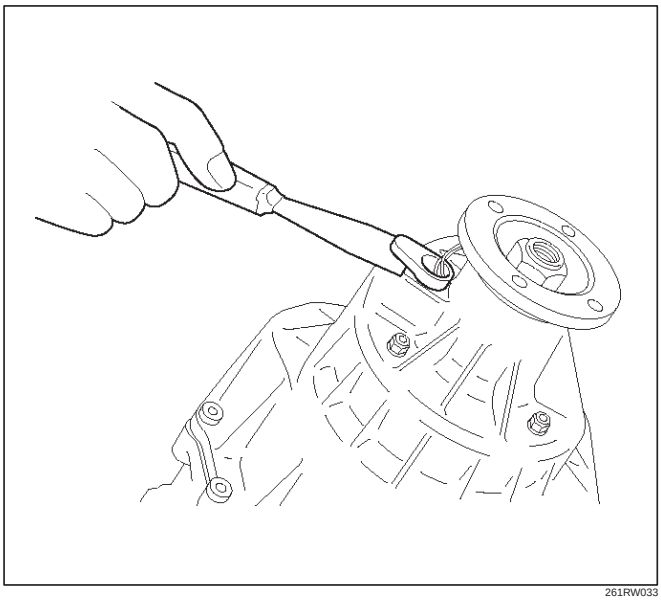

261RW033

Reassembly

1. Remove the oil seal from the transfer cover assembly.
2. Apply oil to the circumference of the new oil seal and fill the lip with grease (Besco L2 or equivalent).
3. Using the oil seal installer 5-8840-2412-0 (J-42804), install the oil seal to the transfer cover assembly.

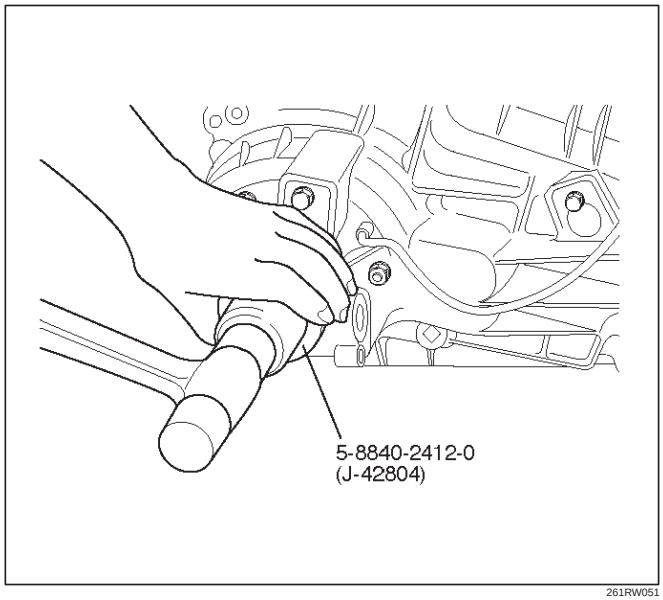

261RW051

Rear Output Shaft Oil Seal

Distance between the transfer case end and oil seal.

NOTE: When installing the oil seal to the specified dimension, be careful not to damage it.

Dimension : 9.85 — 10.35mm (0.39 — 0.41 in)

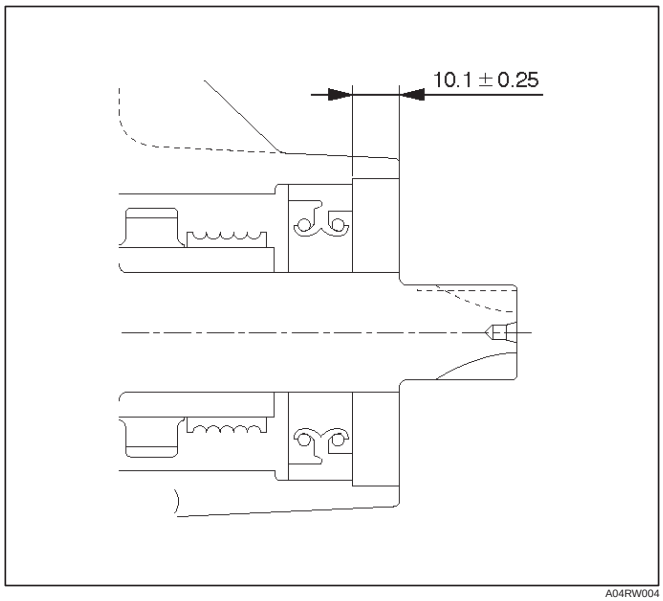

A04RW004

4. Apply a thin coat of grease to the seal ring of each front and rear speed sensor, and mount the sensors carefully.
5. Tighten the bolts to the specified torque.

Torque : 5 N·m (0.5 kg·m/43 lb in)

NOTE: Pay attention not to mount the front (or rear) sensor to the rear (or front) sensor position.

6. Install the ball bearing (1) for the front output shaft as flat as shown in the figure.

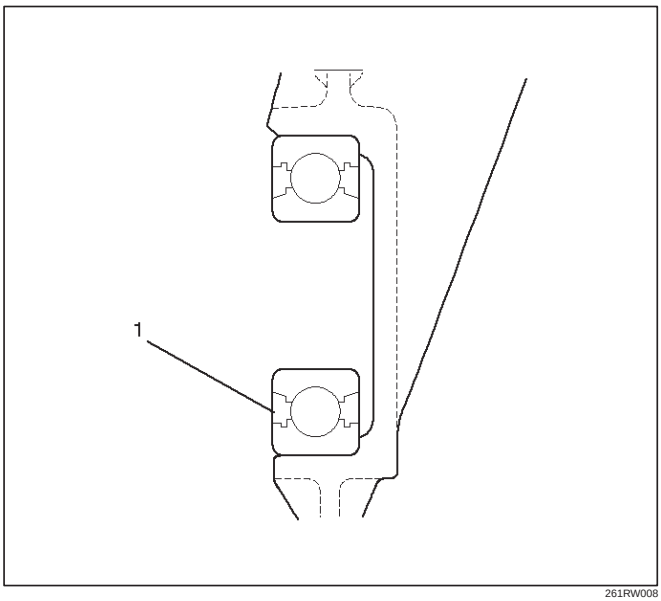

261RW008

7. Mount the coil assembly and tighten the nuts to the specified torque.

Torque : 10 N·m (1.0 kg·m/87 lb in)

8. Connect the terminal in the central connector.

NOTE: Be careful not to damage other terminals.

9. Install speed gear and tone wheel.
10. Mount the ball bearing (2) as flat as shown in the figure.

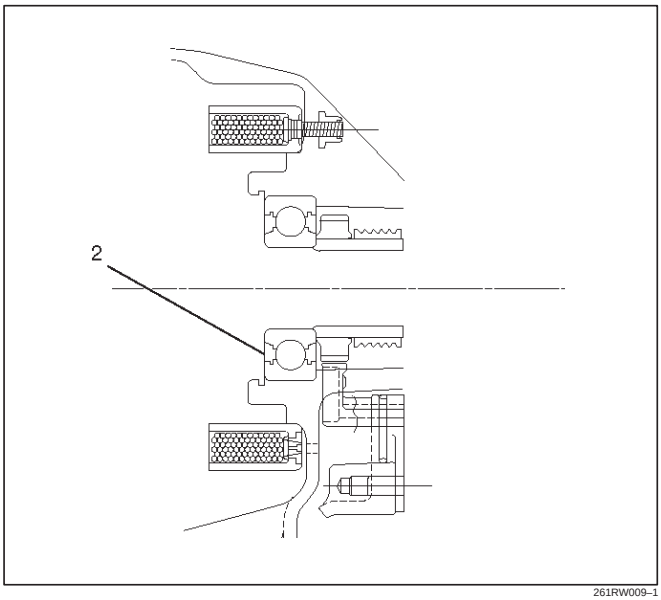

261RW009–1

11. Using snap ring pliers, install the snap ring to the transfer cover assembly.

NOTE: Securely install the snap ring to the groove of the transfer cover assembly.

Transfer Case Assembly Clutch Pack and Clutch Cam

Disassembled View

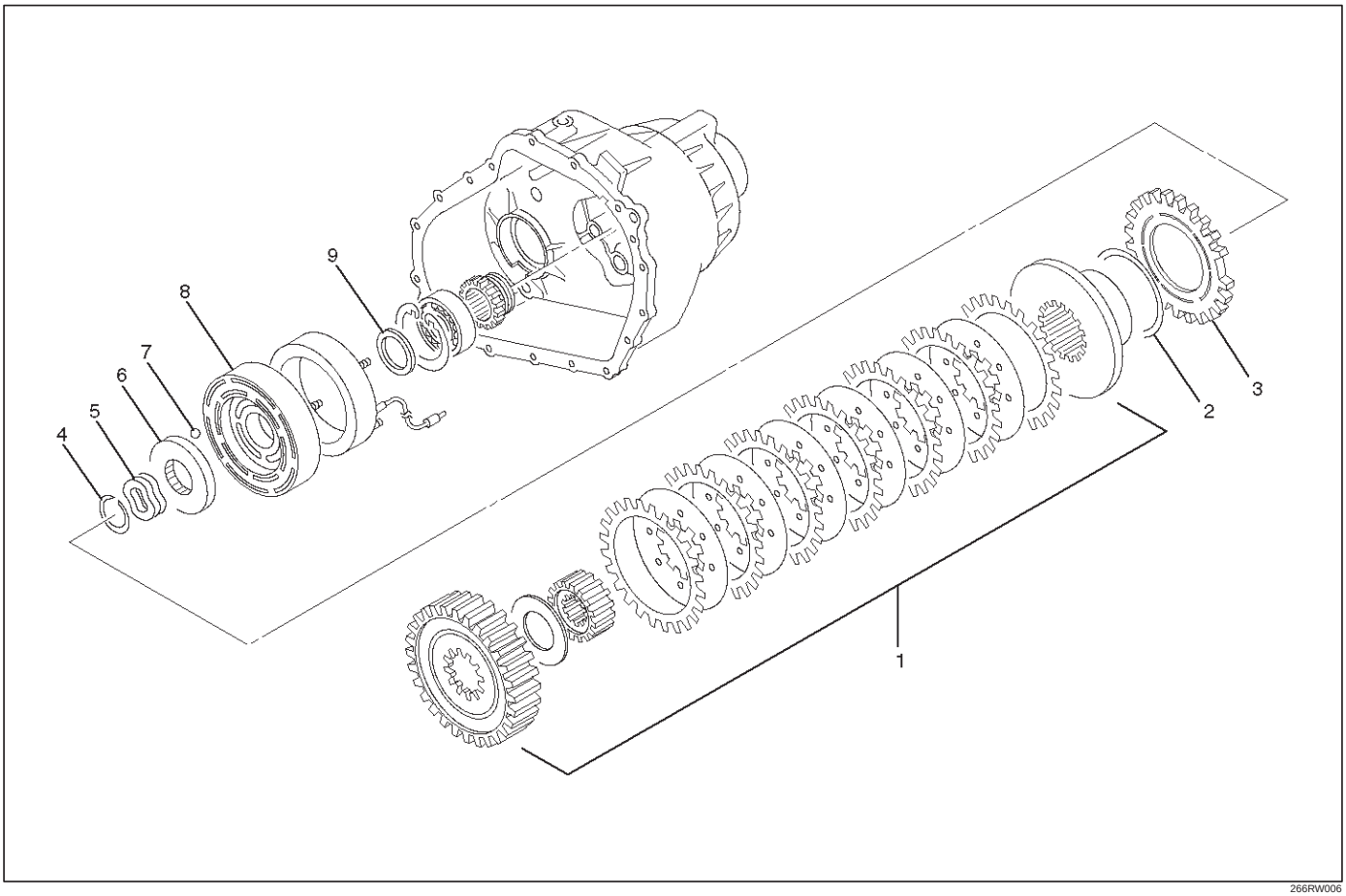

266RW006

Legend

(1) Clutch Pack Assembly
(2) Insulator Washer
(3) Armature Plate
(4) Snap Ring
(5) Wave Spring
(6) Cam Pulley
(7) Cam Ball
(8) Cam and Coil Housing
(9) Thrust Bearing

Disassembly

1. Remove the thrust bearing.
2. Remove the cam and coil housing.

NOTE: When the cam and coil housing is removed, the cam balls may be detached together with the housing. Be careful not to lose the ball.

3. Remove the cam ball.

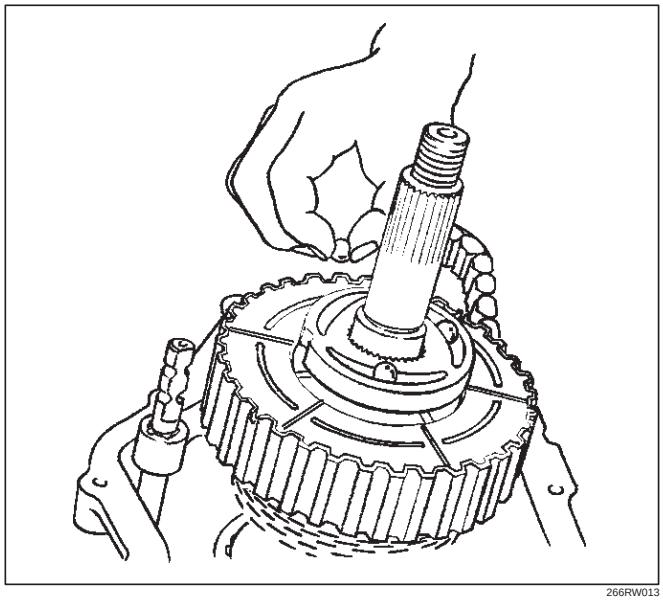

266RW013

4. Remove the cam pulley.
5. Remove the wave spring.
6. Using snap ring pliers, remove the snap ring.

NOTE: Be careful not to damage the snap ring.

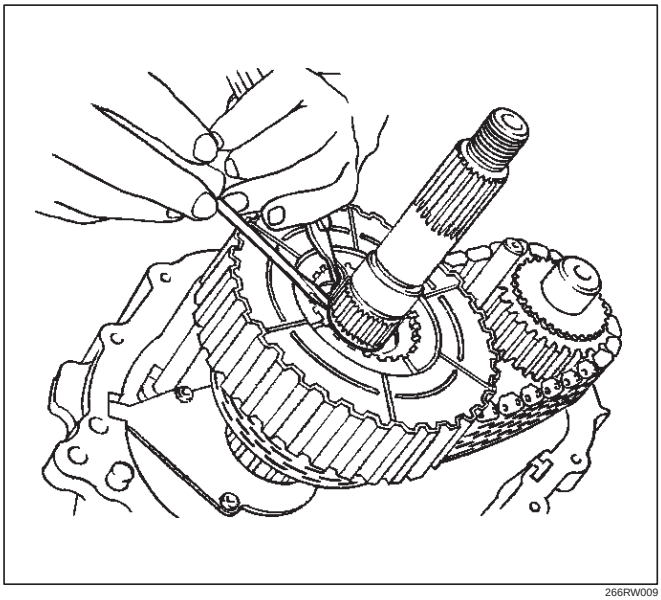

266RW009

7. Remove the armature plate.
8. Remove the insulator washer.
9. Remove the clutch pack assembly as a package.

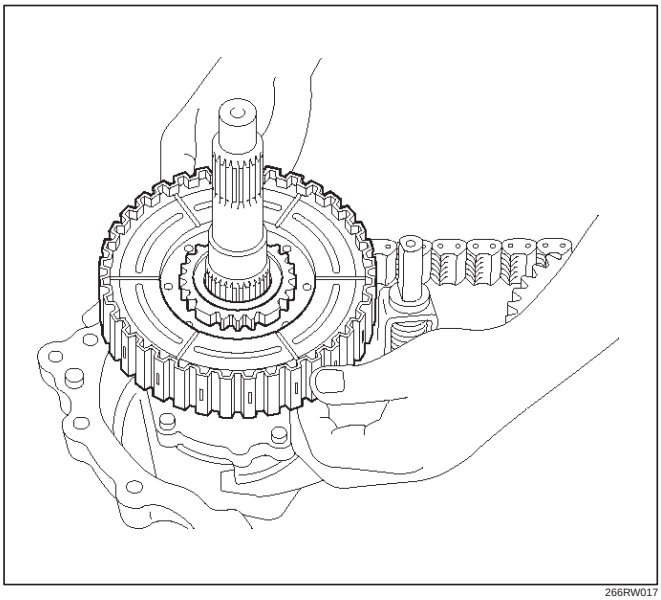

266RW017

Sprocket and Mechanical Lock

Disassembled View

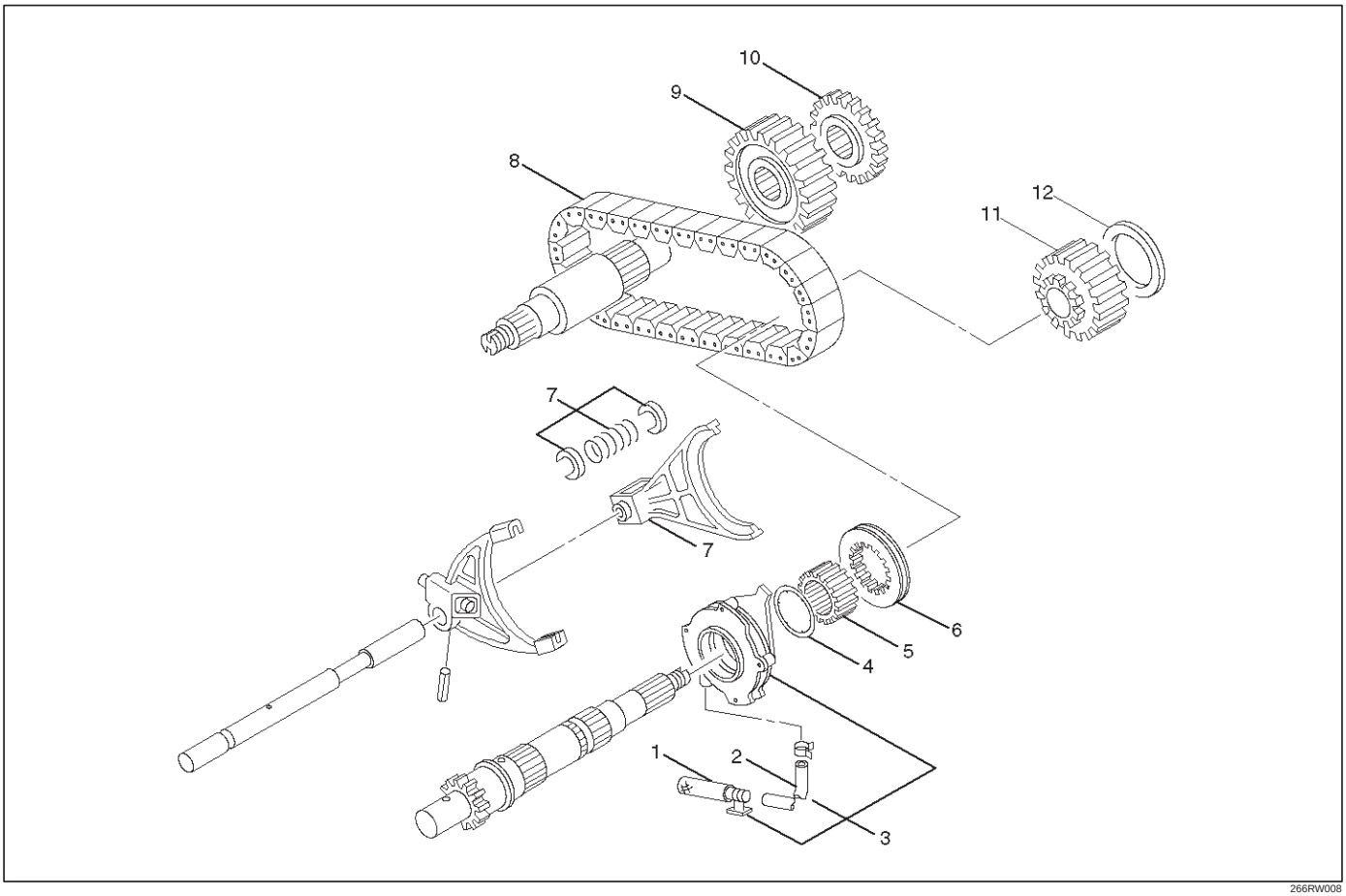

266RW008

Legend

(1) Strainer
(2) Hose
(3) Oil Pump Assembly
(4) Thrust Washer
(5) Mechanical Lock Hub
(6) Lock-up Sleeve
(7) Lock-up Fork
(8) Chain
(9) Lower Drive Sprocket
(10) Front Tone Wheel
(11) Drive Sprocket
(12) Sprocket Spacer

Disassembly

1. Remove the sprocket spacer.
2. Remove the front tone wheel.

3. Remove the drive sprocket, lower drive sprocket, and chain together from the front and rear output shafts.

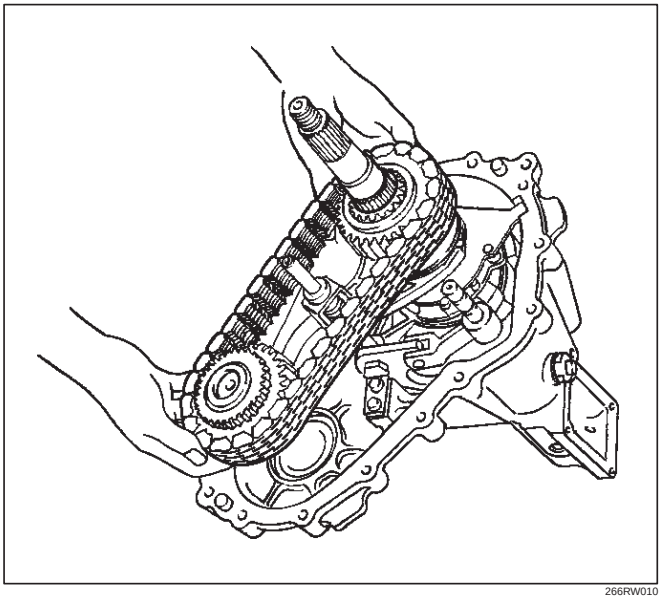

266RW010

4. Remove the mechanical lock hub.
5. Remove the lock-up fork.
6. Remove the spring retainer from the connection between rail shaft and lock-up fork.
7. Remove the lock-up sleeve.

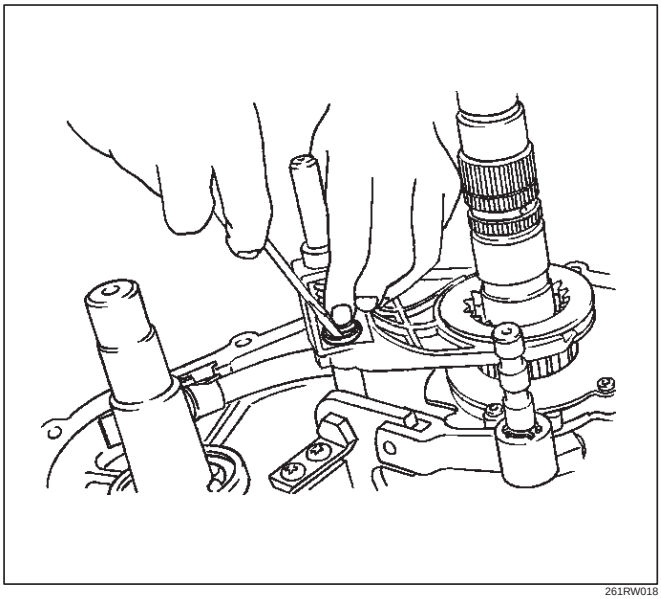

261RW018

8. Remove the thrust washer.
9. Remove the magnet from the strainer set position together with the oil pump assembly.
10. Remove the strainer from the oil pump assembly.
11. Remove the hose from the oil pump assembly.

Output Shafts and Shift Control Shaft

Disassembled View

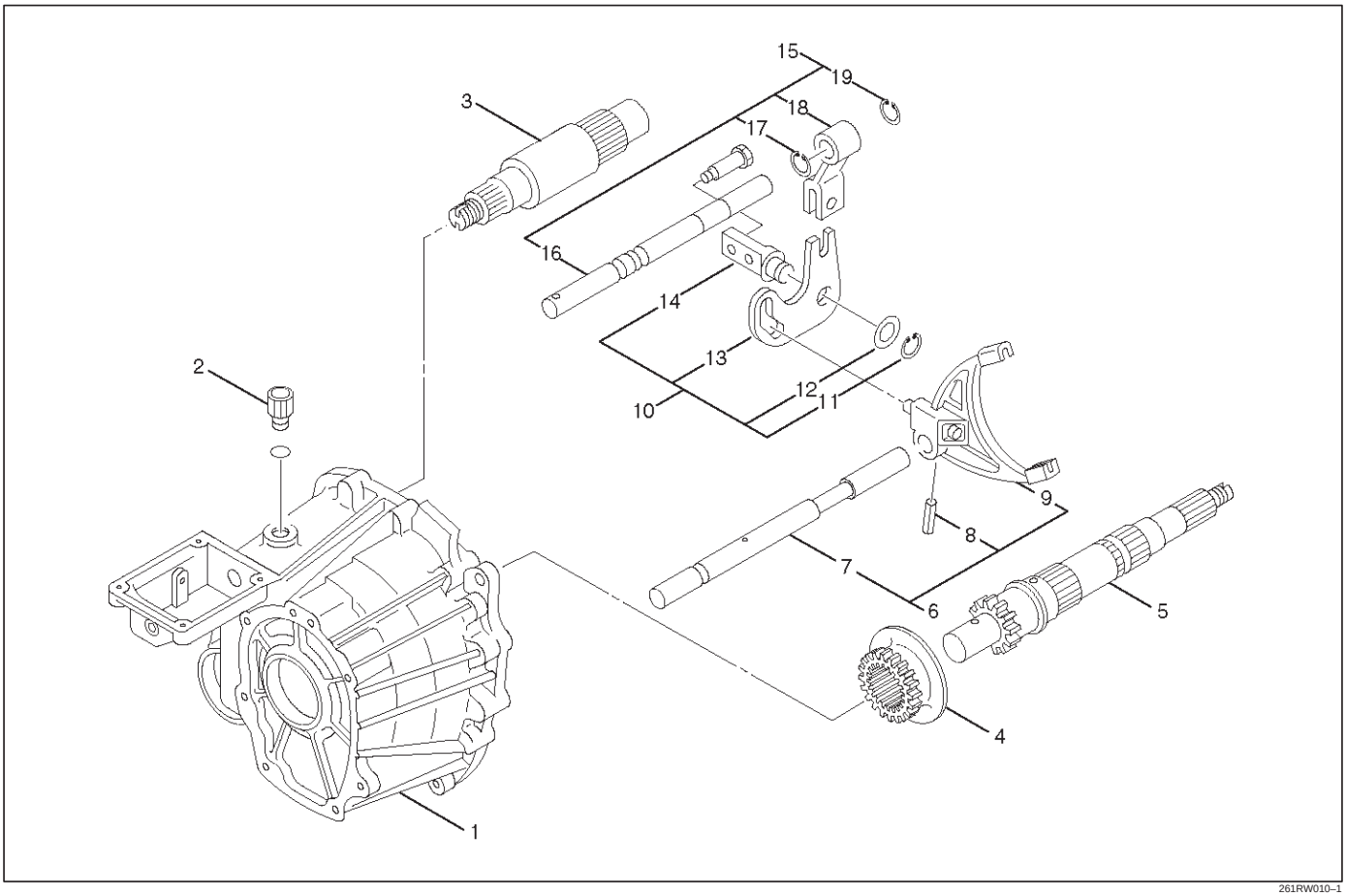

261RW010–1

Legend

(1) Transfer Case Assembly
(2) Detent Spring
(3) Front Output Shaft
(4) Reduction Hub
(5) Output Shaft
(6) Reduction Fork Assembly
(7) Lock-up Shaft
(8) Spring Pin
(9) Reduction Fork
(10) Cam Assembly
(11) Snap Ring
(12) Washer
(13) Cam
(14) Cam Pilot Block
(15) Shifter Shaft Assembly
(16) Shifter Lever Shaft
(17) Snap Ring
(18) Reduction Lever Assembly
(19) Snap Ring

Disassembly

1. Remove the output shaft.

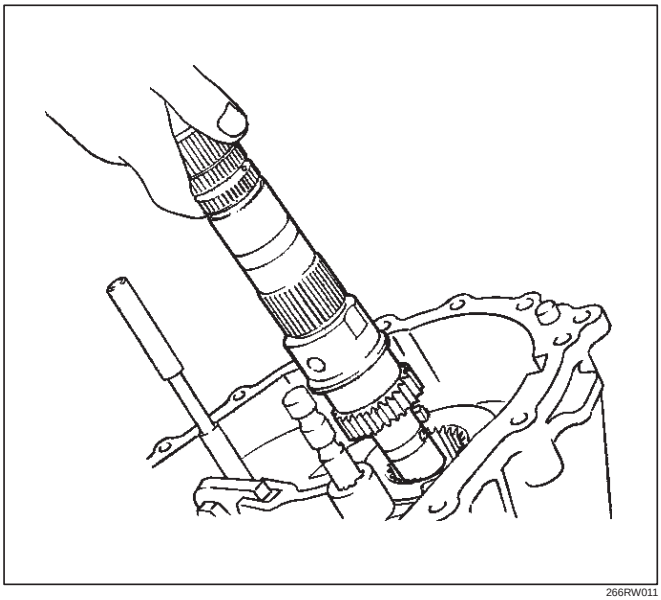

266RW011

2. Remove the detent spring.
3. Remove the cam pilot block bolts.
4. Remove the shifter shaft assembly and cam assembly.

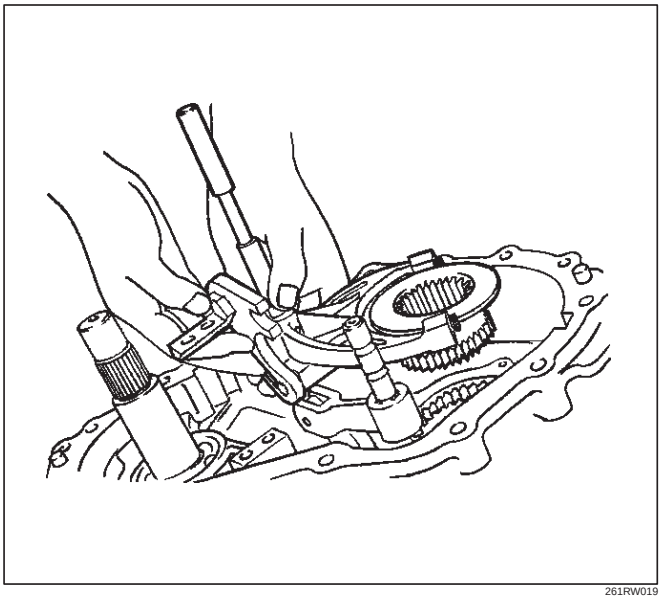

261RW019

5. Remove the spring pin that fixes the reduction fork to the lock-up shaft.

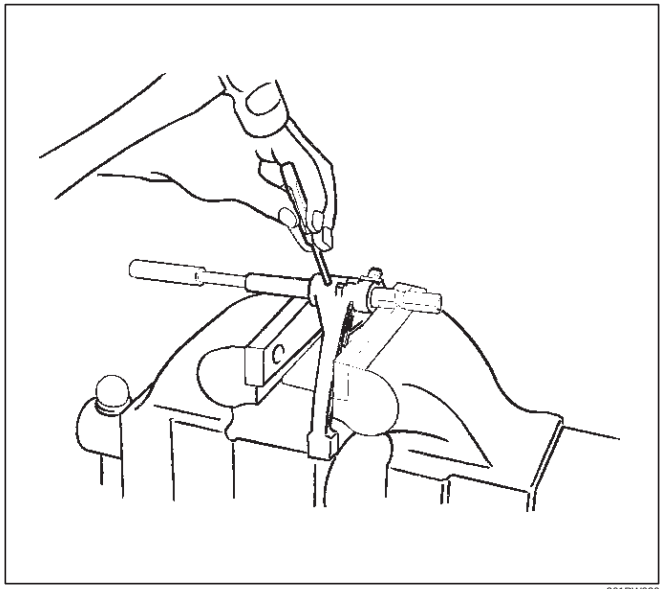

261RW020

6. Remove the reduction fork.
7. Remove the lock-up shaft.
8. Using snap ring pliers, remove the snap ring from cam pilot block.

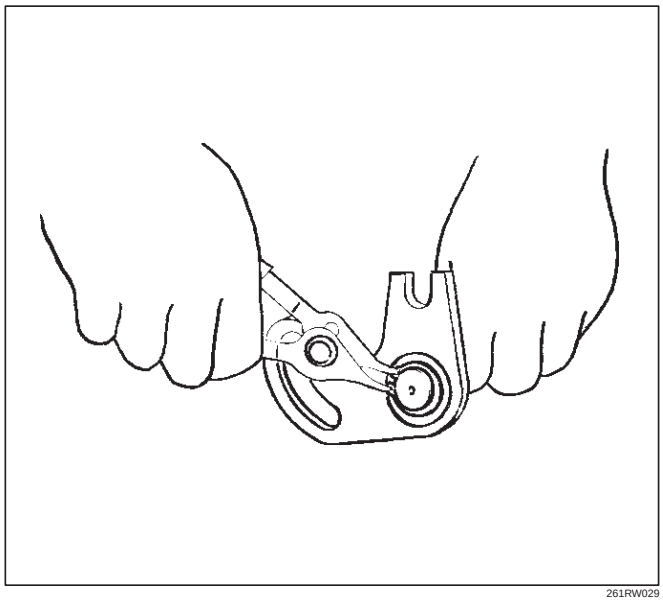

261RW029

9. Remove the washer.
10. Remove the cam.
11. Remove the cam pilot block.

12. Using snap ring pliers, remove the snap ring from shifter lever shaft.

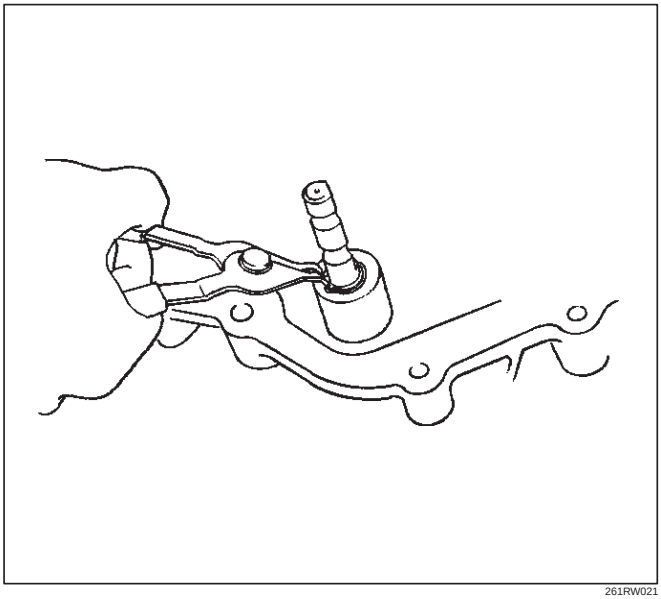

261RW021

13. Remove the reduction lever assembly.
14. Remove the snap ring.
15. Remove the shifter lever shaft.
16. Remove the front output shaft.

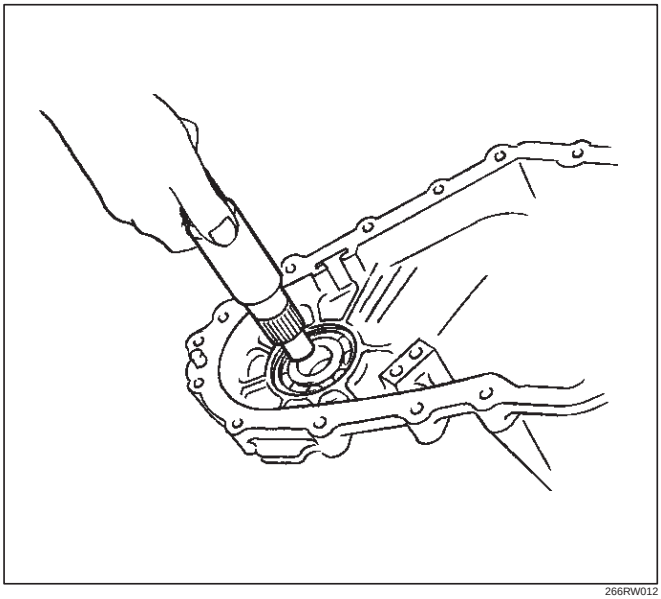

266RW012

17. Remove the transfer case assembly.

Transfer Case

Disassembled View

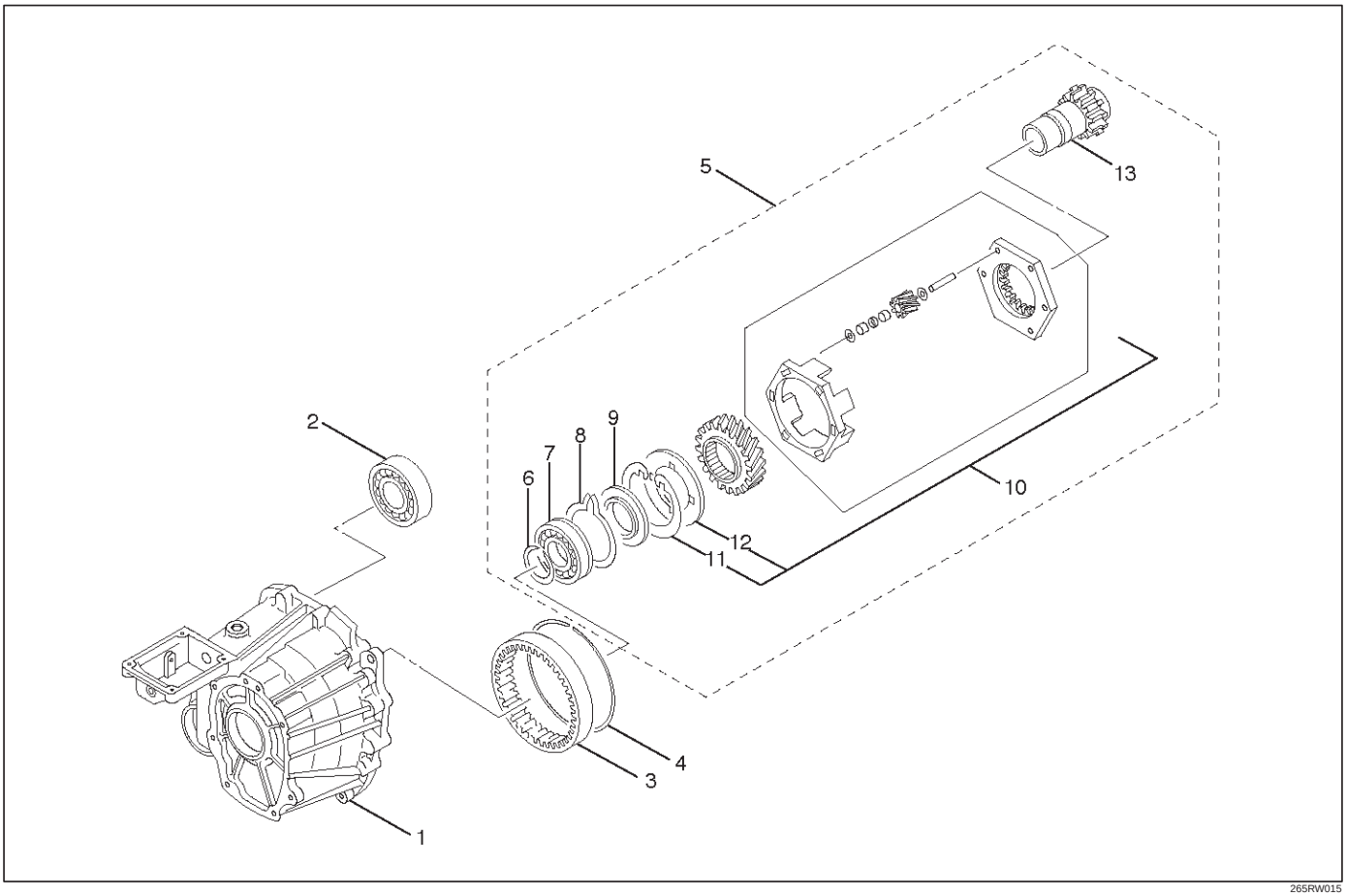

265RW015

Legend

(1) Transfer Case
(2) Ball Bearing
(3) Ring Gear
(4) Snap Ring
(5) Input Shaft and Carrier Assembly
(6) Snap Ring
(7) Ball Bearing
(8) Snap Ring
(9) Thrust Plate
(10) Carrier Assembly
(11) Snap Ring
(12) Circular Hub
(13) Input Shaft

Disassembly

1. Remove the ball bearing (for front output shaft).
2. Expand the snap ring through the opening in the planetary gear assembly.

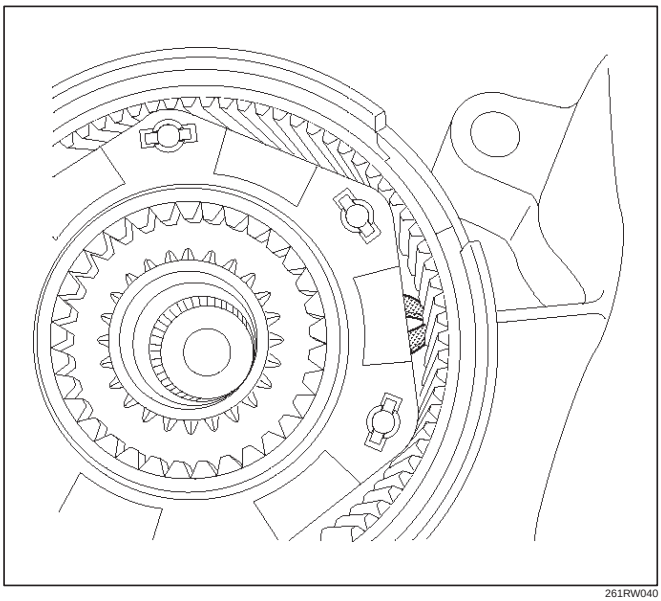

261RW040

3. While expanding the snap ring, remove the input shaft, ball bearing, carrier assembly, and thrust plate from the transfer case.

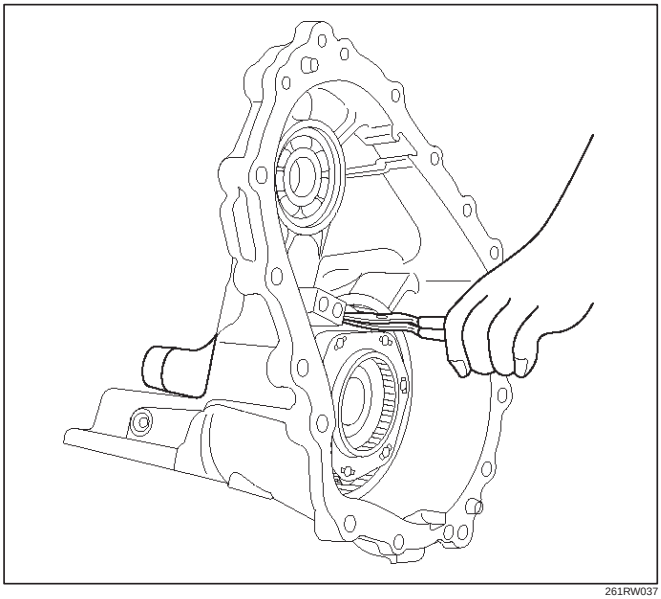

261RW037

4. Remove the snap ring from the transfer case.

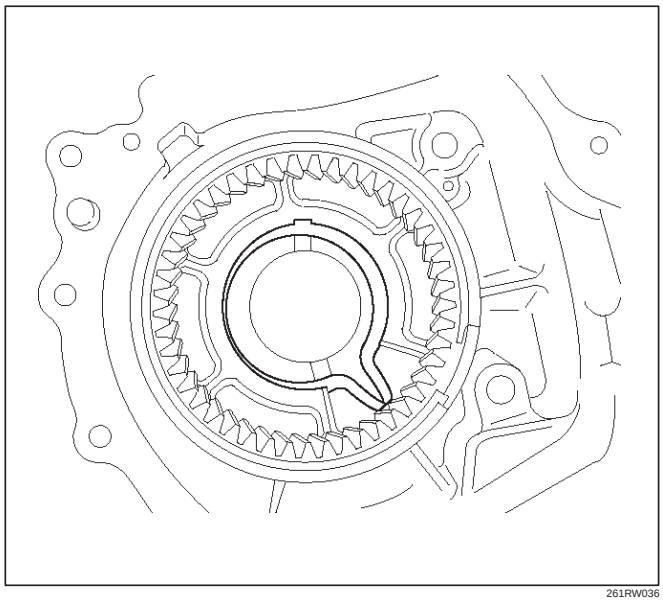

261RW036

5. Using snap ring pliers, remove the snap ring before the ball bearing.

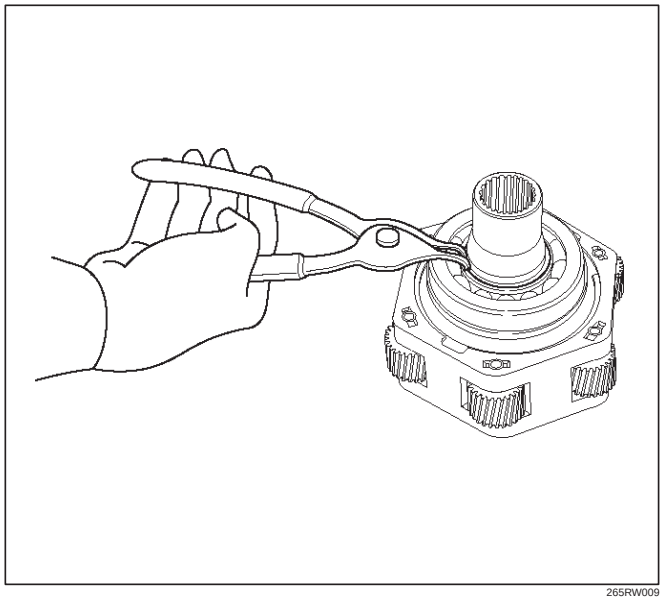

265RW009

6. Using the bearing remover 5-8840-0015-0 (J-22912-01), remove the ball bearing from the input shaft.

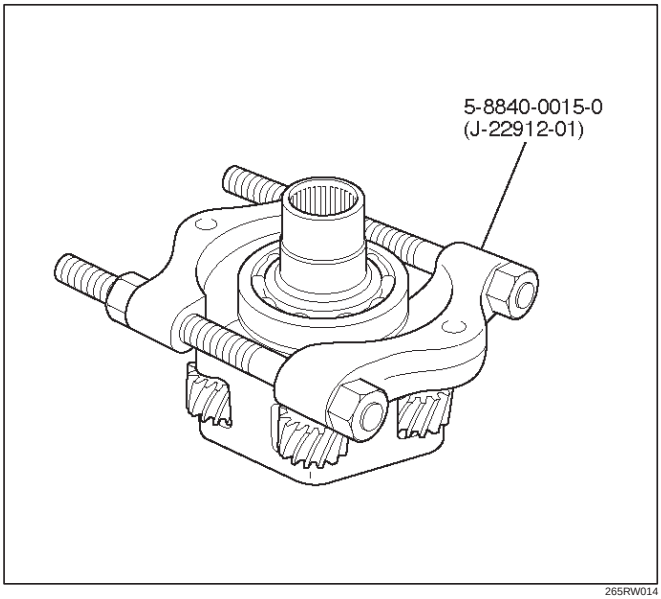

265RW014

7. Remove the thrust plate.
8. Remove the carrier assembly.
9. Remove the snap ring from the carrier assembly.

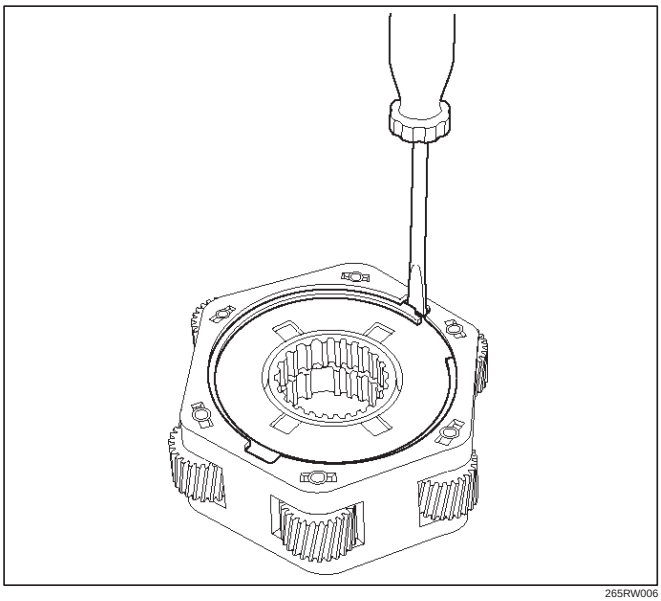

265RW006

10. Remove the circular hub.
11. Remove the snap ring before the ring gear.

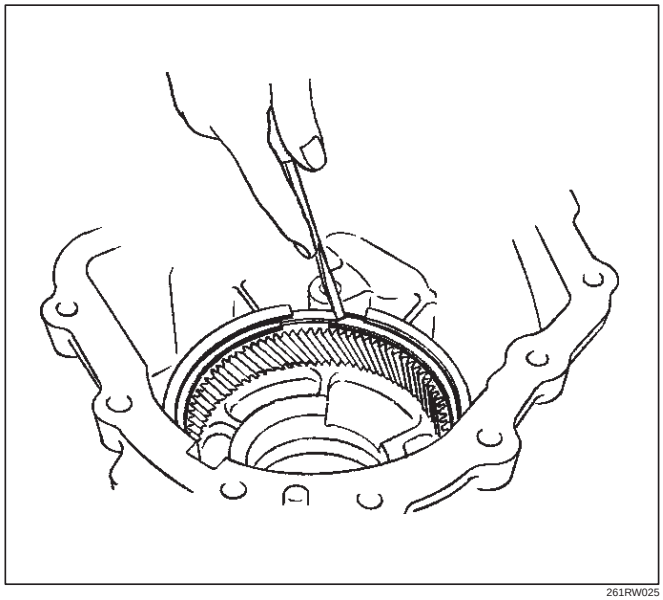

261RW025

12. Using the replacer 5-8840-2413-0 (J-42806), remove the ring gear.

NOTE: Removing the ring gear needs a high-load press. This means the transfer case may be damaged. To remove and replace the ring gear, it is recommended that the transfer case assembly should be replaced.

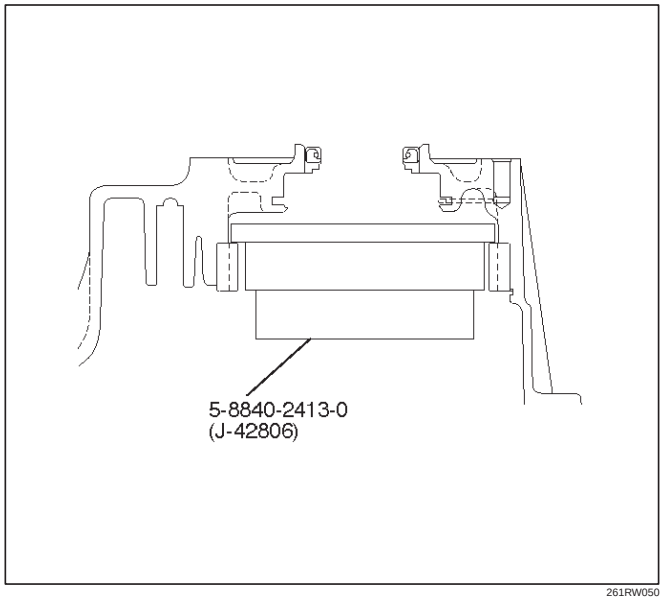

261RW050

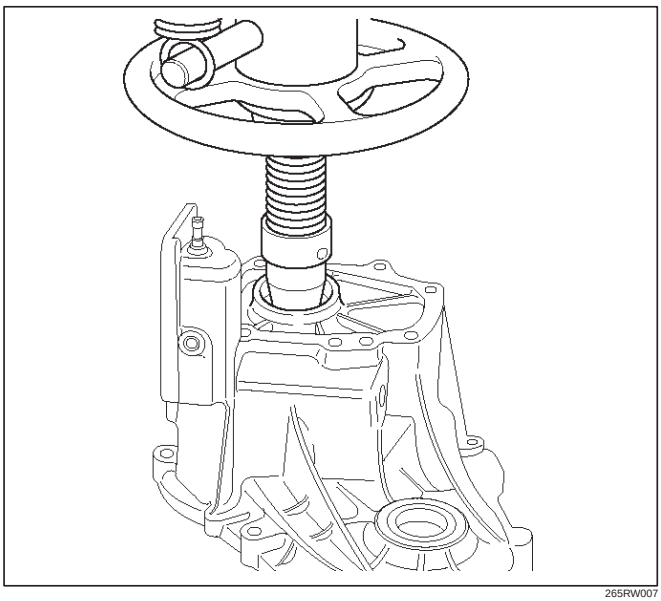

265RW007

Inspection and Repair

When wear, damage, or any other defects are observed during the inspection, the part or parts must be repaired or replaced. Wash all the parts with clean solvent, and check that old oil, metallic particles, dirt, or foreign materials are completely removed. Blow the air into oil holes and grooves to remove foreign materials or residual detergent.

Chain

- Check whether the face that contacts the sprocket is free from excessive wear or damage. If defects are observed, replace the part.
- If the chain interference mark is found on the inside wall of the transfer cover or the chain is so slack that a skipped engagement occurs between the chain and sprocket, replace the chain.

Sprocket

- Check whether the sprocket tooth surface is excessively worn or damaged, and there is evidence of burrs, chipping, wear, or damage on the gear spline. Remove minor flaws or scratches with oil stone. If excessive wear or damage is observed, replace the part.
- If excessive wear or damage is observed on the sprocket inside sliding surface, replace the part.

Gear

Check whether the gear tooth surface is excessively worn or damaged, and there is evidence of burrs, chipping, wear, or damage on the gear spline. Remove minor flaws or scratches with oil stone. If excessive wear or damage is observed, replace the part.

Thickness of Reduction Hub

- Measure the thickness with a micrometer.
- If the measurement exceeds the limit, replace the reduction hub.

  Standard : 3.05-3.30 mm (0.120-0.130 in)

  Allowable limit : 2.5 mm (0.098 in)

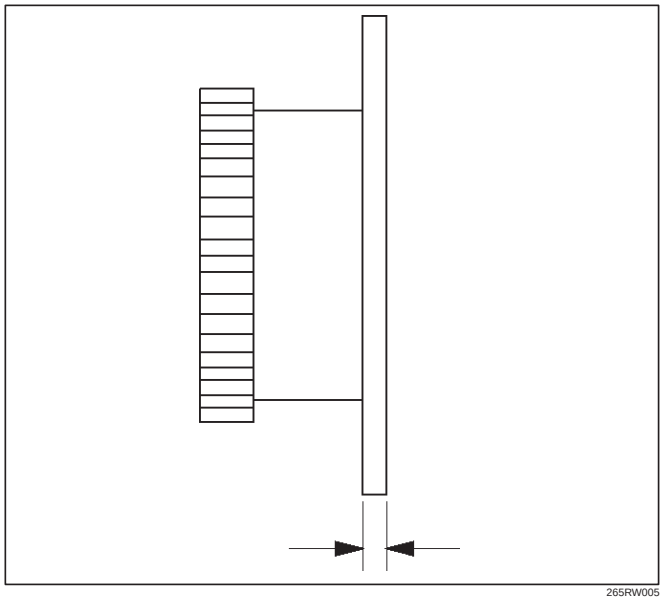

265RW005

Lock-up Sleeve

Mount the mechanical lock hub, drive sprocket assembly, and lock-up sleeve to the output shaft.

If the lock-up sleeve does not move smoothly, replace the sleeve.

NOTE: Apply ATF to the area engaging the gear.

Thickness of Lock-up Sleeve

- If the measurement exceeds the limit, replace the lock-up sleeve.

  Standard : 7.16-7.32 mm (0.282-0.288 in)

  Allowable limit : 7.9 mm (0.311 in)

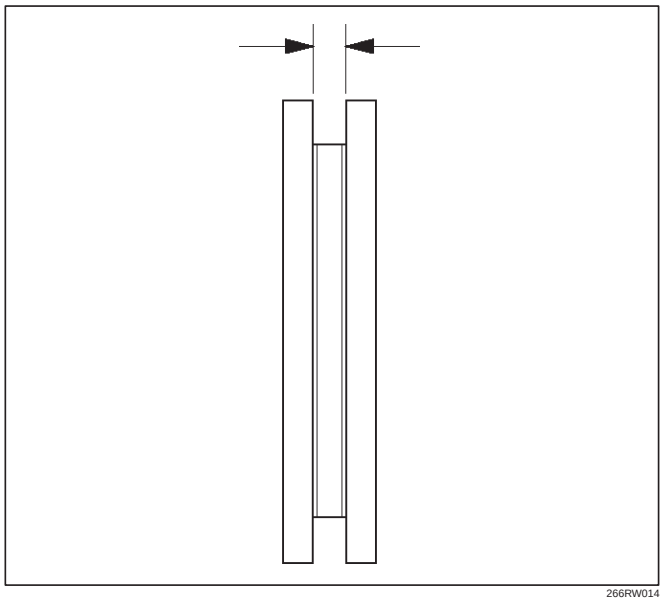

266RW014

Reduction Fork

Check the reduction fork and shaft for wear, distortion, and scratches. If defects are observed, replace the parts.

Thickness of Reduction Fork

- If the measurement exceeds the limit, replace the reduction fork.

  Standard : 3.41-3.79 mm (0.134-0.149 in)

  Allowable limit : 4.4 mm (0.173 in)

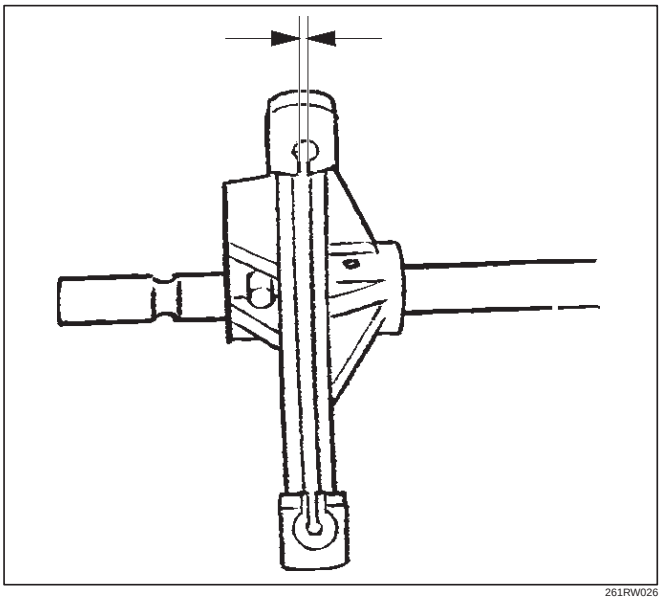

261RW026

Lock-up Fork

- Check the lock-up fork and shaft for wear, distortion, and scratches. If defects are observed, replace the parts.

Thickness Lock-up Fork

If the measurement exceeds the limit, replace the lock-up fork.

Standard : 6.99-7.09 mm (0.275-0.279 in)

Allowable limit : 6.3 mm (0.248 in)

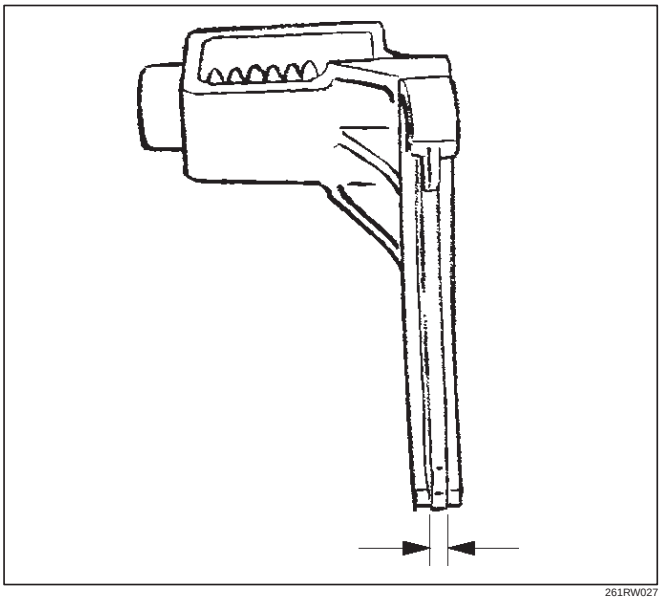

261RW027

Bearing

Check the profile of the needle, roller, ball, and thrust bearings. Wash the bearings with clean solvent completely, and dry with air.

NOTE: If the bearing is rotated excessively, the rollers may be damaged. So, rotate the bearing slowly with your hand. Apply grease to the bearing, and check the smoothness of the bearing while slowly rotating the race with your hand.

- Use a dial indicator to measure the ball bearing play.

  Allowable limit : 0.23 mm (0.009 in)

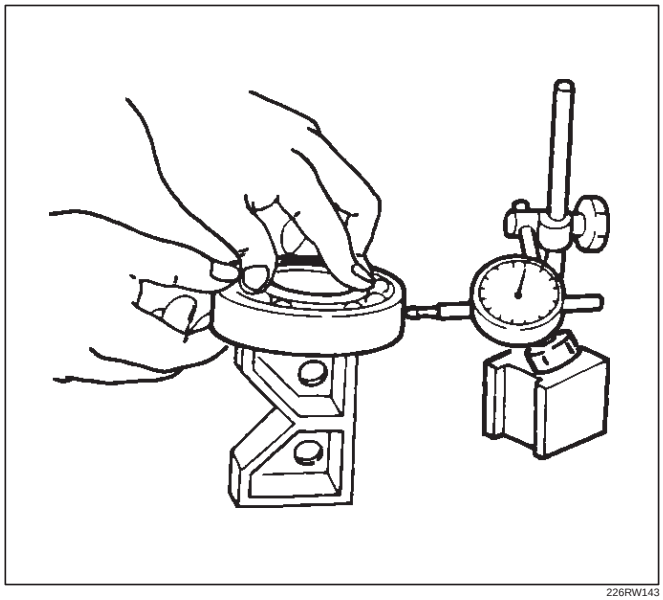

226RW143

Lock-up Fork Spring

Check the lock-up fork spring for distortion, cracking, and wear. If defects are observed, replace the part.

Free Length of the Lock-up Fork Spring

- If the measurement exceeds the limit, replace the spring.

  Standard : 60.96 mm (2.40 in)

  Allowable limit : 55.0 mm (2.17 in)

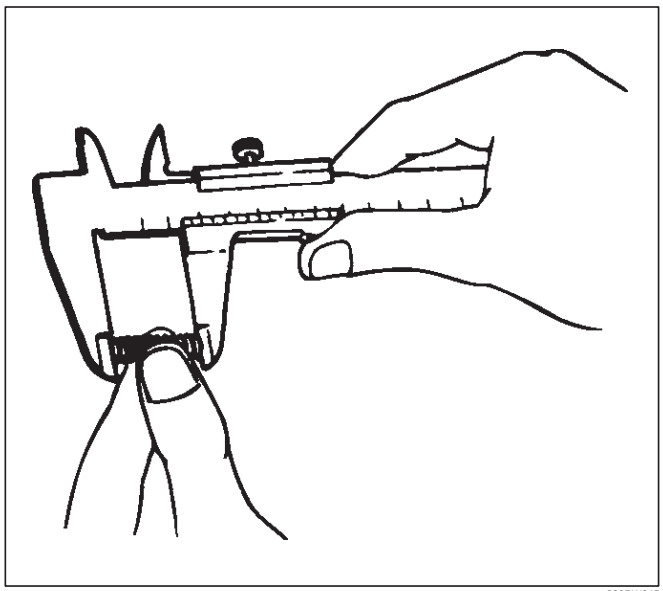

220RW045

Tension of Lock-up Fork Spring

- If the measurement exceeds the limit, replace the spring. (When compressed to 41.4 mm)

  Standard : 27.1-33.8 N {2.76-3.45 kg/6.08-7.61 lb}

  Allowable limit : 24.5 N {2.5 kg/5.5 lb}

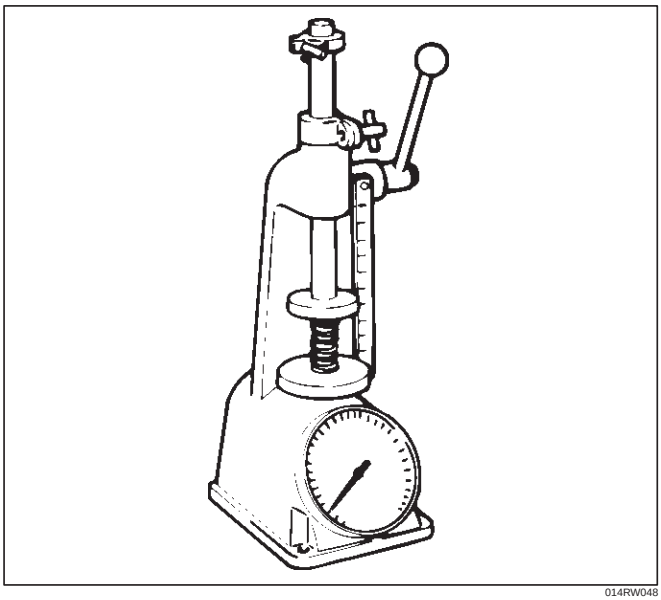

014RW048

Tension of Detent Spring Assembly

- If the measurement exceeds the limit, replace the spring. N {kg} (When compressed by 3 mm from the free length)

  Standard : 139 N -203 {14.2-20.7 kg/31.3-45.6 lb}

  Allowable limit : 130 N {13.3 kg/29.3 lb}

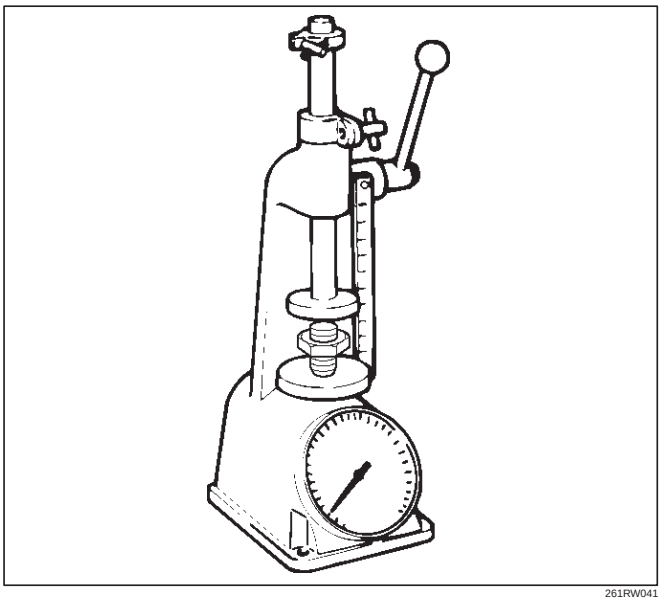

261RW041

Oil Pump

- Remove foreign materials from the strainer. If the strainer is damaged, replace it.
- If the area into which the shaft is inserted is excessively worn or damaged, replace the pump.

Multi Plate Disk Clutch

- If the burned, mirror-surfaced clutch facing, or scraping is observed on the clutch plates, clutch housing, armature plate, and insulator washer, replace the part or parts.

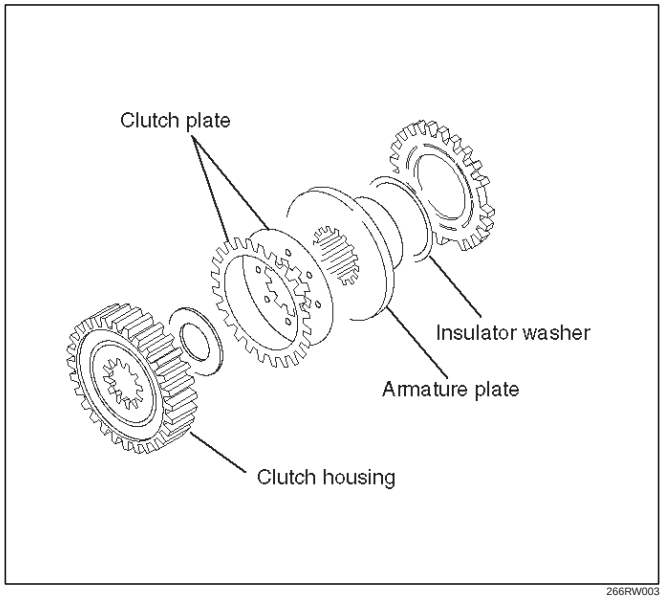

266RW003

Coil Assembly

- Check the resistance of the coil with a tester. If defects are observed, replace the assembly.
  * (ordinary temperature)

  Standard : 1.4~2.0 Ω

  Allowable limit : 1.0~5.0 Ω

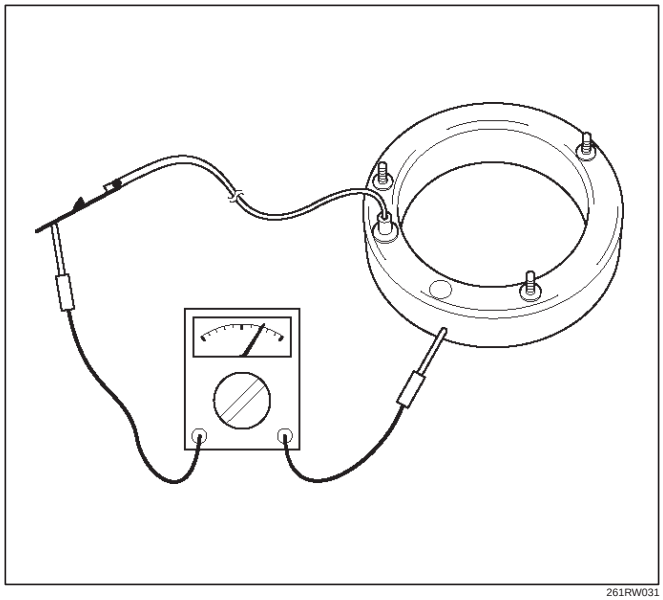

261RW031

Cam Pulley, Cam Ball, and Cam&Coil Housing

- Check the cam balls and cam for excessive wear or damage. If defective, replace the parts. 4H and 4L switches.

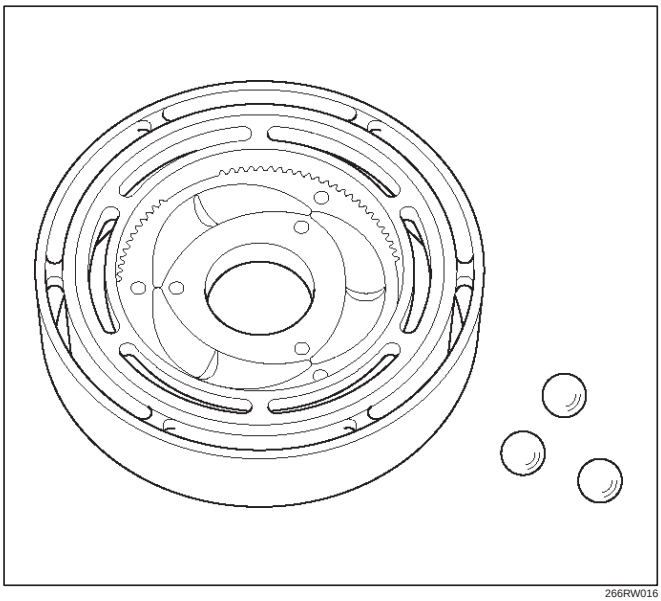

266RW016

The Parts 4H and 4L Switch

- Check the continuity of 4H and 4L switch.

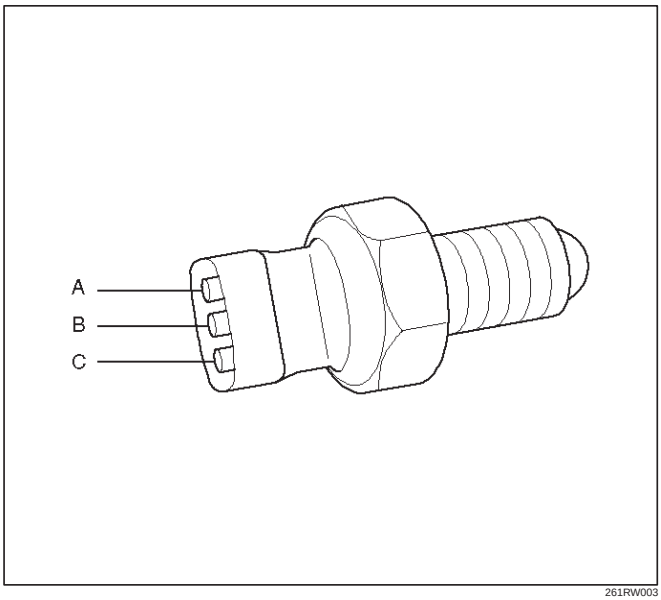

261RW003

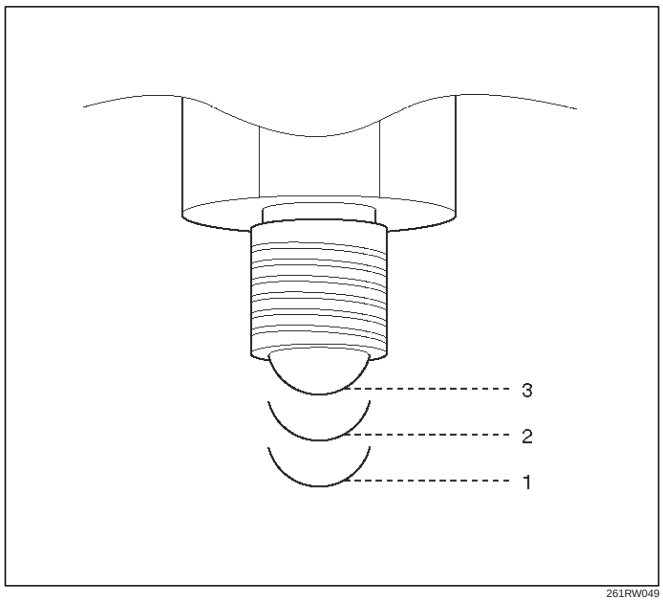

261RW049

Switch Stroke	4H Switch Signal	4L Switch Signal	The correspo nding position of transfer lever
	B to Switch Body	A to C	
1	Open	Open	High
2	Open	Close	4L
3	Close	Close	Neutral

Transfer Case

Disassembled View

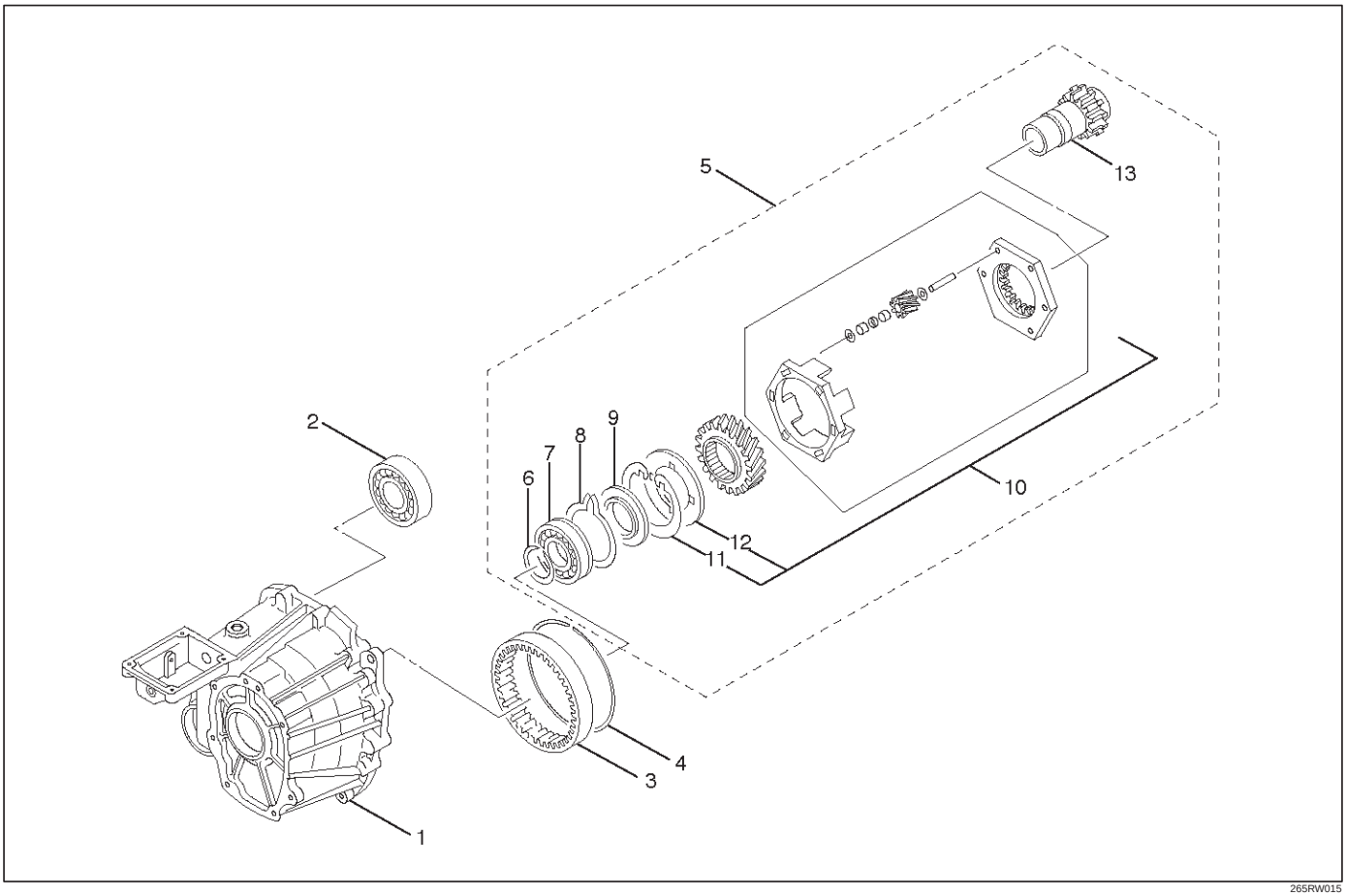

265RW015

Legend

(1) Transfer Case
(2) Ball Bearing
(3) Ring Gear
(4) Snap Ring
(5) Input Shaft and Carrier Assembly
(6) Snap Ring
(7) Ball Bearing
(8) Snap Ring
(9) Thrust Plate
(10) Carrier Assembly
(11) Snap Ring
(12) Circular Hub
(13) Input Shaft

Reassembly

1. Remove the oil seal from the transfer case.
2. Apply engine oil to the circumference of the new oil seal and fill the lip with grease (Besco L2 or equivalent).

3. Using the front output shaft oil seal installer 5-8840-2410-0 (J-42807), install the oil seal to the transfer case.

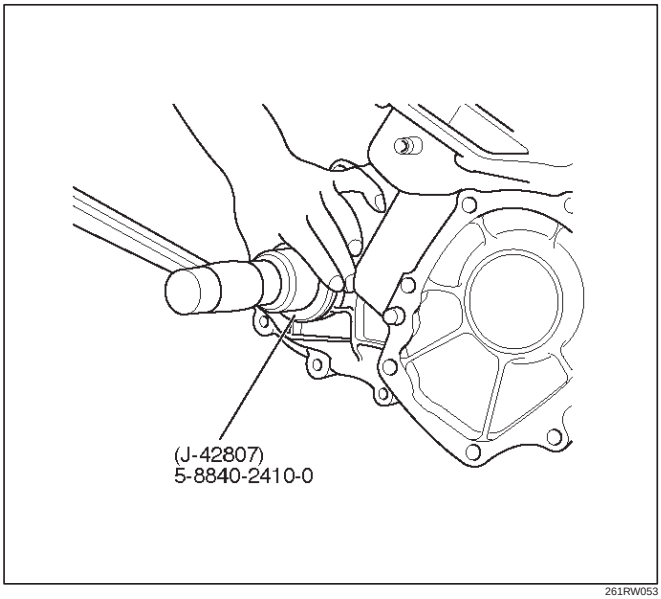

261RW053

Front Output Shaft Oil Seal

Distance between the transfer case end and oil seal.

NOTE: When installing the oil seal to the specified dimension, be careful not to damage it.

Distance : 0.93 — 1.43mm (0.037 — 0.056 in)

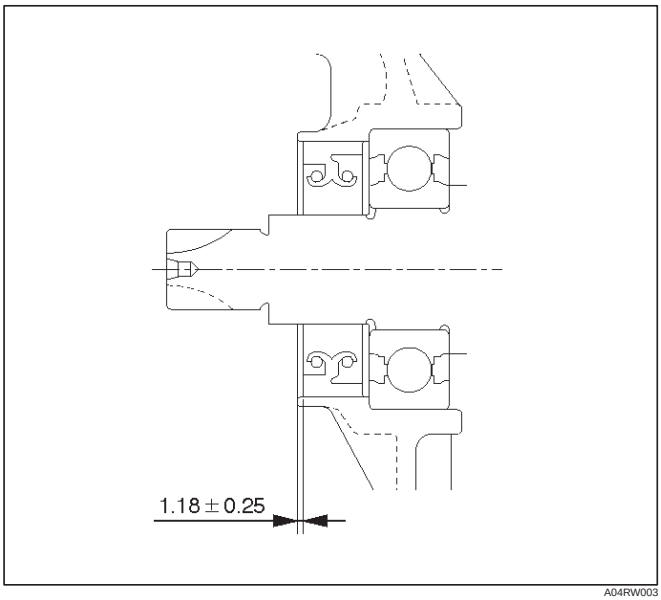

A04RW003

4. Using the input shaft (main) oil seal installer 5-8840-2411-0 (J-42808), install the oil seal to the transfer case.

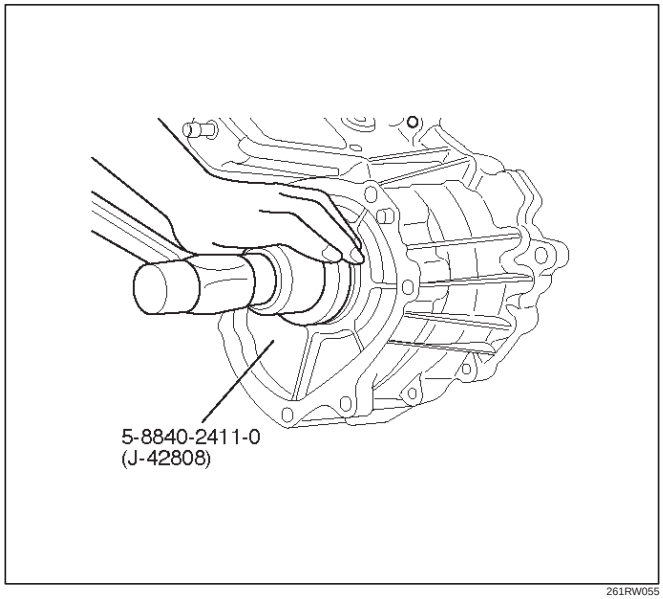

261RW055

Input Shaft Oil Seal

Distance between the transfer case end and oil seal.

NOTE: When installing the oil seal to the specified dimension, be careful not to damage it.

Distance : 3.25 — 3.75mm (0.13 — 0.15 in)

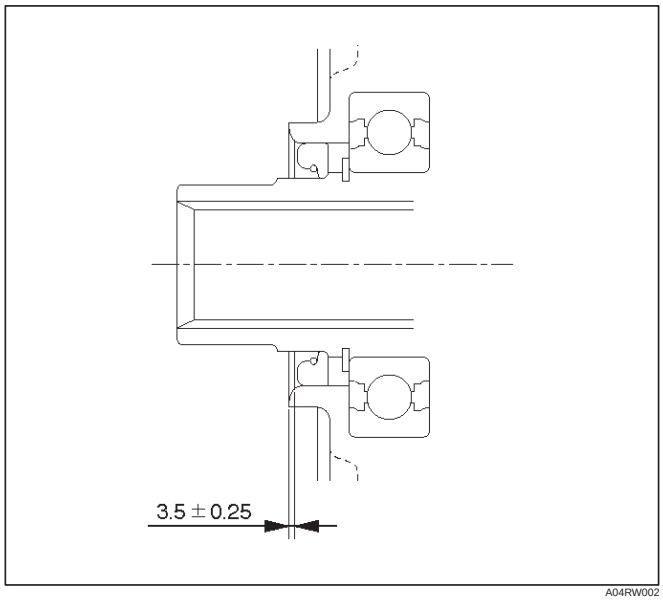

A04RW002

5. Using the installer 5-8840-2416-0 (J-42809), press-fit the ring gear.

Pay attention to the following points.

- Identify the correct direction of gear.
- Do not damage the gear.
- Do not press-fit the ring gear slantingly.
- Press-fit the ring gear to the innermost.
- Remove burrs generated by press-fitting.
- If the transfer case has serrations, match them with those of the gear and press-fit the gear.

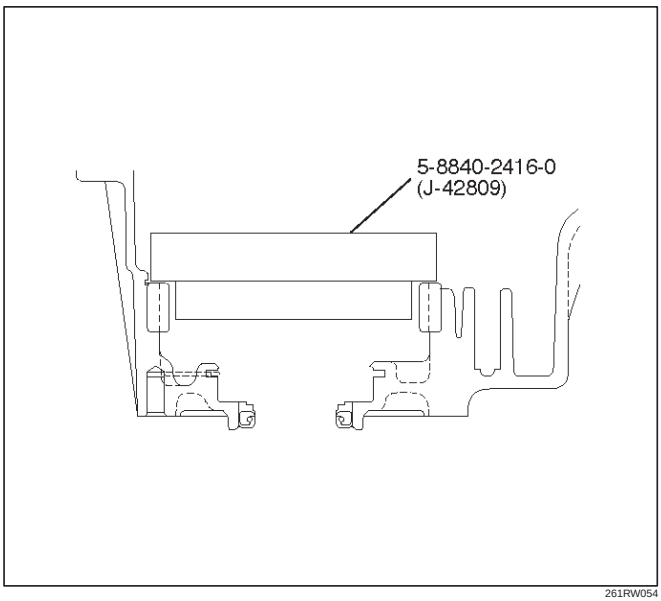

261RW054

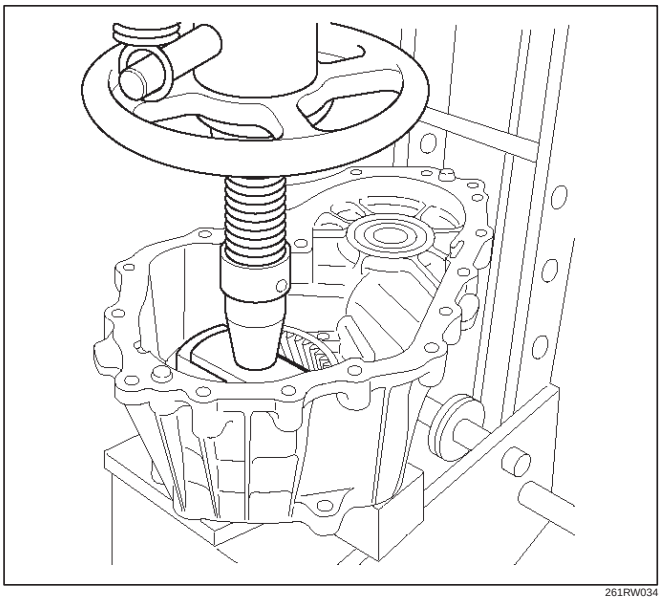

261RW034

6. Install the snap ring to the transfer case.
7. Install the circular hub.
8. Install the snap ring to the carrier.
9. Mount the carrier assembly to the input shaft.
10. Check the direction of thrust plate and mount it to the input shaft.

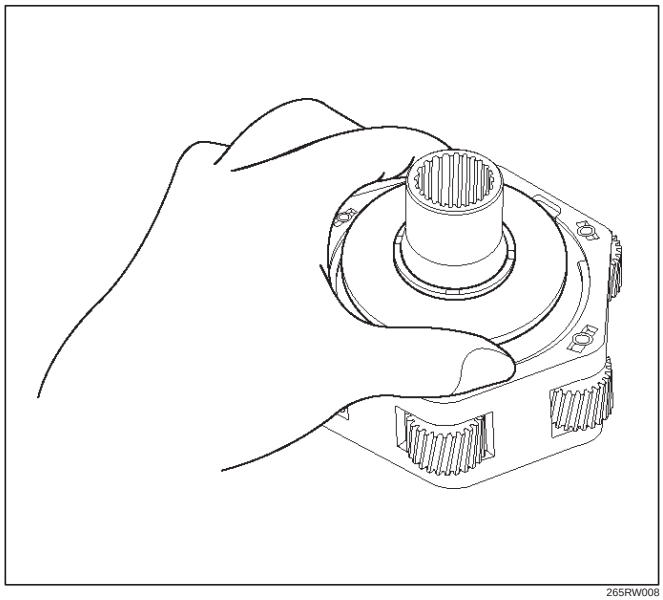

265RW008

11. Mount the ball bearing to the input shaft so that the snap ring will be installed to the input shaft.

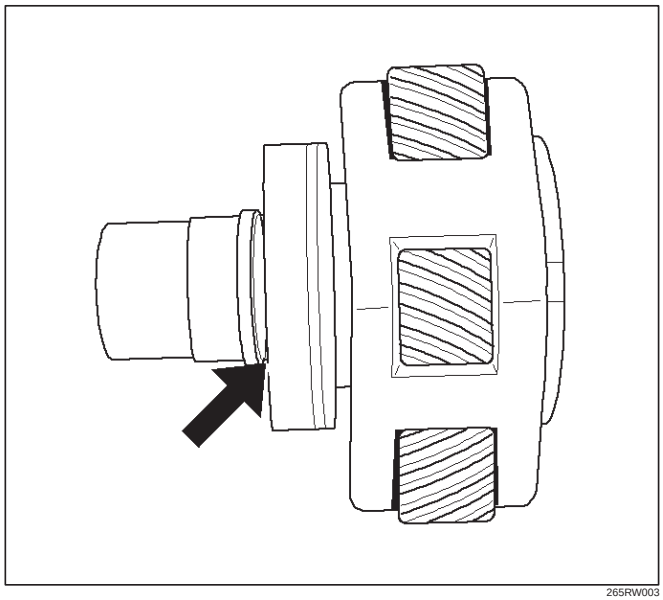

265RW003

12. Install the snap ring to the input shaft.
13. Install the snap ring to the transfer case.

14. Using the snap ring pliers, expand the snap ring through the opening between the ring gear and carrier assembly and securely install the input shaft and carrier assembly.

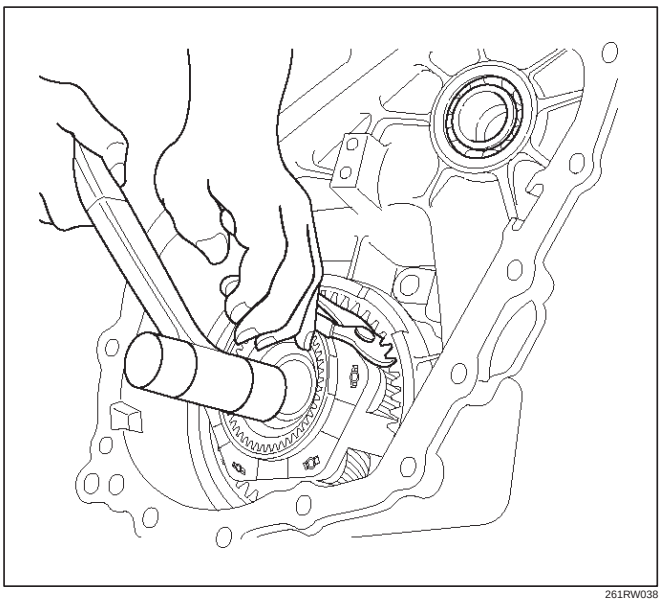

261RW038

15. Install the ball bearing (for front output shaft)

Output Shafts and Shift Control Shaft

Disassembled View

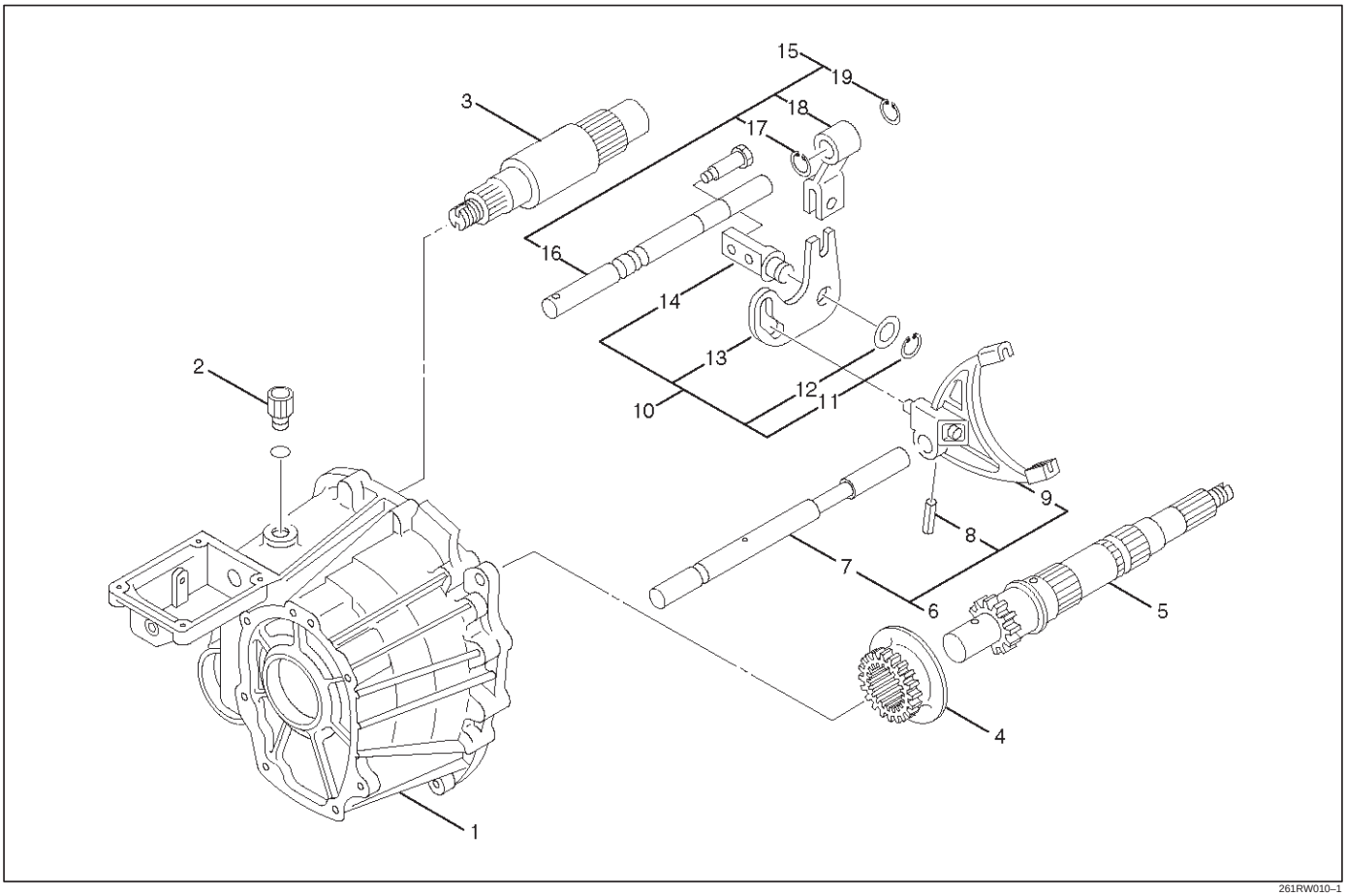

261RW010–1

Legend

(1) Transfer Case Assembly
(2) Detent Spring
(3) Front Output Shaft
(4) Reduction Hub
(5) Output Shaft
(6) Reduction Fork Assembly
(7) Lock-up Shaft
(8) Spring Pin
(9) Reduction Fork
(10) Cam Assembly
(11) Snap Ring
(12) Washer
(13) Cam
(14) Cam Pilot Block
(15) Shifter Shaft Assembly
(16) Shifter Lever Shaft
(17) Snap Ring
(18) Reduction Lever Assembly
(19) Snap Ring

Reassembly

1. Apply ATF to the inside of the ball bearing for the front output shaft.

2. Mount the front output shaft to the transfer case.

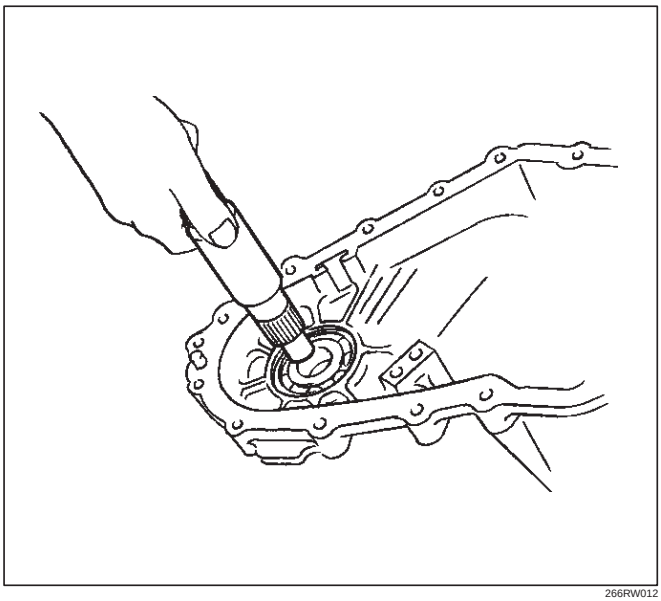

266RW012

3. Install the shifter lever shaft.
4. Install the snap ring.
5. Install the reduction lever assembly to the shifter lever shaft and fix the assembly with the snap ring.

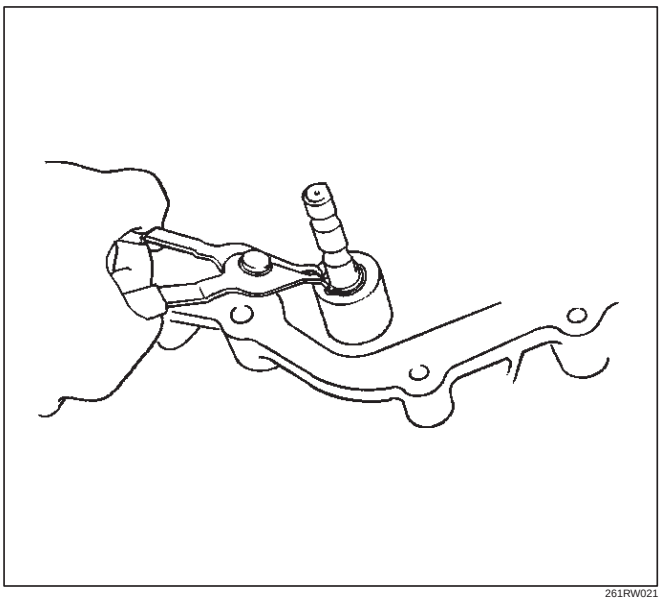

261RW021

6. Install the cam to the cam pilot block.
7. Attach the washer to the cam pilot block and fix the washer with the snap ring.

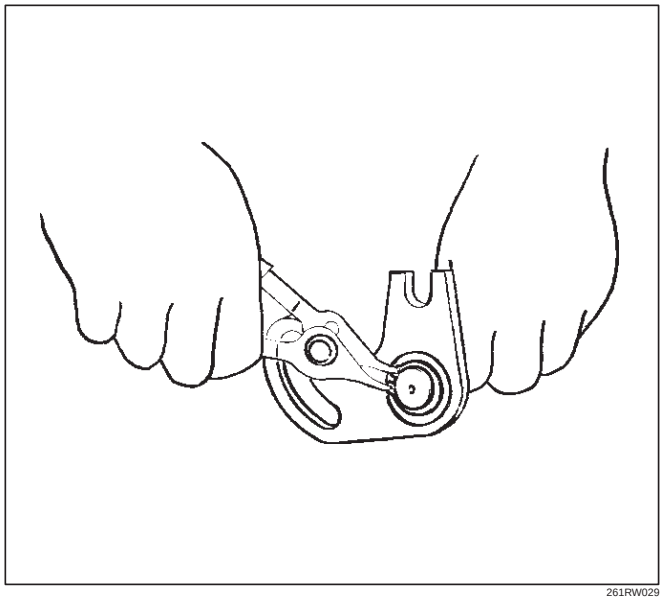

261RW029

8. Mount the reduction fork to the lock-up shaft.
9. Install the spring pin to the reduction fork and lock-up roll.

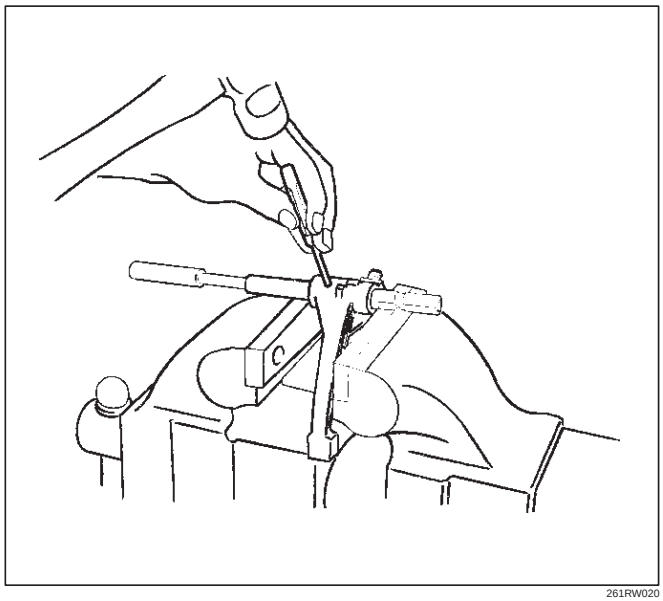

261RW020

10. Install the reduction fork assembly together with reduction hub to the transfer case assembly.
11. Install the shifter shaft assembly.

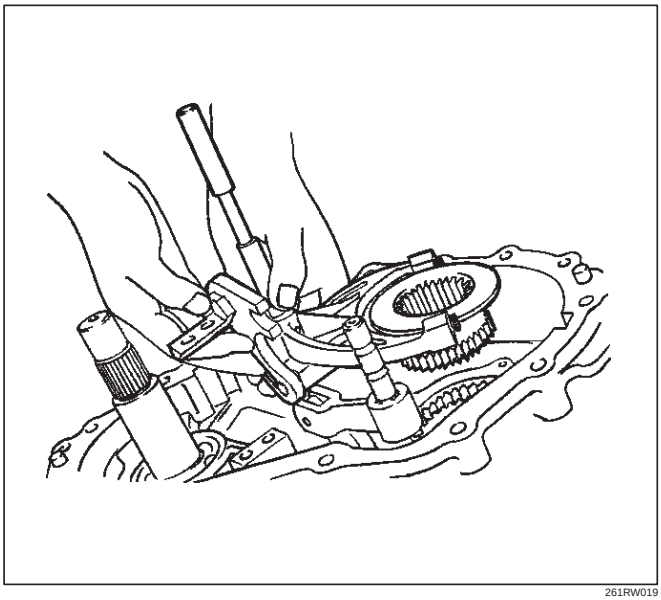

261RW019

12. Tighten the cam pilot block set bolts to the specified torque.

    Torque : 12 N·m (1.2 kg·m/104 lb in)
13. Tighten the detent spring to the specified torque.

    Torque : 24 N·m (2.4 kg·m/17 lb in)

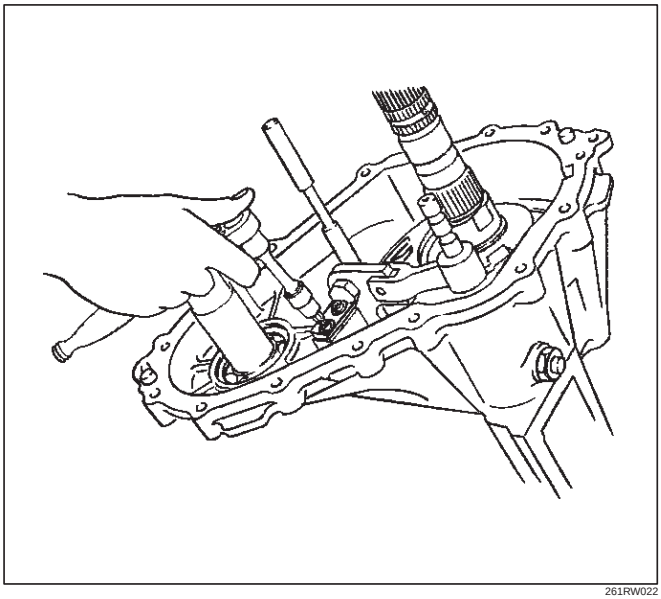

261RW022

14. Apply ATF to the needle bearing inside the input shaft assembly.
15. Install the output shaft to the transfer case.

Sprocket and Mechanical Lock

Disassembled View

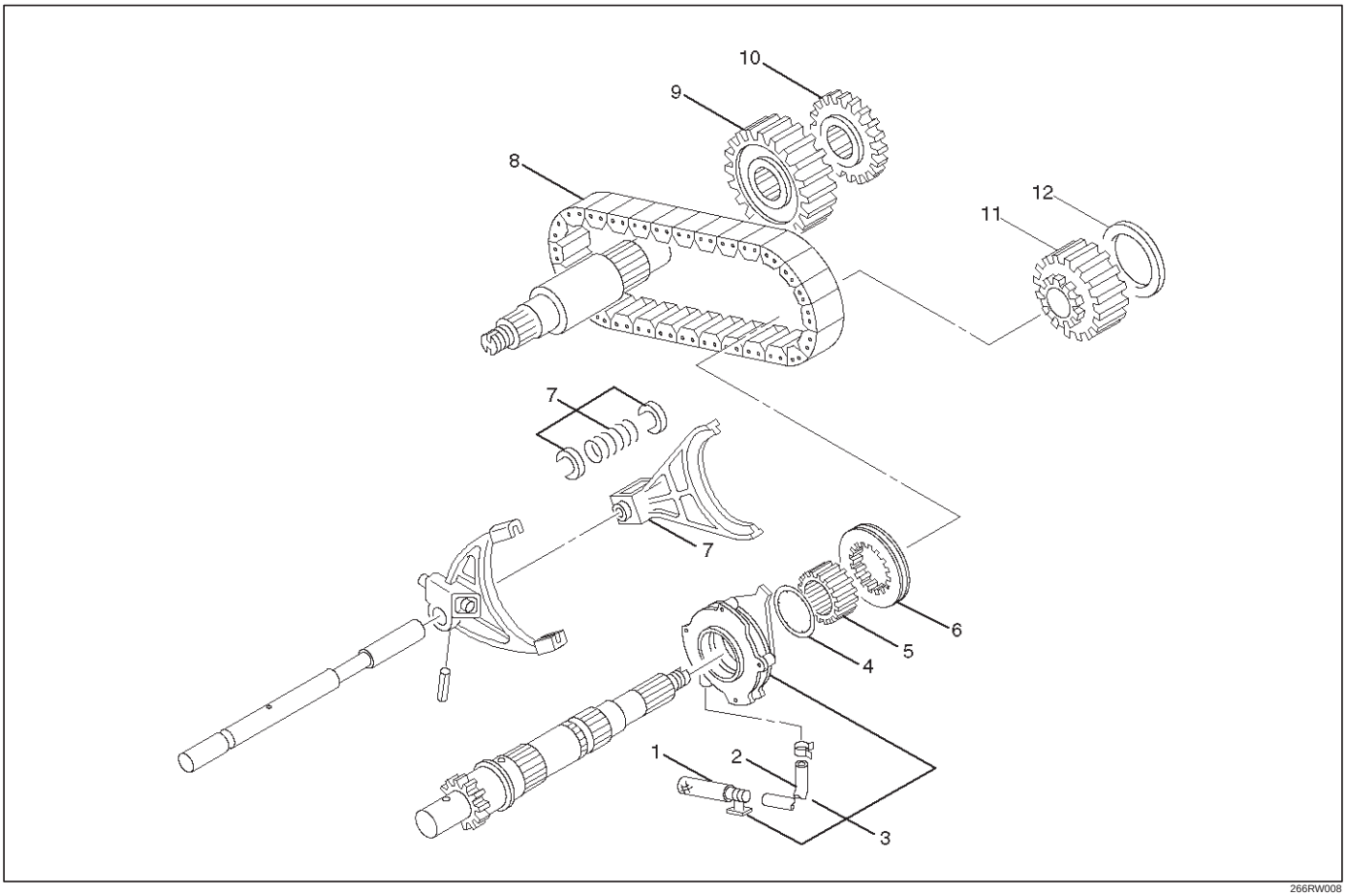

266RW008

Legend

(1) Strainer
(2) Hose
(3) Oil Pump Assembly
(4) Thrust Washer
(5) Mechanical Lock Hub
(6) Lock-up Sleeve
(7) Lock-up Fork
(8) Chain
(9) Lower Drive Sprocket
(10) Front Tone Wheel
(11) Drive Sprocket
(12) Sprocket Spacer

Reassembly

1. Connect the hose and strainer to the oil pump assembly.
2. Install the oil pump assembly to the output shaft and set the magnet to the strainer position.
3. Install the thrust washer.
4. Install the spring to the lock-up fork.

5. Install the lock-up sleeve together with the lock-up fork to the output shaft and lock-up shaft assembly.
6. Install the spring retainers to the lock-up fork.

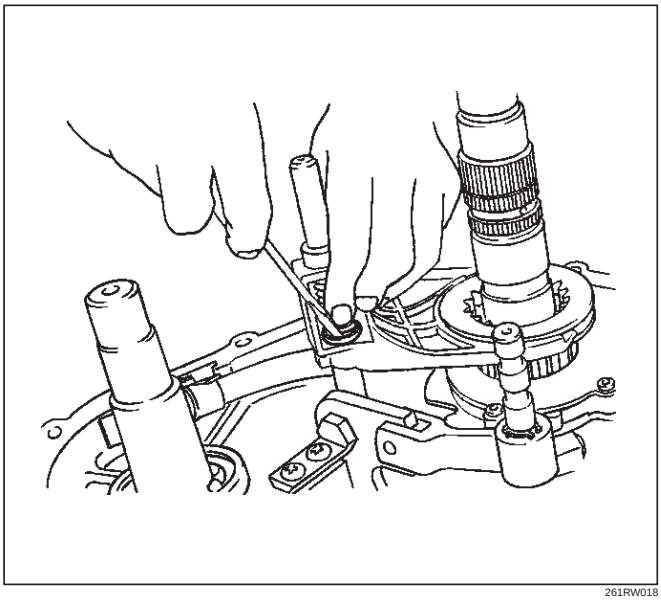

261RW018

7. Install the mechanical lock hub.
8. Apply ATF to the chain.
9. Engage the chain to both sprockets.
10. Install the chain and sprocket assembly to both output shafts.

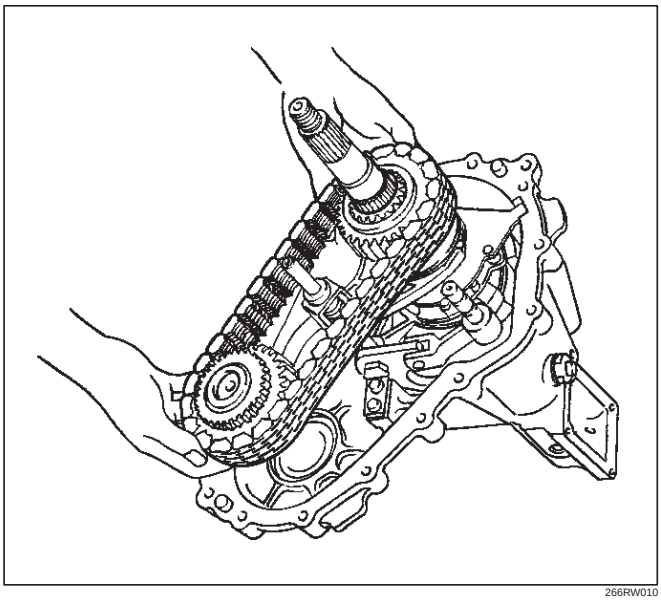

266RW010

11. Install the front tone wheel and sprocket spacer.

Clutch Pack and Clutch Cam

Disassembled View

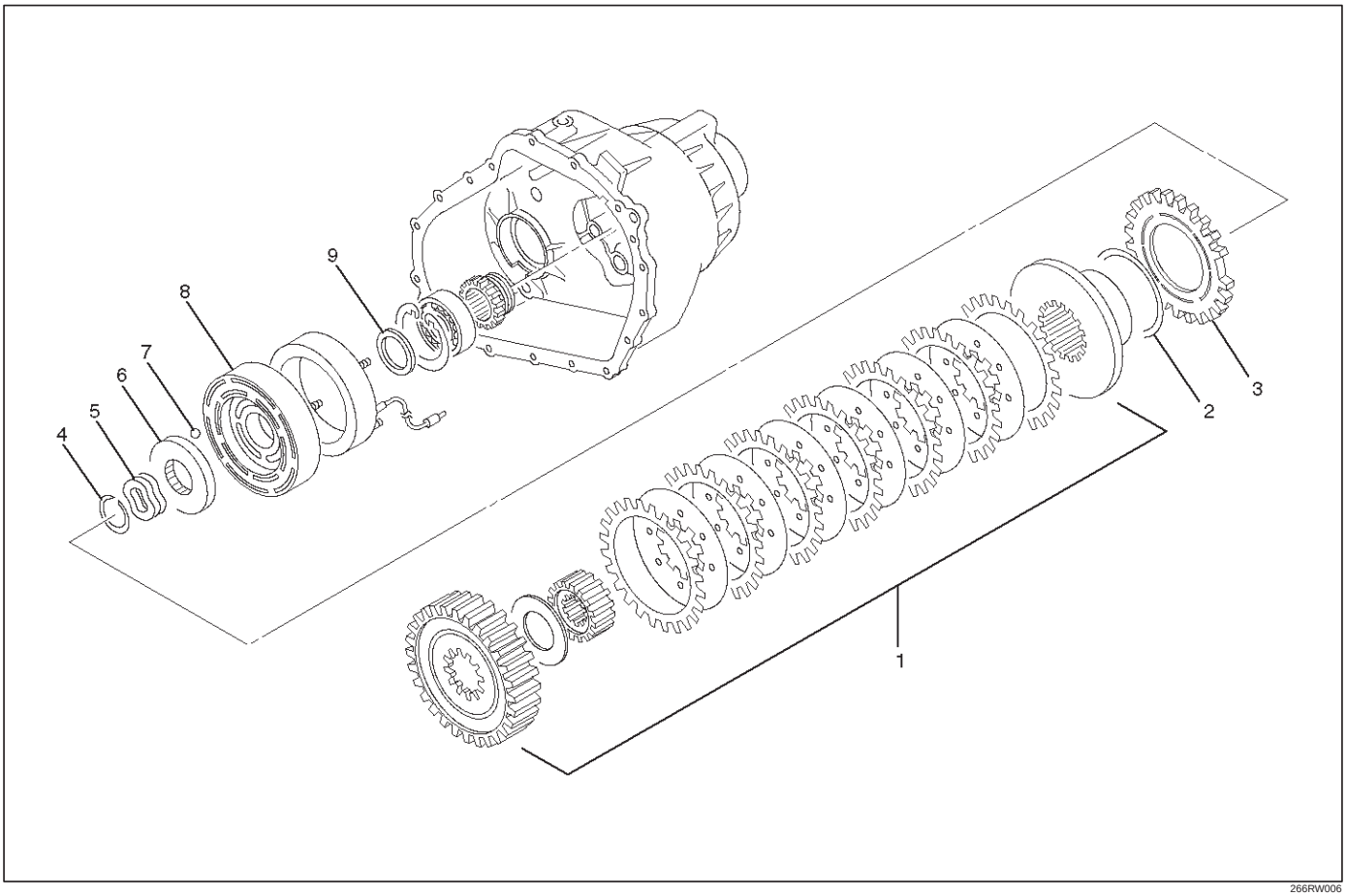

Legend

(1) Clutch Pack Assembly
(2) Insulator Washer
(3) Armature Plate
(4) Snap Ring
(5) Wave Spring
(6) Cam Pulley
(7) Cam Ball
(8) Cam and Coil Housing
(9) Thrust Bearing

Reassembly

1. Mount the clutch pack assembly to which the multi plate disk clutch is already installed to the output shaft.

NOTE: Mount the clutch pack assembly while adjusting the phase of both the clutch housing and drive sprocket.

2. Install the insulator washer.
3. Install the armature plate.

4. Using snap ring pliers, install the snap ring.

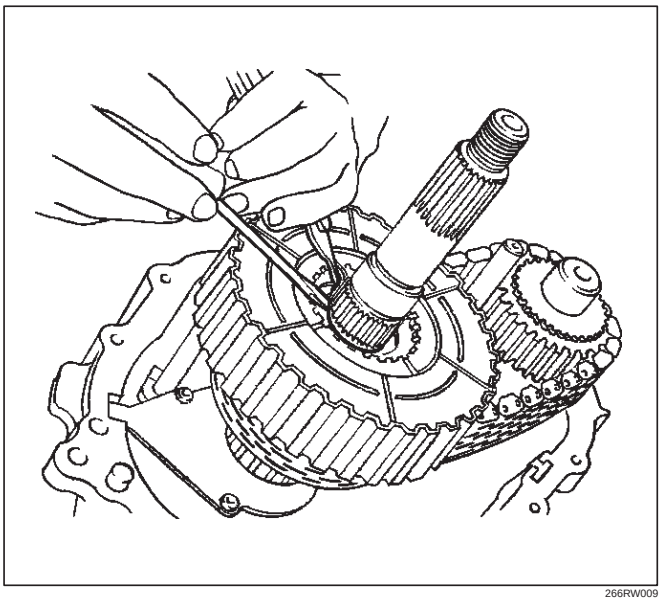

266RW009

5. Install the wave spring.
6. Install the cam pulley.
7. Place a ball on each groove of the cam pulley.

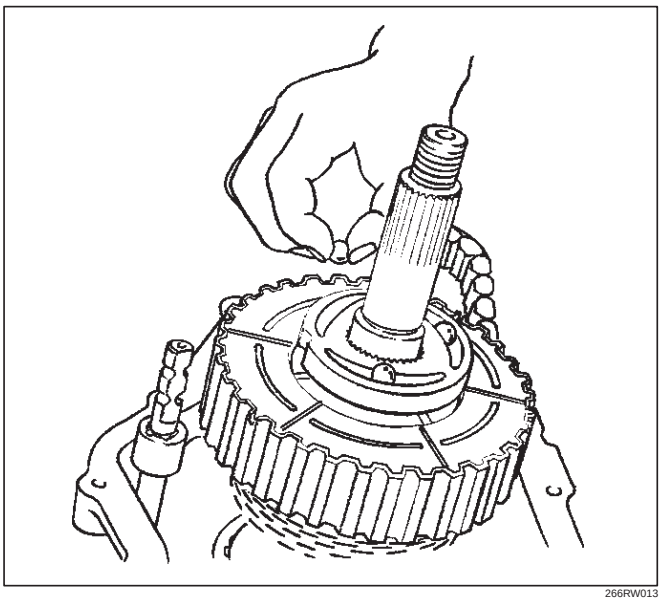

266RW013

8. Install the cam and coil housing.
9. Install the thrust bearing.

Main Data and Specifications

Leading Particulars

Type		Transfer case with low range reduction mechanism
	2H	Rear wheel drive
	TOD	Electronically controlled torque split four wheel drive
	4L	Low-speed mechanical lock-up four wheel drive
Control system		Floor direct control
Gear ratio	H	1.000
	L	2.480
Oil quantity, Lit		1.9
Oil		ATF DEXRON®-IIE or ATF DEXRON®-III

Torque Specifications

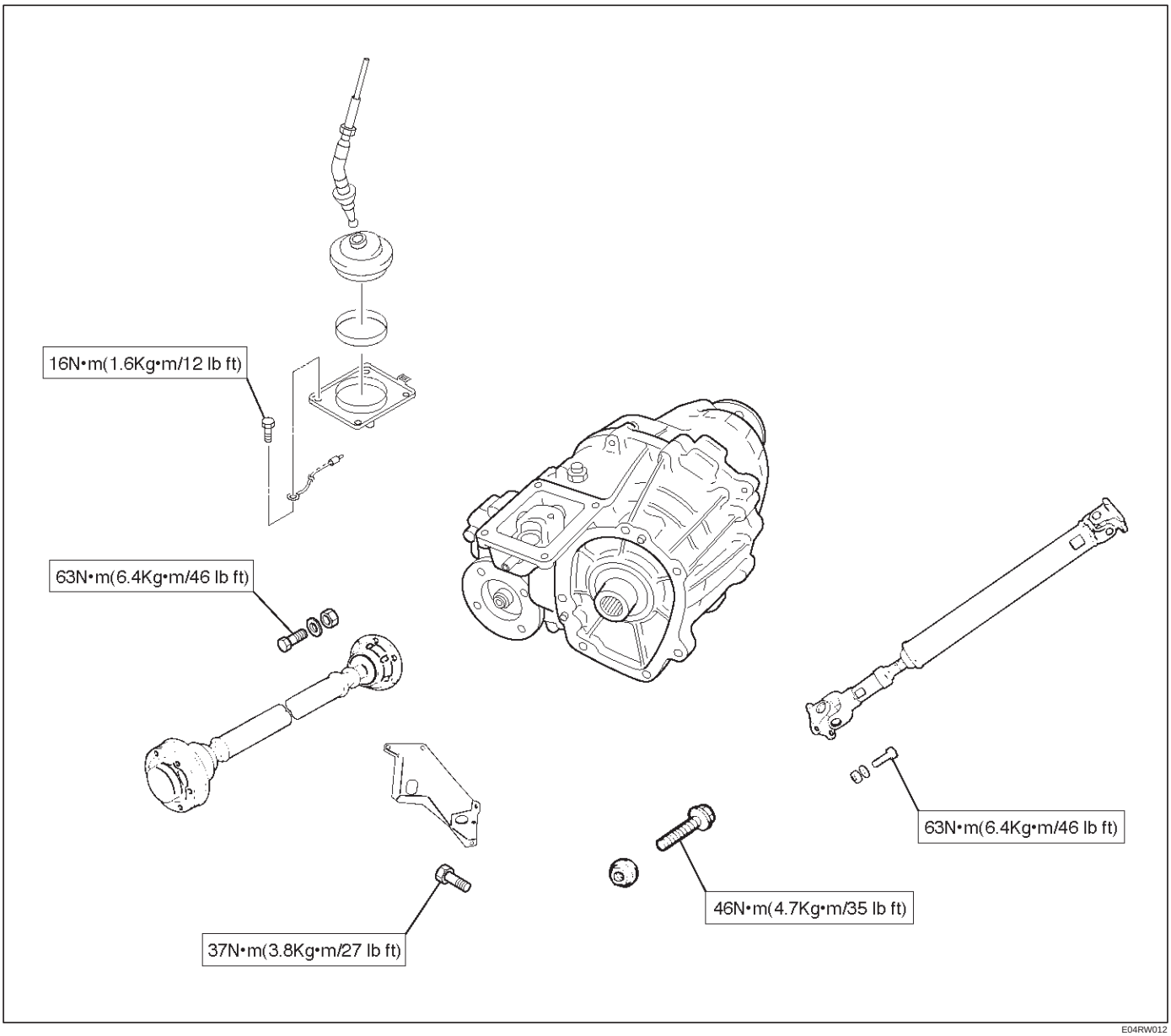

E04RW012

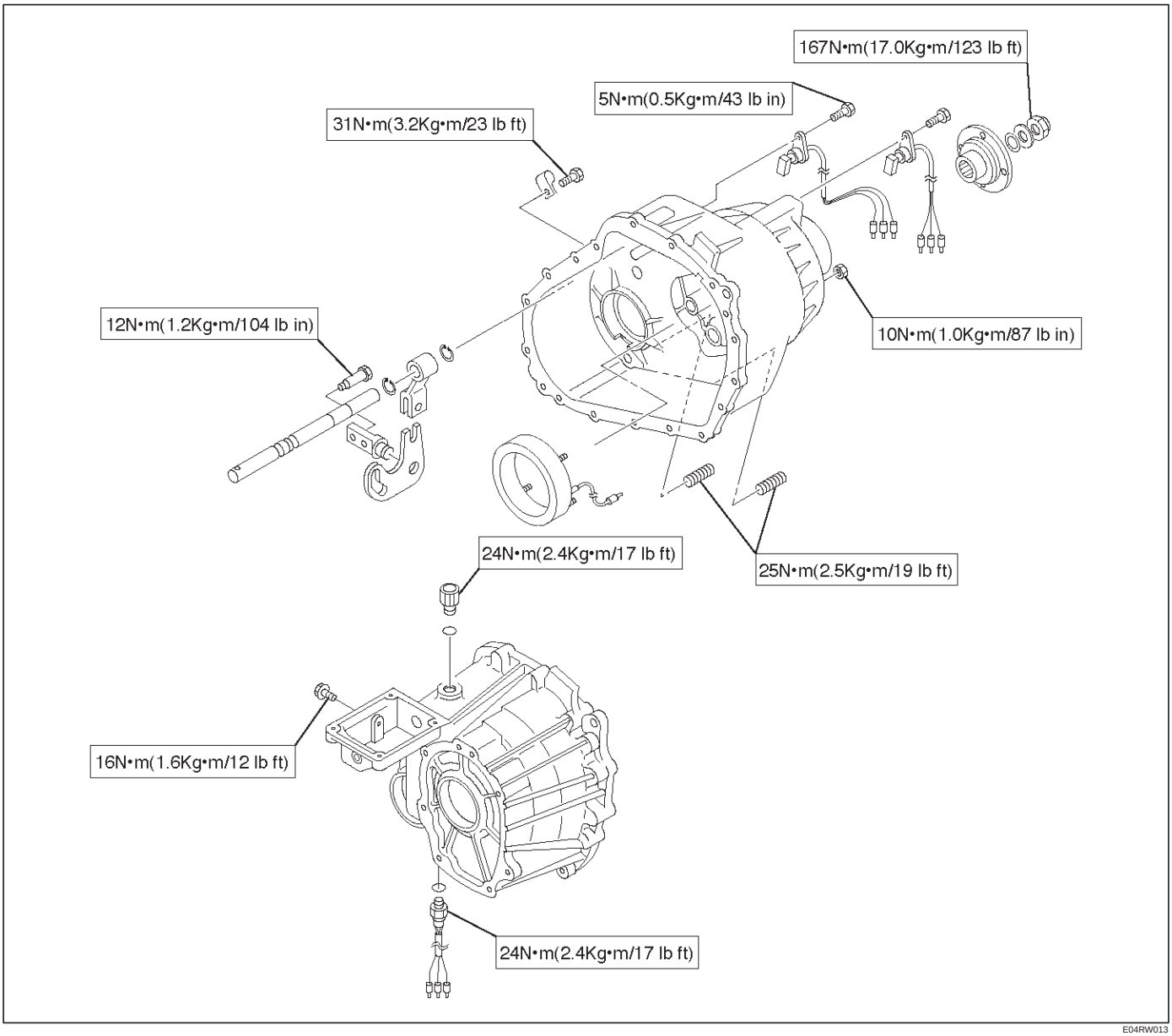
167N•m(17.0Kg•m/123 lb ft)
5N•m(0.5Kg•m/43 lb in)
31N•m(3.2Kg•m/23 lb ft)
12N•m(1.2Kg•m/104 lb in)
10N•m(1.0Kg•m/87 lb in)
24N•m(2.4Kg•m/17 lb ft)
25N•m(2.5Kg•m/19 lb ft)
16N•m(1.6Kg•m/12 lb ft)
24N•m(2.4Kg•m/17 lb ft)

E04RW013

Special Tools

ILLUSTRATION	TOOL NO. TOOL NAME
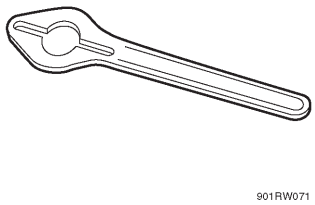 901RW071	**5–8840–0133–0** **(J–8614–11)** Flange Holder
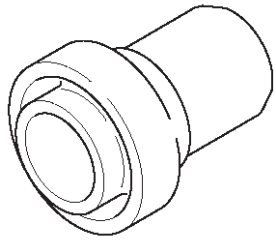 901RW095	**5–8840–2412–0** **(J–42804)** Rear Oil Seal Installer
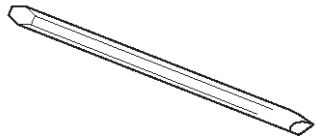 901RW089	**5–8840–2293–0** **(J–39209)** Punch
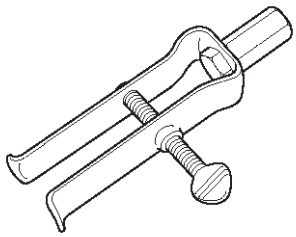 901RW094	**5–8840–2409–0** **(J–42805)** Bearing Remover
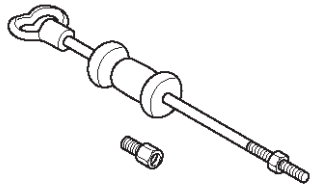 901RW096	**5–8840–0084–0** **(J–2619–01)** Slide Hammer
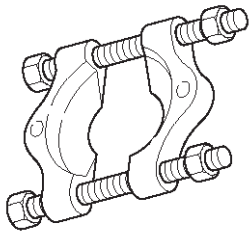 901RW091	**5–8840–0015–0** **(J–22912–01)** Bearing Remover

ILLUSTRATION	TOOL NO. TOOL NAME
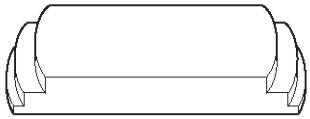 901RW093	**5–8840–2413–0** **(J–42806)** Ring Gear Replacer
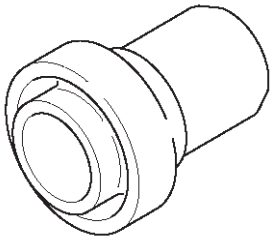 901RW095	**5–8840–2410–0** **(J–42807)** Front Out Oil Seal Installer
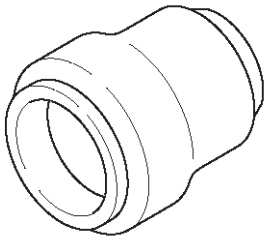 901RW097	**5–8840–2411–0** **(J–42808)** Input Shaft Oil Seal Installer
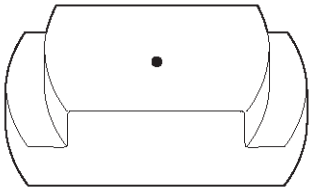 901RW098	**5–8840–2416–0** **(J–42809)** Ring Gear Installer

BRAKES

CONTENTS

Brake Control System 5A
Anti–lock Brake System 5B
Power–Assisted Brake System 5C
Parking Brakes 5D

BRAKE CONTROL SYSTEM

CONTENTS

Service Precaution 5A–2
General Description 5A–3
System Components 5A–3
Electronic Hydraulic Control Unit (EHCU) . 5A–3
ABS Warning Light 5A–4
Wheel Speed Sensor 5A–4
G-Sensor 5A–4
Normal and Anti-lock Braking 5A–4
Brake Pedal Travel 5A–4
Acronyms and Abbreviations 5A–4
General Diagnosis 5A–5
General Information 5A–5
ABS Service Precautions 5A–5
Computer System Service Precautions . . . 5A–5
General Service Precautions 5A–5
Note on Intermittents 5A–5
Test Driving ABS Complaint Vehicles 5A–6
“ABS” Warning Light 5A–6
Normal Operation 5A–6
Basic Diagnostic Flow Chart 5A–6
Basic Inspection Procedure 5A–7
Tech 2 Scan Tool 5A–8
Getting Started 5A–9
Operating Procedure 5A–10
Data List 5A–11
EHCU Connector Pin-out Checks 5A–12
Circuit Diagram (LHD model / 6VD1 and 4JG2) 5A–13
Circuit Diagram (LHD model / 4JG2) 5A–14
Circuit Diagram (LHD model / 4JG2) 5A–15
Circuit Diagram (LHD model / 6VD1) 5A–16
Circuit Diagram (LHD model / 6VD1) 5A–17
Connector List (LHD model) 5A–18
Part Location (LHD model) 5A–20
Circuit Diagram (RHD model / 6VD1 and 4JG2) 5A–21
Circuit Diagram (RHD model / 4JG2) 5A–22
Circuit Diagram (RHD model / 4JG2) 5A–23
Circuit Diagram (RHD model / 6VD1) 5A–24
Circuit Diagram (RHD model / 6VD1) 5A–25
Circuit Diagram (RHD model / 6VE1 and 4JX1) 5A–26
Circuit Diagram (RHD model / 4JX1) 5A–27
Circuit Diagram (RHD model / 4JX1) 5A–28
Circuit Diagram (RHD model / 6VE1) 5A–29
Circuit Diagram (RHD model / 6VE1) 5A–30
Connector List (RHD model) 5A–31
Part Location (RHD model) 5A–34
Symptom Diagnosis 5A–35
Chart A–1 ABS Works Frequently But Vehicle Does Not Decelerate 5A–35
Chart TA-1 ABS Works Frequently But Vehicle Does Not Decelerate (Use TECH 2) 5A–36
Chart A-2 Uneven Braking Occurs While ABS Works 5A–36
Chart A-3, TA-3 The Wheels Are Locked . 5A–36
Chart A-4 Brake Pedal Feed Is Abnormal . 5A–37
Chart A-5, TA-5 Braking Sound (From EHCU) Is Heard While Not Braking 5A–38
Diagnostic Trouble Codes 5A–39
Diagnosis By “ABS” Warning Light Illumination Pattern 5A–40
Diagnostic Trouble Codes (DTCs) 5A–40
Chart B-1 With the key in the ON position (Before starting the engine). Warning light (W/L) is not activated. 5A–43
Chart B-2 EHCU Abnormality (DTC 14) . . . 5A–43
Chart B-3 Power Voltage Drop (DTC 15) . . 5A–44
Chart B-4 CLASS-2 Communication Line Abnormality (DTC 16) 5A–44
Chart B-5 G-Sensor Circuit (DTC 21) 5A–45
Chart B-6 Abnormal Transmission Input (DTC 23) 5A–46
Chart B-7 Transfer Monitor (DTC 24) 5A–47
Chart B-8 EHCU Pump Motor And Motor Relay Circuit (DTC 32) 5A–47
Chart B-9 EHCU Pump Valve And Valve Relay Circuit (DTC 35) 5A–47
Chart B-10 FL Isolation Solenoid Valve Abnormality (DTC 41) 5A–48
Chart B-11 FL Dump Solenoid Valve Abnormality (DTC 42) 5A–48
Chart B-12 FR Isolation Solenoid Valve Abnormality (DTC 43) 5A–48
Chart B-13 FR Dump Solenoid Valve Abnormality (DTC 44) 5A–49
Chart B-14 Rear Isolation Solenoid Valve Abnormality (DTC 45) 5A–49
Chart B-15 Rear Dump Solenoid Valve Abnormality (DTC 46) 5A–49

Chart B-16 FL Speed Sensor Disconnection (DTC 51) 5A–50
Chart B-17 FR Speed Sensor Disconnection (DTC 52) 5A–50
Chart B-18 RL Speed Sensor Disconnection (DTC 53) 5A–51
Chart B-19 RR Speed Sensor Disconnection (DTC 54) 5A–51
Chart B-20 FL Speed Sensor Short Circuit (DTC 61) 5A–52
Chart B-21 FR Speed Sensor Short Circuit (DTC 62) 5A–53
Chart B-22 RL Speed Sensor Short Circuit (DTC 63) 5A–54
Chart B-23 RR Speed Sensor Short Circuit (DTC 64) 5A–55
Chart B-24 Sensor Signal Input Abnormality (DTC 65) 5A–56
Sensor Signal Abnormality Criteria using TECH 2 . . . . . 5A–56
Unit Inspection Procedure 5A–57
Chart C-1-1 FL Sensor Output Inspection Procedure 5A–57
Chart C-1-2 FR Sensor Output Inspection Procedure 5A–58
Chart C-1-3 RL Sensor Output Inspection Procedure 5A–58
Chart C-1-4 RR Sensor Output Inspection Procedure 5A–59
Chart TC-1 Sensor Output Inspection Procedure (Use TECH 2) 5A–59
Chart C-2 Transmission Input Inspection Procedure 5A–60
Chart TC-2 Transmission Input Inspection Procedure (Use TECH 2) 5A–61
Special Tools 5A–62

Service Precaution

WARNING: IF SO EQUIPPED WITH A SUPPLEMENTAL RESTRAINT SYSTEM (SRS), REFER TO THE SRS COMPONENT AND WIRING LOCATION VIEW IN ORDER TO DETERMINE WHETHER YOU ARE PERFORMING SERVICE ON OR NEAR THE SRS COMPONENTS OR THE SRS WIRING. WHEN YOU ARE PERFORMING SERVICE ON OR NEAR THE SRS COMPONENTS OR THE SRS WIRING, REFER TO THE SRS SERVICE INFORMATION. FAILURE TO FOLLOW WARNINGS COULD RESULT IN POSSIBLE AIR BAG DEPLOYMENT, PERSONAL INJURY, OR OTHERWISE UNNEEDED SRS SYSTEM REPAIRS.

CAUTION: Always use the correct fastener in the proper location. When you replace a fastener, use ONLY the exact part number for that application. ISUZU will call out those fasteners that require a replacement after removal. ISUZU will also call out the fasteners that require thread lockers or thread sealant. UNLESS OTHERWISE SPECIFIED, do not use supplemental coatings (Paints, greases, or other corrosion inhibitors) on threaded fasteners or fastener joint interfaces. Generally, such coatings adversely affect the fastener torque and the joint clamping force, and may damage the fastener. When you install fasteners, use the correct tightening sequence and specifications. Following these instructions can help you avoid damage to parts and systems.

General Description

The Anti-lock Brake System (ABS) works on all four wheels. A combination of wheel speed sensor and Electronic Hydraulic Control Unit (EHCU) can determine when a wheel is about to stop turning and adjust brake pressure to maintain best braking.

This system helps the driver maintain greater control of the vehicle under heavy braking conditions.

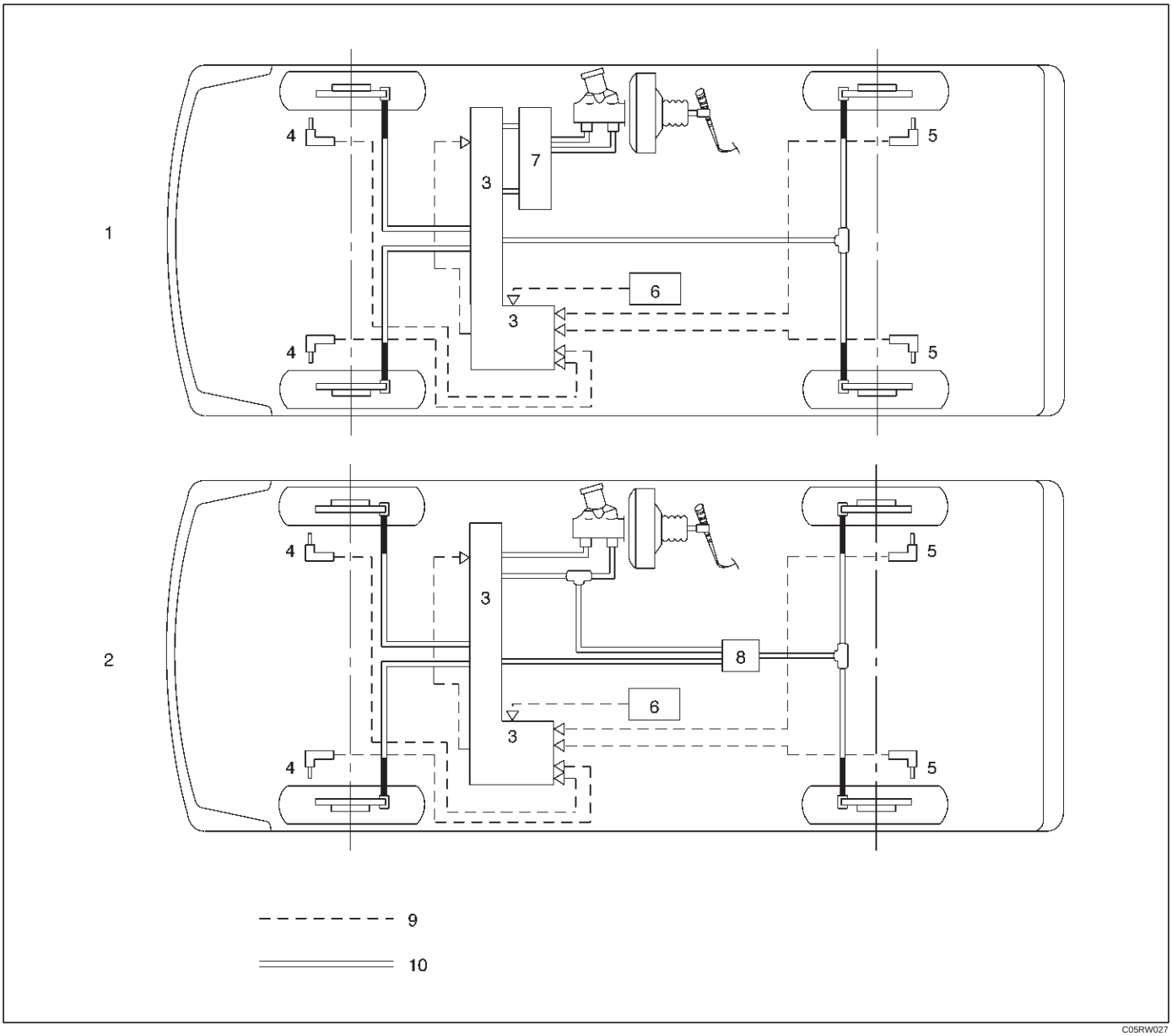

C05RW027

Legend

(1) With P&B Valve Model
(2) With LSPV Model
(3) Electronic Hydraulic Control Unit (EHCU)
(4) Front Wheel Speed Sensor
(5) Rear Wheel Speed Sensor
(6) G-Sensor
(7) Proportioning and Bypass (P&B) Valve
(8) Load Sensing Proportioning Valve (LSPV)
(9) Electronic Line
(10) Hydraulic Line

System Components

Electronic Hydraulic Control Unit (EHCU), four Wheel Speed Sensors, Warning Light, and G-sensor.

Electronic Hydraulic Control Unit (EHCU)

The EHCU consists of ABS control circuits, fault detector, and a fail-safe. It drives the hydraulic unit according to the signal from each sensor, cancelling ABS to return to

normal braking when a malfunction has occurred in the ABS.
The EHCU has a self-diagnosing function which can indicate faulty circuits during diagnosis.
The EHCU is mounted on the engine compartment front right side. It consists of a Motor, Plunger Pump, Solenoid Valves and Check Valve.
On the outside, the relay box containing a motor relay and a valve relay is installed.
Solenoid Valves: Reduces or holds the caliper fluid pressure for each front disc brake or both rear disc brakes according to the signal sent from the EHCU.
Reservoir: Temporarily holds the brake fluid that returns from the front and rear disc brake caliper so that pressure of front disc brake caliper can be reduced smoothly.
Plunger Pump: Feeds the brake fluid held in the reservoir to the master cylinder.
Motor: Drives the pump according to the signal from EHCU.
Check Valve: Controls the brake fluid flow.

ABS Warning Light

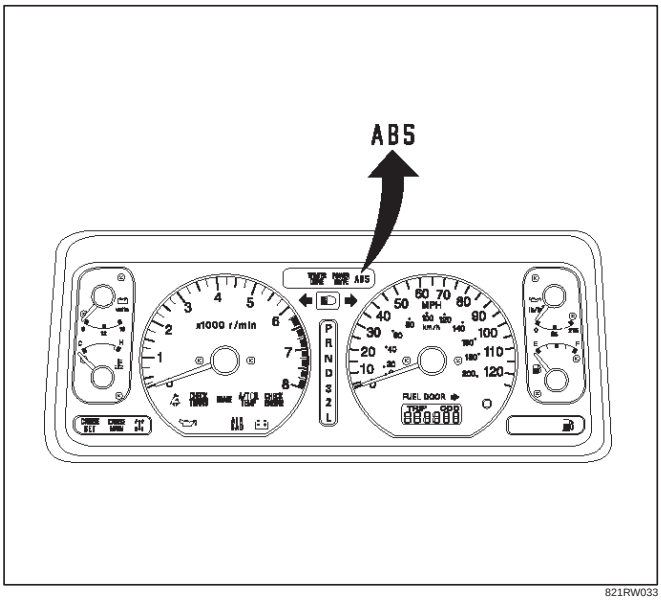

821RW033

Vehicles equipped with the Anti-lock Brake System have an amber “ABS” warning light in the instrument panel. The “ABS” warning light will illuminate if a malfunction in the Anti-lock Brake System is detected by the Electronic Hydraulic Control Unit (EHCU). In case of an electronic malfunction, the EHCU will turn “ON” the “ABS” warning light and disable the Anti-lock braking function.
The “ABS” light will turn “ON” for approximately three seconds after the ignition switch is to the “ON” position.
If the “ABS” light stays “ON” after the ignition switch is the “ON” position, or comes “ON” and stays “ON” while driving, the Anti-lock Brake System should be inspected for a malfunction according to the diagnosis procedure.

Wheel Speed Sensor

It consists of a sensor and a rotor. The sensor is attached to the knuckle on the front wheels and to the axle shaft bearing holder on the rear wheels.
The rotor is press-fit in the axle shaft.
The flux generated from electrodes magnetized by a magnet in the sensor varies due to rotation of the rotor, and the electromagnetic induction generates alternating voltage in the coil. This voltage draws a “sine curve” with the frequency proportional to rotor speed and it allows detection of wheel speed.

G-Sensor

The G-sensor installed inside the center console detects the vehicle deceleration speed and sends a signal to the EHCU. In 4WD operation, all four wheels may be decelerated in almost the same phase, since all wheels are connected mechanically.
This tendency is noticeable particularly on roads with low friction coefficient, and the ABS control is adversely affected.
The G-sensor judges whether the friction coefficient of road surface is low or high, and changes the EHCU’s operating system to ensure ABS control.

Normal and Anti-lock Braking

Under normal driving conditions, the Anti-lock Brake System functions the same as a standard power assisted brake system. However, with the detection of wheel lock-up, a slight bump or kick-back will be felt in the brake pedal. This pedal “bump” will be followed by a series of short pedal pulsations which occurs in rapid succession. The brake pedal pulsation will continue until there is no longer a need for the anti-lock function or until the vehicle is stopped. A slight ticking or popping noise may be heard during brake applications when the Anti-lock features is being used.
When the Anti-lock feature is being used, the brake pedal may rise even as the brakes are being applied. This is also normal. Maintaining a constant force on the pedal will provide the shortest stopping distance.

Brake Pedal Travel

Vehicles equipped with the Anti-lock Brake System may be stopped by applying normal force to the brake pedal. Although there is no need to push the pedal beyond the point where it stops or holds the vehicle, by applying more force the pedal will continue to travel toward the floor. This extra brake pedal travel is normal.

Acronyms and Abbreviations

Several acronyms and abbreviations are commonly used throughout this section:

ABS
Anti-lock Brake System

CKT
Circuit

DLC
Data Link Connector

EHCU
Electronic Hydraulic Control Unit

FL
Front Left

FR
Front Right

GEN
Generator

MV
Millivolts

RL
Rear Left

RR
Rear Right

RPS
Revolution per Second

VDC
Volts DC

VAC
Volts AC

W/L
Warning Light

WSS
Wheel Speed Sensor

General Diagnosis

General Information

ABS malfunction can be classified into two types, those which can be detected by the ABS warning light and those which can be detected as a vehicle abnormality by the driver.
In either case, locate the fault in accordance with the "BASIC DIAGNOSTIC FLOWCHART" and repair.
Please refer to Section 5C for the diagnosis of mechanical troubles such as brake noise, brake judder (brake pedal or vehicle vibration felt when braking), uneven braking, and parking brake trouble.

ABS Service Precautions

Required Tools and Items:

- Box Wrench
- Brake Fluid
- Special Tool

Some diagnosis procedures in this section require the installation of a special tool.

J-39200 High Impedance Multimeter

When circuit measurements are requested, use a circuit tester with high impedance.

Computer System Service Precautions

The Anti-lock Brake System interfaces directly with the Electronic Hydraulic Control Unit (EHCU) which is a control computer that is similar in some regards to the Powertrain Control Module. These modules are designed to withstand normal current draws associated with vehicle operation. However, care must be taken to avoid overloading any of the EHCU circuits. In testing for opens or shorts, do not ground or apply voltage to any of the circuits unless instructed to do so by the appropriate diagnostic procedure. These circuits should only be tested with a high impedance multimeter (J-39200) or special tools as described in this section. Power should never be removed or applied to any control module with the ignition in the "ON" position.
Before removing or connecting battery cables, fuses or connectors, always turn the ignition switch to the "OFF" position.

General Service Precautions

The following are general precautions which should be observed when servicing and diagnosing the Anti-lock Brake System and/or other vehicle systems. Failure to observe these precautions may result in Anti-lock Brake System damage.

- If welding work is to be performed on the vehicle using an electric arc welder, the EHCU and valve block connectors should be disconnected before the welding operation begins.
- The EHCU and valve block connectors should never be connected or disconnected with the ignition "ON" .
- EHCU of the Anti-lock Brake System are not separately serviceable and must be replaced as assemblies. Do not disassemble any component which is designated as non-serviceable in this Section.
- If only rear wheels are rotated using jacks or drum tester, the system will diagnose a speed sensor malfunction and the "ABS" warning light will illuminate. But actually no trouble exists. After inspection stop the engine once and re-start it, then make sure that the "ABS" warning light does not illuminate.

If the battery has been discharged

The engine may stall if the battery has been completely discharged and the engine is started via jumper cables. This is because the Anti-lock Brake System (ABS) requires a large quantity of electricity. In this case, wait until the battery is recharged, or set the ABS to a non-operative state by removing the fuse for the ABS (40A). After the battery has been recharged, stop the engine and install the ABS fuse. Start the engine again, and confirm that the ABS warning light does not light.

Note on Intermittents

As with virtually any electronic system, it is difficult to identify an intermittent failure. In such a case duplicating the system malfunction during a test drive or a good description of vehicle behavior from the customer may be helpful in locating a "most likely" failed component or circuit. The symptom diagnosis chart may also be useful in isolating the failure. Most intermittent problems are caused by faulty electrical connections or wiring. When an intermittent failure is encountered, check suspect circuits for:

- Suspected harness damage.
- Poor mating of connector halves or terminals not fully seated in the connector body (backed out).
- Improperly formed or damaged terminals.

Test Driving ABS Complaint Vehicles

In case that there has been an malfunction in the lighting pattern of “ABS” warning light, the fault can be located in accordance with the “DIAGNOSIS BY “ABS” WARNING LIGHT ILLUMINATION PATTERN” . In case of such trouble as can be detected by the driver as a vehicle symptom, however, it is necessary to give a test drive following the test procedure mentioned below, thereby reproducing the symptom for trouble diagnosis on a symptom basis:

1. Start the engine and make sure that the “ABS” W/L goes OFF. If the W/L remains ON, it means that the Diagnostic Trouble Code (DTC) is stored. Therefore, read the code and locate the fault.
2. Start the vehicle and accelerate to about 30 km/h (19 mph) or more.
3. Slowly brake and stop the vehicle completely.
4. Then restart the vehicle and accelerate to about 40 km/h (25 mph) or more.
5. Brake at a time so as to actuate the ABS and stop the vehicle.
6. Be cautious of abnormality during the test. If the W/L is actuated while driving, read the DTC and locate the fault.
7. If the abnormality is not reproduced by the test, make best efforts to reproduce the situation reported by the customer.
8. If the abnormality has been detected, repair in accordance with the “SYMPTOM DIAGNOSIS” .

NOTE:

- Be sure to give a test drive on a wide, even road with little traffic.
- If an abnormality is detected, be sure to suspend the test and start trouble diagnosis at once.

“ABS” Warning Light

When ABS trouble occurs and actuates when possible the “ABS” warning light, the trouble code corresponding to the trouble is stored in the EHCU. Only the ordinary brake system is available when the ABS is turned off. When the “ABS” warning light is actuated, if the starter switch is set ON after setting it OFF once, the EHCU checks up on the entire system and, if there is no abnormality, judges ABS to work currently and the warning light works normally even though the trouble code is stored.

NOTE: Illumination of the “ABS” warning light indicates that anti-lock braking is no longer available. Power assisted braking without anti-lock control is still available.

Normal Operation

“ABS” Warning Light

When the ignition is first moved from “OFF” to “RUN” , the amber “ABS” warning light will turn “ON” . The “ABS” warning light will turn “ON” during engine starting and will usually stay “ON” for approximately three seconds after the ignition switch is returned to the “ON” position. The warning light should remain “OFF” at all other times.

Basic Diagnostic Flow Chart

Step	Action	Yes	No
1	1. Customer complaint. 2. Questioning to customer. 3. Basic inspection (Refer to “Basic inspection procedure”) Using TECH 2?	Go to Step 2	Go to Step 4
2	Make sure of DTC by mode “F0: Diagnostic Trouble Codes”. Is EHCU including DTC?	Go to Step 3	Go to Step 5
3	1. Repair of faulty part. 2. Elimination of DTC. 3. Inspection of “ABS” W/L Illumination pattern with ignition SW “ON”. 4. Test drive. Does repeat trouble?	Repeat the diagnosis it the symptom or DTC appears again Go to Step 1	Go to Step 5
4	Check if the DTC is stored. Is EHCU including DTC?	Go to Step 3	Trouble diagnosis based on symptom (Refer to “SYMPTOM DIAGNOSIS”) Go to Step 3
5	1. Reconnect all components and ensure all component are properly mounted. 2. Clear diagnostic trouble code. Was this step finished?	Finished	Go to Step 5

Basic Inspection Procedure

1. Basic Inspection of System Brake

Step	Action	Yes	No
1	Is the fluid level normal?	Go to Step 2	Replenish with fluid. Go to Step 2
2	Does fluid leak?	Repair. Go to Step 3	Go to Step 3
3	Is the booster functioning normal?	Go to Step 4	Repair. Go to Step 4
4	Is the pad and rotor normal?	Go to Step 5	Repair. Go to Step 5
5	Reconnect all components and ensure all component are properly mounted. Was this step finished?	Finished	Go to Step 5

2. Inspection of Front Axle Switch

Step	Action	Yes	No
1	Turn the key switch on and shift the T/F to 4WD position. Does the 4WD light come on?	Go to Step 2	Repair. Go to Step 2
2	Reconnect all components and ensure all components are properly mounted. Was this step finished?	Finished	Go to Step 2

3. Ground Inspection

Step	Action	Yes	No
1	Are ABS—related ground points ok?	Go to Step 2	Repair. Go to Step 2
2	Reconnect all components and ensure all components are properly mounted. Was this step finished?	Finished	Go to Step 2

Tech 2 Scan Tool

From 98 MY, Isuzu dealer service departments are recommended to use Tech 2. Please refer to Tech 2 scan tool user guide.

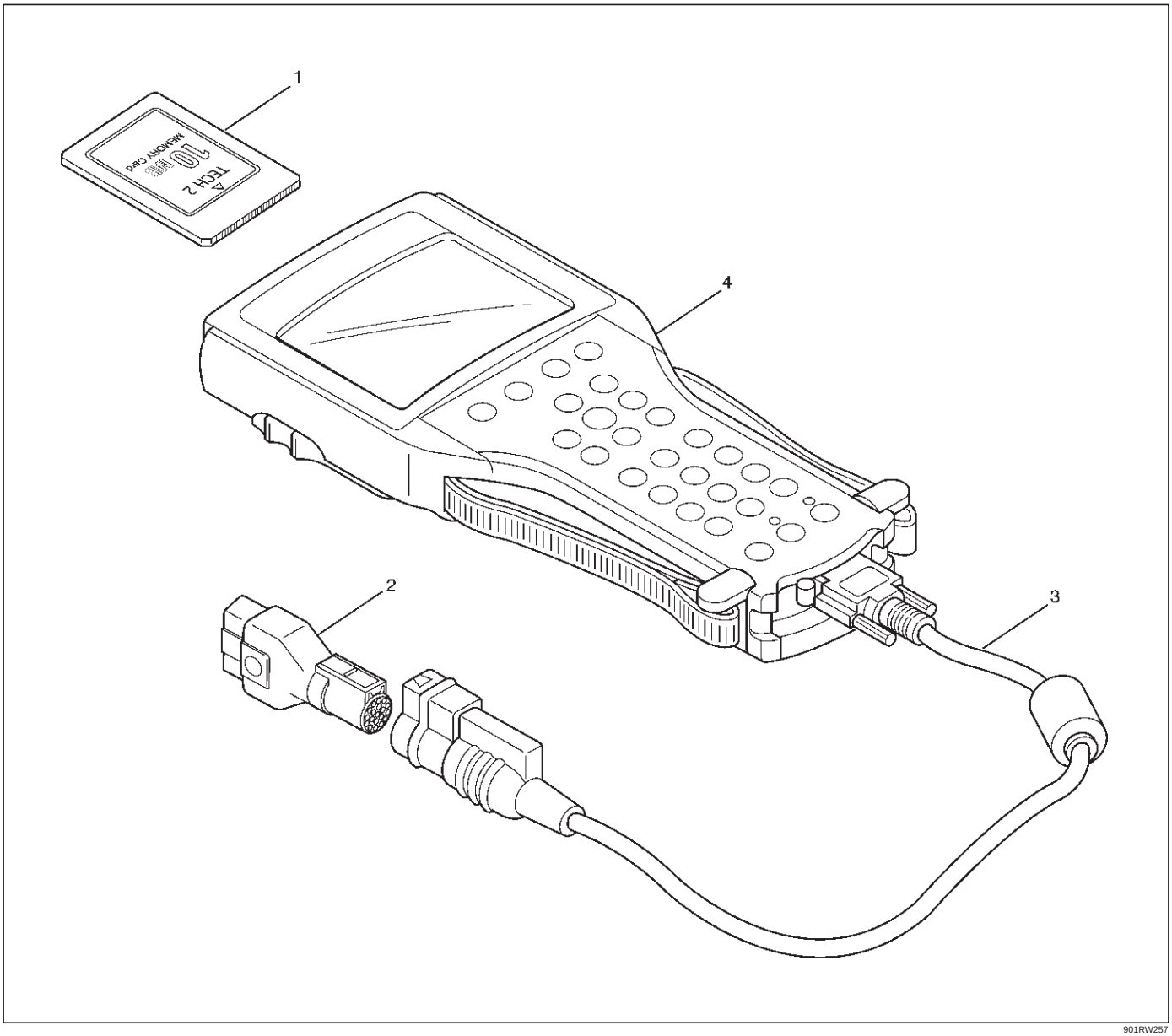

901RW257

Legend

(1) PCMCIA Card
(2) SAE 16/19 Adaptor
(3) DLC Cable
(4) Tech–2

Getting Started

- Before operating the Isuzu PCMCIA card with the Tech 2, the following steps must be performed:

1. The Isuzu 98 System PCMCIA card (1) inserts into the Tech 2 (4).
2. Connect the SAE 16/19 adapter (2) to the DLC cable (3).
3. Connect the DLC cable to the Tech 2 (4).
4. Make sure the vehicle ignition is off.
5. Connect the Tech 2 SAE 16/19 adapter to the vehicle DLC connector.

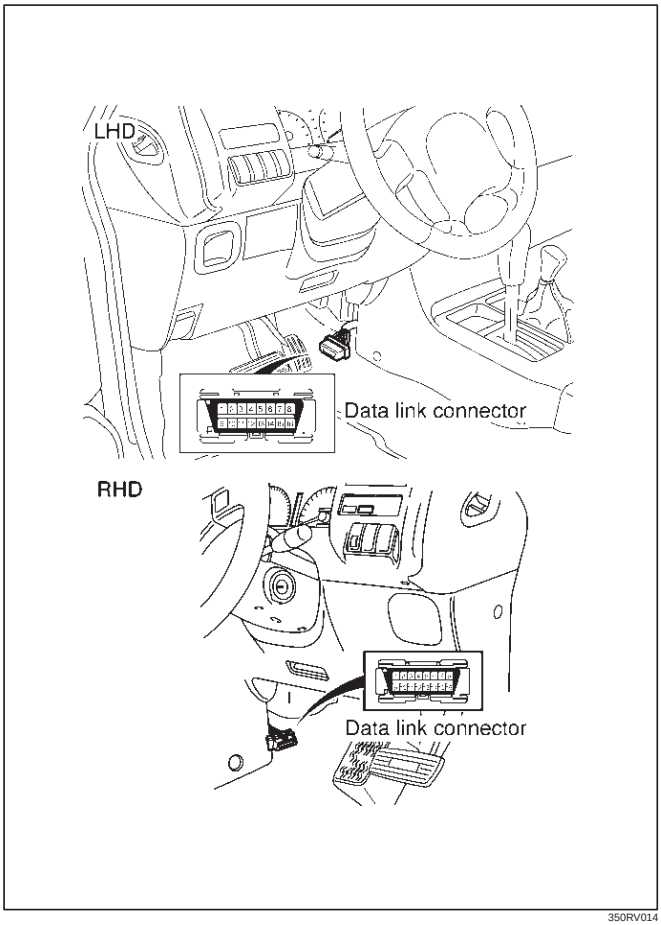

350RV014

6. The vehicle ignition turns on.
7. Power up the Tech 2.
8. Verify the Tech 2 power up display.

060RW009

Operating Procedure

The power up screen is displayed when you power up the tester with the Isuzu systems PCMCIA card. Follow the operating procedure below.

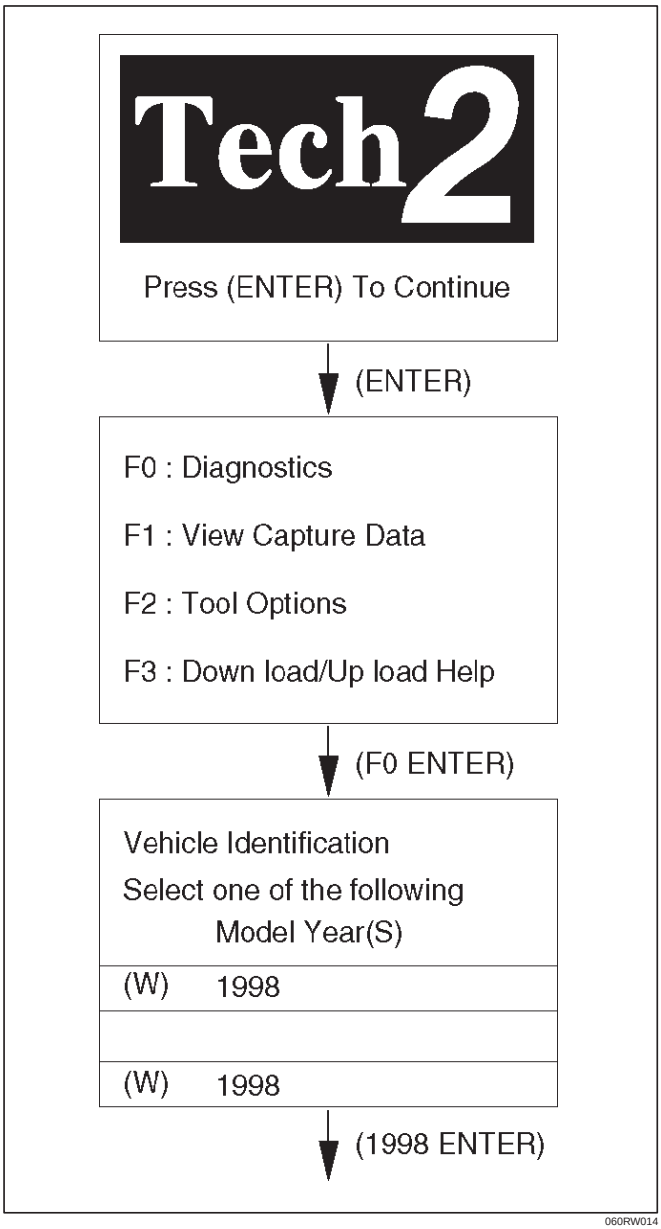

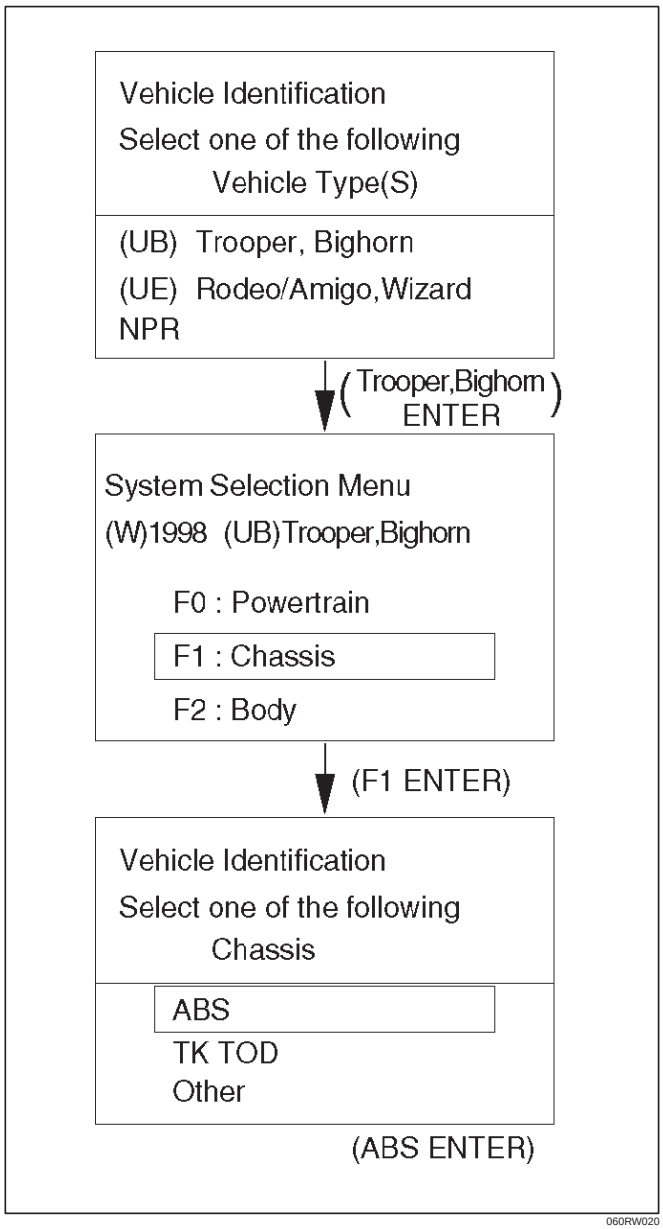

Data List

Display	Content	OK/NG Criteria for Data
Battery Voltage	Voltage	● Between 10-16.9V
Brake Light Switch	Open/Close	● Open(0V) when pedal is released
		● Closed(12V) when pedal is depressed.
Front Left Wheel Speed Front Right Wheel Speed Rear Left Wheel Speed Rear Right Wheel Speed	MPH(km/h)	● Start the vehicle and make sure of linear change in each wheel speed. ● Turn each wheel by hand and make sure that each speed data change.
Wheel Sensor Status	OK/NG	● To be OK usually
G-sensor	Low/High	● To be Low usually
Transfer Monitor(TOD)	2 Wheel Drive 4 Wheel Drive	● When 2WD: 2 Wheel Drive ● When 4WD: 4 Wheel Drive
Off-Road Switch (Transmission Input)	Active/Inactive	● When shift lever position is 1, 2 and R: Active (M/T)
		● When shift lever position is L and R: Active (A/T)
Valve Relay	Active/Inactive	● To be Active usually
ABS State	ON/OFF	● To be OFF usually
ABS Relay	Active/Inactive	● To be Active usually
Return Pump Relay	Active/Inactive	● To be Inactive usually
Front Left Isolation Valve	Active/Inactive	● To be Inactive usually
Front Left Dump Valve		
Front Right Isolation Valve		
Front Right Dump Valve		
Rear Isolation Valve		
Rear Dump Valve		
ABS Warning Lamp	ON/OFF	● To be ON usually (while engine stopped)

EHCU Connector Pin-out Checks

- Disconnect Electronic Brake Control Module.
- Perform checks with high impedance digital multimeter (5-8840-0366-0) or equivalent.

No.	Circuit to be Tested	Ignition Switch Position	Multimeter Scale/Range	Measure between Pin Number	Nominal Value	Note
1	Ignition enable	OFF	20DCV	8 (+), 15 (–)	0V to 0.1V	
		ON	20DCV	8 (+), 15 (–)	11.5V to 14.5V	
2	Stop light switch	OFF	20DCV	10, 15	10.5V to 14.5V	Press brake pedal
3	Ground connection	OFF	200Ω	12, Ground 15, Ground	Less than 2Ω	
4	FL speed sensor	OFF	2kΩ	20, 21	1.3k to 1.9kΩ	Internal Resistance
		OFF	200kΩ	20, 15	more than 100kΩ	Insulation Resistance
		OFF	200mACV	20, 21	more than 200mV	Turn wheel at 1RPS
5	FR speed sensor	OFF	2kΩ	4, 5	1.3k to 1.9kΩ	Internal Resistance
		OFF	200kΩ	4, 15	more than 100kΩ	Insulation Resistance
		OFF	200mACV	4, 5	more than 200mV	Turn wheel at 1RPS
6	RL speed sensor	OFF	2kΩ	22, 23	1.3k to 1.9kΩ	Insulation Resistance
		OFF	200kΩ	22, 15	more than 100kΩ	Internal Resistance
		OFF	200mACV	22, 23	more than 200mV	Turn wheel at 1RPS
7	RR speed sensor	OFF	2kΩ	2, 3	1.3k to 1.9kΩ	Internal Resistance
		OFF	200kΩ	2, 15	more than 100kΩ	Insulation Resistance
		OFF	200mACV	2, 3	more than 200mV	Turn wheel at 1RPS
8	G-sensor	ON		26,8	1k to 2kΩ	Horizontal vehicle
9	Transmission Input	ON	20DCV	6 (+), 15 (–)	Less than 6V (Shift lever position – L, R) 6.6 to 9.0V (other shift position)	A/T Battery voltage 12V
					More than 9.6V (Shift lever position – 1, 2, R) 6.6 to 9.0V (other shift position)	M/T Battery voltage 12V

Circuit Diagram (LHD model / 6VD1 and 4JG2)

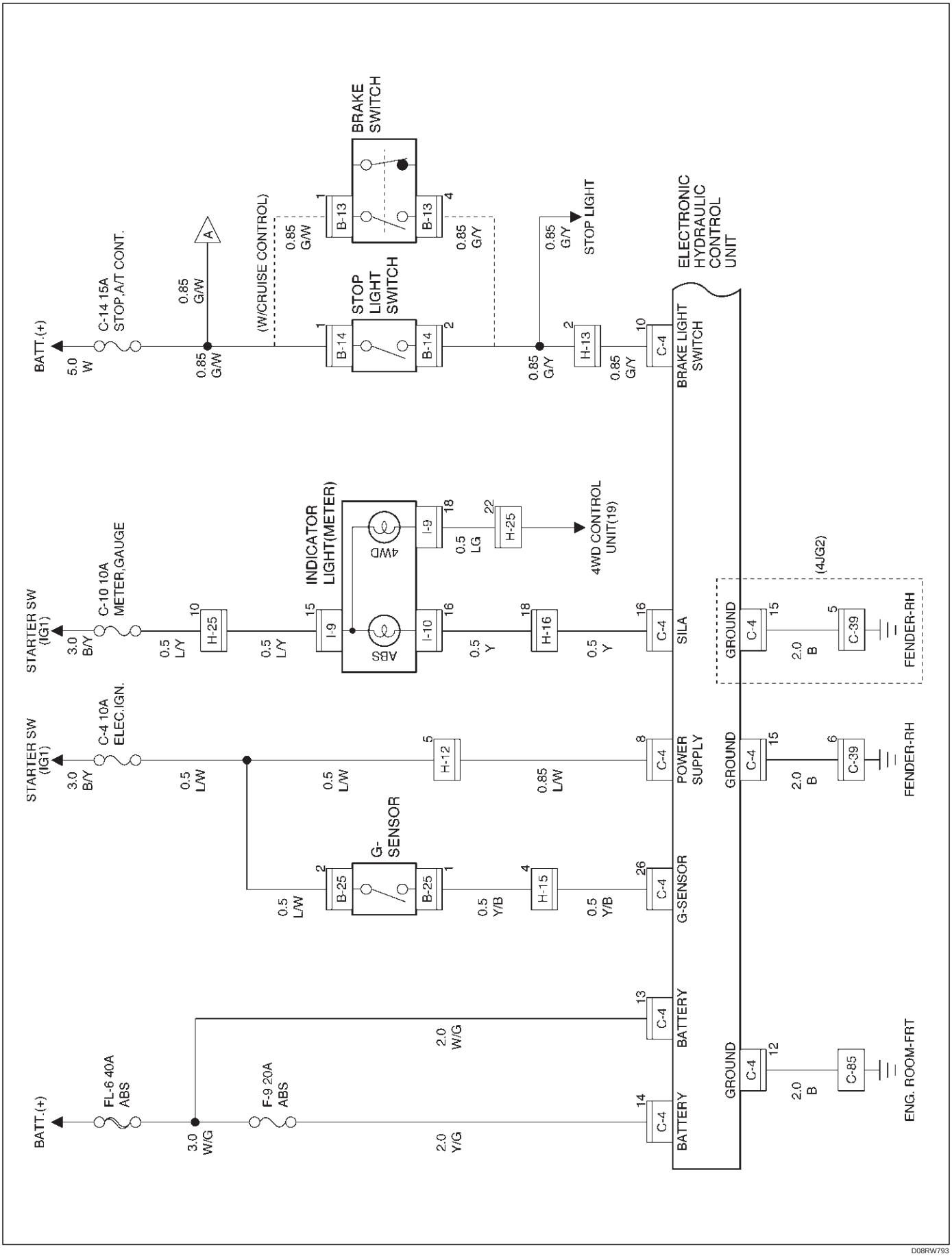

D08RW793

Circuit Diagram (LHD model / 4JG2)

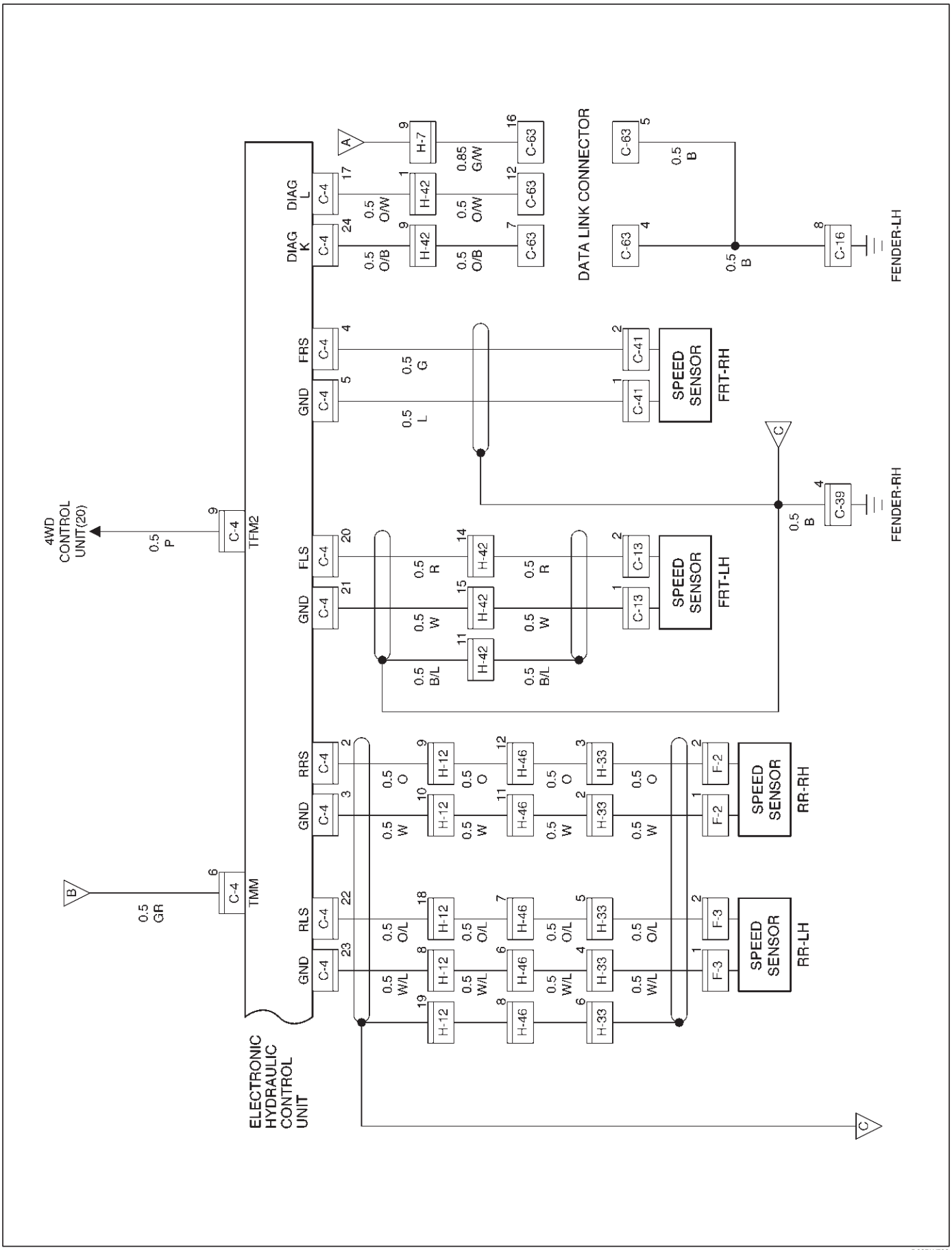

D08RW792

Circuit Diagram (LHD model / 4JG2)

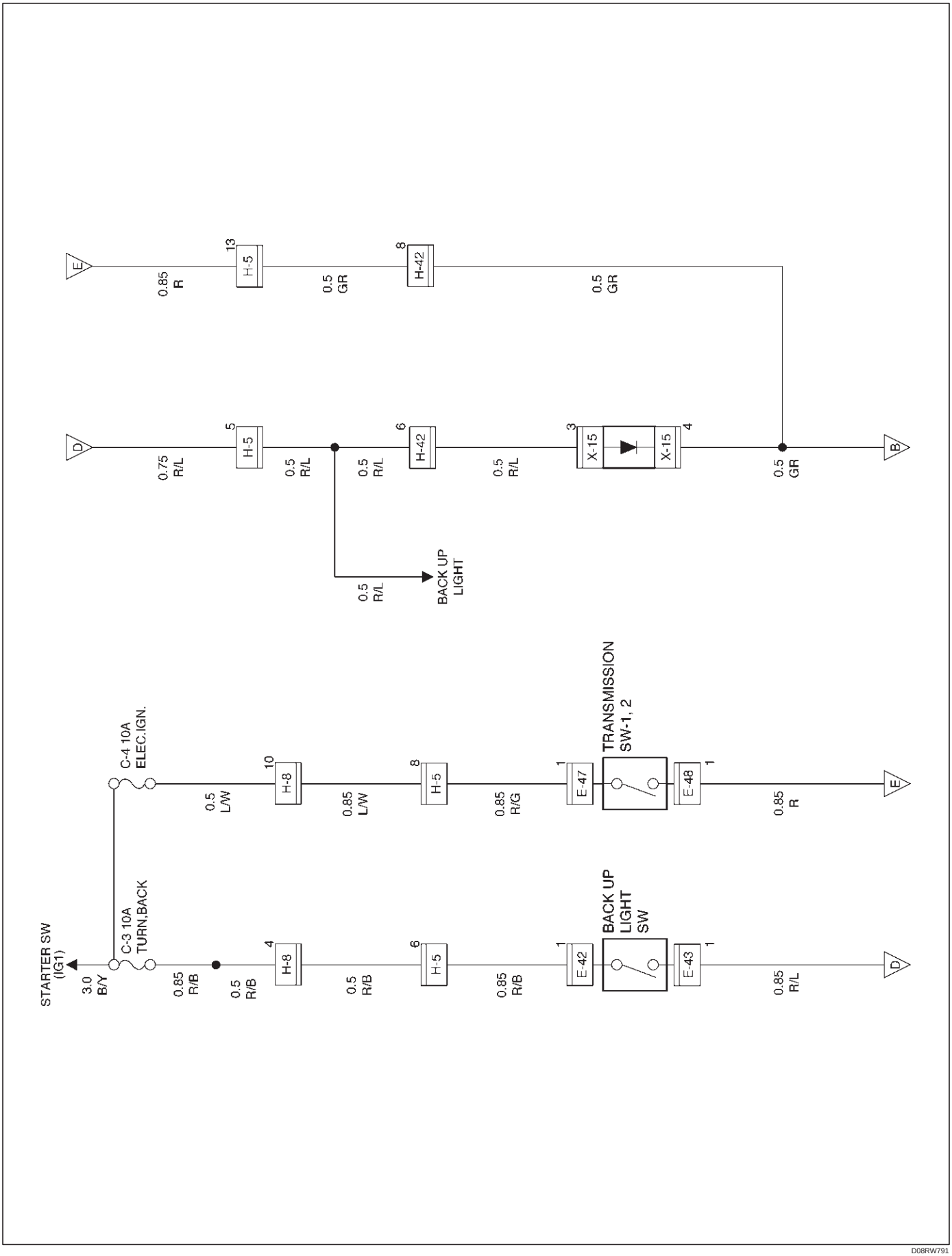

D08RW791

Circuit Diagram (LHD model / 6VD1)

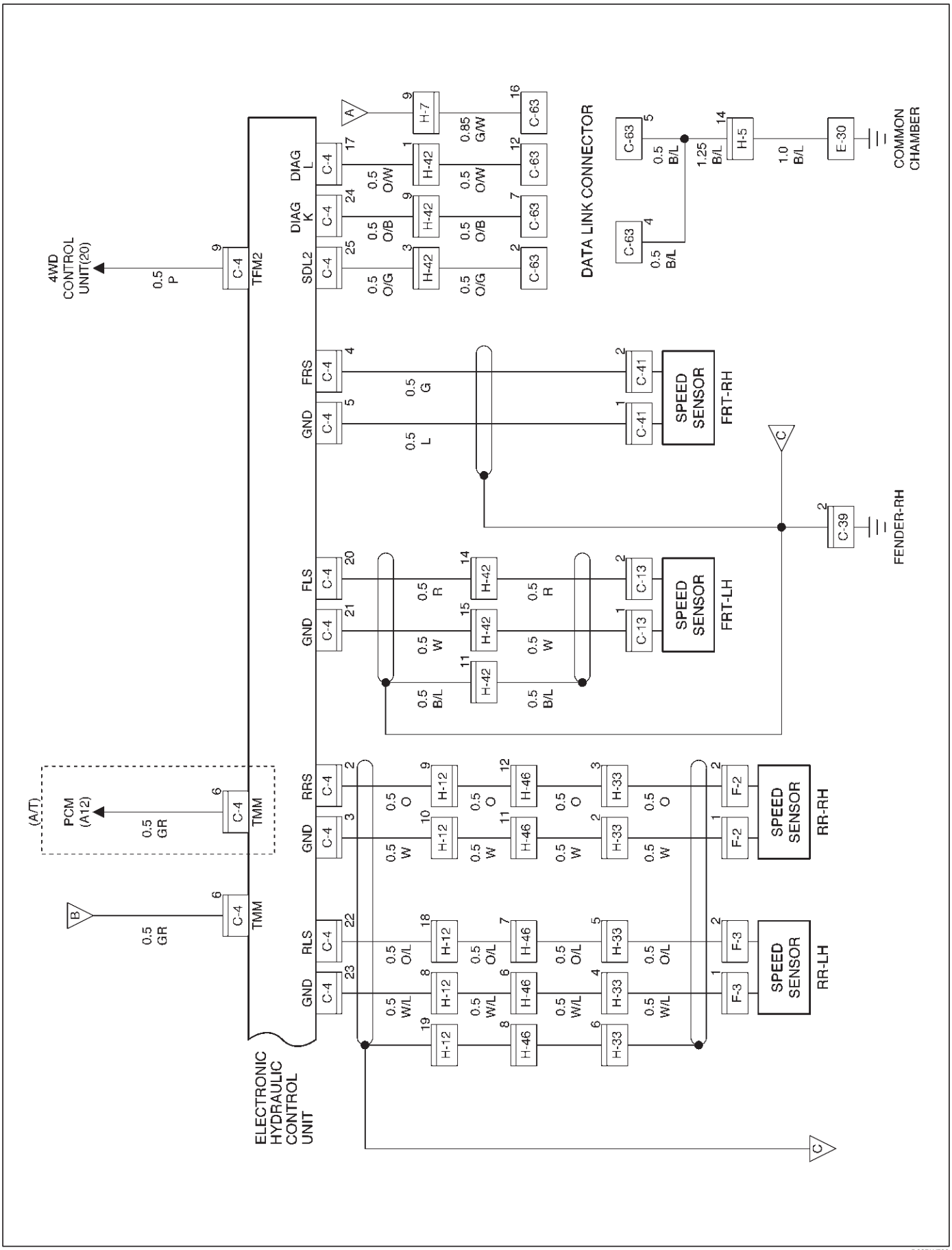

D08RW790

Circuit Diagram (LHD model / 6VD1)

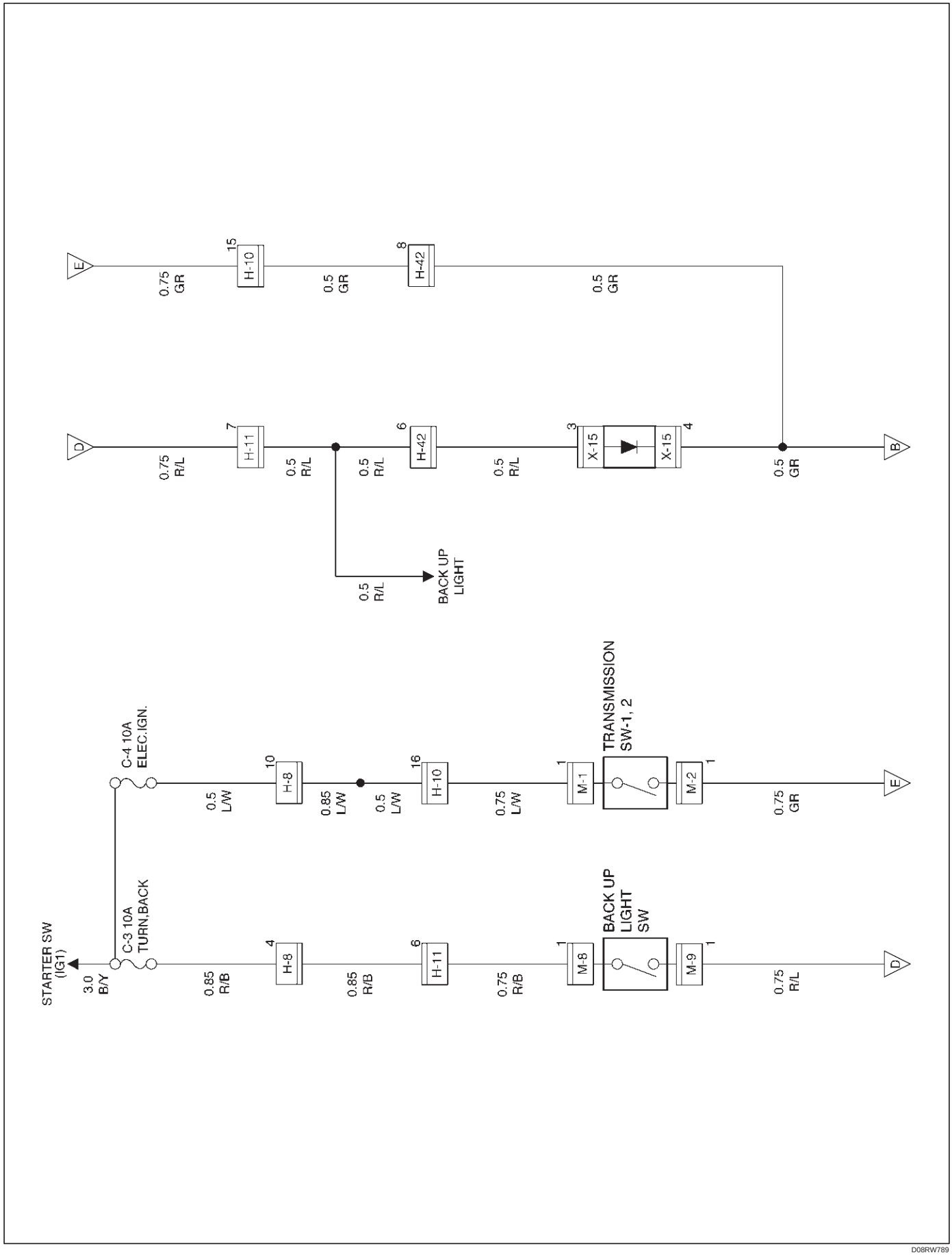

D08RW789

Connector List (LHD model)

No.	Connector face	No.	Connector face
B-13		C-85	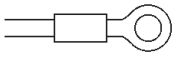
B-14		E-30	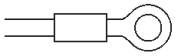
B-25		E-42	
C-4	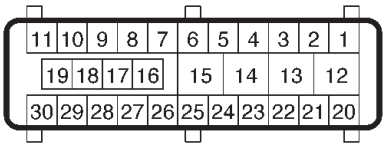	E-43	
C-13	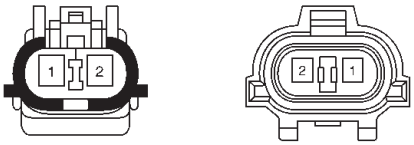	E-47	
C-16		E-48	
C-39		F-2	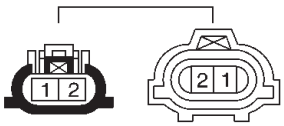
C-41	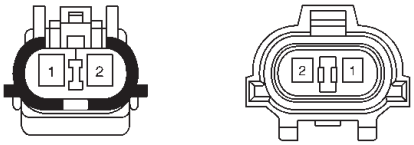	F-3	
C-63	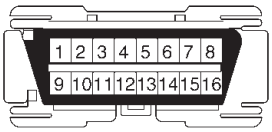	H-5	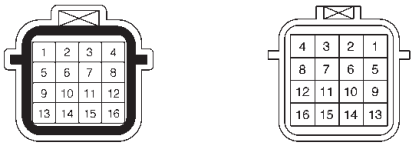

No.	Connector face	No.	Connector face
H-7	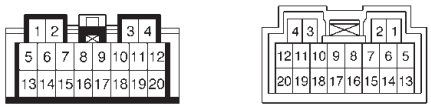	H-33	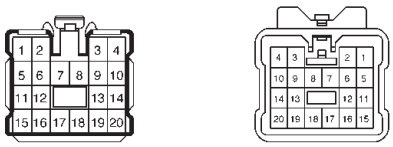
H-8	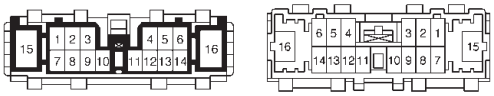	H-42	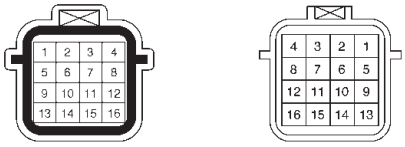
H-10	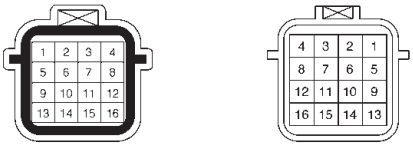	H-46	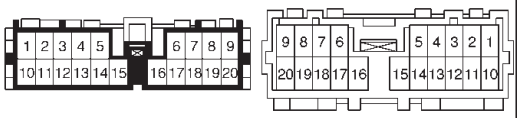
H-11	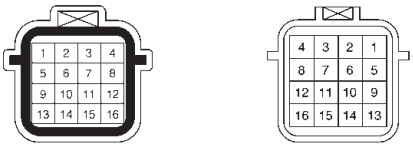	I-9	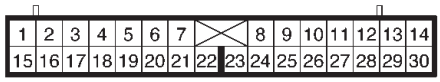
H-12	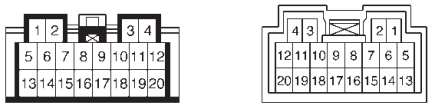	I-10	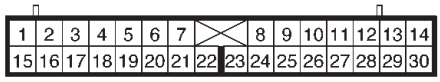
H-13		M-1	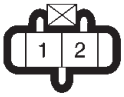
H-15	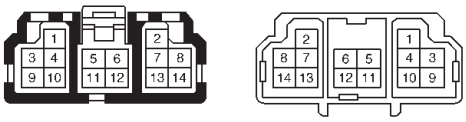	M-8	
H-16	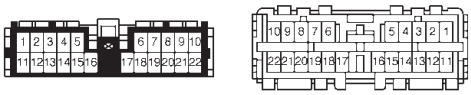		
H-25	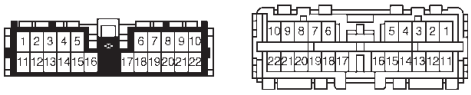		

Part Location (LHD model)

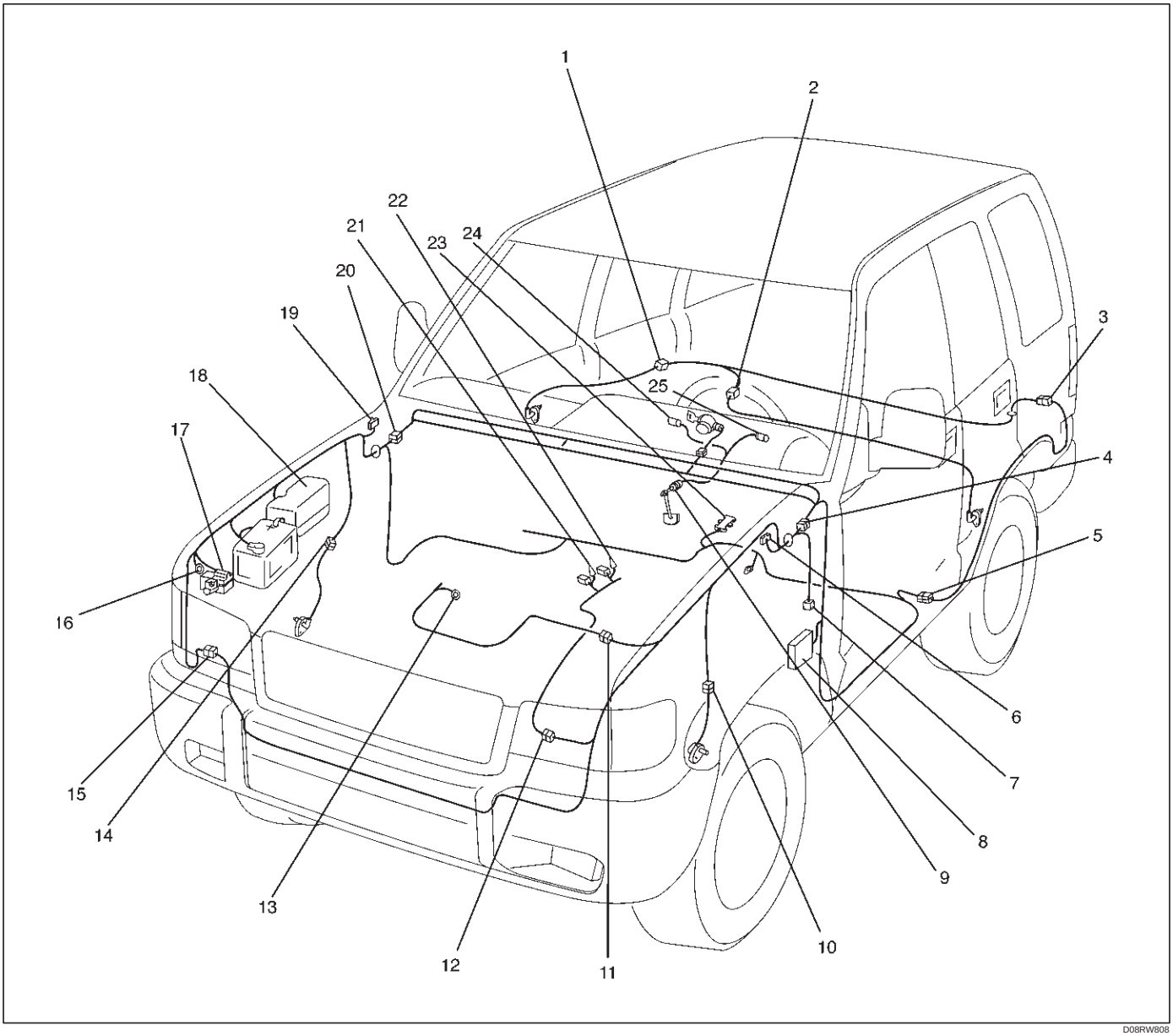

D08RW808

Legend

(1) F–2
(2) F–3
(3) H–33
(4) H–7, H–8, H–25
(5) H–46
(6) C–16
(7) C–63
(8) Fuse Box
(9) B–13 or B–14
(10) C–13
(11) H–5
(12) H–10, H–11
(13) E–30
(14) C–41
(15) H–42
(16) C–85
(17) C–4 (EHCU)
(18) Relay & Fuse Box
(19) C–39
(20) H–12, H–13, H–15, H–16
(21) E–47, E–48, M–1
(22) E–42, E–43, M–8
(23) B–25
(24) I–10
(25) I–9

Circuit Diagram (RHD model / 6VD1 and 4JG2)

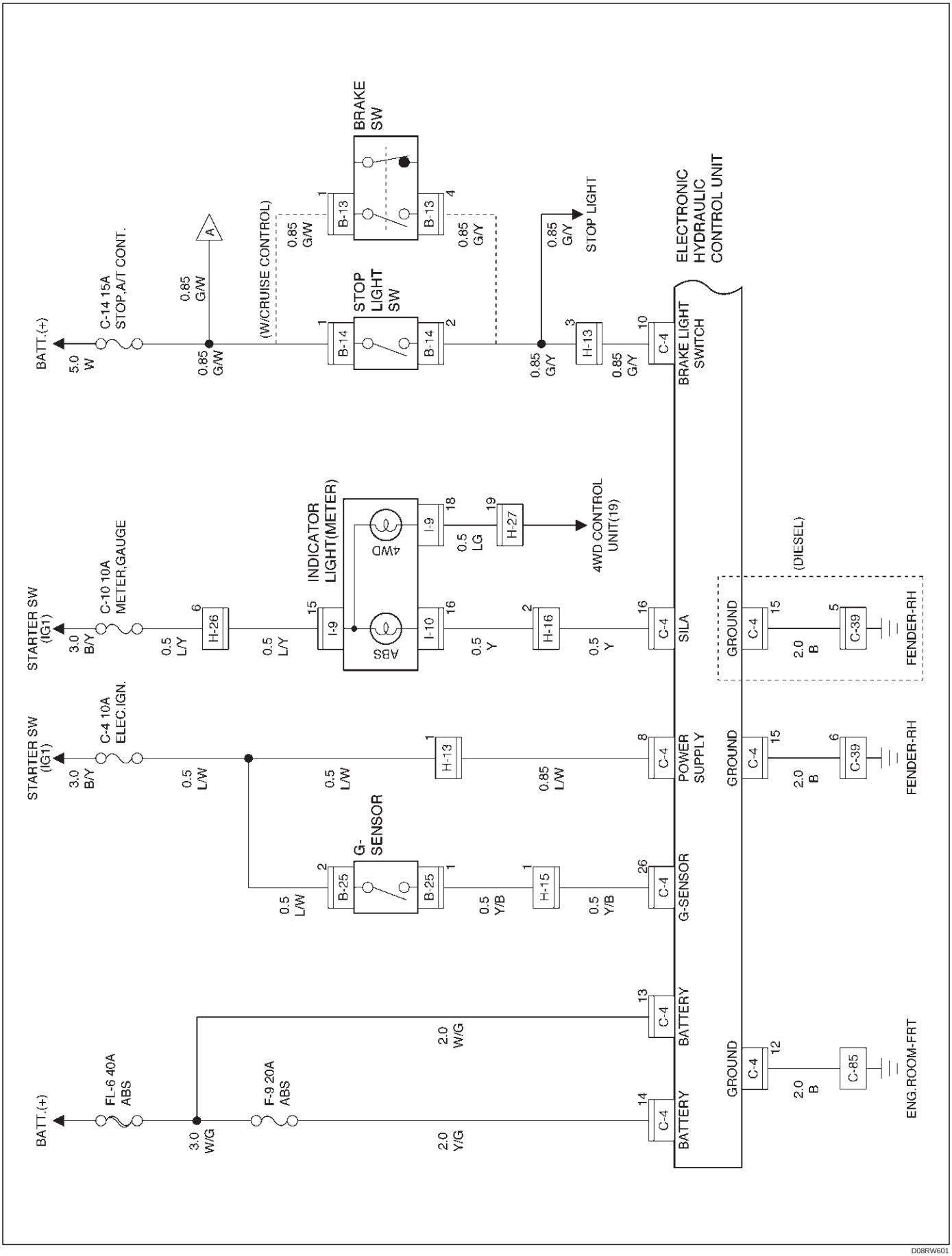

D08RW601

Circuit Diagram (RHD model / 4JG2)

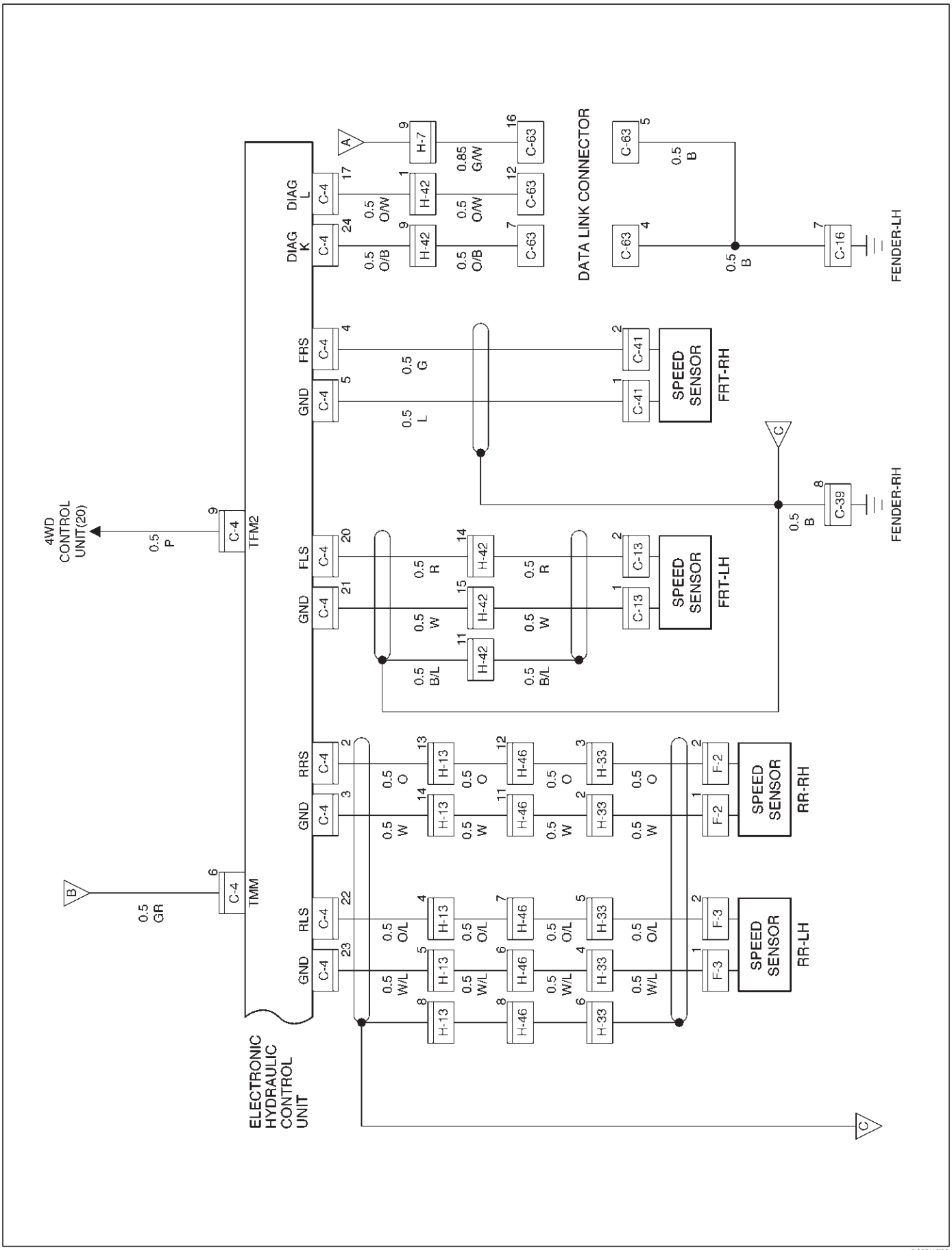

D08RW788

Circuit Diagram (RHD model / 4JG2)

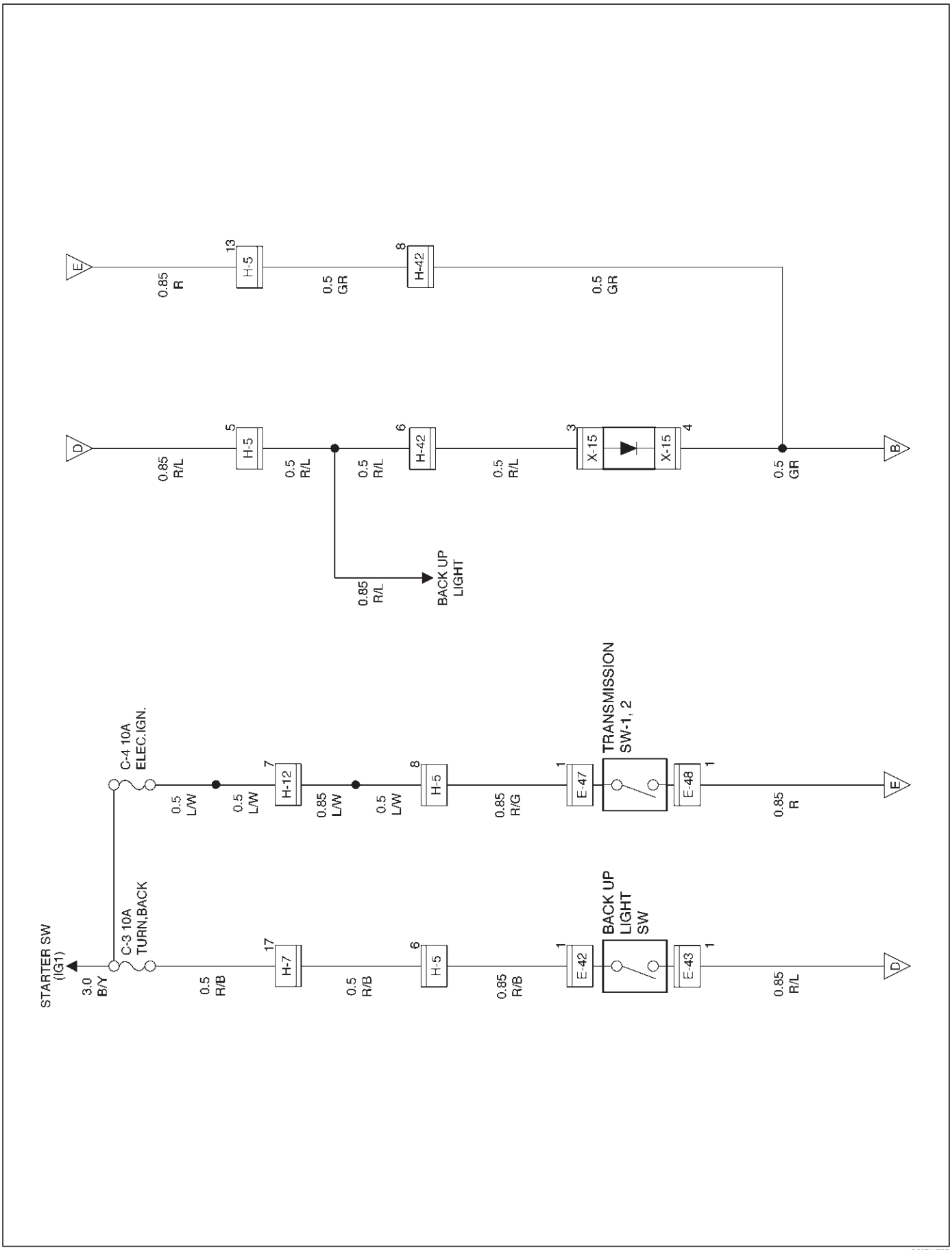

D08RW787

Circuit Diagram (RHD model / 6VD1)

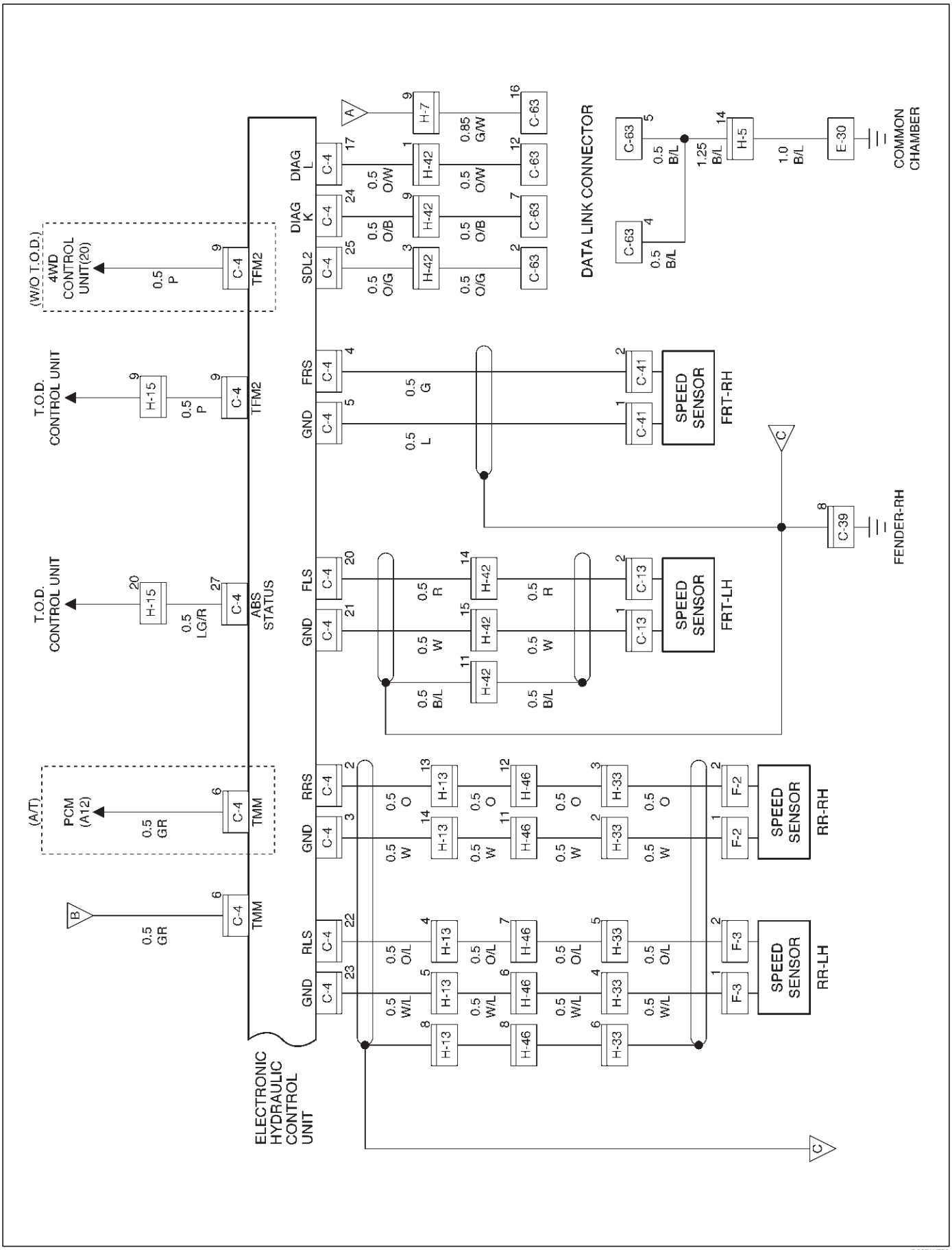

D08RW786

Circuit Diagram (RHD model / 6VD1)

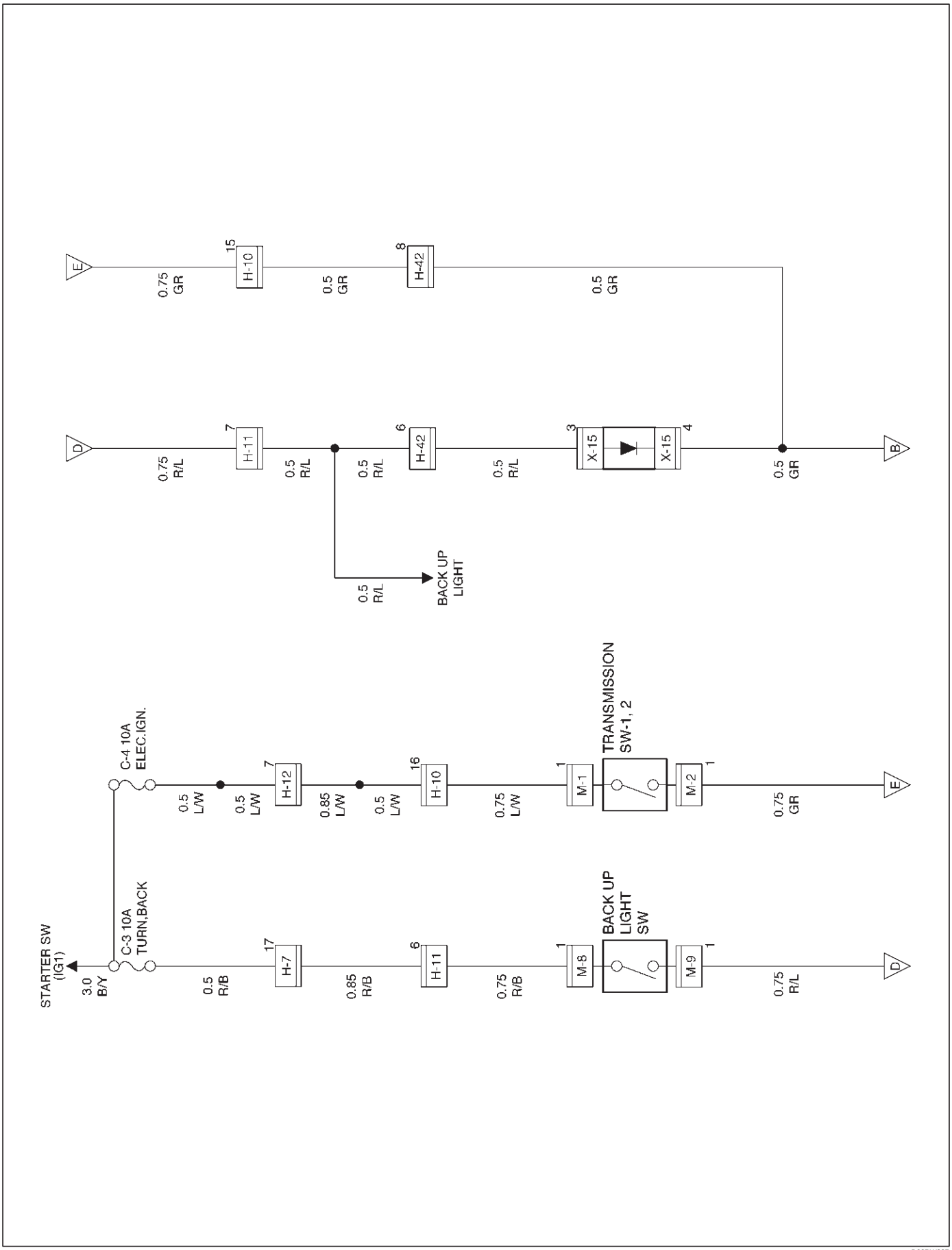

D08RW827

Circuit Diagram (RHD model / 6VE1 and 4JX1)

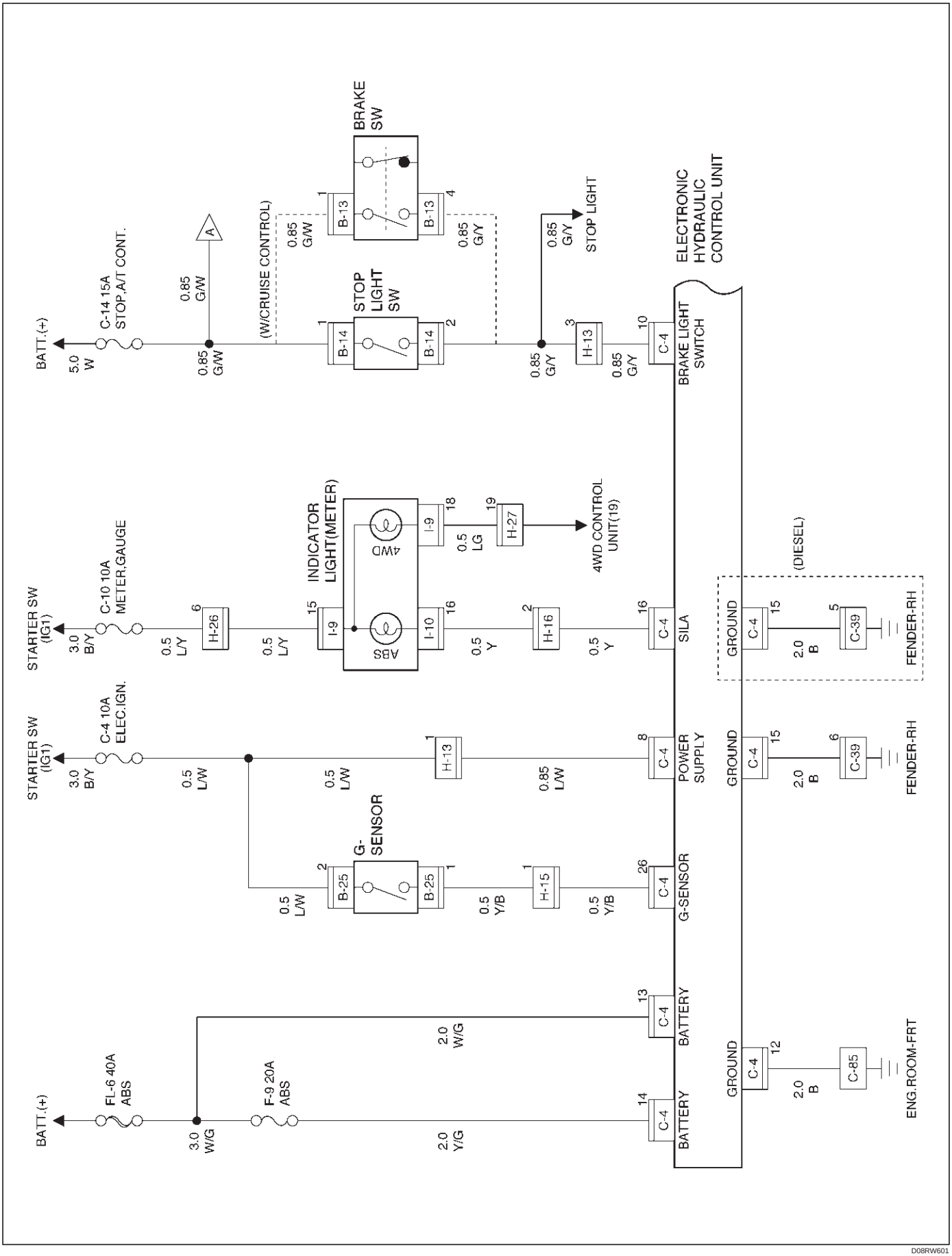

D08RW601

Circuit Diagram (RHD model / 4JX1)

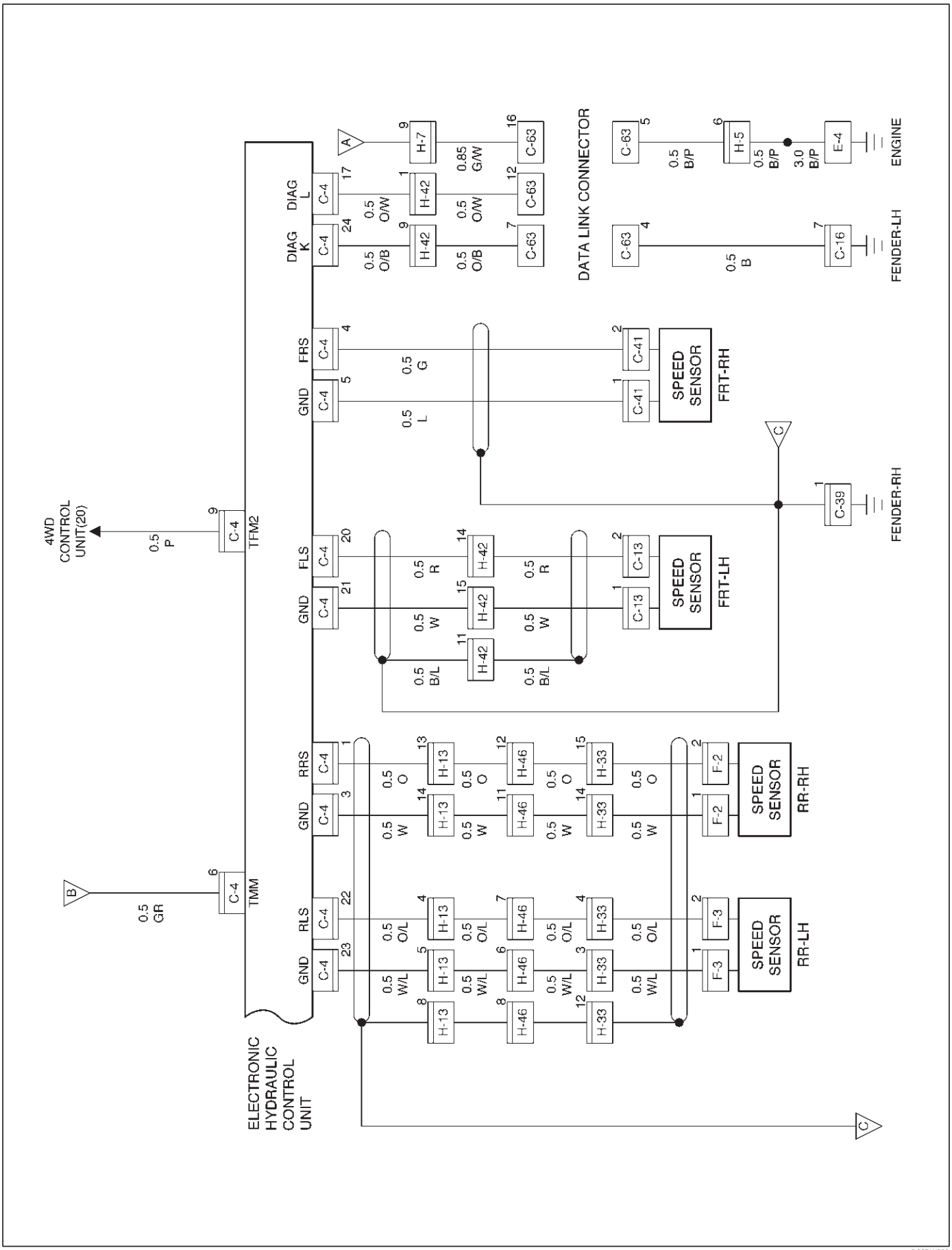

D08RW600

Circuit Diagram (RHD model / 4JX1)

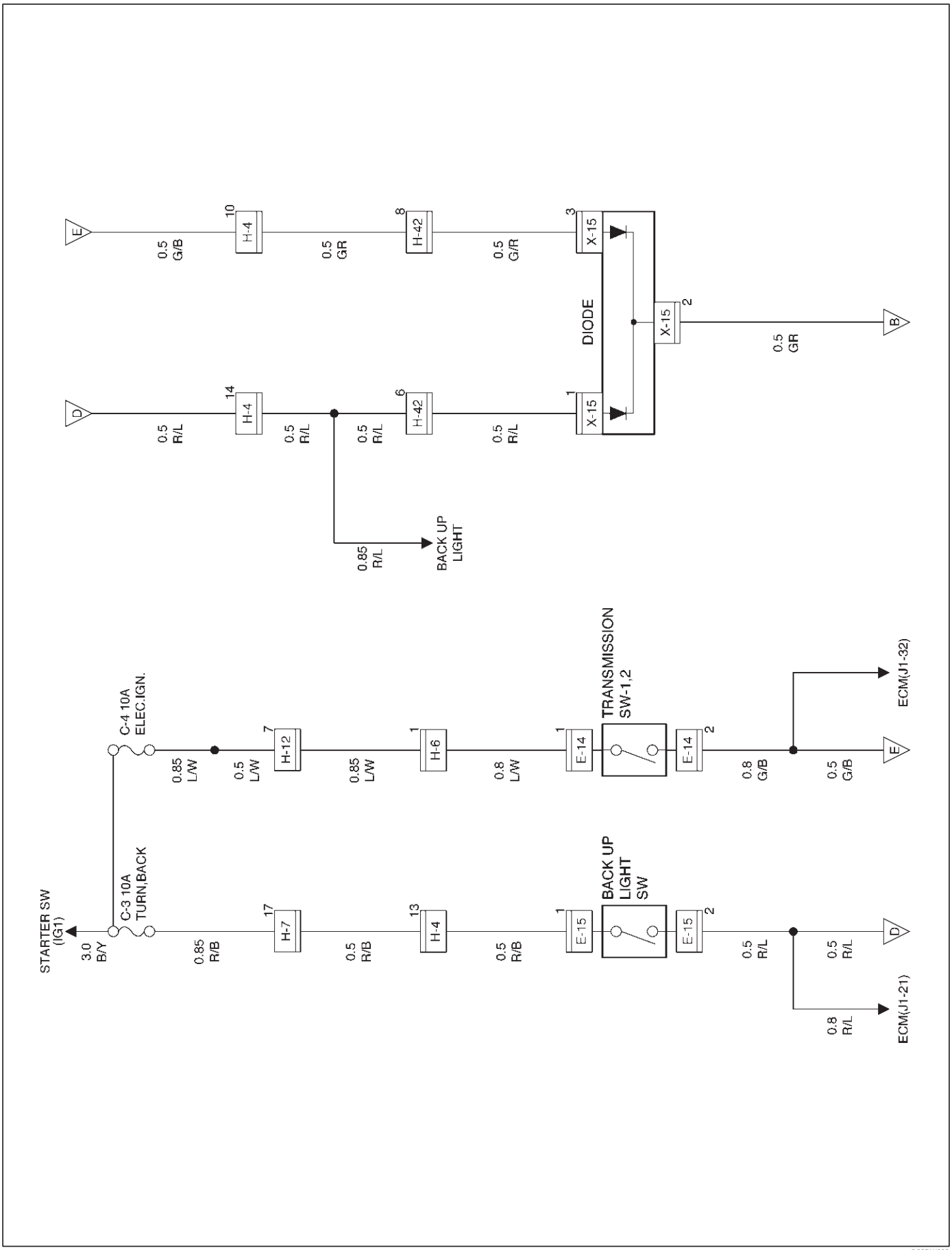

D08RW602

Circuit Diagram (RHD model / 6VE1)

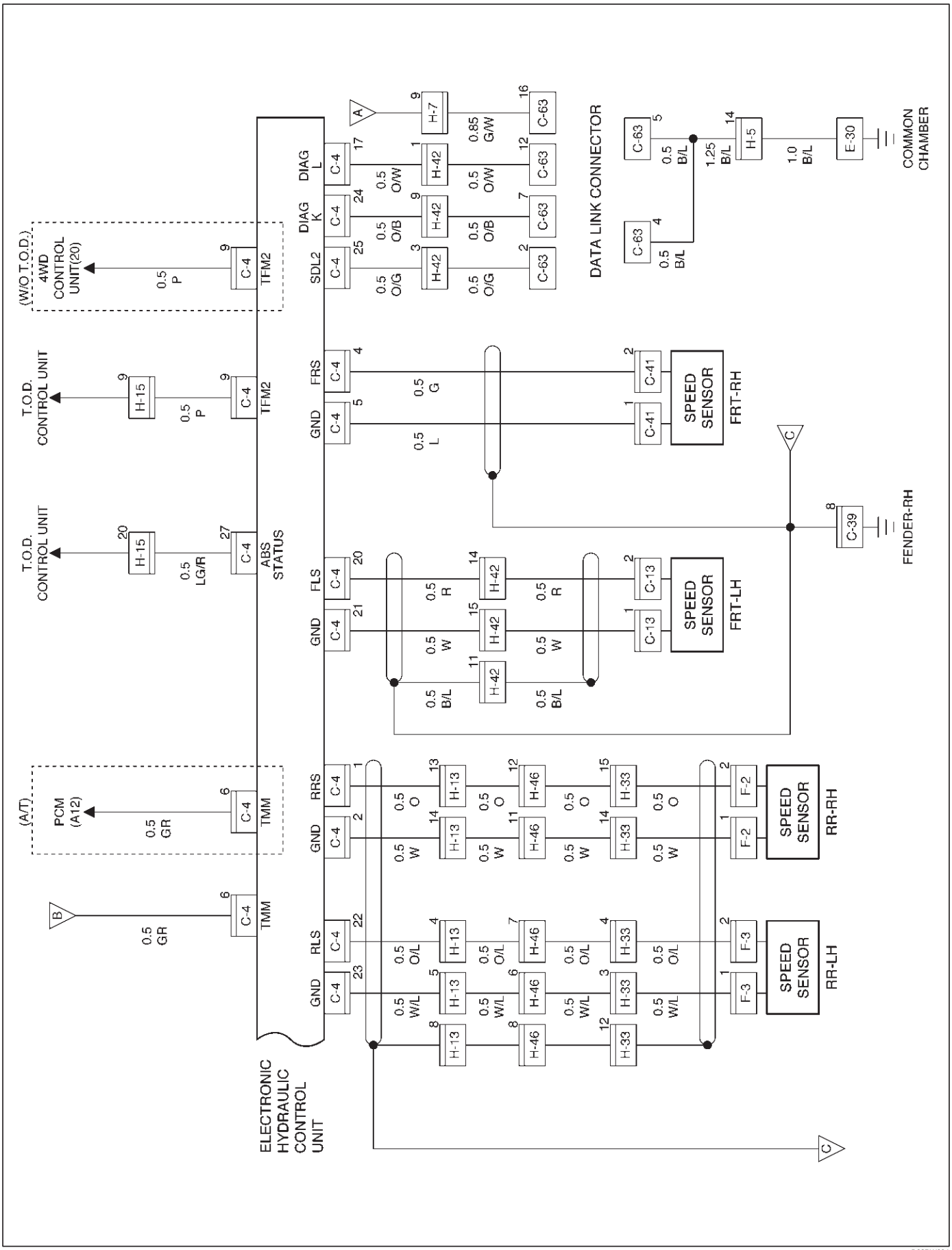

D08RW604

Circuit Diagram (RHD model / 6VE1)

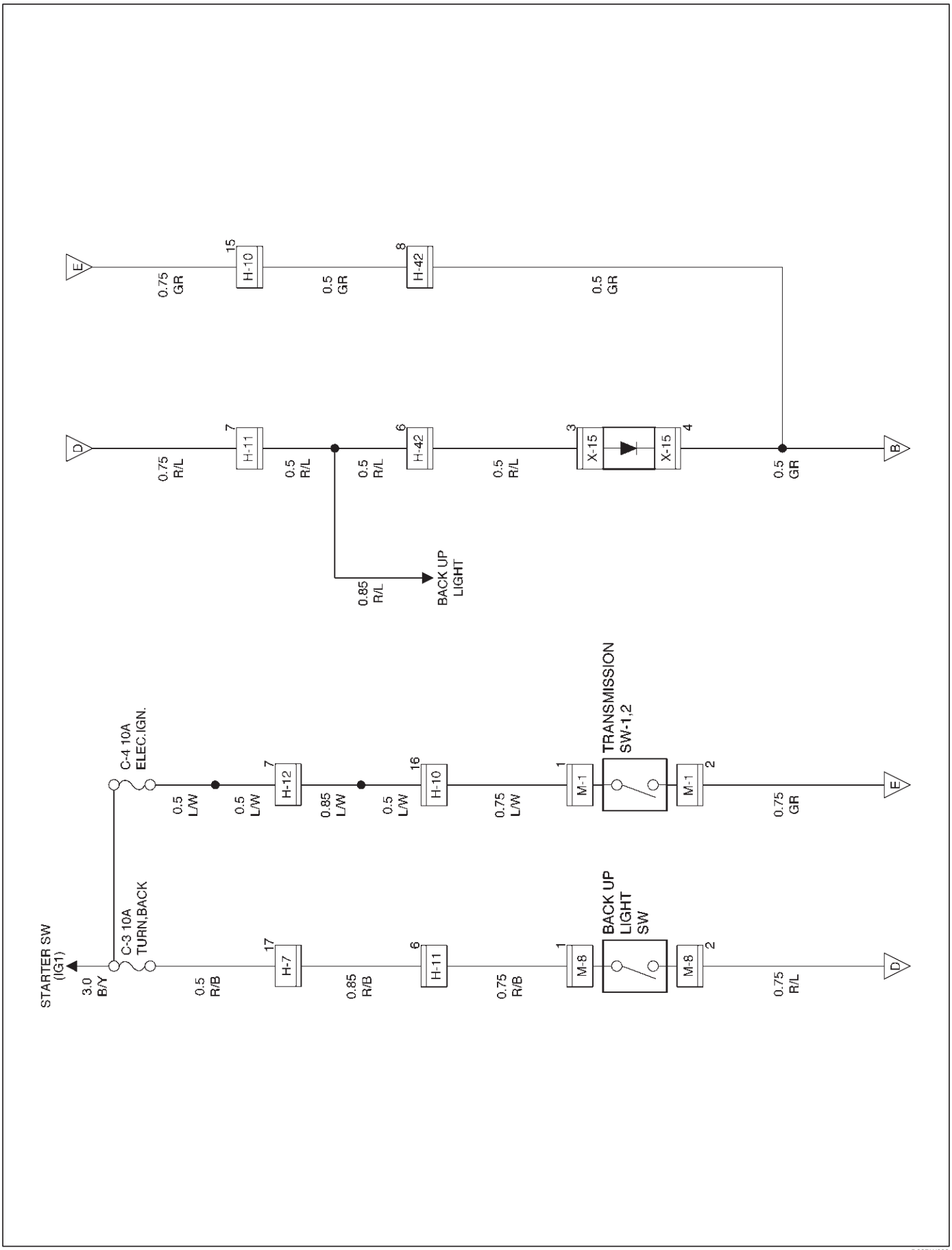

D08RW603

Connector List (RHD model)

No.	Connector face	No.	Connector face
B-13		C-85	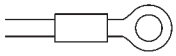
B-14		E-4	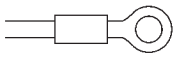
B-25		E-14	
C-4	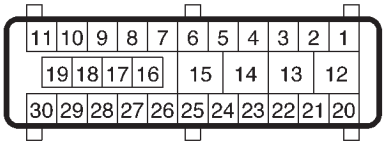	E-15	
C-13	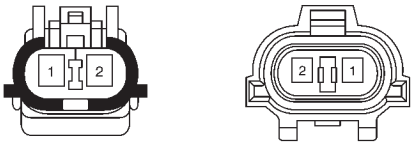	E-30	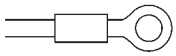
C-16		E-42	
C-39		E-43	
C-41	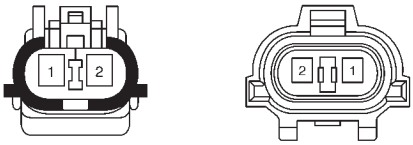	E-47	
C-63	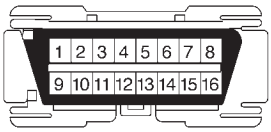	E-48	

No.	Connector face	No.	Connector face
F-2	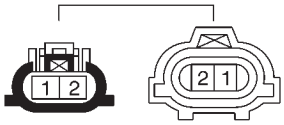	H-13	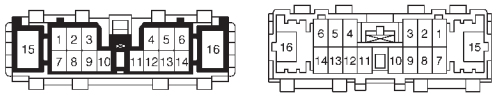
F-3		H-15	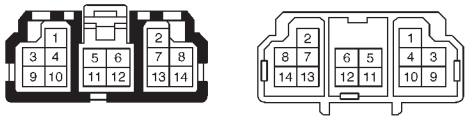
H-4	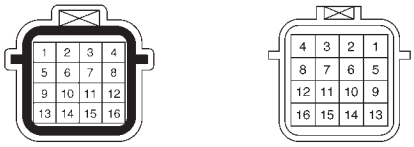	H-16	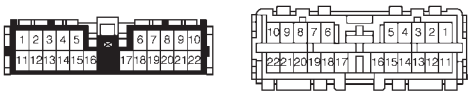
H-5	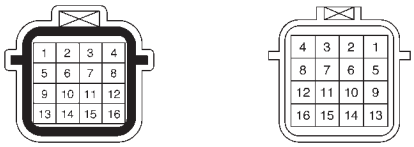	H-26	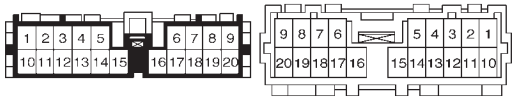
H-6	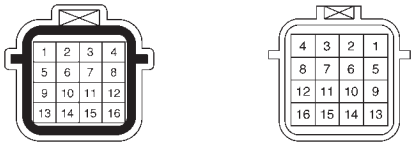	H-27	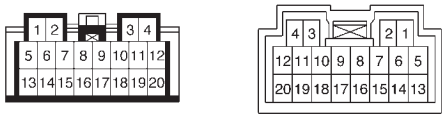
H-7	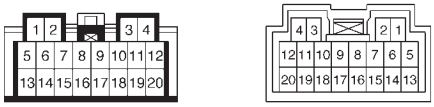	H-33	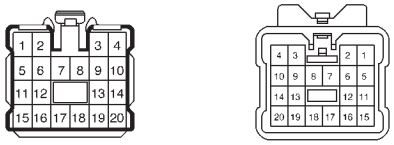
H-10	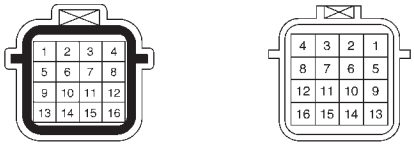	H-41	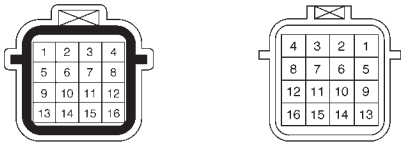
H-11	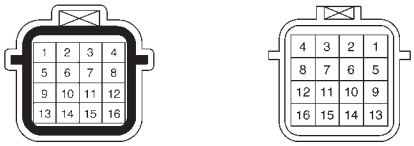	H-42	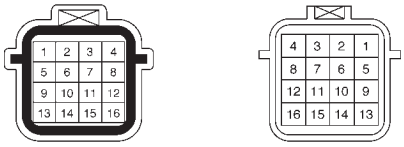
H-12	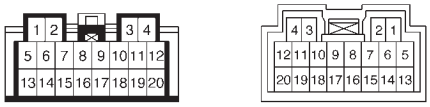	H-46	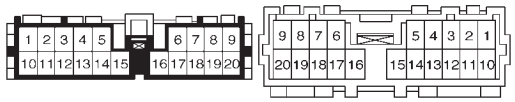

No.	Connector face	No.	Connector face
I-9	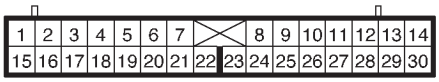		
I-10	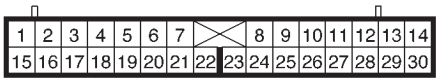		
M-1			
M-8			
X-15	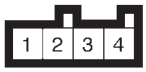		

Part Location (RHD model)

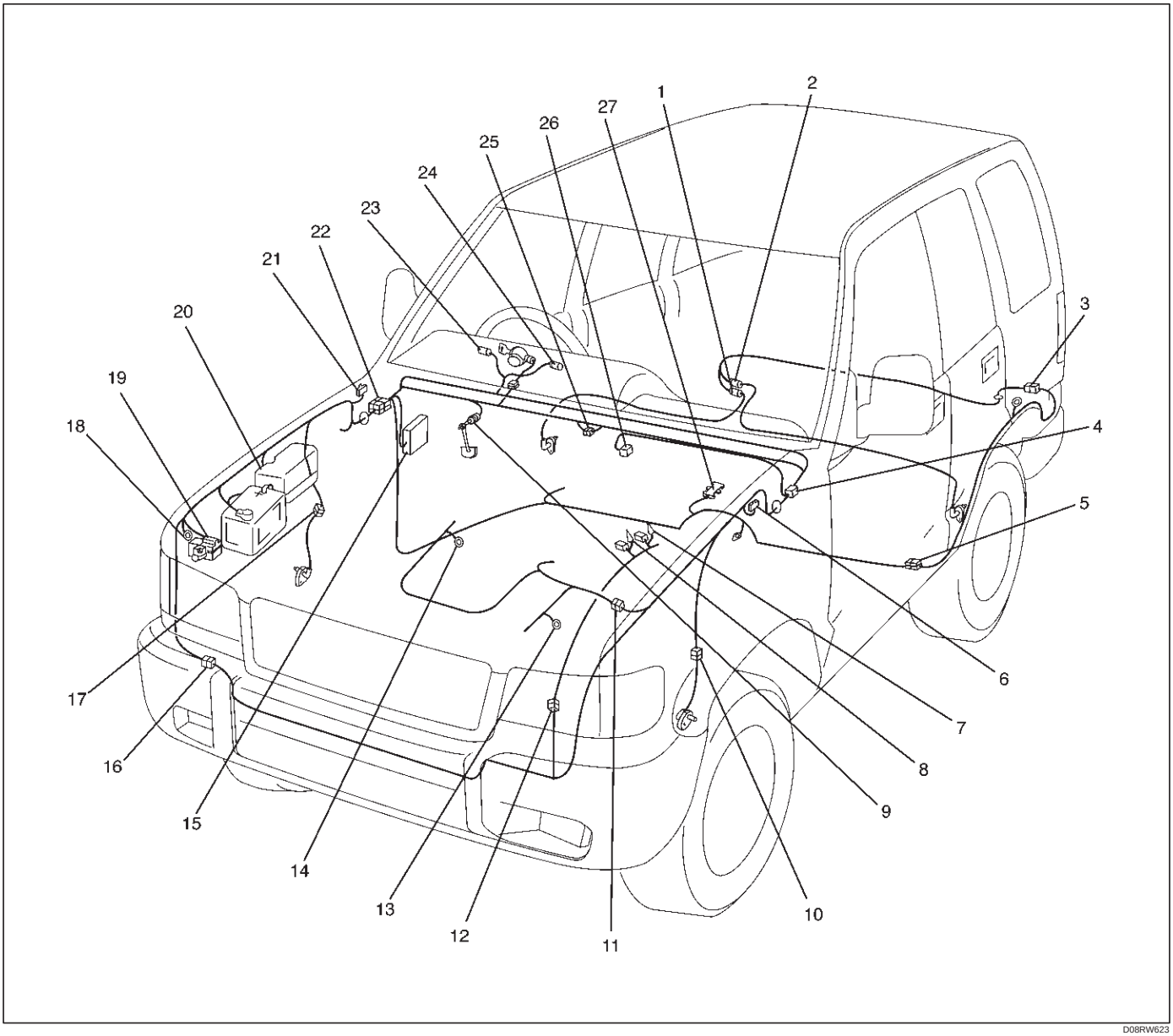

Legend

(1) F–2
(2) F–3
(3) H–33
(4) H–7
(5) H–46
(6) C–16
(7) E–42, E–43, M–8
(8) E–47, E–48, M–1
(9) B–13 or B–14
(10) C–13
(11) H–4, H–5, H–6
(12) H–10, H–11
(13) E–4 (4JX1)
(14) E–30 (4GJ2, 6VD1/6VE1)
(15) Fuse Box
(16) H–42
(17) C–41
(18) C–85
(19) C–4 (EHCU)
(20) Relay & Fuse Box
(21) C–39
(22) H–13, H–15, H–16, H–26, H–27
(23) I–10
(24) I–9
(25) H–12
(26) C–63
(27) B–25

Symptom Diagnosis

The symptoms that cannot be indicated by the warning light can be divided in the following five categories:

1. ABS works frequently but vehicle does not decelerate.
2. Uneven braking occurs while ABS works.
3. The wheels lock during braking.
4. Brake pedal feel is abnormal.
5. Braking sound (from EHCU) is heard while not braking.

These are all attributable to problems which cannot be detected by EHCU self-diagnosis. Use the customer complaint and a test to determine which symptom is present. Then follow the appropriate flow chart listed below.

No.	Symptom	Diagnostic Flow Charts	
		Without TECH 2	With TECH 2
1	ABS works frequently but vehicle does not decelerate.	Chart A–1	Chart TA–1
2	Uneven braking occurs while ABS works.	Chart A–2	—
3	The wheels are locked.	Chart A–3	Chart TA–3
4	Brake pedal feel is abnormal.	Chart A–4	—
5	Braking sound (from EHCU) is heard while not braking.	Chart A–5	Chart TA–5

Chart A–1 ABS Works Frequently But Vehicle Does Not Decelerate

Step	Action	Yes	No
1	1. Turn key off. 2. G Sensor connector and EHCU connector disconnected. Is there continuity between EHCU terminals 26 and 8?	Go to Step 2	Go to Step 3
2	Connect EHCU connector. Is there continuity between the G sensor and the EHCU?	Go to Step 3	Repair circuit. Go to Step 1
3	Is the G sensor normal? (Refer to chart B-5)	Go to Step 4	Replace G sensor. Go to Step 11
4	Is braking force distribution normal between the front and rear of the vehicle?	Go to Step 5	Repair brake parts. Go to Step 11
5	Are axle parts installed normally?	Go to Step 6	Repair axle parts. Go to Step 11
6	Is there play in each wheel speed sensor?	Repair wheel speed sensor. Go to Step 11	Go to Step 7
7	Is there damage, or powered iron sticking to each wheel speed sensor/sensor ring?	Replace sensor or sensor ring. Go to Step 11	Go to Step 8
8	Is the output of each wheel speed sensor normal? (Refer to chart C-1 or TC-1)	Go to Step 9	Replace wheel speed sensor or repair harness. Go to Step 11
9	Is the input of transmission normal? (Refer to chart C-2 or TC-2)	Go to Step 10	Replace switch or repair harness. Go to Step 11

Step	Action	Yes	No
10	Is the input of 4WD controller normal?	Go to Step 11	Replace controller or repair harness. Go to Step 11
11	Reconnect all components and ensure all components are properly mounted. Was this step finished?	Repeat the “Basic diagnostic flow chart.”	Go to Step 11

Chart TA-1 ABS Works Frequently But Vehicle Does Not Decelerate (Use TECH 2)

Step	Action	Yes	No
1	1. Connect TECH 2. 2. Make sure of the output conditions of each wheel speed sensor by mode “F1: Data Display”. Is the output of each sensor normal?	Go to Step 2	Replace wheel speed sensor. Go to Step 3
2	Return to Chart A-1. Was the Chart A-1 finished?	Go to Step 3	Go to Step 2
3	Reconnect all components, ensure all components are properly mounted. Was this step finished?	Repeat the “Basic diagnostic flow chart.”	Go to Step 3

Chart A-2 Uneven Braking Occurs While ABS Works

Step	Action	Yes	No
1	Is there play in each sensor?	Repair. Go to Step 5	Go to Step 2
2	Is there damage or powdered iron sticking to each sensor/sensor ring?	Repair. Go to Step 5	Go to Step 3
3	Is the output of each sensor normal? (Refer to chart C-1 or TC-1)	Go to Step 4	Replace sensor or repair harness. Go to Step 5
4	Is brake pipe connecting order correct?	Replace EHCU. Go to Step 5	Reconnect brake pipe correctly. Go to Step 5
5	Reconnect all components, ensure all components are properly mounted. Was this step finished?	Repeat the “Basic diagnostic flow chart.”	Go to Step 5

Chart A-3, TA-3 The Wheels Are Locked

Step	Action	Yes	No
1	Is ABS working?	Go to Step 2	Go to Step 6
2	Is vehicle speed under 10 km/h (6mph)?	Normal.	Go to Step 3
3	Is sensor output normal? (Chart C-1 or TC-1)	Go to Step 4	Replace sensor or repair harness. Go to Step 9
4	Is transmission input normal? (Chart C-2 or TC-2)	Go to Step 5	Replace SW or repair harness. Go to Step 9

Step	Action	Yes	No
5	Is front 4WD controller normal?	Replace EHCU. Go to Step 9	Replace 4WD controller or repair harness. Go to Step 9
6	Is transmission input normal? (Chart C-2 or TC-2)	Go to Step 7	Replace SW or repair harness Go to Step 9
7	Is front 4WD controller normal?	Go to Step 8	Replace 4WD controller or repair harness. Go to Step 9
8	Is hydraulic unit grounded properly?	Replace EHCU. Go to Step 9	Correct. Go to Step 9
9	Reconnect all components, ensure all components are properly mounted. Was this step finished?	Repeat the “Basic diagnostic flow chart.”	Go to Step 9

Chart A-4 Brake Pedal Feed Is Abnormal

Step	Action	Yes	No
1	Is the stop light actuated when the brake pedal is depressed?	Go to Step 2	Go to Step 3
2	1. Turn the ignition switch off. 2. Disconnected EHCU connector. 3. Measure voltage between the EHCU connector terminal 10 and 15 when brake pedal is depressed. Is the voltage equal to the battery voltage?	Go to Step 4	Harness NG between brake SW and EHCU. Go to Step 7
3	Is stop light fuse C-14 normal?	Go to Step 5	Replace fuse C-14. Go to Step 7
4	Is there continuity between EHCU connector terminals, 12 and 15 to body ground?	Go to Step 6	Repair body grounded harness. Go to Step 7
5	Is the brake SW normal?	Repair stop light harness. Go to Step 7	Replace brake SW. Go to Step 7
6	Is the check harness/connector for suspended disconnection?	Hydraulic system leakage or air entry (Refer to servicing “Leakage or brake fluid”) Go to Step 7	Repair harness. Go to Step 7
7	Reconnect all components and ensure all components are properly mounted. Was this step finished?	Repeat the “Basic diagnostic flow chart.”	Go to Step 7

Chart A-5, TA-5 Braking Sound (From EHCU) Is Heard While Not Braking

Step	Action	Yes	No
1	Is this the first time the vehicle is being driven after starting the engine?	It is self checking sound. Normal.	Go to Step 2
2	Is vehicle speed under 10 km/h (6 mph)?	It is self checking sound. Normal.	Go to Step 3
3	Check for the following condition: ● At the time of shift down or clutch operation. ● At the time of low μ drive (ice or snow road) or rough road drive. ● At the time of high-speed turn. ● At the time of passing curb. ● At the time of operating electrical equipment switches. ● At the time of racing the engine (over 5000 rpm). Did it occur under any one condition above?	ABS may sometime be actuated even when brake pedal is not applied.	Go to Step 4
4	Is there play in each sensor/wheel speed sensor rings?	Go to Step 5	Repair. Go to Step 7
5	Damage or powdered iron sticking to each sensor/wheel speed sensor ring?	Go to Step 6	Repair. Go to Step 7
6	Is each sensor output normal?(Refer to chart C-1 or TC-1).	Check harness/ connector for suspected disconnection. If no disconnection is found, replace EHCU. Go to Step 7	Repair. Go to Step 7
7	Reconnect all components, ensure all components are properly mounted. Was this step finished?	Repeat the “Basic diagnostic flow chart.”	Go to Step 7

Diagnostic Trouble Codes

Choose and trace an appropriate flowchart by the numbers listed below to find fault and repair.

Code	Item	Diagnosis	Chart No.
12	Start Code	Normal	—
14	EHCU Function	Abnormality in input/output, operational and control circuits	B-2
15	Power Voltage Drop		B-3
16	CLASS–2 Communication Line Abnormality		B-4
21	G-sensor	Wiring disconnection	B-5
23	Transmission Input	Input abnormality	B-6
24	Transfer Monitor		B-7
32	Motor & Motor Relay	Shorted or disconnected coil	B-8
35	Valve Relay	Shorted or disconnected coil/wiring	B-9
41	FL Holding Solenoid Valve	Shorted or disconnected coil/wiring	B-10
42	FL Decompression Solenoid Valve	Shorted or disconnected coil/wiring	B-11
43	FR Holding Solenoid Valve	Shorted or disconnected coil/wiring	B-12
44	FR Decompression Solenoid Valve	Shorted or disconnected coil/wiring	B-13
45	Rear Holding Solenoid Valve	Shorted or disconnected coil/wiring	B-14
46	Rear Decompression Solenoid Valve	Shorted or disconnected coil/wiring	B-15
51	FL Wheel Speed Sensor	Disconnected coil/wiring	B-16
52	FR Wheel Speed Sensor	Disconnected coil/wiring	B-17
53	RL Wheel Speed Sensor	Disconnected coil/wiring	B-18
54	RR Wheel Speed Sensor	Disconnected coil/wiring	B-19
61	FL Wheel Speed Sensor	Shorted coil/wiring	B-20
62	FR Wheel Speed Sensor	Shorted coil/wiring	B-21
63	RL Wheel Speed Sensor	Shorted coil/wiring	B-22
64	RR Wheel Speed Sensor	Shorted coil/wiring	B-23
65	Sensor Signal Input	Wrong number of teeth	B-24

Diagnosis By “ABS” Warning Light Illumination Pattern

In the event that there is abnormality in the “ABS” warning light illumination pattern while the key is in the ON position or if the warning light is actuated during driving, trouble should be diagnosed on a illumination pattern basis as follows:

No.	Condition	“ABS” Warning Light Illumination Pattern	Diagnostic
1	Warning light is actuated normally	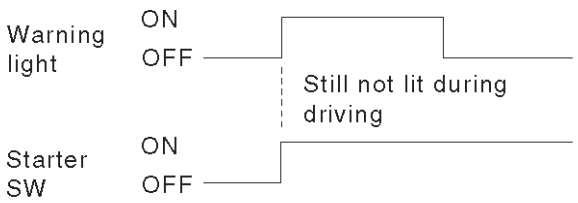	Normal
2	Warning light is not lit	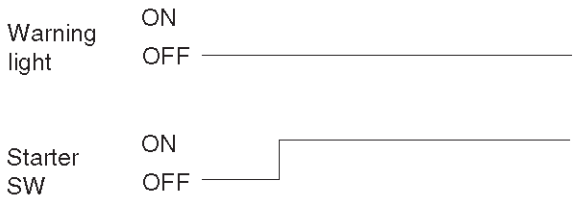	Warning light lighting circuit trouble→Go to Chart B-1
3	Warning light remains ON	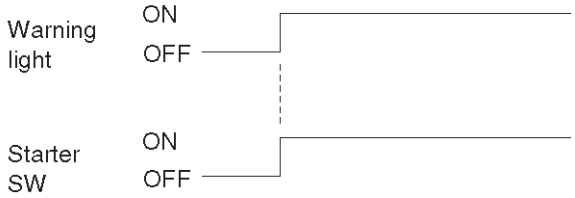	Diagnostic trouble codes are stored. Display diagnostic trouble codes and diagnose on a code basis according to the flow charts.
4	Warning light is actuated while driving	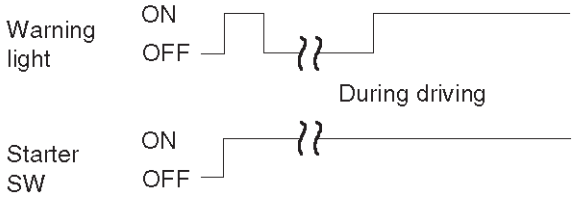	Diagnostic trouble codes are stored. Display diagnostic trouble codes and diagnose on a code basis according to the flow charts.

Diagnostic Trouble Codes (DTCs)

When the warning light in the meter remains ON, the EHCU stores the fault identification and disables the ABS.

1. How to display and erase DTCs:

NOTE:

- If DTCs are not displayed, harness C-4 connector terminal 30 and I-10 connector terminal 2 may be disconnected. Repair the harness and try DTC display again.
- DTCs can be displayed also by TECH 2. Select mode “F0: Diagnostic Trouble Codes” from Application Menu.

1. How to start DTC display:
   - Confirm that the vehicle has come to a complete stop (with the wheels standing still) and that the brake pedal is not depressed. (Unless these two conditions are satisfied, DTC display cannot be started.)
   - With IGN OFF, connect #12 terminal with #4 terminal or # 5 terminal (GND) . Then turn IGN ON.

The DLC is located behind the center console

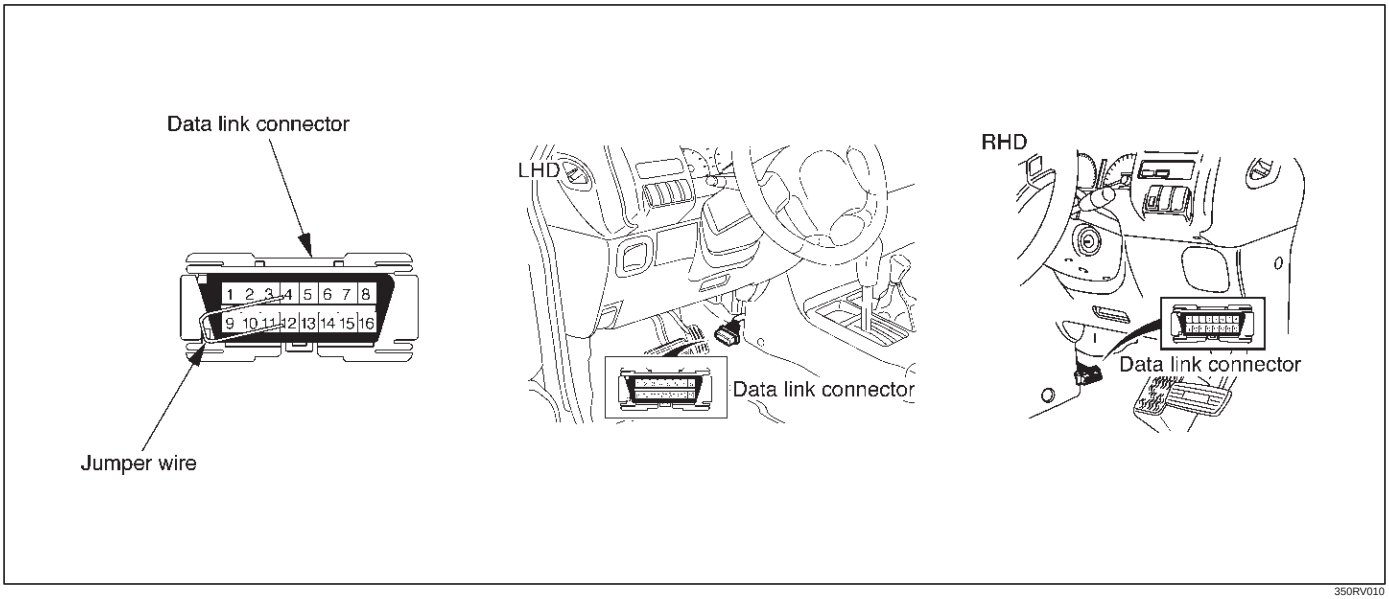

350RV010

- Keep #12 terminal connected with #4 terminal or # 5 terminal (GND) during DTC display. (If #12 terminal is separated from #4 terminal or # 5 terminal (GND) during display, display will stop.)

2. DTC display:
   - DTC is displayed by blinking warning light.
   - Double-digit display.
   - First, normal DTC 12 is displayed three times and then any other DTCs are displayed three times. (If no other DTCs have been stored, the display of DTC 12 will be repeated.)
3. How to erase code:
   - Conduct brake switch ON/OFF operation 6 or more times within 3 seconds of self-diagnosis startup.
   - The code cannot be erased if more than 3 seconds have passed since self-diagnosis startup, or if self-diagnosis has started with brake switched on (brake pedal depressed).

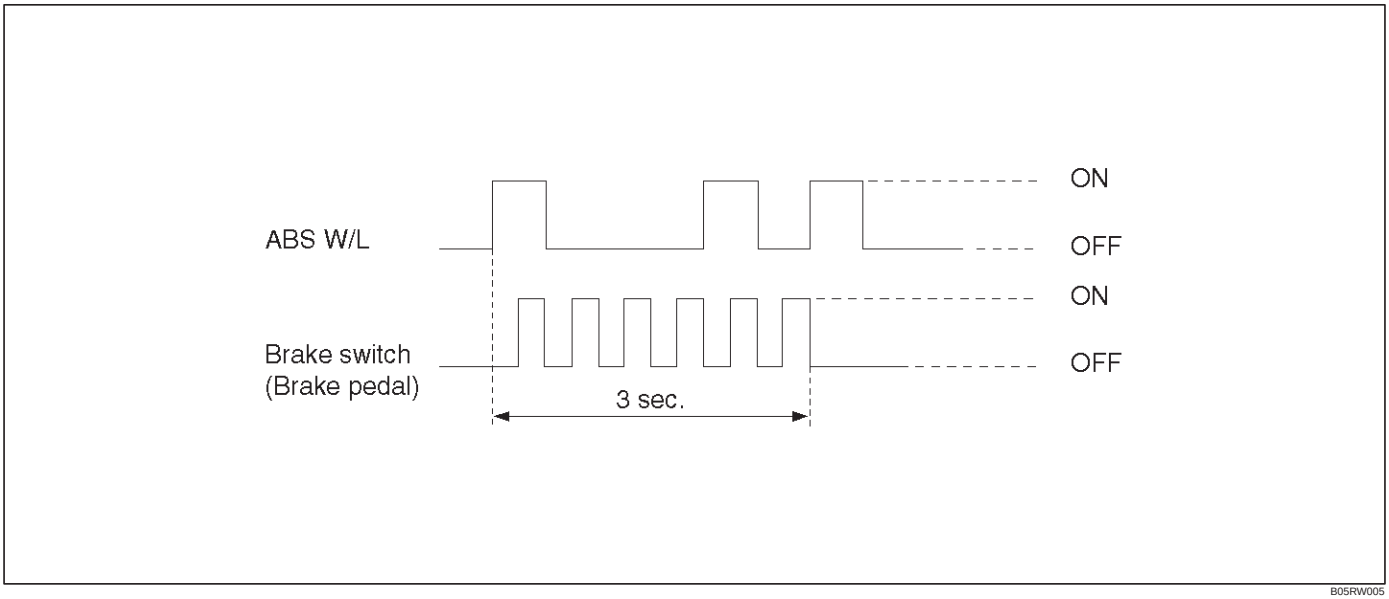

B05RW005

4. Notes
   - If the following should occurs during Diagnostic Trouble Code (DTC) display the display will be discontinued. After initial check, the status that is under the control of ABS will be returned :
     - The vehicle starts (The wheels turn) or the brake pedal is depressed.
   - Up to 3 different codes can be stored.
   - If the ABS should turn OFF due to an intermittent defect, the system will be restored at the next key cycle, if the initial check finds no abnormality (when IGN is switched from OFF to ON).
5. An example of DTC display

   Display of DTC 23

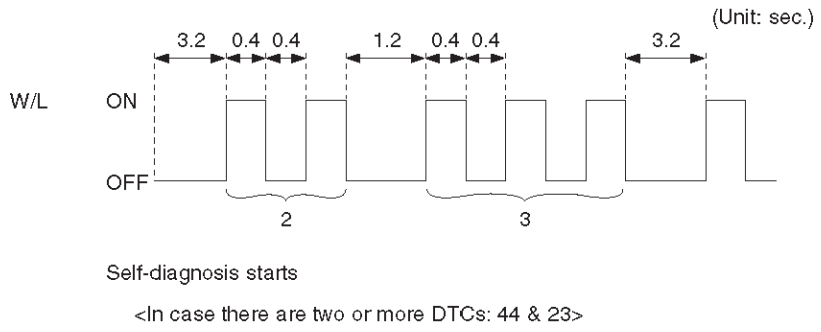

B05RW006

After displaying DTC 12 three times, one DTC after another is displayed, starting with the most recent one. (However, display is discontinued after about 5 minutes.)

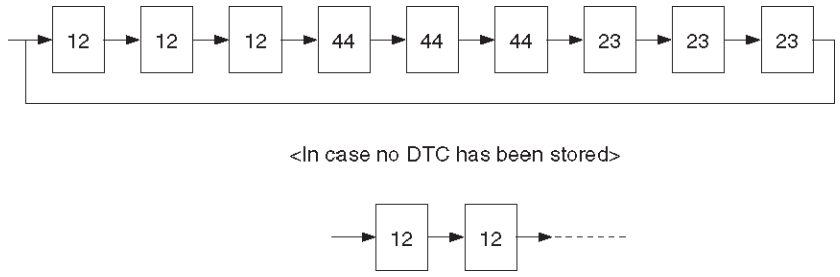

B05RS005

The DTC 12 is displayed repeatedly. (display is discontinued after about 5 minutes)

Chart B-1 With the key in the ON position (Before starting the engine). Warning light (W/L) is not activated.

Step	Action	Yes	No
1	Is W/L fuse C-10 disconnected?	Replace fuse. Go to Step 5	Go to Step 2
2	Is W/L burnt out?	Replace W/L bulb. Go to Step 5	Go to Step 3
3	1. Turn the key off. 2. Disconnect EHCU connector. 3. Turn the key ON. 4. Measure the voltage between EHCU connector terminal 13 and 14. Is the voltage equal to the battery voltage?	Go to Step 4	Repair harness and connector. Go to Step 5
4	Is there continuity between EHCU connector terminals, 12 and 15 and body ground.	Check harness for suspected disconnection. No fault found: Replace EHCU. Go to Step 5	Repair harness and connector. Go to Step 5
5	Reconnect all components, ensure all components are properly mounted. Was this step finished?	Repeat the “Basic diagnostic flow chart.”	Go to Step 5

Chart B-2 EHCU Abnormality (DTC 14)

Step	Action	Yes	No
1	1. Turn the key off. 2. Disconnect the EHCU connector. 3. Inspect EHCU ground. Is there resistance between the EHCU connector terminals, 12 and 15 and body ground?	Go to Step 2	Repair the body ground harness. Go to Step 3
2	1. Turn the key off, connect the EHCU. 2. Erase the trouble code. 3. Turn Ignition off, then on, to perform system self-check. 4. If warning light remains on, display trouble codes once again. Is the check trouble code 14?	Replace EHCU. Go to Step 3	Inspect in accordance with the DTC displayed.
3	1. Reconnect all components and ensure all components are properly mounted. 2. Clear diagnostic trouble code. Was this step finished?	Repeat the “Basic diagnostic flow chart.”	Go to Step 3

Chart B-3 Power Voltage Drop (DTC 15)

Step	Action	Yes	No
1	Is the battery voltage normal? (Battery capacity check)	Go to Step 2	Charge or replace battery. Go to Step 2
2	1. Turn the key off. 2. Disconnect EHCU connector. 3. Turn the key on. Is the voltage between EHCU connector terminals 8 and 15, higher than 10V?	Check harness connector for suspected disconnection. Fault found: Repair, and perform system self-check. No fault found: replace EHCU. Go to Step 3	Repair harness or connector. Go to Step 3
3	1. Reconnect all components, ensure all components are properly mounted. 2. Clear diagnostic trouble code. Was this step finished?	Repeat the “Basic diagnostic flow chart.”	Go to Step 3

Chart B-4 CLASS-2 Communication Line Abnormality (DTC 16)

Step	Action	Yes	No
1	1. Turn the key off. 2. Disconnect EHCU and PCM connector. Is there continuity between EHCU connector terminals 25 and ground?	Go to Step 2	Repair harness or connector. Go to Step 3
2	1. Connect EHCU connector. 2. Clear diagnostic trouble code. 3. Turn the key on. Is the diagnostic trouble code 16 shown on the displayed?	Check the PCM harness. Refer to 6E section. Go to Step 3	Replace EHCU. Go to Step 3
3	1. Reconnect all components, ensure all components are properly mounted. 2. Clear diagnostic trouble code. Was this step finished?	Repeat the “Basic diagnostic flow chart.”	Go to Step 3

Chart B-5 G-Sensor Circuit (DTC 21)

Step	Action	Yes	No
1	Vehicle placed horizontal. Is the resistance between the G sensor connector terminals 1 and 2 within 4.0-6.0 kΩ?	Check harness connector for short. Fault found : Repair , and perform system self-check. No fault found : replace EHCU. Go to Step 3	Go to Step 2
2	Is the bracket installed horizontally?	Go to Step 4	Repair or replace bracket. Go to Step 4
3	Remove G sensor. Is the resistance between the G sensor connector terminals 1 and 2 within 1.0-2.0 kΩ when G sensor is horizontal?	Go to Step 4	Replace G sensor. Go to Step 5
4	Measure resistance between G sensor connector terminals 1 and 2 within 4.0-6.0 kΩ when G sensor tilted to 30˚ or more?	Harness between EHCU and G sensor is faulty and short. Repair the harness Go to Step 5	Replace G sensor. Go to Step 5
5	1. Reconnect all components and ensure all components are properly mounted. 2. Clear diagnostic trouble code. Was this step finished?	Repeat the “Basic diagnostic flow chart.”	Go to Step 5

Chart B-6 Abnormal Transmission Input (DTC 23)

Step	Action	Yes	No
1	1. Turn the key off. 2. Disconnect EHCU connector. Is there continuity between EHCU connector terminal 6 to 15 (Gear position-P(A/T), N(M/T))?	Shorted switch harness. Repair switch or harness. Go to Step 6	Go to Step 2
2	Is the vehicle an A/T model?	Go to Step 3	Go to Step 4
3	Turn the key on and measure the voltage between EHCU connector terminal 6 and 15. Is the 6V under when the gear position is L, and R(Battery voltage 12V)?	Go to Step 5	Transmission SW trouble. Disconnected harness. Repair SW and harness. Go to Step 6
4	Turn the key on and measure the voltage between EHCU connector terminal 6 and 15. Is the 9.6V over when the gear position is 1, 2, R(Battery voltage 12V)?	Go to Step 5	Transmission SW trouble. Disconnected harness. Repair SW and harness. Go to Step 6
5	Is there 6.6 to 9.0V when the gear position is 3, 4, 5 and N(M/T) or 2,3,D,N and P(A/T)(Battery voltage 12V)?	Suspected harness/ connector short power source/GND. Suspected shorted transmission SW. Fault found: repair, and perform system self-check. No fault found: replace EHCU. Go to Step 6	Transmission SW trouble. Disconnected harness. Repair SW and harness. Go to Step 6
6	1. Reconnect all components, ensure all components are properly mounted. 2. Clear diagnostic trouble code. Was this step finished?	Repeat the “Basic diagnostic flow chart.”	Go to Step 6

Chart B-7 Transfer Monitor (DTC 24)

Step	Action	Yes	No
1	1. Turn the key off. 2. Disconnect EHCU connector. Is the EHCU connector terminal 9 line normally?	Go to Step 2	Repair Go to Step 3
2	Is the TOD ECU or 4WD controller normal?	Replace EHCU. Go to Step 3	Repair or replace TOD ECU or 4WD contrder. Go to Step 3
3	1. Reconnect all components, ensure all components are properly mounted. 2. Clear diagnostic trouble code. Was this step finished?	Repeat the “Basic diagnostic flow chart.”	Go to Step 3

Chart B-8 EHCU Pump Motor And Motor Relay Circuit (DTC 32)

Step	Action	Yes	No
1	1. Turn the key off. 2. Disconnect EHCU connector. 3. Measure voltage between EHCU connector terminal 13 and body ground. Is the voltage equal to battery voltage?	Go to Step 2	Repair fuse/harness between battery and EHCU connector terminal 13. Go to Step 3
2	Is there continuity between EHCU connector terminal 12 and ground?	Go to Step 3	Repair between EHCU connector terminal 12 and ground. Go to Step 3
3	1. Reconnect all components and ensure all components are properly mounted. 2. Clear diagnostic trouble code. Was this step finished?	Repeat the “Basic diagnostic flow chart.”	Go to Step 3

Chart B-9 EHCU Pump Valve And Valve Relay Circuit (DTC 35)

Step	Action	Yes	No
1	1. Turn the key off. 2. Disconnect EHCU connector. 3. Measure voltage between EHCU connector terminal 14 and body ground. Is the voltage equal to battery voltage?	Replace EHCU. Go to Step 2	Repair fuse and harness EHCU connector terminal 14 and battery. Go to Step 2
2	1. Reconnect all components and ensure all components are properly mounted. 2. Clear diagnostic trouble code. Was this step finished?	Repeat the “Basic diagnostic flow chart.”	Go to Step 2

Chart B-10 FL Isolation Solenoid Valve Abnormality (DTC 41)

Step	Action	Yes	No
1	Was the “EHCU Connector Pin-out Checks” performed?	Go to Step 2	Go to “EHCU Connector Pin-out Checks”.
2	Is the EHCU connector free from damage or corrosion?	Go to Step 3	Repair the connector. Repeat the “Basic Diagnostic Flow Chart”.
3	1. Replace the EHCU. 2. Reconnect all component, ensure all component are properly mounted. Was this step finished?	Repeat the “Basic Diagnostic Flow Chart”.	Go to Step 3

Chart B-11 FL Dump Solenoid Valve Abnormality (DTC 42)

Step	Action	Yes	No
1	Was the “EHCU Connector Pin-out Checks” performed?	Go to Step 2	Go to “EHCU Connector Pin-out Checks”.
2	Is the EHCU connector free from damage or corrosion?	Go to Step 3	Repair the connector. Repeat the “Basic Diagnostic Flow Chart”.
3	1. Replace the EHCU. 2. Reconnect all component, ensure all component are properly mounted. Was this step finished?	Repeat the “Basic Diagnostic Flow Chart”.	Go to Step 3

Chart B-12 FR Isolation Solenoid Valve Abnormality (DTC 43)

Step	Action	Yes	No
1	Was the “EHCU Connector Pin-out Checks” performed?	Go to Step 2	Go to “EHCU Connector Pin-out Checks”.
2	Is the EHCU connector free from damage or corrosion?	Go to Step 3	Repair the connector. Repeat the “Basic Diagnostic Flow Chart”.
3	1. Replace the EHCU. 2. Reconnect all component, ensure all component are properly mounted. Was this step finished?	Repeat the “Basic Diagnostic Flow Chart”.	Go to Step 3

Chart B-13 FR Dump Solenoid Valve Abnormality (DTC 44)

Step	Action	Yes	No
1	Was the “EHCU Connector Pin-out Checks” performed?	Go to Step 2	Go to “EHCU Connector Pin-out Checks”.
2	Is the EHCU connector free from damage or corrosion?	Go to Step 3	Repair the connector. Repeat the “Basic Diagnostic Flow Chart”.
3	1. Replace the EHCU. 2. Reconnect all component, ensure all component are properly mounted. Was this step finished?	Repeat the “Basic Diagnostic Flow Chart”.	Go to Step 3

Chart B-14 Rear Isolation Solenoid Valve Abnormality (DTC 45)

Step	Action	Yes	No
1	Was the “EHCU Connector Pin-out Checks” performed?	Go to Step 2	Go to “EHCU Connector Pin-out Checks”.
2	Is the EHCU connector free from damage or corrosion?	Go to Step 3	Repair the connector. Repeat the “Basic Diagnostic Flow Chart”.
3	1. Replace the EHCU. 2. Reconnect all component, ensure all component are properly mounted. Was this step finished?	Repeat the “Basic Diagnostic Flow Chart”.	Go to Step 3

Chart B-15 Rear Dump Solenoid Valve Abnormality (DTC 46)

Step	Action	Yes	No
1	Was the “EHCU Connector Pin-out Checks” performed?	Go to Step 2	Go to “EHCU Connector Pin-out Checks”.
2	Is the EHCU connector free from damage or corrosion?	Go to Step 3	Repair the connector. Repeat the “Basic Diagnostic Flow Chart”.
3	1. Replace the EHCU. 2. Reconnect all component, ensure all component are properly mounted. Was this step finished?	Repeat the “Basic Diagnostic Flow Chart”.	Go to Step 3

Chart B-16 FL Speed Sensor Disconnection (DTC 51)

Step	Action	Yes	No
1	1. Turn the key off. 2. Disconnect EHCU connector. 3. Measure the resistance between EHCU connector terminals 20 and 21. Is the resistance between 1.3k and 1.9k ohms?	Check for faults in harness between speed sensor and EHCU. Fault found: Repair, and perform system self-check. No fault found: Replace EHCU. Go to Step 3	Go to Step 2
2	Measure the FL speed sensor resistance at the sensor connector. Is the resistance between 1.3k and 1.9k ohms?	Repair harness abnormality between sensors and EHCU. Go to Step 3	Replace sensor. Go to Step 3
3	1. Reconnect all components, ensure all components are properly mounted. 2. Clear diagnostic trouble code. Was this step finished?	Repeat the “Basic diagnostic flow chart.”	Go to Step 3

Chart B-17 FR Speed Sensor Disconnection (DTC 52)

Step	Action	Yes	No
1	1. Turn the key off. 2. Disconnect EHCU connector. 3. Measure the resistance between EHCU connector terminals 4 and 5. Is the resistance between 1.3k and 1.9k ohms?	Check for faults in harness between speed sensor and EHCU. Fault found: Repair, and perform system self-check. No fault found: Replace EHCU. Go to Step 3	Go to Step 2
2	Measure the FR speed sensor resistance at the sensor connector. Is the resistance between 1.3k and 1.9k ohms?	Repair harness abnormality between sensors and EHCU. Go to Step 3	Replace sensor. Go to Step 3
3	1. Reconnect all components and ensure all components are properly mounted. 2. Clear diagnostic trouble code. Was this step finished?	Repeat the “Basic diagnostic flow chart.”	Go to Step 3

Chart B-18 RL Speed Sensor Disconnection (DTC 53)

Step	Action	Yes	No
1	1. Turn the key off. 2. Disconnect EHCU connector. 3. Measure the resistance between EHCU connector terminals 22 and 23. Is the resistance between 1.3k and 1.9k ohms?	Check for faults in harness between speed sensor and EHCU. Fault found: Repair, and perform system self-check. No fault found: Replace EHCU. Go to Step 3	Go to Step 2
2	Measure the RL speed sensor resistance at the sensor connector. Is the resistance between 1.3k and 1.9k ohms?	Repair harness abnormality between sensors and EHCU. Go to Step 3	Replace sensor. Go to Step 3
3	1. Reconnect all components and ensure all components are properly mounted. 2. Clear diagnostic trouble code. Was this step finished?	Repeat the “Basic diagnostic flow chart.”	Go to Step 3

Chart B-19 RR Speed Sensor Disconnection (DTC 54)

Step	Action	Yes	No
1	1. Turn the key off. 2. Disconnect EHCU connector. 3. Measure the resistance between EHCU connector terminals 2 and 3. Is the resistance between 1.3K and 1.9k ohms?	Check for faults in harness between speed sensor and EHCU. Fault found: Repair, and perform system self-check. No fault found: Replace EHCU. Go to Step 3.	Go to Step 2
2	Measure the RR speed sensor resistance at the sensor connector. Is the sensor resistance between 1.3k and 1.9k ohms?	Repair harness abnormality between sensors and EHCU. Go to Step 3	Replace sensor. Go to Step 3
3	1. Reconnect all components and ensure all components are properly mounted. 2. Clear diagnostic trouble code. Was this step finished?	Repeat the “Basic diagnostic flow chart.”	Go to Step 3

Chart B-20 FL Speed Sensor Short Circuit (DTC 61)

Step	Action	Yes	No
1	1. Turn the key off. 2. Disconnect EHCU connector 3. Measure the FL speed sensor resistance between EHCU connector terminals 20 and 21. Is the resistance between 1.3k and 1.9k ohms?	Go to Step 2	Go to Step 3
2	Is there play in the sensor/sensor rotor?	Go to Step 4	Repair. Go to Step 6
3	Measure the FL speed sensor resistance at the sensor connector. Is the resistance between 1.3k and 1.9k ohms?	Repair harness abnormality between sensors and EHCU. Go to Step 6	Replace sensor. Go to Step 6
4	Damage and powdered iron sticking to sensor/sensor ring?	Go to Step 5	Repair. Go to Step 6
5	Is sensor output normal? (Chart C-1-1 or TC-1)	Check for faults in harness between speed sensor and EHCU. Fault found: repair, and perform system self-check. No fault found: replace EHCU. Go to Step 6	Replace sensor. Go to Step 6
6	1. Reconnect all components and ensure all components are properly mounted. 2. Clear diagnostic trouble code. Was this step finished?	Repeat the “Basic diagnostic flow chart.”	Go to Step 6

NOTE: Even after repairing the faulty part the warning light (W/L) does not go out if the vehicle is at a stop. Turn the ignition switch to the ON position and drive the vehicle at 12 km/h or higher to make sure that the warning light goes out.

Chart B-21 FR Speed Sensor Short Circuit (DTC 62)

Step	Action	Yes	No
1	1. Turn the key off. 2. Disconnect EHCU connector. 3. Measure the FR speed sensor resistance between EHCU connector terminals 4 and 5. Is the resistance between 1.3k and 1.9k ohms?	Go to Step 2	Go to Step 3
2	Is there play in the sensor/sensor rotor?	Go to Step 4	Repair. Go to Step 6
3	Measure the FR speed sensor resistance at the sensor connector. Is the resistance between 1.3k and 1.9k ohms?	Repair harness abnormality between sensors and EHCU. Go to Step 6	Replace sensor. Go to Step 6
4	Damage and powdered iron sticking to sensor/sensor ring?	Go to Step 5	Repair. Go to Step 6
5	Is sensor output normal? (Chart C-1-2 or TC-1)	Check for faults in harness between speed sensor and EHCU. Fault found: repair, and perform system self-check. No fault found: replace EHCU. Go to Step 6	Replace sensor. Go to Step 6
6	1. Reconnect all components and ensure all components are properly mounted. 2. Clear diagnostic trouble code. Was this step finished?	Repeat “Basic diagnostic flow chart.”	Go to Step 6

NOTE: Even after repairing the faulty part the warning light (W/L) does not go out if the vehicle is at a stop. Turn the ignition switch to the ON position and drive the vehicle at 12 km/h or higher to make sure that the warning light goes out.

Chart B-22 RL Speed Sensor Short Circuit (DTC 63)

Step	Action	Yes	No
1	1. Turn the key off. 2. Disconnect EHCU connector 3. Measure the RL speed sensor resistance between EHCU connector terminals 22 and 23. Is the resistance between 1.3k and 1.9k ohms?	Go to Step 2	Go to Step 3
2	Is there play in the sensor/sensor rotor?	Go to Step 4	Repair. Go to Step 6
3	Measure the RL speed sensor resistance at the sensor connector. Is the resistance between 1.3k and 1.9k ohms?	Repair harness abnormality between sensors and EHCU. Go to Step 6	Replace sensor. Go to Step 6
4	Damage and powdered iron sticking to sensor/sensor ring?	Go to Step 5	Repair. Go to Step 6
5	Is sensor output normal? (Chart C-1-3 or TC-1)?	Check for faults in harness between speed sensor and EHCU. Fault found: repair, and perform system self-check. No fault found: replace EHCU. Go to Step 6	Replace sensor. Go to Step 6
6	1. Reconnect all components and ensure all components are properly mounted. 2. Clear diagnostic trouble code. Was this step finished?	Repeat the “Basic diagnostic flow chart.”	Go to Step 6

NOTE: Even after repairing the faulty part the warning light (W/L) does not go out if the vehicle is at a stop. Turn the ignition switch to the ON position and drive the vehicle at 12 km/h or higher to make sure that the warning light goes out.

Chart B-23 RR Speed Sensor Short Circuit (DTC 64)

Step	Action	Yes	No
1	1. Turn the key off. 2. Disconnect EHCU connector. 3. Measure the RR speed sensor resistance between EHCU connector terminals 2 and 3. Is the resistance between 1.3k and 1.9k ohms?	Go to Step 2	Go to Step 3
2	Is there play in the sensor/sensor rotor?	Go to Step 4	Repair. Go to Step 6
3	Measure the RR speed sensor resistance at the sensor connector. Is the resistance between 1.3k and 1.9k ohms?	Repair harness abnormality between sensors and EHCU. Go to Step 6	Replace sensor. Go to Step 6
4	Damage and powdered iron sticking to sensor/sensor ring?	Go to Step 5	Repair. Go to Step 6
5	Is sensor output normal? (Chart C-1-4 or TC-1)	Check for faults in harness between speed sensor and EHCU. Fault found: repair, and perform system self-check. No fault found: replace EHCU. Go to Step 6	Replace sensor. Go to Step 6
6	1. Reconnect all components and ensure all components are properly mounted. 2. Clear diagnostic trouble code. Was this step finished?	Repeat “Basic diagnostic flow chart.”	Go to Step 6

NOTE: Even after repairing the faulty part the warning light (W/L) does not go out if the vehicle is at a stop. Turn the ignition switch to the ON position and drive the vehicle at 12 km/h or higher to make sure that the warning light goes out.

Chart B-24 Sensor Signal Input Abnormality (DTC 65)

Step	Action	Yes	No
1	Using TECH 2?	Go to Step 2	Go to Step 3
2	1. Connect TECH 2. 2. Select Snap shot manual trigger. 3. With wheel speed data displayed, run the vehicle when speed has arrived at 30 km/h (18 mph). 4. Check speed data on each wheel (refer to the criterion given below). *1 Is the abnormal sensor condition found?	Replace. Go to Step 8	Go to Step 3 All the sensors should follow the following flowchart (without using TECH 2).
3	Is there play in sensor/sensor ring?	Repair. Go to Step 8	Go to Step 4
4	Is there powdered iron sticking to sensor/sensor ring?	Repair. Go to Step 8	Go to Step 5
5	Is there a broken tooth or indentation in sensor ring?	Replace sensor ring. Go to Step 8	Go to Step 6
6	Is there play in wheel bearing?	Adjust or repair. Go to Step 8	Go to Step 7
7	Is the check wiring between sensor and EHCU normal?	Replace EHCU. Go to Step 8	Repair, and perform system self-check. Go to Step 8
8	1. Reconnect all components, ensure all components are properly mounted. 2. Clear diagnostic trouble code. Was this step finished?	Repeat “Basic diagnostic flow chart.”	Go to Step 8

Sensor Signal Abnormality Criteria using TECH 2

1. While driving, the speed of one or two wheels 25% or more higher than that of the other wheels.
2. The speed of one or two wheels is 10 km/h (6 mph) or more higher than that of the other wheels.
3. During steady driving, wheel speed changes abruptly.

*1 The vehicle must run on a level paved road.

NOTE: Even after repairing the faulty part the warning light (W/L) does not go out if the vehicle is at a stop.

Turn the ignition switch to the ON position and drive the vehicle at 12 km/h or higher to make sure that the warning light goes out.

It is important to verify that the correct tires are installed on vehicle.

Unit Inspection Procedure

This section describes the following inspection procedures referred to during “SYMPTOM DIAGNOSIS” and “DIAGNOSIS BY ‘ABS’ WARNING LIGHT ILLUMINATION PATTERN” :

	without TECH 2	with TECH 2
Wheel Speed Sensor Output Inspection	Chart C-1-1 to C-1-4	Chart TC-1
Transmission SW Inspection	Chart C-2	Chart TC-2

Chart C-1-1 FL Sensor Output Inspection Procedure

Step	Action	Yes	No
1	1. Turn the key off. 2. Disconnect EHCU connector. 3. Jack up the vehicle, With all four wheels off the ground. Measure the AC voltage between EHCU connector terminals while turning FL wheel at a speed of 1 RPS: Is voltage between EHCU connector terminals 20 and 21 under 200 mV?	Go to Step 2	Ok. Go to Step 3
2	1. Disconnect the wheel speed sensor. 2. Measure resistance between the wheel speed sensor connector terminals 1 and 2. Is resistance between connector (C-13) terminals 1 and 2 within 1.3k - 1.9k ohms?	Connector is faulty, or open or short circuit in harness between wheel speed sensor connector and EHCU. Inspect and correct the connector or harness Go to Step 3	Wheel speed sensor is faulty. Replace the wheel speed sensor. Go to Step 3
3	Reconnect all components and ensure all components are properly mounted. Was this step finished?	Repeat the “Basic diagnostic flow chart.”	Go to Step 3

Chart C-1-2 FR Sensor Output Inspection Procedure

Step	Action	Yes	No
1	1. Turn the key off. 2. Disconnect EHCU connector. 3. Jack up the vehicle with all four wheels off the ground. Measure the AC voltage between EHCU connector terminals while turning FR wheel at a speed of 1 RPS: Is voltage between EHCU connector terminals 4 and 5 under 200 mV?	Go to Step 2	Ok. Go to Step 3
2	1. Disconnect the wheel speed sensor. 2. Measure resistance between the wheel speed sensor connector terminals 1 and 2. Is resistance between connector (C-41) terminals 1 and 2 within 1.3k - 1.9k ohms?	Connector is faulty, or open or short circuit of harness between wheel speed sensor connector and EHCU. Inspect and correct the connector or harness Go to Step 3	Wheel speed sensor is faulty. Replace the wheel speed sensor. Go to Step 3
3	Reconnect all components and ensure all components are properly mounted. Was this step finished?	Repeat the “Basic diagnostic flow chart.”	Go to Step 3

Chart C-1-3 RL Sensor Output Inspection Procedure

Step	Action	Yes	No
1	1. Turn the key off. 2. Disconnect EHCU connector. 3. Jack up the vehicle with all four wheels off the ground. Measure the AC voltage between EHCU connector terminals while turning RL wheel at a speed of 1 RPS: Is voltage between EHCU connector terminals 22 and 23 under 200 mV?	Go to Step 2	Ok. Go to Step 3
2	1. Disconnect the wheel speed sensor. 2. Measure resistance between the wheel speed sensor connector terminals 1 and 2. Is resistance between connector (F-3) terminals 1 and 2 within 1.3k - 1.9k ohms?	Connector is faulty, or open or short circuit of harness between wheel speed sensor connector and EHCU. Inspect and correct the connector or harness Go to Step 3	Wheel speed sensor is faulty. Replace the wheel speed sensor. Go to Step 3
3	Reconnect all components and ensure all components are properly mounted. Was this step finished?	Repeat the “Basic diagnostic flow chart.”	Go to Step 3

Chart C-1-4 RR Sensor Output Inspection Procedure

Step	Action	Yes	No
1	1. Turn the key off. 2. Disconnect EHCU connector. 3. Jack up the vehicle with all four wheels off the ground. Measure the AC voltage between EHCU connector terminals while turning RR wheel at a speed of 1 RPS: Is voltage between EHCU connector terminals 2 and 3 under 200 mV?	Go to Step 2	Ok. Go to Step 3
2	1. Disconnect the wheel speed sensor. 2. Measure resistance between the wheel speed sensor connector terminals 1 and 2. Is resistance between connector (F-2) terminals 1 and 2 within 1.3k - 1.9k ohms?	Connector is faulty, or open or short circuit of harness between wheel speed sensor connector and EHCU. Inspect and correct the connector or harness Go to Step 3	Wheel speed sensor is faulty. Replace the wheel speed sensor. Go to Step 3
3	Reconnect all components and ensure all components are properly mounted. Was this step finished?	Repeat the “Basic diagnostic flow chart.”	Go to Step 3

Chart TC-1 Sensor Output Inspection Procedure (Use TECH 2)

Step	Action	Yes	No
1	1. Connect TECH 2. 2. While driving the vehicle, check the wheel speed of each sensor by Data List. Is the vehicle speed value is normal?	Go to Step 6	Go to Step 2
2	Check the sensor harness for suspected disconnection (Check while shaking harness/connector). Is the sensor harness connection normal?	Replace speed sensor. Go to Step 3	Repair. Go to Step 6
3	While driving the vehicle, check the wheel speed of each sensor by Data List. Is the vehicle speed value is normal?	Go to Step 6	Go to Step 4
4	Check the sensor rotor. Is the sensor rotor normal?	Go to Step 6	Replace sensor rotor. Go to Step 5
5	While driving the vehicle, check the wheel speed of each sensor by Data List. Is the vehicle speed value is normal?	Go to Step 6	Repair harness or connector between EHCU and speed sensor. Go to Step 6
6	Reconnect all components, ensure all components are properly mounted. Was this step finished?	Repeat the “Basic diagnostic flow chart.”	Go to Step 6

Chart C-2 Transmission Input Inspection Procedure

Step	Action	Yes	No
1	1. Turn the key off. 2. Disconnect EHCU connector. Is there continuity between EHCU connector terminals 6 and 15 (Gear position-P(A/T), N(M/T))?	Shorted switch harness. Repair switch or harness. Go to Step 6	Go to Step 2
2	Is the vehicle an A/T model?	Go to Step 3	Go to Step 5
3	Turn the key on and measure voltage between EHCU connector terminals 6 and 15. Is there less than 6V when the gear position is L, and R(Battery voltage 12V)?	Go to Step 5	Transmission SW trouble. Disconnected harness. Repair SW and harness. Go to Step 6
4	Turn the key on and measure the voltage between EHCU connector terminal 6 and 15. Is there more than 9.6V when the gear position is 1, 2, R(Battery voltage 12V)?	Go to Step 5	Transmission SW trouble. Disconnected harness. Repair SW and harness. Go to Step 6
5	Measure the voltage between EHCU connector terminals 6 and 15. Is there 6.6 to 9.0V when the gear position is 3, 4, 5 and N(M/T) or 2,3,D,N and P(A/T)(Battery voltage 12V)?	Go to Step 6	Transmission SW trouble. Disconnected harness. Repair SW and harness. Go to Step 6
6	1. Reconnect all components and ensure all components are properly mounted. 2. Clear diagnostic trouble code. Was this step finished?	Repeat the “Basic diagnostic flow chart.”	Go to Step 6

Chart TC-2 Transmission Input Inspection Procedure (Use TECH 2)

Step	Action	Yes	No
1	1. Connect TECH 2. 2. Select Data List. Is this vehicle an A/T model ?	Go to Step 2	Go to Step 4
2	Is “Off-Road Switch(Transmission Input): Active” when the shift lever is the L and R?	Go to Step 3	Go to Step 6
3	Is “Off-Road Switch(Transmission Input): Inactive” when the shift lever is other than the L and R?	Go to Step 7	Go to Step 6
4	Is “Off-Road Switch(Transmission Input): Active” when the shift lever is in 1, 2 and R?	Go to Step 5	Go to Step 6
5	Is “Off-Road Switch(Transmission Input): Inactive” when the shift lever is other than the 1, 2 and R?	Go to Step 7	Go to Step 6
6	1. Abnormal T/M SW, inhibitor SW, or harness. 2. Repair T/M SW, inhibitor SW, or harness. Is the T/M SW, inhibitor SW, or harness repaired?	Go to Step 7	Go to Step 6
7	Reconnect all components, ensure all components are properly mounted. Was this step finished?	Repeat the “Basic diagnostic flow chart.”	Go to Step 7

Special Tools

ILLUSTRATION	**TOOL NO.** TOOL NAME
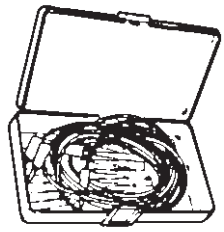	**5–8840–0385–0** **(J–35616)** Connector test adapter kit
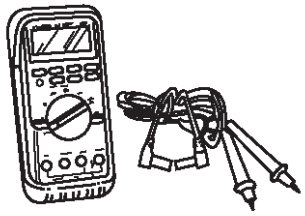	**5–8840–0366–0** **(J–39200)** High impedance multimeter
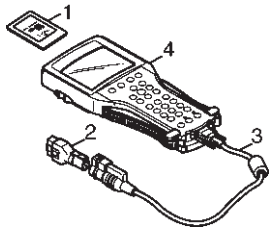	(1) PCMCIA Card (2) SAE 16/19 Adapter (3) DLC Cable (4) Tech–2

BRAKES

ANTI-LOCK BRAKE SYSTEM

CONTENTS

Service Precaution 5B–1
Electronic Hydraulic Control Unit 5B–2
Electronic Hydraulic Control Unit and Associated Parts 5B–2
Removal 5B–2
Installation 5B–2
G-Sensor 5B–3
Removal 5B–3
Inspection and Repair 5B–3
Installation 5B–3
Front Wheel Speed Sensor 5B–4
Front Wheel Speed Sensor and Associated Parts 5B–4
Removal 5B–4
Inspection and Repair 5B–5
Installation 5B–5
Rear Wheel Speed Sensor 5B–6
Rear Wheel Speed Sensor and Associated Parts 5B–6
Removal 5B–6
Inspection and Repair 5B–6
Installation 5B–6

Service Precaution

WARNING: IF SO EQUIPPED WITH A SUPPLEMENTAL RESTRAINT SYSTEM(SRS), REFER TO THE SRS COMPONENT AND WIRING LOCATION VIEW IN ORDER TO DETERMINE WHETHER YOU ARE PERFORMING SERVICE ON OR NEAR THE SRS COMPONENTS OR THE SRS WIRING. WHEN YOU ARE PERFORMING SERVICE ON OR NEAR THE SRS COMPONENTS OR THE SRS WIRING, REFER TO THE SRS SERVICE INFORMATION. FAILURE TO FOLLOW WARNINGS COULD RESULT IN POSSIBLE AIR BAG DEPLOYMENT, PERSONAL INJURY, OR OTHERWISE UNNEEDED SRS SYSTEM REPAIRS.

CAUTION: Always use the correct fastener in the proper location. When you replace a fastener, use ONLY the exact part number for that application. ISUZU will call out those fasteners that require a replacement after removal. ISUZU will also call out the fasteners that require thread lockers or thread sealant. UNLESS OTHERWISE SPECIFIED, do not use supplemental coatings (Paints, greases, or other corrosion inhibitors) on threaded fasteners or fastener joint interfaces. Generally, such coatings adversely affect the fastener torque and the joint clamping force, and may damage the fastener. When you install fasteners, use the correct tightening sequence and specifications. Following these instructions can help you avoid damage to parts and systems.

CAUTION: Replace all components included in repair kits used to service this system. Lubricate rubber parts with clean, fresh brake fluid to ease assembly. Do not use shop air with in–line lubricators on brake parts, as damage to rubber components may result. If any hydraulic component is removed or brake line disconnected, it may be necessary to bleed part or all of the brake system.

NOTE: The use of rubber hoses or parts other than those furnished specifically for the Anti–lock Brake System may lead to functional problems requiring major overhaul.

Electronic Hydraulic Control Unit

Electronic Hydraulic Control Unit and Associated Parts

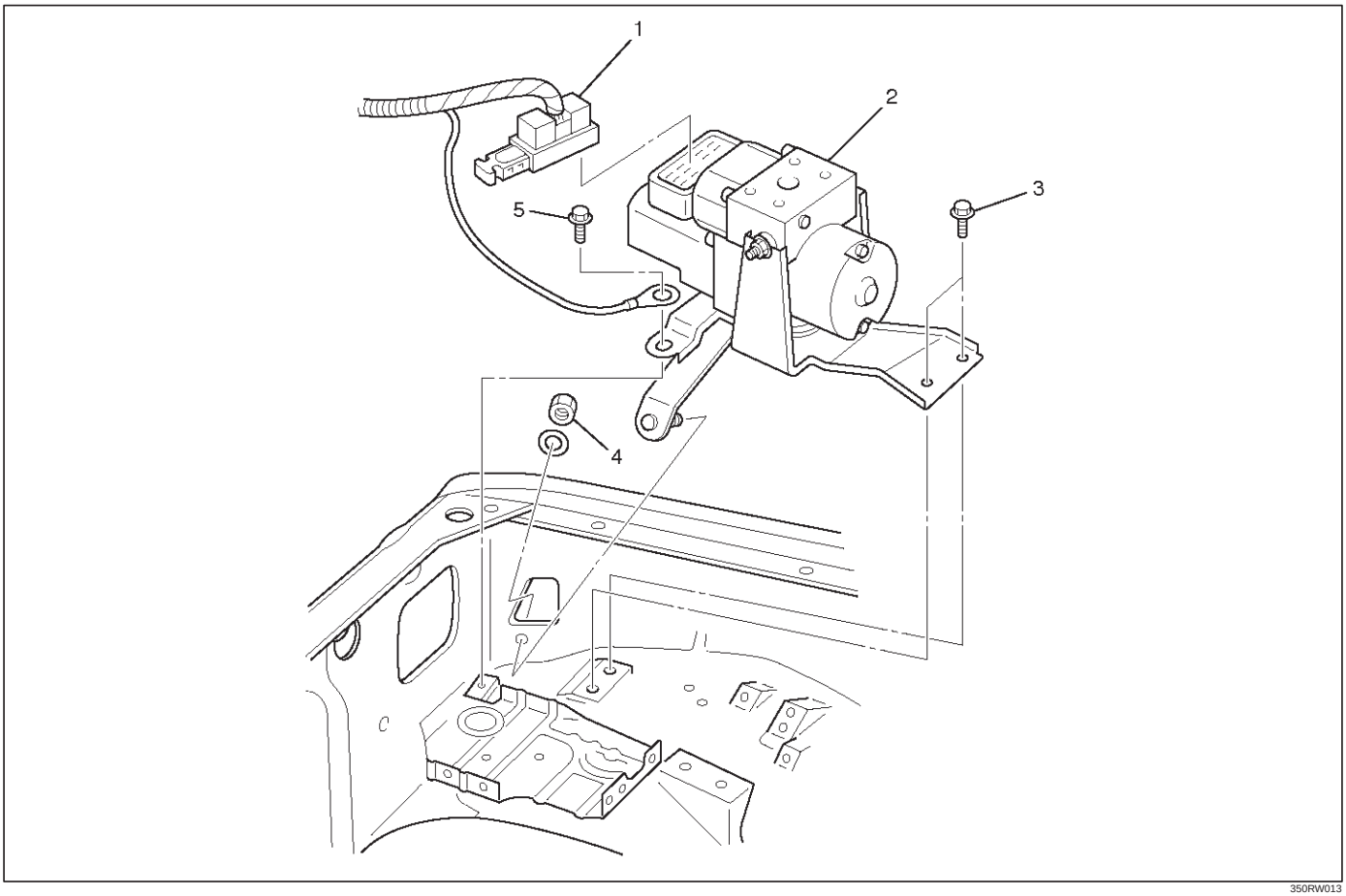

350RW013

Legend

(1) Connector
(2) Hydraulic Unit ASM
(3) Bolts
(4) Nut
(5) Bolt

Removal

1. Remove battery ASM.
2. Remove harness connector.
3. Remove EHCU fixing nuts.
4. Remove brake pipes.
   - After disconnecting brake pipe, cap or tape the openings of the brake pipe to prevent the entry of foreign matter.
5. Remove hydraulic unit fixing nuts.

Installation

To install, follow the removal steps in the reverse order, noting the following points:

Torque

Hydraulic unit fixing nuts : 22 N·m (2.2kg·m/16 lb ft)

Ground cable : 14 N·m (1.4kg·m/10 lb ft)

Brake pipe (joint bolts) : 16 N·m (1.6kg·m/12 lb ft)

- After installing the hydraulic unit, bleed brakes completely. Refer to Servicing in Power Assisted Brake System section.

G-Sensor

Removal

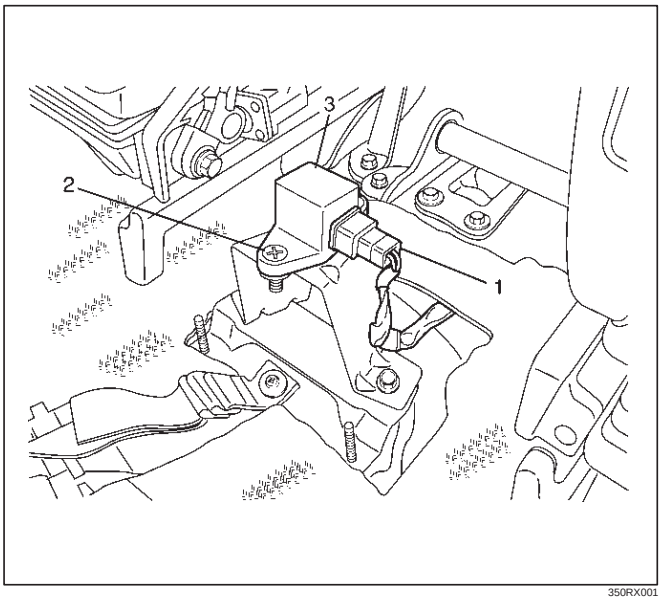

350RX001

1. Remove center console.
   - Refer to Consoles in Body and Accessories section.
2. Remove clip from G-sensor connector (1), then disconnect connector.
3. Remove G-sensor assembly fixing bolt (2).
4. Remove G-sensor assembly (3).

Inspection and Repair

Refer to Chart B-5 in Brake Control System section.

Installation

1. Install G-sensor assembly (3).
   - Care should be taken so that the G-sensor is not installed in the wrong direction.
2. Install G-sensor assembly fixing bolt (2).
   - Tighten the fixing bolt to the specified torque.

   Torque : 10 N·m (1.0kg·m/87 lb in)
3. Install G-sensor wiring connector (1).
4. Install center console.
   - Refer to Consoles in Body and Accessories section.

Front Wheel Speed Sensor

Front Wheel Speed Sensor and Associated Parts

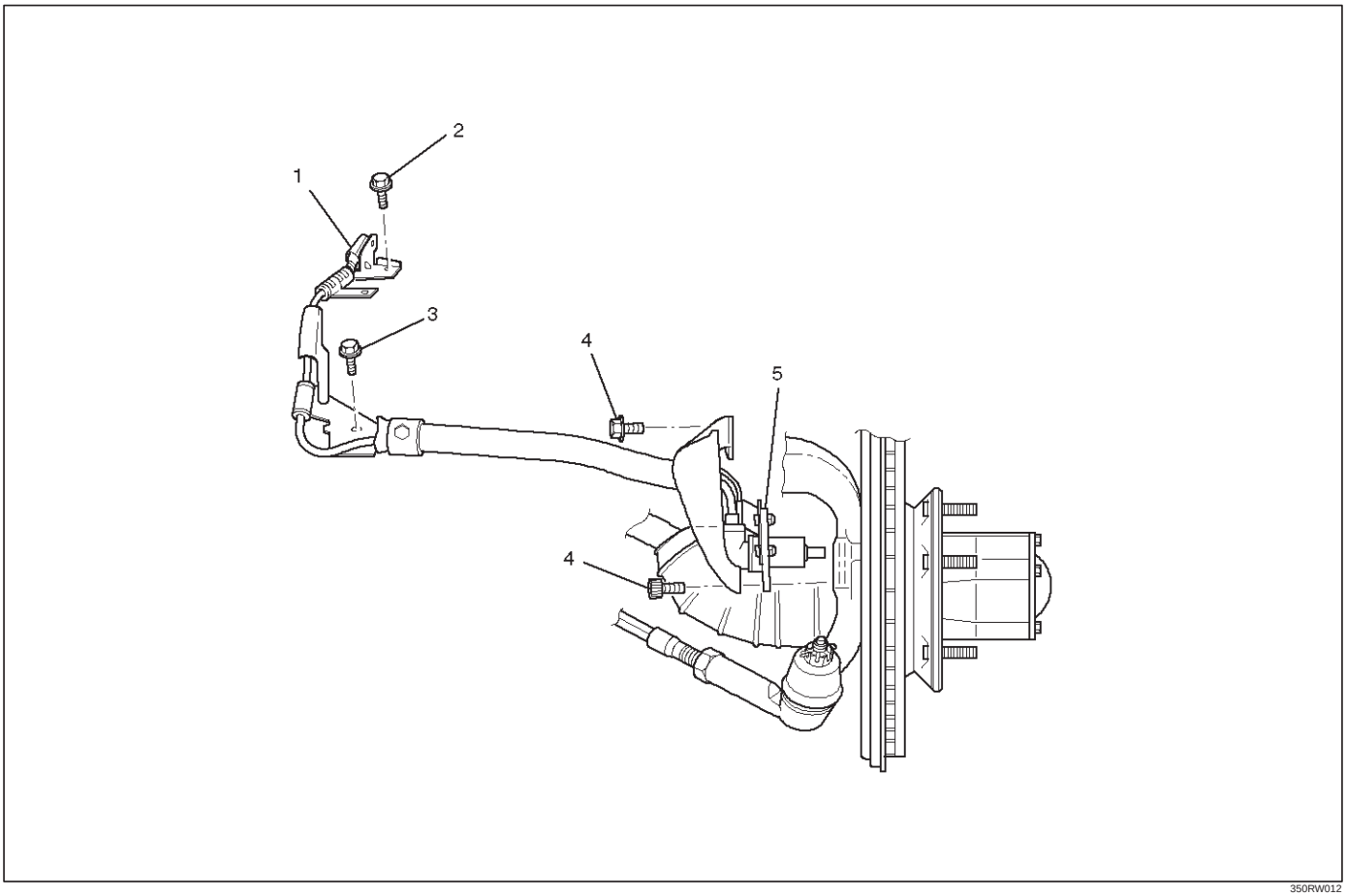

350RW012

Legend

(1) Speed Sensor Connector
(2) Sensor Cable Fixing Bolt (Upper side)
(3) Sensor Cable Fixing Bolt (Lower side)
(4) Sensor Cable Fixing Bolt (Sensor side)
(5) Speed Sensor

Removal

1. Remove speed sensor connector.
2. Remove sensor cable fixing bolt (Upper side).
3. Remove sensor cable fixing bolt (Lower side).
4. Remove the speed sensor cable fixing bolts (1) and caliper fixing bolt (2) from caliper side speed sensor cable bracket (3).

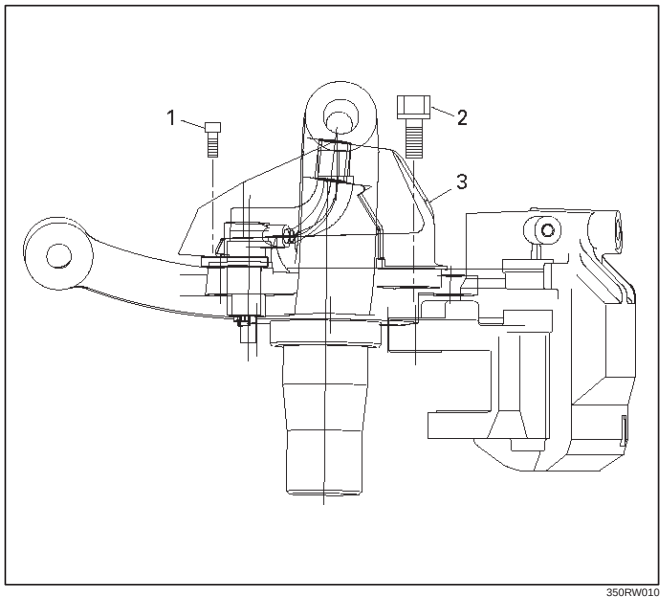

350RW010

5. Remove speed sensor.

Inspection and Repair

1. Check the speed sensor pole piece for presence of foreign materials; remove any dirt, etc.
2. Check the pole piece for damage; replace speed sensor if necessary.
3. Check the speed sensor cable for short or open circuit, and replace with a new one if necessary.
   To check for cable short or open, bend or stretch the cable while checking for continuity.
4. Check the sensor ring for damage including tooth chipping, and if damaged, replace the sensor ring assembly. Refer to Front Hub and Disc in Drive Shaft System section.

Installation

1. Install speed sensor and take care not to hit the speed sensor pole piece during installation.
2. Install speed sensor fixing bolt and tighten the fixing bolt to the specified torque.

   Torque

   Sensor side : 8 N·m (0.8kg·m/69 lb in)

   Caliper side : 155 N·m (15.8kg·m/115 lb ft)

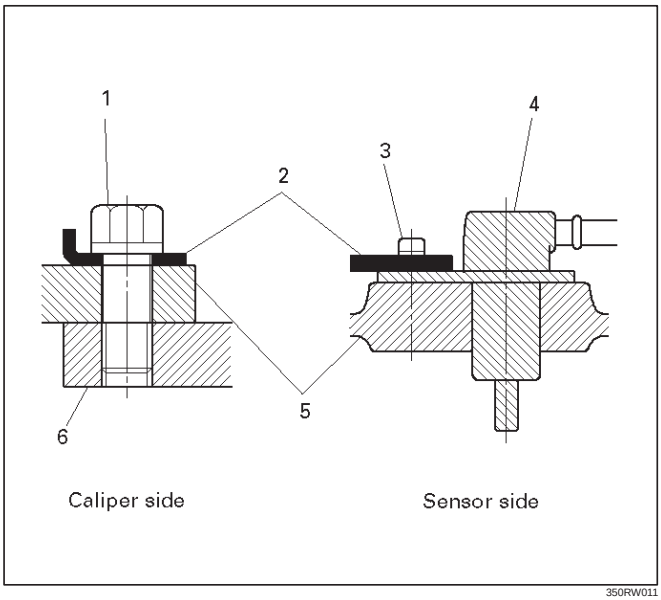

350RW011

Legend

(1) Caliper Fixing Bolt
(2) Bracket
(3) Sensor Fixing Bolt
(4) Sensor
(5) Knuckle
(6) Brake Caliper

3. Install speed sensor cable fixing bolt (Lower side) and tighten the fixing bolt to the specified torque.

   Torque : 24 N·m (2.4kg·m/18 lb ft)

4. Install speed sensor cable fixing bolt (Upper side) and tighten the fixing bolt to the specified torque.

   Torque : 6 N·m (0.6kg·m/52 lb in)

NOTE: Confirm that a white line marked on the cable is not twisted when connecting the speed sensor cable.

5. Install speed sensor connector.

Rear Wheel Speed Sensor

Rear Wheel Speed Sensor and Associated Parts

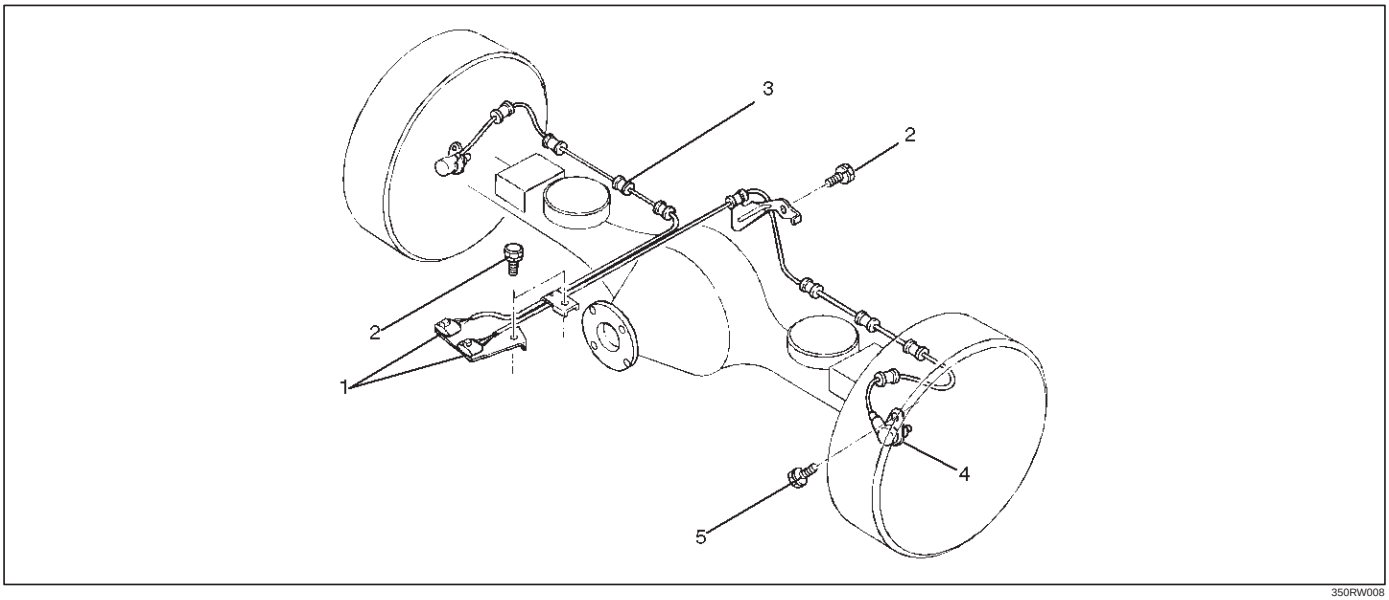

350RW008

Legend

(1) Speed Sensor Connector
(2) Sensor Cable Fixing Bolt
(3) Clip (11 pieces)
(4) Speed Sensor
(5) Sensor Fixing Bolt

Removal

1. Remove speed sensor connector.
2. Remove clip.
3. Remove sensor cable fixing bolt.
4. Remove sensor fixing bolt.
5. Remove speed sensor.

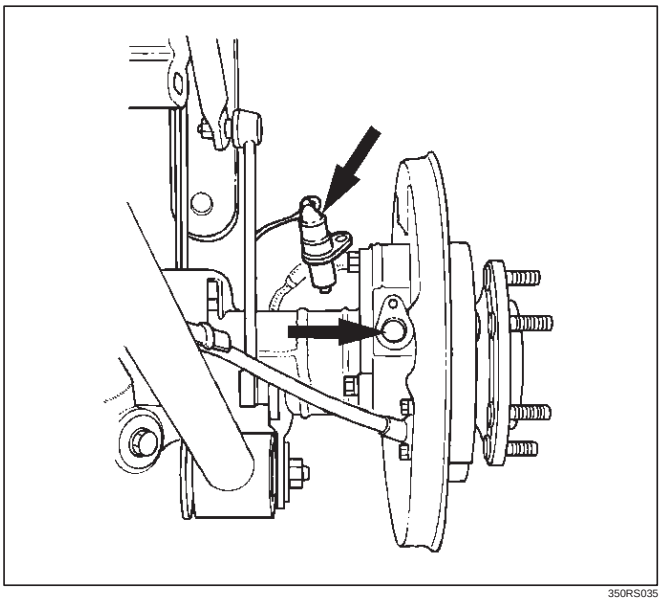

350RS035

Inspection and Repair

1. Check the speed sensor pole piece for presence of foreign materials; remove any dirt, etc.
2. Check the pole piece for damage, and replace the speed sensor if necessary.
3. Check the speed sensor cable for a short or an open, and replace with a new one if necessary. To check for cable short or open, bend or stretch the cable while checking for continuity.
4. Check the sensor ring for damage including tooth chipping. If damaged replace the axle shaft assembly. Refer to Front Hub and Disc in Drive Shaft System section.

Installation

1. Install the speed sensor and take care not to hit the speed sensor pole piece during installation.
2. Install the sensor fixing bolt and tighten it to the specified torque.

   Torque : 18 N·m (1.8kg·m/13 lb ft)

3. Install the sensor cable fixing bolt and tighten it to the specified torque.

   Torque : 24 N·m (2.4kg·m/18 lb ft)

NOTE: Confirm that the cable is not twisted when connecting the speed sensor cable.

4. Install clip.
5. Install speed sensor connector.

SECTION 5C

POWER ASSISTED BRAKE SYSTEM

CONTENTS

PAGE

Service Precaution 5C- 2
Brake System Diagnosis 5C- 3
Troubleshooting 5C- 5
Main Data and Specifications 5C- 7
Service Standard 5C- 8
Servicing 5C- 9
Fixing Torque 5C-18
Special Tools 5C-21
General Description 5C-22
- Master Cylinder 5C-22
- Vacuum Booster 5C-23
- Disc Brakes 5C-24

On-Vehicle Service 5C-25
- Brake Hose Replacement 5C-25
- Brake Pipe Replacement 5C-27
- P & B Valve 5C-28
- P & B Valve Replacement 5C-29
- Load Sensing Proportioning Valve (LSPV) 5C-30
- Brake Pedal Replacement 5C-34
- Stoplight Switch Replacement 5C-36
- Fluid Reservoir Tank 5C-38
- Master Cylinder Assembly 5C-39
- Vacuum Booster Assembly 5C-41
- Exterior Components 5C-44

Front Disc Brakes 5C-47
Brake Pads Replacement 5C-47
Caliper Replacement 5C-50
Rebuilding the Caliper 5C-53
Rear Disc Brakes 5C-56
Brake Pads Replacement 5C-56
Caliper Replacement 5C-59
Rebuilding the Caliper 5C-62
Unit Repair 5C-65
Master Cylinder 5C-65
Vacuum Booster 5C-67

SERVICE PRECAUTION

WARNING:
IF SO EQUIPPED WITH A SUPPLEMENTAL RESTRAINT SYSTEM (SRS), REFER TO THE SRS COMPONENT AND WIRING LOCATION VIEW IN ORDER TO DETERMINE WHETHER YOU ARE PERFORMING SERVICE ON OR NEAR THE SRS COMPONENTS OR THE SRS WIRING. WHEN YOU ARE PERFORMING SERVICE ON OR NEAR THE SRS COMPONENTS OR THE SRS WIRING, REFER TO THE SRS SERVICE INFORMATION. FAILURE TO FOLLOW WARNINGS COULD RESULT IN POSSIBLE AIR BAG DEPLOYMENT, PERSONAL INJURY, OR OTHERWISE UNNEEDED SRS SYSTEM REPAIRS.

CAUTION:
Always use the correct fastener in the proper location. When you replace a fastener, use ONLY the exact part number for that application. ISUZU will call out those fasteners that require a replacement after removal. ISUZU will also call out the fasteners that require thread lockers or thread sealant. UNLESS OTHERWISE SPECIFIED, do not use supplemental coatings (Paints, greases, or other corrosion inhibitors) on threaded fasteners or fastener joint interfaces. Generally, such coatings adversely affect the fastener torque and the joint clamping force, and may damage the fastener. When you install fasteners, use the correct tightening sequence and specification. Following these instructions can help you avoid damage to parts and systems.

BRAKE SYSTEM DIAGNOSIS

ROAD TESTING THE BRAKES

Brake Test

Brakes should be tested on a dry, clean, reasonably smooth and level roadway. A true test of brake performance cannot be made if the roadway is wet, greasy or covered with loose dirt so that all tires do not grip the road equally. Testing will also be adversely affected if the roadway is crowned so as to throw the weight of the vehicle toward wheels on one side or if the roadway is so rough that wheels tend to bounce. Test the brakes at different vehicle speeds with both light and heavy pedal pressure; however, avoid locking the wheels and sliding the tires. Locked wheels and sliding tires do not indicate brake efficiency, since heavily braked but turning wheels will stop the vehicle in less distance than locked wheels. More tire-to-road friction is present with a heavily braked turning tire then with a sliding tire.

The standard brake system is designed and balanced to avoid locking the wheels except at very high deceleration levels.

It is designed this way because the shortest stopping distance and best control is achieved without brake lock-up.

Because of high deceleration capability, a firmer pedal may be felt at higher deceleration levels.

External Conditions That Affect Brake Performance

1. Tires: Tires having unequal contact and grip on the road will cause unequal braking. Tires must be equally inflated, identical in size, and the tread pattern of right and left tires must be approximately equal.
2. Vehicle loading: A heavily loaded vehicle requires more braking effort.
3. Wheel Alignment: Misalignment of the wheels, particularly in regard to excessive camber and caster, will cause the brakes to pull to one side.

BRAKE FLUID LEAKS

With engine running at idle and the transmission in “Neutral”, depress the brake pedal and hold a constant foot pressure on the pedal. If pedal gradually falls away with the constant pressure, the hydraulic system may be leaking.

Check the master cylinder fluid level. While a slight drop in reservoir level will result from normal lining wear, an abnormally low level in resevoir indicates a leak in the system. The hydraulic system may be leaking internally as well as externally. Refer to “Master Cylinder Inspection”. Also, the system may appear to pass this test but still have slight leakage. If fluid level is normal, check the vacuum booster push

rod length. If an incorrect length push rod is found, adjust or replace the push rod. Check the brake pedal travel and the parking brake adjustment.

When checking the fluid level, the master cylinder fluid level may be low from the "MAX" mark if the front and rear linings are worn. This is not abnormal.

WARNING LIGHT OPERATION

When the ignition switch is in the START position, the "BRAKE" warning light should glow and go OFF when the ignition switch returns to the ON position.

The following conditions will activate the "BRAKE" light:

1. Parking brake applied. The light should be ON whenever the parking brake is applied and the ignition switch is ON.
2. Low fluid level. A low fluid level in the master cylinder will turn the "BRAKE" light ON.
3. During engine cranking the "BRAKE" light should remain ON. This notifies the driver that the warning circuit is operating properly.
4. Low vacuum warning light. The vacuum warning device is equipped on the diesel engine equipped vehicles. The "BRAKE" light comes on when the reserved vacuum is lowered to a critical level or power brake line is damaged.

NOTE:

Depressing the brake pedal repeatedly may cause the brake warning light to come ON when the engine is running at idling speed or at low speed. This is because the amount of vacuum is used more than that supplied by the vacuum pump, however, no problem will occur actually.

If the lamp is still lighting even after 2 or 3 seconds at idling speed, the vacuum line may be defective.

ANTILOCK BRAKE SYSTEM (ABS)

Refer to Brake Control System for inspection and diagnosis procedure of the hydraulic unit.

TROUBLESHOOTING

Condition	Possible Cause	Correction
Brake Pull	1. Tire inflation pressures unequal. 2. Front wheel alignment incorrect. 3. Unmatched tires on same axle. 4. Restricted brake pipes or hoses. 5. Water or oil on brake pads. 6. Brake pads hardened. 7. Brake pads worn excessively. 8. Brake rotor worn or scored. 9. Disc brake caliper malfunctioning. 10. Front hub bearing preload incorrect. 11. Loose suspension parts. 12. Loose calipers.	1. Adjust 2. Adjust 3. Tire with approx. the same amount of tread should be used on the same axle. 4. Check for soft hoses and damaged lines. Replace with new hoses and new double-walled steel brake piping. 5. Clean or replace. 6. Replace. 7. Replace. 8. Grind or replace. 9. Clean or replace. 10. Adjust or replace. 11. Check all suspension mountings. 12. Check and tighten bolts to specifications.
Brake Roughness-or Chatter (Pulsates)	1. Excessive lateral runout. 2. Parallelism not within specifications. 3. Wheel bearings not adjusted. 4. Pad reversed (steel against iron).	1. Check per instructions. If not within specifications, replace or machine the rotor. 2. Check per instructions. If not within specifications, replace or machine the rotor. 3. Adjust wheel bearings to correct specifications. 4. Replace brake pad and machine rotor to within specifications.
Excessive Pedal Effort	1. Malfunctioning vacuum booster. 2. Partial system failure. 3. Excessively worn pad. 4. Piston in caliper stuck or sluggish. 5. Fading brakes due to incorrect pad. 6. Vacuum leak to vacuum booster. 7. Check direction of check valve within vacuum hose. 8. Grease on the brake pads.	1. Check vacuum booster operation and repair, if necessary. 2. Check front and rear brake system for failure and repair. Also, check brake warning light. If a failed system is found, the light should indicate a failure. 3. Check and replace pads in sets. 4. Remove caliper and rebuild. 5. Remove and replace with original equipment pad or equivalent. 6. Check for ruptured or loose hose. 7. Correct vacuum hose direction. 8. Replace or clean.
Excessive Brake Pedal Travel	1. Air in hydraulic circuit. 2. Level of brake fluid in resevoir too low. 3. Master cylinder push rod clearance excessive. 4. Leakage in hydraulic system.	1. Bleed hydraulic circuit. 2. Replenish brake fluid resevoir to specified level and bleed hydraulic circuit as necessary. 3. Adjust. 4. Correct or replace defective parts.

Condition	Possible Cause	Correction
Brake Drag	1. Master cylinder pistons not returning correctly. 2. Restricted brake pipes or hoses. 3. Parking brake maladjusted. 4. Parking brake lining clearance insufficient. 5. Brake pedal free play insufficient. 6. Piston in master cylinder sticking. 7. Piston in disc brake caliper sticking. 8. Brake pads sticking in caliper. 9. Return spring weakened. 10. Parking brake binding. 11. Front hub bearing preload incorrect. 12. Parking brake shoes not returning. 13. Obstructions in hydraulic circuit. 14. Rotor warped excessively. 15. Rear brake drum distorted. 16. Parking cable sticking.	1. Adjust stop light switch and vacuum booster operating rod. If necessary, rebuild. 2. Check for soft hoses or damaged pipes, and replace with new hoses and new double-walled steel brake piping. 3. Adjust. 4. Adjust. 5. Adjust brake pedal height or power cylinder operating rod. 6. Replace. 7. Replace piston seals. 8. Clean. 9. Replace. 10. Overhaul parking brakes and correct. 11. Adjust or replace. 12. Correct or replace brake back plate and brake shoe as necessary. 13. Clean. 14. Grind or replace. 15. Grind or replace. 16. Clean or replace.
Grabbing or Uneven Braking Action (All conditions listed under "Pulls")	1. Malfunctioning vacuum booster. 2. Binding brake pedal mechanism. 3. Corroded caliper assembly.	1. Check operation and correct as necessary. 2. Check and lubricate, if necessary. 3. Clean and lubricate.
Brake Noisy	1. Brake pads worn. 2. Brake pads hardened. 3. Brake pads in poor contact with rotor. 4. Brake disc(s) warped, worn or damaged. 5. Disc brake anti-squeak shims fatigued. 6. Front hub bearings loose or preload is incorrect. 7. Brake disc rusted.	1. Replace. 2. Replace. 3. Correct. 4. Grind or replace. 5. Replace. 6. Adjust or replace. 7. Grind or replace.
Poor Brake Action	1. Master cylinder faulty. 2. Vacuum booster faulty. 3. Level of brake fluid in reservoir too low. 4. Air in hydraulic circuit. 5. Disc brake caliper faulty. 6. Water or oil on brake pads. 7. Brake pads in poor contact with rotor. 8. Brake pads worn. 9. Brake disc rusted. 10. Check valve in vacuum hose faulty.	1. Correct or replace. 2. Correct or replace. 3. Replenish and bleed. 4. Bleed. 5. Clean or replace. 6. Clean or replace. 7. Correct. 8. Replace. 9. Grind or replace. 10. Correct or replace.

MAIN DATA AND SPECIFICATIONS

MASTER CYLINDER		
Type		Dual-circuit
Piston Bore Diameter	mm (in)	25.4 (1.000)
VACUUM BOOSTER		
Diaphragm Diameter		
	Front; mm (in)	205 (8.07) (Gasoline) / 180 (7.09) (Diesel)
	Rear; mm (in)	230 (9.06) (Gasoline) / 205 (8.07) (Diesel)
Push Rod Stroke	mm (in)	More than 32.0 (1.26)
Plunger Diameter	mm (in)	10.13 (0.399)
Push Rod Diameter	mm (in)	27.4 (1.08)
FRONT DISC BRAKE		
Type		Floating, Pin Slide
Pad Dimension	cm^2 (in^2)	55 (8.52)
Adjusting Method		Self-adjusting
Piston Diameter	mm (in)	60.33 (2.38)
Disc (Rotor) Type		Ventilated
Disc (Rotor) Thickness	mm (in)	26 (1.02)
Disc (Rotor) Effective Diameter	mm (in)	222 (8.74)
REAR DISC BRAKE		
Type		Floating, Pin Slide
Pad Dimension	cm^2 (in^2)	33 (5.11)
Adjusting Method		Self-adjusting
Piston Diameter	mm (in)	41.3 (1.63)
Disc (Rotor) Type		Ventilated
Disc (Rotor) Thickness	mm (in)	18 (0.71)
Disc (Rotor) Effective Diameter	mm (in)	269.2 (10.60)

SERVICE STANDARD

HYDRAULIC BRAKE FLUID		DOT 3 grade
BRAKE PEDAL		
Pedal Free Play	mm (in)	6 to 10 (0.23 to 0.39)
Pedal Height (LHD / RHD)	mm (in)	208 to 218 (8.19 to 8.58) / 211 to 221 (8.31 to 8.70)
Stop Light Switch Clearance	mm (in)	0 to 0.2 (0 to 0.008)
FRONT DISC BRAKE		
Pad Thickness Minimum Limit	mm (in)	1.0 (0.039)
Disc (Rotor) Maximum Runout	mm (in)	0.13 (0.005)
Disc (Rotor) Maximum Parallelism	mm (in)	0.010 (0.0004)
Disc (Rotor) Minimum Wear Dimensions (Thickness)	mm (in)	24.60 (0.969)
Disc (Rotor) Minimum Refinish Dimensions (Thickness)	mm (in)	24.97 (0.983)
REAR DISC BRAKE		
Pad Thickness Minimum Limit	mm (in)	1.0 (0.039)
Disc (Rotor) Maximum Runout	mm (in)	0.13 (0.005)
Disc (Rotor) Maximum Parallelism	mm (in)	0.010 (0.0004)
Disc (Rotor) Minimum Wear Dimensions (Thickness)	mm (in)	16.60 (0.654)
Disc (Rotor) Minimum Refinish Dimensions (Thickness)	mm (in)	16.97 (0.668)

SERVICING

FILLING MASTER CYLINDER RESERVOIR

CAUTION:

1) **Use only specified brake fluid. Do not use any fluid which contains a petroleum base. Do not use a container which has been used for petroleum based fluids or a container which is wet with water. Petroleum based fluids will cause swelling and distortion of rubber parts in the hydraulic brake system. Water mixed with brake fluid lowers the fluid boiling point. Keep all fluid containers capped to prevent contamination.**
2) **Always fill the master cylinder reservoid when the engine is cold.**
3) **Never allow the brake fluid to come in contact with the painted surfaced.**

The master cylinder reservoir must be kept properly filled to ensure adequate reserve and to prevent air and moisture from entering the hydraulic system.
However, because of expansion due to heat absorbed from the brakes and the engine, the reservoir must not be overfilled. The brake fluid reservoir is on the master cylinder, which is located under the hood on the driver side of the cowl. Thoroughly clean reservoir cap before removal to avoid getting dirt into reservoir. Remove cap and diaphragm. Add fluid as required to bring level to the “MAX” mark on the reservoir tank. Use “DOT 3“ Hydraulic Brake Fluid. If the fluid cap diaphragm is stretched, return it to the original position before installing.

DETERIORATION OF BRAKE FLUID

Using any other brake fluid than speficied or brake fluid with mineral oil or water mixed in will drop the boiling point of brake fluid. It may, in turn, reuslt in vapor lock or deteriorated rubber parts of the hydraulic system. Be sure to change brake fluid at specified intervals.
If rubber parts are deteriorated, remover all the system parts and clean them with alcohol. Prior to reassembly, dry the cleaned parts with air to remove the alcohol. Replace all hoses and rubber parts of the system.

LEAKAGE OF BRAKE FLUID

With engine idling, set shift lever in the neutral position and continue to depress brake pedal at a constant pedal application force.
Should the pedal stroke become deeper gradually, leak from the hydraulic pressure system is possible.
Make sure by visual check that there is no leak.

BLEEDING BRAKE HYDRAULIC SYSTEM

A bleeding operation is necessary to remove air from the hydraulic brake system whenever air is introduced into the hydraulic system. It may be necessary to bleed the hydraulic system at all four brakes if air has been introduced through a low fluid level or by disconnecting brake pipes at the master cylinder. If a brake pipe is disconneted at one wheel, only that wheel cylinder/caliper needs to be bled. If pipes are disconnected at any fitting located between master cylinder and brakes, then the brake system served by the disconnected pipe must be bled.

1. For 4-wheel Antilock Brake System (ABS) equipped vehicle, be sure to remove the ABS main fuse 40A located at the relay and fuse box before bleeding air. If you attempt to bleed air without removing the main fuse, air cannot be let out thoroughly, and this may cause damage to the hydraulic unit. After bleeding air, be sure to replace the ABS main fuse back to its original position.
2. Set the parking brake completely, then start the engine.

NOTE:
The vacuum booster will be damaged if the bleeding operation is performed with the engine off.

3. Remove the master cylinder reservoir cap.
4. Fill the master cylinder reservoir with brake fluid. Keep the reservoir at least half full during the air bleeding operation.
5. Always use new brake fluid for replenishment.
6. In replenishing brake fluid, take care that air bubbles do not enter the brake fluid.
   - When the master cylinder is replaced or overhauled, first bleed the air from the master cylinder, then from each wheel cylinder and caliper following the procedures described below.

Bleeding the Master Cylinder

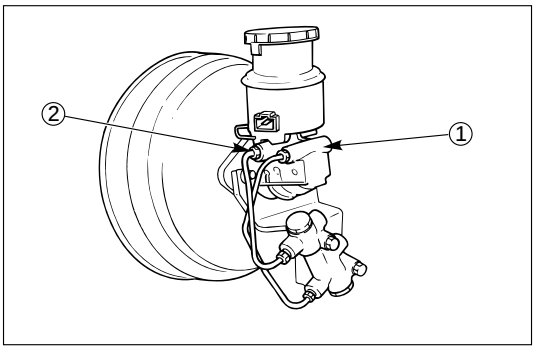

7. Disconnect the rear wheel brake pipe ① from the master cylinder. Check the fluid level and replenish as necessary. If replenished, leave the system for at least one minute.
8. Depress the brake pedal slowly once and hold it depressed.
9. Completely seal the delivery port of the master cylinder where the pipe was disconnected with your finger, then release the brake pedal slowly.
10. Release your finger from the delivery port when the brake pedal returns completely.
11. Repeat steps 7 through 9 until the brake fluid comes out of the delivery port during step 7.

NOTE:
Do not allow the fluid level in the reservoir to go below the half-way mark.

12. Reconnect the brake pipe ① to the master cylinder and tighten the pipe.
13. Depress the brake pedal slowly once and hold it depressed.
14. Loosen the rear wheel brake pipe ① at the master cylinder.
15. Retighten the brake pipe, then release the brake pedal slowly.
16. Repeat steps 13 through 15 until no air comes out from the port when the brake pipe is loosened.

NOTE:
Be very careful not to allow the brake fluid to come in contact with painted surfaces.

17. Bleed the air from the front wheel brake pipe connection ② by repeating steps 7 through 16.

Bleeding the Caliper

18. Bleed the air from each wheel in the order listed below.
    LHD models:
    1) Right rear caliper
    2) Left rear caliper
    3) Load sensing proportioning valve (only for Europe and South Africa)
    4) Right front caliper
    5) Left front caliper
    RHD models:
    1) Left rear caliper
    2) Right rear caliper
    3) Load sensing proportioning valve (only for Europe and South Africa)
    4) Left front caliper
    5) Right front caliper

Conduct air bleeding from the wheels in the above order. If no brake fluid comes out, it suggests that air is mixed in the master cylinder. In this case, bleed air from the master cylinder in accordance with Steps 7 through 17, and then bleed air from the caliper.

19. Place the proper size box end wrench over the bleeder screw.
20. Cover the bleeder screw with a transparent tube, and submerge the free end of the transparent tube in a transparent container containing brake fluid.
21. Pump the brake pedal slowly three (3) times (once/sec), then hold it depressed.
22. Loose the bleeder screw until fluid flows through the tube.
23. Retighten the bleeder screw.
24. Release the brake pedal slowly.
25. Repeat step 21 through 24 until the air is compeletely removed. It may be necessary to repeat the bleeding procedure 10 or more times for front wheels and 15 or more times for rear wheels.
26. Go to the next wheel in the sequence after each wheels is bled. Be sure to monitor reservoir fluid level.

27. Depress the brake pedal to check if you feel "sponginess" after the air has been removed from all wheel cylinders and calipers. If the pedal feels "spongy", the entire bleeding procedure must be repeated.
28. After the bleeding operation is completed on each individual wheel, check the level of brake fluid in the reservoir and replenish up to the "MAX" level if necessary.
29. Attach the reservoir cap.
    - If the diaphragm inside the cap is deformed, reform it and install.
30. Stop the engine.

FLUSHING BRAKE HYDRAULIC SYSTEM

It is recommended that the entire hydraulic system be thoroughly flushed with clean brake fluid whenever new parts are installed in the hydraluic system. Approximately one quart of fluid is required to flush the hydraulic system.

The system must be flushed if there is any doubt as to the grade of fluid in the system or if fluid has been used which contains the slightest trace of mineral oil. All rubber parts that have been subjected to a contaminated fluid must be replaced.

BRAKE PIPES AND HOSES

The hydraulic brake system components are interconnected by special steel piping and flexible hoses. Flexible hoses are used between the frame and the front calipers, the frame and rear axle case and the rear axle and the rear calipers.

When the hydraulic pipes have been disconnected for any reason, the brake system must be bled after reconnecting the pipe; refer to "Bleeding Brake Hydraulic System" in this section.

BRAKE HOSE INSPECTION

The brake hoses should be inspected at least twice a year. The brake hose assembly should be checked for road hazard, cracks and chafing of the outer cover, and for leaks and blisters. Inspect for proper routing and mounting of the hose. A brake hose that rubs on suspension components will wear and eventually fail. A light and mirror may be needed for an adequate inspection. If any of the above conditions are observed on the brake hose, adjust or replace the hose as necessary.

CAUTION:
Never allow brake components such as calipers to hang from the brake hoses, as damage to the hoses may occur.

CHECKING BRAKE PEDAL HEIGHT

The push rod serves as the brake pedal stopper when the pedal is fully released. Brake pedal height adjustment should be performed as follows:

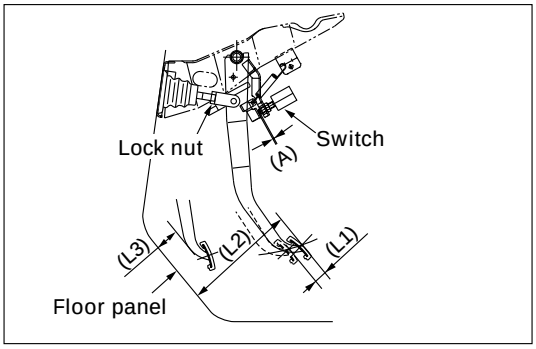

Adjust Brake Pedal

1. Measure the brake pedal height after making sure the pedal is fully returned by the pedal return spring.
   Pedal height (L2) must be measured after starting the engine and revving it several times.

Pedal Free Play (L1)	mm (in)
6 – 10 (0.23 – 0.39)	

Pedal Height (L2)	mm (in)
LHD	RHD
208 – 218 (8.19 – 8.58)	211 – 221 (8.31 – 8.70)

NOTE:
Pedal free play (L1) must be measured after turning off the engine and stepping on the brake pedal firmly five times or more.

2. If the measured value is not within the above range, adjust the brake pedal as follows:
   a) Disconnect the stop light switch connector.
   b) Loosen the stop light switch lock nut.
   c) Rotate the stop light switch so that it moves away from the brake pedal.
   d) Loosen the lock nut on the push rod.
   e) Adjust the brake pedal to the specified height by rotating the push rod in the appropriate direction.
   f) Tighten the lock nut to the specified torque.

Lock Nut Torque	N·m (kg·m/lb·ft)
20 (2.0 / 15)	

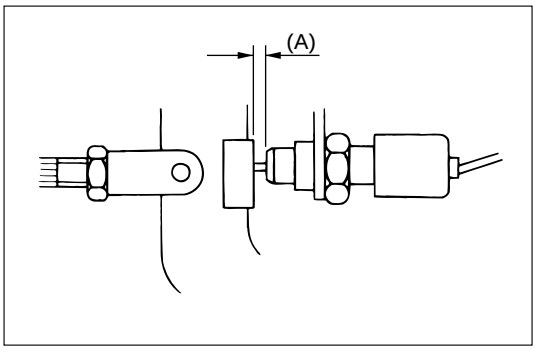

   g) Adjust the stop light switch to the specified clearance (between switch housing and brake pedal) by rotating the switch housing.

Clearance	mm (in)
0 – 0.2 (0 – 0.008)	

NOTE:
While adjusting the installation of the stoplight switch, make sure that the threaded part of the stoplight switch does not push the brake pedal.

   h) Tighten the stop light switch lock nut.
   i) Connect the stop light switch connector.

CHECKING BRAKE PEDAL TRAVEL

1. Pedal height (L3) must be measured after starting the engine and removing it several times to apply vacuum to the vacuum booster fully.

NOTE:
Pedal height (L3) must be 100 mm (3.9 in)/85 mm (3.5 in) (LHD/RHD) or more when about 50 kg (110.25 lb) of stepping force is applied.

2. If the measured value is lower than the above range, air existing in the hydrauic system is suspected and perform bleeding procedure.

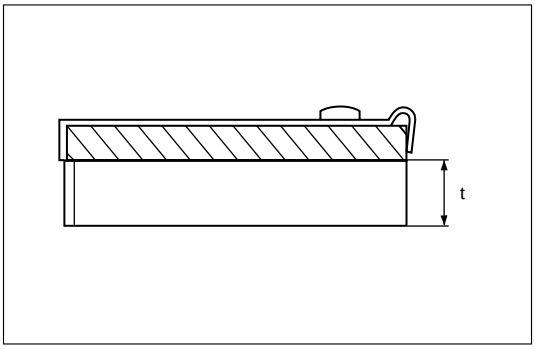

FRONT AND REAR DISC BRAKE PADS INSPECTION

Check the outer pad by looking at each caliper from above. Check the thickness on the inner pad by looking down through the inspection hole in the top of the caliper. Whenever the pad is worn to about the thickness of the pad base, the pad should be removed for further measurements. The pad should be replaced anytime the pad thickness (t) is worn to within 1.0 mm (0.039 in) of the pad itself.
The disc pads have a wear indicator that makes a noise when the pad wears to where replacement is required.

Minimum Limit	mm (in)
1.0 (0.039)	

SERVICING THE FRONT BRAKE ROTOR

In the manufacturing of the front brake rotor, all the tolerances regarding surface finish, parallelism and lateral runout are held very closely. The maintenance of these tolerances provide the surface necessary to assure smooth brake operation.

LATERAL RUNOUT

Lateral runout is the movement of the rotor from side to side as it rotates on the spindle. This could also be referred to as “rotor wobble”.
This movement causes the piston to be knocked back into its bore. This results in additional pedal travel and a vibration during braking.

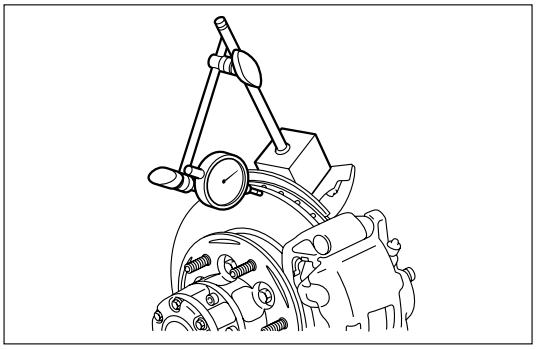

CHECKING LATERAL RUNOUT

1. Adjust the wheel bearing correctly.
   - Refer to Front Hub and Disc in Driveline / Axle Section.
2. Attach a dial indicator to some portion of the suspension so that the stem contacts the rotor face about 29 mm (1.14 in) from the rotor edge.
3. Move the rotor one complete rotation.
   - The lateral runout should not exceed 0.13 mm (0.005 in).

Maximum Runout	mm (in)
0.13 (0.005)	

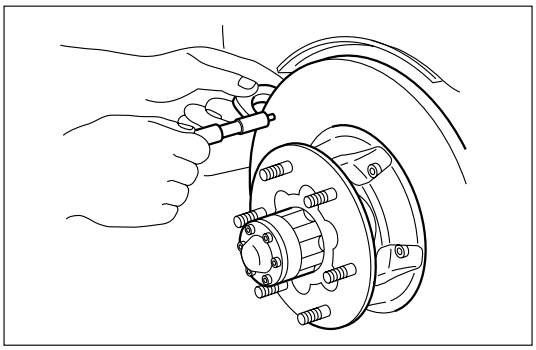

PARALLELISM

Parallelism is the measurement of the thickness of the rotor at four or more points around the circumference of the rotor. All measurement must be made at 29 mm (1.14 in) from the edge of the rotor.
The rotor thickness must not vary more than 0.010 mm (0.004 in) from point to point.

Maximum Parallelism	mm (in)
0.010 (0.0004)	

REPLACING FRONT BRAKE ROTORS

When installing new brake rotors, do not refinish the surfaces. These parts are at the correct level of surface finish.

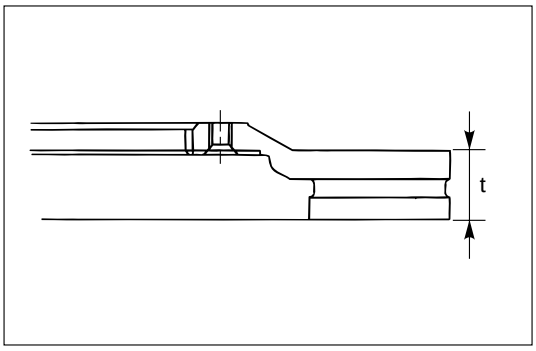

REFINISHING FRONT BRAKE ROTORS

Accurate control of the rotor tolerances is necessary for proper performance of the disc brakes. Machining of the rotor should be done only with precision equipment. All brake rotors have a minimum thickness dimension cast into them. This dimension is the minimum wear dimension and not a refinish dimension. The minimum wear dimension is 24.60 mm (0.969 in). The minimum refinish dimension is 24.97 mm (0.983 in).
When refinishing rotors, always use sharp cutting tools or bits. Dull or worn tools leave a poor surface finish which will affect initial braking performance. Vibration dampening attachments should always be used when refinishing braking surfaces. These attachments eliminate tool chatter and will result in better surface finish.
After refinishing, replace any rotor that does not meet the minimum thickness of 24.97 mm (0.983 in). Do not use a brake rotor that will not meet the specification.

Minimum Wear Dimension	mm (in)
24.60 (0.969)	

Refinish Dimension	mm (in)
24.97 (0.983)	

SERVICING THE REAR BRAKE ROTOR

In the manufacturing of the rear brake rotor, all the tolerances regarding surface finish, parallelism and lateral runout are held very closely. The maintenance of these tolerances provide the surface necessary to assure smooth brake operation.

LATERAL RUNOUT

Lateral runout is the movement of the rotor from side to side as it rotates on the spindle. This could also be referred to as “rotor wobble”.
This movement causes the piston to be knocked back into its bore. This results in additional pedal travel and a vibration during braking.

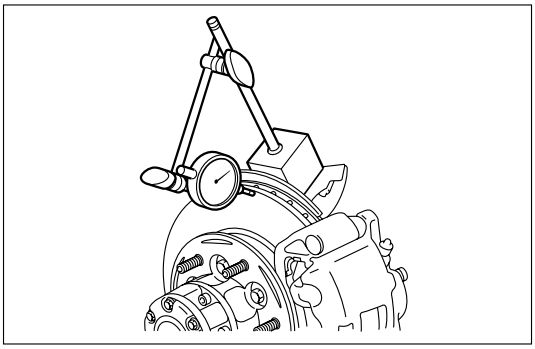

CHECKING LATERAL RUNOUT

1. Attach a dial indicator to some portion of the suspension so that the stem contacts the rotor face about 22 mm (0.87 in) from the rotor edge.
2. Move the rotor one complete rotation.
   - The lateral runout should not exceed 0.13 mm (0.005 in).

Maximum Runout	mm (in)
0.13 (0.005)	

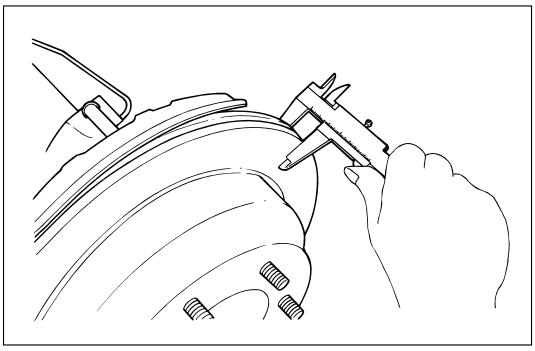

PARALLELSIM

Parallelism is the measurement of the thickness of the rotor at four or more points around the circumference of the rotor. All measurements must be made at 22 mm (0.87 in) from the edge of the rotor.
The rotor thickness must not vary more than 0.010 mm (0.0004 in) from point to point.

Maximum Parallelism Variation	mm (in)
0.010 (0.0004)	

REPLACING REAR BRAKE ROTORS

When installing new brake rotors, do not refinish the surfaces. These parts are at the correct level of surface finish.

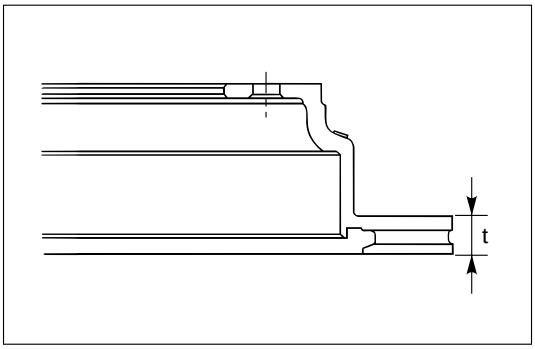

REFINISHING REAR BRAKE ROTORS

Accurate control of the rotor tolerances is necessary for proper performance of the disc brakes. Machining of the rotor should be done only with precision equipment. All brake rotors have a minimum thickness dimension cast into them. This dimension is the minimum wear dimension and not a refinish dimension. The minimum wear dimension is 16.60 mm (0.654 in). The refinish dimension is 16.97 mm (0.668 in).
When refinishing rotors, always use sharp cutting tools or bits. Dull or worn tools leave a poor surface finish which will affect initial braking performance.

Vibration dampening attachments should always be used when refinishing braking surfaces. These attachments eliminate tool chatter and will result in better surface finish.

After refinishing, replace any rotor does not meet the minimum thickness of 16.97 mm (0.668 in). Do not use a brake rotor that will not meet the specification.

Minimum Wear Dimension	mm (in)
16.60 (0.654)	

Refinish Dimension	mm (in)
16.97 (0.668)	

FIXING TORQUE

Brake Hydraulic Lines

N·m (kg·m/lb·ft)

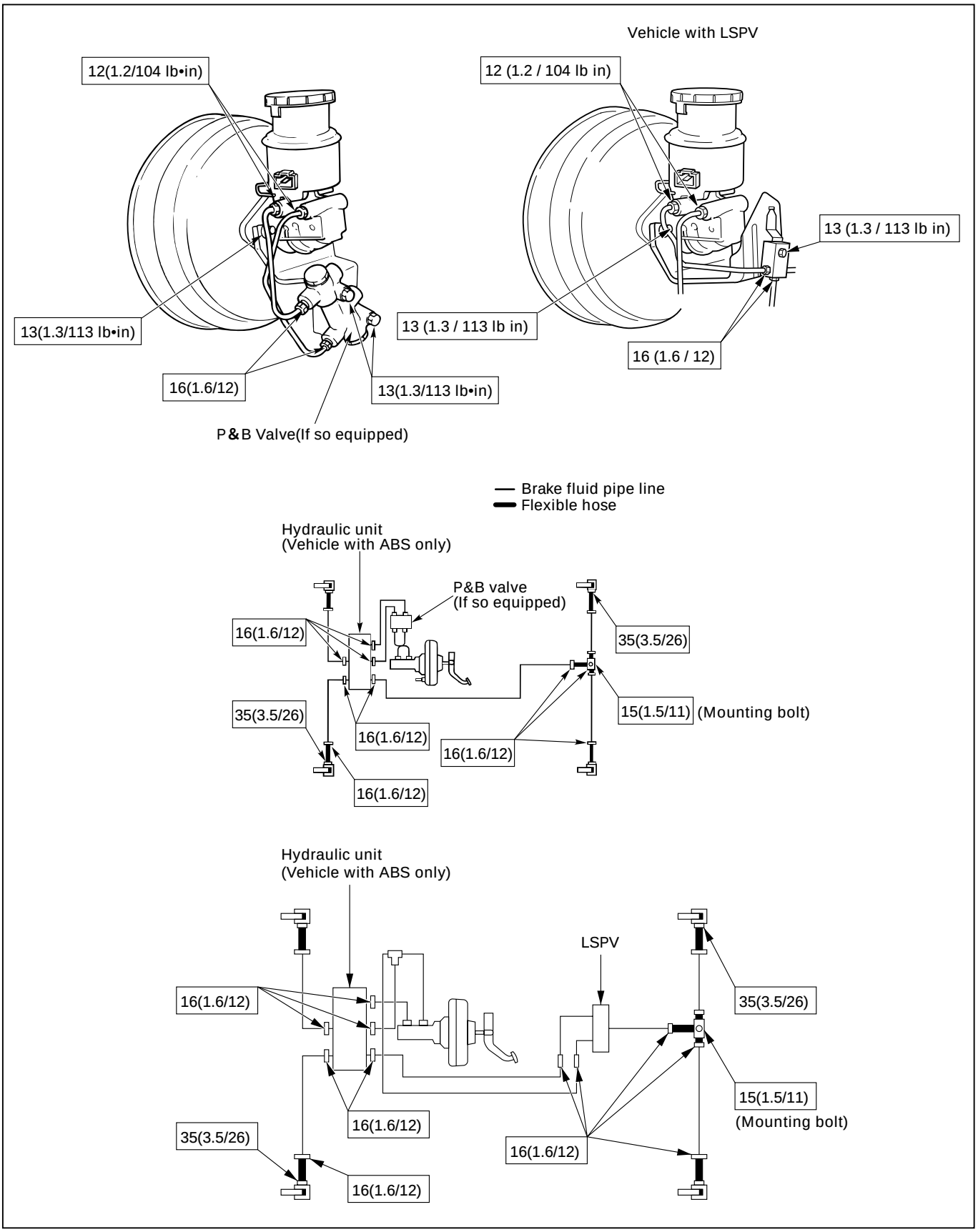

Brake Pedal

N·m (kg·m/lb·ft)

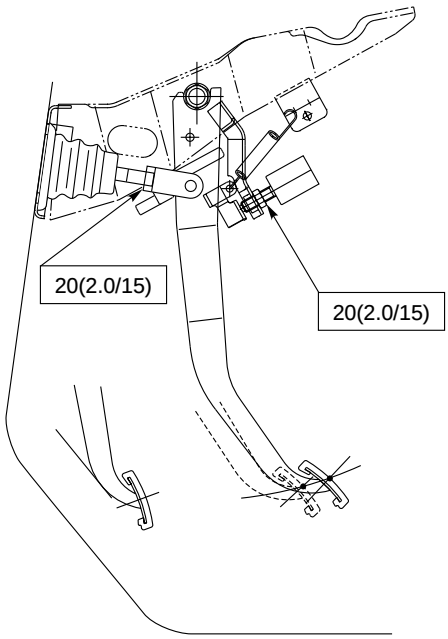

Front and Rear Brakes

N·m (kg·m/lb·ft)

Front disc brake

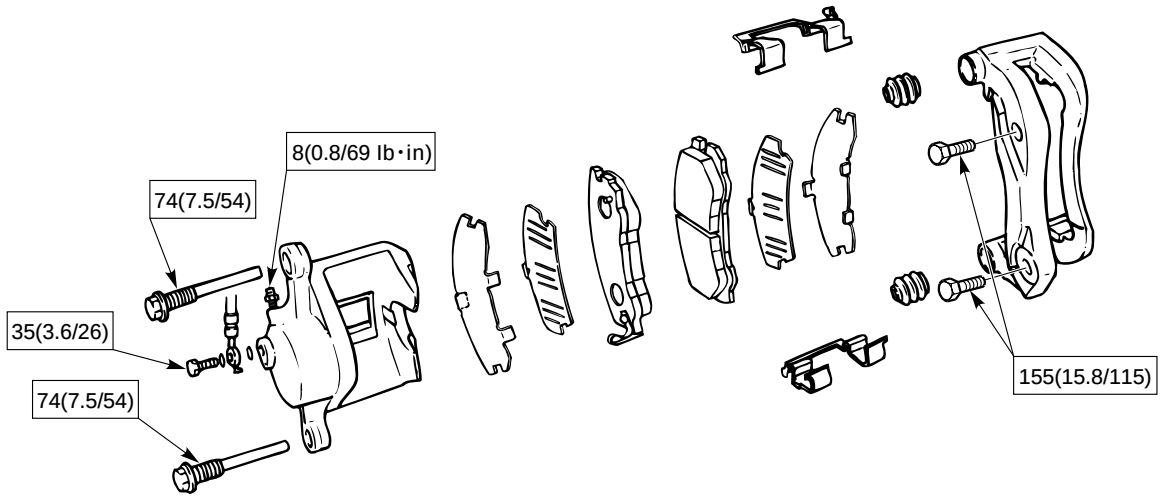

Rear disc brake

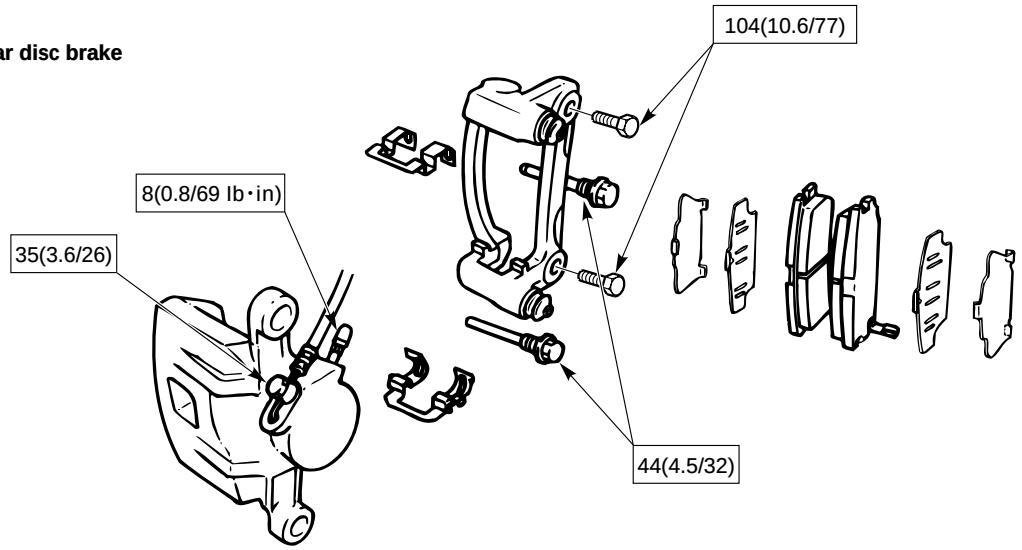

SPECIAL TOOLS

ILLUSTRATION	PART NO.	PARTNAME
	5-8840-2306-0 (J-39242)	Primary piston holder (including master cylinder attach-ment and master cylinder plug)
	5-8840-0277-0 (J-24460-01)	Radiator cap tester
	5-8840-2300-0 (J-39216)	Push rod gauge
	5-8840-0279-0 (J-23738-A)	Vacuum pump
	5-8840-2305-0 (J-39241)	Push rod support

GENERAL DESCRIPTION

MASTER CYLINDER

The master cylinder contains two pistons that supply the hydraulic pressure for a dual-circuit braking system. The primary piston provides the fluid pressure to the front brakes, while the secondary piston provides the fluid pressure to the rear brakes. If the pressure is lost from either system, the remaining system will function to stop the vehicle.

CAUTION:

1) **The master cylinder is not repairable. If found defective, it must be replaced as complete assembly.**
2) **If any hydraulic component is removed or disconneted, it may be necessary to bleed all or part of the brake system.**
3) **The torque values specified are for dry, unlubricated fasteners.**
4) **Perform service operations on a clean bench free from all mineral oil materials.**

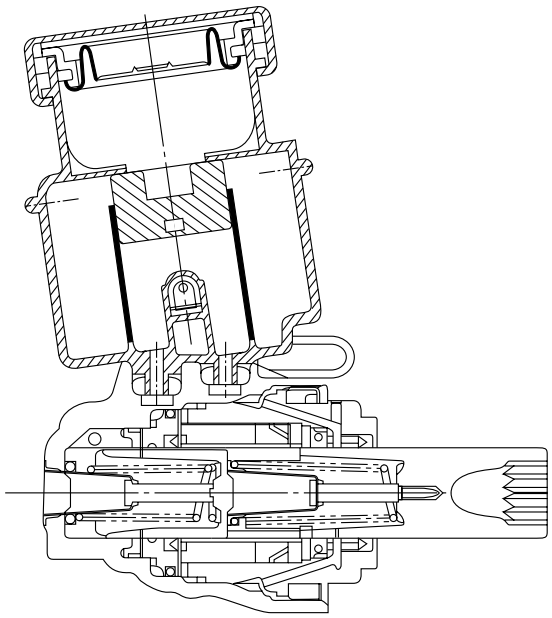

330RW013

VACUUM BOOSTER

This booster is a tandem vacuum unit with a diaphragm effective diameter 205 mm + 230 mm (gasoline engine model) / 180 mm + 205 mm (diesel engine model). In normal operating mode, with the service brakes in the released position, the tandem vacuum booster operates with vacuum on both sides of its diaphragms. When the brakes are applied, air at atmospheric pressure is admitted to one side of each diaphragm to provide the power assist. When the service brake is released, the atmospheric air is shut off from the one side of each diaphragm. The air is then drawn from the booster through the vacuum check valve to the vacuum source.

CAUTION:

1) **If any hydraulic component is removed or disconnected, it may be necessary to bleed all or part of the brake system.**
2) **The torque values specified are for dry, unlubricated fasteners.**
3) **The vacuum booster is not repairable and must be replaced as complete assembly.**

DISC BRAKES

The disc brake assembly consists of a caliper, piston, rotor, pad assembly and support bracket. The caliper assembly has a single bore and is mounted to the support bracket with 2 mounting bolts. The support bracket allows the caliper to move laterally against the rotor. The caliper is a one-piece casting with the inboard side containing the piston bore. A square cut rubber seal is located in a groove in the piston bore which provides the hydraulic seal between the piston and the cylinder wall.

NOTE:

1) **Replace all components included in repair kits used to service this caliper.**
2) **Lubricate rubber parts with clean brake fluid to ease assembly.**
3) **If any hydraulic component is removed or disconnected, it may be necessary to bleed all or part of the brake system.**
4) **Replace pads in axle sets only.**
5) **The torque values specified are for dry, unlubricated fasteners.**
6) **Perform service operation a clean bench free from all mineral oil materials.**

OPERATION

Hydraulic pressure, created by applying the brake pedal, is converted by the caliper to a stopping force. This force acts equally against the piston and the bottom of the caliper bore to move the piston outward and to move (slide) the caliper inward resulting in a clamping action on the rotor. This clamping action forces the linings against the rotor, creating friction to stop the vehicle.

Front disc brakes

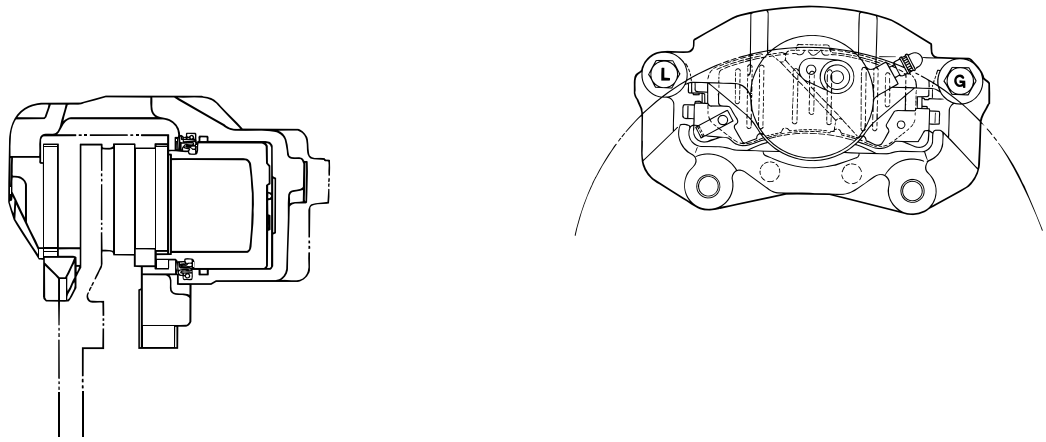

Rear disc brakes

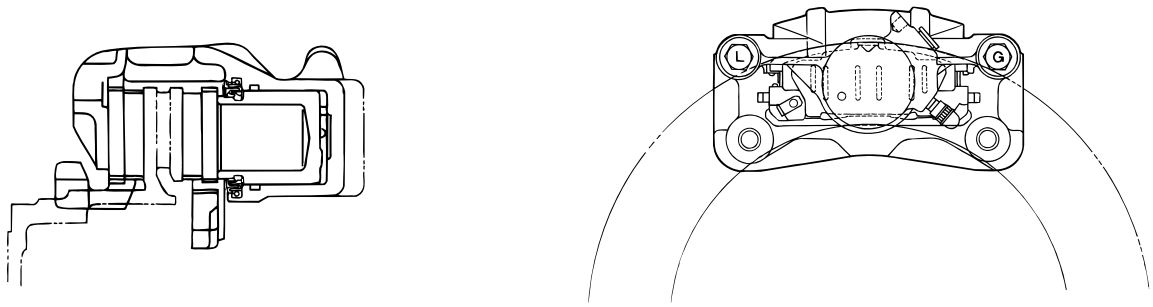

ON-VEHICLE SERVICE

BRAKE HOSE REPLACEMENT

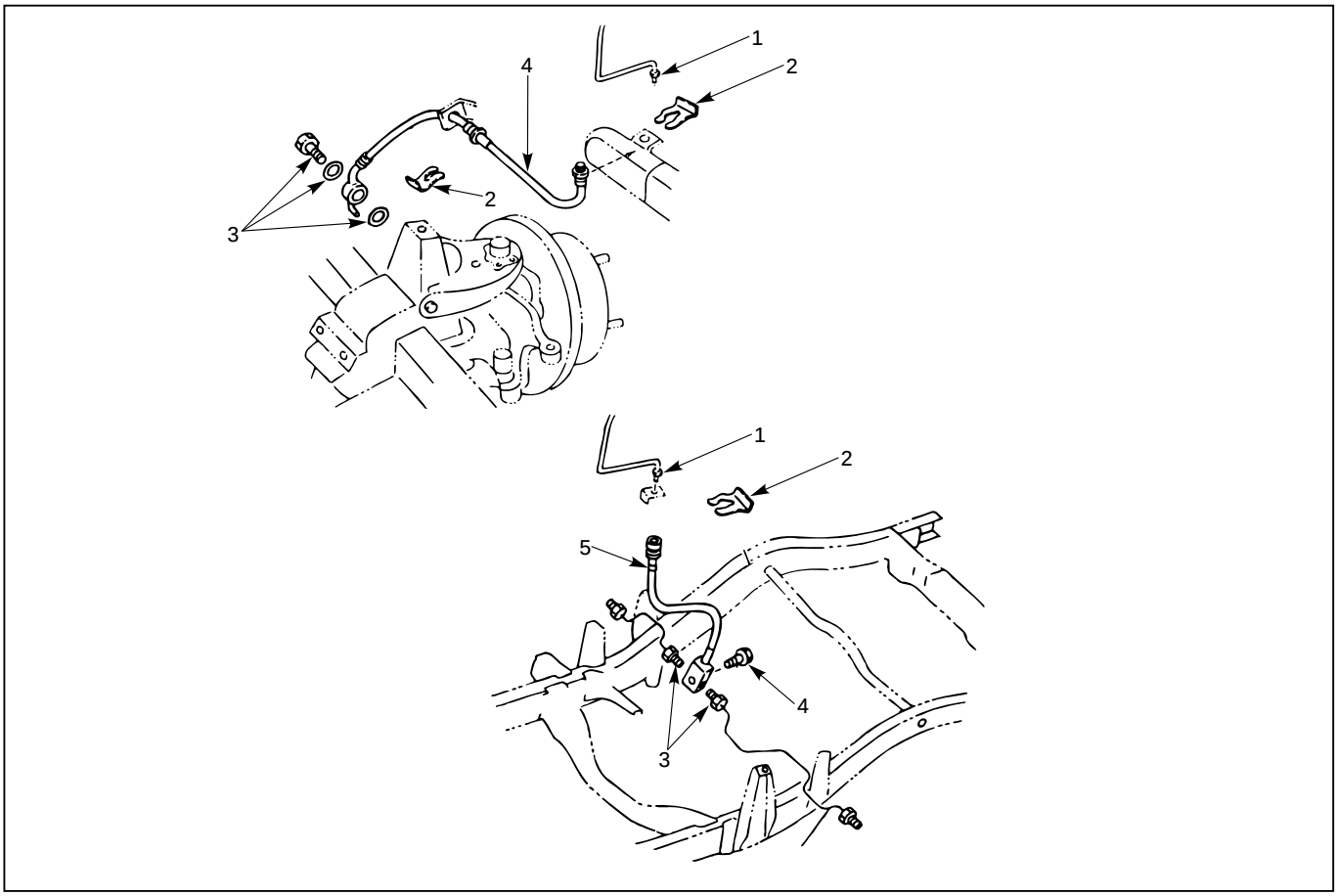

Front/Rear Caliper Brake Hose

Removal Steps

1. Brake pipe
2. Clip
3. Bolt and gasket
4. Hose

Installation Steps

To install, follow the removal steps in the reverse order.

Rear Axle Brake Hose

Removal Steps

1. Brake pipe
2. Clip
3. Brake pipe
4. Bolt
5. Hose

Installation Steps

To install, follow the removal steps in the reverse order.

REMOVAL

Preparation:

1) Raise the vehicle and support it with suitable safety stands.
2) Remove wheel and tire assembly.
3) Clean dirt, grease, and other foreign material off the hose fittings at both ends.

Front/Rear Caliper Brake Hose

1. **Brake Pipe**
2. **Clip**
3. **Bolt and Gasket**
4. **Hose**

Rear Axle Brake Hose

1. **Brake Pipe**
2. **Clip**
3. **Brake Pipe**
4. **Bolt**
5. **Hose**

INSTALLATION

To install, follow the removal steps in the reverse order, noting the following points. After installing the brake hoses, bleed brakes as described in this section.

Front/Rear Caliper Brake Hose

1. Tighten the brake pipes to the specified torque.

Brake Pipe Torque	N·m(kg·m/lb·ft)
16 (1.6 / 12)	

2. Tighten the bolt to the specified torque.

Bolt Torque	N·m(kg·m/lb·ft)
35 (3.5 / 26)	

NOTE:

- **Always use new copper gaskets.**
- **Be sure to put the hooked edge of the flexible hose end into the anti-rotation cavity.**

Rear Axle Brake Hose

1. Tighten the brake pipes to the specified torque.

Brake Pipe Torque	N·m(kg·m/lb·ft)
16 (1.6 / 12)	

2. Tighten the bolt to the specified torque.

Bolt Torque	N·m(kg·cm/lb·in)
13 (130 / 113)	

BRAKE PIPE REPLACEMENT

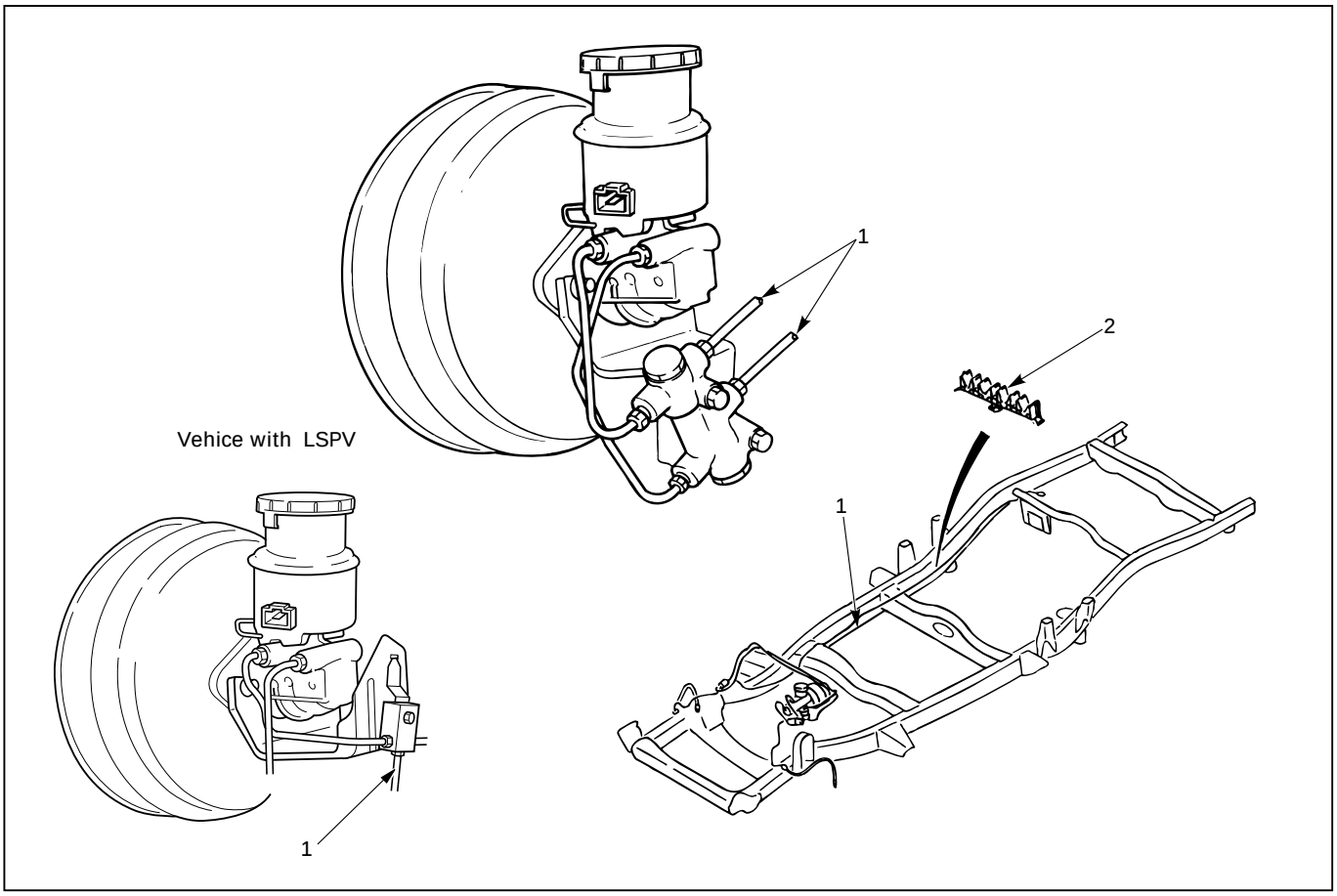

Removal Steps

1. Brake pipe
2. Plastic clip

Installation Steps

To install, follow the removal steps in the reverse order.

REMOVAL

Preparation:

1) Raise the vehicle and support it with suitable safety stands.
2) Remove wheel and tire assembly as necessary.
3) Clean dirt, grease, and other foreign material off the pipe fittings at both ends.

1. Brake Pipe

2. Plastic Clip

INSTALLATION

To install, follow the removal steps in the reverse order, noting the following points. After installing the brake pipes, bleed brakes as described in this section.

1. Tighten the brake pipes to the specified torque.

Brake Pipe Torque	N·m(kg·m/lb·ft)
Master Cylinder Side	Others
12 (1.2/9)	16 (1.6/12)

P & B (PROPORTIONING AND BYPASS) VALVE

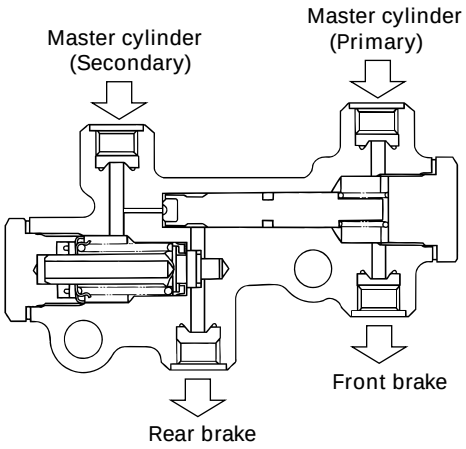

The P & B valve contains two sections, each serving a different function.
The proportioning section of the P & B valve proportions outlet pressure to the rear brakes after a predetermined rear input pressure has been reached. This is done to prevent rear wheel lock-up on the vehicles with light rear wheel loads.
The valve has a By-bass feature which assures full system pressure to the rear brakes in the event of a font brake mulfunction, also full front pressure is retained in the event of rear brake mulfunction.
The P & B valve is not repairable and must be replaced as a complete assembly.

P & B VALVE REPLACEMENT

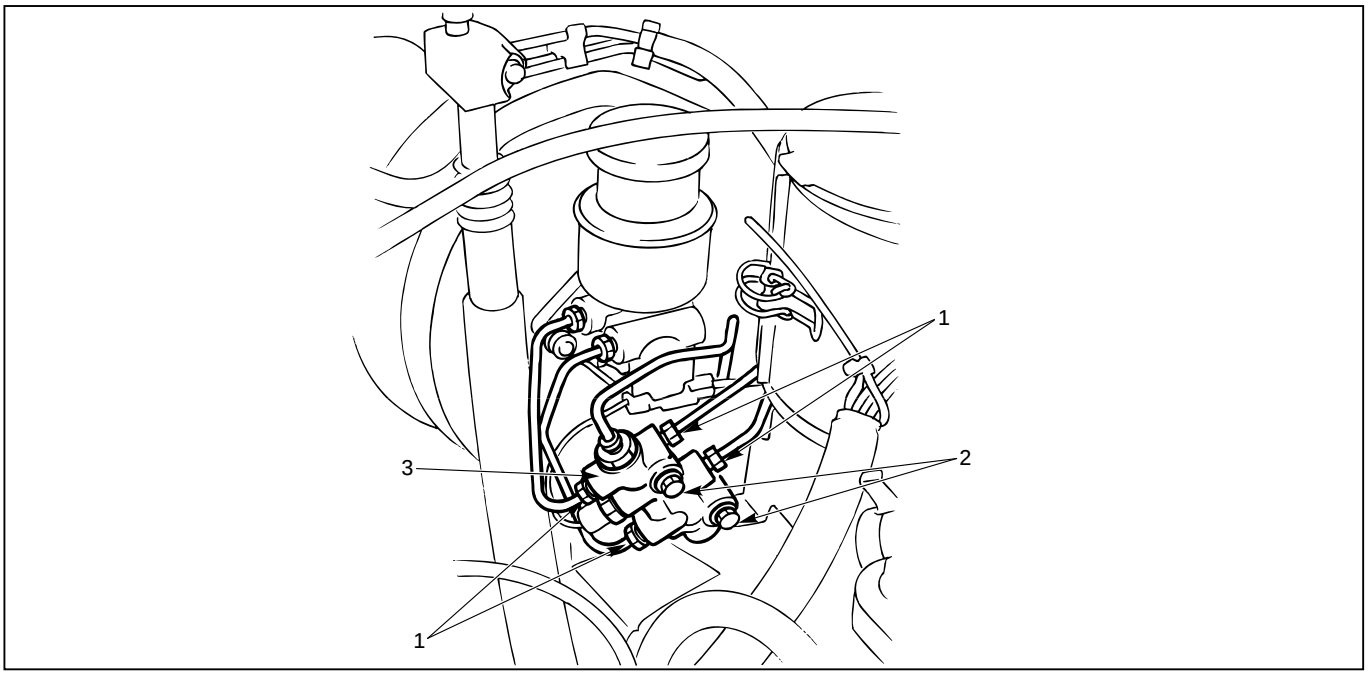

Removal Steps

1. Hydraulic pipes
2. Bolt
3. P & B valve

Installation Steps

To install, follow the removal steps in the reverse order.

REMOVAL

- P & B valve is not repairable and must be replaced as a complete assembly.
- Care must be taken to prevent brake fluid from contacting any painted surface.

1. Hydraulic Pipes

- Plug the pipes to prevent the loss of fluid or the entrance of dirt.

2. Bolt

3. P & B Valve

INSTALLATION

3. P & B Valve

2. Bolt

Bolt Torque	N·m(kg·cm/lb·in)
13 (130/113)	

1. Hydraulic Pipes

Hydraulic Pipe Torque	N·m(kg·m/lb·ft)
16 (1.6/12)	

After installing the brake pipes, bleed brakes as described in Bleeding Brake Hydrauric System this section.

LOAD SENSING PROPORTIONING VALVE (LSPV) (FOR EUROPE AND SOUTH AFRICA)

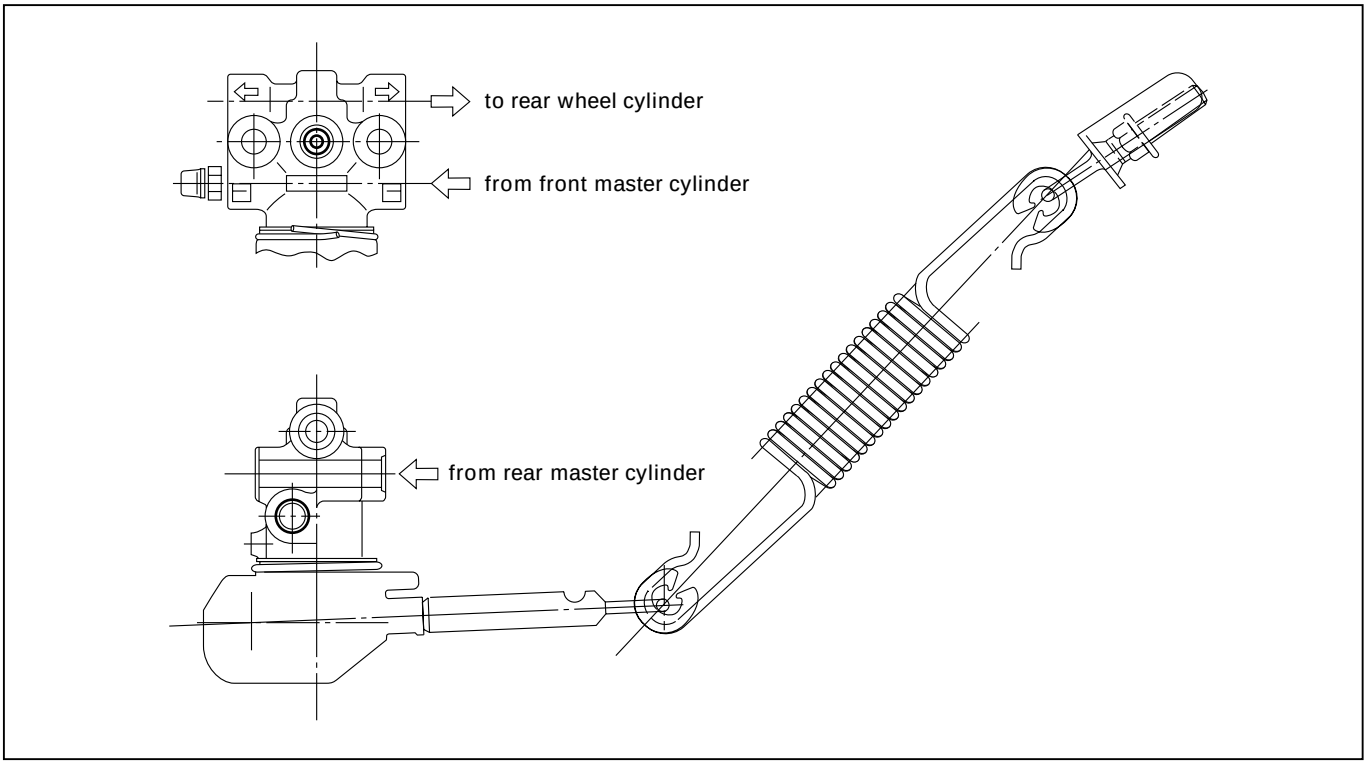

F05RW003

Structure and Operation

The following is an explanation of the structure and operation of the linkage type load sensing device. This device controls the fluid pressure to the rear brakes in accordance with changes in rear axle load (vertical displacements of the rear axle springs).

- Structure

  This device consists of a load sensing lever and a valve.

  The valve is mounted through a bracket to the frame. One end of the load sensing lever is fixed to the valve at the frame and the other end to the rear axle housing through a spring.

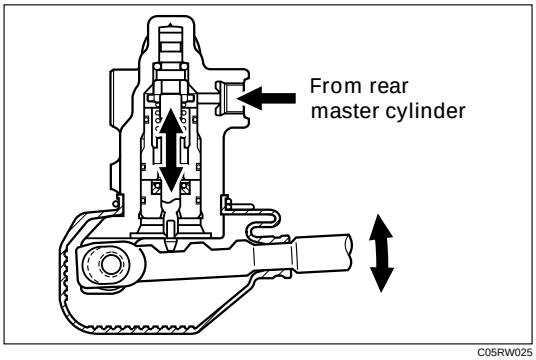

C05RW025

- Operation

1) Outline

When the L.S.P.V. (Load Sensing Proportioning Valve) detects a change in load weight, the load sensing lever moves. Its reaction force is transmitted to the bottom of the load sensing valve to secure an optimum rear wheel cylinder fluid pressure break point in proportion to the actual load weight.
Besides, if the front brake system should fail, the devices is designed to prevent the master cylinder fluid pressure from decreasing and to apply it directly to the rear wheel cylinder to obtain a sufficient braking performance.

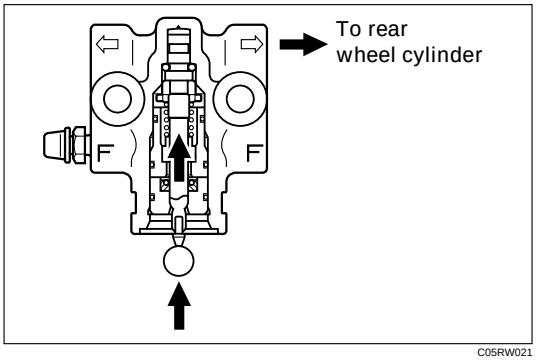

C05RW021

2) Operation

(1) When the fluid pressure is under the break point.
The fluid pressure of the rear master cylinder passes through a clearance between the valve seal and the piston and acts on the rear wheel cylinder. At this moment, a downward force is applied to the piston. However, the compression spring force and reaction force of the load sensing lever keep the piston in the upper position by pushing upwards. (See the left figure.)

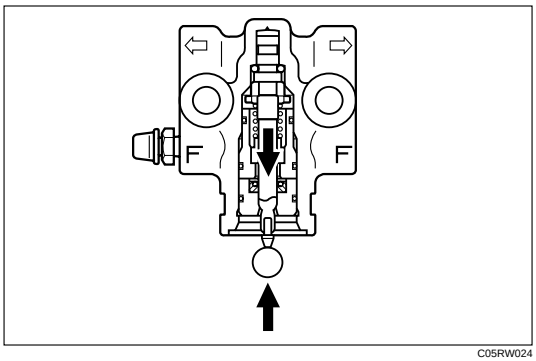

C05RW024

(2) When the fluid pressure is equal to the break point.
As the rear wheel cylinder pressure increases, it surpasses the compression spring force and reaction force of the load sensing lever, causing the pistion to move downwards, so that the pistion butts against the valve seal to shut off the fluid line between the master cylinder and rear wheel cylinder. (See the left figure.)

(3) When the fluid pressure is over the break point.
When the fluid pressure increases further, the piston moves upwards. The moment the piston comes apart from the valve seal, fluid pressure is applied to the rear wheel cylinder and the piston moves downwards so that the fluid line is shut off again. This process goes on repeatedly to control the fluid pressure to the rear wheel cylinder.

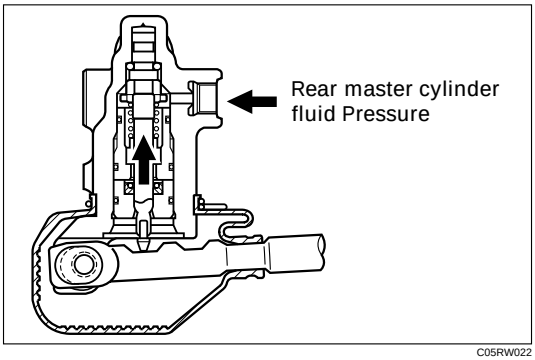

C05RW022

(4) When the front brake system fails.
When there is a failure in the front brake system, the fluid pressure from the front master cylinder decreases. As a result, the balance between the front and rear brake side fluid pressures is lost at the control valve sleeve so that the control valve sleeve moves upwards.
The control valve sleeve strikes against the piston, thereby pushing the piston upwards.
Accordingly, the fluid pressure of the rear master cylinder is not decreased and is applied directly to the rear wheel cylinder to secure a sufficient braking performance of the rear brakes. (See the left figure.)

Valve Maintenance
In the case of fluid leak or other abnormalities, faulty valve should be replaced.

Note:
The load sensing proportioning valve is not repairable and must be replaced as a complete assembly.

ADJUSTMENT PROCEDURE OF LSPV

1. Adjust the rear axle weight by loading the laggage compartmemt as necessary.

Rear Axle Weight	N (kg / lb)
10,300 (1,050 / 2,315)	

Note:
The rear axle weight should be adjusted to the specified value with a man seated in the driver seat.

2. Check the rear wheel cylinder fluid pressure. Install the pressure gauge on bleeder screws on the front and rear brakes.
   a. Depress the brake pedal slowly until the front wheel cylinder fluid pressure reaches 7845 kPa (80 kg/cm^2 / 114 psi)

      Note:
      - **The brake pedal should be depressed gradually until specified pressure is reached without pumping or adjusting foot pressure.**
      - **If the front wheel cylinder fluid pressure rises abobe 7845 kPa (80 kg/cm^2 / 114 psi), release the pedal fully, then depress the pedal again.**

   b. Hold the front wheel cylinder fluid pressure at 7845 kPa (80 kg/cm^2 / 114 psi) for 2 seconds, check the rear wheel cylinder fluid pressure.

Rear wheel cylinder fluid pressure	kPa (kg/cm^2 / psi)
6374±539 (65±5.5 / 924±78)	

   c. If the rear wheel cylinder fluid pressure is not within the specified range, adjust the fluid pressure.

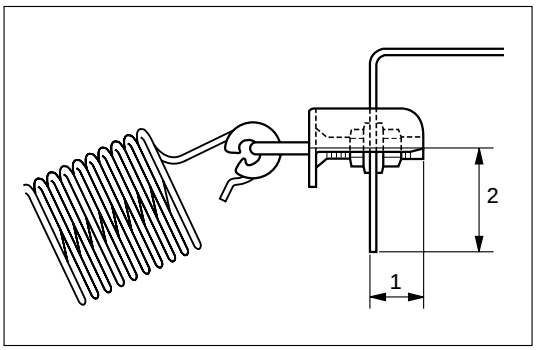

C05RW023

3. Adjust the rear wheel cylinder fluid pressure. The fluid pressure can be adjusted by the bolt projection (1) or bolt projection (2).
   a. If the fluid pressure is lower than specified range, increase the dimention (1) or (2).
   b. If the fluid pressure is higher than the specified range, decrease the dimention (1) or (2).

      Reference:

      Dimention (1): The fluid pressure can be adjusted about 196 kPa (2 kg/cm^2 / 28 psi) by one turning of the nut.

      Dimention (2): The fluid pressure can be adjusted about 98 kPa (1 kg/cm^2 / 14 psi) by sliding the bolt position (per 1 mm / 0.039 in).
4. Check the rear wheel cylinder fluid pressure. If the rear wheel cylinder fluid pressure is not within the specified range, try the adjustment again.
5. Bleed the brake hydraulic line and check the fluid leak.

BRAKE PEDAL REPLACEMENT

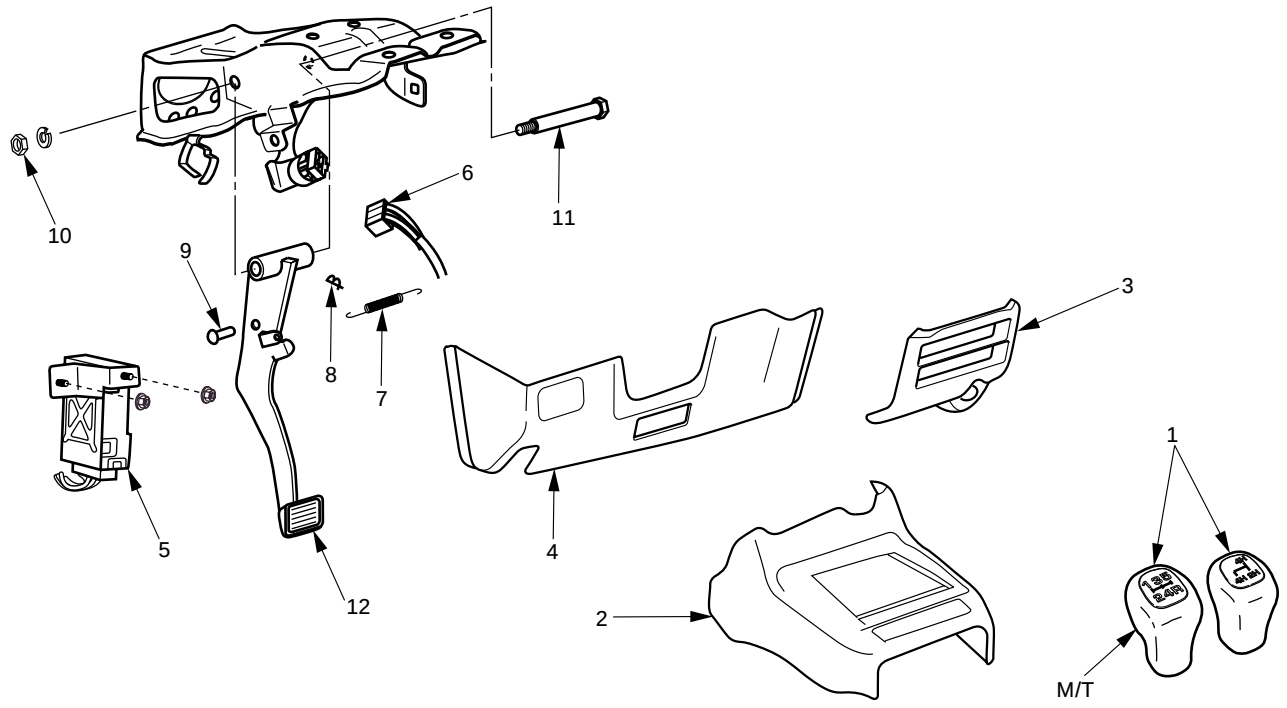

This illustration is based on the LHD model.

Removal Steps

1. Shift knob
2. Front console assembly
3. Lower cluster assembly
4. Instrument panel driver lower cover assembly
5. Anti-theft controller
6. Stoplight switch connector
7. Return spring
8. Snap pin
9. Pin
10. Nut
11. Pin, fulcrum
12. Brake pedal

Installation Steps

12. Brake pedal
11. Pin, fulcrum
10. Nut
9. Pin
8. Snap pin
7. Return spring
6. Stoplight switch connector
5. Anti-theft controller
4. Instrument panel driver lower cover assembly
3. Lower cluster assembly
2. Front console assembly
1. Shift knob

REMOVAL

1. **Shift Knob**
2. **Front Console Assembly**
3. **Lower Cluster Assembly**
4. **Instrument Panel Driver Lower Cover Assembly**
5. **Anti-theft Controller**
6. **Stoplight switch Connector**
7. **Return Spring**
8. **Snap Pin**
9. **Pin**
10. **Nut**
11. **Pin, Fulcrum**
12. **Brake Pedal**

INSTALLATION

12. **Brake Pedal**
11. **Pin, Fulcrum**
    - Apply grease to the entire circumference of the fulcrum pin.
10. **Nut**

Bolt and Nut Torque	N·m (kg·m / lb·ft)
	33 (3.3 / 24)

9. **Pin**
    - Apply grease to the entire circumference of the push rod pin.
8. **Snap Pin**
    - Adjust pedal free travel. Refer to “Brake Pedal Adjustment” previously in this section.
7. **Return Spring**
6. **Stoplight Switch Connector**
5. **Anti-theft Connector**
4. **Instrument Panel Driver Lower Cover Assembly**
3. **Lower Cluster Assembly**
2. **Front Console Assembly**
1. **Shift Knob**

STOPLIGHT SWITCH REPLACEMENT

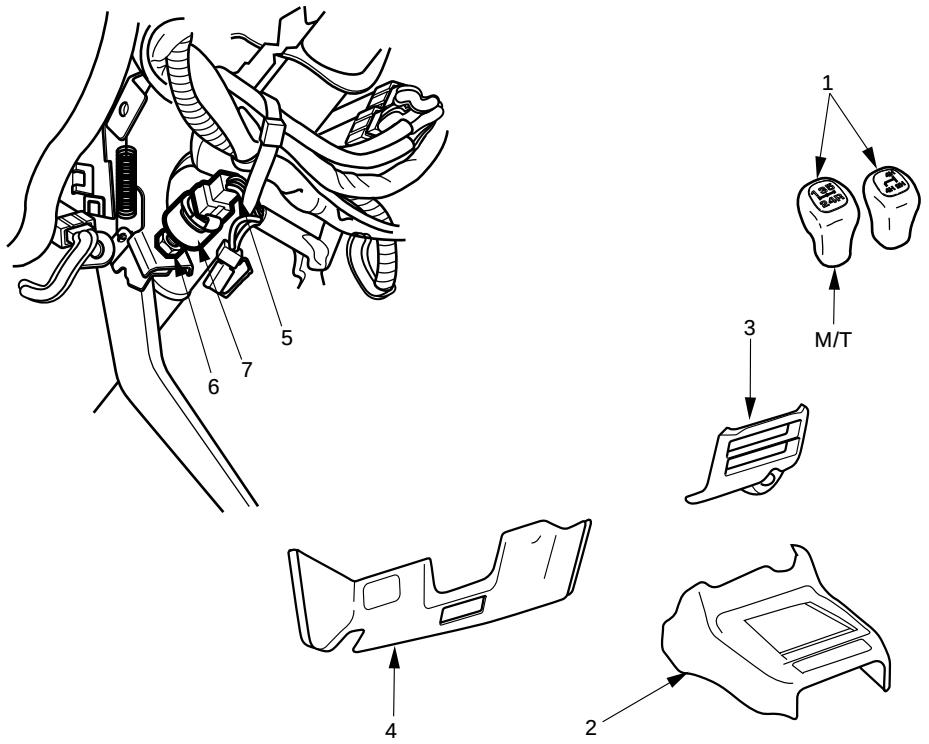

This illustration is based on the LHD model.

Removal Steps

1. Shift Knob
2. Front Console Assembly
3. Lower Cluster Assembly
4. Instrument Panel Driver Lower Cover Assembly
5. Stoplight Switch Connector
6. Lock Nut
7. Switch

Installation Steps

7. Switch
6. Lock Nut
5. Stoplight Switch Connector
4. Instrument Panel Driver Lower Cover Assembly
3. Lower Cluster Assembly
2. Front Console Assembly
1. Shift Knob

REMOVAL

1. **Shift Knob**
2. **Front Console Assembly**
3. **Lower Cluster Assembly**
4. **Instrument Panel Driver Lower Cover Assembly**
5. **Stoplight Switch Connector**
6. **Lock Nut**
7. **Switch**

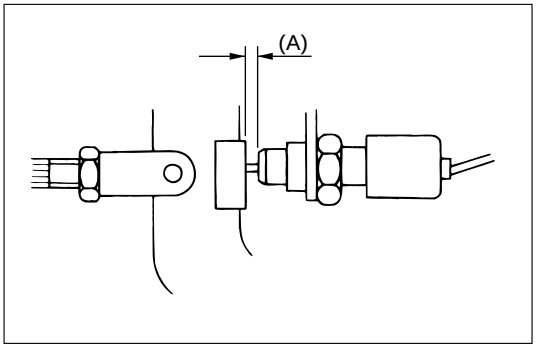

INSTALLATION

7. **Switch**
   - Adjust the stoplight switch to the specified clearance (between switch housing and brake pedal) by rotating the switch housing.

Clearance	mm (in)
0 – 0.2 (0 – 0.008)	

NOTE:
While adjusting the installation of the stoplight switch, make sure that the threaded part of the stoplight switch does not push the brake pedal.

6. **Lock Nut**
5. **Stoplight Switch Connector**
4. **Instrument Panel Driver Lower Cover Assembly**
3. **Lower Cluster Assembly**
2. **Front Console Assembly**
1. **Shift Knob**

FLUID RESERVOIR TANK

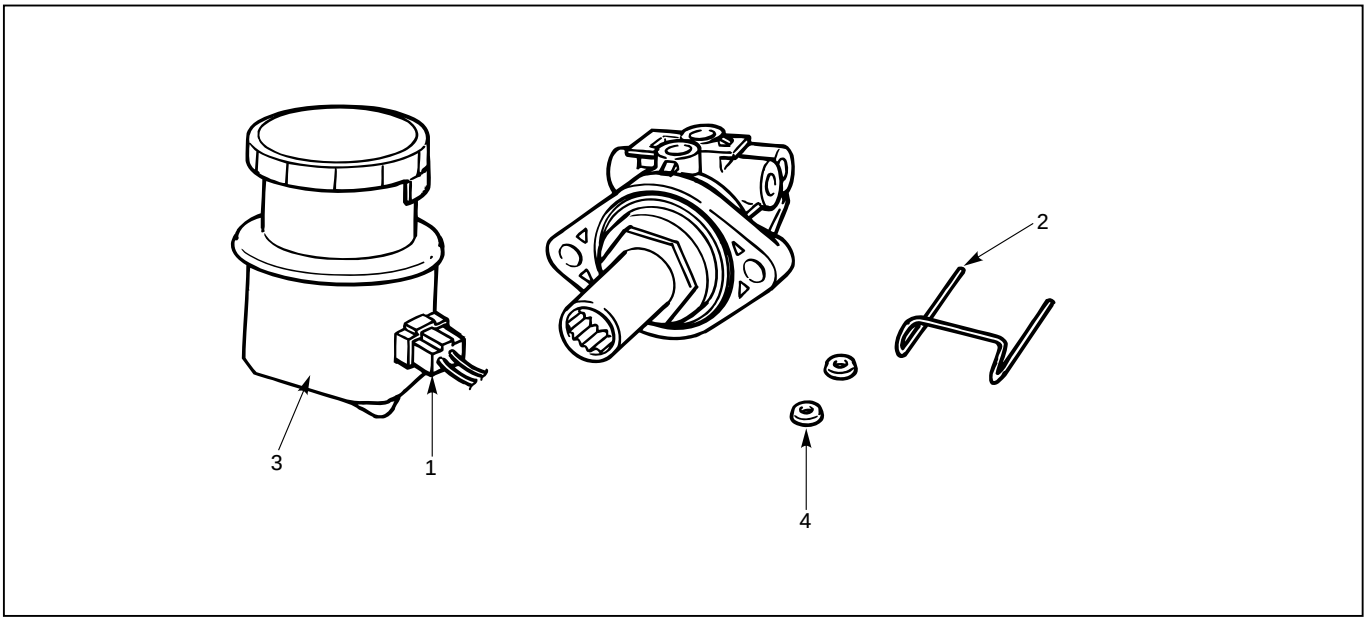

Removal Steps

1. Electrical connector
2. Retainer
3. Fluid reservoir
4. O-ring

Installation Steps

To install, follow the removal steps in the reverse order.

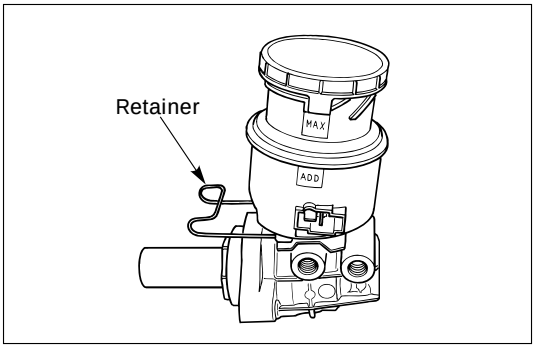

REMOVAL

NOTE:
Before removing fluid reservoir, remove brake fluid from fluid reservoir.

1. **Electrical Connector**
2. **Retainer**
3. **Fluid Reservoir**
   - The fluid level sensor is built into the fluid reservoir. It cannot be removed for servicing.
4. **O-ring**

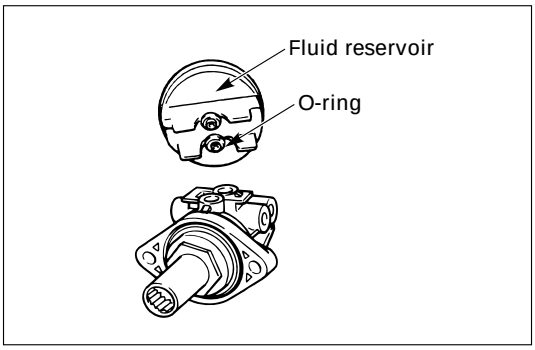

INSTALLATION

To install, follow the removal steps in the reverse order, noting the following points;

4. **O-ring**
   - O-ring must be set onto the fluid reservoir, before installing fluid reservoir.

MASATER CYLINDER ASSEMBLY

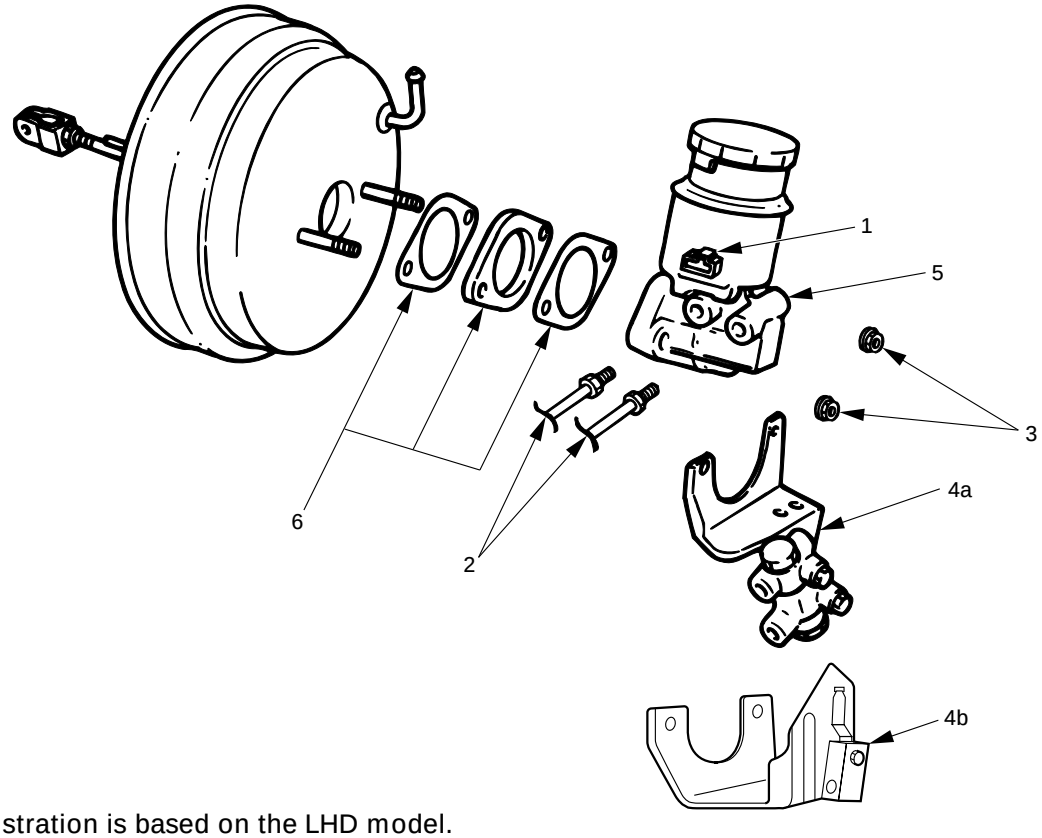

This illustration is based on the LHD model.

330RW015

Removal Steps

1. Electrical connector
2. Brake pipes
3. 2 attaching nuts

4a. P&B valve and bracket

4b. 3-way connector and bracket (Vehicle with LSPV only)

5. Master cylinder
6. Spacer and 2 gaskets

Installation Steps

To install, follow the removal steps in the reverse order.

REMOVAL

CAUTION:
When removing master cylinder from vacuum booster, be sure to get rid of the internal negative pressure of the vacuum booster (by, for instance, disconnecting vacuum hose) in advance.
If any negative pressure remains in the vacuum booster, the piston may possibly come out when the master cylinder is being removed, letting the brake fluid run out.
While removing master cylinder, further, do not hold the piston as it can be easily pulled out.
Outside surface of the piston is the surface on which seals are to slide. Care should be taken to keep the surface free of cuts and dents.

1. **Electrical Connector**
2. **Brake Pipes**
   - After disconnecting the brake pipe, cap or tape the openings of the brake pipe to prevent the entry of foreign matter.
3. **2 Attaching Nuts**

4a. **P & B Valve and Bracket**

4b. **3-way Connector and Bracket (Vehicle with LSPV Only)**

5. **Master Cylinder**
6. **Spacer and 2 Gaskets**

INSTALLATION

6. **Spacer and 2 Gaskets**
5. **Master Cylinder**
   - When replacing the master cylinder or vacuum booster or both, always measure the vacuum booster push rod protrusion and adjust it as necessary. (Refer to Vacuum Booster Assembly in this section.)

4a. **P & B Valve and Bracket**

4b. **3-way Connector and Bracket (Vehicle with LSPV Only)**

3. **2 Attaching Nuts**
   - Tighten the attaching nuts to the specified torque.

Attaching Nut Torque	N·m (kg·cm / lb·in)
13 (130 / 113)	

2. **Brake Pipes**
   - Tighten the brake pipe to the specified torque.

Brake Pipe Torque	N·m (kg·m / lb·ft)
Master Cylinder Side	Others
12 (1.2 / 9)	16 (1.6 / 12)

1. **Electrical Connector**

VACUUM BOOSTER ASSEMBLY

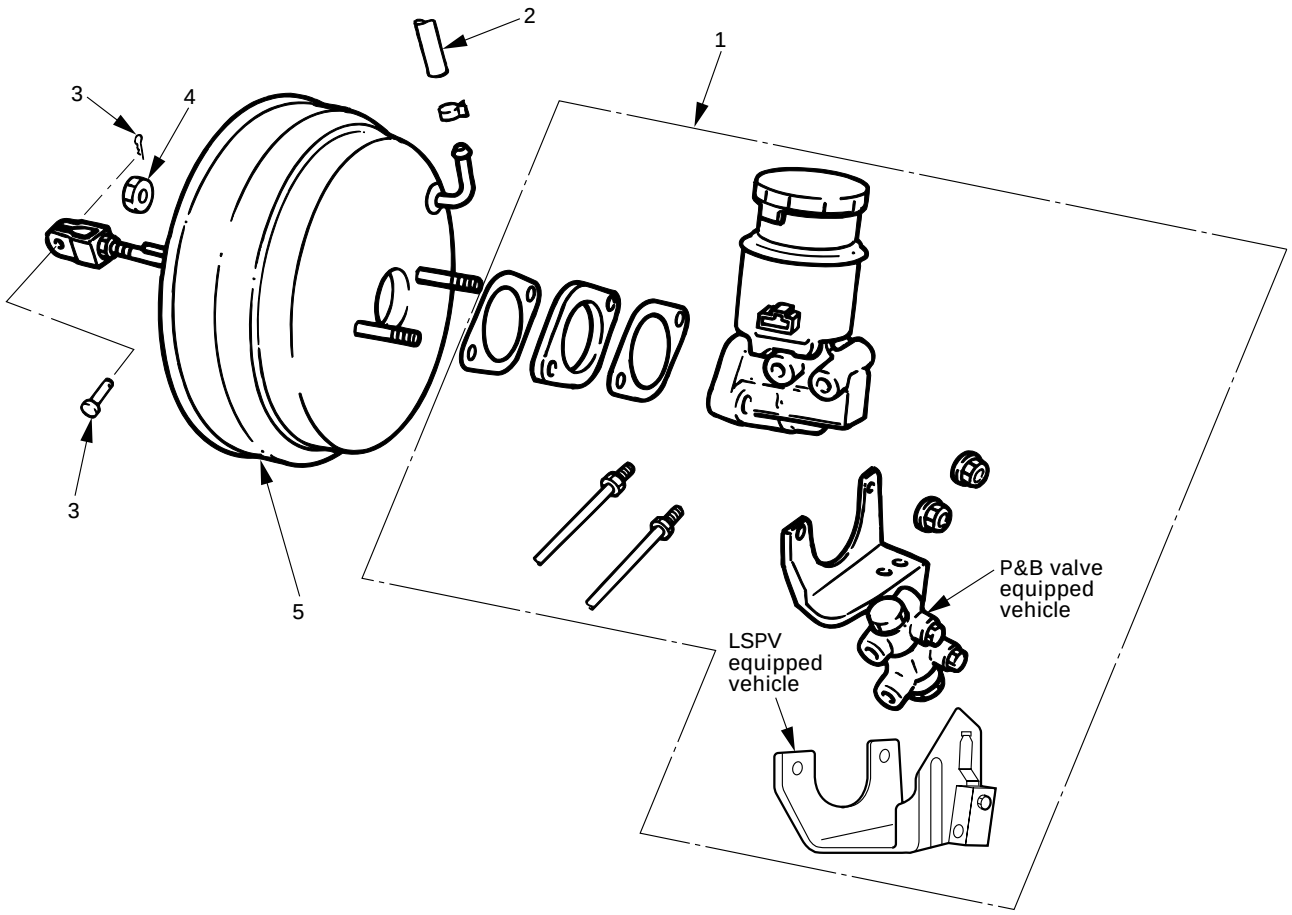

This illustration is based on the LHD model.

331RW010

Removal Steps

1. Master cylinder
2. Vacuum hose
3. Yoke clevis
4. Vacuum booster fixing nut
5. Vauum booster

Installation Steps

To install, follow the removal steps in the reverse order.

REMOVAL

- Before removing the vacuum booster assembly, disconnect and remove brake pipes.

1. **Master Cylinder**
   - Refer to Master Cylinder Assembly in this Section.

CAUTION:
When removing master cylinder from vacuum booster, be sure to get rid of the internal negative pressure of the vacuum booster (by, for instance, disconnecting vacuum hose) in advance.
If any negative pressure remains in the vacuum booster, the piston may possibly come out when the master cylinder is being removed, letting the brake fluid run out.
While removing master cylinder, further, do not hold the piston as it can be easily pulled out.
Outside surface of the piston is the surface on which seals are to slide. Care should be taken to keep the surface free of cuts and dents.

2. **Vacuum Hose**
3. **Yoke Clevis**
   - Disconnect the yoke clevis from the brake pedal.
4. **Vacuum Booster Fixing Nut**
5. **Vacuum Booster**

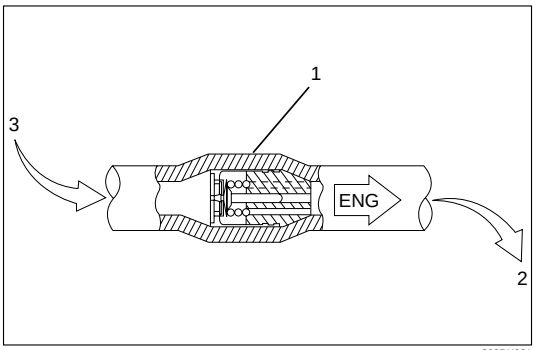

360RX001

INSPECTION AND REPAIR

Vacuum Hose

Inspect the check valve (1), which is installed inside the vacuum hose.

1) Air should pass freely from the vacuum booster side (3) to the engine side (2).
2) Air should not pass from the engine side (2) to the vacuum booster side (3). If it does, the check valve is inoperative and vacuum hose must be replaced.

INSTALLATION

5. **Vacuum Booster**

Vacuum booster push rod adjustment.

NOTE:
When replacing either master cylinder or vacuum booster, be sure to measure push rod, and adjust required.

Push rod gauge: 5-8840-2300-0 (J-39216)
Vacuum pump: 5-8840-0279-0 (J-23738-A)
Push rod support: 5-8840-2305-0 (J-39241)

1) Remove retainer from vacuum booster front shell using a small screwdriver. Then gently draw plate and seal assembly out of the shell inside.

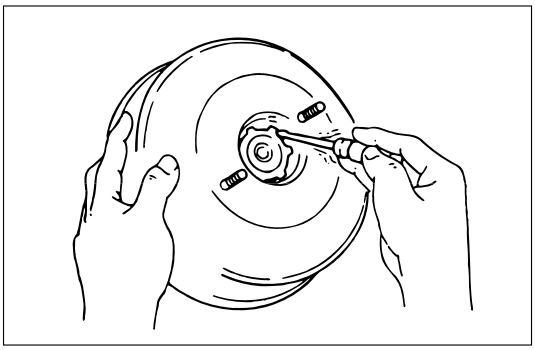

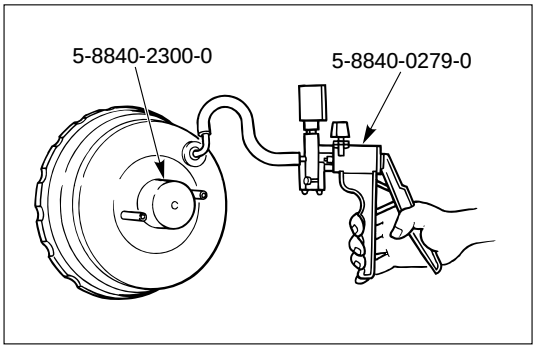

2) Set push rod gauge on vacuum booster, and apply negative pressure by means of vacuum pump so that the pressure in the vacuum booster becomes 500 mm Hg.

NOTE:
Be sure to apply. NEGATIVE pressure after installing a push rod gauge on vacuum booster.

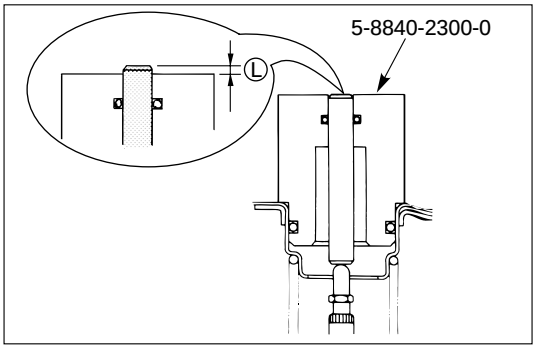

3) Measure dimension Ⓛ

Dimension Ⓛ (Standard)	mm
0 ± 0.1	

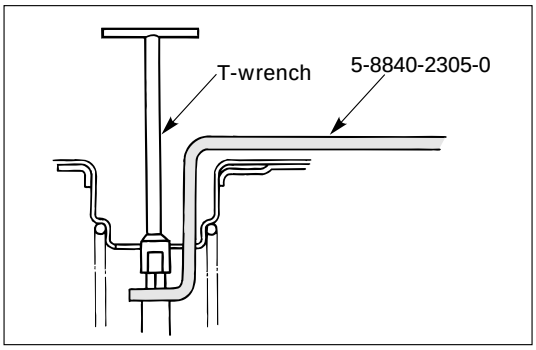

4) If dimension Ⓛ is out of the standard range, adjust push rod using the special tool.
5) Mount plate and seal assembly in vacuum booster front shell. Then install retainer.

4. Vacuum Booster Fixing Nut

Vacuum Booster Fixing Nut Torque	N·m (kg·m / lb·ft)
21 (2.1 / 16)	

3. Yoke Clevis

2. Vacuum Hose

- In case of the gasoline engine model, make sure that the arrow on the hose points in the direction of the engine.

1. Master Cylinder

- Refer to Master Cylinder Assembly in this Section.

EXTERIOR COMPONENTS

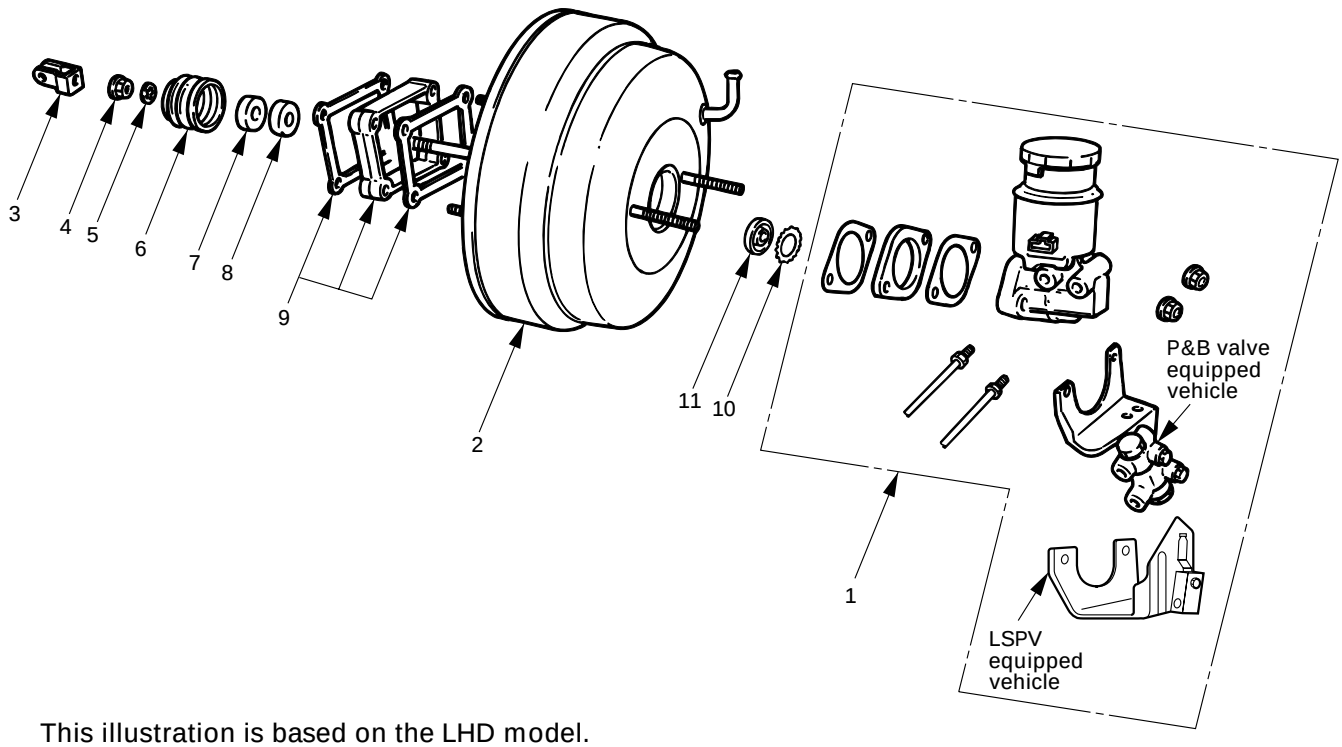

This illustration is based on the LHD model.

331RW011

Removal Steps

1. Master cylinder
2. Vacuum booster
3. Yoke clevis
4. Lock nut
5. Retaining clip
6. Valve body guard
7. Silencer
8. Filter
9. 2 gaskets and spacer
10. Retainer
11. Plate and seal assembly

Installation Steps

To install, follow the removal steps in the reverse order.

REMOVAL

1. **Master Cylinder**
   - Refer to Master Cylinder Assembly in this Section.
2. **Vacuum Booster**
   - Refer to Vacuum Booster Assembly in this section.
3. **Yoke Clevis**
4. **Lock Nut**
5. **Retaining Clip**
6. **Valve Body Guard**
7. **Silencer**
8. **Filter**
9. **2 gaskets and Spacer**
10. **Retainer**
    - Use a small screwdriver to pry out the retainer. Gently pull out the plate and seal assembly from the shell.

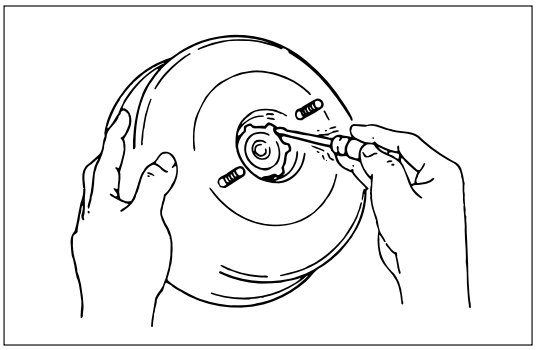

11. **Plate and Seal Assembly**

INSPECTION AND REPAIR

Visual Check:

Make necessary parts replacement if cuts, nicks, excessive wear, or other abnormal conditions are found through inspection. Check the following parts.

1) Yoke clevis
2) Valve body guard
3) Silencer
4) Filter
5) Plate and seal assembly

INSTALLATION

11. **Plate and Seal Assembly**
10. **Retainer**
9. **2 gaskets and Spacer**
8. **Filter**
7. **Silencer**
6. **Valve Body Guard**
5. **Retaining Clip**
4. **Lock Nut**

Lock Nut Torque	N·m (kg·m / lb·ft)
	20 (2.0 / 15)

3. **Yoke Clevis**
2. **Vacuum Booster**
   - Refer to Vacuum Booster Assembly in this section.
1. **Master Cylinder**
   1) Refer to Master Cylinder Assembly in this Section.
   2) After installation, perform brake pedal check and adjustment. Refer to Checking Brake Pedal Height / Travel in this section.

FRONT DISC BRAKE

BRAKE PADS REPLACEMENT

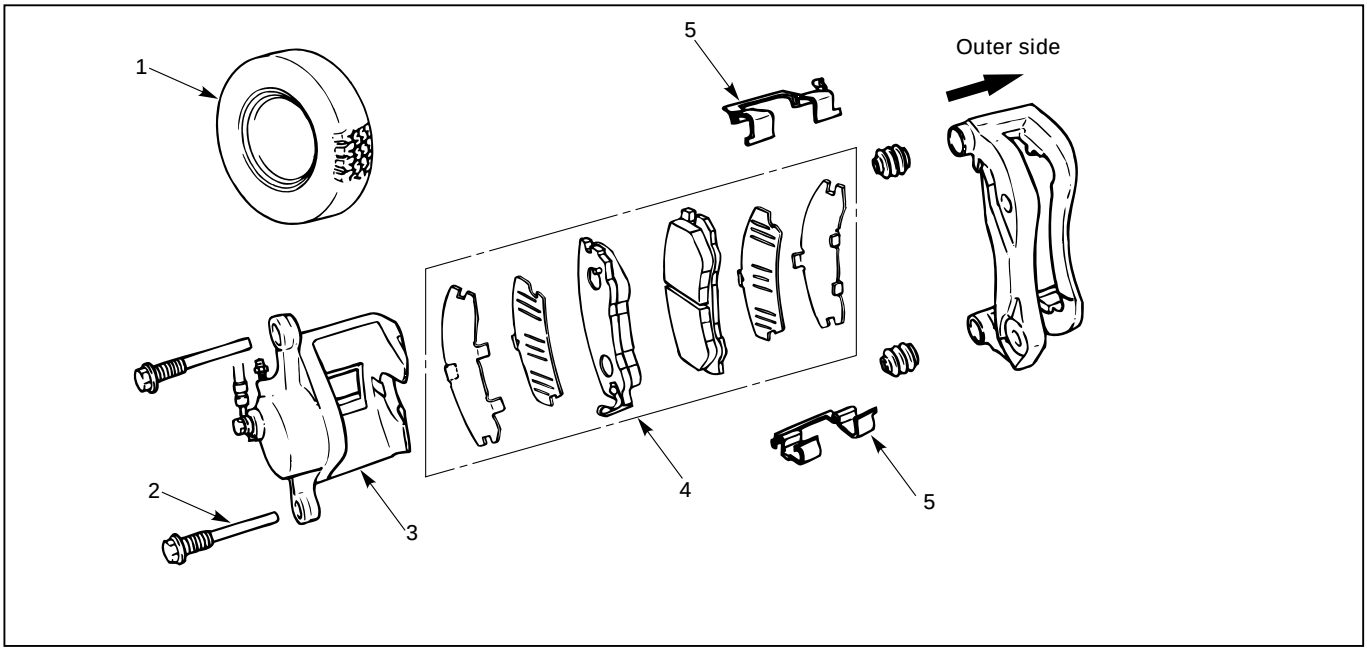

Removal Steps

1. Wheel and tire assembly
2. Lock bolt
3. Caliper assembly
4. Pad assembly with shim
5. Clip

Installation Steps

To install, follow the removal steps in the reverse order.

REMOVAL

NOTE:
If a squealing noise occurs from the front brake while driving, check the pad wear indicator plate. If the indicator plate contacts the rotor, the disc pad assembly should be replaced.

Preparation:

1) Draw out two-thirds of the brake fluid from the reservoir.
2) Raise the vehicle and support it with suitable safety stands.

1. Wheel and Tire Assembly

- Refer to Wheels and Tires in Suspension section.

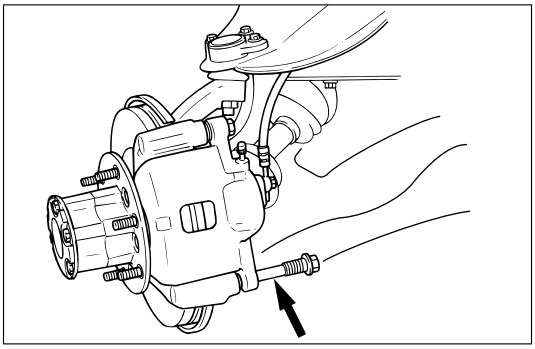

2. **Lock Bolt**

3. **Caliper Assembly**
   - Support the caliper assembly so that the brake hose is not stretched or damaged.
4. **Pad Assembly with Shim**
5. **Clip**

INSTALLATION

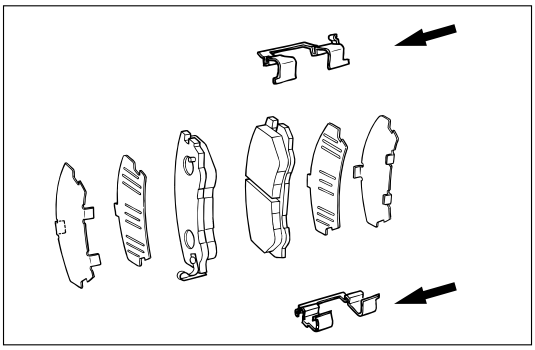

5. **Clip**

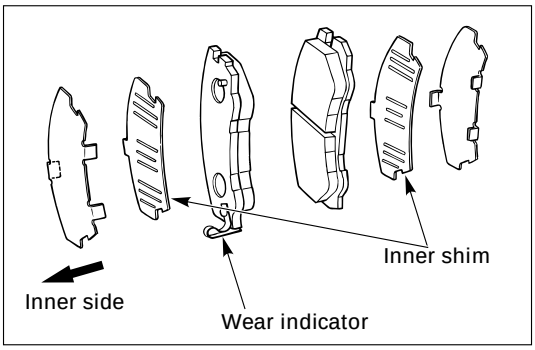

4. **Pad Assembly with Shim**
   - Apply special grease (approx 0.2 g) to both contacting surfaces of inner shims. Wipe off extruded grease after installing.

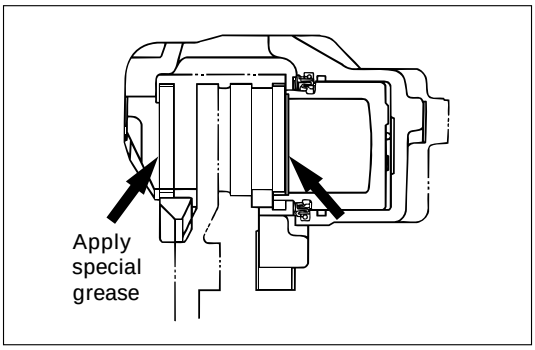

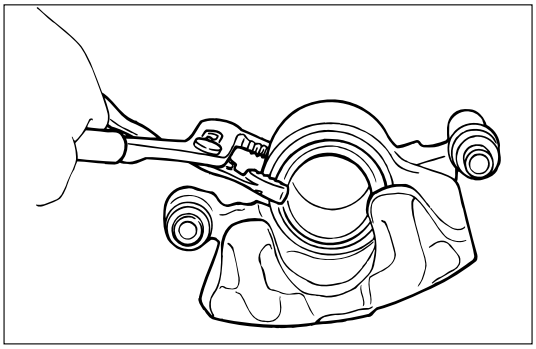

3. Caliper Assembly

1) Use adjustable pliers to bottom the piston into the caliper bore. Be careful not to damage the piston dust boot.
2) Do not damage the flexible hose by twisting or pulling it.

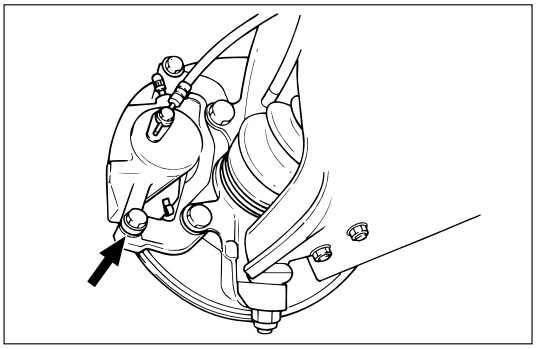

2. Lock Bolt

Lock Bolt Torque	N·m (kg·m / lb·ft)
74 (7.5 / 54)	

1. Wheel and Tire Assembly

1) Refer to Wheels and Tires in Suspension section.
2) Pump the brake pedal several times to make sure that the pedal is firm. Check the brake fluid level in the reservoir after pumping the brakes.

CALIPER REPLACEMENT

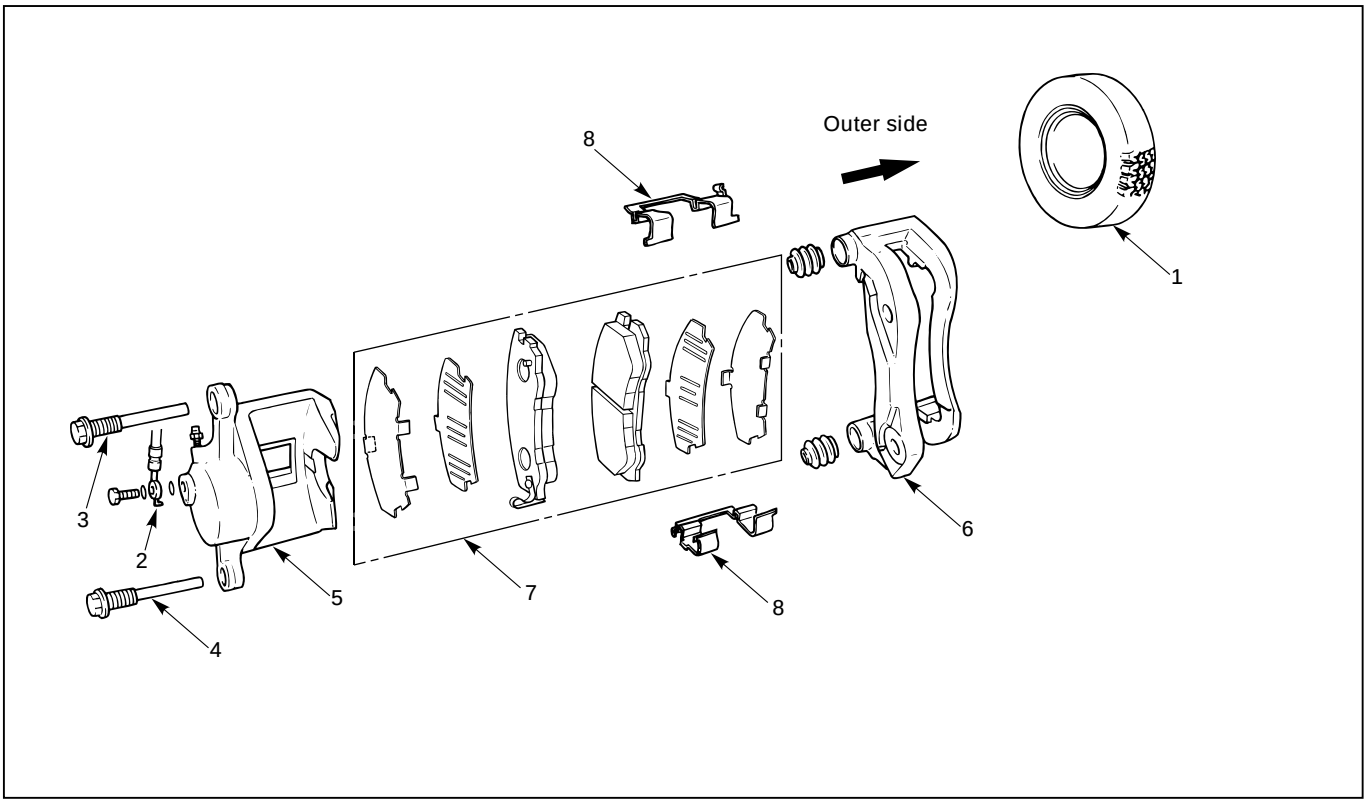

Removal Steps

1. Wheel and tire assembly
2. Brake flexible hose
3. Guide bolt
4. Lock bolt
5. Caliper assembly
6. Support bracket with pad assembly
7. Pad assembly with shim
8. Clip

Installation Steps

To install, follow the removal steps in the reverse order.

REMOVAL

Raise the vehicle and support with suitable safety stands

1. Wheel and Tire Assembly

- Refer to Wheels and Tires in Suspension section.

2. Brake Flexible Hose

1) Remove the bolt and gaskets, then disconnect the flexible hose from the caliper.
2) After disconnecting the flexible hose, cap or tape the openings to prevent entry of foreign material.
3) Since the brake fluid flows out from the connecting coupler, place a drain pan under the vehicle.

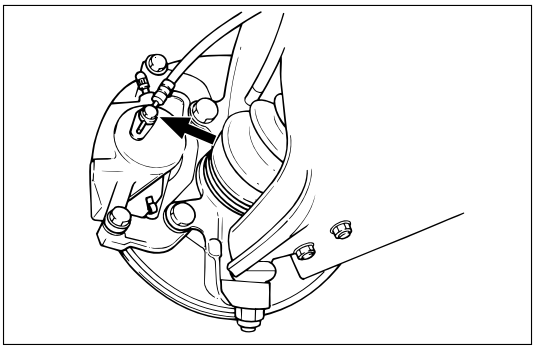

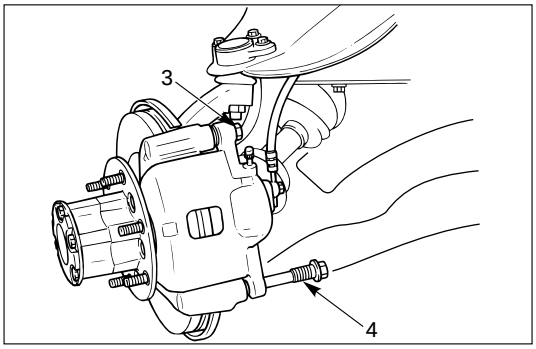

3. **Guide Bolt**
4. **Lock Bolt**

5. **Caliper Assembly**
6. **Support Bracket with Pad Assembly**
   - Take care not to damage the flexible brake hose when removing the support bracket.
7. **Pad Assembly with Shim**
   - Mark the lining locations if they are to be reinstalled.
8. **Clip**

INSTALLATION

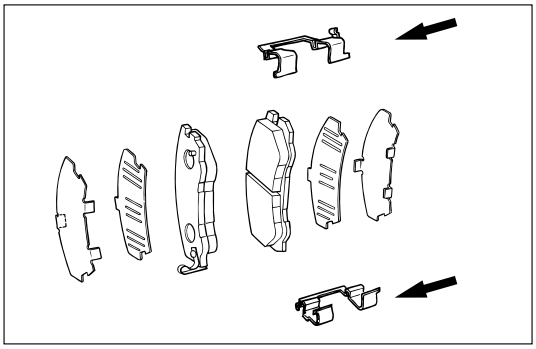

8. **Clip**

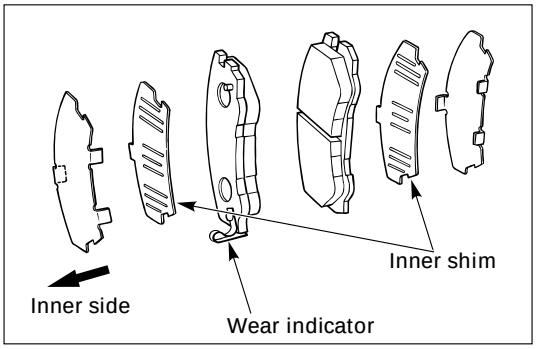

7. **Pad Assembly with Shim**
   - Apply special greae (approx 0.2 g) to the both contacting surfaces of inner shims. Wipe off extruded grease after installing.

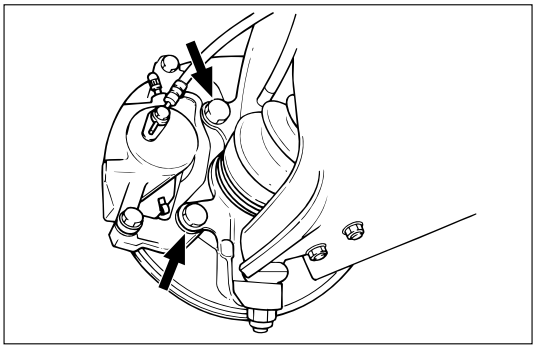

6. **Support Bracket**

Support Bracket Torque	N·m (kg·m / lb·ft)
155 (15.8 / 115)	

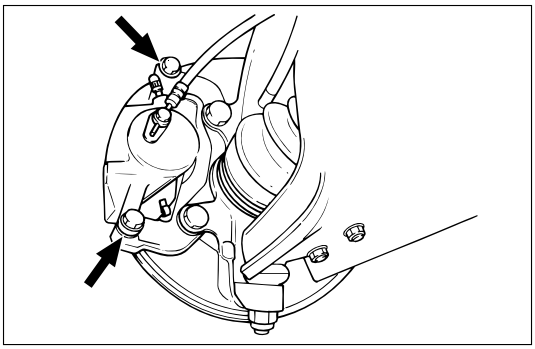

5. Caliper Assembly

4, 3. Lock Bolt and Guide Bolt

Lock Bolt and Guide Bolt Torque	N·m (kg·m / lb·ft)
74 (7.5 / 54)	

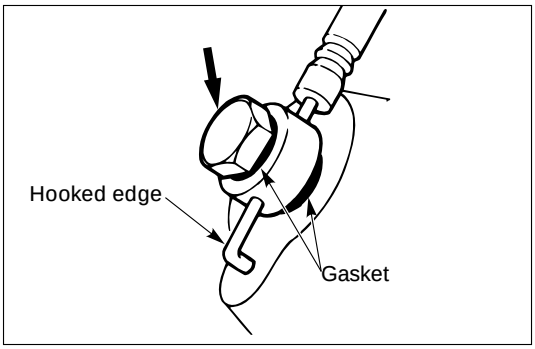

2. Brake Flexible Hose

1) Always use new gaskets.
2) Be sure to put the hooked edge of the flexible hose end into the anti-rotation cavity.

Brake Flexible Hose Torque	N·m (kg·m / lb·ft)
35 (3.5 / 26)	

1. Wheel and Tire Assembly

1) Refer to Wheels and Tires in Suspension section.
2) Bleed brakes. Refer to Bleeding Brake Hydraulic System in this section.

REBUILDING THE CALIPER

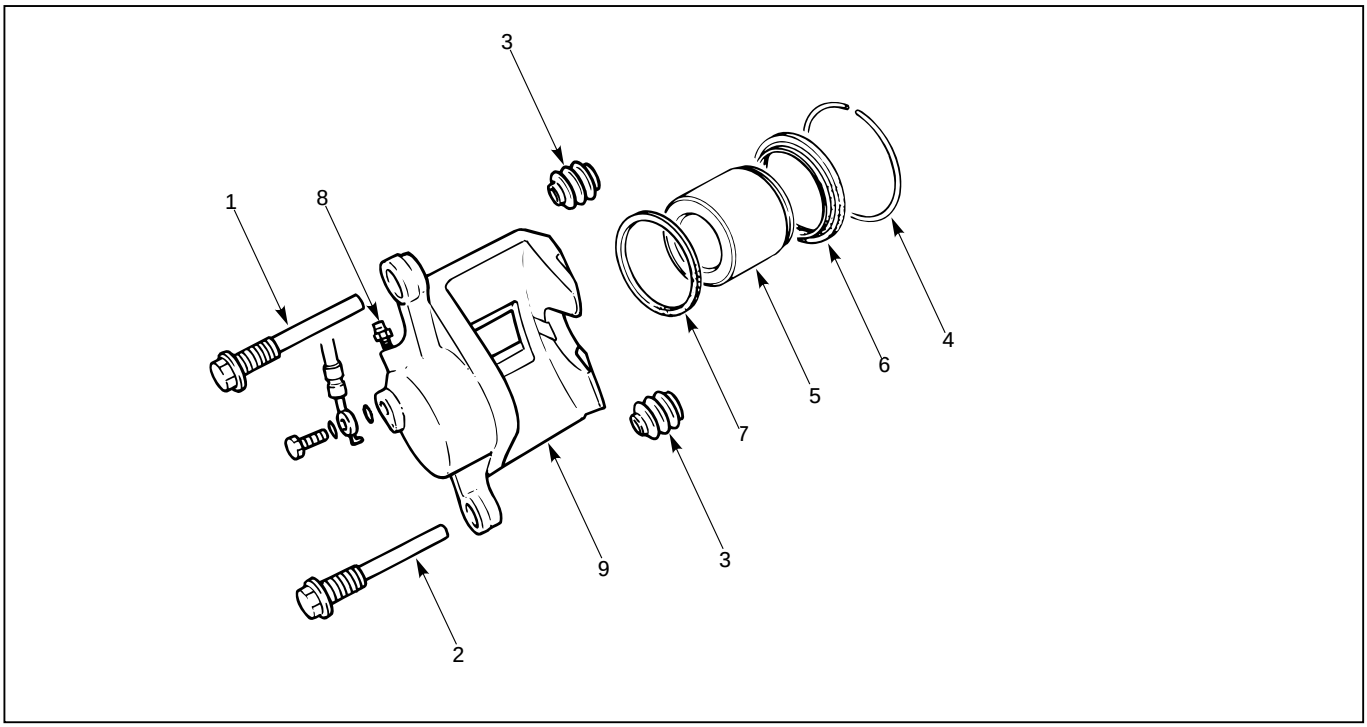

Disassembly Steps

1. Guide bolt
2. Lock bolt
3. Dust boot; guide bolt and lock bolt
4. Dust boot ring
5. Piston
6. Dust boot; piston
7. Piston seal
8. Bleeder with cap
9. Caliper body

Reassembly Steps

9. Caliper body
8. Bleeder with cap
7. Piston seal
5. Piston
6. Dust boot; piston
4. Dust boot ring
3. Dust boot; guide bolt and lock bolt
2. Lock bolt
1. Guide bolt

DISASSEMBLY

1. **Guide Bolt**
2. **Lock Bolt**
3. **Dust Boot; Guide Bolt and Lock Bolt**
4. **Dust Boot Ring**
   - Using a small screwdriver, remove the dust boot ring.

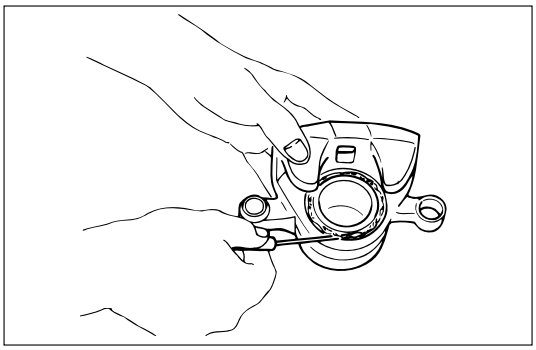

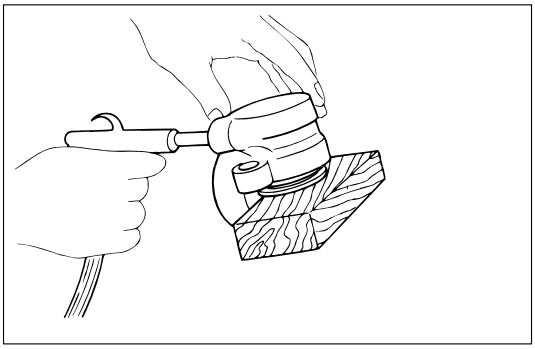

5. **Piston**
   - Insert a block of wood into the caliper and force out the piston by blowing compressed air into the caliper at the flexible hose attachment. This procedure must be done prior to removal of dust boot.

WARNING:
DO NOT PLACE YOUR FINGERS IN FRONT OF THE PISTON IN AN ATTEMPT TO CATCH OR PROTECT IT WHEN APPLYING COMPRESSED AIR. THIS COULD RESULT IN PERSONAL INJURY.

CAUTION:
Use just enough air to ease the piston out of the bore. If the piston is blown out, it may be damaged.

6. **Dust Boot; Piston**
7. **Piston Seal**
8. **Bleeder with Cap**
9. **Caliper Body**

INSPECTION AND REPAIR

Make necessary parts replacement, if wear, damage, corrosion or any other abnormal conditions are found through inspection.
Check the following parts;
- Rotor
- Cylinder body
- Cylinder bore
- Piston
- Guide bolt, Lock bolt
- Support bracket

NOTE:
The piston seal, boot ring and dust boot are to be replaced each time the caliper is overhauled. Discard these used rubber parts and replace with new ones.

REASSEMBLY

9. **Caliper Body**
8. **Bleeder with Cap**

Bleeder Torque	N·m (kg·cm / lb·in)
	8 (80 / 69)

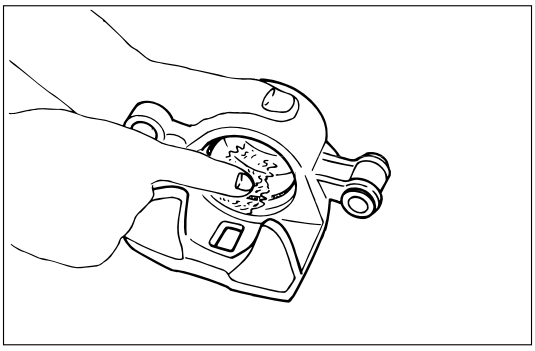

7. **Piston Seal**
   - Apply special rubber grease to the piston seal and cylinder wall, then insert the piston seal into the cylinder. The special rubber grease is included in the repair kit.

5. **Piston**

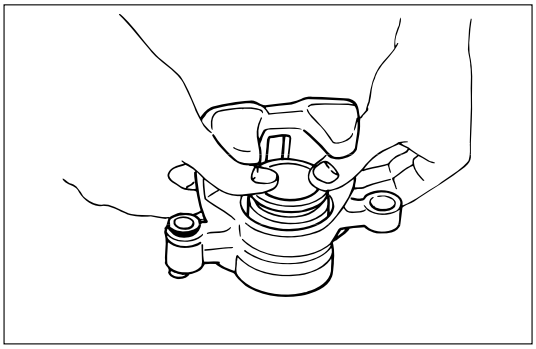

6. Dust Boot; Piston

- When inserting the piston into the cylinder, use finger pressure only. Do not use a mallet or other impact tools, since damage to the cylinder wall or piston seal can result.

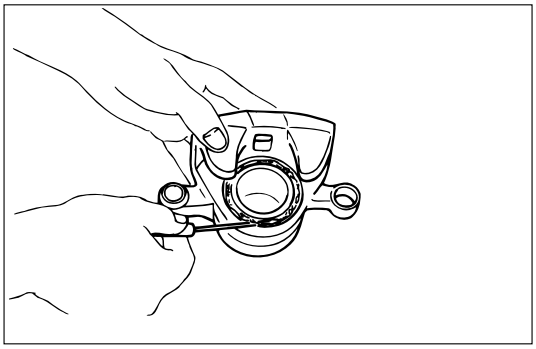

4. Dust Boot Ring

- Apply special grease (Approx. 1 g) to the piston and attach the dust boot to the piston and caliper. Insert the dust boot ring into the dust boot.

3. Dust Boot; Guide Bolt and Lock Bolt

2, 1. Lock Bolt and Guide Bolt

Lock and Guide Bolt Torque	N·m (kg·m / lb·ft)
74 (7.5 / 54)	

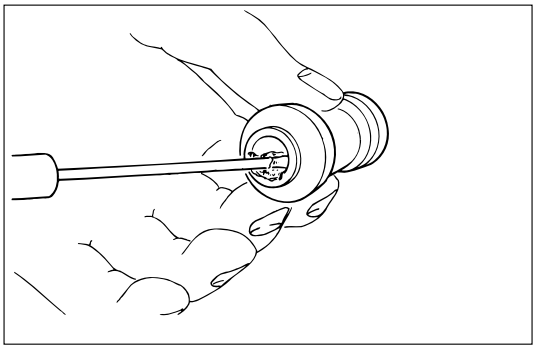

- Install the dust boot on the support bracket after applying special grease (Approx. 1 g) onto the dust boot inner surface. Also apply special grease onto the lock bolt and guide bolt setting hole of the support bracket.

REAR DISC BRAKE

BRAKE PADS REPLACEMENT

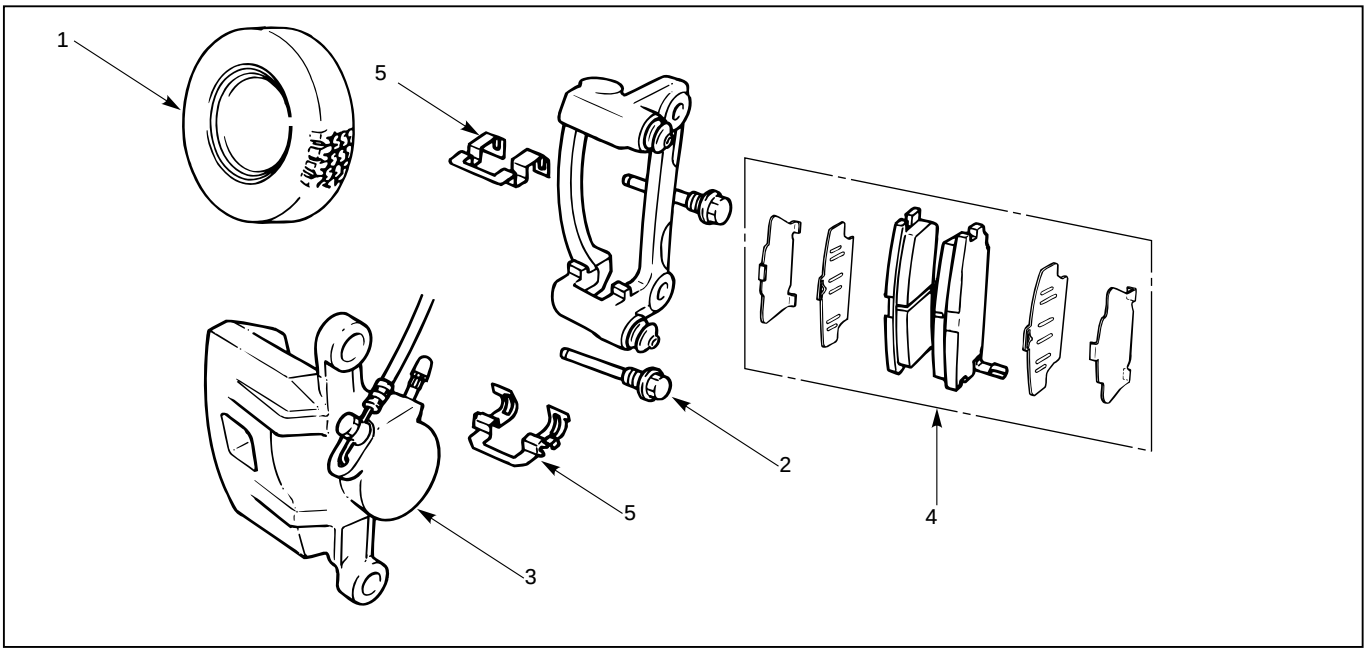

Removal Steps

1. Wheel and tire assembly
2. Lock bolt
3. Caliper assembly
4. Pad assembly with shim
5. Clip

Installation Steps

To install, follow the removal steps in the reverse order.

REMOVAL

NOTE:
If a squealing noise occurs from the rear brake while driving, check the pad wear indicator plate. If the indicator plate contacts the rotor, the disc pad assembly should be replaced.

1) Draw out two-thirds of the brake fluid from the reservoir.
2) Raise the vehicle and support it with suitable safety stands.

1. Wheel and Tire Assembly

- Refer to Wheels and Tires in Suspension section.

2. Lock Bolt

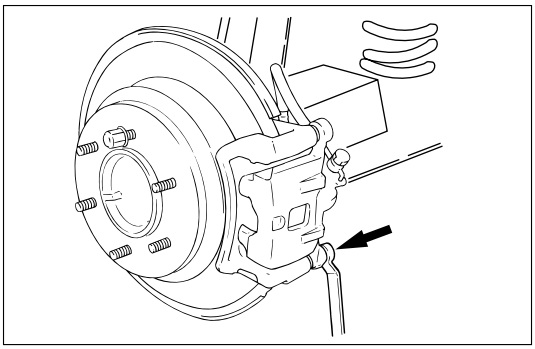

3. **Caliper Assembly**
   - Support the caliper assembly so that the brake hose is not stretched or damaged.
4. **Pad Assembly with Shim**
5. **Clip**

INSTALLATION

5. **Clip**

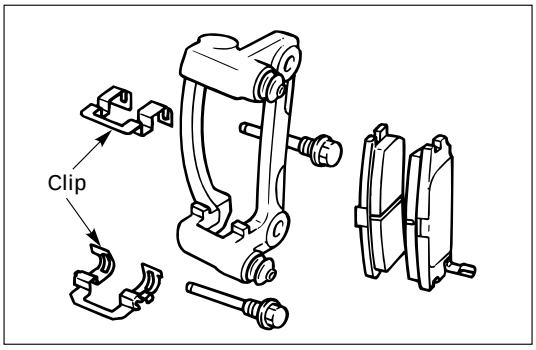

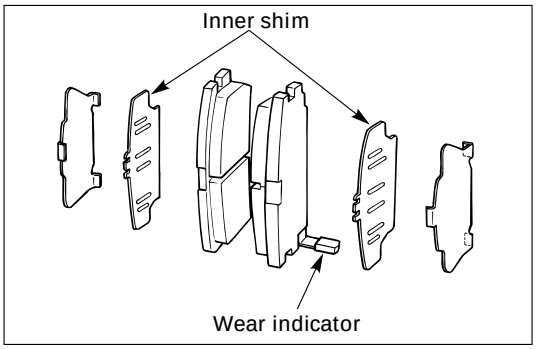

4. **Pad Assembly with Shim**
   - Apply special grease (approx. 0.2 g) to both contacting surfaces of inner shims. Wide off extruded grease after installing.

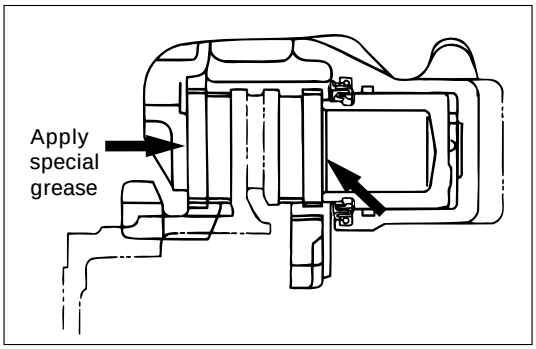

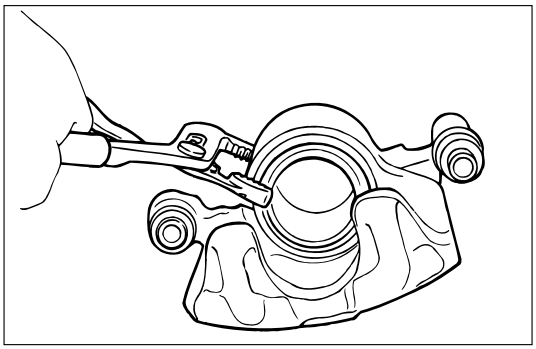

3. **Caliper Assembly**
   1) Use adjustable pliers to bottom the piston into the caliper bore. Be careful not to damage the piston dust boot.
   2) Do not damage the flexible hose by twisting or pulling it.

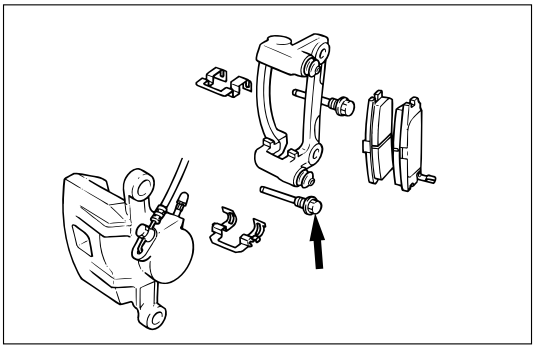

2. Lock Bolt

Lock Bolt Torque	N·m (kg·m / lb·ft)
44 (4.5 / 32)	

1. Wheel and Tire Assembly

1) Refer to Wheels and Tires in Suspension section.
2) Pump the brake pedal several times to make sure that the pedal is firm. Check the brake fluid level in the reservoir after pumping the brakes.

CALIPER REPLACEMENT

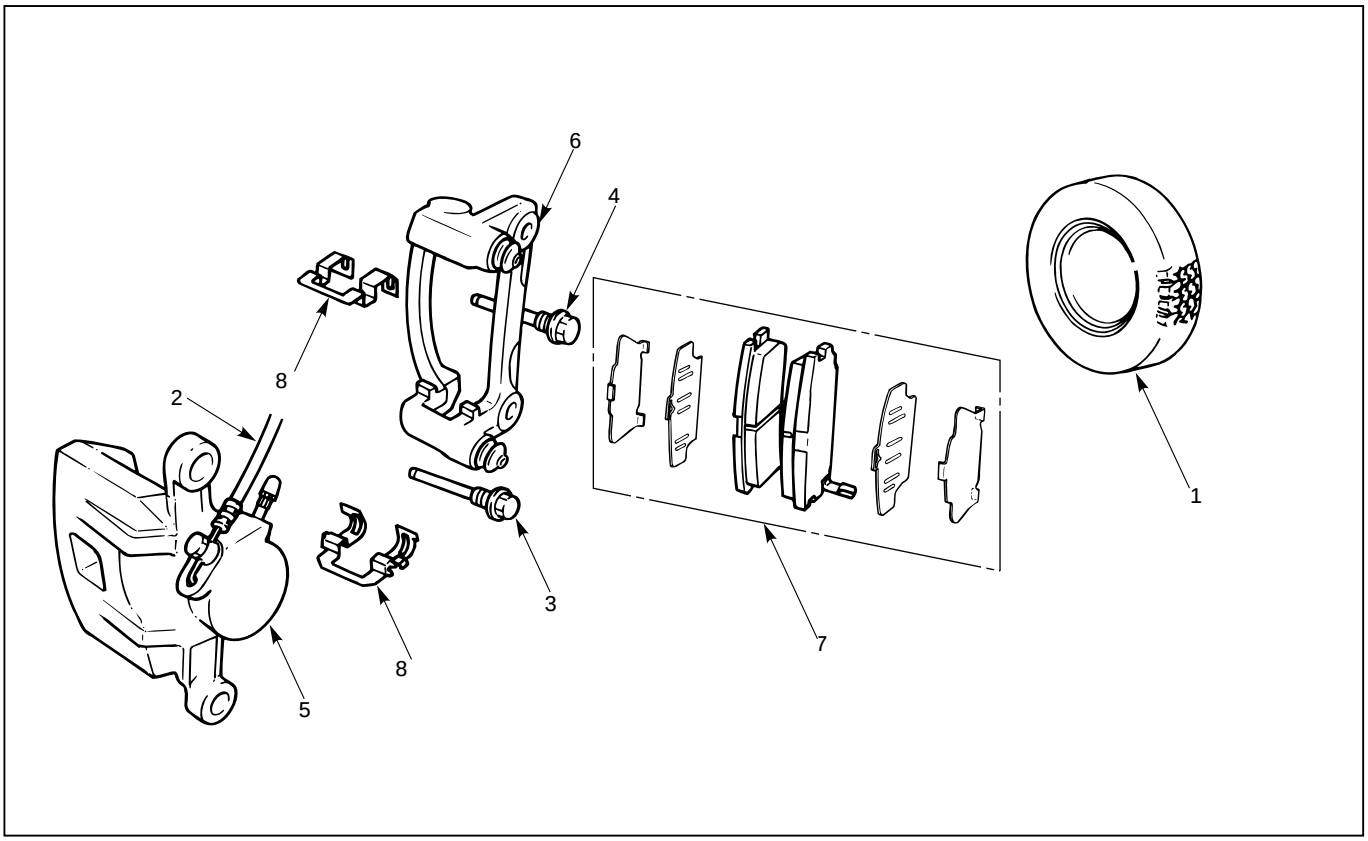

Removal Steps

1. Wheel and tire assembly
2. Brake flexible hose
3. Lock bolt
4. Guide bolt
5. Caliper assembly
6. Support bracket
7. Pad assembly with shim
8. Clip

Installation Steps

To install, follow the removal steps in the reverse order.

REMOVAL

- Raise the vehicle and support with suitable safety stands.

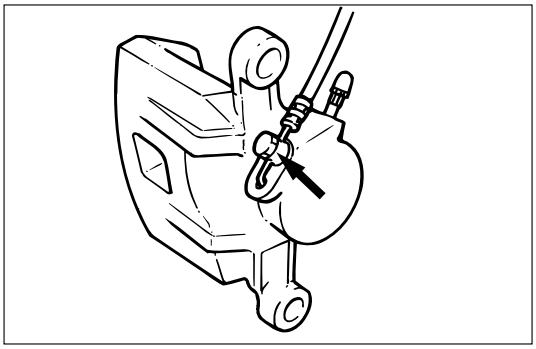

1. Wheel and Tire Assembly

- Refer to Wheels and Tires in Suspension section.

2. Brake Flexible Hose

1) Remove the bolt and gaskets, then disconnect the flexible hose from the caliper.
2) After disconnecting the flexible hose, cap or tape the openings to prevent entry of foreign material.
3) Since the brake fluid flows out from the connecting coupler, place a drain pan under the vehicle.

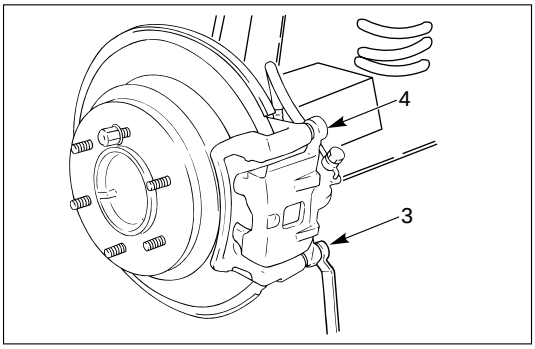

3. **Lock Bolt**
4. **Guide Bolt**

5. **Caliper Assembly**
6 **Support Bracket**
   - Take care not to damage the flexible brake hose when removing the support bracket.
7. **Pad Assembly with Shim**
   - Mark the lining locations if they are to be reinstalled.
8. **Clip**

INSTALLATION

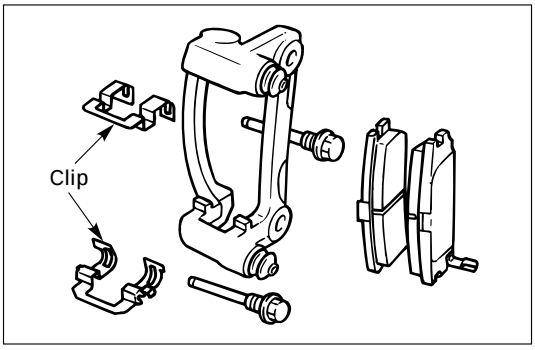

8. **Clip**

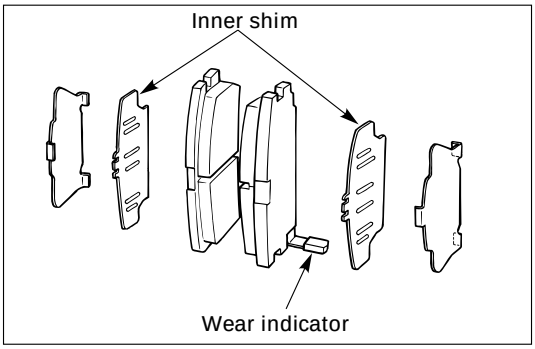

7. **Pad Assembly with Shim**
   - Apply special grease (approx. 0.2 g) to both contacting surfaces of inner shims. Wipe off extruded grease after installing.

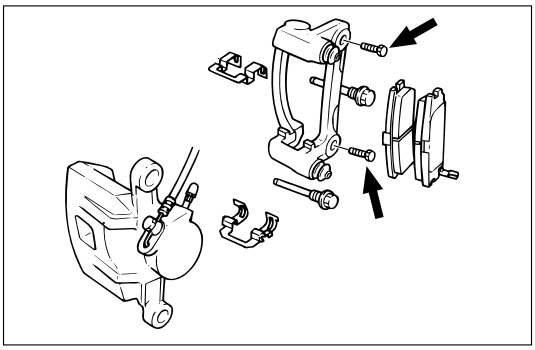

6. **Support Bracket**

Support Bracket Torque	N·m (kg·m / lb·ft)
104 (10.6 / 77)	

5. **Caliper Assembly**

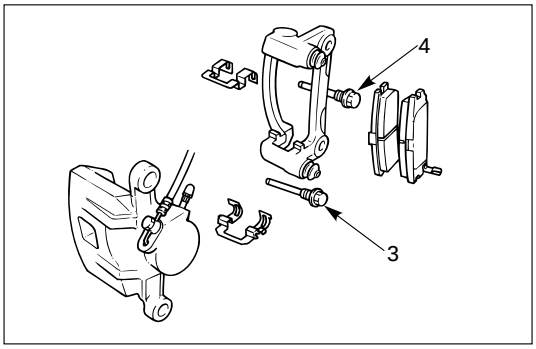

4. Guide Bolt

3. Lock Bolt

Lock Bolt Torque	N·m (kg·m / lb·ft)
44 (4.5 / 32)	

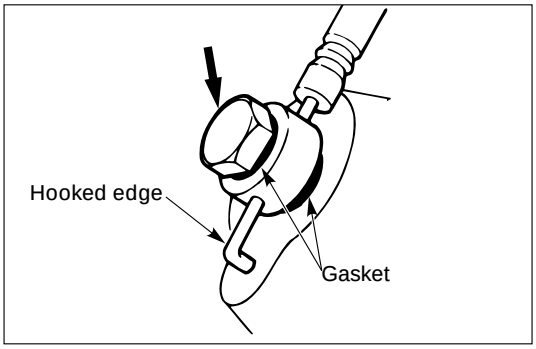

2. Brake Flexible Hose

1) Always use new gaskets.
2) Be sure to put the hooked edge of the flexible hose end into the anti-rotation cavity.

Brake Flexible Hose Torque	N·m (kg·m / lb·ft)
35 (3.5 / 26)	

1. Wheel and Tire Assembly

1) Refer to Wheels and Tires in Suspension section.
2) Bleed brakes.

REBUILDING THE CALIPER

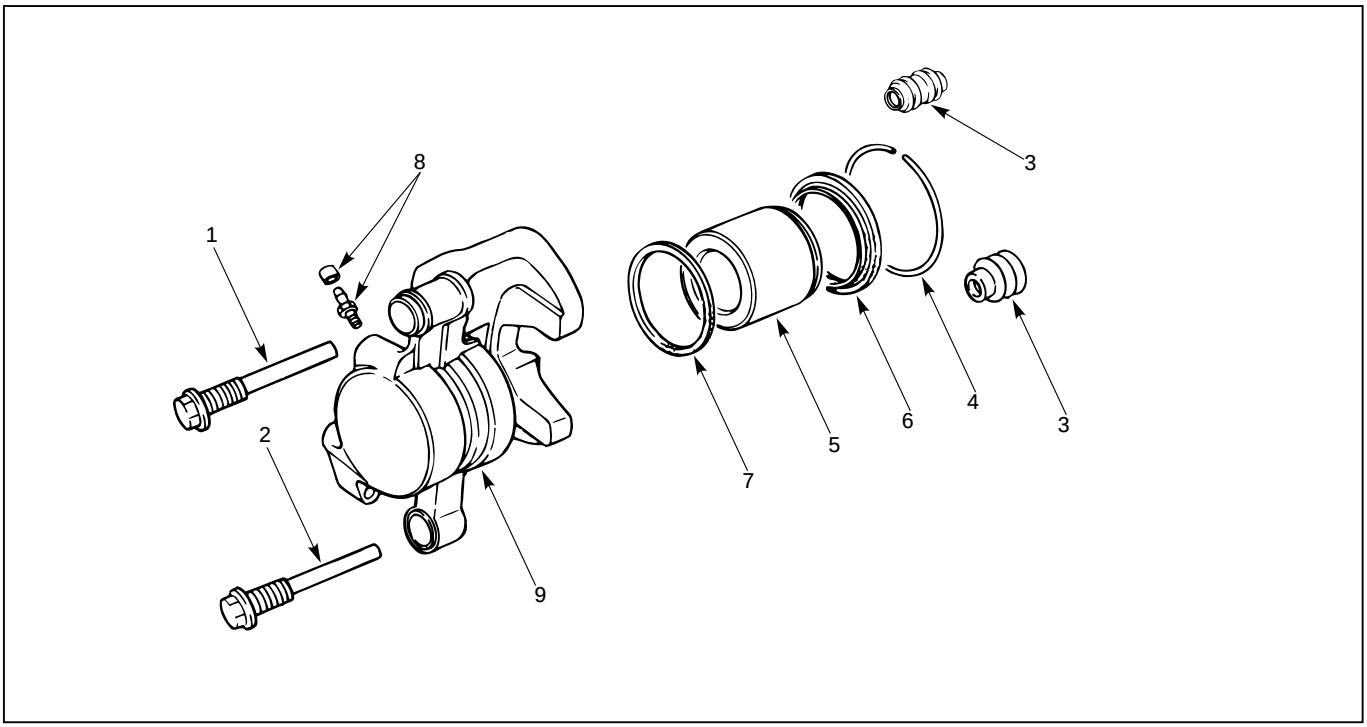

Disassembly Steps

1. Guide bolt
2. Lock bolt
3. Dust boot
4. Dust boot ring
5. Piston
6. Dust boot; piston
7. Piston seal
8. Bleeder with cap
9. Caliper body

Reassembly Steps

9. Caliper body
8. Bleeder with cap
7. Piston seal
5. Piston
6. Dust boot; pisotn
4. Dust boot ring
3. Dust boot
2. Lock bolt
1. Guide bolt

DISASSEMBLY

1. **Guide Bolt**
2. **Lock Bolt**
3. **Dust Boot**
4. **Dust Boot Ring**
   - Using a small screwdriver, remove the dust boot ring.

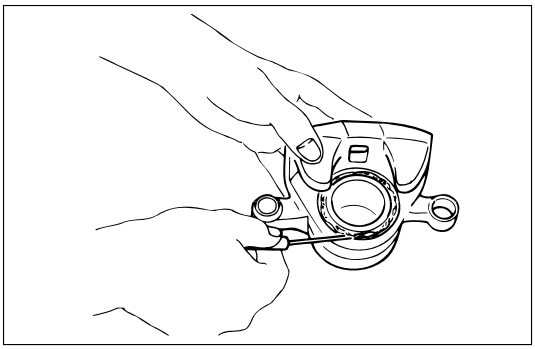

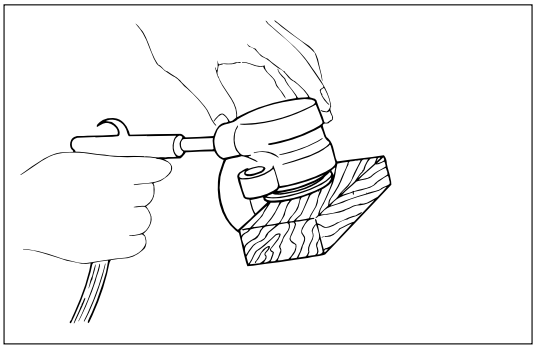

5. **Piston**
   - Insert a block of wood into the caliper and force out the piston by blowing compressed air into the caliper at the flexible hose attachment. This procedure must be done prior to removal of dust boot.

WARNING:
DO NOT PLACE YOUR FINGERS IN FRONT OF THE PISTON IN AN ATTEMPT TO CATCH OR PROTECT IT WHEN APPLYING COMPRESSED AIR. THIS COULD RESULT IN PERSONAL INJURY.

CAUTION:
Use just enough air to ease the piston out of the bore. If the piston is blown out, it may be damaged.

6. **Dust Boot; Piston**
7. **Piston Seal**
8. **Bleeder with Cap**
9. **Caliper Body**

INSPECTION AND REPAIR

Make necessary parts replacement, if wear, damage, corrosion or any other abnormal conditions are found through inspection.
Check the following parts;
- Rotor
- Cylinder body
- Cylinder bore
- Piston
- Slide pin
- Support bracket

NOTE:
The piston dust seal and dust boot are to be replaced each time the caliper is overhauled.
Discard these used rubber parts and replace with new ones.

REASSEMBLY

9. **Caliper Body**
8. **Bleeder with Cap**

Bleeder Torque	N·m (kg·cm / lb·in)
8 (80 / 69)	

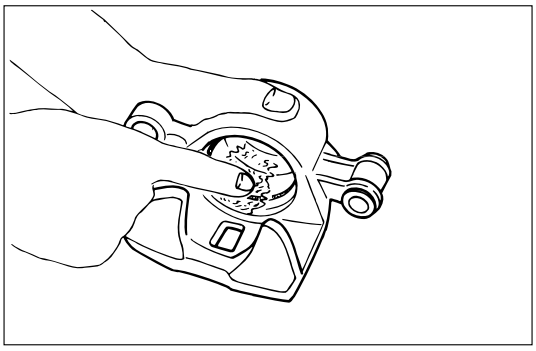

7. **Piston Seal**
   - Apply special rubber grease to the piston seal and cylinder wall, then insert the piston seal into the cylinder. The special rubber grease is included in the repair kit.
5. **Piston**

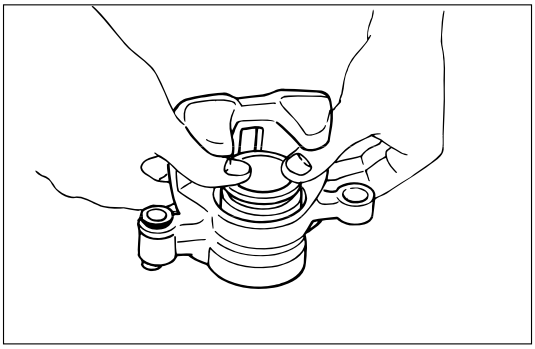

6. Dust Boot; Piston

- When inserting the piston into the cylinder, use finger pressure only. Do not use a mallet or other impact tools, since damage to the cylinder wall or piston seal can result.

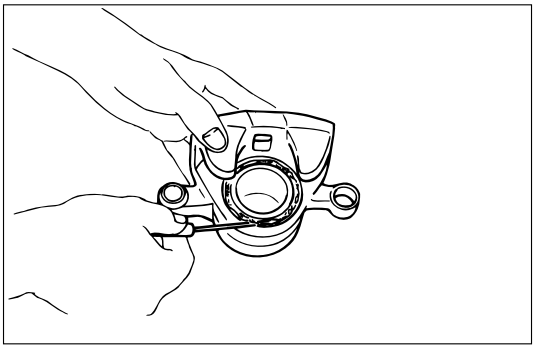

4. Dust Boot Ring

- Apply special grease (Approx. 1 g) to the piston and attach the dust boot to the piston and caliper. Insert the dust boot ring into the dust boot.

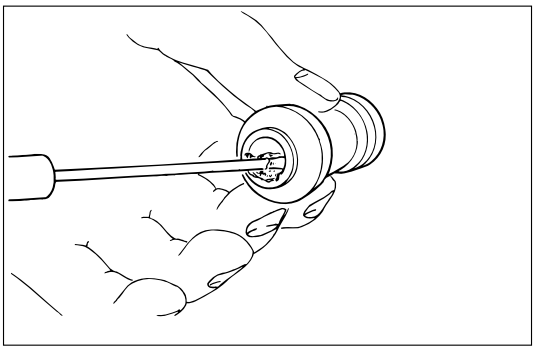

3. Dust Boot

- Install the dust boot on the support bracket after applying special grease (Approx 1 g) onto the dust boot inner surface. Also apply special grease onto the lock bolt and guide bolt setting hole of the support bracket.

2. Lock Bolt

1. Guide Bolt

Guide Bolt Torque	N·m (kg·m / lb·ft)
44 (4.5 / 32)	

UNIT REPAIR

MASTER CYLINDER

The master cylinder is not repairable and must be replaced as complete assembly if found defective.

INSPECTION

Excessive brake pedal travel, malfunction or dragging brake suggests that the master cylinder is defective. In such cases perform the following visual check.

Visual check

Make parts replacement as required if wear, distortion, nicks, cuts, corrosion, or other abnormal conditions are found through the following parts inspection;

- Master cylinder body
- Fluid reservoir
- O-ring

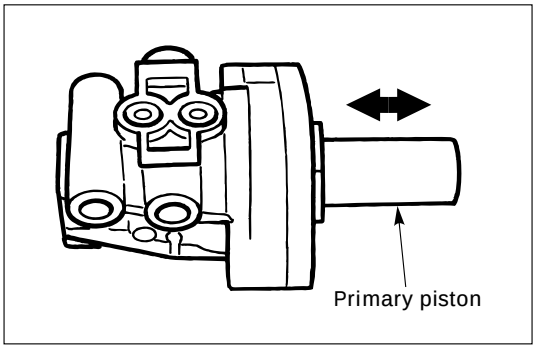

FUNCTIONAL INSPECTION OF MASTER CYLINDER PISTON

Push the primary piston with your fingers to check that it travels smoothly. If the motion is questionable, replace the master cylinder as a complete assembly.

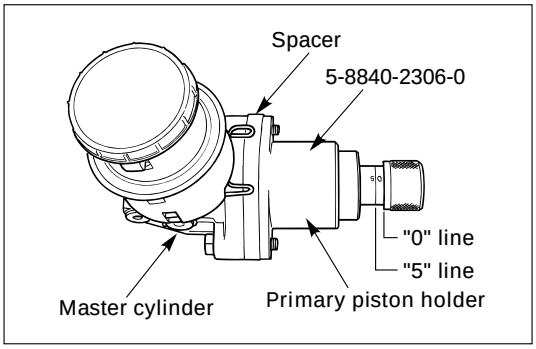

FUNCTIONAL INSPECTION OF MASTER CYLINDER

Inspect the master cylinder for function as follows. If any abnormal function is found, replace with a new one.

Primary piston holder: 5-8840-2306-0 (J-39242) (including master cylinder attachment and master cylinder plug)

- Install the primary piston holder onto the master cylinder with the spacer (2 bolts) with its adjusting bolt screwed in up to the “0” line.

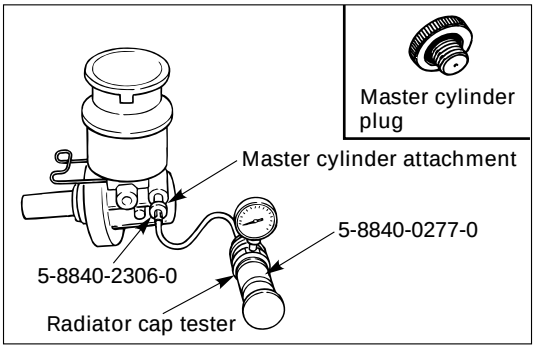

Radiator cap tester: 5-8840-0277-0 (J-24460-01)

- Connect master cylinder attachment with the end of radiator cap tester, and apply air pressure with the cap tester. Make sure there is no rise in pressure and that with the adjusting bolt further screwed in 5 mm (align the adjusting bolt to the “5” line). There should be a pressure increase of 49 kpa (0.5 kg/cm^2/7.1 psi) or more.

NOTE:
When checking the front (or primary) side, be sure to mount master cylinder plug in the rear (or secondary) port.

	“0” line	“5” line
Apply air pressure to the front and rear ports	No pressure rise.	Pressure increase of 49 kpa (0.5 kg/cm^2/ 7.1 psi) more
Remarks	Check port into the atmospheric pressure chamber	Checks air tightness of the pressure chamber

NOTE:
1) **Do not use an air compressor, as the air from compressor is mixed with compressor oil.**
2) **When installing the master cylinder onto the vacuum booster, always adjust vacuum booster push rod. (Refer to Vacuum Booster Assembly in this section.)**
3) **After the master cylinder is installed onto the vehicle, check for leakage, pedal travel and pedal free play.**

VACUUM BOOSTER

- The vacuum booster cannot be disassembled for repair. Replace a defective vacuum booster with a new one.

SECTION 5D
PARKING BRAKES

CONTENTS

PAGE
Service Precaution 5D- 1
Main Data and Specifications 5D- 2
Service Standard 5D- 2
Servicing 5D- 3
Fixing Torque 5D- 5
General Description 5D- 6
On-Vehicle Service 5D- 7
Parking Brake Lever Replacement 5D- 7
Parking Brake Cable 5D- 9

SERVICE PRECAUTION

WARNING:
IF SO EQUIPPED WITH A SUPPLEMENTAL RESTRAINT SYSTEM (SRS), REFER TO THE SRS COMPONENT AND WIRING LOCATION VIEW IN ORDER TO DETERMINE WHETHER YOU ARE PERFORMING SERVICE ON OR NEAR THE SRS COMPONENTS OR THE SRS WIRING. WHEN YOU ARE PERFORMING SERVICE ON OR NEAR THE SRS COMPONENTS OR THE SRS WIRING, REFER TO THE SRS SERVICE INFORMATION. FAILURE TO FOLLOW WARNINGS COULD RESULT IN POSSIBLE AIR BAG DEPLOYMENT, PERSONAL INJURY, OR OTHERWISE UNNEEDED SRS SYSTEM REPAIRS.

CAUTION:
Always use the correct fastener in the proper location. When you replace a fastener, use ONLY the exact part number for that application. ISUZU will call out those fasteners that require a replacement after removal. ISUZU will also call out the fasteners that require thread lockers or thread sealant. UNLESS OTHERWISE SPECIFIED, do not use supplemental coatings (Paints, greases, or other corrosion inhibitors) on threaded fasteners or fastener joint interfaces. Generally, such coatings adversely affect the fastener torque and the joint clamping force, and may damage the fastener. When you install fasteners, use the correct tightening sequence and specification. Following these instructions can help you avoid damage to parts and systems.

MAIN DATA AND SPECIFICATIONS

REAR PARKING BRAKE		
Type		Duo-servo
Lining Dimensions	cm^2 (in^2)	121.2 (18.79)
Adjusting Method		Manual Adjusting
Rear Drum (in Disc)		
Inside Diameter	mm (in)	210 (8.27)
Parking Brake Lever Stroke		6 to 7 notches When pulled with a force of 30 kg (66 lb)

SERVICE STANDARD

REAR PARKING BRAKE		
Rear Drum (in Disc) Minimum Wear		
Inside Diameter	mm (in)	211.4 (8.32)
Parking Brake Lining Thickness		
Minimum Limit	mm (in)	1.0 (0.039)
Parking Brake Lever Stroke		6 to 7 notches When pulled with a force of 30 kg (66 lb)

SERVICING

REAR DRUM (IN DISC) INSIDE DIAMETER CHECK

Check the rear drum inside diameter by measuring at more than two portions as shown in the figure.
If the inside diameter is greater than the limit, replace the rear rotor.

Rear Drum Inside Diameter — mm (in)

Standard	Limit
210.0 (8.27)	211.4 (8.32)

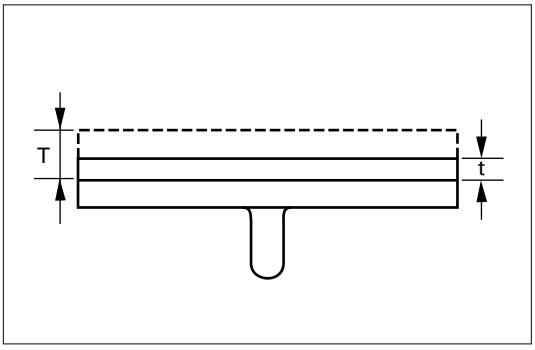

PARKING BRAKE LINING INSPECTION

Check the shoe assemblies for wear by removing the brake drum rotor.
Replace the shoe assemblies, if the lining thickness is less than 1.0 mm (0.039 in).

Minimum Limit	mm (in)
1.0 (0.039)	

PARKING BRAKE ADJUSTMENT

1. **Adjustment of Parking Brake Assembly**
   - Prior to lever stroke adjustment, adjust the rear brake shoe/rotor (drum) gap. Perform this procedure by loosening the adjust nut of the equalizer.

   a) Remove the adjusting hole plug (rubber) and turn the shoe adjusting screw downward with a small screwdriver so that shoes will expand until they get into close touch with the rotor. (Turn down the adjusting screw notch by notch until the rotor does not turn.)

   b) Turn the adjusting screw in the opposite direction (upward) until the rotor can be turned lightly. Standard number of notches to turn upward: 7 or 8.
   Turn the rotor and make sure that there is no brake dragging.

2. Adjustment of Parking Brake Cable

a) Turn the equalizer nut so that the parking brake lever travels 6 or 7 notches when pulled up with a force of 30 kg (66 lb).

b) Make sure there is no brake dragging and tighten the cable lock nut.

Cable Lock Nut Torque	N·m (kg·cm/lb·in)
6 (60 / 52)	

3. Break-in of Parking Brake Shoe

- When poor braking effect possibly resulting from insufficient break-in is felt, or just after replacement of parking brake shoe, be sure to conduct break-in by driving vehicle as follows:

a) Forward 50 km/h (30 mph) x 400 m (About 30 seconds) with a lever pull force of 15 kg (33 lb), and

b) Backward 10 km/h (6 mph) x 50 m (18 seconds) with a lever pull force of 15kg (33 lb).

NOTE:
Break-in procedure must be performed under the safety conditions and traffic rules.

- If braking effect still remains poor after the above break-in, wait for some time until parking brake shoe cools down and repeat the procedures a) and b) notes above.
- On completion of break-in, inspect parking brake lever stroke, and if the lever does not come within the specified number of notches when pulled up, readjust.
- Excessive break-in may cause premature wear of the parking brake lining.

FIXING TORQUE

N·m (kg·m/lb·ft)

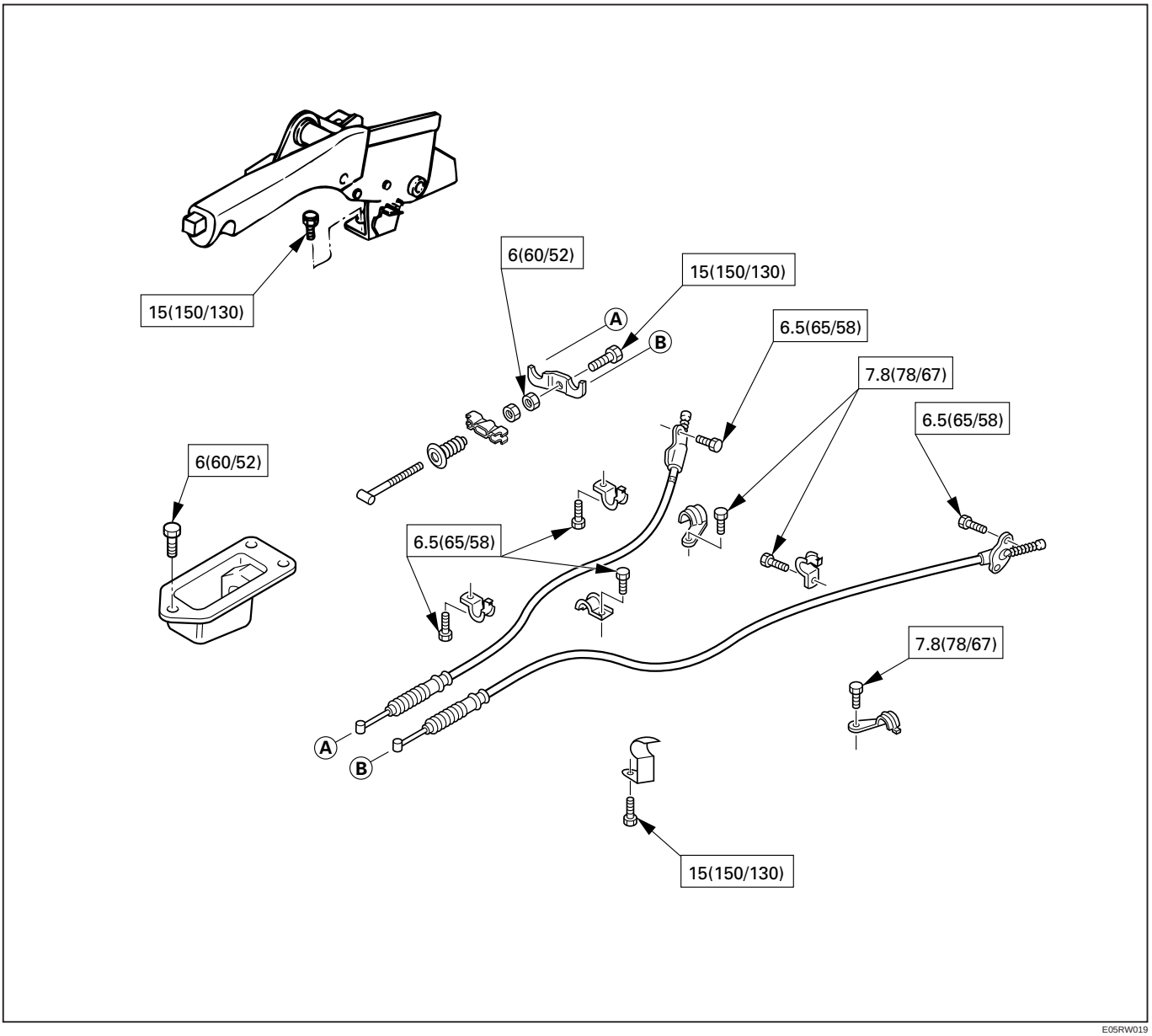

E05RW019

GENERAL DESCRIPTION

Pulling up the parking brake lever by hand will set the parking brake. Once pulled up, the lever is held by means of a ratchet type lock until it is released. The position of the lever is transmitted through cable/lever systems to the rear wheels. These parts are designed to obtain sufficient braking force when parking on slopes. When the parking brake is set, or when the ignition SW is in the “ON” position, the brake warning light illuminates. The rear wheel parking brake is a duo-servo brake (mechanical inside expansion type) built-in to rear disc brake. Parking brake adjustment is made through the adjusting hole (bored through back plate). Parking brake lever stroke should be adjusted to 6 or 7 notches.

OPERATION

When pulled in the direction “A”, the parking lever presses the secondary shoe against the brake drum using the lever/shoe joint “B” as a fulcrum and pushes the strut in the direction “C”. The strut, in turn, presses the primary shoe against the brake drum. Counter force “D” to the primary shoe is transmitted again to the secondary shoe through the fulcrum “B”. The secondary shoe contacts the drum, thereby producing braking effect. Clearance which may result from worn parking brake shoe lining can be adjusted by turning the adjusting screw

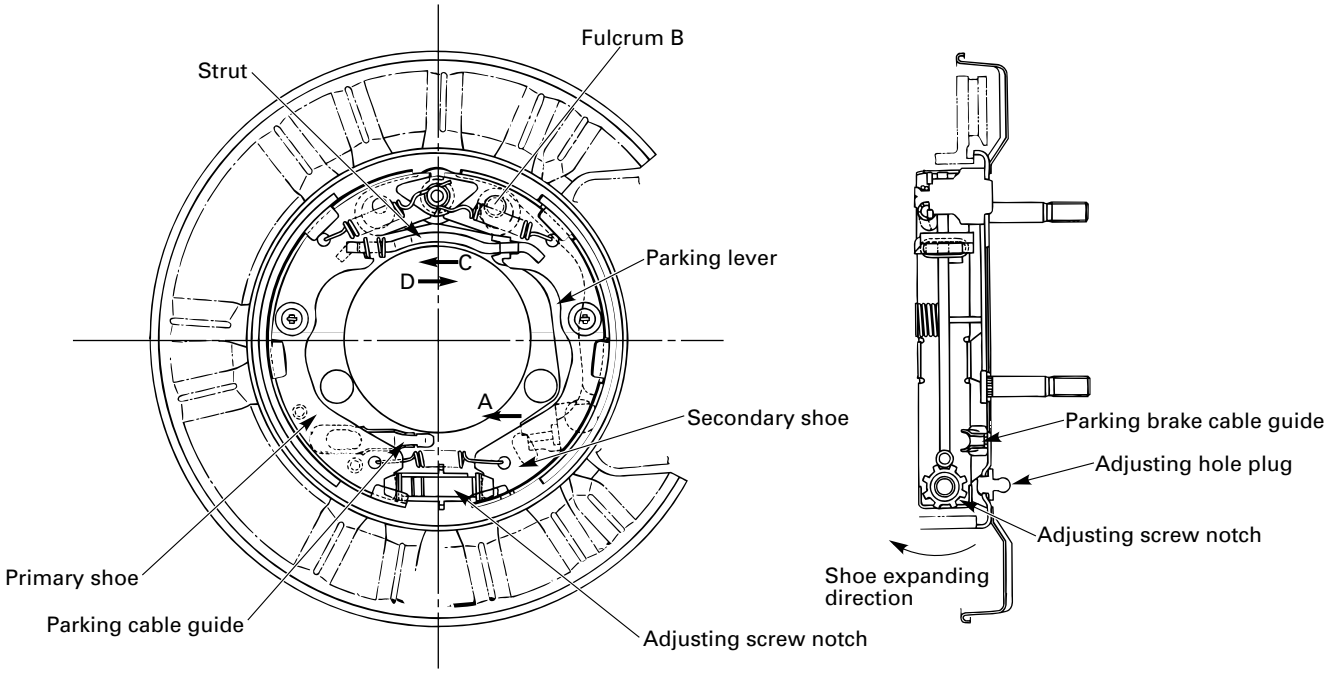

ON-VEHICLE SERVICE

PARKING BRAKE LEVER REPLACEMENT

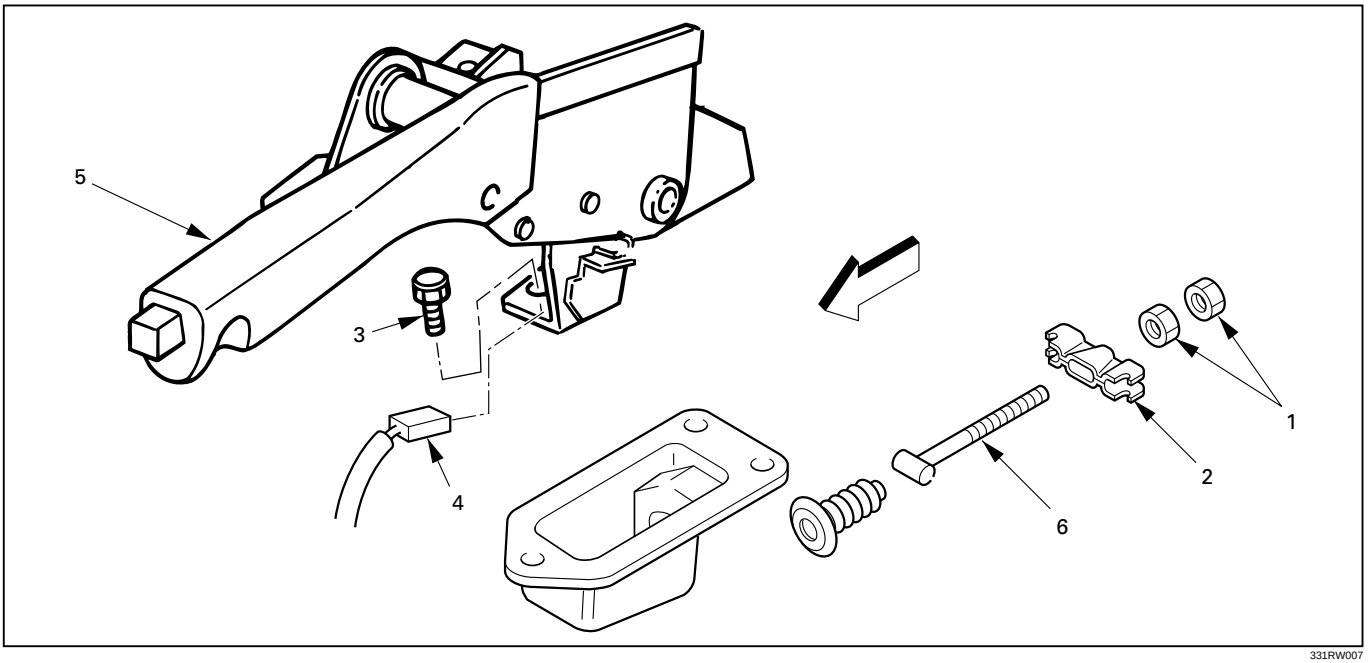

331RW007

Removal Steps

1. Ajusting nut
2. Equalizer
3. Bolt
4. Switch connector
5. Parking brake lever
6. Parking brake front cable

Installation Steps

To install, follow the removal steps in the reverse order.

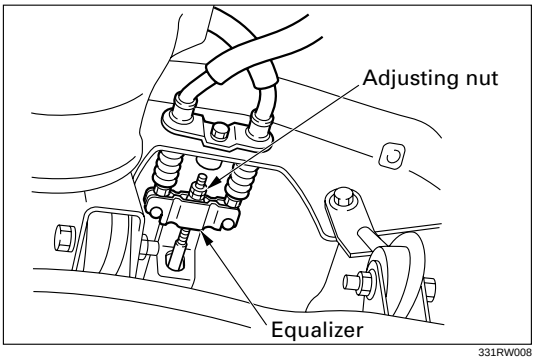

331RW008

REMOVAL

1. **Ajusting Nut**
2. **Equalizer**
3. **Bolt**

   Remove the center console as described in Body and Accessories section.
   Then remove the fixing bolt.
4. **Switch Connector**
5. **Parking Brake Lever**
6. **Parking Brake Front Cable**

INSTALLATION

6. **Parking Brake Front Cable**
5. **Parking Brake Lever**
   - Apply grease (BESCO L-2 or equivalent) to front cable contact point.
4. **Switch Connector**
3. **Bolt**
   - Tighten the parking brake lever fixing bolt to the specified torque.

Bolt Torque	N·m (kg·m / lb·ft)
15 (1.5 / 11)	

   - Install the center console.
2. **Equalizer**
1. **Adjusting Nut**

PARKING BRAKE CABLE

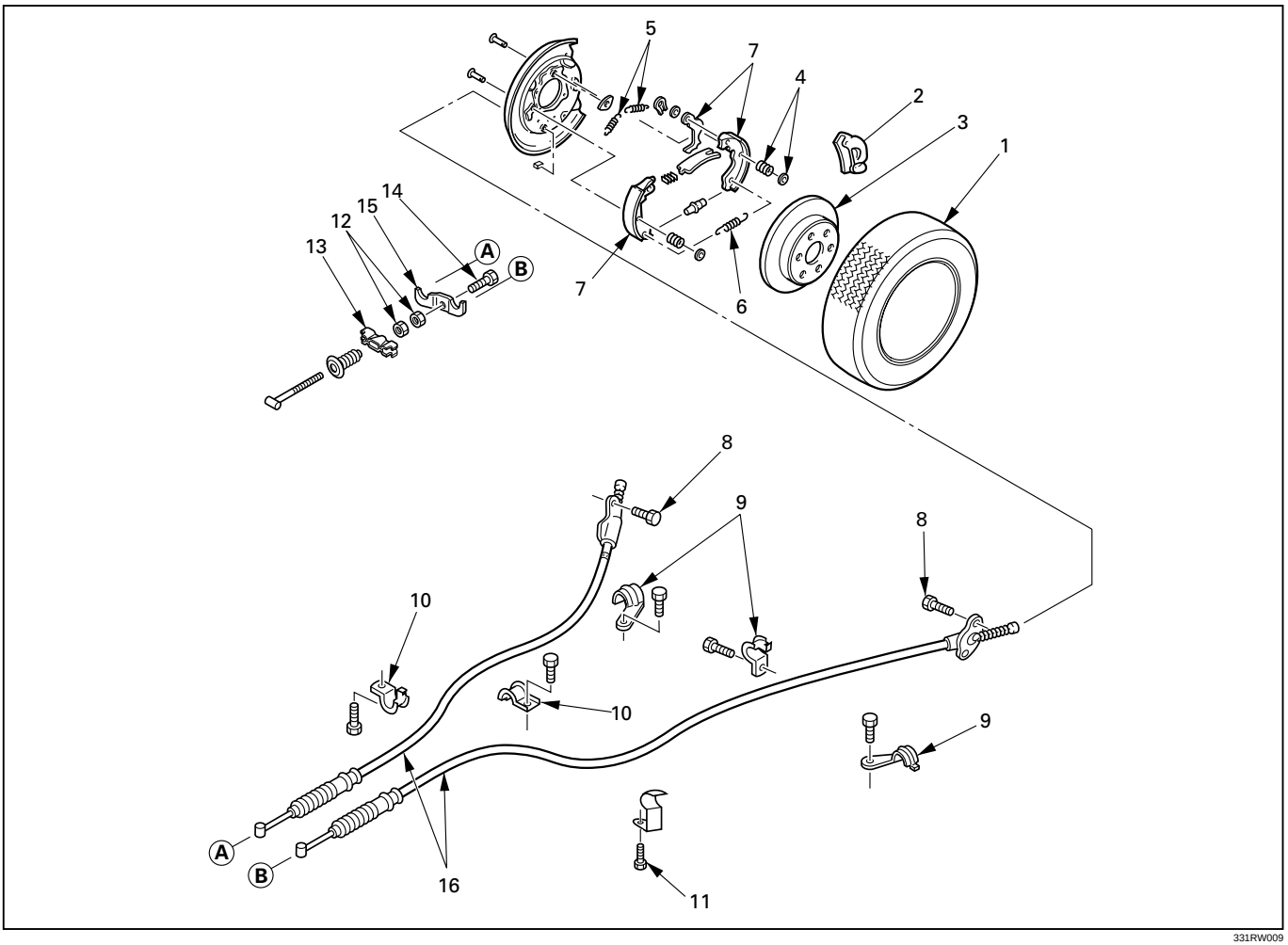

331RW009

Removal Steps

1. Rear wheels
2. Caliper assembly
3. Rotor (Drum)
4. Holding spring
5. Return spring; upper
6. Return spring; lower
7. Shoe assembly
8. Cable fixing bolt
9. Clip
10. Clip
11. Clip
12. Adjust nut
13. Equalizer
14. Bolt
15. Retaining plate
16. Parking brake cable

Installation Steps

To install, follow the removal steps in the reverse order.

REMOVAL

1. **Rear Wheels**
2. **Caliper Assembly**
   - Remove 2 bolts to remove the caliper assembly from the support bracket. (Refer to Rear Disc Brakes in Power Assisted Brake System section.) Temporarily hang the caliper with wire to avoid stretching the brake hose.
3. **Rotor (Drum)**
4. **Holding Spring**
5. **Return Spring; Upper**
6. **Return Spring; Lower**
7. **Shoe Assembly**
   - Remove the brake shoe assembly. Then remove the parking brake cable from the parking brake lever.
8. **Cable Fixing Bolt**
9. **Clip**
10. **Clip**
11. **Clip**
12. **Adjust Nut**
13. **Equalizer**
14. **Bolt**
15. **Retaining Plate**
16. **Parking Brake Cable**

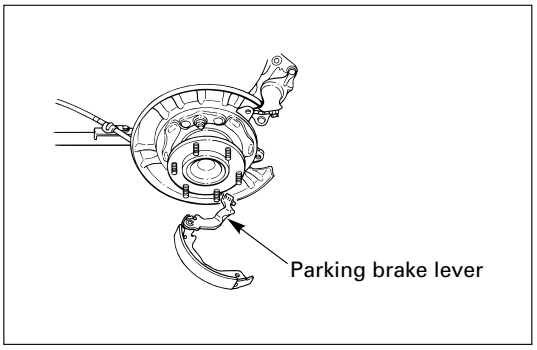

INSTALLATION

To install, follow the removal steps in the reverse order, noting the following points.

15. **Parking Brake Cable**
    - Apply grease (BESCO L-2 or equivalent) to the connecting portion of the rear cable and equalizer.
12. **Adjust Nut**
    - Tighten the adjust nut to the specified torque.

Adjust Nut Torque	N·m (kg·cm / lb·in)
6 (60 / 52)	

    - To adjust the parking brake, refer to Parking Brake Adjustment in this section.
11. **Clip**
    - Tighten the fixing bolt to the specified torque.

Fixing Bolt Torque	N·m (kg·cm / lb·in)
15 (150 / 130)	

10. **Clip**
    - Tighten the fixing bolt to the specified torque.

Fixing Bolt Torque	N·m (kg·cm / lb·in)
6.5 (65 / 58)	

9. Clip

- Tighten the fixing bolt to the specified torque.

Fixing Bolt Torque	N·m (kg·cm / lb·in)
7.8 (78 / 67)	

8. Cable Fixing Bolt

- Tighten the cable fixing bolt to the specified torque.

Cable Fixing Bolt Torque	N·m (kg·cm / lb·in)
6.5 (65 / 58)	

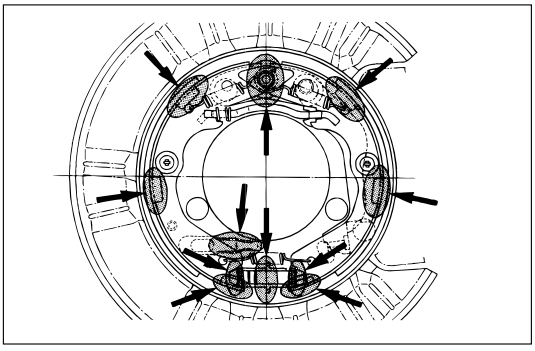

7. Shoe Assembly

- After installation of the shoe and cable assembly, apply special grease (included in the repair kit) to the following portions indicated in the left figure.

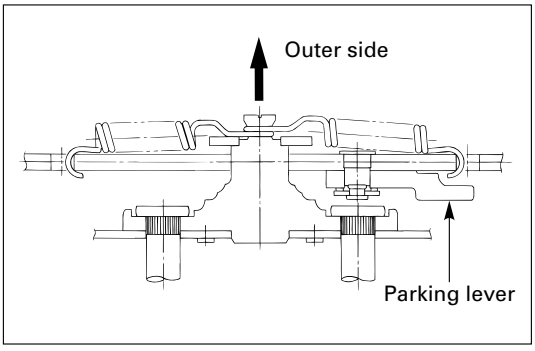

5. Return Spring; Upper

- The parking brake lever side (secondary side) return spring must be installed on the outer side of the primary side return spring.

ENGINE

CONTENTS

Engine Mechanical 6A
Engine Cooling 6B
Engine Fuel 6C
Engine Electrical 6D1
Ignition System 6D2
Starting and Charging System 6D3
Driveability and Emissions 6E
Engine Exhaust 6F
Engine Lubrication 6G
Engine Speed Control System 6H
Inducton 6J

ENGINE MECHANICAL

CONTENTS

Service Precaution 6A–2
General Description 6A–3
Engine Diagnosis 6A–4
Cylinder Head Cover LH 6A–18
Removal 6A–18
Installation 6A–19
Cylinder Head Cover RH 6A–21
Removal 6A–21
Installation 6A–22
Common Chamber 6A–24
Removal 6A–24
Installation 6A–24
Exhaust Manifold LH 6A–26
Removal 6A–26
Installation 6A–26
Exhaust Manifold RH 6A–27
Removal 6A–27
Installation 6A–27
Crankshaft Pulley 6A–28
Removal 6A–28
Installation 6A–28
Timing Belt 6A–29
Removal 6A–29
Installation 6A–30
Camshaft 6A–33
Removal 6A–33
Installation 6A–33
Cylinder Head 6A–37
Removal 6A–37
Installation 6A–37
Valve Stem Oil Controller , Valve Spring and Valve Guide 6A–39
Removal 6A–39
Installation 6A–39
Piston, Piston Ring and Connecting Rod . . . 6A–40
Removal 6A–40
Installation 6A–41
Crankshaft and Main Bearings 6A–42
Removal 6A–42
Installation 6A–43
Rear Oil Seal 6A–47
Removal 6A–47
Installation 6A–47
Engine Assembly 6A–48
Removal 6A–48
Installation 6A–48
Cylinder Head 6A–52
Cylinder Head and Associated Parts 6A–52
Disassembly 6A–52
Clean 6A–53
Inspection and Repair 6A–53
Reassembly 6A–53
Valve Spring, Oil Controller, Valve, Valve Guide 6A–56
Valve Spring, Oil Controller, Valve, Valve Guide and Associated Parts 6A–56
Disassembly 6A–56
Inspection and Repair 6A–57
Reassembly 6A–60
Valve Clearance Adjustments 6A–61
Camshaft 6A–63
Camshaft and Associated Parts 6A–63
Disassembly 6A–63
Inspection and Repair 6A–64
Reassembly 6A–66
Crankshaft 6A–69
Crankshaft and Associated Parts 6A–69
Disassembly 6A–69
Inspection and Repair 6A–70
Inspection and Repair 6A–71
Reassembly 6A–73

Piston and Connecting Rod 6A–77
Piston, Connecting Rod and Associate Parts 6A–77
Disassembly 6A–77
Inspection and Repair 6A–78
Reassembly 6A–82
Cylinder Block 6A–85
Cylinder Block and Associated Parts 6A–85
Disassembly 6A–85
Inspection and Repair 6A–86
Reassembly 6A–87
Main Data and Specification 6A–90
Special Tool 6A–96

Service Precaution

WARNING: IF SO EQUIPPED WITH A SUPPLEMENTAL RESTRAINT SYSTEM (SRS), REFER TO THE SRS COMPONENT AND WIRING LOCATION VIEW IN ORDER TO DETERMINE WHETHER YOU ARE PERFORMING SERVICE ON OR NEAR THE SRS COMPONENTS OR THE SRS WIRING. WHEN YOU ARE PERFORMING SERVICE ON OR NEAR THE SRS COMPONENTS OR THE SRS WIRING, REFER TO THE SRS SERVICE INFORMATION. FAILURE TO FOLLOW WARNINGS COULD RESULT IN POSSIBLE AIR BAG DEPLOYMENT, PERSONAL INJURY, OR OTHERWISE UNNEEDED SRS SYSTEM REPAIRS.

CAUTION: Always use the correct fastener in the proper location. When you replace a fastener, use ONLY the exact part number for that application. ISUZU will call out those fasteners that require a replacement after removal. ISUZU will also call out the fasteners that require thread lockers or thread sealant. UNLESS OTHERWISE SPECIFIED, do not use supplemental coatings (Paints, greases, or other corrosion inhibitors) on threaded fasteners or fastener joint interfaces. Generally, such coatings adversely affect the fastener torque and the joint clamping force, and may damage the fastener. When you install fasteners, use the correct tightening sequence and specifications. Following these instructions can help you avoid damage to parts and systems.

General Description

Engine Cleanliness And Care

An automobile engine is a combination of many machined, honed, polished and lapped surfaces with tolerances that are measured in the thousandths of a millimeter (ten thousandths of an inch). Accordingly, when any internal engine parts are serviced, care and cleanliness are important. Throughout this section, it should be understood that proper cleaning and protection of machined surfaces and friction areas is part of the repair procedure. This is considered standard shop practice even if not specifically stated.

- A liberal coating of engine oil should be applied to all friction areas during assembly to protect and lubricate the surfaces on initial operation.
- Whenever valve train components, pistons, piston rings, connecting rods, rod bearings, and crankshaft journal bearings are removed for service, they should be retained in order.
- At the time of installation, they should be installed in the same locations and with the same mating surfaces as when removed.
- Battery cables should be disconnected before any major work is performed on the engine. Failure to disconnect cables may result in damage to wire harness or other electrical parts.
- The six cylinders of this engine are identified by numbers; Right side cylinders 1, 3 and 5, Left side cylinders 2, 4 and 6, as counted from crankshaft pulley side to flywheel side.

General Information on Engine Service

The following information on engine service should be noted carefully, as it is important in preventing damage and contributing to reliable engine performance:

- When raising or supporting the engine for any reason, do not use a jack under the oil pan. Due to the small clearance between the oil pan and the oil pump strainer, jacking against the oil pan may cause damage to the oil pick–up unit.
- The 12–volt electrical system is capable of damaging circuits. When performing any work where electrical terminals could possibly be grounded, the ground cable of the battery should be disconnected at the battery.
- Any time the intake air duct or air cleaner is removed, the intake opening should be covered. This will protect against accidental entrance of foreign material into the cylinder which could cause extensive damage when the engine is started.

Cylinder Block

The cylinder block is made of aluminum die–cast casting for 75˚V–type six cylinders. It has a rear plate integrated structure and employs a deep skint. The cylinder liner is cast and the liner inner diameter and crankshaft journal diameter are classified into grades. The crankshaft is supported by four bearings of which width of No.3 bearing on the body side is different in order to support the thrust bearing. The bearing cap is made of nodular cast iron and each bearing cap uses four bolts and two side bolts.

Cylinder Head

The cylinder head, made of aluminum alloy casting employs a pent–roof type combustion chamber with a spark plug in the center. The intake and exhaust valves are placed in V–type design. The ports are cross–flow type.

Valve Train

Intake and exhaust camshaft on the both side of banks are driven through an camshaft drive gear by timing belt. The valves are operated by the camshaft and the valve clearance is adjusted to select suitable thickness shim.

Intake Manifold

The intake manifold system is composed of the aluminum cast common chamber and intake manifold attached with six fuel injectors.

Exhaust Manifold

The exhaust manifold is made of nodular cast iron.

Pistons and Connecting Rods

Aluminum pistons are used after selecting the grade that meets the cylinder bore diameter. Each piston has two compression rings and one oil ring. The piston pin is made of chromium steel is offset 1mm toward the thrust side, and the thrust pressure of piston to the cylinder wall varies gradually as the piston travels. The connecting rods are made of forged steel. The connecting rod bearings are graded for correct seze selection.

Crankshaft and Bearings

The crankshaft is made of Ductile cast–iron. Pins and journals are graded for correct size selection for their bearing.

Engine Lubrication

The oil discharged by a trochoid–type oil pump driven by the crankshaft is fed through full–flow oil filter and to the oil gallery provided under the crankshaft bearing cap. The oil is then led to the crankshaft journals and cylinder head. The crank pins are lubricated with oil from crankshaft journals through oil holes. Also, an oil jet is fed to each cylinder from crankshaft juornals on the connecting rod for piston cleaning. The oil pan flange is dealed with liquid packing only; do not deform or damage the flange surface during removal or installation.

Engine Diagnosis

Hard Starting

1. Starting Motor Does Not Turn Over

Troubleshooting Procedure

Turn on headlights and starter switch.

Condition	Possible cause	Correction
Headlights go out or dim considerably	Battery run down or under charged	Recharge or replace battery
	Terminals poorly connected	Clean battery posts and terminals and connect properly
	Starting motor coil circuit shorted	Overhaul or replace
	Starting motor defective	Overhaul or replace

2. Ignition Trouble — Starting Motor Turns Over But Engine Does Not Start

Spark Test

Disconnect an igniton coil from any spark plug. Connect the spark plug tester 5–8840–0607–0, start the engine, and check if a spark is generated in the spark plug tester. Before starting the engine, make sure that the spark plug tester is properly grounded. To avoid electrical shock, do not touch the part where insulation of the igniton coil is broken while the engine is running.

Condition	Possible cause	Correction
Spark jumps across gap	Spark plug defective	Clean, adjust spark gap or replace
	Ignition timing incorrect	Refer to Ignition System
	Fuel not reaching fuel injector(s) or engine	Refer to item 3 (Trouble in fuel system)
	Valve timing incorrect	Adjust
	Engine lacks compression	Refer to item 4 (Engine lacks compression)
No sparking takes place	Ignition coil disconnected or broken	Connect properly or replace
	Electronic Ignition System with module	Replace
	Poor connections in engine harness	Correct
	Powertrain Control Module cable disconnected or defective	Correct or replace

3. Trouble In Fuel System

Condition	Possible cause	Correction
Starting motor turns over and spark occurs but engine does not start.	Fuel tank empty	Fill
	Water in fuel system	Clean
	Fuel filter clogged	Replace filter
	Fuel pipe clogged	Clean or replace
	Fuel pump defective	Replace
	Fuel pump circuit open	Correct or replace
	Evaporative Emission Control System circuit clogged	Correct or replace
	Multiport Fuel Injection System faulty	Refer to “Electronic Fuel Injection” section

4. Engine Lacks Compression

Condition	Possible cause	Correction
Engine lacks compression	Spark plug loosely fitted or spark plug gasket defective	Tighten to specified torque or replace gasket
	Valve timing incorrect	Adjust
	Cylinder head gasket defective	Replace gasket
	Valve incorrectly seated	Lap valve
	Valve stem seized	Replace valve and valve guide
	Valve spring weakened or broken	Replace
	Cylinder or piston rings worn	Overhaul engine
	Piston ring seized	Overhaul engine.

Engine Compression Test Procedure

1. Start and run the engine until the engine reaches normal operating temperature.
2. Turn the engine off.
3. Remove all the spark plugs.
4. Remove ignition coil fuse (15A) and disable the ignition system.
5. Remove the fuel pump relay from the relay and fuse box.
6. Engage the starter and check that the cranking speed is approximately 300 rpm.
7. Install cylinder compression gauge into spark plug hole.
8. With the throttle valve opened fully, keep the starter engaged until the compression gage needle reaches the maximum level. Note the reading.
9. Repeat the test with each cylinder.
   If the compression pressure obtained falls below the limit, engine overhaul is necessary.

   Limit; 1000 kPa (145 psi)

Rough Engine Idling or Engine Stalling

Condition	Possible cause	Correction
Trouble in fuel injection system	Idle air control valve defective	Replace
	Throttle shutting off incomplete	Correct or replace
	Throttle position sensor circuit open or shorted	Correct or replace
	Fuel injector circuits open or shorted	Correct or replace
	Fuel injectors damaged	Replace
	Fuel pump relay defective	Replace
	Mass Airflow Sensor circuit open or poor connections	Correct or replace
	Mass Airflow Sensor defective	Replace
	Manifold Absolute Pressure Sensor circuit open or poor connections	Correct or replace
	Manifold Absolute Pressure Sensor defective	Replace
	Engine Coolant Temperature Sensor circuit open or poor connections	Correct or replace
	Engine Coolant Temperature Sensor defective	Replace
	Intake Air Temperature sensor circuit open or poor connections	Correct or replace
	Intake Air Temperature sensor defective	Replace
	Knock Sensor (KS) cable broken or poor connections	Correct or replace
	KS defective	Replace
	KS Module circuits open or ground	Correct or replace
	KS Module defective	Replace
	Vehicle Speed Sensor circuit open or shorted	Correct or replace
	Vehicle Speed Sensor defective	Replace
Trouble in emission control system	Powertrain Control Module defective	Replace
	Exhaust Gas Recirculation Valve circuit open or poor connections	Correct or replace
	Exhaust Gas Recirculation Valve faulty	Replace
	Canister purge valve circuit open or poor connections	Correct or replace
	Canister purge valve defective	Replace
	Evaporative Emission Canister Purge control valve defective	Replace
	Trouble in ignition system	Refer to “Hard Start”

Condition	Possible cause	Correction
Others	Engine lacks compression	Refer to “Hard Start”
	Valve incorrectly seated	Lap valve
	Air Cleaner Filter clogged	Replace filter element
	Valve timing incorrect	Readjust
	Idle air control valve broken	Replace
	Fast idle solenoid defective	Replace
	Positive Crankcase Ventilation valve defective or clogged	Replace

Rough Engine Running

Condition	Possible cause	Correction
Engine misfires periodically	Ignition coil layer shorted	Replace
	Spark plugs fouling	Clean or install hotter type plug
	Spark plug(s) insulator nose leaking	Replace
	Fuel injector(s) defective	Replace
	Powertrain control module faulty	Replace
Engine knocks periodically	Spark plugs running too hot	Install colder type spark plugs
	Powertrain control module faulty	Replace
Engine lacks power	Spark plugs fouled	Clean
	Fuel injectors defective	Replace
	Mass Airflow Sensor or Intake Airflow Sensor circuit defective	Correct or replace
	Manifold Absolute Pressure (MAP) Sensor or Manifold Absolute Pressure Sensor circuit defective	Correct or replace
	Engine Coolant Temperature Sensor or Engine Coolant Temperature Sensor circuit defective	Correct or replace
	Powertrain Control Module faulty	Replace
	Intake Air Temperature Sensor or Intake Air Temperature Sensor circuit defective	Correct or replace
	Throttle Position Sensor or Throttle Position Sensor circuit defective	Correct or replace
	Knock Sensor or Knock Sensor circuits defective	Correct or replace
	Knock Sensor Module or Knock Sensor Module circuits defective	Correct or replace

Hesitation

Condition	Possible cause	Correction
Hesitation on acceleration	Throttle Position Sensor adjustment incorrect	Replace throttle valve assembly
	Throttle Position Sensor circuit open or shorted	Correct or replace
	Excessive play in accelerator linkage	Adjust or replace
	Mass Airflow Sensor circuit open or poor connections	Correct or replace
	Mass Airflow Sensor defective	Replace
	Manifold Absolute Pressure (MAP) Sensor circuit open or shorted	Correct or replace
	MAP Sensor defective	Replace
	Intake Air Temperature (IAT) Sensor circuit open or shorted	Correct or replace
	Knock Sensor (KS) Circuit open or poor connections	Correct or replace
	KS defective	Replace
	KS Module circuits open or shorted	Correct or replace
	KS Module defective	Replace
	IAT Sensor defective	Replace
Hesitation at high speeds (Fuel pressure too low)	Fuel tank strainer clogged	Clean or replace
	Fuel pipe clogged	Clean or replace
	Fuel filter clogged	Replace
	Defective fuel pump system	Check and replace
	Fuel Pressure Control Valve leaking	Replace
Hesitation at high speeds (Fuel injector not working normally)	Power supply or ground circuit for Multiport Fuel Injection System shorted or open	Check and correct or replace
	Fuel Injector defective	Replace
	Cable of Multiport Fuel Injection System circuit open or poor connections	Correct or replace

Condition	Possible cause	Correction
Hesitation at high speeds	Powertrain Control Module defective	Replace
	Throttle Position Sensor cable broken or poor connections	Correct or replace
	Throttle Position Sensor defective	Replace
	Engine Coolant Temperature Sensor circuit open or shorted	Correct or replace
	Engine Coolant Temperature Sensor defective	Replace
	Mass Airflow Sensor circuit open or poor connections	Correct or replace
	Mass Airflow Sensor defective	Replace
	MAP Sensor cable broken or poor connections	Correct or replace
	MAP Sensor defective	Replace
	IAT Sensor circuit open or poor connections	Correct or replace
	IAT Sensor defective	Replace
	KS circuit open or poor connections	Correct or replace
	KS defective	Replace
	KS Module circuit open or shorted	Correct or replace
	KS Module defective	Replace
	Throttle valve not fully opened	Check and correct or replace
	Air Cleaner Filter clogged	Replace filter element
	Power supply voltage too low	Check and correct or replace

Engine Lacks Power

Condition	Possible cause	Correction
Trouble in fuel system	Fuel Pressure Control Valve not working normally	Replace
	Fuel injector clogged	Clean or replace
	Fuel pipe clogged	Clean
	Fuel filter clogged or fouled	Replace
	Fuel pump drive circuit not working normally	Correct or replace
	Fuel tank not sufficiently breathing due to clogged Evaporative Emission Control System circuit	Clean or replace
	Water in fuel system	Clean
	Inferior quality fuel in fuel system	Use fuel of specified octane rating
	Powertrain Control Module supplied poor voltage	Correct circuit
	Throttle Position Sensor cable broken or poor connections	Correct or replace
	Throttle Position Sensor defective	Replace
	Mass Airflow Sensor not working normally	Replace
	Manifold Absolute Pressure Sensor not working normally	Replace
	Intake Air Temperature Sensor not working normally	Replace
	Engine Coolant Temperature Sensor circuit open or shorted	Correct or replace
	Engine Coolant Temperature Sensor defective	Replace
	Powertrain Control Module defective	Replace
Trouble in intake or exhaust system	Air Cleaner Filter clogged	Replace filter element
	Air duct kinked or flattened	Correct or replace
Ignition failure	———	Refer to Hard Start Troubleshooting Guide
	Heat range of spark plug inadequate	Install spark plugs of adequate heat range
	Ignition coil defective	Replace

Condition	Possible cause	Correction
Engine overheating	Level of Engine Coolant too low	Replenish
	Fan clutch defective	Replace
	Incorrect fan installed	Replace
	Thermostat defective	Replace
	Engine Coolant pump defective	Correct or replace
	Radiator clogged	Clean or replace
	Radiator filler cap defective	Replace
	Level of oil in engine crankcase too low or wrong engine oil	Change or replenish
	Resistance in exhaust system increased	Clean exhaust system or replace defective parts
	Throttle Position Sensor adjustment incorrect	Replace with Throttle Valve ASM
	Throttle Position Sensor circuit open or shorted	Correct or replace
	Cylinder head gasket damaged	Replace
Engine overcooling	Thermostat defective	Replace (Use a thermostat set to open at 82˚C (180˚F))
Engine lacks compression	———	Refer to Hard Start
Others	Tire inflation pressure abnormal	Adjust to recommended pressures
	Brake drag	Adjust
	Clutch slipping	Adjust or replace
	Level of oil in engine crankcase too high	Correct level of engine oil
	Exhaust Gas Recirculation Valve defective	Replace

Engine Noisy

Abnormal engine noise often consists of various noises originating in rotating parts, sliding parts and other moving parts of the engine. It is, therefore, advisable to locate the source of noise systematically.

Condition	Possible cause	Correction
Noise from crank journals or from crank bearings (Faulty crank journals and crank bearings usually make dull noise that becomes more evident when accelerating)	Oil clearance increased due to worn crank journals or crank bearings	Replace crank bearings and crankshaft or regrind crankshaft and install the undersize bearing
	Crankshaft out of round	Replace crank bearings and crankshaft or regrind crankshaft and install the undersize bearing
	Crank bearing seized	Crank bearing seized. Replace crank bearings and crankshaft or regrind crankshaft and install the undersize bearing

Troubleshooting Procedure

Short out each spark plug in sequence using insulated spark plug wire removers. Locate cylinder with defective bearing by listening for abnormal noise that stops when spark plug is shorted out.

Condition	Possible cause	Correction
Noise from connecting rods or from connecting rod bearings (Faulty connecting rods or connecting rod bearings usually make an abnormal noise slightly higher than the crank bearing noise, which becomes more evident when engine is accelerated)	Bearing or crankshaft pin worn	Replace connecting rod bearings and crankshaft or regrind crankshaft pin and install the undersize bearing
	Crankpin out of round	Replace connecting rod bearings and crankshaft or regrind crankshaft pin and install the undersize bearing
	Connecting rod bent	Correct or replace
	Connecting rod bearing seized	Replace connecting rod bearings and crankshaft or regrind crankshaft pin and install the undersize bearing

Troubleshooting Procedure

Abnormal noise stops when the spark plug on the cylinder with defective part is shorted out.

Condition	Possible cause	Correction
Piston and cylinder noise (Faulty piston or cylinder usually makes a combined mechanical thumping noise which increases when engine is suddenly accelerated but diminishes gradually as the engine warms up)	Piston clearance increased due to cylinder wear	Replace piston and cylinder body
	Piston seized	Replace piston and cylinder body
	Piston ring broken	Replace piston and cylinder body
	Piston defective	Replace pistons and others

Troubleshooting Procedure

Short out each spark plug and listen for change in engine noise.

Condition	Possible cause	Correction
Piston pin noise (Piston makes noise each time it goes up and down)	Piston pin or piston pin hole worn	Replace piston, piston pin and connecting rod assy

Troubleshooting Procedure

The slapping sound stops when spark plug on bad cylinder is shorted out.

Condition	Possible cause	Correction
Timing belt noise	Timing belt tension is incorrect	Replace pusher or adjust the tension pulley or replace timing belt
	Tensioner bearing defective	Replace
	Timing belt defective	Replace
	Timing pulley defective	Replace
	Timing belt comes in contact with timing cover	Replace timing belt and timing cover
Valve noise	Valve clearance incorrect	Replace adjusting shim
	Valve and valve guide seized	Replace valve and valve guide
	Valve spring broken or weakened	Replace
	Valve seat off–positioned	Correct
	Camshaft worn out	Replace
Crankshaft noise	Crankshaft end play excessive (noise occurs when clutch is engaged)	Replace thrust bearing

Condition	Possible cause	Correction
Engine knocking	Preignition due to use of spark plugs of inadequate heat range	Install Spark Plugs of adequate heat range
	Carbon deposits in combustion chambers	Clean
	Fuel too low in octane rating	Replace fuel
	Wide Open Throttle enrichment system failure	Refer to Section 6E
	Selection of transmission gear incorrect	Caution operator of incorrect gear selection
	Engine overheating	Refer to “Engine Lacks Power”
Others	Water pump defective	Replace
	Drive belt slipping	Replace auto tentioner or drive belt

Abnormal Combustion

Condition	Possible cause	Correction
Trouble in fuel system	Fuel pressure control valve defective	Replace
	Fuel filter clogged	Replace
	Fuel pump clogged	Clean or replace
	Fuel tank or fuel pipe clogged	Clean or replace
	Fuel injector clogged	Clean or replace
	Fuel pump relay defective	Replace
	Power supply cable for fuel pump broken or poor connections	Reconnect, correct or replace
	Mass Airflow (MAF) sensor circuit open or defective	Correct or replace
	MAF Sensor defective	Replace
	Manifold Absolute Pressure Sensor circuit open or shorted	Correct or replace
	Manifold Absolute Pressure Sensor defective	Replace
	Engine Coolant Temperature (ECT) Sensor circuit open or shorted	Correct or replace
	ECT Sensor defective	Replace
	Throttle Position Sensor adjustment incorrect	Readjust
	Throttle Position Sensor defective	Replace
	Throttle Position Sensor connector poor connections	Reconnect
	Vehicle Speed Sensor cable poor connections or defective	Correct or replace
	Vehicle Speed Sensor loosely fixed	Fix tightly
	Vehicle Speed Sensor in wrong contact or defective	Replace
	Powertrain Control Module cable poor connections or defective	Correct or replace

Condition	Possible cause	Correction
Trouble in emission control system	Heated Oxygen Sensor circuit open	Correct or replace
	Heated Oxygen Sensor defective	Replace
	Signal vacuum hose loosely fitted or defective	Correct or replace
	EGR Valve circuit open or shorted	Correct or replace
	Exhaust Gas Recirculation Valve defective	Replace
	ECT Sensor circuit open or shorted	Correct or replace
	Canister Purge Valve circuit open or shorted	Correct or replace
	Canister Purge Valve defective	Replace
	ECT Sensor defective	Replace
	Positive Crankcase Ventilation (PCV) valve and hose clogged	Correct or replace
	Evaporator system	Refer to Section 6E
Trouble in ignition system	———	Refer to “Engine Lacks Power”
Trouble in cylinder head parts	Carbon deposits in combustion chamber	Remove carbon
	Carbon deposit on valve, valve seat and valve guide	Remove carbon

Engine Oil Consumption Excessive

Condition	Possible cause	Correction
Oil leaking	Oil pan drain plug loose	Retighten or replace gasket
	Crankcase fixing bolts loosened	Retighten
	Oil pan setting bolts loosened	Retighten
	Oil pan gasket broken	Replace gasket
	Front cover retaining bolts loose or gasket broken	Retighten or replace gasket
	Head cover fixing bolts loose or gasket broken	Retighten or replace gasket
	Oil cooler adapter cracked	Replace
	Oil cooler center bolt loose	Retighten
	Oil cooler O–ring broken	Replace
	Oil cooler piping loose or broken	Retighten or replace
	Oil filter adapter cracked	Replace
	Oil filter attaching bolt loose or rubber gasket broken	Retighten or replace oil filter
	Oil cooler broken	Replace
	Crankshaft front or rear oil seal defective	Replace oil seal
	Oil pressure unit loose or broken	Retighten or replace
	Blow–by gas hose broken	Replace hose
	Positive Crankcase Ventilation Valve clogged	Clean
	Engine/Transmission coupling failed	Replace oil seal

Condition	Possible cause	Correction
Oil leaking into combustion chambers due to poor seal in valve system	Valve stem oil seal defective	Replace
	Valve stem or valve guide worn	Replace valve and valve guide
Oil leaking into combustion chambers due to poor seal in cylinder parts	Cylinders and pistons worn excessively	Replace cylinder body assembly and pistons
	Piston ring gaps incorrectly positioned	Correct
	Piston rings set with wrong side up	Correct
	Piston ring sticking	Replace cylinder body assembly and pistons
	Piston ring and ring groove worn	Replace pistons and others
	Return ports in oil rings clogged	Clean piston and replace rings
Positive Crankcase Ventilation System malfunctioning	Positive Crankcase Ventilation Valve clogged	Clean
Others	Improper oil viscosity	Use oil of recommended S.A.E. viscosity
	Continuous high speed driving and/or severe usage such as trailer towing	Continuous high speed operation and/or severe usage will normally cause increased oil consumption

Fuel Consumption Excessive

Condition	Possible cause	Correction
Trouble in fuel system	Mixture too rich or too lean due to trouble in fuel injection system	Refer to “Abnormal Combustion”
	Fuel cut function does not work	Refer to “Abnormal Combustion”
Trouble in ignition system	Misfiring or abnormal combustion due to trouble in ignition system	Refer to “Hard Start” or “Abnormal Combustion”
Others	Engine idle speed too high	Reset Idle Air Control Valve
	Returning of accelerator control sluggish	Correct
	Fuel system leakage	Correct or replace
	Clutch slipping	Correct
	Brake drag	Correct
	Selection of transmission gear incorrect	Caution operator of incorrect gear selection
	Excessive Exhaust Gas Recirculation flow due to trouble in Exhaust Gas Recirculation system	Refer to “Abnormal Combustion”

Lubrication Problems

Condition	Possible cause	Correction
Oil pressure too low	Wrong oil in use	Replace with correct engine oil
	Relief valve sticking	Replace
	Oil pump not operating properly	Correct or replace
	Oil pump strainer clogged	Clean or replace strainer
	Oil pump worn	Replace
	Oil pressure gauge defective	Correct or replace
	Crankshaft bearing or connecting rod bearing worn	Replace
Oil contamination	Wrong oil in use	Replace with correct engine oil
	Oil filter clogged	Replace oil filter
	Cylinder head gasket damage	Replace gasket
	Burned gases leaking	Replace piston and piston rings or cylinder body assembly
Oil not reaching valve system	Oil passage in cylinder head or cylinder body clogged	Clean or correct

Engine Oil Pressure Check

1. Check for dirt, gasoline or water in the engine oil.
   a. Check the viscosity of the oil.
   b. Change the oil if the viscosity is outside the specified standard.
   c. Refer to the “Maintenance and Lubrication” section of this manual.
2. Check the engine oil level.
   The level should fall somewhere between the “ADD” and the “FULL” marks on the oil level dipstick.
   If the oil level does not reach the “ADD” mark on the oil level dipstick, engine oil must be added.
3. Remove the oil pressure unit.
4. Install an oil pressure gauge.
5. Start the engine and allow the engine to reach normal operating temperature (About 80˚C).
6. Measure the oil pressure.
   Oil pressure should be:
   392–550 kPa (56.9–80.4 psi) at 3000 rpm.
7. Stop the engine.
8. Remove the oil pressure gauge.
9. Install the oil pressure unit.
10. Start the engine and check for leaks.

Malfunction Indicator Lamp

The instrument panel “CHECK ENGINE” Malfunction Indicator Lamp (MIL) illuminates by self diagnostic system when the system checks the starting of engine, or senses malfunctions.

Condition	Possible cause	Correction
“CHECK ENGINE” MIL does not illuminate at the starting of engine	Bulb defective	Replace
	MIL circuit open	Correct or replace
	Command signal circuit to operate self diagnostic system shorted	Correct or replace
	Engine Control Module (PCM) cable loosely connected, disconnected or defective	Correct or replace
	PCM defective	Replace
“CHECK ENGINE” MIL illuminates, and stays on	Deterioration of heated oxygen sensor internal element	Replace
	Heated oxygen sensor connector terminal improper contact	Reconnect properly
	Heated oxygen sensor lead wire shorted	Correct
	Heated oxygen sensor circuit open	Correct or replace
	Deterioration of engine coolant temperature sensor internal element	Replace
	Engine coolant temperature sensor connector terminal improper contact	Reconnect properly
	Engine coolant temperature sensor lead wire shorted	Correct
	Engine coolant temperature sensor circuit open	Correct or replace
	Throttle position sensor open or shorted circuits	Correct or replace
	Deterioration of crankshaft position sensor	Replace
	Crankshaft position sensor circuit open or shorted	Correct or replace
	Vehicle speed sensor circuit open	Correct or replace
	Manifold absolute pressure sensor circuit open or shorted	Correct or replace
	Intake air temperature sensor circuit open or shorted	Correct or replace
	Fuel injector circuit open or shorted	Correct or replace
	PCM driver transistor defective	Replace PCM
	Malfunctioning of PCM RAM (Random Access Memory) or ROM (Read Only Memory)	Replace PCM

Cylinder Head Cover LH

Removal

1. Disconnect battery ground cable.
2. Drain engine coolant from faucet bottom of radiator.
3. Remove engine cover from the dowels on the common chamber.

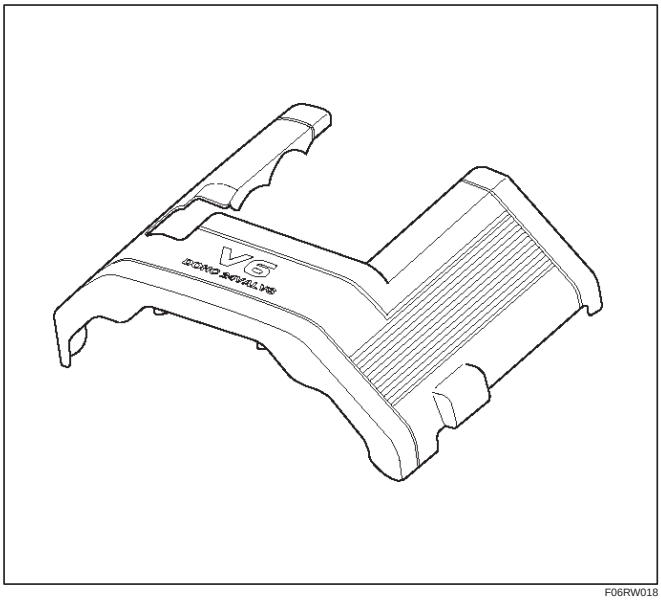

F06RW018

4. Remove air cleaner duct assembly (3) and air cleaner element (4).

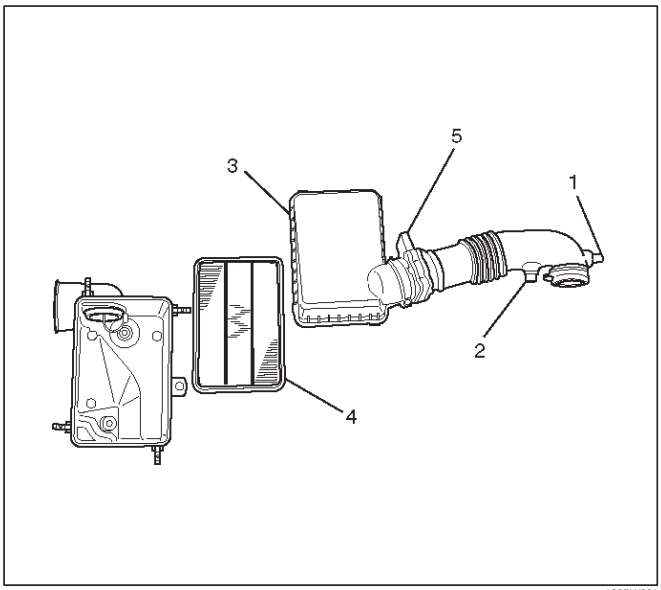

130RW001

Legend

(1) Positive Crankcase Ventilation Hose Connector
(2) Intake Air Temperature Sensor
(3) Air Cleaner Duct Assembly
(4) Air Cleaner Element
(5) Mass Air Flow Sensor

NOTE: Disconnect the mass air flow (MAF) sensor connector, intake air temperature (IAT) sensor connector, and positive crankcase ventilation (PCV) hose before hand the air cleaner duct assembly is removed.

5. Disconnect following wiring connectors and bonding cable:
   - Manifold Absolute Pressure (MAP) sensor
   - Vacuum Switching Valve (VSV) for Induction Air Control Valve (IACV) actuator
   - Ignition coils for left bank
   - Fuel injectors for left bank
   - Idle air control (IAC) valve
   - Throttle position sensor (TPS)
   - Bonding cable
   - Others as necessitated
6. Disconnect following vacuum hoses:
   - Brake master VAC
   - Canister
   - VSV for IACV actuator
   - Duty solenoid valve
   - PCV
7. Disconnect radiator upper and lower hoses
8. Remove engine harness from the cylinder head cover.
9. Remove the upper fan guide.
10. Remove cooling fan and clutch assembly.
11. Remove drive belt by pushing down the auto tensioner using spanner as illustrated.

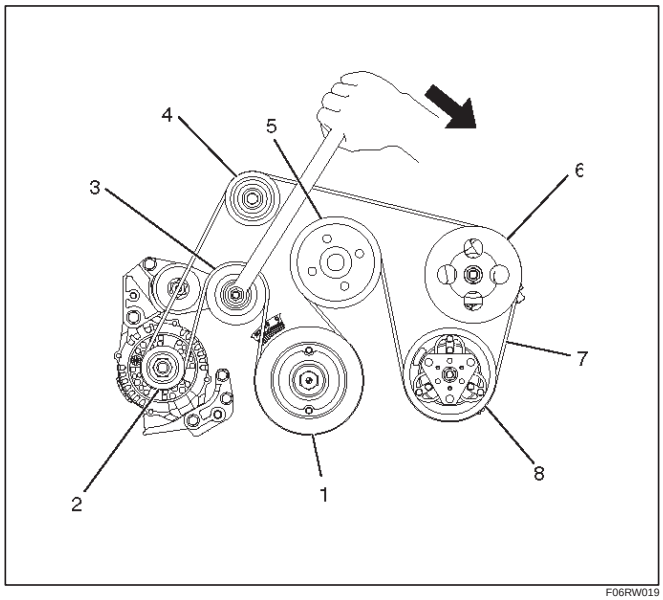

F06RW019

Legend

(1) Crankshaft Pulley
(2) Generator
(3) Auto Tensioner
(4) Idle Pulley
(5) Cooling Fan Pulley
(6) Power Steering Oil Pump
(7) Drive Belt
(8) Air Conditioner Compressor

12. Remove power steering oil pump pulley.
13. Remove fan pulley and bracket assembly.
14. Remove idle pulley assembly.
15. Remove auto tensioner assembly.
16. Remove crankshaft pulley using 5–8840–0133–0 crankshaft holder.
17. Remove timing belt covers from the right bank side to the left bank side in order.
18. Remove ignition coil assemblies for the left side bank.

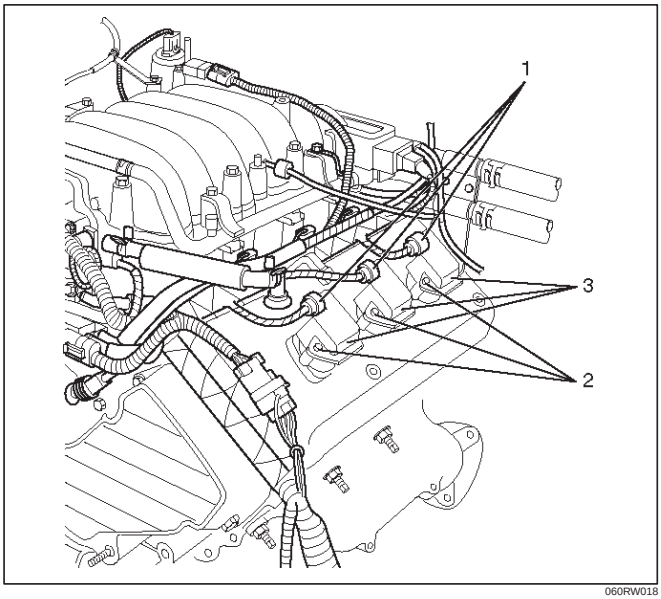

060RW018

Legend

(1) Ignition Coil Connectors
(2) Bolts
(3) Ignition Coil Assemblies

19. Remove cylinder head cover assembly.

Installation

1. Install cylinder head cover.
   - Clean the sealing surface of cylinder head and cylinder head cover to remove oil and sealing materials completely.
   - Apply sealant (TB-1207B or equivalent) of bead diameter 2-3 mm at eight place of arched area of camshaft bracket on front and rear sides.
   - The cylinder head cover must be installed within 5 minutes after sealant application to prevent premature hardening of sealant.

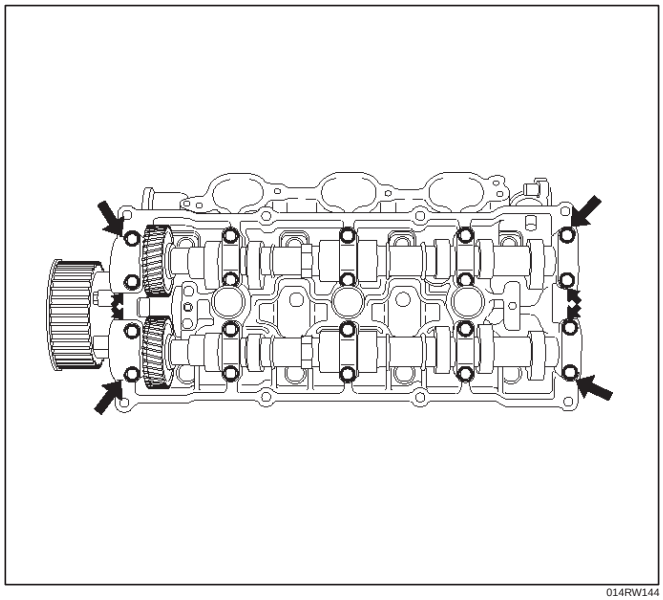

014RW144

   - Tighten bolts to the specified torque.

   Torque : 9 N·m (0.9 Kg·m/78 lb in)

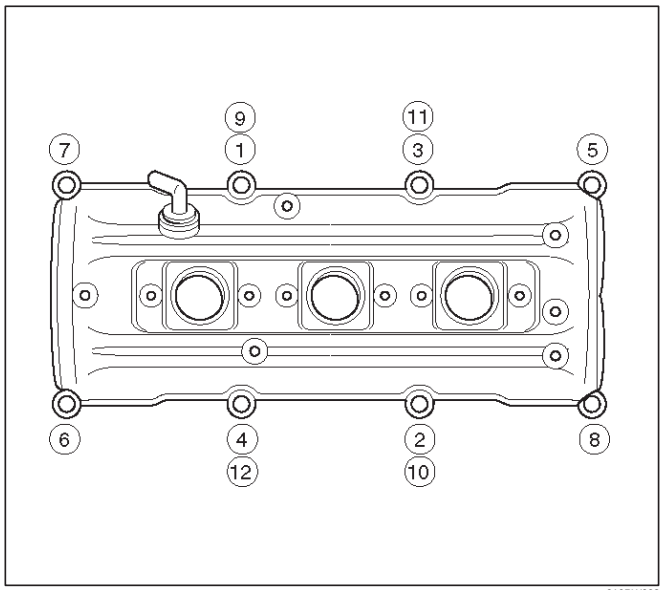

010RW008

2. Install ignition coil assemblies and tighten the fixing bolts to the specified torque.

   Torque : 4 N·m (0.4 Kg·m/35 lb in)

3. Install timing belt covers from left bank side to right bank side, and tighten the fixing bolts and nut to the specified torque.

   Torque : 19 N·m (1.9 Kg·m/14 lb ft)

4. Install crankshaft pulley and tighten the fixing bolt using 5–8840–0133–0 crankshaft holder to the specified torque.

   Torque : 167 N·m (17.0 Kg·m/123 lb ft)

5. Install auto tensioner assembly and tighten the fixing bolts to the specified torque.

   Torque :

   Shorter Bolt : 20 N·m (2.0 Kg·m/14 lb ft)

   Longer Bolt : 39 N·m (4.0 Kg·m/29 lb ft)

6. Install idle pulley and bracket assembly and tighten the fixing bolt to the specified torque.

   Torque : 52 N·m (5.3 Kg·m/38 lb ft)

7. Install fan pulley and bracket assembly and tighten the fixing bolts and nut to the specified torque.

   Torque : 22 N·m (2.2 Kg·m/16 lb ft)

8. Install power steering oil pump pulley and tighten the fixing bolt to the specified torque.

   Torque : 78 N·m (8.0 Kg·m/58 lb ft)

9. Install drive belt by pushing down the auto tensioner using spanner as shown in the removal step of drive belt.
10. Install cooling fan and clutch assembly and tighten the fixing bolts to the specified torque.

    Torque : 10 N·m (1.0 Kg·m/87 lb in)

11. Install upper fan guide and clip both side and tighten the fixing bolts to the specified torque.

    Torque : 4 N·m (0.4 Kg·m/35 lb in)

12. Install engine harness and tighten the fixing bolts of the retaining clip and bracket to the specified torque.

    Torque : 4 N·m (0.4 Kg·m/35 lb in)

13. Connect radiator upper and lower hoses and clip them securely.
14. Connect vacuum hoses of those which were disconnected in the removal step.
15. Connect wiring connectors and bonding cable of those which were disconnected in the removal step.
16. Install air cleaner element and air cleaner duct assembly, and clip the both end securely.
17. Connect MAF sensor connector, IAT sensor connector and PCV hose.
18. Install engine cover mating with the dowels.

Cylinder Head Cover RH

Removal

1. Disconnect battery ground cable.
2. Remove battery from the vehicle.
3. Drain engine coolant from faucet bottom of radiator.
4. Remove engine cover from the dowels on the common chamber.

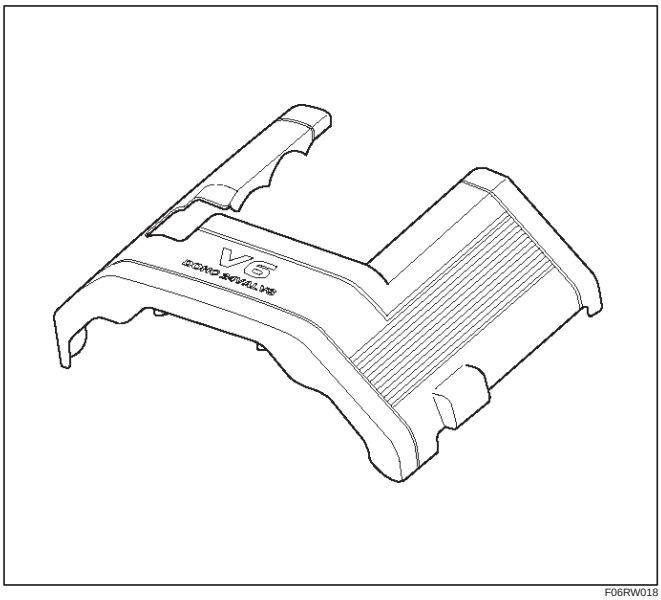

F06RW018

5. Remove air cleaner duct assembly (3) and air cleaner element (4).

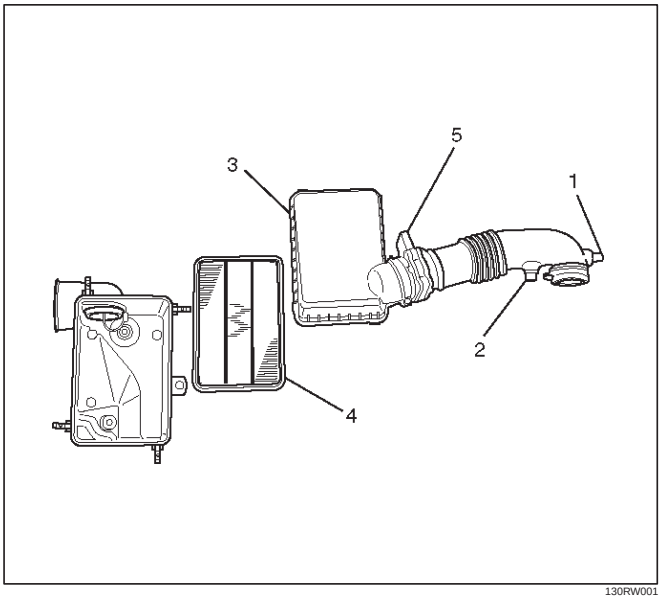

130RW001

Legend

(1) Positive Crankcase Ventilation Hose Connector
(2) Intake Air Temperature Sensor
(3) Air Cleaner Duct Assembly
(4) Air Cleaner Element
(5) Mass Air Flow Sensor

NOTE: Disconnect the mass air flow (MAF) sensor connector, intake air temperature (IAT) sensor connector, and positive crankcase ventilation (PCV) hose before hand the air cleaner duct assembly is removed.

6. Disconnect following wiring connectors and bonding cable:
   - Exhaust Gas Recirculation (EGR) valve
   - Fuel injectors for right bank
   - Ignition coils for right bank
   - Bonding cable
   - Othres as necessitated
7. Disconnect radiator upper and lower hoses.
8. Remove engine harness from the cylinder head cover.
9. Remove the upper fan guide.
10. Remove cooling fan and clutch assembly.
11. Remove drive belt by pushing down the auto tensioner using spanner as illustrated.

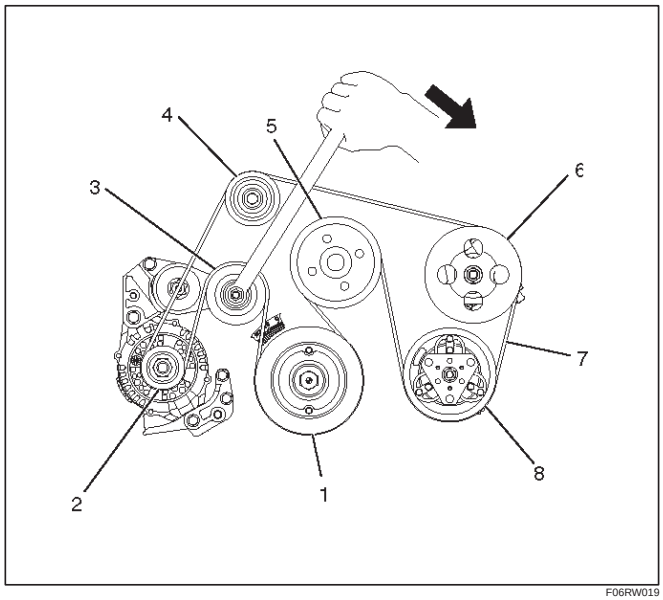

F06RW019

Legend

(1) Crankshaft Pulley
(2) Generator
(3) Auto Tensioner
(4) Idle Pulley
(5) Cooling Fan Pulley
(6) Power Steering Oil Pump
(7) Drive Belt
(8) Air Conditioner Compressor

12. Remove fan pulley and bracket assembly.
13. Remove idle pulley assembly.
14. Remove auto tensioner assembly.
15. Remove crankshaft pulley using 5–8840–0133–0 crankshaft holder.

16. Remove timing belt covers for right bank side.
17. Reomve timing belt covers for right bank side.

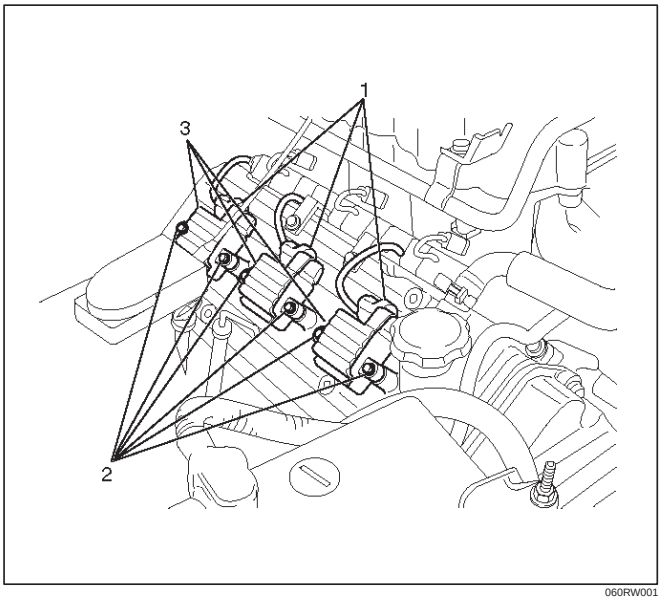

060RW001

Legend

(1) Ignition Coil Connectors
(2) Bolts
(3) Ignition Coil Assemblies

18. Remove ignition coil assemblies for the right side bank.
19. Remove cylinder head cover assembly.

Installation

1. Install cylinder head cover.
   - Clean the sealing surface of cylinder head and cylinder head cover to remove oil and sealing materials completely.
   - Apply sealant (TB-1207B or equivalent) of bead diameter 2-3 mm at eight place of arched area of camshaft bracket on front and rear sides.
   - The cylinder head cover must be installed within 5 minutes after sealant application before the sealant hardens.

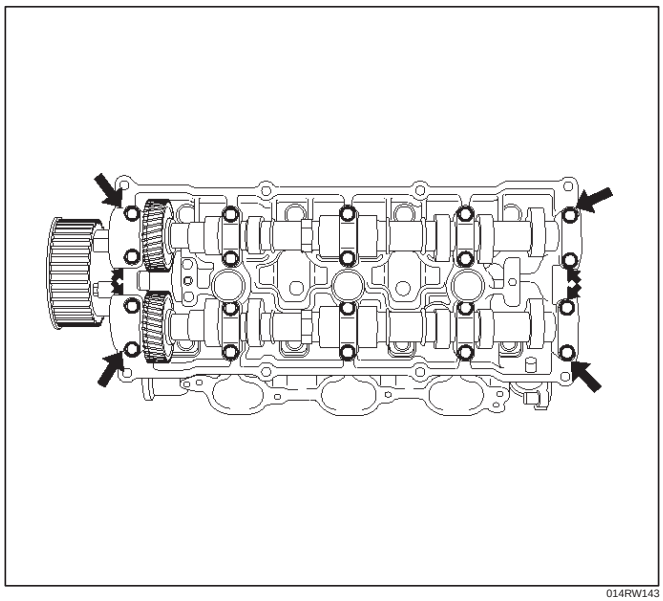

014RW143

- Tighten bolts in turn to the specified torque.

Torque : 8.8 N·m (0.9 Kg·m/78 lb in)

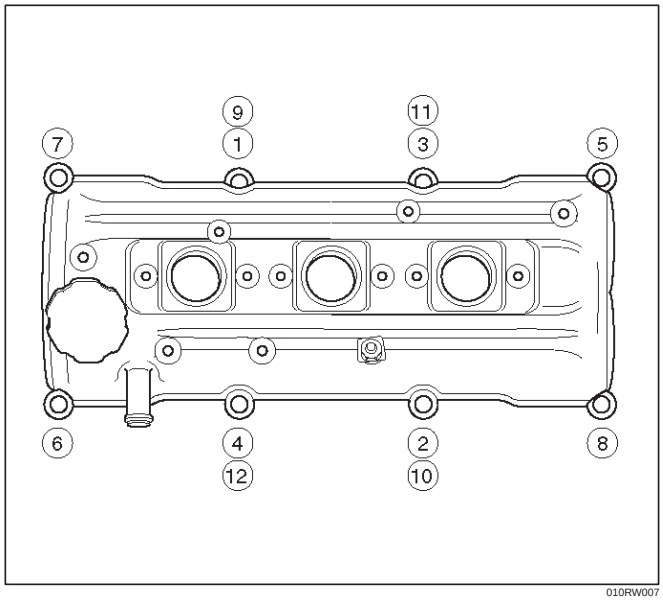

010RW007

2. Install ignition coil assemblies and tighten the fixing bolts to the specified torque.

   Torque : 4 N·m (0.4 Kg·m/35 lb in)

3. Install timing belt cover and tighten the fixing bolts and nut to the specified torque.

   Torque : 19 N·m (1.9 Kg·m/14 lb ft)

4. Install crankshaft pulley and tighten the fixing bolt using 5–8840–0133–0 crankshaft holder to the specified torque.

   Torque : 167 N·m (17 Kg·m/123 lb ft)

5. Install auto tensioner assembly and tighten the fixing bolts to the specified torque.

   Torque :

   Shorter Bolt : 20 N·m (2.0 Kg·m/14.8 lb ft)

   Longer Bolt : 39 N·m (4.0 Kg·m/28.8 lb ft)

6. Install idle pulley assembly and tighten the fixing bolt to the specified torque.

   Torque : 52 N·m (5.3 Kg·m/38.4 lb ft)

7. Install fan pulley and bracket assembly and tighten the fixing bolts and nut to the specified torque.

   Torque : 22 N·m (2.2 Kg·m/16.2 lb ft)

8. Install drive belt by pushing down the auto tensioner using spanner as shown in the removal step of drive belt.
9. Install cooling fan clutch assembly and tighten the fixing bolts to the specified torque.

   Torque : 10 N·m (1.0 Kg·m/88.5 lb in)

10. Install upper fan guide and clip both side and tighten the fixing bolts to the specified torque.

    Torque : 4 N·m (0.4 Kg·m/35.4 lb in)

11. Install engine harness and tighten the fixing bolts of the retaining clip and brackets to the specified torque.

    Torque : 4 N·m (0.4 Kg·m/35.4 lb in)

12. Connect radiator upper and lower hoses and clip them securely.
13. Connect wiring connectors and bonding cable of those which were disconnected in the removal step.
14. Install air cleaner element and air cleaner duct assembly, and the clip both end securely.
15. Connect MAF sensor connector, IAT sensor connector and PCV hose.
16. Install engine cover mating with the dowels.

Common Chamber

Removal

1. Disconnect battery ground cable.
2. Remove air cleaner duct assembly.

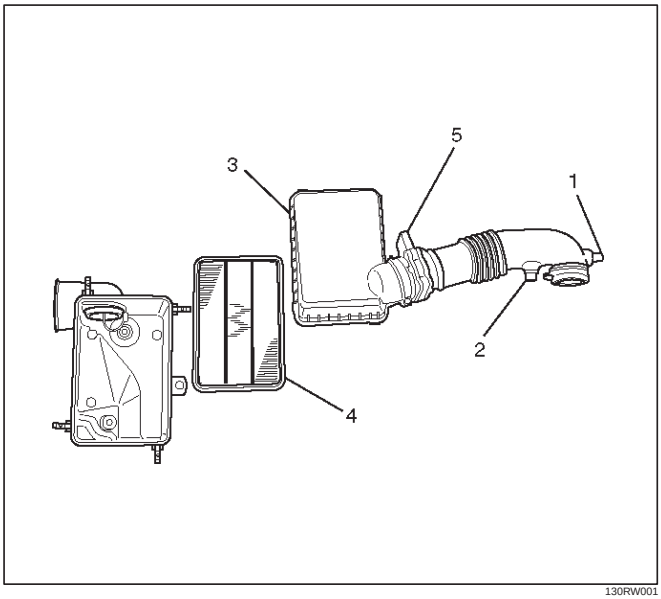

130RW001

Legend

(1) Positive Crankcase Ventilation Hose Connector
(2) Intake Air Temperature Sensor
(3) Air Cleaner Duct Assembly
(4) Air Cleaner Element
(5) Air Flow Sensor

3. Disconnect accelerator pedal cable from throttle body and cable bracket.
4. Disconnect vacuum booster hose from common chamber.
5. Disconnect connector from manifold absolute pressure sensor, idle air control valve, throttle position sensor, solenoid valve, electric vacuum sensing valve, and EGR valve.
6. Disconnect vacuum hose on canister VSV and positive crankcase ventilation hose, fuel rail assembly with pressure control valve bracket.
7. Remove ventilation hose from throttle valve and intake duct and remove water hose.
8. Remove the four throttle body fixing bolts.
9. Remove exhaust gas recirculation valve assembly fixing bolt and nut on common chamber and remove EGR valve assembly.
10. Remove two bolts from common chamber rear side for remove fuel hose bracket.
11. Remove common chamber four bolts and four nuts then remove the common chamber.

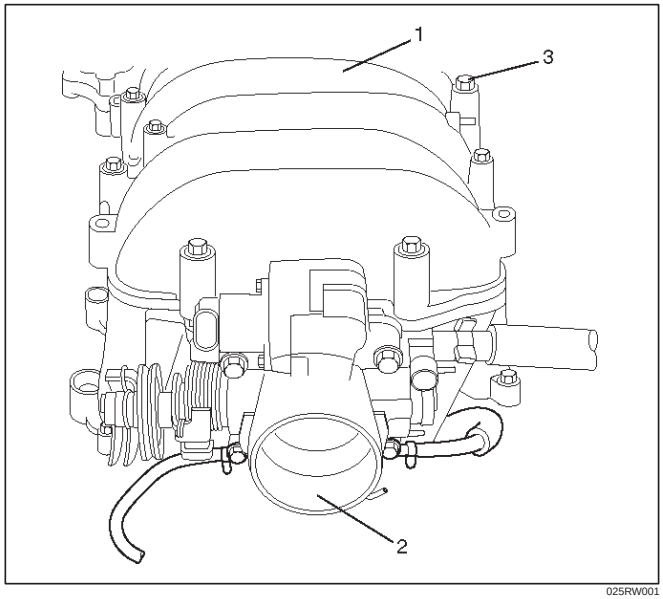

025RW001

Legend

(1) Common Chamber
(2) Throttle Valve Assembly
(3) Bolt

Installation

1. Install common chamber and tighten bolts and nuts to the specified torque.

   Torque :

   Bolt : 25 N·m (2.5 Kg·m/18 lb ft)

   Nut : 25 N·m (2.5 Kg·m/18 lb ft)
2. Install fuel hose bracket and tighten bolts to specified torque.

   Torque : 10 N·m (1.0 Kg·m/89 lb in)
3. Install exhaust gas recirculation valve assembly and tighten bolt and nut to the specified torque.

   Torque : 25 N·m (2.5 Kg·m/18 lb ft)
4. Install throttle body and tighten bolts to the specified torque.

   Torque : 25 N·m (2.5 Kg·m/18 lb ft)
5. Install ventilating hose to throttle valve and intake duct.
6. Connect vacuum hoses on canister VSV and positive crankcase ventilation hose. Tighten bolts for fuel rail assembly with pressure control valve bracket.

   Torque : 25 N·m (2.5 Kg·m/18 lb ft)
7. Connect each connector without fail.
8. Connect vacuum booster hose.
9. Connect accelerator pedal cable.

   Accelerator pedal cable adjustment

   1. Loosen the adjusting nut and screw cap.
   2. Pull outer cable while fully closing the throttle valve.

3. Tighten adjusting nut and lock nut temporarily.
4. Loosen adjusting nut by three turns and tighten lock nut.

   Then manually operating the throttle valve, make sure that the valve lever returns up to the stopper screw.
   If it does not reach the stopper screw, repeat from step 1.

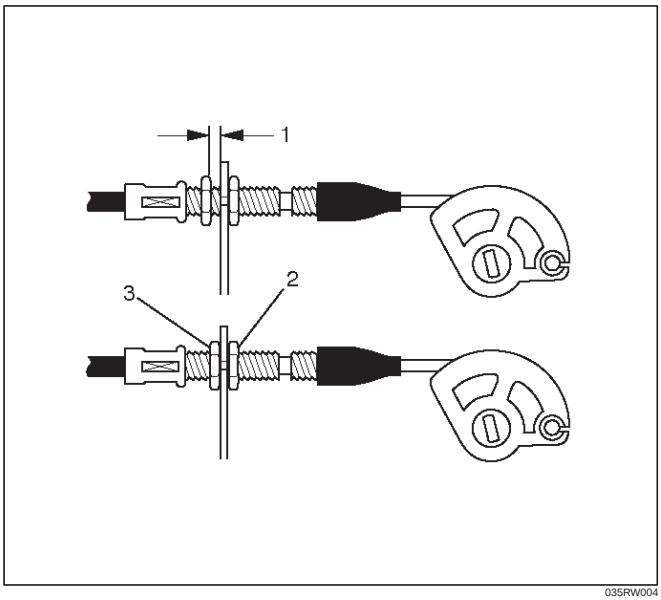

035RW004

Legend
(1) Clearance
(2) Lock Nut
(3) Adjusting Nut

10. Install air cleaner duct assembly.

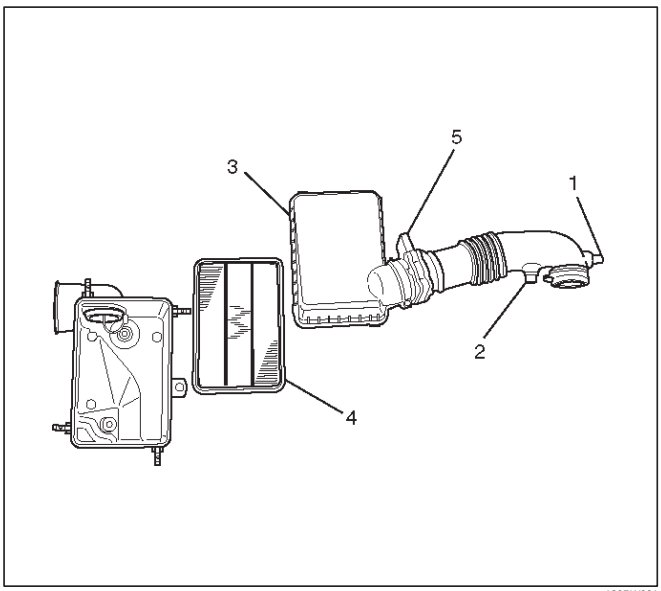

130RW001

Legend
(1) Positive Crankcase Ventilation Hose Connector
(2) Intake Air Temperature Sensor
(3) Air Cleaner Duct Assembly
(4) Air Cleaner Element.
(5) Mass Air Flow Sensor

Exhaust Manifold LH

Removal

1. Disconnect battery ground cable.
2. Remove air cleaner duct assembly.

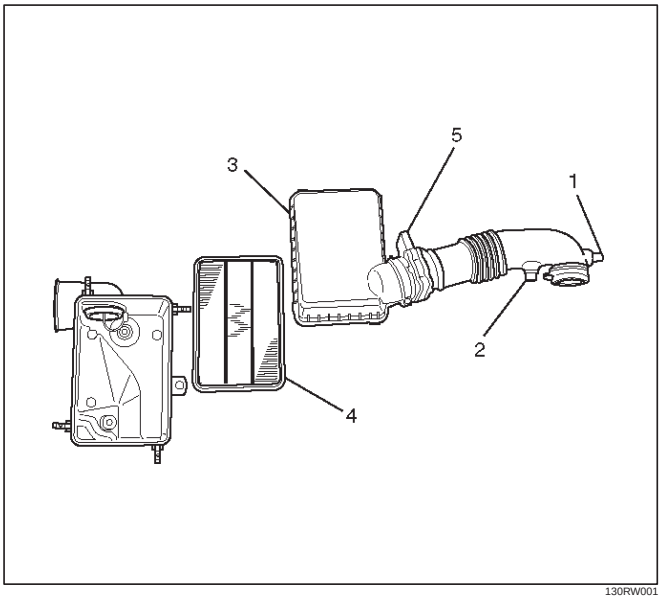

130RW001

Legend

(1) Positive Crankcase Ventilation Hose Connector
(2) Intake Air Temperature Sensor
(3) Air Cleaner Duct Assembly
(4) Air Cleaner Element
(5) Mass Air Flow Sensor

3. Remove exhaust front pipe three stud nuts from exhaust side and two nuts from rear end of exhaust front pipe.

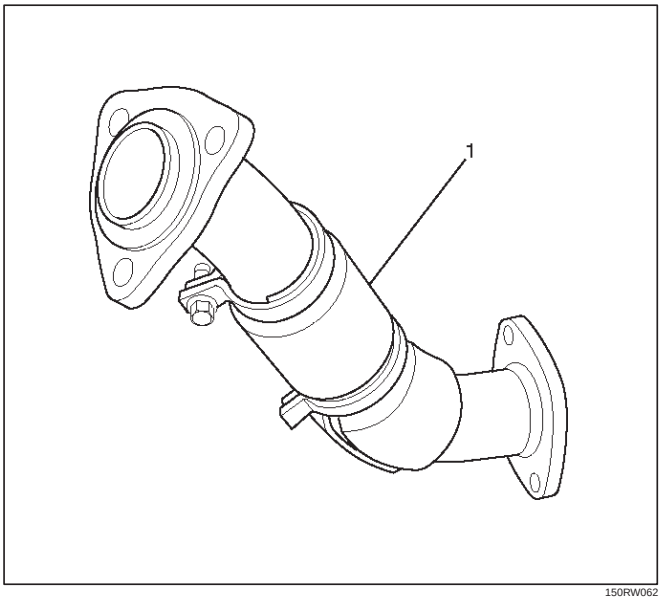

150RW062

Legend

(1) Exhaust Front Pipe LH

4. Remove heat protector two fixing bolts then the heat protector.
5. Remove a bolt on engine LH side for air conditioner (A/C) compressor bracket and loosen two bolts for A/C compressor then move A/C compressor to front side.
6. Remove exhaust manifold eight fixing nuts and remove exhaust manifold from the engine.

Installation

1. Install exhaust manifold and tighten exhaust manifold fixing nuts to the specified torque with new nuts.

   Torque: 57 N·m (5.8 Kg·m/42 lb ft)

2. Install heat protector.
3. Install exhaust front pipe and tighten three stud nuts and two nuts to the specified torque.

   Torque :

   Stud nuts: 67 N·m (6.8 Kg·m/49 lb ft)

   Nuts: 43 N·m (4.4 Kg·m/32 lb ft)

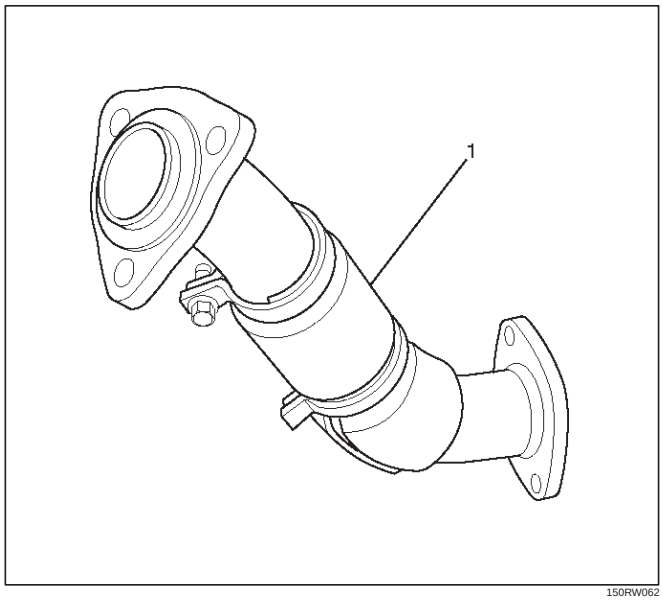

150RW062

Legend

(1) Exhaust Front Pipe LH

4. Set A/C compressor to normal position and tighten two bolts and a bolt to the specified torque.

   Torque : 40 N·m (4.1 Kg·m/30 lb ft)

5. Install air cleaner duct assembly.

Exhaust Manifold RH

Removal

1. Disconnect battery ground cable.
2. Remove torsion bar. Refer to removal procedure in Front Suspension section.
3. Remove exhaust front pipe three stud nuts and two nuts then disconnect exhaust front pipe.

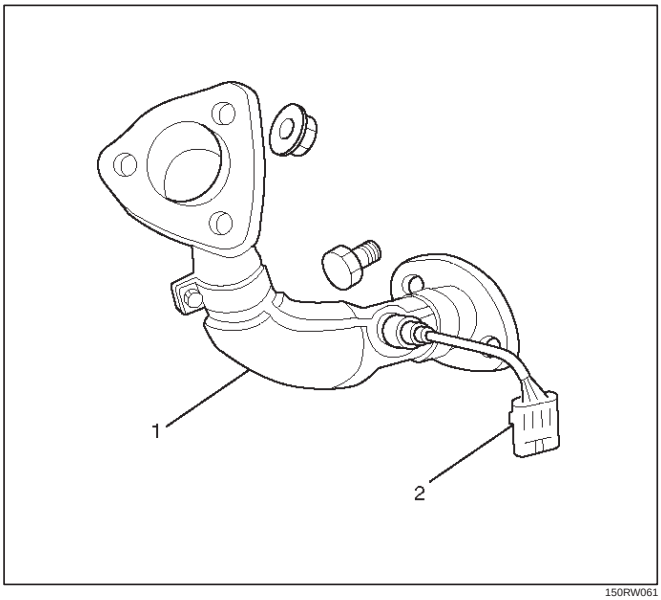

150RW061

Legend

(1) Exhaust Front Pipe RH
(2) O_2 Sensor (for IGM)

4. Remove heat protector two fixing bolts then the heat protector.
5. Remove exhaust gas recirculation (EGR) pipe fixing bolt and nut from exhaust manifold, remove a nut from EGR valve and a bolt from rear side of cylinder head for bracket of EGR pipe then remove the EGR pipe.

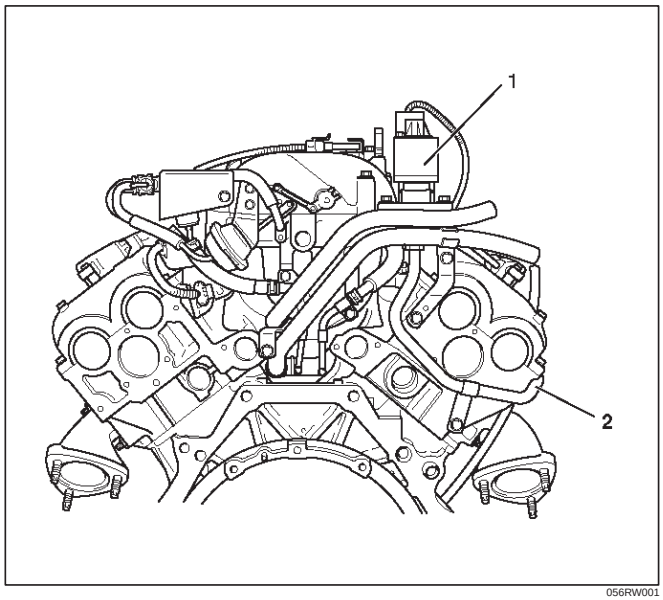

056RW001

Legend

(1) Exhaust Gas Recirculation (EGR) Valve
(2) EGR Pipe

6. Remove exhaust manifold eight fixing nuts then the exhaust manifold.

Installation

1. Install exhaust manifold and tighten bolts to the specified torque.

   Torque : 57 N·m (5.8 Kg·m/42 lb ft)

2. Install the EGR pipe, tighten bolt and nut on exhaust manifold to specified torque.

   Torque : 28 N·m (2.9 Kg·m/21 lb ft)

   Tighten nut to EGR valve to the specified torque.

   Torque : 44 N·m (4.5 Kg·m/33 lb ft)

   Tighten the bolt for EGR pipe bracket to specified torque.

   Torque : 25 N·m (2.5 Kg·m/18 lb ft)

3. Install heat protector
4. Install exhaust front pipe and tighten three stud nuts and two nuts to the specified torque.

   Torque:

   Stud nuts: 67 N·m (6.8 Kg·m/49 lb ft)

   Nuts: 43 N·m (4.4 Kg·m/32 lb ft)

5. Install the torsion bar and readjust the vehicle height. Refer to installation and vehicle height adjustment procedure for Front Suspension.

Crankshaft Pulley

Removal

1. Disconnect battery ground cable.
2. Remove air cleaner assembly.

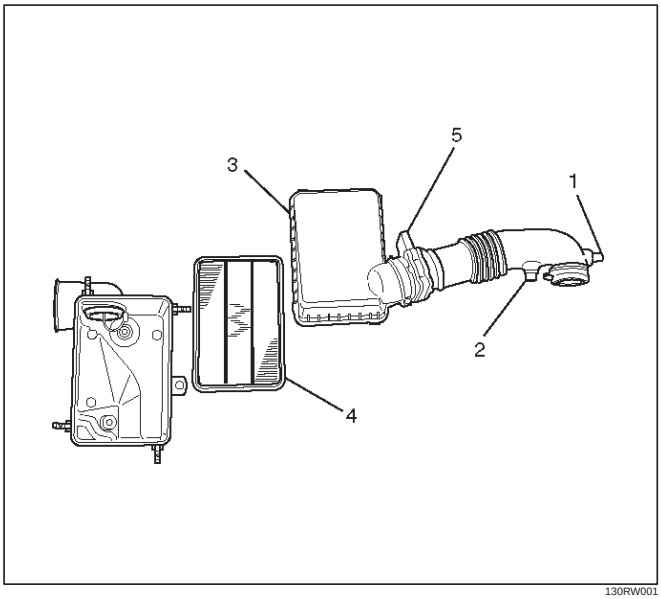

130RW001

Legend

(1) Positive Crankcase Ventilation Hose Connector
(2) Intake Air Temperature Sensor
(3) Air Cleaner Duct Assembly
(4) Air Cleaner Element
(5) Mass Air Flow Sensor

3. Remove radiator upper fan shroud from radiator.
4. Move serpentine belt tensioner to loose side using wrench then remove serpentine belt.

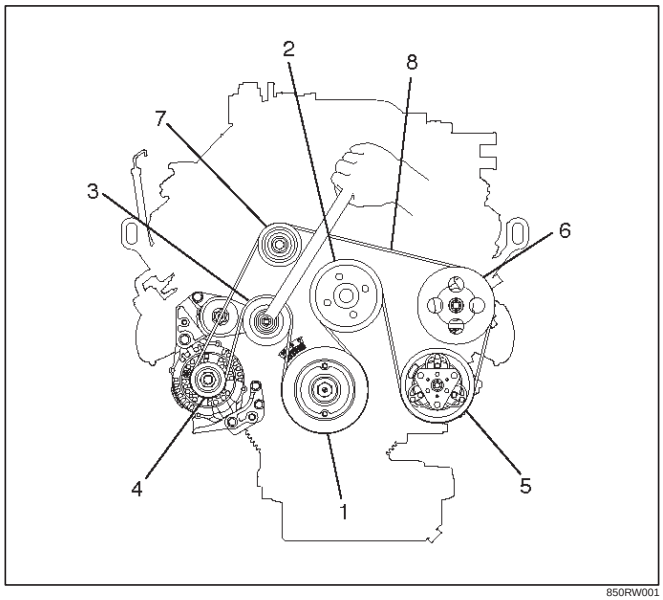

850RW001

Legend

(1) Crankshaft Pulley
(2) Cooling Fan Pulley
(3) Tensioner
(4) Generator
(5) Air Conditioner Compressor
(6) Power Steering Oil Pump
(7) Serpentine Belt

5. Remove cooling fan assembly four fixing nuts, then the cooling fan assembly.
6. Remove crankshaft pulley assembly using J-8614-01 crankshaft holder, hold crankshaft pulley then remove center bolt and pulley.

Installation

1. Install crankshaft pulley using J-8614-01 crankshaft holder, hold the crankshaft pulley and tighten center bolt to the specified torque.

   Torque : 167 N·m (17.0 Kg·m/123 lb ft)

2. Install cooling fan assembly and tighten bolts/nuts to the specified torque.

   Torque : 22 N·m (2.2 Kg·m/16 lb ft) for fan pulley and fan bracket.

   Torque : 10 N·m (1.0 Kg·m/88.5 lb in) for fan and clutch assembly.

3. Move serpentine belt tensioner to loose side using wrench, then install serpentine belt to normal position.
4. Install radiator upper fan shroud.
5. Install air cleaner assembly.

Timing Belt

Removal

1. Disconnect battery ground cable.
2. Remove air cleaner assembly.
3. Remove radiator upper fan shroud from radiator.
4. Move drive belt tensioner to loose side using wrench then remove drive belt.

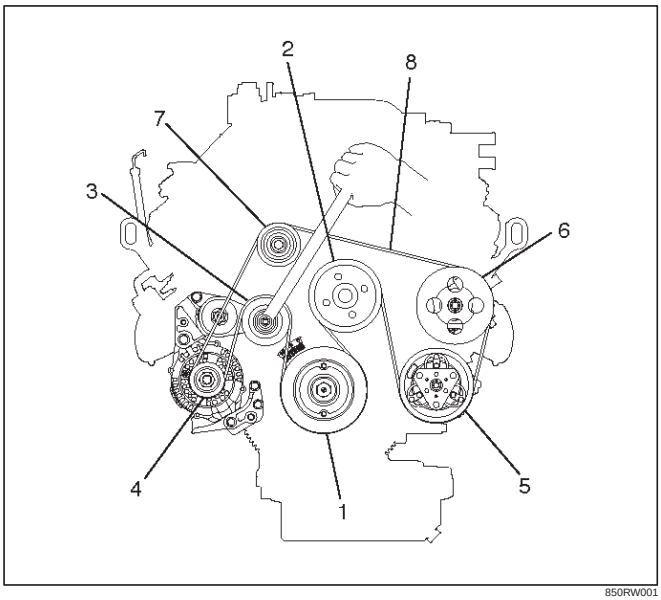

850RW001

Legend

(1) Crankshaft Pulley
(2) Cooling Fan Pulley
(3) Tensioner
(4) Generator
(5) Air Conditioner Compressor
(6) Power Steering Oil Pump
(7) Drive Belt

5. Remove cooling fan assembly four nuts, then the cooling fan assembly.
6. Remove cooling fan drive pulley assembly.
7. Remove idle pulley assembly.
8. Remove serpentine belt tensioner assembly.
9. Remove power steering pump assembly.
10. Remove crankshaft pulley assembly using 5–8840–0133–0 crankshaft holder, hold crankshaft pulley remove center bolt, then the pulley.
11. Remove right side timing belt cover then left side timing belt cover.
12. Remove lower timing belt cover
13. Remove pusher.

CAUTION: The pusher prevents air from entering the oil chamber. Its rod must always be facing upward.

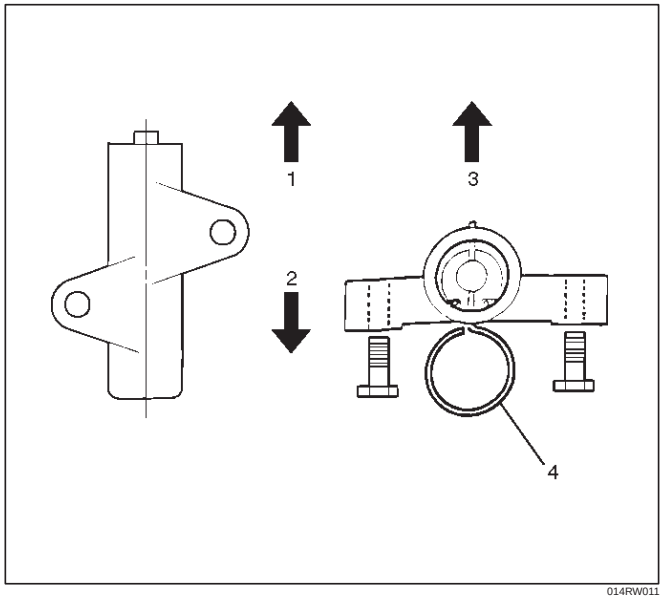

014RW011

Legend

(1) Up Side
(2) Down Side
(3) Direction For Installation
(4) Locking Pin

14. Remove timing belt.

CAUTION:

1. **Do not bend or twist the belt, otherwise its core could be damaged. The belt should not be bent at a radius less than 30 mm.**
2. **Do not allow oil or other chemical substances to come in contact with the belt. They will shorten the life.**
3. **Do not attempt to pry or stretch the belt with a screw driver or any other tool during installation.**
4. **Store timing belt in a cool and dark place. Never expose the belt direct sunlight or heat.**

Installation

NOTE: For correct belt installation, the letter on the belt must be able to be read as viewed from the front of the vehicle.

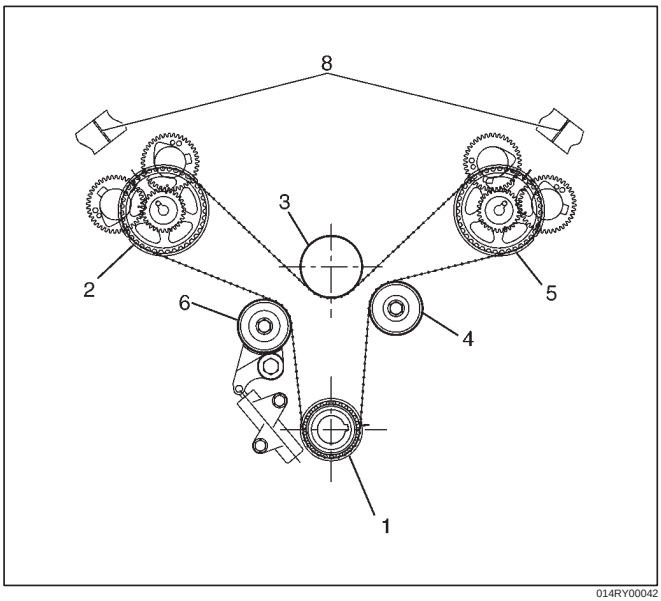

014RY00042

Legend

(1) Crankshaft Timing Pulley
(2) RH Bank Camshaft Drive Gear Pulley
(3) Water Pump Pulley
(4) Idle Pulley
(5) LH Bank Camshaft Drive Gear Pulley
(6) Tension Pulley

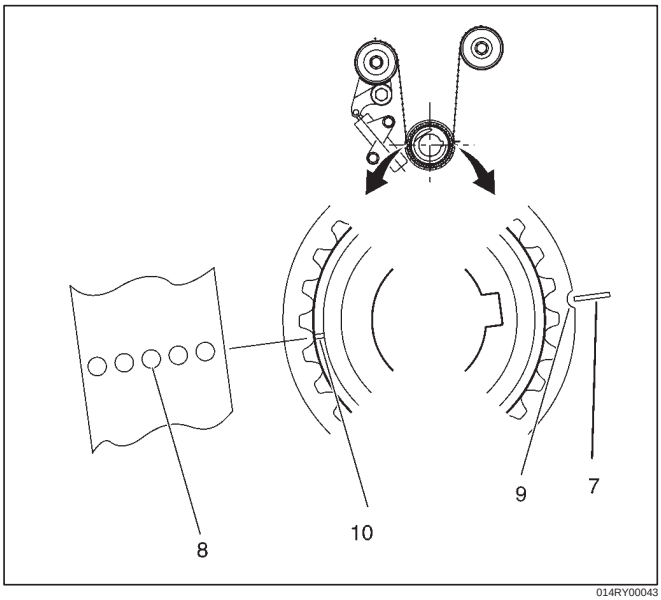

014RY00043

Legend

(7) Alignment Mark on Oil Pump.
(8) Alignment Mark on Timing Belt
(9) Alignment Mark (notch) on Crankshaft Timing Pulley.
(10) Alignment Mark (groove) on Crankshaft Timing Pulley.

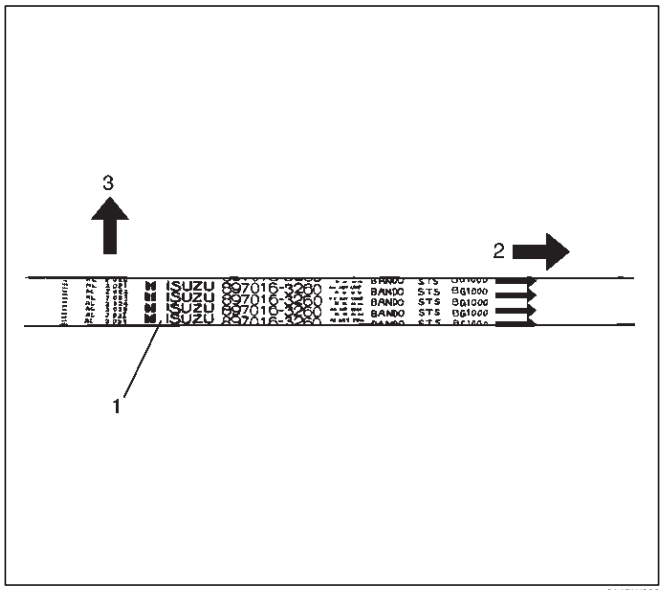

014RW006

Legend

(1) Timing Belt
(2) Engine Rotation Direction
(3) Cylinder Head Side

1. Install timing belt.
   1. Align the mark (notch) of crankshaft timing pulley (2) with mark on oil pump (1).
      Align the mark (groove) on the crankshaft timing pulley (3) with alignment mark (white dots line) on the timing belt (4).

NOTE: When timing marks are aligned, No.2 piston will be on Top Dead Center.

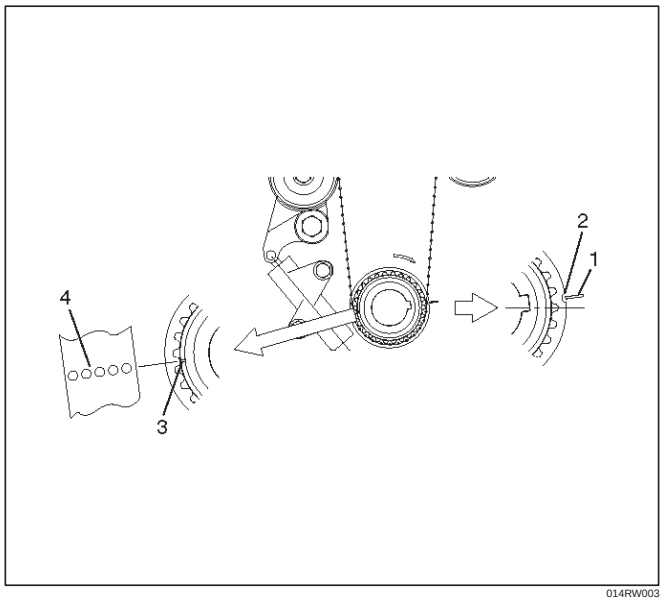

014RW003

Legend

(1) Alignment Mark on Oil Pump
(2) Groove on Crankshaft Timing Pulley
(3) Alignment Mark on Crankshaft Timing Pulley
(4) Alignment Mark on Timing Belt

2. Align the alignment mark on the RH bank camshaft drive gear pulley (2) to the alignment mark of the cylinder head cover RH (3).
3. Align the alignment mark (white line) on the timing belt (1) with alignment mark on the RH bank camshaft drive gear pulley (2) (on the left side as viewed from the front of the vehicle) and put the timing belt on the camshaft drive gear pulley.

   Secure the belt with a double clip or equivalent clip.

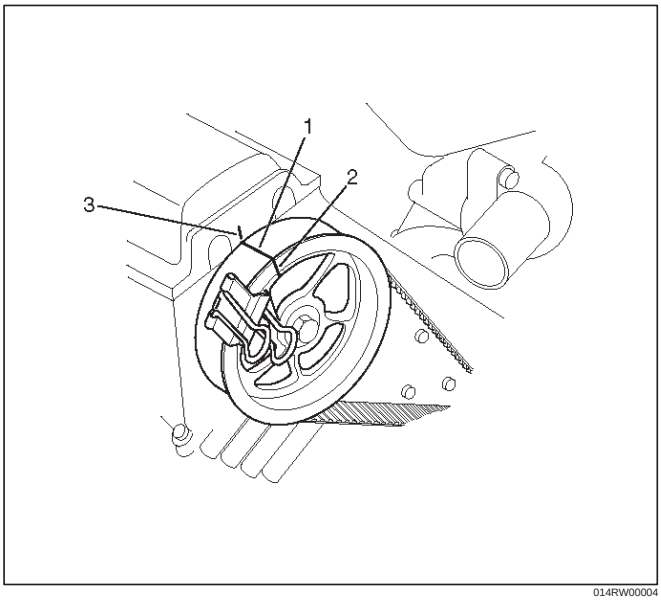

014RW00004

Legend

(1) Alignment Mark on Timing Belt (White line).
(2) Alignment Mark on Camshaft Drive Gear Pulley.
(3) Alignemnt Mark on Cylinder Head Cover RH.

4. Align the alignment mark on the LH bank camshaft drive gear pulley (2) to the alignment mark of the cylinder head cover LH (3).
5. Align the alignment mark (white line) on the timing belt (1) with the alignment mark on the LH bank camshaft drive gear pulley (2).

   When aligning the timing marks, use a wrench to turn the camshaft drive gear pulley, then set the timing mark between timing belt and camshaft drive gear pulley and put the timing belt on the camshaft drive gear pulley.
   Secure the belt with a double clip or equivalent clip.

NOTE: It is recommended for easy installation that the belt be secured with a double clip or equivalent clip after it is installed the timing belt to each pulley.

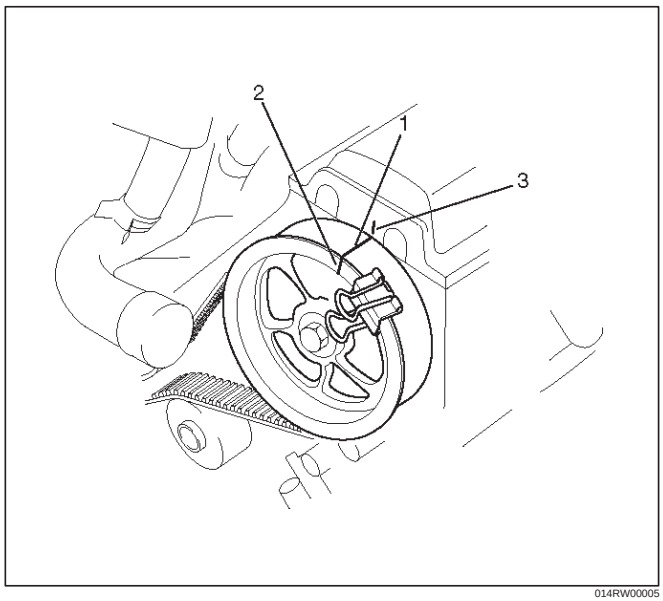

014RW00005

Legend

(1) Alignment Mark on Timing Belt (White line).
(2) Alignment Mark on Camshaft Drive Gear Pulley.
(3) Alignemnt Mark on Cylinder Head Cover LH.

6. Install crankshaft pulley temporarily and tighten center bolt by hand (do not use a wrench).

   Turn the crankshaft pulley clockwise to give some belt slack between the crankshaft timing pulley and the RH bank camshaft drive gear pulley.

2. Install pusher and tighten bolt to the specified torque.

Torque : 25 N·m (2.5 Kg·m/18 lb ft)

1. Install the pusher while pushing the tension pulley to the belt.
2. Pull out pin from the pusher.

NOTE: When reusing the pusher, press the pusher with approximately 100Kg to retract the rod, and insert a pin (1.4 mm piano wire).

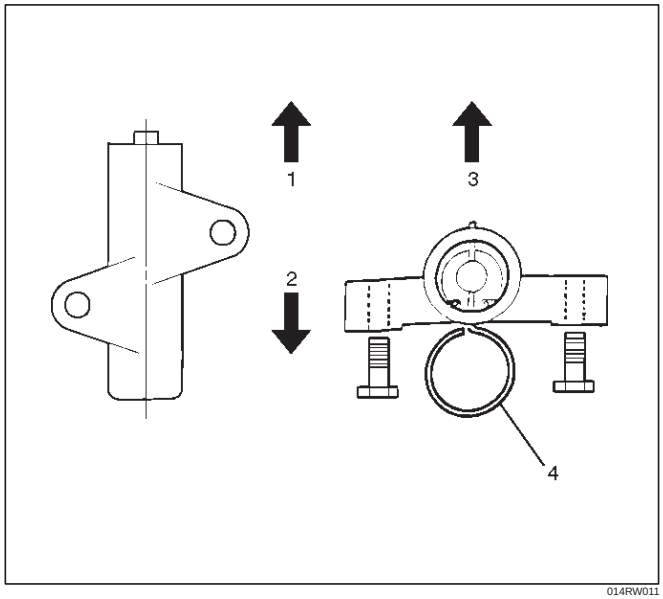

014RW011

Legend
(1) Up Side
(2) Down Side
(3) Direction for Installation
(4) Locking Pin

3. Remove double clips or equivalent clips, from timing belt pulleys.

   Turn the crankshaft pulley clockwise by two turns.

3. Install timing belt cover.

   Remove crankshaft pulley that was installed in step 1 item 5.

   Tighten bolts to the specified torque.

   Torque: 19 N·m (1.9 Kg·m/14 lb ft)

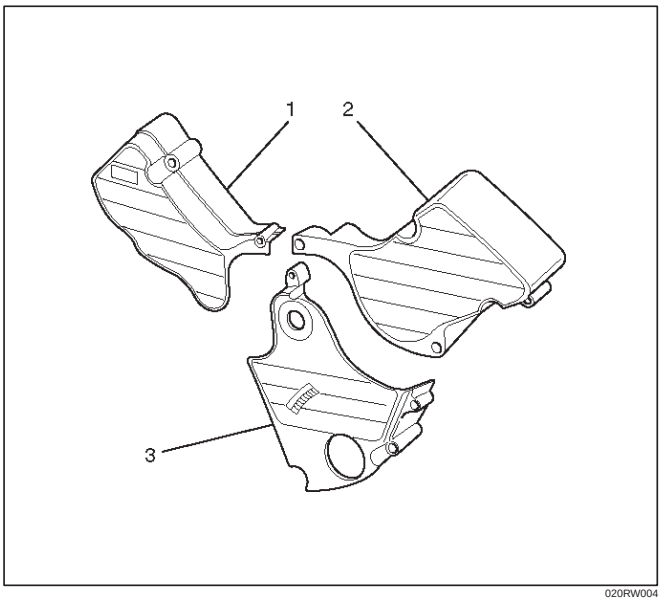

020RW004

Legend
(1) Timing Belt Cover RH
(2) Timing Belt Cover LH
(3) Timing Belt Cover Lower

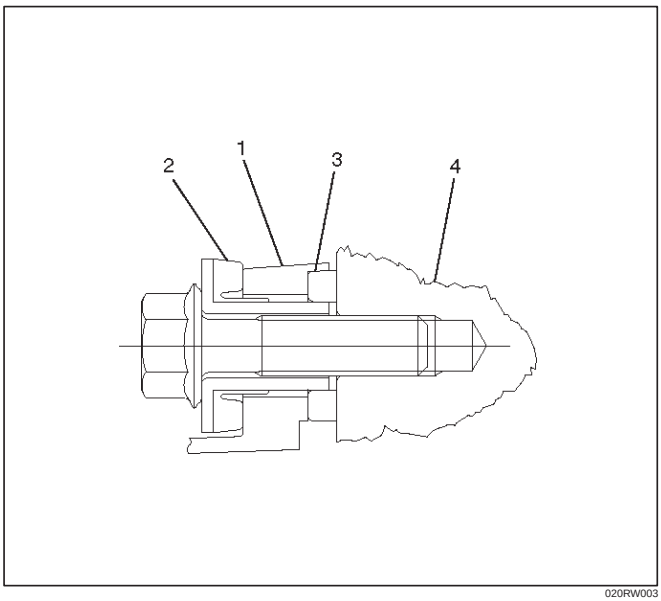

020RW003

Legend
(1) Timing Belt Cover
(2) Rubber Bushing
(3) Sealing Rubber
(4) Cylinder Body

4. Install crankshaft pulley using 5–8840–0133–0, hold the crankshaft pulley and tighten center bolt to the specified torque.

   Torque : 167 N·m (17.0 Kg·m/123 lb ft)

5. Install fan pulley bracket and tighten fixing bolts to the specified torque.

   Torque : 22 N·m (2.2 Kg·m/16 lb ft)

6. Install power steering pump assembly and tighten to the specified torque.

   Torque :

   M8 bolt : 22 N·m (2.2 Kg·m/16 lb ft)

   M10 bolt : 46 N·m (4.7 Kg·m/34 lb ft)

7. Install cooling fan assembly and tighten bolts/nuts to the specified torque.

   Torque : 22 N·m (2.2 Kg·m/16 lb ft) for fan pulley and fan bracket.

   Torque : 10 N·m (1.0 Kg·m/88.5 lb in) for fan and clutch assembly.

8. Move drive belt tensioner to loose side using wrench, then install drive belt to normal position.

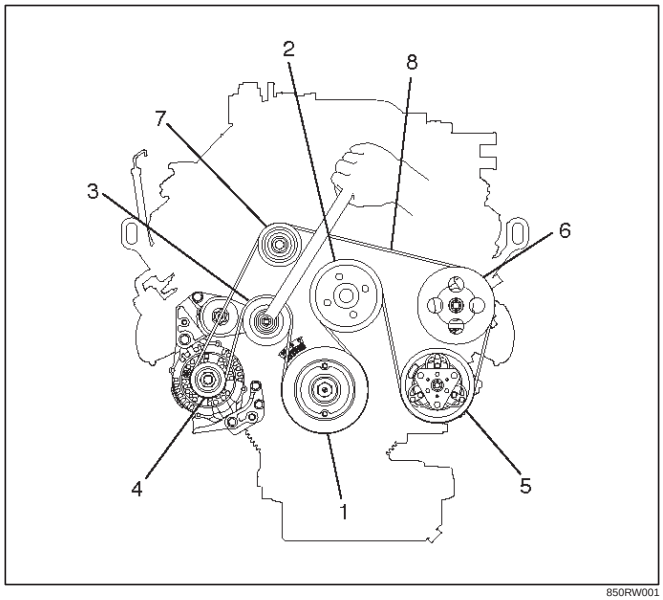

850RW001

Legend
(1) Crankshaft Pulley
(2) Cooling Fan Pulley
(3) Auto Tensioner
(4) Generator
(5) Air Conditioner Compressor
(6) Power Steering Oil Pump
(7) Idle Pulley
(8) Drive Belt

9. Install radiator upper fan shroud.
10. Install air cleaner assembly.

Camshaft

Removal

1. Disconnect battery ground cable.
2. Remove crankshaft pulley.
   - Refer to removal procedure for Crankshaft Pulley in this manual.
3. Remove timing belt.
   - Refer to removal procedure for Timing Belt in this manual.
4. Remove cylinder head cover LH.
   - Refer to removal procedure for Cylinder Head Cover LH in this manual.
5. Remove cylinder head cover RH.
   - Refer to removal procedure for Cylinder Head Cover RH in this manual.
6. Remove twenty fixing bolts from inlet and exhaust camshaft bracket on one side bank, then camshaft brackets.

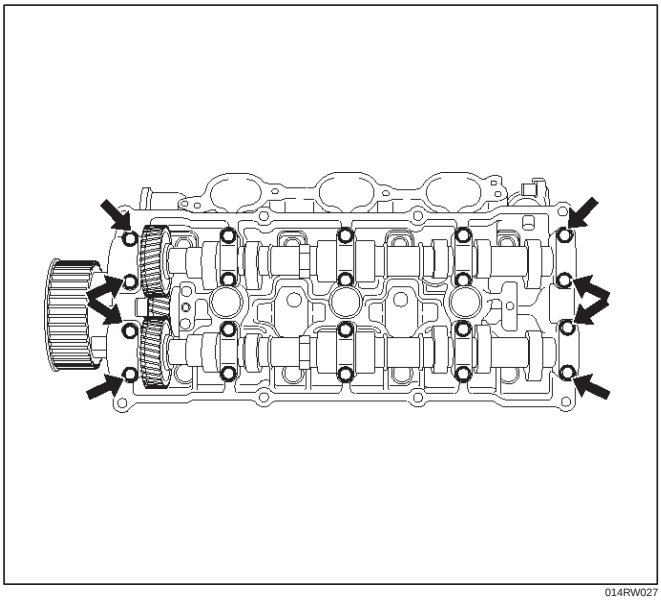

014RW027

7. Remove camshaft assembly.
8. Remove fixing bolt for camshaft drive gear pulley.
9. Remove three fixing bolts from camshaft drive gear retainer, then camshaft drive gear assembly.

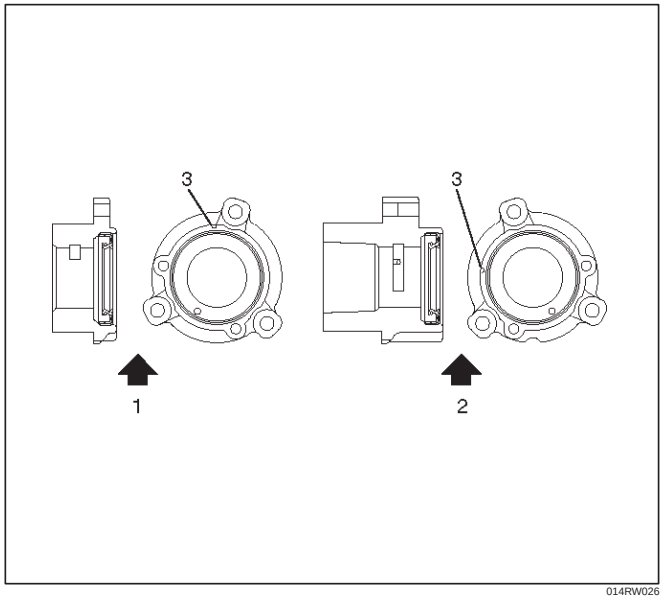

014RW026

Legend

(1) Right Bank
(2) Left Bank
(3) Timing Mark on Retainer

Installation

1. Install camshaft drive gear assembly and tighten three bolts to the specified torque.

   Torque : 10 N·m (1.0 Kg·m/89 lb in)

2. Tighten bolt for camshaft drive gear assembly pulley to the specified torque.

   Torque : 98 N·m (10.0 Kg·m/72 lb ft)

3. Tighten sub gear setting bolt.
   1. Use the 5–8840–2443–0 gear spring lever to turn sub gear to right direction until it aligns with the M5 bolt hole between camshaft driven gear and sub gear.
   2. Tighten the M5 bolt to a suitable torque to prevent the sub gear from moving.

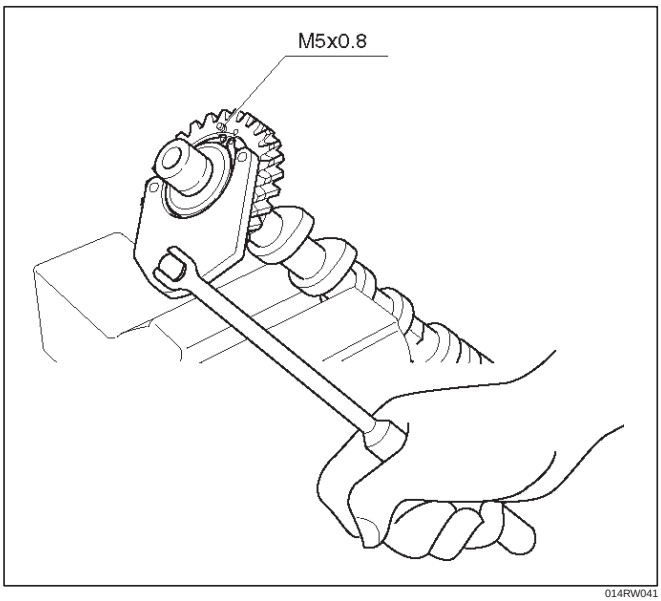

014RW041

4. Install camshaft assembly and camshaft brackets, tighten twenty bolts on one side bank to the specified torque.
   1. Apply engine oil to camshaft journal and bearing surface of camshaft bracket.
   2. Align timing mark on intake camshaft (one dot for right bank, two dot for left bank) and exhaust camshaft (one dot for right bank, two dots for left bank) to timing mark on camshaft drive gear (one dot).

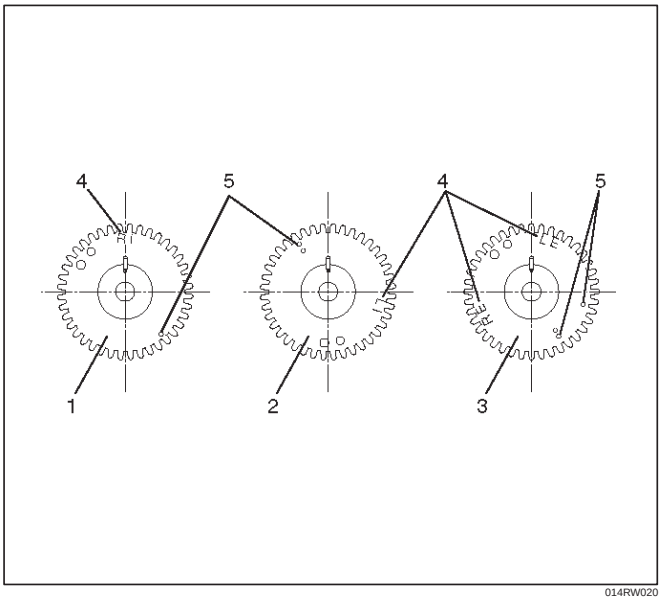

014RW020

Legend

(1) Intake Camshaft Timing Gear for Right Bank
(2) Intake Camshaft Timing Gear for Left Bank
(3) Exhaust Camshaft Timing Gear
(4) Discrimination Mark
(LI: Left bank intake, RI: Right bank intake)
(LE: Left bank exhaust, RE: Right bank exhaust)

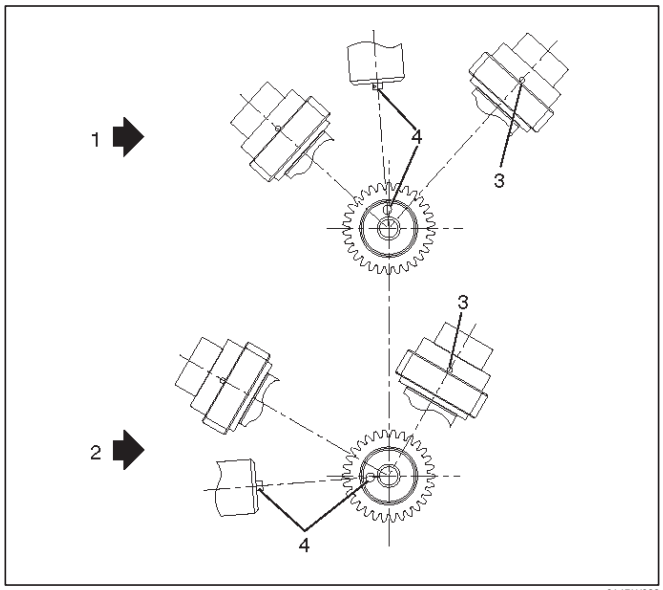

014RW023

Legend

(1) Right Bank Camshaft Drive Gear
(2) Left Bank Camshaft Drive Gear
(3) Timing Mark on Drive Gear
(4) Dowel Pin

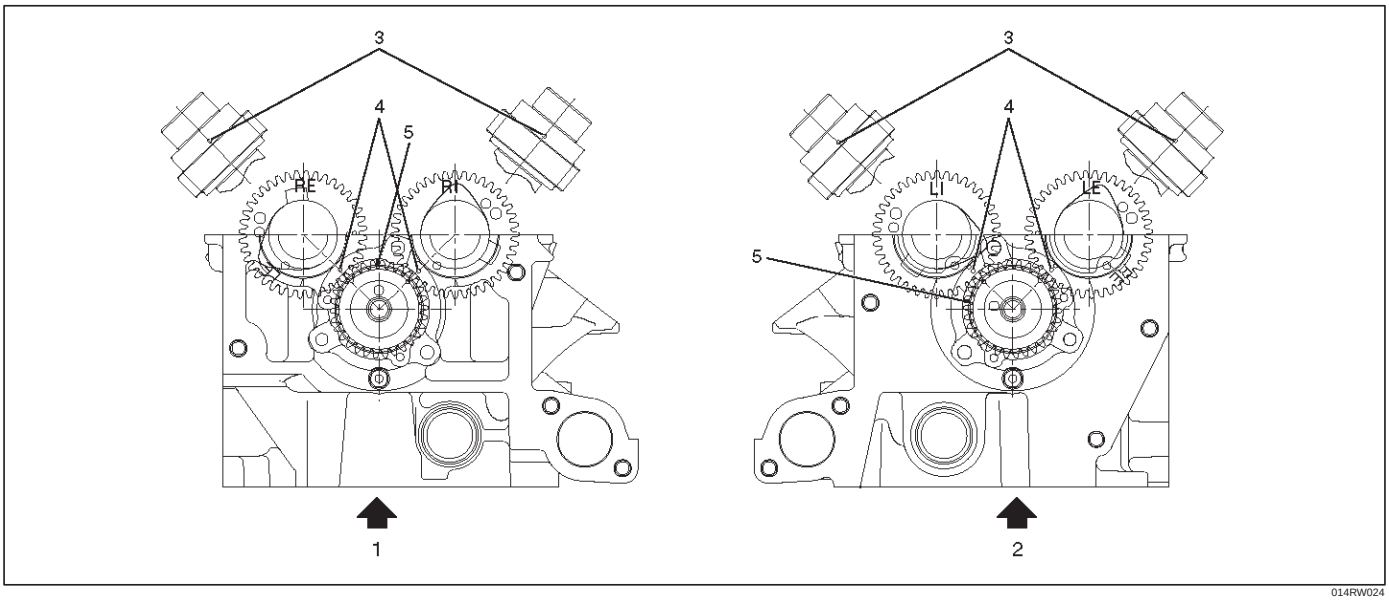

014RW024

Legend

(1) Right Bank
(2) Left Bank
(3) Alignment Mark on Camshaft Drive Gear
(4) Alignment Mark on Camshaft
(5) Alignment Mark on Retainer

3. Tighten twenty bolts on numerical order an one side bank as shown in the illustration.

Torque : 10 N·m (1.0 Kg·m/89 lb in)

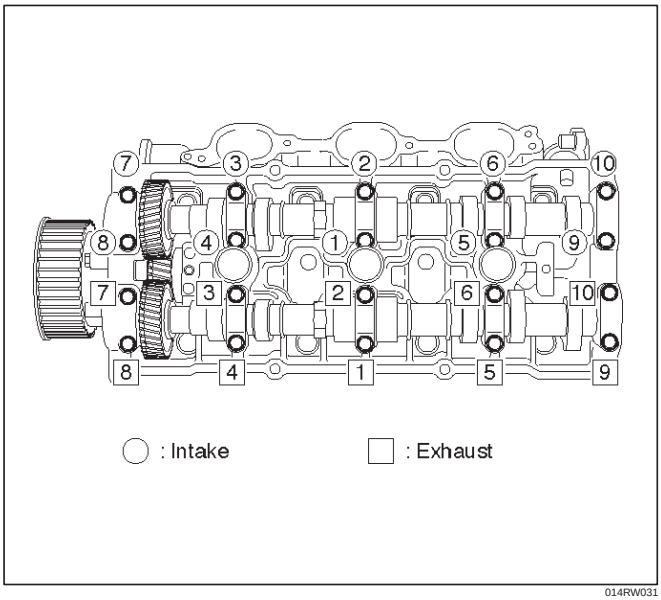

014RW031

5. Install cylinder head cover RH.
   - Refer to installation procedure for CYLINDER HEAD COVER RH in this manual.
6. Install cylinder head cover LH.
   - Refer to installation procedure for CYLINDER HEAD COVER LH in this manual.
7. Install timing belt.
   - Refer to installation procedure for TIMING BELT in this manual.
8. Install crankshaft pulley.
   - Refer to installation procedure for CRANKSHAFT PULLEY in this manual.

   Accelerator pedal cable adjustment

   1. Loosen adjusting nut and lock nut.
   2. Pull outer cable while closing fully the throttle valve.
   3. Tighten adjusting nut and lock nut temporarily.

4. Loosen adjusting nut by three turns and tighten lock nut.

   Then, manually operating the throttle valve, make sure that the valve lever returns up to the stopper screw.
   If it does not reach the stopper screw, repeat from step 1.

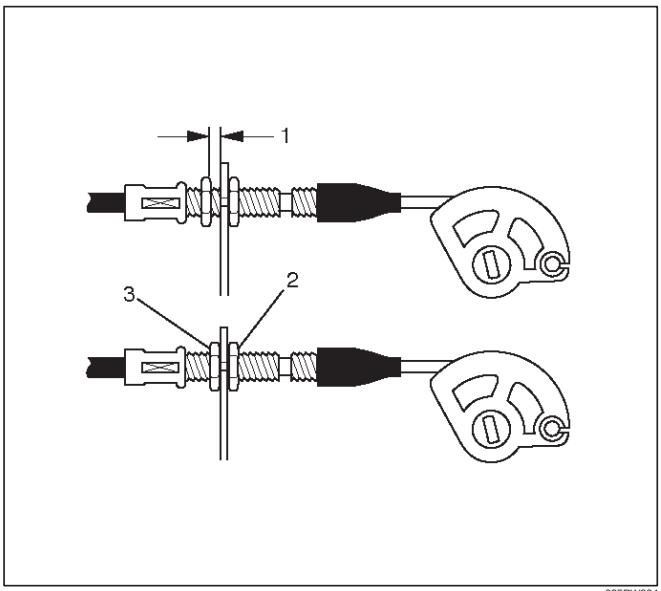

035RW004

Legend

(1) Clearance
(2) Lock Nut
(3) Adjusting Nut

Cylinder Head

Removal

1. Remove engine hood.
2. Disconnect battery ground cable.
3. Drain radiator coolant.
4. Drain engine oil.
5. Remove crankshaft pulley.
   - Refer to removal procedure for Crankshaft Pulley in this manual.
6. Remove timing belt.
   - Refer to removal procedure for Timing Belt in this manual.
7. Remove cylinder head cover LH.
   - Refer to removal procedure for Cylinder Head Cover LH in this manual.
8. Remove cylinder head cover RH.
   - Refer to removal procedure for Cylinder Head Cover RH in this manual.
9. Remove common chamber.
   - Refer to removal procedure for Common Chamber in this manual.
10. Remove cylinder head assembly.
    1. Loosen eights bolts for tight cylinder head.
    2. Remove cylinder head assembly.

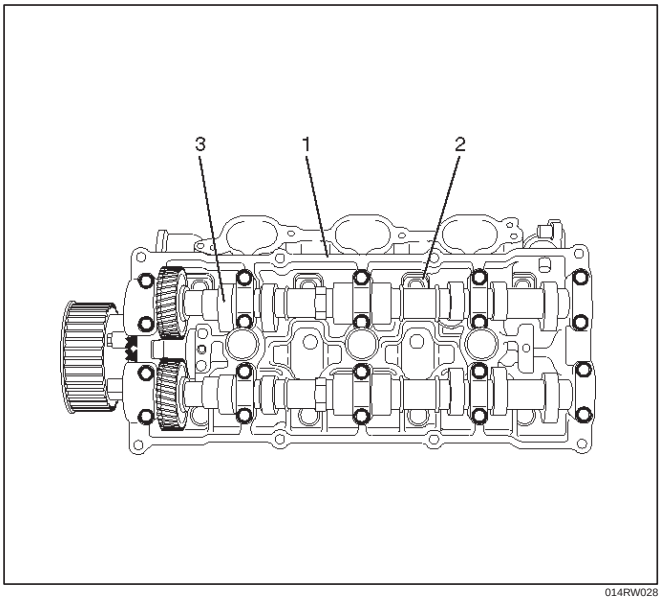

014RW028

Legend

(1) Cylinder Head
(2) Cylinder Head Bolt
(3) Camshaft

Installation

1. Install cylinder head assembly to cylinder block.
   1. Put cylinder head gasket on the cylinder block.

NOTE: There is discrimination mark “R” for right bank and “L” for left bank on the cylinder head gasket as shown in the illustration.

Do not reuse cylinder head gasket.

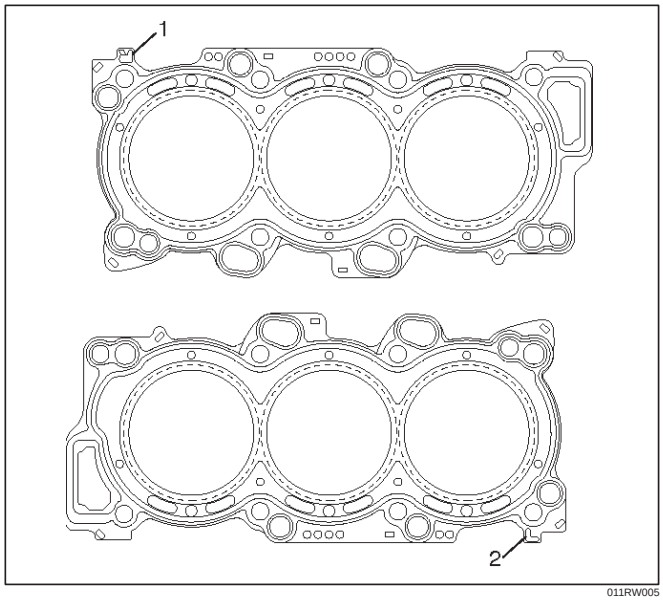

011RW005

   2. Align dowel pin hole to dowel pin on the cylinder block.
   3. Tighten two bolts temporarily by hand to prevent the cylinder head assembly from moving.
   4. Using 9–8511–4209–0 cylinder head bolt wrench, tighten bolts in numerical order as shown in the illustration to the specified torque.

NOTE: Do not reuse cylinder head bolts.

Do not apply any lubricant to the cylinder head bolts.

Torque :

Temporary : 29 N·m (3.0 Kg·m/21 lb ft)

Final : 64 N·m (6.5 Kg·m/47 lb ft)

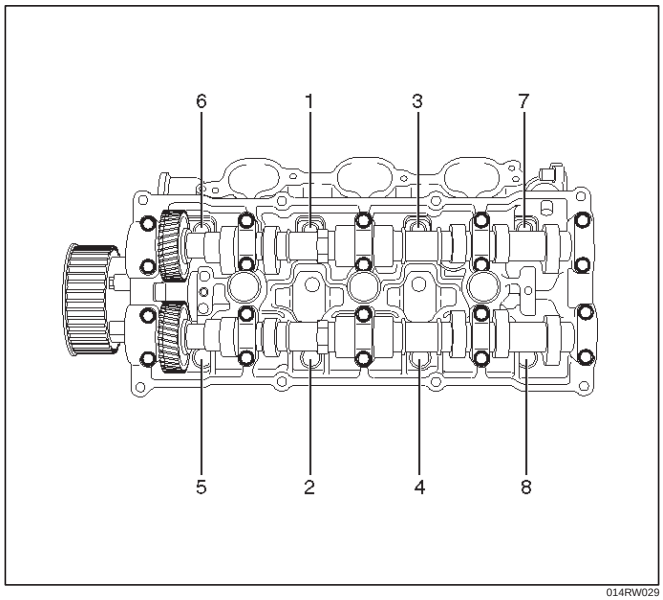

014RW029

2. Install common chamber.
   - Refer to installation procedure for Common Chamber in this manual.
3. Install cylinder head cover RH.
   - Refer to installation procedure for Cylinder Head Cover RH in this manual.
4. Install cylinder head cover LH.
   - Refer to installation procedure for Cylinder Head Cover LH in this manual.
5. Install timing belt.
   - Refer to installation procedure for Timing Belt in this manual.
6. Install crankshaft pulley.
   - Refer to installation procedure for Crankshaft Pulley in this manual.

Accelerator pedal cable adjustment

1. Loosen adjusting nut and lock nut.
2. Pull outer cable while closing fully the throttle valve.
3. Tighten adjusting nut and lock nut temporarily.
4. Loosen adjusting nut by three turns and tighten lock nut.

   Then, manually operating the throttle valve, make sure that the valve lever returns up to the stopper screw.
   If it does not reach the stopper screw, repeat from step 1.

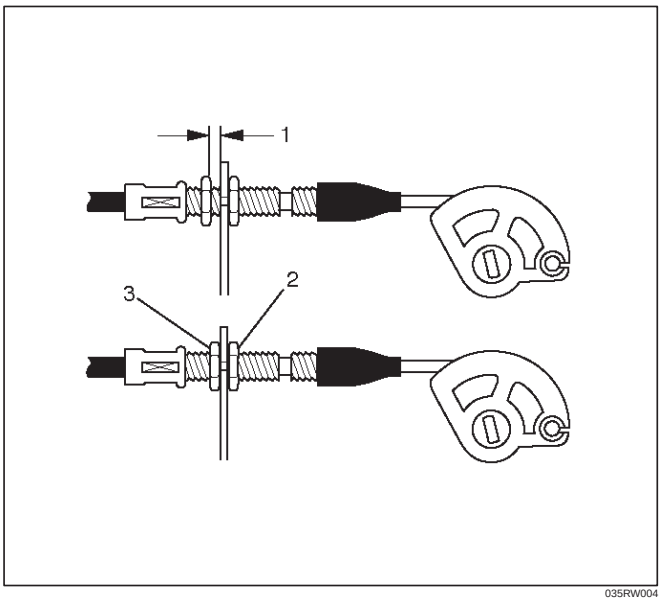

035RW004

Legend

(1) Clearance
(2) Lock Nut
(3) Adjusting Nut

Valve Stem Oil Controller , Valve Spring and Valve Guide

Removal

1. Disconnect battery ground cable.
2. Drain engine oil.
   - Drain engine coolant.
3. Remove cylinder head assembly.
   - Refer to removal procedure for Cylinder Head in this manual.
4. Remove camshaft.
   - Refer to removal procedure for Camshaft in this manual.
5. Remove tappets with shim.

NOTE: Do not damage shim surface.

6. Remove valve springs using 5–8840–2446–0 valve spring compressor and 5–8840–2547–0 valve spring compressor adapter then remove upper valve spring seat and lower seat.

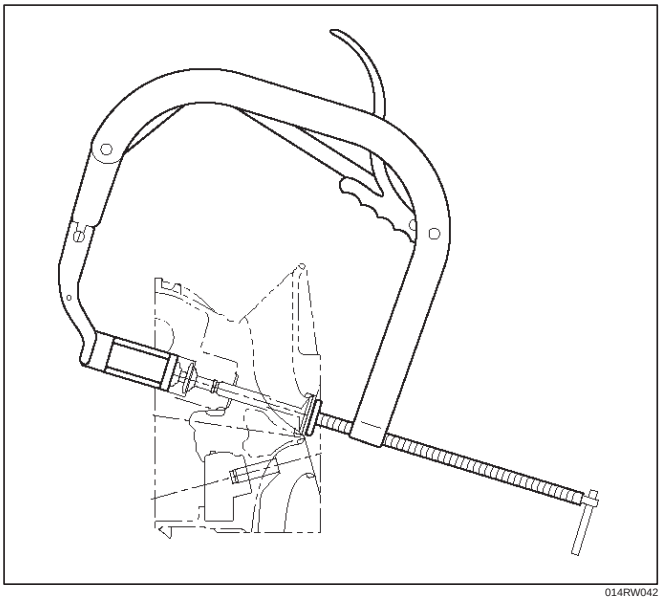

014RW042

7. Remove oil controller using 5–8840–0623–0 oil controller remover, remove each valve stem oil controller.
8. Remove valve guide using 5–8840–2549–0 valve guide replacer.

Installation

1. Install valve guide using 5–8840–2442–0 valve guide installer.
2. Install oil controller using 5–8840–0624–0 oil controller installer.
3. Install lower valve spring seat, valve spring and upper valve spring seat then put split collars on the upper spring seat, using 5–8840–2446–0 valve spring compressor and 5–8840–2547–0 valve spring compressor adapter to install the split collars.

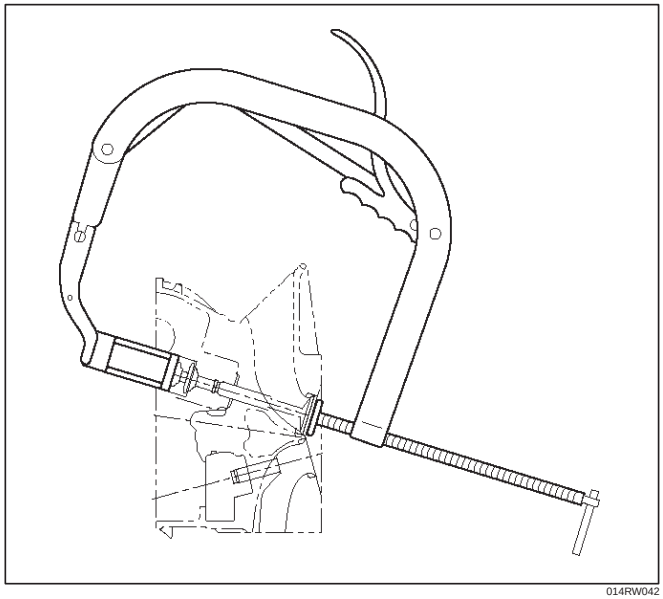

014RW042

4. Install tappet with shim.
5. Install camshaft assembly.
   - Refer to installation procedure for Camshaft in this manual.
6. Install cylinder head assembly.
   - Refer to installation procedure for Cylinder Head in this manual.
7. Fill engine oil until full level.
8. Fill engine coolant.

Piston, Piston Ring and Connecting Rod

Removal

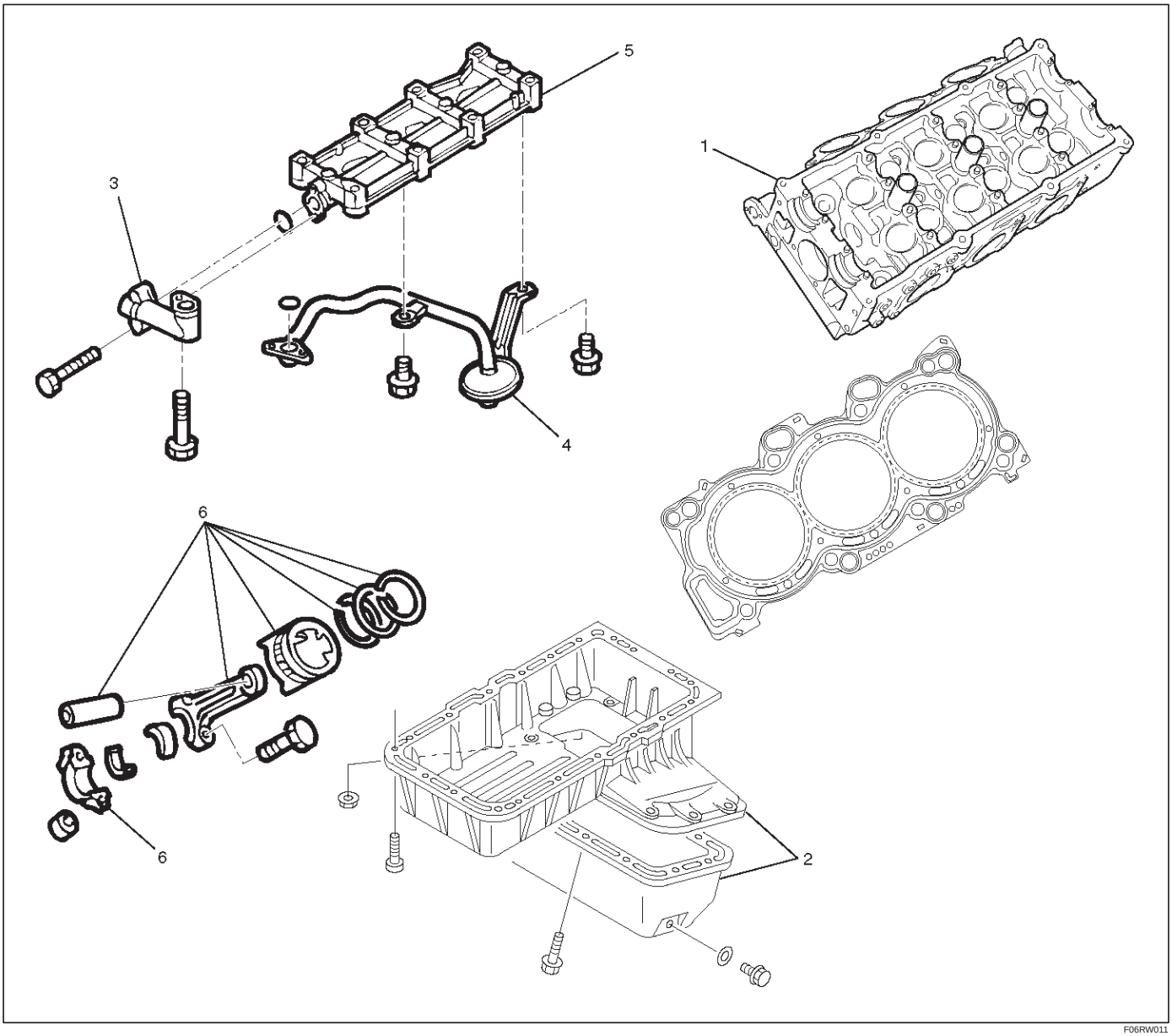

F06RW011

Legend

(1) Cylinder Head
(2) Crankcase with Oil Pan
(3) Oil Pipe
(4) Oil Strainer
(5) Oil Gallery
(6) Piston with Connecting Rod Assembly

1. Remove cylinder head assembly.
   - Refer to removal procedure for Cylinder Head in this manual.
2. Remove crankcase with Oil Pan.
   - Refer to removal procedure for Oil Pan and Crankcase in this manual.

3. Remove oil strainer fixing bolts, remove oil strainer assembly with O-ring.

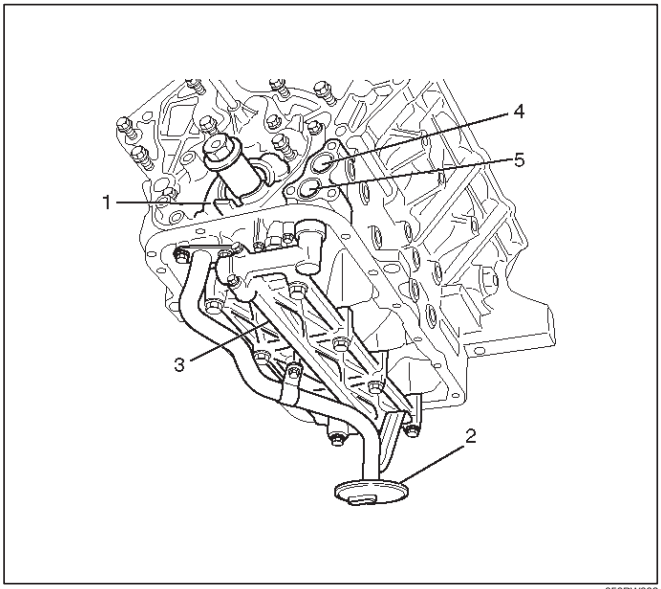

050RW002

Legend
(1) Oil Pump
(2) Oil Strainer
(3) Oil Gallery
(4) From Oil Filter
(5) To Oil Filter

4. Remove three fixing bolts, oil pipe with O-ring.
5. Remove eight fixing bolts, oil gallery.
6. Remove piston with connecting rod assembly, before removing the bearing cap, remove carbon on the top of cylinder bore and push piston with connecting rod out from the top of cylinder bore.

Installation

1. Install piston with connecting rod assembly.
   - Apply engine oil to cylinder bore, connecting rod bearing and crank pin.
     When installing the piston, its front mark must face the engine front side.
   - The bearing cap number must be the same as connecting rod number.
   - Apply engine oil to the thread and seating surface of each nut.
   - Tighten nuts to the specified torque.

   Torque : 54 N·m (5.5 Kg·m/40 lb ft)

   - After tightening the nuts, make sure that the crankshaft rotates smoothly.

NOTE: Do not apply engine oil to the bearing back faces and connecting rod bearing fitting surfaces.

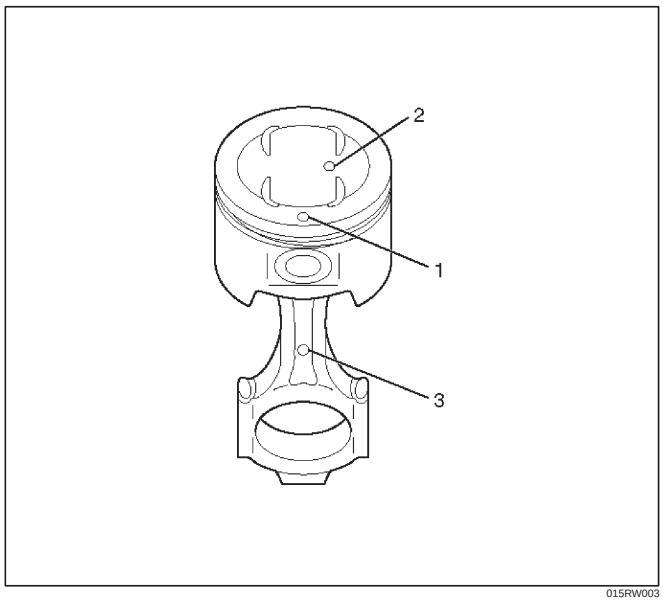

015RW003

Legend
(1) Piston Front Mark
(2) Piston Grade
(3) Connecting Rod Front Mark

2. Install oil gallery and tighten the bolts in two steps, in the order shown in illustration.

   Torque :

   1st step : 29 N·m (3.0 Kg·m/21 lb ft)

   2nd step : 55°–65°

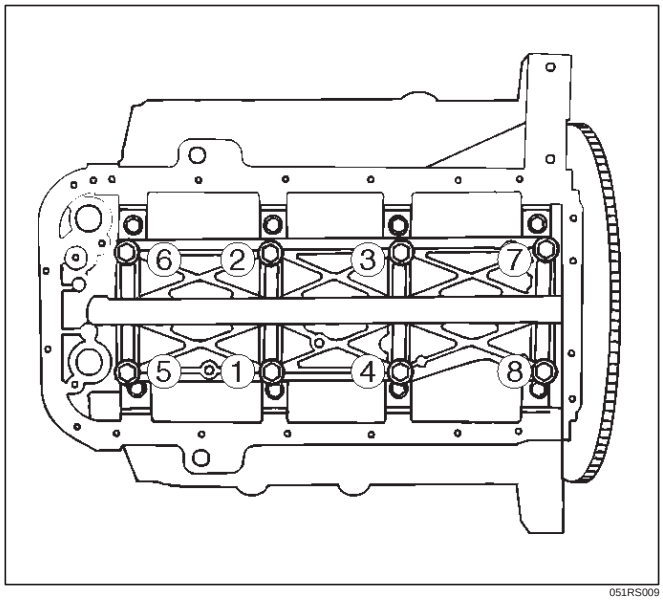

051RS009

3. Install oil pipe with O-ring.

   Torque : 10 N·m (1.0 Kg·m/89 lb in)

4. Install oil strainer assembly with O-ring.

   Torque : 25 N·m (2.5 Kg·m/18 lb ft)

5. Install crankcase with Oil Pan.
   - Refer to installation procedure for Oil Pan and Crankcase in this manual.
6. Install cylinder head assembly.
   - Refer to installation procedure for Cylinder Head in this manual.

Crankshaft and Main Bearings

Removal

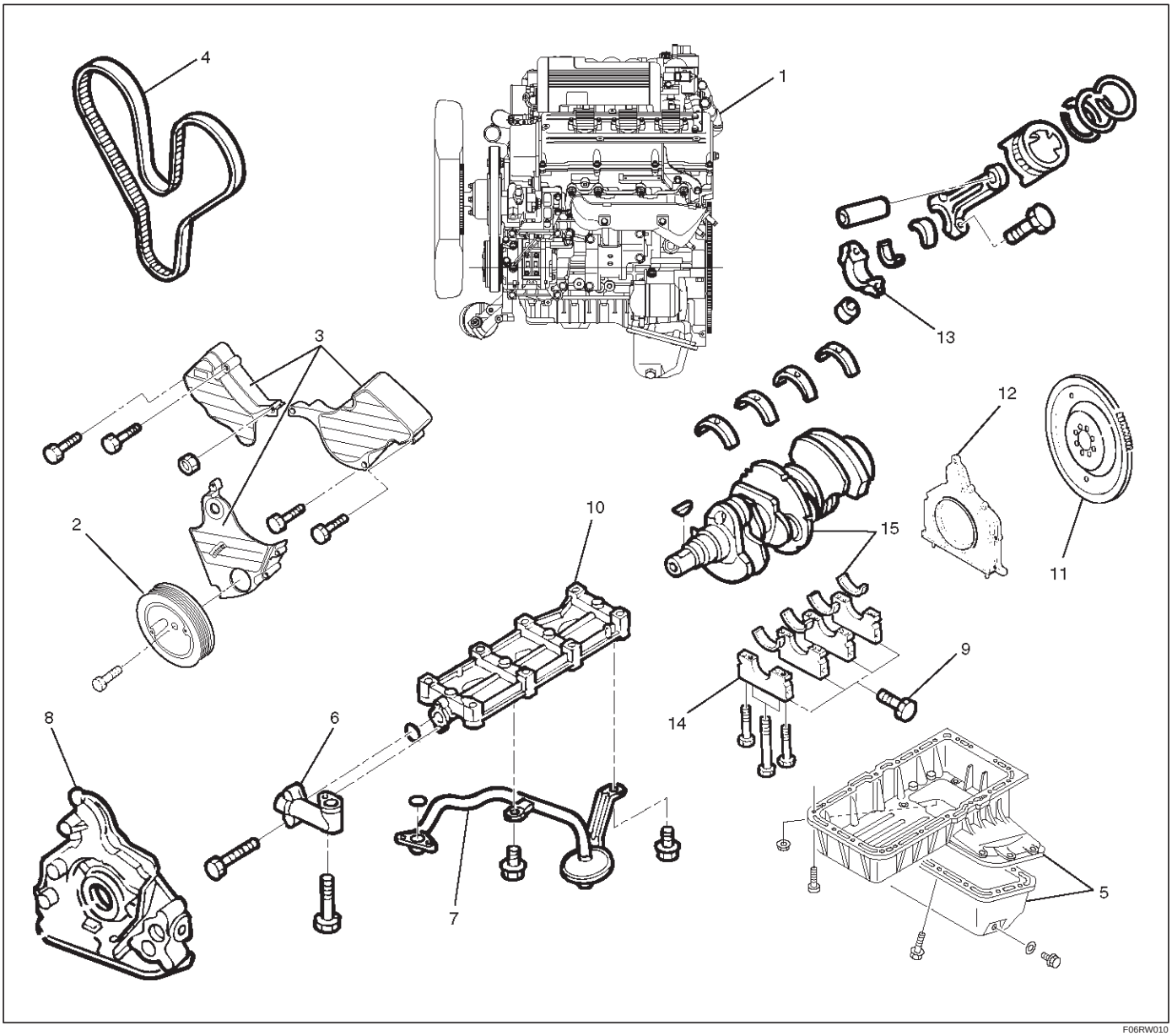

F06RW010

Legend

(1) Engine Assembly
(2) Crankshaft Pulley
(3) Timing Belt Cover
(4) Timing Belt
(5) Crankcase with Oil Pan
(6) Oil Pipe
(7) Oil Strainer
(8) Oil Pump Assembly
(9) Cylinder Body Side Bolt
(10) Oil Gallery
(11) Flywheel
(12) Rear Oil Seal Retainer
(13) Connecting Rod Cap
(14) Crankshaft Main Bearing Cap
(15) Crankshaft and Main Bearing

1. Remove engine assembly.
   - Refer to removal procedure for Engine Assembly in this manual.
2. Remove timing belt.
   - Refer to removal procedure for Timing Belt in this manual.
3. Remove oil pan and crankcase.
   - Refer to removal procedure for Oil Pan and Crankcase in this manual.
4. Remove oil pipe with O-ring.
5. Remove oil strainer assembly with O-ring.

6. Remove oil pump assembly.
   - Refer to removal procedure for Oil Pump in this manual.
7. Remove cylinder body side bolts.
8. Remove oil gallery.
9. Remove flywheel.
10. Remove rear oil seal retainer.
    - Refer to removal procedure for Rear Oil Seal in this manual.
11. Remove connecting rod caps.
12. Remove crankshaft main bearing caps.
13. Remove crankshaft and main bearings.

Installation

1. Install crankshaft and main bearings.
   - Install main bearing in the cylinder block and main bearing cap respectively.
     Apply new engine oil to upper and lower main bearings.

NOTE:

- Do not apply engine oil to the bearing back faces.
- Make sure that main bearings are in correct position.
- Install crankshaft with care.
- Apply engine oil to the thrust washer.
- Install thrust washer on No.3 journal.
- Oil grooves in thrust washer must face the crankshaft.

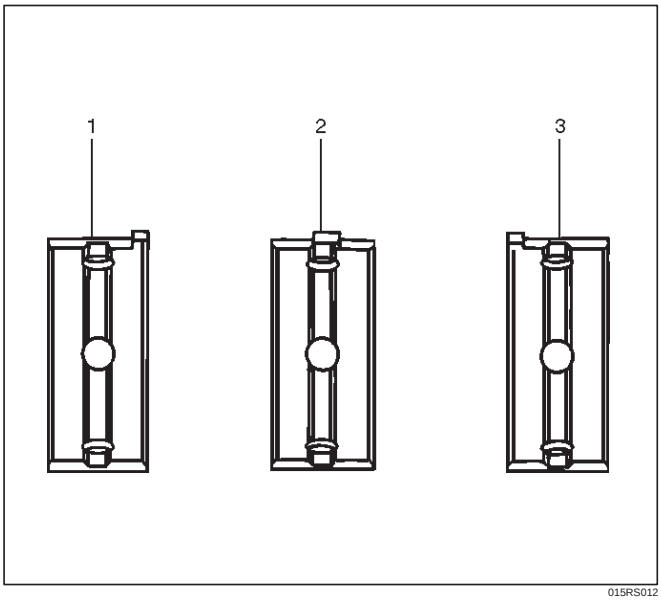

015RS012

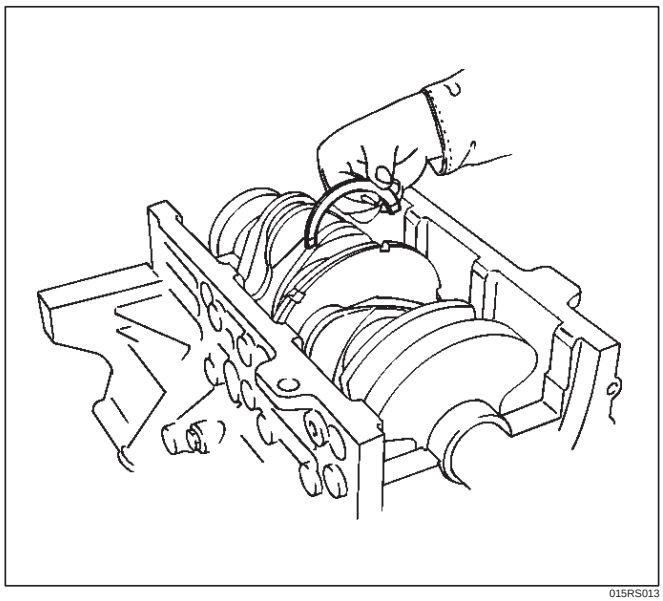

015RS013

2. Install crankshaft main bearing caps.
   - Apply engine oil to the thread and seating surface of each bearing cap fixing bolt.

NOTE:

- Do not apply engine oil to the bearing back faces.
- Install bearing caps in the order of numbers, starting with cylinder block front side.
- Tighten main bearing fixing bolts to the specified torque.

  Torque : 39 N·m (4.0 Kg·m/29 lb ft)
- After tightening the bolts, make sure that the crankshaft rotates smoothly.

3. Install connecting rod caps.
   - The cap number must be same as connecting rod number.
   - Apply engine oil to the thread and seating surface of each nut.
   - Tighten nuts to the specified torque.

   Torque : 54 N·m (5.5 Kg·m/40 lb ft)
   - After tightening the nuts, make sure that the crankshaft rotates smoothly.
4. Install rear oil seal retainer.
   - Remove oil on cylinder block and retainer fitting surface.
   - Apply sealant (TB1207B or equivalent) to retainer fitting surface as shown in illustration.

- The oil seal retainer must be installed within 5 minutes after sealant application before the sealant hardens.

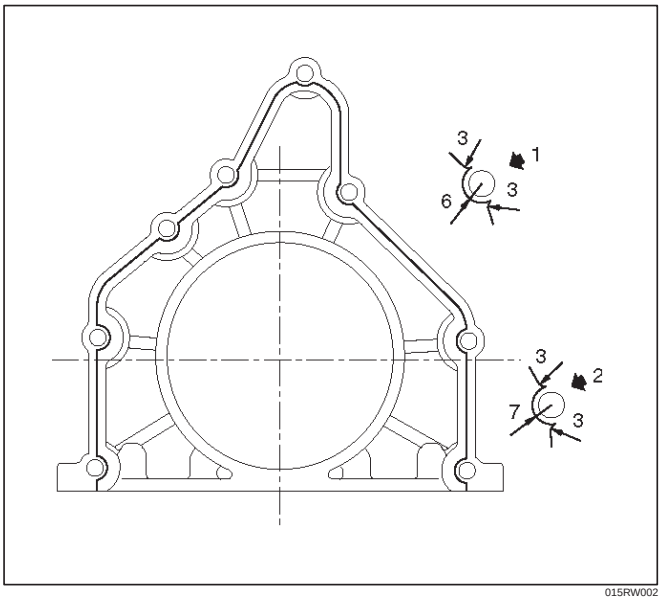

015RW002

Legend

(1) Around Bolt Holes
(2) Around Dowel Pin

- Apply engine oil to oil seal lip and align a dowel pin hole in the cylinder block with that in the retainer.
- Tighten retainer fixing bolts to the specified torque.

Torque : 18 N·m (1.8 Kg·m/13 lb ft)

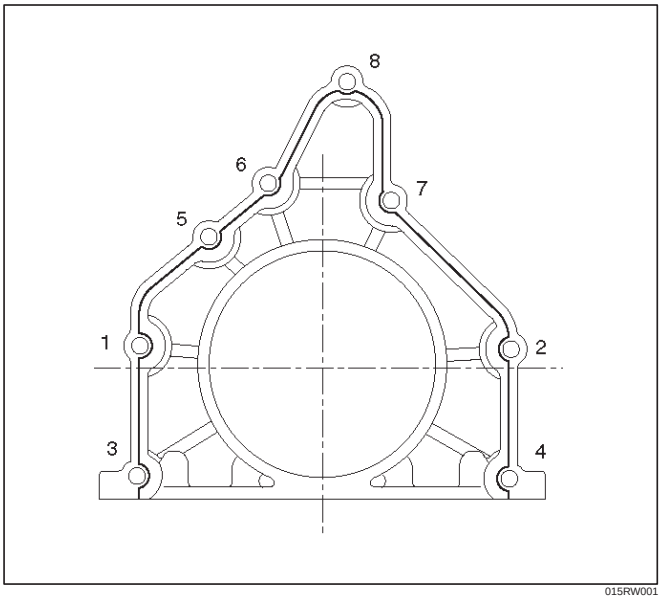

015RW001

5. Install flywheel.
   - Clean tapped holes in the crankshaft.
   - Remove oil on crankshaft and flywheel fitting surface.

NOTE:

- Do not reuse the bolts.
- Do not apply oil or thread lock to the bolts.
- Tighten fixing bolts to the specified torque.

Torque : 54 N·m (5.5 Kg·m/40 lb ft)

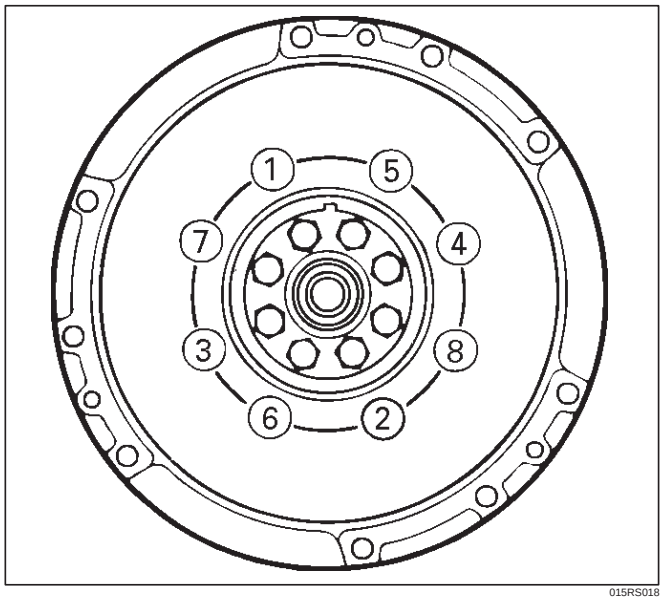

015RS018

6. Install oil gallery.
   - Clean contact surface of oil gallery and main bearing cap.
     Apply engine oil to oil gallery fixing bolts and tighten the bolts in two steps, in the order shown in illustration.

Torque :

1st step : 29 N·m (3.0 Kg·m/21 lb ft)

2nd step : 55˚–65˚

7. Install cylinder body side bolts and tighten bolts in order to the specified torque.

Torque : 39 N·m (4.0 Kg·m/29 lb ft)

NOTE: Do not apply the oil to the bolts.

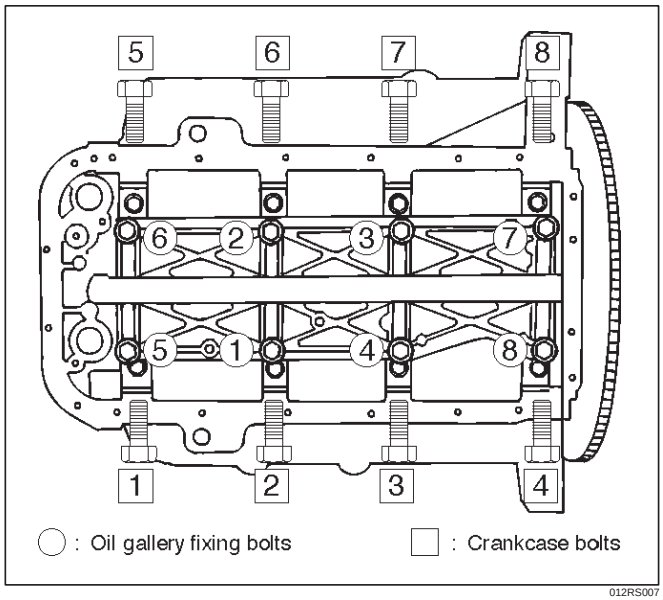

012RS007

8. Install oil pump assembly.
   - Remove oil on cylinder block and oil pump mounting surface.

- Apply sealant (TB1207B or equivalent) to the oil pump mounting surface.
- The oil pump assembly must be installed within 5 minutes after sealant application before the sealant hardens.
- Apply engine oil to oil seal lip.
- Install oil pump in the cylinder block and tighten fixing bolts to the specified torque.

Torque : 25 N·m (2.5 Kg·m/18 lb ft)

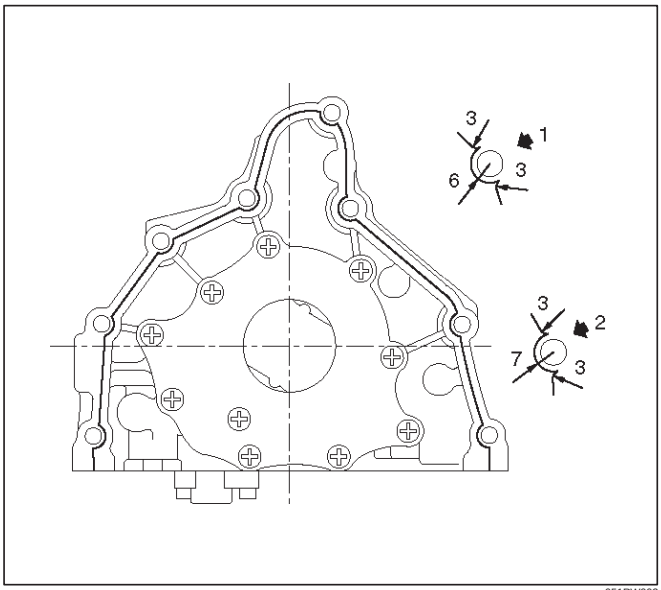

051RW002

Legend

(1) Around Bolt Holes
(2) Around Dowel Pin

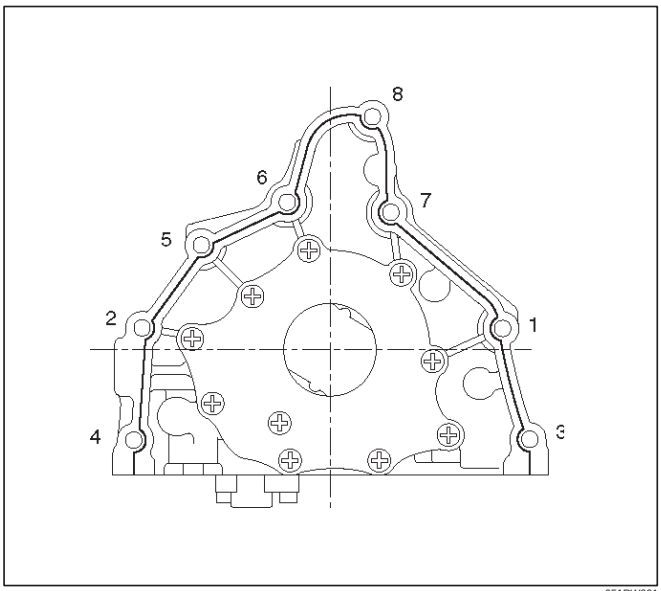

051RW001

9. Install oil strainer with O-ring, tighten to the specified torque.

   Torque : 25 N·m (2.5 Kg·m/18 lb ft)

10. Install oil pipe with O-ring, tighten fixing bolts to the specified torque.

    Torque : 25 N·m (2.5 Kg·m/18 lb ft)

11. Install crankcase.
    - Remove oil on crankcase mounting surface and dry the surface.
    - Properly apply a 4.5 mm (0.7 in) wide bead of sealant (TB1207C or equivalent) to the crankcase mounting surface. The bead must be continuous.
    - The crankcase must be installed within 5 minutes after sealant application before the sealant hardens.
    - Tighten fixing bolts to the specified torque.

    Torque : 10 N·m (1.0 Kg·m/89 lb in)

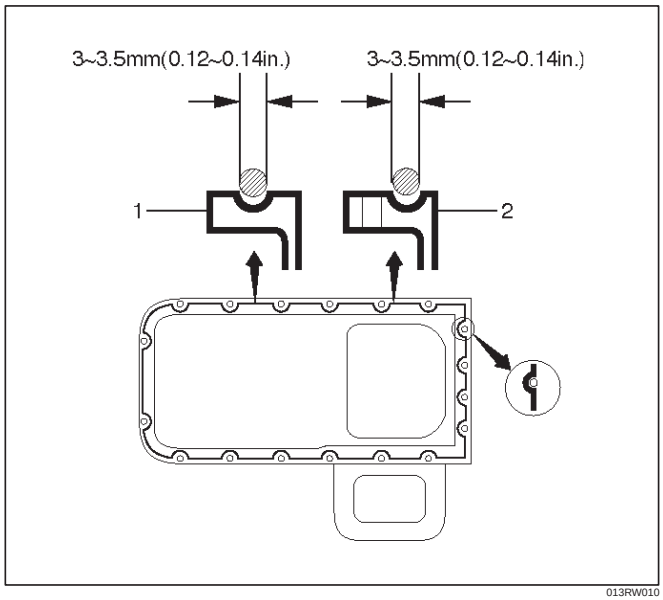

013RW010

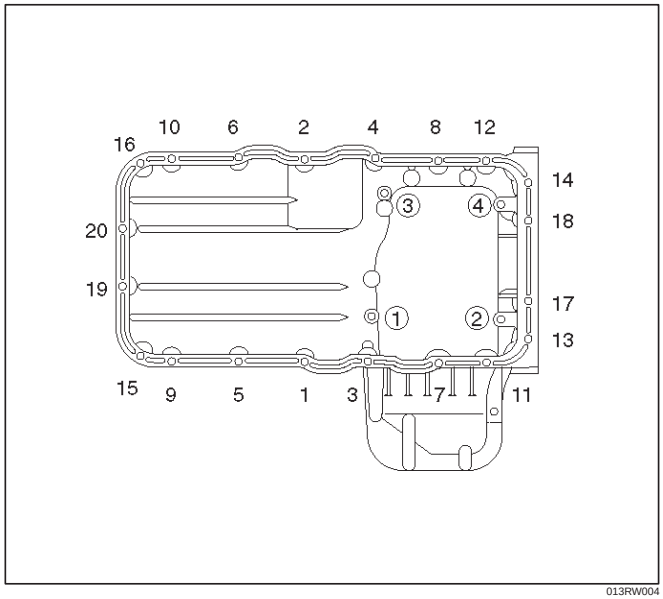

013RW004

12. Install oil pan
    - Remove oil on oil pan mounting surface and dry the surface.
    - Properly apply a 4.5 mm (0.7 in) wide bead of sealant (TB1207C or equivalent) to the oil pan mounting surface. The bead must be continuous.
    - The oil pan must be installed within 5 minutes after sealant application to prevent premature hardening of sealant.

- Tighten fixing bolts to the specified torque.

Torque : 25 N·m (2.5 Kg·m/18 lb ft)

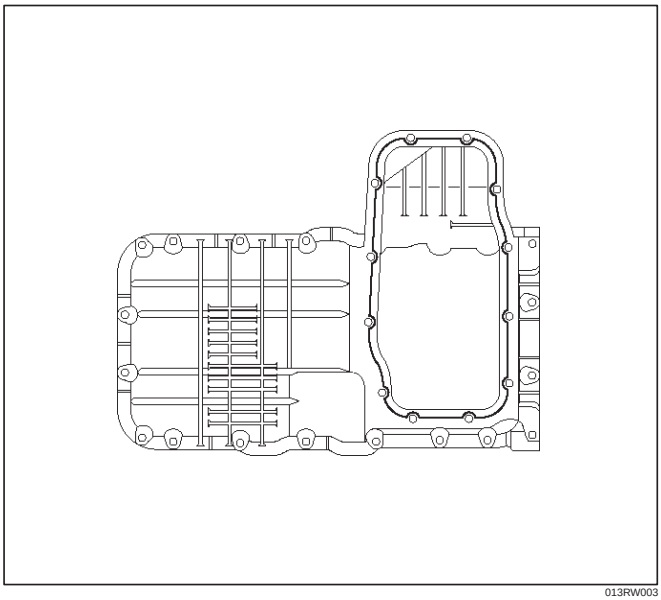

013RW003

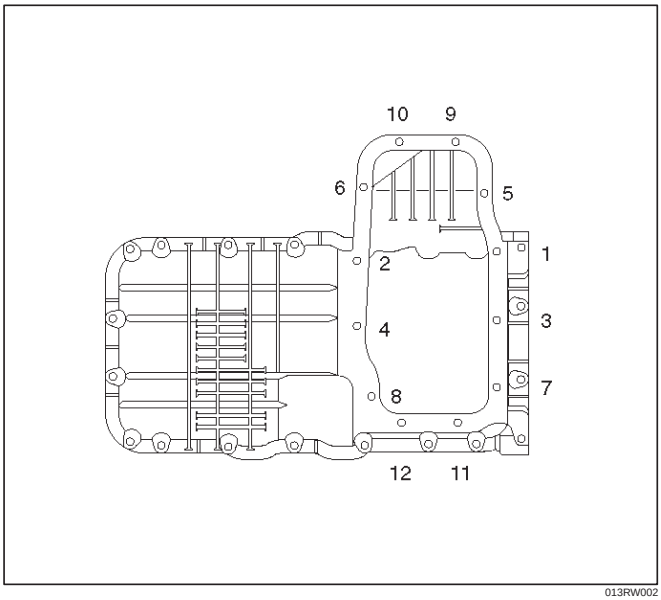

013RW002

13. Install timing belt.
    - Refer to installation procedure for Timing Belt in this manual.
14. Install engine assembly.
    - Refer to installation procedure for Engine in this manual.

Rear Oil Seal

Removal

1. Remove transmission assembly.
   - Refer to removal procedure for Transmission section in this manual.
2. Remove flywheel.
3. Remove rear oil seal using a seal remover.

NOTE: Take care not to damage the crankshaft or oil seal retainer when removing oil seal.

Installation

1. Apply engine oil to oil seal lip and install oil seal using 5–8840–2286–0.

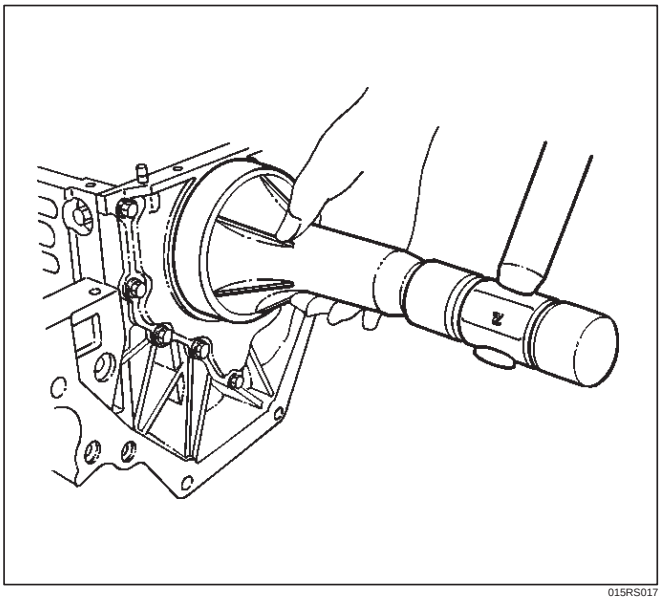

015RS017

2. Install flywheel.
   - Clean tapped holes in the crankshaft.
   - Remove oil on the crankshaft and flywheel mounting surface.
   - Tighten fixing bolts to the specified torque.

NOTE: Do not reuse the bolts and do not apply oil or thread lock to the bolts.

Torque : 54 N·m (5.5 Kg·m/40 lb ft)

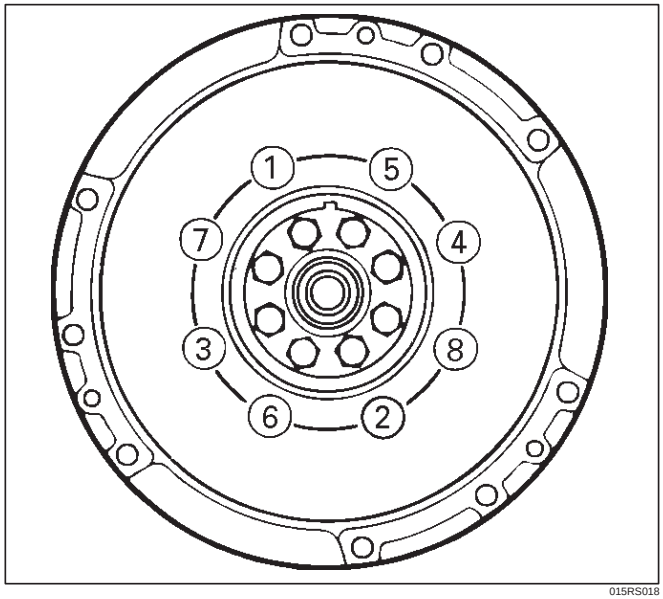

015RS018

3. Install transmission.
   - See Transmission section in this manual.

CAUTION: When assembling the engine and transmission, confirm that dowels have been mounted in the specified positions at the engine side. Take care that dowel positions are different between the manual transmission and the automatic transmission.
Otherwise, the transmission may be damaged.

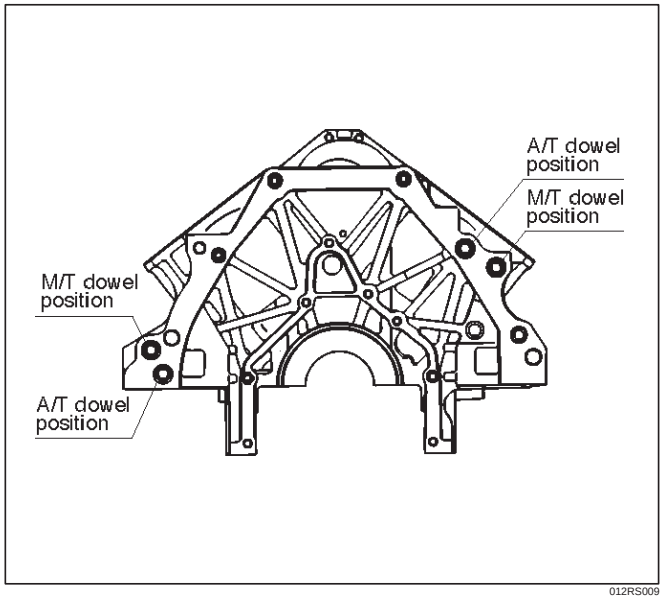

012RS009

Engine Assembly

Removal

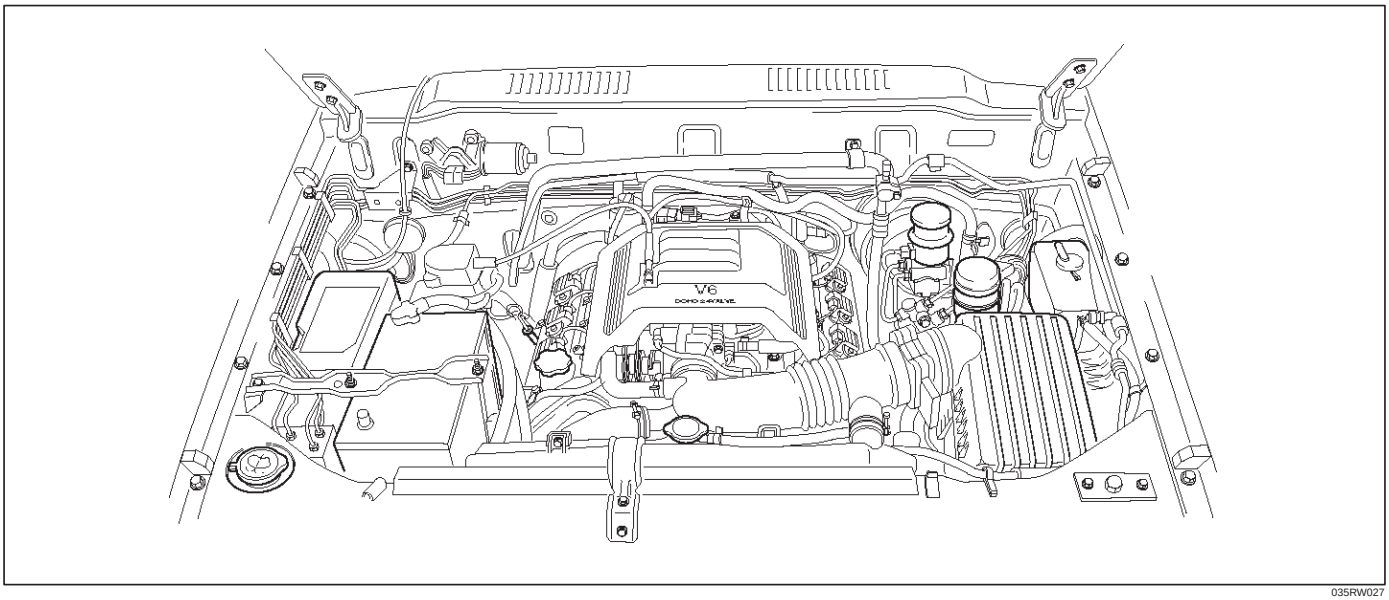

035RW027

1. Disconnect battery ground and positive cable.
2. Remove battery.
3. Make alignment mark on the engine hood and hinges before removal in order to return the hood to original position exactly.
4. Remove engine hood.
5. Drain radiator coolant.
6. Disconnect accelerator cable and automatic cruise control cable from throttle valve on common chamber.
7. Disconnect air duct with air cleaner cover.
8. Remove air cleaner assembly.
9. Disconnect canister vacuum hose.
10. Disconnect vacuum booster hose.
11. Disconnect three engine harness connectors.
12. Disconnect harness connector to transmission (left front side of engine compartment), disconnect shift on the fly harness connector from front side of front axle and remove transmission harness bracket from engine left side.
13. Disconnect ground cable between engine and frame.
14. Disconnect bonding cable connector on the back of right dash panel.
15. Disconnect bonding cable terminal on the left bank.
16. Disconnect starter harness connector from starter.
17. Disconnect generator harness connector from generator.
18. Disconnect coolant reserve tank hose from radiator.
19. Remove radiator upper and lower hoses.
20. Remove upper fan shroud.
21. Remove cooling fan assembly four fixing nuts, then the cooling fan assembly.
22. Move drive belt tensioner to loose side using wrench then remove drive belt.
23. Remove power steering pump fixing bolts, then power steering pump. Place the power steering pump along with piping on the body side.
24. Remove air conditioning compressor fixing bolts from bracket and place the compressor along with piping on the body side.
25. Remove O_2 sensor harness connectors from exhaust front pipe.
26. Remove three exhaust pipe fixing nuts from each bank.
27. Remove two exhaust pipe fixing nuts from each exhaust pipe, then move exhaust pipe to rear side of vehicle.
28. Remove flywheel dust covers.
29. Disconnect two heater hoses from engine.
30. Disconnect fuel hoses from right side of transmission.

CAUTION: Plug fuel pipes on engine side and fuel hoses from fuel tank.

31. Remove transmission assembly. Refer to Transmission section in this manual.
32. Support the engine by engine hoist.
33. Remove two left side engine mount fixing bolts from engine mount on chassis side.
34. Remove two right side engine mount fixing bolts from engine mount on chassis side.
35. Remove engine assembly.

Installation

CAUTION: When assembling the engine and transmission, confirm that dowels have been mounted in the specified positions at the engine side. Take care that dowel positions are different between the manual transmission and the automatic transmission.

If the engine is assembled in the condition that the dowels have not been mounted in the specified positions, the transmission may be damaged the transmission.

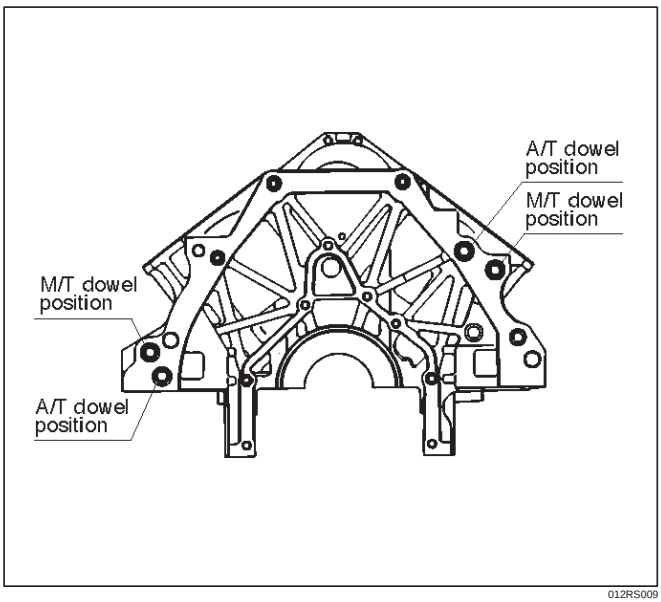

012RS009

1. Install engine assembly. Tighten engine mount fixing bolts to frame to the specified torque.

   Torque: 41 N·m (4.2 Kg·m/30 lb ft)

2. Reconnect fuel hose to fuel pipe on engine.
3. Install transmission assembly. Refer to Transmission section in this manual.
4. Reconnect two heater hoses to engine.
5. Install flywheel dust covers.
6. Install exhaust pipe and temporally tighten two (each bank) rear exhaust flange nuts then tighten three stud nuts (each bank) between exhaust manifold and exhaust pipe, finally tighten rear side nuts to the specified torque.

   Torque:

   Nuts: 43 N·m (4.4 Kg·m/32 lb ft)

   Stud nuts: 67 N·m (6.8 Kg·m/49 lb ft)

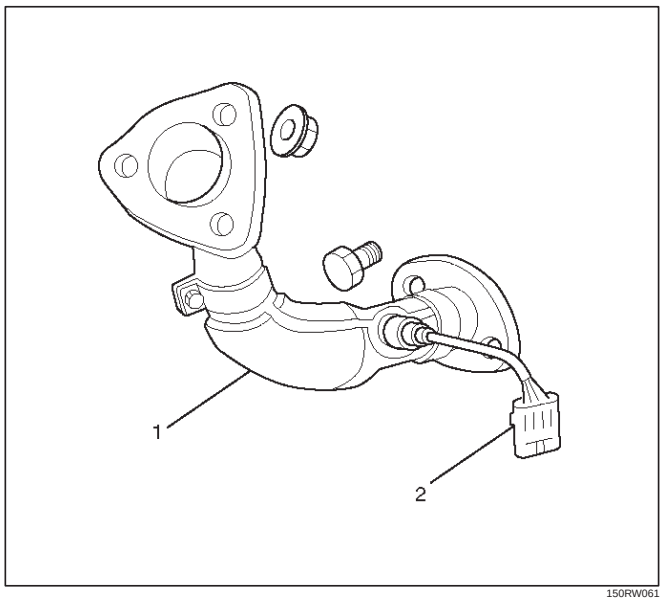

150RW061

Legend

(1) Exhaust Front Pipe RH

(2) O_2 Sensor (for IGM)

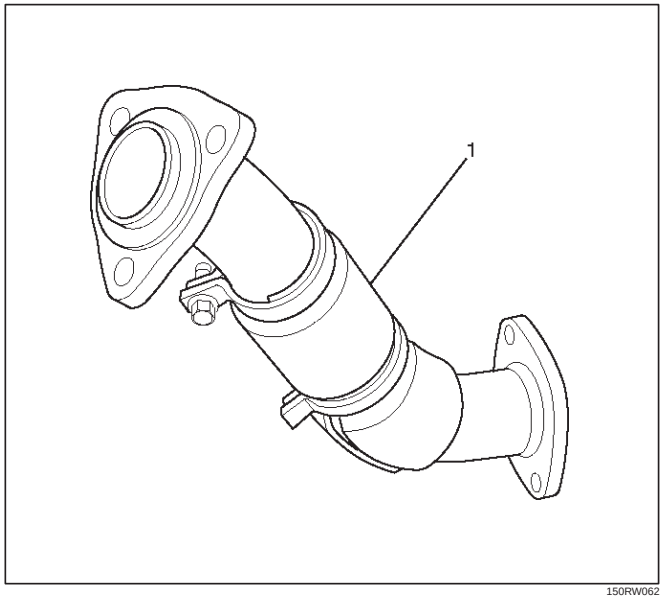

150RW062

Legend

(1) Exhaust Front Pipe LH

7. Reconnect O_2 sensor connector.
8. Install cooling fan assembly and tighten bolts/nuts to the specified torque.

   Torque : 22 N·m (2.2 Kg·m/16 lb ft) for fan pulley and fan bracket.

   Torque : 10 N·m (1.0 Kg·m/88.5 lb in) for fan and clutch assembly.

9. Install air conditioner compressor to engine and tighten to the specified torque.

   Torque :

   M8 bolts : 22 N·m (2.2 Kg·m/16 lb ft)

   M10 bolts : 43 N·m (4.4 Kg·m/32 lb ft)

10. Install power steering pump, tighten fixing bolt to the specified torque.

    Torque :

    M8 bolts : 22N·m (2.2 Kg·m/16 lb ft)

    M10 bolts : 46 N·m (4.7 Kg·m/34 lb ft)

11. Move drive belt tensioner to loose side using wrench, then install drive belt to normal position.

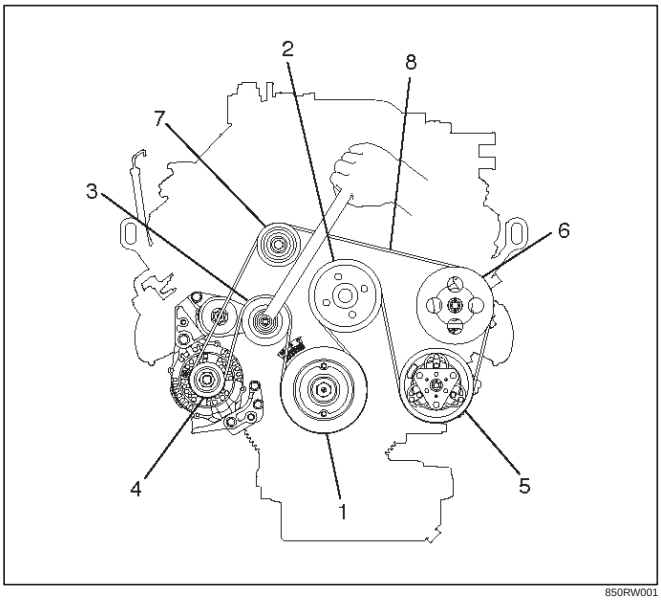

850RW001

Legend

(1) Crankshaft Pulley
(2) Cooling Fan Pulley
(3) Tensioner
(4) Generator
(5) Air Conditioner Compressor
(6) Power Steering Oil Pump
(7) Drive Belt

12. Install upper fan shroud.
13. Reconnect radiator upper and lower hoses.
14. Reconnect coolant reserve tank hose to radiator.
15. Reconnect generator harness connector.
16. Reconnect starter harness connector.
17. Reconnect bonding cable terminal on left bank
18. Reconnect bonding cable terminal on the back of right dash panel.
19. Reconnect ground cable between engine and chassis.
20. Reconnect harness connector to transmission and install transmission harness bracket on engine left side.
21. Reconnect three engine harness connectors.
22. Reconnect vacuum booster hose.
23. Reconnect canister vacuum hose.
24. Install air cleaner assembly.
25. Reconnect air duct.
26. Reconnect accelerator cable and automatic cruise control cable to throttle valve on common chamber.

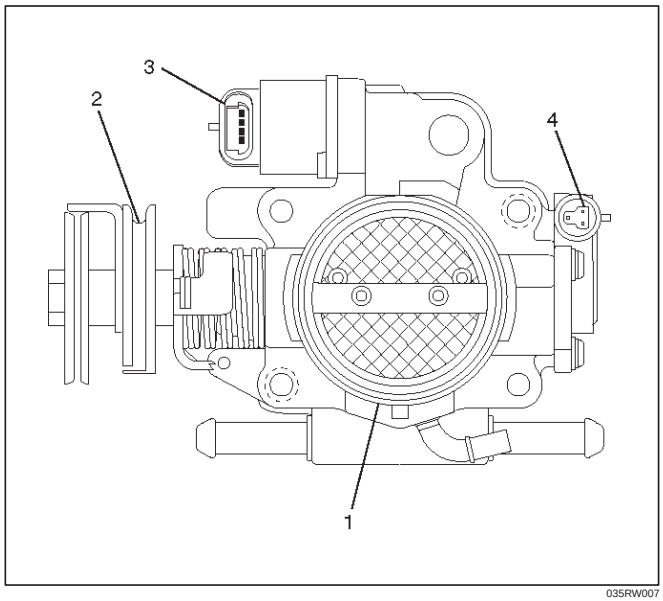

035RW007

Legend

(1) Throttle Valve Assembly
(2) Throttle Lever
(3) Idle Air Control Valve
(4) Throttle Position Sensor

27. Install engine hood to the original position.
    - Refer to installation procedure for Body section in this manual.

    Accelerator pedal cable adjustment

    1. Loosen adjusting nut and lock nut.
    2. Pull outer cable while fully closing the throttle valve.
    3. Tighten adjusting nut and lock nut temporarily.
    4. Loosen adjusting nut by three turns and tighten lock nut.

       Then, manually operating the throttle valve, make sure that the valve lever returns up to the stopper screw.

If it does not reach the stopper screw, repeat from step 1.

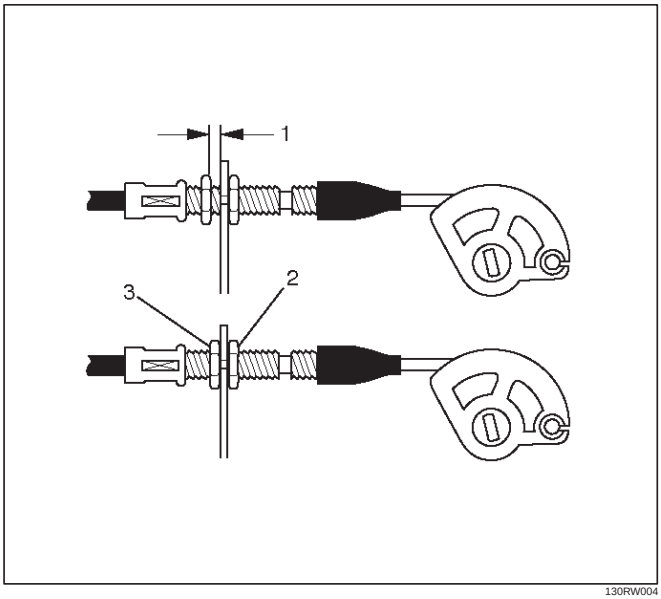

130RW004

Legend

(1) Clearance
(2) Lock Nut
(3) Adjusting Nut

Cylinder Head

Cylinder Head and Associated Parts

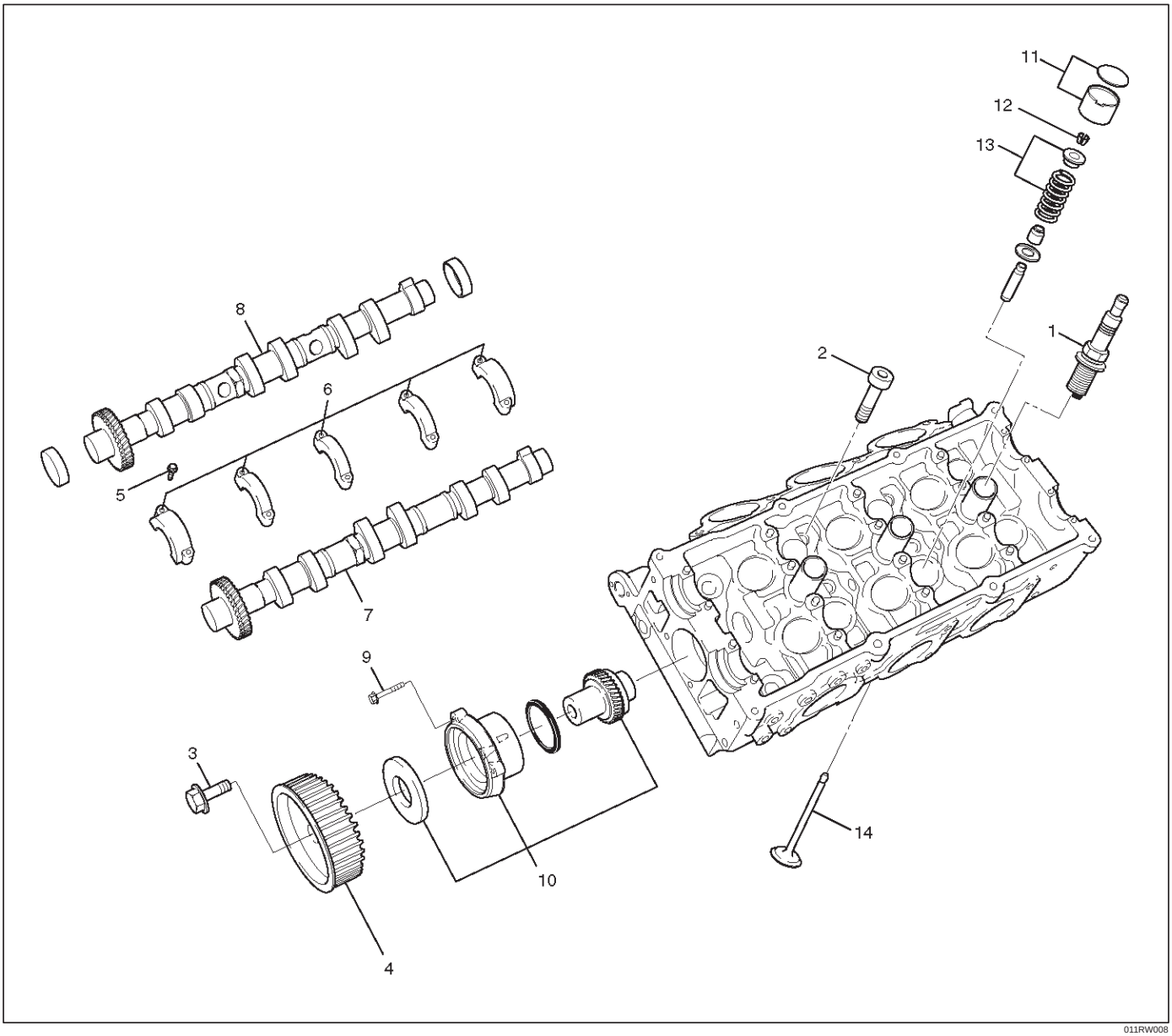

011RW008

Legend

(1) Spark Plug
(2) Cylinder Head Bolt
(3) Camshaft Drive Gear Pulley Fixing Bolt
(4) Camshaft Drive Gear Pulley
(5) Camshaft Bracket Fixing Bolt
(6) Camshaft Bracket
(7) Camshaft Exhaust
(8) Camshaft Intake
(9) Retainer Fixing Bolt
(10) Retainer Assembly
(11) Tappet with Shim
(12) Split Collar
(13) Valve Spring and Spring Upper Seat
(14) Valve

Disassembly

NOTE:

- During disassembly, be sure that the valve train components are kept together and identified so that they can be reinstalled in their original locations.
- Before removing the cylinder head from the engine and before disassembling the valve mechanism, perform a compression test and note the results.

1. Remove camshaft drive gear pulley fixing bolt (3), then pulley (4).

2. Remove camshaft bracket fixing bolt (5), camshaft bracket (6), then camshaft exhaust (7), and intake side (8).
3. Remove tappet with shim (11).
4. Use the 5–8840–2446–0 valve spring compressor and 5–8840–2547–0 valve spring compressor adapter to remove the split collar (12), valve spring with upper seat (13) and valve (14).

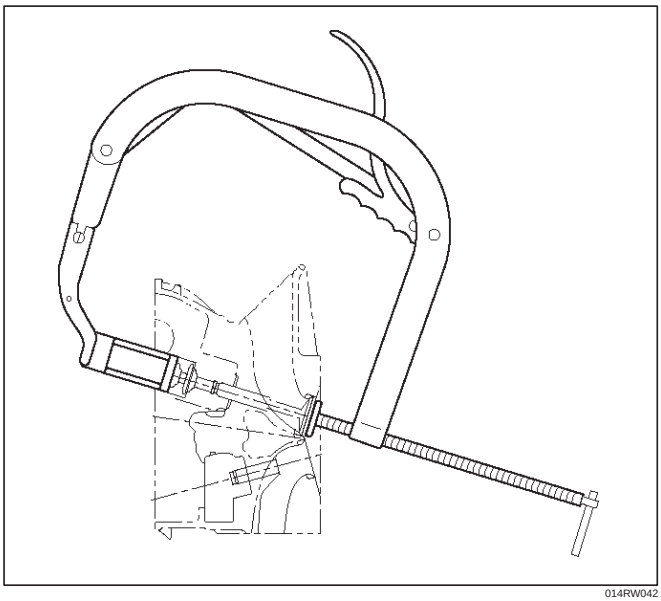

014RW042

5. Remove spark plug (1).

CAUTION: Do not remove the spark plugs when the head and plugs are hot. Clean dirt and debris from spark plug recess areas before removal.

Clean

Cylinder head

Carefully remove all varnish, soot and carbon from the bare metal. Do not use a motorized wire brush on any gasket sealing surface.

Inspection and Repair

1. Cylinder head gasket and mating surfaces for leaks, corrosion and blow–by. If the gasket has failed, determine the cause.
   – Insufficient torque on head bolts.
   – Improper installation
   – Loose or warped cylinder head
   – Missing dowel pins
   – Warped case surface
2. Cylinder head for cracks, especially between valve seats and in the exhaust ports.
3. Cylinder head deck for corrosion, sand particles in head and porosity.

CAUTION:

- **Do not attempt to weld the cylinder head. Replace it.**
- **Do not reuse cylinder head bolts.**

4. Cylinder head deck, common chamber and exhaust manifold mating surfaces for flatness. These surfaces may be reconditioned by milling. If the surfaces are “out of flat” by more than specification, the surface should be ground to within specifications. Replace the head if it requires machining beyond the repairable limit.

   Head surface and manifold surface

   Standard: 0.05 mm (0.002 in) or less

   Warpage limit: 0.2 mm (0.0079 in)

   Maximum Repairable limit: 0.2 mm (0.0079 in)

   Head height

   Standard height : 133.2 mm (5.2441 in)

   Warpage limit : 0.2 mm (0.0079 in)

   Maximum Repairable limit : 133.0 mm (5.2362 in)

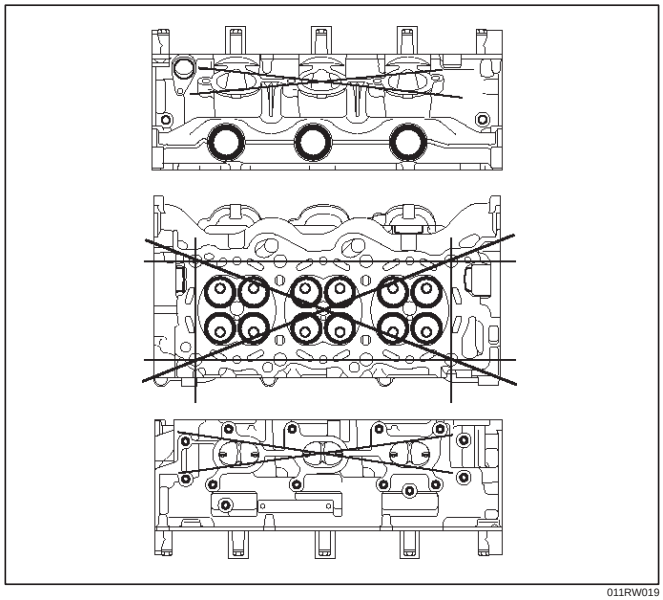

011RW019

5. Water jacket sealing plugs seating surfaces.

Reassembly

1. Install Spark plug and tighten all the spark plugs to specified torque.

   Torque: 18 N·m (1.8 Kg·m/13 lb ft)

2. Tighten sub gear setting bolt.
   1. Use 5–8840–2443–0 gear spring lever to turn sub gear to right direction until the M5 bolt aligns with the hole between camshaft driven gear and sub gear.

2. Tighten the M5 bolt to a suitable torque to prevent the sub gear from moving .

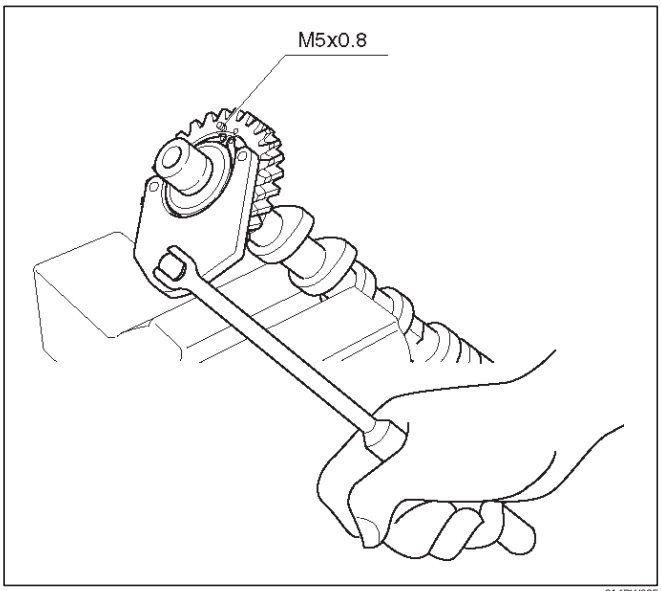

014RW025

3. Install camshaft drive gear assembly and tighten three bolts to the specified torque.

Torque: 10 N·m (1.0 Kg·m/89 lb in)

4. Install camshaft assembly and camshaft brackets, tighten twenty bolts on one side bank to the specified torque.
   1. Apply engine oil to camshaft journal and bearing surface of camshaft bracket.
   2. Align timing mark on intake camshaft (one dot for right bank, two dots for left bank) and exhaust camshaft (one dot for right bank, two dots for left bank) to timing mark on camshaft drive gear (one dot).

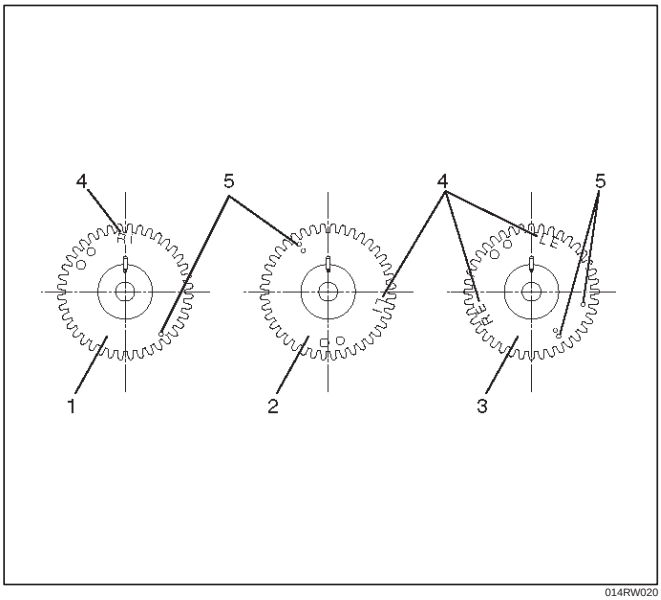

014RW020

Legend

(1) Intake Camshaft Timing Gear for Right Bank
(2) Intake Camshaft Timing Gear for Left Bank
(3) Exhaust Camshaft Timing Gear
(4) Discrimination Mark
LI: Left Bank Intake
RI: Right Bank Intake
LE: Left Bank Exhaust
RE: Right Bank Exhaust

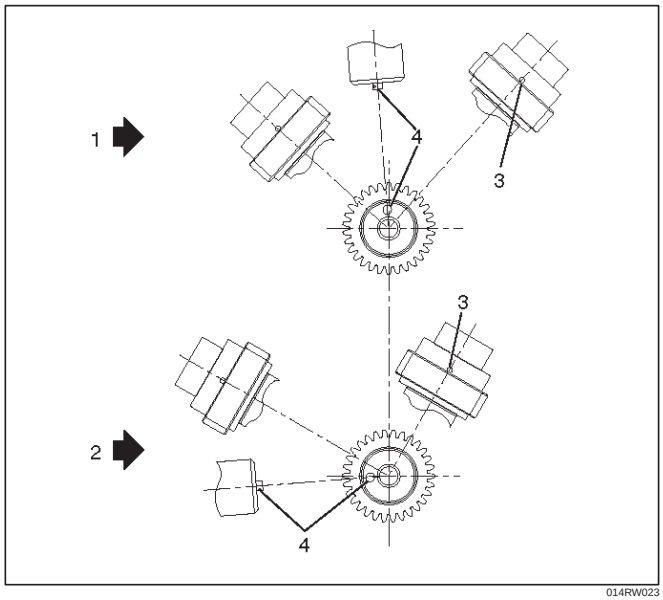

014RW023

Legend

(1) Right Bank Camshaft Drive Gear
(2) Left Bank Camshaft Drive Gear
(3) Timing Mark on Drive Gear
(4) Dowel Pin

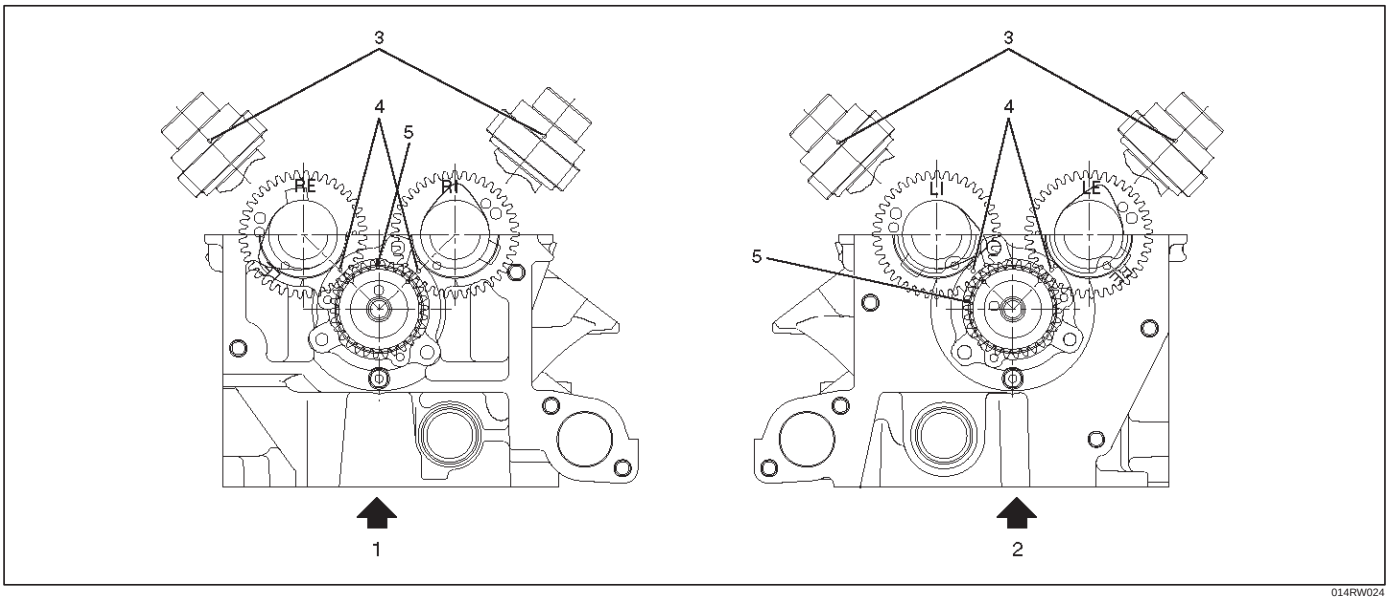

014RW024

Legend

(1) Right Bank
(2) Left Bank
(3) Alignment Mark on Camshaft Drive Gear
(4) Alignment Mark on Camshaft
(5) Alignment Mark on Retainer

3. Tighten twenty bolts in numerical order on one side bank as shown in the illustration.

Torque: 10 N·m (1.0 Kg·m/89 lb in)

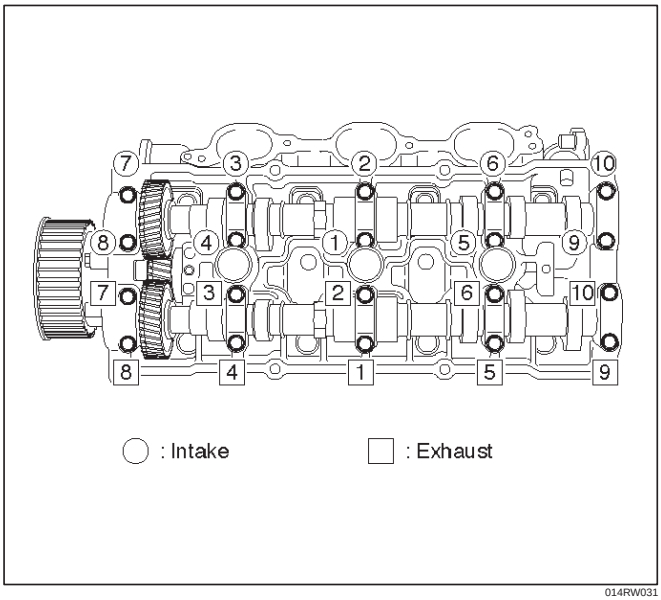

014RW031

5. Tighten bolt for camshaft drive gear assembly pulley to the specified torque.

Torque: 98 N·m (10.0 Kg·m/72 lb ft)

Valve Spring, Oil Controller, Valve, Valve Guide

Valve Spring, Oil Controller, Valve, Valve Guide and Associated Parts

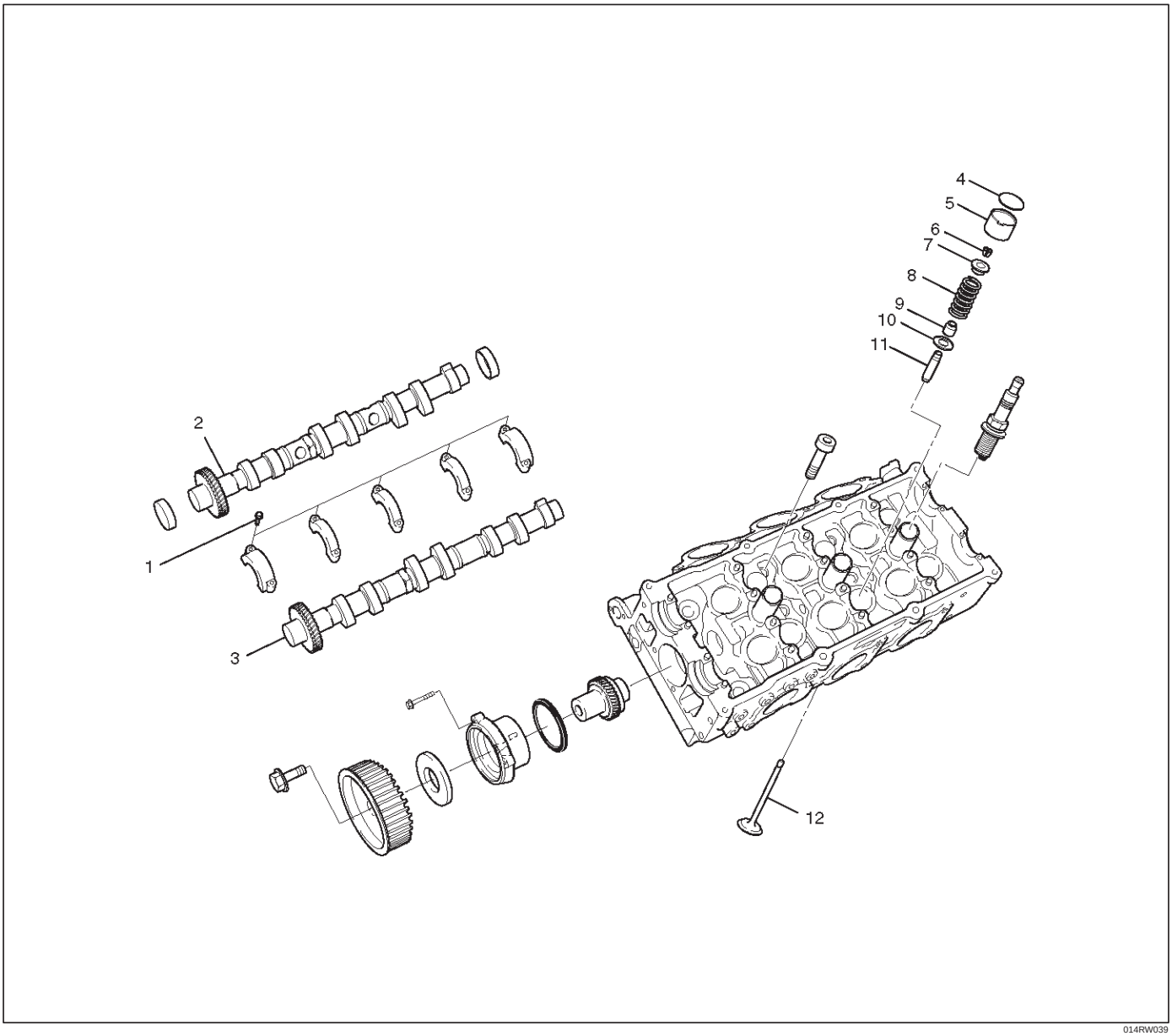

014RW039

Legend

(1) Camshaft Bracket Fixing Bolts
(2) Camshaft Assembly Inlet
(3) Camshaft Assembly Exhaust
(4) Shim
(5) Tappet
(6) Split Collar
(7) Spring Upper Seat
(8) Valve Spring
(9) Oil Controller
(10) Spring Lower Seat
(11) Valve Guide
(12) Valve

Disassembly

1. Remove camshaft bracket fixing bolts (1).
2. Remove camshaft assembly (intake).
3. Remove camshaft assembly (Exhaust side).
4. Remove shim (4) and tappet (5).

5. Use 5–8840–2446–0 valve spring compressor and 5–8840–2547–0 valve spring compressor adapter to remove split collar.

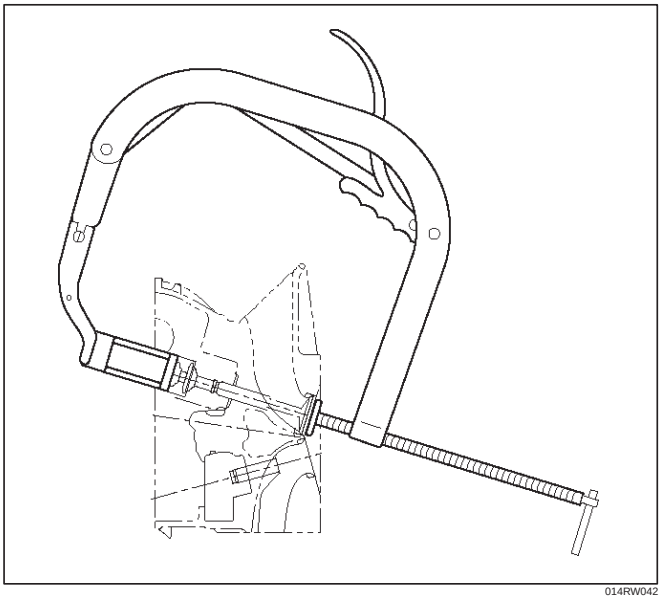

014RW042

6. Remove valve spring.
7. Remove valve.
8. Remove oil controller and spring lower seat.
9. Remove the valve guide using the 5–8840–2442–0 valve guide replacer.

Inspection and Repair

Valve Spring

CAUTION: Visually inspect the valve springs and replace them if damage or abnormal wear is evident.

1. Measure the free height of the springs. The springs must be replaced if the free height is below the specified limit.

   Standard : 44.6 mm (1.7559 in)

   Limit : 43.6 mm (1.7165 in)

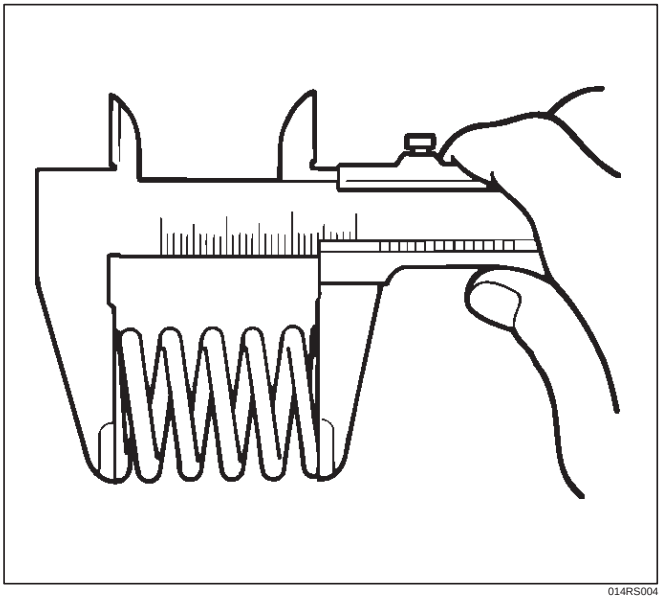

014RS004

2. Measure the valve spring squareness with a steel square and replace the valve springs if the measured value exceeds the specified limit.

   Limit : 2 mm (0.0787 in)

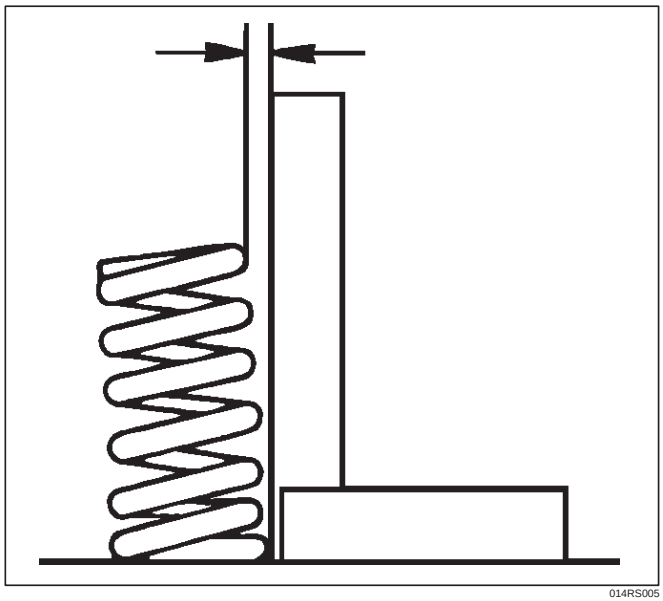

014RS005

3. Using a spring tester to compress the springs to the installed height, measure the compressed spring tension, and replace the springs if the measured tension is below the specified limit.

   At installed height: 35.0 mm (1.38 in)

   Standard: 196 N (44 lb)

   Limit: Less than 181 N (41 lb)

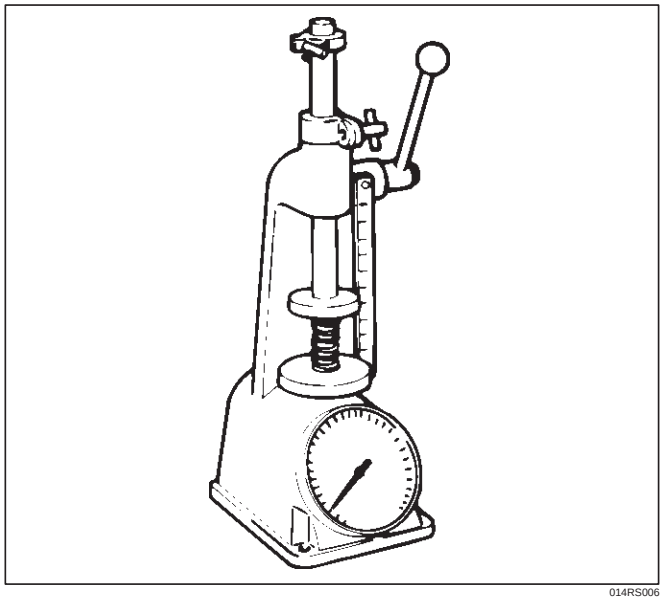

014RS006

Valve Guide

CAUTION: Take care not to damage the valve seat contact surface, when removing carbon adhering to the valve head. Carefully inspect the valve stem for scratchs or abnormal wear. If these conditions are present, the valve and the valve guide must be replaced as a set.

1. Measure the valve stem diameter with a micrometer. If the valve stem diameter is less than the specified limit, the valve and the valve guide must be replaced as a set.

Diameter of Valve Stem

Intake

Standard : 5.977 mm–5.959 mm (0.2353 in–0.2346 in)

Limit : 5.90 mm (0.2323 in)

Exhaust

Standard : 5.952 mm–5.970 mm (0.2343 in–0.2350 in)

Limit : 5.90 mm (0.2323 in)

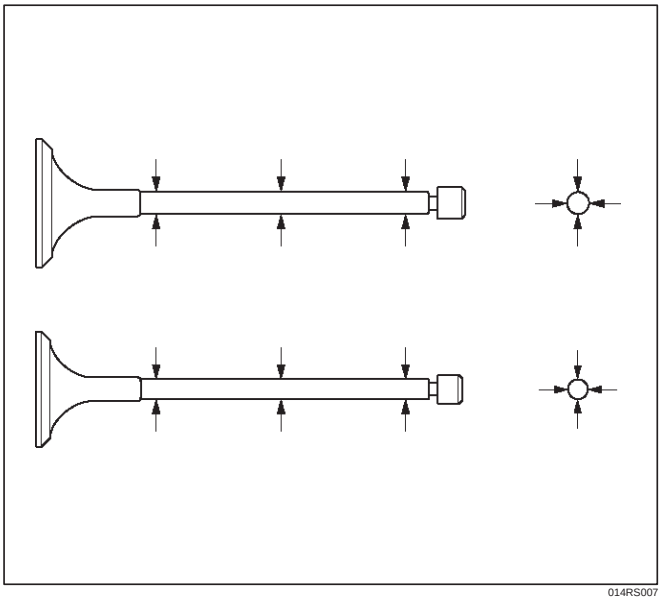

014RS007

2. Measure the inside diameter of the valve guide with a micrometer. Subtract the measured outer diameter of the valve stem from the measured inner diameter of the valve guide. If the value exceeds the specified limit, the valve and the valve guide must be replaced as a set.

Inside Diameter of the Vale Guide

Inlet clearance

Standard : 0.023 mm–0.056 mm (0.0009 in–0.0002 in)

Limit : 0.20 mm (0.00787 in)

Exhaust clearance

Standard : 0.030 mm–0.063 mm (0.0012 in–0.0025 in)

Limit : 0.20 mm (0.00787 in)

Valve Guide Replacement

1. Using Valve guide replacer: 5–8840–2442–0, drive out the valve guide from the combustion chamber side.

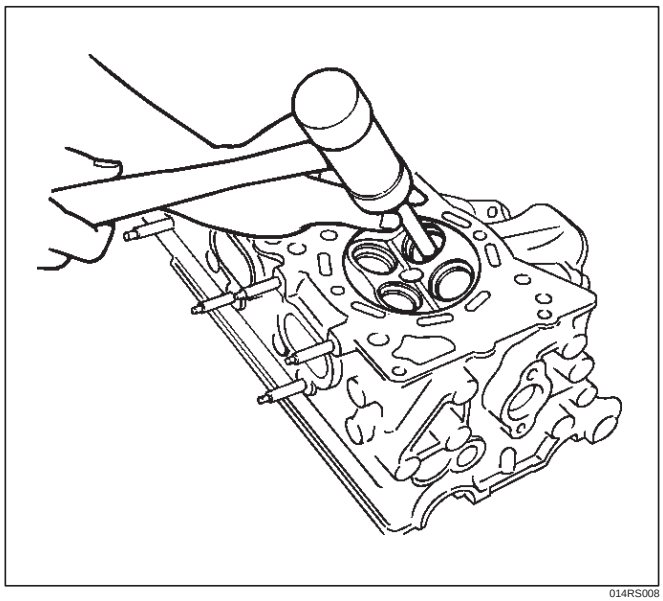

014RS008

2. Apply engine oil to the outside of the valve guide. Using valve guide replacer 5–8840–2442–0, drive in a new valve guide from the camshaft side, and check the valve guide height.

Valve guide upper end height: 13.0 mm (0.5118 in)

(Measured from the cylinder head upper face)

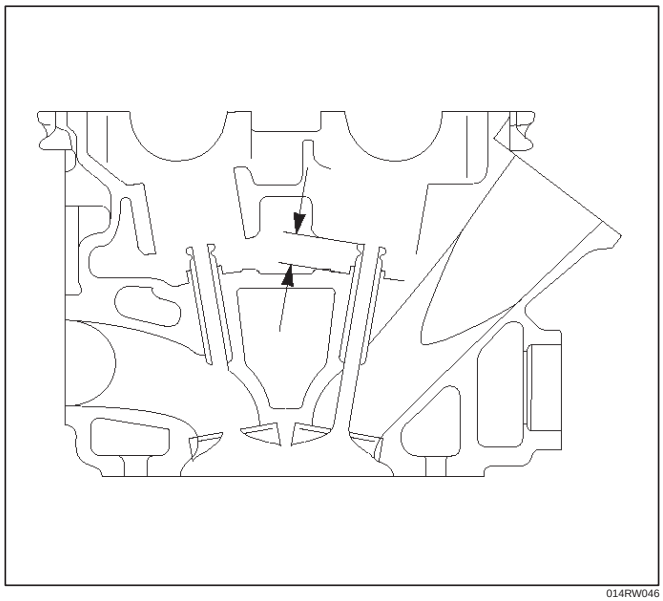

014RW046

3. Check the clearance. If the clearance is less than the specified value, ream the inside diameter of valve guide. Using a sharp 6 mm reamer, ream the valve guide to obtain the specified clearance.

Valve Seat

1. Measure the protrusion of the valve stem when a new valve is installed in the cylinder head. If the protrusion of the valve stem exceeds the limit, replace the valve seat insert or the cylinder head assembly.

Protrusion of valve stem

Intake

Standard: 39.32 mm (1.5480 in)

Limit: 39.47 mm (1.5539 in)

Exhaust

Standard: 39.30 mm (1.5472 in)

Limit: 39.45 mm (1.5531 in)

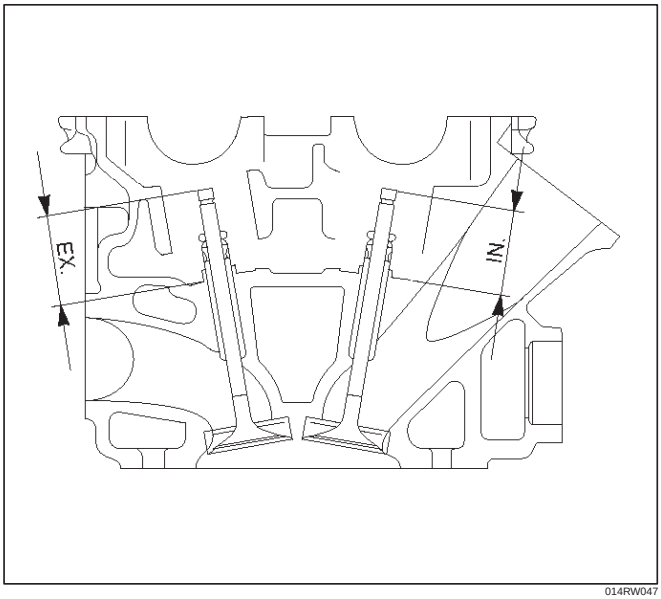

014RW047

2. Measure the valve seat contact width. Make the necessary corrections if the seat contact surface is damaged or rough or if the contact width wear exceeds the limit.

Valve seat contact width

Standard: 1.1 mm (0.0433 in)

Limit: 1.7 mm (0.0669 in)

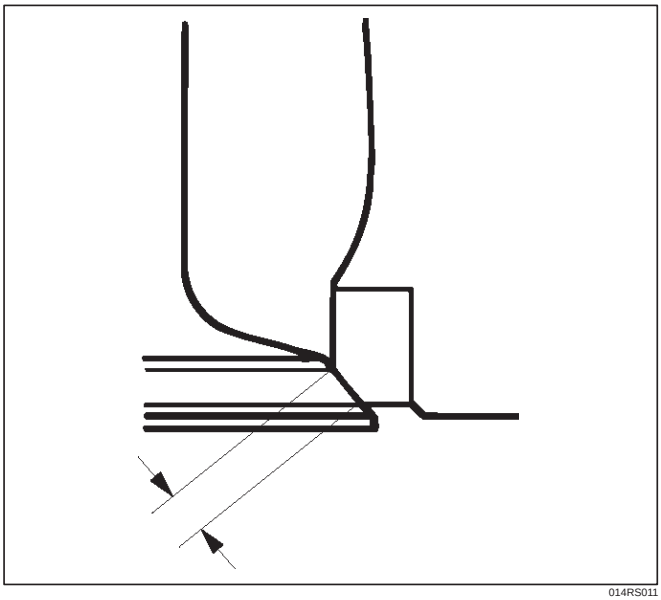

014RS011

Contact Surface Angle on Valve Seat on Valve

1. Measure contact surface angle on valve seat.
2. If the measured value exceeds the limit, replace valve, valve guide and valve seat as a set.

Valve contact surface angle: 45˚

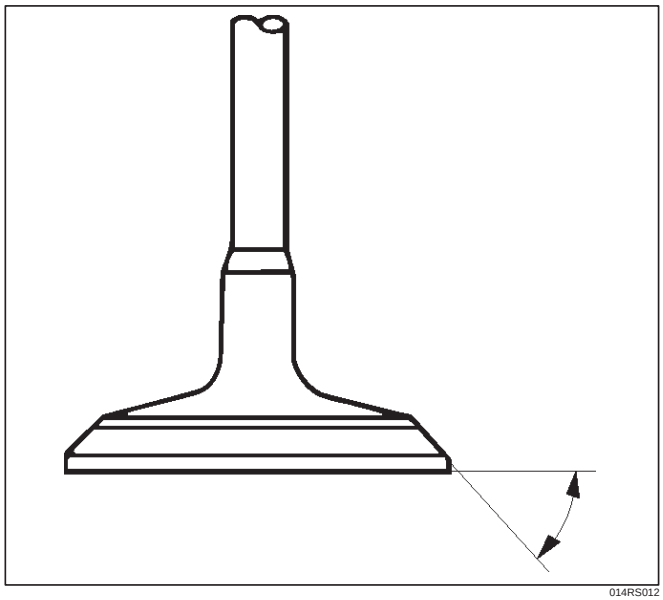

014RS012

Valve Seat Insert Correction

1. Remove the carbon from the valve seat insert surface.
2. Use a valve cutter to minimize scratches and other rough areas. This will bring the contact width back to the standard value. Remove only the scratches and rough areas. Do not cut away too much. Take care not to cut away unblemished areas of the valve seat surface.

Valve seat angle degree: 90˚

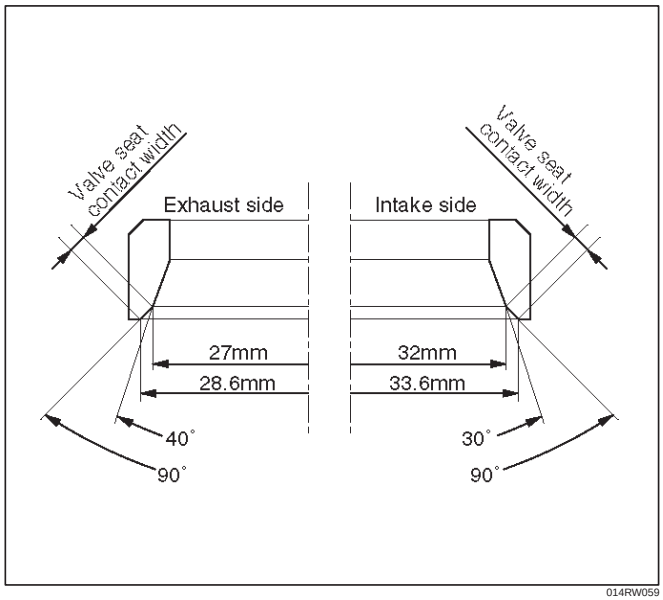

014RW059

3. Apply abrasive compound to the valve seat insert surface.
4. Insert the valve into the valve guide.
5. Turn the valve while lapping it to fit the valve seat insert.

6. Check that the valve contact width is correct.
7. Check that the valve seat insert surface is in contact with the entire circumference of the valve.

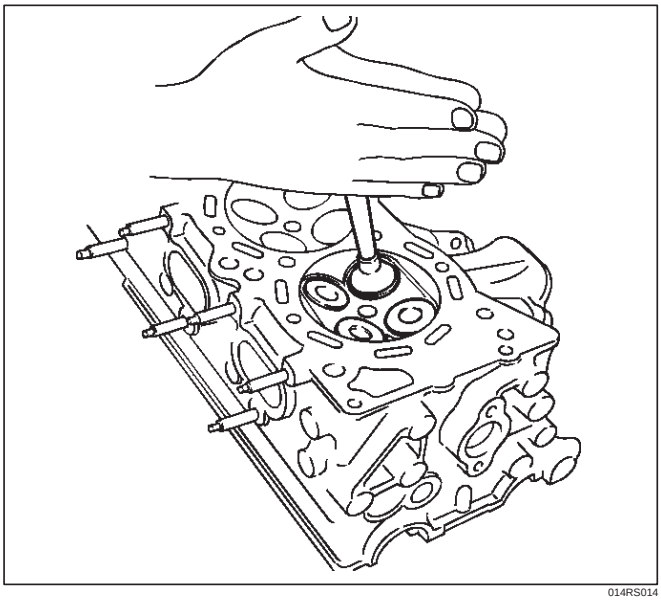

014RS014

Valve Seat Insert Replacement

1. Arc weld the rod at several points. Be careful not to damage the aluminum section.
2. Allow the rod to cool for a few minutes. This will cause the valve seat to shrink.
3. Strike the rod and pull it out.

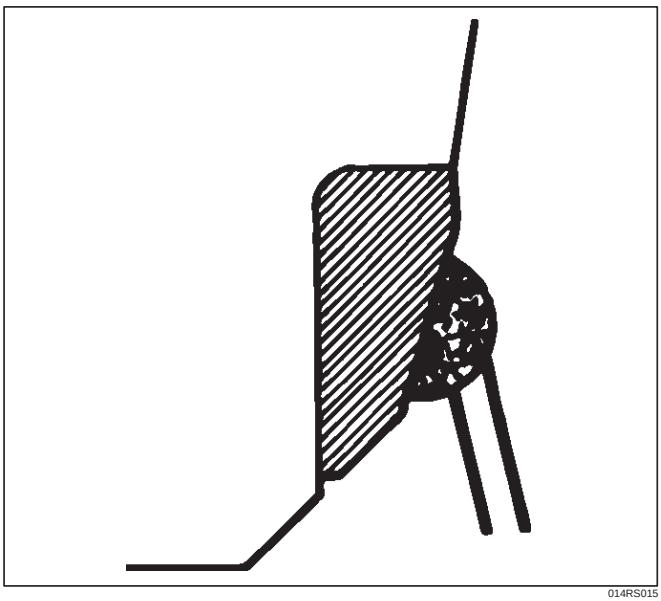

014RS015

4. Carefully clean the valve seat press–fit section on the cylinder head side.
5. Heat the press–fit section with steam or some other means to cause expansion. Cool the valve seat with dry ice or some other means.
6. Insert the press–fit section into the valve seat horizontally.

   Standard fitting interference: 0.14 mm–0.09 mm (0.0055 in–0.0035 in)

7. After insertion, use a seat grinder to grind finish the seating face. Carefully note the seating angle, the contact width, and the depression.
8. Lap the valve and the seat.

Reassembly

1. Install valve guide (1) to cylinder head. Apply engine oil to the outside of the valve guide. Using valve guide replacer 5–8840–2442–0, drive in a new valve guide from the camshaft side.
2. Install oil controller (3) and spring lower seat (2). Using oil controller replacer 5–8840–0623–0, drive in a new oil controller.

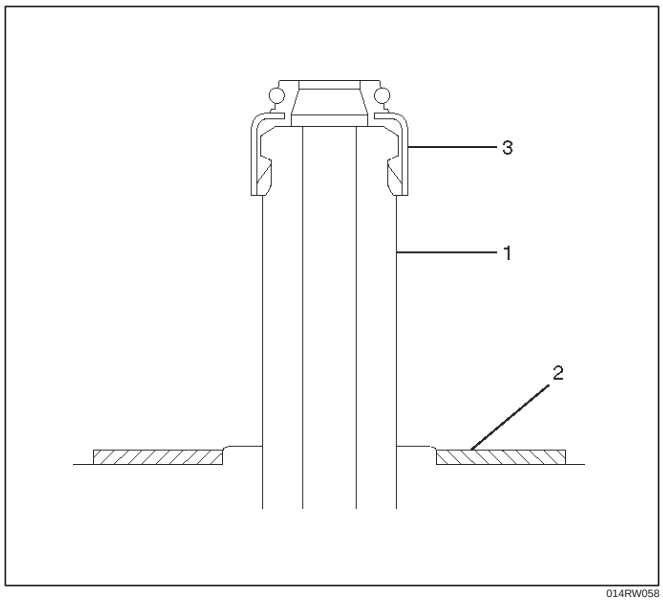

014RW058

3. Install valve to valve guide. Before install valve guide apply engine oil to the outside of the valve stem.
4. Install valve spring to cylinder head. Attach the valve spring to the lower spring seat. The painted area of the valve spring should be facing downward.

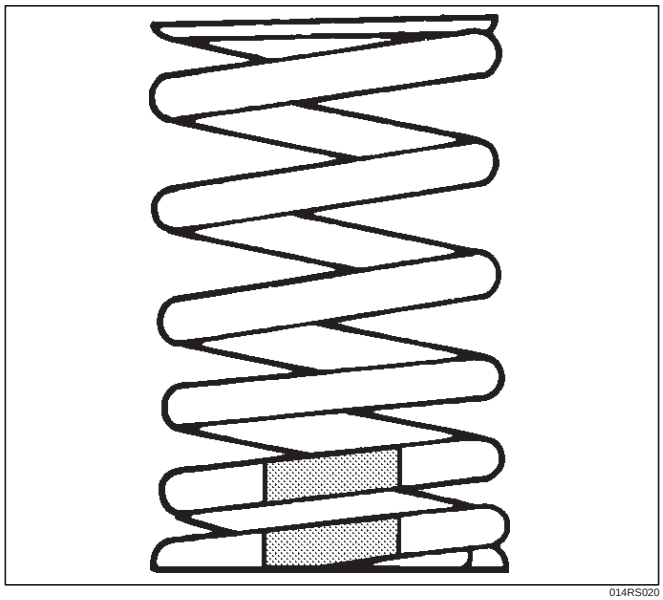

014RS020

5. Install lower valve spring seat, valve spring and upper valve spring seat then put split collars on the upper spring seat, using the 5–8840–2446–0 valve spring compressor and 5–8840–2547–0 valve spring compressor adapter to install the split collars.

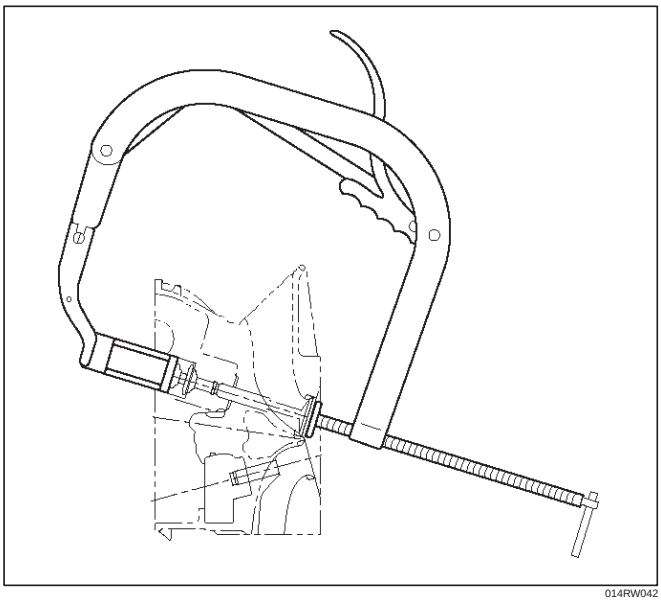

014RW042

6. Install tappet with shim.
7. Install camshaft assembly.
   - Refer to installation procedure for Camshaft in this manual.

Valve Clearance Adjustments

NOTE: To adjust valve clearance, apply engine oil to the cam as well as to the adjusting shim (2) with the cylinder head built on the cylinder block, give a few turns to the camshaft by means of timing pulley tightening bolt, and measure valve clearance when the nose of cam is just opposite to maximum cam lift (1) as shown in illistration below.

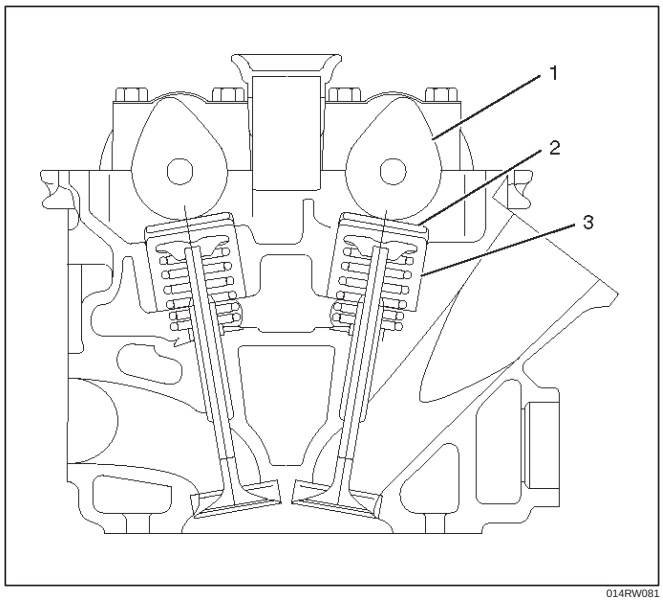

014RW081

Legend

(1) Cam
(2) Shim
(3) Tappet

Valve Clearance Standard Value (cold)

Intake: 0.23 mm–0.33 mm (0.0091 in–0.0130 in)

Exhaust: 0.25 mm–0.35 mm (0.0098 in–0.0138 in)

Selection of Adjusting Shim

Shim to be selected = (Thickness of removed shim) + (Valve clearance measurement – Standard valve)
Based on the above formula, the best suited shim should be selected from 41 sorts of shim (differently thick at 0.02mm (0.0008 in) intervals from 2.40mm (0.0945 in) through 3.2mm (0.1260 in) thick). Install the shim and check valve clearance.

Replacement of Shim

Let the cam push down the edge of tappet by using 5–8840–2444–0 valve clearance adjusting tool and push out the shim with a flat blade screw driver as shown in illustrations below.

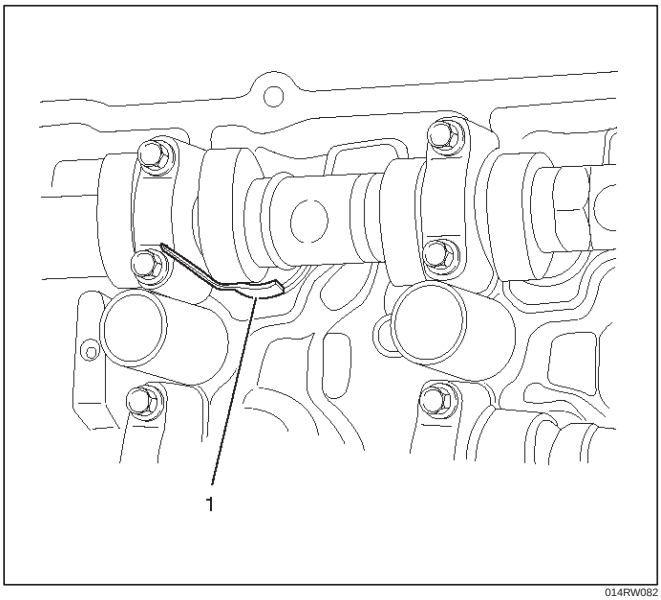

014RW082

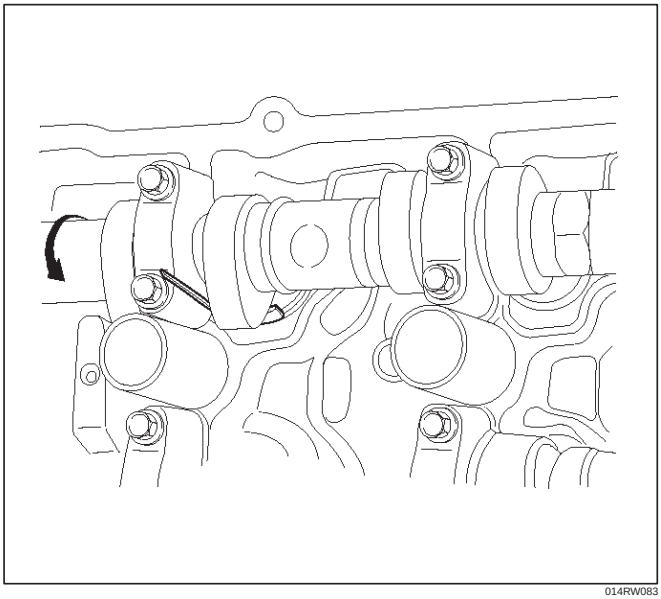

014RW083

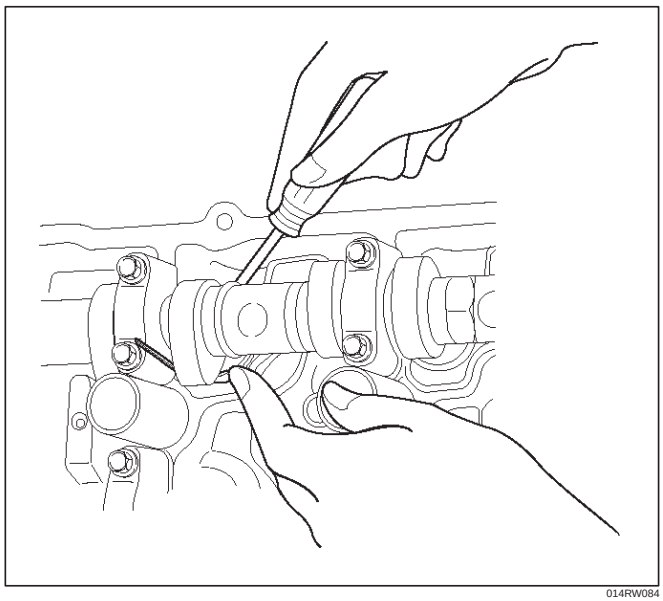

014RW084

Camshaft

Camshaft and Associated Parts

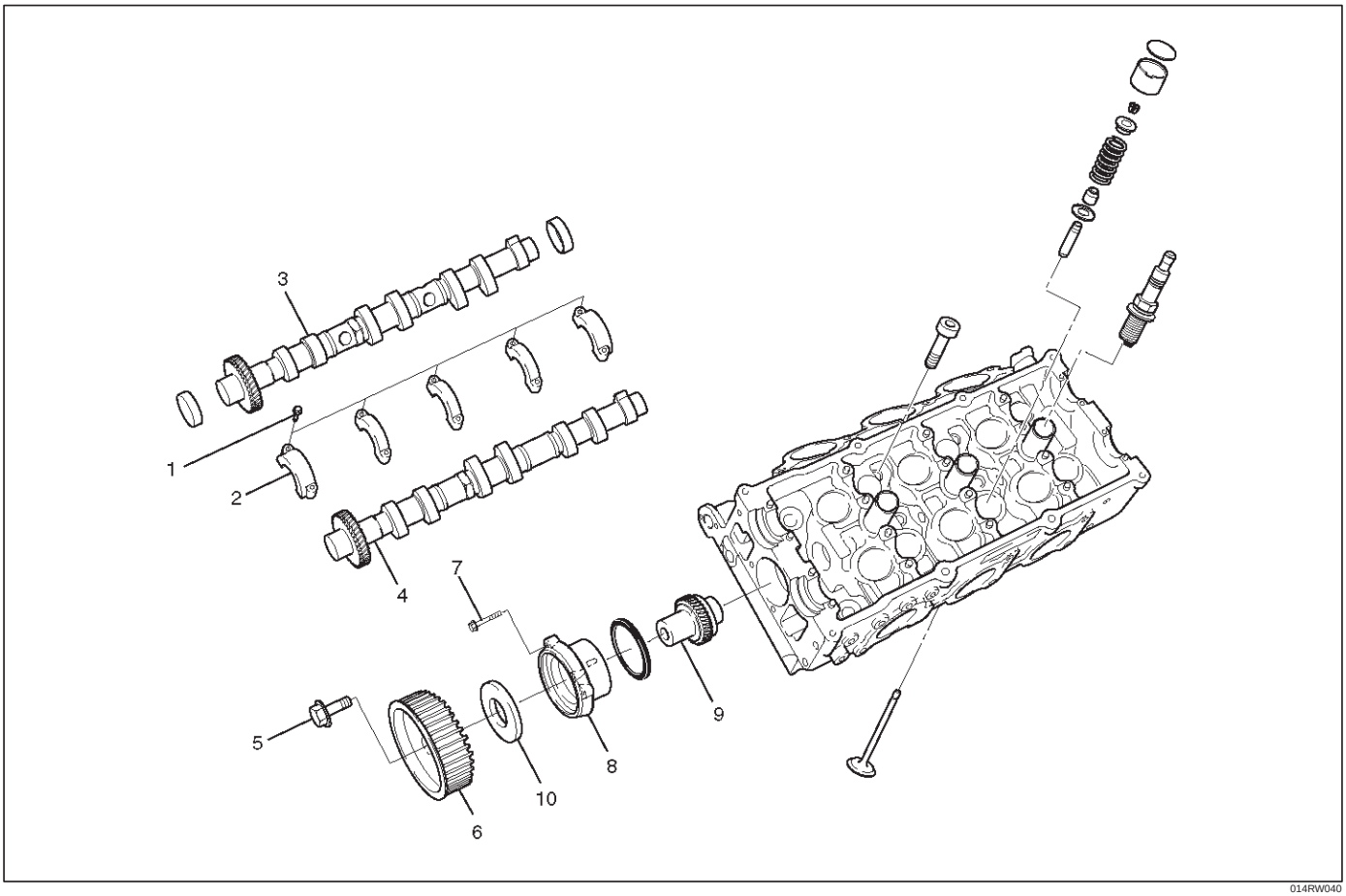

014RW040

Legend

(1) Camshaft Bracket Fixing Bolt
(2) Camshaft Bracket
(3) Camshaft Assembly Intake
(4) Camshaft Assembly Exhaust
(5) Pulley Fixing Bolt
(6) Camshaft Drive Gear Pulley
(7) Retainer Fixing Bolt
(8) Retainer
(9) Camshaft Drive Gear
(10) Oil Seal

Disassembly

1. Remove fixing bolt (5) for camshaft drive gear pulley using the 5–8840–2447–0 universal holder.

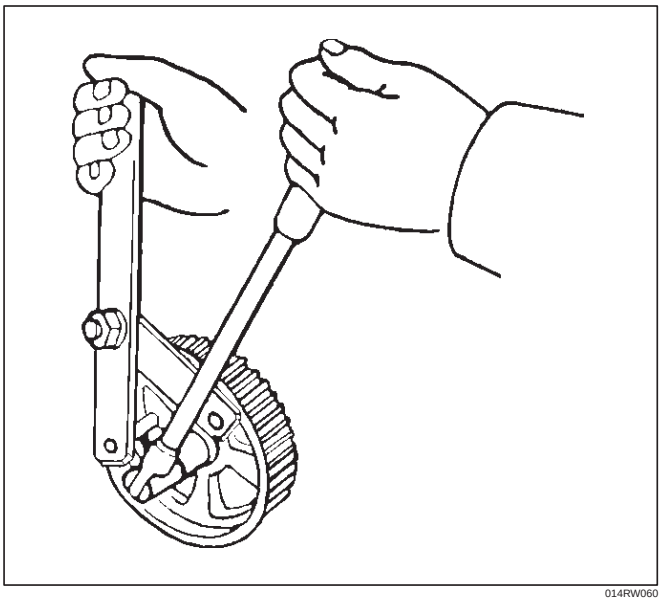

014RW060

2. Remove twenty fixing bolts from inlet and exhaust camshaft bracket on one side bank, then camshaft brackets (2).

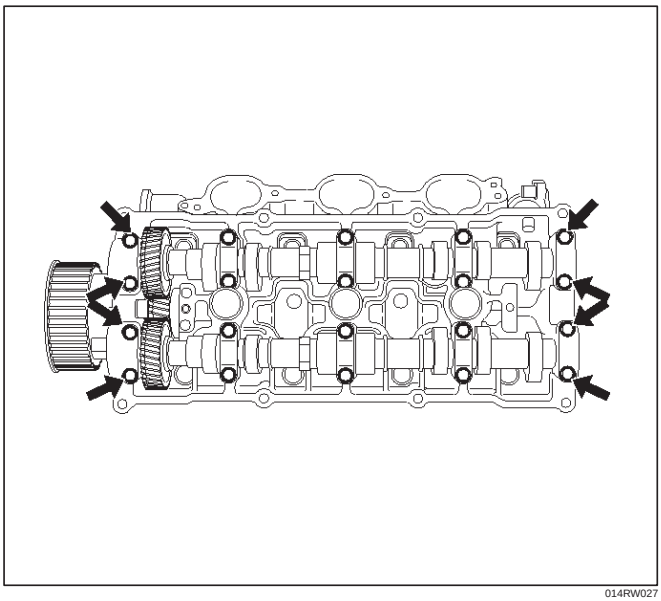

014RW027

3. Remove camshaft assembly (3), (4).
4. Remove three fixing bolts (7) from camshaft drive gear retainer (8), then camshaft drive gear assembly.

Inspection and Repair

1. Use a micrometer to measure the cam lobe height and uneven wear. Replace the camshaft if either the lobe height or the uneven wear exceeds the specified limit.

Lobe height : 44.709 mm (1.7602 in)

Uneven wear : 0.05 mm (0.0020 in)

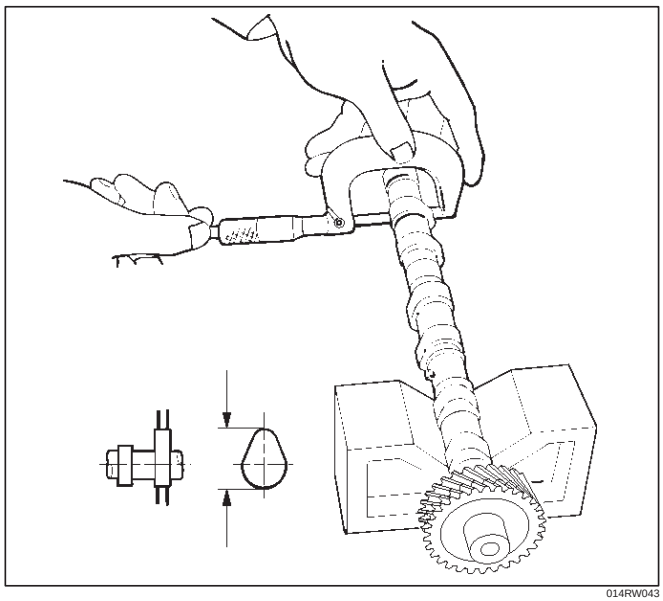

014RW043

2. Use a micrometer to measure the diameter and the uneven wear of the camshaft journals.
   Replace the camshaft if the diameter or the uneven wear exceeds the specified limit.

Journal Diameter

Standard : 25.972 mm–25.993 mm (1.0225 in–1.0233 in)

Limit : 25.8 mm (1.0157 in)

Uneven wear : 0.05 mm (0.0020 in)

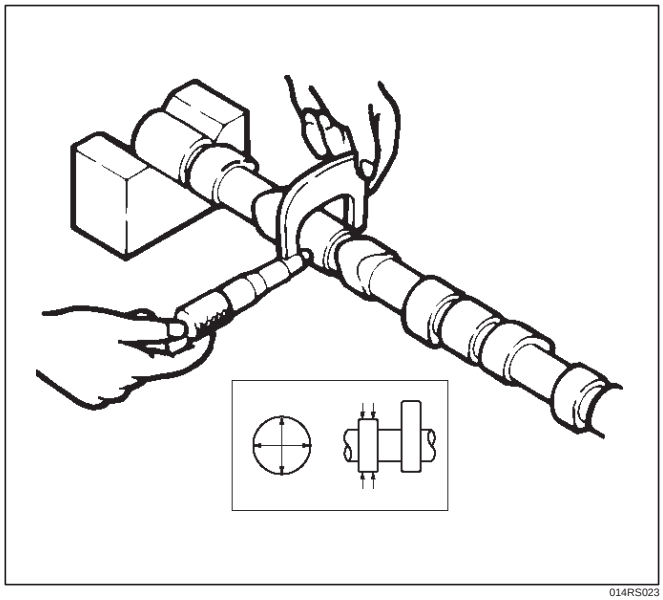

014RS023

3. Place the camshaft on V–blocks.
   Slowly rotate the camshaft and measure the runout with a dial indicator.
   Replace the camshaft if the runout exceeds the specified limit.

Runout

Limit : 0.1 mm (0.0039 in)

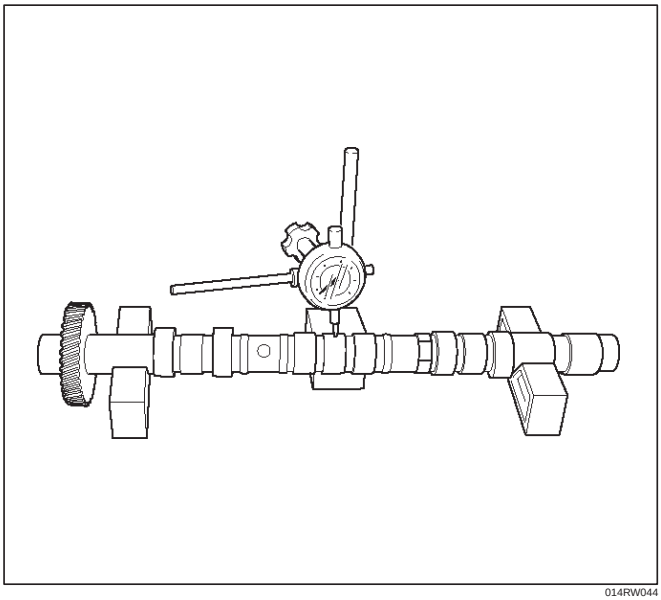

014RW044

4. Measure the camshaft journal oil clearance.
   1. Measure the camshaft bracket housing inside diameter.

NOTE: Tighten camshaft bracket (2) to specified torque before measuring the camshaft bracket inside diameter.

Torque : 10 N·m (1.0 Kg·m/89 lb in)

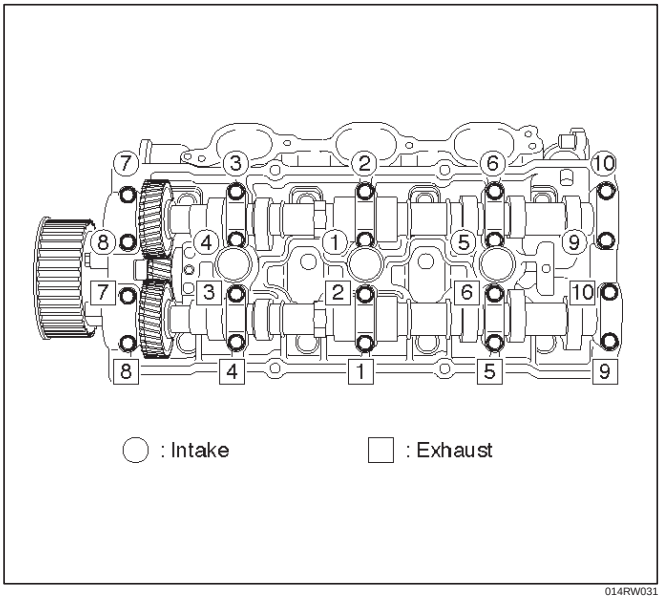

014RW031

   2. Subtract the camshaft outside diameter from the camshaft bracket housing inside diameter.

Oil Clearance

Standard : 0.027 mm–0.078 mm (0.0011 in–0.0031 in)

Limit : 0.11 mm (0.0043 in)

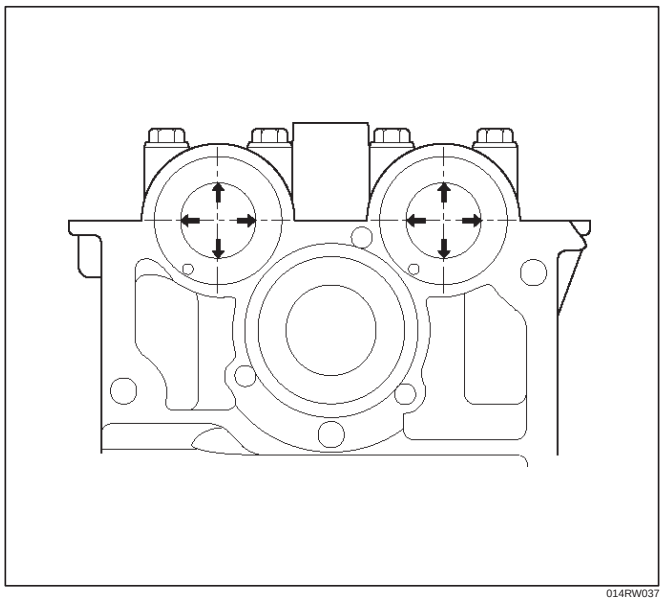

014RW037

5. Replace the cylinder head and/or camshaft if the measured oil clearance exceeds the specified limit.
   1. Carefully clean the camshaft journal, the camshaft bracket, and the cylinder head.
   2. Install camshaft assembly and camshaft brackets (2), tighten twenty bolts (1) on one side bank to the specified torque.

Torque: 10 N·m (1.0 Kg·m/89 lb in)

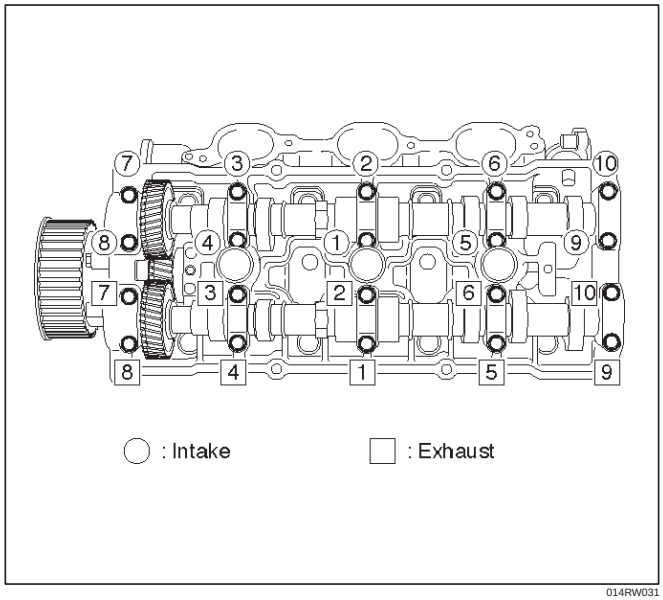

014RW031

   3. Measure the camshaft thrust clearance with a dial indicator. Replace the camshaft and/or the cylinder head if the camshaft thrust clearance exceeds the specified limit.

Camshaft thrust Clearance

Standard : 0.03 mm–0.08 mm (0.0012 in.–0.0031 in.)

Limit : 0.12 mm (0.0047 mm)

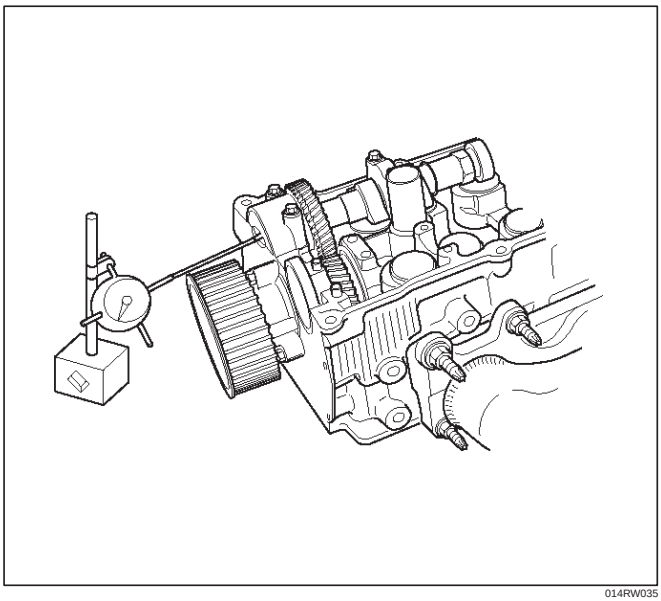

014RW035

Reassembly

1. Install camshaft drive gear assembly and tighten three bolts to specified torque.

   Torque: 10 N·m (1.0 Kg·m/89 lb in)

2. Tighten sub gear setting bolt.
   1. Use 5–8840–2443–0 to turn sub gear to right direction until the M5 bolt hole aligns between camshaft driven gear and sub gear.
   2. Tighten M5 bolt suitable torque for prevent moving the sub gear.

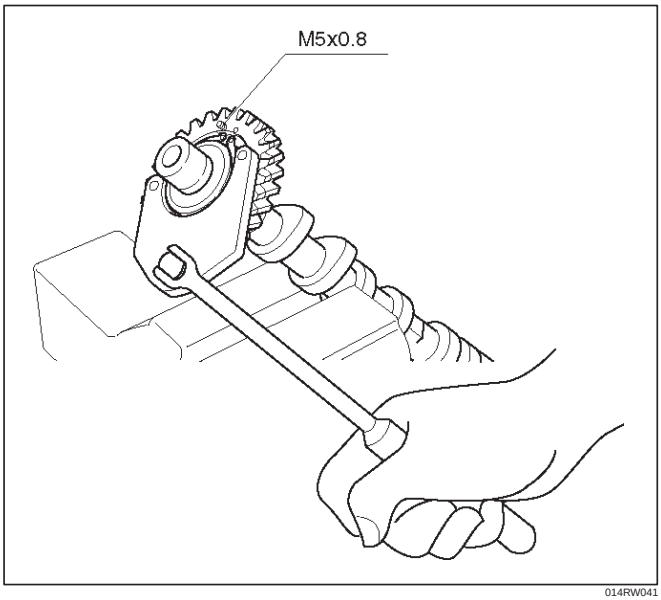

014RW041

3. Install camshaft assembly and camshaft brackets, tighten twenty bolts on one side bank to the specified torque.
   1. Apply engine oil to camshaft journal and bearing surface of camshaft bracket.
   2. Align timing mark on intake camshaft (one dot for right bank, two dots for left bank) and exhaust camshaft (one dot for right bank, two dots for left bank) to timing mark on camshaft drive gear (one dot).

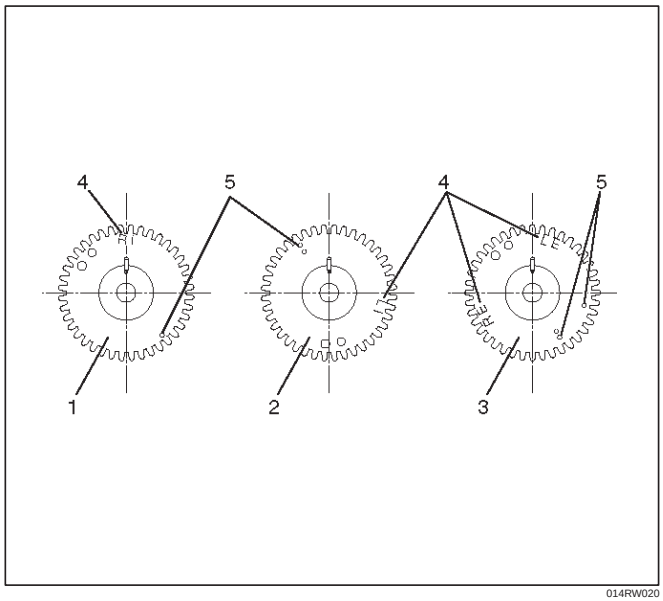

014RW020

Legend

(1) Intake Camshaft Timing Gear for Right Bank
(2) Intake Camshaft Timing Gear for Left Bank
(3) Exhaust Camshaft Timing Gear
(4) Discerning Mark
LI: Left Bank Intake
RI: Right Bank Intake
LE: Left Bank Exhaust
RE: Right Bank Exhaust

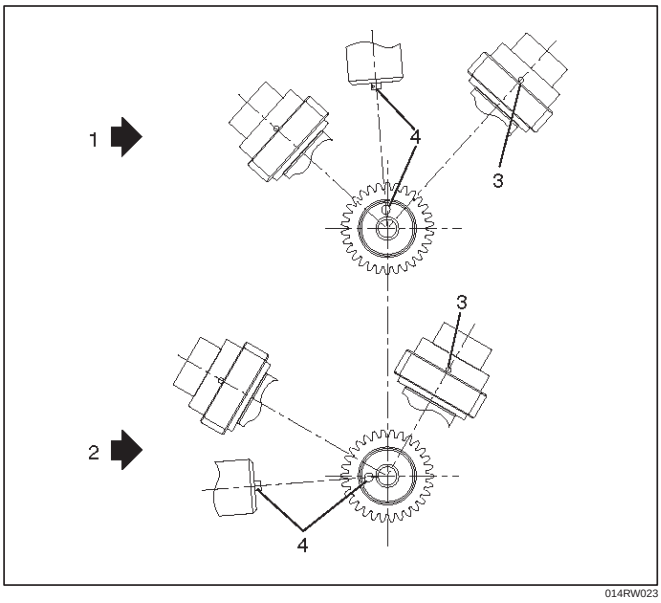

Legend

(1) Right Bank Camshaft Drive Gear
(2) Left Bank Camshaft Drive Gear
(3) Timing Mark on Drive Gear
(4) Dowel Pin

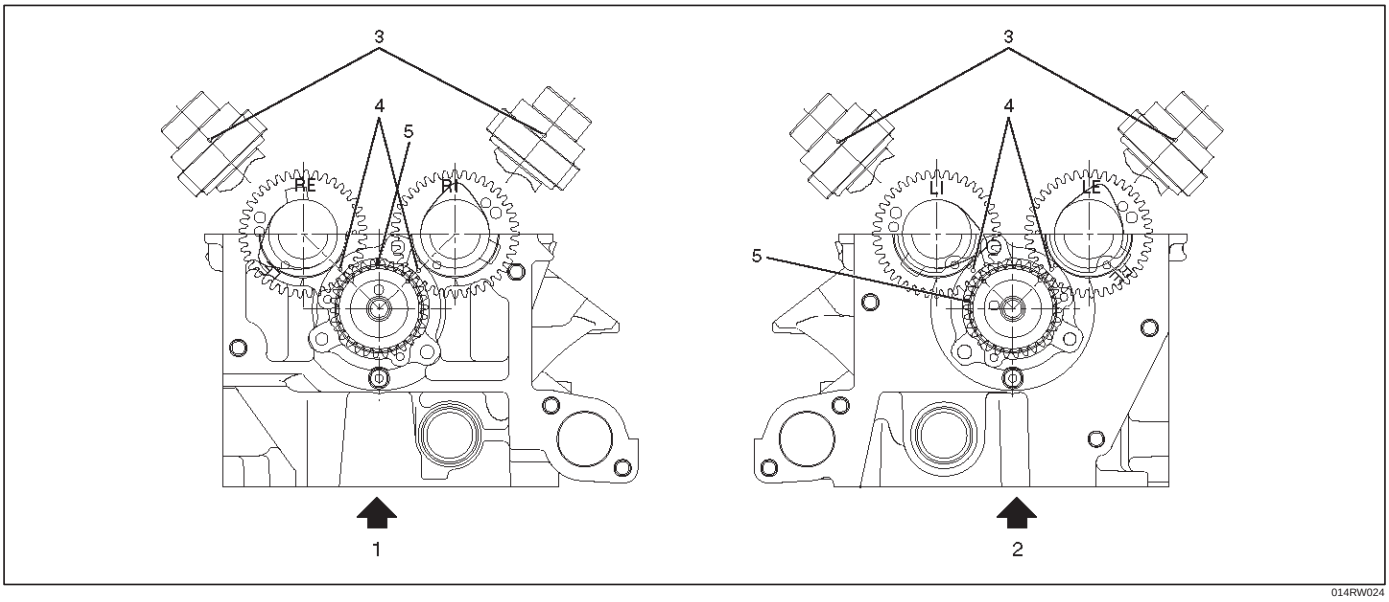

Legend

(1) Right Bank
(2) Left Bank
(3) Alignment Mark on Camshaft Drive Gear
(4) Alignment Mark on Camshaft
(5) Alignment Mark on Retainer

3. Tighten twenty bolts in numerical order on one side bank as shown in the illustration.

Torque: 10 N·m (1.0 Kg·m/89 lb in)

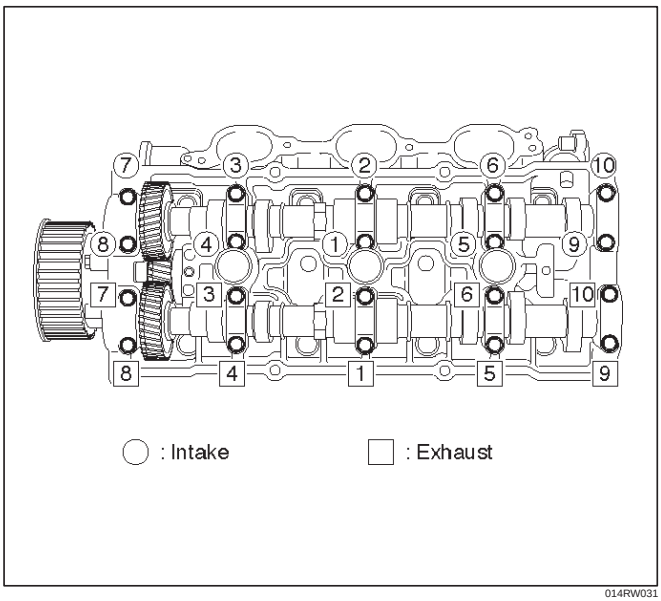

014RW031

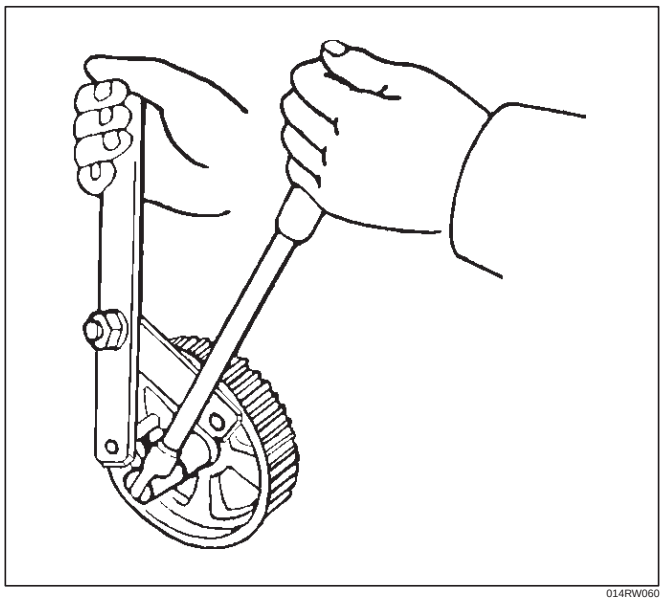

014RW060

4. If the oil seal requires replacement, use the 5–8840–2445–0 to install the oil seal.

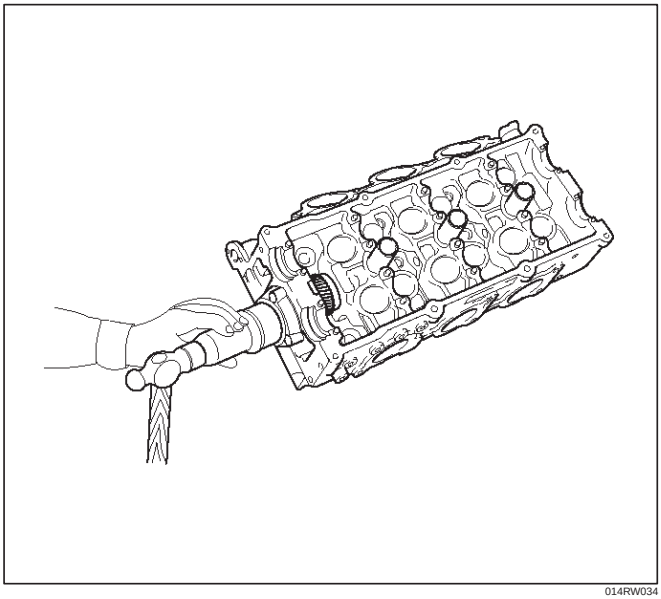

014RW034

5. Tighten bolt for camshaft drive gear pulley to the specified torque using the 5–8840–2447–0 universal holder.

Torque: 98 N·m (10.0 Kg·m/72 lb ft)

Crankshaft

Crankshaft and Associated Parts

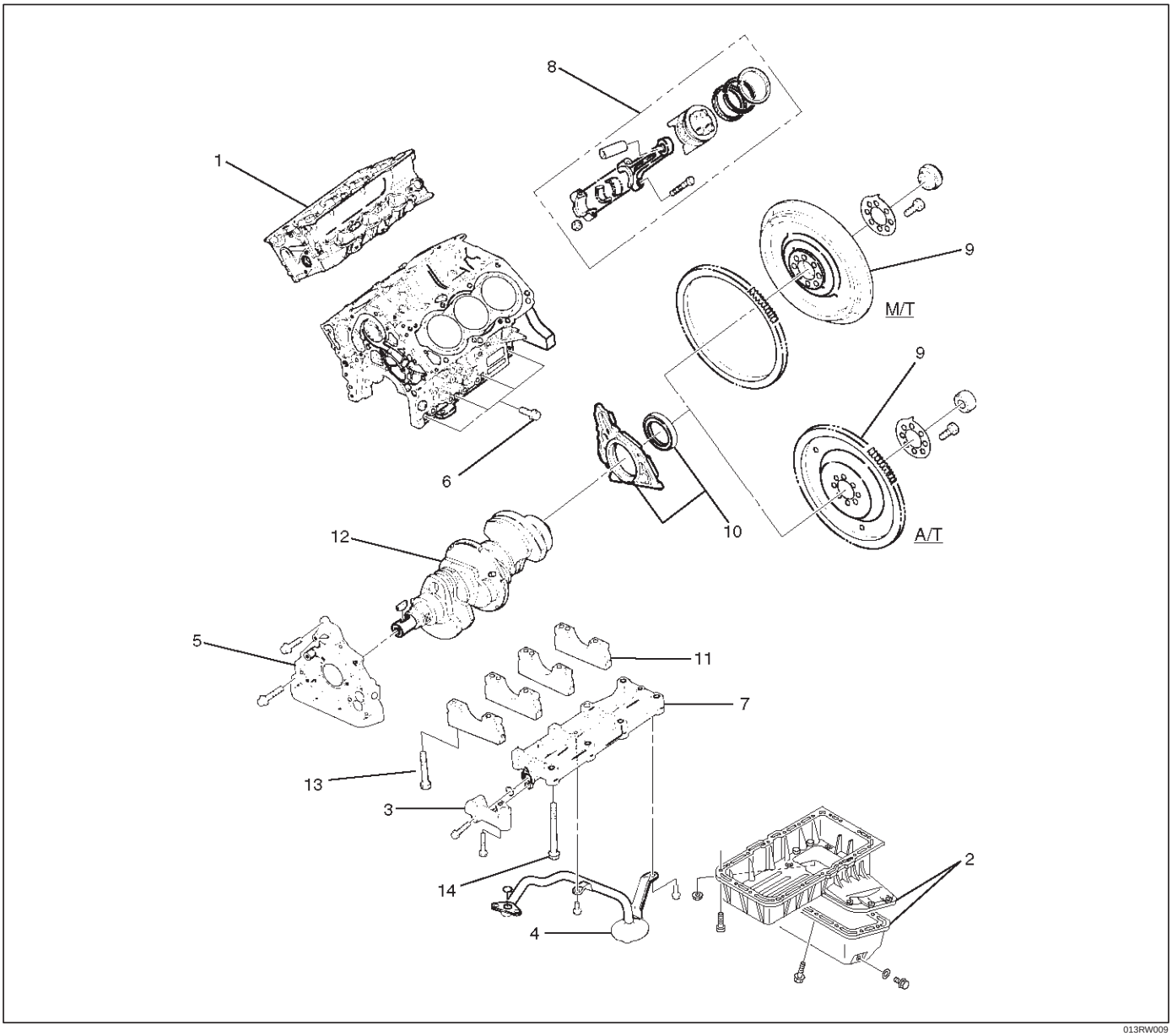

013RW009

Legend

(1) Cylinder Head Assembly
(2) Crankcase with Oil Pan
(3) Oil Pipe and O-Ring
(4) Oil Strainer and O-Ring
(5) Oil Pump Assembly
(6) Cylinder Block Side Bolts
(7) Oil Gallery
(8) Piston and Connecting Rod Assembly
(9) Flywheel
(10) Rear Oil Seal Retainer and Oil Seal
(11) Main Bearing Cap
(12) Crankshaft
(13) Main Bearing Cap Fixing Bolts
(14) Oil Gallery Fixing Bolts

Disassembly

1. Remove cylinder head assembly (1). Refer to “Cylinder Head” in this manual.
2. Remove crankcase with oil pan (2). Refer to “Oil Pan and Crankcase” in this manual.

CAUTION: Take care not to damage or deform the sealing flange surface of crankcase.

3. Remove oil pipe and O-ring (3).
4. Remove oil strainer and O-ring (4).
5. Remove oil pump assembly (5).
6. Remove crankcase side bolts (6).

7. Remove oil gallery (7).
8. Remove piston and connecting rod assembly (8). Refer to “Piston, Piston Ring and Connecting Rod” in this manual.
9. Remove flywheel (9).
10. Remove rear oil seal retainer (10).
11. Remove main bearing cap (11).
12. Remove crankshaft (12).

Inspection and Repair

1. Crankshaft
   Set the dial indicator as shown in the illustration and measure the crankshaft thrust clearance. If the thrust clearance exceeds the specified limit, replace the thrust bearings as a set.

   Thrust Clearance

   Standard : 0.06 mm–0.24 mm (0.0024 in–0.0094 in)

   Limit : 0.30 mm (0.0118 in)

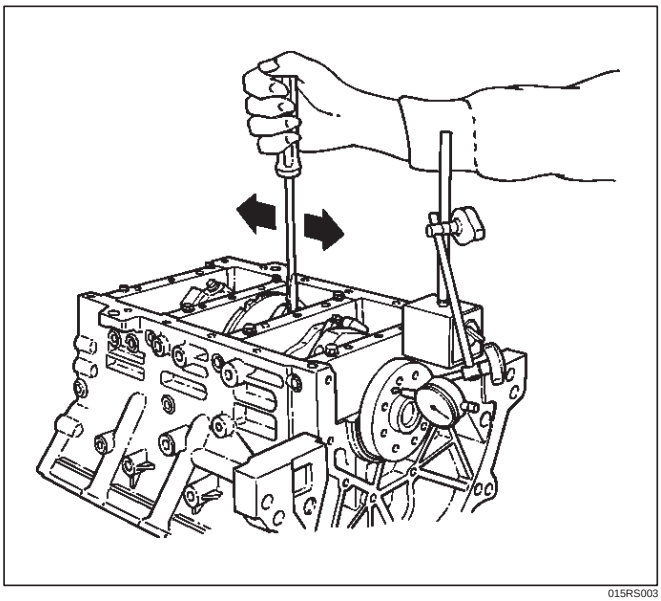

015RS003

Main Bearing Clearance

1. Remove the bearing caps and measure the oil clearance.
2. Remove the main bearing cap fixing bolts in the sequence shown in the illustration.
   Arrange the removed main bearing caps in the cylinder number order.
   Remove the main bearings.

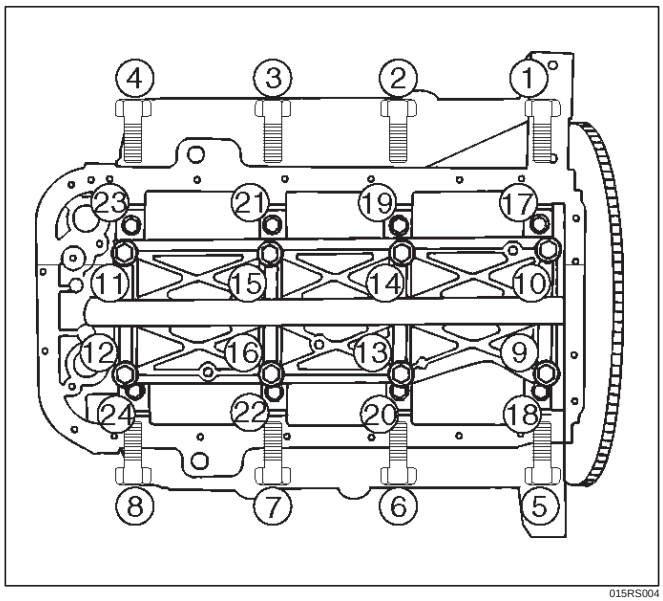

015RS004

3. Remove the crankshaft.
   Remove the main bearings.
4. Clean the upper and lower bearings as well as the crankshaft main journal.
5. Check the bearings for damage or excessive wear.
   The bearings must be replaced as a set if damage or excessive wear is discovered during inspection.
6. Set the upper bearings and the thrust washers to their original positions.
   Carefully install the crankshaft.
7. Set the lower bearings to the bearing cap original position.
8. Apply plastigage to the crankshaft journal unit as shown in the illustration.

NOTE: Do not set the plastigage on the oil hole.

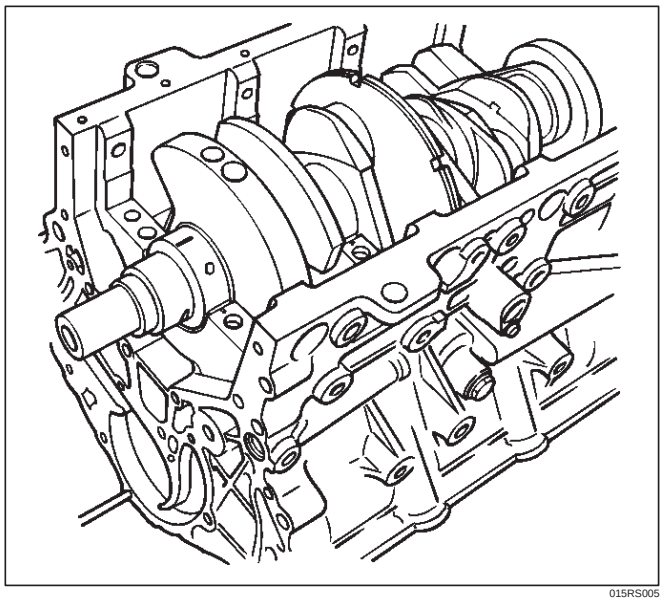

015RS005

9. Install main bearing caps, oil gallery and crank case bolts in the order shown, and tighten each bolt to the specified torque.

NOTE: Do not apply engine oil to the crank case side bolts.

Main bearing cap bolts.

Torque: 39 N·m (4.0 Kg·m/29 lb ft)

Oil gallery fixing bolts.

Torque:

1st step: 29 N·m (3.0 Kg·m/21 lb ft)

2nd step 55°~ 65°

Crank case side bolts

Torque : 39 N·m (4.0 Kg·m/29 lb ft)

NOTE: Do not allow the crankshaft to rotate.

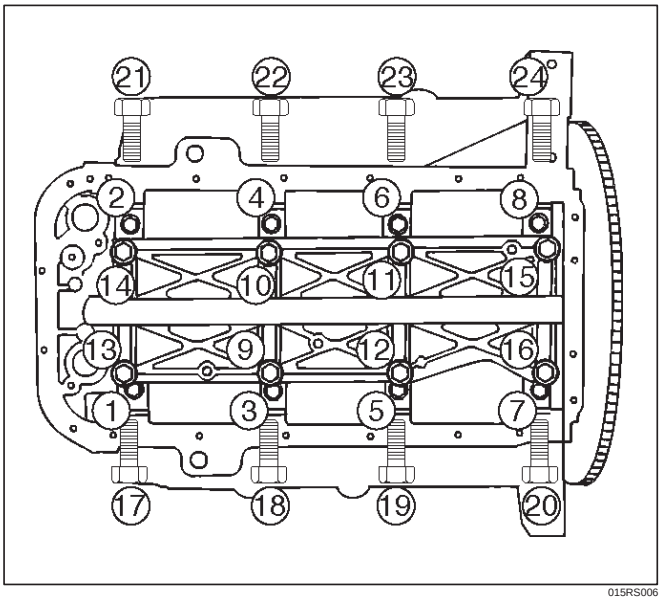

015RS006

10. Remove the main bearing caps in the sequence shown in the illustration.

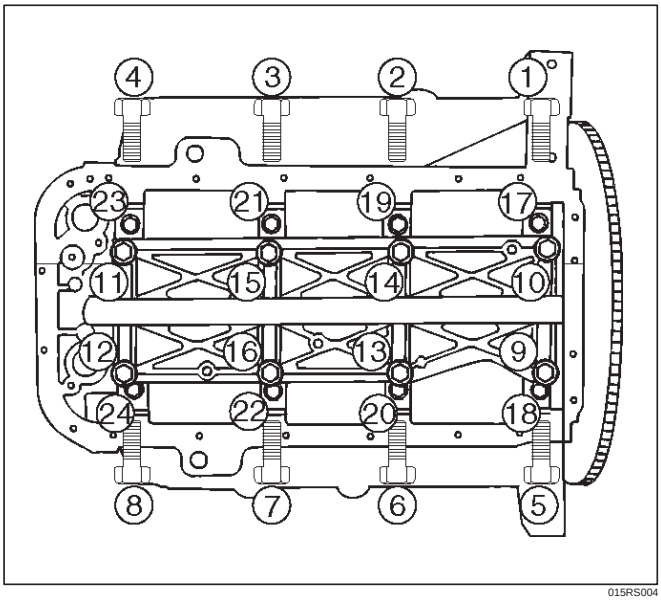

015RS004

11. Measure the plastigage width and determine the oil clearance. If the oil clearance exceeds the specified limit, replace the main bearings as a set and/or replace the crankshaft.

Standard : 0.019 mm–0.043 mm (0.0007 in–0.0017 in)

Limit : 0.08 mm (0.0031 in)

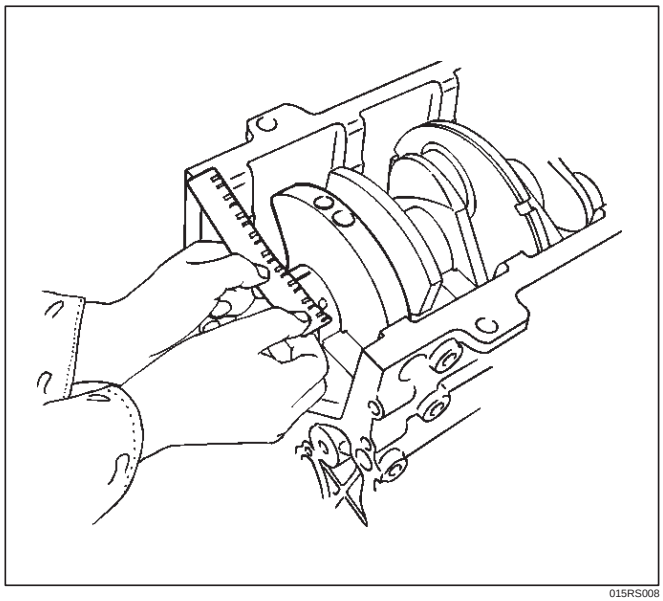

015RS008

12. Clean the plastigage from the bearings and the crankshaft.
    Remove the crankshaft and the bearings.

Crankshaft (12) Inspection

Inspect the surface of the crankshaft journal and crank pins for excessive wear and damage. Inspect the oil seal fitting surfaces for excessive wear and damage. Inspect the oil ports for obstructions.

Inspection and Repair

1. Carefully set the crankshaft on the V–blocks. Slowly rotate the crankshaft and measure the runout. If the crankshaft runout exceeds the specified limit, the crankshaft must be replaced.

Runout : 0.04 mm (0.0016 in)

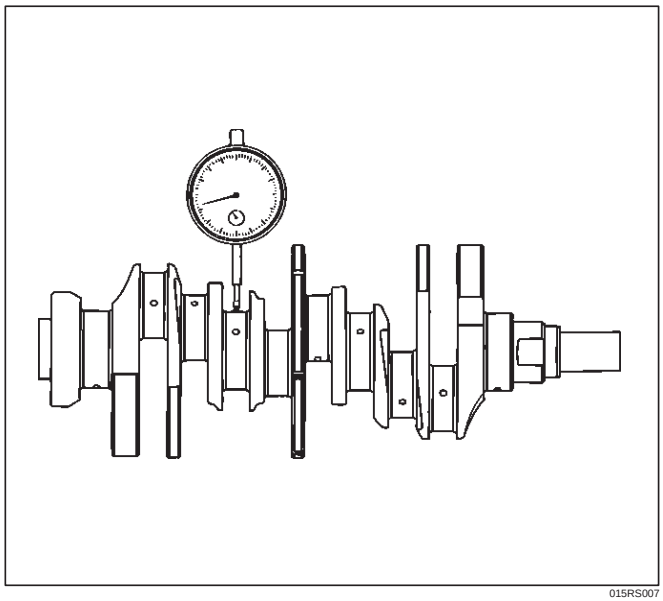

015RS007

2. Measure the diameter and the uneven wear of main journal and crank pin. If the crankshaft wear exceeds the specified limit, crankshaft must be replaced.

Main journal diameter : 63.918 mm–63.933 mm (2.5165 in–2.5170 in)

Crank pin diameter : 53.922 mm–53.937 mm (2.1229 in.–2.1235 in.)

Uneven wear limit : 0.005 mm (0.0002 in)

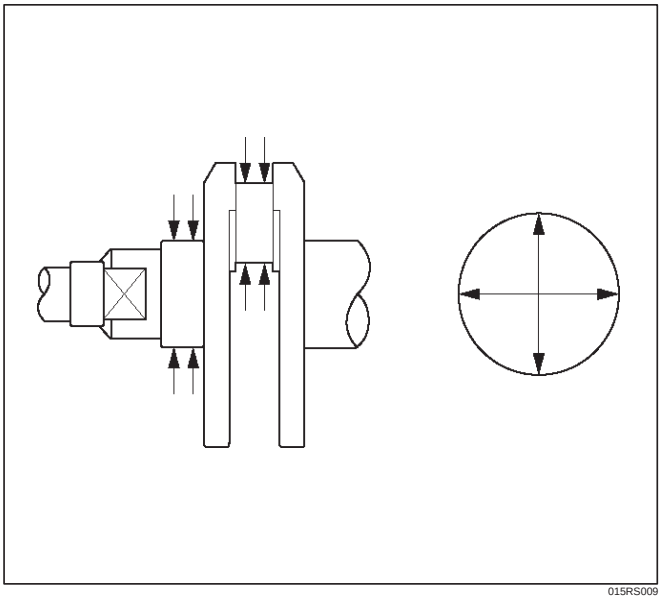

015RS009

Crankshaft Bearing Selection

When installing new crankshaft bearings or replacing bearings, refer to the selection table below. Select and install the new crankshaft bearings, paying close attention to the cylinder block journal hole.

1. Diameter size mark (1) and the crankshaft journal.

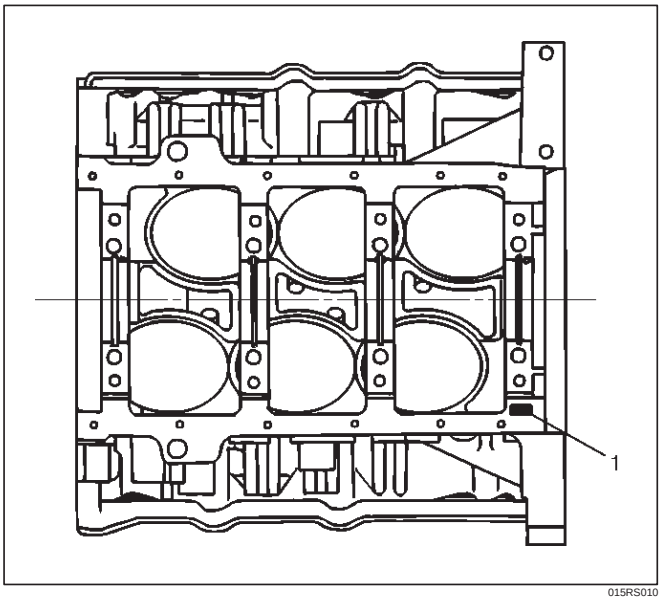

015RS010

2. Diameter size mark (1).
   The diameter size marks are stamped on the No.1 crankshaft balancer as shown in the illustration.

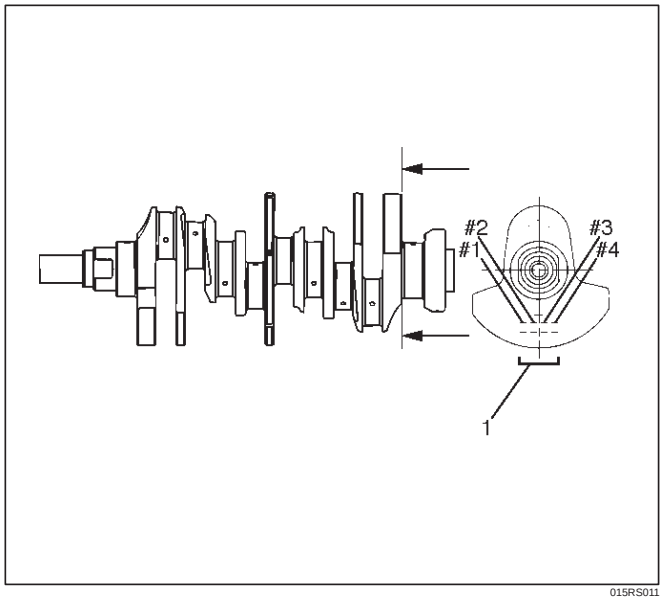

015RS011

NOTE: Take care to ensure the bearings are positioned correctly.

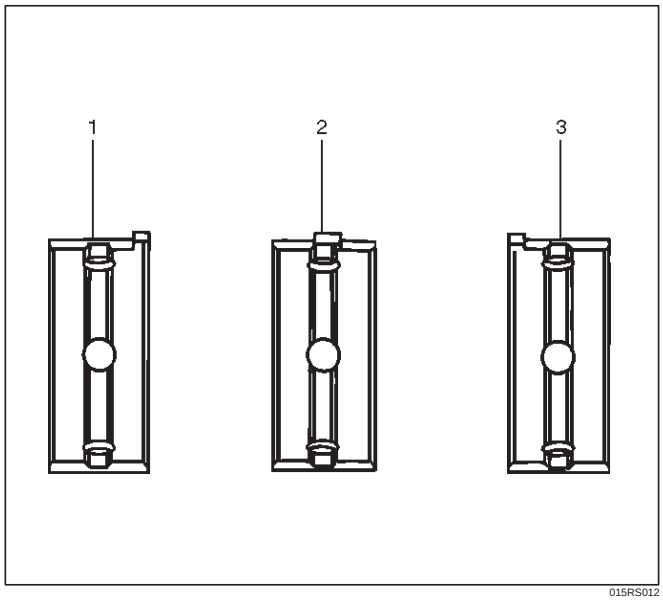

015RS012

Legend

(1) Number 1 and 4 main bearing upper and lower
(2) Number 2 and 3 main bearing upper
(3) Number 2 and 3 main bearing lower

1 Size Mark	Main Bearing Bore Diameter	Crank Shaft Main Journal Diameter	2 Size Mark	Crank Shaft Bearing Size Mark (Upper Side)	Crank Shaft Bearing Size Mark (Lower Side)	Oil Clearance (Reference)
1	68.994-69.000 (2.7163-2.7165)	63.918-63.925 (2.5165-2.5167)	2	Blue	Blue	0.030-0.049 (0.0012-0.0019)
		63.926-63.933 (2.5168-2.5170)	1	Brown	Brown	0.028-0.047 (0.0011-0.0019)
2	68.987-68.993 (2.7160-2.7163)	63.918-63.925 (2.5165-2.5167)	2			0.029-0.048 (0.0011-0.0019)
		63.926-63.933 (2.5168-2.5170)	1	Green	Green	0.027-0.046 (0.0011-0.0018)
3	68.980-68.986 (2.7157-2.7160)	63.918-63.925 (2.5165-2.5167)	2			0.028-0.047 (0.0011-0.0019)
		63.926-63.933 (2.5168-2.5170)	1	Yellow	Yellow	0.026-0.045 (0.0010-0.0018)

Reassembly

1. Crankshaft (12)
   - Install the main bearings to the cylinder block and the main bearing caps.
   - Be sure that they are positioned correctly.
   - Apply new engine oil to the upper and lower main bearing faces.

NOTE: Do not apply engine oil to the main bearing back faces.

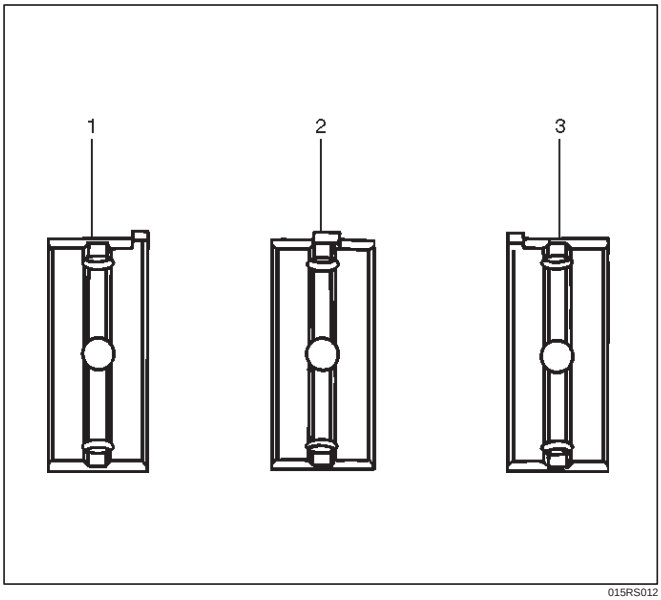

015RS012

- Carefully mount the crankshaft.
- Apply engine oil to the thrust washer.
- Assemble the thrust washer to the No.3 bearing journal. The oil grooves must face the crankshaft.

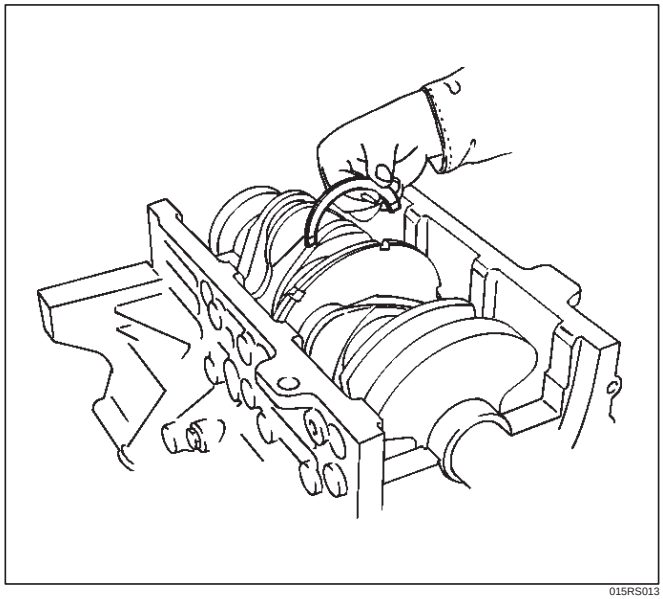

015RS013

2. Rear oil seal (10)
   - Remove the oil from the cylinder block and the retainer mounting surface.
   - Apply sealant (TB–1207B or equivalent) to the retainer mounting surface, following the pattern shown in the illustration.

     The retainer must be installed within 5 minutes after sealant application befor the sealant hardens.

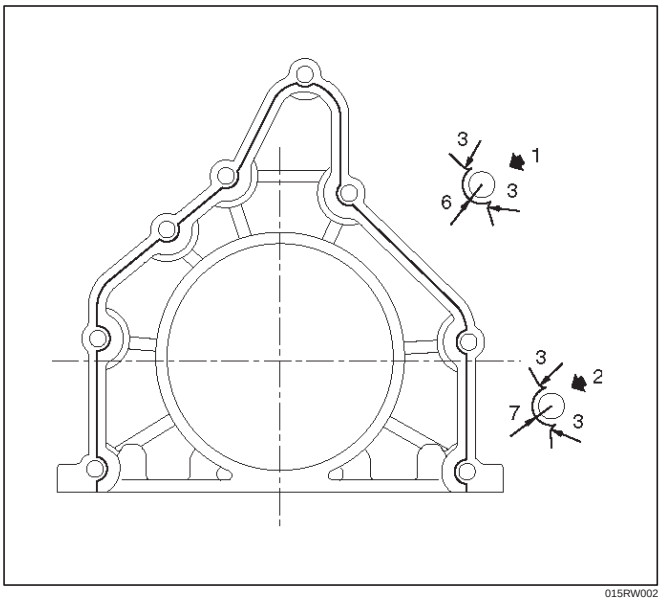

015RW002

Legend

(1) Around Bolt Holes
(2) Around Dowel Pin

- Apply engine oil to the oil seal lip.
- Align the cylinder block dowel pin holes with the rear retainer dowel pins.
- Tighten the rear retainer fixing bolts. New bolts should be used when installing rear retainer.

Torque: 18 N·m (1.8 Kg·m/13 lb ft)

NOTE: Be very careful not to disengage the oil seal garter spring during installation of the rear retainer.

If the seal was removed from retainer for replacement, apply engine oil to the oil seal lip and install the oil seal using 5–8840–2286–0 oil seal installer.

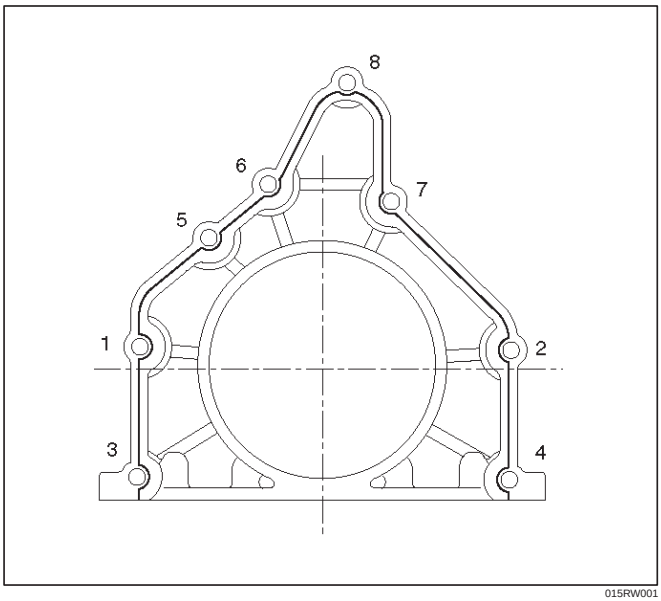

015RW001

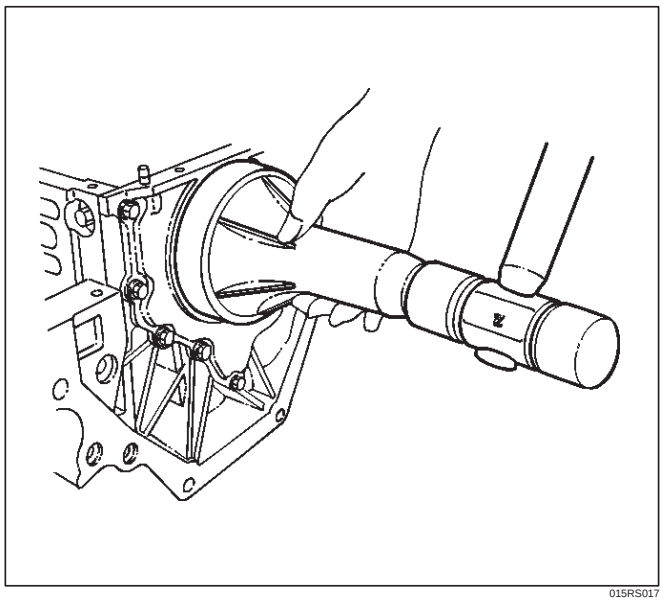

015RS017

3. Flywheel (9)
   1. Thoroughly clean and remove the oil from the threads of crankshaft.
   2. Remove the oil from the crankshaft and flywheel mounting faces.
   3. Mount the flywheel on the crankshaft and then install the washer.
   4. Hold the crankshaft to prevent from rotating then install the bolts in the order shown to the specified torque.

Torque: 54 N·m (5.5 Kg·m/40 lb ft)

NOTE: Do not reuse the bolt and do not apply oil or thread lock to the bolt.

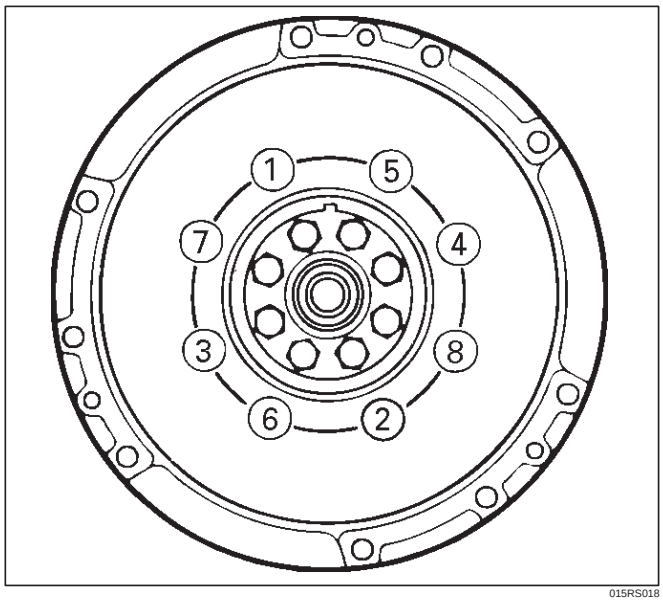

015RS018

4. Piston and connecting rod assembly (8)
   - Apply engine oil to the cylinder bores, the connecting rod bearings and the crankshaft pins. Check to see that the piston ring end gaps are correctly positioned.

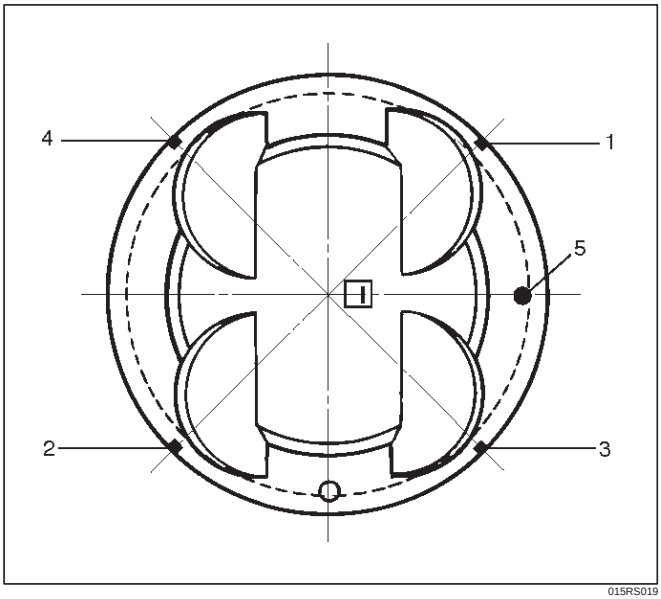

015RS019

Legend

(1) No.1 Compression Ring
(2) No.2 Compression Ring
(3) Oil Ring Side Rail Upper
(4) Oil Ring Side Rail Lower
(5) Piston Front Mark

- Insert the piston/connecting rod assemblies into each cylinder with the piston ring compressor. The front marks must be facing the front of the engine.
- Match the numbered caps with the numbers on the connecting rods. Align the punched marks on the connecting rods and caps.
- Apply engine oil to the threads and seating faces of the nuts.
- Tighten the nuts.

Torque: 54 N·m (5.5 Kg·m/40 lb ft)

After tightening the cap nuts, check to see that the crankshaft rotates smoothly.

NOTE: Do not apply engine oil to the bearing back faces.

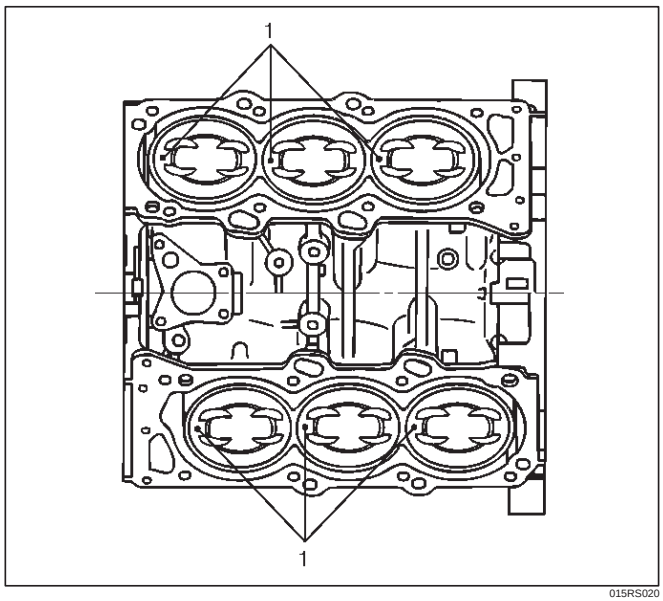

015RS020

5. Install oil gallery (7) and tighten the bolts in 2 steps, in the order shown.

1st step: 29 N·m (3.0 Kg·m/22 lb ft)

2nd step: 55°~ 65°

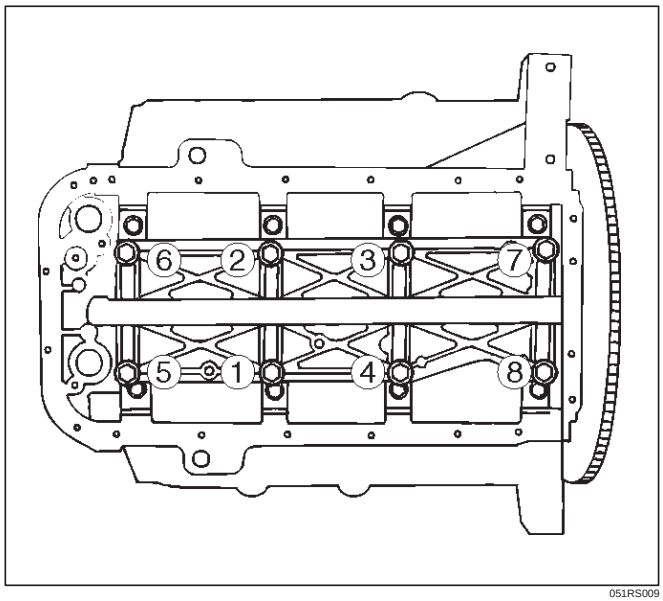

051RS009

6. Cylinder block side bolts (6)
   - Tighten all the bolts to the specified torque in the order shown.

NOTE: Do not apply engine oil to the crank case side bolts.

Torque: 39 N·m (4.0 Kg·m/29 lb ft)

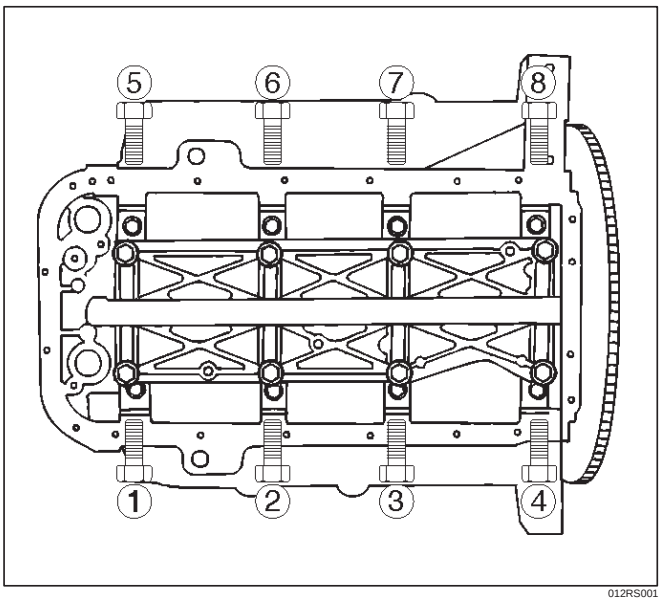

012RS001

7. Install oil pump assembly (5), refer to “Oil pump” in this manual.
8. Install oil strainer and O-ring (4).
9. Install oil pipe and O-ring (3) and tighten the bolts.

Torque: 25 N·m (2.5 Kg·m/18 lb ft)

10. Install crankcase with oil pan (2).
    1. Completely remove all residual sealant, lubricant and moisture from the sealing surfaces. The surfaces must be perfectly dry.
    2. Apply a correct width bead of sealant (TB—1207C or its equivalent) to the contact surfaces of the oil pan. There must be no gaps in the bead.
    3. The crankcase assembly must be installed within 5 minutes after sealant application to prevent premature hardening of the sealant.
    4. Tighten the bolts and nuts to the specified torque.

Torque : 10 N·m (1.0 Kg·m/89 lb in)

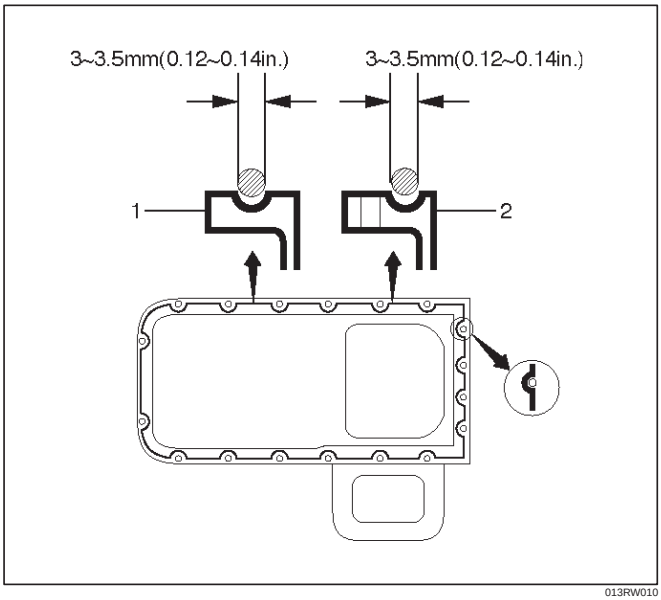

013RW010

Legend

(1) Portion Between Bolt Holes
(2) Bolt Hole Portion

11. Install cylinder head assembly, refer to “Cylinder head” in this manual.

Piston and Connecting Rod

Piston, Connecting Rod and Associate Parts

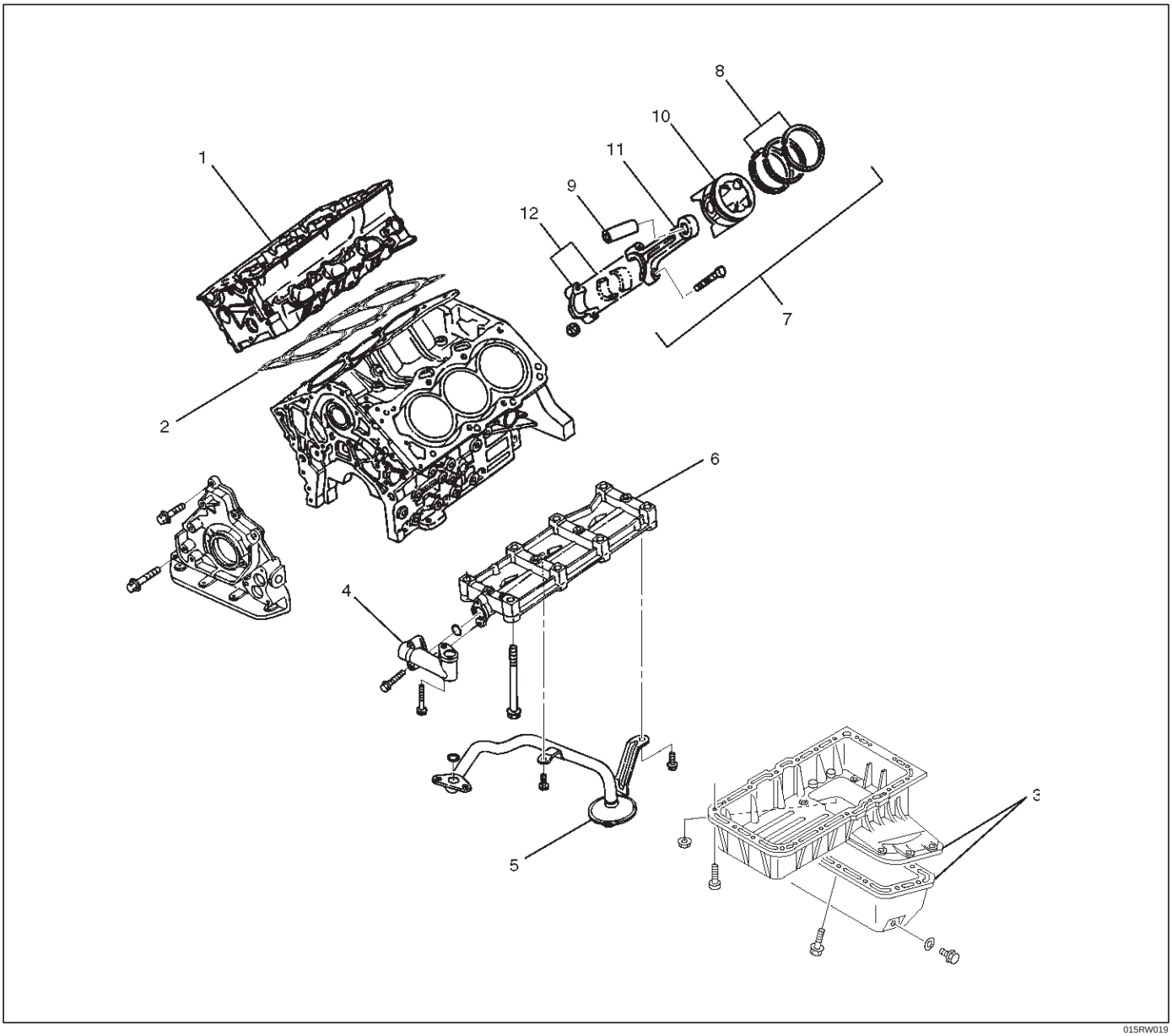

015RW019

Legend

(1) Cylinder Head Assembly
(2) Cylinder Head Gasket
(3) Crankcase with Oil Pan
(4) Oil Pipe and O-Ring
(5) Oil Strainer and O-Ring
(6) Oil Gallery
(7) Piston and Connecting Rod Assembly
(8) Piston Ring
(9) Piston Pin
(10) Piston
(11) Connecting Rod
(12) Connecting Rod Cap

Disassembly

1. Remove cylinder head assembly (1). Refer to “Cylinder Head Removal” in this manual.
2. Remove cylinder head gasket (2).
3. Remove crankcase with oil pan (3). Refer to“Oil Pan and Crankcase” in this manual.
4. Remove oil pipe and O-ring (4).
5. Remove oil strainer and O-ring (5).
6. Remove oil gallery (6).
7. Remove connecting rod cap with connecting rod lower bearing (12).
8. Remove piston and connecting rod assembly (7).

NOTE: Before removing piston and connecting rod assembly, measure thrust clearance.

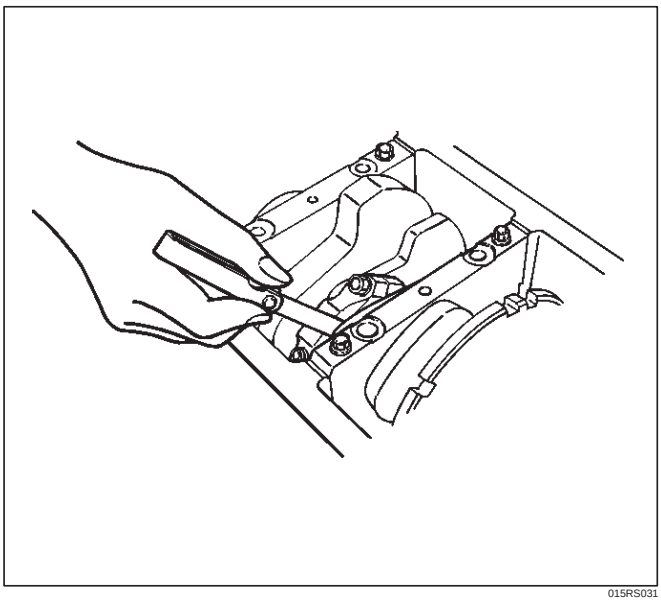

015RS031

- Remove any ridge or carbon build up from the top end of the cylinder.

9. Remove the piston rings (8) with a piston ring expander. Arrange the removed piston rings in the cylinder number order.

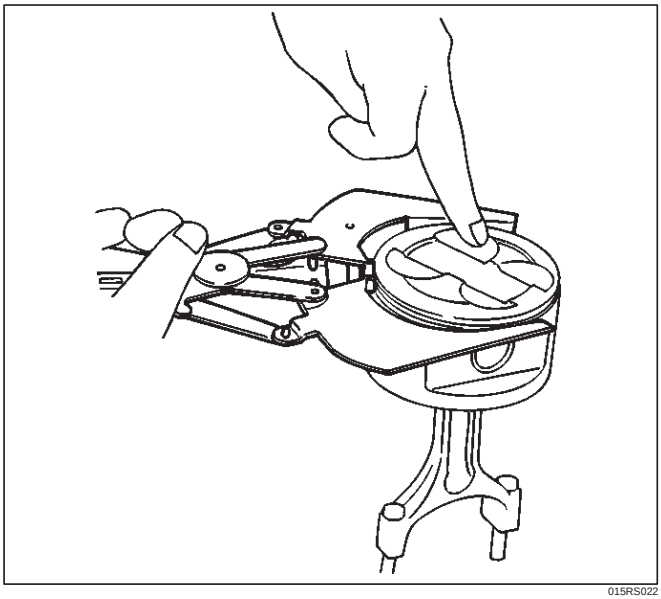

015RS022

10. Remove the piston pin (9) using 5–8840–0551–0 piston pin service set and piston support with a press.

NOTE: Keep the parts removed from each cylinder separate. All parts must be reinstalled in their original positions. Heating the connecting rod will permit easy removal of the piston pin.

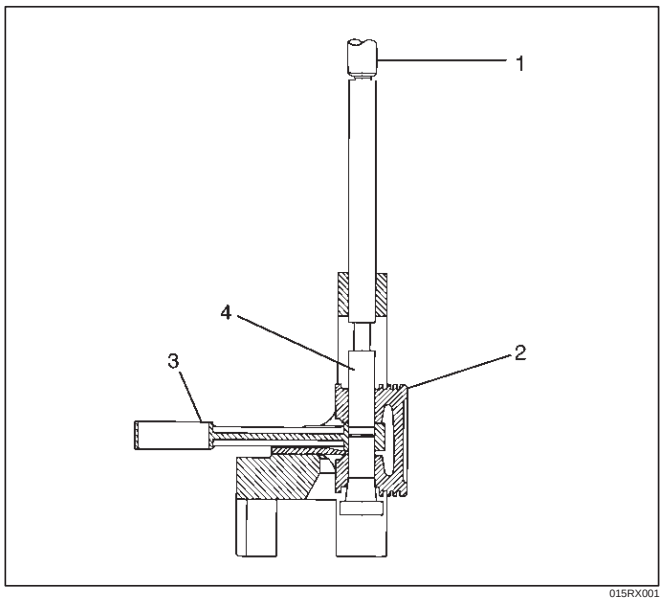

015RX001

Legend

(1) Press Ram
(2) Piston
(3) Connecting Rod
(4) Piston Pin

11. Piston (10)
12. Connecting rod (11)

Inspection and Repair

Pistons (10)

Carefully clean away all the carbon adhering to the piston head and the piston ring grooves.

NOTE: Never use a wire brush to clean the pistons. Damage will result. Visually check each piston for cracking, scoring, and other signs of excessive wear. If any of the above conditions are found, the piston must be replaced.

Piston Diameter

1. Measure the piston outside diameter with micrometer at the piston grading position and a right angle to the piston pin.
   Piston grading position (from piston head)

Piston grading position : 43.0 mm (1.6929 in)

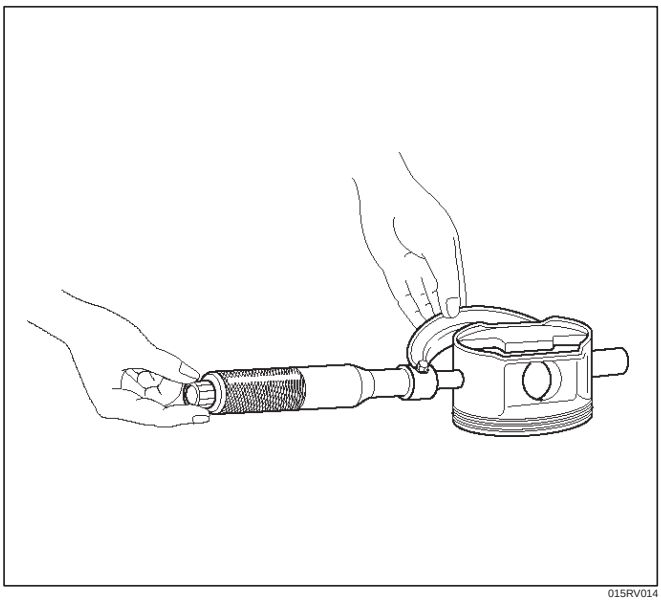

015RV014

The size mark (1) for piston outside diameter is represented as shown in illustration below.

Outside Diameter

Size Mark A : 93.360 mm–93.370 mm (3.6756 in–3.6760 in)

Size Mark B : 93.371 mm–93.380 mm (3.6760 in–3.6764 in)

Size Mark C : 93.381 mm–93.390 mm (3.6764 in–3.6768 in)

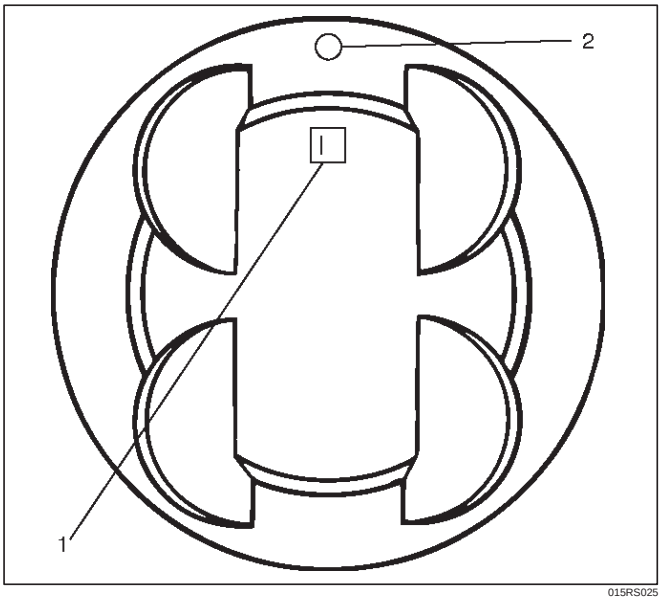

015RS025

Measure the cylinder bore inside diameter (refer to “Cylinder Block” in this manual).

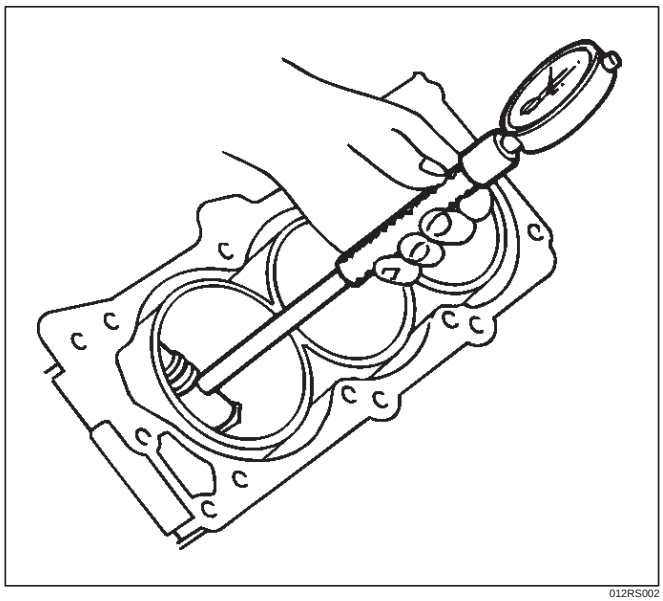

012RS002

Piston Rings (8)

Any worn or damaged part discovered during engine overhaul must be replaced with a new one.

1. Ring end gap measurement
   - Insert the piston ring into the bore.
   - Push the ring by the piston, at a right angle to the wall, into the point at which the cylinder bore diameter is the smallest.
   - Measure the ring end gap.

Compression Ring

1st ring	
Standard:	**0.300 mm–0.400 mm (0.0118 in–0.0157 in)**
Limit:	**1.0 mm (0.0394 in)**
2nd ring	
Standard:	**0.450 mm–0.600 mm (0.0177 in–0.0236 in)**
Limit:	**1.2 mm (0.0472 in)**
Oil ring	
Standard:	**0.150 mm–0.450 mm (0.0059 in–0.0177 in)**
Limit:	**1.05 mm (0.0413 in)**

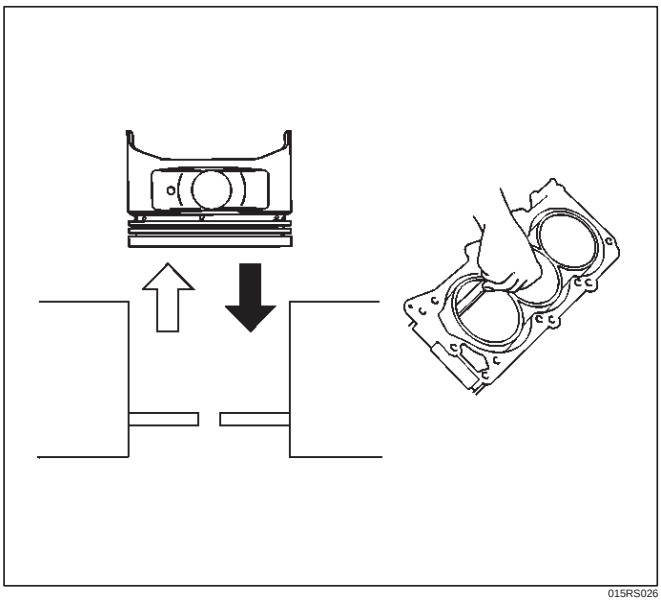

015RS026

- Positioning mark (1) is painted as shown in the illustration.

Marked T : No.1 Compression ring

Marked T2 : No.2 Compression ring

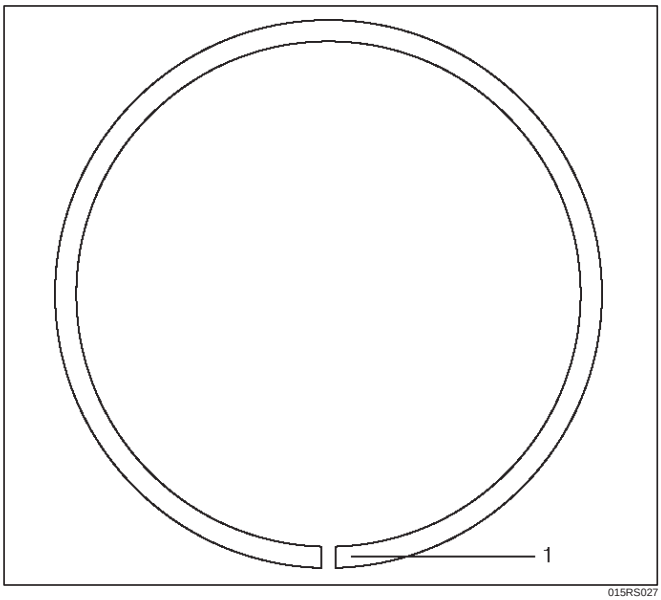

015RS027

2. Measure the clearance between the piston ring groove and the piston ring with a feeler gauge. If the piston ring groove / piston ring clearance exceeds the specified limit, the piston must be replaced.

Compression Ring Clearance

Standard : 0.016 mm–0.038 mm (0.0006 in.–0.0015 in)

Limit : 0.15mm (0.0059 in)

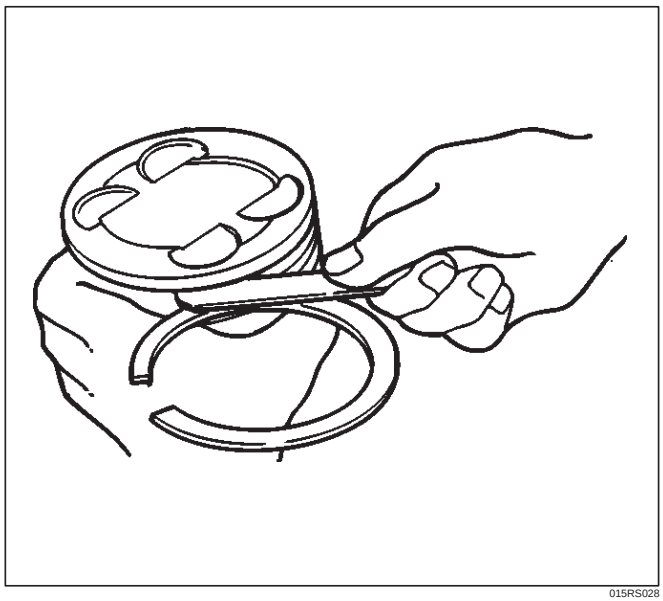

015RS028

Piston Pin (9)

NOTE: Do not reuse the old piston pin.

1. Use a micrometer to measure the new piston pin outside diameter in both directions at three different positions.
2. Measure the inside diameter of the connecting rod small end. If the fitting interference between the small end and pin does not conform to the specified value, the connecting rod must be replaced.

Standard : 0.023 mm–0.038 mm (0.0009 in–0.0015 in)

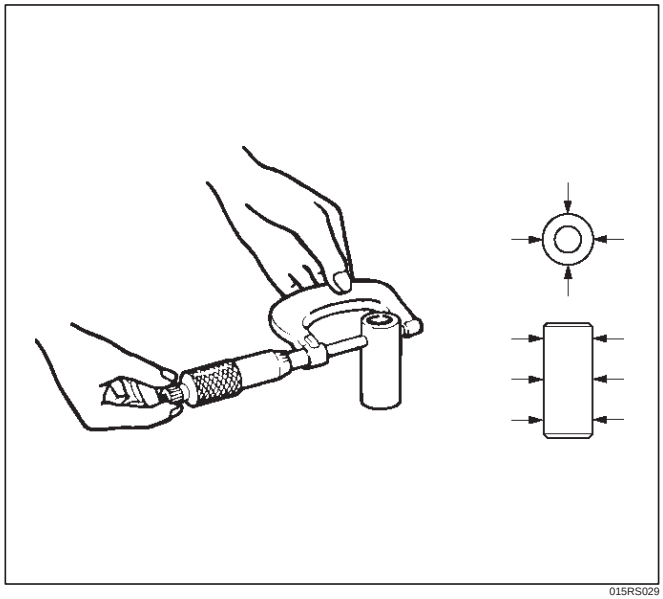

015RS029

3. Insert the new pin into the piston and rotate it. If the pin rotates smoothly with no backlash, the clearance is normal. If there is backlash or roughness, measure the clearance. If the clearance exceeds the specified limit, the piston must be replaced.

Clearance

Standard : 0.010 mm–0.017 mm (0.0004 in.–0.0007 in)

Limit : 0.040 mm (0.0016 in)

Connecting Rods (11)

1. Check the connecting rod alignment If either the bend or the twist exceeds the specified limit, the connecting rod must be replaced.

   Bend per 100 mm (3.937 in)

   Limit: 0.15 (0.0059)

   Twist per 100 mm (3.937 in)

   Limit: 0.20 (0.0078)

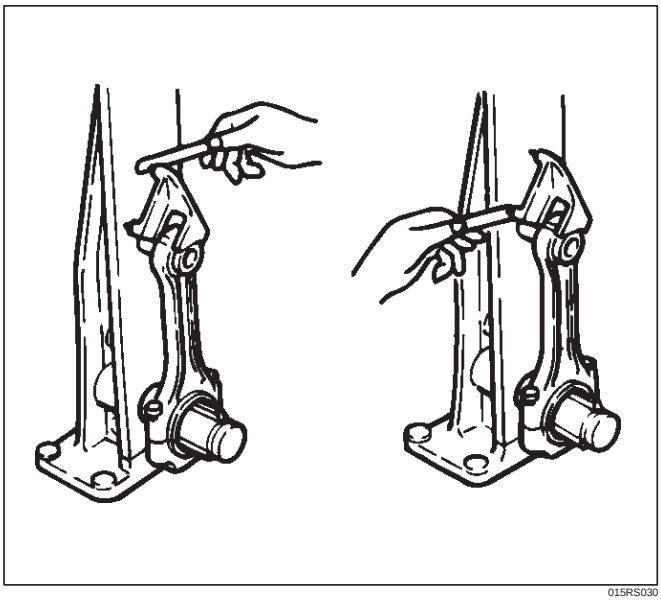

015RS030

2. Measure the connecting rod thrust clearance. Use a feeler gauge to measure the thrust clearance at the large end of the connecting rod If the clearance exceeds the specified limit, the connecting rod must be replaced.

   Standard : 0.16 mm–0.35 mm (0.0063 in.–0.0138 in)

   Limit : 0.40 mm (0.0157 in)

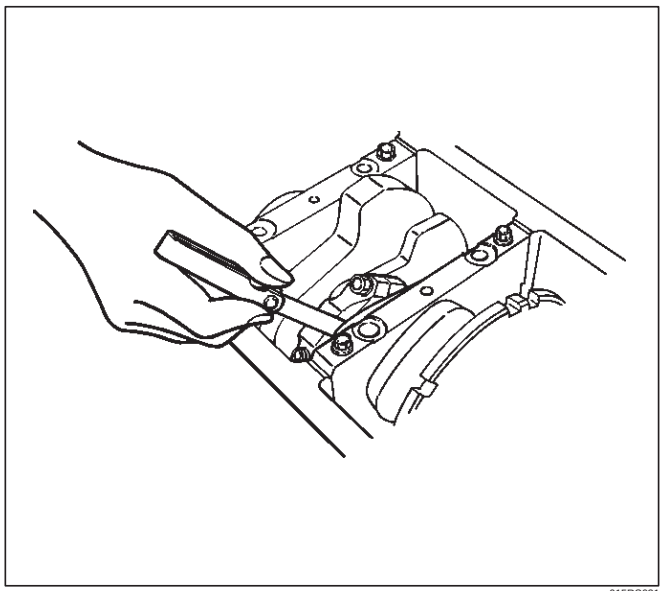

015RS031

3. Measure the oil clearance between the connecting rod and the crankshaft.
   1. Remove the connecting rod cap nuts and the rod caps (12).
      Arrange the removed rod caps in the cylinder number order.
   2. Clean the rod bearings and the crankshaft pins.
   3. Carefully check the rod bearings. If even one bearing is found to be damaged or badly worn, the entire bearing assembly must be replaced as a set. Reinstall the bearings in their original positions. Apply plastigage to the crank pin.

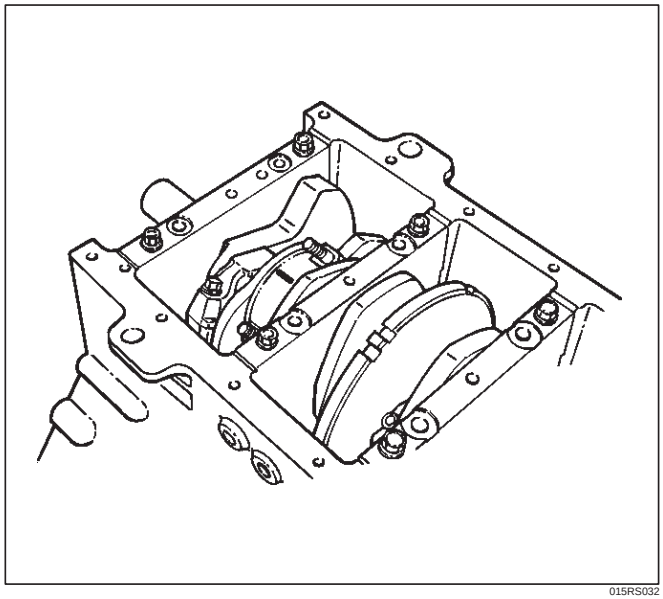

015RS032

4. Reinstall the rod caps (12) to their original positions.

   Tighten the rod cap nuts.

Torque: 54 N·m (5.5 Kg·m/40 lb ft)

NOTE: Do not allow the crankshaft to rotate.

5. Remove the rod caps.
6. Measure the width of the plastigage and determine the oil clearance. If the oil clearance exceeds the limit, replace the rod bearing as a set.

Standard : 0.019 mm–0.043 mm (0.0007 in–0.0017 in)

Limit : 0.08 mm (0.003 in)

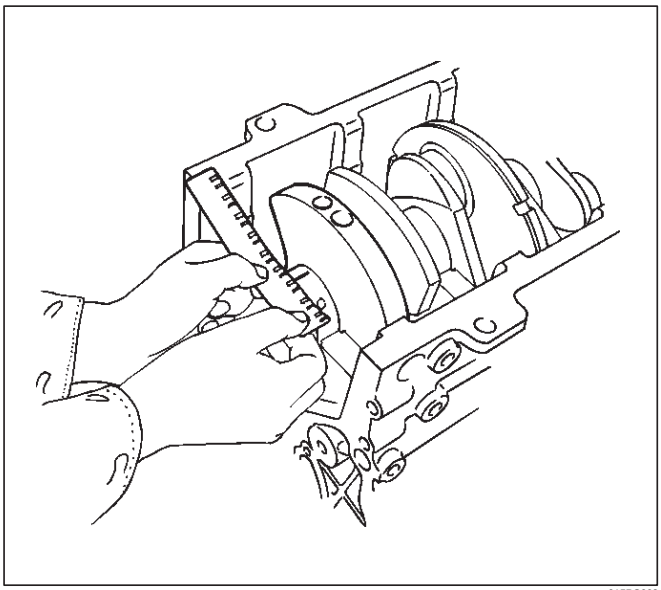

015RS008

7. Clean the plastigage from the bearings and the crankshaft pins.

Con–rod Bearing Selection

Select and install the new connecting rod bearings, paying close attention to the connecting rod big end diameter size mark (1).

NOTE: Take care not to confuse the alignment mark (2) and the size mark (1) during the installation procedure.

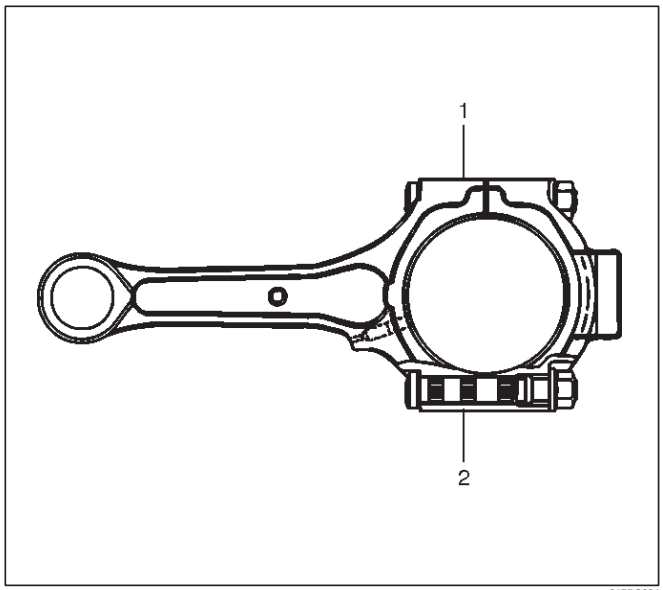

015RS034

1 Size Mark	Big end Bore Diameter	Crankshaft Pin Diameter	Connecting Rod Bearing Thickness (Reference)	Color of Size Mark	Oil Clearance (Reference)
A	56.994-57.000 (2.2439-2.2441)	53.922-53.937 (2.1229-2.1235)	1.512-1.516 (0.0595-0.0597)	Yellow	0.025-0.054 (0.0010-0.0021)
B	56.988-56.994 (2.2436-2.2439)		1.508-1.512 (0.0594-0.0595)	Green	0.027-0.056 (0.0011-0.0022)
C	56.982-56.988 (2.2434-2.2436)		1.504-1.508 (0.0592-0.0594)	Pink	0.029-0.058 (0.0011-0.0023)

Reassembly

1. Install connecting rod
2. Install piston
3. Install piston pin
   - Apply a thin coat of engine oil to the piston pin. Try to insert the piston pin into the piston pin hole with normal finger pressure.

NOTE: When changing piston / connecting rod combinations, do not change the piston / piston pin combination and do not reuse the old piston pin.

- Attach the piston to the connecting rod with the piston front mark and the connecting rod front mark on the same side.

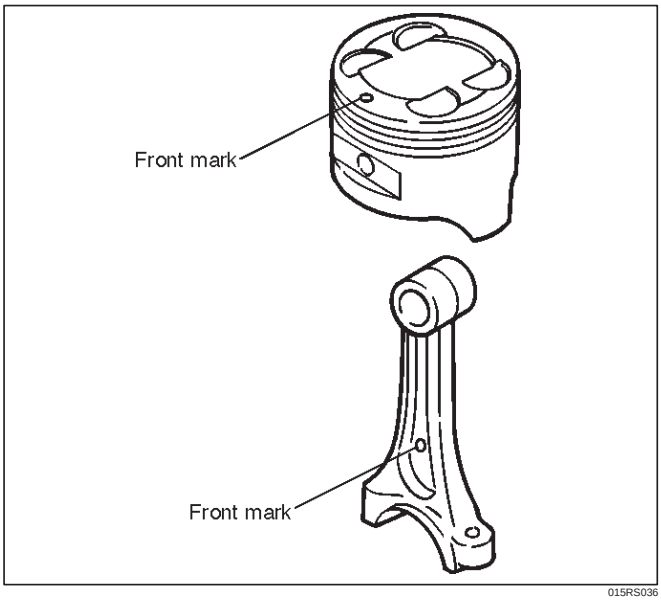

015RS036

- With 5–8840–0551–0 Piston pin service set and a press, press fit the piston pin.

NOTE: Heat the connecting rod small end to a suitable temperature to ensure smooth installation.

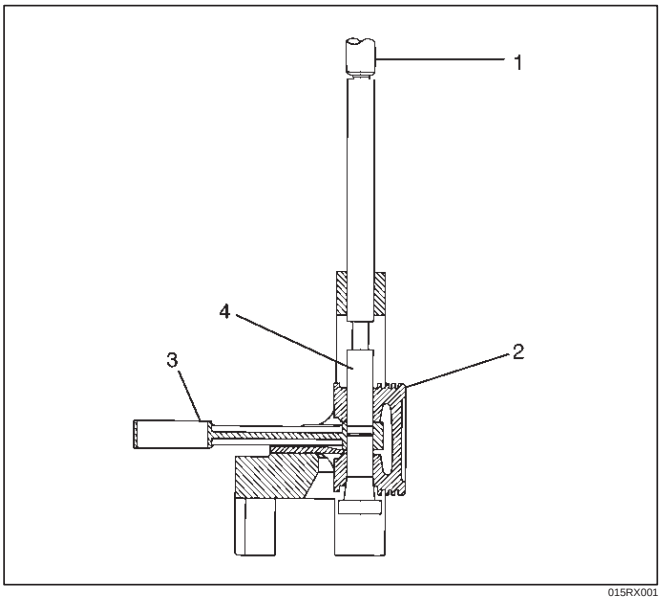

015RX001

Legend

(1) Press Ram
(2) Piston
(3) Connecting Rod
(4) Piston Pin

4. Install piston ring with the piston ring expander. The compression ring must be set with the T mark (1) facing up.

Marked T : No.1 Compression ring

Marked T2 : No.2 Compression ring

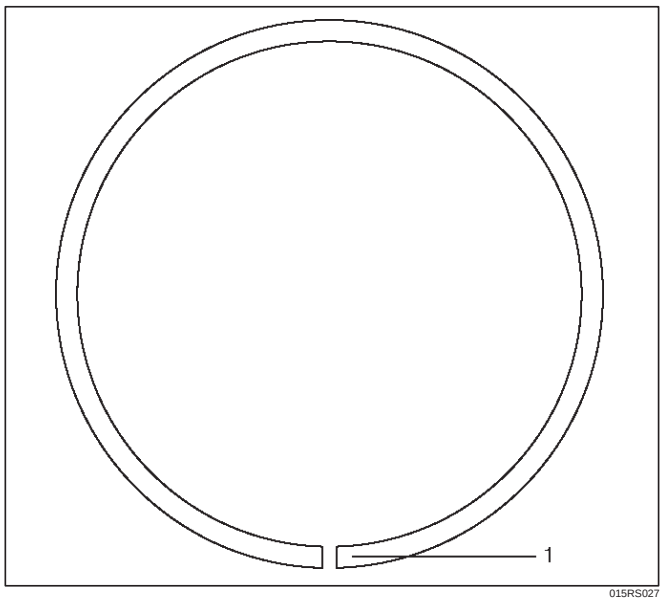

015RS027

- Install piston rings in the following sequence.

1. Oil ring
   1. Expander ring
   2. Upper side rail
   3. Lower side rail
2. 2nd compression ring
3. 1st compression ring

- The compression rings must be set with the T or T2 mark facing up.

Marked T : No.1 Compression ring

Marked T2 : No.2 Compression ring

- After installation, apply engine oil to the entire circumference of the piston rings. Check to see that all the rings rotate smoothly.

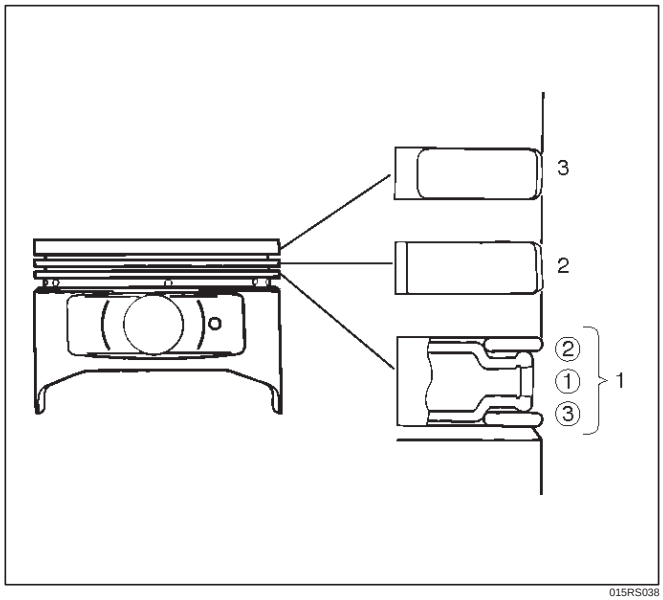

015RS038

5. Install piston and connecting rod assembly.

- Insert the bearings into the connecting rods and caps. Apply new engine oil to the bearing faces and nuts.

- Tighten the connecting rod cap nuts

Torque : 54 N·m (5.5 Kg·m/40 lb ft)

NOTE: Do not apply engine oil to the bearing back faces.

6. Oil gallery, refer to “Crankshaft and main bearing” in this manual.
7. Oil strainer and O-ring.
8. Oil pipe and O-ring.
9. Install crankcase with oil pan, refer to “Oil pan and Crankcase” in this manual.
10. Install cylinder head gasket.
11. Install Cylinder head assembly.
    - Refer to “Cylinder head” in this manual.

Cylinder Block

Cylinder Block and Associated Parts

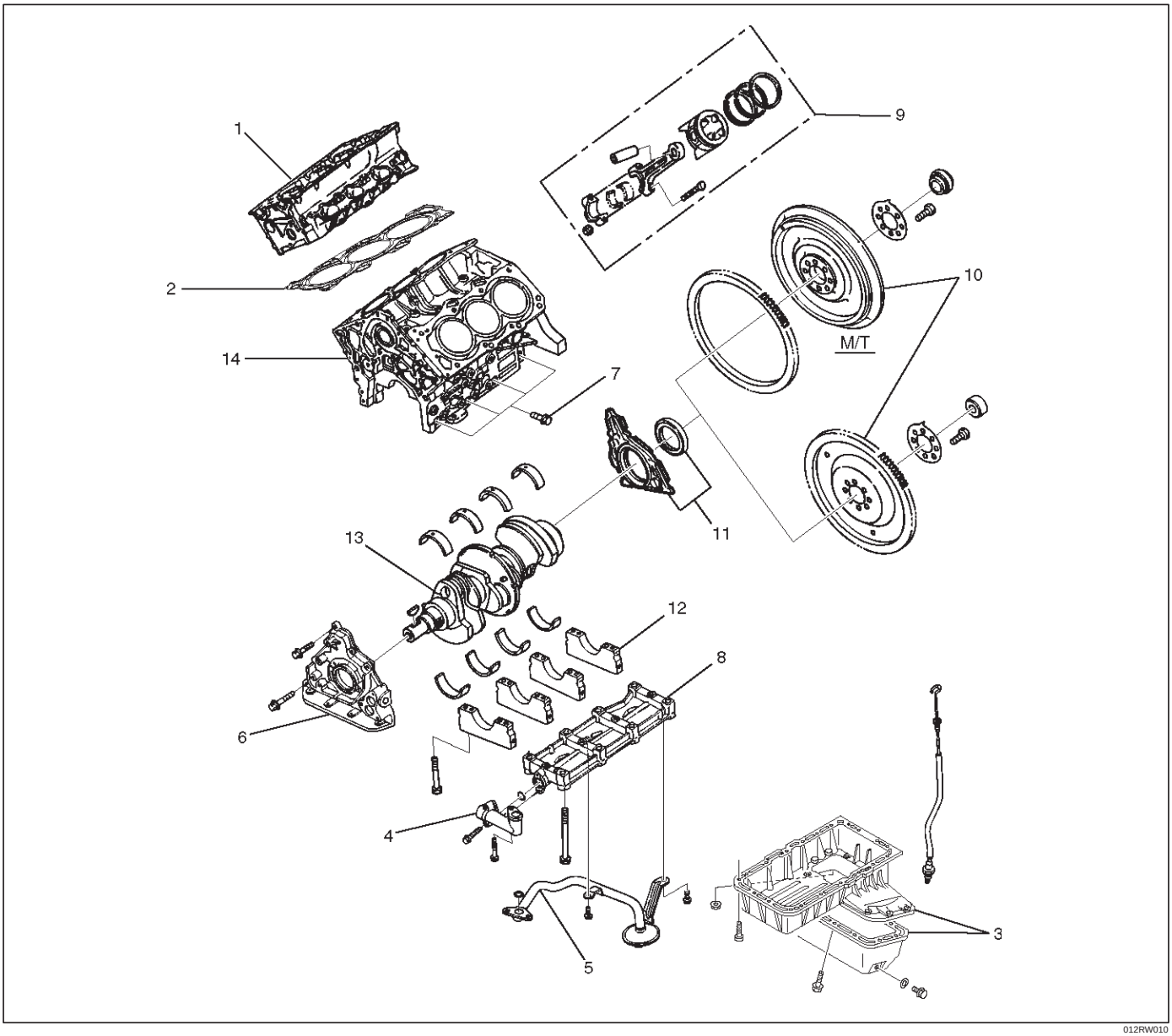

012RW010

Legend

(1) Cylinder Head Assembly
(2) Cylinder Head Gasket
(3) Crankcase with Oil Pan
(4) Oil Pipe and O-Ring
(5) Oil Strainer and O-Ring
(6) Oil Pump Assembly
(7) Cylinder Block Side Bolts
(8) Oil Gallery
(9) Piston and Connecting Rod Assembly
(10) Flywheel
(11) Rear Oil Seal Retainer Assembly
(12) Main Bearing Cap
(13) Crankshaft
(14) Cylinder Block

Disassembly

1. Remove cylinder head assembly.
2. Remove cylinder head gasket.
3. Remove crankcase with oil pan.
4. Remove oil pipe and O-ring.
5. Remove oil strainer and O-ring.
6. Remove oil pump assembly.
7. Remove crankcase side bolts.
8. Remove oil gallery.
9. Remove piston and connecting rod assembly.
10. Remove flywheel.

11. Remove rear oil seal retainer assembly.
12. Remove main bearing cap.
13. Remove crankshaft.
14. Remove cylinder block.

Inspection and Repair

1. Remove the cylinder head gasket and any other material adhering to the upper surface of the cylinder block. Be very careful not to allow any material to accidentally drop into the cylinder block. Be very careful not to scratch the cylinder block.
2. Carefully remove the oil pump, rear oil seal retainer, and crankcase assembly installation surface seal.
3. Wipe the cylinder block clean.
4. Visually inspect the cylinder block. If necessary, use a flaw detector to perform a dye penetrate and hydraulic (or air pressure) test. If cracking or other damage is discovered, the cylinder block must either be repaired or replaced.

Flatness

1. Using a straight–edge and feeler gauge, check that the upper surface of the cylinder block is not warped.

CAUTION: Be very careful not to allow any material to accidentally drop into the upper surface of the cylinder block. Be very careful not to scratch the upper surface of the cylinder block.

2. The cylinder block must be reground or replaced if the warpage exceeds the limit.

Warpage

Limit : 0.15 mm (0.0059 in)

Maximum repairable limit: 0.15 mm (0.0059 in)

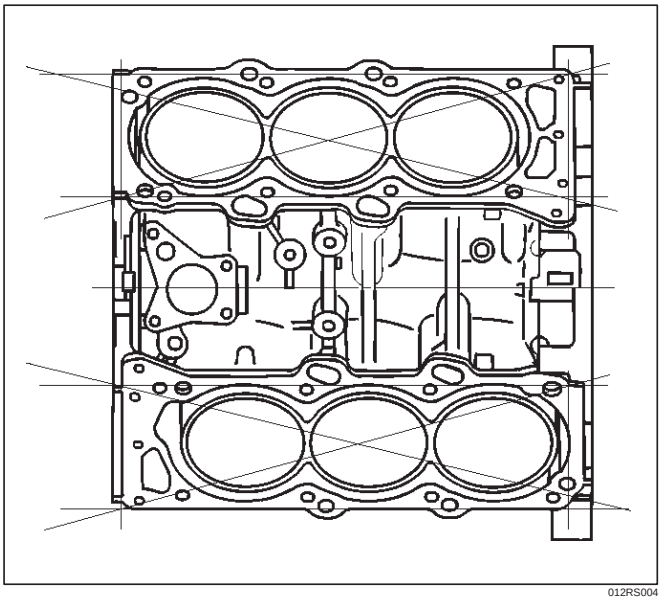

012RS004

Cylinder Bore

Use a cylinder gauge to measure the cylinder bore diameter in both the axial and thrust directions. Each measurement should be made at six points.

CAUTION: Be very careful not to allow any material to accidentally drop into the upper surface of the cylinder block. Be very careful not to scratch the upper surface of the cylinder block.

Cylinder Bore Inside Diameter

Limit : 93.530 (3.6823)

If the measurement exceed the specified limit, the cylinder block must be replaced.

Diameter

Grade A : 93.400 mm–93.410 mm (3.6772 in–3.6776 in)

Grade B : 93.411 mm–93.420 mm (3.6776 in–3.6779 in)

Grade C : 93.421 mm–93.430 mm (3.6780 in–3.6783 in)

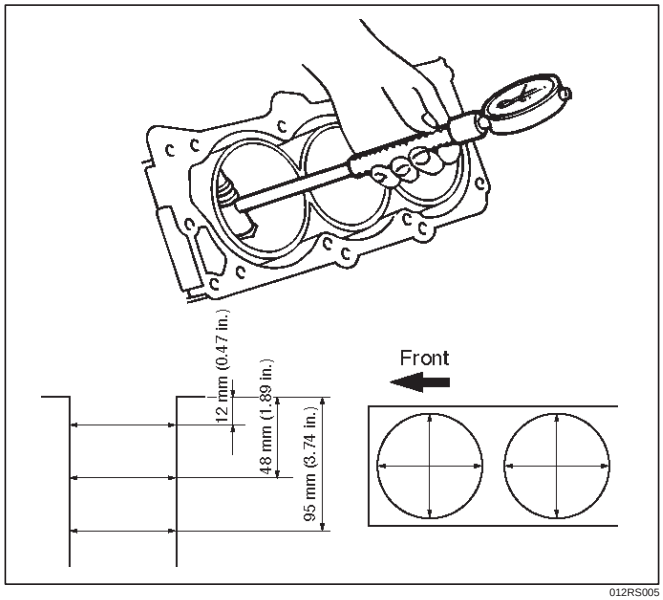

012RS005

NOTE: For information on piston diameter, please refer to the section ”Inspection of the Piston and Connecting Rod Assembly” in this manual.

- The ”Grade” mark (1) is stamped at the position illustrated.

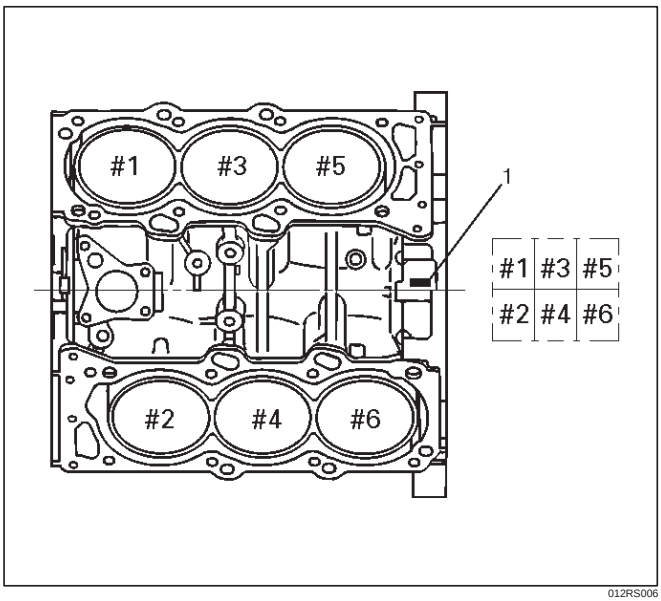

012RS006

Reassembly

1. Install cylinder block.
2. Install crankshaft.
   - Install the main bearings to the cylinder block and the main bearing caps.
   - Be sure that they are positioned correctly.
   - Apply new engine oil to the upper and lower main bearing faces.

NOTE: Do not apply engine oil to the bearing back faces.

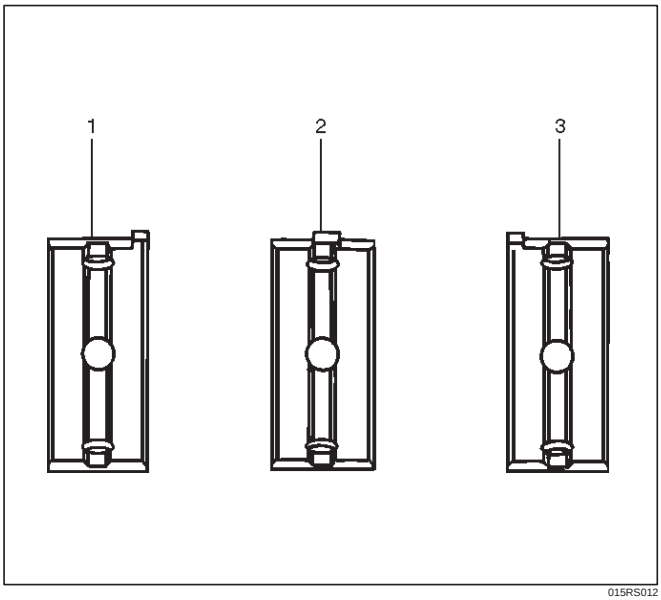

015RS012

Legend

(1) Number 1 and 4 main bearing upper and lower.
(2) Number 2 and 3 main bearing upper.
(3) Number 2 and 3 main bearing lower.

- Carefully mount the crankshaft.
- Apply engine oil to the thrust washer.
- Assemble the thrust washer to the No. 3 bearing journal. The oil grooves must face the crankshaft.

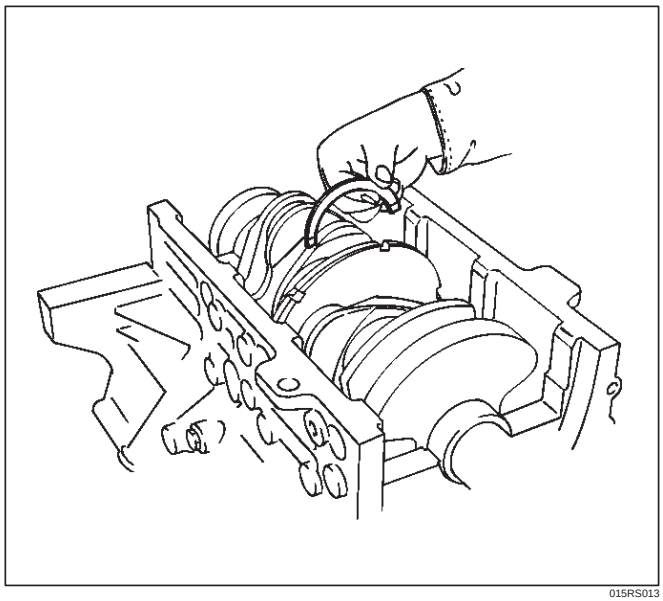

015RS013

3. Install rear oil seal retainer.
   - Remove oil on cylinder block and retainer fitting surface.
   - Apply sealant (TB1207B or equivalent) to retainer fitting surface as shown in illustration.
   - The oil seal retainer must be installed within 5 minutes after sealant application before the sealant hardens.

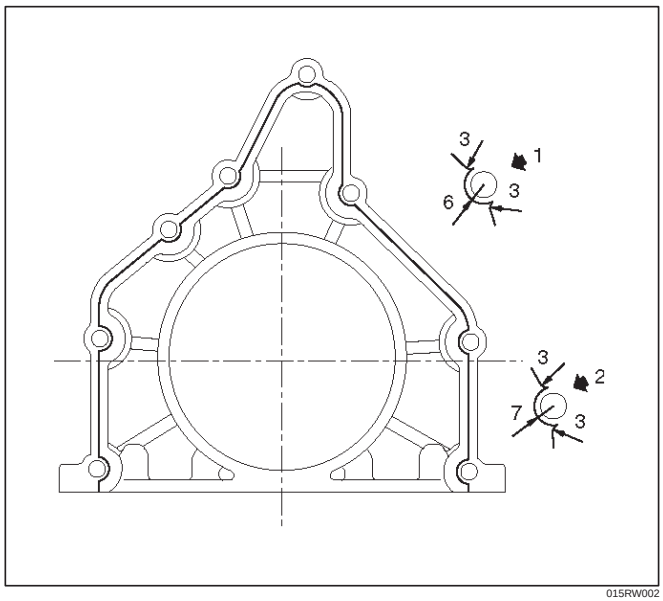

015RW002

Legend

(1) Around Bolt Holes
(2) Around Dowel Pin

- Apply engine oil to oil seal lip and align a dowel pin hole in the cylinder block with that in the retainer.
- Tighten retainer fixing bolts to the specified torque.

Torque: 25 N·m (2.5 Kg·m/18.4 lb ft)

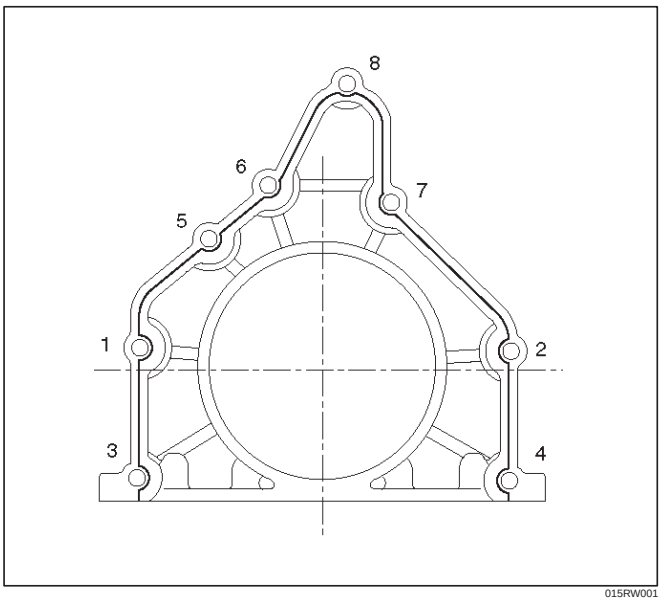

015RW001

4. Install flywheel
   1. Thoroughly clean and remove the oil from the threads of crankshaft.
   2. Remove the oil from the crankshaft and flywheel mounting faces.
   3. Mount the flywheel on the crankshaft and then install the washer.
   4. Holding the crankshaft stationary, tighten the flywheel bolts in the order shown.

Torque: 54 N·m (5.5 Kg·m/40 lb ft)

NOTE: Do not reuse the bolts and do not apply oil or thread lock to the bolts.

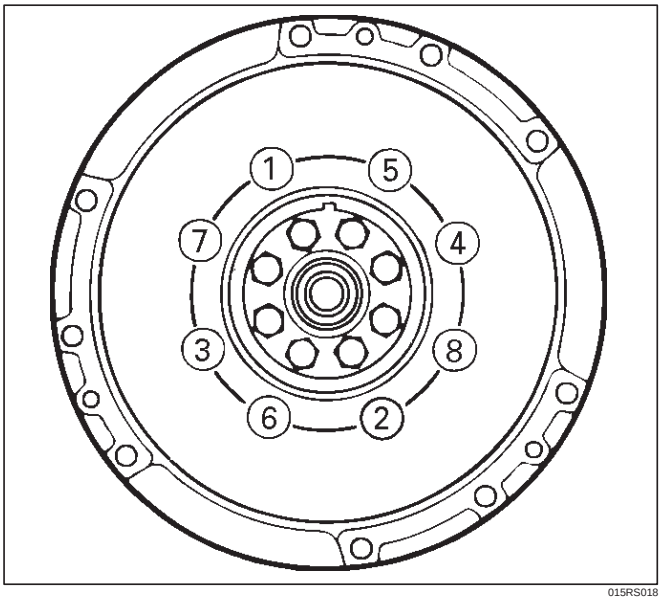

015RS018

5. Install piston and connecting rod assembly.
   - Apply engine oil to the cylinder bores, the connecting rod bearings and the crankshaft pins.

NOTE: Do not apply engine oil to the bearing back faces.

- Check to see that the piston ring end gaps are correctly positioned.

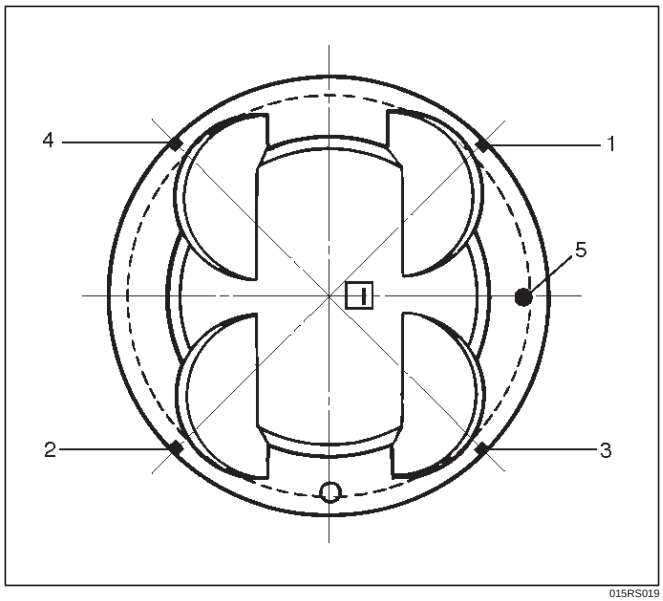

015RS019

Legend

(1) No.1 Compression Ring
(2) No.2 Compression Ring
(3) Oil Ring Side Rail Upper
(4) Oil Ring Side Rail Lower
(5) Piston Front Mark

- Insert the piston/connecting rod assemblies into each cylinder with the piston ring compressor.
- The front marks (1) must be facing the front of the engine.

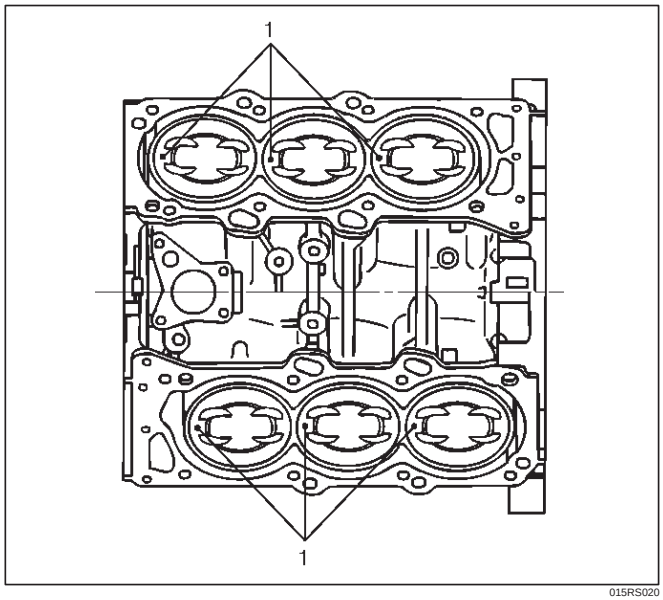

015RS020

6. Install oil gallery and tighten the bolts in 2 steps in the order shown.

1st step : 29 N·m (3.0 Kg·m/22 lb ft)

2nd step : 55˚~ 65˚

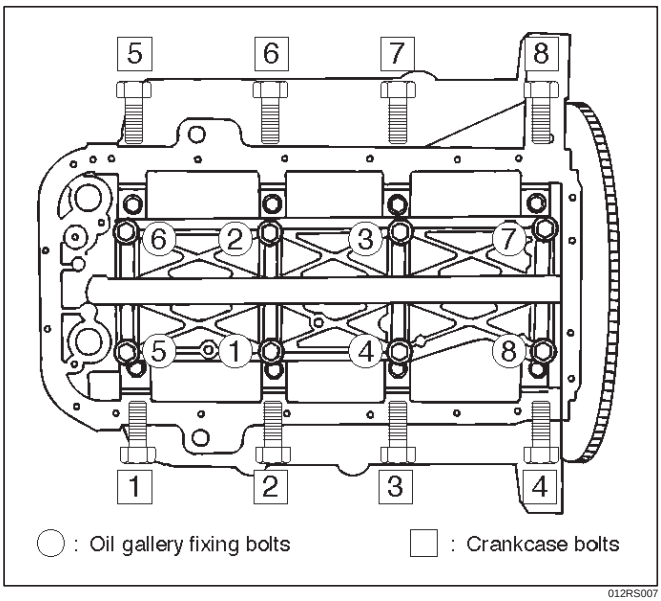

012RS007

7. Install cylinder block side bolts (1) and tighten crankcase bolts in sequence shown in the illustration.

Torque : 39 N·m (4.0 Kg·m/29 lb ft)

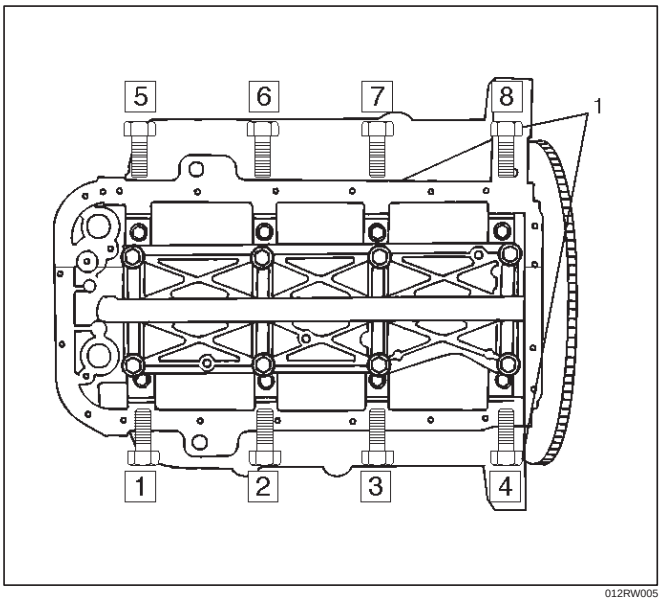

012RW005

8. Install oil pump assembly. Refer to “Oil Pump” in this manual.
9. Install oil strainer and O-ring.
10. Install oil pipe and O-ring.
11. Install crankcase with oil pan.
    1. Completely remove all residual sealant, lubricant and moisture from the sealing surfaces. The surfaces must be perfectly dry.
    2. Apply a correct width bead of sealant (TB– 1207C or its equivalent) to the contact surfaces of the crankcase. There must be no gaps in the bead.
    3. The oil pan must be installed within 5 minutes after sealant application to prevent premature hardening of sealant.
    4. Tighten the bolts and nuts to the specified torque.

Torque : 10 N·m (1.0 Kg·m/89 lb in)

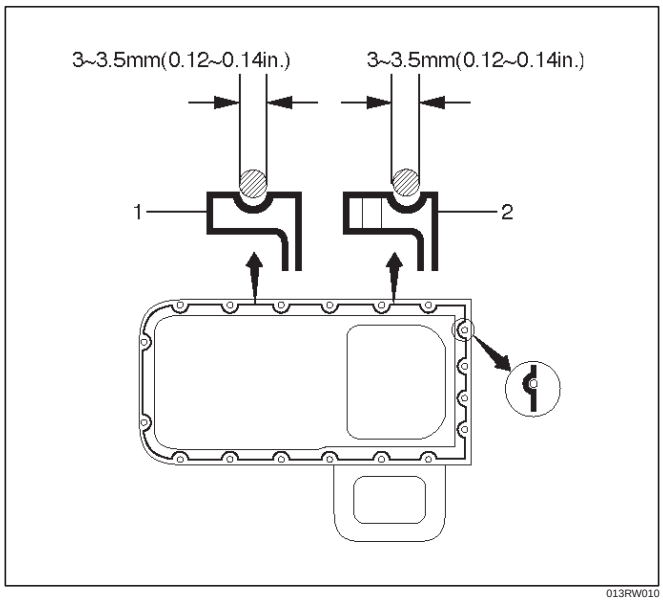

013RW010

Legend

(1) Portion Between Both Holes
(2) Bolt Hole Portions

12. Install cylinder head gasket.
13. Install cylinder head assembly. Refer to “Cylinder Head” in this manual.

Main Data and Specification

General Specification

Item	Specifications	
	6VD1	6VE1
Engine type, number of cylinders and arrangement	Water cooled, four cycle V6	
Form of combustion chamber	Pent roof type	
Valve mechanism	4-Cams, 4-Valves, DOHC Gear & Belt Drive	
Cylinder liner type	Casted in cylinder drive	
Total piston displacement	3165 cc	3494 cc
Cylinder bore x stroke	93.4mm x 77.0mm (3.6772 in x 3.0315 in)	93.4mm x 85.0mm (3.6772 in x 3.3465 in)
Compression ratio	9.1 : 1	
Compression pressure at 300rpm	14.0 Kg/cm^2	
Engine idling speed rpm	Non adjustable (750)	
Valve clearance	Intake: 0.28 mm (0.11 in)	
	Exhaust: 0.30mm (0.12in)	
Oil capacity	5.3 liters	
Ignition timing	Non adjustable 16˚ BTDC at idle rpm)	Non adjustable (20˚ BTDC at idle rpm)
Spark plug	K16PR–P11, PK16PR11, RC10PYP4	
Plug gap	1.0 mm–1.1 mm(0.0394 in – 0.0433 in)	

Torque Specifications

Ignition coil, Spark plug, Crankshaft angle sensor and Under cover

N·m (Kg·m/lb ft)

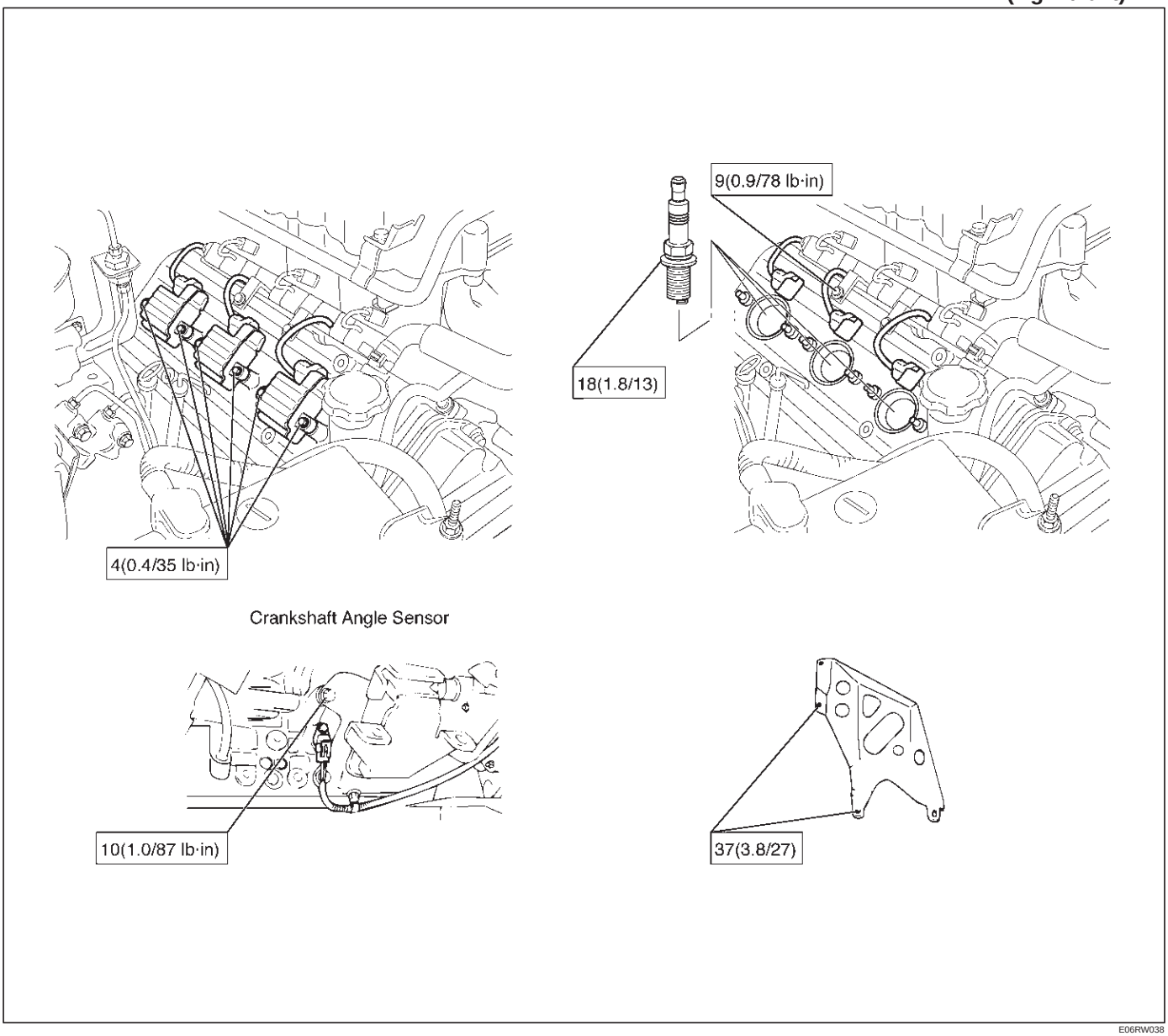

E06RW038

Cylinder head cover, Cylinder head, Camshaft bracket, Common chamber, EGR valve and EGR pipe

N·m (Kg·m/lb ft)

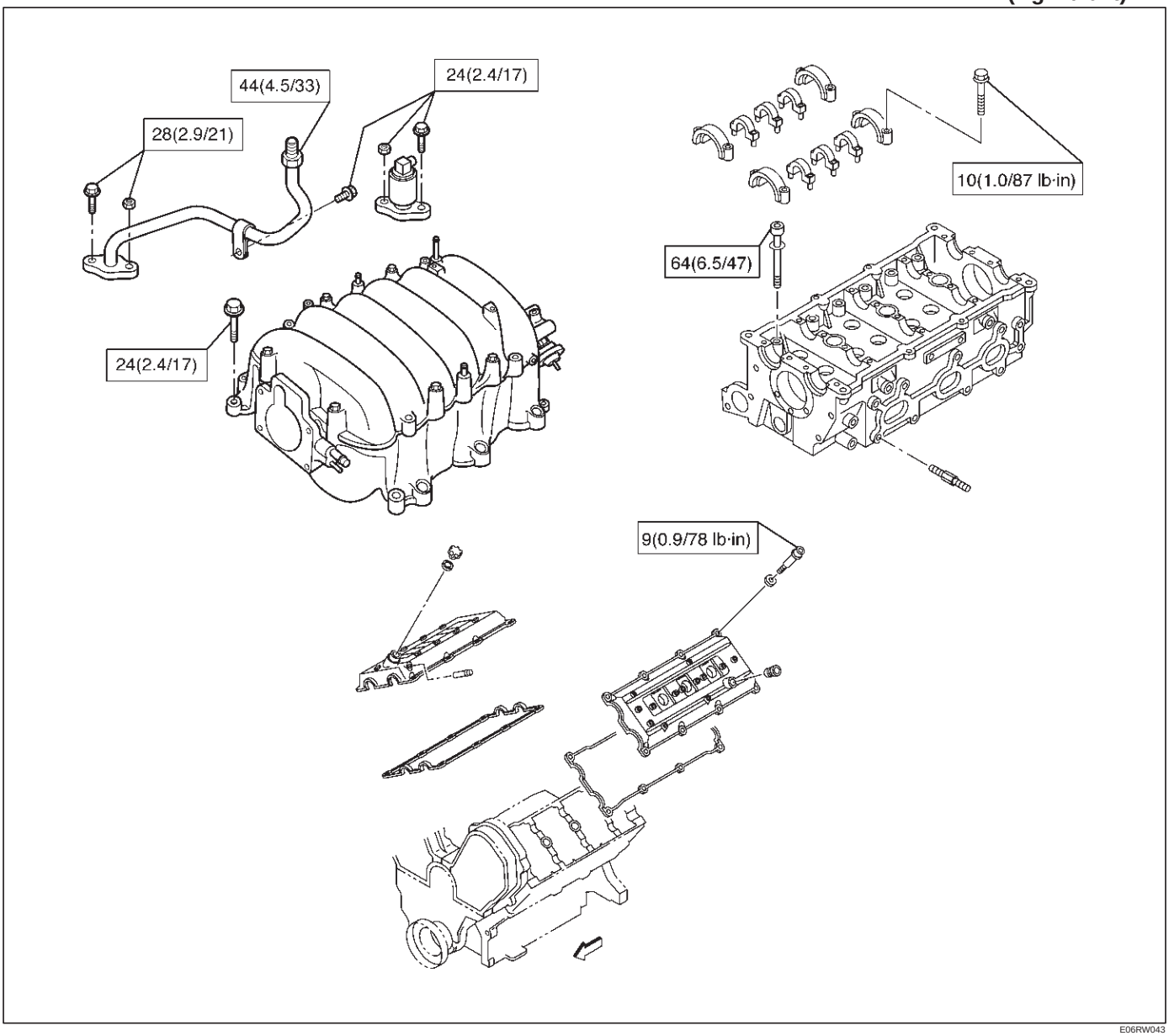

E06RW043

Crankshaft main bearing, Flywheel, Crankcase, Oil pan, Timing belt tensioner, Timing pulley, Timing belt cover, Oil pump, Oil gallery, Oil strainer and Water pump

N·m (Kg·m/lb ft)

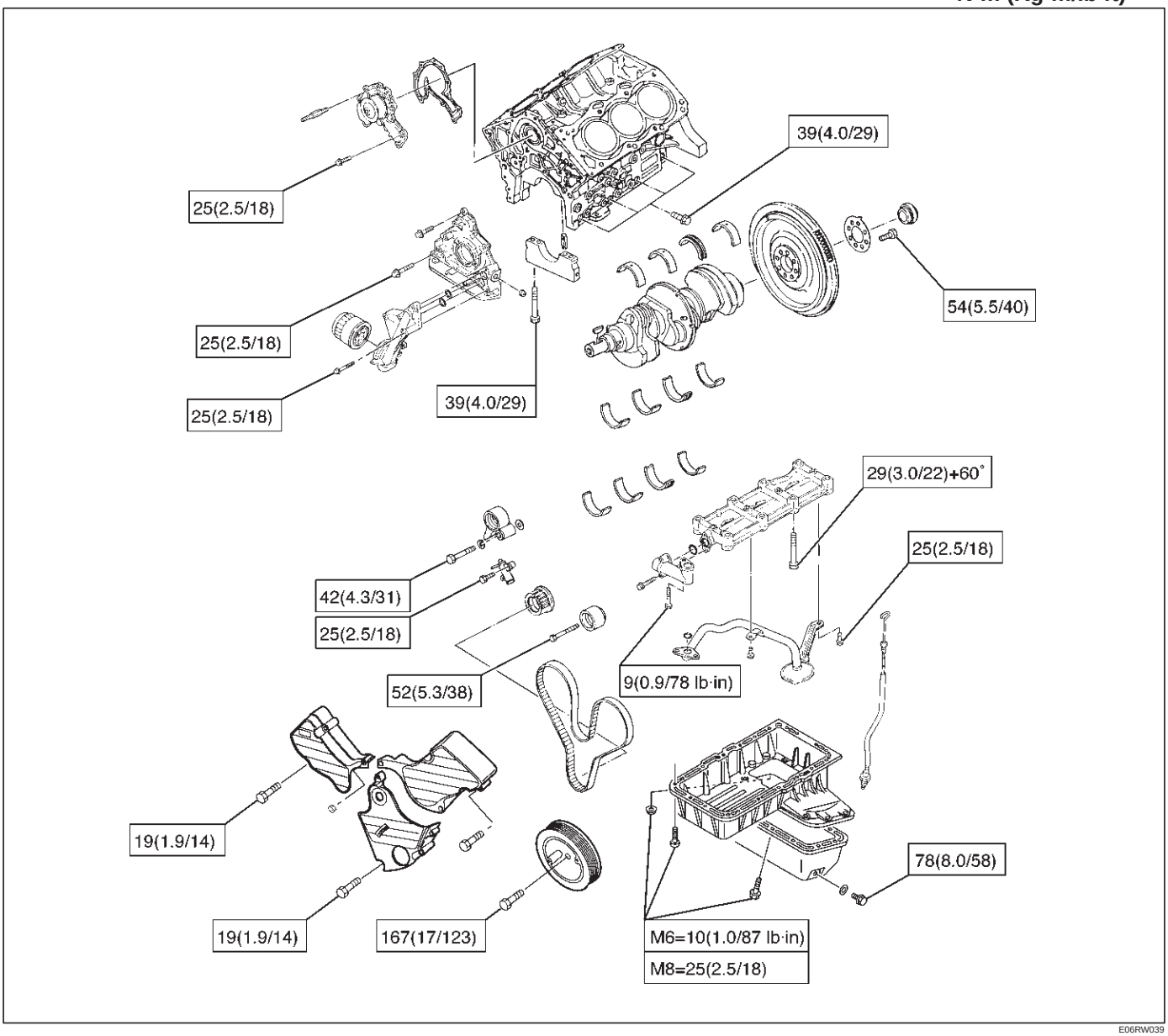

E06RW039

Connecting rod and Water pump

N·m (Kg·m/lb ft)

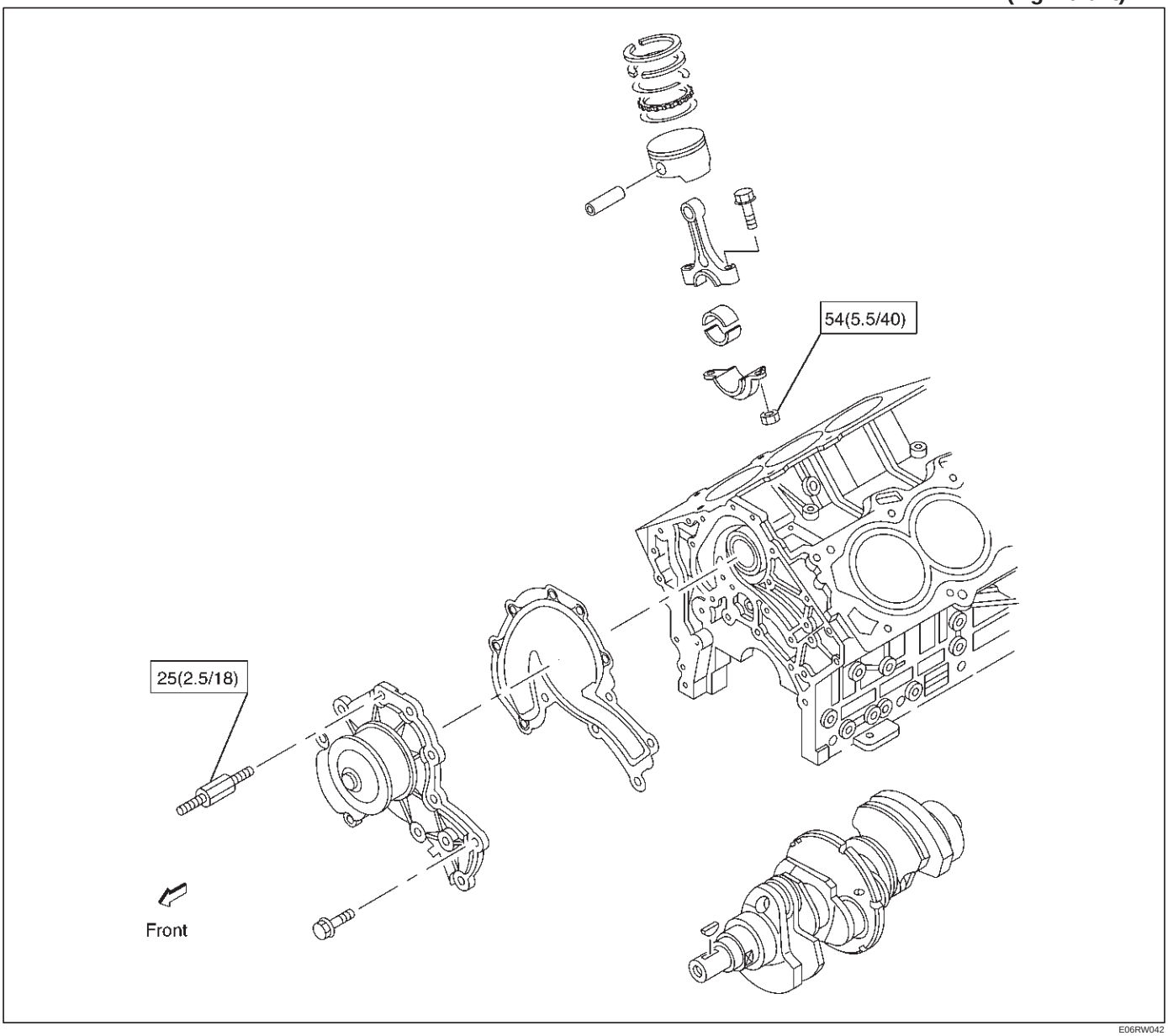

E06RW042

Engine mount

N·m (Kg·m/lb ft)

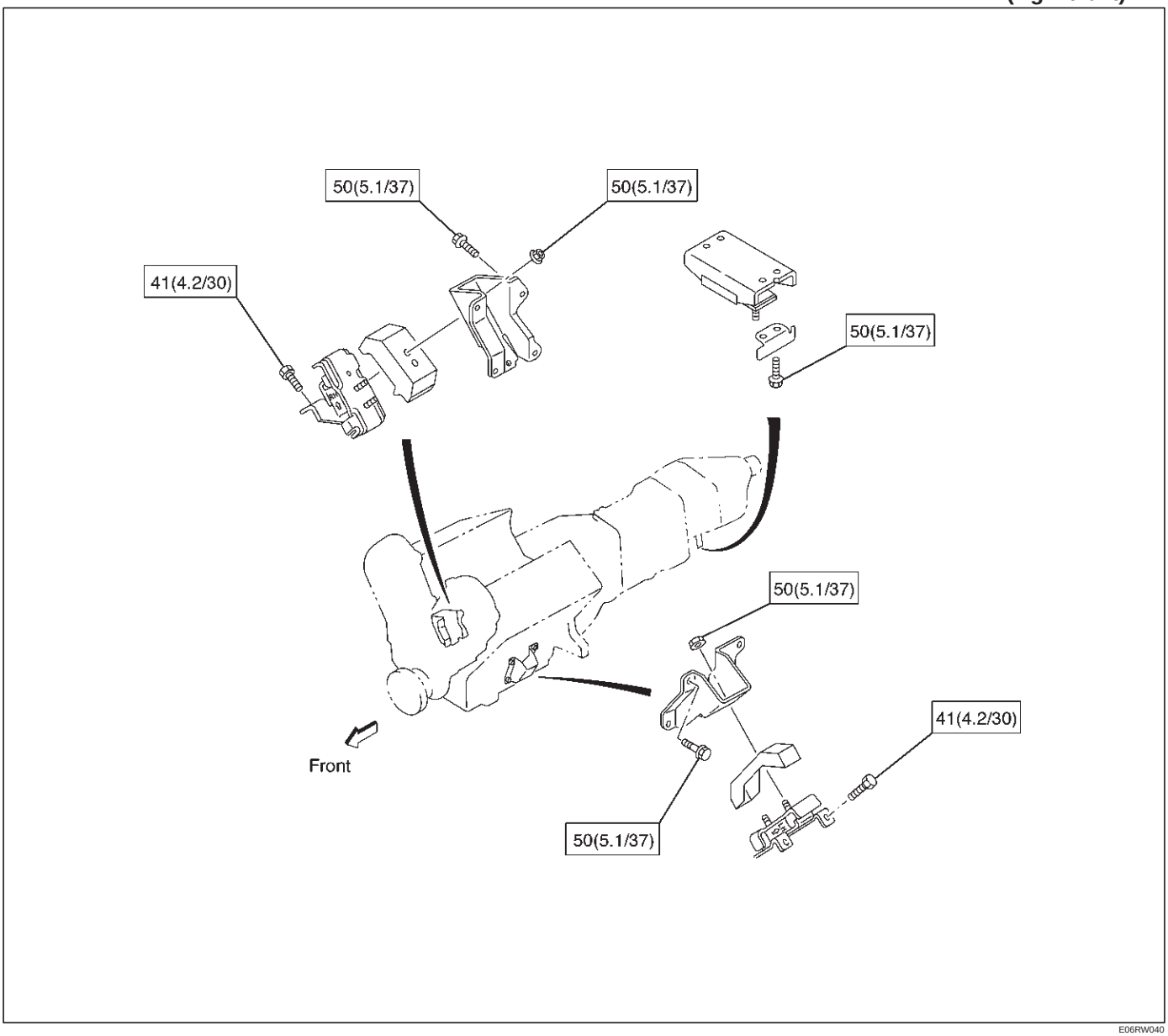

E06RW040

Special Tool

ILLUSTRATION	TOOL NO. TOOL NAME
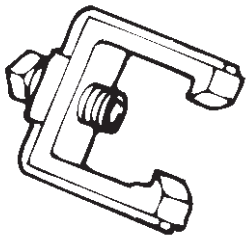 901RT033	**5–8840–0011–0** **(J–21687–02)** Remover; tie rod end
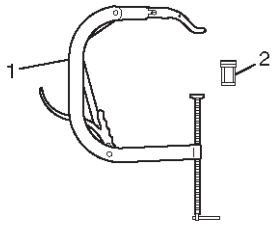 F06RW002	**5–8840–2441–0** Set Number of Valve Compressor **5–8840–2446–0** **(J–8062)** Compressor; Valve Spring (1) **5–8840–2547–0** **(J–42898)** Adapter; Compressor Valve Spring (2)
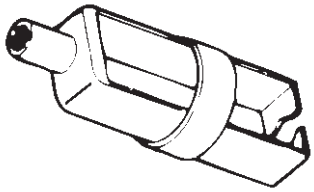 901RT036	**5–8840–0623–0** **(J–37281)** Remover; Oil controller
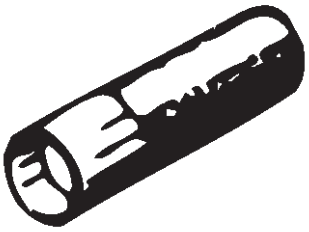 901RT037	**5–8840–0624–0** **(J–38537)** Installer; Oil controller
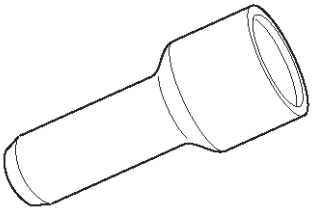 901RW171	**5–8840–2445–0** **(J–42985)** Installer; Camshaft oil seal
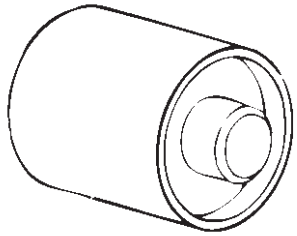 901RT040	**5–8840–2545–0** **(J–39206)** Installer; Pilot bearing

ILLUSTRATION	TOOL NO. TOOL NAME
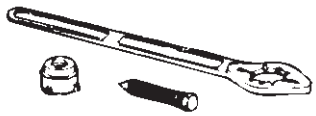 901RT041	**5–8840–0133–0** **(J–8614–01)** Holder; Crankshaft
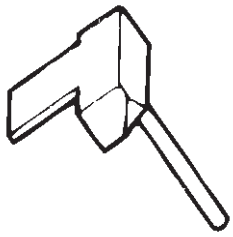 901RT042	**5–8840–2153–0** **(J–37228)** Seal cutter
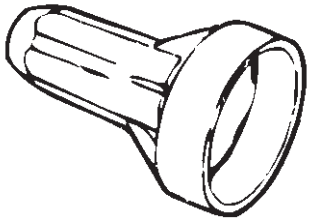 901RT043	**5–8840–2286–0** **(J–39201)** Installer; Real oil seal
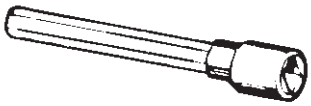 901RT046	**9–8511–4209–0** **(J–24239–1)** Cylinder head bolt wrench
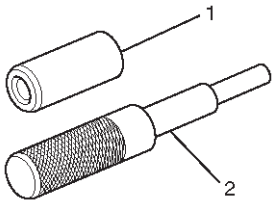 901RW182	**5–8840–2442–0** **(J–42899)** Replacer; Valve guide (set) (1,2) **5–8840–2548–0** **(J–42687)** Installer; Valve guide (1) **5–8840–2549–0** **(J–37985–1)** Remover; Valve guide (2)
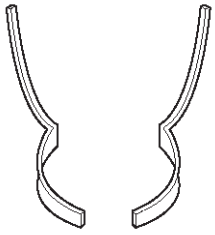 901RW109	**5–8840–2444–0** **(J–42689)** Adjusting Tool: Valve clearance

ILLUSTRATION	**TOOL NO.** TOOL NAME
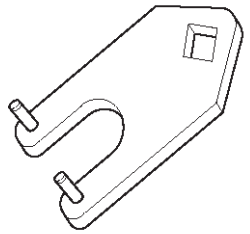 901RW110	**5–8840–2443–0** **(J–42686)** Lever; Gear spring
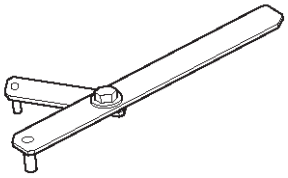 901RW115	**5–8840–2447–0** **(J–43041)** Holder; Universal

ENGINE

ENGINE COOLING

CONTENTS

Service Precaution 6B–1
General Description 6B–2
Diagnosis 6B–5
Draining and Refilling Cooling System 6B–6
Water Pump 6B–7
Water Pump and Associated Parts 6B–7
Removal 6B–7
Inspection 6B–7
Installation 6B–7
Thermostat 6B–8
Thermostat and Associated Parts 6B–8
Removal 6B–8
Inspection 6B–8
Installation 6B–8
Radiator 6B–9
Radiator and Associated Parts 6B–9
Removal 6B–9
Inspection 6B–10
Installation 6B–11
Drive Belt and Cooling Fan 6B–12
Drive Belt and Associated Parts 6B–12
Inspection 6B–12
Installation 6B–12
Main Data and Specifications 6B–13
Special Tool 6B–14

Service Precaution

WARNING: IF SO EQUIPPED WITH A SUPPLEMENTAL RESTRAINT SYSTEM (SRS), REFER TO THE SRS COMPONENT AND WIRING LOCATION VIEW IN ORDER TO DETERMINE WHETHER YOU ARE PERFORMING SERVICE ON OR NEAR THE SRS COMPONENTS OR THE SRS WIRING. WHEN YOU ARE PERFORMING SERVICE ON OR NEAR THE SRS COMPONENTS OR THE SRS WIRING, REFER TO THE SRS SERVICE INFORMATION. FAILURE TO FOLLOW WARNINGS COULD RESULT IN POSSIBLE AIR BAG DEPLOYMENT, PERSONAL INJURY, OR OTHERWISE UNNEEDED SRS SYSTEM REPAIRS.

CAUTION: Always use the correct fastener in the proper location. When you replace a fastener, use ONLY the exact part number for that application. ISUZU will call out those fasteners that require a replacement after removal. ISUZU will also call out the fasteners that require thread lockers or thread sealant. UNLESS OTHERWISE SPECIFIED, do not use supplemental coatings (Paints, greases, or other corrosion inhibitors) on threaded fasteners or fastener joint interfaces. Generally, such coatings adversely affect the fastener torque and the joint clamping force, and may damage the fastener. When you install fasteners, use the correct tightening sequence and specifications. Following these instructions can help you avoid damage to parts and systems.

General Description

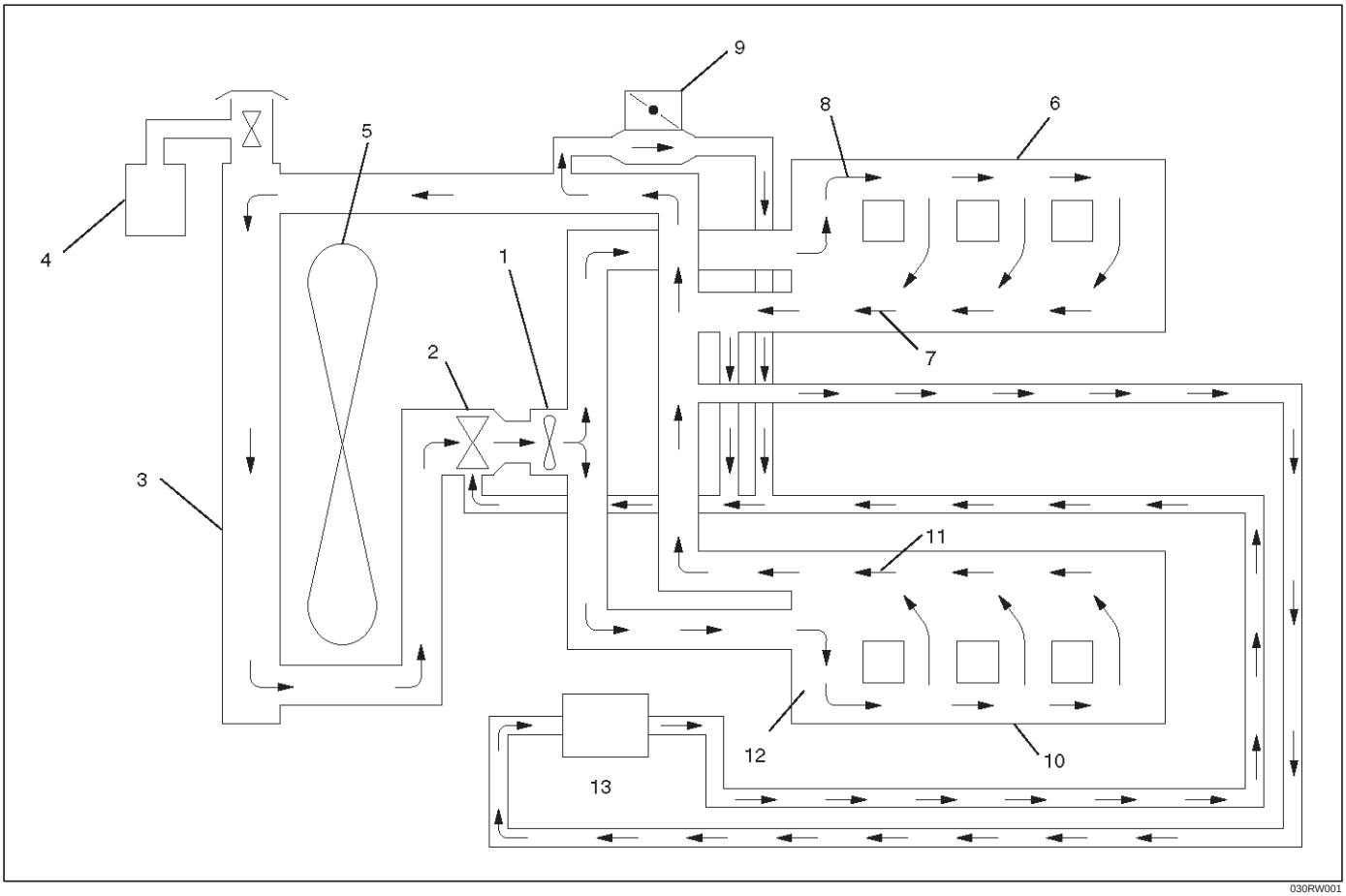

030RW001

Legend

(1) Water Pump
(2) Thermostat
(3) Radiator
(4) Reserve Tank
(5) Cooling Fan
(6) Cylinder Block
(7) Cylinder Head
(8) Right Bank
(9) Throttle Body
(10) Cylinder Block
(11) Cylinder Head
(12) Left Bank
(13) Heater

The cooling system is a pressurized Engine Coolant (EC) forced circulation type which consists of a water pump, thermostat cooling fan, radiator and other components. The automatic transmission fluid is cooled by the EC in radiator.

Water Pump

The EC pump is a centrifugal impeller type and is driven by a timing belt.

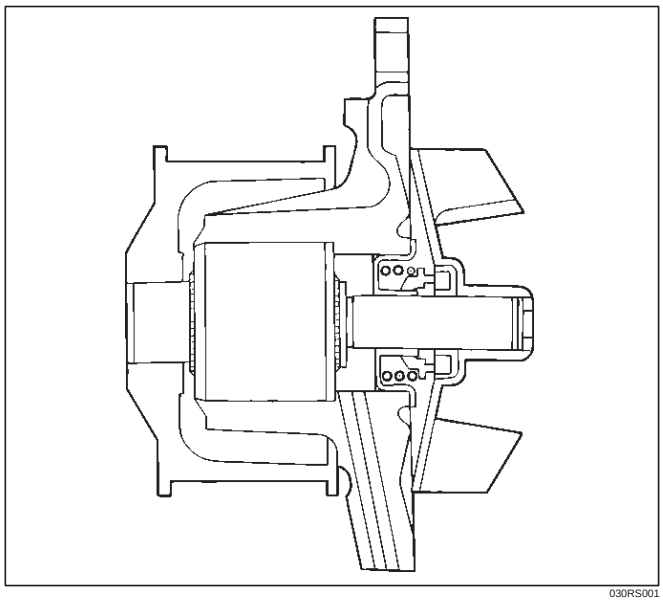

030RS001

Thermostat

The thermostat is a wax pellet type with a air hole(1) and is installed in the thermostat housing.

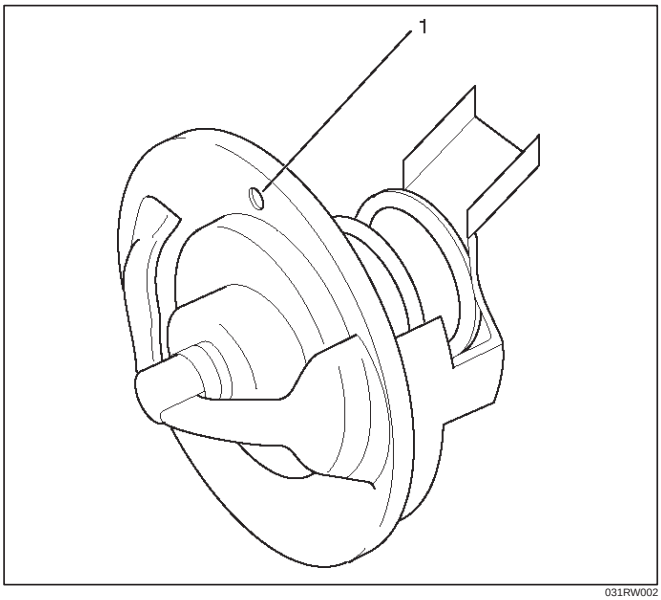

031RW002

Radiator

The radiator is a tube type with corrugated fins. In order to raise the boiling point of the coolant, the radiator is fitted with a cap in which the valve is operated at 88.2 ~ 117.6 kPa (12.8 ~ 17.0 psi) pressure. (No oil cooler provided for M/T)

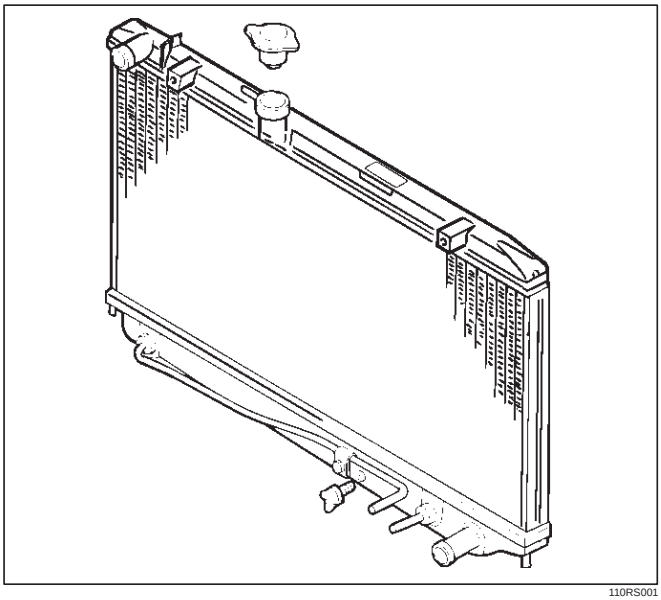

110RS001

Anti Freeze Solution

- Relation between the mixing ratio and freezing temperature of the EC varies with the ratio of anti–freeze solution in water. Proper mixing ratio can be determined by referring to the chart. Supplemental inhibitors or additives claiming to increase cooling capability that have not been specifically approved by Isuzu are not recommended for addition to the cooling system.
- Calculating mixing ratio

$$\text{Mixing ratio} = \frac{\text{Anti freeze solution (Lit/gal.)}}{\text{Anti freeze solution (Lit/gal.)} + \text{Water (Lit/gal.)}}$$

F06RW005

NOTE: Antifreeze solution + Water = Total cooling system capacity.

- **Total Cooling System Capacity**
- **M/T 8.8Lit (2.32Us gal)**
- **A/T 8.4Lit (2.22Us gal)**

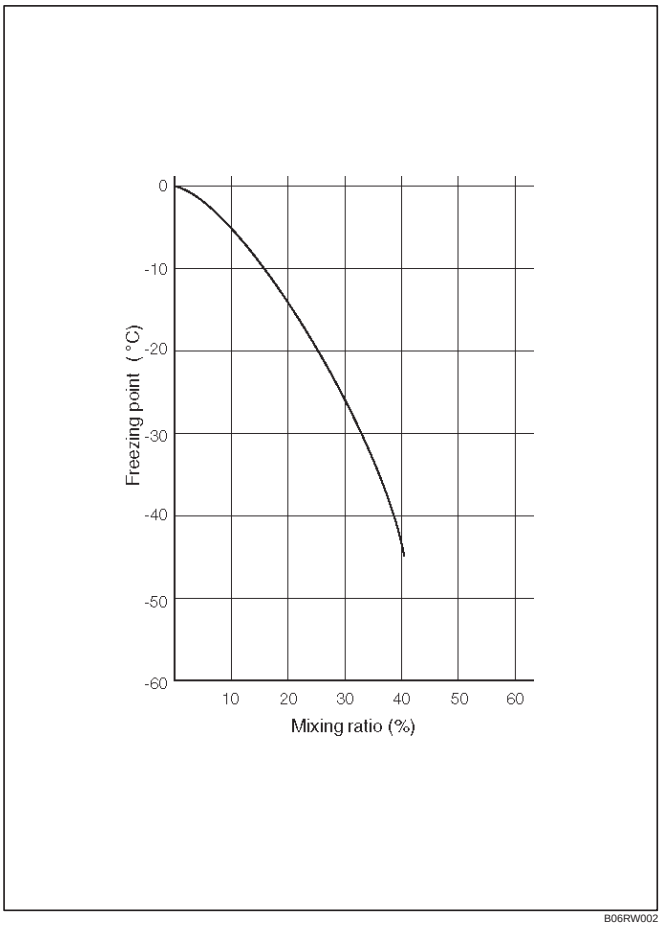

B06RW002

- Mixing ratio

  Check the specific gravity of engine coolant in the cooling system temperature ranges from 0˚C to 50˚C using a suction type hydrometer, then determine the density of the engine coolant by referring to the table.

NOTE:

1. Even in the areas where the atmospheric temperature is higher than 0˚C, be sure not to use antifreeze solution at a mixing ratio lower than 20% so that the inside of the engine may not be corroded.
2. If antifreeze solution is used at a mixing ratio higher than 60%, the specific heat of the coolant falls and the engine may be overheated. Moreover, antifreeze performance drop and the coolant may be frozen. The density of the solution must be adjusted as occasion calls.

Antifreeze solution lower than 20% may not have sufficient anticorrosive performance, and therefore, please never fail to adjust as occasion demands within the range of 20% to 60%.

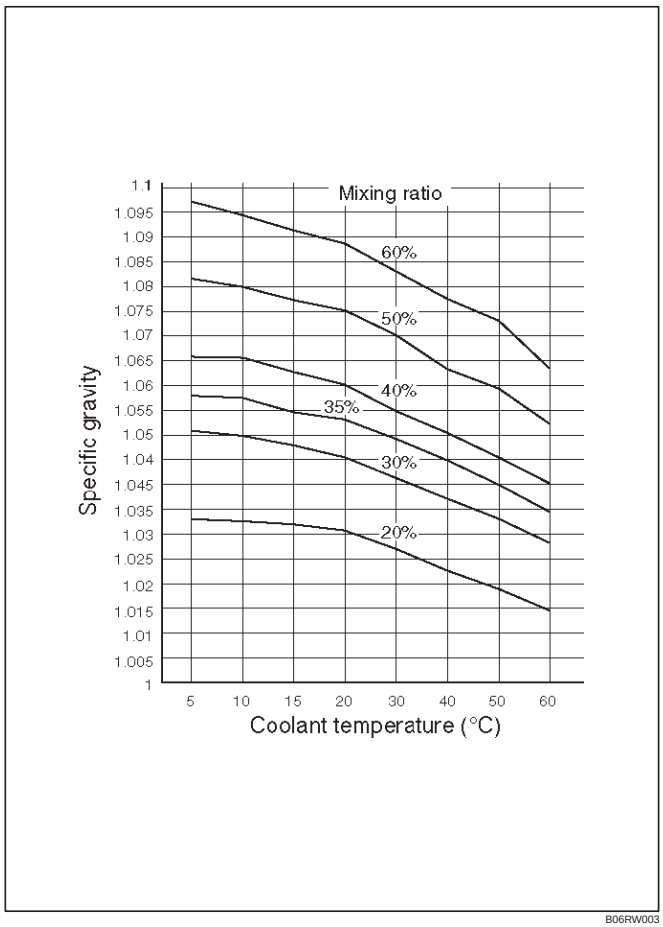

B06RW003

Diagnosis

Engine Cooling Trouble

Condition	Possible cause	Correction
Engine overheating	Low Engine Coolant level	Replenish
	Incorrect fan installed	Replace
	Thermo meter unit faulty	Replace
	Faulty thermostat	Replace
	Faulty Engine Coolant temperature sensor	Repair or replace
	Clogged radiator	Clean or replace
	Faulty radiator cap	Replace
	Low engine oil level or use of improper engine oil	Replenish or change oil
	Clogged exhaust system	Clean exhaust system or replace faulty parts
	Faulty Throttle Position sensor	Replace throttle valve assembly
	Open or shorted Throttle Position sensor circuit	Repair or replace
	Damaged cylinder head gasket	Replace
Engine overcooling	Faulty thermostat	Replace
Engine slow to warm–up	Faulty thermostat	Replace
	Thermo unit faulty	Replace

Draining and Refilling Cooling System

Before draining the cooling system, inspect the system and perform any necessary service to ensure that it is clean, does not leak and is in proper working order. The engine coolant (EC) level should be between the “MIN” and “MAX” lines of reserve tank when the engine is cold. If low, check for leakage and add EC up to the “MAX” line. There should not be any excessive deposit of rust or scales around the radiator cap or radiator filler hole, and the EC should also be free from oil.
Replace the EC if excessively dirty.

1. Completely drain the cooling system by opening the drain plug (2) at the bottom of the radiator.

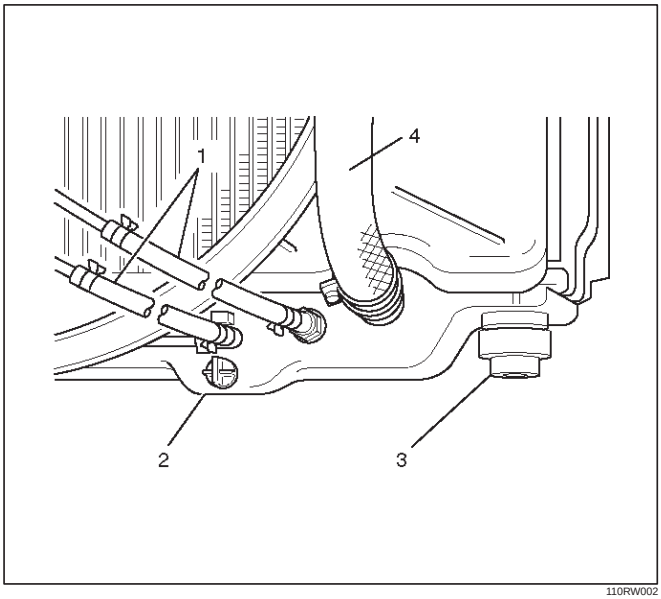

110RW002

2. Remove the radiator cap.

WARNING: TO AVOID THE DANGER OF BEING BURNED, DO NOT REMOVE THE CAP WHILE THE ENGINE AND RADIATOR ARE STILL HOT. SCALDING FLUID AND STEAM CAN BE BLOWN OUT UNDER PRESSURE.

3. Disconnect all hoses from the EC reserve tank.
   Scrub and clean the inside of the reserve tank with soap and water. Flush it well with clean water, then drain it. Install the reserve tank and hoses.
4. Refill the cooling system with the EC using a solution that is at least 50 percent antifreeze but no more than 70 percent antifreeze.
5. Fill the radiator to the base of the filler neck.
   Fill the EC reserve tank to “MAX” line when the engine is cold.
6. Block the drive wheels and firmly apply the parking brake. Shift an automatic transmission to “P” (Park) or a manual transmission to neutral.
7. Remove the radiator cap. Start the engine and warm it up at 2,500 ~ 3,000 rpm for about 30 minutes.
8. When the air comes out from the radiator filler neck and the EC level has gone down, replenish with the EC. Repeat this procedure until the EC level does not go down. Then stop the engine and install the radiator cap. Let the engine cool down.
9. After the engine has cooled, replenish with EC up to the “MAX” line of the reserve tank.
10. Start the engine. With the engine running at 3,000 rpm, make sure there is no running water sound from the heater core (behind the center console).
11. If the running water sound is heard, repeat steps 8 to 10.

Water Pump

Water Pump and Associated Parts

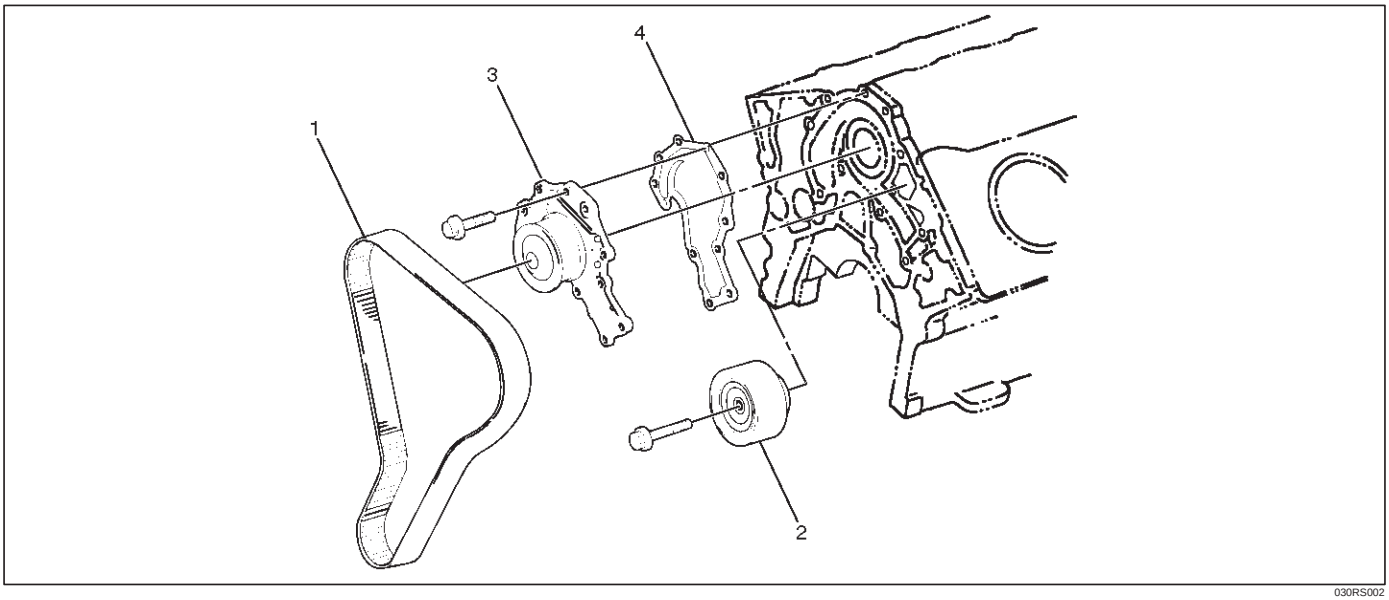

030RS002

Legend
(1) Timing Belt
(2) Idle Pulley
(3) Water Pump Assembly
(4) Gasket

Removal

1. Disconnect battery ground cable.
2. Drain coolant.
3. Radiator hose (on inlet pipe side).
4. Remove timing belt. Refer to “Timing Belt” in this manual.
5. Remove Idle pulley.
6. Remove water pump assembly.
7. Remove gasket.

Inspection

Make necessary repair and parts replacement if extreme wear or damage is found during inspection. Should any of the following problems occur, the entire water pump assembly must be replaced:

- Crack in the water pump body
- EC leakage from the seal unit
- Play or abnormal noise in the bearing
- Cracks or corrosion in the impeller.

Installation

1. Install gasket, clean the mating surface of gasket before installation.
2. Install water pump assembly and tighten bolts to the specified torque.

   Torque: 25 N·m (2.5 Kg·m/18 lb ft)

   - Tightening order
     The tightening order are in the illustrate.

NOTE: To prevent the oil leakage, apply the LOCTITE 262 or an equivalent, to the arrow marked fixing bolt thread.

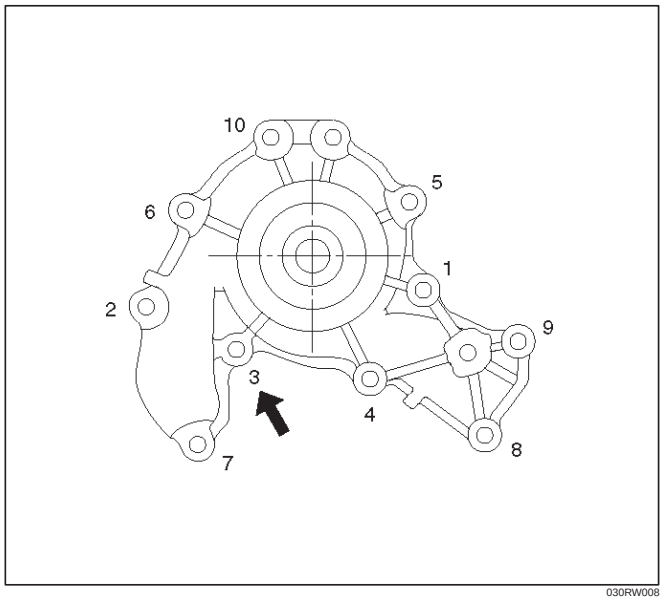

030RW008

3. Idle pulley
   - Install idle pulley and tighten bolt to the specified torque.

   Torque: 52 N·m (5.3 Kg·m/38 lb ft)

4. Timing belt
   - Install timing belt. Refer to timing belt installation step in “Timing Belt” in this manual.
5. Connect radiator inlet hose and replenish EC.
6. Connect battery ground cable.

Thermostat

Thermostat and Associated Parts

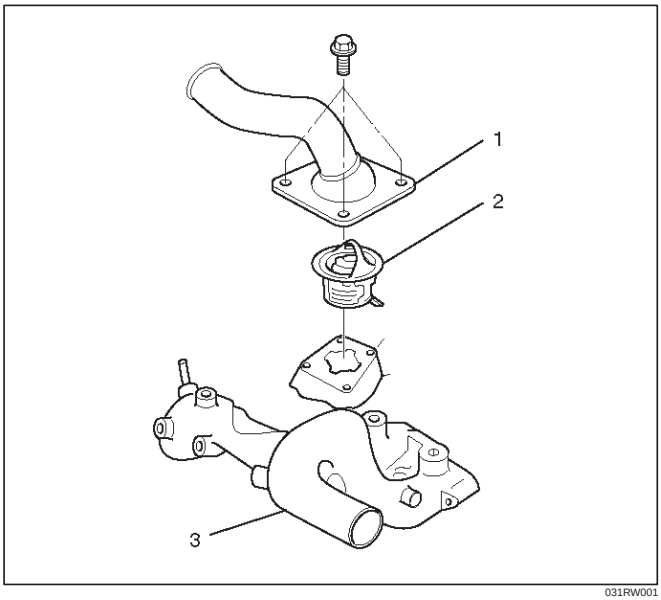

031RW001

Legend

(1) Thermostat Housing
(2) Thermostat
(3) Outlet Pipe

Removal

1. Disconnect battery ground cable.
2. Drain engine coolant from the radiator and engine.
3. Disconnect radiator hose from the inlet pipe.
4. Remove thermostat housing.
5. Remove thermostat(2).

Inspection

Suspend the thermostat in a water–filled container using thin wire. Place a thermometer next to the thermostat. Do not directly heat the thermostat.
Gradually increase the water temperature. Stir the water so that the entire water is same temperature.

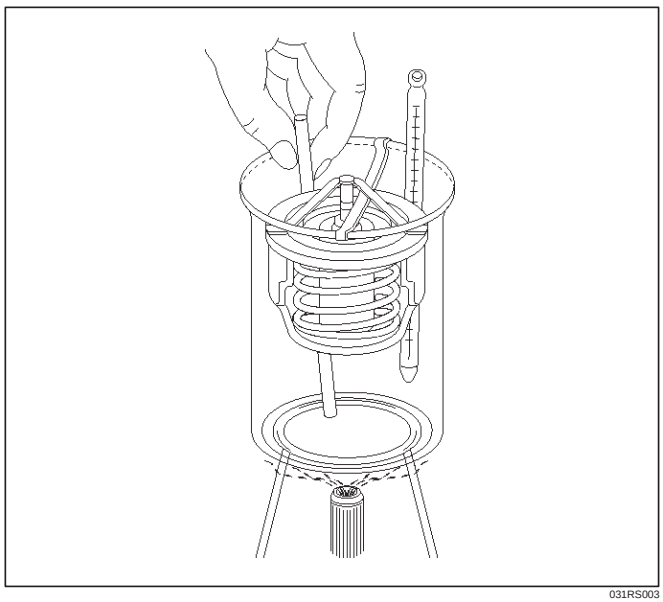

031RS003

Confirm the temperature when the valve first begins to open.

Valve opening temperature 74.5C ~ 78.5˚C (166.1˚F ~ 173.3˚F)

Confirm the temperature when the valve is fully opened.

Valve full open temperature and lift More than 8.5mm (0.33 in) at 90˚C (194˚F)

Make necessary repair and parts replacement if extreme wear or damage is found during inspection.

Installation

1. Install thermostat into the outlet pipe(4) making sure that the air hole is in the up position.
2. Install thermostat housing and tighten bolts to the specified torque.

   Torque: 25 N·m (2.5 Kg·m/18 lb ft)

3. Installation rubber hose.
4. Replenish engine coolant (EC).
5. Start engine and check for EC leakage.

Radiator

Radiator and Associated Parts

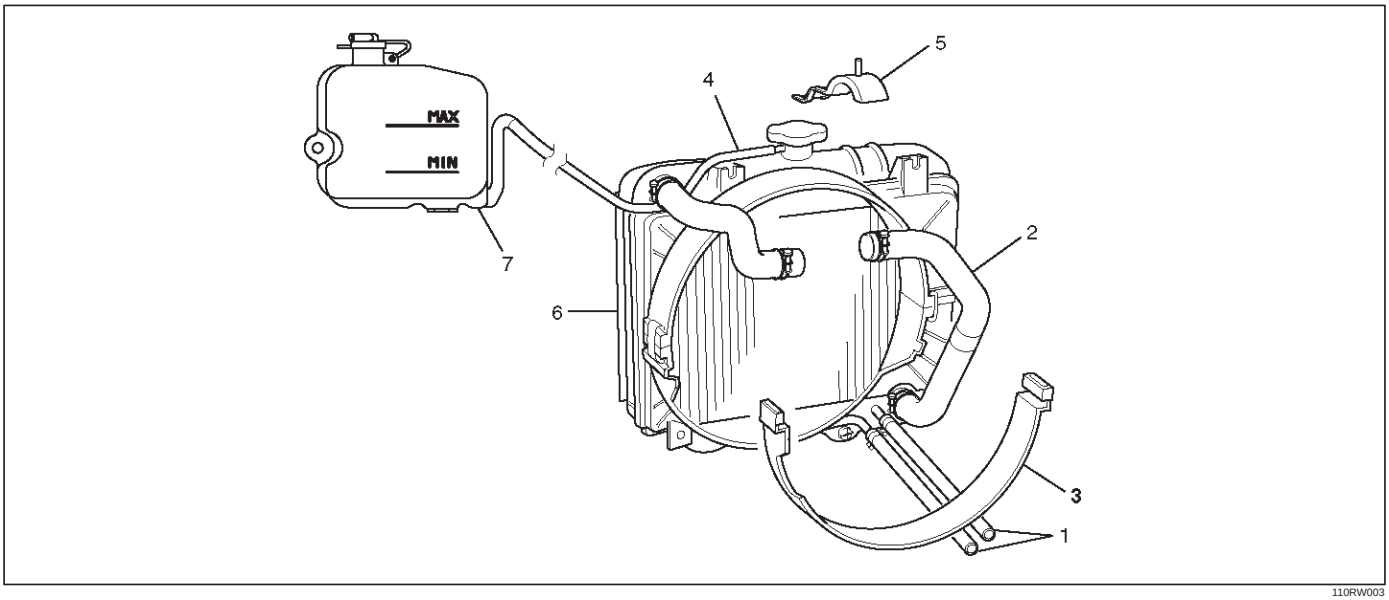

110RW003

Legend

(1) Oil Cooler Hose For Automatic Transmission
(2) Radiator Hose
(3) Fan Guide, Lower
(4) Reserve Tank Hose
(5) Bracket
(6) Radiator Assembly
(7) Reserve Tank

Removal

1. Disconnect battery ground cable.
2. Loosen a drain plug(2) to drain EC.
3. Disconnect oil cooler hose(1) on automatic transmission (A/T).
4. Disconnect radiator inlet hose and outlet hose from the engine.

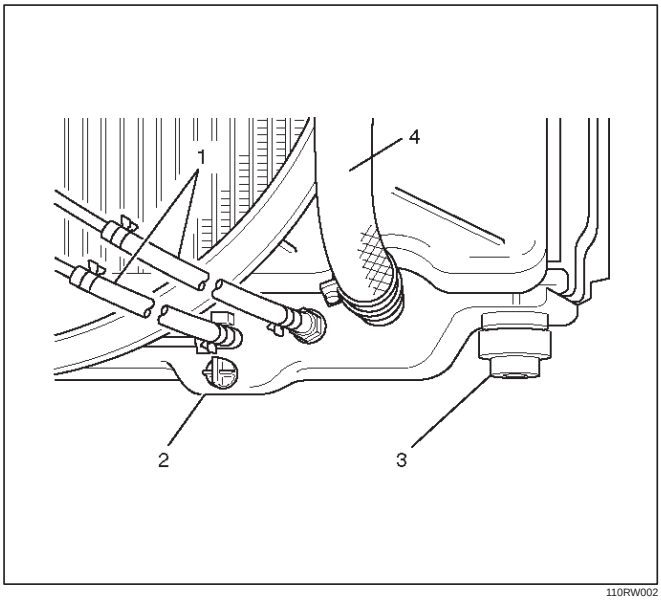

110RW002

5. Remove fan guide(1), clips(3) on both sides and the bottom lock, then remove lower fan guide(3) with fan shroud(4).

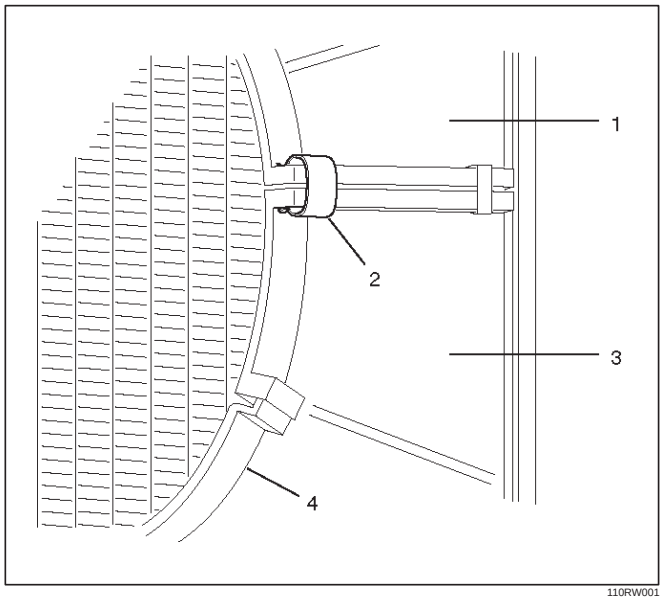

110RW001

6. Disconnect the reserve tank hose(4) from radiator.
7. Remove bracket(5).

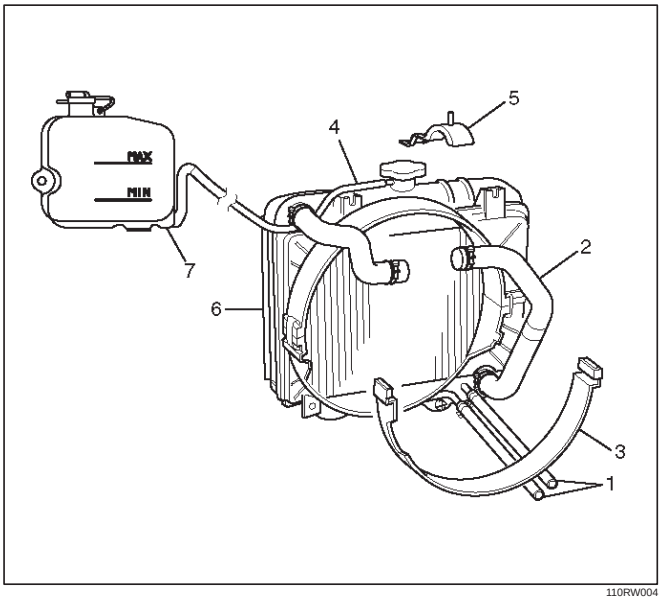

110RW004

8. Lift up and remove the radiator assembly with hose, taking care not to damage the radiator core with a fan blade.
9. Remove rubber cushions on both sides at the bottom.

Inspection

Radiator Cap

Measure the valve opening pressure of the pressurizing valve with a radiator filler cap tester.
Replace the cap if the valve opening pressure is outside the standard range.

Valve opening pressure kPa (psi) 88.3 ~ 117.7 (12.8 ~17.1)

Cap tester: 5–8840–0277–0
Adapter: 5–8840–2603–0
Check the condition of the vacuum valve in the center of the valve seat side of the cap. If considerable rust or dirt is found, or if the valve seat cannot be moved by hand, clean or replace the cap.

Valve opening vacuum kPa (psi) 1.96 ~ 4.91 (0.28 ~ 0.71)

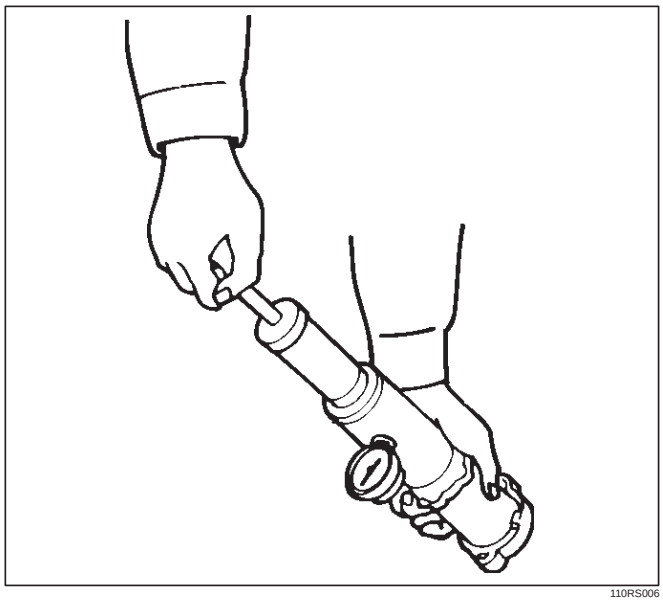
110RS006

Radiator Core

1. A bent fin may result in reduced ventilation and overheating may occur. All bent fins must be straightened. Pay close attention to the base of the fin when it is being straightened.
2. Remove all dust, bugs and other foreign material.

Flushing the Radiator

Thoroughly wash the inside of the radiator and the engine coolant passages with cold water and mild detergent. Remove all signs of scale and rust.

Cooling System Leakage Check

Use a radiator cap tester to force air into the radiator through the filler neck at the specified pressure of 196 kPa (28.5 psi) with a cap tester:

- Leakage from the radiator
- Leakage from the coolant pump
- Leakage from the water hoses
- Check the rubber hoses for swelling.

Cap tester: 5–8840–0277–0
Adapter: 5–8840–2603–0

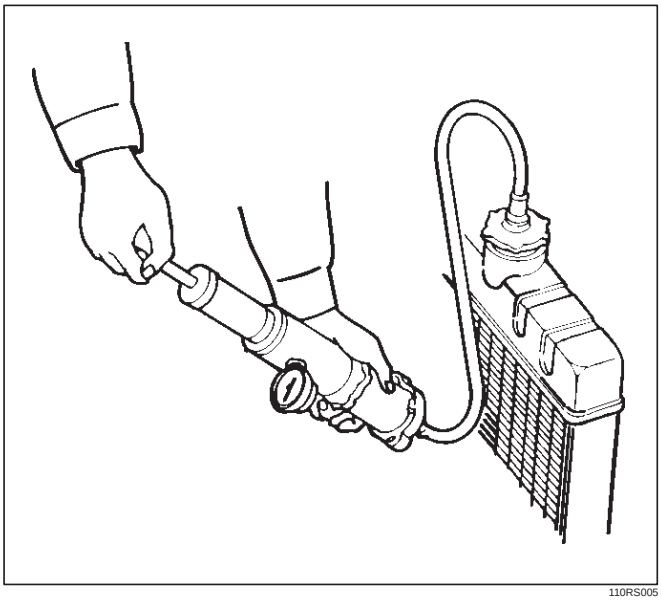

110RS005

Installation

1. Install rubber cushions on both sides of radiator bottom.
2. Install radiator assembly with hose, taking care not to damage the radiator core with a fan blade.
3. Install bracket (6) and support the radiator upper tank with the bracket (5) and secure the radiator.
4. Connect reserve tank hose (4).
5. Install lower fan guide (3).
6. Connect radiator inlet hose and outlet hose to the engine.
7. Connect oil cooler hose (1) to automatic transmission.

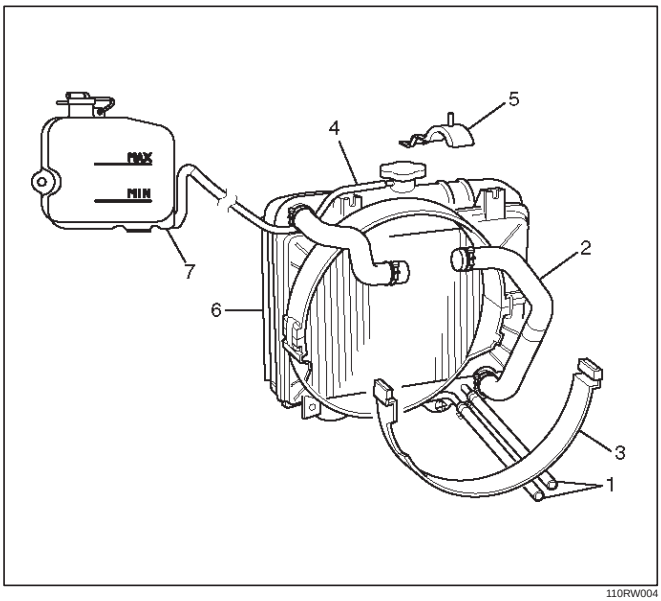

110RW004

8. Connect battery ground cable.
9. Pour engine coolant up to filler neck of radiator, and up to MAX mark of reserve tank.

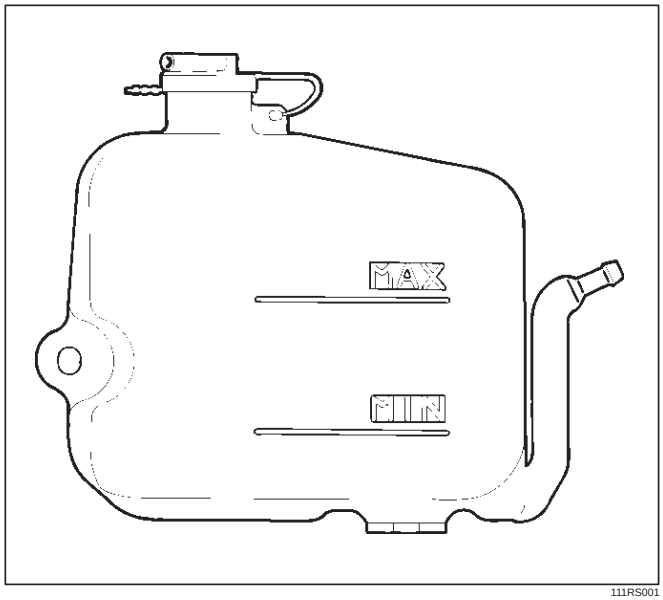

111RS001

Important operation (in case of 100% engine coolant change) procedure for filling with engine coolant.

1. Make sure that the engine is cool.
2. Open radiator cap pour coolant up to filler neck.
3. Pour coolant into reservoir tank up to “MAX” line.
4. Tighten radiator cap and start the engine. After idling for 2 to 3 minutes, stop the engine and reopen radiator cap. If the water level is lower, replenish.

WARNING: WHEN THE COOLANT IS HEATED TO A HIGH TEMPERATURE, BE SURE NOT TO LOOSEN OR REMOVE THE RADIATOR CAP. OTHERWISE YOU MIGHT GET SCALDED BY HOT VAPOR OR BOILING WATER. TO OPEN THE RADIATOR CAP, PUT A PIECE OF THICK CLOTH ON THE CAP AND LOOSEN THE CAP SLOWLY TO REDUCE THE PRESSURE WHEN THE COOLANT HAS BECOME COOLER.

5. After tightening radiator cap, warm up the engine at about 2000 rpm. Set heater adjustment to the highest temperature position, and let the coolant circulate also into heater water system.
6. Check to see the thermostat has opened through the needle position of water thermometer, conduct a 5–minute idling again and stop the engine.
7. When the engine has been cooled, check filler neck for water level and replenish if required. Should extreme shortage of coolant is found, check the cooling system and reservoir tank hose for leakage.
8. Pour coolant into reservoir tank up tp “MAX” line.

Drive Belt and Cooling Fan

Drive Belt and Associated Parts

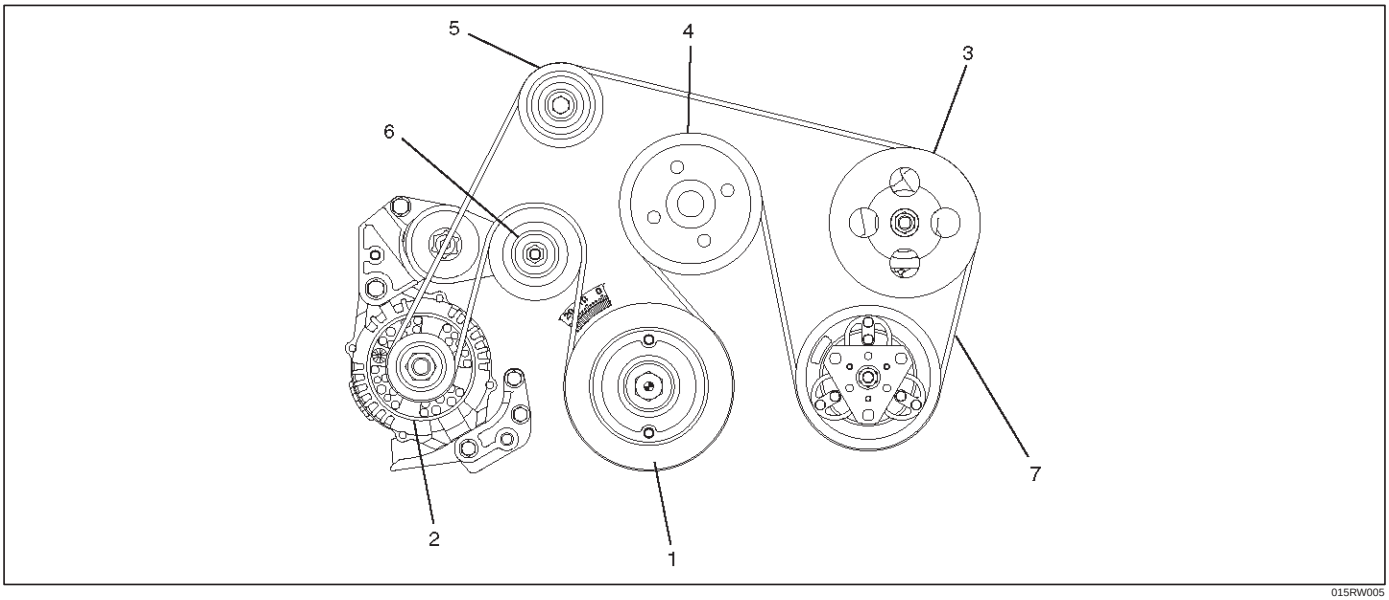

015RW005

Legend

(1) Crankshaft Pulley
(2) Generator
(3) Power Steering Pump
(4) Water Pump and Cooling Fan Pulley
(5) Idle Pulley
(6) Tension Pulley
(7) Drive Belt

The drive belt adjustment is not required as automatic drive belt tensioner is equipped.

Inspection

Check drive belt for wear or damage, and replace with a new one as necessary.

Installation

Install cooling fan assembly and tighten bolts/nuts to the specified torque.

Torque : 22 N·m (2.2 Kg·m/16 lb ft) for fan pulley and fan bracket.

Torque : 10 N·m (1.0 Kg·m/88.5 lb in) for fan and clutch assembly.

NOTE: Fan belts for 6VE1 Gasoline Engine mounted on 98MY (UX) have been brought into one. As a result, the rotating direction of a fan belt is opposite to the direction of cooling fan for 92 to 97MY 6VD1 with no interchangeability.

Therefore, incorrect installation of a fan may cause the air for cooling to flow in the opposite direction, this resulting in the poor performance of the air-conditioner and a rise temperature in engine cooling water.

Main Data and Specifications

General Specifications

	M/T	A/T
Cooling system	Engine coolant forced circulation	
Radiator	(1 tube in row) Tube type corrugated (2 tube in row)	
Heat radiation capacity	68,000 kcal/h	77,000 kcal/h
Heat radiation area	9.445m^2 (0.878ft^2)	11.21m^2 (1.04ft^2)
Radiator front area	0.302m^2 (0.028ft^2)	
Radiator dry weight	39N (8.8lb)	44N (9.9lb)
Radiator cap valve opening pressure	93.3 ~ 122.7kpa (13.5 ~ 17.8psi)	
Engine coolant capacity	2.5lit (2.6U.S q.t.)	2.4lit (2.5U.S q.t.)
Engine coolant pump	Centrifugal impeller type	
Delivery	300 (317) or more	
Pump speed	5000 ± 50 rpm	
Thermostat	Wax pellet type with air hole	
Valve opening temperature	74.5 ~ 78.5˚C (166.1 ~ 173.3˚F)	
Engine coolant total capacity	10.4lit (11.0U.S qt)	10.5lit (11.1U.S qt)

Torque Specifications

N·m (Kg·m/lb ft)

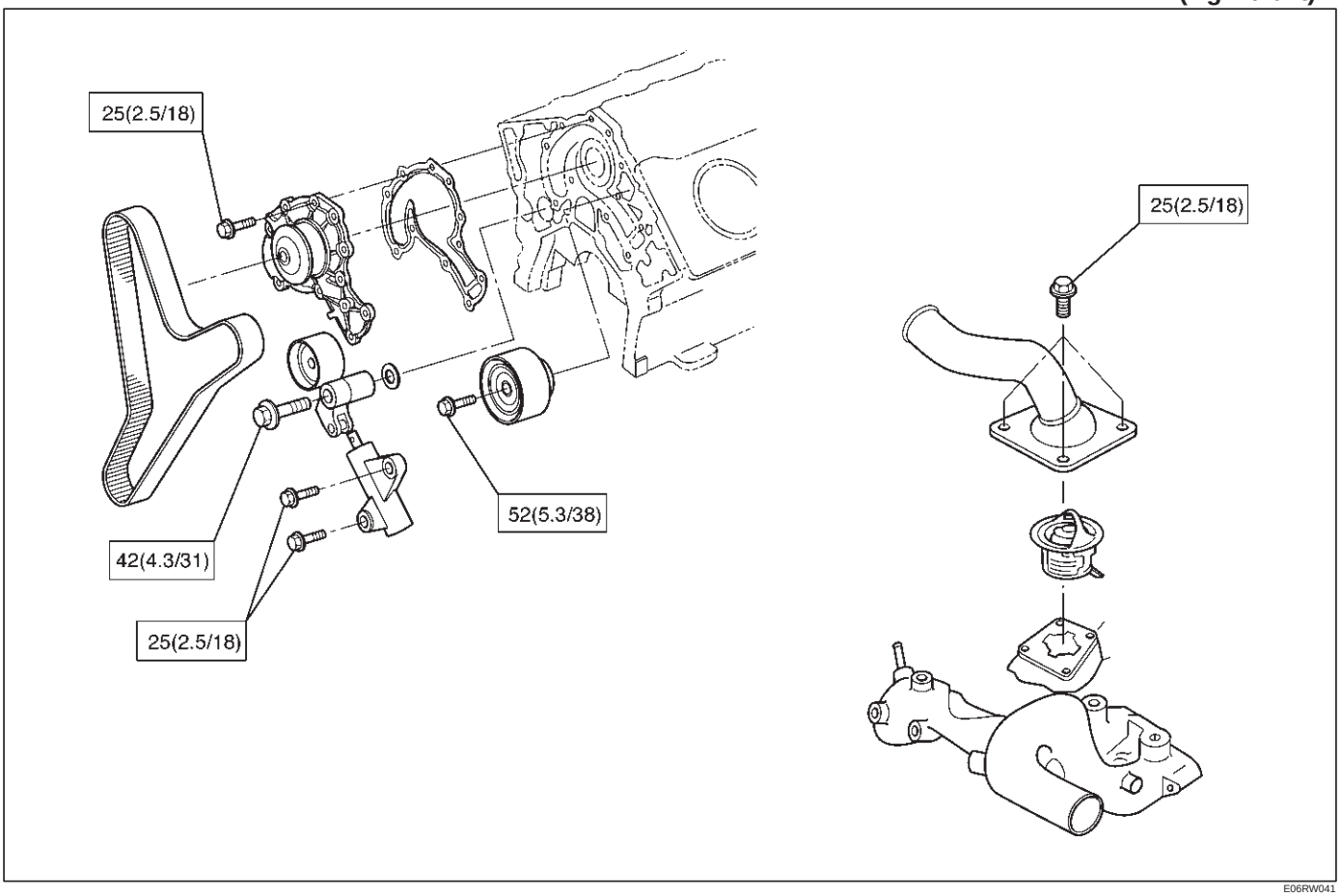

E06RW041

Special Tool

ILLUSTRATION	**TOOL NO.** TOOL NAME
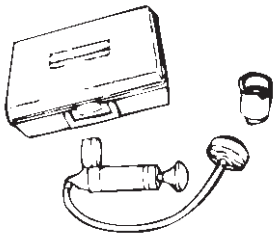	**5–8840–0277–0** **(J–24460–01)** Tester; radiator cap
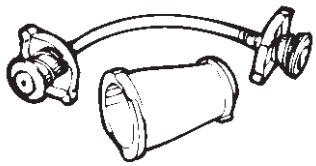	**5–8840–2603–0** **(J–33984–A)** Adapter; radiator cap

ENGINE

ENGINE FUEL

CONTENTS

Service Precaution 6C–1
General Description 6C–2
Fuel Metering 6C–3
Fuel Filter 6C–4
Fuel Filter and Associated Parts 6C–4
Removal 6C–4
Inspection 6C–4
Installation 6C–5
Inspection 6C–5
In–Tank Fuel Filter 6C–5
Fuel Pump Flow Test 6C–5
Fuel Pump 6C–6
Fuel Pump and Associated Parts 6C–6
Removal 6C–6
Installation 6C–6
Fuel Pump Relay 6C–7
General Description 6C–7
Fuel Tank 6C–7
Fuel Tank and Associated Parts 6C–7
Removal 6C–7
Installation 6C–8
Fuel Tube / Quick – Connect Fittings 6C–8
Precautions 6C–8
Cautions During Work 6C–8
Removal 6C–8
Reuse of Quick–Connector 6C–10
Assembling Advice 6C–10
Fuel Gauge Unit 6C–11
Fuel Gauge Unit and Associated Parts . . . 6C–11
Removal 6C–11
Installation 6C–11
Fuel Filler Cap 6C–12
General Description 6C–12
Inspection 6C–12
Main Data and Specifications 6C–12

Service Precaution

WARNING: IF SO EQUIPPED WITH A SUPPLEMENTAL RESTRAINT SYSTEM (SRS), REFER TO THE SRS COMPONENT AND WIRING LOCATION VIEW IN ORDER TO DETERMINE WHETHER YOU ARE PERFORMING SERVICE ON OR NEAR THE SRS COMPONENTS OR THE SRS WIRING. WHEN YOU ARE PERFORMING SERVICE ON OR NEAR THE SRS COMPONENTS OR THE SRS WIRING, REFER TO THE SRS SERVICE INFORMATION. FAILURE TO FOLLOW WARNINGS COULD RESULT IN POSSIBLE AIR BAG DEPLOYMENT, PERSONAL INJURY, OR OTHERWISE UNNEEDED SRS SYSTEM REPAIRS.

CAUTION: Always use the correct fastener in the proper location. When you replace a fastener, use ONLY the exact part number for that application. ISUZU will call out those fasteners that require a replacement after removal. ISUZU will also call out the fasteners that require thread lockers or thread sealant. UNLESS OTHERWISE SPECIFIED, do not use supplemental coatings (Paints, greases, or other corrosion inhibitors) on threaded fasteners or fastener joint interfaces. Generally, such coatings adversely affect the fastener torque and the joint clamping force, and may damage the fastener. When you install fasteners, use the correct tightening sequence and specifications. Following these instructions can help you avoid damage to parts and systems.

General Description

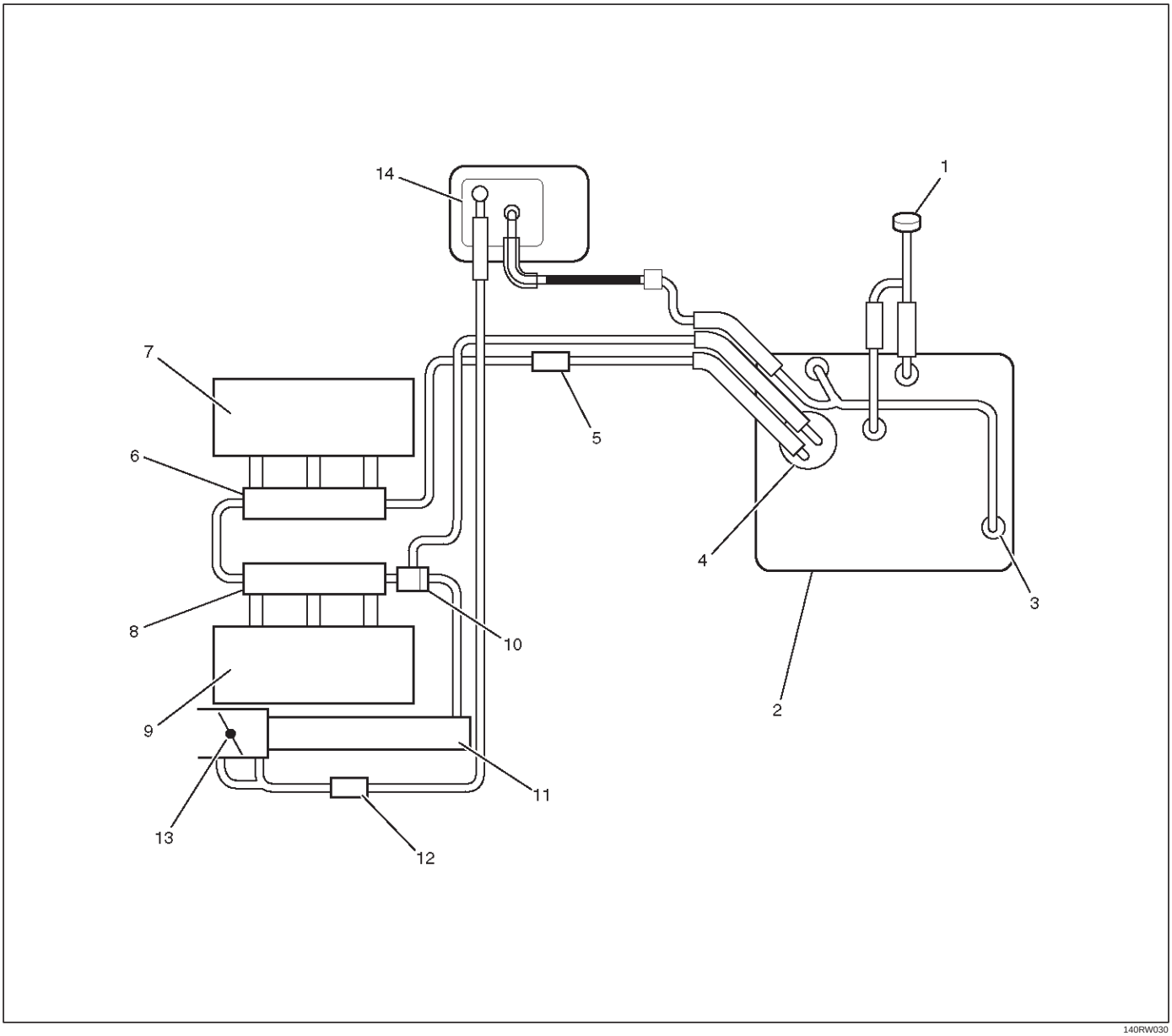

140RW030

Legend

(1) Fuel Filler Cap
(2) Fuel Tank
(3) Rollover Valve
(4) Fuel Pump
(5) Fuel Filter
(6) Fuel Rail Right
(7) Right Bank
(8) Fuel Rail Left
(9) Left Bank
(10) Fuel Pressure Control Valve
(11) Common Chamber
(12) Duty Solenoid Valve
(13) Throttle Valve
(14) Canister

When working on the fuel system, there are several things to keep in mind:

- Any time the fuel system is being worked on, disconnect the negative battery cable except for those tests where battery voltage is required.
- Always keep a dry chemical (Class B) fire extinguisher near the work area.
- Replace all pipes with the same pipe and fittings that were removed.
- Clean and inspect “O” rings. Replace if required.
- Always relieve the line pressure before servicing any fuel system components.
- Do not attempt repairs on the fuel system until you have read the instructions and checked the pictures relating to that repair.

- Adhere to all Notices and Cautions.

All gasoline engines are designed to use only unleaded gasoline. Unleaded gasoline must be used for proper emission control system operation.
Its use will also minimize spark plug fouling and extend engine oil life. Using leaded gasoline can damage the emission control system and could result in loss of emission warranty coverage.
All cars are equipped with an Evaporative Emission Control System. The purpose of the system is to minimize the escape of fuel vapors to the atmosphere.

Fuel Metering

The Engine Control Module (ECM) is in complete control of this fuel delivery system during normal driving conditions.
The intake manifold function, like that of a diesel, is used only to let air into the engine. The fuel is injected by separate injectors that are mounted over the intake manifold.
The Manifold Absolute Pressure (MAP) sensor measures the changes in the intake manifold pressure which result from engine load and speed changes, which the MAP sensor converts to a voltage output.
This sensor generates the voltage to change corresponding to the flow of the air drawn into the engine. The changing voltage is transformed into an electric signal and provided to the ECM.
With receipt of the signals sent from the MAP sensor, Intake Air Temperature sensor and others, the ECM determines an appropriate fuel injection pulse width feeding such information to the fuel injector valves to effect an appropriate air/fuel ratio.
The Multiport Fuel Injection system utilizes an injection system where the injectors turn on at every crankshaft revolution. The ECM controls the injector on time so that the correct amount of fuel is metered depending on driving conditions.
Two interchangeable “O” rings are used on the injector that must be replaced when the injectors are removed.
The fuel rail is attached to the top of the intake manifold and supplies fuel to all the injectors.
Fuel is recirculated through the rail continually while the engine is running. This removes air and vapors from the fuel as well as keeping the fuel cool during hot weather operation.
The fuel pressure control valve that is mounted on the fuel rail maintains a pressure differential across the injectors under all operating conditions. It is accomplished by controlling the amount of fuel that is recirculated back to the fuel tank based on engine demand.
See Section “Driveability and Emission” for more information and diagnosis.

Fuel Filter

Fuel Filter and Associated Parts

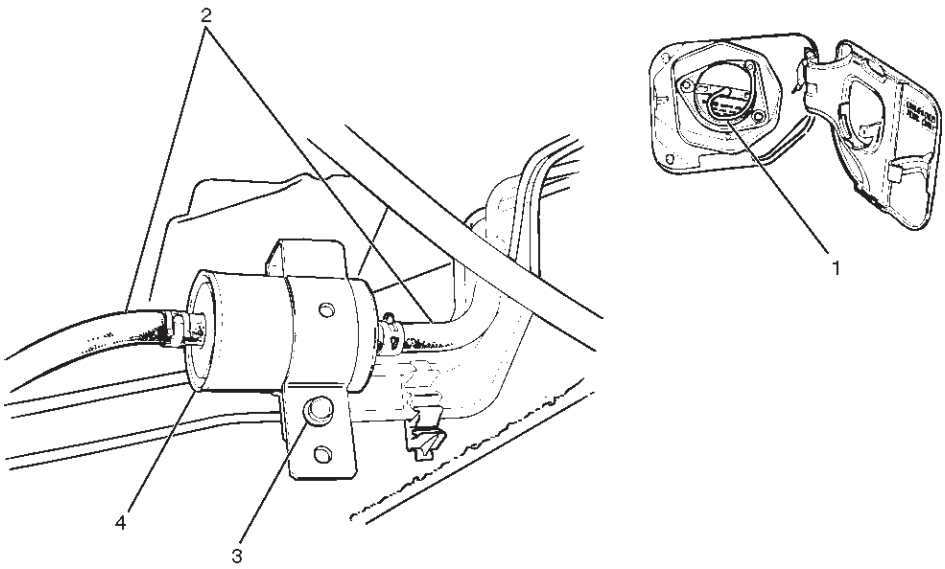

041RW014

Legend

(1) Fuel Filler Cap
(2) Fuel Hose
(3) Fuel Filter Fixing Bolt
(4) Fuel Filter

Removal

CAUTION: When repair to the fuel system has been completed, start engine and check the fuel system for loose connection or leakage. For the fuel system diagnosis, see Section “Driveability and Emission”.

1. Disconnect battery ground cable.
2. Remove Fuel filler cap(1).
3. Disconnect fuel hoses(2) from fuel filter on both engine side and fuel tank side.
4. Fuel filter fixing bolt(3).
   - Remove the fuel filter fixing bolt(3) on fuel filter holder.
5. Remove fuel filter(4).

Inspection

1. Replace the fuel filter if the fuel leaks from fuel filter body or if the fuel filter body itself is damaged.
2. Replace the filter if it is clogged with dirt or sediment.
3. Check the drain of receive rubber and if it is clogged with dust, clean it up with air.

Installation

1. Install the fuel filter in the proper direction.
2. Install fuel filter holder fixing bolt.
3. Connect fuel hoses on engine side(1) and fuel tank side(2).

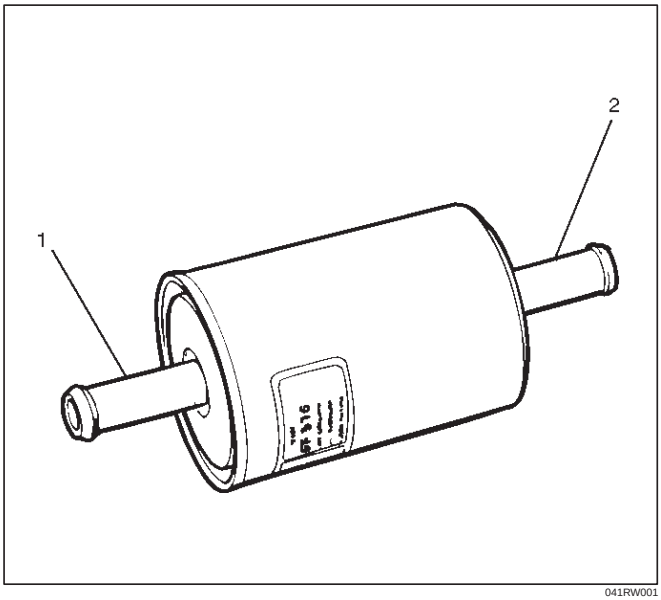

041RW001

4. Install fuel filler cap
5. Connect the battery ground cable.

Inspection

After installation, start engine and check for fuel leakage.

In–Tank Fuel Filter

The filter is located on the lower end of fuel pickup tube in the fuel tank. It prevents dirt from entering the fuel pipe and also stops water unless the filter is completely submerged in the water. It is a self cleaning type, not requiring scheduled maintenance. Excess water and sediment in the tank restricts fuel supply to the engine, resulting in engine stoppage. In such a case, the tank must be cleaned thoroughly.

Fuel Pump Flow Test

If reduction of fuel supply is suspected, perform the following checks:

1. Make sure that there is fuel in the tank.
2. With the engine running, check the fuel feed pipe and hose from fuel tank to injector for evidence of leakage. Retighten, if pipe or hose connection is loose. Also, check pipes and hoses for squashing or clogging.
3. Insert the hose from fuel feed pipe into a clean container, and check for fuel pump flow rate.
4. Connect the pump relay terminals with a jumper wire(1) as shown and start the fuel pump to measure delivery.

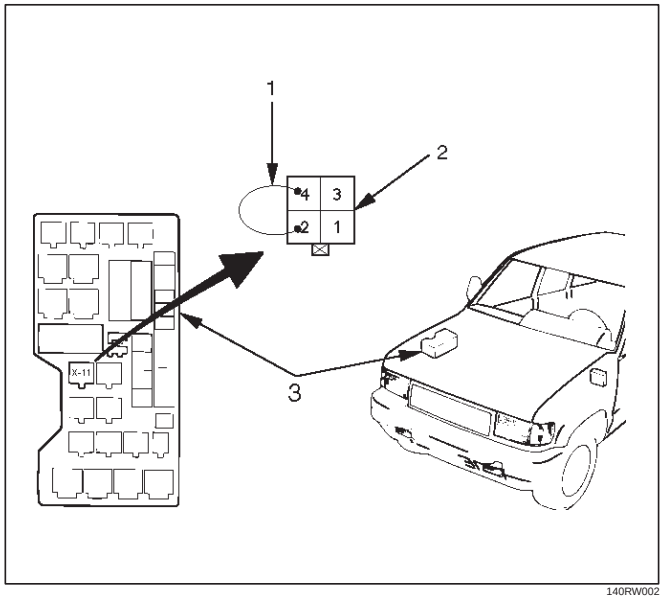

140RW002

CAUTION: Never generate sparks when connecting a jumper wire.

Delivery	Delivery
15 seconds	0.38 liters minimum

If the measure value is out of standard, conduct the pressure test.

Pressure test

For the pressure test to the fuel system, see Section 6E “Fuel Control System”.

Fuel Pump

Fuel Pump and Associated Parts

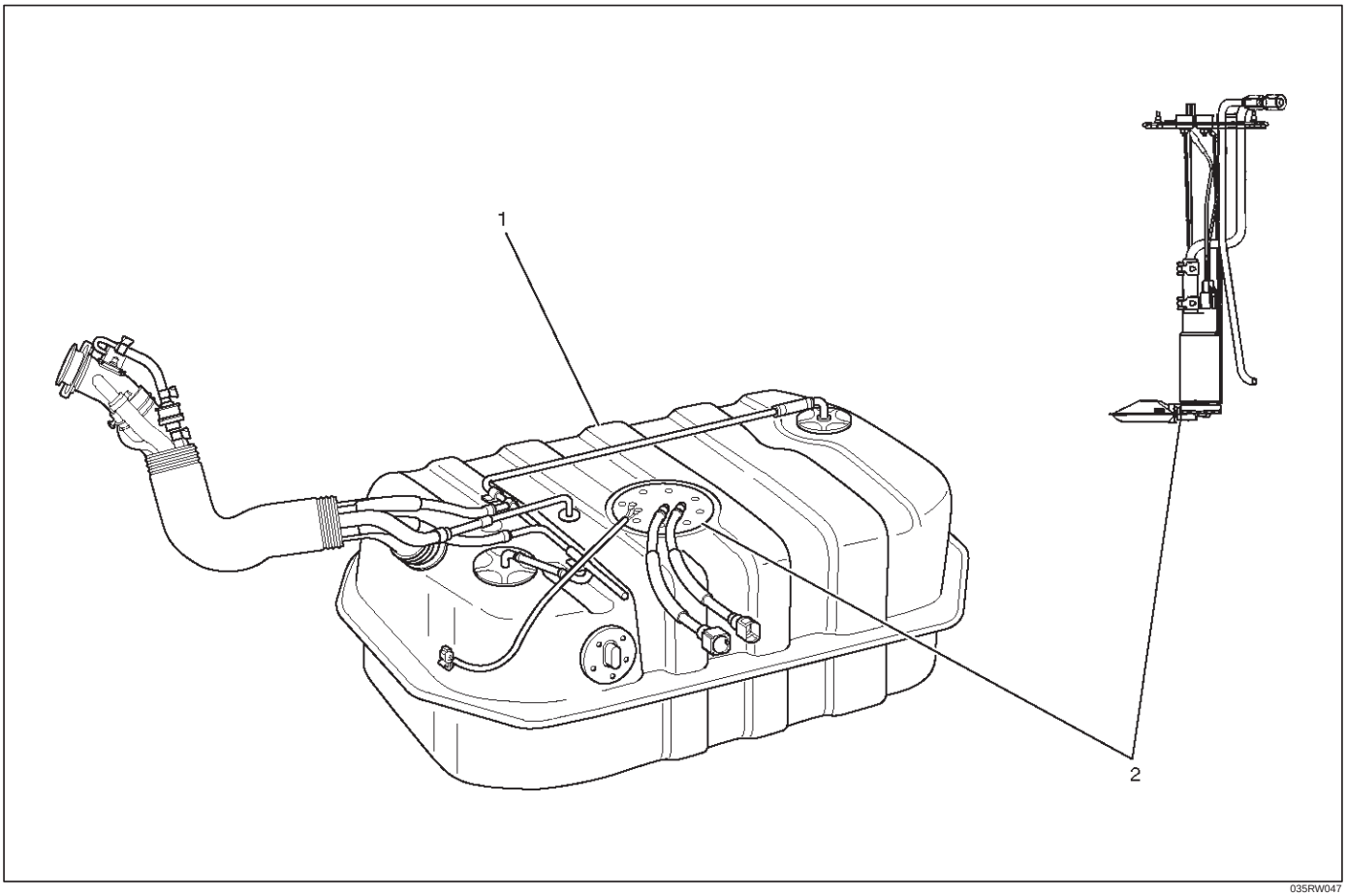

035RW047

Removal

CAUTION: When repair to the fuel system has been completed, start engine and check the fuel system for loose connection or leakage. For the fuel system diagnosis, see Section "Driveability and Emission".

1. Disconnect battery ground cable.
2. Loosen fuel filler cap.
3. Drain fuel.
   Tighten drain plug to the specified torque after draining fuel.

   Torque: 20 N·m (2.0 Kg·m/14 lb ft) — M8
4. Remove fuel tank assembly(1). Refer to "Fuel Tank Removal" in this section.
5. Remove fuel pump (FP) assembly(2) fixing screws and remove the FP assembly.

NOTE: After removing FP, cover fuel tank to prevent any dust entering.

Installation

1. Install FP assembly(2).
2. Install fuel tank assembly(1). Refer to "Fuel Tank Installation".
3. Fill the tank with fuel and tighten fuel filler cap.
4. Connect battery ground cable.

Fuel Pump Relay

General Description

In order to control the FP operation, the FP relay is provided. When the starter switch is turned to “ON” position, the FP relay operates the FP for 2 seconds. When it is turned to “START” position, the Power Train Control Module (PCM) receives the reference pulse from the Ignition Control Module and it operates the relay, again causing the FP to feed fuel.

Fuel Tank

Fuel Tank and Associated Parts

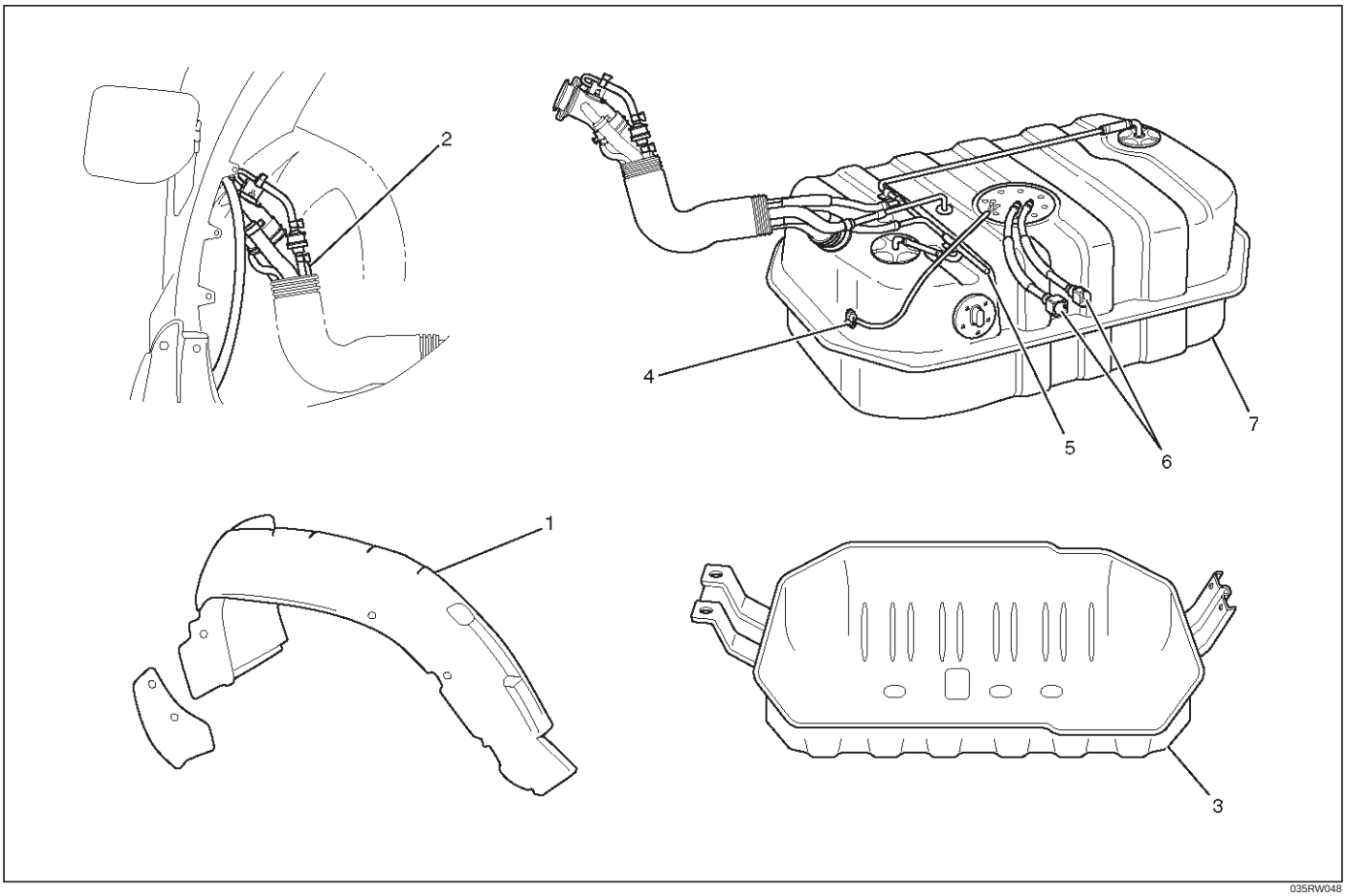

035RW048

Legend

(1) Fender Liner
(2) Fuel Filler Hose and Air Breather Hose and Evapo Hose
(3) Undercover
(4) Fuel Tank Wiring Connector
(5) Evapo Fuel Hose
(6) Fuel Feed Tube and Fuel Return Tube/Quick–Connect Fittings
(7) Fuel Tank

Removal

CAUTION: When repair to the fuel system has been completed, start engine and check the fuel system for loose connection or leakage. For the fuel system diagnosis, see Section “Driveability and Emission”.

1. Disconnect battery ground cable.
2. Loosen fuel filler cap.
3. Drain fuel.
   Tighten drain plug to the specified torque after draining fuel.

   Torque: 20 N·m (2.0 Kg·m/14 lb ft) — M8
4. Remove fender liner (1) of wheel well on rear right side.
5. Fuel filler hose, air breather hose and evapo hose (2).
6. Remove undercover fixing bolts on both sides and remove under cover(3).

7. Disconnect two fuel tank wiring connectors(4) on front right side of tank.
8. Disconnect evapo fuel hose(5).
9. Disconnect fuel feed tube and fuel return tube(6).

NOTE: Handling of the fuel tube, be sure to refer “Fuel Tube/Quick–Connect Fittings” in this section.

10. Remove fuel tank fixing bolts on both sides and remove fuel tank(7).

Installation

1. Install fuel tank(7).
   - Place a flange on right side of tank on the bracket.
   - Install a flange on left side on the bracket from the bottom, and tighten bolts to the specified torque.

   Torque: 36 N·m (3.7 Kg·m/27 lb ft)
2. Connect fuel feed tube and fuel return tube(6).
3. Connect evapo fuel hose(5).
4. Connect fuel tank wiring connector(4).
5. Install undercover(3).
6. Connect fuel filler hose, air breather hose and evapo hose(2).
7. Install fender liner(1).
   - Mount fender liner to the wheel well.
   - Fill the tank with fuel and tighten fuel filler cap.
   - Connect battery ground cable.

Fuel Tube / Quick – Connect Fittings

Precautions

- Lighting of Fires Prohibited.
- Keep flames away from your work area to prevent the inflammable from catching fire.
- Disconnect the battery negative cable to prevent shorting during work.
- When welding or conducting other heat-generating work on other parts, be sure to provide pretreatment to protect the piping system from thermal damage or spattering.

Cautions During Work

Do not expose the assembly to battery electrolyte or do not wipe the assembly with a cloth used to wipe off spilt battery electorolyte.
The piping wet with battery electrolyte cannot be used.
Be careful not to give a bending or twisting force to the piping during the work. If deformed, replace with a new piping.

Removal

1. Open the fuel cap to relieve the fuel pressure in the tank.
   If the fuel quick-connect fittings are dusty, clean with an air blower, etc. and then remove it.

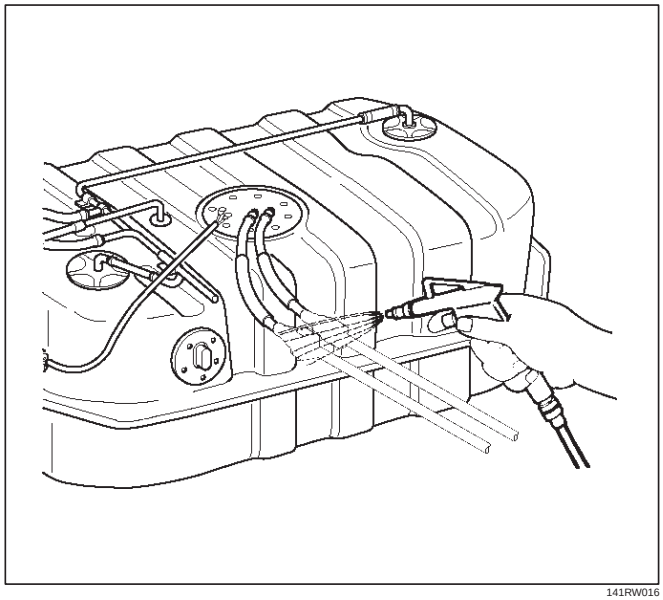

141RW016

As some pressure may remain in the piping, cover the connector with a cloth, etc. to prevent the splashing of fuel in the first disconnection of the piping.

2. For removal of the delivery pipe (feeding fuel to the engine), hold the connector in one hand, and hold the retainer tab with the other hand and pull out the connector, as illustrated. The pipe can be removed with the retainer attached.

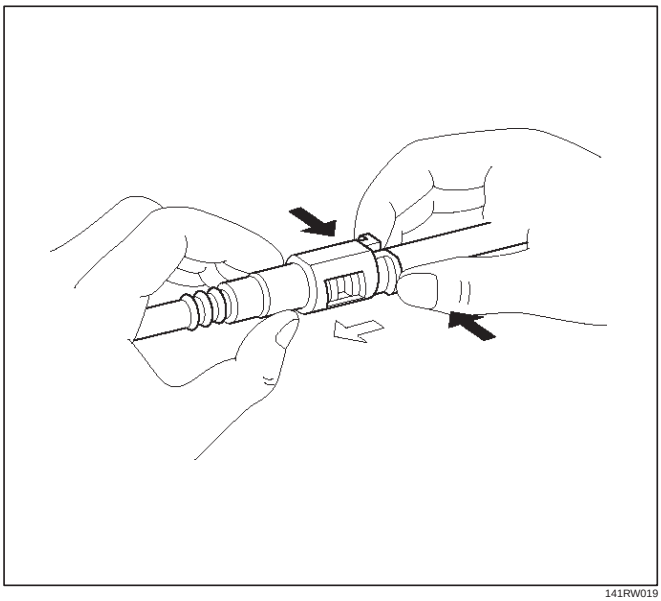

141RW019

3. For removal of the return pipe (returning fuel to the tank), hold the pipe in one hand, and pull out the connentor with the other hand while pressing the square relieve button of the retainer, as illustrated.

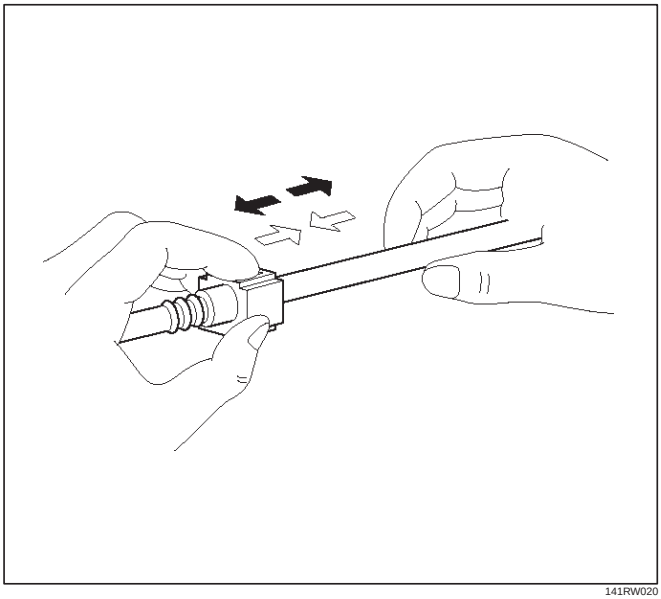

141RW020

NOTE: This work should be done by hands. Do not use any tools. Should the pipe can hardly be removed from the connector, use a lubricant (light oil) and/or push and pull the connector longitudinally until the pipe is removed.

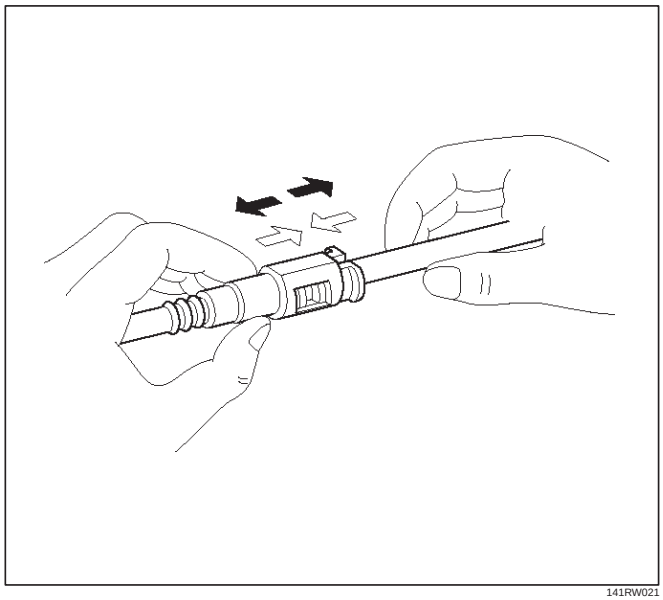

141RW021

When reusing the delivery pipe retainer, reuse without removing the retainer from the pipe. If the retainer is damaged or deformed, however, replace with a new retainer.

Cover the connectors removed with a plastic bag, etc. to prevent the entry of dust or rain water.

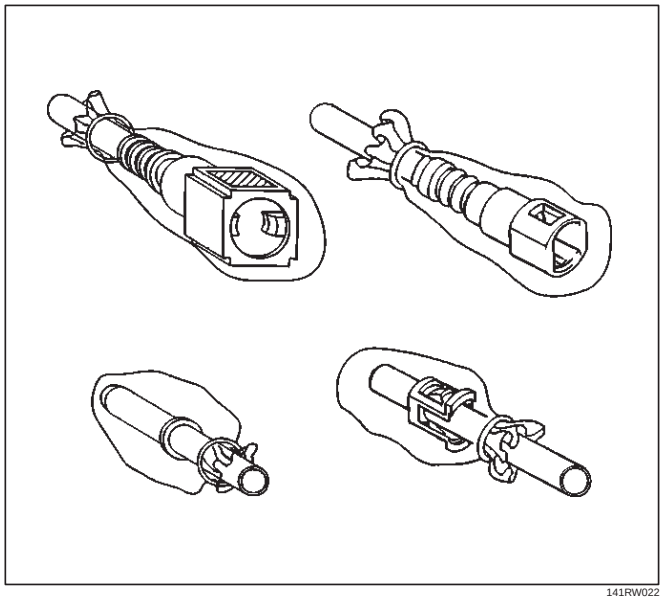

141RW022

Reuse of Quick–Connector

(Delivery Pipe)

- Replace the pipe and connector if scratch, dent or crack is found.
- Remove mud and dust from the pipe and make sure that the end including spool is free of defects, such as scratch, rust, and dent, which may cause poor sealability. If defective, replace with a new pipe.
- If the retainer removed according to the removal step above is attached to the pipe, clean and insert it straight into the quick-connector till it clicks. After it clicks, try pulling it out to make sure that it is not drawn and is securely locked.

NOTE: The retainer, once removed from the pipe, cannot be reused. Just replace with a new retainer. Insert the new retainer into the connector side until it clicks, and connect the pipe as inserting it into the retainer until it clicks.

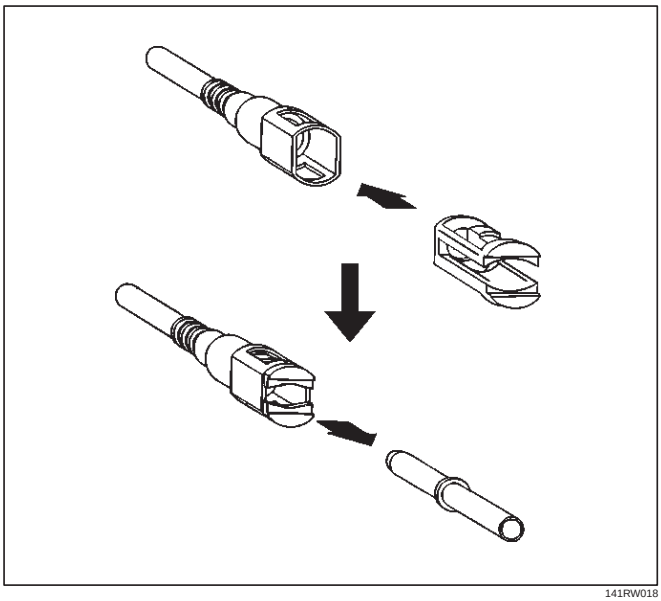

141RW018

(Return Pipe)

- Replace the pipe and connector if scratch, dent or crack is found.
- Remove mud or dust from the pipe and make sure that the end including spool is free from defects, such as scratch, rust, and dent, which may cause poor sealability. If defective, replace with a new pipe.
- After cleaning the pipe, insert it straight into the connector until it clicks. After it clicks, try pulling it out to make sure that it is not drawn and is securely locked.

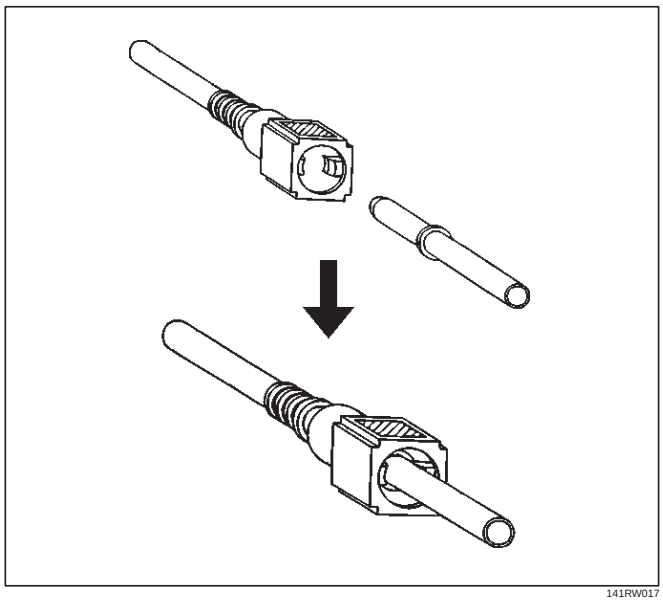

141RW017

Assembling Advice

Application of engine oil or light oil to the pipe facilitates connecting work. The work should be started immediately after lubrication, since dust may stick to the pipe surface to cause poor sealability if a long time passes after lubrication.

Test/Inspection After Assembling

1. Reconnect the battery negative cable.
2. Turn the ignition key to the “ON” position and check pump startup sound. As the pump is actuated to raise fuel pressure, check and see fuel leak from the piping system.
3. Make sure of no fuel leakage by conducting the above fuel leak check a few times.
4. Start the engine and make sure of stable idling speed and normal vehicle run.The entry of dust during the work may sometimes affect the fuel injection system.

Fuel Gauge Unit

Fuel Gauge Unit and Associated Parts

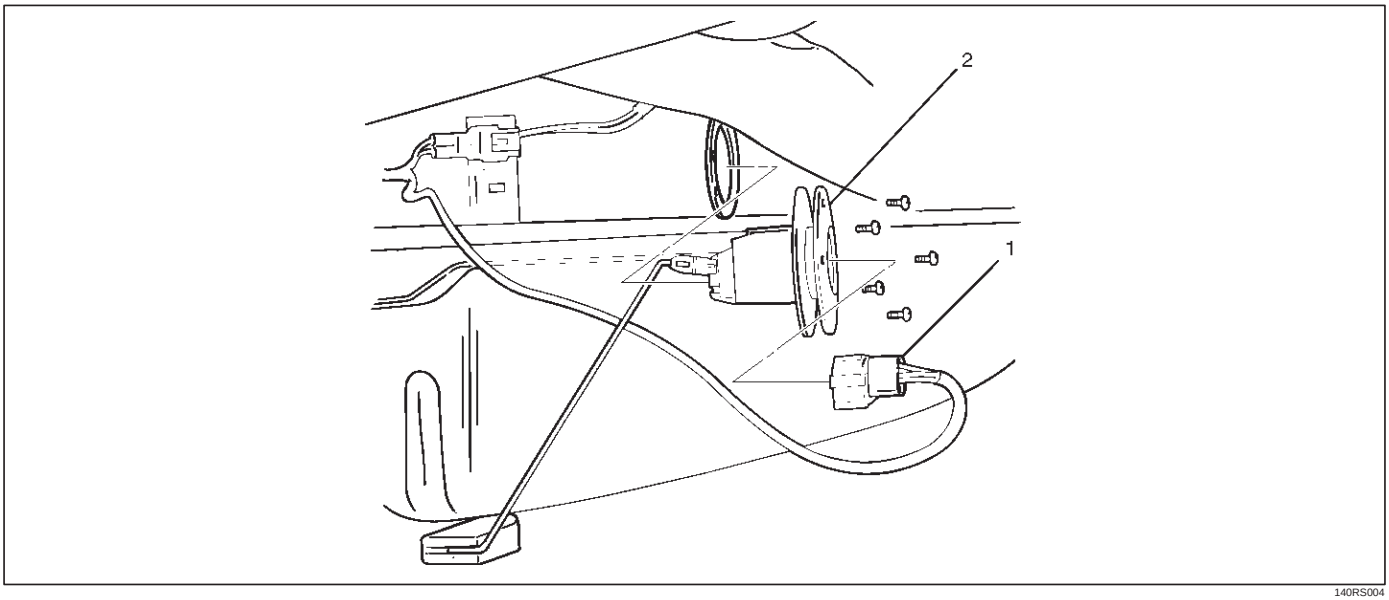

140RS004

Legend

(1) Wiring Connector
(2) Fuel Gauge Unit

Removal

CAUTION: When repair to the fuel system has been completed, start engine and check the fuel system for loose connection or leakage. For the fuel system diagnosis, see Section "Driveability and Emission".

1. Disconnect battery ground cable.
2. Loosen fuel filler cap.
3. Drain fuel.
   Tighten drain plug to the specified torque after draining fuel.

   Torque: 20 N·m (2.0 Kg·m/14 lb ft) — M8
4. Wiring connector
   - Disconnect wiring connector(1) from the unit.
5. Fuel gauge unit
   - Remove the fixing screws, then the fuel gauge unit(2).

NOTE: After removing fuel gauge unit, cover fuel tank to prevent any dust entering

Installation

1. Fuel gauge unit(2).
2. Wiring connector(1).
   - Connect the wiring connector to the fuel gauge unit.
   - Fill the tank with fuel and tighten fuel filler cap.
   - Connect battery ground cable.

Fuel Filler Cap

General Description

Fuel filler cap includes vacuum valve and pressure valve. In case any high vacuum and any high pressure happen in tank, each valve works to adjust the pressure to prevent the tank from being damaged.

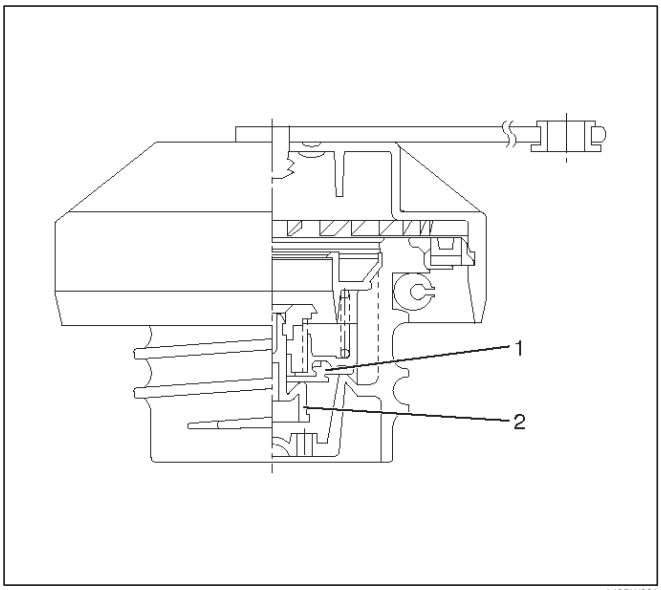

140RW021

Legend

(1) Vacuum Valve
(2) Pressure Valve

Inspection

Check the seal ring in the filler cap for presence of any abnormality and for seal condition.
Replace the filler cap, if abnormal.

CAUTION: The fuel filler cap valves have characteristics.

A defective valve, no valve at all or a valve with the wrong characteristics will do a lot of harm to engine operating characteristics; be sure to use the same fuel filler cap as installed in this vehicle.

Main Data and Specifications

Torque Specification

N·m (Kg·m/lb ft)

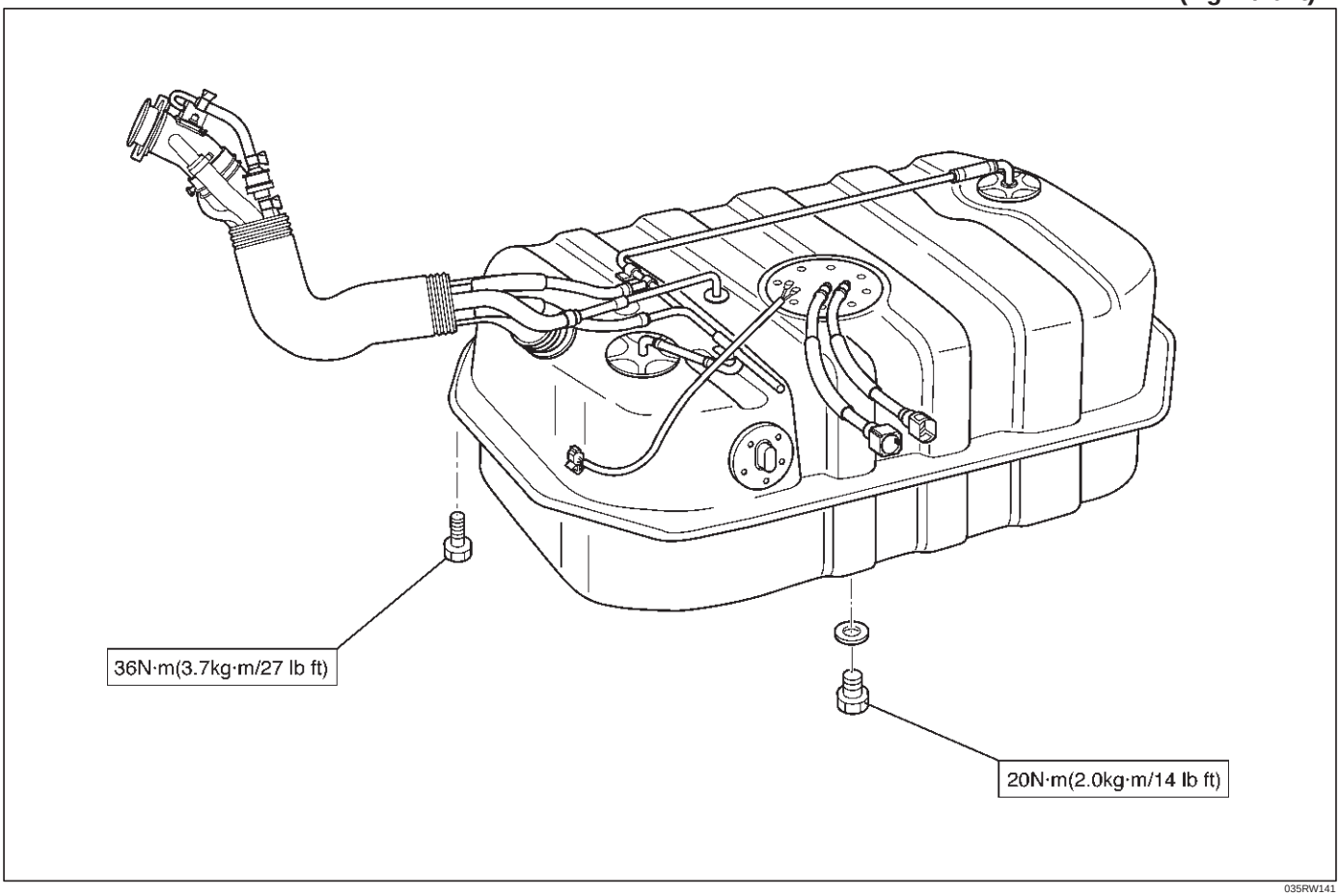

035RW141

ENGINE

ENGINE ELECTRICAL

CONTENTS

Service Precaution 6D1–1
Battery 6D1–2
General Description 6D1–2
Diagnosis 6D1–2
Battery Charging 6D1–3
Jump Starting 6D1–3
Battery Removal 6D1–4
Battery Installation 6D1–4
Main Data and Specifications 6D1–5

Service Precaution

WARNING: IF SO EQUIPPED WITH A SUPPLEMENTAL RESTRAINT SYSTEM (SRS), REFER TO THE SRS COMPONENT AND WIRING LOCATION VIEW IN ORDER TO DETERMINE WHETHER YOU ARE PERFORMING SERVICE ON OR NEAR THE SRS COMPONENTS OR THE SRS WIRING. WHEN YOU ARE PERFORMING SERVICE ON OR NEAR THE SRS COMPONENTS OR THE SRS WIRING, REFER TO THE SRS SERVICE INFORMATION. FAILURE TO FOLLOW WARNINGS COULD RESULT IN POSSIBLE AIR BAG DEPLOYMENT, PERSONAL INJURY, OR OTHERWISE UNNEEDED SRS SYSTEM REPAIRS.

CAUTION: Always use the correct fastener in the proper location. When you replace a fastener, use ONLY the exact part number for that application. ISUZU will call out those fasteners that require a replacement after removal. ISUZU will also call out the fasteners that require thread lockers or thread sealant. UNLESS OTHERWISE SPECIFIED, do not use supplemental coatings (Paints, greases, or other corrosion inhibitors) on threaded fasteners or fastener joint interfaces. Generally, such coatings adversely affect the fastener torque and the joint clamping force, and may damage the fastener. When you install fasteners, use the correct tightening sequence and specifications. Following these instructions can help you avoid damage to parts and systems.

Battery

General Description

There are six battery fluid caps on top of the battery. These are covered by a paper label.
The battery is completely sealed except for the six small vent holes on the side. These vent holes permit the escape of small amounts of gas generated by the battery.
This type of battery has the following advantages over conventional batteries:

1. There is no need to add water during the entire service life of the battery.
2. The battery protects itself against overcharging.
   The battery will refuse to accept an extensive charge.
   (A conventional battery will accept an excessive charge, resulting in gassing and loss of battery fluid.)
3. The battery is much less vulnerable to self discharge than a conventional type battery.

Diagnosis

1. Visual Inspection

Inspect the battery for obvious physical damage, such as a cracked or broken case, which would permit electrolyte loss.
Replace the battery if obvious physical damage is discovered during inspection.
Check for any other physical damage and correct it as necessary.

2. Hydrometer Check

There is a built–in hydrometer (Charge test indicator(1)) at the top of the battery. It is designed to be used during diagnostic procedures.
Before trying to read the hydrometer, carefully clean the upper battery surface.
If your work area is poorly lit, additional light may be necessary to read the hydrometer.

a. BLUE RING OR DOT VISIBLE(5) – Go to Step 4.
b. BLUE RING OR DOT NOT VISIBLE(4) – Go to Step 3.

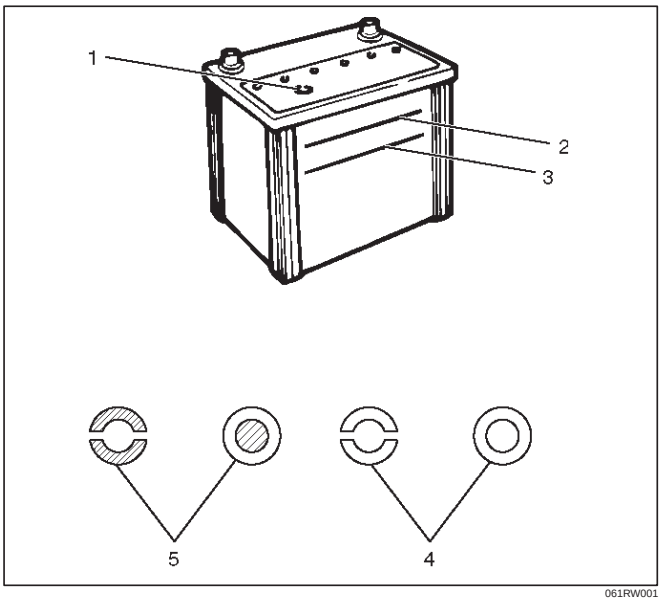

061RW001

3. Fluid Level Check

The fluid level should be between the upper level line(2) and lower level line(3) on side of battery.

a. CORRECT FLUID LEVEL – Charge the battery.
b. BELOW LOWER LEVEL – Replace battery.

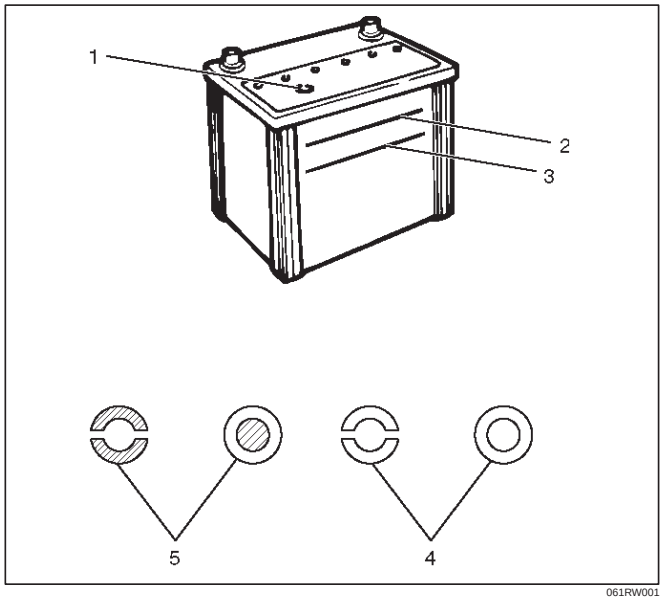

061RW001

4. Voltage Check

1. Put voltmeter test leads to battery terminals.
   a. VOLTAGE IS 12.4V OR ABOVE – Go to Step 5.
   b. VOLTAGE IS UNDER 12.4V – Go to procedure (2) below.
2. Determine fast charge amperage from specification. (See Main Data and Specifications in this section).
   Fast charge battery for 30 minutes at amperage rate no higher than specified value.
   Take voltage and amperage readings after charge.
   a. VOLTAGE IS ABOVE 16V AT BELOW 1/3 OF AMPERAGE RATE – Replace battery.
   b. VOLTAGE IS ABOVE 16V AT ABOVE 1/3 OF AMPERAGE RATE – Drop charging voltage to 15V and charge for 10 – 15 hours. Then go to Step 5.
   c. VOLTAGE IS BETWEEN 12V AND 16V – Continue charging at the same rate for an additional 3–1/2 hours. Then go to Step 5.
   d. VOLTAGE BELOW 12V – Replace Battery.

5. Load Test

1. Connect a voltmeter and a battery load tester across the battery terminals.
2. Apply 300 ampere load for 15 seconds to remove surface charge from the battery. Remove load.
3. Wait 15 seconds to let battery recover. Then apply specified load from specifications (See Main Data and Specifications in this section).
   Read voltage after 15 seconds, then remove load.

a. VOLTAGE DOES NOT DROP BELOW THE MINIMUM LISTED IN THE TABLE – The battery is good and should be returned to service.

b. VOLTAGE IS LESS THAN MINIMUM LISTED – Replace battery.

ESTIMATED TEMPERATURE		MINIMUM VOLTAGE
˚F	˚C	V
70	21	9.6
60	16	9.5
50	10	9.4
40	4	9.3
30	–1	9.1
20	–7	8.9
10	–12	8.7
0	–18	8.5
The battery temperature must be estimated by feel and by the temperature the battery has been exposed to for the preceding few hours.		

Battery Charging

Observe the following safety precautions when charging the battery:

1. Never attempt to charge the battery when the fluid level is below the lower level line on the side of the battery. In this case, the battery must be replaced.
2. Pay close attention to the battery during charging procedure.

   Battery charging should be discontinued or the rate of charge reduced if the battery feels hot to the touch.

   Battery charging should be discontinued or the rate of charge reduced if the battery begins to gas or spew electrolyte from the vent holes.
3. In order to more easily view the hydrometer blue dot or ring, it may be necessary to jiggle or tilt the battery.
4. Battery temperature can have a great effect on battery charging capacity.
5. The sealed battery used on this vehicle may be either quick charged or slow charged in the same manner as other batteries.

   Whichever method you decide to use, be sure that you completely charge the battery. Never partially charge the battery.

Jump Starting

Jump Starting with an Auxiliary (Booster) Battery

CAUTION: Never push or tow the vehicle in an attempt to start it. Serious damage to the emission system as well as other vehicle parts will result.

Treat both the discharged battery and the booster battery with great care when using jumper cables. Carefully follow the jump starting procedure, being careful at all times to avoid sparking.

WARNING: FAILURE TO CAREFULLY FOLLOW THE JUMP STARTING PROCEDURE COULD RESULT IN THE FOLLOWING:

1. Serious personal injury, particularly to your eyes.
2. Property damage from a battery explosion, battery acid, or an electrical fire.
3. Damage to the electronic components of one or both vehicles particularly.

Never expose the battery to an open flame or electrical spark. Gas generated by the battery may catch fire or explode.

Remove any rings, watches, or other jewelry before working around the battery. Protect your eyes by wearing an approved set of goggles.

Never allow battery fluid to come in contact with your eyes or skin.

Never allow battery fluid to come in contact with fabrics or painted surfaces.

Battery fluid is a highly corrosive acid.

Should battery fluid come in contact with your eyes, skin, fabric, or a painted surface, immediately and thoroughly rinse the affected area with clean tap water.

Never allow metal tools or jumper cables to come in contact with the positive battery terminal, or any other metal surface of the vehicle. This will protect against a short circuit.

Always keep batteries out of reach of young children.

Jump Starting Procedure

1. Set the vehicle parking brake.

   If the vehicle is equipped with an automatic transmission, place the selector level in the “PARK” position.

   If the vehicle is equipped with a manual transmission, place the shift lever in the “NEUTRAL” position.

   Turn “OFF” the ignition.

   Turn “OFF” all lights and any other accessory requiring electrical power.
2. Look at the built–in hydrometer.

   If the indication area of the built–in hydrometer is completely clear, do not try to jump start.
3. Attach the end of one jumper cable to the positive terminal of the booster battery.

   Attach the other end of the same cable to the positive terminal of the discharged battery.

   Do not allow the vehicles to touch each other. This will cause a ground connection, effectively neutralizing the charging procedure.

   Be sure that the booster battery has a 12 volt rating.

4. Attach one end of the remaining cable to the negative terminal of the booster battery.

   Attach the other end of the same cable to a solid engine ground (such as the air conditioning compressor bracket or the generator mounting bracket) of the vehicle with the discharged battery.

   The ground connection must be at least 450 mm (18 in.) from the battery of the vehicle whose battery is being charged.

WARNING: NEVER ATTACH THE END OF THE JUMPER CABLE DIRECTLY TO THE NEGATIVE TERMINAL OF THE DEAD BATTERY.

5. Start the engine of the vehicle with the good battery.
   Make sure that all unnecessary electrical accessories have been turned “OFF”.
6. Start the engine of the vehicle with the dead battery.
7. To remove the jumper cables, follow the above directions in reverse order.
   Be sure to first disconnect the negative cable from the vehicle with the discharged battery.

Battery Removal

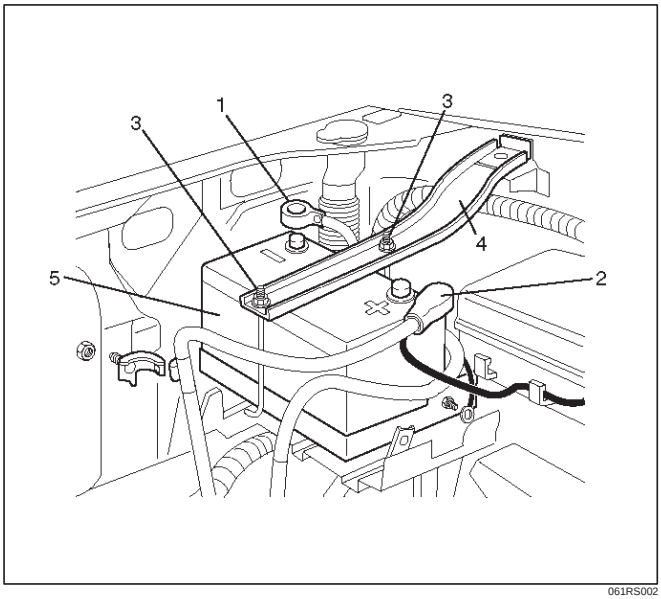

061RS002

1. Remove negative cable (1).
2. Remove positive cable (2).
3. Remove retainer screw and rods (3).
4. Remove retainer (4).
5. Remove battery (5).

Battery Installation

1. Install battery (5).
2. Install retainer (4).
3. Instal retainer screw and rods (3).

NOTE: Make sure that the rod is hooked on the body side.

4. Install positive cable (2).
5. Install negative cable (1).

Main Data and Specifications

General Specifications

Model (JIS)	95D31R–MF	80D26R–MF	75D26R–MF
Voltage (V)	12	12	12
Cold Cranking Performance (Amp)	622	582	490
Reserve Capacity (Min)	159	133	123
Load Test (Amp)	310	290	245
Fast Charge Maximum Amperage (Amp)	20	20	20
BCI Group No.	27	24	24

MEMO

ENGINE

IGNITION SYSTEM

CONTENTS

Service Precaution 6D2–1
General Description 6D2–2
Diagnosis 6D2–2
Ignition Coil 6D2–3
Removal 6D2–3
Inspection and Repair 6D2–3
Installation 6D2–3
Spark Plug 6D2–4
Removal 6D2–4
Inspection and Repair 6D2–4
Installation 6D2–4
Crankshaft Angle Sensor 6D2–5
Removal 6D2–5
Installation 6D2–5
Main Data and Specifications 6D2–6

Service Precaution

WARNING: IF SO EQUIPPED WITH A SUPPLEMENTAL RESTRAINT SYSTEM (SRS), REFER TO THE SRS COMPONENT AND WIRING LOCATION VIEW IN ORDER TO DETERMINE WHETHER YOU ARE PERFORMING SERVICE ON OR NEAR THE SRS COMPONENTS OR THE SRS WIRING. WHEN YOU ARE PERFORMING SERVICE ON OR NEAR THE SRS COMPONENTS OR THE SRS WIRING, REFER TO THE SRS SERVICE INFORMATION. FAILURE TO FOLLOW WARNINGS COULD RESULT IN POSSIBLE AIR BAG DEPLOYMENT, PERSONAL INJURY, OR OTHERWISE UNNEEDED SRS SYSTEM REPAIRS.

CAUTION: Always use the correct fastener in the proper location. When you replace a fastener, use ONLY the exact part number for that application. ISUZU will call out those fasteners that require a replacement after removal. ISUZU will also call out the fasteners that require thread lockers or thread sealant. UNLESS OTHERWISE SPECIFIED, do not use supplemental coatings (Paints, greases, or other corrosion inhibitors) on threaded fasteners or fastener joint interfaces. Generally, such coatings adversely affect the fastener torque and the joint clamping force, and may damage the fastener. When you install fasteners, use the correct tightening sequence and specifications. Following these instructions can help you avoid damage to parts and systems.

General Description

Ignition is done by the electronic ignition (EI) that directly fires the spark plugs from ignition coils through spark plug wires without using a distributor. A pair of ignition coils for the cylinders having different phases by 360˚ (No.1 and No.4,No.2 and No.5,No.3 and No.6) are fired simultaneously.

Since the cylinder on exhaust stroke requires less energy to fire its ignition plug, energy from the ignition coils can be utilized to fire the mating cylinder on compression stroke. After additional 360˚ rotation, respective cylinder strokes are reversed.

The EI consists of six ignition coils,ignition control module, crank angle sensor, powertrain control module (PCM) and other components.

The ignition coils are connected with the PCM by means of a 32 pin connector.

The ignition control module turns on/off the primary circuit of ignition coils, and also it controls the ignition timing at the engine speed below 538 rpm.

A notch in the timing disc on the crankshaft activates the crank angle sensor which then sends information such as firing order and starting timing of each ignition coil to the PCM.

Further, the EI employs ignition control (IC) to control similar to a distributor system.

By receiving signals such as crank position,engine speed, water temperature and Manifold Absolute Pressure (MAP), the PCM controls the ignition timing.

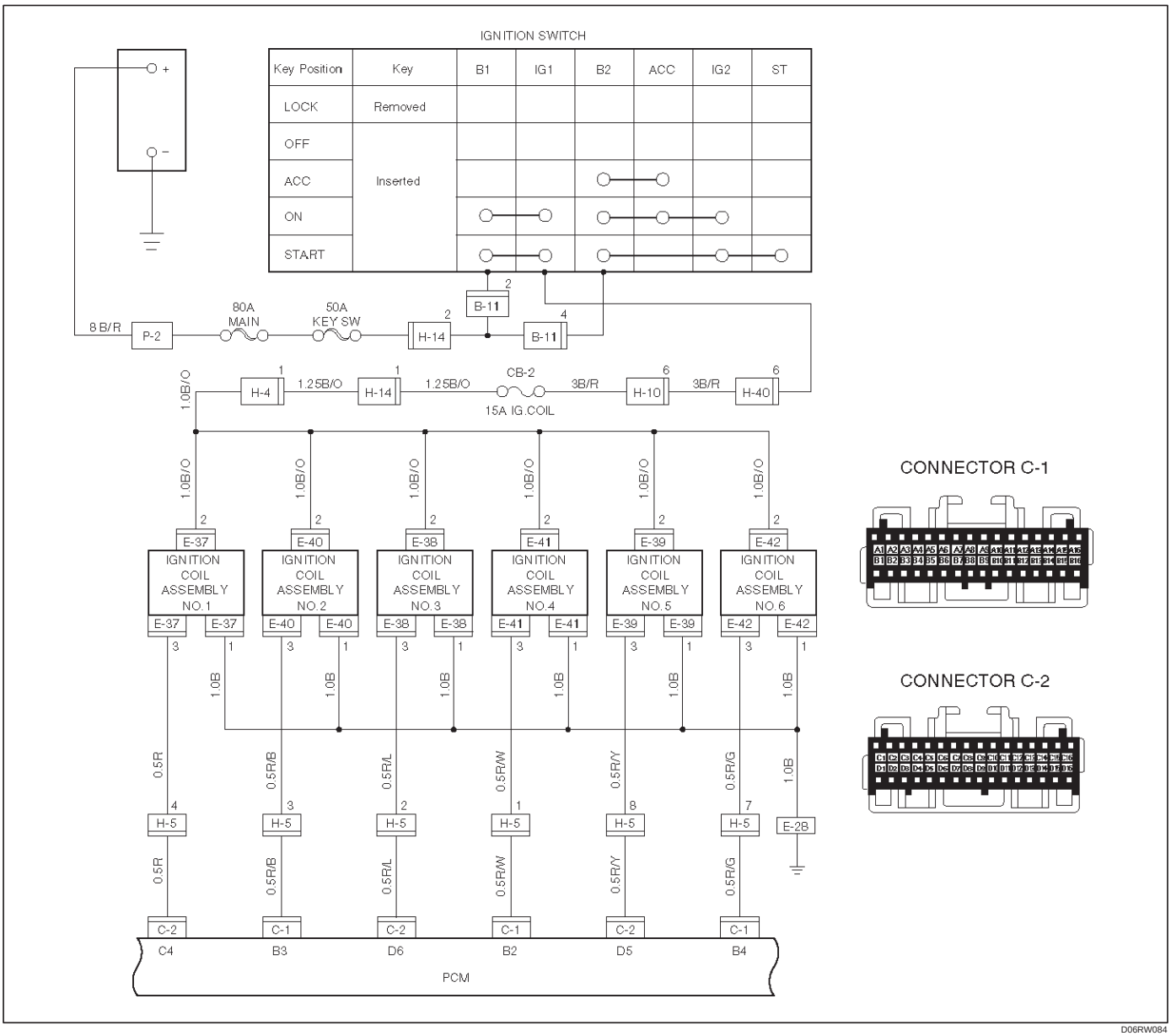

D06RW084

Diagnosis

Refer to Section Drivability and Emissions for the diagnosis to electronic ignition system (EI system).

Ignition Coil

Removal

1. Disconnect battery ground cable.
2. Ignition coil connector and ignition coil.
   - Disconnect three connector from ignition coil.
   - Remove harness bracket bolt on cylinder head cover.
   - Remove fixing bolts on ignition coil.

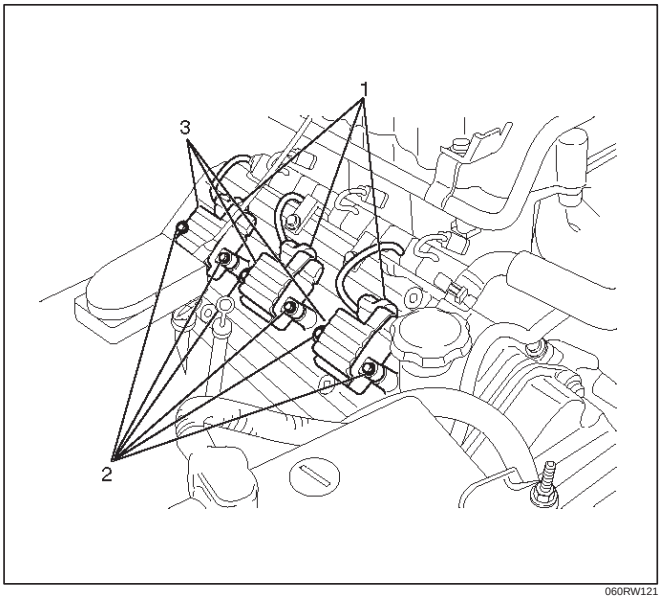

060RW121

Legend

(1) Ignition Coil Connector
(2) Bolt
(3) Ignition Coil Assembly

Inspection and Repair

Check the ignition coil assembly for insulation. Check terminals for corrosion or damage, and replace as necessary.
Measuring resistance of ignition coil assembly.

Terminal No.	Limit
1 to 2	Without 0 ohm or infinity maximum ohm.
1 to 3	Same as above
2 to 3	Same as above

Measure resistance of ignition coil assembly, and replace the ignition coil assembly if its value exceeds the standard.

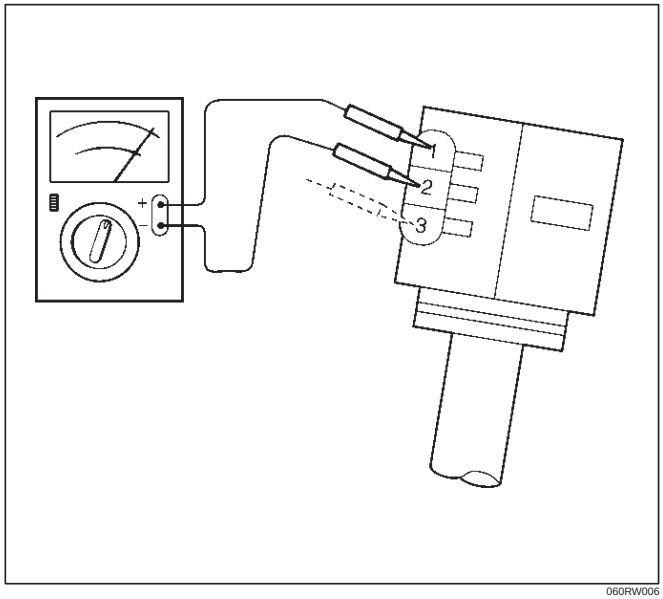

060RW006

Installation

1. Install the ignition coil assembly (3).
   Connect ignition coil connector (1) and ignition coil (3), then tighten bolt (2) to the specified torque.

   Torque: 4 N·m (0.4 Kg·m/35 lb in)

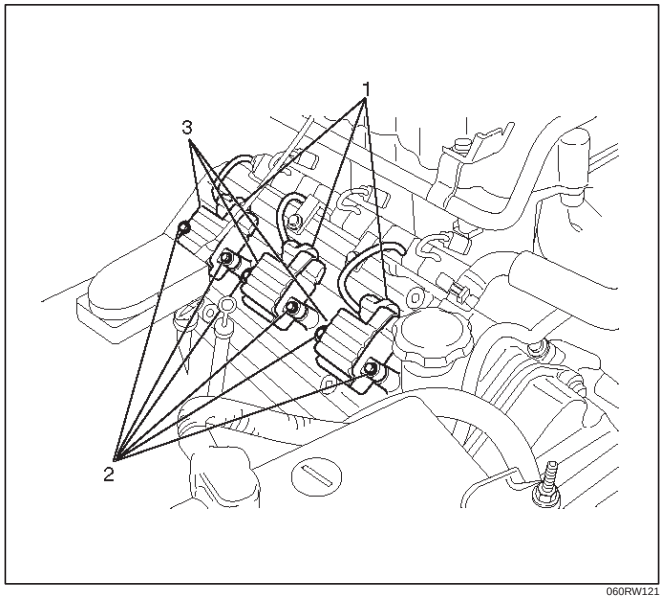

060RW121

2. Connect battery ground cable.

Spark Plug

Removal

1. Remove spark plugs.

Inspection and Repair

The spark plug affects entire engine performance and therefore its inspection is very important.

- Check electrode and insulator for presence of cracks, and replace if any.
- Check electrode for wear, and replace if necessary.
- Check gasket for damage, and replace if necessary.
- Measure insulation resistance with an ohmmeter, and replace if faulty.
- Adjust spark plug gap to 1.0 mm (0.04 in) ~ 1.1 mm (0.043 in).
- Check fuel and electrical systems if spark plug is extremely dirty.
- Use spark plugs having low heat value (hot type plug) if fuel and electrical systems are normal.
- Use spark plugs having high heat value (cold type plug) if insulator and electrode are extremely burned.

Sooty Spark Plugs

Much deposit of carbon or oil on the electrode and insulator of spark plug reduces the engine performance.

Possible causes:

- Too rich mixture
- Presence of oil in combustion chamber
- Incorrectly adjusted spark plug gap

Burning Electrodes

This fault is characterized by scorched or heavily oxidized electrode or blistered insulator nose.

Possible causes:

- Too lean mixture
- Improper heat value

Measuring Insulation Resistance

- Measure insulation resistance using a 500 volt megaohm meter.
- Replace spark plugs if measured value is out of standard.

Insulation resistance: 50 MΩ or more

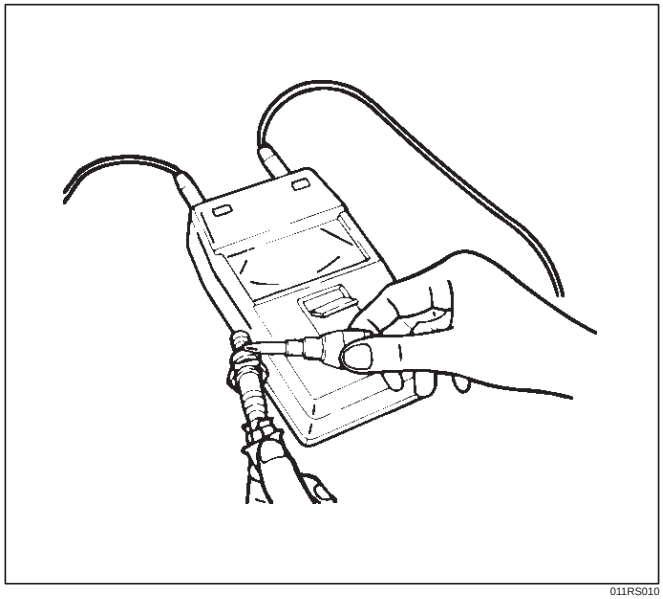

011RS010

Cleaning Spark Plugs

- Clean spark plugs with a spark plug cleaner.
- Raise the ground electrode to an angle of 45 to 60 degrees. If electrode is wet, dry it before cleaning.
- After spark plug is thoroughly cleaned, check insulator for presence of cracks.
- Clean threads and metal body with a wire brush.
- File the electrode tip if electrode is extremely worn.
- Bend the ground electrode to adjust the spark plug gap.

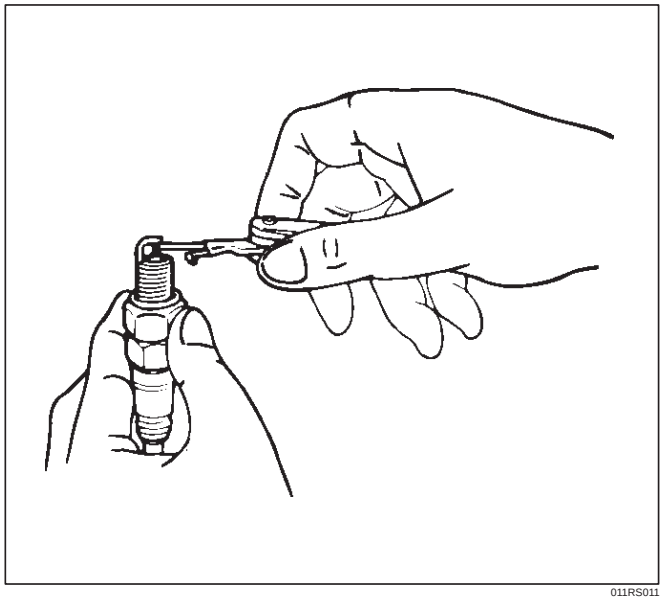

011RS011

Installation

1. Spark plugs
   - Tighten spark plugs to the specified torque.

   Torque: 18 N·m (1.8 Kg·m/13 lb ft)

Crankshaft Angle Sensor

Removal

1. Disconnect battery ground cable
2. Wiring connector from crankshaft angle sensor.
3. Remove crankshaft angle sensor from cylinder block.

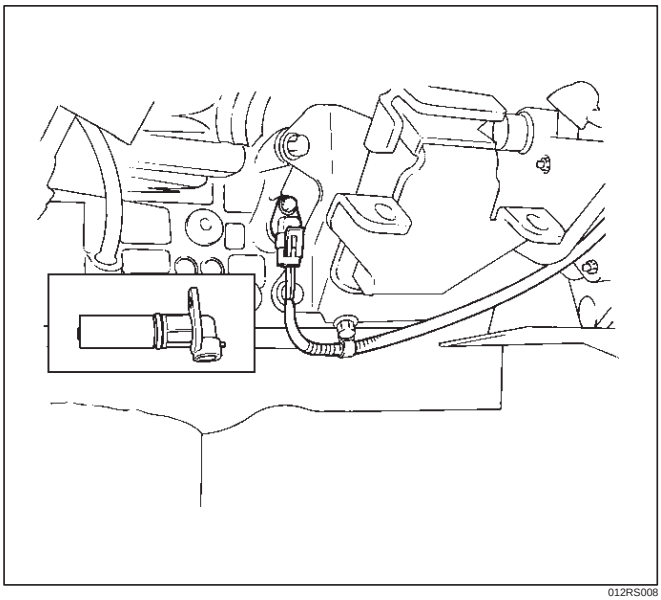

012RS008

Installation

1. Install crankshaft angle sensor into the cylinder block. Before installation,apply small amount of engine oil to the O–ring.

   Torque: 10 N·m (1.0 Kg·m/89 lb in)

2. Reconnect wiring connector to crankshaft angle sensor.

Main Data and Specifications

General Specifications

Ignition System	
Ignition Form	Electronic Ignition System (El system) with Crankshaft angle Sensor
Spark Plug	
Type	K16PR–P11 RC10PYP4 PK16PR11
Plug gap	1.0 mm (0.04 in) – 1.1 mm (0.043 in)
Torque	18 N·m (1.8 Kg·m/13 lb ft)

Torque Specifications

N·m (Kg·m/lb ft)

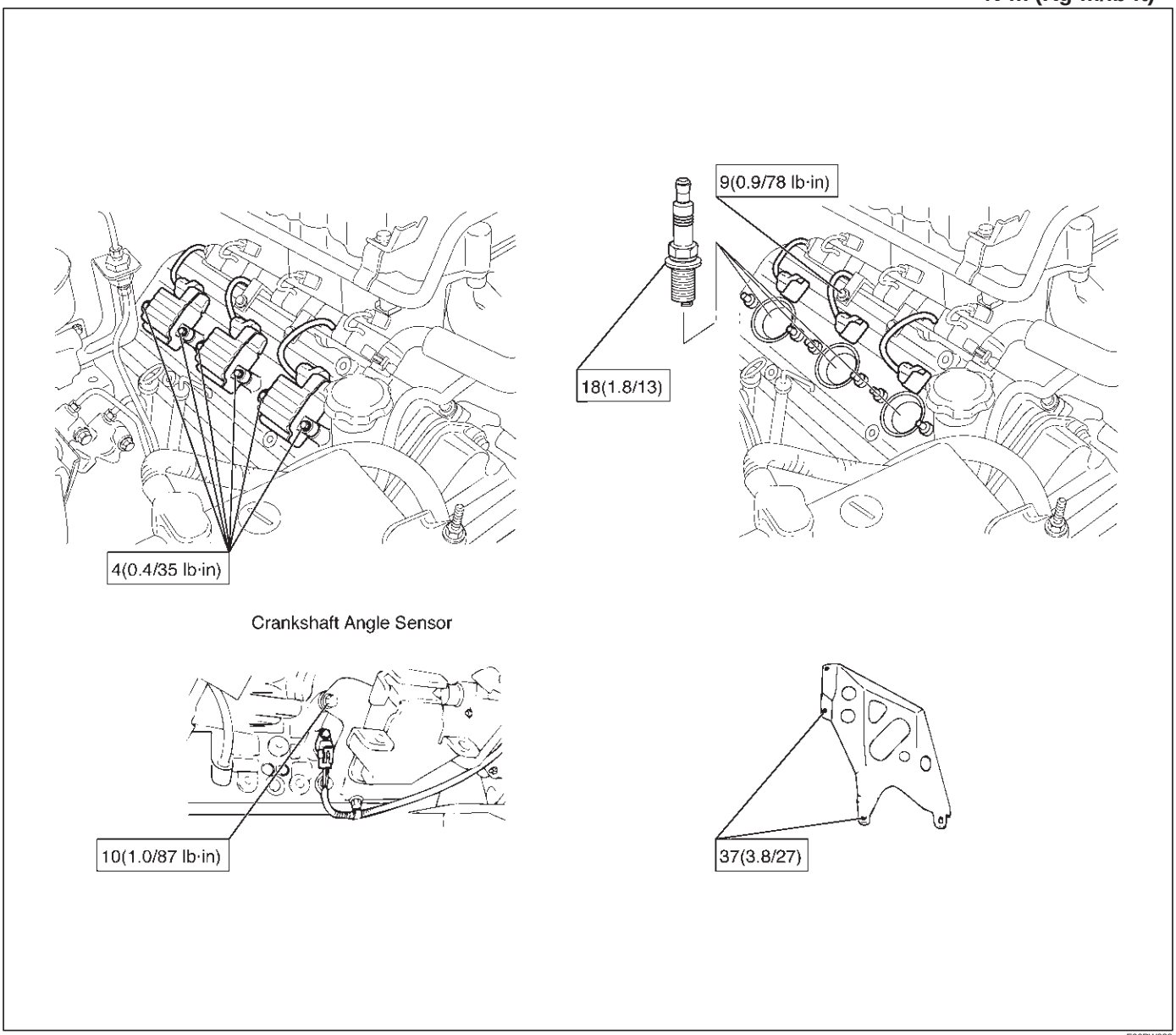

E06RW038

ENGINE

STARTING AND CHARGING SYSTEM

CONTENTS

Service Precaution 6D3–1
Starting System 6D3–2
General Description 6D3–2
Diagnosis 6D3–4
Starter 6D3–5
Removal 6D3–5
Installation 6D3–5
Disassembled View 6D3–6
Disassembly 6D3–7
Inspection and Repair 6D3–9
Reassembly 6D3–13
Main Data and Specifications 6D3–15
Charging System 6D3–18
General Description 6D3–18
General On–Vehicle Inspection 6D3–18
Generator 6D3–19
Removal 6D3–19
Inspection 6D3–19
Installation 6D3–19
Disassembled View 6D3–20
Disassembly 6D3–21
Inspection and Repair 6D3–23
Reassembly 6D3–24
Bench Test 6D3–25
Main Data and Specifications 6D3–26

Service Precaution

WARNING: IF SO EQUIPPED WITH A SUPPLEMENTAL RESTRAINT SYSTEM (SRS), REFER TO THE SRS COMPONENT AND WIRING LOCATION VIEW IN ORDER TO DETERMINE WHETHER YOU ARE PERFORMING SERVICE ON OR NEAR THE SRS COMPONENTS OR THE SRS WIRING. WHEN YOU ARE PERFORMING SERVICE ON OR NEAR THE SRS COMPONENTS OR THE SRS WIRING, REFER TO THE SRS SERVICE INFORMATION. FAILURE TO FOLLOW WARNINGS COULD RESULT IN POSSIBLE AIR BAG DEPLOYMENT, PERSONAL INJURY, OR OTHERWISE UNNEEDED SRS SYSTEM REPAIRS.

CAUTION: Always use the correct fastener in the proper location. When you replace a fastener, use ONLY the exact part number for that application. ISUZU will call out those fasteners that require a replacement after removal. ISUZU will also call out the fasteners that require thread lockers or thread sealant. UNLESS OTHERWISE SPECIFIED, do not use supplemental coatings (Paints, greases, or other corrosion inhibitors) on threaded fasteners or fastener joint interfaces. Generally, such coatings adversely affect the fastener torque and the joint clamping force, and may damage the fastener. When you install fasteners, use the correct tightening sequence and specifications. Following these instructions can help you avoid damage to parts and systems.

Starting System

General Description

Cranking Circuit

The cranking system consists of a battery, starter, starter switch, starter relay, etc. These main components are connected.

Starter

The cranking system employs a magnetic type reduction starter in which the motor shaft is also used as a pinion shaft. When the starter switch is turned on, the contacts of magnetic switch are closed, and the armature rotates. At the same time, the plunger is attracted, and the pinion is pushed forward by the shift lever to mesh with the ring gear.

Then, the ring gear runs to start the engine. When the engine starts and the starter switch is turned off, the plunger returns, the pinion is disengaged from the ring gear, and the armature stops rotation. When the engine speed is higher than the pinion, the pinion idles, so that the armature is not driven.

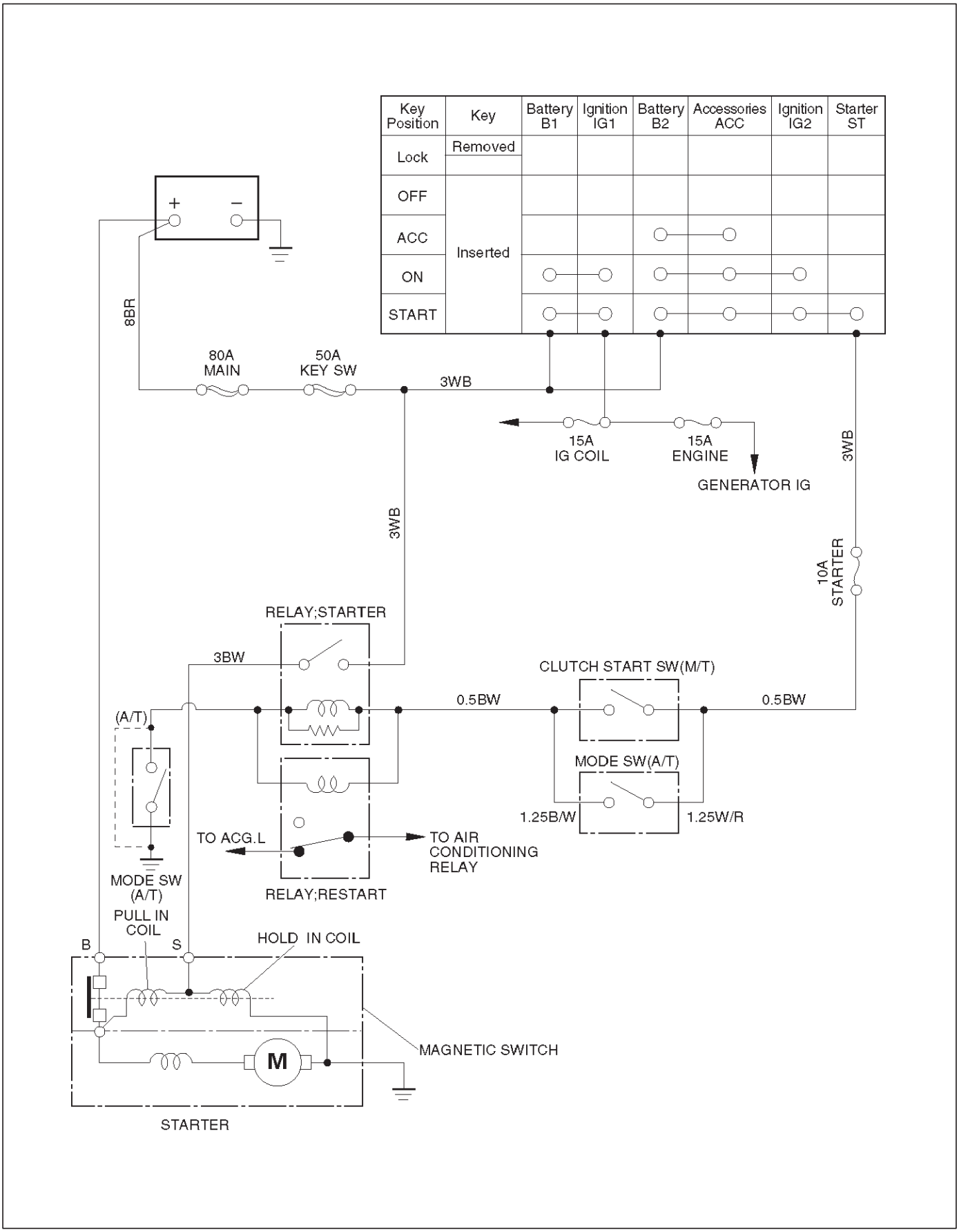
Key Position
Key
Battery B1
Ignition IG1
Battery B2
Accessories ACC
Ignition IG2
Starter ST
Lock
Removed
OFF
ACC
ON
START
Inserted
+
–
8BR
80A MAIN
50A KEY SW
3WB
15A IG COIL
15A ENGINE
GENERATOR IG
3WB
3WB
10A STARTER
RELAY;STARTER
3BW
CLUTCH START SW(M/T)
0.5BW
0.5BW
(A/T)
MODE SW(A/T)
1.25B/W
1.25W/R
TO ACG.L
TO AIR CONDITIONING RELAY
MODE SW (A/T)
RELAY;RESTART
PULL IN COIL
B
S
HOLD IN COIL
MAGNETIC SWITCH
M
STARTER

C06RW005

Diagnosis

Condition	Possible cause	Correction
Starter does not run	Charging failure	Repair charging system
	Battery Failure	Replace Battery
	Terminal connection failure	Repair or replace terminal connector and/or wiring harness
	Starter switch failure	Repair or replace starter switch
	Starter failure	Repair or replace starter

Starter

Removal

1. Battery ground cable.
2. Remove exhaust front left pipe(1).

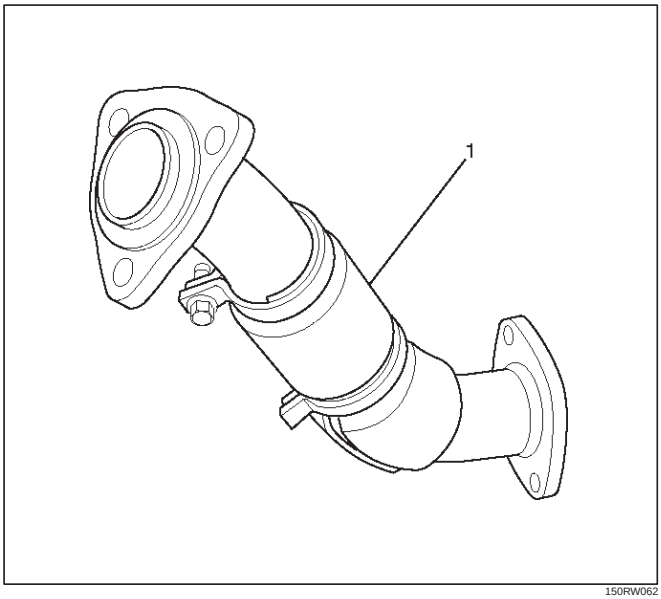

150RW062

3. Remove heat protector(3).
4. Disconnect starter wiring connector from terminals “B” and “S”(4).
5. Remove starter assembly mounting bolts on inside and outside(5).
6. Remove starter assembly toward the bottom of engine(6).

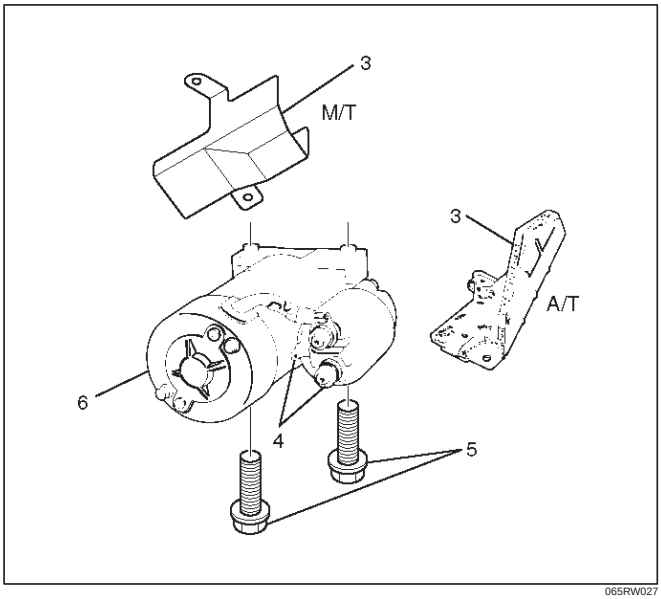

065RW027

Installation

1. Install starter assembly(6).
2. Install mounting bolts and tighten bolts to specified torque(5).

   Torque: 40 N·m (4.1 Kg·m/30 lb ft)
3. Reconnect the connectors to terminals “B” and “S” and tighten Terminals “B” to specified torque.

   Torque: 9 N·m (0.9 Kg·m/80 lb in)
4. Install heat protector(3).

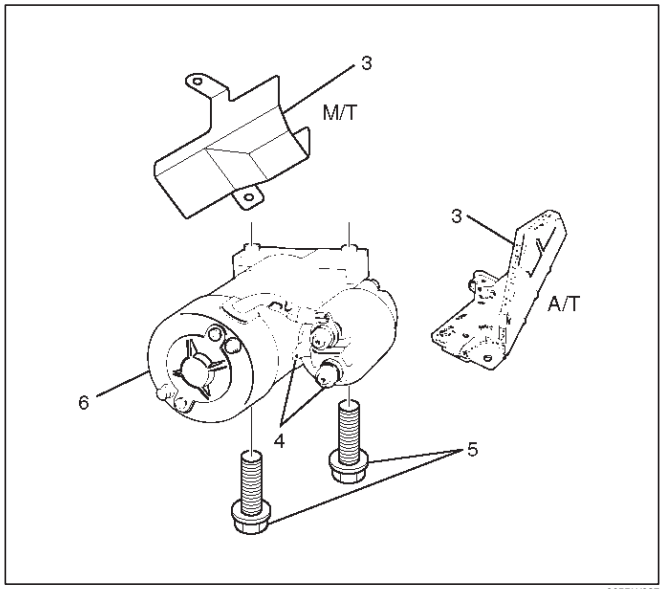

065RW027

5. Install exhaust front left pipe and tighten bolts and nuts to specified torque(2).

   Stud Nuts

   Torque: 67 N·m (6.8 Kg·m/49 lb ft)

   Nuts

   Torque: 43 N·m (4.4 Kg·m/32 lb ft)

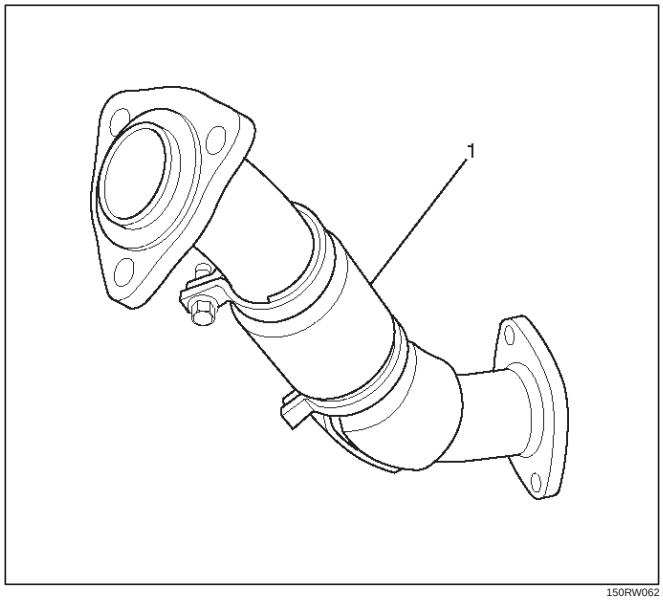

150RW062

6. Reconnect the battery ground cable.

Disassembled View

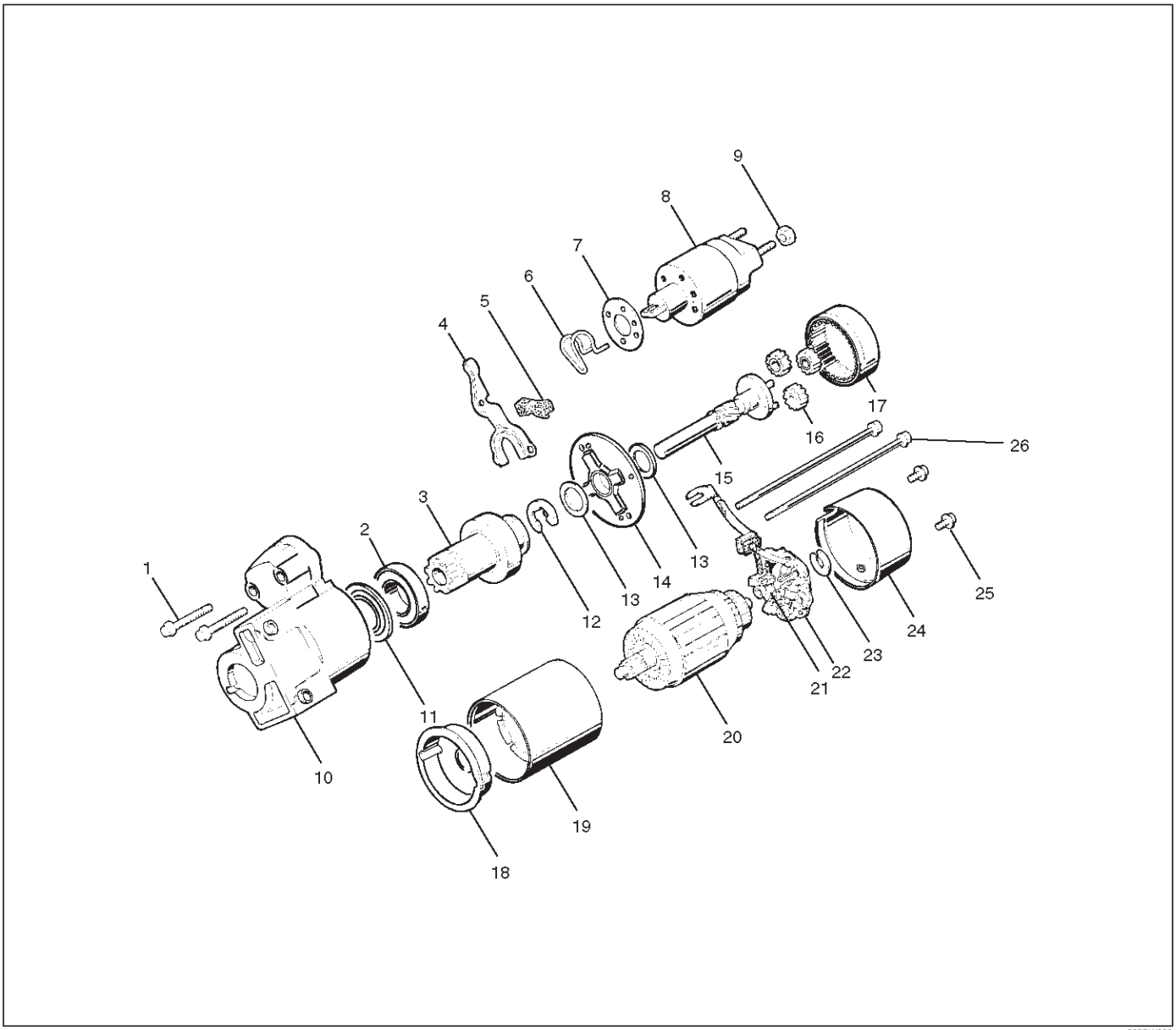

065RW002

Legend

(1) Bolt (2 pcs)
(2) Ball Bearing
(3) Pinion
(4) Shift Lever
(5) Dust Cover
(6) Torsion Spring
(7) Dust Cover
(8) Magnetic Switch
(9) Nut
(10) Gear Case
(11) Bearing Cover
(12) E–Ring
(13) Thrust Washer (2)
(14) Center Bracket
(15) Pinion Shaft
(16) Planet Gear (3)
(17) Internal Gear
(18) Center Bracket (A)
(19) Yoke Assembly
(20) Armature
(21) Brush
(22) Brush Holder
(23) Thrust Washer
(24) Rear Cover
(25) Screw (2 pcs)
(26) Through Bolt (2 pcs)

Disassembly

1. Loosen the nut(1) on terminal “M” of magnetic switch and disconnect the connector cable.
2. Remove bolt (2 pcs) (2).

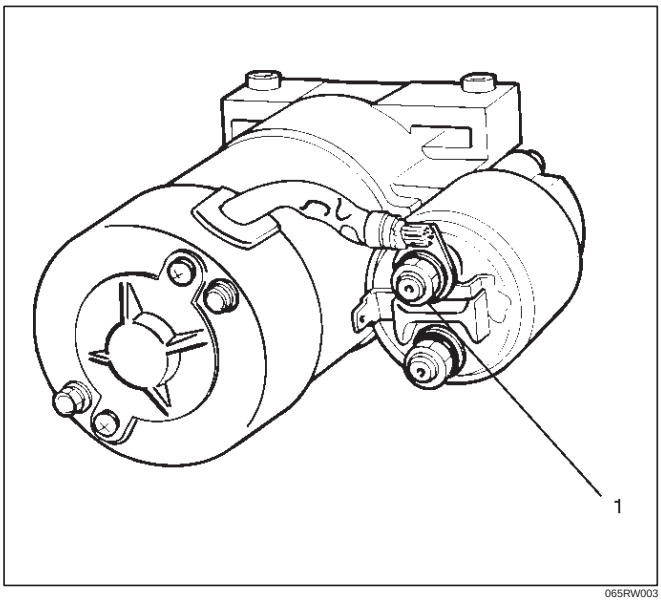

065RW003

3. Remove magnetic switch(5).
4. Remove dust cover(4).
5. Remove torsion spring bolts, then the magnetic switch assembly.
6. Remove torsion spring(3) from magnetic switch assembly(5).

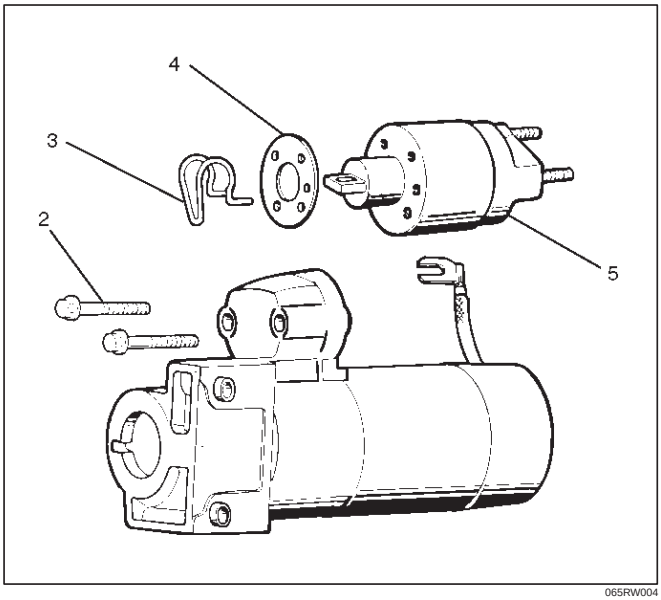

065RW004

7. Remove screw (2 pcs) (8).
8. Remove through bolt (2 pcs) (7).
9. Remove screws and through bolts, then the rear cover(9) then remove thrust washer(10).
10. Remove brush holder(6).

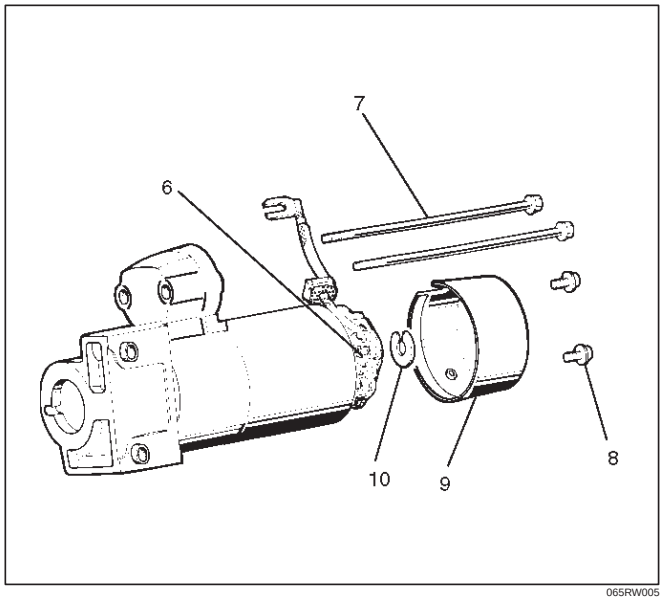

065RW005

11. Raise a brush spring to detach brushes (4 pcs) from the commutator face and pull off the brush holder(12) and brush(11).

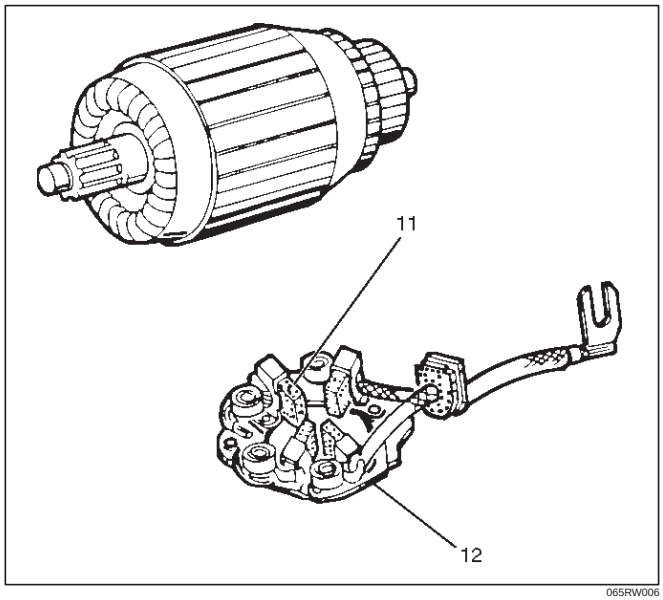

065RW006

12. Remove yoke assembly(14).
13. Remove armature(15).
14. Pull off the yoke assembly, then remove armature, washer and center bracket.(A) (13).

NOTE: In disassembling the yoke assembly, hold the armature and pull off slowly the yoke assembly. Because of strong magnetic force, avoid placing a metallic part near armature.

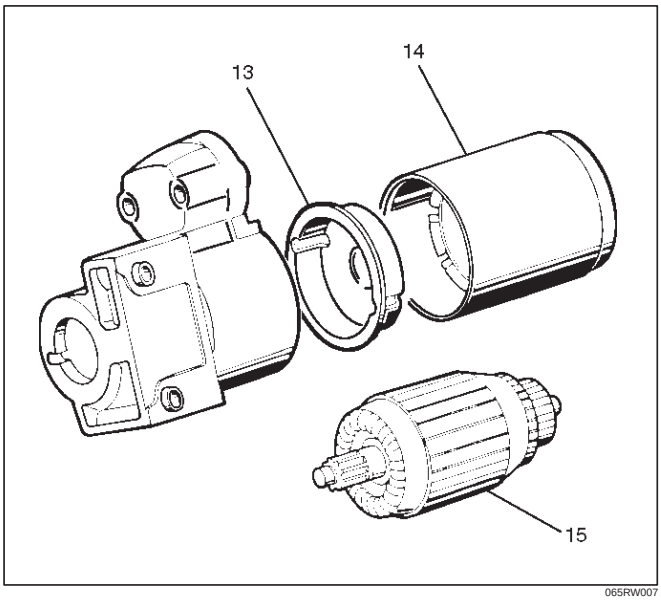

065RW007

15. Remove dust cover(17).
16. Remove a dust cover and shift lever(16) from the gear case.

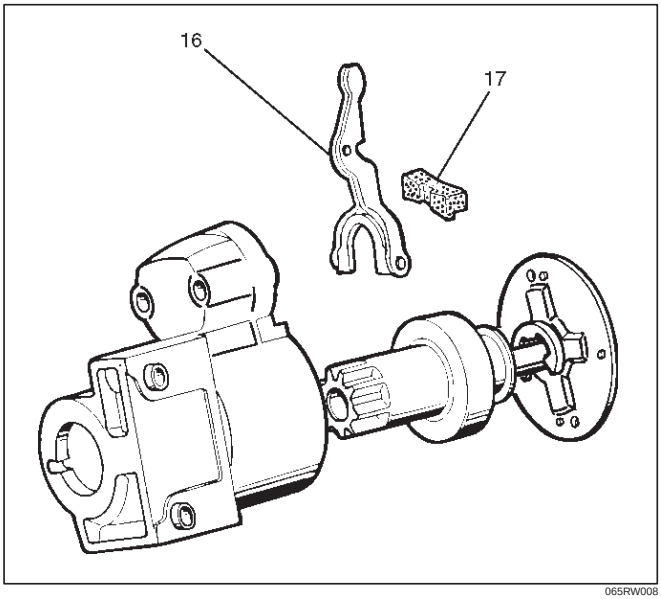

065RW008

17. Remove ball bearing(19).
18. Remove bearing cover(20).
19. Remove a ball bearing and bearing cover from the gear case(18).

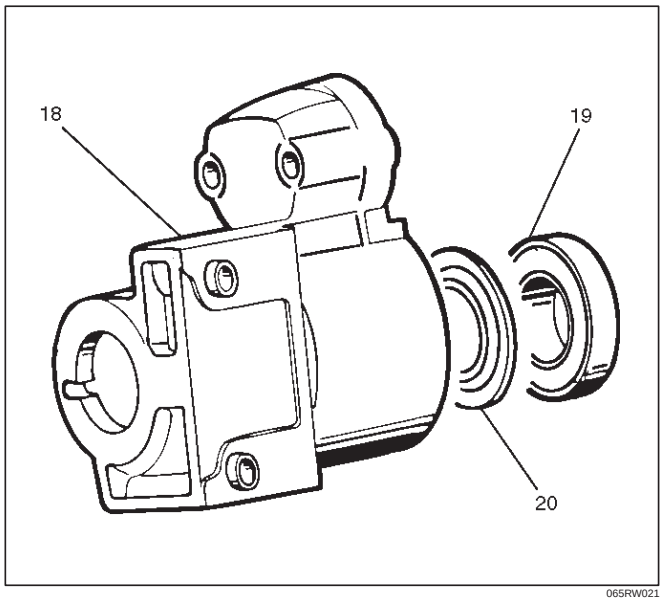

065RW021

20. Internal gear(21).
21. Remove internal gear and planet gear(3) (22).

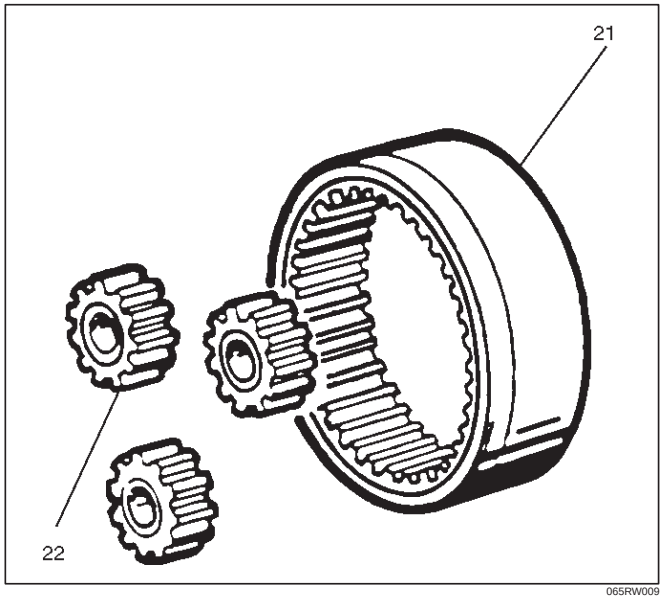

065RW009

22. Remove an E–ring(23) from the pinion shaft using a flat blade screwdriver.

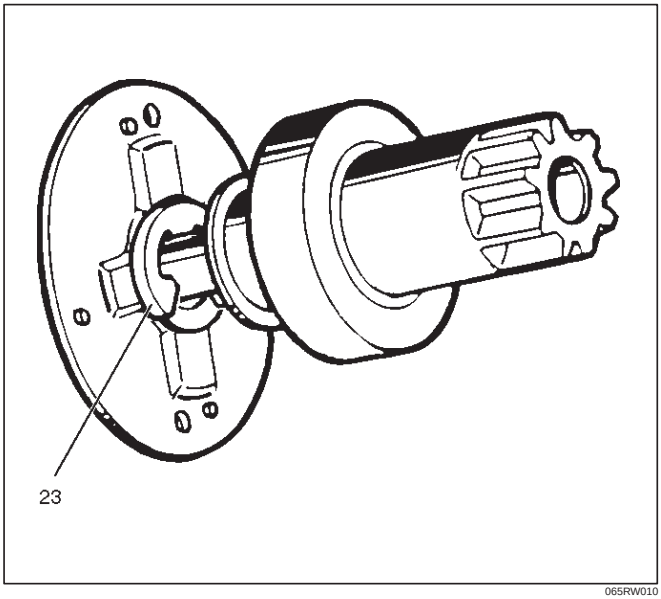

065RW010

23. Holding the pinion shaft, push pinion toward the center bracket. and turn the pinion clockwise or counterclockwise by one tooth of spline, then pull off the pinion.
24. Remove thrust washer(24).
25. Remove center bracket
26. Remove pinion shaft.

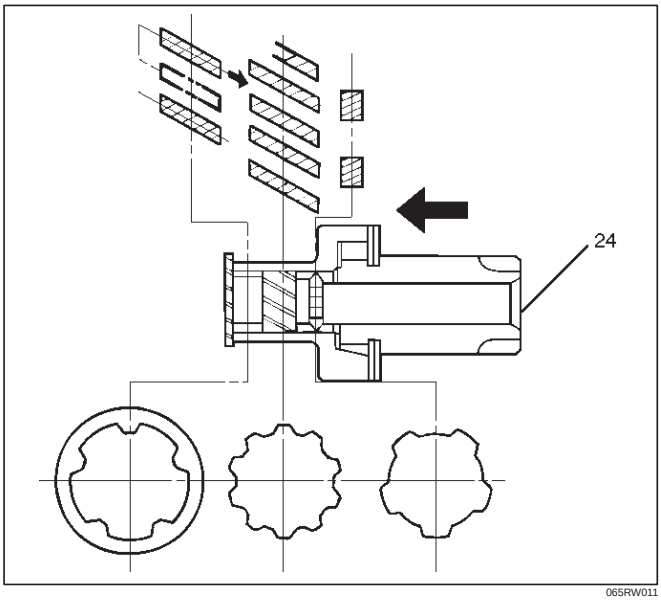

065RW011

Inspection and Repair

Repair or replace necessary parts if extreme wear or damage is found during inspection.

Armature

Measure the outer diameter of commutator, and replace with a new one if it is out of the limit.

Standard: 33.0 mm (1.30 in)

Limit: 32.0 mm (1.26 in)

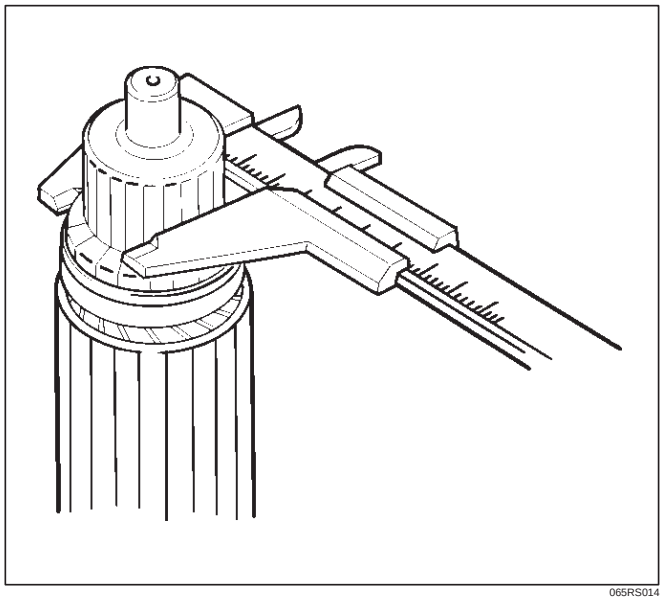

065RS014

Check for continuity between commutator and segment. Replace commutator if there is no continuity (i.e., disconnected).

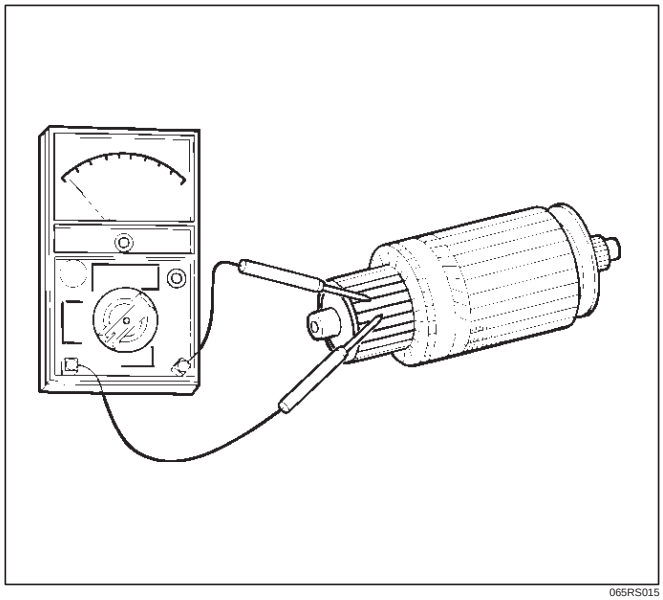

065RS015

Check for continuity between commutator and shaft. Also, check for continuity between commutator and armature core,armature core and shaft. Replace commutator if there is continuity (i.e., internally grounded).

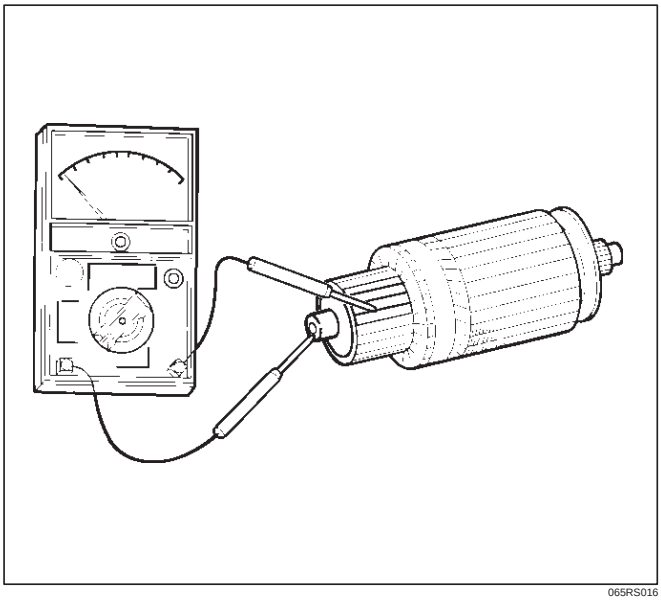

065RS016

Measure runout of armature core and commutator with a dial gauge. Repair or replace, if it exceeds the limit.

Armature

Standard: 0.05 mm (0.002 in) Max.

Limit: 0.10 mm (0.004 in)

Commutator

Standard: 0.05 mm (0.002 in) Max.

Limit: 0.10 mm (0.004 in)

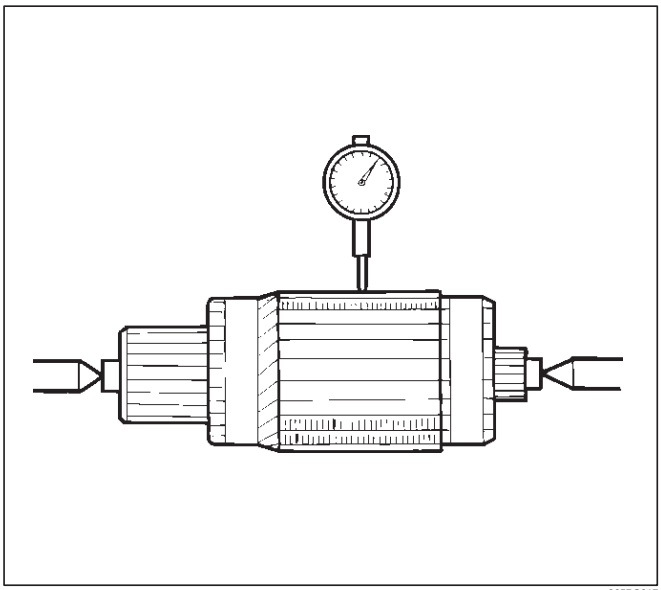

065RS017

Polish the commutator surface with sandpaper #500 to #600 if it is rough.

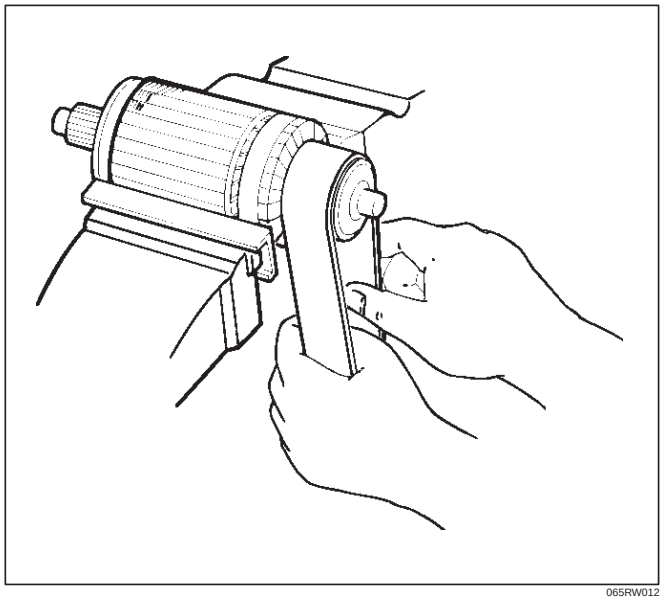

065RW012

Measure the depth of insulator in commutator. Repair, if it is below the limit.

Standard: 0.05 mm to 0.8 mm (0.02 in to 0.03 in)

Limit: 0.2 mm (0.008 in)

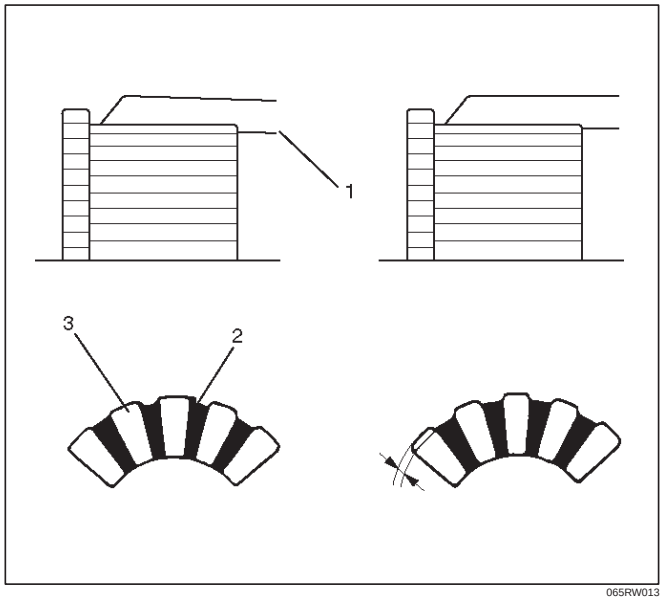

065RW013

Legend

(1) Steel Saw
(2) Insulator
(3) Commutator Segments

Brush

Measure the length of brush.
Replace with a new one, if it is below the limit.

Standard: 16 mm (0.63 in)

Limit: 11 mm (0.43 in)

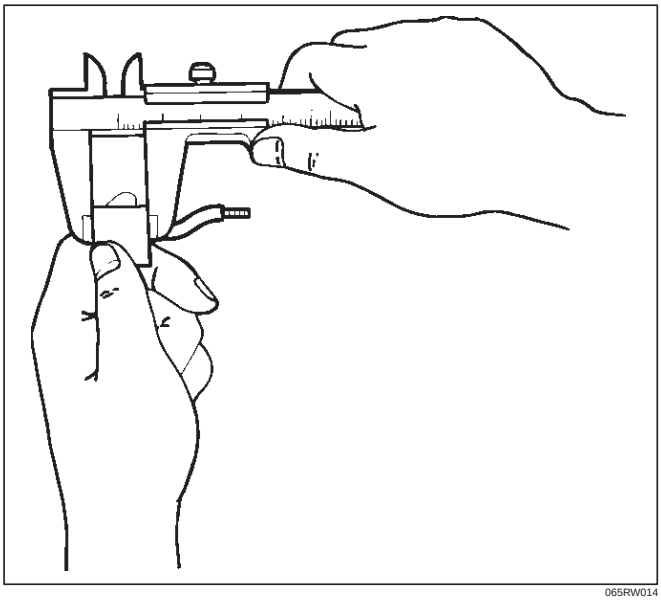

065RW014

Brush Holder

Check for continuity between brush holder (+) (4) and base (–). Replace, if there is continuity (i.e., insulation is broken).

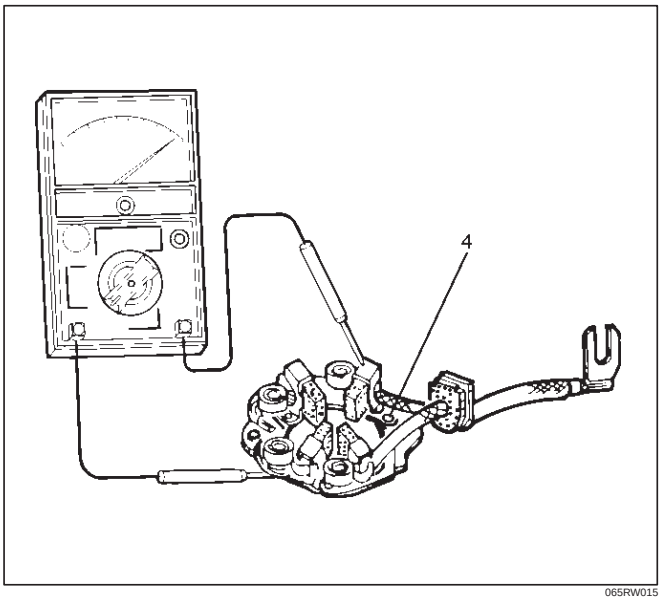

065RW015

Magnetic Switch

Check for continuity of shunt coil between terminals S and M.
Replace, if there is no continuity (i.e., coil is disconnected).

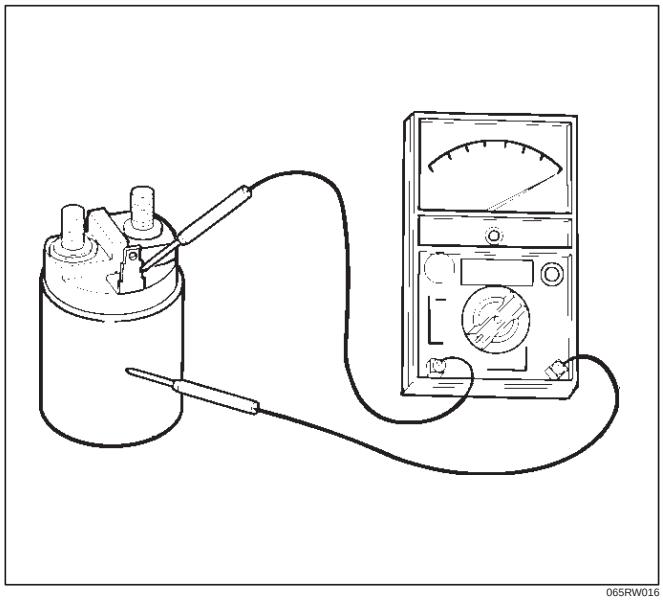

065RW016

Continuity of Series Coil

Check for continuity between terminals S and M.
Replace, if there is no continuity (i.e., coil is disconnected).

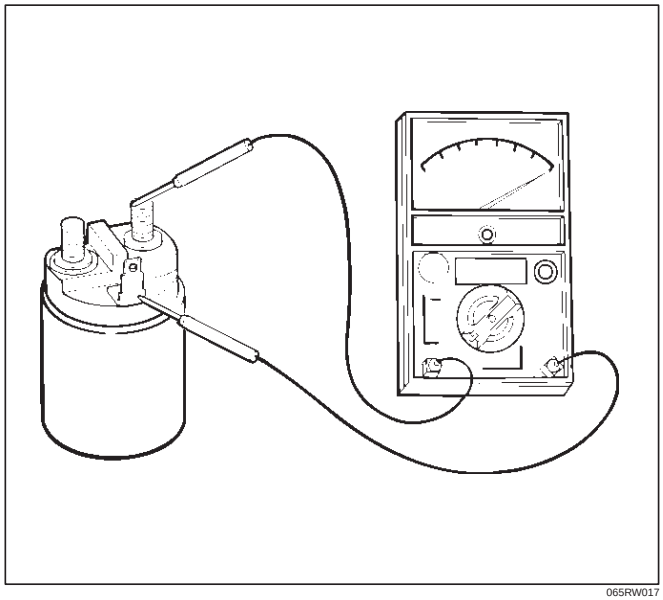

065RW017

Continuity of Contacts

With the plunger faced downward, push down the magnetic switch. In this state, check for continuity between terminals B and M. Replace, if there is no continuity (i.e., contacts are faulty).

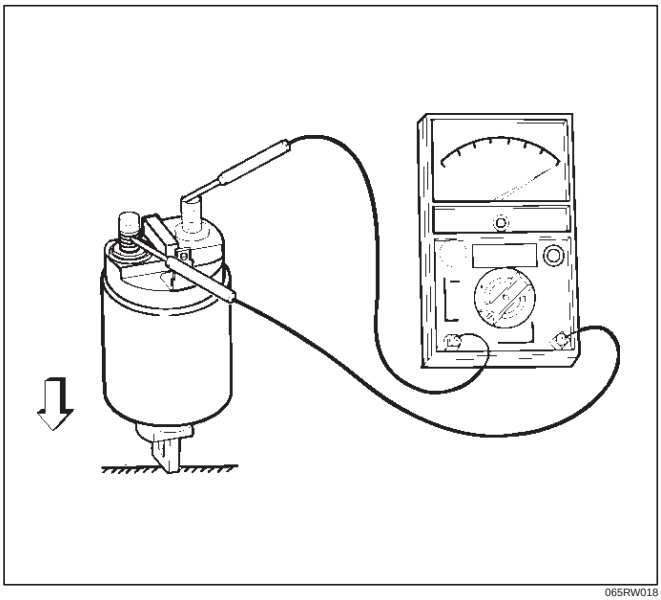

065RW018

Pinion

Check if the pinion rotates smoothly in drive direction by hand, or if it is locked when it is rotated in reverse. If not, replace the pinion.

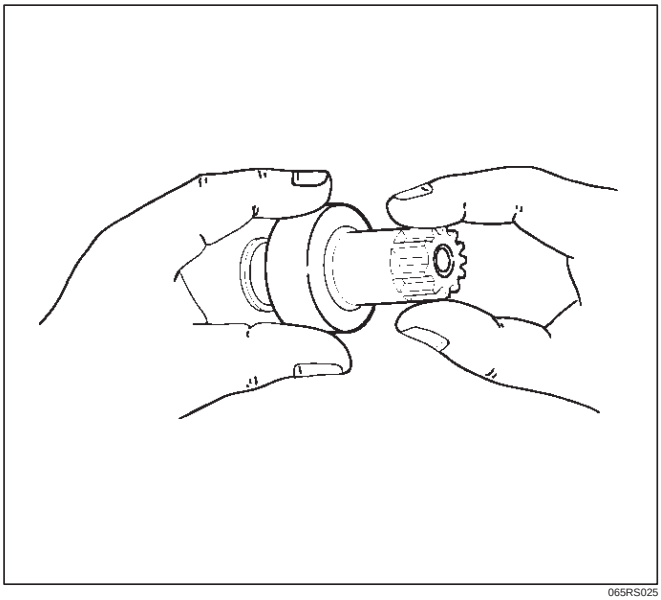

065RS025

Yoke Assembly

Check a magnet inside the yoke.
Replace the yoke assembly if it is broken.

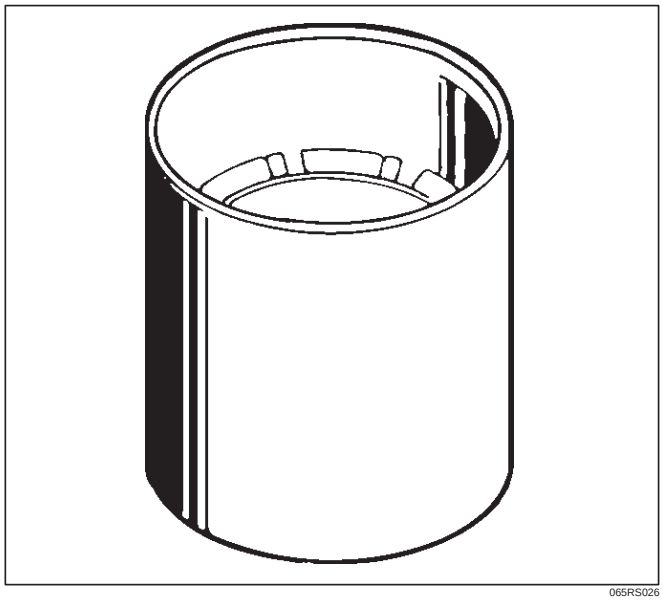

065RS026

Ball Bearing

Clamp the inner race of the ball bearing with your finger, and check for sticking or play when rotating the outer race.
Replace, if abnormality is found.

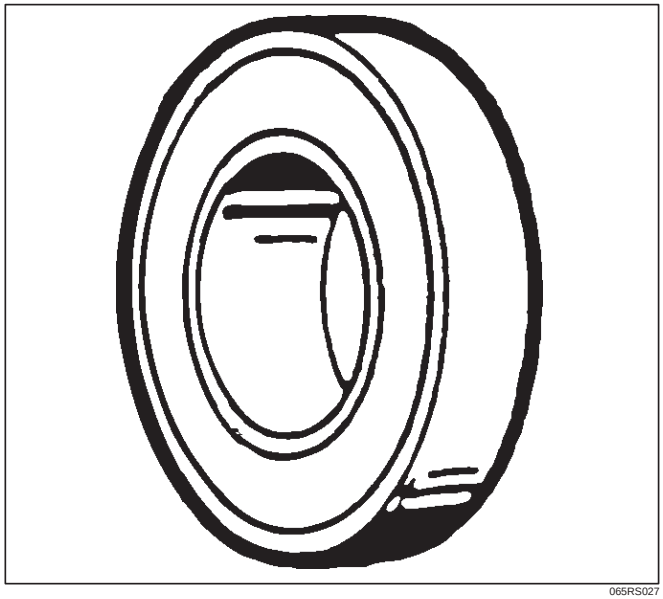

065RS027

Measure inner diameter of bushing in the rear cover, and replace if it exceeds the limit.

Standard: 12.50 mm to 12.527 mm (0.492 in to 0.4932 in)

Limit: 12.60 mm (0.4961 in)

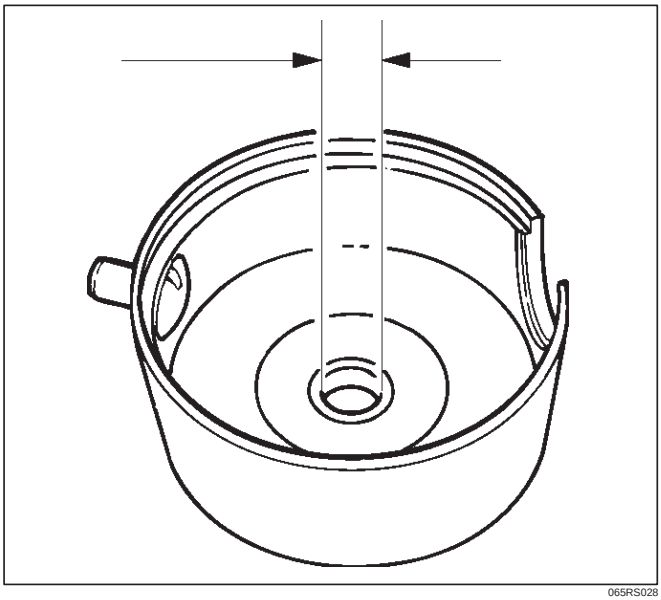

065RS028

Measure inner diameter of bushing in the center bracket (P), and replace if it exceeds the limit.

Standard: 18.01 mm to 18.127 mm (0.7091 in to 0.7137 in)

Limit: 18.15 mm (0.7146 in)

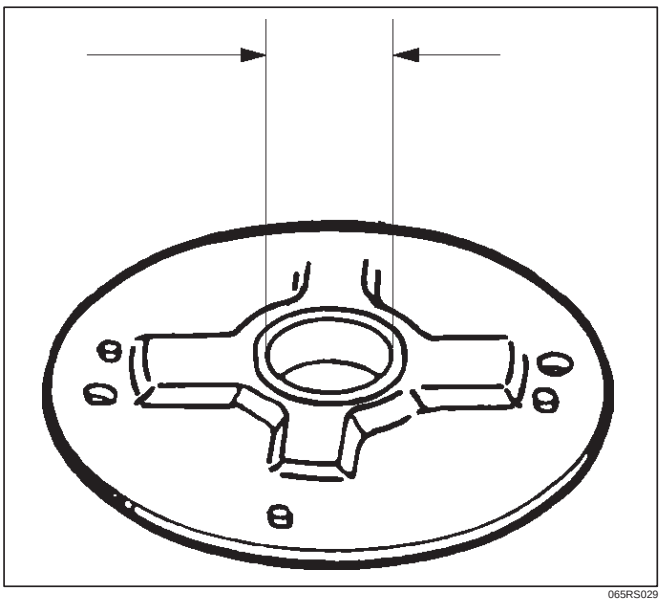

065RS029

Reassembly

To install, follow the removal steps in the reverse order, noting the following points:

Grease application places

- Bushing in rear cover and center bracket
- Gears in reduction gear
- Shift lever operating portion
- Sliding portion of pinion
- Plunger sliding portion of magnetic switch

Reassembling Yoke Assembly

Before reassembly, make sure that no metallic parts attach to the yoke assembly. Because of strong magnetic force, hold the yoke assembly and insert it slowly into the armature.

Torque

Torque for each part (See Torque Specifications in this section)

Pinion Jump–out Dimension

Connect the “+” cable of battery to terminal S and the “–” cable to terminal M. Turn the switch on, and measure pinion travel dimension in thrust direction from the jump–out position.

In measuring the dimension, pull the pinion out a little in the arrow direction.

Dimension(L): 0.05 mm to 1.5 mm (0.002 in to 0.06 in)

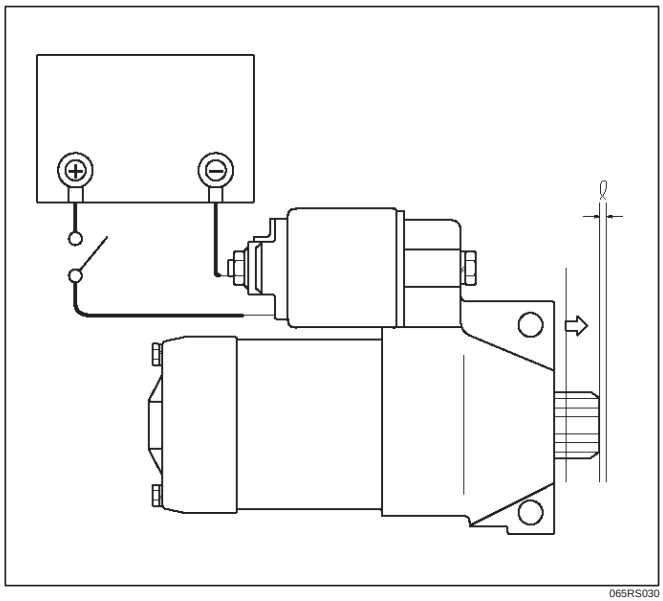

065RS030

If the measured value is out of standard, insert dust cover, or disassemble and adjust.

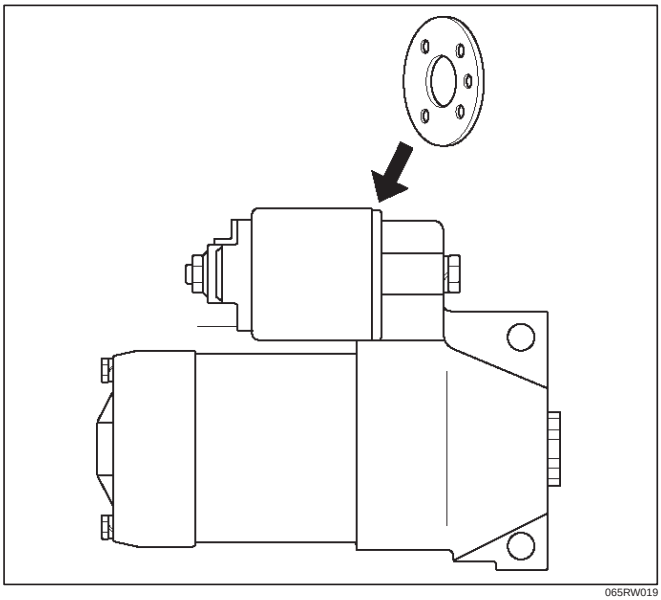

065RW019

Characteristic Test

For easily confirming the characteristics, conduct the no load test as follows:
Rating as short as 30 seconds requires rapid testing.
Fix the starter on the test bench, and wire as shown in illustration. When the switch is closed, the current flows and the starter runs under no load. At this time, measure current, voltage and speed to check if they satisfy the standard.

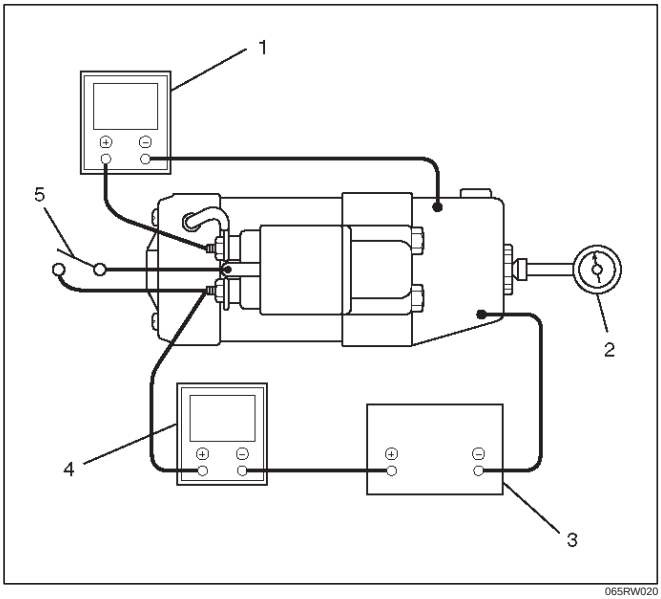

065RW020

Legend

(1) Volt Meter
(2) Tachometer
(3) Battery
(4) Ammeter
(5) Switch

Main Data and Specifications

General Specifications

Model	HITACHI GD002350
Rating	
Voltage	12 V
Output	1.4 Kw
Time	30 sec
Number of teeth of pinion	9
Rotating direction(as viewed from pinion)	Clockwise
Weight(approx.)	34 N
No load characteristics	
Voltage /Current	11V/90A or less
Speed	2700rpm or more
Load characteristics	
Voltage/current	8.4V/250A
Torque	7.3N·m(64lb·in.) or more
Speed	1200rpm or more
Locking characteristics	
Voltage/current	3V/750A or less
Torque	19N·m(14lb·in) or more

Torque Specifications

N·m (Kg·m/lb ft)

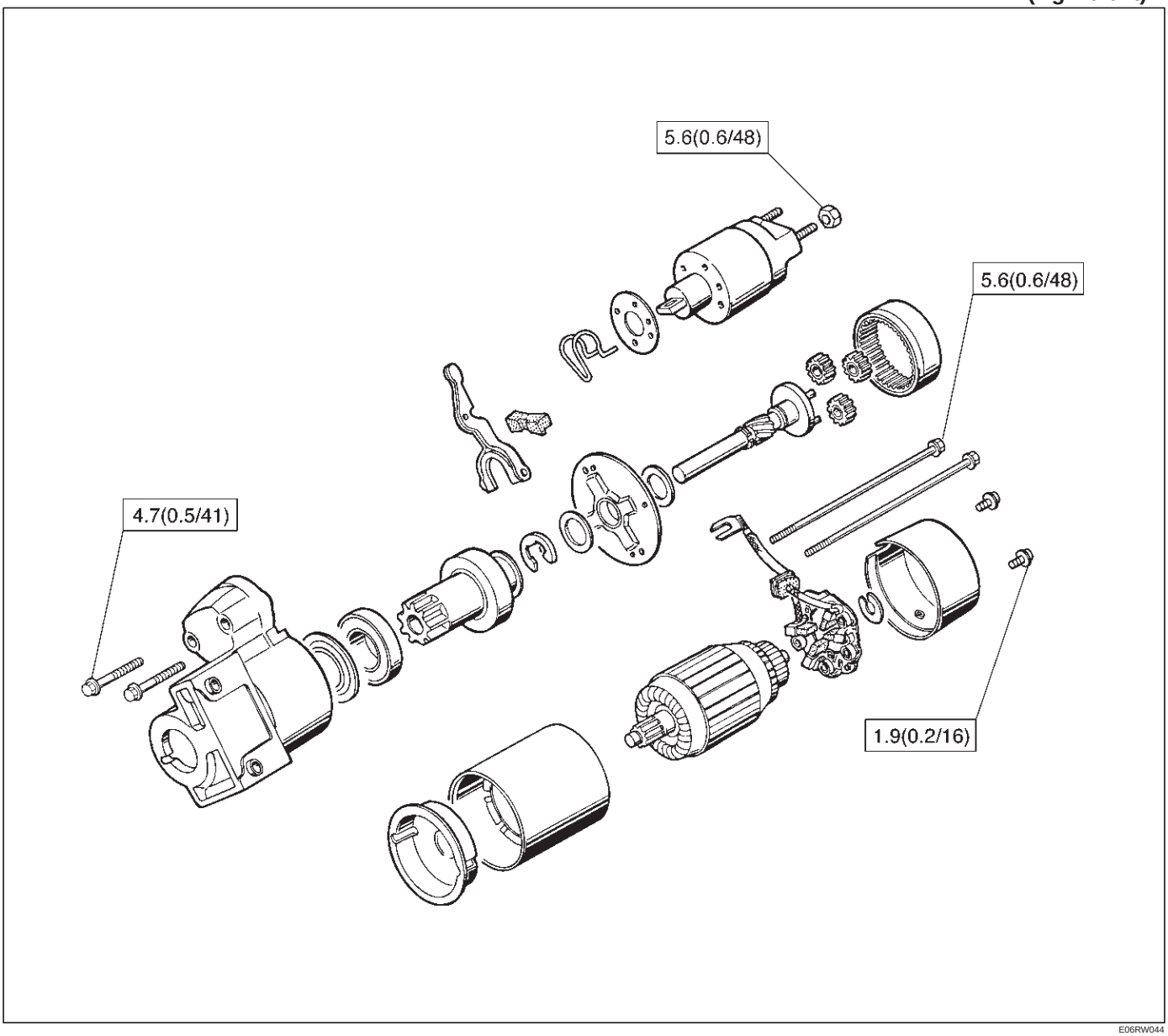

E06RW044

N·m (Kg·m/lb ft)

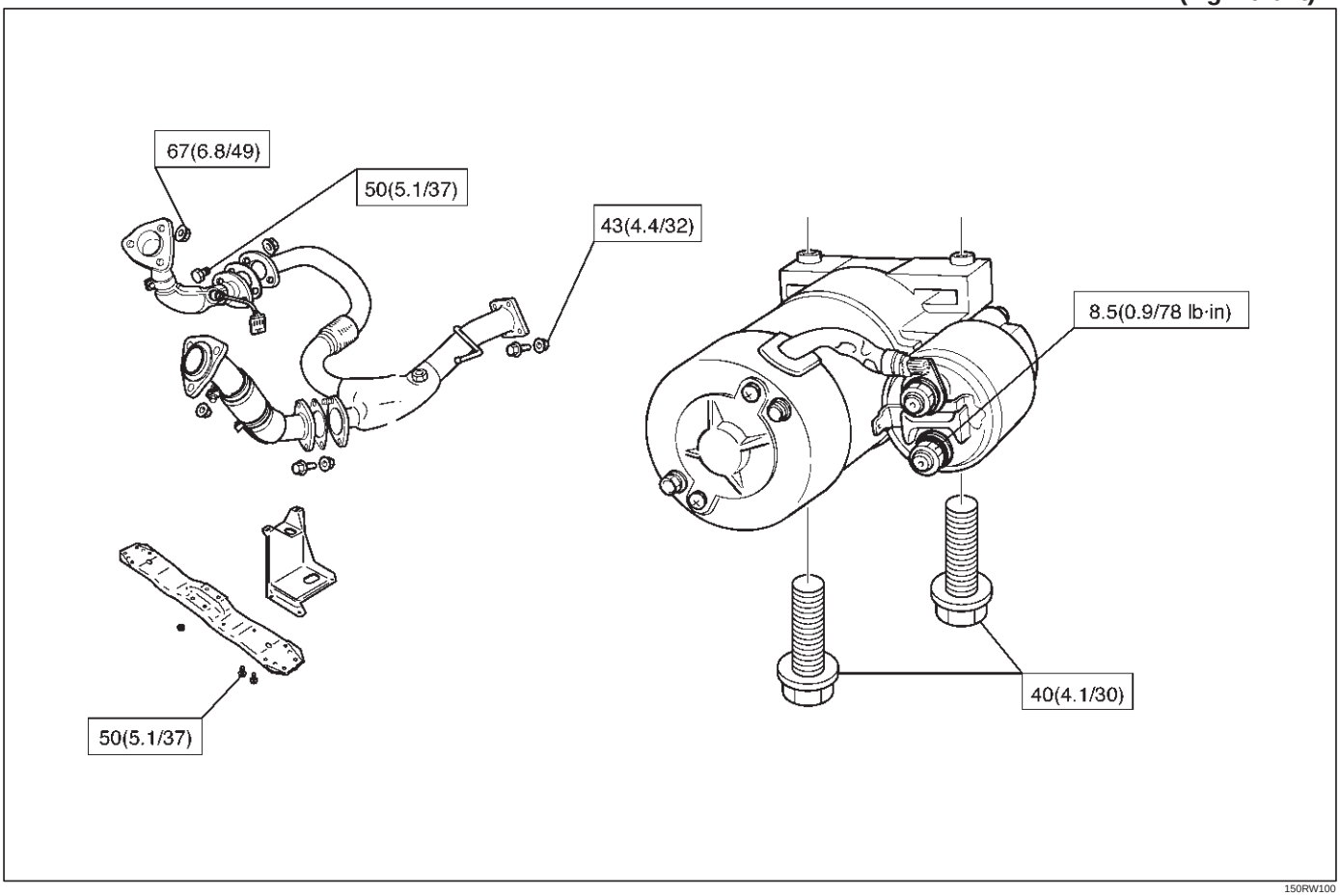

150RW100

Charging System

General Description

The IC integral regulator charging system and its main components are connected as shown in the illustration.
The regulator is a solid state type and it is mounted along with the brush holder assembly inside the generator installed on the rear end cover.
The generator does not require particular maintenance such as voltage adjustment.
The rectifier connected to the stator coil has eight diodes to transform AC voltage into DC voltage.
This DC voltage is connected to the output terminal of generator.

General On–Vehicle Inspection

The operating condition of charging system is indicated by the charge warning lamp. The warning lamp comes on when the starter switch is turned to “ON” position. The charging system operates normally if the lamp goes off when the engine starts.
If the warning lamp shows abnormality or if undercharged or overcharged battery condition is suspected, perform diagnosis by checking the charging system as follows:

1. Check visually the belt and wiring connector.
2. With the engine stopped, turn the stator switch to “ON” position and observe the warning lamp.

   If lamp does not come on:

   Disconnect wiring connector from generator, and ground the terminal “L” on connector side.

   If lamp comes on:

   Repair or replace the generator.

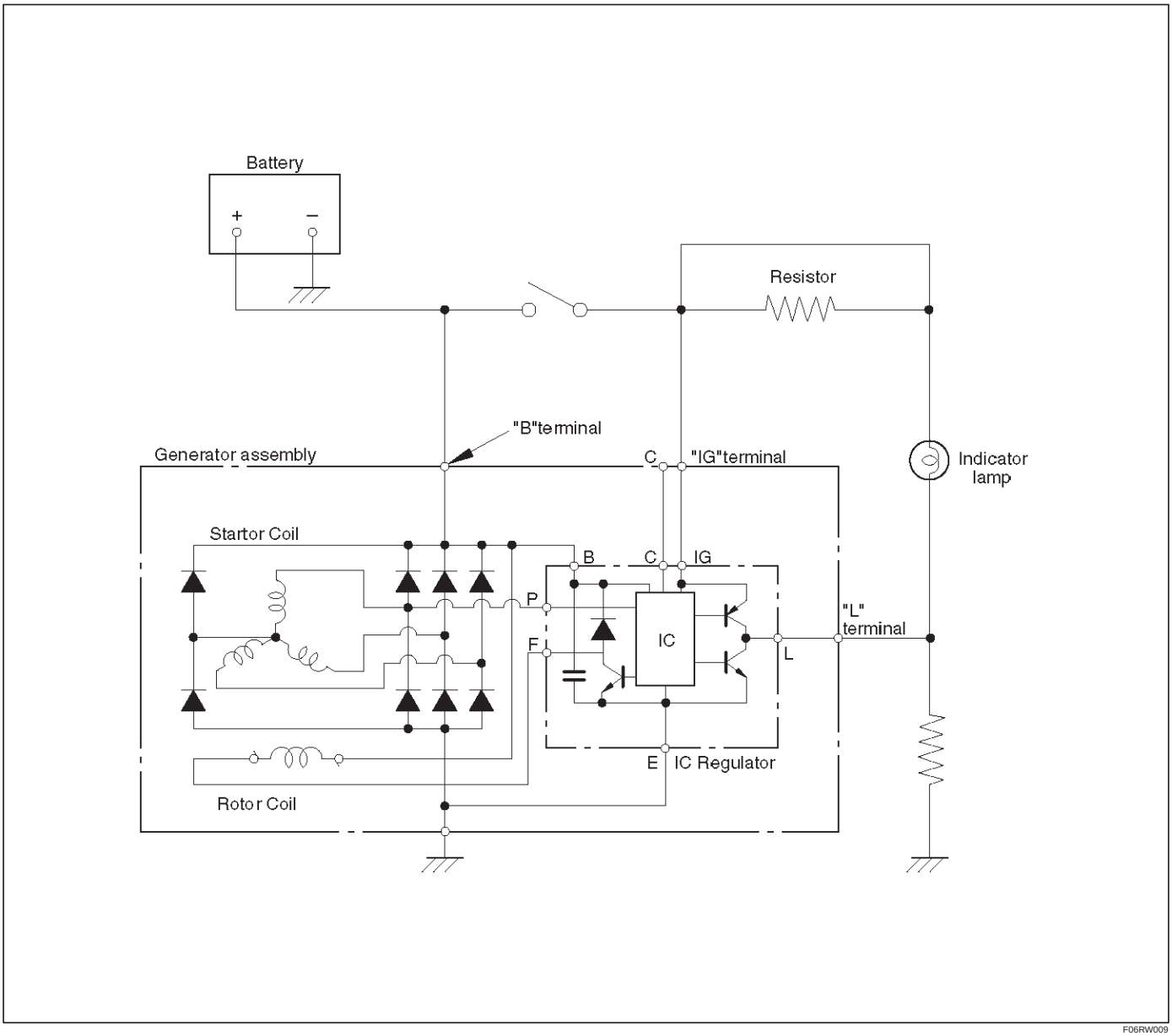

F06RW009

Generator

Removal

1. Disconnect battery ground cable.
2. Move drive belt tensioner to loose side using wrench then remove drive belt (1).
3. Disconnect the wire from terminal “B” and disconnect the connector (4).
4. Remove generator fixing bolt (3).
5. Remove generator assembly (2).

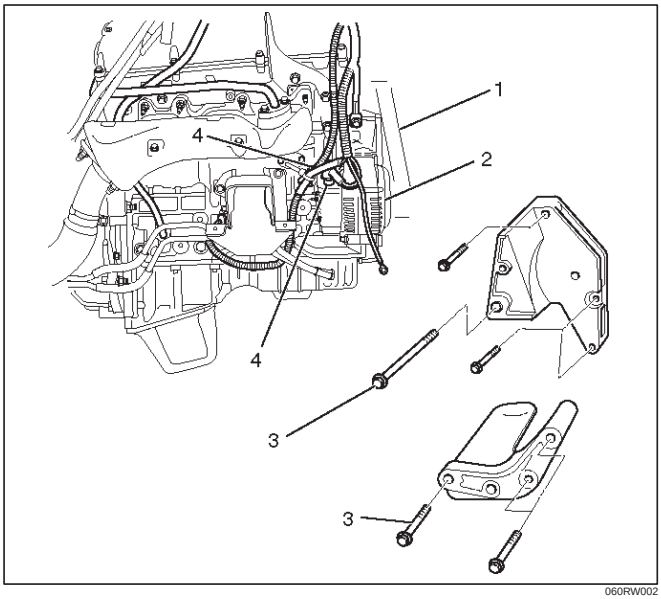

060RW002

Inspection

1. Disconnect the wiring connector from generator.
2. With the engine stopped, turn starter switch to “ON” and connect a voltmeter between connector terminal L (2) and ground or between terminal IG (1) and ground.

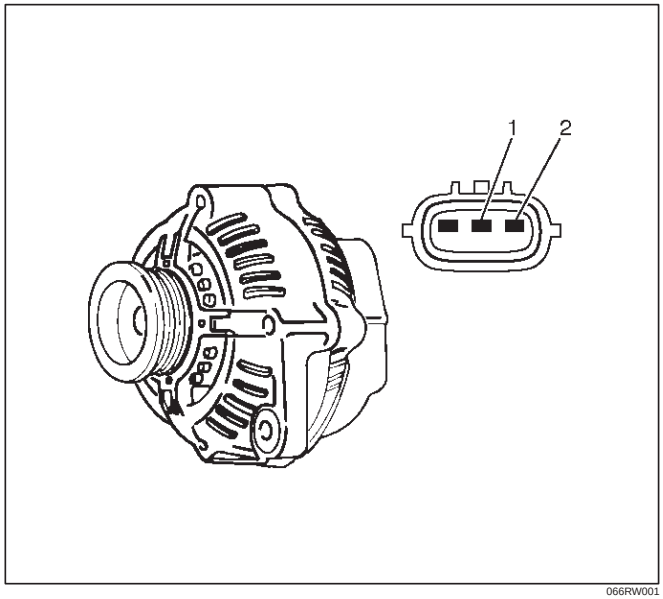

066RW001

If voltage is not present, the line between battery and connector is disconnected and so requires repair.

3. Reconnect the wiring connector to the generator, run the engine at middle speed, and turn off all electrical devices other than engine.
4. Measure battery voltage. If it exceeds 16V, repair or replace the generator.
5. Connect an ammeter to output terminal of generator, and measure output current under load by turning on the other electrical devices (eg., head lights). At this time, the voltage must not be less than 13V.

Installation

1. Install generator assembly to the position to be installed.
2. Install generator assembly and tighten the fixing bolts to the specified torque.

   Torque:

   M10 bolt: 41 N·m (4.2 Kg·m/30 lb ft)

   M8 bolt: 21 N·m (2.1 Kg·m/15 lb ft)
3. Connect wiring harness connector and direct terminal “B”.
4. Move drive belt tensioner to loose side using wrench, then install drive belt to normal position.
5. Reconnect battery ground cable.

Disassembled View

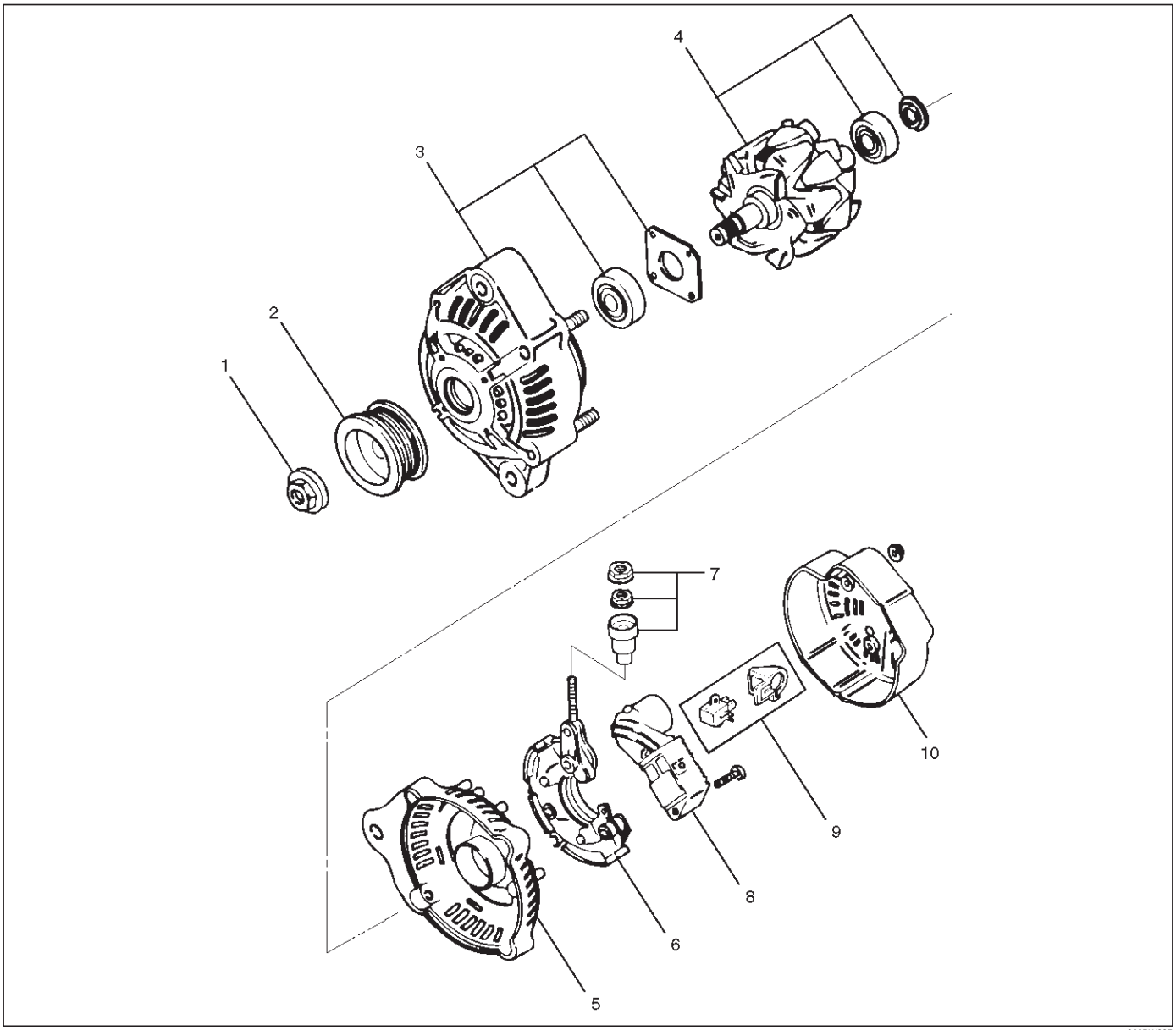

066RW007

Legend

(1) Pulley Nut
(2) Pulley
(3) Front Cover Assembly
(4) Rotor Assembly
(5) Rear End Cover
(6) Rectifier
(7) Terminal Insulator and Nut
(8) Regulator Assembly
(9) Brush Holder Assembly
(10) Rear Cover

Disassembly

1. Terminal insulator and nut(2).
2. Remove three nuts(1) on the rear cover and a nut on terminal B and insulator, then remove the rear cover(3).

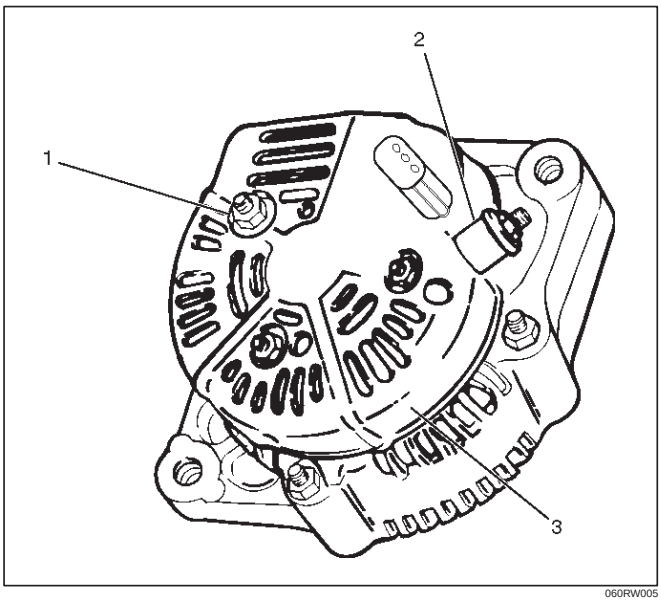

060RW005

3. Remove two screws that fix the brush holder(5) and rectifier, then remove the brush holder assembly(4).

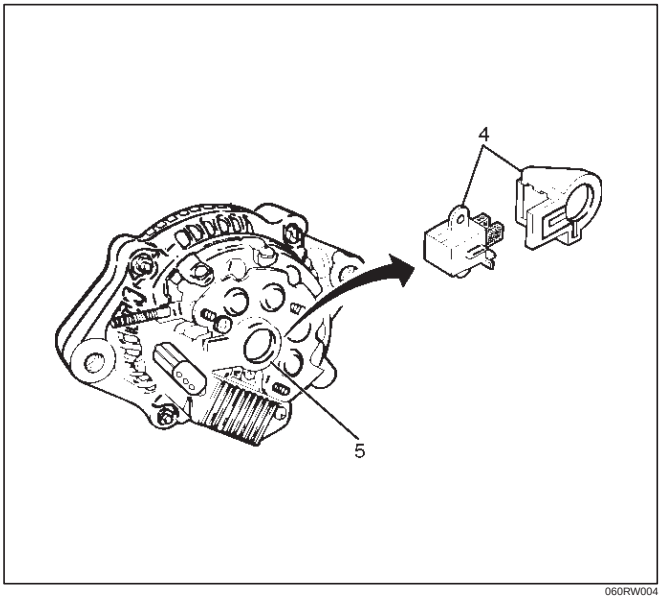

060RW004

4. Remove three screws on the IC regulator, then the IC regulator assembly(6).

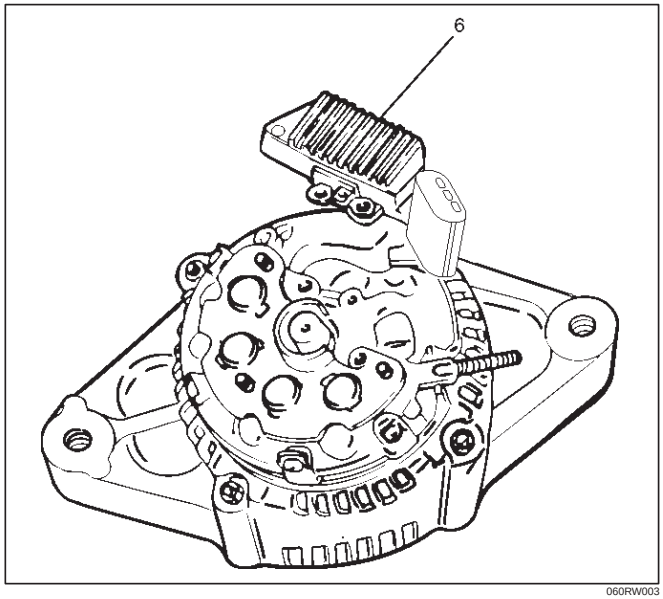

060RW003

5. Remove four screws that fix rectifier(7) and stator lead wires.

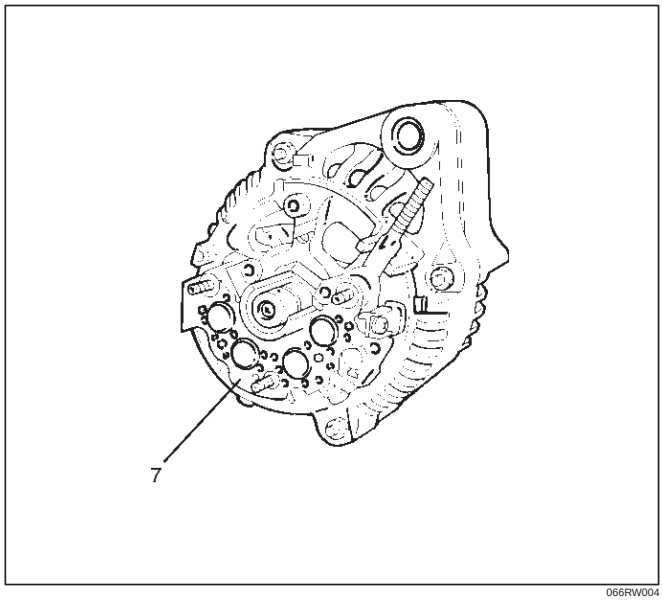

066RW004

6. Secure the pulley directly in the vise between two copper plates, and remove the nut and pulley.

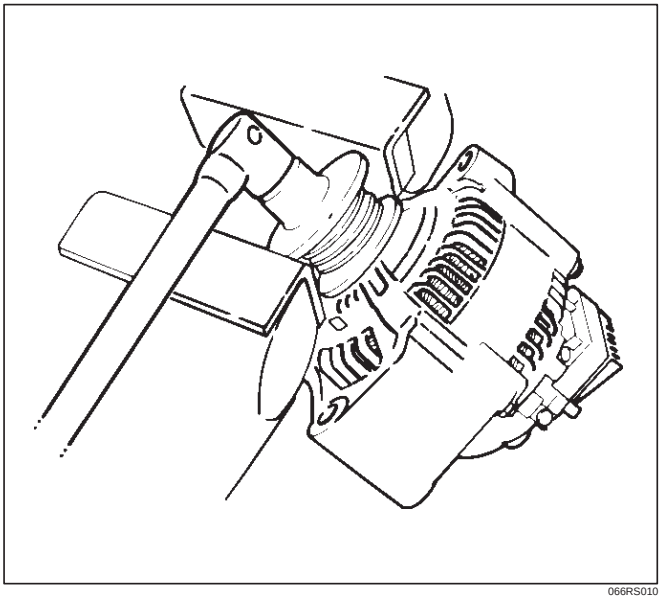

066RS010

7. Remove four nuts(8) that secure the front cover assembly and rear end cover, and an insulator(9).

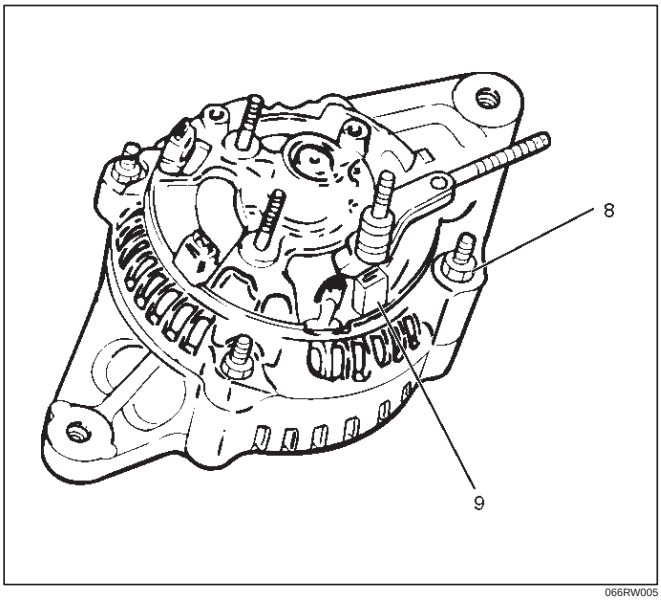

066RW005

8. Use the puller to remove the rear end cover.
9. Rotor assembly

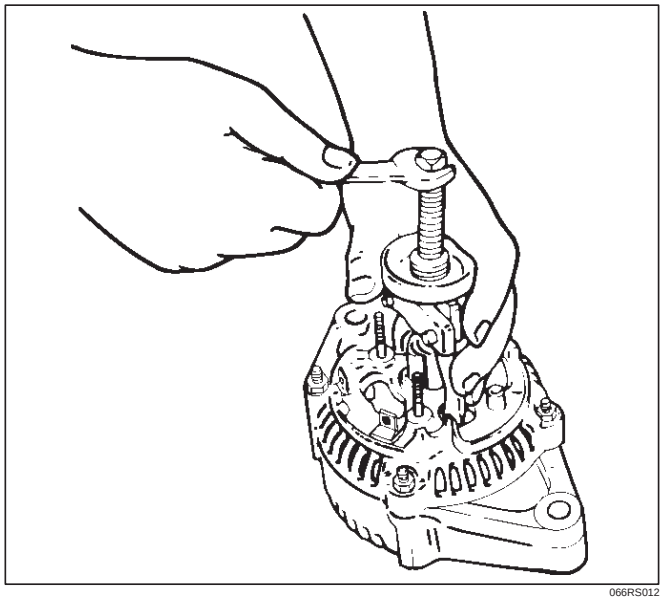

066RS012

10. Pull the rotor assembly(10) off the front cover assembly(12) using a bench press(11).

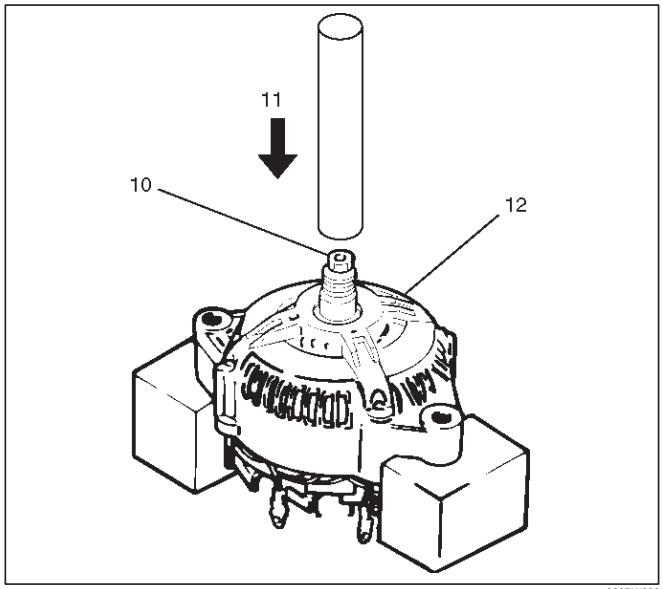

066RW006

Inspection and Repair

Repair or replace necessary parts if extreme wear or damage is found during inspection.

Rotor Assembly

1. Check the rotor slip ring surfaces for contamination and roughness. If rough, polish with #500—600 sandpaper.

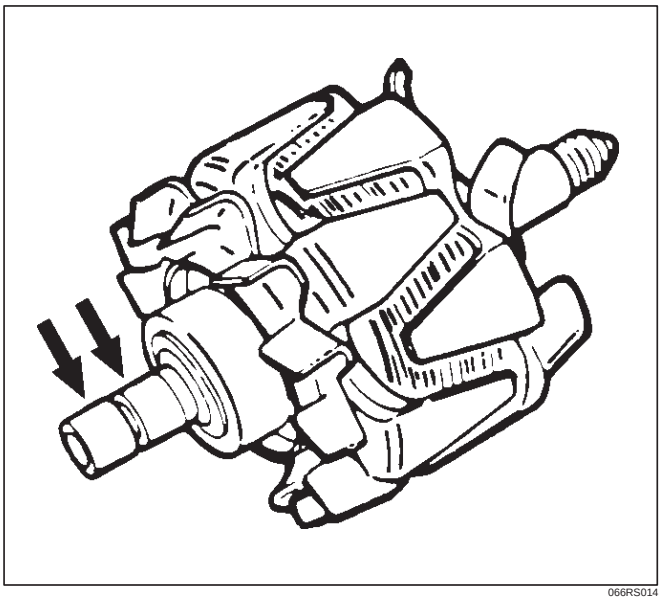

066RS014

2. Measure the slip ring diameter, and replace if it exceeds the limit.

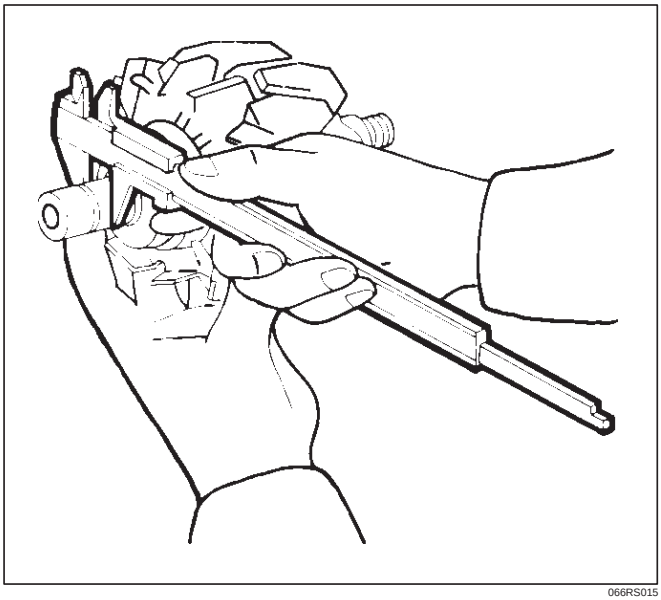

066RS015

3. Check resistance between slip rings, and replace if there is no continuity.

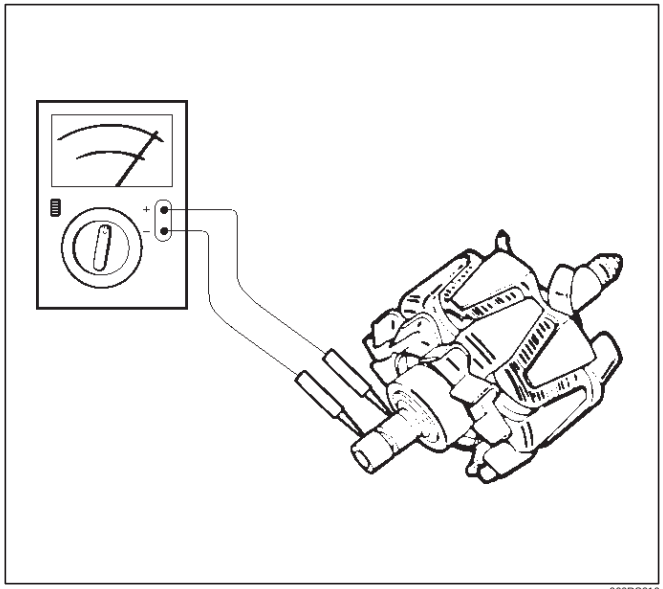

066RS016

4. Check for continuity between slip ring and rotor core. In case of continuity, replace the rotor assembly.

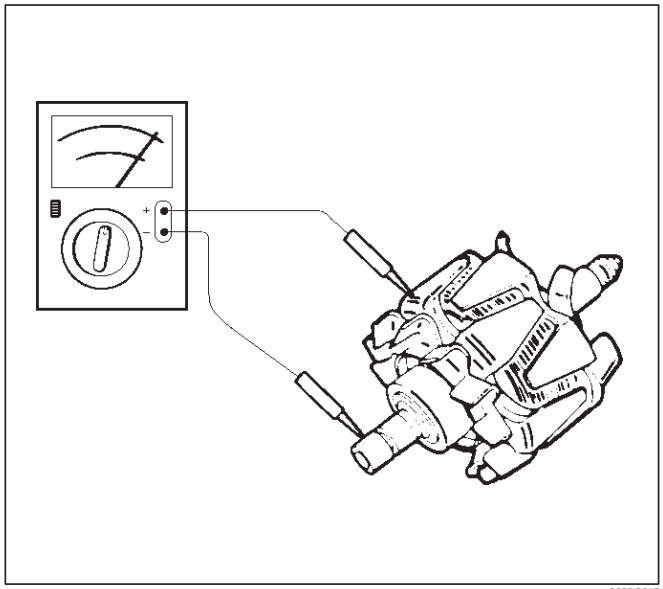

066RS017

Stator Coil

1. Measure resistance between respective phases.
2. Measure insulation resistance between stator coil and core with a mega–ohmmeter.
   If less than standard, replace the coil.

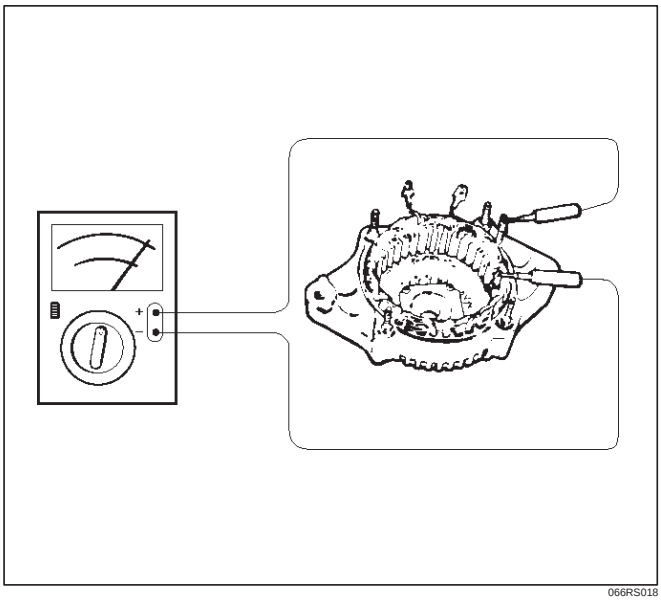

066RS018

Brush

Measure the brush length.
If more than limit, replace the brush.

Standard: 10.mm (0.4134 in)

Limit: 8.4.mm (0.3307 in)

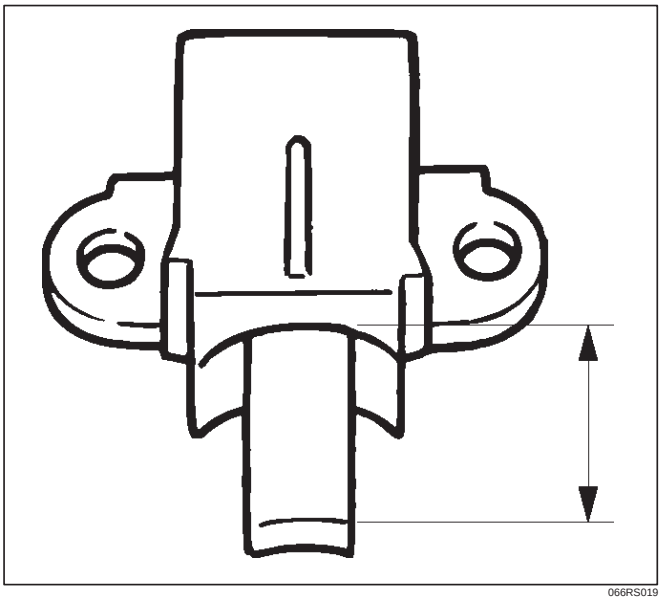

066RS019

Rectifier Assembly

Check for continuity across “P” and “E” in the × 100W range of multimeter.

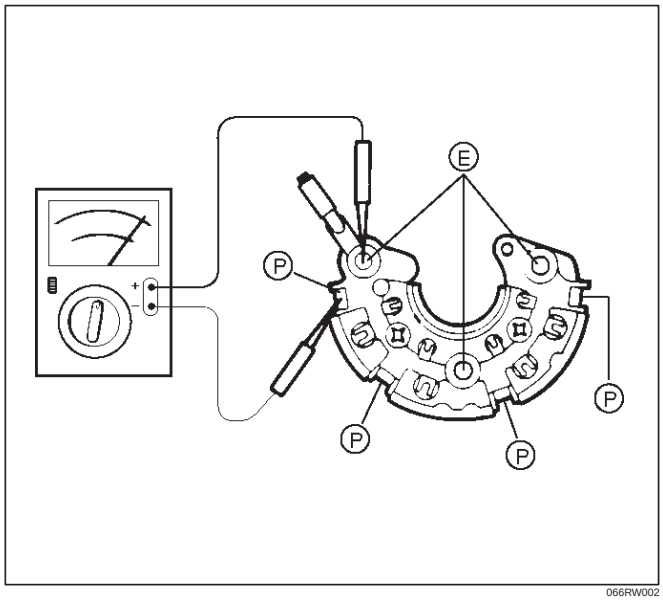

066RW002

Change polarity, and make sure that there is continuity in one direction, and not in the reverse direction. In case of continuity in both directions, replace the rectifier assembly.

IC Regulator Assembly

Check for continuity across “B” and “F” in the × 100W range of multimeter.

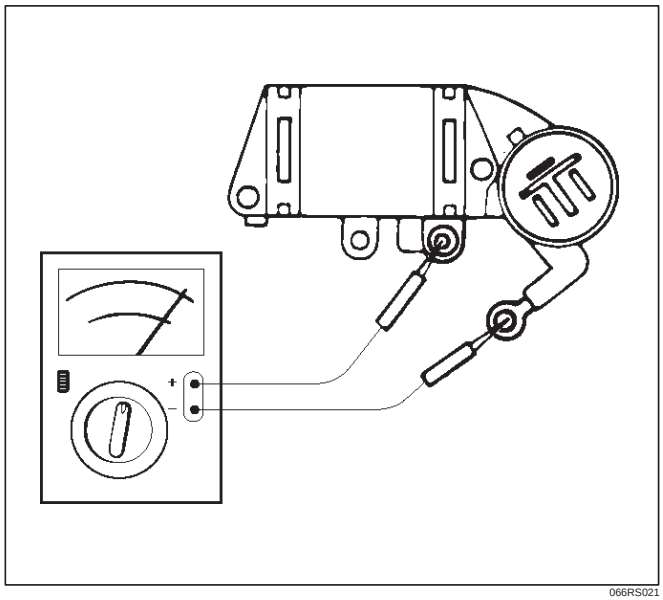

066RS021

Change polarity, and make sure that there is continuity in one direction, and not in the reverse direction. In case of continuity in both directions, replace the IC regulator assembly.

Reassembly

To reassemble, follow the disassembly steps in the reverse order, noting the following points:

1. Using a press with a socket wrench attached, reassemble rotor and rear end cover assembly in the front cover.

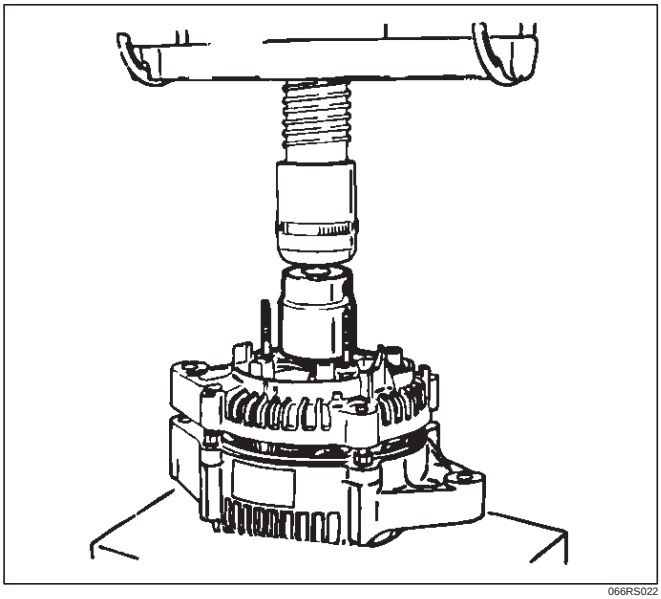

066RS022

2. Install pulley on the rotor.
   Secure the pulley directly in the vise between two copper plates, and tighten nut to the specified torque.

Torque: 111 N·m (11.3 Kg·m/82 lb ft)

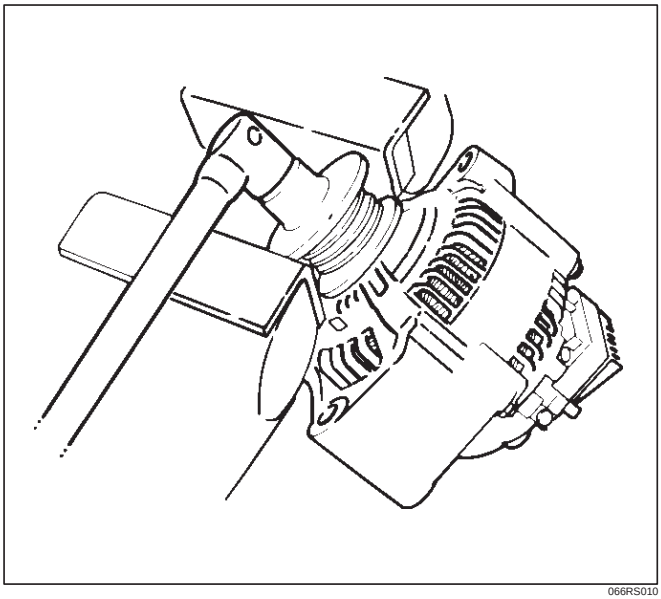

066RS010

Bench Test

Conduct a bench test of the generator.

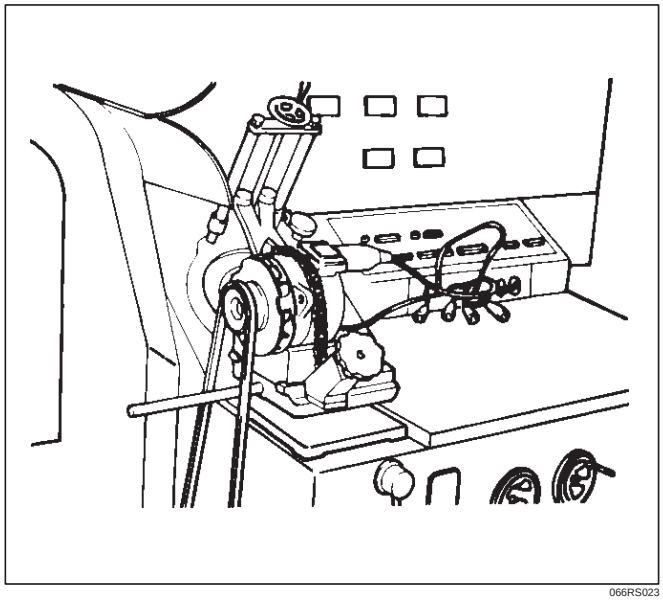

066RS023

Preparation

Remove generator from the vehicle (see “Generator removal”).

1. Secure generator to the bench test equipment and connect wires.
   Terminal “IG” for energization
   Terminal “L” for neutral (warning lamp)
   Terminal “B” for output
2. Conduct the generator characteristic test.
   Characteristics of generator are shown in illustration.
   Repair or replace the generator if its outputs are abnormal.

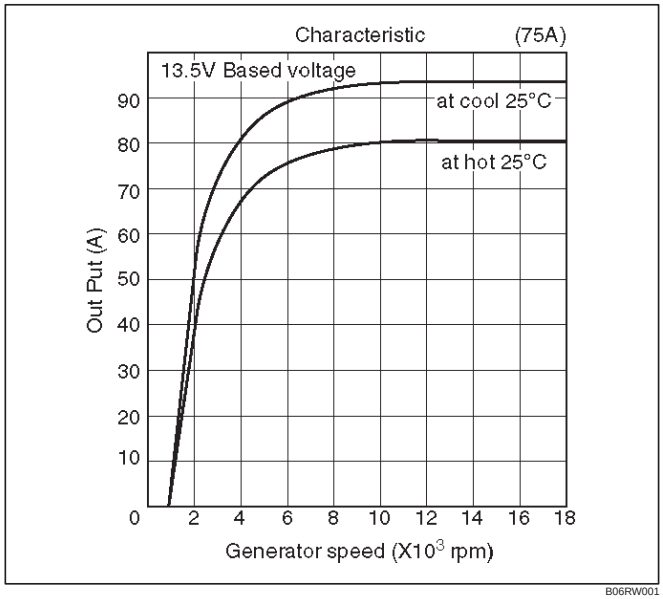

B06RW001

Main Data and Specifications

General Specifications

Parts Number (Nippon denso)	102211—5030
Model	ACHD04
Rated voltage	12 V
Rated output	75 A
Rotating direction (As viewed from pulley)	Clockwise
Pulley effective diameter	50 mm (1.97 in)
Weight	44 N (33 lb)

ENGINE

ENGINE DRIVEABILITY AND EMISSIONS

CONTENTS

Specifications 6E–5
Tightening Specifications 6E–5
Vehicle Type Specifications 6E–5
Diagrams and Schematics 6E–6
PCM Wiring Diagram (1 of 11) 6E–6
PCM Wiring Diagram (2 of 11) For EC, THAILAND, SOUTH EAST ASIA, LATIN AMERICA, GULF, SAUDI, CHINA. 6E–7
PCM Wiring Diagram (3 of 11) For SOUTH AFRICA and EXP. 6E–8
PCM Wiring Diagram (4 of 11) 6E–9
PCM Wiring Diagram (5 of 11) 6E–10
PCM Wiring Diagram (6 of 11) For AUSTRALIA, THAILAND, SOUTH EAST ASIA, LATIN AMERICA, GULF, SAUDI, LATIN AMERICA. 6E–11
PCM Wiring Diagram (7 of 11) For EC. . . . 6E–12
PCM Wiring Diagram (8 of 11) For EXPORT and SOUTH AFRICA. 6E–13
PCM Wiring Diagram (9 of 11) Except EXP and SOUTH AFRICA 6E–14
PCM Wiring Diagram (10 of 11) For EXPORT and SOUTH AFRICA 6E–15
PCM Wiring Diagram (11 of 11) 6E–16
PCM Pinouts 6E–17
PCM Pinout Table, 32-Way Red Connector – Row “A” 6E–17
PCM Pinout Table, 32-Way Red Connector – Row “B” 6E–19
PCM Pinout Table, 32-Way White Connector – Row “C” (For EC) 6E–20
PCM Pinout Table, 32-Way White Connector – Row “C” (For except EC) . . . 6E–21
PCM Pinout Table, 32-Way White Connector – Row “D” (For except EXPORT and SOUTH AFRICA) 6E–22
PCM Pinout Table, 32-Way White Connector – Row “D” (For EXPORT and SOUTH AFRICA) 6E–23
PCM Pinout Table, 32-Way Blue Connector – Row “E” (For except EXPORT and SOUTH AFRICA) 6E–24
PCM Pinout Table, 32-Way Blue Connector – Row “E” (For EXPORT and SOUTH AFRICA) 6E–26
PCM Pinout Table, 32-Way Blue Connector – Row “F” 6E–27
Component Locators 6E–28
Engine Component Locator (This illustration is based on RHD model.) 6E–28
Engine Component Locator Table 6E–29
Engine Component Locator Table 6E–31
Undercarriage Component Locator 6E–32
Undercarriage Component Locator Table (Automatic Transmission) 6E–32
Undercarriage Component Locator Table (Manual Transmission) 6E–33
Fuse and Relay Panel (Underhood Electrical Center) 6E–33
Sensors and Miscellaneous Component Locators 6E–34
Diagnosis 6E–37
Strategy-Based Diagnostics 6E–37
Strategy-Based Diagnostics 6E–37
DTC Stored 6E–37
No DTC 6E–37
No Matching Symptom 6E–37
Intermittents 6E–37
No Trouble Found 6E–37
Verifying Vehicle Repair 6E–37
General Service Information 6E–38
OBD Serviceablity Issues 6E–38
Maintenance Schedule 6E–38
Visual / Physical Engine Compartment Inspection 6E–38
Basic Knowledge of Tools Required 6E–38
Serial Data Communications 6E–38
Class II Serial Data Communications 6E–38
On-Board Diagnostic (OBD) 6E–39
On-Board Diagnostic Tests 6E–39
Comprehensive Component Monitor Diagnostic Operation 6E–39
Common OBD Terms 6E–40
The Diagnostic Executive 6E–40
DTC Types 6E–41
Verifying Vehicle Repair 6E–42
Reading Diagnostic Trouble Codes Using A Tech 2 . . . . . 6E–42
Tech 2 Tech 2 . . . . . 6E–43
Tech 2 Features 6E–43
Getting Started 6E–44
Operating Procedure (For Example) 6E–44
DTC Modes 6E–45
DTC Information Mode 6E–46
Injector Balance Test 6E–46
EGR Control Test 6E–47
Idle Air Control System Test 6E–48

Primary System-Based Diagnostic 6E–50
Primary System-Based Diagnostic 6E–50
Fuel Control Heated Oxygen Sensor 6E–50
HO2S Heater 6E–50
Fuel Trim System Monitor Diagnostic Operation 6E–50
Fuel Trim System Monitor Diagnostic Operation 6E–50
Fuel Trim Cell Diagnostic Weights 6E–50
On-Board Diagnostic (OBD) System Check . 6E–51
A/C Clutch Control Circuit Diagnosis 6E–54
Electronic Ignition System Diagnosis 6E–60
Fuel Metering System Check 6E–60
Idle Air Control (IAC) Valve 6E–60
Fuel System Pressure Test 6E–60
Fuel Injector Coil Test Procedure and Fuel Injector Balance Test Procedure 6E–60
Knock Sensor Diagnosis 6E–65
Powertrain Control Module (PCM) Diagnosis 6E–65
Multiple PCM Information Sensor DTCS Set 6E–65
Exhaust Gas Recirculation (EGR) Diagnosis (For except EXPORT and SOUTH AFRICA) 6E–68
Engine Tech 2 Data Definitions and Ranges 6E–68
Typical Scan Data Values 6E–70
No Malfunction Indicator Lamp (MIL) 6E–74
Malfunction Indicator Lamp (MIL) “ON” Steady 6E–77
Engine Cranks But Will Not Run 6E–79
Fuel System Electrical Test 6E–85
Fuel System Diagnosis 6E–88
Idle Air Control (IAC) System Check 6E–93
Knock Sensor (KS) System Check (Engine Knock, Poor Performance, or Poor Economy) 6E–95
Exhaust Gas Recirculation (EGR) System Check 6E–97
Manifold Absolute Pressure (MAP) Output Check 6E–99
PCM Diagnostic Trouble Codes 6E–101
Diagnostic Trouble Code (DTC) P0101 MAF System Performance 6E–104
Diagnostic Trouble Code (DTC) P0102 MAF Sensor Circuit Low Frequency 6E–107
Diagnostic Trouble Code (DTC) P0103 MAF Sensor Circuit High Frequency 6E–110
Diagnostic Trouble Code (DTC) P0107 MAP Sensor Circuit Low Voltage 6E–112
Diagnostic Trouble Code (DTC) P0108 MAP Sensor Circuit High Voltage 6E–115
Diagnostic Trouble Code (DTC) P0112 IAT Sensor Circuit Low Voltage 6E–118
Diagnostic Trouble Code (DTC) P0113 IAT Sensor Circuit High Voltage 6E–121
Diagnostic Trouble Code (DTC) P0117 ECT Sensor Circuit Low Voltage 6E–124
Diagnostic Trouble Code (DTC) P0118 ECT Sensor Circuit High Voltage 6E–127
Diagnostic Trouble Code (DTC) P0121 TP System Performance 6E–130
Diagnostic Trouble Code (DTC) P0122 TP Sensor Circuit Low Voltage 6E–133
Diagnostic Trouble Code (DTC) P0123 TP Sensor Circuit High Voltage 6E–136
Diagnostic Trouble Code (DTC) P0131 HO2S Circuit Low Voltage Bank 1 Sensor 1 . . . . . 6E–139
Diagnostic Trouble Code (DTC) P0132 HO2S Circuit High Voltage Bank 1 Sensor 1 . . . . . 6E–142
Diagnostic Trouble Code (DTC) P0134 HO2S Circuit Insufficient Activity Bank 1 Sensor 1 . . . . . 6E–145
Diagnostic Trouble Code (DTC) P0151 HO2S Circuit Low Voltage Bank 2 Sensor 1 . . . . . 6E–148
Diagnostic Trouble Code (DTC) P0152 HO2S Circuit HIGH Voltage Bank 2 Sensor 1 . . . . . 6E–151
Diagnostic Trouble Code (DTC) P0171 Fuel Trim System Lean Bank 1 . . . . . 6E–154
Diagnostic Trouble Code (DTC) P0172 Fuel Trim System Rich Bank 1 . . . . . 6E–158
Diagnostic Trouble Code (DTC) P0174 Fuel Trim System Lean Bank 2 . . . . . 6E–162
Diagnostic Trouble Code (DTC) P0175 Fuel Trim System Rich Bank 2 . . . . . 6E–166
Diagnostic Trouble Code (DTC) P0201 Injector 1 Control Circuit 6E–170
Diagnostic Trouble Code (DTC) P0202 Injector 2 Control Circuit 6E–173
Diagnostic Trouble Code (DTC) P0203 Injector 3 Control Circuit 6E–176
Diagnostic Trouble Code (DTC) P0204 Injector 4 Control Circuit 6E–179
Diagnostic Trouble Code (DTC) P0205 Injector 5 Control Circuit 6E–182
Diagnostic Trouble Code (DTC) P0206 Injector 6 Control Circuit 6E–185
Diagnostic Trouble Code (DTC) P0325 KS Module Circuit 6E–188
Diagnostic Trouble Code (DTC) P0327 KS Sensor Circuit 6E–190
Diagnostic Trouble Code (DTC) P0336 58X Reference Signal Circuit 6E–193
Diagnostic Trouble Code (DTC) P0337 CKP Sensor Circuit Low Frequency 6E–195
Diagnostic Trouble Code (DTC) P0341 CMP Sensor Circuit Performance 6E–198
Diagnostic Trouble Code (DTC) P0342 CMP Sensor Circuit Low 6E–202

Diagnostic Trouble Code (DTC) P0351 Ignition 1 Control Circuit 6E–206
Diagnostic Trouble Code (DTC) P0352 Ignition 2 Control Circuit 6E–209
Diagnostic Trouble Code (DTC) P0353 Ignition 3 Control Circuit 6E–212
Diagnostic Trouble Code (DTC) P0354 Ignition 4 Control Circuit 6E–215
Diagnostic Trouble Code (DTC) P0355 Ignition 5 Control Circuit 6E–218
Diagnostic Trouble Code (DTC) P0356 Ignition 6 Control Circuit 6E–221
Diagnostic Trouble Code (DTC) P0402 EGR Pintle Crank Error 6E–224
Diagnostic Trouble Code (DTC) P0404 EGR Open Stuck 6E–226
Diagnostic Trouble Code (DTC) P0405 EGR Low Voltage 6E–228
Diagnostic Trouble Code (DTC) P0406 EGR High Voltage 6E–231
Diagnostic Trouble Code (DTC) P0502 VSS Circuit Low Input 6E–234
Diagnostic Trouble Code (DTC) P0562 System Voltage Low 6E–237
Diagnostic Trouble Code (DTC) P0563 System Voltage High 6E–239
Diagnostic Trouble Code (DTC) P0601 PCM Memory 6E–240
Diagnostic Trouble Code (DTC) P1154 HO2S Circuit Transition Time Ratio Bank 2 Sensor 1 . . . . . 6E–241
Diagnostic Trouble Code (DTC) P1171 Fuel System Lean During Acceleration 6E–245
Diagnostic Trouble Code (DTC) P1380 ABS Rough Road ABS System Fault 6E–248
Diagnostic Trouble Code (DTC) P1404 EGR Closed Stuck 6E–249
Diagnostic Trouble Code (DTC) P1508 IAC System Low RPM 6E–251
Diagnostic Trouble Code (DTC) P1509 IAC System High RPM 6E–254
Diagnostic Trouble Code (DTC) P1618 Serial Peripheral Interface (SPI) PCM Interprocessor Communication Error 6E–257
Diagnostic Trouble Code (DTC) P1625 PCM Unexpected Reset 6E–258
Diagnostic Trouble Code (DTC) P1640 Driver-1-Input High Voltage 6E–259
Symptom Diagnosis 6E–262
Default Matrix Table 6E–288
Camshaft Position (CMP) Sensor 6E–291
Crankshaft Position (CKP) Sensor 6E–292
Engine Coolant Temperature (ECT) Sensor . 6E–292
Heated Oxygen Sensor (HO2S) 6E–293
Intake Air Temperature (IAT) Sensor 6E–295
Knock Sensor (KS) 6E–296
Mass Air Flow (MAF) Sensor 6E–297
Manifold Absolute Pressure (MAP) Sensor . 6E–297
Malfunction Indicator Lamp (MIL) 6E–298
Powertrain Control Module (PCM) 6E–298
EEPROM 6E–300
Power Steering Pressure (PSP) Switch 6E–300
Throttle Position (TP) Sensor 6E–301
Vehicle Speed Sensor (VSS) 6E–302
Air Cleaner/Air Filter 6E–303
Idle Air Control (IAC) Valve 6E–304
Common Chamber 6E–305
Accelerator Cable Assembly 6E–305
Accelerator Pedal Replacement 6E–308
Fuel Filter Cap 6E–310
Fuel Filter 6E–310
Fuel Gauge Unit 6E–313
Fuel Injectors 6E–314
Fuel Pressure Regulator 6E–315
Fuel Metering System 6E–317
Fuel Pump Assembly 6E–318
Fuel Pump Relay 6E–319
Fuel Rail Assembly 6E–319
Fuel Tank 6E–321
Throttle Body (TB) 6E–323
Electronic Ignition System 6E–324
Catalytic Converter 6E–325
Air Conditioning Relay 6E–325
EVAP Canister Hoses 6E–326
EVAP Canister 6E–326
EVAP Canister Purge Solenoid 6E–327
Fuel Tank Vent Valve 6E–328
Linear Exhaust Gas Recirculation (EGR) Valve 6E–328
Positive Crankcase Ventilation (PCV) Valve . 6E–329
Wiring and Connectors 6E–330
PCM Connectors and Terminals 6E–330
Wire Harness Repair: Twisted Shielded Cable 6E–330
Twisted Leads 6E–331
Weather-Pack Connector 6E–332
Com-Pack III 6E–333
Metri-Pack 6E–333
General Description 6E–335
General Description (PCM and Sensors) . . . 6E–335
58X Reference PCM Input 6E–335
A/C Request Signal 6E–335
Crankshaft Position (CKP) Sensor 6E–335
Camshaft Position (CMP) Sensor and Signal 6E–335
Engine Coolant Temperature (ECT) Sensor 6E–335
Electrically Erasable Programmable Read Only Memory (EEPROM) 6E–336
Fuel Control Heated Oxygen Sensors 6E–336
Intake Air Temperature (IAT) Sensor 6E–336

Knock Sensor 6E–337
Linear Exhaust Gas Recirculation (EGR) Control 6E–337
Mass Air Flow (MAF) Sensor 6E–337
Manifold Absolute Pressure (MAP) Sensor 6E–338
Powertrain Control Module (PCM) 6E–338
PCM Function 6E–338
PCM Components 6E–339
PCM Voltage Description 6E–339
PCM Input/Outputs 6E–339
PCM Service Precautions 6E–339
Reprogramming The PCM 6E–339
Throttle Position (TP) Sensor 6E–339
Transmission Fluid Temperature (TFT) Sensor 6E–340
Transmission Range Switch 6E–340
Vehicle Speed Sensor (VSS) 6E–340
Use of Circuit Testing Tools 6E–340
Aftermarket Electrical and Vacuum Equipment 6E–340
Electrostatic Discharge Damage 6E–341
Upshift Lamp 6E–341
General Description (Air Induction) 6E–341
Air Induction System 6E–341
General Description (Fuel Metering) 6E–341
Acceleration Mode 6E–341
Accelerator Controls 6E–341
Battery Voltage Correction Mode 6E–341
CMP Signal 6E–341
Clear Flood Mode 6E–342
Deceleration Mode 6E–342
Engine Speed/Vehicle Speed/Fuel Disable Mode 6E–342
Fuel Cutoff Mode 6E–342
Fuel Injector 6E–342
Fuel Metering System Components 6E–342
Fuel Metering System Purpose 6E–342
Fuel Pressure Regulator 6E–343
Fuel Pump Electrical Circuit 6E–343
Fuel Rail 6E–343
Idle Air Control (IAC) Valve 6E–343
Run Mode 6E–344
Starting Mode 6E–344
Throttle Body Unit 6E–344
General Description (Electronic Ignition System) 6E–344
Camshaft Position (CMP) Sensor 6E–344
Crankshaft Position (CKP) Sensor 6E–345
Electronic Ignition 6E–345
Ignition Coils 6E–345
Ignition Control 6E–345
Ignition Control PCM Output 6E–347
Knock Sensor (KS) PCM Input 6E–347
Powertrain Control Module (PCM) 6E–347
Spark Plug 6E–347
A/C Clutch Diagnosis 6E–349
A/C Clutch Circuit Operation 6E–349
A/C Clutch Circuit Purpose 6E–349
A/C Request Signal 6E–349
General Description (Exhaust Gas Recirculation (EGR) System) 6E–349
EGR Purpose 6E–349
Linear EGR Valve 6E–349
Linear EGR Control 6E–349
Linear EGR Valve Operation and Results of Incorrect Operation 6E–349
EGR Pintle Position Sensor 6E–350
General Description (Positive Crankcase Ventilation (PCV) System) 6E–350
Crankcase Ventilation System Purpose . . . 6E–350
Crankcase Ventilation System Operation . 6E–350

Specifications

Tightening Specifications

Application	N·m	Lb Ft.	Lb In.
Camshaft Position Sensor Retaining Screw	9	—	78
Crankshaft Position Sensor Mounting Bolt	10	—	87
EGR Bolt	28	21	—
EGR Nut	28	21	—
Engine Coolant Temperature Sensor	20	7.7	—
Fuel Drain Plug	29	22	—
Fuel Pressure Regulator Attaching Screw	6.5	—	60
Fuel Rail Bolts	25	18	—
Fuel Tank Undercover Retaining Bolts	36	27	—
Heated Oxygen Sensor	42	31	—
Lower Intake Manifold to Engine Block Bolts	25	18	—
Lower Intake Manifold to Engine Block Nuts	25	18	—
Spark Plugs	18	13	—
Throttle Body Mounting Bolts	25	18	—
Upper Intake Manifold to Lower Intake Manifold Bolts	25	18	—
VSS Retaining Bolt	13	—	120

Vehicle Type Specifications

EC		AUSTRALIA		THAILAND SOUTH-EAST-ASIA LATIN AMERICA		GULF CONTRIES SAUDI CHINA		SOUTH AFRICA	EXPORT		Specifications			
UBS		UBS		UBS		UBS		UBS	UBS		OBD	O_2 SENSOR	CATA	EGR
MT	AT	MT	AT	MT	AT	MT	AT	MT	MT	AT				
•											I	2	1	●
	•										I	2	1	●
		•										1	1	●
			•									1	1	●
				•								1	1	●
					•							1	1	●
						•						1		●
							•					1		●
								•						
									•		I			
										•				

Diagrams and Schematics

PCM Wiring Diagram (1 of 11)

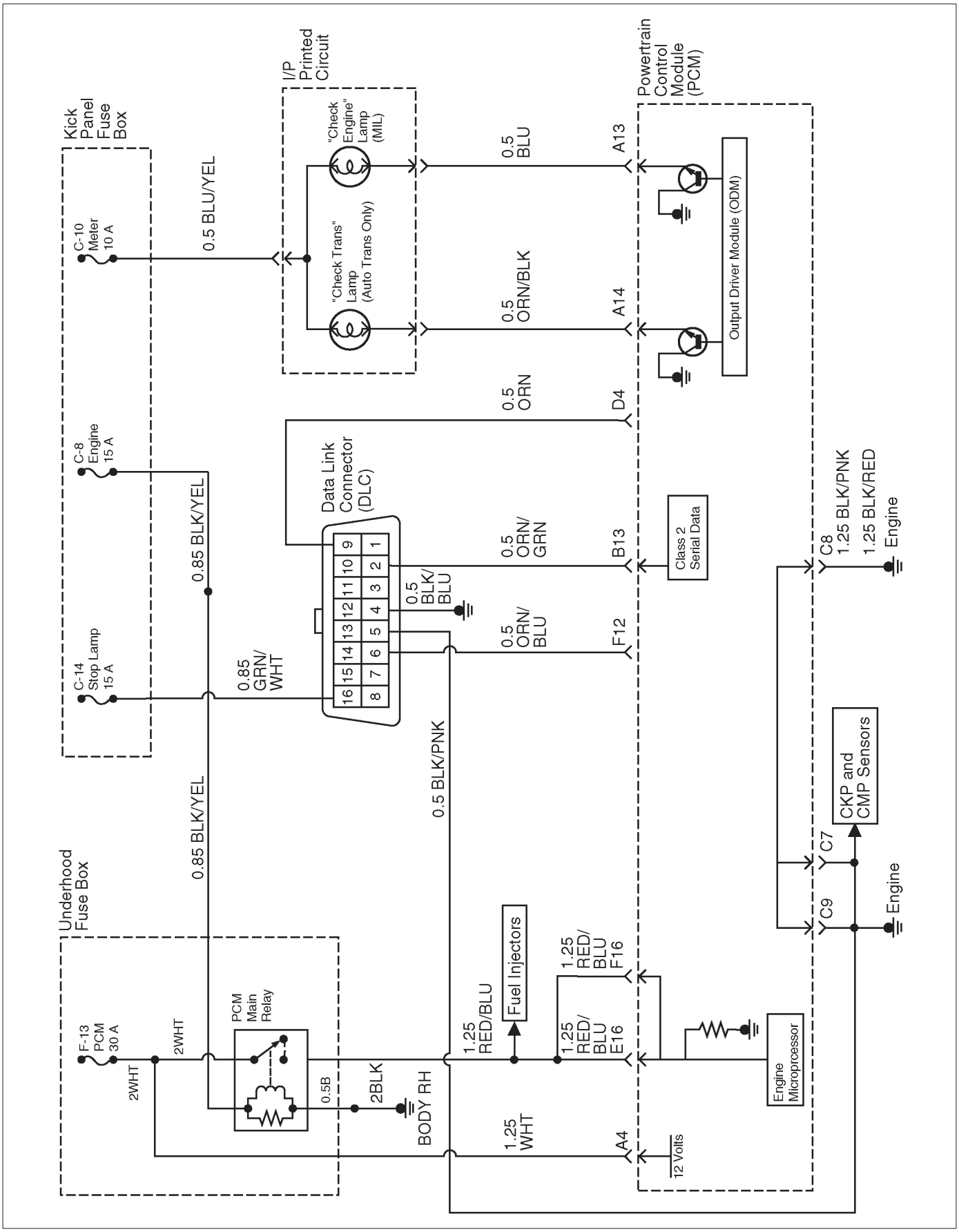

D06RW00005

PCM Wiring Diagram (2 of 11) For EC, THAILAND, SOUTH EAST ASIA, LATIN AMERICA, GULF, SAUDI, CHINA.

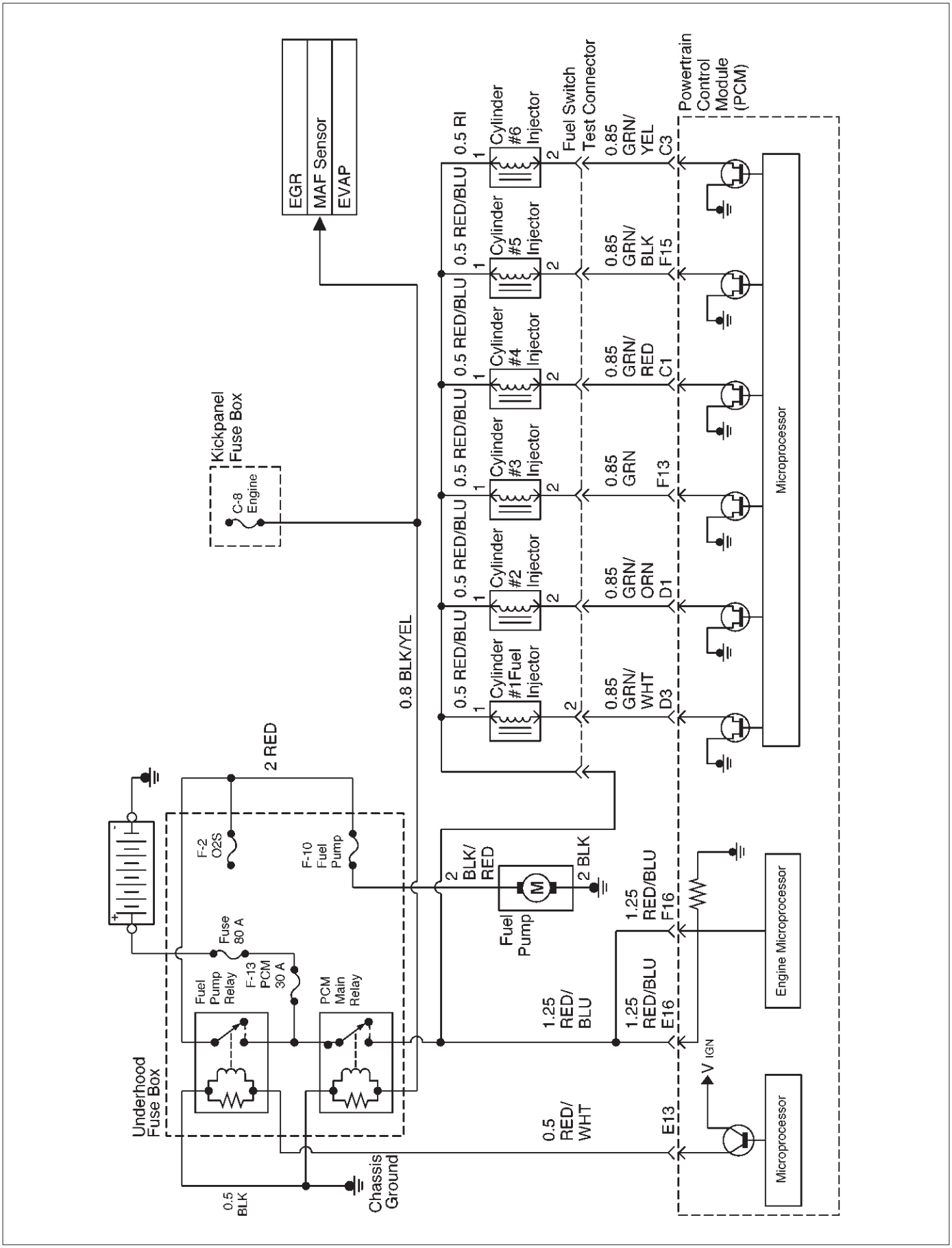

D06RW134

PCM Wiring Diagram (3 of 11) For SOUTH AFRICA and EXP.

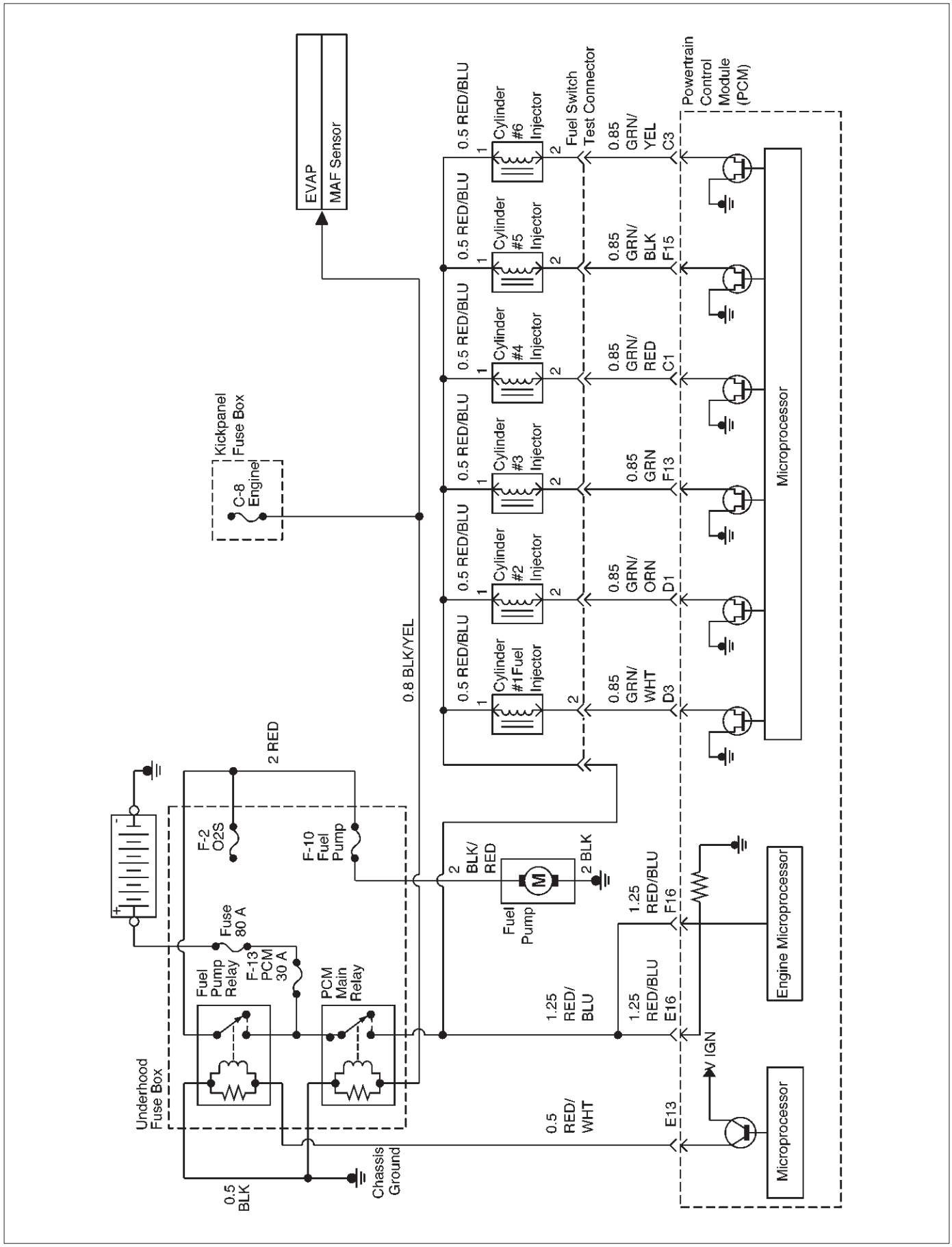

D06RW140

PCM Wiring Diagram (4 of 11)

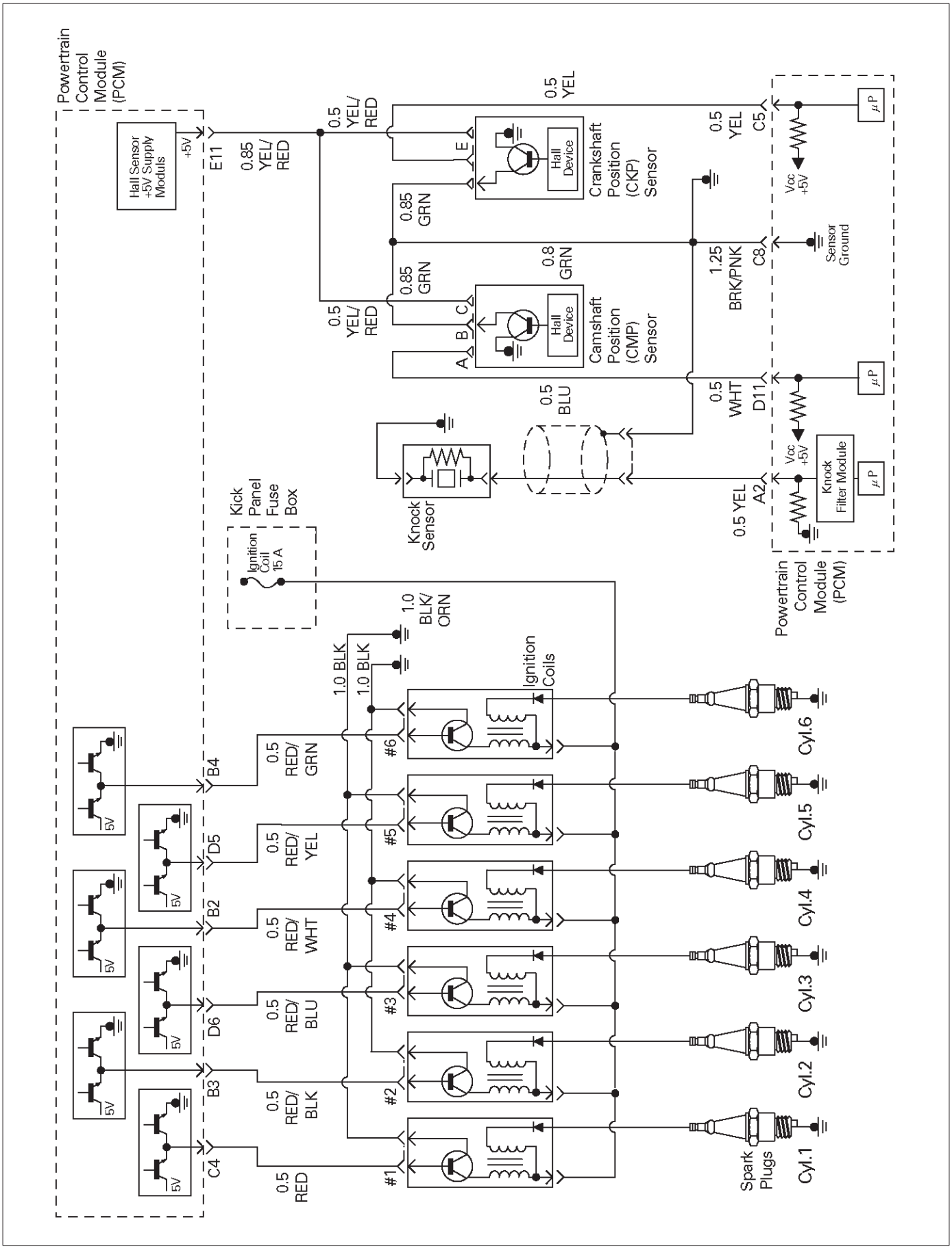

D06RX00003

PCM Wiring Diagram (5 of 11)

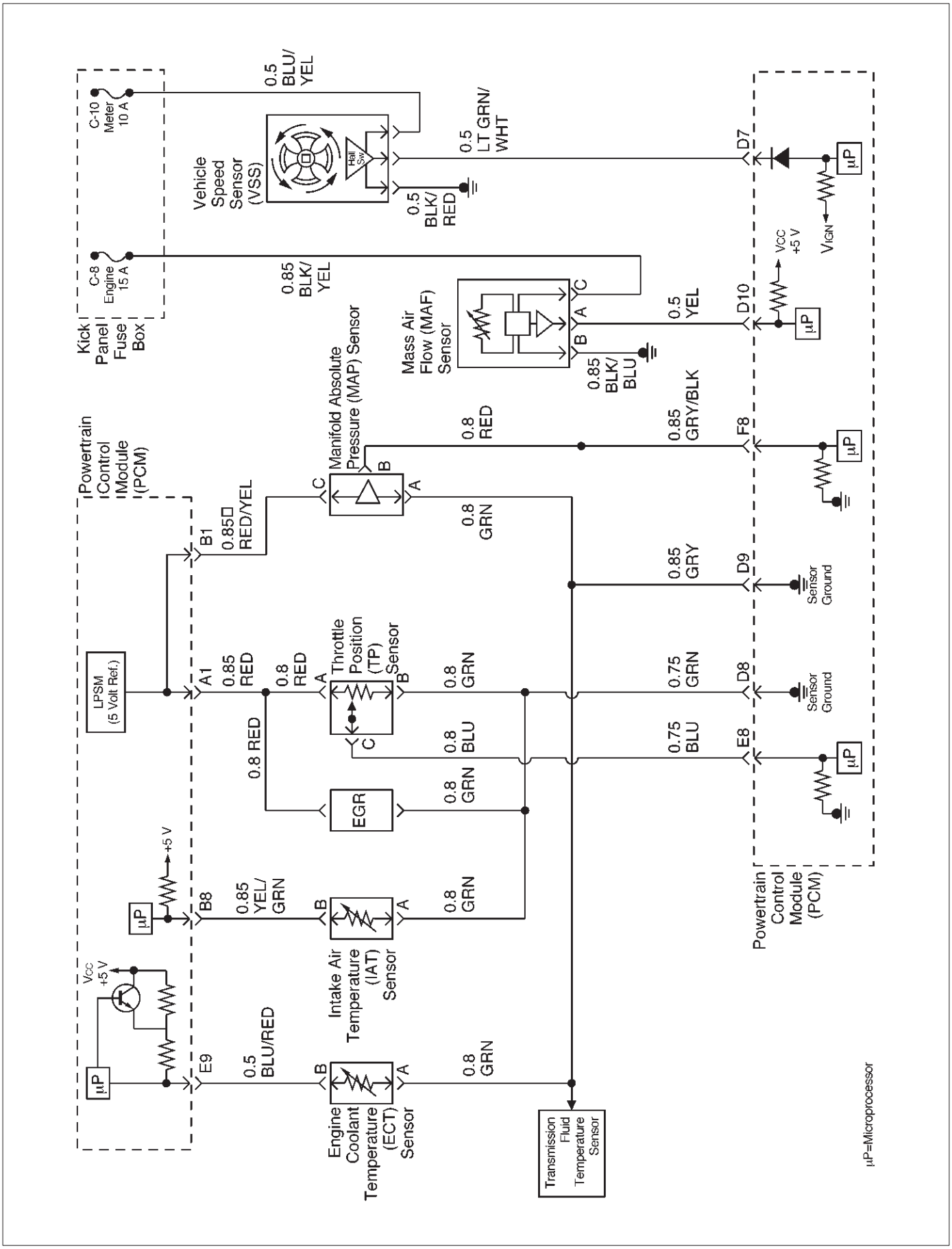

PCM Wiring Diagram (6 of 11) For AUSTRALIA, THAILAND, SOUTH EAST ASIA, LATIN AMERICA, GULF, SAUDI, LATIN AMERICA.

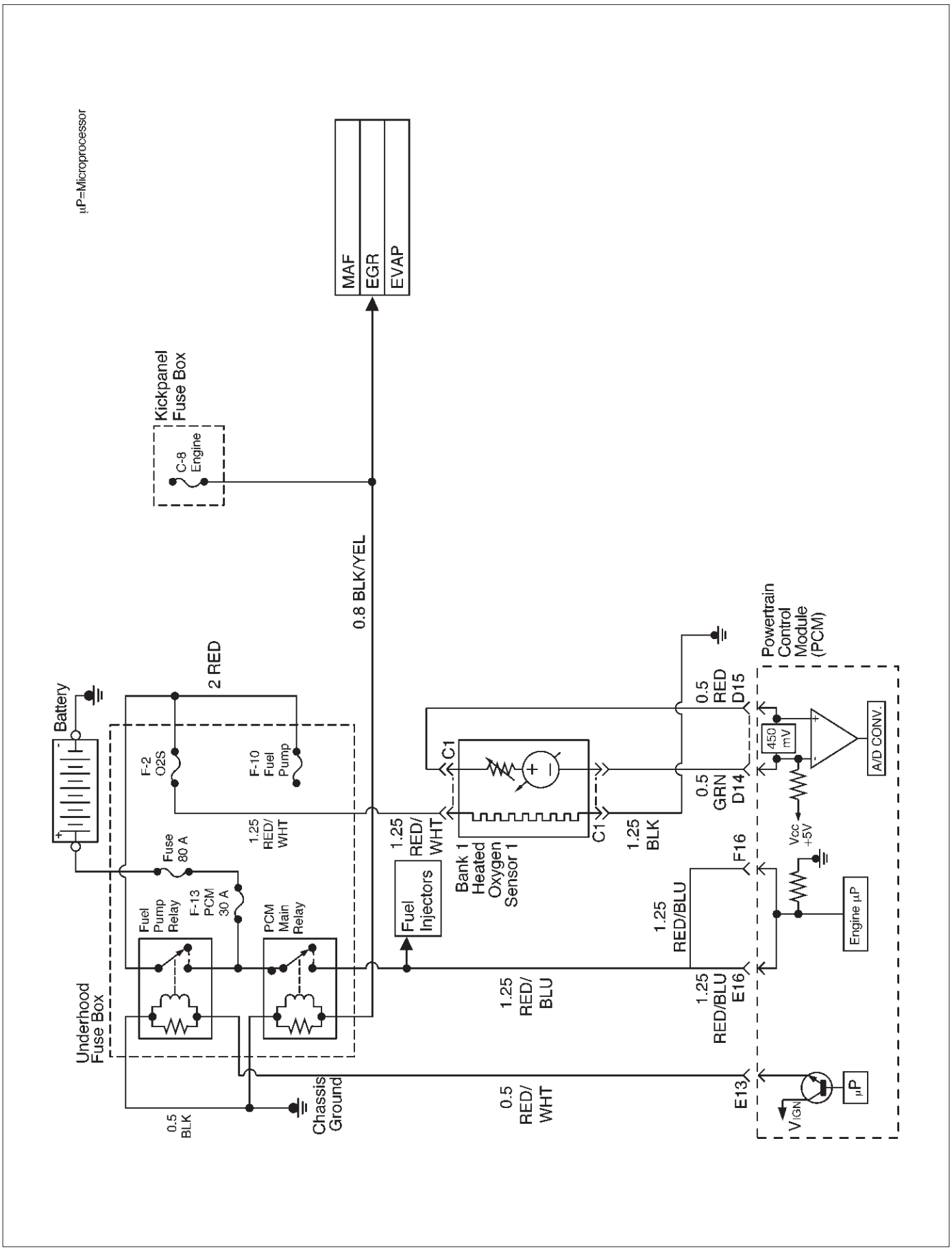

D06RW137

PCM Wiring Diagram (7 of 11) For EC.

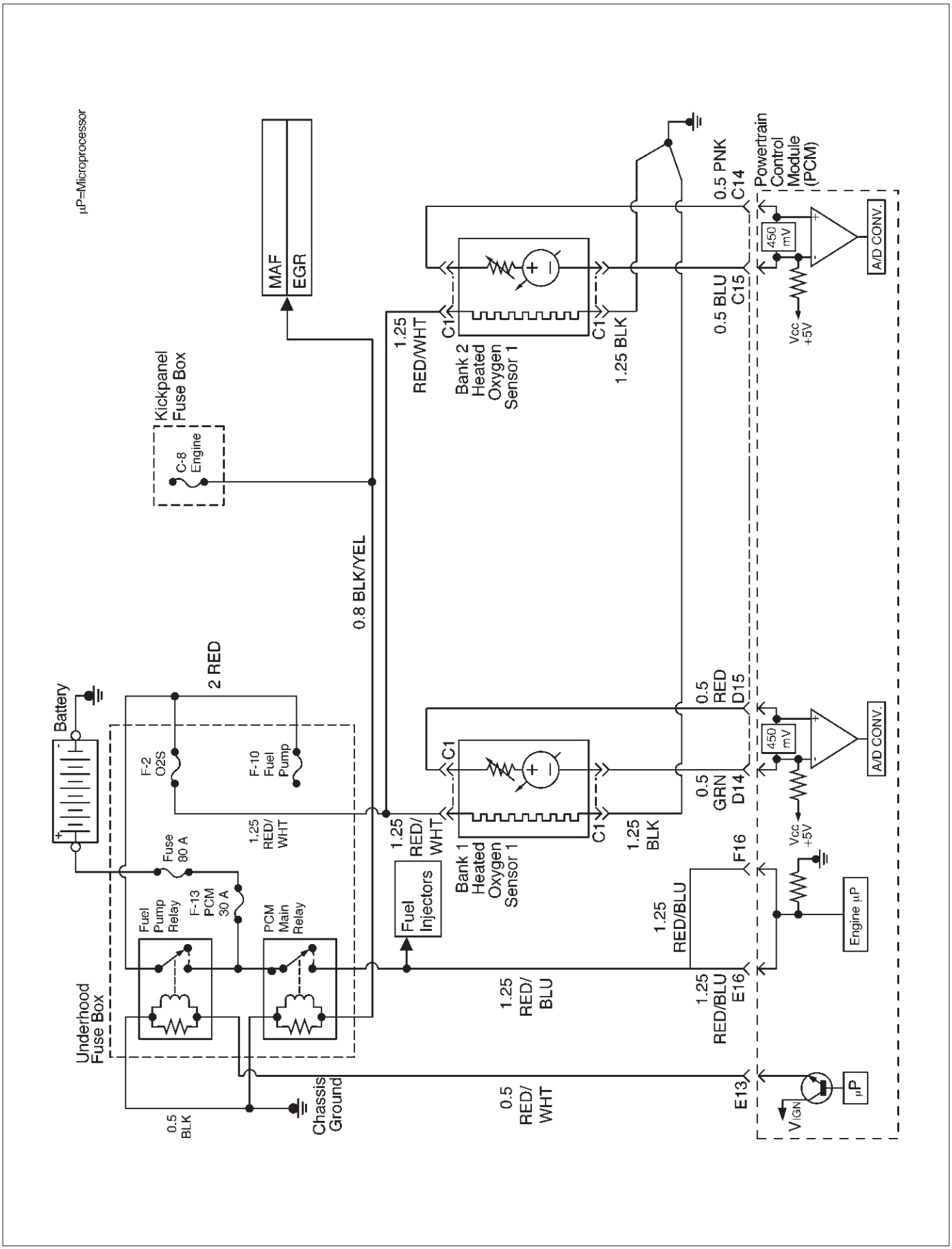

D06RW100

PCM Wiring Diagram (8 of 11) For EXPORT and SOUTH AFRICA.

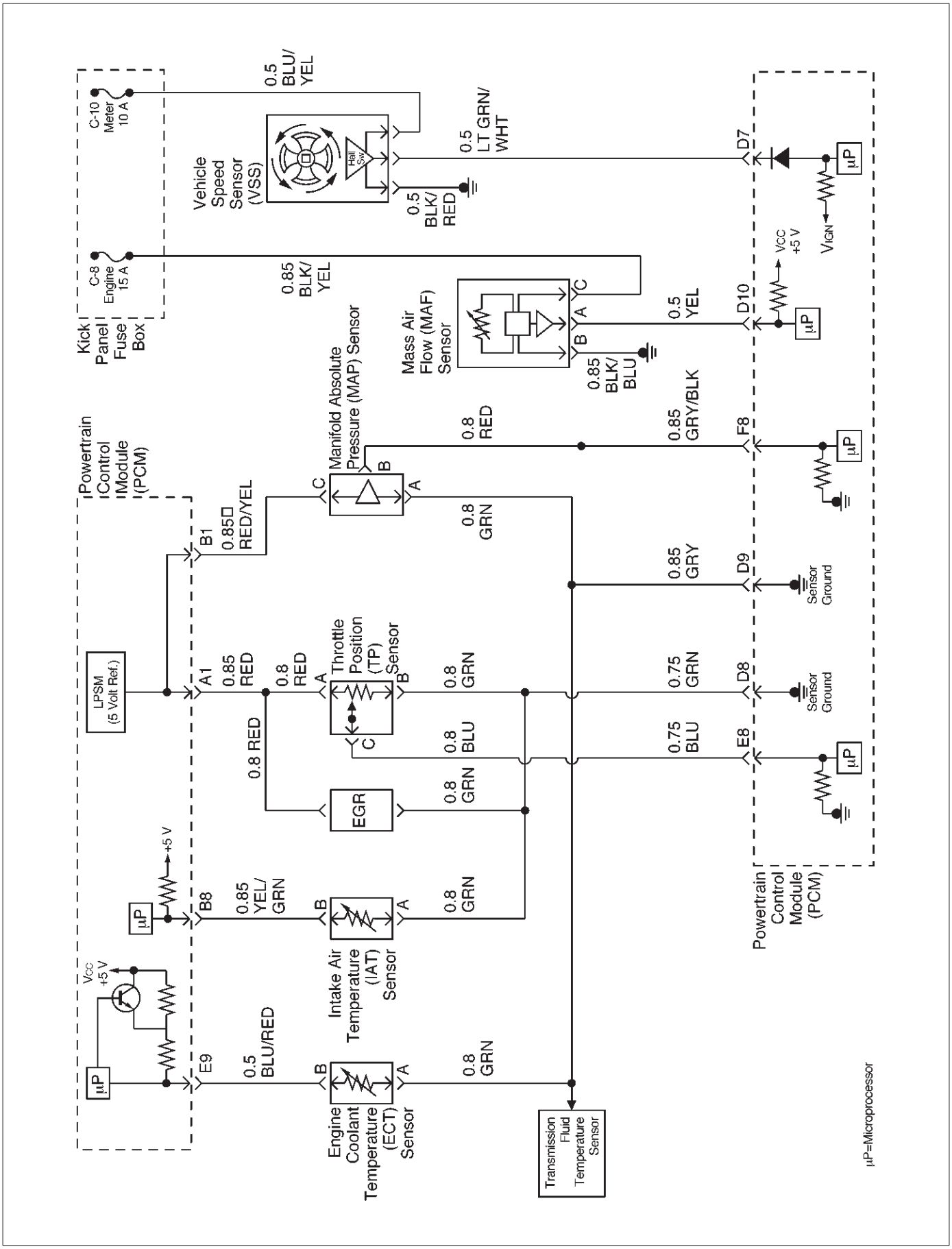

D06RW138

PCM Wiring Diagram (9 of 11) Except EXP and SOUTH AFRICA

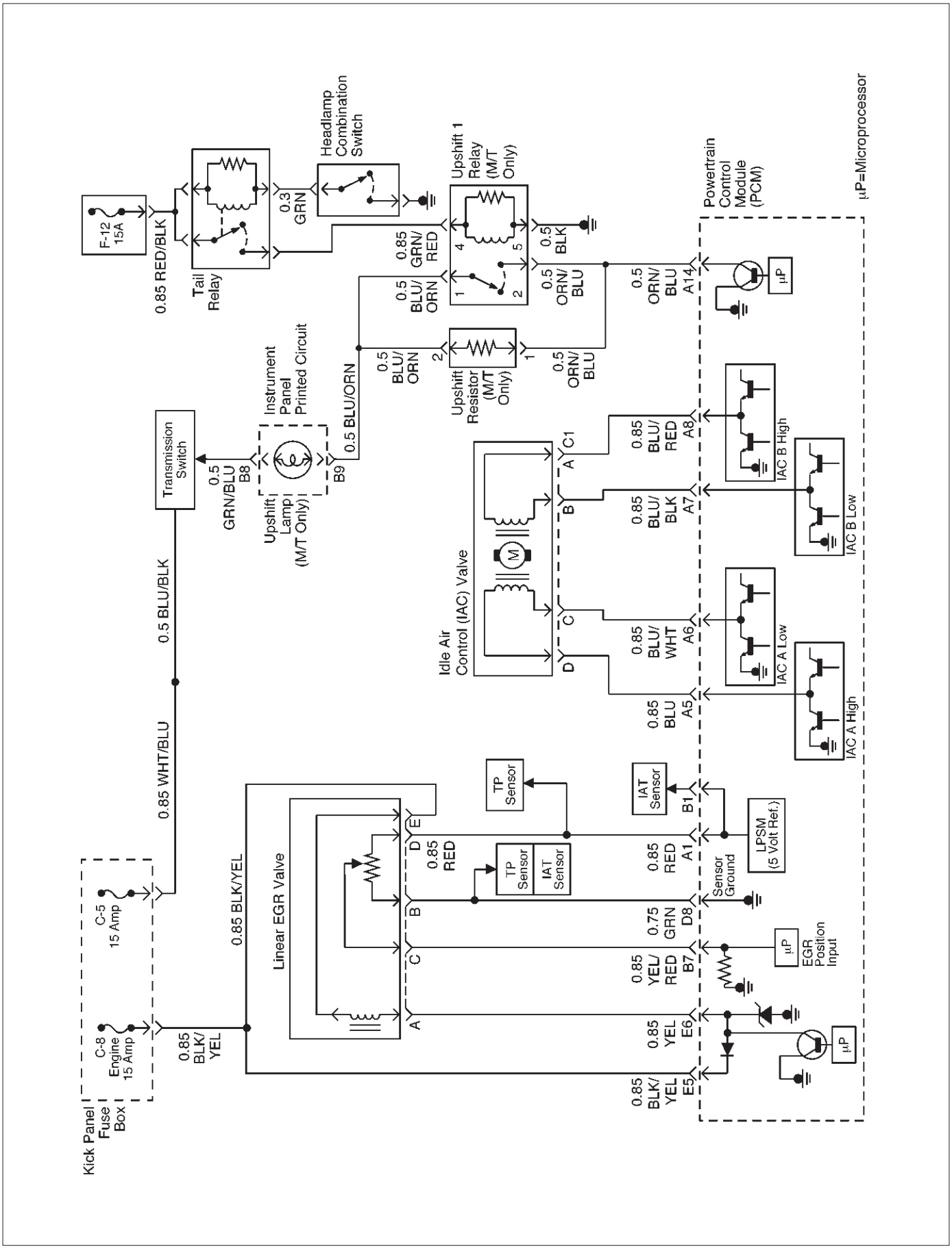

D06RW099

PCM Wiring Diagram (10 of 11) For EXPORT and SOUTH AFRICA

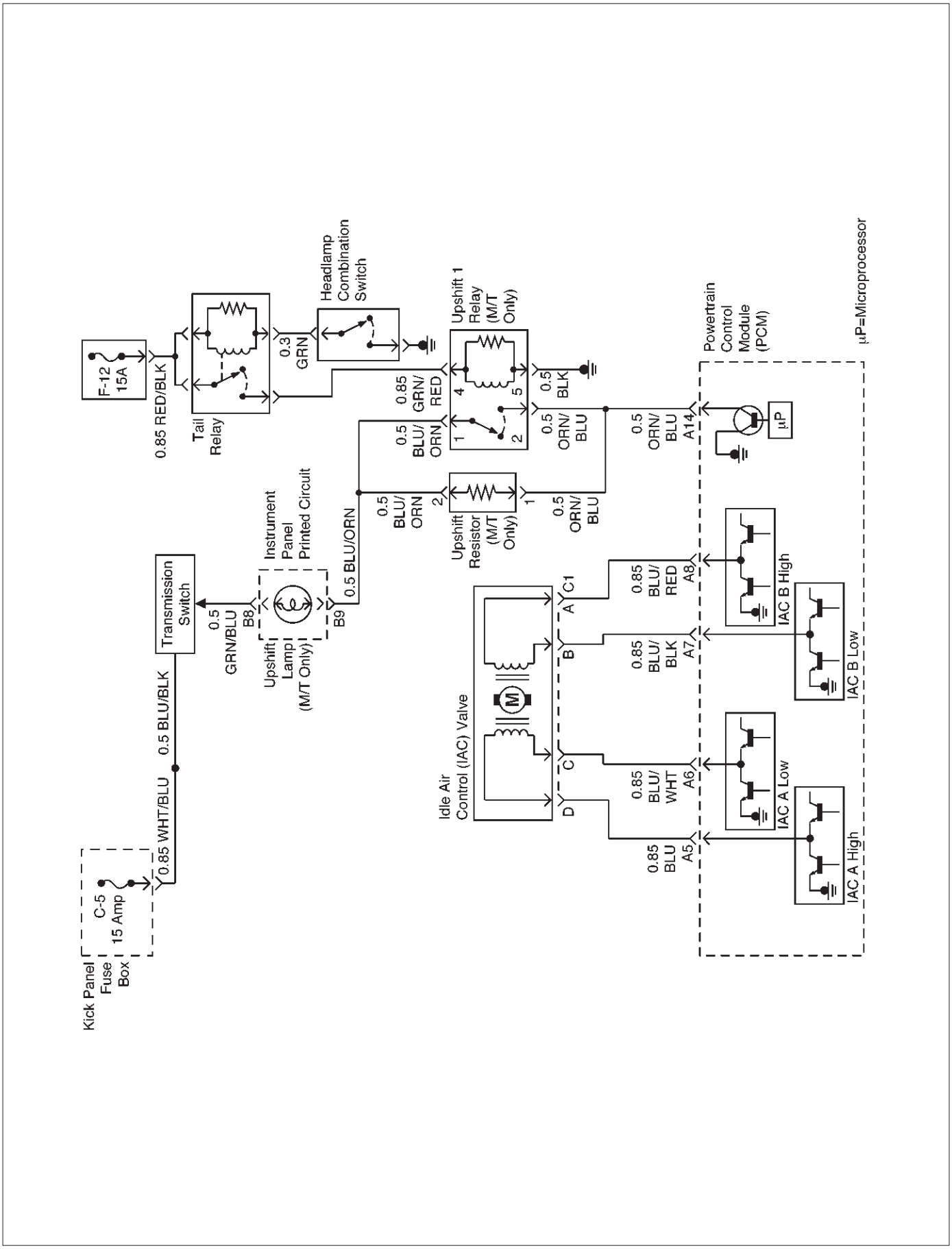

D06RW141

PCM Wiring Diagram (11 of 11)

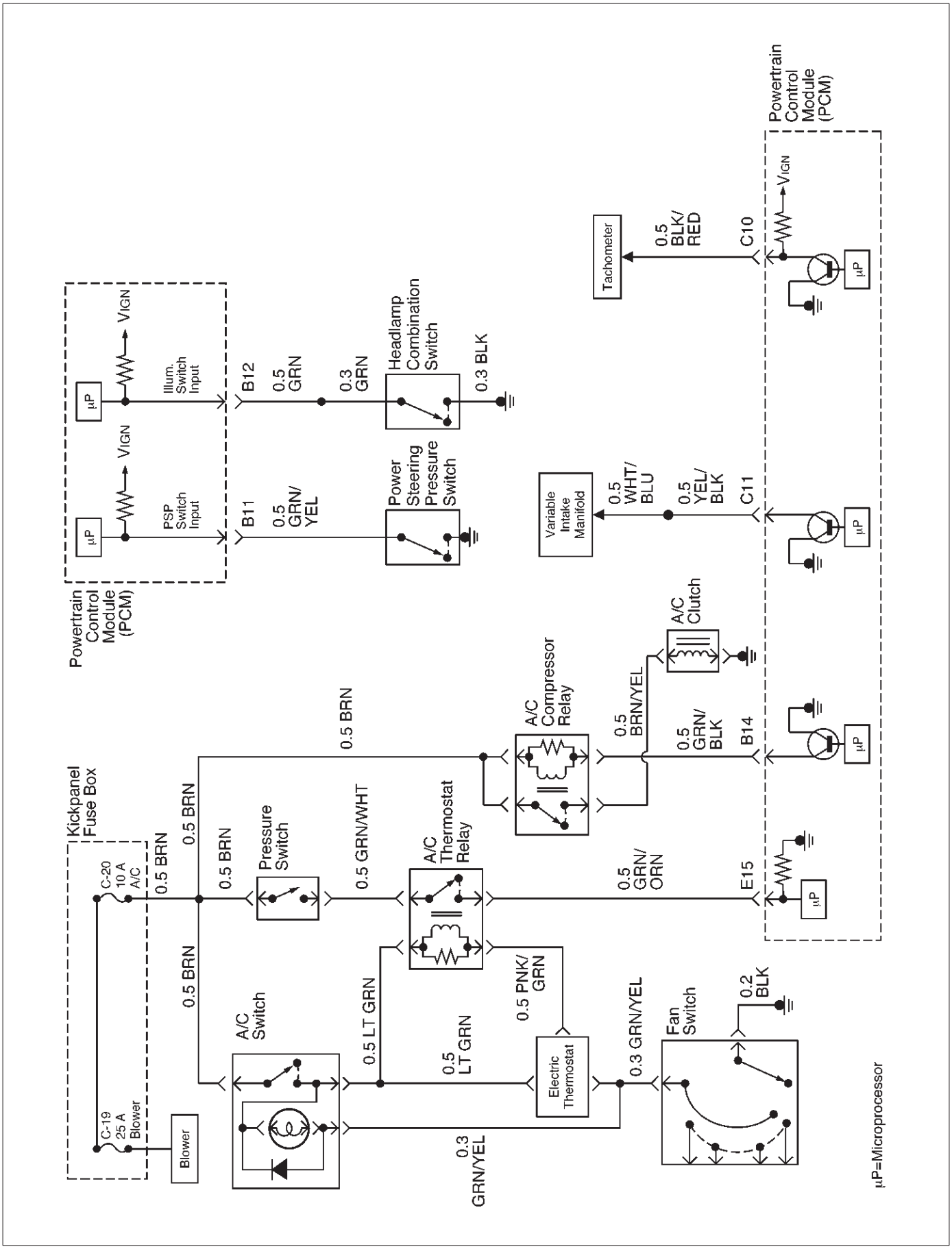

D06RW136

PCM Pinouts

PCM Pinout Table, 32-Way Red Connector – Row “A”

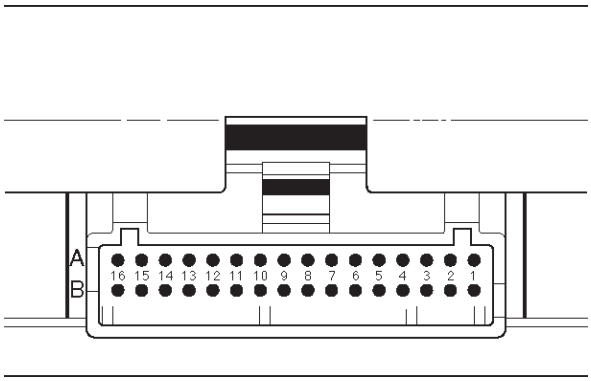

TS23344

PIN	PIN Function	Wire Color	IGN ON	ENG RUN	Refer To
A1	5 Volt Reference “A”	RED	5.0 V	5.0 V	Appropriate Sensor
A2	Knock Sensor	YEL	0.0 V DC 2mV AC	0.0 V DC 18mV AC (at idle)	General Description and Operation, Knock Sensor
A3	Not Used	—	—	—	—
A4	Battery Feed	WHT	B+	B+	Chassis Electrical
A5	Idle Air Control (IAC) “A” High	BLU	B+/0.8 V	B+/0.8 V	General Description and Operation, IAC
A6	IAC “A” Low	BLU/WHT	B+/0.8 V	B+/0.8 V	General Description and Operation, IAC
A7	IAC “B” Low	BLU/BLK	B+/0.8 V	B+/0.8 V	General Description and Operation, IAC
A8	IAC “B” High	BLU/RED	B+/0.8 V	B+/0.8 V	General Description and Operation, IAC
A9	Automatic Transmission Fluid (ATF) Lamp	ORN/BLU	B+	B+	Automatic Transmission (4L30E)
A10	Winter Lamp	PNK/GRN	B+	B+	Automatic Transmission (4L30E)
A11	Power Lamp	GRY/WHT	B+	B+	Automatic Transmission (4L30E)
A12	Antilock Brake System (ABS)	GRY	B+	B+	Antilock Brake System
A13	Malfunction Indicator (Check Engine or MIL) Lamp	BLU	0.0 V	B+	Chassis Electrical
A14	“Check Transmission” Lamp Driver (AT) Up Shift Lamp Driver (MT)	ORN/BLK ORN/BLU	B+	B+	Chassis Electrical

PIN	PIN Function	Wire Color	IGN ON	ENG RUN	Refer To
A15	EVAP	RED/BLU	B+	5.0 V	—
A16	Band Apply (AT) Air Pump (MT)	BRN/YEL	B+	B+	Automatic Transmission (4L30E)

PCM Pinout Table, 32-Way Red Connector – Row “B”

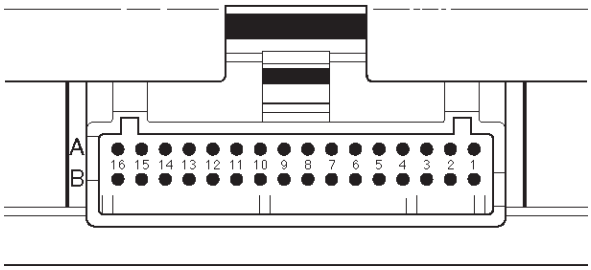

TS23344

PIN	PIN Function	Wire Color	IGN ON	ENG RUN	Refer To
B1	5 Volt Reference “B”	RED/YEL	5.0 V	5.0 V	Appropriate Sensor
B2	Ignition coil	RED/WHT	0.0 V	0.1 V	General Description and Operation
B3	Ignition coil	RED/BLK	0.0 V	0.1 V	General Description and Operation
B4	Ignition coil	RED/GRN	0.0 V	0.1 V	General Description and Operation
B5	Not Used	—	—	—	—
B6	Not Used	—	—	—	—
B7	Exhaust Gas Recirculation (EGR)	YEL/RED	0.6 V	0.6 V	General Description and Operation, Linear EGR Control
B8	Intake Air Temperature (IAT) Sensor	YEL/GRN	0.5-4.9 V (depends on temperature)	0.5-4.9 V (depends on temperature)	General Description and Operation, IAT
B9	Not Used	—	—	—	—
B10	Not Used	—	—	—	—
B11	Power Steering Pressure (PSP) Switch	GRN/YEL	B+	B+	General Description and Operation, PSP
B12	Illuminated Switch	GRN	B+	B+	Chassis Electrical
B13	Class 2 Data	ORN/GRN	0.0 V	0.0 V	Diagnosis, Class 2 Serial Data
B14	A/C Clutch	GRN/BLK	B+ (A/C OFF)	B+ (A/C OFF)	General Description and Operation, A/C Clutch Circuit Operation
B15	ECM to ECU Communication	Violet	0.0 V	0.1 V	—
B16	Not Used	—	—	—	—

PCM Pinout Table, 32-Way White Connector – Row “C” (For EC)

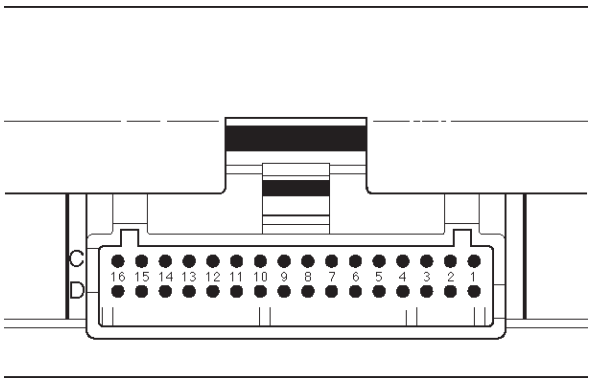

TS23345

PIN	PIN Function	Wire Color	IGN ON	ENG RUN	Refer To
C1	Injector Cylinder #4	GRN/RED	B+	B+	General Description and Operation, Fuel Injector
C2	Shift “B” Solenoid	BRN/BLK	0.0 V	0.0 V	Automatic Transmission (4L30E)
C3	Injector Cylinder #6	GRN/YEL	B+	B+	General Description and Operation, Fuel Injector
C4	Ignition Control (IC) Cylinder #1	RED	0.0 V	0.1 V	General Description and Operation, Fuel Injector
C5	Crankshaft Position Sensor, “A” Circuit	YEL	0.3 V to 5 V	2.2 V	General Description and Operation, Crankshaft Position Sensor
C6	Not Used	—	—	—	—
C7	PCM Ground	YEL	0.0 V	0.0 V	Chassis Electrical
C8	PCM Ground	BLK/PNK	0.0 V	0.0 V	Chassis Electrical
C9	PCM Ground	BLK/BLU	0.0 V	0.0 V	Chassis Electrical
C10	Tachometer	BLK/RED	8.8 V	10.0 V (at idle)	Chassis Electrical
C11	Variable Intake Manifold	YEL/BLK	0.0 V	B+ (rpm 3600 over)	Manual Transmission
C12	Alternator Control Gain	WHT/BLU	10.5 V	B+	Chassis Electrical
C13	Fuel PWM	BLU/PNK	B+	B+	—
C14	Bank 2 HO2S 1 High	PNK	0.4 V	0.1-0.9 V	General Description and Operation, Fuel HO2S 1
C15	Bank 2 HO2S 1 Low	BLU	0.0 V	0.1 V	General Description and Operation, Fuel HO2S 1
C16	Not Used	—	—	—	—

PCM Pinout Table, 32-Way White Connector – Row “C” (For except EC)

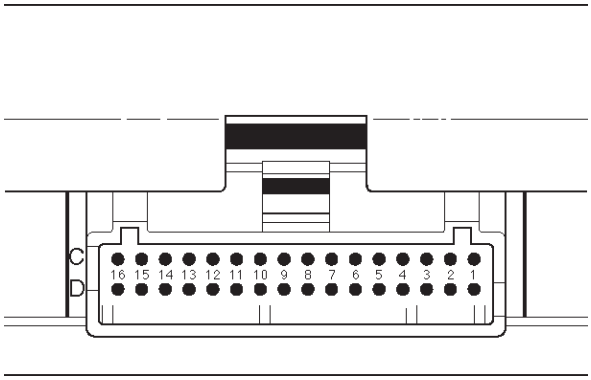

TS23345

PIN	PIN Function	Wire Color	IGN ON	ENG RUN	Refer To
C1	Injector Cylinder #4	GRN/RED	B+	B+	General Description and Operation, Fuel Injector
C2	Shift “B” Solenoid	BRN/BLK	0.0 V	0.0 V	Automatic Transmission (4L30E)
C3	Injector Cylinder #6	GRN/YEL	B+	B+	General Description and Operation, Fuel Injector
C4	Ignition Control (IC) Cylinder #1	RED	0.0 V	0.1 V	General Description and Operation, Fuel Injector
C5	Crankshaft Position Sensor, “A” Circuit	YEL	0.3 V to 5 V	2.2 V	General Description and Operation, Crankshaft Position Sensor
C6	Not Used	—	—	—	—
C7	PCM Ground	BLK/BLU	0.0 V	0.0 V	Chassis Electrical
C8	PCM Ground	BLK/PNK	0.0 V	0.0 V	Chassis Electrical
C9	PCM Ground	BLK/BLU	0.0 V	0.0 V	Chassis Electrical
C10	Tachometer	BLK/RED	8.8 V	10.0 V (at idle)	Chassis Electrical
C11	Variable Intake Manifold	YEL/BLK	0.0 V	B+ (rpm 3600 over)	Manual Transmission
C12	Not Used	—	—	—	—
C13	Not Used	—	—	—	—
C14	Not Used	—	—	—	—
C15	Not Used	—	—	—	—
C16	Not Used	—	—	—	—

PCM Pinout Table, 32-Way White Connector – Row “D” (For except EXPORT and SOUTH AFRICA)

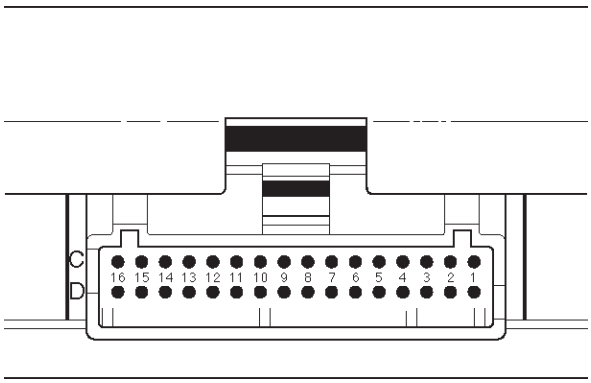

TS23345

PIN	PIN Function	Wire Color	IGN ON	ENG RUN	Refer To
D1	Injector Cylinder #2	GRN/ORN	B+	B+	General Description and Operation, Fuel Injector
D2	Torque Converter Clutch (TCC)	BRN/BLU	0.0 V	0.0 V	On-Vehicle Service, Torque Converter Clutch
D3	Injector Cylinder #1	GRN/WHT	B+	B+	General Description and Operation, Fuel Injector
D4	Serial Data (8192)	ORN	5.0 V	5.0 V	Chassis Electrical
D5	Ignition Control, Cylinder #5	RED/YEL	0.0 V	0.1 V	General Description and Operation, Ignition Coil
D6	Ignition Control, Cylinder #3	RED/BLUE	0.0 V	0.0 V	General Description and Operation, Ignition Coil
D7	VSS Input / IMOB Response	WHT/BLK	0.0 V	0.1 V (at rest)	Chassis Electrical
D8	Sensor Ground 5V Reference A Return	GRN	0.0 V	0.0 V	Appropriate Sensor
D9	Sensor Ground 5 V Reference B Return	GRY	0.0 V	0.0 V	Appropriate Sensor
D10	Mass Air Flow (MAF)	YEL	4.9 V	4.2 V	General Description, Mass Air Flow Sensor
D11	Camshaft Position Sensor	WHT	5.0 V or less than 1.0 V	4.6 V	General Description and Operation, Camshaft Position Sensor
D12	Not Used	—	—	—	—
D13	Not Used	—	—	—	—
D14	Bank 1 HO2S 1 Low	GRN	0.0 V	0.1 V	General Description and Operation, Fuel HO2S 1
D15	Bank 1 HO2S 1 Signal	RED	0.4 V	0.1-0.9 V	General Description and Operation, Fuel HO2S 1
D16	Not Used	—	—	—	—

PCM Pinout Table, 32-Way White Connector – Row “D” (For EXPORT and SOUTH AFRICA)

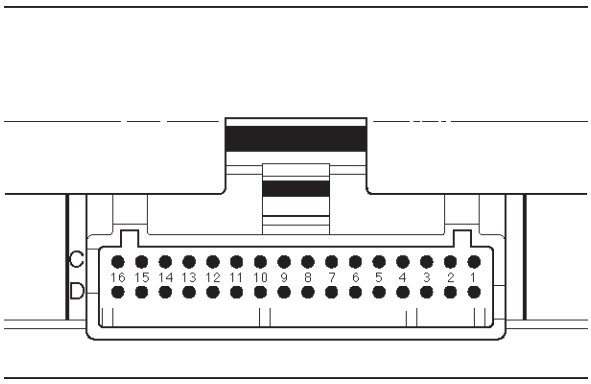

TS23345

PIN	PIN Function	Wire Color	IGN ON	ENG RUN	Refer To
D1	Injector Cylinder #2	GRN/ORN	B+	B+	General Description and Operation, Fuel Injector
D2	Torque Converter Clutch (TCC)	BRN/BLU	0.0 V	0.0 V	On-Vehicle Service, Torque Converter Clutch
D3	Injector Cylinder #1	GRN/WHT	B+	B+	General Description and Operation, Fuel Injector
D4	Serial Data (8192)	ORN	5.0 V	5.0 V	Chassis Electrical
D5	Ignition Control, Cylinder #5	RED/YEL	0.0 V	0.1 V	General Description and Operation, Ignition Coil
D6	Ignition Control, Cylinder #3	RED/BLUE	0.0 V	0.0 V	General Description and Operation, Ignition Coil
D7	VSS Input / IMOB Response	LIGHT GRN/WHT	0.0 V	0.1 V (at rest)	Chassis Electrical
D8	Sensor Ground 5V Reference A Return	GRN	0.0 V	0.0 V	Appropriate Sensor
D9	Sensor Ground 5 V Reference B Return	GRY	0.0 V	0.0 V	Appropriate Sensor
D10	Mass Air Flow (MAF)	YEL	4.9 V	4.2 V	General Description, Mass Air Flow Sensor
D11	Camshaft Position Sensor	WHT	5.0 V or less than 1.0 V	4.6 V	General Description and Operation, Camshaft Position Sensor
D12	Not Used	—	—	—	—
D13	Not Used	—	—	—	—
D14	Not Used	—	—	—	—
D15	Not Used	—	—	—	—
D16	Not Used	—	—	—	—

PCM Pinout Table, 32-Way Blue Connector – Row “E” (For except EXPORT and SOUTH AFRICA)

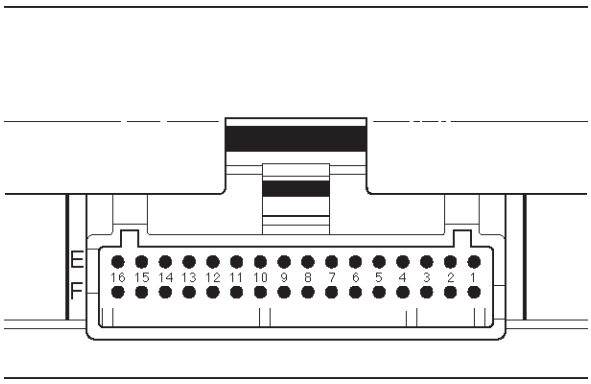

TS23346

PIN	PIN Function	Wire Color	IGN ON	ENG RUN	Refer To
E1	Transmission Output Shaft Sensor (TOSS) High	RED	0.0 V	0.1 V	Automatic Transmission (4L30E)
E2	Transmission Output Shaft Sensor (TOSS) Low	WHT	0.0 V	0.0 V	Automatic Transmission (4L30E)
E3	Pressure Control Solenoid Low	PPL/RED	0.0 V	1.1 V	Automatic Transmission (4L30E)
E4	Pressure Control Solenoid High	PPL/WHT	0.0 V	4.9 V	Automatic Transmission (4L30E)
E5	Exhaust Gas Recirculation (EGR) Control High	BLK/YEL	B+	B+	General Description and Operation, EGR Control
E6	Exhaust Gas Recirculation (EGR) Control Low	YEL	B+	B+	General Description and Operation, EGR Control
E7	Transmission Range Signal “B”	BLU/YEL	0.0 V	0.0 V	Automatic Transmission (4L30E)
E8	Throttle Position (TP) Sensor	BLU	0.5-0.8 V	0.5-0.8 V (at idle)	General Description and Operation, Throttle Position Sensor
E9	Engine Coolant Temperature (ECT) Sensor	BLU/RED	0.5-4.9 V (depends on temperature)	0.5-4.9 V (depends on temperature)	General Description and Operation, Engine Coolant Temperature (ECT) Sensor
E10	Not Used	—	—	—	—
E11	Crankshaft Position (CKP) Sensor +5 Volt Reference	YEL/RED	5.0 V or less than 1.0 V	5.0 V	General Description and Operation, Crankshaft Position Sensor
E12	Transmission Range Signal “A”	BLU/WHT	B+	B+	Automatic Transmission (4L30E)
E13	Fuel Pump (FP) Relay	RED/WHT	0.0 V	B+	On-Vehicle Service, Fuel Pump Relay
E14	Shift High (BAND APPLY)	BRN/WHT	B+	B+	Automatic Transmission (4L30E)

PIN	PIN Function	Wire Color	IGN ON	ENG RUN	Refer To
E15	A/C Request	GRN/ORN	0.0 V	0.0 V	Electric Cooling Fans
E16	Ignition Feed (1 of 2 F16)	RED/BLU	B+	B+	—

PCM Pinout Table, 32-Way Blue Connector – Row “E” (For EXPORT and SOUTH AFRICA)

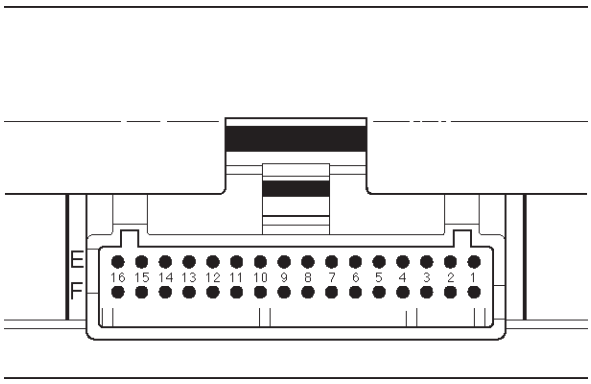

TS23346

PIN	PIN Function	Wire Color	IGN ON	ENG RUN	Refer To
E1	Transmission Output Shaft Sensor (TOSS) High	RED	0.0 V	0.1 V	Automatic Transmission (4L30E)
E2	Transmission Output Shaft Sensor (TOSS) Low	WHT	0.0 V	0.0 V	Automatic Transmission (4L30E)
E3	Pressure Control Solenoid Low	PPL/RED	0.0 V	1.1 V	Automatic Transmission (4L30E)
E4	Pressure Control Solenoid High	PPL/WHT	0.0 V	4.9 V	Automatic Transmission (4L30E)
E5	Not Used	—	—	—	—
E6	Not Used	—	—	—	—
E7	Transmission Range Signal “B”	BLU/YEL	0.0 V	0.0 V	Automatic Transmission (4L30E)
E8	Throttle Position (TP) Sensor	BLU	0.5-0.8 V	0.5-0.8 V (at idle)	General Description and Operation, Throttle Position Sensor
E9	Engine Coolant Temperature (ECT) Sensor	BLU/RED	0.5-4.9 V (depends on temperature)	0.5-4.9 V (depends on temperature)	General Description and Operation, Engine Coolant Temperature (ECT) Sensor
E10	Not Used	—	—	—	—
E11	Crankshaft Position (CKP) Sensor +5 Volt Reference	YEL/RED	5.0 V or less than 1.0 V	5.0 V	General Description and Operation, Crankshaft Position Sensor
E12	Transmission Range Signal “A”	BLU/WHT	B+	B+	Automatic Transmission (4L30E)
E13	Fuel Pump (FP) Relay	RED/WHT	0.0 V	B+	On-Vehicle Service, Fuel Pump Relay
E14	Shift High (BAND APPLY)	BRN/WHT	B+	B+	Automatic Transmission (4L30E)
E15	A/C Request	GRN/ORN	0.0 V	0.0 V	Electric Cooling Fans
E16	Ignition Feed (1 of 2 F16)	RED/BLU	B+	B+	—

PCM Pinout Table, 32-Way Blue Connector – Row “F”

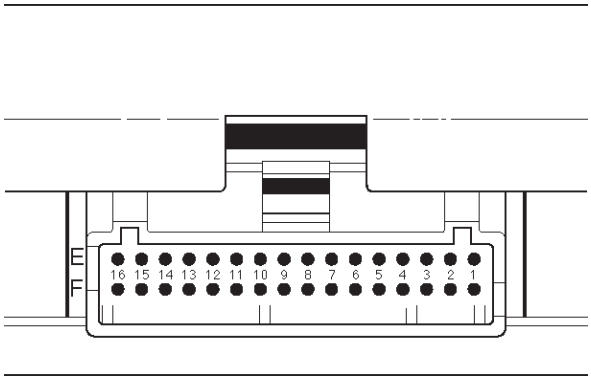

TS23346

PIN	PIN Function	Wire Color	IGN ON	ENG RUN	Refer To
F1	Not Used	—	—	—	—
F2	Transmission Range Signal “C”	BLU/BLK	0.0 V	0.0 V	Automatic Transmission (4L30E)
F3	Transmission Range Signal “P”	YEL/GRN	B+	0.0 V	Automatic transmission (4L30E)
F4	Brake Switch	GRN/YEL	0.0 V	0.0 V	Automatic transmission (4L30E)
F5	Power Switch	PPL/RED	B+	B+	Automatic Transmission (4L30E)
F6	Winter Switch	PPL/GRN	B+	B+	Automatic Transmission (4L30E)
F7	Transmission Fluid Temperature	RED/BLK	0.5-4.9 V (depends on temperature)	0.5-4.9 V (depends on temperature)	Automatic Transmission (4L30E)
F8	Manifold Absolute Pressure (MAP)	GRY/BLK	3.5-4.9 V (depends on altitude and barometric pressure)	0.6-1.3 V	General Description and Operation, Manifold Absolute Pressure
F9	Not Used	—	—	—	—
F10	Cruise Control	GRY/BLU	B+	B+	Automatic transmission (4L30E)
F11	Kickdown Switch	LT BLU	B+	B+	Automatic Transmission (4L30E)
F12	DIAG	ORN/BLU	B+	B+	—
F13	Injector “C” Cylinder #3	GRN	B+	B+	General Description and Operation, Fuel Injector
F14	Shift “A” Solenoid	BRN/RED	B+	B+	Automatic Transmission (4L30E)
F15	Injector Cylinder #5	GRN/BLK	B+	B+	General Description and Operation, Fuel Injector
F16	Ignition Feed (1 of 2 E16)	RED/BLU	B+	B+	—

Component Locators

Engine Component Locator (This illustration is based on RHD model.)

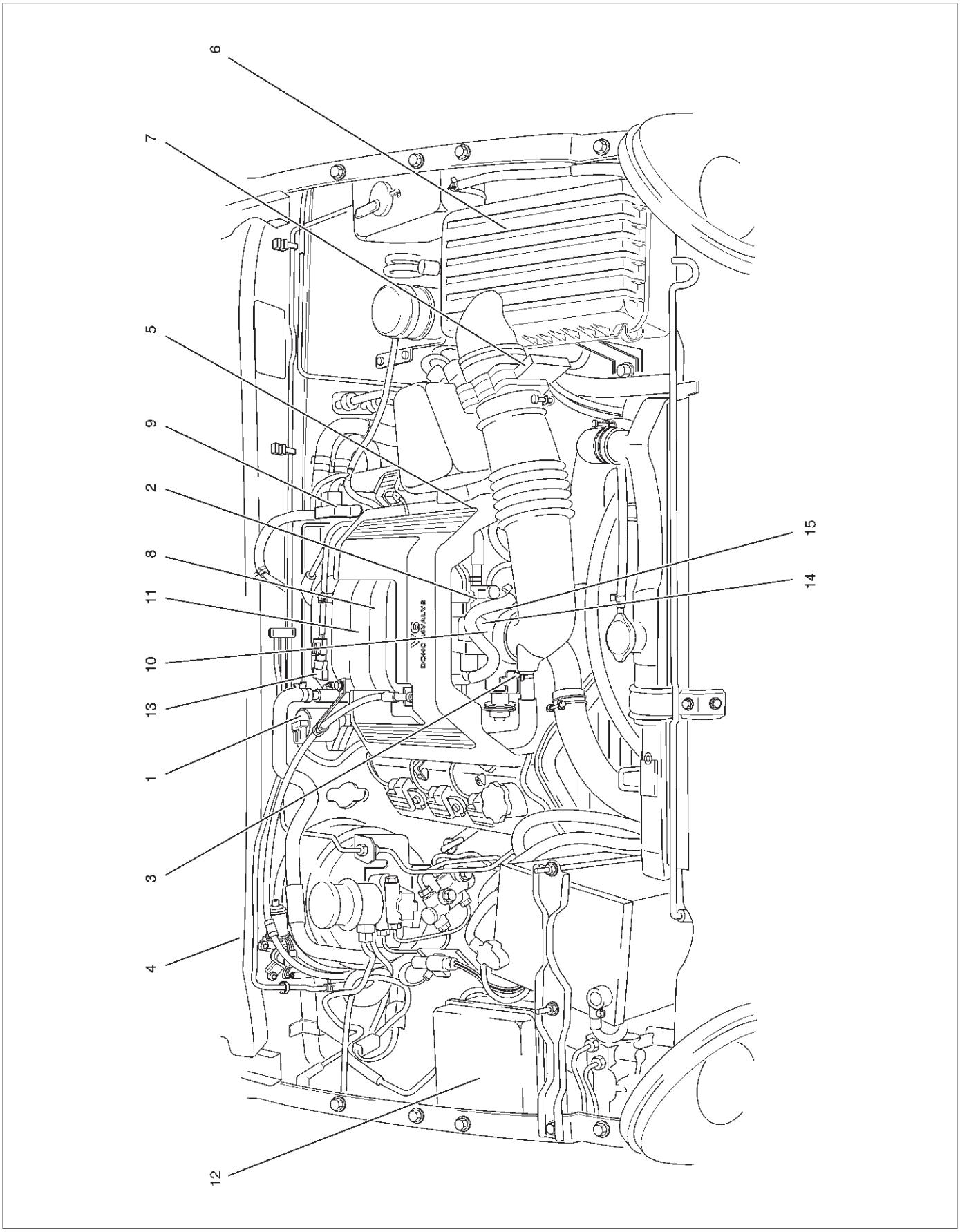

060RW210

Engine Component Locator Table

Number	Name	Location
1	Linear Exhaust Gas Recirculation (EGR) Valve	Rear right side of the engine
2	Throttle Position (TP) Sensor	On the rear of the throttle body
3	Intake Air Temperature (IAT) Sensor	On the intake air duct near the throttle body
4	Check Engine (MIL) Light	On the instrument panel beneath the tachometer
5	Positive Crankcase Ventilation (PCV) Valve	On the left of the cylinder head cover
6	Air Cleaner	Left front of the engine bay
7	Mass Air Flow (MAF) Sensor	Attached to the air filter box
8	Camshaft Position (CMP) Sensor	On the rear right side at the left of the cylinder head cover
9	Fuel Pressure Regulator	Rear right side of the engine
10	Idle Air Control (IAC) Valve	On the left of the throttle body
11	Upper Intake Manifold	Top of the engine
12	Fuse/Relay Box	Along the inside of the right fender
13	Manifold Absolute Pressure (MAP) Sensor	Bolted to the top of the upper intake manifold
14	Throttle Body	Between the intake air duct and the upper intake manifold
15	Engine Coolant Temperature Sensor	On the coolant crossover pipe at the front of the engine, near the throttle body

Engine Component Locator (This illustration is based on LHD model.)

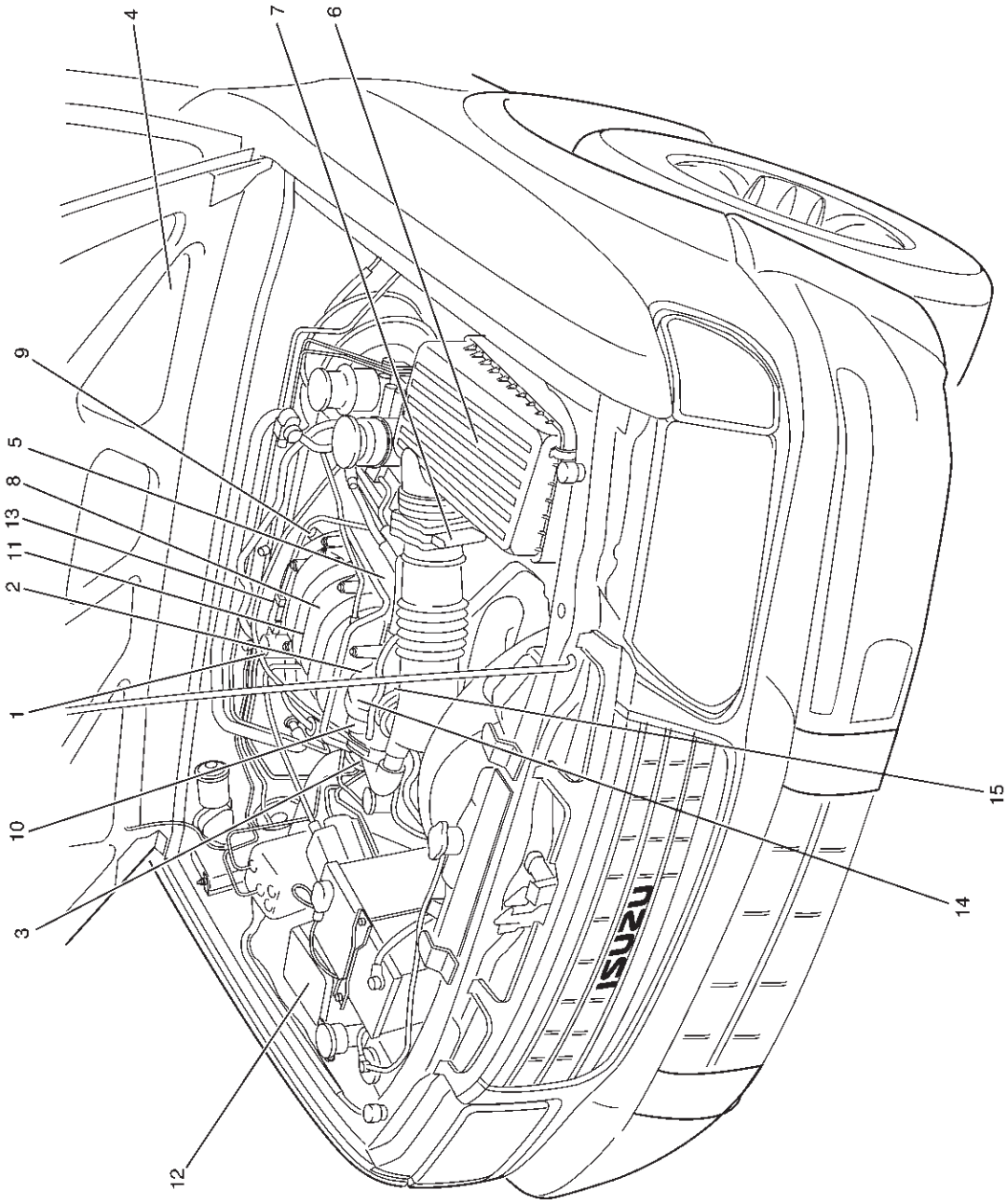

755RW062

Engine Component Locator Table

Number	Name	Location
1	Linear Exhaust Gas Recirculation (EGR) Valve	Rear right side of the engine
2	Throttle Position (TP) Sensor	On the rear of the throttle body
3	Intake Air Temperature (IAT) Sensor	On the intake air duct near the throttle body
4	Check Engine (MIL) Light	On the instrument panel beneath the tachometer
5	Positive Crankcase Ventilation (PCV) Valve	On the left of the cylinder head cover
6	Air Cleaner	Left front of the engine bay
7	Mass Air Flow (MAF) Sensor	Attached to the air filter box
8	Camshaft Position (CMP) Sensor	On the rear right side at the left of the cylinder head cover
9	Fuel Pressure Regulator	Rear right side of the engine
10	Idle Air Control (IAC) Valve	On the left of the throttle body
11	Upper Intake Manifold	Top of the engine
12	Fuse/Relay Box	Along the inside of the right fender
13	Manifold Absolute Pressure (MAP) Sensor	Bolted to the top of the upper intake manifold
14	Throttle Body	Between the intake air duct and the upper intake manifold
15	Engine Coolant Temperature Sensor	On the coolant crossover pipe at the front of the engine, near the throttle body

Undercarriage Component Locator

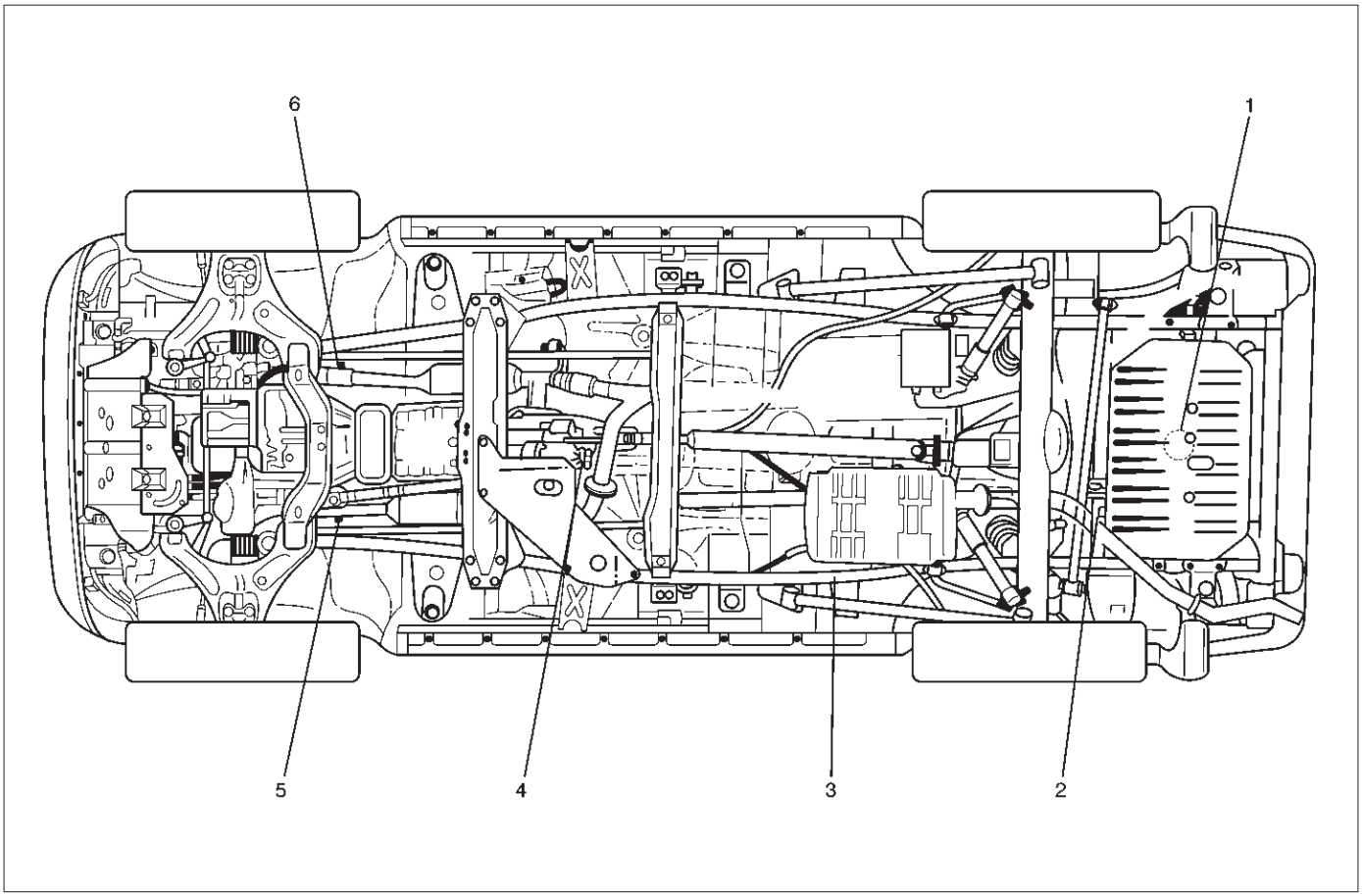

F00RW040

Undercarriage Component Locator Table (Automatic Transmission)

Number	Name	Location
1	Fuel Pump Assembly	Installed in the top of the fuel tank
2	Fuel Gauge Unit	Installed in the front edge of the fuel tank, on the right side
3	Fuel Filter	Located along the inside of the right frame rail, ahead of the rear axle
4	Vehicle Speed Sensor (VSS)	2WD: Protrudes from the transmission housing, just ahead of the propeller shaft. 4WD: Protrudes from the rear output shaft housing of the transfer case.
5	Heated Oxygen Sensor (Bank 1, HO2S 1)	Threaded into the exhaust pipe ahead of the right-hand catalytic converter
6	Heated Oxygen Sensor (Bank 2, HO2S 1)	Threaded into the exhaust pipe ahead the left-hand catalytic converter

Undercarriage Component Locator Table (Manual Transmission)

Number	Name	Location
1	Fuel Pump Assembly	Installed in the top of the fuel tank
2	Fuel Gauge Unit	Installed in the front edge of the right frame rail, ahead of the rear axle
3	Fuel Filter	Located along the inside of the right frame rail, ahead of the rear axle
4	Vehicle Speed Sensor (VSS)	2WD: Protrudes from the transmission housing, just ahead of the propeller shaft. 4WD: Protrudes from the rear output shaft housing of the transfer case.
5	Heated Oxygen Sensor (Bank 1, HO2S 1)	Threaded into the exhaust pipe ahead of the right-hand catalytic converter
6	Heated Oxygen Sensor (Bank 2, HO2S 1)	Threaded into the exhaust pipe ahead of the left-hand catalytic converter

Fuse and Relay Panel (Underhood Electrical Center)

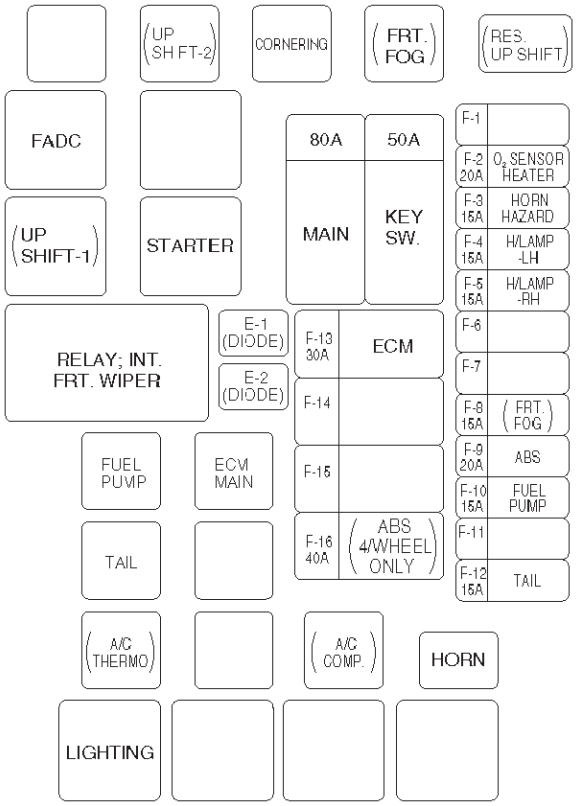

TS23336

Sensors and Miscellaneous Component Locators

- **For EC.**

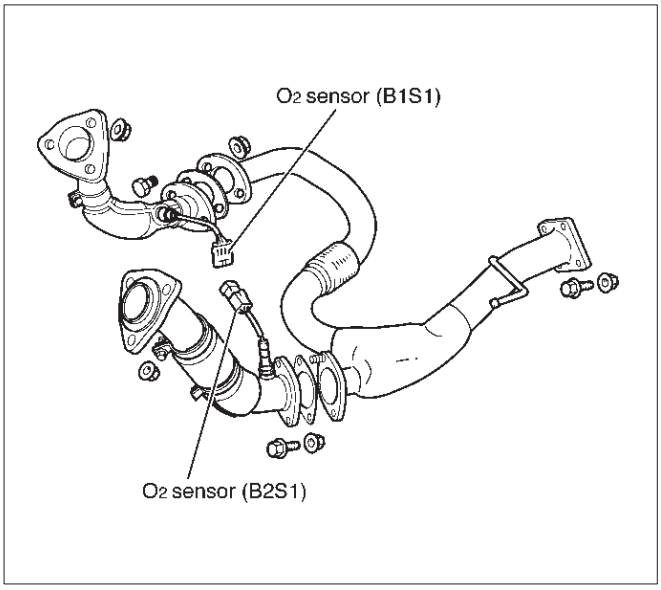

060RW194

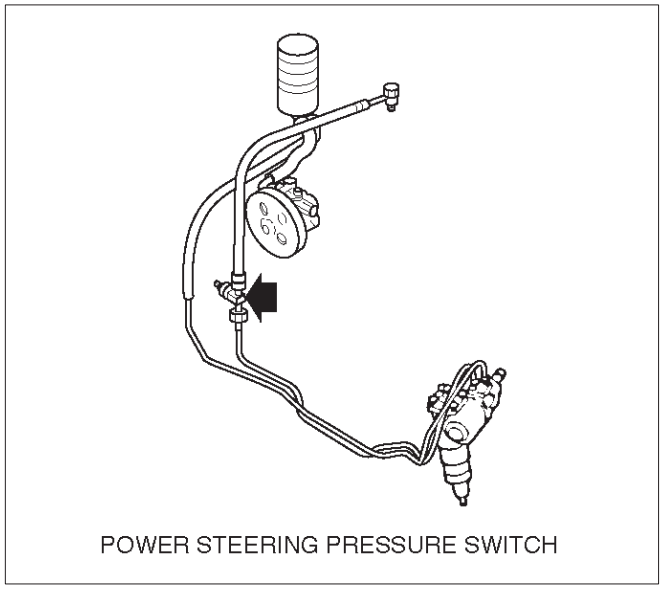

T321066

- **For AUSTRALIA, THAILAND, SOUTH EAST ASIA, LATIN AMERICA, GULF, SAUDI, CHINA.**

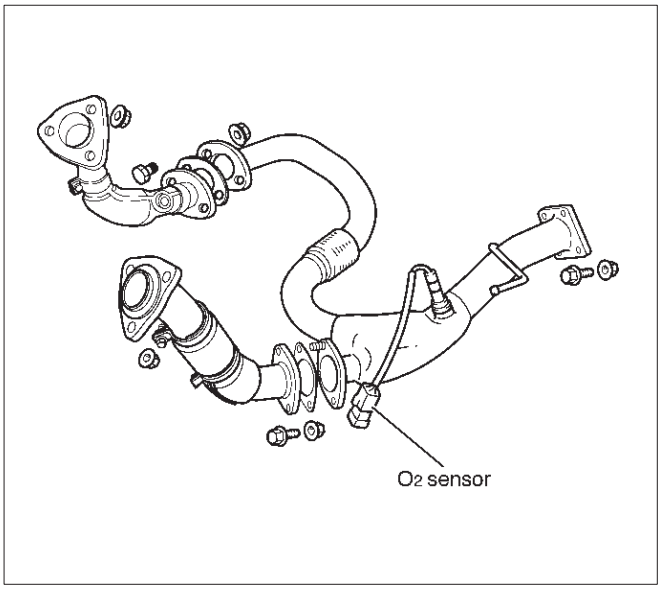

150RW101

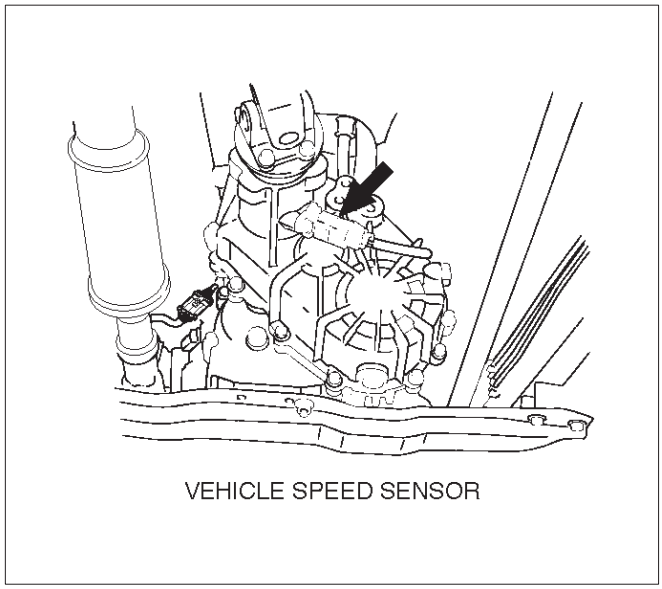

T321067

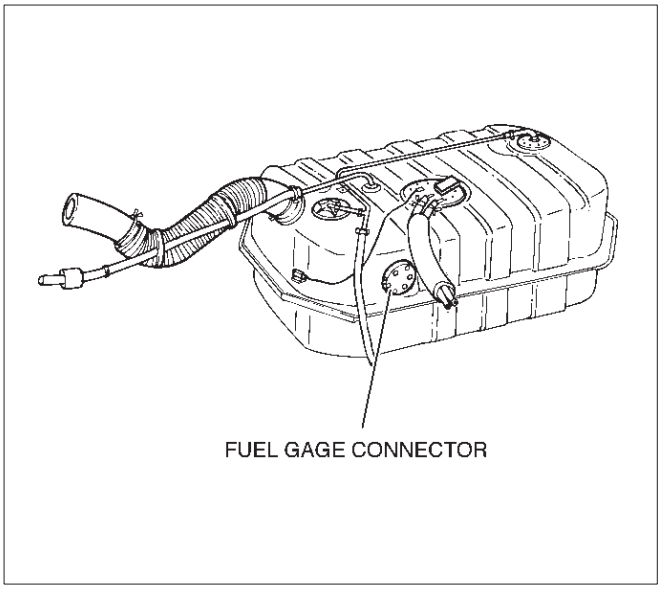

140RW032

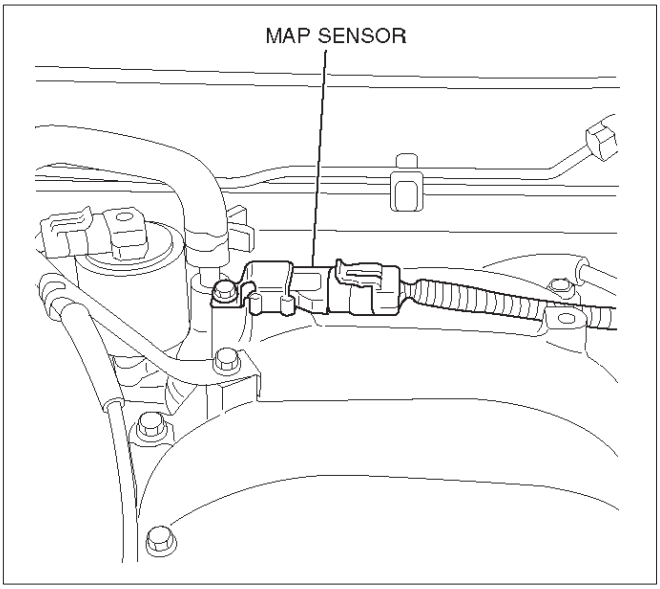

055RW003

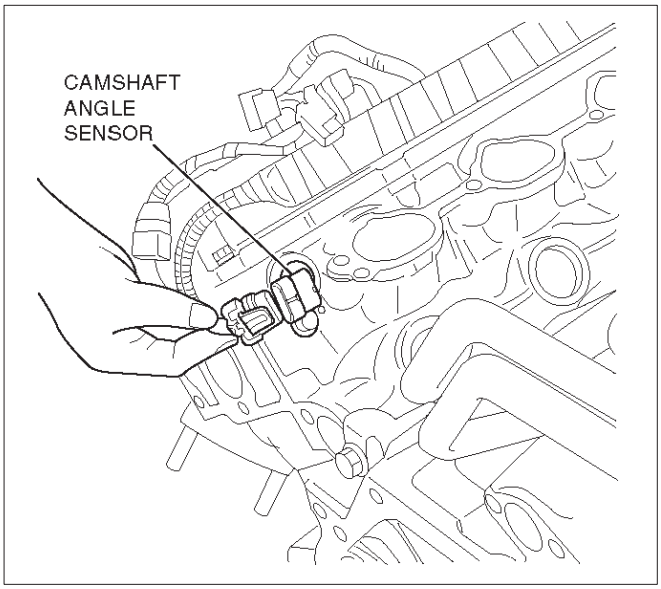

014RW125

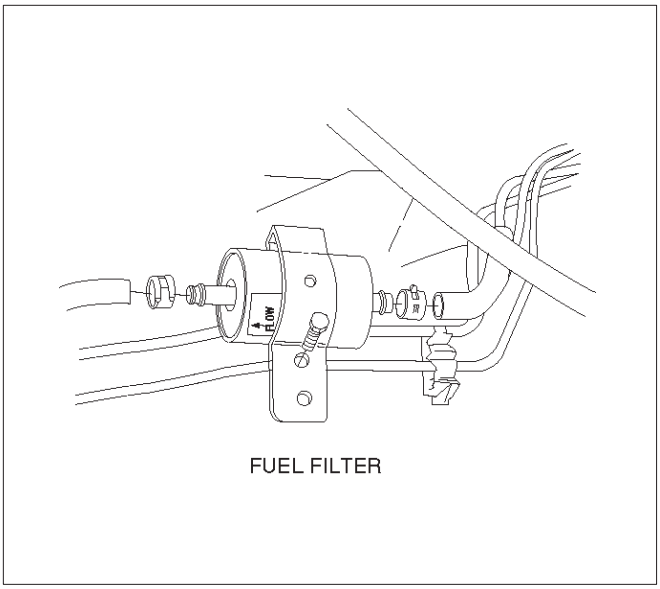

041RW004

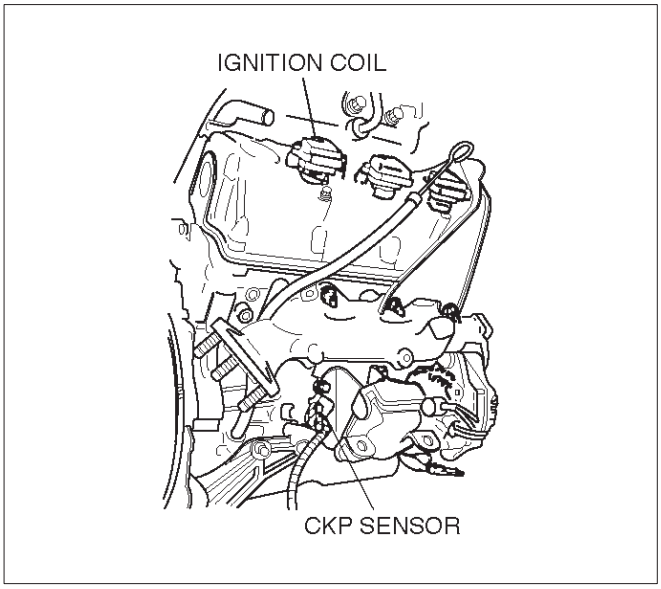

T321070

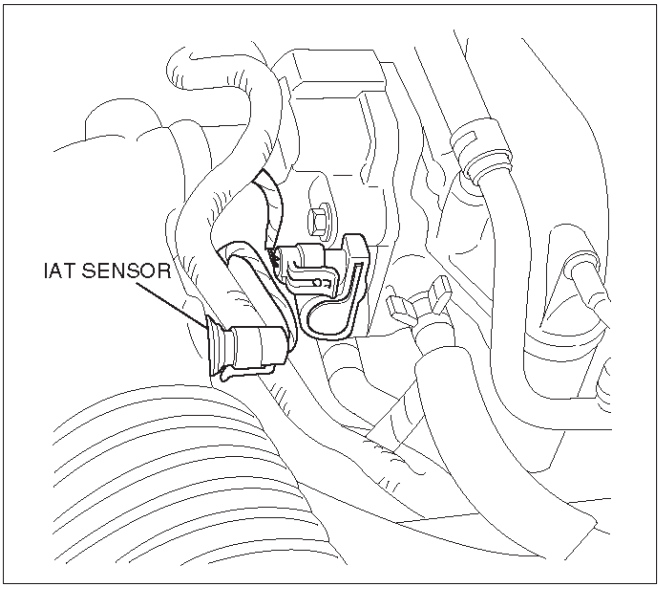

025RW005

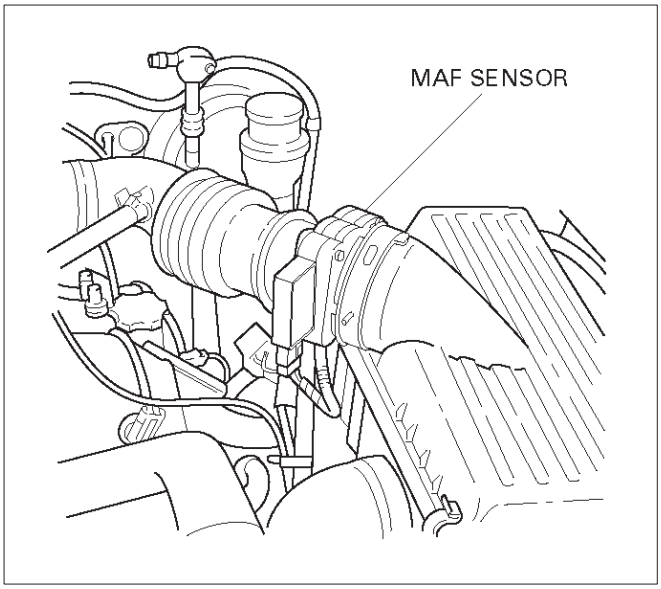

T321078

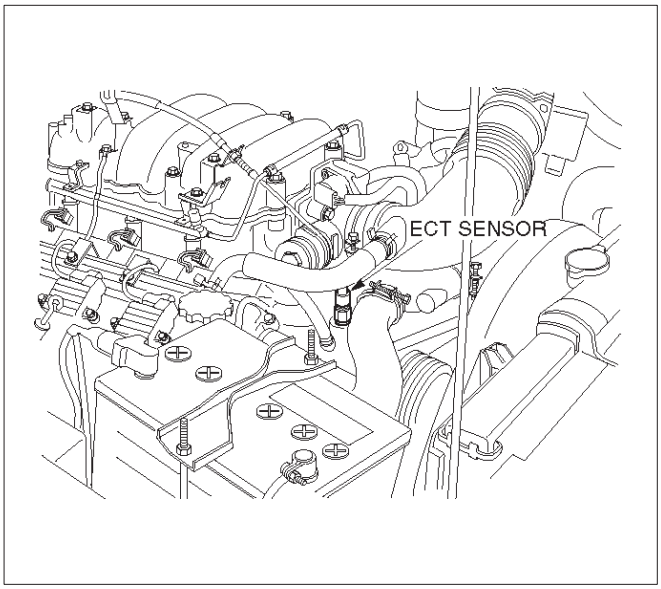

060RW007

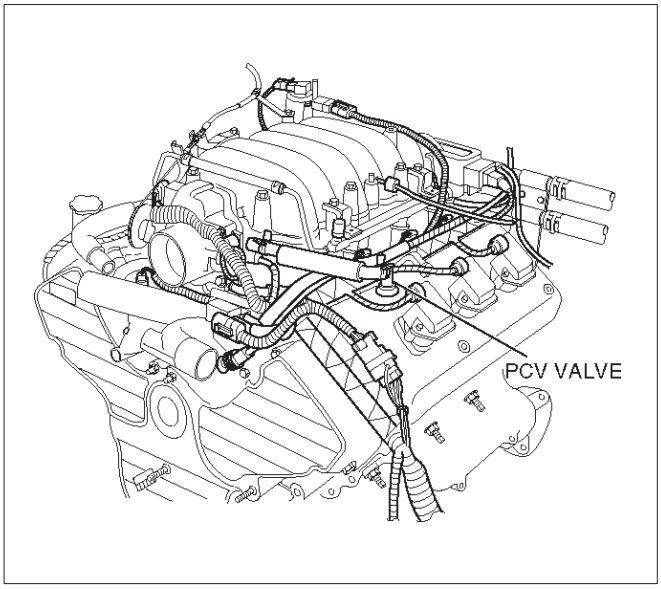

028RW001

Diagnosis

Strategy-Based Diagnostics

Strategy-Based Diagnostics

The strategy-based diagnostic is a uniform approach to repair all Electrical/Electronic (E/E) systems. The diagnostic flow can always be used to resolve an E/E system problem and is a starting point when repairs are necessary. The following steps will instruct the technician how to proceed with a diagnosis:

1. Verify the customer complaint.
   - To verify the customer complaint, the technician should know the normal operation of the system.
2. Perform preliminary checks.
   - Conduct a thorough visual inspection.
   - Review the service history.
   - Detect unusual sounds or odors.
   - Gather diagnostic trouble code information to achieve an effective repair.
3. Check bulletins and other service information.
   - This includes videos, newsletters, etc.
4. Refer to service information (manual) system check(s).
   - “System checks” contain information on a system that may not be supported by one or more DTCs. System checks verify proper operation of the system. This will lead the technician in an organized approach to diagnostics.
5. Refer to service diagnostics.

DTC Stored

Follow the designated DTC chart exactly to make an effective repair.

No DTC

Select the symptom from the symptom tables. Follow the diagnostic paths or suggestions to complete the repair. You may refer to the applicable component/system check in the system checks.

No Matching Symptom

1. Analyze the complaint.
2. Develop a plan for diagnostics.
3. Utilize the wiring diagrams and the theory of operation.

Call technical assistance for similar cases where repair history may be available. Combine technician knowledge with efficient use of the available service information.

Intermittents

Conditions that are not always present are called intermittents. To resolve intermittents, perform the following steps:

1. Observe history DTCs, DTC modes, and freezeframe data.
2. Evaluate the symptoms and the conditions described by the customer.
3. Use a check sheet or other method to identify the circuit or electrical system component.
4. Follow the suggestions for intermittent diagnosis found in the service documentation.

Most Tech 2s, such as the Tech II and the 5–8840–0285–0 (Fluke model 87 DVOM), have data-capturing capabilities that can assist in detecting intermittents.

No Trouble Found

This condition exists when the vehicle is found to operate normally. The condition described by the customer may be normal. Verify the customer complaint against another vehicle that is operating normally. The condition may be intermittent. Verify the complaint under the conditions described by the customer before releasing the vehicle.

1. Re-examine the complaint.

   When the Complaint cannot be successfully found or isolated, a re-evaluation is necessary. The complaint should be re-verified and could be intermittent as defined in *Intermittents*, or could be normal.
2. Repair and verify.

   After isolating the cause, the repairs should be made. Validate for proper operation and verify that the symptom has been corrected. This may involve road testing or other methods to verify that the complaint has been resolved under the following conditions:
   - Conditions noted by the customer.
   - If a DTC was diagnosed, verify a repair by duplicating conditions present when the DTC was set as noted in the Failure Records or Freeze Frame data.

Verifying Vehicle Repair

Verification of the vehicle repair will be more comprehensive for vehicles with OBD system diagnostics. Following a repair, the technician should perform the following steps:

IMPORTANT: Follow the steps below when you verify repairs on OBD systems. Failure to follow these steps could result in unnecessary repairs.

1. Review and record the Failure Records and the Freeze Frame data for the DTC which has been diagnosed (Freeze Frame data will only be stored for an A or B type diagnostic and only if the MIL(”Check Engine” lamp) has been requested).
2. Clear the DTC(S).
3. Operate the vehicle within conditions noted in the Failure Records and Freeze Frame data.
4. Monitor the DTC status information for the specific DTC which has been diagnosed until the diagnostic test associated with that DTC runs.

General Service Information

OBD Serviceablity Issues

The list of non-vehicle faults that could affect the performance of the OBD system has been compiled. These non-vehicle faults vary from environmental conditions to the quality of fuel used.
The illumination of the MIL ("Check Engine" lamp) due to a non-vehicle fault could lead to misdiagnosis of the vehicle, increased warranty expense and customer dissatisfaction. The following list of non-vehicle faults does not include every possible fault and may not apply equally to all product lines.

Fuel Quality

Using fuel with the wrong octane rating for your vehicle may cause driveability problems. Many of the major fuel companies advertise that using "premium" gasoline will improve the performance of your vehicle. Most premium fuels use alcohol to increase the octane rating of the fuel. Although alcohol-enhanced fuels may raise the octane rating, the fuel's ability to turn into vapor in cold temperatures deteriorates. This may affect the starting ability and cold driveability of the engine.
Low fuel levels can lead to fuel starvation, lean engine operation, and eventually engine misfire.

Non-OEM Parts

All of the OBD diagnostics have been calibrated to run with OEM parts. Something as simple as a high-performance exhaust system that affects exhaust system back pressure could potentially interfere with the operation of the EGR valve and thereby turn on the MIL ("Check Engine" lamp). Small leaks in the exhaust system near the post catalyst oxygen sensor can also cause the MIL ("Check Engine" lamp) to turn on.
Aftermarket electronics, such as cellular phones, stereos, and anti-theft devices, may radiate EMI into the control system if they are improperly installed. This may cause a false sensor reading and turn on the MIL ("Check Engine" lamp).

Environment

Temporary environmental conditions, such as localized flooding, will have an effect on the vehicle ignition system. If the ignition system is rain-soaked, it can temporarily cause engine misfire and turn on the MIL ("Check Engine" lamp).

Poor Vehicle Maintenance

The sensitivity of OBD diagnostics will cause the MIL ("Check Engine" lamp) to turn on if the vehicle is not maintained properly. Restricted air filters, fuel filters, and crankcase deposits due to lack of oil changes or improper oil viscosity can trigger actual vehicle faults that were not previously monitored prior to OBD. Poor vehicle maintenance can not be classified as a "non-vehicle fault", but with the sensitivity of OBD diagnostics, vehicle maintenance schedules must be more closely followed.

Related System Faults

Many of the OBD system diagnostics will not run if the PCM detects a fault on a related system or component. One example would be that if the PCM detected a Misfire fault, the diagnostics on the catalytic converter would be suspended until Misfire fault was repaired. If the Misfire fault was severe enough, the catalytic converter could be damaged due to overheating and would never set a Catalyst DTC until the Misfire fault was repaired and the Catalyst diagnostic was allowed to run to completion. If this happens, the customer may have to make two trips to the dealership in order to repair the vehicle.

Maintenance Schedule

Refer to the *Maintenance Schedule*.

Visual / Physical Engine Compartment Inspection

Perform a careful visual and physical engine compartment inspection when performing any diagnostic procedure or diagnosing the cause of an emission test failure. This can often lead to repairing a problem without further steps. Use the following guidelines when performing a visual/physical inspection:

- Inspect all vacuum hoses for punches, cuts, disconnects, and correct routing.
- Inspect hoses that are difficult to see behind other components.
- Inspect all wires in the engine compartment for proper connections, burned or chafed spots, pinched wires, contact with sharp edges or contact with hot exhaust manifolds or pipes.

Basic Knowledge of Tools Required

NOTE: Lack of basic knowledge of this powertrain when performing diagnostic procedures could result in an incorrect diagnosis or damage to powertrain components. Do not attempt to diagnose a powertrain problem without this basic knowledge.

A basic understanding of hand tools is necessary to effectively use this section of the Service Manual.

Serial Data Communications

Class II Serial Data Communications

This vehicle utilizes the "Class II" communication system. Each bit of information can have one of two lengths: long or short. This allows vehicle wiring to be reduced by transmitting and receiving multiple signals over a single wire. The messages carried on Class II data streams are also prioritized. If two messages attempt to establish communications on the data line at the same time, only the message with higher priority will continue. The device with the lower priority message must wait. The most significant result of this regulation is that it provides Tech 2 manufacturers with the capability to access data from any make or model vehicle that is sold.

The data displayed on the other Tech 2 will appear the same, with some exceptions. Some Tech 2s will only be able to display certain vehicle parameters as values that are a coded representation of the true or actual value. For more information on this system of coding, refer to *Decimal/Binary/Hexadecimal Conversions.* On this vehicle Tech 2 displays the actual values for vehicle parameters. It will not be necessary to perform any conversions from coded values to actual values.

On-Board Diagnostic (OBD)

On-Board Diagnostic Tests

A diagnostic test is a series of steps, the result of which is a pass or fail reported to the diagnostic executive. When a diagnostic test reports a pass result, the diagnostic executive records the following data:

- The diagnostic test has been completed since the last ignition cycle.
- The diagnostic test has passed during the current ignition cycle.
- The fault identified by the diagnostic test is not currently active.

When a diagnostic test reports a fail result, the diagnostic executive records the following data:

- The diagnostic test has been completed since the last ignition cycle.
- The fault identified by the diagnostic test is currently active.
- The fault has been active during this ignition cycle.
- The operating conditions at the time of the failure.

Remember, a fuel trim DTC may be triggered by a list of vehicle faults. Make use of all information available (other DTCs stored, rich or lean condition, etc.) when diagnosing a fuel trim fault.

Comprehensive Component Monitor Diagnostic Operation

Input Components:

Input components are monitored for circuit continuity and out-of-range values. This includes rationality checking. Rationality checking refers to indicating a fault when the signal from a sensor does not seem reasonable, i.e. Throttle Position (TP) sensor that indicates high throttle position at low engine loads or MAP voltage. Input components may include, but are not limited to the following sensors:

- Vehicle Speed Sensor (VSS)
- Crankshaft Position (CKP) sensor
- Knock Sensor (KS)
- Throttle Position (TP) sensor
- Engine Coolant Temperature (ECT) sensor
- Camshaft Position (CMP) sensor
- Manifold Absolute Pressure (MAP) sensor
- Mass Air Flow (MAF) sensor

In addition to the circuit continuity and rationality check, the ECT sensor is monitored for its ability to achieve a steady state temperature to enable closed loop fuel control.

Output Components:

Output components are diagnosed for proper response to control module commands. Components where functional monitoring is not feasible will be monitored for circuit continuity and out-of-range values if applicable. Output components to be monitored include, but are not limited to, the following circuits:

- Idle Air Control (IAC) Motor
- Electronic Transmission controls
- A/C relays
- Cooling fan relay
- VSS output
- MIL control
- Cruise control inhibit

Refer to PCM and Sensors in General Descriptions.

Passive and Active Diagnostic Tests

A passive test is a diagnostic test which simply monitors a vehicle system or component. Conversely, an active test, actually takes some sort of action when performing diagnostic functions, often in response to a failed passive test. For example, the EGR diagnostic active test will force the EGR valve open during closed throttle decel and/or force the EGR valve closed during a steady state. Either action should result in a change in manifold pressure.

Intrusive Diagnostic Tests

This is any on-board test run by the Diagnostic Management System which may have an effect on vehicle performance or emission levels.

Warm-Up Cycle

A warm-up cycle means that engine at temperature must reach a minimum of 70˚C (160˚F) *and* rise at least 22˚C (40˚F) over the course of a trip.

Freeze Frame

Freeze Frame is an element of the Diagnostic Management System which stores various vehicle information at the moment an emissions-related fault is stored in memory and when the MIL is commanded on. These data can help to identify the cause of a fault. Refer to *Storing And Erasing Freeze Fame Data* for more detailed information.

Failure Records

Failure Records data is an enhancement of the OBD Freeze Frame feature. Failure Records store the same vehicle information as does Freeze Frame, but it will store that information for any fault which is stored in on-board memory, while Freeze Frame stores information only for emission-related faults that command the MIL on.

Common OBD Terms

Diagnostic

When used as a noun, the word diagnostic refers to any on-board test run by the vehicle's Diagnostic Management System. A diagnostic is simply a test run on a system or component to determine if the system or component is operating according to specification. There are many diagnostics, shown in the following list:

- Oxygen sensors
- Oxygen sensor heaters
- EGR
- Catalyst monitoring

Enable Criteria

The term "enable criteria" is engineering language for the conditions necessary for a given diagnostic test to run. Each diagnostic has a specific list of conditions which must be met before the diagnostic will run. "Enable criteria" is another way of saying "conditions required".
The enable criteria for each diagnostic is listed on the first page of the DTC description under the heading "Conditions for Setting the DTC". Enable criteria varies with each diagnostic, and typically includes, but is not limited to the following items:

- engine speed
- vehicle speed
- ECT
- MAF/MAP
- barometric pressure
- IAT
- TP
- fuel trim
- TCC enabled
- A/C on

Trip

Technically, a trip is a key on-run-key off cycle in which all the enable criteria for a given diagnostic are met, allowing the diagnostic to run. Unfortunately, this concept is not quite that simple. A trip is official when all the enable criteria for a given diagnostic are met. But because the enable criteria vary from one diagnostic to another, the definition of trip varies as well. Some diagnostic are run when the vehicle is at operating temperature, some when the vehicle first start up; some require that the vehicle be cruising at a steady highway speed, some run only when the vehicle is idle; some diagnostics function with the TCC disables. Some run only immediately following a cold engine start-up.
A trip then, is defined as a key on-run-key off cycle in which the vehicle was operated in such a way as to satisfy the enables criteria for a given diagnostic, and this diagnostic will consider this cycle to be one trip. However, another diagnostic with a different set of enable criteria (which were not met) during this driving event, would not consider it a trip. No trip will occur for that particular diagnostic until the vehicle is driven in such a way as to meet all the enable criteria.

The Diagnostic Executive

The Diagnostic Executive is a unique segment of software which is designed to coordinate and prioritize the diagnostic procedures as well as define the protocol for recording and displaying their results. The main responsibilities of the Diagnostic Executive are listed as following:

- Commanding the MIL ("Check Engine" lamp) on and off
- DTC logging and clearing
- Freeze Frame data for the first emission related DTC recorded
- Non-emission related Service Lamp (future)
- Operating conditions Failure Records buffer, (the number of records will vary)
- Current status information on each diagnostic

The Diagnostic Executive records DTCs and turns on the MIL when emission-related faults occur. It can also turn off the MIL if the conditions cease which caused the DTC to set.

Diagnostic Information

The diagnostic charts and functional checks are designed to locate a faulty circuit or component through a process of logical decisions. The charts are prepared with the requirement that the vehicle functioned correctly at the time of assembly and that there are not multiple faults present.
There is a continuous self-diagnosis on certain control functions. This diagnostic capability is complemented by the diagnostic procedures contained in this manual. The language of communicating the source of the malfunction is a system of diagnostic trouble codes. When a malfunction is detected by the control module, a diagnostic trouble code is set and the Malfunction Indicator Lamp (MIL) ("Check Engine" lamp) is illuminated.

Malfunction Indicator Lamp (MIL)

The Malfunction Indicator Lamp (MIL) looks the same as the MIL you are already familiar with ("Check Engine" lamp). However, OBD requires that the it illuminate under a strict set of guide lines.
Basically, the MIL is turned on when the PCM detects a DTC that will impact the vehicle emissions.
The MIL is under the control of the Diagnostic Executive. The MIL will be turned on if an emissions-related diagnostic test indicates a malfunction has occurred. It will stay on until the system or component passes the same test, for three consecutive trips, with no emissionsrelated faults.

Extinguishing the MIL

When the MIL is on, the Diagnostic Executive will turn off the MIL after *three consecutive* trips that a "test passed" has been reported for the diagnostic test that originally caused the MIL to illuminate.
Although the MIL has been turned off, the DTC will remain in the PCM memory (both Freeze Frame and Failure Records) until *forty(40) warm-up cycles after no faults* have been completed.

If the MIL was set by either a fuel trim or misfire-related DTC, additional requirements must be met. In addition to the requirements stated in the previous paragraph, these requirements are as follows:

- The diagnostic tests that are passed must occur with 375 RPM of the RPM data stored at the time the last test failed.
- Plus or minus ten (10) percent of the engine load that was stored at the time the last failed.
- Similar engine temperature conditions (warmed up or warming up) as those stored at the time the last test failed.

Meeting these requirements ensures that the fault which turned on the MIL has been corrected.

The MIL ("Check Engine" lamp) is on the instrument panel and has the following function:

- It informs the driver that a fault affects vehicle emission levels has occurred and that the vehicle should be taken for service as soon as possible.
- As a bulb and system check, the MIL will come "ON" with the key "ON" and the engine not running. When the engine is started, the MIL will turn "OFF."
- When the MIL remains "ON" while the engine is running, or when a malfunction is suspected due to a driveability or emissions problem, a Powertrain On-Board Diagnostic (OBD ll) System Check must be performed. The procedures for these checks are given in On-Board Diagnostic (OBD) System Check. These checks will expose faults which may not be detected if other diagnostics are performed first.

DTC Types

Each DTC is directly related to a diagnostic test. The Diagnostic Management System sets DTC based on the failure of the tests during a trip or trips. Certain tests must fail two (2) consecutive trips before the DTC is set. The following are the four (4) types of DTCs and the characteristics of those codes:

- Type A
  - Emissions related
  - Requests illumination of the MIL of the first trip with a fail
  - Stores a History DTC on the first trip with a fail
  - Stores a Freeze Frame (if empty)
  - Stores a Fail Record
  - Updates the Fail Record each time the diagnostic test fails
- Type B
  - Emissions related
  - "Armed" after one (1) trip with a fail
  - "Disarmed" after one (1) trip with a pass
  - Requests illumination of the MIL on the *second consecutive trip* with a fail
  - Stores a History DTC on the second consecutive trip with a fail (The DTC will be armed after the first fail)
  - Stores a Freeze Frame on the second consecutive trip with a fail (if empty)
  - Stores a Fail Record when the first test fails (not dependent on *consecutive trip* fails)
  - Updates the Fail Record each time the diagnostic test fails
- Type C (if the vehicle is so equipped)
  - Non-Emissions related
  - Requests illumination of the Service Lamp or the service message on the Drive Information Center (DIC) on the *first trip* with a fail
  - Stores a History DTC on the *first trip* with a fail
  - *Does not* store a Freeze Frame
  - Stores Fail Record when test fails
  - Updates the Fail Record each time the diagnostic test fails
- Type D (*Type D* non-emissions related are not utilized on certain vehicle applications).
  - Non-Emissions related
  - Dose not request illumination of any lamp
  - Stores a History DTC on the *first trip* with a fail
  - *Does not* store a Freeze Frame
  - Stores Fail Record when test fails
  - Updates the Fail Record each time the diagnostic test fails

IMPORTANT: Only four Fail Records can be stored. Each Fail Record is for a different DTC. It is possible that there will not be Fail Records for every DTC if multiple DTCs are set.

Storing and Erasing Freeze Frame Data and Failure Records

The data captured is called Freeze Frame data. The Freeze Frame data is very similar to a single record of operating conditions. Whenever the MIL is illuminated, the corresponding record of operating conditions is recorded to the Freeze Frame buffer.

Data from these faults take precedence over data associated with any other fault. The Freeze Frame data will not be erased unless the associated history DTC is cleared.

Each time a diagnostic test reports a failure, the current engine operating conditions are recorded in the *Failure Records* buffer. A subsequent failure will update the recorded operating conditions. The following operating conditions for the diagnostic test which failed *typically* include the following parameters:

- Air Fuel Ratio
- Air Flow Rate
- Fuel Trim
- Engine Speed
- Engine Load
- Engine Coolant Temperature
- Vehicle Speed
- TP Angle
- MAP/BARO
- Injector Base Pulse Width
- Loop Status

Intermittent Malfunction Indicator Lamp

In the case of an “intermittent” fault, the MIL (“Check Engine” lamp) may illuminate and then (after three trips) go “OFF”. However, the corresponding diagnostic trouble code will be stored in the memory. When unexpected diagnostic trouble codes appear, check for an intermittent malfunction.

A diagnostic trouble code may reset. Consult the “Diagnostic Aids” associated with the diagnostic trouble code. A physical inspection of the applicable sub-system most often will resolve the problem.

Data Link Connector (DLC)

The provision for communication with the control module is the Data Link Connector (DLC). The DLC is used to connect to Tech 2. Some common uses of Tech 2 are listed below:

- Identifying stored Diagnostic Trouble Codes (DTCs).
- Clearing DTCs.
- Performing output control tests.
- Reading serial data.

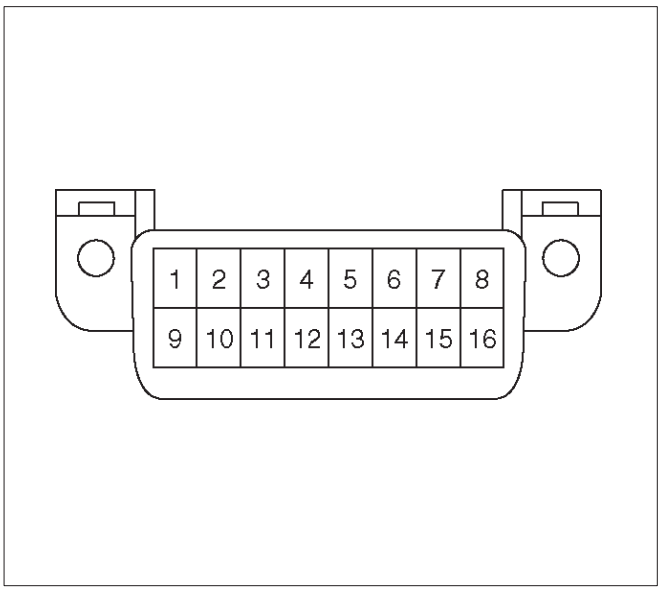

TS24064

Verifying Vehicle Repair

Verification of vehicle repair will be more comprehensive for vehicles with OBD system diagnostic. Following a repair, the technician should perform the following steps:

1. Review and record the Fail Records and/or Freeze Frame data for the DTC which has been diagnosed (Freeze Frame data will only be stored for an A or B type diagnostic and only if the MIL has been requested).
2. Clear DTC(s).
3. Operate the vehicle within conditions noted in the Fail Records and/or Freeze Frame data.
4. Monitor the DTC status information for the specific DTC which has been diagnosed until the diagnostic test associated with that DTC runs.

Following these steps are very important in verifying repairs on OBD systems. Failure to follow these steps could result in unnecessary repairs.

Reading Diagnostic Trouble Codes Using A Tech 2

The procedure for reading diagnostic trouble code(s) is to used a diagnostic Tech 2. When reading DTC(s), follow instructions supplied by Tech 2 manufacturer.

Clearing Diagnostic Trouble Codes

IMPORTANT: Do not clear DTCs unless directed to do so by the service information provided for each diagnostic procedure. When DTCs are cleared, the Freeze Frame and Failure Record data which may help diagnose an intermittent fault will also be erased from memory.

If the fault that caused the DTC to be stored into memory has been corrected, the Diagnostic Executive will begin to count the “warm-up” cycles with no further faults detected, the DTC will automatically be cleared from the PCM memory.

To clear Diagnostic Trouble Codes (DTCs), use the diagnostic Tech 2 “clear DTCs”. When clearing DTCs follow instructions supplied by the tool manufacturer.

When Tech 2 is not available, DTCs can also be cleared by disconnecting *one* of the following sources for at least thirty (30) seconds.

NOTE: To prevent system damage, the ignition key must be “OFF” when disconnecting or reconnecting battery power.

- The power source to the control module. Examples: fuse, pigtail at battery PCM connectors etc.
- The negative battery cable. (Disconnecting the negative battery cable will result in the loss of other on-board memory data, such as preset radio tuning).

Tech 2

From 98 MY, Isuzu dealer service departments are recommended to use Tech 2. Please refer to Tech 2 Tech 2 user guide.

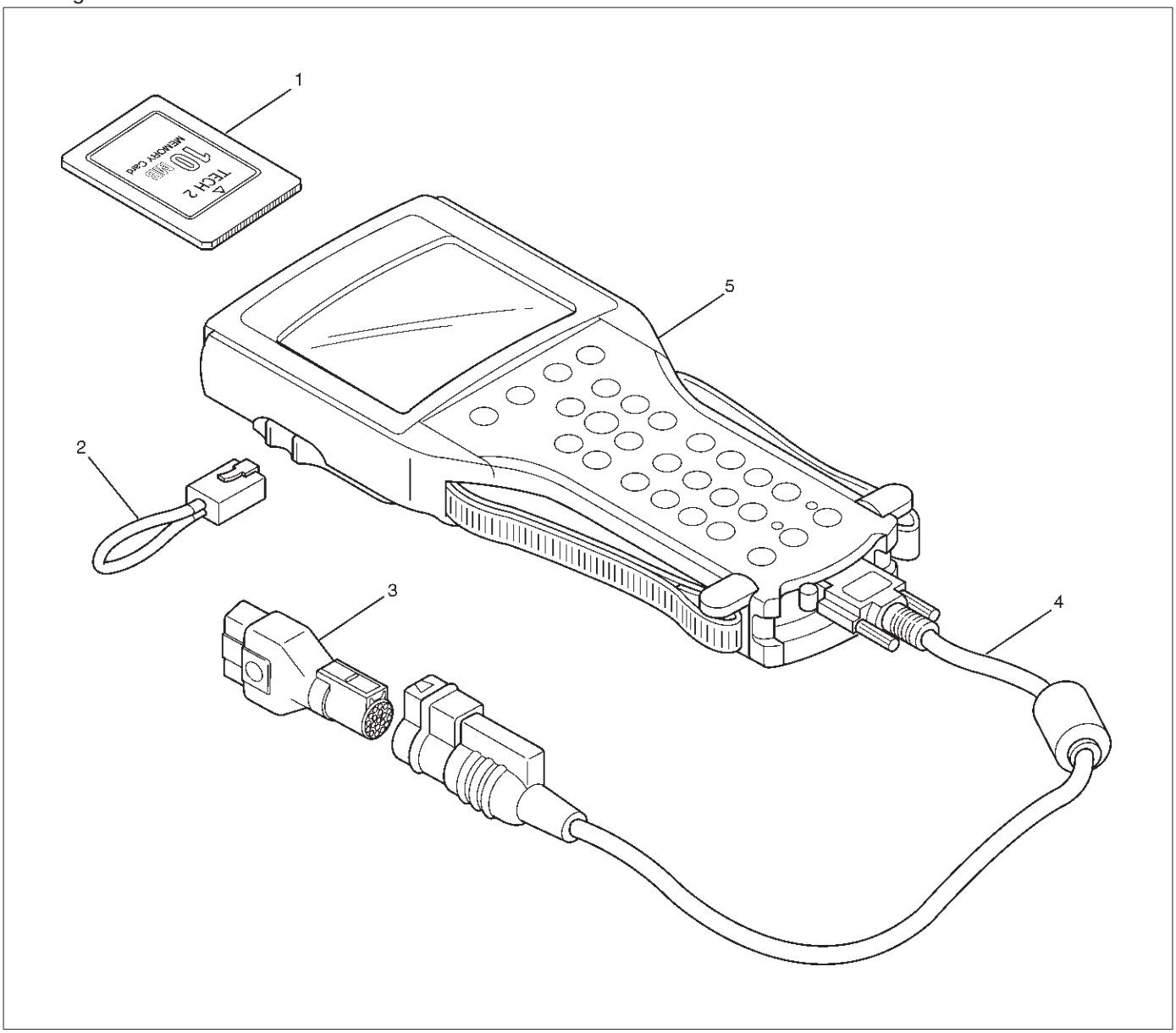

901RW180

Legend

(1) PCMCIA Card
(2) RS 232 Loop Back Connector
(3) SAE 16/19 Adaptor
(4) DLC Cable
(5) Tech–2

Tech 2 Features

1. Tech 2 is 12 volt system. Do not apply 24 volt.
2. After connect and/or install Tech 2 body, Vehicle Communications Interface (VCI) module, PCMCIA card and DLC connector, connect them to the vehicle DLC.
3. After power off to the Tech 2, remove and reinstall the PCMCIA card.
4. The PCMCIA card has a capacity of 10 Megabytes which is 10 times greater than the memory of the Tech 1 Mass Storage Cartridge.
5. The Tech 2 has the capability of two snapshots.
6. The PCMCIA card is sensitive to magnetism and static electricity, so care should be taken in the handling of the card.
7. The Tech 2 can plot a graph when replaying a snapshot.
8. Always return to the Main Menu to press EXIT key several times before shutting down.
9. To clear Diagnostic Trouble Codes (DTCs), open Application Menu and press “F1: Clear DTC Info”.

Getting Started

- Before operating the Isuzu PCMCIA card with the Tech 2, the following steps must be performed:

1. The Isuzu 98 System PCMCIA card (1) inserts into the Tech 2 (5).
2. Connect the SAE 16/19 adapter (3) to the DLC cable (4).
3. Connect the DLC cable to the Tech 2 (5)
4. Make sure the vehicle ignition is off.
5. Connect the Tech 2 SAE 16/19 adapter to the vehicle DLC.
   1. For RHD model: Right front side in the console box.
   2. For LHD model: Left front side in the console box.

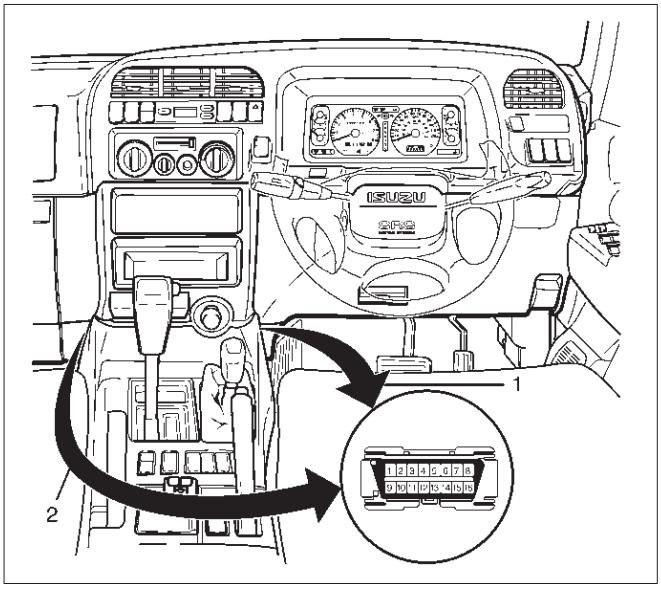

060RW220

6. The vehicle ignition turns on.
7. Verify the Tech 2 power up display.

060RW009

NOTE: The RS232 Loop back connector is only to use for diagnosis of Tech 2 and refer to user guide of the Tech 2.

Operating Procedure (For Example)

The power up screen is displayed when you power up the tester with the Isuzu systems PCMCIA card. Follow the operating procedure below. (Ver. 5.471)

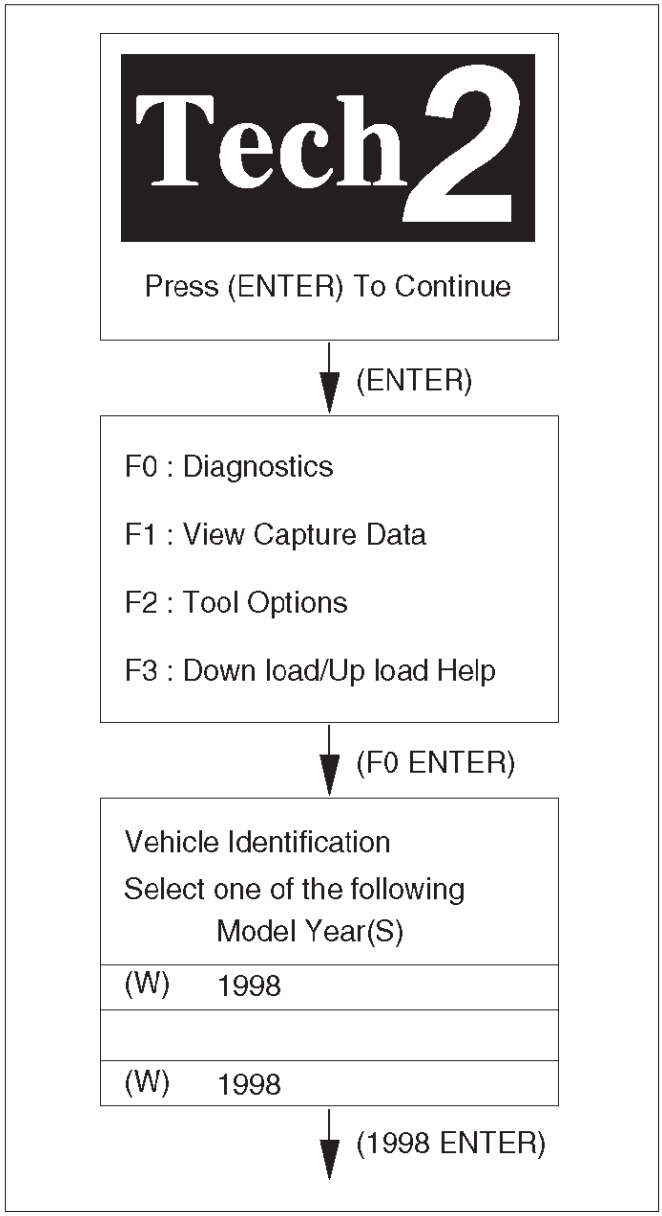

060RW014

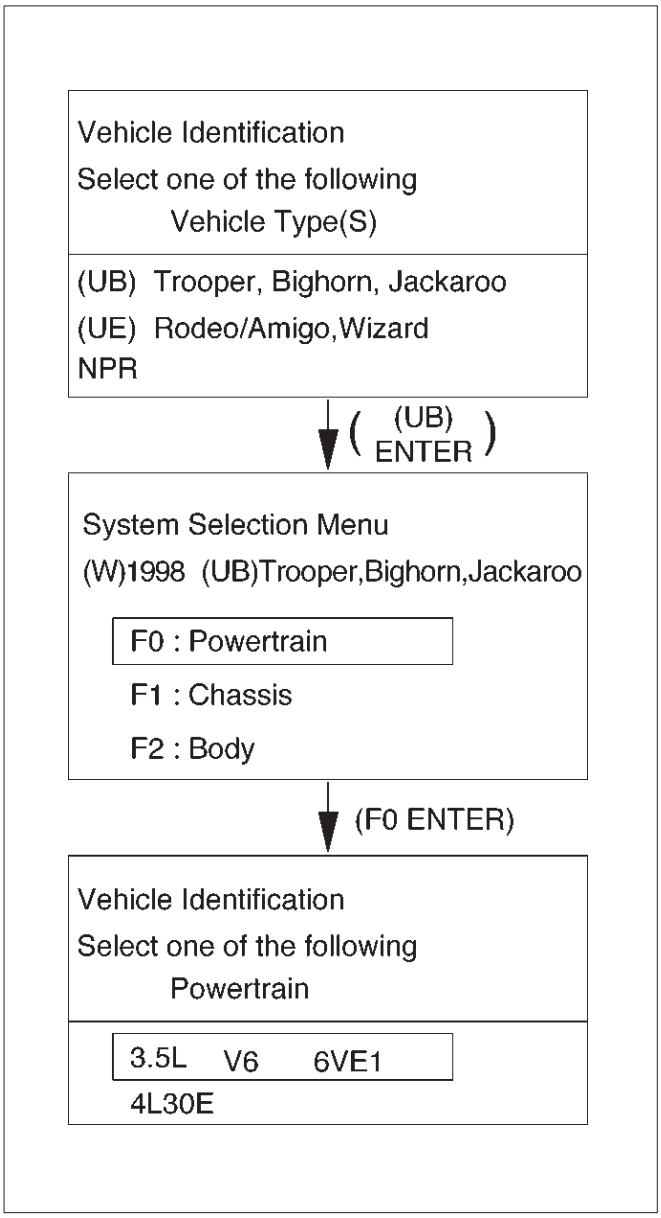

060RW218

Menu

- The following table shows, which functions are used the available equipment versions.

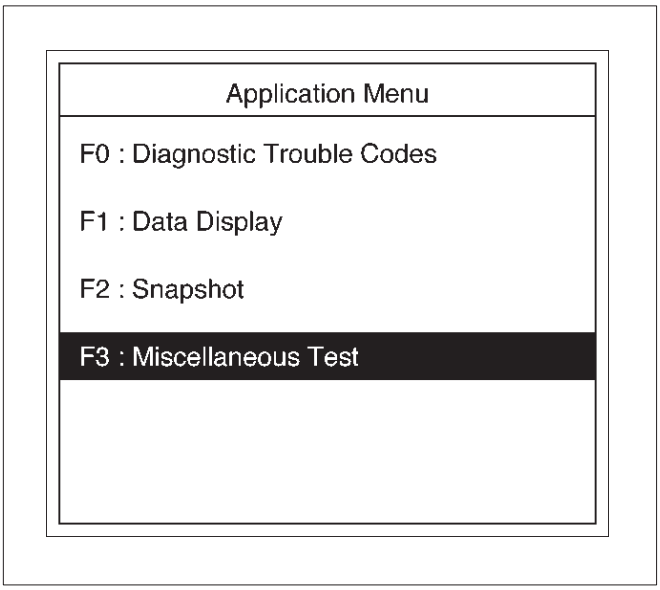

060RW228

DTC Modes

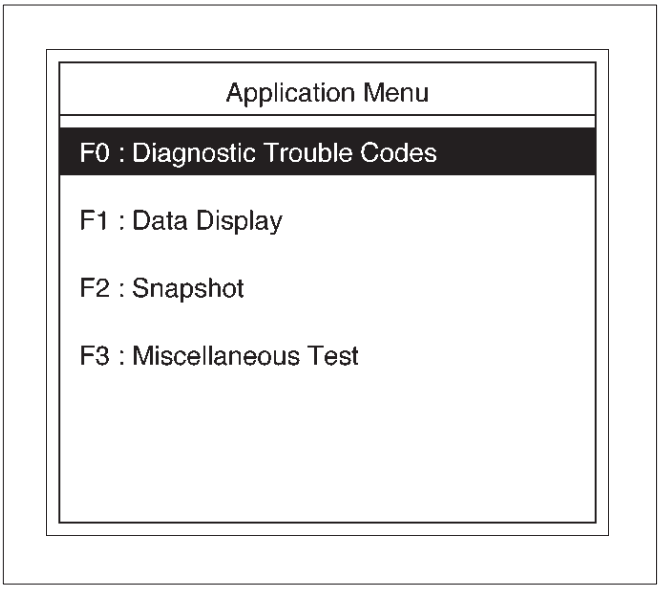

060RW229

On OBD passenger cars there are five options available in Tech 2 DTC mode to display the enhanced information available. A description of the new modes, DTC Info follows. After selecting DTC, the following menu appears:

- DTC Info
- Freeze Frame
- Fail Records (not all applications)
- Clear Info

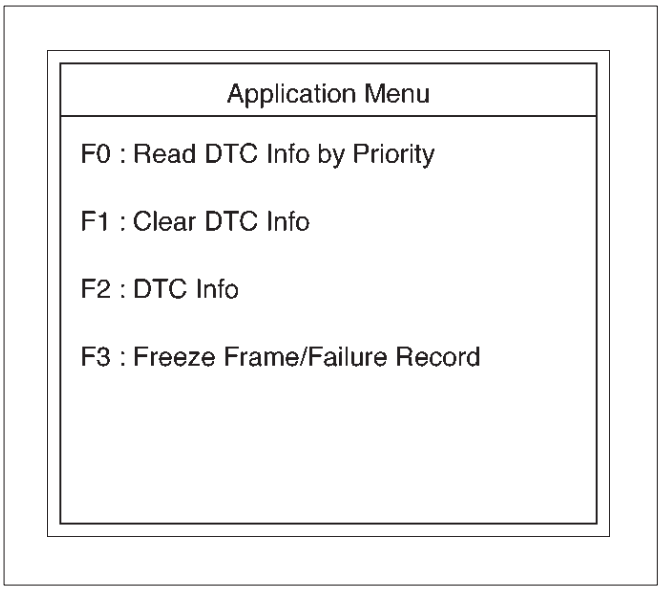

060RW223

The following is a brief description of each of the sub menus in DTC Info and Specific DTC. The order in which they appear here is alphabetical and not necessarily the way they will appear on the Tech 2.

DTC Information Mode

Use the DTC info mode to search for a specific type of stored DTC information. There are seven choices. The service manual may instruct the technician to test for DTCs in a certain manner. Always follow published service procedures.

To get a complete description of any status, press the "Enter" key before pressing the desired F-key. For example, pressing "Enter" then an F-key will display a definition of the abbreviated Tech 2 status.

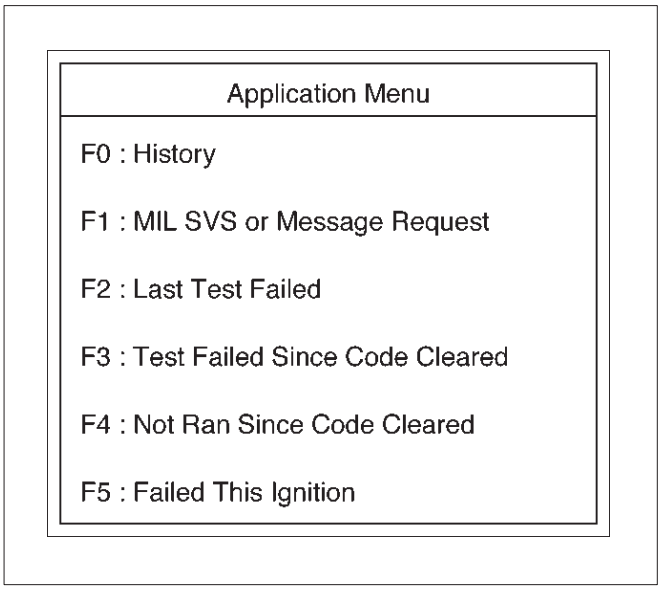

060RW221

DTC Status

This selection will display any DTCs that have not run during the current ignition cycle or have reported a test failure during this ignition up to a maximum of 33 DTCs. DTC tests which run and pass will cause that DTC number to be removed from Tech 2 screen.

Fail This Ignition

This selection will display all DTCs that have failed during the present ignition cycle.

History

This selection will display only DTCs that are stored in the PCM's history memory. It will not display Type B DTCs that have not requested the MIL ("Check Engine" lamp). It will display all type A and B DTCs that have requested the MIL and have failed within the last 40 warm-up cycles. In addition, it will display all type C and type D DTCs that have failed within the last 40 warm-up cycles.

Last Test Failed

This selection will display only DTCs that have failed the last time the test ran. The last test may have run during a previous ignition cycle if a type A or type B DTC is displayed. For type C and type D DTCs, the last failure must have occurred during the current ignition cycle to appear as Last Test Fail.

MILSVC or Message Requested

This selection will display only DTCs that are requesting the MIL. Type C and type D DTCs cannot be displayed using this option. This selection will report type B DTCs only after the MIL has been requested.

Not Run Since Code Clear

This option will display up to 33 DTCs that have not run since the DTCs were last cleared. Since any displayed DTCs have not run, their condition (passing or failing) is unknown.

Test Failed Since Code Clear

This selection will display all active and history DTCs that have reported a test failure since the last time DTCs were cleared. DTCs that last failed more than 40 warm-up cycles before this option is selected will not be displayed.

Injector Balance Test

This test is conducted to make it sure that appropriate electric signals are being sent to injectors Nos. 1–6.

Tech 2 must be used for this test.

Test Procedure:

1. Connect Tech 2 to the vehicle DLC.
2. Run the Engine at idle.

3. Select F3: Miscellaneous Test in the Application Menu.

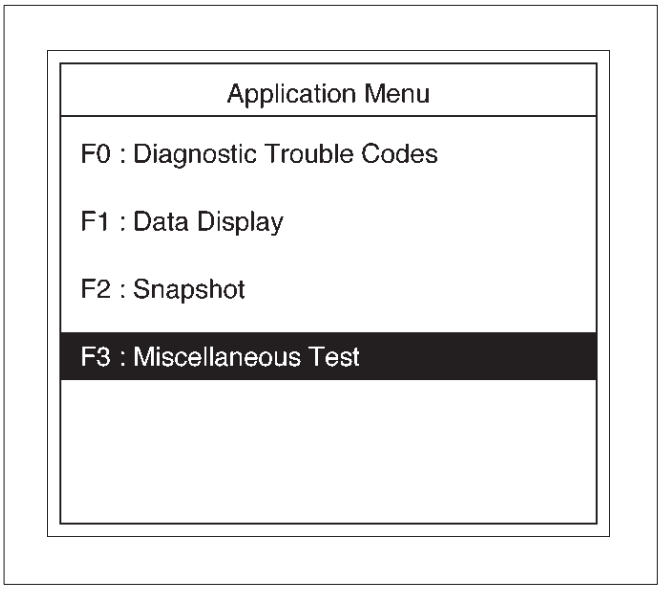

060RW228

4. Select F7: Injector Balance Test in the Miscellaneous Test.

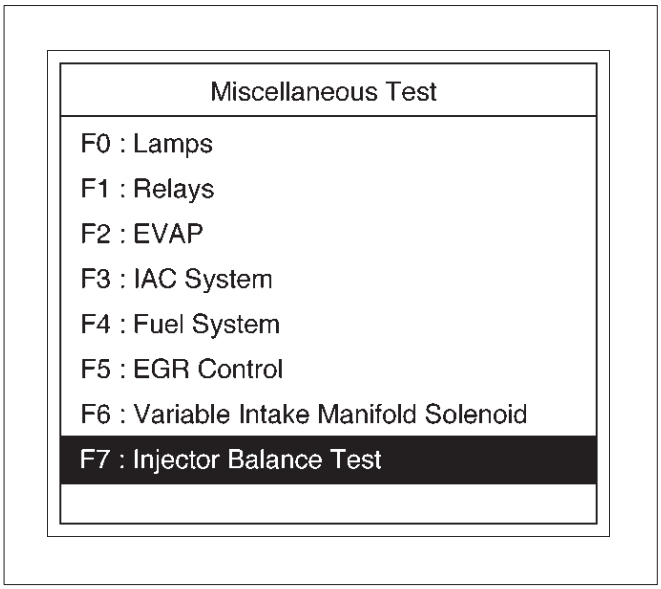

060RX006

5. Select injector number and push “injector off” of soft key.

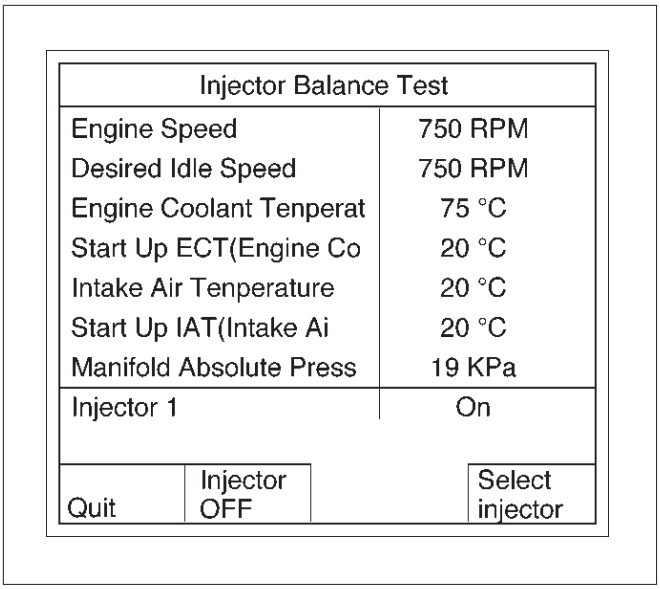

060RW230

6. Make sure of engine speed change.
7. In the engine speed whose change has been confirmed, the injector electric circuit can be regard as normal.

   As for the engine speed whose change has not been confirmed, the injector electric circuit or the injector proper is faulty.

EGR Control Test

This test is conducted check EGR valve for its working. Tech 2 must be used for this test.
Test Procedure:

1. Connect Tech 2 to the vehicle DLC.
2. Run the Engine at idle.
3. Select F3: Miscellaneous Test in the Application Menu.

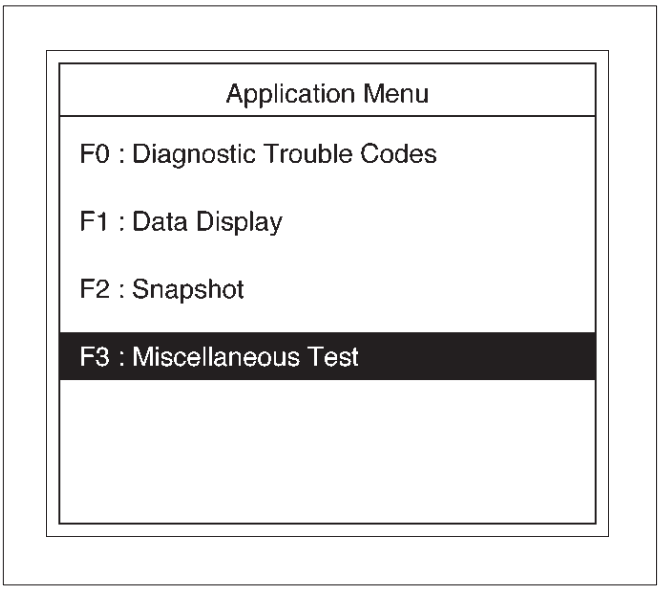

060RW228

4. Select F5: EGR Control Test in the Miscellaneous Test.

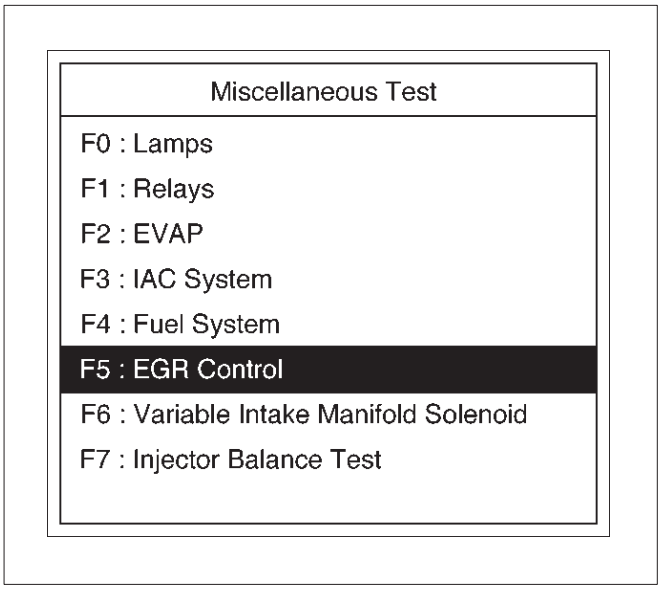

060RX008

5. Instruct EGR Valve to check a data list.

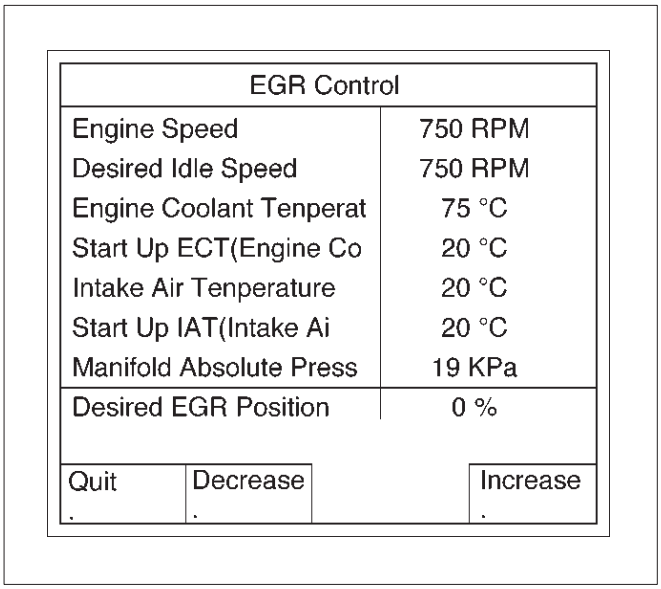

060RW234

6. If change in the data list shows a normal valve.

Idle Air Control System Test

This test is conducted check IAC system for its working. Tech 2 must be used for this test.

Test Procedure:

1. Connect Tech 2 to the vehicle DLC.
2. Run the Engine at idle.
3. Select F3: Miscellaneous Test in the Application Menu.

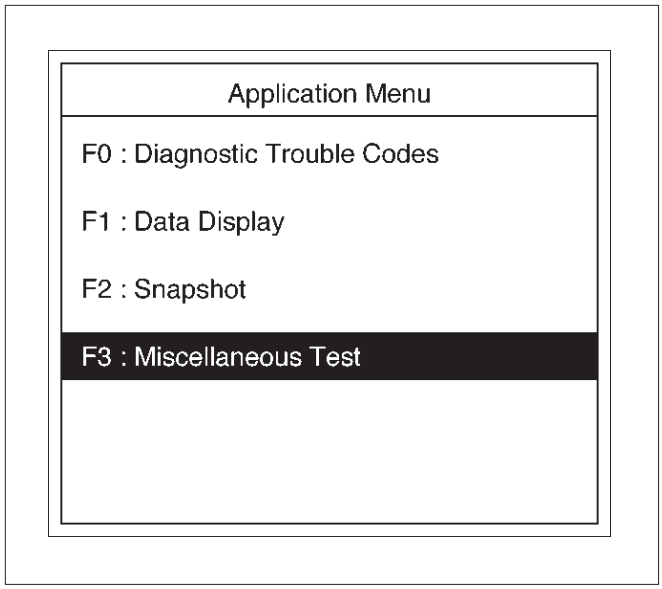

060RW228

4. Select F3: IAC System Test in the Miscellaneous Test.

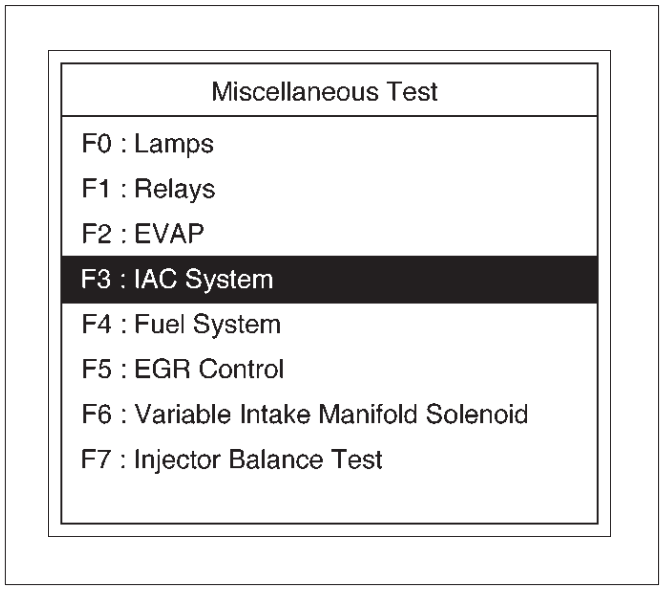

060RX007

5. Select F1: IAC Control Test.

Application Menu
F0 : RPM Control
F1 : IAC Control
F2 : IAC Reset

060RW235

6. Instruct IAC system to check a data list.

IAC Control	
Engine Speed	750 RPM
Desired Idle Speed	750 RPM
Engine Coolant Tenperat	75 °C
Start Up ECT(Engine Co	20 °C
Intake Air Tenperature	20 °C
Start Up IAT(Intake Ai	20 °C
Manifold Absolute Press	19 KPa
Idle Air Control	21 Steps

Quit	Decrease	Increase
.	.	.

060RW233

- F0: RPM Control

RPM Control	
Engine Speed	750 RPM
Desired Idle Speed	750 RPM
Engine Coolant Tenperat	75 °C
Start Up ECT(Engine Co	20 °C
Intake Air Tenperature	20 °C
Start Up IAT(Intake Ai	20 °C
Manifold Absolute Press	19 KPa
Desired Idle Speed	750 RPM

Quit	Decrease	Increase
.	.	.

060RW232

- F2: IAC Reset

IAC Reset	
Engine Speed	750 RPM
Desired Idle Speed	750 RPM
Engine Coolant Tenperat	75 °C
Start Up ECT(Engine Co	20 °C
Intake Air Tenperature	20 °C
Start Up IAT(Intake Ai	20 °C
Manifold Absolute Press	19 KPa
Idle Air Control	21 Steps

Quit	Reset IAC

060RW231

7. If change in the data list shows a normal IAC.

Primary System-Based Diagnostic

Primary System-Based Diagnostic

There are primary system-based diagnostics which evaluate system operation and its effect on vehicle emissions. The primary system-based diagnostics are listed below with a brief description of the diagnostic function:

Oxygen Sensor Diagnosis

The fuel control heated oxygen sensors (Bank 1 HO2S 1 and Bank 2 HO2S 1) are diagnosed for the following conditions:

- Inactive signal (output steady at bias voltage – approx. 450 mV)
- Signal fixed high
- Signal fixed low

If the oxygen sensor pigtail wiring, connector or terminal are damaged, the entire oxygen sensor assembly must be replaced. DO NOT attempt to repair the wiring, connector or terminals. In order for the sensor to function properly, it must have clean reference air provided to it. This clean air reference is obtained by way of the oxygen sensor wire(s). Any attempt to repair the wires, connector or terminals could result in the obstruction of the reference air and degrade oxygen sensor performance. Refer to *On-Vehicle Service, Heated Oxygen Sensors.*

Fuel Control Heated Oxygen Sensor

The main function of the fuel control heated oxygen sensors is to provide the control module with exhaust stream oxygen content information to allow proper fueling and maintain emissions within mandated levels. After it reaches operating temperature, the sensor will generate a voltage, inversely proportional to the amount of oxygen present in the exhaust gases. The control module uses the signal voltage from the fuel control heated oxygen sensors while in closed loop to adjust fuel injector pulse width. While in closed loop, the PCM can adjust fuel delivery to maintain an air/fuel ratio which allows the best combination of emission control and driveability.

HO2S Heater

Heated oxygen sensors are used to minimize the amount of time required for closed loop fuel control to begin operation and to allow accurate catalyst monitoring. The oxygen sensor heater greatly decreases the amount of time required for fuel control sensors (Bank 1 HO2S 1 and Bank2 HO2S 1) to become active. Oxygen sensor heaters are required to maintain a sufficiently high temperature which allows accurate exhaust oxygen content readings further away from the engine.

Fuel Trim System Monitor Diagnostic Operation

Fuel Trim System Monitor Diagnostic Operation

This system monitors the averages of short-term and long-term fuel trim values. If these fuel trim values stay at their limits for a calibrated period of time, a malfunction is indicated. The fuel trim diagnostic compares the averages of short-term fuel trim values and long-term fuel trim values to rich and lean thresholds. If either value is within the thresholds, a pass is recorded. If both values are outside their thresholds, a rich or lean DTC will be recorded.

The fuel trim system diagnostic also conducts an intrusive test. This test determines if a rich condition is being caused by excessive fuel vapor from the EVAP canister. In order to meet OBD requirements, the control module uses weighted fuel trim cells to determine the need to set a fuel trim DTC. A fuel trim DTC can only be set if fuel trim counts in the weighted fuel trim cells exceed specifications. This means that the vehicle could have a fuel trim problem which is causing a problem under certain conditions (i.e., engine idle high due to a small vacuum leak or rough idle due to a large vacuum leak) while it operates fine at other times. No fuel trim DTC would set (although an engine idle speed DTC or HO2S DTC may set). Use a Tech 2 to observe fuel trim counts while the problem is occurring.

A fuel trim DTC may be triggered by a number of vehicle faults. Make use of all information available (other DTCs stored, rich or lean condition, etc.) when diagnosing a fuel trim fault.

Fuel Trim Cell Diagnostic Weights

No fuel trim DTC will set regardless of the fuel trim counts in cell 0 unless the fuel trim counts in the weighted cells are also outside specifications. This means that the vehicle could have a fuel trim problem which is causing a problem under certain conditions (i.e. engine idle high due to a small vacuum leak or rough due to a large vacuum leak) while it operates fine at other times. No fuel trim DTC would set (although an engine idle speed DTC or HO2S DTC may set). Use a Tech 2 to observe fuel trim counts while the problem is occurring.

On-Board Diagnostic (OBD) System Check

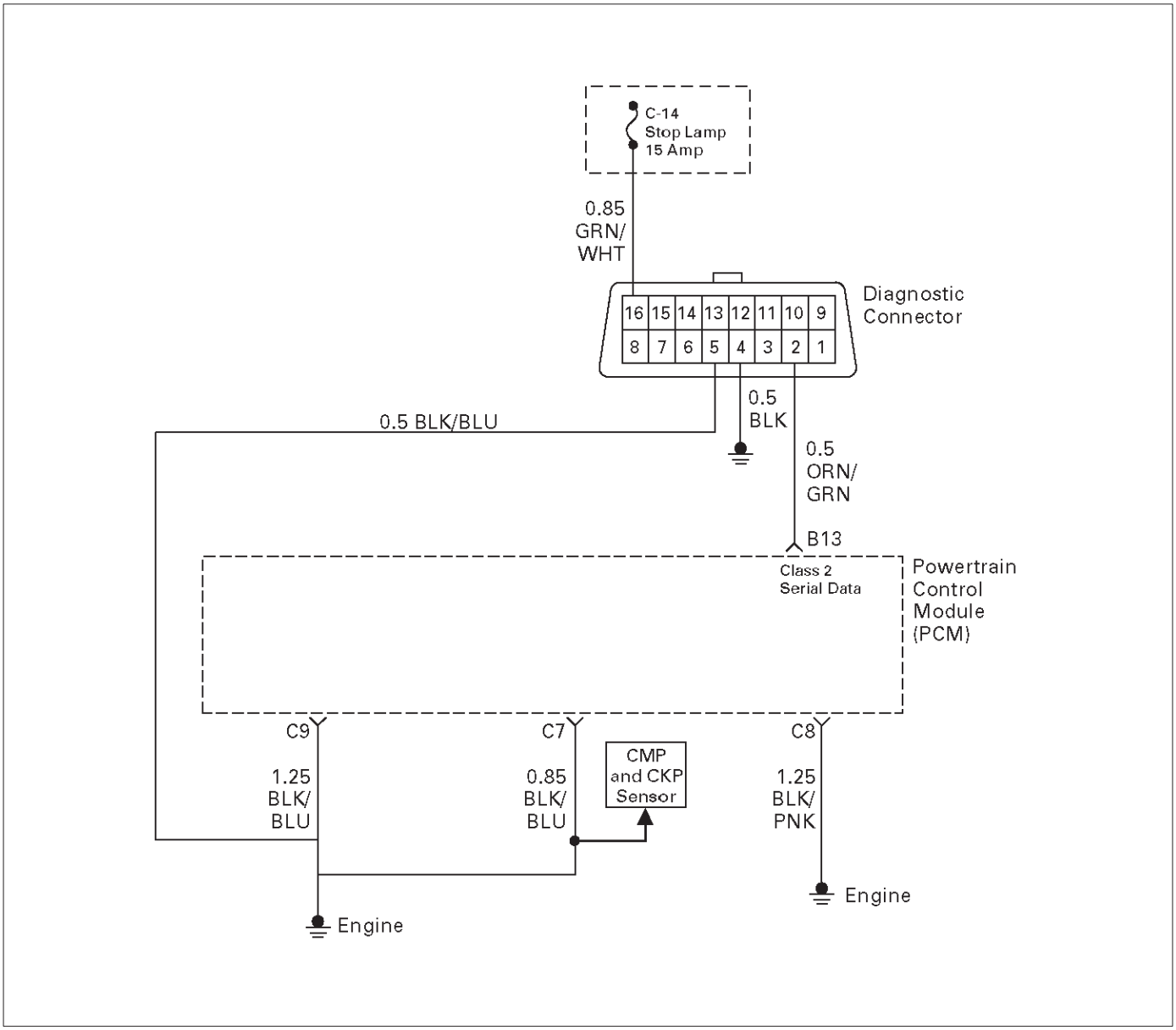

TS321119

Circuit Description

The on-board diagnostic system check is the starting point for any driveability complaint diagnosis. Before using this procedure, perform a careful visual/physical check of the PCM and engine grounds for cleanliness and tightness.

The on-board diagnostic system check is an organized approach to identifying a problem created by an electronic engine control system malfunction.

Diagnostic Aids

An intermittent may be caused by a poor connection, rubbed-through wire insulation or a wire broken inside the insulation. Check for poor connections or a damaged harness. Inspect the PCM harness and connector for improper mating, broken locks, improperly formed or damaged terminals, poor terminal-to-wire connection, and damaged harness.

Test Description

Number(s) below refer to the step number(s) on the Diagnostic Chart:

1. The MIL (“Check Engine” lamp) should be “ON” steady with the ignition “ON”/engine “OFF.” If not, Chart A-1 should be used to isolate the malfunction.
2. Checks the Class 2 data circuit and ensures that the PCM is able to transmit serial data.
3. This test ensures that the PCM is capable of controlling the MIL (“Check Engine” lamp) and the MIL (“Check Engine” lamp) driver circuit is not shorted to ground.
4. If the engine will not start, the *Cranks But Will Not Run* chart should be used to diagnose the condition.
7. A Tech 2 parameter which is not within the typical range may help to isolate the area which is causing the problem.

10. This vehicle is equipped with a PCM which utilizes an electrically erasable programmable read only memory (EEPROM). When the PCM is replaced, the new PCM must be programmed. *Refer to UBS 98 model year Immobilizer Workshop Manual.*

On-Board Diagnostic (OBD) System Check

Step	Action	Value(s)	Yes	No
1	1. Ignition “ON,” engine “OFF.” 2. Observe the malfunction indicator lamp (MIL or “Check Engine” lamp). Is the MIL (“Check Engine” lamp)“ON?”	—	Go to *Step 2*	Go to *No MIL (“Check Engine” lamp)*
2	1. Ignition “OFF.” 2. Install a Tech 2. 3. Ignition “ON.” 4. Attempt to display PCM engine data with the Tech 2. Does the Tech 2 display PCM data?	—	Go to *Step 3*	Go to *Step 8*
3	1. Using the Tech 2 output tests function, select MIL (“Check Engine” lamp) dash lamp control and command the MIL (“Check Engine” lamp) “OFF.” 2. Observe the MIL (“Check Engine” lamp). Did the MIL (“Check Engine” lamp) turn “OFF?”	—	Go to *Step 4*	Go to *MIL (“Check Engine” lamp) On Steady*
4	Attempt to start the engine. Did the engine start and continue to run?	—	Go to *Step 5*	Go to *Cranks But Will Not Run*
5	Select “Display DTCs” with the Tech 2. Are any DTCs stored?	—	Go to *Step 6*	Go to *Step 7*
6	Are two or more of the following DTCs stored? P0107, P0108, P0113, P0118, P0122, P0123, P0712.?	—	Go to *“Multiple PCM Information Sensor DTCs Set”*	Go to applicable DTC table
7	Compare PCM data values displayed on the Tech 2 to the typical engine scan data values. Are the displayed values normal or close to the typical values?	—	Refer to *Typical scan data value*	Refer to indicated *Component System Checks*
8	1. Ignition “OFF,” disconnect the PCM. 2. Ignition “ON,” engine “OFF.” 3. Check the Class 2 data circuit for an open, short to ground, or short to voltage. Also, check the DLC ignition feed circuit for an open or short to ground and the DLC ground circuit for an open. 4. If a problem is found, repair as necessary. Was a problem found?	—	Go to *Step 2*	Go to *Step 9*
9	Attempt to display PCM data with the Tech 2. Does the Tech 2 display PCM engine data?	—	Go to *Step 2*	Go to *Step 10*
10	Replace the PCM. **IMPORTANT:** The replacement PCM must be programmed. Refer to *Powertrain Control Module (PCM) in On-Vehicle Service.* Is the action complete?	—	Go to *Step 2*	—

A/C Clutch Control Circuit Diagnosis

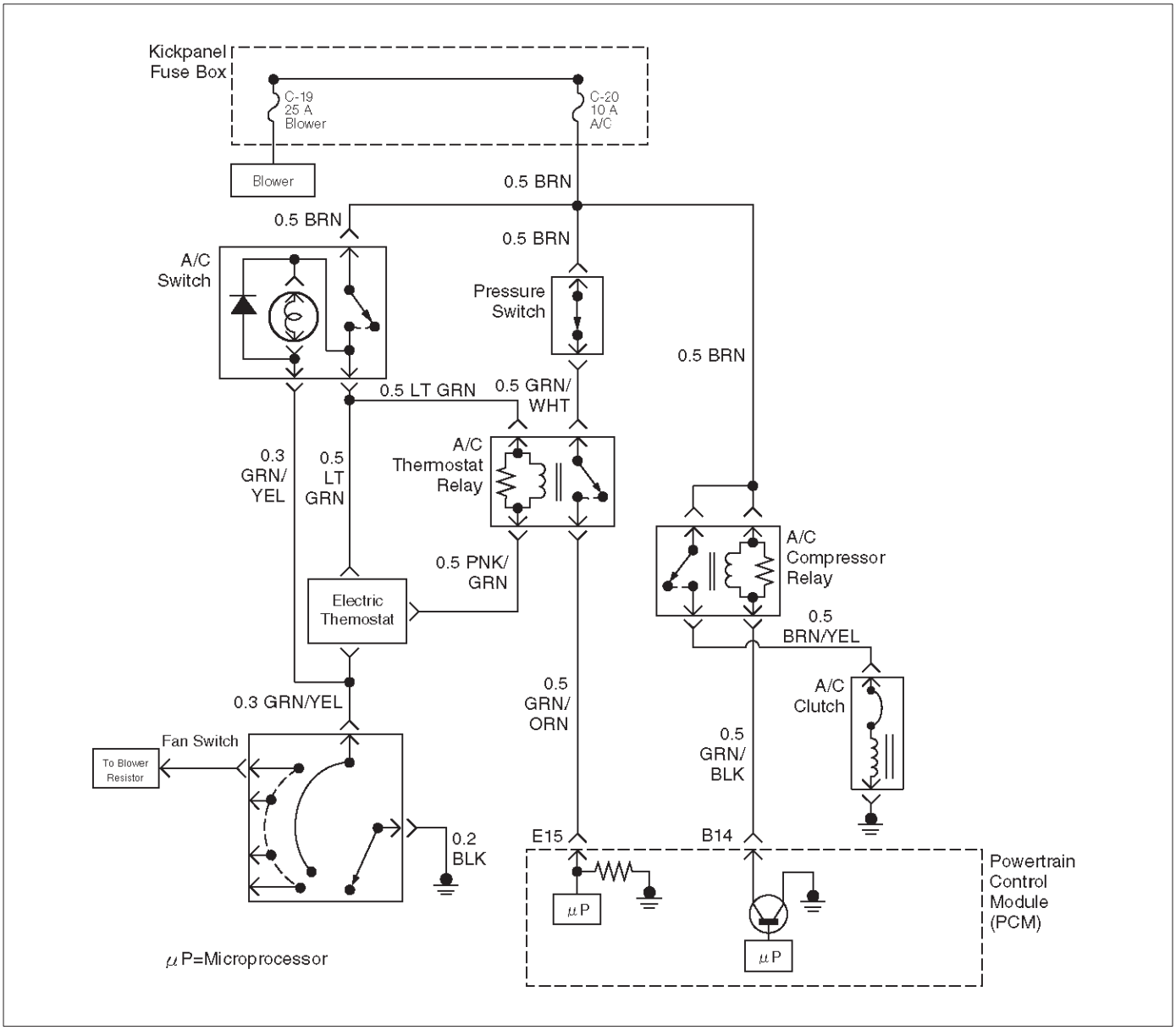

D06RW085

Circuit Description

When air conditioning and blower fan are selected, and if the system has a sufficient refrigerant charge, a 12-volt signal is supplied to the A/C request input of the powertrain control module (PCM). The A/C request signal may be temporarily canceled during system operation by the electronic thermostat in the evaporator case. The electronic thermostat may intermittently remove the control circuit ground for the A/C thermostat relay to prevent the evaporator from forming ice. When the A/C request signal is received by the PCM, the PCM supplies a ground from the compressor clutch relay if the engine operating conditions are within acceptable ranges. With the A/C compressor relay energized, voltage is supplied to the compressor clutch coil.

The PCM will enable the compressor clutch to engage whenever A/C has been selected with the engine running, unless any of the following conditions are present:

- The throttle is greater than 90%.
- The ignition voltage is below 10.5 volts.
- The engine speed is greater than 4500 RPM for 5 seconds or 5400 RPM.
- The engine coolant temperature (ECT) is greater than 125 °C (257 °F).
- The intake air temperature (IAT) is less than 5°C (41°F).
- The power steering pressure switch signals a cramped position.

Diagnostic Aids

To diagnose an the intermittent fault, check for the following conditions:

- Poor connection at the PCM–Inspect connections for backed-out terminals, improper mating, broken locks, improperly formed or damaged terminals, and poor terminal-to-wire connection.

- Damaged harness–Inspect the wiring harness for damage. If the harness appears to OK, observe the A/C clutch while moving connectors and wiring harnesses related to the A/C. A sudden clutch malfunction will indicate the source of the intermittent fault.

A/C Clutch Diagnosis

This chart should be used for diagnosing the electrical portion of the A/C compressor clutch circuit. A Tech 2 will be used in diagnosing the system. The Tech 2 has the ability to read the A/C request input to the PCM. The Tech 2 can display when the PCM has commanded the A/C clutch "ON." The Tech 2 should have the ability to override the A/C request signal and energize the A/C compressor relay.

Test Description

IMPORTANT: Do not engage the A/C compressor clutch with the engine running if an A/C mode is not selected at the A/C control switch.

The numbers below refer to the step numbers on the Diagnostic Chart:

3. This a test determine is the problem is with the refrigerant system. If the switch is open, A/C pressure gauges will be used to determine if the pressure switch is faulty or if the system is partially discharged or empty.
4. Although the normal complaint will be the A/C clutch failing to engage, it is possible for a short circuit to cause the clutch to run when A/C has not been selected. This step is a test for that condition.
7. There is an extremely low probability that both relays will fail at the same time, so the substitution process is one way to check the A/C Thermostat relay. Use a known good relay to do a substitution check.
9. The blower system furnishes a ground for the A/C control circuit, and it also shares a power source through the Heater and A/C Relay. The blower must be "ON" in order to test the A/C system.

A/C Clutch Control Circuit Diagnosis

Step	Action	Value(s)	Yes	No
1	Was the "On-Board Diagnostic (OBD) System Check" performed?	—	Go to *Step 2*	Go to *OBD System Check*
2	Are any other DTCs stored?	—	Go to the other DTC chart(s) first	Go to *Step 3*
3	1. Disconnect the electrical connector at the pressure switch located on the receiver/drier. 2. Use an ohmmeter to check continuity across the pressure switch. Is the pressure switch open?	—	Go to Air *Conditioning* to diagnose the cause of the open pressure switch	Go to *Step 4*
4	**IMPORTANT:** Before continuing with the diagnosis, the following conditions must be met: ● The intake air temperature must be greater than 15˚C. (60˚F). ● The engine coolant temperature must be less than 119˚C (246˚F). 1. A/C "OFF." 2. Start the engine and idle for 1 minute. 3. Observe the A/C compressor. Is the A/C compressor clutch engaged even though A/C has not been requested?	—	Go to *Step 45*	Go to *Step 5*
5	1. Idle the engine. 2. A/C "ON". 3. Blower "ON". 4. Observe the A/C compressor. Is the A/C compressor magnetic clutch engaged?	—	Refer to *Diagnostic Aids*	Go to *Step 6*

A/C Clutch Control Circuit Diagnosis (Cont'd)

Step	Action	Value(s)	Yes	No
6	1. Engine idling. 2. A/C "ON". 3. Blower "ON". 4. Observe the "A/C Request" display on the Tech 2. Does the tool "A/C Request" display indicate "Yes?"	—	Go to *Step 34*	Go to *Step 7*
7	Temporarily substitute the A/C compressor relay in place of the A/C thermostat relay, then repeat Step 5. Did the "A/C Request" display indicate "Yes?"	—	Go to *Step 8*	Go to *Step 9*
8	Replace the original A/C thermostat relay. Is the action complete?	—	Verify repair	—
9	Dose the blower operate?	—	Go to *Step 10*	Go to *Step 11*
10	Repair the blower. Is the action complete?	—	Verify repair	—
11	Check for a faulty 10a A/C fuse in the underdash fuse panel. Was the 10A fuse OK?	—	Go to *Step 13*	Go to *Step 12*
12	Check for short circuit and make repairs if necessary. Replace the 10A A/C fuse. Is the action complete?	—	Verify repair	—
13	1. Ignition "ON." 2. Use a DVM to check voltage at the positive A/C switch wire (BRN). Was voltage equal to the specified value?	+B	Go to *Step 15*	Go to *Step 14*
14	Repair the open wire (BRN) between the A/C switch and the A/C fuse. Is the action complete?	—	Verify repair	—
15	1. Remove the glove box to gain access to the A/C thermostat. 2. Disconnect the thermostat connector. 3. Attach a fused jumper between ground and the PNK/GRN wire at the thermostat. 4. A/C "ON." 5. Blower "ON." Dose A/C request indicate "YES" on the Tech 2?	—	Go to *Step 16*	Go to *Step 23*
16	1. Ignition "ON." 2. Use a DVM to check voltage at the electronic A/C thermostat. Was voltage equal to the specified value?	+B	Go to *Step 20*	Go to *Step 17*
17	Check for an open (LT GRN) between the thermostat and the A/C switch. Was the wire open?	—	Go to *Step 18*	Go to *Step 19*
18	Repair the open wire (LT GRN) between the thermostat and the A/C switch. Is the action complete?	—	Verify repair	—

A/C Clutch Control Circuit Diagnosis (Cont'd)

Step	Action	Value(s)	Yes	No
19	Replace the A/C switch. Is the action complete?	—	Verify repair	—
20	Use an ohmmeter to check continuity between the electronic A/C thermostat and the blower switch. Was there an open circuit?	—	Go to *Step 21*	Go to *Step 22*
21	Repair the open wire (GRN/YEL) between the thermostat and the blower switch. Is the action complete?	—	Verify repair	—
22	Replace the electronic A/C thermostat. Is the an action complete?	—	Verify repair	—
23	Check for an open circuit between A/C thermostat relay and PCM A/C request terminal (E-15). Was there an open circuit?	—	Go to *Step 24*	Go to *Step 25*
24	Repair the open circuit between the PCM and A/C thermostat relay. Is the action complete?	—	Verify repair	—
25	Check for an open circuit between the A/C switch (LT GRN) and the A/C thermostat relay (LT GRN). Was there an open circuit?	—	Go to *Step 26*	Go to *Step 27*
26	Repair the open circuit between the A/C switch and the A/C thermostat relay. Is the action complete?	—	Verify repair	—
27	1. Ignition "ON." 2. Use a DVM to check voltage at the A/C pressure switch (BRN). Was voltage equal to the specified value?	+B	Go to *Step 29*	Go to *Step 28*
28	Repair the open circuit between the 10A A/C fuse and the pressure switch. Is the action complete?	—	Verify repair	—
29	Use an ohmmeter to check continuity between the pressure switch (GRN/WHT) and the A/C thermostat relay (GRN/WHT). Was the circuit open?	—	Go to *Step 30*	Go to *Step 31*
30	Repair the open circuit between the pressure switch and the A/C thermostat relay. Is the action complete?	—	Verify repair	—
31	Check for damaged pin or terminal at E-15 of the PCM. Was a damaged pin or terminal found?	—	Go to *Step 32*	Go to *Step 33*
32	Repair the damaged pin or terminal. Is the action complete?	—	Verify repair	—
33	Replace the PCM. **IMPORTANT:** The replacement PCM must be programmed. Refer to *UBS 98model year Immobilizer Workshop Manual.* Is the action complete?	—	Verify repair	—

A/C Clutch Control Circuit Diagnosis (Cont'd)

Step	Action	Value(s)	Yes	No
34	1. Remove the A/C compressor relay. 2. Ignition "ON." 3. Use a DVM to check voltage at both of the BRN wires at the A/C compressor relay socket. Is the voltage equal to the specified value?	+B	Go to *Step 36*	Go to *Step 35*
35	Repair the faulty BRN wire between the A/C fuse and the A/C compressor relay . Is the action complete?	—	Verify repair	—
36	1. A/C compressor relay removed. 2. Engine idling. 3. A/C "ON." 4. Blower "ON." 5. Use a DVM to measure voltage between the GRN/BLK wire at the A/C compressor relay socket and battery±. Did the DVM indicate the specified value?	+B	Go to *Step 40*	Go to *Step 37*
37	Check for an open GRN/BLK wire between PCM terminal B-14 and the A/C compressor relay. Was the wire open?	—	Go to *Step 38*	Go to *Step 39*
38	Repair the open GRN/BLK wire between the PCM and the A/C compressor relay. Is the action complete?	—	Verify repair	—
39	Check for a damaged pin or terminal at B-14 of the PCM. Was a damaged pin or a terminal found?	—	Go to *Step 32*	Go to *Step 33*
40	1. A/C compressor relay removed. 2. Connect a fused jumper at the A/C compressor relay socket between either BRN wire and the BRN/YEL wire. 3. Engine idling. 4. A/C "ON." 5. Blower "ON." Did the compressor magnetic clutch engage?	—	Go to *Step 41*	Go to *Step 42*
41	Repair the A/C compressor relay. Is the action complete?	—	Verify repair	—
42	Check for an open circuit between the A/C compressor relay and the A/C clutch. Was an open circuit found?	—	Go to *Step 43*	Go to *Step 44*
43	Repair the open circuit between the compressor Clutch and the A/C compressor relay. Is the action complete?	—	Verify repair	—
44	Service the compressor clutch or replace the compressor due to a faulty internal overheat switch. Is the action complete?	—	Verify repair	—

A/C Clutch Control Circuit Diagnosis (Cont'd)

Step	Action	Value(s)	Yes	No
45	1. Remove the A/C compressor relay. 2. Idle the engine. Is the compressor clutch still engaged when A/C is not selected?	—	Go to *Step 46*	Go to *Step 47*
46	Repair the short to voltage between the A/C clutch and A/C compressor relay. Is the action complete?	—	Verify repair	—
47	1. Reinstall the A/C compressor relay. 2. Remove the A/C thermostat relay. 3. Engine idling. Is the compressor clutch still engaged when A/C is not selected?	—	Go to *Step 48*	Go to *Step 50*
48	Use a DVM to check for a short to ground between the A/C compressor relay and B-14 of the PCM. Was a short detected?	—	Go to *Step 49*	Go to *Step 33*
49	Repair the short to ground between the PCM and A/C compressor relay. Is the action complete?	—	Verify repair	—
50	Repair the short to ground between the A/C thermostat relay and the electronic thermostat. Is the action complete?	—	Verify repair	—

Electronic Ignition System Diagnosis

If the engine cranks but will not run or immediately stalls, the Engine Cranks But Will Not Start chart must be used to determine if the failure is the ignition system or the fuel system. If DTC P0341, or P0336 is set, the appropriate diagnostic trouble code chart must be used for diagnosis. If a misfire is being experienced with no DTC set, refer to the *Symptoms* section for diagnosis.

Fuel Metering System Check

Some failures of the fuel metering system will result in an "Engine Cranks But Will Not Run" symptom. If this condition exists, refer to the *Cranks But Will Not Run* chart. This chart will determine if the problem is caused by the ignition system, the PCM, or the fuel pump electrical circuit.

Refer to *Fuel System Electrical Test* for the fuel system wiring schematic.

If there is a fuel delivery problem, refer to *Fuel System Diagnosis*, which diagnoses the fuel injectors, the fuel pressure regulator, and the fuel pump. If a malfunction occurs in the fuel metering system, it usually results in either a rich HO2S signal or a lean HO2S signal. This condition is indicated by the HO2S voltage, which causes the PCM to change the fuel calculation (fuel injector pulse width) based on the HO2S reading. Changes made to the fuel calculation will be indicated by a change in the long term fuel trim values which can be monitored with a Tech 2. Ideal long term fuel trim values are around 0%; for a lean HO2S signal, the PCM will add fuel, resulting in a fuel trim value above 0%. Some variations in fuel trim values are normal because all engines are not exactly the same. If the fuel trim values are greater than +23%, refer to *DTC P0131, DTC P0151, DTC P0171, and DTC 1171* for items which can cause a lean HO2S signal.

Idle Air Control (IAC) Valve

The Tech 2 displays the IAC pintle position in counts. A count of "0" indicates the PCM is commanding the IAC pintle to be driven all the way into a fully-seated position. This is usually caused by a large vacuum leak.

The higher the number of counts, the more air is being commanded to bypass the throttle blade. Refer to IAC System Check in order to diagnose the IAC system. Refer to *Rough, Unstable, or Incorrect Idle, Stalling* in *Symptoms* for other possible causes of idle problems.

Fuel System Pressure Test

A fuel system pressure test is part of several of the diagnostic charts and symptom checks. To perform this test, refer to *Fuel Systems Diagnosis.*

Fuel Injector Coil Test Procedure and Fuel Injector Balance Test Procedure

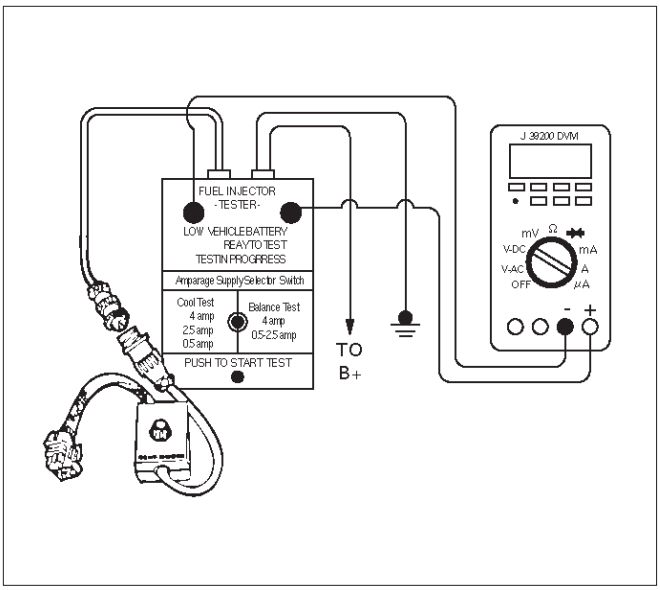

T32003

Test Description

Number(s) below refer to the step number(s) on the Diagnostic Chart:

2. Relieve the fuel pressure by connecting the 5-8840-0378-0 Fuel Pressure Gauge to the fuel pressure connection on the fuel rail.

CAUTION: In order to reduce the risk of fire and personal injury, wrap a shop towel around the fuel pressure connection. The towel will absorb any fuel leakage that occurs during the connection of the fuel pressure gauge. Place the towel in an approved container when the connection of the fuel pressure gauge is complete.

Place the fuel pressure gauge bleed hose in an approved gasoline container.

With the ignition switch "OFF," open the valve on the fuel pressure gauge.

3. Record the lowest voltage displayed by the DVM after the first second of the test. (During the first second, voltage displayed by the DVM may be inaccurate due to the initial current surge.)

Injector Specifications:

Resistance Ohms	Voltage Specification at 10˚C-35˚C (50˚F-95˚F)
11.8 – 12.6	5.7 – 6.6

- The voltage displayed by the DVM should be within the specified range.
- The voltage displayed by the DVM may increase throughout the test as the fuel injector windings warm and the resistance of the fuel injector windings changes.

- An erratic voltage reading (large fluctuations in voltage that do not stabilize) indicates an intermittent connection within the fuel injector.

5. Injector Specifications:

Highest Acceptable Voltage Reading Above/Below 35˚C/10˚C (95˚F/50˚F)	Acceptable Subtracted Value
9.5 Volts	0.6 Volts

7. The Fuel Injector Balance Test portion of this chart (Step 7 through Step 11) checks the mechanical (fuel delivery) portion of the fuel injector. An engine cool-down period of 10 minutes is necessary in order to avoid irregular fuel pressure readings due to “Hot Soak” fuel boiling.

Injector Coil Test Procedure (Steps 1-6) and Injector Balance Test Procedure (Steps 7-11)

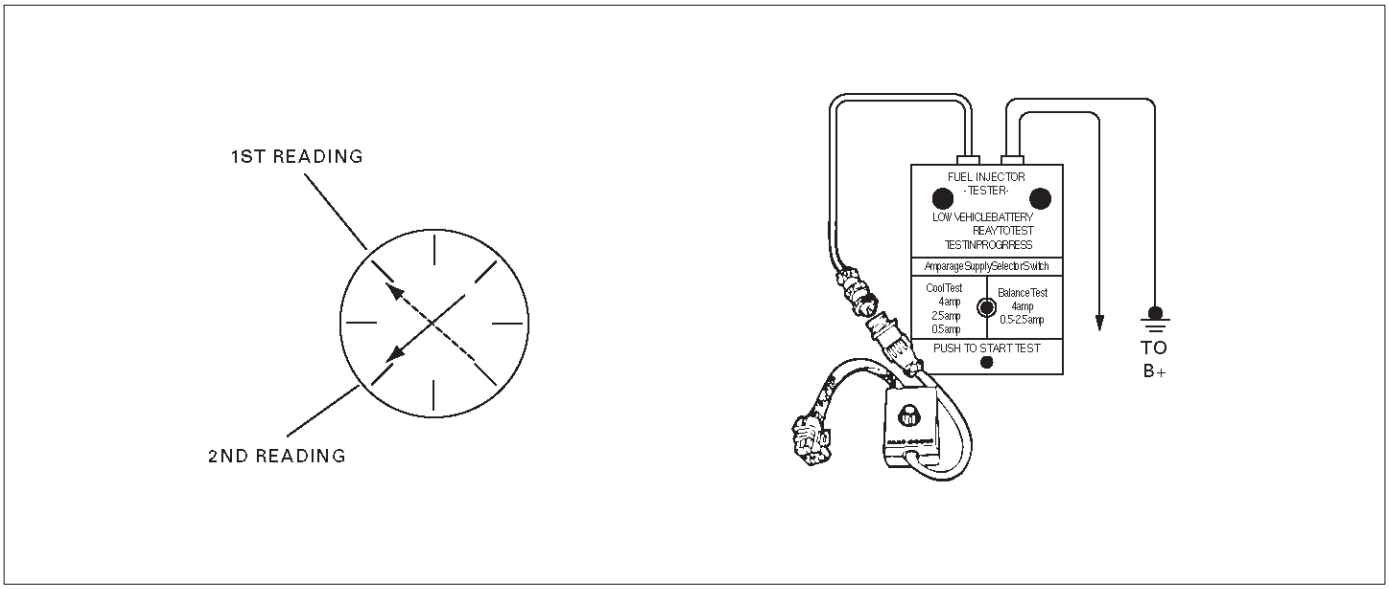

R262001

CYLINDER	1	2	3	4	5	6
1st Reading (1)	296 kPa (43 psi)	296 kPa (43 psi)	296 kPa (43 psi)	296 kPa (43 psi)	296 kPa (43 psi)	296 kPa (43 psi)
2nd Reading (2)	131 kPa (19 psi)	117 kPa (17 psi)	124 kPa (18 psi)	145 kPa (21 psi)	131 kPa (19 psi)	130 kPa (19 psi)
Amount of Drop (1st Reading–2nd Reading)	165 kPa (24 psi)	179 kPa (26 psi)	172 kPa (25 psi)	151 kPa (22 psi)	165 kPa (24 psi)	166 kPa (24 psi)
Av.drop = 166 kPa/24 psi ± 10 kPa/1.5 psi = 156 – 176 kPa or 22.5 – 25.5 psi	OK	Faulty, Rich (Too Much Fuel Drop)	OK	Faulty, Lean (Too Little Fuel Drop)	OK	OK

NOTE: These figures are examples only.

Injector Coil Test Procedure (Steps 1-6) and Injector Balance Test Procedure (Steps 7-11)

Step	Action	Value(s)	Yes	No
1	Was the “On-Board Diagnostic (OBD) System Check” performed?	—	Go to Step 2	Go to *OBD System Check*
2	1. Turn the engine “OFF.” NOTE: In order to prevent flooding of a single cylinder and possible engine damage, relieve the fuel pressure before performing the fuel injector coil test procedure. 2. Relieve the fuel pressure. Refer to *Test Description Number 2.* 3. Connect the 5-8840-2638-0 Fuel Injector Tester to B+ and ground, and to the 5-8840-2619-0 Injector Switch Box. 4. Connect the injector switch box to the grey fuel injector harness connector located on the front of the EVAP canister bracket. 5. Set the amperage supply selector switch on the fuel injector tester to the “Coil Test” 0.5 amp position. 6. Connect the leads from the 5-8840-0285-0 Digital Voltmeter (DVM) to the injector tester. Refer to the illustrations associated with the test description. 7. Set the DVM to the tenths scale (0.0). 8. Observe the engine coolant temperature. Is the engine coolant temperature within the specified values?	10˚C (50˚F) to 35˚C (95˚F)	Go to *Step 3*	Go to *Step 5*
3	1. Set injector switch box injector #1. 2. Press the “Push to Start Test” button on the fuel injector tester. 3. Observe the voltage reading on the DVM. **IMPORTANT:** The voltage reading may rise during the test. 4. Record the lowest voltage observed after the first second of the test. 5. Set the injector switch box to the next injector and repeat steps 2, 3, and 4. Did any fuel injector have an erratic voltage reading (large fluctuations in voltage that did not stabilize) or a voltage reading outside of the specified values?	5.7-6.6 V	Go to *Step 4*	Go to *Step 7*
4	Replace the faulty fuel injector(s). Refer to *Fuel Injector.* Is the action complete?	—	Go to *Step 7*	—

Injector Coil Test Procedure (Steps 1-6) and Injector Balance Test Procedure (Steps 7-11) (Cont'd)

Step	Action	Value(s)	Yes	No
5	1. Set injector switch box injector #1. 2. Press the "Push to Start Test" button on the fuel injector tester. 3. Observe the voltage reading on the DVM. **IMPORTANT:** The voltage reading may rise during the test. 4. Record the lowest voltage observed after the first second of the test. 5. Set the injector switch box to the next injector and repeat steps 2, 3, and 4. Did any fuel injector have an erratic voltage reading (large fluctuations in voltage that did not stabilize) or a voltage reading above the specified value?	9.5 V	Go to *Step 4*	Go to *Step 6*
6	1. Identify the highest voltage reading recorded (other than those above 9.5 V). 2. Subtract the voltage reading of each injector from the highest voltage selected in step 1. Repeat until you have a subtracted value for each injector. For any injector, is the subtracted Value in step 2 greater than the specified value?	0.6 V	Go to *Step 4*	Go to *Step 7*
7	**CAUTION: In order to reduce the risk of fire and personal injury, wrap a shop towel around the fuel pressure connection. The towel will absorb any fuel leakage that occurs during the connection of the fuel pressure gauge. Place the towel in an approved container when the connection of the fuel pressure gauge is complete.** 1. Connect the 5-8840-0378-0 Fuel Pressure Gauge to the fuel pressure test port. 2. Energize the fuel pump using the scan tool. 3. Place the bleed hose of the fuel pressure gauge into an approved gasoline container. 4. Bleed the air out of the fuel pressure gauge. 5. With the fuel pump running, observe the reading on the fuel pressure gauge. Is the fuel pressure within the specified values?	296-376 kPa (43-55 psi)	Go to *Step 8*	Go to *Fuel System Diagnosis*
8	Turn the fuel pump "OFF." Does the fuel pressure remain constant?	—	Go to *Step 9*	Go to *Fuel System Diagnosis*

Injector Coil Test Procedure (Steps 1-6) and Injector Balance Test Procedure (Steps 7-11) (Cont'd)

Step	Action	Value(s)	Yes	No
9	1. Connect the 5-8840-2638-0 Fuel Injector Tester and 5-8840-2619-0 Injector Switch Box the fuel injector harness connector. 2. Set the amperage supply selector switch on the fuel injector tester to the "Balance Test" 0.5–2.5 amp position. 3. Using the scan tool turn the fuel pump "ON" then "OFF" in order to pressurize the fuel system. 4. Record the fuel pressure indicated by the fuel pressure gauge after the fuel pressure stabilizes. This is the first pressure reading. 5. Energize the fuel injector by depressing the "Push to Start Test" button on the fuel injector tester. 6. Record the fuel pressure indicated by the fuel pressure gauge after the fuel pressure gauge needle has stopped moving. This is the second pressure reading. 7. Repeat steps 1 through 6 for each fuel injector. 8. Subtract the second pressure reading from the first pressure reading for one fuel injector. The result is the pressure drop value. 9. Obtain a pressure drop value for each fuel injector. 10. Add all of the individual pressure drop values. This is the total pressure drop. 11. Divide the total pressure drop by the number of fuel injectors. This is the average pressure drop. Does any fuel injector have a pressure drop value that is either higher than the average pressure drop or lower than the average pressure drop by the specified value?	10 kPa (1.5 psi)	Go to *Step 10*	Go to *OBD System Check*
10	Re-test any fuel injector that does not meet the specification. Refer to the procedure in step 11. NOTE: Do not repeat any portion of this test before running the engine in order to prevent the engine from flooding. Does any fuel injector still have a pressure drop value that is either higher than the average pressure drop or lower than the average pressure drop by the specified value?	10 kPa (1.5 psi)	Go to *Step 11*	Go to *Symptoms*
11	Replace the faulty fuel injector(s). Refer to *Fuel Injector.* Is the action complete?	—	Verify repair	—

Knock Sensor Diagnosis

The Tech 2 has two data displays available for diagnosing the knock sensor (KS) system. The two displays are described as follows:

- "Knock Retard" indicates the number of degrees that the spark timing is being retarded due to a knock condition.
- "KS Noise Channel" indicates the current voltage level being monitored on the noise channel.

DTCs P0325 and P0327 are designed to diagnose the KS module, the knock sensor, and the related wiring. The problems encountered with the KS system should set a DTC. However, if no DTC was set but the KS system is suspect because of a detonation complaint, refer to *Detonation/Spark Knock in Symptoms.*

Powertrain Control Module (PCM) Diagnosis

To read and clear diagnostic trouble codes, use a Tech 2.

IMPORTANT: Use of a Tech 2 is recommended to clear diagnostic trouble codes from the PCM memory. Diagnostic trouble codes can also be cleared by turning the ignition "OFF" and disconnecting the battery power from the PCM for 30 seconds. Turning off the ignition and disconnecting the battery power from the PCM will cause all diagnostic information in the PCM memory to be cleared. Therefore, all the diagnostic tests will have to be re-run.

Since the PCM can have a failure which may affect only one circuit, following the diagnostic procedures in this section will determine which circuit has a problem and where it is.

If a diagnostic chart indicates that the PCM connections or the PCM is the cause of a problem, and the PCM is replaced, but this does not correct the problem, one of the following may be the reason:

- There is a problem with the PCM terminal connections. The terminals may have to be removed from the connector in order to check them properly.
- The problem is intermittent. This means that the problem is not present at the time the system is being checked. In this case, refer to the *Symptoms* portion of the manual and make a careful physical inspection of all component and wiring associated with the affected system.
- There is a shorted solenoid, relay coil, or harness. Solenoids and relays are turned "ON" and "OFF" by the PCM using internal electronic switches called drivers. A shorted solenoid, relay coil, or harness will not damage the PCM but will cause the solenoid or relay to be inoperative.

Multiple PCM Information Sensor DTCS Set

Circuit Description

The powertrain control module (PCM) monitors various sensors to determine the engine operating conditions. The PCM controls fuel delivery, spark advance, transmission operation, and emission control device operation based on the sensor inputs.

The PCM provides a sensor ground to all of the sensors. The PCM applies 5 volts through a pull-up resistor, and determines the status of the following sensors by monitoring the voltage present between the 5-volt supply and the resistor:

- The engine coolant temperature (ETC) sensor
- The intake air temperature (IAT) sensor
- The transmission fluid temperature (TFT) sensor

The PCM provides the following sensors with a 5-volt reference and a sensor ground signal:

- The exhaust gas recirculating (EGR) pintle position sensor
- The throttle position (TP) sensor
- The manifold absolute pressure (MAP) sensor

The PCM monitors the separate feedback signals from these sensors in order to determine their operating status.

Diagnostic Aids

IMPORTANT: Be sure to inspect PCM and engine grounds for being secure and clean.

A short to voltage in one of the sensor input circuits may cause one or more of the following DTCs to be set:

- P0108
- P0113
- P0118
- P0123
- P0560
- P0712
- P0406

IMPORTANT: If a sensor input circuit has been shorted to voltage, ensure that the sensor is not damaged. A damaged sensor will continue to indicate a high or low voltage after the affected circuit has been repaired. If the sensor has been damaged, replace it.

An open in the sensor ground circuit between the PCM and the splice will cause one or more of the following DTCs to be set:

- P0108
- P0113
- P0118
- P0123
- P0712
- P0406

A short to ground in the 5-volt reference A or B circuit will cause one or more of the following DTCs to be set:

- P0107
- P0122

In the 5-volt reference circuit A, between the PCM and the splice, will cause one or more of the following DTCs to be set:

- P0122

In the 5-volt reference circuit B, between the PCM and the splice, will cause one or more of the following DTCs to be set:

- P0107

Check for the following conditions:

- **Poor connection at PCM.** Inspect the harness connectors for backed-out terminals, improper mating, broken locks, improperly formed or damage terminals, and a poor terminal-to-wire connection.
- **Damaged harness.** Inspect the wiring harness for damage. If the harness is not damaged, observe an affected sensor's displayed value on the Tech 2 with the ignition "ON" and the engine "OFF" while you move the connectors and the wiring harnesses related to the following sensors:
  - IAT
  - ECT
  - TP
  - MAP
  - EGR
  - TFT

Multiple PCM Information Sensor DTCs Set

Step	Action	Value(s)	Yes	No
1	Was the "On-Board Diagnostic (OBD) System Check" performed?	—	Go to *Step 2*	Go to *OBD System Check*
2	1. Turn the ignition "OFF," disconnect the PCM. 2. Turn the ignition "ON," check the 5 volt reference A circuit for the following conditions: • A poor connection at the PCM. • An open between the PCM connector and the splice. • A short to ground. • A short to voltage. Is there an open or short?	—	Go to *Step 3*	Go to *Step 4*
3	Repair the open or short. Is the action complete?	—	Verify repair	—
4	Check the sensor ground circuit for the following conditions: • A poor connection at the PCM or the affected sensors. • An open between the PCM connector and the affected sensors. Is there an open or a poor connection?	—	Go to *Step 5*	Go to *Step 6*
5	Repair the open or the poor connection. Is the action complete?	—	Verify repair	—
6	Measure the voltage between the EGR pintle position sensor signal circuit at the PCM harness connector and ground. Does the voltage measure near the specified value?	0 V	Go to *Step 7*	Go to *Step 12*
7	Measure the voltage between the MAP sensor signal circuit at the PCM harness connector and ground. Does the voltage measure near the specified value?	0 V	Go to *Step 8*	Go to *Step 15*
8	Measure the voltage between the TP sensor signal circuit at the PCM harness connector and ground. Does the voltage measure near the specified value?	0 V	Go to *Step 9*	Go to *Step 16*
9	Measure the voltage between the IAT sensor signal circuit at the PCM harness connector and ground. Does the voltage measure near the specified value?	0 V	Go to *Step 10*	Go to *Step 17*
10	Measure the voltage between the ECT sensor signal circuit at the PCM harness connector and ground. Does the voltage measure near the specified value?	0 V	Go to *Step 11*	Go to *Step 18*

Multiple PCM Information Sensor DTCs Set (Cont'd)

Step	Action	Value(s)	Yes	No
11	1. Disconnect the EGR valve. 2. Measure the voltage between the EGR pintle position sensor signal circuit at the PCM harness connector and ground. Does the voltage measure near the specified value?	0 V	Go to *Step 13*	Go to *Step 18*
12	Measure the voltage between the TFT sensor signal circuit at the PCM harness connector and ground. Does the voltage measure near the specified value?	0 V	Go to *Step 20*	Go to *Step 19*
13	Replace the EGR valve. Is the action complete?	—	Verify repair	—
14	Locate and repair the short to voltage in the MAP sensor signal circuit. Is the action complete?	—	Verify repair	—
15	Locate and repair the short to voltage in the TP sensor signal circuit. Is the action complete?	—	Verify repair	—
16	Locate and repair the short to voltage in the IAT sensor signal circuit. Is the action complete?	—	Verify repair	—
17	Locate and repair the short to voltage in the ECT sensor signal circuit. Is the action complete?	—	Verify repair	—
18	Locate and repair the short to voltage in the EGR pintle position sensor signal circuit. Is the action complete?	—	Verify repair	—
19	Locate and repair the short to voltage in the TFT sensor signal circuit. Is the action complete?	—	Verify repair	—
20	Replace the PCM. **IMPORTANT:** The replacement PCM must be programmed. Refer to *UBS 98model year Immobilizer Workshop Manual.* Is the action complete?	—	Go to *OBD System Check*	—

Exhaust Gas Recirculation (EGR) Diagnosis (For except EXPORT and SOUTH AFRICA)

Pintle position error diagnosis is covered by DTC P0402, P0404, P1404, P0405, P0406. If EGR diagnostic trouble codes P0402, P0404, P1404, P0405, P0406 are encountered, refer to the DTC charts.

Engine Tech 2 Data Definitions and Ranges

A/C CLUTCH – Tech 2 Displays ON or OFF –
Indicates whether the PCM has commanded the A/C clutch ON. Used in A/C system diagnostic.

A/C REQUEST — Tech 2 Displays YES or NO —
Indicates the state of the A/C request input circuit from the HVAC controls. The PCM uses the A/C request signal to determine whether A/C compressor operation is being requested.

AIR/FUEL RATIO — Tech 2 Range 0.0-25.5 —
Air/fuel ratio indicates the PCM commanded value. In closed loop, the air/fuel ratio should normally be displayed around “14.2-14.7.” A lower air/fuel ratio indicates a richer commanded mixture, which may be seen during power enrichment or TWC protection modes. A higher air/fuel ratio indicates a leaner commanded mixture. This can be seen during deceleration fuel mode.

BAROMETRIC PRESSURE — Tech 2 Range 10-105 kPa/0.00-5.00 Volts —
The barometric pressure reading is determined from the MAP sensor signal monitored during key up and wide open throttle (WOT) conditions. The barometric pressure is used to compensate for altitude differences and is normally displayed around “61-104” depending on altitude and barometric pressure.

CHECK TRANS LAMP — AUTO TRANSMISSION —
Indicates the need to check for a DTC with the Tech 2 when the lamp is flashing 0.2 seconds ON and 0.2 seconds OFF.

CMP ACT. COUNTER – Cam Position Activity
DECEL FUEL MODE — Tech 2 Display ACTIVE or INACTIVE —
“ACTIVE” displayed indicates that the PCM has detected conditions appropriate to operate in deceleration fuel mode. The PCM will command the deceleration fuel mode when it detects a closed throttle position while the vehicle is traveling over 20 mph. While in the deceleration fuel delivered by entering open loop and decreasing the injector pulse width.

DESIRED EGR POS. — Tech 2 Range 0%-100% —
Represents the EGR pintle position that the PCM is commanding.

DESIRED IDLE — Tech 2 Range 0-3187 RPM —
The idle speed that the PCM is commanding. The PCM will compensate for various engine loads based on engine coolant temperature, to keep the engine at the desired speed.

ECT — (Engine Coolant Temperature) Tech 2 Range –40˚C to 151˚C (–40˚F to 304˚F) —
The engine coolant temperature (ECT) is mounted in the coolant stream and sends engine temperature information to the PCM. The PCM applies 5 volts to the ECT sensor circuit. The sensor is a thermistor which changes internal resistance as temperature changes. When the sensor is cold (high resistance), the PCM monitors a high signal voltage and interprets that as a cold engine. As the sensor warms (decreasing resistance), the voltage signal will decrease and the PCM will interpret the lower voltage as a warm engine.

EGR DUTY CYCLE — Tech 2 Range 0%-100% —
Represents the EGR valve driver PWM signal from the PCM. A duty cycle of 0% indicates that no EGR flow is being commanded; a 100% duty cycle indicates maximum EGR flow commanded.

EGR FEEDBACK — Tech 2 Range 0.00-5.00 Volts —
Indicates the EGR pintle position sensor signal voltage being monitored by the PCM. A low voltage indicates a fully extended pintle (closed valve); a voltage near 5 volts indicates a retracted pintle (open valve).

ENGINE LOAD — Tech 2 Range 0%-100% —
Engine load is calculated by the PCM from engine speed and MAF sensor readings. Engine load should increase with an increase in RPM or air flow.

ENGINE RUN TIME — Tech 2 Range 00:00:00-99:99:99 Hrs:Min:Sec —
Indicates the time elapsed since the engine was started. If the engine is stopped, engine run time will be reset to 00:00:00.

ENGINE SPEED — Range 0-9999 RPM —
Engine speed is computed by the PCM from the 58X reference input. It should remain close to desired idle under various engine loads with engine idling.

FUEL PUMP — Tech 2 Displays ON or OFF —
Indicates the PCM commanded state of the fuel pump relay driver circuit.

FUEL TRIM CELL — Tech 2 Range 0-21 —
The fuel trim cell is dependent upon engine speed and MAF sensor readings. A plot of RPM vs. MAF is divided into 22 cells. Fuel trim cell indicates which cell is currently active.

FUEL TRIM LEARN — Tech 2 Displays NO or YES —
When conditions are appropriate for enabling long term fuel trim corrections, fuel trim learn will display “YES.” This indicates that the long term fuel trim is responding to the short term fuel trim. If the fuel trim learn displays “NO,” then long term fuel trim will not respond to changes in short term fuel trim.

HO2S BANK 1, SEN. 1 — Tech 2 Range 0-1132 mV —
Represents the fuel control exhaust oxygen sensor output voltage. Should fluctuate constantly within a range between 10 mV (lean exhaust) and 1000 mV (rich exhaust) while operating in closed loop.

HO2S BANK2, SEN. 1—Tech 2 Range 0-1132 mV—
Represents the fuel control exhaust oxygen sensor output voltage. Should fluctuate constantly within a range between 10mV (lean exhaust) and 1000 mV (rich exhaust) while operating in closed loop.

HO2S BANK 1, SEN. 1—Tech 2 Displays NOT READY or READY—
Indicates the status of the exhaust oxygen sensor. The Tech 2 will indicate that the exhaust oxygen sensor is ready when the PCM detects a fluctuating HO2S voltage sufficient to allow closed loop operation. This will not occur unless the exhaust oxygen sensor is warmed up.

HO2S BANK 2, SEN. 1 — Tech 2 Displays NOT READY or READY —
Indicates the status of the exhaust oxygen sensor. The Tech 2 will indicate that the exhaust oxygen sensor is ready when the PCM detects a fluctuating HO2S voltage sufficient to allow closed loop operation. This will not occur unless the exhaust oxygen sensor is warmed up.

HO2S WARM UP TIME BANK 1, SEN. 1/BANK 2 SEN. 1 — Tech 2 Range 00:00:00-99:99:99 HRS:MIN:SEC —
Indicates warm-up time for each HO2S. The HO2S warm-up time is used for the HO2S heater test. The PCM will run the heater test only after a cold start (determined by engine coolant and intake air temperature at the time of start-up) and only once during an ignition cycle. When the engine is started the PCM will monitor the HO2S voltage. When the HO2S voltage indicates a sufficiently active sensor, the PCM looks at how much time has elapsed since start-up. If the PCM determines that too much time was required for the HO2S to become active, a DTC will set. If the engine was warm when started, HO2S warm-up will the display “00:00:00”.

IAC POSITION — Tech 2 Range 0-255 Counts —
Displays the commanded position of the idle air control pintle in counts. A larger number of counts means that more air is being commanded through the idle air passage. Idle air control should respond fairly quickly to changes in engine load to maintain desired idle RPM.

IAT (INTAKE AIR TEMPERATURE) — Tech 2 Range –40˚C to 151˚C (–40˚F to 304˚F) —
The PCM converts the resistance of the intake air temperature sensor to degrees. Intake air temperature (IAT) is used by the PCM to adjust fuel delivery and spark timing according to incoming air density.

IGNITION 1 — Tech 2 Range 0-25.5 Volts —
This represents the system voltage measured by the PCM at its ignition feed.

INJ. PULSE BANK 1/INJ. PULSE BANK 2 — Tech 2 Range 0-1000 msec. —
Indicates the amount of time the PCM is commanding each injector “ON” during each engine cycle. A longer injector pulse width will cause more fuel to be delivered. Injector pulse width should increase with increased engine load.

KS NOISE CHANNEL (Knock Sensor) —
Indicates the output from the KS noise channel. There is always some electrical noise in an engine compartment and to avoid mistaking this as engine knock, the output from the knock sensor is compared to the output from the noise channel. A knock condition is not set unless the knock sensor output is greater than the noise channel output.

LONG TERM FUEL TRIM BANK 1/BANK 2 —
The long term fuel trim is derived from the short term fuel trim values and represents a long term correction of fuel delivery for the bank in question. A value of 0% indicates that fuel delivery requires no compensation to maintain the PCM commanded air/fuel ratio. A negative value significantly below 0% indicates that the fuel system is rich and fuel delivery is being reduced (decreased injector pulse width). A positive value significantly greater than 0% indicates that a lean condition exists and the PCM is compensating by adding fuel (increased injector pulse width). Because long term fuel trim tends to follow short term fuel trim, a value in the negative range due to canister purge at idle should not be considered unusual. Fuel trim values at maximum authority may indicate an excessively rich or lean system.

LOOP STATUS — Tech 2 Displays OPEN or CLOSED —
“CLOSED” indicates that the PCM is controlling fuel delivery according to oxygen sensor voltage. In “OPEN” the PCM ignores the oxygen sensor voltage and bases the amount of fuel to be delivered on TP sensor, engine coolant, and MAF sensor inputs only.

MAF — Tech 2 Range 0.0-512 gm/s —
MAF (mass air flow) is the MAF input frequency converted to grams of air per second. This indicates the amount of air entering the engine.

MAP — Tech 2 Range 10-105 kPa (0.00-4.97 Volts) —
The manifold absolute pressure (MAP) sensor measures the change in the intake manifold pressure from engine load, EGR flow, and speed changes. As intake manifold pressure increases, intake vacuum decreases, resulting in a higher MAP sensor voltage and kPa reading. The MAP sensor signal is used to monitor intake manifold pressure changes during the EGR flow test, to update the BARO reading, and as an enabling factor for several of the diagnostics.

MIL — Tech 2 Displays ON or OFF —
Indicates the PCM commanded state of the malfunction indicator lamp.

POWER ENRICHMENT — Tech 2 Displays ACTIVE or INACTIVE —
“ACTIVE” displayed indicates that the PCM has detected conditions appropriate to operate in power enrichment mode. The PCM will command power enrichment mode when a large increase in throttle position and load is detected. While in power enrichment mode, the PCM will increase the amount of fuel delivered by entering open loop and increasing the injector pulse width. This is done to prevent a possible sag or hesitation from occurring during acceleration.

SPARK — Tech 2 Range –64˚ to 64˚ —
Displays the amount of spark advance being commanded by the PCM on the IC circuit.

START-UP ECT — Tech 2 Range –40˚C to 151˚C (–40˚F to 304˚F) —
Indicates the engine coolant temperature at the time that the vehicle was started. Used by the HO2S diagnostic to determine if the last start-up was a cold start.

START-UP IAT — Tech 2 Range –40˚C to 151˚C (–40˚F to 304˚F) —
Indicates the intake air temperature at the time that the vehicle was started. Used by the HO2S diagnostic to determine if the last start-up was a cold start.

TP — Tech 2 Range 0%-100% —
TP (throttle position) angle is computed by the PCM from the TP sensor voltage. TP angle should display “0%” at idle and “100%” at wide open throttle.

TP SENSOR — Tech 2 Range 0.00-5.00 Volts —
The voltage being monitored by the PCM on the TP sensor signal circuit.

CATALYST PROTECTION MODE — Tech 2 Displays YES or NO —
“YES” displayed indicates that the PCM has detected conditions appropriate to operate in TWC protection mode. The PCM will decrease the air/fuel ratio to a value that depends on mass air flow (higher mass air flow = lower air/fuel ratio).

UPSHIFT LAMP (MANUAL TRANSMISSION)
VEHICLE SPEED — Tech 2 Range 0-255 km/h (0-155 mph) —
The vehicle speed sensor signal is converted into km/h and mph for display.

WEAK CYLINDER — Tech 2 Displays Cylinder Number —
This indicates that the PCM has detected crankshaft speed variations that indicate 2% or more cylinder firing events are misfires.

Typical Scan Data Values

Use the Typical Scan Data Values Table only after the On-Board Diagnostic System Check has been completed, no DTC(s) were noted, and you have determined that the on-board diagnostics are functioning properly. Tech 2 values from a properly-running engine may be used for comparison with the engine you are diagnosing. The typical scan data values represent values that would be seen on a normally-running engine.

NOTE: A Tech 2 that displays faulty data should not be used, and the problem should be reported to the Tech 2 manufacturer. Use of a faulty Tech 2 can result in misdiagnosis and unnecessary replacement of parts.

Only the parameters listed below are referred to in this service manual for use in diagnosis. For further information on using the Tech 2 to diagnose the PCM and related sensors, refer to the applicable reference section listed below. If all values are within the typical range described below, refer to the *Symptoms* section for diagnosis.

Test Conditions

Engine running, lower radiator hose hot, transmission in park or neutral, closed loop, accessaries off, brake not applied and air conditioning off.

3.2/3.5L V-6 Engine

Tech 2 Parameter	Data List	Units Displayed	Typical Data Values (IDLE)	Typical Data Values (2500 RPM)	Refer To
A/C Clutch	Engine	On/Off	Off	Off	General Description and Operation, A/C Clutch Circuit Operation
A/C Request	Engine	Yes/No	No	No	General Description and Operation, A/C Request Signal
Air/Fuel Ratio	Engine	Ratio: _ to 1	14.7	14.7	General Description and Operation, Fuel System Metering Purpose
Barometric Pressure	Engine	kPa	61-104 (depends on altitude and barometric)	61-104 (depends on altitude and barometric)	General Description and Operation
CMP Act. Counter (Cam Position Activity)	Engine	Counts	0-255, always increasing	0-255, always increasing	DTC P0341 and P0342
Decel Fuel Mode	Engine	Active/Inactive	Inactive	Inactive	General Description and Operation, Deceleration Mode
Desired EGR Position	Engine	Percent	0%	0%	General Description and Operation, EGR Pintle Position Sensor
Desired Idle	Engine	RPM	750	—	General Description and Operation, Idle Air Control (IAC) Valve
ECT (Engine Coolant Temp)	Engine	Degrees C, Degrees F	80-100˚C (176-212˚F)	80-100˚C (176-212˚F)	General Description and Operation, Engine Coolant Temperature (ECT) Sensor
EGR Closed Valve Pintle Position	Engine	Steps	20-40	20-40	General Description and Operation, EGR Pintle Position Sensor
EGR Duty Cycle	Engine	Percent	0%	0%	General Description and Operation, Linear EGR Operation and Results of Incorrect Operation
EGR Feedback	Engine	Volts	0.45-0.80	0.45-0.80	—
EGR Normalized	Engine	Percent	0%	0%	—
Engine Load	Engine	Percent	2.0% - 5.5%	8.0% - 16.0%	General Description and Operation, Mass Air Flow (MAF) Sensor
Time From Start	Engine	Sec	Varies. Resets at each engine start.	Varies. Resets at each engine start.	—
Engine Speed	Engine	RPM	Within –50 to +100 of “Desired Idle”	Actual engine speed	DTCs: P1508, P1509
Fuel Pump	Engine	On/Off	On	On	Engine Fuel
HO2S Bank 1 Sen.1 (millivolts)	O2 Sensor Data	Millivolts	50-950 changing quickly	50-950, always changing quickly	General Description and Operation, Fuel control HO2S

Tech 2 Parameter	Data List	Units Displayed	Typical Data Values (IDLE)	Typical Data Values (2500 RPM)	Refer To
HO2S Bank 2 Sen.1 (millivolts)	O2 Sensor Data	Millivolts	50-950 changing quickly	50-950 changing quickly	General Description and Operation, Fuel Control HO2S
HO2S Bank 1 Sen.1 (ready/not ready)	O2 Sensor Data	Ready Yes/No	Ready Yes	Ready Yes	General Description and Operation, Fuel Control HO2S; DTC: P0135
HO2S Bank 2 Sen.1 (ready/not ready)	O2 Sensor Data	Ready Yes/No	Ready Yes	Ready Yes	General Description and Operation, Fuel Control HO2S
HO2S Warm-Up Time Bank 1 Sen.1	O2 Sensor Data	Seconds	25-45	25-45	General Description and Operation, Fuel Control HO2S
HO2S Warm-Up Time Bank 2 Sen.1	O2 Sensor Data	Seconds	25-45	25-45	General Description and Operation, Fuel Control HO2S
IAT (Intake Air Temp)	Engine	Degrees C, Degrees F	0-100˚C, depends on underhood	0-80˚C, depends on underhood	General Description and Operation, Intake Air Temperature (IAT) Sensor
Ignition Voltage	Engine	Volts	12.8-14.1	12.8-14.1	General Description and Operation, Electronic Ignition System
Inj. Pulse Bank 1	Engine	Milliseconds	2.0-4.0	2.5-4.0	General Description, Fuel Metering, Fuel Injector
Inj. Pulse Bank 2	Engine	Milliseconds	2.0-4.0	2.5-4.0	General Description, Fuel Metering, Fuel Injector
KS Noise Channel (Knock Sensor)	Engine	Volts	0.10-0.40	0.50-1.75	General Description and Operation, Knock Sensor Purpose and Operation; DTCs: P0352, P0327
Loop Status	Engine	Open/Closed	Closed	Closed	General Description and Operation, Fuel Metering System; DTCs: P0125-P0155
MAF (Mass Air Flow)	Engine	Grams per second	2.85-6.65	9.5-16.5	General Description and Operation, MAF; DTCs: P101, P0102, P0103
MAP kPa (Manifold Absolute Pressure)	Engine	Kilopascals	—	—	General Description and Operation, Manifold Absolute Pressure (MAP) Sensor; DTCs: P0106, P0107, P0108
MIL	Engine	On/Off	Off	Off	On-Board Diagnostic System Check
Power Enrichment	Engine	Inactive/Active	Inactive	Inactive	General Description and Operation, Acceleration Mode
Spark (Advance)	Engine	Degrees Before Top Dead Center	15-22	34-44	General Description and Operation, Electronic Ignition System

Tech 2 Parameter	Data List	Units Displayed	Typical Data Values (IDLE)	Typical Data Values (2500 RPM)	Refer To
Start-Up ECT (Engine Coolant Temp)	Engine	Degrees C, Degrees F	Depends on engine coolant temperature at time of start-up	Depends on engine coolant temperature at time of start-up	General Description and Operation, Engine Coolant Temperature (ECT) Sensor
Start-Up IAT (Intake Air Temp)	Engine	Degrees C, Degrees F	Depends on intake air temperature at time of start-up	Depends on intake air temperature at time of start-up	General Description and Operation, Intake Air Temperature (IAT) Sensor
TP (Throttle Position)	Engine	Percent	0	—	General Description and Operation, Throttle Position (TP) Sensor; DTCs: P0121, P0122,P0123
TP Sensor (Throttle Position)	Engine	Volts	0.50-0.82	0.60-1.00	General Description and Operation, Throttle Position (TP) Sensor; DTCs: P0121, P0122,P0123
Catalyst Protection Mode	Engine	No/Yes	No	No	General Description, Fuel Metering, catalytic Converter Protection Mode
Vehicle Speed	Engine	MPH / km/h	0	0	4L30-E Automatic Transmission Diagnosis
EVAP Purge Solenoid	Engine	Percent	65	99	General Description
VIM Solenoid	Engine	On/Off	On	On	General Description
Security Wait Time	Engine	Active/Inactive	Inactive	Inactive	—

No Malfunction Indicator Lamp (MIL)

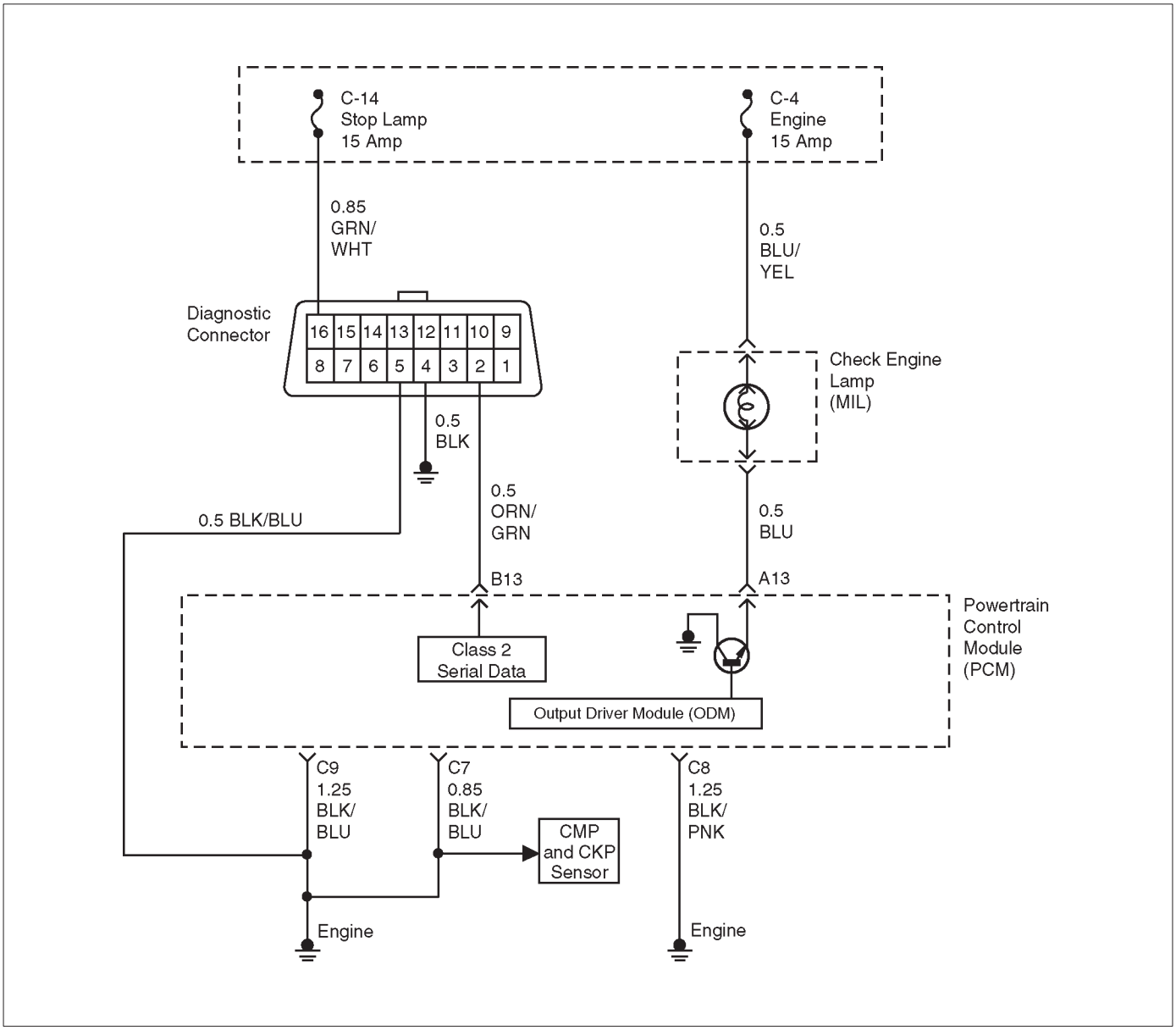

D06RW00006

Circuit Description

The “Check Engine” lamp (MIL) should always be illuminated and steady with the ignition “ON” and the engine stopped. Ignition feed voltage is supplied to the MIL bulb through the meter fuse. The powertrain control module (PCM) turns the MIL “ON” by grounding the MIL driver circuit.

Diagnostic Aids

An intermittent MIL may be cased by a poor connection, rubbed-through wire insulation, or a wire broken inside the insulation. Check for the following items:

- Inspect the PCM harness and connections for improper mating, broken locks, improperly formed or damaged terminals, poor terminal-to-wire connection, and damaged harness.
- If the engine runs OK, check for a faulty light bulb, an open in the MIL driver circuit, or an open in the instrument cluster ignition feed.
- If the engine cranks but will not run, check for an open PCM ignition or battery feed, or a poor PCM to engine ground.

Test Description

Number(s) below refer to the step number(s) on the Diagnostic Chart.

2. A “No MIL” condition accompanied by a no-start condition suggests a faulty PCM ignition feed or battery feed circuit.

9. Using a test light connected to B+, probe each of the PCM ground terminals to ensure that a good ground is present. Refer to *PCM Terminal End View* for terminal locations of the PCM ground circuits.

12. In this step, temporarily substitute a known good relay for the PCM relay. The horn relay is nearby, and it can be verified as “good” simply by honking the horn. Replace the horn relay after completing this step.

17. This vehicle is equipped with a PCM which utilizes an electrically erasable programmable read only memory (EEPROM). When the PCM is replaced, the new PCM must be programmed. Refer to *UBS 98 model year Immobilizer Workshop Manual.*

No Malfunction Indicator Lamp (MIL)

Step	Action	Value(s)	Yes	No
1	Was the "On-Board Diagnostic (OBD) System Check" performed?	—	Go to *Step 2*	Go to *OBD System Check*
2	Attempt to start the engine. Does the engine start?	—	Go to *Step 3*	Go to *Step 6*
3	Check the meter fuse for the instrument cluster ignition feed circuit. Is the fuse OK?	—	Go to *Step 4*	Go to *Step 16*
4	Ignition "ON," probe the ignition feed circuit at the cluster connector with a test light to ground. Is the test light "ON?"	—	Go to *Step 5*	Go to *Step 13*
5	1. Ignition "OFF." 2. Disconnect the PCM. 3. Jumper the MIL driver circuit at the PCM connector to ground. 4. Ignition "ON." Is the MIL "ON?"	—	Go to *Step 10*	Go to *Step 11*
6	Check the PCM ignition feed and battery feed fuses (15 A engine fuse and 15 A PCM fuse). Are both fuses OK?	—	Go to *Step 7*	Go to *Step 15*
7	1. Ignition "OFF." 2. Disconnect the PCM. 3. Ignition "ON." 4. Probe the ignition feed circuit at the PCM harness connector with a test light to ground. Is the test light "ON?"	—	Go to *Step 8*	Go to *Step 12*
8	Probe the battery feed circuit at the PCM harness connector with a test light to ground. Is the test light "ON?"	—	Go to *Step 9*	Go to *Step 14*
9	Check for a faulty PCM ground connection. Was a problem found?	—	Verify repair	Go to *Step 10*
10	Check for damaged terminals at the PCM. Was a problem found?	—	Verify repair	Go to *Step 17*
11	Check for an open MIL driver circuit between the PCM and the MIL. Was a problem found?	—	Verify repair	Go to *Step 18*
12	Substitute a known "good" relay for the PCM main relay. Was the malfunction fixed?	—	Verify repair	Go to *Step 13*
13	Repair the open in the ignition feed circuit. Is the action complete?	—	Verify repair	—

No Malfunction Indicator Lamp (MIL) (Cont'd)

Step	Action	Value(s)	Yes	No
14	Locate and repair the open PCM battery feed circuit. Is the action complete?	—	Verify repair	—
15	Locate and repair the short to ground in the PCM ignition feed circuit or PCM battery feed circuit. Is the action complete?	—	Verify repair	—
16	Locate and repair the short to ground in the ignition feed circuit to the instrument cluster, and replace the fuse. Is the action complete?	—	Verify repair	—
17	Replace the PCM. **IMPORTANT:** The replacement PCM must be programmed. Refer to *PCM* in *ON-Vehicle Service* for procedures. Is the action complete?	—	Verify repair	—
18	Check the MIL driver circuit for a poor connection at the instrument panel connector. Was a problem found?	—	Verify repair	Go to *Instrument Panel* in *Electrical Diagnosis*

Malfunction Indicator Lamp (MIL) “ON” Steady

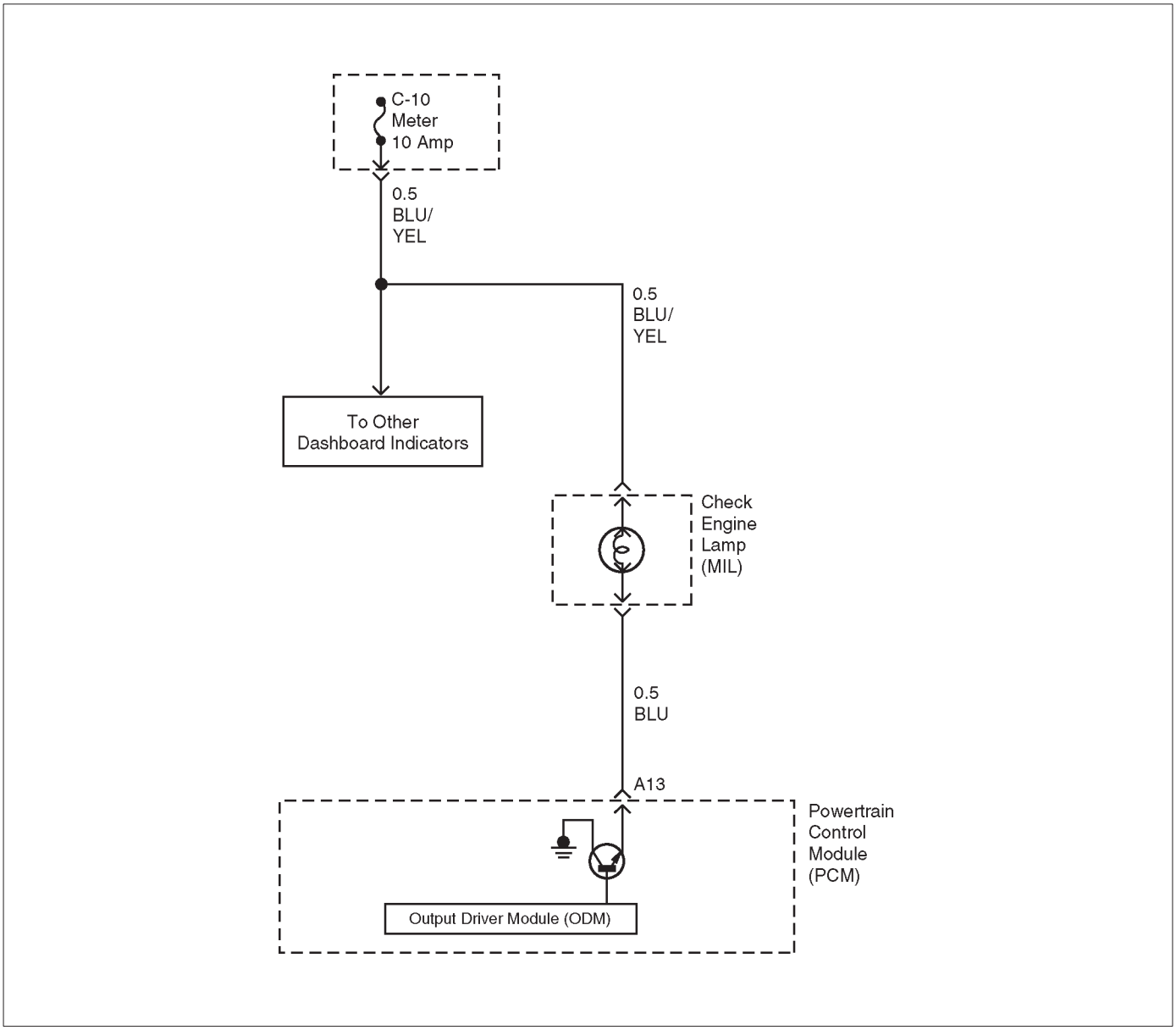

D06RW00007

Circuit description

The malfunction indicator lamp (MIL) should always be illuminated and steady with ignition “ON” and the engine stopped. Ignition feed voltage is supplied directly to the MIL indicator. The powertrain control module (PCM) turns the MIL “ON” by grounding the MIL driver circuit. The MIL should not remain “ON” with the engine running and no DTC(s) set. A steady MIL with the engine running and no DTC(s) suggests a short to ground in the MIL driver circuit.

Diagnostic Aids

An intermittent may be caused by a poor connection, rubbed-through wire insulation, or a wire broken inside the insulation. Check for the following items:

- Poor connection or damaged harness – Inspect the PCM harness and connectors for improper mating, broken locks, improperly formed or damaged terminals, poor terminal-to-wire connection, and damaged harness.

Test Description

Number(s) below refer to the step number(s) on the Diagnostic Chart.

2. If the MIL does not remain “ON” when the PCM is disconnected, the MIL driver wiring is not faulty.
3. If the MIL driver circuit is OK, the instrument panel cluster is faulty.
6. This vehicle is equipped with a PCM which utilizes an electrically erasable programmable read only memory (EEPROM). When the PCM is replaced, the new PCM must be programmed. Refer to *UBS 98 model year Immobilizer Workshop Manual.*

Malfunction Indicator Lamp (MIL) “ON” Steady

Step	Action	Value(s)	Yes	No
1	Was the “On-Board diagnostic (OBD) System Check” performed?	—	Go to *Step 2*	Go to *OBD System Check*
2	1. Ignition “OFF,” disconnect PCM. 2. Ignition “ON,” observe the MIL (Service Engine Soon lamp). Is the MIL “ON?”	—	Go to *Step 3*	Go to *Step 5*
3	1. Ignition “OFF,” disconnect the instrument panel cluster. 2. Check the MIL driver circuit between the PCM and the instrument panel cluster for a short to ground. 3. If a problem is found, repair as necessary. Was the MIL driver circuit shorted to ground?	—	Go to *OBD System Check*	Go to *Step 4*
4	Replace the instrument panel cluster. Is the action complete?	—	Go to *OBD System Check*	—
5	1. Ignition “OFF,” reconnect the PCM. 2. Using Tech 2, select “Output Miscellaneous Test” and command the MIL “OFF.” Did the MIL turn “OFF?”	—	Go to *OBD System Check*	Go to *Step 6*
6	Replace the PCM. **IMPORTANT:** The replacement PCM must be programmed. Refer to *UBS 98model year Immobilizer Workshop Manual.* Is the action complete?	—	Go to *OBD System Check*	—

Engine Cranks But Will Not Run

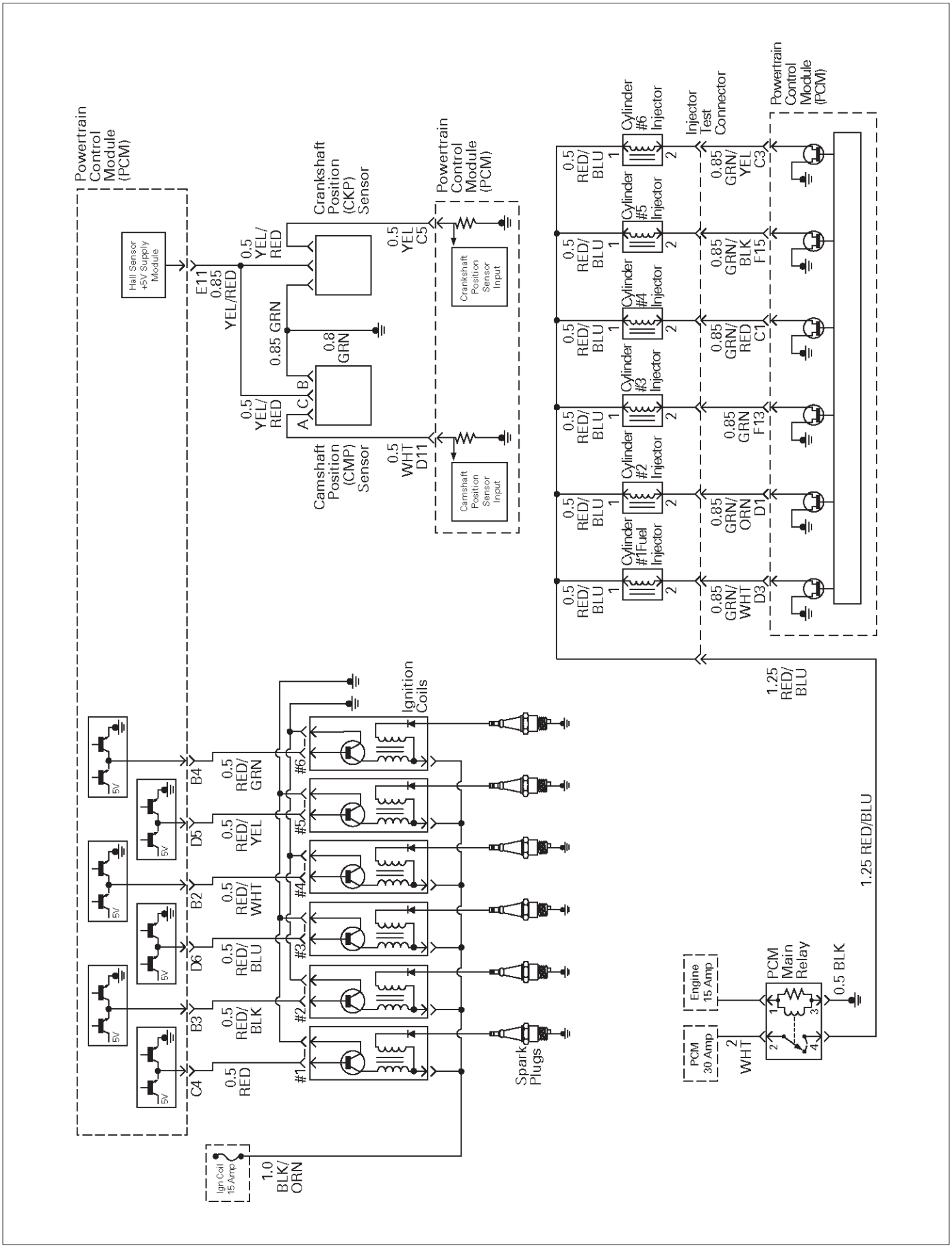

D06RX00004

Circuit Description

The electronic Ignition system uses a coil-at-plug method of spark distribution. In this type of ignition system, the powertrain control module (PCM) triggers the correct driver inside the ignition coil, which then triggers the correct ignition coil based on the 58X signal received from the crankshaft position sensor (CKP). The spark plug connected to the coil fires when the ICM opens the ground circuit for the coil's primary circuit.

During crank, the PCM monitors the CKP 58X signal. The CKP signal is used to determine which cylinder will fire first. After the CKP 58X signal has been processed by the PCM, it will command all six injectors to allow a priming shot of fuel for all the cylinders. After the priming, the injectors are left "OFF" during the next six 58X reference pulses from the CKP. This allows each cylinder a chance to use the fuel from the priming shot. During this waiting period, a camshaft position (CMP) signal pulse will have been received by the PCM. The CMP signal allows the PCM to operate the injectors sequentially based on camshaft position. If the camshaft position signal is not present at start-up, the PCM will begin sequential fuel delivery with a 1-in-6 chance that fuel delivery is correct. The engine will run without a CMP signal, but will set a DTC code.

Diagnostic Aids

An intermittent problem may be caused by a poor connection, rubbed-through wire insulation or a wire broken inside the insulation. Check for the following items:

- Poor connection or damaged harness – Inspect the PCM harness and connectors for improper mating, broken locks, improperly formed or damaged terminals, poor terminal-to-wire connection, and damaged harness.
- Faulty engine coolant temperature sensor – Using Tech 2, compare engine coolant temperature with intake air temperature on a completely cool engine. Engine coolant temperature should be within 10˚C of intake air temperature. If not, replace the ECT sensor.

Test Description

Number(s) below refer to the step number(s) on the Diagnostic Chart.

5. An obvious cause of low fuel pressure would be an empty fuel tank.

6. The engine will easily start and run if a few injectors are disabled. It is not necessary to test all injectors at this time since this step is only a test to verify that all of the injectors have not been disabled by fuel contamination.

7. A blinking test light verifies that the PCM is monitoring the 58X crankshaft reference signal and is capable of activating the injectors. If there is an open or shorted driver circuit, DTCs 201-206 should be set.

19. By using a spark tester, each ignition coil's ability to produce 25,000 volts is verified.

25. If there is an open or shorted driver circuit, DTCs 201-206 should be set. All six injector driver circuits can be checked at one time without removing the intake manifold if a 5-8840-2636-0 test light is available. This is the alternative procedure:
    - With the ignition "OFF," disconnect the gray connector located at the rear of the air filter, attached to a bracket on the purge canister.
    - Connect test light 5-8840-2636-0 to the connector. Do any of the light constantly illuminate or fail to blink when the engine is cranked? If so, repair the short or open circuit, or replace the PCM if indicated.

This procedure only tests the driver circuit as far as the test connection, so step 31 is added to test the circuit all the way to the injector.

Engine Cranks But Will Not Run

Step	Action	Value(s)	Yes	No
1	Was the “On-Board Diagnostic (OBD) System Check” performed?	—	Go to *Step 2*	Go to *OBD System Check*
2	Check the 15 A ignition coil fuse, the 15 A engine fuse, and the 30 A PCM fuse. Was a fuse blown?	—	Go to *Step 3*	Go to *Step 4*
3	Check for a short to ground and replace the fuse. Is the action complete?	—	Verify repair	—
4	1. Ignition “OFF,” install a fuel pressure gauge at the test fitting on the fuel supply line in the engine compartment. (Use a shop cloth to absorb any fuel leakage while making the connection.) 2. Ignition “ON,” observe the fuel pressure. Is the fuel pressure within the specified values, and does it hold steady?	285-376 kPa (43-55 psi)	Go to *Step 6*	Go to *Step 5*
5	Is any fuel pressure indicated?	—	Go to *Fuel System Electrical Test*	Go to *Fuel System Diagnosis*
6	Install an injector switch box to the injector test connector, and attempt to operate the injector. Did the fuel pressure drop when the injector is operated?	—	Go to *Step 7*	Go to *Step 12*
7	Install an injector test light at the #2 cylinder injector harness connector. Does the light blink when the engine is cranked?	—	Go to *Step 8*	Go to *Step 18*
8	1. Ignition “ON.” 2. While the coil connectors are disconnected, touch each coil connector’s ignition feed terminal with a grounded test light (the ignition feed wire is black with orange tracer). Did the test light illuminate?	—	Go to *Step 10*	Go to *Step 9*
9	Repair the open ignition feed circuit. Is the action complete?	—	Verify repair	—
10	While the coil connectors are disconnected, touch each connector’s secondary ground terminal with a test light to B+. (The ground wires are black.) Did the test light illuminate at each coil connector?	—	Go to *Step 12*	Go to *Step 11*
11	Repair the open secondary ground circuit. Is the action complete?	—	Verify repair	—
12	1. Test the fuel for contamination. 2. If a problem is found, clean the fuel system and correct the contaminated fuel condition as necessary. Replace the fuel filter and replace any injectors that are not delivering fuel (see Injector Balance Test). Was a problem found?	—	Verify repair	Go to *Step 13*

Engine Cranks But Will Not Run (Cont'd)

Step	Action	Value(s)	Yes	No
13	1. Remove any ignition coil and install a spark tester at the spark plug end of the coil. 2. Observe the tester while the engine is cranking. Was a crisp, blue spark observed? Only one or two sparks followed by no result is considered the same as "No Spark."	—	Go to *Step 15*	Go to *Step 14*
14	Replace the ignition coil, and return to Step 13 to test the remaining coils. Is the action complete?	—	Verify repair	—
15	Repeat Step 13 for each coil. Remove only one coil at a time, and reinstall each coil on its spark plug after testing, but do not refasten coils with screws at this time. After all coils have passed the spark test, does the engine start?	—	Refasten all coils with their screws	Go to *Step 16*
16	1. Remove the spark plugs from all cylinders. 2. Visually inspect the spark plug electrodes. 3. Replace any spark plugs with loose or missing electrodes or cracked insulators. Did your inspection reveal any spark plugs exhibiting excessive fouling?	—	Correct the fouling condition	Go to *Step 17*
17	Refer to *Engine Mechanical Diagnosis* to diagnose the following conditions: ● Faulty or incorrect camshaft drive belts ● Leaking or sticky valves or rings ● Excessive valve deposits ● Loose or worn rocker arms ● Weak valve springs ● Incorrect valve timing ● Leaking head gasket Is the action complete?	—	Verify repair	Go to *Step 19*
18	Observe the "Engine Speed" data display on the scan tool while cranking the engine. Is the engine RPM indicated? (If the scan tool is normally powered from the cigarette lighter socket, and if the scan tool display goes blank while cranking the engine, it will be necessary to power the scan tool directly from the vehicle battery.)	—	Go to *Step 19*	Go to *Step 28*
19	1. Disconnect the 7-pin gray connector at the rear of the air filter beneath the point where the air duct attaches to the MAF sensor. 2. Ignition "ON." 3. Using a test light connected to ground, probe the ignition terminal at the PCM (female) side of the 7-pin connector. Is the test light "ON?"	—	Go to *Step 20*	Go to *Step 26*

Engine Cranks But Will Not Run (Cont'd)

Step	Action	Value(s)	Yes	No
20	1. At the PCM (female) side of the connector, connect a test light between the ignition + terminal and one of the injector driver circuits at the same connector. 2. Ignition "ON." 3. Observe the test light, and repeat the test for each injector driver circuit. Did the test light stay on when checking any of the 6 injector driver circuits?	—	Go to *Step 21*	Go to *Step 23*
21	1. Ignition "OFF," disconnect the PCM. 2. Ignition "ON," observe the test light. Is the test light "ON?"	—	Go to *Step 22*	Go to *Step 27*
22	Locate and repair the short to ground in the injector driver circuit. Is the action complete?	—	Verify repair	—
23	1. Using the same test location as in step 20, connect a test light between the ignition terminal and one of the driver circuits. 2. Crank the engine and observe the test light. 3. Repeat for each injector driver circuit. Did the light blink during the test for each circuit?	—	Go to *Step 25*	Go to *Step 24*
24	Check for an open injector driver circuit. Was a problem found?	—	Verify repair	Go to *Step 27*
25	1. At the injector (male) side of the gray connector, connect an ohmmeter between the ignition pin and one of the driver circuit pins. 2. Check for continuity in the circuit. 3. Repeat for each injector circuit. The readings should be approximately equal to the specified value for injector resistance. Was a problem found?	12.5 ohms	Verify repair	Go to *Step 8*
26	Repair the ignition feed circuit. Is the action complete?	—	Verify repair	—
27	Replace the PCM. **IMPORTANT:** The replacement PCM must be programmed. Refer to *UBS 98model year Immobilizer Workshop Manual.* Is the action complete?	—	Verify repair	—
28	1. Raise the vehicle and disconnect the CKP sensor harness. 2. Ignition "ON." 3. With a test light to ground, probe the harness ignition feed terminal. Did the light illuminate?	—	Go to *Step 30*	Go to *Step 29*
29	Check the ignition feed wire between the sensor and the PCM for a short to ground or open circuit. Is the action complete?	—	Verify repair	—

Engine Cranks But Will Not Run (Cont'd)

Step	Action	Value(s)	Yes	No
30	1. Ignition "ON." 2. At the CKP harness connector, connect a test light between the ignition and ground terminals. Did the light illuminate?	—	Go to *Step 32*	Go to *Step 31*
31	Check the sensor ground circuit for an open or short to voltage. Is the action complete?	—	Verify repair	—
32	Check the signal circuit between the sensor and the PCM for a short to ground, short to voltage, or an open. Was a problem found?	—	Verify repair	Go to *Step 33*
33	Replace the CKP sensor. Is the action complete?	—	Verify repair	Go to *Step 27*

Fuel System Electrical Test

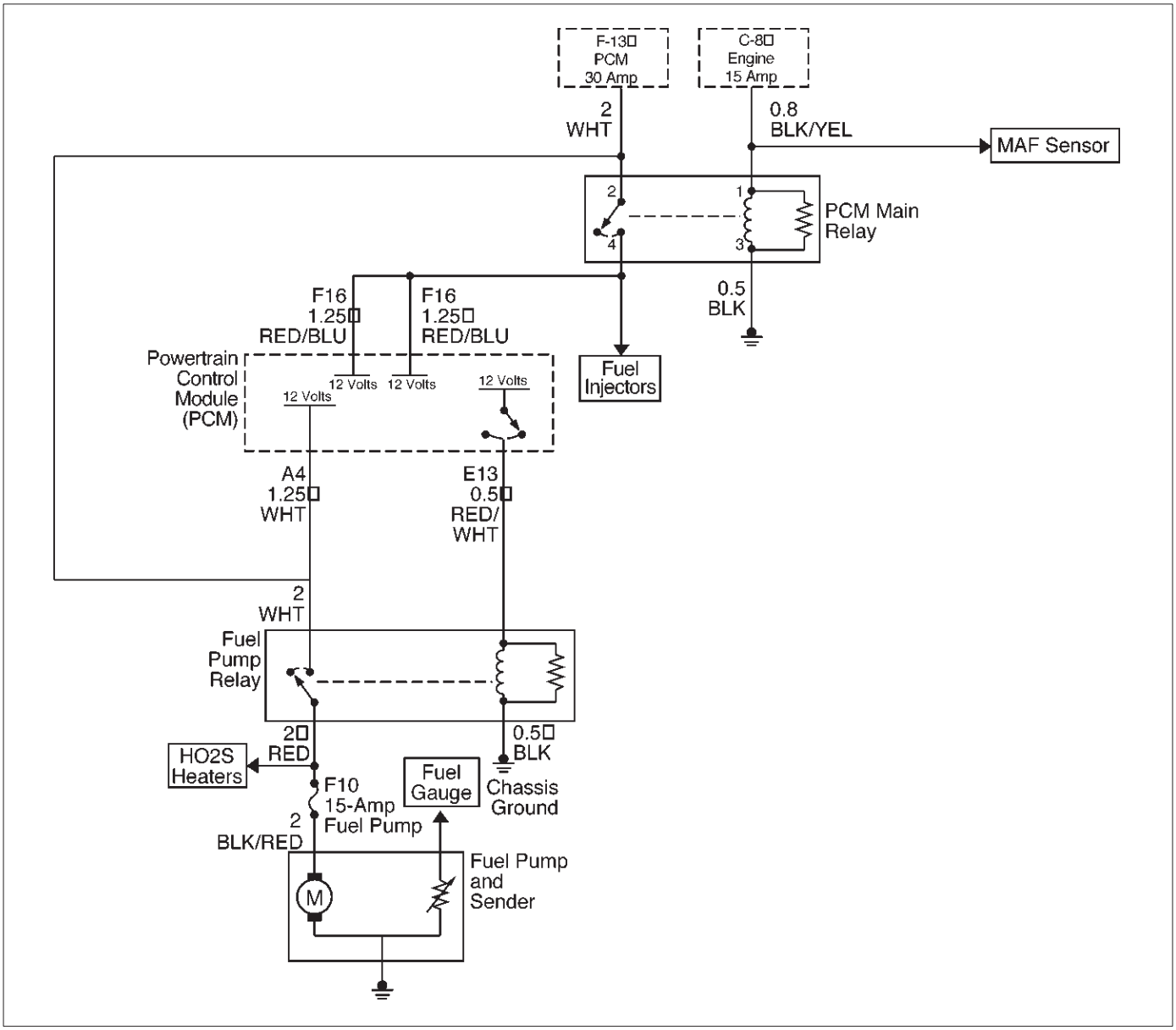

D06RW101

Circuit Description

When the ignition switch is first turned "ON," the powertrain control module (PCM) energizes the fuel pump relay which applies power to the in-tank fuel pump. The fuel pump relay will remain "ON" as long as the engine is running or cranking and the PCM is receiving 58X crankshaft position pulses. If no 58X crankshaft position pulses are present, the PCM de-energizes the fuel pump relay within 2 seconds after the ignition is turned "ON" or the engine is stopped.

The fuel pump delivers fuel to the fuel rail and injectors, then to the fuel pressure regulator. The fuel pressure regulator controls fuel pressure by allowing excess fuel to be returned to the fuel tank. With the engine stopped and ignition "ON," the fuel pump can be turned "ON" by using a command by Tech 2.

Diagnostic Aids

An intermittent may be caused by a poor connection, rubbed-through wire insulation, or a wire broken inside the insulation. Check for the following items:

- Poor connection or damaged harness – Inspect the PCM harness and connectors for improper mating, broken locks, improperly formed or damaged terminals, poor terminal-to-wire connection, and damaged harness.

Test Description

Number(s) below refer to the step number(s) on the Diagnostic Chart.

2. If the fuel pump is operating but incorrect pressure is noted, the fuel pump wiring is OK and the "Fuel System Pressure Test" chart should be used for diagnosis.

CAUTION: To reduce the risk of fire and personal injury:

- **It is necessary to relieve fuel system pressure before connecting a fuel pressure gauge. Refer to Fuel Pressure Relief Procedure, below.**
- **A small amount of fuel may be released when disconnecting the fuel lines. Cover fuel line fittings with a shop towel before disconnecting, to catch any fuel that may leak out. Place the towel in an approved container when the disconnect is completed.**

Fuel Pressure Relief Procedure

1. Remove the fuel cap.
2. Remove the fuel pump relay from the underhood relay center.
3. Start the engine and allow it to stall.
4. Crank the engine for an additional 3 seconds.

Fuel Gauge Installation

1. Remove the shoulder fitting cap.
2. Install fuel gauge 5-8840-0378-0 to the fuel feed line located in front of and above the right side valve train cover .
3. Reinstall the fuel pump relay.

Fuel System Electrical Test

Step	Action	Value(s)	Yes	No
1	Was the “On-Board Diagnostic (OBD) System Check” performed?	—	Go to *Step 2*	Go to *OBD System Check*
2	1. Read the “Caution” above. 2. Relieve the fuel system pressure and install the fuel pump pressure gauge to the test fitting. 3. Use Tech 2 to command the fuel pump “ON.” Is there an immediate pressure build-up which indicates the pump is running?	—	Go to *Step 3*	Go to *Step 4*
3	1. Verify that the pump is not running by removing the fuel filler cap and listening. 2. Command the pump “ON” with Tech 2. Did the pump turn “OFF” after 2 seconds?	—	Test completed	Go to *Step 12*
4	1. Ignition “OFF.” 2. Remove the fuel pump relay. 3. Using a test light connected to ground, probe the battery feed to the relay. Did the light illuminate?	—	Go to *Step 6*	Go to *Step 5*
5	Repair short or open battery feed to fuel pump relay. Is the action complete?	—	Verify repair	—
6	1. Connect a test light between the two wires that connect to the fuel pump relay pull-in coil. 2. Ignition “ON.” Did the test light illuminate for 2 seconds and then turn off?	—	Go to *Step 12*	Go to *Step 7*
7	1. With a test light connected to battery (–), probe the fuel pump relay connector at the wire which runs from the relay pull-in coil to the PCM. 2. Ignition “ON.” Did the test light illuminate for 2 seconds and then turn off?	—	Go to *Step 8*	Go to *Step 9*
8	Locate and repair open in the fuel pump relay ground circuit. Is the action complete?	—	Verify repair	—

Fuel System Electrical Test (Cont'd)

Step	Action	Value(s)	Yes	No
9	Check for short or open between the PCM and the fuel pump relay. Was a problem found?	—	Verify repair	Go to *Step 10*
10	1. Check the fuel pump relay circuit for a poor terminal connection at the PCM. 2. If a problem is found, replace terminal as necessary. Was a problem found?	—	Verify repair	Go to *Step 11*
11	Replace the PCM. **IMPORTANT:** The replacement PCM must be programmed. Refer to *UBS 98model year Immobilizer Workshop Manual.* Is the action complete?	—	Verify repair	—
12	1. Reconnect the fuel pump relay. 2. Disconnect the fuel pump electrical connector at the fuel tank. 3. Using a test light connected to ground, probe the fuel pump feed wire (harness side). 4. Command the fuel pump "ON" with Tech 2. Did the light illuminate for 2 seconds?	—	Go to *Step 15*	Go to *Step 13*
13	1. Honk the horn to verify that the horn relay is functioning. 2. Substitute the horn relay for the fuel pump relay. 3. Leave the test light connected as in step 12. 4. Command the fuel pump "ON" with Tech 2. Did the test light illuminate for 2 seconds when the fuel pump was commanded "ON?"	—	Go to *Step 17*	Go to *Step 14*
14	1. Re-connect the horn relay in its proper location. 2. Check for a short circuit, blown fuse or open circuit between the relay and the fuel tank. Is the action complete?	—	Verify repair	—
15	1. With the fuel pump electrical connector at the fuel tank disconnected, connect a test light between the feed wire and the ground wire (harness side). 2. Command the fuel pump "ON" with Tech 2. Did the test light illuminate for 2 seconds?	—	Go to *Step 18*	Go to *Step 16*
16	Repair the open circuit in the fuel pump ground wire. Is the action complete?	—	Verify repair	—
17	1. Re-connect the horn relay in its proper location. 2. Replace the fuel pump relay. Is the action complete?	—	Verify repair	—
18	Replace the fuel pump. Is the action complete?	—	Verify repair	—

Fuel System Diagnosis

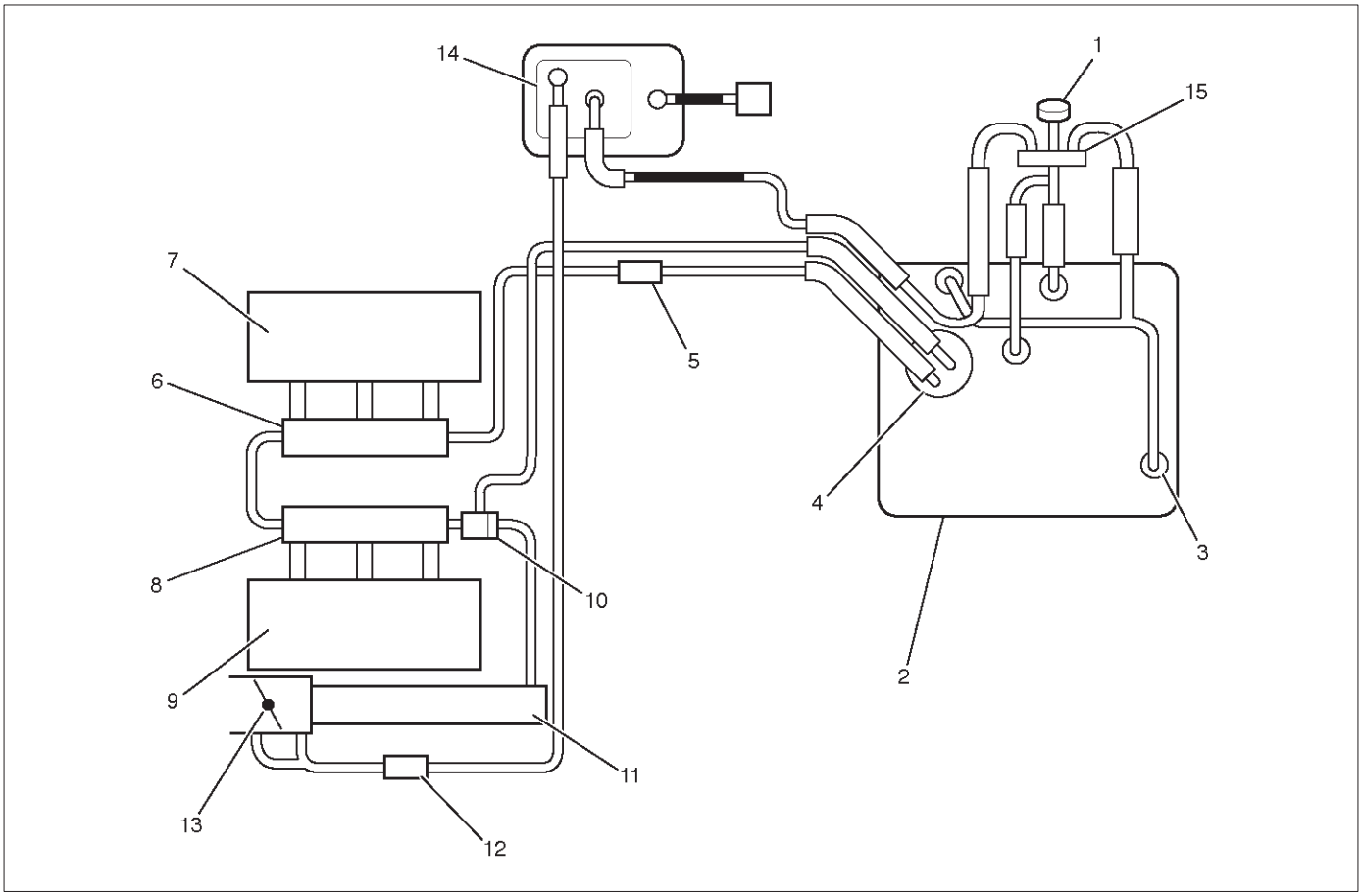

140RW020

Legend

(1) Fuel Filler Cap
(2) Fuel Tank
(3) Rollover Valve
(4) Fuel Pump and Sender Assembly
(5) Fuel Filter
(6) Fuel Rail Right
(7) Right Bank
(8) Fuel Rail Left
(9) Left Bank
(10) Fuel Pressure Control Valve
(11) Common Chamber
(12) Duty Solenoid Valve
(13) Throttle Valve
(14) Canister
(15) Evapo Shut Off Valve

Circuit Description

When the ignition switch is turned "ON," the powertrain control module (PCM) will turn "ON" the in-tank fuel pump. The in-tank fuel pump will remain "ON" as long as the engine is cranking or running and the PCM is receiving 58X crankshaft position pulses. If there are no 58X crankshaft position pulses, the PCM will turn the in-tank fuel pump "OFF" 2 seconds after the ignition switch is turned "ON" or 2 seconds after the engine stops running. The in-tank fuel pump is an electric pump within an integral reservoir. The in-tank fuel pump supplies fuel through an in-line fuel filter to the fuel rail assembly. The fuel pump is designed to provide fuel at a pressure above the pressure needed by the fuel injectors. A fuel pressure regulator, attached to the fuel rail, keeps the fuel available to the fuel injectors at a regulated pressure. Unused fuel is returned to the fuel tank by a separate fuel return line.

Test Description

Number(s) below refer to the step number(s) on the Diagnostic Chart.

2. Connect the fuel pressure gauge to the fuel feed line as shown in the fuel system illustration. Wrap a shop towel around the fuel pressure connection in order to absorb any fuel leakage that may occur when installing the fuel pressure gauge. With the ignition switch "ON" and the fuel pump running, the fuel pressure indicated by the fuel pressure gauge should be 333-376 kPa (48-55 psi). This pressure is controlled by the amount of pressure the spring inside the fuel pressure regulator can provide.
3. A fuel system that cannot maintain a constant fuel pressure has a leak in one or more of the following areas:
   - The fuel pump check valve.
   - The fuel pump flex line.

- The valve or valve seat within the fuel pressure regulator.
- The fuel injector(s).

4. Fuel pressure that drops off during acceleration, cruise, or hard cornering may case a lean condition. A lean condition can cause a loss of power, surging, or misfire. A lean condition can be diagnosed using a Tech II Tech 2. If an extremely lean condition occurs, the oxygen sensor(s) will stop toggling. The oxygen sensor output voltage(s) will drop below 500 mV. Also, the fuel injector pulse width will increase.

IMPORTANT: Make sure the fuel system is not operating in the "Fuel Cut-Off Mode."

When the engine is at idle, the manifold pressure is low (high vacuum). This low pressure (high vacuum) is applied to the fuel pressure regulator diaphragm. The low pressure (high vacuum) will offset the pressure being applied to the fuel pressure regulator diaphragm by the spring inside the fuel pressure regulator. When this happens, the result is lower fuel pressure. The fuel pressure at idle will vary slightly as the barometric pressure changes, but the fuel pressure at idle should always be less than the fuel pressure noted in step 2 with the engine "OFF."

16. Check the spark plug associated with a particular fuel injector for fouling or saturation in order to determine if that particular fuel injector is leaking. If checking the spark plug associated with a particular fuel injector for fouling or saturation does not determine that a particular fuel injector is leaking, use the following procedure:
    - Remove the fuel rail, but leave the fuel lines and injectors connected to the fuel rail. Refer to *Fuel Rail Assembly* in *On-Vehicle Service.*
    - Lift the fuel rail just enough to leave the fuel injector nozzles in the fuel injector ports.

CAUTION: In order to reduce the risk of fire and personal injury that may result from fuel spraying on the engine, verify that the fuel rail is positioned over the fuel injector ports and verify that the fuel injector retaining clips are intact.

- **Pressurize the fuel system by connecting a 10 amp fused jumper between B+ and the fuel pump relay connector.**
- **Visually and physically inspect the fuel injector nozzles for leaks.**

17. A rich condition may result from the fuel pressure being above 376 kPa (55 psi). A rich condition may cause a DTC P0132 or a DTC P0172 to set. Driveability conditions associated with rich conditions can include hard starting (followed by black smoke) and a strong sulfur smell in the exhaust.
20. This test determines if the high fuel pressure is due to a restricted fuel return line or if the high fuel pressure is due to a faulty fuel pressure regulator.
21. A lean condition may result from fuel pressure below 333 kPa (48 psi). A lean condition may cause a DTC P0131 or a DTC P0171 to set. Driveability conditions associated with lean conditions can include hard starting (when the engine is cold), hesitation, poor driveability, lack of power, surging , and misfiring.
22. Restricting the fuel return line causes the fuel pressure to rise above the regulated fuel pressure. Command the fuel pump "ON" with Tech 2. The fuel pressure should rise above 376 kPa (55 psi) as the fuel return line becomes partially closed.

NOTE: Do not allow the fuel pressure to exceed 414 kPa (60 psi). Fuel pressure in excess of 414 kPa (60 psi) may damage the fuel pressure regulator.

CAUTION: To reduce the risk of fire and personal injury:

- **It is necessary to relieve fuel system pressure before connecting a fuel pressure gauge. Refer to Fuel Pressure Relief Procedure, below.**
- **A small amount of fuel may be released when disconnecting the fuel lines. Cover fuel line fittings with a shop towel before disconnecting, to catch any fuel that may leak out. Place the towel in an approved container when the disconnect is completed.**

Fuel Pressure Relief Procedure

1. Remove the fuel cap.
2. Remove the fuel pump relay from the underhood relay center.
3. Start the engine and allow it to stall.
4. Crank the engine for an additional 3 seconds.

Fuel Gauge Installation

1. Remove the shoulder fitting cap.
2. Install fuel gauge 5-8840-0378-0 to the fuel feed line located in front of and above the right side valve train cover.
3. Reinstall the fuel pump relay.

Fuel System Diagnosis

Step	Action	Value(s)	Yes	No
1	Was the “On-Board Diagnostic (OBD) System Check” performed?	—	Go to *Step 2*	Go to *OBD System Check*
2	1. Turn the ignition “OFF.” 2. Turn the air conditioning system “OFF.” 3. Relieve fuel system pressure and install the fuel pressure gauge. 4. Turn the ignition “ON.” NOTE: The fuel pump will run for approximately 2 seconds. Use Tech 2 to command the fuel pump “ON”. 5. Observe the fuel pressure indicated by the fuel pressure gauge with the fuel pump running. Is the fuel pressure within the specified limits?	290-376 kPa (42-55 psi)	Go to *Step 3*	Go to *Step 17*
3	NOTE: The fuel pressure will drop when the fuel pump stops running, then it should stabilize and remain constant. Does the fuel pressure indicated by the fuel pressure gauge remain constant?	—	Go to *Step 4*	Go to *Step 12*
4	1. When the vehicle is at normal operation temperature, turn the ignition “ON” to build fuel pressure and observe the measurement on the gauge. 2. Start the engine and observe the fuel pressure gauge. Did the reading drop by the amount specified after the engine was started?	21-105 kPa (3-15 psi)	Go to *Step 5*	Go to *Step 9*
5	Is fuel pressure dropping off during acceleration, cruise, or hard cornering?	—	Go to *Step 6*	Check for improper fuel
6	Visually and physically inspect the following items for a restriction: ● The in-pipe fuel filter. ● The fuel feed line. Was a restriction found?	—	Verify repair	Go to *Step 7*
7	Remove the fuel tank and visually and physically inspect the following items: ● The fuel pump strainer for a restriction. ● The fuel line for a leak. ● Verify that the correct fuel pump is in the vehicle. Was a problem found in any of these areas?	—	Verify repair	Go to *Step 8*
8	Replace the fuel pump. Is the action complete?	—	Verify repair	—
9	1. Disconnect the vacuum hose from the fuel pressure regulator. 2. With the engine idling, apply 12-14 inches of vacuum to the fuel pressure regulator. Does the fuel pressure indicated by the fuel pressure gauge drop by the amount specified?	21-105 kPa (3-15 psi)	Go to *Step 10*	Go to *Step 11*

Fuel System Diagnosis (Cont'd)

Step	Action	Value(s)	Yes	No
10	Locate and repair the loss of vacuum to the fuel pressure regulator. Is the action complete?	—	Verify repair	—
11	Replace the fuel pressure regulator. Is the action complete?	—	Verify repair	—
12	1. Run the fuel pump with Tech 2. 2. After pressure has built up, turn off the pump and clamp the supply hose shut with suitable locking pliers. Does the fuel pressure indicated by the fuel pressure gauge remain constant?	—	Go to *Step 13*	Go to *Step 15*
13	Visually inspect the fuel supply line and repair any leaks. Was a problem found?	—	Verify repair	Go to *Step 14*
14	Remove the fuel tank and inspect for leaky hose or in-tank fuel line. Was a problem found?	—	Verify repair	Go to *Step 8*
15	1. If the pliers are still clamped to the fuel supply hose, remove the locking pliers. 2. With suitable locking pliers, clamp the fuel return line to prevent fuel from returning to the fuel tank. 3. Run the fuel pump with Tech 2. 4. After pressure has built up, remove power to the pump. Does the fuel pressure indicated by the fuel pressure gauge remain constant?	—	Go to *Step 11*	Go to *Step 16*
16	Locate and replace any leaking fuel injector(s). Is the action complete?	—	Verify repair	—
17	Is the fuel pressure indicated by the fuel pressure gauge above the specified limit?	376 kPa (55 psi)	Go to *Step 18*	Go to *Step 21*
18	1. Relieve the fuel pressure. Refer to the *Fuel Pressure Relief.* 2. Disconnect the fuel return line from the fuel rail. 3. Attach a length of flexible hose to the fuel rail return outlet passage. 4. Place the open end of the flexible hose into an approved gasoline container. 5. Run the fuel pump with Tech 2. 6. Observe the fuel pressure indicated by the fuel pressure gauge with the fuel pump running. Is the fuel pressure within the specified limits?	290-376 kPa (42-55 psi)	Go to *Step 19*	Go to *Step 20*
19	Locate and correct the restriction in the fuel return line. Is the action complete?	—	Verify repair	—
20	Visually and physically inspect the fuel rail outlet passages for a restriction. Was a restriction found?	—	Verify repair	Go to *Step 11*
21	Is the fuel pressure indicated by the fuel pressure gauge above the specified value?	0 kPa (0 psi)	Go to *Step 22*	Go to *Step 23*

Fuel System Diagnosis (Cont'd)

Step	Action	Value(s)	Yes	No
22	1. Command the fuel pump "ON" with Tech 2. 2. Using suitable pliers which will not damage the fuel hose, gradually apply pressure with the pliers to pinch the flexible fuel return hose closed. **CAUTION: Do not let the fuel pressure exceed the second specified value.** Does the fuel pressure indicated by the fuel pressure gauge rise above the first specified value?	376 kPa (55 psi) 414 kPa (60 psi)	Go to *Step 11*	Go to *Step 7*
23	1. Command the fuel pump "ON" with Tech 2. 2. Remove the fuel filler cap and listen for the sound of the fuel pump running. 3. Turn the pump off. Was the fuel pump running?	—	Go to *Step 7*	Go to *Fuel System Electrical Test Chart*

Idle Air Control (IAC) System Check

Circuit Description

The powertrain control module (PCM) controls engine idle speed with the idle air control (IAC) valve. To increase idle speed, the PCM retracts the IAC valve pintle away from its seat, allowing more air to bypass the throttle bore. To decrease idle speed, it extends the IAC valve pintle towards its seat, reducing by pass air flow. Tech 2 will read the PCM commands to the IAC valve in counts. Higher counts indicate more air bypass (higher idle). Lower counts indicate less air is allowed to bypass (lower idle).

Diagnostic Aids

A slow, unstable, or fast idle may be caused by a non-IAC system problem that cannot be overcome by the IAC valve. Out of control range IAC Tech 2 counts will be above 60 if idle is too low, and zero counts if idle is too high. The following checks should be made to repair a non-IAC system problem:

- Vacuum leak (high idle) – If idle is too high, stop the engine. Fully extend (low) IAC with the Tech 2. Start the engine. If idle speed is above 800 RPM, locate and correct the vacuum leak, including the PCV system. Check for binding of the throttle blade or linkage.
- Lean heated oxygen sensor signal (high air/fuel ratio) – The idle speed may be too high or too low. Engine speed may vary up and down, and disconnecting the IAC valve does not help. Diagnostic trouble codes P0131, P0151, P0171, or P0174 may be set. Tech 2 oxygen (O2) voltage will be less than 100 mV (0.1 V). Check for low regulated fuel pressure, water in fuel, or a restricted injector.
- Rich heated oxygen sensor signal (low air/fuel ratio) – The idle speed will be too low. Tech 2 IAC counts will usually be above 80. The system is obviously rich and may exhibit black smoke in the exhaust.

  Tech 2 O2 voltage will be fixed at about 750 mV (0.75 V). Check for high fuel pressure, or a leaking or sticking injector. A silicon-contaminated heated oxygen sensor will show an O2 voltage slow to respond on Tech 2.
- Throttle body – Remove the IAC valve and inspect the bore for foreign material.
- IAC valve electrical connections – IAC valve connections should be carefully checked for proper contact.
- PCV valve – An incorrect or faulty PCV valve may result in an incorrect idle speed. Refer to *Diagnosis, Rough Idle, Stalling.* If intermittent poor driveability or idle symptoms are resolved by disconnecting the IAC, carefully recheck the connections and valve terminal resistance, or replace the IAC.

Test Description

Number(s) below refer to the step number(s) on the Diagnostic Chart.

1. The Tech 2 is used to extend and retract the IAC valve. Valve movement is verified by an engine speed change. If no change in engine speed occurs, the valve can be resettled when removed from the throttle body.
2. This step checks the quality of the IAC movement in step 1. Between 700 revolutions per minute (RPM) and about 1500 RPM, the engine speed should change smoothly with each flash of the tester light in both extend and retract. If the IAC valve is retracted beyond the control range (about 1500 RPM), it may take many flashes to extend the IAC valve before engine speed will begin to drop. This is normal on certain engines. Fully extending the IAC may cause engine stall. This may be normal.

Idle Air Control (IAC) System Check

Step	Action	Value(s)	Yes	No
1	1. Ignition “OFF.” 2. Connect the Tech 2. 3. Set the parking brake. 4. Block the wheels. 5. Turn the air conditioning “OFF.” 6. Idle the engine in Park (A/T) or Neutral (M/T). 7. Operate the IAC test. 8. The engine speed should decrease and increase as the IAC is cycled. Does the RPM change?	—	Go to *Step 2*	Go to *Step 3*
2	RPM should change smoothly. Does the RPM change within the range specified?	700-1500 RPM	—	Go to *Step 3*
3	Check the IAC passages. Are the IAC passages OK?	—	Go to *Step 4*	Go to *Step 5*
4	Clear any obstruction from the IAC passages. Is the action complete?	—	Verify repair	—
5	Replace the IAC. Refer to *On-Vehicle Service, Idle Air Control Valve.* Is the action complete?	—	Verify repair	—

Knock Sensor (KS) System Check (Engine Knock, Poor Performance, or Poor Economy)

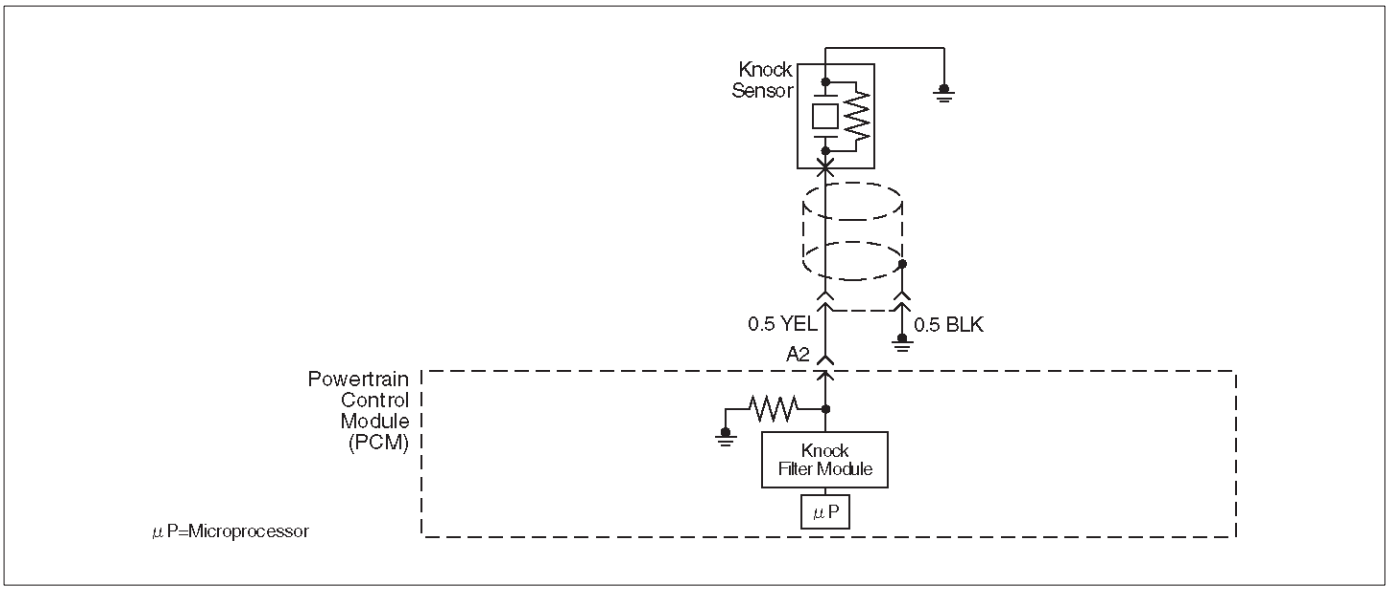

D06RW035

Circuit Description

The knock sensor (KS) sends an AC voltage signal to the powertrain control module (PCM). As the KS detects engine knock, the signal to the PCM changes in amplitude and frequency. The PCM retards timing if the engine speed is over 900 RPM.

Diagnostic Aids

If the KS system checks OK, but detonation is the complaint, refer to *Diagnosis, Detonation/Spark Knock.*

Test Description

The numbers below refer to the step numbers on the Diagnostic Chart.

9. The change in signal speed depends on how hard the tapping is done. Normally there is about 1.5 to 10 mV at PCM pin A2 with the engine off. Loud tapping should be able to make the reading jump to 20-25 mV AC.

Knock Sensor (KS) System Check (Engine Knock, Poor Performance, or Poor Economy)

Step	Action	Value(s)	Yes	No
1	Is DTC P0325 or P0327 set?	—	Go to *DTC P0325 or DTC P0327*	Go to *Step 2*
2	Run the engine at 1500 RPM. Is there an internal engine knock?	—	Go to *Step 3*	Go to *Step 4*
3	Repair the mechanical problem. Is the action complete?	—	Verify repair	—
4	1. Install Tech 2. 2. Turn the ignition “ON.” 3. Cycle through the list until “Knock Retard” is displayed. Is knock retard at the specified value?	0˚	Go to *Step 6*	Go to *Step 7*
5	Replace the PCM. **IMPORTANT:** The replacement PCM must be programmed. Refer to *UBS 98model year Immobilizer Workshop Manual.* Is the action complete?	—	Verify repair	—
6	1. Start the engine. 2. Monitor the knock retard display on Tech 2 while changing the throttle setting to place different loads on the engine. Is knock retard at the specified value? (Turn the ignition “OFF.”)	0˚	Go to *Step 9*	Go to *Step 7*
7	1. At the rear of the engine, behind the rear fuel injector on the lift side, disconnect the 2-wire knock sensor harness connector. 2. Attach the positive lead of DVM to B+. 3. On the main harness side of the connector, use the negative lead of the DVM to probe the connector pin that is connected to the black wire. Dose the DVM indicate the specified value? (Reconnect the knock sensor harness.)	B+	Go to *Step 9*	Go to *Step 8*
8	Repair the open black wire ground for the shield which prevents stray electromagnetic pulses from affecting the knock signal. Is the action complete?	—	Verify repair	—
9	1. Reconnect the wire harness. 2. Set a DVM to AC voltage. 3. With the DVM, backprobe the PCM connector at A2. 4. Tap the engine lift brackprobe with a socket extension. Did the DVM show an increase in AC voltage while tapping on the lift bracket?	—	System OK	Go to *Step 10*
10	Replace the knock sensor. Is the action complete?	—	Verify repair	—

Exhaust Gas Recirculation (EGR) System Check

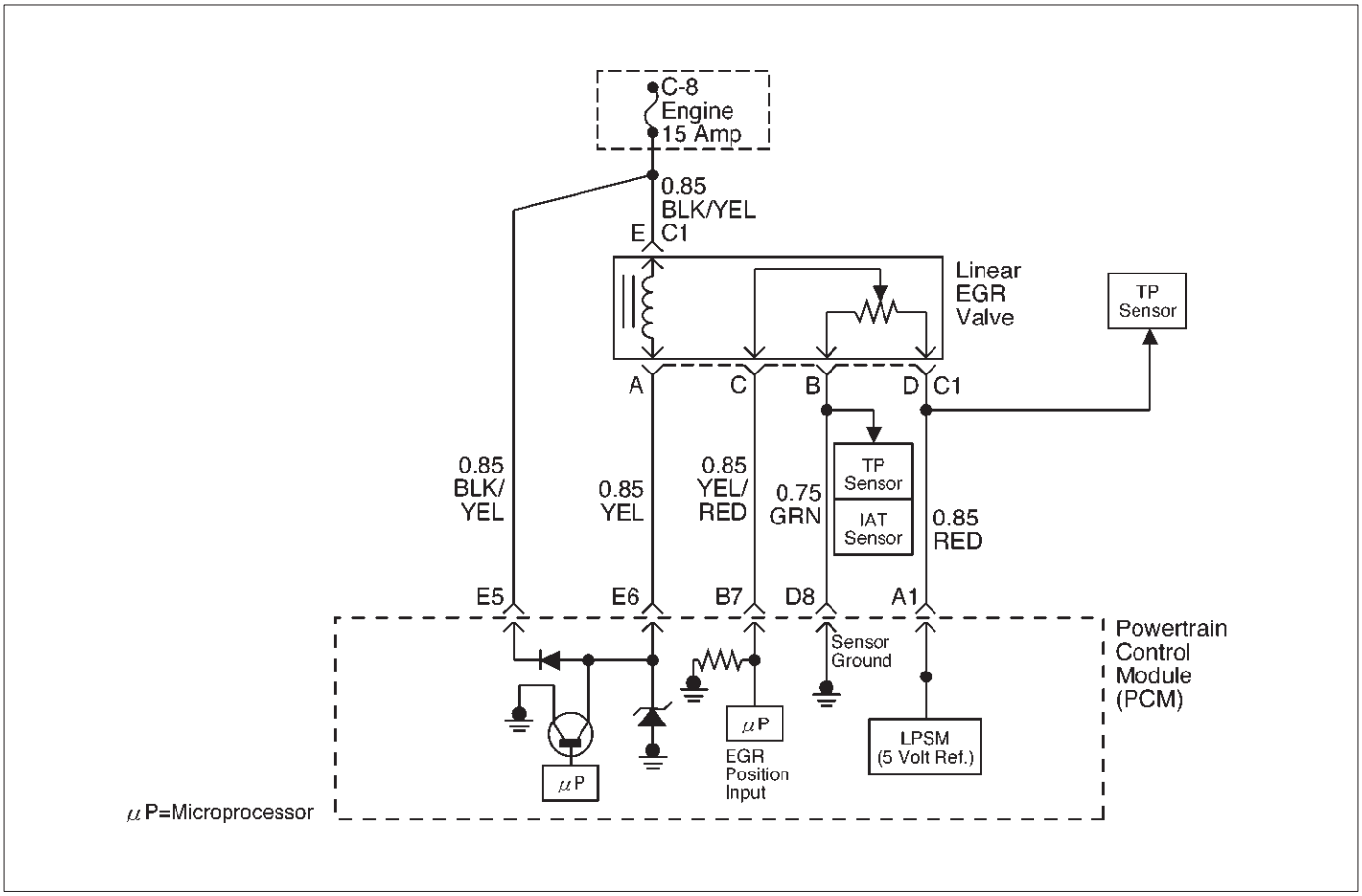

D06RW106

Circuit Description

A properly operation exhaust gas recirculation (EGR) system will directly affect the air/fuel requirements of the engine. Since the exhaust gas introduced into the air/fuel mixture is an inert gas (contains very little or no oxygen), less fuel is required to maintain a correct air/fuel ratio.

Introducing exhaust gas into the combustion chamber lowers combustion temperatures and reduces the formation of oxides of nitrogen (NOx) in the exhaust gas. Lower combustion temperatures also prevent detonation. If the EGR pintle were to stay closed, the inert exhaust gas would be replaced with air and the air/fuel mixture would be leaner. The powertrain control module (PCM) would compensate for the lean condition by adding fuel, resulting in higher long term fuel trim values.

Diagnostic Aids

The EGR valve chart is a check of the EGR system. An EGR pintle constantly in the closed position could cause detonation and high emissions of NOx. It could also result in high long term fuel trim values in the open throttle cell, but not in the closed throttle cell. An EGR pintle constantly in the open position would cause a rough idle. Also, an EGR mounted incorrectly (rotated 180˚) could cause rough idle. Check for the following items:

- EGR passages – Check for restricted or blocked EGR passages.
- Manifold absolute pressure sensor – A manifold absolute pressure sensor may shift in calibration enough to affect fuel delivery. Refer to *Manifold Absolute Pressure Output Check.*

Exhaust Gas Recirculation (EGR) System Check

Step	Action	Value(s)	Yes	No
1	Check the EGR valve for looseness. Is the EGR valve Loose?	—	Go to *Step 2*	Go to *Step 3*
2	Tighten the EGR valve. Is the action complete?	—	Verify repair	—
3	1. Place the transmission selector in Park or Neutral. 2. Start the engine and idle until warm. 3. Using Tech 2, command EGR “50% ON.” Does the engine idle rough and lose RPMs?	—	EGR system working properly. No problem found.	Go to *Step 4*
4	1. Engine “OFF.” 2. Ignition “ON.” 3. Using a test light to ground, check the EGR harness between the EGR valve and the ignition feed. Does the test light illuminate?	—	Go to *Step 6*	Go to *Step 5*
5	Repair the EGR harness ignition feed. Was the problem corrected?	—	Verify repair	Go to *Step 6*
6	1. Remove the EGR valve. 2. Visually and physically inspect the EGR valve pintle, valve passages and adapter for excessive deposits, obstructions or any restrictions. Does the EGR valve have excessive deposits, obstructions or any restrictions?	—	Go to *Step 7*	Go to *Step 8*
7	Clean or replace EGR system components as necessary. Was the problem corrected?	—	Verify repair	Go to *Step 8*
8	1. Ground the EGR valve metal case to battery (–). 2. Using Tech 2, command EGR “ON” and observe the EGR valve pintle for movement. Does the EGR valve pintle move according to command?	—	Go to *Step 9*	Go to *DTC P1406 chart*
9	1. Remove the EGR inlet and outlet pipes from the intake and exhaust manifolds. 2. Visually and physically inspect manifold EGR ports and EGR inlet and outlet pipes for blockage or restriction caused by excessive deposits or other damage. Do the manifold EGR ports or inlet and outlet pipes have excessive deposits, obstructions, or any restrictions?	—	Go to *Step 10*	EGR system working properly. No problem found.
10	Clean or replace EGR system components as necessary. Is the action complete?	—	Verify repair	—

Manifold Absolute Pressure (MAP) Output Check

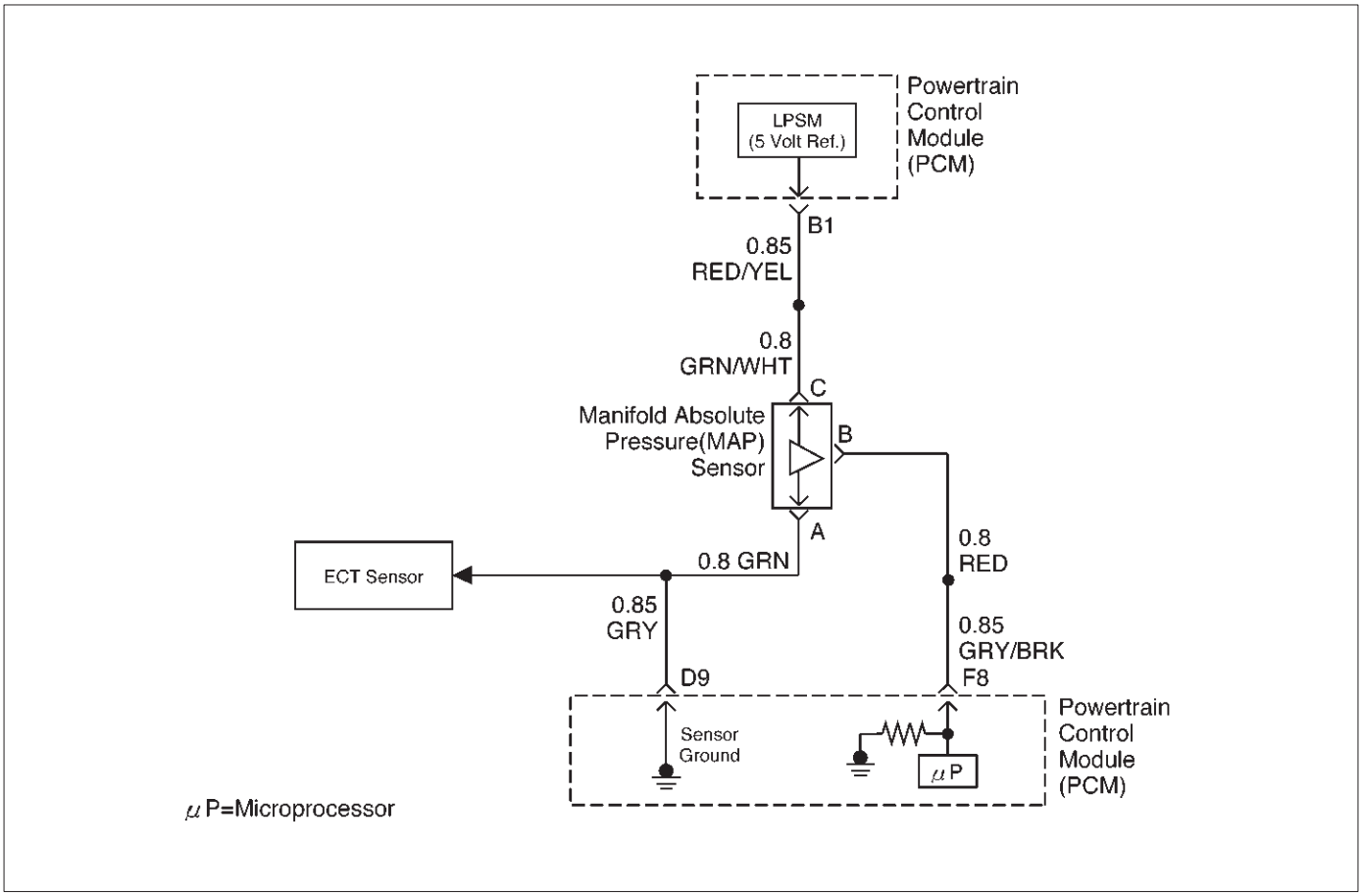

D06RW102

Circuit Description

The manifold absolute pressure (MAP) sensor measures the changes in the intake MAP which result from engine load (intake manifold vacuum) and engine speed changes; and converts these into a voltage output. The powertrain control module (PCM) sends a 5-volt reference voltage to the MAP sensor. As the MAP changes, the output voltage of the sensor also changes. By monitoring the the sensor output voltage, the PCM knows the MAP. A lower pressure (low voltage) output voltage will be about 1-2 volts at idle. Higher pressure (high voltage) output voltage will be about 4-4.8 volts at wide open throttle. The MAP sensor is also used, under certain conditions, to measure barometric pressure, allowing the PCM to make adjustments for different altitudes. The PCM uses the MAP sensor to diagnose proper operation of the EGR system, in addition to other functions.

Test Description

IMPORTANT: Be sure to used the same diagnostic test equipment for all measurements.

The number(s) below refer to the step number(s) on the Diagnostic Chart.

2. Applying 34 kPa (10 Hg) vacuum to the MAP sensor should cause the voltage to be 1.5-2.1 volts less than the voltage at step 1. Upon applying vacuum to the sensor, the change in voltage should be instantaneous. A slow voltage change indicates a faulty sensor.
3. Check the vacuum hose to the sensor for leaking or restriction, Be sure that no other vacuum devices are connected to the MAP hose.

IMPORTANT: Make sure the electrical connector remains securely fastened.

4. Disconnect the sensor from the bracket. Twist the sensor with your hand to check for an intermittent connection. Output changes greater than 0.10 volt indicate a bad sensor.

Manifold Absolute Pressure (MAP) Output Check

Step	Action	Value(s)	Yes	No
1	1. Turn the ignition “OFF”and leave it “OFF” for 15 seconds. 2. Ignition “ON.” Don’t crank engine. 3. Tech 2 should indicate a manifold absolute pressure (MAP) sensor voltage. 4. Compare this scan reading to scan reading of a known good vehicle obtained using the exact same procedure as in Steps 1-4. Is the voltage reading the same +/–0.40 volt?	—	Go to *Step 2*	Go to *Step 5*
2	1. Disconnect the vacuum hose at the MAP sensor and plug the hose. 2. Connect a hand vacuum pump to the MAP sensor. 3. Start the engine. 4. Apply 34 kPa (10 Hg) of vacuum and note the voltage change. Is the voltage change 1.5-2.1 volts less than Step 1?	—	Go to *Step 3*	Go to *Step 4*
3	No trouble found. Check the sensor cover for leakage or restriction. Does the hose supply vacuum to the MAP sensor only?	—	Go to *Step 5*	Go to *Step 4*
4	Repair the material to block. Is the action complete?	—	Verify repair	—
5	Check the sensor connection. Is the sensor connection good?	—	Go to *Step 6*	Go to *Step 7*
6	Replace the sensor. Refer to *On-Vehicle Service, MAP Sensor.* Is the action complete?	—	Verify repair	—
7	Repair the poor connection. Is the action complete?	—	Verify repair	—

PCM Diagnostic Trouble Codes

The following table lists the diagnostic trouble codes supported by this vehicle application. If any DTCs not listed here are displayed by a Tech 2, the Tech 2 data may be faulty; notify the Tech 2 manufacturer of any DTCs displayed that are not included in the following table.

A - Emission related P-code, check engine light on as soon as a failure detected.

B - Emission related P-code, check engine light on if a failure detected in two consecutive trips.

C - Non emission related P-code, check engine light on if a failure detected in one trip.

D - Non emission related P-code, no check engine light, but P-code will be set if a failure detected.

X - Do not check.

PCM Diagnostic Trouble Codes

DTC	Description / Countries	G. EXP A/T w/o immobi	G. EXP M/T w/o immobi	EC A/T w/ immobi	EC A/T w/o immobi	EC M/T w/ immobi	EC M/T w/o immobi	AUST A/T w/ immobi	AUST M/T w/ immobi
P0101	MAF system performance	B	B	B	B	B	B	B	B
P0102	MAF sensor circuit low frequency	A	A	A	A	A	A	A	A
P0103	MAF sensor circuit high frequency	A	A	A	A	A	A	A	A
P0107	MAP sensor circuit low voltage	A	A	A	A	A	A	A	A
P0108	MAP sensor circuit high voltage	A	A	A	A	A	A	A	A
P0112	ITA sensor circuit low voltage	A	A	A	A	A	A	A	A
P0113	ITA sensor circuit high voltage	A	A	A	A	A	A	A	A
P0117	ETC sensor circuit low voltage	A	A	A	A	A	A	A	A
P0118	ETC sensor circuit high voltage	A	A	A	A	A	A	A	A
P0121	TP system performance	A	A	A	A	A	A	A	A
P0122	TP sensor circuit low voltage	A	A	A	A	A	A	A	A
P0123	TP sensor circuit high voltage	A	A	A	A	A	A	A	A
P0131	HO2S circuit low voltage bank 1 sensor 1	X	X	A	A	A	A	A	A
P0132	HO2S circuit high voltage bank 1 sensor 1	X	X	A	A	A	A	A	A
P0134	HO2S circuit insufficient activity bank 1 sensor 1	X	X	X	X	X	X	A	A
P0151	HO2S circuit low voltage bank 2 sensor 1	X	X	A	A	A	A	X	X
P0152	HO2S circuit high voltage bank 2 sensor 1	X	X	A	A	A	A	X	X
P0171	Fuel trim system lean bank 1	X	X	B	B	B	B	B	B
P0172	Fuel trim system rich bank 1	X	X	B	B	B	B	B	B
P0174	Fuel trim system lean bank 2	X	X	B	B	B	B	X	X
P0175	Fuel trim system rich bank 2	X	X	B	B	B	B	X	X
P0201	Injector 1 control circuit	A	A	A	A	A	A	A	A
P0202	Injector 2 control circuit	A	A	A	A	A	A	A	A
P0203	Injector 3 control circuit	A	A	A	A	A	A	A	A
P0204	Injector 4 control circuit	A	A	A	A	A	A	A	A
P0205	Injector 5 control circuit	A	A	A	A	A	A	A	A
P0206	Injector 6 control circuit	A	A	A	A	A	A	A	A
P0218	T overtemp	D	X	D	D	X	X	D	X
P0325	KS sensor circuit	B	B	B	B	B	B	B	B
P0327	KS sensor circuit	B	B	B	B	B	B	B	B
P0336	58X reference signal circuit	B	B	B	B	B	B	B	B
P0337	CKP sensor circuit low frequency	B	B	B	B	B	B	B	B
P0341	CMP sensor circuit performance	B	B	B	B	B	B	B	B
P0342	CMP sensor circuit low	B	B	B	B	B	B	B	B
P0351	Injector 1 control circuit	A	A	A	A	A	A	A	A
P0352	Injector 2 control circuit	A	A	A	A	A	A	A	A
P0353	Injector 3 control circuit	A	A	A	A	A	A	A	A
P0354	Injector 4 control circuit	A	A	A	A	A	A	A	A
P0355	Injector 5 control circuit	A	A	A	A	A	A	A	A
P0356	Injector 6 control circuit	A	A	A	A	A	A	A	A
P0402	EGR pintle crank error	X	X	B	B	B	B	A	A
P0404	EGR open stuck	X	X	B	B	B	B	A	A
P0405	EGR low voltage	X	X	A	A	A	A	A	A
P0406	EGR high voltage	X	X	A	A	A	A	A	A
P0502	VSS circuit low input	B	B	B	B	B	B	B	B
P0560	T voltage	C	X	C	C	X	X	C	X
P0562	System voltage low	D	D	D	D	D	D	D	D
P0563	System voltage high	B	B	B	B	B	B	B	B
P0601	PCM memory	A	A	A	A	A	A	A	A
P0705	T range circuit	D	X	D	D	X	X	D	X
P0706	T range rat	D	X	D	D	X	X	D	X
P0712	T temp LO	D	X	D	D	X	X	D	X
P0713	T temp HI	D	X	D	D	X	X	D	X
P0719	T switch B LO	D	X	D	D	X	X	D	X
P0722	T shaft speed no signal	C	X	C	C	X	X	C	X
P0723	T shaft speed rat	C	X	C	C	X	X	C	X
P0730	T gear ratio	C	X	C	C	X	X	C	X
P0748	press solenoid circuit	C	X	C	C	X	X	C	X
P0753	T solenoid A circuit	C	X	C	C	X	X	C	X
P0758	T solenoid B circuit	C	X	C	C	X	X	C	X
P1127	CO ADJUST ERROR	A	A	X	X	X	X	X	X
P1154	HO2S circuit transition time ratio bank 2 sensor 1	X	X	A	A	A	A	X	X
P1171	Fuel system lean during acceleration	X	X	A	A	A	A	A	A
P1380	ABS rough road ABS system fault	X	X	X	X	X	X	A	A
P1404	EGR closed stuck	X	X	B	B	B	B	A	A
P1508	IAC system low RPM	B	B	B	B	B	B	B	B
P1509	IAC system high RPM	B	B	B	B	B	B	B	B
P1618	Serial peripheral interface(SPI)	C	X	C	C	X	X	C	X
P1625	PCM unexpected reset	D	D	D	D	D	D	D	D
P1626	immobi no response	X	X	D	X	D	X	D	D
P1631	immobi incorrect response	X	X	D	X	D	X	D	D
P1640	Driver 1 input high voltage	D	D	D	D	D	D	D	D
P1648	immobi wrong key	X	X	D	X	D	X	D	D
P1649	immobi no key	X	X	D	X	D	X	D	D
P1790	T ROM checksum	C	X	C	C	X	X	C	X
P1792	EEPROM checksum	C	X	C	C	X	X	C	X
P1835	T kick down switch	D	X	D	D	X	X	D	X
P1850	brake band solenoid	D	X	D	D	X	X	D	X
P1860	TCC PWM circuit	D	X	D	D	X	X	D	X

PCM Diagnostic Trouble Codes (Cont'd)

DTC	Description / Countries	LAO A/T w/o immobi	LAO M/T w/o immobi	S.A. M/T w/ ommobi	SAUD/CHINA A/T w/o immobi	SAUD/CHINA M/T w/o immobi
P0101	MAF system performance	B	B	B	B	B
P0102	MAF sensor circuit low frequency	A	A	A	A	A
P0103	MAF sensor circuit high frequency	A	A	A	A	A
P0107	MAP sensor circuit low voltage	A	A	A	A	A
P0108	MAP sensor circuit high voltage	A	A	A	A	A
P0112	ITA sensor circuit low voltage	A	A	A	A	A
P0113	ITA sensor circuit high voltage	A	A	A	A	A
P0117	ETC sensor circuit low voltage	A	A	A	A	A
P0118	ETC sensor circuit high voltage	A	A	A	A	A
P0121	TP system performance	A	A	A	A	A
P0122	TP sensor circuit low voltage	A	A	A	A	A
P0123	TP sensor circuit high voltage	A	A	A	A	A
P0131	HO2S circuit low voltage bank 1 sensor 1	A	A	X	A	A
P0132	HO2S circuit high voltage bank 1 sensor 1	A	A	X	A	A
P0134	HO2S circuit insufficient activity bank 1 sensor 1	A	A	X	X	X
P0151	HO2S circuit low voltage bank 2 sensor 1	X	X	X	A	A
P0152	HO2S circuit high voltage bank 2 sensor 1	X	X	X	A	A
P0171	Fuel trim system lean bank 1	B	B	X	B	B
P0172	Fuel trim system rich bank 1	B	B	X	B	B
P0174	Fuel trim system lean bank 2	X	X	X	B	B
P0175	Fuel trim system rich bank 2	X	X	X	B	B
P0201	Injector 1 control circuit	A	A	A	A	A
P0202	Injector 2 control circuit	A	A	A	A	A
P0203	Injector 3 control circuit	A	A	A	A	A
P0204	Injector 4 control circuit	A	A	A	A	A
P0205	Injector 5 control circuit	A	A	A	A	A
P0206	Injector 6 control circuit	A	A	A	A	A
P0218	T overtemp	D	X	X	D	X
P0325	KS sensor circuit	B	B	B	B	B
P0327	KS sensor circuit	B	B	B	B	B
P0336	58X reference signal circuit	B	B	B	B	B
P0337	CKP sensor circuit low frequency	B	B	B	B	B
P0341	CMP sensor circuit performance	B	B	B	B	B
P0342	CMP sensor circuit low	B	B	B	B	B
P0351	Injector 1 control circuit	A	A	A	A	A
P0352	Injector 2 control circuit	A	A	A	A	A
P0353	Injector 3 control circuit	A	A	A	A	A
P0354	Injector 4 control circuit	A	A	A	A	A
P0355	Injector 5 control circuit	A	A	A	A	A
P0356	Injector 6 control circuit	A	A	A	A	A
P0402	EGR pintle crank error	A	A	X	B	B
P0404	EGR open stuck	A	A	X	B	B
P0405	EGR low voltage	A	A	X	A	A
P0406	EGR high voltage	A	A	X	A	A
P0502	VSS circuit low input	B	B	B	B	B
P0560	T voltage	C	X	X	C	X
P0562	System voltage low	D	D	D	D	D
P0563	System voltage high	B	B	B	B	B
P0601	PCM memory	A	A	A	A	A
P0705	T range circuit	D	X	X	D	X
P0706	T range rat	D	X	X	D	X
P0712	T temp LO	D	X	X	D	X
P0713	T temp HI	D	X	X	D	X
P0719	T switch B LO	D	X	X	D	X
P0722	T shaft speed no signal	C	X	X	C	X
P0723	T shaft speed rat	C	X	X	C	X
P0730	T gear ratio	C	X	X	C	X
P0748	press solenoid circuit	C	X	X	C	X
P0753	T solenoid A circuit	C	X	X	C	X
P0758	T solenoid B circuit	C	X	X	C	X
P1127	CO ADJUST ERROR	X	X	A	X	X
P1154	HO2S circuit transition time ratio bank 2 sensor 1	X	X	X	A	A
P1171	Fuel system lean during acceleration	A	A	X	A	A
P1380	ABS rough road ABS system fault	A	A	X	X	X
P1404	EGR closed stuck	A	A	X	B	B
P1508	IAC system low RPM	B	B	B	B	B
P1509	IAC system high RPM	B	B	B	B	B
P1618	Serial peripheral interface(SPI)	C	X	X	C	X
P1625	PCM unexpected reset	D	D	D	D	D
P1626	immobi no response	X	X	D	X	X
P1631	immobi incorrect response	X	X	D	X	X
P1640	Driver 1 input high voltage	D	D	D	D	D
P1648	immobi wrong key	X	X	D	X	X
P1649	immobi no key	X	X	D	X	X
P1790	T ROM checksum	C	X	X	C	X
P1792	EEPROM checksum	C	X	X	C	X
P1835	T kick down switch	D	X	X	D	X
P1850	brake band solenoid	D	X	X	D	X
P1860	TCC PWM circuit	D	X	X	D	X

Diagnostic Trouble Code (DTC) P0101 MAF System Performance

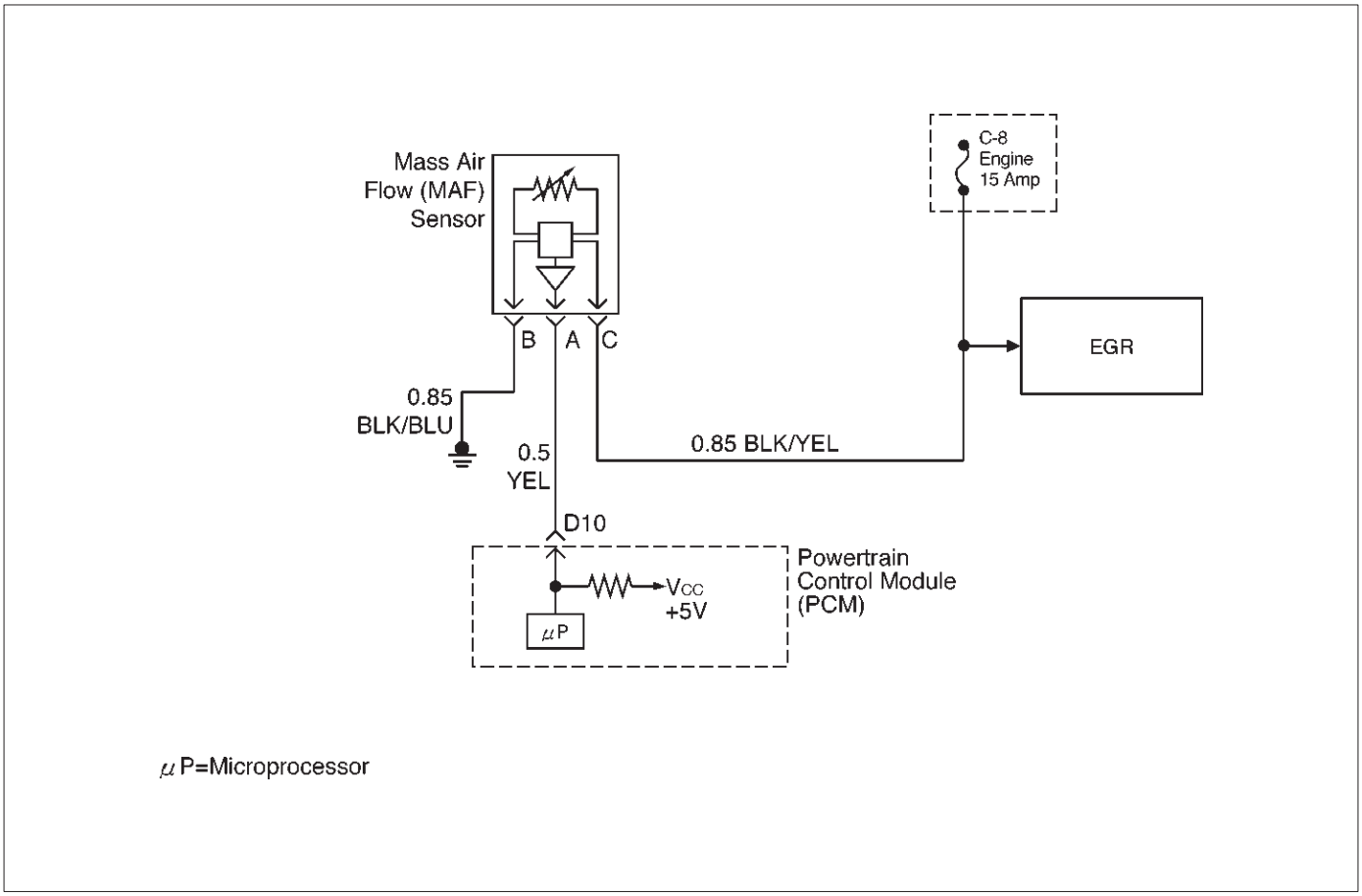

D06RW103

Circuit Description

The mass air flow (MAF) sensor measures the amount of air which passes through it into the engine during a given time. The powertrain control module (PCM) uses the mass air flow information to monitor engine operating conditions for fuel delivery calculations. A large quantity of air entering the engine indicates an acceleration or high load situation, while a small quantity or air indicates deceleration or idle.

The MAF sensor produces a frequency signal which can be monitored using a Tech 2. DTC P0101 will be set if the signal from the MAF sensor does not match a predicted value based on throttle position and engine RPM.

Conditions for Setting the DTC

- The engine is running.
- No TP sensor or MAP sensor DTCs are set.
- The throttle is steady, TP angle doesn't change by more than 1%.
- System voltage is between 11.5 volts and 16 volts.
- Calculated air flow is between 25 g/second and 40 g/second.
- Above conditions present for at least 1 second.
- MAF signal frequency indicates an airflow significantly higher or lower than a predicted value based on throttle position and engine RPM for a total of 12.5 seconds over a 25-second period of time.

Action Taken When the DTC Sets

- The PCM will illuminate the malfunction indicator lamp (MIL) after the second consecutive trip in which the fault is detected.
- The PCM calculates an airflow value based on idle air control valve position, throttle position, RPM and barometric pressure.
- The PCM will store conditions which were present when the DTC was set as Freeze Frame and in the Failure Records data.

Conditions for Clearing the MIL/DTC

- DTC P0101 can be cleared by using the Tech 2 "Clear Info" function or by disconnecting the PCM battery feed.

Diagnostic Aids

An intermittent may be caused by the following:

- Poor connections.
- Mis-routed harness.
- Rubbed through wire insulation.
- Broken wire inside the insulation.

Refer to Intermittents under service category Symptoms.

Any un-metered air may cause this DTC to set. Check for the following:

- The duct work at the MAF sensor for leaks.
- An engine vacuum leak.
- The PCV system for vacuum leaks.
- An incorrect PCV valve.

- The engine oil dip stick not fully seated.
- The engine oil fill cap loose or missing.

Test Description

Number(s) below refer to the step number(s) on the Diagnostic Chart.

2. The MAF system performance or “rationality” diagnostic uses the MAP sensor signal along with other input to calculate an expected airflow rate that is then compared to the actual measured airflow from the MAF sensor. The first few steps of this table verify that the MAP sensor is working properly.

6. Using Freeze Frame and/or Failure Records data may aid in locating an intermittent condition. If the DTC cannot be duplicated, the information included in the Freeze Frame and/or Failure Records data can be useful in determining how many miles since the DTC set. The Fail Counter and Pass Counter can also be used to determine how many ignition cycles the diagnostic reported a pass and/or a fail. Operate the vehicle within the same Freeze Frame conditions (RPM, load, vehicle speed , temperature, etc.) that were noted. This will isolate when the DTC failed.

   For any test that requires back probing the PCM or component harness connectors, use the Connector Test Adapter Kit J 35616-A. Using this kit will prevent any damage to the harness connector terminals.

7. Any un-metered air may cause this DTC to set. Check the PVC system for vacuum leaks. Also inspect the dip stick for being pulled out. Check the oil fill cap for being loose.

8. Verifies the signal circuit from the MAF sensor electrical connector to the PCM.

9. Verifies whether a ground and B+ circuit is available.

10. Checks a signal circuit for an open.

11. Checks for a signal circuit shorted to B+.

DTC P0101 – MAF System Performance

Step	Action	Value(s)	Yes	No
1	Was the “On-Board Diagnostic (OBD) System Check” performed?	—	Go to *Step 2*	Go to *OBD System Check*
2	1. Ignition “ON,” engine “OFF.” 2. Using a Tech 2, select “MAP” from the Engine 1 Data List. Is the value displayed greater than the value shown?	85 kPa	Go to *Step 3*	Go to*Step 13*
3	1. Remove the MAP sensor from the intake manifold but leave the electrical harness connected. 2. Connect a hand operated vacuum pump to the MAP sensor. 3. Observe the MAP display while slowly applying vacuum up to 20” Hg as indicated on the pump gauge. Each 1” of vacuum applied should result in a 3 to 4 kPa drop in the MAP sensor value on the Tech 2 and the value should change smoothly with each increase in vacuum. Did the MAP value change smoothly through the entire range of the test without any erratic readings?	—	Go to *Step 13*	Go to *Step 4*
4	With 20” Hg vacuum applied to the MAP sensor, is the MAF sensor reading the same or less than the value shown?	34 kPa	Go to *Step 5*	Go to *Step 13*
5	Disconnect the vacuum source from the MAP sensor. Does the MAP sensor reading return to its original value?	—	Go to *Step 6*	Go to *Step 13*

DTC P0101 – MAF System Performance (Cont'd)

Step	Action	Value(s)	Yes	No
6	1. Ignition "ON," engine "OFF." 2. Review the Freeze Frame and/or Failure Records data for this DTC and note parameters. 3. Ignition "OFF" for 15 seconds. 4. Start the engine and operate the vehicle within the conditions required for this diagnostic to run, and as close to the conditions recorded in Freeze Frame /Failure Records possible. (Special operating conditions that need to be met before the PCM will run this diagnostic (where applicable) are listed in "Conditions for Setting the DTC"). 5. Using the Tech 2, select "DTC," then enter the DTC number which was set. Does the Tech 2 indicate that this diagnostic failed this ignition?	—	Go to *Step 7*	Refer to *Diagnostic Aids*
7	1. Check for the following conditions: • Objects blocking the MAF sensor inlet screen; • Intake manifold vacuum leaks; • Vacuum leaks at throttle body; • Vacuum leaks EGR value flange and pipes. • Crankcase ventilation valve faulty, missing, or incorrectly installed. 2. If a problem is found, repair as necessary. Was a problem found?	—	Verify repair	Go to*Step 8*
8	1. Ignition "OFF." 2. Disconnect the MAF sensor connector. 3. Ignition "ON," engine "OFF." 4. Using DVM 5-8840-0285-0, measure voltage between the MAF sensor signal circuit and chassis ground. Is the voltage near the specified value?	5 V	Go to *Step 9*	Go to*Step 10*
9	Connect a test light (5-8840-0607-0) between the MAF sensor ignition feed and ground circuits at the MAF sensor harness connector. Is the test light "ON?"	—	Go to *Step 13*	Go to*Step 12*
10	Is the voltage less than the specified value?	4.5 V	Go to *Step 13*	Go to*Step 11*
11	1. Ignition "OFF," disconnect the PCM. 2. Ignition "ON," engine "OFF." 3. Measure voltage between the MAF signal circuit and ground. Does the voltage measure near the specified value?	0 V	Go to *Step 13*	Go to*Step 12*
12	Connect a test light (5-8840-0607-0) between the MAF sensor ignition feed circuit and chassis ground. Is the test light "ON?"	—	Go to *Step 13*	Go to*Step 7*
13	1. Check for a poor connection at the MAF sensor. 2. If a poor connection is found, replace faulty terminal(s). Refer to *Repair Procedures in Electrical Diagnosis (8A Cell 5).* Was a poor connection found?	—	Verify repair	Solved

Diagnostic Trouble Code (DTC) P0102 MAF Sensor Circuit Low Frequency

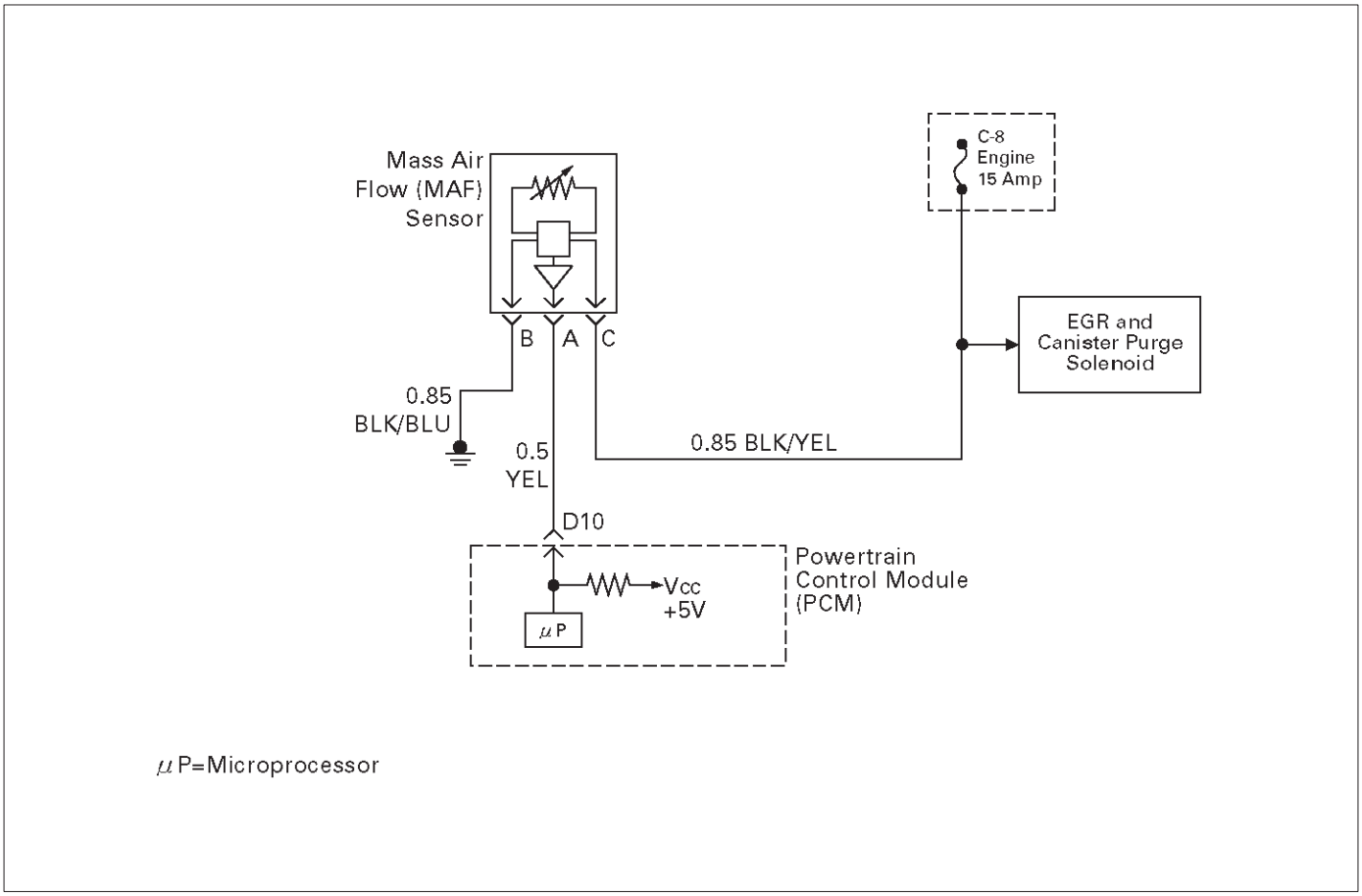

T321122

Circuit Description

The mass air flow (MAF) sensor measures the amount of air which passes through it into the engine during a given time. The powertrain control module (PCM) uses the mass air flow information to monitor engine operating conditions for fuel delivery calculations. A large quantity of air entering the engine indicates an acceleration or high load situation, while a small quantity of air indicates deceleration or idle.

The MAF sensor produces a frequency signal which can be monitored using a Tech 2. The frequency will vary within a range of around 2500 Hz at idle to around 1900 Hz at maximum engine load. DTC P0102 will be set if the signal from the MAF sensor is below the possible range of a normally operating MAF sensor.

Conditions for Setting the DTC

- The engine is running above 500 RPM for greater than 10 seconds.
- System voltage is above 11.5 volts.
- MAF signal frequency is below 1000 Hz for a total of 50-percent of the last 1000 samples monitored. A sample is taken every cylinder event.

Action Taken When the DTC Sets

- The PCM will illuminate the malfunction indicator lamp (MIL) the first time the fault is detected.
- The PCM calculates an air flow value based on idle air control valve position, throttle position, RPM and barometric pressure.
- The PCM will store conditions which were present when the DTC was set as Freeze Frame and in the Failure Records data.

Conditions for Clearing the MIL/DTC

- DTC P0102 can be cleared by using the Tech 2 “Clear Info” function or by disconnecting the PCM battery feed.

Diagnostic Aids

Check for the following conditions:

- Poor connection at PCM – Inspect harness connectors for backed-out terminals, improper mating, broken locks, improperly formed or damaged terminals, and poor terminal-to-wire connection.
- Misrouted harness – Inspect the MAF sensor harness to ensure that it is not routed too close to high voltage wires.
- Damaged harness – Inspect the wiring harness for damage. If the harness appears to be OK, observe the Tech 2 while moving connectors and wiring harnesses related to the MAF sensor. A change in the display will indicate the location of the fault.
- Plugged intake air duct or filter element – A wide-open throttle acceleration from a stop should cause the mass air flow displayed on a Tech 2 to increase from about 3-6 g/second at idle to 100 g/second or greater at the time of the 1-2 shift. If not, check for a restriction.

If DTC P0102 cannot be duplicated, the information included in the Failure Records data can be useful in determining vehicle mileage since the DTC was last set.

Test Description

Number(s) below refer to the step number(s) on the Diagnostic Chart.

2. This step verifies that the problem is present at idle.
4. A voltage reading of less than 4 or over 5 volts at the MAF sensor signal circuit indicates a fault in the wiring or a poor connection.
5. This verifies that ignition feed voltage and a good ground are available at the MAF sensor.

DTC P0102 – MAF Sensor Circuit Low Frequency

Step	Action	Value(s)	Yes	No
1	Was the “On-Board Diagnostic (OBD) System Check” performed?	—	Go to *Step 2*	Go to *OBD System Check*
2	1. Start the engine. 2. With the engine idling, monitor “MAF Frequency” display on the Tech 2. Is the “MAF Frequency” below the specified value?	3 g/Sec	Go to *Step 4*	Go to *Step 5*
3	1. Ignition “ON,” engine “OFF.” 2. Review and record Tech 2 Failure Records data. 3. Operate the vehicle within Failure Records conditions as noted. 4. Using a Tech 2, monitor “DTC” info for DTC P0102. Does the Tech 2 indicate DTC P0102 failed this ignition?	—	Go to *Step 4*	Refer to *Diagnostic Aids*
4	1. Ignition “OFF.” 2. Disconnect the MAF sensor connector. 3. Ignition “ON,” engine “OFF.” 4. Using a DVM, measure voltage between the MAF sensor signal circuit and battery ground. Is the voltage near the specified value?	5 V	Go to *Step 5*	Go to *Step 8*
5	Connect a test light between the MAF sensor ignition feed and ground circuits at the MAF sensor harness connector. Is the test light “ON?”	—	Go to *Step 13*	Go to *Step 6*
6	Connect a test light between the MAF sensor ignition feed circuit and battery ground. Is the test light “ON?”	—	Go to *Step 12*	Go to *Step 7*
7	1. Check for a poor connection at the MAF sensor. 2. If a poor connection is found, replace the faulty terminal(s). Was a poor connection found?	—	Verify repair	Go to *Step 11*
8	1. Ignition “OFF.” 2. Disconnect the MAF sensor. 3. Disconnect the PCM connector for the MAF signal circuit. 4. Ignition “ON,” engine “OFF.” 5. With the DVM, measure the voltage between the MAF signal terminal at the PCM and battery ground. Is the voltage under the specified value?	4 V	Go to *Step 9*	Go to *Step 10*

DTC P0102 – MAF Sensor Circuit Low Frequency (Cont'd)

Step	Action	Value(s)	Yes	No
9	1. Ignition "OFF." 2. Disconnect the PCM white connector. 3. Ignition "ON." 4. Check the MAF sensor signal circuit for a short to 5 volts. Is the action complete?	—	Verify repair	—
10	1. Ignition "OFF." 2. Disconnect the PCM white connector. 3. Ignition "ON." 4. Check the MAF sensor signal circuit between the PCM and the MAF sensor for an open, short to ground, or short to the MAF ground circuit. Is the action complete?	—	Verify repair	Go to *Step 13*
11	Locate and repair the open in the ground circuit to the MAF sensor. Is the action complete?	—	Verify repair	—
12	Locate and repair the open in the ignition feed circuit to the MAF sensor. Is the action complete?	—	Verify repair	—
13	Replace the MAF sensor. Is the action complete?	—	Verify repair	Go to *Step 14*
14	Replace the PCM. **IMPORTANT:** The replacement PCM must be programmed. Refer to *UBS 98model year Immobilizer Workshop Manual.* Is the action complete?	—	Verify repair	—

Diagnostic Trouble Code (DTC) P0103 MAF Sensor Circuit High Frequency

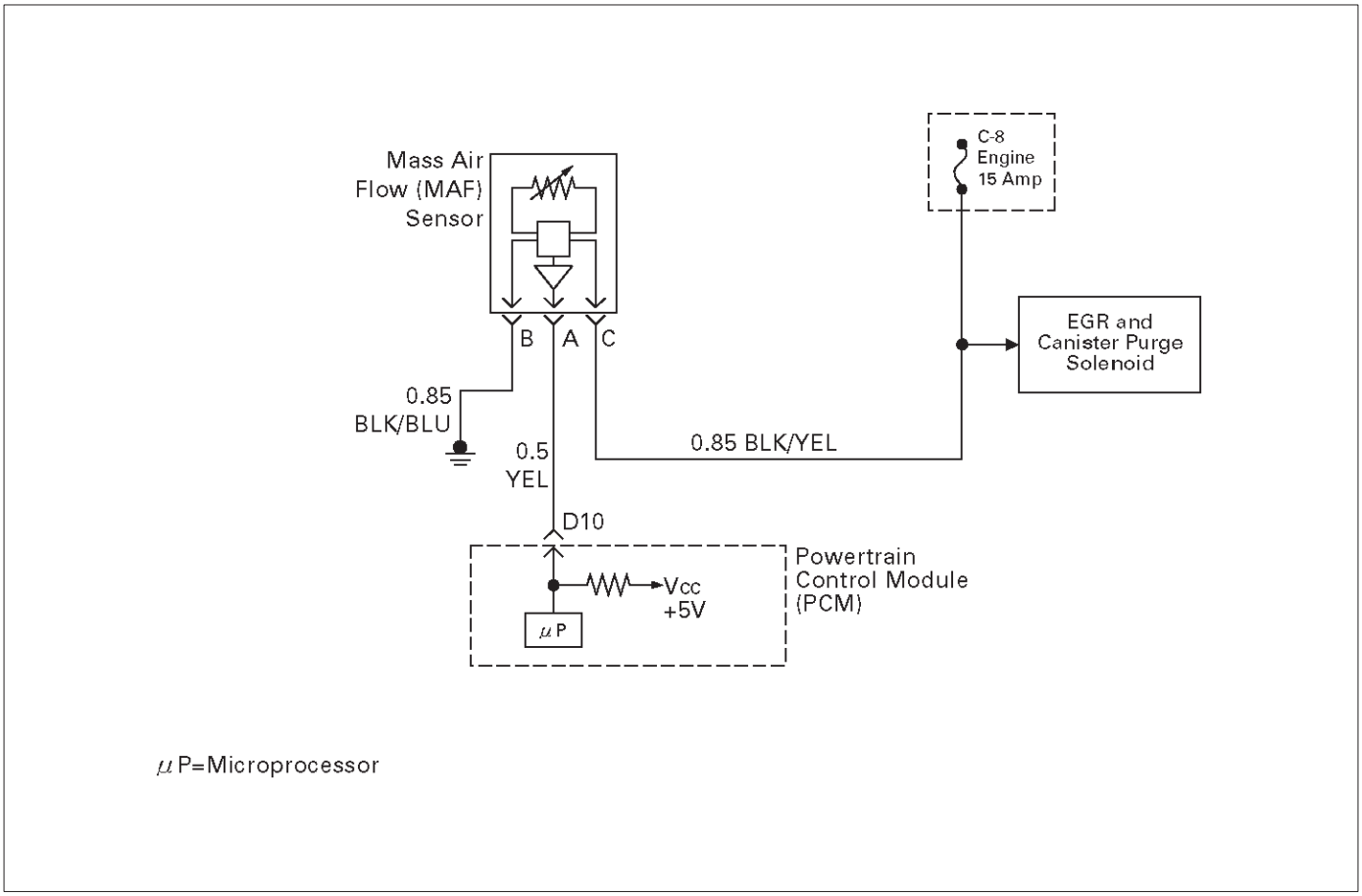

T321122

Circuit Description

The mass air flow (MAF) sensor measures the amount of air which passes through it into the engine during a given time. The powertrain control module (PCM) uses the mass air flow information to monitor engine operating conditions for fuel delivery calculations. A large quantity of air entering the engine indicates an acceleration or high load situation, while a small quantity of air indicates deceleration or idle.

The MAF sensor produces a frequency signal which can be monitored using a Tech 2. The frequency will vary within a range of around 2500 Hz at idle to around 9000 Hz at maximum engine load. DTC P0103 will be set if the signal from the MAF sensor is above the possible range of a normally operating MAF sensor.

Conditions for Setting the DTC

- The engine is running above 500 RPM for more than 10 seconds.
- System voltage is above 11.5 volts.
- MAF signal frequency is above 10,000 Hz (10.0 kHz) for a total of 50 percent of the last 200 samples monitored. A sample is taken every cylinder event.

Action Taken When the DTC Sets

- The PCM will illuminate the malfunction indicator lamp (MIL) the first time the fault is detected.
- The PCM calculates an airflow value based on idle air control valve position, throttle position, RPM and barometric pressure.
- The PCM will store conditions which were present when the DTC was set as Freeze Frame and in the Failure Records data.

Conditions for clearing the MIL/DTC

- DTC P0103 can be cleared by using the Tech 2 “Clear Info” function or by disconnecting the PCM battery feed.

Diagnostic Aids

If DTC P0103 cannot be duplicated, the information included in the Failure Records data can be useful in determining vehicle mileage since the DTC was last set.

Test Description

Number(s) below refer to the step number(s) on the Diagnostic Chart.

2. This step verifies that the problem is present at idle.

4. A frequency reading with the MAF sensor connector disconnected indicates an electromagnetic interfernce (EMI) related fault.

DTC P0103 – MAF Sensor Circuit High Frequency

Step	Action	Value(s)	Yes	No
1	Was the “On-Board Diagnostic (OBD) System Check” performed?	—	Go to *Step 2*	Go to *OBD System Check*
2	1. Ignition “ON,” engine “OFF.” 2. Review and record Tech 2 Failure Records data. 3. Operate the vehicle within Failure Records conditions as noted. 4. Using a Tech 2, monitor “DTC” info for DTC P0103. Does the Tech 2 indicate DTC P0103 failed this ignition?	—	Go to *Step 3*	Refer to *Diagnostic Aids*
3	1. Start the engine. 2. With the engine idling, monitor “MAF Frequency” display on the Tech 2. Is “MAF Frequency” above the specified value?	219 g/Sec	Go to *Step 4*	Go to *Step 7*
4	1. Ignition “OFF.” 2. Disconnect the MAF sensor connector. 3. Ignition “ON,” engine idling. 4. Using a Tech 2, monitor “MAF Frequency.” Does the Tech 2 indicate a “MAF Frequency” at the specified value?	0.0 g/Sec	Go to *Step 5*	Go to *Step 6*
5	Replace the MAF sensor. Is the action complete?	—	Verify repair	Go to *Step 8*
6	1. Check the MAF harness for incorrect routing near high voltage components (solenoids, relays, motors). 2. If incorrect routing is found, correct the harness routing. Was a problem found?	—	Verify repair	Go to *Step 7*
7	1. With the engine idling, monitor “MAF Frequency” display on the Tech 2. 2. Quickly snap open throttle to wide open throttle while under a road load and record value. Does the Tech 2 indicate “MAF Frequency” above the specified value?	219 g/Sec	Go to *Step 5*	Go to *Step 8*
8	Replace the PCM. **IMPORTANT:** The replacement PCM must be programmed. Refer to *UBS 98model year Immobilizer Workshop Manual.* Is the action complete?	—	Verify repair	—

Diagnostic Trouble Code (DTC) P0107 MAP Sensor Circuit Low Voltage

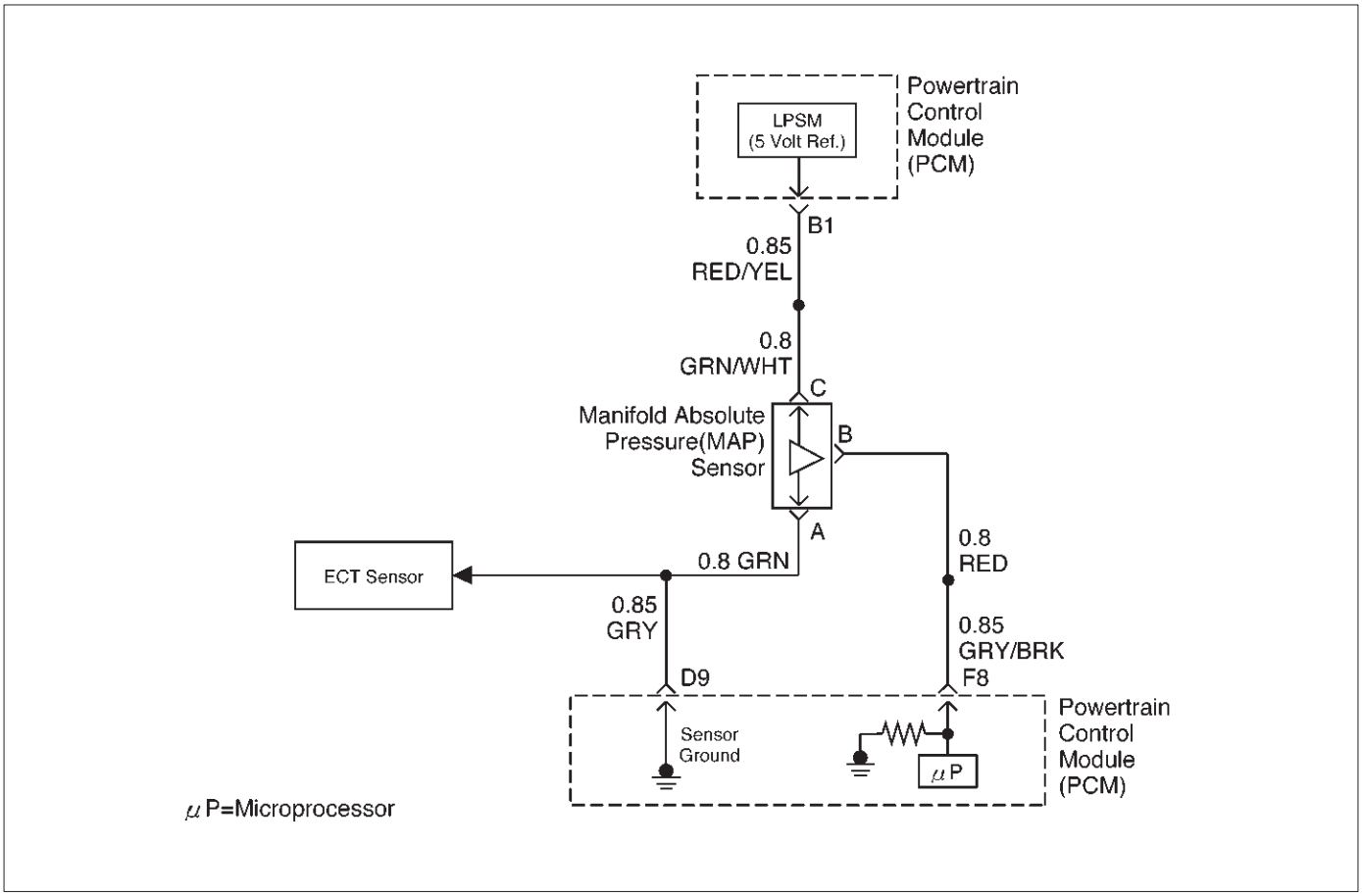

D06RW102

Circuit Description

The manifold absolute pressure (MAP) sensor responds to changes in intake manifold pressure (vacuum). The MAP sensor signal voltage to the powertrain control module (PCM) varies from below 2 volts at idle (high vacuum) to above 4 volts with the ignition "ON," engine not running or at wide-open throttle (low vacuum).

The MAP sensor is used to determine manifold pressure changes while the exhaust gas recirculation (EGR) flow test diagnostic is being run (refer to *DTC P0401*), to determine engine vacuum level for some other diagnostics and to determine barometric pressure (BARO). The PCM monitors the MAP signals for voltages outside the normal range of the MAP sensor. If the PCM detects a MAP signal voltage that is excessively low, DTC P0107 will be set.

Conditions for Setting the DTC

- No TP sensor DTCs present.
- Engine is running.
- Throttle angle is above 1% if engine speed is less than 1000 RPM.
- Throttle angle is above 2% if engine speed is above 1000 RPM.
- The MAP sensor indicates manifold absolute pressure at or below 11 kPa for a total of approximately 10 seconds over a 16-second period.
- Ignition voltage more than 11 volts.

Action Taken When the DTC Sets

- The PCM will illuminate the malfunction indicator lamp (MIL) the first time the fault is detected.
- The PCM will default to a BARO value of 79.3 kPa.
- The PCM will store conditions which were present when the DTC was set as Freeze Frame and in the Failure Records data.

Conditions for Clearing the MIL/DTC

- DTC P0107 can be cleared by using the Tech 2 "Clear Info" function or by disconnecting the PCM battery feed.

Diagnostic Aids

Check for the following conditions:

- Check for intermittent codes.
- The MAP sensor shares a 5 Volt reference with the Rough Road Sensor. If these codes are also set, it could indicate a problem with the 5 Volt reference circuit .
- The MAP sensor shares a ground with the Rough Road Sensor, the ECT sensor, and the Transmission Fluid Temperature sensor.
- Poor connection at PCM – Inspect harness connectors for backed-out terminals, improper mating, broken locks, improperly formed or damaged terminals, and poor terminal-to-wire connection.
- Damaged harness – Inspect the wiring harness for damage. If the harness appears to be OK, observe the MAP display on the Tech 2 while moving connectors

and wiring harnesses related to the sensor. A change in the display will indicate the location of the fault.

If DTC P0107 cannot be duplicated, the information included in the Failure Records data can be useful in determining vehicle mileage since the DTC was last set. If it is determined that the DTC occurs intermittently, performing the DTC P0107 Diagnostic Chart may isolate the cause of the fault.

DTC P0107 – MAP Sensor Circuit Low Voltage

Step	Action	Value(s)	Yes	No
1	Was the “On-Board Diagnostic (OBD) System Check” performed?	—	Go to *Step 2*	Go to *OBD System Check*
2	1. Ignition “ON,” engine “OFF.” 2. With the throttle closed, observe the MAP value displayed on the Tech 2. Is the MAP value near the specified value?	11 kPa at sea level	Go to *Step 4*	Go to *Step 3*
3	1. Ignition “ON,” engine “OFF.” 2. Review and record Tech 2 Failure Records data. 3. Operate the vehicle within Failure Records conditions as noted. 4. Using a Tech 2, monitor “Specific DTC” info for DTC P0107. Does the Tech 2 indicate DTC P0107 failed?	—	Go to *Step 4*	Refer to *Diagnostic Aids*
4	1. Ignition “OFF.” 2. Disconnect the MAP sensor electrical connector. 3. Jumper the 5 volt reference “A” circuit and the MAP signal together at the MAP sensor harness connector. 4. Ignition “ON.” 5. Observe the MAP value displayed on the Tech 2. Is the MAP value near the specified value?	5 V 104 kPa	Go to *Step 10*	Go to *Step 5*
5	1. Disconnect the jumper. 2. Connect a test light between B+ and the MAP sensor signal circuit at the MAP sensor harness connector. 3. Observe the MAP value displayed on the Tech 2. Is the MAP value near the specified value.	5 V 104 kPa	Go to *Step 6*	Go to *Step 8*
6	1. Ignition “OFF.” 2. Disconnect the PCM and check the 5 volt reference “A” circuit for an open or short to ground. 3. If the 5 volt reference “A” circuit is open or shorted to ground, repair it as necessary. Was the 5 volt reference “A” circuit open or shorted to ground?	—	Verify repair	Go to *Step 7*
7	Check the 5 volt reference “A” circuit for a poor connection at the PCM and replace the terminal if necessary. Did the terminal require replacement?	—	Verify repair	Go to *Step 11*
8	1. Ignition “OFF.” 2. Disconnect the PCM, and check the MAP signal circuit for an open, short to ground, or short to the sensor ground circuit. 3. If the MAP sensor signal circuit is open or shorted to ground, repair it as necessary. Was the MAP signal circuit open or shorted to ground?	—	Verify repair	Go to *Step 9*

DTC P0107 – MAP Sensor Circuit Low Voltage (Cont'd)

Step	Action	Value(s)	Yes	No
9	Check the MAP sensor signal circuit for a poor connection at the PCM and the MAP sensor; replace the terminal if necessary. Did the terminal require replacement?	—	Verify repair	Go to *Step 11*
10	Replace the MAP sensor. Is the action complete?	—	Verify repair	—
11	Replace the PCM. **IMPORTANT:** The replacement PCM must be programmed. Refer to *UBS 98model year Immobilizer Workshop Manual.* Is the action complete?	—	Verify repair	—

Diagnostic Trouble Code (DTC) P0108 MAP Sensor Circuit High Voltage

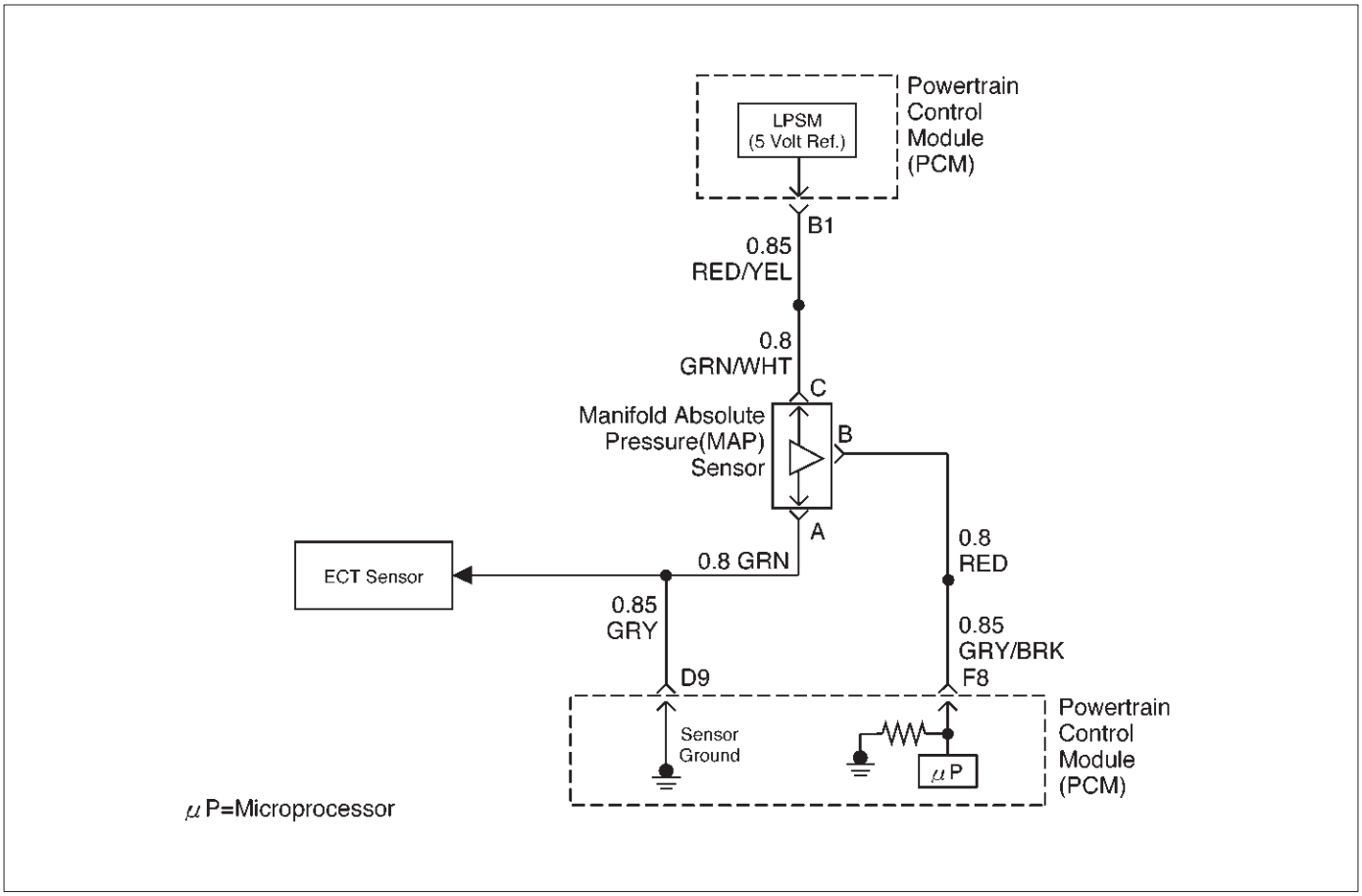

D06RW102

Circuit Description

The manifold absolute pressure (MAP) sensor responds to changes in intake manifold pressure (vacuum). The MAP sensor signal voltage to the powertrain control module (PCM) varies from below 2 volts at idle (high vacuum) to above 4 volts with the key "ON," engine not running or at wide-open throttle (low vacuum).

The MAP sensor is used to determine manifold pressure changes while the linear EGR flow test diagnostic is being run (refer to *DTC P0401*), to determine engine vacuum level for some other diagnostics and to determine barometric pressure (BARO). The PCM monitors the MAP signals for voltages outside the normal range of the MAP sensor. If the PCM detects a MAP signal voltage that is excessively high, DTC P0108 will be set.

Conditions for Setting the DTC

- No TP sensor DTCs present.
- Engine is running for more than 10 seconds.
- Throttle position is below 3% if engine speed is below 1000 RPM.
- Throttle position is below 10% if engine speed is above 1000 RPM.
- The MAP sensor indicates an intermittent manifold absolute pressure above 80 kPa for a total of approximately 10 seconds over a 16-second period.

Action Taken When the DTC Sets

- The PCM will illuminate the malfunction indicator lamp (MIL) the first time the fault is detected.
- The PCM will default to a BARO value of 79.3 kPa.
- The PCM will store conditions which were present when the DTC was set as Freeze Frame and in the Failure Records data.

Conditions for Clearing the MIL/DTC

- DTC P0108 can be cleared by using the Tech 2 "Clear Info" function or by disconnecting the PCM battery feed.

Diagnostic Aids

Check for the following conditions:

- Poor connection at PCM – Inspect harness connectors for backed-out terminals, improper mating, broken locks, improperly formed or damaged terminals, and poor terminal-to-wire connection.
- Damaged harness – Inspect the wiring harness for damage. If the harness appears to be OK, observe the MAP display on the Tech 2 while moving connectors and wiring harnesses related to the sensor. A change in the display will indicate the location of the fault.

If DTC P0108 cannot be duplicated, the information included in the Failure Records data can be useful in determining vehicle mileage since the DTC was last set. If it is determined that the DTC occurs intermittently, performing the DTC P1108 Diagnostic Chart may isolate the cause of the fault.

DTC P0108 – MAP Sensor Circuit High Voltage

Step	Action	Value(s)	Yes	No
1	Was the “On-Board Diagnostic (OBD) System Check” performed?	—	Go to *Step 2*	Go to *OBD System Check*
2	1. If the engine idle is rough, unstable or incorrect, repair the idle problem before using this chart. Refer to *Symptoms* section. 2. With the engine idling, note the MAP value on the Tech 2. Is the MAP reading above the specified value?	90 kPa	Go to *Step 4*	Go to *Step 3*
3	1. Ignition “ON,” engine “OFF.” 2. Review and record Tech 2 Failure Records data. 3. Operate the vehicle within Failure Records conditions as noted. 4. Using a Tech 2, monitor “Specific DTC” info for DTC P0108. Does the Tech 2 indicate DTC P0108 failed this ignition?	—	Go to *Step 4*	Refer to *Diagnostic Aids*
4	1. Ignition “OFF.” 2. Disconnected the MAP sensor electrical connector. 3. Ignition “ON.” 4. Note the MAP sensor voltage displayed on the Tech 2. Is the MAP sensor voltage at the specified value?	0.0 V 11 kPa	Go to *Step 5*	Go to *Step 6*
5	Probe the sensor ground circuit with a test light to B+. Is the test light “ON?”	—	Go to *Step 7*	Go to *Step 9*
6	1. Check the MAP signal circuit for a short to voltage or a short to the 5 volt reference “A” circuit. 2. If the MAP sensor signal circuit is shorted, repair circuit as necessary. Was the MAP sensor signal circuit shorted?	—	Verify repair	Go to *Step 11*
7	1. Check for a poor sensor ground terminal connection at the MAP sensor electrical connector. 2. If a problem if found, replace the faulty terminal. Did the terminal require replacement?	—	Verify repair	Go to *Step 8*
8	Check for a plugged or leaking vacuum supply to the MAP sensor. Is the vacuum supply plugged or leaking?	—	Verify repair	Go to *Step 12*
9	1. Check for a poor sensor ground terminal connection at the PCM. 2. If a problem is found, replace the faulty terminal. Did the terminal require replacement?	—	Verify repair	Go to *Step 10*
10	1. Check the continuity of the MAP sensor ground circuit. 2. If the MAP sensor ground circuit measures over 5 ohms, repair open or poor connection. Was a condition found and corrected?	—	Verify repair	Go to *Step 11*

DTC P0108 – MAP Sensor Circuit High Voltage (Cont'd)

Step	Action	Value(s)	Yes	No
11	Replace the PCM. **IMPORTANT:** The replacement PCM must be programmed. Refer to *UBS 98model year Immobilizer Workshop Manual.* Is the action complete?	—	Verify Repair	—
12	Replace the MAP sensor. Is the action complete?	—	Verify repair	—

Diagnostic Trouble Code (DTC) P0112 IAT Sensor Circuit Low Voltage

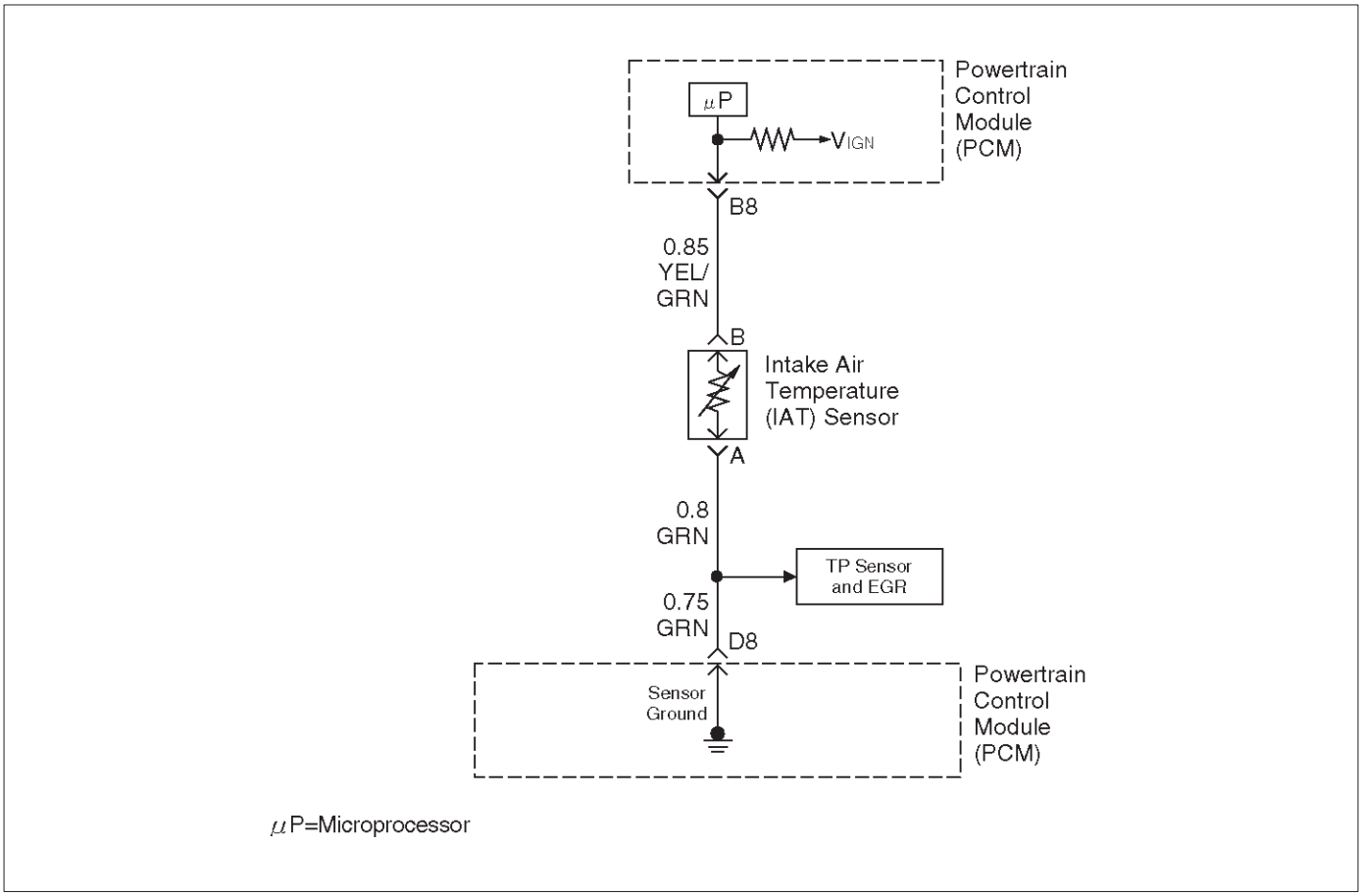

D06RW026

Circuit Description

The intake air temperature (IAT) sensor is a thermistor which measures the temperature of the air entering the engine. The powertrain control module (PCM) applies 5 volts through a pull-up resistor to the IAT sensor. When the intake air is cold, the sensor resistance is high and the PCM will monitor a high signal voltage on the IAT signal circuit. If the intake air is warm, the sensor resistance is lower, causing the PCM to monitor a lower voltage. DTC P0112 will set when the PCM detects an excessively low signal voltage on the intake air temperature sensor signal circuit.

Conditions for Setting the DTC

- The engine has been running for over 2 minutes.
- Vehicle speed is greater than 30 mph (48 km/h) .
- IAT signal voltage indicates and intake air temperature greater than 148˚C (298˚F) (about 5 volts) for a total of 12.5 seconds over a 25-second period of time.

Action Taken When the DTC Sets

- The PCM will illuminate the malfunction indicator lamp (MIL) the first time the fault is detected.
- The PCM will store conditions which were present when the DTC was set as Freeze Frame and in the Failure Records data.

Conditions for Clearing the MIL/DTC

- DTC P0112 can be cleared by using the Tech 2 “Clear Info” function or by disconnecting the PCM battery feed.

Diagnostic Aids

Check for the following conditions:

- Poor connection at PCM – Inspect harness connectors for backed-bout terminals, improper mating, broken locks, improperly formed or damaged terminals, and poor terminal-to-wire connection.
- Damaged harness – Inspect the wiring harness for damage. If the harness appears to be OK, observe the IAT display on the Tech 2 while moving connectors and wiring harnesses related to the IAT sensor. A change in the IAT display will indicate the location of the fault.

If DTC P0112 cannot be duplicated, the information included in the Failure Records data can be useful in determining vehicle mileage since the DTC was last set.

Test Description

Number(s) below refer to the step number(s) on the Diagnostic Chart:

2. Verifies that the fault is present.

3. If DTC P0112 can be repeated only by duplicating the Failure Records condition, refer to the *Temperature vs. Resistance Value* table. The table may be used to test the IAT sensor at various temperatures to evaluate the possibility of a "shifted" sensor that may be stored above or below a certain temperature. If this is the case, replace the IAT sensor. If the IAT sensor appears to be OK, the fault is intermittent; refer to *Diagnostic Aids*.

Intake Air Temperature Sensor

˚C	˚F	OHMS
Temperature vs. Resistance Values (approximate)		
100	212	177
80	176	332
60	140	667
45	113	1188
35	95	1802
25	77	2796
15	59	4450
5	41	7280
–5	23	12300
–15	5	21450
–30	–22	52700
–40	–40	100700

DTC P0112–IAT Sensor Circuit Low Voltage

Step	Action	Value(s)	Yes	No
1	Was the “On-Board Diagnostic (OBD) System Check” performed?	—	Go to *Step 2*	Go to *OBD System Check*
2	1. Ignition “ON,” engine “OFF.” 2. Using a Tech 2, monitor the intake air temperature (IAT). Is the intake air temperature greater than the specified value?	148˚C (283˚F)	Go to *Step 4*	Go to *Step 3*
3	1. Ignition “ON,” engine “OFF.” Review and record Tech 2 Failure Records data. 2. Operate the vehicle within Failure Records conditions as noted. 3. Using a Tech 2, monitor the “Specific DTC” info for DTC P0112. Does the Tech 2 indicate DTC P0112 failed this ignition?	—	Refer to *Test Description*	Refer to *Diagnostic Aids*
4	1. Ignition “OFF.” 2. Disconnect the IAT sensor electrical connector. 3. Ignition “ON.” 4. Observe the intake air temperature on the Tech 2. Is the intake air temperature below the specified value?	–38˚C (–36˚F)	Go to *Step 6*	Go to *Step 5*
5	1. Ignition “OFF.” 2. Disconnect the PCM electrical connectors. 3. Check the IAT sensor signal circuit for a short to ground. Is the IAT sensor signal circuit shorted to ground?	—	Verify repair	Go to *Step 7*
6	Replace the IAT sensor. Is the action complete?	—	Verify repair	—
7	Replace the PCM. **IMPORTANT:** The replacement PCM must be programmed. Refer to *UBS 98model year Immobilizer Workshop Manual.* Is the action complete?	—	Verify repair	—

Diagnostic Trouble Code (DTC) P0113 IAT Sensor Circuit High Voltage

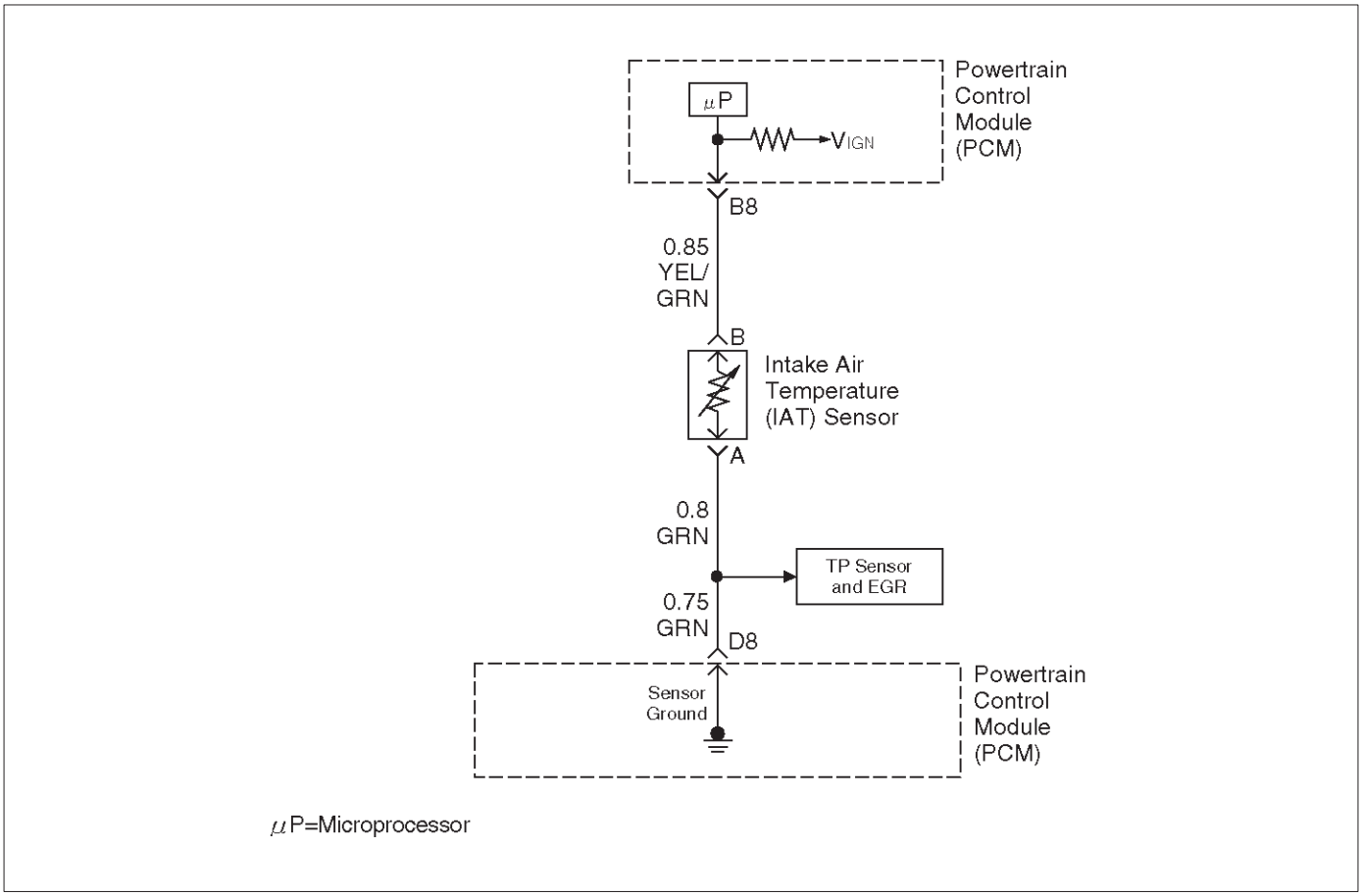

D06RW026

Circuit Description

The intake air temperature (IAT) sensor is a thermistor which measures the temperature of the air entering the engine. The powertrain control module (PCM) applies 5 volts through a pull-up resistor to the IAT sensor. When the intake air is cold, the sensor resistance is high and the PCM will monitor a high signal voltage on the IAT signal circuit. If the intake air is warm, the sensor resistance is lower causing the PCM to monitor a lower voltage. DTC P0113 will set when the PCM detects an excessively high signal voltage on the intake air temperature sensor signal circuit.

Conditions for Setting the DTC

- The engine has been running for over 4 minutes.
- Vehicle speed is less than 20 mph (32 km/h).
- ECT signal temperature is above 60˚C (140˚F).
- Mass air flow is less then 20 g/second.
- IAT signal voltage indicates an intake air temperature less than –39˚C (–38˚F) for total of 12.5 seconds over a 25-second period.

Action Taken When the DTC Sets

- The PCM will illuminate the malfunction indicator lamp (MIL) the first time the fault is detected.
- The PCM will store conditions which were present when the DTC was set as Freeze Frame and in the Failure Records data.

Conditions for Clearing the MIL/DTC

- DTC P0113 can be cleared by using the Tech 2 “Clear Info” function or by disconnecting the PCM battery feed.

Diagnostic Aids

Check for the following conditions:

- The IAT sensor shares a ground with the EGR position sensor and the TP sensor. Check the ground if these DTC’s are set.
- Poor connection at PCM – Inspect harness connectors for backed-out terminals, improper mating, broken locks, improperly formed or damaged terminals, and poor terminal-to-wire connection.
- Damaged harness – Inspect the wiring harness for damage. If the harness appears to be OK, observe the IAT display on the Tech 2 while moving connectors and wiring harnesses related to the IAT sensor. A change in the IAT display will indicate the location of the fault.

If DTC P0113 cannot be duplicated, the information included in the Failure Records data can be useful in determining vehicle mileage since the DTC was last set.

Test Description

Number(s) below refer to the step number(s) on the Diagnostic Chart:

2. Verifies that the fault is present.

3. If DTC P0113 can be repeated only by duplicating the Failure Records conditions, refer to the "Temperature vs. Resistance Values" table. The table may be used to test the IAT sensor at various temperatures to evaluate the possibility of a "shifted" sensor that may be open above or below a certain temperature. If this is the case, replace the IAT sensor. If the IAT sensor appears to be OK, the fault is intermittent; refer to *Diagnostic Aids*.

Intake Air Temperature Sensor

˚C	˚F	OHMS
Temperature vs. Resistance Values (approximate)		
100	212	177
80	176	332
60	140	667
45	113	1188
35	95	1802
25	77	2796
15	59	4450
5	41	7280
–5	23	12300
–15	5	21450
–30	–22	52700
–40	–40	100700

DTC P0113 –IAT Sensor Circuit High Voltage

Step	Action	Value(s)	Yes	No
1	Was the "On-Board Diagnostic (OBD) System Check" performed?	—	Go to *Step 2*	Go to *OBD System Check*
2	Ignition "ON," engine "OFF." Observe the "Intake Air Temp" display on the Tech 2. Is the "Intake Air Temp" below the specified value?	–38˚C (–36˚F)	Go to *Step 4*	Go to *Step 3*
3	1. Ignition "ON," engine "OFF." 2. Review and record Tech 2 Failure Records data parameters. 3. Operate the vehicle within Failure Records conditions as noted. 4. Using a Tech 2, monitor "Specific DTC" info for DTC P0113. Does the Tech 2 indicate DTC P0113 failed?	—	Refer to *Test Description*	Refer to *Diagnostic Aids*
4	1. Ignition "OFF." 2. Disconnect the IAT sensor electrical connector. 3. Jumper the IAT signal circuit and the sensor ground circuit together at the IAT sensor harness connector. 4. Ignition "ON." 5. Observe the "Intake Air Temp" display on the Tech 2. Is the "Intake Air Temp" at the specified value?	140˚C (284˚F)	Go to *Step 6*	Go to *Step 5*
5	1. Jumper the IAT signal circuit at the IAT sensor harness connector to chassis ground. 2. Observe the "Intake Air Temp" display on the Tech 2. Is the "Intake Air Temp" at the specified value?	140˚C (284˚F)	Go to *Step 7*	Go to *Step 8*

DTC P0113 –IAT Sensor Circuit High Voltage (Cont'd)

Step	Action	Value(s)	Yes	No
6	Check for poor connections at the IAT sensor and replace terminals if necessary. Did any terminals require replacement?	—	Verify repair	Go to *Step 10*
7	1. Ignition "OFF." 2. Disconnect the PCM, and check the IAT sensor ground circuit for an open. 3. If the IAT sensor ground circuit is open, repair it as necessary. Was the IAT sensor ground circuit open?	—	Verify repair	Go to *Step 9*
8	1. Ignition "OFF." 2. Disconnect the PCM, and check the IAT signal circuit for an open. 3. If the IAT sensor signal circuit is open, repair it as necessary. Was the IAT signal circuit open?	—	Verify repair	Go to *Step 9*
9	Check for a poor sensor ground or IAT signal circuit terminal connection at the PCM and replace terminal(s) if necessary. Did any of the terminals need to be replaced?	—	Verify repair	Go to *Step 11*
10	Replace the IAT sensor. Is the action complete?	—	Verify repair	—
11	Replace the PCM. **IMPORTANT:** The replacement PCM must be programmed. Refer to *UBS 98model year Immobilizer Workshop Manual.* Is the action complete?	—	Verify repair	—

Diagnostic Trouble Code (DTC) P0117 ECT Sensor Circuit Low Voltage

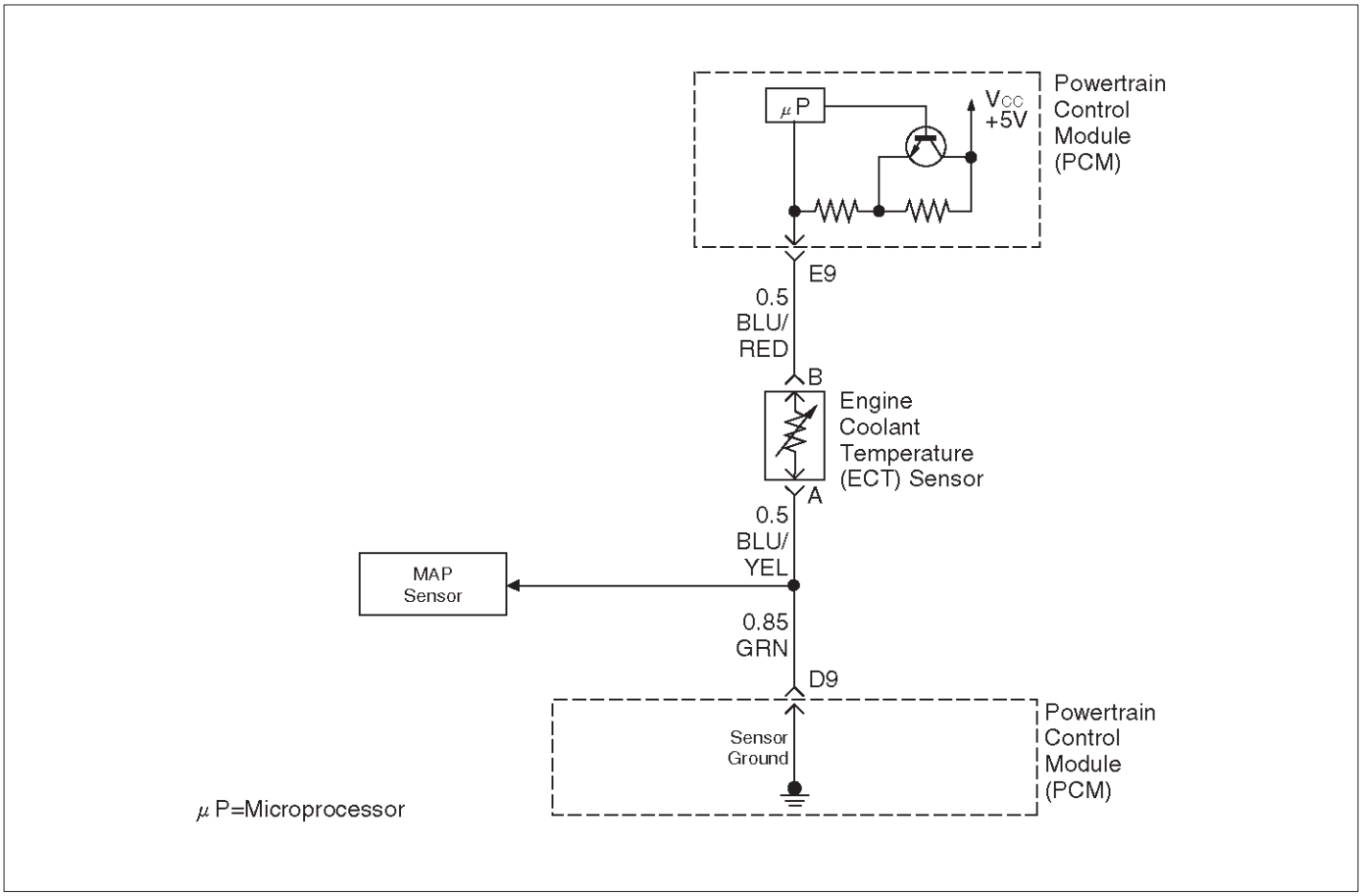

060RY00304

Circuit Description

The engine coolant temperature (ETC) sensor is a thermistor mounted on a coolant crossover pipe at the rear of the engine. The powertrain control module (PCM) applies a voltage (about 5 volts) through a pull-up resistor to the ECT signal circuit. When the engine coolant is cold, the sensor (thermistor) resistance is high, therefore the PCM will measure a high signal voltage. As the engine coolant warms, the sensor resistance becomes lower, and the ECT signal voltage measured at the PCM drops. With a fully warmed-up engine, the ECT signal voltage should measure about 1.5 to 2.0 volts.

Conditions for Setting the DTC

- Engine running time is longer than one minute.
- The ECT sensor signal indicates an engine coolant temperature greater than 150˚C (302˚F) (about 0.10 V) for a total of 50 seconds over a 100–second period.

Action Taken When the DTC Sets

- The PCM will illuminate the malfunction indicator lamp (MIL) the first time the fault is detected.
- The PCM will substitute the ECT reading with a default engine coolant temperature value. The default value is based on start-up intake air temperature and running time.
- The PCM will store conditions which were present when the DTC was set as Freeze Frame and in the Failure Records data.

Conditions for Clearing the MIL/DTC

- DTC P0117 can be cleared by using the Tech 2 “Clear Info” function or by disconnecting the PCM battery feed.

Diagnostic Aids

Check for the following conditions:

- Poor connection at PCM – Inspect harness connectors for backed-out terminals, improper mating, broken locks, improperly formed or damaged terminals, and poor terminal-to-wire connection.
- Damaged harness – Inspect the wiring harness for damage. If the harness appears to be OK, observe the ECT display on the Tech 2 while moving connectors and wiring harnesses related to the ECT sensor. A change in the ECT display will indicate the location of the fault.

If DTC P0117 cannot be duplicated, the information included in the Failure Records data can be useful in determining vehicle mileage since the DTC was last set.

Test Description

Number(s) below refer to the step number(s) on the Diagnostic Chart.

2. Verifies that the fault is present.
3. If DTC P0117 can be repeated only by duplicating the Failure Records conditions, refer to the “Temperature vs. Resistance Values” table. The table may be used to test the ECT sensor at various temperatures to evaluate the possibility of a “shifted” sensor that may be shorted above or below a certain temperature. If this is the case, replace the ECT sensor. If the ECT sensor appears to be OK, the fault is intermittent; refer to *Diagnostic Aids*.

Engine Coolant Temperature Sensor

˚C	˚F	OHMS
Temperature vs. Resistance Values (approximate)		
100	212	177
80	176	332
60	140	667
45	113	1188
35	95	1802
25	77	2796
15	59	4450
5	41	7280
–5	23	12300
–15	5	21450
–30	–22	52700
–40	–40	100700

DTC P0117 – ECT Sensor Low Voltage

Step	Action	Value(s)	Yes	No
1	Was the “On-Board Diagnostic (OBD) System Check” performed?	—	Go to *Step 2*	Go to *OBD System Check*
2	1. Ignition “ON,” engine “OFF.” 2. Observe the “Eng Cool Temp” display on the Tech 2. Is the “Eng Cool Temp” below the specified value?	139˚C (282˚F)	Go to *Step 4*	Go to *Step 3*
3	1. Ignition “ON,” engine “OFF.” 2. Review and record Tech 2 Failure Records data. 3. Operate the vehicle within Failure Records conditions as noted. 4. Using a Tech 2, monitor “Specific DTC” info for DTC P0117. Does the Tech 2 indicate DTC P0117 failed this ignition?	—	Go to *Step 4*	Refer to *Diagnostic Aids*
4	1. Disconnect the ECT sensor electrical connector. 2. Observe the “Eng Cool Temp” display on the Tech 2. Is the “Eng Cool Temp” at the specified value?	–39˚C (–38˚F)	Go to *Step 6*	Go to *Step 5*
5	1. Ignition “OFF.” 2. Disconnect the PCM and check the ECT signal circuit for a short to ground or a short to the sensor ground circuit. 3. If the ECT signal circuit is shorted. repair it as necessary. Was the ECT signal circuit shorted to ground?	—	Verify repair	Go to *Step 7*
6	Replace the ECT sensor. Is the action complete?	—	Verify repair	—
7	Replace the PCM. **IMPORTANT:** The replacement PCM must be programmed. Refer to *UBS 98model year Immobilizer Workshop Manual.* Is the action complete?	—	Verify repair	—

Diagnostic Trouble Code (DTC) P0118 ECT Sensor Circuit High Voltage

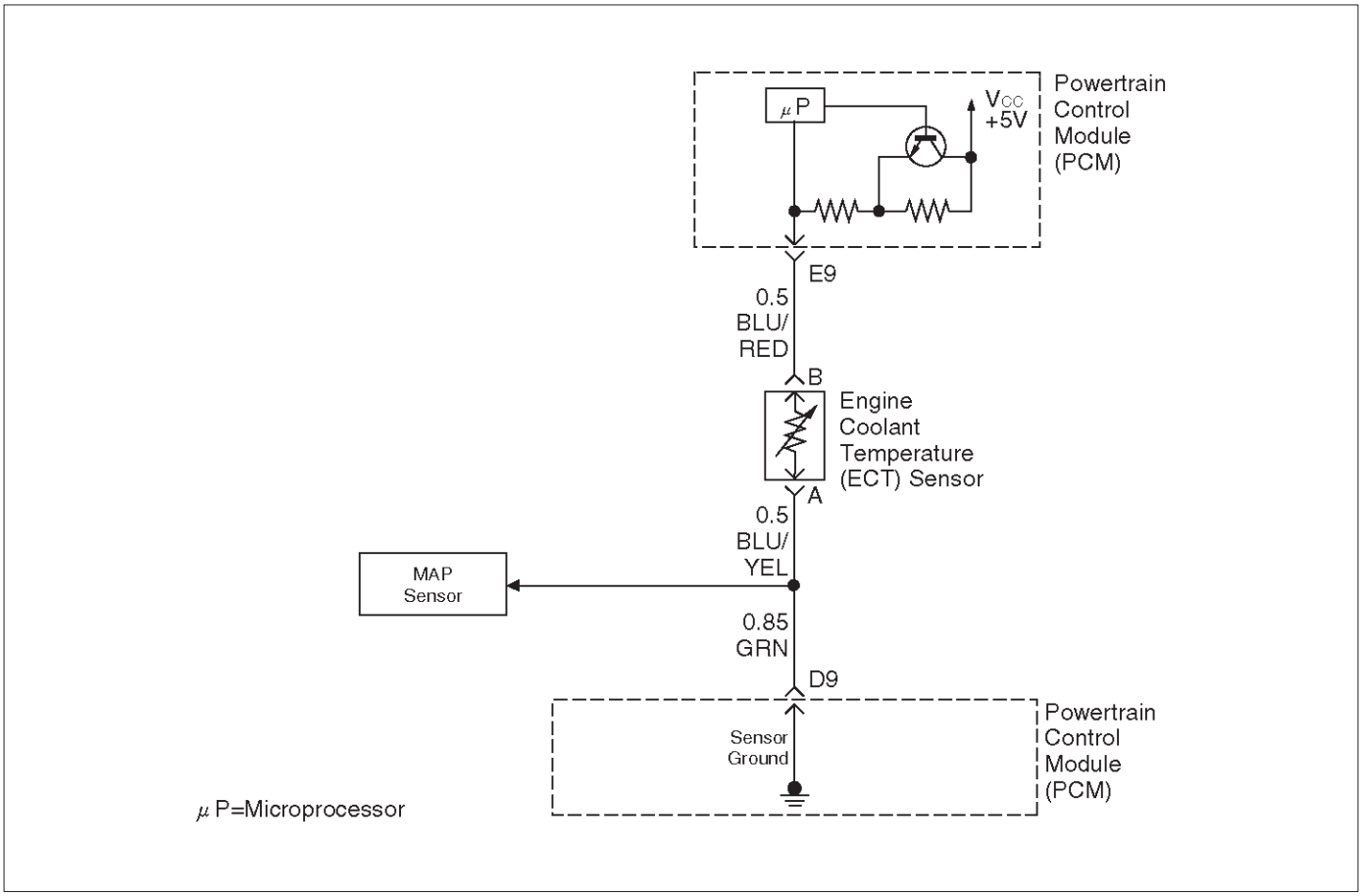

060RY00304

Circuit Description

The engine coolant temperature (ETC) sensor is a thermistor mounted in on a coolant crossover pipe at the rear of the engine. The powertrain control module (PCM) applies a voltage (about 5 volts) through a pull-up resistor to the ECT signal circuit. When the engine coolant is cold, the sensor (thermistor) resistance is high, therefore the PCM will measure a high signal voltage. As the engine coolant warms, the sensor resistance becomes less, and the ECT signal voltage measured at the PCM drops. With a fully warmed-up engine, the ECT signal voltage should measure about 1.5 to 2.0 volts.

Conditions for Setting the DTC

- Engine running time is longer than 1.5 minutes.
- The ECT sensor signal indicates an engine coolant temperature of –39˚C (–38˚F) or less (about 5 volts) for a total of 50 seconds over a 100-second period.

Action Taken When the DTC Sets

- The PCM will illuminate the malfunction indicator lamp (MIL) the first time the fault is detected.
- The PCM will substitute the ECT reading with a default engine coolant temperature value. The default value is based on start-up intake air temperature and running time.
- The PCM will store conditions which were present when the DTC was set as Freeze Frame and in the Failure Records data.

Conditions for Clearing the MIL/DTC

- DTC P0118 can be cleared by using the Tech 2 “Clear Info” function or by disconnecting the PCM battery feed.

Diagnostic Aids

Check for the following conditions:

The ECT shares a ground with the Transmission Fluid Temperature sensor, the Rough Road sensor, and the MAP sensor.

Check the ground if these DTCs are also set.

- Poor connection at PCM – Inspect harness connectors for backed-out terminals, improper mating, broken locks, improperly formed or damaged terminals, and poor terminal-to-wire connection.
- Damaged harness – Inspect the wiring harness for damage. If the harness appears to be OK, observe the ECT display on the Tech 2 while moving connectors and wiring harnesses related to the ECT sensor. A change in the ECT display will indicate the location of the fault.

If DTC P0118 cannot be duplicated, the information included in the Failure Records data can be useful in determining vehicle mileage since the DTC was last set. If it is determined that the DTC occurs intermittently, performing the DTC P1115 Diagnostic Chart may isolate the cause of the fault.

Test Description

Number(s) below refer to the step number(s) on the Diagnostic Chart.

2. Verifies that the fault is present.

3. If DTC P0118 can be repeated only by duplicating the Failure Records conditions, refer to the "Temperature vs. Resistance Value" table. The table may be used to test the ECT sensor at various temperatures to evaluate the possibility of a "shifted" sensor that may be shorted above or below a certain temperature. If this is the case, replace the ECT sensor. If the ECT sensor appears to be OK, the fault is intermittent; refer to *Diagnostic Aids*.

Engine Coolant Temperature Sensor

˚C	˚F	OHMS
Temperature vs. Resistance Values (approximate)		
100	212	177
80	176	332
60	140	667
45	113	1188
35	95	1802
25	77	2796
15	59	4450
5	41	7280
–5	23	12300
–15	5	21450
–30	–22	52700
–40	–40	100700

DTC P0118 – ECT Sensor Circuit High Voltage

Step	Action	Value(s)	Yes	No
1	Was the "On-Board Diagnostic (OBD) System Check" performed?	—	Go to *Step 2*	Go to *OBD System Check*
2	1. Ignition "ON," engine "OFF." 2. Observe the "Eng Cool Temp" display on the Tech 2. Is the "Eng Cool Temp" below the specified value?	–39˚C (–38˚F)	Go to *Step 4*	Go to *Step 3*
3	1. Ignition "ON," engine "OFF." 2. Review and record Tech 2 Failure Records data. 3. Operate the vehicle within Failure Records conditions as noted. 4. Using a Tech 2, monitor the "Specific DTC" info for DTC P0118. Does the Tech 2 indicate DTC P0118 failed?	—	Refer to *Test Description*	Refer to *Diagnostic Aids*
4	1. Disconnect the ECT sensor electrical connector. 2. Jumper the ECT signal circuit and the sensor ground circuit together at the ECT sensor harness connector. 3. Observe the "Eng Cool Temp" display on the Tech 2. Is the "Eng Cool Temp" at the specified value?	140˚C (284˚F)	Go to *Step 6*	Go to *Step 5*
5	1. Jumper the ECT signal circuit at the ECT sensor harness connector to chassis ground. 2. Observe the "Eng Cool Temp" display on the Tech 2. Is the "Eng Cool Temp" at the specified value?	140˚C (284˚F)	Go to *Step 7*	Go to *Step 8*
6	Check for poor connections at the ECT sensor and replace terminals if necessary. Did any terminals require replacement?	—	Verify repair	Go to *Step 10*

DTC P0118 – ECT Sensor Circuit High Voltage (Cont'd)

Step	Action	Value(s)	Yes	No
7	1. Ignition "OFF." 2. Disconnect the PCM, and check the ECT sensor ground circuit for an open. 3. If the ECT sensor ground circuit is open, repair it as necessary. Was the ECT sensor ground circuit open?	—	Verify repair	Go to *Step 9*
8	1. Ignition "OFF." 2. Disconnect the PCM, and check the ECT signal circuit for an open. 3. If the ECT sensor signal circuit is open, repair it as necessary. Was the ECT signal circuit open?	—	Verify repair	Go to *Step 9*
9	Check for a poor sensor ground or ECT signal circuit terminal connection at the PCM and replace terminal(s) if necessary. Did any of the terminals need to be replaced?	—	Verify repair	Go to *Step 11*
10	Replace the ECT sensor. Is the action complete?	—	Verify repair	—
11	Replace the PCM. **IMPORTANT:** The replacement PCM must be programmed. Refer to *UBS 98model year Immobilizer Workshop Manual.* Is the action complete?	—	Verify repair	—

Diagnostic Trouble Code (DTC) P0121 TP System Performance

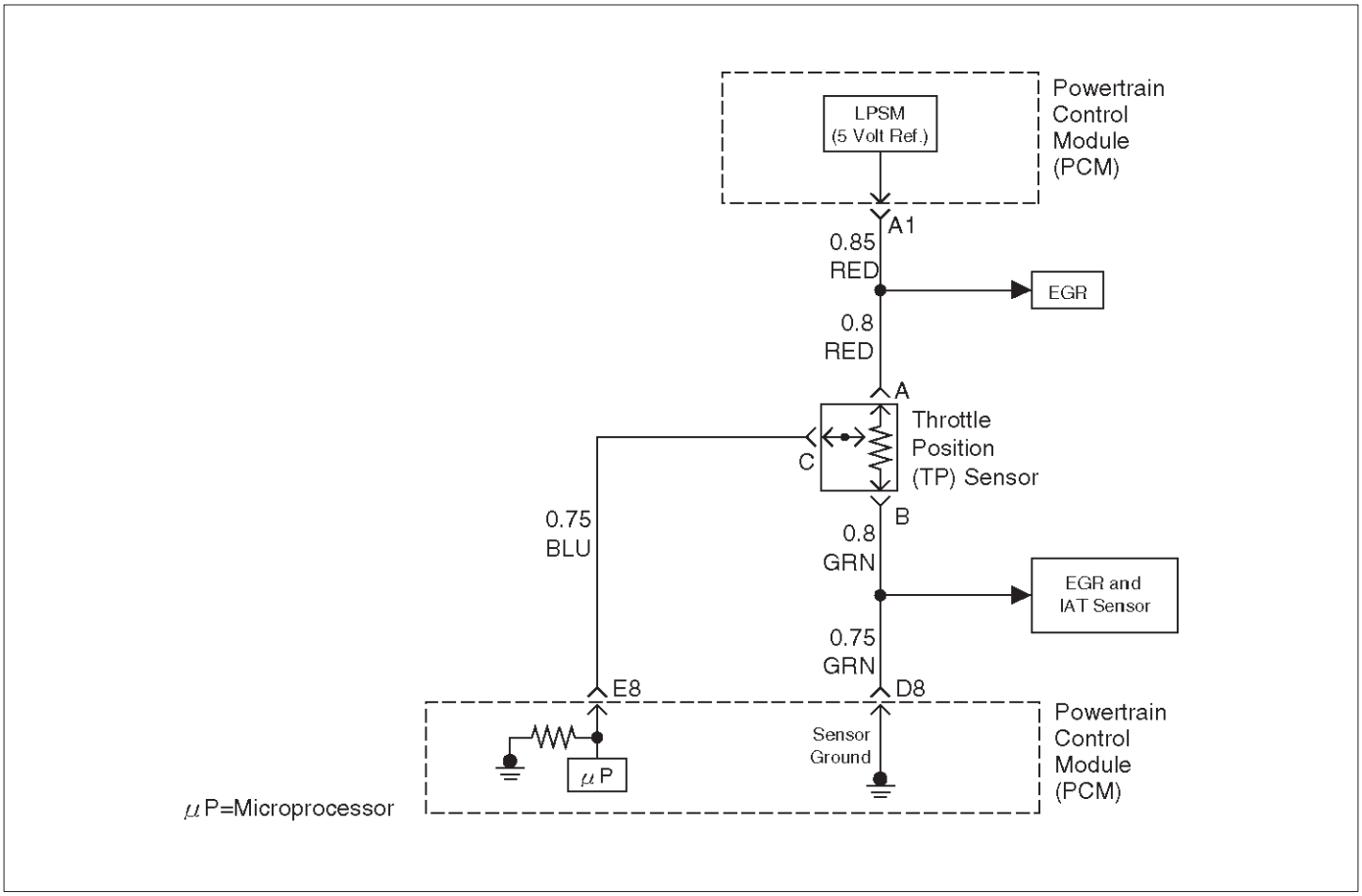

D06RW028

Circuit Description

The throttle position (TP) sensor circuit provides a voltage signal that changes relative to throttle blade angle. The signal voltage will vary from about 0.6 volts at closed throttle to about 4.5 volts at wide open throttle (WOT).
The TP signal is used by the powertrain control module (PCM) for fuel control and many of the PCM-controlled outputs. The PCM monitors throttle position and compares actual throttle position from the TP sensor to a predicted TP value calculated from engine speed. If the PCM detects an out-of-range condition, DTC P0121 will set.

Conditions for Setting the DTC

- The engine is running.
- No MAP DTCs, or P0121, P0122, P0123 are set.
- MAP reading is below 55 kPa.
- Throttle is steady, throttle angle is changing less than 1%.
- Predicted throttle angle is not close to actual throttle angle.
- Above conditions are present for a total of 12.5 seconds over a 25-second period of time.

Action Taken When the DTC Sets

- The PCM will illuminate the malfunction indicator lamp (MIL) after the second consecutive trip in which the fault is detected.
- The PCM will store conditions which were present when the DTC was set as Freeze Frame and in the Failure Records data.
- The PCM will use a default throttle position based on mass air flow and RPM.

Conditions for Clearing the MIL/DTC

- DTC P0121 can be cleared by using the Tech 2 “Clear info ” function or by disconnecting the PCM battery feed.

Diagnostic Aids

Check for the following conditions:

- Skewed MAP signal or faulty Map sensor – An incorrect MAP signal may cause the PCM to incorrectly calculate the predicted TP sensor value during high engine load situations. Check for an unusually low MAP reading. This condition can cause DTC P0121 to be set.
- Poor connection at PCM – Inspect harness connectors for backed-out terminals, improper mating, broken locks improperly formed or damaged terminals, and poor terminal-to-wire connection.
- Damaged harness – Inspect the wiring harness for damage. If the harness appears to be OK, observe the ECT display on the Tech 2 while moving connectors and wiring harnesses related to the sensor. A change in the display will indicate the location of the fault.

If DTC P0121 cannot be duplicated, the information included in the Failure Records data can be useful in determining vehicle mileage since the DTC was last set.

DTC P0121 –TP System Performance

Step	Action	Value(s)	Yes	No
1	Was the “On-Board Diagnostic (OBD) System Check” performed?	—	Go to *Step 2*	Go to *OBD System Check*
2	1. Ignition “ON,” engine not running. 2. Observe the MAP reading on the Tech 2. Is the MAP reading less than the specified value?	65 kPa	Go to *Step 3*	Go to *Step 6*
3	1. Disconnected the MAP sensor. 2. Connect a test light between the 5 volt reference “A” circuit and the MAP signal circuit at the MAP sensor harness connector. 3. Observe the MAP reading on the Tech 2. Is the MAP reading less than the specified value?	65 kPa	Go to *Step 5*	Go to *Step 4*
4	1. Check the MAP signal circuit between the PCM and the MAP sensor for an open, short to ground, or short to the MAP ground circuit. 2. If the MAP signal circuit is open or shorted, repair it as necessary. Was the MAP signal circuit open or shorted?	—	Verify repair	Go to *Step 12*
5	Replace the MAP sensor. Is the action complete?	—	Verify repair	—
6	Observe the TP angle reading on the Tech 2 while slowly opening the throttle. Does the TP angle increase steadily and evenly from the closed throttle value to the wide open throttle value?	Closed throttle = 0% Wide open throttle = 100%	Refer to *Diagnostic Aids*	Go to *Step 7*
7	1. Disconnect the TP sensor. 2. Observe the TP sensor reading on the Tech 2. Is the TP sensor reading near the specified value?	0 V	Go to *Step 8*	Go to *Step 9*
8	1. Connect a test light between the 5 volt reference “A” circuit and the TP sensor signal circuit at the TP sensor harness connector. 2. Observe the TP sensor reading on the Tech 2. Is the TP sensor reading at the specified value?	5 V	Go to *Step 11*	Go to *Step 10*
9	Check the following items: 1. TP signal circuit for a short to voltage. 2. TP sensor ground circuit for high resistance between the PCM and the TP sensor. 3. TP sensor ground circuit for a poor connection. 4. If a problem is found, repair wiring harness as necessary. Was a problem found?	—	Verify repair	Go to *Step 12*

DTC P0121 –TP System Performance (Cont'd)

Step	Action	Value(s)	Yes	No
10	Check the following items: 1. TP signal circuit or 5 volt reference "A" circuit for a poor connection. 2. TP signal circuit or 5 volt reference "A" circuit for high resistance between the PCM and the TP sensor. 3. If a problem is found, repair wiring harness as necessary. Was a problem found?	—	Verify repair	Go to *Step 12*
11	Replace the TP sensor. Is the action complete?	—	Verify repair	—
12	Replace the PCM. **IMPORTANT:** The replacement PCM must be programmed. Refer to *UBS 98model year Immobilizer Workshop Manual.* Is the action complete?	—	Verify repair	—

Diagnostic Trouble Code (DTC) P0122 TP Sensor Circuit Low Voltage

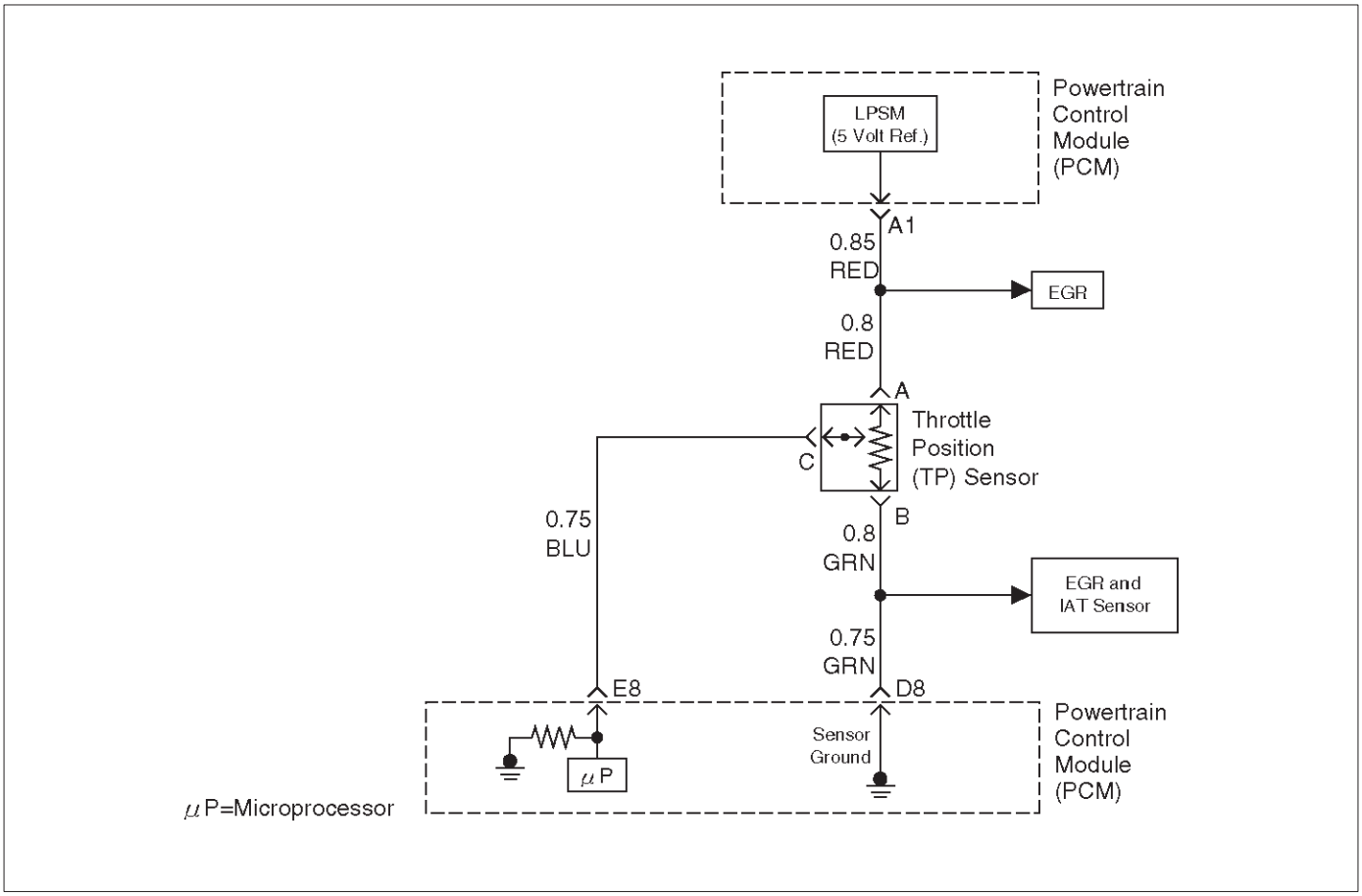

D06RW028

Circuit Description

The throttle position (TP) sensor circuit provides a voltage signal that changes relative to throttle blade angle. The signal voltage will vary from below 0.6 volts at closed throttle to about 4.5 volts at wide open throttle (WOT). The TP signal is used by the powertrain control module (PCM) for fuel control and many of the PCM–controlled outputs.

Conditions for Setting the DTC

- The ignition is “ON.”
- TP sensor signal voltage is less than 0.22 volt for a total of 0.78 second over a 1.5-second period.

Action Taken When the DTC Sets

- The PCM will illuminate the malfunction indicator lamp (MIL) the first time the fault is detected.
- The PCM will store conditions which were present when the DTC was set as Freeze Frame and in the Failure Records data.
- The PCM will use a default throttle position based on mass air flow and RPM.

Conditions for Clearing the MIL/DTC

- DTC P0122 can be cleared by using the Tech 2 “Clear Info” function or by disconnecting the PCM battery feed.

Diagnostic Aids

Check for the following conditions:

- Check intermittent codes.
- The TP sensor shares a 5 Volt reference with the EGR position sensor. Check the 5 Volt reference if these DTCs are also set.
- The TP sensor shares a ground with the IAT sensor, the EGR position sensor.
- Poor connection at PCM – Inspect harness connectors for backed-out terminals, improper mating, broken locks, improperly formed or damaged terminals, and poor terminal-to-wire connection.
- Damaged harness – Inspect the wiring harness for damage. If the harness appears to be OK, observe the throttle position display on the Tech 2 while moving connectors and wiring harnesses related to the TP sensor. A change in the display will indicate the location of the fault.

If DTC P0122 cannot be duplicated, the information included in the Failure Records data can be useful in determining vehicle mileage since the DTC was last set.

DTC P0122 –TP Sensor Circuit Low Voltage

Step	Action	Value(s)	Yes	No
1	Was the “On-Board Diagnostic (OBD) System Check” performed?	—	Go to *Step 2*	Go to *OBD System Check*
2	1. Ignition “ON,” engine “OFF.” 2. With the throttle closed, observe the “TP Sensor” display on the Tech 2. Is the “TP Sensor” below the specified value?	0.22 V	Go to *Step 4*	Go to *Step 3*
3	1. Ignition “ON,” engine “OFF.” 2. Review and record Tech 2 Failure Records data. 3. Operate the vehicle within Failure Records conditions as noted. 4. Using a Tech 2, monitor the “DTC” info for DTC P0122. Does the Tech 2 indicate DTC P0122 failed?	—	Go to *Step 4*	Refer to *Diagnostic Aids*
4	1. Ignition “OFF.” 2. Disconnect the TP sensor electrical connector. 3. Jumper the 5 volt reference “A” circuit and the TP signal together at the TP sensor harness connector. 4. Ignition “ON.” Observe the “TP Sensor” display on the Tech 2. Is the “TP Sensor” at the specified value?	5 V	Go to *Step 10*	Go to *Step 5*
5	1. Disconnect jumper. 2. Connect a test light between B+ and the TP sensor signal circuit at the TP sensor harness connector. Observe the “TP Sensor” display on the Tech 2. Is the “TP Sensor” at the specified value?	5 V	Go to *Step 6*	Go to *Step 8*
6	1. Ignition “OFF.” 2. Disconnect the PCM and check the 5 volt reference “A” circuit for an open or short to ground. 3. If the 5 volt reference “A” circuit is open or shorted to ground, repair it as necessary. Was the 5 volt reference “A” circuit open or shorted to ground?	—	Verify repair	Go to *Step 7*
7	Check the 5 volt reference “A” circuit for a poor connection at the PCM and replace the terminal if necessary. Did the terminal require replacement?	—	Verify repair	Go to *Step 12*
8	1. Ignition “OFF.” 2. Disconnect the PCM, and check the TP signal circuit for an open, short to ground, or short to the sensor ground circuit. 3. If the TP sensor signal circuit is open or shorted to ground, repair it as necessary. Was the TP signal circuit open or shorted to ground?	—	Verify repair	Go to *Step 9*
9	Check the TP sensor signal circuit for a poor connection at the PCM and replace the terminal if necessary. Did the terminal require replacement?	—	Verify repair	Go to *Step 12*

DTC P0122 –TP Sensor Circuit Low Voltage (Cont'd)

Step	Action	Value(s)	Yes	No
10	Check the TP sensor signal circuit for a poor connection at the TP sensor and replace the terminal if necessary. Did the terminal require replacement?	—	Verify repair	Go to *Step 11*
11	Replace the TP sensor. Is the action complete?	—	Verify repair	—
12	Replace the PCM. **IMPORTANT:** The replacement PCM must be programmed. Refer to *UBS 98model year Immobilizer Workshop Manual.* Is the action complete?	—	Verify repair	—

Diagnostic Trouble Code (DTC) P0123 TP Sensor Circuit High Voltage

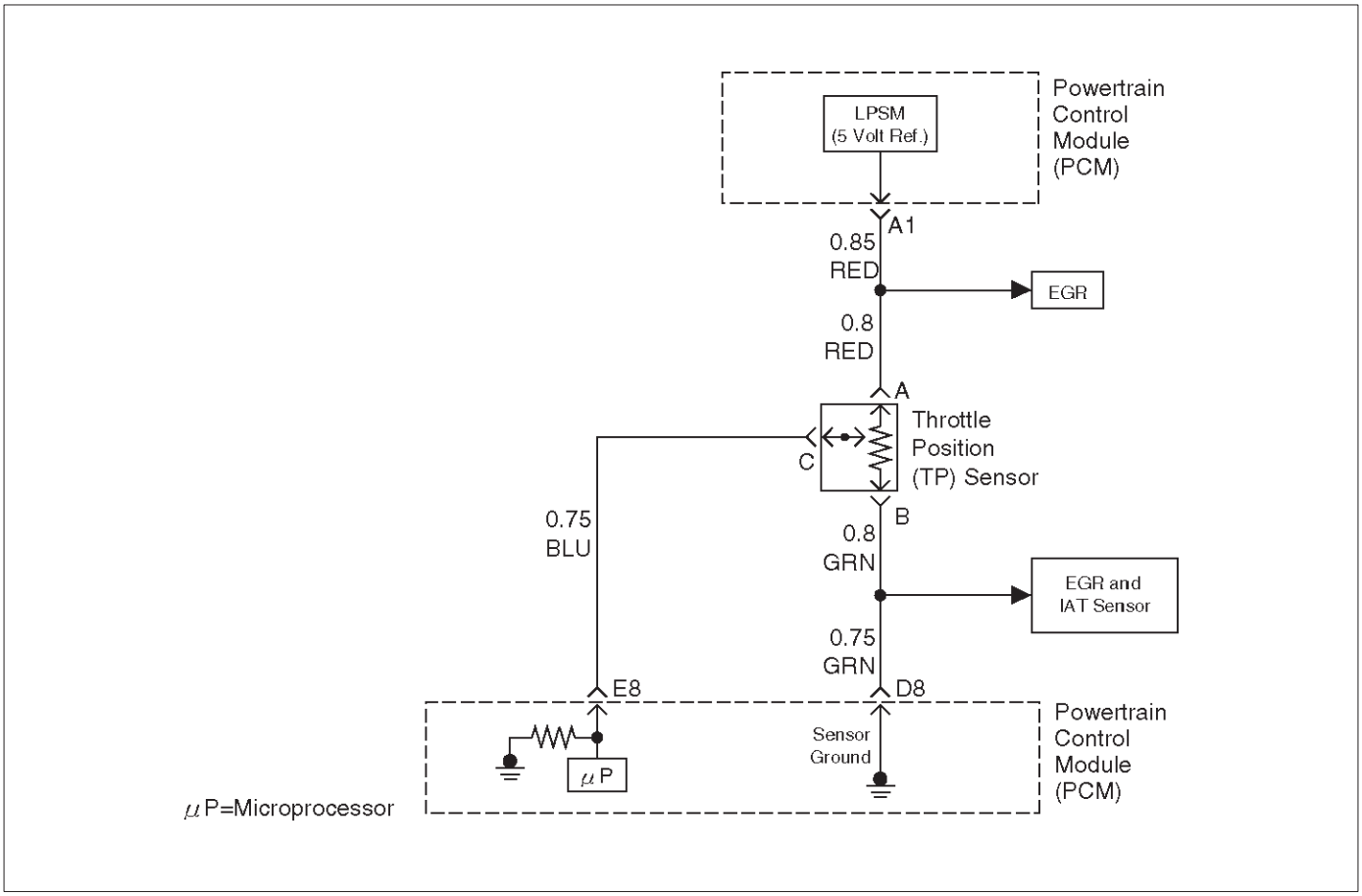

D06RW028

Circuit Description

The throttle position (TP) sensor circuit provides a voltage signal that changes relative to throttle blade angle. The signal voltage will vary from about 0.6 volts at closed throttle to about 4.5 volts at wide open throttle (WOT). The TP signal is one of the most important inputs used by the powertrain control module (PCM) for fuel control and many of the PCM-controlled outputs.

Conditions for Setting the DTC

- The ignition is “ON.”
- TP sensor signal voltage is greater than 4.88 volts for a total of 0.78 second over a 1.5-second period.

Action Taken When the DTC Sets

- The PCM will illuminate the malfunction indicator lamp (MIL) the first time the fault is detected.
- The PCM will store conditions which were present when the DTC was set as Freeze Frame and in the Failure Records data.
- The PCM will use a default throttle position based on mass air flow and RPM.

Conditions for Clearing the MIL/DTC

- DTC P0123 can be cleared by using the Tech 2 “Clear Info” function or by disconnecting the PCM battery feed.

Diagnostic Aids

Check for the following conditions:

- Check intermittent codes.
- The TP sensor shares a 5 Volt reference with the EGR position sensor. Check the 5 Volt reference if these DTCs are also set.
- The TP sensor shares a ground with the IAT sensor and the EGR position sensor. Check the ground if these other DTCs are also set.
- Poor connection at PCM – Inspect harness connectors for backed-out terminals, improper mating, broken locks, improperly formed or damaged terminals, and poor terminal-to-wire connection.
- Damaged harness – Inspect the wiring harness for damage. If the harness appears to be OK, observe the TP sensor display on the Tech 2 while moving connectors and wiring harnesses related to the TP sensor. A change in the display will indicate the location of the fault.
- Faulty TP sensor – With the ignition key “ON,” engine “OFF,” observe the TP sensor display on the Tech 2 while slowly depressing the accelerator to wide open throttle. If a voltage over 4.88 volts is seen at any point in normal accelerator travel, replace the TP sensor.

If DTC P0123 cannot be duplicated, the information included in the Failure Records data can be useful in determining vehicle mileage since the DTC was last set.

Test Description

Number (s) below refer to the step number(s) on the Diagnostic Chart.

7. Components that share the TP sensor 5 volt reference “A” circuit include the following device:

- EGR valve

Disconnect the component while observing the TP sensor display on the Tech 2. If the reading changes drastically when this component is disconnected, replace the component that affected the reading.

DTC P0123 – TP Sensor Circuit High Voltage

Step	Action	Value(s)	Yes	No
1	Was the “On-Board Diagnostic (OBD) System Check” performed?	—	Go to *Step 2*	Go to *OBD System Check*
2	1. Ignition “ON,” engine “OFF.” 2. With the throttle closed, observe the “TP Sensor” display on the Tech 2. Is the “TP Sensor” above the specified value?	4.88 V	Go to *Step 4*	Go to *Step 3*
3	1. Ignition “ON,” engine “OFF.” 2. Review and record Tech 2 Failure Records data. 3. Operate the vehicle within Failure Records conditions as noted. 4. Using a Tech 2, monitor “Specific DTC” info for DTC P0123. Does the Tech 2 indicate DTC P0123 failed.	—	Go to *Step 4*	Refer to *Diagnostic Aids*
4	1. Disconnect the TP sensor electrical connector. 2. Observe the “TP Sensor” display on the Tech 2. Is the “TP Sensor” near the specified value?	0 V	Go to *Step 5*	Go to *Step 6*
5	Probe the sensor ground circuit at the TP sensor harness connector with a test light connected to B+. Is the test light “ON?”	—	Go to *Step 7*	Go to *Step 10*
6	1. Ignition “OFF,” disconnect the PCM. 2. Ignition “ON,” engine “OFF.” 3. Check for a short to voltage on the TP sensor signal circuit. 4. If the TP sensor signal circuit is shorted, repair it as necessary. Was the TP sensor signal circuit shorted?	—	Verify repair	Go to *Step 12*
7	1. Ignition “ON.” 2. Monitor the “TP Sensor” Tech 2 display while disconnecting each of the components that share the 5 volt reference “A” circuit (one at a time). 3. If the “TP Sensor” Tech 2 display changes, replace the component that caused the display to change when disconnected. Does disconnecting any of these components cause the “TP Sensor” display to change?	—	Verify repair	Go to *Step 8*
8	1. Ignition “OFF,” disconnect the PCM. 2. Ignition “ON,” engine “OFF.” 3. Check for a short to B+ on the 5 volt reference “A” circuit. 4. If the 5 volt reference “A” circuit is shorted, repair it as necessary. Was the 5 volt reference “A” circuit shorted?	—	Verify repair	Go to *Step 9*
9	Check for poor electrical connections at the TP sensor and replace terminals if necessary. Did any terminals require replacement?	—	Verify repair	Go to *Step 11*

DTC P0123 – TP Sensor Circuit High Voltage (Cont'd)

Step	Action	Value(s)	Yes	No
10	1. Ignition "OFF." 2. Disconnect the PCM, and check for an open sensor ground circuit to the TP sensor. 3. If a problem is found, repair it as necessary. Was the sensor ground circuit to the TP sensor open?	—	Verify repair	Go to *Step 12*
11	Replace the TP sensor. Is the action complete?	—	Verify repair	—
12	Replace the PCM. **IMPORTANT:** The replacement PCM must be programmed. Refer to *UBS 98model year Immobilizer Workshop Manual.* Is the action complete?	—	Verify repair	—

Diagnostic Trouble Code (DTC) P0131 HO2S Circuit Low Voltage Bank 1 Sensor 1

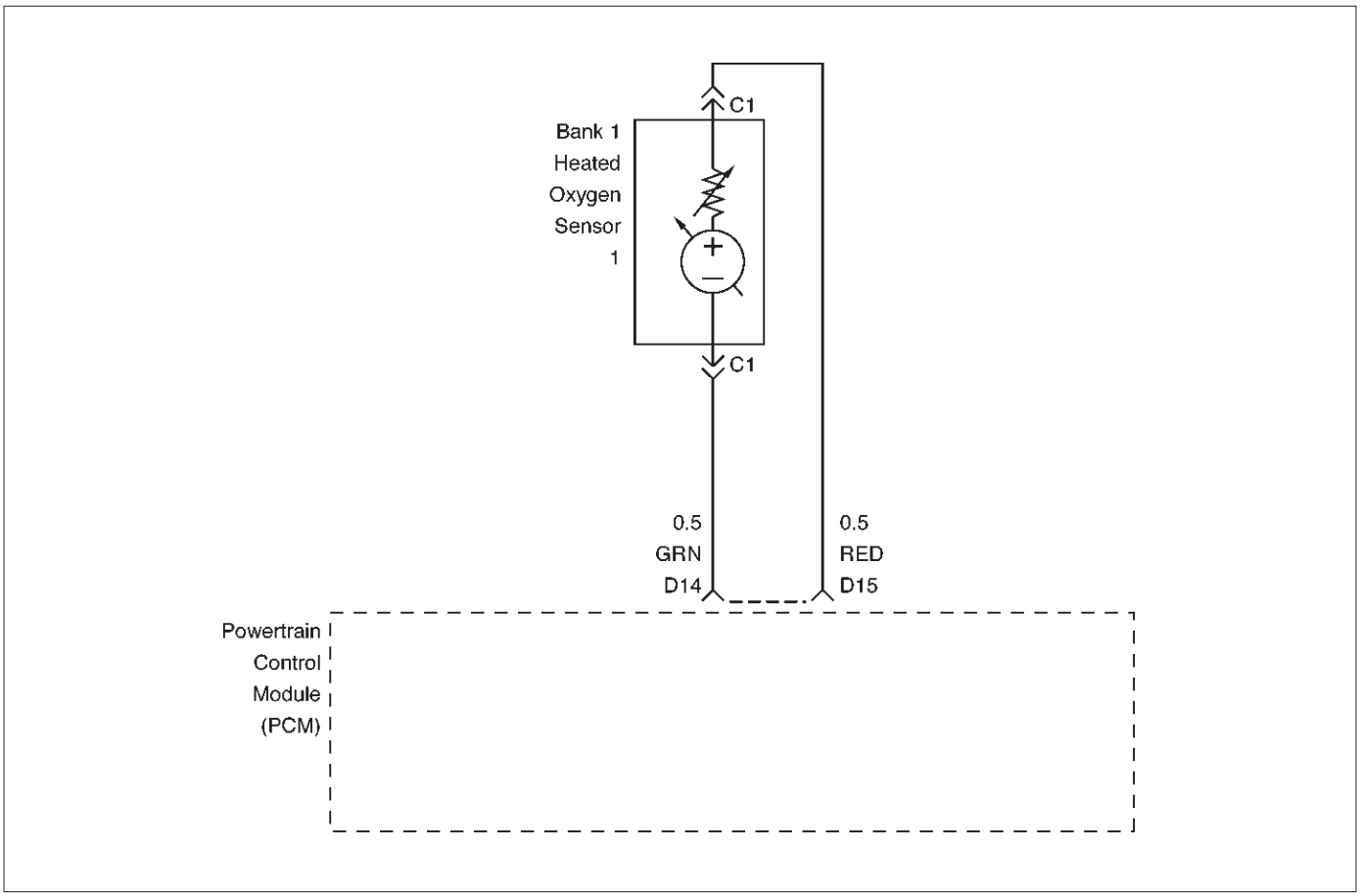

060RW236

Circuit Description

The powertrain control module (PCM) supplies a bias voltage of about 450 mV between the heated oxygen sensor (HO2S) signal high and signal low circuits. When measured with a 10 megaohm digital voltmeter, this may display as low as 350 mV. The oxygen sensor varies the voltage within a range of about 1000 mV when the exhaust is rich, down through about 10 mV when exhaust is lean. The PCM constantly monitors the HO2S signal during “closed loop” operation and compensates for a rich or lean condition by decreasing or increasing injector pulse width as necessary. If the Bank 1 HO2S 1 voltage remains excessively low for an extended period of time, DTC P0131 will be set.

Conditions for Setting the DTC

- No related DTCs.
- Vehicle is operating in “closed loop.”
- Engine coolant temperature is above 60˚C (140˚F).
- “Closed loop” commanded air/fuel ratio is between 14.5 and 14.8.
- Throttle angle is between 3% and 19%.
- Bank 1 HO2S 1 signal voltage remains below 22 mV during normal “closed loop” operation for a total of 77 seconds over a 90-second period of time.

Action Taken When the DTC Sets

- The PCM will illuminate the malfunction indicator lamp (MIL) the first time the fault is detected.
- The PCM will store conditions which were present when the DTC was set as Freeze Frame and in the Failure Records data.
- “Open loop” fuel control will be in effect.

Conditions for Clearing the MIL/DTC

- DTC P0131 can be cleared by using the Tech 2 “Clear Info” function or by disconnecting the PCM battery feed.

Diagnostic Aids

Check for the following conditions:

- Heated oxygen sensor wiring – The sensor pigtail may be routed incorrectly and contacting the exhaust system.
- Poor PCM to engine block grounds.
- Fuel pressure – The system will go lean if pressure is too low. The PCM can compensate for some decrease. However, If fuel pressure is too low, a DTC P0131 may be set. Refer to *Fuel System Diagnosis*.
- Lean injector(s) – Perform “Injector Balance Test.”
- Vacuum leaks – Check for disconnected or damaged vacuum hoses and for vacuum leaks at the intake manifold, throttle body, EGR system, and PCV system.
- Exhaust leaks – An exhaust leak may cause outside air to be pulled into the exhaust gas stream past the

HO2S, causing the system to appear lean. Check for exhaust leaks that may cause a false lean condition to be indicated.

- MAF sensor – The system can go lean if the MAF sensor signal indicates an engine airfiow measurement that is not correct. Disconnect the MAF sensor to see if the lean condition is corrected. If so, replace the MAF sensor.
- Fuel contamination – Water, even in small amounts, can be delivered to the fuel injectors. The water can cause a lean exhaust to be indicated. Excessive alcohol in the fuel can also cause this condition. Refer to *Fuel System Diagnosis* for the procedure to check for fuel contamination.
- If none of the above conditions are present, replace the affected HO2S.

Test Description

Number(s) below refer to step numbers on the diagnostic chart.

3. DTC P0131 failing during operation may indicate a condition described in the “Diagnostic Aids” above. If the DTC P0131 test passes while the Failure Records conditions are being duplicated, an intermittent condition is indicated.

Reviewing the Failure Records vehicle mileage since the diagnostic test last failed may help determine how often the condition that caused the DTC to be set occurs. This may assist in diagnosing the condition.

DTC P0131 –HO2S Circuit Low Voltage Bank 1 Sensor 1

Step	Action	Value(s)	Yes	No
1	Was the “On-Board Diagnostic (OBD) System Check” performed?	—	Go to *Step 2*	Go to *OBD System Check*
2	1. Install the Tech 2. 2. Run the engine at operating temperature. 3. Operate the vehicle within the parameters specified under “Conditions for Setting the DTC” criteria included in Diagnostic Support. 4. Using a Tech 2, monitor Bank 1 HO2S 1 voltage. Does the Bank 1 HO2S 1 voltage remain below the specified value?	22 mV	Go to *Step 4*	Go to *Step 3*
3	1. Ignition “ON,” engine “OFF,” review and record Tech 2 Failure Records data and note parameters. 2. Operate the vehicle within Failure Records conditions as noted. 3. Using a Tech 2, monitor “Specific DTC” info for DTC P0131 until the DTC P0131 test runs. Note test result. Does Tech 2 indicate DTC P0131 failed this ignition?	—	Go to *Step 4*	Refer to *Diagnostic Aids*
4	1. Turn the ignition “OFF.” 2. Disconnect the PCM. 3. Check the Bank 1 HO2S 1 high and low circuits for a short to ground or a short to the heater ground circuit. Are the Bank 1 HO2S 1 signal circuits shorted to ground?	—	Go to *Step 5*	Go to *Step 6*
5	Repair the Bank 1 HO2S 1 signal circuit. Is the action complete?	—	Verify repair	—
6	1. Turn the ignition “OFF,” HO2S 1 and PCM disconnected. 2. Check for continuity between the high and low signal circuits. Was there continuity between the high and low circuits?	—	Go to *Step 7*	Go to *Step 8*
7	Repair the short between the high and low circuits. Is the action complete?	—	Verify repair	—

DTC P0131 –HO2S Circuit Low Voltage Bank 1 Sensor 1 (Cont'd)

Step	Action	Value(s)	Yes	No
8	1. Ignition "OFF." 2. Reconnect the PCM, leave the sensor disconnected. 3. Ignition "ON." Does the Tech 2 indicate Bank 1 HO2S 1 voltage between the specified values?	425-475 mV	Refer to *Diagnostic Aids*	Go to *Step 9*
9	Replace the PCM. **IMPORTANT:** The replacement PCM must be programmed. Refer to *UBS 98model year Immobilizer Workshop Manual.* Is the action complete?	—	Verify repair	—

Diagnostic Trouble Code (DTC) P0132 HO2S Circuit High Voltage Bank 1 Sensor 1

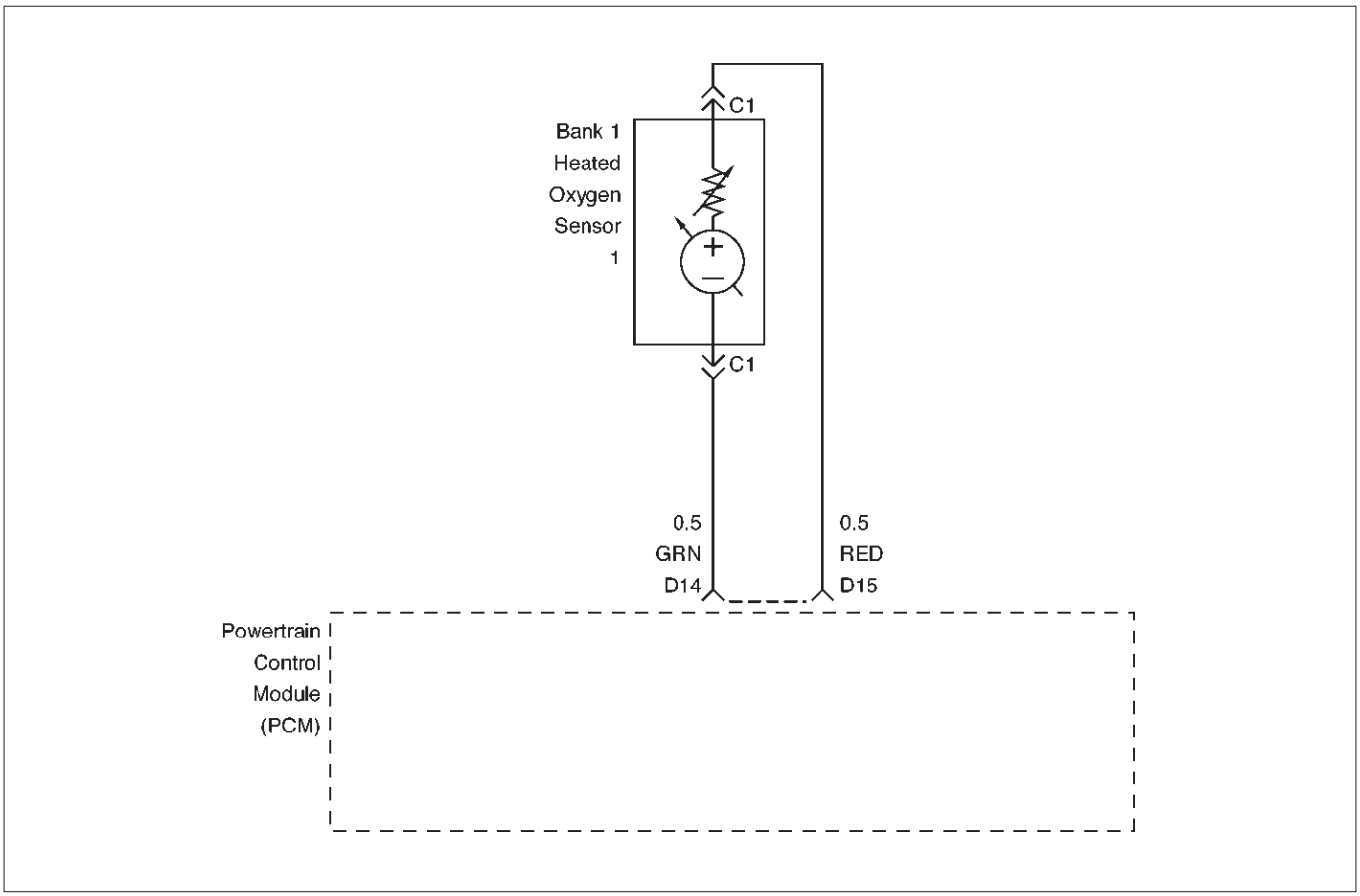

060RW236

Circuit Description

The powertrain control module (PCM) supplies a bias voltage of about 450 mV between the heated oxygen sensor (HO2S) signal and low circuits. When measured with a 10 megaohm digital voltmeter, this may display as low as 320 mV. The oxygen sensor varies the voltage within a range of about 1000 mV when exhaust is rich, down through about 10 mV when exhaust is lean. The PCM constantly monitors the HO2S signal during "closed loop" operation and compensates for a rich or lean condition by decreasing or increasing injector pulse width as necessary. If the Bank 1 HO2S 1 voltage remains excessively high for an extended period of time, DTC P0132 will be set.

Conditions for Setting the DTC

- No related DTCs.
- Engine coolant temperature is above 60˚C (140˚F)
- "Closed loop" commanded air/fuel ratio is between 14.5 and 14.8.
- Throttle angle is between 3% and 19%.
- Bank 1 HO2S 1 signal voltage remains above 952 mV during normal "closed loop" operation for a total of 77 seconds over a 90-second period.

OR

- Bank 1 HO2S 1 signal voltage remains above 500 mV during "deceleration fuel cutoff mode" operation for 3 seconds.

Action Taken When the DTC Sets

- The PCM will illuminate the malfunction indicator lamp (MIL) the first time the fault is detected.
- The PCM will store conditions which were present when the DTC was set as Freeze Frame and in the Failure Records data.
- "Open loop" fuel control will be in effect.

Conditions for Clearing the MIL/DTC

- DTC P0132 can be cleared by using the Tech 2 "Clear Info" function or by disconnecting the PCM battery feed.

Diagnostic Aids

Check the following items:

- Fuel pressure – The system will go rich if pressure is too high. The PCM can compensate for some increase. However, if fuel pressure is too high, a DTC P0132 may be set. Refer to *Fuel System Diagnosis*.
- Perform "Injector Balance Test" – Refer to *Fuel System Diagnosis*.
- MAF sensor –The system can go rich if MAF sensor signal indicates an engine airflow measurement that is not correct. Disconnect the MAF sensor to see it the rich condition is corrected. If so, replace the MAF sensor.
- Check for a leak in the fuel pressure regulator diaphragm by checking the vacuum line to the regulator for the presence of fuel. There should be no fuel in the vacuum line.

- An intermittent TP sensor output will cause the system to go rich due to a false indication of the engine accelerating.
- Shorted Heated Oxygen Sensor (HO2S) –If the HO2S is internally shorted, the HO2S voltage displayed on the Tech 2 will be over 1 volt. Try disconnecting the affected HO2S with the key "ON," engine "OFF." If the displayed HO2S voltage changes from over 1000 mV to around 450 mV, replace the HO2S. Silicon contamination of the HO2S can also cause a high HO2S voltage to be indicated. This condition is indicated by a powdery white deposit on the portion of the HO2S exposed to the exhaust stream. If contamination is noticed, replace the affected HO2S.
- Open HO2S Signal Circuit or Faulty HO2S–A poor connection or open in the HO2S signal circuit can cause the DTC to set during deceleration fuel mode. An HO2S which is faulty and not allowing a full voltage swing between the rich and lean thresholds can also cause this condition. Operate the vehicle by monitoring the HO2S voltage with a Tech 2. If the HO2S voltage is limited within a range between 300 mV to 600 mV, check the HO2S signal circuit wiring and associated terminal conditions.
- If none of the above conditions are present, replace the affected HO2S.

Test Description

Number(s) below refer to the step number(s) on the Diagnostic Chart.

3. DTC P0132 failing during "deceleration fuel cutoff mode" operation may indicate a condition described in the "Diagnostic Aids" above. If the DTC P0132 test passes while the Failure Records conditions are being duplicated, an intermittent condition is indicated.

Reviewing the Failure Records vehicle mileage since the diagnostic test last failed may help determine how often the condition that caused the DTC to be set occurs. This may assist in diagnosing the condition.

DTC P0132 – HO2S Circuit High Voltage Bank 1 Sensor 1

Step	Action	Value(s)	Yes	No
1	Was the "On-Board Diagnostic (OBD) System Check" performed?	—	Go to *Step 2*	Go to *OBD System Check*
2	1. Install the Tech 2. 2. Run the engine at operating temperature. 3. Operate the vehicle within parameters specified under "Conditions for Setting the DTC" included in Diagnostic Support. 4. Using a Tech 2, monitor Bank 1 HO2S 1 voltage. Does the Bank 1 HO2S 1 voltage remain above the specified value?	952 mV (500 mV in deceleration fuel cutoff mode)	Go to *Step 4*	Go to *Step 3*
3	1. Ignition "ON," review and record Tech 2 Failure Records data. 2. Operate the vehicle within Failure Records conditions as noted. 3. Using a Tech 2, monitor "Specific DTC" info for DTC P0132 until the DTC P0132 test runs. 4. Note the test result. Does the Tech 2 indicate DTC P0132 failed this ignition?	—	Go to *Step 4*	Refer to *Diagnostic Aids*
4	1. Ignition "OFF." 2. Disconnect Bank 1 HO2S 1. 3. Ignition "ON." 4. At HO2S Bank 1 Sensor 1 connector (PCM side) use a DVM to measure voltages at the high and low signal terminals. Are the voltages in the specified range?	3-4 V	Go to *Step 5*	Go to *Step 6*
5	Repair short to voltage in signal circuit. Is the action complete?	—	Verify repair	—

DTC P0132 – HO2S Circuit High Voltage Bank 1 Sensor 1 (Cont'd)

Step	Action	Value(s)	Yes	No
6	1. Ignition "ON," engine"OFF." 2. At Bank 1 HO2S 1 connector (PCM side) jumper both the HO2S high and low signal circuits (PCM side) to ground. 3. Using a Tech 2, monitor Bank 1 HO2S 1 voltage. Is Bank 1 HO2S 1 voltage below the specified value?	10 mV	Go to *Step 7*	Go to *Step 8*
7	1. Disconnect the jumpers to ground from Bank 1 HO2S 1 PCM-side connector. 2. With the HO2S 1 connector disconnected, monitor Bank 1 HO2S 1 voltage. Is Bank 1 HO2S 1 voltage between the specified values?	425-475 mV	Refer to *Diagnostic Aids*	Go to *Step 8*
8	Replace the PCM. **IMPORTANT:** The replacement PCM must be programmed. Refer to *UBS 98model year Immobilizer Workshop Manual.* Is the action complete?	—	Verify repair	—

Diagnostic Trouble Code (DTC) P0134 HO2S Circuit Insufficient Activity Bank 1 Sensor 1

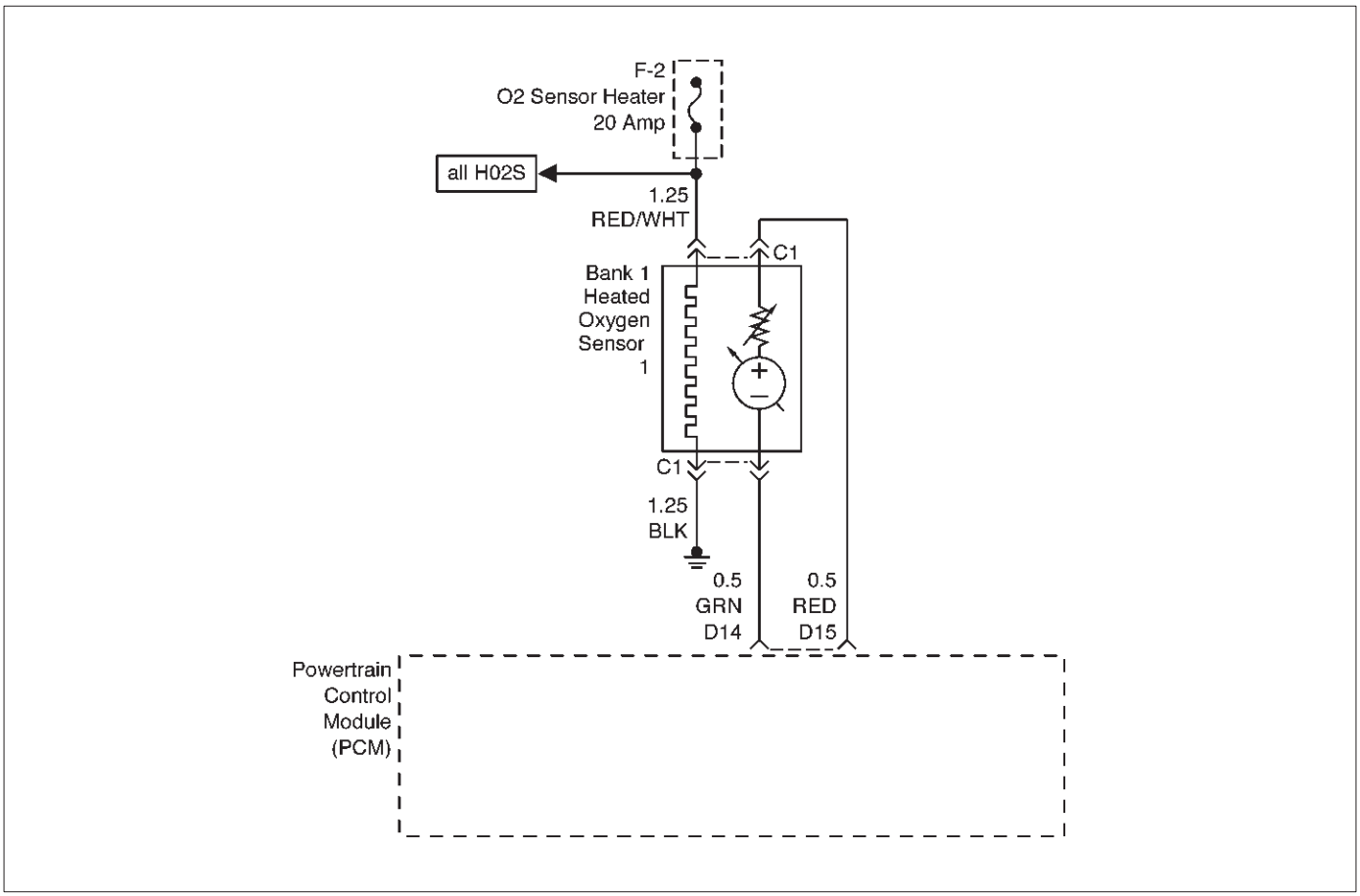

060RW237

Circuit Description

- The powertrain control module (PCM) supplies a bias voltage of about 450 mV between the heated oxygen sensor (HO2S) high and low circuits. When measured with a 10 megaohm digital voltmeter, this may display as low as 320 mV. The oxygen sensor varies the voltage within a range of about 1000 mV when the exhaust is rich, down through about 10 mV when exhaust is lean. The PCM constantly monitors the HO2S signal during “closed loop” operation and compensates for a rich or lean condition by decreasing or increasing injector pulse width as necessary. If the Bank 1 HO2S 1 voltage remains at or near the 450 mV bias for an extended period of time, DTC P0134 will be set, indicating an open sensor signal or sensor low circuit.
- Heated oxygen sensors are used to minimize the amount of time required for “closed loop” fuel control operation and to allow accurate catalyst monitoring. The oxygen sensor heater greatly decreases the amount of time required for fuel control sensors Bank 1 HO2S 1 and Bank 2 HO2S 1 to become active.
- Oxygen sensor heaters are required by post-catalyst monitor sensors to maintain a sufficiently high temperature for accurate exhaust oxygen content readings further from the engine.

Conditions for Setting the DTC

- No related DTCs.
- Battery voltage is above 10 volts.
- Engine run time is longer than 40 seconds.
- Oxygen sensor heater has been determined to be functioning properly.
- Bank 1 HO2S 1 signal voltage remains between 400 mV and 500 mV for a total of 77 seconds over a 90-second period of time.

Action Take When the DTC Sets

- The PCM will illuminate the malfunction indicator lamp (MIL) the first time the fault is detected.
- The PCM will store conditions which were present when the DTC was set as Freeze Frame and in the Failure Records data.
- “Open loop” fuel control will be in effect.

Conditions for Clearing the MIL/DTC

- DTC P0134 can be cleared by using Tech 2 “Clear Info” function or by disconnecting the PCM battery feed.

Diagnostic Aids

Check for the following conditions:

- Poor connection or damaged harness – Inspect the harness connectors for backed-out terminals, improper mating, broken locks, improperly formed or damaged terminals, poor terminal-to-wire connection, and damaged harness.
- Faulty HO2S heater or heater circuit – With the ignition “ON,” engine “OFF,” after a cool down period, the HO2S 1 voltage displayed on Tech 2 is normally 455-460 mV. A reading over 1000 mV indicates a signal line shorted to voltage. A reading under 5 mV

indicates a signal line shorted to ground or signal lines shorted together. Disconnect the HO2S and connect a test light between the HO2S ignition feed and heater ground circuits. If the test light does not light for 2 seconds when the ignition is turned on, repair the open ignition feed or sensor ground circuit as necessary. If the test light lights and the HO2S signal and low circuits are OK, replace the HO2S.

- Intermittent test – With the Ignition "ON," monitor the HO2S signal voltage while moving the wiring harness and related connectors. If the fault is induced, the HO2S signal voltage will change. This may help isolate the location of the malfunction.

Test Description

Number(s) below refer to the step number(s) on the Diagnostic Chart.

3. If the DTC P0134 test passes while the Failure Records conditions are being duplicated, an intermittent conditions is indicated.

Reviewing the Failure Records vehicle mileage since the diagnostic test last failed may help determine how often the condition that caused the DTC to be set occurs. This may assist in diagnosing the condition.

DTC P0134 –HO2S Circuit Insufficient Activity Bank 1 Sensor 1

Step	Action	Value(s)	Yes	No
1	Was the "On-Board Diagnostic (OBD) System Check" performed?	—	Go to *Step 2*	Go to *OBD System Check*
2	1. Install Tech 2. 2. Run the engine at operating temperature. 3. Operate the engine above 1200 RPM for two minutes. Does Tech 2 indicate Bank 1 HO2S 1 voltage varying outside the specified values?	400-500 mV	Go to *Step 3*	Go to *Step 4*
3	1. Ignition "ON," engine "OFF," review and record Tech 2 Failure Records data and note parameters. 2. Operate the vehicle within Failure Records conditions as noted. 3. Using Tech 2, monitor "Specific DTC" info for DTC P0134 until the DTC P0134 test runs. 4. Note the test result. Does Tech 2 indicate DTC P0134 failed this ignition?	—	Go to *Step 4*	Refer to *Diagnostic Aids*
4	Check for a damaged harness. Was a problem found?	—	Verify repair	Go to *Step 5*
5	Check for poor Bank 1 HO2S 1 high and low circuit terminal connections at the Bank 1 HO2S 1 harness connector and replace terminal(s) if necessary. Did any terminals require replacement?	—	Verify repair	Go to *Step 6*
6	Check for poor Bank 1 HO2S 1 high and low circuit terminal connections at the PCM and replace terminals if necessary. Did any terminals require replacement?	—	Verify repair	Go to *Step 7*
7	1. Ignition "OFF." 2. With the PCM disconnected, check continuity of the Bank 1 HO2S 1 high circuit. 3. If the Bank 1 HO2S 1 high circuit measures over 5.0 ohms, repair open or poor connection as necessary. Was a Bank 1 HO2S 1 high circuit problem found and corrected?	—	Verify repair	Go to *Step 8*

DTC P0134 –HO2S Circuit Insufficient Activity Bank 1 Sensor 1 (Cont'd)

Step	Action	Value(s)	Yes	No
8	1. Ignition "OFF." 2. With the PCM disconnected, check continuity of the Bank 1 HO2S 1 low circuit. 3. If the Bank 1 HO2S 1 low circuit measures over 5 ohms, repair open or poor connection as necessary. Was a Bank 1 HO2S 1 low circuit problem found and corrected?	—	Verify repair	Go to *Step 9*
9	1. Ignition "ON," engine "OFF." 2. Disconnect Bank 1 HO2S 1 and jumper the HO2S high and low circuits (PCM side) to ground. 3. Using Tech 2, monitor Bank 1 HO2S 1 voltage. Is Bank 1 HO2S 1 voltage in the specified range?	0-10 mV	Go to *Step 10*	Go to *Step 11*
10	Replace Bank 1 HO2S 1. Is the action complete?	—	Verify repair	—
11	Replace the PCM. **IMPORTANT:** The replacement PCM must be programmed. Refer to *UBS 98model year Immobilizer Workshop Manual.* Is the action complete?	—	Verify repair	—

Diagnostic Trouble Code (DTC) P0151 HO2S Circuit Low Voltage Bank 2 Sensor 1

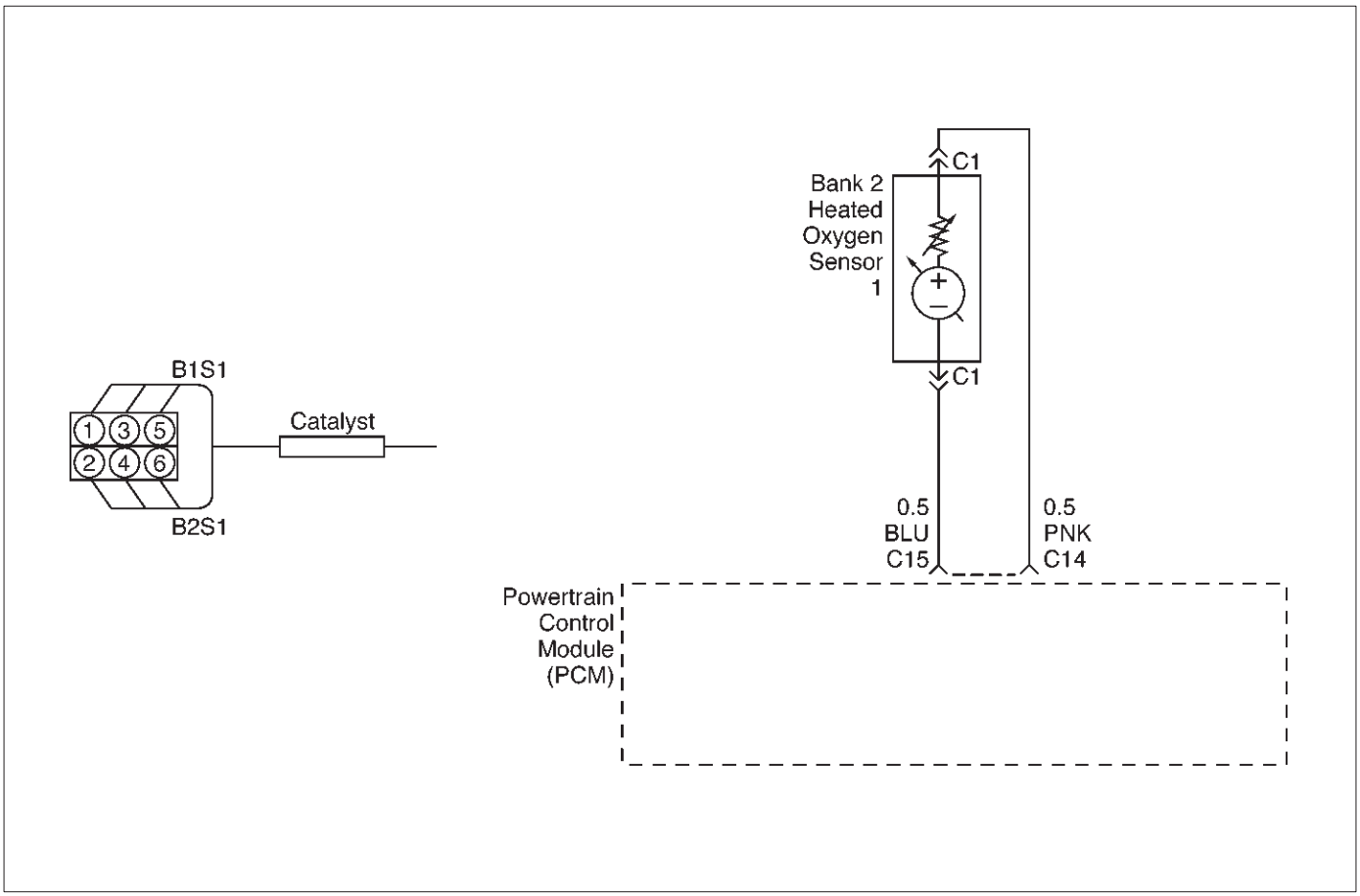

060RW190

Circuit Description

The powertrain control module (PCM) supplies a bias voltage of about 450 mV between the heated oxygen sensor (HO2S) signal high and signal low circuits. When measured with a 10 megaohm digital voltmeter, this may display as low as 320 mV. The oxygen sensor varies the voltage within a range of about 1000 mV when the exhaust is rich, down through about 10 mV when exhaust is lean. The PCM constantly monitors the HO2S signal during "closed loop" operation and compensates for a rich or lean condition by decreasing or increasing injector pulse width as necessary. If the Bank 2 HO2S 1 voltage remains excessively low for an extended period of time, DTC P0151 will be set.

Conditions for Setting the DTC

- No related DTCs.
- The engine is operating in "closed loop."
- Engine coolant temperature is above 60˚C (140˚F).
- "Closed loop" commanded air/fuel ratio is between 14.5 and 14.8.
- Throttle angle is between 3% and 19%.
- Bank 2 HO2S 1 signal voltage remains below 22 mV during normal "closed loop" operation for a total of 77 seconds over a 90-second period of time.

Action Taken When the DTC Sets

- The PCM will illuminate the malfunction indicator lamp (MIL) the first time the fault is detected.
- The PCM will store conditions which were present when the DTC was set as Freeze Frame and in the Failure Records data.
- "Open loop" fuel control will be in effect.

Conditions for Clearing the MIL/DTC

- DTC P0151 can be cleared by using Tech 2 "Clear Info" function or by disconnecting the PCM battery feed.

Diagnostic Aids

Check for the following conditions:

- Heated oxygen sensor wiring – The sensor pigtail may be mispositioned and contacting the exhaust system.
- Poor PCM to engine block grounds.
- Fuel pressure – The system will go lean if pressure is too low. The PCM can compensate for some decrease. However, if fuel pressure is too low, a DTC P0151 may be set. Refer to *Fuel System Diagnosis*.
- Lean injector(s) – Perform "Injector Balance Test."
- Vacuum leaks – Check for disconnected or damaged vacuum hoses and for vacuum leaks at the intake manifold, throttle body, EGR system, and PCV system.
- Exhaust leaks – An exhaust leak may cause outside air to be pulled into the exhaust gas stream past the HO2S, causing the system to appear lean. Check for

exhaust leaks that may cause a false lean condition to be indicated.

- MAF sensor –The system can go lean if the MAF sensor signal indicates an engine airflow measurement that is not correct. Disconnect the MAF sensor to see if the lean condition is corrected. If so, replace the MAF sensor.
- Fuel contamination – Water, even in small amounts, can be delivered to the fuel injectors. The water can cause a lean exhaust to be indicated. Excessive alcohol in the fuel can also cause this condition. Refer to *Fuel System Diagnosis* for the procedure to check for fuel contamination.
- If none of the above conditions are present, replace the affected HO2S.

Test Description

Number(s) below refer to the step number(s) on the Diagnostic Chart.

3. DTC P0151 failing during operation may indicate a condition described in the “Diagnostic Aids” above. If the DTC P0151 test passes while the Failure Records conditions are being duplicated, an intermittent condition is indicate.

Reviewing the Failure Records vehicle mileage since the diagnostic test last failed may help determine how often the condition that caused the DTC to be set occurs. This may assist in diagnosing the condition.

DTC P0151 – HO2S Circuit Low Voltage Bank 2 Sensor 1

Step	Action	Value(s)	Yes	No
1	Was the “On-Board Diagnostic (OBD) System Check” performed?	—	Go to *Step 2*	Go to *OBD System Check*
2	1. Install Tech 2. 2. Run the engine at operating temperature. 3. Operate the vehicle within the parameters specified under “Conditions for Setting the DTC” criteria included in Diagnostic Support. 4. Using Tech 2, monitor Bank 2 HO2S 1 voltage. Does the Bank 2 HO2S 1 voltage remain below the specified value?	22 mV	Go to *Step 4*	Go to *Step 3*
3	1. Ignition “ON,” engine “OFF,” review and record Tech 2 Failure Records data and note parameters. 2. Operate the vehicle within Failure Records conditions as noted. 3. Using Tech 2, monitor “Specific DTC” info for DTC P0151 until the DTC P0151 test runs. 4. Note test result. Does Tech 2 indicate DTC P0151 failed this ignition?	—	Go to *Step 4*	Refer to *Diagnostic Aids*
4	1. Turn ignition “OFF.” 2. Disconnect the PCM. 3. Check the Bank 2 HO2S 1 high and low signal circuits for a short to ground or a short to the heater ground circuit. Were Bank 2 HO2S 1 signal circuits shorted?	—	Go to *Step 5*	Go to *Step 6*
5	Repair the Bank 2 HO2S 1 signal circuit. Is the action complete?	—	Verify repair	—
6	1. Ignition “OFF.” 2. Leave the PCM and HO2S 1 disconnected. 3. Check for continuity between the high and low signal circuits. Was there continuity between the high and low circuits?	—	Go to *Step 7*	Go to *Step 8*
7	Repair the short between the high and low circuits. Is the action complete?	—	Verify repair	—

DTC P0151 – HO2S Circuit Low Voltage Bank 2 Sensor 1 (Cont'd)

Step	Action	Value(s)	Yes	No
8	1. Ignition "OFF." 2. Reconnect the PCM, leave HO2S 2 disconnected. 3. Ignition "ON." Does Tech 2 indicate Bank 2 HO2S 1 voltage near the specified value?	425-475 mV	Refer to *Diagnostic Aids*	Go to *Step 9*
9	Replace the PCM. **IMPORTANT:** The replacement PCM must be programmed. Refer to *UBS 98model year Immobilizer Workshop Manual.* Is the action complete?	—	Verify repair	—

Diagnostic Trouble Code (DTC) P0152 HO2S Circuit HIGH Voltage Bank 2 Sensor 1

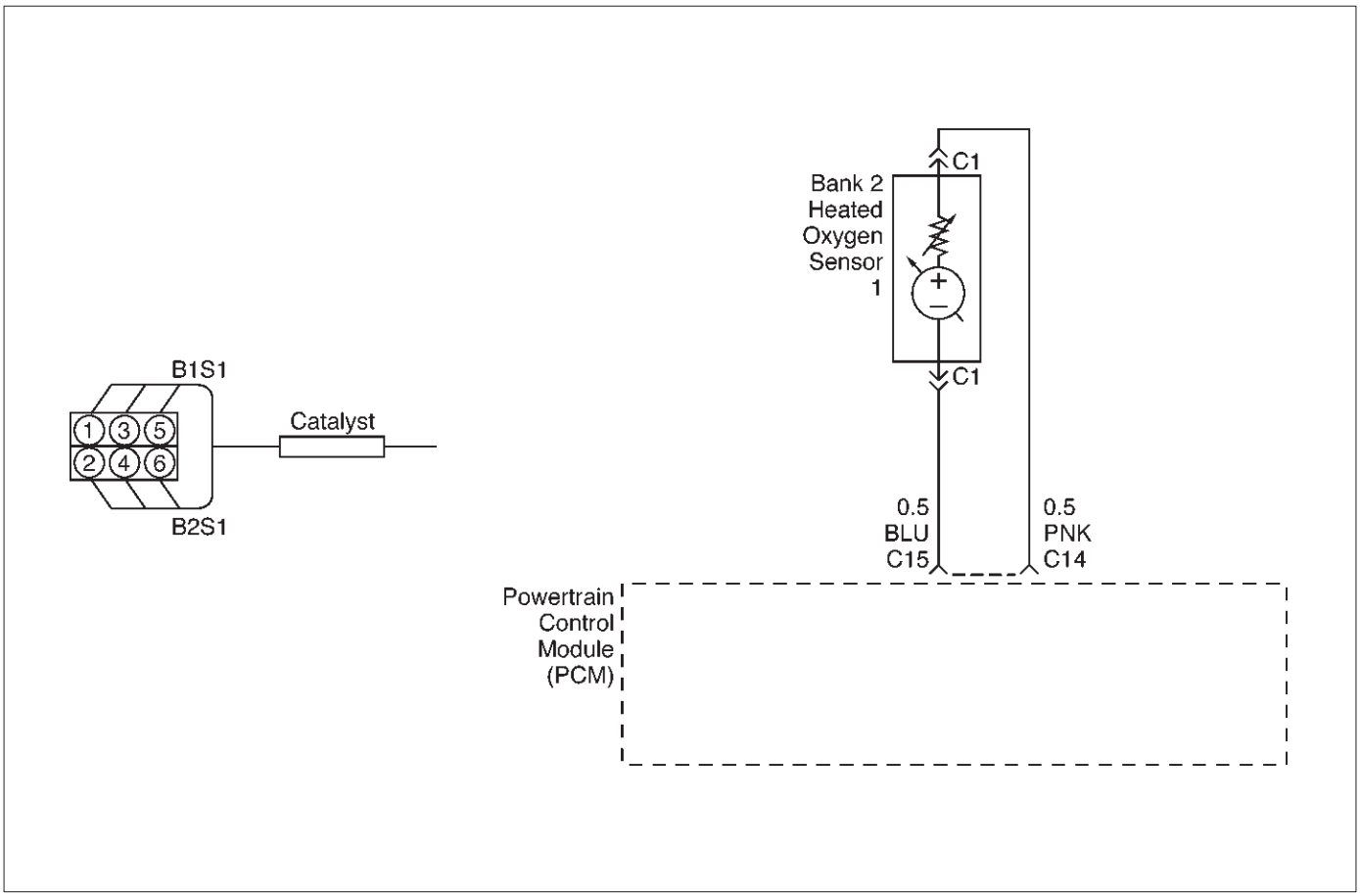

060RW190

Circuit Description

The powertrain control module (PCM) supplies a bias voltage of about 450 mV between the heated oxygen sensor (HO2S) signal high and signal low circuits. When measured with a 10 megaohm digital voltmeter, this may display as low as 320 mV. The oxygen sensor varies the voltage within a range of about 1000 mV when the exhaust is rich, down through about 10 mV when exhaust is lean. The PCM constantly monitors the HO2S signal during "closed loop" operation and compensates for a rich or lean condition by decreasing or increasing the injector pulse width as necessary. If the Bank 2 HO2S 1 voltage remains excessively high for an extended period of time, DTC P0152 will be set.

Conditions for Setting the DTC

- No related DTCs.
- The engine is operating in "closed loop."
- The engine coolant temperature is above 60˚C (140˚F).
- "Closed loop" commanded air/fuel ratio between 14.5 and 14.8.
- Throttle angle between 3% and 19%.
- Bank 2 HO2S 1 signal voltage remains above 952 mV during normal "closed loop" operation for a total of 77 seconds over a 90-second period.

OR

- Bank 2 HO2S 1 signal voltage remains above 500 mV during deceleration fuel cutoff mode operation for up to 3 seconds.

Action Taken When the DTC Sets

- The PCM will illuminate the malfunction indicator lamp (MIL) the first time the fault is detected.
- The PCM will store conditions which were present when the DTC was set as Freeze Frame and in the Failure Records data.
- "Open loop" fuel control will be in effect.

Conditions for Clearing the MIL/DTC

- DTC P0152 can be cleared by using Tech 2 "Clear Info" function or by disconnecting the PCM battery feed.

Diagnostic Aids

Check for the following conditions:

- Fuel pressure – The system will go rich if pressure is too high. The PCM can compensate for some increase. However, if fuel pressure is too high, a DTC P0152 may be set. Refer to *Fuel System Diagnosis*.
- Rich injector(s) – Perform "Injector Balance Test."
- Leaking injector – Refer to *Fuel System Diagnosis*.
- Evaporative emissions (EVAP) system – Check the canister for fuel saturation. If the canister is full of fuel, check EVAP control system components and hoses. Refer to *Evaporative Emission (EVAP) Control System*.

- MAF sensor – The system can go rich if the MAF sensor signal indicates an engine airflow measurement that is not correct. Disconnect the MAF sensor to see if rich condition is corrected. If so, replace MAF sensor.
- Check for leaking fuel pressure regulator diaphragm by checking vacuum line to regulator for the presence of fuel. There should be no fuel in the vacuum line.
- TP sensor – An intermittent TP sensor output will cause the system to go rich, due to a false indication of the engine accelerating.
- Shorted Heated Oxygen Sensor (HO2S)– If the HO2S is internally shorted, the HO2S voltage displayed on Tech 2 will be over 1 volt. Try disconnecting the affected HO2S with the key "ON," engine "OFF." If the displayed HO2S voltage changes from over 1000 mV to around 450 mV, replace the HO2S. Silicon contamination of the HO2S can cause a high HO2S voltage to be indicated. This condition is indicated by powdery white deposit on the portion of the HO2S exposed to the exhaust stream. If contamination is noticed, replace the affected HO2S.
- Open HO2S Signal Circuit of Faulty HO2S– A poor connection or open in the HO2S signal circuit can cause the DTC to set during deceleration fuel mode. An HO2S which is faulty and not allowing a full voltage switch between the rich and lean thresholds can also cause the condition. Operate the vehicle while monitoring the HO2S voltage with Tech 2. If the HO2S is limited within a range between 300 mV to 600 mV, check the HO2S signal circuit wiring and associated terminal connections.
- If none of the above conditions are present, replace the affected HO2S.

Test Description

Number(s) below refer to the step number(s) on the Diagnostic Chart.

3. DTC P0152 failing during deceleration fuel cutoff mode operation may indicate a condition described in the "Diagnostic Aids" above. If the DTC P0152 test passes while the Failure Records conditions are being duplicated, an intermittent condition is indicated.

Reviewing the Failure Records vehicle mileage since the diagnostic test last failed may help determine how often the condition that caused the DTC to be set occurs. This may assist in diagnosing the condition.

DTC P0152 – HO2S Circuit High Voltage Bank 2 Sensor 1

Step	Action	Value(s)	Yes	No
1	Was the "On-Board Diagnostic (OBD) System Check" performed?	—	Go to *Step 2*	Go to *OBD System Check*
2	1. Install Tech 2. 2. Engine is at operating temperature. 3. Operate the vehicle within the parameters specified under "Conditions for Setting the DTC" criteria included in Diagnostic Support. 4. Using Tech 2, monitor Bank 2 HO2S 1 voltage. Does the Bank 2 HO2S 1 voltage remain above the specified value?	952 mV (500 mV in deceleration fuel cut-off mode)	Go to *Step 4*	Go to *Step 3*
3	1. Ignition "ON." 2. Review and record Tech 2 Failure Records data. 3. Operate the vehicle within Failure Records conditions as noted. 4. Using Tech 2, monitor "Specific DTC" info for DTC P0152 until the DTC P0152 test runs. 5. Note the test result. Does Tech 2 indicate DTC P0152 failed this ignition?	—	Go to *Step 4*	Refer to *Diagnostic Aids*
4	1. Ignition "OFF." 2. Disconnect Bank 2 HO2S 1. 3. Ignition "ON." 4. At HO2S Bank 2 Sensor 1 connector (PCM side) use a DVM to measure voltages at the high and low signal terminals. Are the voltages in the specified range?	3-4 V	Go to *Step 5*	Go to *Step 6*
5	Repair short to voltage in signal circuit. Is the action complete?	—	Verify repair	—

DTC P0152 – HO2S Circuit High Voltage Bank 2 Sensor 1 (Cont'd)

Step	Action	Value(s)	Yes	No
6	1. Ignition "ON," engine"OFF." 2. At Bank 2 HO2S 1 connector (PCM side) jumper both the HO2S high and low signal circuits (PCM side) to ground. 3. Using Tech 2, monitor Bank 2 HO2S 1 voltage. Is Bank 2 HO2S 1 voltage below the specified value?	10 mV	Go to *Step 7*	Go to *Step 8*
7	1. Disconnect the jumpers to ground from Bank 2 HO2S 1 PCM-side connector. 2. With the HO2S 1 connector disconnected, monitor Bank 2 HO2S 1 voltage. Is the Bank 2 HO2S 1 voltage between the specified values?	425-475 mV	Refer to *Diagnostic Aids*	Go to *Step 8*
8	Replace the PCM. **IMPORTANT:** The replacement PCM must be programmed. Refer to *UBS 98model year Immobilizer Workshop Manual.* Is the action complete?	—	Verify repair	—

Diagnostic Trouble Code (DTC) P0171 Fuel Trim System Lean Bank 1

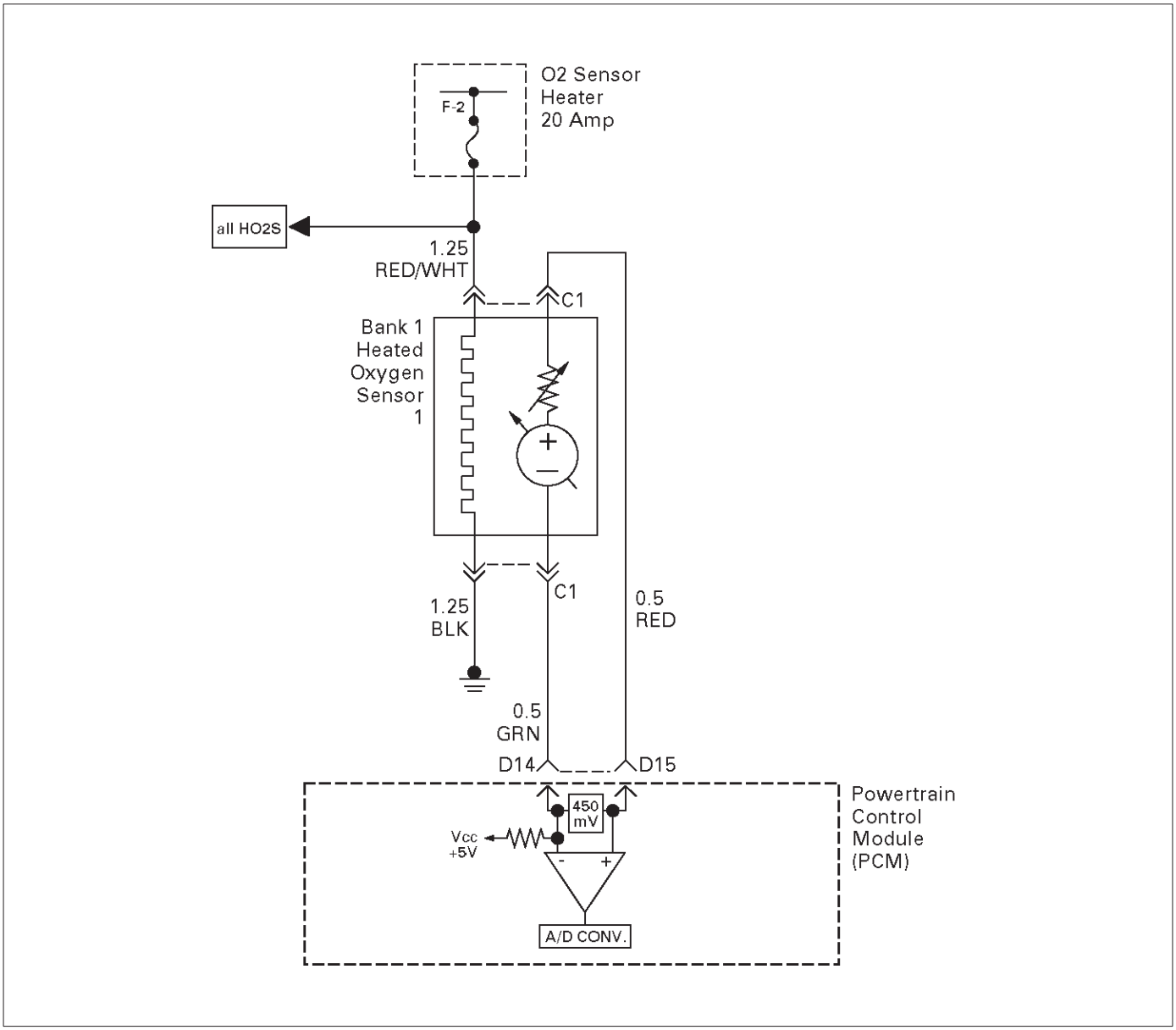

D06RW030

Circuit Description

To provide the best possible combination of driveability, fuel economy, and emission control, a “closed loop” air/fuel metering system is used. While in “closed loop,” the powertrain control module (PCM) monitors the Bank 1 HO2S 1 and Bank 2 HO2S 1 signals and adjusts fuel delivery based upon the HO2S signal voltages. A change made to fuel delivery will be indicated by the long and short term fuel trim values which can be monitored with a Tech 2. Ideal fuel trim values are around 0%; if the HO2S signals are indicating a lean condition the PCM will add fuel, resulting in fuel trim values above 0%. If a rich condition is detected, the fuel trim values will be below 0%, indicating that the PCM is reducing the amount of fuel delivered. If an excessively lean condition is detected on Bank 1, the PCM will set DTC P0171.

The PCM’s maximum authority to control long term fuel trim allows a range between –15% (automatic transmission) or –12% (manual transmission) and +20%. The PCM monitors fuel trim under various engine speed/load fuel trim cells before determining the status of the fuel trim diagnostic.

Conditions for Setting the DTC

- No Tech 2 test is being run.
- None of the following: EGR DTCs, HO2S DTCs, (response, transition, open, low volts, no activity), MAF DTCs, TP sensor DTCs, MAP DTCs, IAT DTCs, canister purge DTCs, EVAP DTCs, injector circuit DTCs, or misfire DTCs.
- Engine coolant temperature is between 25˚C (77˚F) and 100˚C (212˚F).
- Intake air temperature is between –40˚C (–40˚F) and 120˚C (248˚F).
- Manifold absolute pressure is between 24 kPa and 99 kPa.
- Throttle angle is steady below 95%.
- Vehicle speed is below 136 km/h (85 mph).
- Engine speed is between 400 and 6,000 RPM.
- Barometric pressure is greater than 72.5 kPa.

- Mass air flow is between 2 g/second and 200 g/second.
- Ignition voltage is above 9.5 volts.
- Fuel system is in “closed loop.”

Action Taken When the DTC Sets

- The PCM will illuminate the malfunction indicator lamp (MIL) after the second consecutive trip in which the fault is detected.
- The PCM will store conditions which were present when the DTC was set as Freeze Frame and in the Failure Records data.

Conditions for Clearing the MIL/DTC

- DTC P0171 can be cleared by using the Tech 2 “Clear Info” function or by disconnecting the PCM battery feed.

Diagnostic Aids

Check for the following conditions:

- Poor connection at PCM – Inspect harness connectors for backed-out terminals, improper mating, broken locks, improperly formed or damaged terminals, and poor terminal-to-wire connection.
- Damaged harness – Inspect the wiring harness for damage. If the harness appears to be OK, observe the Bank 1 HO2S 1 display on the Tech 2 while moving connectors and wiring harnesses related to the engine harness. A change in the display will indicate the location of the fault.

Reviewing the Failure Records vehicle mileage since the diagnostic test last failed may help determine how often the condition that caused the DTC to be set occurs. This may assist in diagnosing the condition.

Test Description

Number(s) below refer to the step number(s) on the Diagnostic Chart.

2. DTCs other than P0171 and P0174 may indicate a condition present which may cause a lean condition. If this is the case, repairing the condition which caused the other DTC will most likely correct the DTC P0171/P0174.

4. If the DTC P0171 test passes while the Failure Records conditions are being duplicated, the lean condition is intermittent. Refer to *Diagnostic Aids* or *Symptoms* for additional information on diagnosing intermittent problems.

DTC P0171 – Fuel Trim System Lean Bank 1

Step	Action	Value(s)	Yes	No
1	Was the “On-Board Diagnostic (OBD) System Check” performed?	—	Go to *Step 2*	Go to *OBD System Check*
2	Are any DTCs set other than P0171 and P0174?	—	Go to the applicable DTC charts and repair the other DTCs before proceeding with this chart	Go to *Step 3*
3	1. Start the engine and operate the vehicle in “closed loop.” 2. Observe the “BANK 1 L.T. FUEL TRIM” display on the Tech 2. Is the displayed value greater than the specified value?	L.T. Fuel Trim: +20%	Go to *Step 5*	Go to *Step 4*
4	1. Review and record the Tech 2 Failure Records data. 2. Clear the DTC P0171/P0174 and operate the vehicle to duplicate the Failure Records conditions. 3. Monitor the Tech 2 “Specific DTC” info for DTC P0171 while operating the vehicle to duplicate the Failure Records conditions. 4. Continue operating the vehicle until the DTC P0171 test runs and note the test result. Does the Tech 2 indicate DTC P0171 failed this ignition?	—	Go to *Step 5*	The lean condition is not present. If a driveability symptom still exists, refer to *Symptoms* section.
5	Was DTC P0174 also set?	—	Go to *Step 6*	Go to *Step 15*
6	Visually and physically inspect the vacuum hoses for disconnects, splits, kinks, improper routing and improper connections and repair any problem found. Did your inspection reveal a problem requiring repair?	—	Verify repair	Go to *Step 7*
7	Visually and physically inspect the crankcase ventilation valve for proper installation and repair any problem found (refer to *Crankcase Ventilation System*). Did your inspection reveal a problem requiring repair?	—	Verify repair	Go to *Step 8*
8	1. Inspect the MAF sensor inlet screen for damage or for the presence of foreign objects which may partially block the air flow sample through the MAF sensor. 2. Correct any problem that is found as necessary. Did your inspection of the MAF sensor reveal a condition requiring repair?	—	Verify repair	Go to *Step 9*
9	Start the engine and note the idle quality. Is a high or unsteady idle being experienced?	—	Go to *Step 10*	Go to *Step11*
10	1. Visually and physically inspect the throttle body, intake manifold, EGR valve and the EGR feed pipe for vacuum leaks. 2. Repair any vacuum leaks as necessary. Did your inspection reveal a vacuum leak?	—	Verify repair	Go to *Step 11*

DTC P0171 – Fuel Trim System Lean Bank 1 (Cont'd)

Step	Action	Value(s)	Yes	No
11	Check the fuel for excessive water, alcohol, or other contaminants (see *Diagnosis* in *Engine Fuel* for the procedure) and correct the contaminated fuel condition if present (see *Engine Fuel*). Was the fuel contaminated?	—	Verify repair	Go to *Step 12*
12	1. Visually and physically inspect the PCM injector grounds, power grounds and sensor grounds to ensure that they are clean, tight, and in their proper locations. 2. If a faulty ground condition is present, correct it as necessary. Did your inspection reveal a condition requiring repair?	—	Verify repair	Go to *Step 13*
13	1. Disconnect the MAF sensor electrical connector. 2. Operate the vehicle in "closed loop" while monitoring the "BANK 1 S.T. FUEL TRIM" displayed on the Tech 2. Does "BANK 1 S.T. FUEL TRIM" value decrease to near the specified value?	0%	Go to *Step 19*	Go to *Step 14*
14	Perform the procedure in the "Fuel System Pressure Test" and repair fuel system problem if necessary. Did Fuel System Pressure Test isolate a condition requiring repair?	—	Verify repair	Go to *Step 15*
15	1. Visually and physically inspect the intake manifold, injector O-rings, EGR adapter, EGR valve and the EGR feed pipes for vacuum leaks. 2. Repair any problem that is found. Did your inspection reveal a problem?	—	Verify repair	Go to *Step 16*
16	Visually and physically inspect the Bank 1 exhaust manifold for leaks and loose or missing hardware and correct any problem found. Did your inspection reveal a problem?	—	Verify repair	Go to *Step 17*
17	Perform the "Injector Balance Test," and correct any problem found (refer to *Fuel Metering System*). Did Injector Balance Test isolate a problem?	—	Verify repair	Go to *Step 18*
18	1. Visually and physically inspect the Bank 1 HO2S 1 to ensure that it is installed securely and that the Bank 1 HO2S 1 pigtail and wiring harness are not contacting the exhaust or otherwise damaged. 2. If a problem is found, correct it as necessary. Did your inspection reveal a problem?	—	Verify repair	Refer to *Diagnostic Aids*
19	Replace the MAF sensor. Is the action complete?	—	Verify repair	—

Diagnostic Trouble Code (DTC) P0172 Fuel Trim System Rich Bank 1

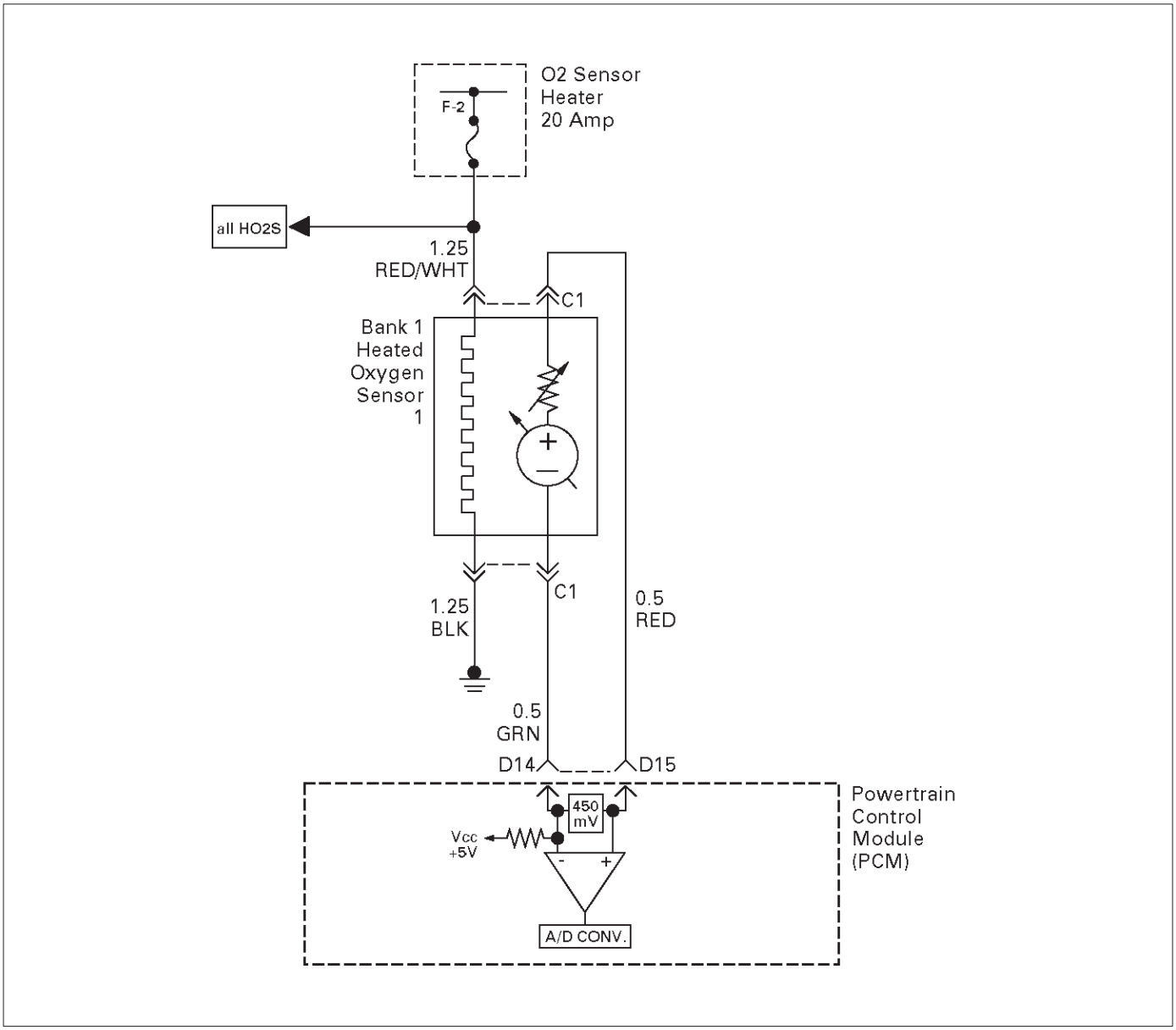

D06RW030

Circuit Description

To provide the best possible combination of driveability, fuel economy, and emission control, a “closed loop” air/fuel metering system is used. While in “closed loop,” the powertrain control module (PCM) monitors the Bank 1 heated oxygen sensors (HO2S) 1 and Bank 2 HO2S 1 signals and adjusts fuel delivery based upon the HO2S signal voltages. A change made to fuel delivery will be indicated by the long and short term fuel trim values which can be monitored with a Tech 2. Ideal fuel trim values are around 0%; if the HO2S signals are indicating a lean condition the PCM will add fuel, resulting in fuel trim values above 0%. If a rich condition is detected, the fuel trim values will be below 0%, indicating that the PCM is reducing the amount of fuel delivered. If an excessively rich condition is detected on Bank 1, the PCM will set DTC P0172.

The PCM’s maximum authority to control long term fuel trim allows a range between –15% (automatic transmission) or –12 (manual transmission) and +20%. The PCM’s maximum authority to control short term fuel trim allows a range between –11% and +20%. The PCM monitors fuel trim under various engine speed/load fuel trim cells before determining the status of the fuel trim diagnostic.

Conditions for Setting the DTC

- No Tech 2 test is being run.
- None of the following was set: EGR DTCs, HO2S DTCs, (response, transition, open, low volts, no activity), MAF DTCs, TPS DTCs, MAP DTCs, IAT DTCs, canister purge DTCs, EVAP DTCs, injector circuit DTCs, or misfire DTCs.
- Engine coolant temperature is between 25˚C (77˚F) and 100˚C (212˚F).
- Intake air temperature is between –40˚C (–40˚F) and 120˚C (248˚F).
- Manifold absolute pressure is between 24 kPa and 99 kPa.
- Throttle angle is steady below 95%.

- Vehicle speed is below 136 km/h (85 mph).
- Engine speed is between 400 and 6,000 RPM.
- Barometric pressure is greater than 72.5 kPa.
- Mass air flow is between 2 g/second and 200 g/second.
- Ignition voltage is above 9.5 volts.
- Fuel system is in “closed loop.”

Action Taken When the DTC Sets

- The PCM will illuminate the malfunction indicator lamp (MIL) after the second consecutive trip in which the fault is detected.
- The PCM will store conditions which were present when the DTC was set as Freeze Frame and in the Failure Records data.

Conditions for Clearing the MIL/DTC

- DTC P0172 can be cleared by using the Tech 2 “Clear Info” function or by disconnecting the PCM battery feed.

Diagnostic Aids

Check for the following conditions:

- Poor connection at PCM – Inspect harness connectors for backed-out terminals, improper mating, broken locks, improperly formed or damaged terminals, and poor terminal-to-wire connection.
- Damaged harness – Inspect the wiring harness for damage. If the harness appears to be OK, observe the Bank 1 HO2S 1 display on the Tech 2 while moving connectors and wiring harnesses related to the engine harness. A change in the display will indicate the location of the fault.

Reviewing the Failure Records vehicle mileage since the diagnostic test last failed may help determine how often the condition that caused the DTC to be set occurs. This may assist in diagnosing the condition.

Test Description

Number(s) below refer to the step number(s) on the Diagnostic Chart.

2. DTCs other than P0172 and P0175 may indicate a condition present which may cause a lean condition. If this is the case, repairing the condition which caused the other DTC will most likely correct the DTC P0172/P0175.

4. If the DTC P0172 test passes while the Failure Records conditions are being duplicated, the rich condition is intermittent. Refer to *Diagnostic Aids* or *Symptoms* for additional information on diagnosing intermittent problems.

DTC P0172 – Fuel Trim System Rich Bank 1

Step	Action	Value(s)	Yes	No
1	Was the “On-Board Diagnostic (OBD) System Check” performed?	—	Go to *Step 2*	Go to *OBD System Check*
2	Are any DTCs set other than P0172 and P0175?	—	Go to the applicable DTC charts and repair the other DTCs before proceeding with this chart	Go to *Step 3*
3	1. Start the engine and operate the vehicle in “closed loop.” 2. Observe “B1 Long Term Fuel Trim” display on the Tech 2. Is the displayed value more negative than the specified value?	L.T. Fuel Trim: –15% (auto. trans.) OR –12% (man. trans.)	Go to *Step 5*	Go to *Step 4*
4	1. Review and record the Tech 2 Failure Records data. 2. Clear the DTC P0172/P0175 and operate the vehicle to duplicate the Failure Records conditions. 3. Monitor the Tech 2 “DTC” info for DTC P0172 while operating the vehicle to duplicate the Failure Records conditions. 4. Continue operating the vehicle until the DTC P0172 test runs and note test result. Does the Tech 2 indicate DTC P0172 failed this ignition?	—	Go to *Step 5*	The rich condition is not present. If a driveability symptom still exists, refer to *Symptoms*.
5	Is DTC P0175 also set?	—	Go to *Step 6*	Go to *Step 15*
6	Visually and physically inspect the air filter element and replace it if necessary. Did the air filter require replacement?	—	Verify repair	Go to *Step 7*
7	Visually and physically inspect the air intake duct for collapse or restriction and repair if necessary. Did your inspection reveal a condition requiring repair?	—	Verify repair	Go to *Step 8*
8	Inspect the MAF sensor inlet screen for damage or for the presence of foreign objects which may partially block air flow through the screen and correct any problem found. Did your inspection of the MAF sensor reveal a condition requiring repair or replacement?	—	Verify repair	Go to *Step 9*
9	Start the engine and note the idle quality. Is a low or unsteady idle being experienced?	—	Go to *Step 10*	Go to *Step 11*
10	1. Ignition “OFF.” 2. Physically inspect the throttle body bore, throttle plate, and IAC passages for coking and foreign objects. 3. If a problem was found, repair as necessary. Did your inspection reveal a condition requiring repair?	—	Verify repair	Go to *Step 11*

DTC P0172 – Fuel Trim System Rich Bank 1 (Cont'd)

Step	Action	Value(s)	Yes	No
11	1. Disconnect the vacuum hose from the fuel pressure regulator and inspect the hose for the presence of fuel. 2. If fuel is present in the vacuum hose, replace the fuel pressure regulator (refer to *Fuel Metering System*). Did the fuel pressure regulator require replacement?	—	Verify repair	Go to *Step 12*
12	Ignition "ON," engine "OFF," monitor the TP Angle display on the Tech 2 while slowly depressing the accelerator pedal. Does the TP Angle display increase steadily and evenly from minimum value at closed throttle to maximum value at wide-open throttle?	Minimum 0% Maximum 100%	Go to *Step 13*	Go to *Step 18*
13	1. Disconnect the MAF sensor electrical connector. 2. Operate the vehicle in "closed loop" while monitoring the "BANK 1 L.T. FUEL TRIM" and "BANK 1 S. T. FUEL TRIM" display on the Tech 2. Did both values change to near the specified value?	0%	Go to *Step 19*	Go to *Step 14*
14	1. Perform "Fuel System Pressure Test." 2. If Fuel System Pressure Test isolates a problem, repair as necessary (refer to *Engine Fuel* or *Fuel Metering System*). Did the Fuel System Pressure Test isolate a problem requiring repair?	—	Verify repair	Go to *Step 16*
15	Replace the PCM. **IMPORTANT:** The replacement PCM must be programmed. Refer to *UBS 98model year Immobilizer Workshop Manual.* Is the action complete?	—	Verify repair	—
16	1. Perform the "Injector Balance Test." 2. If Injector Balance Test isolates a problem, repair as necessary (refer to *Fuel Metering System*). Did the Injector Balance Test isolate a problem requiring repair?	—	Verify repair	Go to *Step 17*
17	1. Remove and visually/physically inspect the Bank 1 HO2S 1 for silicon contamination. This will be indicated by a powdery white deposit on the portion of the HO2S that is exposed to the exhaust stream. 2. If contamination is evident on the Bank 1 HO2S 1, replace the contaminated sensors. Did the sensor require replacement?	—	Verify repair	Refer to *Diagnostic Aids*
18	1. Check the TP sensor mounting screws and tighten or replace them as necessary if they are loose or missing. 2. If the screws are OK, replace the TP sensor. Is the action complete?	—	Verify repair	—
19	Replace the MAF sensor. Is the action complete?	—	Verify repair	—

Diagnostic Trouble Code (DTC) P0174 Fuel Trim System Lean Bank 2

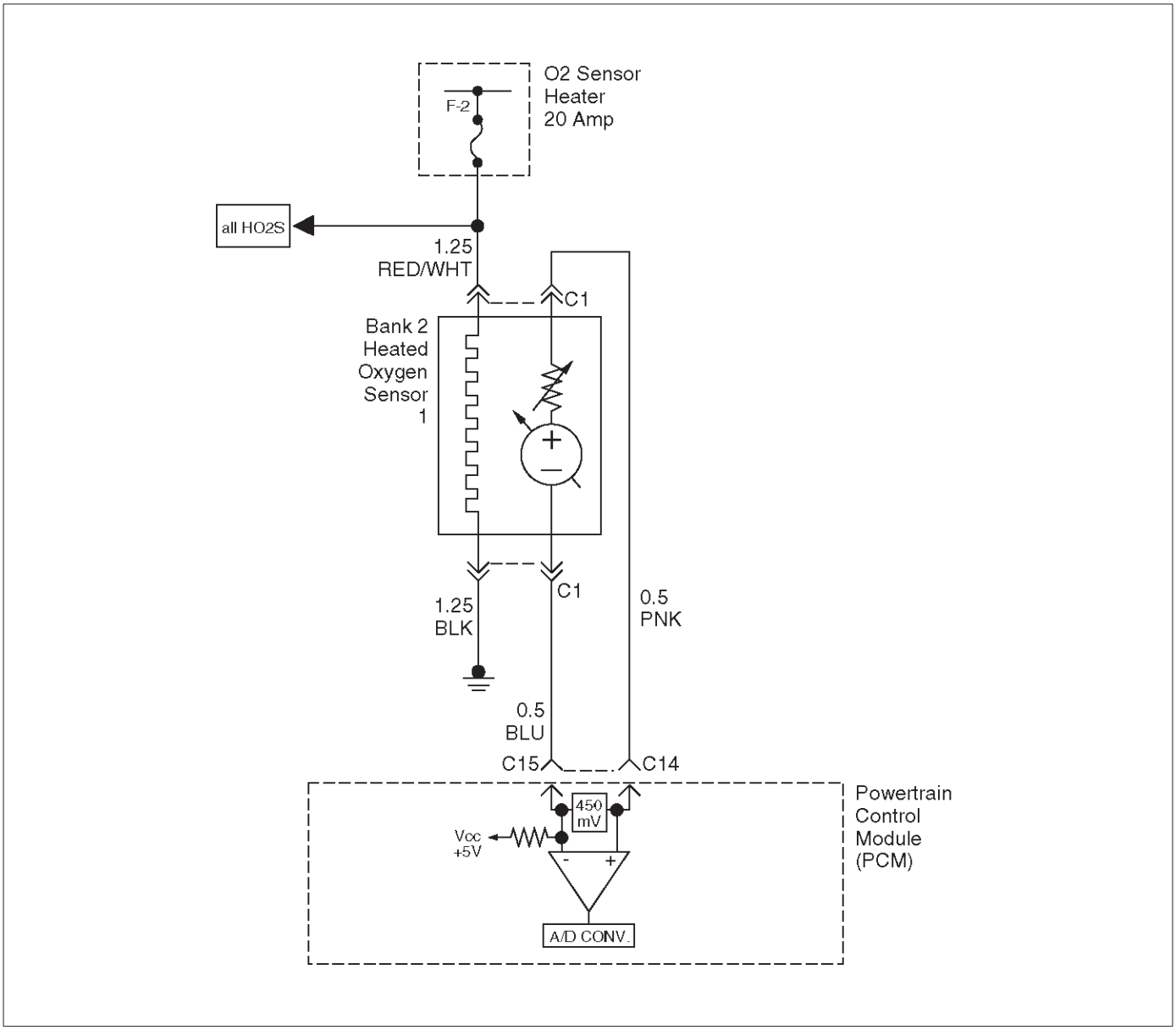

D06RW031

Circuit Description

To provide the best possible combination of driveability, fuel economy, and emission control, a “closed loop” air/fuel metering system is used. While in “closed loop,” the powertrain control module (PCM) monitors the Bank 1 HO2S 1 and Bank 2 HO2S 1 signals and adjusts fuel delivery based upon the HO2S signal voltages. A change made to fuel delivery will be indicated by the long and short term fuel trim values which can be monitored with a Tech 2. Ideal fuel trim values are around 0%; if the HO2S signals are indicating a lean condition the PCM will add fuel, resulting in fuel trim values above 0%. If a rich condition is detected, the fuel trim values will be below 0%, indicating that the PCM is reducing the amount of fuel delivered. If an excessively lean condition is detected on Bank 2, the PCM will set DTC P0174.

The PCM’s maximum authority to control long term fuel trim allows a range between –15%(automatic transmission) or –12%(manual transmission) and +20%. The PCM monitors fuel trim under various engine speed/load fuel trim cells before determining the status of the fuel trim diagnostic.

Conditions for Setting the DTC

- No Tech 2 test is being run.
- None of the following DTCs are set: idle system, EGR, HO2S, (response, transition, open, low volts, no activity), MAF, TP sensor, MAP, IAT, canister purge, EVAP, injector circuit, or misfire.
- Engine coolant temperature is between 25˚C (77˚F) and 100˚C (212˚F).
- Intake air temperature is between –40˚C (–40˚F) and 120˚C (248˚F).
- Manifold absolute pressure is between 24 kPa and 99 kPa.
- Throttle angle is steady below 95%.
- Vehicle speed is below 136 km/h (85 mph).
- Engine speed is between 400 and 6,000 RPM.
- Barometric pressure is greater than 72.5 kPa.
- Mass air flow is between 2 g/second and 200 g/second.

- Ignition voltage is above 9.5 volts.
- Fuel system is in “closed loop.”

Action Taken When the DTC Sets

- The PCM will illuminate the malfunction indicator lamp (MIL) after the second consecutive trip in which the failure is detected.
- The PCM will store conditions which were present when the DTC was set as Freeze Frame and in the Failure Records data.

Conditions for Clearing the MIL/DTC

- DTC P0174 can be cleared by using the Tech 2 “Clear Info” function or by disconnecting the PCM battery feed.

Diagnostic Aids

Check for the following conditions:

- Poor connection at PCM – Inspect harness connectors for backed-out terminals, improper mating, broken locks, improperly formed or damaged terminals, and poor terminal-to-wire connection.
- Damaged harness – Inspect the wiring harness for damage. If the harness appears to be OK, observe the Bank 2 HO2S 1 display on the Tech 2 while moving connectors and wiring harnesses related to the engine harness. A change in the display will indicate the location of the fault.

Reviewing the Failure Records vehicle mileage since the diagnostic test last failed may help determine how often the condition that caused the DTC to be set occurs. This may assist in diagnosing the condition.

Test Description

Number(s) below refer to the step number(s) on the Diagnostic Chart.

2. DTCs other than P0171 and P0174 may indicate a condition present which may cause a lean condition. If this is the case, repairing the condition which caused the other DTC will most likely correct the DTC P0171/P0174.

4. If the DTC P0174 test passes while the Failure Records conditions are being duplicated, the lean condition is intermittent. Refer to *Diagnostic Aids* or *Symptoms* for additional information on diagnosing intermittent problems.

DTC P0174 – Fuel Trim System Lean Bank 2

Step	Action	Value(s)	Yes	No
1	Was the “On-Board Diagnostic (OBD) System Check” performed?	—	Go to *Step 2*	Go to *OBD System Check*
2	Are any DTCs set other than P0174 and P0171?	—	Go to the applicable DTC charts and repair the other DTCs before proceeding with this chart.	Go to *Step 3*
3	1. Start the engine and operate the vehicle in “closed loop.” 2. Observe the “BANK 2 L.T. FUEL TRIM” display on the Tech 2. Is the displayed values greater than the specified values?	L.T. Fuel Trim: +20%	Go to *Step 5*	Go to *Step 4*
4	1. Review and record Tech 2 Failure Records data. 2. Clear the DTC P0171/P0174 and operate the vehicle to duplicate the Failure Records conditions. 3. Monitor the Tech 2 “DTC” info for DTC P0174 while operating the vehicle to duplicate the Failure Records conditions. 4. Continue operating the vehicle until the DTC P0174 test runs. 5. Note the test result. Does the Tech 2 indicate DTC P0174 failed this ignition?	—	Go to *Step 5*	The lean condition is not present. If a driveability symptom still exists, refer to *Symptoms* section.
5	Was DTC P0171 also set?	—	Go to *Step 6*	Go to *Step 15*
6	Visually and physically inspect the vacuum hoses for disconnects, splits, kinks, improper routing and improper connections and repair any problem found. Did your inspection reveal a problem requiring repair?	—	Verify repair	Go to *Step 7*
7	Visually and physically inspect the crankcase ventilation valve for proper installation and repair any problem found (refer to *Crankcase Ventilation System*). Did your inspection reveal a problem requiring repair?	—	Verify repair	Go to *Step 8*
8	1. Inspect the MAF sensor inlet screen for damage or for the presence of foreign objects which may partially block the air flow sample through the MAF sensor. 2. Correct any problem that is found as necessary. Did your inspection of the MAF sensor reveal a condition requiring repair?	—	Verify repair	Go to *Step 9*
9	Start the engine and note the idle quality. Is a high or unsteady idle being experienced?	—	Go to *Step 10*	Go to *Step 11*

DTC P0174 – Fuel Trim System Lean Bank 2 (Cont'd)

Step	Action	Value(s)	Yes	No
10	1. Visually and physically inspect the throttle body, intake manifold, EGR valve and the EGR feed pipe for vacuum leaks. 2. Repair any vacuum leaks as necessary. Did your inspection reveal a vacuum leak?	—	Verify repair	Go to *Step 11*
11	Check the fuel for excessive water, alcohol, or other contaminants (see *Diagnosis* in *Engine Fuel* for procedure) and correct the contaminated fuel condition is present (see *Engine Fuel*). Was the fuel contaminated?	—	Verify repair	Go to *Step 12*
12	1. Visually and physically inspect the PCM injector grounds, power grounds and sensor grounds to ensure that they are clean, tight, and in their proper locations. 2. If a faulty ground condition is present, correct it as necessary. Did your inspection reveal a condition requiring repair?	—	Verify repair	Go to *Step 13*
13	1. Disconnect the MAF sensor electrical connector. 2. Operate the vehicle in "closed loop" while monitoring the "BANK 1 S.T. FUEL TRIM" displayed on the Tech 2. Does the "BANK 1 S.T. FUEL TRIM" value decrease to near the specified value?	0%	Go to *Step 19*	Go to *Step 14*
14	Perform the procedure in the "Fuel System Pressure Test" and repair fuel system problem if necessary. Did the Fuel System Pressure Test isolate a condition requiring repair?	—	Verify repair	Go to *Step 15*
15	1. Visually and physically inspect the intake manifold, injector O-rings, EGR adapter, EGR valve and the EGR feed pipes for vacuum leaks. 2. Repair any problem that is found. Did your inspection reveal a problem?	—	Verify repair	Go to *Step 16*
16	Visually and physically inspect the Bank 2 exhaust manifold for leaks and loose or missing hardware and correct any problem found. Did your inspection reveal a problem?	—	Verify repair	Go to *Step 17*
17	Perform the "Injector Balance Test," and correct any problem found (refer to *Fuel Metering System*). Did the Injector Balance Test isolate a problem?	—	Verify repair	Go to *Step 18*
18	1. Visually and physically inspect the Bank 2 HO2S 1 to ensure that it is installed securely and that the Bank 2 HO2S 1 pigtail and wiring harness are not contacting the exhaust or otherwise damaged. 2. If a problem is found, correct it as necessary. Did your inspection reveal a problem?	—	Verify repair	Refer to *Diagnostic Aids*
19	Replace the MAF sensor. Is the action complete?	—	Verify repair	—

Diagnostic Trouble Code (DTC) P0175 Fuel Trim System Rich Bank 2

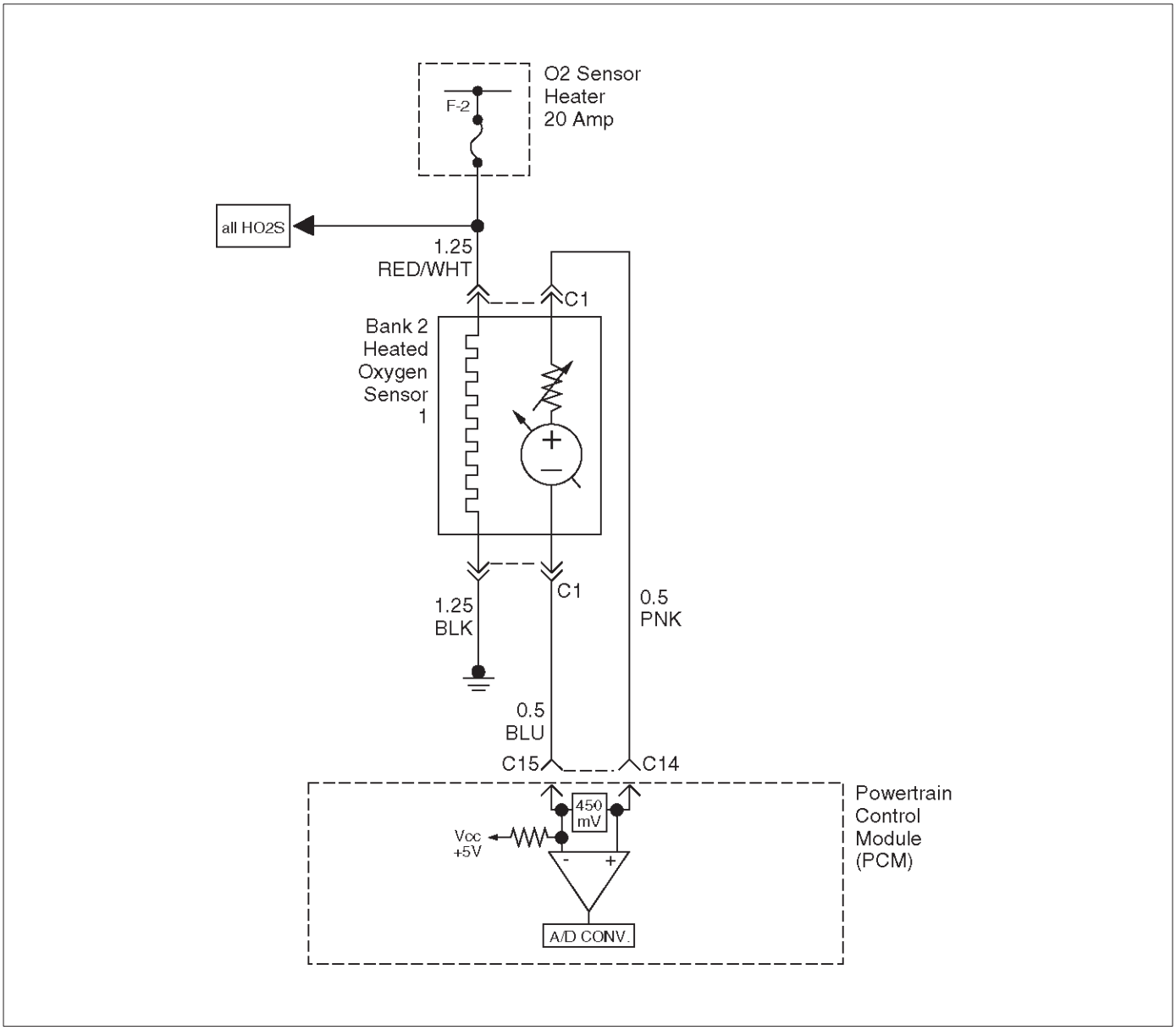

D06RW031

Circuit Description

To provide the best possible combination of driveability, fuel economy, and emission control, a “closed loop” air/fuel metering system is used. While in “closed loop,” the powertrain control module (PCM) monitors the Bank 1 HO2S 1 and Bank 2 HO2S 1 signals and adjusts fuel delivery based upon the HO2S signal voltages. A change made to fuel delivery will be indicated by the long and short term fuel trim values which can be monitored with a Tech 2. Ideal fuel trim values are around 0%; if the HO2S signals are indicating a lean condition the PCM will add fuel, resulting in fuel trim values above 0%. If a rich condition is detected, the fuel trim values will be below 0%, indicating that the PCM is reducing the amount of fuel delivered. If an excessively rich condition is detected on Bank 2, the PCM will set DTC P0175.

The PCM’s maximum authority to control long term fuel trim allows a range between –15%(automatic transmission) or –12%(manual transmission) and +20%. The PCM’s maximum authority to control short term fuel trim allows a range between –11% and +20%. The PCM monitors fuel trim under various engine speed/load fuel trim cells before determining the status of the fuel trim diagnostic.

Conditions for Setting the DTC

- No Tech 2 test is being run.
- None of the following DTCs are set: idle system, EGR, HO2S, (response, transition, open, low volts, no activity), MAF, TPS, MAP, IAT, canister purge, EVAP, injector circuit, or misfire.
- Engine coolant temperature is between 25˚C (77˚F) and 100˚C (212˚F).
- Intake air temperature is between –40˚C (–40˚F) and 120˚C (248˚F).
- Manifold absolute pressure is between 24 kPa and 99 kPa.
- Throttle angle is steady below 95%.
- Vehicle speed is below 136 km/h (85 mph).
- Engine speed is between 400 and 6,000 RPM.

- Barometric pressure is greater than 72.5 kPa.
- Mass air flow is between 2 g/second and 200 g/second.
- Ignition voltage is above 9.5 volts.
- Fuel system is in “closed loop.”

Action Taken When the DTC Sets

- The PCM will illuminate the malfunction indicator lamp (MIL) after the second consecutive trip in which the failure is detected.
- The PCM will store conditions which were present when the DTC was set as Freeze Frame and in the Failure Records data.

Conditions for Clearing the MIL/DTC

- DTC P0175 can be cleared by using the Tech 2 “Clear Info” function or by disconnecting the PCM battery feed.

Diagnostic Aids

Check for the following conditions:

- Poor connection at PCM – Inspect harness connectors for backed -out terminals, improper mating, broken locks, improperly formed or damaged terminals, and poor terminal-to-wire connection.
- Damaged harness – Inspect the wiring harness for damage. If the harness appears to be OK, observe the Bank 2 HO2S 1 display on the Tech 2 while moving connectors and wiring harnesses related to the engine harness. A change in the display will indicate the location of the fault.

Reviewing the Failure Records Vehicle mileage since the diagnostic test last failed may help determine how often the condition that caused the DTC to be set occurs. This may assist in diagnosing the condition.

Test Description

Number(s) below refer to the step number(s) on the Diagnostic Chart.

2. DTCs other than P0172 and P0175 may indicate a condition present which may cause a lean condition. If this is the case, repairing the condition which caused the other DTC will most likely correct the DTC P0172/P0175.

4. If the DTC P0175 test passes while the Failure Records conditions are being duplicated, the rich condition is intermittent. Refer to *Diagnostic Aids* or *Symptoms* for additional information on diagnosing intermittent problems.

DTC P0175 – Fuel Trim System Rich Bank 2

Step	Action	Value(s)	Yes	No
1	Was the ”On-Board Diagnostic (OBD) System Check” performed?	—	Go to Step 2	Go to *OBD System Check*
2	Are any DTCs set other than P0172 and P0175?	—	Go to the applicable DTC charts and repair the other DTCs before proceeding with this chart.	Go to *Step 3*
3	1. Start the engine and operate the vehicle in “closed loop.” 2. Observe the “BANK 2 L.T. FUEL TRIM” display on the Tech 2. Is the displayed value more negative than the specified value?	L.T. Fuel Trim: –15% (auto. trans.) OR –12% (man. trans.)	Go to *Step 5*	Go to *Step 4*
4	1. Review and record the Tech 2 Failure Records data. 2. Clear the DTC P0172/P0175 and operate the vehicle to duplicate the Failure Records conditions. 3. Monitor the Tech 2 “DTC” info for DTC P0175 while operating the vehicle to duplicate the Failure Records conditions. 4. Continue operating the vehicle until the DTC P0175 test runs. 5. Note the test result. Does the Tech 2 indicate DTC P0175 failed this ignition?	—	Go to *Step 5*	The rich condition is not present. If a driveability symptom still exists, refer to *Symptoms*.
5	Was DTC P0172 also set?	—	Go to *Step 6*	Go to *Step 15*
6	Visually and physically inspect the air filter element and replace it if necessary. Did the air filter require replacement?	—	Verify repair	Go to *Step 7*
7	Visually and physically inspect the air intake duct for collapse or restriction and repair if necessary. Did your inspection reveal a problem requiring repair?	—	Verify repair	Go to *Step 8*
8	Inspect the MAF sensor inlet screen for damage or for the presence of foreign objects which may partially block air flow through the screen and correct any problem found. Did your inspection of the MAF sensor reveal a condition requiring repair or replacement?	—	Verify repair	Go to *Step 9*
9	Start the engine and note the idle quality. Is a low or unsteady idle being experienced?	—	Go to *Step 10*	Go to *Step 11*
10	1. Turn the ignition off and physically inspect the throttle body bore, throttle plate, and IAC passages for coking and foreign objects. 2. If a problem was found, repair as necessary. Did your inspection reveal a condition requiring repair?	—	Verify repair	Go to *Step 11*

DTC P0175 – Fuel Trim System Rich Bank 2 (Cont'd)

Step	Action	Value(s)	Yes	No
11	1. Disconnect the vacuum hose from the fuel pressure regulator and inspect the hose for the presence of fuel. 2. If fuel is present in the vacuum hose, replace the fuel pressure regulator (refer to *Fuel Metering System*). Did the fuel pressure regulator require replacement?	—	Verify repair	Go to *Step 12*
12	1. Ignition "ON," engine "OFF." 2. Monitor the TP Angle display on the Tech 2 while slowly depressing the accelerator pedal. Does the TP Angle display increase steadily and evenly from minimum value at closed throttle to maximum value at wide-open throttle?	Minimum 0% Maximum 100%	Go to *Step 13*	Go to *Step 18*
13	1. Disconnect the MAF sensor electrical connector. 2. Operate the vehicle in "closed loop" while monitoring the "BANK 1 L.T. FUEL TRIM" and "BANK 1 S.T. FUEL TRIM" display on the Tech 2. Did both values change to near the specified value?	0%	Go to *Step 19*	Go to *Step 14*
14	1. Perform the "Fuel System Pressure Test." 2. If Fuel System Pressure Test isolates a problem, repair as necessary (refer to *Engine Fuel* or *Fuel Metering System*). Did the Fuel System Pressure Test isolate a condition requiring repair?	—	Verify repair	Go to *Step 16*
15	Replace the PCM. **IMPORTANT:** The replacement PCM must be programmed. Refer to *UBS 98model year Immobilizer Workshop Manual.* Is the action complete?	—	Verify repair	—
16	1. Perform the "Injector Balance Test." 2. If the Injector Balance Test isolates a problem, repair as necessary (refer to *Fuel Metering System*). Did the Injector Balance Test isolate a problem requiring repair?	—	Verify repair	Go to *Step 17*
17	1. Remove and visually/physically inspect the Bank 2 HO2S 1 for silicon contamination. This will be indicated by a powdery white deposit on the portion of the HO2S that is exposed to the exhaust stream. 2. If contamination is evident on the Bank 2 HO2S 1, replace the contaminated sensor. Did the sensor require replacement?	—	Verify repair	Refer to *Diagnostic Aids*
18	1. Check the TP sensor mounting screws and tighten or replace them as necessary if they are loose or missing. 2. If the screws are OK, replace the TP sensor. Is the action complete?	—	Verify repair	—
19	Replace the MAF sensor. Is the action complete?	—	Verify repair	—

Diagnostic Trouble Code (DTC) P0201 Injector 1 Control Circuit

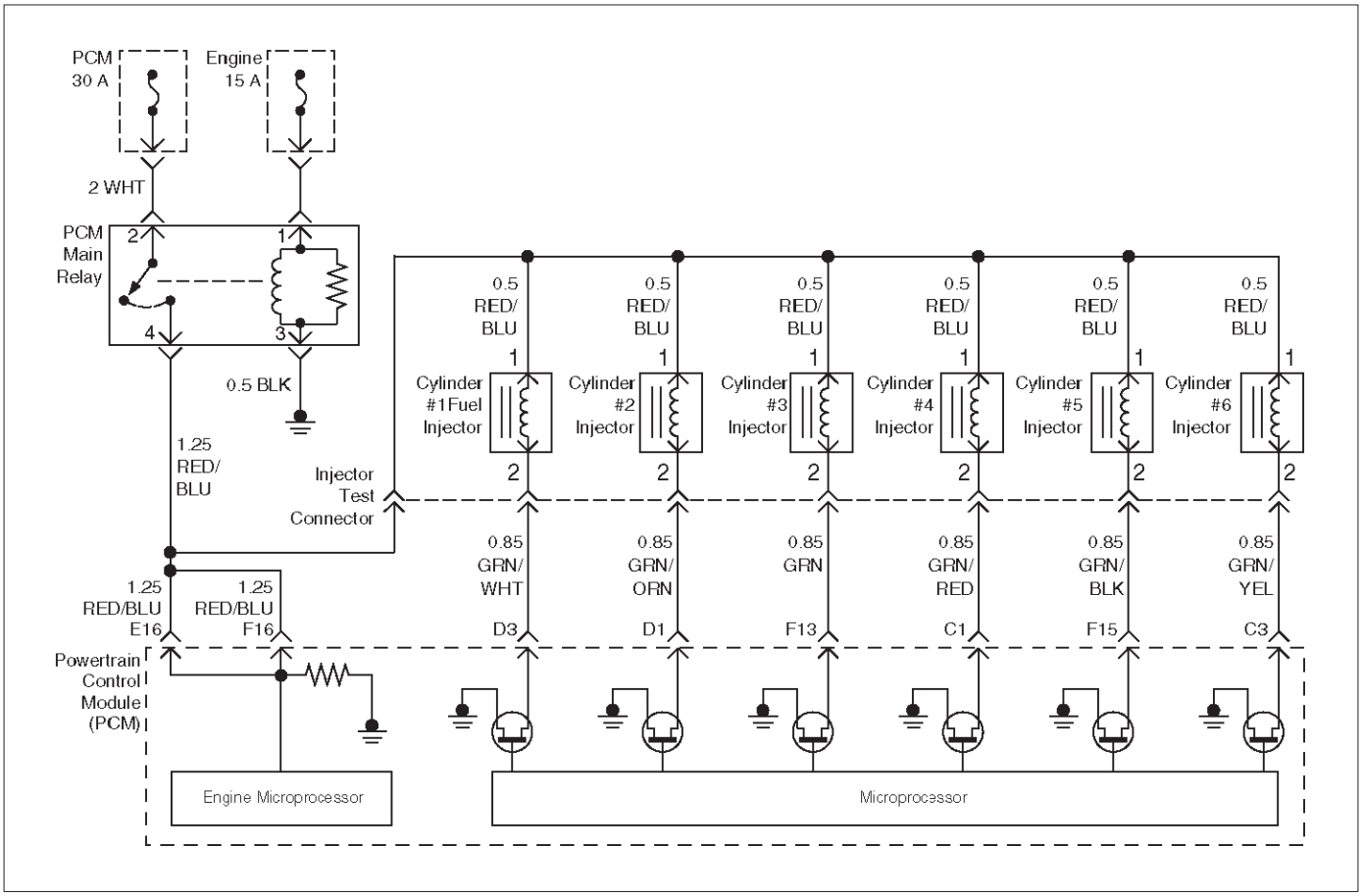

D06RW034

Circuit Description

The powertrain control module (PCM) has six individual injector driver circuits. Each controls an injector. When a driver circuit is grounded by the PCM, the injector is activated. The PCM monitors the current in each driver circuit. The voltage on each driver is monitored to detect a fault. If the voltage is not what the PCM expects to monitor on the circuit, a DTC is set. This DTC is also set if an injector driver is shorted to voltage or if there is an open circuit.

Conditions for Setting the DTC

- The battery voltage is more than 9 volts.
- The engine is turning, determined by 58X crankshaft position input signal.
- The injector voltage does not equal the ignition voltage when the injector is commanded “OFF” or the injector voltage does not equal 0 volts when the injector is commanded “ON.”
- The above conditions are met for 15 seconds.

Action Taken When the DTC Sets

- The PCM will illuminate the malfunction indicator lamp (MIL) the first time the fault is detected.
- The PCM will store conditions which were present when the DTC was set as Freeze Frame and in the Failure Records data.

Conditions for Clearing the MIL/DTC

- DTC P0201 can be cleared by using the Tech 2 “Clear Info” function or by disconnecting the PCM battery feed.

Diagnostic Aids

An injector driver circuit that is open or shorted to voltage will cause a DTC P0201 to set. It will also cause a misfire due to an inoperative injector. A misfire DTC will also be set indicating which cylinder is inoperative.
Long term and short term fuel trims that are excessively high or low are a good indication that an injector is faulty. Use Fuel Injector Coil Test Procedure to check for faulty injectors.

Test Description

The number(s) below refer to the step number(s) on the Diagnostic Chart.

3. This step determines if DTC P0201 is the result of a hard failure or an intermittent condition.

5. A special injector test connector is provided so that the injectors can be electrically tested without removal of the manifold. On the Trooper, the special 7-way gray connector is located at the front of the charcoal canister. The test connector can be identified by the blue connector lock which is tethered to the wiring harness. If the light for cylinder 1 is “ON” steady before cranking the engine as well as while cranking the engine, then the injector driver circuit is shorted to ground.

If the test light blinks while cranking, the PCM and the wiring to the injectors are OK. The Fuel Injector Coil Test Procedure will check if the injectors are faulty.

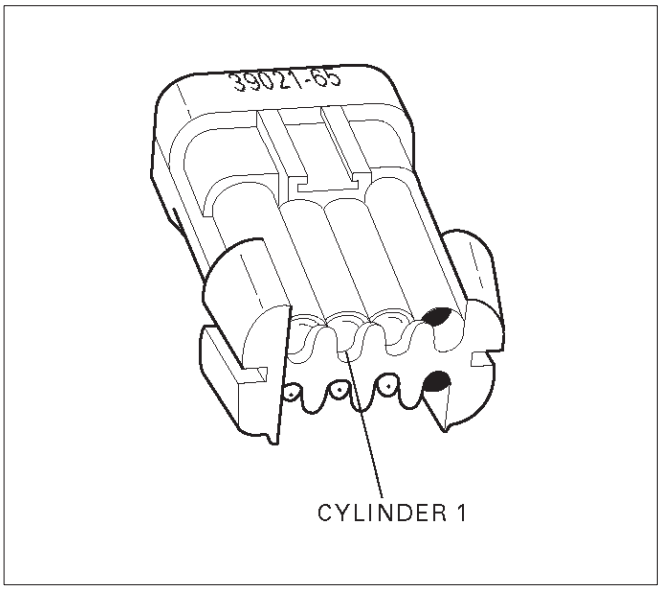

R321054

7. Because the test light was “ON” steady, voltage to the injector is OK, but the driver circuit is grounded at all times. This step determines if the circuit is shorted to ground or the PCM is faulty.
9. The reading should be about 12-14Ω.
10. Locating the open in the harness or in the injector will require removal of the manifold to provide access.

DTC P0201 – Injector 1 Control Circuit

Step	Action	Value(s)	Yes	No
1	Was the “On-Board Diagnostic (OBD) System Check” performed?	—	Go to *Step 2*	Go to *OBD System Check*
2	Will the engine start?	—	Go to *Step 3*	Go to *Engine Cranks But Will Not Run* chart
3	1. Install the Tech 2. Clear the DTC. 2. Idle the engine for one minute. Does DTC P0201 reset?	—	Go to *Step 5*	Go to *Step 4*
4	1. Review the Freeze Frame data with the ignition “ON” and the engine “OFF” and note the parameters. 2. Operate the vehicle within the Freeze Frame conditions as noted. Does P0201 reset?	—	Go to *Step 5*	Go to *Diagnostic Aids*
5	1. Engine “OFF.” 2. Disconnect the injector connector. 3. Install an injector test light 5-8840-2636-0 on the injector test connector. 4. Crank the engine and note the light. Does the injector test light blink?	—	Go to *Fuel Injector Coil Test Procedure*	Go to *Step 6*
6	Note whether the injector test light for cylinder 1 was “OFF” or “ON” steady in step 5. Was the test light “ON” steady while cranking the engine?	—	Go to *Step 7*	Go to *Step 9*

DTC P0201 – Injector 1 Control Circuit (Cont'd)

Step	Action	Value(s)	Yes	No
7	1. Disconnect the PCM connector for the affected injectors. 2. With a test light connected to B+, probe the affected injector driver circuit. Does the test light illuminate?	—	Go to *Step 8*	Go to *Step 15*
8	Repair short to ground in the injector driver circuit. Is the action complete?	—	Go to *OBD System Check*	—
9	1. Disconnect the injector test connector. 2. At the injector side of the harness, connect an ohmmeter between the positive wire (red with blue tracer) and the wire for cylinder 1 (green with white tracer). Does the ohmmeter indicate continuity?	—	Go to *Step 11*	Go to *Step 10*
10	Repair the open injector harness wire or open injector. Is the action complete?	—	Verify repair	—
11	At the PCM side of the injector test connector, check the green/white wire for a short to voltage. Was there a short to voltage?	—	Go to *Step 12*	Go to *Step 13*
12	Repair the short to voltage. Is the action complete?	—	Verify repair	—
13	Check for an open circuit between the injector test connector and the PCM. Was there an open circuit?	—	Go to *Step 14*	Go to *Step 15*
14	Repair the open circuit. Is the action complete?	—	Verify repair	—
15	Replace the PCM. **IMPORTANT:** The replacement PCM must be programmed. Refer to *UBS 98model year Immobilizer Workshop Manual.* Is the action complete?	—	Verify repair	—

Diagnostic Trouble Code (DTC) P0202 Injector 2 Control Circuit

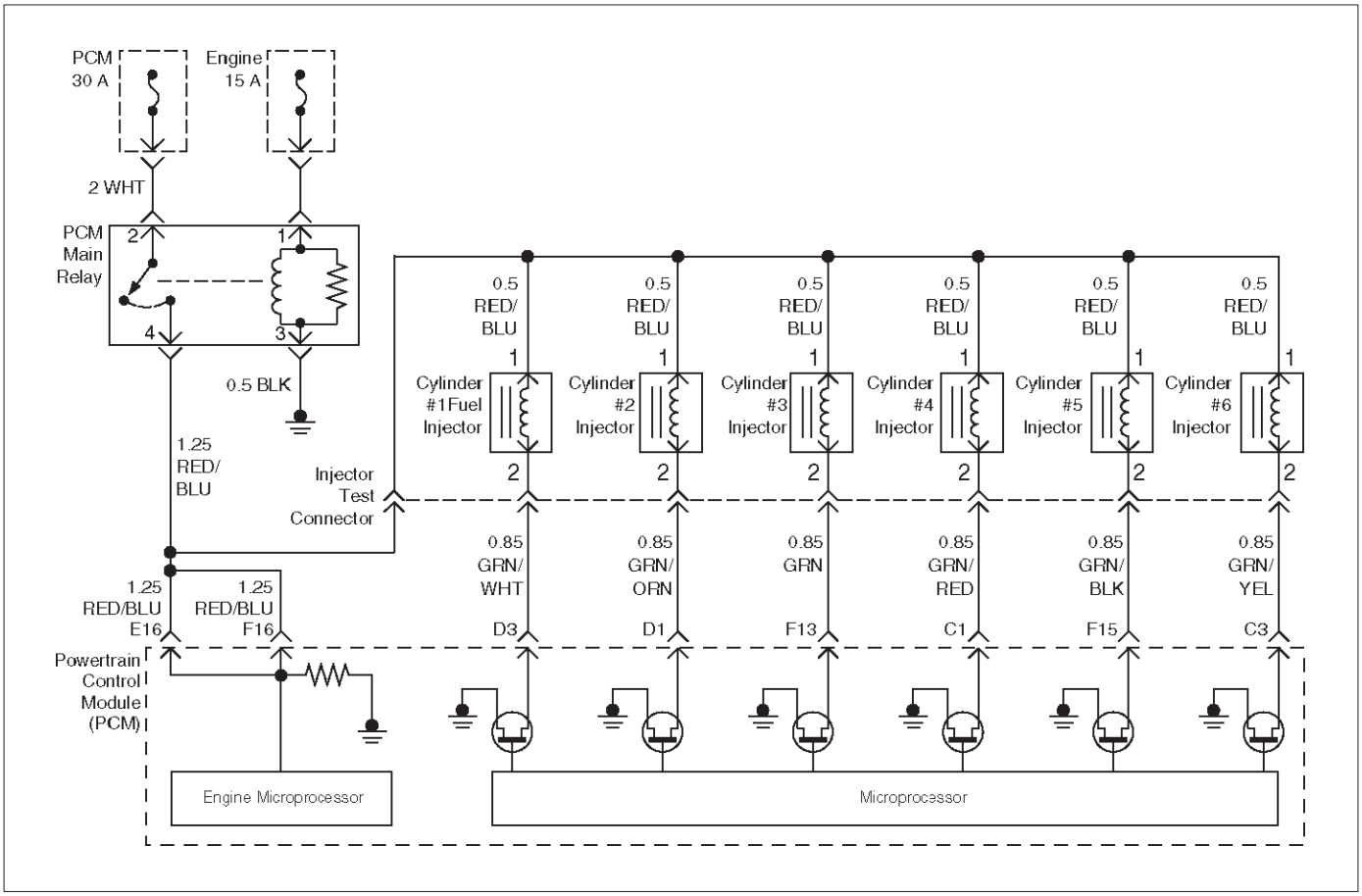

D06RW034

Circuit Description

The powertrain control module (PCM) has six individual injector driver circuits. Each controls an injector. When a driver circuit is grounded by the PCM, the injector is activated. The PCM monitors the current in each driver circuit. The voltage on each driver is monitored to detect a fault. If the voltage is not what the PCM expects to monitor on the circuit, a DTC is set. This DTC is also set if an injector driver is shorted to voltage or if there is an open circuit.

Conditions for Setting the DTC

- The battery voltage is more than 9 volts.
- The engine is turning, determined by 58X crankshaft position input signal.
- The injector voltage does not equal the ignition voltage when the injector is commanded “OFF” or the injector voltage does not equal 0 volts when the injector is commanded “ON.”
- The above conditions are met for 15 seconds.

Action Taken When the DTC Sets

- The PCM will illuminate the malfunction indicator lamp (MIL) the first time the fault is detected.
- The PCM will store conditions which were present when the DTC was set as Freeze Frame and in the Failure Records data.

Conditions for Clearing the MIL/DTC

- DTC P0202 can be cleared by using the Tech 2 “Clear Info” function or by disconnecting the PCM battery feed.

Diagnostic Aids

An injector driver circuit that is open or shorted to voltage will cause a DTC P0202 to set. It will also cause a misfire due to an inoperative injector. A misfire DTC will also be set indicating which cylinder is inoperative.
Long term and short term fuel trims that are excessively high or low are a good indication that an injector is faulty. Use Fuel Injector Coil Test Procedure to check for faulty injectors.

Test Description

The number(s) below refer to the step number(s) on the Diagnostic Chart.

3. This step determines if DTC P0202 is the result of a hard failure or an intermittent condition.

5. A special injector test connector is provided so that the injectors can be electrically tested without removal of the manifold. On the Trooper, the special 7-way gray connector is located at the front of the charcoal canister. The test connector can be identified by the blue connector lock which is tethered to the wiring harness. If the light for cylinder 2 is “ON” steady before cranking the engine as well as while cranking the engine, then the injector driver circuit is shorted to ground.

If the test light blinks while cranking, the PCM and the wiring to the injectors are OK. The Fuel Injector Coil Test Procedure will check if the injectors are faulty.

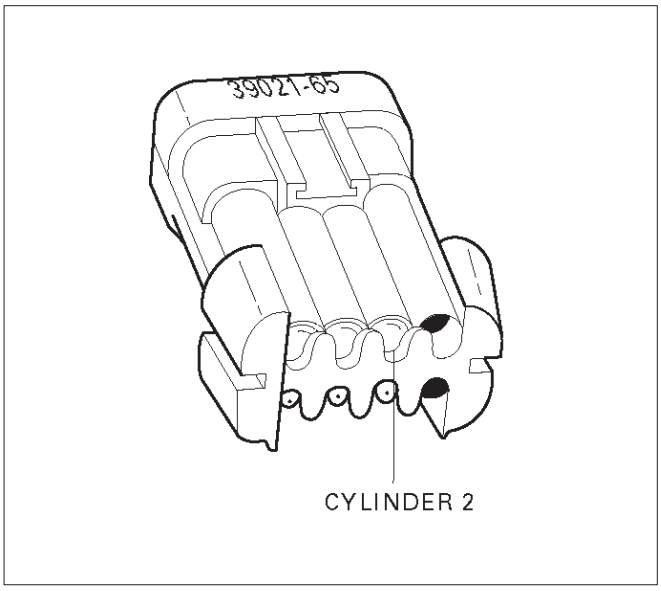

R321055

7. Because the test light was “ON” steady, voltage to the injector is OK, but the driver circuit is grounded at all times. This step determines if the circuit is shorted to ground or the PCM is faulty.

9. The reading should be about 12-14Ω.

10. Locating the open in the harness or in the injector will require removal of the manifold to provide access.

DTC P0202 – Injector 2 Control Circuit

Step	Action	Value(s)	Yes	No
1	Was the “On-Board Diagnostic (OBD) System Check” performed?	—	Go to *Step 2*	Go to *OBD System Check*
2	Will the engine start?	—	Go to *Step 3*	Go to *Engine Cranks But Will Not Run* chart
3	1. Install the Tech 2. Clear the DTC. 2. Idle the engine for one minute. Does DTC P0202 reset?	—	Go to *Step 5*	Go to *Step 4*
4	1. Review the Freeze Frame data with the ignition “ON” and the engine “OFF” and note the parameters. 2. Operate the vehicle within the Freeze Frame conditions as noted. Does P0202 reset?	—	Go to *Step 5*	Go to *Diagnostic Aids*
5	1. Engine “OFF.” 2. Disconnect the injector test connector. 3. Install an injector test light 5-8840-2636-0 on injector connector. 4. Crank the engine and note the light. Does the cylinder 2 test light blink?	—	Go to *Fuel Injector Coil Test Procedure*	Go to *Step 6*
6	Note whether the injector test light for cylinder 2 was “OFF” or “ON” steady in step 5. Was the test light “ON” steady while cranking the engine?	—	Go to *Step 7*	Go to *Step 9*

DTC P0202 – Injector 2 Control Circuit (Cont'd)

Step	Action	Value(s)	Yes	No
7	1. Disconnect the PCM connector for the affected injectors. 2. With a test light connected to B+, probe the affected injector driver circuit. Does the test light illuminate?	—	Go to *Step 8*	Go to *Step 15*
8	Repair short to ground in the injector driver circuit. Is the action complete?	—	Go to *OBD System Check*	—
9	1. Disconnect the injector test connector. 2. At the injector side of the harness, connect an ohmmeter between the positive wire (red with blue tracer) and the wire for cylinder 2 (green with orange tracer). Does the ohmmeter indicate continuity?	—	Go to *Step 11*	Go to *Step 10*
10	Repair the open injector harness wire or open injector. Is the action complete?	—	Verify repair	—
11	At the PCM side of the injector test connector, check the green/orange wire for a short to voltage. Was there a short to voltage?	—	Go to *Step 12*	Go to *Step 13*
12	Repair the short to voltage. Is the action complete?	—	Verify repair	—
13	Check for an open circuit between the injector test connector and the PCM. Was there an open circuit?	—	Go to *Step 14*	Go to *Step 15*
14	Repair the open circuit. Is the action complete?	—	Verify repair	—
15	Replace the PCM. **IMPORTANT:** The replacement PCM must be programmed. Refer to *UBS 98model year Immobilizer Workshop Manual.* Is the action complete?	—	Verify repair	—

Diagnostic Trouble Code (DTC) P0203 Injector 3 Control Circuit

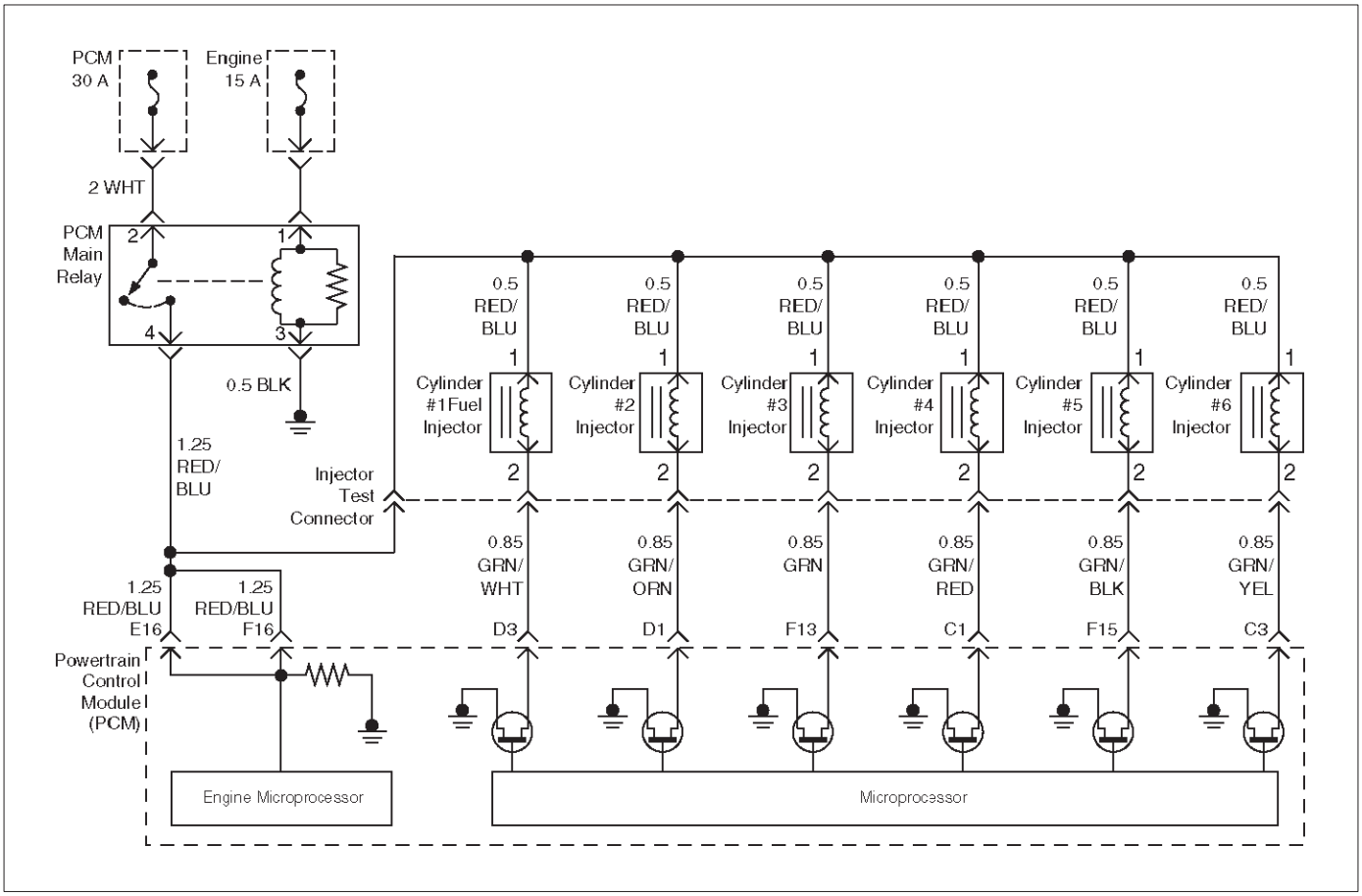

D06RW034

Circuit Description

The powertrain control module (PCM) has six individual injector driver circuits. Each controls an injector. When the driver circuit is grounded by the PCM, the injector is activated. The PCM monitors the current in each driver circuit. The voltage on each driver is monitored to detect a fault. If the voltage is not what the PCM expects to monitor on the circuit, a DTC is set. This DTC is also set if an injector driver is shorted to voltage or if there is an open circuit.

Conditions for Setting the DTC

- The battery voltage is more than 9 volts.
- The engine is turning, determined by the 58X crankshaft position input signal.
- The injector voltage does not equal the ignition voltage when the injector is commanded “OFF” or the injector voltage does not equal 0 volts when the injector is commanded “ON.”
- The above conditions are met for 15 seconds.

Action Taken When the DTC Sets

- The PCM will illuminate the malfunction indicator lamp (MIL) the first time the fault is detected.
- The PCM will store conditions which were present when the DTC was set as Freeze Frame and in the Failure Records data.

Conditions for Clearing the MIL/DTC

- DTC P0203 can be cleared by using the Tech 2 “Clear Info” function or by disconnecting the PCM battery feed.

Diagnostic Aids

An injector driver circuit that is open or shorted to voltage will cause a DTC P0203 to set. It will also cause a misfire due to an inoperative injector. A misfire DTC will also be set indicating which cylinder is inoperative.
Long term and short term fuel trims that are excessively high or low are a good indication that an injector is faulty. Use Fuel Injector Coil Test Procedure to check for faulty injectors.

Test Description

The number(s) below refer to the step number(s) on the Diagnostic Chart.

3. This step determines if DTC P0203 is the result of a hard failure or an intermittent condition.

5. A special injector test connector is provided so that the injectors can be electrically tested without removal of the manifold. On the Trooper, the special 7-way gray connector is located at the front of the charcoal canister. The test connector can be identified by the blue connector lock which is tethered to the wiring harness. If the light for cylinder 3 is “ON” steady before cranking the engine as well as while cranking the engine, then the injector driver circuit is shorted to ground.

If the test light blinks while cranking, the PCM and the wiring to the injectors are OK. The Fuel Injector Coil Test Procedure will check if the injectors are faulty.

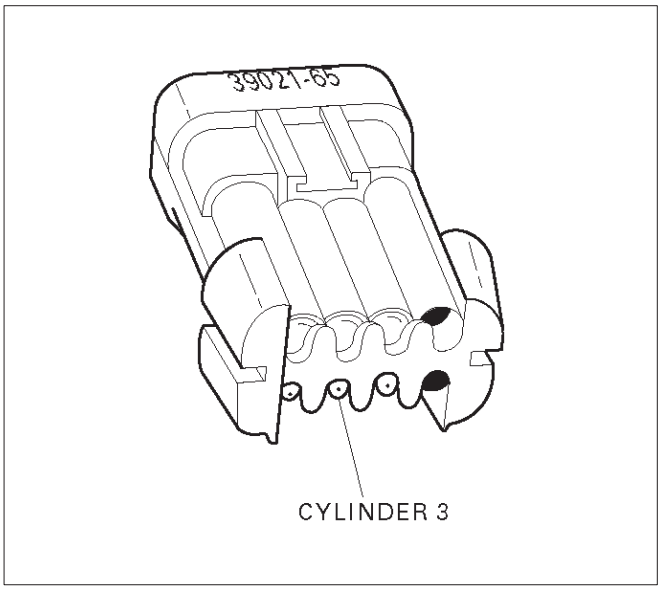

R321056

7. Because the test light was “ON” steady, voltage to the injector is OK, but the driver circuit is grounded at all times. This step determines if the circuit is shorted to ground or the PCM is faulty.
9. The reading should be about 12-14Ω.
10. Locating the open in the harness or in the injector will require removal of the manifold to provide access.

DTC P0203 – Injector 3 Control Circuit

Step	Action	Value(s)	Yes	No
1	Was the “On-Board Diagnostic (OBD) System Check” performed?	—	Go to *Step 2*	Go to *OBD System Check*
2	Will the engine start?	—	Go to *Step 3*	Go to *Engine Cranks But Will Not Run* chart
3	1. Install the Tech 2. Clear the DTC. 2. Idle the engine for one minute. Does DTC P0203 reset?	—	Go to *Step 5*	Go to *Step 4*
4	1. Review the Freeze Frame data with the ignition “ON” and the engine “OFF” and note the parameters. 2. Operate the vehicle within the Freeze Frame conditions as noted. Does P0203 reset?	—	Go to *Step 5*	Go to *Diagnostic Aids*
5	1. Engine “OFF.” 2. Disconnect the injector test connector . 3. Install an injector test light 5-8840-2636-0 on injector connector. 4. Crank the engine and note the light. Does the cylinder 3 test light blink?	—	Go to *Fuel Injector Coil Test Procedure*	Go to *Step 6*
6	Note whether the injector test light for cylinder 3 was “OFF” or “ON” steady in step 5. Was the test light “ON” steady while cranking the engine?	—	Go to *Step 7*	Go to *Step 9*

DTC P0203 – Injector 3 Control Circuit (Cont'd)

Step	Action	Value(s)	Yes	No
7	1. Disconnect the PCM connector for the affected injectors. 2. With a test light connected to B+, probe the affected injector driver circuit. Does the test light illuminate?	—	Go to *Step 8*	Go to *Step 15*
8	Repair short to ground in the injector driver circuit. Is the action complete?	—	Go to *OBD System Check*	—
9	1. Disconnect the injector test connector. 2. At the injector side of the harness, connect an ohmmeter between the positive wire (red with blue tracer) and the wire for cylinder 3 (green). Does the ohmmeter indicate continuity?	—	Go to *Step 11*	Go to *Step 10*
10	Repair the open injector harness wire or open injector. Is the action complete?	—	Verify repair	—
11	At the PCM side of the injector test connector, check the green wire for a short to voltage. Was there a short to voltage?	—	Go to *Step 12*	Go to *Step 13*
12	Repair the short to voltage. Is the action complete?	—	Verify repair	—
13	Check for an open circuit between the injector test connector and the PCM. Was there an open circuit?	—	Go to *Step 14*	Go to *Step 15*
14	Repair the open circuit. Is the action complete?	—	Verify repair	—
15	Replace the PCM. **IMPORTANT:** The replacement PCM must be programmed. Refer to *UBS 98model year Immobilizer Workshop Manual.* Is the action complete?	—	Verify repair	—

Diagnostic Trouble Code (DTC) P0204 Injector 4 Control Circuit

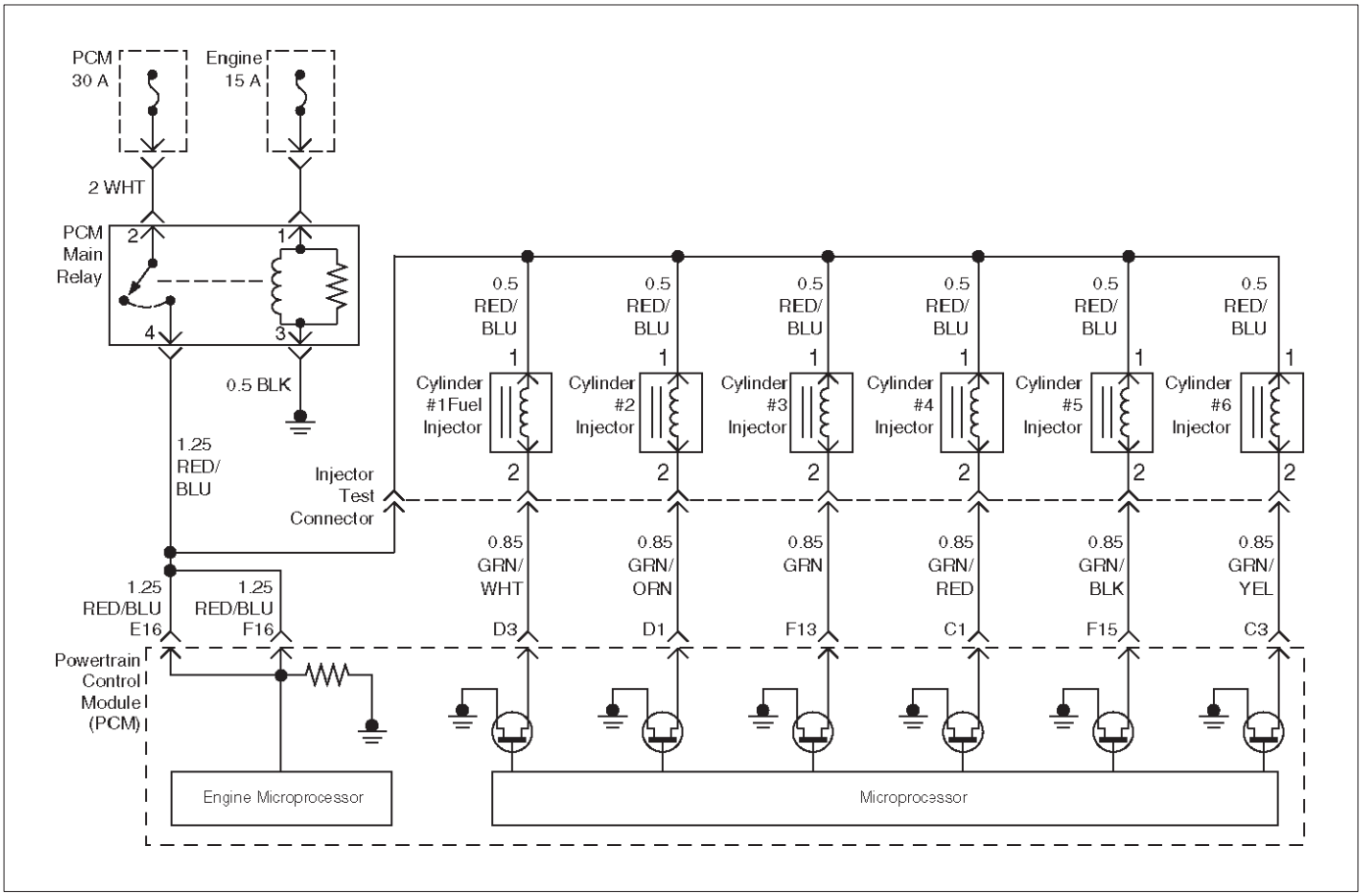

D06RW034

Circuit Description

The powertrain control module (PCM) has six individual injector driver circuits. Each controls an injector. When the driver circuit is grounded by the PCM, the injector is activated. The PCM monitors the current in each driver circuit. The voltage on each driver is monitored to detect a fault. If the voltage is not what the PCM expects to monitor on the circuit, a DTC is set. This DTC is also set if an injector driver is shorted to voltage or if there is an open circuit.

Conditions for Setting the DTC

- The battery voltage is more than 9 volts.
- The engine is turning, determined by the 58X crankshaft position input signal.
- The injector voltage does not equal the ignition voltage when the injector is commanded “OFF” or the injector voltage does not equal 0 volts when the injector is commanded “ON.”
- The above conditions are met for 15 seconds.

Action Taken When the DTC Sets

- The PCM will illuminate the malfunction indicator lamp (MIL) the first time the fault is detected.
- The PCM will store conditions which were present when the DTC was set as Freeze Frame and in the Failure Records data.

Conditions for Clearing the MIL/DTC

- DTC P0204 can be cleared by using the Tech 2 “Clear Info” function or by disconnecting the PCM battery feed.

Diagnostic Aids

An injector driver circuit that is open or shorted to voltage will cause a DTC P0204 to set. It will also cause a misfire due to an inoperative injector. A misfire DTC will also be set indicating which cylinder is inoperative.
Long term and short term fuel trims that are excessively high or low are a good indication that an injector is faulty. Use Fuel Injector Coil Test Procedure to check for faulty injectors.

Test Description

The number(s) below refer to the step number(s) on the Diagnostic Chart.

3. This step determines if DTC P0204 is the result of a hard failure or an intermittent condition.

5. A special injector test connector is provided so that the injectors can be electrically tested without removal of the manifold. On the Trooper, the special 7-way gray connector is located at the front of the charcoal canister. The test connector can be identified by the blue connector lock which is tethered to the wiring harness. If the light for cylinder 4 is “ON” steady before cranking the engine as well as while cranking the engine, then the injector driver circuit is shorted to ground.

If the test light blinks while cranking, the PCM and the wiring to the injectors are OK. The Fuel Injector Coil Test Procedure will check if the injectors are faulty.

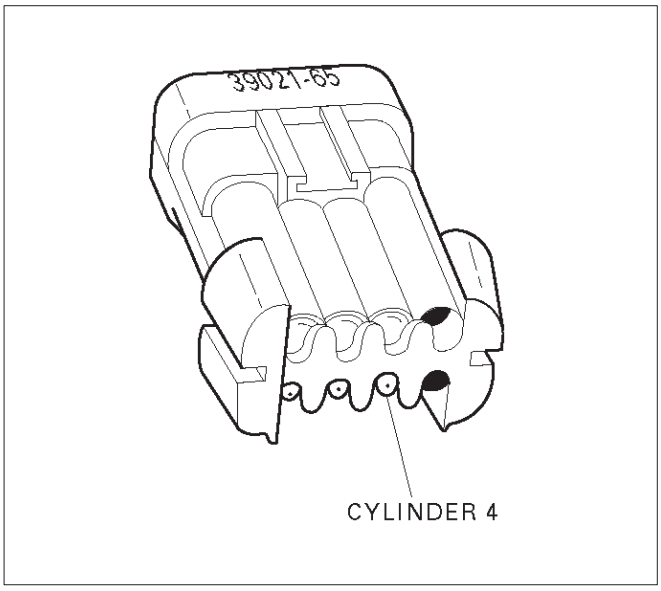

R321057

7. Because the test light was “ON” steady, voltage to the injector is OK, but the driver circuit is grounded at all times. This step determines if the circuit is shorted to ground or the PCM is faulty.
9. The reading should be about 12-14Ω.
10. Locating the open in the harness or in the injector will require removal of the manifold to provide access.

DTC P0204 – Injector 4 Control Circuit

Step	Action	Value(s)	Yes	No
1	Was the “On-Board Diagnostic (OBD) System Check” performed?	—	Go to *Step 2*	Go to *OBD System Check*
2	Will the engine start?	—	Go to *Step 3*	Go to *Engine Cranks But Will Not Run* chart
3	1. Install the Tech 2. Clear the DTC. 2. Idle the engine for one minute. Does DTC P0204 reset?	—	Go to *Step 5*	Go to *Step 4*
4	1. Review the Freeze Frame data with the ignition “ON” and the engine “OFF” and note the parameters. 2. Operate the vehicle within the Freeze Frame conditions as noted. Does P0204 reset?	—	Go to *Step 5*	Go to *Diagnostic Aids*
5	1. Engine “OFF.” 2. Disconnect the injector test connector. 3. Install an injector test light 5-8840-2636-0 on injector connector. 4. Crank the engine and note the light. Does the cylinder 4 test light blink?	—	Go to *Fuel Injector Coil Test Procedure*	Go to Step 6
6	Note whether the injector test light for cylinder 4 was “OFF” or “ON” steady in step 5. Was the test light “ON” steady while cranking the engine?	—	Go to *Step 7*	Go to *Step 9*

DTC P0204 – Injector 4 Control Circuit (Cont'd)

Step	Action	Value(s)	Yes	No
7	1. Disconnect the PCM connector for the affected injectors. 2. With a test light connected to B+, probe the affected injector driver circuit. Does the test light illuminate?	—	Go to *Step 8*	Go to *Step 15*
8	Repair short to ground in the injector driver circuit. Is the action complete?	—	Go to *OBD System Check*	—
9	1. Disconnect the injector test connector. 2. At the injector side of the harness, connect an ohmmeter between the positive wire (red with blue tracer) and the wire for cylinder 4 (green/red). Does the ohmmeter indicate continuity?	—	Go to *Step 11*	Go to *Step 10*
10	Repair the open injector harness wire or open injector. Is the action complete?	—	Verify repair	—
11	At the PCM side of the injector test connector, check the green/red wire for a short to voltage. Was there a short to voltage?	—	Go to *Step 12*	Go to *Step 13*
12	Repair the short to voltage. Is the action complete?	—	Verify repair	—
13	Check for an open circuit between the injector test connector and the PCM. Was there an open circuit?	—	Go to *Step 14*	Go to *Step 15*
14	Repair the open circuit. Is the action complete?	—	Verify repair	—
15	Replace the PCM. **IMPORTANT:** The replacement PCM must be programmed. Refer to *UBS 98model year Immobilizer Workshop Manual.* Is the action complete?	—	Verify repair	—

Diagnostic Trouble Code (DTC) P0205 Injector 5 Control Circuit

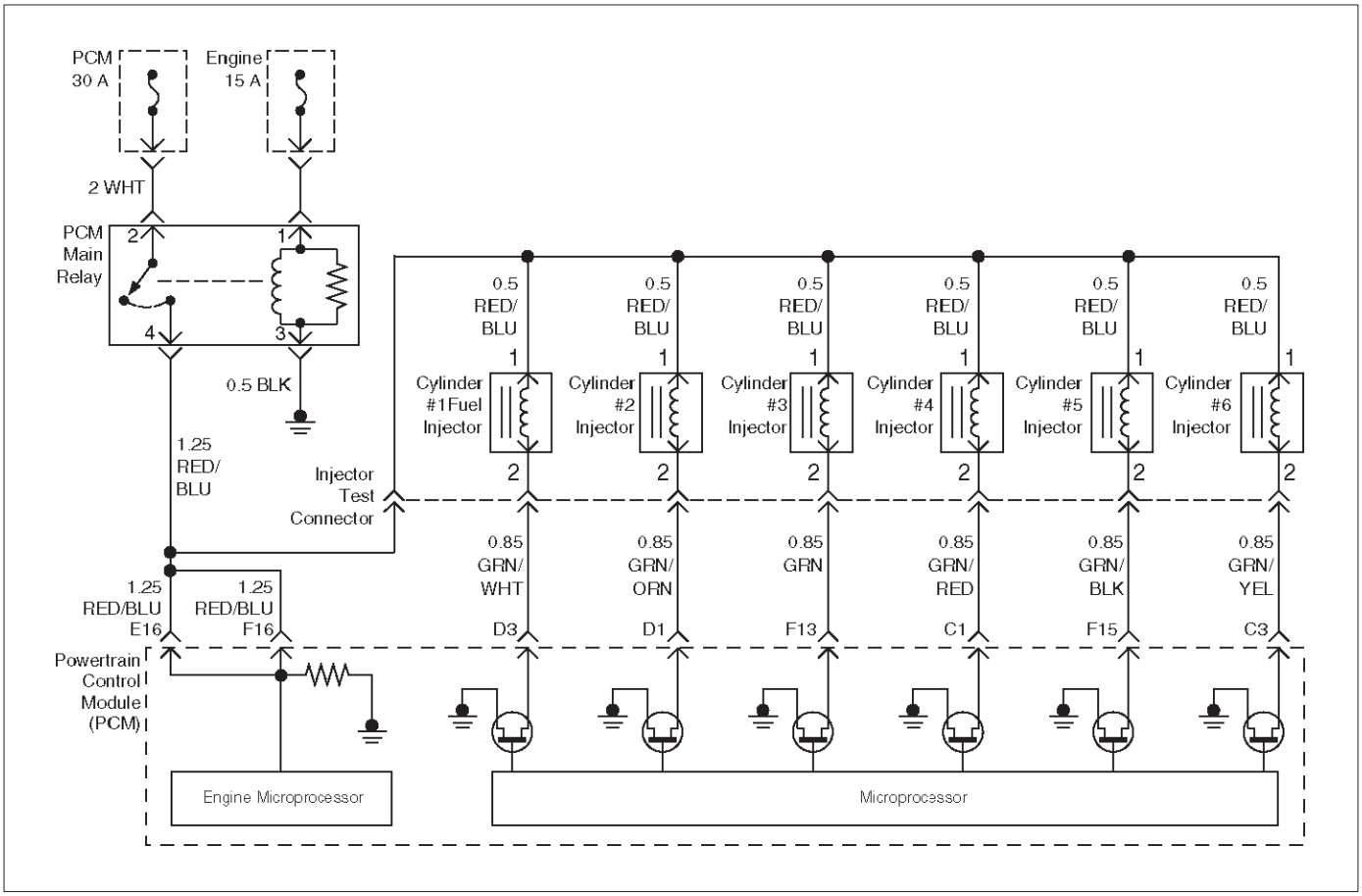

D06RW034

Circuit Description

The powertrain control module (PCM) has six individual injector driver circuits. Each controls an injector. When the driver circuit is grounded by the PCM, the injector is activated. The PCM monitors the current in each driver circuit. If the voltage is not what the PCM expects to monitor on the circuit, a DTC is set. This DTC is also set if an injector driver is shorted to voltage or if there is an open circuit.

Conditions for Setting the DTC

- The battery voltage is more than 9 volts.
- The engine is turning, determined by the 58X crankshaft position input signal.
- The injector voltage does not equal the ignition voltage when the injector is commanded “OFF” or the injector voltage does not equal 0 volts when the injector is commanded “ON.”
- The above conditions are met for 15 seconds.

Action Taken When the DTC Sets

- The PCM will illuminate the malfunction indicator lamp (MIL) the first time the fault is detected.
- The PCM will store conditions which were present when the DTC was set as Freeze Frame and in the Failure Records data.

Conditions for Clearing the MIL/DTC

- DTC P0205 can be cleared by using the Tech 2 “Clear Info” function or by disconnecting the PCM battery feed.

Diagnostic Aids

An injector driver circuit that is open or shorted to voltage will cause a DTC P0205 to set. It will also cause a misfire due to an inoperative injector. A misfire DTC will also be set indicating which cylinder is inoperative.
Long term and short term fuel trims that are excessively high or low are a good indication that an injector is faulty. Use Fuel Injector Coil Test Procedure to check for faulty injectors.

Test Description

The number(s) below refer to the step number(s) on the Diagnostic Chart.

3. This step determines if DTC P0205 is the result of a hard failure or an intermittent condition.

5. A special injector test connector is provided so that the injectors can be electrically tested without removal of the manifold. On the Trooper, the special 7-way gray connector is located at the front of the charcoal canister. The test connector can be identified by the blue connector lock which is tethered to the wiring harness. If the light for cylinder 5 is “ON” steady before cranking the engine as well as while cranking the engine, then the injector driver circuit is shorted to ground.

If the test light blinks while cranking, the PCM and the wiring to the injectors are OK. The Fuel Injector Coil Test Procedure will check if the injectors are faulty.

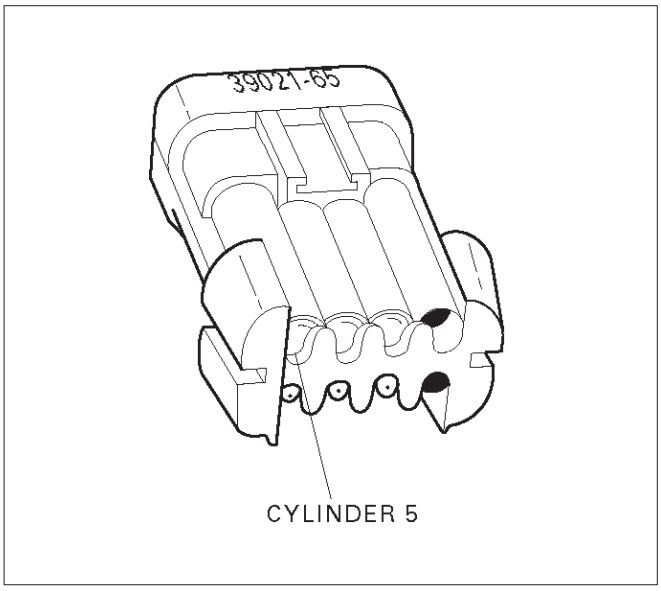

R321058

7. Because the test light was “ON” steady, voltage to the injector is OK, but the driver circuit is grounded at all times. This step determines if the circuit is shorted to ground or the PCM is faulty.
9. The reading should be about 12-14Ω.
10. Locating the open in the harness or in the injector will require removal of the manifold to provide access.

DTC P0205 – Injector 5 Control Circuit

Step	Action	Value(s)	Yes	No
1	Was the “On-Board Diagnostic (OBD) System Check” performed?	—	Go to *Step 2*	Go to *OBD System Check*
2	Will the engine start?	—	Go to *Step 3*	Go to *Engine Cranks But Will Not Run* chart
3	1. Install the Tech 2. Clear the DTC. 2. Idle the engine for one minute. Does DTC P0205 reset?	—	Go to *Step 5*	Go to *Step 4*
4	1. Review the Freeze Frame data with the ignition “ON” and the engine “OFF” and note the parameters. 2. Operate the vehicle within the Freeze Frame conditions as noted. Does P0205 reset?	—	Go to *Step 5*	Go to *Diagnostic Aids*
5	1. Engine “OFF.” 2. Disconnect the injector test connector. 3. Install an injector test light 5-8840-2636-0 on injector connector. 4. Crank the engine and note the light. Does the cylinder 5 test light blink?	—	Go to *Fuel Injector Coil Test Procedure*	Go to *Step 6*
6	Note whether the injector test light for cylinder 5 was “OFF” or “ON” steady in step 5. Was the test light “ON” steady while cranking the engine?	—	Go to *Step 7*	Go to *Step 9*

DTC P0205 – Injector 5 Control Circuit (Cont'd)

Step	Action	Value(s)	Yes	No
7	1. Disconnect the PCM connector for the affected injectors. 2. With a test light connected to B+, probe the affected injector driver circuit. Does the test light illuminate?	—	Go to *Step 8*	Go to *Step 15*
8	Repair short to ground in the injector driver circuit. Is the action complete?	—	Go to *OBD System Check*	—
9	1. Disconnect the injector test connector. 2. At the injector side of the harness, connect an ohmmeter between the positive wire (red with blue tracer) and the wire for cylinder 5 (green with black tracer). Does the ohmmeter indicate continuity?	—	Go to *Step 11*	Go to *Step 10*
10	Repair the open injector harness wire or open injector. Is the action complete?	—	Verify repair	—
11	At the PCM side of the injector test connector, check the green/black wire for a short to voltage. Was there a short to voltage?	—	Go to *Step 12*	Go to *Step 13*
12	Repair the short to voltage. Is the action complete?	—	Verify repair	—
13	Check for an open circuit between the injector test connector and the PCM. Was there an open circuit?	—	Go to *Step 14*	Go to *Step 15*
14	Repair the open circuit. Is the action complete?	—	Verify repair	—
15	Replace the PCM. **IMPORTANT:** The replacement PCM must be programmed. Refer to *UBS 98model year Immobilizer Workshop Manual.* Is the action complete?	—	Verify repair	—

Diagnostic Trouble Code (DTC) P0206 Injector 6 Control Circuit

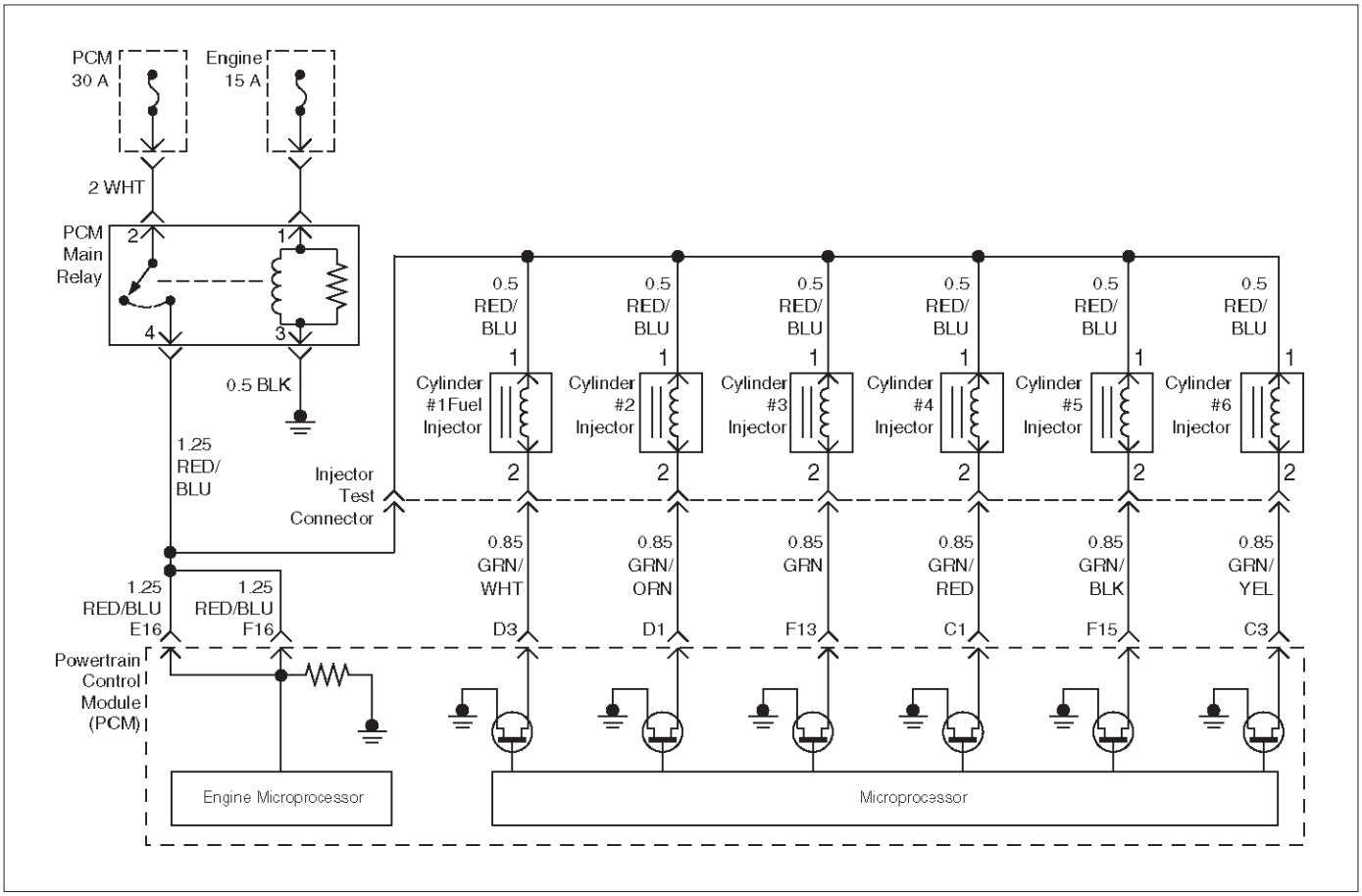

D06RW034

Circuit Description

The powertrain control module (PCM) has six individual injector driver circuits. Each controls an injector. When the driver circuit is grounded by the PCM, the injector is activated. The PCM monitors the current in each driver circuit. The voltage on each driver is monitored to detect a fault. If the voltage is not what the PCM expects to monitor on the circuit, a DTC is set. This DTC is also set if an injector driver is shorted to voltage or if there is an open circuit.

Conditions for Setting the DTC

- The battery voltage is more than 9 volts.
- The engine is turning, determined by 58X crankshaft position input signal.
- The injector voltage does not equal the ignition voltage when the injector is commanded “OFF” or the injector voltage does not equal 0 volts when the injector is commanded “ON.”
- The above conditions are met for 15 seconds.

Action Taken When the DTC Sets

- The PCM will illuminate the malfunction indicator lamp (MIL) the first time the fault is detected.
- The PCM will store conditions which were present when the DTC was set as Freeze Frame and in the Failure Records data.

Conditions for Clearing the MIL/DTC

- DTC P0206 can be cleared by using the Tech 2 “Clear Info” function or by disconnecting the PCM battery feed.

Diagnostic Aids

An injector driver circuit that is open or shorted to voltage will cause a DTC P0206 to set. It will also cause a misfire due to an inoperative injector. A misfire DTC will also be set indicating which cylinder is inoperative.
Long term and short term fuel trims that are excessively high or low are a good indication that an injector is faulty. Use Fuel Injector Coil Test Procedure to check for faulty injectors.

Test Description

The number(s) below refer to the step number(s) on the Diagnostic Chart.

3. This step determines if DTC P0206 is the result of a hard failure or an intermittent condition.

5. A special injector test connector is provided so that the injectors can be electrically tested without removal of the manifold. On the Trooper, the special 7-way gray connector is located at the front of the charcoal canister. The test connector can be identified by the blue connector lock which is tethered to the wiring harness. If the light for cylinder 6 is “ON” steady before cranking the engine as well as while cranking the engine, then the injector driver circuit is shorted to ground.

If the test light blinks while cranking, the PCM and the wiring to the injectors are OK. The Fuel Injector Coil Test Procedure will check if the injectors are faulty.

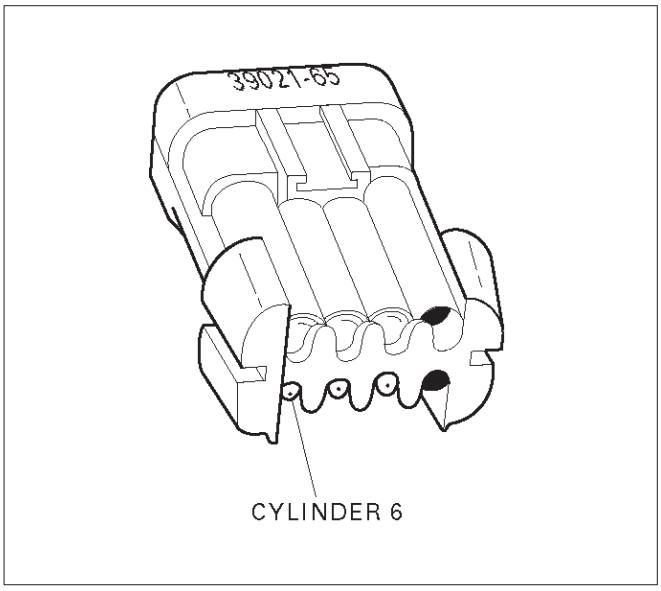

R321059

7. Because the test light was “ON” steady, voltage to the injector is OK, but the driver circuit is grounded at all times. This step determines if the circuit is shorted to ground or the PCM is faulty.
9. The reading should be about 12-14Ω.
10. Locating the open in the harness or in the injector will require removal of the manifold to provide access.

DTC P0206 – Injector 6 Control Circuit

Step	Action	Value(s)	Yes	No
1	Was the “On-Board Diagnostic (OBD) System Check” performed?	—	Go to *Step 2*	Go to *OBD System Check*
2	Will the engine start?	—	Go to *Step 3*	Go to *Engine Cranks But Will Not Run* chart
3	1. Install the Tech 2. Clear the DTC. 2. Idle the engine for one minute. Does DTC P0206 reset?	—	Go to *Step 5*	Go to *Step 4*
4	1. Review the Freeze Frame data with the ignition “ON” and the engine “OFF” and note the parameters. 2. Operate the vehicle within the Freeze Frame conditions as noted. Does P0206 reset?	—	Go to *Step 5*	Go to *Diagnostic Aids*
5	1. Engine “OFF.” 2. Disconnect the injector test connector. 3. Install an injector test light 5-8840-2636-0 on injector connector. 4. Crank the engine and note the light. Does the cylinder 6 test light blink?	—	Go to *Fuel Injector Coil Test Procedure*	Go to *Step 6*
6	Note whether the injector test light for cylinder 6 was “OFF” or “ON” steady in step 5. Was the test light “ON” steady while cranking the engine?	—	Go to *Step 7*	Go to *Step 9*

DTC P0206 – Injector 6 Control Circuit (Cont'd)

Step	Action	Value(s)	Yes	No
7	1. Disconnect the PCM connector for the affected injectors. 2. With a test light connected to B+, probe the affected injector driver circuit. Does the test light illuminate?	—	Go to *Step 8*	Go to *Step 15*
8	Repair short to ground in the injector driver circuit. Is the action complete?	—	Go to *OBD System Check*	—
9	1. Disconnect the injector test connector. 2. At the injector side of the harness, connect an ohmmeter between the positive wire (red with blue tracer) and the wire for cylinder 6 (green with yellow tracer). Does the ohmmeter indicate continuity?	—	Go to *Step 11*	Go to *Step 10*
10	Repair the open injector harness wire or open injector Is the action complete?	—	Verify repair	—
11	At the PCM side of the injector test connector, check the green/yellow wire for a short to voltage. Was there a short to voltage?	—	Go to *Step 12*	Go to *Step 13*
12	Repair the short to voltage. Is the action complete?	—	Verify repair	—
13	Check for an open circuit between the injector test connector and the PCM. Was there an open circuit?	—	Go to *Step 14*	Go to *Step 15*
14	Repair the open circuit. Is the action complete?	—	Verify repair	—
15	Replace the PCM. **IMPORTANT:** The replacement PCM must be programmed. Refer to *UBS 98model year Immobilizer Workshop Manual.* Is the action complete?	—	Verify repair	—

Diagnostic Trouble Code (DTC) P0325 KS Module Circuit

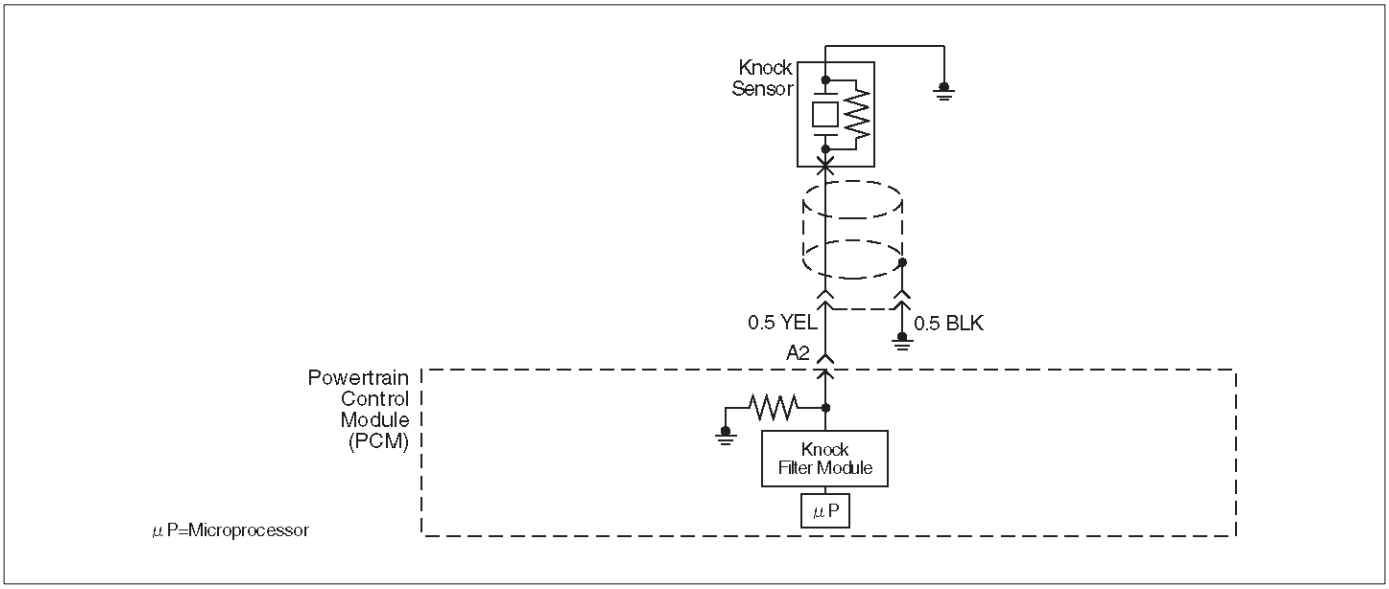

D06RW035

Circuit Description

The knock sensor is used to detect engine detonation, allowing the powertrain control module (PCM) to retard ignition control (IC) spark timing based on the knock sensor (KS) signal being received. The knock sensor produces an AC signal so that under a no knock condition the signal on the KS circuit measures about 0.007 V AC. The KS signal's amplitude and frequency depend upon the amount of knock being experienced. The PCM contains a non-replaceable knock filter module called a signal-to-noise enhancement filter (SNEF) module. This filter module in the PCM determines whether knock is occurring by comparing the signal level on the KS circuit with the voltage level on the noise channel. The noise channel allows the PCM to reject any false knock signal by knowing the amount of normal engine mechanical noise present. Normal engine noise varies depending on engine speed and load. When the PCM determines that an abnormally low noise channel voltage level is being experienced, a DTC P0325 will set.

Conditions for Setting the DTC

- Engine has been running for at least 30 seconds.
- The PCM determines that its internal signal from its knock filter module indicates a continuous knocking condition for more than 10 seconds.

Action Taken When the DTC Sets

- The PCM will store conditions which were present when the DTC was set as Freeze Frame and in the Failure Records data.
- The PCM will use a "substitute" default spark retard value of 6 degrees to minimize knock during conditions when knock is likely to occur.

Conditions for Clearing the MIL/DTC

- DTC P0325 can be cleared by using Tech 2 "Clear Info" function or by disconnecting the PCM battery feed.

Diagnostic Aids

Check for the following conditions:

- Poor connection at PCM – Inspect the knock sensor and PCM connectors for backed-out terminals, broken locks, and improperly formed or damaged terminals.
- Misrouted harness – Inspect the knock sensor harness to ensure that it is not routed too close to high voltage wires such as spark plug leads.

Reviewing the Failure Records vehicle mileage since the diagnostic test last failed may help determine how often the condition that caused the DTC to be set occurs. This may assist in diagnosing the condition.

Test Description

Number(s) below refer to the step number(s) on the Diagnostic Chart.

2. Ensures that the fault is present.

DTC P0325 – KS Module Circuit

Step	Action	Value(s)	Yes	No
1	Was the “On-Board Diagnostic (OBD) System Check” performed?	—	Go to *Step 2*	Go to *OBD System Check*
2	**IMPORTANT:** If an engine knock can be heard, repair the engine mechanical problem before proceeding with this diagnostic. 1. Operate the vehicle within parameters specified under criteria included in “Conditions for Setting the DTC.” 2. Using Tech 2, monitor “Specific DTC” info for DTC P0325 until the DTC P0325 test runs. 3. Note the test result. Does Tech 2 indicate DTC P0325 failed this ignition?	—	Go to *Step 4*	Go to *Step 3*
3	1. Ignition “ON,” engine “OFF.” 2. Review and record Tech 2 Failure Records data for DTC P0325. 3. Operate the vehicle within Failure Records conditions. 4. Using Tech 2, monitor “Specific DTC” info for DTC P0325 until the DTC P0325 test runs. Does Tech 2 indicate DTC P0325 test failed this ignition?	—	Go to *Step 4*	Refer to *Diagnostic Aids*
4	Replace the PCM. **IMPORTANT:** The replacement PCM must be programmed. Refer to *UBS 98model year Immobilizer Workshop Manual.* Is the action complete?	—	Verify repair	—

Diagnostic Trouble Code (DTC) P0327 KS Sensor Circuit

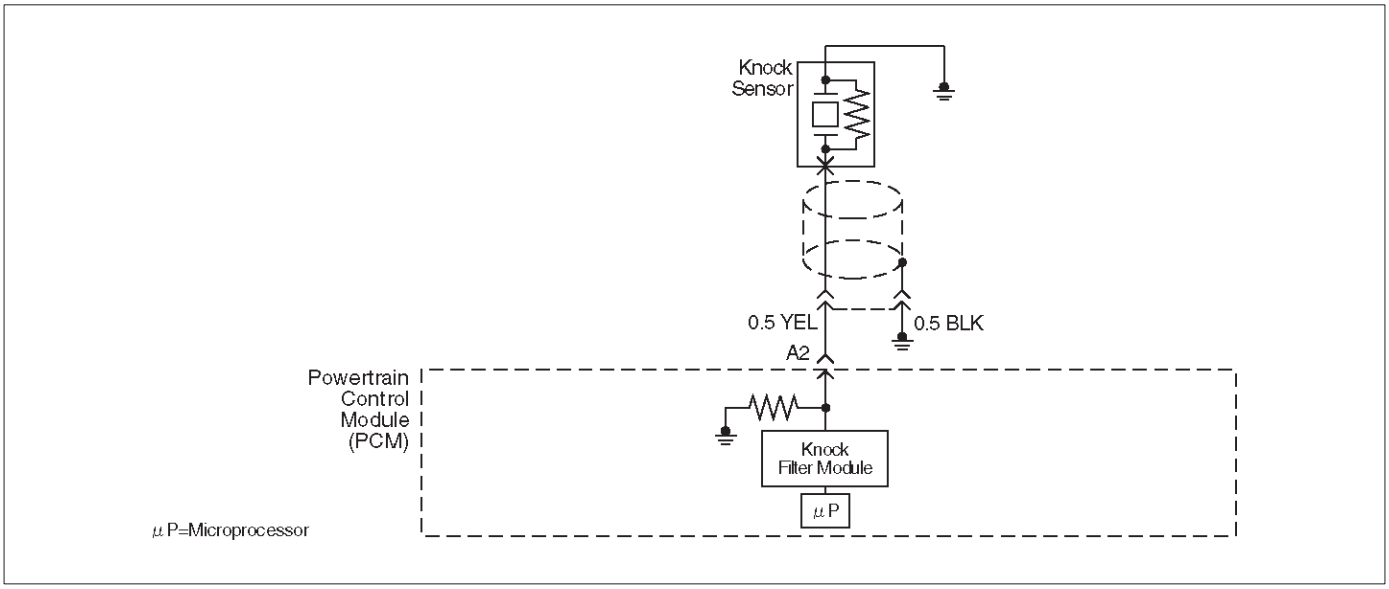

D06RW035

Circuit Description

The powertrain control module (PCM) uses the knock sensor to detect engine detonation, allowing the PCM to retard ignition control (IC) spark timing based on the knock sensor (KS) signal being received. The knock sensor produces an AC signal so that under a no knock condition the signal on the KS circuit measures about 0.007 V AC. The signal amplitude and frequency are dependent upon the amount of knock being experienced. The PCM monitors the KS signal and can diagnose the KS sensor and circuitry.

Conditions for Setting the DTC

- Engine running for at least 10 seconds.
- The TP sensor is greater than 5%.
- The ECT sensor is greater than 60˚C (140˚F).
- Engine speed is between 2000 and 4000 RPM.
- The knock sensor signal voltage is less than 0.20 volts, or greater than 4.8 volts.
- All conditions are present for more than 15 seconds.

Action Taken When the DTC Sets

- The PCM will illuminate the malfunction indicator lamp (MIL) after the second consecutive trip in which the fault is detected.
- The PCM will store conditions which were present when the DTC was set as Freeze Frame and in the Failure Records data.
- The PCM will use a calculated spark retard value to minimize knock during conditions when knock is likely to occur. The calculated value will vary based on engine speed and load.

Conditions for Clearing the MIL/DTC

- DTC P0327 can be cleared by using Tech 2 “Clear Info” function or by disconnecting the PCM battery feed.

Diagnostic Aids

Reviewing the Failure Records vehicle mileage since the diagnostic test last failed may help determine how often the condition that caused the DTC to be set occurs. This may assist in diagnosing the condition.

Test Description

Number(s) below refer to the step number(s) on the Diagnostic Chart.

2. Ensures that the fault is present.

4. The knock sensor is attached to a short jumper harness, so it can be tested without removing the intake manifold. A 2-wire connector for the knock sensor is accessible behind the left rear fuel injector.

DTC P0327 – KS Sensor Circuit

Step	Action	Value(s)	Yes	No
1	Was the “On-Board Diagnostic (OBD) System Check” performed?	—	Go to *Step 2*	Go to *OBD System Check*
2	**IMPORTANT:** If an engine knock can be heard, repair the engine mechanical problem before proceeding with this diagnostic. 1. Operate the engine within the conditions specified in diagnostic support “Conditions for Setting the DTC.” 2. Using Tech 2, monitor “Specific DTC” info for DTC P0327 until the DTC P0327 test runs. 3. Note the test result. Does Tech 2 indicate DTC P0327 failed this ignition?	—	Go to *Step 4*	Go to *Step 3*
3	1. Ignition “ON,” engine “OFF.” 2. Review and record Tech 2 Failure Records data. 3. Operate the vehicle within Failure Records conditions. 4. Using Tech 2, monitor “Specific DTC” info for DTC P0327 until the DTC P0327 test runs. 5. Note the test result. Does Tech 2 indicate DTC P0327 failed this ignition?	—	Go to *Step 4*	Refer to *Diagnostic Aids*
4	1. Check for a damaged terminal at the knock sensor connector. 2. If a problem is found, repair as necessary. Was a problem found?	—	Verify repair	Go to *Step 5*
5	Using a test light to battery +, check the black/blue wire (PCM side) to verify that the shield connection is good. Did the test light illuminate?	—	Go to *Step 7*	Go to *Step 6*
6	Repair the open shield ground. Is the action complete?	—	Verify repair	—
7	1. Ignition “OFF,” disconnect the PCM. 2. Check the KS signal circuit for a poor terminal connection at the PCM. 3. If a problem is found, replace the faulty terminal. Was a problem found?	—	Verify repair	Go to *Step 8*
8	1. Ignition “OFF,” PCM disconnected. 2. Check the KS signal circuit between the PCM and the knock sensor connector for an open, a short to voltage, or a short to ground. 3. If a problem is found, repair as necessary. Was a problem found?	—	Verify repair	Go to *Step 9*
9	1. Ignition “OFF,” PCM disconnected. 2. Knock sensor connected. 3. Measure the resistance of the knock sensor by connecting the DVM between the PCM connector and the engine block. Is the resistance of each knock sensor near the specified value?	100K ohms	Go to *Step 10*	Go to *Step 11*

DTC P0327 – KS Sensor Circuit (Cont'd)

Step	Action	Value(s)	Yes	No
10	1. Ignition "OFF," PCM disconnected. 2. Connect the DVM to monitor AC voltage between the PCM connector and engine ground. 3. Tap on the engine lift bracket with a socket extension while observing the signal indicated on the DVM. Is any signal indicated on the DVM while tapping on the engine lift bracket?	—	Go to *Step 12*	Go to *Step 11*
11	Replace the knock sensor. Is the action complete?	—	Verify repair	—
12	Replace the PCM. **IMPORTANT:** The replacement PCM must be programmed. Refer to *UBS 98model year Immobilizer Workshop Manual.* Is the action complete?	—	Verify repair	—

Diagnostic Trouble Code (DTC) P0336 58X Reference Signal Circuit

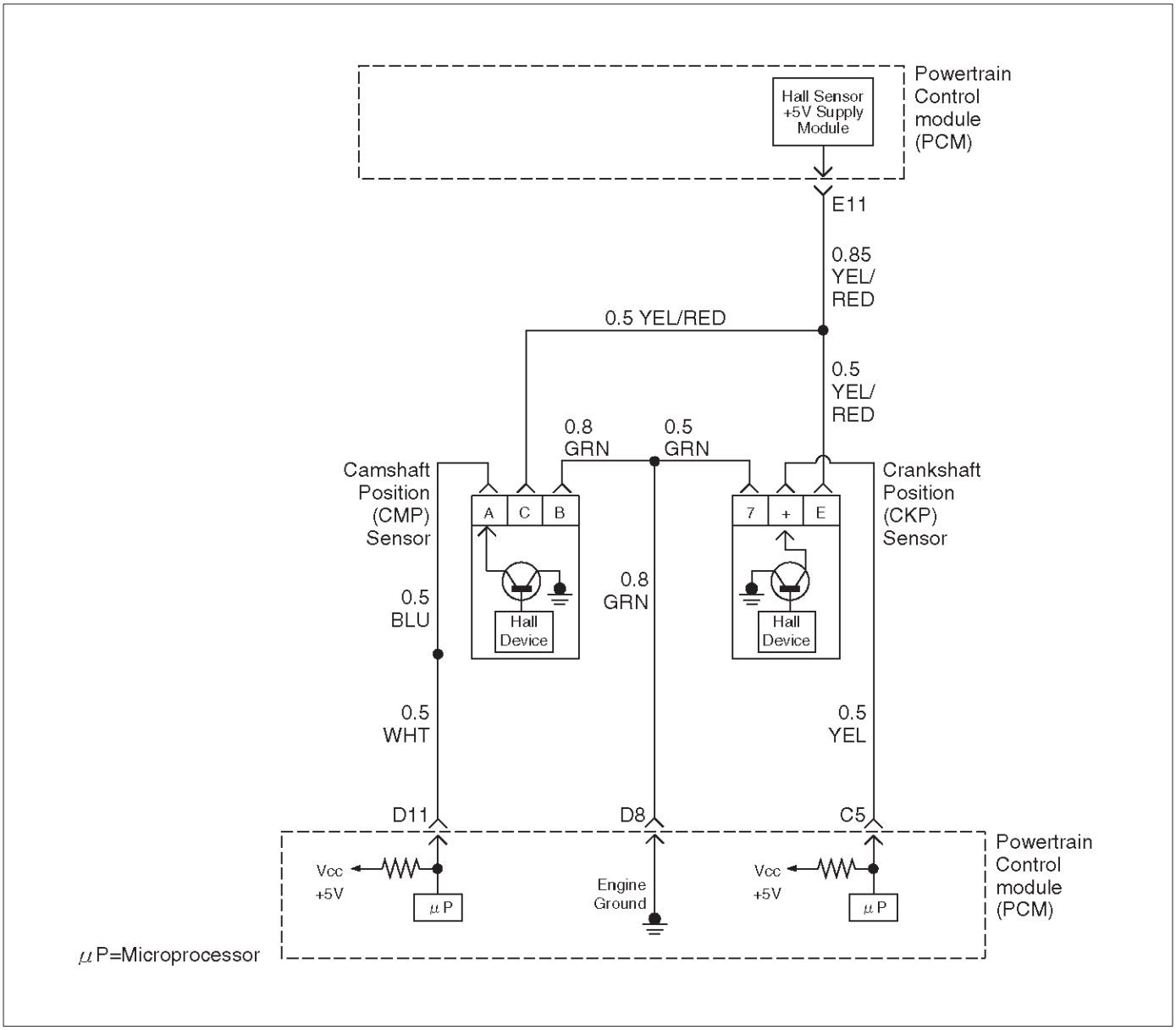

D06RW032

Circuit Description

The 58X reference signal is produced by the crankshaft position (CKP) sensor. During one crankshaft revolution, 58 crankshaft pulses will be produced. The powertrain control module (PCM) uses the 58X reference signal to calculate engine RPM and crankshaft position. The PCM constantly monitors the number of pulses on the 58X reference circuit and compares them to the number of camshaft position (CMP) signal pulses being received. If the PCM receives an incorrect number of pulses on the 58X reference circuit, DTC P0336 will set.

Conditions for Setting the DTC

- Engine is running.
- Extra or missing pulse is detected between consecutive 58X reference pulses.
- Above condition is detected in 10 of 100 crankshaft rotations.

Action Taken When the DTC Sets

- The PCM will illuminate the malfunction indicator lamp (MIL) after the second consecutive trip in which the fault is detected.
- The PCM will store conditions which were present when the DTC was set as Freeze Frame and in the Failure Records data.

Conditions for Clearing the MIL/DTC

- DTC P0336 can be cleared by using Tech 2 “Clear Info” function or by disconnecting the PCM battery feed.

Diagnostic Aids

An intermittent may be caused by a poor connection, rubbed-through wire insulation or a wire broken inside the insulation. Check for:

- Poor connection - Inspect the PCM harness and connectors for improper mating, broken locks, improperly formed or damaged terminals, and poor terminal-to-wire connection.

- Damaged harness – Inspect the wiring harness for damage. If the harness appears to be OK, disconnect the PCM, turn the ignition on and observe a voltmeter connected to the 58X reference circuit at the PCM harness connector while moving connectors and wiring harnesses related to the ICM. A change in voltage will indicate the location of the fault.

Reviewing the Failure Records vehicle mileage since the diagnostic test last failed may help determine how often the condition that caused the DTC to be set occurs. This may assist in diagnosing the condition.

DTC P0336 – 58X Reference Signal Circuit

Step	Action	Value(s)	Yes	No
1	Was the "On-Board Diagnostic (OBD) System Check" performed?	—	Go to *Step 2*	Go to *OBD System Check*
2	Attempt to start the engine. Does the engine start?	—	Go to *Step 3*	Go to *"Engine Cranks But Will Not Run"* chart
3	1. Review and record Failure Records information. 2. Clear DTC P0336. 3. Start the engine and idle for 1 minute. 4. Observe DTCs. Is DTC P0336 set?	—	Go to *Step 4*	Refer to Diagnostic Aids
4	1. Disconnect the PCM and CKP sensor. 2. Check for an open or a short to ground in the 58X reference circuit between the CKP sensor connector and the PCM harness connector. 3. If a problem is found, repair as necessary. Was a problem found?	—	Verify repair	Go to *Step 5*
5	1. Reconnect the PCM and CKP sensor. 2. Connect a DVM to measure voltage on the 58X reference circuit at the PCM connector. 3. Observe the voltage while cranking the engine. Is the voltage near the specified value?	2.5 V	Go to *Step 8*	Go to *Step 6*
6	Check the connections at the CKP sensor and replace the terminals if necessary. Did any terminals require replacement?	—	Verify repair	Go to *Step 7*
7	Replace the CKP sensor. Use caution to avoid any hot oil that may drip out. Is the action complete?	—	Verify repair	—
8	Check connections at the PCM and replace the terminals if necessary. Did any terminals require replacement?	—	Verify repair	Go to *Step 9*
9	Replace the PCM. **IMPORTANT:** The replacement PCM must be programmed. Refer to *UBS 98model year Immobilizer Workshop Manual.* Is the action complete?	—	Verify repair	—

Diagnostic Trouble Code (DTC) P0337 CKP Sensor Circuit Low Frequency

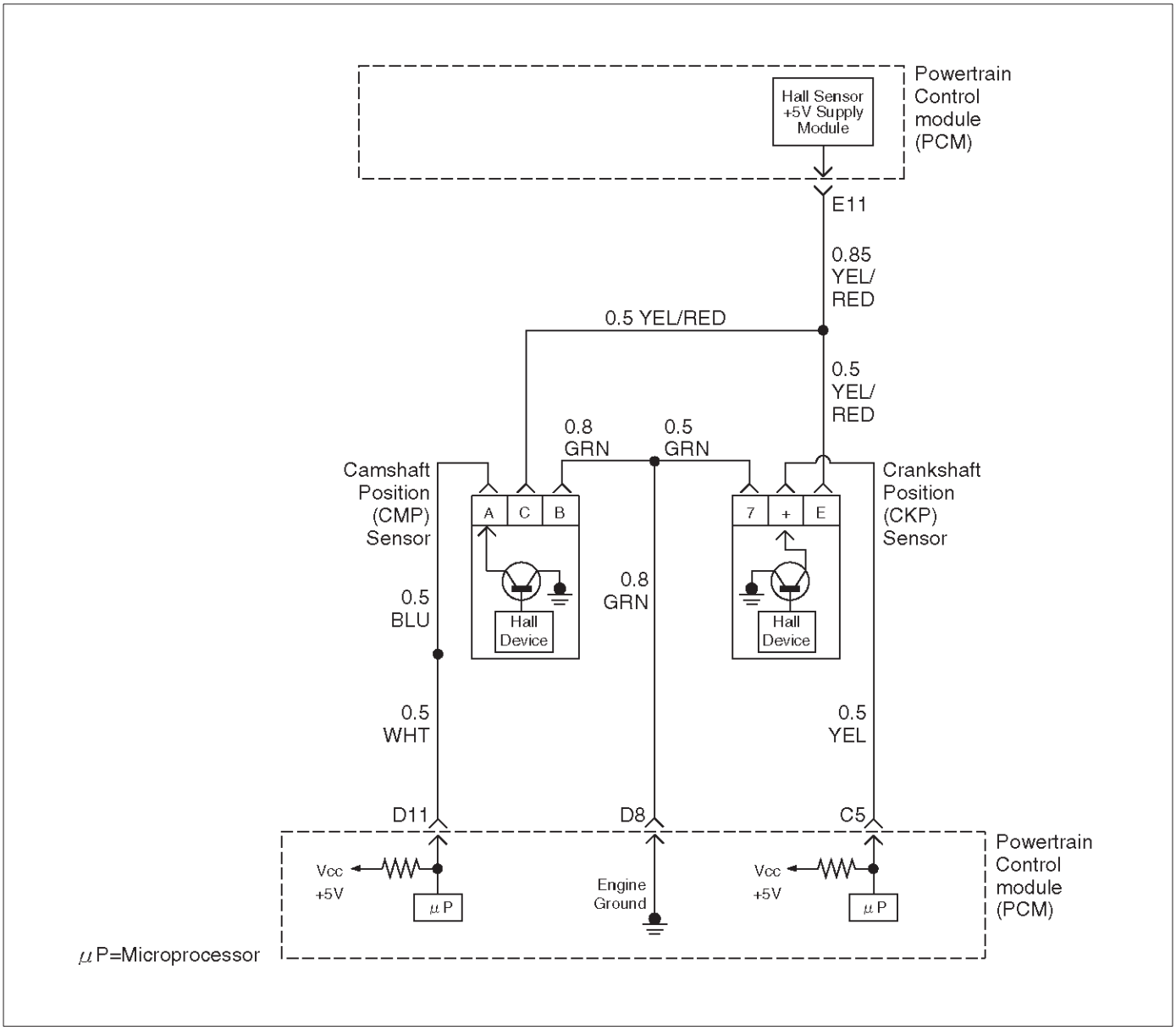

D06RW032

Circuit Description

The 58X reference signal is produced by the crankshaft position (CKP) sensor. During one crankshaft revolution, 58 crankshaft reference pulses will be produced. The powertrain control module (PCM) uses the 58X reference signal to calculate engine RPM and crankshaft position. The PCM constantly monitors the number of pulses on the 58X reference circuit and compares them to the number of camshaft position (CMP) signal pulses being received. If the PCM does not receive pulses on the 58X reference circuit, DTC P0337 will set.

Conditions for Setting the DTC

- No camshaft position (CMP) sensor DTCs are set.
- Engine cranking.
- Crankshaft position (CKP) sensor signal is not present between two cam pulses.
- CKP reference pulse is not detected within 8 CMP pulses.

Action Taken When the DTC Sets

- The PCM will illuminate the malfunction indicator lamp (MIL) after the second consecutive trip in which the fault is detected.
- The PCM will store conditions which were present when the DTC was set as Freeze Frame and in the Failure Records data.

Conditions for Clearing the MIL/DTC

- DTC P0337 can be cleared by using Tech 2 “Clear Info” function or by disconnecting the PCM battery feed.

Diagnostic Aids

An intermittent may be caused by a poor connection, rubbed-through wire insulation or a wire broken inside the insulation. Check for:

- Poor connection – Inspect the PCM harness and connectors for improper mating, broken locks, improperly formed or damaged terminals, and poor terminal-to-wire connection.

- Damaged harness – Inspect the wiring harness for damage. If the harness appears to be OK, disconnect the PCM, turn the ignition on and observe a voltmeter connected to the 58X reference circuit at the PCM harness connector while moving connectors and wiring harnesses related to the ICM. A change in voltage will indicate the location of the fault.

Reviewing the Failure Records vehicle mileage since the diagnostic test last failed may help determine how often the condition that caused the DTC to be set occurs. This may assist in diagnosing the condition.

DTC P0337 – CKP Sensor Circuit Low Frequency

Step	Action	Value(s)	Yes	No
1	Was the “On-Board Diagnostic (OBD) System Check” performed?	—	Go to *Step 2*	Go to *OBD System Check*
2	Attempt to start the engine. Does the engine start?	—	Go to *Step 3*	Go to *Chart 3*
3	1. Review and record Failure Records information. 2. Clear DTC P0337. 3. Start the engine and idle for 1 minute. 4. Observe DTCs. Is DTC P0337 set?	—	Go to *Step 4*	Refer to *Diagnostic Aid*
4	1. Disconnect the CKP sensor. 2. Ignition “ON.” 3. Using a DVM, verify that 5 V reference and ground are being supplied at the sensor connector (PCM side). Are 4-6 volts and ground available at the sensor?	—	Go to *Step 7*	Go to *Step 5*
5	1. Ignition “ON.” 2. With a DVM, backprobe the PCM connector 5 V reference and ground connections. Are 5 V reference and ground available at the PCM?	—	Go to *Step 6*	Go to *Step 11*
6	Check 5 V reference or ground between the CKP sensor and PCM and repair the open circuit, short to ground or short to voltage. Is the action complete?	—	Verify repair	—
7	1. Ignition “OFF.” 2. Disconnect the PCM and CKP sensor. 3. Check for an open or a short to ground in the 58X reference circuit between the CKP sensor connector and the PCM harness connector. 4. If a problem is found, repair as necessary. Was a problem found?	—	Verify repair	Go to *Step 8*
8	1. Reconnect the PCM and CKP sensor. 2. Connect a DVM to measure voltage on the 58X reference circuit at the PCM connector. 3. Observe the voltage while cranking the engine. Is the voltage near the specified value?	2.5 V	Go to *Step 11*	Go to *Step 9*
9	Check the connections at the CKP sensor and replace the terminals if necessary. Did any terminals require replacement?	—	Verify repair	Go to *Step 10*
10	Replace the CKP sensor. Use caution and avoid hot oil that may drip out. Is the action complete?	—	Verify repair	—

DTC P0337 – CKP Sensor Circuit Low Frequency (Cont'd)

Step	Action	Value(s)	Yes	No
11	Check the connections at the PCM and replace the terminals if necessary. Did any terminals require replacement?	—	Verify repair	Go to *Step 12*
12	Replace the PCM. **IMPORTANT:** The replacement PCM must be programmed. Refer to *UBS 98model year Immobilizer Workshop Manual.* Is the action complete?	—	Verify repair	—

Diagnostic Trouble Code (DTC) P0341 CMP Sensor Circuit Performance

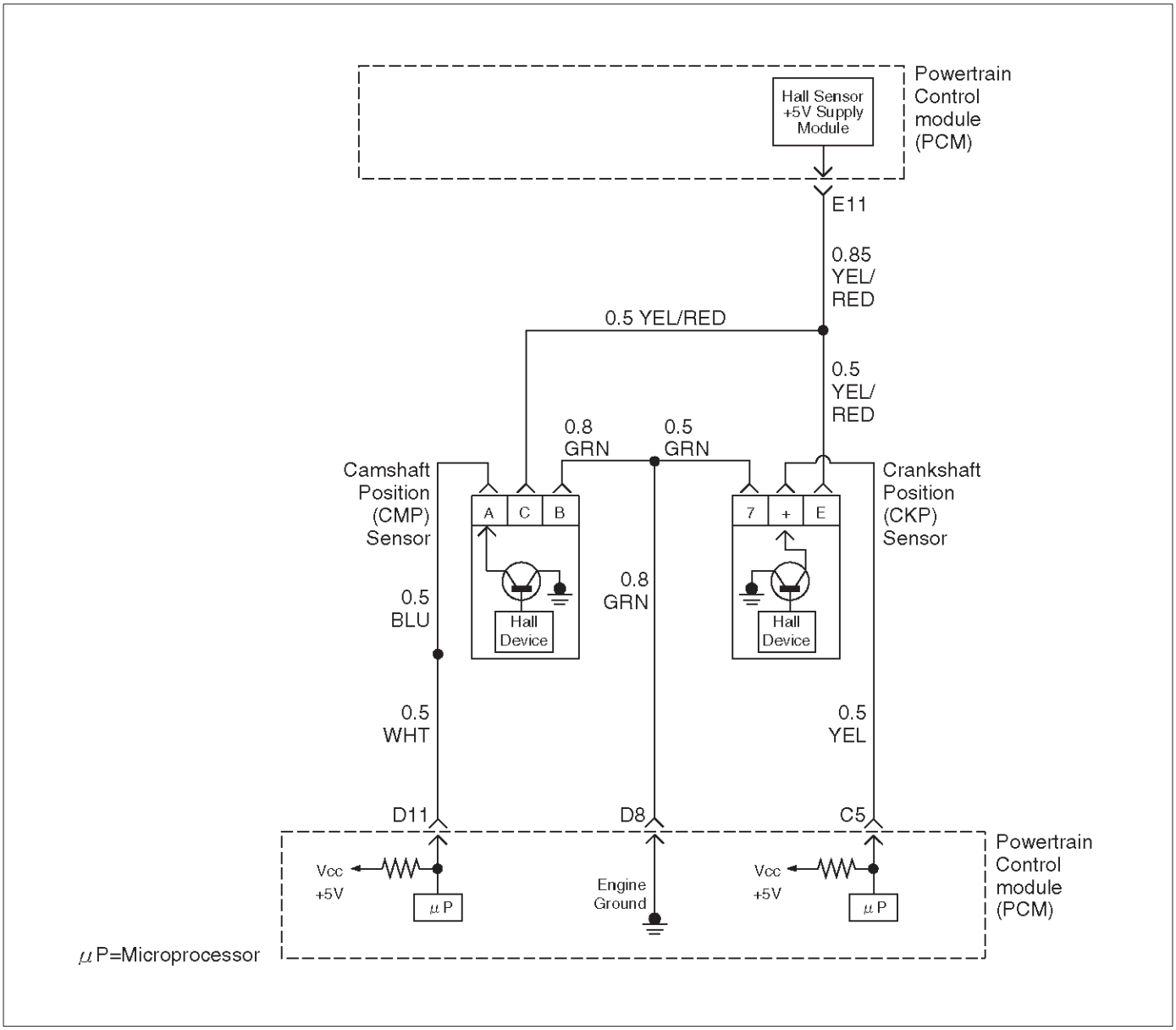

D06RW032

Circuit Description

The CMP signal is produced by the camshaft position (CMP) sensor pulses when the engine is running and crankshaft position (CKP) sync pulses are also being received. The powertrain control module (PCM) uses the CMP signal pulses to initiate sequential fuel injection. The PCM constantly monitors the number of pulses on the CMP signal circuit and compares the number of CMP pulses to the number of 58X reference pulses received. If the PCM receives an incorrect number of pulses on the CMP reference circuit, DTC P0341 will set and the PCM will initiate injector sequence without the CMP signal with a one in six chance that injector sequence is correct. The engine will continue to start and run normally, although the misfire diagnostic will be affected if a misfiring condition occurs.

Conditions for Setting the DTC

- The engine is running (1X CMP reference pulses are being received).
- The CMP sensor signal is not detected at the correct interval every 6 cylinders.
- Above condition fails for 100 occurrences within 200 test samples.

Action Taken When the DTC Sets

- The PCM will illuminate the malfunction indicator lamp (MIL) after the second consecutive trip in which the fault is detected.
- The PCM will initiate the injector sequence without the CMP signal with a one in six chance that the injector sequence is correct.
- The PCM will store conditions which were present when the DTC was set as Freeze Frame and in the Failure Records data.

Conditions for Clearing the MIL/DTC

- DTC P0341 can be cleared by using Tech 2 “Clear Info” function or by disconnecting the PCM battery feed.

Diagnostic Aids

An intermittent may be caused by a poor connection, rubbed-through wire insulation or a wire broken inside the insulation. Check for:

- Poor connection – Inspect the PCM harness and connectors for improper mating, broken locks, improperly formed or damaged terminals, and poor terminal-to-wire connection.
- Damaged harness – Inspect the wiring harness for damage. If the harness appears to be OK, disconnect the PCM, turn the ignition on and observe a voltmeter connected to the CMP signal circuit at the PCM harness connector while moving connectors and wiring harnesses related to the ICM and the CMP sensor. A change in voltage will indicate the location of the fault.

Reviewing the Failure Records vehicle mileage since the diagnostic test last failed may help determine how often the condition that caused the DTC to be set occurs. This may assist in diagnosing the condition.

Test Description

Number(s) below refer to the step number(s) on the Diagnostic Chart.

2. Ensures that the fault is present.

12. Determines whether the fault is being caused by a missing camshaft magnet or a faulty sensor. The voltage measured in this step should read around 4 volts, toggling to near 0 volts when the CMP sensor interfaces with the camshaft magnet.

DTC P0341 – CMP Sensor Circuit Performance

Step	Action	Value(s)	Yes	No
1	Was the “On-Board Diagnostic (OBD) System Check” performed?	—	Go to *Step 2*	Go to *OBD System Check*
2	1. Ignition “ON.” 2. Review and record Tech 2 Failure Records data. 3. Operate the vehicle within Failure Records conditions as noted. 4. Using Tech 2, monitor “Specific DTC” info for DTC P0341 until the DTC P0341 test runs. 5. Note the test result. Does Tech 2 indicate DTC P0341 failed this ignition?	—	Go to *Step 3*	Refer to *Diagnostic Aids*
3	1. Disconnect the CMP sensor. 2. Measure the voltage between the sensor feed circuit and the sensor ground circuit at the CMP sensor harness connector. Does the voltage measure near the specified value?	4-6 V	Go to *Step 4*	Go to *Step 5*
4	Measure the voltage between the CMP sensor signal circuit and the sensor ground circuit at the CMP sensor harness connector. Does the voltage measure near the specified value?	4-6 V	Go to *Step 11*	Go to *Step 8*
5	If the voltage measured in step 3 was less than 4-6 volts, proceed directly to step 6 without completing this step. If the voltage in step 3 was greater than 4-6 V, repair the short to voltage in the CMP feed circuit. Is the action complete?	—	Verify repair	—
6	1. Check for poor connections at the camshaft position sensor. 2. If a problem is found, repair it as necessary. Was a problem found?	—	Verify repair	Go to *Step 7*
7	1. Ignition “OFF,” disconnect the PCM and the CMP sensor. 2. Check the following circuits for an open between the ignition coil and the CMP sensor: ● The sensor feed circuit. 3. If a problem is found, repair as necessary. Was a problem found?	—	Verify repair	Go to *Step 9*
8	1. Ignition “OFF,” disconnect the PCM (leave the CMP sensor disconnected). 2. Ignition “ON,” check the following circuits: ● The CMP sensor signal circuit for an open or a short to voltage. ● The CMP sensor input signal circuit for a short to ground. 3. If a problem is found, repair it as necessary. Was a problem found?	—	Verify repair	Go to *Step 9*
9	Check for a short or open in the sensor ground circuit. Was a problem found?	—	Verify repair	Go to *Step 10*

DTC P0341 – CMP Sensor Circuit Performance (Cont'd)

Step	Action	Value(s)	Yes	No
10	1. Check for poor connections at the PCM. 2. If a problem is found, repair it as necessary. Was a problem found?	—	Verify repair	Go to *Step 11*
11	Backprobe the PCM connector with a DVM to monitor voltage on the camshaft position input signal circuit while cranking the engine with the sensor connected. (Use rubber band, tape, or an assistant to keep the DVM lead in contact with the sensor terminal during this test.) Does the voltage toggle between the specified values?	4-0 V	Go to *Step 15*	Go to *Step 12*
12	1. Remove the CMP sensor from the engine front cover (leave the sensor wiring connected). 2. Place a magnet on the CMP sensor. (If you use a magnet that is too small to cover the face of the sensor, test on every part of the sensor face because only a small area will respond to this test.) Does the DVM display a voltage near the specified value?	0 V	Go to *Step 13*	Go to *Step 14*
13	Replace the faulty or missing camshaft position sensor magnet. Is the action complete?	—	Verify repair	—
14	Replace the camshaft position sensor. Is the action complete?	—	Verify repair	—
15	Replace the PCM. **IMPORTANT:** The replacement PCM must be programmed. Refer to *UBS 98model year Immobilizer Workshop Manual.* Is the action complete?	—	Verify repair	—

Diagnostic Trouble Code (DTC) P0342 CMP Sensor Circuit Low

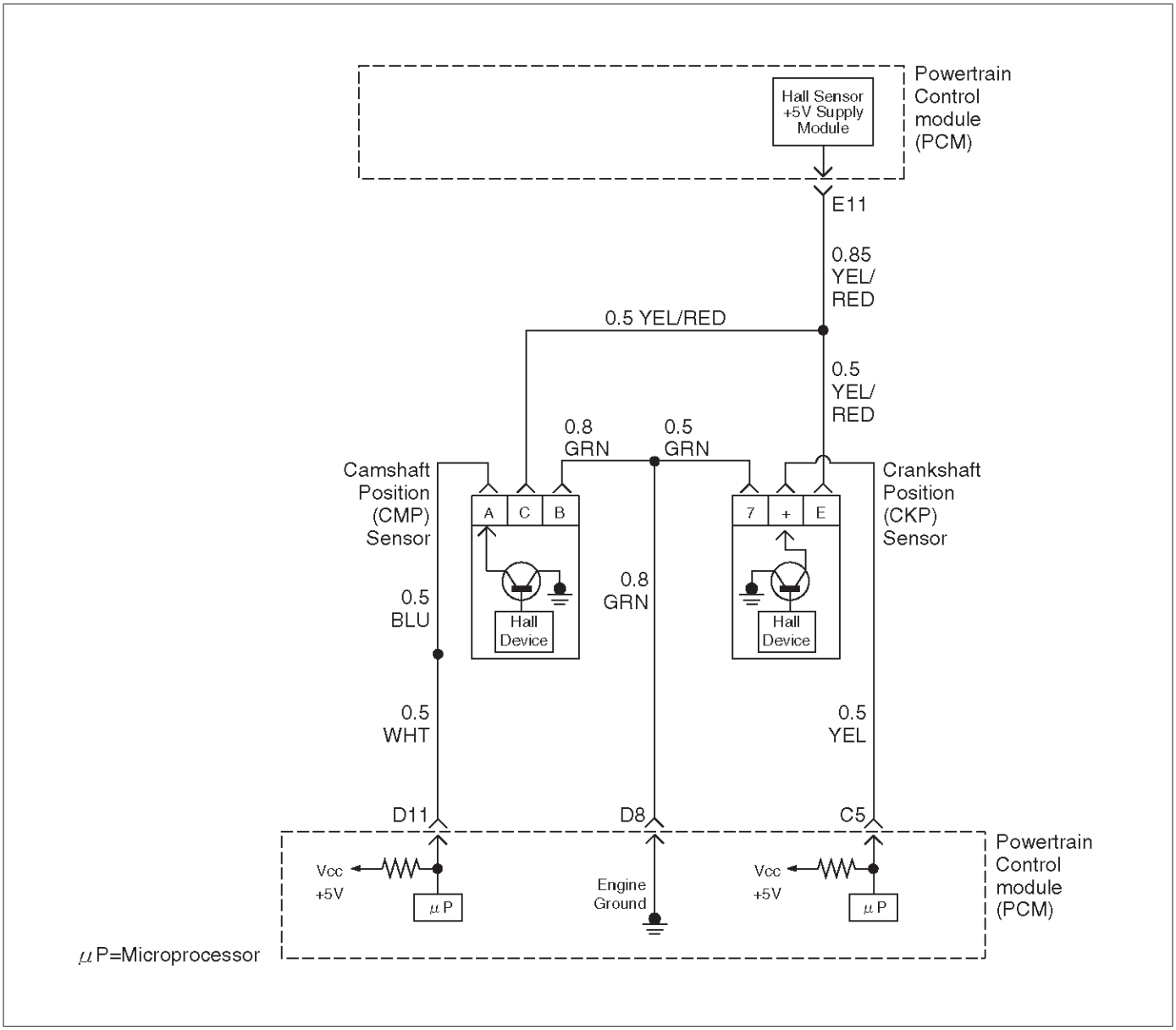

D06RW032

Circuit Description

The CMP signal produced by the camshaft position (CMP) sensor pulses when the engine is running and crankshaft position (CKP) sync pulses are also being received. The hall type CMP sensor and the CKP sensor share 5 V and ground connections at the powertrain control module (PCM). The third wire at the sensor is a signal circuit to the PCM. The PCM uses the CMP signal pulses to initiate sequential fuel injection. The PCM constantly monitors the number of pulses on the CMP signal circuit and compares the number of CMP pulses to the number of 58X reference pulses received. If the PCM does not receive pulses on the CMP reference circuit, DTC P0342 will set and the PCM will initiate injector sequence without the CMP signal with a one in six chance that injector sequence is correct. The engine will continue to start and run normally, although the misfire diagnostic will be affected if a misfiring condition occurs.

Conditions for Setting the DTC

- The engine is running.
- The CMP sensor signal is not received by the PCM once every 6 cylinders.
- The above condition occurs for 10 seconds.

Action Taken When the DTC Sets

- The PCM will illuminate the malfunction indicator lamp (MIL) after the second consecutive trip in which the fault is detected.
- The PCM will initiate injector sequence without the CMP signal with a one in six chance that the injector sequence is correct.
- The PCM will store conditions which were present when the DTC was set as Freeze Frame and in the Failure Records data.

Conditions for Clearing the MIL/DTC

- DTC P0342 can be cleared by using Tech 2 “Clear Info” function or by disconnecting the PCM battery feed.

Diagnostic Aids

An intermittent may be caused by a poor connection, rubbed-through wire insulation or a wire broken inside the insulation. Check for:

- Poor connection – Inspect the PCM harness and connectors for improper mating, broken locks, improperly formed or damaged terminals, and poor terminal to wire connection.
- Damaged harness – Inspect the wiring harness for damage. If the harness appears to be OK, disconnect the PCM, turn the ignition on and observe a voltmeter connected to the CMP signal circuit at the PCM harness connector while moving connectors and wiring harnesses related to the ICM and the CMP sensor. A change in voltage will indicate the location of the fault.

Test Description

Number(s) below refer to the step number(s) on the Diagnostic Chart.

2. Ensures that the fault is present.

14. Determines whether the fault is being caused by a missing camshaft magnet or a faulty PCM. The voltage measured in this step should read around 4 volts, toggling to near 0 volts when the CMP sensor interfaces with the camshaft magnet.

DTC P0342 – CMP Sensor Circuit Low

Step	Action	Value(s)	Yes	No
1	Was the “On-Board Diagnostic (OBD) System Check” performed?	—	Go to *Step 2*	Go to *OBD System Check*
2	1. Ignition “ON.” 2. Review and record Tech 2 Failure Records data. 3. Operate the vehicle within Failure Records conditions as noted. 4. Using Tech 2, monitor “Specific DTC” information for DTC P0342 until the DTC P0342 test runs. 5. Note test result. Does Tech 2 indicate DTC P0342 failed this ignition?	—	Go to *Step 3*	Refer to *Diagnostic Aids*
3	1. Ignition “ON.” 2. Disconnect the CMP sensor. 3. Measure the voltage between the sensor feed circuit and the sensor ground circuit at the CMP sensor harness connector. Does the voltage measure near the specified value?	4-6 V	Go to *Step 7*	Go to *Step 4*
4	1. Ignition “OFF,” disconnect the PCM and the CMP sensor. 2. Check for poor connections at the camshaft position sensor. 3. If a problem is found, repair it as necessary. Was a problem found?	—	Verify repair	Go to *Step 5*
5	1. Check for poor connections at the PCM. 2. If a problem is found, repair it as necessary. Was a problem found?	—	Verify repair	Go to *Step 6*
6	1. Check the following circuits between the PCM and the CMP sensor: • The sensor feed circuit. Open or short to ground? • The sensor ground circuit. Open or short to voltage? 2. If a problem is found, repair as necessary. Was a problem found?	—	Verify repair	—

DTC P0342 – CMP Sensor Circuit Low (Cont'd)

Step	Action	Value(s)	Yes	No
7	1. Ignition "ON," engine "OFF." 2. Measure the voltage between the CMP sensor signal circuit and the sensor ground circuit at the CMP sensor harness connector. Does the voltage measure near the specified value?	4-6 V	Go to *Step 8*	Go to *Step 9*
8	1. Turn the ignition "OFF." 2. Disconnect the PCM and connect a DVM to monitor voltage on the camshaft position signal circuit at the PCM connector. 3. Ignition "ON." 4. Monitor the voltage display on the DVM while repeatedly touching the CMP sensor signal circuit at the CMP sensor connector with a test light to ground. Does the DVM voltage display switch between 0 and approximately 5 volts when the test light is touched to the CMP sensor signal circuit?	—	Go to *Step 12*	Go to *Step 9*
9	1. Ignition "OFF." 2. Leave the PCM disconnected. 3. Ignition "ON." 4. Probe the camshaft position signal circuit at the PCM connector with a test light to B+. 5. If the test light is "ON," locate and repair the short to ground in the camshaft position input signal circuit. Was either circuit shorted to ground?	—	Verify repair	Go to *Step 10*
10	1. Ignition "OFF." 2. Leave the PCM disconnected. 3. Ignition "ON." 4. Probe the camshaft position signal circuit with a test light to ground. 5. If the test light is "ON," locate and repair the short to voltage in the camshaft position input signal circuit. Was the test light "ON"?	—	Verify repair	Go to *Step 11*
11	1. Ignition "OFF," disconnect the PCM (leave the CMP sensor disconnected). 2. Ignition "ON," check the following circuit: ● The CMP sensor signal circuit for an open. 3. If a problem is found, repair it as necessary. Was a problem found?	—	Verify repair	—
12	1. Ignition "ON." 2. Remove the CMP sensor from the engine front cover (leave the sensor wiring connected). 3. Place a magnet on the CMP sensor. If you use a magnet that is too small to cover the face of the sensor, test on every part of the sensor face because only a small area will respond to this test. Does the DVM display a voltage near the specified value?	0 V	Go to *Step 14*	Go to *Step 13*
13	Replace the camshaft position sensor. Is the action complete?	—	Verify repair	—

DTC P0342 – CMP Sensor Circuit Low (Cont'd)

Step	Action	Value(s)	Yes	No
14	1. Reinstall the CMP sensor to the engine front cover. 2. Observe the DVM connected to monitor voltage on the camshaft position signal circuit while cranking the engine. Does the voltage toggle between the specified values?	4-0 V	Go to *Step 15*	Go to *Step 16*
15	Replace the PCM. NOTE: The replacement PCM must be programmed. Refer to *UBS 98model year Immobilizer Workshop Manual.* Is the action complete?	—	Verify repair	—
16	Replace faulty or missing camshaft magnet. Is the action complete?	—	Verify repair	—

Diagnostic Trouble Code (DTC) P0351 Ignition 1 Control Circuit

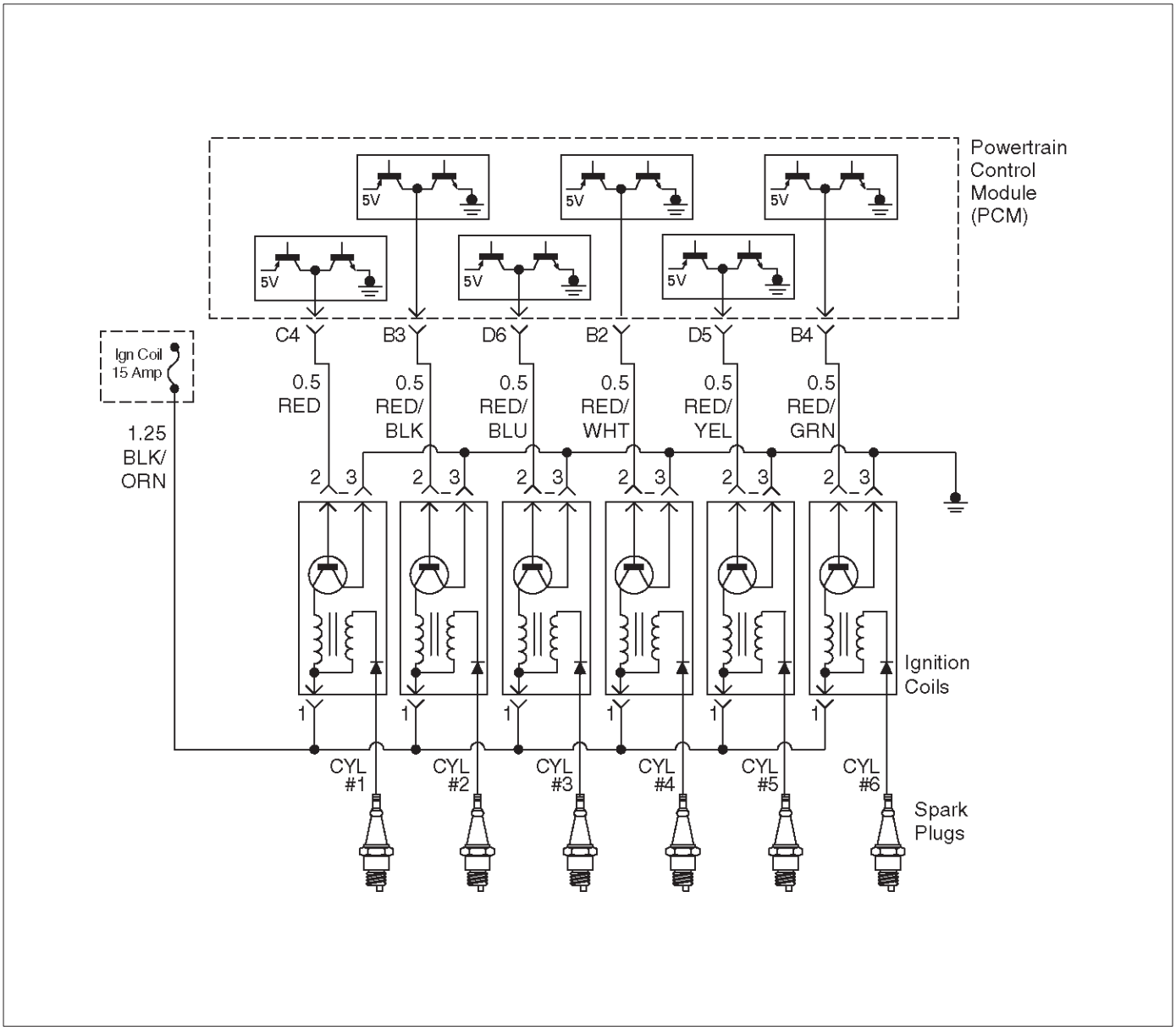

D06RW072

Circuit Description

The powertrain control module's (PCM) control circuit 1 provides a zero-volt or a 5-volt output signal to the ignition coil. The normal voltage on the circuit is zero volts. When the ignition coil receives the 5-volt signal from the PCM, it provides a ground path for the B+ supply to the primary side of the number 1 ignition coil. When the PCM shuts off the 5 volts to the ignition coil, the ignition coil turns "OFF." This causes the ignition coil primary magnetic field to collapse, producing a voltage in the secondary coil which fires the spark plug.

The circuit between the PCM and ignition coil is monitored for an open circuit, short to voltage, and short to ground. When the PCM detects a problem on ignition control circuit 1, it will set a DTC P0351.

Conditions for Setting the DTC

- The ignition is "ON."
- The engine is turning, determined by the 58X crankshaft position input signal.
- The output voltage is not equal to 5 volts when output is "ON."
- The output voltage is not equal to 0 volts when output is "OFF."
- Twenty test failures occur within 40 samples of continuous spark events.

Action Taken When the DTC Sets

- The PCM will illuminate the malfunction indicator lamp (MIL) the first time the fault is detected.
- The PCM will store conditions which were present when the DTC was set as Freeze Frame and in the Failure Records data.

Conditions for Clearing the MIL/DTC

- DTC P0351 can be cleared by using Tech 2 "Clear Info" function or by disconnecting the PCM battery feed.

Diagnostic Aids

Check for the following conditions:

- Poor connection at PCM – Inspect the harness connectors for backed-out terminals, improper mating, broken locks, improperly formed or damaged terminals, and poor terminal-to-wire connections.
- Damaged harness – Inspect the wiring harness for damage. If the harness appears to be OK, observe Tech 2 display related to DTC P0351 while moving the connector and wiring related to the ignition system. A change in the display will indicate the location of the fault.

Reviewing the Failure Records vehicle mileage since the diagnostic test last failed may help determine how often the condition that caused the DTC to be set occurs. This may assist in diagnosing the condition.

DTC P0351 – Ignition 1 Control Circuit

Step	Action	Value(s)	Yes	No
1	Was the “On-Board Diagnostic (OBD) System Check” performed?	—	Go to *Step 2*	Go to *OBD System Check*
2	1. Ignition “ON,” engine “OFF.” 2. Review and record Tech 2 Failure Records data. 3. Operate the vehicle within Failure Record conditions as noted. 4. Use Tech 2 to monitor the “Specific DTC” information for DTC P0351 until the DTC P0351 test runs. 5. Note the test result. Does Tech 2 indicate DTC P0351 failed this ignition cycle?	—	Go to *Step 3*	Go to *Diagnostic Aids*
3	Check for faulty connection at ignition coil. Was a problem found?	—	Verify repair	Go to *Step 4*
4	Check for faulty connection at PCM connector. Was a problem found?	—	Verify repair	Go to *Step 5*
5	1. Ignition “ON,” engine “OFF.” 2. Back probe the ignition control circuit 1 at the PCM with a DVM. Is the voltage near the specified value?	25-55 mV	Go to *Step 6*	Go to *Step 9*
6	1. Ignition “ON,” engine running. 2. Back probe the ignition control circuit at the PCM for the cylinder being tested. Is the voltage in the specified range, rapidly toggling back and forth to a reading 20-50 mV higher?	100-180 mV	Go to *Step 7*	Go to *Step 13*
7	1. Ignition “OFF.” 2. Disconnect the 3-pin and 5-pin connectors at the ignition coil. 3. Check ignition control circuit 1 voltage at the ignition coil connector while cranking the engine. Does the voltage measure between the specified values?	200-1200 mV	Go to *Step 8*	Go to *Step 11*
8	Replace the ignition coil. Is the action complete?	—	Verify repair	—
9	1. Ignition “OFF.” 2. Disconnect the PCM and the ignition coil. 3. Check ignition control circuit 1 for short to ground. Was a problem found?	—	Verify repair	Go to *Step 10*
10	Check ignition control circuit 1 for short to voltage. Was a problem found?	—	Verify repair	Go to *Step 13*

DTC P0351 – Ignition 1 Control Circuit (Cont'd)

Step	Action	Value(s)	Yes	No
11	Check for an open ignition control circuit 1. Was the ignition control circuit open?	—	Go to *Step 12*	Go to *Step 13*
12	Repair the open ignition control circuit. Is the action complete?	—	Verify repair	—
13	Replace the PCM. **IMPORTANT:** The replacement PCM must be programmed. Refer to *UBS 98model year Immobilizer Workshop Manual.* Is the action complete?	—	Verify repair	—

Diagnostic Trouble Code (DTC) P0352 Ignition 2 Control Circuit

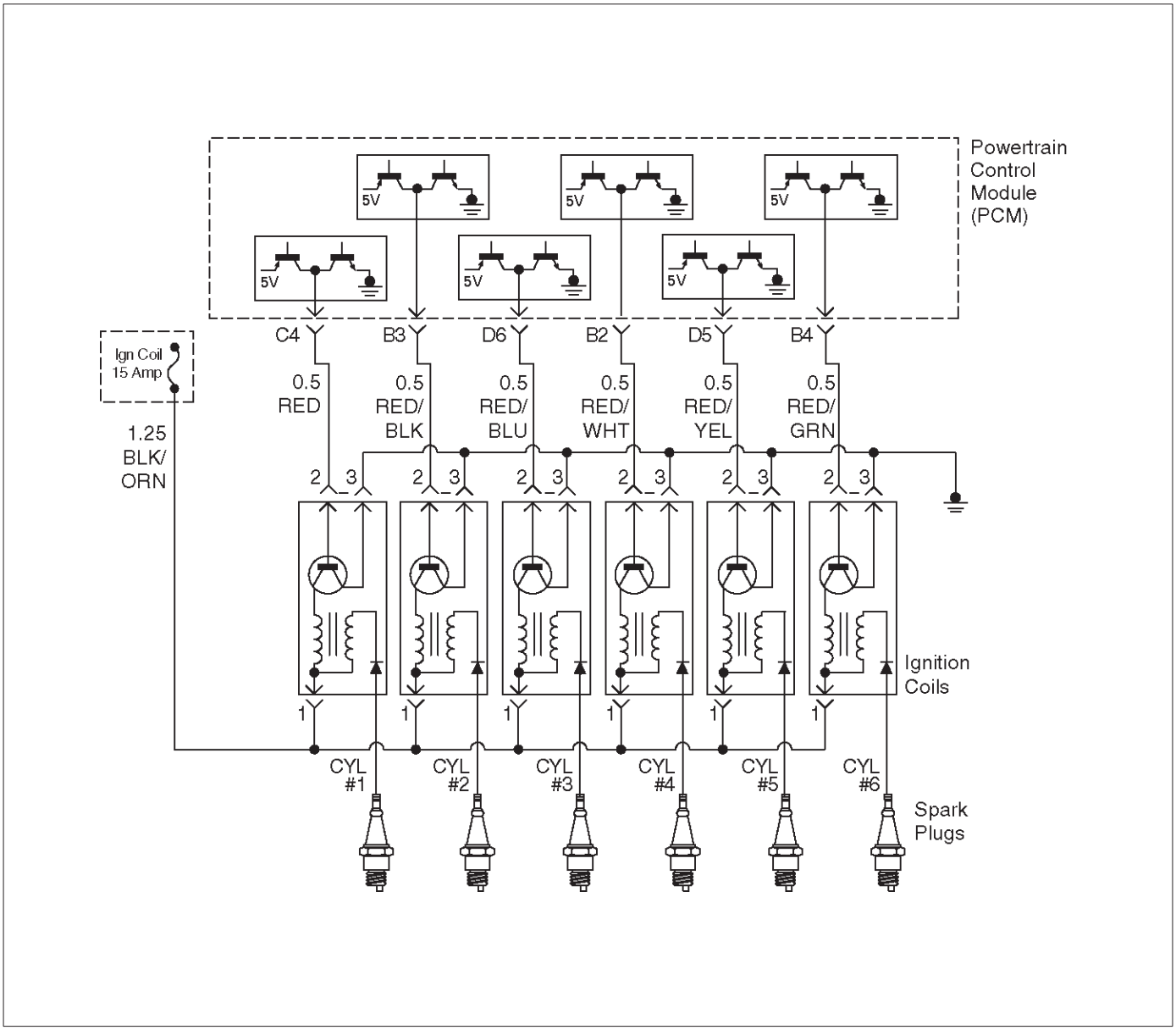

D06RW072

Circuit Description

The powertrain control module's (PCM) control circuit 2 provides a zero-volt or a 5-volt output signal to the ignition coil. The normal voltage on the circuit is zero volts. When the ignition coil receives the 5-volt signal from the PCM, it provides a ground path for the B+ supply to the primary side of the number 2 ignition coil. When the PCM shuts off the 5 volts to the ignition coil, the ignition coil turns "OFF." This causes the ignition coil primary magnetic field to collapse, producing a voltage in the secondary coil which fires the spark plug.

The circuit between the PCM and ignition coil is monitored for an open circuit, short to voltage, and short to ground. When the PCM detects a problem on ignition control circuit 2, it will set a DTC P0352.

Conditions for Setting the DTC

- The ignition is "ON."
- The engine is turning, determined by the 58 X crankshaft position input signal.
- The output voltage is not equal to 5 volts when output is "ON."
- The output voltage is not equal to 0 volts when output is "OFF."
- Twenty test failures occur within 40 samples of continuous spark events.

Action Taken When the DTC Sets

- The PCM will illuminate the malfunction indicator lamp (MIL) the first time the fault is detected.
- The PCM will store conditions which were present when the DTC was set as Freeze Frame and in the Failure Records data.

Conditions for Clearing the MIL/DTC

- DTC P0352 can be cleared by using the Tech 2 "Clear Info" function or by disconnecting the PCM battery feed.

Diagnostic Aids

Check for the following conditions:

- Poor connection at PCM – Inspect the harness connectors for backed-out terminals, improper mating, broken locks, improperly formed or damaged terminals, and poor terminal-to-wire connections.
- Damaged harness – Inspect the wiring harness for damage. If the harness appears to be OK, observe the Tech 2 display related to DTC P0352 while moving the connector and wiring related to the ignition system. A change in the display will indicate the location of the fault.

Reviewing the Failure Records vehicle mileage since the diagnostic test last failed may help determine how often the condition that caused the DTC to be set occurs. This may assist in diagnosing the condition.

DTC P0352 – Ignition 2 Control Circuit

Step	Action	Value(s)	Yes	No
1	Was the “On-Board Diagnostic (OBD) System Check” performed?	—	Go to *Step 2*	Go to *OBD System Check*
2	1. Ignition “ON,” engine “OFF.” 2. Review and record Tech 2 Failure Records data. 3. Operate the vehicle within Failure Record conditions as noted. 4. Use a Tech 2 to monitor the “Specific DTC” information for DTC P0352 until the DTC P0352 test runs. 5. Note the test result. Does the Tech 2 indicate DTC P0352 failed this ignition cycle?	—	Go to *Step 3*	Go to *Diagnostic Aids*
3	Check for faulty connection at ignition coil. Was a problem found?	—	Verify repair	Go to *Step 4*
4	Check for faulty connection at PCM connector. Was a problem found?	—	Verify repair	Go to *Step 5*
5	1. Ignition “ON,” engine “OFF.” 2. Back probe the ignition control circuit 2 at the PCM with a DVM . Is the voltage near the specified value?	25-55 mV	Go to *Step 6*	Go to *Step 9*
6	1. Ignition “ON,” engine running. 2. Back probe the ignition control circuit at the PCM for the cylinder being tested. Is the voltage in the specified range, rapidly toggling back and forth to a reading 20-50 mV higher?	100-180 mV	Go to *Step 7*	Go to *Step 13*
7	1. Ignition “OFF.” 2. Disconnect the 3-pin and 5-pin connectors at the ignition coil. 3. Check ignition control circuit 2 voltage at the ignition coil connector while cranking the engine connector. Does the voltage measure between the specified values?	200-1200 mV	Go to *Step 8*	Go to *Step 11*
8	Replace the ignition coil. Is the action complete?	—	Verify repair	—
9	1. Ignition “OFF.” 2. Disconnect the PCM and the ignition coil. 3. Check ignition control circuit 2 for short to ground. Was a problem found?	—	Verify repair	Go to *Step 10*
10	Check ignition control circuit 2 for short to voltage. Was a problem found?	—	Verify repair	Go to *Step 13*

DTC P0352 – Ignition 2 Control Circuit (Cont'd)

Step	Action	Value(s)	Yes	No
11	Check for an open ignition control circuit 1. Was the ignition control circuit open?	—	Go to *Step 12*	Go to *Step 13*
12	Repair the open ignition control circuit. Is the action complete?	—	Verify repair	—
13	Replace the PCM. **IMPORTANT:** The replacement PCM must be programmed. Refer to *UBS 98model year Immobilizer Workshop Manual.* Is the action complete?	—	Verify repair	—

Diagnostic Trouble Code (DTC) P0353 Ignition 3 Control Circuit

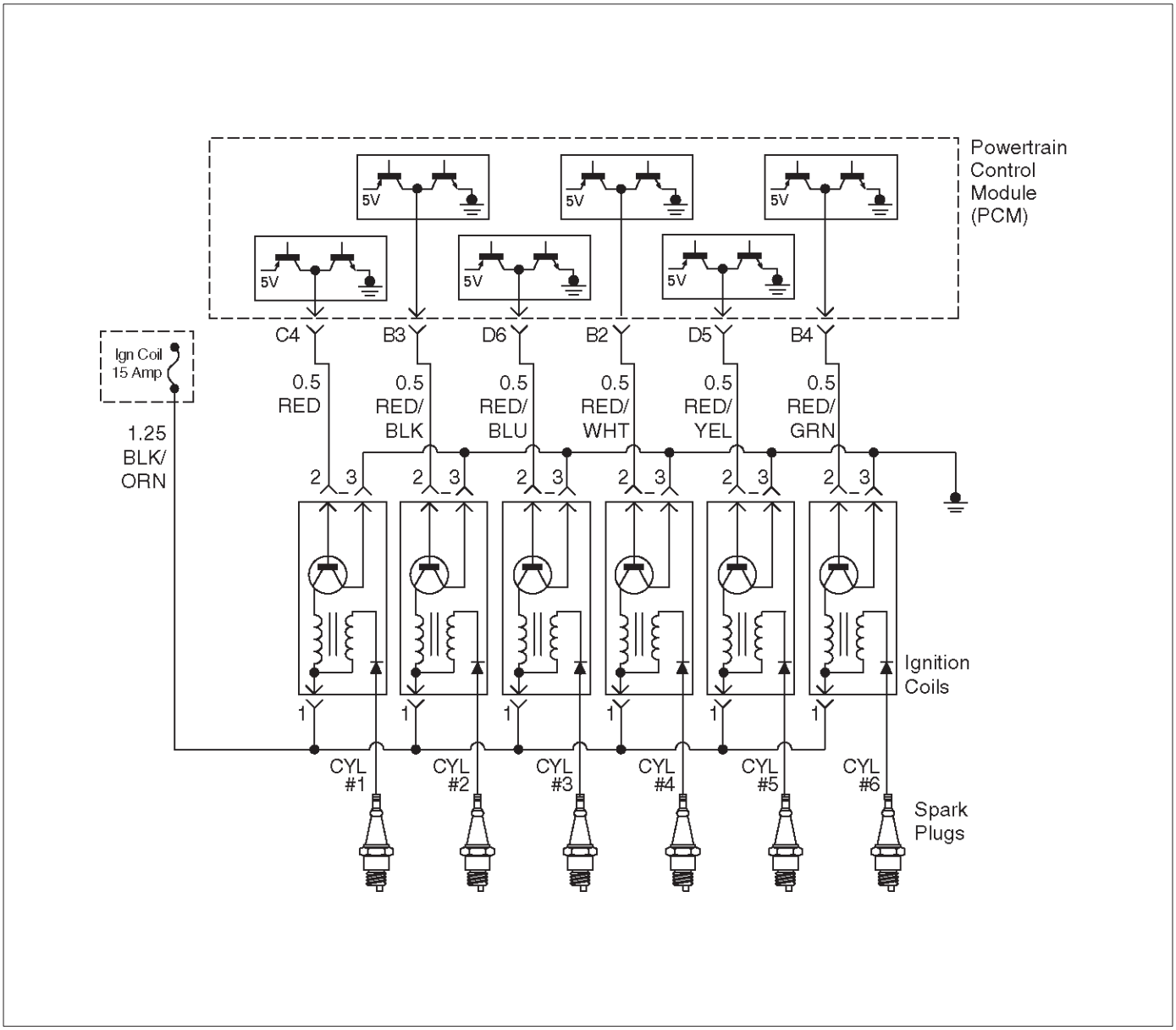

Circuit Description

The powertrain control module's (PCM) control circuit 3 provides a zero-volt or a 5-volt output signal to the ignition coil. The normal voltage on the circuit is zero volts. When the ignition coil receives the 5-volt signal from the PCM, it provides a ground path for the B+ supply to the primary side of the number 3 ignition coil. When the PCM shuts off the 5 volts to the ignition coil, the ignition coil turns "OFF." This causes the ignition coil primary magnetic field to collapse, producing a voltage in the secondary coil which fires the spark plug.

The circuit between the PCM and ignition coil is monitored for an open circuit, short to voltage, and short to ground. When the PCM detects a problem on ignition control circuit 3, it will set a DTC P0353.

Conditions for Setting the DTC

- The ignition is "ON."
- The engine is turning, determined by the 58X crankshaft position input signal.
- The output voltage is not equal to 5 volts when output is "ON."
- The output voltage is not equal to 0 volts when output is "OFF."
- Twenty test failures occur within 40 samples of continuous spark events.

Action Taken When the DTC Sets

- The PCM will illuminate the malfunction indicator lamp (MIL) the first time the fault is detected.
- The PCM will store conditions which were present when the DTC was set as Freeze Frame and in the Failure Records data.

Conditions for Clearing the MIL/DTC

- DTC P0353 can be cleared by using the Tech 2 "Clear Info" function or by disconnecting the PCM battery feed.

Diagnostic Aids

Check for the following conditions:

- Poor connection at PCM – Inspect the harness connectors for backed-out terminals, improper mating, broken locks, improperly formed or damaged terminals, and poor terminal-to-wire connections.
- Damaged harness – Inspect the wiring harness for damage. If the harness appears to be OK, observe the Tech 2 display related to DTC P0353 while moving the connector and wiring related to the ignition system. A change in the display will indicate the location of the fault.

Reviewing the Failure Records vehicle mileage since the diagnostic test last failed may help determine how often the condition that caused the DTC to be set occurs. This may assist in diagnosing the condition.

DTC P0353 – Ignition 3 Control Circuit

Step	Action	Value(s)	Yes	No
1	Was the “On-Board Diagnostic (OBD) System Check” performed?	—	Go to *Step 2*	Go to *OBD System Check*
2	1. Ignition “ON,” engine “OFF.” 2. Review and record Tech 2 Failure Records data. 3. Operate the vehicle within Failure Record conditions as noted. 4. Use a Tech 2 to monitor the “Specific DTC” information for DTC P0353 until the DTC P0353 test runs. 5. Note the test result. Does the Tech 2 indicate DTC P0353 failed this ignition cycle?	—	Go to *Step 3*	Go to *Diagnostic Aids*
3	Check for faulty connection at ignition coil. Was a problem found?	—	Verify repair	Go to *Step 4*
4	Check for faulty connection at PCM connector. Was a problem found?	—	Verify repair	Go to *Step 5*
5	1. Ignition “ON,” engine “OFF.” 2. Back probe the ignition control circuit 3 at the PCM with a DVM positive lead with the negative lead to ground. Is the voltage near the specified value?	25-55 mV	Go to *Step 6*	Go to *Step 9*
6	1. Ignition “ON,” engine running. 2. Back probe the ignition control circuit at the PCM for the cylinder being tested. Is the voltage in the specified range, rapidly toggling back and forth to a reading 20-50 mV higher?	100-180 mV	Go to *Step 7*	Go to *Step 13*
7	1. Ignition “OFF.” 2. Disconnect the 3-pin and 5-pin connectors at the ignition coil. 3. Check ignition control circuit 3 voltage at the ignition coil connector while cranking the engine. Does the voltage measure between the specified values?	200-1200 mV	Go to *Step 8*	Go to *Step 11*
8	Replace the ignition coil. Is the action complete?	—	Verify repair	—
9	1. Ignition “OFF.” 2. Disconnect the PCM and the ignition coil. 3. Check ignition control circuit 3 for short to ground. Was a problem found?	—	Verify repair	Go to *Step 10*
10	Check ignition control circuit 3 for short to voltage. Was a problem found?	—	Verify repair	Go to *Step 13*

DTC P0353 – Ignition 3 Control Circuit (Cont'd)

Step	Action	Value(s)	Yes	No
11	Check for an open ignition control circuit 1. Was the ignition control circuit open?	—	Go to *Step 12*	Go to *Step 13*
12	Repair the open ignition control circuit. Is the action complete?	—	Verify repair	—
13	Replace the PCM. **IMPORTANT:** The replacement PCM must be programmed. Refer to *UBS 98model year Immobilizer Workshop Manual.* Is the action complete?	—	Verify repair	—

Diagnostic Trouble Code (DTC) P0354 Ignition 4 Control Circuit

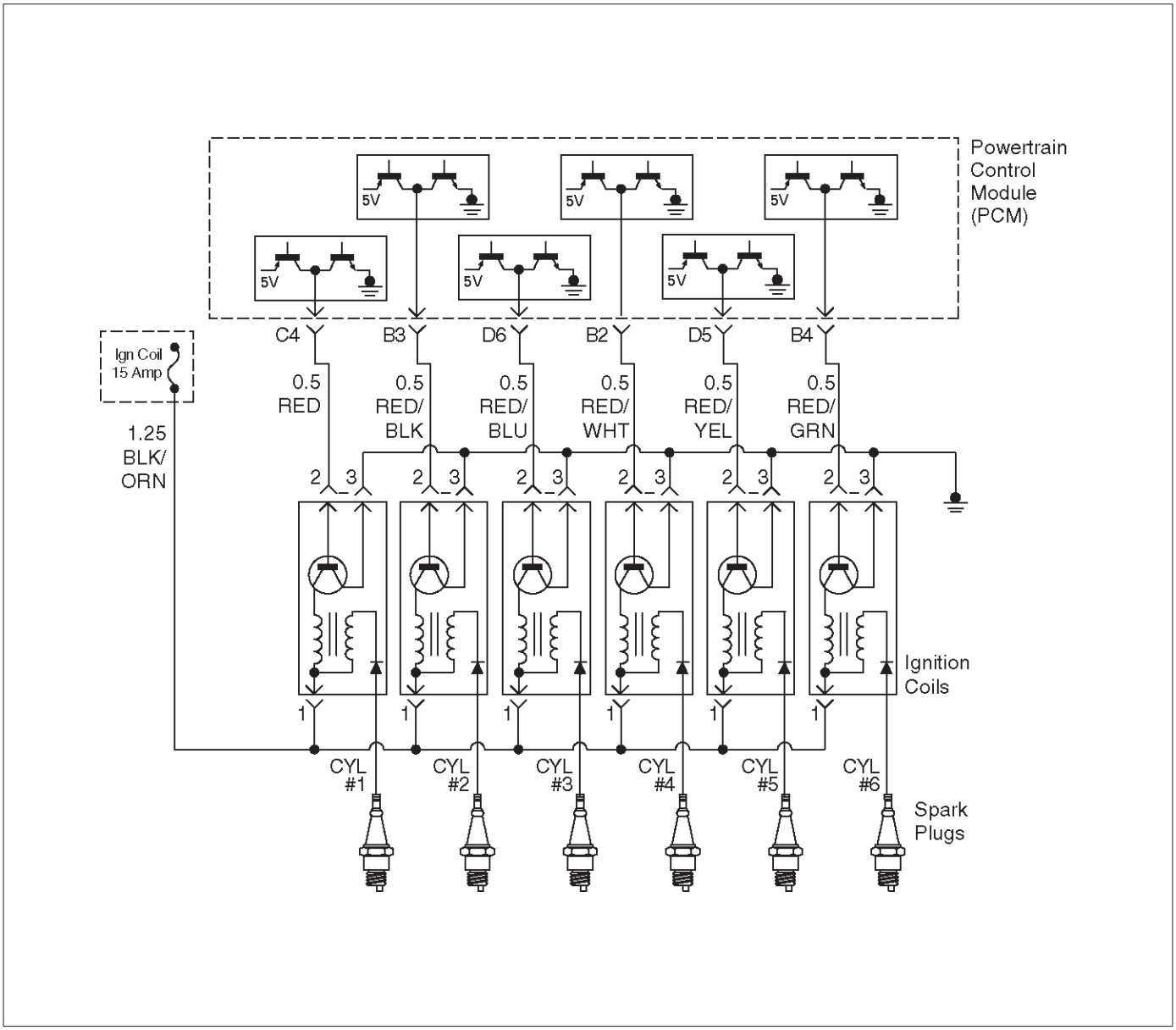

Circuit Description

The powertrain control module's (PCM) control circuit 4 provides a zero-volt or a 5-volt output signal to the ignition coil. The normal voltage on the circuit is zero volts. When the ignition coil receives the 5-volt signal from the PCM, it provides a ground path for the B+ supply to the primary side of the number 4 ignition coil. When the PCM shuts off the 5 volts to the ignition coil, the ignition coil turns "OFF." This causes the ignition coil primary magnetic field to collapse, producing a voltage in the secondary coil which fires the spark plug.

The circuit between the PCM and ignition coil is monitored for an open circuit, short to voltage, and short to ground. When the PCM detects a problem on ignition control circuit 4, it will set a DTC P0354.

Conditions for Setting the DTC

- The ignition is "ON."
- The engine is turning, determined by the 58X crankshaft position input signal.
- The output voltage is not equal to 5 volts when output is "ON."
- The output voltage is not equal to 0 volts when output is "OFF."
- Twenty test failures occur within 40 samples of continuous spark events.

Action Taken When the DTC Sets

- The PCM will illuminate the malfunction indicator lamp (MIL) the first time the fault is detected.
- The PCM will store conditions which were present when the DTC was set as Freeze Frame and in the Failure Records data.

Conditions for Clearing the MIL/DTC

- DTC P0354 can be cleared by using the Tech 2 "Clear Info" function or by disconnecting the PCM battery feed.

Diagnostic Aids

Check for the following conditions:

- Poor connection at PCM – Inspect the harness connectors for backed-out terminals, improper mating, broken locks, improperly formed or damaged terminals, and poor terminal-to-wire connections.
- Damaged harness – Inspect the wiring harness for damage. If the harness appears to be OK, observe the Tech 2 display related to DTC P0354 while moving the connector and wiring related to the ignition system. A change in the display will indicate the location of the fault.

Reviewing the Failure Records vehicle mileage since the diagnostic test last failed may help determine how often the condition that caused the DTC to be set occurs. This may assist in diagnosing the condition.

DTC P0354 – Ignition 4 Control Circuit

Step	Action	Value(s)	Yes	No
1	Was the “On-Board Diagnostic (OBD) System Check” performed?	—	Go to *Step 2*	Go to *OBD System Check*
2	1. Ignition “ON,” engine “OFF.” 2. Review and record Tech 2 Failure Records data. 3. Operate the vehicle within Failure Record conditions as noted. 4. Use a Tech 2 to monitor the “Specific DTC” information for DTC P0354 until the DTC P0354 test runs. 5. Note the test result. Does the Tech 2 indicate DTC P0354 failed this ignition cycle?	—	Go to *Step 3*	Go to *Diagnostic Aids*
3	Check for faulty connection at ignition coil. Was a problem found?	—	Verify repair	Go to *Step 4*
4	Check for faulty connection at PCM connector. Was a problem found?	—	Verify repair	Go to *Step 5*
5	1. Ignition “ON,” engine “OFF.” 2. Back probe the ignition control circuit 4 at the PCM with a DVM positive lead with the negative lead to ground. Is the voltage near the specified value?	25-55 mV	Go to *Step 6*	Go to *Step 9*
6	1. Ignition “ON,” engine running. 2. Back probe the ignition control circuit at the PCM for the cylinder being tested. Is the voltage in the specified range, rapidly toggling back and forth to a reading 20-50 mV higher?	100-180 mV	Go to *Step 7*	Go to *Step 13*
7	1. Ignition “OFF.” 2. Disconnect the 3-pin and 5-pin connectors at the ignition coil. 3. Check ignition control circuit 4 voltage at the ignition coil connector while cranking the engine. Does the voltage measure between the specified values?	200-1200 mV	Go to *Step 8*	Go to *Step 11*
8	Replace the ignition coil. Is the action complete?	—	Verify repair	—
9	1. Ignition “OFF.” 2. Disconnect the PCM and the ignition coil. 3. Check ignition control circuit 4 for short to ground. Was a problem found?	—	Verify repair	Go to *Step 10*
10	Check ignition control circuit 4 for short to voltage. Was a problem found?	—	Verify repair	Go to *Step 13*

DTC P0354 – Ignition 4 Control Circuit (Cont'd)

Step	Action	Value(s)	Yes	No
11	Check for an open ignition control circuit 1. Was the ignition control circuit open?	—	Go to *Step 12*	Go to *Step 13*
12	Repair the open in ignition control circuit. Is the action complete?	—	Verify repair	—
13	Replace the PCM. **IMPORTANT:** The replacement PCM must be programmed. Refer to *UBS 98model year Immobilizer Workshop Manual.* Is the action complete?	—	Verify repair	—

Diagnostic Trouble Code (DTC) P0355 Ignition 5 Control Circuit

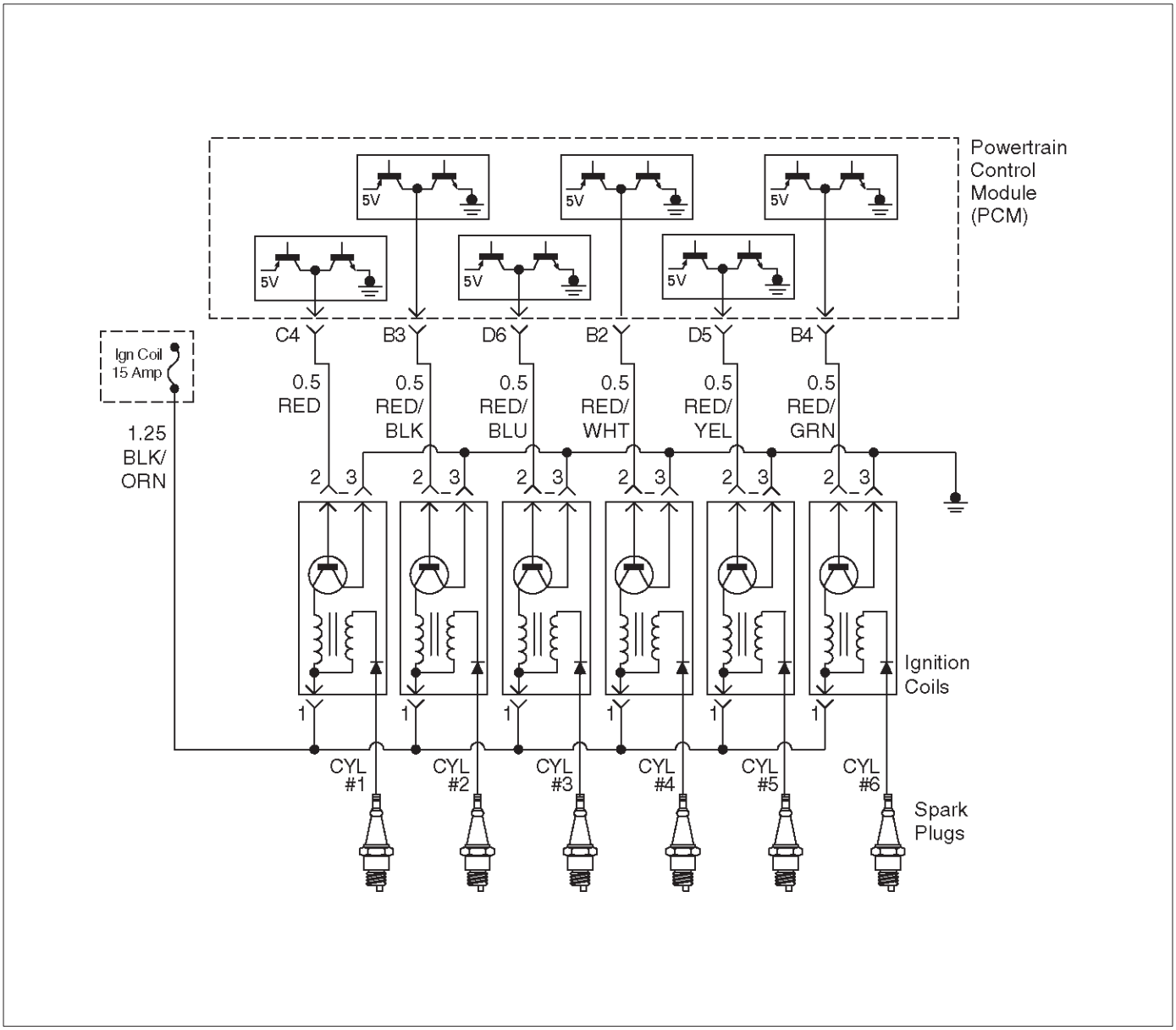

D06RW072

Circuit Description

The powertrain control module's (PCM) control circuit 5 provides a zero-volt or a 5-volt output signal to the ignition coil. The normal voltage on the circuit is zero volts. When the ignition coil receives the 5-volt signal from the PCM, it provides a ground path for the B+ supply to the primary side of the number 5 ignition coil. When the PCM shuts off the 5 volts to the ignition coil, the ignition coil turns "OFF." This causes the ignition coil primary magnetic field to collapse, producing a voltage in the secondary coil which fires the spark plug.

The circuit between the PCM and ignition coil is monitored for an open circuit, short to voltage, and short to ground. When the PCM detects a problem on ignition control circuit 5, it will set a DTC P0355.

Conditions for Setting the DTC

- The ignition is "ON."
- The engine is turning, determined by the 58X crankshaft position input signal.
- The output voltage is not equal to 5 volts when output is "ON."
- The output voltage is not equal to 0 volts when output is "OFF."
- Twenty test failures occur within 40 samples of continuous spark events.

Action Taken When the DTC Sets

- The PCM will illuminate the malfunction indicator lamp (MIL) the first time the fault is detected.
- The PCM will store conditions which were present when the DTC was set as Freeze Frame and in the Failure Records data.

Conditions for Clearing the MIL/DTC

- DTC P0355 can be cleared by using the Tech 2 "Clear Info" function or by disconnecting the PCM battery feed.

Diagnostic Aids

Check for the following conditions:

- Poor connection at PCM – Inspect the harness connectors for backed-out terminals, improper mating, broken locks, improperly formed or damaged terminals, and poor terminal-to-wire connections.
- Damaged harness – Inspect the wiring harness for damage. If the harness appears to be OK, observe the Tech 2 display related to DTC P0355 while moving the connector and wiring related to the ignition system. A change in the display will indicate the location of the fault.

Reviewing the Failure Records vehicle mileage since the diagnostic test last failed may help determine how often the condition that caused the DTC to be set occurs. This may assist in diagnosing the condition.

DTC P0355 – Ignition 5 Control Circuit

Step	Action	Value(s)	Yes	No
1	Was the “On-Board Diagnostic (OBD) System Check” performed?	—	Go to *Step 2*	Go to *OBD System Check*
2	1. Ignition “ON,” engine “OFF.” 2. Review and record Tech 2 Failure Records data. 3. Operate the vehicle within Failure Record conditions as noted. 4. Use a Tech 2 to monitor the “Specific DTC” information for DTC P0355 until the DTC P0355 test runs. 5. Note the test result. Does the Tech 2 indicate DTC P0355 failed this ignition cycle?	—	Go to *Step 3*	Go to *Diagnostic Aids*
3	Check for faulty connection at ignition coil. Was a problem found?	—	Verify repair	Go to *Step 4*
4	Check for faulty connection at PCM connector. Was a problem found?	—	Verify repair	Go to *Step 5*
5	1. Ignition “ON,” engine “OFF.” 2. Back probe the ignition control circuit 5 at the PCM with a DVM positive lead with the negative lead to ground. Is the voltage near the specified value?	25-55 mV	Go to *Step 6*	Go to *Step 9*
6	1. Ignition “ON,” engine running. 2. Back probe the ignition control circuit at the PCM for the cylinder being tested. Is the voltage in the specified range, rapidly toggling back and forth to a reading 20-50 mV higher?	100-180 mV	Go to *Step 7*	Go to *Step 13*
7	1. Ignition “OFF.” 2. Disconnect the 3-pin and 5-pin connectors at the ignition coil. 3. Check ignition control circuit 5 voltage at the ignition coil connector while cranking the engine. Does the voltage measure between the specified values?	200-1200 mV	Go to *Step 8*	Go to *Step 11*
8	Replace the ignition coil. Is the action complete?	—	Verify repair	—
9	1. Ignition “OFF.” 2. Disconnect the PCM and the ignition coil. 3. Check ignition control circuit 5 for short to ground. Was a problem found?	—	Verify repair	Go to *Step 10*
10	Check ignition control circuit 5 for short to voltage. Was a problem found?	—	Verify repair	Go to *Step 13*

DTC P0355 – Ignition 5 Control Circuit (Cont'd)

Step	Action	Value(s)	Yes	No
11	Check for an open ignition control circuit 1. Was the ignition control circuit open?	—	Go to *Step 12*	Go to *Step 13*
12	Repair the open ignition control circuit. Is the action complete?	—	Verify repair	—
13	Replace the PCM. **IMPORTANT:** The replacement PCM must be programmed. Refer to *UBS 98model year Immobilizer Workshop Manual.* Is the action complete?	—	Verify repair	—

Diagnostic Trouble Code (DTC) P0356 Ignition 6 Control Circuit

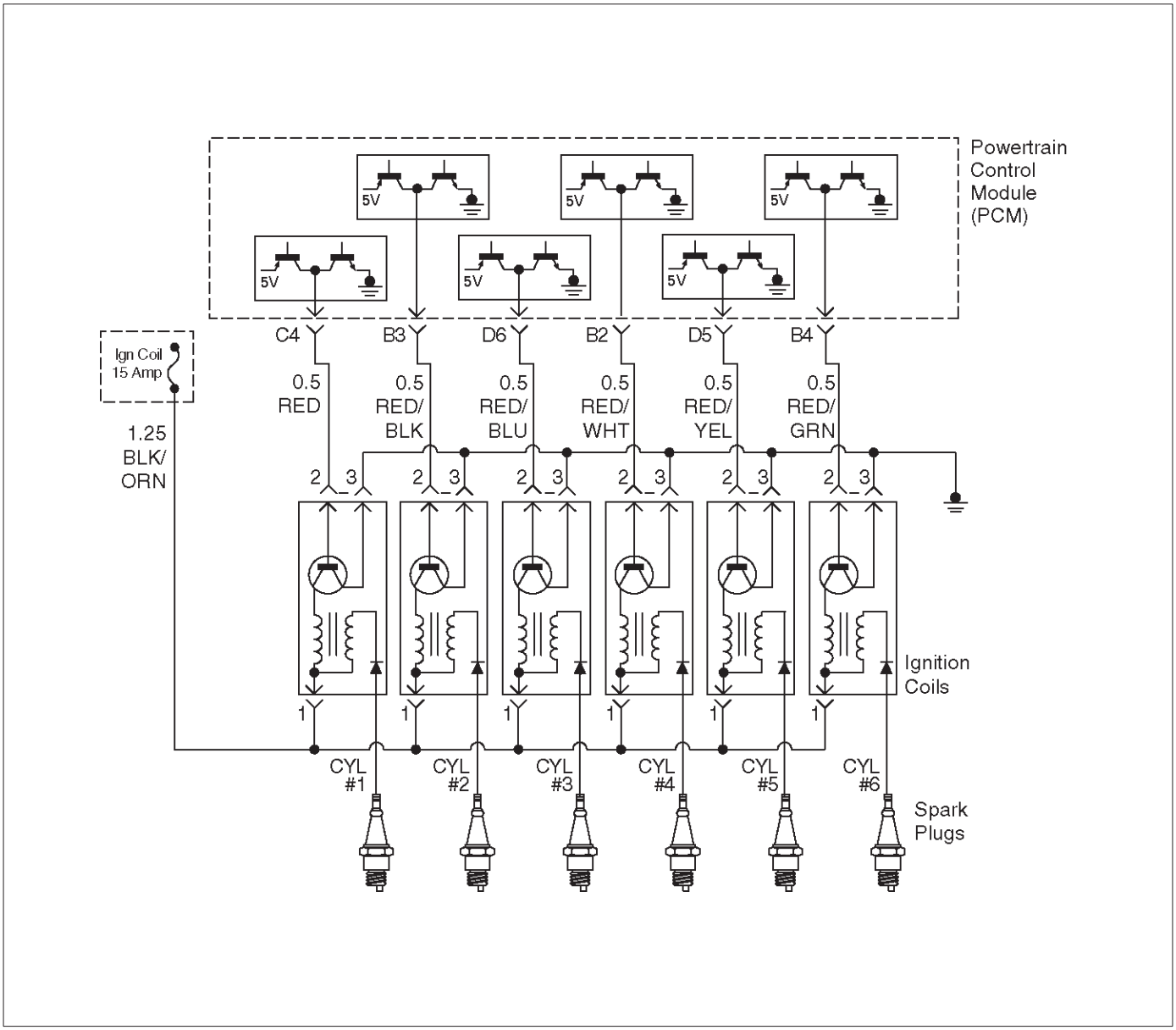

Circuit Description

The powertrain control module's (PCM) control circuit 6 provides a zero-volt or a 5-volt output signal to the ignition coil. The normal voltage on the circuit is zero volts. When the ignition coil receives the 5-volt signal from the PCM, it provides a ground path for the B+ supply to the primary side of the number 6 ignition coil. When the PCM shuts off the 5 volts to the ignition coil, the ignition coil turns "OFF." This causes the ignition coil primary magnetic field to collapse, producing a voltage in the secondary coil which fires the spark plug.

The circuit between the PCM and ignition coil is monitored for an open circuit, short to voltage, and short to ground. When the PCM detects a problem on ignition control circuit 6, it will set a DTC P0356.

Conditions for Setting the DTC

- The ignition is "ON."
- The engine is turning, determined by the 58X crankshaft position input signal.
- The output voltage is not equal to 5 volts when output is "ON."
- The output voltage is not equal to 0 volts when output is "OFF."
- Twenty test failures occur within 40 samples of continuous circuit monitoring.

Action Taken When the DTC Sets

- The PCM will illuminate the malfunction indicator lamp (MIL) the first time the fault is detected.
- The PCM will store conditions which were present when the DTC was set as Freeze Frame and in the Failure Records data.

Conditions for Clearing the MIL/DTC

- DTC P0356 can be cleared by using the Tech 2 "Clear Info" function or by disconnecting the PCM battery feed.

Diagnostic Aids

Check for the following conditions:

- Poor connection at PCM – Inspect the harness connectors for backed-out terminals, improper mating, broken locks, improperly formed or damaged terminals, and poor terminal-to-wire connections.
- Damaged harness – Inspect the wiring harness for damage. If the harness appears to be OK, observe the Tech 2 display related to DTC P0356 while moving the connector and wiring related to the ignition system. A change in the display will indicate the location of the fault.

Reviewing the Failure Records vehicle mileage since the diagnostic test last failed may help determine how often the condition that caused the DTC to be set occurs. This may assist in diagnosing the condition.

DTC P0356 – Ignition 6 Control Circuit

Step	Action	Value(s)	Yes	No
1	Was the “On-Board Diagnostic (OBD) System Check” performed?	—	Go to *Step 2*	Go to *OBD System Check*
2	1. Ignition “ON,” engine “OFF.” 2. Review and record Tech 2 Failure Records data. 3. Operate the vehicle within Failure Record conditions as noted. 4. Use a Tech 2 to monitor the “Specific DTC” information for DTC P0356 until the DTC P0356 test runs. 5. Note the test result. Does the Tech 2 indicate DTC P0356 failed this ignition cycle?	—	Go to *Step 3*	Go to *Diagnostic Aids*
3	Check for faulty connection at ignition coil. Was a problem found?	—	Verify repair	Go to *Step 4*
4	Check for faulty connection at PCM connector. Was a problem found?	—	Verify repair	Go to *Step 5*
5	1. Ignition “ON,” engine “OFF.” 2. Back probe the ignition control circuit 6 at the PCM with a DVM positive lead with the negative lead to ground. Is the voltage near the specified value?	25-55 mV	Go to *Step 6*	Go to *Step 9*
6	1. Ignition “ON,” engine running. 2. Back probe the ignition control circuit at the PCM for the cylinder being tested. Is the voltage in the specified range, rapidly toggling back and forth to a reading 20-50 mV higher?	100-180 mV	Go to *Step 7*	Go to *Step 13*
7	1. Ignition “OFF.” 2. Disconnect the 3-pin and 5-pin connectors at the ignition coil. 3. Check ignition control circuit 6 voltage at the ignition coil connector while cranking the engine. Does the voltage measure between the specified values?	200-1200 mV	Go to *Step 8*	Go to *Step 11*
8	Replace the ignition coil. Is the action complete?	—	Verify repair	—
9	1. Ignition “OFF.” 2. Disconnect the PCM and the ignition coil. 3. Check ignition control circuit 6 for short to ground. Was a problem found?	—	Verify repair	Go to *Step 10*
10	Check ignition control circuit 6 for short to voltage. Was a problem found?	—	Verify repair	Go to *Step 13*

DTC P0356 – Ignition 6 Control Circuit (Cont'd)

Step	Action	Value(s)	Yes	No
11	Check for an open ignition control circuit 1. Was the ignition control circuit open?	—	Go to *Step 12*	Go to *Step 13*
12	Repair the open ignition control circuit. Is the action complete?	—	Verify repair	—
13	Replace the PCM. **IMPORTANT:** The replacement PCM must be programmed. Refer to *UBS 98model year Immobilizer Workshop Manual.* Is the action complete?	—	Verify repair	—

Diagnostic Trouble Code (DTC) P0402 EGR Pintle Crank Error

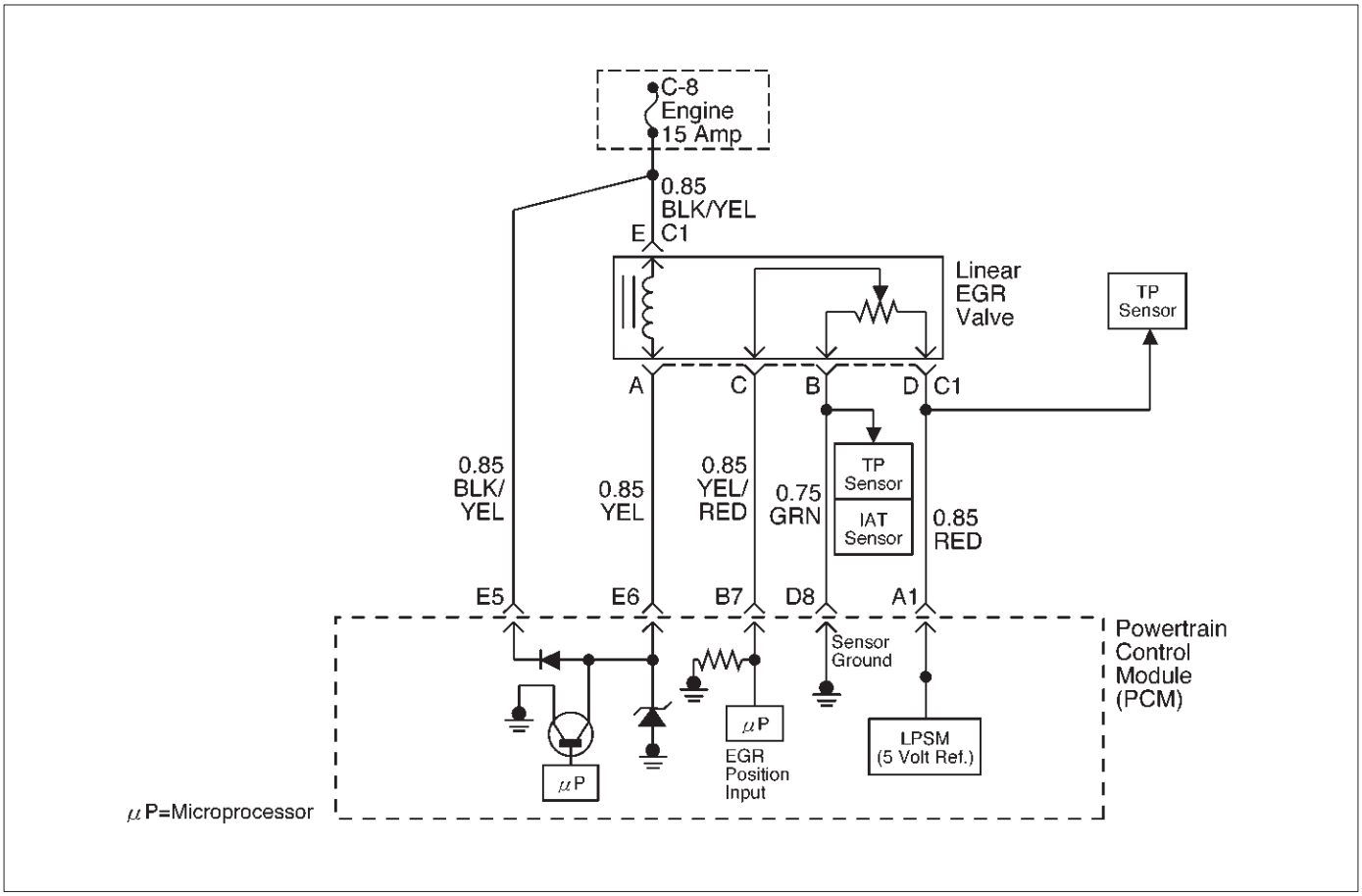

D06RW106

Circuit Description

The powertrain control module (PCM) monitors the EGR valve pintle position input to ensure that the valve responds properly to commands from the PCM, and to detect a fault if pintle position is stuck open. If the PCM detects a pintle position signal indicates more than 21.5% and more than for 625 msec during cranking, the PCM will set DTC P0402.

Conditions for Setting the DTC

- Ignition voltage is between 11 and 16 volts.
- Intake Air temp is more than 3˚C
- At Engine revolution less than 600 RPM, EGR pintle position indicates more than 21.5% and more than for 625 msecs.

Action Taken When the DTC Sets

- The PCM will illuminate the malfunction indicator lamp (MIL) after the second consecutive trip in which the fault is detected.
- The PCM will store conditions which were present when the DTC was set as Freeze Frame and in Failure Records data.

Conditions for Clearing the MIL/DTC

- DTC P0402 can be cleared by using Tech 2 “Clear Info” function or by disconnecting the PCM battery feed.

Diagnostic Aids

Check for the following conditions:

- Foreign material on EGR valve between pintle and seat may cause EGR stuck open. Inspect foreign material in EGR valve.
- Excessive carbon deposit may cause unsmooth operation of EGR valve shaft. Inspect carbon deposit and clean up inside of carbon deposit.
- Poor connection or damaged harness–inspect the wiring harness for damage If the harness appears to be OK, observe the EGR actual position display on Tech 2 while moving connectors and wiring harnesses related to EGR valve. A change in the display will indicate the location of the fault.

NOTE: If the EGR valve shows signs of excessive heat, check the exhaust system for blockage (possibly a plugged catalytic converter) using the “Restricted Exhaust System Check”.

DTC P0402 – EGR Pintle Crank Open Error

Step	Action	Value(s)	Yes	No
1	Was the “On-Board Diagnostic (OBD) System Check” performed?	—	Go to *Step 2*	Go to *OBD System Check*
2	1. Ignition “ON”, engine “OFF”, review and record Tech 2 Failure Records data. 2. Operate the vehicle within Failure Records conditions as noted. 3. Using Tech 2, monitor “Specific DTC” info for DTC P0402 until the DTC P0402 test runs. Note the result. Does Tech 2 indicates DTC P0402 failed this ignition?	—	Go to *Step 3*	Refer to *Diagnostic Aids*
3	1. Disconnect the EGR valve harness connector. 2. Inspect the EGR valve and connectors for damaged pin or terminals. Were there any damaged pins or terminals?	—	Go to *Step 4*	Go to *Step 5*
4	Repair the damaged pin or terminal. Is the action complete?	—	Verify repair	—
5	1. Remove EGR valve from Engine. 2. Inspect EGR valve whether there is any foreign material between seat and pintle. Was any foreign material in EGR valve?	—	Go to *Step 6*	Go to *Step 7*
6	1. Remove EGR valve foreign material from EGR valve and clean up inside. 2. Visually inspect damage of pintle and seat, which leakage may occur. Was there any severe damage which affects function?	—	Go to *Step 7*	Verify repair Go to *Step 8*
7	1. Reconnect. 2. Ignition “OFF”. 3. Install Tech 2. 4. Run the engine at idle. 5. On Tech-II, select special function for EGR. 6. Use the “UP” arrow to increase the EGR from 0% to 40%. Did EGR work properly?	—	—	Go to *Step 8*
8	Replace the EGR valve. Does DTC P0402 still fail “DTC” test on Tech 2?	—	Go to *Step 9*	Verify repair
9	Replace the EGR valve. Is the action complete?	—	Verify repair	—

Diagnostic Trouble Code (DTC) P0404 EGR Open Stuck

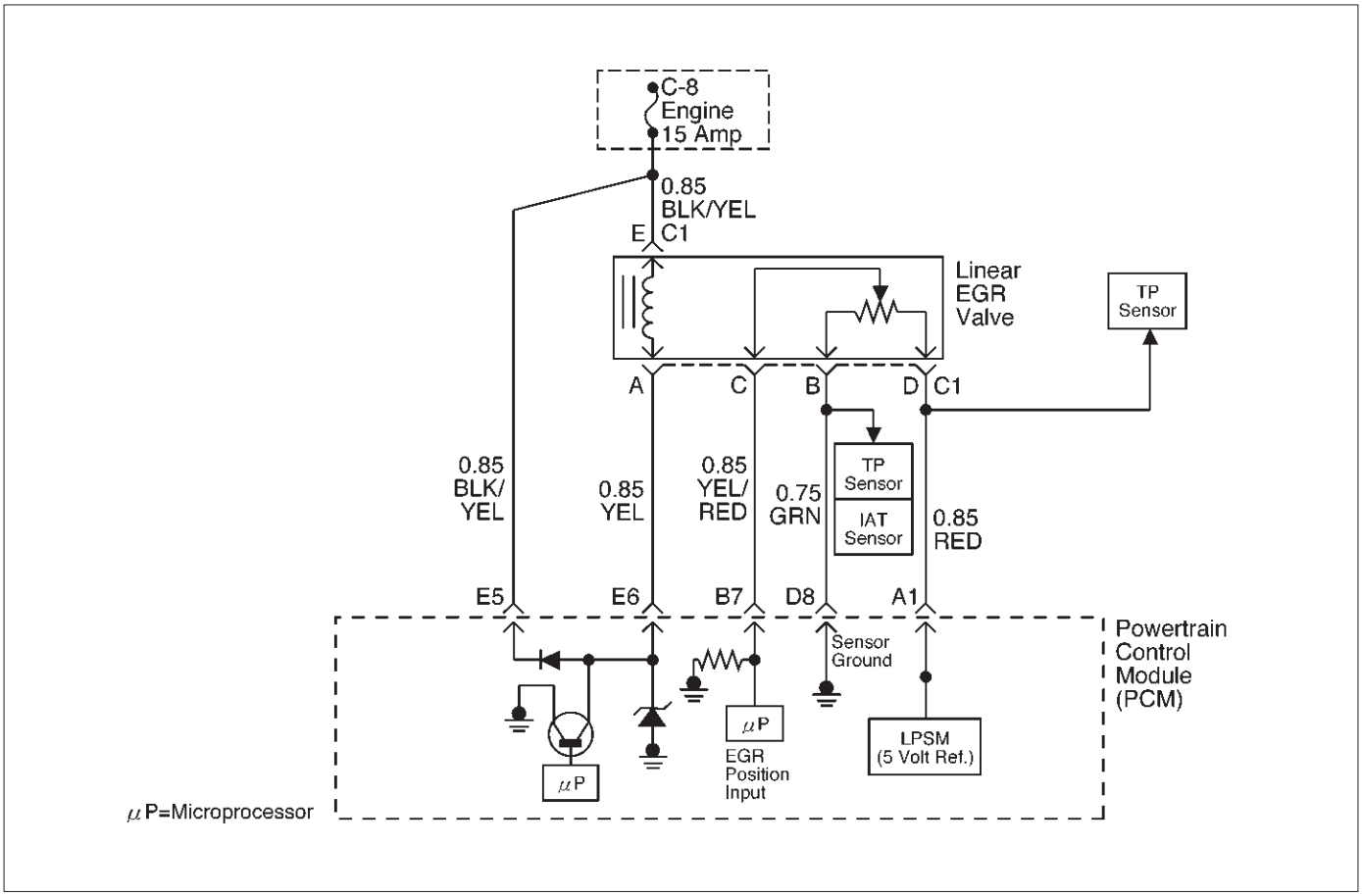

D06RW106

Circuit Description

The powertrain control module (PCM) monitors the EGR valve pintle position input to ensure that the valve responds properly to commands from the PCM, and to detect a fault if pintle position is different from commanded position. If the PCM detects a pintle position signal indicates more than 15 points different between current and commanded and more than 15 seconds, the PCM will set DTC P0404.

Conditions for Setting the DTC

- Ignition voltage is between 11 and 16 volts.
- Intake Air temp is more than 3˚C.
- Desire EGR position is more than 0.
- The difference between desired EGR and current EGR is less than 3%.
- Difference EGR pintle position between current and commanded position becomes more than 15% and last more than 15 seconds, and this condition meets three times in a trip. Then it trigger, the PCM lights on.

Action Taken When the DTC Sets

- The PCM will illuminate the malfunction indicator lamp (MIL) as soon as failure detected after consecutive 2nd trip in which the fault is detected.
- The PCM will store conditions which were present when the DTC was set as Freeze Frame and in Failure Records data.

Conditions for Clearing the MIL/DTC

- DTC P0404 can be cleared by using Tech 2 “Clear Info” function or by disconnecting the PCM battery feed.

Diagnostic Aids

Check for the following conditions:

- Excessive carbon deposit on EGR valve shaft may cause EGR stuck open or unsmooth operation. Those carbon deposit may occur by unusual port operation. Clean up carbon may make smooth function of EGR valve.
- Poor connection or damaged harness – Inspect the wiring harness for damage. If the harness appears to be OK, observe the EGR actual position display on Tech 2 while moving connectors and wiring harnesses related to EGR valve. A change in the display will indicate the location of the fault.

DTC P0404 – EGR Open Stuck

Step	Action	Value(s)	Yes	No
1	Was the “On-Board Diagnostic (OBD) System Check” performed?	—	Go to *Step 2*	Go to *OBD System Check*
2	1. Ignition “ON,” engine “OFF”, review and record Tech 2 Failure Records Data. 2. Operate the vehicle within Failure Records conditions as noted. 3. Using Tech 2, monitor “Specific DTC” info for DTC P0404 until the DTC P0404 test runs. Note the result. Does Tech 2 indicates DTC P0404 failed this ignition?	—	Go to *Step 3*	Refer to *Diagnostic Aids*
3	1. Disconnect the EGR valve harness connector. 2. Inspect the EGR valve and connectors for damaged pin or terminals. Were there any damaged pins or terminals?	—	Go to *Step 4*	Go to *Step 5*
4	Repair the damaged pin or terminal.	—	Verify repair	Is the action complete?
5	1. Remove EGR valve from Engine. 2. Inspect EGR valve whether there is any excessive carbon deposit on EGR shaft. Was excessive carbon deposit 0n EGR valve shaft?	—	Go to *Step 6*	Go to *Step 7*
6	1. Clean up EGR valve shaft and inside of EGR valve. 2. Visually inspect damage of pintle and seat whether there is bent, leakage may occur. Was there any severe damage which affects function?	—	Go to *Step 8*	Verify repair Go to *Step 7*
7	1. Reconnect. 2. Ignition “OFF”. 3. Install Tech 2. 4. Run the engine at idle. 5. On Tech 2, select F3:Misc. Test; F2:EGR. 6. Use the “UP” arrow to increase the EGR from 0% to 40%. Did EGR work properly?	—	—	Go to *Step 8*
8	Replace the EGR valve. Does DTC P0404 still fail “DTC” test on Tech 2?	—	Go to *Step 9*	Verify repair
9	Replace the PCM. **IMPORTANT:** The replacement PCM must be programmed. Refer to *UBS 98model year Immobilizer Workshop Manual.* Is the action complete?	—	Verify repair	—

Diagnostic Trouble Code (DTC) P0405 EGR Low Voltage

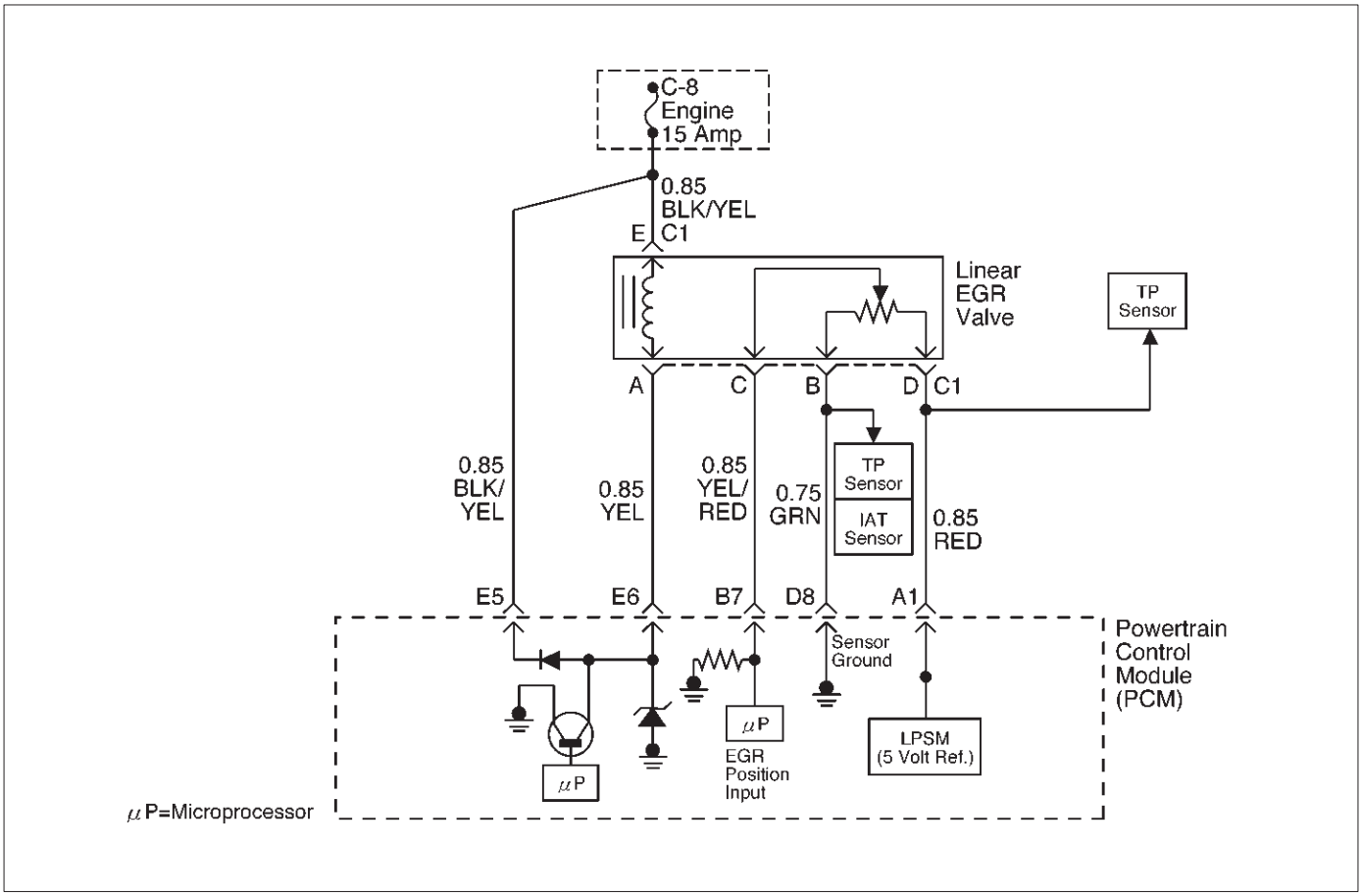

D06RW106

Circuit Description

The powertrain control module (PCM) monitors the EGR valve pintle position input to ensure that the valve responds properly to command from the PCM. If current pintle position voltage indicates less than 0.1 V and last more than 10 seconds, then the PCM will set DTC P0405.

Conditions for Setting the DTC

- Ignition voltage is between 11 and 16 volts.
- EGR pintle position output voltage is less than 0.1 volt and last more than 10 sec. Action taken when the DTC sets.

Action Taken When the DTC Sets

- The PCM will illuminate the malfunction indicator lamp (MIL) as soon as failure detected.
- The PCM will store conditions which were present when the DTC was set as Freeze Frame and in Failure Records data.

Conditions for Clearing the MIL/DTC

- DTC P0405 can be cleared by using Tech 2 “Clear Info” function or by disconnecting the PCM battery feed.

Diagnostic Aids

Check for the following conditions:

- Poor connection or damaged harness – Inspect the wiring harness for damage. If the harness appears to be OK, observe the EGR actual position display on Tech 2 while moving connectors and wiring harnesses related to EGR valve. A change in the display will indicate the location of the fault.

DTC P0405 – EGR Low Volt

Step	Action	Value(s)	Yes	No
1	Was the “On-Board Diagnostic (OBD) System Check” performed?	—	Go to *Step 2*	Go to *OBD System Check*
2	1. Ignition “ON,” engine “OFF”, review and record Tech 2 Failure Records Data. 2. Operate the vehicle within Failure Records conditions as noted. 3. Using Tech 2, monitor “DTC” info for DTC P0405 until the DTC P0405 test runs. Note the result. Does Tech 2 indicates DTC P0405 failed this ignition?	—	Go to *Step 3*	Refer to *Diagnostic Aids*
3	1. Disconnect the EGR valve harness connector. 2. Inspect the EGR valve and connectors for damaged pin or terminals. Were there any damaged pins or terminals?	—	Go to *Step 4*	Go to *Step 5*
4	Repair the damaged pin or terminal. Is the action complete?	—	Verify repair	—
5	1. Disconnect the EGR harness connector. 2. Ignition “ON”. 3. At the EGR valve, use a DVM to check the voltage at the 5 volt reference wire (RED) and ground (B). Did the DVM indicate the specified value?	4–6 V	Go to *Step 6*	Go to *Step 7*
6	1. Disconnect the EGR harness connector. 2. Measure resistance between terminal B and D. Was resistance in range?	5–5.5 KΩ	Go to *Step 10*	Go to *Step 17*
7	1. Ignition “ON”. 2. At the PCM connector, backprobe with a DVM at the 5 volt reference for the EGR valve. Did the DVM indicate the specified value?	4–6 V	Go to *Step 8*	Go to *Step 9*
8	Repair the open 5 volt reference circuit. Is the action complete?	—	Verify repair	—
9	Repair the damaged sensor ground wire. Is the action complete?	—	Verify repair	—
10	1. Disconnect the EGR harness 2. Use an ohmmeter to measure between the pintle position pin and the sensor ground pin on the EGR valve. NOTE: J-35616 Connector Test Adapter Kit may be useful for gaining access to the recessed pins on the valve. Was the ohmmeter reading approximately equal to the specified value?	1 to 1.25 KΩ	Go to *Step 11*	Go to *Step 17*
11	1. Ignition “ON”. 2. Backprobe with a DVM to measure voltage at EGR valve pintle position pin and sensor ground pin. Was voltage in range?	Less than 0.1 V	Go to *Step 17*	Go to *Step 12*

DTC P0405 – EGR Low Volt (Cont'd)

Step	Action	Value(s)	Yes	No
12	1. Ignition "ON". 2. Backprobe with a DVM to measure voltage at PCM sensor ground pin and pintle position pin. Was voltage in range?	Less than 0.1 V	Go to *Step 13*	Go to *Step 18*
13	1. Ignition "OFF". 2. Disconnect the EGR harness. 3. Check short circuit between EGR pintle position circuit and EGR ground circuit. Was any short circuit?	—	Go to *Step 14*	Go to *Step 18*
14	Locate and repair the short to ground in the pintle position circuit Is the action complete?	—	Verify repair	—
15	1. Ignition "OFF". 2. Disconnect the PCM. 3. Ignition "ON". 4. Measure the voltage between the EGR pintle position circuit and ground. Is the measured voltage near the specified value?	Less than 0.1 V	Go to *Step 17*	Go to *Step 16*
16	Check for a short circuit between other wires and the pintle position circuit Was any short circuit?	—	Repair short circuit Verify repair	Go to *Step 17*
17	Replace the EGR valve. Does DTC P1404 still fail "specific DTC test on Tech 2?	—	Go to *Step 18*	Verify repair
18	Examine the PCM pin and terminal connection. Was there a damaged terminal?	—	Go to *Step 4*	Go to *Step 19*
19	Replace the PCM. **IMPORTANT:** The replacement PCM must be programmed. Refer to *UBS 98model year Immobilizer Workshop Manual.* Is the action complete?	—	Verify repair	—

Diagnostic Trouble Code (DTC) P0406 EGR High Voltage

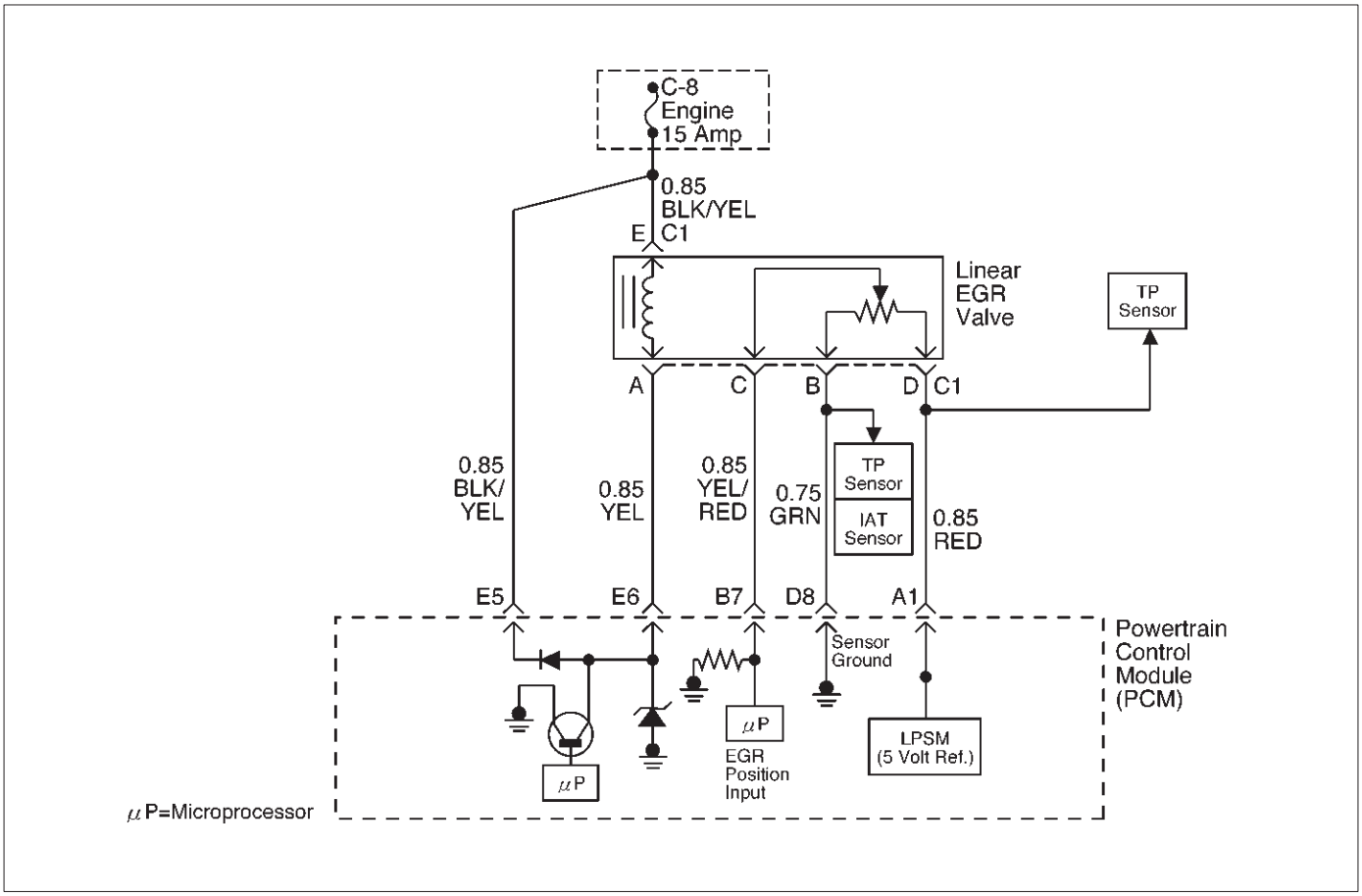

D06RW106

Circuit Description

The powertrain control module (PCM) monitors the EGR valve pintle position input to ensure that the valve responds properly to command from the PCM. If current pintle position voltage indicates more than 4.8 V and last more than 10 seconds, then the PCM will set DTC P0406.

Conditions for Setting the DTC

- Ignition voltage is between 11 and 16 volts.
- EGR pintle position output voltage is more than 4.8 volt and last more than 10 sec.

Action Taken When the DTC Sets

- The PCM will illuminate the malfunction indicator lamp (MIL) as soon as failure detected.
- The PCM will store conditions which were present when the DTC was set as Freeze Frame and in Failure Records data.

Conditions for Clearing the MIL/DTC

- DTC P0404 can be cleared by using Tech 2 “Clear Info” function or by disconnecting the PCM battery feed.

Diagnostic Aids

Check for the following conditions:

- Poor connection or damaged harness – Inspect the wiring harness for damage. If the harness appears to be OK, observe the EGR actual position display on Tech 2 while moving connectors and wiring harnesses related to EGR valve. A change in the display will indicate the location of the fault.

DTC P0406 – EGR High Voltage

Step	Action	Value(s)	Yes	No
1	Was the “On-Board Diagnostic (OBD) System Check” performed?	—	Go to *Step 2*	Go to *OBD System Check*
2	1. Ignition “ON,” engine “OFF”, review and record Tech 2 Failure Records Data. 2. Operate the vehicle within Failure Records conditions as noted. 3. Using Tech 2, monitor “DTC” info for DTC P0406 until the DTC P0406 test runs. Note the result. Does Tech 2 indicates DTC P0406 failed this ignition?	—	Go to *Step 3*	Refer to *Diagnostic Aids*
3	1. Disconnect the EGR valve harness connector. 2. Inspect the EGR valve and connectors for damaged pin or terminals. Were there any damaged pins or terminals?	—	Go to *Step 4*	Go to *Step 5*
4	Repair the damaged pin or terminal. Is the action complete?	—	Verify repair	Is the action complete?
5	1. Disconnect the EGR harness connector. 2. Ignition “ON”. 3. At the EGR valve, use a DVM to check the voltage at the 5 volt reference wire (RED). Did the DVM indicate the specified value?	4–6 V	Go to *Step 8*	Go to *Step 6*
6	1. Ignition “ON”. 2. At the PCM connector, backprobe with a DVM at the 5 volt reference for the EGR valve. Did the DVM indicate the specified value?	4–6 V	Go to *Step 7*	Go to *Step 16*
7	Repair the open 5 volt reference circuit Is the action complete?	—	Verify repair	—
8	1. Ignition “OFF” 2. Disconnect the EGR harness. 3. Use a DVM to check for an resistance between D (5 V reference) and B (Sensor Ground) at EGR sensor terminals. NOTE: J-35616 Connector Test Adapter Kit may be useful for gaining access to the recessed pins on the valve. Was there measured resistance in range?	5 to 5 KΩ	Go to *Step 9*	Go to *Step 15*
9	1. Ignition “OFF”. 2. Disconnect the EGR harness. 3. Use a DVM to check for an resistance between B and C at EGR sensor terminal. Was there open circuit?	—	Go to *Step 15*	Go to *Step 10*
10	1. Ignition “OFF”. 2. Disconnect the EGR harness at PCM connector. 3. Use a DVM to check for shorted wire between A1 and B7. Was there shorted wire?	—	Go to *Step 14*	Go to *Step 11*

DTC P0406 – EGR High Voltage (Cont'd)

Step	Action	Value(s)	Yes	No
11	1. Ignition "ON". 2. Use a DVM to backprobe at terminal C of EGR valve for voltage. Was measured voltage more than 4.8 V?	more than 4.8 V	Go to *Step 12*	Go to *Step 12*
12	1. Ignition "ON". 2. Stay the EGR harness connected. 3. Check voltage by backproving at PCM B7 terminal. Was voltage more than 4.8 V?	4.8 V	Go to *Step 16*	Go to *Step 13*
13	1. Locate short circuit at EGR harness between RED to RED or GREEN, RED to YEL. 2. Replace EGR harness. Is the action complete?	—	Verify repair	—
14	Replace EGR harness. Is the action complete?	—	Verify repair	—
15	Replace the EGR valve. Does DTC P1404 still fail "specific DTC test on Tech 2?	—	Go to *Step 16*	Verify repair
16	Replace the PCM. **IMPORTANT:** The replacement PCM must be programmed. Refer to *UBS 98model year Immobilizer Workshop Manual.* Is the action complete?	—	Verify repair	—

Diagnostic Trouble Code (DTC) P0502 VSS Circuit Low Input

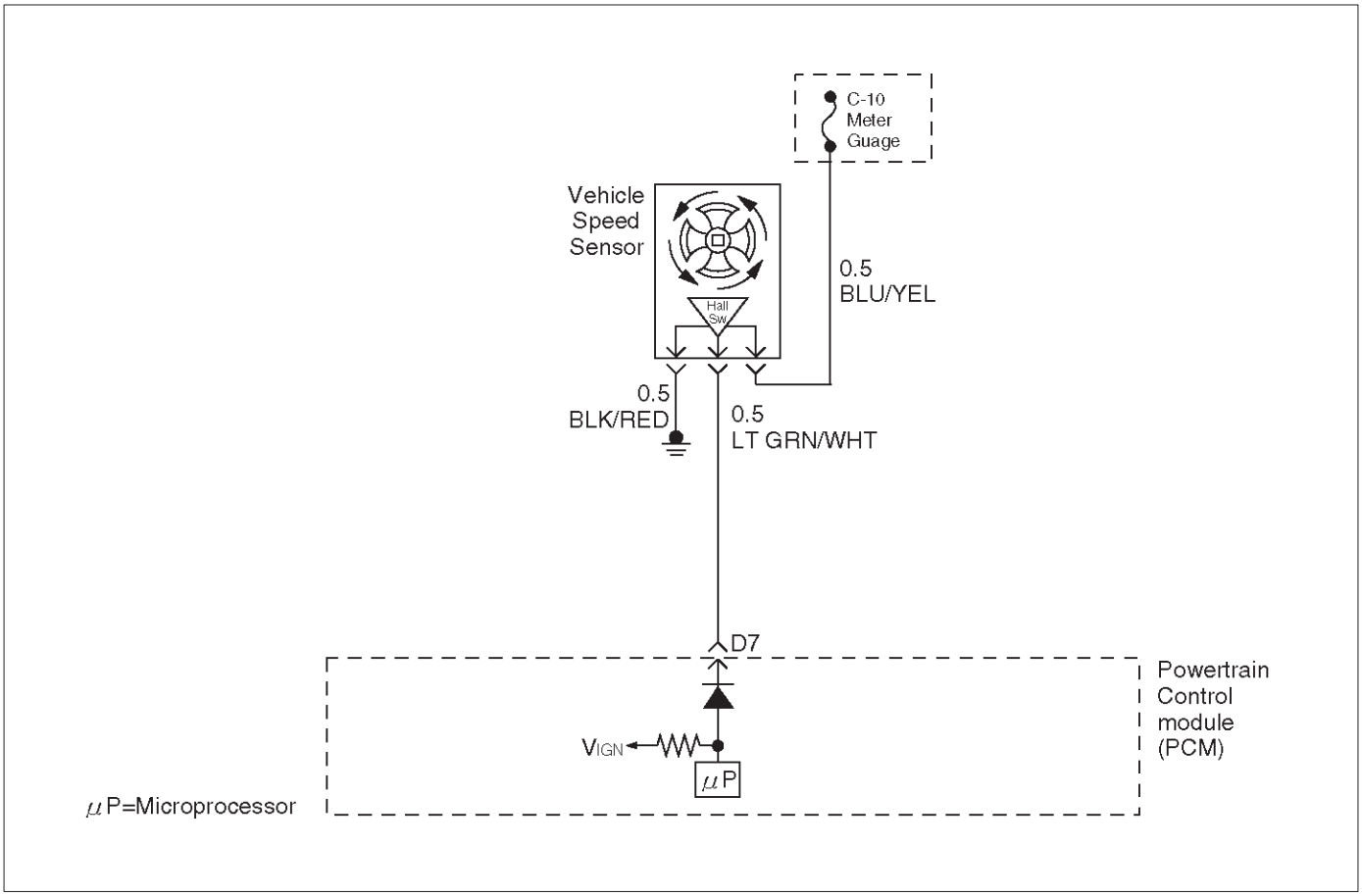

D06RW019

Circuit Description

The vehicle speed sensor has a magnet rotated by the transmission output shaft. Attached to the sensor is a hall effect circuit the interacts with the magnetic field treated by the rotating magnet. A 12-volt operating supply for the speed sensor hall circuit is supplied from the meter fuse. The VSS pulses to ground the 9-volt signal sent from the powertrain control module (PCM) on the reference circuit. The PCM interprets vehicle speed by the number of pulses to ground per second on the reference circuit.

Conditions for Setting the DTC

- Engine is running.
- Engine coolant temperature is above 60˚C (140˚F).
- Engine speed is between 1800 RPM and 2500 RPM.
- Throttle angle is between 10% and 40%.
- Engine load is greater than 50 kPa.
- MAP sensor indicates greater than 50 kPa manifold pressure.
- PCM detects no VSS signal for 12.5 seconds over a period of 25 seconds.

Action Taken When the DTC Sets

- The PCM will illuminate the malfunction indicator lamp (MIL) the first time the fault is detected.
- The PCM will store conditions which were present when the DTC was set as Freeze Frame and in the Failure Records data.

Conditions for Clearing the MIL/DTC

- DTC P0502 can be cleared by using the Tech 2 “Clear Info” function or by disconnecting the PCM battery feed.

Test Description

Number(s) below refer to the step number(s) on the Diagnostic Chart.

10. To avoid backprobing the VSS and possibly damaging a seal or terminal, the VSS output can be tested at the point where the transmission harness connects to the engine harness. Power and ground are applied by jumpers to the VSS through the connectors which are located just in front of the air cleaner assembly. The VSS signal is monitored with a DVM as the rear driveshaft turns. The wheels can be turned to rotate the driveshaft, or in 2-wheels-drive vehicles the driveshaft can be turned directly.

12. The speedometer-to-PCM VSS signal wire is spliced to a wire leading to the cruise control module. If a short to ground or voltage is indicated between the PCM and speedometer, it could be on the cruise control circuit if the vehicle is equipped with cruise control.

DTC P0502 – VSS Circuit Low Input

Step	Action	Value(s)	Yes	No
1	Was the “On-Board Diagnostic (OBD) System Check” performed?	—	Go to *Step 2*	Go to *OBD System Check*
2	Does the speedometer work?	—	Go to *Step 10*	Go to *Step 3*
3	1. Disconnect the VSS connector. 2. Ignition “ON.” 3. Using a test light to battery +, probe the connector ground wire. Did the light illuminate?	—	Go to *Step 5*	Go to *Step 4*
4	Repair the sensor ground. Is the action complete?	—	Verify repair	—
5	1. Ignition “ON,” sensor disconnected. 2. Using a DVM, measure at the VSS connector between ground and voltage supply. Was the measurement near the specified value?	Battery voltage	Go to *Step 7*	Go to *Step 6*
6	Repair the open or short to ground which may have blown the meter fuse. Is the action complete?	—	Verify repair	—
7	1. Ignition “ON,” VSS disconnected. 2. Using a DVM, measure at the VSS connector between ground and the wire from the speedometer. Was the measurement near the specified value?	7.5-8 V	Go to *Step 9*	Go to *Step 8*
8	Check for an open or short circuit between the speedometer and the VSS. Was an open or short circuit located?	—	Verify repair	Go to *Step 9*
9	Replace the speedometer. Is the action complete?	—	Verify repair	—

DTC P0502 – VSS Circuit Low Input (Cont'd)

Step	Action	Value(s)	Yes	No
10	1. Ignition "OFF." 2. Disconnect the MAF sensor and remove the air cleaner assembly and filter element to gain access to the 16-way black connector located immediately to the rear of the left front headlamp. The connector attaches the VSS wires from the transmission harness to the left-side engine harness. 3. Disconnect the black 16-way connector. 4. Select a terminal adapter from kit J 35616 that can be used with a jumper to supply B+ to the blue wire with a yellow tracer (transmission side of the connector). 5. Use another terminal adapter to attach a voltmeter to the light-green wire with a while tracer (next to the wire in the previous step.) 6. Disconnect the blue connector next to the black 16-way connector, and locate the black/red tracer wire at one corner of the blue connector. The black/red wire is the VSS ground. Use a terminal adapter to attach a jumper to ground to the black/red VSS ground wire at the transmission side of the blue connector. 7. Raise the rear wheels off the ground with transmission in neutral. Does the DVM toggle back and forth between 0.6 V and 10 V as the wheels (and driveshaft) are rotated?	—	Go to *Step 11*	Go to *Step 12*
11	Replace the VSS. Is the action complete?	—	Verify repair	—
12	Check for an open or short between the PCM and the speedometer. Was a problem found?	—	Verify repair	Go to *Step 13*
13	Replace the PCM. **IMPORTANT:** The replacement PCM must be programmed. Refer to *UBS 98model year Immobilizer Workshop Manual.* Is the action complete?	—	Verify repair	—

Diagnostic Trouble Code (DTC) P0562 System Voltage Low

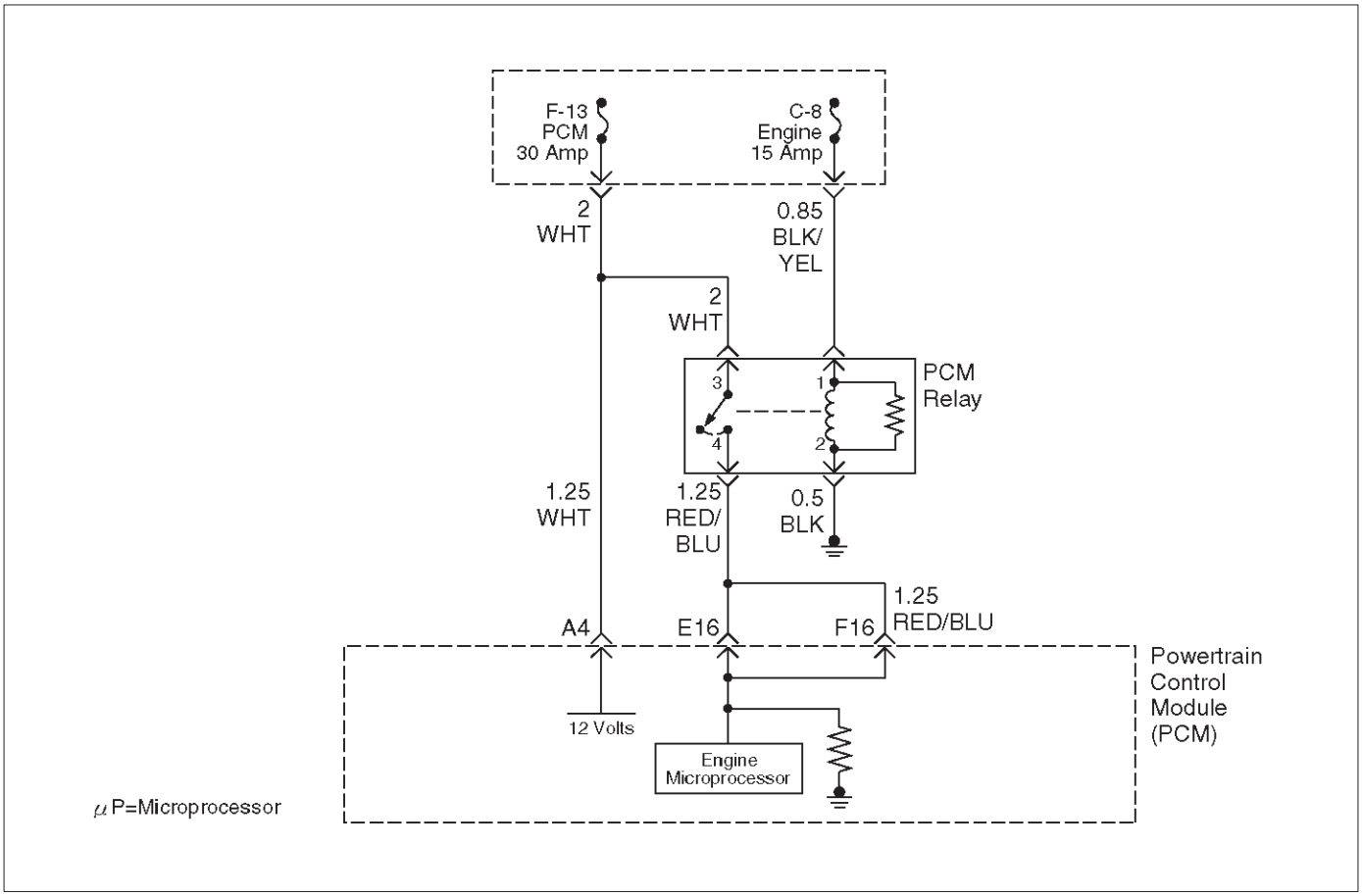

D06RW020

Circuit Description

The powertrain control module (PCM) monitors the system voltage on the ignition feed terminal to the PCM. A system voltage DTC will set whenever the voltage is below a calibrated value.

Conditions for Setting the DTC

- Ignition “ON.”
- System voltage is below 11.5 volts for 15 minutes.

Action Taken When the DTC Sets

- The PCM will not illuminate the malfunction indicator lamp (MIL).
- The PCM will store as Failure Records conditions which were present when the DTC was set. This information will not be stored as Freeze Frame data.

Conditions for Clearing the MIL/DTC

- A history DTC P0562 will clear after 40 consecutive warm-up cycles have occurred without a fault.
- DTC P0562 can be cleared by using the Tech 2 “Clear Info” function or by disconnecting the PCM battery feed.

Diagnostic Aids

If the DTC sets when an accessory is operated, check for a poor connection or excessive current draw.

DTC P0562 – System Voltage Low

Step	Action	Value(s)	Yes	No
1	Was the “On-Board Diagnostic (OBD) System Check” performed?	—	Go to *Step 2*	Go to *OBD System Check*
2	Using a Tech 2, measure the battery voltage at the battery. Is the battery voltage greater than the specified value?	11.5 V	Go to *Step 3*	Charge battery, then go to *Step 3*
3	1. Using a Tech 2. 2. Select “Ignition Volts” on the Tech 2. 3. Start the engine and raise the engine speed to the specified value. 4. Load the electrical system by turning on the headlights, high blower, etc. Is the ignition voltage approximately equal to the specified value?	2000 RPM 12.8-14.1 V	Go to *Step 4*	Go to *Starting/Charging*
4	1. Ignition “OFF.” 2. Disconnect the PCM connector at the PCM. 3. Using a DVM, measure the battery voltage at the PCM connector A-4. Is it approximately equal to battery voltage?	—	Check for excessive current draw with ignition “OFF,” engine “OFF.”	Go to *Step 5*
5	1. Check for faulty connections at the PCM harness terminals. 2. Repair as necessary. Was a repair necessary?	—	Verify repair	Go to *Step 6*
6	Check for an open battery feed circuit to the PCM. Is the action complete?	—	Verify repair	Go to *Step 7*
7	Replace the PCM. **IMPORTANT:** The replacement PCM must be programmed. Refer to *UBS 98model year Immobilizer Workshop Manual.* Is the action complete?	—	Verify repair	—

Diagnostic Trouble Code (DTC) P0563 System Voltage High

Circuit Description

The powertrain control module (PCM) monitors the system voltage on the ignition feed terminals to the PCM. A system voltage DTC will set whenever the voltage is above a calibrated value.

Conditions for Setting the DTC

- Ignition “ON.”
- System voltage is above 16 volts for 15 minutes.

Action Taken When the DTC Sets

- The PCM will not illuminate the malfunction indicator lamp (MIL).
- The PCM will store as Failure Records only conditions which were present when the DTC was set. This information will not be stored as Freeze Frame data.

Conditions for Clearing the MIL/DTC

- A history DTC P0563 will clear after 40 consecutive warm-up cycles have occurred without a fault.
- DTC P0563 can be cleared by using the Tech 2 “Clear Info” function or by disconnecting the PCM battery feed.

Diagnostic Aids

If the DTC sets when an accessory is operated, check for a poor connection or excessive current draw.

DTC P0563 – System Voltage High

Step	Action	Value(s)	Yes	No
1	Was the “ON-Board Diagnostic (OBD) System Check” performed?	—	Go to *Step 2*	Go to *OBD System Check*
2	Using a Tech 2, measure the battery voltage at the battery. Is the battery voltage less than the specified value?	11.5 V	Go to *Step 3*	Go to *Step 4*
3	1. Charge the battery and clean the battery terminals. 2. Clean the battery ground cable connection if corrosion is indicated. Is the battery voltage less than the specified value?	11.5 V	Replace battery	Go to *Step 4*
4	1. Turn “OFF” all the accessories. 2. Install a Tech 2. 3. Select the ignition voltage parameter on the Tech 2. 4. Start the engine and raise the engine RPM to the specified value. Is the voltage more than 2.5 volts greater than the measurement taken in step 2 or 3?	2000 RPM	Go to *Starting/Charging*	Go to *Step 5*
5	Replace the PCM. **IMPORTANT:** The replacement PCM must be programmed. Refer to *UBS 98 model year Immobilizer Workshop Manual.* Is the action complete?	—	Verify repair	—

Diagnostic Trouble Code (DTC) P0601 PCM Memory

Circuit Description

The powertrain control module (PCM) used in this vehicle utilizes an electrically erasable programmable read-only memory (EEPROM). The EEPROM contains program information and the calibrations required for engine, transmission, and powertrain diagnostics operation. Unlike the PROM used in past applications, the EEPROM is not replaceable.

Conditions for Setting the DTC

- The PCM detects an internal program fault (check sum error).

Action Taken When the DTC Sets

- The PCM will not illuminate the malfunction indicator lamp (MIL).
- The PCM will store conditions which were present when the DTC was set in the Failure Records data only.

Conditions for Clearing the MIL/DTC

- DTC P0601 can be cleared by using the Tech 2 “Clear Info” function or by disconnecting the PCM battery feed.

Diagnostic Aids

- DTC P0601 indicates that the contents of the EEPROM have changed since the PCM was programmed. The only possible repair is PCM replacement.

DTC P0601 – PCM Memory

Step	Action	Value(s)	Yes	No
1	Was the “On-Board Diagnostic (OBD) System Check” performed?	—	Go to *Step 2*	Go to *OBD System Check*
2	Replace the PCM. **IMPORTANT:** The replacement PCM must be programmed. Refer to *UBS 98model year Immobilizer Workshop Manual.* Is the action complete?	—	Verify repair	—

Diagnostic Trouble Code (DTC) P1154 HO2S Circuit Transition Time Ratio Bank 2 Sensor 1

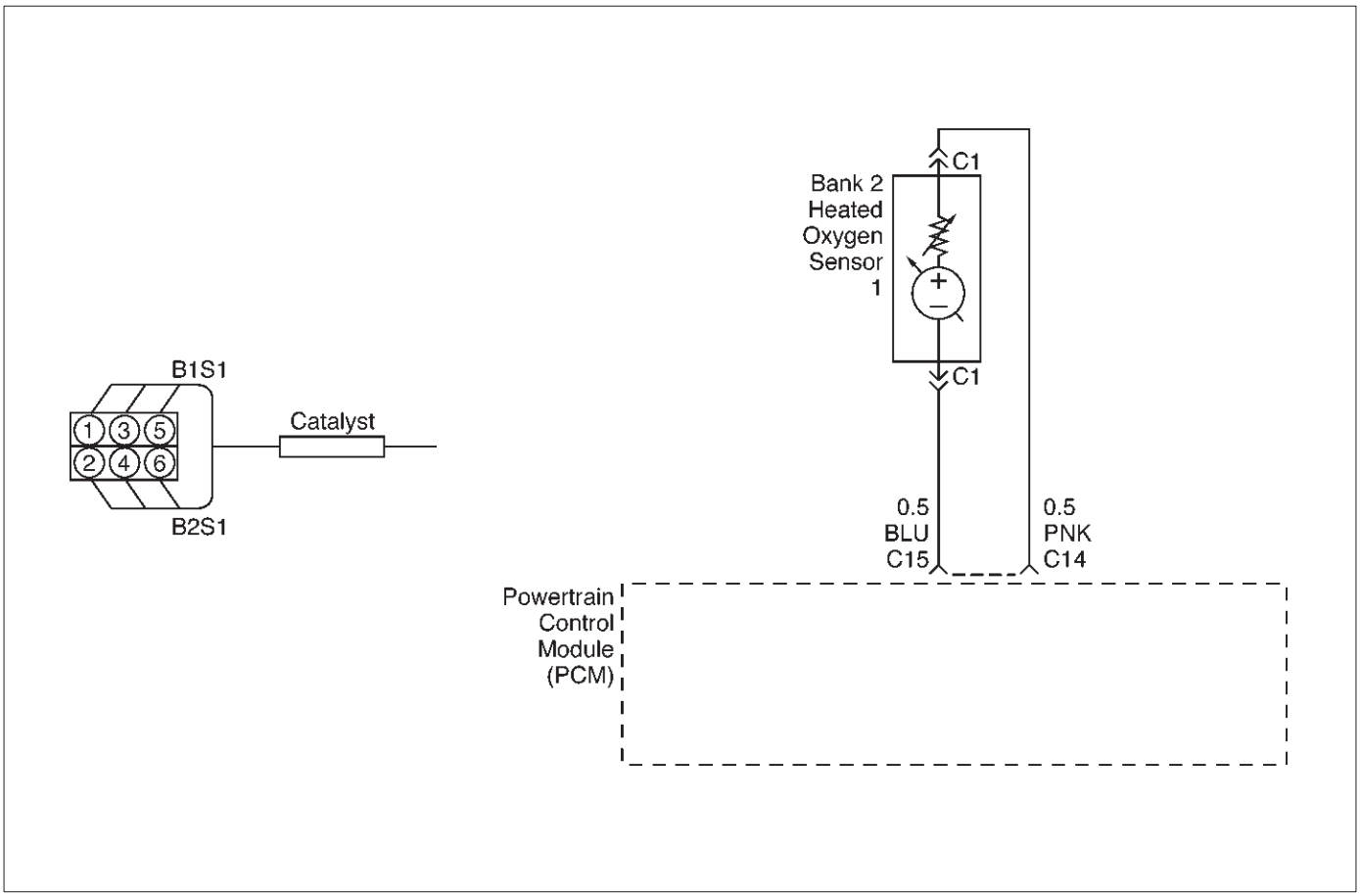

060RW190

Circuit Description

The powertrain control module (PCM) monitors the heated oxygen sensor (HO2S) activity for 90 seconds after “closed loop” and stoichiometric operation have been enabled. During the monitor period the PCM counts the number of times that the HO2S responds from rich-to-lean and from lean-to-rich and adds the amount of time it took to complete all transitions. With this information, an average time for all transitions can be determined. The PCM then divides the rich-to-lean average by the lean-to-rich average to obtain a ratio. If the HO2S transition time ratio is not within this range, DTC P1154 will be set, indicating that the oxygen sensor is not responding as expected to changes in exhaust oxygen content.

Conditions for Setting the DTC

- No related DTCs.
- Engine coolant temperature (ETC) is above 50˚C (122˚F) for automatic transmission; 75˚C (167˚F) for manual transmission.
- The engine is operating in “closed loop.”
- The engine has been running at least one minute.
- Canister purge duty cycle is greater than 2%.
- Engine speed is between 1500 RPM and 3000 RPM.
- Mass air flow is between 9 g/second and 42 g/second.
- Above conditions are present for a 3-second monitoring period.
- 90 seconds after “closed loop” and stoichiometric operation have been enabled, Bank 2 HO2S 1 transition ratio between lean to rich and rich to lean is less than 0.44 or greater than 3.8.

Action Taken When the DTC Sets

- The PCM will illuminate the malfunction indicator lamp (MIL) after the second consecutive trip in which the fault is detected.
- ”Open loop” fuel control will be in effect.
- The PCM will store conditions which were present when the DTC was set as Freeze Frame and in the Failure Records data.

Conditions for Clearing the MIL/DTC

- DTC P1154 can be cleared by using Tech 2 “Clear Info” function or by disconnecting the PCM battery feed.

Diagnostic Aids

A multifunction in the HO2S heater ignition feed or ground circuit may cause a DTC P1154 to set. Check HO2S heater circuitry for intermittent faults or poor connections. If connections and wiring are OK and DTC P1154 continues to set, replace the Bank 2 HO2S 1.

Reviewing the Failure Records vehicle mileage since the diagnostic test last failed may help determine how often

the condition that caused the DTC to be set occurs. This may assist in diagnosing the condition.

Test Description

Number(s) below refer to the step number(s) on the Diagnostic Chart.

3. A condition that affects other heated oxygen sensors indicates probable contamination. To avoid damaging replacement sensors, correct the condition which caused the contamination before replacing the affected sensors.
5. This step checks for conditions which may cause the heated oxygen sensor to appear faulty. Correct any of the described conditions if present.
8. To avoid damaging replacement sensors, correct the condition which caused the contamination before replacing the affected sensors.

DTC P1154 – HO2S Transition Time Ratio Bank 2 Sensor 1

Step	Action	Value(s)	Yes	No
1	Was the “On-Board Diagnostic (OBD) System Check” performed?	—	Go to *Step 2*	Go to *OBD System Check*
2	**IMPORTANT:** If any other DTCs are set (except P1133 and/or P1134), refer to those DTCs before proceeding with this diagnostic chart. 1. Idle the engine at operating temperature. 2. Operate the vehicle within parameters specified under “Conditions for Setting the DTC” criteria included in Diagnostic Support. 3. Using a Tech 2, monitor “Specific DTC” info for DTC P1154 until the DTC P1154 test runs. Note the test result. Does Tech 2 indicate DTC failed this ignition?	—	Go to *Step 3*	Refer to *Diagnostic Aids*
3	Did Tech 2 also indicate P1133, and/or P1134 test failed?	—	Go to *Step 17*	Go to *Step 4*
4	Check for leaks at the pipe joints. Are the joints leaking?	—	Go to *Step 5*	Go to *Step 6*
5	Tighten the U-bolt nuts at the leaking joints. Is your action complete?	—	Go to *Step 2*	—
6	Check for gaskets that are damaged or improperly installed. Are there damaged or misaligned gaskets?	—	Go to *Step 7*	Go to *Step 8*
7	1. Replace the damaged gaskets. 2. Align the connections. 3. Tighten the connections. Is your action complete?	—	Go to *Step 2*	—
8	Check for loose exhaust flange connections. Are the flange connections loose?	—	Go to *Step 9*	Go to *Step 10*
9	Tighten the stud nuts or bolts to specifications. Is your action complete?	—	Go to *Step 2*	—
10	Check for burned or corroded exhaust pipes. Are the exhaust pipes burned or corroded?	—	Go to *Step 11*	Go to *Step 12*
11	Replace the exhaust pipes, as required. Is your action complete?	—	Go to *Step 2*	—

DTC P1154 – HO2S Transition Time Ratio Bank 2 Sensor 1 (Cont'd)

Step	Action	Value(s)	Yes	No
12	Check for leaks at the exhaust manifold. Are there leaks at the exhaust manifold?	—	Go to *Step 13*	Go to *Step 14*
13	Tighten the bolts to specifications or replace the manifold if necessary. Is your action complete?	—	Go to *Step 2*	—
14	Visually/physically inspect the following items: ● Ensure that the Bank 2 HO2S 1 is securely installed. ● Check for corrosion on terminals. ● Check terminal tension (at Bank 2 HO2S 1 and at the PCM). ● Check for damaged wiring. Was a problem found in any of the above areas?	—	Go to *Step 18*	Go to *Step 15*
15	1. Disconnect Bank 1 HO2S 1. 2. Ignition "ON." 3. Using a DVM at the PCM side of the HO2S 1 connector, measure the voltage between the high signal circuit and ground. Also measure the voltage between the low signal circuit and ground. Are both voltages in the specified range?	3-4 V	Go to *Step 16*	Go to *Step 19*
16	1. With Bank 1 HO2S 1 disconnected, jumper the high and low (PCM side) signal circuits to ground. 2. Ignition "ON." 3. Using Tech 2, monitor the Bank 2 HO2S 1 voltage. Does the scan too indicate less than 10 mV and immediately return to about 450 mV when the jumper is removed?	—	Go to *Step 21*	Go to *Step 22*
17	Replace affected heated oxygen sensors. NOTE: Before replacing sensors, the cause of the contamination must be determined and corrected. ● Fuel contamination. ● Use of improper RTV sealant. ● Engine oil/coolant consumption. Is the action complete?	—	Verify repair	—
18	Repair condition as necessary. Is the action complete?	—	Verify repair	—
19	Check for faulty PCM connections or terminal damage. Is the action complete?	—	Verify repair	Go to *Step 20*
20	Repair open, short or grounded signal circuit. Is the action complete?	—	Verify repair	—

DTC P1154 – HO2S Transition Time Ratio Bank 2 Sensor 1 (Cont'd)

Step	Action	Value(s)	Yes	No
21	Replace Bank 2 HO2S 1. Is the action complete?	—	Verify repair	—
22	Replace the PCM. **IMPORTANT:** The replacement PCM must be programmed. Refer to *UBS 98model year Immobilizer Workshop Manual.* Is the action complete?	—	Verify repair	—

Diagnostic Trouble Code (DTC) P1171 Fuel System Lean During Acceleration

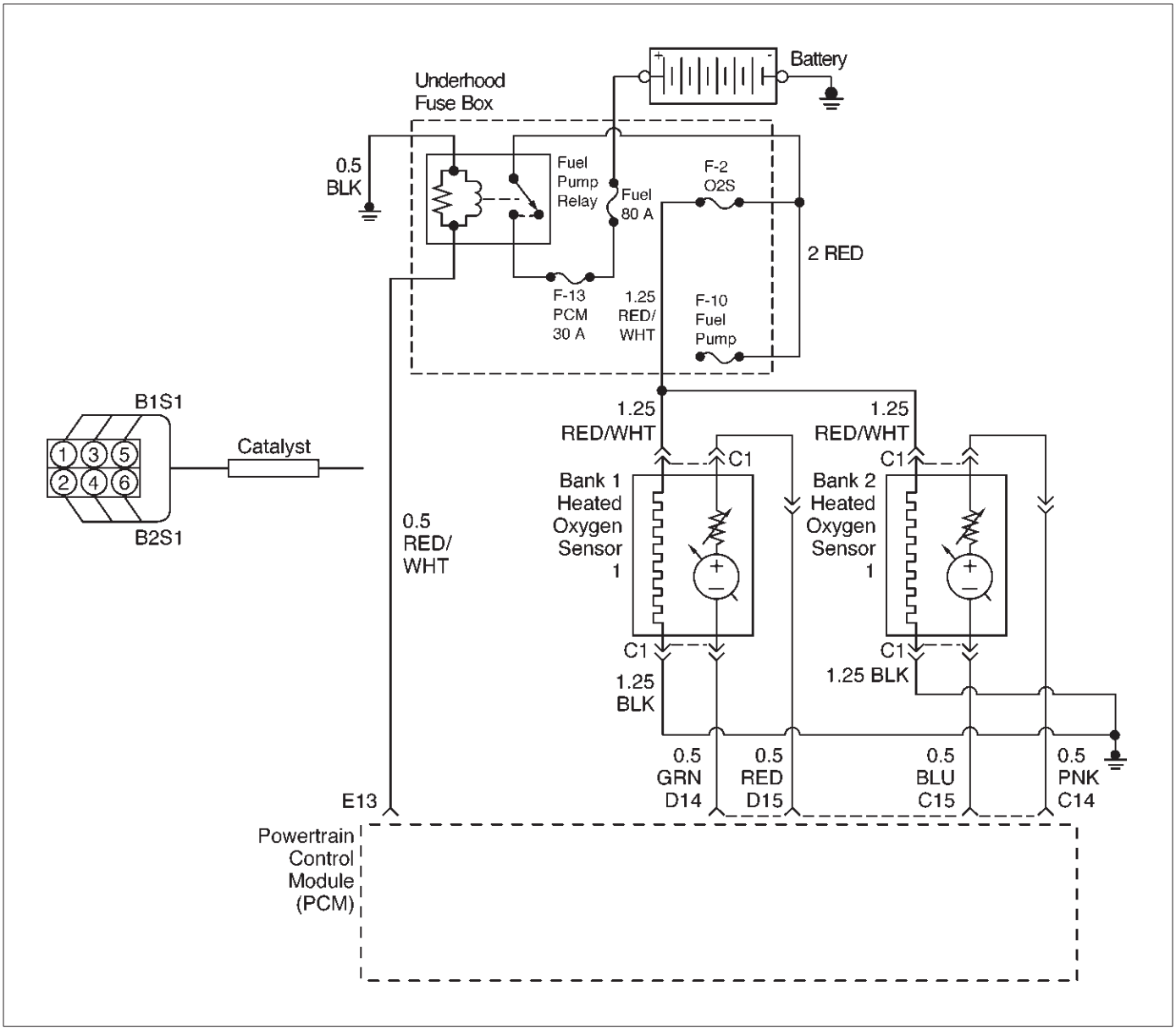

060RW193–1

Circuit Description

The powertrain control module (PCM) internal circuitry can identify if the vehicle fuel system is capable of supplying adequate amounts of fuel during heavy acceleration (power enrichment). The PCM monitors the voltage of the oxygen sensor during power enrichment. When a power enrichment mode of operation is requested during “closed loop” operation (by heavy acceleration), the PCM will provide more fuel to the engine. Under these conditions the PCM should detect a “rich” condition (high oxygen sensor voltage). If this “rich” exhaust is not detected at this time, a DTC P1171 will set. A plugged fuel filter, restricted fuel line, restricted in-tank filter or defective fuel pump can prevent adequate amounts of fuel from being supplied during power enrichment mode.

Conditions for Setting the DTC

- No related DTCs.
- Engine is operating in “closed loop power enrichment” mode for 3 seconds.
- Engine coolant temperature is above 60˚C (140˚F).
- While in “power enrichment” mode the oxygen sensor voltage remains below 400 mV for 3 seconds.

Action Taken When the DTC Sets

- The PCM will illuminate the malfunction indicator lamp (MIL) the first the fault is detected.
- The PCM will store conditions which were present when the DTC was set as Freeze Frame and in the Failure Records data.

Conditions for Clearing the MIL/DTC

- DTC P1171 can be cleared by using Tech 2 “Clear Info” function or by disconnecting the PCM battery feed.

Diagnostic Aids

- A restricted fuel filter or fuel line, restricted in-tank filter, or a defective fuel pomp may supply adequate

amounts of fuel at idle, but may not be able to supply enough fuel during heavy acceleration.

- Water or alcohol in the fuel may cause low HO2S voltage during acceleration.
- Check for faulty or plugged fuel injector(s).
- Check for low fuel.

Test Description

Number(s) below refer to the step number(s) on the Diagnostic Chart.

4. When the engine is idling or at steady cruise, the HO2S voltage should vary from between approximately 100 mV to 900 mV. It is possible to measure a satisfactory fuel pressure at idle even though the pressure may drop at high flow requirements. It may be necessary to watch fuel pressure at high engine load.
5. Wrap a shop towel around the fuel pressure connector to absorb any small amount of fuel leakage that may occur when installing gauge. Ignition “ON,” pump pressure should be 280-320 kPa.

DTC P1171 – Fuel System Lean During Acceleration

Step	Action	Value(s)	Yes	No
1	Was the “On-Board Diagnostic (OBD) System Check” performed?	—	Go to *Step 2*	Go to *OBD System Check*
2	Are any component-related DTCs set?	—	Go to component DTC charts	Go to *Step 3*
3	1. Check the vehicle’s fuel tank for an adequate amount of fuel. 2. Add fuel to the vehicle’s fuel tank if the tank is almost empty. Was fuel added to the vehicle’s fuel tank?	—	Go to *Step 4*	Go to *Step 5*
4	1. Place the transmission in park. 2. Using Tech 2, observe HO2S 1 voltage while running warm engine 75˚C-95˚C (167˚F-203˚F) at 1200 RPM. 3. HO2S 1 voltage should vary within the specified range. 4. Quickly open the throttle halfway for a few seconds. Did the voltage suddenly rise toward the high end of the specified range?	100-900 mV	Go to Chart A-7	Go to *Step 5*
5	1. Disconnect the fuel pump relay and crank the engine to relieve the fuel pressure. 2. Install the fuel pressure gauge. 3. Start the engine and idle at normal operating temperature. 4. Disconnect the vacuum line going to the fuel pressure regulator. With the engine running, is the fuel pressure within the specified range?	280-325 kPa (41-46 psi)	Go to *OBD System Check*	Go to *Step 6*
6	Check for restricted fuel lines or restricted in-line filter. Was a problem found?	—	Verify repair	Go to *Step 7*

DTC P1171 – Fuel System Lean During Acceleration (Cont'd)

Step	Action	Value(s)	Yes	No
7	1. Ignition "OFF." 2. Remove the fuel pump relay and replace it with a fused jumper which will connect the relay's battery terminal to the terminal leading to the fuel pump fuse. 3. While the fuel pump is operating, use pliers to slowly close the return line (do not exceed the first specified value). Using the pliers to restrict the return line, can the fuel pressure be manipulated to exceed the second specified value?	414 kPa (60 psi) 325 kPa (46 psi)	Go to *Diagnostic Aids*	Go to *Step 8*
8	Check for: ● Faulty fuel pump ● Restricted fuel pump strainer (sock) ● Incorrect fuel pump ● Incorrect fuel being used ● Hot fuel Is the action complete?	—	Verify repair	—

Diagnostic Trouble Code (DTC) P1380 ABS Rough Road ABS System Fault

Circuit Description

The powertrain control module (PCM) monitors ABS fault signal. When PCM receives fault signal, PCM will set DTC P1380.

Conditions for Setting the DTC

- Vehicle speed is more than 5 mph.
- Load is less than 99%.
- Engine revolution is less than 6250 rpm.
- PCM receives ABS fault signals from ABS unit.
- Ignition on.
- Misfire DTCs exist.
- 100 test failures within 120 test samples.

Action Taken When the DTC Sets

- The PCM will store DTC 1380 only, no MIL turn on.

Conditions for Clearing the MIL/DTC

- A history DTC P1380 will clear after 40 consecutive warm-up cycles have occurred without a fault.
- DTC 1380 can be cleared by using Tech-2 or disconnecting the PCM battery feed.

Diagnostic Aids

Check for the following conditions:

- PCM and ABS communication line short circuit to other line may cause faulty signal. Inspect communication line.
- Follow ABS ECU diagnosis procedure, refer to ABS procedure page.

DTC P1380 – ABS Rough Road ABS System Fault

Step	Action	Value(s)	Yes	No
1	Was the “On-Board Diagnostic (OBD) System Check” performed?	—	Go to *Step 2*	Go to *OBD System Check*
2	1. Ignition “ON,” engine “OFF”, review and record Tech 2 Failure Records Data. 2. Operate the vehicle within Failure Records conditions as noted. 3. Using a Tech 2, monitor “Specific DTC” info for DTC P1380 and Misfire DTCs until the DTC P1380 and Misfire DTCs test runs. Note the result. Does the Tech 2 indicates DTC P1380 and Misfire DTCs failed this ignition?	—	Refer to ABS diagnosis After inspect ABS, unit repeat *Step 2* Still problem exists, go to *Step 3*	Clear DTC by Tech 2
3	Check short circuit among communication line of PCM/ABS and others. Was short circuit?	—	Repair wiring Verify repair	Go to *Step 4*
4	Replace the PCM. **IMPORTANT:** The replacement PCM must be programmed. Refer to *UBS 98model year Immobilizer Workshop Manual.* Is the action complete?	—	Verify repair	—

Diagnostic Trouble Code (DTC) P1404 EGR Closed Stuck

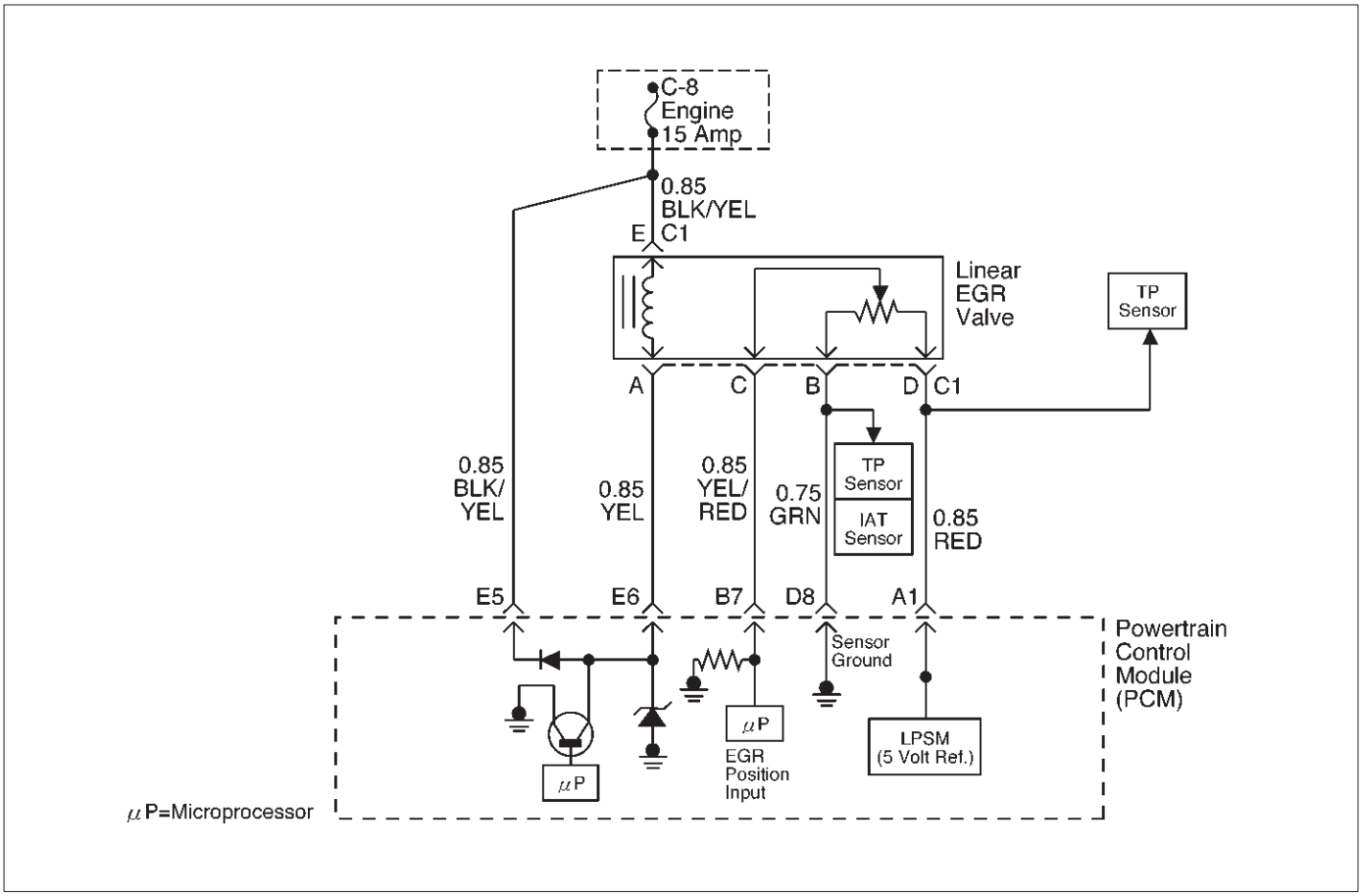

D06RW106

Circuit Description

The powertrain control module (PCM) monitors the EGR valve pintle position input to ensure that the valve responds properly to commands from the PCM, and to detect a fault if current pintle zero position is different from the learned zero position. If the PCM detects a pintle position signal indicates more than 30 % different between current zero position and the learned zero position and more than 5 seconds, and this condition meet 3 times during trip, then the PCM will set DTC P1404.

Conditions for Setting the DTC

- Ignition voltage is between 11 and 16 volts.
- Intake Air temp is more than 3˚C.
- Desire EGR position is 0.
- Difference EGR pintle position between current and the learned zero is more than 30 % last more than 5 seconds, and meet three time to the above condition during a trip. Then it trigger the PCM lights on.

Action Taken When the DTC Sets

- The PCM will illuminate the malfunction indicator lamp (MIL) after consecutive 2nd trip in which the fault is detected.
- The PCM will store conditions which were present when the DTC was set as Freeze Frame and in Failure Records data.

Conditions for Clearing the MIL/DTC

- DTC P1404 can be cleared by using the Tech 2 “Clear Info” function or by disconnecting the PCM battery feed.

Diagnostic Aids

Check for the following conditions:

- Excessive carbon deposit on EGR valve shaft or/and foreign material may cause no return to EGR valve fully seated. Those carbon deposit may occur by unusual port operation. Remove foreign material or/and excessive carbon deposit on EGR valve shaft may make return to EGR valve fully seated.
- Poor connection or damaged harness – Inspect the wiring harness for damage. Same as P1406 description

Reviewing the Failure Records vehicle mileage since the diagnostic test last failed may help determine how often the condition that caused the DTC to be set occurs. This may assist in diagnosing the condition.

DTC P1404 – EGR Closed Stuck

Step	Action	Value(s)	Yes	No
1	Was the “On-Board Diagnostic (OBD) System Check” performed?	—	Go to *Step 2*	Go to *OBD System Check*
2	1. Ignition “ON,” engine “OFF”, review and record Tech 2 Failure Records Data. 2. Operate the vehicle within Failure Records conditions as noted. 3. Using a Tech 2, monitor “DTC inf. for DTC P1404 until the DTC P1404 test runs. Note the result. Does the Tech 2 indicates DTC P1404 failed this ignition?	—	Go to *Step 3*	Refer to *Diagnostic Aids*
3	1. Disconnect the EGR valve harness connector. 2. Inspect the EGR valve and connectors for damaged pin or terminals. Were there any damaged pins or terminals?	—	Go to *Step 4*	Go to *Step 5*
4	Repair the damaged pin or terminal. Is the action complete?	—	Verify repair	—
5	1. Remove EGR valve from Engine. 2. Inspect EGR valve whether there is any excessive carbon deposit on EGR shaft. 3. Inspect any foreign material inside of EGR valve. Was excessive carbon deposit on EGR valve shaft or/and foreign material in EGR valve ?	—	Go to *Step 6*	Go to *Step 7*
6	1. Clean up EGR valve shaft and inside of EGR valve. 2. Remove foreign material from EGR valve. 3. Visually inspect damage of pintle and seat whether there is bent, leakage may occur. Was there any severe damage which affects function?	3–6 ohms	Go to *Step 8*	Verify repair Go to *Step 7*
7	1. Reconnect. 2. Ignition “OFF”. 3. Install the Tech 2. 4. Run the engine at idle. 5. On the Tech 2, select F3:Misc. Test F5:EGR. 6. Use the “UP” arrow to increase the EGR from 0% to 40%. Did EGR work properly?	—	—	Go to *Step 8*
8	1. Reset the learned zero EGR valve position. 2. Repeat step 7. Did EGR work properly?	—	Verify repair	Go to *Step 9*
9	Replace the EGR valve. Replace the EGR valve. Does DTC P1404 still fail “specific DTC” test on the Tech 2?	—	Go to *Step 10*	Verify repair
10	Replace the PCM. **IMPORTANT:** The replacement PCM must be programmed. Refer to *UBS 98model year Immobilizer Workshop Manual.* Is the action complete?	—	Verify repair	—

Diagnostic Trouble Code (DTC) P1508 IAC System Low RPM

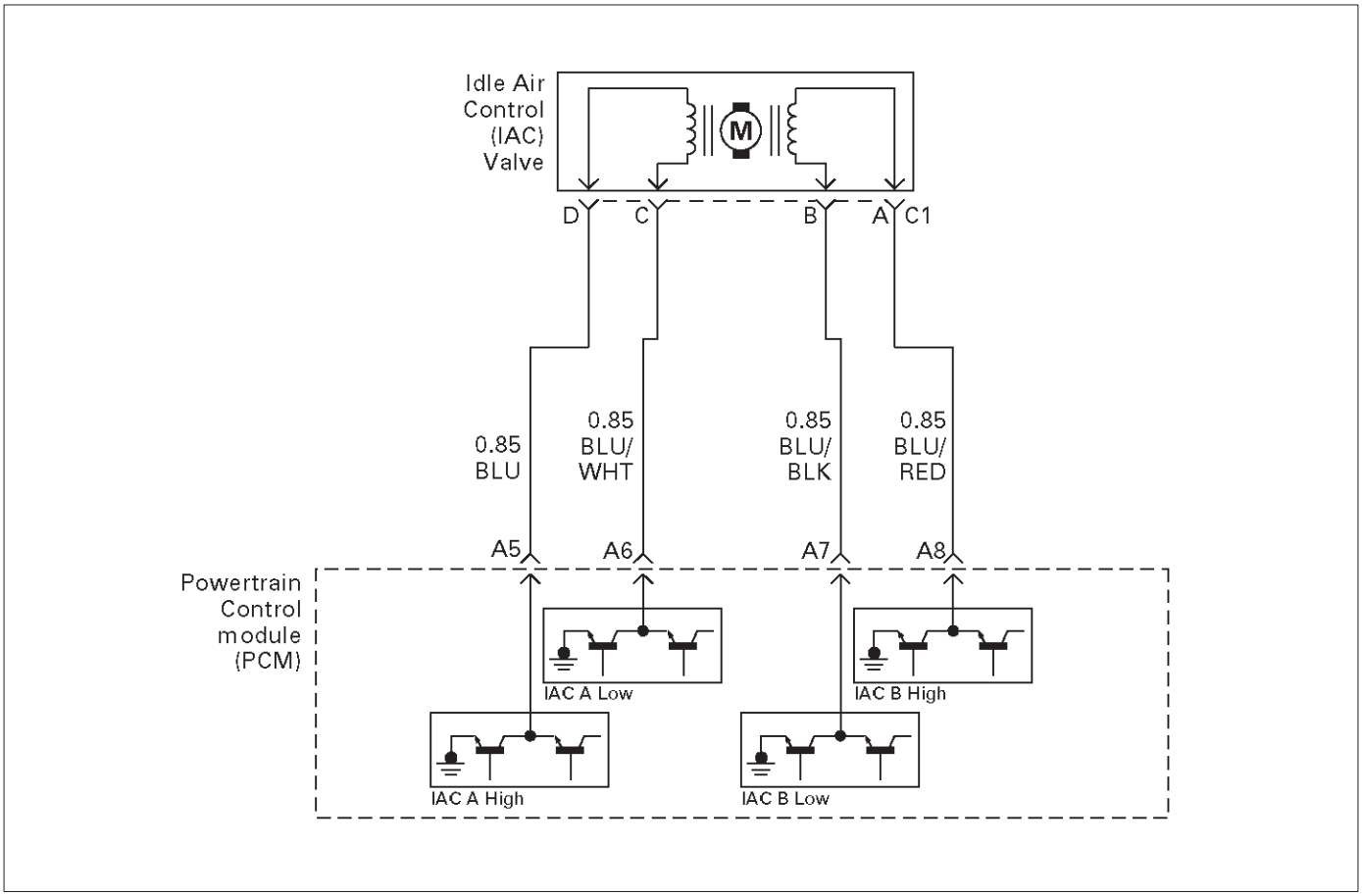

T321115

Circuit Description

The powertrain control module (PCM) controls engine idle speed by adjusting the position of the idle air control (IAC) motor pintle. The IAC is a bi-directional stepper motor driven by two coils. The PCM applies current to the IAC coils in steps (counts) to extend the IAC pintle into a passage in the throttle body to decrease air flow. The PCM reverses the current to retract the pintle, increasing air flow. This method allows highly accurate control of idle speed and quick response to changes in engine load. If the PCM detects a condition where too low of an idle speed is present and the PCM is unable to adjust idle speed by increasing the IAC counts, DTC P1508 will set, indicating a problem with the idle control system.

Conditions for Setting the DTC

- No Tech 2 test is being run.
- None of these DTCs are set: TP sensor, VSS, ECT, EGR, fuel system, MAF, MAP, IAT, canister purge, injector control or ignition control.
- Barometric pressure is above 75 kPa.
- Engine coolant temperature (ECT) is above 50˚C (120˚F).
- Engine speed is more than 100-200 RPM lower than desired idle, based upon coolant temperature.
- The engine has been running for at least 125 seconds.
- Vehicle speed is less than 1 mph.
- Canister purge duty cycle is above 10%.
- Ignition voltage is between 9.5 volts and 16.7 volts.
- The throttle is closed.
- Engine speed is lower than desired idle.
- All of the above conditions are met for 10 seconds.

Action Taken When the DTC Sets

- The PCM will illuminate the malfunction indicator lamp (MIL) after the second consecutive trip in which the fault is detected.
- The PCM will store conditions which were present when the DTC was set as Freeze Frame and in the Failure Records data.

Conditions for Clearing the MIL/DTC

- DTC P1508 can be cleared by using the Tech 2 “Clear Info” function or by disconnecting the PCM battery feed.

Diagnostic Aids

Check for the following conditions:

- Poor connection at PCM or IAC motor – Inspect harness connectors for backed-out terminals, improper mating, broken locks, improperly formed or damaged terminals, and poor terminal-to-wire connection.
- Damaged harness – Inspect the wiring for damage.
- Restricted air intake system – Check for a possible collapsed air intake duct, restricted air filter element, or foreign objects blocking the air intake system.
- Throttle body – Check for objects blocking the IAC passage or throttle bore, excessive deposits in the IAC

passage and on the IAC pintle, and excessive deposits in the throttle bore and on the throttle plate.

- Large vacuum leak – Check for a condition that causes a large vacuum leak, such as an incorrectly installed or faulty PCV valve or a disconnected brake booster hose.

Reviewing the Failure Records vehicle mileage since the diagnostic test last failed may help determine how often the condition that caused the DTC to be set occurs. This may assist in diagnosing the condition.

DTC P1508 – IAC System Low RPM

Step	Action	Value(s)	Yes	No
1	Was the “On-Board Diagnostic (OBD) System Check” performed?	—	Go to *Step 2*	Go to *OBD System Check*
2	1. Start the engine. 2. Turn all accessories “OFF”(A/C, rear defroster, etc). 3. Using a Tech 2, command RPM up to 1500, down to 500, and the up to 1500 while monitoring the “Engine Speed” on the Tech 2. NOTE: This Tech 2 command may cause the engine to “cut out” when RPM goes above 1500. If this occurs, the “cutting out” will stop when the Tech 2 command for the test is discontinued, or if the Tech 2 command is changed to less than 1500 RPM. Does the “Engine Speed” remain within the specified value of the “Desired Idle” for each RPM command?	± 50 RPM	No trouble found. Go to *Diagnostic Aids*	Go to *Step 3*
3	1. Disconnect the IAC. 2. Install IAC Node Light 5-8840-2312-0 or equivalent. 3. With the engine running, command RPM up to 1500, down to 500, and then up to 1500 while observing the node light. NOTE: This Tech 2 command may cause the engine to “cut out” when RPM goes above 1500. If this occurs, the “cutting out” will stop when the Tech 2 command for the test is discontinued, or if the Tech 2 command is changed to less than 1500 RPM. Does each node light cycle red and green (never “OFF”)?	—	Go to *Step 5*	Go to *Step 4*
4	1. Check the following circuits for an open, short to voltage, short ground, or poor connections at the PCM: • IAC “A” Low. • IAC “A” High. • IAC “B” Low. • IAC “B” High. 2. If a problem is found, repair as necessary. Was a problem found?	—	Verify repair	Go to *Step 8*

DTC P1508 – IAC System Low RPM (Cont'd)

Step	Action	Value(s)	Yes	No
5	Visually/physically inspect for following conditions: ● Restricted air intake system. Check for a possible collapsed air intake duct, restricted air filter element, or foreign objects blocking the air intake system. ● Throttle body. Check for objects blocking the IAC passage or throttle bore, excessive deposits in the IAC passage and on the IAC pintle, and excessive deposits in the throttle bore and on the throttle plate. Do any of the above require a repair?	—	Refer to appropriate section for on-vehicle service	Go to *Step 6*
6	1. Check for a poor connection at the IAC harness connector. 2. If a problem is found, replace faulty terminals as necessary. Was a problem found?	—	Verify repair	Go to *Step 7*
7	Replace the IAC valve. Is the action complete?	—	Verify repair	—
8	Replace the PCM. **IMPORTANT:** The replacement PCM must be programmed. Refer to *UBS 98model year Immobilizer Workshop Manual.* Is the action complete?	—	Verify repair	—

Diagnostic Trouble Code (DTC) P1509 IAC System High RPM

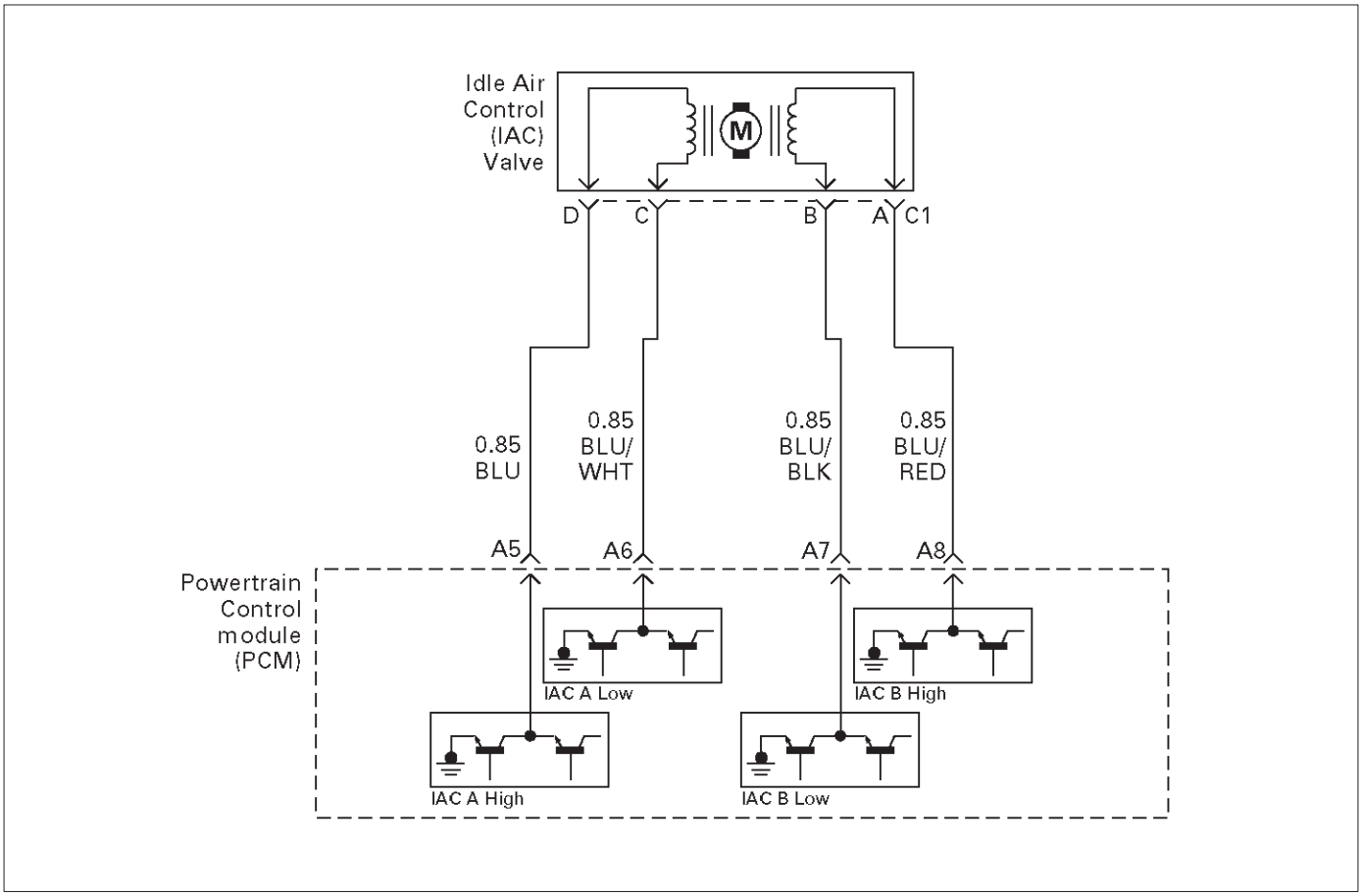

T321115

Circuit Description

The powertrain control module (PCM) controls engine idle speed by adjusting the position of the idle air control (IAC) motor pintle. The IAC is a bi-directional stepper motor driven by two coils. The PCM applies current to the IAC coils in steps (counts) to extend the IAC pintle into a passage in the throttle body to decrease air flow. The PCM reverses the current to retract the pintle, increasing air flow. This method allows highly accurate control of idle speed and quick response to changes in engine load. If the PCM detect a condition where too high of an idle speed is present and the PCM is unable to adjust idle speed by increasing the IAC counts, DTC P1509 will set, indicating a problem with the idle control system.

Conditions for Setting the DTC

- No Tech 2 test is being run.
- None of these DTCs are set: TP sensor, VSS, ECT, EGR, fuel system, MAF, MAP, IAT, canister purge, injector control or ignition control.
- Barometric pressure is above 75 kPa.
- Engine coolant temperature is above 50˚C (120˚F).
- Engine speed is more than 100-200 RPM lower than desired idle, based upon coolant temperature.
- The engine has been running for at least 125 seconds.
- Vehicle speed is less than 1 mph.
- Canister purge duty cycle is above 10%.
- Ignition voltage is between 9.5 volts and 16.7 volts.
- Engine speed is lower than desired idle.
- All of the above conditions are met for 5 seconds.

Action Taken When the DTC Sets

- The PCM will illuminate the malfunction indicator lamp (MIL) after the second consecutive trip in which the fault is detected.
- The PCM will store conditions which were present when the DTC was set as Freeze Frame and in the Failure Records data.

Conditions for Clearing the MIL/DTC

- DTC P1509 can be cleared by using the Tech 2 “Clear Info” function or by disconnecting the PCM battery feed.

Diagnostic Aids

Check for the following conditions:

- Poor connection at PCM or IAC motor – Inspect harness connectors for backed-out terminals, improper mating, broken locks, improperly formed or damaged terminals, and poor terminal-to-wire connection.
- Damaged harness – Inspect the wiring for damage.
- Vacuum leak – Check for a condition that causes a vacuum leak, such as disconnected or damaged hoses, leaks at the EGR valve and the EGR pipe to the intake manifold, leaks at the throttle body, faulty or incorrectly installed PCV valve, leaks at the intake manifold, etc.

- Throttle body – Check for sticking throttle plate. Also inspect the IAC passage for deposits or objects which keep the IAC pintle from fully extending.

Reviewing the Failure Records vehicle mileage since the diagnostic test last failed may help determine how often the condition that caused the DTC to be set occurs. This may assist in diagnosing the condition.

DTC P1509 – IAC System High RPM

Step	Action	Value(s)	Yes	No
1	Was the "On-Board Diagnostic (OBD) System Check" performed?	—	Go to *Step 2*	Go to *OBD System Check*
2	1. Start the engine. 2. Turn all accessories "OFF" (A/C, rear defroster, etc.). 3. Using a Tech 2, command RPM up to 1500, down to 500, and then up to 1500 while monitoring "Engine Speed" on the Tech 2. NOTE: This Tech 2 command may cause the engine to "cut out" when RPM goes above 1500. If this occurs, the "cutting out" will stop when the Tech 2 command for the test is discontinued, or if the Tech 2 command is changed to less than 1500 RPM. Does the "Engine Speed" remain within the specified value of "Desired Idle" for each RPM command?	± 50 RPM	No trouble found. Go to *Diagnostic Aids*	Go to *Step 3*
3	1. Disconnect the IAC. 2. Install IAC Node Light 5-8840-2312-0 or equivalent. 3. With the engine running, command RPM up to 1500, down to 500, and then up to 1500 while observing the node light. NOTE: This Tech 2 command may cause the engine to "cut out" when RPM goes above 1500. If this occurs, the "cutting out" will stop when the Tech 2 command for the test is discontinued, or if the Tech 2 command is changed to less than 1500 RPM. Does each node light cycle red and green (never "OFF")?	—	Go to *Step 5*	Go to *Step 4*
4	1. Check the following circuits for an open, short to voltage, short ground, or poor connections at the PCM: • IAC "A" Low • IAC "A" High • IAC "B" Low • IAC "B" High 2. If a problem is found, repair as necessary. Was a problem found?	—	Verify repair	Go to *Step 8*
5	Visually/physically inspect for following conditions: • Vacuum leaks. • Throttle plate or throttle shaft for binding. • Accelerator and cruise control cables for being misadjusted or for binding. • Faulty, missing, or incorrectly installed PCV valve. Do any of the above require a repair?	—	Refer to appropriate section for on-vehicle service	Go to *Step 6*

DTC P1509 – IAC System High RPM (Cont'd)

Step	Action	Value(s)	Yes	No
6	1. Check for a poor connection at the IAC harness connector. 2. If a problem is found, replace faulty terminals as necessary. Was a problem found?	—	Verify repair	Go to *Step 7*
7	Replace the IAC valve. Is the action complete?	—	Verify repair	—
8	Replace the PCM. **IMPORTANT:** The replacement PCM must be programmed, Refer to *UBS 98model year Immobilizer Workshop Manual.* Is the action complete?	—	Verify repair	—

Diagnostic Trouble Code (DTC) P1618 Serial Peripheral Interface (SPI) PCM Interprocessor Communication Error

Circuit Description

The serial peripheral interface (SPI) communication is used internally by the PCM to send messages between the engine processor and the automatic transmission processor. Included in each message sent between the two-processors is a checksum of the message. Both the engine processor and automatic transmission processor will compare this check sum value with the calculated value. If the checksums don't match, the processor will view the new data as being corrupted and ignore the values. The processor will then use the previous message. The receiving processor will then send a message to the sending processor informing it that it's last message was corrupted.

Conditions for Setting the DTC

- Battery voltage is above 9.0 V for 2 seconds.
- The PCM detects an internal program fault (check sum of data communications error).
- Check sum fault present for 3 out 6 seconds.
- No TCM resets for 2 seconds.

Action Taken When the DTC Sets

- The PCM will flash the "Check Trans" lamp the first time the fault is detected.
- The PCM will store conditions which were present when the DTC was set as Freeze Frame and in the Failure Records data.
- The automatic transmission will operate in the "safety mode" to protect the mechanical parts of the transmission. Shift quality and/or gear changes may not be normal.

Conditions for Clearing the MIL/DTC

- DTC P1618 can be cleared by using the Tech 2 "Clear Info" function or by disconnecting the PCM battery feed.

DTC P1618 – Serial Peripheral Interface (SPI) PCM Interprocessor Communication Error

Step	Action	Value(s)	Yes	No
1	Was the "On-Board Diagnostic (OBD) System Check" performed?	—	Go to Step 2	Go to *OBD System Check*
2	Is the EEPROM calibration the latest version available?	—	Go to *Step 4*	Go to *Step 3*
3	Reprogram the PCM with the latest available calibrations. Does DTC 1618 re-appear when the *OBD System Check* is repeated?	—	Go to *Step 4*	Repair completed
4	Replace the PCM. **IMPORTANT:** The replacement PCM must be programmed. Refer to *UBS 98model year Immobilizer Workshop Manual.* Is the action complete?	—	Verify repair	—

Diagnostic Trouble Code (DTC) P1625 PCM Unexpected Reset

Circuit Description

The powertrain control module (PCM) monitors unexpected PCM reset. This will not turn on MIL light on, only records code DTC P1625.

Conditions for Setting the DTC

- Clock or COP reset.

Action Taken When the DTC Sets

- The PCM will not illuminate the malfunction indicator lamp (MIL).
- The PCM will store conditions which were present when the DTC was set as Failure Records only. This information will not be stored as Freeze Frame data.

Conditions for Clearing the MIL/DTC

- DTC P1625 can be cleared by using the Tech 2 “Clear Info” function or by disconnecting the PCM battery feed.

Diagnostic Aids

Check for the following conditions:

- P1625 alone stored does not need diagnosis. Clear DTC code.

Diagnostic Trouble Code (DTC) P1640 Driver-1-Input High Voltage

Circuit Description

Output driver modules (ODMs) are used by the powertrain control module (PCM) to turn “ON” many of the current-driven devices that are needed to control various engine and transmission functions. Each ODM is capable of controlling up to 7 separate outputs by applying ground to the device which the PCM is commanding “ON.”

Unlike the Quad Driver Modules (QDMs) used in prior model years, ODMs have the capability of diagnosing each output circuit individually. DTC P1640 set indicates an improper voltage level has been detected on an ODM output.

Since A/C is an option, No A/C will cause the air conditioning clutch relay output to always fault. If a fault is seen on the air conditioning clutch relay output, it will not be logged as a fault until the A/C request input interrupts a high voltage, indicating that A/C has been installed.

Conditions for Setting the DTC

- Ignition “ON.”
- Engine running.
- No DTC 1618.
- Ignition voltage is above 13.2 volts for 4 seconds.
- Output voltage does not equal ignition voltage when output is “OFF” or output voltage is not less than 1 volt when output is “ON.”
- Above conditions occur for at least 1 second.

Action Taken When the DTC Sets

- The PCM will not illuminate the malfunction indicator lamp (MIL).
- The PCM will store conditions which were present when the DTC was set as Failure Records only. This information will not be stored as Freeze Frame data.

Conditions for Clearing the MIL/DTC

- DTC P1640 can be cleared by using the Tech 2 “Clear Info” function or by disconnecting the PCM battery feed.

Diagnostic Aids

Check for the following conditions:

- Poor connection at PCM – Inspect harness connectors for backed-out terminals, improper mating, broken locks, improperly formed or damaged terminals, and poor terminal-to-wire connection.
- Damaged harness – Inspect the wiring harness for damage, If the harness appears to be OK, disconnect the PCM, turn the ignition “ON” and observe a voltmeter connected to the suspect driver circuit at the PCM harness connector while moving connectors and wiring harnesses relates to the MIL. A change in voltage will indicate the location of the fault.
- Poor connection at component – Examine for damaged connectors, unplugged connector, or damaged terminals at the following locations: Instrument cluster harness, canister purge solenoid, A/C clutch relay. An open ignition feed circuit at any of these components will cause DTC P1640 to be set.

Reviewing the Failure Records vehicle mileage since the diagnostic test last failed may help determine how often the condition that caused the DTC to be set occurs. This may assist in diagnosing the condition.

The following PCM pins are controlled by output driver modules (ODMs):

- A13 – “Check Engine Lamp”
- A14 – SVS (”Check Trans”)
- B14 – A/C Clutch

Test Description

Number(s) below refer to the step number(s) on the Diagnostic Chart.

6. The Tech 2 Driver Module Status indicates the PCM pin that is affected.

11. The Tech 2 may indicate “short circuit” even when the problem is an open circuit. The cause of an open circuit may be in the component itself-lamp, purge, solenoid, or A/C compressor relay.

13. A short to ground on the ignition side of the component will blow the fuse. Since the fuse was checked in Step 4, a short to ground would be between the affected component and the PCM.

DTC P1640 – Driver-1-Input High Voltage

Step	Action	Value(s)	Yes	No
1	Was the “On-Board Diagnostic (OBD) System Check” performed?	—	Go to *Step 2*	Go to *OBD System Check*
2	1. Ignition “ON,”engine “OFF.” 2. Install the Tech 2. 3. Review and record Tech 2 Failure Records data. 4. Operate the vehicle within Failure Records conditions as noted. 5. Use the Tech 2 to indicate DTC P1640. Does the Tech 2 indicate DTC P1640?	—	Go to *Step 3*	—
3	Check the fuse for the driver circuit that was shown as faulty. Was the fuse blown?	—	Go to *Step 4*	Go to *Step 5*
4	1. Check for a short to ground between the fuse and the affected component. 2. Replace the fuse after making any necessary repairs. Is the action complete?	—	Verify repair	—
5	Disconnect the PCM connector for the affected driver circuit. Is there any damage to the PCM pin or connector?	—	Go to *Step 6*	Go to *Step 7*
6	Repair the damaged pin or terminal. Is the action complete?	—	Verify repair	—
7	Were either of the lamp circuits for “Check Engine” or “Check Trans.” indicated as faulty by the Tech 2?	—	Go to *Step 8*	Go to *Step 14*
8	1. Leave the PCM connector for the lamp driver circuit disconnected. 2. Ignition “ON.” 3. Using a DVM, check the voltage at the PCM connector for the affected lamp driver circuit. Was the voltage equal to the specified value?	B+	Go to *Step 16*	Go to *Step 9*
9	1. Ignition “ON.” 2. Check for battery voltage at the fuse for the affected lamp circuit. Was battery voltage available at the fuse?	—	Go to *Step 11*	Go to *Step 10*
10	Repair the open circuit between the ignition switch and the fuse. Is the action complete?	—	Verify repair	—
11	1. Ignition “OFF.” 2. Disconnect the PCM connector for the affected driver terminal. 3. Connect an ohmmeter between a good ground and the PCM connector for the affected driver. Did the ohmmeter indicate continuity?	—	Go to *Step 12*	Go to *Step 13*
12	Repair the short to ground between the affected component and is PCM driver terminal. Is the action complete?	—	Verify repair	—

DTC P1640 – Driver-1-Input High Voltage (Cont'd)

Step	Action	Value(s)	Yes	No
13	Repair the open circuit between the fuse and the PCM driver terminal for the affected circuit. Is the action complete?	—	Verify repair	—
14	1. Connect the PCM. 2. Start the engine and let it idle. 3. Backprobe the affected terminal at the PCM with a DVM. Was the voltage equal to the specified value?	+B	Go to *Step 16*	Go to *Step 15*
15	1. Run the engine at idle. 2. Check for battery voltage at the fuse for the affected circuit. Was battery voltage available at the fuse?	—	Go to *Step 11*	Go to *Step 10*
16	Replace the PCM. **IMPORTANT:** The replacement PCM must be programmed. Refer to *UBS 98model year Immobilizer Workshop Manual.* Is the action complete?	—	Verify repair	—

Symptom Diagnosis

Preliminary Checks

Before using this section, perform the "On-Board Diagnostic (OBD) System Check" and verify all of the following items:

- The powertrain control module (PCM) and malfunction indicator lamp (MIL) (Service Engine Soon lamp) are operating correctly.
- There are no DTC(s) stored.
- Tech 2 data is within normal operating range. Refer to *Typical Scan Data Values*.
- Verify the customer complaint and locate the correct symptom in the table of contents. Perform the procedure included in the symptom chart.

Visual/Physical Check

Several of the symptom procedures call for a careful visual/physical check. This can lead to correcting a problem without further checks and can save valuable time.

This check should include the following items:

- PCM grounds for cleanliness, tightness and proper location.
- Vacuum hoses for splits, kinks, and proper connections, as shown on the "Vehicle Emission Control Information" label. Check thoroughly for any type of leak or restriction.
- Air intake ducts for collapsed or damaged areas.
- Air leaks at throttle body mounting area, mass air flow (MAF) sensor and intake manifold sealing surfaces.
- Ignition wires for cracking, hardness, and carbon tracking.
- Wiring for proper connections, pinches and cuts.

Intermittents

IMPORTANT: An intermittent problem may or may not turn on the malfunction indicator lamp (MIL) or store a DTC. DO NOT use the Diagnostic Trouble Code (DTC) charts for intermittent problems. The fault must be present to locate the problem.

Most intermittent problems are caused by faulty electrical connections or wiring. Perform a careful visual/physical check for the following conditions:

- Poor mating of the connector halves or a terminal not fully seated in the connector (backed out).
- Improperly formed or damaged terminal.
- All connector terminals in the problem circuit should be carefully checked for proper contact tension.
- Poor terminal-to-wire connection. This requires removing the terminal from the connector body to check.

Road test the vehicle with a J 39200 Digital Multimeter connected to a suspected circuit. An abnormal voltage when the malfunction occurs is a good indication that there is a fault in the circuit being monitored.

Use Tech 2 to help detect intermittent conditions. Tech 2s have several features that can be used to locate an intermittent condition. Use the following feature to find intermittent faults:

- Using Tech 2's "Freeze Frame" buffer or "Failure Records" buffer can aid in locating an intermittent condition. Review and record the information in the freeze frame or failure record associated with the intermittent DTC being diagnosed. The vehicle can be driven within the conditions that were present when the DTC originally set.

To check for loss of diagnostic code memory, disconnect the MAP sensor and idle the engine until the MIL (Service Engine Soon lamp) comes on. DTC P0107 should be stored and kept in memory when the ignition is turned "OFF." If not, the PCM is faulty. When this test is completed, make sure that you clear the DTC P0107 from memory.

An intermittent MIL (Service Engine Soon lamp) with no stored DTC may be caused by the following:

- Ignition coil shorted to ground and arcing at ignition wires or plugs.
- MIL (Service Engine Soon lamp) wire to PCM shorted to ground.
- Poor PCM grounds. Refer to the PCM wiring diagrams.

Check for improper installation of electrical options such as lights, cellular phones, etc. Route ignition coil wiring away from the ignition coils. Check all wires from the PCM to the ignition coil for poor connections.

Check for an open diode across the A/C compressor clutch and check for other open diodes (refer to wiring diagrams in *Electrical Diagnosis*).

If problem has not been found, refer to *PCM Connector Symptom* tables.

Hard Start Symptom

Step	Action	Value(s)	Yes	No
1	**DEFINITION:** Engine cranks, but does not start for a long time. Does eventually run, or may start but immediately stalls. Was the "On-Board Diagnostic (OBD) System Check" performed?	—	Go to *Step 2*	Go to *OBD System Check*
2	1. Perform a bulletin search. 2. If a bulletin that addresses the symptom is found, correct the condition as instructed in the bulletin. Was a bulletin found that addresses the symptom?	—	Verify repair	Go to *Step 3*
3	Was a visual/physical check performed?	—	Go to *Step 4*	Go to *Visual/Physical Check*
4	Check engine coolant temperature (ECT) sensor for shift in value. After 8 hours with the hood up and the engine not running, connect Tech 2. With the ignition "ON" and the engine not running, compare engine coolant temperature to intake air temperature. Are ECT and IAT within the specified value of each other?	± 5˚C (± 9˚F)	Go to *Step 8*	Go to *Step 5*
5	1. Using Tech 2, display the engine coolant temperature and note the value. 2. Check the resistance of the engine coolant temperature sensor. 3. Refer to *Engine Coolant Temperature Sensor Temperature vs. Resistance* chart on *DTC P0118 Diagnostic Support* for resistance specifications. Is the resistance value near the resistance for the temperature noted?	—	Go to *Step 7*	Go to *Step 6*
6	Replace the ECT sensor. Is the action complete?	—	Verify repair	—
7	Locate and repair high resistance or poor connection in the ECT signal circuit or the ECT sensor ground. Is the action complete?	—	Verify repair	—
8	1. Check for a faulty, plugged, or incorrectly installed PCV valve. 2. If a problem is found, repair as necessary. Was a problem found?	—	Verify repair	Go to *Step 9*
9	1. Check for water- or alcohol-contaminated fuel. 2. If a problem is found, repair as necessary. Was a problem found?	—	Verify repair	Go to *Step 10*
10	1. Perform the procedure in *Fuel System Pressure Test*. 2. If a problem is found, repair as necessary. Was a problem found?	—	Verify repair	Go to *Step 11*
11	1. Check for proper ignition voltage output with spark tester J 26792 (ST-125). Refer to *Electric Ignition System* for procedure. 2. If a problem is found, repair as necessary. Was a problem found?	—	Verify repair	Go to *Step 12*

Hard Start Symptom (Cont'd)

Step	Action	Value(s)	Yes	No
12	1. Remove spark plugs. Check for wet plugs, cracks, wear, improper gap, burned electrodes, or heavy deposits. Refer to *Electronic Ignition System*. NOTE: If spark plugs are gas or oil fouled, the cause of the fouling must be determined before replacing the spark plugs. 2. If a problem is found, repair as necessary. Was a problem found?	—	Verify repair	Go to *Step 13*
13	1. Check for a loose ignition coil ground. Refer to *Electronic Ignition System*. 2. If a problem is found, repair as necessary. Was a problem found?	—	Verify repair	Go to *Step 14*
14	1. Remove the ignition coils and check the ignition coils for cracks or carbon tracking. 2. If a problem is found, replace affected coil(s) as necessary. Was a problem found?	—	Verify repair	Go to *Step 15*
15	1. Check IAC operation. Perform the procedure in the *DTC P0506, Step 6* diagnostic table. 2. If a problem is found, repair as necessary. Was a problem found?	—	Verify repair	Go to *Step 16*
16	1. Check for the following engine mechanical problems (refer to *Engine Mechanical*): ● Low compression ● Leaking cylinder head gaskets ● Worn or incorrect camshaft ● Camshaft drive belt slipped or stripped 2. If a problem is found, repair as necessary. Was a problem found?	—	Verify repair	Go to *Step 17*
17	1. Review all diagnostic procedures within this table. 2. If all procedures have been completed and no malfunctions have been found, review/inspect the following: ● Visual/physical inspection ● Tech 2 data ● Freeze Frame data/Failure Records buffer ● All electrical connections within a suspected circuit and/or system. 3. If a problem is found, repair as necessary. Was a problem found?	—	Verify repair	Contact Technical Assistance

Surges and/or Chuggles Symptom

Step	Action	Value(s)	Yes	No
1	**DEFINITION:** Engine power variation under steady throttle or cruise. Feels like the vehicle speeds up and slows down with no change in the accelerator pedal. Was the “On-Board Diagnostic (OBD) System Check” performed?	—	Go to *Step 2*	Go to *OBD System Check*
2	1. Perform a bulletin search. 2. If a bulletin that addresses the symptom is found, correct the condition as instructed in the bulletin. Was a bulletin found that addresses the symptom?	—	Verify repair	Go to *Step 3*
3	Was a visual/physical check performed?	—	Go to *Step 4*	Go to *Visual/Physical Check*
4	Be sure that the driver understands transmission torque converter clutch and A/C compressor operation as explained in the owner’s manual. Inform the customer how the TCC and the A/C clutch operate. Is the customer experiencing a normal condition?	—	System OK	Go to *Step 5*
5	1. Check the the fuel control heated oxygen sensors (HO2S, B1S1 and B2S1). The fuel control heated oxygen sensors (HO2S) should respond quickly to different throttle positions. If they don’t, check them for silicon or other contaminants from fuel or use of improper RTV sealant. The sensors may have a white powdery coating. Silicon contamination causes a high but false HO2S signal voltage (rich exhaust indication). The PCM will then reduce the amount of fuel delivered to the engine, causing a severe driveability problem. For more information, refer to *Powertrain Control Module (PCM) and Sensors*. 2. If a problem is found, repair as necessary. Was a problem found?	—	Verify repair	Go to *Step 6*
6	1. Check the fuel pressure. Refer to *Fuel System Pressure Test*. 2. If a problem is found, repair as necessary. Was a problem found?	—	Verify repair	Go to *Step 7*
7	Monitor the long term fuel trim on Tech 2. Is the long term fuel trim significantly in the negative range (rich condition)?	—	Go to *Step 8*	Go to *Step 9*
8	1. Check items that can cause the engine to run rich. Refer to *Diagnostic Aids* in *DTC P0172 Diagnostic Support*. 2. If a problem is found, repair as necessary. Was a problem found?	—	Go to *Step 10*	Verify repair
9	1. Check items that can cause the engine to run lean. Refer to *Diagnostic Aids* in *DTC P0171*. 2. If a problem is found, repair as necessary. Was a problem found?	—	Go to *Step 10*	Verify repair

Surges and/or Chuggles Symptom (Cont'd)

Step	Action	Value(s)	Yes	No
10	1. Check for proper ignition voltage output with spark tester J 26792 (ST-125). Refer to *Electric Ignition System* for procedure. 2. If a problem is found, repair as necessary. Was a problem found?	—	Verify repair	Go to *Step 11*
11	1. Check for a loose ignition coil ground. Refer to *Electric Ignition System*. 2. If a problem is found, repair as necessary. Was a problem found?	—	Verify repair	Go to *Step 12*
12	1. Check the ignition coils for cracks or carbon tracking. 2. If a problem is found, repair as necessary. Was a problem found?	—	Verify repair	Go to *Step 13*
13	1. Remove the spark plugs and check for wet plugs, cracks, wear, improper gap, burned electrodes, or heavy deposits. Refer to *Electronic Ignition System*. NOTE: If spark plugs are gas or oil fouled, the cause of the fouling must be determined before replacing the spark plugs. 2. If a problem is found, repair as necessary. Was a problem found?	—	Verify repair	Go to *Step 14*
14	1. Check the injector connections. 2. If any of the injector connectors are connected to an incorrect cylinder, correct as necessary. Was a problem found?	—	Verify repair	Go to *Step 15*
15	1. Check PCM grounds for the cleanliness, tightness and proper locations. Refer to the PCM wiring diagrams in *Electrical Diagnosis*. 2. If a problem is found, repair as necessary. Was a problem found?	—	Verify repair	Go to *Step 16*
16	1. Check MAF sensor connections. 2. If a problem is found, replace the faulty terminals as necessary. Refer to *Electrical Diagnosis* for wiring repair procedures. Was a problem found?	—	Verify repair	Go to *Step 17*
17	1. Visually/physically check vacuum hoses for splits, kinks, and proper connections and routing as shown on the "Vehicle Emission Control Information" label. 2. If a problem is found, repair as necessary. Was a problem found?	—	Verify repair	Go to *Step 18*

Surges and/or Chuggles Symptom (Cont'd)

Step	Action	Value(s)	Yes	No
18	1. Check the exhaust system for possible restriction: ● Inspect the exhaust system for damaged or collapsed pipes. ● Inspect the muffler for heat distress or possible internal failure. ● Check for a possible plugged three-way catalytic converter by checking the exhaust system back pressure. Refer to *Restricted Exhaust System Check*. 2. If a problem is found, repair as necessary. Was a problem found?	—	Verify repair	Go to *Step 19*
19	1. Review all diagnostic procedures within this table. 2. If all procedures have been completed and no malfunctions have been found, review/inspect the following: ● Visual/physical inspection ● Tech 2 data ● Freeze Frame data/Failure Records buffer ● All electrical connections within a suspected circuit and/or system. 3. If a problem is found, repair as necessary. Was a problem found?	—	Verify repair	Contact Technical Assistance

Lack of Power, Sluggish or Spongy Symptom

Step	Action	Value(s)	Yes	No
1	**DEFINITION:** Engine delivers less than expected power. Little or no increase in speed when accelerator pedal is pushed down part-way. Was the "On-Board Diagnostic (OBD) System Check" performed?	—	Go to *Step 2*	Go to *OBD System Check*
2	1. Perform a bulletin search. 2. If a bulletin that addresses the symptom is found, correct the condition as instructed in the bulletin. Was a bulletin found that addresses the symptom?	—	Verify repair	Go to *Step 3*
3	Was a visual/physical check performed?	—	Go to *Step 4*	Go to *Visual/Physical Check*
4	1. Remove and check the air filter element for dirt or restrictions. Refer to *Air Intake System* in *ON-Vehicle Service*. 2. Replace the air filter element if necessary. Was a repair required?	—	Verify repair	Go to *Step 5*
5	1. Check for low fuel pressure. Refer to *Fuel System Pressure Test*. 2. If a problem is found, repair as necessary. Was a problem found?	—	Verify repair	Go to *Step 6*
6	1. Check for water- or alcohol-contaminated fuel. 2. If a problem is found, repair as necessary. Was a problem found?	—	Verify repair	Go to *Step 7*
7	1. Using Tech 2, monitor the knock sensor (KS) system for excessive spark retard activity. Refer to *Knock Sensor (KS) System*. 2. If a problem is found, repair as necessary. Was a problem found?	—	Verify repair	Go to *Step 8*
8	1. Check for proper ignition voltage output with spark tester J 26792 (ST-125). Refer to *Electronic Ignition System* for procedure. 2. If a problem is found, repair as necessary. Was a problem found?	—	Verify repair	Go to *Step 9*
9	1. Remove the spark plugs and check for wet plugs, cracks, wear, improper gap, burned electrodes, or heavy deposits. Refer to *Electronic Ignition System*. NOTE: If spark plugs are gas or oil fouled, the cause of the fouling must be determined before replacing the spark plugs. 2. If a problem is found, repair as necessary. Was a problem found?	—	Verify repair	Go to *Step 10*
10	1. Check the ignition coils for cracks or carbon tracking. 2. If a problem is found, repair as necessary. Was a problem found?	—	Verify repair	Go to *Step 11*

Lack of Power, Sluggish or Spongy Symptom (Cont'd)

Step	Action	Value(s)	Yes	No
11	1. Check the PCM grounds for the cleanliness, tightness and proper locations. Refer to the PCM wiring diagrams in *Electrical Diagnosis*. 2. If a problem is found, repair as necessary. Was a problem found?	—	Verify repair	Go to *Step 12*
12	1. Check the exhaust system for possible restriction: ● Inspect the exhaust system for damaged or collapsed pipes. ● Inspect the muffler for heat distress or possible internal failure. ● Check for a possible plugged three-way catalytic converter by checking the exhaust system back pressure. Refer to *Restricted Exhaust System Check*. 2. If a problem is found, repair as necessary. Was a problem found?	—	Verify repair	Go to *Step 13*
13	1. Check the torque converter clutch (TCC) for proper operation. Refer to *4L30-E Transmission Diagnosis*. 2. If a problem is found, repair as necessary. Was a problem found?	—	Verify repair	Go to *Step 14*
14	1. Check for an engine mechanical problem. Check for low compression, incorrect or worn camshaft, loose timing belt, etc. Refer to *Engine Mechanical*. 2. If a problem is found, repair as necessary. Was a problem found?	—	Verify repair	Go to *Step 15*
15	1. Review all diagnostic procedures within this table. 2. If all procedures have been completed and no malfunctions have been found, review/inspect the following: ● Visual/physical inspection ● Tech 2 data ● Freeze Frame data/Failure Records buffer ● All electrical connections within a suspected circuit and/or system. 3. If a problem is found, repair as necessary. Was a problem found?	—	Verify repair	Contact Technical Assistance

Detonation/Spark Knock Symptom

Step	Action	Value(s)	Yes	No
1	**DEFINITION:** A mild to severe ping, usually worse under acceleration. The engine makes sharp metallic knocks that change with throttle opening. Was the “On-Board Diagnostic (OBD) System Check” performed?	—	Go to *Step 2*	Go to *OBD System Check*
2	1. Perform a bulletin search. 2. If a bulletin that addresses the symptom is found, correct the condition as instructed in the bulletin. Was a bulletin found that addresses the symptom?	—	Verify repair	Go to *Step 3*
3	Was a visual/physical check performed?	—	Go to *Step 4*	Go to *Visual/Physical Check*
4	If Tech 2 readings are normal (refer to *Typical Scan Values*) and there are no engine mechanical faults, fill the fuel tank with a known quality gasoline that has a minimum octane rating of 87 and re-evaluate the vehicle performance. Is detonation present?	—	Go to *Step 5*	Verify repair
5	1. Check the transmission range switch circuit. Use Tech 2 and be sure Tech 2 indicates that the vehicle is in drive with the gear selector in drive or overdrive. 2. If a problem is found, diagnose and repair the transmission range switch as necessary (refer to *4L30-E Automatic Transmission Diagnosis*). Was a problem found?	—	Verify repair	Go to *Step 6*
6	1. Check TCC operation. Refer to *4L30-E Transmission Diagnosis*. 2. If a problem is found, repair as necessary. Was a problem found?	—	Verify repair	Go to *Step 7*
7	1. Check for obvious overheating problems: • Low engine coolant. • Restricted air flow to radiator, or restricted water flow through radiator. • Correct coolant solution should be a 50/50 mix of approved antifreeze/coolant and water. Refer to *Engine Cooling*. 2. If a problem is found, repair as necessary. Was a problem found?	—	Verify repair	Go to *Step 8*
8	1. Check fuel pressure. Refer to Chart Fuel System Pressure Test. 2. If a problem is found, repair as necessary. Was a problem found?	—	Verify repair	Go to *Step 9*
9	1. Check items that can cause an engine to run lean (long term fuel trim significantly in the positive range). For a lean condition, refer to *Diagnostic Aids* in *DTC P0171 Diagnostic Support*. 2. If a problem is found, repair as necessary. Was a problem found?	—	Verify repair	Go to *Step 10*

Detonation/Spark Knock Symptom (Cont'd)

Step	Action	Value(s)	Yes	No
10	1. Spark plugs for proper heat range. Refer to *General Information*. 2. If incorrect spark plugs are installed, replace spark plugs as necessary. Did any spark plugs require replacement?	—	Verify repair	Go to *Step 11*
11	1. Remove excessive carbon buildup with a top engine cleaner. Refer to instructions on the top engine cleaner can. 2. Re-evaluate vehicle performance. Is detonation still present?	—	Go to *Step 12*	Verify repair
12	1. Check for an engine mechanical problem. Perform a cylinder compression check. Refer to *Engine Mechanical*. 2. If a problem is found, repair as necessary. Was a problem found?	—	Verify repair	Go to *Step 13*
13	1. Review all diagnostic procedures within this table. 2. If all procedures have been completed and no malfunctions have been found, review/inspect the following: • Visual/physical inspection • Tech 2 data • Freeze Frame data/Failure Records buffer • All electrical connections within a suspected circuit and/or system. 3. If a problem is found, repair as necessary. Was a problem found?	—	Verify repair	Contact Technical Assistance

Rough, Unstable, or Incorrect Idle, Stalling Symptom

Step	Action	Value(s)	Yes	No
1	**DEFINITION:** Engine runs unevenly at idle. If severe, the engine or vehicle may shake. Engine idle speed may vary in RPM. Either condition may be severe enough to stall the engine. Was the “On-Board Diagnostic (OBD) System Check” performed?	—	Go to *Step 2*	Go to *OBD System Check*
2	1. Perform a bulletin search. 2. If a bulletin that addresses the symptom is found, correct the condition as instructed in the bulletin. Was a bulletin found that addresses the symptom?	—	Go to *Step 13*	Go to *Step 3*
3	Was a visual/physical check performed?	—	Go to *Step 4*	Go to *Visual/Physical Check*
4	1. Check the PCM grounds for cleanliness, tightness and proper routing. Refer to the PCM wiring diagrams in *Electrical Diagnosis*. 2. If a problem is found, repair as necessary. Was a problem found?	—	Verify repair	Go to *Step 5*
5	Observe the long term fuel trim on Tech 2. Is the long term fuel trim significantly in the negative range (rich condition)?	—	Go to *Step 6*	Go to *Step 7*
6	1. Check items that can cause the engine to run rich. Refer to *Diagnostic Aids* in *DTC P0172 Diagnostic Support*. 2. If a problem is found, repair as necessary. Was a problem found?	—	Verify repair	Go to *Step 9*
7	Is the long term fuel trim significantly in the positive range (lean condition)?	—	Go to *Step 8*	Go to *Step 9*
8	1. Check items that can cause the engine to run lean. Refer to *Diagnostic Aids* in *DTC P0171 Diagnostic Support*. 2. If a problem is found, repair as necessary. Was a problem found?	—	Verify repair	Go to *Step 9*
9	1. Check for incorrect idle speed. Ensure that the following conditions are present: ● The engine is fully warm. ● The accessories are “OFF.” 2. Using Tech 2, monitor the IAC position. Is the IAC position within the specified values?	Between 10 and 50 counts	Go to *Step 11*	Go to *Step 10*

Rough, Unstable, or Incorrect Idle, Stalling Symptom (Cont'd)

Step	Action	Value(s)	Yes	No
10	1. Visually/physically inspect for the following conditions: ● Restricted air intake system. Check for a possible collapsed air intake duct, restricted air filter element, or foreign objects blocking the air intake system. ● Throttle body. Check for objects blocking the IAC passage or throttle bore, excessive deposits in the IAC passage and on the IAC pintle, and excessive deposits in the throttle bore and on the throttle plate. ● Large vacuum leak. Check for a condition that causes a large vacuum leak, such as an incorrectly installed or faulty crankcase ventilation valve or a disconnected brake booster hose. 2. If a problem is found, repair as necessary. Was a problem found?	—	Verify repair	Go to *Step 8*
11	Check the injector connections. If any of the injectors are connected to an incorrect cylinder, correct as necessary. Was a problem found?	—	Verify repair	Go to *Step 12*
12	1. Perform the "Injector Coil/Balance Test" in *Fuel Metering System*. 2. If a problem is found, repair as necessary. Was a problem found?	—	Verify repair	Go to *Step 13*
13	1. Check for fuel in the pressure regulator vacuum hose. 2. If fuel is present, replace the fuel pressure regulator assembly. Refer to *Fuel Metering System*. 3. If a problem is found, repair as necessary. Was a problem found?	—	Verify repair	Go to *Step 14*
14	1. Check for proper ignition voltage output with spark tester J 26792 (ST-125). Refer to *Electronic Ignition System* for the procedure. 2. If a problem is found, repair as necessary. Was a problem found?	—	Verify repair	Go to *Step 15*
15	1. Remove spark plugs. Check for wet plugs, cracks, wear, improper gap, burned electrodes, or heavy deposits. Refer to *Electronic Ignition System*. NOTE: If spark plugs are gas or oil fouled, the cause of the fouling must be determined before replacing the spark plugs. 2. If a problem is found, repair as necessary. Was a problem found?	—	Verify repair	Go to *Step 16*
16	1. Check for a loose ignition coil ground. Refer to *Electrical Ignition System*. 2. If a problem is found, repair as necessary. Was a problem found?	—	Verify repair	Go to *Step 17*

Rough, Unstable, or Incorrect Idle, Stalling Symptom (Cont'd)

Step	Action	Value(s)	Yes	No
17	1. Check ignition coils for cracks or carbon tracking. 2. If a problem is found, repair as necessary. Was a problem found?	—	Verify repair	Go to *Step 18*
18	Using Tech 2, monitor the throttle position (TP) angle with the engine idling. Is the TP angle at the specified value and steady?	0%	Go to *Step 19*	Refer to *DTC P0123* for further diagnosis
19	1. Check the positive crankcase ventilation (PCV) valve for proper operation. Refer to *Crankcase Ventilation System*. 2. If a problem is found, repair as necessary. Was a problem found?	—	Verify repair	Go to *Step 20*
20	1. Check the transmission range switch circuit. Use Tech 2 and be sure Tech 2 indicates that the vehicle is in drive with the gear selector in drive or overdrive. 2. If a problem is found, diagnose and repair the transmission range switch as necessary (refer to *4L30-E Automatic Transmission Diagnosis*). Was a problem found?	—	Verify repair	Go to *Step 21*
21	1. Check for the following engine mechanical items. Refer to *Engine Mechanical* for diagnosis procedures: • EGR valve mounted backward. Compare with a known-good vehicle. • Low compression • Sticking or leaking valves • Worn camshaft lobe(s) • Camshaft drive belt slipped or stripped • Incorrect valve timing • Worn rocker arms • Broken valve springs 2. If a problem is found, repair as necessary. Was a problem found?	—	Verify repair	Go to *Step 22*
22	1. Check for faulty motor mounts. Refer to *Engine Mechanical* for inspection of mounts. 2. If a problem is found, repair as necessary. Was a problem found?	—	Verify repair	Go to *Step 23*
23	1. Review all diagnostic procedures within this table. 2. If all procedures have been completed and no malfunctions have been found, review/inspect the following: • Visual/physical inspection • Tech 2 data • Freeze Frame data/Failure Records buffer • All electrical connections within a suspected circuit and/or system. 3. If a problem is found, repair as necessary. Was a problem found?	—	Verify repair	Contact Technical Assistance

Poor Fuel Economy Symptom

Step	Action	Value(s)	Yes	No
1	**DEFINITION:** Fuel economy, as measured by an actual road test, is noticeably lower than expected. Also, economy is noticeably lower than it was on this vehicle at one time, as previously shown by an actual road test. (Non-standard tires will cause odometer readings to be incorrect, and that may cause fuel economy to appear poor when it is actually normal.) Was the "On-Board Diagnostic (OBD) System Check" performed?	—	Go to *Step 2*	Go to *OBD System Check*
2	1. Perform a bulletin search. 2. If a bulletin that addresses the symptom is found, correct the condition as instructed in the bulletin. Was a bulletin found that addresses the symptom?	—	Verify repair	Go to *Step 3*
3	Was a visual/physical check performed?	—	Go to *Step 4*	Go to *Visual/Physical Check*
4	Check owner's driving habits. ● Is the A/C "ON" full time (defroster mode "ON")? ● Are tires at the correct pressure? ● Are excessively heavy loads being carried? ● Is acceleration too much, too often? Was a problem found?	—	Go to *Step 5*	Go to *Step 6*
5	Review the items in Step 4 with the customer and advise as necessary. Is the action complete?	—	System OK	—
6	1. Visually/physically check: Vacuum hoses for splits, kinks, and improper connections and routing as shown on the "Vehicle Emission Control Information" label. 2. If a problem is found, repair as necessary. Was a problem found?	—	Verify repair	Go to *Step 7*
7	1. Remove and check the air filter element for dirt or for restrictions. Refer to *Air Intake System*. 2. Replace the air filter element if necessary. Was a repair required?	—	Verify repair	Go to *Step 8*
8	1. Remove spark plugs and check for wet plugs, cracks, wear, improper gap, burned electrodes, or heavy deposits. Refer to *Spark Plug Replacement*. NOTE: If spark plugs are gas or oil fouled, the cause of the fouling must be determined before replacing the spark plugs. 2. If a problem is found, repair as necessary. Was a problem found?	—	Verify repair	Go to *Step 9*
9	1. Check for low engine coolant level. Refer to *Engine Cooling*. 2. If a problem is found, repair as necessary. Was a problem found?	—	Verify repair	Go to *Step 10*

Poor Fuel Economy Symptom (Cont'd)

Step	Action	Value(s)	Yes	No
10	1. Check for an incorrect or faulty engine thermostat. Refer to *Engine Cooling*. 2. If a problem is found, repair as necessary. Was a problem found?	—	Verify repair	Go to *Step 11*
11	1. Check for low engine compression. Refer to *Engine Mechanical*. 2. If a problem is found, repair as necessary. Was a problem found?	—	Verify repair	Go to *Step 12*
12	1. Check the TCC operation. Refer to *4L30-E Transmission Diagnosis*. 2. If a problem is found, repair as necessary. Was a problem found?	—	Verify repair	Go to *Step 13*
13	1. Check the exhaust system for possible restriction: ● Inspect the exhaust system for damaged or collapsed pipes. ● Inspect the muffler for heat distress or possible internal failure. ● Check for a possible plugged three-way catalytic converter by checking the exhaust system back pressure. Refer to *Restricted Exhaust System Check*. 2. If a problem is found, repair as necessary. Was a problem found?	—	Verify repair	Go to *Step 14*
14	Check for proper calibration of the speedometer. Does the speed indicated on the speedometer closely match the vehicle speed displayed on Tech 2?	—	Go to *Step 16*	Go to *Step 15*
15	Diagnose and repair an inaccurate speedometer condition as necessary. Refer to *Vehicle Speed Sensor* in *Electrical Diagnosis*. Was a problem found?	—	Verify repair	—
16	1. Check the air intake system and the crankcase for air leaks. Refer to *Air Intake System* and *Crankcase Ventilation System*. 2. If a problem is found, repair as necessary. Was a problem found?	—	Verify repair	Go to *Step 17*
17	1. Review all diagnostic procedures within this table. 2. When all procedures have been completed and no malfunctions have been found, review/inspect the following: ● Visual/physical inspection ● Tech 2 data ● Freeze Frame data/Failure Records buffer ● All connections within a suspected circuit and/or system. 3. If a problem is found, repair as necessary. Was a problem found?	—	Verify repair	Go to *Step 18*
18	Perform the procedure in *Fuel System Pressure Test*. Was the fuel pressure normal?	—	Contact Technical Assistance	Verify repair

Excessive Exhaust Emissions or Odors Symptom

Step	Action	Value(s)	Yes	No
1	**DEFINITION:** Vehicle fails an emission test. Vehicle has excessive "rotten egg" smell. (Excessive odors do not necessarily indicate excessive emissions.) Was the "On-Board Diagnostic (OBD) System Check" performed?	—	Go to *Step 2*	Go to *OBD System Check*
2	1. Perform a bulletin search. 2. If a bulletin that addresses the symptom is found, correct the condition as instructed in the bulletin. Was a bulletin found that addresses the symptom?	—	Go to *Step 12*	Go to *Step 3*
3	Was a thorough visual/physical check performed?	—	Go to *Step 4*	Go to *Visual/Physical Check*
4	1. Check for vacuum leaks. Check vacuum lines, intake manifold, throttle body, etc. 2. If a problem is found, repair as necessary. Were any vacuum leaks located?	—	Go to *Step 12*	Go to *Step 5*
5	1. Check the fuel cap for proper installation. 2. Secure the fuel cap if necessary. Was the fuel cap installed properly?	—	Go to *Step 6*	Go to *Step 12*
6	1. Check the fuel pressure. Perform the procedure in *Fuel System Pressure Test*. 2. If a problem is found, repair as necessary. Was a problem found?	—	Go to *Step 12*	Go to *Step 7*
7	1. Check for a faulty, plugged, or incorrectly installed crankcase ventilation valve; also check the crankcase ventilation system for plugging. 2. If a problem is found, repair as necessary. Was a problem found?	—	Go to *Step 12*	Go to *Step 8*
8	1. Check the injector connections. 2. If any of the injectors are connected to an incorrect cylinder, correct as necessary. Was a problem found?	—	Go to *Step 12*	Go to *Step 9*
9	1. Perform the "Injector Coil/Balance Test" in *Fuel Metering System*. 2. If a problem is found, repair as necessary. Was a problem found?	—	Go to *Step 12*	Go to *Step 10*
10	1. Refer to *Engine Cooling* for cooling system diagnosis. 2. If a problem is found, repair as necessary. Was a problem found?	—	Go to *Step 12*	Go to *Step 11*
11	1. Remove excessive carbon buildup with a top engine cleaner. Refer to the instructions on the top engine cleaner can. 2. Perform the exhaust emission test. Does the vehicle pass the test?	—	System OK	Go to *Step 13*
12	Perform the exhaust emission test. Does the vehicle pass the test?	—	System OK	Go to *Step 13*

Excessive Exhaust Emissions or Odors Symptom (Cont'd)

Step	Action	Value(s)	Yes	No
13	Does the exhaust emission test indicate excessive CO and HC levels or is long term fuel trim significantly in the negative range (rich condition)?	—	Go to *Step 14*	Go to *Step 15*
14	1. Check items that can cause the engine to run rich. Refer to *Diagnostic Aids* in *DTC P0172 Diagnostic Support*. Make any necessary repairs. 2. Perform the exhaust emission test. Does the vehicle pass the test?	—	System OK	Go to *Step 16*
15	1. Check items that can cause the engine to run lean. Refer to *Diagnostic Aids* in *DTC P0171 Diagnostic Support*. Make any necessary repairs. 2. Perform the exhaust emission test. Does the vehicle pass the test?	—	System OK	Go to *Step 16*
16	1. Check the EGR system. 2. If a problem is found, repair as necessary. Was a problem found?	—	Go to *Step 12*	Go to *Step 17*
17	1. Check for an engine mechanical problem. Perform a cylinder compression check (refer to *Engine Mechanical*). 2. If a problem is found, repair as necessary. Was a problem found?	—	Go to *Step 12*	Go to *Step 18*
18	1. Review all diagnostic procedures within this table. 2. If all procedures have been completed and no malfunctions have been found, review/inspect the following: ● Visual/physical inspection ● Tech 2 data ● Freeze Frame data/Failure Records butter ● All electrical connections within a suspected circuit and/or system. 3. If a problem is found, repair as necessary. Was a problem found?	—	Verify repair	Contact Technical Assistance

Dieseling, Run-On Symptom

Step	Action	Value(s)	Yes	No
1	**DEFINITION:** Engine continues to run after key is turned “OFF,” but runs very rough. If engine runs smooth, check ignition switch and adjustment. Was the “On-Board Diagnostic (OBD) System Check” performed?	—	Go to *Step 2*	Go to *OBD System Check*
2	1. Perform a bulletin search. 2. If a bulletin that addresses the symptom is found, correct the condition as instructed in the bulletin. Was a bulletin found that addresses the symptom?	—	Verify repair	Go to *Step 3*
3	Was a visual/physical check performed?	—	Go to *Step 4*	Go to *Visual/Physical Check*
4	1. Check for a short between B+ and any of the ignition feed circuits. 2. If a problem is found, repair as necessary. Was a problem found?	—	Verify repair	Go to *Step 5*
5	1. Review all diagnostic procedures within this table. 2. If all procedures have been completed and no malfunctions have been found, review/inspect the following: ● Visual/physical inspection ● Tech 2 data ● Freeze Frame data/Failure Records butter ● All electrical connections within a suspected circuit and/or system 3. If a problem is found, repair as necessary. Was a problem found?	—	Verify repair	Contact Technical Assistance

Backfire Symptom

Step	Action	Value(s)	Yes	No
1	**DEFINITION:** Fuel ignites in the intake manifold, or in the exhaust system, making a loud popping noise. Was the “On-Board Diagnostic (OBD) System Check” performed?	—	Go to *Step 2*	Go to *OBD System Check*
2	1. Perform a bulletin search. 2. If a bulletin that addresses the symptom is found, correct the condition as instructed in the bulletin. Was a bulletin found that addresses the symptom?	—	Verify repair	Go to *Step 3*
3	Was a visual/physical check performed?	—	Go to *Step 4*	Go to *Visual/Physical Check*
4	1. Check for proper ignition voltage coil output with spark tester 5-8840-0383-0. Refer to *Electric Ignition System* for procedure. 2. If a problem is found, repair as necessary. Was a problem found?	—	Verify repair	Go to *Step 5*
5	1. Remove spark plugs and check for wet plugs, cracks, wear, improper gap, burned electrodes, or heavy deposits. Refer to *Electronic Ignition System*. NOTE: If spark plugs are gas or oil fouled, the cause of the fouling must be determined before replacing the spark plugs. Refer to *DTC P0172* to determine the cause of a rich condition or *Engine Mechanical* for an oil fouling condition. 2. If a problem is found, repair as necessary. Was a problem found?	—	Verify repair	Go to *Step 6*
6	1. Visually/physically inspect the ignition coils for cracks. 2. If a problem is found, repair as necessary. Was a problem found?	—	Verify repair	Go to *Step 7*
7	1. Check for an intermittent ignition system malfunction: • Intermittent CKP 58X signal. • Intermittent ignition feed circuit or sensor ground circuit to the crankshaft position sensor. 2. If a problem is found, repair as necessary. Was a problem found?	—	Verify repair	Go to *Step 8*
8	1. Check the fuel pressure. Refer to *Fuel System Pressure Test*. 2. If a problem is found, repair as necessary. Was a problem found?	—	Verify repair	Go to *Step 9*

Backfire Symptom (Cont'd)

Step	Action	Value(s)	Yes	No
9	1. Check for the following engine mechanical conditions. Refer to *Engine Mechanical* for diagnosis procedures: ● Low compression ● Sticking or leaking valves ● Worn camshaft lobe(s) ● Camshaft drive belt slipped or stripped ● Incorrect valve timing 2. If a problem is found, repair as necessary. Was a problem found?	—	Verify repair	Go to *Step 10*
10	1. Check the intake and exhaust manifold(s) for casting flash. Refer to *Engine Mechanical*. 2. If a problem is found, repair as necessary. Was a problem found?	—	Verify repair	Go to *Step 11*
11	1. Review all diagnostic procedures within this table. 2. If all procedures have been completed and no malfunctions have been found, review/inspect the following: ● Visual/physical inspection ● Tech 2 data ● Freeze Frame data/Failure Records butter ● All electrical connections within a suspected circuit and/or system. 3. If a problem is found, repair as necessary. Was a problem found?	—	Verify repair	Contact Technical Assistance

Cuts Out, Misses Symptom

Step	Action	Value(s)	Yes	No
1	**DEFINITION:** Steady pulsation or jerking that follows engine speed; usually more pronounced as engine load increases. Was the “On-Board Diagnostic (OBD) System Check” performed?	—	Go to *Step 2*	Go to *OBD System Check*
2	1. Perform a bulletin search. 2. If a bulletin that addresses the symptom is found, correct the condition as instructed in the bulletin. Was a bulletin found that addresses the symptom?	—	Go to *Step 13*	Go to *Step 3*
3	Was a visual/physical check performed?	—	Go to *Step 4*	Go to *Visual/Physical Check*
4	1. Check the PCM grounds for clearness, tightness and proper routing. Refer to the PCM wiring diagrams in *Electrical Diagnosis*. 2. If a problem is found, repair as necessary. Was a problem found?	—	Verify repair	Go to *Step 5*
5	Observe the long term fuel trim on Tech 2. Is the long term fuel trim significantly in the negative range (rich condition)?	—	Go to *Step 6*	Go to *Step 7*
6	1. Check items that can cause the engine to run rich. Refer to *Diagnostic Aids* in *DTC P0172 Diagnostic Support*. 2. If a problem is found, repair as necessary. Was a problem found?	—	Verify repair	Go to *Step 9*
7	Is the long term fuel trim significantly in the positive range (lean condition)?	—	Go to *Step 8*	Go to *Step 9*
8	1. Check items that can cause the engine to run lean. Refer to *Diagnostic Aids* in *DTC P0171 Diagnostic Support*. 2. If a problem is found, repair as necessary. Was a problem found?	—	Verify repair	Go to *Step 9*
9	1. Check for incorrect idle speed. Ensure that the following conditions are present: ● The engine is fully warm. ● The accessories are “off.” 2. Using Tech 2, monitor the IAC position. Is the IAC position within the specified values?	Between 5 and 50 counts	Go to *Step 11*	Go to *Step 10*

Cuts Out, Misses Symptom (Cont'd)

Step	Action	Value(s)	Yes	No
10	1. Visually/physically inspect for the following conditions: ● Restricted air intake system. Check for a possible collapsed air intake duct, restricted air filter element, or foreign objects blocking the air intake system. ● Throttle body. Check for objects blocking the IAC passage or throttle bore, excessive deposits in the IAC passage and on the IAC pintle, and excessive deposits in the throttle bore and on the throttle plate. ● Large vacuum leak. Check for a condition that causes a large vacuum leak, such as an incorrectly installed or faulty PCV valve or brake booster hose disconnected . 2. If a problem is found, repair as necessary. Was a problem found?	—	Verify repair	Go to *Step 8*
11	Check the injector connections. If any of the injectors are connected to an incorrect cylinder, correct as necessary. Was a problem found?	—	Verify repair	Go to *Step 12*
12	1. Perform the "Injector Coil/Balance Test" in *Fuel Metering System*. 2. If a problem is found, repair as necessary. Was a problem found?	—	Verify repair	Go to *Step 13*
13	1. Check for fuel in the pressure regulator vacuum hose. 2. If fuel is present, replace the fuel pressure regulator assembly. Refer to *Fuel Metering System*. 3. If a problem is found, repair as necessary. Was a problem found?	—	Verify repair	Go to *Step 14*
14	1. Check for proper ignition voltage output with spark tester J 26792 (ST-125). Refer to *Electronic Ignition System* for the procedure. 2. If a problem is found, repair as necessary. Was a problem found?	—	Verify repair	Go to *Step 15*
15	1. Remove spark plugs. Check for wet plugs, cracks, wear, improper gap, burned electrodes, or heavy deposits. Refer to *Electronic Ignition System*. NOTE: If spark plugs are gas or oil fouled, the cause of the fouling must be determined before replacing the spark plugs. 2. If a problem is found, repair as necessary. Was a problem found?	—	Verify repair	Go to *Step 16*
16	1. Check for a loose ignition coil ground. Refer to *Electronic Ignition System*. 2. If a problem is found, repair as necessary. Was a problem found?	—	Verify repair	Go to *Step 17*

Cuts Out, Misses Symptom (Cont'd)

Step	Action	Value(s)	Yes	No
17	1. Check ignition coils for cracks or carbon tracking. 2. If a problem is found, repair as necessary. Was a problem found?	—	Verify repair	Go to *Step 18*
18	Using Tech 2, monitor the TP angle with the engine idling. Is the TP angle at the specified value and steady?	0%	Go to *Step 19*	Refer to *DTC P0123* for further diagnosis
19	1. Check the PCV valve for proper operation. Refer to *Crankcase Ventilation System*. 2. If a problem is found, repair as necessary. Was a problem found?	—	Verify repair	Go to *Step 20*
20	1. Check the transmission range switch circuit. Use Tech 2 and be sure Tech 2 indicates that the vehicle is in drive with the gear selector in drive or overdrive. 2. If a problem is found, diagnose and repair the transmission range switch as necessary (refer to *4L30-E Automatic Transmission Diagnosis*). Was a problem found?	—	Verify repair	Go to *Step 21*
21	1. Check the following engine mechanical items. Refer to *Engine Mechanical* for diagnosis procedures: • Low compression • Sticking or leaking valves • Worn camshaft lobe(s) • Camshaft drive belt slipped or stripped • Incorrect valve timing • Worn rocker arms • Broken valve springs 2. If a problem is found, repair as necessary. Was a problem found?	—	Verify repair	Go to *Step 22*
22	1. Check for faulty motor mounts. Refer to *Engine Mechanical* for inspection of mounts. 2. If a problem is found, repair as necessary. Was a problem found?	—	Verify repair	Go to *Step 23*
23	1. Review all diagnostic procedures within this table. 2. If all procedures have been completed and no malfunctions have been found, review/inspect the following: • Visual/physical inspection • Tech 2 data • Freeze Frame data/Failure Records butter • All electrical connections within a suspected circuit and/or system 3. If a problem is found, repair as necessary. Was a problem found?	—	Verify repair	Contact Technical Assistance

Hesitation, Sag, Stumble Symptom

Step	Action	Value(s)	Yes	No
1	**DEFINITION:** Momentary lack of response as the accelerator is pushed down. Can occur at any vehicle speed. Usually most pronounced when first trying to make the vehicle move, as from a stop sign. May cause the engine to stall if severe enough. Was the "On-Board Diagnostic (OBD) System Check" performed?	—	Go to *Step 2*	Go to *OBD System Check*
2	1. Perform a bulletin search. 2. If a bulletin that addresses the symptom is found, correct the condition as instructed in the bulletin. Was a bulletin found that addresses the symptom?	—	Verify repair	Go to *Step 3*
3	Was a visual/physical check performed?	—	Go to *Step 4*	Go to *Visual/Physical Check*
4	1. Check the fuel control heated oxygen sensors (HO2S, B1S1 and B2S1). The fuel control heated oxygen sensors (HO2S) should respond quickly to different throttle positions. If they don't, check them for silicon or other contaminants from fuel or use of improper RTV sealant. The sensors may have a white powdery coating. Silicon contamination causes a high but false HO2S signal voltage (rich exhaust indication). The PCM will then reduce the amount of fuel delivered to the engine, causing a severe driveability problem. For more information, refer to *Powertrain Control Module (PCM) and Sensors*. 2. If a problem is found, repair as necessary. Was a problem found?	—	Verify repair	Go to *Step 5*
5	1. Check the fuel pressure. Refer to *Fuel System Pressure Test.* 2. If a problem is found, repair as necessary. Was a problem found?	—	Verify repair	Go to *Step 6*
6	Observe the TP angle display on Tech 2 while slowly increasing throttle pedal. Does the TP angle display steadily increase from 0% at closed throttle to 100% at WOT?	—	Go to *Step 7*	Go to *Step 18*
7	Monitor the long term fuel trim on Tech 2. Is the long term fuel trim significantly in the negative range (rich condition)?	—	Go to *Step 8*	Go to *Step 9*
8	1. Check items that can cause the engine to run rich. Refer to *Diagnostic Aids* in *DTC P0172 Diagnostic Support*. 2. If a problem is found, repair as necessary. Was a problem found?	—	Verify repair	Go to *Step 10*
9	1. Check items that can cause the engine to run lean. Refer to *Diagnostic Aids* in *DTC P0171 Diagnostic Support*. 2. If a problem is found, repair as necessary. Was a problem found?	—	Verify repair	Go to *Step 10*

Hesitation, Sag, Stumble Symptom (Cont'd)

Step	Action	Value(s)	Yes	No
10	1. Check for proper ignition voltage output with spark tester J 26792 (ST-125). Refer to *Electronic Ignition System* for the procedure. 2. If a problem is found, repair as necessary. Was a problem found?	—	Verify repair	Go to *Step 11*
11	1. Check for a loose ignition coil ground. Refer to *Electronic Ignition System*. 2. If a problem is found, repair as necessary. Was a problem found?	—	Verify repair	Go to *Step 12*
12	1. Check the ignition coils for cracks or carbon tracking. 2. If a problem is found, repair as necessary. Was a problem found?	—	Verify repair	Go to *Step 13*
13	1. Remove spark plugs and check for wet plugs, cracks, wear, improper gap, burned electrodes, or heavy deposits. Refer to *Electronic Ignition System*. NOTE: If spark plugs are gas or oil fouled, the cause of the fouling must be determined before replacing the spark plugs. 2. If a problem is found, repair as necessary. Was a problem found?	—	Verify repair	Go to *Step 14*
14	1. Check the PCM grounds for clearness, tightness and proper routing. Refer to the PCM wiring diagrams in Electrical Diagnosis. 2. If a problem is found, repair as necessary. Was a problem found?	—	Verify repair	Go to *Step 15*
15	1. Check the MAF sensor connections. 2. If a problem is found, replace the faulty terminals as necessary. Refer to *Electrical Diagnosis* for wiring repair procedures. Was a problem found?	—	Verify repair	Go to *Step 16*
16	1. Visually/physically check vacuum hoses for splits, kinks, and proper connections and routing as shown on the "Vehicle Emission Control Information" label. 2. If a problem is found, repair as necessary. Was a problem found?	—	Verify repair	Go to *Step 17*

Hesitation, Sag, Stumble Symptom (Cont'd)

Step	Action	Value(s)	Yes	No
17	1. Review all diagnostic procedures within this table. 2. If all procedures have been completed and no malfunctions have been found, review/inspect the following: ● Visual/physical inspection ● Tech 2 data ● Freeze Frame data/Failure Records butter ● All electrical connections within a suspected circuit and/or system 3. If a problem is found, repair as necessary. Was a problem found?	—	Verify repair	Contact Technical Assistance
18	Replace the TP sensor. Is the action complete?	—	Verify repair	—

Default Matrix Table

Service Procedure Default Strategy

A referral strategy has been established to assist the technician with additional information when the cause of the failure cannot be determined. If no problem is found after performing diagnostics, then refer to the default matrix table for further diagnostic information.

Default Matrix Table

Strategy Based Diagnostic Charts	Initial Diagnosis	Default Section(s)
On-Board Diagnostic (OBD) System Check	Vehicle does not enter diagnostics.	Chassis Electrical
On-Board Diagnostic (OBD) System Check	Vehicle enters diagnostics and communicates with Tech 2. MIL is “ON” in diagnostics. Engine does not start and run.	Ignition System Check
On-Board Diagnostic (OBD) System Check	Engine starts and runs, no PCM codes set. Customer complains of vibration.	—
On-Board Diagnostic (OBD) System Check	Engine starts and runs, no PCM codes set. Customer complains of harsh or soft shift, poor performance, delayed or no engagement into drive or reverse, transmission fluid leak, transmission noise or vibration, or improper TCC operation.	Automatic Transmission
PCM Power and Ground Check	On-Board Diagnostic (OBD) System Check.	Chassis Electrical
PCM Power and Ground Check	On-Board Diagnostic (OBD) System Check. PCM power and ground circuits OK. Data link voltage incorrect.	Chassis Electrical
On-Board Diagnostic (OBD) System Check	Engine starts and runs, no PCM codes set. Customer complains of harsh or soft shift, poor performance, delayed or no engagement into drive or reverse, transmission fluid leak, transmission noise or vibration, or improper TCC operation.	Automatic Transmission

Symptoms	Initial Diagnosis	Default Section(s)
Intermittents	1. On-board Diagnostic (OBD) system check. 2. Careful visual/physical inspections.	Chassis Electrical
Hard Starts	1. OBD system check. 2. Sensors (ECT, MAP, MAF, TP) ; MAP output chart. 3. Fuel system electrical test, fuel system diagnosis. 4. Ignition system. 5. IAC system check.	Engine Mechanical, Ignition System Check, Exhaust System Diagnosis
Surges and/or Chuggles	1. OBD system check. 2. Heated oxygen sensors. 3. Fuel system diagnosis. 4. Ignition system.	Calibration ID “Broadcast Code”/Service Bulletins, Ignition System Check, Generator Output, Exhaust System Diagnosis, 4L30-E System Test

Symptoms	Initial Diagnosis	Default Section(s)
Lack of Power, Sluggish or Spongy	1. OBD system check. 2. Fuel system diagnosis. 3. Ignition system. 4. Knock sensor. 5. EGR operation. 6. EGR system check.	Refer to *Exhaust System* in *Engine Exhaust*, TCC Operation, Calibration ID/Service Bulletins
Detonation/Spark Knock	1. OBD system check. 2. Transmission range switch. 3. EGR operation. 4. EGR system check. 5. TCC operation. 6. Fuel system diagnosis. 7. Ignition system. 8. Knock sensor.	TCC operation, Cooling System, Ignition System Check, Calibration ID/Service Bulletins
Hesitation, Sag, Stumble	1. OBD system check. 2. TP. 3. MAP output check. 4. Fuel system diagnosis. 5. Fuel injector and fuel injector balance test. 6. Ignition system.	EGR Operation, EGR System Check, Generator Output Voltage (refer to *Chassis Electrical*), Calibration ID/Service Bulletins, Ignition System Check
Cuts Out, Misses	1. OBD system check. 2. Cylinder balance test.	Ignition System Check
Rough, Unstable, or Incorrect Idle, Stalling	1. OBD system check. 2. Fuel injector and fuel injector balance test. 3. Ignition system. 4. IAC operation. 5. EGR operation.	MAP Output Check, Throttle Linkage, IAC System Check, EGR System Check, A/C Clutch Control Circuit Diagnosis, Crankcase Ventilation System, Calibration ID/Service Bulletins, Generator Output Voltage (refer to *Chassis Electrical*), Exhaust Diagnosis
Poor Fuel Economy	1. OBD system check. 2. Careful visual/physical inspection. 3. Ignition system. 4. Cooling system.	TCC Operation, Exhaust System (refer to *Engine Exhaust*)
Engine Cranks But Will Not Run	1. OBD system check.	Fuel System Electrical Diagnosis, Fuel System Diagnosis, Fuel Injector and Fuel Injector Balance Test.
Excessive Exhaust Emissions or Odors	1. OBD system check. 2. Emission test. 3. Cooling system. 4. Fuel system diagnosis. 5. Fuel injector and fuel injector balance test. 6. Crankcase ventilation system. 7. Ignition system. 8. MAP output check.	EGR System Check, Exhaust Diagnosis, Calibration ID/Service Bulletins
Dieseling, Run-On	1. OBD system check. 2. Careful visual/physical inspection. 3. Fuel system diagnosis.	—

Symptoms	Initial Diagnosis	Default Section(s)
Backfire	1. OBD system check. 2. Ignition system. 3. Fuel system diagnosis. 4. Fuel injector and fuel injector balance test. 5. EGR operation, EGR system check.	Exhaust System Diagnosis, Intake Casting Flash, Ignition System Check
Catalyst Monitor	1. OBD system check. 2. Careful visual/physical inspection. 3. Heated oxygen sensors.	Exhaust System
Fuel Trim	1. OBD system check. 2. Careful visual/physical inspection. 3. Fuel system diagnosis. 4. Heated oxygen sensors, MAF sensors.	Exhaust System Intake Air System
Evaporative Emissions	1. OBD system check. 2. Careful visual/physical inspection. 3. Fuel system diagnosis.	—
Heated Oxygen Sensors	1. OBD system check. 2. Careful visual/physical inspection.	Exhaust System

Camshaft Position (CMP) Sensor

Removal Procedure

1. Disconnect the negative battery cable.
2. Remove the engine cover.
3. Remove the common chamber assembly.
   Refer to Common Chamber in Engine Mechanical.

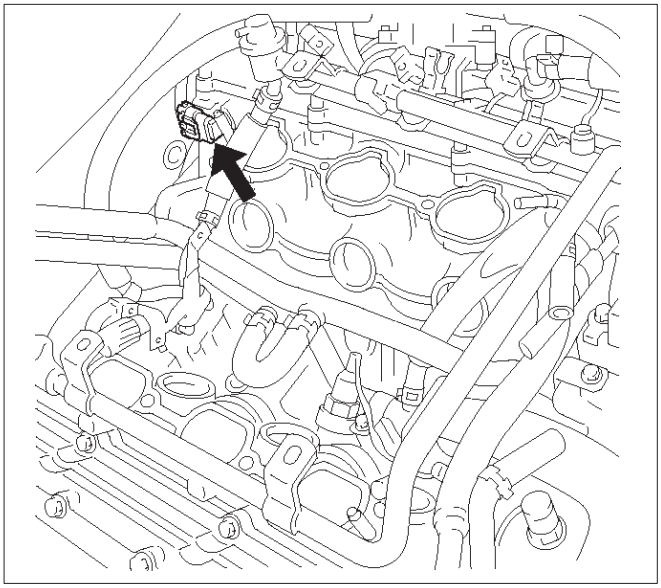

014RW120

4. Disconnect the electrical connector to the CMP sensor.

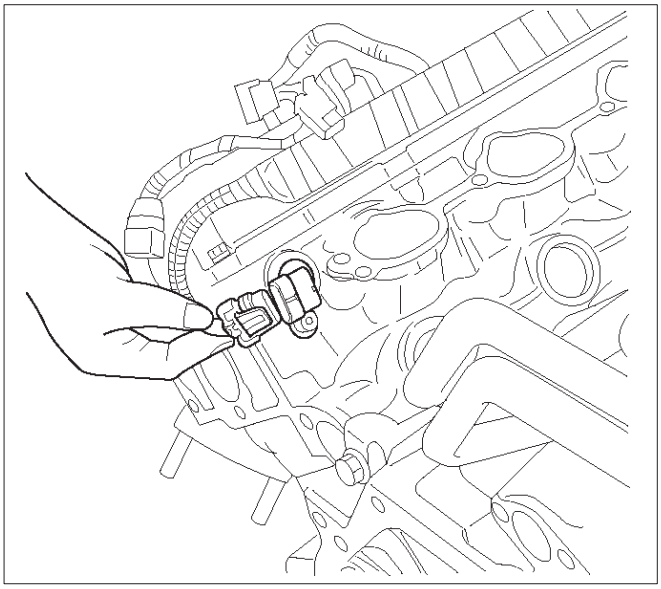

014RV053

5. Remove the CMP retaining bolt from the side of left cylinder head.
6. Remove the CMP sensor from the cylinder head.

Inspection Procedure

1. Inspect the sensor O-ring for cracks or leaks.
2. Replace the O-ring if it is worn or damaged.
3. Lubricate the new O-ring with engine oil.
4. Install the lubricated O-ring.

Installation Procedure

1. Install the CMP sensor in the cylinder head.
2. Install the CMP sensor retaining bolt.

Tighten

- Tighten the retaining screw to 9 N·m (78 lb in.).

3. Connect the electrical connector to the CMP sensor.

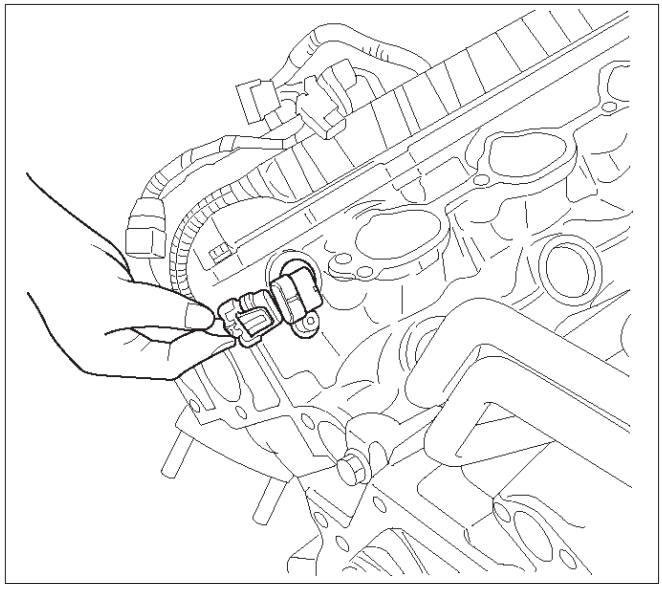

014RV053

4. Install the common chamber assembly.
   Refer to Common Chamber in Engine Mechanical.

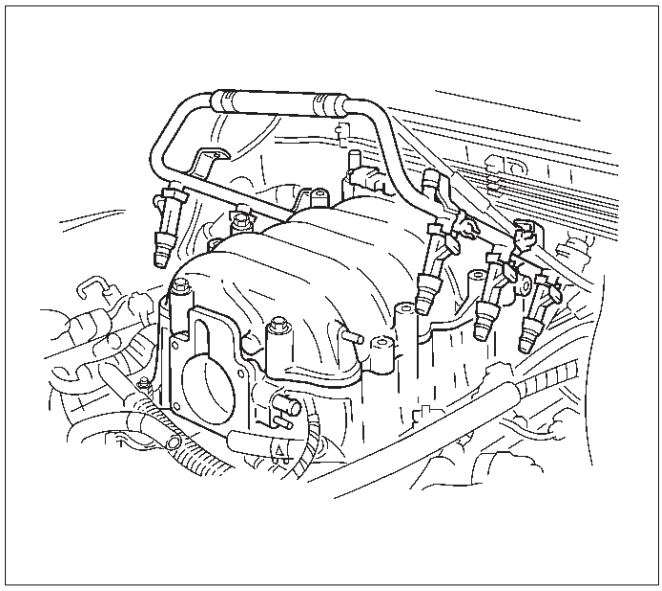

014RW106

5. Install the engine cover.
6. Connect the negative battery cable.

Crankshaft Position (CKP) Sensor

Removal Procedure

1. Disconnect the negative battery cable.
2. Disconnect the electrical connector to the CKP sensor.
3. Remove one bolt and the CKP sensor from the right side of the engine block, just behind the mount.

NOTE: Use caution to avoid any hot oil that might drip out.

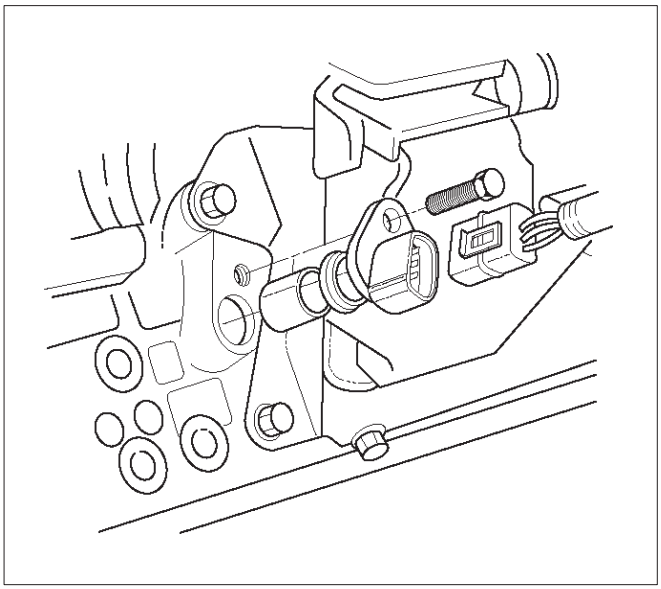

TS22909

Inspection Procedure

1. Inspect the sensor O-ring for cracks or leaks.
2. Replace the O-ring if it is worn or damaged.
3. Lubricate the new O-ring with engine oil.
4. Install the lubricated O-ring.

Installation Procedure

1. Install the CKP sensor in the engine block.
2. Install the CKP sensor mounting bolt.

Tighten

- Tighten the mounting bolt to 9 N·m (78 lb in.).

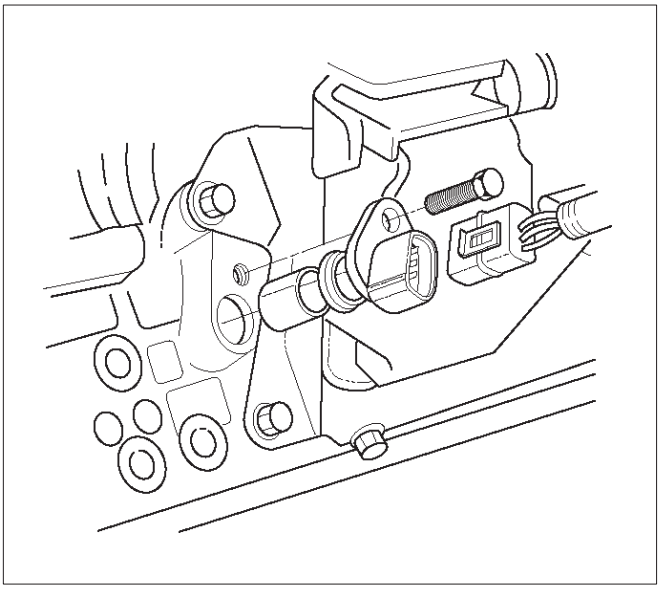

TS22909

3. Connect the electrical connector to the CKP sensor.
4. Connect the negative battery cable.

Engine Coolant Temperature (ECT) Sensor

Removal Procedure

NOTE: Care must be taken when handling the engine coolant temperature (ECT) sensor. Damage to the ECT sensor will affect proper operation of the fuel injection system.

1. Disconnect the negative battery cable.
2. Drain the radiator coolant. Refer to *Draining and Refilling Cooling System* in *Engine Cooling*.
3. Disconnect the electrical connector.

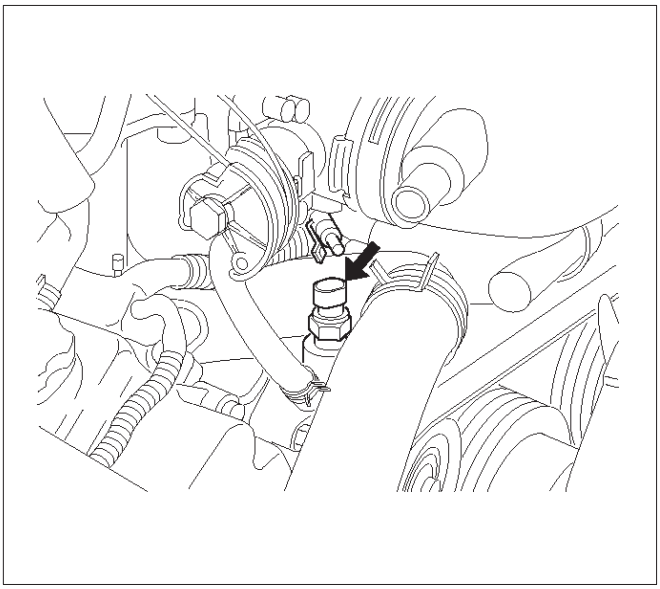

014RW127

4. Remove the ECT sensor from the coolant crossover.

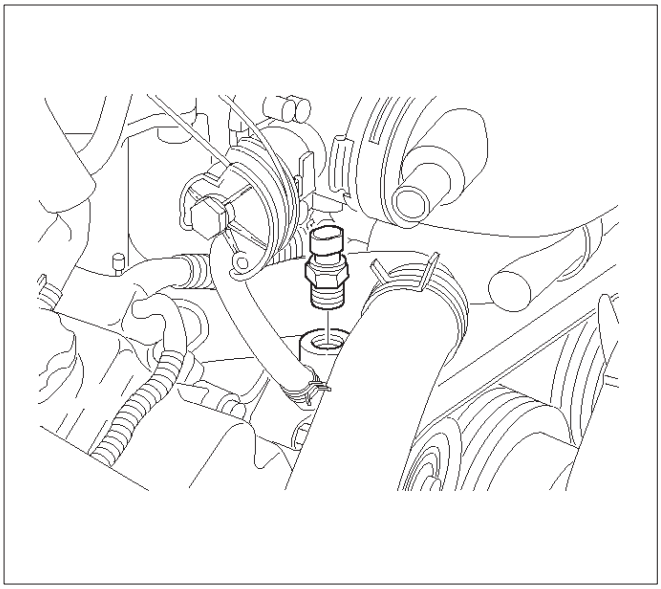

014RW086

Installation Procedure

1. Apply sealer or the equivalent to the threads of the ECT sensor.
2. Install the ECT sensor in the coolant crossover.

Tighten

- Tighten the ECT sensor to 30 N·m (22 lb ft.).

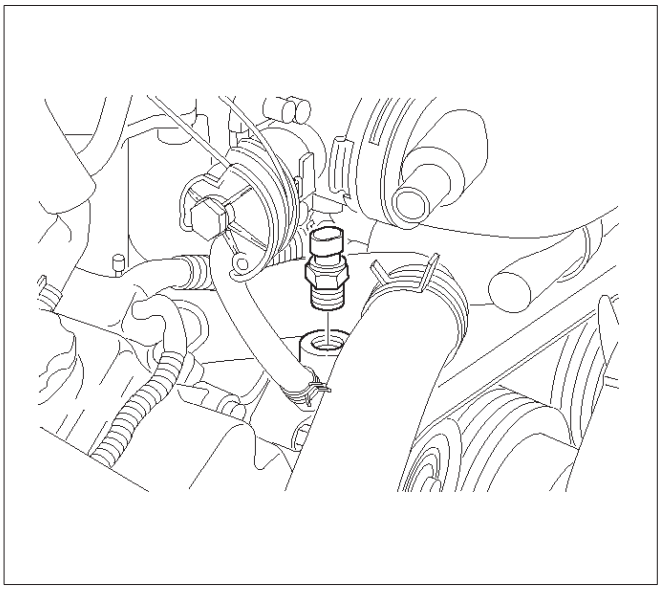

014RW086

3. Connect the electrical connector.

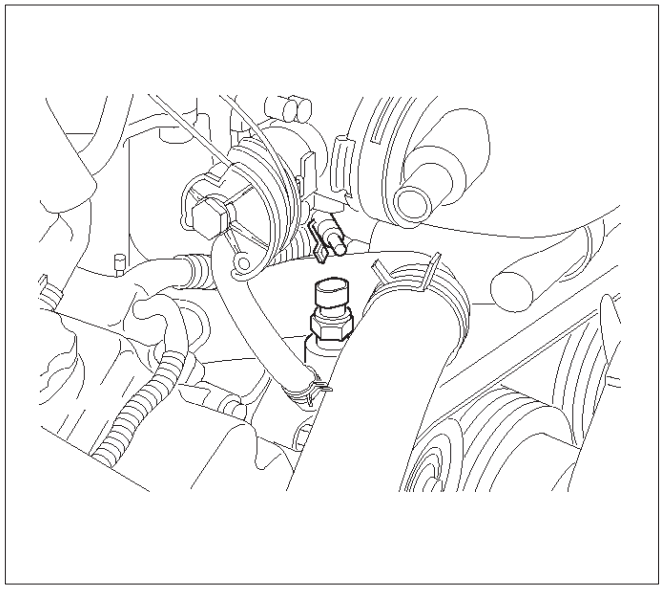

014RW085

4. Fill the radiator with coolant. Refer to *Draining and Refilling Cooling System* in *Engine Cooling*.
5. Connect the negative battery cable.

Heated Oxygen Sensor (HO2S)

Removal Procedure

1. Disconnect the negative battery cable.
2. Locate the oxygen sensors.
   - Bank 1 sensor 1 is mounted on the right-hand front exhaust pipe.

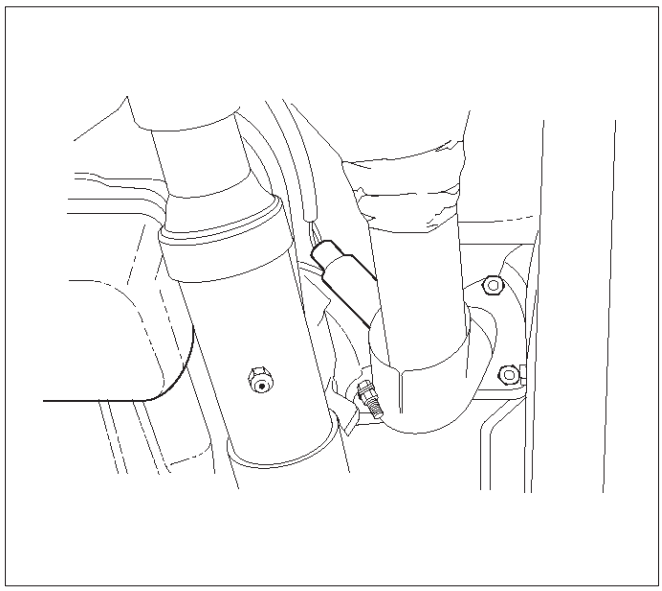

TS22912

- Bank 2 sensor 1 is mounted on the exhaust pipe ahead of the catalytic converter.

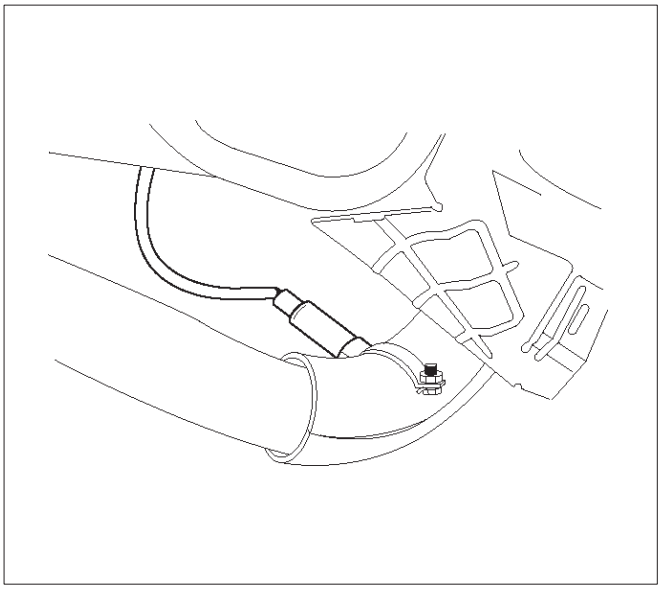

TS22914

3. Disconnect the pigtail from the wiring harness.

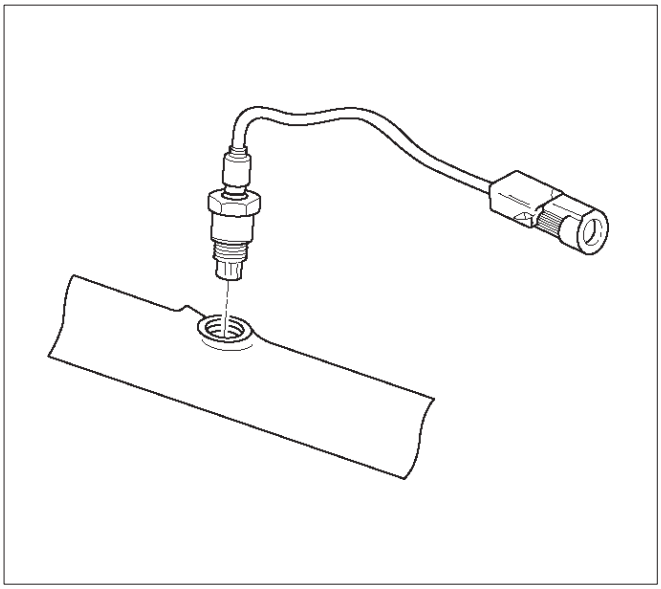

TS23739

IMPORTANT: The pigtail is permanently attached to the sensor. Be careful not to pull the wires out.

NOTE: Do not use a torch to remove an HO2S unless the sensor is being replaced. Using a torch could damage the sensor.

4. Remove the sensor from the exhaust pipe.
   - Because of the expansion and contraction of the metal in the exhaust system over time, this may be difficult if the engine temperature is below 48˚C (120˚F).

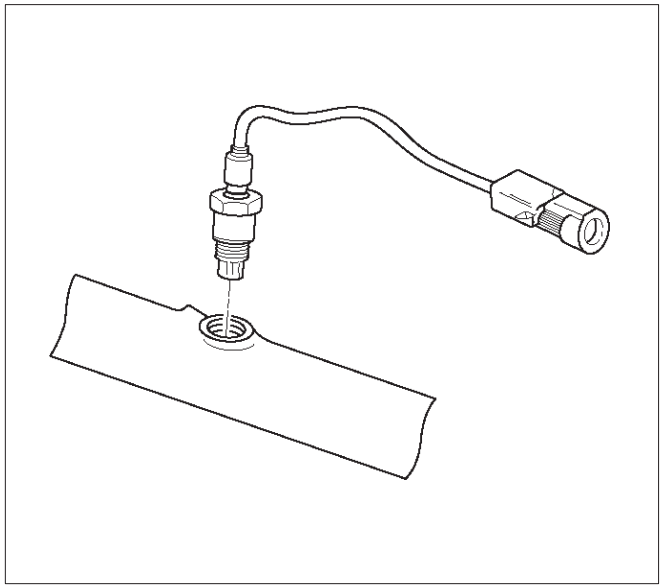

TS23739

Inspection Procedure

All two sensors are identical. Inspect each in the same way.

1. Inspect the pigtail and the electrical connector for grease, dirt, corrosion, and bare wires or worn insulation.
2. Inspect the louvered end of the sensor for grease, dirt, or other contaminations.

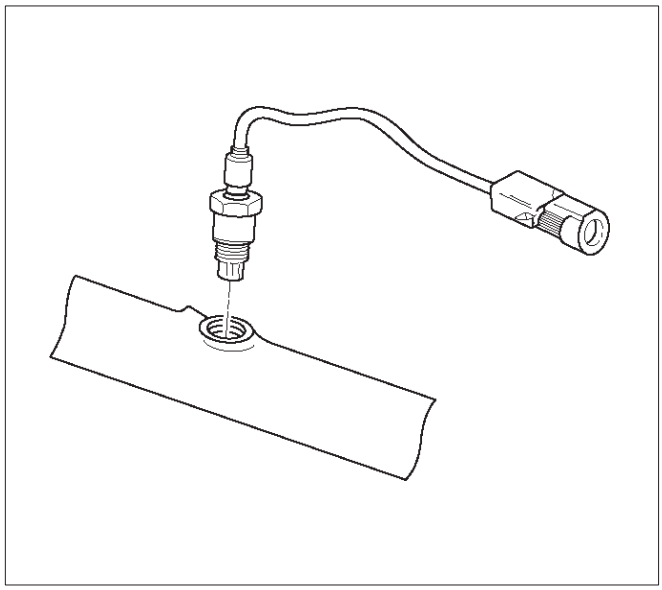

TS23739

Installation Procedure

IMPORTANT:

- A special anti-seize compound, P/N 5613695, is used on the HO2S threads. This compound consists of glass beads suspended in a liquid graphite solution. The graphite burns away with engine heat, but the glass beads will remain, making the sensor easier to remove.
- New or service sensors will already have the compound applied to the threads. If a sensor is removed and is to be reinstalled for any reason, the threads must have anti-seize compound applied.

1. Apply anti-seize compound or the equivalent to the threads of the oxygen sensor, if necessary.
2. Install the oxygen sensor on the exhaust pipe in its original position.

Tighten

- Tighten the oxygen sensor to 55 N·m (40 lb in.).

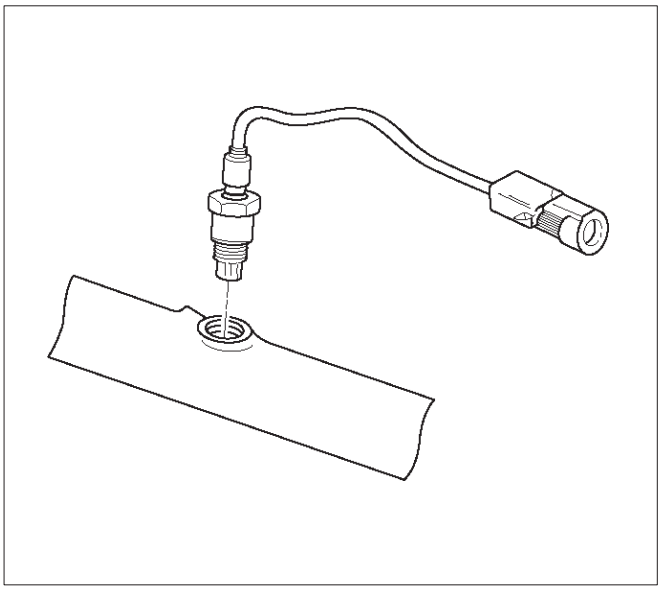

TS23739

3. Connect the pigtail to the wiring harness.
4. Connect the negative battery cable.

Intake Air Temperature (IAT) Sensor

Removal Procedure

1. Disconnect the negative battery cable.
2. Remove the engine cover
3. The IAT sensor is located in the intake air duct, behind the throttle body.
4. Disconnect the electrical connector from the IAT sensor.

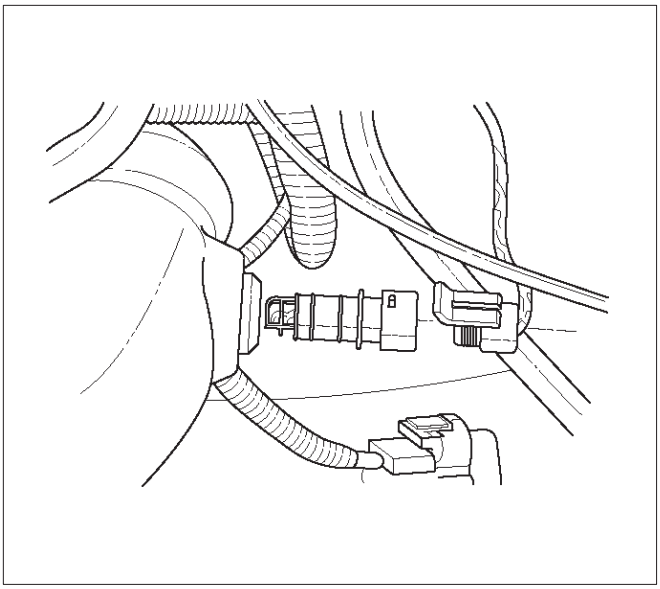

TS23741

5. Remove the IAT sensor from the intake air duct by using a rocking motion while pulling the sensor.

Installation Procedure

1. Install the IAT sensor into the grommet in the intake air duct.
2. Correct the IAT electrical connector.

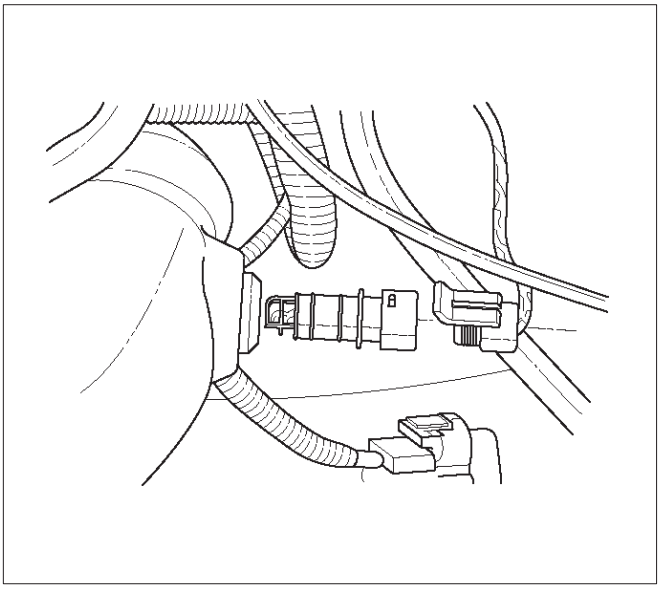

TS23741

3. Install the engine cover.
4. Connect the negative battery cable.

Knock Sensor (KS)

Removal Procedure

1. Disconnect the negative battery cable.
2. Drain the cooling system. Refer to *Draining and Filling the Cooling System* in *Engine Cooling*.
3. Remove the engine cover.
4. Remove the common chamber assembly.

   Refer to Common Chamber in Engine Mechanical.

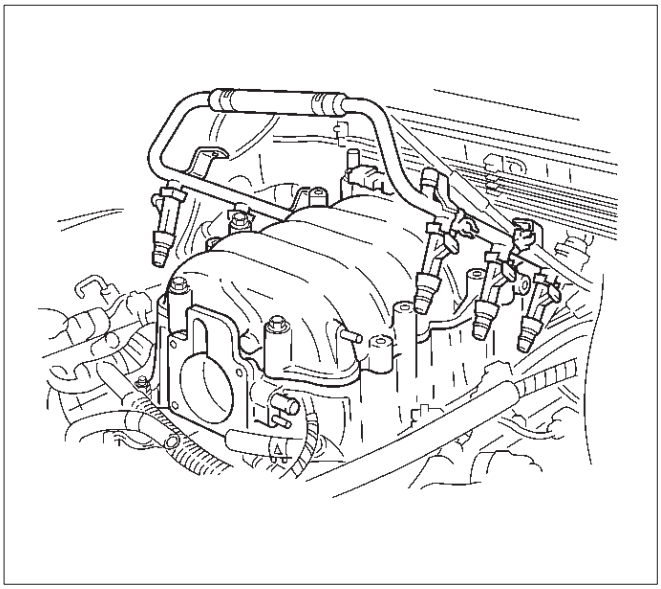

014RW106

5. Disconnect the electrical connector from the knock sensor.

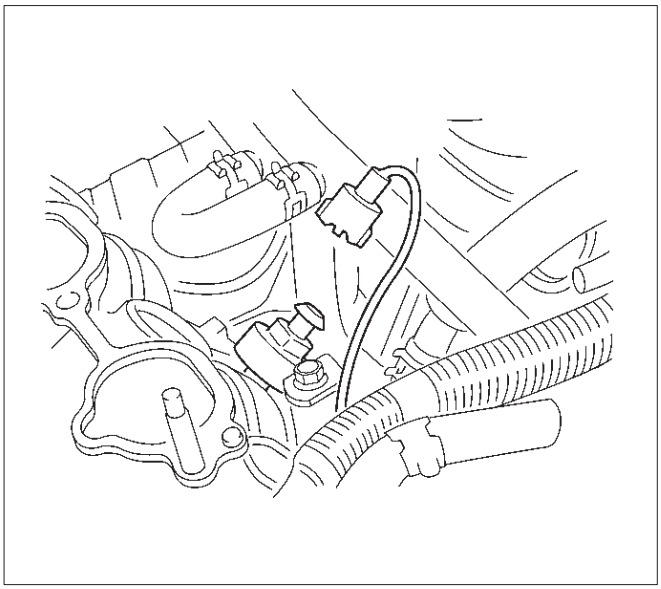

014RW103

6. Unscrew the knock sensor from the engine block.

Installation Procedure

NOTE: Do not apply thread sealant to the sensor threads. The sensor is coated at the factory and applying additional sealant will affect the sensor's ability to detect detonation.

1. Screw the knock sensor into the engine block.

Tighten

- Tighten the knock sensor to 20 N·m (177 lb in.).

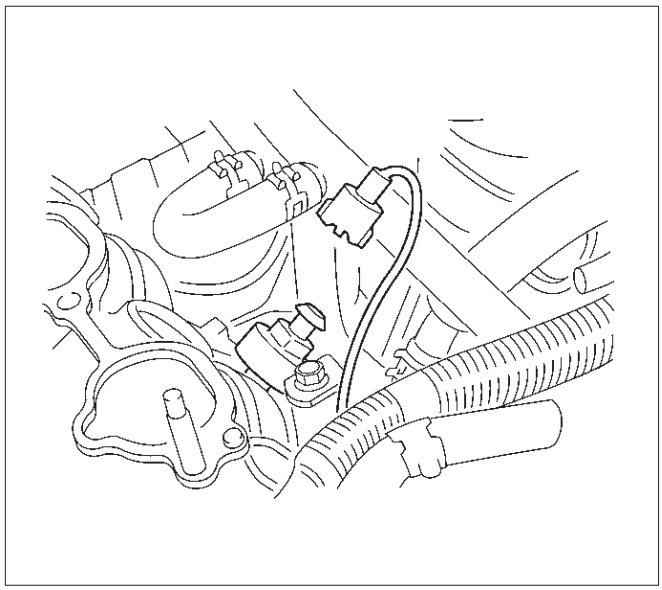

014RW103

2. Connect the electrical connector to the knock sensor.
3. Install the common chamber assembly.

   Refer to Common Chamber in Engine Mechanical.

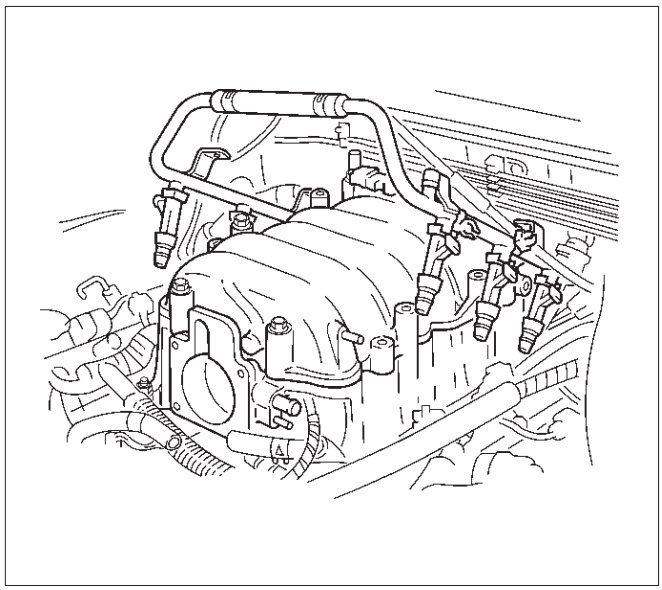

014RW106

4. Install the engine cover.
5. Fill the cooling system.

   Refer to Draining and Filling the Cooling System in Engine Cooling.
6. Connect the negative battery cable.

Mass Air Flow (MAF) Sensor

Removal Procedure

1. Disconnect the negative battery cable.
2. Disconnect the electrical connector from the MAF sensor.

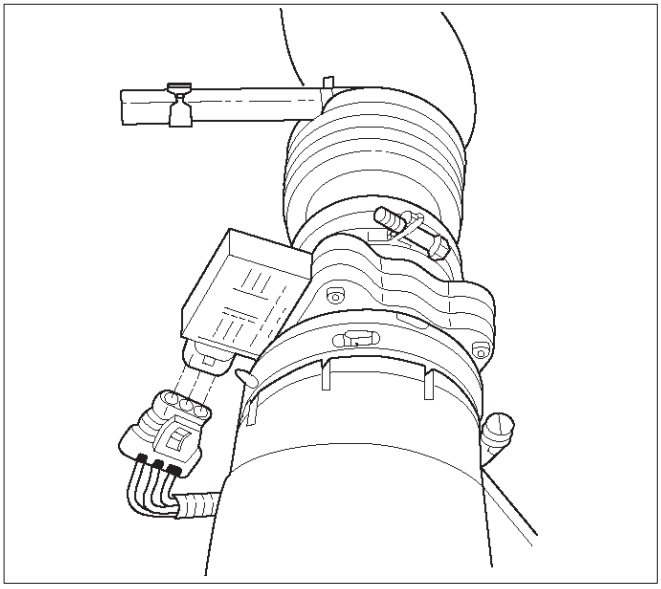

TS23740

3. Loosen the clamps which secure the intake air duct and the air cleaner to the MAF sensor.
4. Remove the intake air duct from the MAF sensor.
5. Remove the MAF sensor from the air cleaner.

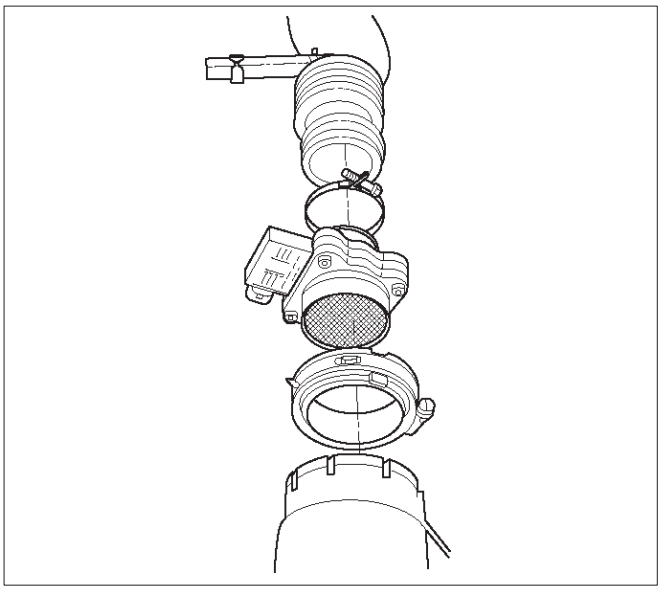

TS23781

Installation Procedure

1. Install the MAF sensor on the air cleaner with the clamp.
2. Install the intake air duct and the clamp on the MAF sensor.

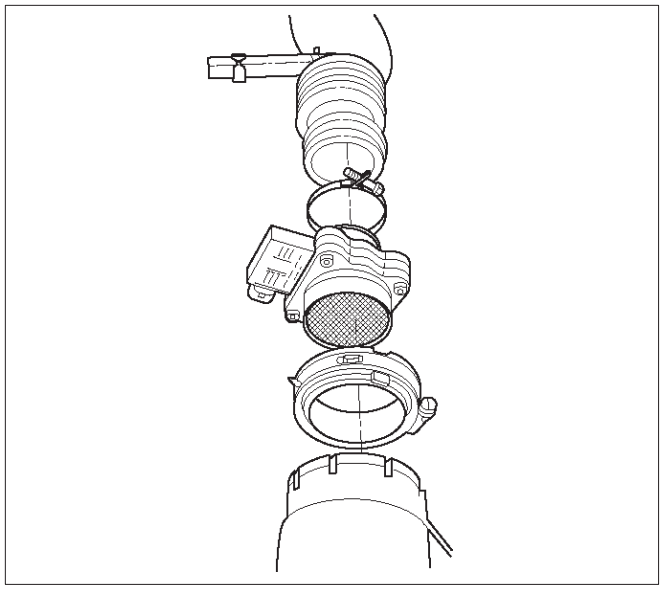

TS23781

3. Tighten the clamps to secure the MAF sensor to the intake air duct and the air cleaner.
4. Connect the MAF electrical connector.
5. Connect the negative battery cable.

Manifold Absolute Pressure (MAP) Sensor

Removal Procedure

1. Disconnect the negative battery cable.
2. Disconnect the electrical connector from the MAP sensor.

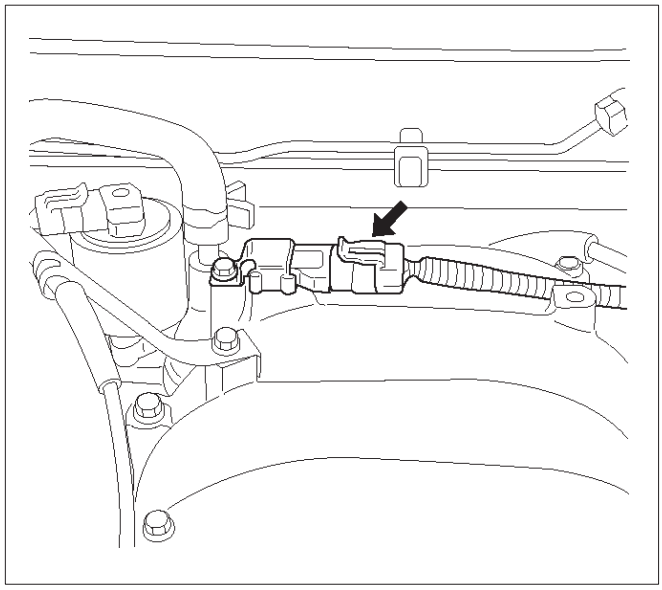

055RW005

3. Remove the bolt securing the MAP sensor to the mounting bracket on the common chamber.

4. Remove the MAP sensor from the mounting bracket.

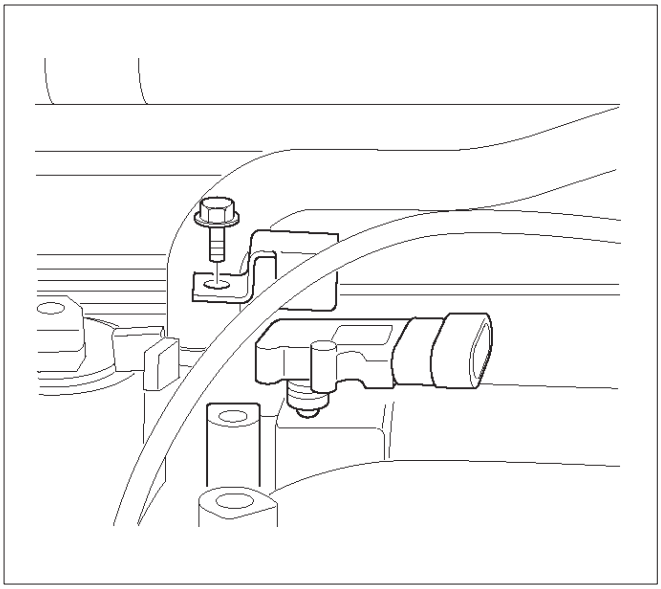

055RW002

Installation Procedure

1. Install the MAP sensor in the mounting bracket.

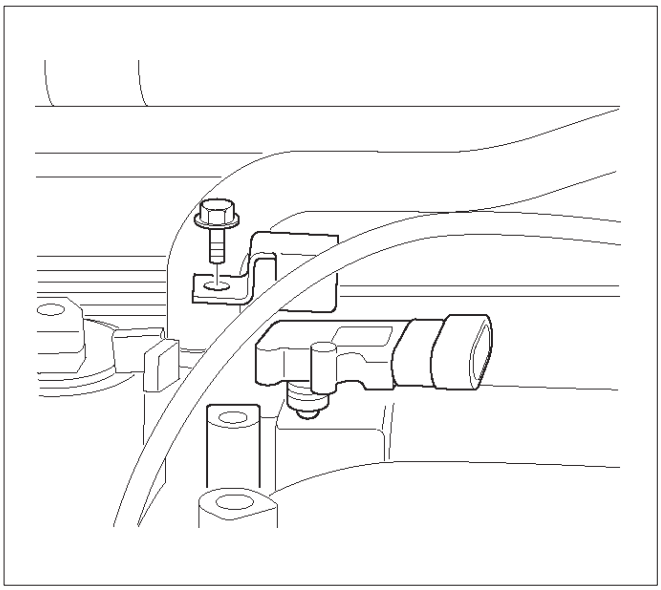

055RW002

2. Install the mounting bracket retaining bolt on the common chamber.
3. Connect the MAP electrical connector.

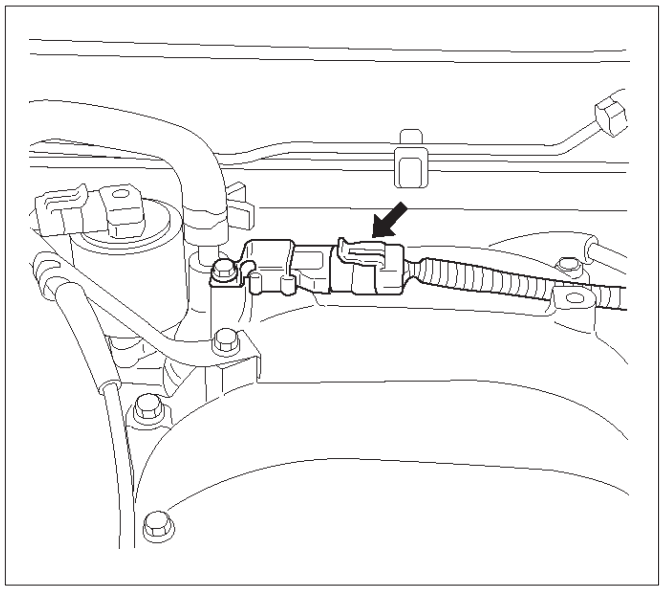

055RW005

4. Connect the negative battery cable.

Malfunction Indicator Lamp (MIL)

Removal and Installation Procedure

Refer to Warning light bulb, indicator light valve, illumination light bulb, A/T indicator light bulb in Meter and Gauge.

Powertrain Control Module (PCM)

Service Precaution

NOTE: To prevent possible electrostatic discharge damage to the PCM, do not touch the connector pins or soldered components on the circuit board.

Electrostatic Discharge (ESD) Damage

Electronic components used in the control systems are often designed to carry very low voltage. Electronic components are susceptible to damage caused by electrostatic discharge. Less than 100 volts of static electricity can cause damage to some electronic components. By comparison, it takes as much as 4,000 volts for a person to even feel the zap of a static discharge.

There are several ways for a person to become statically charged. The most common methods of charging are by friction and by induction. An example of charging by friction is a person sliding across a car seat.

Charging by induction occurs when a person with well insulated shoes stands near a highly charged object and momentarily touches ground. Charges of the same polarity are drained off leaving the person highly charged with the opposite polarity. Static charges can cause

damage, therefore, it is important to use care when handling and testing electronic components.

NOTE: To prevent possible Electrostatic Discharge damage, follow these guidelines:

- Do not touch the control module connector pins or soldered components on the control module circuit board.
- Do not open the replacement part package until the part is ready to be installed.
- Before removing the part from the package, ground the package to a known good ground on the vehicle.
- If the part has been handled while sliding across the seat, or while sitting down from a standing position, or while walking a distance, touch a known good ground before installing the part.

NOTE: To prevent internal PCM damage, the ignition must be in the “OFF” position in order to disconnect or reconnect power to the PCM (for example: battery cable, PCM pigtail, PCM fuse, jumper cables, etc.).

IMPORTANT: When replacing the production PCM with a service PCM, it is important to transfer the broadcast code and production PCM number to the service PCM label. This will allow positive identification of PCM parts throughout the service life of the vehicle. Do not record this information on the metal PCM cover.

IMPORTANT: The ignition should always be in the “OFF” position in order to install or remove the PCM connectors.

Service of the PCM should normally consist of either replacement of the PCM or EEPROM programming. If the diagnostic procedures call for the PCM to be replaced, the PCM should be checked first to ensure it is the correct part. If it is, remove the faulty PCM and install the new service PCM.

The service PCM EEPROM will not be programmed. DTC P0601 indicates the check sum error.

Removal Procedure

1. Disconnect the negative battery cable.
2. Block the wheels.
3. Remove the front console assembly.
   1. Remove the four screws.

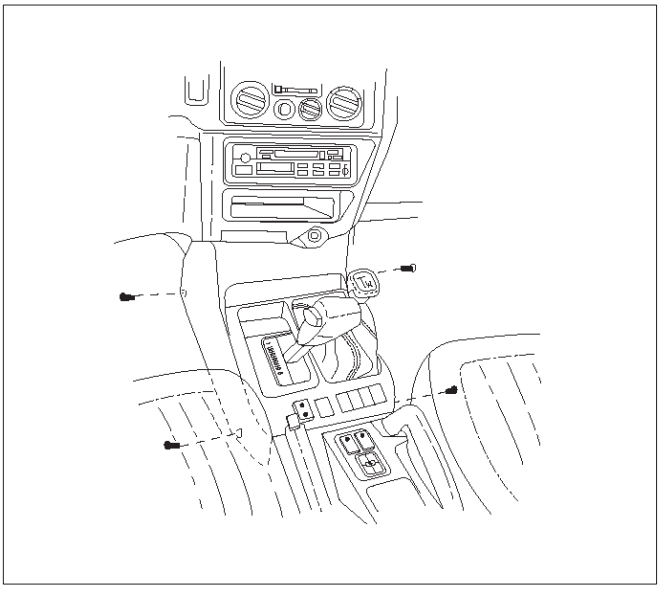

TS23755

   2. Remove the transfer shift lever knob by unscrewing the knob.
   3. Move the transmission gear selector out of the park position.
   4. Lift up sharply on the back edge of the assembly.
   5. Disconnect the seat heater switch connectors (if equipped).
   6. Disconnect the POWER and WINTER switch connectors.
   7. Lift out the front console assembly.

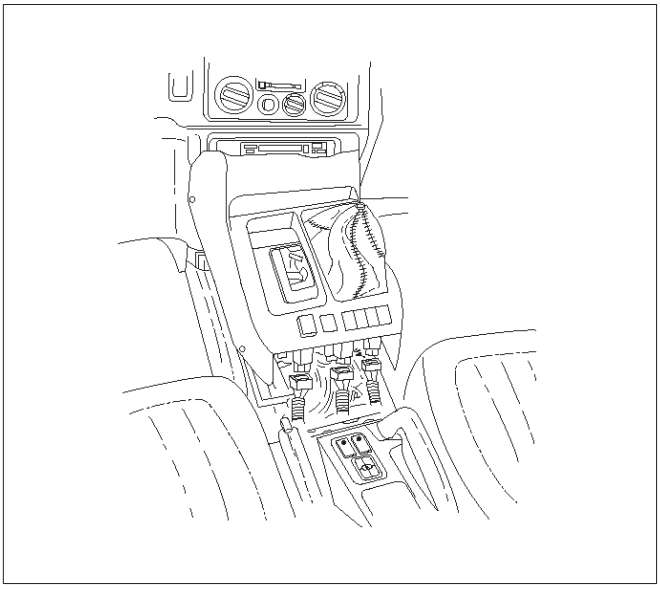

TS23756

4. Disconnect the red, white, and blue electrical connectors at the PCM.
5. Remove the two screws in the front of the PCM.
6. Remove the one screw at the left rear of the PCM.
7. Pull the PCM straight out from the dashboard.

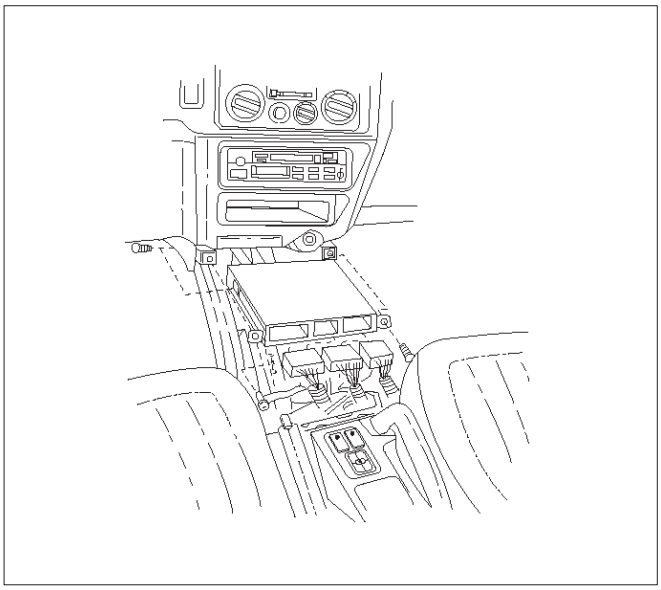

TS23757

Installation Procedure

1. Insert the PCM into the dashboard.
   - Line up the holes in front for the mounting screws.
2. Install the PCM with two screws in the front and one screw at the left rear.
3. Plug the red, white, and blue connectors into the appropriate sockets.

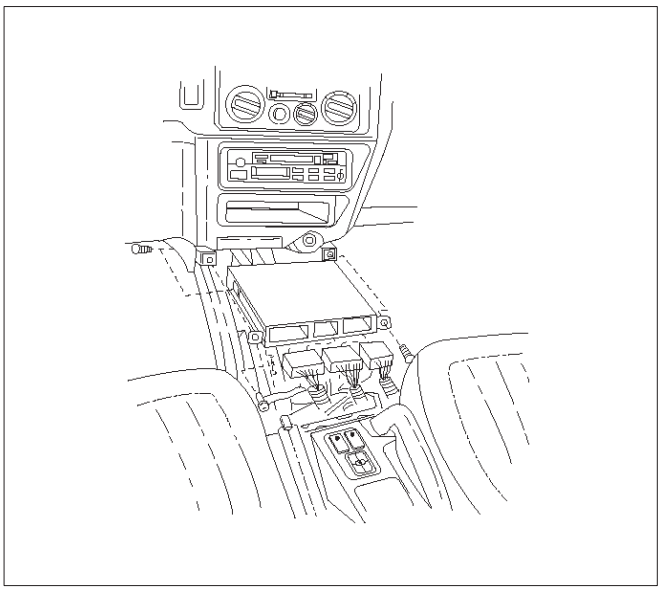

TS23757

EEPROM

General Description

The Electronically Erasable Programmable Read Only Memory (EEPROM) is a permanent memory that is physically soldered within the PCM. The EEPROM contains program and calibration information that the PCM needs to control powertrain operation.

EEPROM Programming

1. Step-up – Ensure that the following conditions have been met:
   - The battery is fully charged.
   - The ignition is “ON.”
   - The Vehicle Interface Module cable connection at the DLC is secure.
2. Program the PCM using the latest software matching the vehicle. Refer to up-to-date Techline equipment user’s instructions.
3. If the PCM fails to program, Refer to *UBS 98 model year Immobilizer Workshop Manual.*

Functional Check

1. Perform the On-Board Diagnostic System Check.
2. Start the engine and run for one minute.
3. Scan for DTCs using the Tech 2.

Power Steering Pressure (PSP) Switch

General Description

The Power Steering Pressure (PSP) switch closes when the hydraulic pressure reaches 3920 ± 690 kPa (570 ± 100 psi). This causes the PCM to actuate the idle air control valve in order to prevent the additional load from slowing down the engine. The switch opens when the hydraulic pressure drops to 2970 ± 560 kPa (430 ± 80 psi).

Removal Procedure

1. Disconnect the PSP switch pigtail from the wiring harness.
   - The pigtail is permanently attached to the switch. Do not attempt to remove the wires from the sensor.
   - Have a container ready to catch the power steering fluid that leaks out of the line when the switch is removed.

2. Remove the PSP switch from the power steering line.
   - Plug the line to prevent excessive loss of fluid and possible contamination of the power steering system.

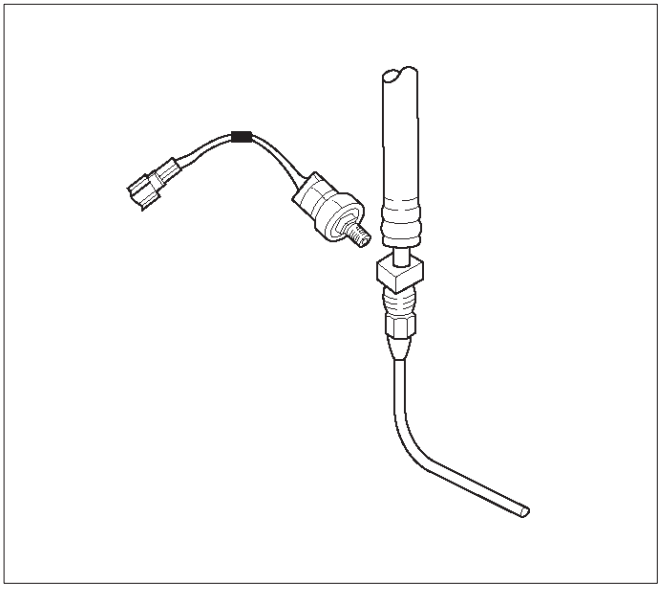

TS23760

Installation Procedure

1. Install the PSP switch in the power steering line.

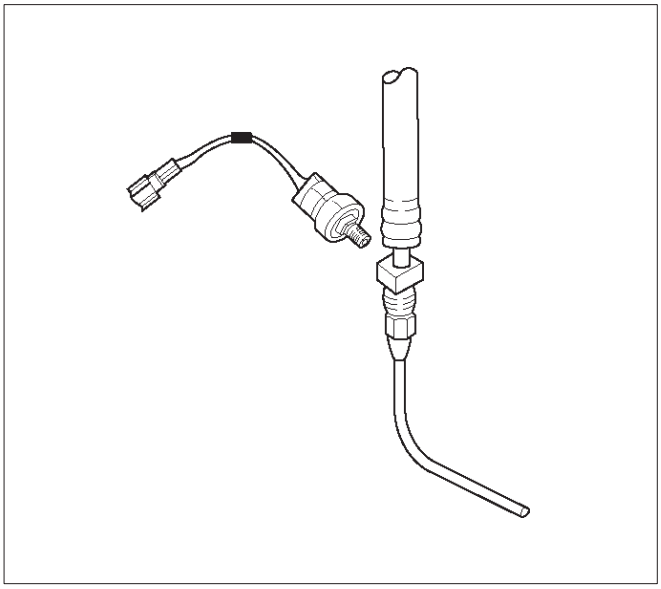

TS23760

2. Connect the PSP switch pigtail to the wiring harness.
3. Check the power steering fluid level. Refer to *Power Steering*.
4. Start the engine. Watch the PSP switch for signs of fluid leakage.

Throttle Position (TP) Sensor

Removal Procedure

1. Disconnect the negative battery cable.
2. Disconnect the TPS electrical connector.
3. Remove the bolts and the TP sensor from the throttle body.

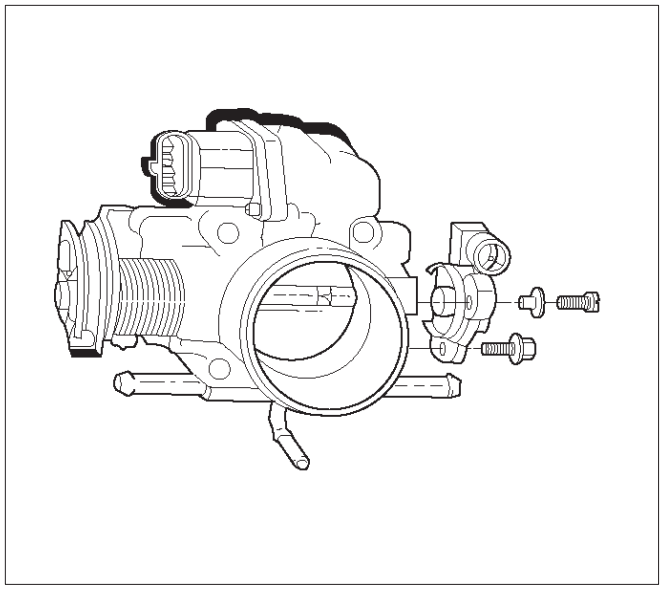

TS23747

NOTE: Do not clean the TP sensor by soaking it in solvent. The sensor will be damaged as a result.

Function Check

Use a Tech 2 to check the TP sensor output voltage at closed throttle.

- The voltage should be under 0.85 volt.
- If the reading is greater than 0.85 volt, check the throttle shaft to see if it is binding. Check that the throttle cable is properly adjusted, also. Refer to *Throttle Cable Adjustment*.
- If the throttle shaft is not binding and the throttle cable is properly adjusted, install a new TP sensor.

Installation Procedure

1. Install the TP sensor on the throttle body with the bolts.

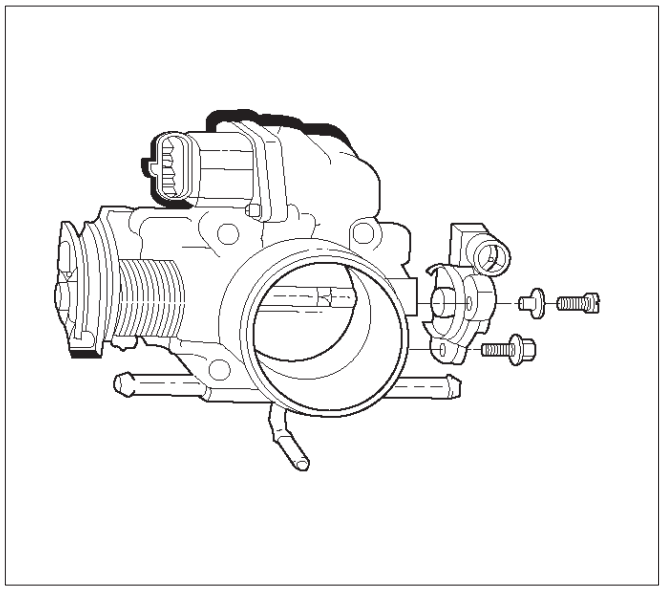

TS23747

2. Connect the TP electrical connector.
3. Install the negative battery cable.

Vehicle Speed Sensor (VSS)

Removal Procedure

CAUTION: The VSS is located on the right side of the transfer case just ahead of the rear propeller shaft and very close to the exhaust pipes. Be sure that the exhaust pipes are cool enough to touch before trying to remove the VSS. If the pipes are hot, you could be burned.

1. Disconnect the negative battery cable.
2. Disconnect the VSS electrical connector.

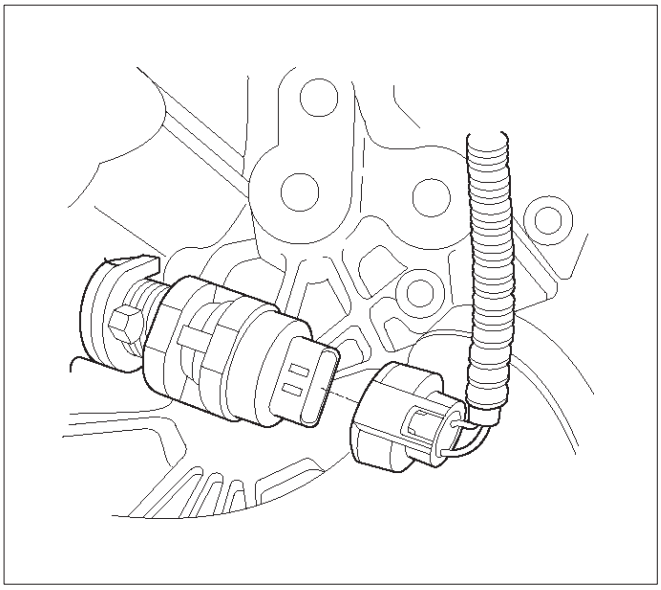

TS23748

3. Remove the bolt and the clamp securing the VSS in place.

IMPORTANT: Have a container ready to catch any fluid that leaks out when the VSS is removed from the transfer case.

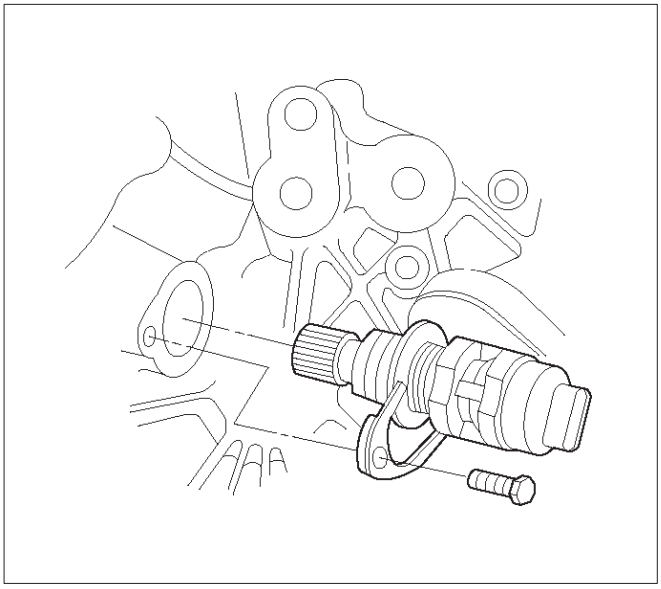

TS23780

4. Remove the VSS from the transfer case by wiggling it slightly and pulling it straight out.

Inspection Procedure

1. Inspect the electrical connector for signs of corrosion or warping. Replace the VSS if the electrical connector is corroded or warped.
2. Inspect the VSS driven gear for chips, breaks, or worn condition. Replace the VSS if the driven gear is chipped, broken or worn.
3. Inspect the O-ring for wear, nicks, tears, or looseness. Replace the O-ring if necessary.

Installation Procedure

1. Install the VSS in the transfer case with the notch for the connector facing the rear.
2. Secure the VSS in place with the clamp and the bolt.

Tighten

- Tighten the bolt to 16 N·m (12 lb ft.).

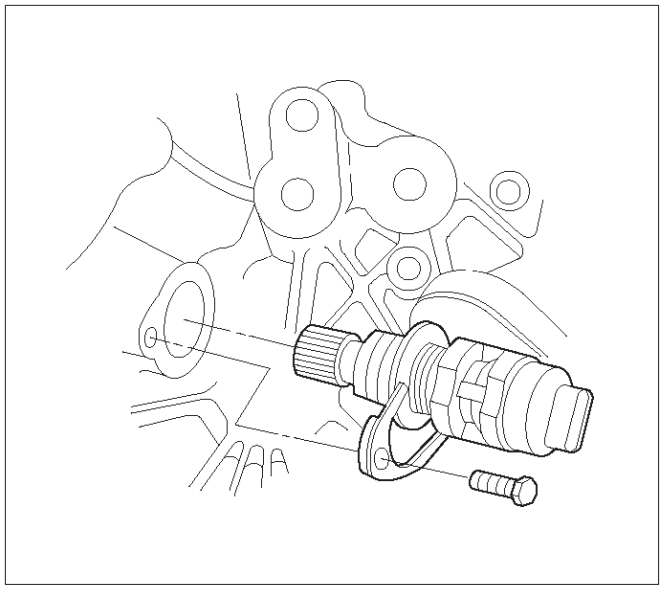

TS23780

3. Connect the VSS electrical connector.

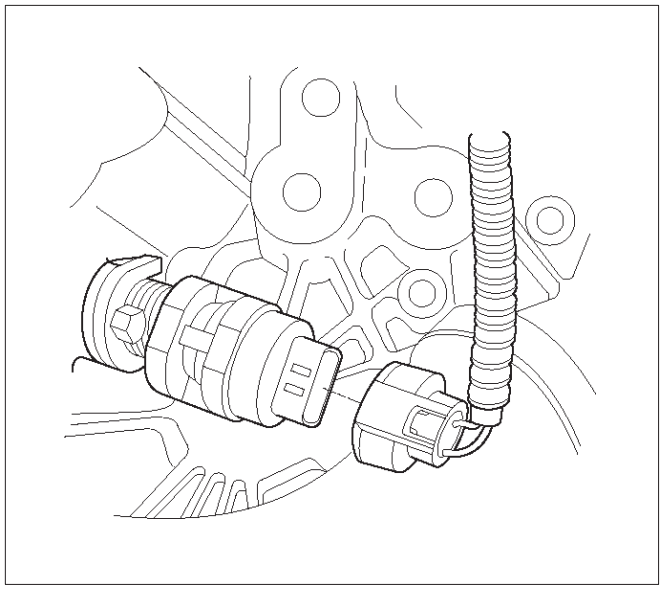

TS23748

4. Check the transfer case oil level. Add fluid if necessary.
5. Connect the negative battery cable.

Air Cleaner/Air Filter

Removal Procedure

1. Loosen the clamp between the air cleaner lid and the mass air flow sensor.
2. Release the four latches securing the lid to the air cleaner housing.
3. Remove the air cleaner lid.

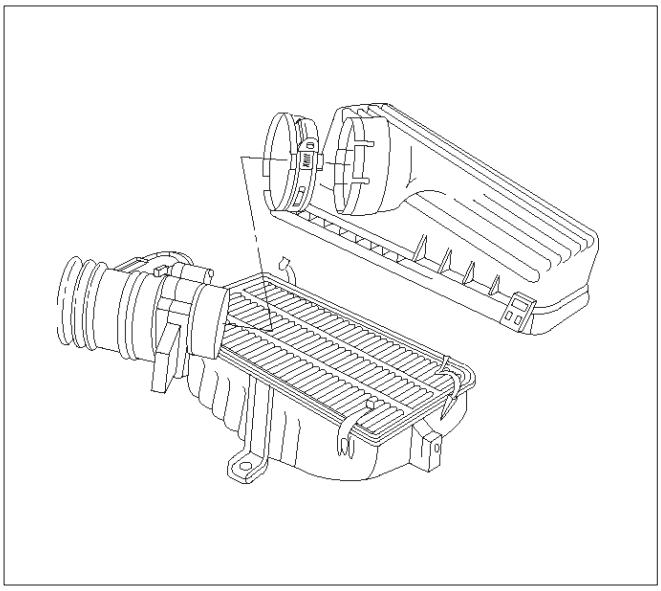

TS23973

4. Remove the air filter element.

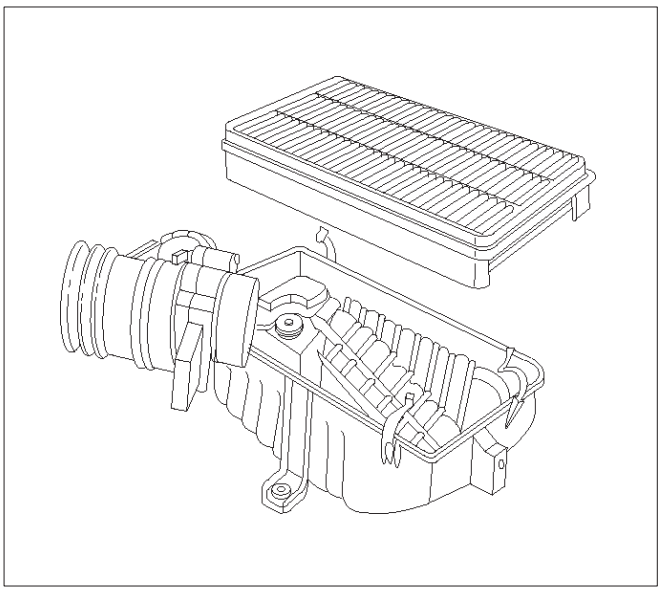

TS23794

5. Remove the retaining bolts and the air cleaner housing from the vehicle.

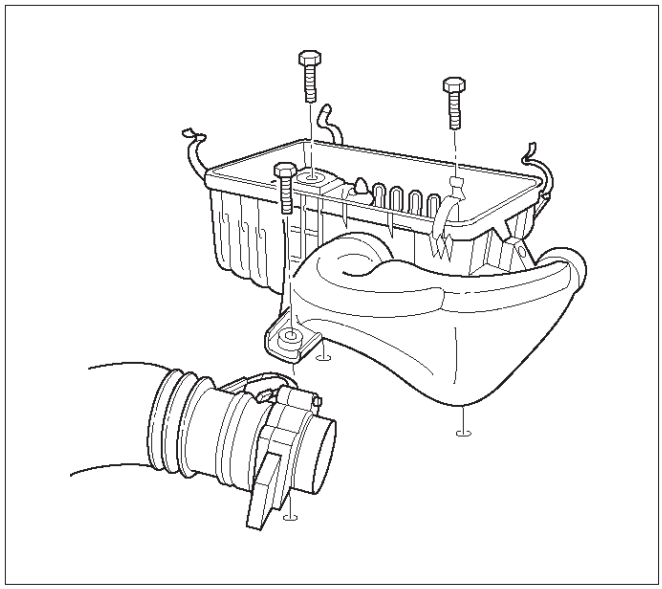

130RT002

Installation Procedure

1. Install the air cleaner housing in the vehicle with the retaining bolts.

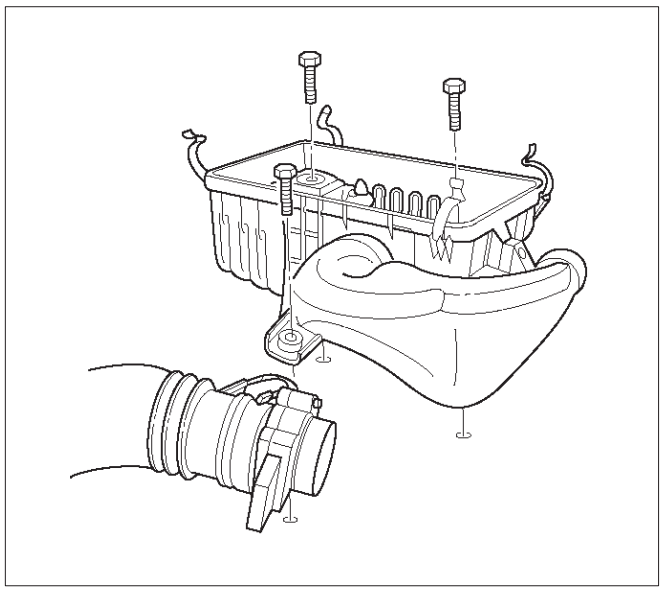

130RT002

2. Install the air filter element in the air cleaner housing.

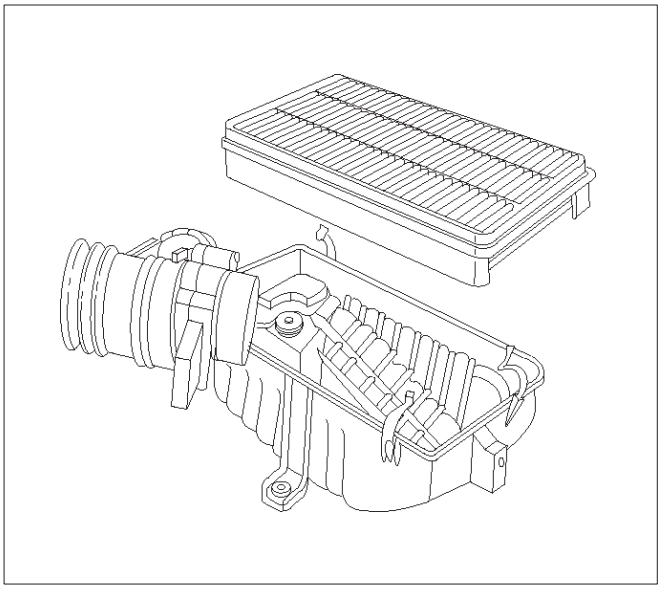

TS23794

3. Install the air cleaner lid on the MAF sensor and the air cleaner housing.

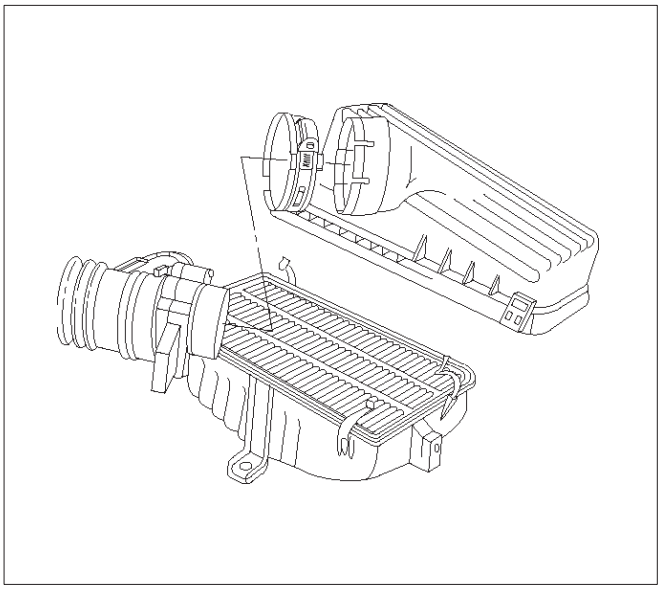

TS23973

4. Tighten the clamp and secure the four latches between the lid and the air cleaner housing.

Idle Air Control (IAC) Valve

Removal Procedure

1. Disconnect the negative battery cable.
2. Disconnect the IAC electrical connector.
3. Remove the bolts and the IAC valve from the throttle body.

NOTE: Do not clean the IAC valve by soaking it in solvent. The valve will be damaged as a result.

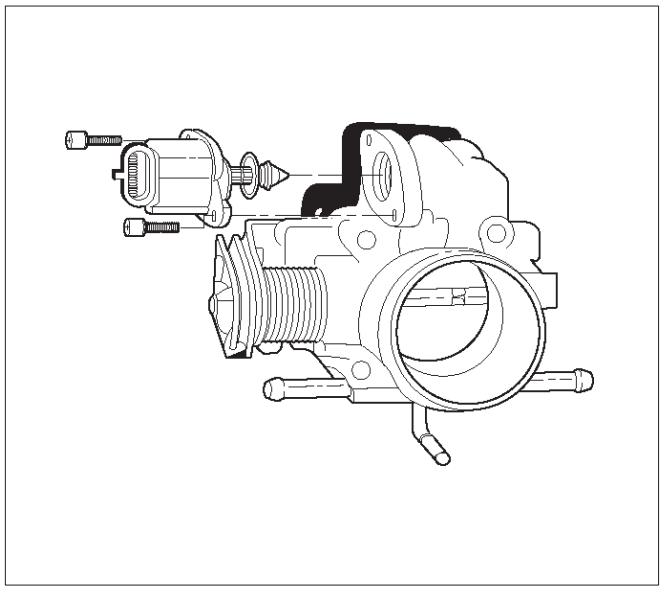

TS23745

Cleaning, Inspection, and Measurement Procedure

- Clean the IAC valve O-ring sealing surface, pintle valve seat and air passage.
  - Use carburetor cleaner and a parts cleaning brush to remove carbon deposits. Do not use a cleaner that contains methyl ethyl ketone. This is an extremely strong solvent and not necessary for this type of deposit.
  - Shiny spots on the pintle are normal and do not indicate misalignment or a bent pintle shaft.
  - If the air passage has heavy deposits, remove the throttle body for complete cleaning.

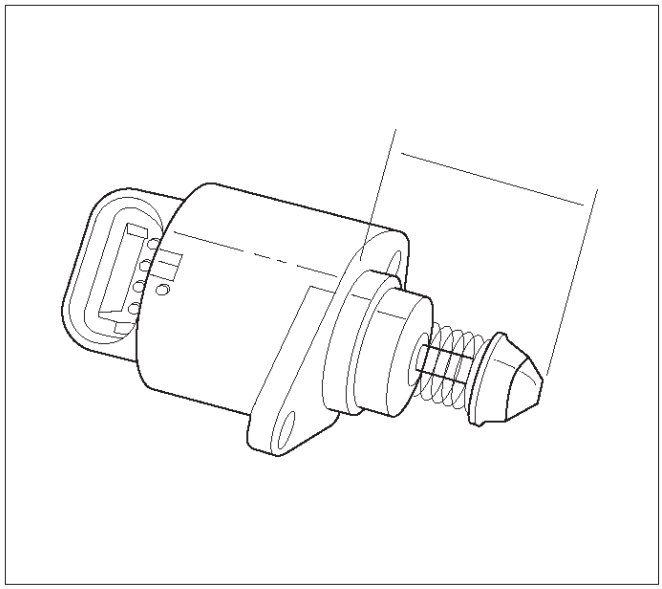

TS23746

- Inspect the IAC valve O-ring for cuts, cracks, or distortion. Replace the O-ring if damaged.

- In order to install a new IAC valve, measure the distance between the tip of the pintle and the mounting flange. If that measurement is 28 mm (1.1 in.) or less, the valve needs no adjustment. If the measurement is greater than 28 mm (1.1 in.), apply finger pressure and retract the valve. The force required to retract the pintle on a new valve will not damage the valve, shaft, or pintle.

NOTE: Do not push or pull on the IAC valve pintle on IAC valves that have been in service. The force required to move the pintle may damage it.

IMPORTANT: Use an identical replacement part in order to replace a valve. IAC valve pintle shape and diameter are designed for the specific application.

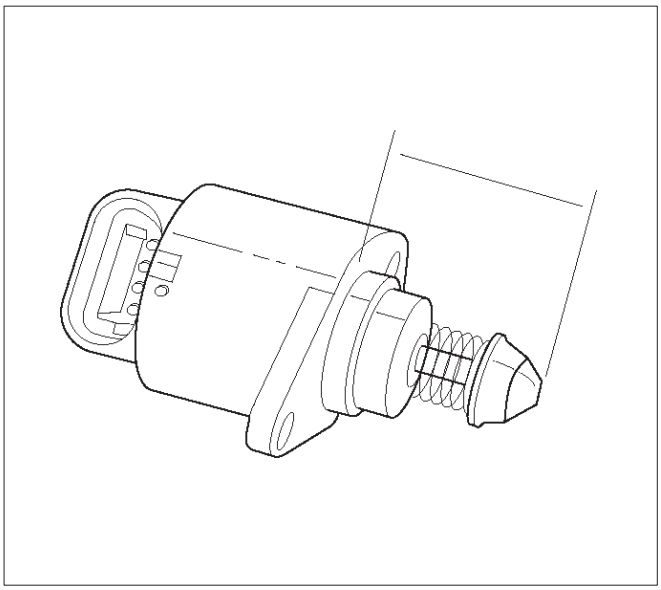

TS23746

Installation Procedure

1. Install the IAC valve on the throttle body with the bolts.

Tighten

- Tighten the bolts to 1 N·m (9 lb in.).

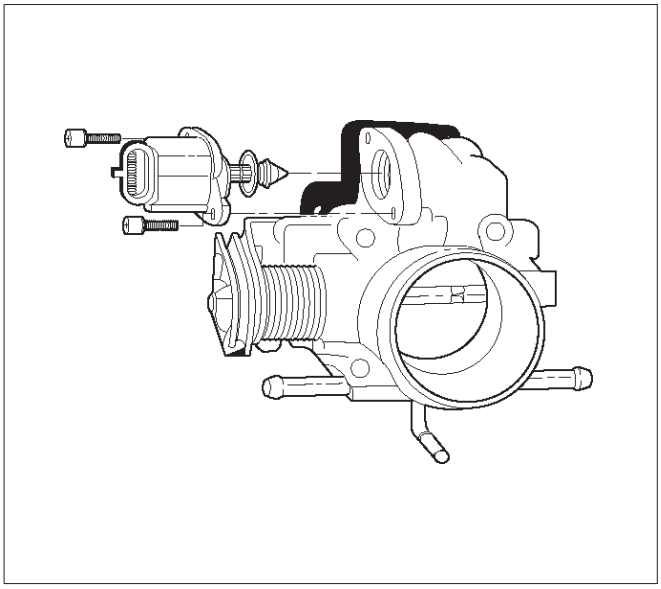

TS23745

2. Connect the IAC valve electrical connector.
3. Install the negative battery cable.

Common Chamber

Removal and Installation Procedure

Refer to Common Chamber in Engine Mechanical.

Accelerator Cable Assembly

Removal Procedure

1. Remove the engine cover.
2. Loosen the adjusting nut on the cable bracket mounting on the common chamber.

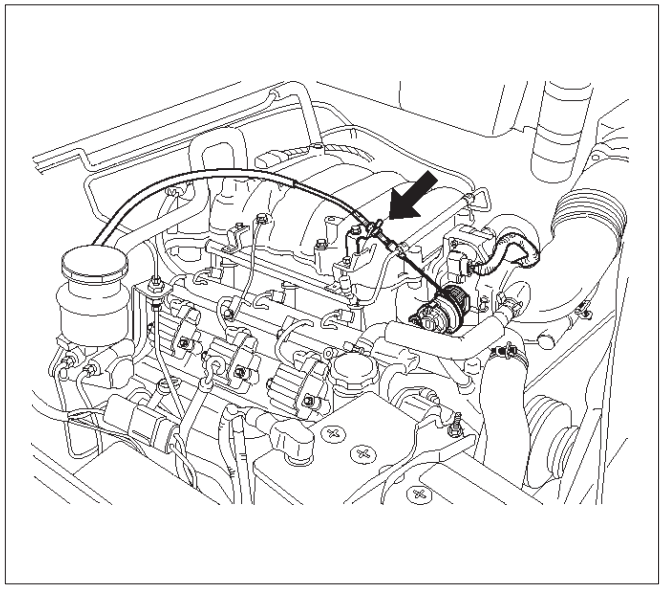

101RW005

3. Remove the accelerator control cable (on the throttle valve end).

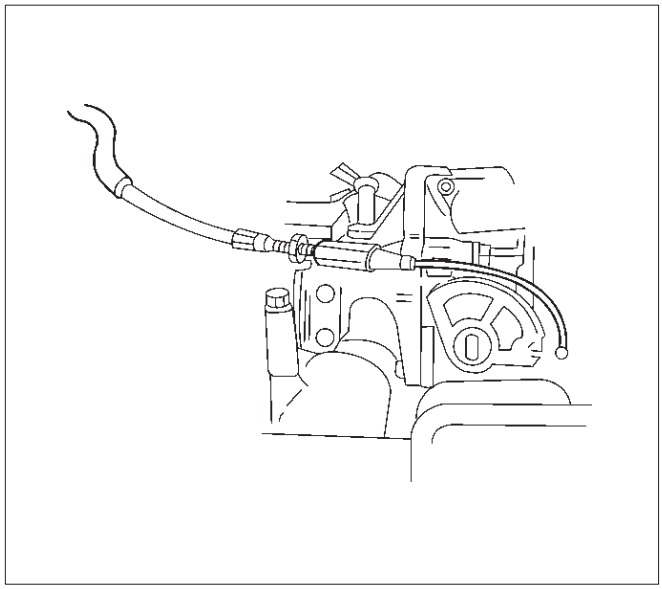

101RW006

4. Remove the accelerator control cable (on the accelerator pedal end).

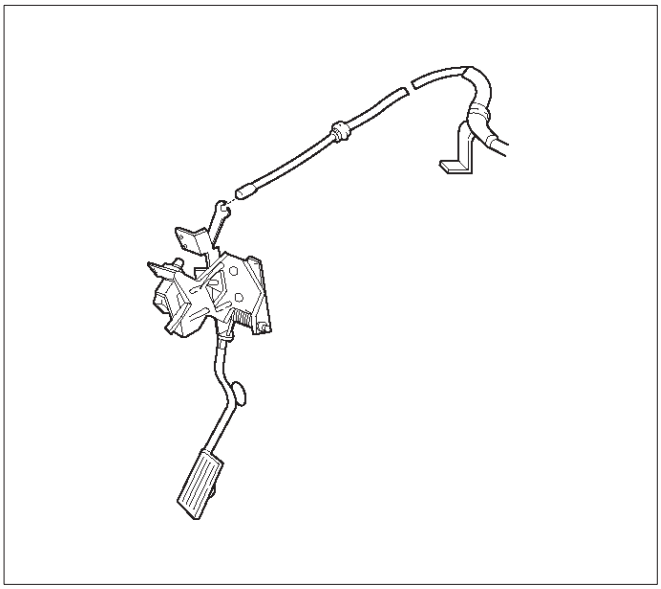

TS23982

5. Remove the grommet.
6. Remove the accelerator control cable.

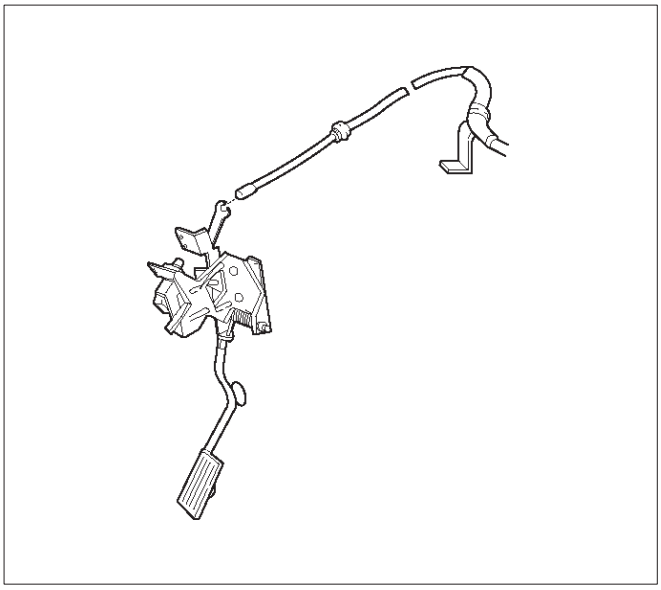

TS23983

Inspection Procedure

Check the following items, and replace the control cable if any abnormality is found:

- The control cable should move smoothly.
- The control cable should not be bent or kinked.
- The control cable should be free of damage and corrosion.

Installation Procedure

1. Install the accelerator control cable.

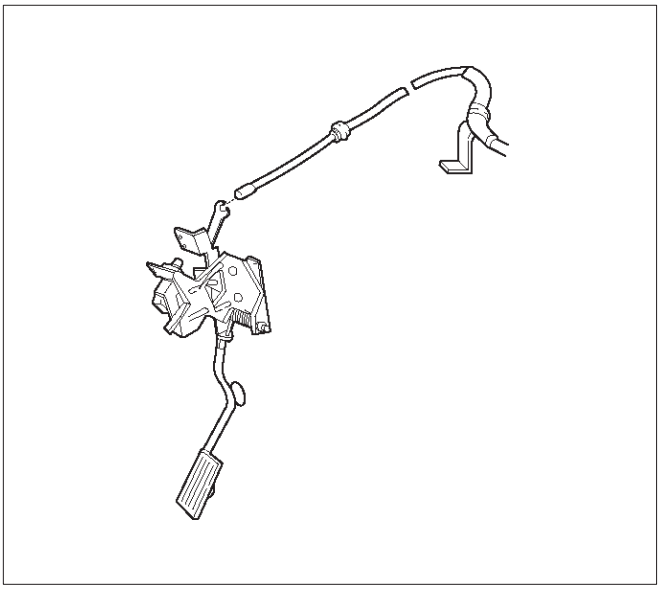

TS23983

2. Install the grommet.
3. Install the accelerator control cable (on the accelerator pedal end).

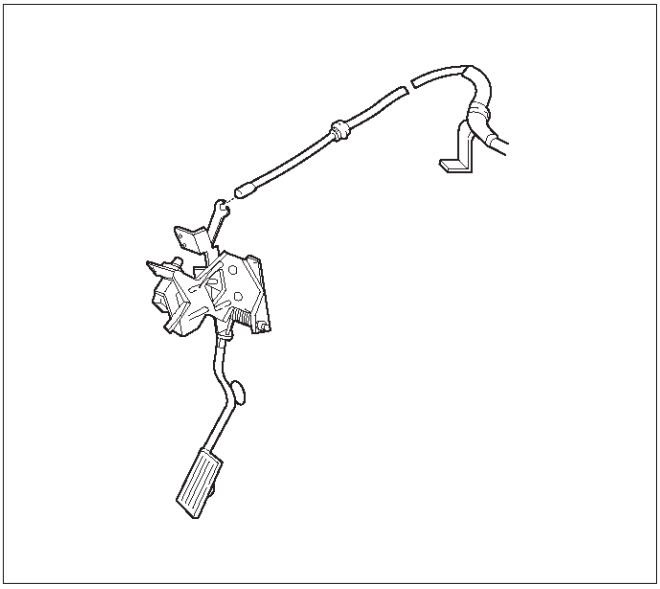

TS23982

4. Install the accelerator control cable (on the throttle valve end).

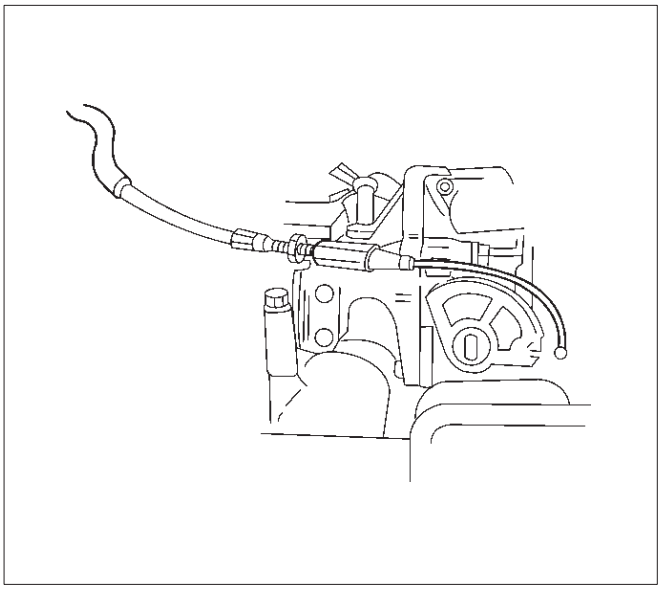

101RW006

5. Install the adjusting nut.

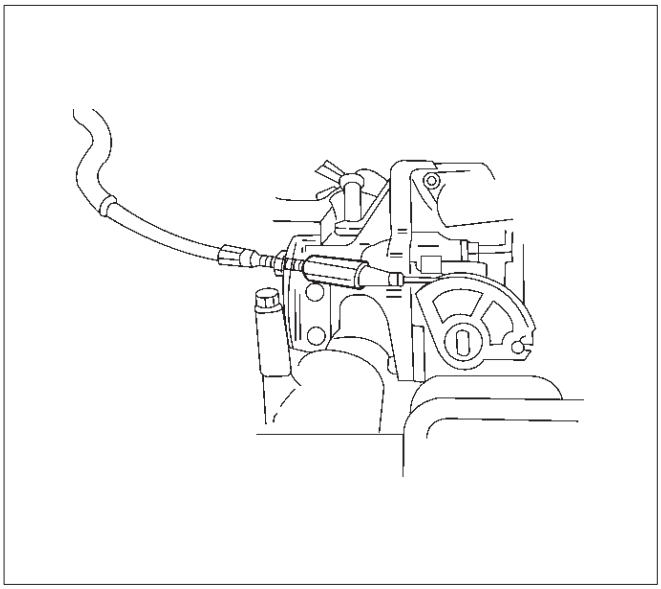

101RW007

6. Adjust the accelerator cable at the throttle body. Refer to *Accelerator Cable Adjustment*.
7. Install the engine cover.

Adjustment Procedure

1. Loosen the adjusting nut and lock nut.
2. Pull outer cable closing fully the throttle valve.
3. Tighten adjusting nut and lock nut temporarily.

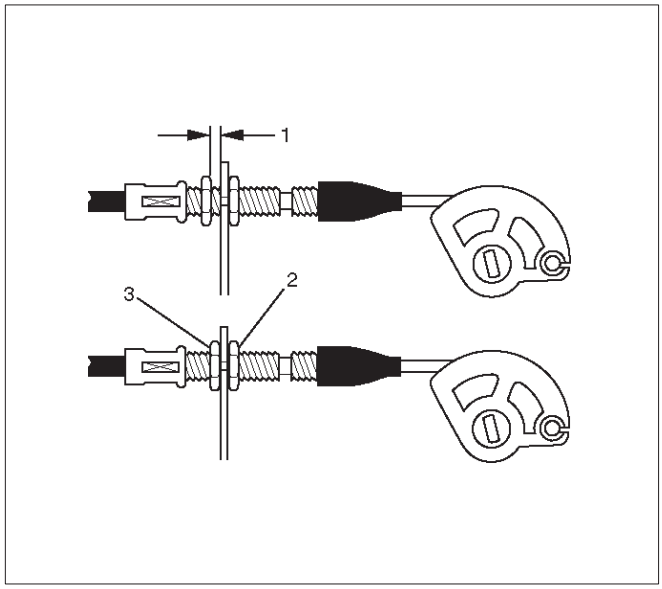

035RW004

4. Loosen adjusting nut by three turns and tighten lock nut. Then, manually operating the throttle valve, make sure that the valve lever returns up to the stopper screw.

IMPORTANT: The valve lever must return up to the stopper screw. If the valve lever does not reach the stopper screw, repeat the procedure again from step 1.

5. It does not reach the stopper screw, repeat from step 1.

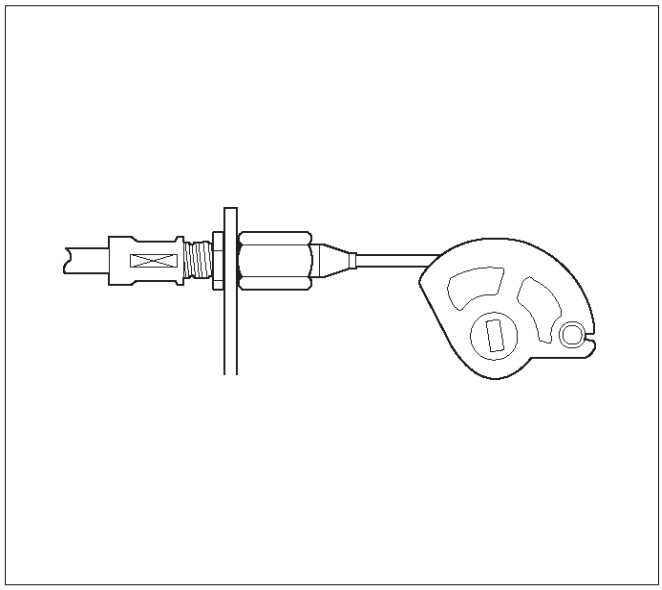

TS23782

Accelerator Pedal Replacement

Removal Procedure

1. Disconnect the cruise control cable from the accelerator pedal assembly.

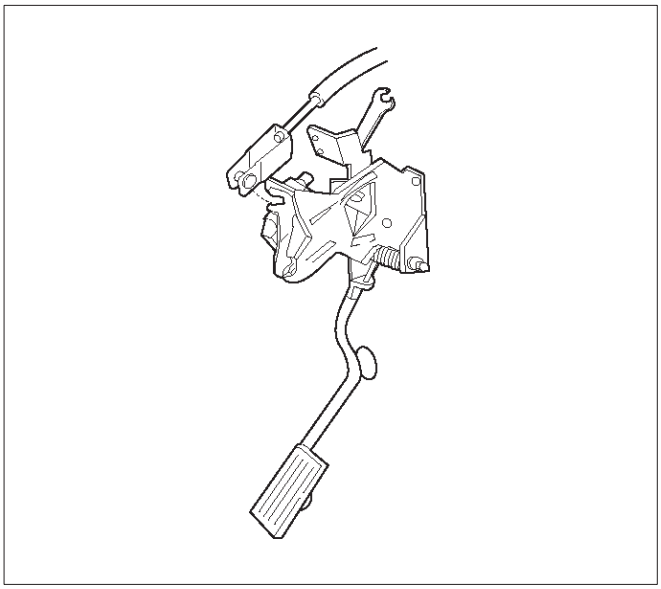

TS24053

2. Disconnect the accelerator pedal control cable from the accelerator pedal assembly.

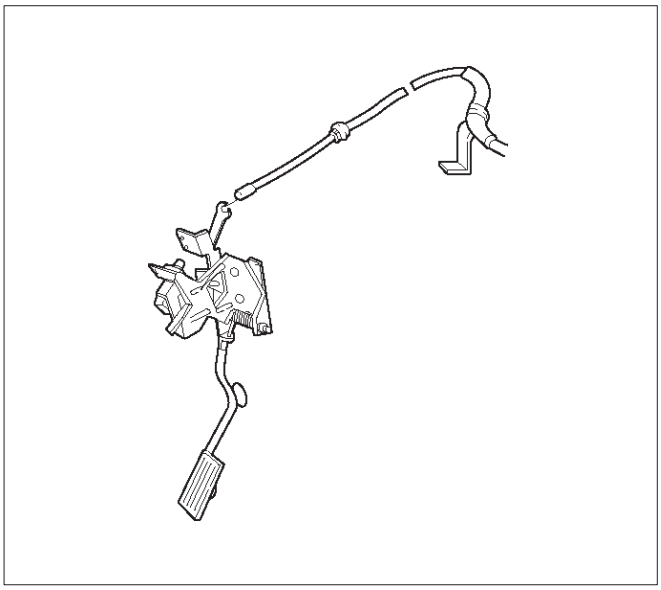

TS24054

3. Disconnect the wiring harness from the kick-down switch.

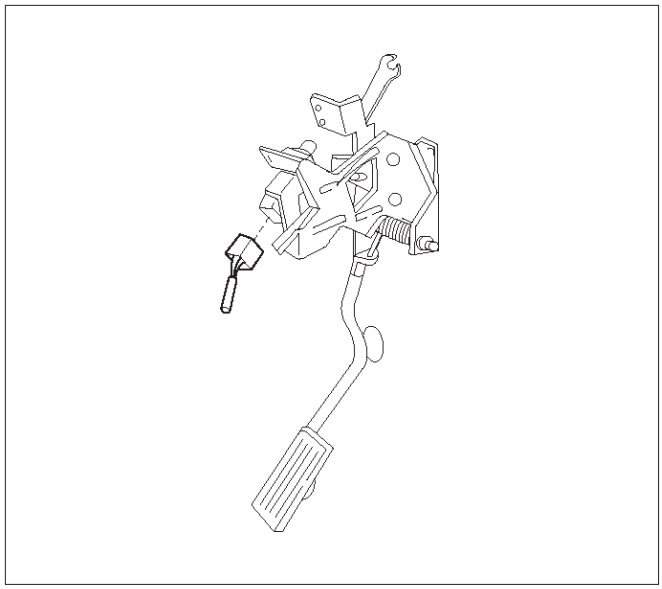

TS24038

4. Remove the two screws from the accelerator pedal assembly.

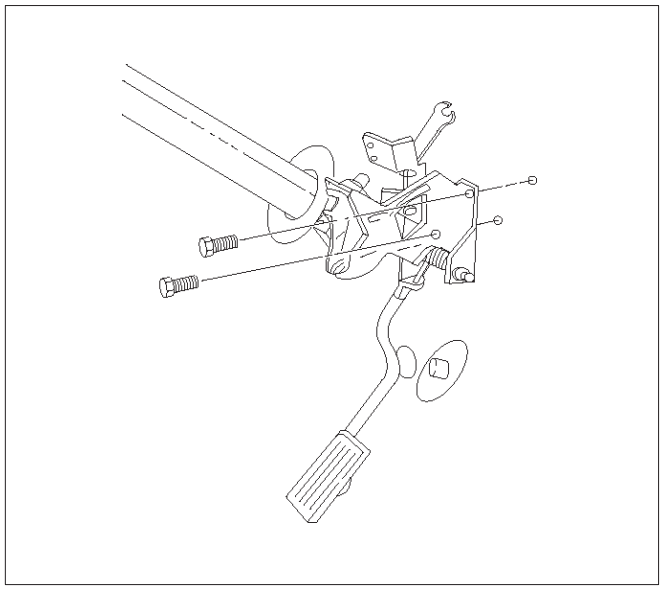

TS24055

5. Remove the accelerator pedal assembly from the bulkhead.

Installation Procedure

1. Install the accelerator pedal assembly on the bulkhead.
2. Install the two screws to the accelerator pedal assembly.

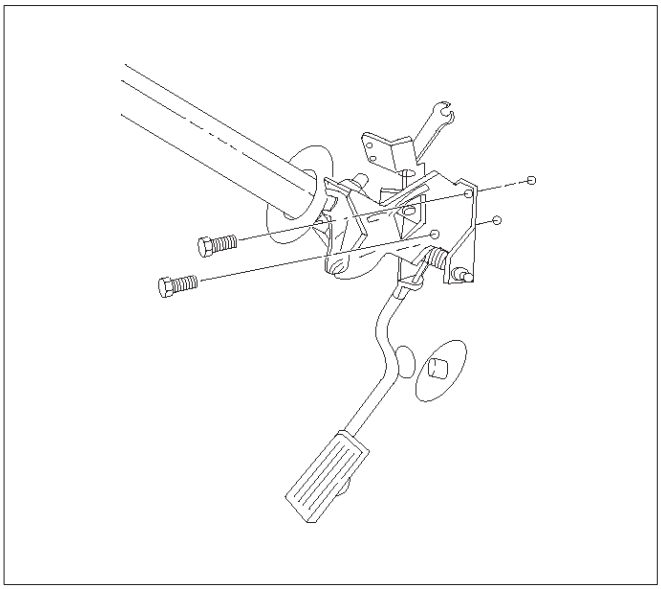

TS24055

3. Connect the wiring harness to the kick-down switch.

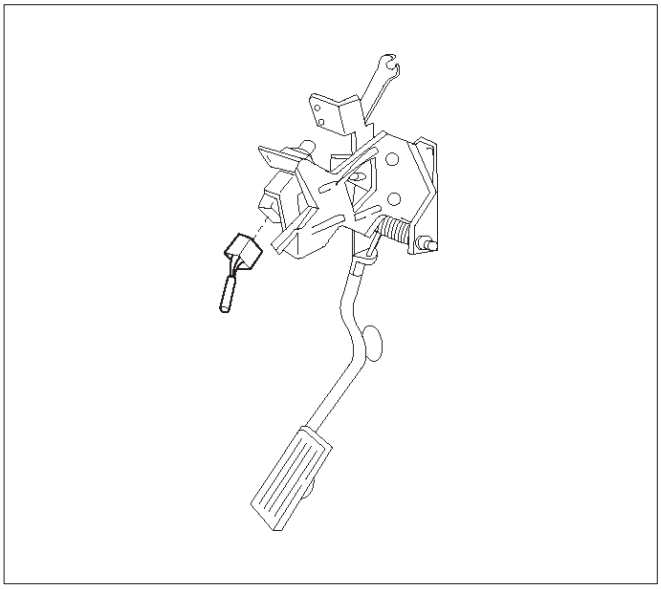

TS24038

4. Connect the accelerator pedal control cable to the accelerator pedal assembly.

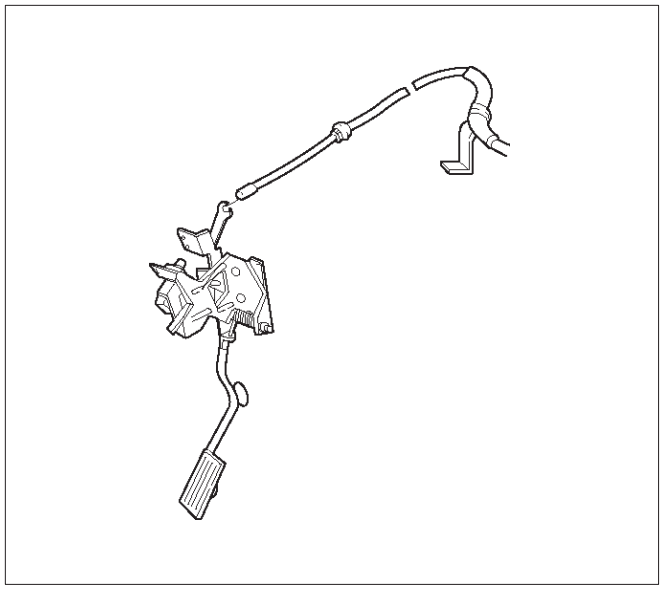

TS24054

5. Connect the cruise control cable to the accelerator pedal assembly.

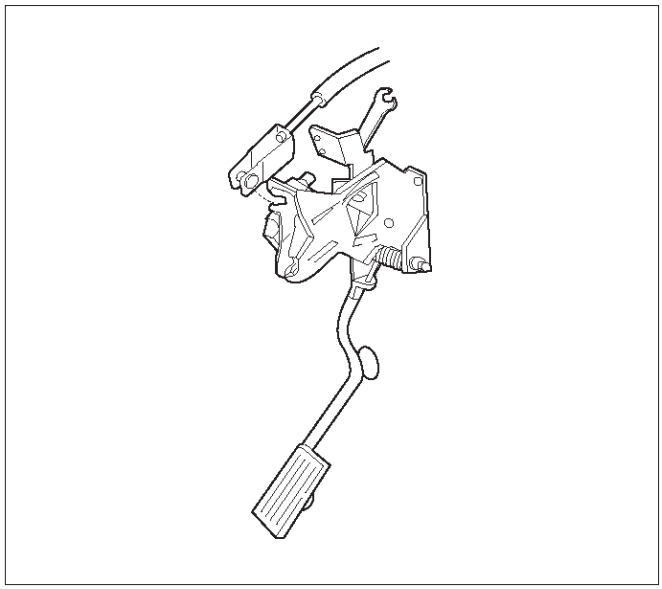

TS24053

Pedal Stroke Adjustment Procedure

1. Loosen the jam nut and rotate the kick-down switch counterclockwise.

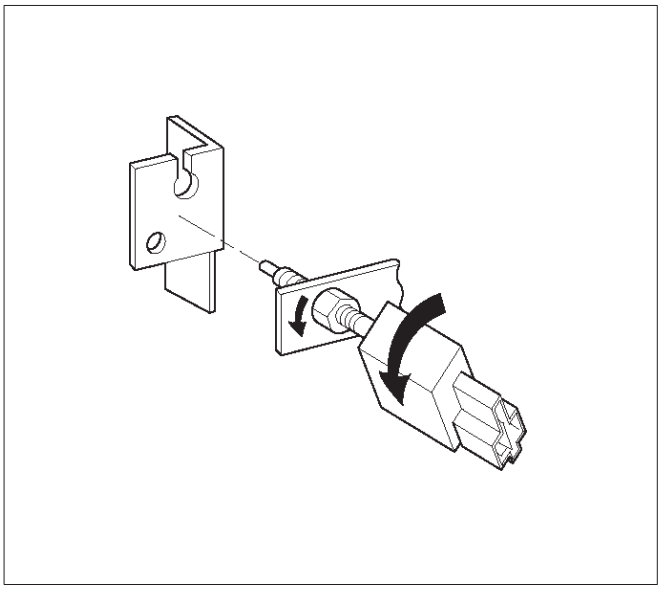

TS24039

2. Fully depress the pedal and hold it by hand. Rotate the switch clockwise until the switch clicks.
3. Rotate the switch 1/2 turn further and lock it in this position by tightening the jam nut.

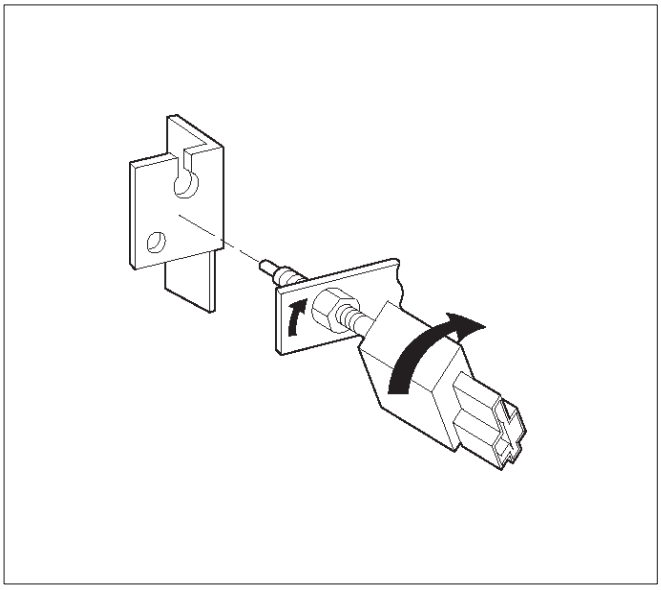

TS24040

4. Step on the accelerator pedal and make sure there is a clicking sound at the full-stroke position.

Fuel Filter Cap

General Description

The fuel filler cap includes a vacuum valve and a pressure valve.

If high vacuum or high pressure occurs in the fuel tank, each valve works to adjust the pressure in order to prevent damage to the tank at the EGR valve.

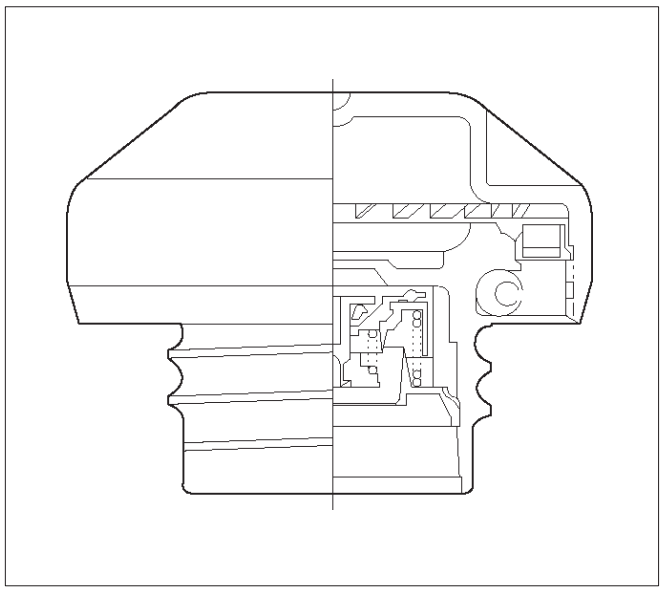

TS23767

Inspection Procedure

NOTE: Replace the fuel filler cap with the same type of filler cap that was originally installed on the vehicle.

- Check the seal ring in the filler cap for any abnormality and for seal condition.
- Replace the filler cap if any abnormality is found.

Fuel Filter

Removal Procedure

1. Disconnect the negative battery cable.
2. Remove the fuel filler cap.

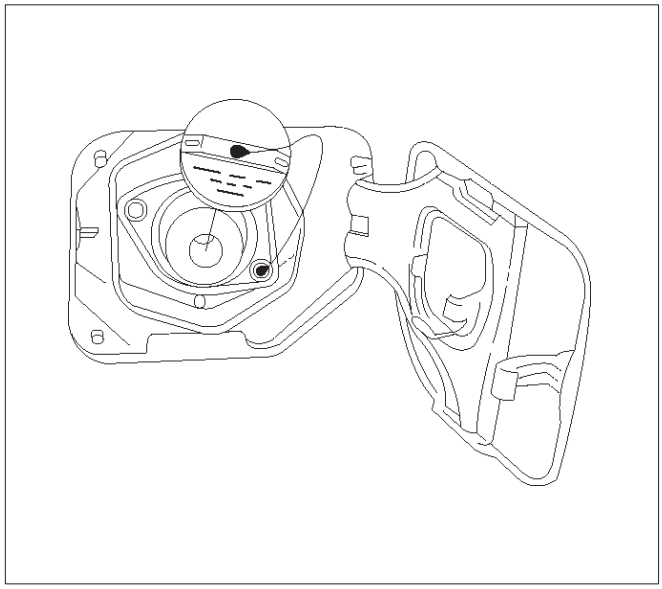

041RW005

3. Disconnect the fuel line from the fuel filter on the engine side.
4. Disconnect the fuel line from the fuel filter on the fuel tank side.

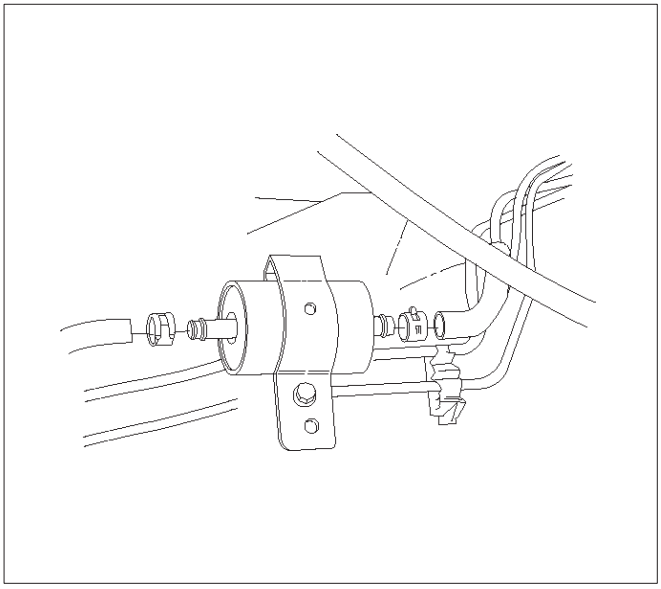

041RW006

5. Remove the bolt on the fuel filter holder.

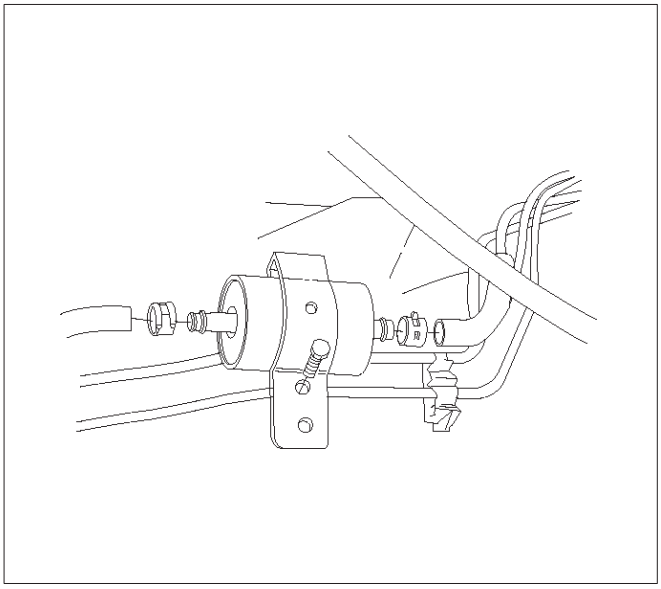

041RW007

6. Remove the fuel filter.

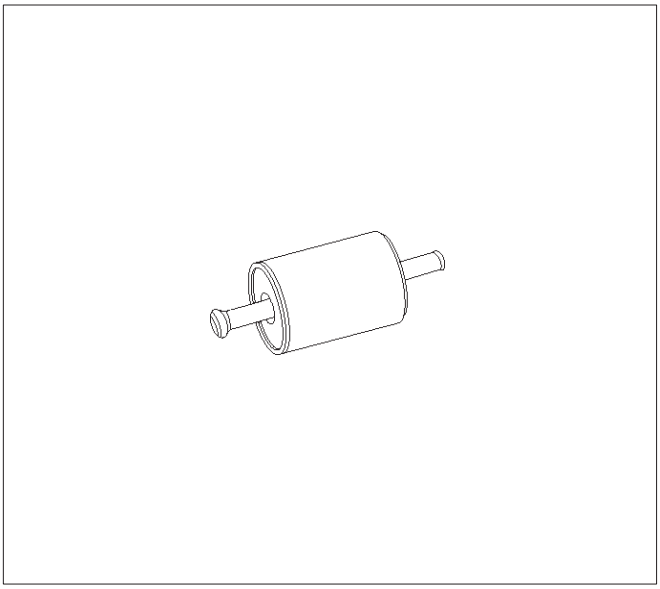

041RW008

Inspection Procedure

1. Replace the fuel filter when the following occur:
   - Fuel leaks from the fuel filter body.
   - The fuel filter body is damaged.
   - The fuel filter is clogged with dirt or sediment.
2. If the drain hole is clogged, clean the drain.

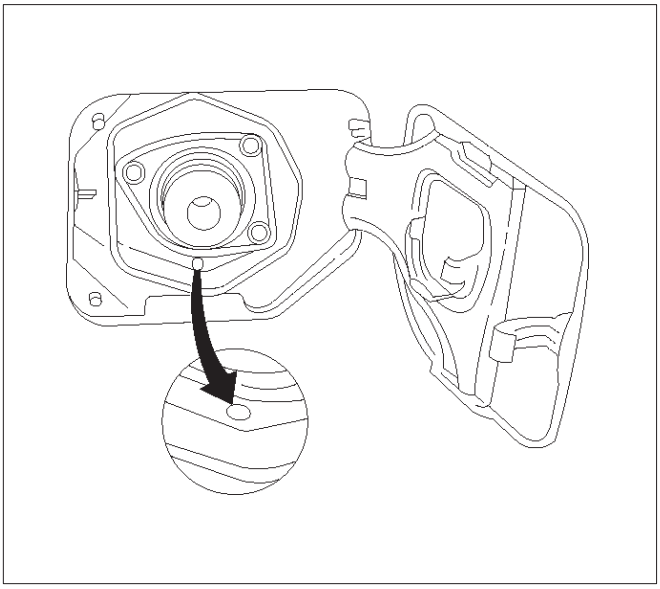

041RW009

Installation Procedure

1. Install the fuel filter in the correct direction.

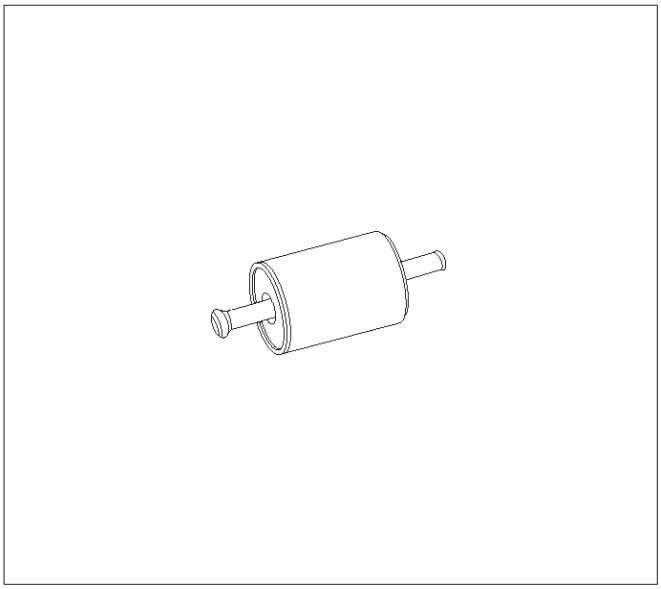

041RW008

2. Install the bolt on the fuel filter holder.

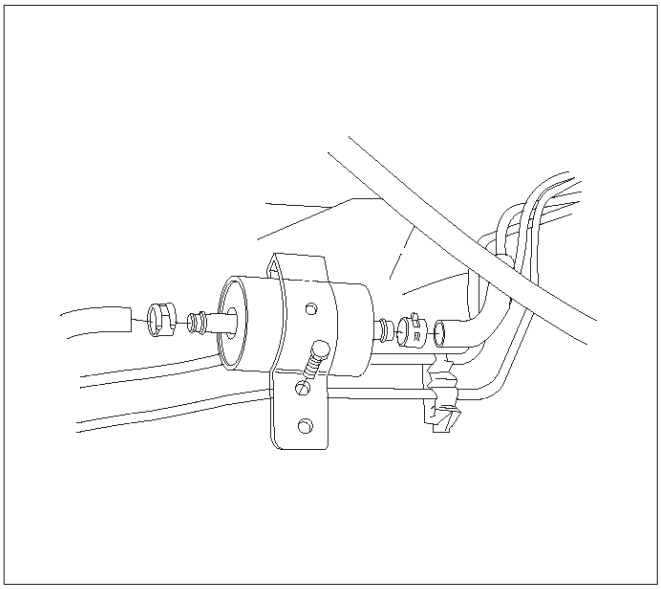

041RW007

3. Connect the fuel line on the engine side.
4. Connect the fuel line on the fuel tank side.

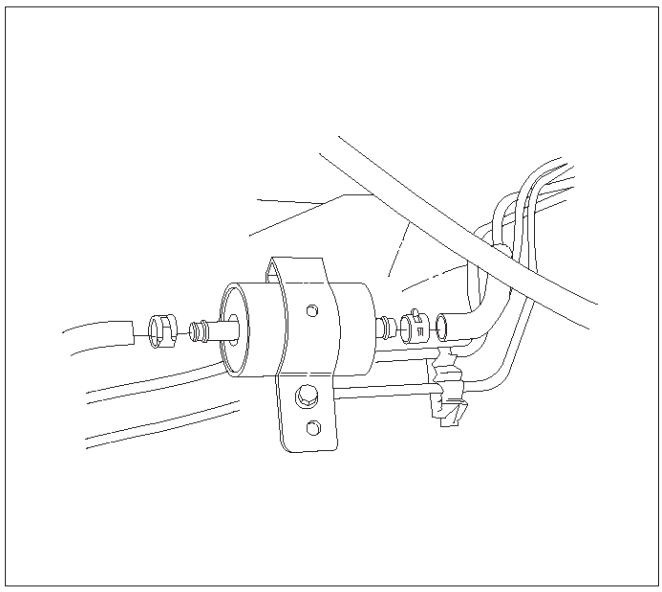

041RW006

5. Install the fuel filler cap.

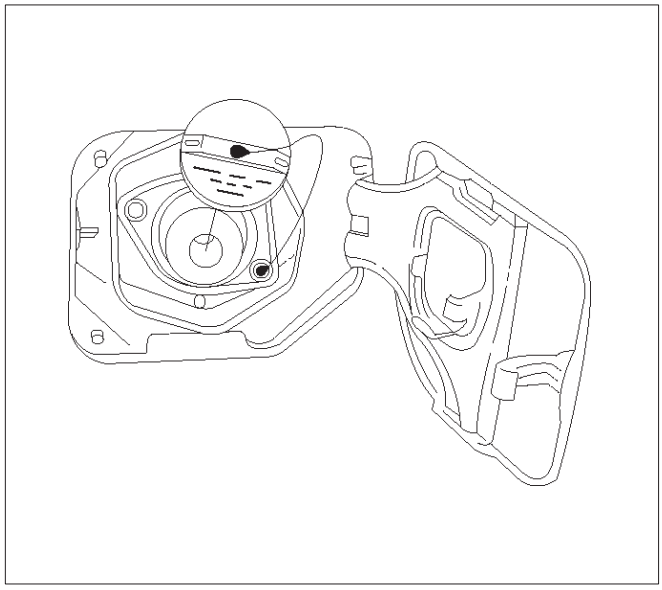

041RW005

6. Connect the negative battery cable.

Fuel Gauge Unit

Removal Procedure

1. Disconnect the negative battery cable.
2. Loosen the fuel filler cap.
3. Drain the fuel from the tank.

Tighten

- Tighten the drain plug to 20 N·m (14 lb ft.).

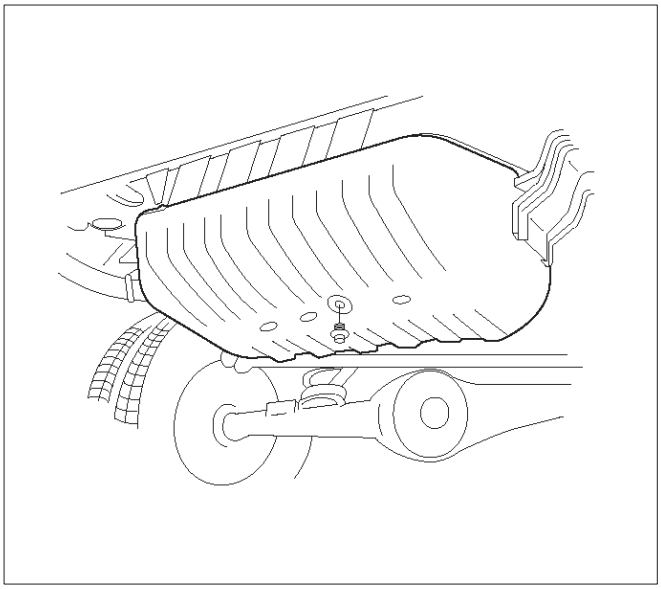

TS22907

4. Disconnect the wiring connector from the fuel gauge unit.

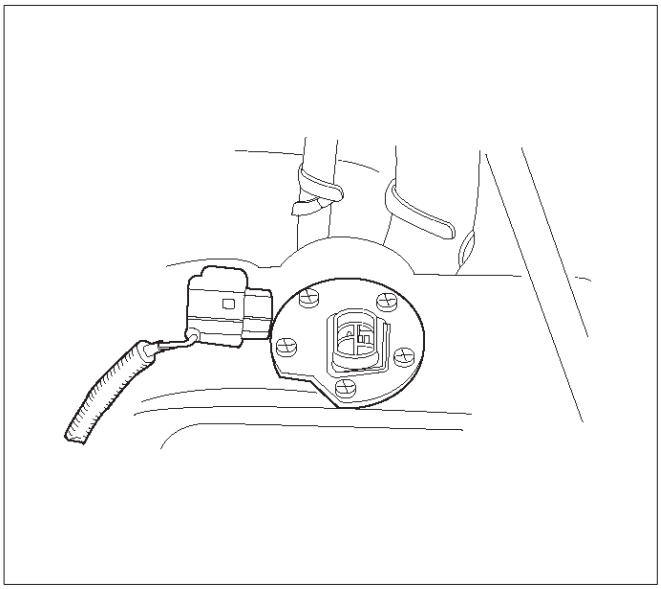

TS23771

5. Remove the fuel gauge unit retaining screws.
6. Remove the fuel gauge unit.
   - Cover or plug the fuel tank to prevent dust, dirt, or debris from entering the tank.

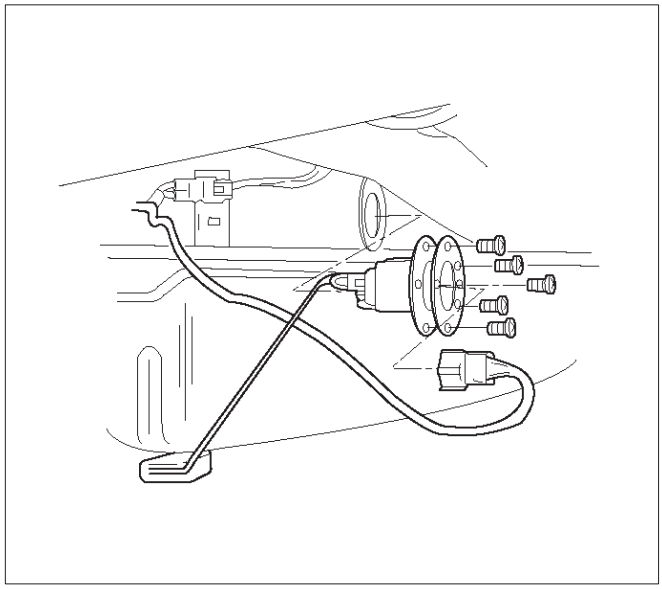

TS22911

Installation Procedure

1. Install the fuel gauge unit.
2. Install the fuel gauge unit retaining screws.

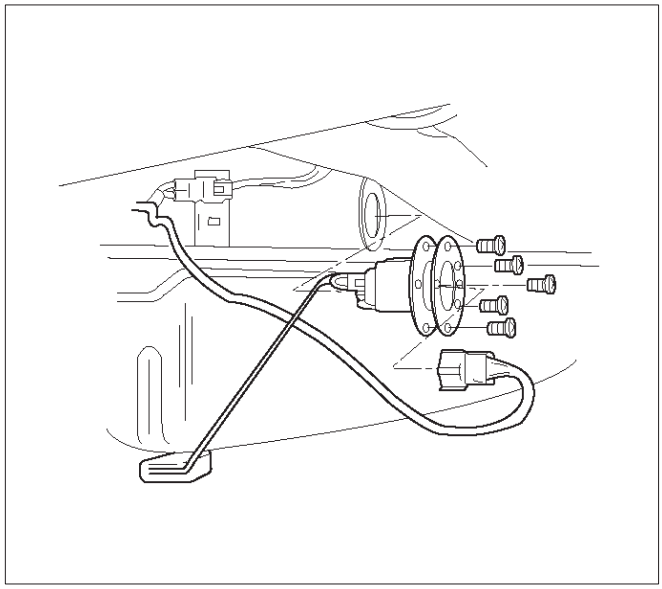

TS22911

3. Connect the wiring connector to the fuel gauge unit.

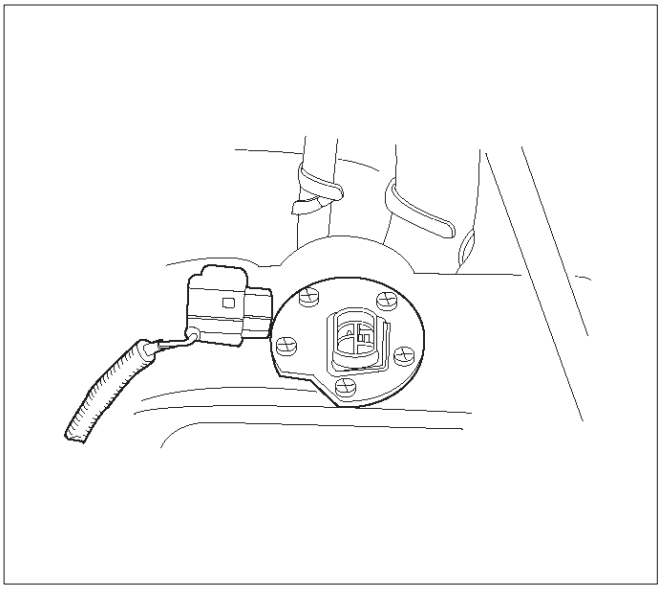

TS23771

4. Fill the fuel tank with fuel.
   - Tighten the fuel filler cap.
   - Check for leaks at the fuel gauge unit gasket.
5. Connect the negative battery cable.

Fuel Injectors

Removal Procedure

NOTE: If the fuel injectors are leaking, the engine oil may be contaminated with fuel. Check the oil for signs of contamination and change the oil and the filter if necessary.

NOTE: Use care in removing the fuel injectors in order to prevent damage to the fuel injector electrical connector pins or the fuel injector nozzles. The fuel injector is an electrical component and should not be immersed in any type of cleaner as this may damage the fuel injector.

IMPORTANT: Fuel injectors are serviced as a complete assembly only.

1. Disconnect the negative battery cable.
2. Remove the upper intake manifold. Refer to *Common Chamber in Engine Mechanical.*.
3. Remove the fuel rail. Refer to *Fuel Rail*.

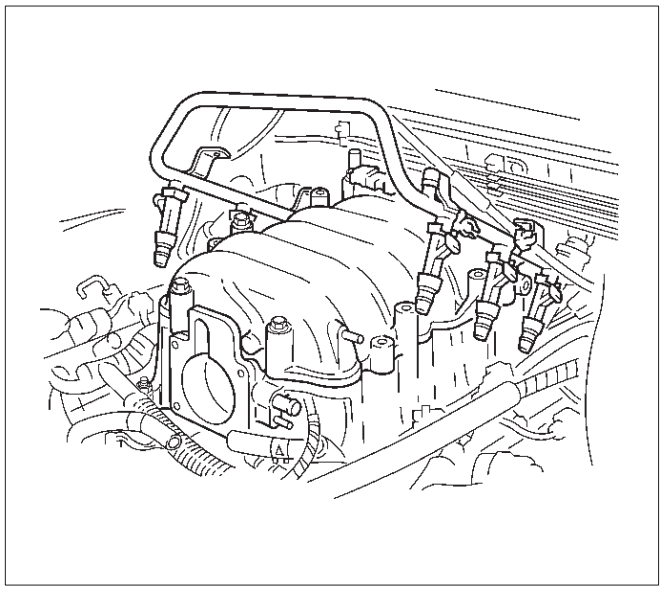

014RW164

4. Remove the injector retainer clip.

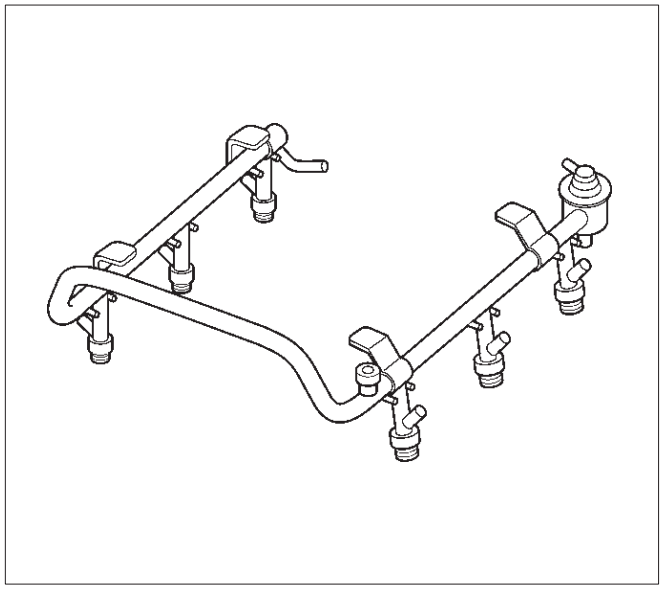

055RW009

5. Remove the fuel injector assembly.
6. Remove the O-ring from the fuel injector.
7. Remove the O-ring backup from the fuel injector .

Inspection Procedure

1. Inspect the O-rings for cracks or leaks.
2. Replace worn or damaged O-rings.
3. Lubricate the new O-rings with engine oil before installation.

Installation Procedure

1. Install the O-ring backup on the fuel injector.
2. Install the new O-ring on the fuel injector.
3. Install the fuel injector on the fuel rail.

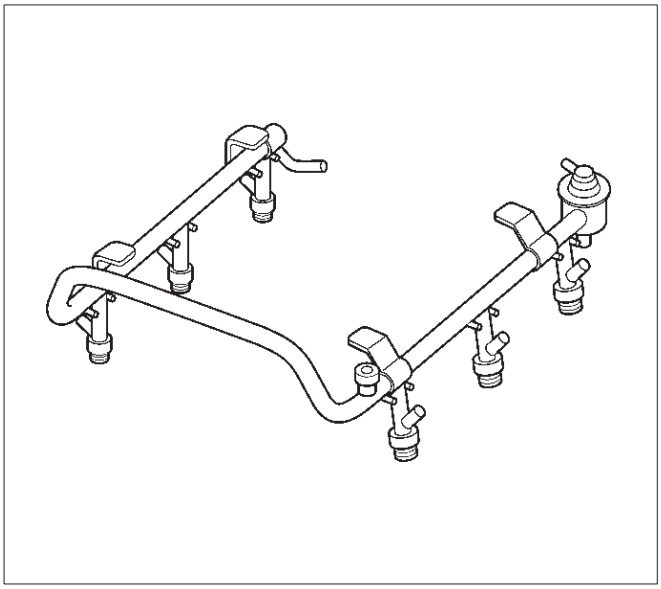

055RW009

4. Use new fuel injector retainer clips to retain the fuel injector to the fuel rail.
5. Coat the end of the fuel injector with engine oil.
6. Install the fuel rail. Refer to *Fuel Rail*.

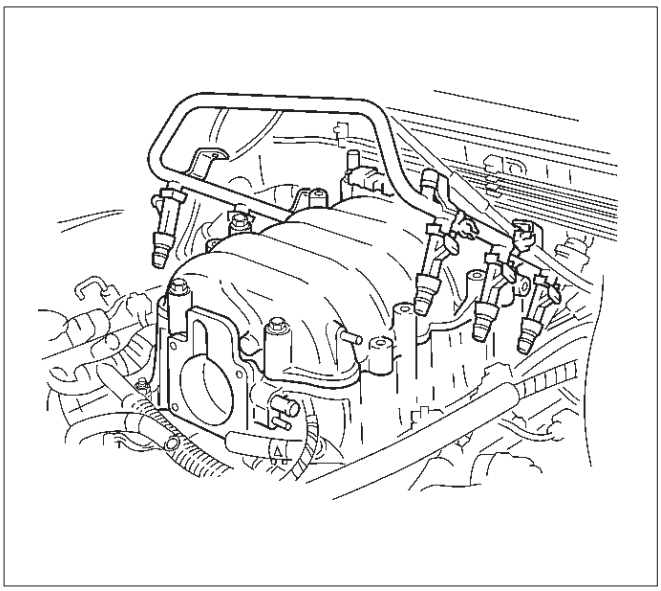

014RW164

7. Install the upper intake manifold. Refer to *Common Chamber in Engine Mechanical.*
8. Install the engine cover.
9. Connect the negative battery cable.

Fuel Pressure Regulator

Removal Procedure

CAUTION: To reduce the risk of fire and personal injury, it is necessary to relieve the fuel system pressure before servicing the fuel system components.

CAUTION: After relieving the system pressure, a small amount of fuel may be released when servicing fuel lines or connections. Reduce the chance of personal injury by covering the fuel line fittings with a shop towel before disconnecting the fittings. The towels will absorb any fuel that may leak out. When the disconnect is completed, place the towel in an approved container.

NOTE: Compressed air must never be used to test or clean a fuel pressure regulator, as damage to the fuel pressure regulator may result.

NOTE: To prevent damage to the fuel pressure regulator, do not immerse the pressure regulator in solvent.

1. Depressurize the fuel system. Refer to *Fuel Pressure Relief Procedure*.
2. Disconnect the negative battery cable.
3. Remove the fuel pump relay. Refer to *Fuel Pump Relay*.
4. Remove the pressure regulator hose from the fuel pressure regulator.

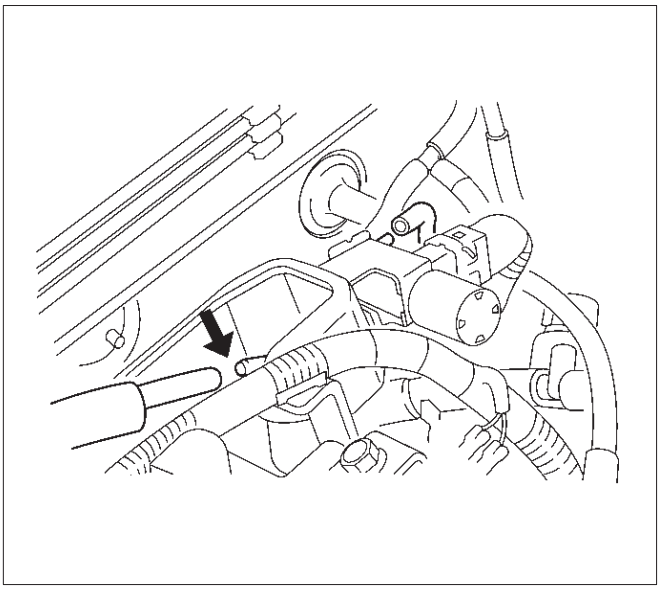

014RW110

5. Remove the two bolts from the protector that secures the common chamber.

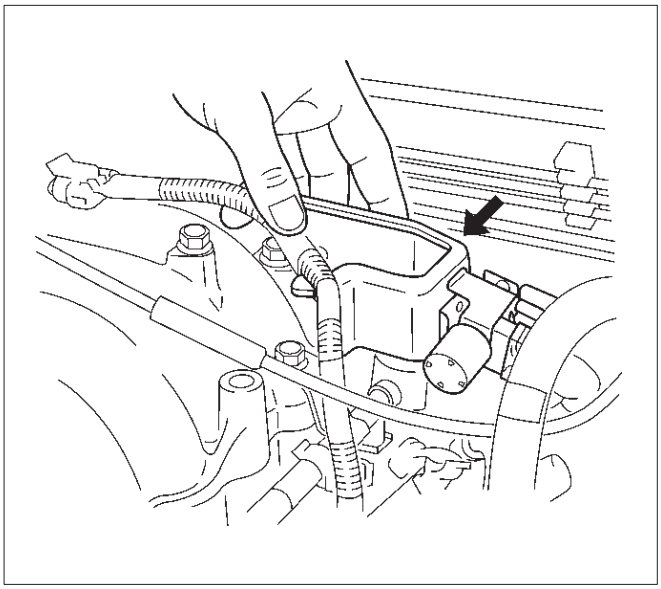

014RW109

6. Remove the fuel pressure regulator attaching screw.

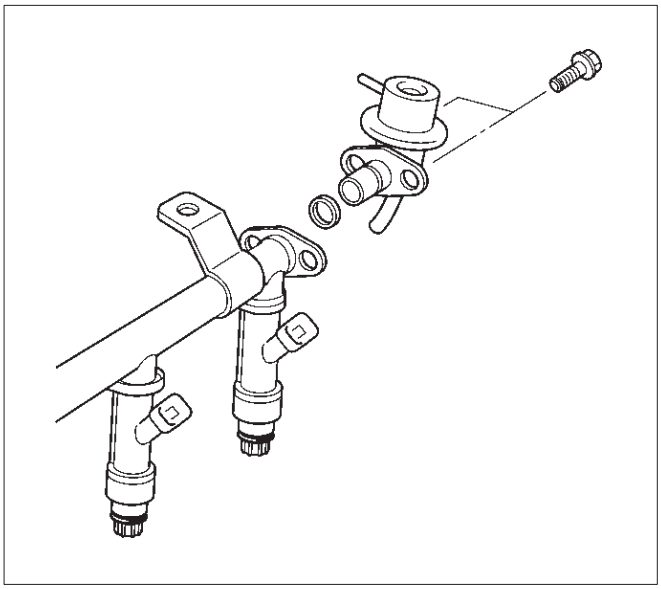

F06RW043

7. Remove the fuel pressure regulator from the fuel rail.

Disassembly Procedure

1. Remove the O-ring from the fuel pressure regulator.
2. Loosen the swivel nut.
3. Remove the fuel return line from the fuel pressure regulator.
4. Remove the O-ring from the fuel return line.
   - The O-ring may be left inside the fuel pressure regulator instead of on the fuel return line.

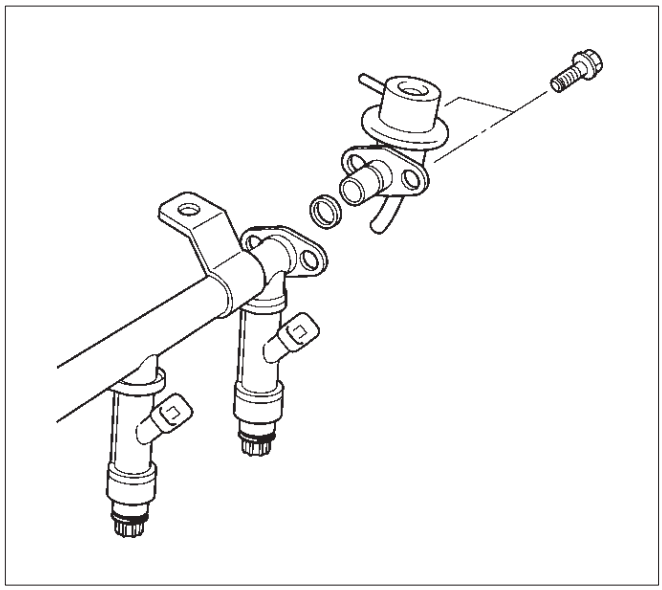

F06RW043

Assembly Procedure

1. Install a new O-ring on the fuel return line.
2. Install the fuel return line on the fuel pressure regulator.

NOTE: Do not over-tighten the swivel nut on the fuel pressure regulator. The fuel pressure regulator can be damaged and fuel may leak if the swivel nut is over-tightened.

3. Tighten the swivel nut.
4. Install a new O-ring on the fuel pressure regulator.

Installation Procedure

1. Install the fuel pressure regulator attaching screw.

Tighten

- Tighten the fuel pressure regulator attaching screw to 3 N·m (26 lb in.).

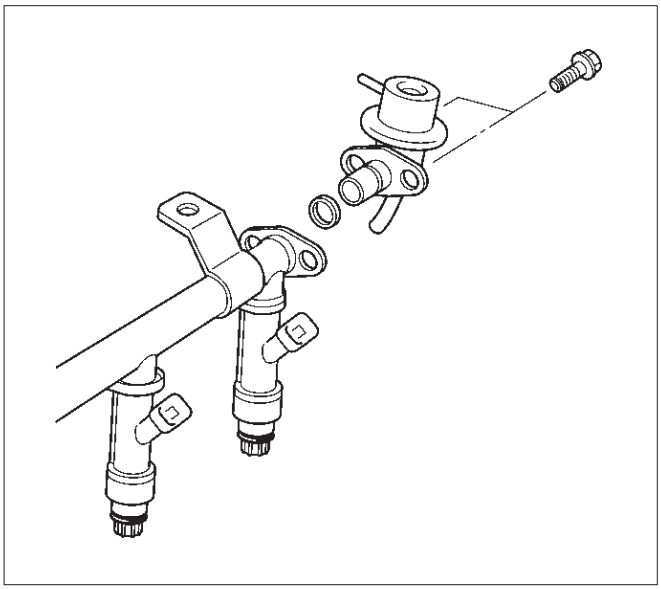

F06RW043

2. Install the fuel pressure regulator on the fuel rail.
3. Install the two bolts to the protector that secures the common chamber.

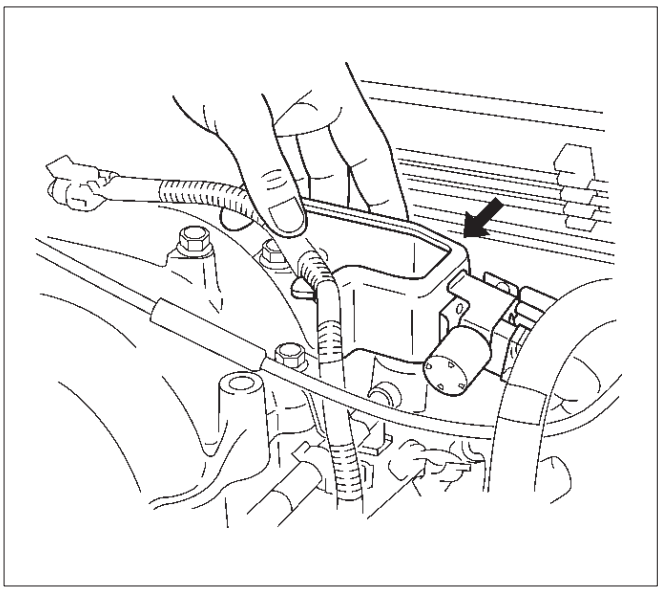

014RW109

4. Install the pressure regulator hose to the fuel pressure regulator.

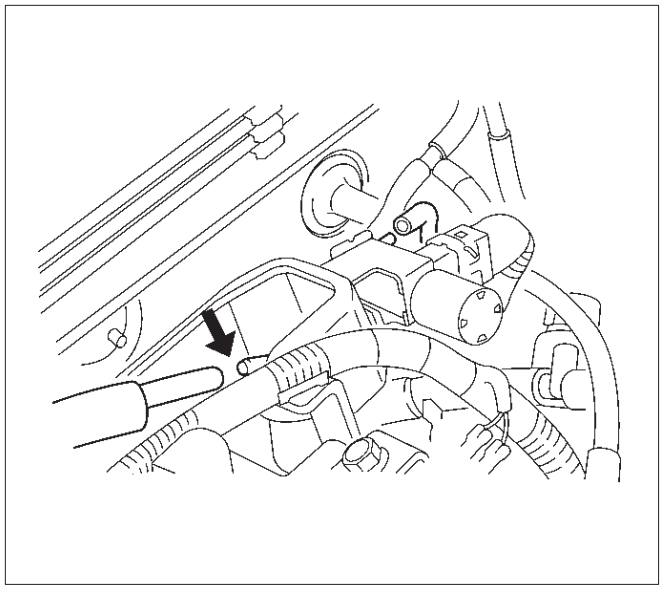

014RW110

5. Install the fuel pump relay. Refer to *Fuel Pump Relay*.
6. Connect the negative battery cable.
7. Crank the engine until it starts. Cranking the engine may take longer than usual due to trapped air in the fuel lines.

Fuel Metering System

Fuel Pressure Relief Procedure

CAUTION: To reduce the risk of fire and personal injury, it is necessary to relieve the fuel system pressure before servicing the fuel system components.

CAUTION: After relieving the system pressure, a small amount of fuel may be released when servicing fuel lines or connections. Reduce the chance of personal injury by covering the fuel line fittings with a shop towel before you disconnect the fittings. The towels will absorb any fuel that may leak out. When the disconnect is completed, place the towel in an approved container.

1. Remove the fuel cap.

2. Remove the fuel pump relay from the underhood relay box. Refer to *Fuel Pump Relay*.

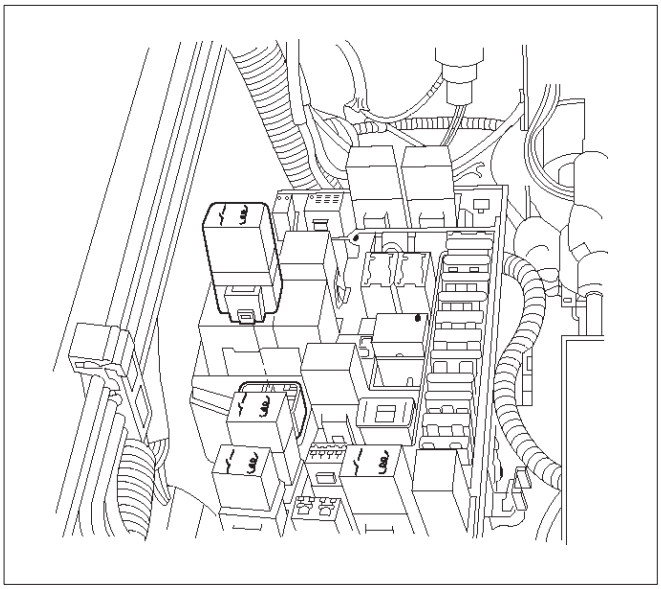

TS23976R

3. Start the engine and allow it to stall.
4. Crank the engine for 30 seconds.
5. Disconnect the negative battery cable.

Fuel Pump Assembly

Removal Procedure

1. Disconnect the negative battery cable.
2. Drain all the fuel from the tank.
3. Install and tighten the drain plug.

Tighten

- Tighten the drain plug to 20 N·m (14 lb ft.).

4. Remove the fuel tank. Refer to *Fuel Tank*.
5. Remove the retaining screws from the fuel tank.
6. Remove the fuel pump assembly from the fuel tank.
   - Cover the fuel pump opening in order to prevent dust, dirt, or debris from entering the fuel tank.

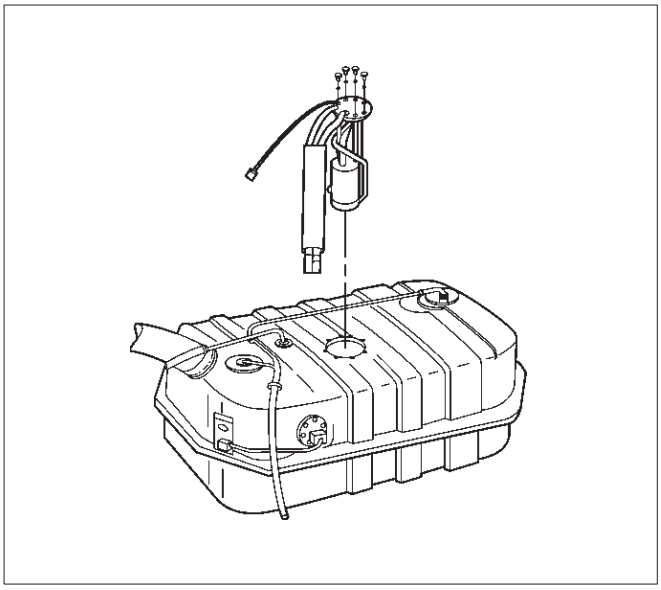

TS23795

Inspection Procedure

1. Inspect the fuel pump gasket for tears, cracks, stretching, or rotting. If any of these conditions are found, replace the fuel pump gasket.
2. Inspect the in-tank fuel filter for tears or evidence of dirt, debris, or water in the fuel. If any of these conditions are found, replace the in-tank fuel filter.

Installation Procedure

1. Install the fuel pump assembly.
2. Install the fuel pump assembly retaining screws.
3. Install the fuel tank assembly. Refer to *Fuel Tank*.
4. Fill the tank with fuel.
5. Tighten the fuel filler cap.
6. Connect the negative battery cable.

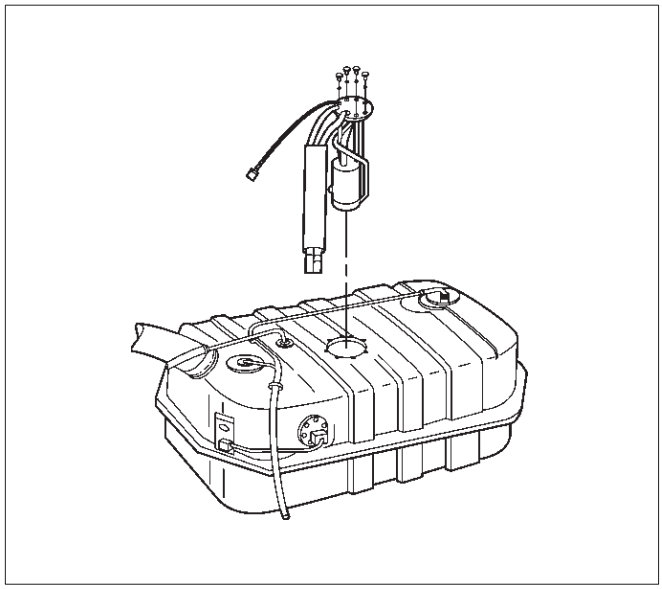

TS23795

Fuel Pump Relay

Removal Procedure

1. Remove the fuse and relay box cover from under the hood.
2. Consult the diagram on the cover to determine which is the correct relay.
3. Insert a small screwdriver into the catch slot on the forward side of the fuel pump relay.
   - The screwdriver blade will release the catch inside.

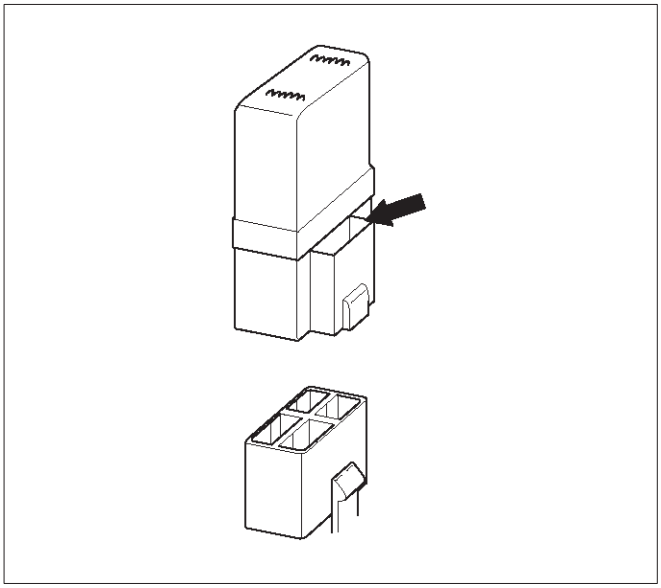

T321092

4. Pull the relay straight up and out of the fuse and relay box.

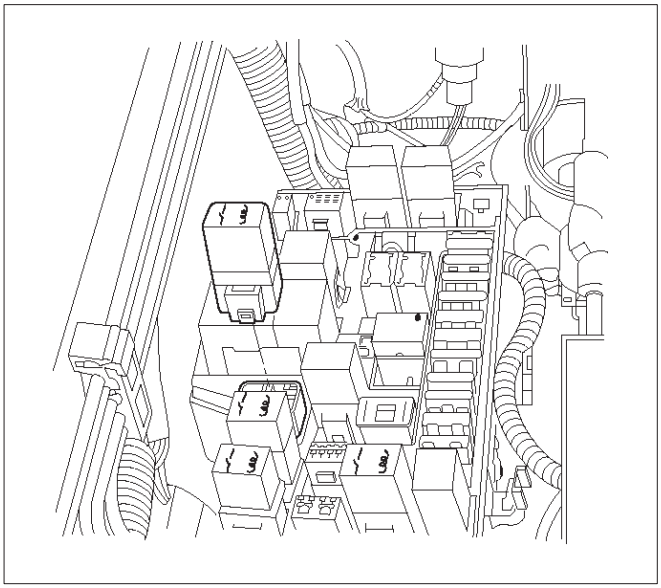

TS23976R

Installation Procedure

1. Insert the relay into the correct place in the fuse and relay box with the catch slot facing forward.
2. Press down until the catch engages.
   - An audible “click” will be heard.

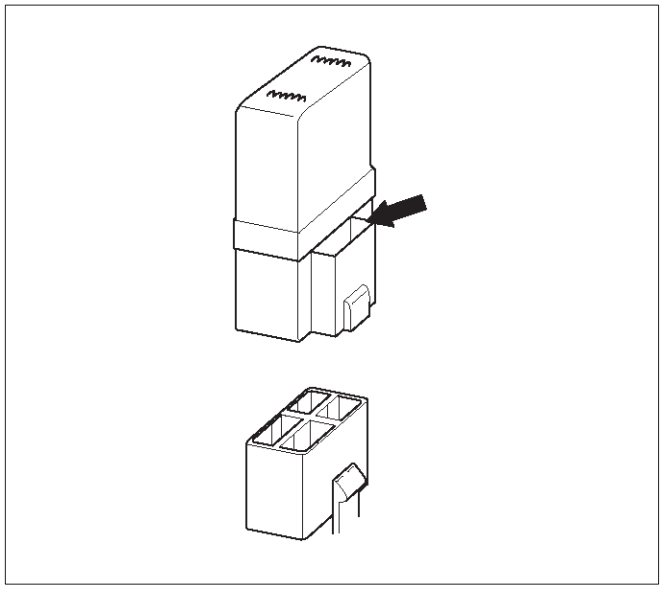

T321092

3. Install the fuse and relay box cover.

Fuel Rail Assembly

Removal Procedure

NOTE:

- Do not attempt to remove the fuel inlet fitting on the fuel rail. It is staked in place. Removing the fuel inlet fitting will result in damage to the fuel rail or the internal O-ring seal.
- Use care when removing the fuel rail assembly in order to prevent damage to the injector electrical connector terminals and the injector spray tips.
- Fittings should be capped and holes plugged during servicing to prevent dirt and other contaminants from entering open lines and passages.

IMPORTANT: An eight-digit identification number is stamped on the side of the fuel rail. Refer to this number when you service the fuel rail or when a replacement part is required.

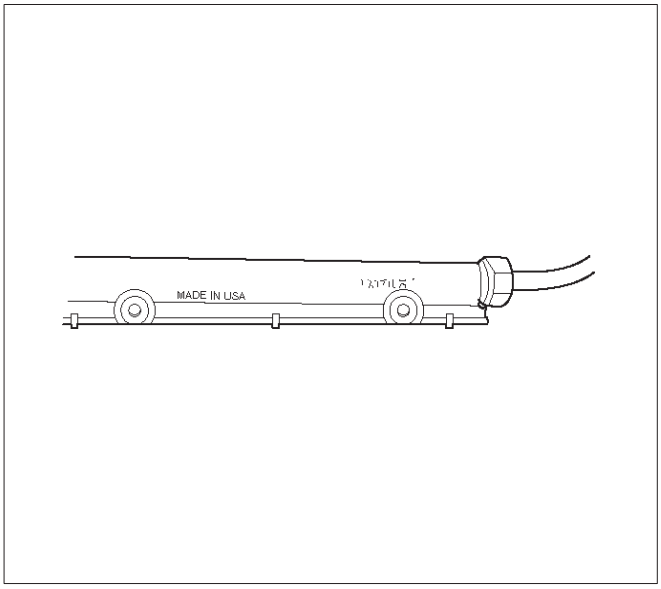

TS24022

Before removal, the fuel rail assembly may be cleaned with a spray type engine cleaner. Follow the spray package instructions. Do not immerse the fuel rails in liquid cleaning solvent.

1. Depressurize the fuel system. Refer to Fuel Pressure Relief Procedure in this Section.
2. Disconnect the negative battery cable.
3. Remove the engine cover.
4. Disconnect the accelerator pedal cable from throttle body and cable bracket.
5. Disconnect the connectors from manifold absolute pressure sensor, solenoid valve, electric vacuum sensing valve.
6. Disconnect the vacuum hose on canister VSV and positive crankcase ventilation hose.
7. Remove the common chamber. Refer to the common chamber in Engine Mechanical.
   1. Lift up carefully on the fuel injectors. Do not separate the fuel injectors from the fuel rail.
   2. If an injector becomes separated from the fuel rail, the infector O-ring seals and the retainer clip must be replaced.
   3. Drain residual fuel into an approved container.

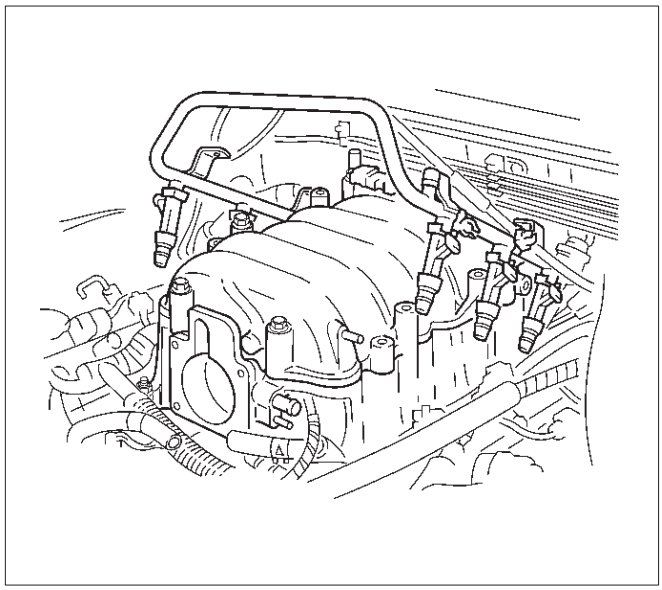

014RW164

8. If removal of the fuel pressure regulator is necessary, refer to *Fuel Pressure Regulator*.
9. If removal of the fuel injectors is necessary, refer to *Fuel Injectors*.

Installation Procedure

1. If the fuel injectors were removed, install them. Refer to *Fuel Injectors*.
2. If the fuel pressure regulator was removed, install it. Refer to *Fuel Pressure Regulator*.
3. Install the common chamber. Refer to common chamber in engine Mechanical.

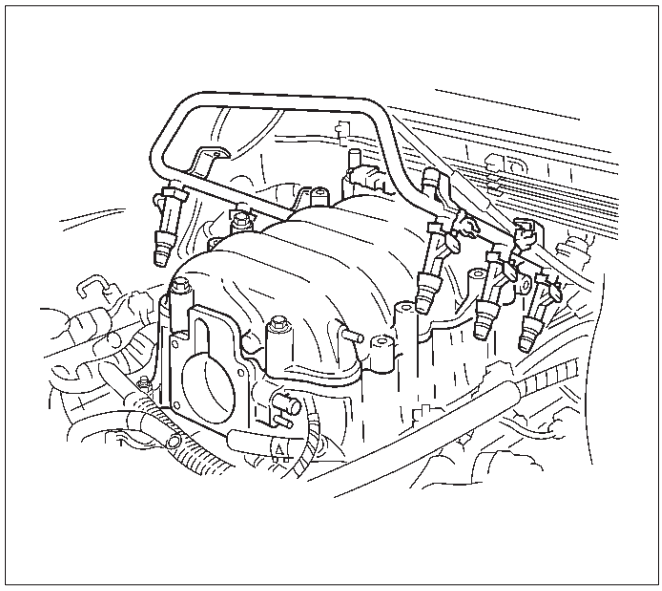

014RW164

4. Connect the vacuum hose on Canister VSV and positive crankcase ventilation hose.
5. Connect the connectors to manifold absolute pressure sensor, solenoid valve, electric vacuum sensing valve.
6. Connect the accelerator pedal cable to throttle body and cable bracket.
7. Install the engine cover.
8. Connect the negative battery cable.
9. Crank the engine until it starts. Cranking the engine may take longer than usual due to trapped air in the fuel rail and in the injectors.

Fuel Tank

Removal Procedure

1. Disconnect the negative battery cable.
2. Loosen the fuel filler cap.
3. Drain the fuel from the tank into an approved container.
4. Install and tighten the drain plug.

Tighten

- Tighten the drain plug to 20 N·m (14 lb ft.).

5. Disconnect the fuel filler hose at the fuel tank.
6. Disconnect the air breather hose at the fuel tank.

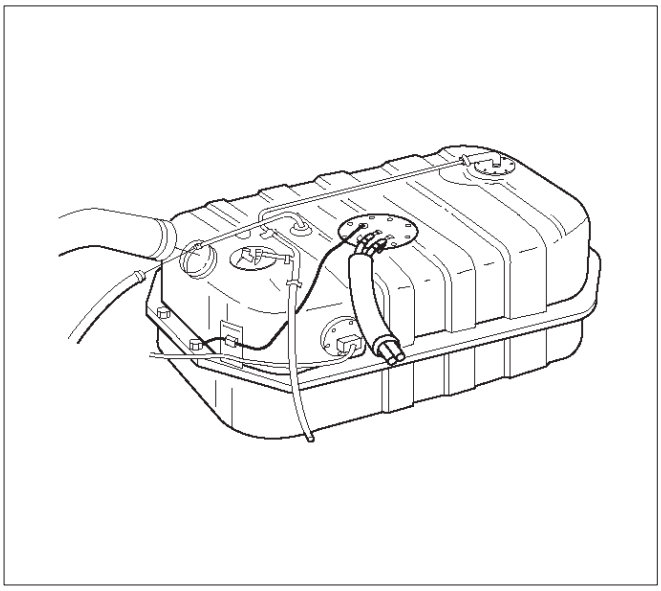

TS23796

7. Remove the undercover retaining bolts.
8. Remove the undercover.

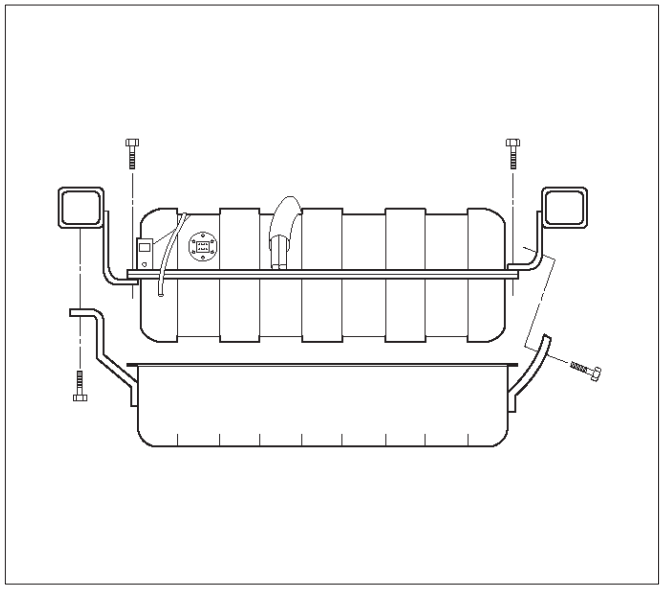

TS23797

9. Disconnect the wiring connector to the fuel pump.
10. Disconnect the wiring connector to the fuel gauge unit.
11. Remove the fuel gauge unit connector from the bracket.
12. Disconnect the EVAP vapor hose.
13. Disconnect the fuel supply hose.
14. Disconnect the fuel return hose.
    - Plug the hoses to prevent dust from entering the hoses.

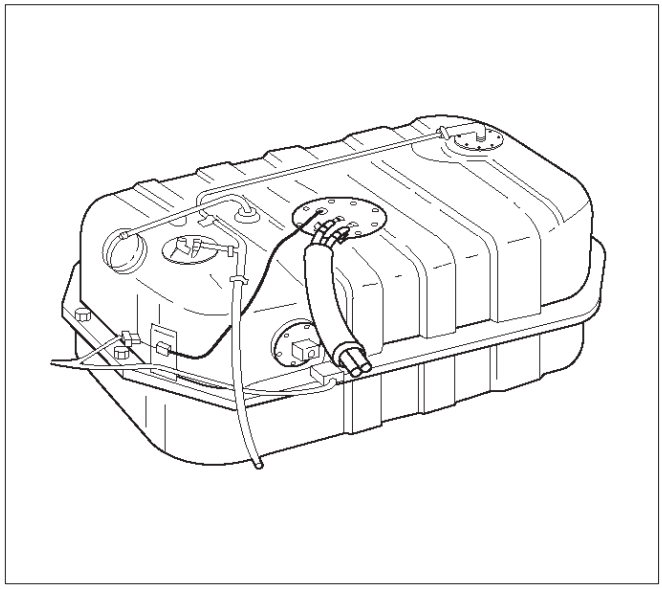

TS23769

15. Remove the fuel tank retaining bolts on both sides.
16. Remove the fuel tank.

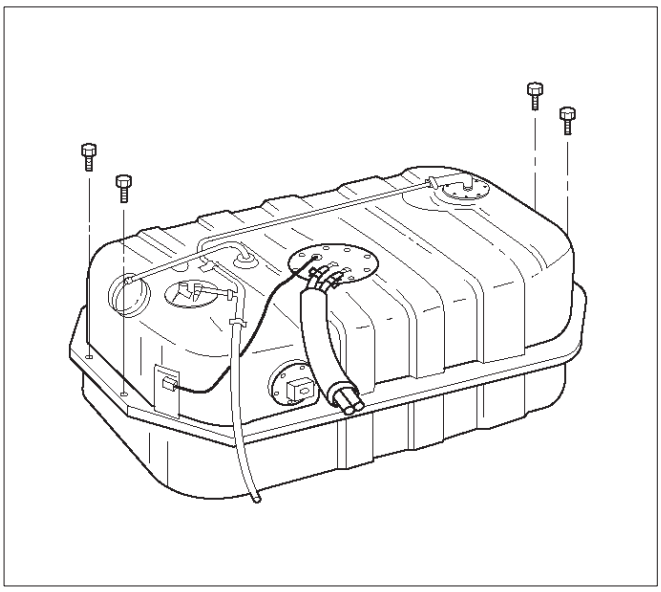

TS23770

Installation Procedure

1. Install the fuel tank.
   - Place the flanges on the left and right side of the tank on the bracket.
2. Install the fuel tank retaining bolts.

Tighten

- Tighten the fuel tank retaining bolts to 36 N·m (27 lb ft.).

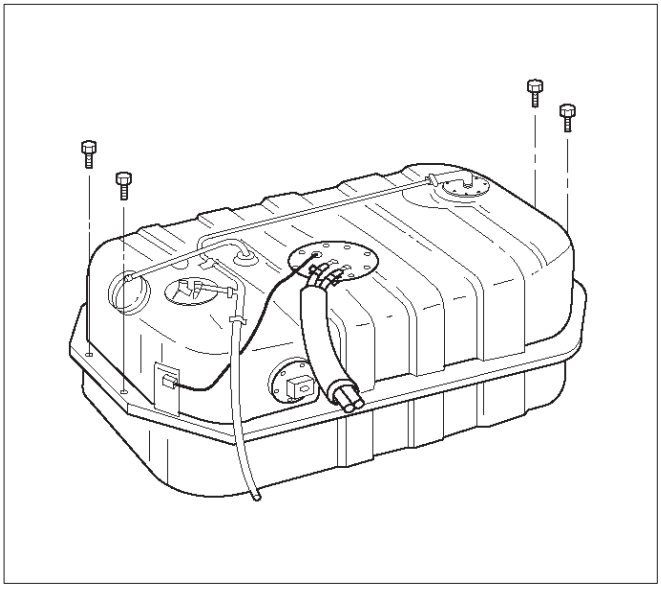

TS23770

3. Connect the fuel return hose.
4. Connect the fuel supply hose.
5. Connect the EVAP vapor hose.
6. Connect the wiring connector for the fuel gauge unit.
7. Connect the fuel gauge wiring connector to the bracket.
8. Connect the wiring connector for the fuel pump.

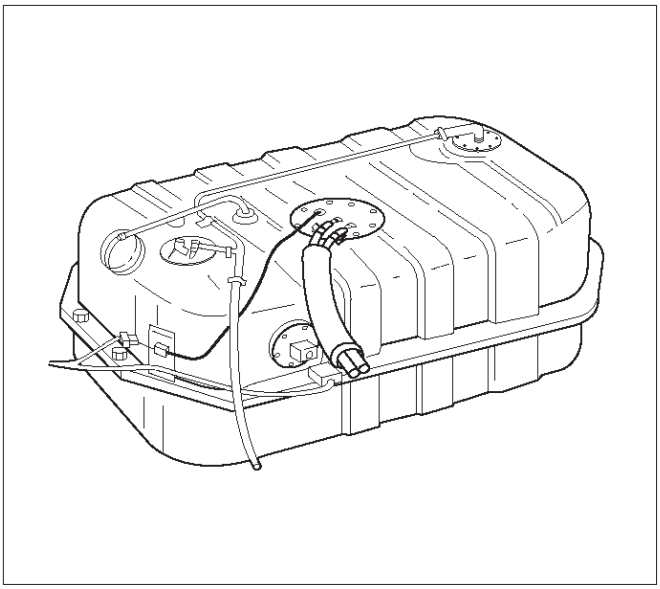

TS23769

9. Install the undercover.
10. Secure the undercover with the retaining bolts.

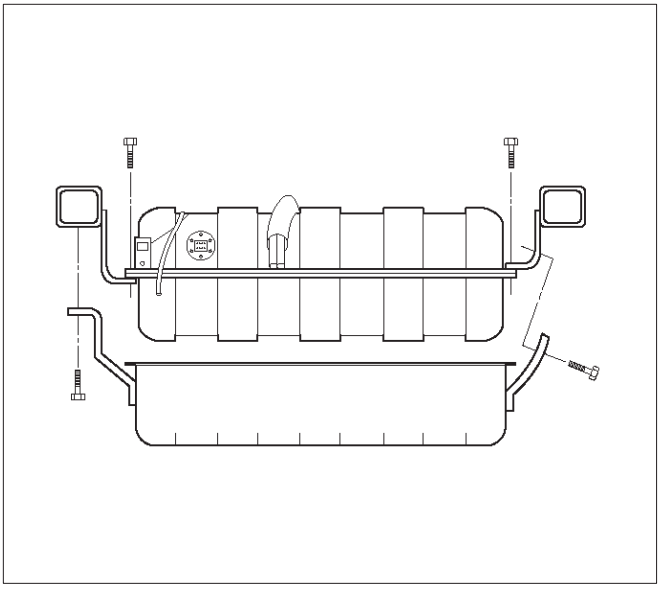

TS23797

11. Connect the fuel filler fuse at the tank.
12. Connect the air breather hose at the tank.

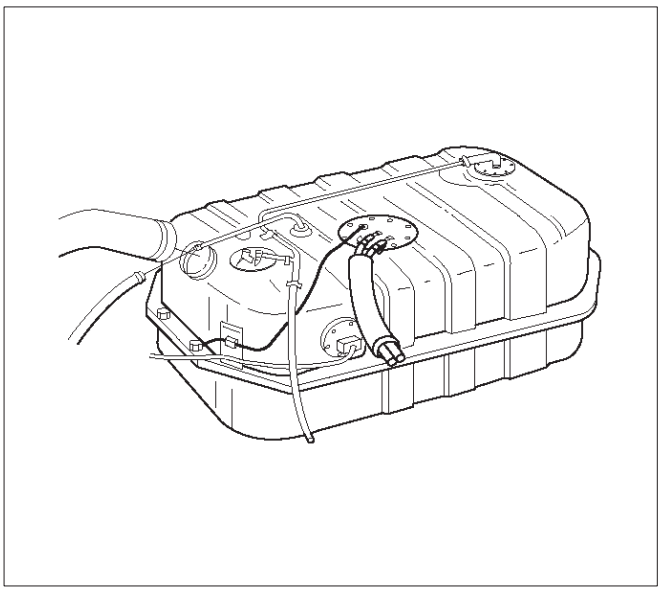

TS23796

13. Fill the fuel tank with fuel.
14. Tighten the fuel filler cap.
15. Connect the negative battery cable.

Throttle Body (TB)

Removal Procedure

1. Disconnect the negative battery cable.
2. Drain the cooling system. Refer to *Cooling System*.
3. Remove the accelerator cable assembly. Refer to *Accelerator Cable in Engine Speed Control System.*.
4. Disconnect the electrical connectors:
   - Throttle position (TP) sensor.
   - Idle air control (IAC) solenoid.
   - Intake air temperature (IAT) sensor. Refer to *Intake Air Temperature Sensor*.

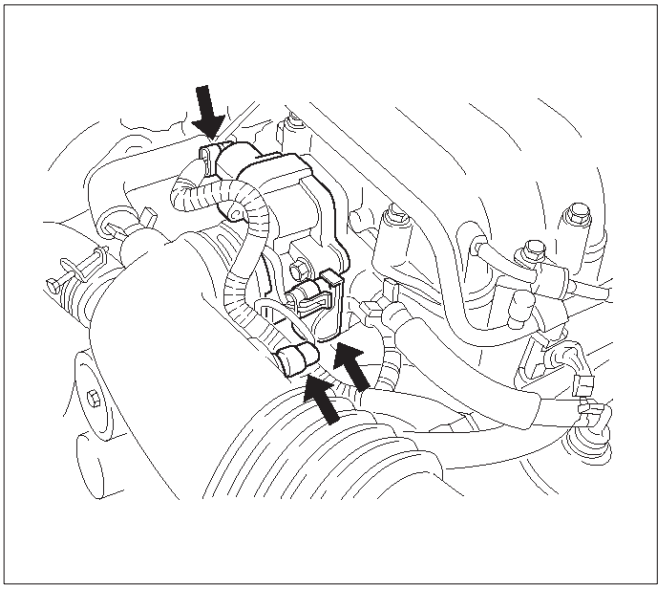

035RW023

5. Disconnect the vacuum hose below the air horn.
6. Remove the intake air duct clamp.
7. Disconnect the intake air duct.
8. Disconnect the coolant lines from the throttle body.
9. Remove the bolts from the common chamber.
10. Remove the throttle body from the common chamber.
11. Remove the gasket from the upper intake manifold.

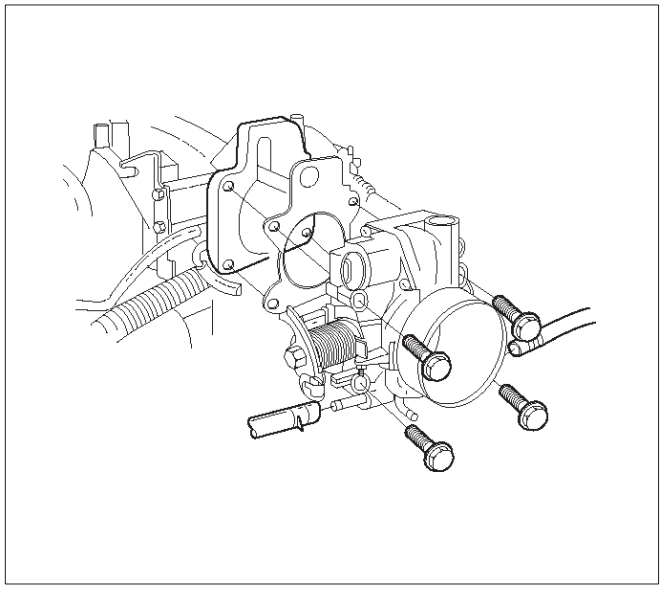

035RW024

12. Remove the IAC. Refer to *Idle Air Control (IAC) Solenoid*.
13. Remove the TP sensor. Refer to *Throttle Position (TP) Sensor*.

Inspection Procedure

NOTE: Do not use solvent of any type when you clean the gasket surfaces on the intake manifold and the throttle body assembly. The gasket surfaces and the throttle body assembly may be damaged as a result.

- If the throttle body gasket needs to be replaced, remove any gasket material that may be stuck to the mating surfaces of the manifold.
- Do not leave any scratches in the aluminum casting.

Installation Procedure

1. Install the TP sensor. Refer to *Throttle Position (TP) Sensor*.
2. Install the IAC. Refer to *Idle Air Control (IAC) Solenoid*.
3. Install the gasket on the common chamber.
4. Install the throttle body on the common chamber.

5. Secure the gasket and the throttle body with the four bolts.
   - The vacuum lines must be properly routed under the throttle body before tightening the mounting bolts.

Tighten

- Tighten the throttle body mounting bolts to 24 N·m (17 lb ft.).

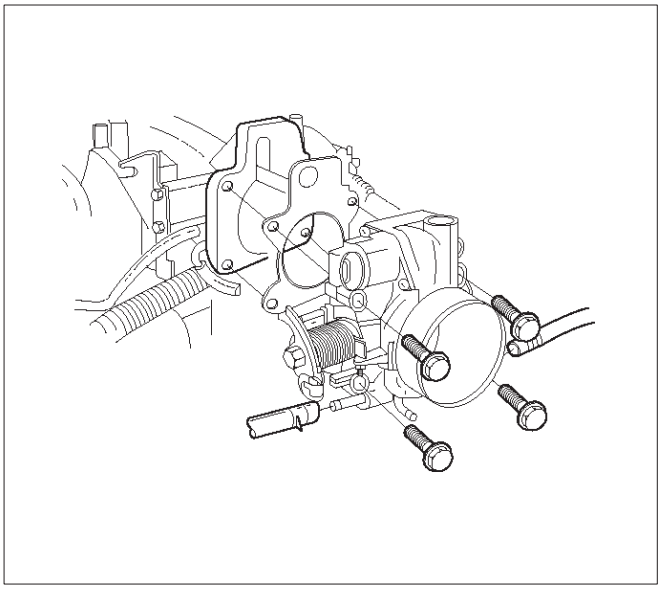

035RW024

6. Install the coolant lines.
7. Connect all the vacuum lines.
8. Install the intake air duct.
9. Tighten the intake air duct clamp.
10. Connect all the electrical connectors:
    - Throttle position (TP) sensor.
    - Idle air control (IAC) solenoid.
    - Intake air temperature (IAT) sensor. Refer to *Intake Air Temperature Sensor*.

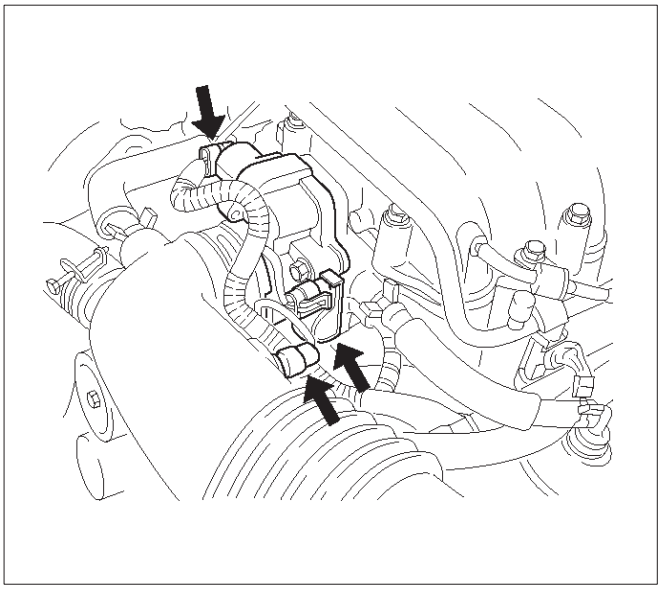

035RW023

11. Install the accelerator cable assembly. Refer to *Accelerator Cable in Engine Speed Control System.*.
12. Fill the cooling system. Refer to *Cooling System*.
13. Install the negative battery cable.

Electronic Ignition System

Removal Procedure

1. Disconnect the negative battery cable.
2. Disconnect the electrical connector at the ignition coil.
3. Remove the two screws that secure the ignition coil to the rocker cover.

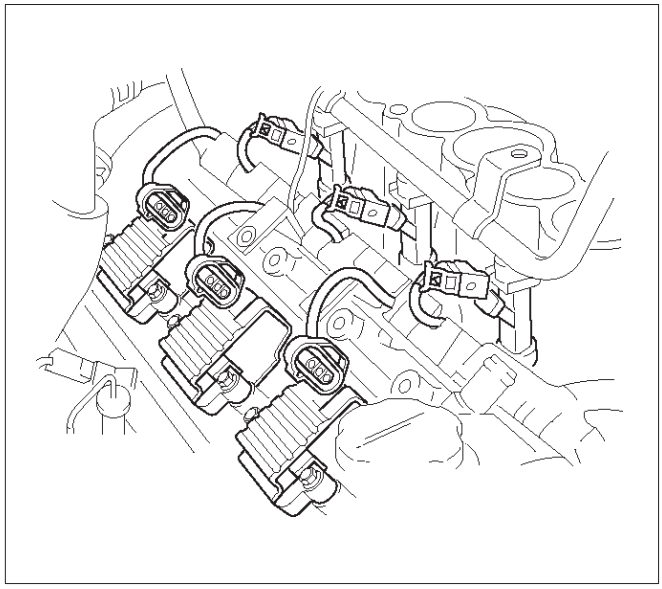

014RW108

4. Remove the ignition coil and the spark plug boot from the spark plug.
   - Twist the ignition coil while pulling it straight up.

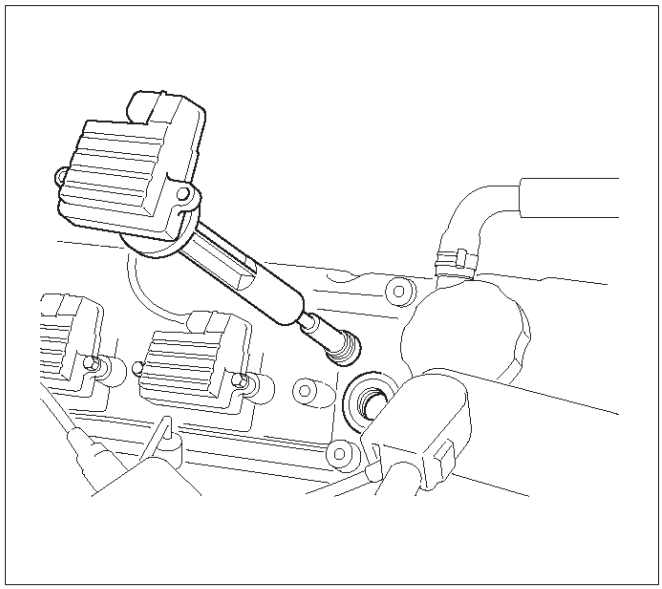

014RW091

5. Use the spark plug socket in order to remove the spark plug from the engine.

Spark Plug Gap Check

- Check the gap of all spark plugs before installation.
- Use a round wire feeler gauge to ensure an accurate check.
- Plugs installed with the wrong gap can cause poor engine performance and excessive emissions.

Installation Procedure

NOTE: The plug must thread smoothly into the cylinder head and be fully seated. Use a thread chaser if necessary to clean the threads in the cylinder head. Cross-threading or failure to fully seat the spark plug can cause plug overheating, exhaust blow-by gas, or thread damage. Do not overtighten the spark plugs. Over tightening can cause aluminum threads to strip.

1. Install the spark plug in the engine. Use the appropriate spark plug socket.

Tighten

- Tighten the spark plug to 18 N·m (13 lb ft.).

2. Install the ignition coil and spark plug boot over the spark plug.

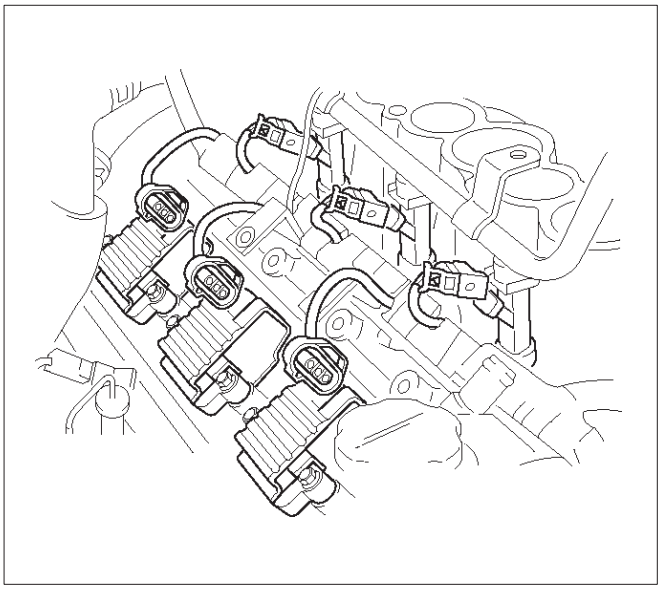

014RW108

3. Secure the ignition coil to the rocker cover with two screws.

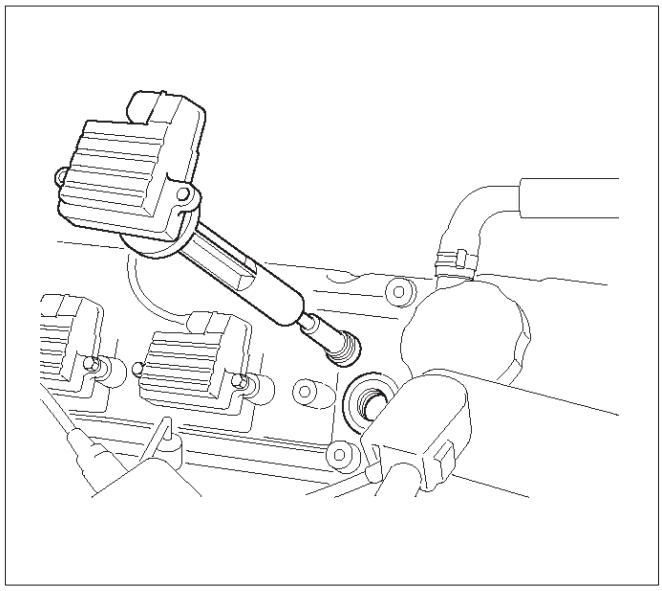

014RW091

4. Connect the electrical connector at the ignition coil.
5. Connect the negative battery cable.

Catalytic Converter

Removal and Installation Procedure

Refer to *Engine Exhaust in Engine*.

Air Conditioning Relay

Removal Procedure

1. Remove the fuse and relay box cover from under the hood.
2. Consult the diagram on the cover to determine which is the correct relay.
3. Insert a small screwdriver into the catch slot on the forward side of the fuel pump relay.
   - The screwdriver blade will release the catch inside.

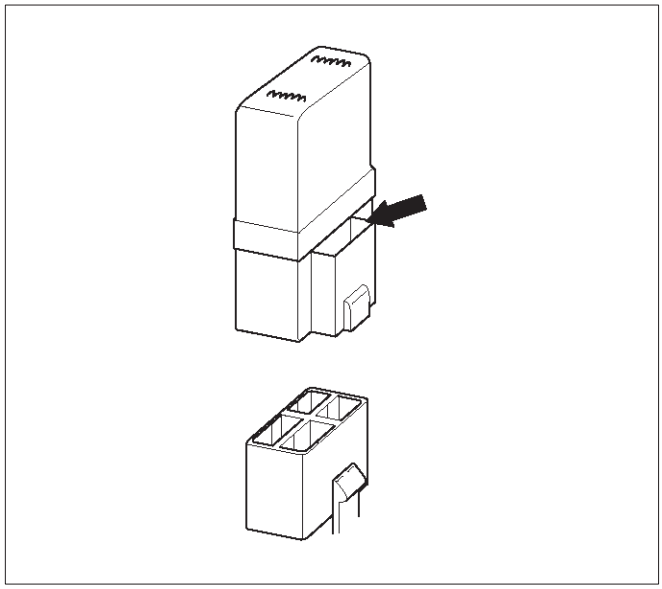

T321092

4. Pull the relay straight up and out of the fuse and relay box.

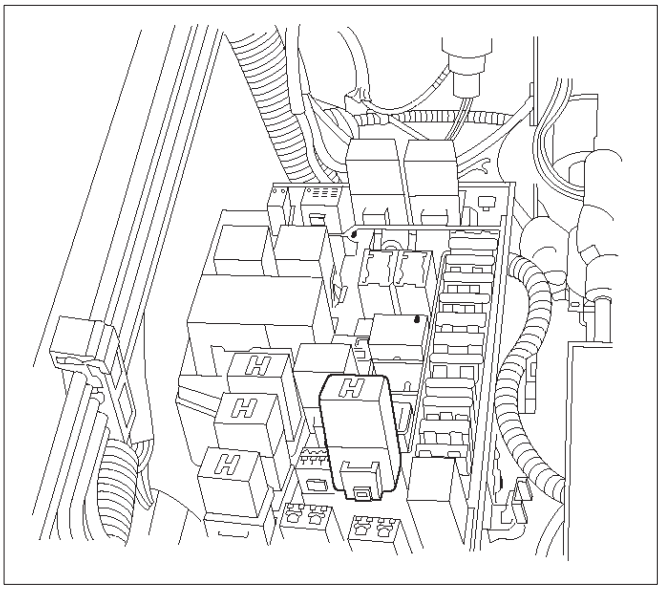

TS23986

Installation Procedure

1. Insert the relay into the correct place in the fuse and relay box with the catch slot facing forward.
2. Press down until the catch engages.
   - An audible “click” will be heard.
3. Install the fuse and relay box cover.

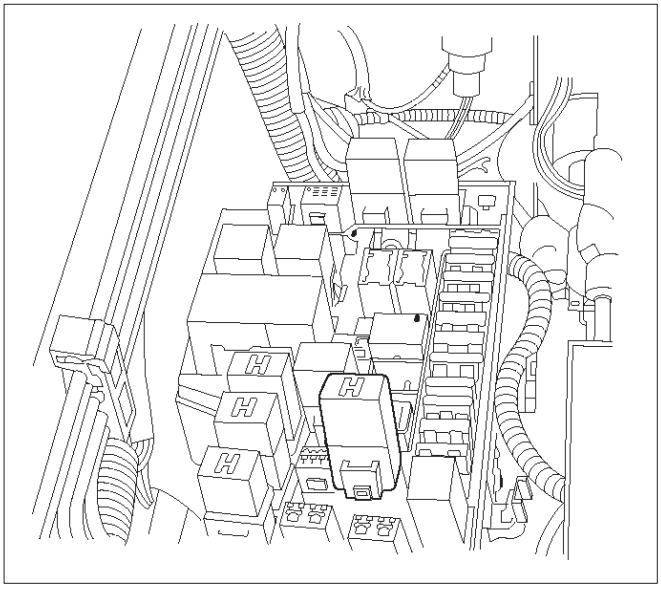

TS23986

EVAP Canister Hoses

Service Information

To view the routing of the EVAP canister hoses, refer to *Vehicle Emission Control Information* in *Diagnosis*. Use 6148M or equivalent when you replace the EVAP canister hoses.

EVAP Canister

Removal Procedure

1. Disconnect the negative battery cable.
2. Disconnect the three hoses from the EVAP canister.

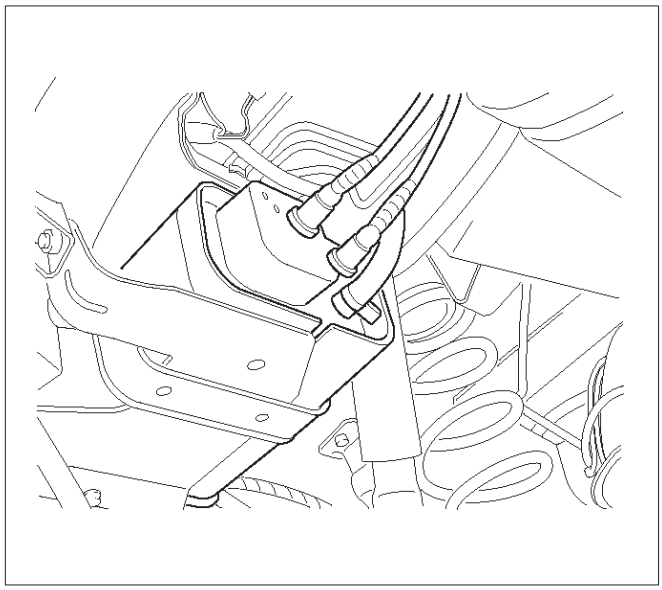

014RW145

3. Remove the retaining two bolts on the mounting bracket and slide the canister out of mounting bracket.

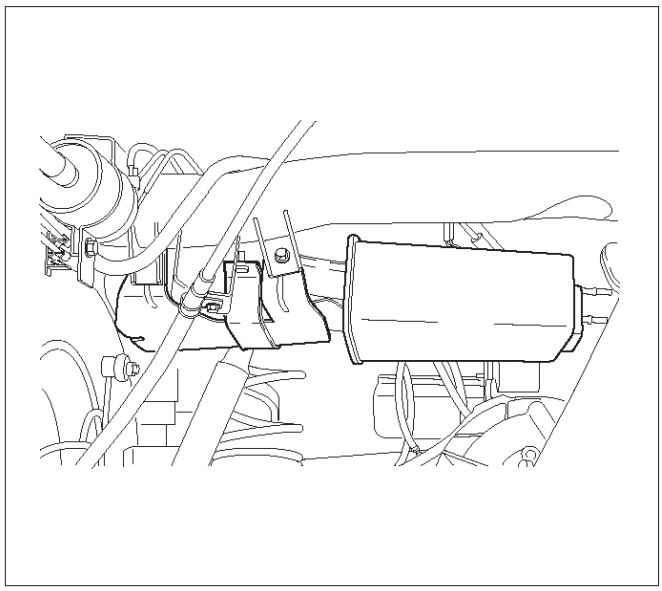

014RW146

Inspection Procedure

1. Inspect the hoses for cracks and leaks.
2. Inspect the canister for a damaged case.

Installation Procedure

1. Slide the canister into mounting bracket and install the mounting bracket two bolts.

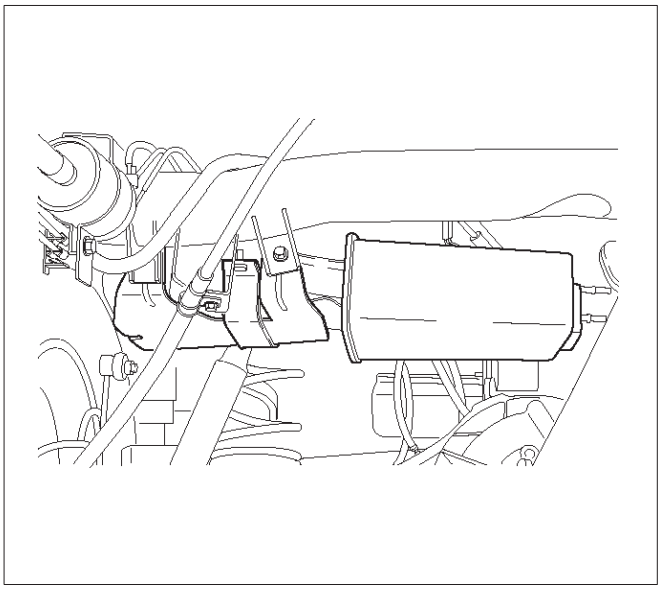

014RW146

2. Connect the three hoses to the EVAP canister.

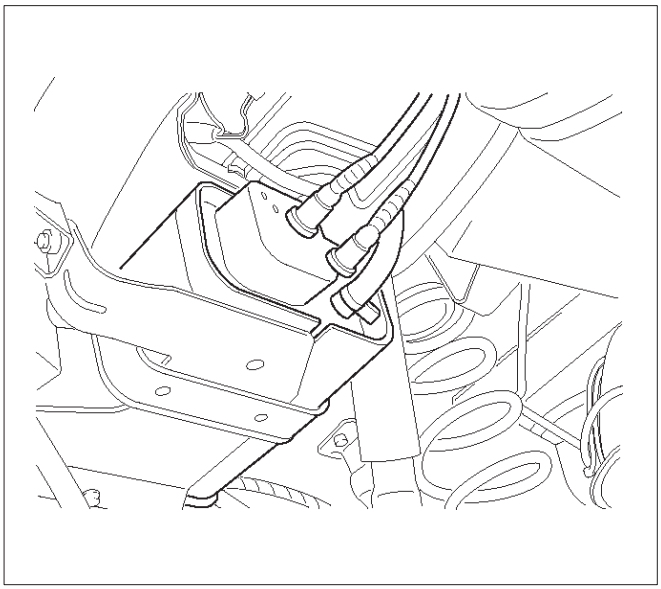

014RW145

3. Disconnect the negative battery cable.

EVAP Canister Purge Solenoid

Removal Procedure

1. Disconnect the electrical connector from the EVAP canister purge solenoid.
2. Disconnect the vacuum hoses from the EVAP canister purge solenoid.

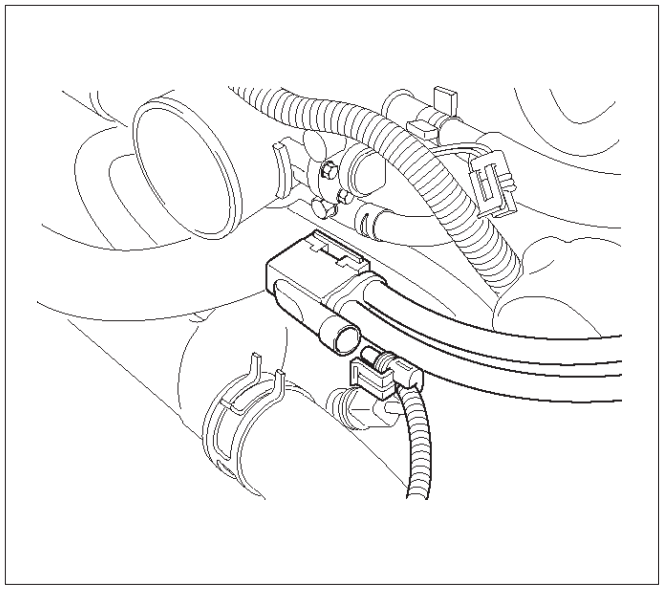

014RW136

3. Remove the EVAP canister purge solenoid retaining bolt from the upper intake manifold.
4. Remove the EVAP canister purge solenoid.

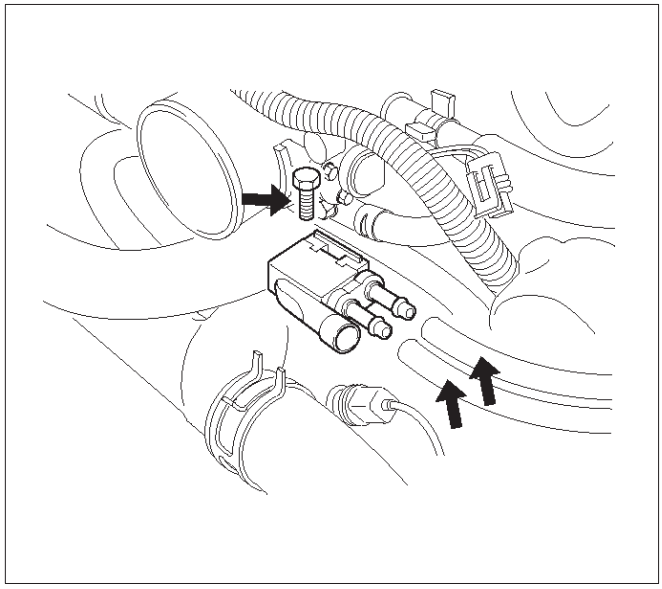

014RW137

Installation Procedure

1. Install the EVAP canister purge solenoid on the upper intake manifold.
2. Install the EVAP canister purge solenoid retaining bolt.

3. Connect the vacuum hoses to the EVAP canister purge solenoid.

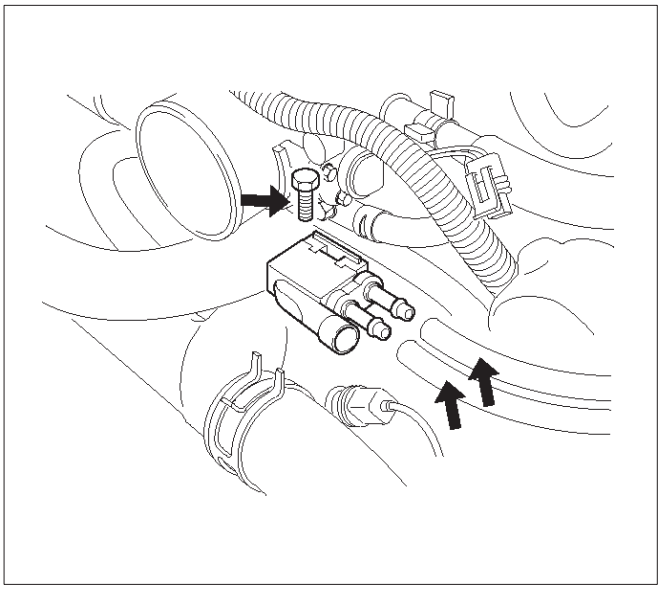

014RW137

4. Connect the electrical connector to the EVAP canister purge solenoid.

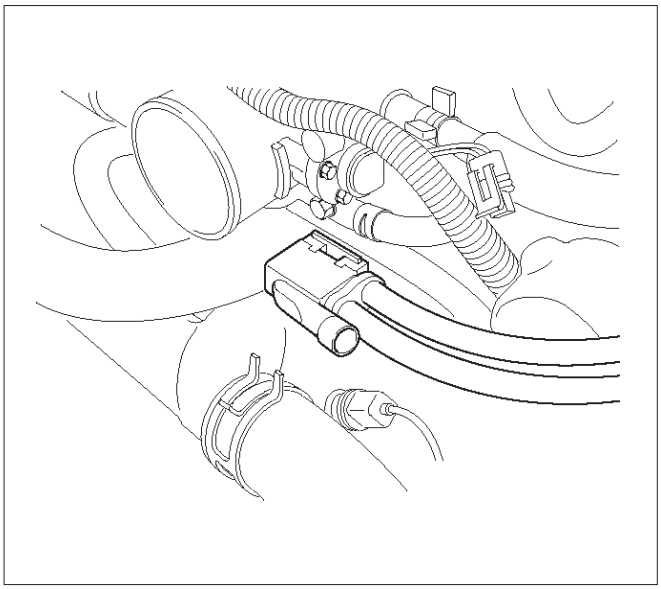

014RW138

Fuel Tank Vent Valve

Removal and Installation Procedure

Refer to *Fuel Pump*

Linear Exhaust Gas Recirculation (EGR) Valve

Removal Procedure

1. Disconnect the negative battery cable.
2. Disconnect the electrical connector at the EGR valve.

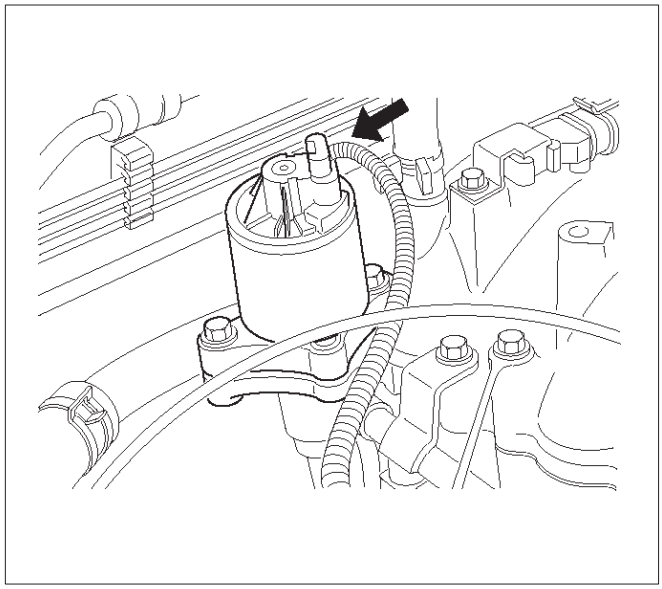

014RW139

3. Remove the bolt and the nut from the upper intake manifold.

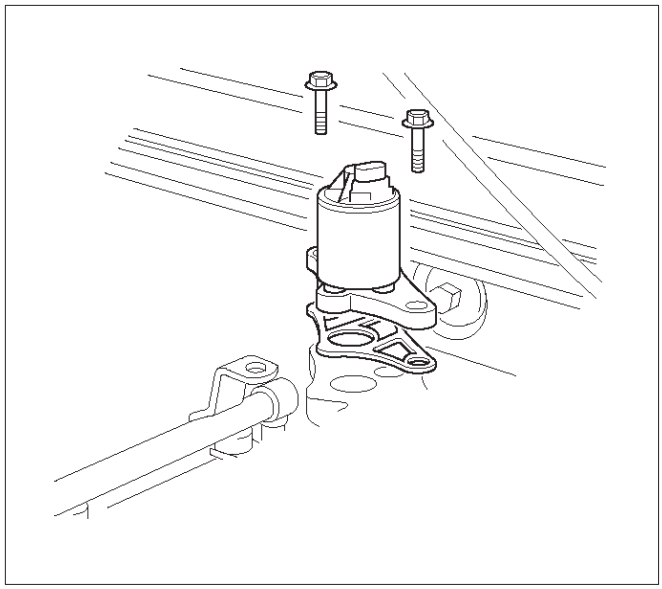

014RW098

4. Remove the EGR valve from the upper intake manifold.
5. Remove the gasket from the upper intake manifold.

Installation Procedure

1. Install the gasket on the upper intake manifold.
2. Install the EGR valve on the upper intake manifold.
3. Secure the EGR valve and the gasket with the bolt and the nut.

NOTE: It is possible to install the EGR valve rotated 180˚ from the correct position. Make sure that the base of the valve is placed so that it aligns with the mounting flange.

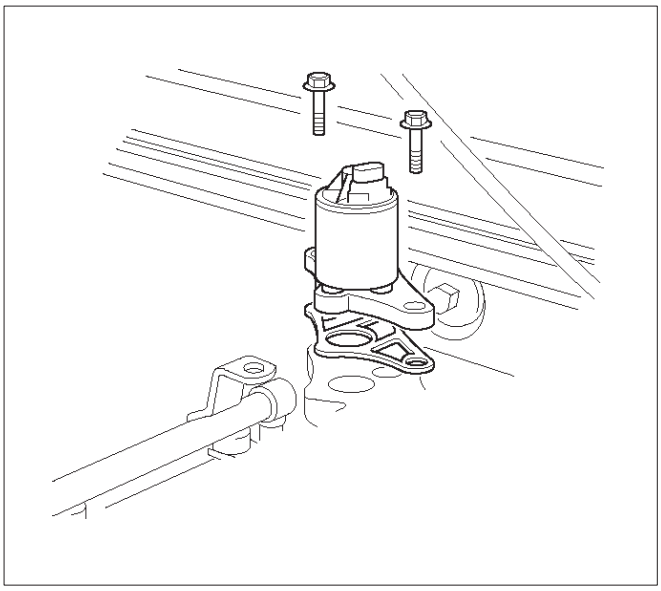

014RW098

4. Connect the electrical connector at the EGR valve.

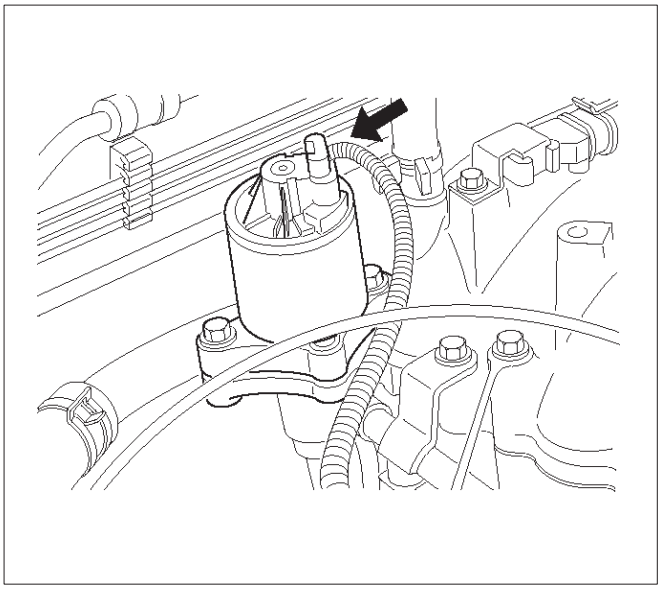

014RW139

5. Connect the negative battery cable.

Positive Crankcase Ventilation (PCV) Valve

Removal Procedure

1. Remove the vacuum hose at the PCV valve.
   - Slide the clamp back to release the hose.
2. Pull the PCV valve from the rubber grommet in the right valve cover.

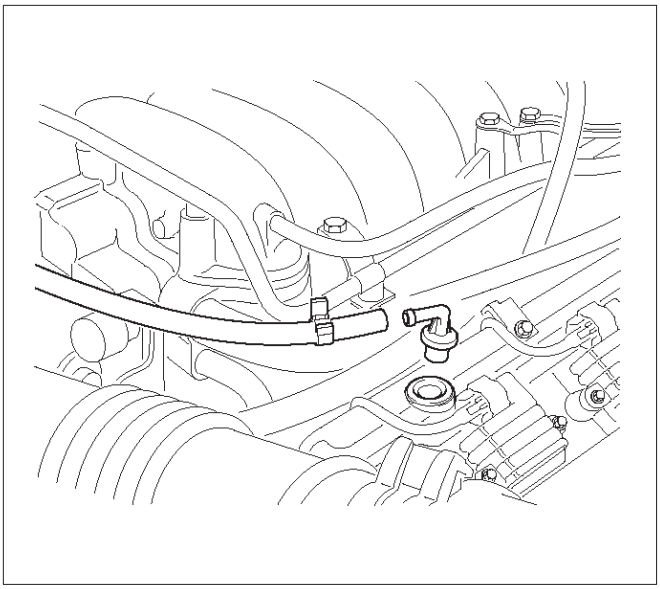

014RW097

Inspection Procedure

1. Shake the valve and listen for the rattle of the needle inside the valve.
2. If the valve does not rattle, replace the valve.

Installation Procedure

1. Push the PCV valve into the rubber grommet in the left valve cover.
2. Install the vacuum hose on the PCV valve and secure the vacuum hose with the clamp.

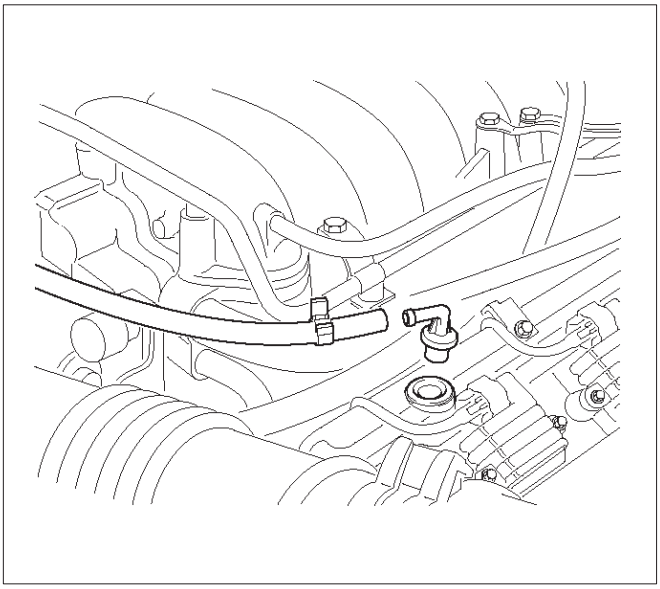

014RW097

Wiring and Connectors

Wiring Harness Service

The control module harness electrically connects the control module to the various solenoids, switches and sensors in the vehicle engine compartment and passenger compartment.
Replace wire harnesses with the proper part number replacement.
Because of the low amperage and voltage levels utilized in powertrain control systems, it is essential that all wiring in environmentally exposed areas be repaired with crimp and seal splice sleeves.
The following wire harness repair information is intended as a general guideline only. Refer to *Chassis Electrical* for all wire harness repair procedures.

Connectors and Terminals

Use care when probing a connector and when replacing terminals. It is possible to short between opposite terminals. Damage to components could result. Always use jumper wires between connectors for circuit checking. NEVER probe through Weather-Pack seals. Use an appropriate connector test adapter kit which contains an assortment of flexible connectors used to probe terminals during diagnosis. Use an appropriate fuse remover and test tool for removing a fuse and to adapt the fuse holder to a meter for diagnosis.
Open circuits are often difficult to locate by sight because oxidation or terminal misalignment are hidden by the connectors. Merely wiggling a connector on a sensor, or in the wiring harness, may temporarily correct the open circuit. Intermittent problems may also be caused by oxidized or loose connections.
Be certain of the type of connector/terminal before making any connector or terminal repair. Weather-Pack and Com-Pack III terminals look similar, but are serviced differently.

PCM Connectors and Terminals

Removal Procedure

1. Remove the connector terminal retainer.
2. Push the wire connected to the affected terminal through the connector face so that the terminal is exposed.
3. Service the terminal as necessary.

Installation Procedure

1. Bend the tab on the connector to allow the terminal to be pulled into position within the connector.
2. Pull carefully on the wire to install the connector terminal retainer.

Wire Harness Repair: Twisted Shielded Cable

Removal Procedure

1. Remove the outer jacket.
2. Unwrap the aluminum/mylar tape. Do not remove the mylar.

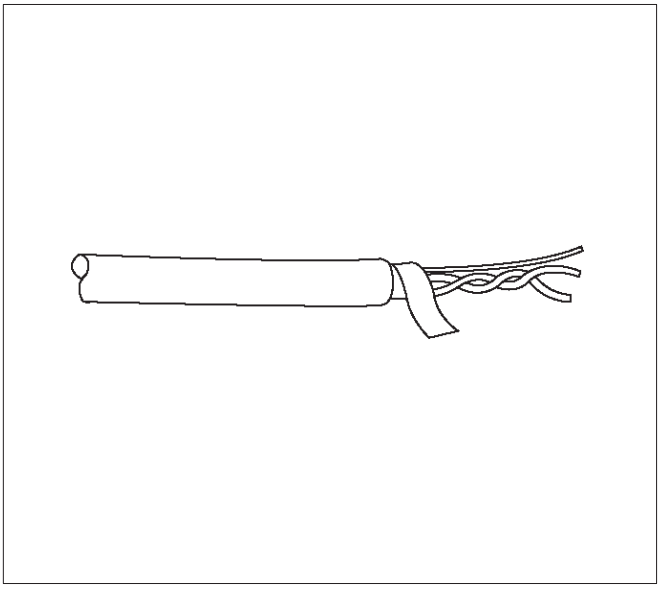

047

3. Untwist the conductors.
4. Strip the insulation as necessary.

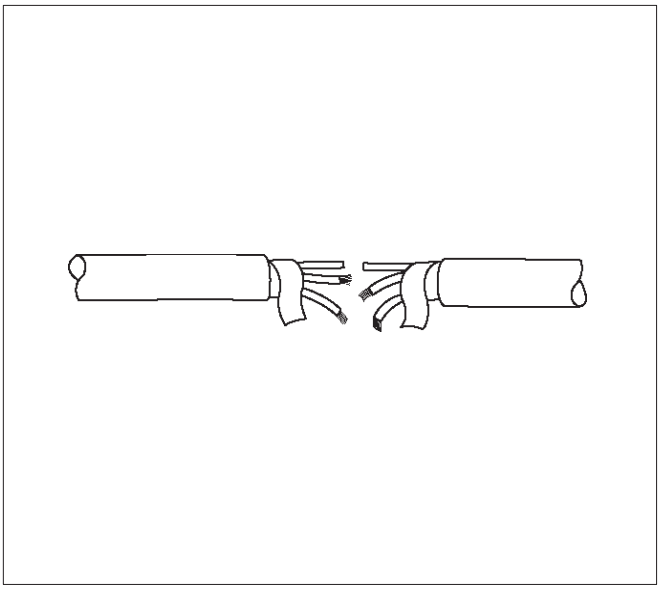

048

Installation Procedure

1. Splice the wires using splice clips and rosin core solder.
2. Wrap each splice to insulate.
3. Wrap the splice with mylar and with the drain (uninsulated) wire.

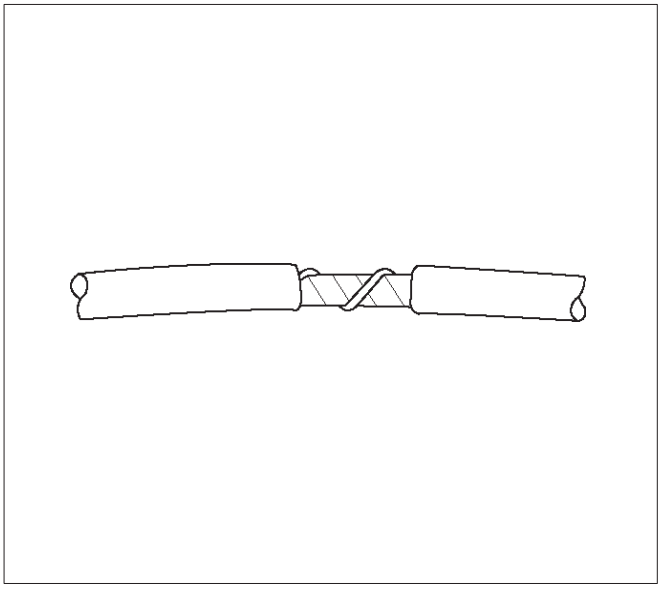

049

4. Tape over the whole bundle to secure.

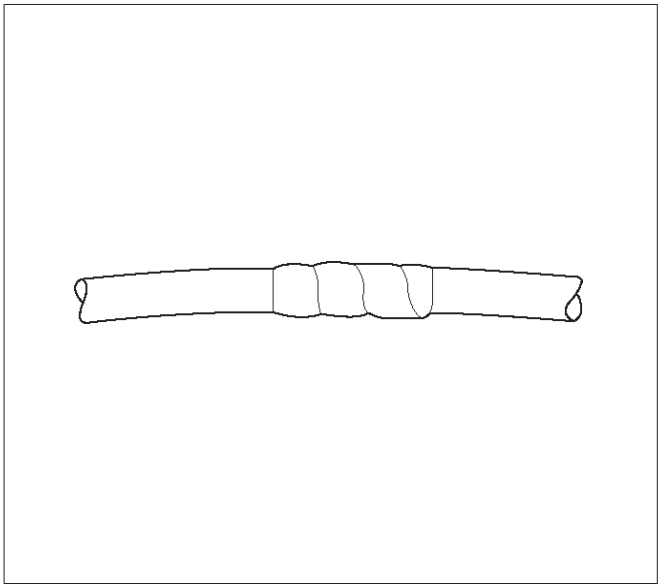

050

Twisted Leads

Removal Procedure

1. Locate the damaged wire.
2. Remove the insulation as required.

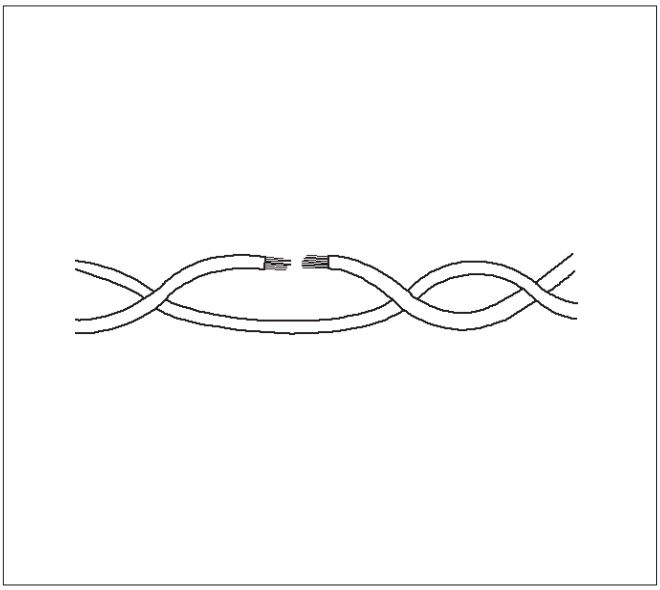

051

Installation Procedure

1. Use splice clips and rosin core solder in order to splice the two wires together.

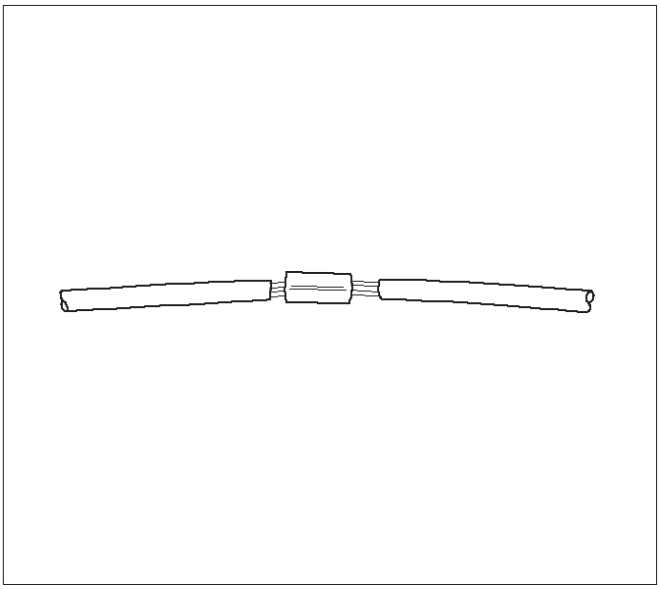

052

2. Cover the splice with tape in order to insulate it from the other wires.

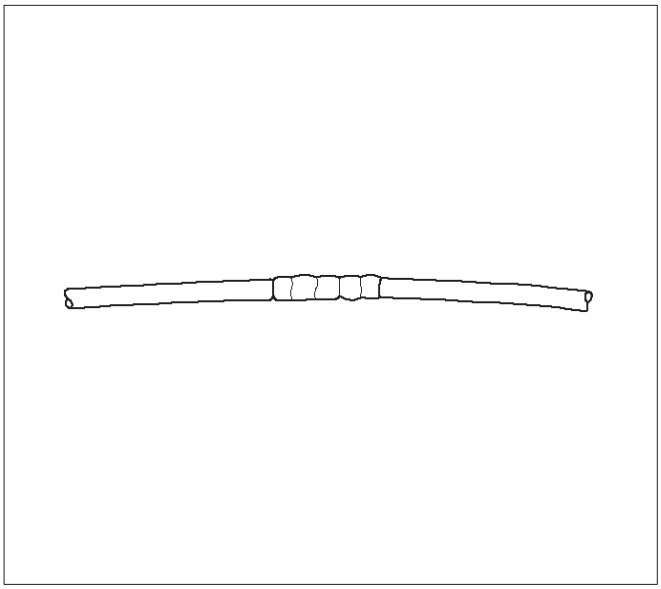

053

3. Twist the wires as they were before starting this procedure.

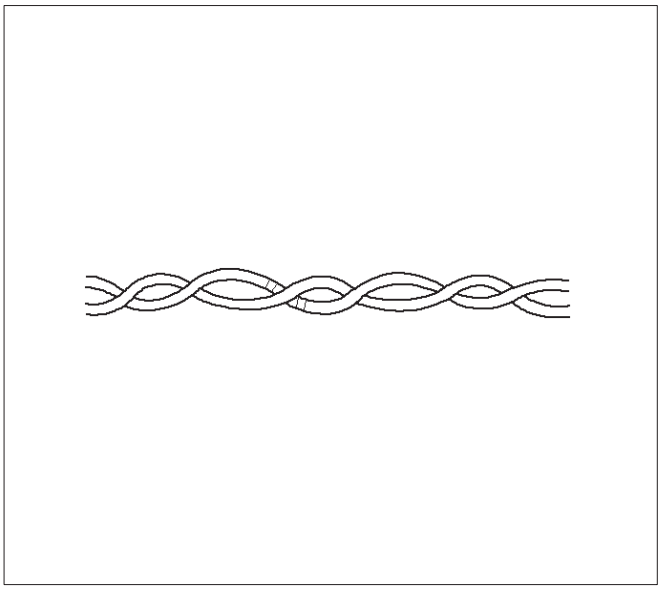

054

4. Tape the wires with electrical tape. Hold in place.

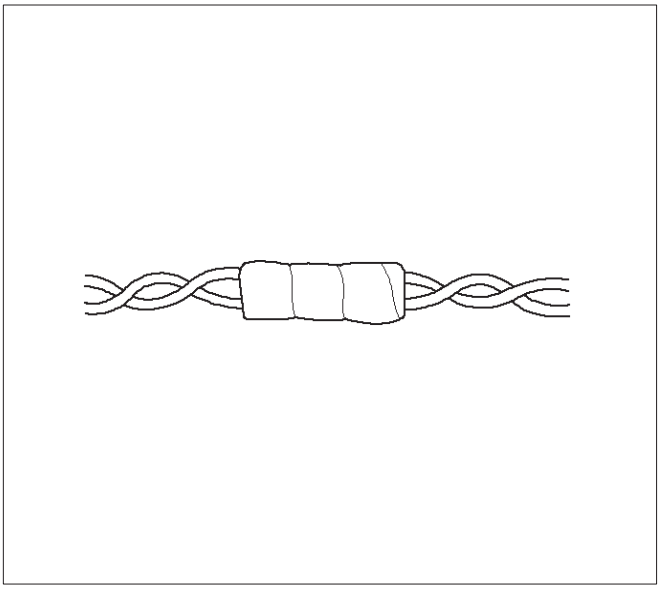

055

Weather-Pack Connector

Tools Required

J 28742-A Weather-Pack II Terminal Remover

Removal Procedure

A Weather-Pack connector can be identified by a rubber seal at the rear of the connector. This engine room connector protects against moisture and dirt, which could from oxidation and deposits on the terminals. This protection is important, because of the low voltage and the low amperage found in the electronic systems.

1. Open the secondary lock hinge on the connector.

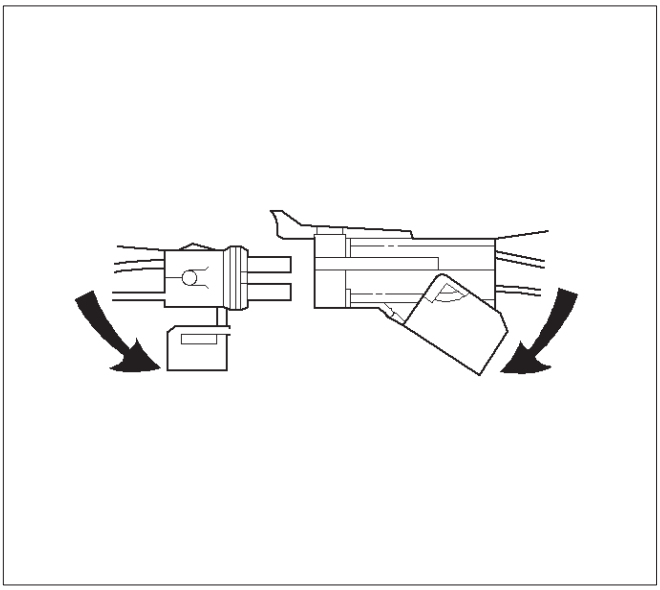

070

2. Use tool J 28742-A or the equivalent to remove the pin and the sleeve terminals. Push on J 28742-A to release.

NOTE: Do the use an ordinary pick or the terminal may be bent or deformed. Unlike standard blade terminals, these terminals cannot be straightened after they have been improperly bent.

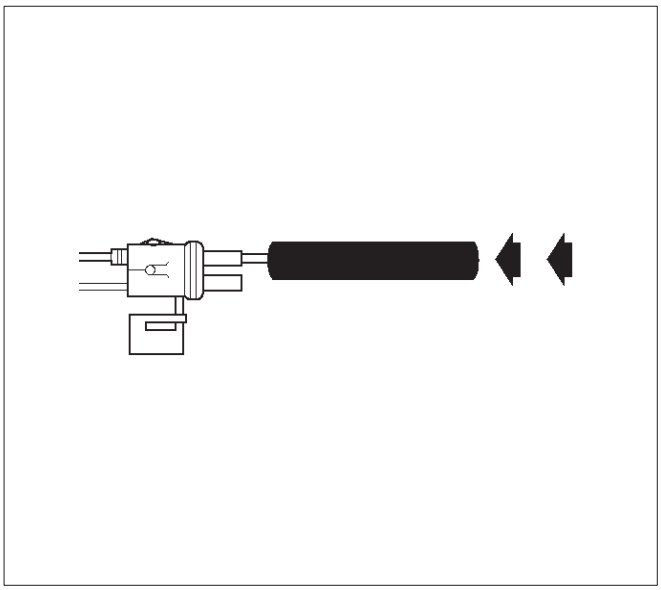

071

3. Cut the wire immediately behind the cable seal.

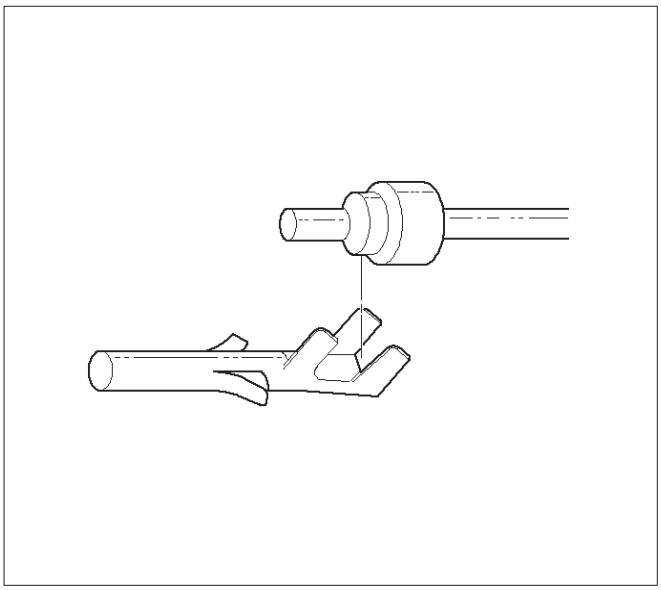

072

Installation Procedure

Make certain the connectors are properly seated and all of the sealing rings are in place when you reconnect the leads. The secondary lock hinge provides a backup locking feature for the connector. The secondary lock hinge is used for added reliability. This flap should retain the terminals even if the small terminal lock tangs are not positioned properly.

Do not replace the Weather-Pack connections with standard connections. Read the instructions provided with the Weather-Pack connector and terminal packages.

1. Replace the terminal.
2. Slip the new seal onto the wire.
3. Strip 5 mm (0.2”) of insulation from the wire.
4. Crimp the terminal over the wire and the seal.

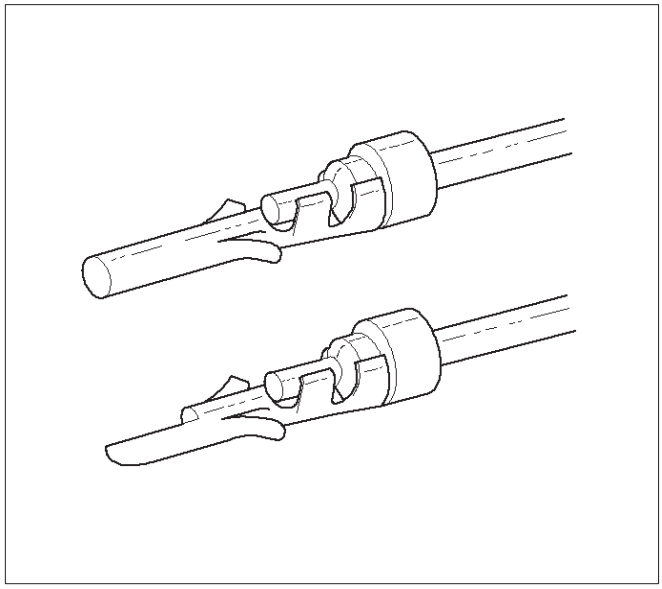

073

5. Push the terminal and the connector to engage the locking tangs.

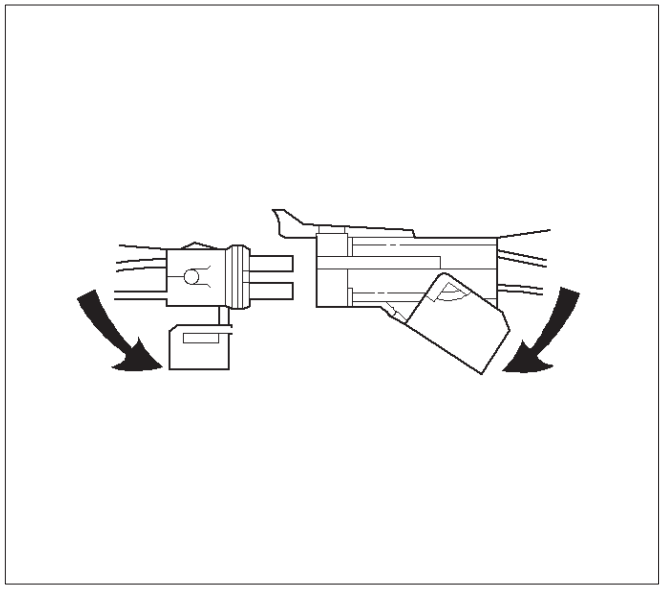

070

6. Close the secondary locking hinge.

Com-Pack III

General Information

The Com-Pack III terminal looks similar to some Weather-Pack terminals. This terminal is not sealed and is used where resistance to the environment is not required. Use the standard method when repairing a terminal. Do not use the Weather-Pack terminal tool J 28742-A or equivalent. These will damage the terminals.

Metri-Pack

Tools Required

J 35689 Terminal Remover

Removal Procedure

Some connectors use terminals called Metri-Pack Series 150. These may be used at the engine coolant temperature (ECT) sensor.

1. Slide the seal (1) back on the wire.
2. Insert the J 35689 tool or equivalent (3) in order to release the terminal locking tang (2).

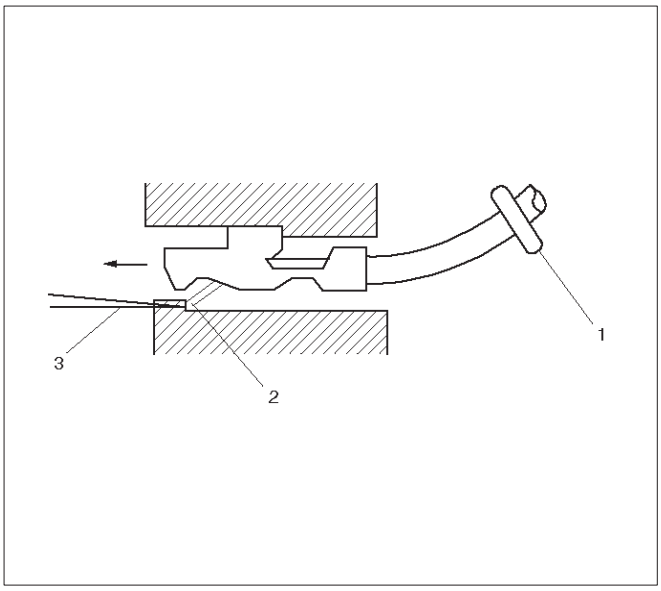

060

3. Push the wire and the terminal out through the connector. If you reuse the terminal, reshape the locking tang.

Installation Procedure

Metri-Pack terminals are also referred to as “pull-to-seat” terminals.

1. In order to install a terminal on a wire, the wire must be inserted through the seal (2) and through the connector (3).
2. The terminal (1) is then crimped onto the wire.

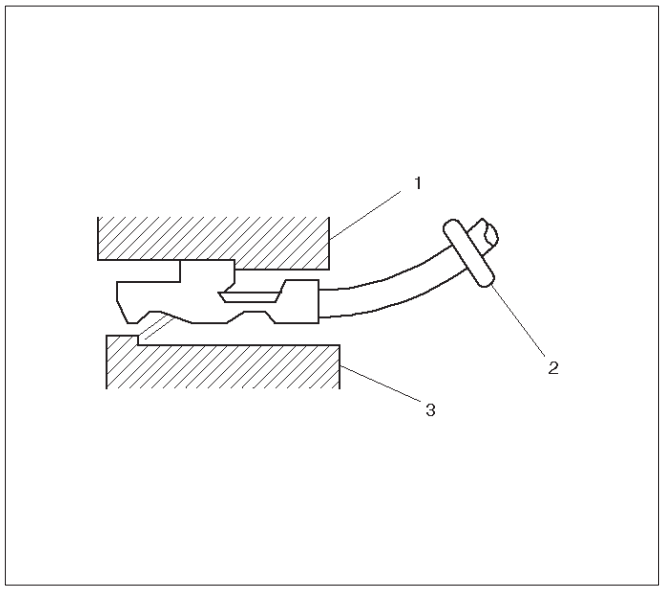

061

3. Then the terminal is pulled back into the connector to seat it in place.

General Description

General Description (PCM and Sensors)

58X Reference PCM Input

The powertrain control module (PCM) uses this signal from the crankshaft position (CKP) sensor to calculate engine RPM and crankshaft position at all engine speeds. The PCM also uses the pulses on this circuit to initiate injector pulses. If the PCM receives no pulses on this circuit, DTC P0337 will set. The engine will not start and run without using the 58X reference signal.

A/C Request Signal

This signal tells the PCM when the A/C mode is selected at the A/C control head. The PCM uses this to adjust the idle speed before turning “ON” the A/C clutch. The A/C compressor will be inoperative if this signal is not available to the PCM.
Refer to *A/C Clutch Circuit Diagnosis* for A/C wiring diagrams and diagnosis for the A/C electrical system.

Crankshaft Position (CKP) Sensor

The crankshaft position (CKP) sensor provides a signal used by the powertrain control module (PCM) to calculate the ignition sequence. The CKP sensor initiates the 58X reference pulses which the PCM uses to calculate RPM and crankshaft position.
Refer to *Electronic Ignition System* for additional information.

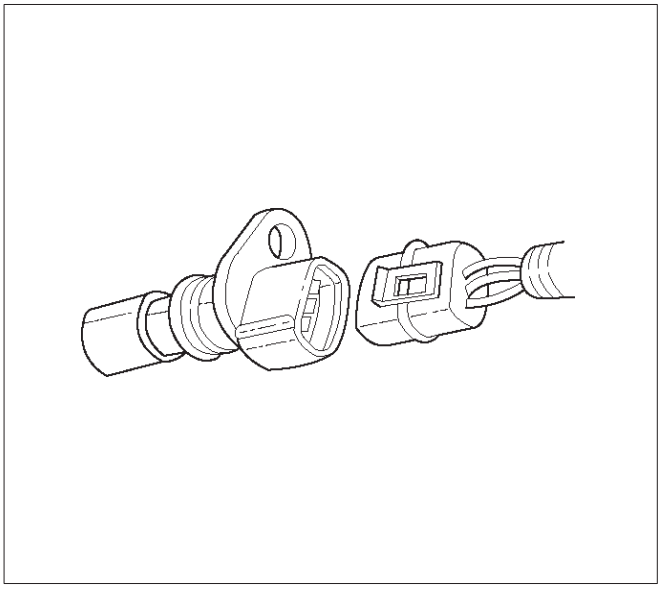

0013

Camshaft Position (CMP) Sensor and Signal

The camshaft position (CMP) sensor sends a CMP signal to the PCM. The PCM uses this signal as a “sync pulse” to trigger the injectors in the proper sequence. The PCM uses the CMP signal to indicate the position of the #1 piston during its power stroke. This allows the PCM to calculate true sequential fuel injection (SFI) mode of operation. If the PCM detects an incorrect CMP signal while the engine is running, DTC P0341 will set. If the CMP signal is lost while the engine is running, the fuel injection system will shift to a calculated sequential fuel injection mode based on the last fuel injection pulse, and the engine will continue to run. As long as the fault is present, the engine can be restarted. It will run in the calculated sequential mode with a 1-in-6 chance of the injector sequence being correct.
Refer to *DTC P0341* for further information.

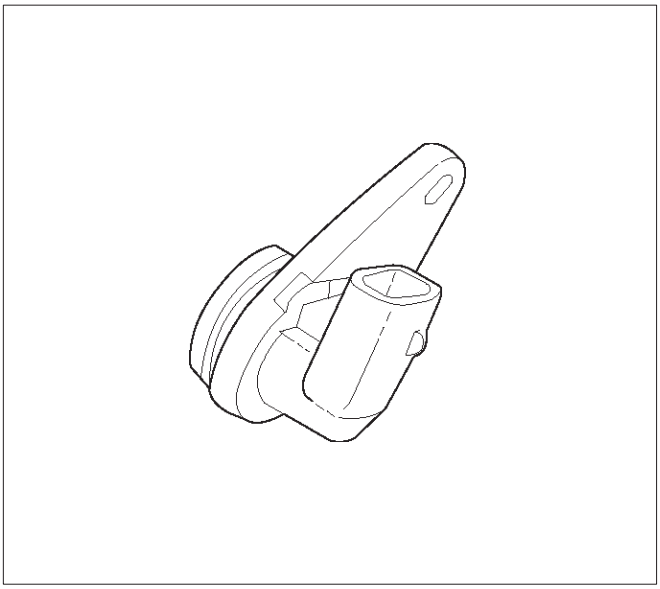

0014

Engine Coolant Temperature (ECT) Sensor

The engine coolant temperature (ECT) sensor is a thermistor (a resistor which changes value based on temperature) mounted in the engine coolant stream. Low coolant temperature produces a high resistance of 100,000 ohms at –40˚C (–40˚F). High temperature causes a low resistance of 70 ohms at 130˚C (266˚F). The PCM supplies a 5-volt signal to the ECT sensor through resistors in the PCM and measures the voltage. The signal voltage will be high when the engine is cold and low when the engine is hot. By measuring the voltage, the PCM calculates the engine coolant temperature. Engine coolant temperature affects most of the systems that the PCM controls.
Tech 2 displays engine coolant temperature in degrees. After engine start-up, the temperature should rise steadily to about 85˚C (185˚F). It then stabilizes when the thermostat opens. If the engine has not been run for several hours (overnight), the engine coolant temperature and intake air temperature displays should be close to each other. A hard fault in the engine coolant sensor circuit will set DTC P0177 or DTC P0118. An intermittent fault will set a DTC P1114 or P1115.

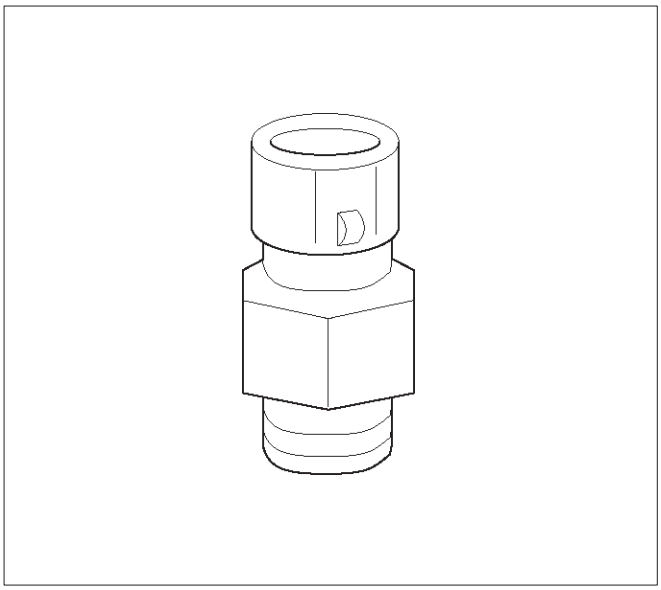

0016

Electrically Erasable Programmable Read Only Memory (EEPROM)

The electrically erasable programmable read only memory (EEPROM) is a permanent memory chip that is physically soldered within the PCM. The EEPROM contains the program and the calibration information that the PCM needs to control powertrain operation.

Unlike the PROM used in past applications, the EEPROM is not replaceable. If the PCM is replaced, the new PCM will need to be programmed. Equipment containing the correct program and calibration for the vehicle is required to program the PCM.

Fuel Control Heated Oxygen Sensors

The fuel control heated oxygen sensors (Bank 1 HO2S 1 and Bank 2 HO2S 1) are mounted in the exhaust stream where they can monitor the oxygen content of the exhaust gas. The oxygen present in the exhaust gas reacts with the sensor to produce a voltage output. This voltage should constantly fluctuate from approximately 100 mV to 900 mV. The heated oxygen sensor voltage can be monitored with Tech 2. By monitoring the voltage output of the oxygen sensor, the PCM calculates the pulse width command for the injectors to produce the proper combustion chamber mixture.

- Low HO2S voltage is a lean mixture which will result in a rich command to compensate.
- High HO2S voltage is a rich mixture which will result in a lean command to compensate.

An open Bank 1 HO2S 1 signal circuit will set a DTC P0134 and Tech 2 will display a constant voltage between 400-500 mV. A constant voltage below 300 mV in the sensor circuit (circuit grounded) will set DTC P0131. A constant voltage above 800 mV in the circuit will set DTC P0132. Faults in the Bank 2 HO2S 1 signal circuit will cause DTC 0154 (open circuit), DTC P0151 (grounded circuit), or DTC P0152 (signal voltage high) to set.

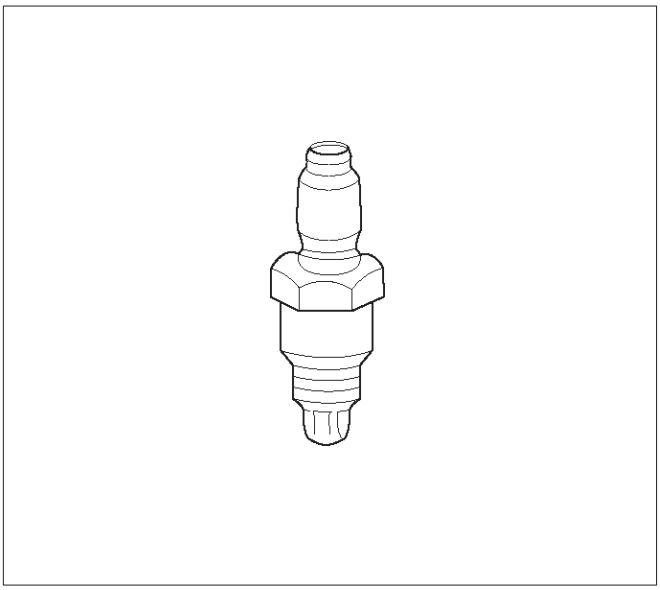

0012

Intake Air Temperature (IAT) Sensor

The intake air temperature (IAT) sensor is a thermistor which changes its resistance based on the temperature of air entering the engine. Low temperature produces a high resistance of 100,000 ohms at –40˚C (–40˚F). High temperature causes low resistance of 70 ohms at 130˚C (266˚F) . The PCM supplies a 5-volt signal to the sensor through a resistor in the PCM and monitors the signal voltage. The voltage will be high when the incoming air is cold. The voltage will be low when the incoming air is hot. By measuring the voltage, the PCM calculates the incoming air temperature. The IAT sensor signal is used to adjust spark timing according to the incoming air density.

Tech 2 displays the temperature of the air entering the engine. The temperature should read close to the ambient air temperature when the engine is cold and rise as underhood temperature increases. If the engine has not been run for several hours (overnight), the IAT sensor temperature and engine coolant temperature should read close to each other. A fault in the IAT sensor circuit will set DTC P0112 or DTC P0113.

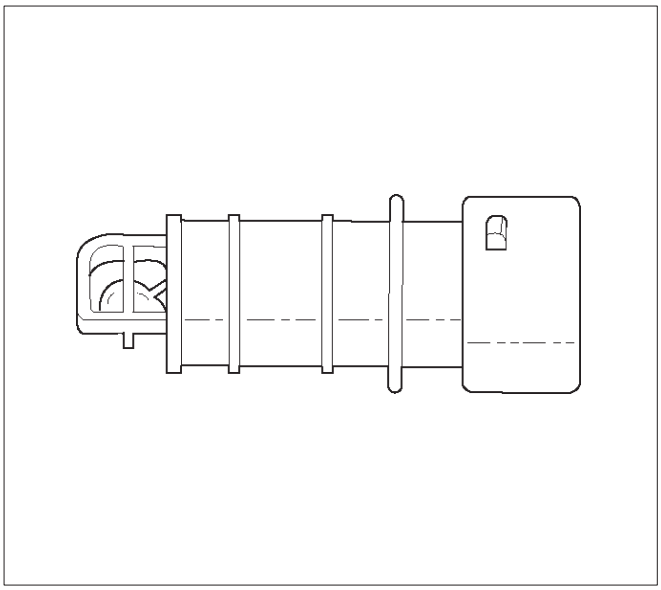

0018

Knock Sensor

Insufficient gasoline octane levels may cause detonation in some engines. Detonation is an uncontrolled explosion (burn) in the combustion chamber. This uncontrolled explosion results from a flame front opposite that of the normal flame front produced by the spark plug. The rattling sound normally associated with detonation is the result of two or more opposing pressures (flame fronts) colliding within the combustion chamber. Light detonation is sometimes considered normal, but heavy detonation could result in engine damage.

A knock sensor system is used to control detonation. This system is designed to retard spark timing up to 20 degrees to reduce detonation in the engine. This allows the engine to use maximum spark advance to improve driveability and fuel economy.

The knock sensor system has two major components:

- The knock sensor (KS) module.
- The knock sensor.

The knock sensor, mounted in the engine block near the cylinders, detects abnormal vibration in the engine. The sensor produces an AC output signal of about 10 millivolts. The signal amplitude and frequency are dependent on the amount of knock being experienced. The signal voltage increases with the severity of the knock. This signal voltage is input to the PCM. The PCM then retards the ignition control (IC) spark timing based on the KS signal being received.

The PCM determines whether knock is occurring by comparing the signal level on the KS circuit with the voltage level on the noise channel. The noise channel allows the PCM to reject any false knock signal by indicating the amount of normal engine mechanical noise present. Normal engine noise varies depending on the engine speed and load. If the voltage level on the KS noise channel circuit is below the range considered normal, DTC P0327 will set, indicating a fault in the KS circuit or the knock sensor. If the PCM determines that an abnormal minimum or maximum noise level is being experienced, DTC P0325 will set.

The PCM contains a knock sensor (KS) module. The KS module contains the circuitry which allows the PCM to utilize the KS signal and diagnose the KS sensor and the KS circuitry. If the KS module is missing or faulty, a continuous knock condition will be indicated, and the PCM will set DTC P0325.

Although it is a plug-in device, the KS module is not replaceable. If the KS module is faulty, the entire PCM must be replaced.

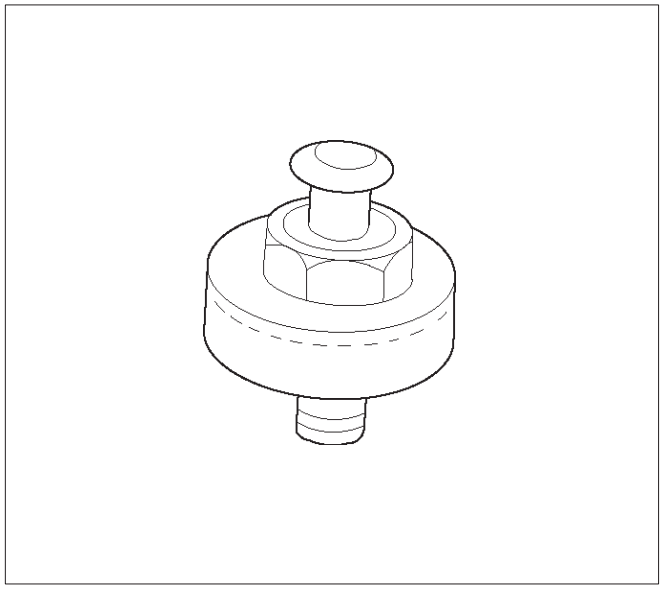

0009

Linear Exhaust Gas Recirculation (EGR) Control

The PCM monitors the exhaust gas recirculation (EGR) actual position and adjusts the pintle position accordingly. The PCM uses information from the following sensors to control the pintle position:

- Engine coolant temperature (ECT) sensor.
- Throttle position (TP) sensor.
- Mass air flow (MAF) sensor.

Mass Air Flow (MAF) Sensor

The mass air flow (MAF) sensor measures the difference between the volume and the quantity of air that enters the engine. “Volume” means the size of the space to be filled. “Quantity” means the number of air molecules that will fit into the space. This information is important to the PCM because heavier, denser air will hold more fuel than lighter, thinner air. The PCM adjusts the air/fuel ratio as needed depending on the MAF value. Tech 2 reads the MAF value and displays it in terms of grams per second (gm/s). At idle, Tech 2 should read between 4-7 gm/s on a fully warmed up engine. Values should change quickly on acceleration. Values should remain stable at any given

RPM. A failure in the MAF sensor or circuit will set DTC P0101, DTC P0102, or DTC P0103.

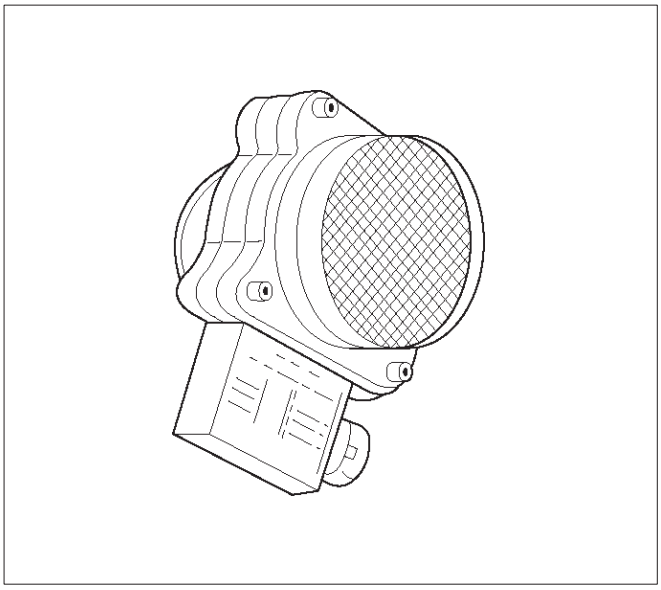

0007

Manifold Absolute Pressure (MAP) Sensor

The manifold absolute pressure (MAP) sensor responds to changes in intake manifold pressure (vacuum). The MAP sensor signal voltage to the PCM varies from below 2 volts at idle (high vacuum) to above 4 volts with the ignition ON, engine not running or at wide-open throttle (low vacuum).

The MAP sensor is used to determine the following:

- Manifold pressure changes while the linear EGR flow test diagnostic is being run. Refer to *DTC P0401*.
- Engine vacuum level for other diagnostics.
- Barometric pressure (BARO).

If the PCM detects a voltage that is lower than the possible range of the MAP sensor, DTC P0107 will be set. A signal voltage higher than the possible range of the sensor will set DTC P0108. An intermittent low or high voltage will set DTC P1107 or DTC P1106, respectively. The PCM can detect a shifted MAP sensor. The PCM compares the MAP sensor signal to a calculated MAP based on throttle position and various engine load factors. If the PCM detects a MAP signal that varies excessively above or below the calculated value, DTC P0106 will set.

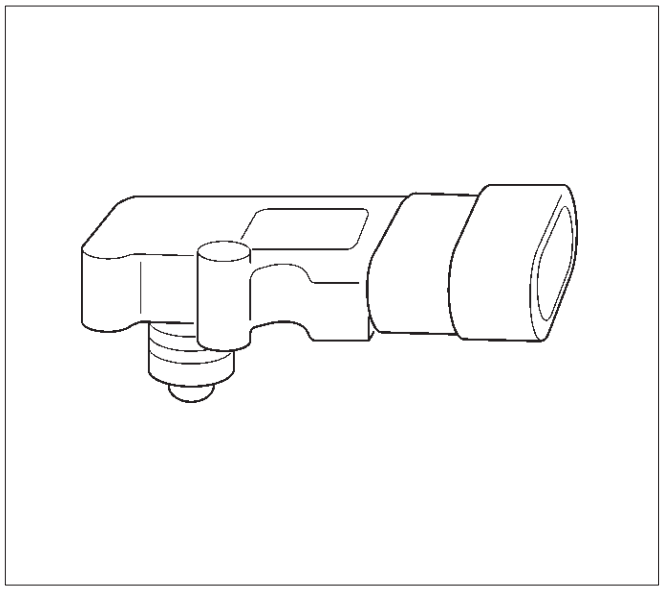

055RW004

Powertrain Control Module (PCM)

The powertrain control module (PCM) is located in the passenger compartment below the center console. The PCM controls the following:

- Fuel metering system.
- Transmission shifting (automatic transmission only).
- Ignition timing.
- On-board diagnostics for powertrain functions.

The PCM constantly observes the information from various sensors. The PCM controls the systems that affect vehicle performance. The PCM performs the diagnostic function of the system. It can recognize operational problems, alert the driver through the MIL (Service Engine Soon lamp), and store diagnostic trouble codes (DTCs). DTCs identify the problem areas to aid the technician in making repairs.

This engine uses 2 different control modules:

- IPCM-6KT for automatic transmission-equipped vehicles.
- ISFI-6 for manual transmission-equipped vehicles.

PCM Function

The PCM supplies either 5 or 12 volts to power various sensors or switches. The power is supplied through resistances in the PCM which are so high in value that a test light will not light when connected to the circuit. In some cases, even an ordinary shop voltmeter will not give an accurate reading because its resistance is too low. Therefore, a digital voltmeter with at least 10 megohms input impedance is required to ensure accurate voltage readings. Tool J 39200 meets this requirement. The PCM controls output circuits such as the injectors, IAC, cooling fan relays, etc., by controlling the ground or the power feed circuit through transistors of following device.

- Output Driver Module (ODM)

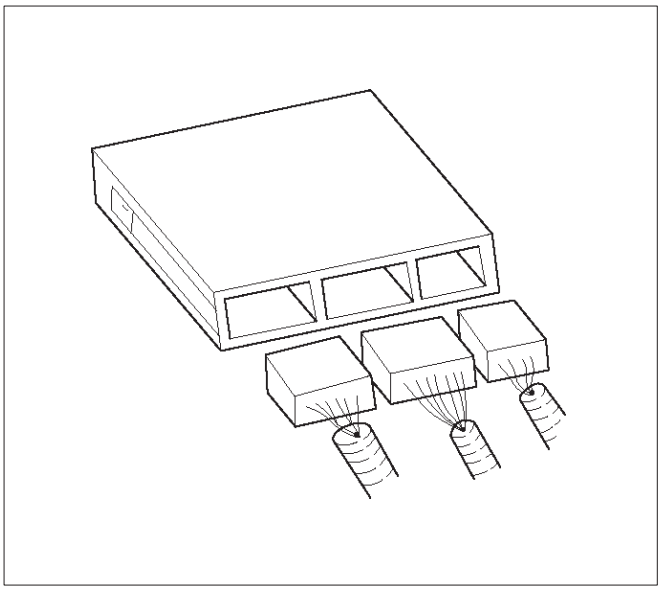

0005

PCM Components

The PCM is designed to maintain exhaust emission levels to government mandated standards while providing excellent driveability and fuel efficiency. The PCM monitors numerous engine and vehicle functions via electronic sensors such as the throttle position (TP) sensor, heated oxygen sensor (HO2S), and vehicle speed sensor (VSS). The PCM also controls certain engine operations through the following:

- Fuel injector control
- Ignition control module
- Knock sensor
- Automatic transmission shift functions
- Cruise control
- A/C clutch control

PCM Voltage Description

The PCM supplies a buffered voltage to various switches and sensors. It can do this because resistance in the PCM is so high in value that a test light may not illuminate when connected to the circuit. An ordinary shop voltmeter may not give an accurate reading because the voltmeter input impedance is too low. Use a 10-megohm input impedance digital voltmeter (such as J 39200) to assure accurate voltage readings.

The input/output devices in the PCM include analog-to-digital converters, signal buffers, counters, and special drivers. The PCM controls most components with electronic switches which complete a ground circuit when turned “ON.” These switches are arranged in groups of 4 and 7, called either a surface-mounted quad driver module (QDM), which can independently control up to 4 output terminals, or QDMs which can independently control up to 7 outputs. Not all outputs are always used.

PCM Input/Outputs

Inputs – Operating Conditions Read

- Air Conditioning “ON” or “OFF”
- Engine Coolant Temperature
- Crankshaft Position
- Exhaust Oxygen Content
- Electronic Ignition
- Manifold Absolute Pressure
- Battery Voltage
- Throttle Position
- Vehicle Speed
- Fuel Pump Voltage
- Power Steering Pressure
- Intake Air Temperature
- Mass Air Flow
- Engine Knock
- Camshaft Position

Outputs – Systems Controlled

- Exhaust Gas Recirculation (EGR)
- Ignition Control
- Fuel Control
- Idle Air Control
- Electric Fuel Pump
- Air Conditioning
- Diagnostics
  - Malfunction Indicator Lamp (Service Engine Soon lamp)
  - Data Link Connector (DLC)
  - Data Output
- Transmission Control Module
- Alternator Gain Control

PCM Service Precautions

The PCM is designed to withstand normal current draws associated with vehicle operation. Avoid overloading any circuit. When testing for opens and shorts, do not ground or apply voltage to any of the PCM’s circuits unless instructed to do so. These circuits should only be tested Tech-2. The PCM should remain connected to the PCM or to a recommended breakout box.

Reprogramming The PCM

The Trooper allow reprogramming of the PCM without removing it from the vehicle . This provides a flexible and cost-effective method of making changes in software calibrations.

The service programming system (SPS) will not allow incorrect software programming or incorrect calibration changes.

Refer to the UBS 98model year Immobilizer Workshop Manual.

Throttle Position (TP) Sensor

The throttle position (TP) sensor is a potentiometer connected to the throttle shaft on the throttle body. The PCM monitors the voltage on the signal line and calculates throttle position. As the throttle valve angle is changed (accelerator pedal moved), the TP sensor signal also changes. At a closed throttle position, the output of

the TP sensor is low. As the throttle valve opens, the output increases so that at wide open throttle (WOT), the output voltage should be above 4 volts.

The PCM calculates fuel delivery based on throttle valve angle (driver demand). A broken or loose TP sensor may cause intermittent bursts of fuel from an injector and unstable idle because the PCM thinks the throttle is moving. A hard failure in the TP sensor 5-volt reference or signal circuits will set a DTC P0123. A hard failure with the TP sensor ground circuit may set DTC P0123. Once a DTC is set, the PCM will use an artificial default value based on engine RPM and mass air flow for the throttle position, and some vehicle performance will return. A high idle may result when DTC P0123 is set. The PCM can also detect a shifted TP sensor. The PCM monitors throttle position and compares the actual TP sensor reading to a predicted TP value calculated from engine speed. If the PCM detects an out-of-range condition, DTC P0121 will be set.

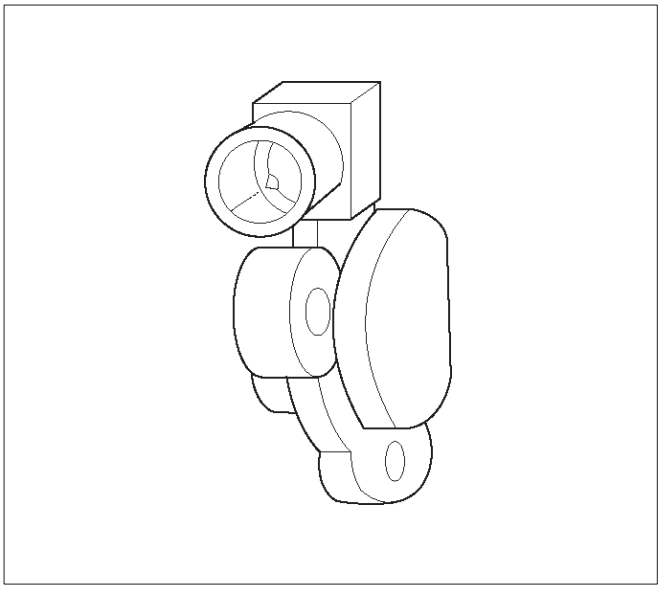

0021

Transmission Fluid Temperature (TFT) Sensor

The transmission fluid temperature sensor is a thermistor which changes its resistance based on the temperature of the transmission fluid. For a complete description of the TFT sensor, refer to *4L30-E Automatic Transmission Diagnosis*.

A failure in the TFT sensor or associated wiring will cause DTC P0712 or DTC P0713 to set. In this case, engine coolant temperature will be substituted for the TFT sensor value and the transmission will operate normally.

Transmission Range Switch

IMPORTANT: The vehicle should not be driven with the transmission range switch disconnected; idle quality will be affected.

The four inputs from the transmission range switch indicate to the PCM which position is selected by the transmission selector lever. This information is used for ignition timing, EVAP canister purge, EGR and IAC valve operation.

For more information on the transmission on the transmission range switch, refer to *4L30-E Automatic Transmission*.

Vehicle Speed Sensor (VSS)

The PCM determines the speed of the vehicle by converting a plusing voltage signal from the vehicle speed sensor (VSS) into miles per hour. The PCM uses this signal to operate the cruise control, speedometer, and the TCC and shift solenoids in the transmission. For more information on the TCC and shift solenoids, refer to *4L30-E Automatic Transmission.*

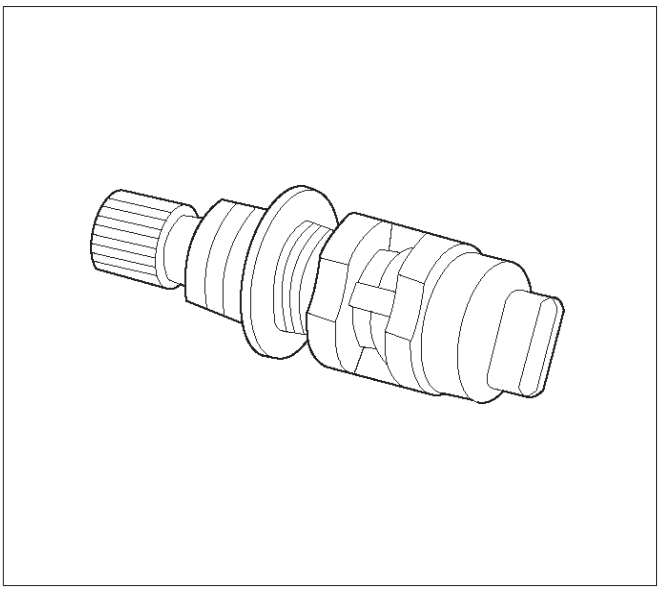

0008

Use of Circuit Testing Tools

Do not use a test light to diagnose the powertrain electrical systems unless specifically instructed by the diagnostic procedures. Use Connector Test Adapter Kit J 35616 whenever diagnostic procedures call for probing connectors.

Aftermarket Electrical and Vacuum Equipment

Aftermarket (add-on) electrical and vacuum equipment is defined as any equipment which connects to the vehicle's electrical or vacuum systems that is installed on a vehicle after it leaves the factory. No allowances have been made in the vehicle design for this type of equipment.

NOTE: No add-on vacuum equipment should be added to this vehicle.

NOTE: Add-on electrical equipment must only be connected to the vehicle's electrical system at the battery (power and ground).

Add-on electrical equipment, even when installed to these guidelines, may still cause the powertrain system to malfunction. This may also include equipment not connected to the vehicle electrical system such as portable telephones and radios. Therefore, the first step in diagnosing any powertrain problem is to eliminate all aftermarket electrical equipment from the vehicle. After

this is done, if the problem still exists, it may be diagnosed in the normal manner.

Electrostatic Discharge Damage

Electronic components used in the PCM are often designed to carry very low voltage. Electronic components are susceptible to damage caused by electrostatic discharge. Less than 100 volts of static electricity can cause damage to some electronic components. By comparison, it takes as much as 4000 volts for a person to feel even the zap of a static discharge.

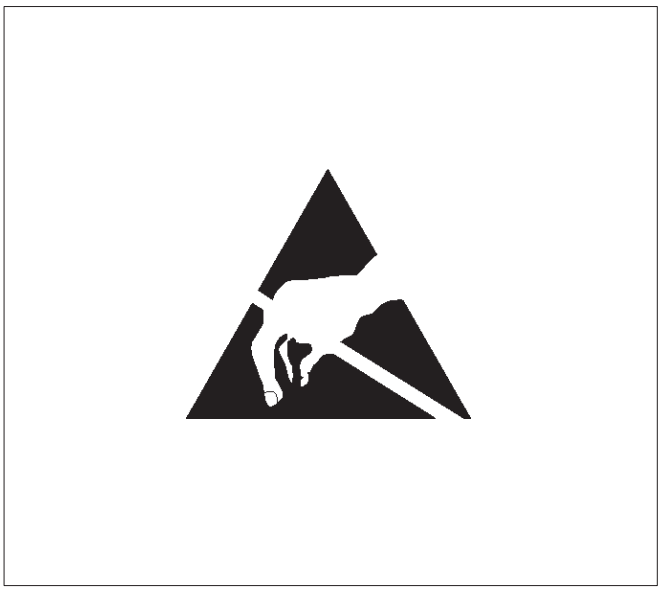

TS23793

There are several ways for a person to become statically charged. The most common methods of charging are by friction and induction.

- An example of charging by friction is a person sliding across a vehicle seat.
- Charge by induction occurs when a person with well insulated shoes stands near a highly charged object and momentary touches ground. Charges of the same polarity are drained off leaving the person highly charged with the opposite polarity. Static charges can cause damage, therefore it is important to use care when handling and testing electronic components.

NOTE: To prevent possible electrostatic discharge damage, follow these guidelines:

- Do not touch the PCM connector pins or soldered components on the PCM circuit board.
- Do not touch the knock sensor module component leads.
- Do not open the replacement part package until the part is ready to be installed.
- Before removing the part from the package, ground the package to a known good ground on the vehicle.
- If the part has been handled while sliding across the seat, while sitting down from a standing position, or while walking a distance, touch a known good ground before installing the part.

Upshift Lamp

Refer to *Manual Transmission*.

General Description (Air Induction)

Air Induction System

The air induction system filters contaminants from the outside air, and directs the progress of the air as it is drawn into the engine. A remote-mounted air cleaner prevents dirt and debris in the air from entering the engine. The air duct assembly routes filtered air to the throttle body. Air enters the engine by to following steps:

1. Through the throttle body.
2. Into the common chamber.
3. Through the cylinder head intake ports.
4. Into the cylinders.

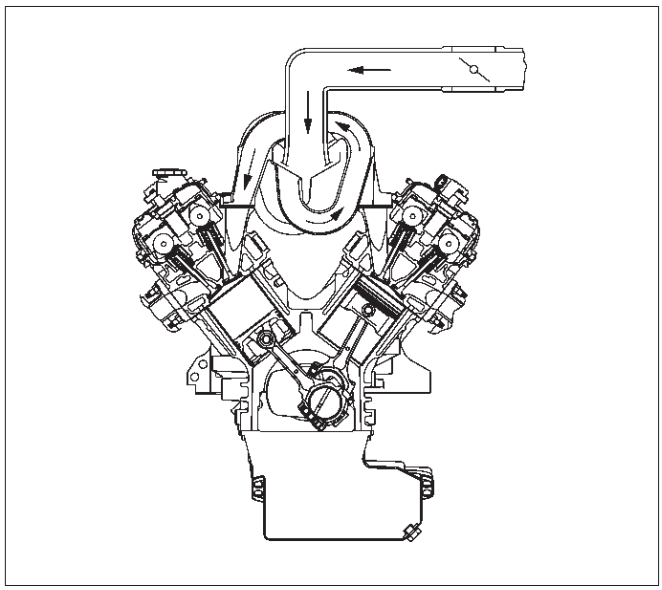

055RV010

General Description (Fuel Metering)

Acceleration Mode

The PCM provides extra fuel when it detects a rapid increase in the throttle position and the air flow.

Accelerator Controls

The accelerator control system is a cable-type system with specific linkage adjustments.
Refer to *Cable Adjustment*.

Battery Voltage Correction Mode

When battery voltage is low, the PCM will compensate for the weak spark by increasing the following:

- The amount of fuel delivered.
- The idle RPM.
- Ignition dwell time.

CMP Signal

The PCM uses this signal to determine the position of the number 1 piston during its power stroke, allowing the

PCM to calculate true sequential multiport fuel injection (SFI). Loss of this signal will set a DTC P0341. If the CMP signal is lost while the engine is running, the fuel injection system will shift to a calculated sequential fuel injection based on the last fuel injection pulse, and the engine will continue to run. The engine can be restarted and will run in the calculated sequential mode as long as the fault is present, with a 1-in-6 chance of being correct.

Clear Flood Mode

Clear a flooded engine by pushing the accelerator pedal down all the way. The PCM then de-energizes the fuel injectors. The PCM holds the fuel injectors de-energized as long as the throttle remains above 80% and the engine speed is below 800 RPM. If the throttle position becomes less than 80%, the PCM again begins to pulse the injectors “ON” and “OFF,” allowing fuel into the cylinders.

Deceleration Mode

The PCM reduces the amount of fuel injected when it detects a decrease in the throttle position and the air flow. When deceleration is very fast, the PCM may cut off fuel completely for short periods.

Engine Speed/Vehicle Speed/Fuel Disable Mode

The PCM monitors engine speed. It turns off the fuel injectors when the engine speed increase above 6400 RPM. The fuel injectors are turned back on when engine speed decreases below 6150 RPM.

Fuel Cutoff Mode

No fuel is delivered by the fuel injectors when the ignition is “OFF.” This prevents engine run-on. In addition, the PCM suspends fuel delivery if no reference pulses are detected (engine not running) to prevent engine flooding.

Fuel Injector

The sequential multiport fuel injection (SFI) fuel injector is a solenoid-operated device controlled by the PCM. The PCM energizes the solenoid, which opens a valve to allow fuel delivery.

The fuel is injected under pressure in a conical spray pattern at the opening of the intake valve. Excess fuel not used by the injectors passes through the fuel pressure regulator before being returned to the fuel tank.

A fuel injector which is stuck partly open will cause a loss of fuel pressure after engine shut down, causing long crank times.

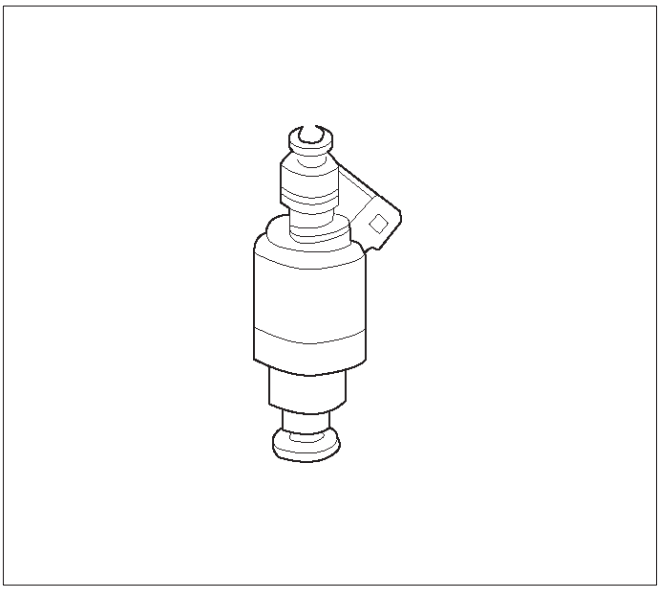

0003

Fuel Metering System Components

The fuel metering system is made up of the following parts:

- The fuel injectors.
- The throttle body.
- The fuel rail.
- The fuel pressure regulator.
- The PCM.
- The crankshaft position (CKP) sensor.
- The camshaft position (CMP) sensor.
- The idle air control (IAC) valve.
- The fuel pump.
- The fuel pump relay.

Basic System Operation

The fuel metering system starts with the fuel in the fuel tank. An electric fuel pump, located in the fuel tank, pumps fuel to the fuel rail through an in-line fuel filter. The pump is designed to provide fuel at a pressure above the pressure needed by the injectors. A fuel pressure regulator in the fuel rail keeps fuel available to the fuel injectors at a constant pressure. A return line delivers unused fuel back to the fuel tank. Refer to *Section 6C* for further information on the fuel tank, line filter, and fuel pipes.

Fuel Metering System Purpose

The basic function of the air/fuel metering system is to control the air/fuel delivery to the engine. Fuel is delivered to the engine by individual fuel injectors mounted in the intake manifold near each intake valve.

The main control sensor is the heated oxygen sensor (HO2S) located in the exhaust system. The HO2S tells the PCM how much oxygen is in the exhaust gas. The PCM changes the air/fuel ratio to the engine by controlling the amount of time that fuel injector is “ON.” The best mixture to minimize exhaust emissions is 14.7 parts of air to 1 part of gasoline by weight, which allows the catalytic converter to operate most efficiently. Because of the

constant measuring and adjusting of the air/fuel ratio, the fuel injection system is called a “closed loop” system.
The PCM monitors signals from several sensors in order to determine the fuel needs of the engine. Fuel is delivered under one of several conditions called “modes.” All modes are controlled by the PCM.

Fuel Pressure Regulator

The fuel pressure regulator is a diaphragm-operated relief valve mounted on the fuel rail with fuel pump pressure on one side and manifold pressure on the other side. The fuel pressure regulator maintains the fuel pressure available to the injector at three times barometric pressure adjusted for engine load. It may be serviced separate.
If the pressure is too low, poor performance and a DTC P0131, DTC P0151,DTC P0171 or DTC P1171 will be the result. If the pressure is too high, excessive odor and/or a DTC P0132, DTC P0152,DTC P0172 or DTC P0175 will be the result. Refer to *Fuel System Diagnosis* for information on diagnosing fuel pressure conditions.

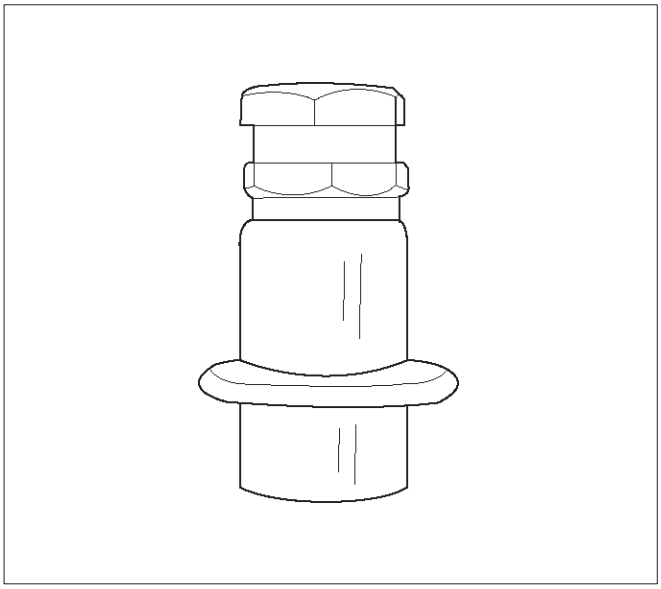

0011

Fuel Pump Electrical Circuit

When the key is first turned “ON,” the PCM energizes the fuel pump relay for two seconds to build up the fuel pressure quickly. If the engine is not started within two seconds, the PCM shuts the fuel pump off and waits until the engine is cranked. When the engine is cranked and the 58 X crankshaft position signal has been detected by the PCM, the PCM supplies 12 volts to the fuel pump relay to energize the electric in-tank fuel pump.
An inoperative fuel pump will cause a “no-start” condition. A fuel pump which does not provide enough pressure will result in poor performance.

Fuel Rail

The fuel rail is mounted to the top of the engine and distributes fuel to the individual injectors. Fuel is delivered to the fuel inlet tube of the fuel rail by the fuel lines. The fuel goes through the fuel rail to the fuel pressure regulator. The fuel pressure regulator maintains a constant fuel pressure at the injectors. Remaining fuel is then returned to the fuel tank.

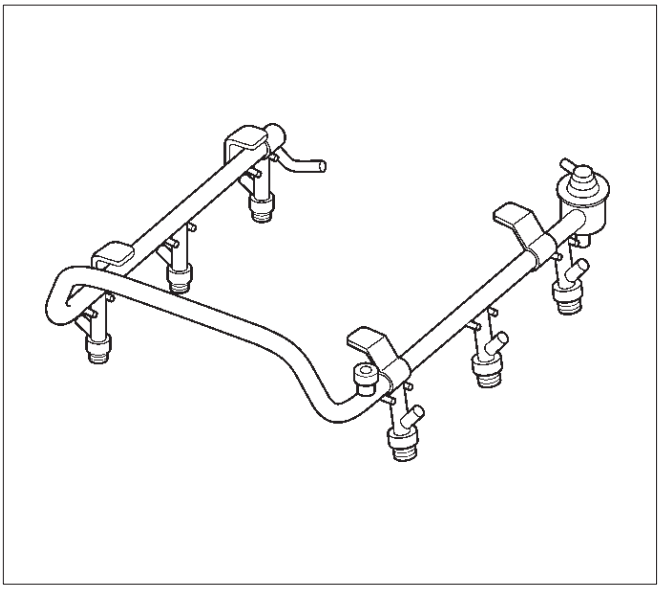

055RW009

Idle Air Control (IAC) Valve

The purpose of the idle air control (IAC) valve is to control engine idle speed, while preventing stalls due to changes in engine load. The IAC valve, mounted in the throttle body, controls bypass air around the throttle plate. By moving the conical valve (pintle) in (to decrease air flow) or out (to increase air flow), a controlled amount of air can move around the throttle plate. If the RPM is too low, the PCM will retract the IAC pintle, resulting in more air moving past the throttle plate to increase the RPM. If the RPM is too high, the PCM will extend the IAC pintle, allowing less air to move past the throttle plate, decreasing the RPM.
The IAC pintle valve moves in small steps called counts. During idle, the proper position of the IAC pintle is calculated by the PCM based on battery voltage, coolant temperature, engine load, and engine RPM. If the RPM drops below a specified value, and the throttle plate is closed, the PCM senses a near-stall condition. The PCM will then calculate a new IAC pintle valve position to prevent stalls.
If the IAC valve is disconnected and reconnected with the engine running, the idle RPM will be wrong. In this case, the IAC must be reset. The IAC resets when the key is cycled “ON” then “OFF.” When servicing the IAC, it should only be disconnected or connected with the ignition “OFF.”
The position of the IAC pintle valve affects engine start-up and the idle characteristics of the vehicle. If the IAC pintle is fully open, too much air will be allowed into the manifold. This results in high idle speed, along with possible hard starting and a lean air/fuel ratio. DTC P0507 or DTC P1509 may set. If the IAC pintle is stuck closed, too little air will be allowed in the manifold. This results in a low idle speed, along with possible hard starting and a rich air/fuel ratio. DTC P0506 or DTC P1508 may set. If the IAC pintle is stuck part-way open, the idle may be high or low and will not respond to changes in the engine load.

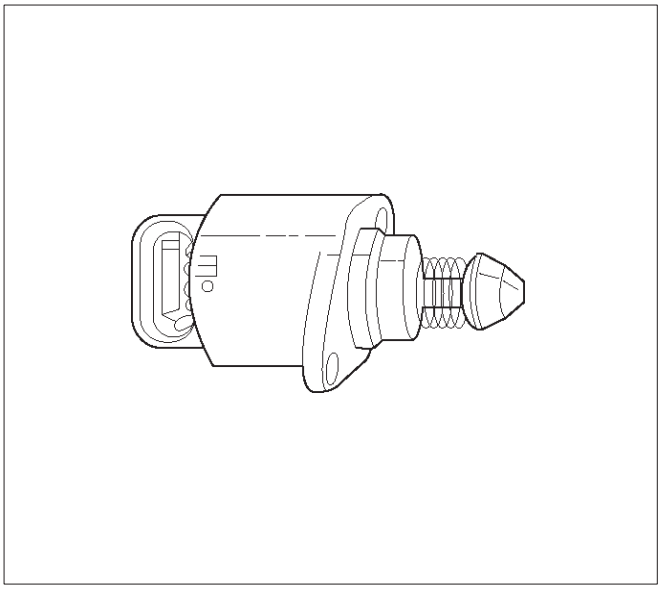

0006

Run Mode

The run mode has the following two conditions:

- Open loop
- Closed loop

When the engine is first started the system is in “open loop” operation. In “open loop,” the PCM ignores the signal from the heated oxygen sensor (HO2S). It calculates the air/fuel ratio based on inputs from the TP, ECT, and MAF sensors.

The system remains in “open loop” until the following conditions are met:

- The HO2S has a varying voltage output showing that it is hot enough to operate properly (this depends on temperature).
- The ECT has reached a specified temperature.
- A specific amount of time has elapsed since starting the engine.
- Engine speed has been greater than a specified RPM since start-up.

The specific values for the above conditions vary with different engines and are stored in the programmable read only memory (PROM). When these conditions are met, the system enters “closed loop” operation. In “closed loop,” the PCM calculates the air/fuel ratio (injector on-time) based on the signal from the HO2S. This allows the air/fuel ratio to stay very close to 14.7:1.

Starting Mode

When the ignition is first turned “ON,” the PCM energizes the fuel pump relay for two seconds to allow the fuel pump to build up pressure. The PCM then checks the engine coolant temperature (ECT) sensor and the throttle position (TP) sensor to determine the proper air/fuel ratio for starting.

The PCM controls the amount of fuel delivered in the starting mode by adjusting how long the fuel injectors are energized by pulsing the injectors for very short times.

Throttle Body Unit

The throttle body has a throttle plate to control the amount of air delivered to the engine. The TP sensor and IAC valve are also mounted on the throttle body. Vacuum ports located behind the throttle plate provide the vacuum signals needed by various components.

Engine coolant is directed through a coolant cavity in the throttle body to warm the throttle valve and to prevent icing.

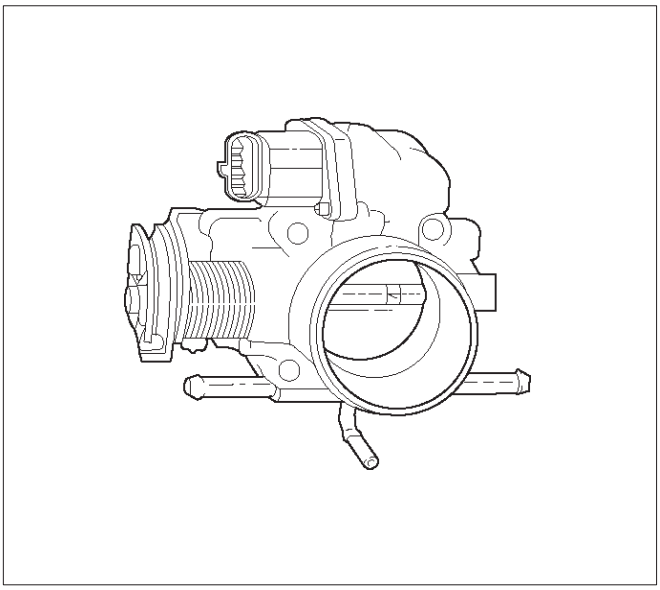

0019

General Description (Electronic Ignition System)

Camshaft Position (CMP) Sensor

As the camshaft sprocket turns, a magnet in the sprocket activates the Hall-effect switch in the CMP sensor. When the Hall-effect switch is activated, it grounds the signal line to the PCM, pulling the camshaft position sensor signal circuit’s applied voltage low. This is a CMP signal. The CMP signals is created as piston #1 is approximately 25˚ after top dead counter on the power stroke. If the correct CMP signal is not received by the PCM, DTC P0341 will be set.

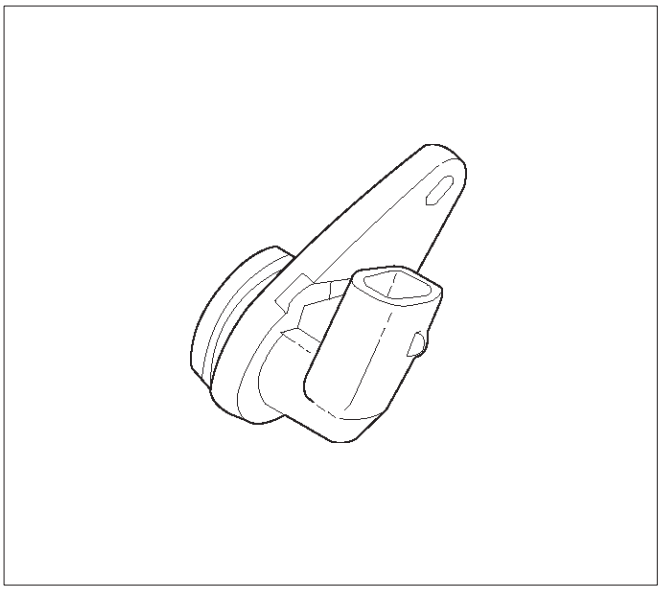

0014

Crankshaft Position (CKP) Sensor

The crankshaft position (CKP) sensor provides a signal used by the powertrain control module (PCM) to calculate the ignition sequence. The sensor initiates the 58X reference pulses which the PCM uses to calculate RPM and crankshaft position. Refer to *Electronic Ignition System* for additional information.

Electronic Ignition

The electronic ignition system controls fuel combustion by providing a spark to ignite the compressed air/fuel mixture at the correct time. To provide optimum engine performance, fuel economy, and control of exhaust emissions, the PCM controls the spark advance of the ignition system. Electronic ignition has the following advantages over a mechanical distributor system:

- No moving parts.
- Less maintenance.
- Remote mounting capability.
- No mechanical load on the engine.
- More coil cooldown time between firing events.
- Elimination of mechanical timing adjustments.
- Increased available ignition coil saturation time.

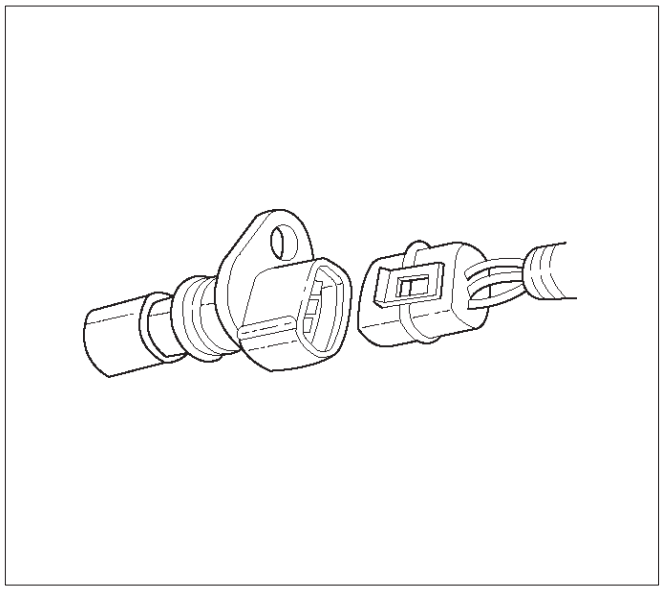

0013

Ignition Coils

A separate coil-at-plug module is located at each spark plug. The coil-at-plug module is attached to the engine with two screws. It is installed directly to the spark plug by an electrical contact inside a rubber boot. A three-way connector provides 12-volt primary supply from the 15-amp ignition fuse, a ground-switching trigger line from the PCM, and a ground.

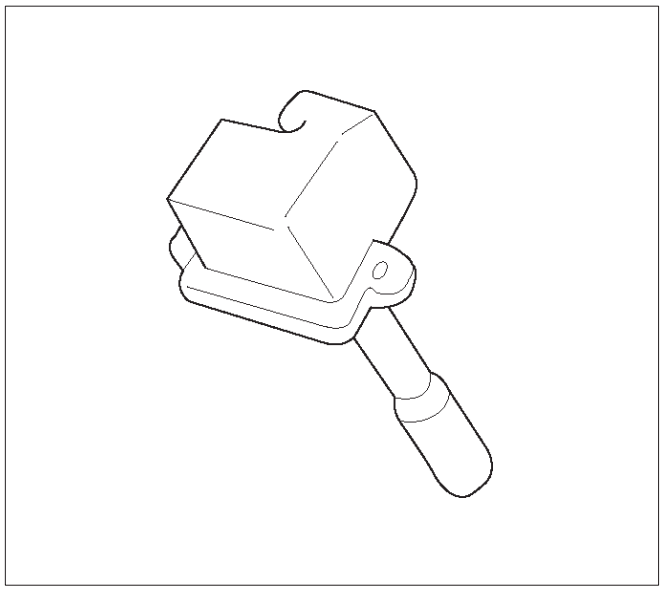

0001

Ignition Control

The ignition control (IC) spark timing is the PCM's method of controlling the spark advance and the ignition dwell. The IC spark advance and the ignition dwell are calculated by the PCM using the following inputs:

- Engine speed.

- Crankshaft position (58X reference).
- Camshaft position (CMP) sensor.
- Engine coolant temperature (ECT) sensor.
- Throttle position (TP) sensor.
- Knock signal (knock sensor).
- Park/Neutral position (PRNDL input).
- Vehicle speed (vehicle speed sensor).
- PCM and ignition system supply voltage.
- The crankshaft positron (CKP) sensor sends the PCM a 58X signal related to the exact position of the crankshaft.

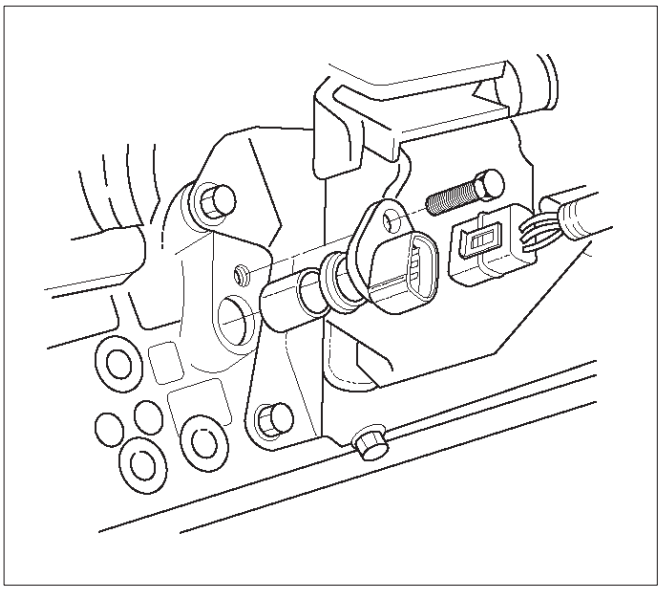

TS22909

- The camshaft position (CMP) sensor sends a signal related to the position of the camshaft.

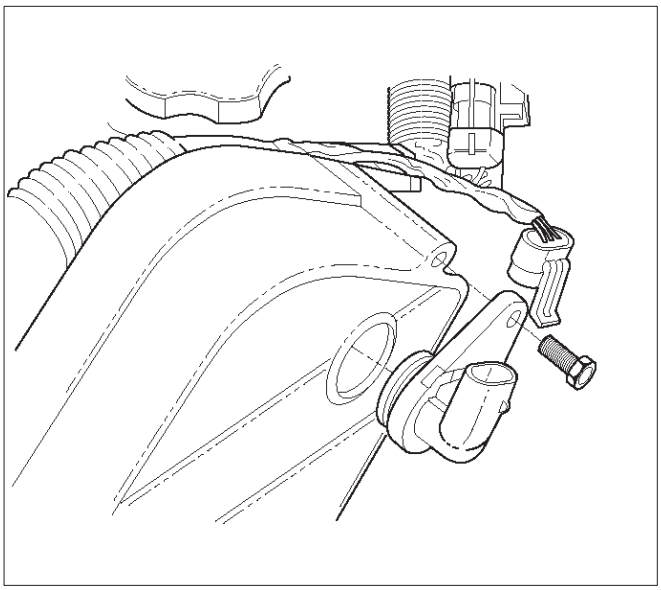

TS22910

- The knock sensor tells the PCM if there is any problem with pre-ignition or detonation. This information allows the PCM to retard timing, if necessary.

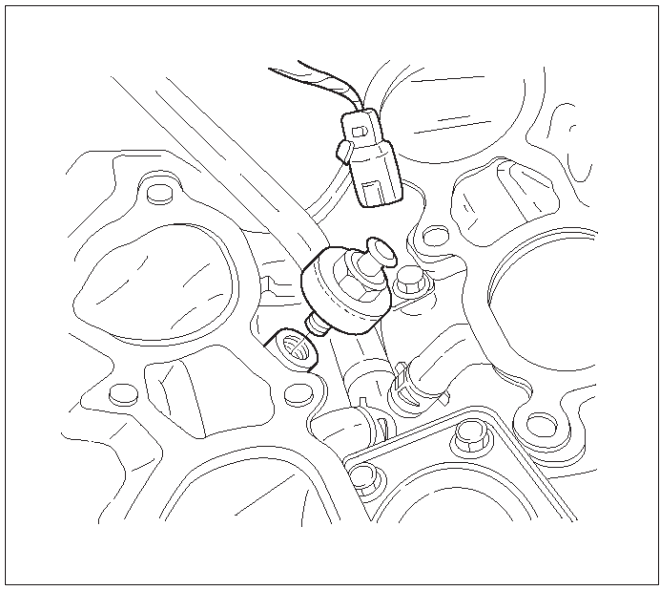

TS24037

Based on these sensor signals and engine load information, the PCM sends 5V to each ignition coil.

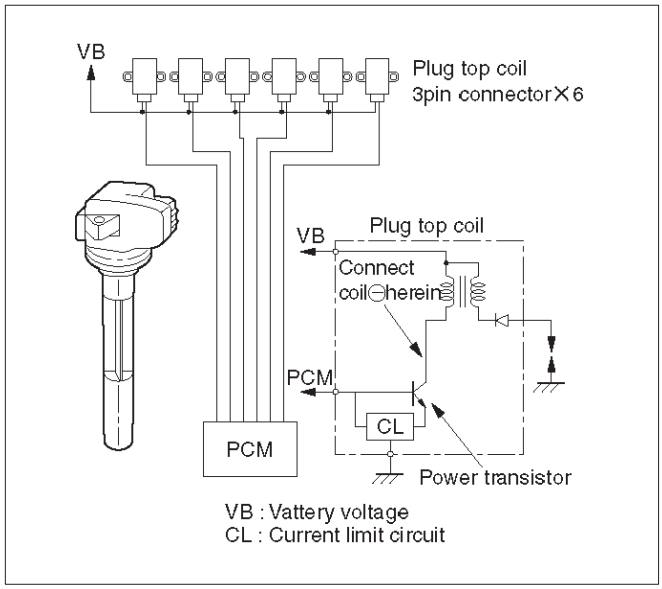

060RW015

The PCM applies 5V signal voltage to the ignition coil requiring ignition. This signal sets on the power transistor of the ignition coil to establish a grounding circuit for the primary coil, applying battery voltage to the primary coil. At the ignition timing, the PCM stops sending the 5V signal voltage. Under this condition the power transistor of the ignition coil is set off to cut the battery voltage to the primary coil, thereby causing a magnetic field generated in the primary coil to collapse. On this moment a line of magnetic force flows to the secondary coil, and when this magnetic line crosses the coil, high voltage induced by

the secondary ignition circuit to flow through the spark plug to the ground.

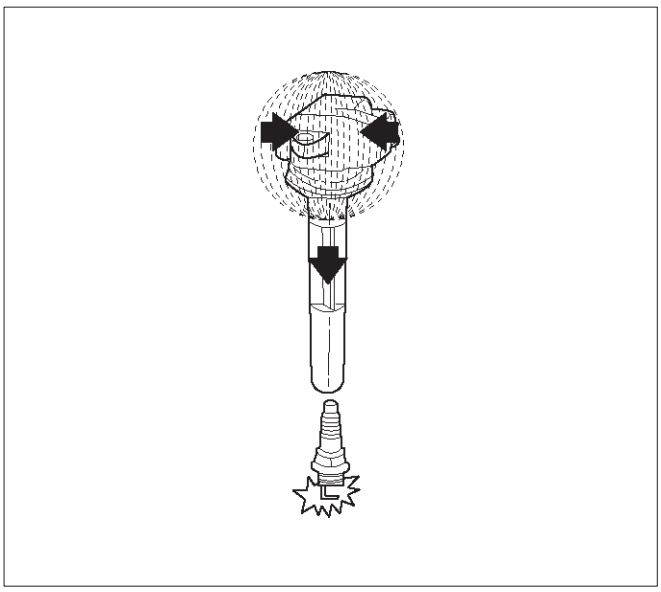

TS24047

Ignition Control PCM Output

The PCM provides a zero volt (actually about 100 mV to 200 mV) or a 5-volt output signal to the ignition control (IC) module. Each spark plug has its own primary and secondary coil module (”coil-at-plug”) located at the spark plug itself. When the ignition coil receives the 5-volt signal from the PCM, it provides a ground path for the B+ supply to the primary side of the coil-at -plug module. This energizes the primary coil and creates a magnetic field in the coil-at-plug module. When the PCM shuts off the 5-volt signal to the ignition control module, the ground path for the primary coil is broken. The magnetic field collapses and induces a high voltage secondary impulse which fires the spark plug and ignites the air/fuel mixture. The circuit between the PCM and the ignition coil is monitored for open circuits, shorts to voltage, and shorts to ground. If the PCM detects one of these events, it will set one of the following DTCs:

- P0351: Ignition coil Fault on Cylinder #1
- P0352: Ignition coil Fault on Cylinder #2
- P0353: Ignition coil Fault on Cylinder #3
- P0354: Ignition coil Fault on Cylinder #4
- P0355: Ignition coil Fault on Cylinder #5
- P0356: Ignition coil Fault on Cylinder #6

Knock Sensor (KS) PCM Input

The knock sensor (KS) system is comprised of a knock sensor and the PCM. The PCM monitors the KS signals to determine when engine detonation occurs. When a knock sensor detects detonation, the PCM retards the spark timing to reduce detonation. Timing may also be retarded because of excessive mechanical engine or transmission noise.

Powertrain Control Module (PCM)

The PCM is responsible for maintaining proper spark and fuel injection timing for all driving conditions. To provide optimum driveability and emissions, the PCM monitors the input signals from the following components in order to calculate spark timing:

- Engine coolant temperature (ECT) sensor.
- Intake air temperature (IAT) sensor.
- Mass air flow (MAF) sensor.
- PRNDL input from transmission range switch.
- Throttle position (TP) sensor.
- Vehicle speed sensor (VSS) .
- Crankshaft position (CKP) sensor.

Spark Plug

Although worn or dirty spark plugs may give satisfactory operation at idling speed, they frequency fail at higher engine speeds. Faulty spark plugs may cause poor fuel economy, power loss, loss of speed, hard starting and generally poor engine performance. Follow the scheduled maintenance service recommendations to ensure satisfactory spark plug performance. Refer to *Maintenance and Lubrication*.

Normal spark plug operation will result in brown to grayish-tan deposits appearing on the insulator portion of the spark plug. A small amount of red-brown, yellow, and white powdery material may also be present on the insulator tip around the center electrode. These deposits are normal combustion by-products of fuels and lubricating oils with additives. Some electrode wear will also occur. Engines which are not running properly are often referred to as “misfiring.” This means the ignition spark is not igniting the air/fuel mixture at the proper time. While other ignition and fuel system causes must also be considered, possible causes include ignition system conditions which allow the spark voltage to reach ground in some other manner than by jumping across the air gap at the tip of the spark plug, leaving the air/fuel mixture unburned. Misfiring may also occur when the tip of the spark plug becomes overheated and ignites the mixture before the spark jumps. This is referred to as “pre-ignition.”

Spark plugs may also misfire due to fouling, excessive gap, or a cracked or broken insulator. If misfiring occurs before the recommended replacement interval, locate and correct the cause.

Carbon fouling of the spark plug is indicated by dry, black carbon (soot) deposits on the portion of the spark plug in the cylinder. Excessive idling and slow speeds under light engine loads can keep the spark plug temperatures so low that these deposits are not burned off. Very rich fuel mixtures or poor ignition system output may also be the cause. Refer to DTC P0172.

Oil fouling of the spark plug is indicated by wet oily deposits on the portion of the spark plug in the cylinder, usually with little electrode wear. This may be caused by oil during break-in of new or newly overhauled engines. Deposit fouling of the spark plug occurs when the normal red-brown, yellow or white deposits of combustion by products become sufficient to cause misfiring. In some cases, these deposits may melt and form a shiny glaze on the insulator around the center electrode. If the fouling is found in only one or two cylinders, valve stem clearances or intake valve seals may be allowing excess lubricating

oil to enter the cylinder, particularly if the deposits are heavier on the side of the spark plug facing the intake valve.

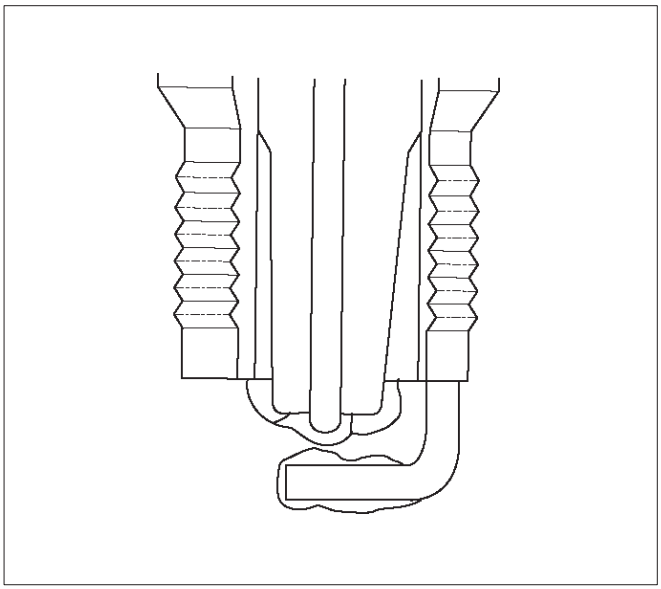

TS23995

Excessive gap means that the air space between the center and the side electrodes at the bottom of the spark plug is too wide for consistent firing. This may be due to improper gap adjustment or to excessive wear of the electrode during use. A check of the gap size and comparison to the gap specified for the vehicle in *Maintenance and Lubrication* will tell if the gap is too wide. A spark plug gap that is too small may cause an unstable idle condition. Excessive gap wear can be an indication of continuous operation at high speeds or with engine loads, causing the spark to run too hot. Another possible cause is an excessively lean fuel mixture.

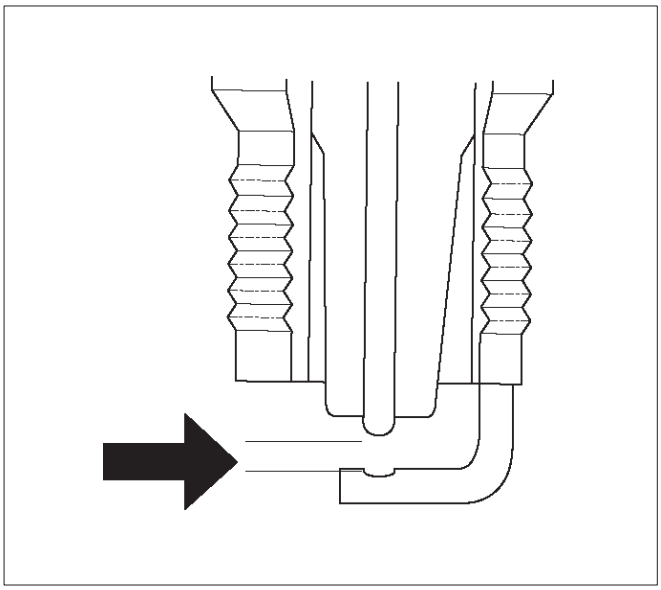

TS23992

Low or high spark plug installation torque or improper seating can result in the spark plug running too hot and can cause excessive center electrode wear. The plug and the cylinder head seats must be in good contact for proper heat transfer and spark plug cooling. Dirty or damaged threads in the head or on the spark plug can keep it from seating even though the proper torque is applied. Once spark plugs are properly seated, tighten them to the torque shown in the Specifications Table. Low torque may result in poor contact of the seats due to a loose spark plug. Overtightening may cause the spark plug shell to be stretched and will result in poor contact between the seats. In extreme cases, exhaust blow-by and damage beyond simple gap wear may occur.

Cracked or broken insulators may be the result of improper installation, damage during spark plug re-gapping, or heat shock to the insulator material. Upper insulators can be broken when a poorly fitting tool is used during installation or removal, when the spark plug is hit from the outside, or is dropped on a hard surface. Cracks in the upper insulator may be inside the shell and not visible. Also, the breakage may not cause problems until oil or moisture penetrates the crack later.

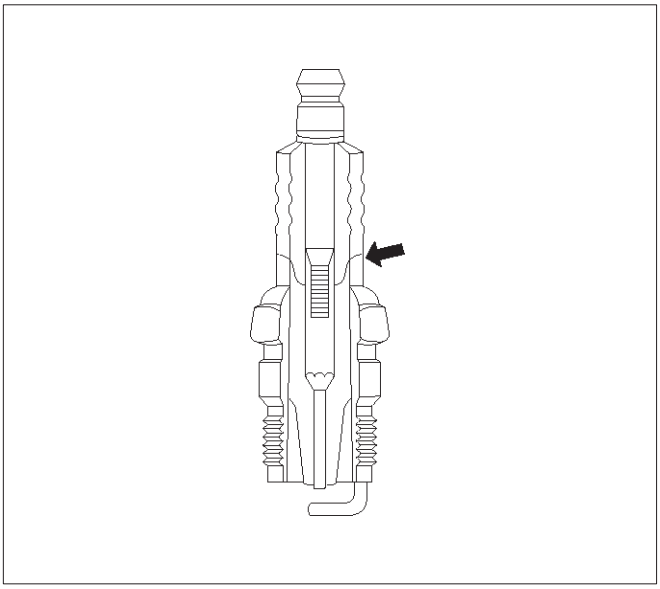

TS23994

A broken or cracked lower insulator tip (around the center electrode) may result from damage during re-gapping or from “heat shock” (spark plug suddenly operating too hot).

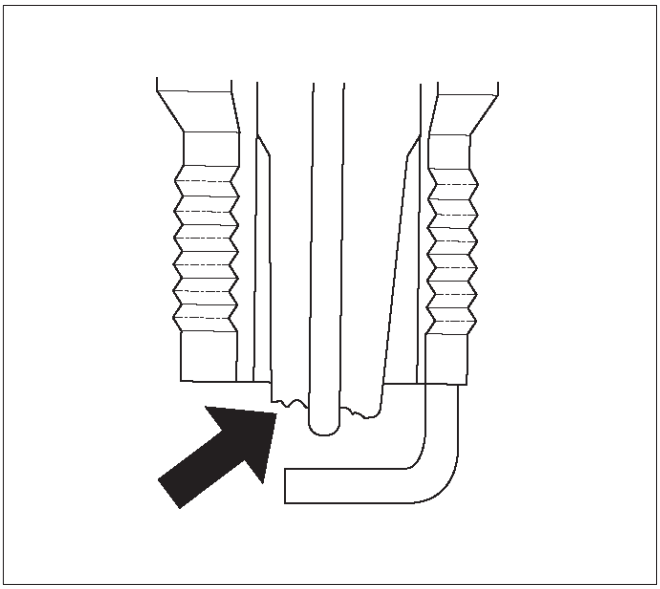

TS23993

- Damage during re-gapping can happen if the gapping tool is pushed against the center electrode or the insulator around it, causing the insulator to crack. When re-gapping a spark plug, make the adjustment by bending only the ground side terminal, keeping the tool clear of other parts.
- ”Heat shock” breakage in the lower insulator tip generally occurs during several engine operating conditions (high speeds or heavy loading) and may be caused by over-advanced timing or low grade fuels. Heat shock refers to a rapid increase in the tip temperature that causes the insulator material to crack.

Spark plugs with less than the recommended amount of service can sometimes be cleaned and re-gapped , then returned to service. However, if there is any doubt about the serviceability of a spark plug, replace it. Spark plugs with cracked or broken insulators should always be replaced.

A/C Clutch Diagnosis

A/C Clutch Circuit Operation

A 12-volt signal is supplied to the A/C request input of the PCM when the A/C is selected through the A/C control switch.

The A/C compressor clutch relay is controlled through the PCM. This allows the PCM to modify the idle air control position prior to the A/C clutch engagement for better idle quality. If the engine operating conditions are within their specified calibrated acceptable ranges, the PCM will enable the A/C compressor relay. This is done by providing a ground path for the A/C relay coil within the PCM. When the A/C compressor relay is enabled, battery voltage is supplied to the compressor clutch coil. The PCM will enable the A/C compressor clutch whenever the engine is running and the A/C has been requested. The PCM will not enable the A/C compressor clutch if any of the following conditions are met:

- The throttle is greater than 90%.
- The engine speed is greater than 6315 RPM.
- The ECT is greater than 119˚C (246˚F).
- The IAT is less than 5˚C (41˚F).
- The throttle is more than 80% open.

A/C Clutch Circuit Purpose

The A/C compressor operation is controlled by the powertrain control module (PCM) for the following reasons:

- It improvises idle quality during compressor clutch engagement.
- It improvises wide open throttle (WOT) performance.
- It provides A/C compressor protection from operation with incorrect refrigerant pressures.

The A/C electrical system consists of the following components:

- The A/C control head.
- The A/C refrigerant pressure switches.
- The A/C compressor clutch.
- The A/C compressor clutch relay.
- The PCM.

A/C Request Signal

This signal tells the PCM when the A/C mode is selected at the A/C control head. The PCM uses this to adjust the idle speed before turning on the A/C clutch. The A/C compressor will be inoperative if this signal is not available to the PCM.

Refer to *A/C Clutch Circuit Diagnosis* for A/C wiring diagrams and diagnosis for A/C electrical system.

General Description (Exhaust Gas Recirculation (EGR) System)

EGR Purpose

The exhaust gas recirculation (EGR) system is use to reduce emission levels of oxides of nitrogen (NOx). NOx emission levels are caused by a high combustion temperature. The EGR system lowers the NOx emission levels by decreasing the combustion temperature.

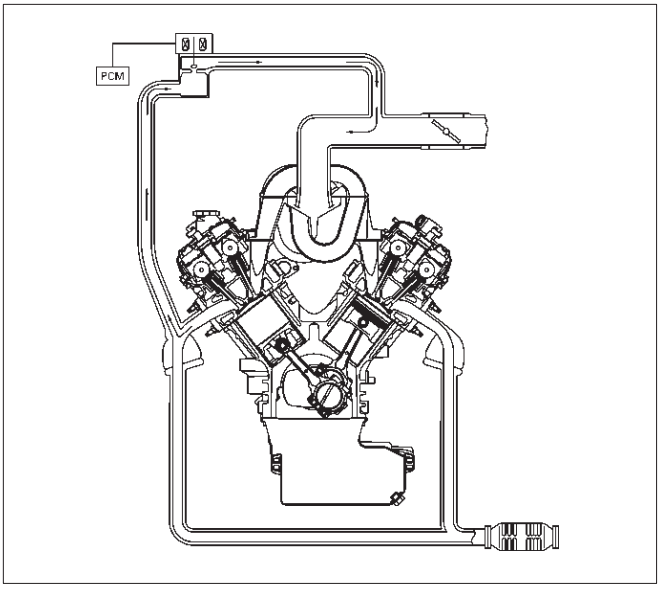

057RW002

Linear EGR Valve

The main element of the system is the linear EGR valve. The EGR valve feeds small amounts of exhaust gas back into the combustion chamber. The fuel/air mixture will be diluted and combustion temperatures reduced.

Linear EGR Control

The PCM monitors the EGR actual positron and adjusts the pintle position accordingly. The uses information from the following sensors to control the pintle position:

- Engine coolant temperature (ECT) sensor.
- Throttle position (TP) sensor.
- Mass air flow (MAF) sensor.

Linear EGR Valve Operation and Results of Incorrect Operation

The linear EGR valve is designed to accurately supply EGR to the engine independent of intake manifold vacuum. The valve controls EGR flow from the exhaust

to the intake manifold through an orifice with a PCM controlled pintle. During operation, the PCM controls pintle position by monitoring the pintle position feedback signal. The feedback signal can be monitored with Tech 2 as “Actual EGR Pos.” “Actual EGR Pos.” should always be near the commanded EGR position (”Desired EGR Pos.”). If a problem with the EGR system will not allow the PCM to control the pintle position properly, DTC P1406 will set. The PCM also tests for EGR flow. If incorrect flow is detected, DTC P0401 will set. If DTCs P0401 and/or P1406 are set, refer to the DTC charts.

The linear EGR valve is usually activated under the following conditions:

- Warm engine operation.
- Above-idle speed.

Too much EGR flow at idle, cruise or cold operation may cause any of the following conditions to occur:

- Engine stalls after a cold start.
- Engine stalls at idle after deceleration.
- Vehicle surges during cruise.
- Rough idle.

Too little or no EGR flow may allow combustion temperatures to get too high. This could cause:

- Spark knock (detonation).
- Engine overheating.
- Emission test failure.
- DTC P0401 (EGR flow test).
- Poor fuel economy.

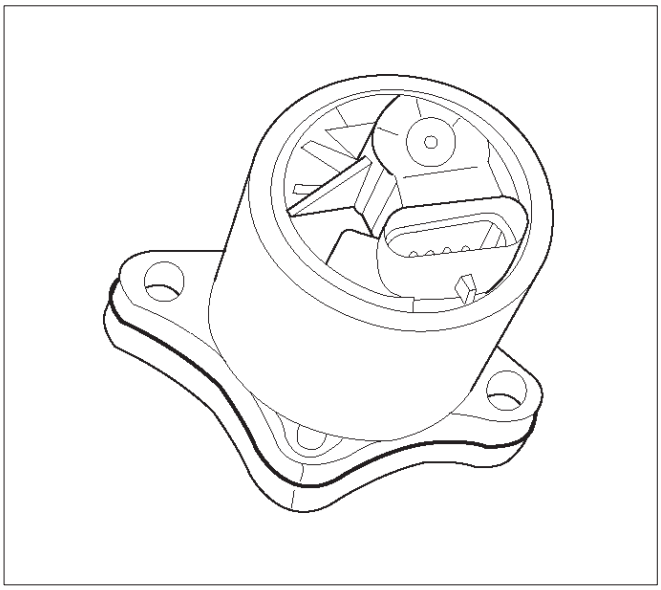

0017

EGR Pintle Position Sensor

The PCM monitors the EGR valve pintle position input to endure that the valve responds properly to commands from the PCM and to detect a fault if the pintle position sensor and control circuits are open or shorted. If the PCM detects a pintle position signal voltage outside the normal range of the pintle position sensor, or a signal voltage that is not within a tolerance considered acceptable for proper EGR system operation, the PCM will set DTC P1406.

General Description (Positive Crankcase Ventilation (PCV) System)

Crankcase Ventilation System Purpose

The crankcase ventilation system is use to consume crankcase vapors in the combustion process instead of venting them to the atmosphere. Fresh air from the throttle body is supplied to the crankcase and mixed with blow-by gases. This mixture is then passed through the positive crankcase ventilation (PCV) valve into the common chamber.

Crankcase Ventilation System Operation

The primary control is through the positive crankcase ventilation (PCV) valve. The PCV valve meters the flow at a rate that depends on the intake vacuum. The PCV valve restricts the flow when the inlet vacuum is highest. In addition, the PCV valve can seal the common chamber off in case of sudden high pressure in the crankcase.

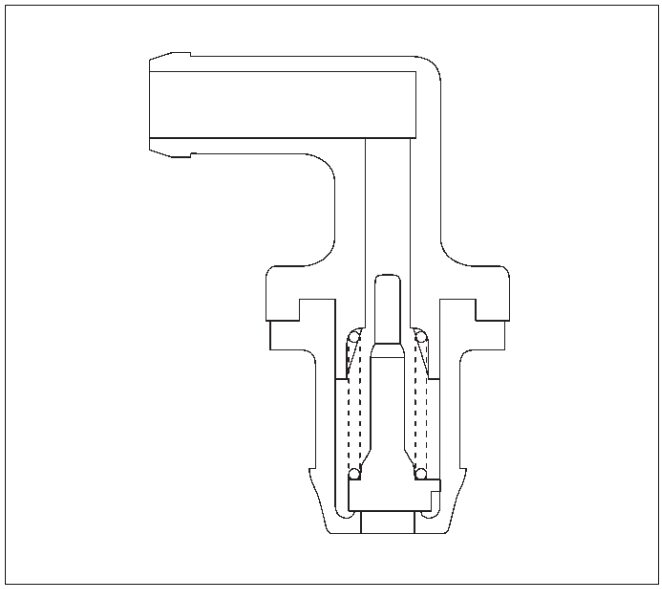

028RV002

While the engine is running, exhaust fuses and small amounts of the fuel/air mixture escape past the piston

rings and enter the crankcase. These gases are mixed with clean air entering through a tube from the air intake duct.

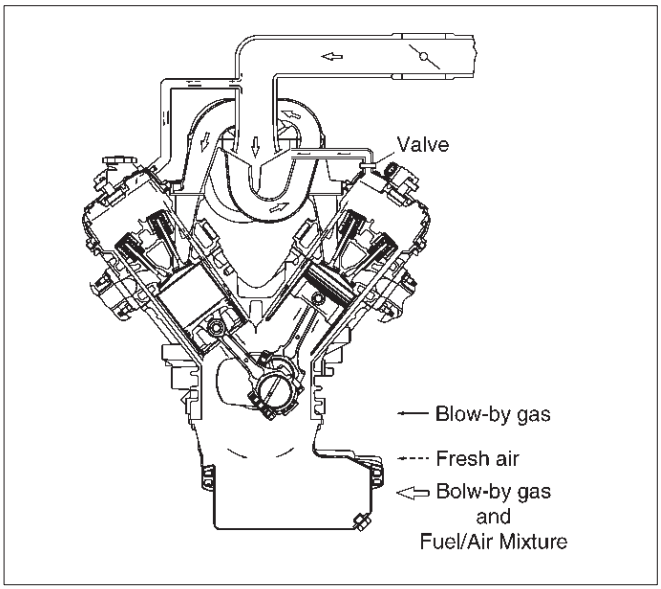

028RW002

During normal, part-throttle operation, the system is designed to allow crankcase gases to flow through the PCV valve into the throttle body to be consumed by normal combustion.

A plugged valve or PCV hose may cause the following conditions:

- Rough idle.
- Stalling of slow idle speed.
- Oil leaks.
- Sludge in the engine.

A leaking PCV hose would cause:

- Rough idle.
- Stalling.
- High idle speed.

Special Tools

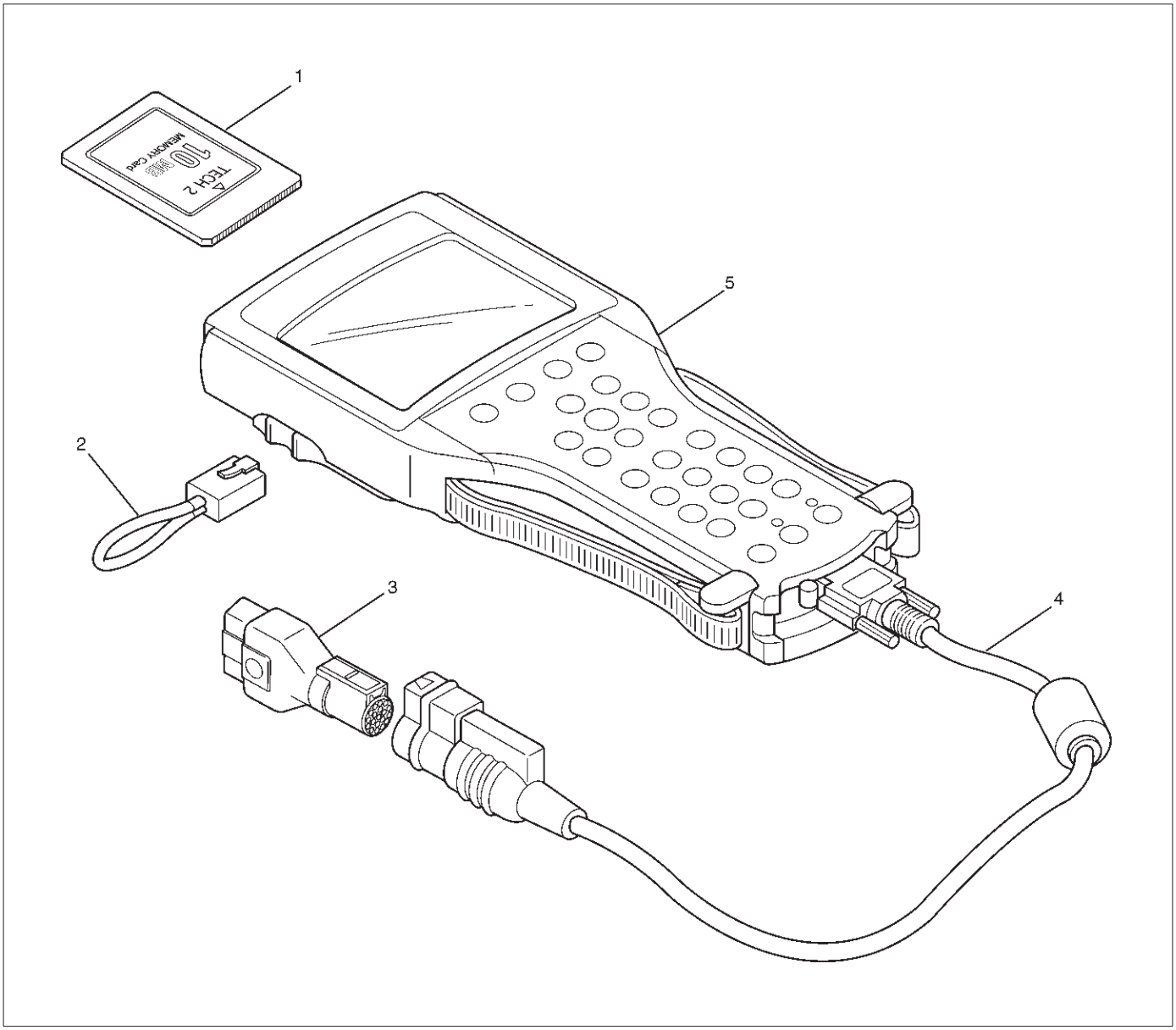

901RW180

Legend

(1) PCMCIA Card
(2) RS232 Loop Back Connector
(3) SAE 16/19 Adapter
(4) DLC Cable
(5) TECH–2

ILLUSTRATION	**TOOL NO.** TOOL NAME
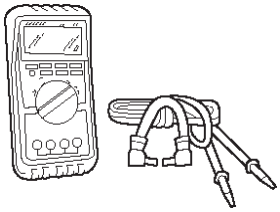	5-8840-0285-0 **(J 39200)** High Impedance Multimeter (Digital Voltmeter – DVM)
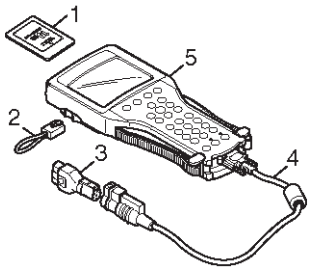	(1) PCMCIA Card (2) RS232 Loop Back Connector (3) SAE 16/19 Adapter (4) DLC Cable (5) TECH–2
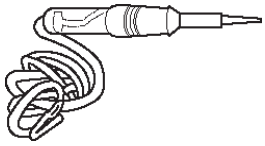	5-8840-0607-0 **(J 34142-B)** Unpowered Test Light
	5-8840-0385-0 **(J 35616-A/BT-8637)** Connector Test Adapter Kit
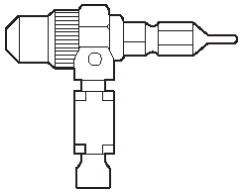	5-8840-0383-0 **(J 26792/BT-7220-1)** Spark Tester
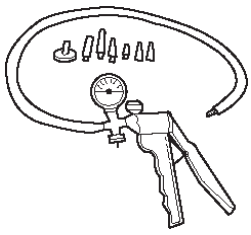	5-8840-0279-0 **(J 23738-A)** Vacuum Pump with Gauge common tool

ILLUSTRATION	**TOOL NO.** TOOL NAME
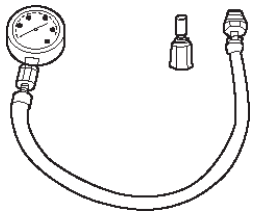	**BT-8515** Exhaust Back Pressure Tester or common tool
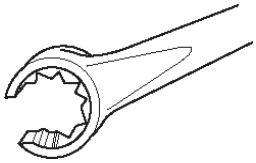	5-8840-2640-0 **(J 39194-B)** Heated Oxygen Sensor Wrench
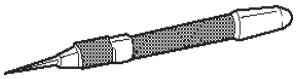	5-8840-0632-0 **(J 35689-A)** Terminal Remover
	5-8840-0388-0 **(J 28742-A)** Weather Pack II Terminal Remover
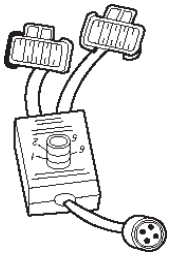	5-8840-2635-0 **(J 39021-90)** Injector Switch Box
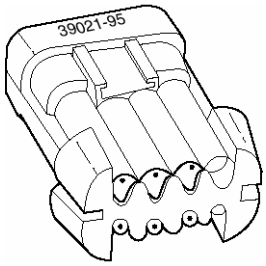	5-8840-2636-0 **(J 39021-65)** Injector Test Light

ILLUSTRATION	**TOOL NO.** TOOL NAME
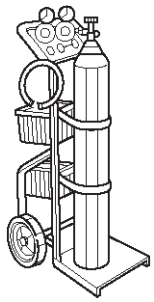	5-8840-2607-0 **(J 41413)** EVAP Pressure/Purge Diagnostic Station
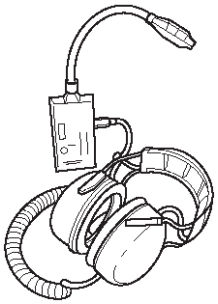	5-8840-2608-0 **(J 41416)** Ultrasonic Leak Detector

1. 5-8840-2607-0 (J-41413)EVAP Pressure/Purge Diagnostic Station is a multipurpose tool which is used to perform several diagnostic procedures for enhanced emission testing. The station will accommodate a nitrogen gas filled cylinder which is used to pressurize the vehicle EVAP system for a leakdown test and leak location test when a vehicle is repaired for leakage in the enhanced evaporative emission control system. It also has two additional gauges (inches of mercury and inches of water) which are used to measure both source vacuum and EVAP canister purge vacuum to verify correct operation and vapor flow within the canister purge circuit.
2. 5-8840-2608-0 (J-41416) Ultrasonic Leak Detector is a microprocessor-based device used to detect leaks in the enhanced evaporative emission control system. The evaporative system is pressurized to 30 inches of water using the 5-8840-2607-0 (J-41413) EVAP Pressure/Purge Diagnostic System. Small leaks in the EVAP system will emit sound at a high frequency undetectable by a human ear but detectable with the 5-8840-2608-0 (J-41416). The technician traces along the evaporative system and can pinpoint leaks due to corroded lines, cracked hoses, or a damaged EVAP component. The detector includes a high quality set of headphones to block out surrounding shop noise and the LED sensitivity meter allows a visual reference for locating leaks in conjunction with the audio output heard through the headphones. Powered by (1) nine volt battery.

ENGINE

ENGINE EXHAUST

CONTENTS

Service Precaution 6F–1
General Description 6F–2
Front Exhaust Pipe 6F–4
Front Exhaust Pipe and Associated Parts . 6F–4
Removal 6F–4
Installation 6F–4
Three Way Catalytic Converter 6F–5
Removal 6F–5
Installation 6F–5
Exhaust Silencer 6F–6
Exhaust Silencer and Associated Parts . . . 6F–6
Removal 6F–6
Installation 6F–6
Rear Exhaust pipe 6F–7
Rear Exhaust pipe and Associated Parts . 6F–7
Removal 6F–7
Installation 6F–7
Main Data and Specifications 6F–8

Service Precaution

WARNING: IF SO EQUIPPED WITH A SUPPLEMENTAL RESTRAINT SYSTEM (SRS), REFER TO THE SRS COMPONENT AND WIRING LOCATION VIEW IN ORDER TO DETERMINE WHETHER YOU ARE PERFORMING SERVICE ON OR NEAR THE SRS COMPONENTS OR THE SRS WIRING. WHEN YOU ARE PERFORMING SERVICE ON OR NEAR THE SRS COMPONENTS OR THE SRS WIRING, REFER TO THE SRS SERVICE INFORMATION. FAILURE TO FOLLOW WARNINGS COULD RESULT IN POSSIBLE AIR BAG DEPLOYMENT, PERSONAL INJURY, OR OTHERWISE UNNEEDED SRS SYSTEM REPAIRS.

CAUTION: Always use the correct fastener in the proper location. When you replace a fastener, use ONLY the exact part number for that application. ISUZU will call out those fasteners that require a replacement after removal. ISUZU will also call out the fasteners that require thread lockers or thread sealant. UNLESS OTHERWISE SPECIFIED, do not use supplemental coatings (Paints, greases, or other corrosion inhibitors) on threaded fasteners or fastener joint interfaces. Generally, such coatings adversely affect the fastener torque and the joint clamping force, and may damage the fastener. When you install fasteners, use the correct tightening sequence and specifications. Following these instructions can help you avoid damage to parts and systems.

General Description

General export with three way catalytic converter model

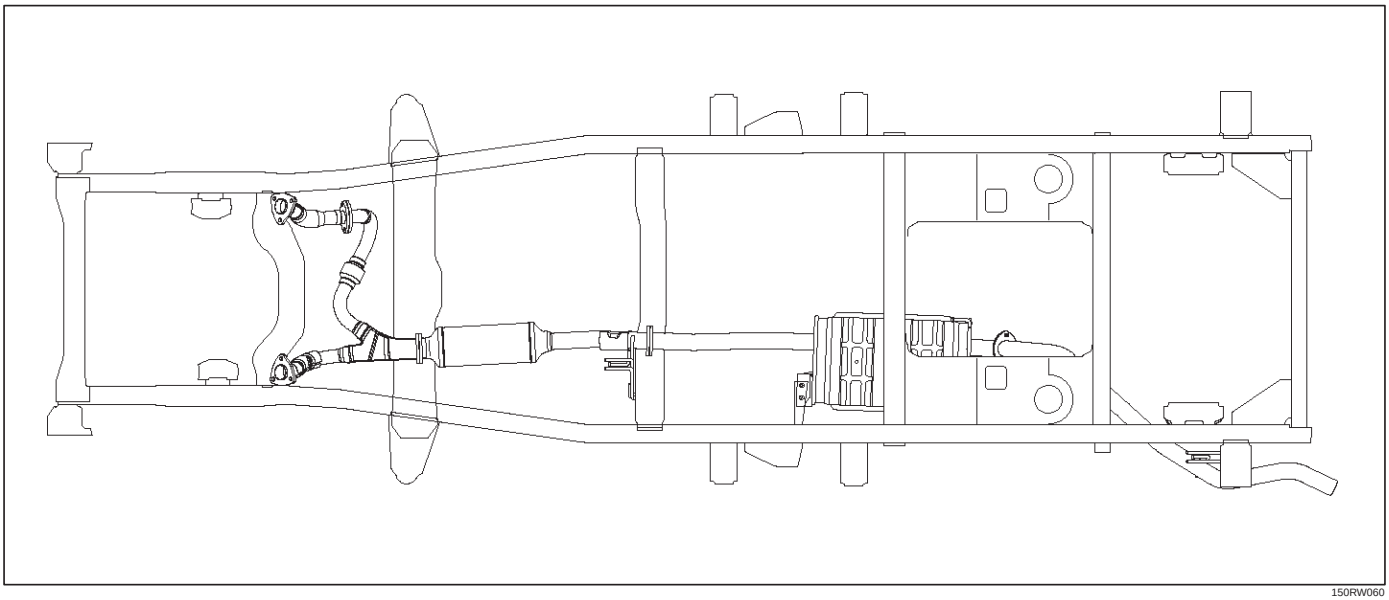

150RW060

General export with out three way catalytic converter model

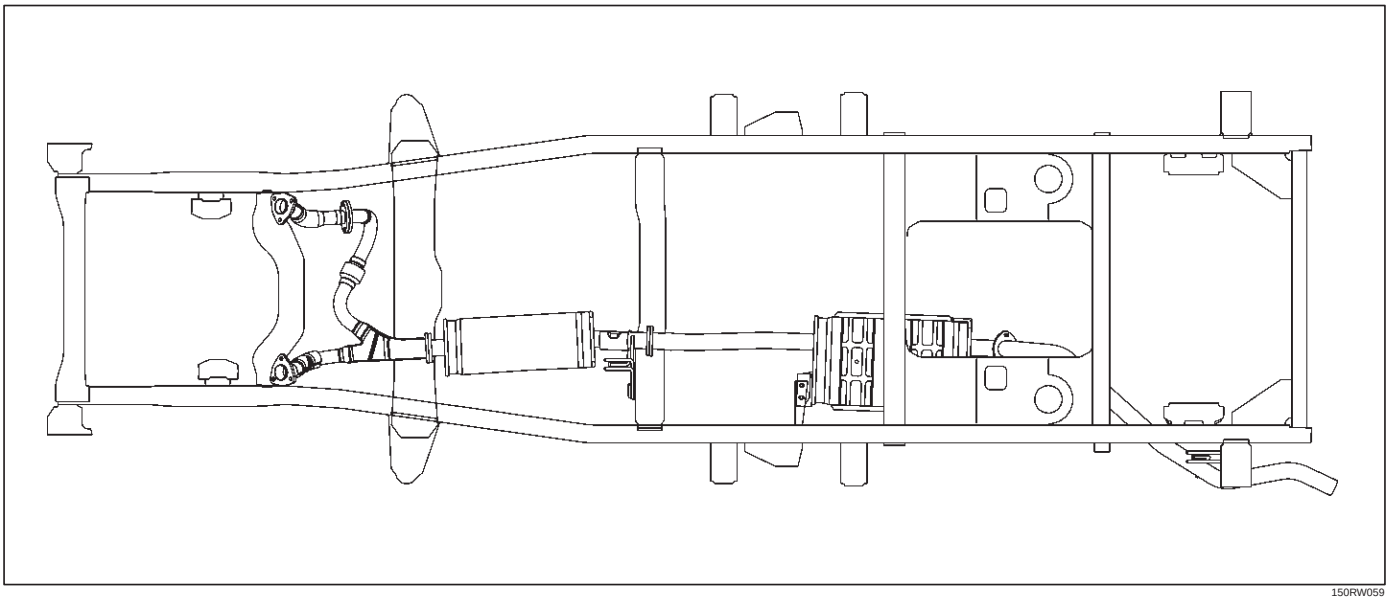

150RW059

For Isuzu General Motors (IGM)

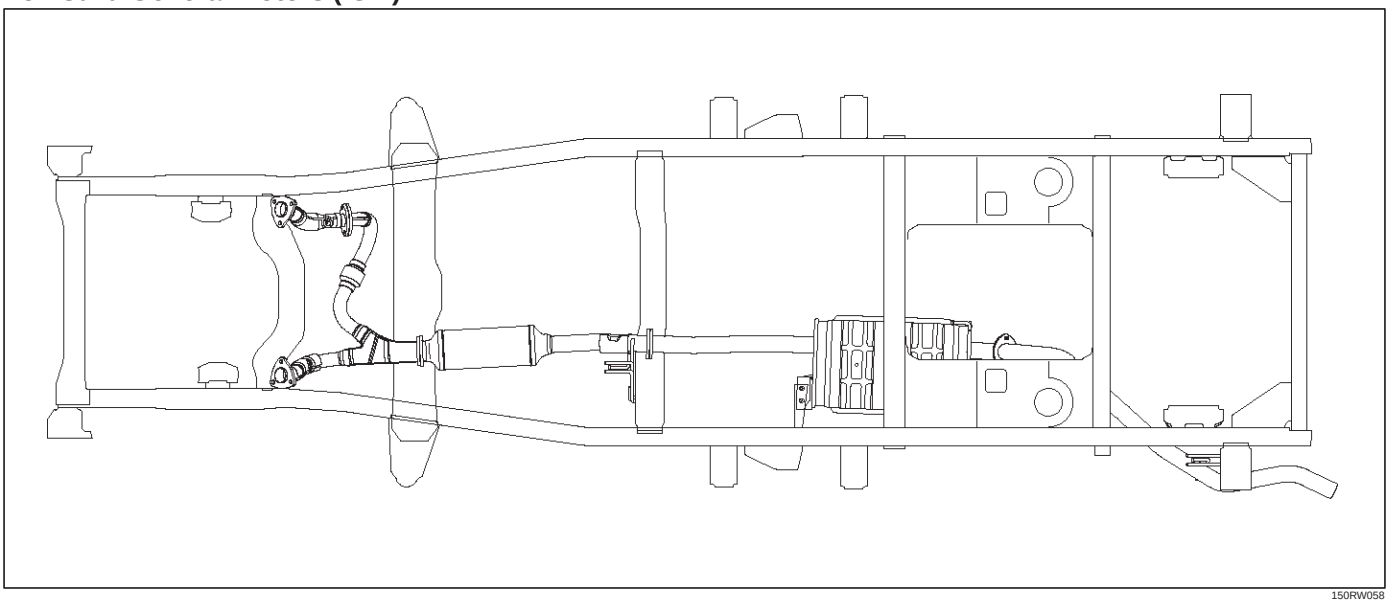

150RW058

When inspecting or replacing exhaust system components, make sure there is adequate clearance from all points on the underbody to prevent overheating the floor pan and possible damage to the passenger compartment insulation and trim materials.

Check complete exhaust system and nearby body areas and rear compartment lid for broken, damaged, missing or mispositioned parts, open seams, holes, loose connections or other deterioration which could permit exhaust fumes to seep into the rear compartment or passenger compartment. Dust or water in the rear compartment may be an indication of a problem in one of these areas. Any faulty areas should be corrected immediately.

Hangers

Various types of hangers are used to support exhaust system(s). These include conventional rubber straps, rubber rings, and rubber blocks.

The installation of exhaust system supports is very important, as improperly installed supports can cause annoying vibrations which can be difficult to diagnose.

Three Way Catalytic Converter

The three way catalytic converter is an emission control device added to the exhaust system to reduce pollutants from the exhaust gas stream.

CAUTION: The catalytic converter requires the use of unleaded fuel only.

Periodic maintenance of the exhaust system is not required. If the vehicle is raised for other service, it is advisable to check the condition of the complete exhaust system.

A dual bed monolith catalytic converter is used in combination with three way catalytic converter.

Catalytic Types:

Three way (Reduction/Oxidation) catalyst

The catalyst coating on the three way (reduction) converter contains platinum and rhodium which lowers the levels of nitrous oxide (NOx) as well as hydrocarbons (HC) and carbon monoxide (Co).

Gasket

The gasket must be replaced whenever a new exhaust pipe, muffler or catalytic converter is installed.

Front Exhaust Pipe

Front Exhaust Pipe and Associated Parts

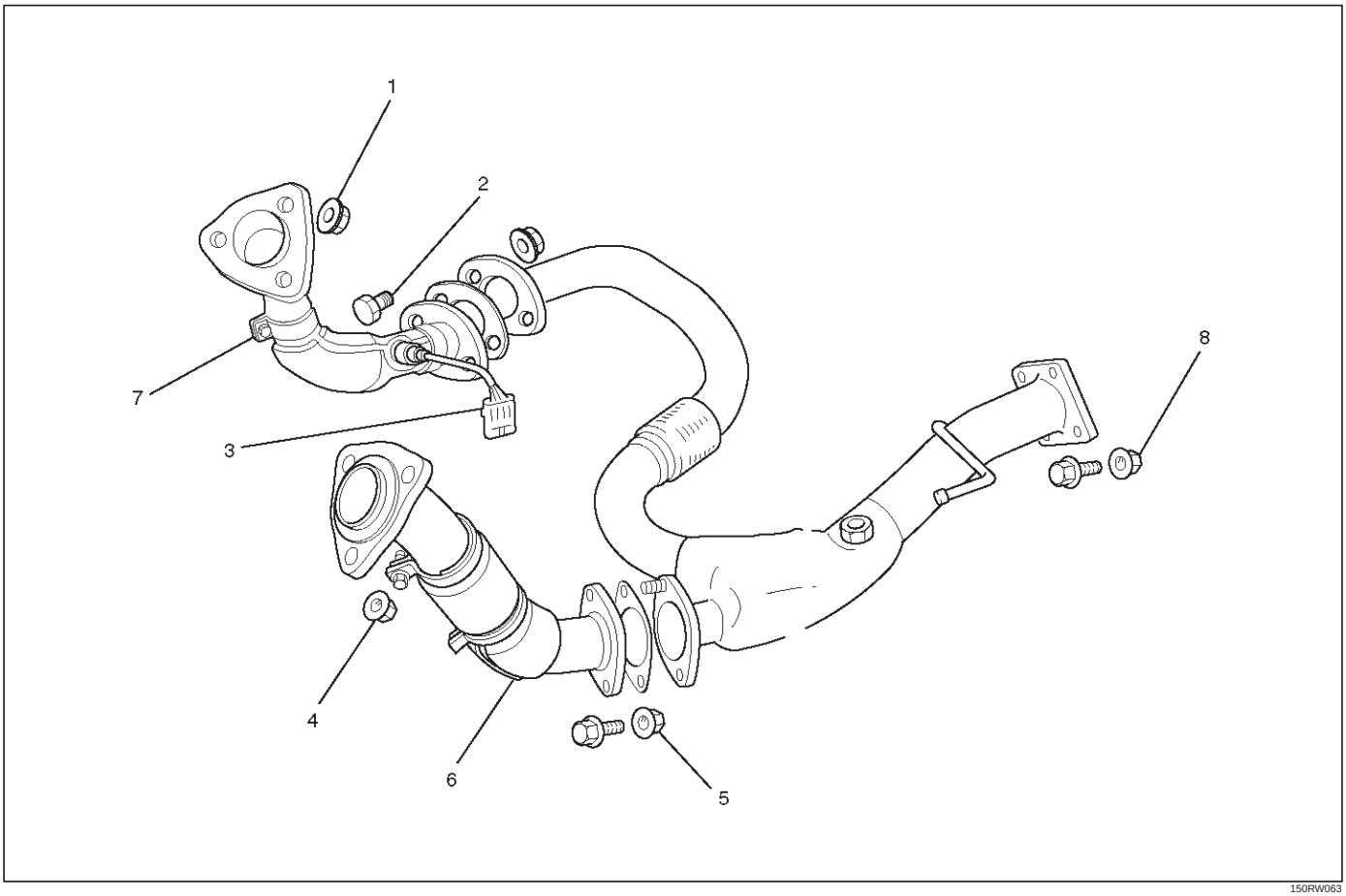

Legend

(1) Front Exhaust Pipe RH Fixing Nuts
(2) Front Exhaust Pipe RH Fixing Bolts and Nuts
(3) O_2 Sensor Terminal Connector (for IGM)
(4) Front Exhaust Pipe LH Fixing Nuts
(5) Front Exhaust Pipe LH Fixing Bolts and Nuts
(6) Front Exhaust Pipe LH
(7) Front Exhaust Pipe RH
(8) Three way Exhaust Pipe Fixing Bolts and Nuts

Removal

1. Disconnect battery ground cable.
2. Raise the vehicle and support with suitable safety stands.
3. Disconnect O_2 sensor harness connector (3).
4. Remove front exhaust pipe fixing nuts and three way Exhaust Pipe Fixing Bolts and Nuts (2)(5)(8).
5. Remove front exhaust pipe fixing three stud nuts from exhaust manifold (1)(4).
6. Remove front exhaust pipe (6)(7).

Installation

1. Install front exhaust pipe (6)(7) and tighten three stud nuts (1)(4) and nuts (2)(5)(8) to the specified torque.

   Torque

   Stud Nuts : 67 N·m (6.8 Kg·m/49 lb ft)

   Nuts : 43 N·m (4.3 Kg·m/32 lb ft)
2. Reconnect O_2 sensor harness connector (3).

Three Way Catalytic Converter

Removal

1. Disconnect battery ground cable.
2. Raise the vehicle and support with suitable safety stands.
3. Remove three way exhaust pipe fixing bolts and nuts.

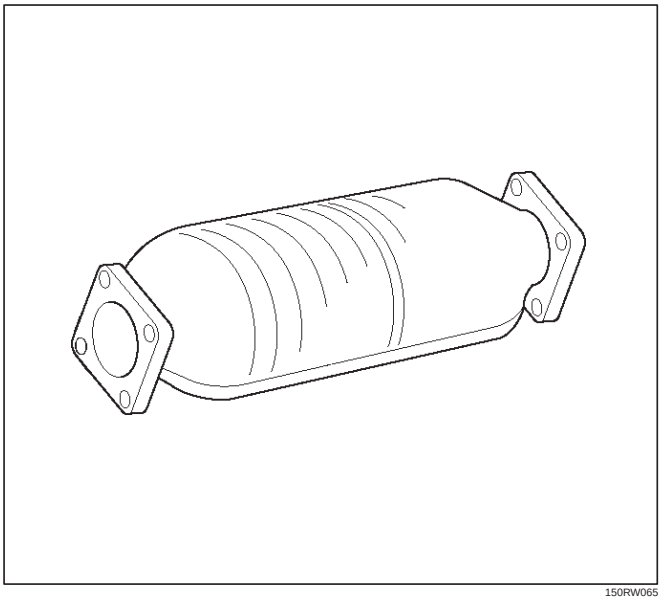

150RW065

Installation

1. Install three way catalytic converter between three way exhaust pipe and silencer.
2. Tighten nuts to the specified torque.

Torque

Nuts : 43 N·m (4.4 Kg·m/32 lb ft)

Exhaust Silencer

Exhaust Silencer and Associated Parts

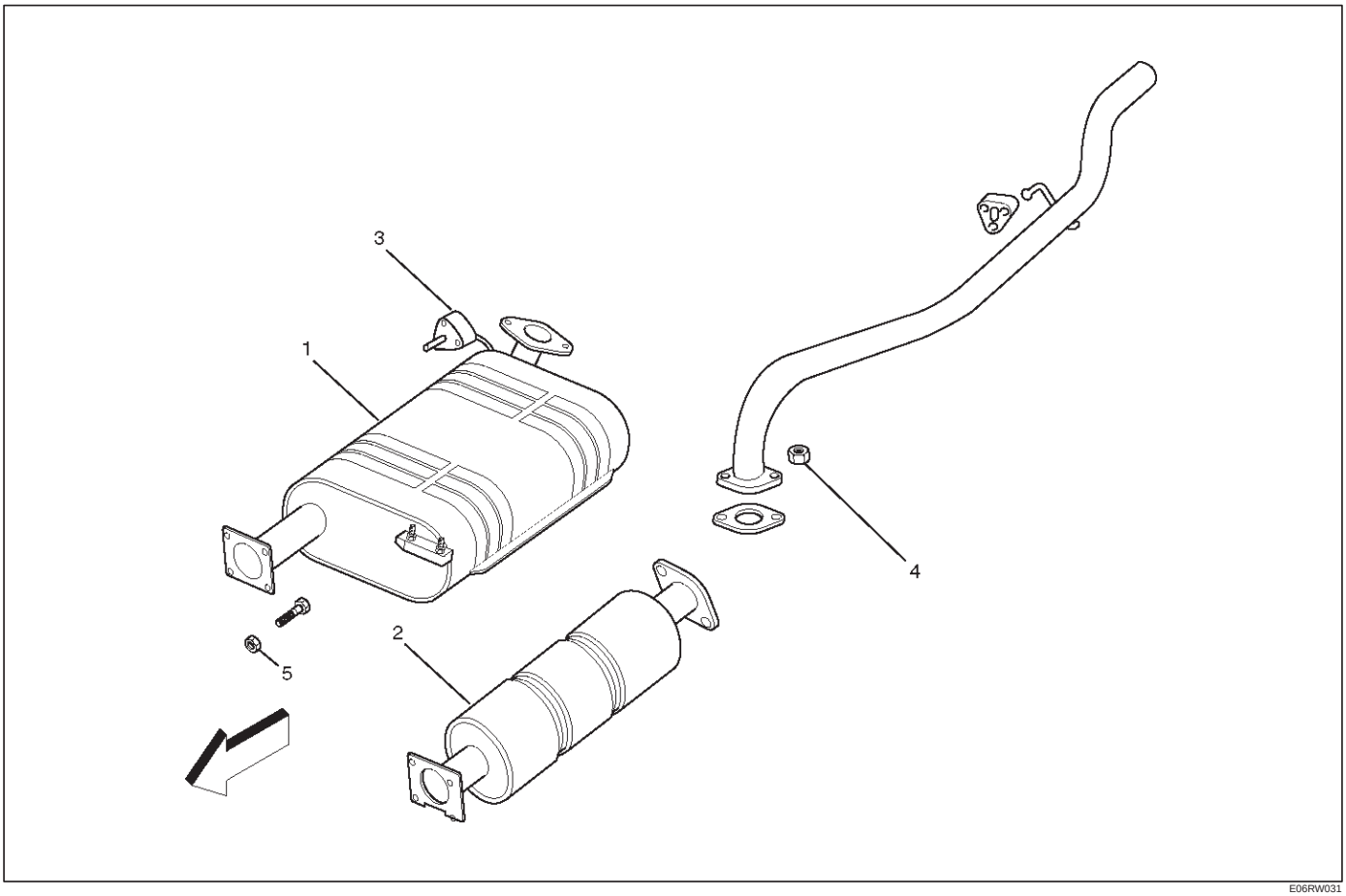

E06RW031

Legend

(1) Exhaust Silencer
(2) Exhaust Silencer
(3) Mounting Rubber
(4) Exhaust Silencer Fixing Nuts
(5) Exhaust Silencer Fixing Bolts

Removal

1. Disconnect battery ground cable.
2. Raise the vehicle and support with suitable safety stands.
3. Remove exhaust silencer fixing nuts (4) then disconnect rear exhaust pipe from exhaust silencer.
4. Remove exhaust silencer fixing nuts (5) then disconnect exhaust silencer from three way exhaust pipe.
5. Remove exhaust silencer mounting nuts from chassis side then remove exhaust silencer (1)(2).

Installation

1. Install the exhaust silencer (1)(2) chassis side and tighten nuts to the specified torque.

   Nuts: 16 N·m (1.6 Kg·m/12 lb ft)

2. Install the exhaust silencer and tighten nuts (5) on front exhaust pipe to specified torque.

   Nuts: 43 N·m (4.4 Kg·m/32 lb ft)

3. Install the rear exhaust pipe and tighten fixing nuts on exhaust silencer to specified torque.

   Nuts: 43 N·m (4.4 Kg·m/32 lb ft)

Rear Exhaust pipe

Rear Exhaust pipe and Associated Parts

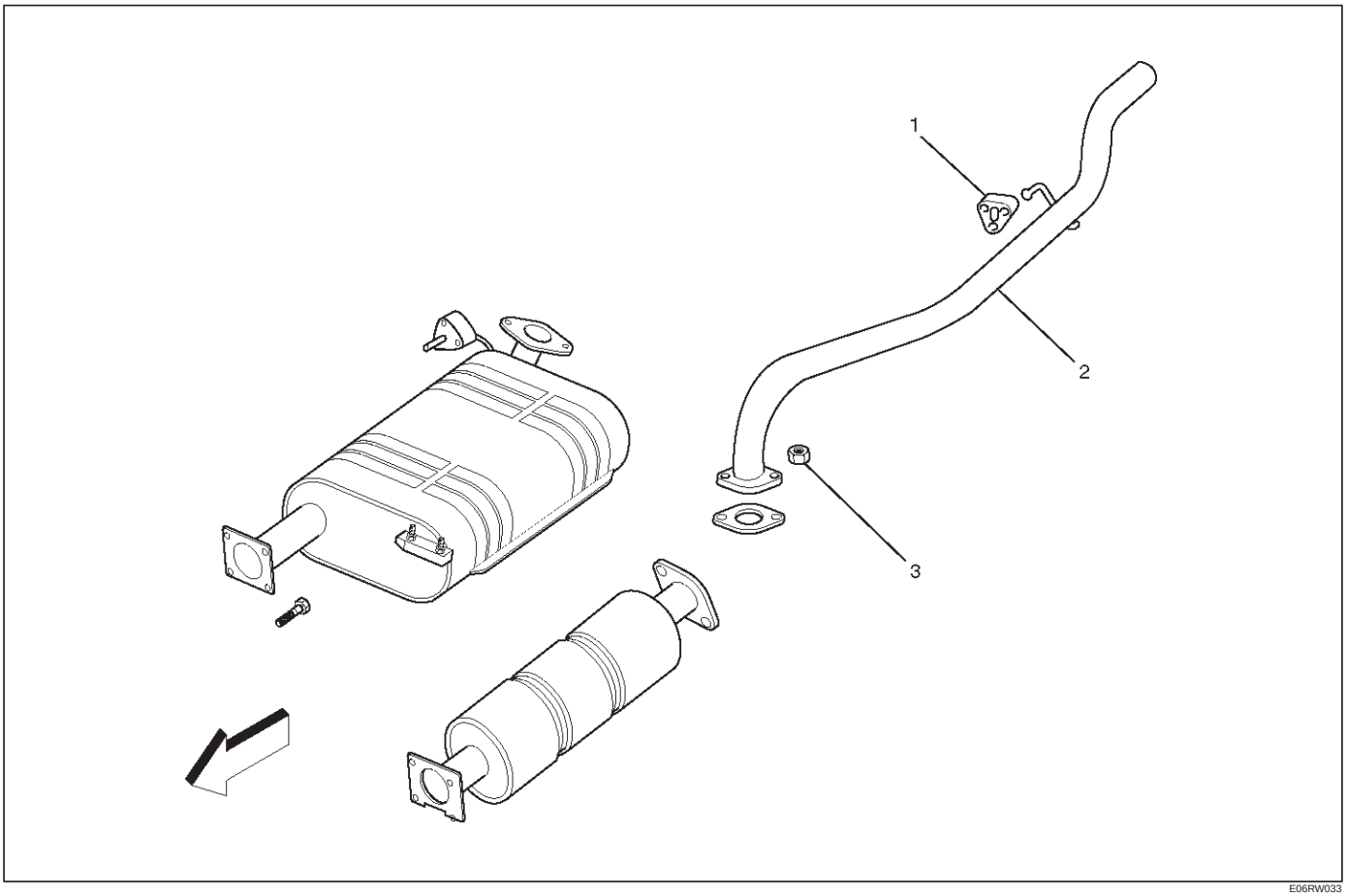

E06RW033

Legend

(1) Mounting Rubber
(2) Rear Exhaust Pipe
(3) Rear Exhaust Pipe Fixing Nuts

Removal

1. Disconnect battery ground cable.
2. Raise the vehicle and support with suitable safety stands.
3. Remove rear exhaust pipe fixing nuts (3), then disconnect rear exhaust pipe from exhaust silencer.
4. Remove mounting rubber (1).
5. Remove rear exhaust pipe (2).

Installation

1. Install the mounting rubber (1).
2. Install the exhaust pipe (2) and tighten two nuts (3) on exhaust silencer to specified torque.

   Nuts: 43 N·m (4.4 Kg·m/32 lb ft)

Main Data and Specifications

Torque Specifications

N·m (Kg·m/lb ft)

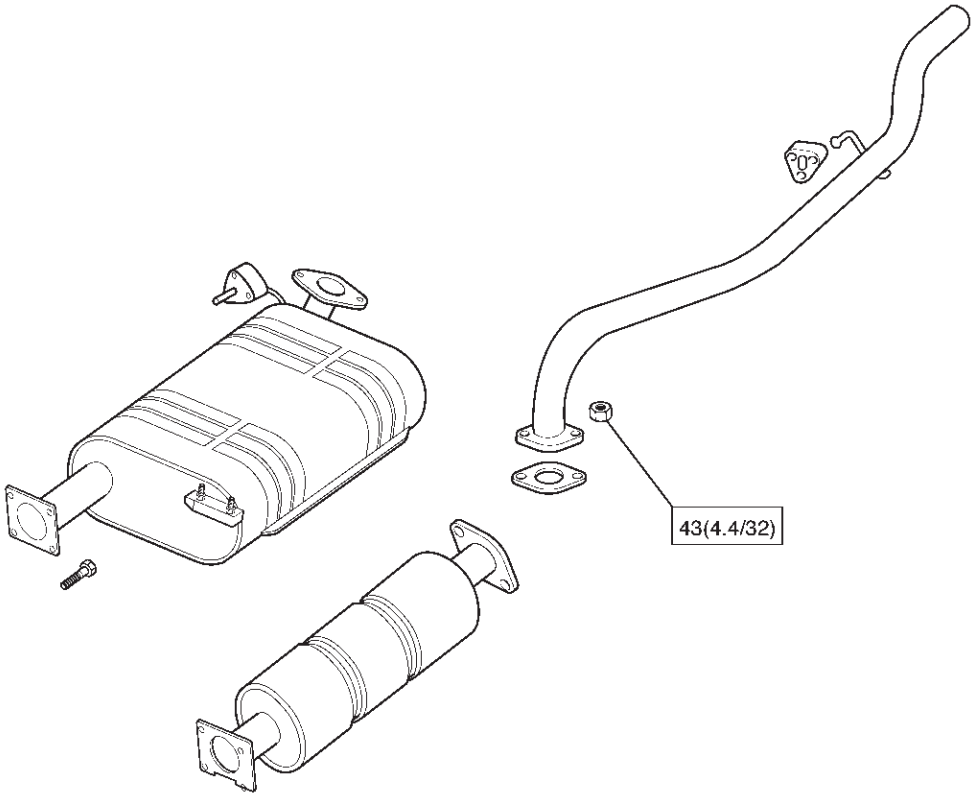

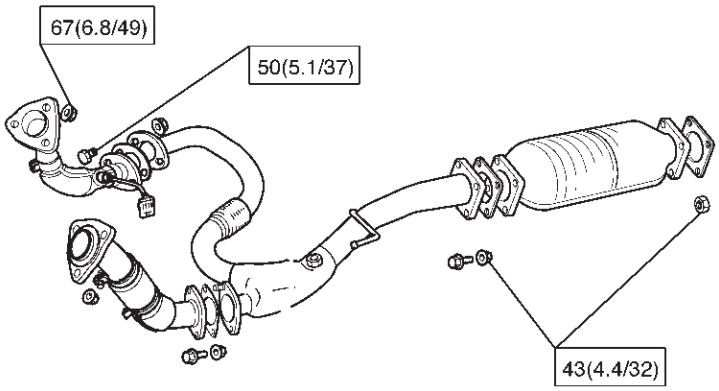

E06RW047

ENGINE

ENGINE LUBRICATION

CONTENTS

Service Precaution 6G–1
General Description 6G–2
Oil Pump 6G–3
Oil Pump and Associated Parts 6G–3
Oil Pump and Associated Parts 6G–3
Inspection and Repair 6G–4
Reassembly 6G–5
Oil Pan and Crankcase 6G–7
Removal 6G–7
Installation 6G–7
Oil Pump 6G–10
Removal 6G–10
Installation 6G–10
Oil Pump Oil Seal 6G–12
Removal 6G–12
Installation 6G–12
Oil Filter 6G–13
Removal 6G–13
Installation 6G–13
Main Data and Specification 6G–14
Special Tool 6G–15

Service Precaution

WARNING: IF SO EQUIPPED WITH A SUPPLEMENTAL RESTRAINT SYSTEM (SRS), REFER TO THE SRS COMPONENT AND WIRING LOCATION VIEW IN ORDER TO DETERMINE WHETHER YOU ARE PERFORMING SERVICE ON OR NEAR THE SRS COMPONENTS OR THE SRS WIRING. WHEN YOU ARE PERFORMING SERVICE ON OR NEAR THE SRS COMPONENTS OR THE SRS WIRING, REFER TO THE SRS SERVICE INFORMATION. FAILURE TO FOLLOW WARNINGS COULD RESULT IN POSSIBLE AIR BAG DEPLOYMENT, PERSONAL INJURY, OR OTHERWISE UNNEEDED SRS SYSTEM REPAIRS.

CAUTION: Always use the correct fastener in the proper location. When you replace a fastener, use ONLY the exact part number for that application. ISUZU will call out those fasteners that require a replacement after removal. ISUZU will also call out the fasteners that require thread lockers or thread sealant. UNLESS OTHERWISE SPECIFIED, do not use supplemental coatings (Paints, greases, or other corrosion inhibitors) on threaded fasteners or fastener joint interfaces. Generally, such coatings adversely affect the fastener torque and the joint clamping force, and may damage the fastener. When you install fasteners, use the correct tightening sequence and specifications. Following these instructions can help you avoid damage to parts and systems.

General Description

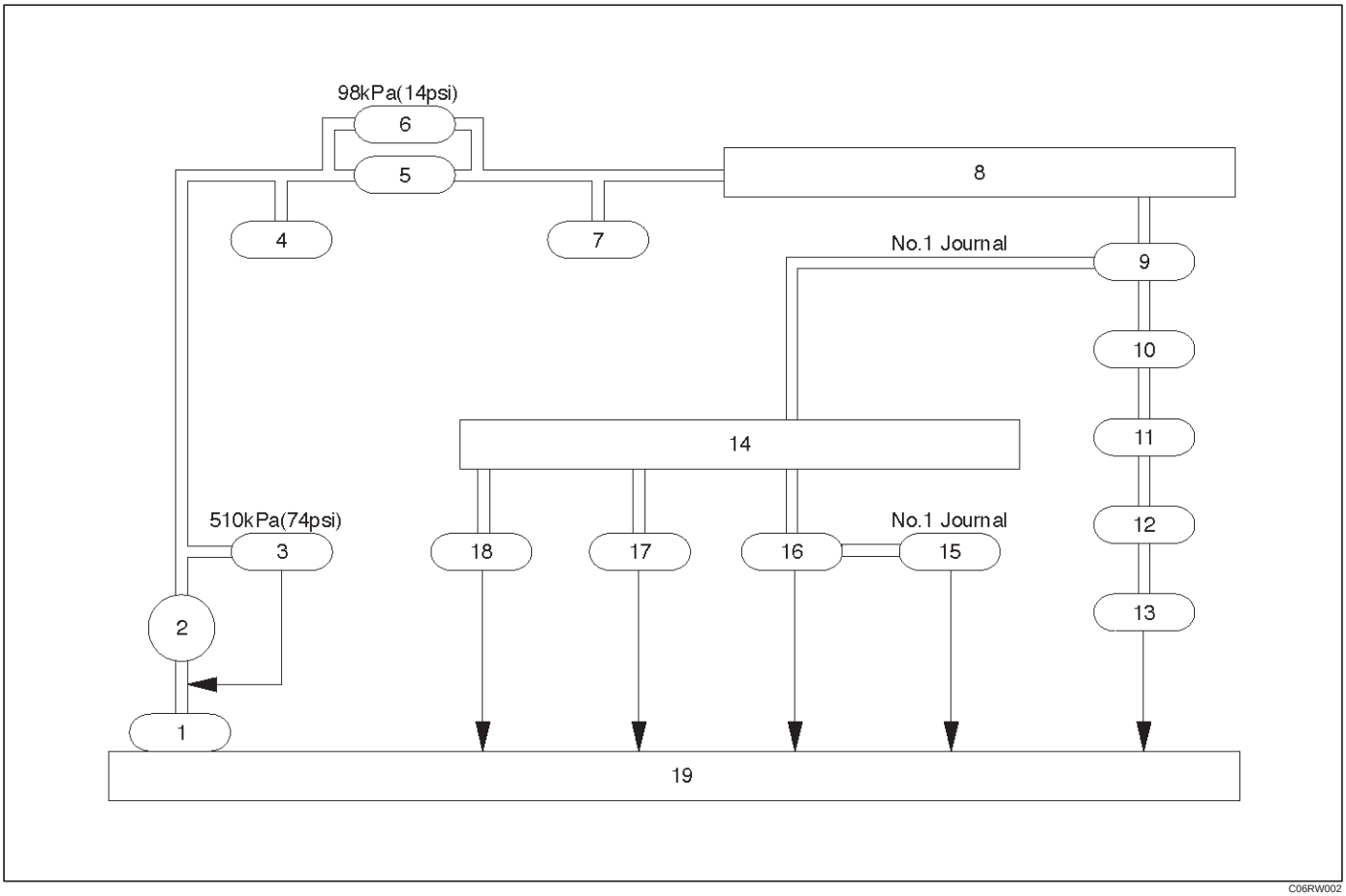

Legend

(1) Oil Strainer
(2) Oil Pump
(3) Relief Valve
(4) Oil Pressure Switch
(5) Oil Filter
(6) Safety Valve
(7) Oil Pressure Unit
(8) Oil Gallery
(9) Crankshaft Bearing
(10) Crankshaft
(11) Connecting Rod Bearing
(12) Connecting Rod
(13) Piston
(14) Oil Gallery; Cylinder Head
(15) Camshaft
(16) Camshaft Journal
(17) Front Journal; Camshaft Drive Gear
(18) Rear Journal; Camshaft Drive Gear
(19) Oil Pan

Oil Pump

Oil Pump and Associated Parts

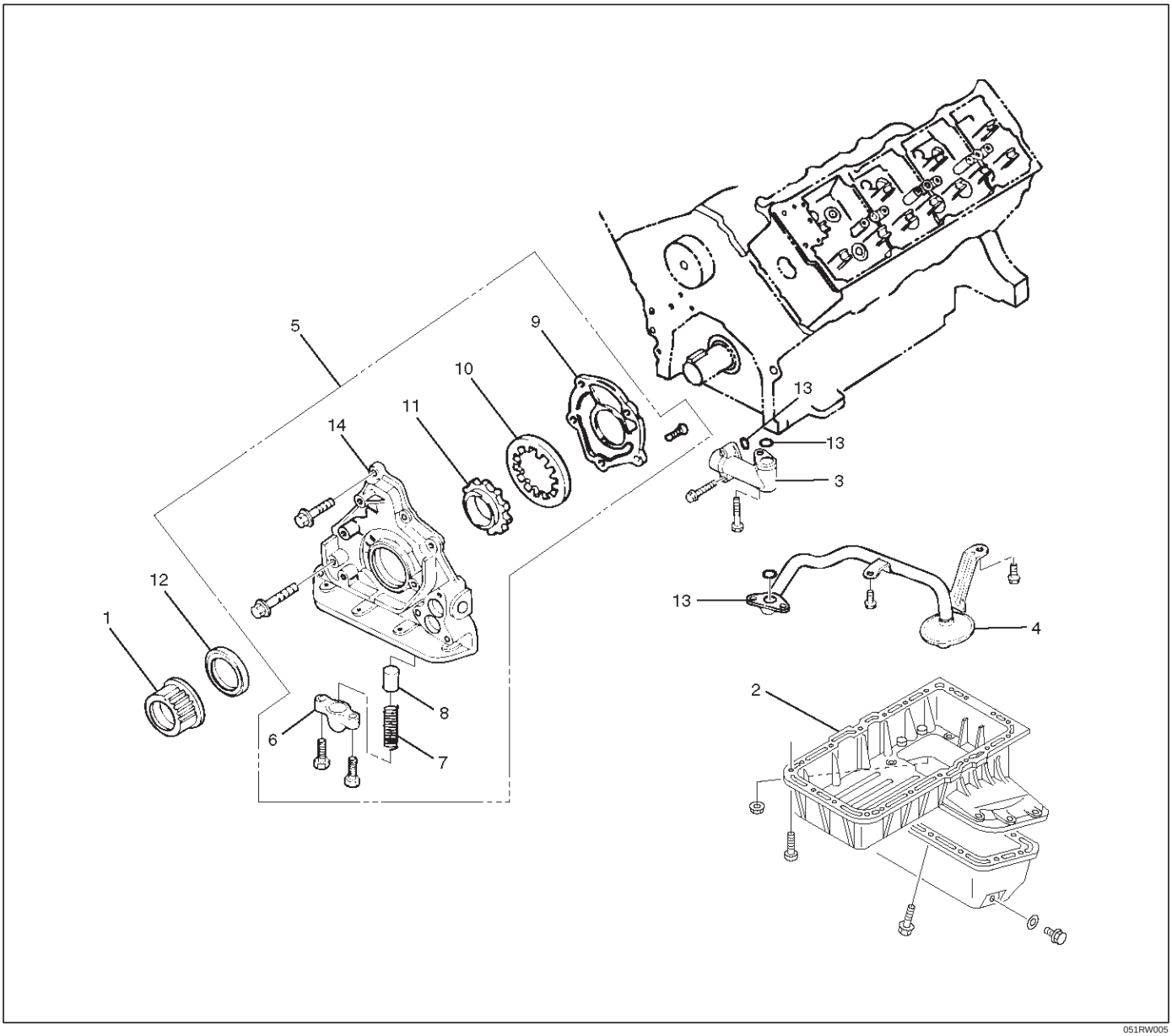

051RW005

Legend

(1) Crankshaft Timing Pulley
(2) Crankcase with Oil Pan
(3) Oil Pipe
(4) Oil Strainer
(5) Oil Pump Assembly
(6) Plug
(7) Spring
(8) Relief Valve
(9) Oil Pump Cover
(10) Driven Gear
(11) Drive Gear
(12) Oil Seal
(13) O-ring
(14) Oil Pump Body

Oil Pump and Associated Parts

1. Remove crankshaft timing pulley.
2. Remove crankcase with oil pan.
3. Remove oil pipe.
4. Remove oil strainer.
5. Remove oil pump assembly.
6. Remove plug.
7. Remove spring.
8. Remove relief valve.
9. Remove oil pump cover.
10. Remove driven gear.

11. Remove drive gear.
12. Remove oil seal.
13. Remove O-ring.

Inspection and Repair

CAUTION: Make necessary correction or parts replacement if wear, damage or any other abnormal conditions are found during inspection.

Relief Valve (8)

- Check to see that the relief valve slides freely.
- The oil pump must be replaced if the relief valve does not slide freely.
- Replace the spring and/or the oil pump assembly (5) if the spring is damaged or badly worn.

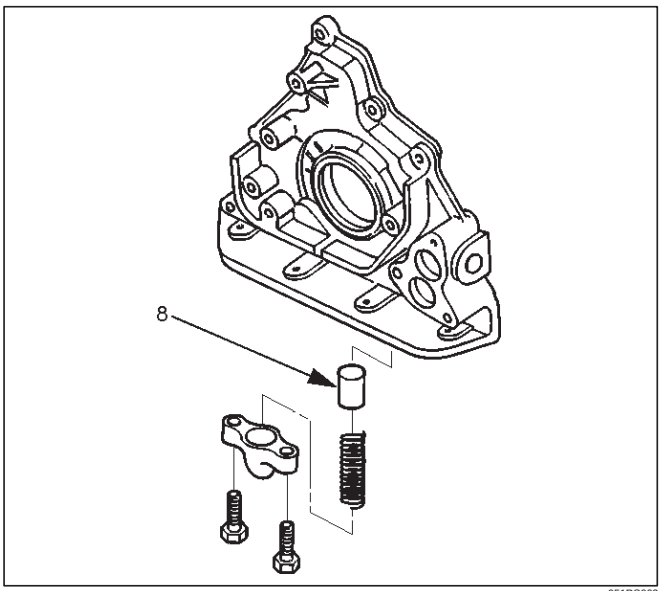

051RS002

Body (14) and Gears (10, 11)

The pump assembly must be replaced if one or more of the conditions below is discovered during inspection.

- Badly worn or damaged driven gear (10).
- Badly worn drive gear (11) driving face.
- Badly scratched or scored body sliding face (14) or driven gear (10).
- Badly worn or damaged gear teeth.

Measure the clearance between the body and the driven gear with a feeler gauge.

Standard : 0.10 mm–0.18 mm (0.0039 in.–0.0070 in)

Limit : 0.20mm (0.0079 in)

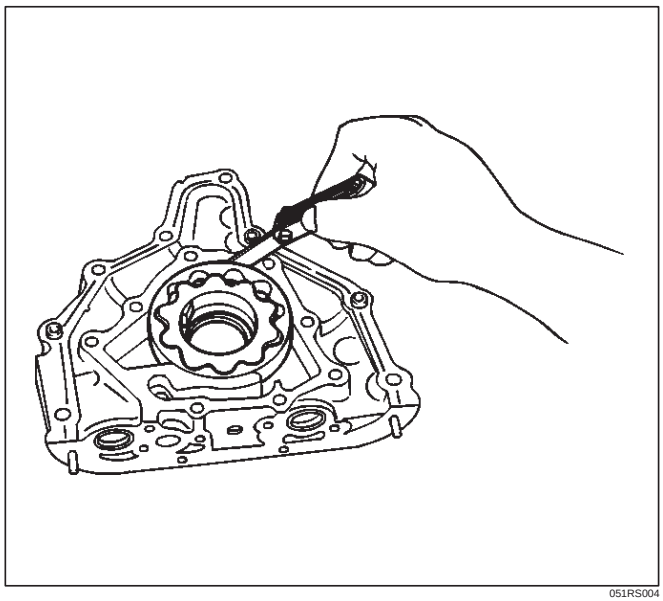

051RS004

- Measure the clearance between the drive gear and driven gear with a feeler gauge.

Standard : 0.11 mm–0.24 mm (0.0043 in–0.0094 in)

Limit : 0.35mm (0.0138 in)

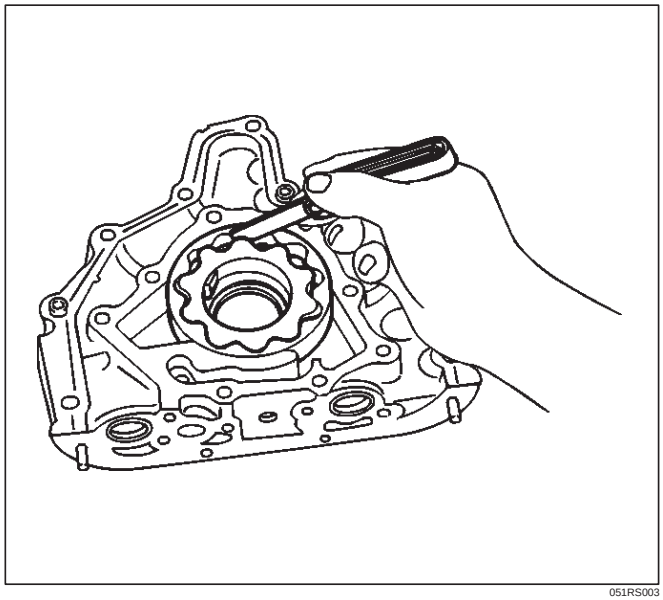

051RS003

- Measure the side clearance with a precision straight edge and a feeler gauge.

Clearance

Standard : 0.03 mm–0.09 mm (0.0011 in–0.0035 in)

Limit : 0.15mm (0.0059 in)

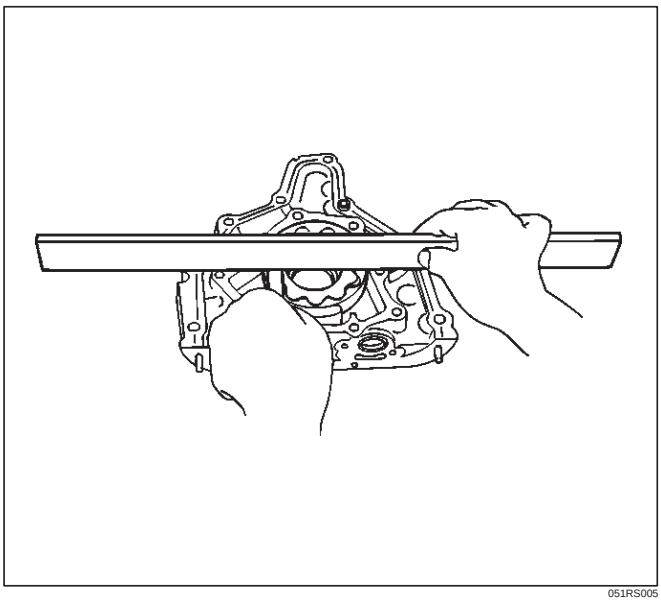

051RS005

Oil Strainer

Check the oil strainer for cracking and scoring. If cracking and scoring are found, the oil strainer must be replaced.

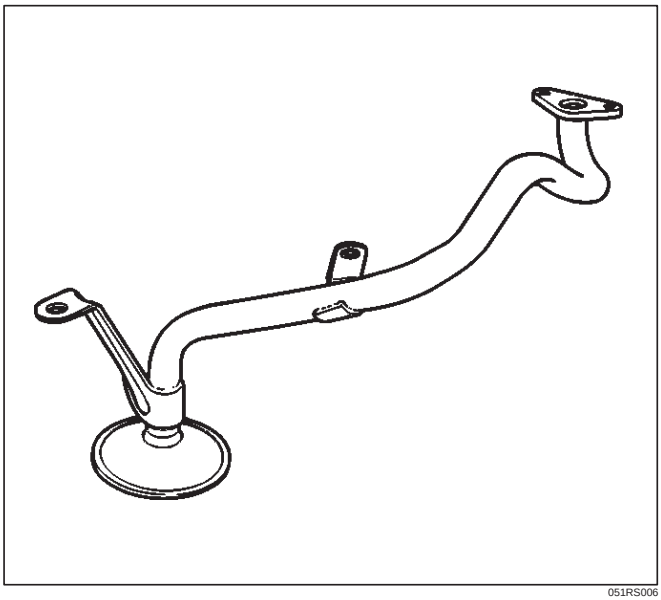

051RS006

Reassembly

1. Install drive gear (11).
2. Install driven gear (10).
3. Install oil pump cover (9) and first, loosely tighten all of the attaching screws. Next, tighten the attaching screws to the specified torque.

   Torque : 10 N·m (1.0 Kg·m/89 lb in)

   After installation, check that the gear rotates smoothly.
4. Install relief valve (8) and apply engine oil to the relief valve and spring (7).
5. Install spring (7).
6. Install the plug (6).

   Torque : 8 N·m (0.8 Kg·m/69 lb in)

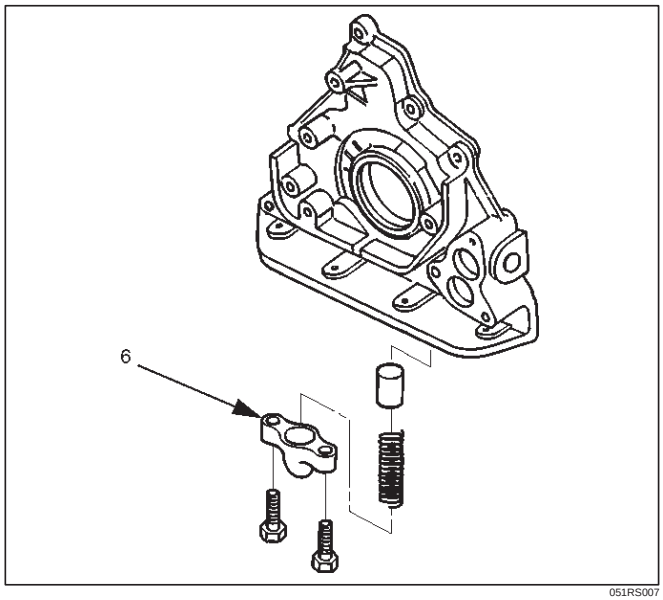

051RS007

7. Install oil pump assembly (5).
   - Carefully remove any oil from the cylinder body and the pump. Apply sealant (TB–1207B or equivalent) to the pump fitting face as shown in illustration. Take care that sealant is not applied to oil port surfaces. The oil pump assembly must be installed within 5 minutes after sealant application before the sealant hardens.

CAUTION: Do not apply an excessive amount of sealant to the contact surface. Applying too much sealant will overflow the contact surfaces. This could cause serious damage to the engine.

- **Attach oil pump assembly to cylinder body.**
- **Tighten the oil pump fixing bolts.**

  Torque : 25 N·m (2.5 Kg·m/18 lb·ft)

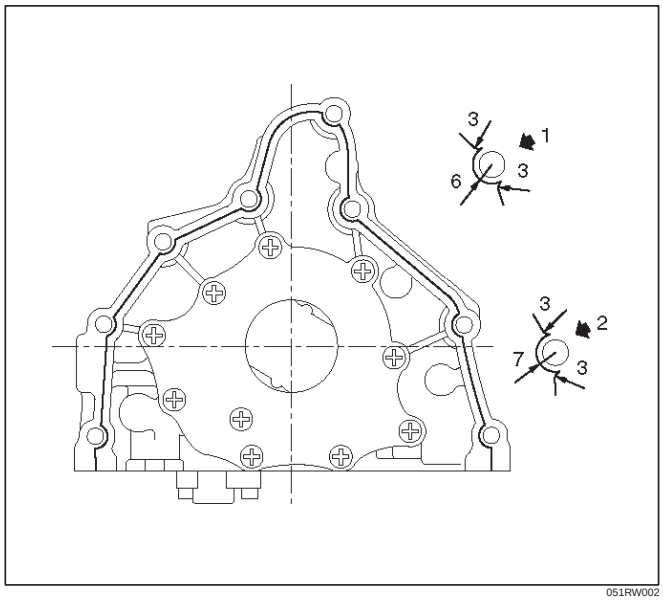

051RW002

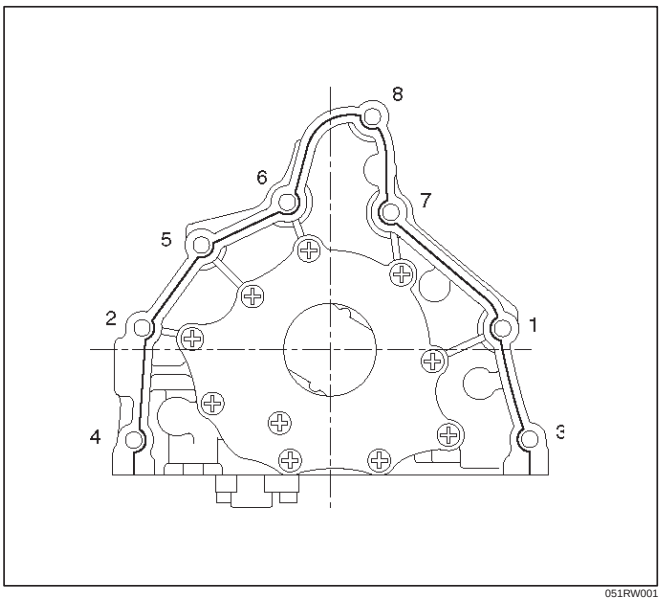

051RW001

Legend

(1) Around Bolt Holes
(2) Around Dowel Pin

8. Install the new oil seal (12). Apply engine oil to the oil seal lip before installation then use 5–8840–2287–0 oil seal Installer, install oil seal.

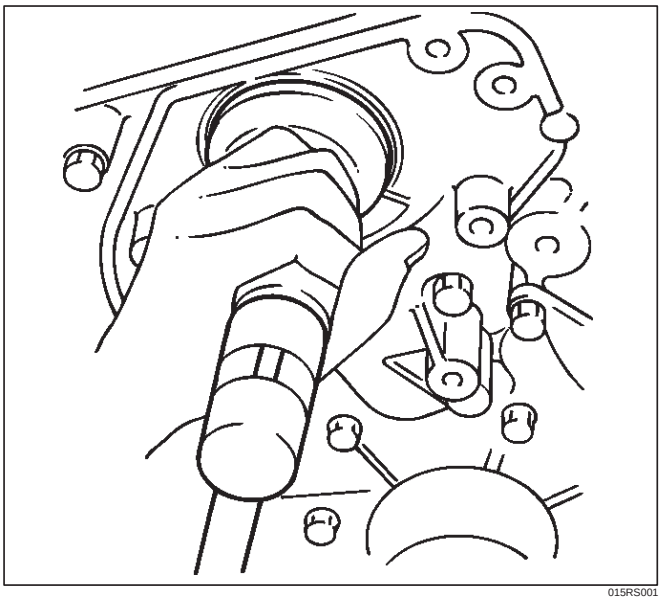

015RS001

9. Install oil strainer (4) with O-ring (13).

   Torque: 25 N·m (2.5 Kg·m/18 lb ft)

10. Install oil pipe (3) with O-ring (13).

    Torque: 25 N·m (2.5 Kg·m/18 lb ft)

11. Install crankcase with oil pan (2).
    - Remove oil on crankcase mounting surface and dry the surface.
    - Apply a proper 4.5 mm (0.7 in) wide bead of sealant (TB1207C or equivalent) to the crankcase mounting surface. The bead must be continuous.
    - The crankcase must be installed within 5 minutes after sealant application before the sealant hardens.
    - Tighten fixing bolts to the specified torque.

    Torque : 10 N·m (1.0 Kg·m/89 lb in)

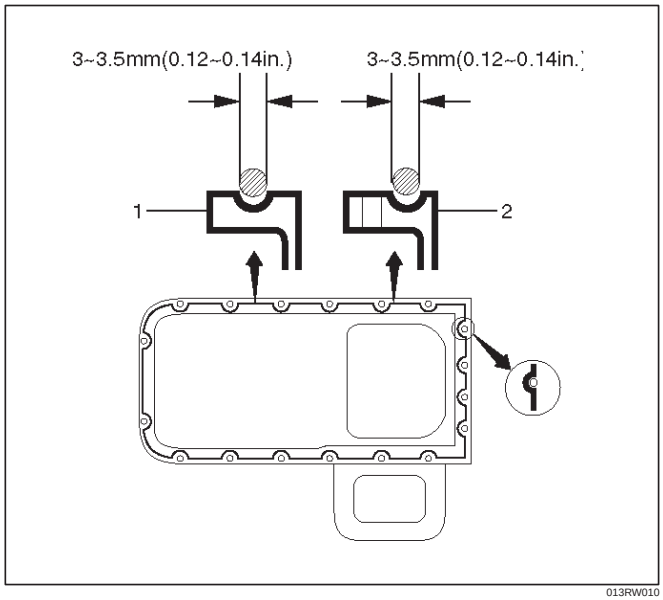

013RW010

12. Install crankshaft timing pulley.

Oil Pan and Crankcase

Removal

1. Disconnect battery ground cable.
2. Drain engine oil.
3. Lift vehicle by supporting the frame.
4. Remove front wheels.
5. Remove oil level dipstick from level gauge tube.
6. Remove stone guard.
7. Remove radiator under fan shroud.
8. Remove suspension cross member fixing bolts, 2 pcs each per side and remove suspension cross member.
9. Remove pitman arm and relay lever assembly, using the 5–8840–2005–0 remover, remove pitman arm from the steering unit and remove four fixing bolts for relay lever assembly.
10. Remove axle housing assembly four fixing bolts from housing isolator side and mounting bolts from wheel side. At this time support the axle with a garage jack and remove axle housing assembly.
11. Remove oil pan fixing bolts.
12. Remove oil pan, using 5–8840–2153–0 sealer cutter, remove oil pan.

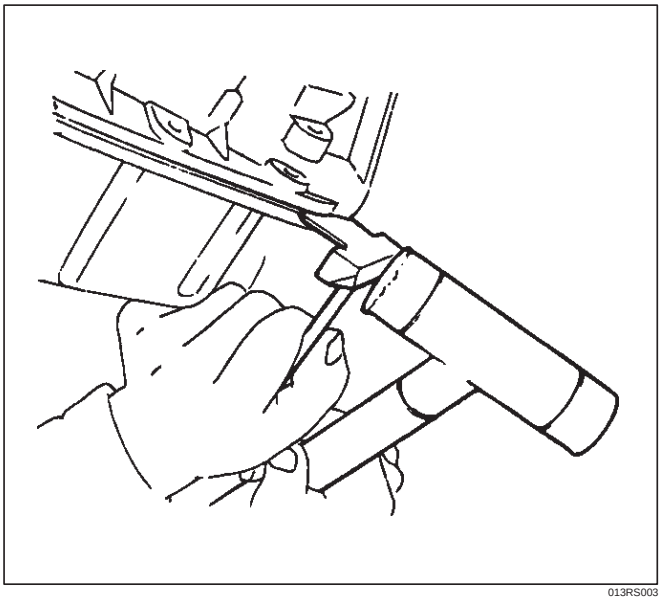

013RS003

13. Remove crankcase fixing bolts.
14. Remove crankcase, using 5–8840–2153–0 sealer cutter, remove crankcase.

NOTE: Do not deform or damage the flange of oil pan and crankcase.

Replace the oil pan and/or crankcase if deformed or damaged.

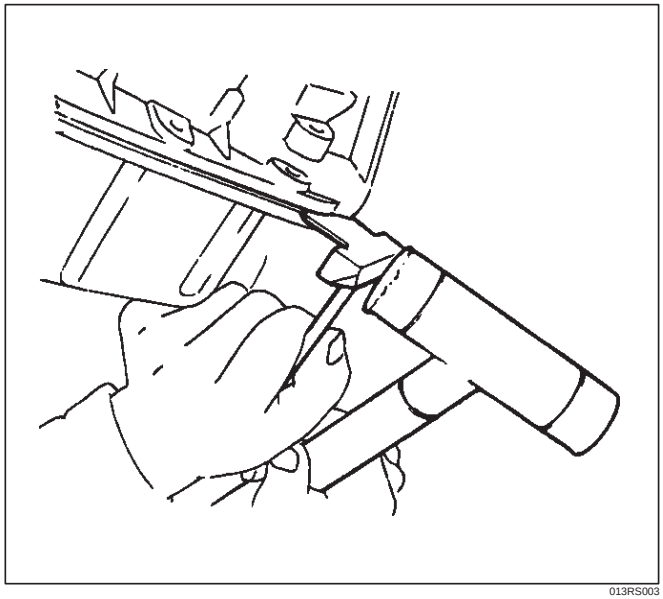

013RS003

Installation

1. Install crankcase.
   1. Remove residual sealant, lubricant and moisture from mounting surface, then dry thoroughly.
   2. Properly apply a 4.5 mm (0.7 in) wide bead of sealant (TB-1207C or equivalent) to mounting surface of crankcase.

      Sealant beat must be continuous.
      - The crankcase must be installed within 5 minutes after sealant application before the sealant hardens.

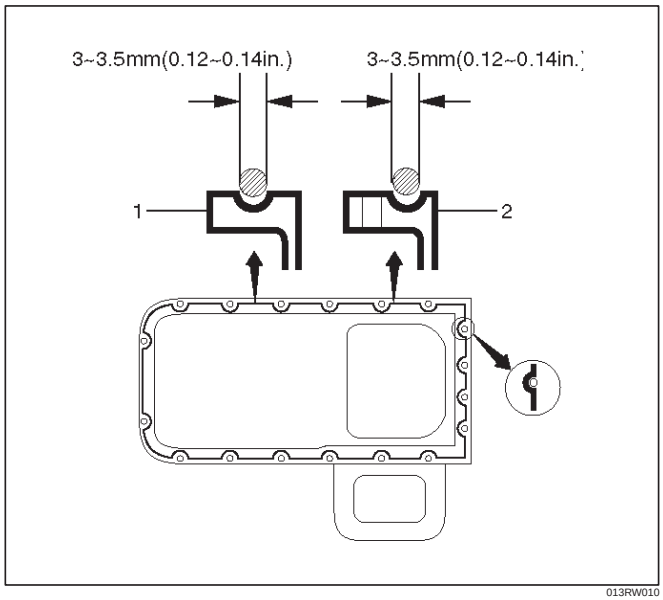

013RW010

3. Install crankcase, tighten crankcase fixing bolts to the specified torque.

Torque : 10 N·m (1.0 Kg·m/89 lb in)

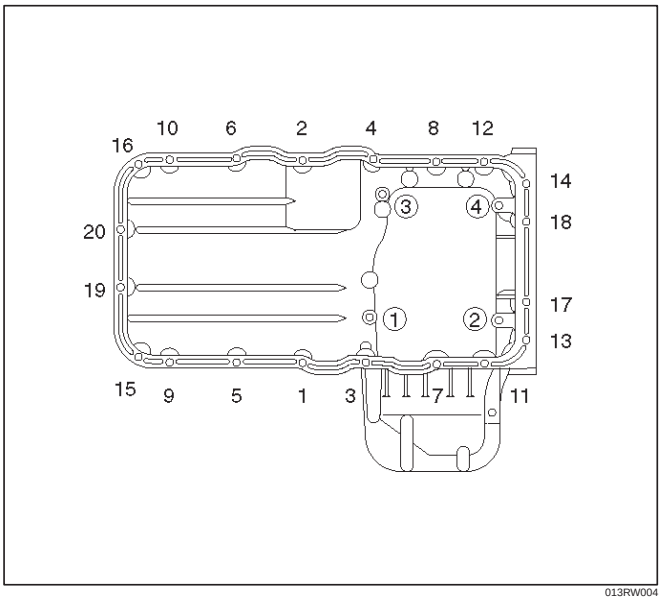

013RW004

2. Install oil pan
   1. Remove residual sealant, lubricant and moisture from mounting surface, then dry thoroughly.
   2. Properly apply a 4.5 mm (07 in) wide bead of sealant (TB-1207C or equivalent) to mounting surface of oil pan.

      Sealant beat must be continuous.
      - The crankcase must be installed within 5 minutes after sealant application befor the sealant hardens.

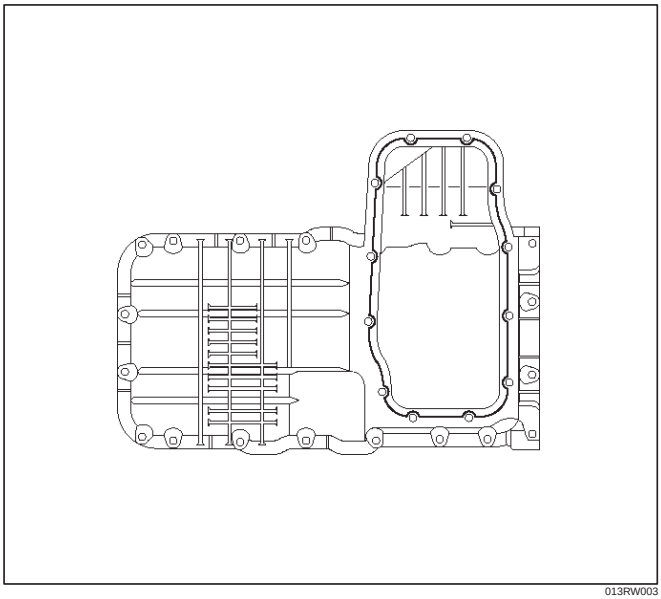

013RW003

3. Install oil pan, tighten oil pan fixing bolts to the specified torque.

Torque : 25 N·m (2.5 Kg·m/18 lb ft)

3. Install axle housing assembly and tighten fixing bolts to the specified torque.

Axle case bolts

Torque : 82 N·m (8.4 Kg·m/60 lb ft)

Mounting bolts

Torque : 152 N·m (15.5 Kg·m/112 lb ft)

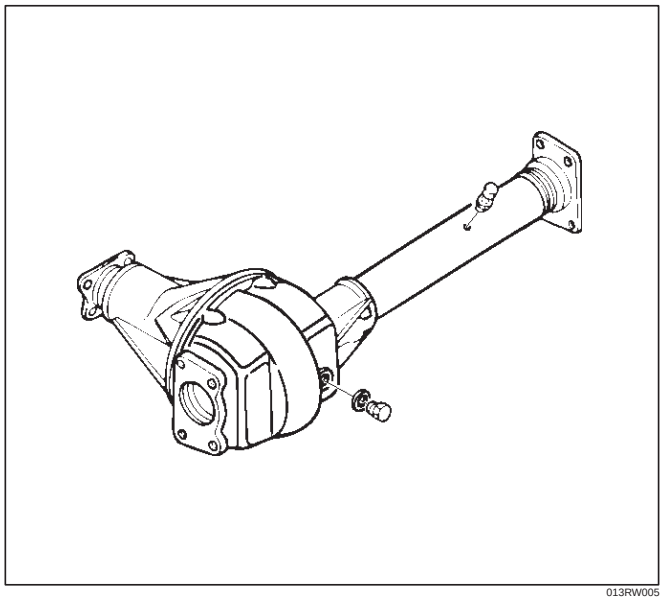

013RW005

4. Install relay lever assembly and tighten fixing bolts.

Torque: 44 N·m (4.5 Kg·m/32 lb ft)

5. Engage teeth of pitman arm and steering unit, and tighten nut to the specified torque.

Torque : 216 N·m (22.0 Kg·m/159 lb ft)

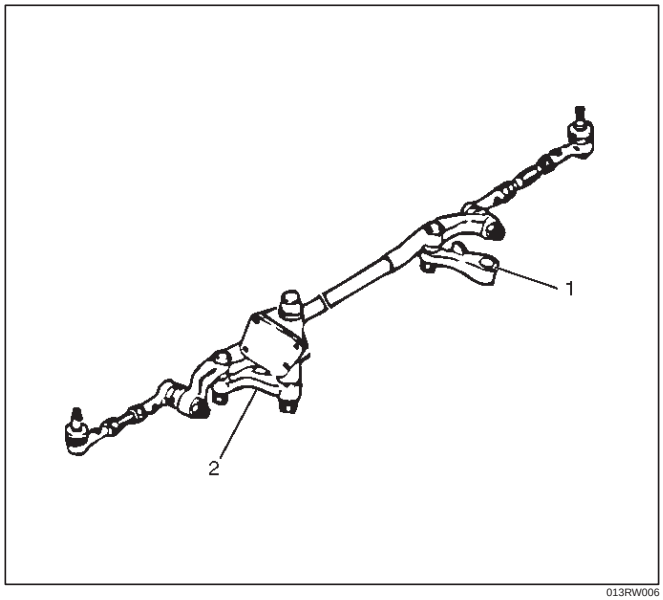

013RW006

Legend

(1) Pitman Arm
(2) Relay Lever

6. Install suspension cross member and tighten fixing bolts to the specified torque.

Torque : 78 N·m (8.0 Kg·m/58 lb ft)

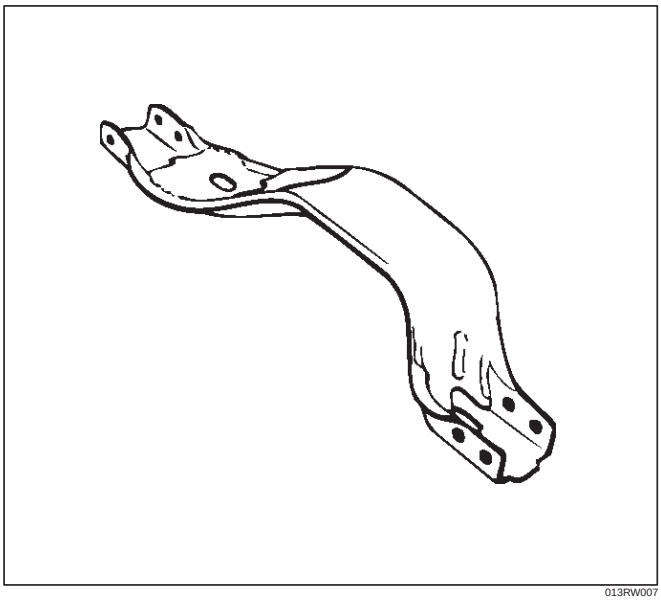

013RW007

7. Install radiator under fan shroud.
8. Install stone guard.
9. Install engine oil level dipstick.
10. Fill engine oil until full level on engine oil gauge dipstick.

Oil Pump

Removal

1. Disconnect battery ground cable.
2. Drain engine oil.
3. Remove crankcase assembly.
   - Refer to removal procedure for Oil Pan and Crankcase in this manual.
4. Remove crankshaft pulley.
   - Refer to removal procedure for Crankshaft Pulley in this manual.
5. Remove timing belt.
   - Refer to removal procedure for Timing Belt in this manual.
6. Remove timing pulley from crankshaft.
7. Remove four fixing bolts from oil filter assembly.
8. Remove oil strainer fixing bolts, remove oil strainer assembly with O-ring.
9. Remove three bolts from oil pipe and O-ring.
10. Remove eight oil pump fixing bolts, then oil pump assembly.
11. Remove sealant from mounting surface of oil pump assembly, cylinder block and take care not to damage mounting surfaces of oil pump and cylinder block.

Installation

1. Install oil pump assembly
   - Apply sealant (TB-1207B or equivalent) to the oil pump mounting surfaces as shown in the illustration.
   - The oil pump assembly must be installed within 5 minutes after sealant application before the sealant hardens.

NOTE: Do not apply sealant to the oil ports.

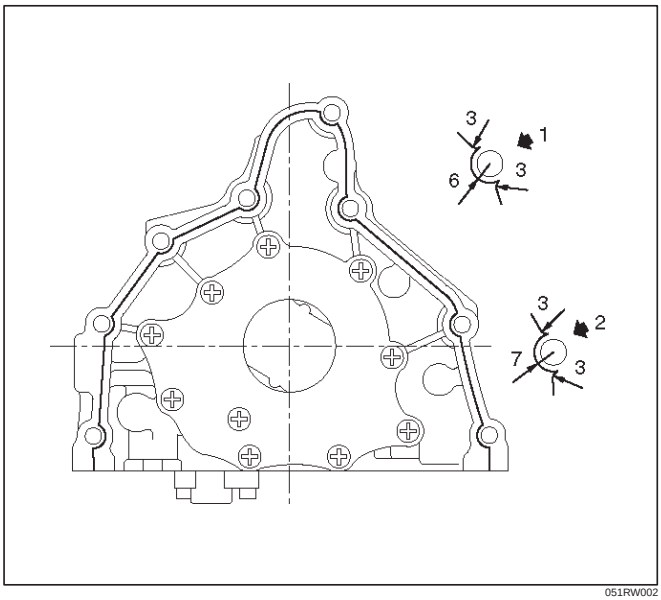

051RW002

- Use 5–8840–2287–0 installer when installing new oil seal.
- Apply engine oil to oil seal lip.
- Install oil pump assembly to the cylinder block.

NOTE: Do not damage oil seal during installation of oil pump assembly.

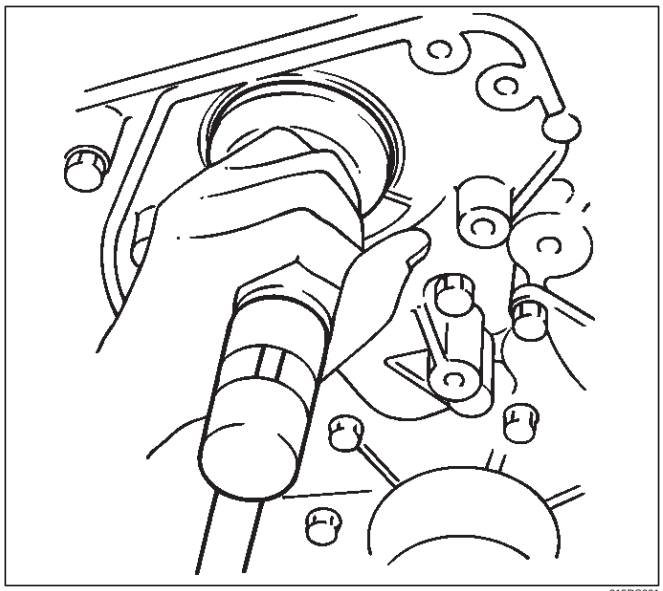

015RS001

- Tighten fixing bolts to the specified torque.

Torque : 25 N·m (2.5 Kg·m/18 lb ft)

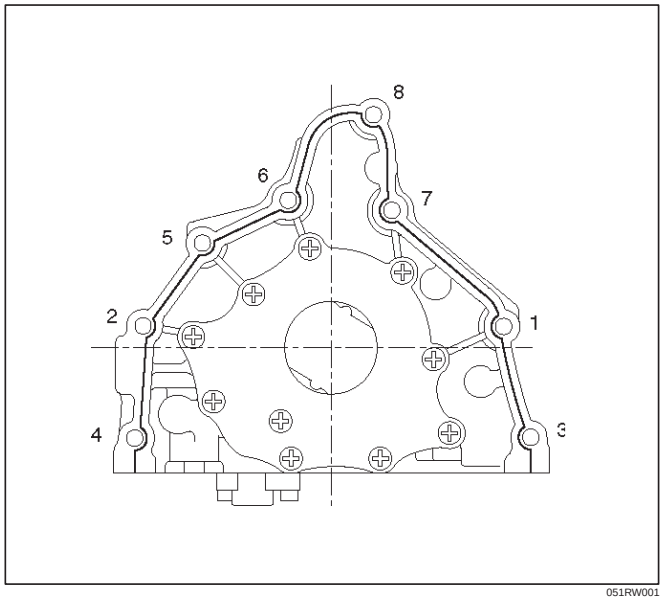

051RW001

2. Install oil pipe with O-ring, tighten fixing bolt to the specified torque.

   Torque : 10 N·m (1.0 Kg·m/89 lb in)

3. Install oil strainer with O-ring, tighten fixing bolt to the specified torque.

   Torque : 25 N·m (2.5 Kg·m/18 lb ft)

4. Install oil filter assembly and tighten bolts to the specified torque.

Torque : 25 N·m (2.5 Kg·m/18 lb ft)

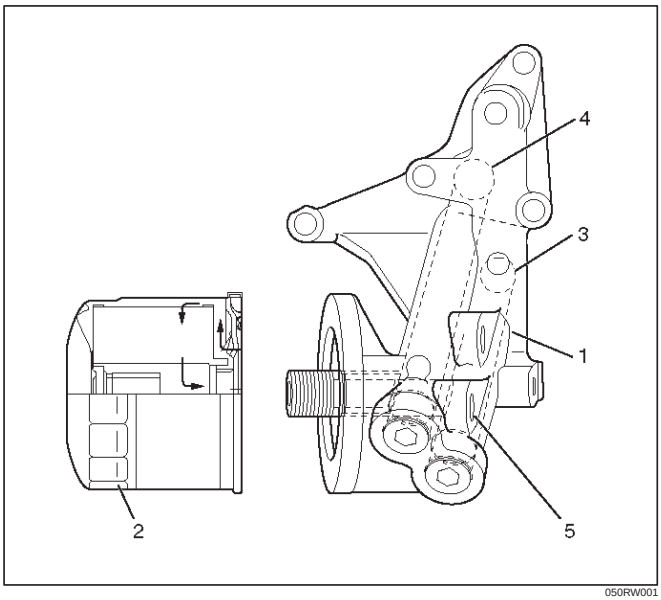

050RW001

Legend

(1) Oil Pump
(2) Oil Filter
(3) Oil Gallery
(4) From Oil Filter
(5) To Oil Filter

5. Install timing pulley on crankshaft.
   Install timing belt.
   - Refer to installation procedure for Timing Belt in this manual.
6. Install crankshaft pulley.
   - Refer to install procedure for Crankshaft Pulley in this manual.
7. Install crankcase assembly.
   - Refer to installation procedure for Oil Pan and Crankcase in this manual.
8. Refill engine oil until full level on engine oil dipstick.

Oil Pump Oil Seal

Removal

1. Disconnect battery ground cable.
2. Drain engine oil.
3. Remove crankshaft pulley.
   - Refer to removal procedure for Crankshaft Pulley in this manual.
4. Remove timing belt.
   - Refer to removal procedure for Timing Belt in this manual.
5. Remove timing pulley from crankshaft.
6. Remove oil pump oil seal using a sealer puller.

NOTE: Take care not to damage sealing surfaces of oil pump and crankshaft when removing oil seal.

Installation

1. Install oil pump oil seal, apply engine oil to oil seal lip, then install oil seal using 5–8840–2287–0 installer.

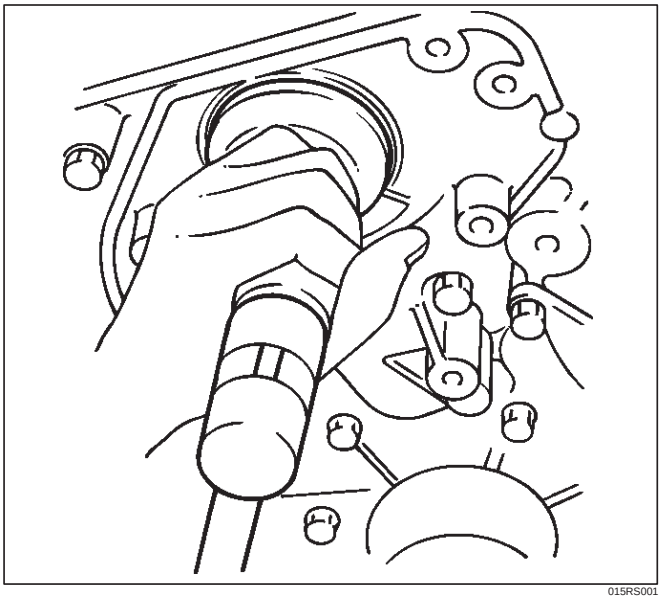

015RS001

2. Install timing pulley to crankshaft.
3. Install timing belt.
   - Refer to installation procedure for Timing Belt in this manual.
4. Install crankshaft pulley.
   - Refer to installation procedure for Crankshaft Pulley in this manual.
5. Refill engine oil until full level.

Oil Filter

Removal

1. Disconnect battery ground cable.
2. Drain engine oil.
3. Remove oil filter using 5-8840-0203-0 filter wrench.

Installation

1. Clean filter fitting surface and apply small amount of engine oil to sealing surface.
2. Install oil filter cartridge by hand until it comes in contact with sealing surface then rotate additional 2/3 turn to tighten using 5-8840-0203-0 filter wrench.

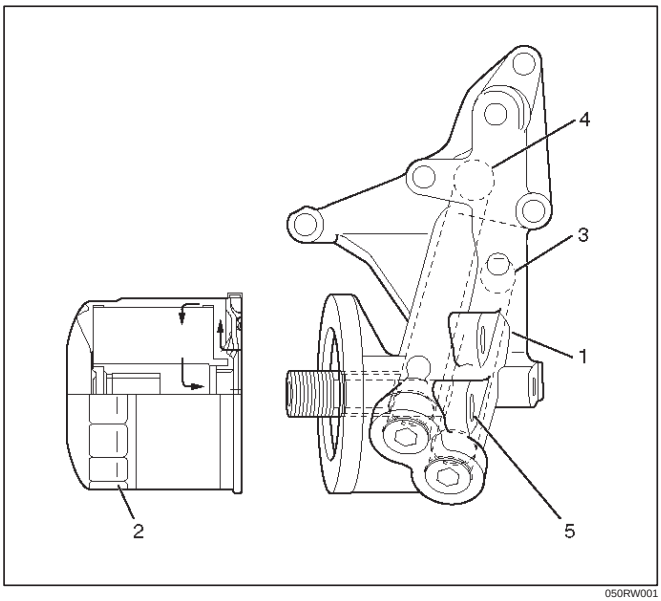

050RW001

Legend

(1) Oil Pump
(2) Oil Filter
(3) Oil Gallery
(4) From Filter
(5) To Filter

3. Fill engine oil until full level on dipstick.
4. Reconnect battery ground cable.

Main Data and Specification

General Specification

Item	Specifications	
	6VD1	6VE1
Oil capacity	5.3 liters	

Torque Specifications

Crankcase, Oil pan, Timing belt tensioner, Timing pulley, timing belt cover, Oil pump, Oil gallery, Oil strainer N·m (Kg·m/lb ft)

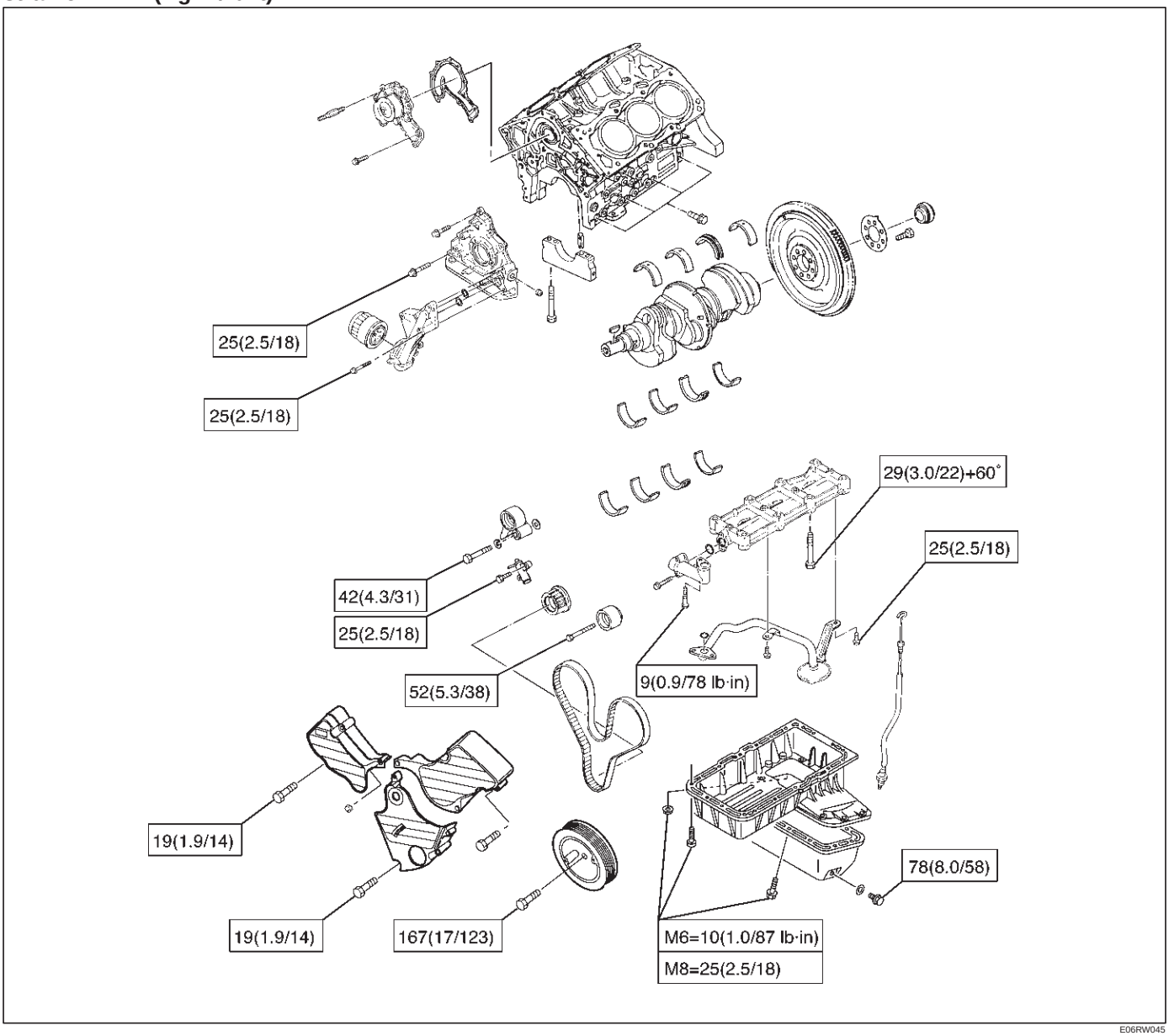

E06RW045

Special Tool

ILLUSTRATION	**TOOL NO.** TOOL NAME
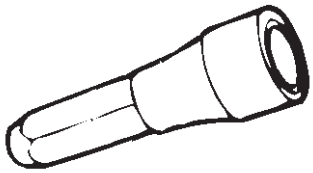 901RT044	**5–8840–2287–0** **(J–39202)** Installer; Oil pump oil seal
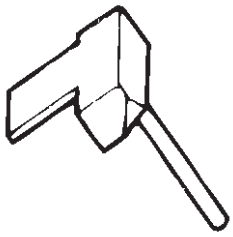 901RT042	**5–8840–2153–0** **(J–37228)** Seal cutter
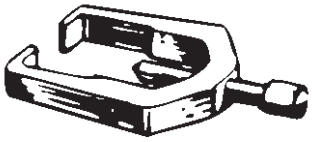 901RT038	**5–8840–2005–0** **(J–29107)** Universal pitman arm puller
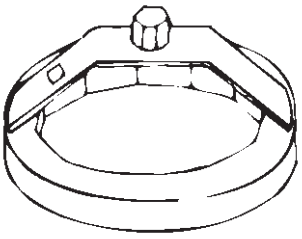 901RT034	**5–8840–0203–0** **(J–36390)** Wrench; Oil filter

ENGINE

ENGINE SPEED CONTROL SYSTEM

CONTENTS

Service Precaution 6H–1
Accelerator Pedal Control Cable 6H–2
Removal 6H–2
Inspection 6H–2
Installation 6H–2
Adjustment 6H–2
Accelerator Pedal 6H–3
Accelerator Pedal and Associated Parts . . 6H–3
Removal 6H–3
Installation 6H–3
Adjustment 6H–3

Service Precaution

WARNING: IF SO EQUIPPED WITH A SUPPLEMENTAL RESTRAINT SYSTEM (SRS), REFER TO THE SRS COMPONENT AND WIRING LOCATION VIEW IN ORDER TO DETERMINE WHETHER YOU ARE PERFORMING SERVICE ON OR NEAR THE SRS COMPONENTS OR THE SRS WIRING. WHEN YOU ARE PERFORMING SERVICE ON OR NEAR THE SRS COMPONENTS OR THE SRS WIRING, REFER TO THE SRS SERVICE INFORMATION. FAILURE TO FOLLOW WARNINGS COULD RESULT IN POSSIBLE AIR BAG DEPLOYMENT, PERSONAL INJURY, OR OTHERWISE UNNEEDED SRS SYSTEM REPAIRS.

CAUTION: Always use the correct fastener in the proper location. When you replace a fastener, use ONLY the exact part number for that application. ISUZU will call out those fasteners that require a replacement after removal. ISUZU will also call out the fasteners that require thread lockers or thread sealant. UNLESS OTHERWISE SPECIFIED, do not use supplemental coatings (Paints, greases, or other corrosion inhibitors) on threaded fasteners or fastener joint interfaces. Generally, such coatings adversely affect the fastener torque and the joint clamping force, and may damage the fastener. When you install fasteners, use the correct tightening sequence and specifications. Following these instructions can help you avoid damage to parts and systems.

Accelerator Pedal Control Cable

Removal

1. Loosen the adjusting nut(5) on the cable bracket mounted on the common chamber.
2. Remove cable clip(3).
3. Disconnect accelerator pedal (AP) control cable(6). (on throttle valve side)
4. Disconnect AP control cable(1). (on AP pedal(7) side)
5. Remove molding cap(2).
6. Remove AP control cable(4).

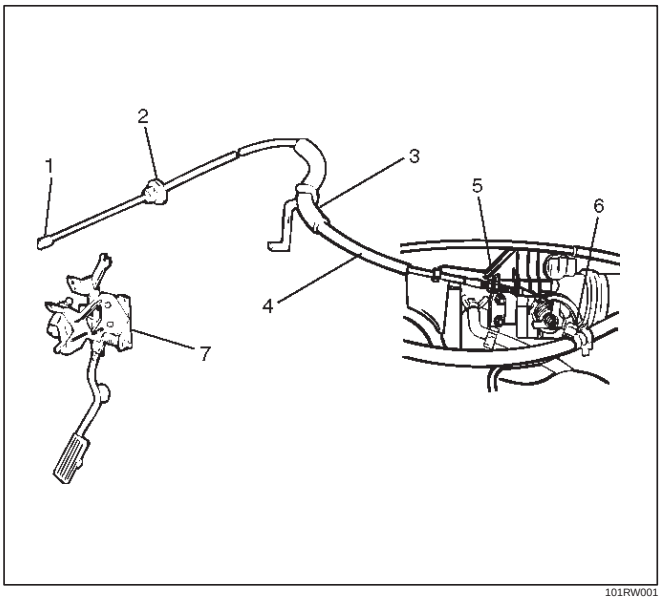

101RW001

Inspection

Check the following items, and replace the control cable if any abnormality is found:

- The control cable should move smoothly.
- The control cable should not be bent or kinked.
- The control cable should be free of damage and corrosion.

Installation

1. Install AP control cable(4).
2. Install molding cap(2).
3. Connect AP control cable(1). (on AP side)
4. Connect AP control cable(6). (on throttle valve side)
5. Install cable clip(3).
6. Install adjusting nut(5).

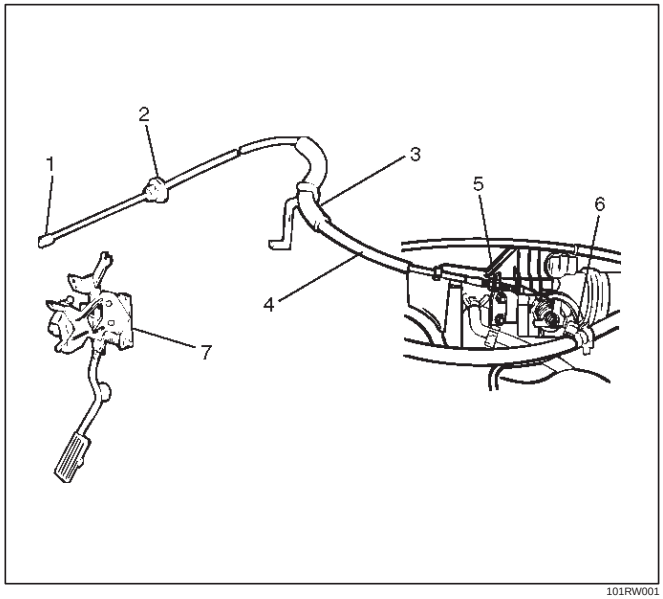

101RW001

Adjustment

1. Loosen adjusting nut and lock nut.
2. Pull outer cable while closing fully the throttle valve.
3. Tighten adjusting nut and lock nut temporarily.
4. Loosen adjusting nut by three turns and tighten lock nut.

   Then, manually operating the throttle valve, make sure that the valve lever returns up to the stopper screw.

   If it does not reach the stopper screw, repeat from step 1.

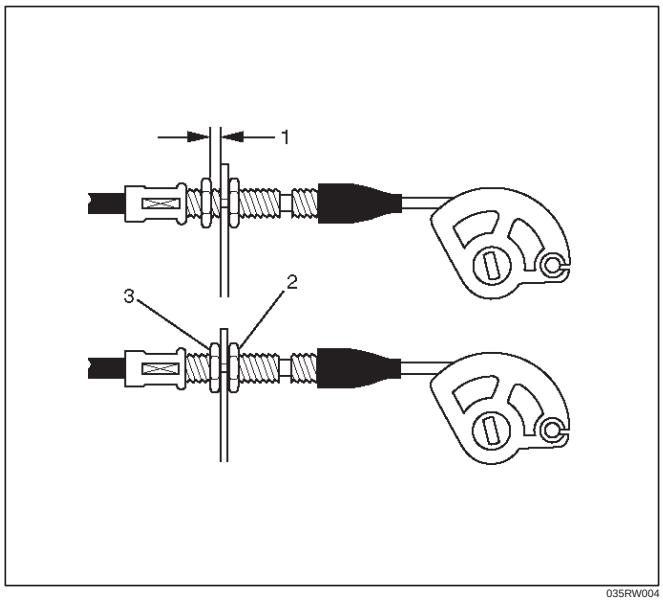

035RW004

Legend

(1) Clearance
(2) Lock Nut
(3) Adjusting Nut

Accelerator Pedal

Accelerator Pedal and Associated Parts

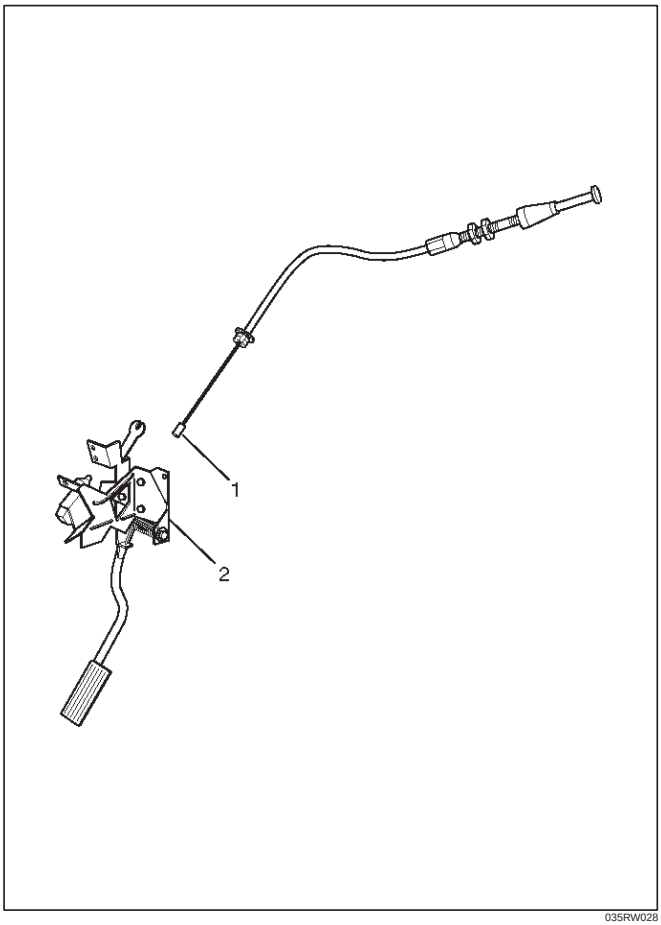

Legend

(1) Accelerator Pedal Control Cable
(2) Accelerator Pedal Assembly

Removal

1. Accelerator Pedal control cable(1).
2. Accelerator Pedal assembly(2).

Installation

1. Accelerator pedal assembly(2).
2. Accelerator pedal control cable(1).

Adjustment

Manual Transmission:

- Rotate counterclockwise to loosen the lock nut and screw the stopper bolt in sufficiently.
- Fully depress the pedal and hold it there with your hand. Next, rotate the stopper bolt until it hits the stopper of pedal bracket. Then, lock the stopper bolt there.

Automatic Transmission:

- Rotate counterclockwise to loosen the kickdown switch sufficiently.
- Fully depress the pedal and hold it there with your hand. Rotate the switch clockwise and then rotate further by 1/2 turn from the position where the switch clicks. Lock the switch there.
- Step on the accelerator pedal and make sure that you can hear a clicking sound at the full stroke position.

MEMO

ENGINE

INDUCTION

CONTENTS

Service Precaution 6J–1
Air Cleaner Element 6J–2
Removal 6J–2
Inspection 6J–2
Installation 6J–2

Service Precaution

WARNING: IF SO EQUIPPED WITH A SUPPLEMENTAL RESTRAINT SYSTEM (SRS),REFER TO THE SRS COMPONENT AND WIRING LOCATION VIEW IN ORDER TO DETERMINE WHETHER YOU ARE PERFORMING SERVICE ON OR NEAR THE SRS COMPONENTS OR THE SRS WIRING. WHEN YOU ARE PERFORMING SERVICE ON OR NEAR THE SRS COMPONENTS OR THE SRS WIRING, REFER TO THE SRS SERVICE INFORMATION. FAILURE TO FOLLOW WARNINGS COULD RESULT IN POSSIBLE AIR BAG DEPLOYMENT, PERSONAL INJURY, OR OTHERWISE UNNEEDED SRS SYSTEM REPAIRS.

CAUTION: Always use the correct fastener in the proper location. When you replace a fastener, use ONLY the exact part number for that application. ISUZU will call out those fasteners that require a replacement after removal. ISUZU will also call out the fasteners that require thread lockers or thread sealant. UNLESS OTHERWISE SPECIFIED, do not use supplemental coatings (Paints, greases, or other corrosion inhibitors) on threaded fasteners or fastener joint interfaces. Generally, such coatings adversely affect the fastener torque and the joint clamping force, and may damage the fastener. When you install fasteners, use the correct tightening sequence and specifications. Following these instructions can help you avoid damage to parts and systems.

Air Cleaner Element

Removal

1. Remove positive ventilation hose from connector(1).
2. Remove intake air temperature sensor(2).
3. Remove air flow sensor(3).
4. Remove air cleaner duct cover(4).
5. Remove air cleaner element(5).

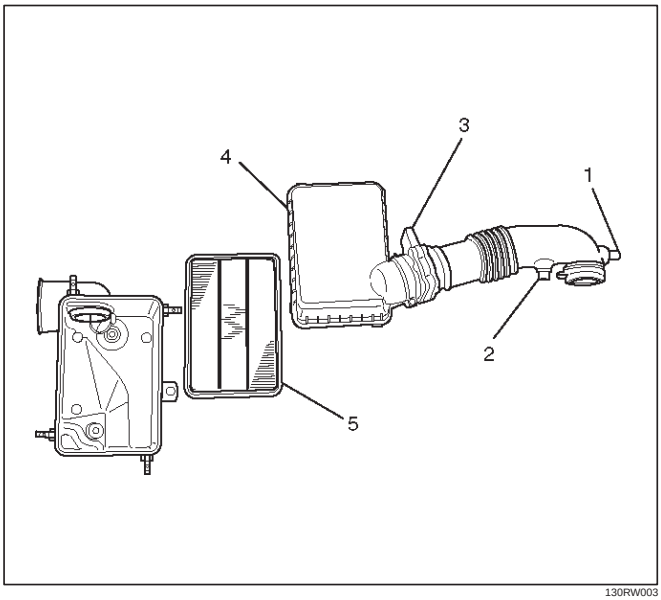

130RW003

Inspection

Check the air cleaner element for damage or dust clogging. Replace if it is damaged, or clean if it is clogged.

Cleaning Method

Tap the air cleaner element gently so as not to damage the paper element, or clean the element by blowing with compressed air of about 490 kPa (71 psi) from the clean side if it is extremely dirty.

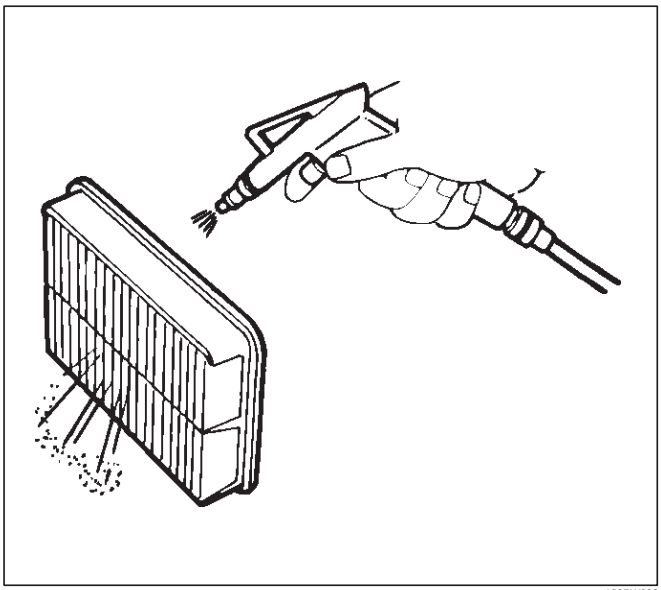

130RW002

Installation

1. Install air cleaner element(5).
2. Attach the air cleaner duct cover (4) to the body completely, then clamp it with the clip.
3. Install mass air flow sensor(3).
4. Install air temperature sensor(2).
5. Connect positive crankcase ventilation hose to connector(1).

For General Export Model

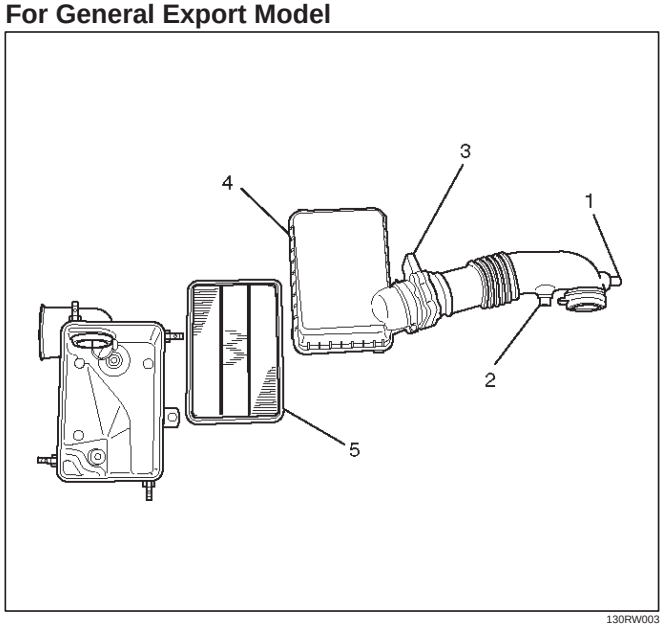

130RW003

For Isuzu General Motors (IGM) Model

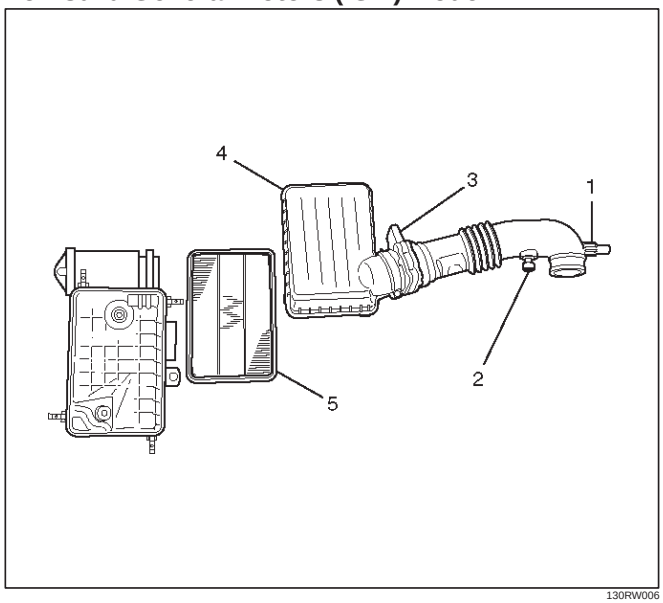

130RW006

SECTION 00

SERVICE INFORMATION

CONTENTS

	PAGE
Troubleshooting	00- 2
Main Data and Specifications	00-20
Service Standard	00-23
Servicing	00-27
Fixing Torque	00-38
Special Tools	00-47

TROUBLESHOOTING

CONTENTS

PAGE

Hard Starting 00- 3
Starter Motor Inoperative 00- 3
Starter Motor Operates but Engine does not turn over 00- 3
Engine turns over but does not start 00- 4
Quick-on Start System (QOS III) 00- 5
Unstable Idling 00- 5
Insufficient Power 00- 7
Excessive Fuel Consumption 00- 9
Excessive Oil Consumption 00- 9
Overheating 00-10
White Exhaust Smoke 00-10
Dark Exhaust Smoke 00-11
Oil Pressure Does Not Rise 00-11
Abnormal Engine Noise 00-12
Engine Knocking 00-12
Gas Leakage noise 00-12
Continuous noise 00-12
Slapping noise 00-13
Engine Cooling Trouble 00-14
Engine Electrical 00-15
Starter does not run 00-15
Faulty Meshing or Pinion and Ring Gear 00-16
Magnetic Switch does not operate though starter switch is turned to “Start (ST)” ... 00-17
Pinion Meshes with ring gear but engine does not run 00-18
Starter does not stop though starter switch is returned to “ON” 00-19

1. HARD STARTING

1. STARTER MOTOR INOPERATIVE		
Checkpoint	**Possible cause**	**Correction**
Battery	Loose battery cable terminal Poor connections due to rusting	Clean and/or retighten the battery cable terminal
	Battery discharged or weak	Recharge or replace the battery
	Fan belt loose or broken	Adjust or replace the fan belt
Fusible link	Fusible link shorted	Replace the fusible link
Starter switch	Defective starter switch or starter relay	Replace the starter switch or the starter relay
Starter motor	Defective magnetic switch or starter relay	Repair or replace the magnetic switch
	Defective starter motor	Repair or replace the starter motor
2. STARTER MOTOR OPERATES BUT ENGINE DOES NOT TURN OVER		
Battery	Loose battery cable terminal Poor connections due to rusting	Clean and/or retighten the battery cable terminal
	Battery discharged or weak	Recharge or replace the battery
	Fan belt loose or broken	Adjust or replace the fan belt
Starter motor	Defective pinion gear	Replace the pinion gear
	Defective magnetic switch	Repair or replace the magnetic switch
	Brush wear, Weak brush spring	Replace the brush and/or the brush spring
Engine	Piston, crank bearing seizuer, or other damage	Repair or replace the related parrts

3. ENGINE TURNS OVER BUT DOES NOT START		
Checkpoint	**Possible cause**	**Correction**
Engine stop mechanism	Defective fuel cut solenoid valve	Replace the fuel cut solenoid valve
FUEL IS NOT BEING DELIVERED TO THE INJECTION PUMP		
Fuel	Fuel tank is empty	Fill the fuel tank
Fuel piping	Clogged or damaged fuel lines. Loose fuel line connection	Repair or replace the fuel lines Retighten the fuel line connection
Fuel filter	Fuel filter overflow valve does not close	Repair or replace the fuel filter overflow valve
	Clogged fuel filter element	Replace the fuel filter element or the filter cartridge
Fuel system	Air in the fuel system	Bleed the air from the fuel system
Fuel feed pump	Defective feed pump	Repair or replace the feed pump
FUEL IS BEING DELIVERED TO THE INJECTION PUMP		
Fuel	Use of the wrong fuel	Use the correct fuel
	Water particles in the fuel	Carge the fuel
Fuel system	Air in the injection pump	Bleed the air from the fuel system
Injection nozzle	Injection nozzle sticking	Replace the injection nozzle
	Injection nozzle injection starting pressure too low Improper spray condition	Adjust or replace the injection nozzle
Injection pump	Defective fuel injection nozzle resulting in the fuel drippage after fuel injection	Replace the delivery valve
	Defective injection pump control rack operation	Repair or replace the injection pump control rack
	Injection pump plunger worn or stuck	Replace the injection pump plunger assembley
	Injection pump drive shaft seizure or other damage	Replace the injection drive shaft
	Injection pump governor spring seizure	Replace the injection pump governor spring

4. QUICK-ON START SYSTEM (QOS III)

PREPARATION
1. Disconnect the thermoswitch connector.
2. Determine whether or not the glow plugs are receiving power.
   a) Make sure that the starter switch is "OFF"
   b) Connect a voltmeter between one of the glow plugs and the cylinder wall.
   c) Move the starter switch to the "ON" position.
      The voltmeter needle will show the souse voltage (12V) if the glow plugs are receiving power.
      If the voltmeter needle does not move, the glow plugs are not receiving power.
3. Perform the troubleshooting procedure.

Glow plug indicator light does not turn on.	1. Defective Fusible link wire 2. Broken indicator light fuse 3. Defective indicator light bulb	Replace the fusible link wire Replace the indicator light fuse Replace the indicator light bulb
Preheating system does not work	1. Defective Fusible link wire shorted 2. Defective glow plug relay connector 3. Defective glow plug connector 4. Defective quick-on start timer connector	Replace the fusible link wire Replace or Repair glow plug relay connector Replace or Repair glow plug connector Replace or Repair quick-on start timer connector
Preheating time to long or to short	1. Defective thermo sensor include defective wiring harness 2. Defective glow plug 3. Defective timer unit	Replace thermo sensor or repair wiring harness. Replace glow plug Replace timer unit

2. UNSTABLE IDLING

Checkpoint	Possible cause	Correction
Idling system	Idling improperly adjusted	Adjust the idling
Fast idling speed control device	Defective fast idling speed control device	Repair or replace the fast idling speed control device
Accelerator control system	Accelerator control system improperly adjusted	Adjust the accelerator control system

Checkpoint	Possible cause	Correction
Fuel system	Fuel system leakage or blockage	Repair or replace the fuel system
	Air in the fuel system	Bleed the air from the fuel system
	Water particles in the fuel system	Change the fuel
Fuel filter	Clogged fuel filter element	Replace the fuel filter element or the fuel filter cartridge
Fuel feed pump	Defective fuel feed pump	Repair or replace the fuel feed pump
Injection nozzle	Injection nozzle sticking	Replace the injection nozzle
	Injection nozzle injection starting pressure too low Improper spray condition	Adjust or replace the injection nozzle
Injection pump	Defective delivery valve resulting in fuel drippage after fuel injection	Replace the delivery valve
	Injection timing improperly adjusted	Adjust the injection timing
	Insufficient injection volume	Adjust the injection volume
	Defective idle spring	Replace the idle spring
	Defective governor lever operation	Repair or replace the governor lever
	Regulator valve improperly adjustment	Adjust or replace the regulator valve
	Broken plunger spring	Replace the plunger spring
	Worn plunger	Replace the plunger assembly
	Worn cam disc	Replace the cam disc
Valve clearance	Valve clearance improperly adjusted	Adjust the valve clearance
Compression pressure	Blown out cylinder head gasket. Worn cylinder liner. Piston ring sticking between the valve and the valve seat	Replace the related parts

3. INSUFFICIENT POWER

Checkpoint	Possible cause	Correction
Air cleaner	Clogged air cleaner element	Clean or replace the air cleaner element
Fuel	Water particle in the fuel	Replace fuel
Fuel filter	Clogged fuel filter element	Replace the fuel filter element or the fuel filter cartridge
Fuel feed pump	Defective fuel feed pump	Repair or replace the fuel feed pump
Injection nozzle	Injection nozzle sticking	Replace the injection nozzle
	Injection nozzle injection starting pressure too low Improper spray condition	Adjust or replace the injectionn nozzle
Fuel injection pipes	Fuel injection pipes damaged or obstructed	Replace the fuel injection pipes
Injection pump	Defective regulating valve	Repair or replace the regulating valve
	Defective delivery valve	Replace the delivery valve
	Defective timer	Repair or replace the timer
	Worn cam disk	Replace the cam disk
	Improper control lever operation	Adjust or replace the control lever
	Defective injection timing	Adjust the injection timing Repair or replace the injection pump timer
	Weak governor spring	Replace the governor spring
	Worn plunger	Replace the plunger saaembly
	Worn cam disk	Replace the cam disk

Checkpoint	Possible cause	Correction
Turbocharger	Booster compensator pipe broken or cracked	Replace the booster compensator pipe
	Exhaust gas leakage from the exhaust system Air leakage from the intake system	Repair or replace the related parts
	Defective waste gate	Repair or replace the waste gare
	Defective turbocharger assembly	Replace the turbocharger assembly
Compression pressure	Blown out cylinder head gasket. Worn cylinder liner. Piston ring sticking between the valve and valve seat	Replace the related parts
Valve clearance	Valve clearance improperly adjusted	Adjust the valve clearance
Valve spring	Valve spring weak or broken	Replace the valve spring
Exhaust system	Exhaust pipe clogged	Clean the exhaust pipe
Full load adjusting screw seal	Open and improperly set adjusting screw seal	Adjust and reseal the adjusting screw

4. EXCESSIVE FUEL CONSUMPTION

Checkpoint	Possible cause	Correction
Fuel system	Fuel leakage	Repair or replace the fuel system related parts
Air cleaner	Clogged air cleaner element	Clean or replace the air cleaner element
Idling speed	Poorly adjusted idling speed	Adjust the idling speed
Injection nozzle	Injection nozzle injection starting pressure too low Improper spray condition	Adjust or replace the injection nozzle
Fuel injection timing	Fuel injection timing improperly	Adjust the fuel injection timing
Injection pump	Defective Delivery valve resulting is fuel drippage after fuel injection	Replace the delivery valve
Turbocharger	Air leakage from the turbocharger intake side	Repair the turbocharger intake side
	Defective turbocharger assembly	Replace the turbocharger assembly
Valve clearance	Valve clearance improperly adjusted	Adjust the valve clearance
Compression pressure	Blown out cylinder head gasket. Worn cylinder liner. Piston ring sticking between the valve and valve seat	Replace the related parts
Valve spring	Valve spring weak or broken	Replace the valve spring

5. EXCESSIVE OIL CONSUMPTION

Checkpoint	Possible cause	Correction
Engine oil	Engine oil unsuitable Too mauch engine oil	Replace the engine oil Correct the engine oil level
Oil seal and gasket	Oil leakage from the oilseal and/or the gasket	Replace the oil seal and/or the gasket
Air breather	Clogged air breather	Clean the air breather
Intake and exhaust valve	Worn valve stems and valve guides	Replace the intake and exhaust valves and the valve springs

6. OVERHEATING

Checkpoint	Possible cause	Correction
Cooling water	Insufficient cooling water	Replace the cooling water
Fan clutch	Oil leakage from the fan clutch	Replace the fan clutch
Fan belt	Fan belt loose or cracked causing slippage	Replace the fan belt
Radiator	Defective radiator cap or clogged radiator core	Replace the radiator cap or clean the radiator core
Water pump	Defective water pump	Repair or replace the water pump
Cylinder head and cylinder body sealing cap	Defective searing cap resulting in water leakage	Replace the sealing cap
Thermostat	Defective thermostat	Replace the thermostat
Cooling system	Cooling system clogged by foreign material	Clean the foreign material from the cooling system
Fuel injection timing	Fuel injection timing improperly adjusted	Adjust the fuel injection timing

7. WHITE EXHAUST SMOKE

Checkpoint	Possible cause	Correction
Fuel	Water particles in the fuel	Replace the fuel
Fuel injection timing	Delayed fuel injection timing	Adjust the fuel injection timing
Compression pressure	Blown out cylinder head gasket. Worn cylinder liner. Piston ring sticking between the valve and valve seat	Replace the related parts
Turbocharger	Defective turbocharger	Replace the turbocharger
Inlet and exhaust valves Valves seals	Defective valve seales. Worn valves stems and valve guides	Replace the valve seales, the valves, and the valve guides

8. DARK EXHAUST SMOKE

Checkpoint	Possible cause	Correction
Air cleaner	Clogged air cleaner element	Clean or replace the air cleaner element
Injection nozzle	Injection nozzle injection starting pressure too low Improper spray condition	Adjust or replace the injection nozzle
Fuel injection timing	Fuel injection timing improperly adjusted	Adjust the fuel injection timing
Injection pump	Defective Delivery valve resulting is fuel drippage after fuel injection	Replace the delivery valve
	Excessive injection volume	Adjust the injection volume

9. OIL PRESSURE DOES NOT RISE

Checkpoint	Possible cause	Correction
Engine oil	Improper viscosity engine oil. Insufficient engine oil	Replace the engine oil Correct the engine oil volume
Oil pressure gauge or unit Oil pressure indicator light	Defective oil pressure gauge or unit Defective indicator light	Repair or replace the oil pressure gauge or unit Replace the indicator light
Oil filter	Clogged oil filter element	Replace the oil filter element or the oil filter cartridge
Relief valve and by-pass valve	Relief valve sticking and/or weak by-pass valve spring	Replace the relief valve and/or the by-pass valve spring
Oil pump	Clogged oil pump strainer	Clean the oil pump strainer
	Worn oil pump related parts	Replace the oil pump related parts
Rocker arm shaft	Worn rocker arm bushing	Replace the rocker arm bushing
Camshaft	Worn camshaft and camshaft bearing	Replace the camshaft and the camshaft bearing
Crankshaft and bearings	Worn crankshaft and bearings	Replace the crankshaft and/or the bearings

10. ABNORMAL ENGINE NOISE

1. ENGINE KNOCKING

Check to see that the engine has been thoroughly warmed up before begining the troubleshooting procedure.

Checkpoint	Possible cause	Correction
Fuel	Fuel unsuitable	Replace the fuel
Fuel injection timing	Fuel injection timing improperly adjusted	Adjust the fuel injection timing
Injection nozzle	Improper injection nozzle starting pressure and spray condition	Adjust or replace the injection nozzle
Compression pressure	Blown out head gasket Broken piston ring	Replace the head gasket or the piston ring
2. GAS LEAKAGE NOISE		
Exhaust pipes	Loosely connected exhaust pipes. Broken exhaust pipes	Tighten the exhaust pipe connections Replace the exhaust pipes
Injection nozzles and/or glow plugs	Loose injection nozzles and/or glow plugs	Replace the washers Tighten the injection nozzles and/or the glow plugs
Exhaust manifold	Loosely connected exhaust manifold and/or glow plugs	Tighten the exhaust manifold connections
Cylinder head gasket	Damaged cylinder head gasket	Replace the cylinder head gasket
3. CONTINUOUS NOISE		
Fan belt	Loose fan belt	Readjust the fan belt tension
Cooling fan	Loose coling fan	Retighten the cooling fan
Water pump bearing	Worn or damaged water pump bearing	Replace the water pump bearing
Alternator or vacuum pump	Defective alternator or vacuum pump	Repair or replace the alternator or the vacuum pump
Valve clearance	Clearance improperly adjust	Adjust the valve clearance

4. SLAPPING NOISE

Checkpoint	Possible cause	Correction
Valve clearance	Valve clearance improperly adjusted	Adjust the valve clearance
Rocker arm	Damaged rocker arm	Replace the rocker arm
Flywheel	Loose flywheel bolts	Retighten the flywheel bolts
Crankshaft and thrust bearings	Worn or damaged crankshaft and/or thrust bearings	Replace the crankshaft and/or the thrust bearings
Crankshaft and connecting rod bearings	Worn or damaged crankshaft and/or connecting rod bearings	Replace the crankshaft and/or the connecting rod bearings
Connecting rod bushing and piston pin	Worn or damaged connecting rod bushing and piston pin	Replace the connecting rod bushing and/or the piston pin
Piston and cylinder liner	Worn or damaged piston and cylinder liner. Foreign material in the cylinder.	Replace the piston and the cylinder liner.

ENGINE COOLING TROUBLE

Condition	Possible cause	Correction
Engine overheating	Low coolant level	Replenish
	Thermo unit faulty	Replace
	Faulty thermostat	Replace
	Faulty coolant unit	Repair or replace
	Clogged radiator	Clean or replace
	Faulty radiator cap	Replace
	Low engine oil level or use of improper engine oil	Replenish or change oil Replenish
	Damaged cylinder head gasket	Replace
	Clogged exhaust system	Clean exhaust system or replace faulty parts
	Loose fan belt	Adjust
	Excessive fuel injected	Adjust
	Improper injection timing	Adjust
	Injection timing improper	Adjust
Engine overcooling	Faulty thermostat	Replace
Too long engine warm-up time	Faulty thermostat	Replace
	Thermo unit faulty	Replace

ENGINE ELECTRICAL

Check if the battery is normal, then perform the following diagnosis.

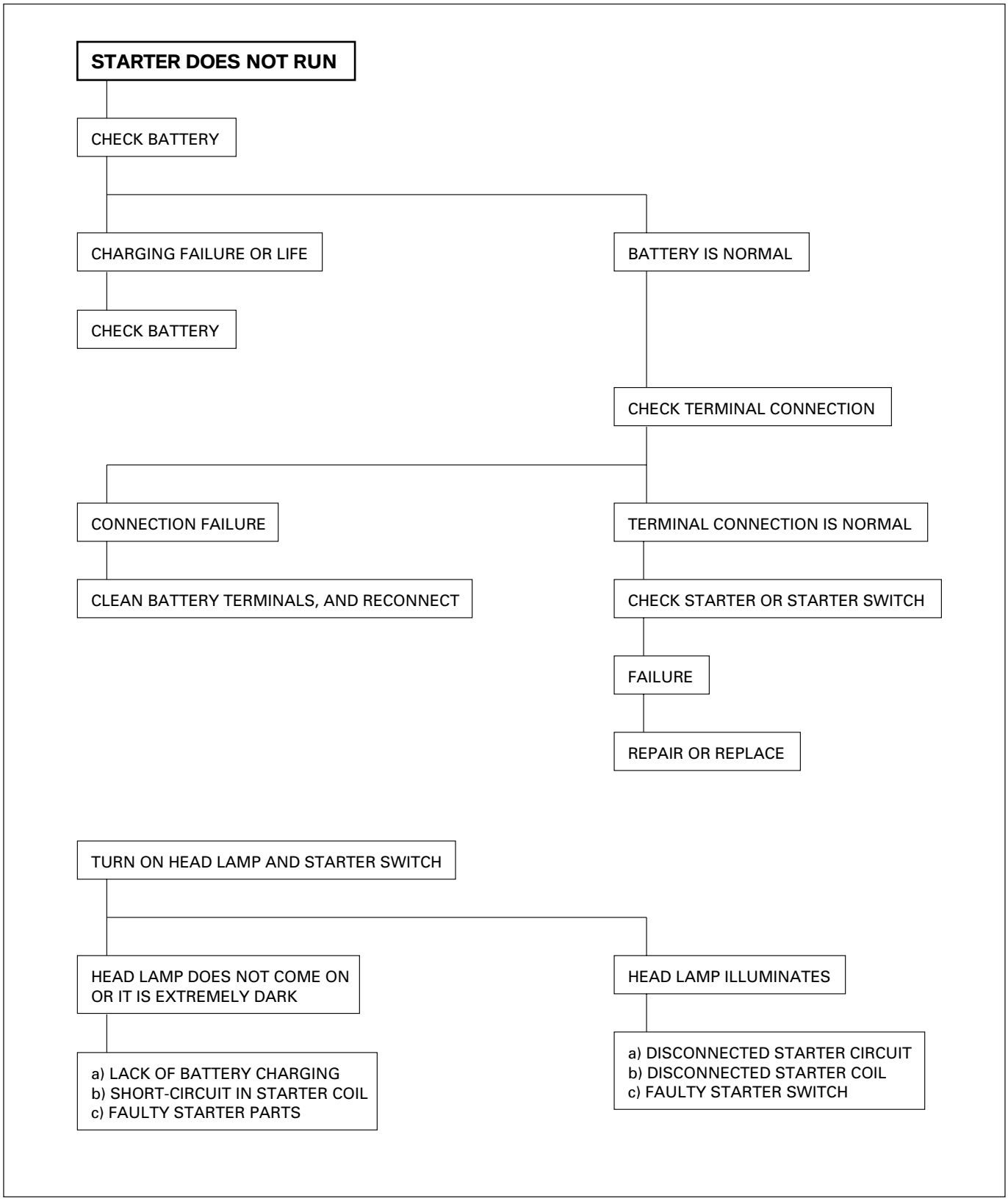

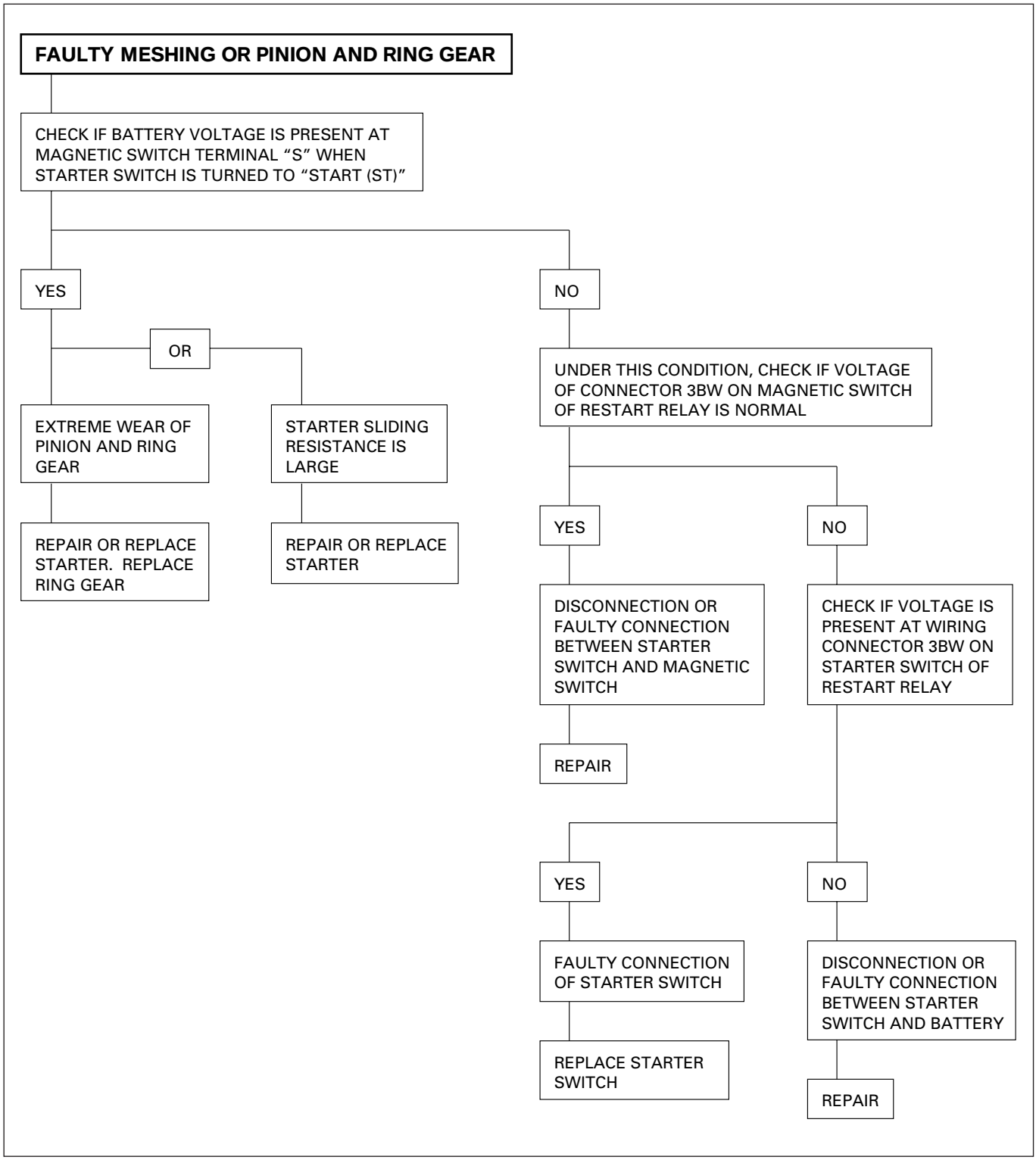
FAULTY MESHING OR PINION AND RING GEAR
CHECK IF BATTERY VOLTAGE IS PRESENT AT MAGNETIC SWITCH TERMINAL "S" WHEN STARTER SWITCH IS TURNED TO "START (ST)"
YES
NO
OR
EXTREME WEAR OF PINION AND RING GEAR
STARTER SLIDING RESISTANCE IS LARGE
REPAIR OR REPLACE STARTER. REPLACE RING GEAR
REPAIR OR REPLACE STARTER
UNDER THIS CONDITION, CHECK IF VOLTAGE OF CONNECTOR 3BW ON MAGNETIC SWITCH OF RESTART RELAY IS NORMAL
YES
NO
DISCONNECTION OR FAULTY CONNECTION BETWEEN STARTER SWITCH AND MAGNETIC SWITCH
CHECK IF VOLTAGE IS PRESENT AT WIRING CONNECTOR 3BW ON STARTER SWITCH OF RESTART RELAY
REPAIR
YES
NO
FAULTY CONNECTION OF STARTER SWITCH
DISCONNECTION OR FAULTY CONNECTION BETWEEN STARTER SWITCH AND BATTERY
REPLACE STARTER SWITCH
REPAIR

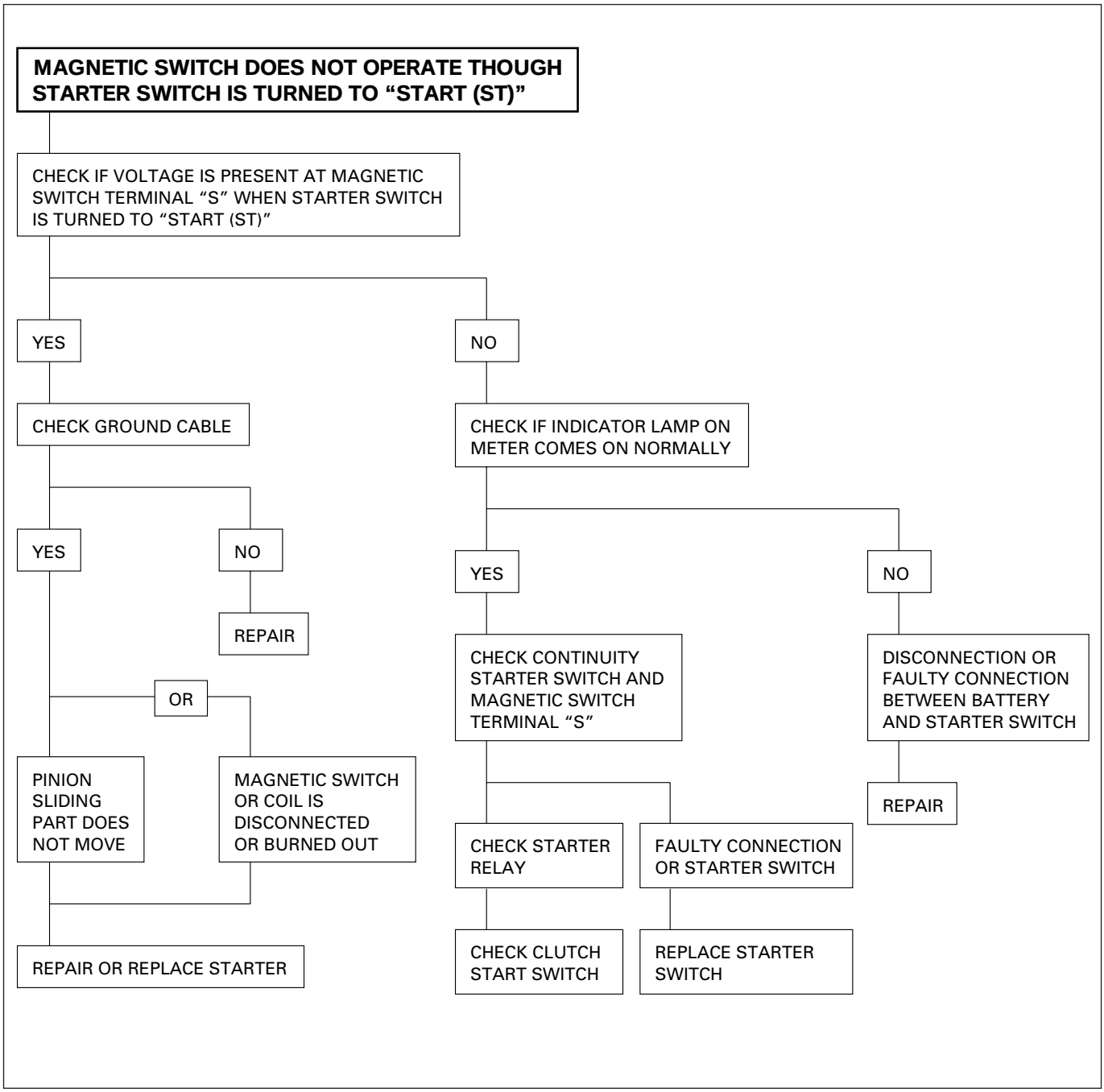
MAGNETIC SWITCH DOES NOT OPERATE THOUGH STARTER SWITCH IS TURNED TO “START (ST)”
CHECK IF VOLTAGE IS PRESENT AT MAGNETIC SWITCH TERMINAL “S” WHEN STARTER SWITCH IS TURNED TO “START (ST)”
YES
NO
CHECK GROUND CABLE
CHECK IF INDICATOR LAMP ON METER COMES ON NORMALLY
YES
NO
REPAIR
OR
PINION SLIDING PART DOES NOT MOVE
MAGNETIC SWITCH OR COIL IS DISCONNECTED OR BURNED OUT
REPAIR OR REPLACE STARTER
YES
NO
CHECK CONTINUITY STARTER SWITCH AND MAGNETIC SWITCH TERMINAL “S”
DISCONNECTION OR FAULTY CONNECTION BETWEEN BATTERY AND STARTER SWITCH
REPAIR
CHECK STARTER RELAY
FAULTY CONNECTION OR STARTER SWITCH
CHECK CLUTCH START SWITCH
REPLACE STARTER SWITCH

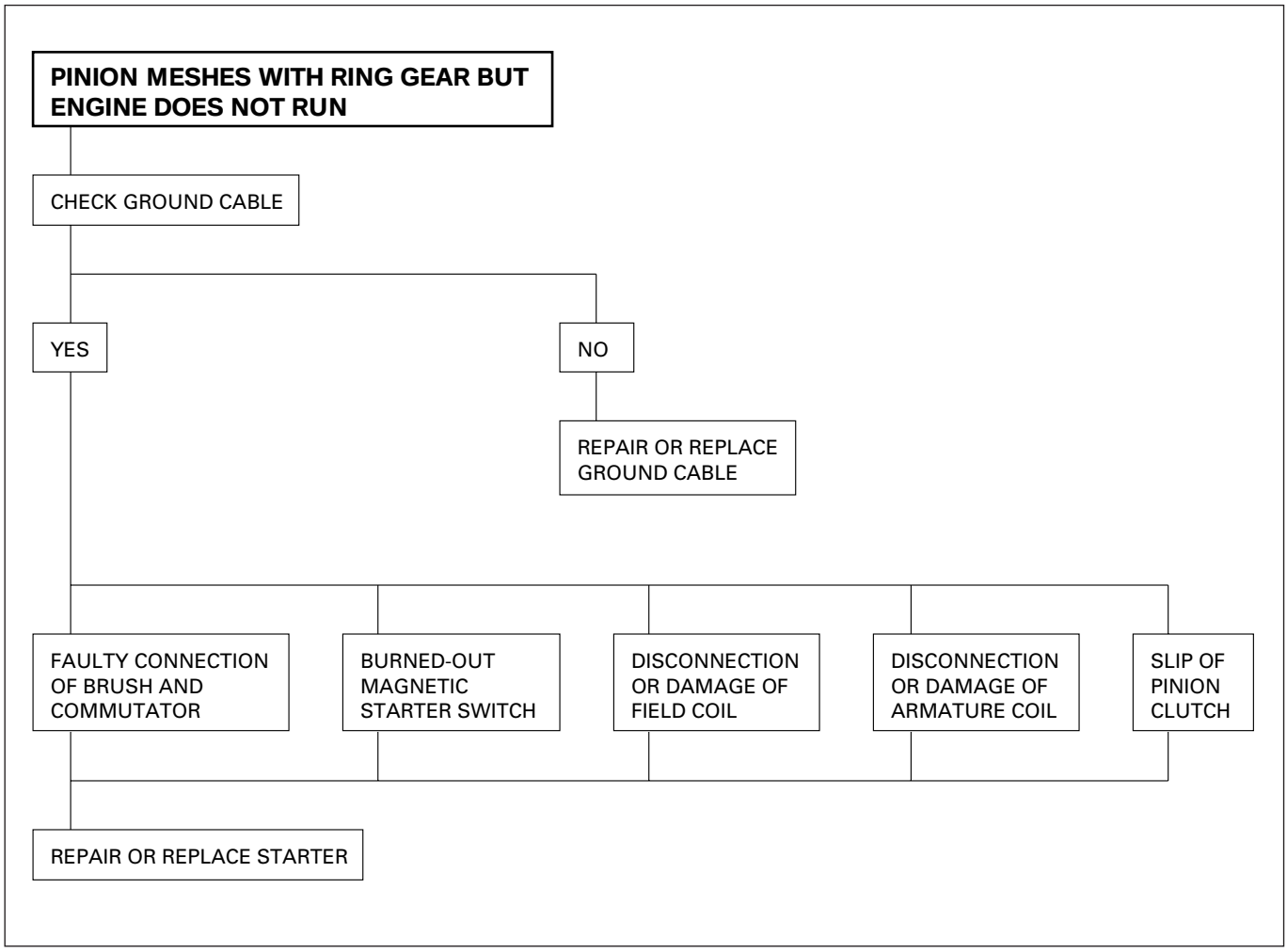
PINION MESHES WITH RING GEAR BUT ENGINE DOES NOT RUN
CHECK GROUND CABLE
YES
NO
REPAIR OR REPLACE GROUND CABLE
FAULTY CONNECTION OF BRUSH AND COMMUTATOR
BURNED-OUT MAGNETIC STARTER SWITCH
DISCONNECTION OR DAMAGE OF FIELD COIL
DISCONNECTION OR DAMAGE OF ARMATURE COIL
SLIP OF PINION CLUTCH
REPAIR OR REPLACE STARTER

STARTER DOES NOT STOP THOUGH STARTER SWITCH IS RETURNED TO “ON”

DISCONNECTED STARTER SWITCH WIRING CONNECTOR, AND CHECK STARTER SWITCH OPERATION.

KEY POSITION	BATTERY B1	IGNITION IG1	BATTERY B2	ACCESSORIES ACC	IGNITION IG2	STARTER ST
LOCK						
OFF						
ACC			●	●		
ON	●	●	●	●	●	
START	●	●	●		●	●

THERE MUST BE NO CONTINUITY EXCEPT ABOVE LINES

YES

MAGNETIC SWITCH CONTACTS ARE FUSED AND NOT MOVED, OR A RETURN SPRING IS BROKEN OR DETERIORATED

REPLACE MAGNETIC SWITCH

NO

REPLACE STARTER SWITCH

MAIN DATA AND SPECIFICATIONS

GENERAL SPECIFICATIONS

Engine type		Diesel, four cycle water cooled inline
Camshaft type		Overhead valve
Cylinder line-type		Dry type
Number of cylinders		4
Bore x stroke	(mm)	95.4 x 107
Total piston displacement	(cc)	3,059
Compression ratio	(to 1)	20.0
Engine weight (dry)	N (kg/lb)	2353 (240/529)(4JG2-NA)
		2597 (265/584)(4JG2-T)
Engine idling speed (Reference)	RPM	750 (4JG2-NA)
		720 (4JG2-T)
Compression pressure	kpa (kg/cm^2/psi)-rpm	2940 (30/426)-200
Firing order		1–3–4–2
Injection timing		1°A.T.D.C (4JG2-NA)
		T.D.C. (4JG2-T)
VALVE SYSTEM		
Intake valves	open at:	B.T.D.C. 24°
	close at:	A.B.D.C. 55°
Exhaust valve	open at:	B.B.D.C. 54°
	close at:	A.T.D.C. 26°
Valve clearance at	cold mm (in)	
	intake:	0.40 (0.016)
	exhaust:	0.40 (0.016)
Oil filter		Full flow and bypass combined type
Oil capacity (Original factory fill or rebuilt engine)		7.1 liters (6.3 US quarts)
Oil capacity (Service change)		
with filter change		6.0 liters (6.3 US quarts)
without filter change		5.0 liters (5.3 US quarts)
Oil cooler		Water cooled type
Inter cooler		Air cooled type
Turbocharger		
Control method		Wastegate control
Lubrication method		Pressurized control
Cooling method		Coolant cooled

Engine Cooling

Cooling system	Coolant forced circulation
Radiator	(2 tube in row) Tube type corrugated
Heat radiation capacity J/h (kcal/h)	318 x 10^6 (76000)
Heat radiation area m^2 (ft^2)	15.63 (1.454)
Front area m^2 (ft^2)	0.309 (2.029)
Dry weight N(Kg/lb)	83 (8.5/18.7)
Radiator cap	
Valve opening pressure kPa(Kg/cm^2 psi)	88.2~117.6 (0.899~1.199/12.78~17.05)
Coolant capacity lit (Imp.qt./US qt.)	2.8 (2.46/2.96)
Coolant pump	Centrifugal impeller type
Pulley ratio	1.2
Coolant total capacity lit (Imp.qt./US qt.)	8.6 (7.57/9.09)

Starting System

Model	HITACHI S14-03	DENSO ADR4G1
Rating		
Voltage V	12	
Output kw	2.8	2.2
Time sec	30	
Number of tooth of pinion	9	
Rotating direction (as viewed from pinion)	Clockwise	
Weight (approx.) N (kg/lb)	59 (6.0/13.2)	
No-load characteristics		
Voltage/current V/A	11/160 or less	11.5/120 or less
Speed rpm	3900 or more	4000 or more
Load characteristics		
Voltage/current V/A	10.85/300	7.5/500
Torque N•m (kg•m/lb•ft)	7.4 (0.75/5.4) or more	13 (1.3/9) or less
Speed rpm	2000 or more	1400 or more
Locking characteristics		
Voltage/current V/A	3/1300 or less	2/850 or less
Torque N•m (kg•m/lb•ft)	26 (2.7/20) or more	16 (1.6/12) or more

Charging System

Model (HITACHI)		LR150 – 446	LR180 – 501B
Rated voltage	V	12	12
Rated output	A	50	80
Rotating direction (As viewed from pulled)		Clockwise	Clockwise
Pulley effective diameter	mm(in)	80 (3.15)	80 (3.15)
Weight (with pump)	N(Kg/lb)	65(6.6 /14.6)	76(7.8 /17.2)

SERVICE STANDARD

Engine Mechanical

mm (in)

Parts	Items	Service standard	Service limit	Remarks
Cylinder Head	Cylinder head deck, and exhaust manifold mating surface for flatness	0.05 (0.0020) or less	0.2 (0.0079)	
	Cylinder head height	92.0 (3.6220)	—	Cannot be reground
	Hot plug depression	—	0.02 (0.0008)	
	Hot plug installation pressure	44000-54000N (4500–5500 kg/9923–12128 lbs)	—	
Valve Spring	Free height	48.0 (1.8898)	47.10 (1.8543)	
	Squareness	—	1.7 (0.0669)	
	Spring tension N (lb)	294 (30/66.1)	257.9 (26.3/57.9)	At installed height 38.9 (1.5)
Valve and Valve Guide	Diameter of Valve stem IN	7.946–7.961 (0.3128–0.3134)	7.880 (0.3102)	
	EX	7.921–7.936 (0.3118–0.3124)	7.850 (0.3091)	
	Valve and valve guide clearance IN	0.039–0.071 (0.0015–0.0028)	0.200 (0.0079)	
	EX	0.064–0.096 (0.0025–0.0038)	0.250 (0.0098)	
	Valve guide upper end height (Measured from the Cylinder head upper face)	13.0 (0.5118)	—	
	Valve guide margin	1.1 (0.0433)	1.6 (0.0630)	
	Valve thickness IN	1.34 (0.0528)	1.1 (0.0433)	
	EX	1.38 (0.0543)	1.1 (0.0433)	
	Valve seat contact surface angle	45°	—	
	Valve seat contact width IN	1.7 (0.0669)	2.2 (0.0866)	
	EX	2.0 (0.0787)	2.5 (0.0984)	
Push rod	Curvature	—	0.3 (0.0118)	

mm (in)

Parts	Items	Service standard	Service limit	Remarks
Camshaft	End play	0.08 (0.0031)	0.2 (0.0079)	
	Cam height	42.02 (1.6543)	41.65 (1.6398)	
	Journal diameter	49.945-49.975 (1.9663-1.9675)	49.60 (1.9528)	
	Run-out	0.02 (0.0008) or less	0.10 (0.0039)	
	Camshaft bearing inside diameter	50.000–50.030 (1.9685–1.9697)	50.08 (1.9716)	
	Camshaft bearing clearance	0.025-0.085 (0.0010-0.0033)	0.12 (0.0047)	
Tappet	Outside diameter	12.97-12.99 (0.5106-0.5114)	12.95 (0.5098)	
	Clearance between tappet and cylinder body	0.03 (0.0012)	0.10 (0.0039)	
Rocker arm Assembly	Rocker arm shaft outside diameter	18.98-19.00 (0.7472-0.7480)	18.90 (0.7441)	
	Rocker arm inside diameter	19.01-19.03 (0.7484-0.7492)	19.10 (0.7520)	
	Clearance between rocker arm and rocker arm shaft	0.01-0.05 (0.00039-0.00197)	0.20 (0.00787)	
	Rocker arm shaft runout	—	0.30 (0.0118)	
Oil pump	Oil clearance			
	Body and gear	0.14 (0.0055)	0.20 (0.0079)	
	Body cover and gear	0.06 (0.0024)	0.15 (0.0059)	
Crankshaft	Thrust clearance	0.10 (0.0039)	0.30 (0.0118)	
	Main bearing clearance (Between main bearing and Crankshaft)	0.031-0.063 (0.0012-0.0025)	0.11 (0.0043)	Cannot be reground
	Crankshaft runout	0.05 (0.0020) or less	0.08 (0.0031)	
	Main journal diameter	69.917-69.932 (2.7526-2.7532)	69.91 (2.7524)	Uneven wear limit 0.05 (0.002)
	Crank pin diameter	52.915-52.930 (2.0833-2.0839)	52.90 (2.0827)	Uneven wear limit 0.08 (0.0031)

mm (in)

Parts	Items	Service standard	Service limit	Remarks
Piston, Piston pin, Piston ring and Connecting rod	Piston diameter	95.365-95.404 (3.7545-3.7561)	—	
	Piston Clearance (Between piston and Cylinder liner)	0.047-0.065 (0.0019-0.0026)	—	
	Piston ring gap 1st/2nd	0.20-0.35 (0.0079-0.0138)	1.5 (0.0591)	
	Oil	0.10-0.30 (0.0039-0.0118)	1.5 (0.0591)	
	Piston ring clearance 1st/2nd	0.05-0.09 (0.0020-0.0035)	0.15 (0.0059)	
	Oil	0.03-0.07 (0.0012-0.0028)	0.15 (0.0059)	
	Piston pin outside diameter	33.995-34.000 (1.3384-1.3386)	33.970 (1.3374)	
	Clearance between connecting rod and piston pin	0.008-0.020 (0.0003-0.0008)	0.05 (0.0020)	
	Clearance between piston and piston pin	0.002-0.015 (0.00008-0.0006)	0.04 (0.0016)	
	Connecting rod alignment Bend	0.08(0.0031) or less	0.20 (0.0079)	Per 100 (3.937)
	Twist	0.05(0.0020) or less	0.15 (0.0059)	Per 100 (3.937)
	Connecting rod thrust clearance	0.230 (0.0091)	0.35 (0.0138)	
	Clearance between crank pin and connecting rod	0.029-0.083 (0.0011-0.0033)	0.100 (0.0039)	
Cylinder Block	Warpage (Upper surface of the cylinder block)	—	0.20 (0.0079)	
	Cylinder bore diameter	97.001-97.040 (3.8189-3.8205)		

mm (in)

Parts	Items	Service standard	Service limit	Remarks
Cylinder Block (cont' d)	Cylinder liner projection Cylinder liner outside diameter	0.0-0.1 (0.00-0.0039) 97.011-97.050 (3.8193-3.8209)		

Engine Cooling

mm (in)

Parts	Items	Service standard	Service limit	Remarks
Thermostat	Valve opening temperature Valve full open temperature and lift	82°C (180°F) More than 10 (0.39) at 95°C (203°F)		
Radiator cap	Valve opening pressure	88.2 ~ 117.6kpa (0.899 ~ 1.199kg/cm^2/ 12.8 ~ 17.0psi)		
Drive belt	Tension (Slackness) AC generator & fan pulley drive belt A/C Compressor drive belt P/S pump drive belt	New belt 8-12 (0.31-0.47) Used belt 8-12 (0.31-0.47) New belt 7-10 (0.28-0.39) Used belt 5-8 (0.2-0.31) New belt 13-16 (0.51-0.63) Used belt 13-16 (0.51-0.63)		

SERVICING

Servicing refers to general maintenance procedures to be performed by qualified service personnel.

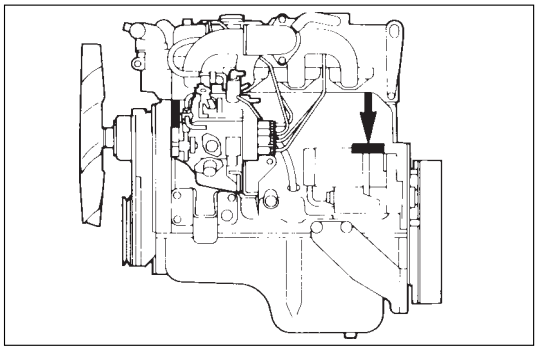

MODEL IDENTIFICATION

Engine Serial Number

The engine number is stamped on the front left hand side of the cylinder body.

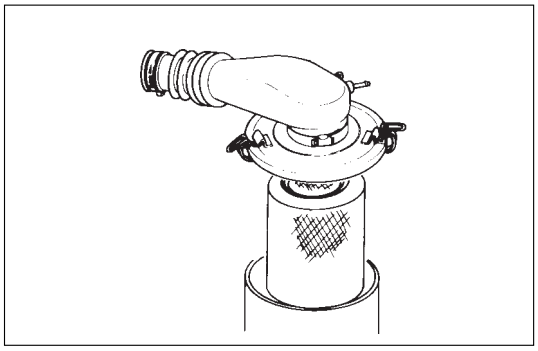

AIR CLEANER

Oil Wetted (Viscous) Type Paper Element (Australia only)

The air cleaner has an oil wetted paper element. No servicing is required until the replacement interval is reached. Never attempt to clean the element, no matter how dirty it may appear. The element is designed to provide normal filtering efficiency until it becomes due for replacement. Refer to the Item "Service and Maintenance" in the Owner's and Driver's Manual for general service information.

Dry Type Paper Element

Element cleaning procedures will vary according to the condition of the element.

Dust Fouled Elemant

Rotate the element with your hand while applying compressed air to the inside of the element. This will blow the dust free.

Compressed air pressure	Kpa (Kg/cm^2 / Psi)
392 - 490 (4-5/57-71)	

CAUTION

Do not bang the element against another object in an attempt to clean it. Damage to the element will result.

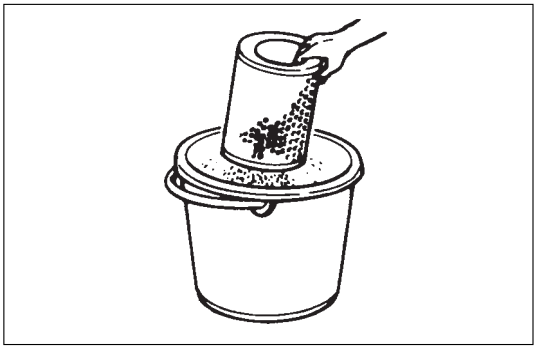

Carbon and Dust Fouled Element

1. Prepare a cleaning solution of Isuzu Genuine Element Cleaner (Donaldson D1400) diluted with water.
2. Submerge the element in the solution for twenty minutes.

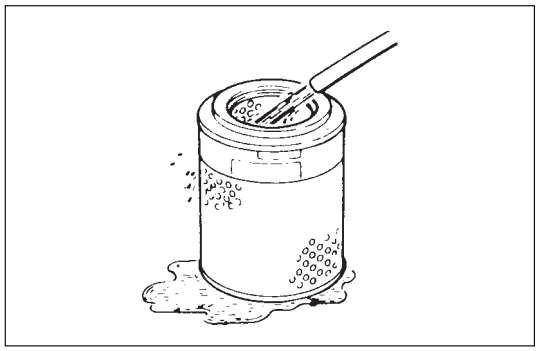

3. Remove the element from the solution and rinse it well with running water.
   Water pressure must not exceed 274 Kpa (2.8 kg/cm²/40 Psi)

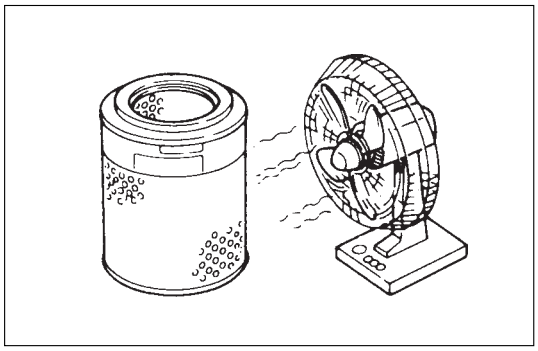

4. Dry the element in a well ventilated area.
   An electric fan will hasten drying.

NOTE:

Do not use compressed air or an open flame to dry the element quickly. Damage to the element will result.
It will usually take two or three days for the element to dry completely. Therefore, it is a good idea to have a spare on hand to use in the interim.

LUBRICATING SYSTEM

Main Oil Filter (Cartridge Type Paper Element)

Replacement Procedure

1. Loosen the drain plug to drain the engine oil.
2. Wait a few minutes and then retighten the drain plug.
3. Loosen the used oil filter by turning it counterclockwise with the filter wrench.
4. Clean the oil cooler fitting face.
   This will allow the new oil filter to seat properly.
5. Apply a light coat of engine oil to the O-ring.
6. Turn in the new oil filter until the filter O-ring is fitted against the sealing face.
7. Use the filter wrench to turn in the filter an additional 1 and 1/4 turns.
   Filter Wrench: 5-8840-0200-0

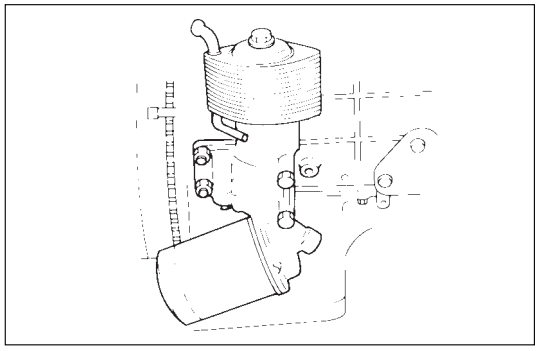

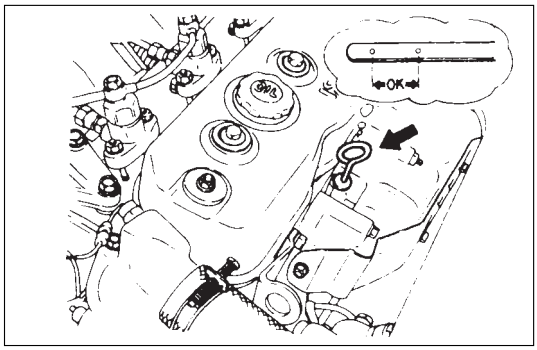

8. Check the engine oil level and replenish to the specified level if required.

Replenishment Engine Oil	lit(Imp qt / US qt)
0.7 (0.62/0.74)	

9. Start the engine and check for oil leakage from the main oil filter.

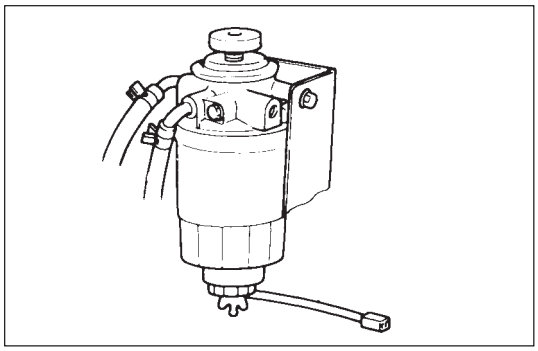

FUEL SYSTEM

Fuel Filter

Replacement Procedure

1. Loosen the used fuel filter by turning it counterclockwise with the filter wrench.
   Filter Wrench: 5-8840-0253-0 (J-22700)
2. Remove the level sensor from the filter by turning it counterclockwise with a wrench.

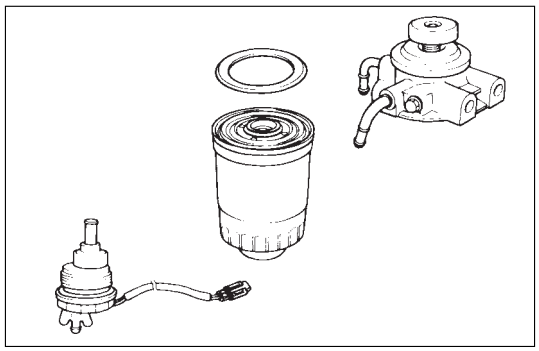

3. Install the level sensor to the new fuel filter with a wrench.

Level Sensor Torque	N·m (Kg·m/lb·ft)
	13 (1.3/9)

4. Clean the filter cover fitting faces.
   This will allow the new fuel filter to seat properly.

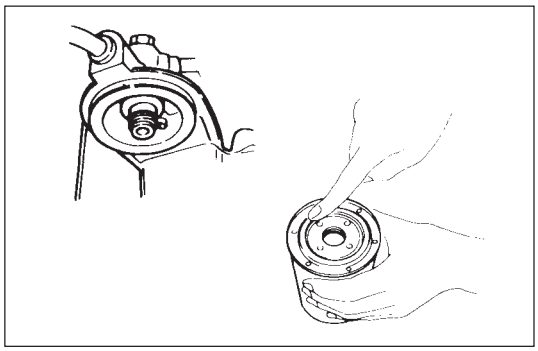

5. Apply a light coat of engine oil to the O-ring.
6. Turn in the fuel filter until the sealing face comes in contact with the O-ring.
7. Turn in the fuel filter an additional 2/3 of a turn with a filter wrench.
   Filter Wrench: 5-8840-0253-0 (J-22700)

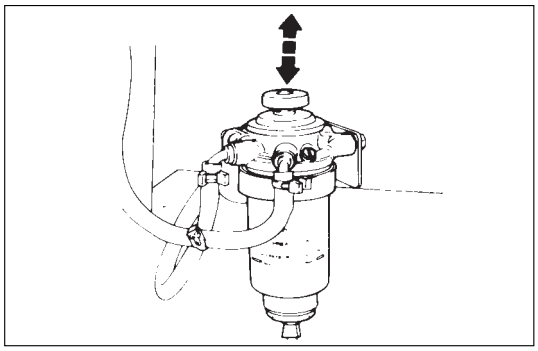

8. Loosen the bleeder plug on the injection pump overflow valve.
9. Operate the priming pump until fuel begins to flow from the fuel filter.
10. Retighten the bleeder plug.
11. Operate the priming pump several times and check for fuel leakage.

NOTE:

The use of an ISUZU genuine fuel filter is strongly recommended.

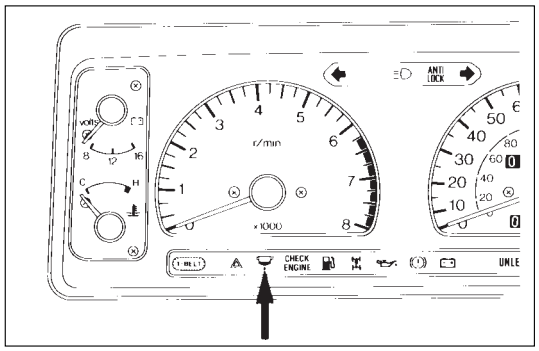

Fuel Filter Water Draining Procedure

The indicator light will come on when the water level in the water separator exceeds the specified level.
Drain the water and foreign material from the water separator with the following procedure.

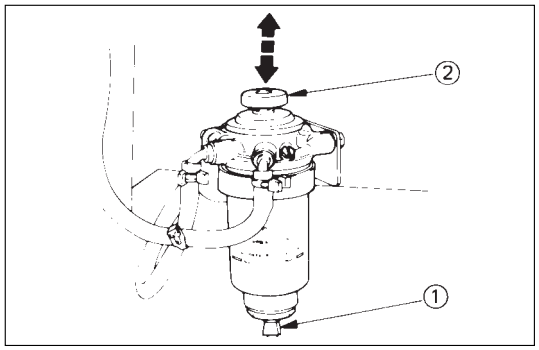

1. Find a safe place to park the vehicle.
2. Open the engine hood and place a container (Approximately 0.2 liter capacity) at the end of the vinyl hose beneath the drain plug on the separator.
3. Loosen the drain plug by turning it counterclockwise (Approximately 5 turns) and operate the priming pump up and down about 10 times until water is drained approximately 0.1 liter.
4. After draining, securely tighten the drain plug by turning it clockwise and operate the priming pump manually up and down several times.
5. After starting the engine, check to see that there is no fuel leak from the drain plug.
   Also check to see that the fuel filter water indicator light has turned off.
   If water separator requires frequent draining, have the fuel tank drained for removal of water at your Isuzu Dealer.

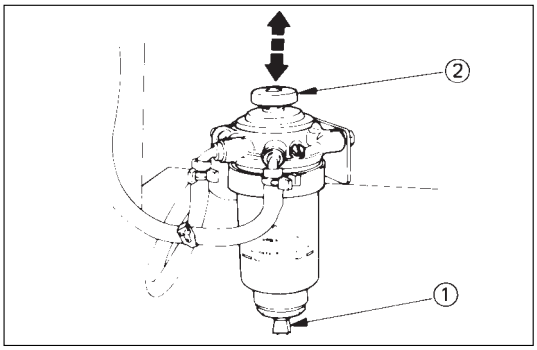

Air Bleeding

1. Loosen the bleeder screw on the injection pump overflow valve.
2. Operate the priming pump until fuel mixed with foam flows from the bleeder screw.
3. Tighten the bleeder screw.
4. Operate the priming pump several times and check for fuel leakage.

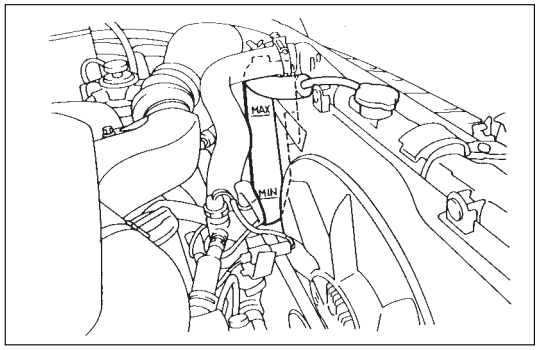

COOLING SYSTEM

Coolant Level

Check the coolant level and replenish the radiator reserve tank as necessary.
If the coolant level falls below the “MIN” line, carefully check the cooling system for leakage. Then add enough coolant to bring the level up to the “MAX” line.

NOTE:

Do not overfill the reserve tank.

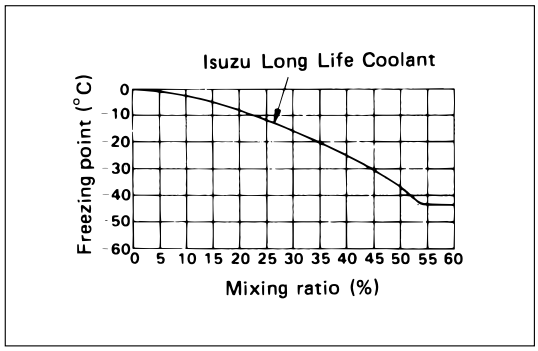

Remove the radiator filler cap only when absolutely necessary.
Always check the coolant level when the engine is cold.
Always refer to the chart at the left to determine the correct cooling water to antifreeze solution mixing ratio.

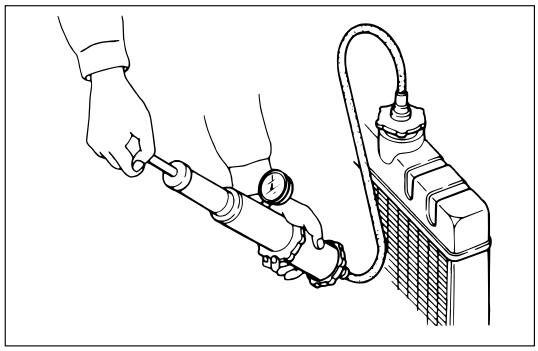

Cooling System Inspection

Install a radiator filler cap tester to the radiator. Apply testing pressure to the cooling system to check for leakage. The testing pressure must not exceed the specified pressure.

Testing Pressure	Kpa (Kg/cm^2 / Psi)
196 (2/28.45)	

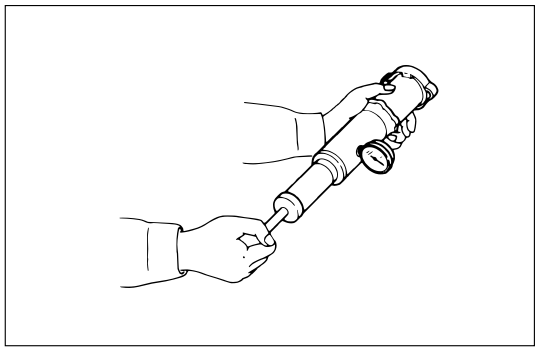

Radiator Cap Inspection

The radiator filler cap is designed to maintain coolant pressure in the cooling system at 1.05 kg/cm^2 (15 psi/103 kPa).
Check the radiator filler cap with a radiator filler cap tester.
The radiator filler cap must be replaced if it fails to hold the specified pressure during the test procedure.
Radiator Filler Cap Pressure

Pressure Valve	Kpa (Kg/cm^2 / Psi)
93.3 – 122.7 (0.95 – 1.25/13.5 –17.8)	

Negative Valve (Reference)	Kpa (Kg/cm^2 / Psi)
1.0 – 3.9 (0.01 – 0.04/0.14 – 0.57)	

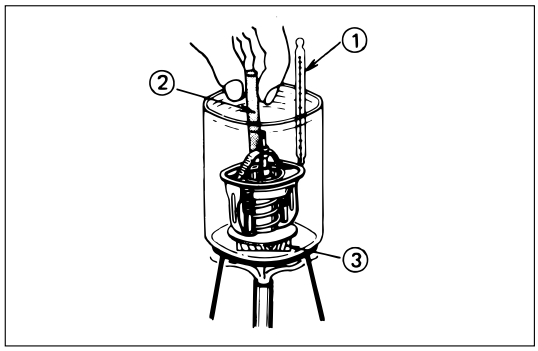

Thermostat Operating Test

1. Completely submerge the thermostat in water.
2. Heat the water.
   Stir the water constantly to avoid direct heat being applied to the thermostat.
3. Check the thermostat initial opening temperature.

Thermostat Initial Opening Temperature	°C(°F)
82 (180)	

4. Check the thermostat full opening temperature.

Thermostat Full Opening Temperature	°C(°F)
90 (194)	
Valve Lift at Fully Open Position	**mm(in)**
10 (0.39)	

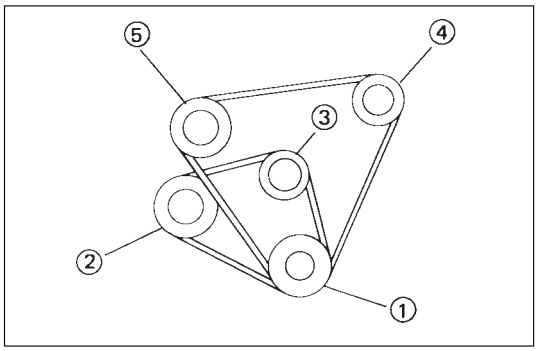

Drive Belt Adjustment

Check the drive belt tension.
Depress the drive belt mid-portion with a 98N (10kg/22 lb) force.

Drive Belt Deflection	mm(in)
10 (0.39)	

Check the drive belt for cracking and other damage.
① Crankshaft damper pulley.
② Alternator pulley
③ Cooling fan pulley
④ Oil pump pulley or idler pulley
⑤ Compressor pulley or idler pulley

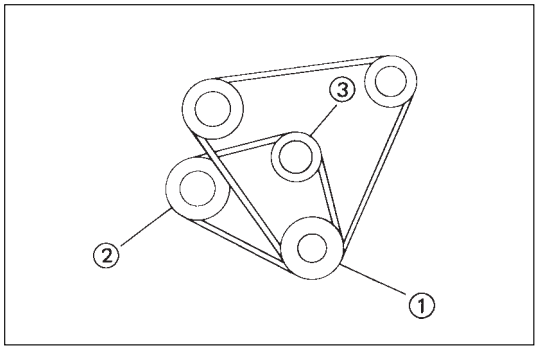

Cooling Fan Pulley Drive Belt

Fan belt tension is adjusted by moving the alternator.
Depress the drive belt mid-portion with a 98N (10Kg/22lb) force.
① Crankshaft damper pulley
② Alternator pulley
③ Cooling fan pulley

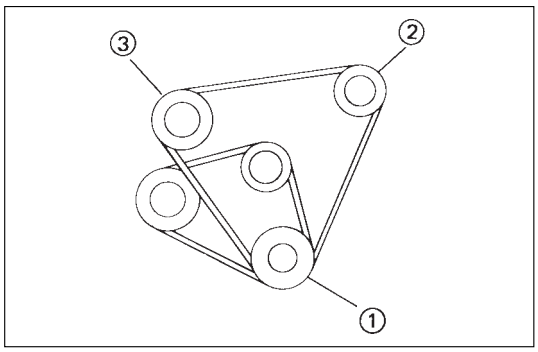

Compressor Pulley Drive Belt

Move the idler pulley as required to adjust the compressor drive belt tension.
If the vehicle is equipped with power steering, move the oil pump as required.
Depress the drive belt mid-portion with a 98N (10Kg/22lb) force.
① Crankshaft damper pulley
② Oil pump pulley or idler pulley
③ Compressor pulley

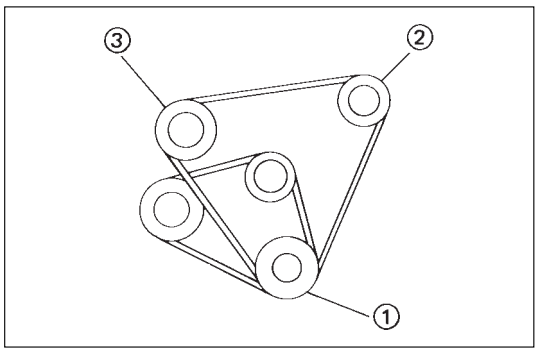

Power Steering Oil Pump Pulley Drive Belt

Move the oil pump as required to adjust the oil pump drive belt tension.
On air conditioner equipped models, both drive belts pulley must always be replaced as a set.
Depress the drive mid-portion with a 98N (10kg/22 lb) force.
① Crankshaft damper pulley
② Oil pump pulley
③ Compressor pulley or idler pulley

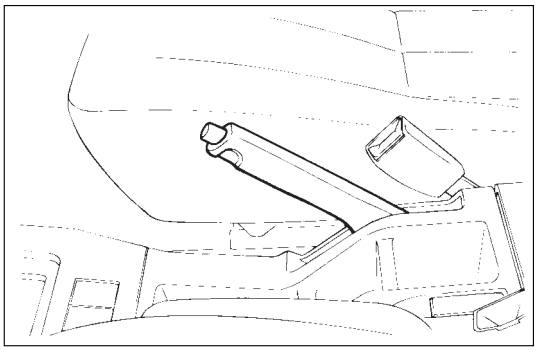

ENGINE CONTROL

Idling Speed Adjustment

1. Set the vehicle parking brake and choke the drive wheels.
2. Place the transmission in neutral.
3. Start the engine and allow it to warm up.
4. Disconnect the engine control cable from the control lever.
5. Set a tachometer to the engine.
6. Check the engine idling speed.
   If the engine idling speed is outside the specified range, it must be adjusted.

Engine Idling Speed	rpm
750 (4JG2-NA)/720 (4JG2-T)	

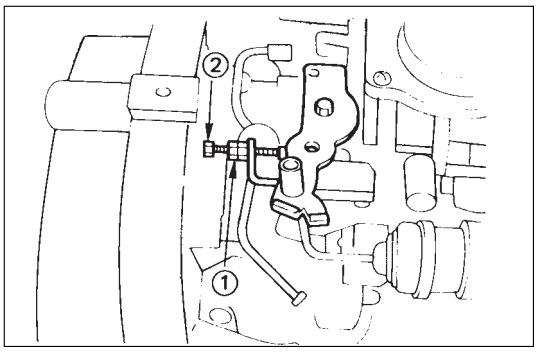

Idling Speed Adjustment

1. Loosen the idling set screw lock nut ① on the injection pump idling set bolt.
2. Adjust the idling speed to the specified range by turning the idling set bolt ②.
3. Lock the idling set bolt with the idling set screw lock nut.
4. Check that the idling control cable is tight (free of slack). If required, remove the slack from the cable.

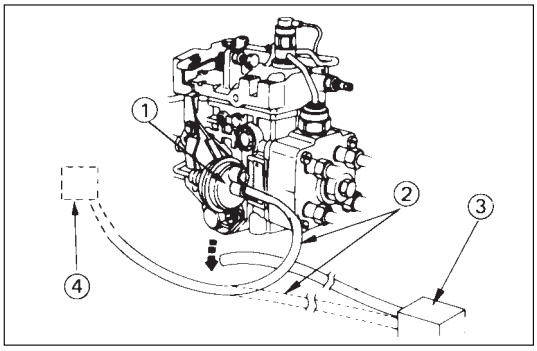

Fast Idling Speed Inspection

1. Set tachometer to the engine.
2. Disconnect the vacuum hose from the fast idle actuator ① on the injection pump.
3. Disconnect the other vacuum hose ② from the vacuum switching valve ③ and connect it to the fast idle actuator ① .
   The vacuum line will now be connected directly from the vacuum pump ④ to the fast idle actuator.
4. Check the engine fast idling speed.
   If the engine idling speed is outside the specified range, it must be adjusted.

Fast Idling Speed	rpm
850 – 950	

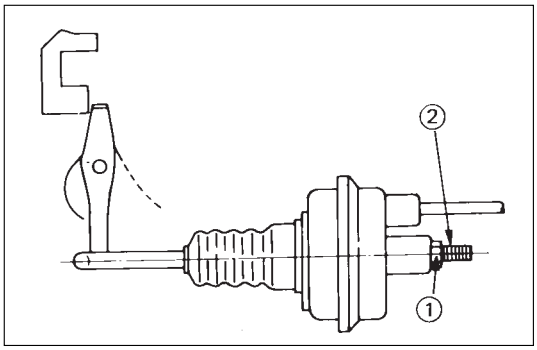

Fast Idling Speed Adjustment

1. Loosen the fast idle actuator lock nut ① .
2. Adjust the fast idling speed by turning the adjusting screw ② .
3. Tighten the lock nut ① .
4. Connect the vacuum hose to the fast idle actuator.
5. Connect the other vacuum hose to the vacuum switching valve.

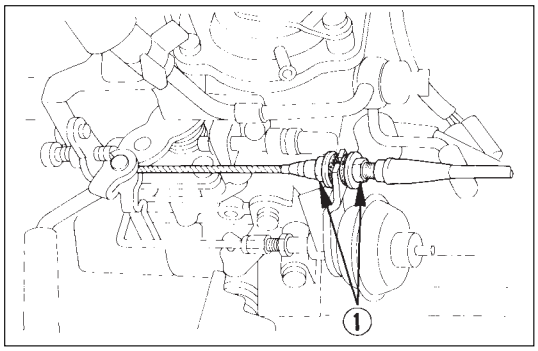

Accelerator Control

Accelerator Control Cable Adjustment

1. Loosen the accelerator cable clamp bolt ① .
2. Check that the idling control knob on the instrument panel is in the engine idling position.
3. Hold the accelerator lever ② in the fully closed position and stretch the control cable ③ in the direction indicated by the arrow to remove any slack.

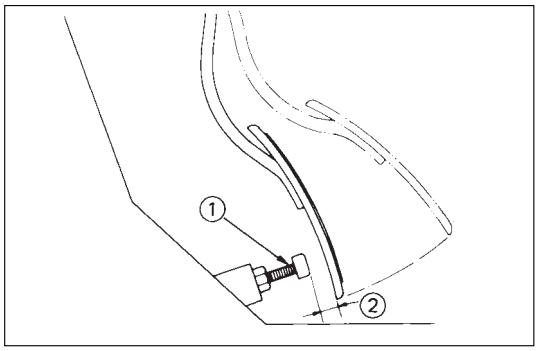

Accelerator Pedal Adjustment

1. Depress the accelerator pedal and hold it.
2. Use the stopper bolt ① to adjust the clearance between the stopper bolt end and the accelerator pedal lower face ② .

Accelerator and Stopper Bolt Clearance	mm(in)
2 – 5 (0.08 – 0.20)	

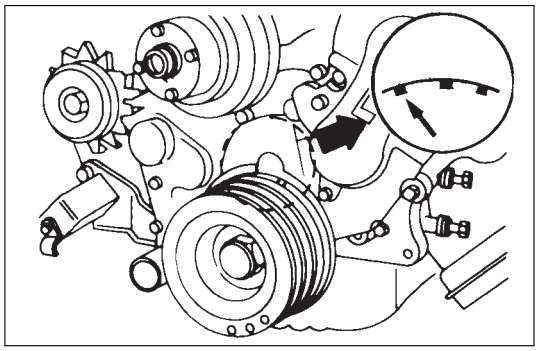

VALVE CLEARANCE ADJUSTMENT

1. Bring the piston in either the No. 1 cylinder or the No. 4 cylinder to TDC on the compression stroke by turning the crankshaft until the crankshaft damper pulley TDC line is aligned with the timing pointer.

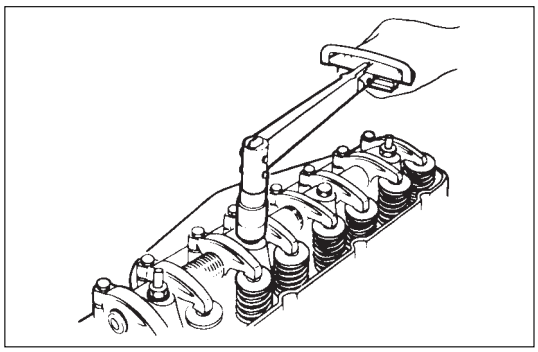

2. Check the rocker arm shaft bracket nuts for looseness. Tighten any loose rocker arm shaft bracket nuts before adjusting the valve clearance.

Rocker Arm Shaft Bracket Nut Torque	N·m(Kg·m/lb·ft)
54 (5.5/40)	

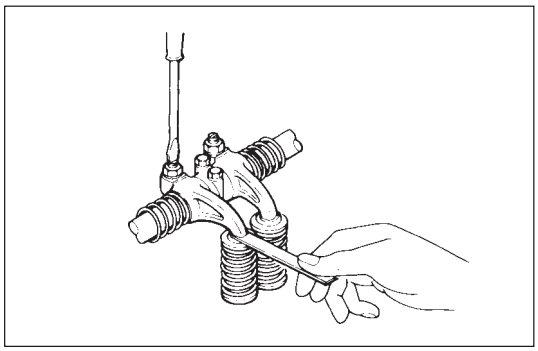

3. Check for play in the No. 1 intake and exhaust valve push rods.
   If the No. 1 cylinder intake and exhaust valve push rods have play, the No. 1 piston is at TDC on the compression stroke.
   If the No.1 cylinder intake and exhaust valve push rods are depressed, the No. 4 piston is at TDC on the compression stroke.

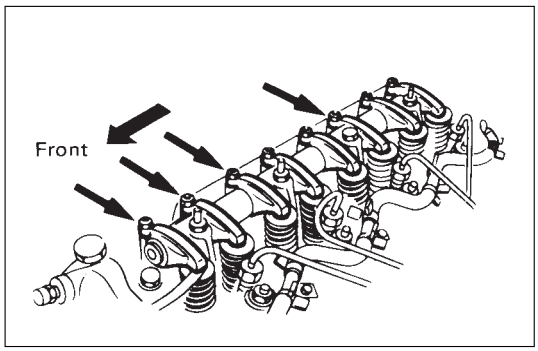

Adjust the No. 1 or the No. 4 cylinder valve clearances while their respective cylinders are at TDC on the compression stroke.

Valve Clearance (At Cold)	mm(in)
0.4 (0.016)	

4. Loosen each valve clearance adjusting screw as shown in the ilustration.
5. Insert a feeler gauge of the appropriate thickness between the rocker arm and the valve stem end.

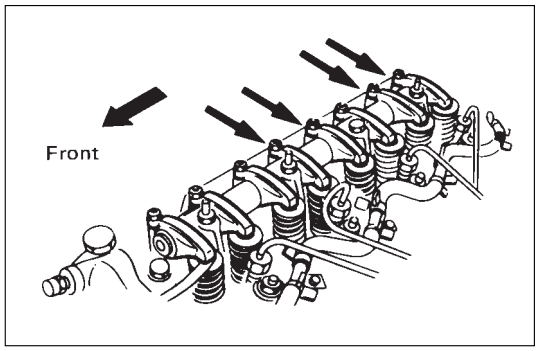

6. Turn the valve clearance adjusting screw until a slight drag can be felt on the feeler gauge.
7. Tighten the lock nut securely.
8. Rotate the crankshaft 360°.
9. Realign the crankshaft damper pulley TDC notched line with the timing pointer.
10. Adjust the clearances for the remaining valves as shown in the illustration.

INJECTION TIMING ADJUSTMENT

1. Set the No. 1 cylinder to Top Dead Center.
2. Remove injector pump distributor head plug.
3. Cancel Wax CSD with the handle of a screw driver.
4. Fit a dial gauge and set lift to 1 mm.
5. Set crankshaft damper pulley Top Dead Center mark about 45° before Top Dead Center from the pointer.
6. Set dial gauge in the “O” position.

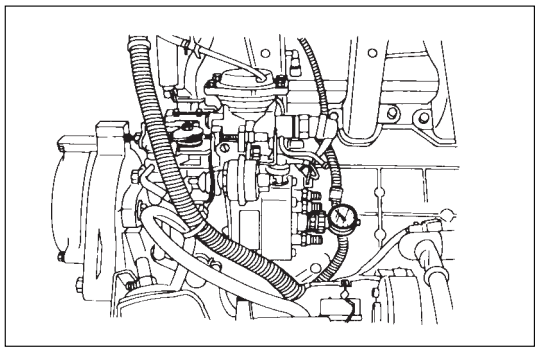

Measuring device : 5-8840-0145-0

7. Turn the crankshaft a little rightwise and leftwise and see it the pointer is stable in the “O” position.
8. Turn the crankshaft in the normal direction and read the measuring device’s indication at TDC (4JG2-T) or 1° ATDC (4JG2-NA).

Starting Timing	mm(in)
0.5 (0.02)	

9. If the injection timing is outside the specified range, continue with the following steps.
10. Loosen the injection pump fixing nuts and bracket bolts.
11. Adjust the injection pump setting angle.
    - If injection timing will be advanced, move the injection pump toward the engine.
    - If injection timing will be retarded, move the injection pump away from the engine.

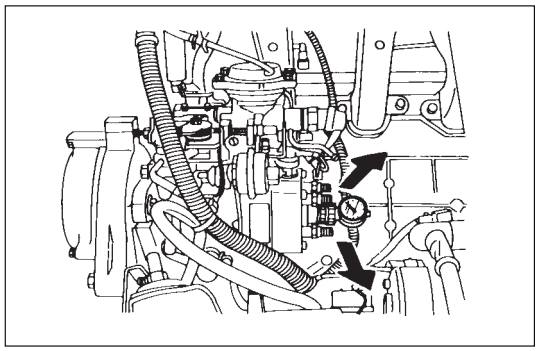

Tighten the pump fixing nut, adjust bolt and pump distributor head plug to the specified torque.

Pump Fixing Bolt	N·m(Kg·m/lb·ft)
19(1.9/13)	

Adjust Bolt	N·m(Kg.m/lb·ft)
40(4.1/30)	

Injection Pump Distributor Head Plug	N·m(Kg·m/lb·ft)
17 (1.7/12)	

CAUTION

- When installing the distributor head plug, be sure to use new copper washer.

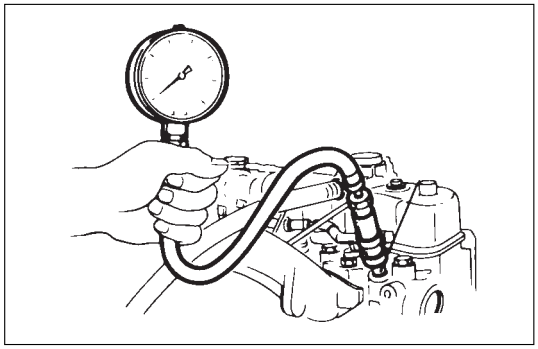

COMPRESSION PRESSURE MEASUREMENT

1. Start the engine and allow it to idle until the coolant temperature reaches 70 – 80°C (158 – 176°F).
2. Remove the following parts.
   * Glow plugs
   * Fuel cut solenoid connector
   * QOS (Quick-On Start System) fusible link wire at the connector.
3. Set the adapter and compression gauge to the No. 1 cylinder glow plug hole.
   Compression Gauge
   (with Adapter): 5-8840-2675-0
   Adapter: 5-8531-7002-0

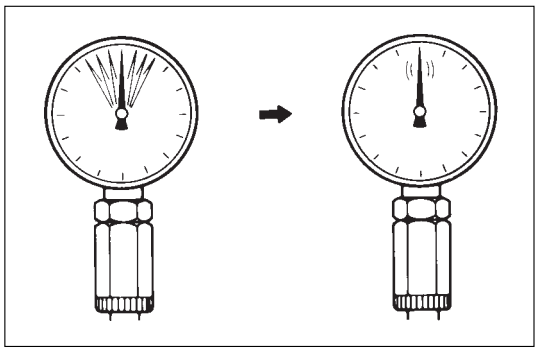

4. Turn the engine over with the starter motor and take the compression gauge reading.

Compression Pressure at 200 rpm	Kpa (Kg/cm^2 / Psi)
Standard	Limit
2940 (30/426)	2157 (22/313)

5. Repeat the procedure (Steps 3 and 4) for the remaining cylinders.
   If the measured value is less than the specified limit, refer to “Troubleshooting” in this Manual.

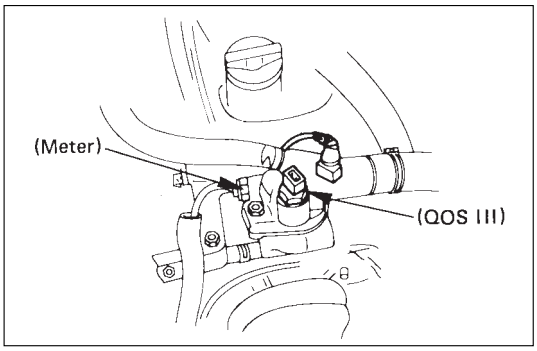

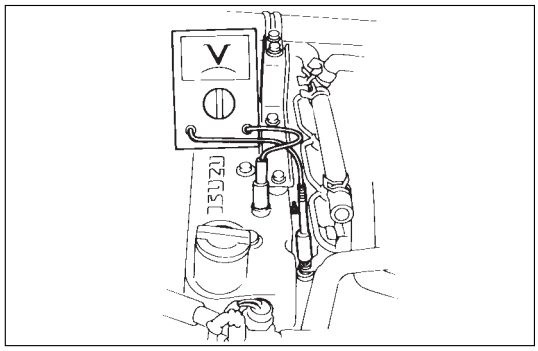

QUICK-ON START III SYSTEM

Quick-On Start System Inspection Procedure

1. Disconnect the thermo-sensor connection on the thermostat outlet pipe.
2. Turn the starter switch to the "ON" position.
   If the Quick-On Start III System is operating properly, the glow relay will make a clicking sound within seven seconds after the starter switch is turned on.
3. Measure the glow plug terminal voltage with a circuit tester immediately after turning the starter switch to the "ON" position.

Glow Plug Terminal Voltage	V
8 – 9	

NOTE:

Electrical power to the quick-on start system will be cut after the starter has remained in the "ON" position for ten seconds.
Turn the starter switch to the "OFF" position and back to the "ON" position.
This will reset the Quick-On Start III System.

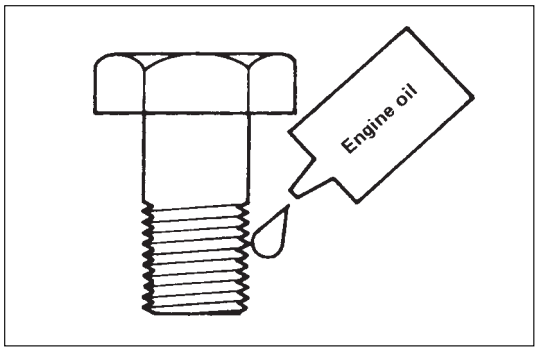

Nut and Bolt Angular Tightening Method (Using The Special Tool)

1. Carefully wash the nuts and bolts to remove all oil and grease.
2. Apply engine oil to the threads and setting faces of the nuts and bolts.
3. Use a torque wrench to tighten the nuts and bolts to the specified torque (snug torque).

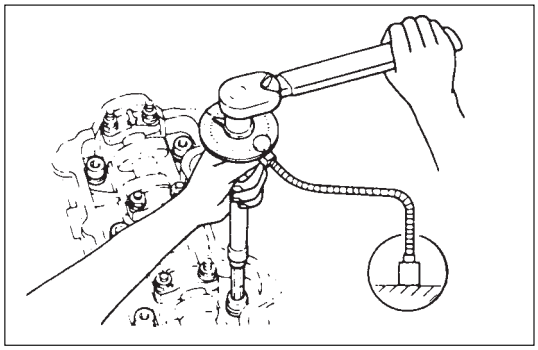

4. Attach the angle gauge to the socket wrench.
   Angle Gauge: 5-88400-266-0
5. Attach a magnet to some part to hold the angle gauge stationary.
6. Tighten the nuts and bolts to the specified angle, noting the angle gauge indication.

FIXING TORQUE

CYLINDER HEAD COVER, CYLINDER HEAD ROCKER, SHAFT BRAKER

N·m (Kg·m/lb·ft)

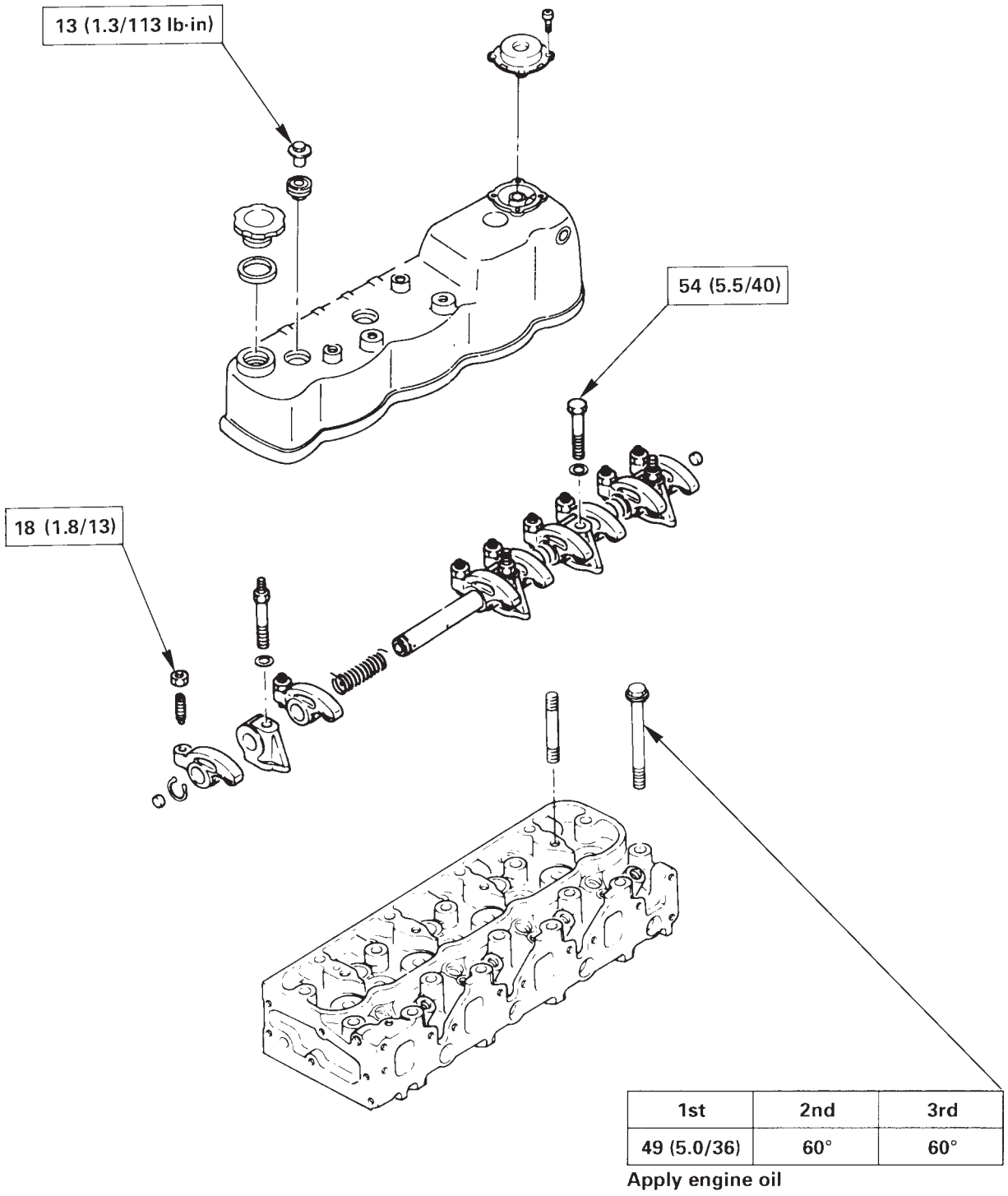

1st	2nd	3rd
49 (5.0/36)	60°	60°

Apply engine oil

Crankshaft Bearing Cap, Connecting Rod Bearing Cap, Crankshaft Damper Pulley, Flywheel, Crank Case

N·m (Kg·m/lb·ft)

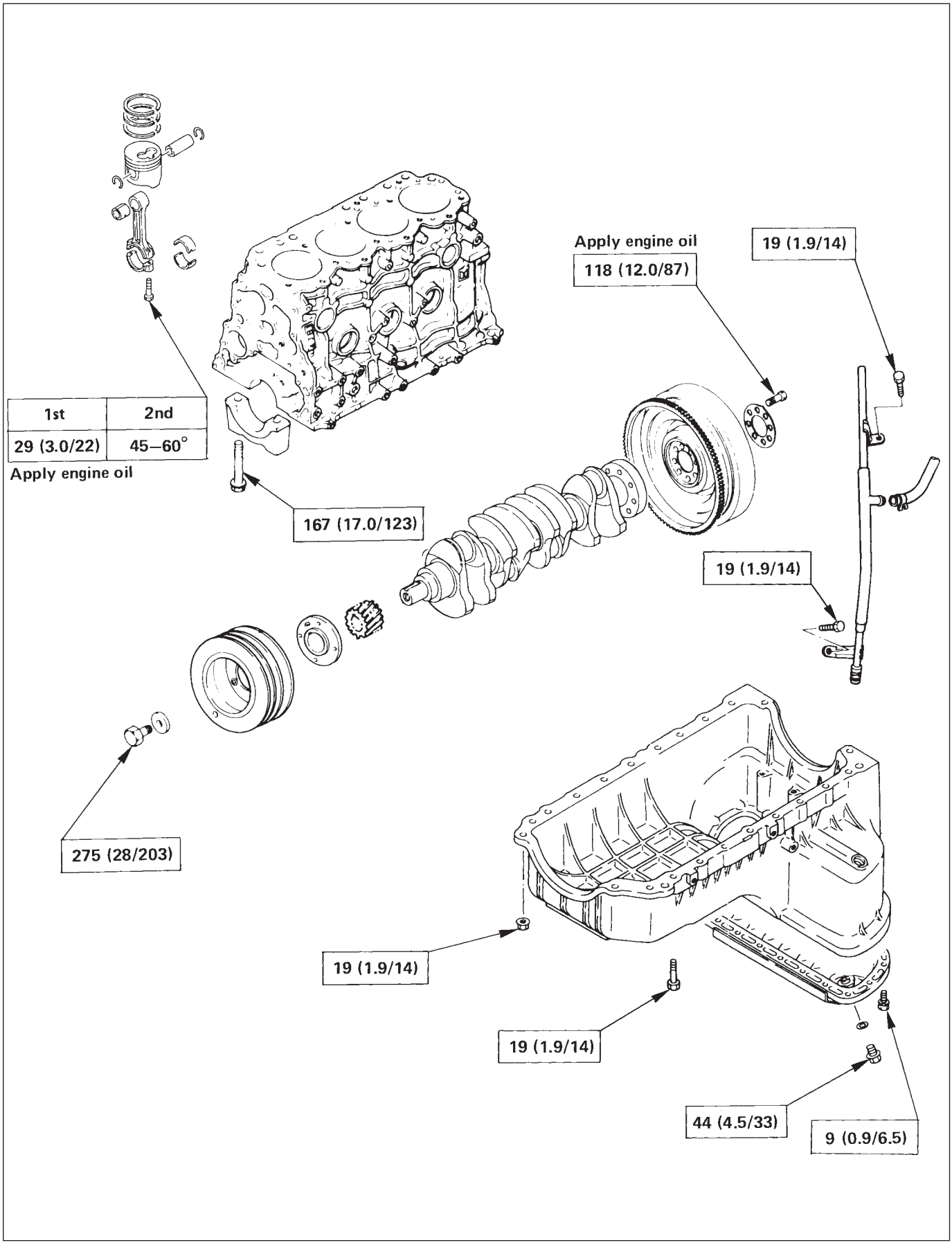

Gear Case, Timing Gear, Camshaft

N·m (Kg·m/lb·ft)

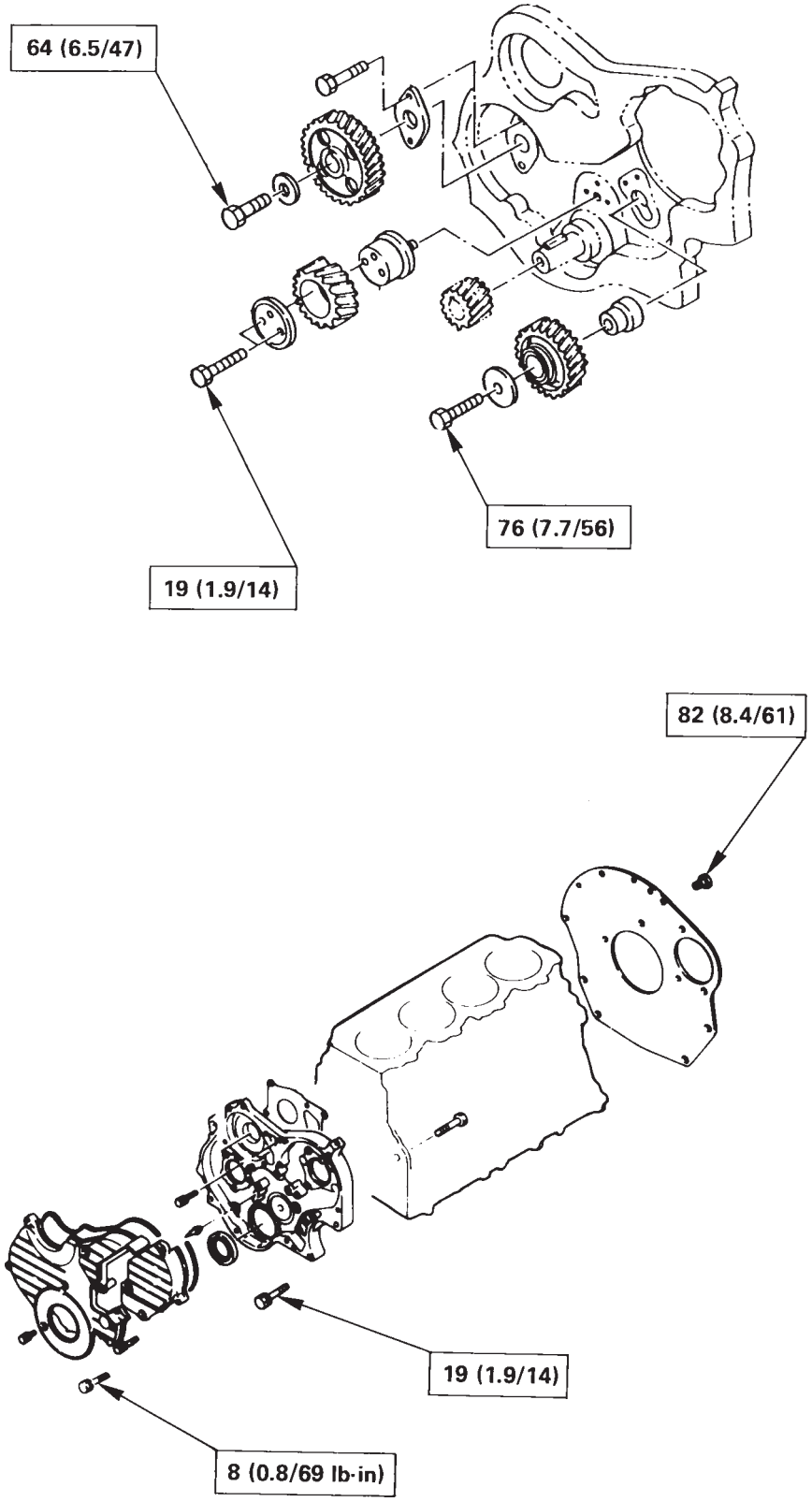

Cooling System and Lubrication System

N·m (Kg·m/lb·ft)

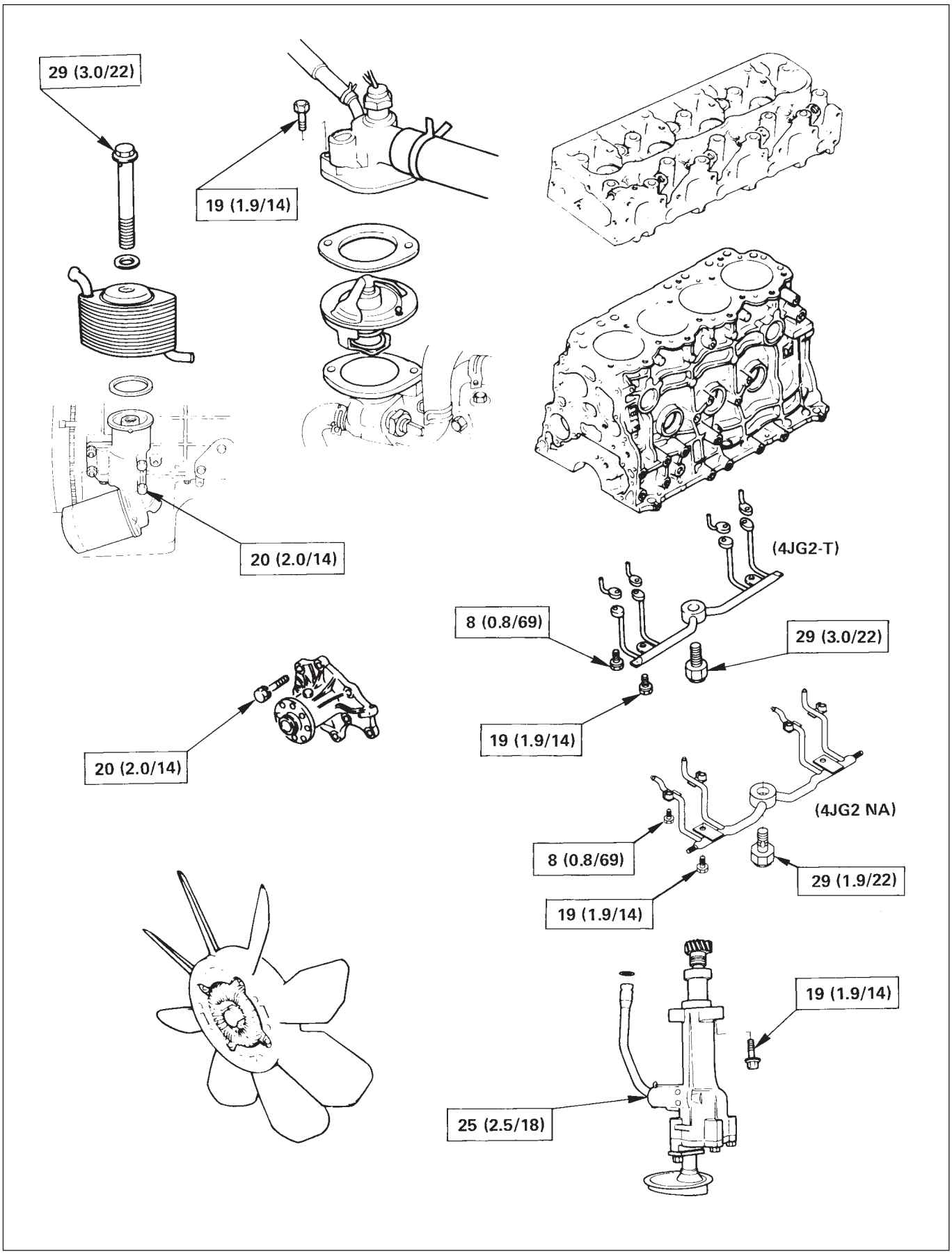

Intake Manifold, Exhaust Manifold, Turbo Charger

N·m (Kg·m/lb·ft)

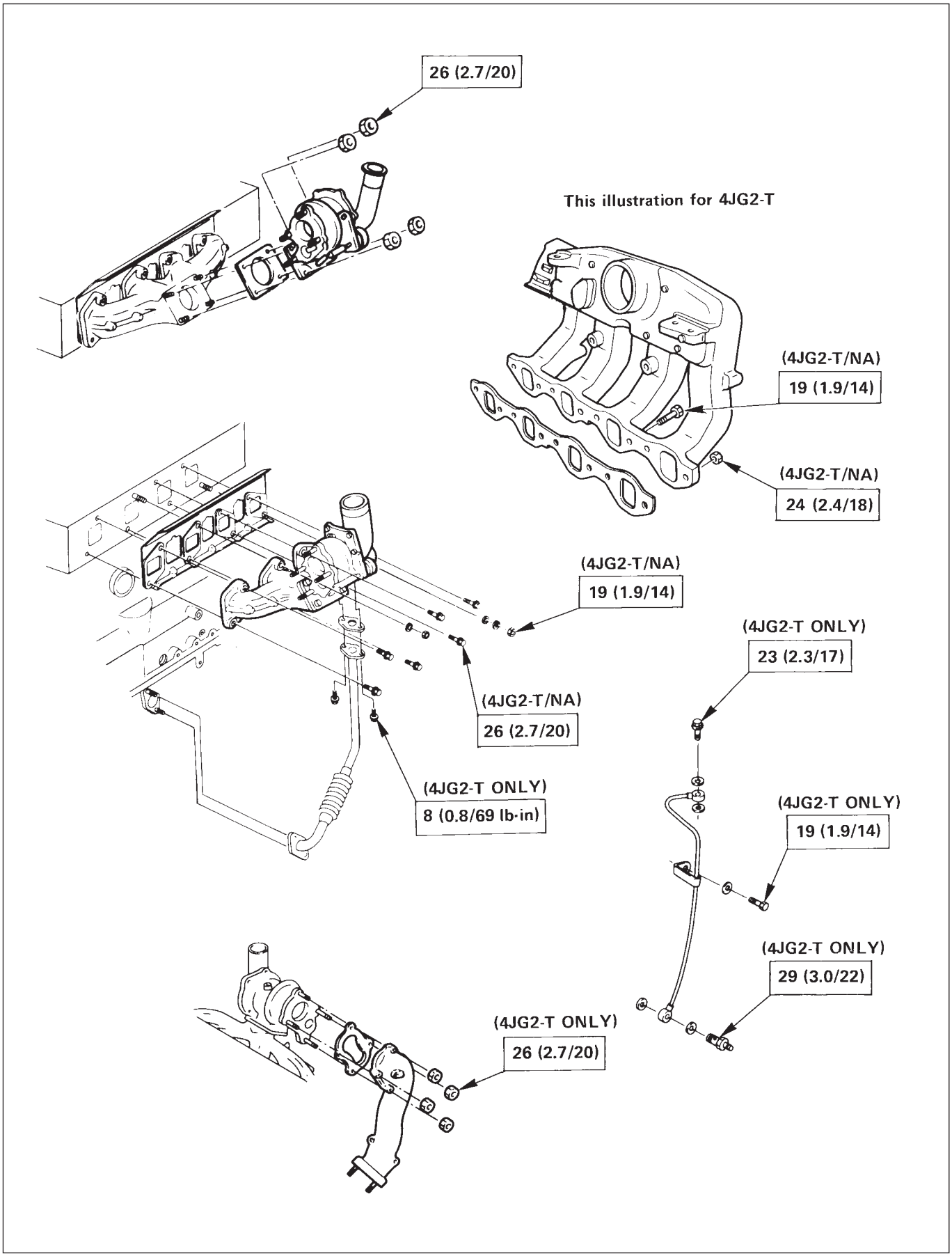

Engine Electricals

N·m (Kg·m/lb·ft)

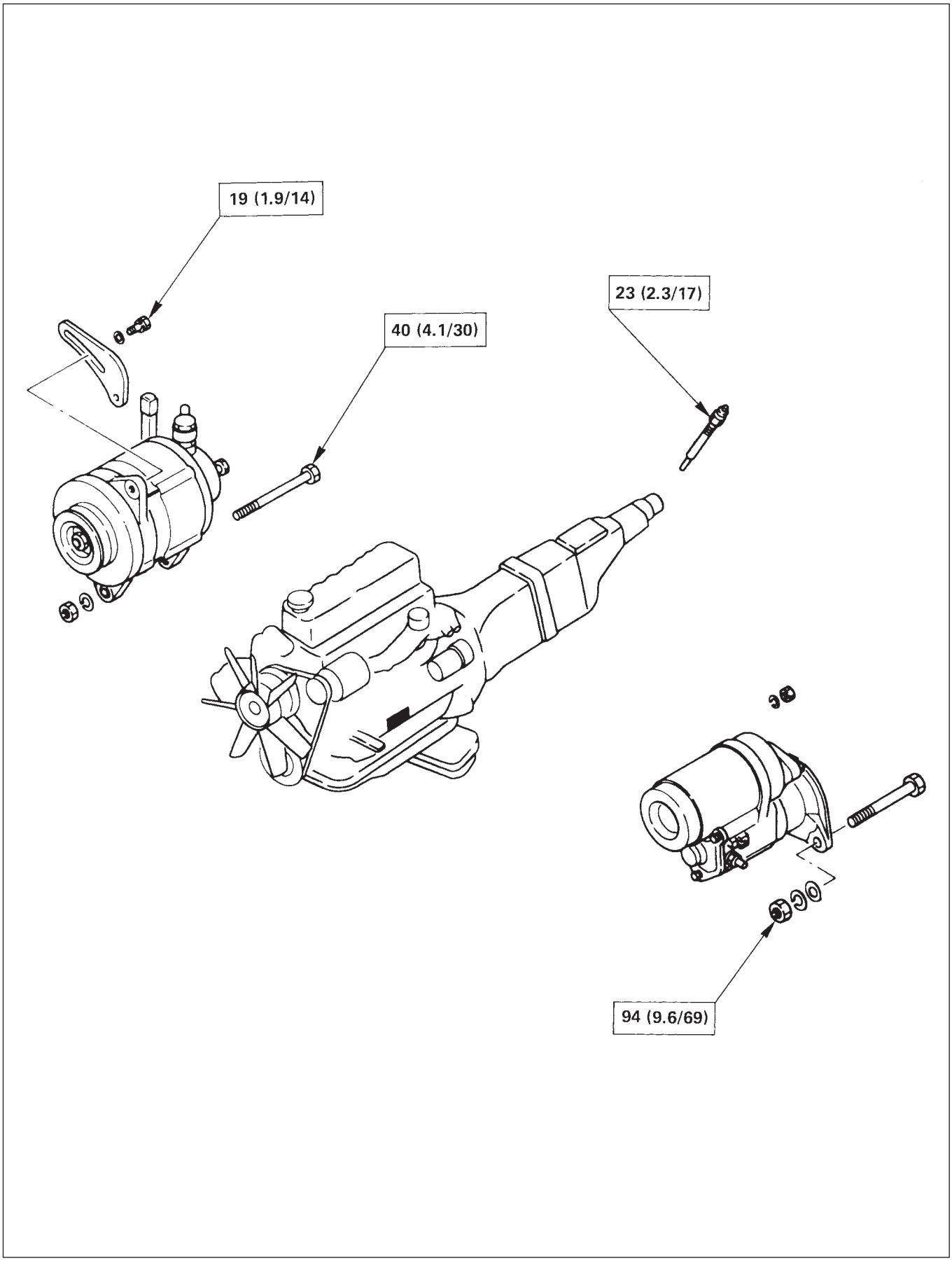

Engine Fuel

N·m (Kg·m/lb·ft)

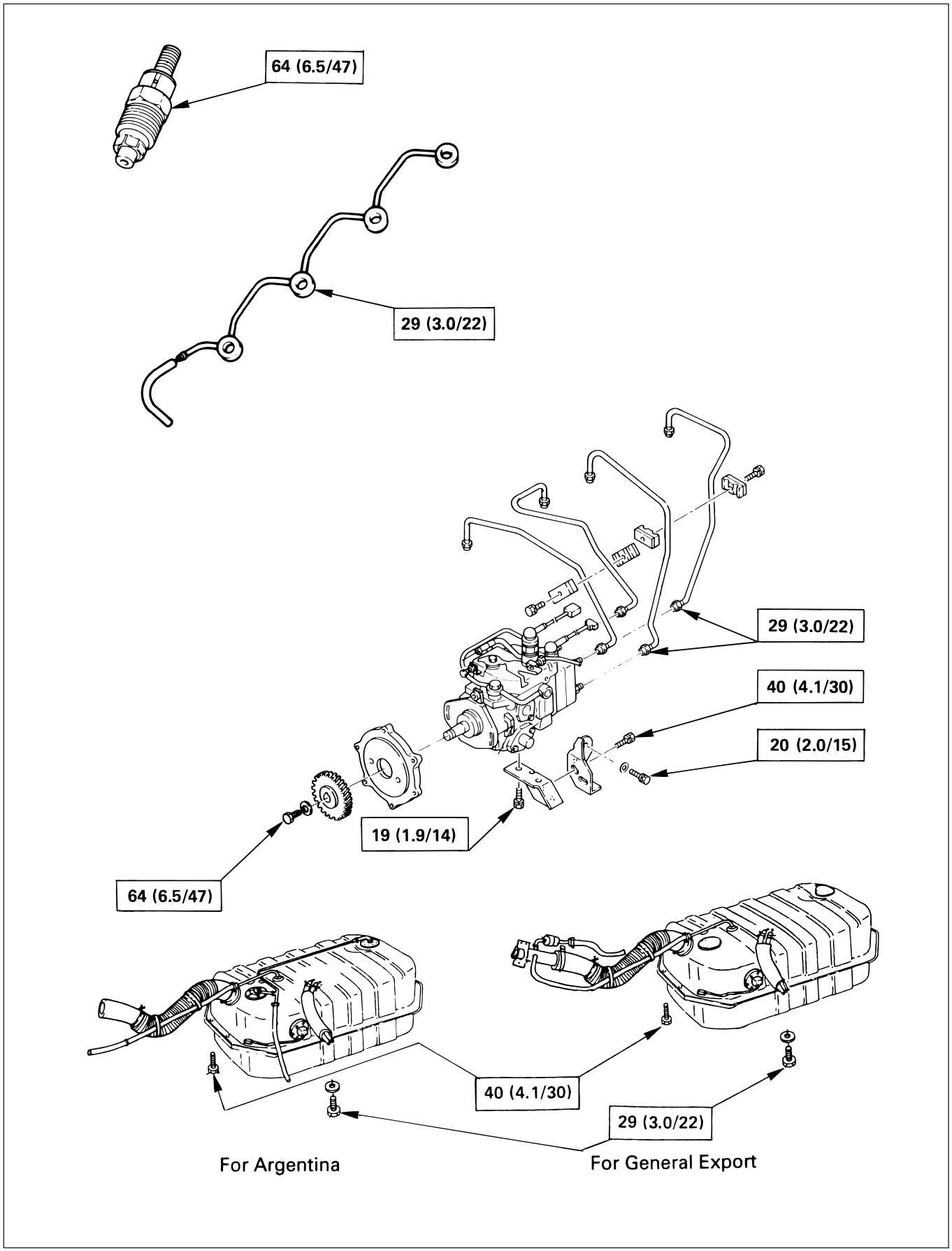

Engine Mount Bracket

N·m (Kg·m/lb·ft)

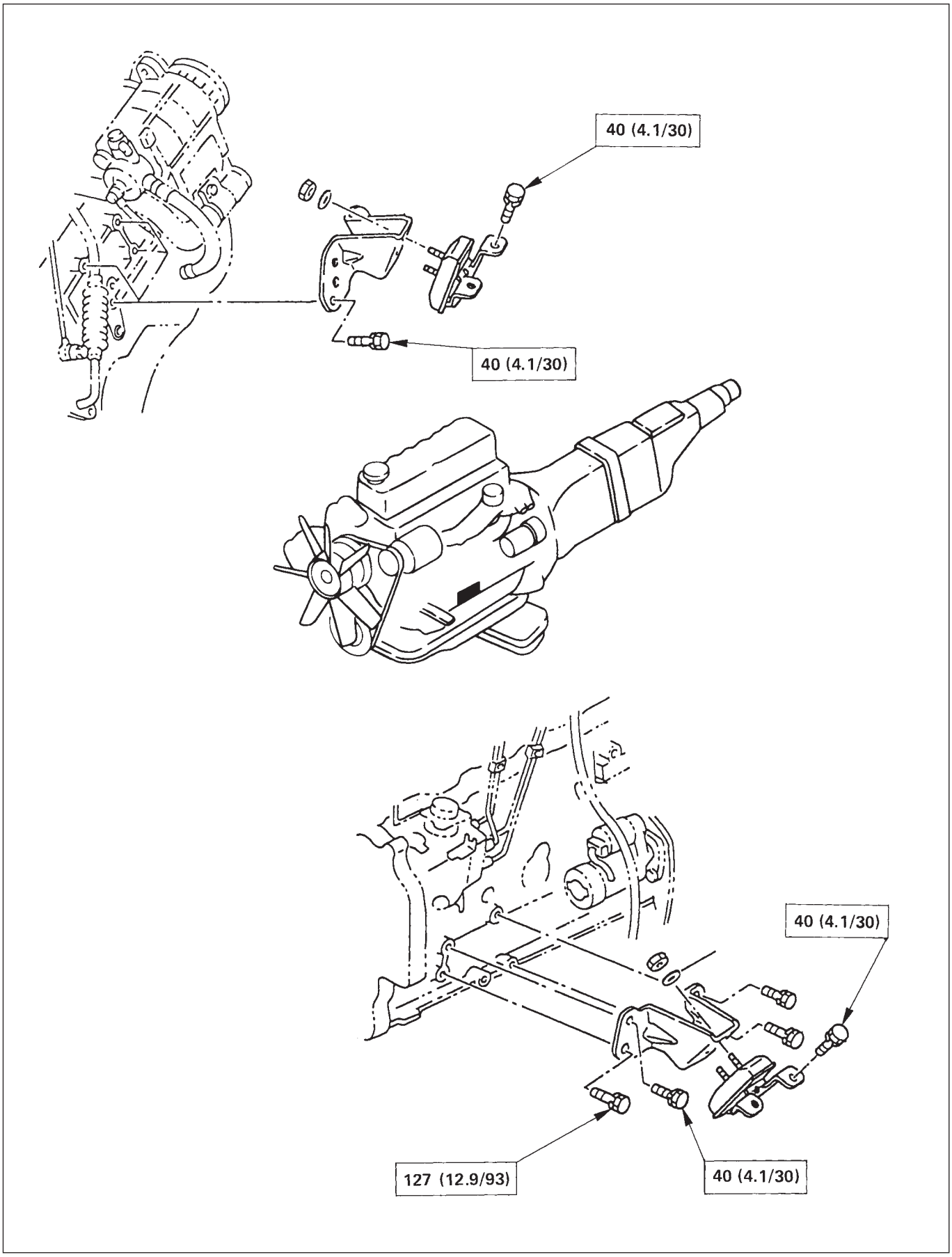

Exhaust System

N·m (Kg·m/lb·ft)

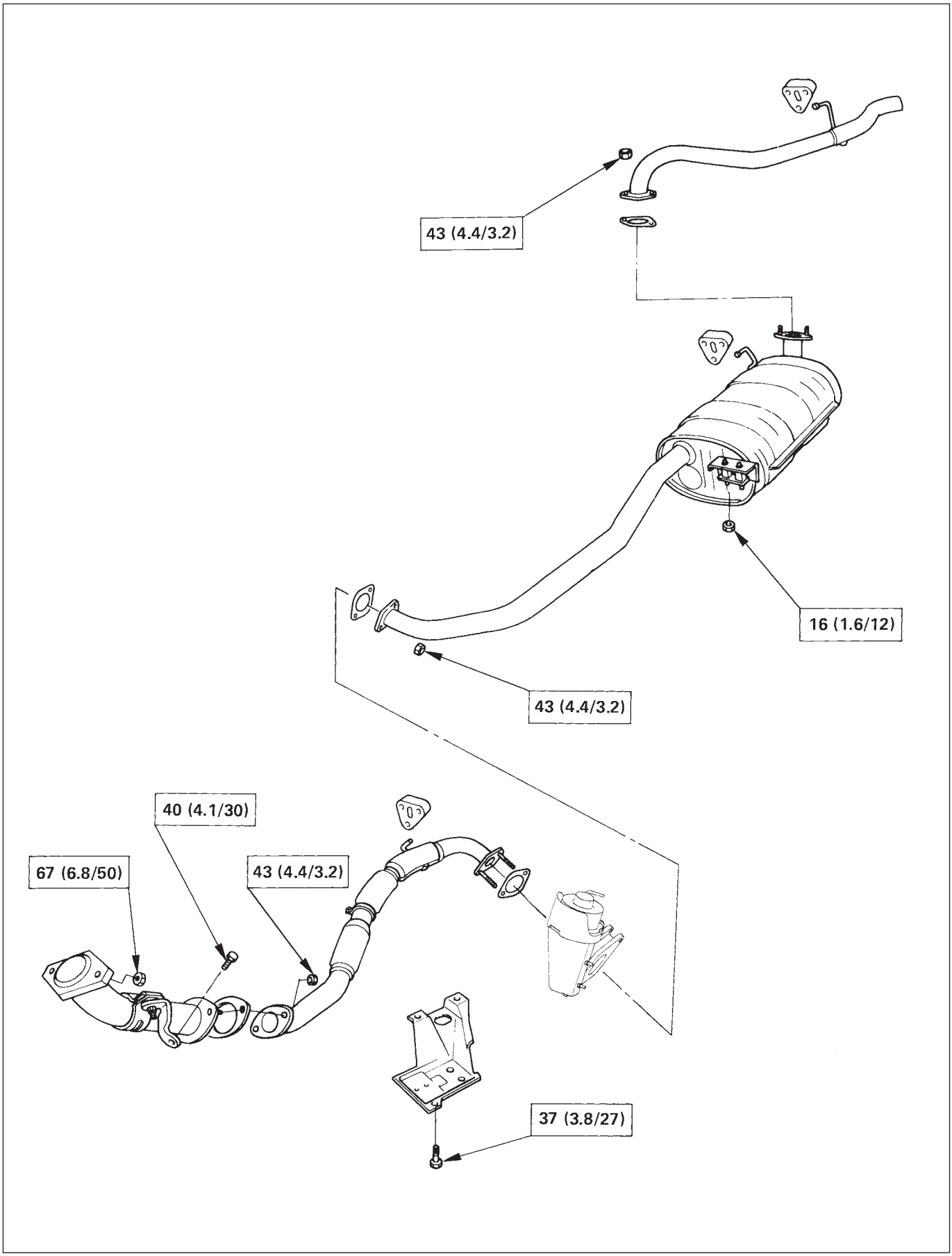

SPECIAL TOOLS

ILLUSTRATION	TOOL NO.	TOOL NAME
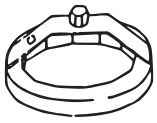	5-8840-0200-0	Oil Filter Wrench
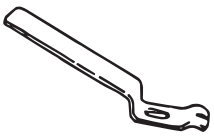	9-8523-1423-0 (J-29760)	Valve Spring Compressor
	5-8840-2033-0	Valve Stem Oil Seal Installer
	5-8840-9018-0	Piston Ring Compressor
	9-8523-1212-0	Valve Guide Replacer
	5-8840-2313-0	Cylinder Liner Installer
	5-8840-2304-0	Cylinder Liner Remover Ankle
	9-8523-1169-0	Cylinder Liner Remover
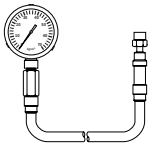	5-8840-2675-0	Compression Gauge
	5-8840-2153-0	Seal Cutter
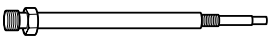	5-8531-7002-0	Gauge Adapter

SPECIAL TOOLS (CONT.1)

ILLUSTRATION	TOOL NO.	TOOL NAME
	5-8840-0145-0	Measuring Device
	5-8522-0024-0	Crankshaft Timing Gear Installer
	5-8840-0266-0	Angle Gauge
	5-8840-9016-0	Injection Nozzle Tester
	5-8840-2038-0	Bearing Replacer
	5-8840-2061-0	Crankshaft Front Oil Seal Installer
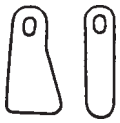	5-8840-2032-0	Engine Hanger
	5-8840-0259-0	Nozzle Holder Wrench
	5-8840-0253-0 (J-22700)	Fuel Filter Wrench
	5-8840-2360-0	Crankshaft Rear Oil Seal Remover
	5-8840-2359-0	Crankshaft Rear Oil Seal Installer

SPECIAL TOOLS (CONT.2)

ILLUSTRATION	TOOL NO.	TOOL NAME
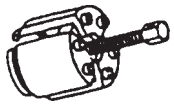	5-8840-2362-0	Crankshaft Front Oil Seal Remover
	5-8840-0133-0	Holder

MEMO

SECTION 6A

ENGINE MECHANICAL

CONTENTS

	PAGE
Cylinder Head	6A- 2
Valve Springs, Valve Stem Oil Seal, Valve, Valve Guide, Push rod	6A- 7
Camshaft, Tappet	6A-14
Rocker Arm Assembly	6A-19
Oil pump	6A-21
Crankshaft	6A-25
Piston and Connecting Rod	6A-34
Cylinder Block	6A-42

CYLINDER HEAD

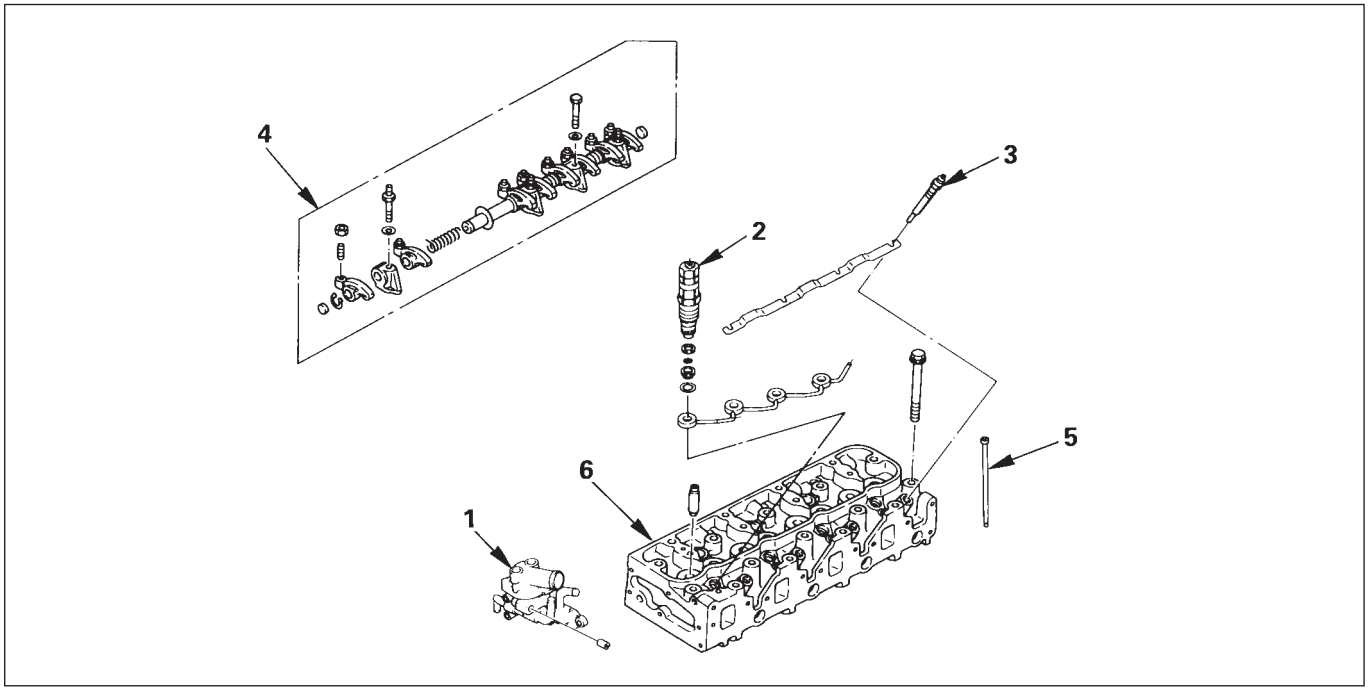

NOTE:

- **During disassembly, be sure that the valve train components are kept together and identified so that they can be re-installed in their original locations.**
- **Before removing the cylinder head from the engine and before disassembling the valve mechanism, make a compression test and note the results.**

DISASSEMBLY

1. **Thermostat Housing Assembly**
2. **Injection Nozzle Holder**
3. **Glow Plug and Glow Plug Connector**
4. **Rocker Arm Shaft and Rocker Arm**
5. **Push Rod**
6. **Cylinder Head**
   - Refer to Section 6A2 “Cylinder Head”

CLEAN

- Cylinder head bolts
- Cylinder head
  Carefully remove all varnish, soot and carbon to the bare metal. Do not use a motorized wire brush on any gasket sealing surface.

INSPECTION AND REPAIR

Make the necessary adjustments, repairs, and part replacements if excessive wear or damage is discovered during inspection.

- Cylinder head gasket and mating surfaces for leaks, corrosion and blow-by. If the gasket has failed, determine the cause;
  – Improper installation
    Loose or warped cylinder head
  – Insufficient torque on head bolts
  – Warped case surface

1. Cylinder head bolts for damaged threads or stretching and damaged heads caused by improper use of tools.

CAUTION:

Suspected bolts must be replaced.

2. Cylinder head for cracks, especially between valve seats and in the exhaust ports.
3. Cylinder head deck for corrosion, sand particles in head and porosity.

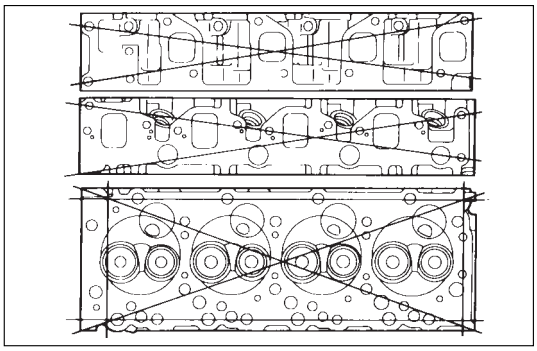

CAUTION:

Do not attempt to weld the cylinder head. Replace it.

4. Cylinder head deck, intake and exhaust manifold mating surfaces for flatness.

   These surfaces may be re-conditioned by milling. If the surfaces are "out of flat" by more than specification, the surface should be grinded to within specifications. If more than limit of specification, it should be replaced.

mm (in)

	Standard	Limit
Cylinder Head Lower Face Warpage	0.05 (0.0020) or less	0.20 (0.0079)
Cylinder Head Height	92 (3.6220)	–

5. Water jacket sealing plugs seating surfaces.

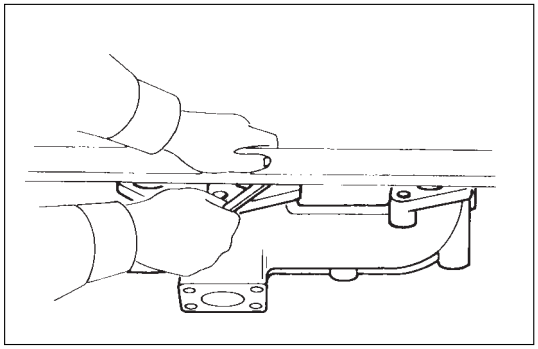

6. Use a straight edge and a feeler gauge to measure the manifold cylinder head fifting face warpage. Regrind the exhaust manifold cylinder head fifting surfaces if the measured values are between the specified limit and the standard.
   If the measured values exceed the specified limit, the manifold must be replaced.

Exhaust Manifold Warpage mm(in)

Standard	Limit
0.05 (0.0020) or less	0.20 (0.0079)

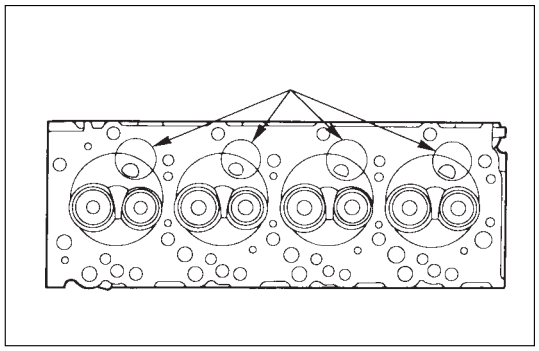

Hot plug depression

1. Clean the cylinder head lower side, taking care not to damage the hot plug surfaces.
2. Use a straight edge and feeler gauge to measure hot plug depression in a straight line from the No.1 hot plug to the No.4 hot plug.

   If the measured value exceeds the limit, the hot plugs must be replaced.

Depression Limit	mm(in)
0.02 (0.0008)	

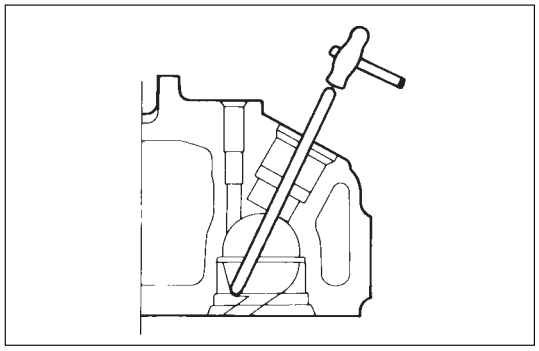

Hot plug removal

1. Insert a 3.0 – 5.0 (0.12 – 0.20 in.) diameter bar into the nozzle holder fitting hole unit it makes contact with the hot plug.
2. Lightly tap the bar with a hammer to drive the hot plug free.

   If the measured value exceeds the limit, the hot plugs must be replaced.

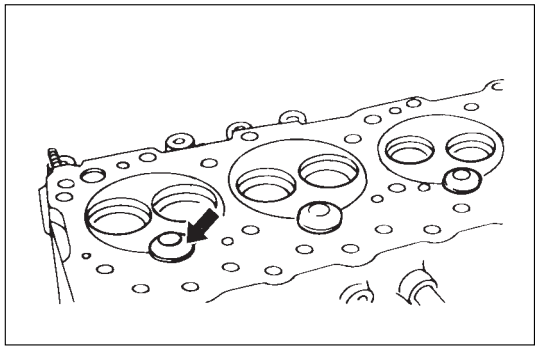

Combustion chamber inspection

1. Remove the carbon adhering to the inside of the combustion chamber. Take care not to damage the hot plug fitting positions.
2. Inspect the inside of the combustion chamber, the hot plug hole, and the hot plug machined faces for cracking and other damage.
   If cracking or damage is present, the cylinder head must be replaced.

Note:

Be absolutely certain that there are no scratches or protuberance on the combustion chamber surfaces which will be in contact with the hot plug after it is installed. There flaws will prevent the hot plug from seating correctly.

Hot plug inspection

Inspection the hot plugs for excessive wear and other damage. Replace the hot plugs if either of these conditions are discovered.

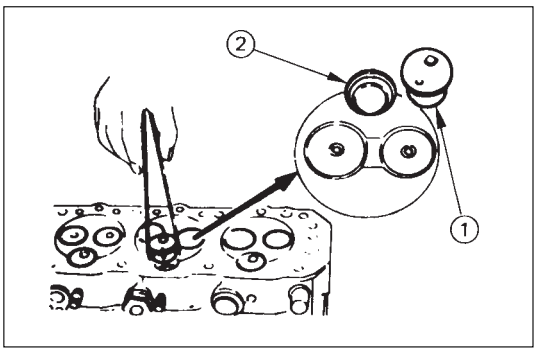

Hot plug installation

1. Align the hot plug knock ball ① with the cylinder head groove ② and tap it temporarily into position with a plastic hammer.

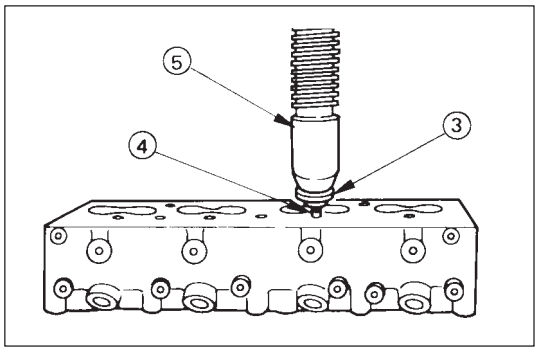

2. Place an appropriate metal plate ③ thick over the hot plug upper surface ④ .
3. Use a press ⑤ to exert a pressure of 44000-54000N(4500 – 5500 kg) (9923 – 12128 lbs.) on the metal plate covering the hot plug upper surface. This will drive the hot plug into position.
4. Lightly tap the hot plug heads to make sure that they are firmly seated.
5. Repeat the procedure Steps 1-4 for the remaining hot plugs.

CAUTION:

Do not apply pressure greater than that specified. Damage to the cylinder head will result.

6. Use a surface grinder to grind off any hot plug surface protuberances.
   The hot plug surfaces must be perfectly flush with the cylinder head.
7. After grinding, make sure that the hot plug surfaces are completely free of protuberances.
   The hot plug surfaces must also be free of depressions.

Once again, lightly tap the hot plug heads to make sure that they are firmly seated.

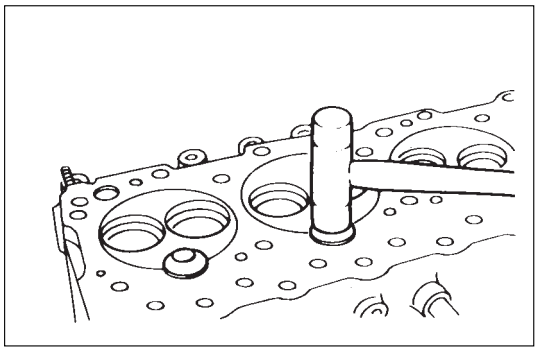

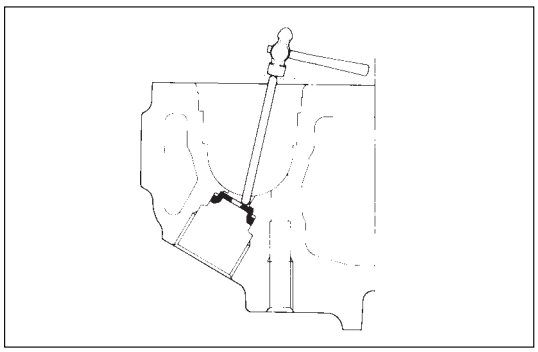

Heat shield removal

After removing the hot plugs, use a hammer ① and a brass bar ② to lightly tap the lower side of the heat shiled ③ and drive it free.

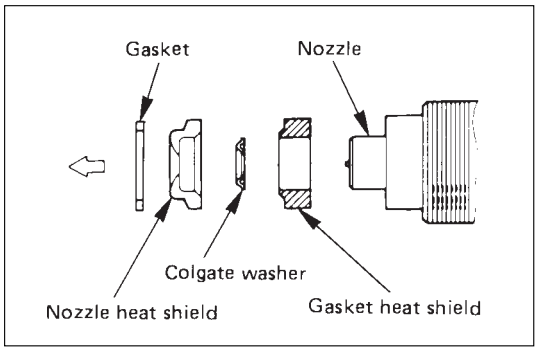

Heat shield installation

Install the heat shield washer and the heat shield to the cylinder head from the nozzle holder installation hole side. Lightly tap the flange into place with a brass bar.

The heat shield flange side must be facing up.

NOTE:

Always install a new heat shield. Never reuse the old heat shield.

REASSEMBLY

6. Cylinder Head

- Refer to Section 6A2 “Cylinder head”

5. Push Rod

4. Rocker Arm Shaft and Rocker Arm

- Tighten rocker arm shaft fixing bolts

N·m (Kg·m/lb·ft)
54 (5.5/40)

3. Glow Plug and Glow Plug Connector

- Tighten glow plugs.

N·m (Kg·m/lb·ft)
23 (2.3/17)

2. Injection Nozzle Holder

- Refer to Section 6C2 “Injection nozzle”.

1. Thermostat Housing Assembly

- Tighten thermostat housing assembly fixing bolt

N·m (Kg·m/lb·ft)
19 (1.9/14)

VALVE SPRING, VALVE STEM OIL SEAL, VALVE, VALVE GUIDE, PUSH ROD

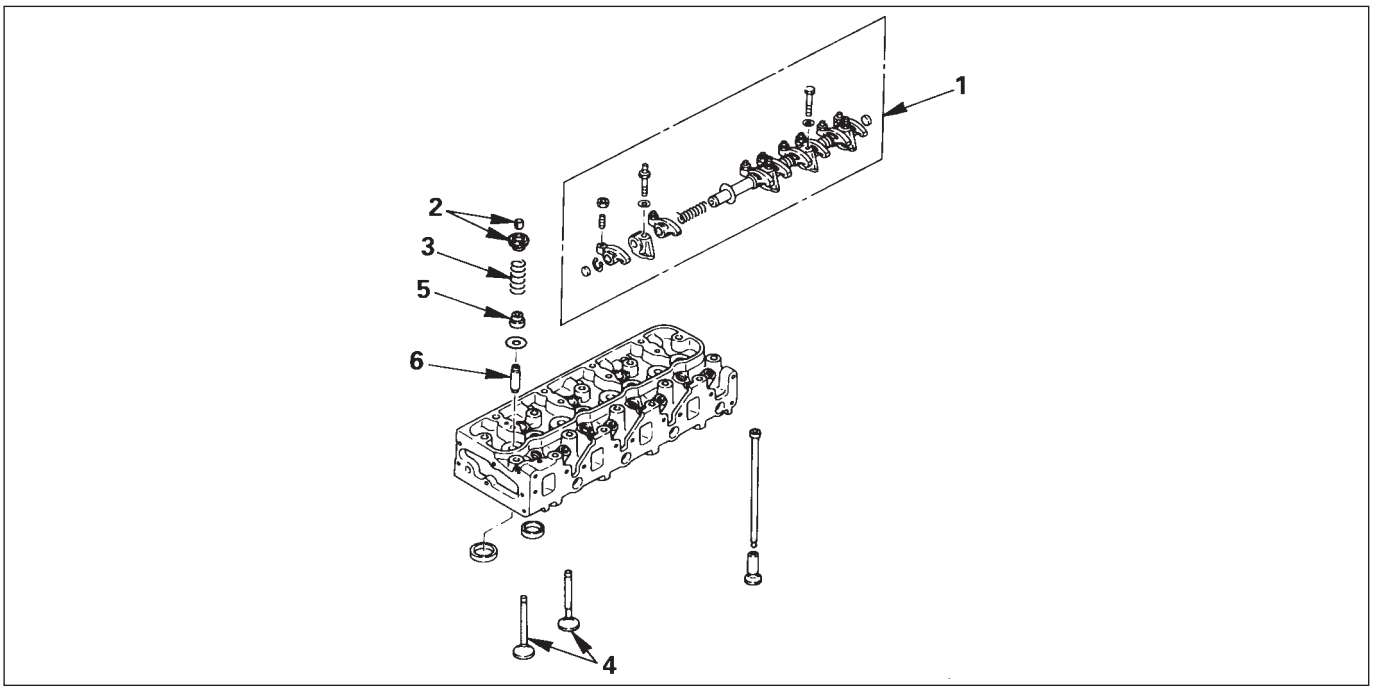

DISASSEMBLY

1 **Rocker Arm Asembly**

2 **Split Collar**
Using special Tool, compress valve spring
Valve spring compressor: 9-8523-1423-0(J-29760)

3. **Valve Spring**
4. **Valve**
5. **Valve Stem Oil Seal**

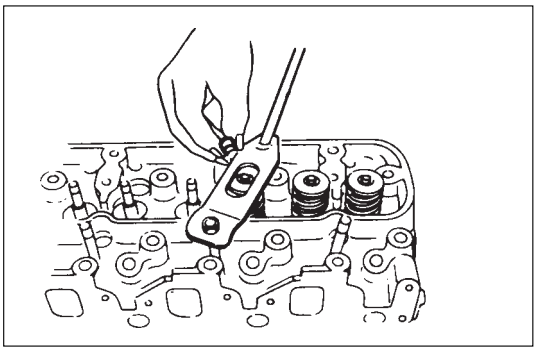

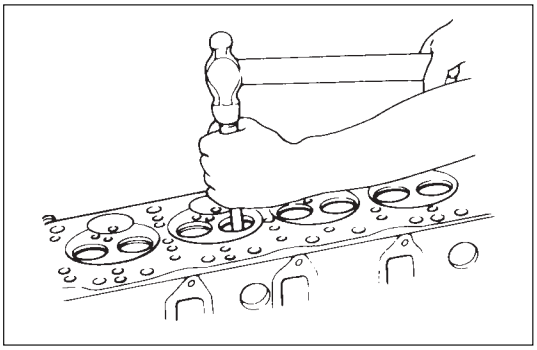

6. **Valve Guide**
Valve Guide Replacer: 9-8523-1212-0

INSPECTION AND REPAIR

Make the necessary adjustments, repairs, and part replacements if excessive wear or damage is discovered during inspection.

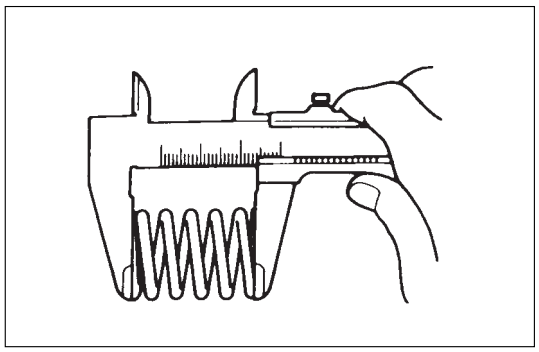

Valve spring

CAUTION:

Visually inspect the valve springs and replace them if damage or abnormal wear is evident.

1. **Free height**
   - Measure the free height of the springs. The springs must be replaced if the height is below the specified limit.

mm(in)

Standard	Limit
48.0 (1.8898)	47.100 (1.8543)

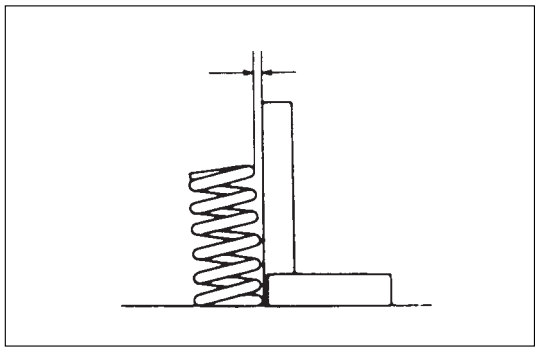

2. **Squareness**
   - Measure the valve spring squareness with a steel square.
   - Replace the valve springs if the measured value exceeds the specified limit.

Limit	mm(in)
1.7 (0.0669)	

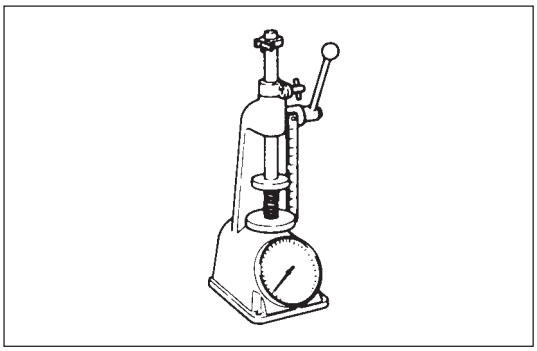

3. **Spring tension**
   - Use a spring tester to compress the springs to the installed height. Measure the compressed spring tension.

     Replace the springs if the measured tension is below the specified limit.

N(Kg/lb)

At installed height 38.9mm (1.5in)	Standard	Limit
	294.0 (30/66.1)	257.9 (26.3/57.9)

Valve Guide

CAUTION:

Taking care not to damage the valve seat contact surface, when removing carbon adhering to the valve head.

Carefully inspect the valve stem for scratching or abnormal wear. If these conditions are present, the valve and the valve guide must be replaced as a set.

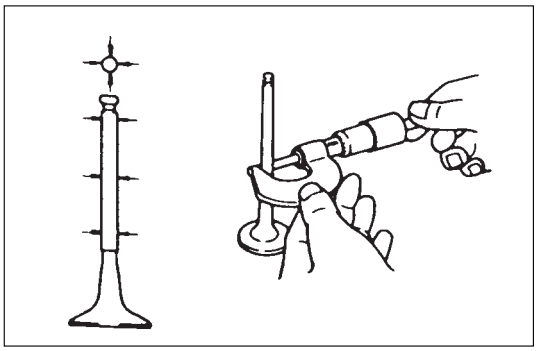

1. Valve Guide Clearance

- Measure the valve stem diameter with a micrometer.
  If the valve stem diameter is less than the specified limit, the valve and the valve guide must be replaced as a set.

mm(in)

		Standard	Limit
Diameter of Valve stem	Inlet	7.946 – 7.961 (0.3128 – 0.3134)	7.880 (0.3102)
	Exhaust	7.921 – 7.936 (0.3118 – 0.3124)	7.850 (0.3091)

- Measure the inside diameter of the valve guide with a micrometer.
- Subtract the measured outer diameter of the valve stem from the measured inner diameter of the valve guide. If the valve exceeds of the valve guide. If the valve exceeds the specified limit, the valve and the valve guide must be replaced as a set.

mm(in)

	Standard	Limit
Inlet clearance	0.039 – 0.071 (0.0015 – 0.0028)	0.200 (0.0079)
Exhaust clearance	0.064 – 0.096 (0.0025 – 0.0038)	0.250 (0.0098)

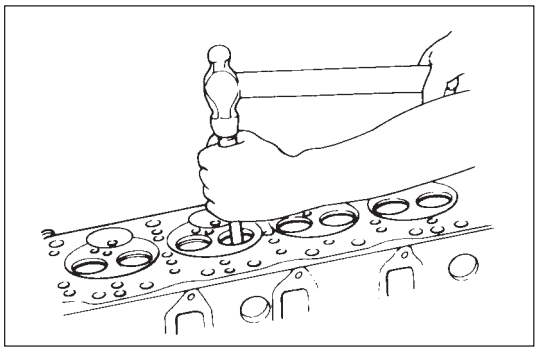

Valve Guide Replacement

1. Using special tool, drive out the valve guide from the combustion chamber side.
   Valve guide replacer: 9-8523-1212-0

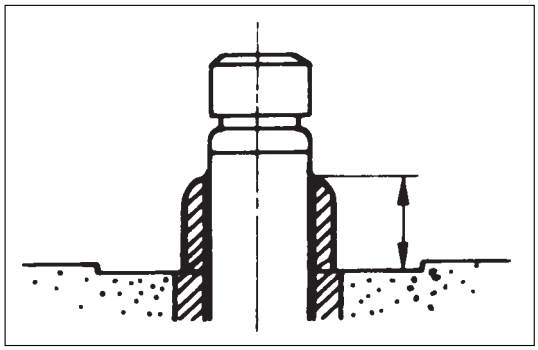

2. Apply engine oil to the outside of the valve guide. Using special tool, drive in a new valve guide from cylinder head upper face side, and check the valve guide height.
   Valve guide replacer: 9-8523-1212-0

Height	mm(in)
13 (0.5118)	

NOTE:

If the valve guide has been removed, both the valve and the valve guide must be replaced as a set.

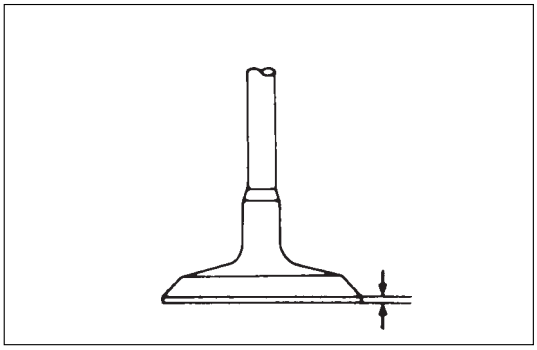

Valve Thickness

1. Measure the valve thickness.
2. If the measured value is less than the specified limit, the valve and the valve guide must be replaced as a set.

mm(in)

	Standard	Limit
Inlet	1.34 (0.0528)	1.1 (0.0433)
Exhaust	1.38 (0.0543)	1.1 (0.0433)

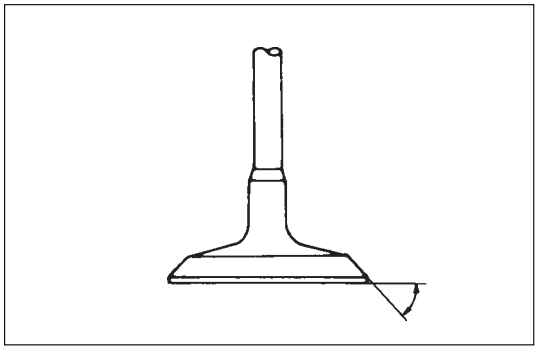

Contact surface angle on valve seat on valve

1. Measure contact surface angle on valve seat.
2. If the measured value exceeds the limit, replace valve, valve guide and valve seat as a set.

Standard	Degree
45	

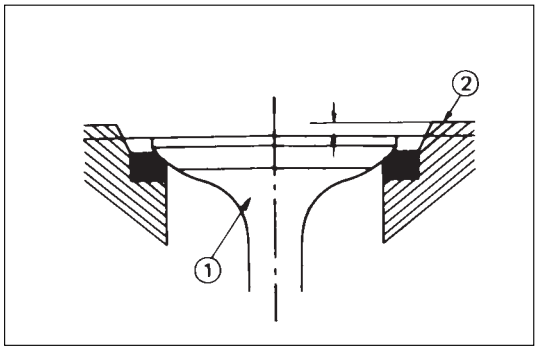

Valve Depression

1. Install the valve ① to the cylinder head ②.
2. Use a depth gauge or a straight edge with steel rule to measure the valve depression from the cylinder head lower surface.
   If the measured value exceeds the specified limit, the valve seat insert must be replaced.

Valve Depression mm(in)

Standard	Limit
1.1 (0.0433)	1.6 (0.0630)

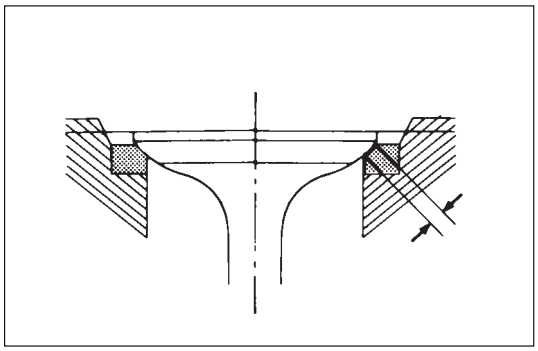

Valve Contact Width

1. Check the valve contact faces for roughness and unevenness. Make smooth the valve contact surfaces.
2. Measure the valve contact width.
   If the measured value exceeds the specified limit, the valve seat insert must be replaced.

mm(in)

	Standard	Limit
Inlet	1.7 (0.0669)	2.2 (0.0866)
Exhaust	2.0 (0.0787)	2.5 (0.0984)

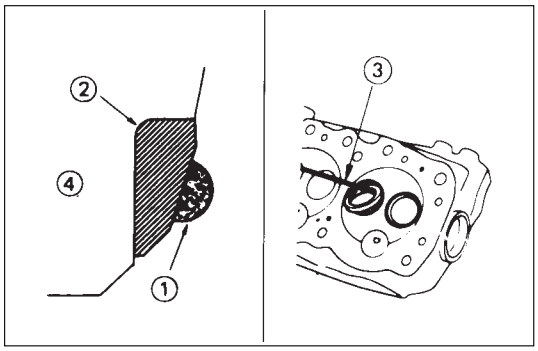

Valve Seat Insert Replacement

Valve Seat Insert Removal

1. Arc weld the entire inside circumference ① of the valve seat insert ②.
2. Allow the valve seat insert to cool for a few minutes. This will invite contraction and make removal of the valve seat insert easier.
3. Use a screwdriver ③ to pry the valve seat insert free. Take care not to damage the cylinder head √ .
4. Carefully remove carbon and other foreign material from the cylinder head insert bore.

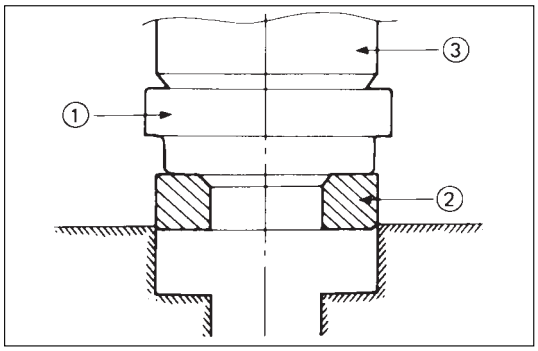

Valve Seat Insert Installation

1. Carefully place the attachment ① (having a smaller outside diameter than the valve seat insert) on the valve seat insert ② .

Note:

The smooth side of the attachment must contact the valve seat insert.

2. Use a bench press ③ to gradually apply pressure to the attachment and press the valve seat insert into place.

Note:

Do not apply an excessive amount of pressure with the bench press. Damage to the valve seat insert will result.

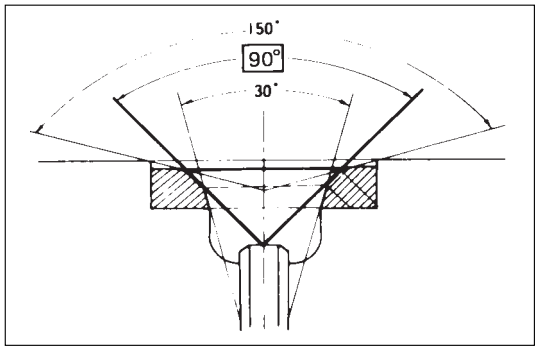

Valve Seat Insert Correction

1. Remove the carbon from the valve seat insert surface.
2. Use a valve cutter (15°, 45°, and 75° blades) to minimize scratches and other rough areas. this will bring the contact width back to the standard value.

   Remove only the scratches and rough areas. Do not cut away too much. Take care not to cut away unblemished areas of the valve seat surface.

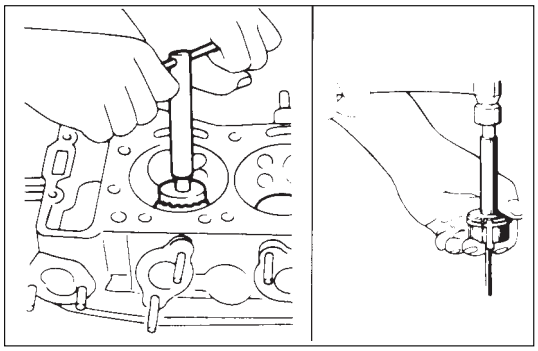

Valve Seat Angle	degree
45	

NOTE:

Use an adjustable valve cutter pilot.
Do not allow the valve cutter pilot to wobble inside the valve guide.

3. Apply abrasive compound to the valve seat insert surface.
4. Insert the valve into the valve guide.
5. Turn the valve while tapping it to fit the valve seat insert.
6. Check that the valve contract width is correct.
7. Check that the valve seat insert surface is in contact with the entire circumference of the valve.

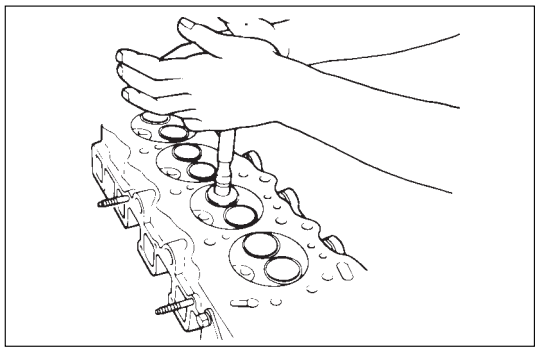

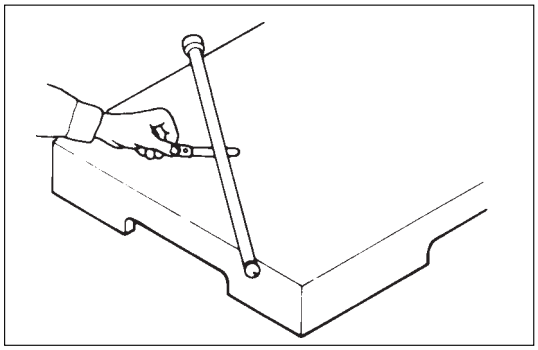

Push Rod Curvature

1. Lay the push rod on a surface plate.
2. Roll the push rod along the surface plate and measure the push rod cuvature with a thickness gauge.

   If the mesure value exceeds the specified limit, the push rod must be replaced.

Push Rod Curvature Limit	mm(in)
0.3 (0.0118)	

3. Visually inspect both ends of the push rod for excessive wear and damage. The push rod must be replaced if these conditions are discovered during inspection.

REASSEMBLY

6. Valve Guide

- Apply engine oil to the outside of the valve guide.

  Using special tool, drive in a new valve guide from the cmashft side.

Valve guide replacer: 9-8523-1212-0

5. Valve Stem Oil Seal

- Using special tool, drive in a new oil seal

Oil special tool, drive in anew oil seal

Oil seal installer: 5-8840-2033-0

4. Valve

- Apply engine oil to the outside of the valve stem.

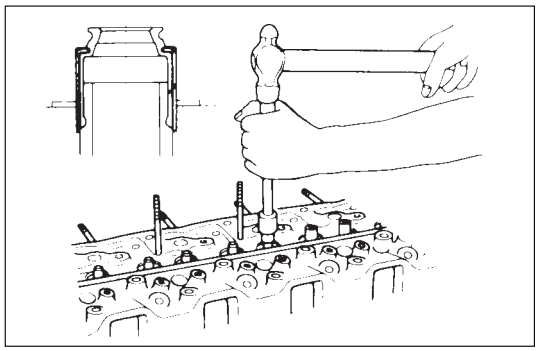

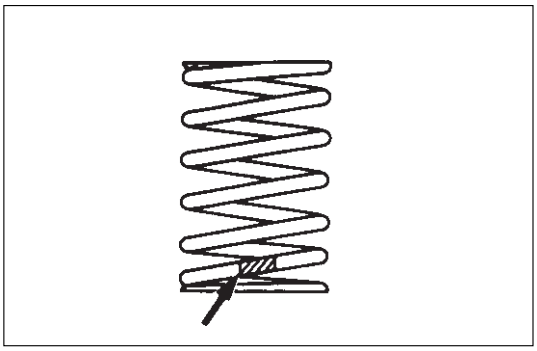

3. Valve Spring

- Attach the valve seat to the upper spring seat. The painted area of the valve spring should be facing downward.

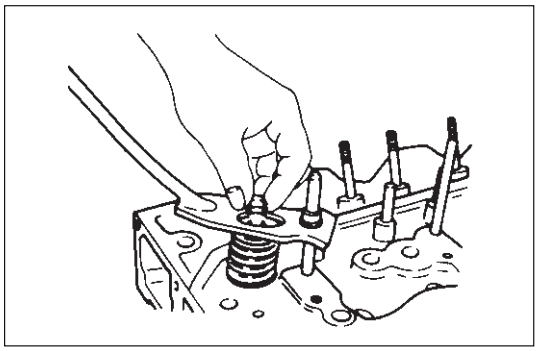

2. Split Collar

- Use a spring compressor to push the valve spirng into position.
- Install the spring seat split collar.
- Set the split collar by tapping lightly around the head of the colar with a rubber hammer.

Valve spring compressor: 9-8523-1423-0 (J-29760)

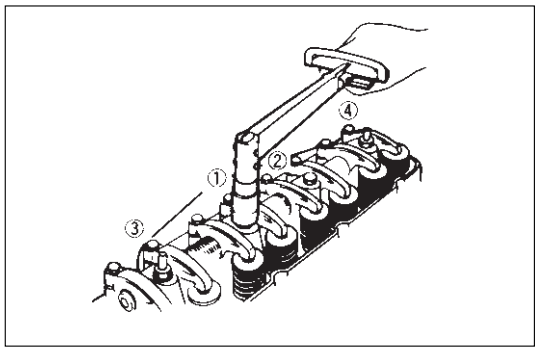

1. Rocker Arm Assembly

N·m(Kg·m/lb·ft)
54 (5.5/40)

CAMSHAFT, TAPPET

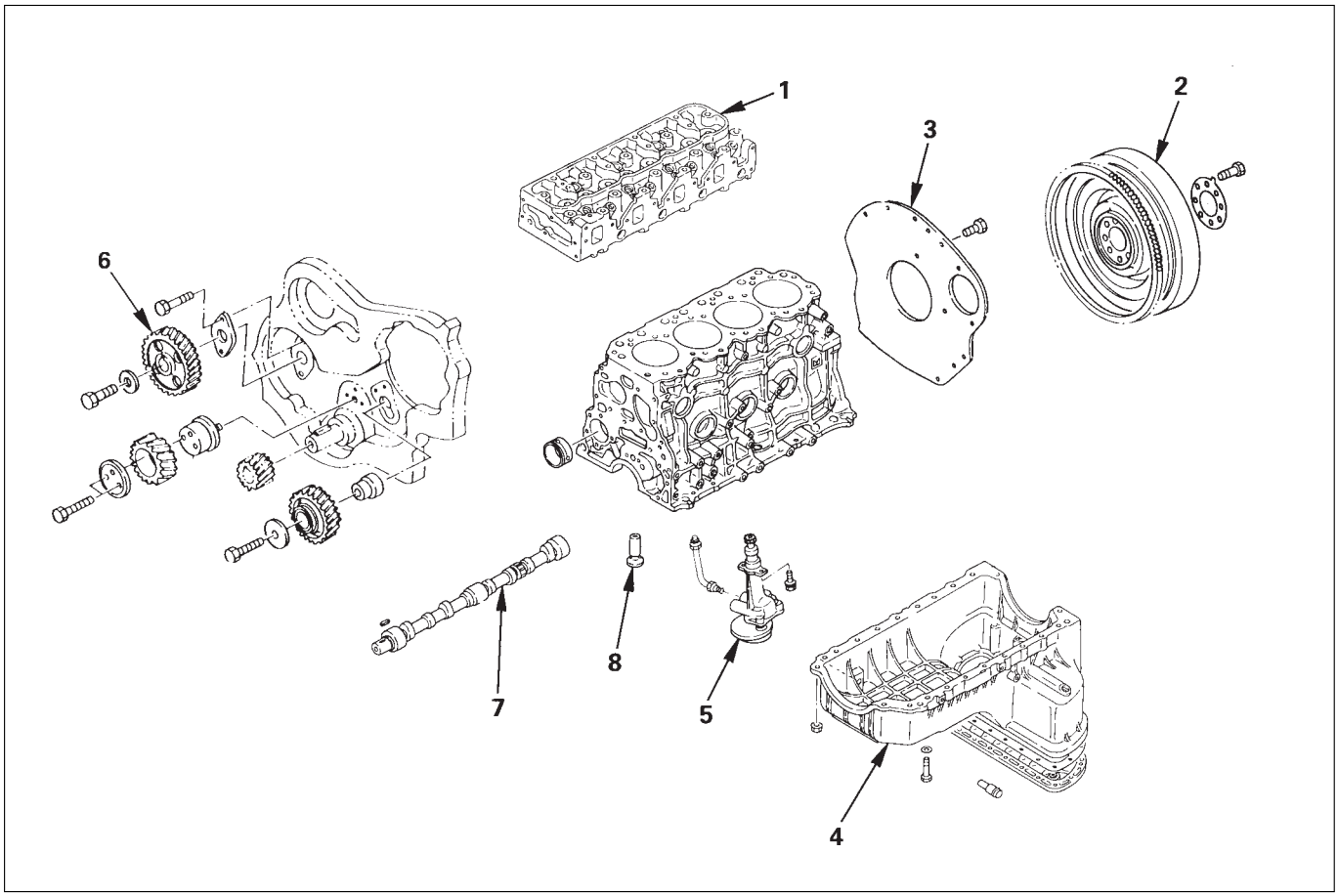

DISASSEMBLY

1. **Cylinder Head Assembly**
2. **Flywheel**
3. **Cylinder Block rear Plate**
4. **Crankcase Assembly**
5. **Oil Pump Assembly**

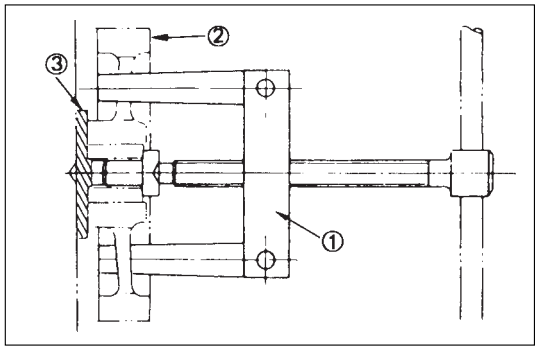

6. **Camshaft Timing Gear**
   - Install the stopper bolt ① to the timing pulley to prevent it from turning.
   - Use the timing pulley puller ② to remove the pulley.

     Camshaft Timing Pulley Puller: 5-8840-0086-0
7. **Camshaft Thrust Plate**

8. **Camshaft**
9. **Tappet**

INSPECTION AND REPAIR

Make the necessary adjustments, repairs, and part replacements if excessive wear or damage is discovered during inspection.

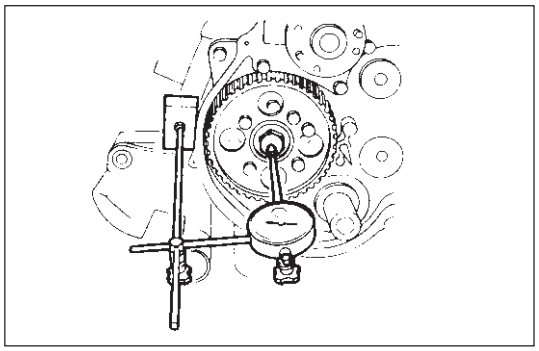

1. Measure the Camshaft Thrust Clearance.

- Use a dial indicator to measure the camshaft end play.
  This must be done before removing the camshaft gear.
  If the camshaft end play exceeds the specified limit, the thrust plate must be replaced.

Camshaft End Play — mm(in)

Standard	Limit
0.08 (0.0031)	0.2 (0.0079)

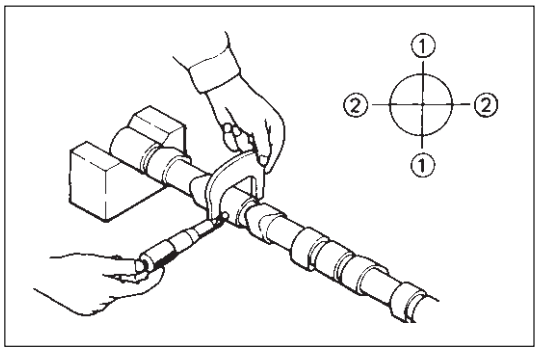

2. Camshaft Journal Diameter

- Use a micrometer to measure each camshaft journal diameter in two directions (① and ②). If the measured value is less than the specified limit, the camshaft must be replaced.

Journal Diameter — mm(in)

Standard	Limit
49.945-49.975 (1.9663-1.9675)	49.60 (1.9528)

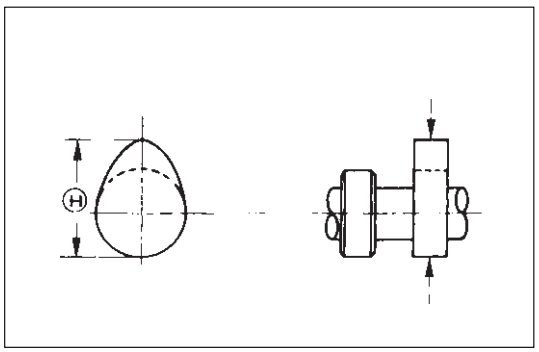

3. Cam Height

- Measure the cam height Ⓗ with a micrometer. If the measured value is less than the specified limit, the camshaft must be replaced.

Cam Height — mm(in)

Standard	Limit
42.02 (1.6543)	41.65 (1.6398)

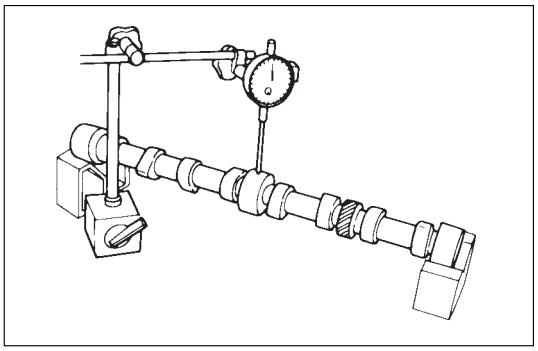

4. Camshaft Run-Out

- Mount the camshaft on V-blocks.
- Measure the run-out with a dial indicator.
  If the measured value exceeds the specified limit, the camshaft must be replaced.

Run-Out mm(in)

Standard	Limit
0.02 (0.0008) or less	0.10 (0.0039)

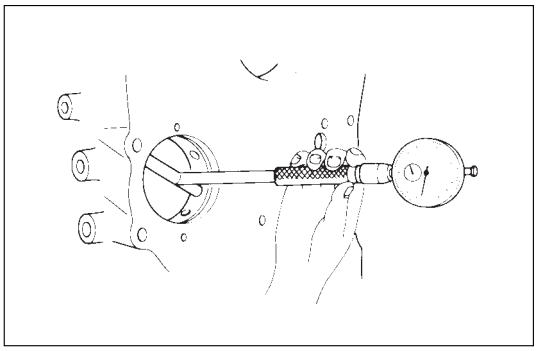

5. Camshaft and Camshaft Bearing Clearance

- Use an inside dial indicator to measure the camshaft bearing inside diameter.

Camshaft Bearing Inside Diameter mm(in)

Standard	Limit
50.00 – 50.03 (1.9685 – 1.9697)	50.08 (1.9716)

Camshaft Bearing Clearance mm(in)

Standard	Limit
0.025 – 0.085 (0.0010 – 0.0033)	0.12 (0.0047)

- If the clearance between the camshaft bearing inside diameter and the journal exceeds the specified limit, the camshaft bearing must be replaced.

Camshaft Bearing Replacement

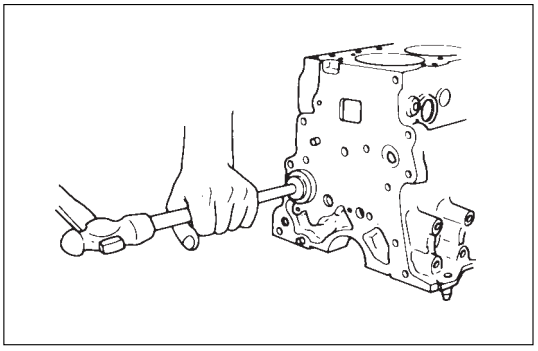

Camshaft Bearing Removal

1. Remove the cylinder body plug plate.
2. Use the bearing replacer to remove the camshaft bearing.
   Bearing Replacer: 5-8840-2038-0

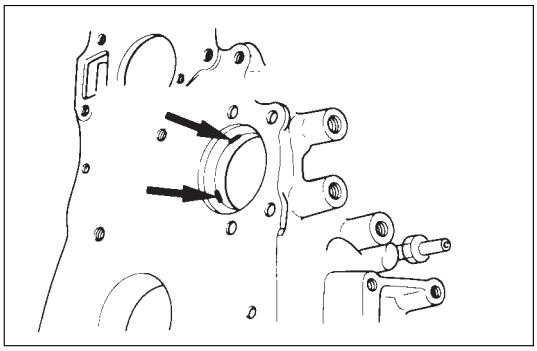

Camshaft Bearing Installation

1. Align the bearing oil holes with the cylinder body oil holes.
2. Use the replacer to install the camshaft bearing.
   Bearing Replacer: 5-8840-2038-0

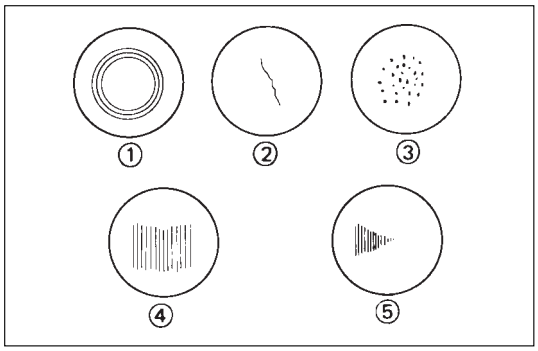

TAPPET

Visually inspect the tappet camshaft contact surfaces for pitting, cracking, and other abnormal conditions. The tappet must be replaced if any of these conditions are present.
Refer to the illustration at the left.

① Normal contact
② Cracking
③ Pitting
④ Irregular contact
⑤ Irregular contact

NOTE:

The tappet surfaces are spherical. Do not attempt to grind them with an oil stone or similar tool in an effort to repair the tappet. If the tappet is damaged, it must be replaced.

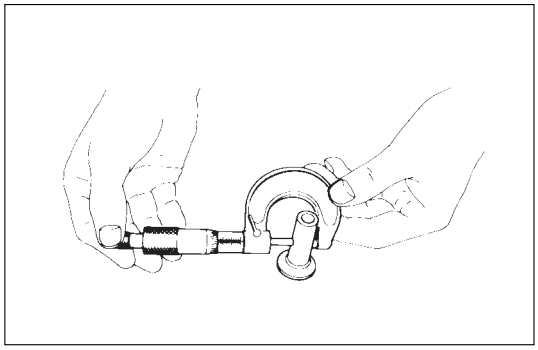

Tappet Outside Diameter

1. Measure the tappet outside diameter with a micrometer. If the measured value is less than the specified limit, the tappet must be replaced.

Tappet Outside Diameter mm(in)

Standard	Limit
12.97 – 12.99 (0.5106 – 0.5114)	12.95 (0.5098)

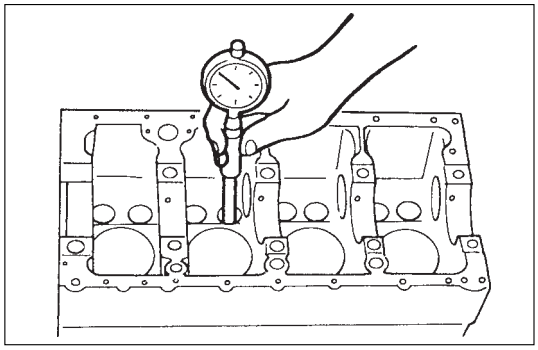

2. Measure the inside diameter tappet on the cylinder block and calculate the clearance.
   If the clearance exceeds the limit, replace tappet or/and cylinder block.

Clearance Between Tappet and Cylinder Body mm(in)

Standard	Limit
0.03 (0.0012)	0.10 (0.0039)

REASSEMBLY

9. Tappet

1) Apply a coat of engine oil to the tappet and the cylinder body tappet insert holes.
2) Locate the position mark applied at disassembly (if the tappet is to be reused).

NOTE:

The tappet must be installed before the camshaft.

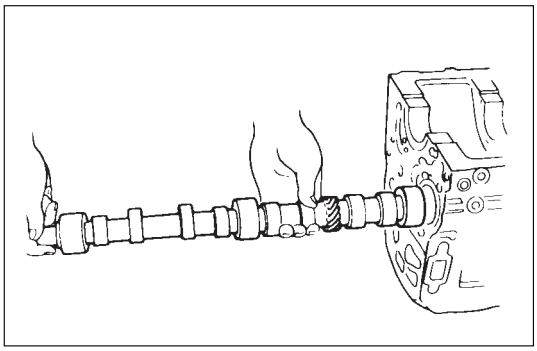

8. Camshaft

1) Apply a coat of engine oil to the camshaft and the camshaft bearings.
   Install the camshaft to the cylinder body.
   Take care not to damage the camshaft bearings.

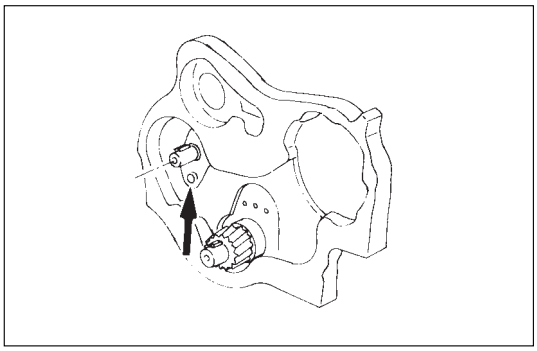

7. Camshaft Thrust Plate

Install the thrust plate to the cylinder body and tighten the thrust plate bolts to specified torque.

N·m(Kg·m/lb·ft)
18 (1.8/13)

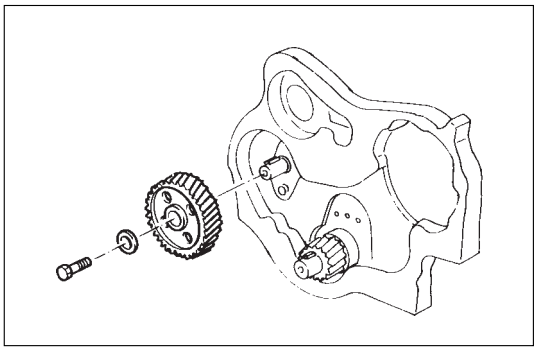

6. Camshaft Timing Gear

1) Install the camshaft timing gear to the camshaft.
   The timing gear mark ("Y - Y") must be facing outward.
2) Tighten the timing gear to the specified torque.

N·m(Kg·m/lb·ft)
64 (6.5/47)

5. Oil Pump Assembly

- Refer to Section 6A2 “Oil Pump Installation”.

4. Crankcase Assembly

- Refer to Section 6A2 “Crankcase”.

3. Cylinder Block Rear Plate

- Tighten cylinder block rear plate fixing bolts to the specified torque.

N·m(kg·m/lb·ft)
82 (8.4/61)

2. Flywheel

- Refer to Section 6A2 “Crankshaft Installation”.

1. Cylinder Head Assembly

- Refer to Section 6A2 “Cylinder Head Installation”.

ROCKER ARM ASSEMBLY

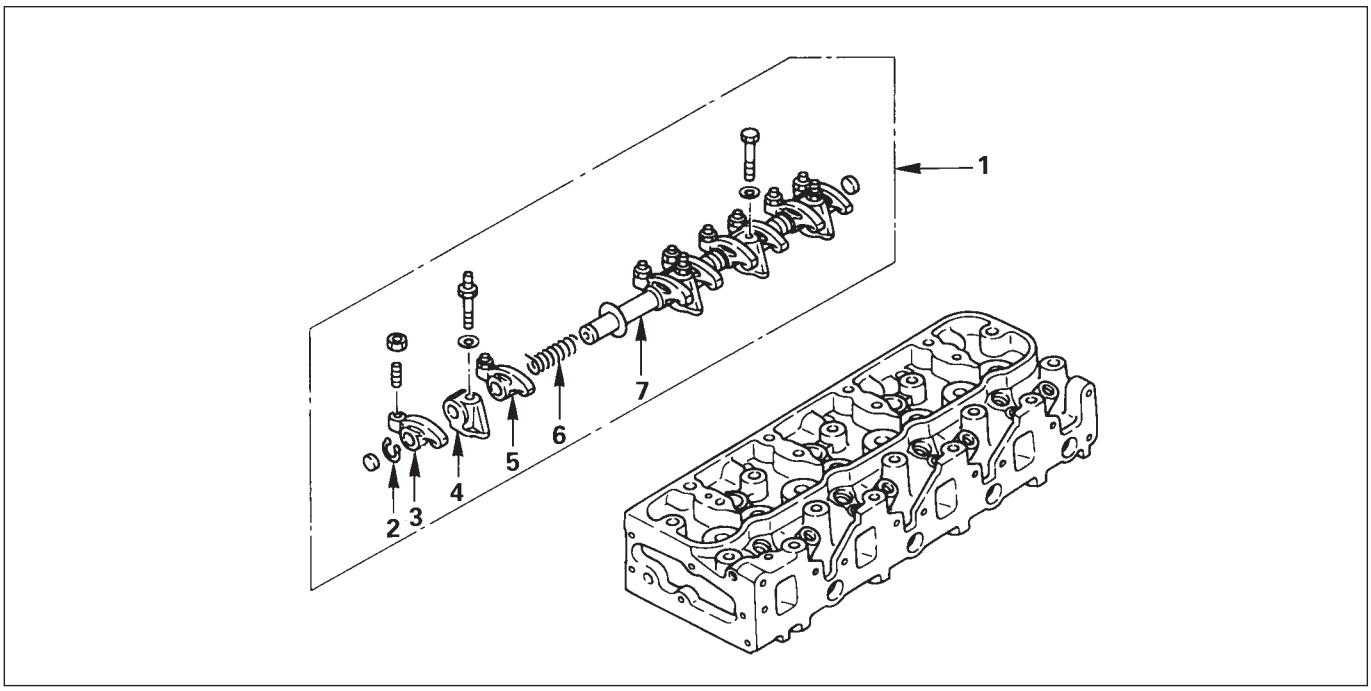

DISASSEMBLY

1. **Rocker Arm Shaft Assembly**
2. **Rocker Arm Shaft Snap Ring**
3. **Rocker Arm**
4. **Rocker Arm Shaft Bracket**
5. **Rocker Arm**
6. **Rocker Arm Shaft Spring**
7. **Rocker Arm Shaft**

INSPECTION AND REPAIR

Make the necessary adjustments, repairs, and part replacements if excessive wear or damage is discovered during inspection.

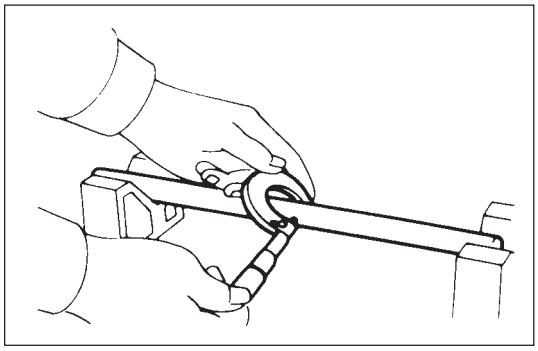

Use a micrometer to measure the rocker shaft outside diameter at the point where the rocker arm moves on the rocker shaft.
Replace the rocker shaft if the diameter exceeds the specified limit.

Rocker Arm Shaft Outside Diameter mm(in)

Standard	Limit
18.98 – 19.00 (0.7472 – 0.7480)	18.9 (0.7441)

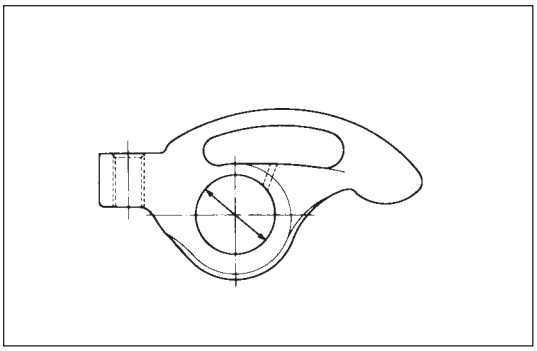

Oil Clearance

1. Use either a vernier caliper or a dial indicator to measure the rocker arm inside diameter.

Rocker Arm Inside Diameter mm(in)

Standard	Limit
19.01 – 19.03 (0.7484 – 0.7492)	19.100 (0.7520)

2. Measure the rocker arm shaft outside diameter.
   If the measured value exceeds the specified limit, replace either the rocker arm or the rocker arm shaft.

Clearance Between Rocker Arm and Rocker Arm Shaft mm(in)

Standard	Limit
0.01 – 0.05 (0.0004 – 0.0019)	0.20 (0.0079)

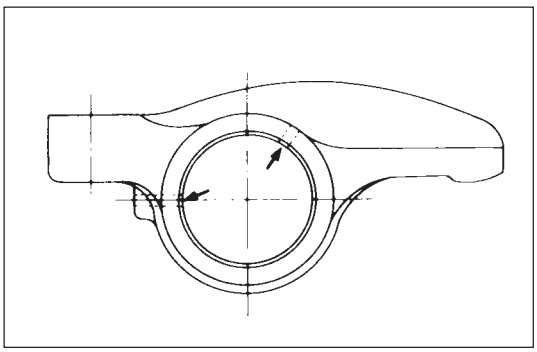

3. Check that the rocker arm oil port is free of obstructions.
   If necessary, use compressed air to clean the rocker arm oil port.

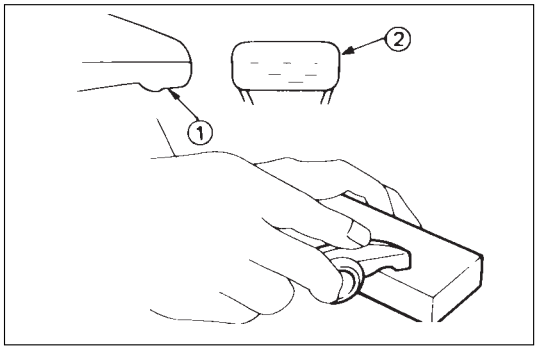

Rocker Arm Correction

Inspection the rocker arm valve stem contact surface for step wear ① and scoring ②.
If the contact surfaces have light step wear or scoring, they may be honed with an oil stone.
If the step wear or scoring is severe, the rocker arm must be replaced.

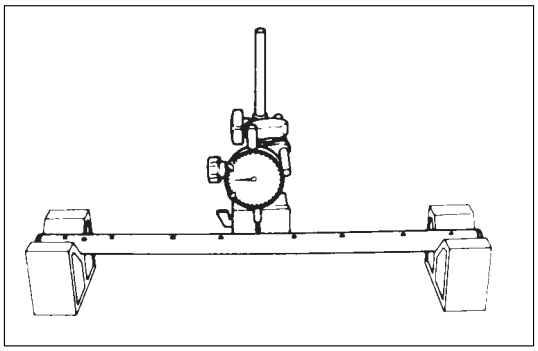

Rocker Arm Shaft Run-Out

1. Place the rocker arm shaft on a V-block.
2. Use a dial indicator to measure the rocker arm shaft central portion run-out.
   If the run-out is very slight, correct the rocker arm shaft run-out with a bench press. The rocker arm must be at cold condition.
   If the measured rocker arm shaft run-out exceeds the specified limit, the rocker arm shaft must be replaced.

Rocker Arm Shaft Run-Out mm(in)

Limit	0.3 (0.0118)

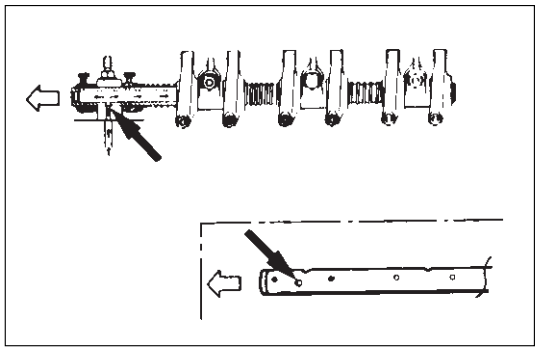

REASSEMBLY

7. **Rocker Arm Shaft**
   - Apply a light coat of engine oil to the rocker arm shafts.
   - Position the rocker arm shaft with the large oil hole (4ϕ) facing the front of the engine.
   - Install the rocker shaft together with the rocker arm, the rocker arm shaft bracket, and the spring.
6. **Rocker Arm Shaft Spring**
5. **Rocker Arm**
4. **Rocker Arm Shaft Bracket**
3. **Rocker Arm**
2. **Rocker Arm Shaft Snap Ring**

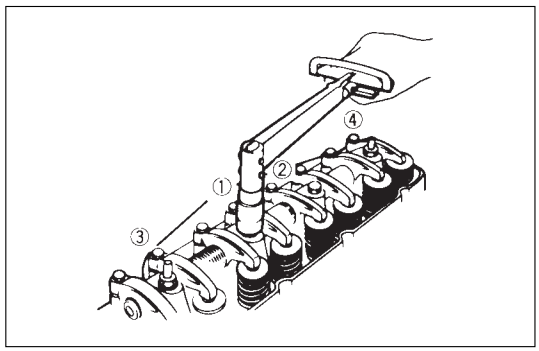

1. **Rocker Arm Shaft Assembly**
   - Install the rocker arm shaft assembly in cylinder head.
   - Tighten the rocker arm shaft fixing bolts to the specified torque.

OIL PUMP

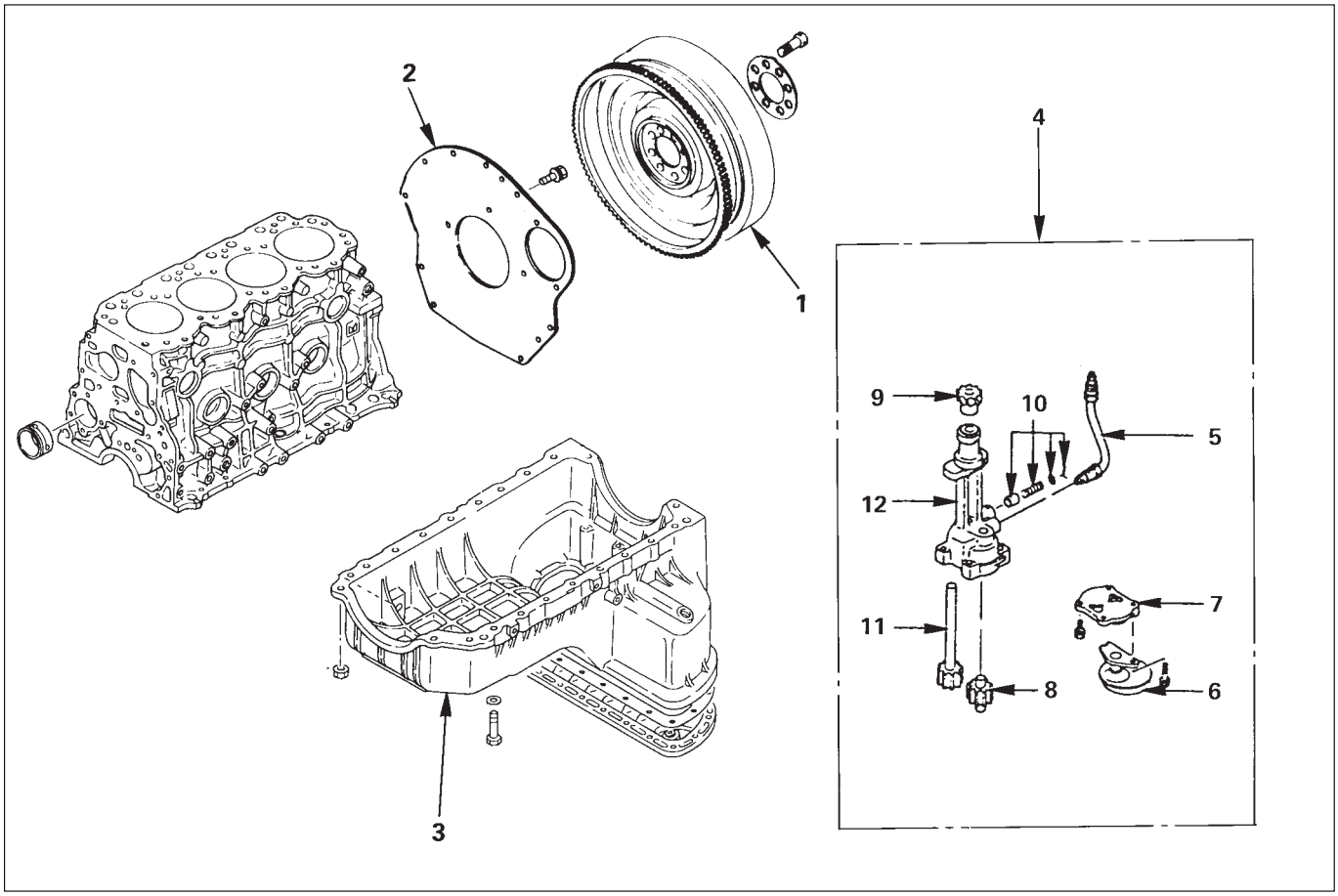

DISASSEMBLY

1. **Flywheel**
2. **Cylinder Block Rear Plate**
3. **Crankcase Assembly**
   - Refer to section 6A2 “Crankcase”.
4. **Oil Pump Assembly**
5. **Oil Pipe**
6. **Strainer Assembly**
7. **Pump Cover**
8. **Driven Gear**
9. **Pinion Gear**
10. **Relief Valve**
11. **Drive Shaft**
12. **Oil Pump Body**

INSPECTION AND REPAIR

Make the necessary adjustments, repairs, and part placements if excessive wear or damage is discovered during inspection.

Body and gears

The pump assembly must be replaced if one or more of the conditions below is discovered during inspection.

- Badly worn or damaged driven gear guide.
- Badly worn or damaged gear teeth.

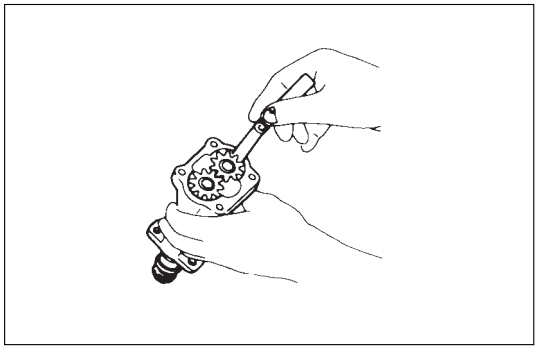

Gear Teeth and Body Inner Wall Clearance

- Use a feeler gauge to measure the clearance between the gear teeth and the body inner wall.
- If the clearance between the gear teeth and the body inner wall exceeds the specified limit, either the gear or the body must be replaced.

Gear Teeth and Body
Internal Wall Clearance — mm(in)

Standard	Limit
0.14 (0.0055)	0.20 (0.0079)

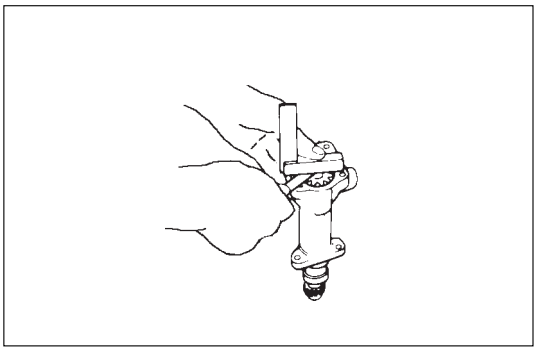

Gear and Body Clearance

- Use a feeler gauge to measure the clearance between the body and the gear.
- If the clearance between the gear and the body exceeds the specified limit, the body must be replaced.

Gear and Body Clearance mm(in)

Standard	Limit
0.06 (0.0024)	0.15 (0.0059)

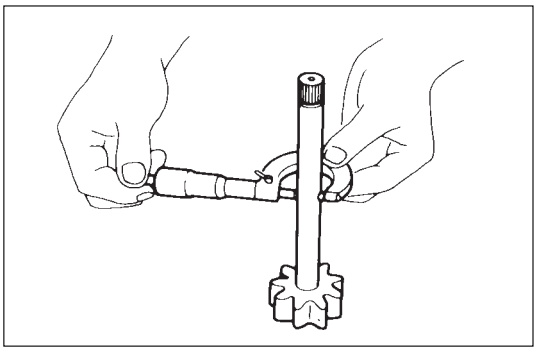

Drive Shaft and Oil Pump Body Clearance

- Use a micrometer to measure the drive shaft outside diameter.
- Use an inside dial indicator to measure the pump body inside diameter.
- If the clearance between the drive shaft and the oil pump body exceeds the specified limit, the oil pump assembly must be replaced.

Drive Shaft and Oil Pump Body Clearance mm(in)

Standard	Limit
0.04 (0.0016)	0.20 (0.0079)

REASSEMBLY

12. Oil Pump Body

11. Drive Shaft

10. Relief Valve

9. Pinion Gear

8. Driven Gear

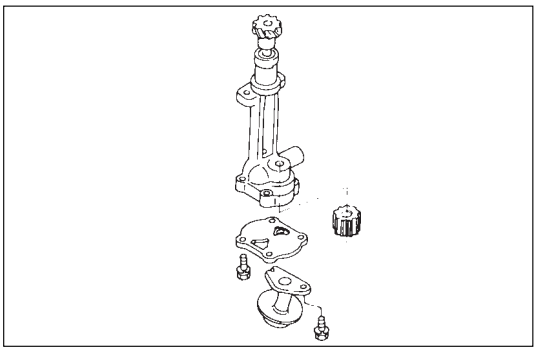

7. Pump Cover

6. Strainer Assembly

- Install the strainer assembly and tighten the strainer assembly fixing bolts.

N·m(kg·m/lb·ft)

16 (1.6/12)

5. Oil Pipe

4. Oil Pump Assembly

- Apply molybdenum mixed engine oil to drive gear of camshaft and driven gear of oil pump.
- Tighten the oil pump fixing bolt to the specified torque

N·m(kg·m/lb·ft)

☡	19 (1.9/14)

3. Crankcase Assembly

- Refer to Section 6A2 “Crankcase”.

2. Cylinder Block Rear Plate

- Align the rear plate with the cylinder body knock pins. Tighten the rear plate to the specified torque.

N·m(kg·m/lb·ft)

☡	82 (8.4/61)

1. Flywheel

- Refer to Section 6A2 “Crankshaft and Main Bearing”.

CRANKSHAFT

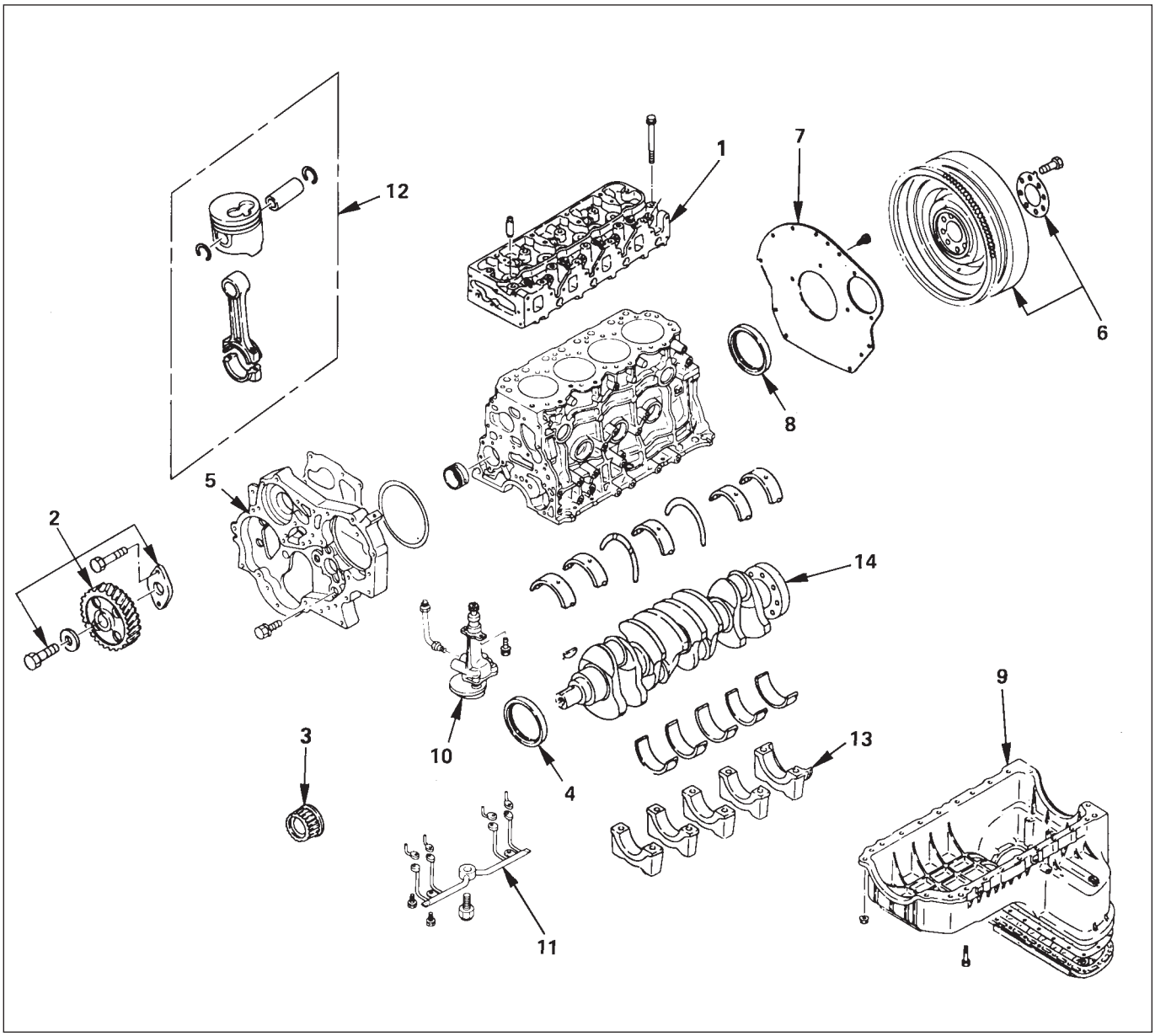

DISASSEMBLY

1. **Cylinder Head**
   - Refer to “Cylinder head” in Section 6A2.
2. **Camshaft Timing Gear**
   - Refer to “Camshaft” in Section 6A2.
3. **Crankshaft Timing Gear**
4. **Crankshaft Front Oil Seal**
5. **Timing Gear Case**
6. **Flywheel**
7. **Cylinder Block Rear Plate**

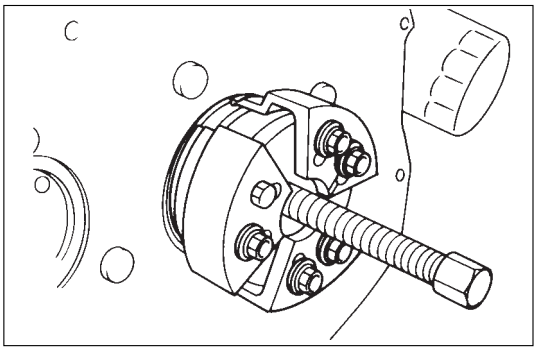

8. Crankshaft Rear Oil Seal

- With the oil seal pushed in deep, install the special tool as shown in the illustration and remove the oil seal.

  Oil Seal Remover : 5-8840-2362-0

9. Crankcase Assembly

- Refer to “Crankcase” in Section 6A2.

10. Oil Pump Assembly

11. Piston Cooling Oil Pipe

12. Piston and Connecting Rod Assembly

13. Main Bearing Cap

14. Crankshaft

INSPECTION AND REPAIR

Make the necessary adjustments, repairs, and part replacements if excessive wear or damage is discovered during inspection.

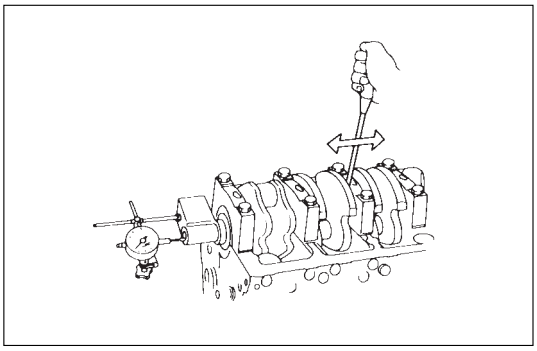

1. Crankshaft

Thrust clearance

Set the dial indicator as shown in the illustration and measure the crankshaft thrust clearance.

If the thrust clearance exceeds the specified limit, replace the thrust bearing as a set.

mm(in)

Standard	Limit
0.10 (0.0039)	0.30 (0.0118)

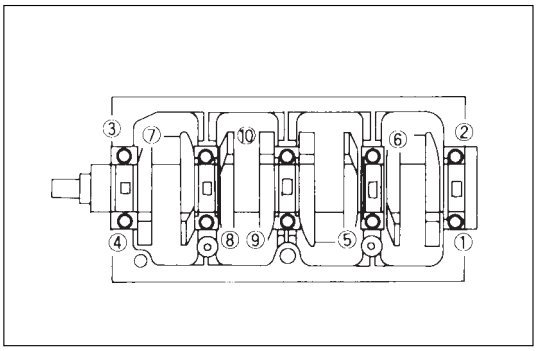

2. Main bearing clearance

1) Remove the main bearing caps in the sequence shown in the illustration
   Arrange the removed main bearing caps in the cylinder number order.
2) Remove the crankshaft. Remove the main bearings.
3) Clean the upper and lower bearings as well as the crankshaft main journal.
4) Check the bearings for damage or excessive wear. The bearings must be replaced as a set if damage or excessive wear is discovered during inspection.
5) Set the upper bearings and the thrust washers to their original positions. Carefully install the crankshaft.
6) Set the lower bearings to the bearing cap original position.
7) Apply plastigage to the crankshaft journal unit as shown in the illustration.
8) Install the main bearing caps. Apply engine oil to the bolt threads and the seats. Tighten the bolts to the specified torque.

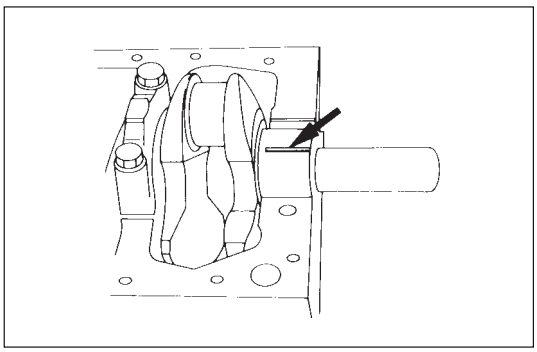

N·m(kg·m/lb·ft)

167 (17/123)

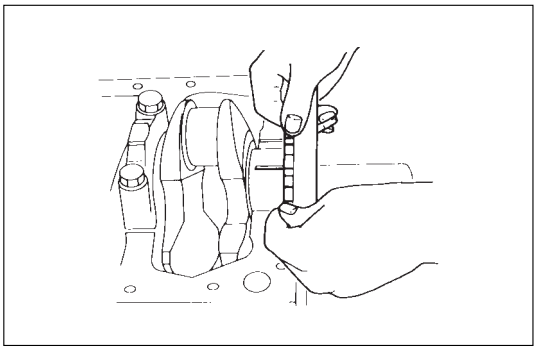

NOTE:

Do not allow the crankshaft to rotate.

9) Remove the main bearing caps.
10) Measure the plastigage width and determine the oil clearance. If the oil clearance exceeds the specified limit, replace the main bearings as a set and/or replace the crankshaft.
11) Clean the plastigage from the bearings and the crankshaft.
Remove the crankshaft and the bearings.

mm(in.)

Standard	Limit
0.031 – 0.063 (0.0012 – 0.0025)	0.11 (0.0043)

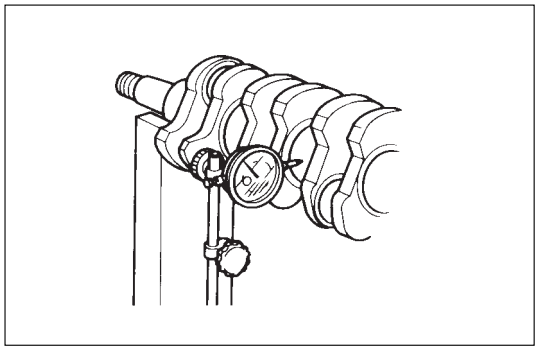

3. Run-out

1) Carefully set the crankshaft on the V-blocks. Slowly rotate the crankshaft and measure the runout. If the crankshaft runout exceeds the specified limit, the crankshaft must be replaced.

Run-Out mm(in)

Standard	Limit
0.05 (0.0020) or less	0.08 (0.0031)

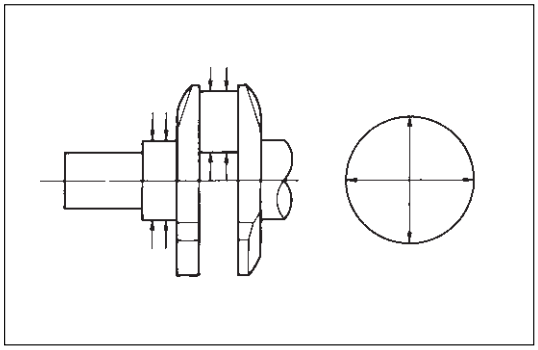

Measure the diameter and the uneven wear of main journal and crank pin.
If the crankshaft wear exceeds the specified limit, crankshaft must be replaced.

mm(in)

	Standard	Limit	Uneven wear limit
Main journal diameter	69.917-69.932 (2.7526-2.7532)	69.91 (2.7524)	0.05 (0.0020) or less
Crank pin diameter	52.915-52.930 (2.0833-2.0839)	52.90 (2.0843)	0.08 (0.0031)

Crankshaft inspection

Inspect the surface of the crankshaft journals and crank pins for excessive wear and damage.
Inspect the oil seal fitting surfaces for excessive wear and damage.
Inspect the oil ports for obstructions.

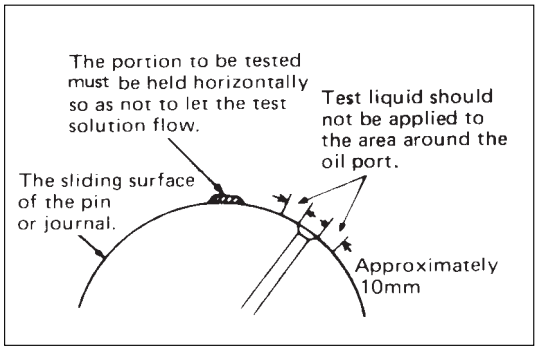

Crankshaft tufftriding inspection

The portion to be tested must be held horizontally so as not to let the test solution flow.
Test liquid should not be applied to the area around the oil port.
The sliding surface of the pin or journal.
Approximately 10mm

NOTE:

To increase crankshaft strength,Tufftride Method (Soft nitriding) has been applied. Because of this, it is not possible to regrind the crankshaft surfaces.

1. Use an organic cleaner to thoroughly clean the crankshaft. There must be no traces of oil the surfaces to be inspected.
2. Prepare a 5 - 10% solution of ammonium cupric chloride (dissolved in distilled water).
3. Use a syringe to apply the solution to the surface to be inspected.
   Hold the surface to be inspected perfectly horizontal to prevent the solution from running.

NOTE:

Do not allow the solution to come in contact with the oil ports and their surrounding area.

Testing

1. Wait for thirty to forty seconds.
   If there is no discoloration after thirty or forty seconds, the crankshaft is usable.
   If discoloration appears (the surface being tested will become the color copper), the crankshaft must be replaced.
2. Steam clean the crankshaft surface immediately after completing the test.

NOTE:

The ammonium cupric chloride solution is highly corrosive. Because of this, it is imperative that the surfaces being tested be cleaned immediately after completing the test.

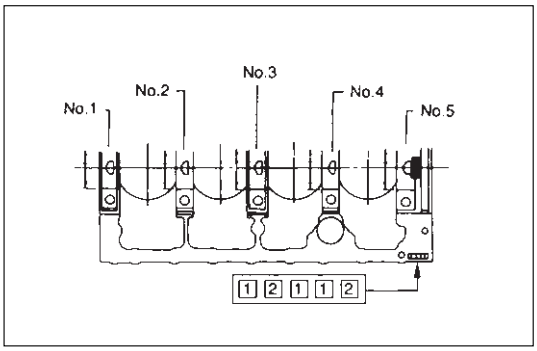

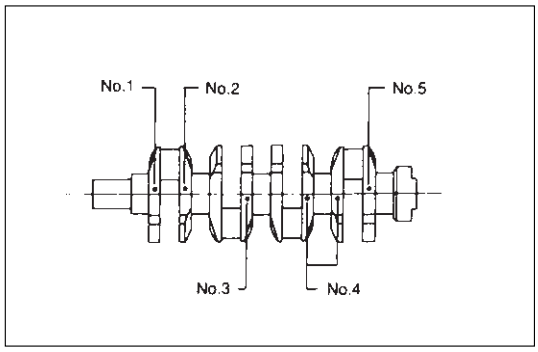

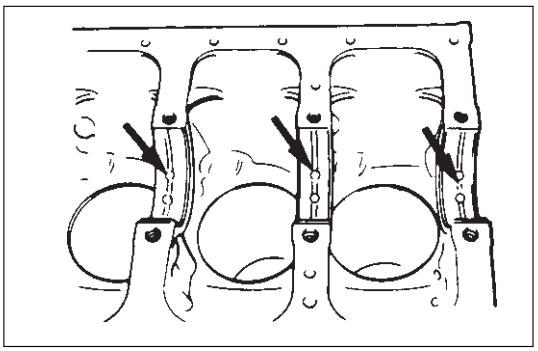

Crankshaft Bearing Selection

When installing new crankshaft bearings or replacing old bearings, refer to the selection table below.
Select and install the new crankshaft bearings, paying close attention to the cylinder body journal hole 1 diameter size mark and the crankshaft journal 2 diameter size mark.

Crankshaft Bearing Housing Grade Mark Position

Crankshaft bearing housing grade marks 1 or 2 are stamped on the rear right hand side of the cylinder body.

Example:

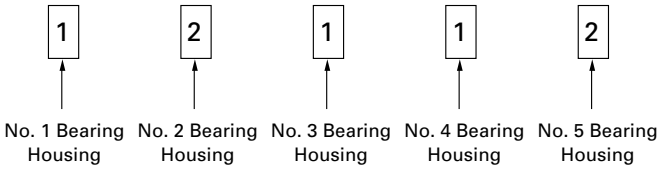

Crankshaft Journal Grade Mark Position

The crankshaft journal grade marks (1 or –) are stamped on each crankshaft journal web.
The crankshaft journal and bearing clearance must be the same for each position after installation of the crankshaft and the crankshaft bearings.

Note:

The crankshaft journal mark No. 4 is stamped on crankshaft No. 4 journal web front side or rear side.

NOTE:

Although all upper journal bearings (cylinder body side) have oil grooves and holes, all lower bearings (bearing cap side) have no groove and hole.
Play close attention to the distinction during the installation procedure.

Main Bearing Bore Diameter mm(in.)		Crankshaft Main Journal Diameter mm(in.)		Crankshaft Bearing Grade Mark	Oil Clearance mm (in.)
Size Mark	Inside Diameter	Grade Mark	Outside Diameter		
1	73.987 ~ 74.000 (2.9129 ~ 2.9134)	1 or -	69.927 ~ 69.932 (2.7530 ~ 2.7532)	Black	0.035 ~ 0.061 (0.0014 ~ 0.0024)
		2 or - -	69.922 ~ 69.927 (2.7528 ~ 2.7530)	Blue	0.032 ~ 0.058 (0.0013 ~ 0.0023)
		3 or - - -	69.917 ~ 69.922 (2.7526 ~ 2.7528)		0.037 ~ 0.063 (0.0015 ~ 0.0025)
2	73.975 ~ 73.987 (2.9124 ~ 2.9129)	1 or -	69.927 ~ 69.932 (2.7530 ~ 2.7532)	Green	0.031 ~ 0.056 (0.0012 ~ 0.0022)
		2 or - -	69.922 ~ 69.927 (2.7528 ~ 2.7530)		0.036 ~ 0.048 (0.0014 ~ 0.0019)
		3 or - - -	69.917 ~ 69.922 (2.7526 ~ 2.7528)	Black	0.033 ~ 0.058 (0.0013 ~ 0.0023)

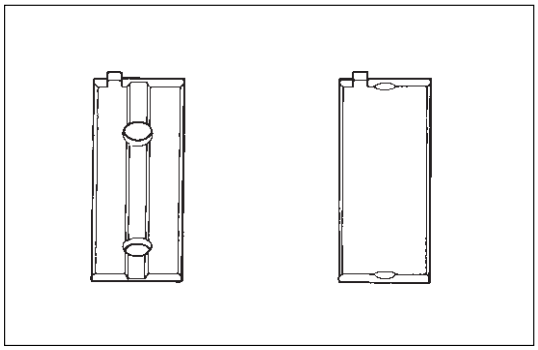

REASSEMBLY

14. Crankshaft

- Install the main bearings to the cylinder body and the main bearing caps.
- Be sure that they are positioned correctly.
- Apply new engine oil to the upper and lower main bearing faces.
- Carefully mount the crankshaft.
- Apply engine oil to the thrust washer.

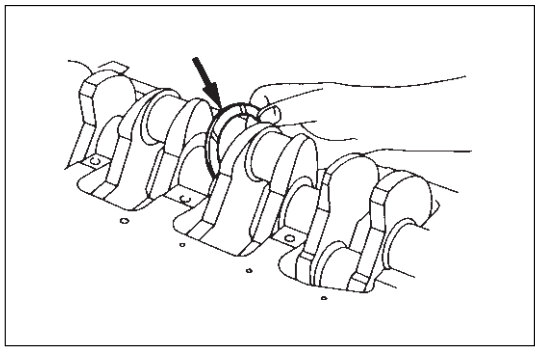

- Assemble the thrust washer to the No. 3 bearing journal. The oil grooves must face the crankshaft.

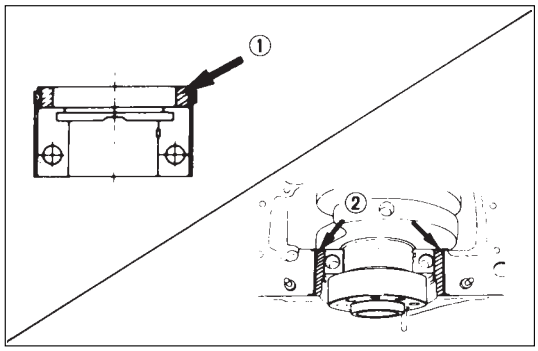

13. Main Bearing Cap

- Apply the recommended liquid gasket or its equivalent to the No. 5 crankshaft bearing cap ① as shown in the illustration.
- Install the arch gasket ② to the No. 5 bearing cap. Use your fingers to push the arch gasket into the bearing cap groove.

NOTE

Take care not to scratch the arch gasket outer surface.

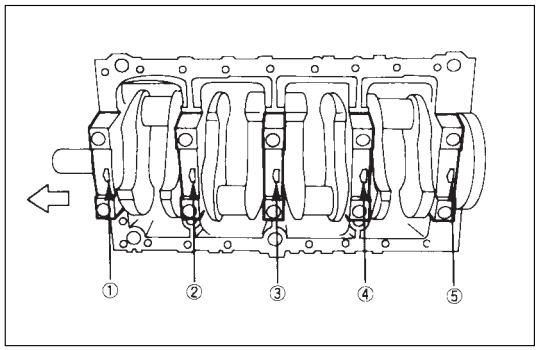

- Apply the recommended liquid gasket or its equivalent to the No. 5 crankshaft bearing cap cylinder body fitting surfaces at points ③ and ④ shown in the illustration.

NOTE:

Be sure that the bearing cap fitting surface is completely free of oil before applying the liquid gasket.
Do not allow the liquid gasket to obstruct the cylinder thread holes and bearings.

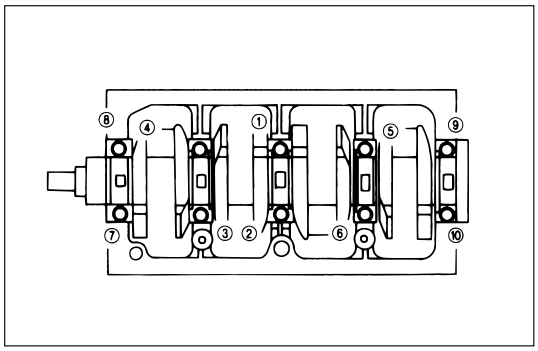

- Install the bearing caps with the bearing cap head arrow mark facing the front of the engine.
- Apply engine oil to the crankshaft bearing cap bolts.
- Tighten the crankshaft bearing cap bolts to the specified torque a little at a time in the sequence shown in the illustration.

N·m(kg·m/lb·ft)

167 (17.0/123)

NOTE:

Check to see that the crankshaft turns smoothly by rotating it manually.

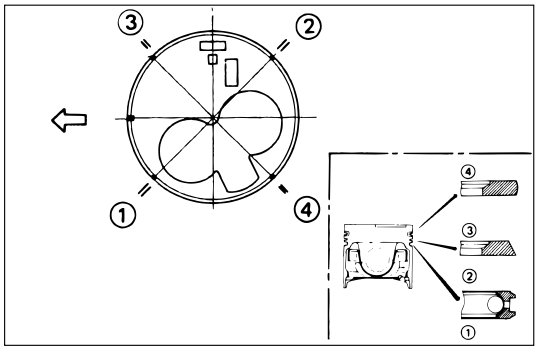

12. Piston and Connecting Rod Assembly

- Apply engine oil to the cylinder bores, the connecting rod bearings and the crankshaft pins and each piston ring and piston.
  Check to see that the piston ring end gaps are correctly positioned.

- Insert the piston/connecting rod assemblies into each cylinder with the piston ring compressor.
  Piston ring compressor: 5-8840-9018-0
  The front marks must be facing the front of the engine.
- Match the numbered caps with the numbers on the connecting rods. Align the punched marks on the connecting rods and caps.
- Apply engine oil to the threads and seating faces of the nuts.
- Tighten the cap nuts in 2 steps, using angular tightening method as shown in the following specifications.

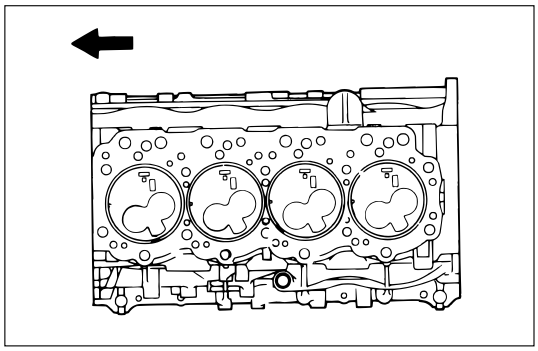

N·m (kg·m/lb·ft)

1st step	2nd step
29 (3.0/22)	45° ~ 60°

After tightening the cap nuts, check to see that the crankshaft rotates smoothly.

11. Piston Cooling Oil Pipe

- Tighten the bolt and oiling jet plug to the specified torque

N·m (kg·m/lb·ft)

M6	8 (0.8/6)
M8	19 (1.9/14)

Oiling Jet Plug N·m(kg·m/lb.ft)

29 (3.0/22)

10. Oil Pump Assembly

1) Prepare a solution of 80% engine oil and 20% molybdenum disulfide.
2) Apply an ample coat of the solution to the teeth of the oil pump pinion.
3) Install the oil pump and tighten the bolts to the specified torque.

N·m(kg·m/lb·ft)

19 (1.9/14)

NOTE:

Take care not to damage the O-rings when tightening the oil pipe bolts.

9. Crankcase Assembly

- Refer to "Crankcase" Section 6A2

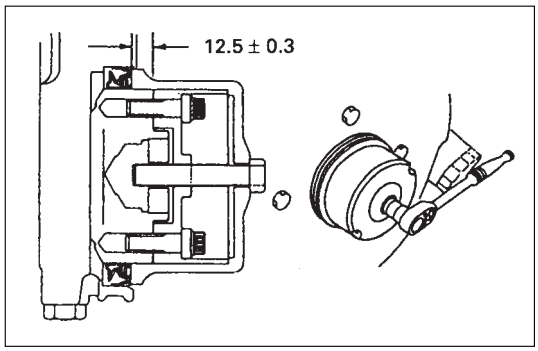

8. Crankshaft Rear Oil Seal

1) Tighten the adapter to the crankshaft rear and section with 2 bolts.
2) Insert the oil seal into the peripheral section of the adapter,
3) Insert the sleeve into the adapter section, and 1) tighten it with a bolt (M12 x 1.75L = 70) until the adapter section hits the sleeve.
4) Remove the adapter and the sleeve.
5) With the seal pressed in, check the dimension of the oil seal section.

Standard Dimension = 12.5 ± 0.3 mm

Oil Seal Installer: 5-8840-2359-0

7. Cylinder Block Rear Plate

Align the rear plate with the cylinder body knock pins. Tighten the rear plate to the specified torque.

N·m(kg·m/lb·ft)

82 (8.4/61)

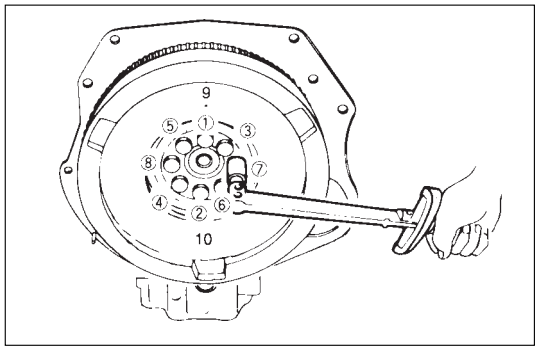

6. Flywheel

1) Thoroughly clean and remove the oil from the threads of crankshaft.
2) Mount the flywheel on the crankshaft and then install the washer.
3) Align the flywheel with the crankshaft dowel pin.
4) Tighten the flywheel bolts to the specified torque in the numerical order shown in the illustration.

N·m(kg·m/lb·ft)

118 (12.0/87)

5. Timing Gear Case

1) Install the timing gear case to the cylinder body.

NOTE:

Take care not to twist the front oil seal.

2) Tighten the timing gear case bolt together with the timing gear case gasket to the specified torque.

N·m(kg·m/lb·ft)
19 (1.9/14)

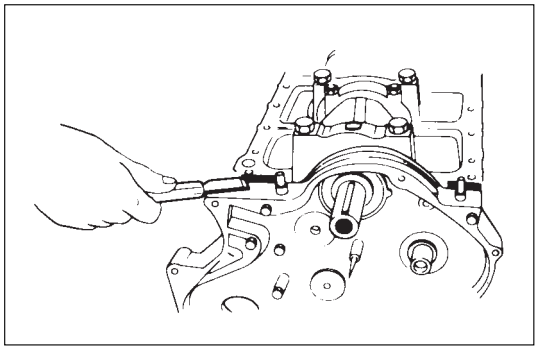

3) Cut away the gasket protruding above the fitting surfaces (as shown in the illustration).

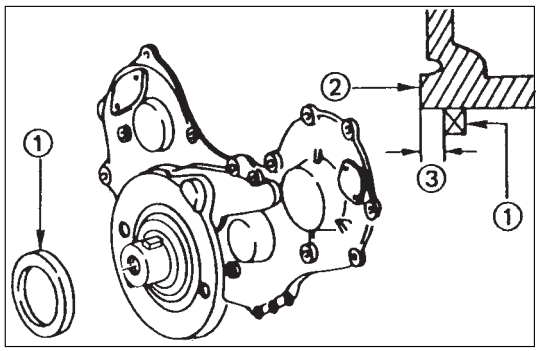

4. Crankshaft Front Oil Seal

- Use the installer to install the front oil seal ① to the gear case cover ②.

  Oil Seal Installer: 5-8840-2061-0

  Note the oil seal installation depth ③ shown in the illustration.

  Depth ③ = 1 mm (0.0394 in.)

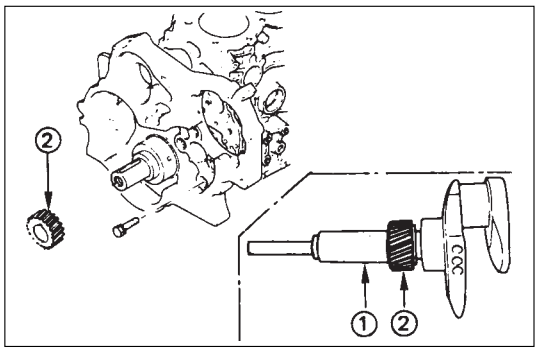

3. Crankshaft Timing Gear

Use the crankshaft timing gear installer ① to install the timing gear ②.
The crankshaft timing mark ("X – X") must be facing outward.
Crankshaft Timing Gear Installer: 5-8522-0024-0

2. Camshaft Timing Gear

- Tighten the fixing bolt to the specified torque.

N·m(kg·m/lb·ft)
64 (6.5/47)

1. Cylinder Head

- Refer to "Cylinder head" in Section 6A2.

PISTON AND CONNECTING ROD

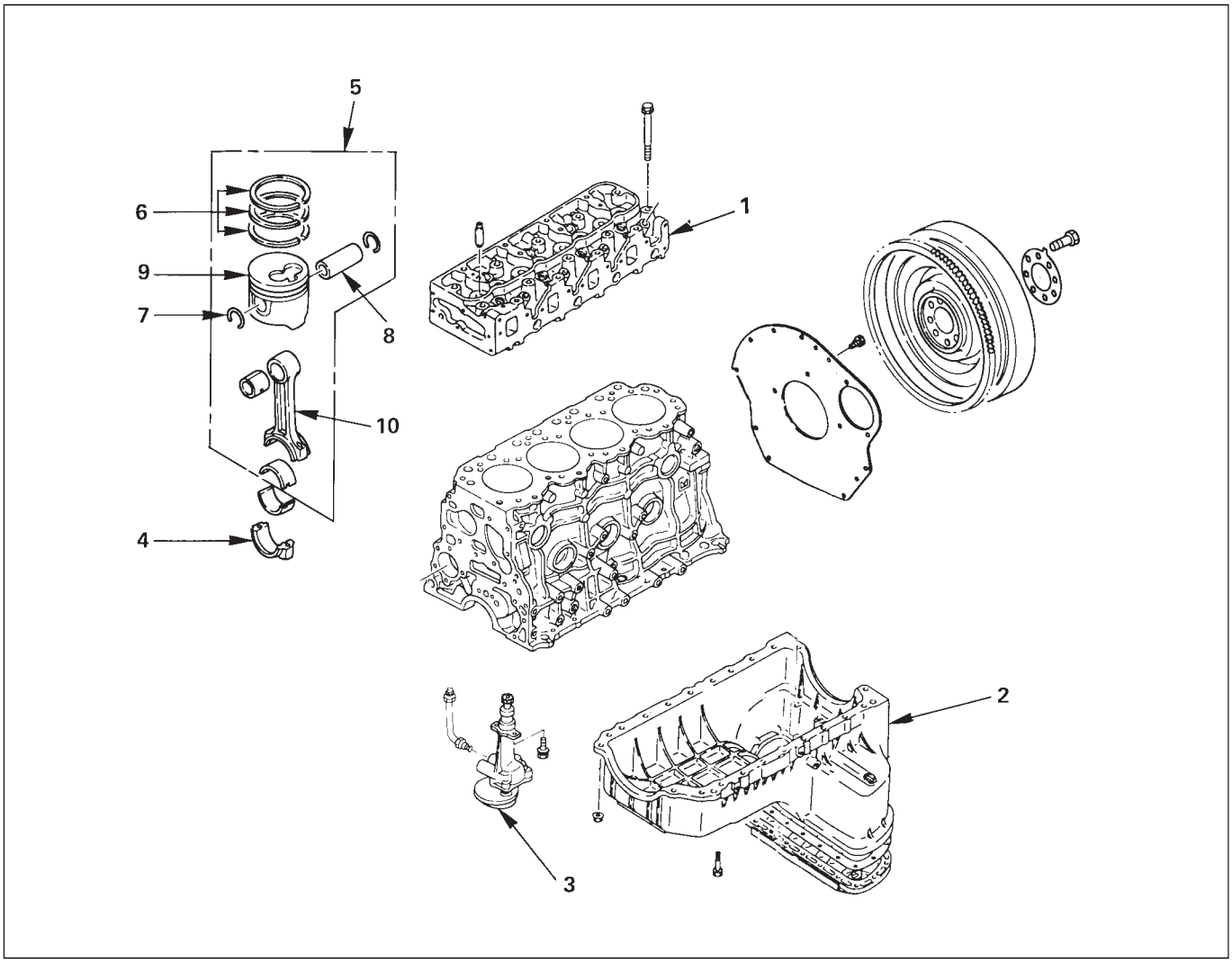

DISASSEMBLY

1. **Cylinder Head Assembly**
   - Refer to “Cylinder head” in Section 6A2.
2. **Crankcase Assembly**
   - Refer to “Crankcase” in Section 6A2
3. **Oil Pump Assembly**
4. **Connecting Rod Bearing Cap**
5. **Piston and Connecting Rod**
   - Remove carbon deposits from the upper portion of the cylinder wall with a scraper before removing the piston and connecting rod

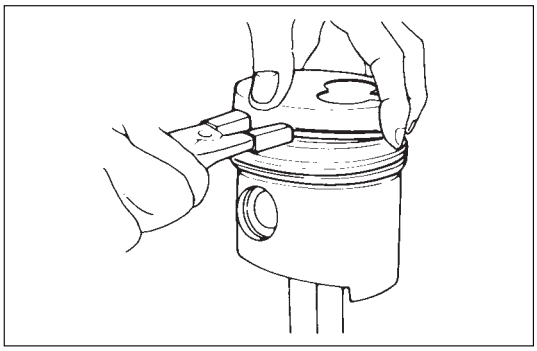

6. Piston Ring

Remove the piston rings with a piston ring expander. Arrange the removed piston rings in the cylinder number order.

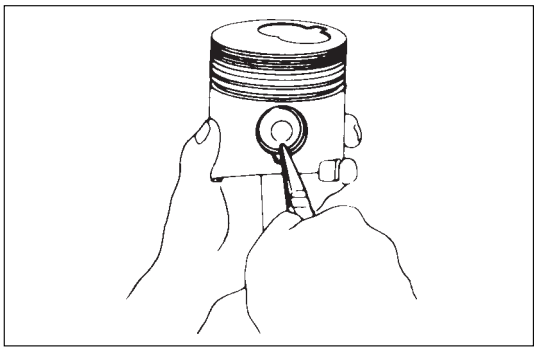

7. Piston Pin Snap Ring

- Use a pair of pliers to remove the piston pin snap rings

8. Piston Pin

NOTE:

Keep the parts removed from each cylinder separate. All parts must be reinstalled in their original positions.

9. Piston

10. Connecting Rod

INSPECTION AND REPAIR

PISTON AND PISTON RING

Pistons

Carefully clean away all the carbon adhering to the piston head and the piston ring grooves.

NOTE:

Never use a wire brush to clean the pistons. Damage will result.

Visually check each piston for cracking, scoring, and other signs of excessive wear.

If any of the above conditions are present, the piston must be replaced.

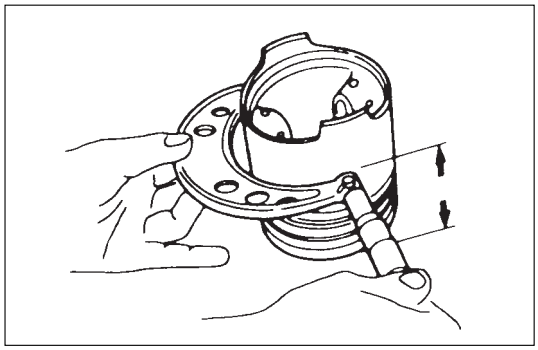

Piston Diameter

1. Measure the piston outside diameter with micrometer at the piston grading position.

Piston Grading Position	mm(in)
71.00 (2.7974)	

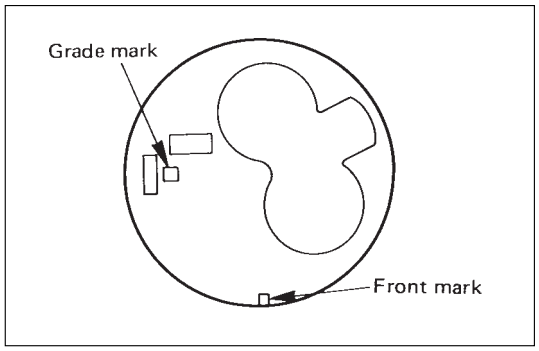

Piston Outside Diameter
Following are installed piston grade from factory.

mm (in)

Grade Mark	Outside Diameter
A	95.365 – 95.374 (3.7545 – 3.7549)
B	95.375 – 95.384 (3.7549 – 3.7553)
C	95.385 – 95.394 (3.7553 – 3.7557)
D	95.395 – 95.404 (3.7557 – 3.7561)

Method of selection grade for piston service part.

mm (in)

Factory Grade	Service Part Grade	Outside Diameter
A and B	AX	95.369 – 95.384 (3.7547 – 3.7553)
C and D	CX	95.385 – 95.400 (3.7553 – 3.7559)

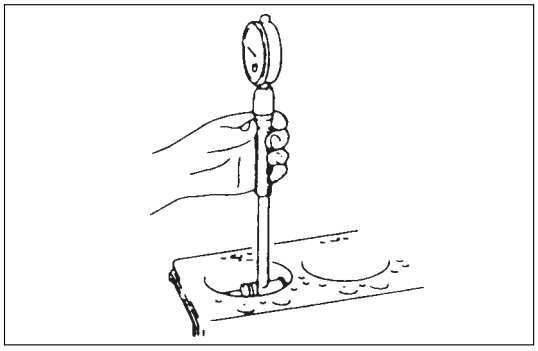

Cylinder Liner Bore Diameter
Following are installed cylinder liner bore grade from factory.

mm (in)

Grade Mark	Inside Diameter
A	95.425 – 95.440 (3.7569 – 3.7575)
B	95.441 – 95.450 (3.7575 – 3.7579)
C	95.451 – 95.460 (3.7579 – 3.7583)
D	95.461 – 95.475 (3.7583 – 3.7589)

Method of selection grade for cylinder liner service part.

mm (in)

Factory Grade	Service Part Grade	Outside Diameter
A and B	AX	95.435 – 95.450 (3.7573 – 3.7579)
C and D	CX	95.451 – 95.466 (3.7579 – 3.7585)

The grading position for piston outside diameter is represented by the Grade mark as shown in Figure.
Measure the cylinder bore inside diameter (refer to "Inspection of the Cylinder Block" in this Section).
If the piston clearance does not conform to the specified valve, the pistons and/or cylinder liners most be replaced.

Piston Clearance	mm(in)
0.051 – 0.066 (0.0020 – 0.0026)	

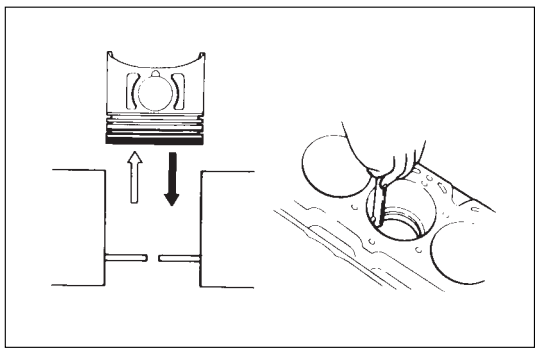

Piston rings

Any worn or damaged part discovered during engine overhaul must replaced with a new one.

1. Ring end gap measurement
   - Insert the piston ring into the bore.

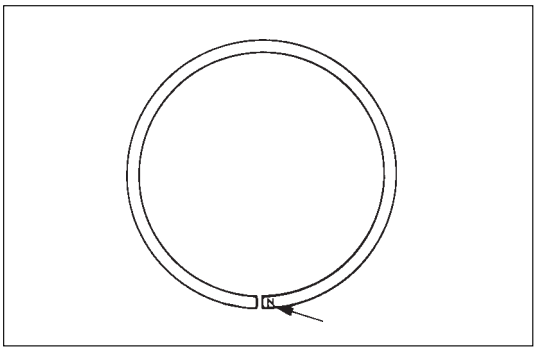

- Push the ring by the piston, at a right angle to the wall, into the point at which the cylinder bore diameter is the smallest.
- Measure the ring end gap.

mm(in)

		Standard	Limit
Compression ring	1st/2nd	0.20-0.35 (0.0079-0.0138)	1.5 (0.0591)
Oil ring		0.10-0.30 (0.0039-0.0118)	

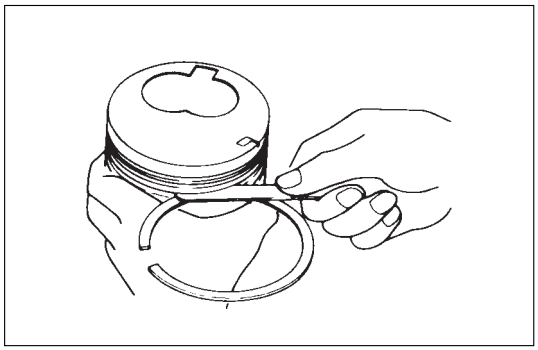

2. Measure the clearance between the piston ring groove and the piston ring with a feeler gauge. If the piston ring groove/piston ring clearance exceeds the specified limit, the piston must be replaced.

mm(in)

		Standard	Limit
Compression ring	Top	0.05-0.09 (0.0020-0.0035)	0.15 (0.0059)
	2nd	0.05-0.09 (0.0020-0.0035)	
Oil ring		0.03-0.07 (0.0012-0.0028)	

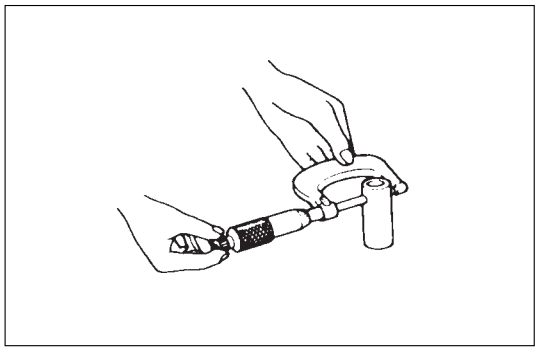

Piston pin

Visually inspect the piston pin for cracks, flaws, and other damage and replace if necessary.

1. Use a micrometer to measure the piston pin outside diameter in both directions at three different positions. If the measurement exceed the specified limit, the piston pin must be replaced.

mm (in)

	Standard	Limit
Piston pin outside diameter	33.995-34.000 (1.3384-1.3386)	33.970 (1.3374)

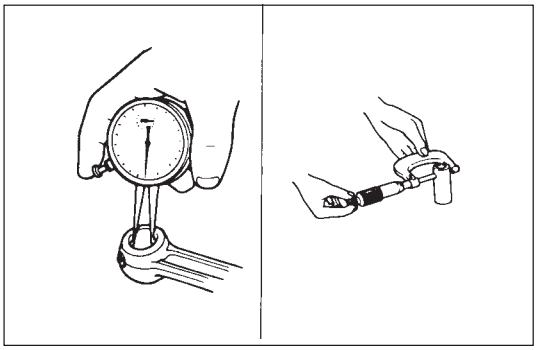

2. Measure the inside diameter of the connecting rod small end. If the clearance between the small end and pin does not conform to the specified value, the connecting rod or bushing and pin must be replaced.

mm (in)

	Standard	Limit
Clearance	0.008 ~ 0.020 (0.0003 ~ 0.0008)	0.05 (0.0020)

3. Insert the piston pin into the piston and rotate it. If the pin rotates smoothly with no backlash, the clearance is normal. If there is backlash or roughness, measure the clearance. If the clearance exceeds the specified limit, the piston and the piston pin must be replaced.

mm (in)

	Standard	Limit
Clearance	0.002 ~ 0.015 (0.00008 ~ 0.0006)	0.04 (0.0016)

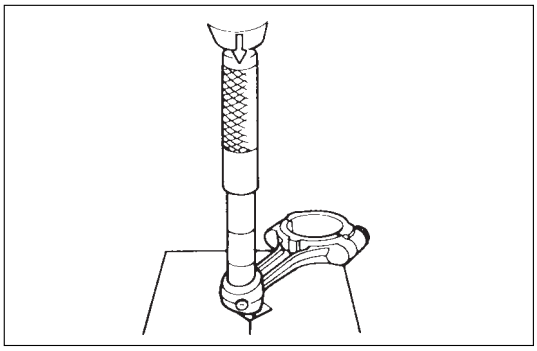

Bushing replacement

Removal: Use a suitable bar and bench press or hammer.
Installation: Use a suitable bar and bench press.

NOTE:

Align the bushing with the connecting rod oil port. After installing a new bushing, finish the bushing bore with a pin hole grinder.

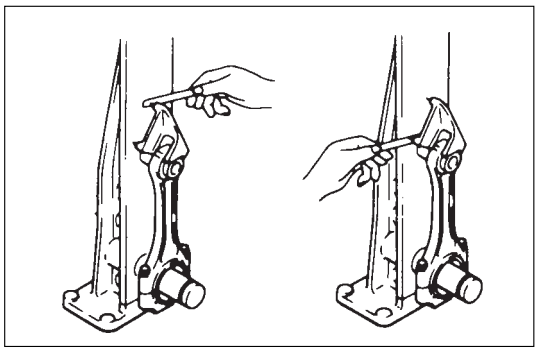

Connecting rods

1. Check the connecting rod alignment with a connecting rod aligner.
   If either the bend or the twist exceeds the specified limit, the connecting rod must be replaced.

mm (in)

	Standard	Limit
Bend per 100 (3.937)	0.08 (0.0031) or less	0.20 (0.0079)
Twist per 100 (3.937)	0.05 (0.0020) or less	0.15 (0.0059)

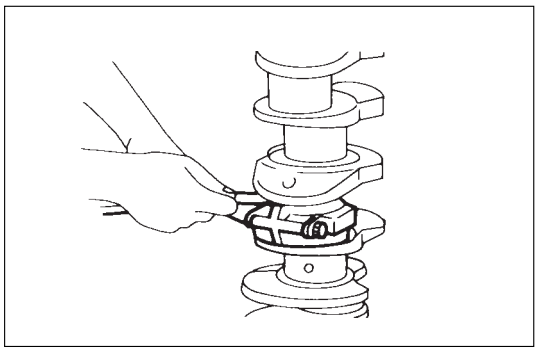

2. Measure the connecting rod thrust clearance.
   Use a feeler gauge to measure the thrust clearance at the big end of the connecting rod.
   If the clearance exceeds the specified limit, the connecting rod must be replaced.

mm (in)

Standard	Limit
0.230 (0.0091)	0.350 (0.0138)

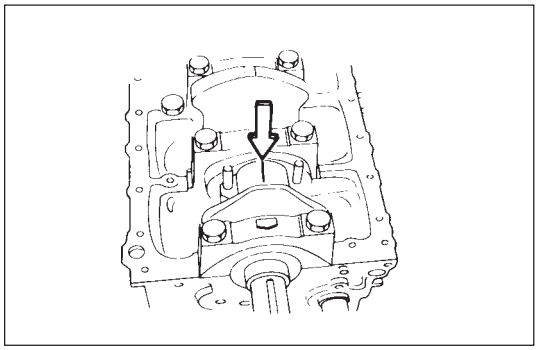

3. Measure the oil clearance between the connecting rod and the crankshaft by:
   1) Remove the connecting rod cap nuts and the rod caps.
      Arrange the removed rod caps in the cylinder number order.
   2) Clean the rod bearings and the crankshaft pins.
   3) Carefully check the rod bearings.
      If even one bearing is found to be damaged or badly worn, the entire bearing assembly must be replaced as a set. Reinstall the bearings in their original positions.
      Apply plastigage to the crank pin.
   4) Reinstall the rod caps to their original positions.
   5) Tighten the cap nuts in 2 steps, using angular tightening method as shown in the following specifications.

N·m (kg·m/lb·ft)

1st step	2nd step
29 (3.0/22)	45° ~ 60°

NOTE:

Do not allow the crankshaft to rotate.

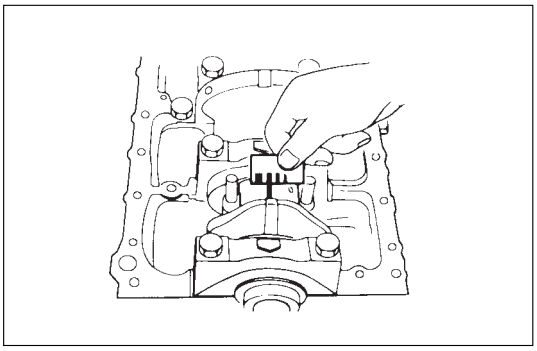

   6) Remove the rod caps.
   7) Measure the width of the plastigage and determine the oil clearance. If the oil clearance exceeds the limit, replace the rod bearings as a set.
   8) Clean the plastigage from the bearings and the crankshaft pins.

mm (in)

Standard	Limit
0.029 (0.0011) – 0.083 (0.0033)	0.100 (0.0039)

REASSEMBLY

10. Connecting Rod

9. Piston

8. Piston Pin

- Apply a coat of engine oil to the piston pin and the piston pin hole.

7. Piston Pin Snap Ring

- Apply a thin coat of engine oil to the piston pin.
  Try to insert the piston pin into the piston pin hole with normal finger pressure.
  Weigh each piston and connecting rod assembly. Select piston and connecting rod combinations so that the weight variation of the different assemblies is held within the specified limits.

g (oz)

Variance in weight after assembly	Less than 3 (0.1058)

NOTE:

When changing piston/connecting rod combinations, do not change the piston/piston pin combination.

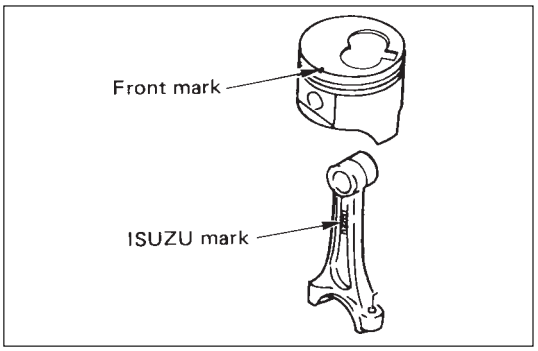

- Attach the piston to the connecting rod with the piston front mark and the connecting rod ISUZU mark on the same side.

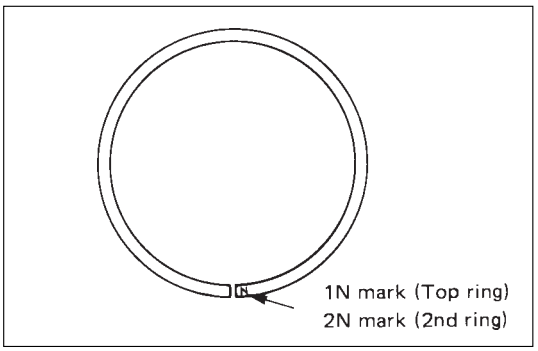

6. Piston Ring

- Install the piston rings with the piston ring expander. The compression ring must be set with the 1N, 2N mark facing up.
- Discrimination mark is painted as shown in the illustration.

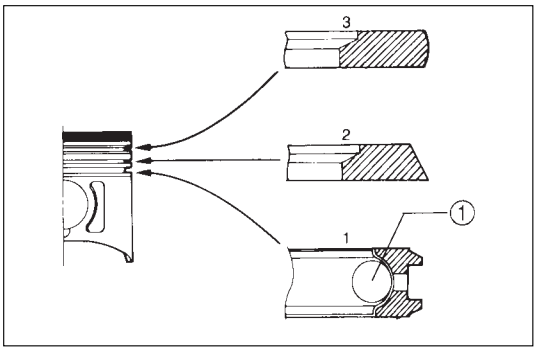

- Install piston rings in the following sequence.

1) Oil ring

① Expander ring

2) 2nd compression ring

3) 1st compression ring

- The compression ring must be set with the 1N or 2N mark facing up.
- 1st compression ring: N
- 2nd compression ring: 2N
- After installation, apply engine oil to the entire circumference of the piston rings.
  Check to see that all the rings rotate smoothly.
- Insert the bearings into the connecting rods and caps.
  Apply new engine oil to the bearing faces.
  Cap side bearings have no oil hole.
  Conn rod side bearing's oil hole should be aligned with oil hole on the conn rod.

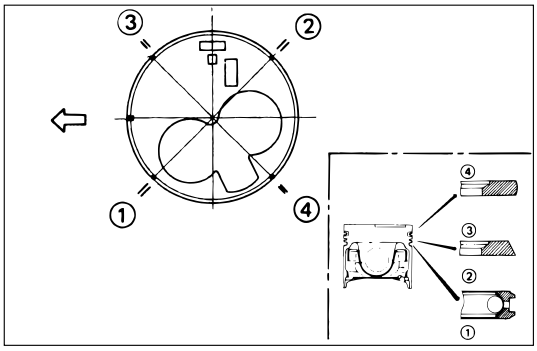

5. Piston and Connecting Rod

- Apply engine oil to the cylinder bores, the connecting rod bearings and the crankshaft pins.
- Check to see that the piston ring end gaps are correctly positioned.
- Insert the piston/connecting rod assemblies into each cylinder with the piston ring compressor.
- The front marks must be facing the front of the engine.

4. Connecting Rod Bearing Cap

- Apply engine oil to screw and seat of bearing cap bolts and nuts.
- Tighten the cap nuts in 2 steps, using angular tightening method as shown in the following specifications.

N·m (kg·m/lb·ft)

1st step	2nd step
29 (3.0/22)	45° ~ 60°

After tightening the cap nuts, check to see that the crankshaft rotates smoothly.

3. Oil Pump Assembly

2. Crankcase Assembly

- Refer to “Crankcase” in Section 6A2.

1. Cylinder Head Assembly

- Refer to “Cylinder head” in Section 6A2.

CYLINDER BLOCK

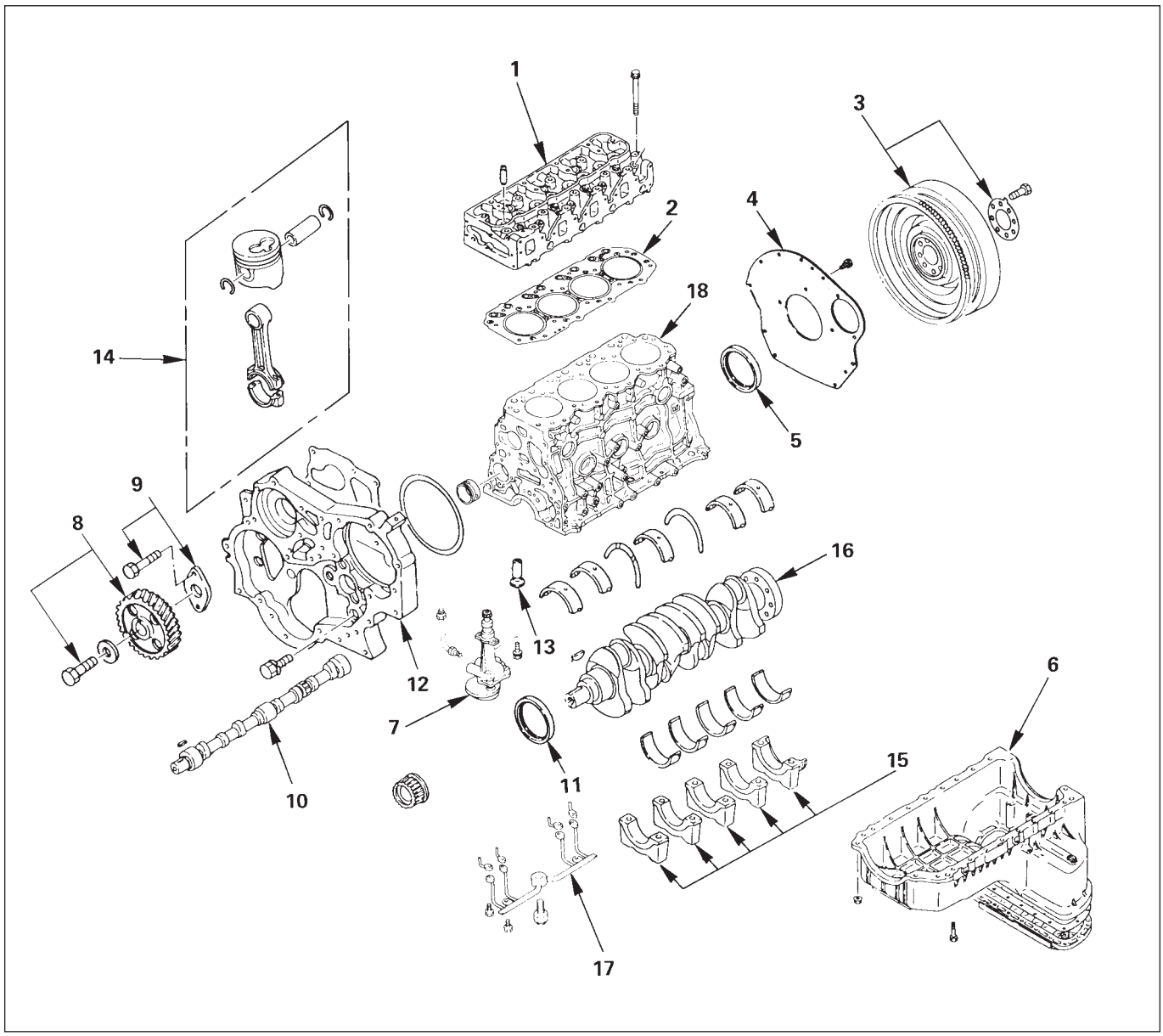

DISASSEMBLY

1. **Cylinder Head Assembly**
   - Refer to “Cylinder head” in Section 6A2.
2. **Cylinder Head Gasket**
3. **Flywheel**
4. **Cylinder Block Rear Plate**
5. **Crankshaft Rear Oil Seal**
   - With the oil seal pushed in deep, install the special tool as shown in the illustration and remove the oil seal.

     Oil Seal Remover : 5-8840-2362-0

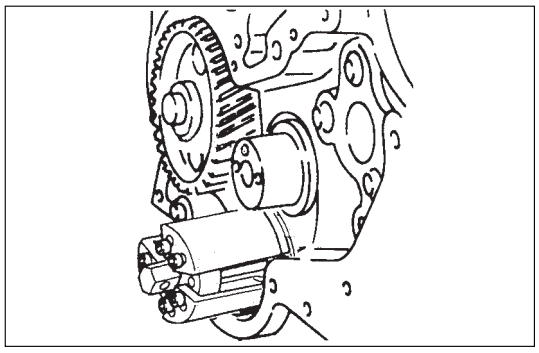

6. **Crankcase Assembly**
   - Refer to “Crankcase” in Section 6A2
7. **Oil Pump Assembly**

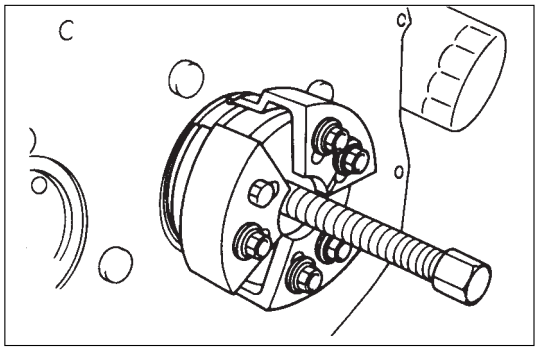

8. **Camshaft Timing Gear**
9. **Camshaft Thrust Plate**
10. **Camshaft**
11. **Crankshaft Front Oil Seal**
    - With the oil seal pushed in deep, install the special tool as shown in the illustration and remove the oil seal.

      Oil Seal Remover : 5-8840-2362-0
12. **Timing Gear Case**
13. **Tappet**
14. **Piston Assembly**
15. **Main Bearing Cap Assembly**
16. **Crankshaft**
17. **Piston Cooling Oil Pipe**
18. **Cylinder Block**

INSPECTION REPAIR

Make the necessary adjustments, repairs, and part replacements if excessive wear or damage is discovered during inspection.

1. Remove the gasket and any other material adhering to the upper surface of the cylinder block.
   Be very careful not to allow any material to accidentally drop into the cylinder block.
   Be very careful not to scratch the cylinder block.
2. Carefully remove the oil pump, Rear Oil Seal retainer, and oil pan installation surface seal.
3. Wipe the cylinder block clean.

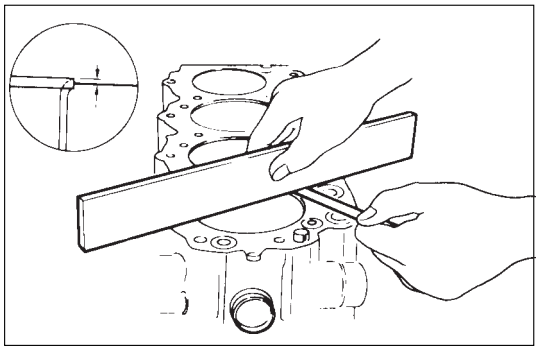

Cylinder Liner Projection Inspection

1. Hold a straight edge ① along the top edge of the cylinder liner to be measured.
2. Use a feeler gauge ② to measure each cylinder liner projection.
   The difference in the cylinder liner projection height between any two adjacent cylinders must not exceed 0.03 mm (0.0012 in).

Standard	mm(in.)
0.0 – 0.1 (0.0000 – 0.0039)	

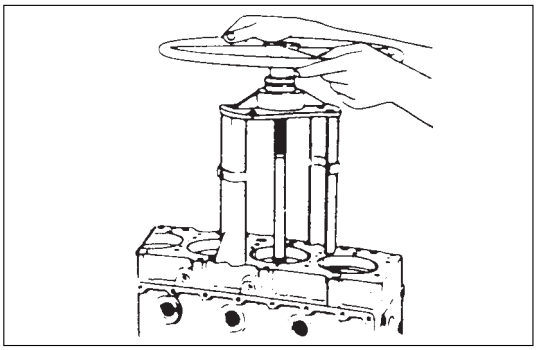

Flatness

1. Remove the cylinder body dowel.
2. Set the cylinder liner remover to the cylinder liner.
3. Check that the remover shaft ankle is firmly gripping the cylinder liner bottom edge.
4. Slowly turn the remover shaft handle counterclockwise to pull the cylinder liner free.

   Cylinder Liner Remover Ankle: 5-8840-2304-0

   Cylinder Liner Remover: 9-8523-1169-0

NOTE:

Take care not to damage the cylinder body upper during the cylinder liner removal procedure.

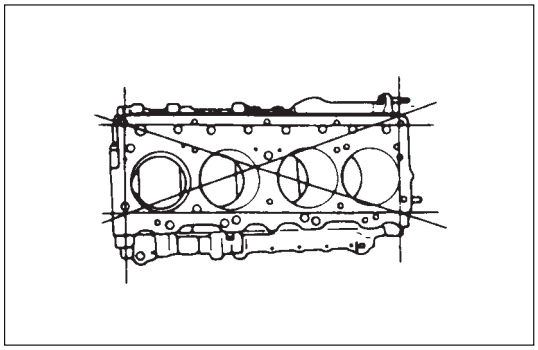

5. Use a straight edge ① and a feeler gauge ② to measure the four sides and the two diagonals of the cylinder body upper face.
   If the measured values exceed the limit, the cylinder body must be replaced.

Limit	mm(in.)
0.20 (0.0079)	

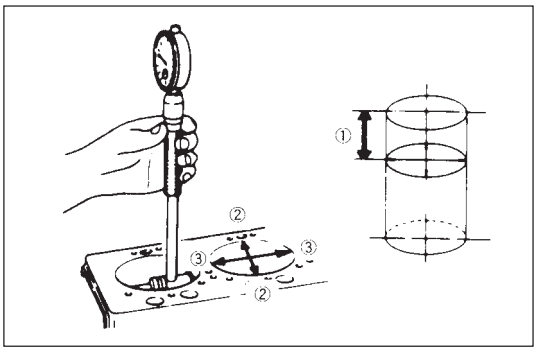

Cylinder Liner Bore Measurement

Use a cylinder indicator to measure the cylinder liner bore at measuring point ① in the thrust ② – ② and axial ③–③ directions of the crankshaft.
Measuring Point ① 20mm (0.79 in)
If the measured value exceeds the specified limit, the cylinder liner must be replaced.

NOTE:

The inside of the dry type cylinder liner is chrome plated. It cannot be rebored or honed.
If the inside of the cylinder liner is scored or scorched, the cylinder liner must be replaced.

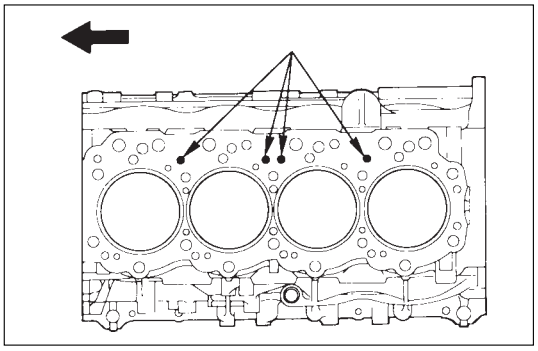

Cylinder Liner Grade Selection

Measure the cylinder body inside diameter and select the appropriate cylinder liner grade.

Standard Fifting Interference	mm (in.)
0.001 – 0.019 (0.0004 – 0.0007)	

If the cylinder liner fitting interference is too small, engine cooling efficiency will be adversely effected.
If the cylinder liner fitting interference is too large, it will be difficult to insert the cylinder liner into the cylinder body.

NOTE:

There are two methods by which liners can be selected.

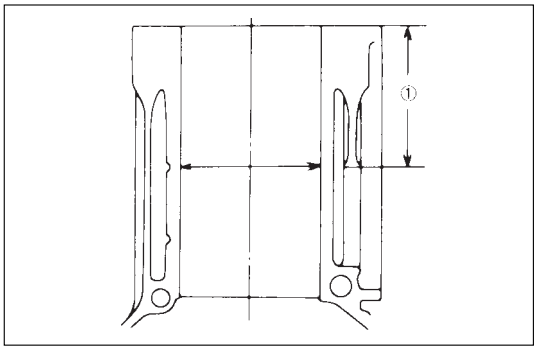

Method I

The cylinder block deck has been marked during production to indicate the correct liner sizes. The liner grade (i.e. 1, 2, 3, 4) is indicated in permanent ink.
In the case of a questionable liner marking use the next method for correct liner selection.

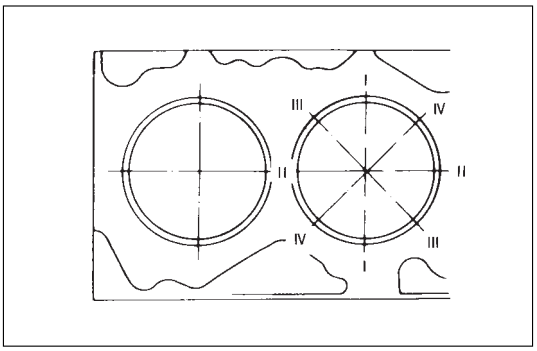

Method II

Cylinder Body Bore Measurement

1) Take measurements at measuring point (A) across positions ① – ① , ② – ② ,③ –③ , and ④ –④ .

Measuring Point (A) 98 mm (3.86 in).

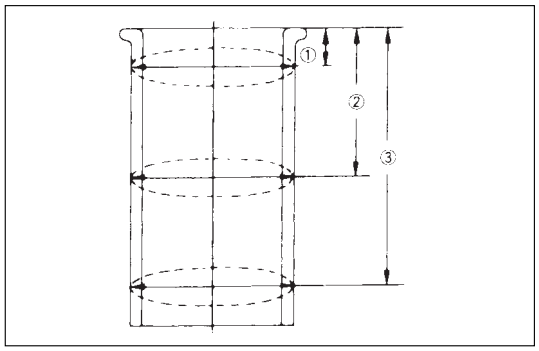

2) Calculate the average value of the four measurements to determine the correct cylinder grade.
3) Consult the following table with the resultant diameter for the correct liner application.

mm (in.)

Liner Grade	Cylinder bore diameter average	Liner outside diameter
1	97.001-97.010 (3.8189-3.8193)	97.011-97.020 (3.8193-3.8197)
2	97.011-97.020 (3.8193-3.8197)	97.021-97.030 (3.8197-3.8201)
3	97.021-97.030 (3.8197-3.8201)	97.031-97.040 (3.8201-3.8205)
4	97.031-97.040 (3.8201-3.8205)	97.041-97.050 (3.8205-3.8209)

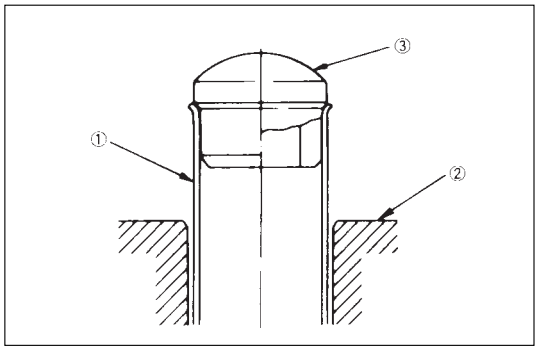

Cylinder Liner Installation

1. Cylinder Liner Installation Using The Special Tool.
   1) Use new kerosene or diesel oil to thoroughly clean the cylinder liners and horse.
   2) Use compressed air to blow-dry the cylinder liner and bore surfaces.

   Cylinder Liner Installer : 5-8840-2313-0

NOTE:

All foreign material must be carefully removed from the cylinder liner and the cylinder bore before installation.

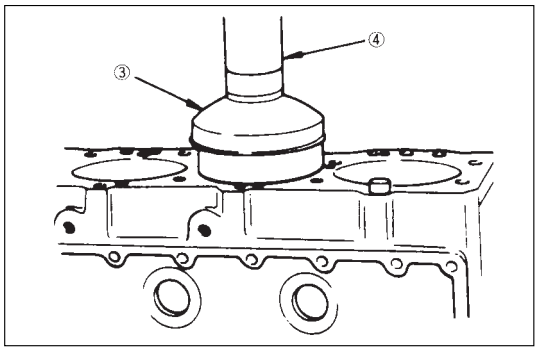

3) Insert the cylinder liner ① into the cylinder body ② from the top of the cylinder body.

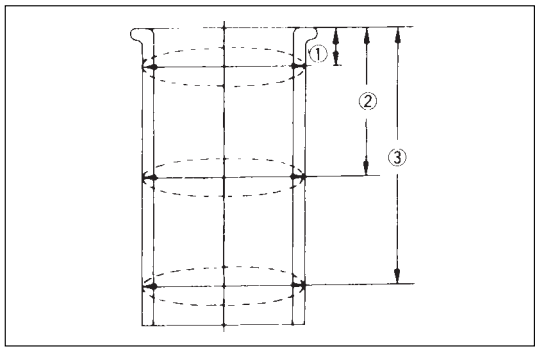

4) Set the cylinder liner installer ③ to the top of the cylinder liner.
   Position the cylinder body so that the installer center is directly beneath the bench press shaft center ④.

Cylinder Liner Installer: 5-8840-2313-0

NOTE:

Check that the cylinder liner is set perpendicular to the bench press and that there is no wobble.

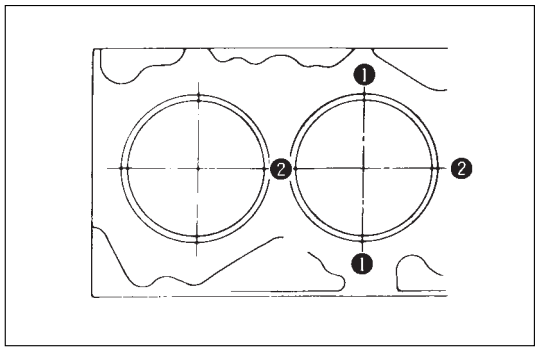

5) Use the bench press to apply a seating force of 4,900 N (500kg/1,102.5 lb) to the cylinder liner.
6) Apply a force of 24,500 N (2,500 kg /5,512.5 lb) to fully seat the cylinder liner.
7) After installing the cylinder liner, measure the cylinder liner projection.
8) After installing the cylinder liner, measure the cylinder liner projection.
   Refer to "Cylinder Liner Projection Inspection" in this Section
   Measure the cylinder liner bore inside diameter and select the appropriate piston grade.

REASSEMBLY

18. Cylinder Block

17. Piston Cooling Oil Pipe

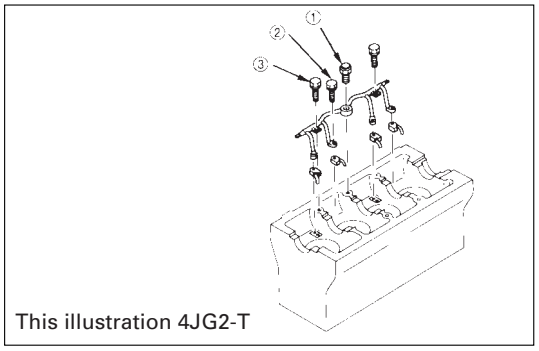

This illustration 4JG2-T

1) Fix the oil jet pipes with knock pins on the cylinder block.
2) Install the oil pipe for piston cooling in the cylinder block, tightening a relief valve ① and four joint bolts ② to the specified torque.

Oil pipe fixing bolts	N·m (kg·m/lb·ft)
M8	19 (1.9/14)
M6	8 (0.8/69 lb·in.)

Relief valve fixing bolt	N·m (kg·m/lb·ft)
29 (3.0/22)	

CAUTION:

After installed the piston assembly. Check and see that there is appropriate clearance between pistons and oil jet pipes by rotating crankshaft slowly.

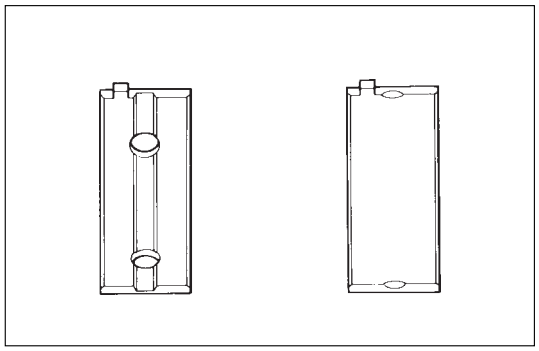

16. Crankshaft

- Install the main bearings to the cylinder body and the main bearing caps.
- Be sure that they are positioned correctly.
- Apply new engine oil to the upper and lower main bearing faces
- Carefully mount the crankshaft.

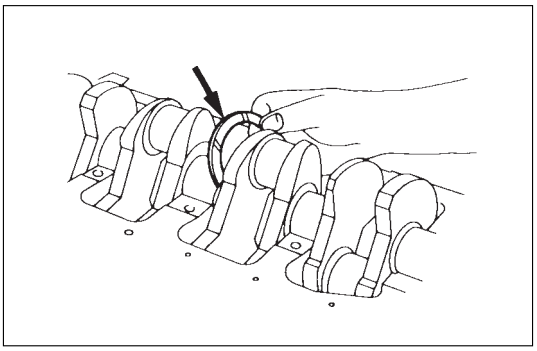

- Apply engine oil to the thrust washer.
- Assemble the thrust washer to the No. 3 bearing journal. The oil grooves must face the crankshaft.

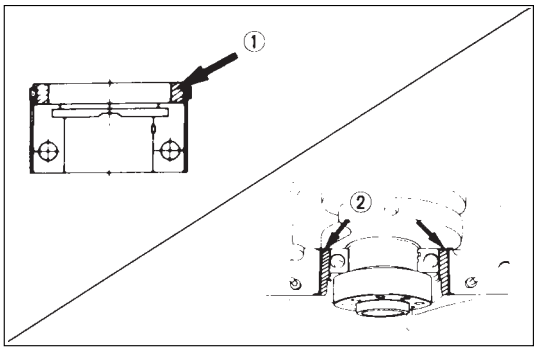

15. Main Bearing Cap Assembly

- Apply the recommended liquid gasket or its equivalent to the No. 5 crankshaft bearing cap cylinder body fiting surfaces at points ① and ② shown in the illustration.

NOTE:

Be sure that the bearing cap fitting surface is completely free of oil before applying the liquid gasket.
Do not allow the liquid gasket to obstruct the cylinder thread holes and bearings.

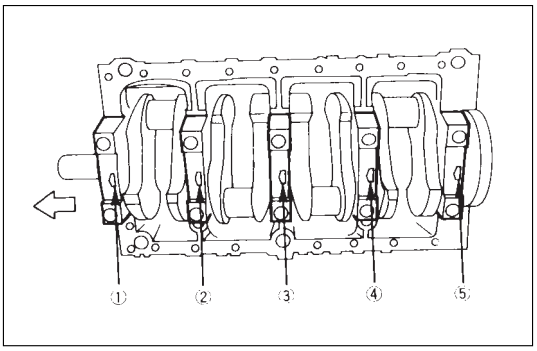

- Install the bearing caps with the bearing cap head arrow mark facing the front of the engine.
- Apply engine oil to the crankshaft bearing cap bolts.

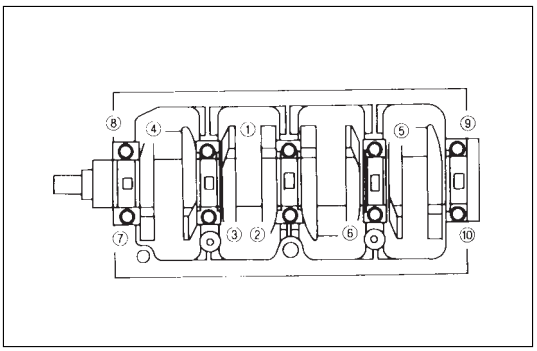

- Tighten the crankshaft bearing cap bolts to the specified torque a little at a time in the sequence shown in the illustration.

N·m (kg·m/lb·ft)
167 (17.0/123)

NOTE:

Check to see that the crankshaft turns smoothly by rotating it manually.

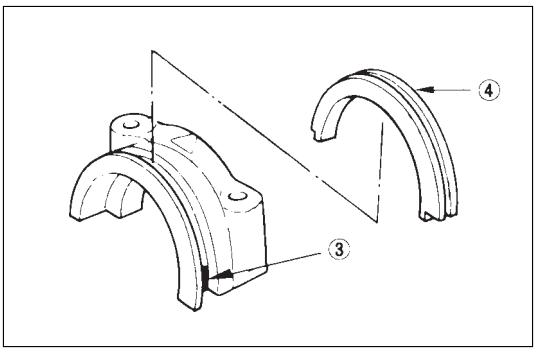

- Apply the recommended liquid packing or its equivalent to the No. 5 crankshaft bearing cap ③ as shown in the illustration.
  Install the arch packing ④ to the No. 5 bearing cap.

NOTE:

Take care to install the arch packing in the groove of bearing cap correctly.
Take care not to scratch the arch packing outer surface.

14. Piston Assembly

- Refer to "Piston and connecting rod" in this Section.

13. Tappet

12. Timing Gear Case

1) Install the timing gear case to the cylinder body.

NOTE:

Take care not to twist the front oil seal.

2) Tighten the timing gear case bolt together with the timing gear case gasket to the specified torque.

	N·m (kg·m/lb·ft)
☡	19 (1.9/14)

3) Cut away the gasket protruding above the fitting surfaces (as shown in the illustration).

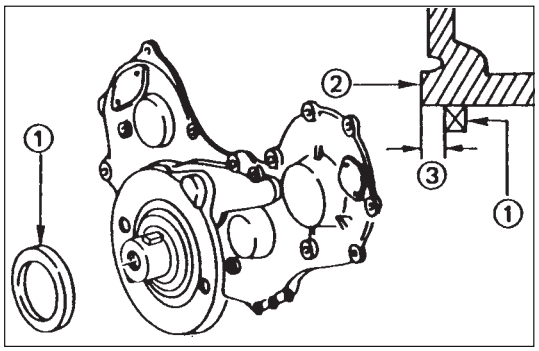

11. Crankshaft Front Oil Seal

- Use the installer to install the front oil seal ① to the gear case cover ②.

  Oil Seal Installer: 5-8840-2061-0

  Note the oil seal installation depth ③ shown in the illustration.

  Depth ③ = 1 mm (0.039 in.)

10. Camshaft

- Refer to 'Camshaft, Tappet' in Section 6A.

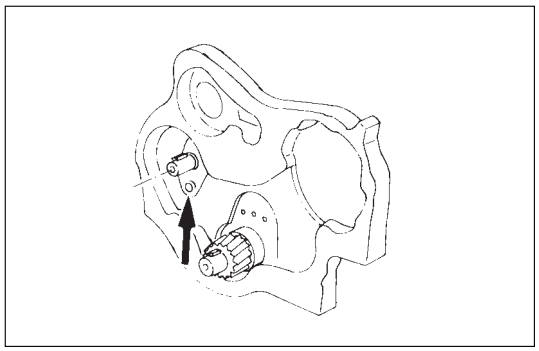

9. Camshaft Thrust Plate

- Install the thrust plate to the cylinder body and tighten the thrust plate bolts to specified torque.

	N·m (kg·m/lb·ft)
☡	18 (1.8/13)

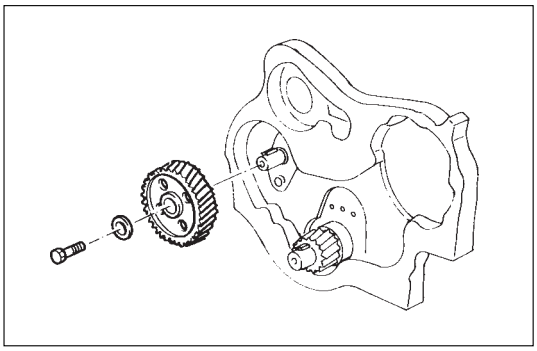

8. Camshaft Timing Gear

1) Install the camshaft timing gear to the camshaft. The timing gear mark ("Y - Y") must be facing outword.
2) Tighten the timing gear to the specified torque.

N·m (kg·m/lb·ft)

64 (6.5/47)

7. Oil Pump Assembly

- Refer to 'Oil pump' in Section 6A2.

6. Crankcase Assembly

- Refer to 'Crankcase' in Section 6A2.

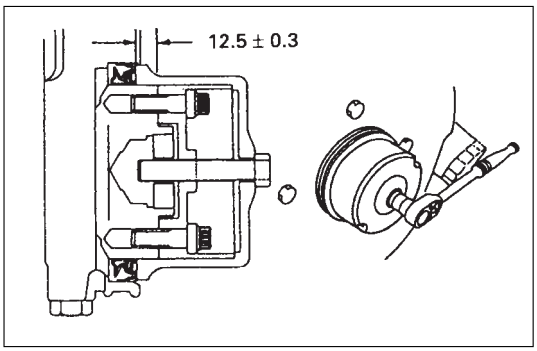

5. Crankshaft Rear Oil Seal

1) Tighten the adapter to the crankshaft rear and section with 2 bolts.
2) Insert the oil seal into the peripheral section of the adapter,
3) Insert the sleeve into the adapter section, and 1) tighten it with a bolt (M12 x 1.75L = 70) until the adapter section hits the sleeve.
4) Remove the adapter and the sleeve.
5) With the seal pressed in, check the dimension of the oil seal section.

Standard Dimension = 12.5 ± 0.3 mm
Oil Seal Installer: 5-8840-2359-0

4. Cylinder Block Rear Plate

- Tighten the cylinder block rear plate fixing bolt to the specified torque

N·m (kg·m/lb·ft)

82 (8.4/61)

3. Flywheel

- Refer to 'Crankshaft' in Section 6A.

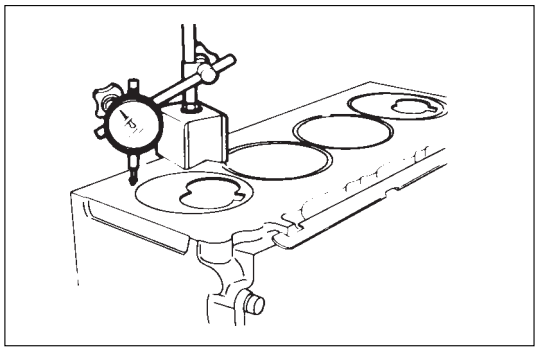

2. Cylinder Head Gasket

1. Carefully remove carbon deposits and gasket residue from the piston top face and the cylinder body upper surface.

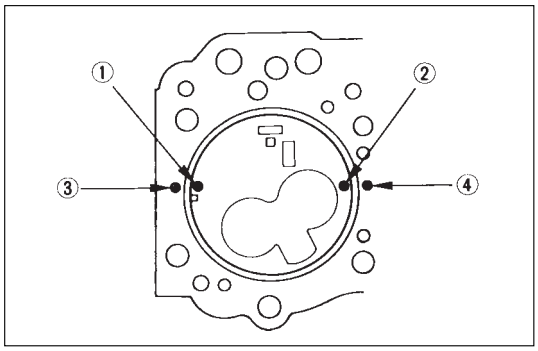

2. Use a dial indicator to measure the piston head projection at measuring points ① and ③ on the piston head and measuring points ② and ④ on the cylinder body.
   Do this for each cylinder.
3. Note the highest measured value.
   This will determine the cylinder head gasket thickness.

Piston Head Projection	mm (in)
0.658 ~ 0.814 (0.0259 ~ 0.0320)	

Piston head projection must be within the range shown in the above table.

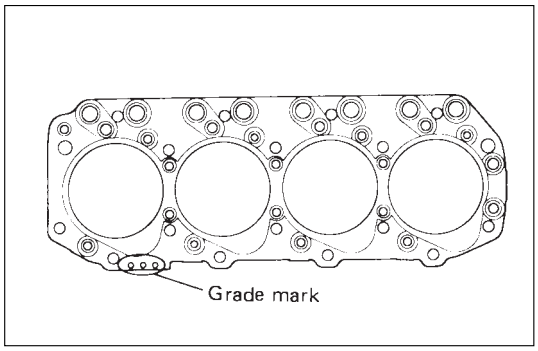

4. Select a cylinder head gasket of the appropriate thickness.
   The difference between the highest measured piston head projection and the lowest measured piston head projection must not exceed mm (in).

mm (in)

Grade mark		Average piston projection	Gasket thickness (Reference)
A		0.658-0.712 (0.0259-0.0281)	1.60 (0.0630)
B		0.713-0.758 (0.0281-0.0299)	1.65 (0.0650)
C		0.759-0.813 (0.0299-0.0320)	1.70 (0.0670)

1. Cylinder Head Assembly

- Refer to Section 6A2 ‘Cylinder head’

MEMO

SECTION 6A2

4JG2-NA/4JG2-TURBO ENGINE

CONTENTS

	PAGE
General Description	6A2- 1
Engine Mount (RH)	6A2- 3
Engine Mount (LH)	6A2- 4
Intercooler (4JG2-T only)	6A2- 5
Cylinder Head Cover	6A2- 6
Inlet Manifold	6A2- 8
Exhaust Manifold	6A2-10
Turbo Charger (4JG2-T only)	6A2-11
Timing Gear	6A2-15
Valve Stem Oil Seal and Valve Spring	6A2-21
Rocker Arm Shaft Assembly	6A2-24
Cylinder Head	6A2-26
Crankcase	6A2-31
Oil Cooler	6A2-34
Oil Pump Assembly	6A2-36
Piston, Piston Ring and Connecting Rod	6A2-37
Crankshaft and Main Bearing	6A2-39
Front Oil Seal	6A2-45
Rear Oil Seal	6A2-46
Engine Assembly	6A2-48

GENERAL DESCRIPTION

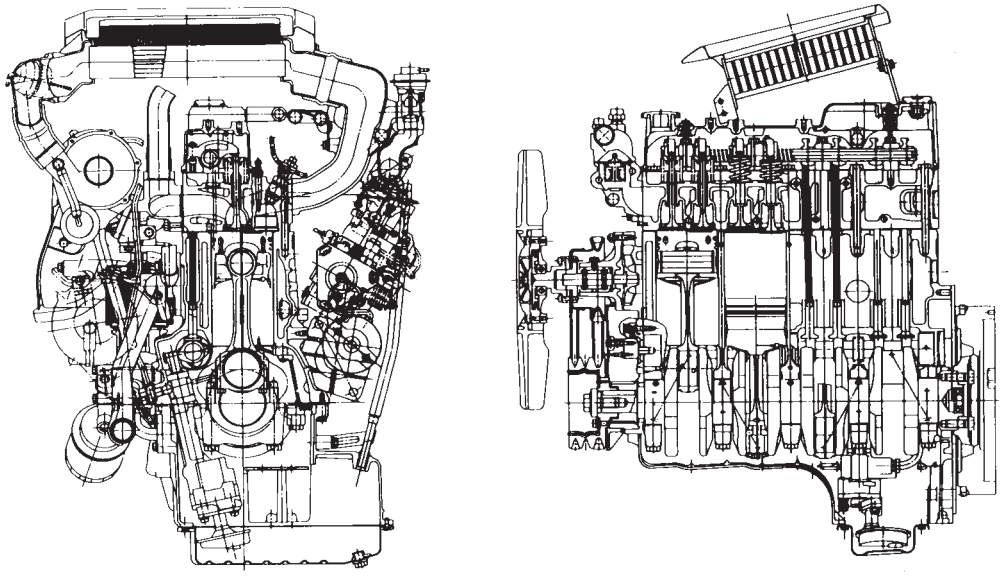

This illustration for 4JG2-T

RECARD Comet V Type swirl combustion chamber which provides superior driving performance, fuel economy and silent combustion over a wide range of driving conditions, is applied.

The cylinder head gasket is of laminated steel sheets.

Three grades of the gasket according to the measured piston head projection from the cylinder block are provided to give the engine a minimum compression ration fluctuation.

The cylinder head fixing blots, flywheel bolts and connecting rod fixing bolts are tightened by the angular Tightening Method.

The chrome plated steel dry type (Chromard) cylinder liners provide the highest durability.

Auto-thermatic pistons having steel struts with 0.7 mm offset from the piston pin center line, ate applied to reduce thermal expansion and resulting engine noise when the engine is cold.

The crankshaft bearings and connecting rod bearings are of aluminum having a high bearing surface.

These bearing are especially sensitive to foreign material such as metal scraps. So, it is very important that the oil ports and other related surfaces are kept clean and free of foreign material.

Crank shaft bearing selection for optimum bearing and journal clearance is applied to reduce vibration and noise.

As tufftriding (Nitrizing treatment) is applied to increase crankshaft strength, crankpins and journals should not be reground.

An oiling jet device for piston cooling is provided in the lubricating oil circuit from cylinder block oil gallery via a check valve.

Take care not to damage any oiling jet when removing and installing piston and connecting assembly.

The DFI (Double Formation Injection) Pintaux Type injection nozzle having a sub-injection hole is applied. This nozzle contributes to substantially minimize the diesel knocking sound noticeable in the cold engine idling operation.
Install the injection nozzle, directing the sub-injection hole to the specified direction.
QOS III preheating system which features a quick-on glow plug with thermometer control of the glowing time and the afterglow time function, is applied.

ENGINE MOUNT (RH)

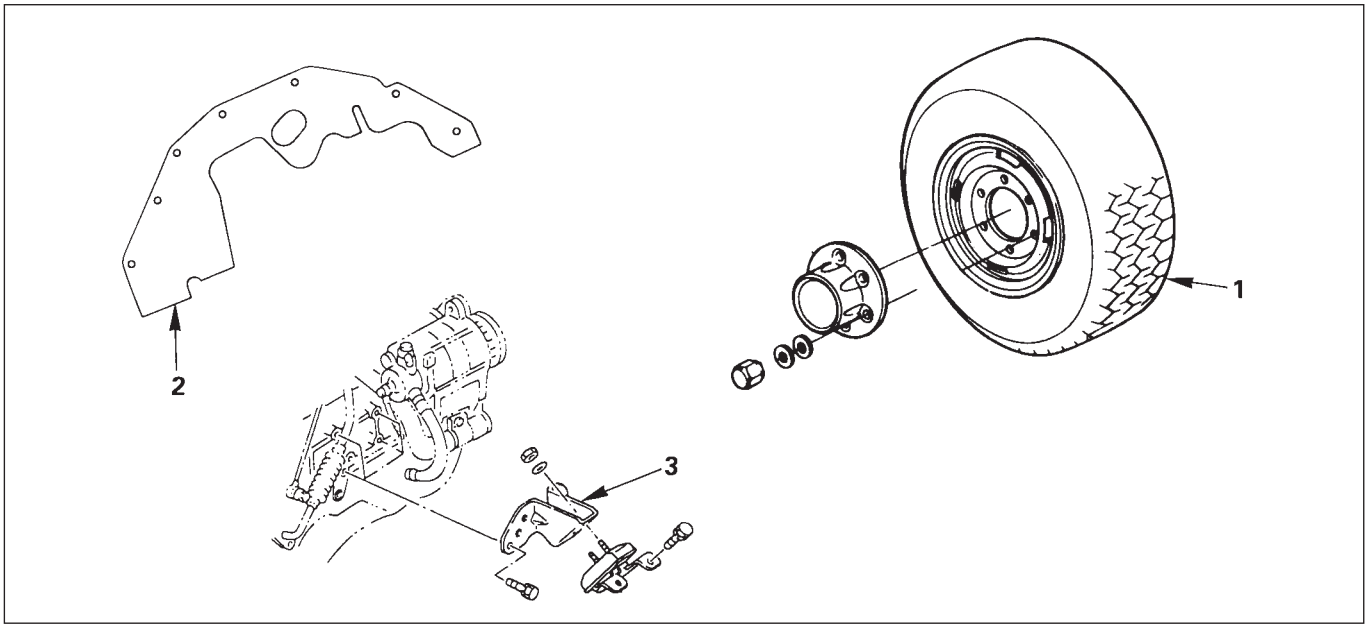

REMOVAL

Preparation:

- Battery ground cable
- Support engine
- Support vehicle

1. **Front Tire**
2. **Dust Cover**
3. **Engine Mount**
   - Remove fixing be its from cylinder body and chassis frame.

INSTALLATION

3. **Engine Mount**

Cylinder body side	N·m(kg·m/lb·ft)
	40 (4.1/30)

Chassis frame side	N·m(kg·m/lb·ft)
	40 (4.1/30)

- Tighten the fixing bolts to the specified torque

2. **Dust Cover**
1. **Front Tire**

	N·m(kg·m/lb·ft)
	118 (12.0/87)

ENGINE MOUNT (LH)

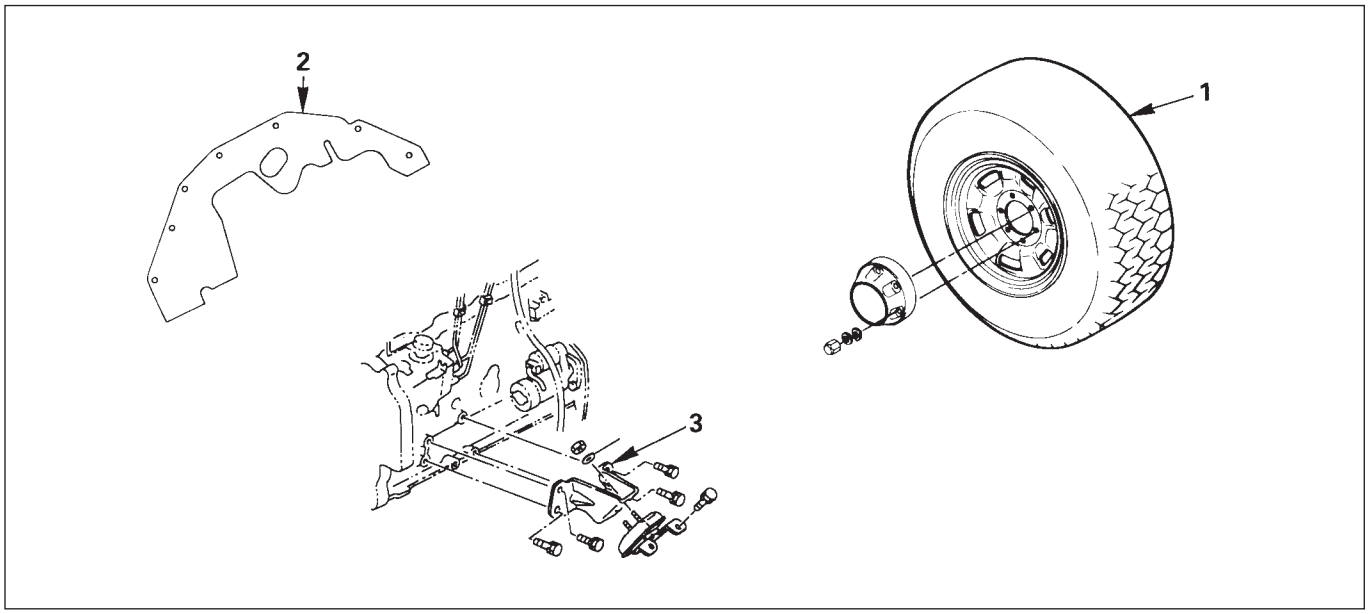

REMOVAL

Preparation:

- Disconnect battery ground cable
- Support engine
- Support vehicle

1. **Front Tire**
2. **Dust Cover**
3. **Engine Mount**
   - Remove fixing bolts from cylinder body and chassis frame.

INSTALLATION

3. **Engine Mount**
   - Tighten the fixing bolts to the specified torque

Cylinder body side	N·m(kg·m/lb·ft)
	40 (4.1/30)

Chassis frame side	N·m(kg·m/lb·ft)
	40 (4.1/30)

Chassis frame side	N·m(kg·m/lb·ft)
	41 (4.2/30)

2. **Dust Cover**
1. **Front Tire**
   - Tighten the fire fixing nuts to specified torque

N·m(kg·m/lb·ft)
118 (12.0/87)

INTERCOOLER (4JG2-T only)

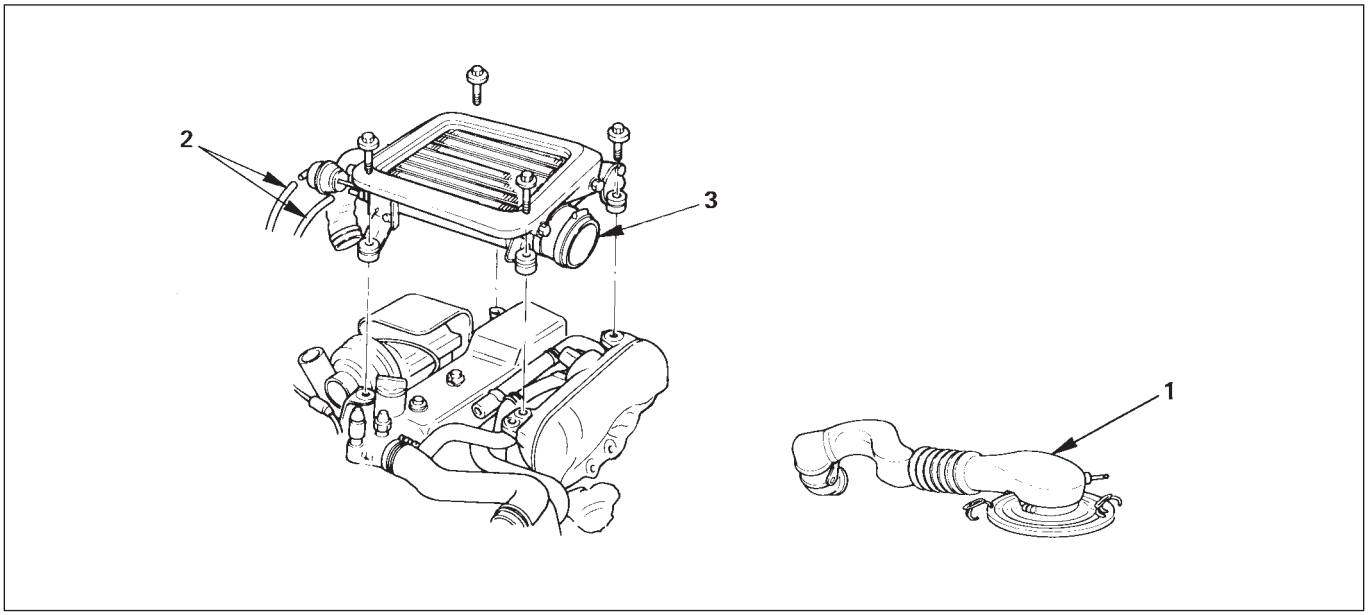

REMOVAL

Preparation:

- Disconnect battery ground cable

1. Air Cleaner Cover & Air Duct

- Remove bolts from intercooler.

2. Vacuum Hose

3. Intercooler Assembly

- Disconnect outlet hose from intake manifold.
- Remove bolts from engine side brakets.

INSTALLATION

3. Intercooler

- Connect outlet hose to intake manifold.
- Install intercooler and tighten fixing bolts to the specified torque.

	N·m (Kg·m/lb·ft)
	19 (2.0/14)

2. Vacuum Hose

1. Air Cleaner Cover & Air Duct

CYLINDER HEAD COVER

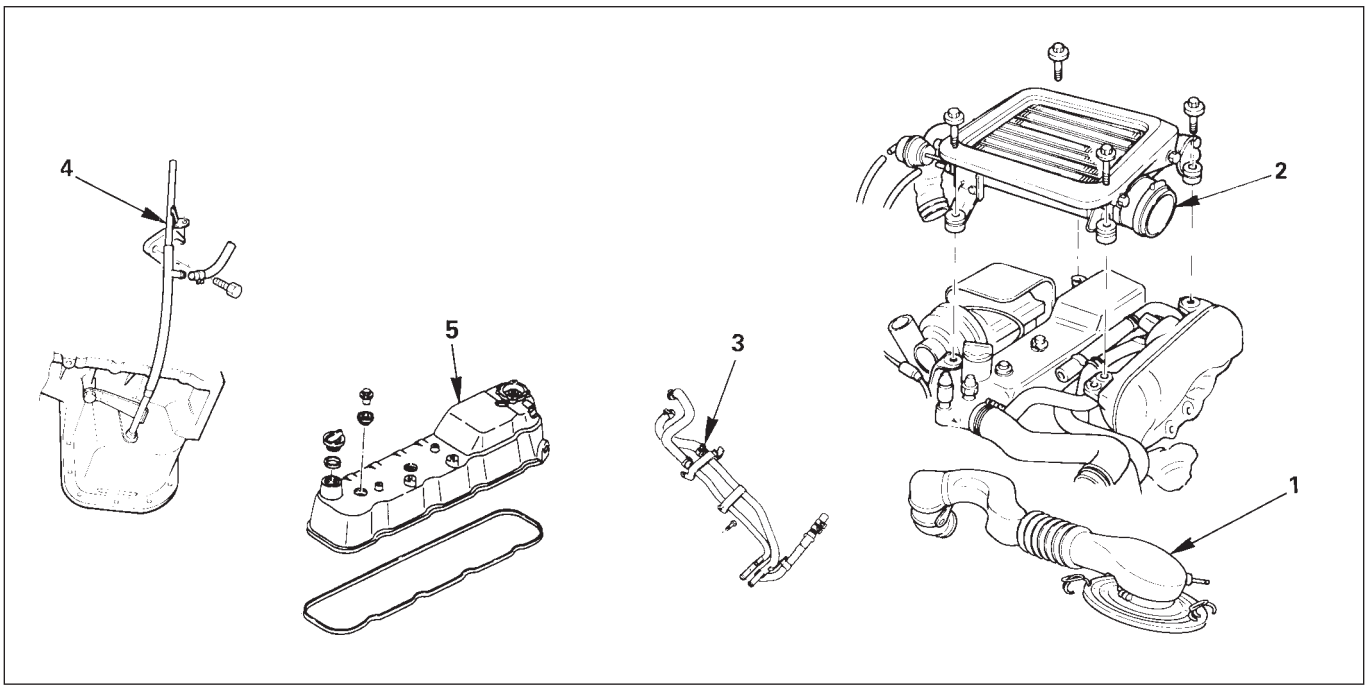

REMOVAL

Preparation:

- Disconnect battery ground cable.

1. **Air Cleaner Cover & Air Duct (4JG2-T only)**
   - Disconnect two air hose.
   - Release clips and bands and remove air cleaner cover.
2. **Intercooler Assembly (4JG2-Tonly)**
   - (Refer to intercooler removal steps in this section)
3. **Heater and Oil Cooler Pipe Fixing Bolts**
   - Remove fixing bolts from.
4. **Oil Level Gauge Tube**
5. **Cylinder head cover**

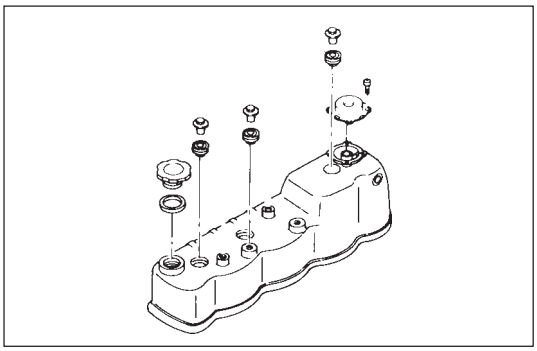

INSTALLATION

5. Cylinder Head Cover

- Apply engine oil to the rocker arms and the valve springs.
- Install the cylinder head cover gasket to the cylinder head cover.
- The gasket must be perfectly smooth with no loose areas.
- Tighten the cylinder head cover nuts to the specified torque in the numerical order.

N·m(Kg·m/lb·in)
13 (1.3/113 lb·in)

4. Oil Level Gauge Tube

Bolt	N·m(Kg·m/lb·ft)
	19 (1.9/14)

3. Heater and Oil Cooler Pipe Fixing Bolts

2. Intercooler Assembly (4JG2-T Only)

- (Refer to intercooler installation steps in this section.)

1. Air Cleaner Cover & Air Duct

INLET MANIFOLD

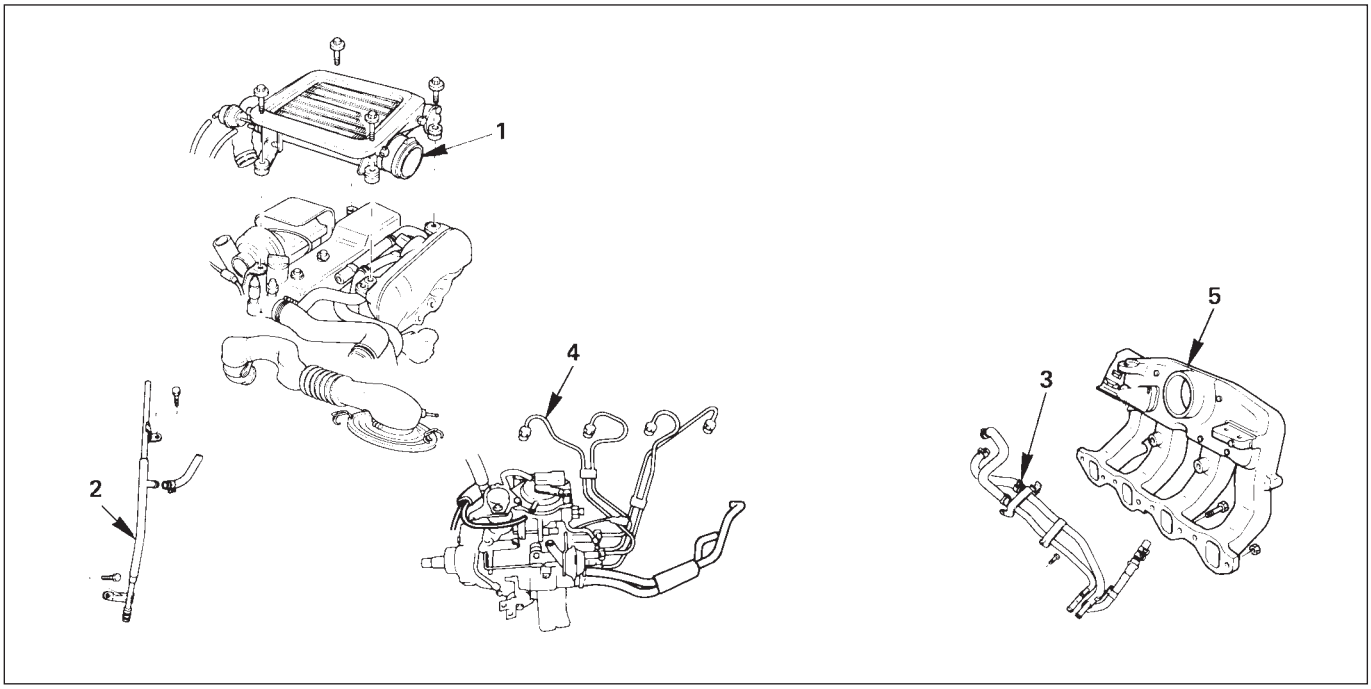

REMOVAL

1. **Intercooler (4JG2-T only)**
2. **Oil Level Gauge Tube (4JG2-T only)**
3. **Heater and Oil Cooler Pipe Fixing Bolts.**
   - Remove fixing bolts from inlet manifold.
4. **Injection Pipes**
5. **Inlet Manifold**

INSTALLATION

5. **Inlet Manifold**
   - Tighten the fixing bolts and nuts to the specified

Bolt	N·m(Kg·m/lb·ft)
	19 (1.9/14)

Nut	N·m(Kg·m/lb·ft)
	24(2.4/18)

4. Injection Pipes

- Tighten the sleeve nut to the specified torque

N·m(Kg·m/lb·ft)
29 (3.0/22)

3. Heater and Oil Cooler Pipe Fixing Bolts

- Tighten fixing bolts to the specified torque

N·m(Kg·m/lb·ft)
19 (1.9/14)

2. Oil Level Gauge Tube (4JG2-T only)

1. Inter Cooler (4JG2-T only)

- Refer to “Inter cooler installation”steps in this section.

EXHAUST MANIFOLD

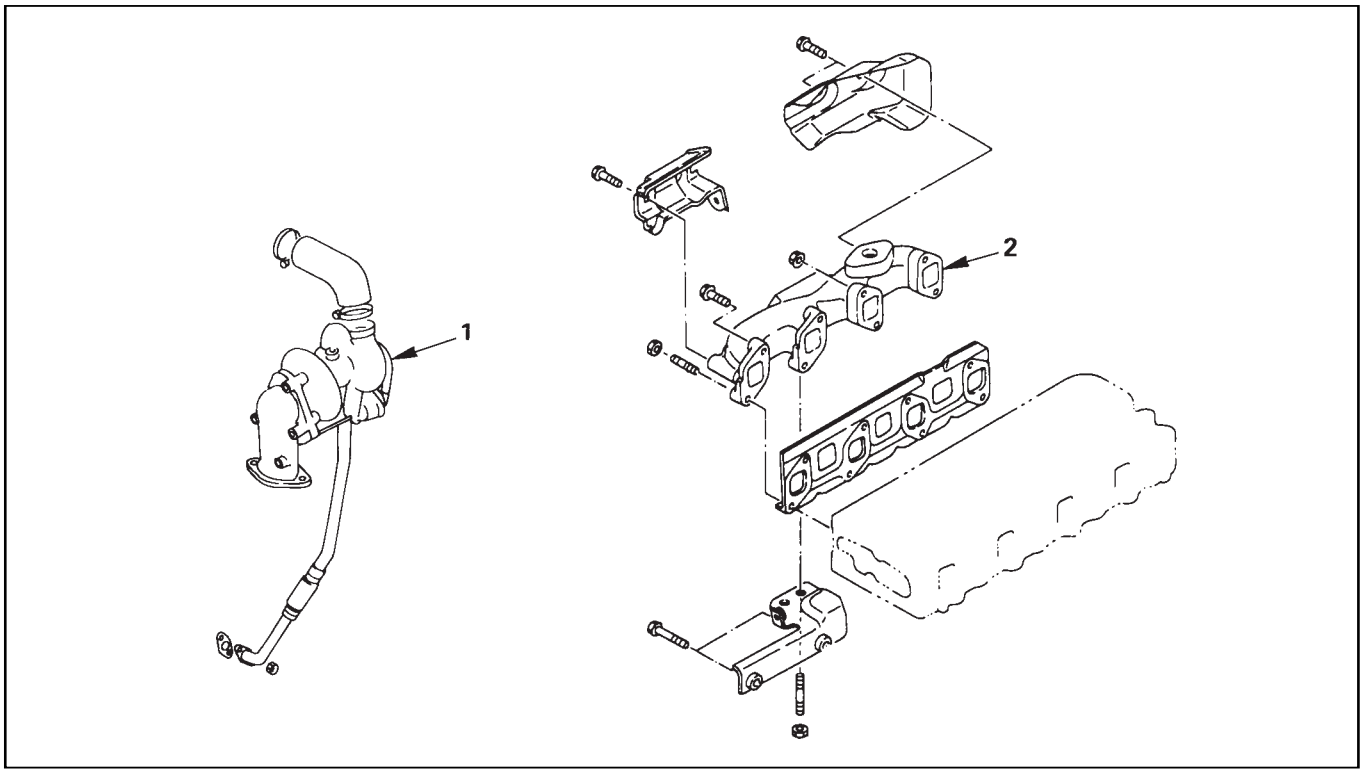

REMOVAL

1. **Turbocharger (4JG2-T only)**
   - Refer to the “Turbocharger” removal in this section.
2. **Exhaust Manifold**

INSTALLATION

2. **Exhaust Manifold**
   - Tighten the fixing nuts and bolts to the specified torque.

Nut	N·m(Kg·m/lb·ft)
	19 (1.9/14)

Bolt	N·m(Kg·m/lb·ft)
	26 (2.7/20)

1. **Turbocharger (4JG2-T only)**
   - Refer to the “Turbocharger” installation in this section.

TURBOCHARGER (4JG2-T only)

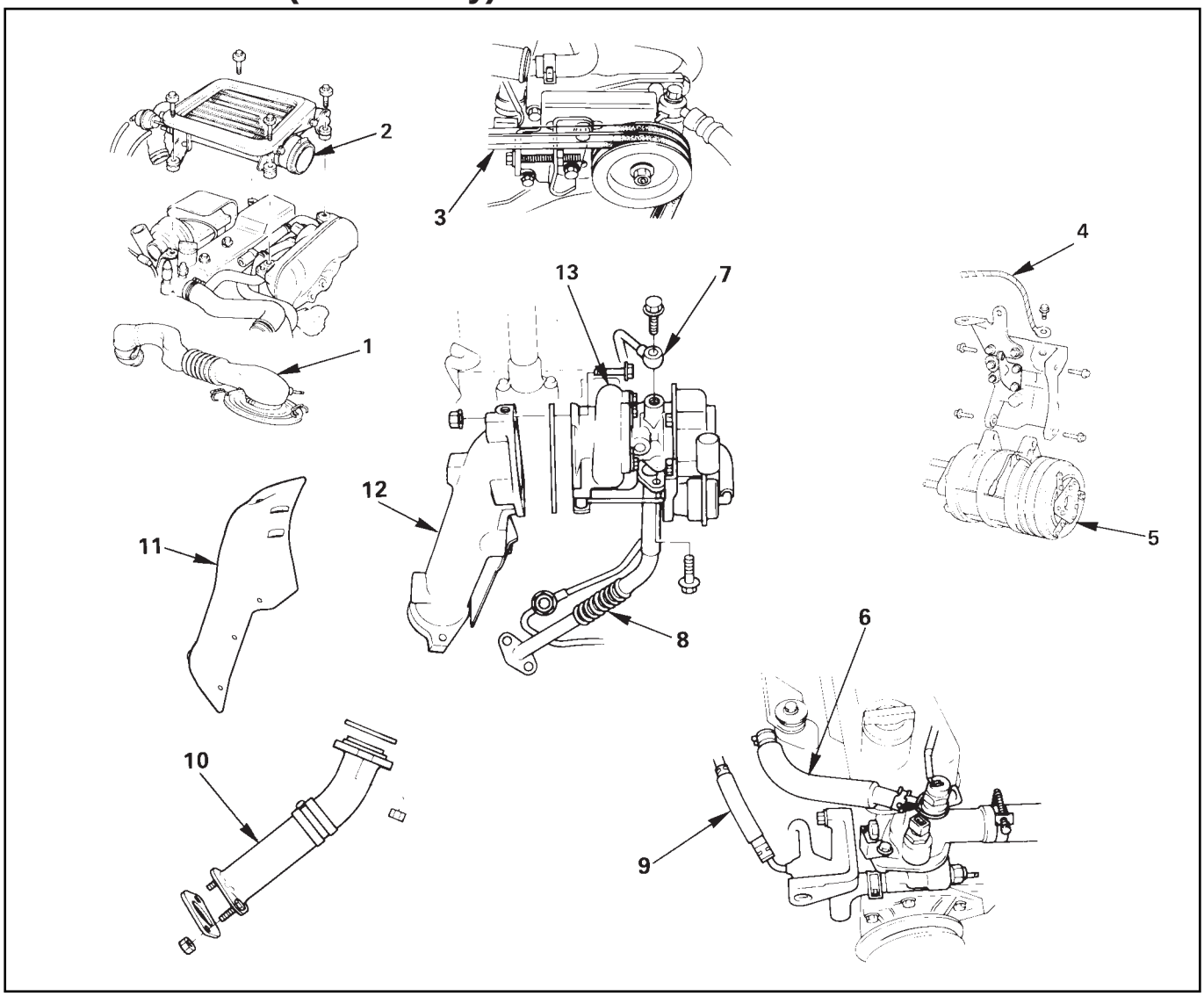

REMOVAL

Preparation

- Space stand and remove right front tire
- Remove battery
- Drain coolant

1. **Air Cleaner Cover & Air Duct**
   - Disconnect connecting rubbers and stay fixing bolts.
2. **Intercooler Assembly (4JG2-T Only)**
   - Refer to intercooler removal steps in this section.
3. **Power Steering (P/S) Pump Drive Belts**
   - Loosen P/S pump fixing bolts and adjusting bolt and remove two drive belt.
4. **Engine Ground Cable**

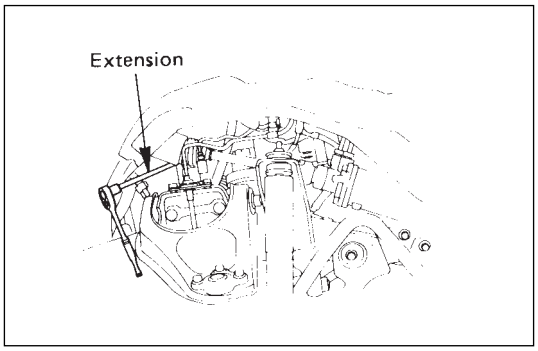

5. **Air Conditioner (A/C) Compressor Assembly**
   - Remove A/C compressor fixng bolt (rear under side of compressor) by using a long extension bar at under side of wheel arch.
   - Disconnect magnetic clutch harness connector.
   - Removal fixing bolts (upper and front lower sides of compressor) and set A/C compressor asm with pipelines on battery cable.
6. **Water Inlet Pipe: Turbo (4JG2-T Only)**
7. **Oil Feed Pipe: Turbo (4JG2-T Only)**
   - Remove joint bolt from turbo charger.
   - Plug up oil port of turbocharger to prevent entrance of foreign material.
8. **Oil Return Pipe: Turbo (4JG2-T Only)**
   - Disconnect oil return pipe flange from turbocharger.
9. **Water Outlet Pipe: Turbo (4JG2-T Only)**
10. **Exh. Pipe: Ft (4JG2-T Only)**
11. **Heat Protector (4JG2-T Only)**
12. **Exh. Adapter (4JG2-T Only)**
13. **Turbocharger Assembly (4JG2-T Only)**
    - Remove turbocharger asm from exhaust manifold.

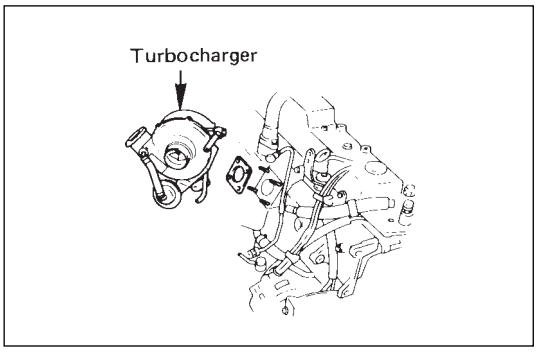

INSTALLATION

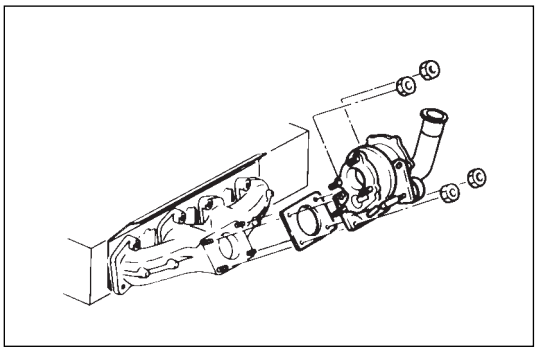

13. Turbocharger Assembly (4JG2-T Only)

- Install the turbocharger asm with gasket in exh. manifold and tighten fixing nuts to the specified torque.

N·m(Kg·m/lb·ft)
26 (2.7/20)

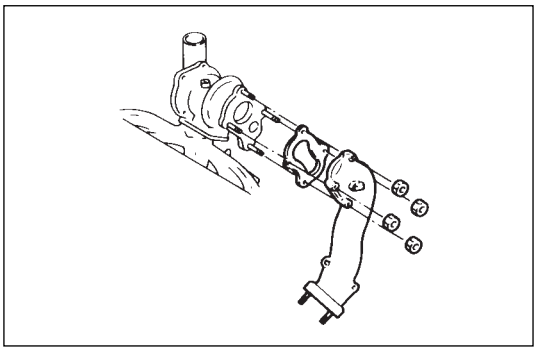

12. Exh. Adapter (4JG2-T Only)

- Install exh. adapter and tighten bolts to the specified torque.

N·m(Kg·m/lb·ft)
26 (2.7/20)

11. Heat Protector (4JG2-T Only)

10. Exh. Pipe: Ft

- Install exh. pipe and tighten bolts to the specified torque.

N·m(Kg·m/lb·ft)
67 (6.8/49)

9. Water Outlet Pipe: Turbo (4JG2-T Only)

- Install water outlet pipe with new gasket to the specified torque.

N·m(Kg·m/lb·ft)
8(0.8/6)

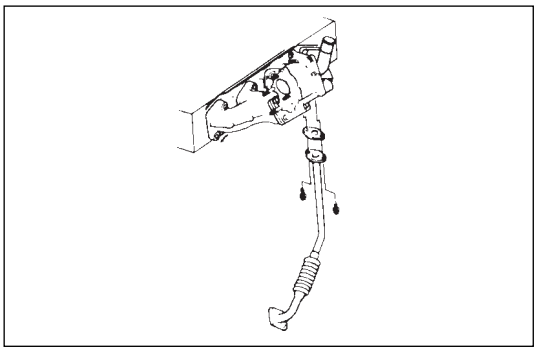

8. Oil Return Pipe: Turbo (4JG2-T Only)

- Install oil return pipe with new gasket in turbocharger and tighten joint bolt to the specified torque.

N·m(Kg·m/lb·ft)

8(0.8/6)

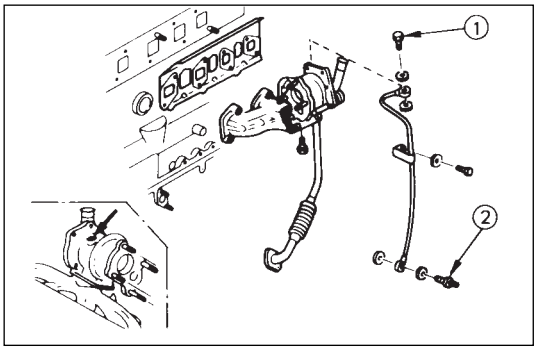

7. Oil Feed Pipe: Turbo (4JG2-T Only)

- Apply about 100 cc engine oil to oil feed hose of turbocharger housing before installing oil feed pipe.
- Lubricate turbocharger securely by rotating turbine shaft by hand.
- Install oil feed pipe with new gasket and tighten joint bolt to the specified torque.

N·m(Kg·m/lb·ft)

① 23 (2.3/17) ② 29 (3.0/22)

6. Water Inlet Pipe: Turbo (4JG2-T Only)

- Install water inlet pipe with new gasket and tighten joint bolt to the specified torque.

N·m(Kg·m/lb·ft)

8(0.8/6)

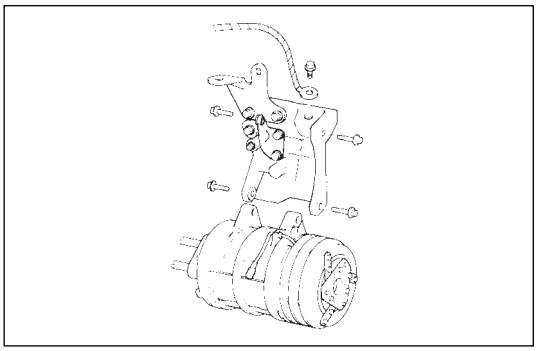

5. A/C Compressor Assembly

- Tighten temporarily fixing bolts (front upper and lower sides of compressor)
- Tighten fixing bolt (rear under side of compressor) to the specified torque by using along extension bar and torque wrench at under side of wheel arch.
- Tighten fixing bolts (front upper and lower side of compressor) to the specified torque.

N·m(Kg·m/lb·ft)

37 (3.8/27)

4. Engine Ground Cable

3. P/S Pump Drive Belts

- Install drive belts, adjust belt tension by adjusting bolt and tighten locking bolt to the specified torque.
- Refer to drive belt adjustment steps in section 6B.

2. Intercooler Assembly (4JG2-T Only)

- Refer to intercooler installation steps in this section.

1. Air Cleaner Cover & Air Duct (4JG2-T Only)

- Connect inlet and outlet connecting hoses and tighten stay fixing bolts.
- Install right front tire.
- Fill coolant
- Install battery and connect battery cables.

TIMING GEAR

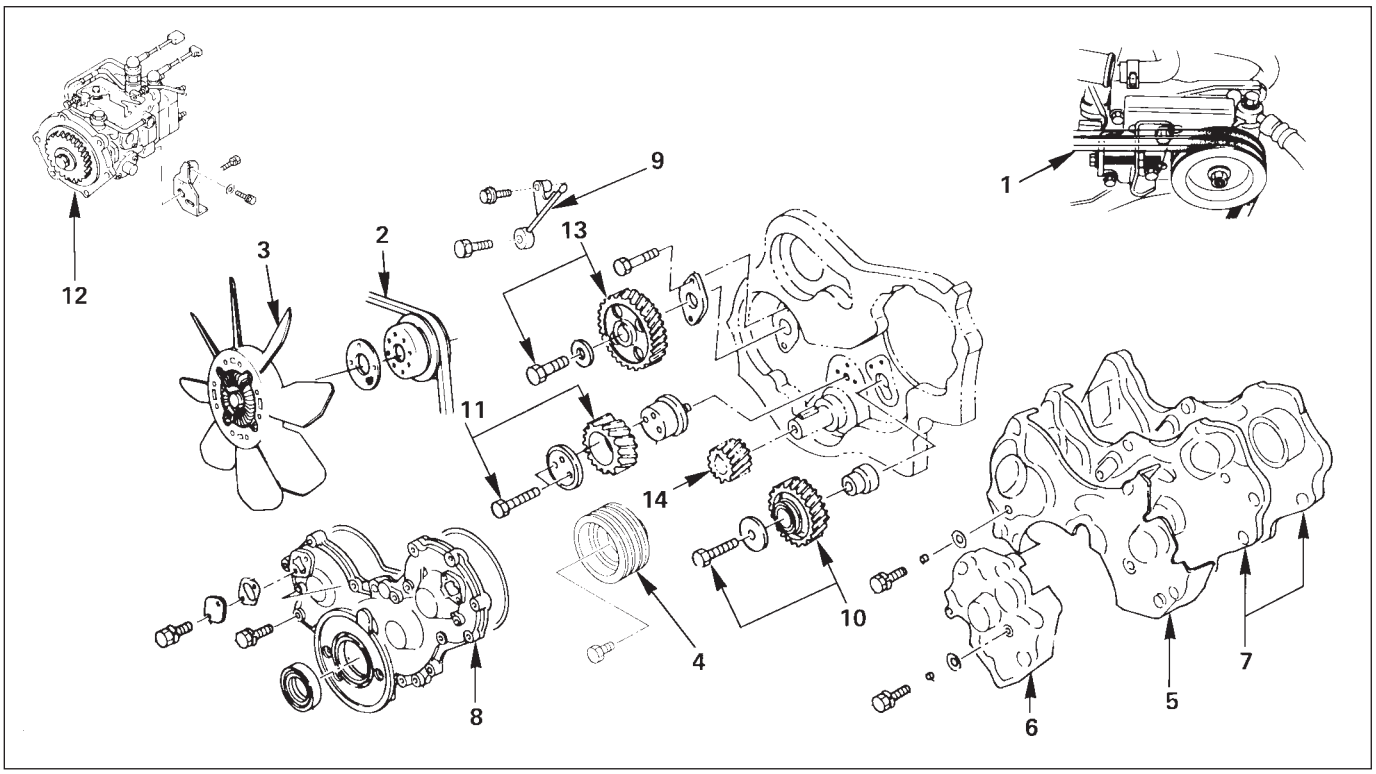

REMOVAL

Preparation:

- Disconnect battery ground cable.
- Drain coolant.

1. P/S Pump Drive Belt

- Loosen P/S pump mounting bolt and adjust bolt, and remove the drive belt.

2. AC Generator Drive Belt

- Loosen AC Generator mounting bolt (under side) and adjust plate lock bolt, and remove the drive belt.

3. Cooling Fan Assembly

- Remove clamp nut, and remove cooling fan asm, distant pipe, and fan pulley.

4. Crankshaft Damper Pulley

5. Upper Noise Shield Cover

6. Lower Noise Shield Cover

7. Noise Cover Spacer.

8. Timing Gear Case Cover

9. Oil Pipe

10. Idler Gear “B” and Shaft

1) Measure the camshaft timing gear backlash and the crenkshaft timing gear backlash before removing the idler gear.

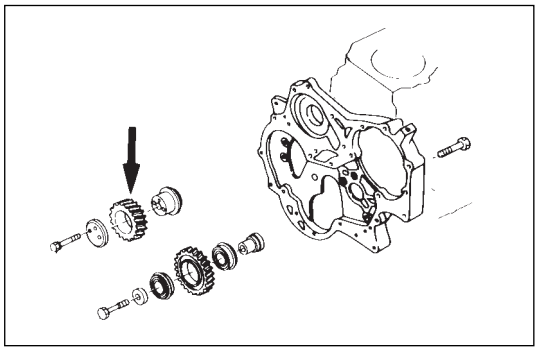

2) Measure the idler gear end play before removing the idler gear.

NOTE:

Refer to the following items for details on the backlash and end play measurement procedures.

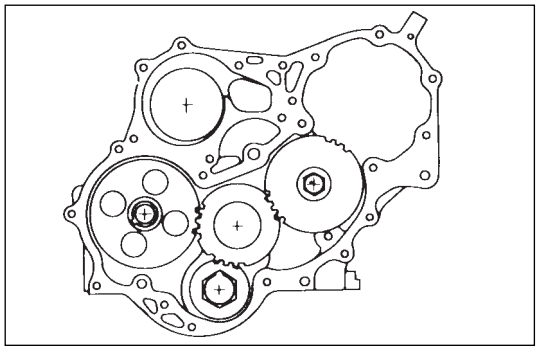

Timing Gear Backlash Measurement

1) Set a dial indicator to the timing gear to measured. Hold both the gear to be checked and the adjoining gear stationary.
2) Move the gear to be checked as far as possible to both the right and the left.
   Take the dial indicator reading.
   It the measured value exceeds the specified limit, the timing gear must be replaced.

Timing Gear Backlash — mm (in)

Standard	Limit
0.10-0.17 (0.0039-0.0067)	0.30 (0.012)

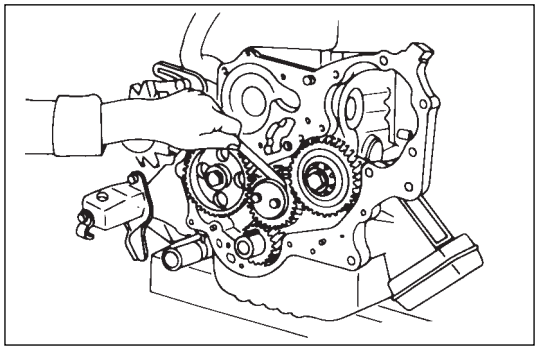

Idler Gear "A" End Play Measurement

Insert a feeler gauge between the idler gear and the thrust collar to measure the gap and determine the idler gear end play.
If the measued value exceeds the specified limit, the the thrust collar must be replaced.

Idler Gear End Play — mm (in)

Standard	Limit
0.07 (0.0028)	0.2 (0.0079)

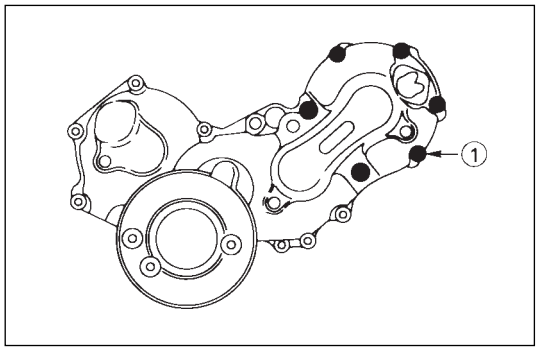

11. Idle Gear

12. Injection Pump

1) Remove the six injection pump bracket bolts ① from the timing gear case.

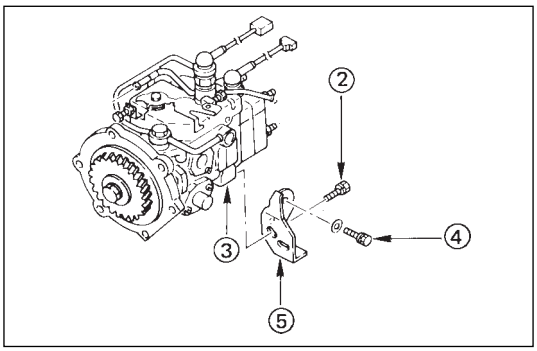

2) Remove the injection pump rear bracket bolts ② from the injection pump bracket ③.
3) Remove the injection pump rear bracket bolts ④ and the bracket ⑤ from the cylinder body.
4) Pull the injection pump along with the injection pump timing gear free toward the rear of the engine.

NOTE:

Plug the injection pump delivery holder ports with the shipping caps (or the equivalent) to prevent the entry of foreign material.

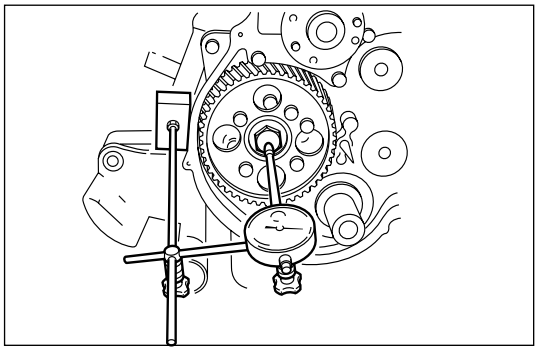

13. Camshaft Timing Gear

1) Use a dial indicator to measure the camshaft end play.
   This must be done before removing the camshaft gear.
   If the camshaft end play exceeds the specified limit, the thrust plate must be replaced.

Camshaft End Play — mm (in)

Standard	Limit
0.050-0.114 (0.0020-0.0044)	0.2 (0.008)

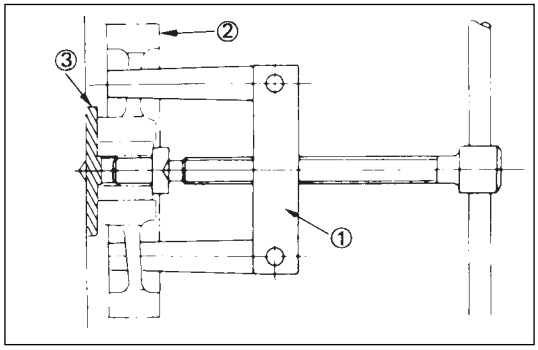

2) Remove the camshaft timing gear bolt from the camshaft.

NOTE:

Hold the camshaft stationaly to prevent the camshaft from turning.

3) Use the universal puller ① to pull out the camshaft timing gear ②.
4) Remove the thrust plate ③.

14. Crank Shaft Gear

INSTALLATION

14. Crank Shaft Gear

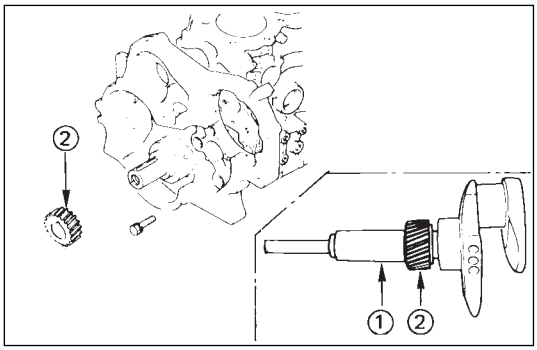

1) Install the crankshaft gear.
2) Use the crankshaft gear installer ① to install the crankshaft gear ②.
   The crankshaft gear timing mark ("X - X") must be facing outward.
   Crankshaft Gear Installer : 9-8522-0020-0

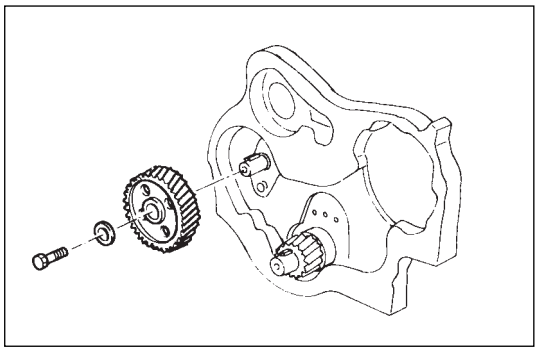

13. Crankshaft Timing Gear

1) Install the camshaft timing gear to the camshaft. The timing gear mark ("Y - Y") must be facing outward.
2) Tighten the timing gear to the specified toeque.

N·m(Kg·m/lb·ft)
64 (6.5/47)

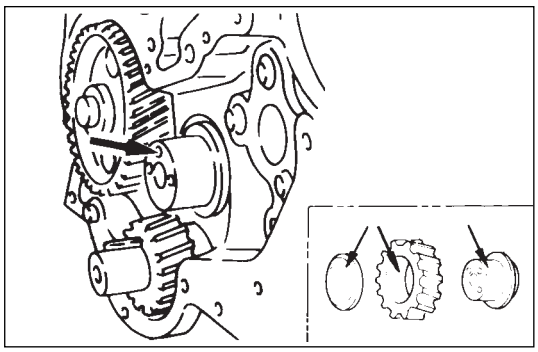

11. Idle Gear

1) Apply engine oil to the idler gear and the idler gear shaft.
   The idler gear shaft oil hole must be facing up.
2) Position the idler gear setting marks "X" and "Y" so that they are facing the front of the engine.

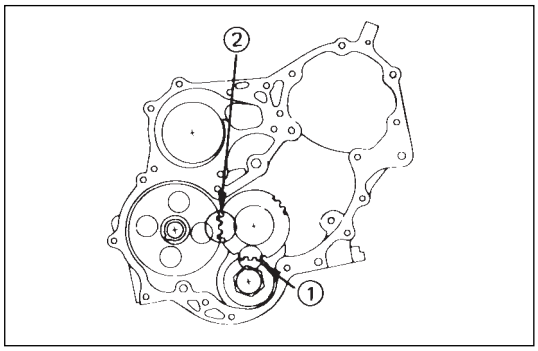

3) Align the idler gear "X" setting mark with the crankshaft timing gear ① "X - X" setting mark.
4) Align the idler gear "Y" setting mark with the camshaft timing gear ② "Y - Y" setting mark.
5) Install the thrust collar and bolts to the cylinder body through the shaft.
   The thrust collar oil hole must be facing up, and the thrust collar chamfered must be outward.
6) Tighten the idler gear bilt to the specified torque.

N·m(Kg·m/lb·ft)
19 (1.9/14)

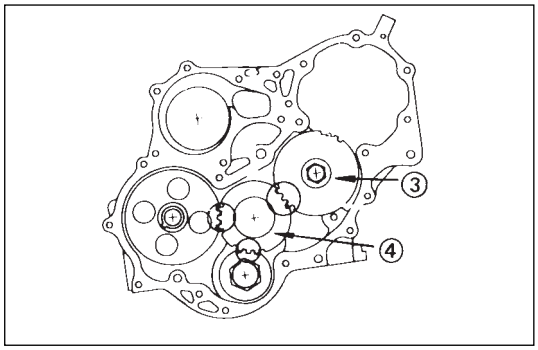

10. Idler Gear "B" and Shaft

1) Apply engine oil to the idler gear and the idler gear shaft.
2) Align the idler gear "B" ③ "Z" setting mark with the idler gear "A" ④ "Z - Z" setting mark.
3) Tighten the idler gear bolt to the specified torque.

N·m(Kg·m/lb·ft)
76 (7.7/56)

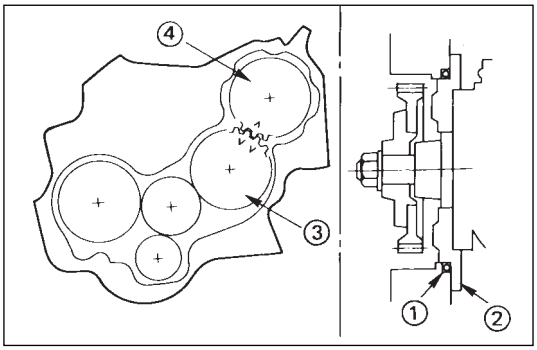

12. Injection Pump

1) Install the O-ring ① to the injection pump flange ②.
2) Install the injection pump to the timing gear case. Align the idler gear "B" ③ "V - V" mark with the injection pump timing gear ④ "V" mark.

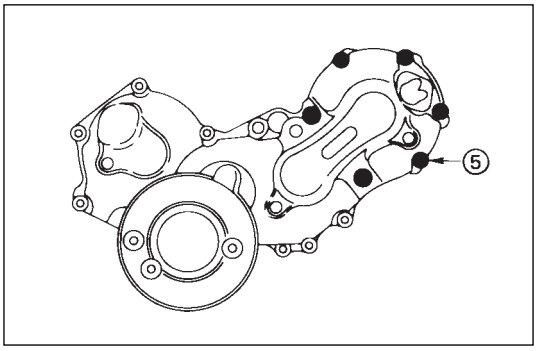

3) Temporarily tighten the six injection pump nuts ⑤.
The injection pump nuts will be finally tightened after the injection pump rear bracket bolts.

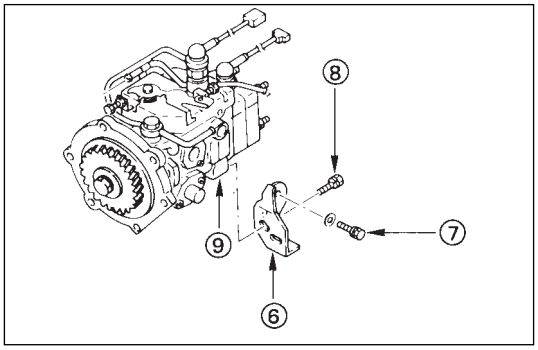

4) Install the injection pump rear bracket ⑥ and the rear bracket bolts ⑦ to the cylinder body.
5) Install the rear bracket bolts ⑧ to the injection pump bracket⑨.
Do not tighten the bolts.
The rear bracket bolts ⑦ and ⑧ will be finally tightened to the specified torque after the injection pump nuts.

6) Tighten the injection pump bracket bolts ⑦ to the specified torque.

N·m(Kg·m/lb·ft)
206(21/152)

7) Tighten the injection pump bracket bolts ⑧ to the specified torque.

N·m(Kg·m/lb·ft)
206(21/152)

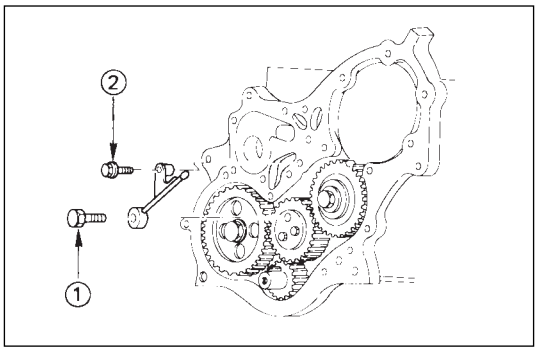

9. Timing Gear Oil Pipe

1) Install the oil pipe to the timing gear case and idler gear "A".
2) Tighten the oil pipe eye bolt ① and bolt ② to the specified torque.

N·m(Kg·m/lb·ft)
13 (1.3/9)

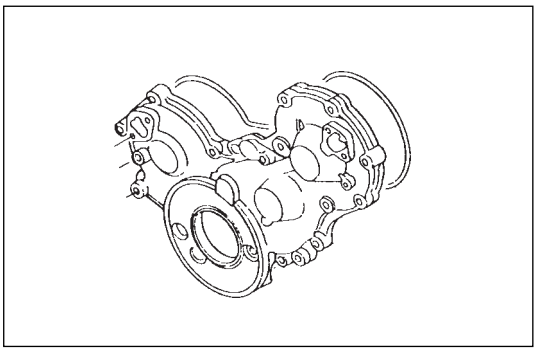

8. Timing Gear Case Cover

1) Align the gear case with the timing gear case knock pin and then install the timing gear case cover.
2) Tighten the gear case cover bolts to the specified torque.

7. Noise Cover Spacer

6. Lower Noise Shield Cover

5. Upper Noise Shield Cover

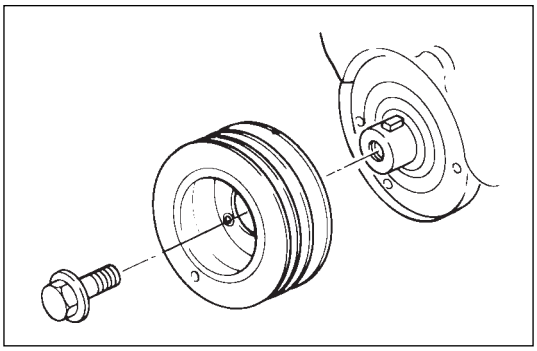

4. Cranshaft Damper Pulley

Tighten the crankshaft damper pulley bolt to the specified torque.

NOTE:

Hold the flywheel ring gear stationary to prevent the crankshaft from turning when tightening the damper pulley.

	N·m(Kg·m/lb·ft)
	206(21/152)

3. Cooling Fan Assembly

- Mount fan pulley, distance piece, and cooling fan asm (in this order) on the water pump, and tighten to the specified torque.

	N·m(Kg·m/lb·ft)
	206(21/152)

2. AC Generator Drive Belt

- Install AC Generator drive belt and adjust belt tension.
- Refer to Drive Belt Adjustment in section 6B.

1. P/S Pump Drive Belt

- Install P.S pump drive belt and adjust belt tension.
- Refer to Drive Belt Adjustment in section 6B.

VALVE STEM OIL SEAL & VALVE SPRING

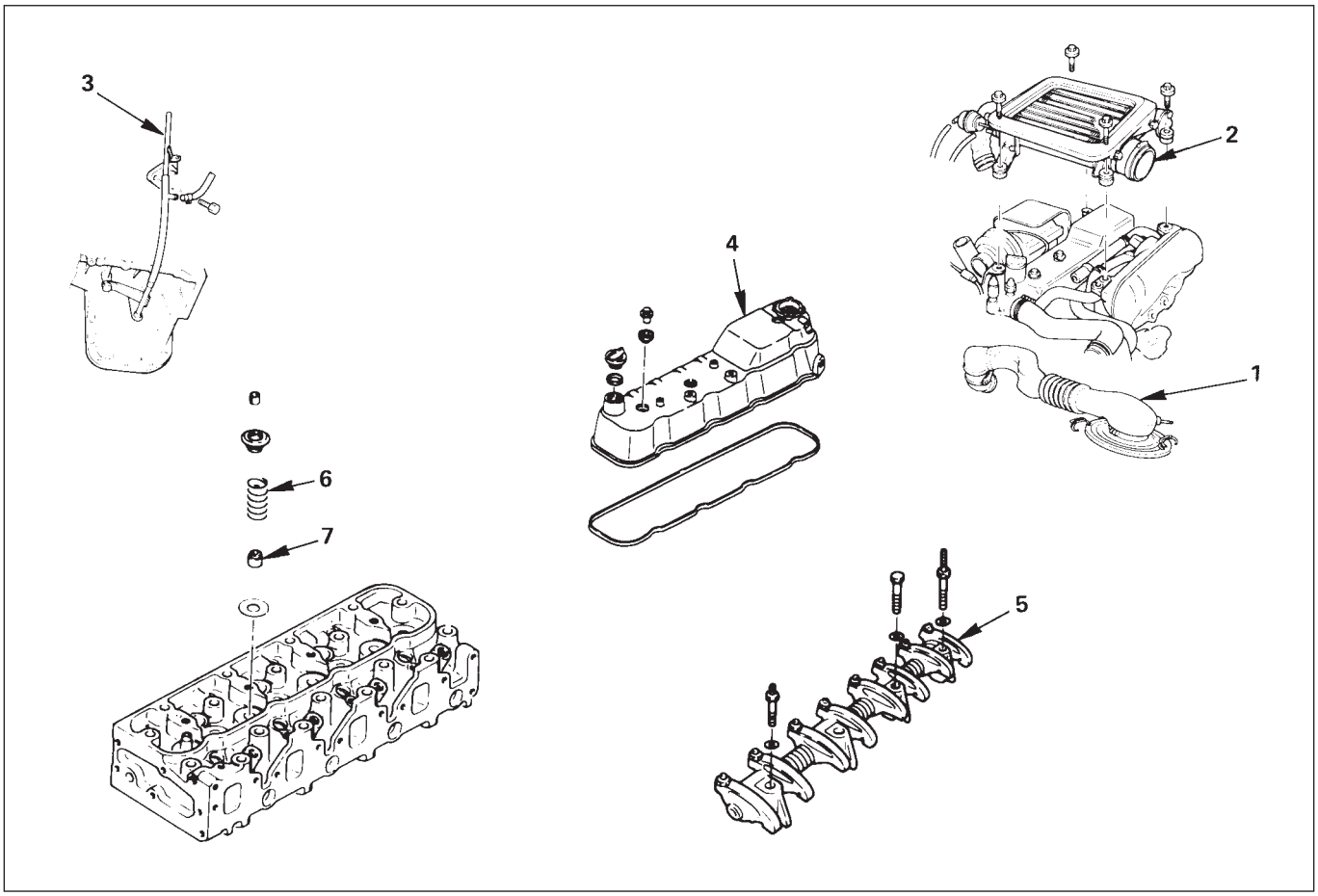

REMOVAL

Preparation

- Disconnect battery ground cable.

1. **Air cleaner Cover & Air Duct (4JG2-T Only)**
   - Disconnect air hoses.
   - Release clips and bands and remove air cleaner cover.
2. **Intercooler Assembly (4JG2-T Only)**
   - (Refer to intercooler removal steps in this section)
3. **Oil Level Gauge Tube**
4. **Cylinder Head Cover**
5. **Rocker Arm Shaft Assembly**
   - Loosen bolts and nuts of rocker arm shaft
   - Bracket by turns and removal rocker
   - Shaft asm.
6. **Valve Spring**
   - Apply compressed air to cylinder from the glow plug hole hold the valve in place.
   - Using special tool, compress valve spring and removal split collar.

Valve spring compressor: 9-8523-1423-0 (J-29760)

CAUTION

- Put removed valve springs in the order of cylinder number.

7. Valve Stem Oil Seal

- Removal oil seal by pliers.

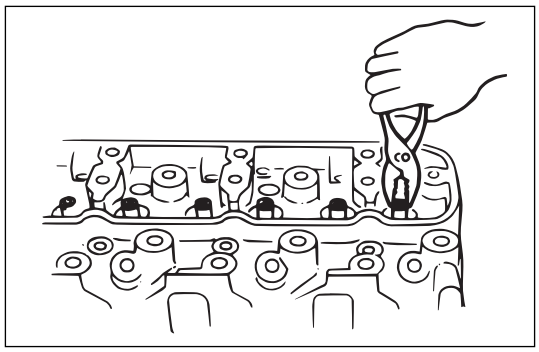

CAUTION

- Removed oil controller should not be reused.

INSTALLATION

7. Valve Stem Oil Seal

- Install new oil seal to valve guide.
- Guide using special tool.

  Special tool: 5-8840-2033-0

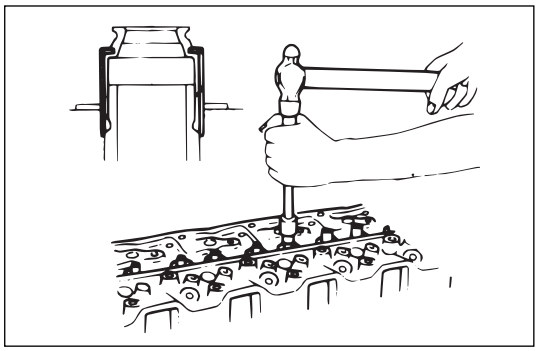

6. Valve Spring

- Attach the valve spring to the upper spring seat.

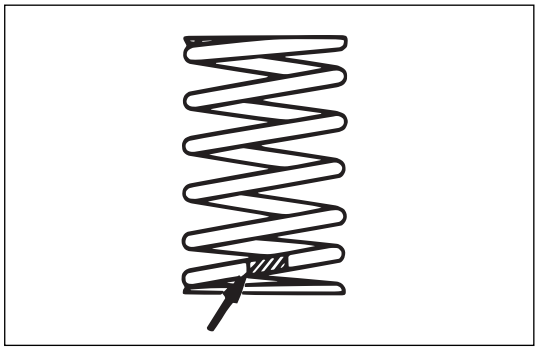

CAUTION

- The painted area of the valve spring should be facing toward.
- Apply compressed air to cylinder from the glow plug hole to hold the valve in place.
- Install split collar by special tool.

  Valve spring compressor: 9-8523-1423-0 (J-29760)

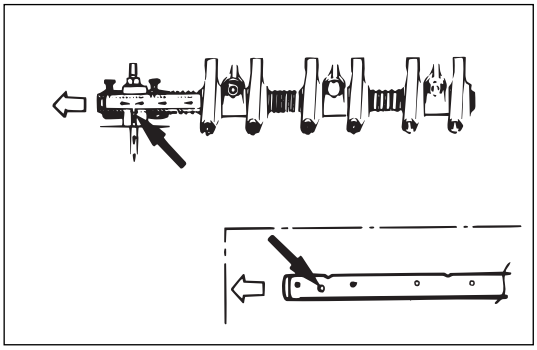

5. Rocker Arm Shaft Assembly

- Install rocker arm shaft with a larger oil hole (ø4) to the front of engine.
- Align fixing bolt with not of rocker arm shaft and tighten fixing bolt to the specified torque.

N·m(Kg·m/lb·ft)
54 (5.5/40)

4. Cylinder Head Cover

- Install cylinder head cover and tighten bolt to the specified torque.

N·m(Kg·m/lb·in)
13 (1.3/113)

3. **Oil Level Gauge Guide Tube**
   - Tighten guide tube to the specified torque.

	N·m(Kg·m/lb·ft)
2	19 (1.9/14)

2. **Intercooler Assembly (4JG2-T Only)**
   - Refer to intercooler installation steps in this section.
1. **Air Cleaner Cover & Air Duct (4JG2-T Only)**

ROCKER ARM SHAFT ASSEMBLY

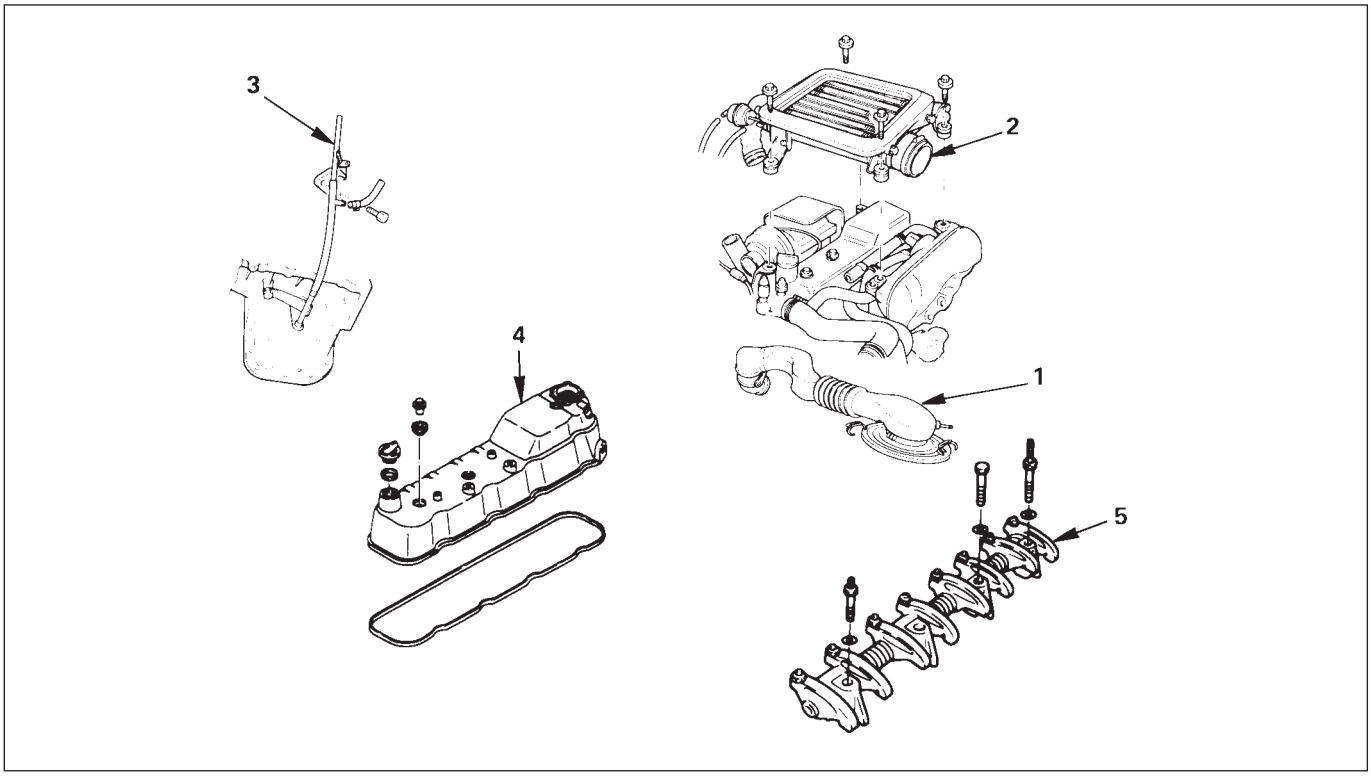

REMOVAL

Preparation

- Disconnect battery ground cable.

1. **Air Cleaner Cover & Air Duct (4JG2-T Only)**
   - Disconnect air hoses.
   - Release clips and bands and remove air cleaner cover.
2. **Intercooler Assembly (4JG2-T Only)**
   - Refer to intercooler removal steps in this section.
3. **Oil Level Gauge Tube**
4. **Cylinder Head Cover**
5. **Rocker Arm Shaft Assembly**
   - Loosen bolts and nuts of rocker arm shaft bracket by turns and remove rocker shaft asm.

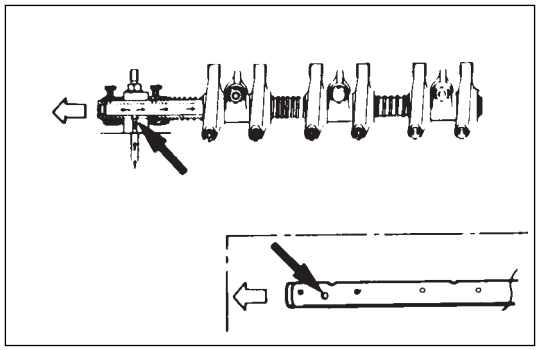

INSTALLATION

5. Rocker Arm Shaft Assembly

- Install rocker arm shaft with larger oil hole (ø4) to the front of engine.
- Align fixing bolt with not of rocker arm shaft and tighten fixing bolts to the specified torque.

N·m (kg·m/lb·ft)
54 (5.5/40)

- Adjust valve clearance refreshing to section valve clearance adjustment.

4. Cylinder Head Cover

- Install cylinder head cover and tighten bolts to the specified torque.

N·m (kg·m/lb·in)
13 (1.3/113)

3. Oil Level Gauge Guide Tube

- Tighten guide tube to the specified torque.

N·m (kg·m/lb·ft)
19 (1.9/14)

2. Intercooler Assembly (4JG2-T Only)

- Refer to intercooler installation steps in this section.

1. Air Cleaner Cover & Air Duct (4JG2-T Only)

CYLINDER HEAD

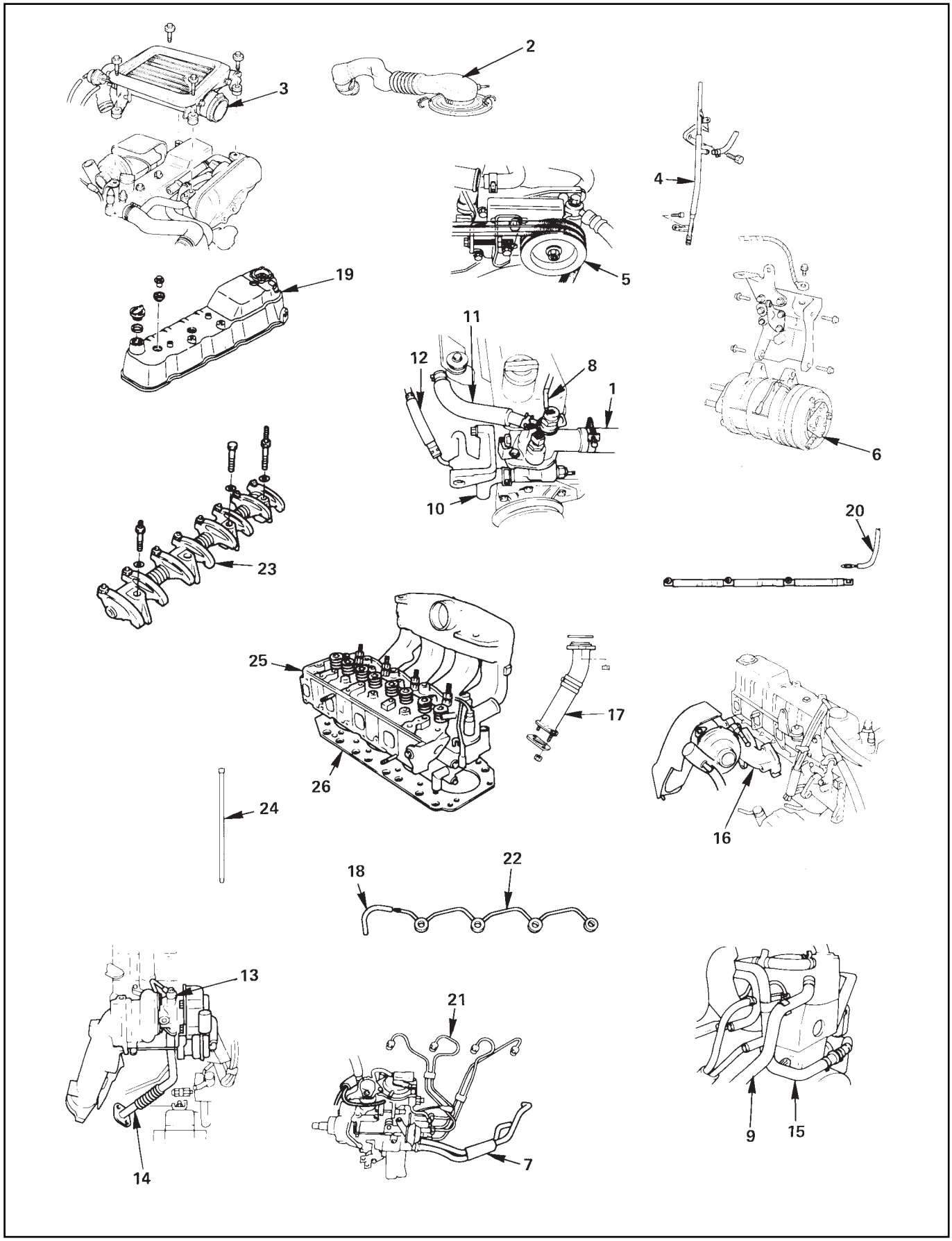

REMOVAL

Preparation

- Remove battery. (two batteries for cold area)
- Disconnect window washer hose, and remove engine hood.
- Drain coolant.
- Space stand and front right tire.

1. **Radiator Hose : Upper**
   - Disconnect upper radiator hose from engine side.
2. **Air Cleaner Cover & Air Duct**
3. **Intercooler Assembly (4JG2-T Only)**
   - (Refer to intercooler removal steps in this section)
4. **Oil Level Gauge Guide Tube**
5. **P/S Pump**
   - Loosen P/S pump fixing bolts and adjusting bolt and remove two drive belts.
   - Remove two fixing bolts (front side). A fixing nut (rear side) and support P/S pump asm with oil hoses by tying to body side.
6. **A/C Compressor Assembly**
   - Remove A/C compressor fixing bolt (rear under side of compressor) by using a long extension bar at under side of wheel arch.
   - Disconnect magnetic clutch harness connector.
   - Remove fixing bolts (upper and front lower side of compressor) and set A/C compressor asm with pipe line on battery carrier.

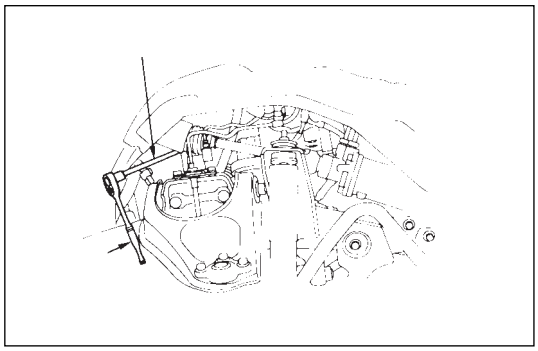

7. **Water Hose; CSD**
   - Disconnect CSD water hoses from heater hose side.
8. **Engine Harness**
   - Disconnect five harness connectors from units on thermostat housing.
9. **Heater Hose: Rear Side**
   - Disconnect heater hose from heater pipe.
10. **Water Bypass Hose**
    - Disconnect water bypass hose from water pump.
11. **Water Inlet Hose: Turbo (4JG2-T Only)**
    - Disconnect from water outlet pipe of engine.

12 **Water Outlet Hose: Turbo (4JG2-T Only)**
   - Disconnect from water inlet pipe of engine.

13 **Oil Feed Pipe: Turbo (4JG2-T Only)**
   - Remove two joint bolts (from turbocharger and cylinder block) and oil feed pipe.

14. **Oil Return Pipe Fixing Nut (4JG2-T Only)**
    - Remove oil return pipe fixing nut from cylinder block.
15. **Oil Cooler Hose**

16. Exh. Manifold; W/turbo (4JG2-T Only)
- Remove exh. manifold bracket fixing bolt from exh. manifold.
- Remove exh. manifold fixing bolts and nuts from cylinder head.
- After pulling out exh. manifold a little, remove oil return pipe flange from stud bolt and remove exh. manifold w/turbo.

17. Front Exhaust Pipe
18. Fuel Leak Off Hose
19. Cylinder Head Cover
20. Glow Plug Harness
21. Injection Pipe
- Loosen sleeve nuts on injection pump side.
- Disconnect sleeve nuts on injection pipe.

22. Fuel Leak Off Pipe
23. Rocker Arm Shaft Assembly
24. Push Rod
25. Cylinder Head W/inlet Manifold
- Disconnect cylinder head bolts in sequence shown in Figure.

26. Cylinder Head Gasket

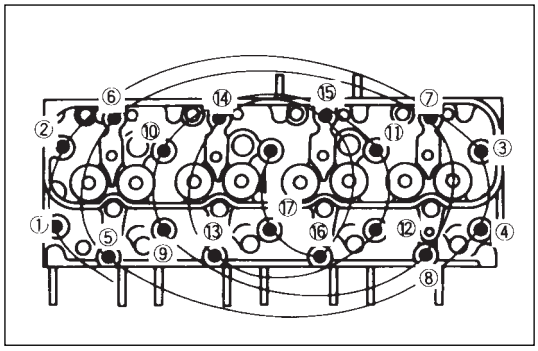

INSTALLATION

26. Cylinder Head Gasket
- Determine cylinder head gasket grade by measuring projection of piston head.
- Install dowel in cylinder block.
- Install cylinder head gasket with top mark up.

25. Cylinder Head W/intake Manifold
- Clean up cylinder head lower surface and cylinder body upper surface.
- Install cylinder head as softly.
- Apply engine oil to screw and seat of cylinder head bolts.
- Tighten cylinder head bolts in following sequence.

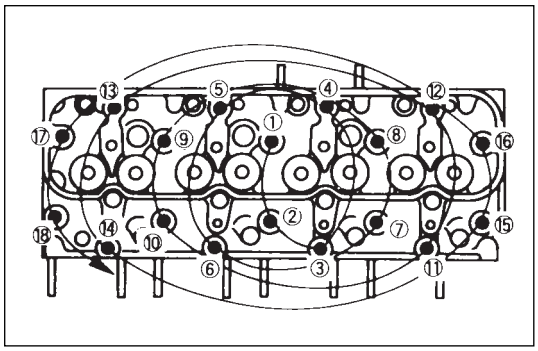

N·m (kg·m/lb·ft)

1st Step	2nd Step	3rd Step
49 (5.0/36)	60°	60°

24. Push Rod
- Inspect curvature, excessive wear and damage. (Refer to push rod inspection)

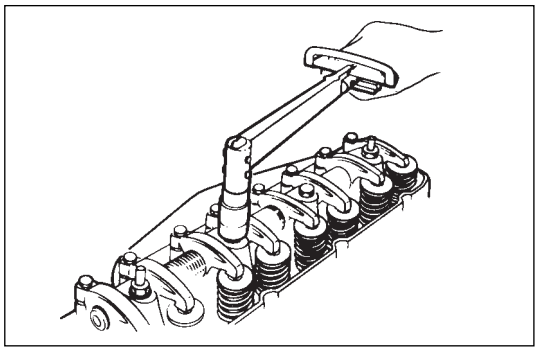

23. Rocker Arm Shaft Assembly

- Loosen all adjusting screws.
- Align fixing bolts to not of rocker arm shaft and tighten them to the specified torque.

N·m (kg·m/lb·ft)

54 (5.5/40)

- Valve clearance adjustment.
- Refer to valve clearance adjustment steps in section 00.

22. Fuel Leak Off Pipe

- Install fuel leak off pipe with new copper gasket and tighten joint bolts to the specified torque.

N·m (kg·m/lb·ft)

29 (3.0/22)

21. Injection Pipe

- Install injection pipes and sleeve nuts securely and tighten them to the specified torque.

N·m (kg·m/lb·ft)

29 (3.0/22)

20. Glow Plug Harness

19. Cylinder Head Cover

- Apply engine oil to the rocker arms and the valve spring.
- Install the cylinder head cover gasket to the cylinder head cover.
- Tighten the cylinder head cover nuts to the specified torque in the numerical order shown in the illustration.

N·m (kg·m/lb·in)

13 (1.3/113)

18. Fuel Leak Off Hose

17. Front Exh. Pipe

- Install front exhaust pipe and tighten fixing bolts to the specified torque.

N·m (kg·m/lb·ft)

19 (1.9/14)

16. Exh. Manifold W/turbo (4JG2-T Only)

- Install manifold gasket in cylinder head.
- Insert exh. manifold into studs on cylinder head a little.
- Under this condition, insert oil return pipe frange into studs on crankcase.
- Tighten exh. manifold fixing bolts and nut to specified torque.

N·m (kg·m/lb·ft)

26 (2.7/20)

15. Oil Cooler Hose

14. Oil Return Pipe: Turbo (4JG2-T Only)

- Tighten joint bolt to the specified torque.

N·m (kg·m/lb·in)

8 (0.8/69)

13. Oil Feed Pipe: Turbo (4JG2-T Only)
- Tighten joint bolts (cylinder block and turbo charger side) to the specified torque.

N·m (kg·m/lb·ft)

23 (23/17)

12. Water Outlet Hose: Turbo (4JG2-T Only)
- Connect to water inlet pipe of engine.

11. Water Inlet Hose: Turbo (4JG2-T Only)
- Connect to water outlet pipe.

10. Water Bypass Hose
- Water bypass hose connect to water inlet pipe.

9. Heater Hose
- Connect to heater pipe.

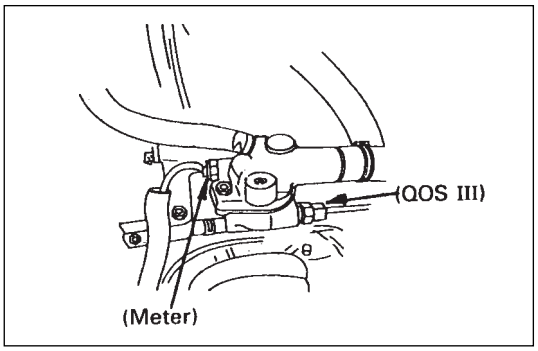

8. Engine Harness
- Connect five harness connecters to units on thermostat housing.

7. Water Hose: CSD

6. A/C Compressor
- Tighten temporarily fixing bolts (upper and front lower sides of compressor.)
- Tighten fixing bolt (rear under side of compressor) to the specified torque by using a long extension bar and torque wrench at under side of wheel arch.
- Tighten fixing bolts (front upper and lower sides of compressor) to the specified torque.

N·m (kg·m/lb·ft)

37 (3.8/27)

5. P/S Pump Drive Belt
- Install drive belts adjust belt tension by adjusting bolt and tighten locking bolt to the specified torque.

N·m (kg·m/lb·ft)

40 (4.1/30)

- Refer to “Drive Belt Adjustment” in section 6B.

4. Oil Level Gauge Guide Tube
- Tighten guide tube to the specified torque.

N·m (kg·m/lb·ft)

19 (1.9/14)

3. Intercooler Assembly (4JG2-T Only)
- Refer to “Drive Belt Adjustment” in section 6B.

2. Intake Air Duct (4JG2-T Only)

1. Radiator Hose Upper
- Connect to water outlet pipe.

CRANKCASE

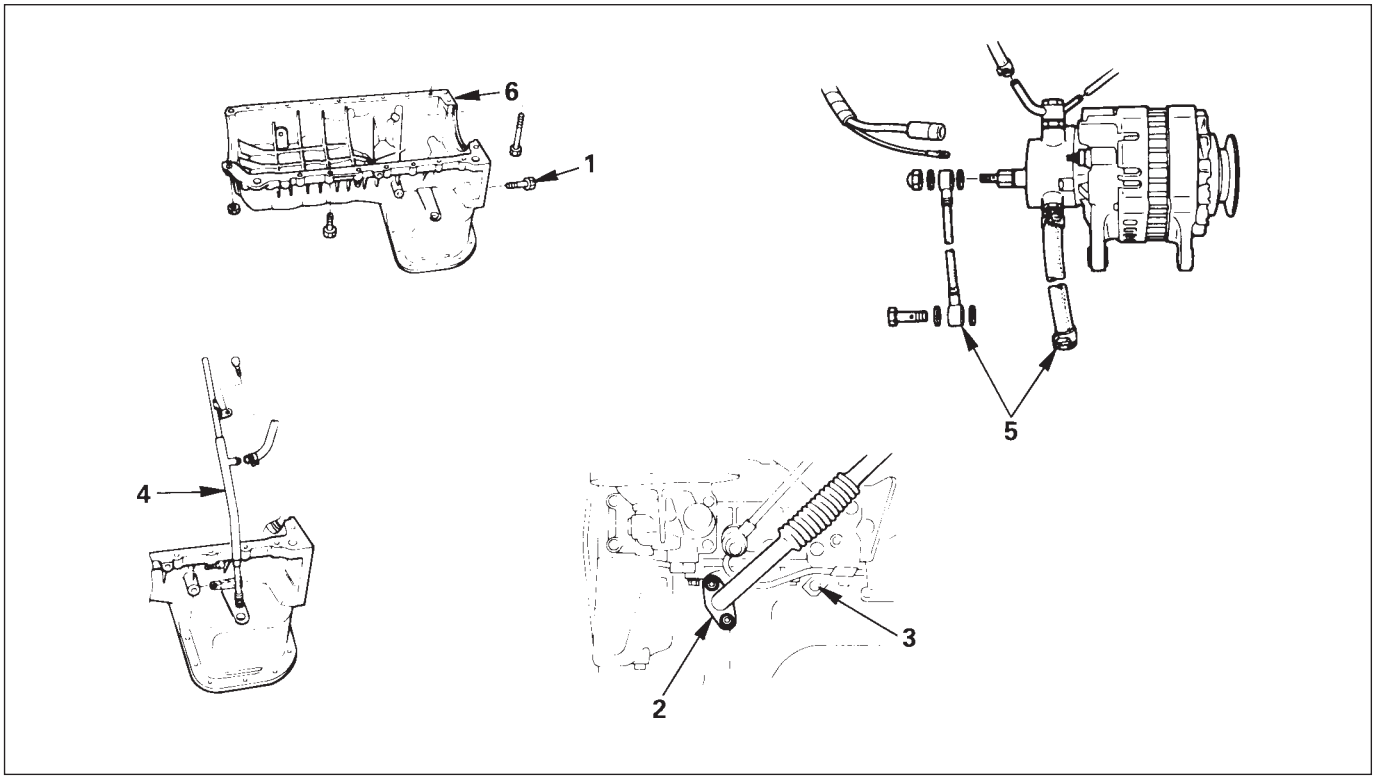

REMOVAL

Preparation

- Disconnect battery ground cable.
- Lift up car.
- Drain engine oil.

NOTE

- Install drain plug with new gasket.

1. **Transmission Housing Bolt**
   - Remove six fixing bolts from under side of housing.
2. **Oil Return Pipe: Turbo (4JG2 -T only)**
   - Remove return pipe fixing nuts and set return pipe frange from stud on crankcase.
3. **Oil Pipe Clip Bolt: Vaccum Pump**
4. **Oil Level Gauge Guide Tube**
   - Remove two guide tube stay fixing bolts.
   - Disconnect blow by hose and remove oil level gauge guide tube.

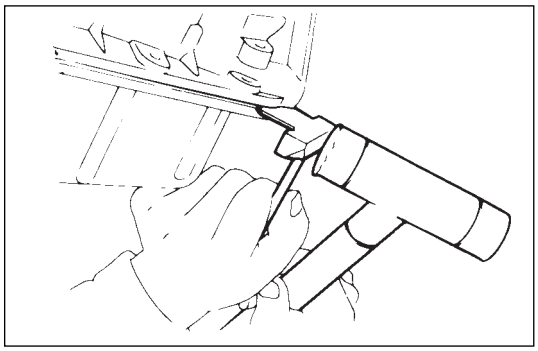

5. **Vacuum Hose**
6. **Crankcase**
   - Remove crankcase fixing bolts two fixing bolts for rear oil seal arch parts on crankcase could be removed extention universal joint box wrench.
   - Remove crankcase by using crankcase seal cutter to shear sealant off and remove crankcase.
     Oil seal cutter: 5-8840-2153-0

NOTE

- Don't ply crankcase or you may distort sealing surface.
- Distorted or damaged crankcase should not by used.

INSTALLATION

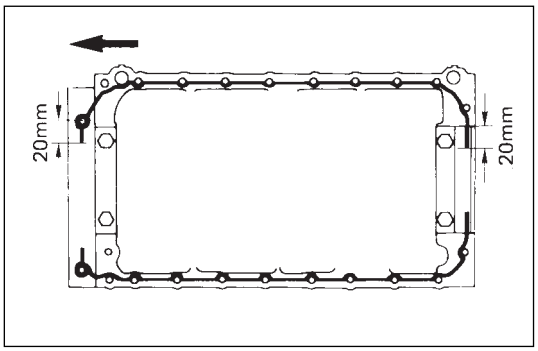

6. **Crankcase**
   - Completely remove all sesidual sealant, lubricant and moisture from the sealing surface of crankcase and cylinder block.
   - Apply a correct width bead of sealant (TB-1207C or its equivalent) to contact surface of crankcase there must be no gaps in the bead.
   - Install crankcase with cylinder-block, and tighten fixing bolts to the specified torque.

N·m (kg·m/lb·ft)
19 (1.9/14)

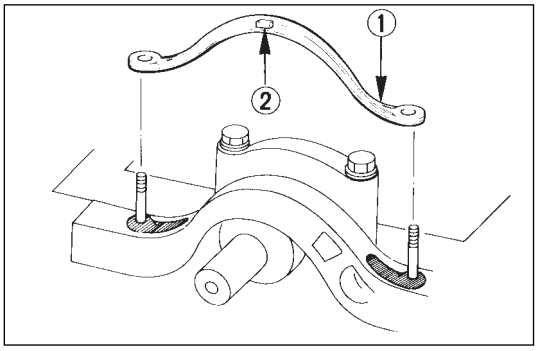

5. **Vacuum Hose**
4. **Oil Level Gauge Guide Tube**
   - Install guide tube to the specified torque.

N·m (kg·m/lb·ft)
19 (1.9/14)

   - Connect blow by hose to guide tube.
3. **Oil Pipe Clip Bolts: Vacuum Pump**
   - Tighten oil pipe clip fixing bolts to the specified torque.

N·m (kg·m/lb·ft)
19 (1.9/14)

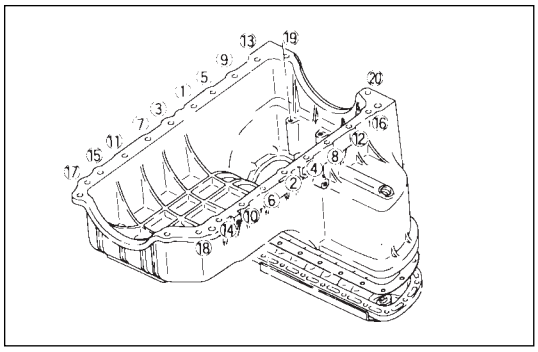

2. **Oil Return Pipe: Turbo.**
   - Tighten fixing nuts to crankcase to the specified torque.

N·m (kg·m/lb·in)
8 (0.8/69)

1. **Transmission Housing Bolts**
   - Pour engine oil into engine.
   - Install battery ground cable.
   - Start the engine and check for oil leakage from crankcase.

OIL FILTER CARTRIDGE

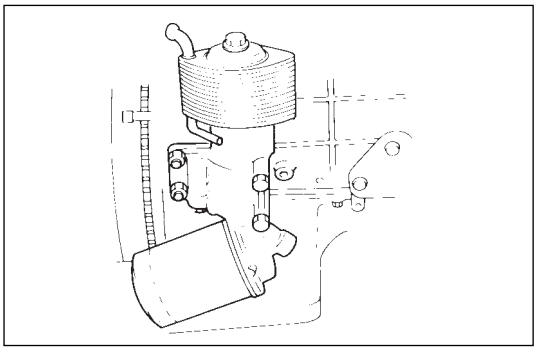

REMOVAL

- Place a receptacle beneath the oil filter to contain the drained oil.
- Remove the oil filter cartridge using filter wrench.
  Filter wrench: 5-8840-0200-0

INSTALLATION

- Lightly oil the o-ring of oil filter cartridge.
- Turn in the new oil filter cartridge by hand until the sealing face is fiffted again the o-ring.
- Use the filter wrench to turn in the oil filter and additional one and 1·1/8 turns.
- Start the engine and check for oil leakage from oil filter.

OIL COOLER

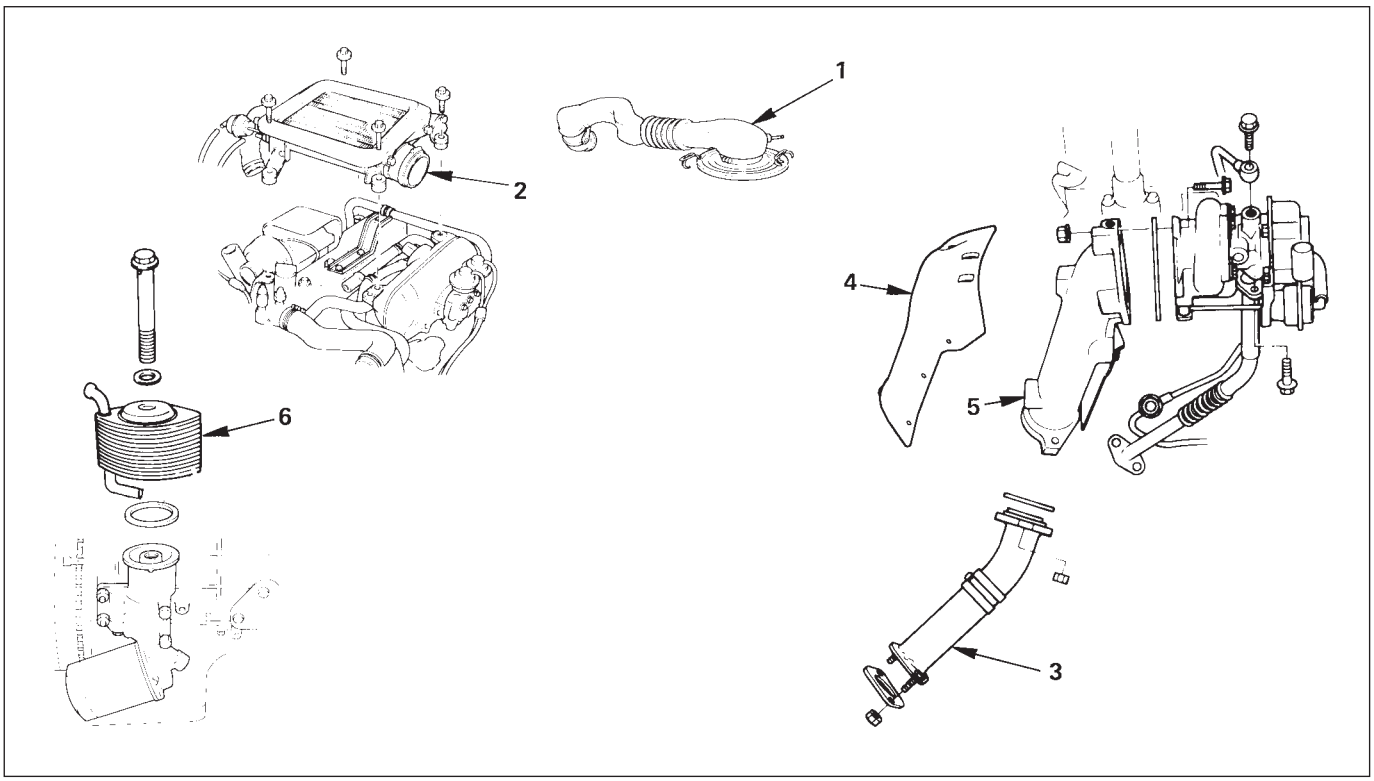

REMOVAL

Preparation

- Disconnect battery ground cable
- Drain coolant

1. **Air Cleaner Cover & Air Duct**
2. **Intercooler Assembly (4JG2-T Only)**
   - Refer to intercooler removal steps in this section
3. **Front Exh. Pipe**
   - Disconnect front exhaust pipe from engine side and intermediate pipe.
4. **Heat Protector (4JG2-T Only)**
5. **Exh. Adapter (4JG2-T Only)**
6. **Oil Cooler**
   - Disconnect water inlet and outlet hose.
   - Remove fixing bolts and oil cooler.
   - Put rag to beneath side of oil cooler to prevent oil leaking.

INSTALLATION

6. Oil Cooler

- Tighten oil cooler fixing bolt to the specified torque and connect water hose.

N·m(Kg·m/lb·ft)
29 (3.0/22)

5. Exh. Adapter (4JG2-T Only)

- Install exhaust duct with gasket and tighten fixing bolts to the specified torque.

N·m(Kg·m/lb·ft)
26 (2.7/20)

4. Heat Protector (4JG2-T Only)

3. Front Exh. Pipe

- Install front exhaust pipe and tighten fixing bolts to the specified torque.

Exh Dust Side	N·m(Kg·m/lb·ft)
67 (6.8/49)	

Intermediate pipe side	N·m(Kg·m/lb·ft)
43 (4.4/32)	

2. Intercooler Assembly (4JG2-T Only)

- Refer to intercooler installation steps in section.
- Pour coolant into radiator.
- Install battery ground cable.
- Start engine and check for oil and water leakage carefully.

1. Air Cleaner Cover & Air Duct

OIL PUMP ASSEMBLY

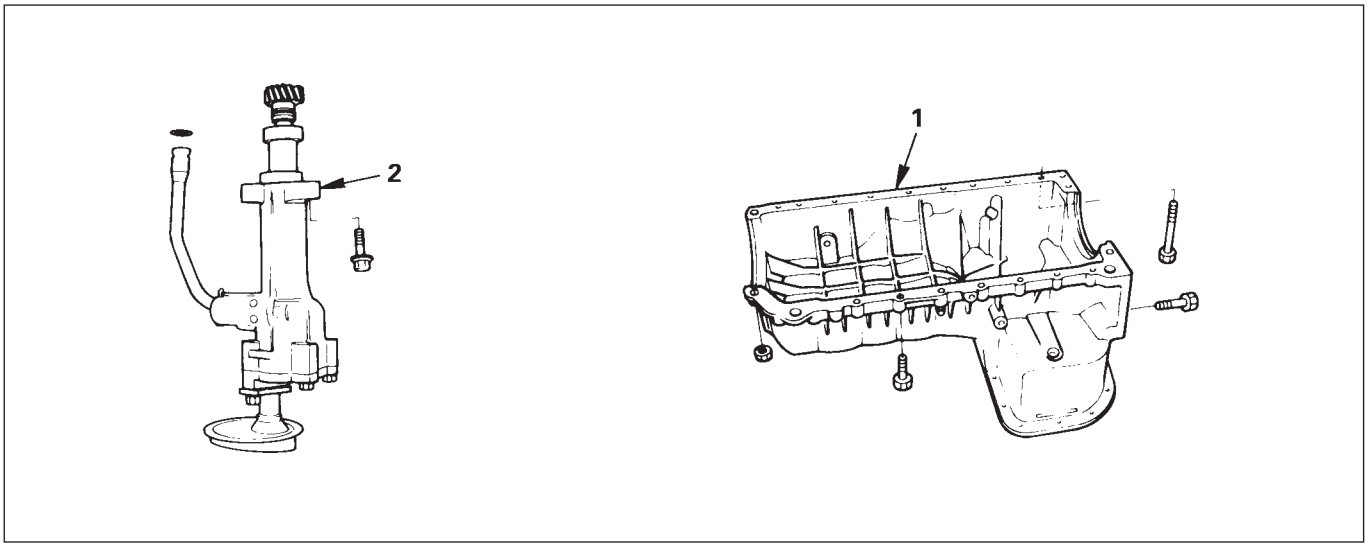

REMOVAL

Preparation

- Disconnect battery ground cable.
- Lift up car.
- Drain engine oil.

NOTE

- **Install drain plug with new washer.**

1. **Crankcase**
   - Refer to crankcase removal steps in this section
2. **Oil Pump Assembly**
   - Remove oil pump asm from cylinder block.

INSTALLATION

- Prepare a solution of 80% engine oil and 20% molybdenum disulfide.
- Apply and ample coat of the solution to the teeth of the oil pump pinion.

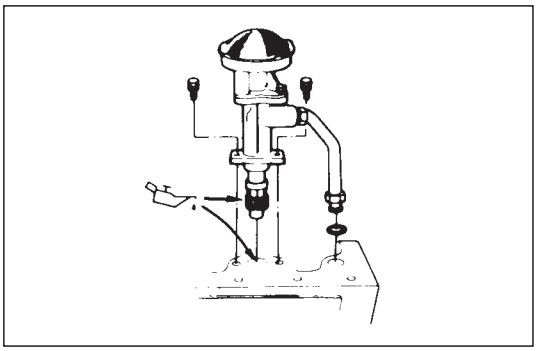

2. **Oil Pump Assembly**
   - Apply engine oil to oil pipe o-ring and insert the o-ring in o-ring hold on cylinder block.
   - Install oil pump asm with oil pipe in cylinder block and tighten fixing bolts to the specified torque.

N·m(Kg·m/lb·ft)
19 (1.9/14)

   - Tighten sleeve nut to the specified torque.

N·m(Kg·m/lb·ft)
25 (2.5/18)

1. **Crankcase**
   - Refer to crankcase installation steps in this section

PISTON, PISTON RING AND CONNECTING ROD

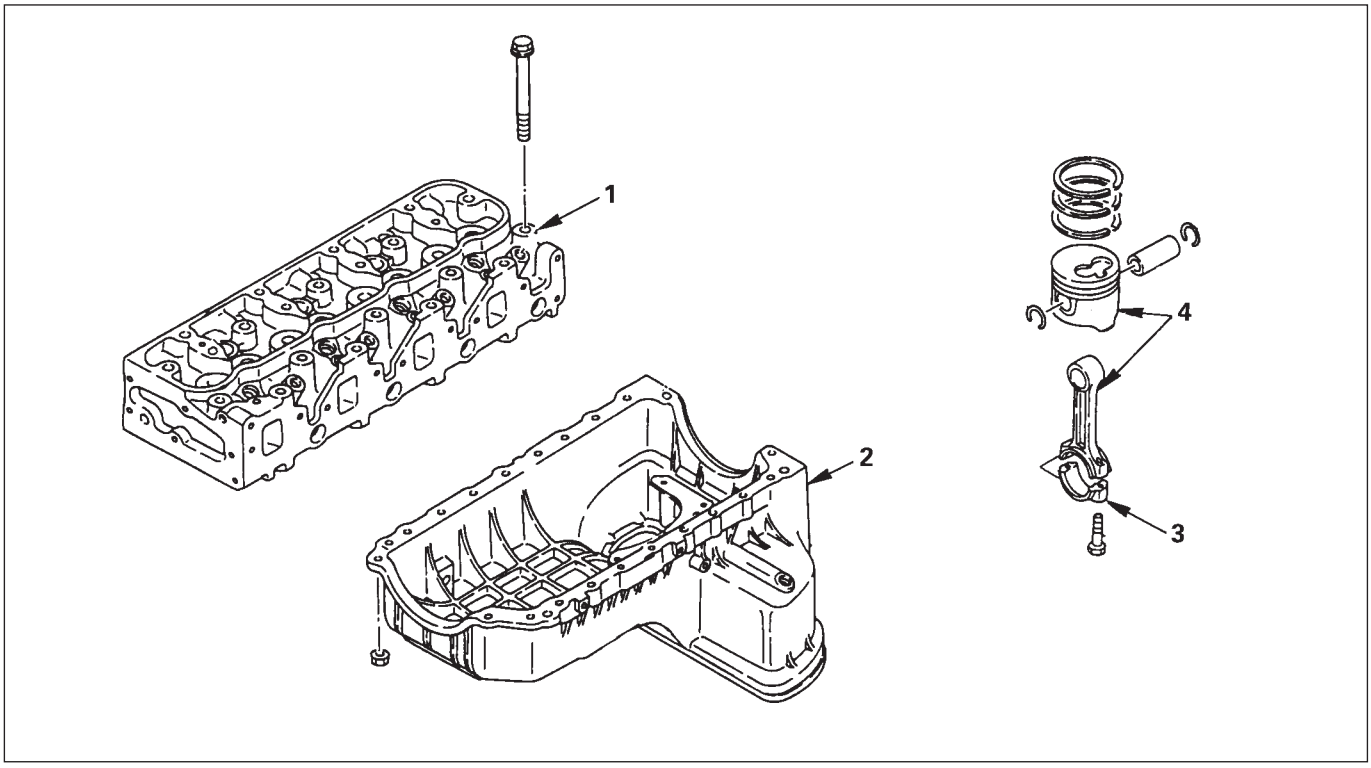

REMOVAL

1. **Cylinder Head**
   - Refer to “Cylinder Head” removal in this section.
2. **Crankcase**
   - Refer to “Crankcase” in this section.
3. **Connecting Rod Bearing Cap**
   - Before removing the bearing cap, remove carbon on the top of cylinder bore.
4. **Piston, Piston Rings and Connecting Rod**
   - Push piston and connecting rod out from the top of cylinder bore.

INSTALLATION

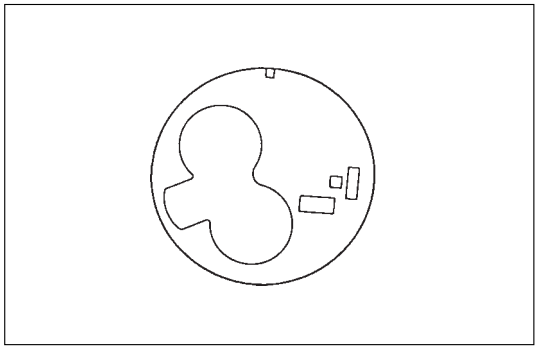

4. **Piston, Piston Rings and Connecting Rod**
   - Apply engine oil to cylinder bore, connecting rod bearings and crank pins.
   - In installing the piston, its front mark must face the engine front side.
3. **Connecting Rod Bearing Cap**
   - The bearing cap number must be same as connecting rod number.
   - Apply engine oil to the thread and sealing surface of each nuts.
   - Tighten nuts to the specified torque.

N·m(Kg·m/lb·ft)

☡	1st step 29 (3.0/22)	2nd step 45° – 60°

- After tightening the nuts, make sure that the crankshaft rotates smoothly.

2. Crankcase

- Refer to “Crankcase” in this section.

1. Cylinder Head

- Refer to “Cylinder Head” installation in this section.

CRANKSHAFT AND MAIN BEARING

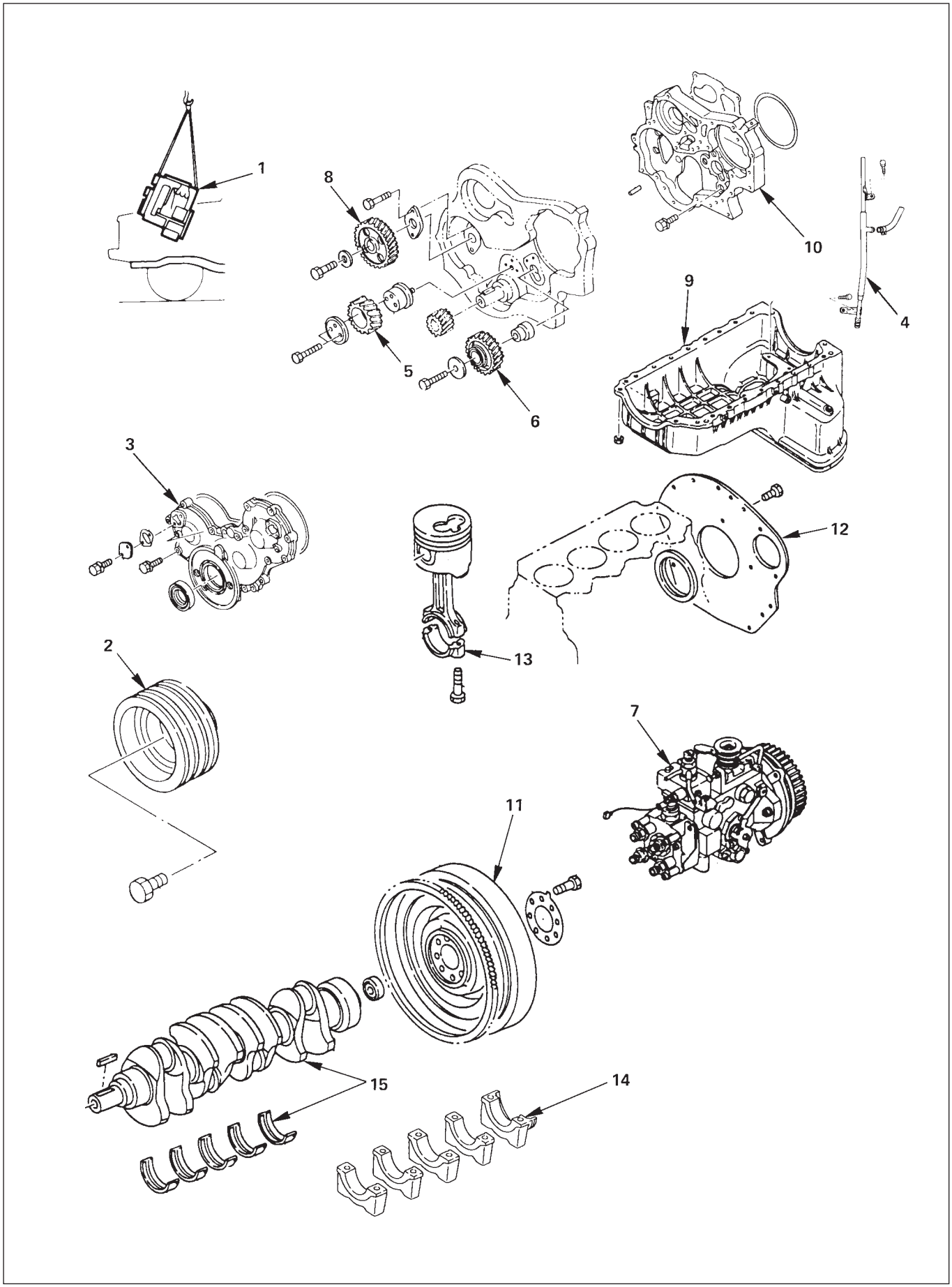

REMOVAL

1. **Engine Assembly**
   - Refer to “Engine Assembly” removal in this section.
2. **Crankshaft Damper Pulley**
3. **Timing Gear Case Cover**
4. **Oil Level Gauge and Guide Tube**
5. **Idler Gear “B” and Shaft**
6. **Idler Gear**
7. **Injection Pump**
8. **Camshaft Timing Gear**
9. **Crankcase**
10. **Gear Case**
11. **Flywheel**
12. **Rear Plate**
13. **Connecting Rod Caps**
14. **Crankshaft Main Bearing Caps**
15. **Crankshaft and Main Bearings**

INSTALLATION

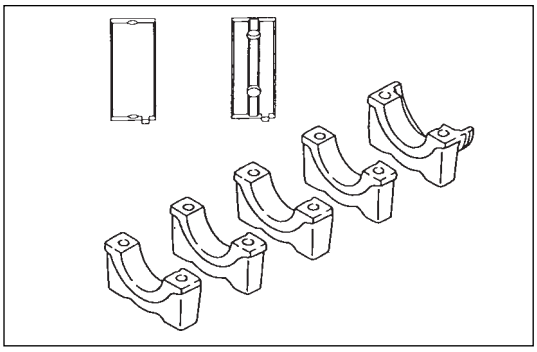

15. Crankshaft and Main Bearings

- Install main bearings in the cylinder body and main bearing cap respectively.
- Apply new engine oil to upper and lower main bearings.
- Make sure that main bearing are in correct position.
- Install crankshaft with care.
- Apply engine oil to the thrust washer.
- Install thrust washer on No. 3 journal.
  Oil grooves in thrust washer must face the crankshaft.

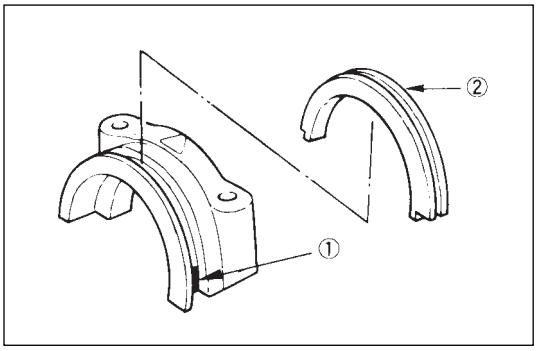

14. Crankshaft Main Bearing Caps

- Apply engine oil to the thread and seating surface of each bearing cap fixing bolt.
- Install bearing caps in the order of numbers, starting with cylinder body front side.
- Tighten main bearing fixing bolts to the specified torque.

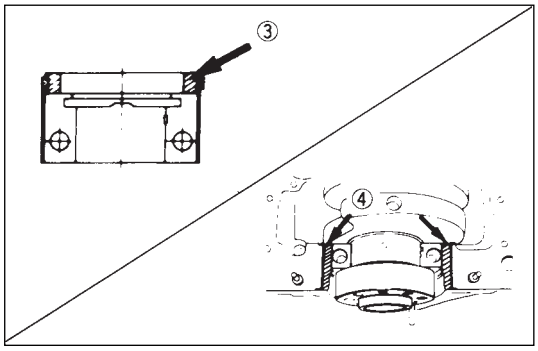

N·m(Kg·m/lb·ft)

167 (17.0/123)

- After tightening the bolts, make sure that the crankshaft rotates smoothly.

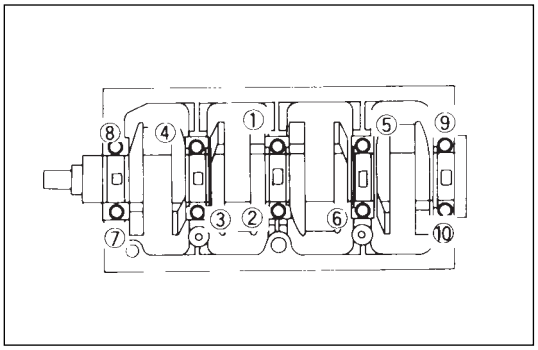

13. Connecting Rod Caps

- The cap number must be same as connecting rod number.
- Apply engine oil to the thread and sealing surface of each nut.
- Tighten nuts to the specified torque.

N·m(Kg·m/lb·ft)

1st step 29 (3.0/22)	2nd step 45° – 60°

- After tightening the nuts, make sure that the crankshaft rotates smoothly.

12. Rear Plate

- Tighten bolts to the specified torque.

N·m(Kg·m/lb·ft)

82 (80/61)

11. Flywheel

- Tighten bolts to the specified torque.

N·m(Kg·m/lb·ft)

118 (12.0/87)

10. Gear Case

- Tighten fixing bolts to the specified torque.

N·m(Kg·m/lb·ft)

19 (1.9/14)

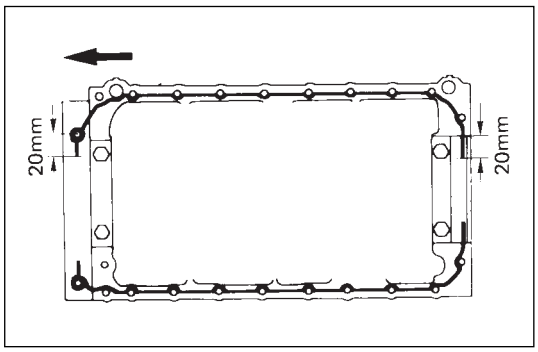

9. Crankcase

- Remove oil from oil pan mounting surface, and dry the surface.
- Apply a proper wide bead of sealant (TB1207C or equivalent) to the crankcase mounting surface. The bead must be continuous.
- Crankcase must be installed within 5 minutes after sealant application.
- Tighten fixing bolts and nuts to the specified torque.

Bolts N·m(Kg·m/lb·ft)

19 (1.9/14)

Nuts	N·m(Kg·m/lb·ft)
	24 (2.4/18)

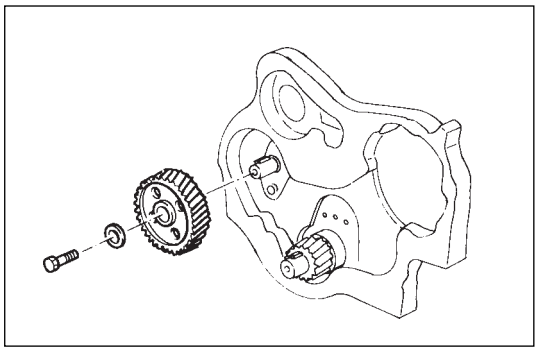

8. Camshaft Timing Gear

1) Install the camshaft timing gear to the camshaft. The timing gear mark ("Y - Y") must be facing outward.
2) Tighten the timing gear to the specified torque.

	N·m(Kg·m/lb·ft)
	64 (6.5/47)

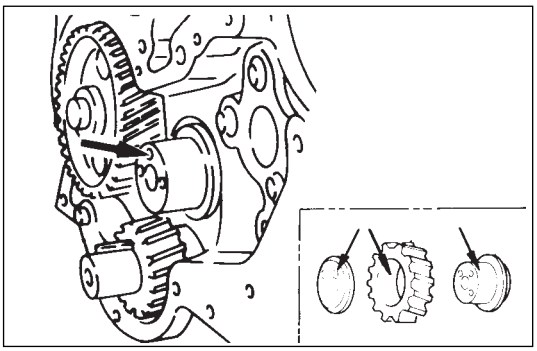

6. Idler Gear

1) Apply engine oil to the idler gear and the idler gear shaft.
   The idler gear shaft oil hole must be facing up.
2) Position the idler gear setting marks "X" and "Y" so that they are facing the front of the engine.

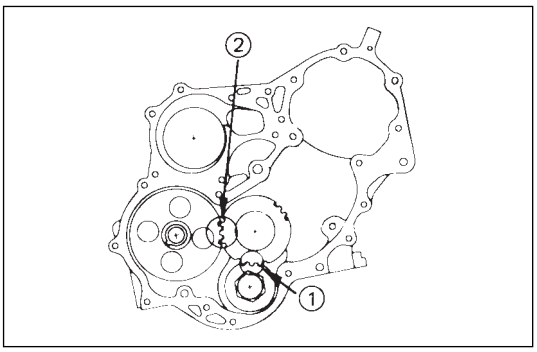

3) Align the idler gear "X" setting mark with the crankshaft timing gear ① "X - X" setting mark.
4) Align the idler gear "Y" setting mark with the camshaft timing gear ② "Y - Y" setting mark.
5) Install the thrust collar and bolts to the cylinder body through the shaft.
   The thrust collar oil hole must be facing up, and the thrust collar chamfered must be outward.
6) Tighten the idler gear bolt to the specified torque.

	N·m(Kg·m/lb·ft)
	19 (1.9/14)

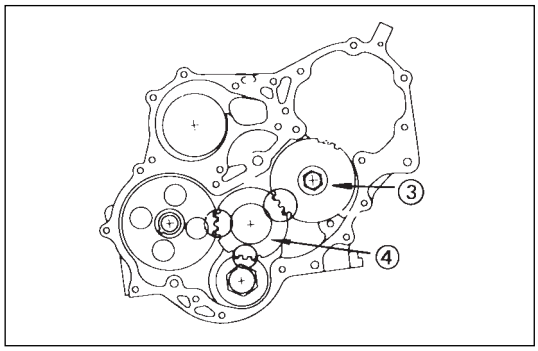

5. Idler Gear "B" and Shaft

1) Apply engine oil to the idler gear and the idler gear shaft.
2) Align the idler gear "B" ③ "Z" setting mark with the idler gear "A" ④ "Z - Z" setting mark.
3) Tighten the idler gear bolt to the specified torque.

	N·m(Kg·m/lb·ft)
	76 (7.7/56)

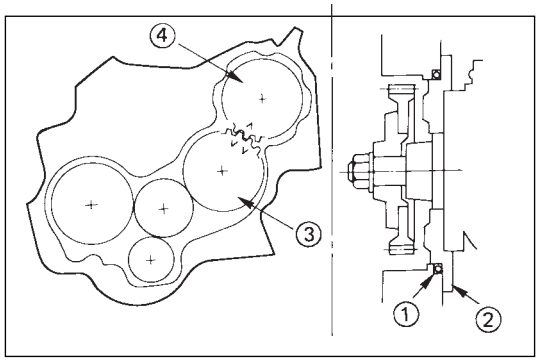

7. Injection Pump

1) Install the O-ring ① to the injection pump flange ②.
2) Install the injection pump to the timing gear case. Align the idler gear "B" ③ "V - V" mark with the injection pump timing gear ④ "V" mark.

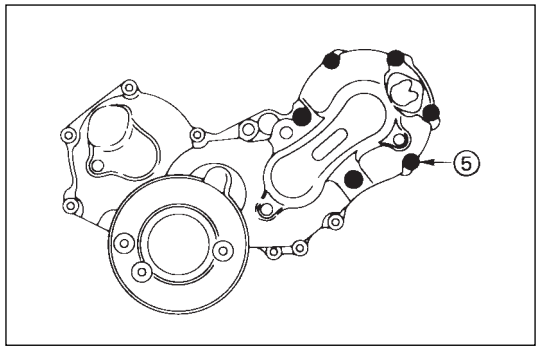

3) Temporarily tighten the six injection pump nuts ⑤. The injection pump nuts will be finally tightened after the injection pump rear bracket bolts.

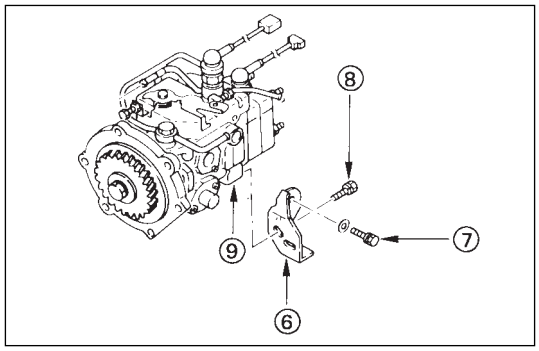

4) Install the injection pump rear bracket ⑥ and the rear bracket bolts ⑦ to the cylinder body.
5) Install the rear bracket bolts ⑧ to the injection pump bracket ⑨.
   Do not tighten the bolts.
   The rear bracket bolts ⑦ and ⑧ will be finally tightened to the specified torque after the injection pump nuts.

6) Tighten the infection pump bracket bolts ⑦ to the specified torque.

N·m(Kg·m/lb·ft)
20 (2.0/15)

7) Tighten the injection pump bracket bolts ⑧ to the specified torque.

N·m(Kg·m/lb·ft)
40 (4.1/30)

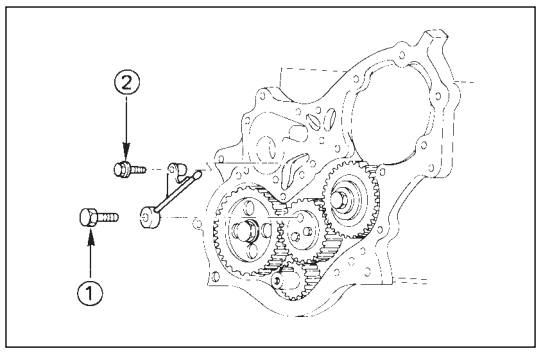

4. Timing Gear Oil Pipe

1) Install the oil pipe to the timing gear case and idler gear "A".
2) Tighten the oil pipe eye bolt ① and bolt ② to the specified torque.

N·m(Kg·m/lb·ft)
13 (1.3/9)

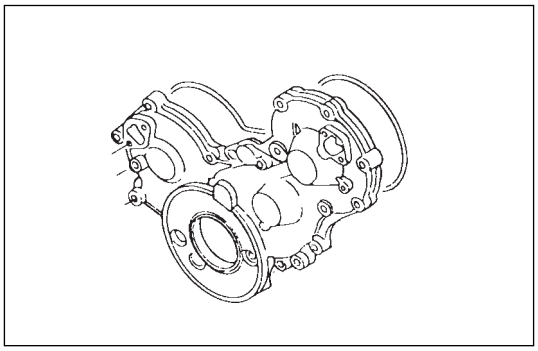

3. Timing Gear Case Cover

1) Align the gear case with the timing gear case knock pin and then install the timing gear case cover.
2) Tighten the gear case cover bolts to the specified torque.

N·m(Kg·m/lb·in)
8 (0.8/69)

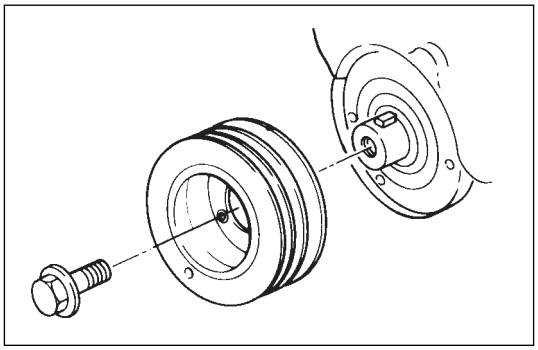

2. Crankshaft Damper Pulley

Tighten the crankshaft damper pulley bolt to the specified torque.

NOTE:

Hold the flywheel ring gear stationary to prevent the crankshaft from turning when tightening the damper pulley.

N·m(Kg·m/lb·ft)
206 (21.0/152)

1. Engine Assembly

FRONT OIL SEAL

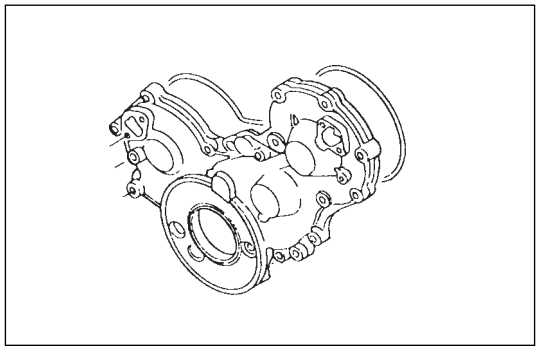

REMOVAL

1. **Crankshaft Damper Pulley**
2. **Timing Gear Case Cover Assembly**
3. **Front Oil Seal**
   - Remove crankshaft front oil seal using suitable size box wrench for push the oil seal from inside of timing gear case cover.

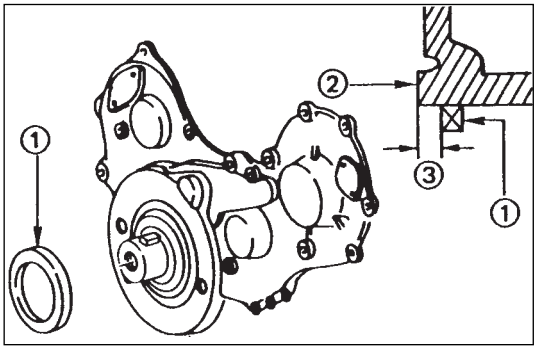

INSTALLATION

3. **Front Oil Seal**
   - Use the installer to install the front oil seal ① to the gear case cover ②.

     Oil Seal Installer: 5-8840-2061-0

     Note the oil seal installation depth ③ shown in the illustration.

     Depth ③ = 1 mm (0.039 in).
2. **Timing Gear Case Cover Assembly**
   1) Align the timing gear case cover with the timing gear case dowel pin then install the timing gear case cover.
   2) Tighten the timing gear case cover bolts to the specified torque.

N·m(Kg·m/lb·in)
8 (0.8/69)

1. **Crankshaft Damper Pulley**

REAR OIL SEAL

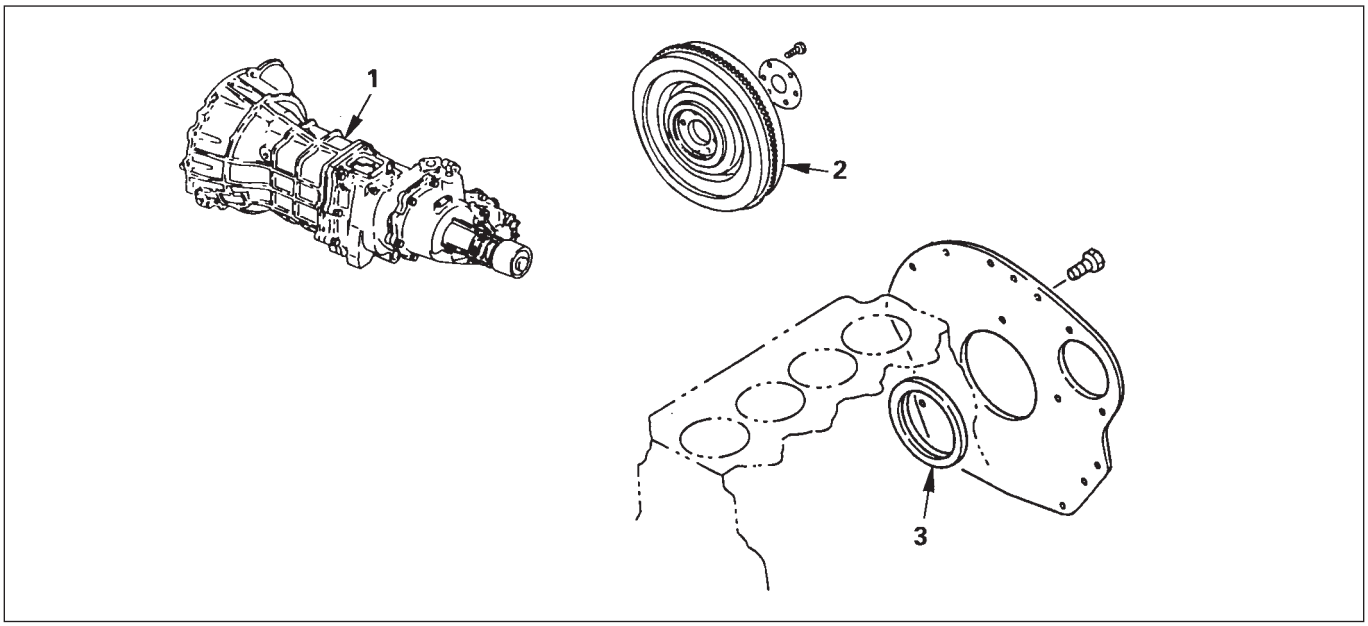

REMOVAL

1. **Transmission Assembly**
   - Refer to “Transmission” removal in section 7.
2. **Flywheel**
3. **Rear Oil Seal**
   - With the oil seal pushed in deep, install the special tool as shown in the illustration and remove the oil seal.

     Oil Seal Remover : 5-8840-2362-0

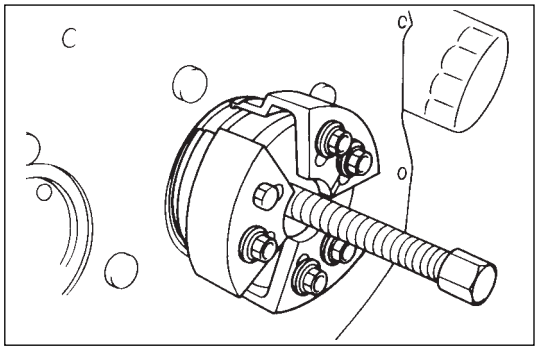

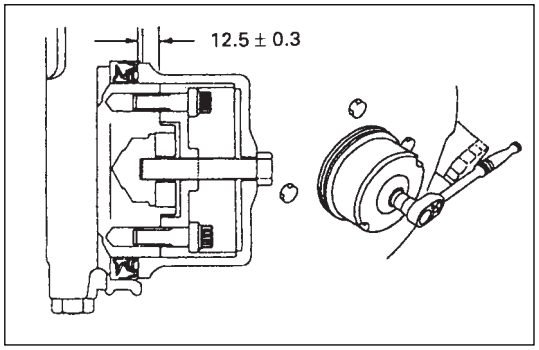

INSTALLATION

3. **Rear Oil Seal**
8. **Crankshaft Rear Oil Seal**
   1) Tighten the adapter to the crankshaft rear and section with 2 bolts.
   2) Insert the oil seal into the peripheral section of the adapter,
   3) Insert the sleeve into the adapter section, and 1) tighten it with a bolt (M12 x 1.75L = 70) until the adapter section hits the sleeve.
   4) Remove the adapter and the sleeve.
   5) With the seal pressed in, check the dimension of the oil seal section.

   Standard Dimension = 12.5 ± 0.3 mm

Oil Seal Installer: 5-8840-2359-0

2. **Flywheel**
   - Tighten bolts to the specified torque.

N·m(Kg·m/lb·ft)
118 (12.0/87)

1. **Transmission Assembly**
   - Refer to “Transmission” installation in section 7.

ENGINE ASSEMBLY

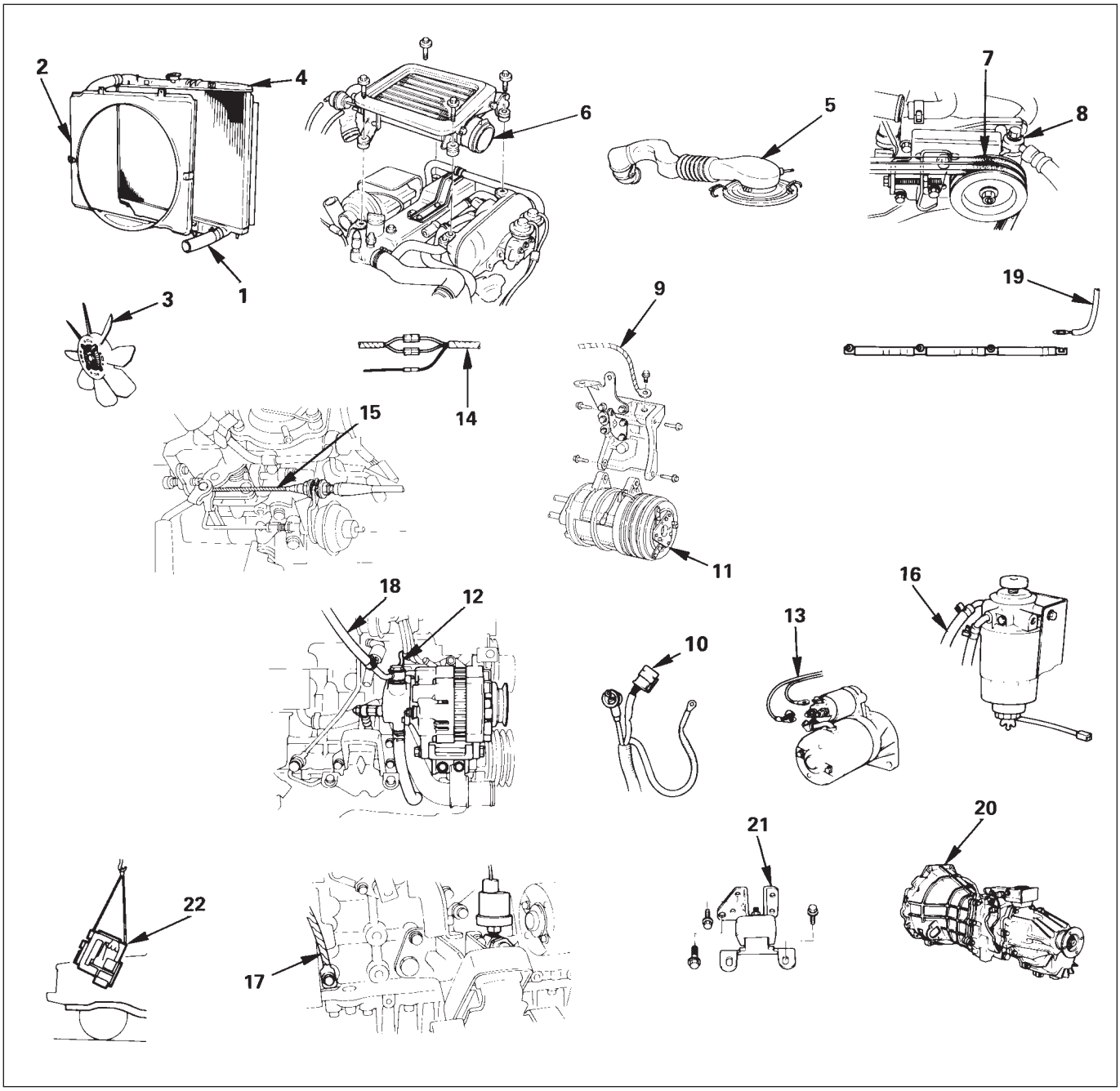

REMOVAL

Preparation

- Space stands and removal front tires.
- Removal battery. (two batteries for cold area)
- Drain coolant.
- Disconnect window washer hose and remove engine hood.

1. Radiator Hose

- Disconnect upper and lower hoses from engine side.

2. Fan Shroud

- Disengage clips and remove upper and lower fan shrouds.

3. **Cooling Fan Assembly**
   - Remove cooling fan asm fixing nuts, cooling fan asm, fan pulley and center.
4. **Radiator Assembly**
   - Remove bracket and radiator asm.
5. **Air Cleaner Cover & Air Duct**
6. **Intercooler Assembly (4JG2 -T only)**
   - (Refer to Intercooler removal steps in this section)

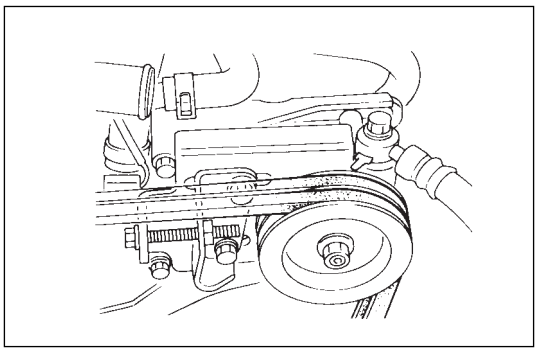

7. **P/S Pump Drive Belts**
   - Loosen P/S pump fixing bolts and adjusting bolt and remove two drive belts.
8. **P/S Pump Assembly**
   - Remove two fixing bolts (front side), a fixing nut (rear side) and support P/S pump asm with oil hoses by tying to body side.
9. **Engine Ground Cable**
   - Disconnect ground cable from A/C compressor bracket.
10. **AC Generator Harness**
    - Disconnect B terminal and harness connector from AC generator.

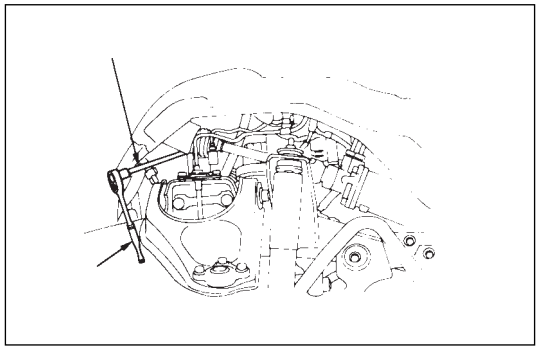

11. **A/C Compressor Assembly**
    - Remove A/C compressor fixing bolt (rear under side of compressor) by using a long extension bar at under side of wheel arch.
    - Disconnect magnetic clutch harness connector.
    - Remove fixing bolts (upper and front lower side of compressor) and set A/C compressor asm with pipe lines on battery carrier.

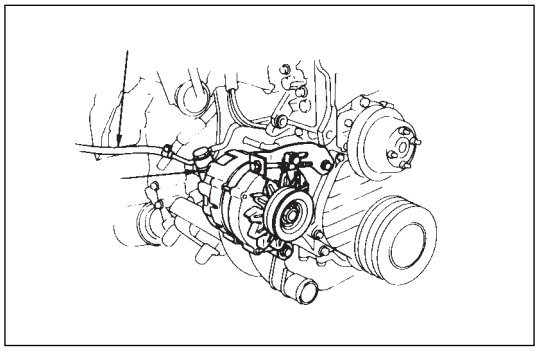

12. **Vacuum Hose: Vacuum Pump**
    - Disconnect vacuum hose from vacuum pump.
13. **Starter Harness**
    - Disconnect B terminal and put cable harness close to chassis side.
    - Disconnect S terminal connector.
14. **Engine Harness.**
    - Disconnect engine harness close to engine side.

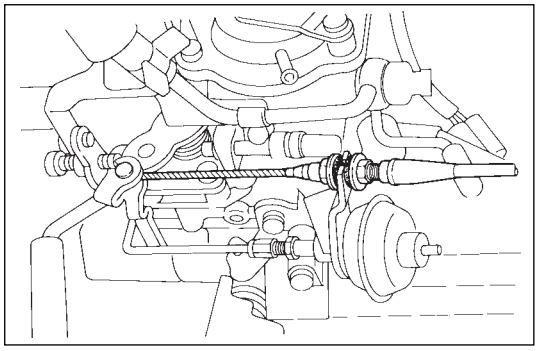

15. **Accelerater Cable**
    - Loosen locking nut at bracket and disconnect accelerater cable from injection pump control lever.
16. **Fuel Hoses**
    - Disconnect fuel hoses from injection pump side and take care not to spill fuel and enter dust.
17. **Engine Ground Cable**
    - Disconnect ground cable from left rear side of timing gear case.

18. Vacuum Hose : Vacuum Tank

- Disconnect vacuum hose from vacuum pump side.

19. Glow Plug Harness

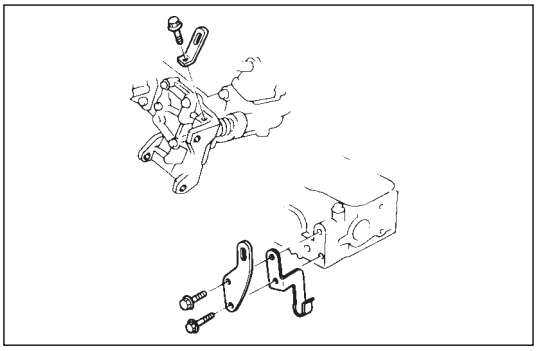

20. Transmission Assembly

- Install special tools (engine hangers) in front right and left rear sides of cylinder head.
- Front right side; use the ground cable fixing bolt on A/C compressor bracket.
- Left rear side; fix hanger together with oil cooler hose clip.
  Engine hanger: 5-8840-2032-0
- Left engine carefully by using hoist.

21. Engine Mounting

- Remove fixing bolts (both left and right side) using extension bar and box wrench at under side of wheel arches.

22. Engine Assembly

- Install special tools (engine hangers) in left rear and front right sides of cylinder head.
- Lift engine carefully by using hoist.
- Lift front part of engine higher than rear part of it.
- Take out engine asm taking care not to damage full pipes, brake pipes and etc.

INSTALLATION

22. Engine Assembly

- Position engine mountings by using hoist.

21. Engine Mounting

- After all fixing bolts (left: two bolts, rights: two bolts) were inserted to every holes, and engine asm and tighten fixing bolts to the specified torque.

N·m(Kg·m/lb·ft)
40 (4.1/30)

20. Transmission Assembly

- Refer to transmission installation steps in section 7.

19. Glow Plug Harness

18 Vacuum Hose: Vacuum Tank

17. Engine Ground Cable

16. Fuel Hose

15. Accelerator Cable

- Refer to accelerater cable installation steps in section 6C.

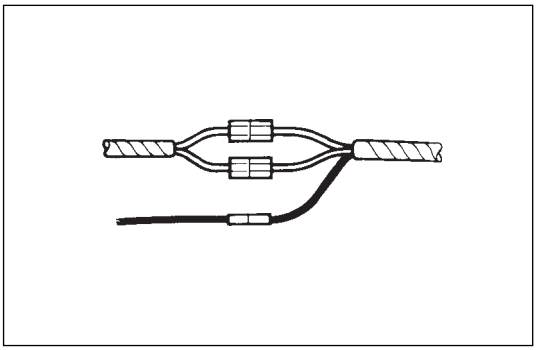

14. Engine Harness.

13. Starter Harness

12. Vacuum Hose: Vacuum Pump

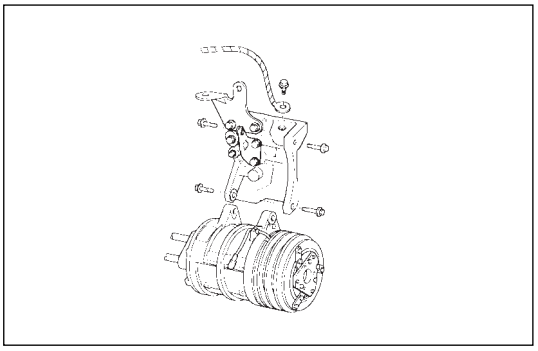

11. A/C Compressor Assembly

- Tighten temporarily fixing bolts (upper and front lower sides of compressor).
- Tighten fixing bolt (rear under side of compressor) to the specified torque by using along extension bar and torque wrench at under side of wheel arch.
- Tighten fixing bolts (front upper and lower sides of compressor) to the specified torque.

N·m(Kg·m/lb·ft)
40 (4.1/30)

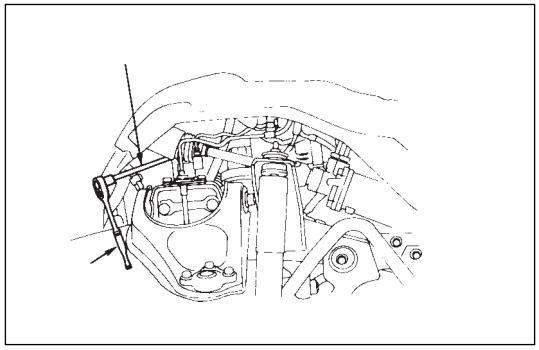

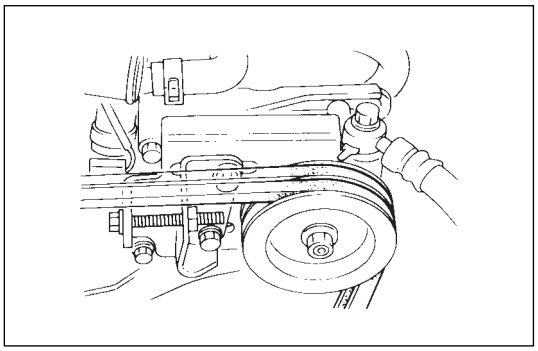

10. A.C. Generator Harness

9. Engine Ground Cable

- Attached ground cable to A/C compressor bracket.

8. P/S Pump Assembly

- Install P/S pump asm in engine and tighten temporarily fixing nut.

7. P/S Pump Drive Belt

- Install drive belts adjust belt tension by adjusting bolt and tighten locking bolt to the specified torque.
- Refer to “Drive Belt Adjustment” in section 6B.

	N·m(Kg·m/lb·ft)
	40 (4.1/30)

6. Intercooler Assembly (4JG2-T Only)

- Refer to intercooler installation steps in this section.

5. Air Cleaner Cover & Duct

4. Radiator Assembly

- Install cushion rubber in under left and right part of radiator and position radiator.
- Fix radiator by bracket.

3. Cooling Fan Assembly

- Install cooling fan asm and tighten fixing bolts to the specified torque.

	N·m(Kg·m/lb·in)
	8 (0.8/69)

2. Fan Shroud

1. Radiator Hose

- Connect upper and lower hose to engine side.
- Pour coolant in to radiator.
- Install battery.
- Connect window washer hose.

SECTION 6B

ENGINE COOLING

CONTENTS

	PAGE
General Description	6B- 1
On-Vehicle Service	6B- 5
Water Pump	6B- 5
Thermostat	6B- 7
Radiator	6B- 9
Drive Belt Adjustment	6B-15

GENERAL DESCRIPTION

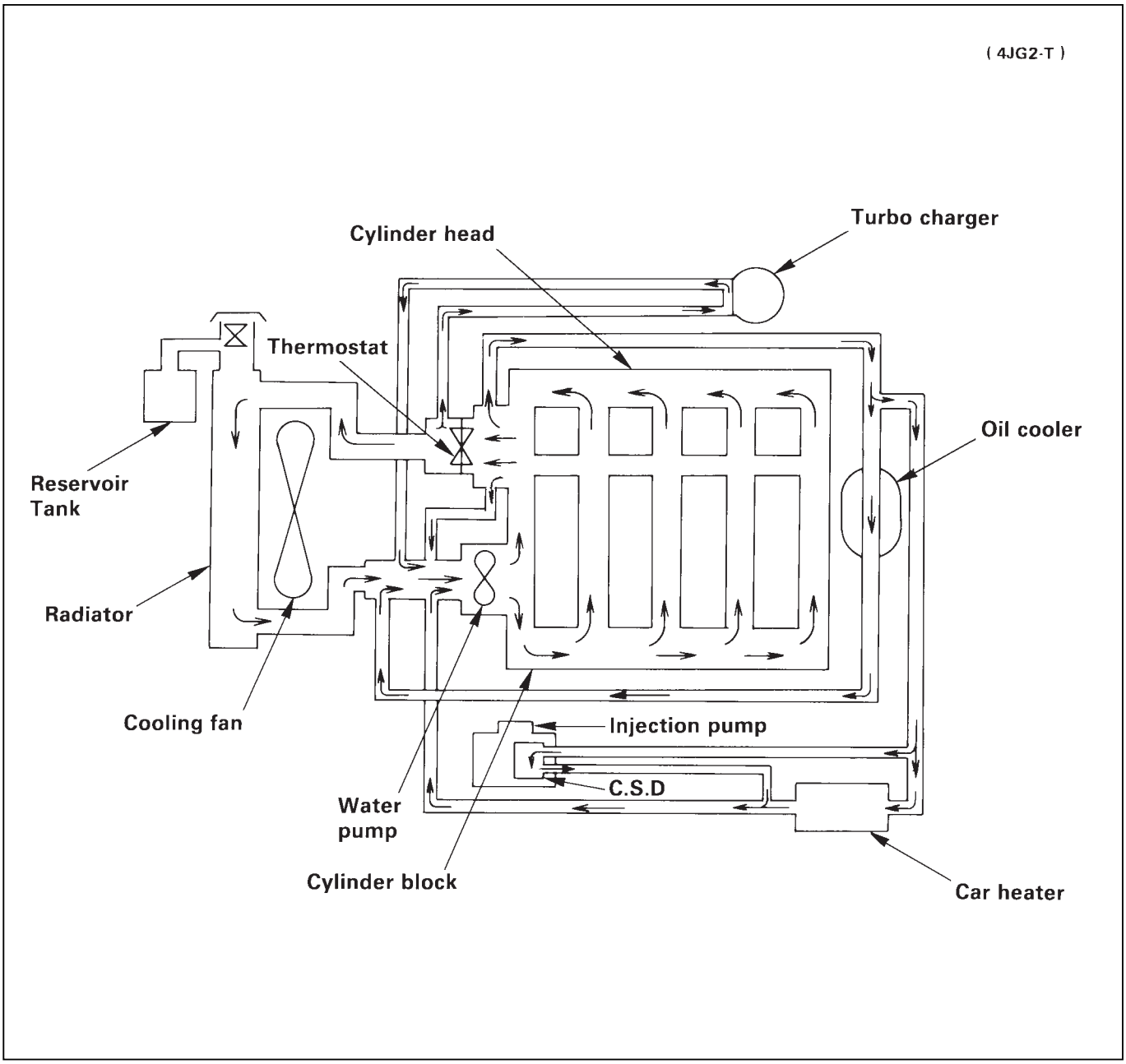

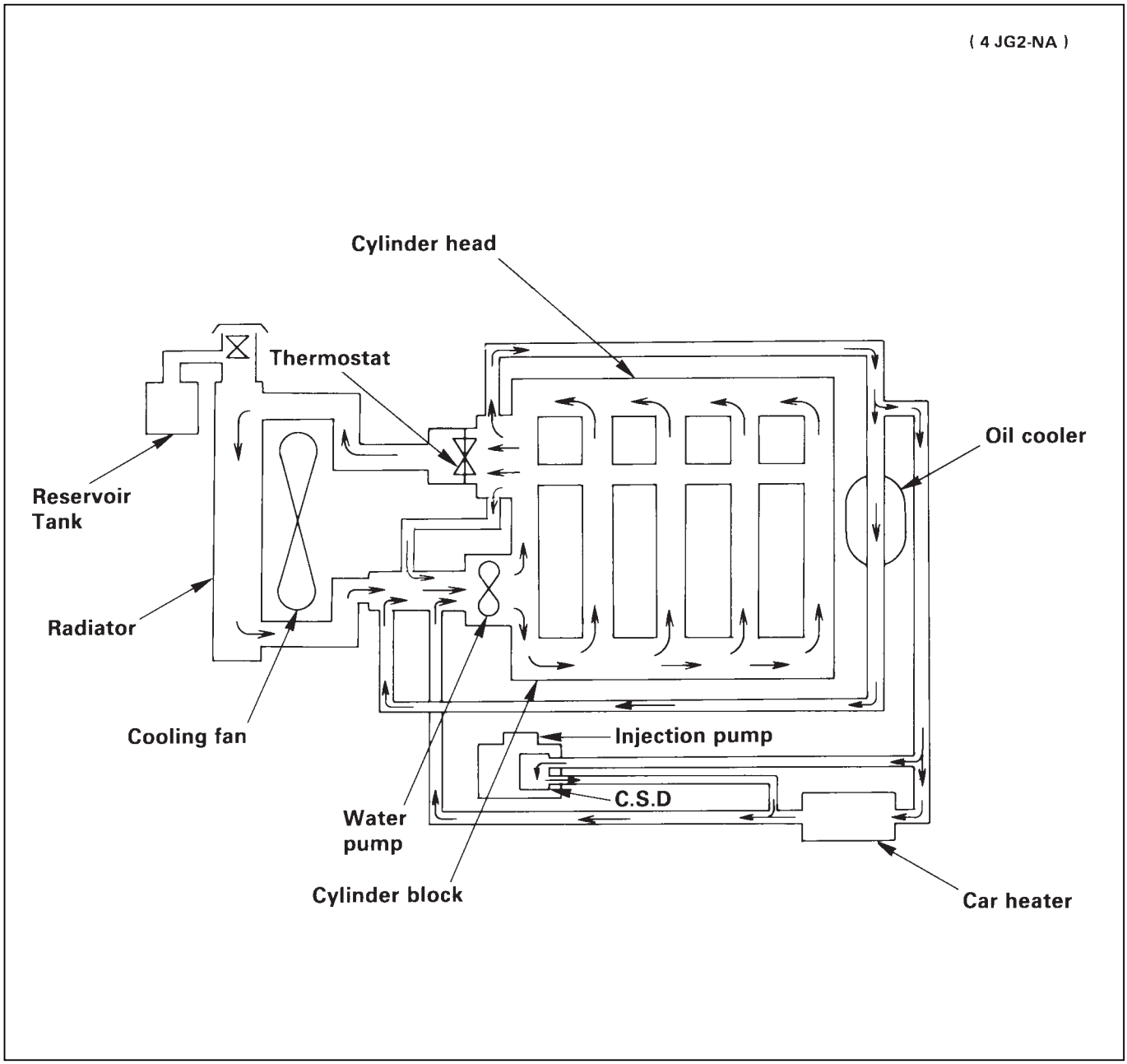
(4 JG2-NA)
Cylinder head
Thermostat
Oil cooler
Reservoir Tank
Radiator
Cooling fan
Injection pump
C.S.D
Water pump
Cylinder block
Car heater

The cooling system is a pressurized coolant forced circulation type which consists of water pump, thermostat cooling fan, radiator and other components. The circulating coolant cools the lubricating oil in the oil filter and turbocharger.

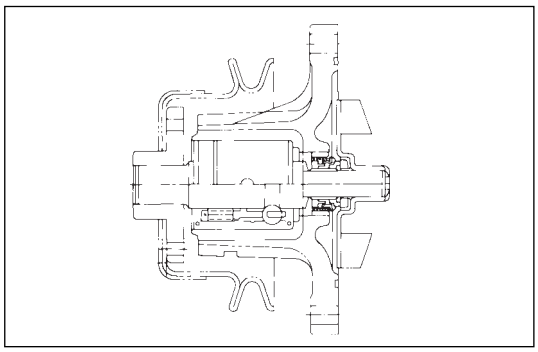

WATER PUMP

The coolant pump is a centrifugal impeller type and is driven by V type drive belt.

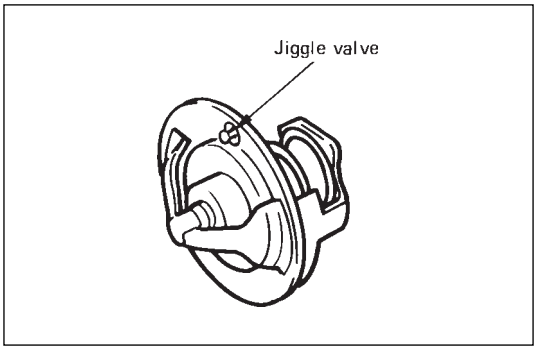

THERMOSTAT

The thermostat is a wax pellet type with a jiggle valve and is installed in the thermostat housing.

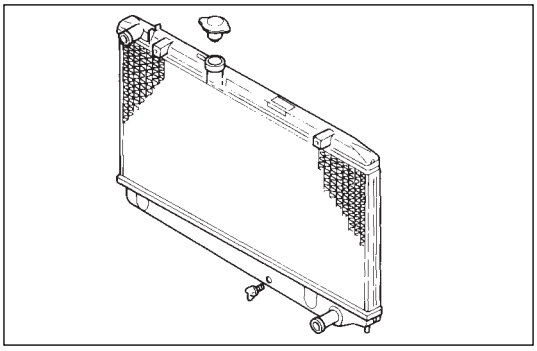

RADIATOR

The radiator is a tube type with corrugated fins. In order to raise the boiling point of coolant, the radiator is fitted with a cap in which the valve is operated under the pressure.

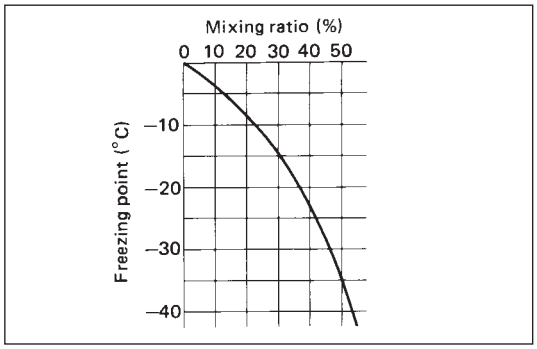

ANTI-FREEZE SOLUTION

- Relation between Mixing ratio and Freezing point

  Freezing temperature of the engine coolant varies with the ratio of anti-freeze solution in water. Proper mixing ratio can be determined by refering to the chart. Supplemental inhibitors or additives claiming to increase cooling capability that have not been specifically approved by Isuzu are not recommended for addition to the cooling system.

- Calculation of mixing ratio

  Mixing ratio

$$= \frac{\text{Anti-freeze solution (Lit/qt.)}}{\text{Anti-freeze solution (Lit/qt.) + Water (Lit/qt.)}}$$

Note: Anti-freeze solution + Water = 8.6 lit
Total cooling system capacity.

In case of 6.8 lit total cooling system capacity

Mixing ratio (%)	Anti-freeze solution: lit. (imp. qt./U.S. qt)	Water: lit. (imp.qt/U.S. qt)
0	0 0	6.8 (5.98/7.19)
5	0.3 (0.26/0.32)	6.5 (5.71/6.87)
10	0.7 (0.62/0.74)	6.0 (5.28/6.34)
15	1.0 (0.88/0.93)	5.8 (5.1/6.13)
20	1.4 (1.23/1.48)	5.4 (4.75/5.7)
25	1.7 (1.50/1.80)	5.1 (4.49/5.39)
30	2.0 (1.76/1.86)	4.8 (4.22/5.04)
35	2.4 (2.11/2.23)	4.4 (3.87/4.65)
40	2.7 (2.38/2.85)	4.1 (3.6/4.33)
45	3.1 (2.72/2.87)	3.7 (3.26/3.91)
50	3.4 (2.99/3.60)	3.4 (2.99/3.59)

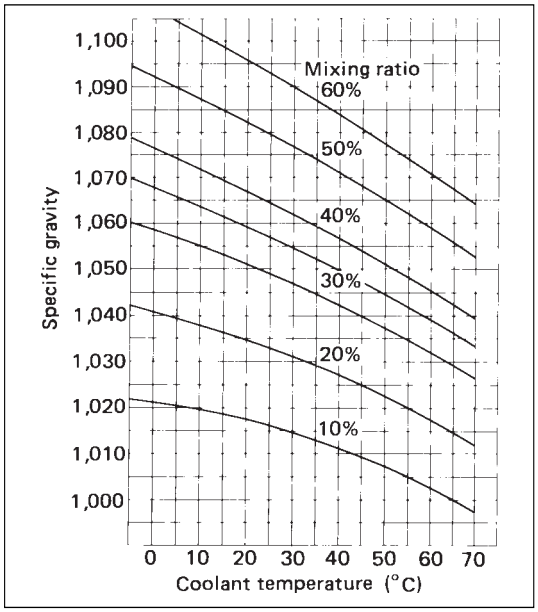

- Mixing ratio

  Check the specific gravity of engine coolant in the cooling system in temperature ranges from 0° C to 50° C using a suction type hydrometer, then determine the density of the coolant by refering to the table at left.

ON-VEHICLE SERVICE

WATER PUMP

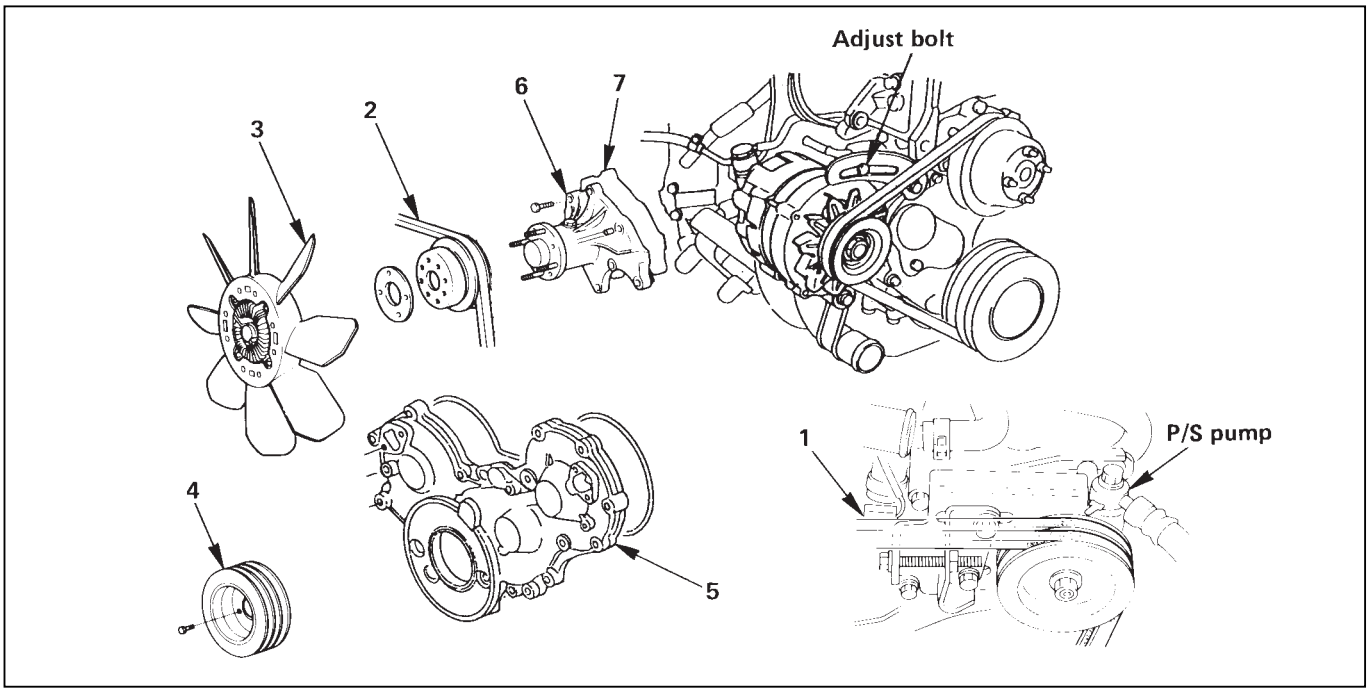

REMOVAL

Preparation

- Drain coolant.

1. **P/S pump Drive Belts**
   - Loosen P/S pump mounting bolt, loosen adjust bolts and remove the drive belts.
2. **AC Generator Drive Belt**
   - Loosen AC Generator mounting bolt (bottom side), adjust plate lock bolt, and remove the drive belt.
3. **Cooling Fan Assembly**
   - Remove lock nut and take out cooling fan assembly, distance piece, and fan pulley.
4. **Crankshaft Damper Pulley.**
5. **Gear Case Cover.**
6. **Water Pump Assembly**
7. **O-ring**

INSPECTION

Make necessary repair and parts replacement if extreme wear or damage is found during inspection. Should any of the following problems occur, the entire water pump assembly must be replaced.

- Cracks in the coolant pump body
- Coolant leakage from the seal unit
- Play or abnormal noise in the bearing
- Cracks or corrosion in the impeller

INSTALLATION

7. O-ring

- Set O-ring in water pump body groove.

6. Water Pump Assembly

- Install water pump assembly, and tighten to specified torque.

	N·m (Kg·m/lb.ft)
	20(2.0/14)

5. Gear Case Cover

- Install gear case cover, and tighten to specified torque.

	N·m (Kg·m/lb·in)
	8(0.8/69)

4. Crankshaft Damper Pulley

- Install crankshaft damper pulley, and tighten to specified torque.

	N·m (Kg·m/lb·ft)
	19(1.9/14)

3. Cooling Fan Assembly

- Install fan pulley, distance piece, and cooling fan assembly in this order on water pump, and tighten to specified torque.

	N·m (Kg·m/lb·in)
	8(0.8/69)

2. AC Generator Drive Belt

- Install AC Generator drive belt and adjust belt tension.
- (Refer to Drive Belt Adjustment in this Section).

1. P/S Pump Drive Belts

- Install P/S pump drive belts and adjust belt tension.
- (Refer to Drive Belt Adjustment in this Section).

THERMOSTAT

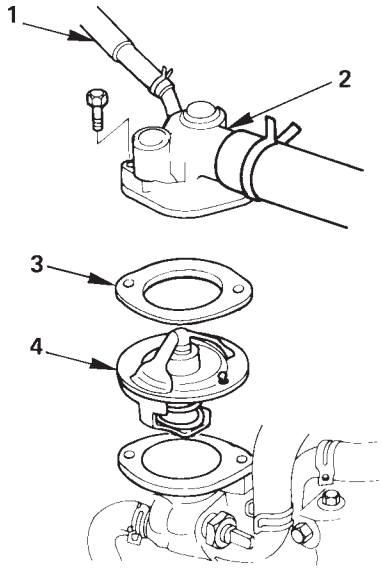

REMOVAL

Preparation

- Disconnect battery ground cable.
- Drain coolant from the radiator and engine.

1. **Water Hose; Turbocharger (4JG2-T Only)**
2. **Outlet Pipe**
   - Remove mounting bolt and remove outlet pipe together with radiator hose.
3. **Gasket**
4. **Thermostat**

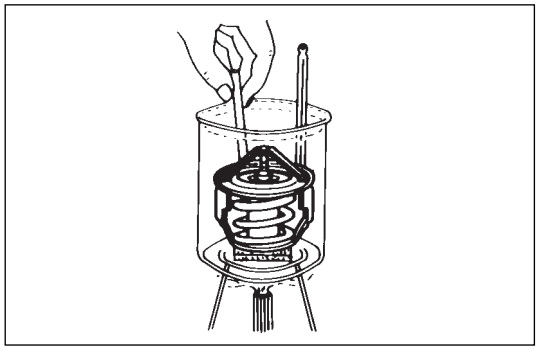

INSPECTION

Submerge the thermostat assembly in the water.
Place wooden blocks on the bottom of the water container.
Not to directly heat the thermostat.
Gradually increase the water temperature. Stir the water so that the entire water is same temperature.

- Make sure that primary valve begins to open at the specified temperature.

Valve Opening Temperature	°C (°F)
82 (180)	

- Make sure that secondary valve opens fully at the specified temperature.

Valve Full Open Temperature	°C (°F)
95 (203)	

Make necessary repair and parts replacement if extreme wear or damage is found during inspection.

INSTALLATION

4. Thermostat
3. Gasket
2. Outlet Pipe

- Connect outlet pipe and tighten bolts to the specified torque.

	N·m (Kgm/lb·ft)
	19(1.9/14)

1. Water Hose: Turbocharger (4JG2-T Only)

- Install battery ground cable.
- Pour coolant,
- Start the engine and check coolant leakage.

RADIATOR

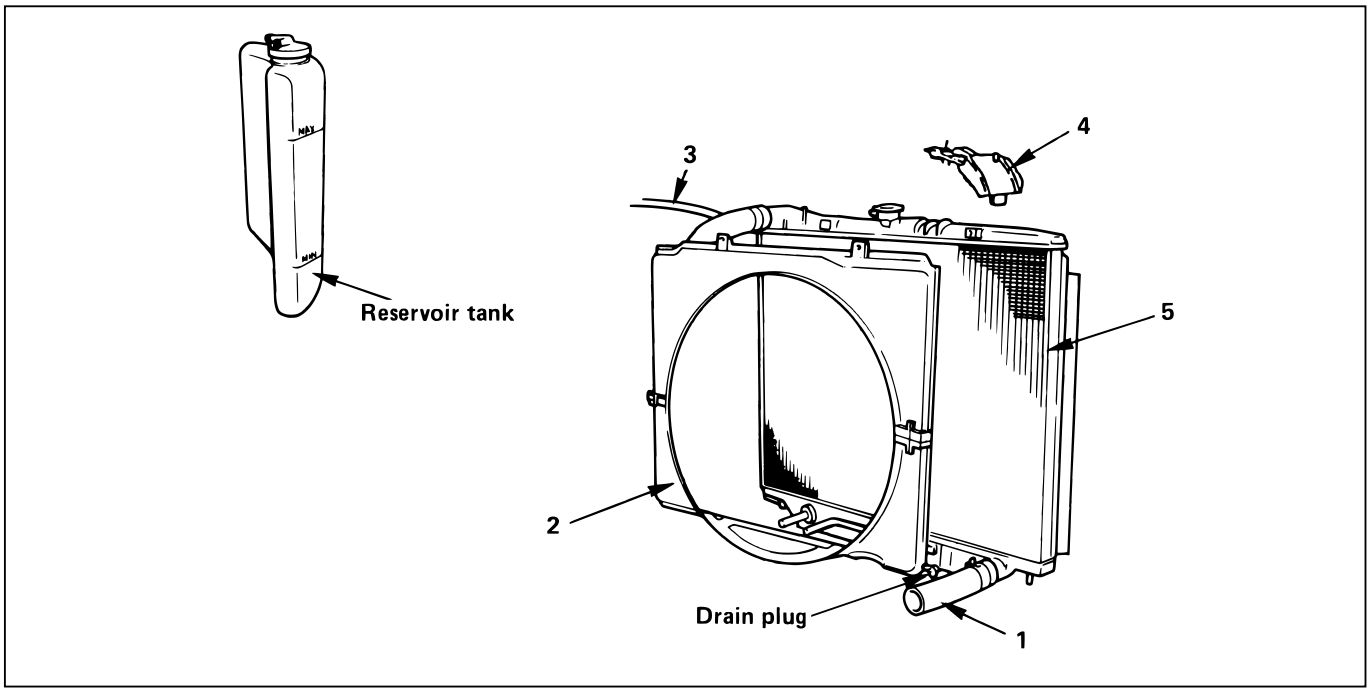

REMOVAL

Preparation

- Disconnect battery ground cable.
- Loosen drain plug to drain coolant.

1. Radiator Hose

- Disconnect lower hose and upper hose from the engine.

2. Fan Guide Lower

- Remove clips on both sides and the bottom lock.

3. Reservoir Tank Hose

- Disconnect the hose from radiator.

4. Bracket

5. Radiator Assembly

- Remove upward the radiator assembly with hose, taking care not to damage the radiator core by fan blade.
- Remove cushion rubbers on both sides of the bottom.

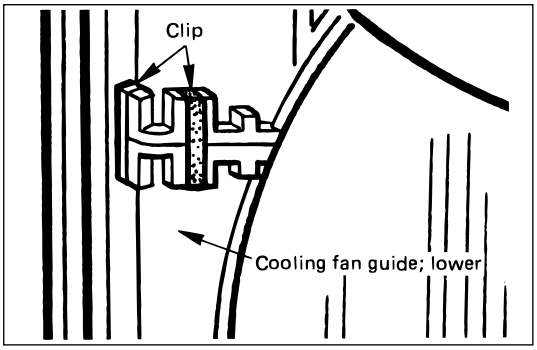

INSPECTION

Radiator Cap

- Measure the valve opening pressure with the radiator cap tester. Replace the radiator cap if it exceeds the standard.

Valve opening pressure	kPa(Kg/cm^2 / psi)
93.3 – 122.7 (0.95 – 1.25/13.5 – 17.8)	

Check the condition of negative pressure valve in the center of valve seat side of the cap. If the valve seat does not move smoothly due to rust or dust, clean or replace the radiator cap.

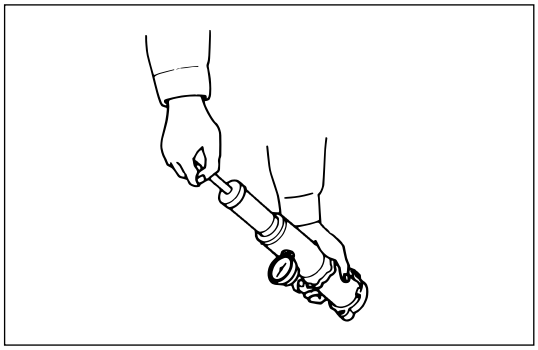

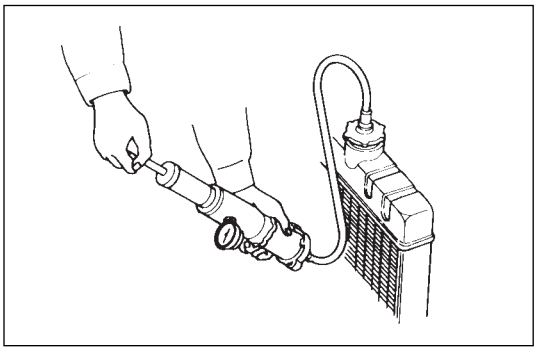

Radiator Core

- Deformed radiator fins could reduce radiation effects, resulting in overheat. Straighten the fins. In such a case, take care not to damage the fin roots.
- Remove dust and other foreign materials.

Flushing the Radiator

- Wash the inside of radiator and the coolant passage with water and neutral detergent. Remove all scales and rust.

Checking for Coolant Leakage

- Check the cooling system for leakage with the radiator cap tester by applying 196.0kPa (28.4 psi) air pressure from filler neck to inside the radiator.

INSTALLATION

5. Radiator Assembly

- Install cushion rubbers on both sides of radiator bottom.
- Install radiator assembly with hose, taking care not to damage the radiator core by a fan blade.

4. Bracket

- Support the radiator upper tank with the bracket and fix the radiator.

3. Reserve Tank Hose

2. Fan Guide, Lower

1. Radiator Hose

- Connect inlet hose and outlet hose to the engine.
- Connect battery ground cable.
- Pour coolant
- Pour coolant up to filler neck of radiator, and up to MAX mark of reserve tank.
- Start engine to warm up, and check for coolant level. Replenish coolant if it does not reach the radiator filler neck, and tighten the cap completely.

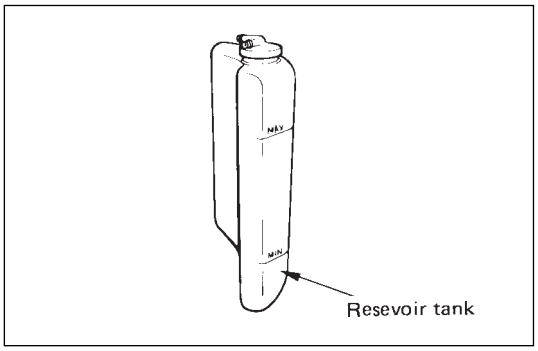

DRIVE BELT ADJUSTMENT

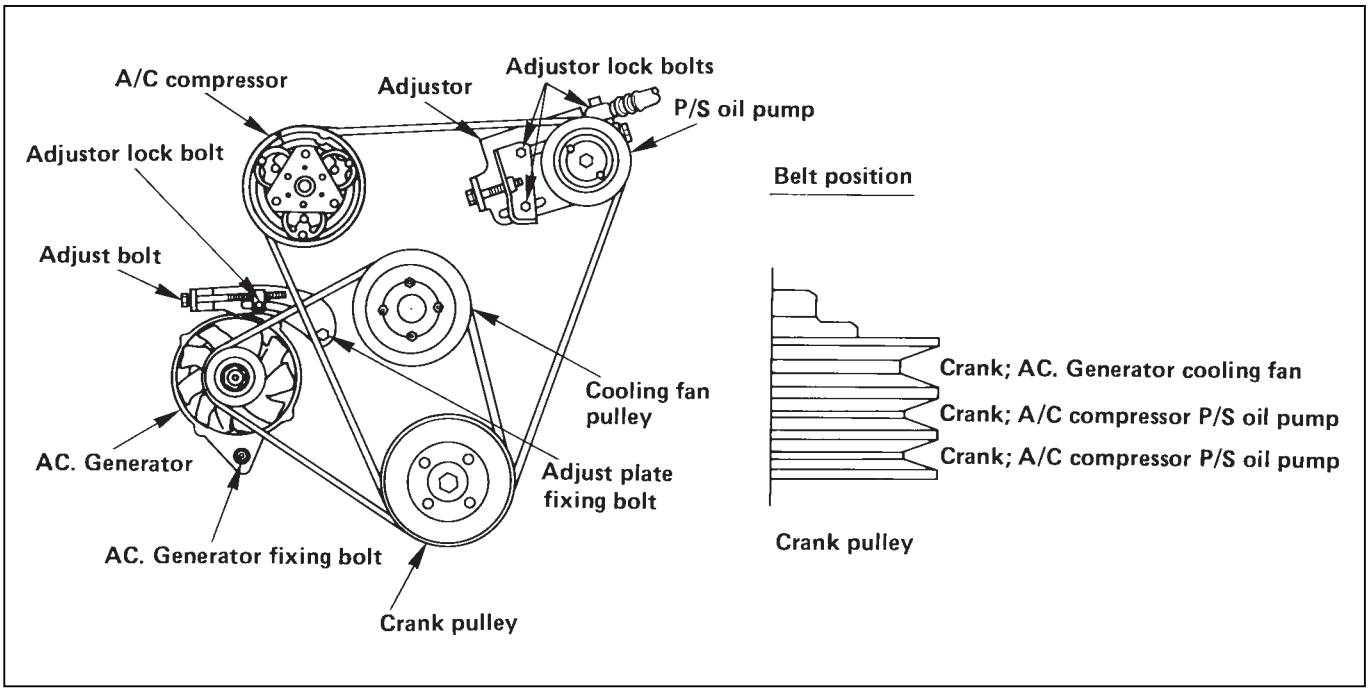

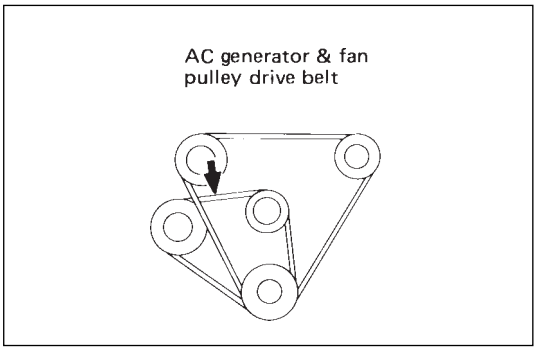

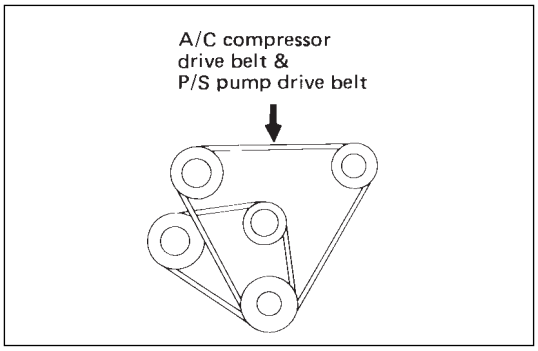

INSPECTION

Check drive belts for wear or damage, and replace with new ones as necessary. Check belts for tension, and adjust as necessary.

- Check drive belts tension
- Push the middle of belts with a force of 98 N (10 kg/22 lb) and check each bolt for deflection.
- Standard deflection

mm (in)

	Initial tension	Tension at readjustment
AC generator & fan pulley drive belt	8~12 (0.31~0.47)	
A/C compressor drive belt	7~12 (0.28~0.39)	5~8 (0.20~0.31)
P/S pump drive belt	13~16 (0.51~0.63)	

TENSION ADJUSTMENT

P/S oil pump and A/C compressor pulley belt.

- With P/S pump lock bolt loose, adjust belt tension with adjust belt.

Cooling fan pulley belt

- With AC Generator mounting and lock bolts loose, adjust belt tension with adjuster's adjust bolt.

Torque Standard N·m(Kg·m/lb·ft)

AC generator fixing bolt	40 (4.1/30)
Adjust plate fixing bolt	24 (2.4/17)
Adjust plate lock bolt	19 (1.9/14)
P/S oil pump adjustor lock bolt	37 (3.8/27)

SECTION 6C

FUEL SYSTEM

CONTENTS

	PAGE
General Description	6C- 1
On-Vehicle Service	6C- 7
Fuel Filter Assembly	6C- 7
Fuel Filter Cartrige	6C- 8
Injection nozzle	6C- 9
Injection Pump Assembly	6C-14
Fuel Tank	6C-18
Fuel Gauge Unit	6C-19
Fuel Filler Cap	6C-20
Accelerator Control	6C-21
Accelerator Control Cable	6C-21
Accelerator Pedal	6C-23
Air Cleaner	6C-24

GENERAL DESCRIPTION

When working on the fuel system, there are several things to keep in mind:

- Any time the fuel system is being worked on, disconnect the negative battery cable except for those tests where battery voltage is required.
- Always keep a dry chemical (Class B) fire extinguisher near the work area.
- Replace all pipes with the same pipe and fittings that were removed.
  Clean and inspect “O” rings. Replace where required.
- Always relieve the line pressure before servicing any fuel system components.
- Do not attempt repairs on the fuel system until you have read the instructions and checked the pictures relating to that repair.

General Export

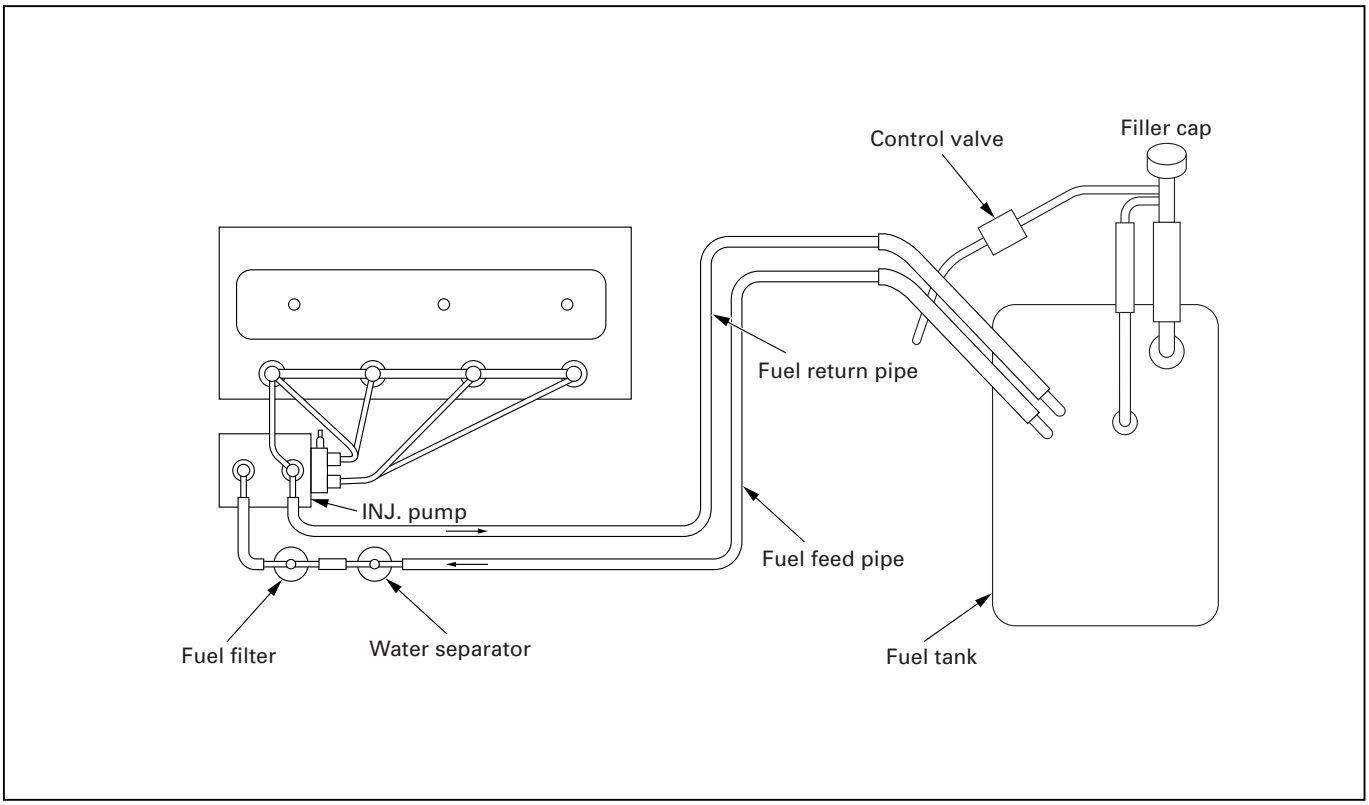

140RX024

Argentina

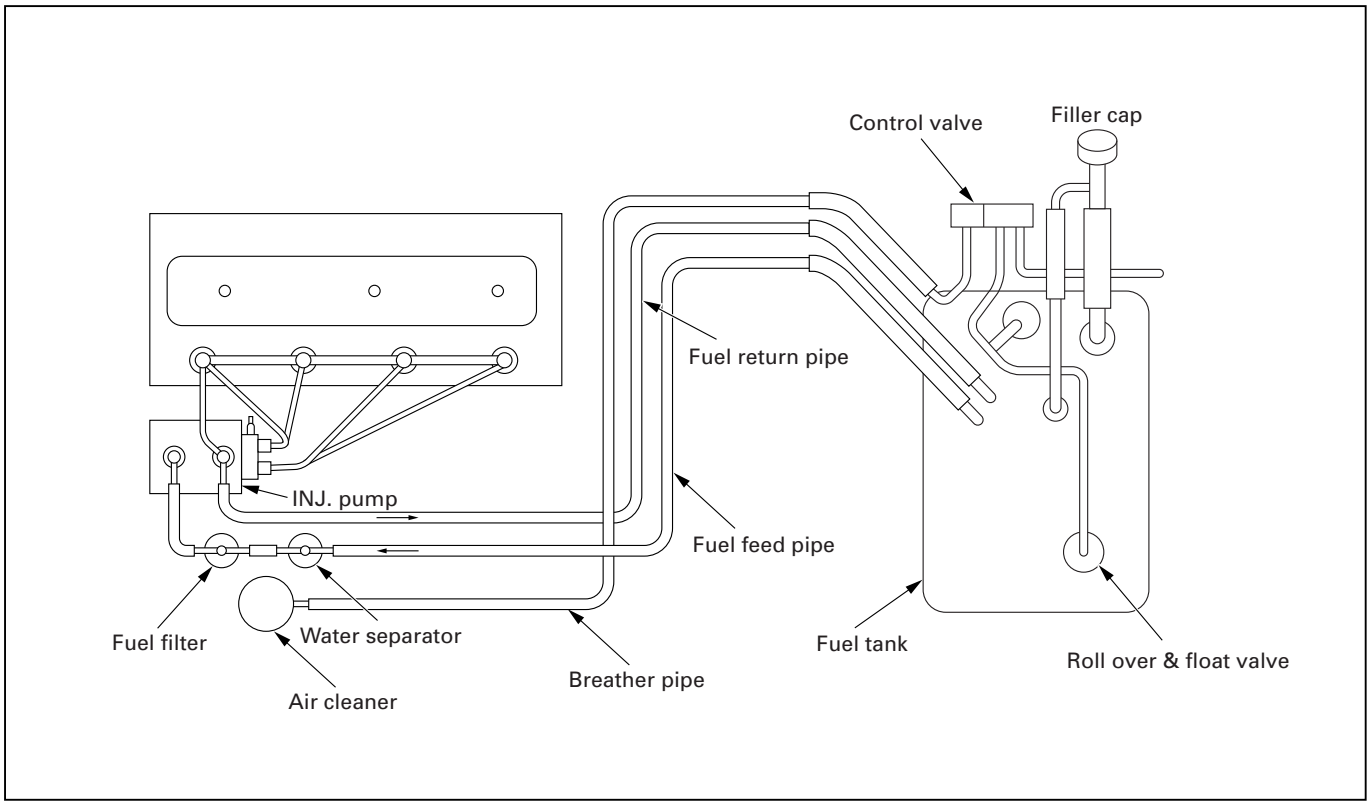

140RX025

Fuel Flow Chart

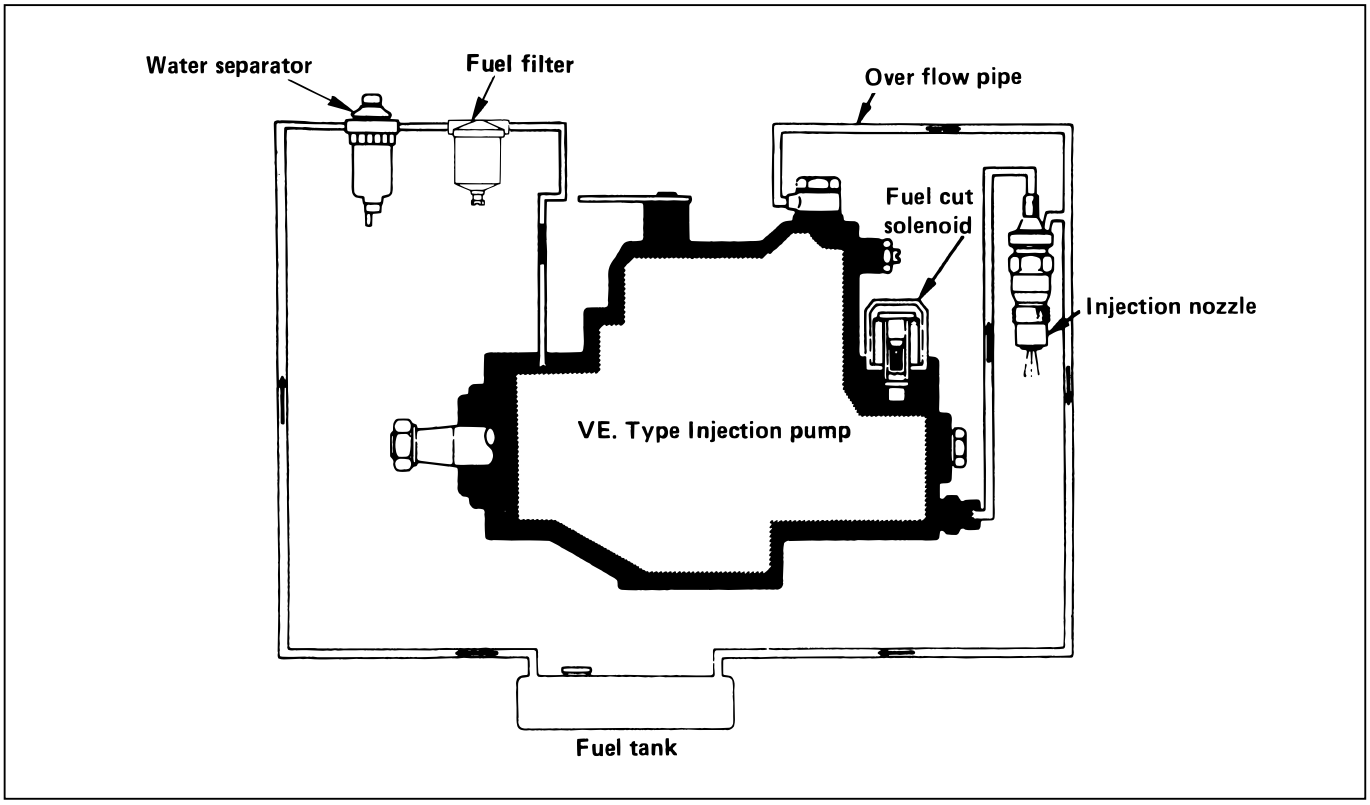

INJECTION PUMP

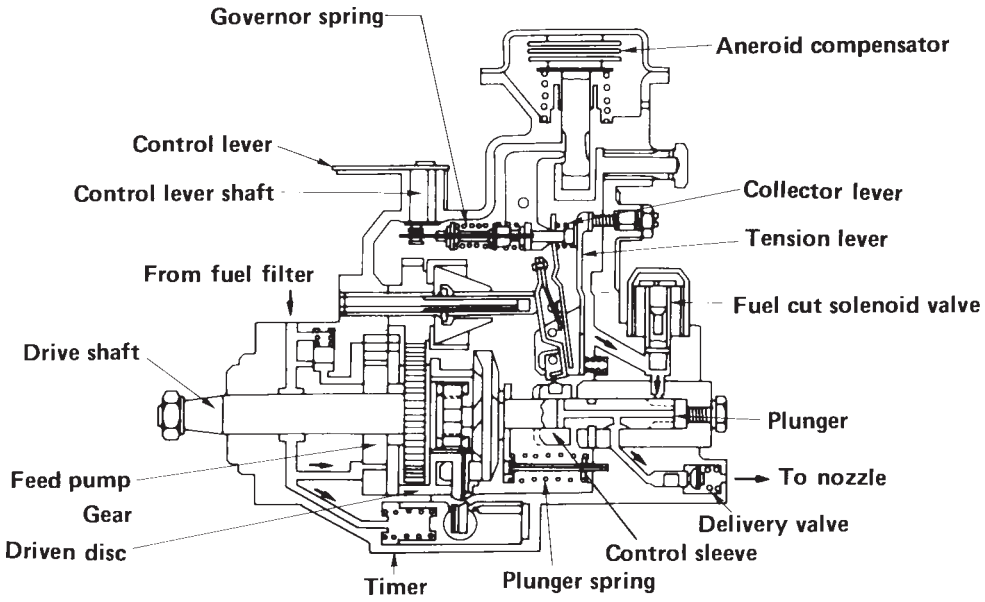

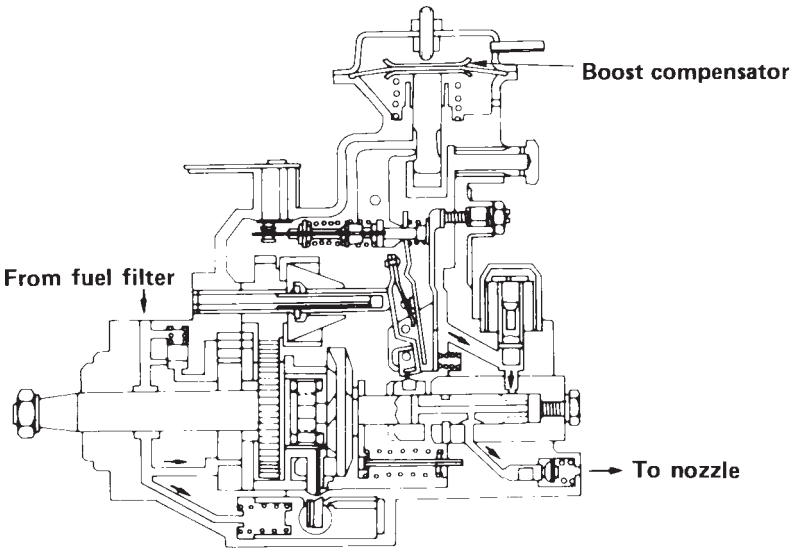

A Bosch Distributor Type Injection Pump is used. A single reciprocating/revolving plunger delivers the fuel uniformly to the injection nozzles, regardless of the number of cylinders.
The governor, the injection timer, and the feed pump are all contained in the injection pump housing. The injection pump is compact, light weight, and provides reliable high-speed operation.
An aneroid compensator is available as an option for vehicles to be operated at high altitudes. It adjusts the fuel and air mixing ratio.
A boost compensator is installed on turbocharger equipped vehicles.

FUEL FILTER AND WATER SEPARATOR

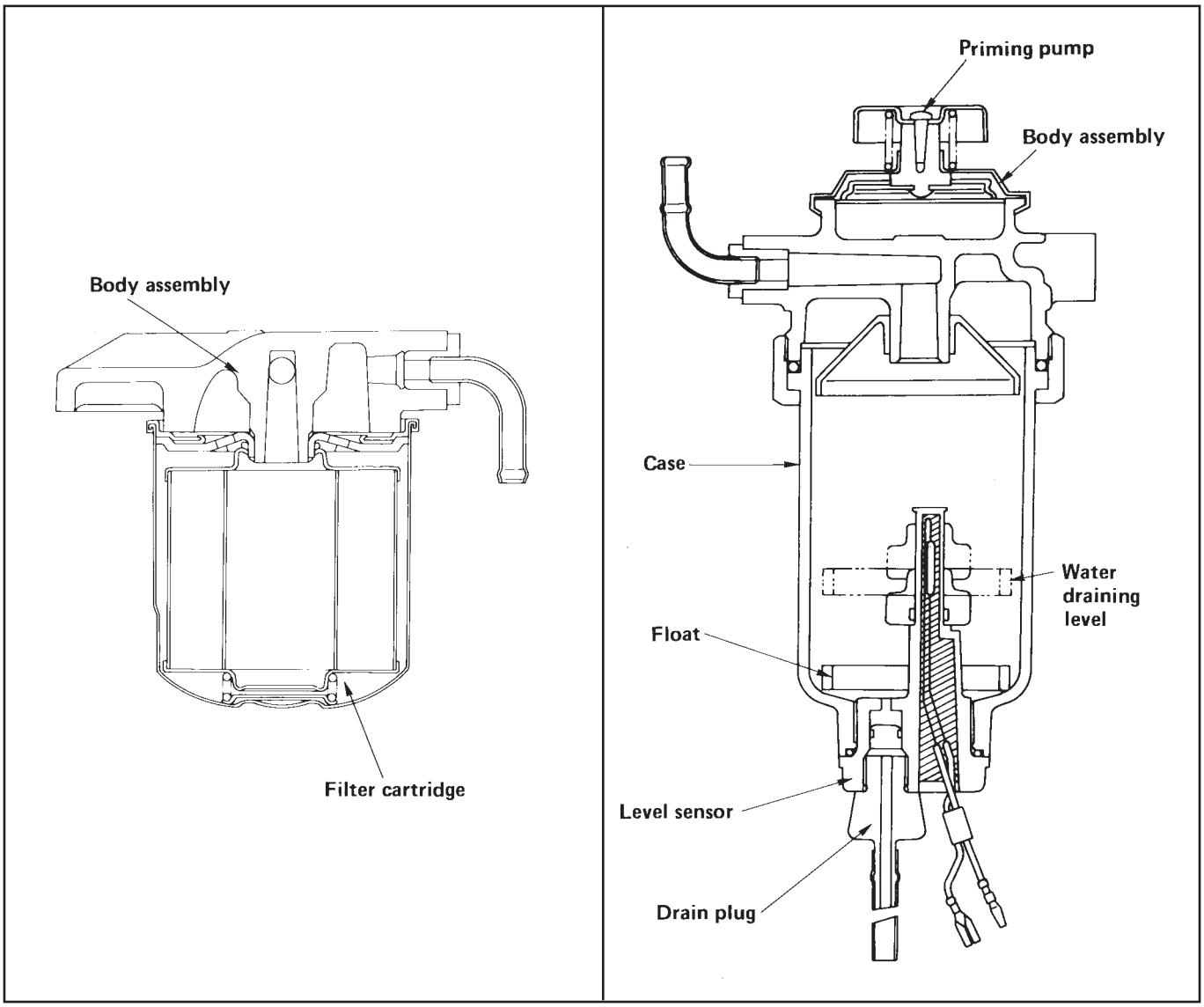

A cartridge type fuel filter and a water separator are used along with the VE type injection pump.
As the inside of the injection pump is lubricated by the fuel which it is pumping, the fuel must be perfectly clean. The fuel filter and the water separator remove water particles and other foreign material from the fuel before it reaches the injection pump.
The water separator has an internal float. When the float reaches the specified level, a warning light comes on to remind you to drain the water from the water separator.
A diaphragm type priming pump is installed at the top of the water separator. It is used during the water draining and the air bleeding procedures.

INJECTION NOZZLE

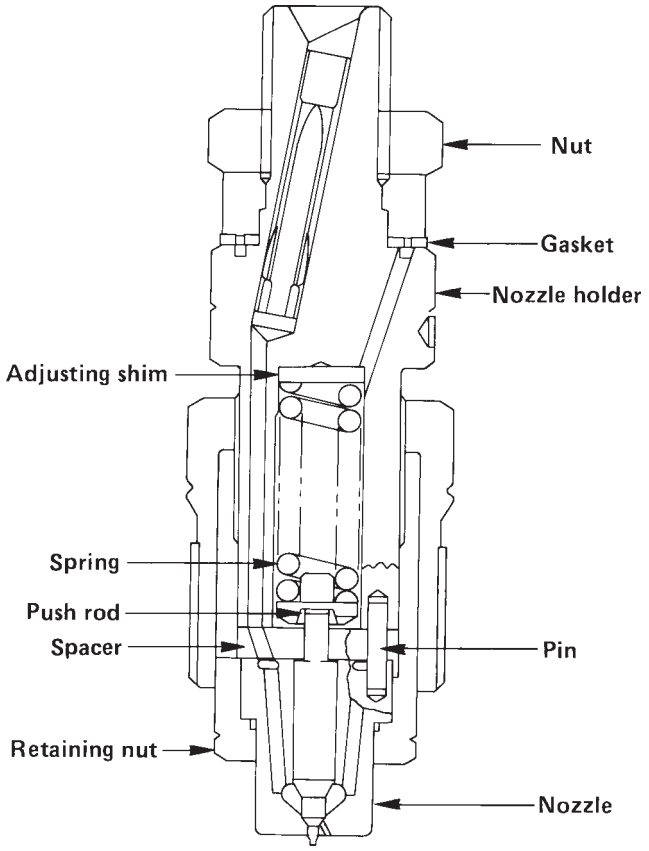

The injection nozzle sprays pressurized fuel from the injection pump through the injection nozzle orifices and into the combustion chamber.
4J series engines with the DFI (Double Formation Injection) Pintaux Type fuel injection nozzle having a sub-injection hole is used. This injection nozzle contibutes to substantially minimize the diesel nocking sound noticeable in the cold engine idling operation.

ON-VEHICLE SERVICE

FUEL FILTER ASSEMBLY

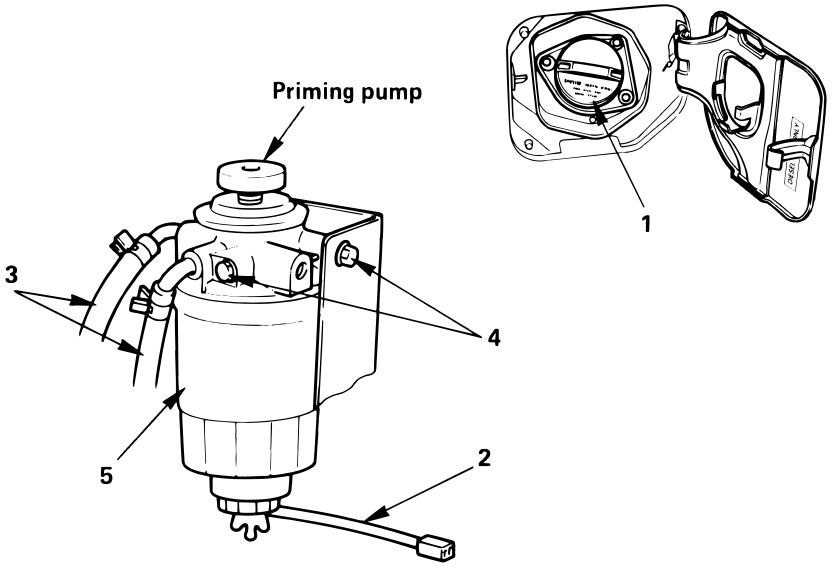

REMOVAL

Preparation: Disconnect battery ground cable.

1. **Fuel Filler Cap**
2. **Lead Switch Harness Connecter**
3. **Fuel Hose**
   - Disconnect fuel hose from filter body.
     Plug the hose ends to prevent fuel spillage.
4. **Remove the Bolt on Fuel Filter Bracket.**
5. **Fuel Filter Assembly**

INSTALLATION

5. **Fuel Filter Assembly**
   - Install the filter
4. **Tighten the Fuel Filter Bracket Fixing Bolt.**
3. **Fuel Hose**
   - Connect hoses to filter body.
2. **Lead Switch Harness Connecter**
1. **Fuel Filler Cap**
   - Connect the battery ground cable.
   - Feed fuel to the injection pump by weans of the priming, and bleed the fuel system.

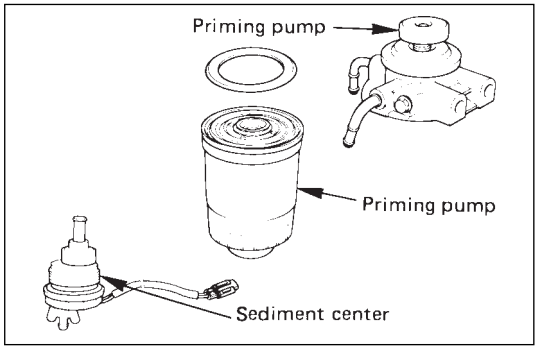

FUEL FILTER CARTRIGE

DISASSEMBLY

- Drain fuel completely from the fuel filter.
- Protect the filter body with cloth and lightly grip with a vise.
- Remove sedimentor center.
- Remove the cartridge using a filter wrench.
  Filter wrench: 5-8840-0253-0(J-22700)

REASSEMBLY

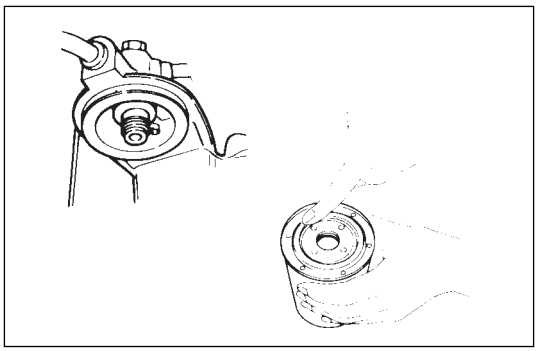

- Install the sedimentor center.
  Clean the cartridge mounting surface of filter body so that the cartridge can be securely.
  Apply engine oil thinly to new cartridge o-ring.
- To facilitate bleeding, fill the new cartridge with light oil.
- Tighten the cartridge until o-ring comes in contact with the sealing, taking care not to spill the light oil.
- Retighten 1/3~2/3 using a filter wrench.
  Filter wrench: 5-8840-0253-0(J-22700)

Bleeding

- Operate priming pump to send the air in the fuel system to the injection pump.
- Loosen injection pump bleeding plug, and operate the priming pump until no bubble is made.
- Tighten the bleeding plug.
- Start the engine, and if it is not started in 10 seconds or less, repeat the bleeding steps.
- Make sure of no fuel leakage, and tighten the priming pump.

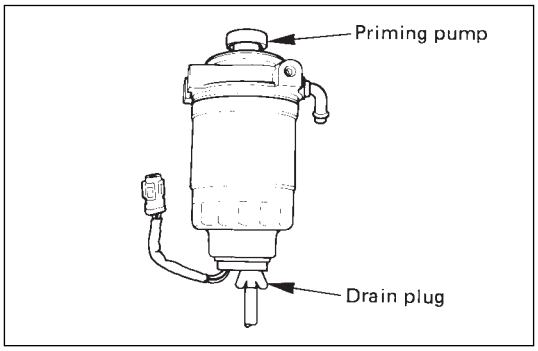

Draining

- When the water in the sedimentor reaches the specified volume, warning light is actuated.
  In this case, follow the draining steps below.
- Set a vinyl hose over the drain plug.
- Loosen the drain plug.
- To drain the water, operate the priming pump several times.
- After draining, tighten the drain plug.
- Operate the priming pump several times to check for fuel leakage.
- Check and see the warning light is off.

INJECTION NOZZLE

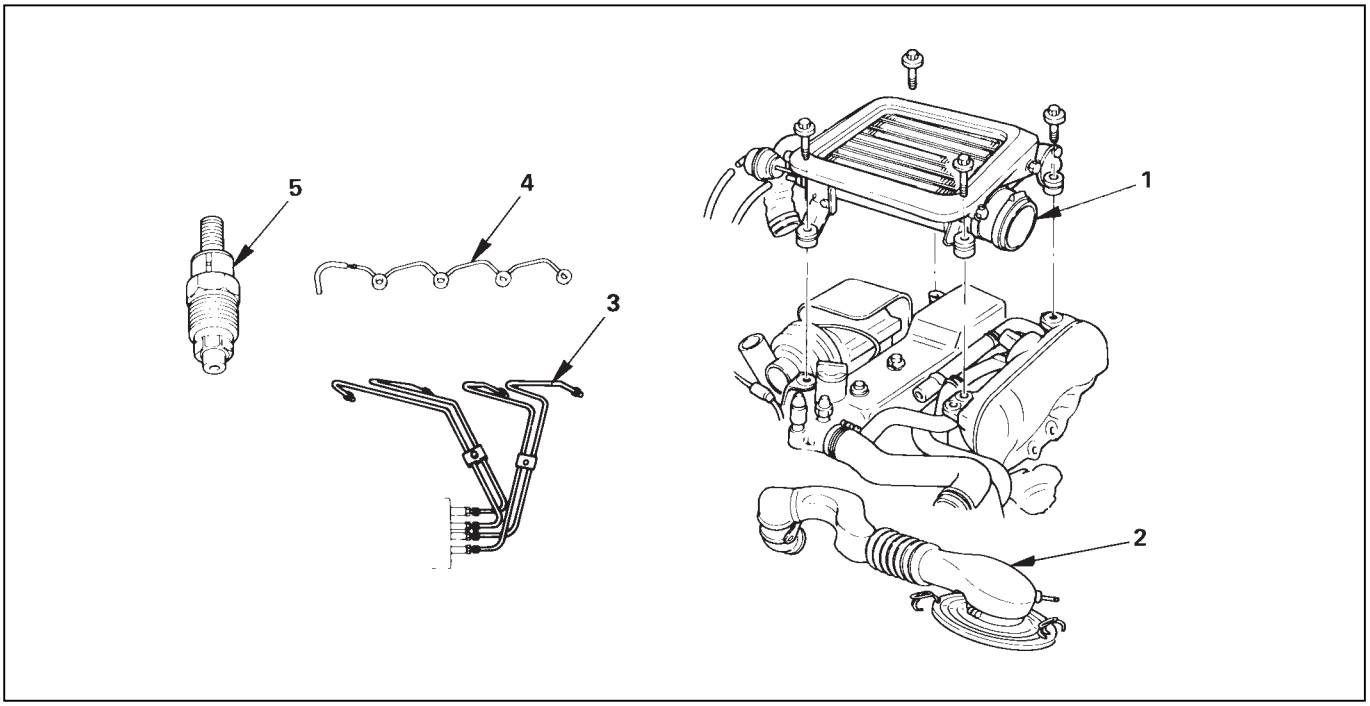

REMOVAL

Preparation:

- Disconnect battery ground cable.

1. **Intercooler Assembly (4JG2-T Only)**
   - (Refer to intercooler removal steps in section 6A2)
2. **Air Cleaner Cover & Air Duct**
3. **Injection Pipe**
   - Release injection pipe clip.
   - Loosen the flare nut on the injection pump side.
   - Loosen the flare nut on the injection nozzle side, disconnect and put aside the pipe.
4. **Leak Off Pipe**
5. **Injection Nozzle**

INSPECTION

- Set the nozzle in a nozzle tester.
  Check there is no fuel leak in the nozzle seal when a fuel pressure of 14710 kpa (150kg/cm^2/2133 psi) is applied.
  If there is leak, replace.

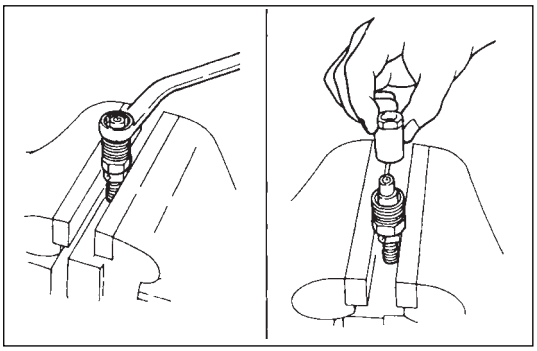

DISASSEMBLY

- Grip nozzle holder with a vise, loosen retaining nut and disassemble.
- Loosen holder nut and remove the nozzle.

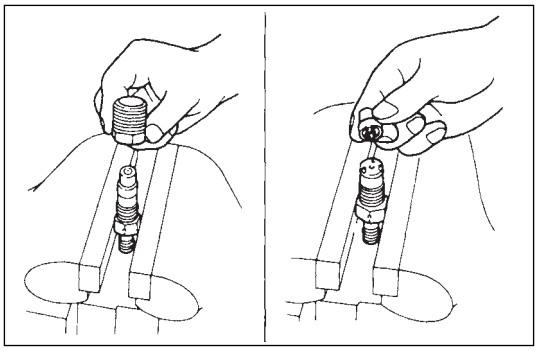

CAUTION

- Be careful not to damage the needle valve.
- Remove spacer, positioning pin, and push rod.
- Remove spring and adjusting shim.

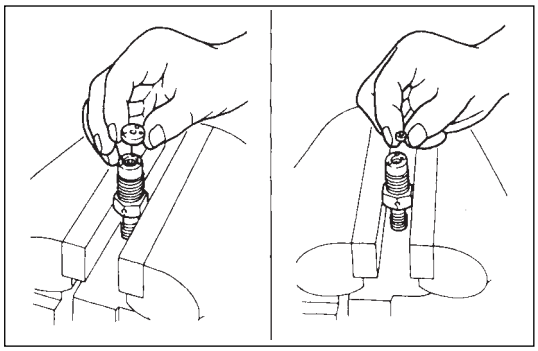

CAUTION

- Wash all the parts removed and arrange them on a cylinder basis, care should be taken not to miss any parts.
- Soak the nozzle assembly in a parts receptacle filled with light oil.
- Care should be taken not to miss shim, if used.

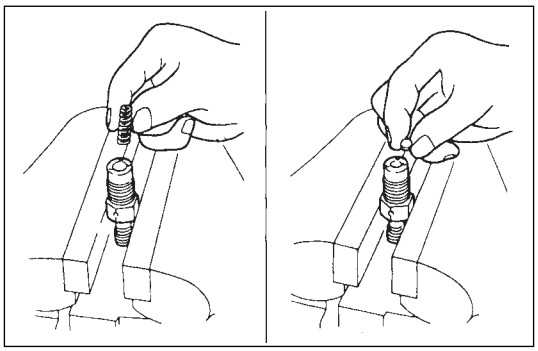

INSPECTION

Nozzle

- Soak the nozzle removed in clean light oil, wash nozzle body and needle valve separately, and check and see that the needle valve slide smoothly in the nozzle body.

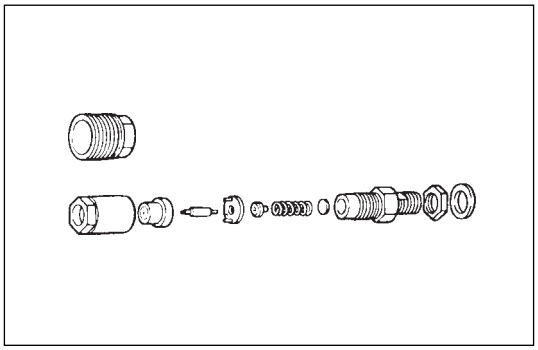

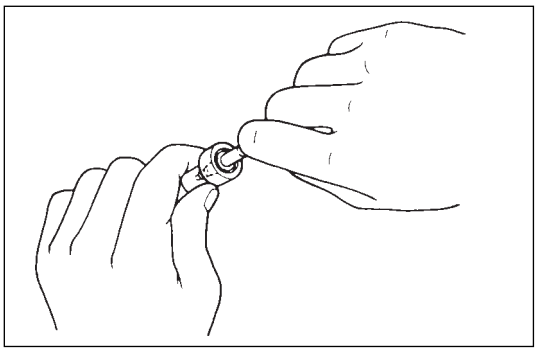

CAUTION

- If the needle valve does not slide smoothly repair or replace with a new nozzle assembly.

Nozzle lapping procedure

- Apply thinly a compound (Chrome oxide kneaded with an animal oil) to the seat of needle valve and lap.

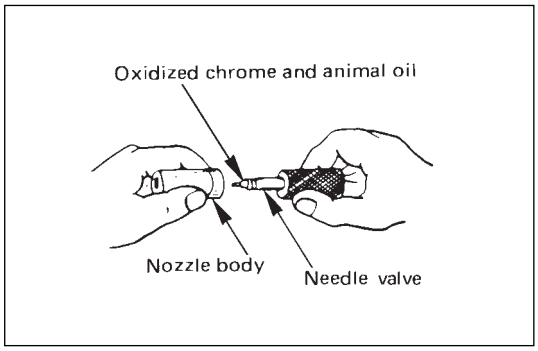

CAUTION

- Excess compound may cause worn needle valve, and be sure to wash out the compound after lapping.

Nozzle body & needle

- Check nozzle body end for seizure.
  If significantly seized, replace as a nozzle assembly basis. Also replace as a nozzle assembly basis, if needle valve end is deformed or seized.

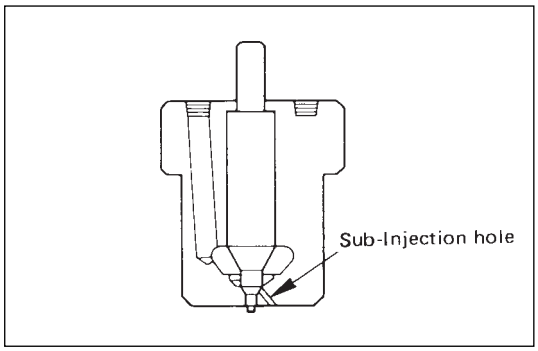

CAUTION

- If either nozzle body or needle valve is faulty, replace with a new nozzle assembly.
- DFI's sub hole is very small, care should be taken not to allow foreign matter to get in.

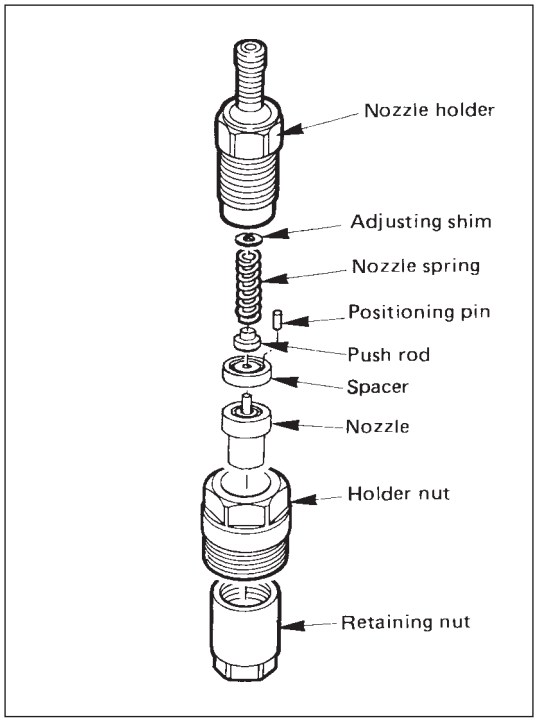

REASSEMBLY

To reassemble, follow the removal steps in the reverse order, noting the following point.

CAUTION

- Be careful to fit spacer because positioning pins are set off.

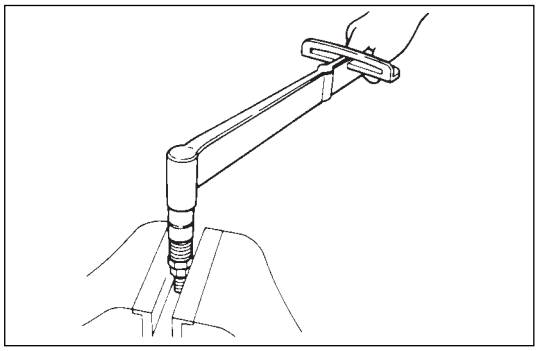

- Install retaining nut and tighten nut to the specified torque.

N·m (Kg·m/lb·ff)

39 (4/35)

ADJUSTMENT OF INJECTION STARTING PRESSURE

- Set nozzle holder asm on a nozzle tester.
- Apply hydraulic pressure by operating tester handle, and make sure fuel cam be injected under the following pressure.

Kpa (Kg/cm^2/Psi)

14710 (150/2133)

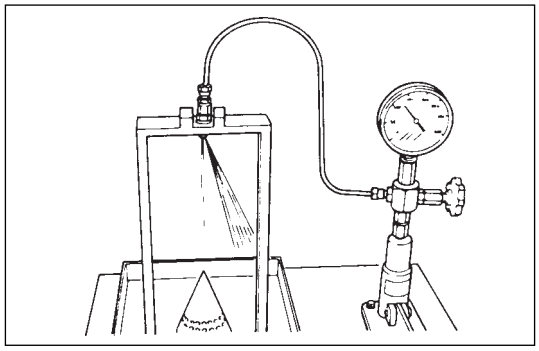

CAUTION

- If not injected under the specified pressure, adjust with adjusting shim.

Ref. Types are available in the 1.0 – 1.75 mm (0.039 – 0.069 in) thickness range (on a 0.01 mm (0.0004 in) basis).

- Unless extremely deformed spray in seen, there is no problem.

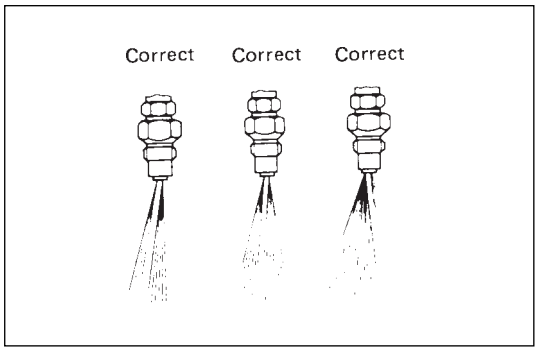

CAUTION

- In case of DFI test results are O.K. if the sub-hole inject fuel in spray.

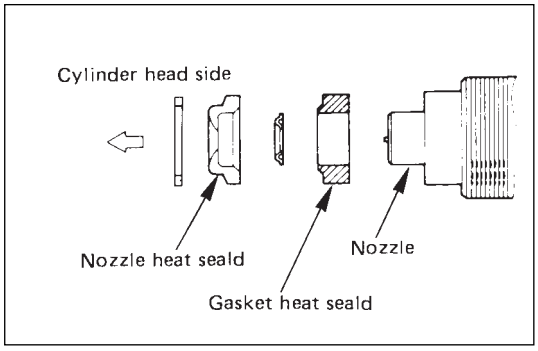

INSTALLATION

DFI should be positioned correctly and then installed in the cylinder head, because the sub-hole must be set in the specified direction.

CAUTION

- Nozzle and assembling should be as illustrated.
- Use new heat shield and new corrugated washer.

5. Injection Nozzle

- Lightly tighten the holder nut to suck extent that the nozzle holder can turn one word and one word.
- Set positioning confirmation drilled hole (ø2) within a nozzle turning angle of ± 5° against the cylinder head-side positioning boss.

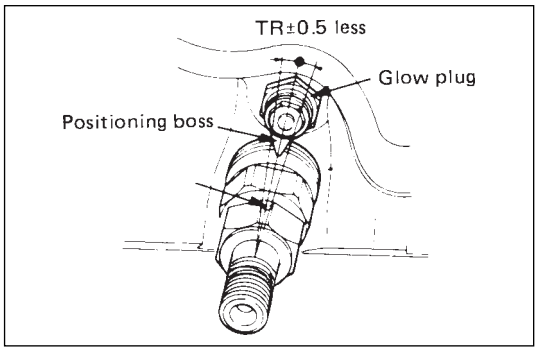

- Apply a wrench as illustrated, and tighten the holder nut to the specified torque using a special tool.

	N·m (Kg·m/lb.ft)
	64 (6.5/47)

wrench: nozzle holder 5-8840-0259-0

CAUTION

- After tightening the holder nut, make sure that the drilled hole makes ± 5° or smaller with the cylinder head-side positioning boss.
- When mounting leak off pipe, injection nozzle and pipe, clean then with air so that dust may not enter.

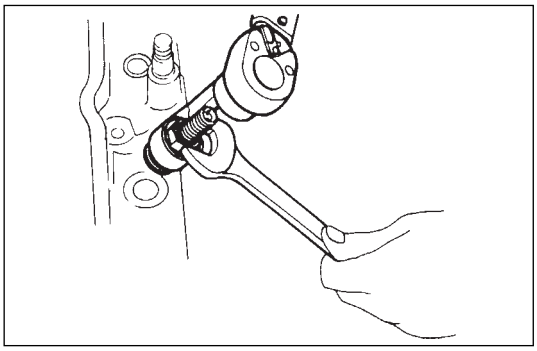

4. Leak Off Pipe
- Mount using a new copper waker

3. Injection Pipe
- Connect injection pipe to nozzle holder.
- Tighten the injection pump side.
- Fit pipe clip in specified position.

2. Air Cleaner Cover & Air duct

1. Intercooler Assembly
- Refer to “Intercooler” installation in section 6A2.

INJECTION PUMP ASSEMBLY

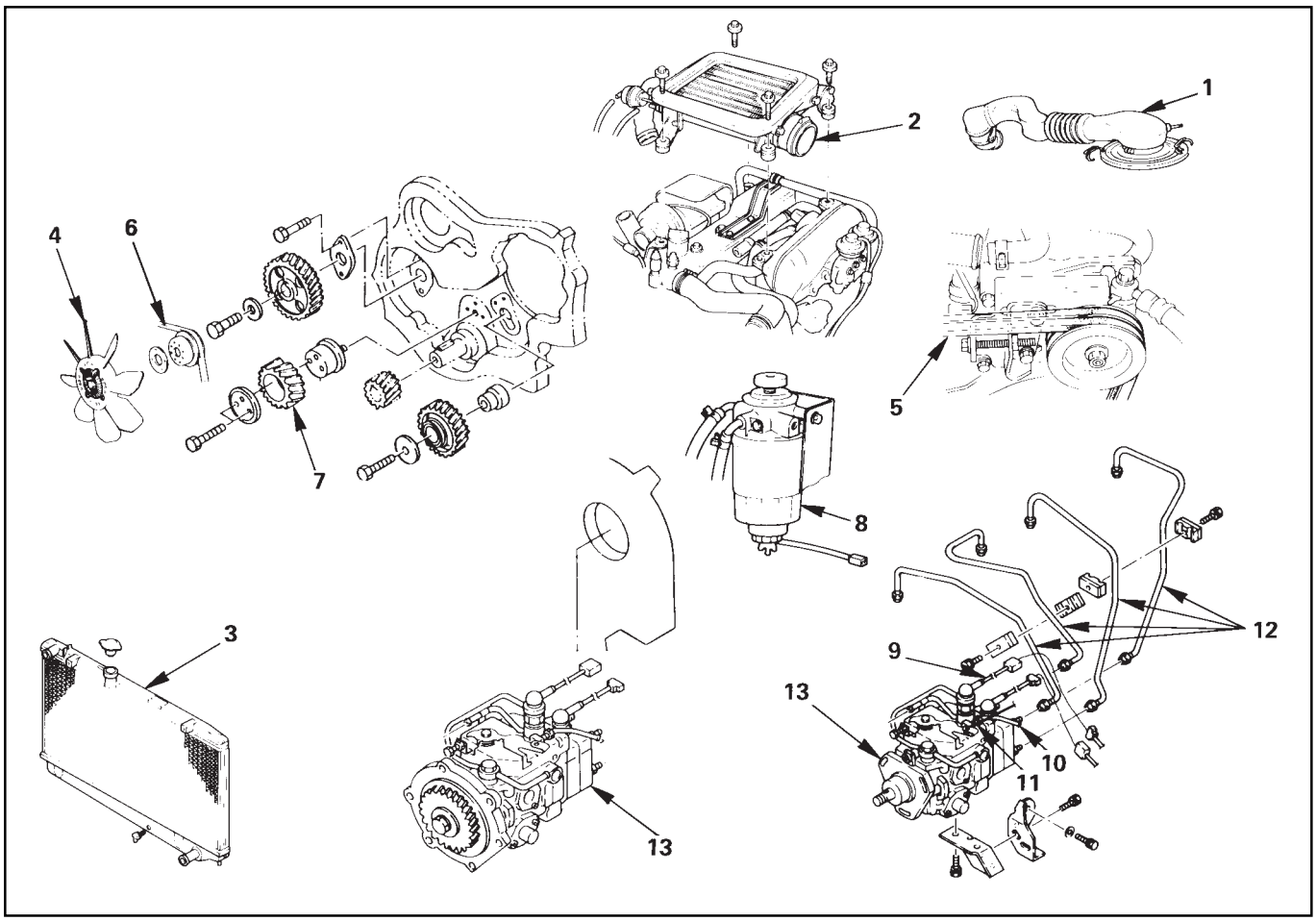

Removal Steps

1. Air cleaner cover & air duct
2. Intercooler assembly
3. Radiator assembly
4. Cooling fan assembly
5. P/S pump drive belt
6. AC generator drive belt
7. Timing gear
8. Fuel filter assembly
9. Injection pump harness
10. Fuel hose and CSD hose
11. Injection pump Control cable
12. Injection pipe
13. Injection pump assembly

Installation Steps

To install, follow the removal steps in the reverse order.

REMOVAL

Preparation:

- Disconnect battery ground cable.
- Drain coolant.

1. **Air Cleaner Cover & Air Duct**
2. **Intercooler Assembly (4JG2-T ONLY)**
   - Refer to Intercooler Assembly removal.
3. **Radiator Assembly**
   - Disconnect upper and lower hoses on the engine side.
4. **Cooling Fan Assembly**
   - Remove cooling fan asm and remove fan pulley and spacer.
5. **P/S Pump Drive Belt**
   - Loosen P/S pump lock bolt and adjust bolt remove two drive belts.
6. **AC Generator Drive Belt**
   - Loosen AC generator mounting bolt (under side) and adjust, bolt and remove drive belt.
7. **Timing Gear**
   - Refer to Timing Gear Removal
   - Remove the loosened nut and fixing bolt and remove the timing gear.
8. **Fuel Filter Assembly**
9. **Injection Pump Harness**
   - Remove tachometer sensor, throttle sensor, and fuel cut solenoid, harness.
10. **Fuel Hose & CSD Hose**
    - Disconnect inlet hose and outlet hose and keep hose end up to prevent fuel from coming out.
    - Disconnect CSD hose.
11. **Injection Pump Control Cable**
12. **Injection Pipe**
    - Release pipe clip.
    - Remove the flare nut on the pump side.
    - Remove the flare nut on the injection nozzle side, and remove the injection pipe.

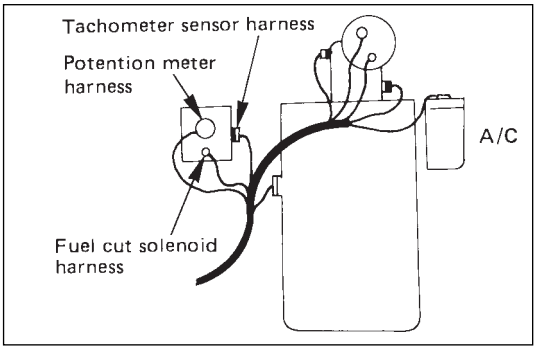

CAUTION

- Be sure to plug the injection nozzle holder and delivery holder to prevent the entry of foreign matter.

13. **Injection Pump Assembly**
    - Remove pump mounting nut
    - Loosen injection pump rear bracket adjuster lock bolt.
    - Remove the mounting bolt on the engine side, and pull out the pump behind the engine.

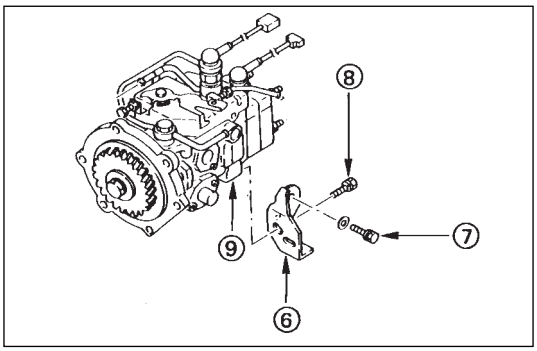

INSTALLATION

13. Injection Pump Assembly

- Tighten the injection pump bracket bolts ⑦ to the specified torque..

N·m (Kg·m/lb·ft)
20 (2.0/15)

- Tighten the injection pump bracket bolts ⑧ to the specified torque..

N·m (Kg·m/lb·ft)
40 (4.1/30)

12. Injection Pipe

- Connect the pump side and nozzle side of the pipe, and tighten securely.
- Install clip where it was.

11. Injection Pump Control Cable

- See adjustment of accelerator control cable.

10. Fuel Hose & CSD Hose

9. Injection Pump Harness

- Mount engine harness and connect it to switches.

8. Fuel Filter Assembly

7. Timing Gear

- Refer to Timing Gear in Section 6A2.

6. AC Generator Drive Belt

- Mount AC Generator drive belt and adjust belt tension.
- See drive belt adjustment in section 6B.

5. P/S Pump Drive Belt

- Mount P/S pump drive belt and adjust belt tension.
- See drive belt adjustment in section 6B.

4. Cooling Fan Assembly

- Mount fan pulley, distance piece, and cooling fan asm (in this order) on the water pump, and tighten to the specified torque.

N·m (Kg·m/lb·in)
8 (0.8/69)

3. Radiator Assembly

2. Intercooler Assembly (4JG2-T ONLY)

- See installation of intercooler.
- Pour coolant.
- Connect battery ground cable.

1. Air Cleaner Cover & Air Duct

INJECTION TIMING ADJUSTMENT

- Set No.1 cylinder to top dead center.
- Remove injection pump distributor head plug.
- Cancel wax CSD with the handle of a driver.
- Fit a dial gauge and set lift to 2 mm(0.0787 in).

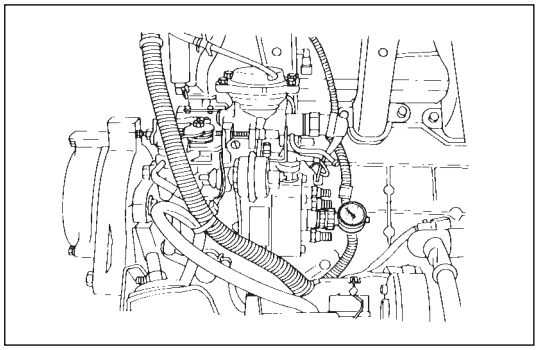

Measuring device: 5-8840-0145-0

- Set crankshaft damper pully top dead center mark about 45° before top dead center from the pointer.
- Set dial gauge in the “0” position.
- Turn the crankshaft a little rightwise and leftwise and see if the pointer is stable in the “0” position.
- Turn the crankshaft in the normal direction and read the measuring divice’s indication at TDC (4JG2-T) and ATDC 1° (4JG2-NA)

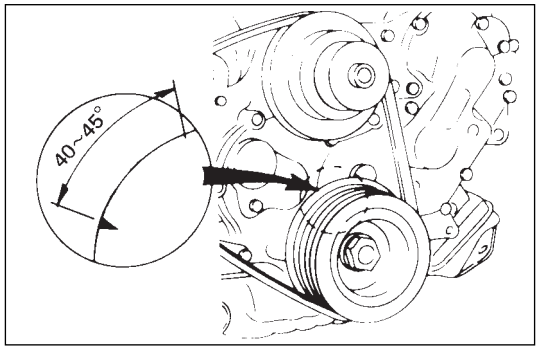

mm(in)

Standard	0.5 (0.0197)

- If it reads abnormal, loosen injection pump fixing nut and pump bracket adjust bolt, make adjustment by changing the pump mounting angle, and tighten the nut and bolt to the specified torque where the dial indicates the specified valve.

Pump fixing nut — N·m (Kg·m/lb·ft)

19 (1.9/13)

Adjust bolt — N·m (Kg·m/lb·ft)

40 (4.1/30)

- Remove the measuring device and tighten the distributor head plug to the specified torque.

N·m (Kg·m/lb·ft)

17 (1.7/12)

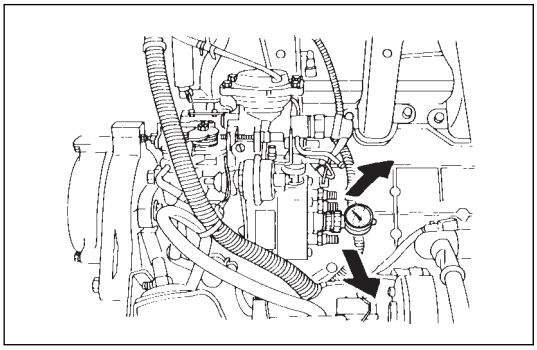

CAUTION

- When installing the distributor head plug, be sure to use new copper washer.
- Connect injection pipe.
- Fit pipe clip where specified.

FUEL TANK

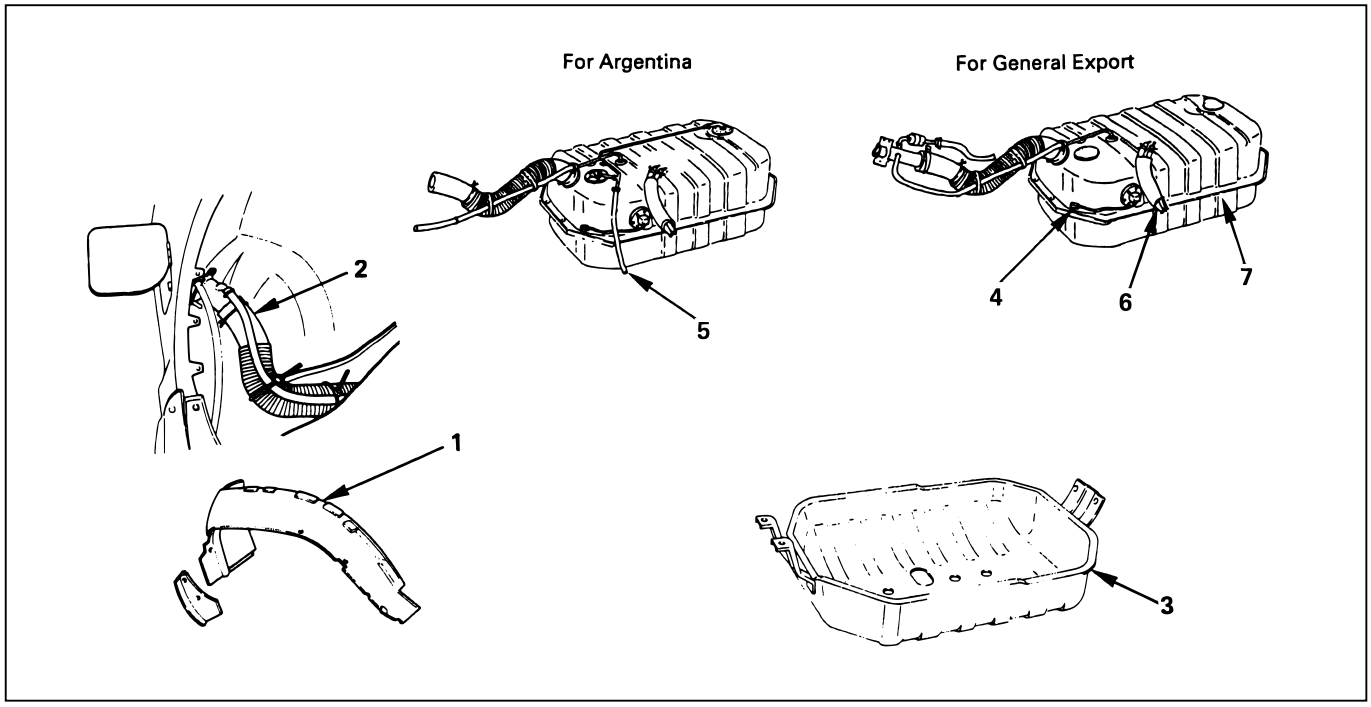

Removal Steps

1. Inner liner
2. Fuel filler hose and breather hose
3. Under cover
4. Fuel tank wiring connector
5. Evapo fuel hose
6. Fuel hose and fuel return hose
7. Fuel tank

Installation Steps

To install, follow the removal steps in the reverse order.

REMOVAL

Preparation:

- Disconnect battery ground cable.
- Loosen fuel filler cap.
- Drain fuel.
- Tighten drain plug to the specified torque after draining fuel.

N·m (Kg·m/lb·ft)
20 (2.0/14)

1. **Inner Liner**
   - Remove inner liner of wheel arch on rear right side.
2. **Fuel Filler Hose and Air Breather Hose**
3. **Under Cover**
   - Remove undercover fixing bolts on both sides.
4. **Fuel Tank Wiring Connector**
   - Disconnect two connectors on front right side of tank.
5. **Evapo Fuel Hose**
6. **Fuel Hose and Fuel Return Hose**
7. **Fuel Tank**
   - Remove fuel tank fixing bolts on both sides.

INSTALLATION

7. Fuel Tank

- Place a flange on right side of tank on the bracket.
- Install a flange on left side on the bracket from the bottom, and tighten bolts to the specified torque.

	N·m (Kg·m/lb·ft)
	36 (3.7/27)

6. Fuel Hose and Fuel Return Hose
5. Evapo Fuel Hose
4. Fuel Tank Wiring Connector
3. Under Cover
2. Fuel Filler Hose and Air Breather Hose
1. Inner Liner

- Mount inner liner on the wheel arch.
- Fill the tank with fuel and tighten fuel filler cap.
- Connect battery ground cable.

FUEL GAUGE UNIT

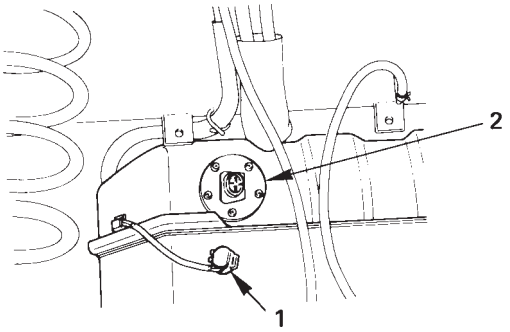

Removal Steps

1. Wiring connector
2. Fuel gauge unit

Installation Steps

To install, follow the removal steps in the reverse order.

REMOVAL

Preparation:

- Disconnect battery ground cable.
- Loosen fuel filler cap.
- Drain fuel.
- Tighten drain plug to the specified torque after draining fuel.

N·m (Kg·m/lb·ft)
20 (2.0/14)

1. **Wiring Connector**
   - Drain fuel
2. **Fuel Gauge Unit**
   - Remove the fixing screws, then the fuel gauge unit.

INSTALLATION

2. **Fuel Gauge Unit**
1. **Wiring Connector**
   - Connect the wiring connector to the fuel gage unit.
   - Fill the tank with fuel and tighten fuel filler cap.
   - Connect battery ground cable.

FUEL FILLER CAP

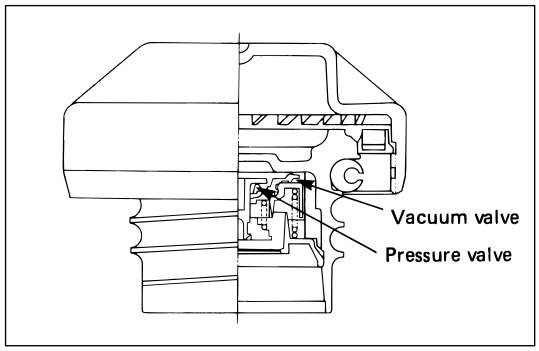

The fuel filler cap contains a vacuum valve. If a negative pressure develops in the fuel tank, the external valve of fuel filler cap opens to allow the fresh air to flow into the fuel tank through the vacuum valve.

INSPECTION

Check the seal ring in the filler cap for presence of any abnormality and for seal condition.
Replace the filler cap, if abnormal.

ACCELERATOR CONTROL

ACCELERATOR CONTROL CABLE

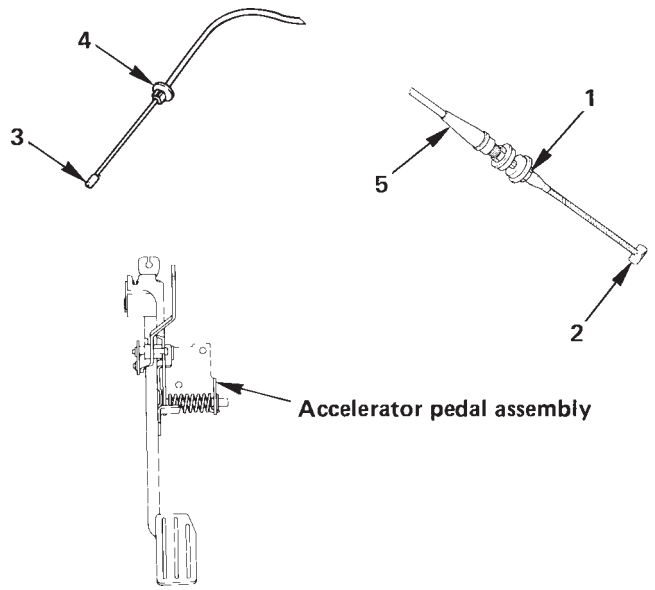

Removal Steps

1. Adjusting nut
2. Accelerator control cable (Injection pump side)
3. Accelerator control cable (Accelerator pedal side)
4. Grommet
5. Accelerator control cable

Installation Steps

To install, follow the removal steps in the reverse order.

REMOVAL

1. **Adjusting Nut**
   - Loosen the adjust nut on the cable bracket mounted on the injection pump.
2. **Accelerator Control Cable (on injection pump side)**
3. **Accelerator Control Cable (on accelerator pedal side)**
4. **Grommet**
5. **Accelerator Control Cable**

INSPECTION

Check the following items, and replace the control cable if any abnormality is found.

- The control cable should move smoothly.
- The control cable should not be bent or kinked.
- The control cable should be free of damage and corrosion.

INSTALLATION

5. **Adjusting Nut**
4. **Accelerator Control Cable (on injection pump side)**
3. **Accelerator Control Cable (on accelerator pedal side)**
2. **Grommet**
1. **Accelerator Control Cable**

Adjustment of Accelerator Control Cable

1. Loosen the lock nut.
2. Lock the throttle valve fully closed, and pull the outer cable. Then, adjust the nut B so that the clearance between nut B and bracket is as shown in figure.
3. Push the nut B against the bracket and tighten nut A to lock the cable.

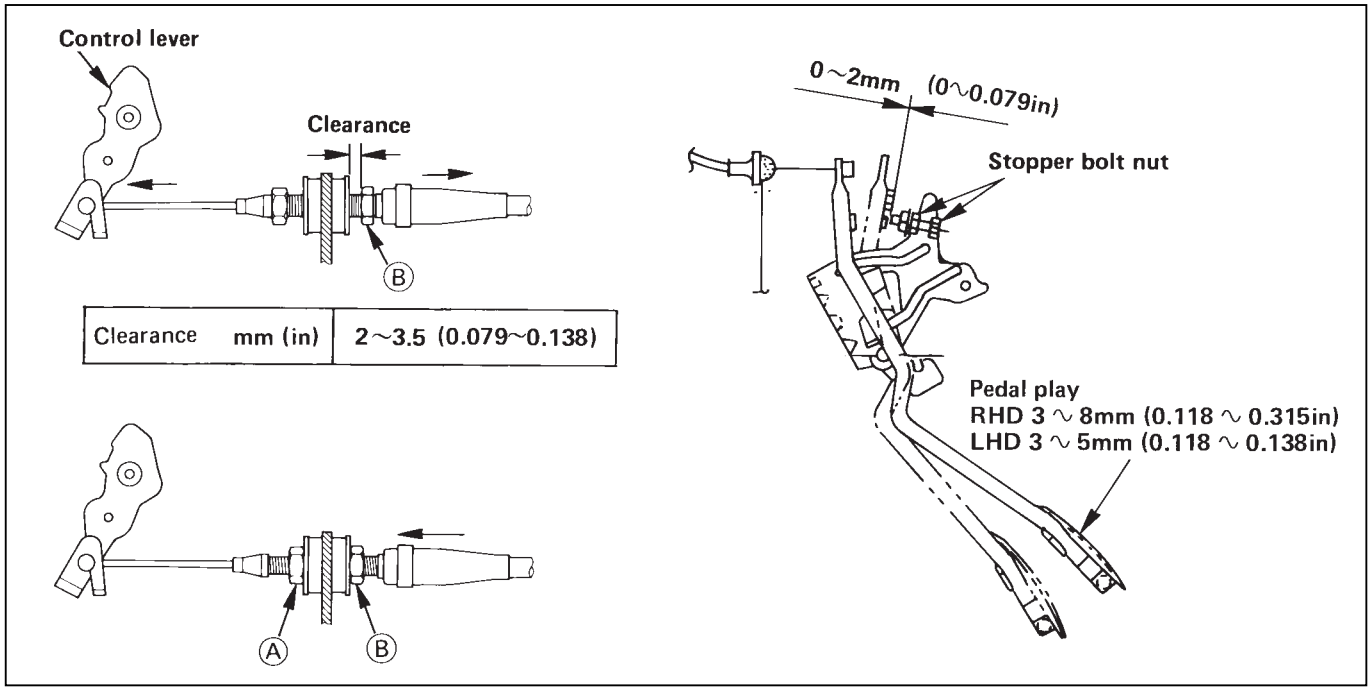

ACCELERATOR PEDAL

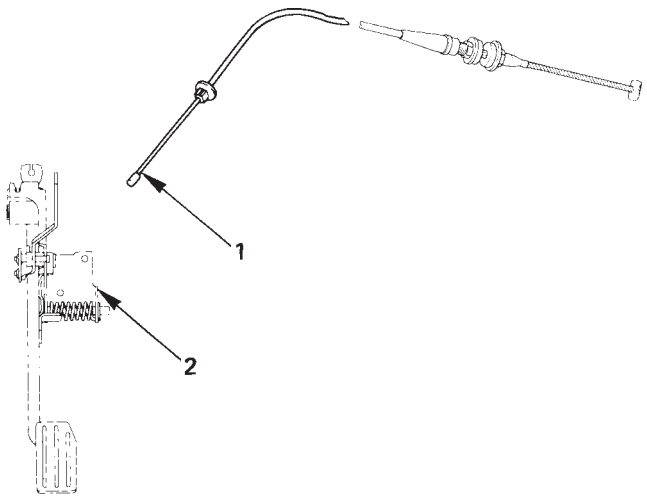

Removal Steps

1. Accelerator control cable
2. Accelerator pedal assembly

Installation Steps

To install, follow the removal steps in the reverse order.

REMOVAL

1. **Accelerator Control Cable**
2. **Accelerator Pedal Assembly**

INSTALLATION

2. **Accelerator Pedal Assembly**
1. **Accelerator Control Cable**

Adjustment of Pedal Stroke Manual Transmission

- Turn counterclockwise and loosen the stopper bolts sufficiently.
- Step on the pedal fully and hold it with your hand. Next turn the stopper bolt until it comes into contact with the stopper of pedal bracket. Then, lock the stopper bolt in that position.

AIR CLEANER

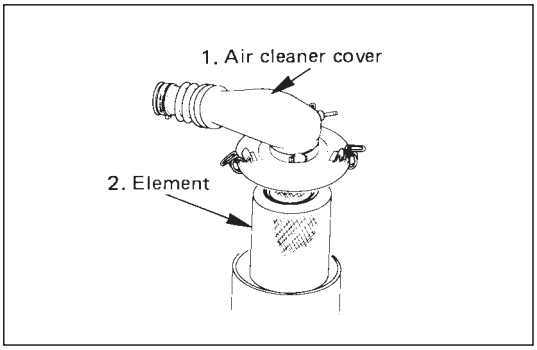

REMOVAL

- Disconnect the hose coming.

1. Air Cleaner Cover

- Disconnect air hose.

2. Element

INSPECTION

Check the element for damage or clogging by dust. Replace if it is damaged, or clean if it is clogged.

Cleaning Method

Top the element carefully not to damage the paper filter, or clean the element by blowing with compressed air of about 49kPa (0.5 kg/cm^2/71 psi) from the clean side if it is extremely dirty.

INSTALLATION

2. Element

1. Air Cleaner Cover

- Set the cover to the body completely, then clamp it with the clip.

SECTION 6D

ENGINE ELECTRICAL

CONTENTS

Battery ..... Section 6D1
Starting System ..... Section 6D2
Charging System ..... Section 6D3
QOS-III Preheating System ..... Section 6D6

SECTION 6D1

BATTERY

CONTENTS

General Description 6D1–1
Diagnosis 6D1–1
On-Vehicle Service 6D1–3
Battery Charging 6D1–3
Jump Starting 6D1–3
Removal and Installation of Battery 6D1–4

GENERAL DESCRIPTION

There are six battery fluid caps at the top of the battery. These are covered by a paper label.
The battery is completely sealed except for the six small vent holes at the side. These vent holes permit the escape of small amounts of gas generated by the battery.
This type of battery has the following advantages over conventional batteries:

1. There is no need to add water during the entire service life of the battery.
2. The battery protects itself against overcharging. The battery will refuse to accept an excessive charge.
   (A conventional battery will accept an excessive charge, resulting in gassing and loss of battery fluid.)
3. The battery is much less vulnerable to self-discharge than a conventional type battery.

DIAGNOSIS

1. VISUAL INSPECTION

Inspect the battery for obvious physical damage, such as a cracked or broken case, which would permit electrolyte loss.
Replace the battery if obvious physical damage is discovered during inspection.
Check for any other physical damage and correct it as necessary. If not, proceed to Step 2.

2. HYDROMETER CHECK

There is a built-in hydrometer (Charge test indicator) at the top of the battery. It is designed to be used during diagnostic procedures.

Before trying to read the hydrometer, carefully clean the upper battery surface.
If your work area is poorly lit, additional light may be necessary to read the hydrometer.

a. BLUE RING OR DOT VISIBLE – Go to Step 4.
b. BLUE RING OR DOT NOT VISIBLE – Go to Step 3.

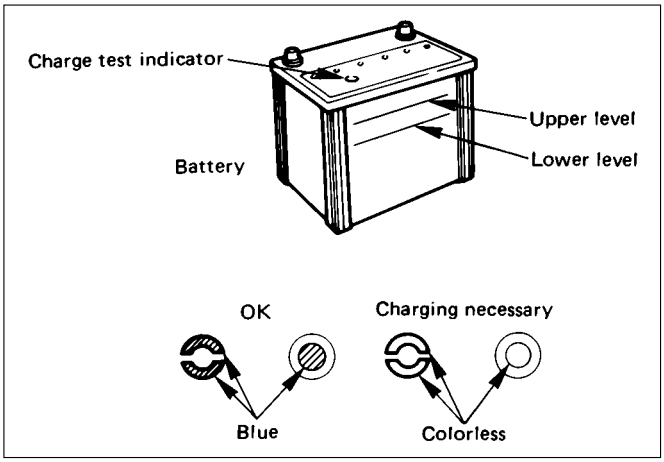

3. FLUID LEVEL CHECK

The fluid level should be between the upper level line and lower level line on side of the battery.

a. CORRECT FLUID LEVEL – Charge the battery.
b. BELOW LOWER LEVEL – Replace battery.

4. VOLTAGE CHECK

(1) Put voltmeter test leads to battery terminals.
   a. VOLTAGE IS 12.4V OR ABOVE – Go to Step 5.
   b. VOLTAGE IS UNDER 12.4V – Go to procedure (2) below.
(2) Determine fast charge amperage from specification. (See Main Data and Specifications in this section).
   Fast charge battery for 30 minutes at amperage rate no higher than specified value.
   Take voltage and amperage readings after charge.
   a. VOLTAGE IS ABOVE 16V AT BELOW 1/3 OF AMPERAGE RATE – Replace battery.
   b. VOLTAGE IS ABOVE 16V AT ABOVE 1/3 OF AMPERAGE RATE – Drop charging voltage to 15V and charge for 10 - 15 hours.
   Then go to Step 5.
   c. VOLTAGE IS BETWEEN 12V AND 16V – Continue charging at the same rate for an additional 3-1/2 hours. Then go to Step 5.
   d. VOLTAGE IS BELOW 12V – Replace battery.

5. LOAD TEST

(1) Connect a voltmeter and a battery load tester across the battery terminals.
(2) Apply 300 ampere load for 15 seconds to remove surface charge from the battery.
   Remove load.
(3) Wait 15 seconds to let battery recover. Then apply specified load from specifications (See Main Data and Specifications in this section).
   Read voltage after 15 seconds, then remove load.
   a. VOLTAGE DOES NOT DROP BELOW THE MINIMUM LISTED IS FOLLOWING TABLE – The battery is good and should be returned to service.
   b. VOLTAGE IS LESS THAN MINIMUM LISTED – Replace battery.

ESTIMATED TEMPERATURE		MINIMUM VOLTAGE
°F	°C	
70	21	9.6
60	16	9.5
50	10	9.4
40	4	9.3
30	–1	9.1
20	–7	8.9
10	–12	8.7
0	–18	8.5

The battery temperature must be estimated by feel and by the temperature the battery has been exposed to for the preceding few hours.

ON-VEHICLE SERVICE

BATTERY CHARGING

Observe the following safety precautions when charging the battery:

1. Never attempt to charge the battery when the fluid level is below the lower level line on the side of the battery. In this case, the battery must be replaced.
2. Pay close attention to the battery during the charging procedure.
   Battery charging should be discontinued or the rate of charge reduced if the battery feels hot to the touch.
   Battery charging should be discontinued or the rate of charge reduced if the battery begins to gas or spew electrolyte from the vent holes.
3. In order to more easily view the hydrometer blue dot or ring, it may be necessary to jiggle or tilt the battery.
4. Battery temperature can have a great effect on battery charging capacity.
5. The sealed battery used on this vehicle may be either quick-charged or slow-charged in the same manner as other batteries.
   Whichever method you decide to use, be sure that you completely charge the battery. Never partially charge the battery.

JUMP STARTING

JUMP STARTING WITH AN AUXILIARY (BOOSTER) BATTERY

CAUTION:

Never push or tow the vehicle in an attempt to start it. Serious damage to the emission system as well as other vehicle parts will result.

Treat both the discharged battery and the booster battery with great care when using jumper cables. Carefully follow the jump starting procedure, being careful at all times to avoid sparking.

WARNING:

Failure to carefully follow the jump starting procedure could result in the following:

1. Serious personal injury, particulaly to your eyes.
2. Property damage from a battery explosion, battery acid, or an electrical fire.
3. Damage to the electronic components of one or both vehicles particularly.

Never expose the battery to an open flame or electrical spark. Gas generated by the battery may catch fire or explode.

Remove any rings, watches, or other jewelry before working around the battery. Protect your eyes by wearing an approved set of goggles.

Never allow battery fluid to come in contact with your eyes or skin.

Never allow battery fluid to come in contact with fabrics or painted surfaces.

Battery fluid is a highly corrosive acid.

Should battery fluid come in contact with your eyes, skin, fabric, or a painted surface, immediately and thoroughly rinse the affected area with clean tap water.

Never allow metal tools or jumper cables to come in contact with the positive battery terminal, or any other metal surface of the vehicle. This will protect against a short circuit.

Always keep batteries out of the reach of young children.

JUMP STARTING PROCEDURE

1. Set the vehicle parking brake.
   If the vehicle is equipped with an automatic transmission, place the selector lever in the “PARK” position.
   If the vehicle is equipped with a manual transmission place the shift lever in the “NEUTRAL” position.
   Turn “OFF” the ignition.
   Turn “OFF” all lights and any other accessory requiring electrical power.
2. Look at the built-in hydrometer.
   If the indication area of the built-in hydrometer is completely clear, do not try to jump start.
3. Attach the end of one jumper cable to the positive terminal of the booster battery.
   Attach the other end of the same cable to the positive terminal of the discharged battery.
   Do not allow the vehicles to touch each other. This will cause a ground connection, effectively neutralizing the charging procedure.
   Be sure that the booster battery has a 12 volt rating.
4. Attach one end of the remaining cable to the negative terminal of the booster battery.
   Attach the other end of the same cable to a solid engine ground (such as the A/C compressor bracket or the generator mounting bracket) of the vehicle with the discharged battery.
   This ground connection must be at least 450 mm (18 in) from the battery of the vehicle whose battery is being charged.

WARNING:
Never attach the end of the jumper cable directly to the negative terminal of the dead battery.

5. Start the engine of the vehicle with the good battery.
   Make sure that all unnecessary electrical accessories have been turned "OFF".
6. Start the engine of the vehicle with the dead battery.
7. To remove the jumper cables, follow the above directions in the reverse order.
   Be sure to first disconnect the negative cable from the vehicle with the discharged battery.

REMOVAL AND INSTALLATION OF THE BATTERY

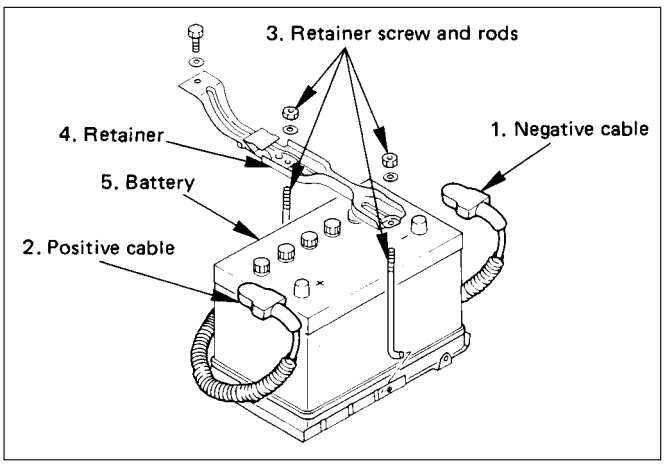

REMOVAL

1. **Negative cable**
2. **Positive cable**
3. **Retainer screw and rods**
4. **Retainer**
5. **Battery**

INSTALLATION

To install the battery, follow the removal procedure in the reverse order, noting the following points:

1. Make sure that the rod is hooked on the body side.

SECTION 6D2

STARTING SYSTEM

CONTENTS

	PAGE
General Description	6D2- 1
On-Vehicle Service	6D2- 3
Unit Repair	6D2- 5

GENERAL DESCRIPTION

STARTING CIRCUIT

The cranking system consists of a battery, starter, starter switch, starter relay, etc. and these main components are connected as shown in Figure. For details of the starting circuit.

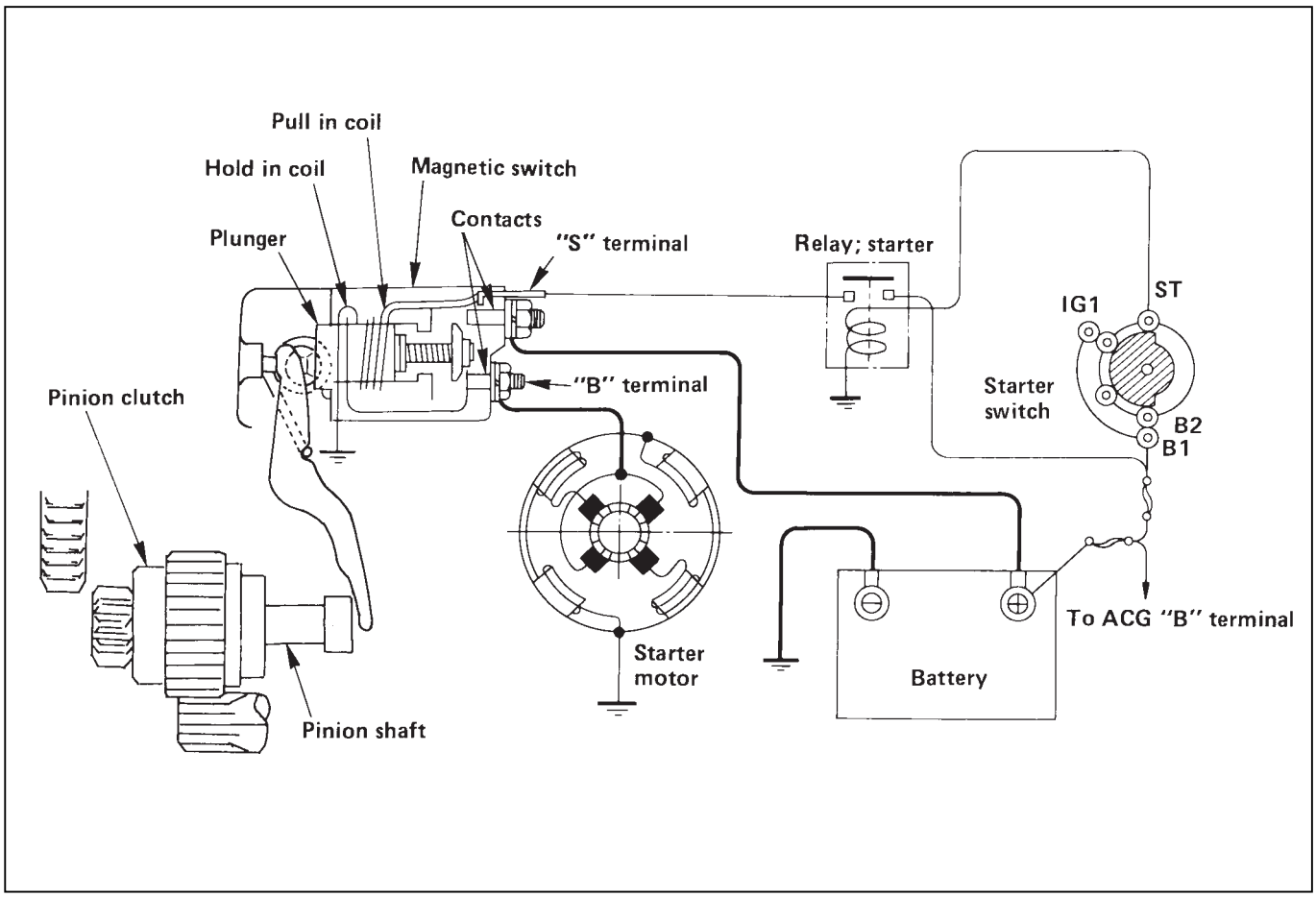

STARTER

The starting system employs a magnetic type reduction starter in which the motor shaft is also used as a pinion shaft. When the starter switch is turned on, the contacts of magnetic switch are closed, and the armature rotates. At the same time, the plunger is attracted, and the pinion is pushed forward by the shift lever to mesh with ring gear. Then, the ring gear runs to start the engine. When the engine starts and the starter switch is turned off,

the plunger returns, the pinion is disengaged from ring gear, and the armature stops rotation. When the engine speed is higher than the pinion, the pinion idles, so that the armature is not driven.

STARTING CIRCUIT

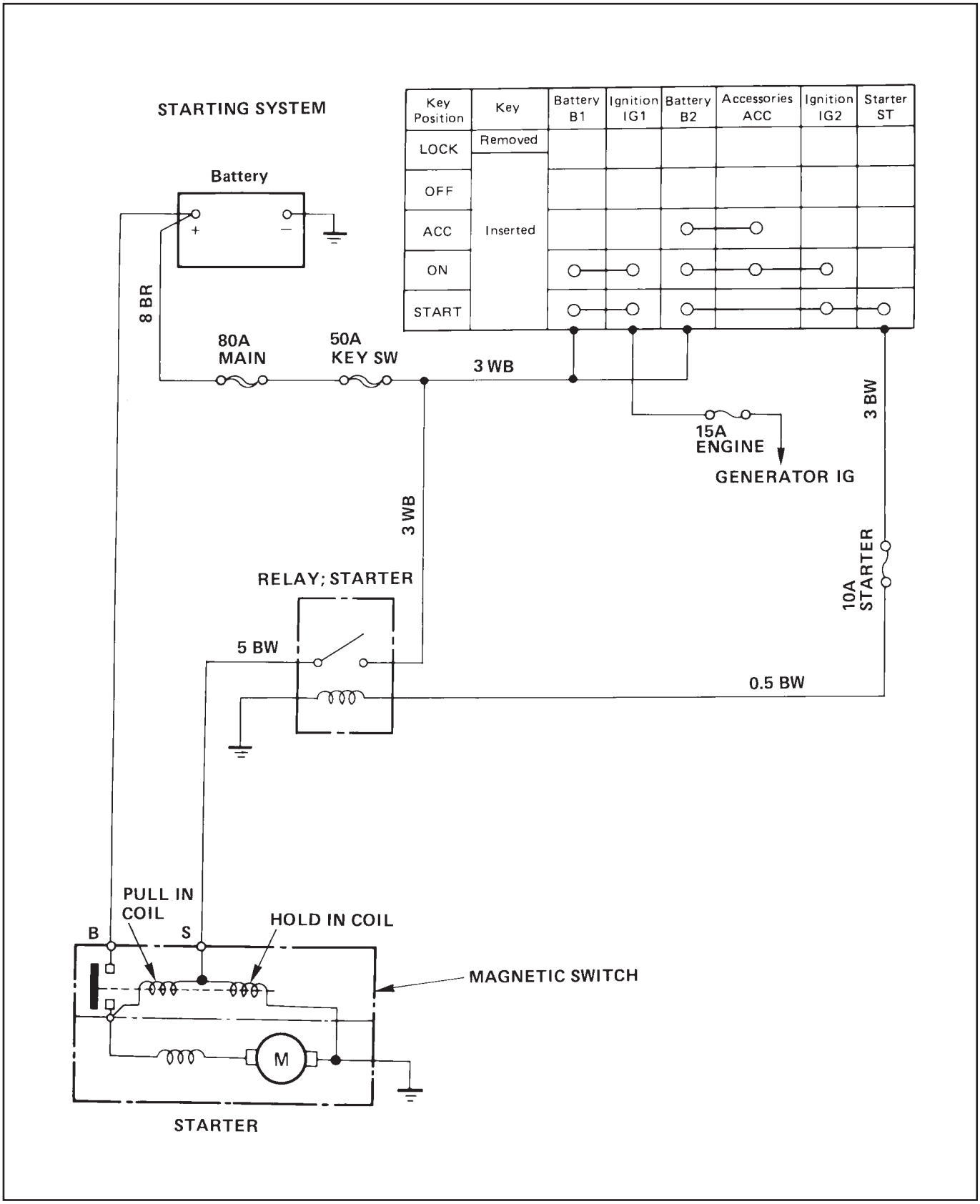

ON-VEHICLE SERVICE

STARTER

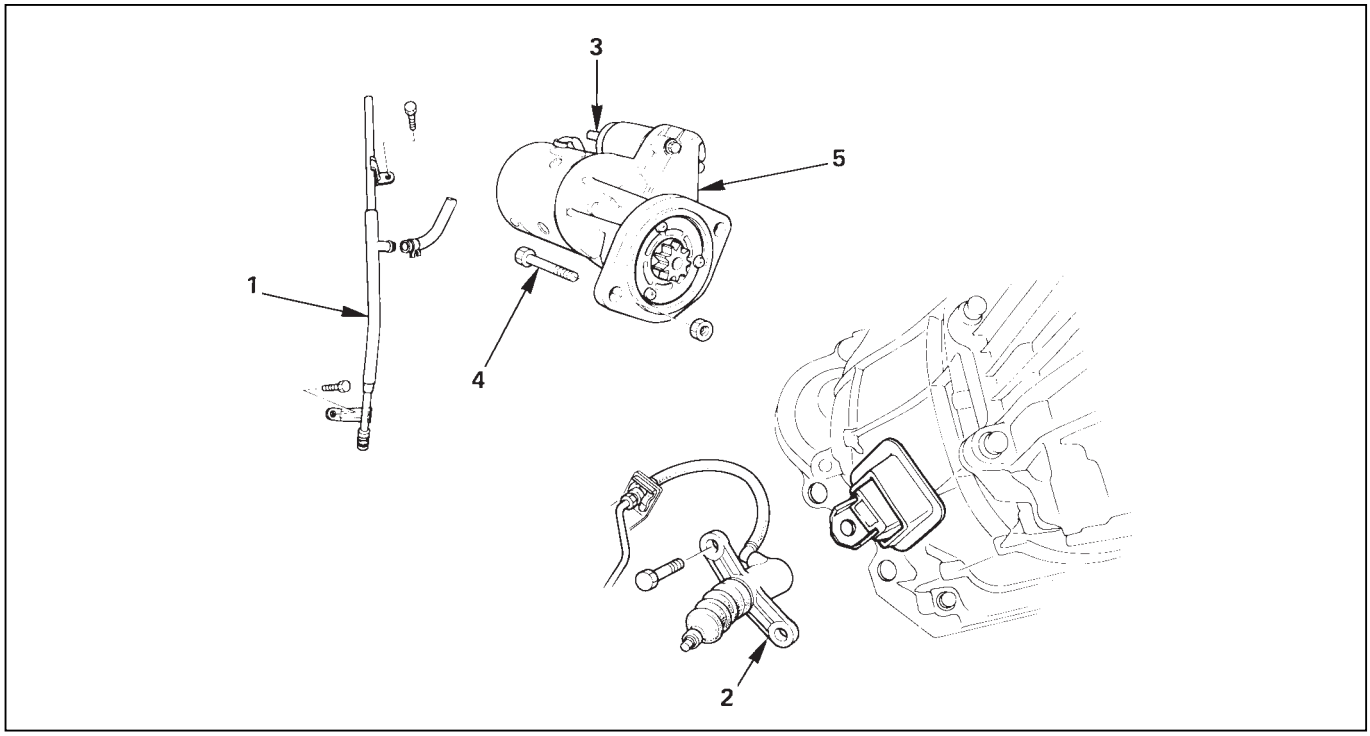

REMOVAL

Preparation

- Battery ground cable (both batteries)

1. **Oil Level Gauge and Guide**
   - Remove the guide and plug the hole on the oil pan.
2. **Clutch Slave Cylinder**
   - Remove the slave cylinder and wire it to the frame.
3. **Starter Wiring Connector**
   - Disconnect the connector from terminals “B” and “S”.
4. **Mounting**
5. **Starter Assembly**

INSTALLATION

To install, follow the removal steps in the reverse order.

5. Starter Assembly

- Tighten the fixing bolt and nut to the specified torque

N·m (Kg·m/lb·ft)
94 (9.6/69)

4. Mounting

3. Starter Wiring Connector

- Reconnect the connectors to terminals “B” and “S”.

2. Clutch Slave Cylinder

- Tighten the fixing bolt and nut to the specified torque

N·m (Kg·m/lb·ft)
78 (8.0/58)

1. Oil Level Gauge and Guide

- Connect the battery ground cable.

UNIT REPAIR

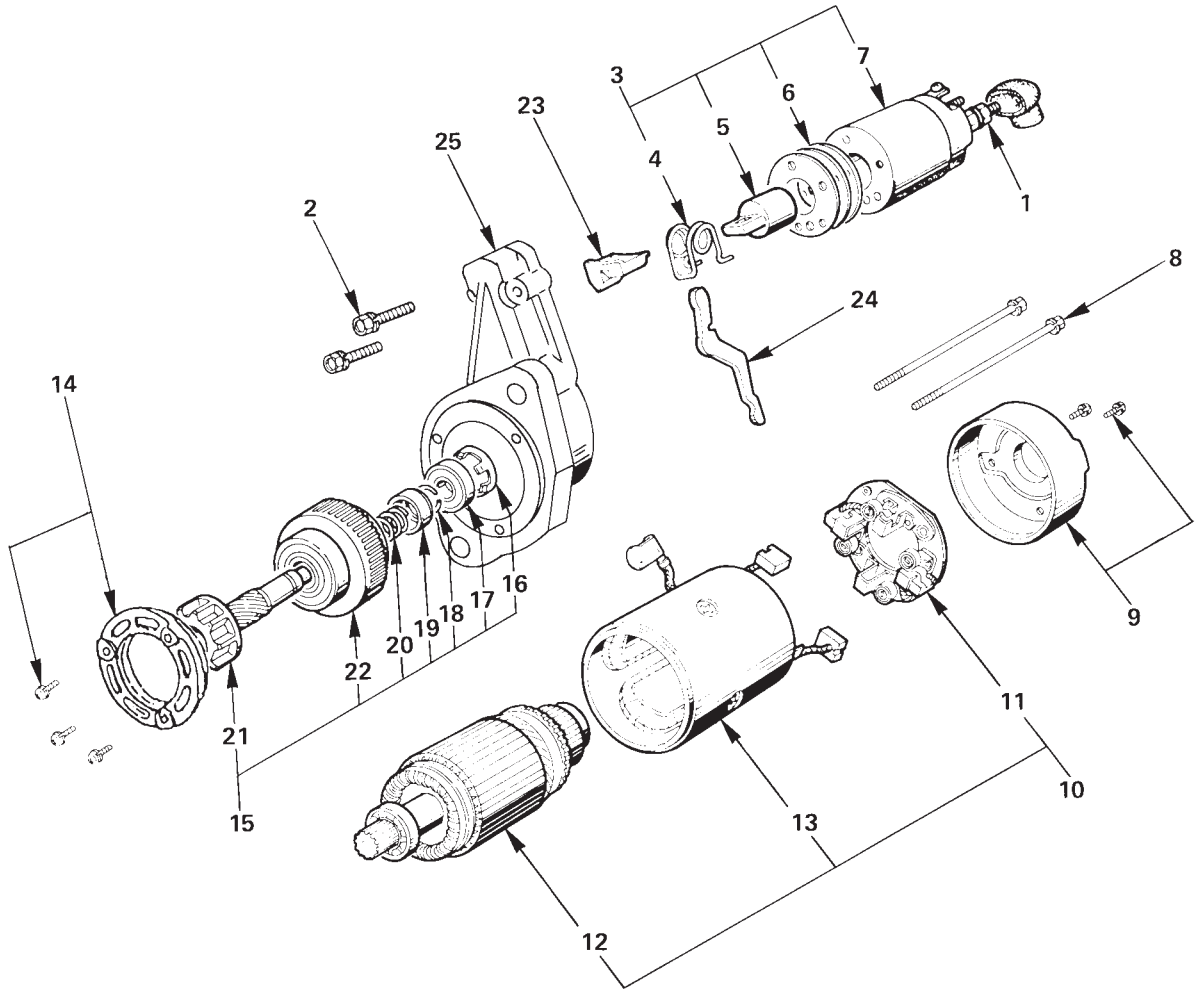

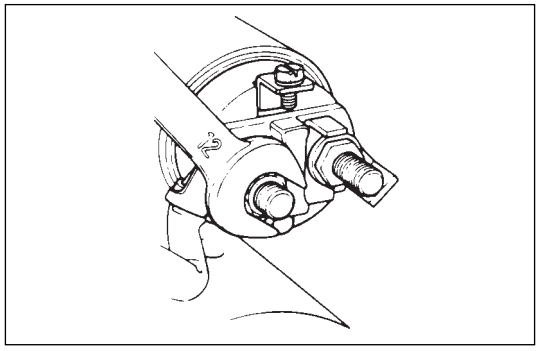

DISASSEMBLY

1. **Lead Wire Nut**
   - Loosen the nut on terminal "M" of magnetic switch and disconnect the connector cable.
2. **Bolt (2 pcs)**
3. **Magnetic Switch Assembly**

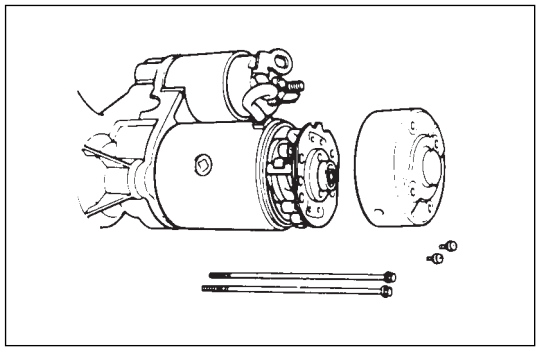

4. **Torsion Spring**
   - Remove torsion spring from magnetic switch assembly.
5. **Plunger**
6. **Shim**
7. **Magnetic Switch**
8. **Through Bolt**
9. **Rear Cover**
   - Remove the through bolts, then remove the rear cover.
10. **Motor Assembly**

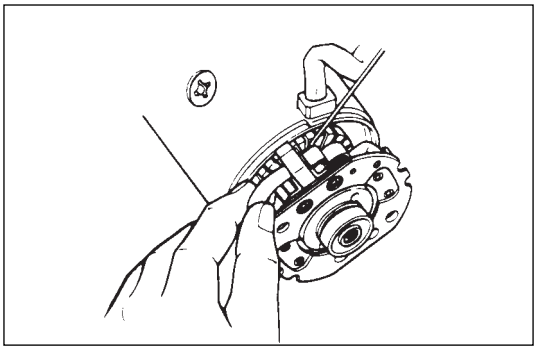

11. **Brush Holder**
    - Raise a brush spring to detach the negative side of the brushes (2 pcs) from the commutator face and remove the positive side of brushes (2pcs) from the positive side of brushes (2pcs) from the brush holder.

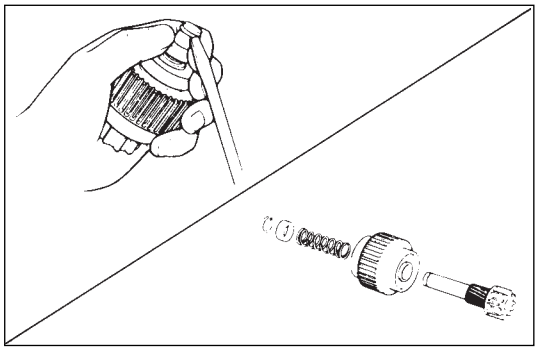

12. **Armature**
13. **Yoke Assembly**
14. **Bearing Retainer**
15. **Pinion Assembly**
16. **Bearing Holder**
17. **Bearing**
18. **Pinion Stopper Clip**
    - Remove the stopper clip using a screw driver o equivalent.
19. **Pinion Stopper**
20. **Return Spring**
21. **Pinion Shaft**
22. **Clutch**
23. **Dust Cover**
24. **Shift Lever**
25. **Gear Case**

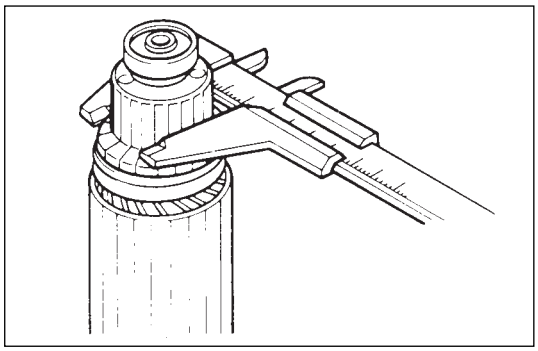

INSPECTION AND REPAIR

Repair or replace necessary parts if extreme wear or damage is found during inspection.

Armature

- Measure the outer diameter of commutator, and replace with a new one if it is out of the limit.

mm (in)

Standard	Limit
38.0(1.50)	36.5(1.44)

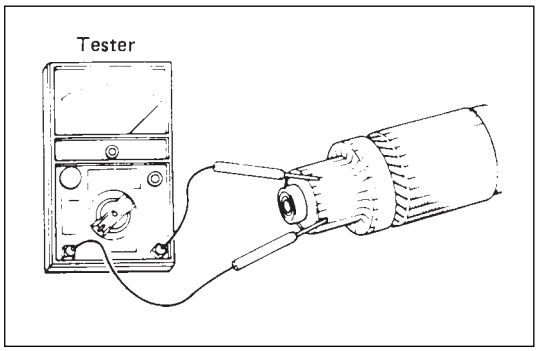

- Check for continuity between commutator and segments. Replace commutator if there is no continuity (i.e., disconnected).

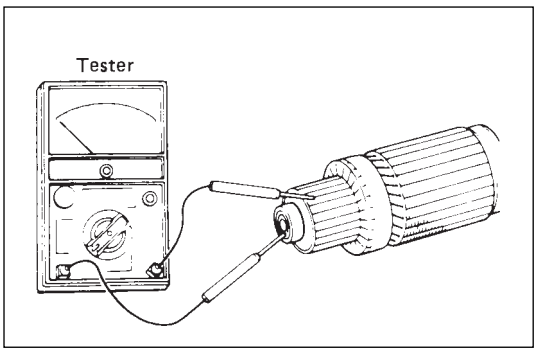

- Check for continuity between commutator and shaft. Also, check for continuity between commutator and armature core,armature core and shaft. Replace commutator if there is continuity (i.e., internally grounded).

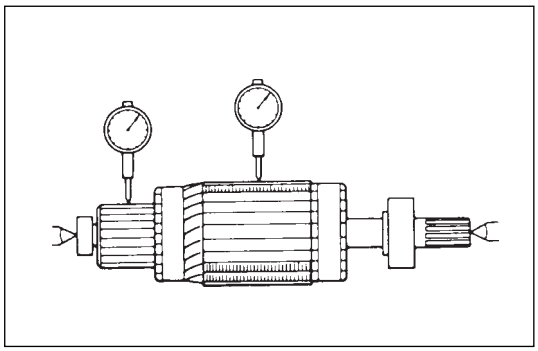

- Measure runout of armature core and commutator with a dial gage. Repair or replace, if it exceeds the limit.

mm(in)

Name	Standard	Limit
Armature	0.05 (0.002) Max.	0.1 (0.004)
Conmutator	0.05 (0.002) Max.	0.1 (0.004)

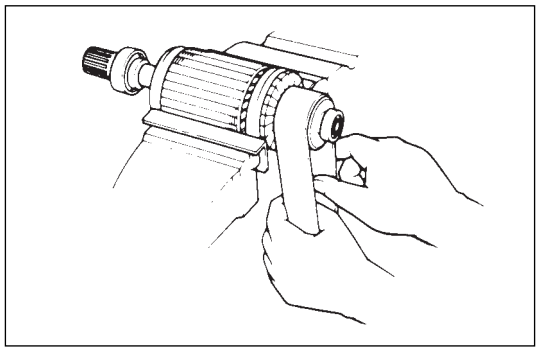

- Polish the commutator surface with sand paper #500 to #600 if it is rough.

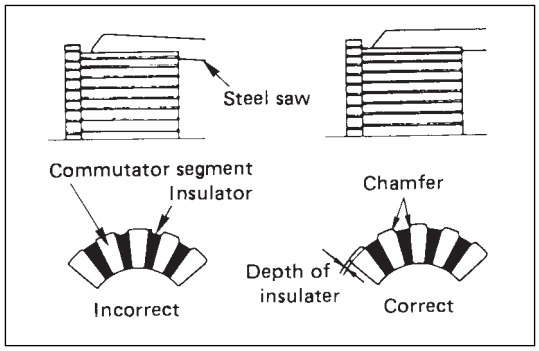

- Measure the depth of insulator in commutator. Repair, if it is below the limit.

mm(in)

Standard	Limit
0.5 ~ 0.8 (0.02 ~ 0.03)	0.2 (0.008)

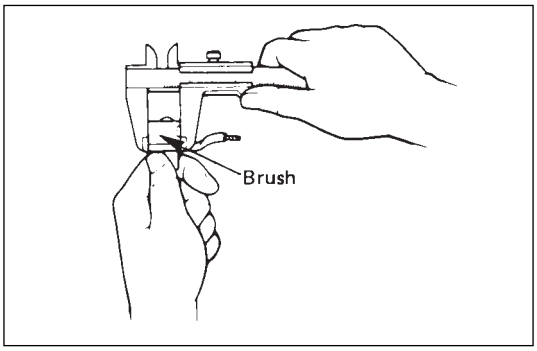

Brush

- Measure the length of brush.
  Replace with a new one, if it is below the limit.

mm(in)

Standard	Limit
18.0 (0.71)	11.0 (0.43)

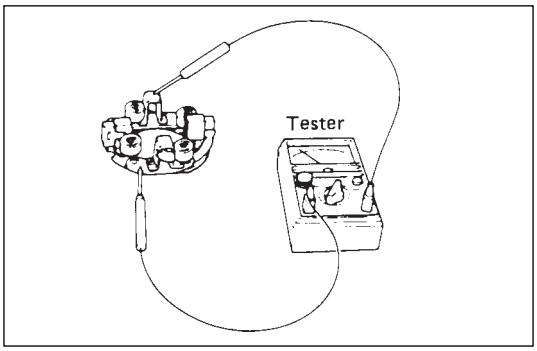

Brush holder

- Check for continuity between brush holder (+) and base (-). Replace, if there is continuity (i.e., insulation is broken).

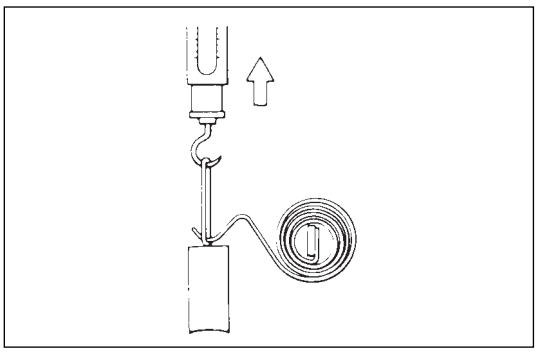

- Inspect the brush springs for wear, damage or other abnormal conditions.

N (Kg/lb)

Standard
28-35 (2.9-3.6/6.4-7.9)

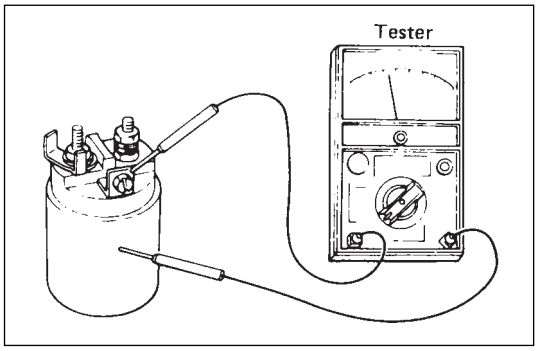

Magnetic switch

- Continuity of shunt coil
  Check for continuity between terminals S and coil case.
  Replace, if there is no continuity (i.e., coil is disconnected).

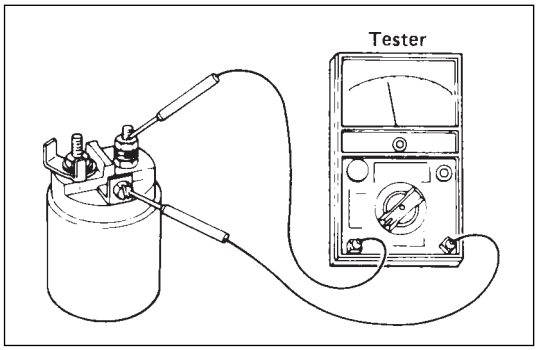

- Continuity of series coil
  Check for continuity between terminals S and M.
  Replace, if there is no continuity (i.e., coil is disconnected).

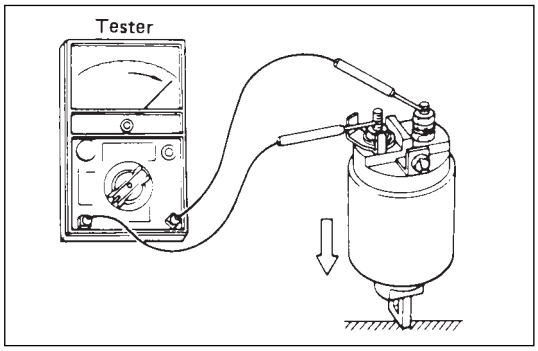

- Continuity of contacts
  With the plunger faced downward, push down the magnetic switch. In this state, check for continuity between terminals B and M. Replace, if there is no continuity (i.e., contacts are faulty).

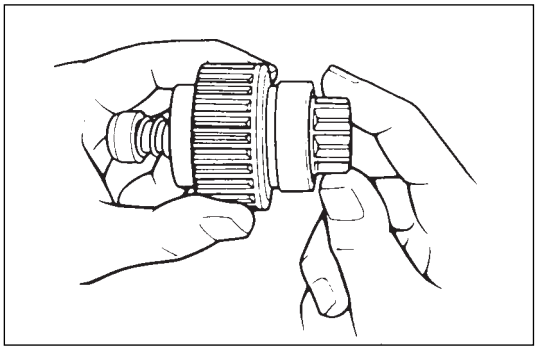

Pinion

- Check if the pinion rotates smoothly in drive direction by hand, or if it is locked when it is rotated reversely. If not, replace the pinion.

Yoke assembly

- Check a magnet inside the yoke.
  Replace the yoke assembly if it is broken.

REASSEMBLY

To install, follow the removal steps in the reverse order, noting the following points:

Grease application places

- Gears in reduction gear
- Shift lever operating portion
- Sliding portion of pinion
- Plunger sliding portion of magnetic switch

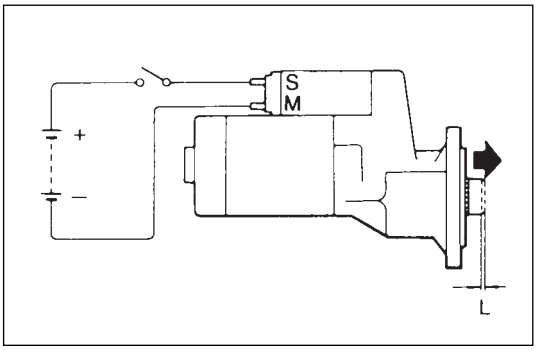

Pinion jump-out dimension

- Connect the (+) cable of battery to terminal S and the (–) cable to terminal M. Turn the switch on, and measure pinion travel dimension “L” in thrust direction from the jump-out position.

In measuring the dimension, pull the pinion out a little in the arrow direction.

mm (in)

Dimension	Standard
L	0.3 - 1.5 (0.01 - 0.06)

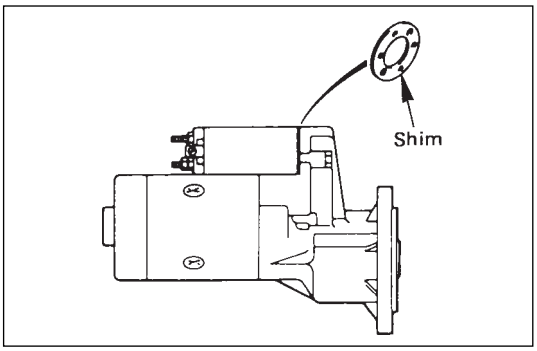

If the measured value is out of standard, adjust the of shims.

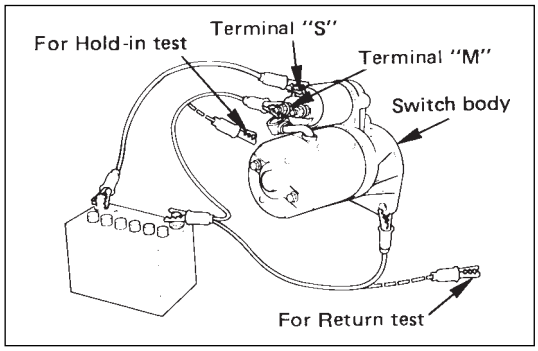

MAGNETIC SWITCH

Pull-out test

Connect the magnetic switch to the battery as shown. The negative side to the “M” terminal and the magnetic switch body (housing); the positive side to the “S” terminal. If the pinion has been ejected, the pull-in coil is satisfactory

Hold-in test

1. Next disconnect the “M” terminal.
2. The pinion should remain the ejected position

Return test

When the switch body is disconnected, the pinion should return quickly

MEMO

SECTION 6D3

CHARGING SYSTEM

CONTENTS

	PAGE
General Description	6D3-1
Diagnosis	6D3-4
Unit Repair	6D3-5

GENERAL DESCRIPTION

The charging system is the IC integral regulator charging system and its main components are connected as shown in Figure.
The regulator is a solid state type and it is mounted along with the brush holder assembly inside the generator installed on the rear end cover.

The generator does not require particular maintenance such as voltage adjustment. The rectifier connected to the stator coil has nine diodes to transform A.C. voltage into D.C. voltage. This D.C. voltage is connected to the output terminal of generator.

Generator

50A

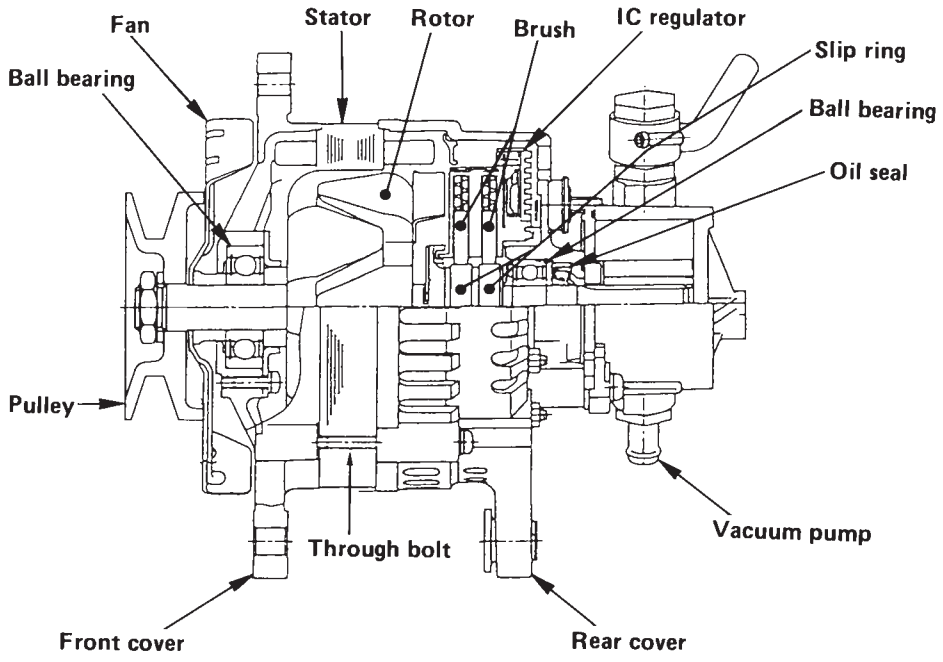

80A

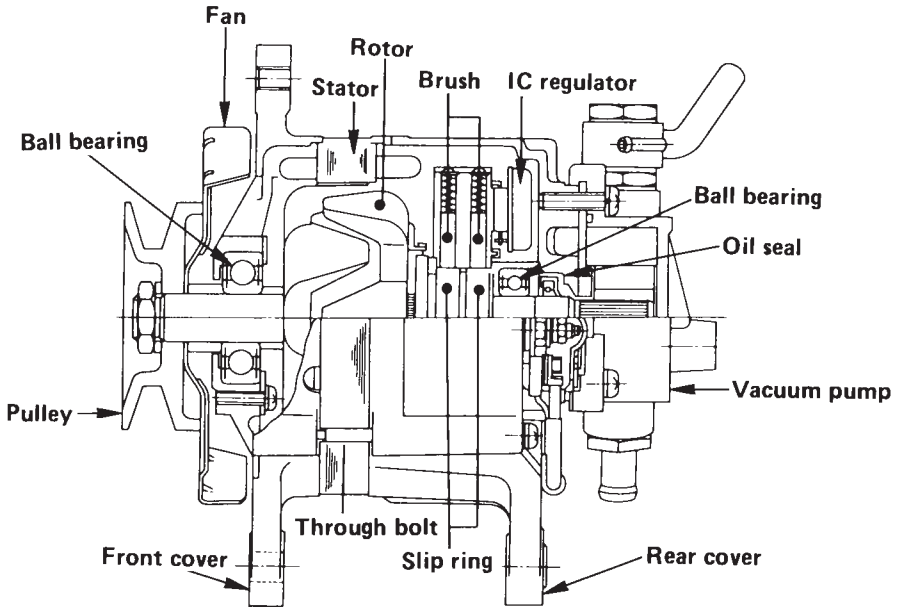

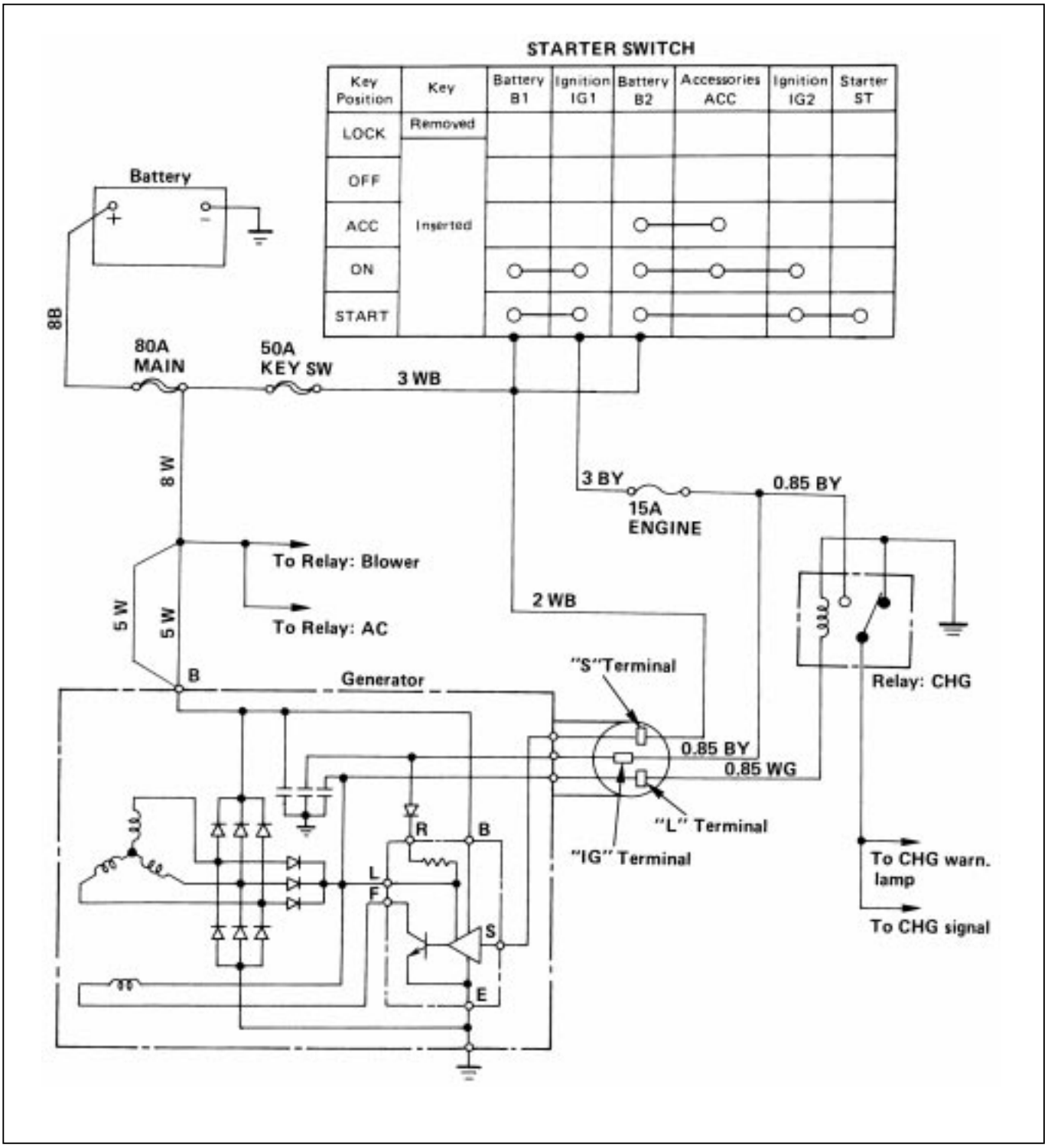
STARTER SWITCH
Key Position
Key
Battery B1
Ignition IG1
Battery B2
Accessories ACC
Ignition IG2
Starter ST
LOCK
Removed
OFF
ACC
Inserted
ON
START
Battery
8B
80A MAIN
50A KEY SW
3 WB
8 W
3 BY
15A ENGINE
0.85 BY
To Relay: Blower
To Relay: AC
5 W
5 W
2 WB
B
Generator
"S" Terminal
Relay: CHG
0.85 BY
0.85 WG
"L" Terminal
"IG" Terminal
R
B
L
F
S
E
To CHG warn. lamp
To CHG signal

DIAGNOSIS

GENERAL ON-VEHICLE INSPECTION

The operating condition of charging system is indicated by the charge warning lamp. The warning lamp comes on when the starter switch is turned to “ON” position. The charging system operates normally if the lamp goes off when the engine starts. If the warning lamp shows abnormality or if undercharged or overcharged battery condition is suspected, perform diagnosis by checking the charging system as follows:

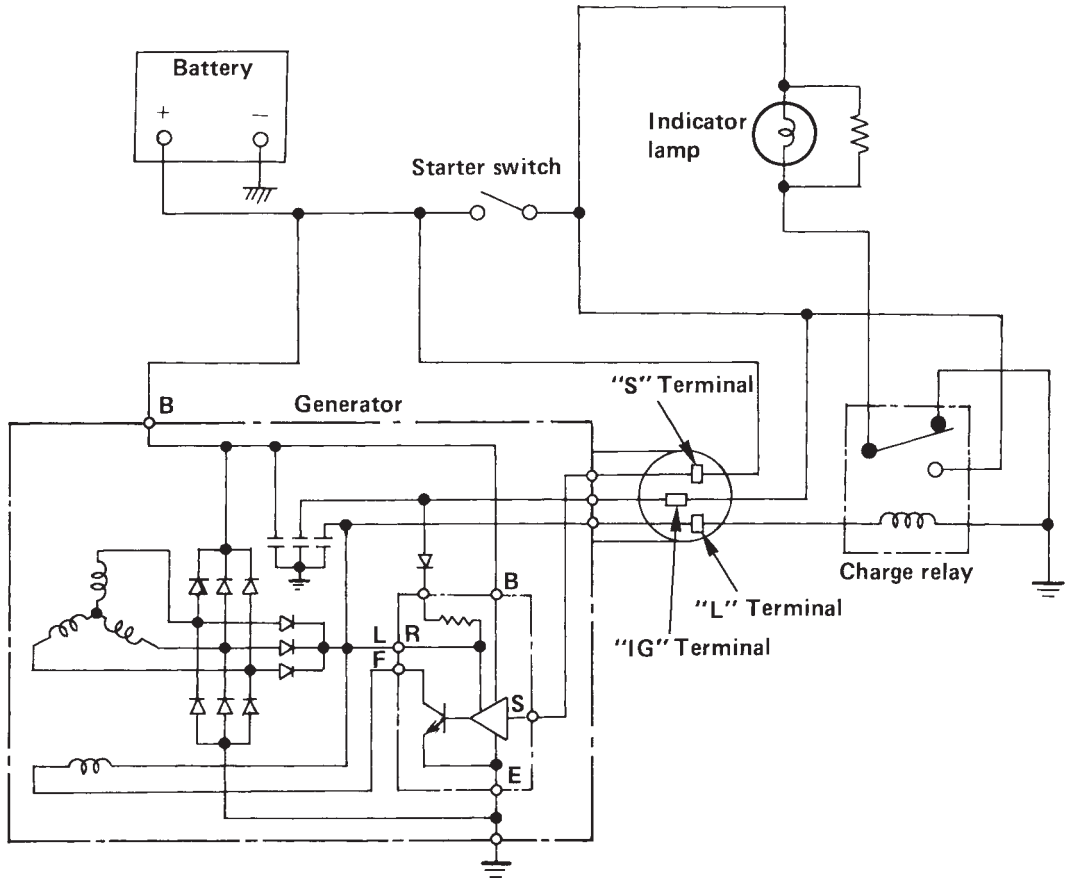

1. Check visually the belt and wiring connector.
2. With the engine in stop status, turn the starter switch to “ON” position and observe the warning lamp.
   - If lamp does not come on:
     Disconnect wiring connector from generator, an ground the terminal “L” on connector side.
   - If lamp comes on:
     Repair or replace the generator.

UNIT REPAIR

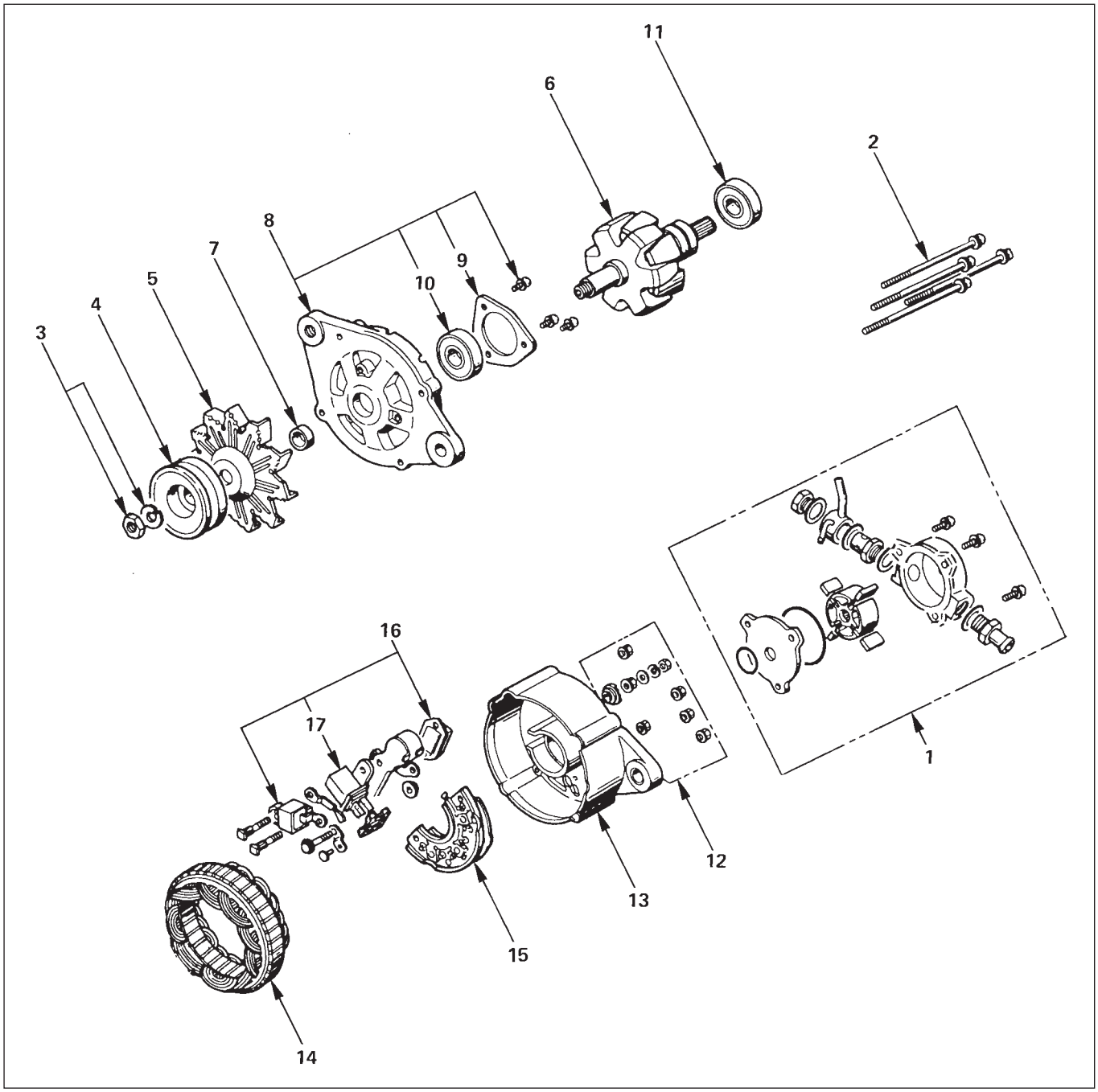

Disassembly Steps

1. Vacuum pump
2. Through bolt
3. Pulley nut
4. Pulley
5. Fan
6. Rotor
7. Spacer
8. Front cover assembly
9. Bearing retainer
10. Front bearing
11. Rear bearing
12. Terminal bolt and nut
13. Rear cover
14. Stator
15. Diode
16. IC regulator assembly
17. Brush holder

Reassembly Steps

To reassemble, follow the disassembly steps in the reverse order.

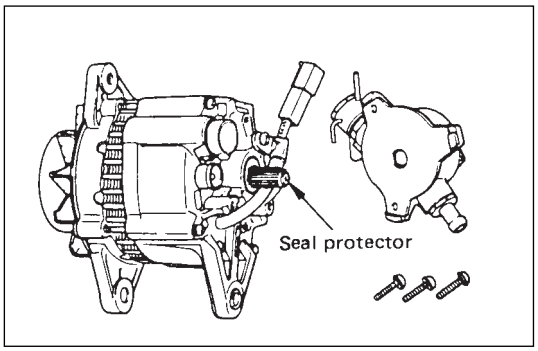

DISASSEMBLY

1. **Vaccum Pump**
   - Dram fluid from discharged port.
   - Remove the vacuum pump fixing bolts. Hold the center plate and remove the vacuum pump horizontally in direction in line with the rotor shaft.
2. **Through Bolt**
3. **Pulley Nut**
   - Cover the vice with copper plates, clamp the rotor with vice, and remove the nut.
4. **Pulley**
5. **Fan**
6. **Rotor**
7. **Spacer**
8. **Front Cover Assembly**
9. **Bearing Retainer**
10. **Front Bearing**
11. **Rear Bearing**
12. **Terminal Bolt and Nut**
13. **Rear Cover**
    - Remove the nuts fixing the B terminal and diode holder.

      Separate the stator and rear cover.

      Note the position of insulation washers to ensure reassembly into original position.
14. **Stator**
15. **Diode**
    - Separate the diodes from the stator by melting away solder on stator coil and diode.

      When melting solder, hold the lead wire with longnose pliers to prevent heat from being transferred to the diodes.
16. **IC Regulator**
    - Separate the IC regulator from the diode by melting away solder on IC regulator holder plate and removing the nut.

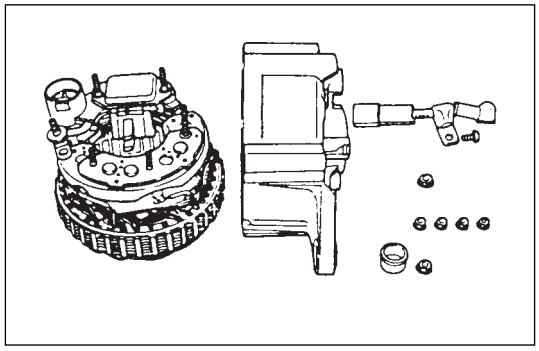

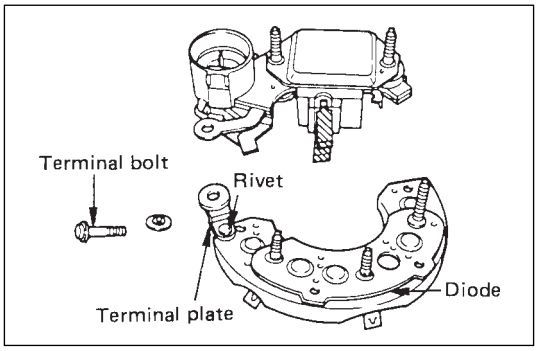

17. Brush Holder Assembly

- Remove the serrated bolts and melt away solder on IC regulator.
- Do not remove the serrated bolts unless the replacement of brush or condenser.

  To install, follow the removal steps in the reverse order.

INSPECTION AND REPAIR

Repair or replace necessary parts if extreme wear or damage is found during inspection.

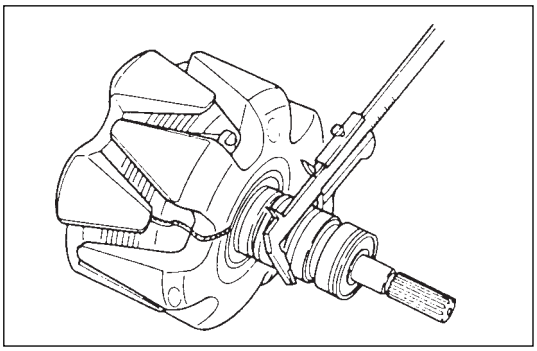

ROTOR ASSEMBLY

1. Check the rotor slip ring surfaces for contamination and roughness. If rough, polish with #500-600 sandpaper.
2. Measure the slip ring diameter, and replace if it exceeds the limit.

mm (in)

Standard	Limit
34.6(1.36)	33.6(1.32)

3. Check for continuity between slip reings, and replace if there is no continuity.
4. Check for continuity between slip ring and rotor core or slip ring and rotor shaft.
   In case of continuity, replace the rotor assembly.

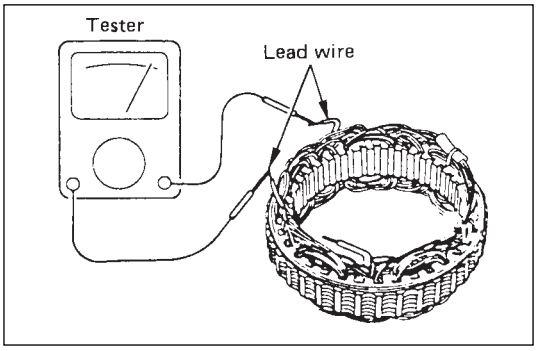

STATOR COIL

1. Check for continuity between respective phases.
   In case of no continuity, replace the stator.

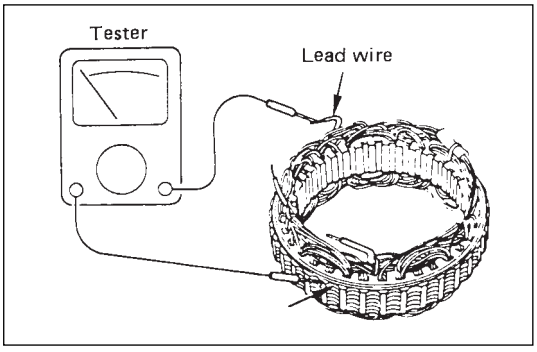

2. Check for continuity across one of the stator coils and stator core. If a continuity exists, replace the coil.

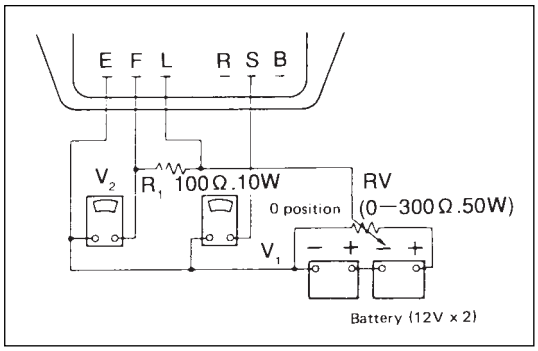

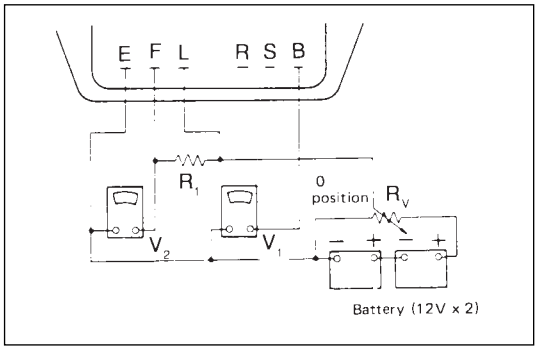

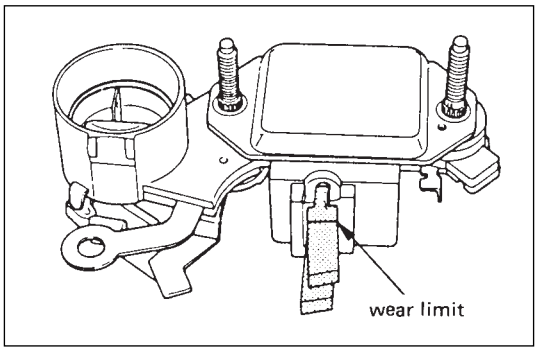

DIODE

1. Check for continuity across the terminal (example: across BAT and U). If a continuity exists, the diode is in satisfactory condition. If no continuity exists the diode is defective.
2. Make a test with the polarities reversed. If no continuity exists, the diode is in satisfactory condition. If a continuity exists at any point, the diode is defective and should be replaced.
   Auxiliary diodes are not provided with the terminal and continuity test should be made across the terminals of the conventional diodes.

Across terminals		BAT (Positive side (+) diodes)	
	Tester pin	Positive side	Negative side
U.V.W.	Positive side		No continuity
	Negative side	Continuity	

Across terminals		BAT (Positive side (+) diodes)	
	Tester pin	Positive side	Negative side
U.V.W.	Positive side		No continuity
	Negative side	Continuity	

BRUSH

Measure length of brushes.
Brush length (L)

mm(in)

Standard	Limit
20(0.7)	6 (0.24)

Brushes are provided with a line which indicates the limit of usage.

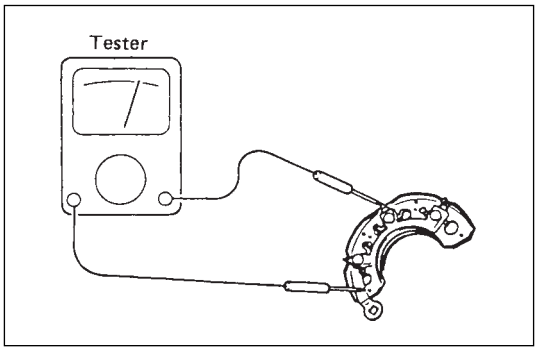

IC REGULATOR

Measureing instruments is necessary.
Take the following measurements with the instruments connected as shown in the illustration.

- (V1) Voltage at BAT1 V

Standard	10 – 13

- (V2) Voltage across F–E V

Standard	Limit
2 or less	2 or more

- Take measurement with 'S' terminal disconnected.
- (V3) Measure the voltage at BAT1 – BAT2. V

Standard	20 – 26

- Measurement the voltage across the E–F while varying resistance gradually from zero using variable resistor.
  Then check that voltage increases from 2V to 10 – 13.
  If increase in voltage is interrupted at any point, replace the regulator.
- (V4) Measure the voltage across the intermediate tap on variable resistor and 'E' terminal without actuating the variable resistor.

V

Standard voltage at 20°C (68°F)	14.0 – 14.6

If measured value deviates from the standard, replace the regualator.

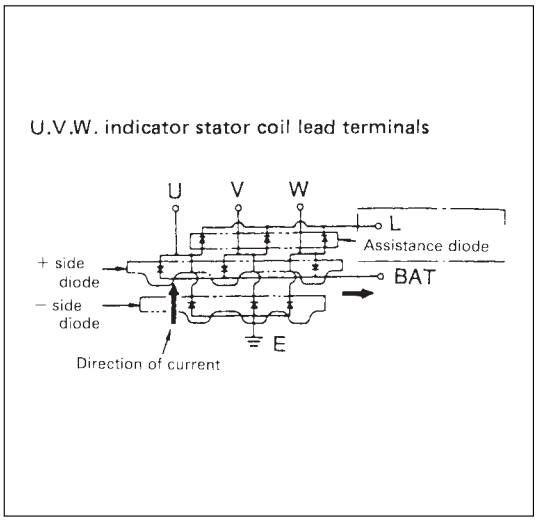

Check the following with the instrument connected as illustrated.
Measure the voltage across the teminals B and E by gradually increasing voltage with variable resistor RV.
Check to see if voltage increases from lower than 2V to range from 10 to 13 volts.
If the voltage does not vary, the regulator is defective and should be replaced.
Check the voltage across the intermediate tap of the variable resistor and terminal E without actuating the variable resistor. V

Standard voltage at 20°C (68°F)	14.5 – 16.6

If measured voltage deviates from the standard value, replace the regulator.

VACUUM PUMP

Visual check

- Inspect the following parts for wear, damage or other abnormal conditions.

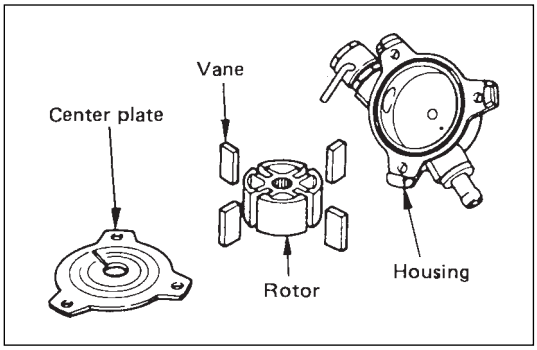

Disassembly of Vacuum pump

- For the center plate, rotor and vane in the mentioned.

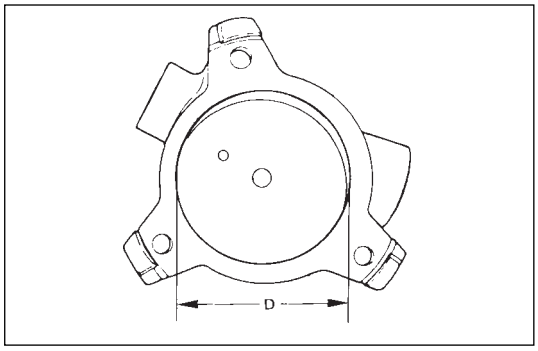

Housing

- Measure the inside diameter of housing and place if it exceed the standard.

mm (in)

Standard	60.0 – 60.1 (2.362 – 2.366)

Vane

Measure the length of vanes

mm (in)

Standard	14.2– 15.2(0.559–0.598)

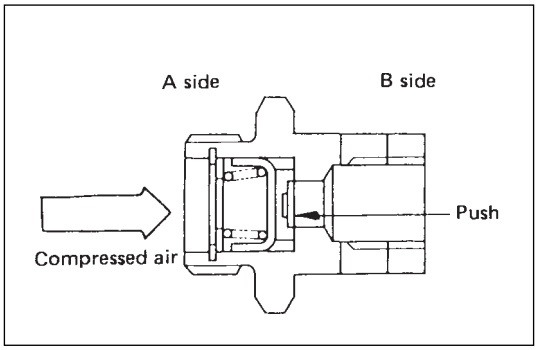

Check valve

1. Apply a light pressure onto the ”B” side of valve with a screw driver and check that valve operates smoothly.
2. Apply compressed air onto ”A” side of valve and check if there is air leak.

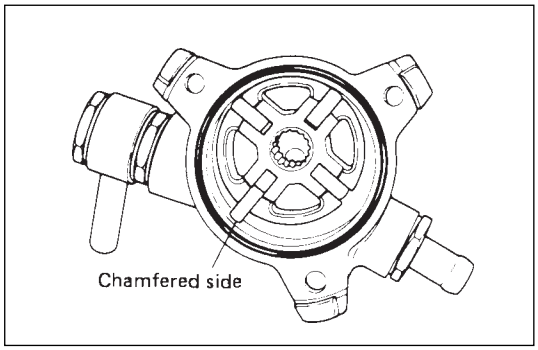

Reassembly of vacuum pump

1. Position the rotor, with the serrated boss turned up, on the center plate and housing.

   Align the holes in center plate and rotor.
2. Install vanes into slits in rotor.

   The vanes should be installed with chamfered side turned outward.
3. Install the O-ring and center plate

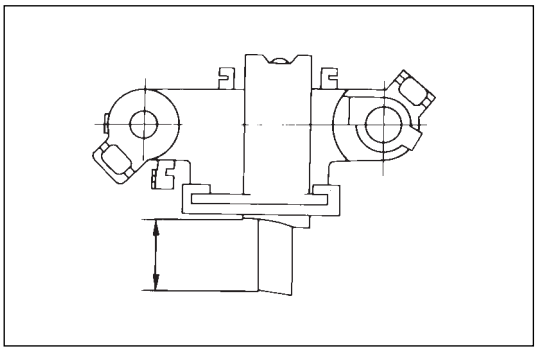

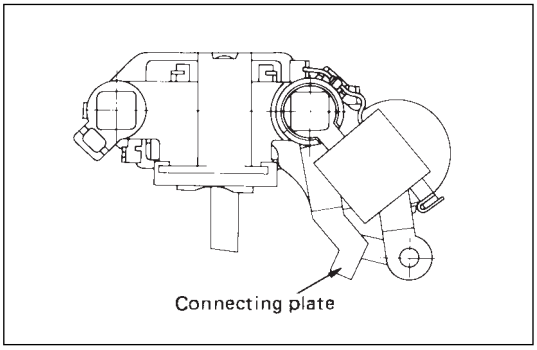

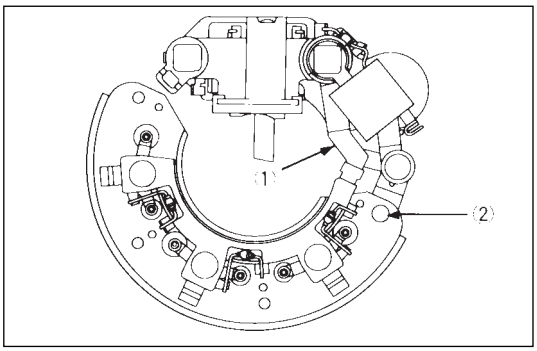

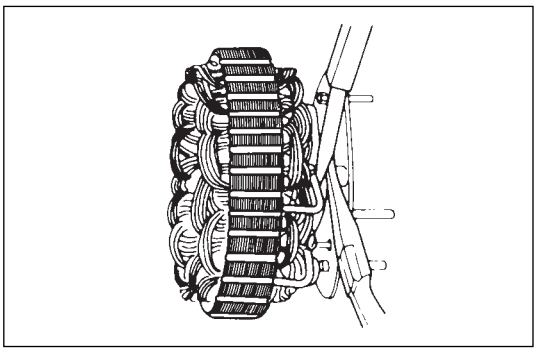

REASSEMBLY

17. Brush Holder

16. IC Regulator Assembly

- Hold the brush in the holder as shown in the illustration and solder the lead wire.
- Put the IC regulator on the brush holder and press the bolt.
  Bushing and connecting plate must be installed when pressing the bolt.

15. Diode

- Connect the terminals by fixing the rivet at ① and soldering the terminal at ② .

14. Stator

- When connecting stator coil leads and diode leads using solder, use long-nose pliers and finish the work as quickly as possible to prevent the heat from being transferred to the diodes.

13. Rear Cover

12. Terminal Bolt and Nut

11. Rear Bearing

10. Front Bearing

9. Bearing Retainer

8. Front Cover Assembly

7. Spacer

6. Rotor

5. Fan

4. Pulley

3. Pulley Nut

- Cover vice with copper plates, clamp the rotor with the vice, and tighten nut to the specified torque.

2. Through Bolt

- Place guide bar through the holes in front cover and rear cover flange for alignment, then install the through bolts.

1. Vacuum Pump

- Install and mount the housing to the generator using 3 bolts.
- Pour engine oil (5 cc or so) in through the filler port, then check that generator pulley can be turned smoothly with hand.

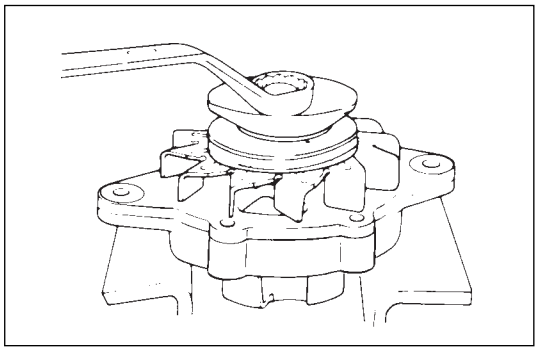

	N·m (Kg·m/lb·ft)
☡	52 (5.3 / 38)

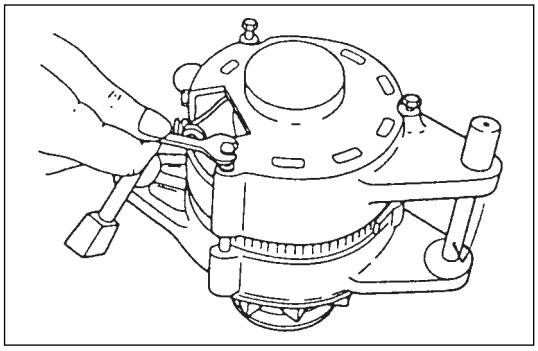

	N·m (Kg·m/lb·in)
☡	7 (0.7 / 61)

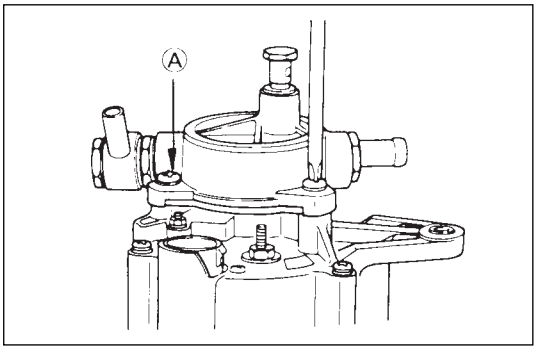

	N·m (Kg·m/lb·in)
☡	7 (0.7 / 61)

SECTION 6D6

QOSIII PREHEATING SYSTEM

CONTENTS

PAGE
General Description 6D6- 1
System Diagram 6D6- 2

GENERAL DESCRIPTION

QOS III preheating system features a quick-on glow plug with thermometer control of the glowing time and the afterglow time function.

The system consists of a controller, indicator lamp, thermosensor, vehicle speedsensor, dropping resistor, relay (2 pcs), and temperature self-control type glow plug (4 pcs).

With the employment of the thermosensor, the glow time changes according to the engine coolant temperature, thus allowing optimum starting conditions to be obtained.

The afterglow time function is controlled by thermosensor, vehicle speed sensor, and the engine runstall sensor (charge relay).

SYSTEM DIAGRAM

WIRING DIAGRAM

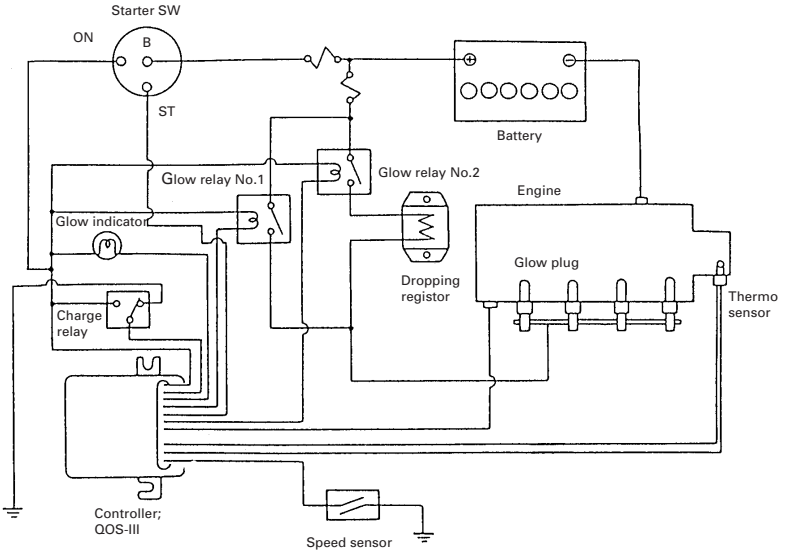

QOS III Timing Chart

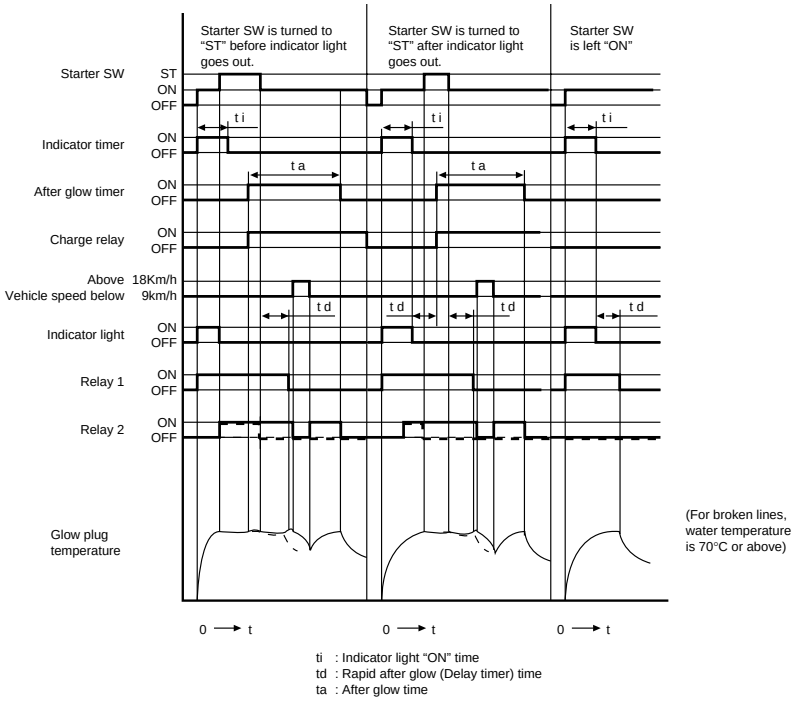

ti : Indicator light "ON" time
td : Rapid after glow (Delay timer) time
ta : After glow time

QOS III FLOW CHART

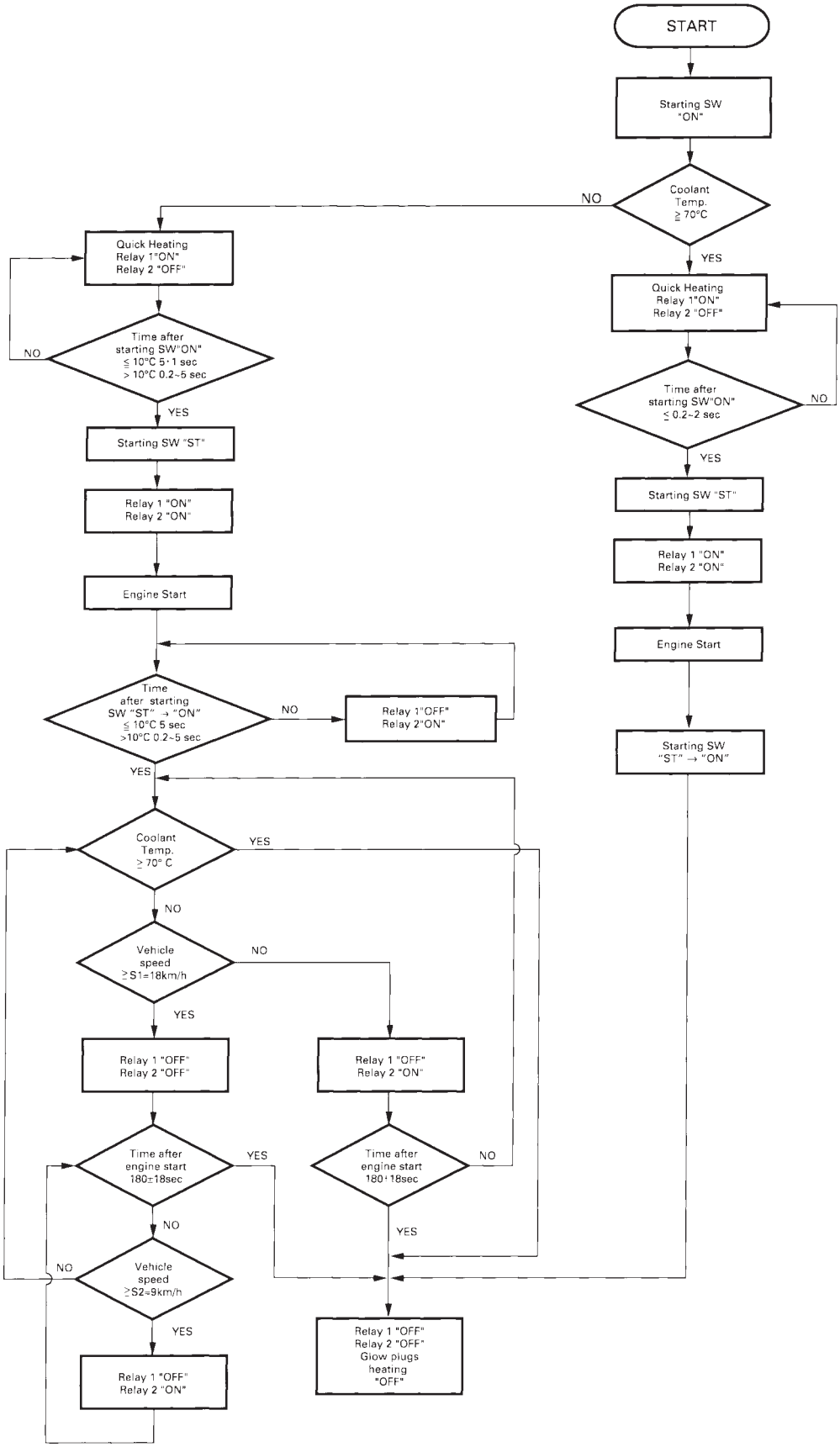

QOS III BLOCK CHART

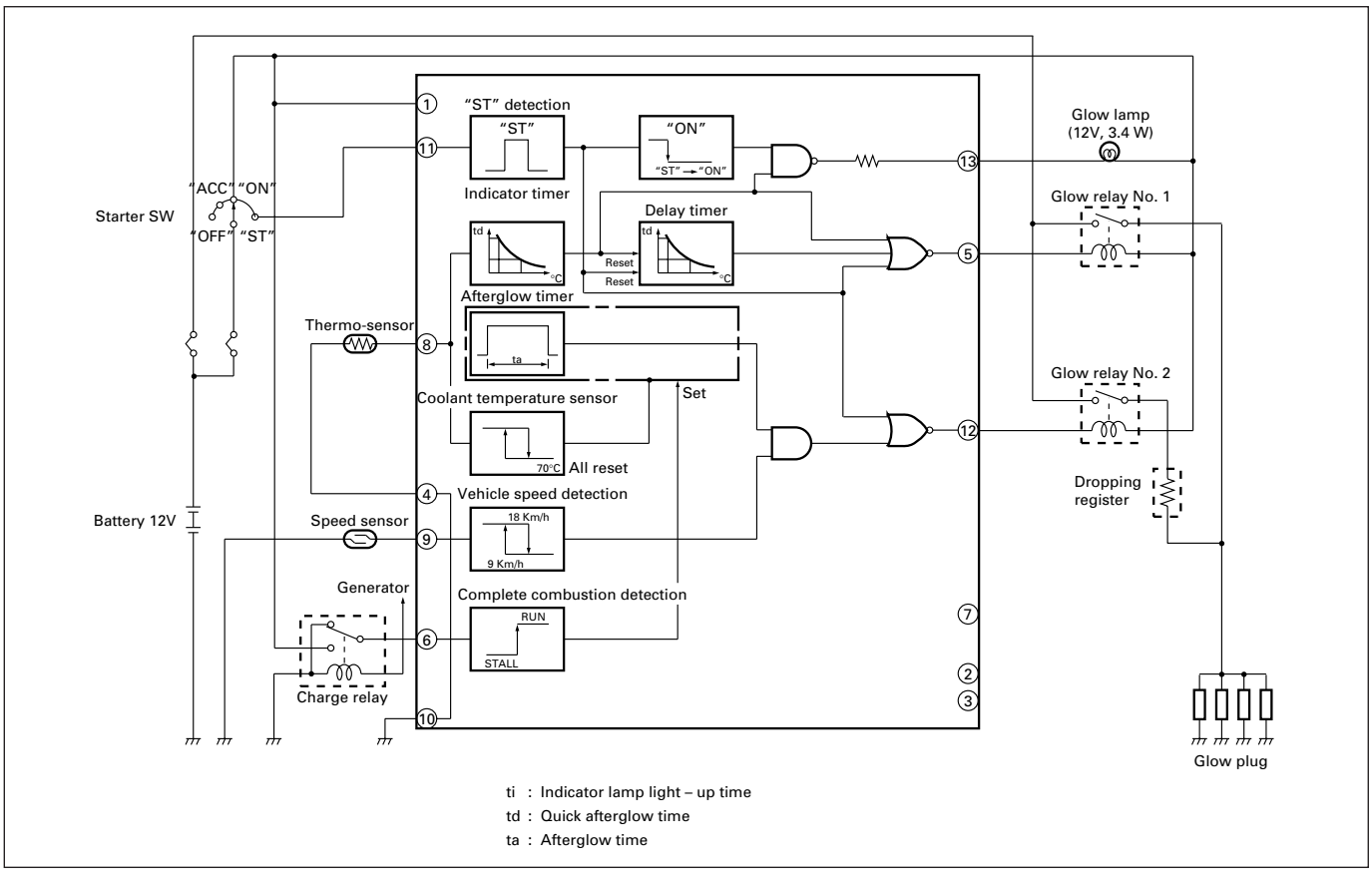

ti : Indicator lamp light – up time
td : Quick afterglow time
ta : Afterglow time

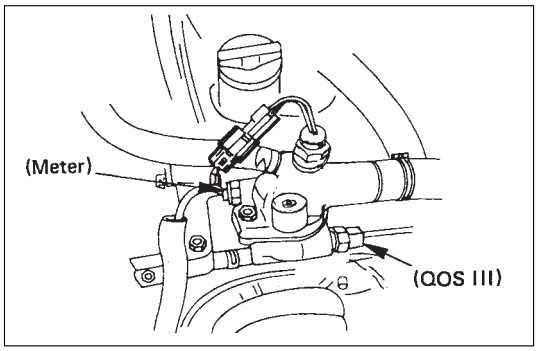

Inspection on QOSIII System Operation

I Inspection on Quick Heating Operation

1. Disconnect thermo-sensor connection on the thermostat housing.

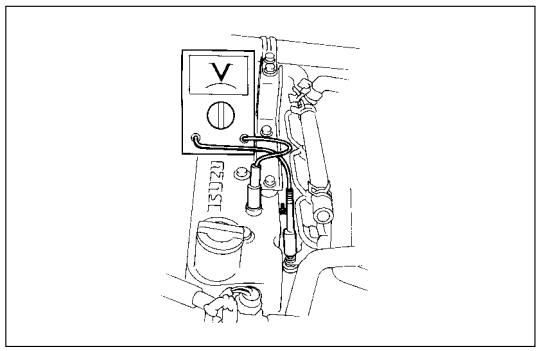

2. Connect the circuit tester between glow plug and engine earth.
3. Inspect the following items with starter switch set to ON position (but do not start the engine).
   1) The glow indicator shall light for about 5 sec.
   2) The circuit tester shall indicate power supply voltage for 9 ~ 13 sec.
      If above specifications are not satisfied, inspect wire harness, glow relay and thermo-sensor. If satisfied, inspect glow plug.

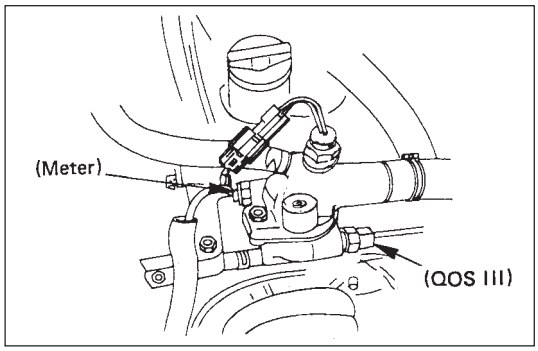

II Inspection on Afterglow Operation

1. Disconnect thermo-sensor connection on the thermostat housing.

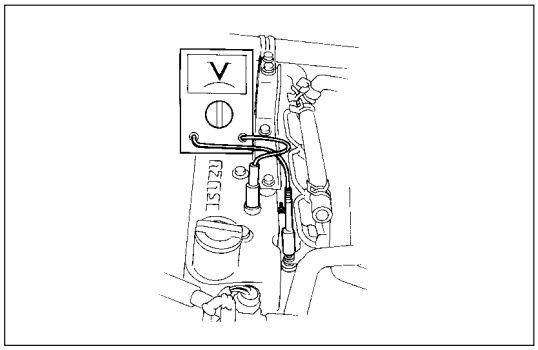

2. Connect the circuit tester between glow plug and engine earth.
3. Inspect the following item with start the engine.
   1) The circuit tester shall indicate about 7 volts after 360 seconds of engine start.
   - If above specifications are not satisfied, inspect battery voltage, engine earth, wiring harness, glow plug, dropping resistor, relay No. 2 read switch and charge relay.

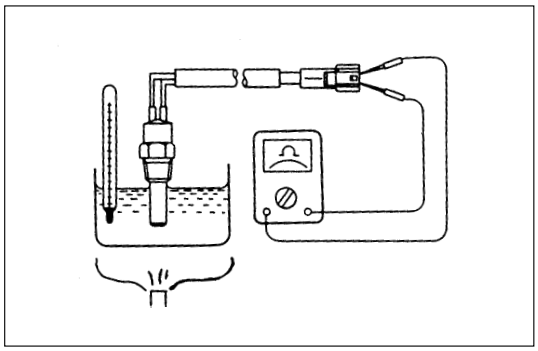

THERMO SENSOR

Measure the resistance depending on the water temperature as shown in the left figure. (Measuring range: -10°C ~ 50°C)

Temperature	Current (mA)	Resistance (KΩ)
20 ± 1	1.0	2.0 ~ 3.0
50 ± 1	1.0	0.6 ~ 1.0

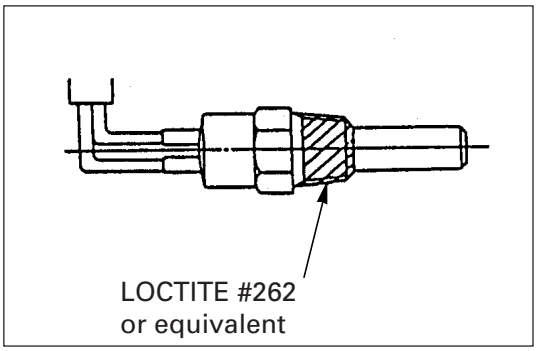

When installing the thermo sensor, apply sealant (Loctite #262 or equivalent) to arrowed portion in the left figure to prevent water leakage.

Torque	N·m (Kg·m/lb·in)
8 (0.8/69)	

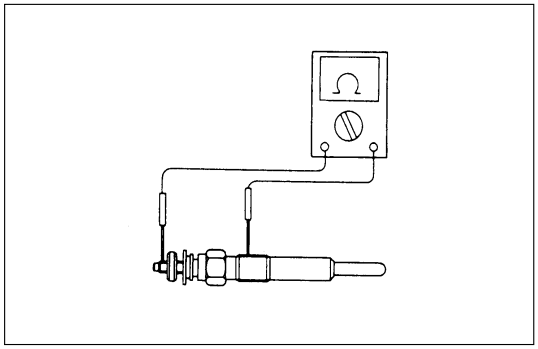

GLOW PLUG

Inspect the resistance

Resistance at normal temperature	Ω
0.8 ~ 1.0	

Torque	N·m (Kg·m/lb·ft)
23 (2.3/17)	

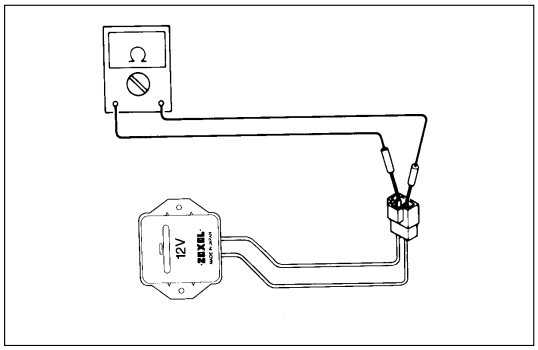

DROPPING RESISTOR

Inspect the resistance

Resistance of normal ambient temperature	mΩ
224 ~ 236	

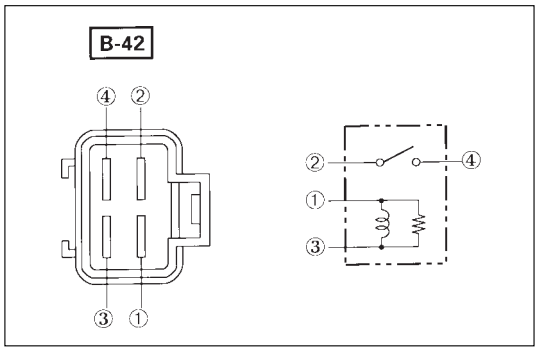

GLOW PLUG RELAY

Inspect the continuity

② – ④	No Continuity
① – ③	Continuity

If apply the battery voltage to terminal between ① - ③

② – ④	Continuity

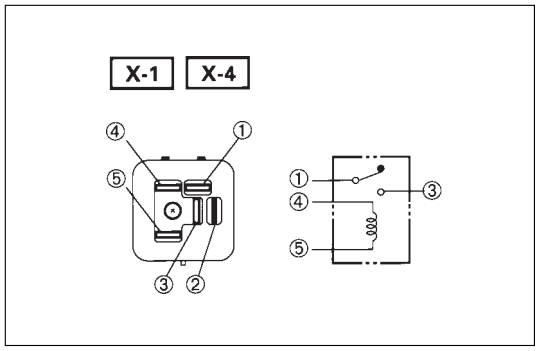

CHARGE RELAY

Inspect the continuity

① – ②	Continuity
① – ③	No Continuity
④ – ⑤	Continuity

If apply the battery voltage to terminal between ④ - ⑤

① – ②	No Continuity
① – ③	Continuity

SECTION 6F

ENGINE EXHAUST

CAUTION:

Exhaust system components must have enough clearance from the underbody to prevent overheating of the floor pan and possible damage to the passenger compartment, insulation and trim materials.

CONTENTS

	PAGE
General Description	**6F-2**
Hangers	**6F-2**
Gasket	**6F-2**
On-Vehicle Service	**6F-3**
Front Exhaust Pipe	**6F-3**
Center Exhaust Pipe	**6F-5**
Exhaust Silencer	**6F-7**
Rear Exhaust Pipe	**6F-9**

GENERAL DESCRIPTION

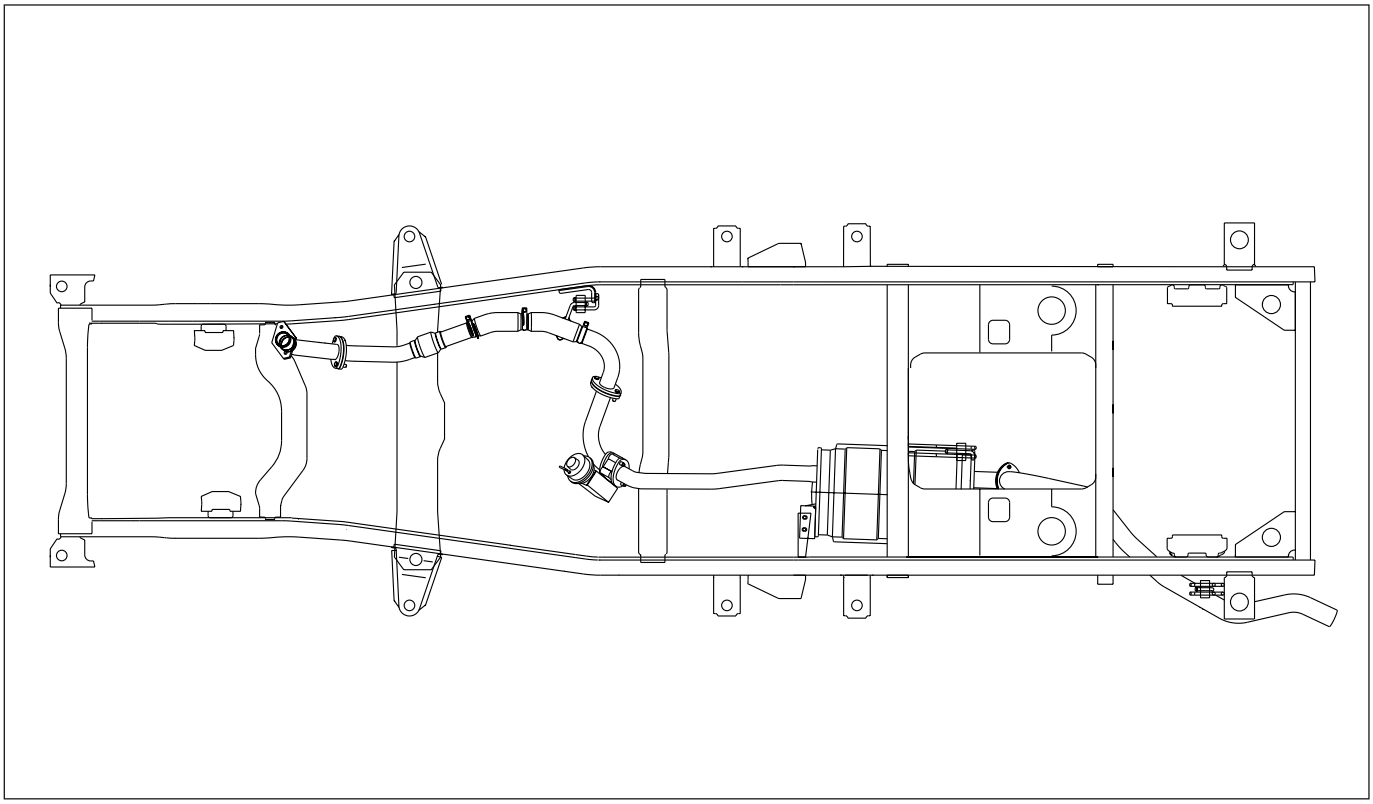

150RV013

When inspecting or replacing exhaust system components, make sure there is adequate clearance from all points on the underbody to prevent overheating of the floor pan and possible damage to the passenger compartment insulation and trim materials.

Check complete exhaust system and nearby body areas and rear compartment lid for broken, damaged, missing or mispositioned parts, open seams, holes, loose connections or other deterioration which could permit exhaust fumes to seep into the rear compartment or passenger compartment. Dust or water in the rear compartment may be an indication of a problem in one of these areas. Any faulty areas should be corrected immediately.

HANGERS

Various types of hangers are used to support exhaust system(s). These include conventional rubber straps, rubber rings, and rubber blocks.

The installation of exhaust system supports is very important, as improperly installed supports can cause annoying vibrations which can be difficult to diagnose.

GASKET

The gasket must be replaced whenever a new exhaust pipe, muffler or exhaust throttle is installed.

ON-VEHICLE SERVICE

Rattles and noise vibrations in the exhaust system are usually caused by misalignment of parts. When aligning the system, leave all bolts or nuts loose until all parts are properly aligned; then tighten, working from front to rear.

1. Check connections for looseness or damage, especially for exhaust gas leakage.
2. Check clamps and rubbers for weakness, cracks or damage.
3. If any part of the converter heat shield is damaged or dented to the extent that it contacts the catalyst, repair or replace.
4. Check for dents or damage and for any holes or cracks caused by corrosion.

FRONT EXHAUST PIPE

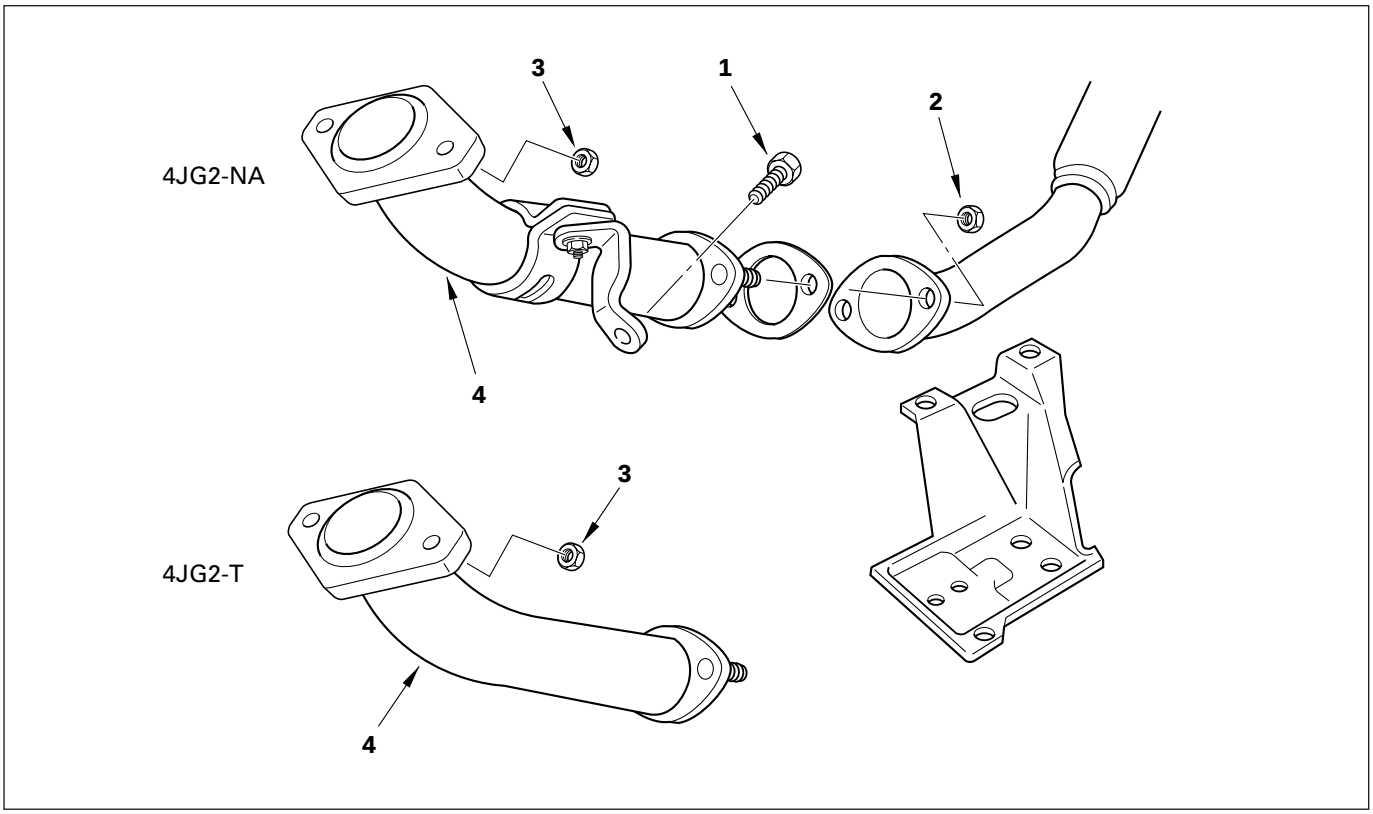

150RV009

REMOVAL

Preparation:

- Disconnect battery negative cable.
- Raise the vehicle and support with suitable safety stands.

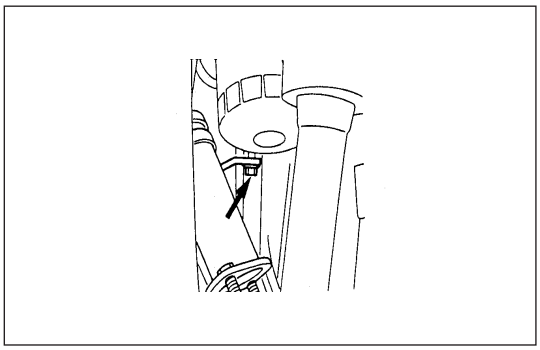

1. Front exhaust pipe mounting bracket fixing bolt

2. Front exhaust pipe fixing nuts

- Remove two bolts fixed from front pipe and center pipe A.

3. Exhaust manifold fixing nuts

- Remove two fixing nuts from exhaust manifold and front pipe.

4. Front exhaust pipe

INSTALLATION

4. Front exhaust pipe

3. Exhaust manifold fixing nuts

- Tighten the fixing nuts to the specified torque.

N·m (Kg·m/lb·ft)
67 (6.8/49)

2. Front exhaust pipe fixing nuts

- Tighten the fixing nuts to the specified torque

N·m (Kg·m/lb·ft)
43 (4.4/32)

1. Front exhaust pipe mounting bracket fixing bolt

- Tighten the fixing nuts to the specified torque

N·m (Kg·m/lb·ft)
40 (4.1/30)

CENTER EXHAUST PIPE

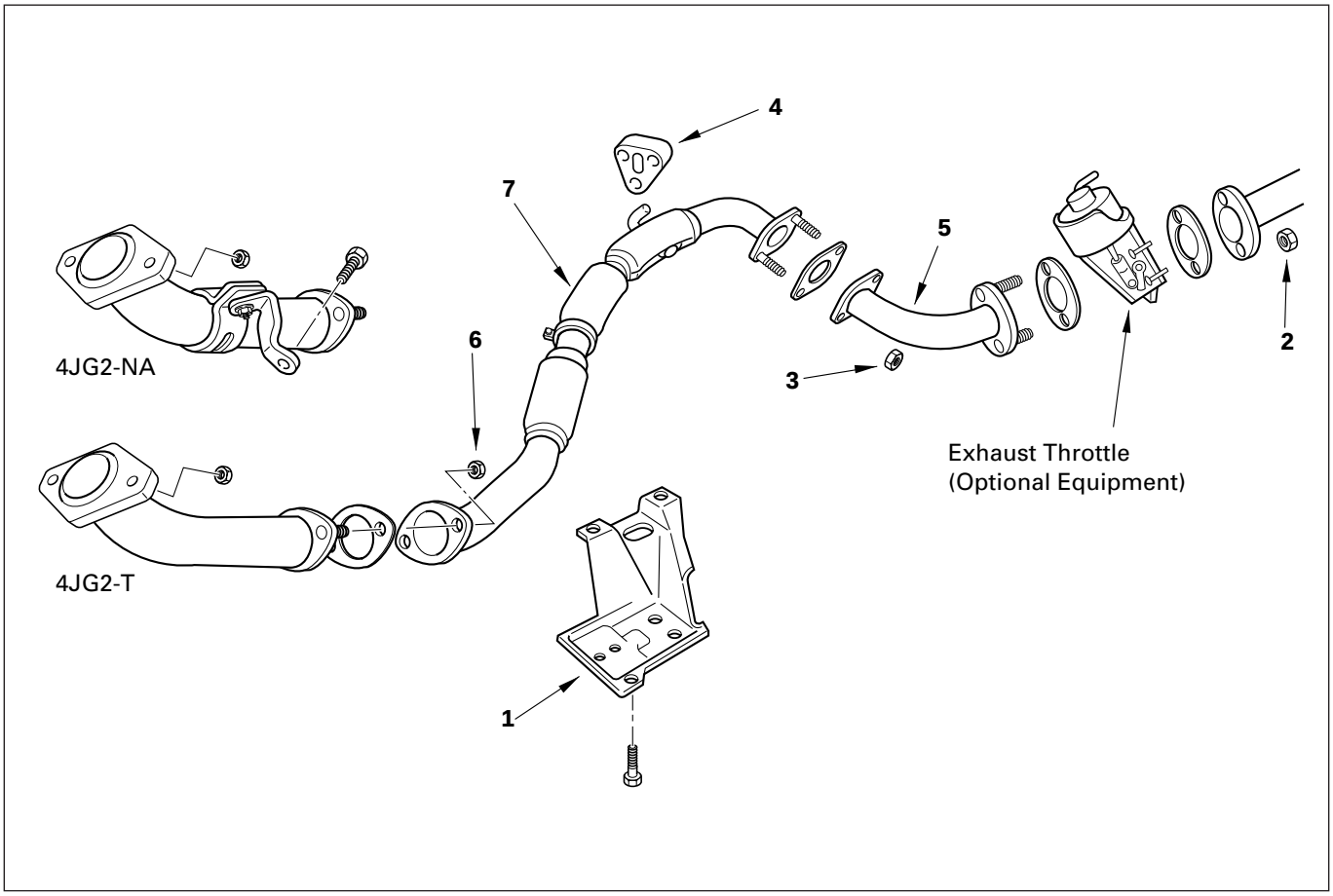

150RV011

REMOVAL

Preparation:

- Disconnect battery negative cable.
- Raise the vehicle and support with suitable safety stands.

1. **Exhaust pipe protector**
2. **Exhaust silencer fixing nuts**
3. **Center exhaust pipe fixing nuts**
   - Remove two fixing nuts from center pipe A and B.
4. **Mounting rubber**
   - Pull out a mounting rod clamped to the center pipe from mounting rubber.
5. **Center exhaust pipe B**
6. **Front exhaust pipe fixing nuts**
   - Remove two fixing nuts from front pipe and center pipe A.
7. **Center exhaust pipe A**

INSTALLATION

7. **Center exhaust pipe A**
6. **Front exhaust pipe fixing nuts**
   - Tighten the fixing nuts to the specified torque

	N·m (Kg·m/lb·ft)
	43 (4.4/32)

5. **Center exhaust pipe B**
4. **Mounting rubber**
3. **Center exhaust pipe fixing nuts**
   - Tighten the fixing nuts to the specified torque.

	N·m (Kg·m/lb·ft)
	43 (4.4/32)

2. **Exhaust silencer fixing nuts**
   - Tighten the fixing bolts to the specified torque.

	N·m (Kg·m/lb·ft)
	40 (4.1/30)

1. **Exhaust pipe protector**
   - Tighten the fixing bolts to the specified torque.

	N·m (Kg·m/lb·ft)
	37 (3.8/27)

EXHAUST SILENCER

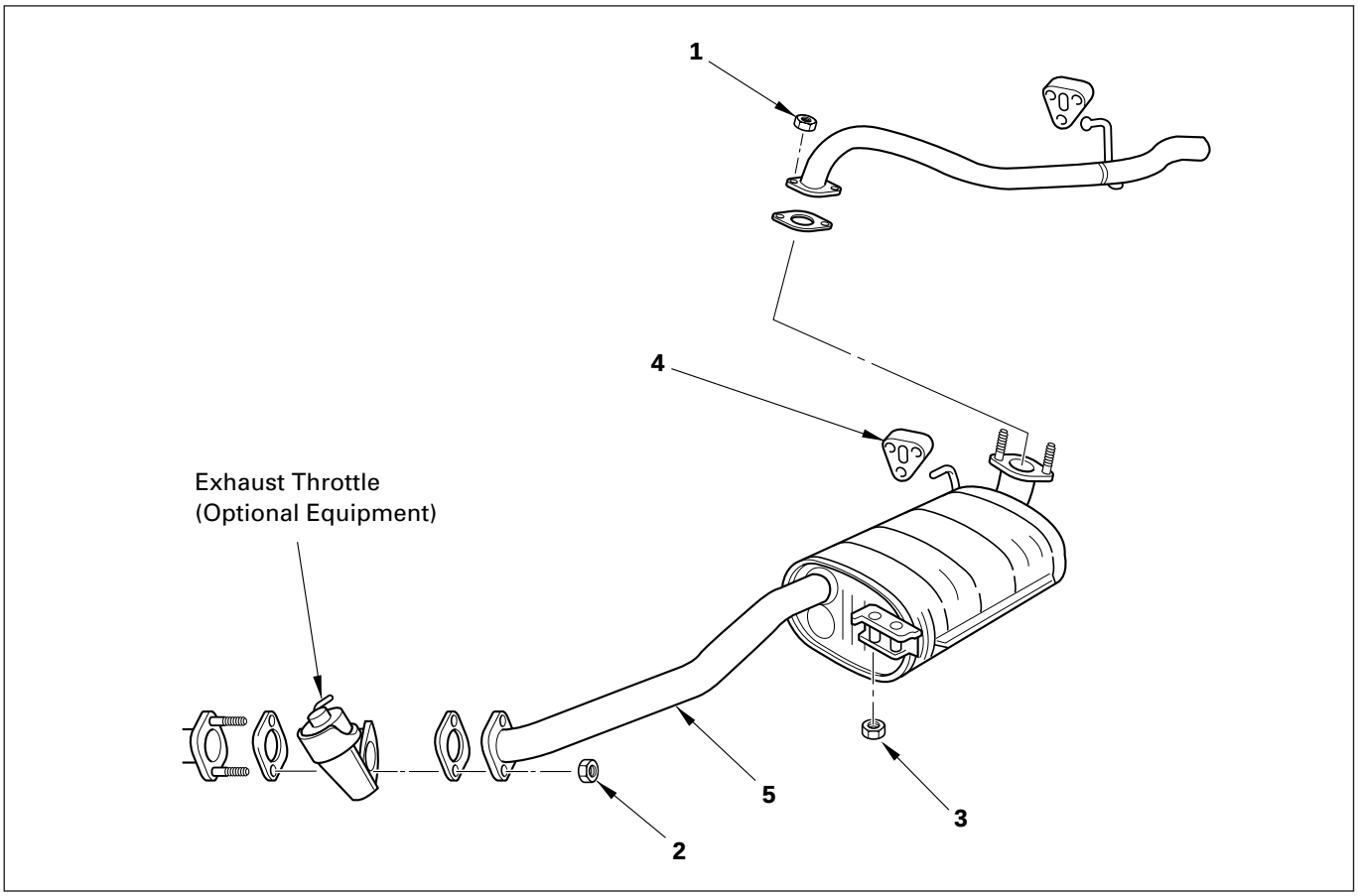

150RV010

REMOVAL

Preparation:

- Disconnect battery negative cable.
- Raise the vehicle and support with suitable safety stands.

1. **Rear exhaust pipe fixing nuts**
2. **Exhaust silencer fixing nuts**
3. **Exhaust silencer fixing nuts**
4. **Mounting rubber**
5. **Exhaust silencer**

INSTALLATION

5. **Exhaust silencer**
4. **Mounting rubber**
3. **Exhaust silencer fixing nuts**
   - Tighten the fixing nuts to the specified torque.

N·m (Kg·m/lb·ft)
16 (1.6/12)

2. **Exhaust silencer fixing nuts**
   - Tighten the fixing nuts to the specified torque.

N·m (Kg·m/lb·ft)
43 (4.4/32)

1. **Rear exhaust pipe fixing nuts**
   - Tighten the fixing nuts to the specified torque.

N·m (Kg·m/lb·ft)
43 (4.4/32)

REAR EXHAUST PIPE

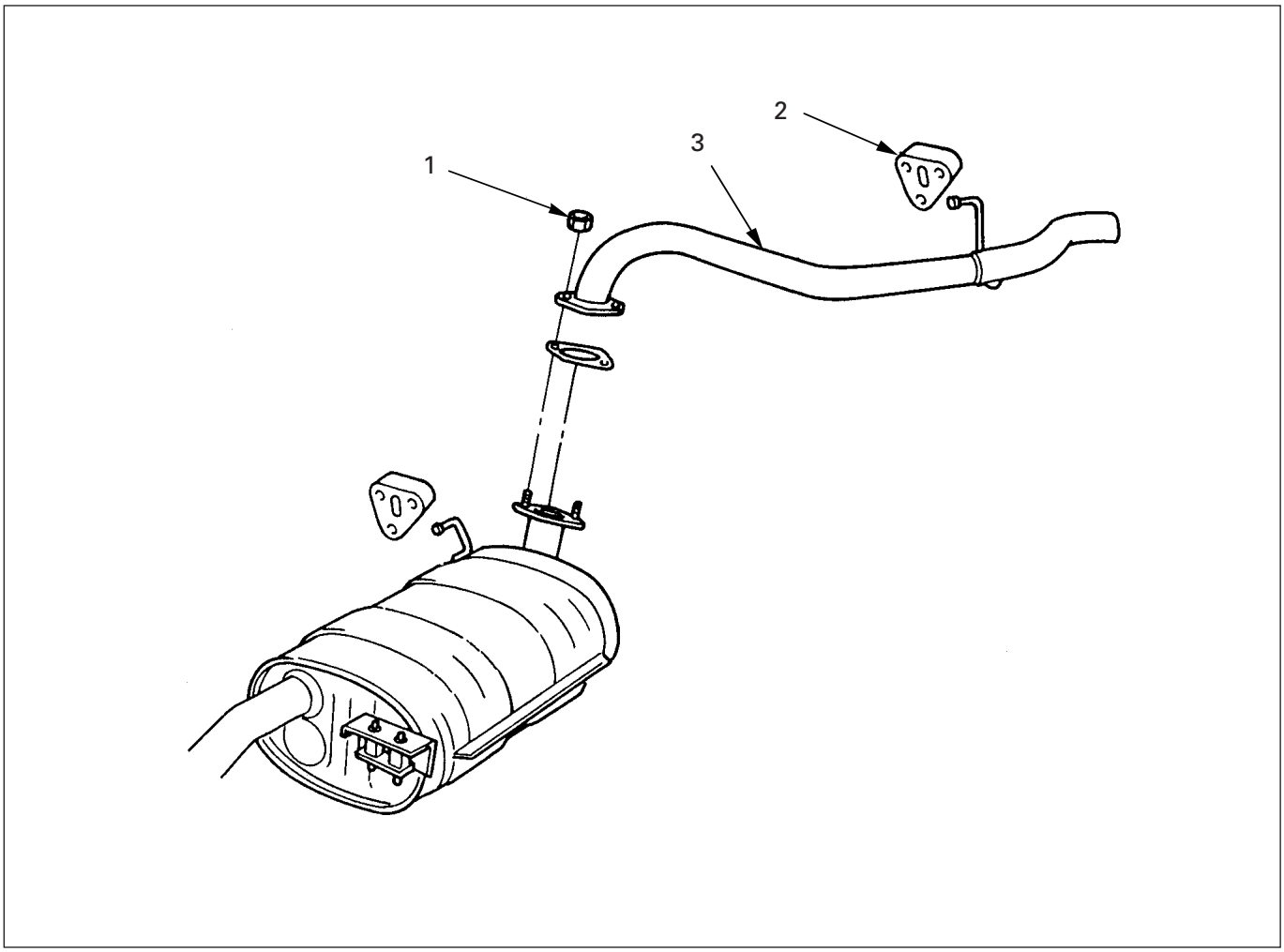

REMOVAL

Preparation:

- Disconnect battery negative cable.
- Raise the vehicle and support with suitable safety stands.

1. Rear exhaust pipe fixing nuts

- Remove two nuts from muffler and rear exhaust pipe.

2. Mounting rubber

- Disconnect front side mounting rubber of rear pipe.

3. Rear exhaust pipe

INSTALLATION

3. Rear Exhaust pipe

2. Mounting rubber

1. Rear exhaust pipe fixing nuts

- Tighten the fixing nuts to the specified torque.

	N·m (Kg·m/lb·ft)
	43 (4.4/32)

ENGINE

ENGINE MECHANICAL

CONTENTS

General Description 6A–2
Service Information 6A–3
Service Standard 6A–6
Servicing 6A–9
Tightening Torque 6A–14
Special Tools 6A–25
Engine Assembly 6A–28
Engine Mount (RH) 6A–30
Engine Mount (LH). 6A–31
Intercooler 6A–32
Cylinder Head Cover 6A–33
Intake Manifold 6A–35
Exhaust Manifold 6A–36
Turbocharger 6A–38
Cylinder Head 6A–41
Cylinder Head Gasket 6A–43
Camshaft. 6A–47
Timing Gear. 6A–52
Valve Stem Seal, Valve Spring and Adjuster. . 6A–60
Valve Clearance Adjustment. 6A–67
Oil Rail and Injector 6A–69
Crank Case 6A–72
Crankshaft. 6A–74
Piston and Connecting Rod 6A–84
Cylinder Block 6A–92
Oil Pump Assembly 6A–98
Oil Filter Cartridge 6A–99
Oil Cooler 6A–99

GENERAL DESCRIPTION

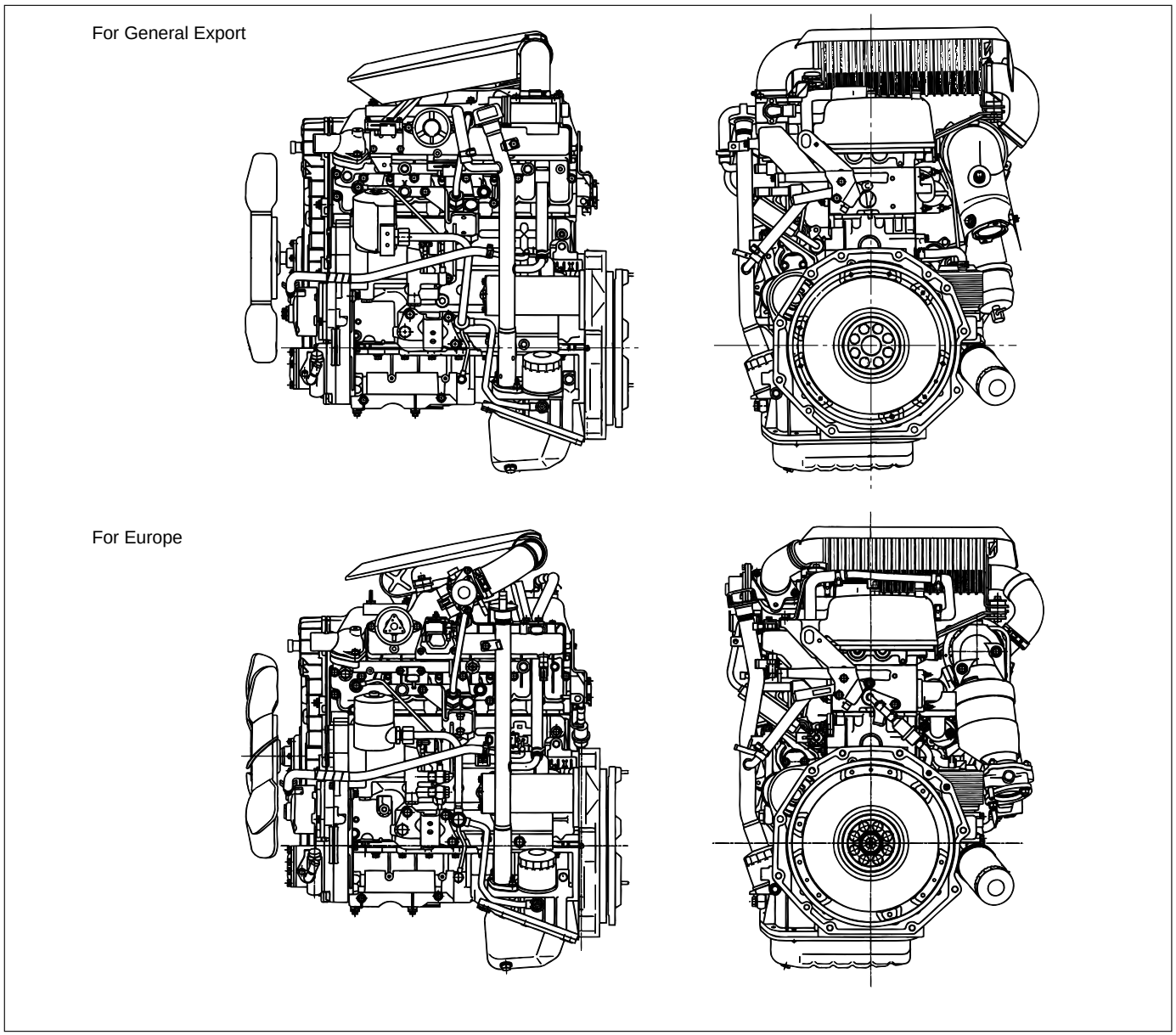

F06R200004

Cylinder Head Gasket

The cylinder head gasket is laminated steel sheets.
Three grades of the gasket according to the measured piston head projection from the cylinder block are provided to give the engine a minimum compression ratio fluctuation.

Tightening Method for Special Bolt

The cylinder head fixing bolts, flywheel bolts and connecting rod cap fixing bolts are tightened by the angular Tightening Method.

Piston

Auto-thermatic pistons having steel struts with a 0.4 mm offset from the piston pin center line, are applied to reduce thermal expansion and resulting engine noise when the engine is cold.

Bearings

The crankshaft bearings and connecting rod bearings are of aluminum having a high bearing surface.
These bearings are especially sensitive to foreign material such as metal scraps. So, it is very important that the oil ports and other related surfaces are kept clean and free of foreign material.
Crankshaft bearings are selected for optimum bearing and journal clearance which reduces vebration and noise.

Crankshaft

As tufftriding (Nitrizing treatment) is applied to increase crankshaft strength, crankpins and journals should not be reground.

Piston Cooling

An oiling jet device for piston cooling is provided in the lubricating oil circuit from the cylinder block oil gallery via a check valve.
Take care not to damage any oiling jet when removing and installing piston and connecting assembly.

Fuel Injection System

The injection system is oil rail type.

Quick On Start 4 System

QOS4 preheating system which features a quick-on glow plug with thermometer control of the glowing time and the afterglow time function, is applied.

SERVICE INFORMATION

MAIN DATA AND SPECIFICATION

Engine type			Diesel, four cycle water cooled inline
Camshaft type			DOHC
Number of cylinders			4
Bore x stroke		(mm)	95.4 x 104.9
Total piston displacement		(cc)	2999
Compression ratio		(to 1)	19.0
			For Europe : 18.5
Engine weight (dry)		N (kg/lb)	2492 (254/560) (A/T)
			For Europe : 2422 (247/545) (A/T)
			2649 (270/593) (M/T)
			For Europe : 2697 (275/606) (M/T)
Engine idling speed (Reference)		RPM	720
Compression pressure		kpa (kg/cm^2/psi)-rpm	3040 (31/441)-200
Firing order			1–3–4–2
VALVE SYSTEM			
Intake valves	open at:		B.T.D.C. 3°
	close at:		A.B.D.C. 57.6°
Exhaust valves	open at:		B.B.D.C. 56.5°
	close at:		A.T.D.C. 5°
Valve clearance (at cold)		mm (in)	
	intake:		0.15 (0.006)
	exhaust:		0.25 (0.01)
Oil filter			Full flow and bypass combined type
Oil capacity (Original factory fill or rebuilt engine)			9.0 liters (7.9 US quarts)
Oil capacity (Service change)			
with filter change			6.0 liters (6.3 US quarts)
without filter change			5.0 liters (5.3 US quarts)
Oil cooler			Water cooled type
Inter cooler			Air cooled type
Turbocharger method			
Control method			Wastegate control
Lubrication			Pressurized control
Cooling method			Coolant cooled

Engine Cooling

Cooling system		Coolant forced circulation
Radiator		(2 tube in row) Tube type corrugated
Heat radiation capacity	J/h (kcal/h)	318 x 10^6 (76000)
Heat radiation area	m^2 (ft^2)	15.63 (1.454)
Front area	m^2 (ft^2)	0.309 (2.029)
Dry weight	N (kg/lb)	83 (8.5/18.7)
Radiator cap		
Valve opening pressure	kPa (kg/cm^2 / psi)	93.3 – 122.7 (0.95 – 1.25/13.5 – 17.8)
Coolant capacity	lit (Imp.qt./US qt.)	M/T 2.5 (2.2/2.6) A/T 2.4 (2.1/2.5)
Coolant pump		Centrifugal impeller type
Pulley ratio	(to 1)	1.2
Coolant total capacity	lit (Imp.qt./US qt.)	9.3 (8.2/9.8)

Starting System

Model		HITACHI S14-0
Rating		
Voltage	V	12
Output	kW	2.8
Time	sec	30
Number of teeth of pinion		9
Rotating direction (as viewed from pinion)		Clockwise
Weight (approx.)	N(kg/lb)	49 (5.0/11)
No-load characteristics		
Voltage/current	V/A	11/160 or less
Speed	rpm	4000 or more
Load characteristics		
Voltage/current	V/A	8.76/300
Torque	N·m(kg·m/lb·ft)	7.4 (0.75/5.4) or more
Speed	rpm	1700 or more
Locking characteristics		
Voltage/current	V/A	2.5/1100 or less
Torque	N·m(kg·m/lb·ft)	18.6 (1.9/14) or more

Charging System

Model (HITACHI)		LR190-750B	LR1100 – 731
Rated voltage	V	12	
Rated output	A	90	100
Rotation direction (As viewed from pulled)		Clockwise	
Pulley effective diameter	mm (in)	69 (2.72)	
Weight	N (kg/lb)	52 (5.3/11.7)	

SERVICE STANDARD

Engine

mm (in)

Parts	Items		Service standard	Service limit	Remarks
Cylinder Head	Cylinder head lower surface for flatness		0.075 (0.0030) or less	0.50 (0.0197)	
	Cylinder head height		95.0 (3.740)	—	Cannot be reground
Valve Spring	Free height		45.7 (1.8)	44.8 (1.765)	
	Squareness		—	1.6 (0.063)	
	Spring tension (when assembled)	N(lb)	241 (54.2)	210 (47.22)	
Valve and Valve guide	Diameter of Valve stem	IN	6.959 – 6.977 (0.27 – 0.272)	6.92 (0.270)	
		EX	6.692 – 6.970 (0.271 – 0.272)	6.90 (0.269)	
	Valve and valve guide clearance	IN	0.023 – 0.056 (0.0009 – 0.0022)	0.19 (0.0074)	
		EX	0.03 – 0.063 (0.0011 – 0.0024)	0.20 (0.0079)	
	Valve guide upper end height (Measured from the Cylinder head upper face)		8.0 (0.312)	—	
	Valve guide margin		1.1 (0.0433)	1.6 (0.0630)	
	Valve thickness	IN	1.2 (0.0472)	1.1 (0.0433)	
		EX	1.2 (0.0472)	1.1 (0.0433)	
	Valve seat contact surface angle		45°	—	
	Valve seat contact width	IN	2.1 (0.0827)	2.6 (0.1024)	
		EX	2.1 (0.0827)	2.6 (0.1024)	
Camshaft	End play		0.08 (0.00314)	2.0 (0.00797)	
	Cam lobe height	IN	46.67 (1.8374)	46.57 (1.8335)	
		EX	46.77 (1.8413)	46.67 (1.8374)	
	Journal diameter		29.939 – 29.960 (1.167 – 1.168)	29.84 (1.1748)	
	Runout		0.02 (0.0008) or less	0.10 (0.0039)	
	Camshaft oil clearance		0.40 – 0.082 (0.0016 – 0.0032)	0.12 (0.0047)	

mm (in)

Parts	Items	Service standard	Service limit	Remarks
Tappet	Outside diameter	32.977 – 32.990 (1.2983 – 1.2988)	32.950 (1.2972)	
	Oil clearance	0.01 – 0.039 (0.0004 – 0.0015)	0.10 (0.0039)	
Crankshaft	Thrust clearance	0.04 – 0.20 (0.0016 – 0.0079)	0.30 (0.00118)	
	Main bearing oil clearance	0.037 – 0.068 (0.0015 – 0.0027)	0.11 (0.0043)	
	Crankshaft runout	0.05 (0.0020) or less	0.08 (0.0031)	
	Main journal diameter	69.917 – 69.932 (2.7526 – 2.7532)	69.91 (2.7524)	Uneven wear limit 0.05 (0.002)
	Crank pin diameter	52.915 – 52.930 (2.0933 – 2.0839)	52.90 (2.0827)	Uneven wear limit 0.08 (0.0031)
Piston, Piston pin, Piston ring and Connecting rod	Piston diameter	95.32 – 95.349 (3.7527 – 3.7539)	—	
	Piston clearance	0.11 – 0.92 (0.0043 – 0.0362)	—	
	Piston ring gap 1st	0.25 – 0.40 (0.0098 – 0.0157)	1.5 (0.0590)	
	2nd	0.20 – 0.35 (0.0079 – 0.0138)	1.5 (0.0590)	
	Oil	0.10 – 0.30 (0.0039 – 0.0118)	1.5 (0.0590)	
	Piston ring clearance 1st/2nd	0.05 – 0.09 (0.0020 – 0.0035)	0.15 (0.0059)	
	Oil	0.03 – 0.07 (0.00118 – 0.00276)	0.15 (0.0059)	
	Piston pin diameter	30.995 – 31.000 (1.203 – 1.205)	30.97 (1.2078)	
	Piston pin clearance (Between connecting rod and piston pin)	0.008 – 0.020 (0.0003 – 0.00079)	0.05 (0.0020)	
	Piston pin clearance (Between piston and piston pin)	0.005 – 0.018 (0.0002 – 0.0007)	0.04 (0.0016)	
	Connecting rod alignment Bend	0.08 (0.031) or less	0.20 (0.00787)	Per 100 (3.94)
	Twist	0.05 (0.0020) or less	0.15 (0.0059)	Per 100 (3.94)
	Connecting rod thrust clearance	0.230 (0.0091)	0.35 (0.0138)	
	Oil clearance (Between crank pin and Connecting rod)	0.022 – 0.042 (0.0009 – 0.0017)	0.0060 (0.0024)	

mm (in)

Parts	Items	Service standard	Service limit	Remarks
Cylinder Block	Warpage (Upper surface of the cylinder block)	—	0.20 (0.0079)	
	Cylinder bore diameter	95.421 – 95.450 (3.7567 – 3.7579)		

Engine Cooling

mm (in)

Parts	Items	Service standard	Service limit	Remarks
Thermostat	Valve opening temperature	83 – 87°C (181 – 189°F)		
	Valve full open temperature and lift	More than 9.5 (0.374) at 100°C (212°F)		
Radiator cap	Valve opening pressure	88.2 – 117.6 kPa (12.8 –17.0 psi)		

SERVICING

Servicing refers to general maintenance procedures to be performed by qualified service personnel.

MODEL IDENTIFICATION

Engine Serial Number

The engine number is stamped on the rear left hand side of the cylinder body.

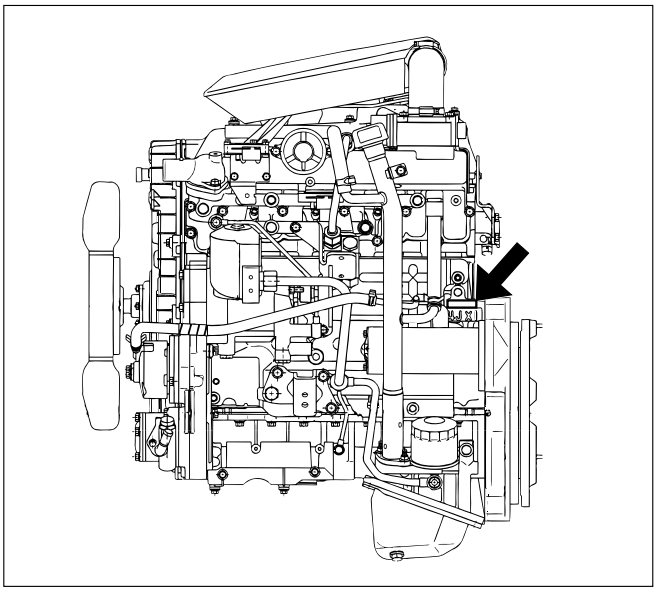

012RW115

AIR CLEANER

Oil Wetted (Viscous) Type Paper Element.

The air cleaner has an oil wetted paper element. No servicing is required until the replacement interval is reached.
Never attempt to clean the element, no matter how dirty it may appear. The element is designed to provide normal filtering efficiency until it becomes due for replacement.
Refer to the Item “Service and Maintenance” in the Owner’s and Driver’s Manual for general service information.

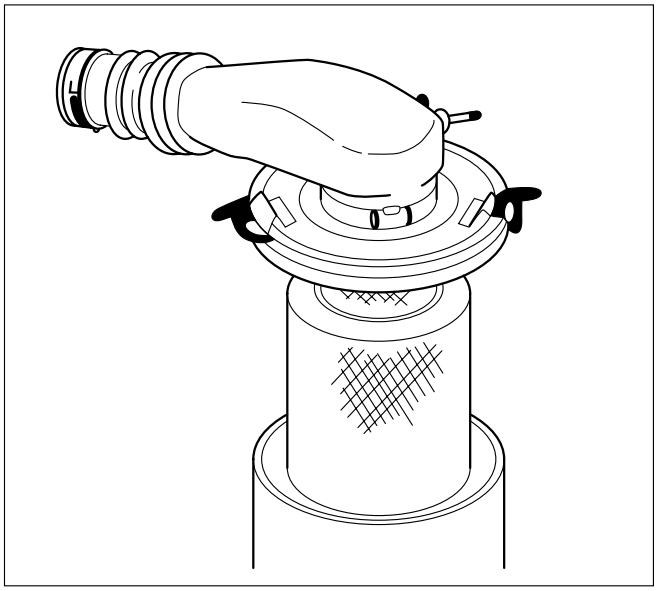

012RW062

LUBRICATING SYSTEM

Main Oil Filter (Cartridge Type Paper Element)

Replacement Procedure

1. Loosen the drain plug to drain the engine oil.
2. Wait a few minutes and then retighten the drain plug.
3. Loosen the used oil filter (2) by turning it counter-clockwise with the filter wrench.
4. Clean the oil filer gasket fitting face.
   This will allow the new oil filter to seat properly.
5. Apply a light coat of engine oil to the O-ring.
6. Turn the new oil filter until the filter O-ring is fitted against the sealing face.
7. Use the filter wrench to turn the filter additional one and 1/4 turns.
   Filter Wrench: 5-5540-0203-0

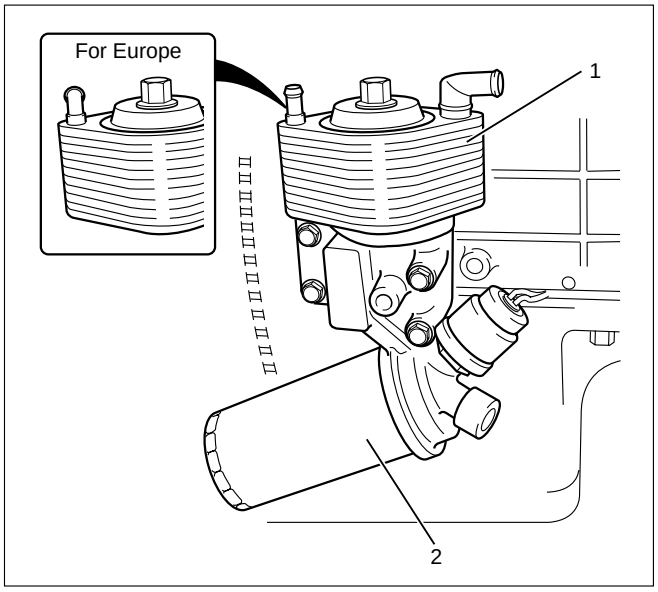

050R200001

8. Check the engine oil level and replenish to the specified level if required.
9. Start the engine and check for oil leakage from the main oil filter.

FUEL SYSTEM

Fuel filter

Replacement Procedure

1. Loosen the used fuel filter by turning it counterclockwise with the filter wrench.
   Filter Wrench : 5-8840-0203-0

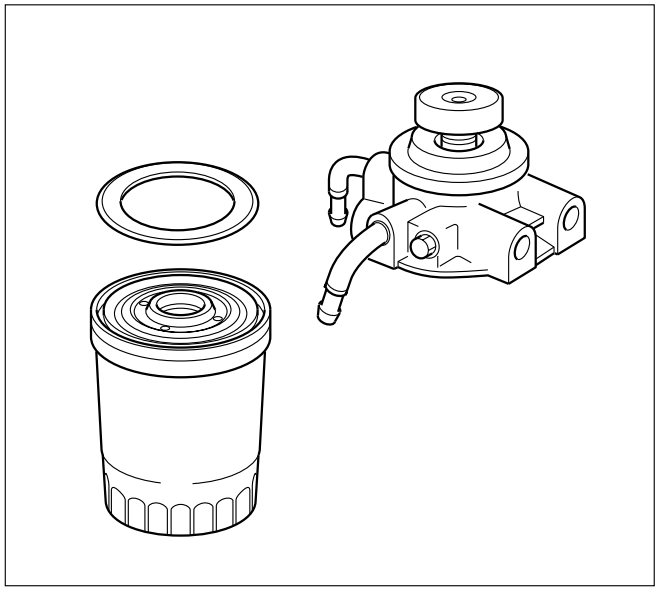

012RW112

2. Clean the filter cover fitting faces.
   This will allow the new fuel filter to seat properly.

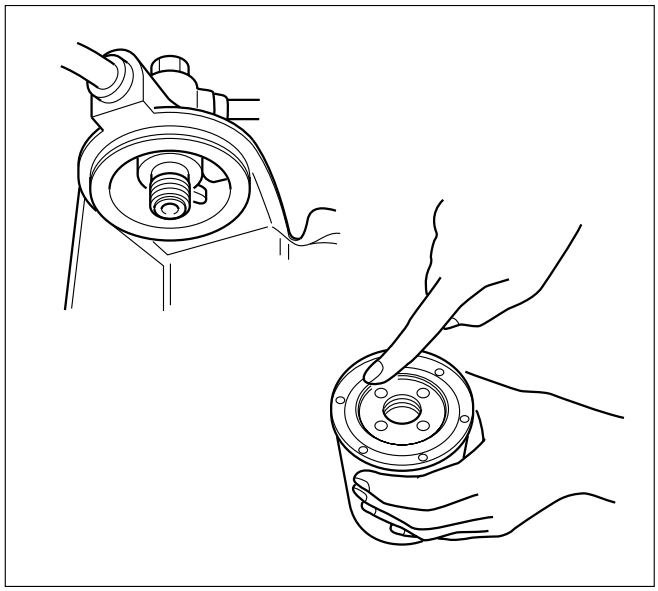

012RW078

3. Apply a light coat of engine oil to the O-ring.
4. Turn the fuel filter until the sealing face comes in contact with the O-ring.
5. Turn the fuel filter with a filter wrench 2/3 of a turn until sealed.
   Filter Wrench: 5-8840-0203-0

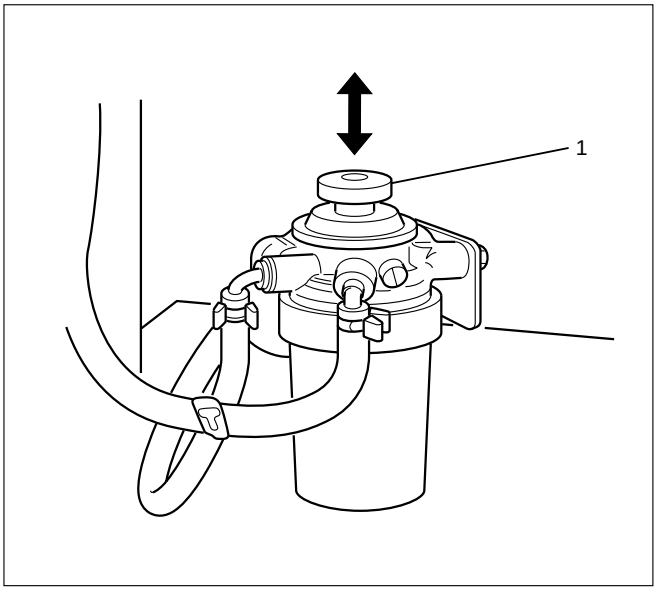

012RW111

Legend
(1) Priming pump

6. Operate the priming pump until the air is discharged completely from fuel system.

NOTE: The use of an Isuzu genuine fuel filter is strongly recommended.

COOLING SYSTEM

Coolant Level

Check the coolant level and replenish the radiator reserve tank as necessary.
If the coolant level falls below the "'MIN" line, carefully check the cooling system for leakage. Then add enough coolant to bring the level up to the "MAX" line.

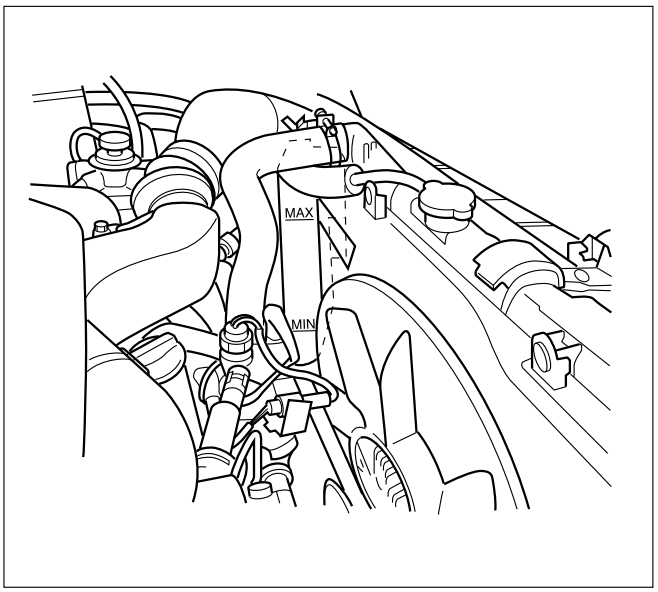

012RW080

NOTE: Do not overfill the reserve tank.

Remove the radiator filler cap only when absolutely necessary.
Always check the coolant level when the engine is cold.
Always refer to the chart at the left to determine the correct cooling water to antifreeze solution mixing ratio.

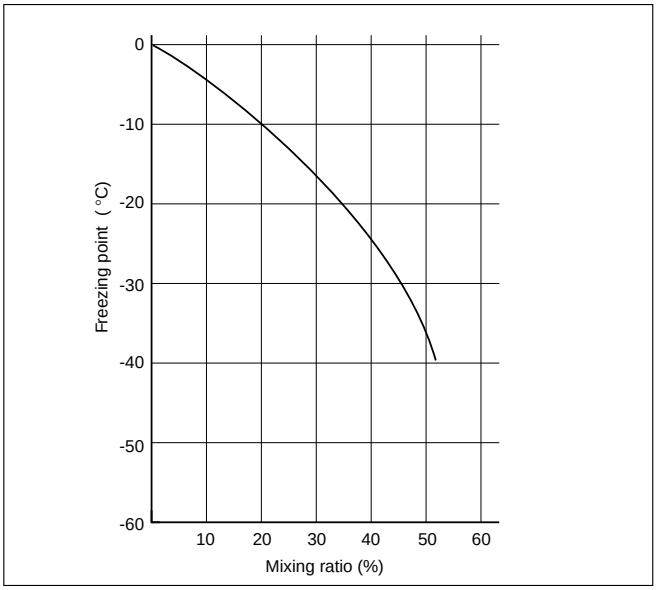

111RW002

Cooling System Inspection

Install a radiator filler cap tester to the radiator. Apply testing pressure to the cooling system to check for leakage.
The testing pressure must not exceed the specified pressure.

Testing Pressure: 196 kPa (2 kg/cm^2/28.45 psi)

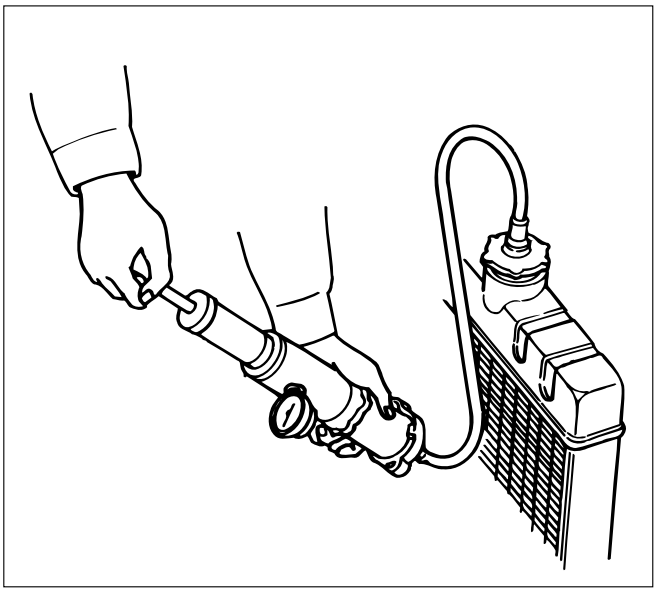

110RS005

Radiator Cap Inspection

The radiator filler cap is designed to maintain coolant pressure in the cooling system at 103 kPa (1.05 kg/cm^2/15 psi).
Check the radiator filler cap with a radiator filler cap tester.

The radiator filler cap must be replaced if it fails to hold the specified pressure during the test procedure.

Radiator Filler Cap Pressure Valve: 88.2 – 117.6 kPa (0.899 – 1.199 kg/cm^2/12.8 – 17.1 psi)

Negative Valve (Reference): 1.0 – 3.9 kPa (0.01 – 0.04 kg/cm^2/0.14 – 0.57 psi)

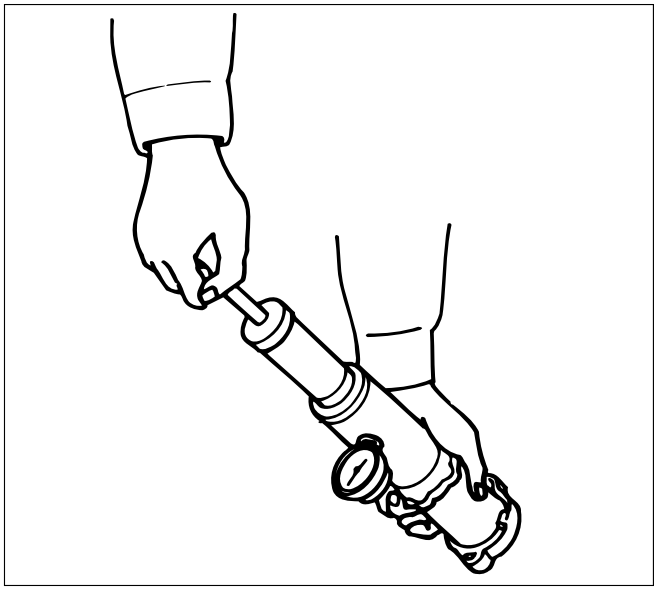

110RS006

Thermostat Operating Test

1. Completely submerge the thermostat in water.
2. Heat the water.
   Stir the water constantly to avoid direct heat being applied to the thermostat.
3. Check the thermostat initial opening temperature.
   Thermostat Initial Opening Temperature: 83 – 87°C (181 – 189°F)
4. Check the thermostat full opening temperature.
   Thermostat Full Opening Temperature: 100°C (212°F)

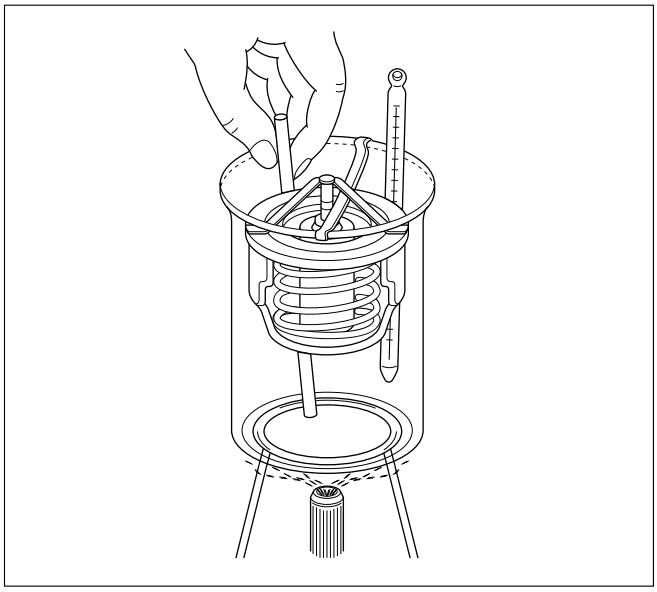

031RS003

Valve Lift at Fully Open Position: 9.5 mm (0.374 in)

Drive Belt Adjustment

Check the drive belt tension
Depress the drive belt mid-portion with a 98 N (10 kg/ 22 lb) force.

Drive Belt Deflection: 10 mm (0.39 in)

Check the drive belt for cracking and other damage.

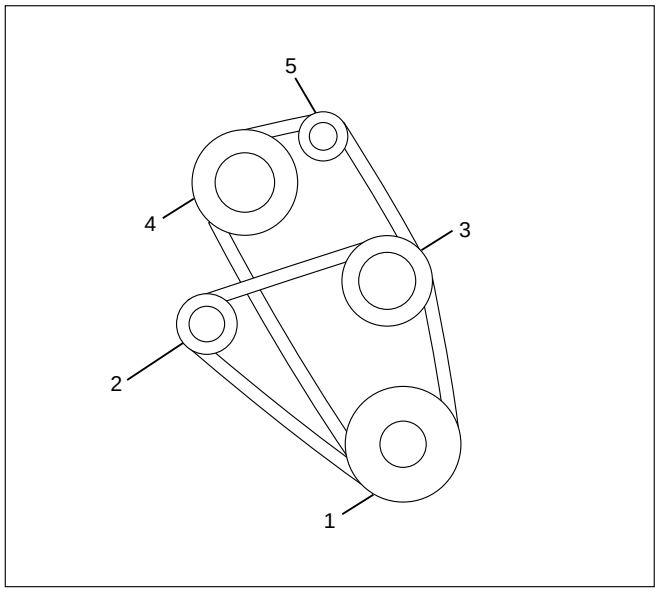

012RW110

Legend
(1) Crankshaft pulley
(2) Generator pulley
(3) Cooling fan pulley
(4) A/C compressor pulley
(5) Belt tensioner pulley

Cooling Fan Pulley Drive Belt

Fan belt tension is adjusted by moving the generator.
Depress the drive belt mid-portion with a 98 N (10 kg/ 22 lb) force.

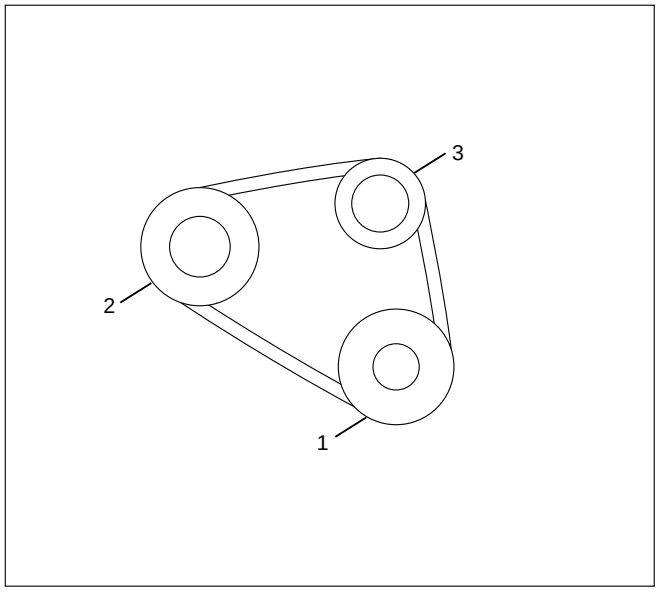

012RW084

Legend
(1) Crankshaft pulley
(2) Generator pulley
(3) Cooling fan pulley

Compressor Pulley Drive Belt

Move the tensioner pulley as required to adjust the compressor drive belt tension.
Depress the drive belt mid-portion with a 98 N (10 kg/ 22 lb) force.

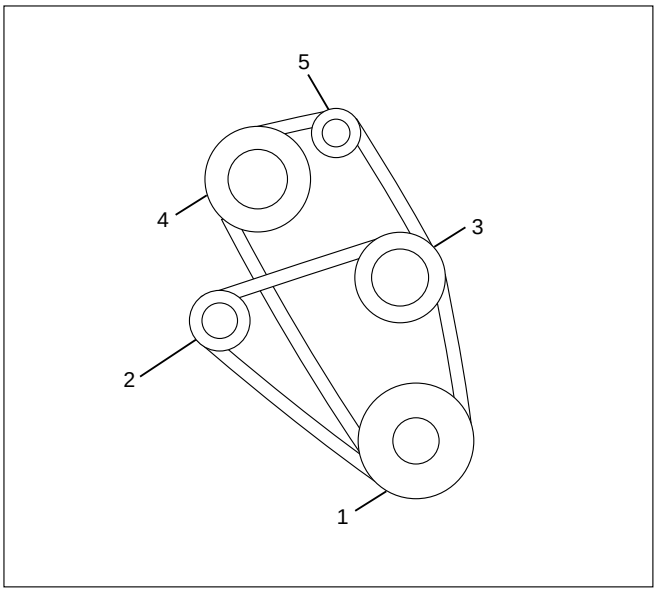

012RW110

Legend
(1) Crankshaft pulley
(2) Generator pulley
(3) Cooling fan pulley
(4) A/C compressor pulley
(5) Belt tensioner pulley

VALVE CLEARANCE ADJUSTMENT

1. Install 2.80 mm valve adjuster (shim) first when reassembling the engine.
   Thickness mark faces down.
2. Measure the valve clearance after installing cam carrier assy with camshafts.
3. Change the adjuster using a special tool when the clearance is out of tolerance.
   Valve Clearance Adjusting Tool: 5-8840-2590-0

VALVE CLEARANCE (When cold condition)

Inlet	0.15 ± 0.05 mm
Exh	0.25 ± 0.05 mm

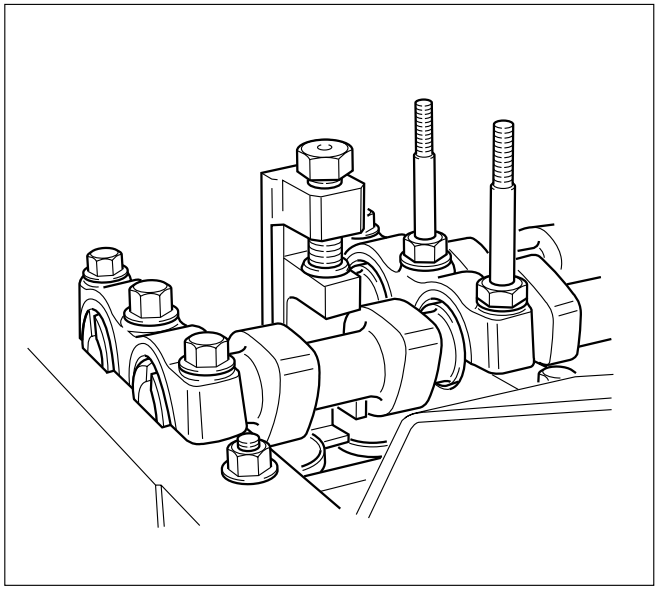

014RW150

COMPRESSION PRESSURE MEASUREMENT

1. Start the engine and allow it to idle until the coolant temperature reaches 70 – 80°C (158 – 176°F).
2. Remove the following parts.
   - Glow plugs
   - Fuel cut solenoid connector
   - QOS (Quick-On Start System) fuse in the fuse box.
3. Set the adapter and compression gauge to the No. 1 cylinder glow plug hole.
   Compression Gauge
   (with Adapter): 5-8840-2008-0
4. Turn the engine over with the starter motor and take the compression gauge reading.

   Compression Pressure at 200 rpm

   Standard: 3040 kPa (31 kg/cm^2/441 psi)

   Limit: 2160 kPa (22 kg/cm^2/313 psi)
5. Repeat the procedure (Steps 3 and 4) for the remaining cylinders.

QUICK-ON START 4 SYSTEM

Quick-On Start System Inspection Procedure

1. Disconnect the ECT-sensor connection around the thermostat outlet pipe.
2. Turn the starter switch to the “ON” position.
   If the Quick-On Start 4 System is operating properly, the glow relay will make a clicking sound within seven seconds after the starter switch is turned on.
3. Measure the glow plug terminal voltage with a circuit tester immediately after turning the starter switch to the “ON” position.

   Glow Plug Terminal Voltage: approx. 12V

NOTE: Electrical power to the quick-on start system will be cut after the starter has remained in the “ON” position for twenty seconds.
Turn the starter switch to the “OFF” position and back to the “ON” position.
This will reset the Quick-On Start 4 System.

TIGHTENING TORQUE

Timing Gear Case, Timing Gear

N·m (kg·m/lb·ft)

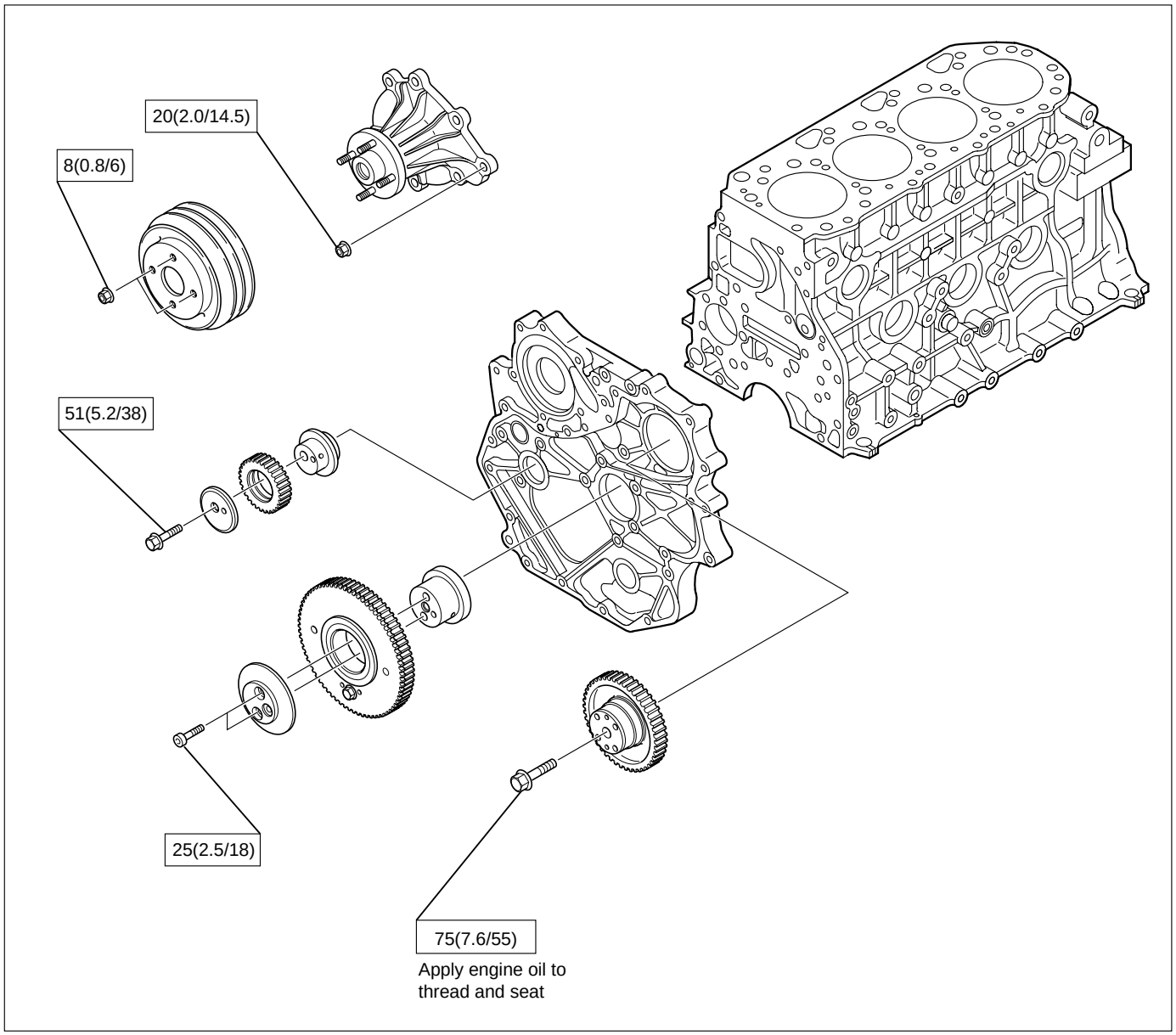

020RW00001

Cylinder Head, Flywheel, Crank Case, Oil Pan

N·m (kg·m/lb·ft)

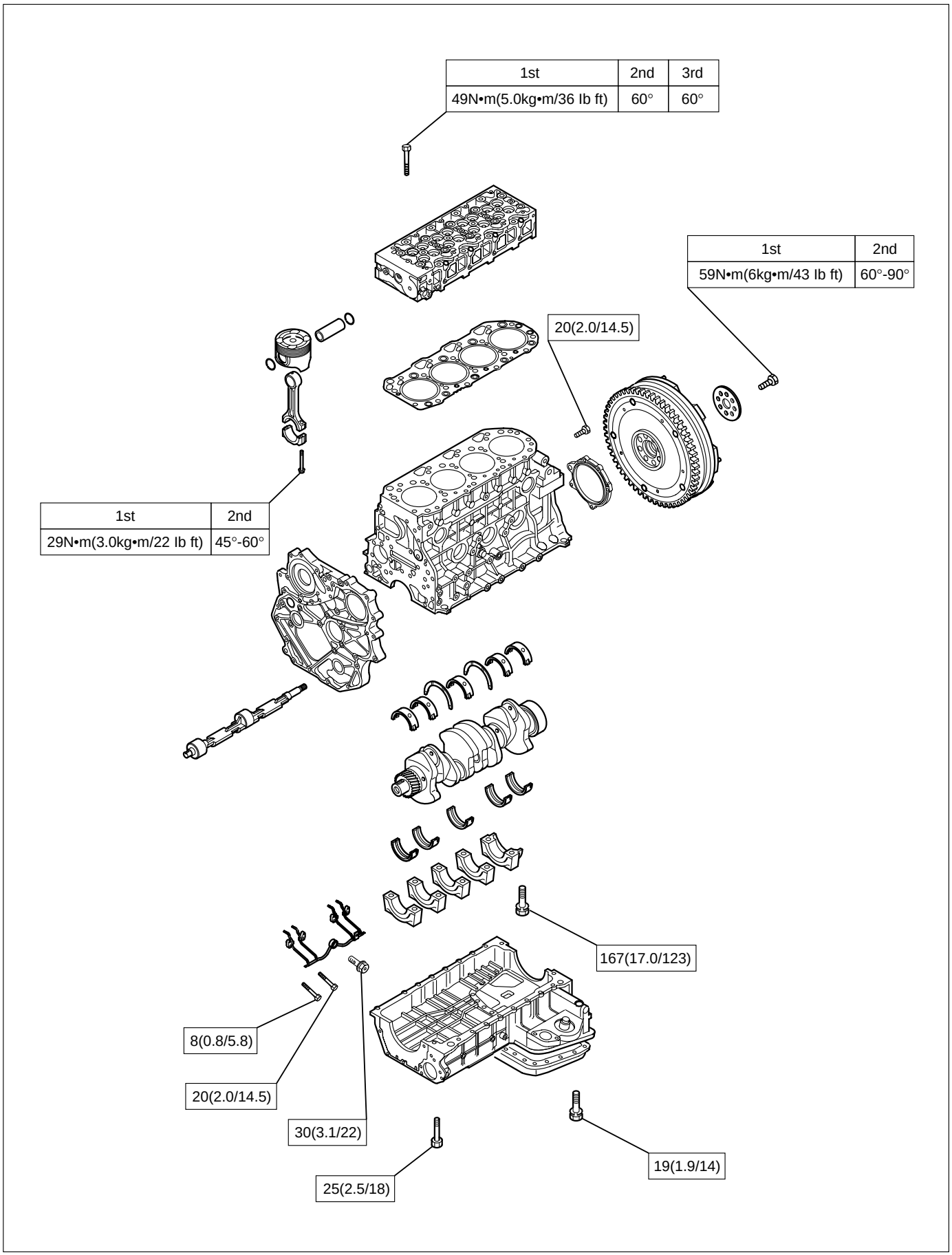

012RW121

Intake / Exhaust Manifold

N·m (kg·m/lb·ft)

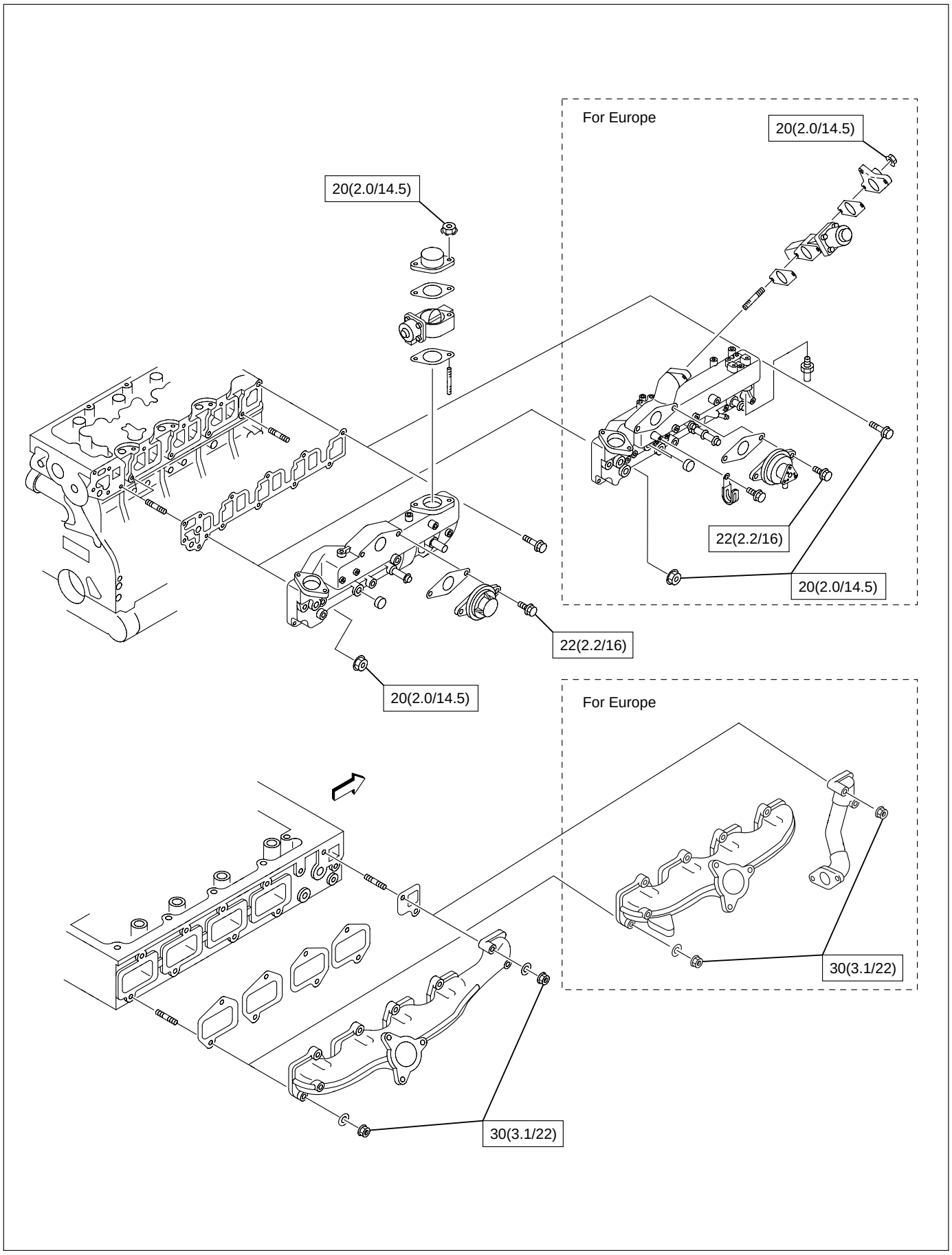

025R200003

Timing Pulley

N·m (kg·m/lb·ft)

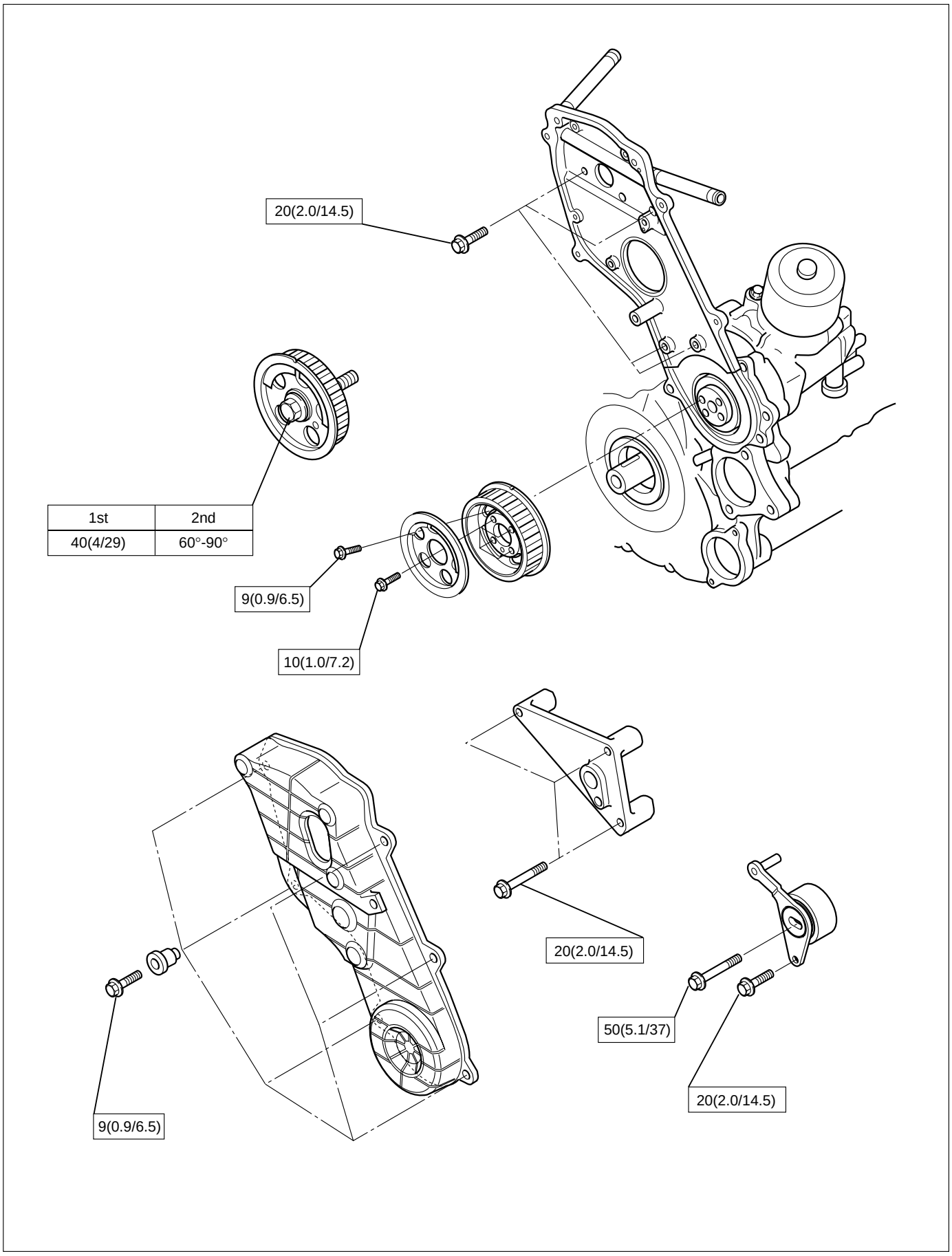

020RW024

Engine Electricals

N·m (kg·m/lb·ft)

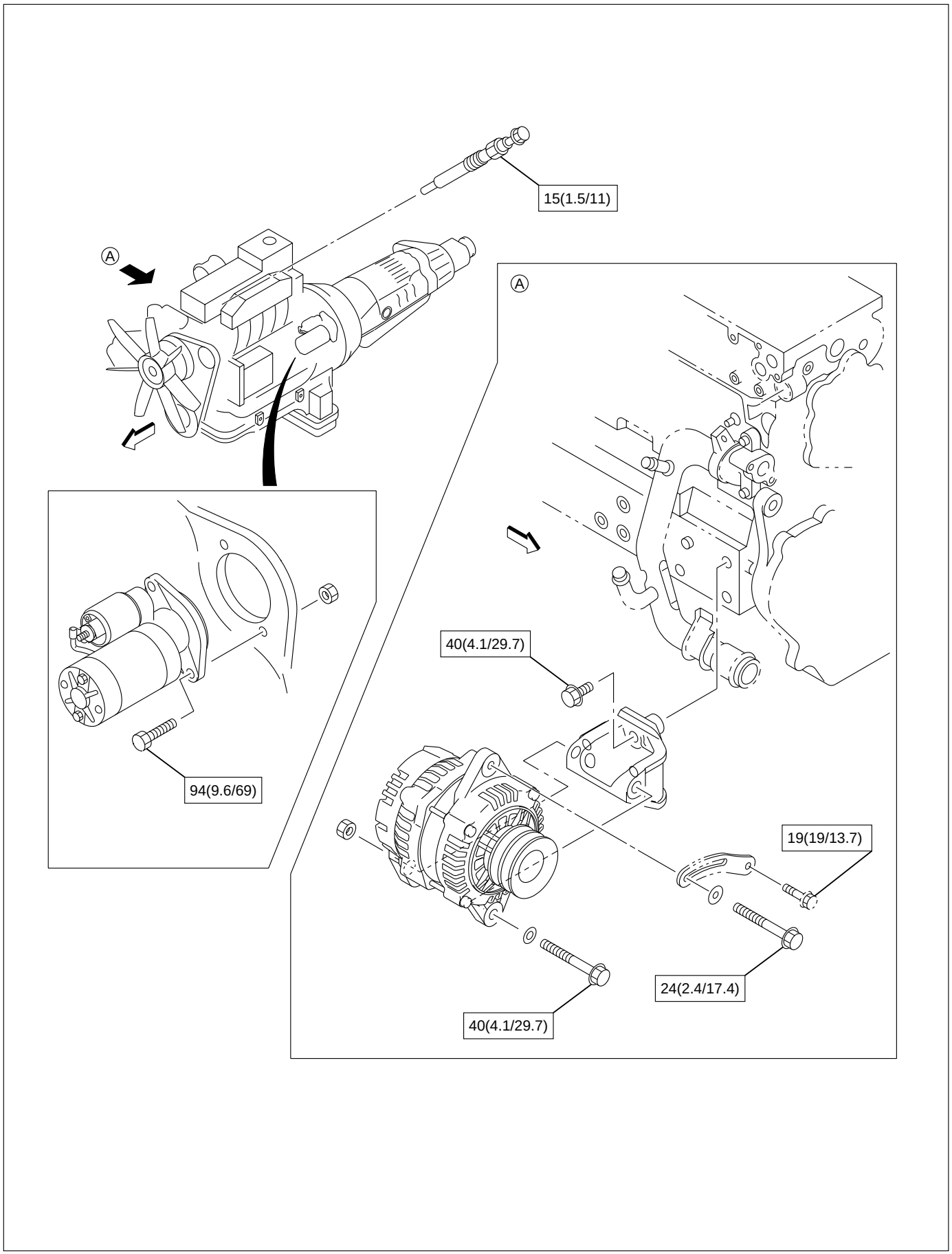

Injector

N·m (kg·m/lb·ft)

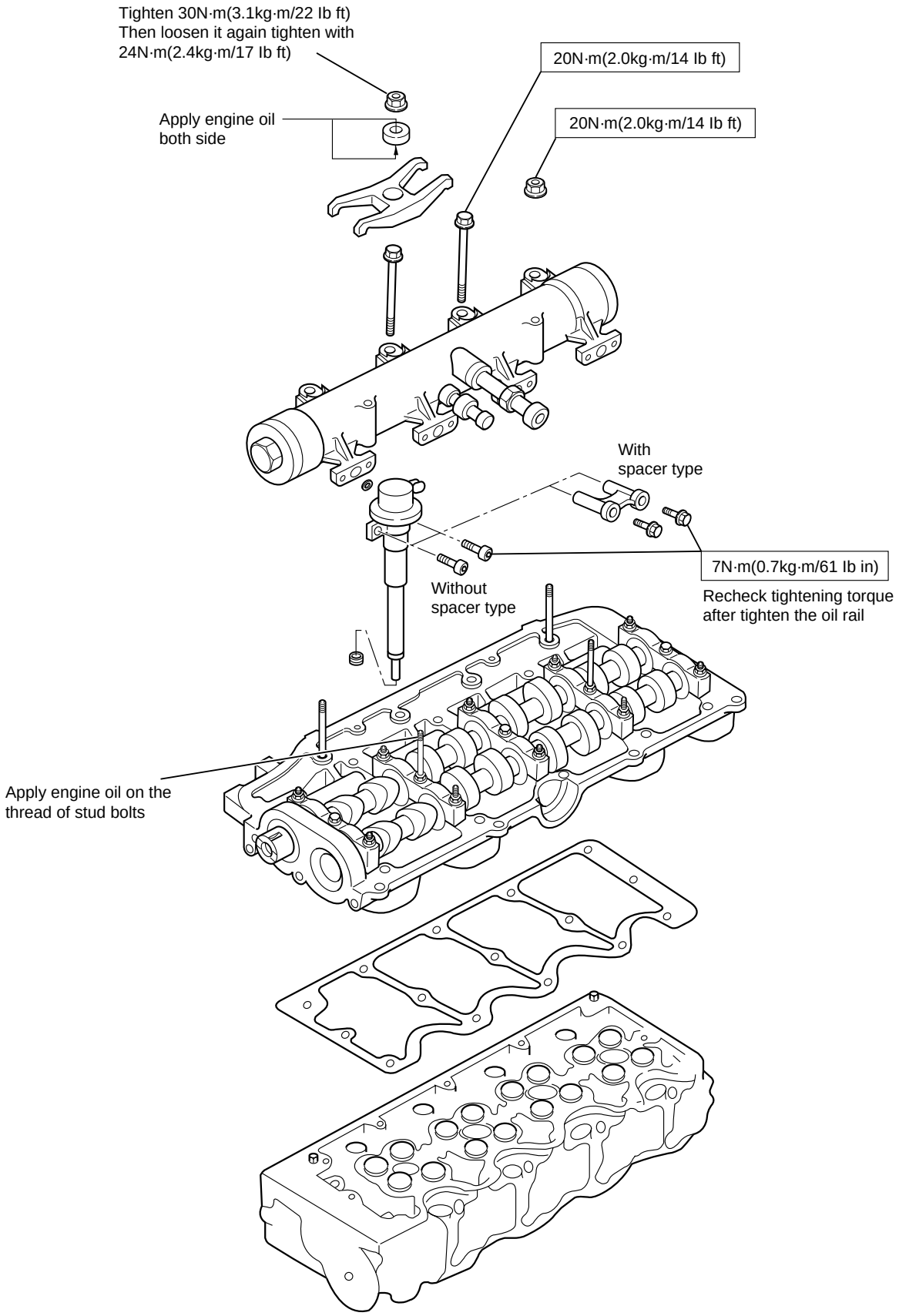

E06R200022

High Pressure Oil Pipe

N·m (kg·m/lb·ft)

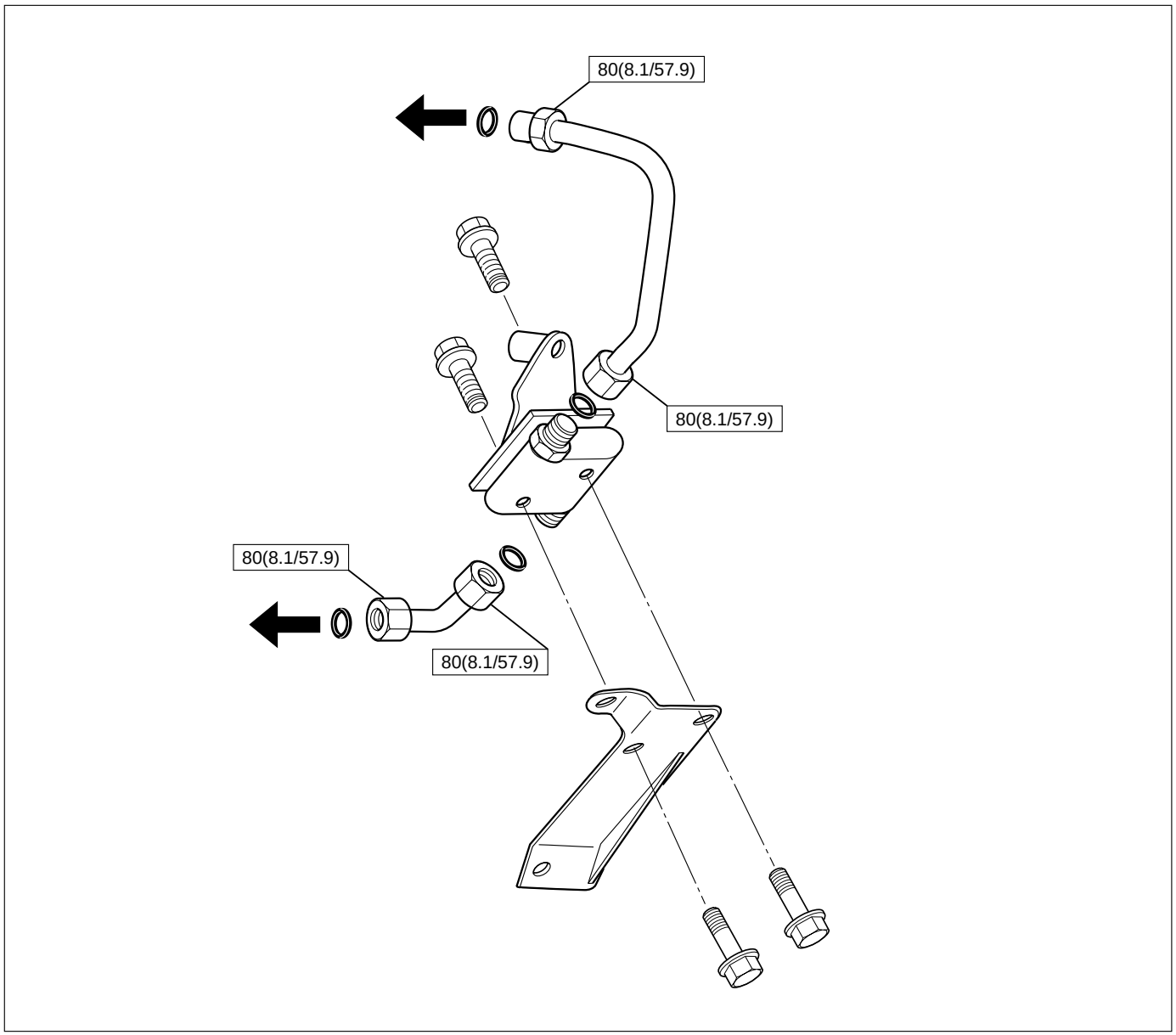

052R200002

Air Duct and Intercooler (For General Export)

N·m (kg·m/lb·ft)

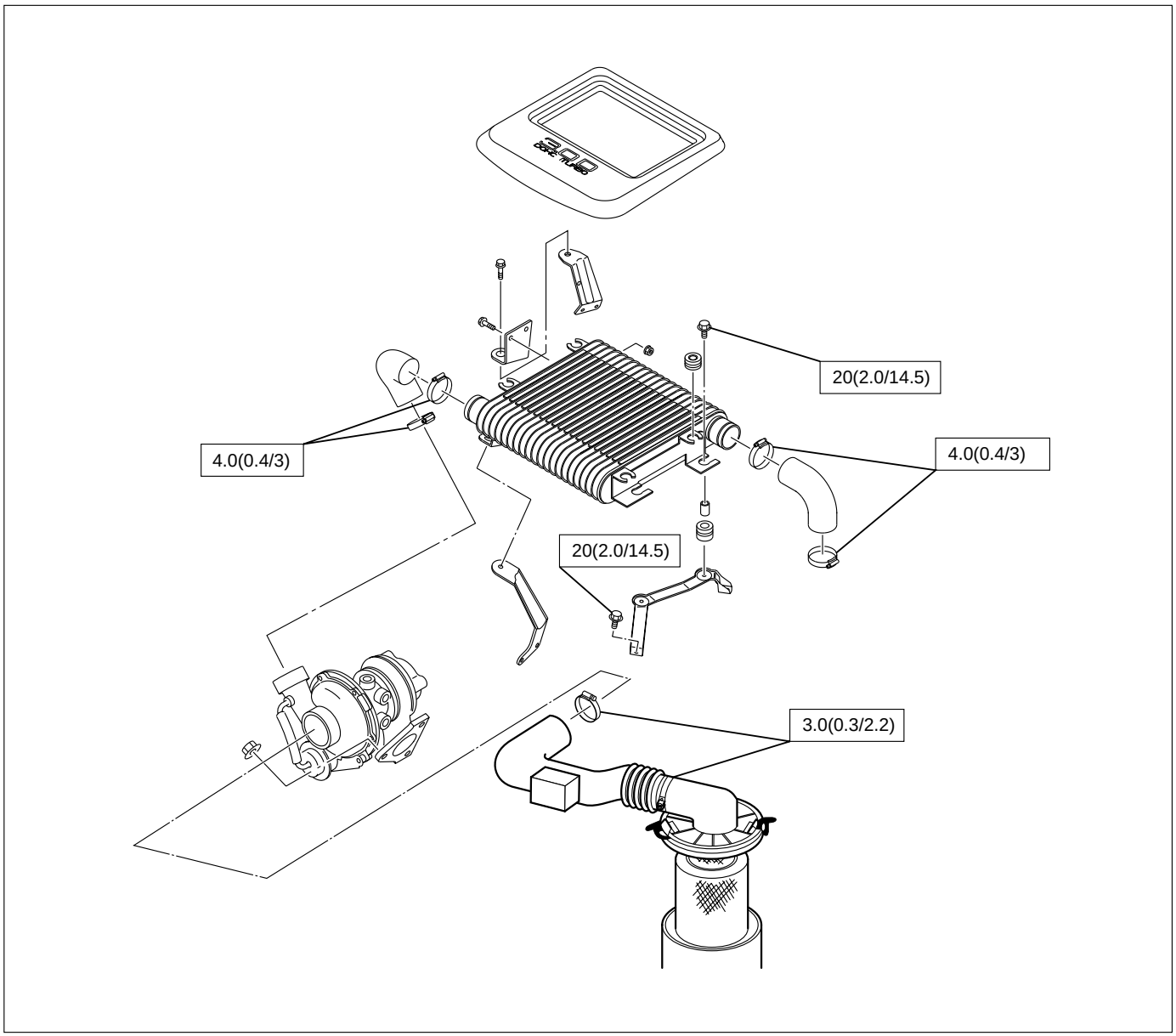

135R200002

Air Duct and Intercooler (For Europe)

N·m (kg·m/lb·ft)

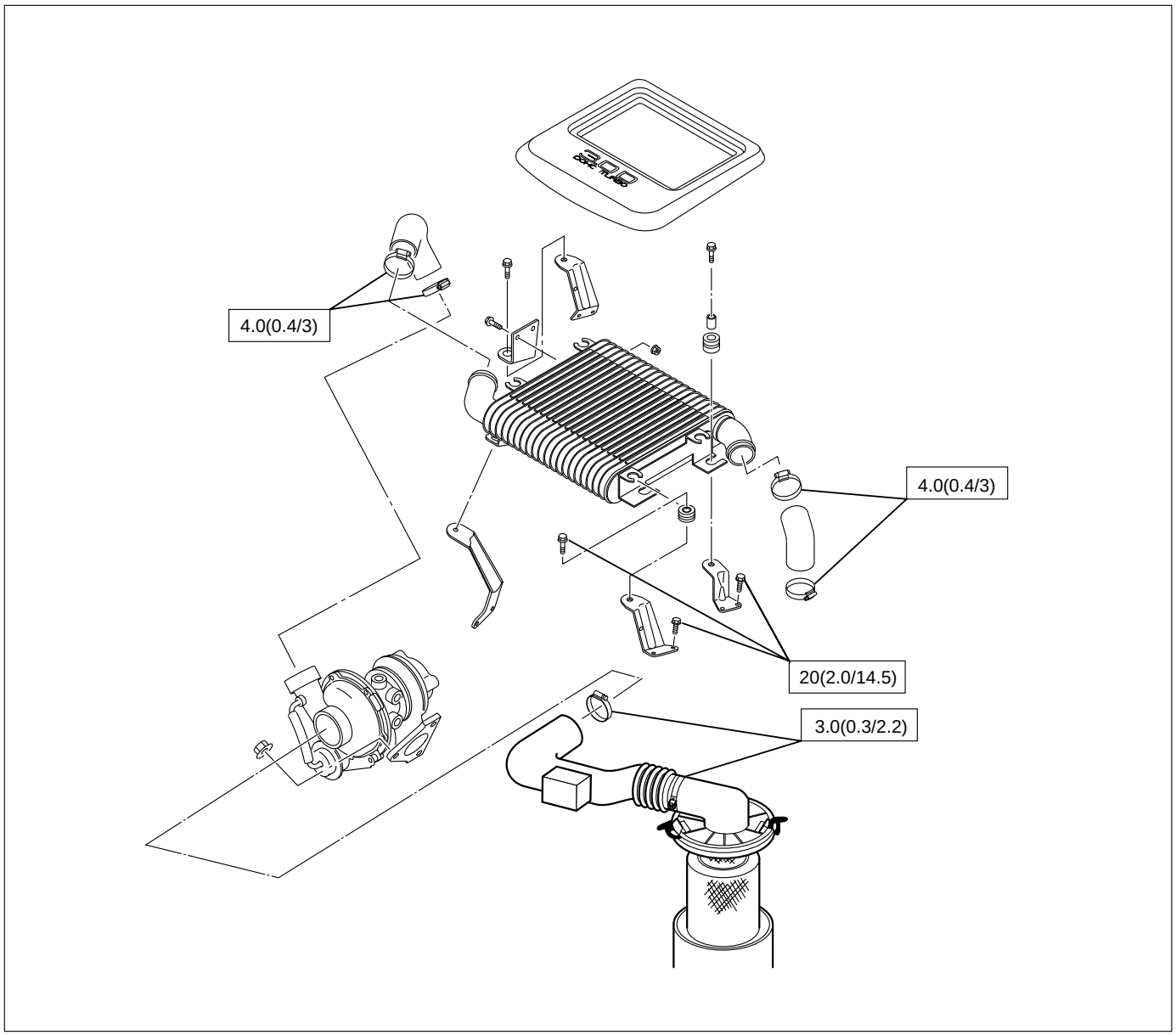

135R200001

Engine Mount Bracket

N·m (kg·m/lb·ft)

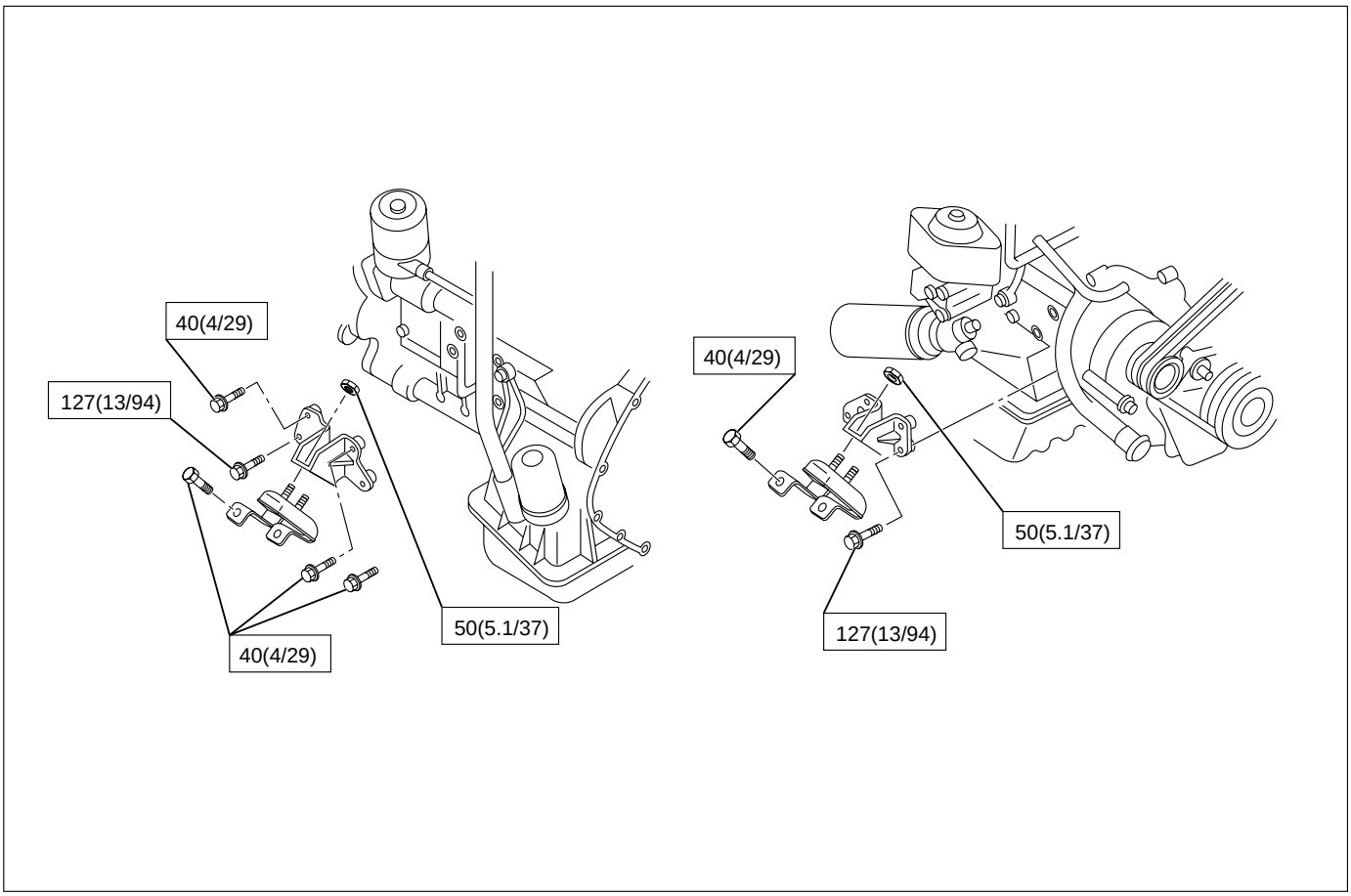

022RW019

Exhaust System

N·m (kg·m/lb·ft)

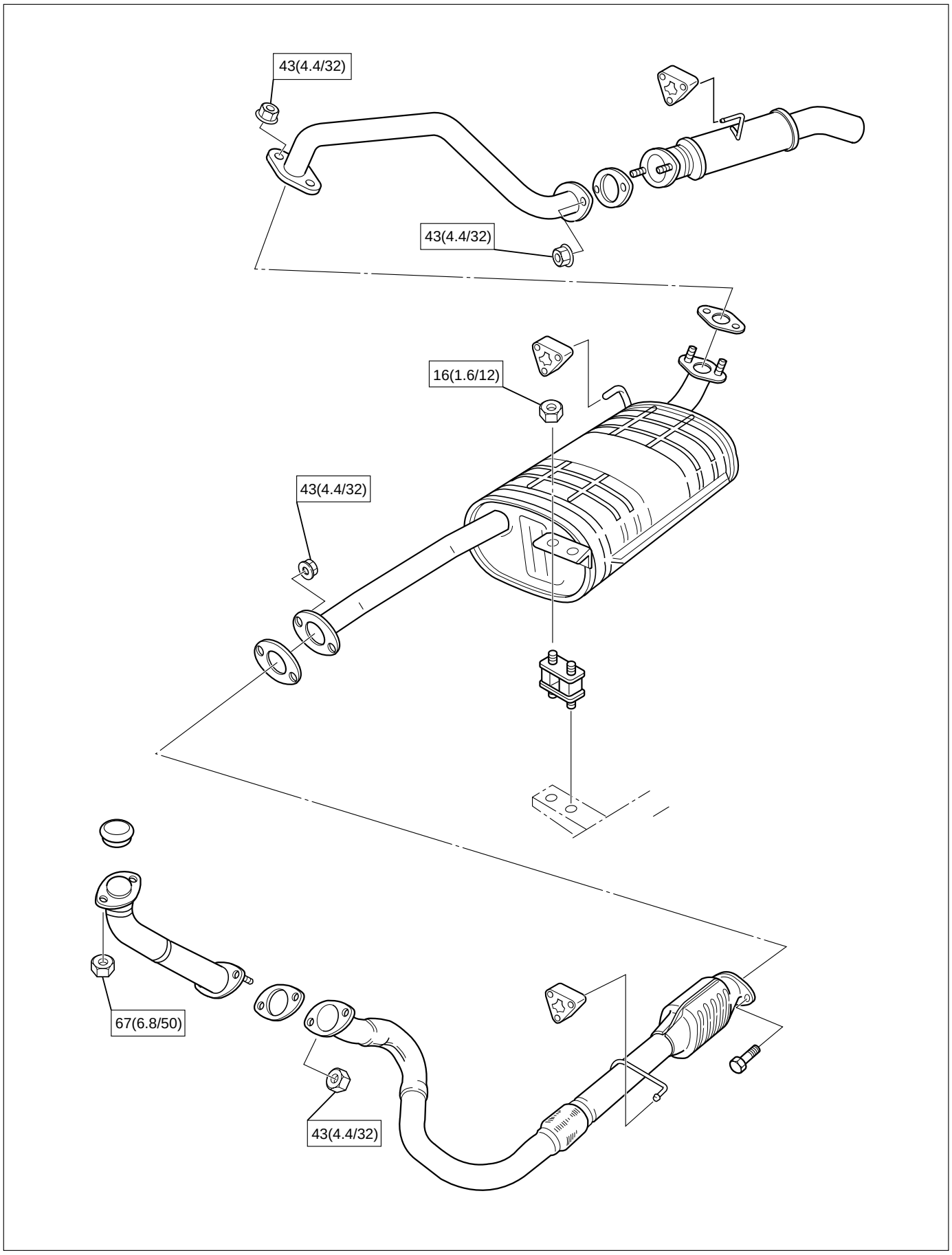

150RW073

SPECIAL TOOLS

Illustration	Tool No.	Tool Name
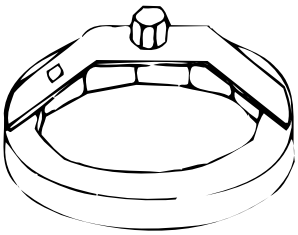 901RT034	5-8840-0203-0	Filter Wrench
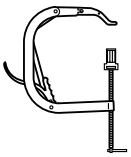 F06RV038	5-8840-2441-0	Valve Spring Compressor
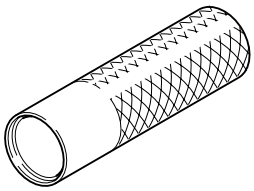 5884020330	5-8840-2033-0	Stem Seal Installer
901LX017	5-8840-9018-0	Piston Ring Compressor
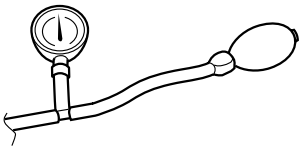 901RX00001	5-8840-0075-0	Turbocharger Pressure Gauge
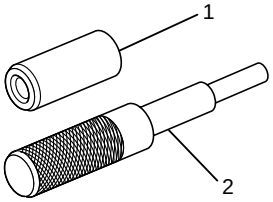 901RW182	9-8523-1212-0	Valve Guide Replacer

SPECIAL TOOLS

Illustration	Tool No.	Tool Name
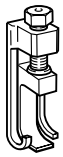 F06RW057	5-8840-2590-0	Valve Clearance Adjusting Tool
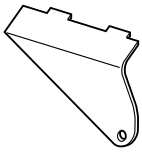 F06RW056	5-8840-2592-0	Camshaft Stopper
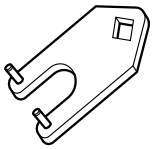 F06RV037	5-8840-2591-0	Camshaft Gear Tool
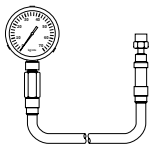 901LX057	5-8840-2675-0	Compression Gauge
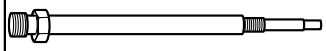 901LX056	5-8531-7002-0	Adapter: Compression Gauge
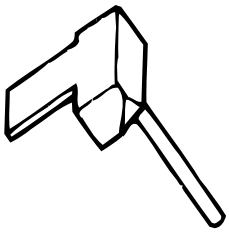 901RT042	5-8840-2153-0	Seal Cutter

SPECIAL TOOLS

Illustration	Tool No.	Tool Name
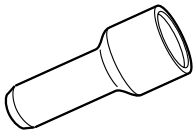 901RV061	9-8522-0021-0	Crankshaft Gear Installer
901LX030	5-8840-0266-0	Angle Gauge
901LX040	5-8840-2360-0	Rear Oil Seal Remover
901LX025	5-8840-2359-0	Rear Oil Seal Installer
901LX039	5-8840-2061-0	Front Oil Seal Installer

ENGINE ASSEMBLY

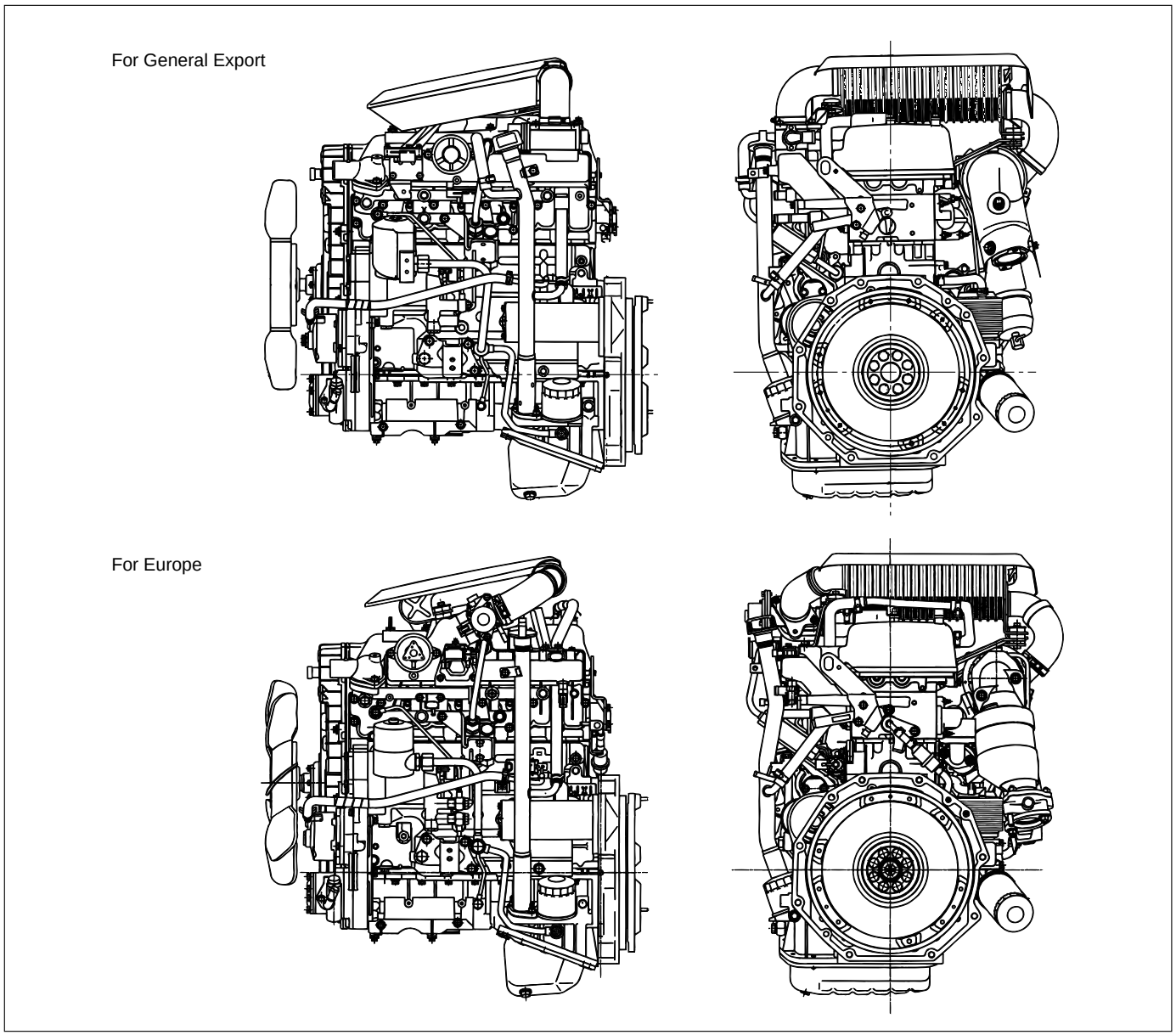

F06R200004

REMOVAL

1. Remove battery.
2. Drain engine coolant
3. Disconnect window washer hose and remove engine hood.
4. Radiator Hose
   1) Disconnect upper and lower hoses from engine side.
5. Fan Shroud
   1) Disengage clips and remove upper and lower fan shrouds.
6. Cooling Fan Assembly
   1) Remove cooling fan assembly fixing nuts, cooling fan assembly.
7. Radiator Assembly
   1) Remove bracket and radiator assembly.
8. Air Cleaner Cover & Air Duct
9. Intercooler Assembly
   1) Refer to “Intercooler” in this manual.
10. Engine Ground Cable
    1) Disconnect ground cable from A/C compressor bracket.
11. AC Generator Harness
    1) Disconnect B terminal and harness connector from AC generator.
12. A/C Compressor Assembly
    1) Disconnect magnetic clutch harness connector.
    2) Remove A/C compressor fixing bolt (rear under side of compressor).
    3) Remove fixing bolts (upper and front lower side of compressor) and set A/C compressor assembly with pipe lines on battery carrier.

13 Vacuum Hose
   1) Disconnect vacuum hose from vacuum pump.
14. Starter Harness
   1) Disconnect B terminal and put cable harness close to chassis side.
   2) Disconnect S terminal connector.
15. Engine Harness
   1) Disconnect engine harness close to engine side.
16. Fuel Pipe
   1) Remove fuel pipe from fuel pump and take care not to spill fuel and let dust enter.
17. Engine Ground Cable
   1) Disconnect ground cable from left rear side of timing gear case.
18. Vacuum Hose: Vacuum Tank
   Disconnect vacuum hose from vacuum pump side.
19. Glow Plug Harness
20. Transmission Assembly
   1) Set transmission support tool under the transmission.
   2) Remove transmission rear mount.
   3) Remove transmission fixing bolt from rear of engine assembly except two bolts.
   4) Carefully hang up engine assembly with a hoist.
   5) Remove remaining two transmission fixing bolts.
   6) Remove transmission assembly.
   7) Remove heater hose.
   8) Disconnect wire harness connector for shift on the fly.
   9) Remove vacuum hose.
21. Prepare Engine Stand
22. Engine Assembly
   1) Remove engine mount fixing bolts.
   2) Carefully hang up the engine assembly.
   3) Take out the engine assembly making sure not to damage the brake oil pipe and other pipe etc.

INSTALLATION

1. Engine assembly
   1) Install engine in mounting position by using hoist.
2. Transmission Assembly
   1) Refer to transmission installation steps in section 7.
3. Engine Mounting
   1) After all fixing bolts (left: two bolts, rights: two bolts) were inserted in every hole, tighten fixing bolts to the specified torque.
   Torque: 40 N·m (4 kg·m/29 lb·ft)
4. Glow Plug Harness
5. Vacuum Hose
   1) Connect Vacuum Hose to Vacuum Pump
6. Engine Ground Cable
7. Fuel Pipe
   1) Install fuel pipe to fuel pump.
8. Engine Harness
9. Starter Harness
10. A/C Compressor Assembly
   1) Tighten temporarily the fixing bolts (upper and front lower sides of compressor.)
   2) Tighten fixing bolt (rear under side of compressor) to the specified torque.
   3) Tighten fixing bolts (front upper and lower sides of compressor) to the specified torque.
   Torque: 40 N·m (4 kg·m/29 lb·ft)

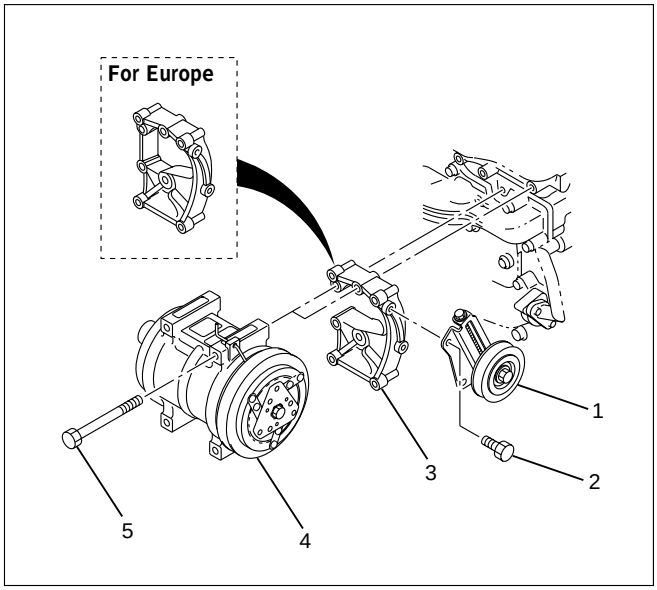

F06R200005

Legend
(1) Tensioner
(2) Bolt
(3) Bracket
(4) A/C compressor
(5) Bolt

11. A.C Generator Harness
12. Engine Ground Cable
   1) Tighten ground cable to A/C compressor bracket.
13. Air Cleaner cover & Duct
14. Intercooler Assembly
   1) Refer to “Intercooler” in this manual.
15. Radiator Assembly
   1) Install rubber cushion in under left and right part of radiator and position radiator.
   2) Fix radiator with bracket.
16. Cooling Fan Assembly
   1) Install cooling fan assembly and tighten fixing bolts to the specified torque.
   Torque: 8 N·m (0.8 kg·m/5.8 lb ft)
17. Fan Shroud
18. Radiator Hose
   1) Connect upper and lower hose to engine side.
   2) Pour coolant into radiator.
19. Install battery.
20. Connect window washer hose and install engine hood.

ENGINE MOUNT (RH)

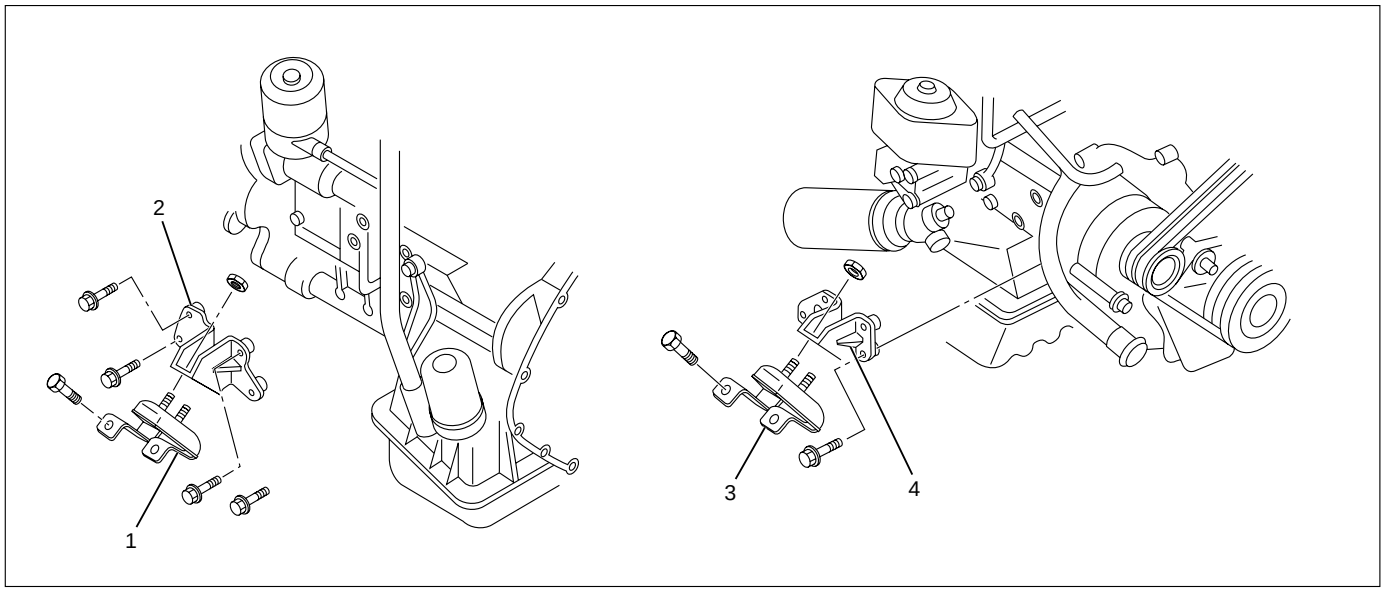

022RW018

Legend

(1) Rubber Engine Mount (LH)
(2) Engine Mounting Bracket (LH)
(3) Rubber Engine Mount (RH)
(4) Engine Mounting Bracket (RH)

REMOVAL

1. Disconnect battery ground cable
2. Hang the engine assembly.
3. Rubber engine mount.
   1) Remove bolts from chassis frame bracket.
   2) Remove nuts from rubber engine mount and engine mounting bracket.
4. Remove bolt which is fixed between engine and mounting bracket then remove the engine mounting bracket.

INSTALLATION

- Tighten the fixing bolts to the specified torque.

1. Engine mounting bracket to cylinder block.

Torque : 40 N·m (4 kg·m/29 lb ft) (for M10)
127 N·m (13 kg·m/94 lb ft) (for M14)

2. Rubber engine mount to chassis frame and engine mounting bracket.

Torque :40 N·m (4 kg·m/29 lb ft)

ENGINE MOUNT (LH)

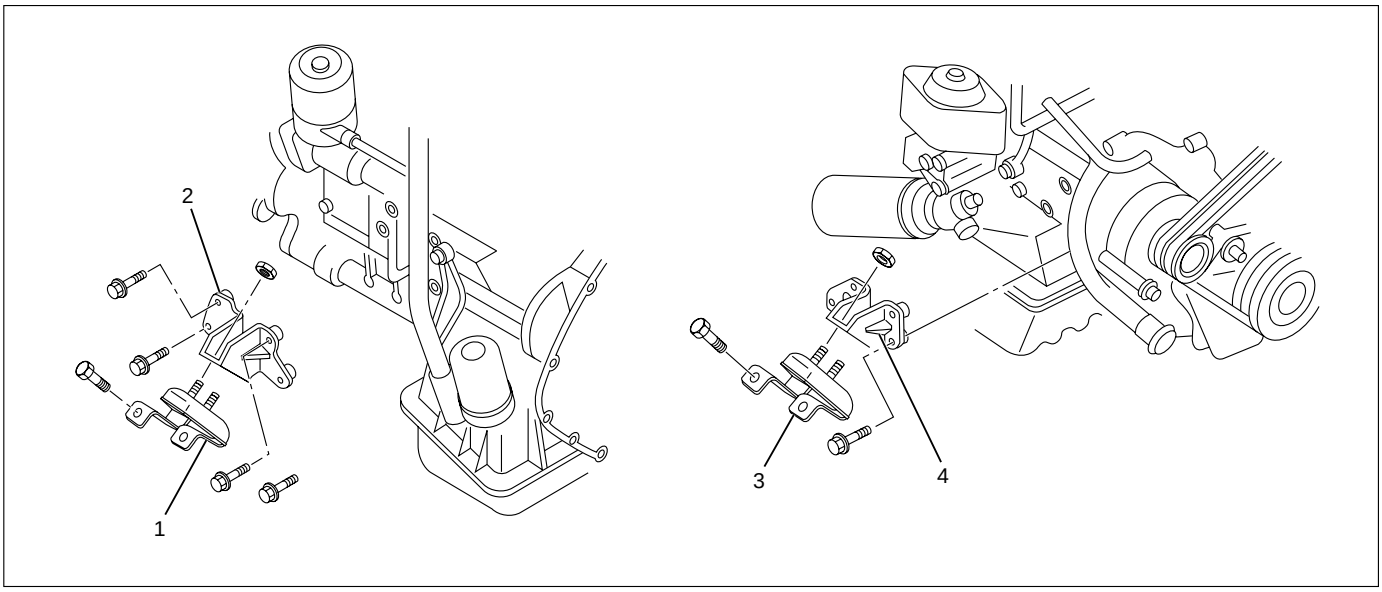

022RW018

Legend

(1) Rubber Engine Mount (LH)
(2) Engine Mounting Bracket (LH)
(3) Rubber Engine Mount (RH)
(4) Engine Mounting Bracket (RH)

REMOVAL

1. Disconnect battery ground cable
2. Hang the engine assembly.
3. Rubber engine mount.
   1) Remove bolts from chassis frame bracket.
   2) Remove nuts from rubber engine mount and engine mounting bracket.
4. Remove bolt which is fixed between engine and mounting bracket then remove the engine mounting bracket.

INSTALLATION

- Tighten the fixing bolts to the specified torque.

1. Engine mounting bracket to cylinder block.

Torque : 40 N·m (4 kg·m/29 lb ft) (for M10)
127 N·m (13 kg·m/94 lb ft) (for M14)

2. Rubber engine mount to chassis frame and engine mounting bracket.

Torque :40 N·m (4 kg·m/29 lb ft)

INTERCOOLER

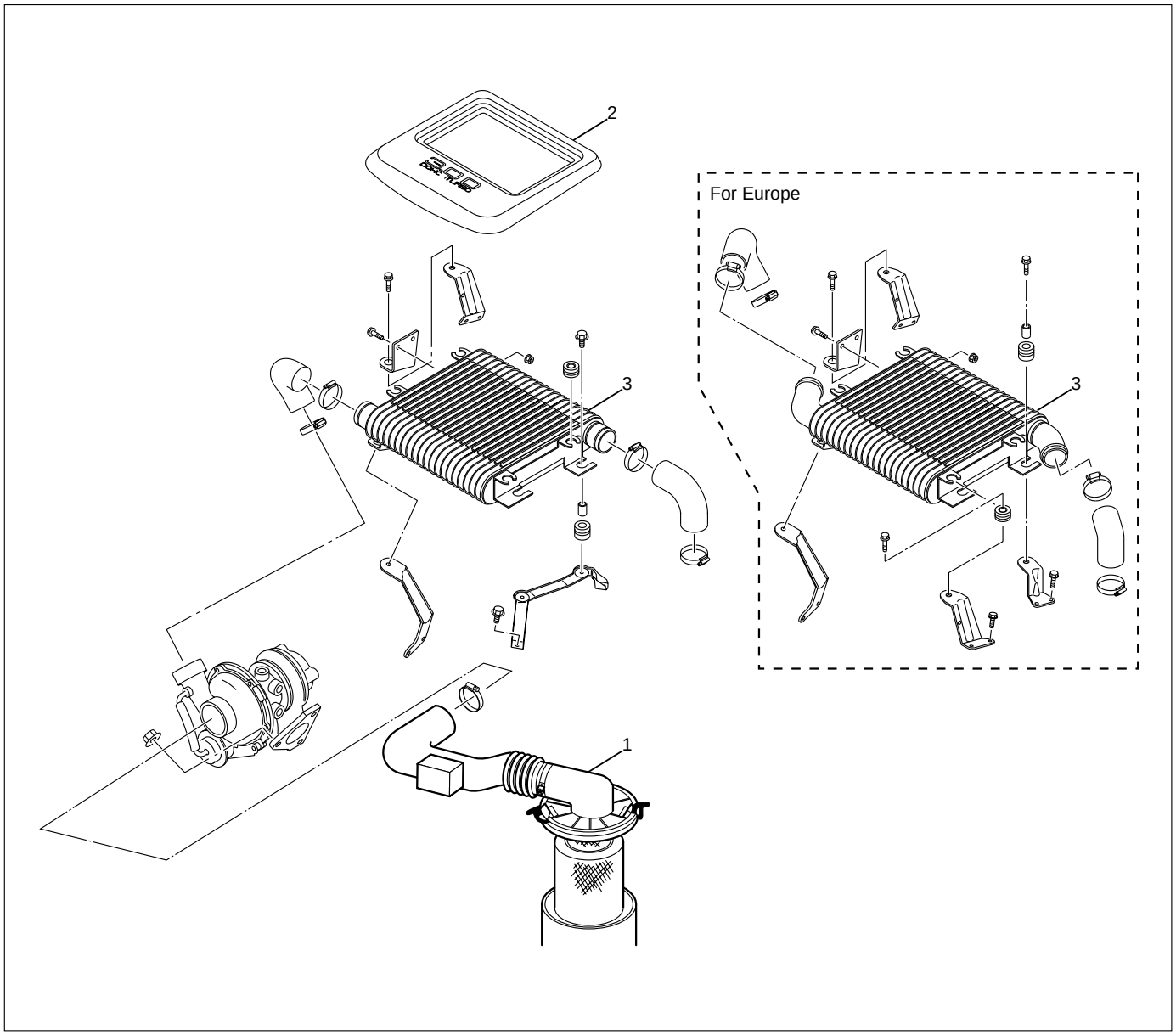

135R200003

Legend

(1) Air Cleaner Cover & Air Duct
(2) Intercooler Cover
(3) Intercooler Assembly

REMOVAL

1. Disconnect the battery ground cable.
2. Remove air cleaner cover and air duct.
3. Remove intercooler cover.
4. Remove intercooler assembly.
   1) Remove rubber hose from between intercooler outlet and intake manifold inlet.
   2) Remove rubber hose from between turbocharger outlet and intercooler inlet.
   3) Remove intercooler assembly fixing bolts from the bracket, remove intercooler assembly.

INSTALLATION

1. Intercooler assembly
   1) Connect outlet hose to intake manifold.

Torque : 4 N·m (0.4 kg·m/3 lb ft)

   2) Connect inlet hose from turbocharger to intercooler.

Torque : 4 N·m (0.4 kg·m/3 lb ft)

   3) Install intercooler and tighten fixing bolts to the specified torque.

Torque : 20 N·m (2.0 kg·m/14.5 lb ft)

2. Install intercooler cover.
3. Install air cleaner cover and air duct.
4. Connect the battery ground cable.

CYLINDER HEAD COVER

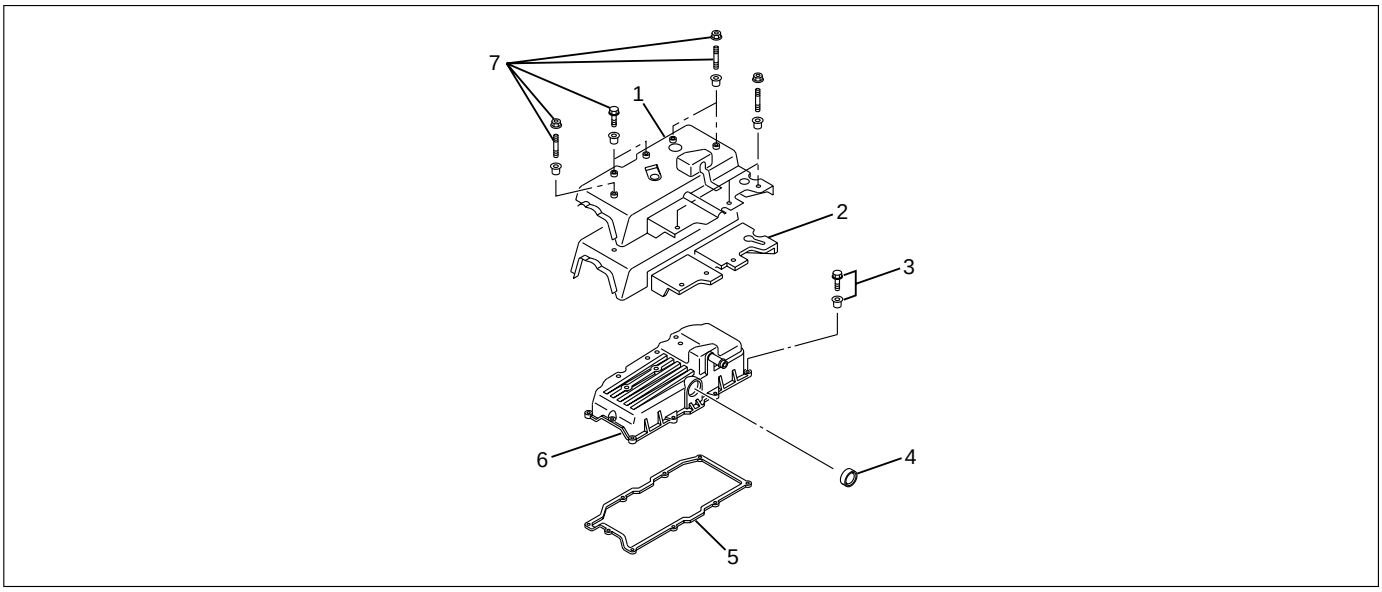

010R200006

Legend

(1) Noise Insulator Cover
(2) Insulator
(3) Bolt
(4) Oil Seal
(5) Gasket
(6) Cylinder Head Cover
(7) Bolt

REMOVAL

1. Disconnect battery ground cable.
2. Remove clip, remove air cleaner cover and air duct.
3. Remove intercooler assembly.
   Refer to “Intercooler” in this manual.
4. Remove PCV hose.
5. Remove bolts which fix noise insulator cover then remove noise insulator cover and insulator.
6. Remove high pressure oil pipe at cylinder head side.
   Take care when removing the injector oil pipe, because sometimes, during removal, your hand can be injured by the remaining high pressure oil.

INSTALLATION

1. Cylinder head cover.
   1) Install the cylinder head cover gasket to cylinder head cover.
   2) The gasket must be set perfectly with no loose areas.
   3) Apply liquid gasket (TB1207B or equivalent) to the rubber seal of the camshaft end, injector harness gasket area and No. 1 camshaft bracket.

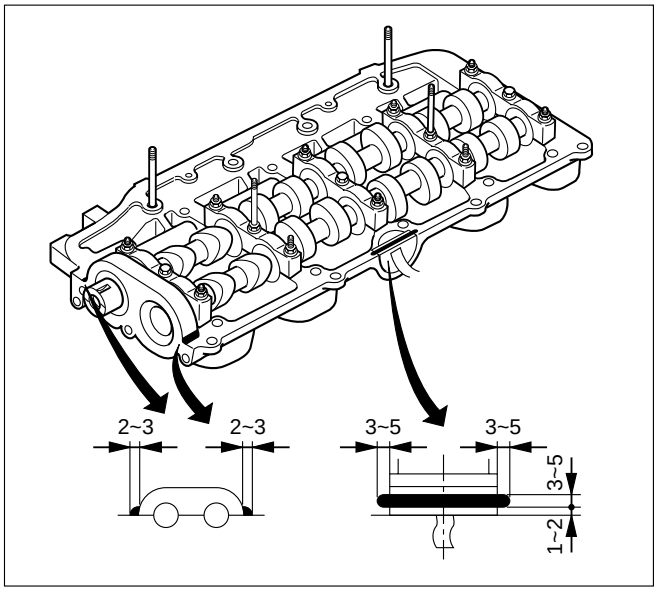

012RW119

   4) Tighten cylinder head cover fixing bolts to the specified torque.

Torque : 9 N·m (0.9 kg·m/6.5 lb ft)

2. Fill with about 300 cc of engine oil from the high pressure oil pipe installation port of the oil rail using an oil rail filler. If assembled without filling the oil rail with oil, the time for starting the engine will be longer.
3. Install the high pressure oil pipe immediately and tighten the sleeve nut to the specified torque.

Torque : 80 N·m (8.1 kg·m/57.9 lb ft)

NOTE: Do not scratch the oil seal on the cylinder head during installation of the high pressure oil pipe.

4. Install the noise insulator and its cover on the cylinder head cover.

NOTE: Do not catch the injector harness with the noise insulator cover.

5. Connect the PCV hose.
6. Install the intercooler assembly.
   Refer to “Intercooler” in this manual.
7. Install air cleaner cover and air duct.
8. Connect battery ground cable.

INTAKE MANIFOLD

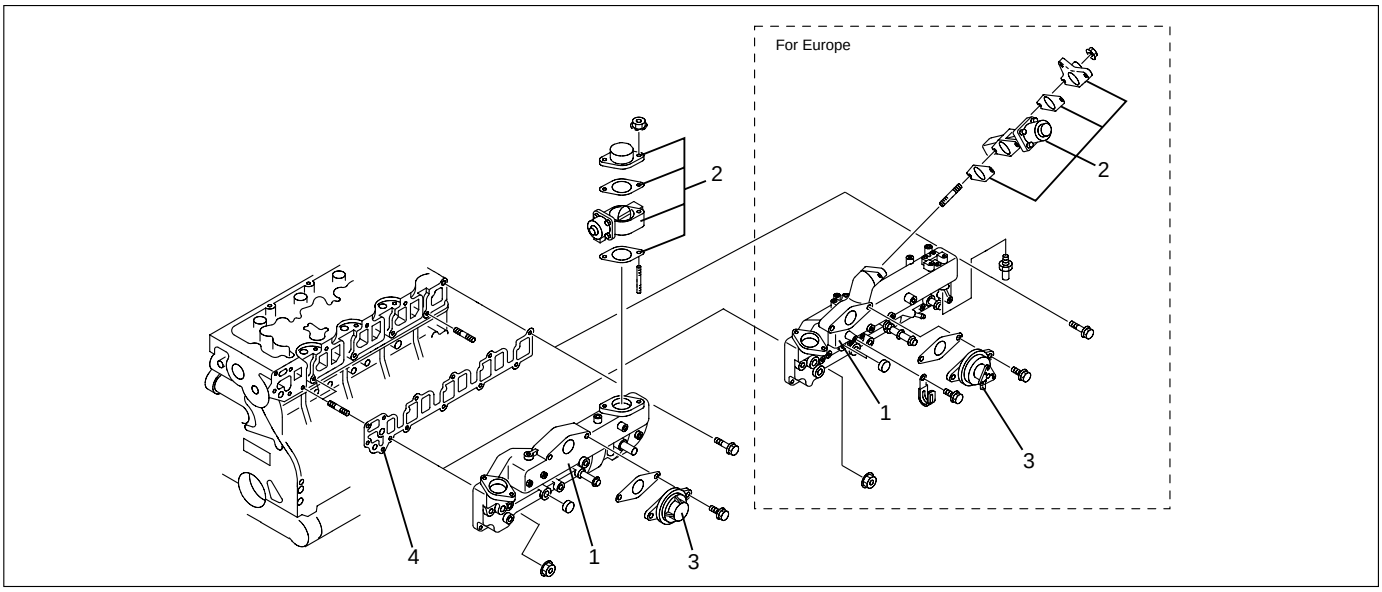

025R200005

Legend

(1) Intake Manifold
(2) Throttle Valve Assembly
(3) EGR Valve
(4) Gasket

REMOVAL

1. Drain engine coolant and disconnect water hose from thermostat hosing.
2. Remove intercooler assembly
   Refer to “Intercooler” in this manual.
3. Remove bracket bolt of oil level gauge guide tube.
4. Remove PCV Hose.
5. Remove hoses from EGR, EGR vacuum sensor and inlet/outlet of heater.
6. Disconnect harness connector form MAP sensor, EGR vacuum sensor, ETC sensor, water temperature unit, IAT sensor and EVRV.
7. Remove high pressure oil pipe.
8. Remove the two way valve.
9. Remove fuel pipe from between intake manifold and high pressure oil pump.
10. Remove fixing bolts and nuts on the intake manifold, then remove the intake manifold assembly.

INSTALLATION

1. Install the intake manifold, tighten bolts and nuts to the specified torque.

Torque : 20 N·m (2.0 kg·m/14.5 lb ft) for bolt and nut

2. Install the fuel pipe and tighten to the specified torque.

Torque :
M16 bolt (apply engine oil) 4 N·m (0.4 kg·m/2.9 lb ft)
Cap nut (M10) 13N·m (1.3 kg·m/9.4 lb ft)
Fuel pipe (M10 apply engine oil) 14 N·m (1.4 kg·m/10 lb ft)

3. Install two way valve.

Torque : 20 N·m (2.0 kg·m/14.5 lb ft)

4. Fill with about 300 cc of engine oil from the high pressure oil pipe installation port of the oil rail using an oil filler. If assembled without filling the oil rail with oil, the time for starting the engine will be longer.
5. Install the high pressure oil pipe immediately and tighten the sleeve nut to the specified torque.

Torque : 80 N·m (8 kg·m/57.9 lb ft)

6. Reconnect harness connector to MAP sensor, EGR vacuum sensor, ETC sensor, Water temperature unit, IAT sensor and EVRV.
7. Connect the hoses to EGR valve, EGR vacuum sensor, and water inlet/outlet pipe for heater.
8. Connect PCV hose.
9. Install the oil level gauge guide tube and tighten bracket bolt.
10. Install the intercooler assembly.
    Refer to “Intercooler” in this manual.
11. Connect the hose to the thermostat housing and fill with engine coolant.

EXHAUST MANIFOLD

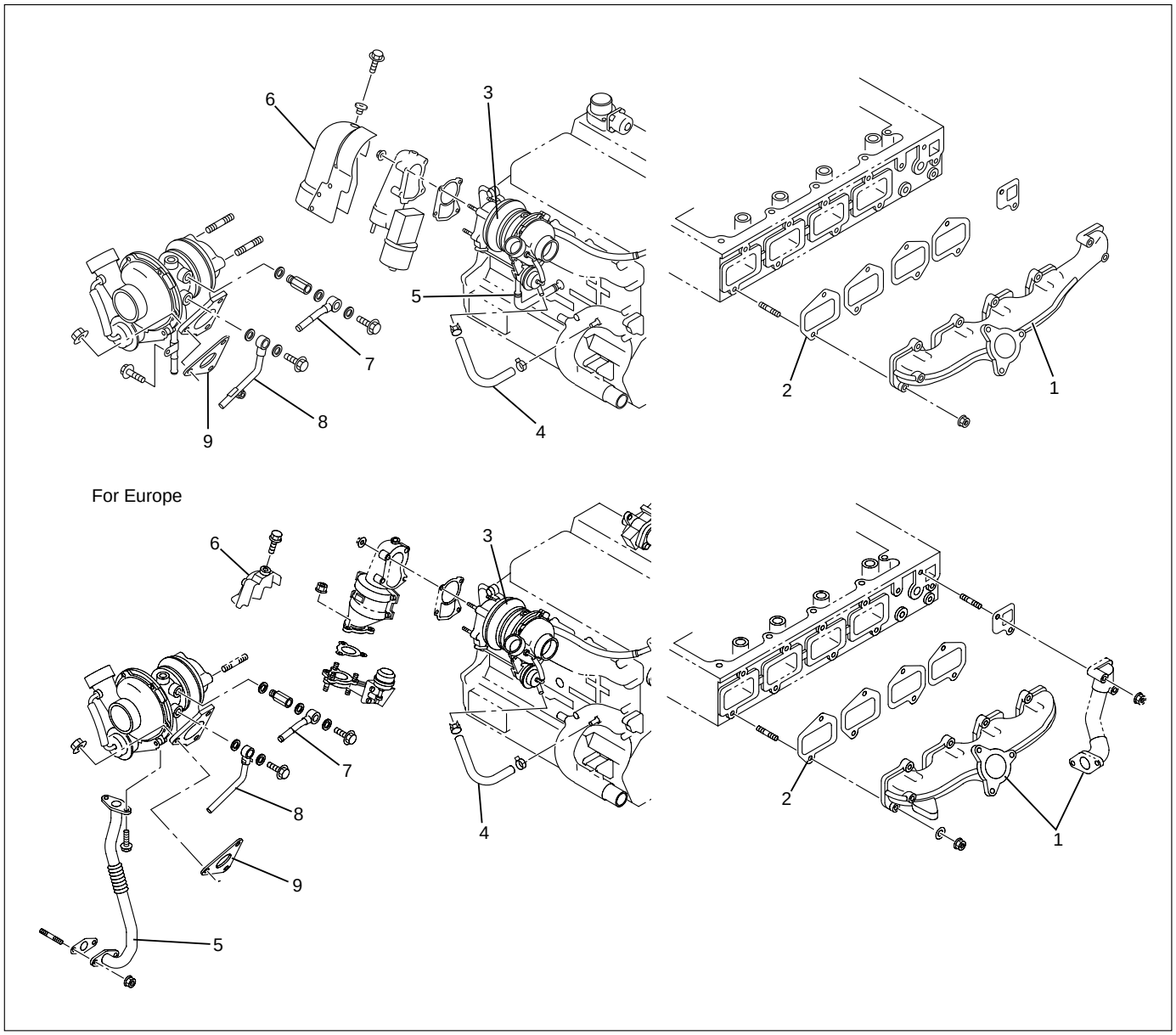

025R200004

Legend

(1) Exhaust Manifold
(2) Gasket
(3) Turbocharger Assembly
(4) Water Hose
(5) Water Hose
(6) Heat Protector
(7) Oil Pipe
(8) Oil Pipe
(9) Gasket

REMOVAL

1. Remove the hose from both turbocharger outlet and intake manifold inlet side, then remove intercooler assembly.
2. Loosen belt tensioner, remove A/C compressor assembly.
3. Remove heat protector from turbocharger.
4. Remove water hoses and oil pipes from turbocharger.
5. Remove turbocharger assembly from exhaust manifold.
6. Remove exhaust manifold fixing nuts, then remove exhaust manifold.

RINSTALLATION

1. Install gasket on the exhaust manifold and tighten to the specified torque.

Torque : 30 N·m (3.1 kg·m/22 lb ft)

2. Install turbocharger on the exhaust manifold.

Torque : 27 N·m (2.8 kg·m/20.2 lb ft)

3. Install water hoses and oil pipes.
4. Install heat protector to turbocharger.

Torque : 9 N·m (0.9 kg·m/6.5 lb ft)

5. Install A/C compressor assembly and readjust belt tensioner.
6. Install the intercooler assembly in the normal position.

   Connect both hoses to turbocharger and intake manifold.

TURBOCHARGER

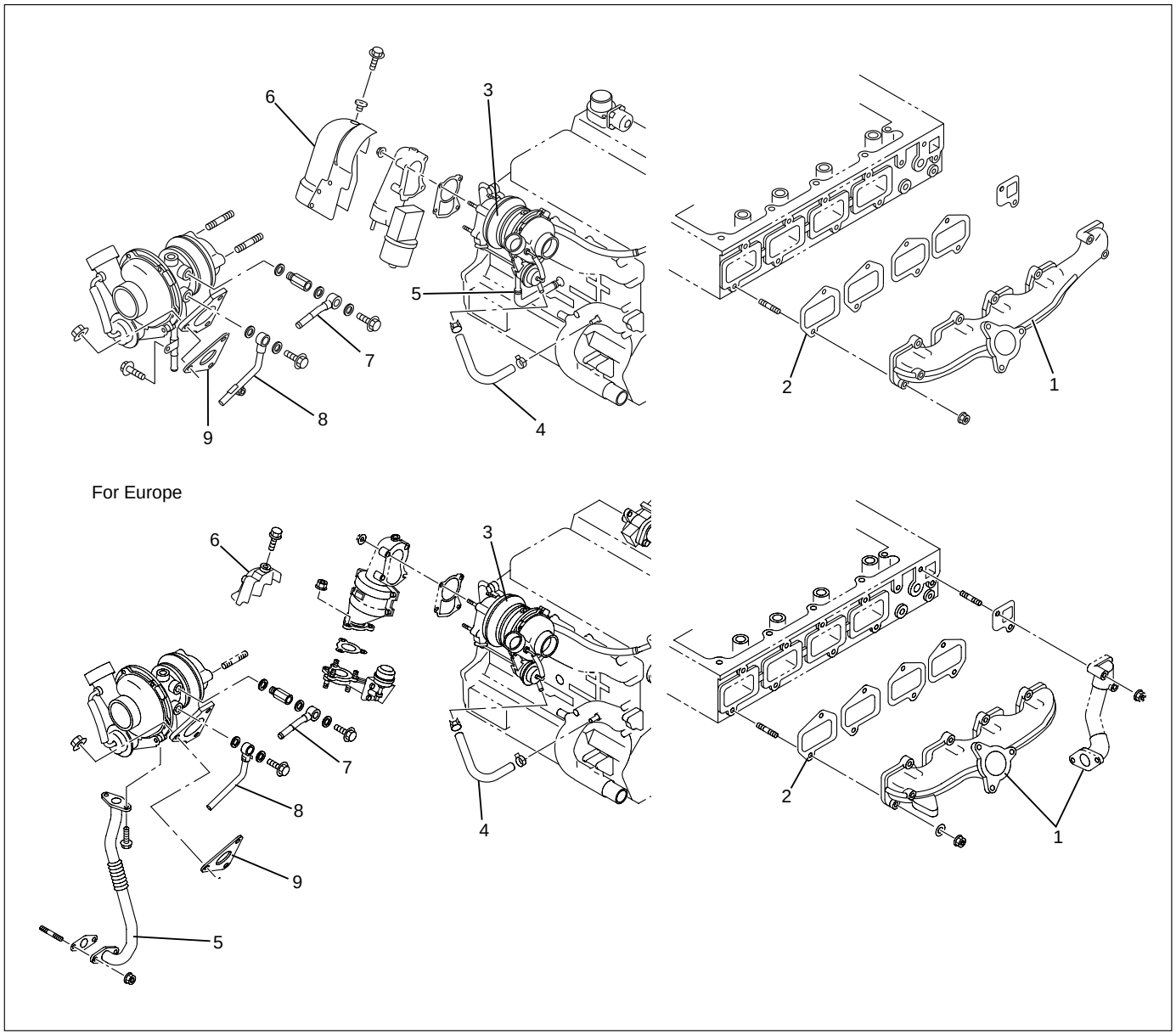

025R200004

Legend

(1) Exhaust Manifold
(2) Gasket
(3) Turbocharger Assembly
(4) Water Hose
(5) Water Hose
(6) Heat Protector
(7) Oil Pipe
(8) Oil Pipe
(9) Gasket

REMOVAL

1. Remove battery.
2. Drain engine coolant.
3. Remove air cleaner cover with air duct.
4. Remove intercooler assembly.
   Refer to “Intercooler” in this manual.
5. Remove water pipe for turbocharger inlet.
6. Remove oil pipe for turbocharger.
   1) Remove eye bolt from turbocharger.
   2) Plug oil port on the turbocharger to prevent entry of foreign materials.
7. Remove oil drain pipe from turbocharger.
8. Remove water outlet pipe.
9. Remove heat protector.
10. Remove exhaust adaptor.
11. Remove turbocharger assembly from exhaust manifold.

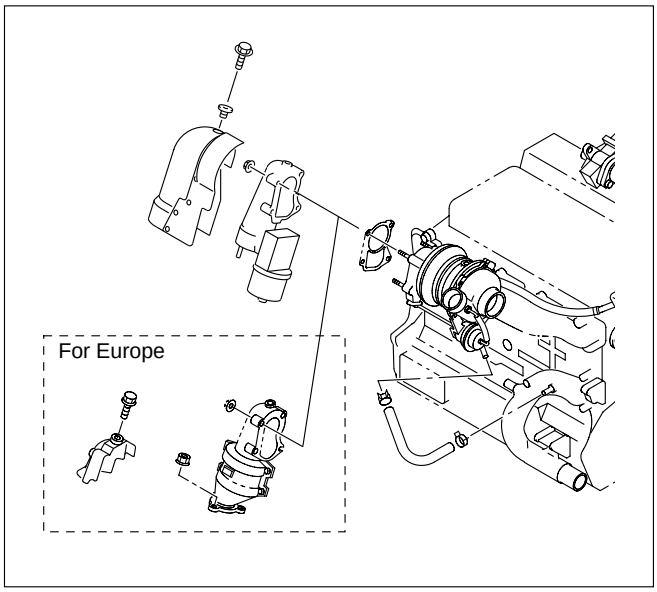

025R200006

INSTALLATION

1. Install turbocharger assembly to exhaust manifold, tighten to the specified torque.

Torque : 27 N·m (2.8 kg·m/20.2 lb ft)

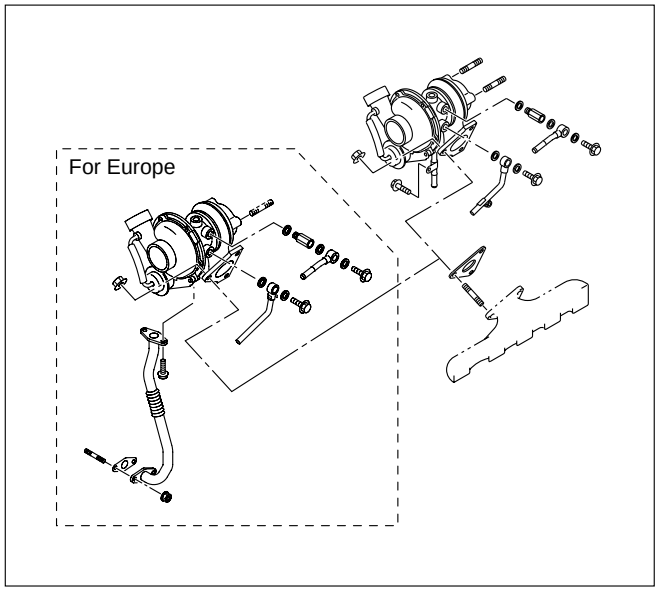

025R200007

2. Install exhaust adaptor.

Torque : 27 N·m (2.8 kg·m/20.2 lb ft)

3. Install heat protector.
4. Install water outlet pipe with gasket.

Torque : 9 N·m (0.9 kg·m/6.5 lb ft)

5. Install turbocharger oil drain pipe.

Torque : 9 N·m (0.9 kg·m/6.5 lb ft)

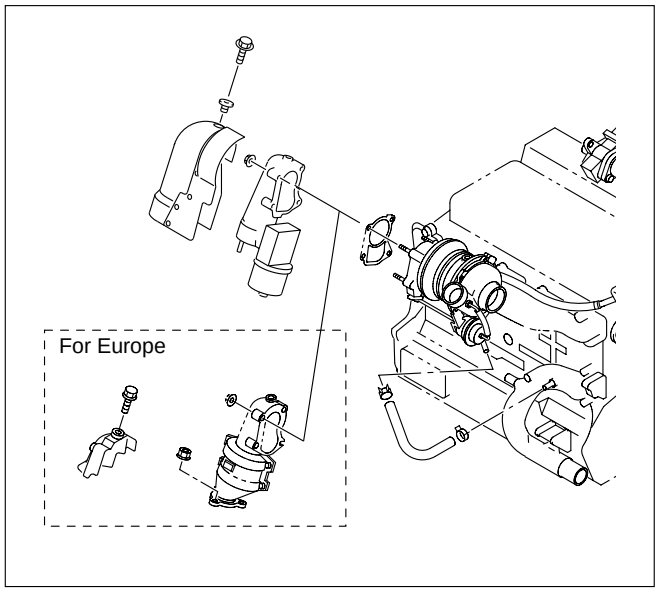

025R200006

6. Install oil supply pipe to turbocharger.
   1) Fill with 100 cc engine oil at the turbocharger oil supply hole before installing the oil pipe.
   2) Turn the turbocharger by hand to lubricate turbocharger shaft.
   3) Install oil supply pipe with new gasket to the turbocharger and tighten oil supply pipe bolts to the specified torque.

Torque : 22 N·m (2.2 kg·m/15.9 lb ft) for M10
54 N·m (5.5 kg·m/39.8 lb ft) for M14

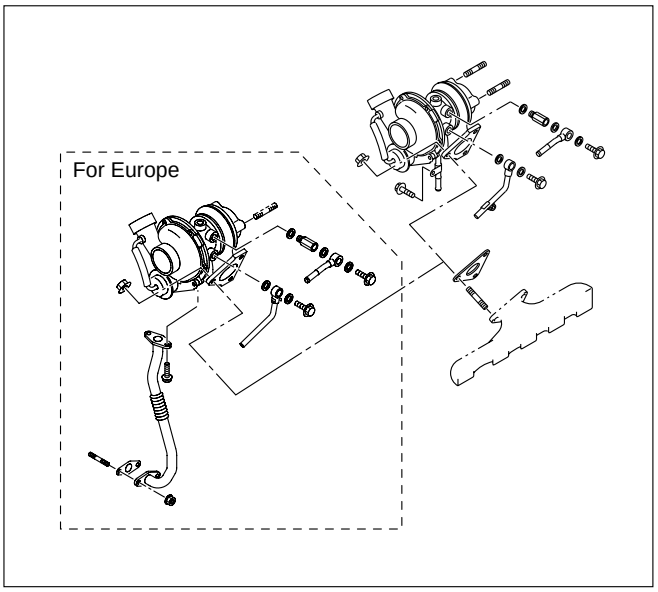

025R200007

7. Install water inlet pipe with new gasket, tighten to the specified torque.

Torque : 9 N·m (0.9 kg·m/6.5 lb ft)

8. Install intercooler assembly.
   Refer to “Intercooler” in this manual.
9. Install air cleaner cover with air duct, connect both side hoses.
10. Fill with engine coolant.
11. Install the battery and connect battery cables.

CYLINDER HEAD

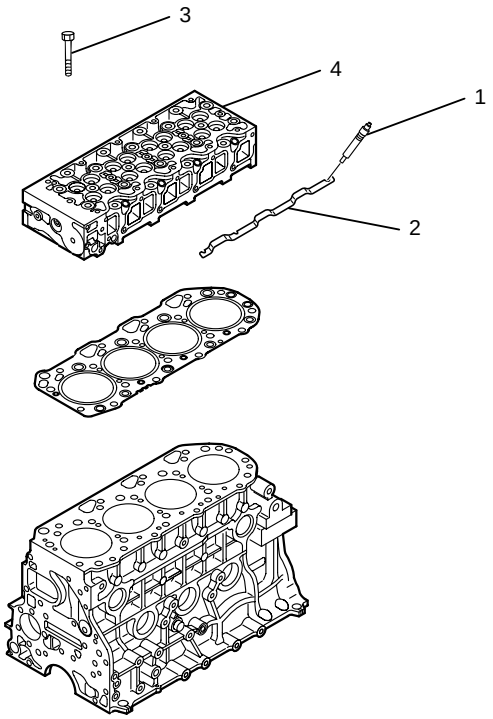

012RW096

Legend

(1) Glow Plug
(2) Plate
(3) Cylinder Head Bolt
(4) Cylinder Head

NOTE:

- During disassembly, be sure that the valve train components are kept together and identified so that they can be re-installed in their original locations.
- Before removing the cylinder head from the engine and before disassembling the valve mechanism, do a compression test and note the results.

DISASSEMBLY

1. Injector Assy
2. Glow Plug and Glow Plug Connector
3. Cylinder Head Assembly
   - Refer to “Cylinder Head Gasket”

CLEAN

- Cylinder head
  Carefully remove all varnish, soot and carbon on the bare metal. Do not use a motorized wire brush on any gasket sealing surface.

INSPECTION AND REPAIR

Make the necessary adjustments, repairs, and part replacements if excessive wear or damage is discovered during inspection.

1. Cylinder head gasket and mating surfaces for leaks, corrosion and blow-by. If the gasket has failed, determine the cause;
   – Improper installation
   – Loosen or warped cylinder head
   – Insufficient torque on head bolts
   – Warped cylinder block surface

2. Cylinder head for cracks, especially between valve seats and in the exhaust ports.
3. Cylinder head deck for corrosion, sand particles in head and porosity.

CAUTION: Do not attempt to weld the cylinder head. Replace it.

4. Cylinder head lower surface for flatness.

   Use a straight edge and a feeler gauge to measure the cylinder head lower surface warpage.

   If the measured values exceed the specified limit, the cylinder head must be replaced.

   Cylinder Head Lower Face Warpage:
   Standard: 0.075 mm (0.0029 in) or less
   Limit: 0.2 mm (0.0079 in)

   Cylinder Head Height:
   Standard: 95 mm (3.740 in)

5. Water jacket sealing plugs seating surfaces.
6. Use a straight edge and a feeler gauge to measure the manifold cylinder head fitting face warpage.

   If the measured values exceed the specified limit, the manifold must be replaced.

   Exhaust Manifold Warpage:
   Standard: 0.05 mm (0.0020 in) or less
   Limit: 0.20 mm (0.0079 in)

CAUTION: Do not attempt to weld the cylinder head. Replace it.

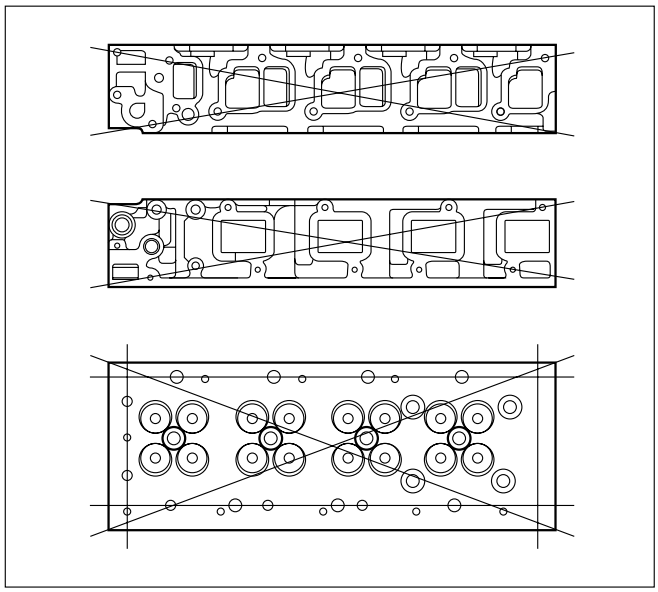

011RW006

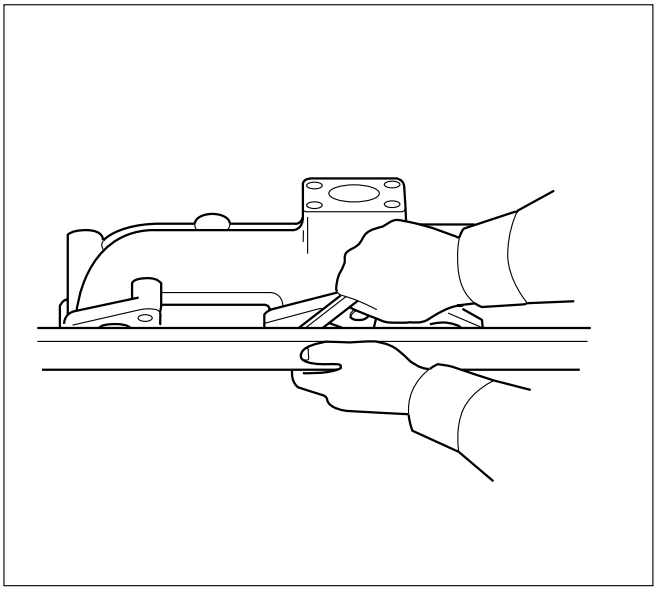

012RW053

REASSEMBLY

1. Cylinder Head
   - Refer to “Cylinder Head Gasket”.
2. Glow Plug and Glow Plug Connector
   - Tighten glow plugs.

   Torque: 15 N·m (1.5 kg·m/11 lb ft)

CYLINDER HEAD GASKET

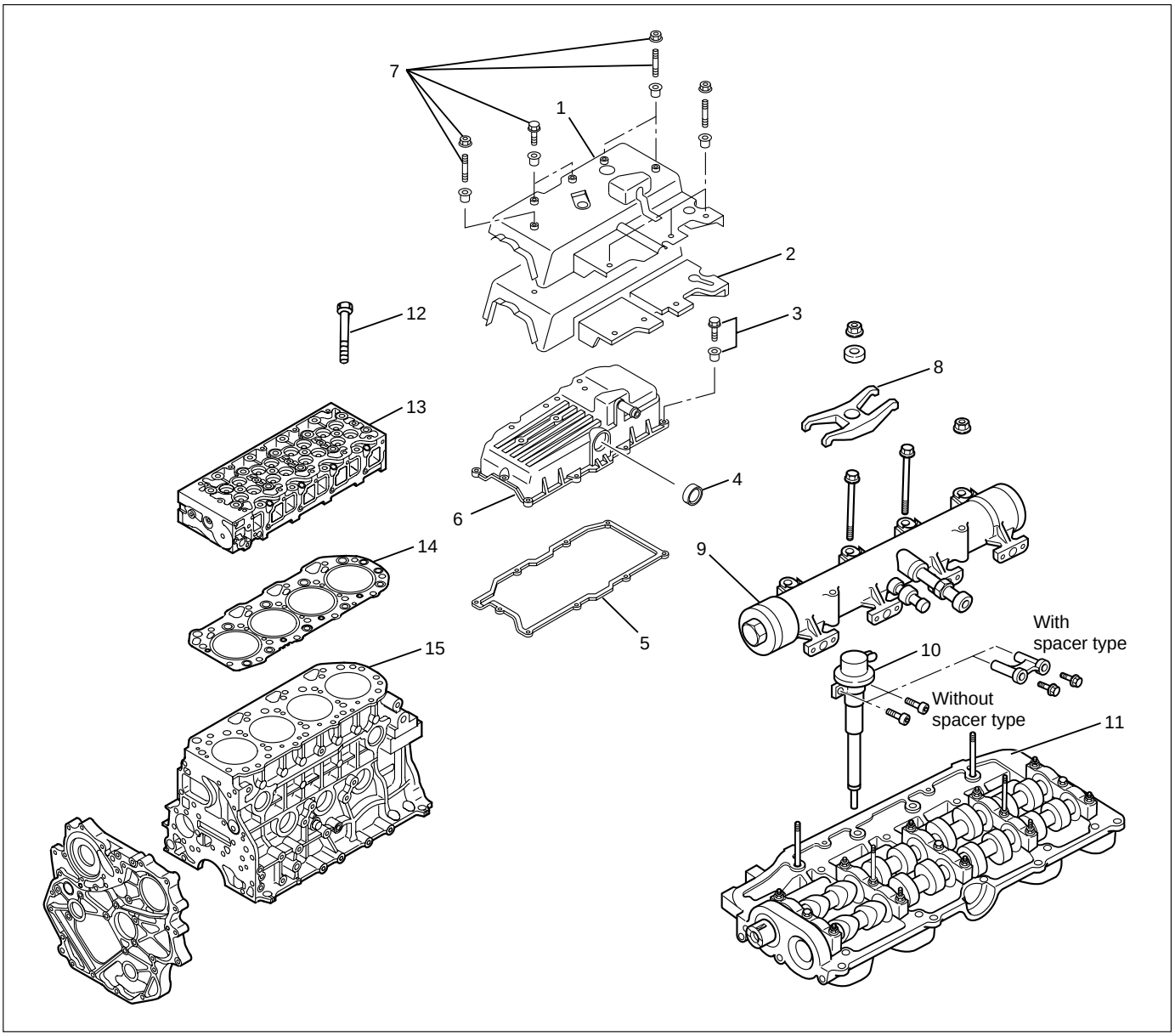

011R200002

Legend

(1) Cylinder Head Noise Insulator Cover
(2) Insulator
(3) Bolt and Gasket
(4) Oil Seal
(5) Gasket
(6) Cylinder Head Cover
(7) Bolt, Stud and Rubber Mounting
(8) Injector Clamp
(9) Oil Rail
(10) Injector Assembly
(11) Camshaft Carrier
(12) Cylinder Head Bolt
(13) Cylinder Head Assembly
(14) Cylinder Head Gasket
(15) Cylinder Block

REMOVAL

1. Disconnect battery ground cable.
2. Drain engine coolant.
3. Remove air cleaner and air duct.
4. Remove intercooler assembly.
   Refer to “Intercooler” in this manual.
5. Remove oil level gauge guide assembly.
6. Remove PCV hose.
7. Remove EGR vacuum hose.
8. Disconnect harness connector around the cylinder head.
9. Remove A/C compressor assembly.
10. Remove A/C compressor bracket.
11. Remove generator assembly and take out fan belt.
12. Remove heat protector and remove valve assembly.
13. Remove water hose and oil pipe from turbocharger.
14. Remove turbocharger assembly.
15. Remove water hose between thermostat and radiator.
16. Remove cylinder head noise insulator cover.

NOTE: Do not make damage to the harness.

17. Remove high pressure pipe.
18. Remove timing belt cover.
19. Remove CMP sensor bracket.
20. Remove timing belt tensioner and remove timing belt.
21. Remove camshaft pulley.
22. Remove front plate.
23. Remove water pipe between cylinder head and water pump.
24. Remove fuel pipe between fuel pump and intake manifold.
25. Remove fuel return pipe.
26. Remove intake manifold assembly.
27. Disconnect glow plug wiring and remove glow plug.
28. Remove cylinder head cover.
29. Drain oil from oil rail.
30. Disconnect injector harness connector.
31. Disconnect harness connector from oil pressure sensor and oil temperature sensor on the oil rail.
32. Disconnect injector harness assembly.
33. Remove injector clamp.
34. Remove injector spacer (If equipped.).
35. Remove injector assembly.
36. Remove oil rail assembly.
37. Remove camshaft carrier.
38. Remove cylinder head assembly.
39. Remove cylinder gasket.

INSTALLATION

1. Install cylinder head gasket with top mark up.

NOTE: Determine cylinder head gasket grade by measuring projection of piston head.

2. Selection cylinder head gasket.
   1) Measure the piston head projection by dial gauge.

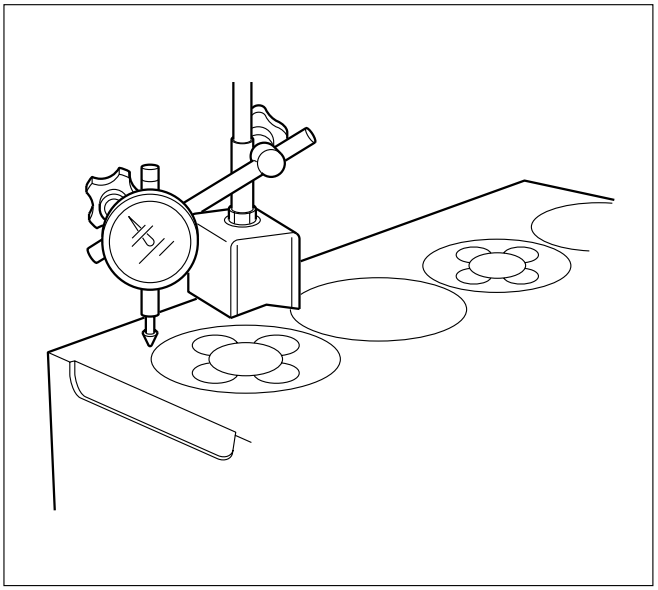

012RW073

   2) Measure the projection of piston head at the nearest possible point to the cylinder bore.
   3) Obtain the largest measurement from among all cylinders.
   4) Determine cylinder head gasket grade by maximum value of measuring projection of piston head.

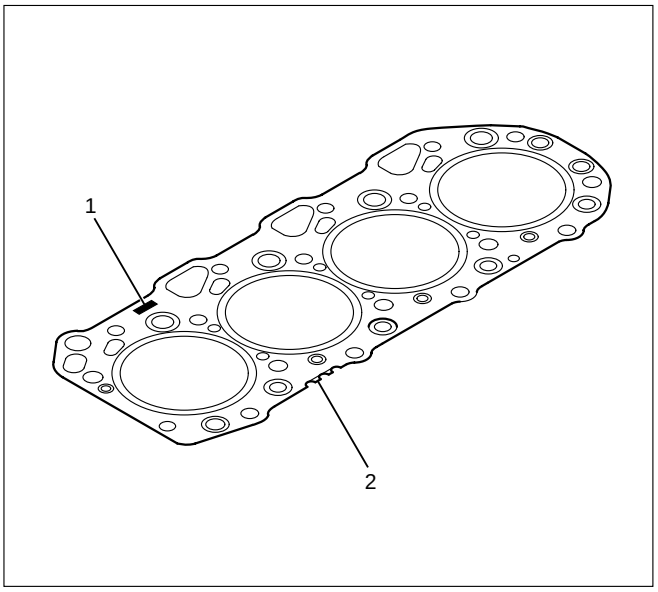

011RW043

Legend
(1) Top Mark
(2) Grade Mark

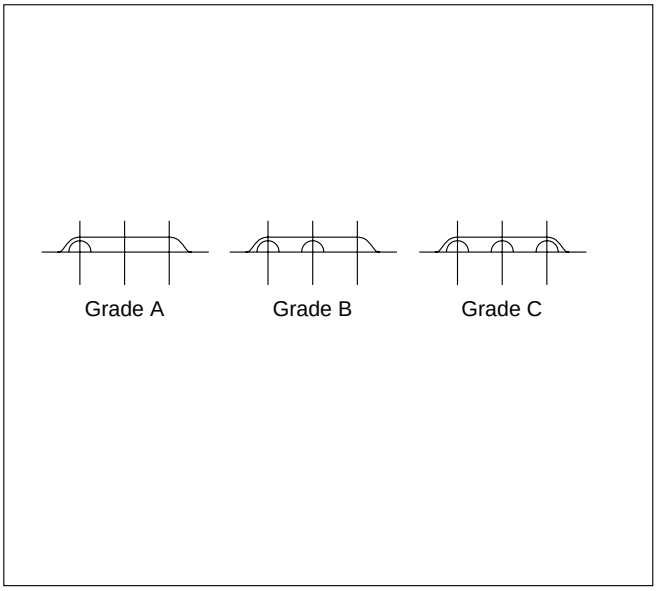

Cylinder head gasket and piston projection mm

Grade	Piston projection	Gasket thickness
A	more 0.333 to less 0.383	1.35
B	more 0.383 to less 0.433	1.40
C	more 0.433 to less 0.483	1.45

CAUTION:
- **The projection of each piston should be 0.333 mm or more and less than 0.483 mm.**
- **Maximum difference in projection between pistons should be less than 0.1 mm.**
- **If the piston projection is without standard, reassemble the engine all over again.**

3. Install cylinder head assembly, tighten bolts by angular tightening method.

Torque:

1st step; 49 N·m (4.9 kg·m/35.4 lb ft)
2nd step; 60°
3rd step; 60°

CAUTION: The cylinder head bolts cannot be reused.

4. Install camshaft carrier assembly.
   Refer to “Camshaft” in this manual.
5. Install oil rail and injector assembly.
   Refer to “Oil rail and injector” in this manual.
6. Install injector harness to connect harness connector.

Note: Apply liquid gasket (TB 1207B or equivalent) to the rubber seal of the camshaft end, injector harness gasket area and No. 1 camshaft bracket. Refer to the Cylinder head cover.

7. Install cylinder head cover.

Torque: 9 N·m (0.9 kg·m/6.5 lb ft)

8. Install glow plug to tighten specified torque.

Torque: 15 N·m (1.5 kg·m/11 lb ft) and connect glow plug harness.

9. Install intake manifold.

Torque: 20 N·m (2.0 kg·m/14.5 lb ft)

10. Install fuel return pipe.
11. Install fuel pipe in between fuel pump and intake manifold.
12. Install water pipe in between cylinder head and water pump.
    Tighten flange bolt to the specified torque.

Torque: 20 N·m (2.0 kg·m/14.5 lb ft)

13. Install front plate.

Torque: 20 N·m (2.0 kg·m/14.5 lb ft)

14. Install camshaft pulley, tighten with angular tightening method.
    1st step 40 N·m (4.0 kg·m/29 lb ft)
    2nd step 60°

NOTE: Apply engine oil to camshaft pulley bolt.

15. Align timing mark oil pump pulley and camshaft pulley to front plate then put the timing belt and tighten tensioner bolt.

Torque: 20 N·m (2.0 kg·m/14.5 lb ft) for M8
50 N·m (5.1 kg·m/37 lb ft)

16. Install CMP sensor bracket.
17. Install timing belt cover.

Torque: 9 N·m (0.9 kg·m/6.5 lb ft)

18. Fill with about 300 cc of engine oil from the high pressure oil pipe installing port of oil rail using an oil filler.
    If assembled without filling the oil rail with oil, the time for engine start will be longer.
19. Immediately install high pressure oil pipe to tighten with specified torque.

Torque: 80 N·m (8 kg·m/57.9 lb ft)

20. Install cylinder head noise insulator cover.

Torque: 9 N·m (0.9 kg·m/6.5 lb ft)

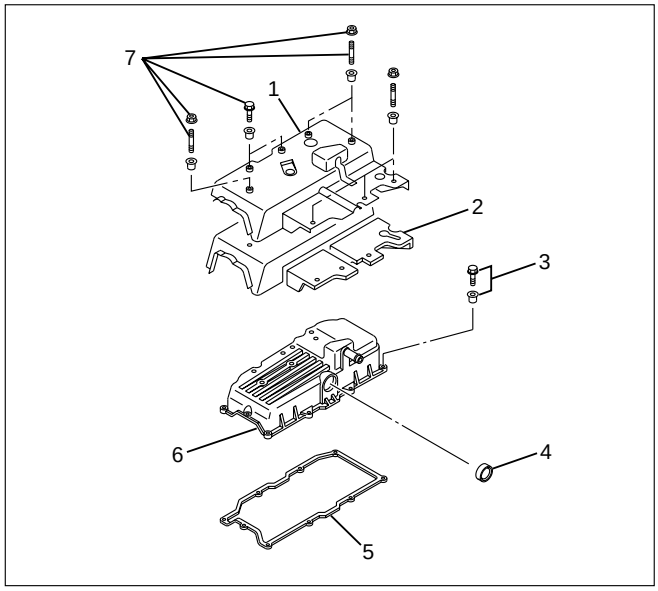

010R200006

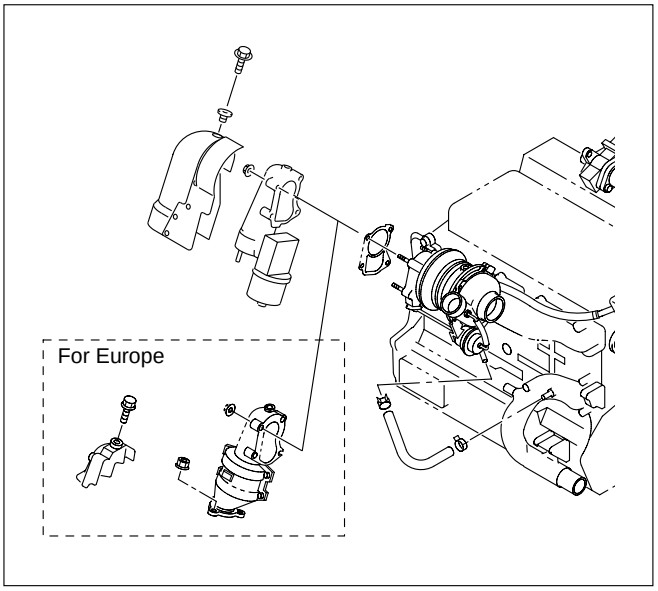

025R200006

Legend

(1) Cylinder Head Noise Insulator Cover
(2) Insulator
(3) Bolt
(4) Oil Seal
(5) Gasket
(6) Cylinder Head Cover
(7) Bolt, Stud and Rubber Mounting

21. Install water hose between thermostat and radiator.
22. Install turbocharger assembly to exhaust manifold.

Torque: 27 N·m (2.8 kg·m/20.2 lb ft)

23. Install water hose and oil pipe for turbocharger.

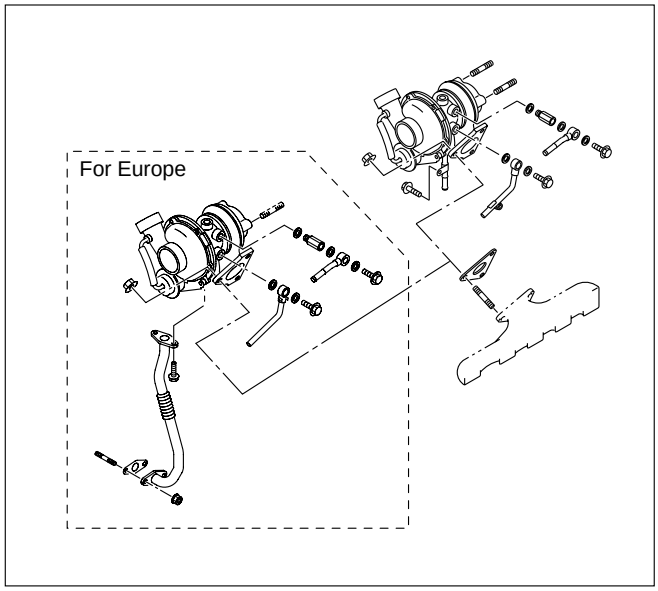

025R200007

24. Install exhaust valve assembly and heat protector.

Torque: 27 N·m (2.8 kg·m/20.2 lb ft) for valve

Torque: 9 N·m (0.9 kg·m/6.5 lb ft) for heat protector

25. Install generator assembly.

Torque: 40 N·m (4.0 kg·m/29 lb ft) for ACG bracket

Torque: 40 N·m (4.0 kg·m/29 lb ft) between ACG and bracket

Torque: 20 N·m (2.0 kg·m/14.5 lb ft) between ACG and adjuster plate

26. Fix the A/C compressor bracket and install A/C compressor.

Torque: 47 N·m (4.7 kg·m/34 lb ft) for A/C bracket

Torque: 20 N·m (2.0 kg·m/14.5 lb ft) for belt tensioner

27. Reconnect harness connector around cylinder head.
28. Connect EGR vacuum hose.
29. Install oil level gauge guide assembly.
    Tighten nuts lower portion and tighten bolt.

Torque: 20 N·m (2.0 kg·m/14.5 lb ft)

30. Install intercooler assembly.
    Refer to “Intercooler” in this manual.
31. Install air duct between air cleaner and turbocharger.
32. Fill engine coolant.
33. Reconnect battery.

CAMSHAFT

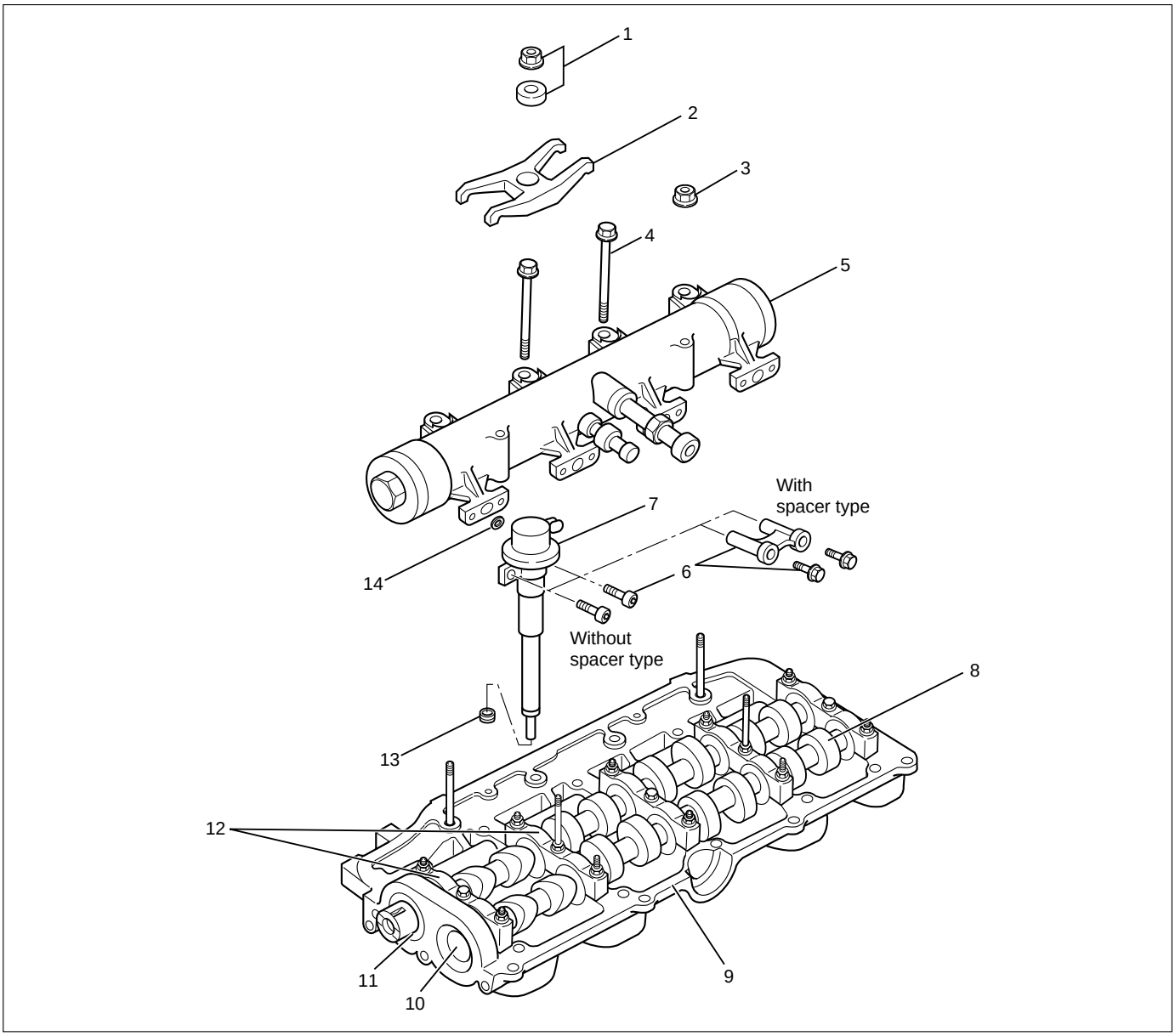

012R200004

Legend

(1) Nut and Washer
(2) Injector Clamp
(3) Nut
(4) Bolt
(5) Oil Rail Assembly
(6) Spacer (If equipped) and Bolt
(7) Injector Assembly
(8) Camshaft
(9) Camshaft Carrier
(10) Plug
(11) Oil Seal
(12) Camshaft Bracket
(13) Gasket
(14) Gasket

DISASSEMBLY

1. Injector clamp
2. Injector assembly
3. Oil rail assembly
4. Camshaft bracket
5. Camshaft
6. Oil seal
7. Plug

NOTE: Before starting disassembly above, drain oil from oil rail to prevent oil from entering the cylinder.

REASSEMBLY

1. Camshaft
   1) Before reassembling the camshaft to the camshaft carrier, align the holes between the main gear and the sub gear on the intake side of the camshaft gear with a special tool.
   2) Set lock pin to gear holes from sub gear side.

   Camshaft Gear Tool: 5-8840-2591-0

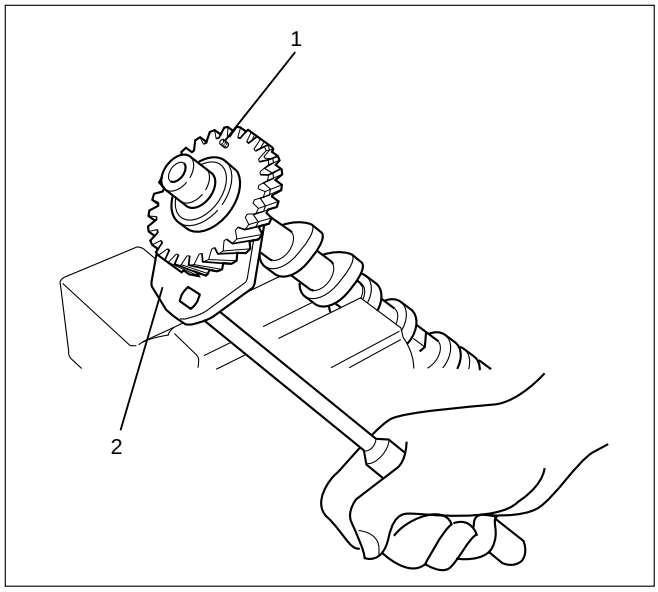

014RW183

Legend
(1) Locking pin
(2) Special tool

   3) Apply engine oil to the camshaft gear tooth.
   4) Apply engine oil to the journal on the camshaft carrier.
   5) Align the timing mark on the intake and exhaust camshaft gear and put on the camshaft carrier.

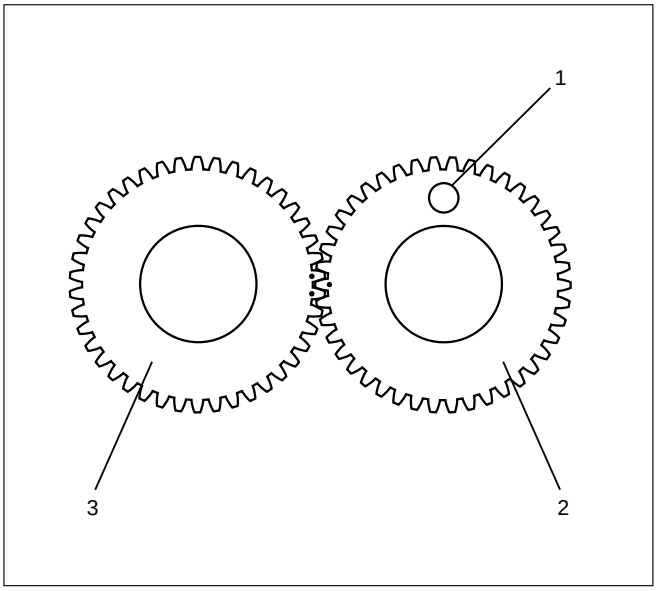

014RW184

Legend
(1) Locking pin
(2) Intake side camshaft gear
(3) Exhaust side camshaft gear

   6) Apply liquid gasket (TB1207B or equivalent) to No. 1 camshaft bracket matching surface.
   7) Set No. 1 to No. 5 camshaft bracket on camshaft carrier.
   8) Temporarily tighten bracket bolts B and C.

Temporal Torque: 20 N·m (2.0 kg·m/14.5 lb ft)

   9) Put gasket on the cylinder head.
   10) Install camshaft carrier onto the cylinder head and tighten bolts to specified torque.

Torque: A; 22 N·m (2.2 kg·m/15.9 lb ft)
B; 38 N·m (3.9 kg·m/28.2 lb ft)
C; 22 N·m (2.2 kg·m/15.9 lb ft)
D; 38 N·m (3.9 kg·m/28.2 lb ft)

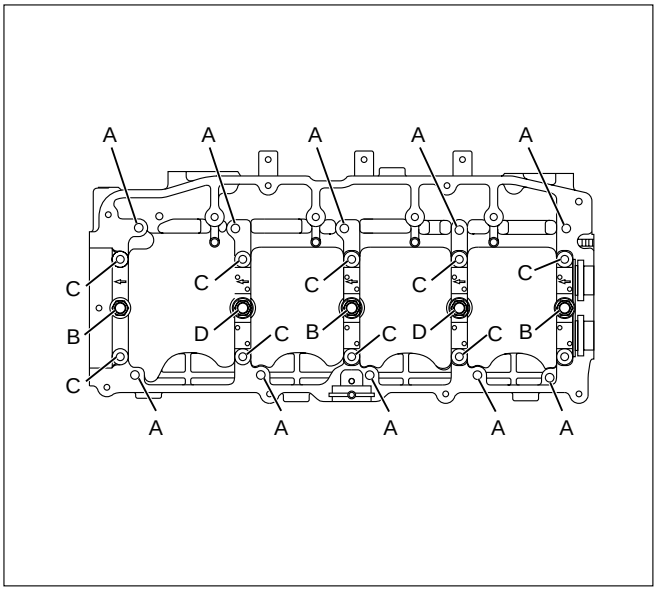

011RW035

- Remove locking pin.

INSPECTION AND REPAIR

Make the necessary adjustments, repairs, and part replacements if excessive wear or damage is discovered during inspection.

1. Camshaft Journal diameter
   1) Use a micrometer to measure each camshaft journal diameter in two directions (1) and (2). If the measured value is less than the specified limit, the camshaft must be replaced.

Standard: 29.939 – 29.96 mm (1.1787 – 1.1795 in)
Limit: 29.84 mm (1.17 in)

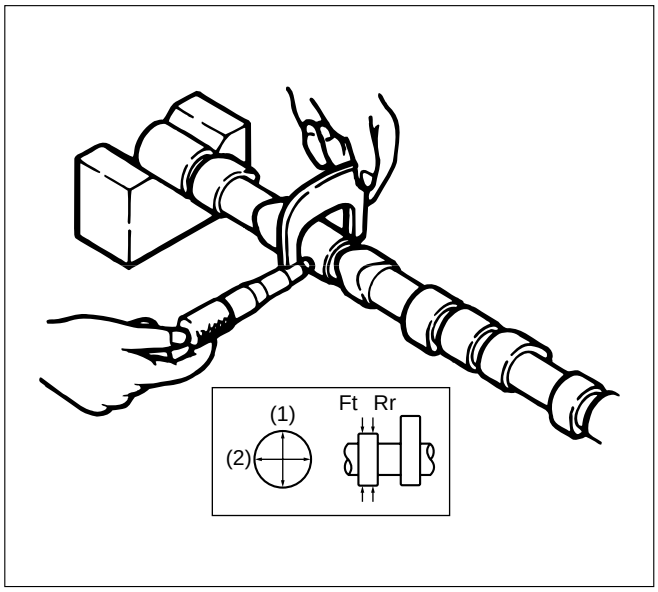

014RW179

2. Cam Height
   1) Measure the cam height (H) with a micrometer. If the measured value is less than the specified limit, the camshaft must be replaced.

Standard: IN 46.62 mm (1.8354 in)
EX 46.72 mm (1.8394 in)

Limit: IN 46.57 mm (1.8335 in)
EX 46.67 mm (1.8374 in)

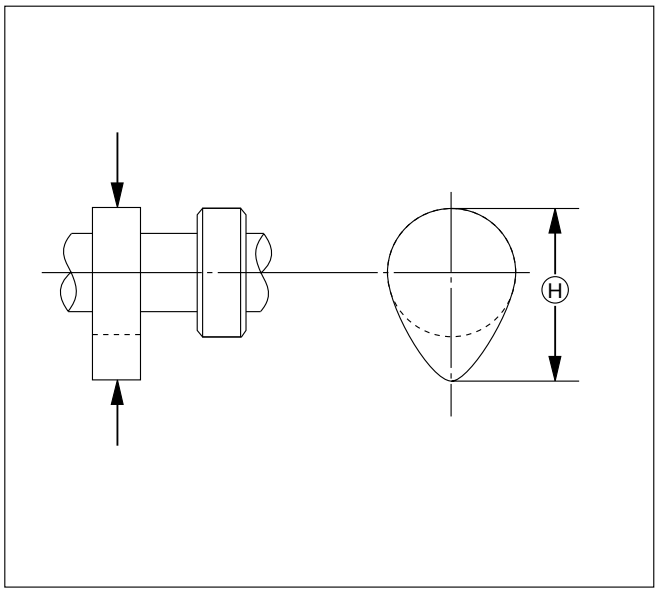

012RW059

3. Cam Run-Out
   1) Mount the camshaft on V-blocks.
   2) Measure the cam height (H) with a micrometer. If the measured value is less than the specified limit, the camshaft must be replaced.

Standard: 0.02 mm (0.0008 in) or less
Limit: 0.10 mm (0.0039 in)

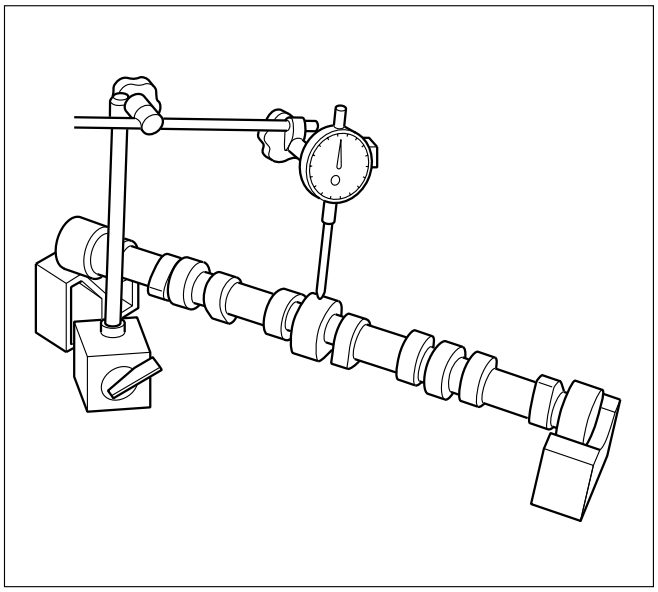

014RW171

4. Camshaft oil clearance
   1) Clean the camshaft, camshaft bracket and camshaft carrier.
   2) Put camshaft carrier on the cylinder head.
   3) Put camshaft on the camshaft carrier.
   4) Put plastigauge on the camshaft journal.
   5) Install camshaft bracket to original position and tighten bolts to specified torque in the numerical order shown in the illustration.

Torque: A; 22 N·m (2.2 kg·m/15.9 lb ft)
B; 38 N·m (3.9 kg·m/28.2 lb ft)
C; 22 N·m (2.2 kg·m/15.9 lb ft)
D; 38 N·m (3.9 kg·m/28.2 lb ft)

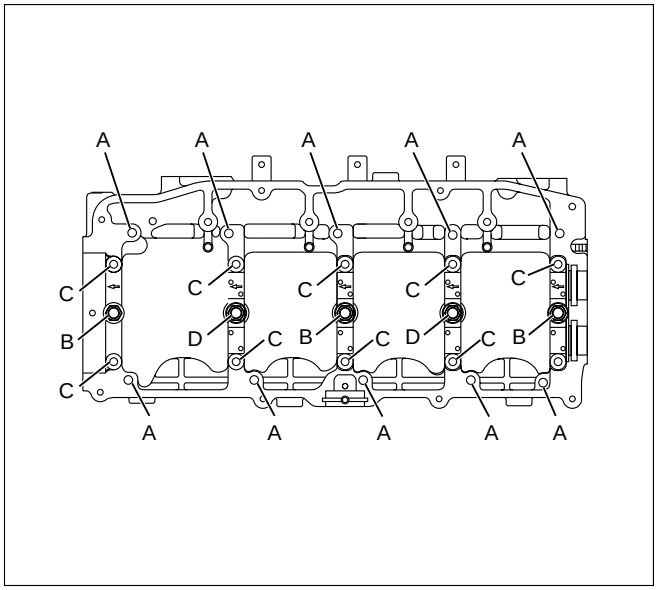

110RW035

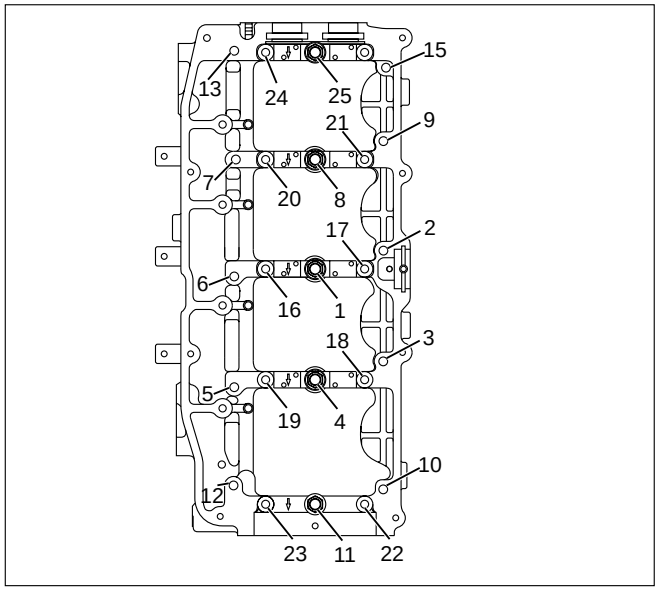

011RW041

NOTE: Do not allow the camshaft to rotate.

6) Remove the camshaft bracket and measure the plastigauge width and determine the oil clearance. If the oil clearance exceeds the specified limit, replace the camshaft carrier and/or camshaft.

Oil clearance.

Standard: 0.040 – 0.082 mm (0.0016 – 0.0032 in)
Limit: 0.12 mm (0.0047 in)

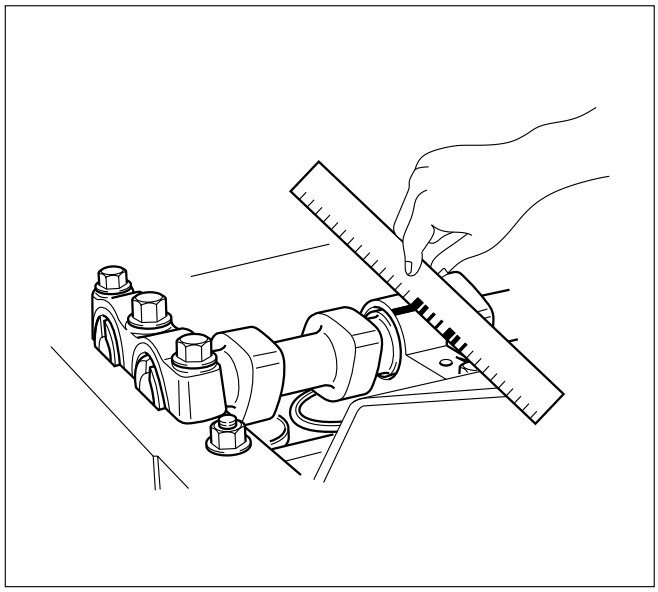

014RW185

7) Clean the plastigauge from the camshaft bracket and camshaft carrier.

5. Camshaft thrust clearance.
   1) Clean the camshaft, camshaft bracket and camshaft carrier.
   2) Put camshaft carrier on the cylinder head.
   3) Put camshaft on the camshaft carrier.
   4) Put plastigauge on the camshaft journal.
   5) Install camshaft bracket to original position and tighten bolts to specified torque in the numerical order shown in the illustration.

Torque: A; 22 N·m (2.2 kg·m/15.9 lb ft)
B; 38 N·m (3.9 kg·m/28.2 lb ft)
C; 22 N·m (2.2 kg·m/15.9 lb ft)
D; 38 N·m (3.9 kg·m/28.2 lb ft)

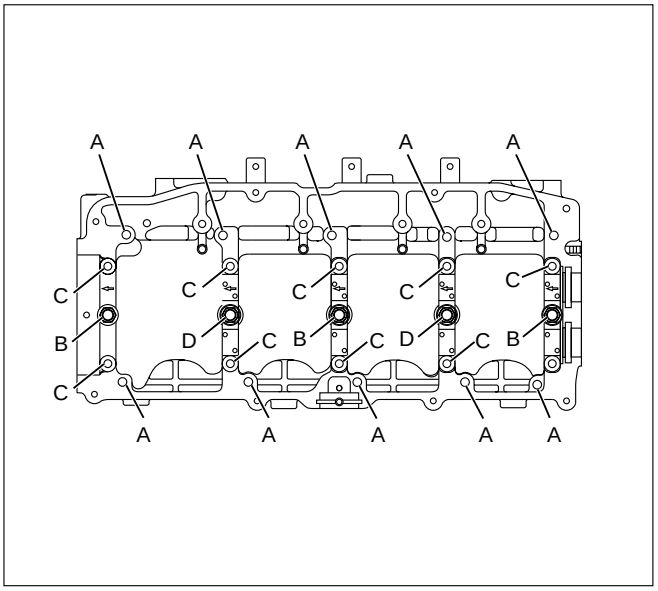

011RW035

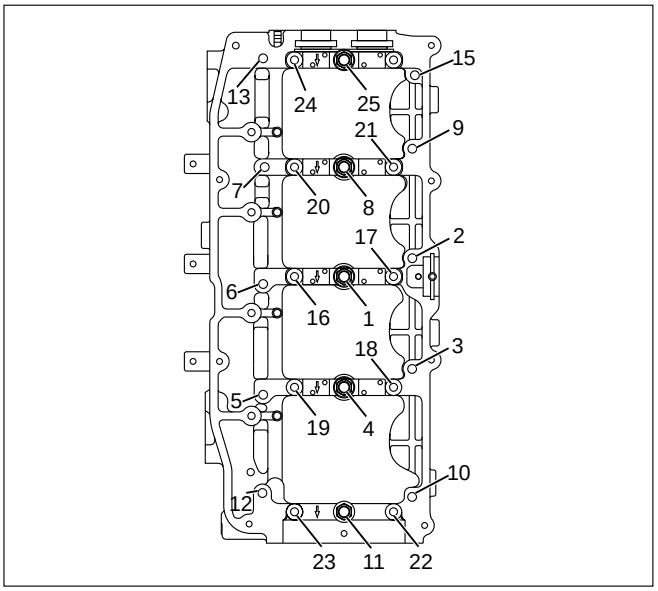

011RW041

6) Use a dial indicator to measure the camshaft thrust clearance. If the camshaft thrust clearance exceeds the specified limit, replace the camshaft carrier and/or camshaft.

Camshaft thrust clearance

Standard: 0.1 mm (0.0002 in)
Limit: 0.2 mm (0.0078 in)

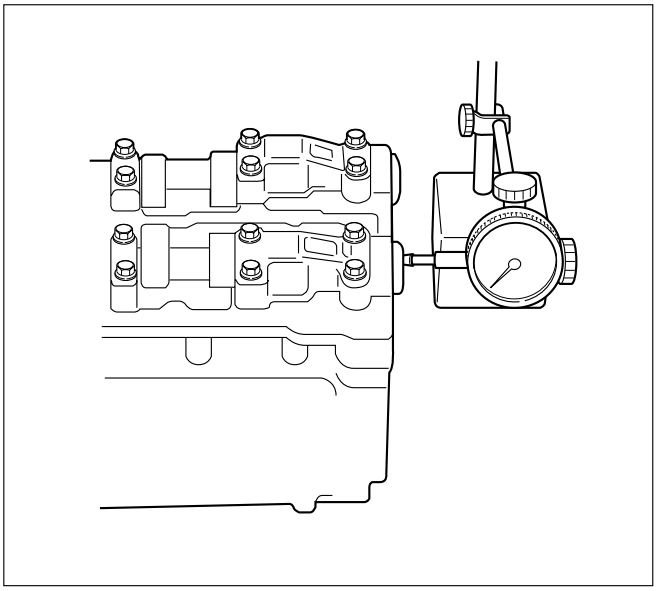

014RW001

TIMING GEAR

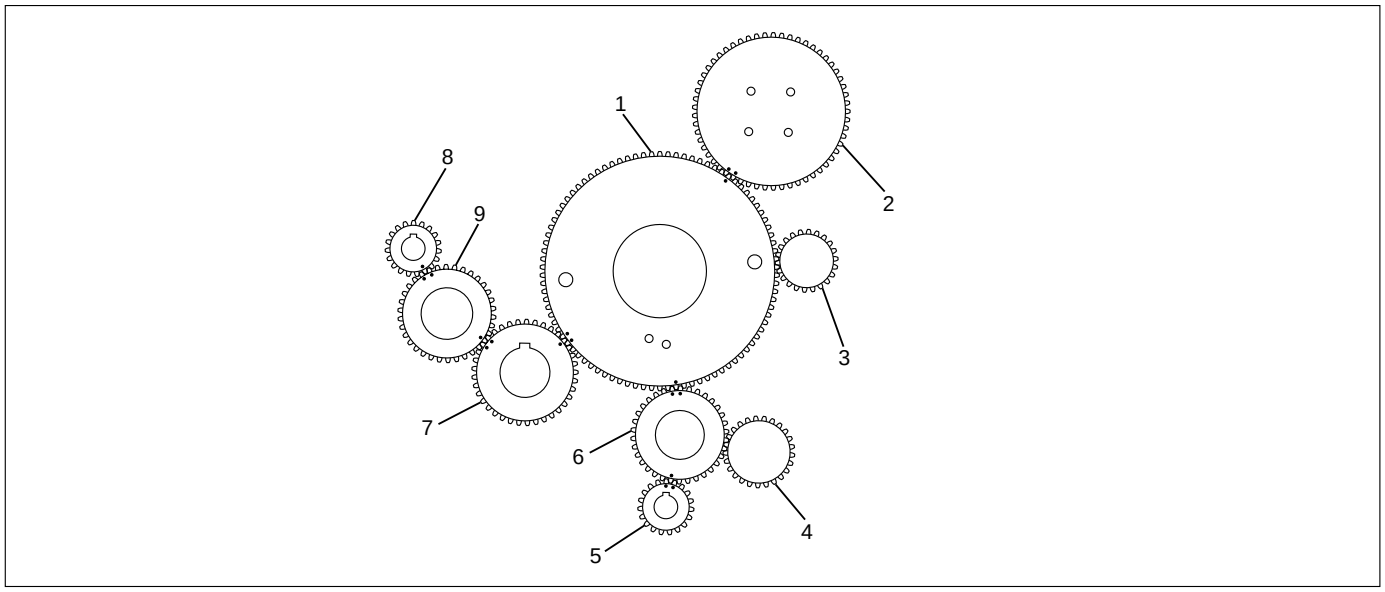

020RW028

Legend
(1) Idle Gear A
(2) High Pressure Oil Pump Gear
(3) Vacuum Pump Gear
(4) Power Steering Pump Gear
(5) Balance Gear LH
(6) Idle Gear C
(7) Crankshaft Gear
(8) Balance Gear RH
(9) Idle Gear B

REMOVAL

1. Loosen fixing bolt for generator and remove generator assembly.
2. Remove fixing nuts, then remove cooling fan assembly and fan pulley.
3. Remove crankshaft damper pulley.
4. Belt cover
   1) Disconnect harness connector of CMP (camshaft position) sensor.
   2) Remove CMP sensor.
   3) Remove belt cover.
5. Loosen belt tensioner to remove timing belt.
6. Remove camshaft pulley.
7. Remove high pressure oil pump pulley.
8. Remove front plate.
9. Remove vacuum pump.
10. Remove power steering pump.
11. Remove gear cover assembly.
12. Idle gear A.
    1) Set two bolts to sub gear of idle gear A and turn it to align the tooth of idle gear A then lock them by bolt as show in the illustration.
    2) Remove idle gear A fixing bolts.
    3) Remove idle gear A.

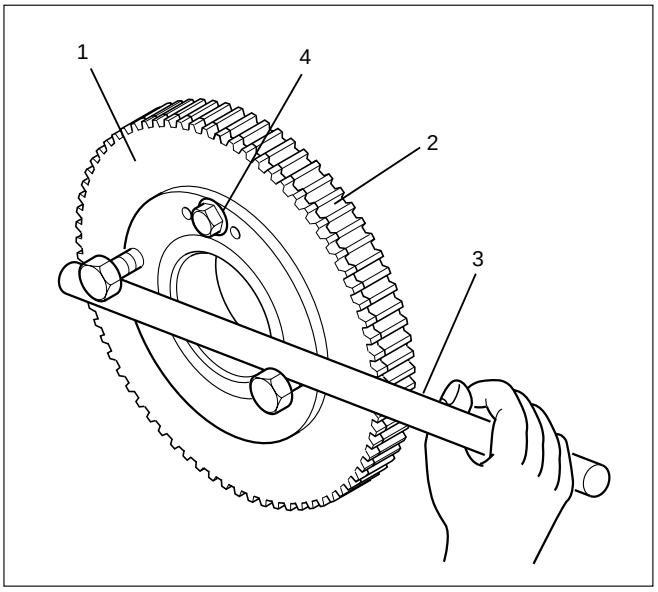

014RW177

Legend
(1) Sub-Gear
(2) Main Gear
(3) Bar
(4) Locking Bolt

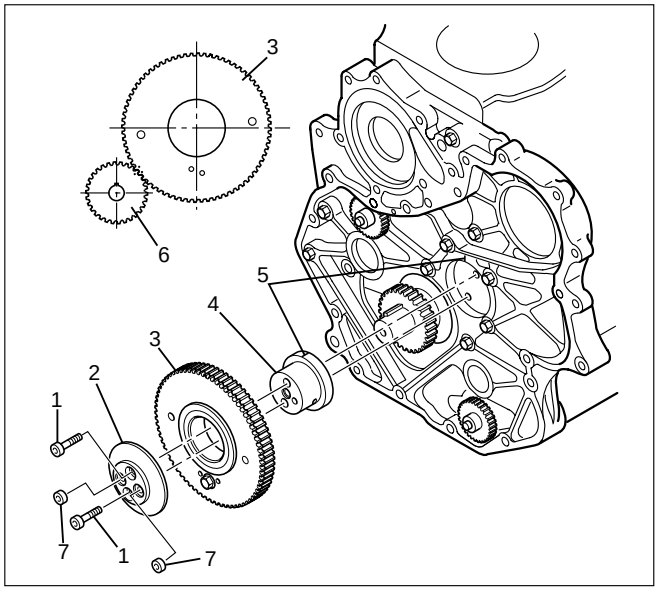

014R200007

Legend
(1) Bolt
(2) Retainer
(3) Idle Gear A
(4) Idle Gear A Shaft
(5) Align Mark
(6) Crankshaft Gear
(7) O-Ring

13. Idle gear C
    1) Use the special tool on idle gear C, turning the sub gear to align the teeth, then set lock pin.
    2) Remove idle gear C fixing bolt then remove the idle gear C with flange.

    Camshaft Gear Tool : 5-8840-2591-0

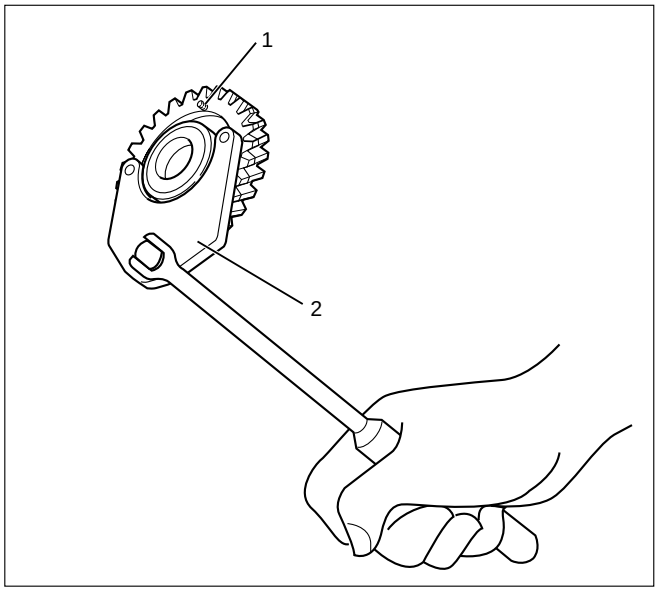

014RW181

Legend
(1) Lock pin
(2) Camshaft Gear Tool

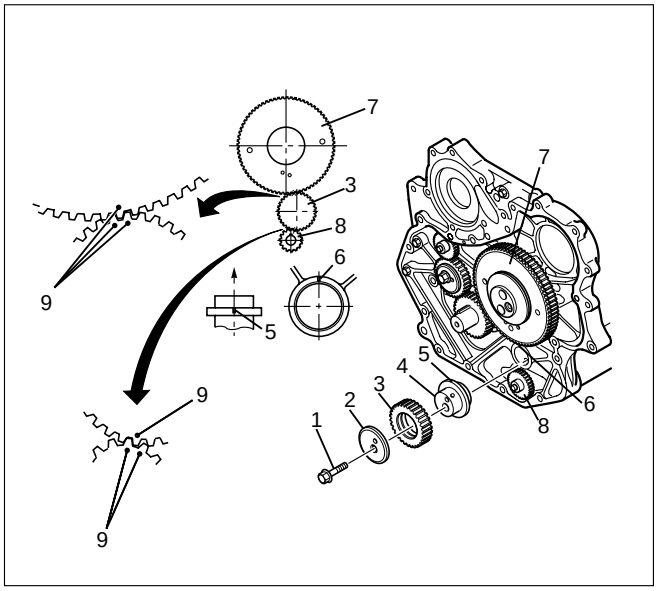

014RW175

Legend
(1) Bolt
(2) Retainer
(3) Idle Gear C
(4) Idle Gear C Shaft
(5) Align Mark
(6) Align Mark
(7) Idle Gear A
(8) Balance Shaft Gear LH
(9) Timing Mark

14. Idle gear B
    1) Loosen idle gear B fixing bolt to remove idle gear B with flange.

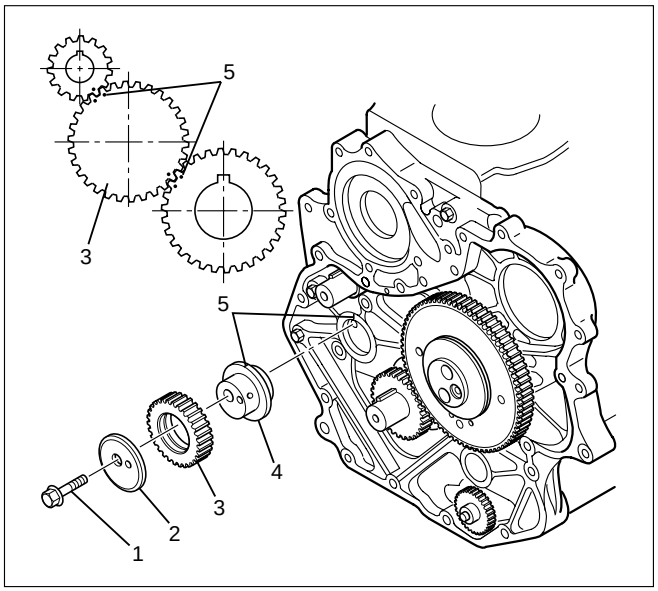

014R200008

Legend
(1) Bolt
(2) Retainer
(3) Idle Gear B
(4) Idle Gear B Shaft
(5) Align Mark

15. High pressure oil pump
    1) Remove oil pump gear fixing bolt then remove oil pump.

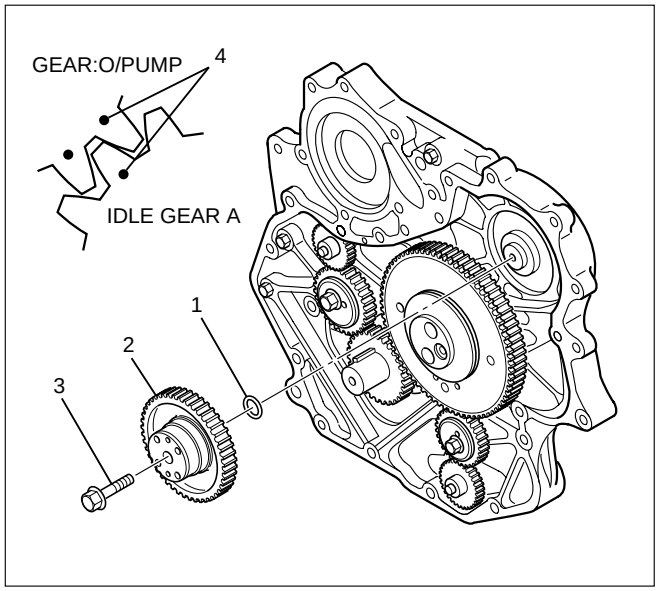

040RW005

Legend
(1) O-Ring
(2) High Pressure Oil Pump Gear
(3) Bolt
(4) Timing Mark

16. Remove balance shaft gear LH. and RH.
17. Remove crankshaft gear.

INSTALLATION

1. Crankshaft gear
    1) Force key into the crankshaft and insert crankshaft gear with the crankshaft gear key groove set on the key.

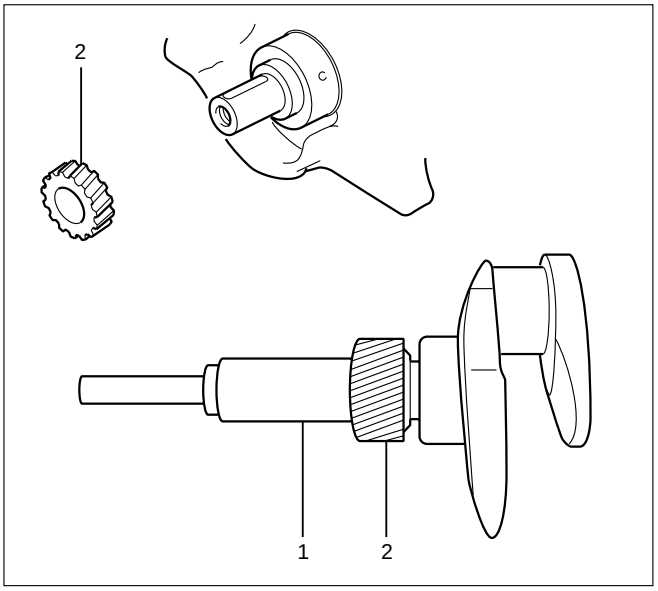

012RW066

Legend
(1) Crankshaft Gear Installer
(2) Crankshaft Gear

2. Balance shaft gear
    1) Install the balance shaft gear RH to balance shaft, tighten center bolt to the specified torque.

Torque : 32 N·m (3.2 kg·m/23 lb ft)

    2) Install thrust plate for balance shaft LH before installing the balance shaft gear LH.

Torque : 25 N·m (2.5 kg·m/18 lb ft)

    3) Install balance shaft gear LH to balance shaft, tighten center bolt to the specified torque.

Torque : 32 N·m (3.2 kg·m/23 lb ft)

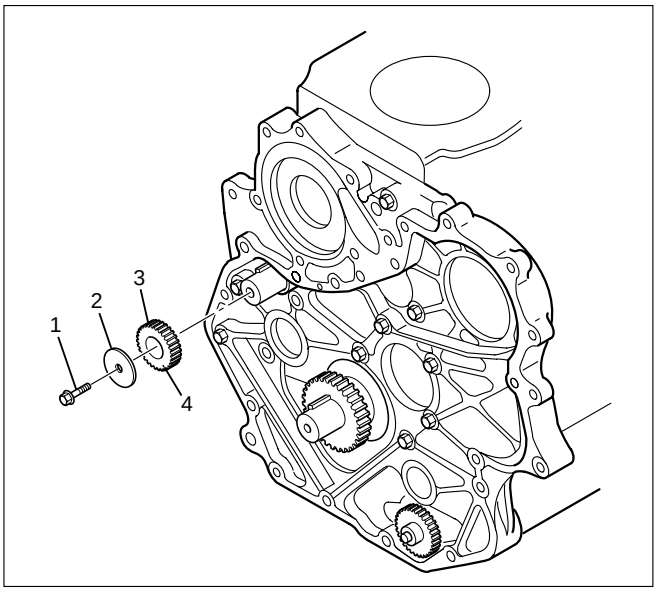

014RW173

Legend
(1) Center Bolt
(2) Plate
(3) Balance Shaft Gear RH
(4) Timing Mark

3. Idle gear A
   1) Insert idle gear A shaft to align alignment mark between idle gear A shaft and timing gear case.
   2) Apply engine oil to the shaft surface.
   3) Install the idle gear A to align the timing mark with the crankshaft gear.
   4) Install the flange, tighten bolts to the specified torque.

Torque: 25 N·m (2.5 kg·m/18 lb ft)

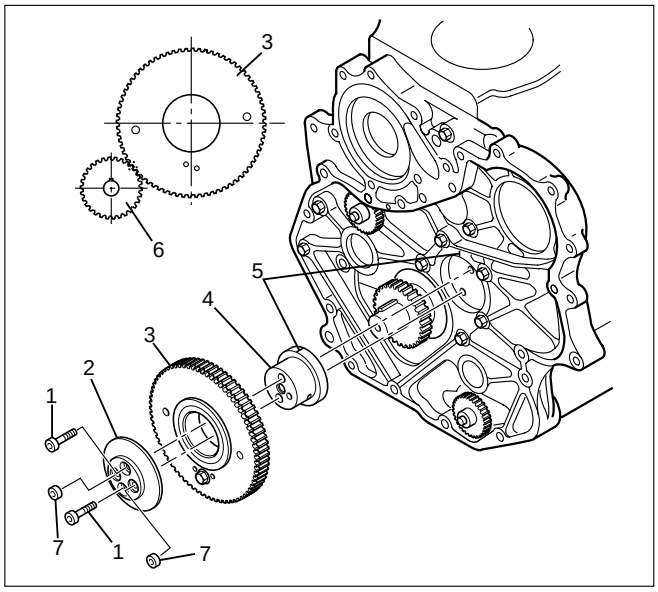

014R200007

Legend
(1) Bolt
(2) Retainer
(3) Idle Gear A
(4) Idle Gear A Shaft
(5) Align Mark
(6) Crankshaft Gear
(7) O-Ring

NOTE: Conform not difference timing marks between each others.

4. Idle gear C
   1) Insert idle gear C shaft to align alignment mark between idle gear C shaft and timing gear case.
   2) Apply engine oil to the shaft surface.
   3) Align timing mark on idle gear C with balance shaft gear LH and idle gear A timing marks, then insert idle gear C.
   4) Set position of idle gear C flange with a dowel pin, tighten bolt to the specified torque.

Torque: 25 N·m (2.5 kg·m/18 lb ft)

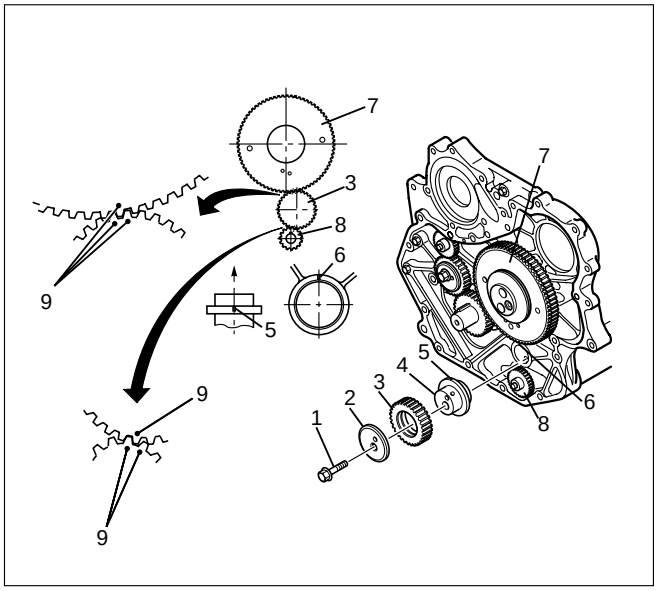

014RW175

Legend
(1) Bolt
(2) Retainer
(3) Idle Gear C
(4) Idle Gear C Shaft
(5) Align Mark
(6) Align Mark
(7) Idle Gear A
(8) Balance Shaft Gear LH
(9) Timing Mark

5. Idle gear B
   1) Insert idle gear B shaft to align alignment mark between idle gear B shaft and timing gear case.
   2) Apply engine oil to the shaft surface.
   3) Align timing mark on idle gear B with balance shaft gear RH and crankshaft gear timing marks, then insert idle gear B.
   4) Install flange and tighten the bolt to the specified torque.

Torque: 51 N·m (5.2 kg·m/38 lb ft)

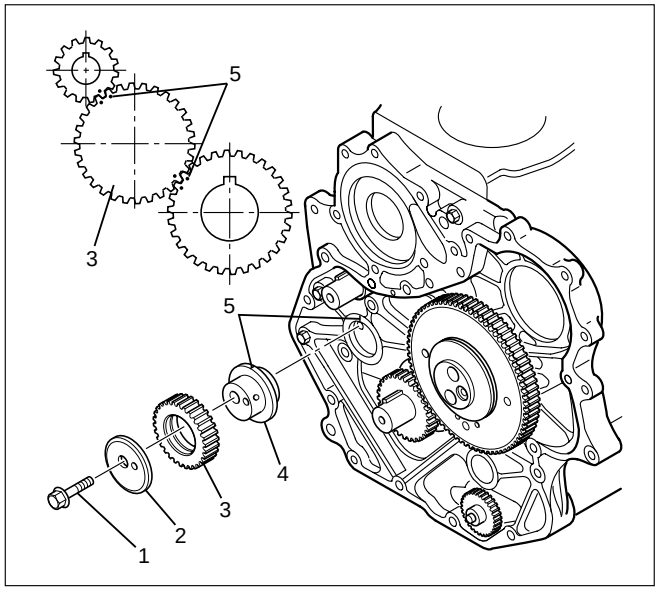

014R200008

Legend
(1) Bolt
(2) Retainer
(3) Idle Gear B
(4) Idle Gear B Shaft
(5) Align Mark

6. High pressure oil pump
   1) Install O-ring on the high pressure oil pump.
   2) Install the high pressure oil pump to the timing gear case, tighten the nut to the specified torque.

Torque: 20 N·m (2.0 kg·m/14.5 lb ft)

NOTE: Be sure to set O-ring completely.

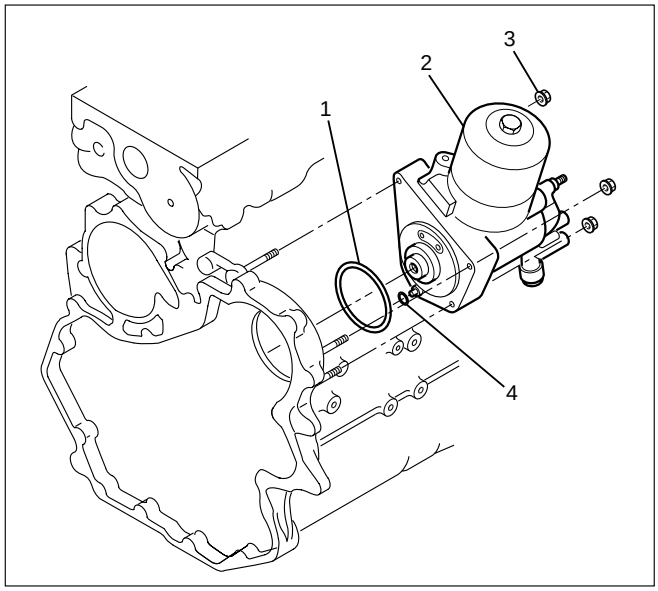

040RW007

Legend
(1) O-ring (large)
(2) High pressure oil pump
(3) Nut
(4) O-ring (small)

7. High pressure oil pump
   1) Install O-ring on the oil pump shaft with grease and install the gear with the idle gear A timing mark set at the oil pump gear timing mark.
   2) Tighten center bolt to the specified torque.

Torque: 75 N·m (7.6 kg·m / 55 lb ft)

NOTE: Be sure to align timing marks with each other.

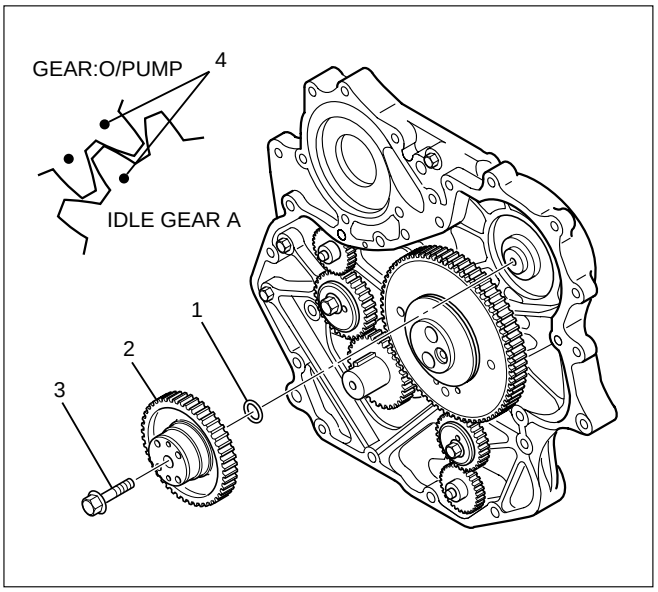

040RW005

Legend
(1) O-ring
(2) High Pressure Oil Pump Gear
(3) Center Bolt
(4) Timing Mark

8. Remove lock from idle gear.
   1) Remove lock bolt from idle gear A and remove lock pin from idle gear C.
9. Timing gear case assembly
   1) Clean fixing surface of timing gear case.
   2) Install the gasket on the idle gear rear side end.
   3) Apply liquid gasket to the timing gear case fitting surface.

NOTE: Be sure to apply liquid gasket evenly.

   4) Install timing gear case and tighten bolts to the specified torque.

Torque: 20 N·m (2.0 kg·m / 14.5 lb ft)

NOTE: Must install within 5 minutes after applying liquid gasket.

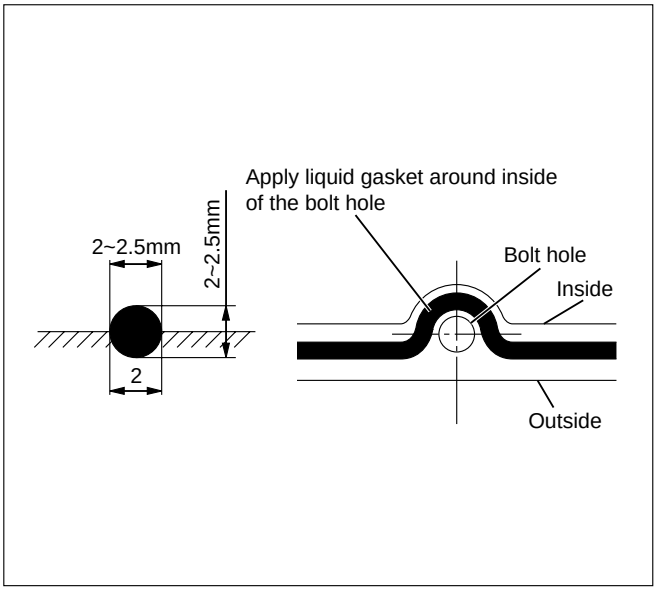

F06HX00001

10. Vacuum pump
    1) Install vacuum pump and tighten bolts to specified torque.

Torque: 25 N·m (2.5 kg·m / 18 lb ft)

    2) Install noise insulator cover.

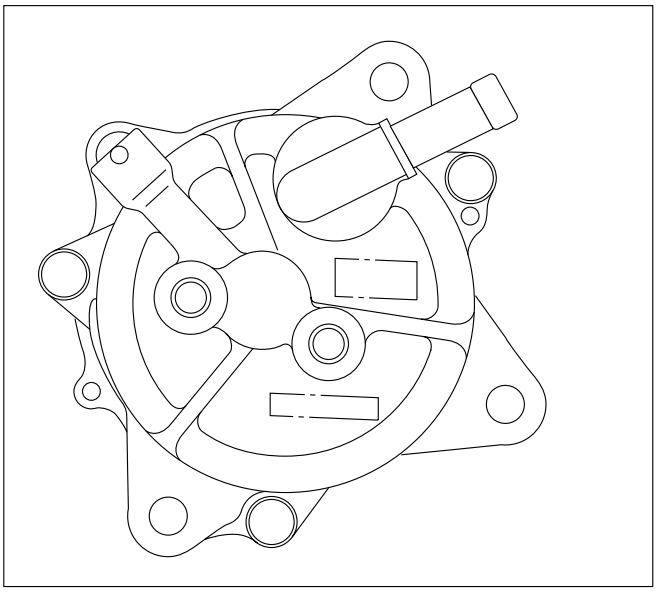

052RW001

11. Power steering pump (P/S)
    1) Install P/S pump.

Torque: 25 N·m (2.5 kg·m / 18 lb ft)

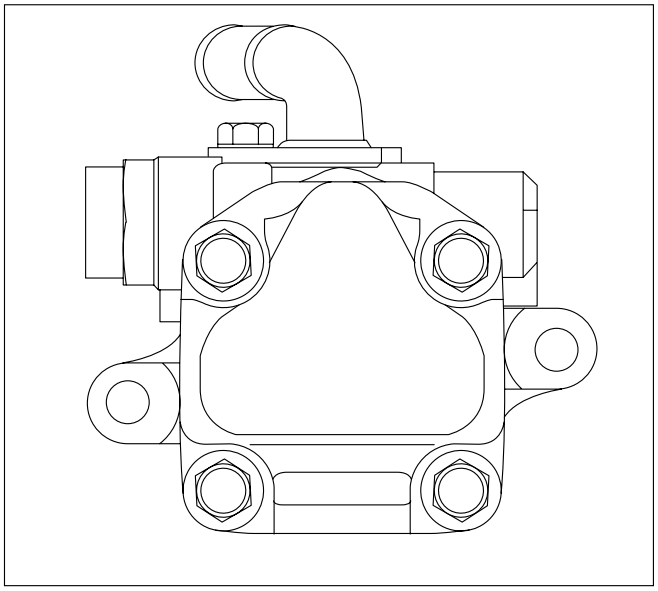

430RW017

12. Install front plate.

Torque: 20 N·m (2.0 kg·m / 14.5 lb ft)

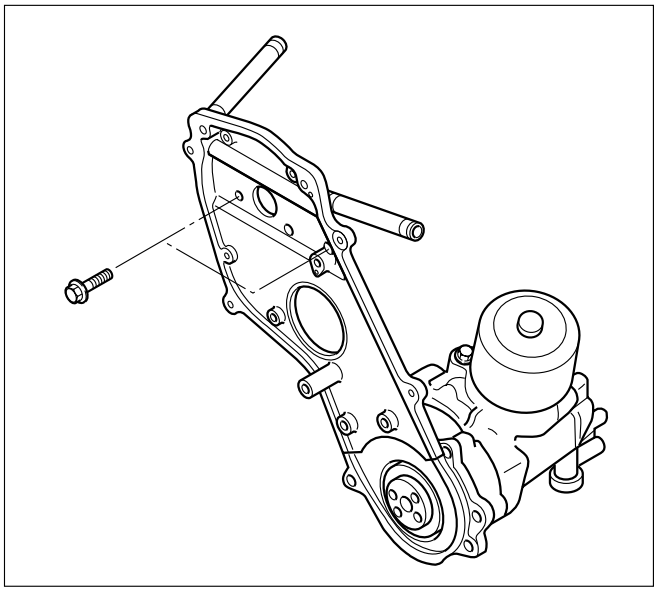

012RW035

13. High pressure oil pump pulley.
    1) Install oil pump pulley and tighten to specified torque.

Torque:10 N·m (1.0 kg·m / 7.2 lb ft)

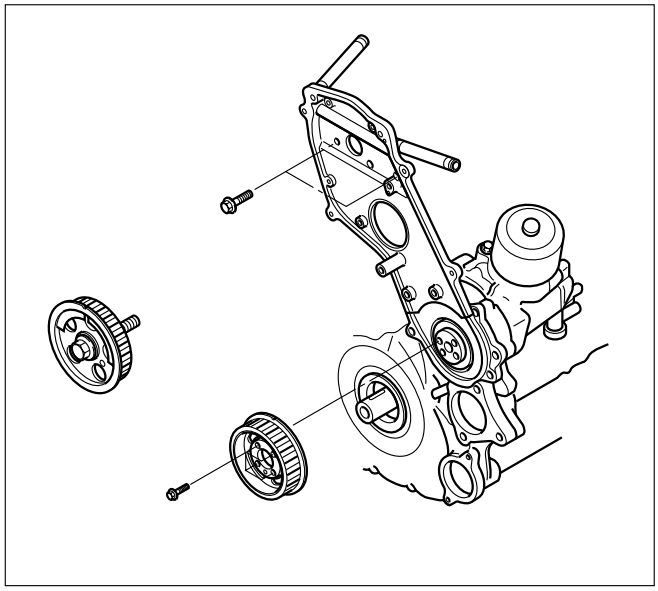

012RW036

14. Camshaft pulley
    1) Align TDC mark with crankshaft pulley and gear case cover.
    2) Set camshaft stopper on the end of intake and exhaust camshaft.

    Camshaft Stopper: 5-8840-2592-0

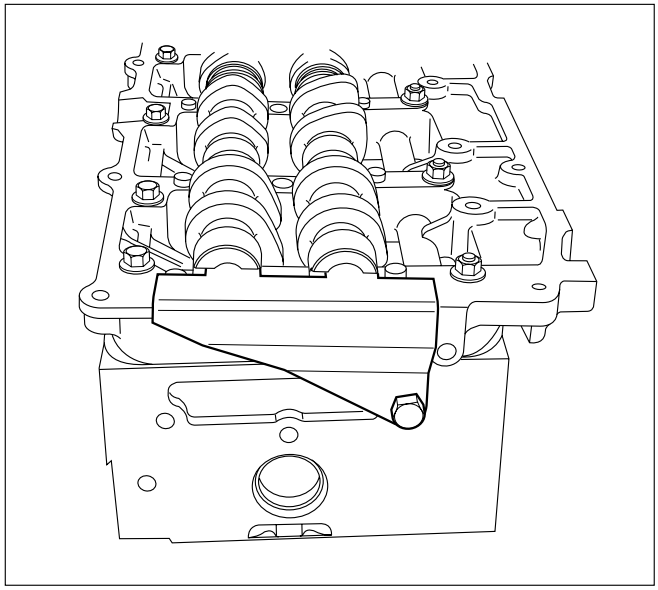

012RW099

    3) Install key to camshaft and install camshaft pulley.
    4) Apply engine oil to camshaft pulley fixing bolt and tighten bolt with angular tightening method.

First step: 40 N·m (4.0 kg·m / 29 lb ft)
Second step: 60° to 90°

15. Timing belt
    1) Install tensioner and tighten the bolt temporarily.
    2) Align timing mark with camshaft pulley timing mark and timing gear case timing mark.
    3) Set No.1 cylinder TDC position.
    4) Install the timing belt in the following order camshaft pulley, oil pump pulley, tensioner.

NOTE:

1) It is recommended for easy installation that the belt be secured with a double clip after it is installed to each pulley.
2) The “ISUZU” mark should be read from the front of the engine when installing the timing belt.

    5) Install the belt tensioner.
    6) Conform not phase difference each pulley.
    7) Tension the timing belt with two turns of the crankshaft.
    8) Tighten the tensioner bolt in order A to B to the specified torque.

Torque: Bolt A 5 N·m (0.5 kg·m/3.6 lb ft)
Bolt B 2 N·m (0.2 kg·m/1.4 lb ft)

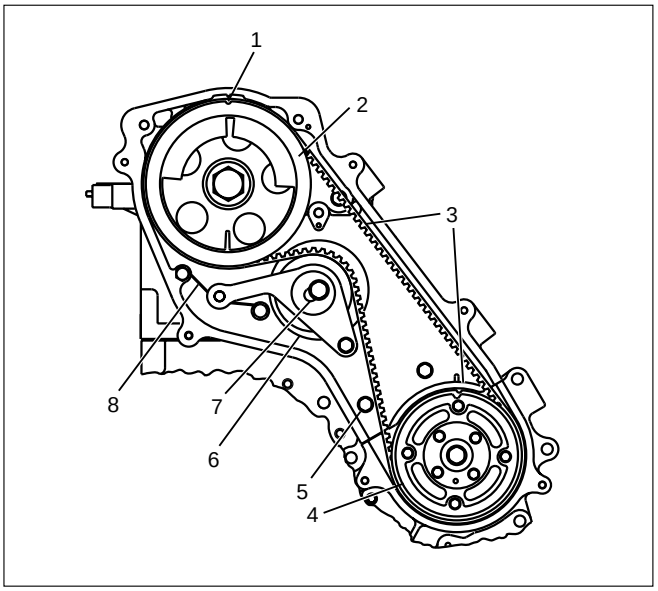

F06RW055

Legend
(1) Align Mark
(2) Camshaft Pulley
(3) Timing Belt
(4) Oil Pump Pulley
(5) Bolt B
(6) Tensioner Assy
(7) Tensioner Bolt A
(8) Tensioner Spring

16. CMP sensor bracket
    1) Install CMP sensor bracket and tighten bolt to the specified torque.

Torque: 20 N·m (2.0 kg·m / 14.5 lb ft)

17. Timing belt cover
    1) Install timing belt cover and tighten bolt to the specified torque.

Torque: 9 N·m (0.9 kg·m / 6.5 lb ft)

    2) Tighten CMP sensor to the specified torque.

Torque: 9 N·m (0.9 kg·m / 6.5 lb ft)

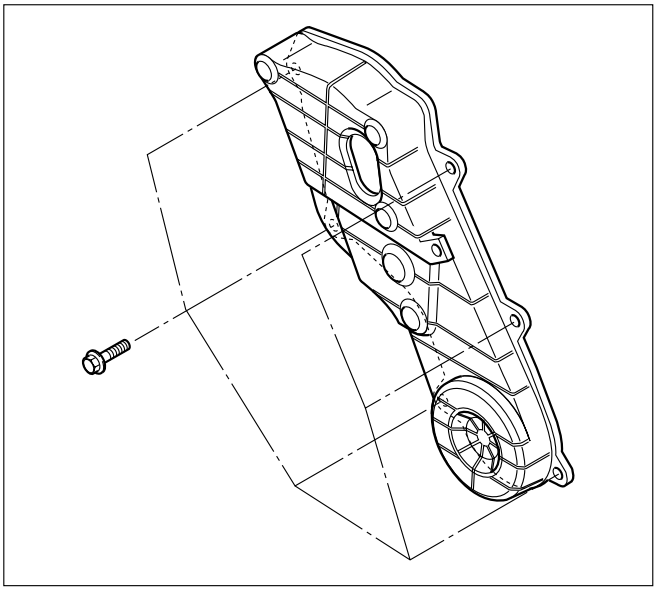

012RW039

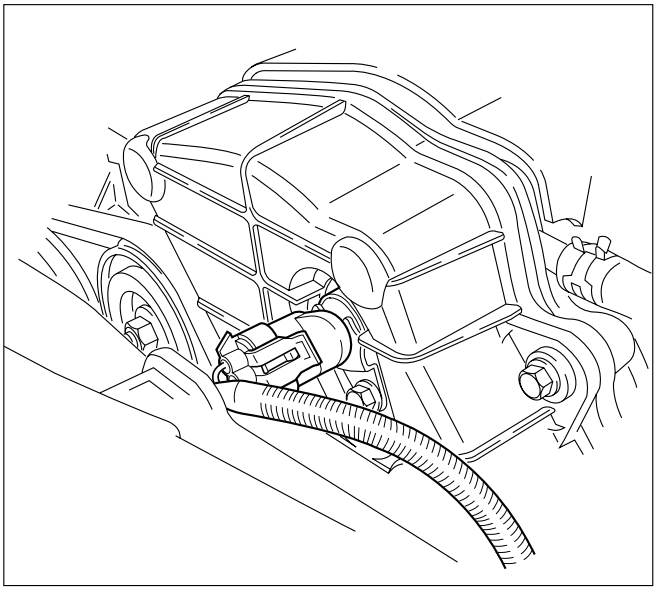

014RW163

18. Crankshaft damper pulley
    1) Insert damper pulley with the crankshaft key groove set on the key.
    2) Tighten damper pulley bolt to the specified torque.

Torque: 220 N·m (22 kg·m / 159 lb ft)

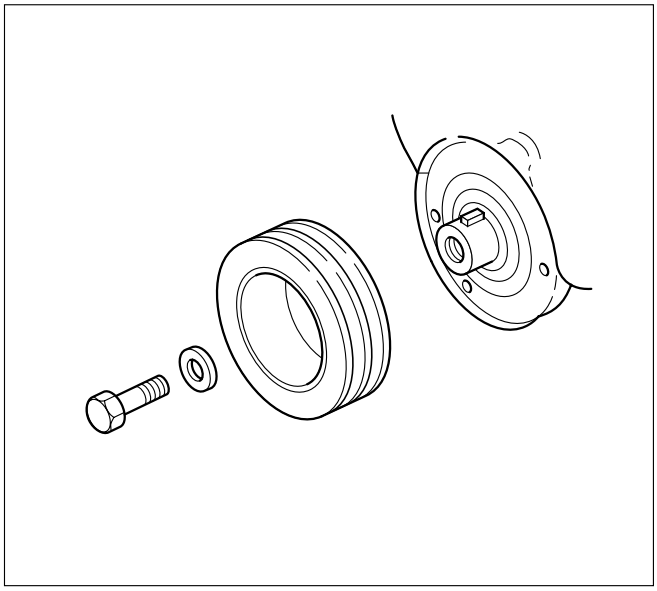

012RW032

19. Cooling fan Assembly
    1) Install the cooling fan assembly to the fan pulley, tighten the nuts to the specified torque.

Torque: 8 N·m (0.8 kg·m / 5.8 lb ft)

20. AC generator drive belt.
    1) Temporarily tighten generator fixing bolts and belt tensioner adjustment plate.
    2) Tension the generator drive belt then tighten the generator fixing bolt.

Torque: 40 N·m (4.0 kg·m / 29 lb ft)

    3) Tighten the belt tensioner adjustment plate bolt.

Torque: 20 N·m (2.0 kg·m / 14.5 lb ft)

VALVE STEM SEAL, VALVE SPRING AND ADJUSTER

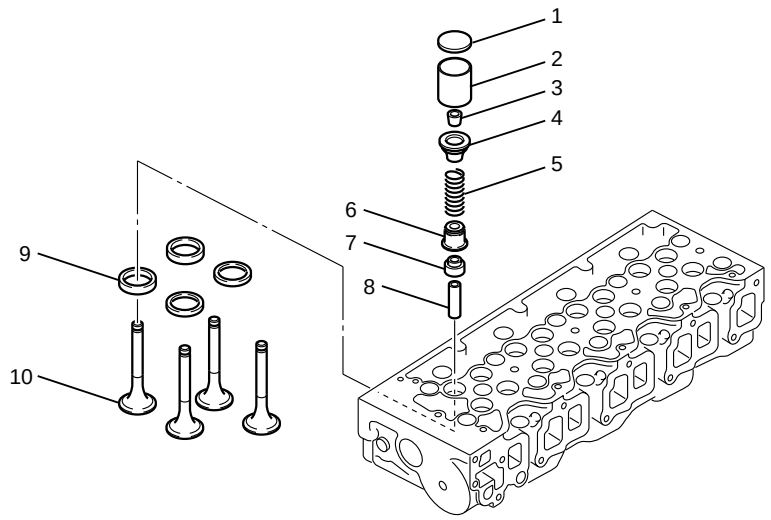

011RW031

Legend

(1) Adjuster
(2) Tappet
(3) Split Collar
(4) Spring Seat Upper
(5) Valve Spring
(6) Spring Seat Lower
(7) Valve Stem Seal
(8) Valve Guide
(9) Valve Seat
(10) Valve

REMOVAL

1. Disconnect battery ground cable.
2. Drain engine coolant.
3. Remove the air duct from between air cleaner and turbocharger.
4. Remove intercooler assembly.
   Refer to “Intercooler” in this manual.
5. Remove oil level gauge guide assembly.
6. Disconnect PCV hose.
7. Disconnect EGR vacuum hose.
8. Disconnect harness connectors around the cylinder head such as the injector, CMP sensor, MAP sensor, EGR sensor, EVRV, IAT sensor, A/C compressor, TP stepping motor, TP sensor and fuel temperature sensor etc.
9. Remove A/C compressor assembly.
10. Remove A/C compressor bracket.
11. Remove generator assembly and take out drive belt.
12. Remove heat protector, remove exhaust valve assembly.
13. Remove water cooling hose and lubrication pipe for turbocharger.
14. Remove turbocharger assembly.
15. Remove hose between thermostat and radiator.
16. Remove noise insulator cover of cylinder head.

NOTE: Do not damage injector harness.

17. Remove high pressure oil pipe.
18. Remove timing belt cover.
19. Remove CMP sensor bracket.
20. Remove timing belt tensioner then remove timing belt.
21. Remove camshaft pulley.
22. Remove front plate.
23. Remove engine coolant pipe between cylinder head and water pump.

24. Remove fuel pipe between fuel pump and intake manifold.
25. Remove fuel return pipe from rear of cylinder head.
26. Remove intake manifold assembly.
27. Disconnect glow plug harness and remove glow plug.
28. Remove cylinder head cover.
29. Remove injector harness connector.
30. Disconnect harness connector from oil pressure sensor and oil temperature sensor on the oil rail.
31. Remove injector harness assembly.
32. Remove injector clamp.
33. Remove injector is fixed bolts.
34. Remove injector assembly.
35. Remove oil rail.
36. Remove camshaft carrier assembly with camshaft.
37. Remove cylinder head assembly.
38. Disassemble valve spring according to the following method.
    1) Use valve spring compressor then remove split collars.
    2) Valve spring compressor: 5-8840-2441-0

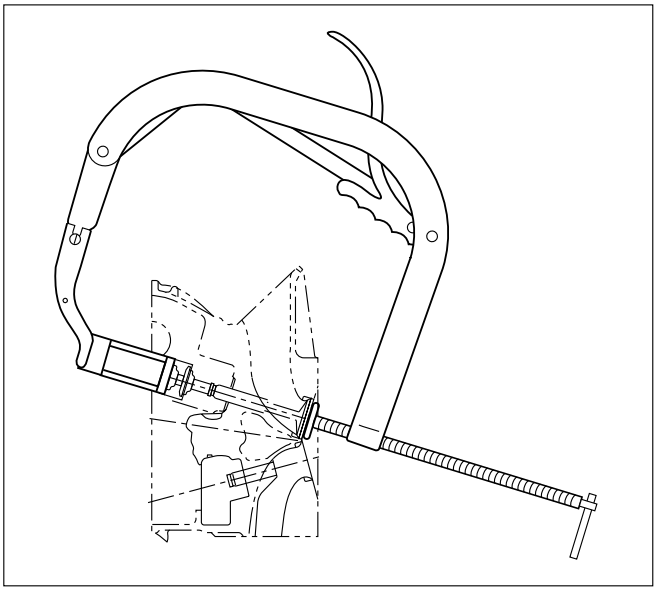

014rw042

NOTE: Put removed valve spring in order of cylinder number.

39. Valve stem seal.
    1) Use a screwdriver or pliers to remove valve stem seal.

NOTE: Do not reuse removed valve stem seal.

INSPECTION AND REPAIR

Make the necessary adjustments, repairs and part replacements if excessive wear or damage is discovered during inspection.

Valve spring

CAUTION: Visually inspect the valve springs and replace them if damage or abnormal wear is evident.

1. Free height
    1) Measure the free height of the springs. The springs must be replaced if the height is below the specified limit.

Standard: 45.85 mm (1.8051in)
Limit: 43.9 mm (1.7283 in)

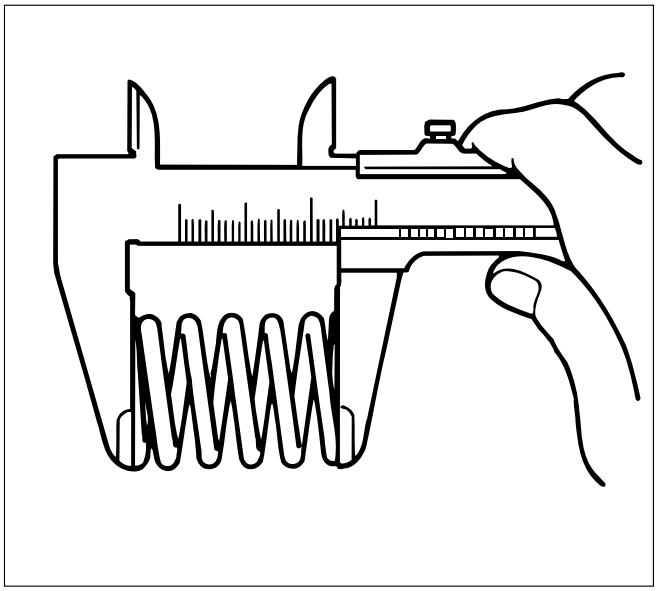

014rs004

2. Squareness
    1) Measure the valve spring squareness with a steel square.
    2) Replace the valve springs if the measured value exceeds the specified limit.

Limit: 1.6 mm (0.063 in)

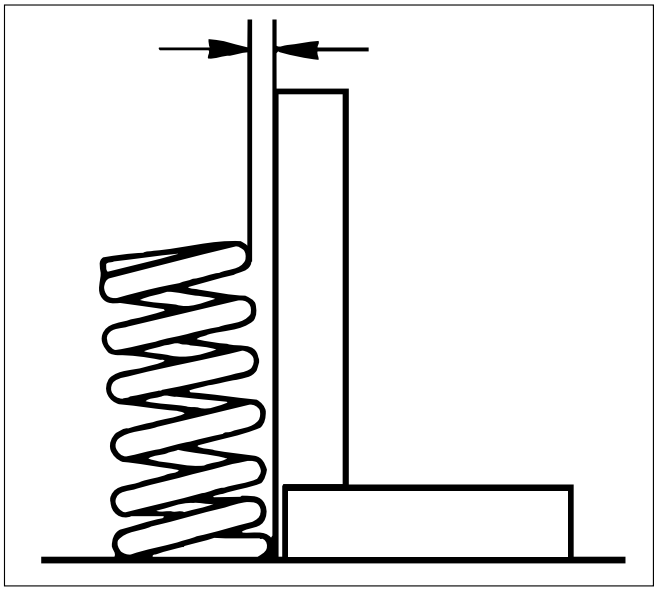

014rs005

3. Spring tension
   1) Use a spring tester to compress the springs to the installed height. Measure the compressed spring tension.
   2) Replace the springs if the measured tension is below the specified limit.

Standard: 236.0 N (24 kg/53 lb)
Limit: 205.0 N (21 kg/46 lb)

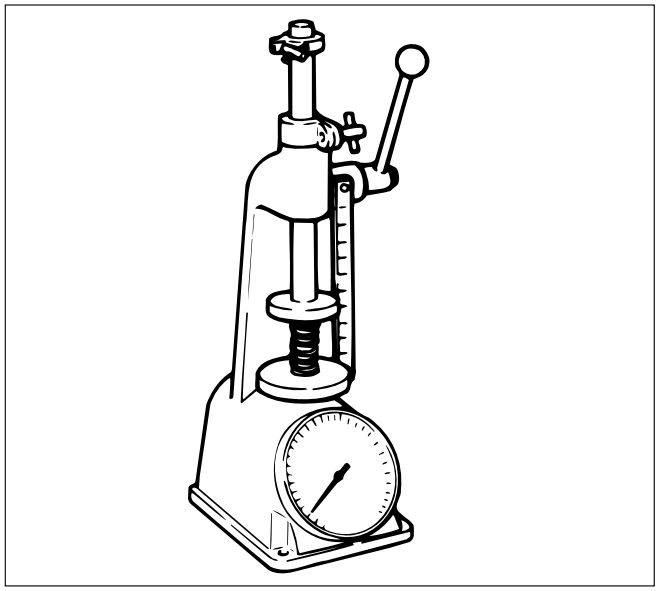

014RS006

Valve Guide

CAUTION: Taking care not to damage the valve seat contact surface, when removing carbon adhering to the valve head.
Carefully inspect the valve stem for scratching or abnormal wear. If these conditions are present, the valve and the valve guide must be replaced as a set.

1. Valve Guide Clearance
   1) Measure the valve stem diameter with a micrometer.

      If the valve stem diameter is less than the specified limit, the valve and the valve guide must be replaced as a set.

Diameter of Valve stem:Inlet

Standard: 6.959 – 6.977 mm (0.2740 – 0.2747 in)
Limit: 6.92 mm (0.2724 in)

Diameter of Valve stem:Exhaust

Standard: 6.952 – 6.97 mm (0.2737 – 0.2744 in)
Limit: 6.90 mm (0.2717 in)

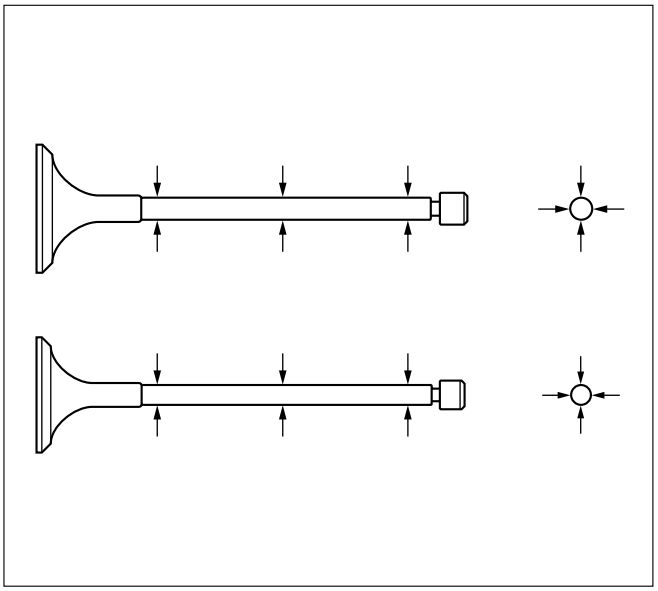

014RS007

   2) Measure the inside diameter of the valve guide with a micrometer.
   3) Subtract the measured outer diameter of the valve stem from the measured inner diameter of the valve guide.

      If the valve exceeds the specified limit, the valve and the valve guide must be replaced as a set.

Inlet clearance

Standard: 0.023 – 0.053 mm (0.0009 – 0.0021 in)
Limit: 0.19 mm (0.0075 in)

Exhaust clearance

Standard: 0.03 – 0.063 mm (0.0012 – 0.0025 in)
Limit: 0.20 mm (0.0079 in)

Valve Guide Replacement

1. Using the special tool, drive out the valve guide from the combustion chamber side.
   Valve guide replacer: 9-8523-1212-0

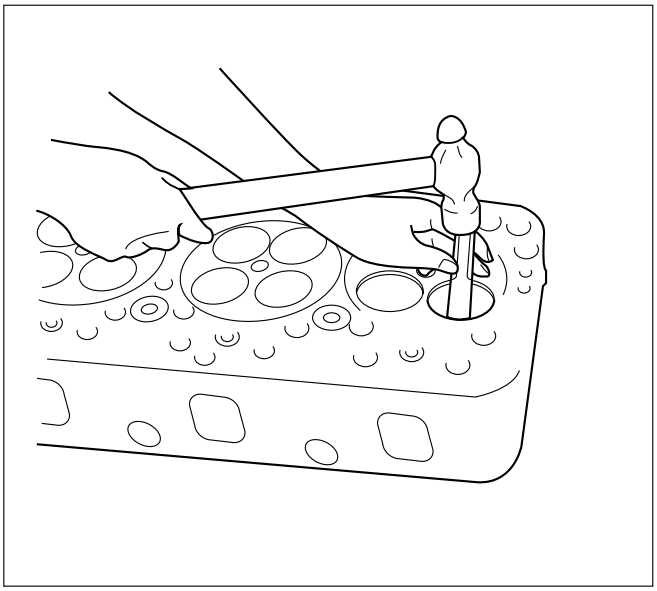

011RW001

2. Apply engine oil to the outside of the valve guide.
   Using the special tool, drive in a new valve guide from cylinder head upper face side, and check the valve guide height.
   Valve guide replacer: 9-8523-1212-0
   Height: 8.0 mm (0.315 in)

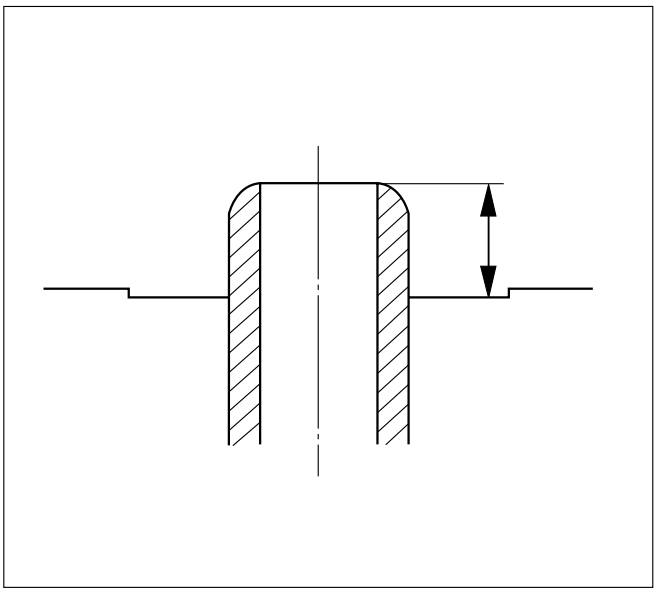

012RW052

NOTE: If the valve guide has been removed, both the valve and the valve guide must be replaced as a set.

Valve Thickness

1. Measure the valve thickness.
2. If the measured value is less than the specified limit, the valve and the valve guide must be replaced as a set.

Inlet

Standard: 1.2 mm (0.0472 in)
Limit: 1.1 mm (0.0433 in)

Exhaust

Standard: 1.2 mm (0.0472 in)
Limit: 1.1 mm (0.0433 in)

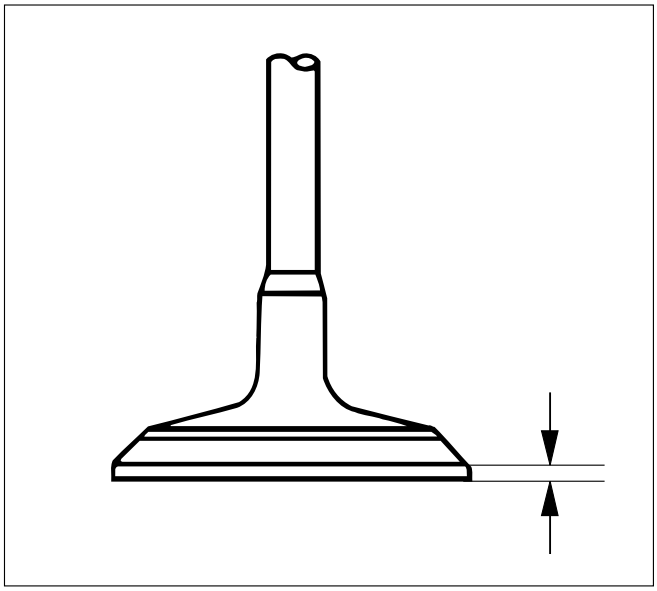

012RW060

Contact surface angle on valve seat on valve

1. Measure contact surface angle on valve seat.
2. If the measured value exceeds the limit, replace valve, valve guide and valve seat as a set.
   Standard: 68°

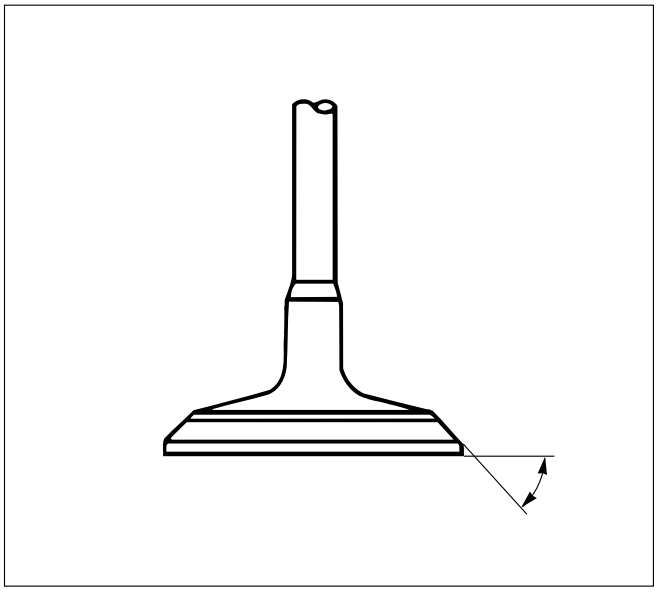

014RW018

Valve Depression

1. Measure the valve stem height from the upper surface of the cylinder head as shown in the illustration.

Standard:
Intake side 35.59 mm (1.4012 in)
Exhaust side 35.49 mm (1.3972 in)

Limit:
Intake side 35.74 mm (1.4071 in)
Exhaust side 35.64 mm (1.4031 in)

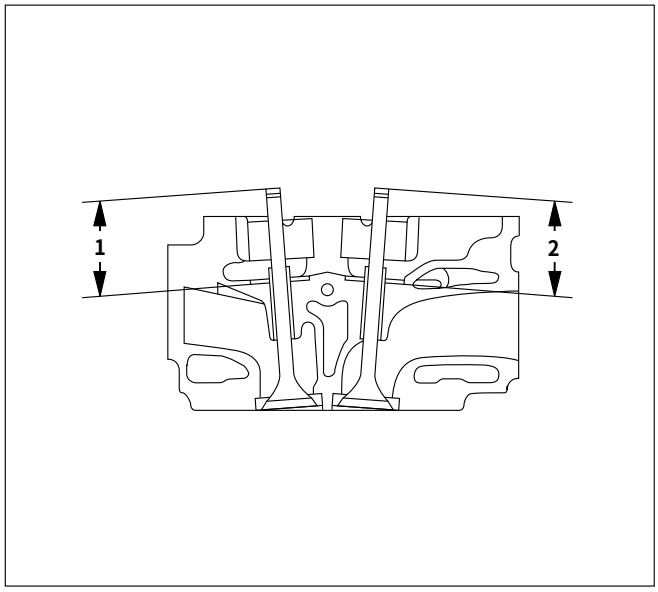

011RW044

Legend
(1) Intake Side
(2) Exhaust Side

Valve Contact Width

1. Check the valve contact faces for roughness and unevenness. Make the valve contact surfaces smooth.
2. Measure the valve contact width.
   If the measured value exceeds the specified limit, the valve seat insert must be replaced.

Inlet
Standard: 2.1 mm (0.0827 in)
Limit: 2.6 mm (0.1024 in)

Exhaust
Standard: 2.0 mm (0.0787 in)
Limit: 2.5 mm (0.0984 in)

Valve Seat Insert Replacement

Valve Seat Insert Removal

1. Arc weld the entire inside circumference of the valve seat insert.

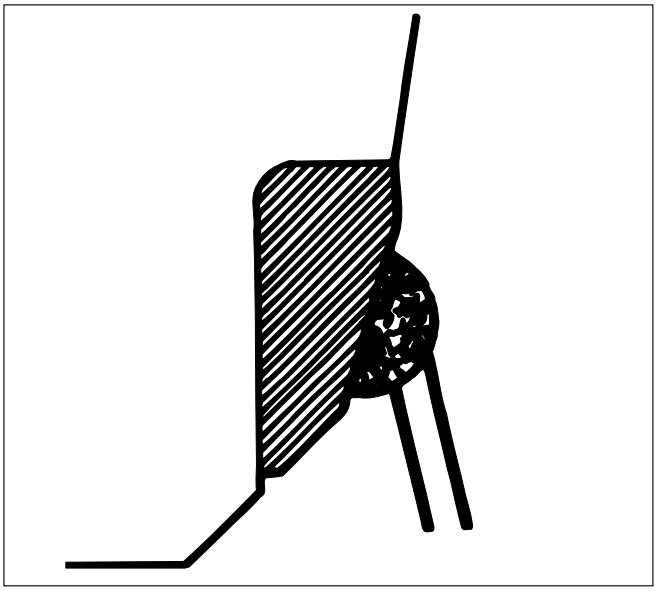

014RS015

2. Allow the valve seat insert to cool for a few minutes. This will invite contraction and make removal of the valve seat insert easier.
3. Use a screwdriver to pry the valve seat insert free. Take care not to damage the cylinder head.
4. Carefully remove carbon and other foreign material from the cylinder head insert bore.

Valve Seat Insert Installation

1. Carefully place the attachment (1) (having a smaller outside diameter than the valve seat insert) on the valve seat insert (2).

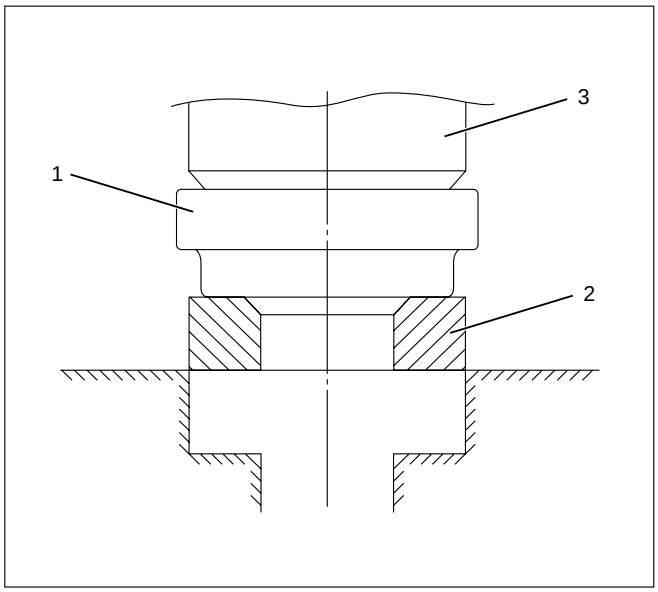

012RW055

Legend
(1) Attachment
(2) Valve Seat Insert
(3) Bench Press

NOTE: The smooth side of the attachment must contact the valve seat insert.

2. Use a bench press (3) to gradually apply pressure to the attachment and press the valve seat insert into place.

Note: Do not apply an excessive amount of pressure with the bench press. Damage to the valve seat insert will result.

Valve Seat Insert Correction

1. Remove the carbon from the valve seat insert surface.
2. Use a valve cutter (15°, 45° and 75° blades) to minimize scratches and other rough areas. This will bring the contact width back to the standard value. Remove only the scratches and rough areas. Do not cut away too much. Take care not to cut away unblemished areas of the valve seat surface.

   Valve Seat Angle: 45°

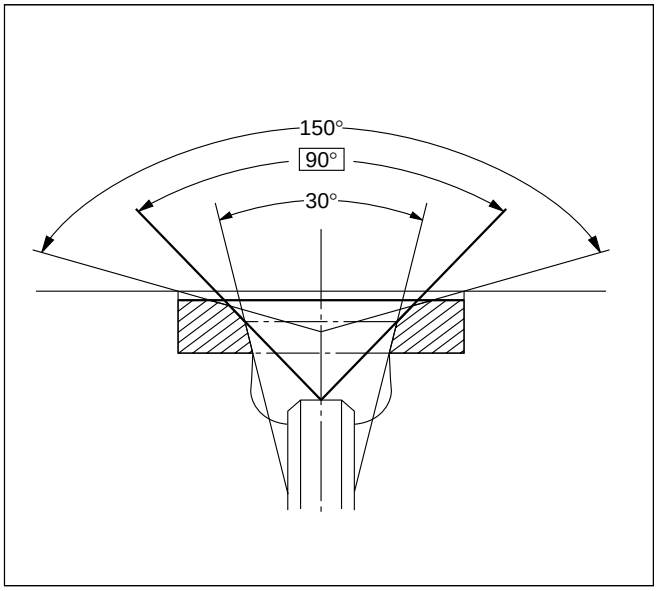

012RW056

NOTE: Use an adjustable valve cutter pilot.
Do not allow the valve cutter pilot to wobble inside the valve guide.

3. Apply abrasive compound to the valve seat insert surface.
4. Insert the valve into the valve guide.
5. Turn the valve while tapping it to fit the valve seat insert.
6. Check that the valve contract width is correct.
7. Check that the valve seat insert surface is in contact with the entire circumference of the valve.

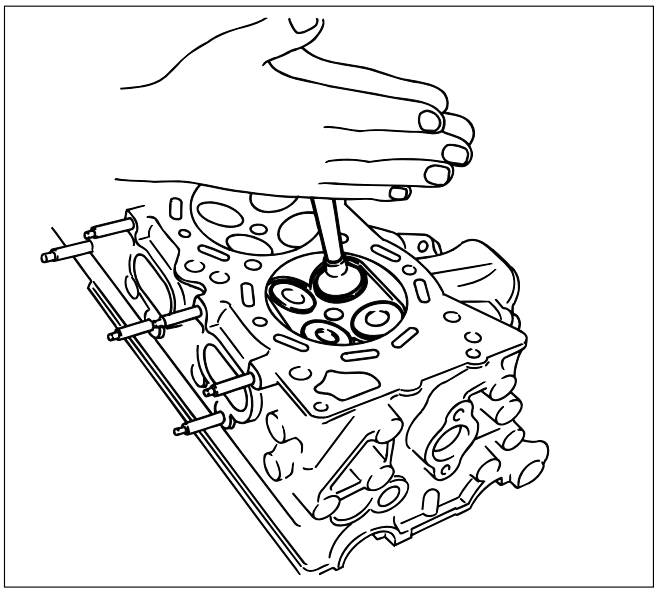

014RS014

INSTALLATION

1. Valve stem seal
   1) Use the special tool to install the stem seal to the valve guide.

   Stem Seal Installer: 5-8840-2033-0
2. Valve spring.
   1) Install the lower valve seat spring, valve spring, then the upper valve spring seat.
   2) Use valve spring compressor to compress the spring then install the split collar.

   Valve spring compressor: 5-8840-2441-0

NOTE: Make sure the split collar installs completely.

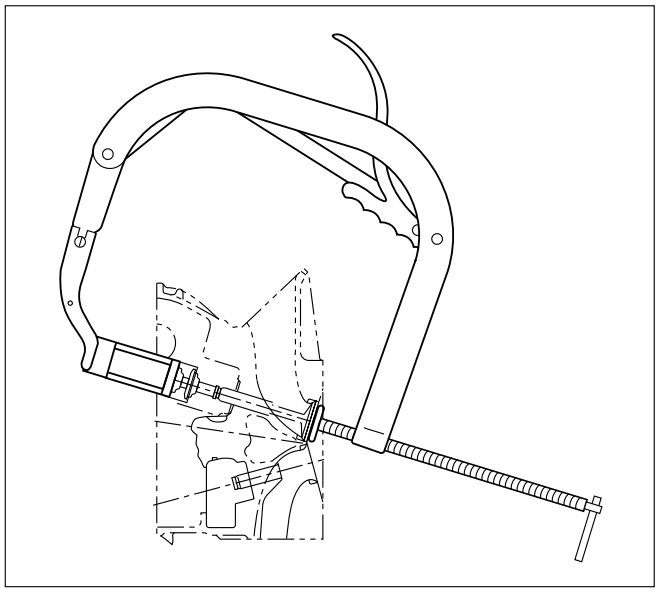

014RW042

3. Install cylinder head assembly.
   Refer to “Cylinder Head” in this manual.
4. Install the camshaft carrier with camshaft.
   Refer to “Camshaft” in this manual.
5. Install oil rail assembly.
   Refer to “Oil rail and injector” in this manual.
6. Install injector assembly.
   Refer to “Oil rail and injector” in this manual.
7. Install the injector harness assembly.
   Refer to “Injector” in this manual.
8. Reconnect harness connecter to oil pressure sensor and oil temperature sensor on the oil rail.
9. Reconnect Injector harness connecter to injector.
   Refer to “Injector” in this manual.
10. Install cylinder head cover with gasket.
    Refer to “Cylinder Head Cover” in this manual.
11. Install glow plug with specified torque.

Torque: 15 N·m (1.5 kg·m / 10.8 lb ft)

12. Install the intake manifold assembly.
    Refer to “Intake Manifold” in this manual.
13. Install the fuel pipe.
14. Install the water pipe between the cylinder head and water pump.

Torque: 20 N·m (2.0 k·m / 14.5 lb ft)

15. Install the front plate.
16. Install the camshaft pulley.
    Refer to “Timing Gear” in this manual.
17. Install timing belt and set the tensioner.
    Refer to “Timing Belt” in this manual.
18. Install CMP sensor bracket.

Torque: 20 N·m (2.0 kg·m / 14.5 lb ft)

19. Install timing belt cover.

Torque: 9 N·m (0.9 kg·m / 6.5 lb ft)

20. Fill the oil rail with engine oil then immediately install the high pressure oil pipe with the specified torque.

Torque: 80 N·m (8.1 kg·m / 57.9 lb ft)

21. Install the noise insulator cover.
22. Reconnect hose between thermostat and radiator.
23. Install turbocharger assembly.
    Refer to “Turbocharger” in this manual.
24. Install water hose and oil pipe for turbocharger.
    Refer to “Turbocharger” in this manual.
25. Install the valve assembly and install heat protector.
26. Install generator and set the fan belts.
27. Install A/C compressor bracket, compressor assembly and set drive belt.
28. Reconnect harness connector around cylinder head.
29. Reconnect vacuum hose to EGR valve.
30. Reconnect PCV hose.
31. Install oil level gauge guide assembly.
32. Install intercooler assembly.
    Refer to “Intercooler” in this manual.
33. Install the air duct assembly.
34. Fill engine coolant.
35. Connect battery ground cable.

VALVE CLEARANCE ADJUSTMENT

NOTE:

1. Valve clearance should be inspected and adjusted while the engine is cool.
2. The tightening of the camshaft bearing cap and camshaft carrier assembly should be checked before inspecting and adjusting valve clearance.

INSPECTION

1. Remove cylinder head noise insulator cover and cylinder head cover.
   Refer to “Cylinder Head” in this manual.
2. Disconnect all harness connecters of the injector and remove harness assembly.
3. Drain oil from oil rail assembly.
4. Remove injector clamp nuts and fixing bolts to take out injector assembly.
5. Loosen oil rail bolts, remove oil rail assembly.
6. Set cylinder No.1 to the TDC at the compression stroke. Make sure that there is play in cylinder No.1 tappets on inlet and exhaust sides and that there is no play in cylinder No.4 tappets.
7. Measure valve clearance at No.1 TDC (Refer to the black circles indicated in the illustration).

Standard Valve clearance:

Intake valve: 0.15 mm (0.0059 in) ± 0.05 mm (0.0020 in)
Exhaust valve: 0.25 mm (0.0098 in) ± 0.05 mm (0.0020 in)

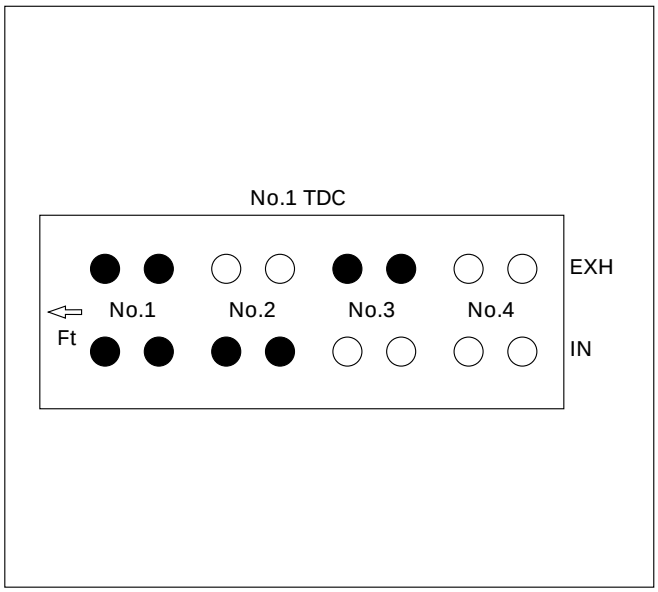

011RW045

8. Turn the crankshaft one turn to set No.4 cylinder TDC at the compression stroke.
9. Measure valve clearance at No.4 TDC (Refer to the black circles indicated in the illustration).

Standard Valve clearance:

Intake valve: 0.15 mm (0.0059 in) ± 0.05 mm (0.0020 in)
Exhaust valve: 0.25 mm (0.0098 in) ± 0.05 mm (0.0020 in)

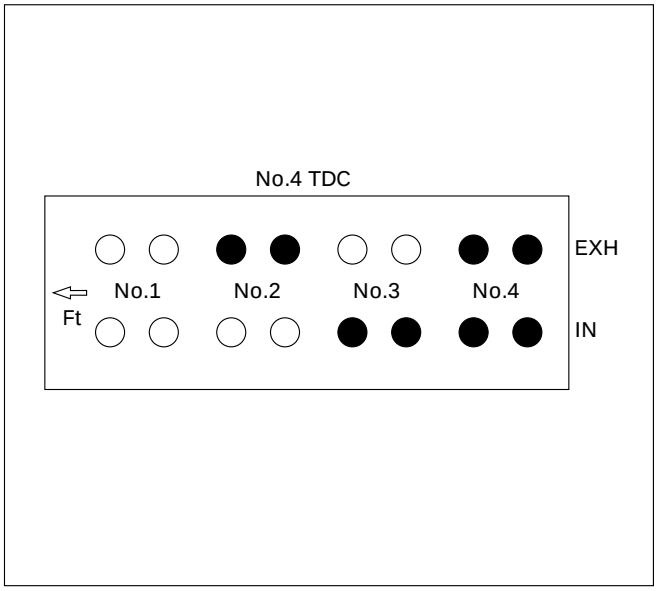

011RW046

10. If measured value is outside standard value, readjust the valve clearance.

ADJUSTMENT

For valve clearance adjustment, follow the procedure given below.

1. Set cylinder No.1 or No.4 to the TDC at the compression stroke.
   Set the valve clearance adjusting tool on the tappet requiring adjustment.
   After making sure of the correct setting of the special tool, depress the tappet by turning the bolt.
   Valve Clearance Adjusting Tool: 5-8840-2590-0

NOTE: Before depressing the tappet, set the tappet notch in the direction where adjuster can be easily taken out.

2. Take out the adjuster using a small screw driver and finger magnet.

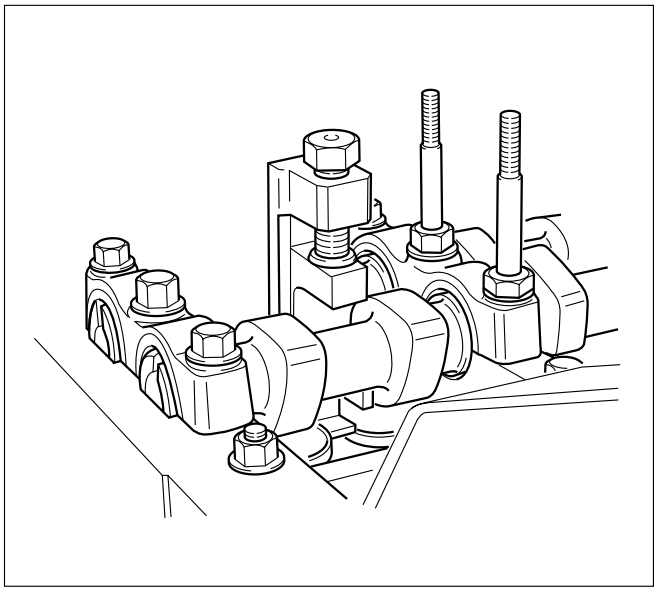

014RW150

3. Determine the thickness of the adjuster as follows.
   1) Measure the thickness of the removed adjuster with a micrometer.
   2) Calculate the thickness of a new adjuster.

   Calculation
   TA: Thickness of new adjuster
   M: Valve clearance measurement.
   TO: Thickness of the removed adjuster
   For intake side: TA=TO+(M–0.15) mm
   For exhaust side: TA=TO+(M–0.25) mm

   Select a new adjuster whose thickness is as close to the estimated value as possible.
4. Install oil rail and tighten it temporarily.
5. Install injector assembly.

NOTE:

1) Do not forget to insert the O-ring between injector and oil rail.
2) Install the injector to the same position as before removal.

6. Install the injector fixing bolts and temporarily tighten.
7. Install the injector clamp and tighten temporarily.
8. Tighten injector fixing bolts to the specified torque.

Torque: 6.5 N·m (0.7 kg·m / 5.1 lb ft)

9. Tighten injector clamp nut to the specified torque with special method.

Torque: loosen one turn and tighten again to specified torque.

Torque: 25 N·m (2.4 kg·m / 17.4 lb ft)

10. Tighten oil rail to the specified torque.

Torque: 20 N·m (2.0 kg·m / 14.5 lb ft)

11. Install injector harness and reconnect connector.
12. Install cylinder head cover.
    Refer to”Cylinder Head” in this manual.
13. Fill with about 300cc of engine oil at the high pressure oil pipe installation port on the oil rail using an oil filler.
    If assembled without filling the oil rail with oil, the time for engine starting will be longer.
14. Immediately install high pressure oil pipe to tighten with specified torque.

Torque: 80 N·m (8.1 kg·m / 57.9 lb ft)

15. Install cylinder head noise insulator cover.
    Refer to “Cylinder Head” in this manual.

OIL RAIL AND INJECTOR

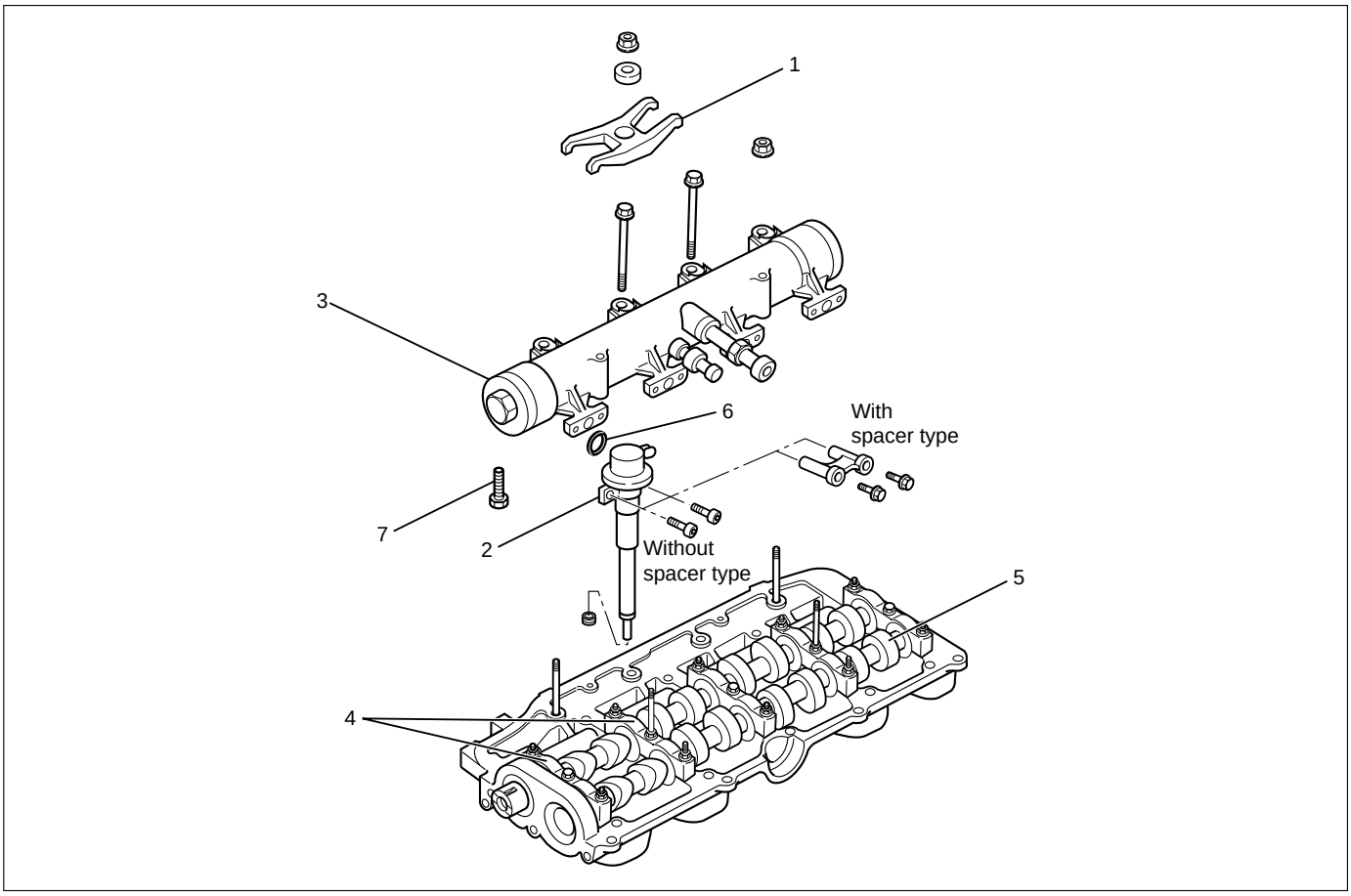

012R200005

Legend

(1) Injector Clamp
(2) Injector Assembly
(3) Oil Rail Assembly
(4) Camshaft Bracket
(5) Camshaft
(6) O-Ring
(7) Drain Plug

REMOVAL

Prior to removal, be sure to confirm and record the group code of the injector installed using Tech2.

1. Disconnect battery ground cable.
2. Remove air cleaner cover and air duct.
3. Remove intercooler.
   Refer to “Intercooler” in this manual.
4. Remove PCV hose and pipe.
5. Remove cylinder head noise insulator cover.
6. Remove high pressure oil pipe.

CAUTION:

1) Sleeve nut should be loosened with cloth tied around it to prevent oil from spurting due to the remaining pressure.

2) The high pressure pipe should be disconnected with a cloth tied around the intake manifold glow plug to prevent oil from flowing out of the oil rail.

7. Loosen eye bolt of fuel pipe at fuel pump side.

NOTE: Cloth should be put around the loosened eye bolt to prevent fuel from flowing out.

8. Remove fuel return hose at chassis side.
9. Remove PCV hose to cylinder head cover.
10. Remove cylinder head cover.
11. Drain the oil from oil rail assembly.
12. Record the identification marking of injector for each cylinder which is indicated on the upper portion of injector.
    There are nine kinds of identification marking available, one alphabet letter and one numeral letter.
    In case three kinds of markings are given, one alphabet letter (sometimes printed) and one numeral letter, top priority is given to the one alphabet letter and one numeral letter.

(For example)
If you find identification marking “A”, “RA” and “2” on the injector, you can use injector grade “A”. (The “RA” is sometimes printed, but can be ignored)

Grade \ Identification Marking	One Alphabet Letter	One Numeral Letter
A	A	1
	A	2
	A	3
B	B	1
	B	2
	B	3
C	C	1
	C	2
	C	3

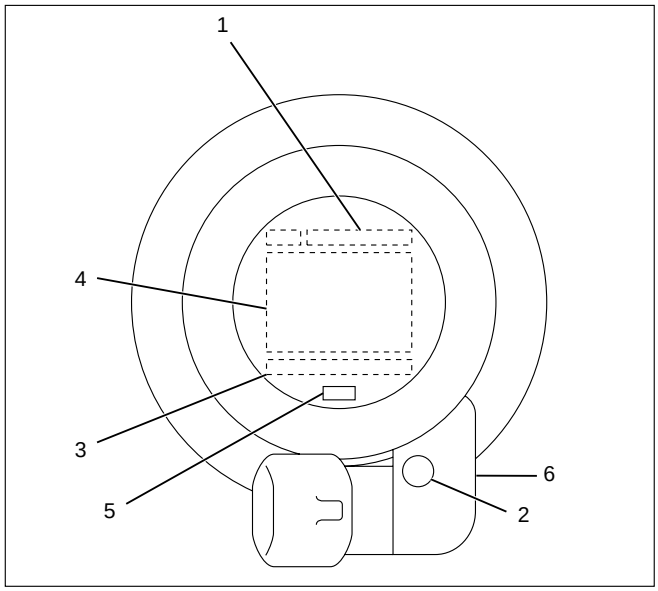

055RW021-1

Legend
(1) Part Number
(2) Two Alphabet Letter
(3) Serial Number
(4) Bar Code
(5) One Alphabet Letter
(6) One Numeral Letter

13. Remove harness connector from each injector.
14. Loosen nuts and bolts for oil rail.
15. Remove injector fixing bolts.
16. Remove injector clamp.
17. Remove injector assembly.

NOTE: Do not drop O-ring

INSTALLATION

1. Install oil rail, tighten temporarily
2. Install injector assembly.

NOTE: Do not forget to install O-ring between injector and oil rail.

3. Install injector fixing bolts, tighten temporarily.
4. Install injector clamp, tighten nut temporarily.
5. Tighten injector bolts to the specified torque.

Torque: 6.5 N·m (0.7 kg·m / 5.1 lb ft)

6. Tighten injector clamp nut to the specified torque with special method.

Torque: 30 N·m (3.1 kg·m / 22 lb ft) then loose a time again tighten as following torque.

Torque: 25 N·m (2.4 kg·m / 17.4 lb ft)

7. Tighten oil rail to the specified torque.

Torque: 20 N·m (2.0 kg·m / 14.5 lb ft)

8. Install injector harness assembly, reconnect harness connecter to injector.
9. Record the identification marking of injector for each cylinder that is indicated on the upper portion of injector.

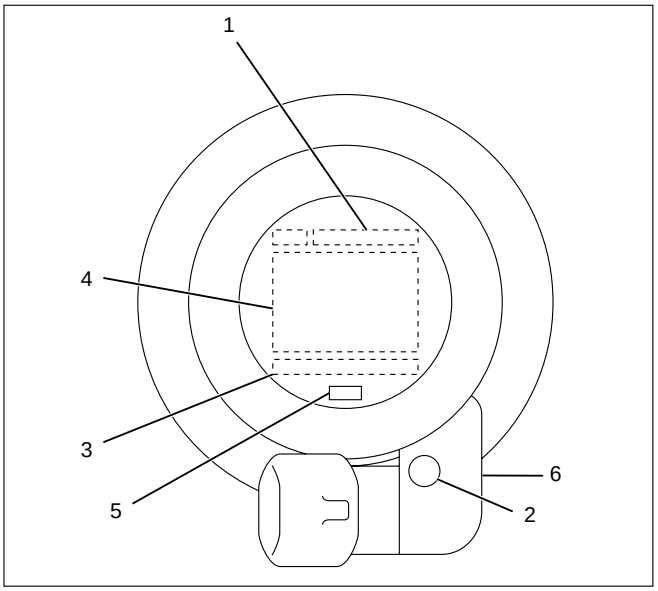

055RW021-1

Legend
(1) Part Number
(2) Two Alphabet Letter
(3) Serial Number
(4) Bar Code
(5) One Alphabet Letter
(6) One Numeral Letter

10. Install cylinder head assembly.
    Refer to “Cylinder Head” in this manual.
11. Fill with about 300cc of engine oil from the high pressure oil pipe at the high pressure oil pipe installation port on the oil rail using an oil filler.
    If assembled without filling the oil rail with oil, the time for engine starting will be longer.

12. Immediately install high pressure oil pipe and tighten to specified torque.

Torque: 80 N·m (8.1 kg·m / 57.9 lb ft)

13. Install cylinder head noise insulator cover.
    Refer to “Cylinder Head” in this manual.
14. Install intercooler assembly.
    Refer to “Intercooler” in this manual.
15. Install air cleaner cover and air duct.
16. Use TECH2 to rewrite injector data to ECM.
    For rewriting method refer to section “Data Programming in Case of ECM Change” of 6E 4JX1 engine driveability and emissions in this manual.

NOTE:

1) On completion of servicing, bleed air from the engine inside fuel passage by means of the priming pump. (The priming pump should be operated more times than in the case of conventional engines.)
2) As air is in the oil rail, it takes more time to start the engine. Rough idling may occur while the air is being bled completely after starting the engine, but it does not indicate trouble.

   The air will be bled and normal engine status will be reached while the vehicle is driven for about 5 km or engine is operated for about 5 minutes at 1500 to 2000 rpm.
3) The injector spare part will be provided for group number B1, B2 and B3 only.

CRANK CASE

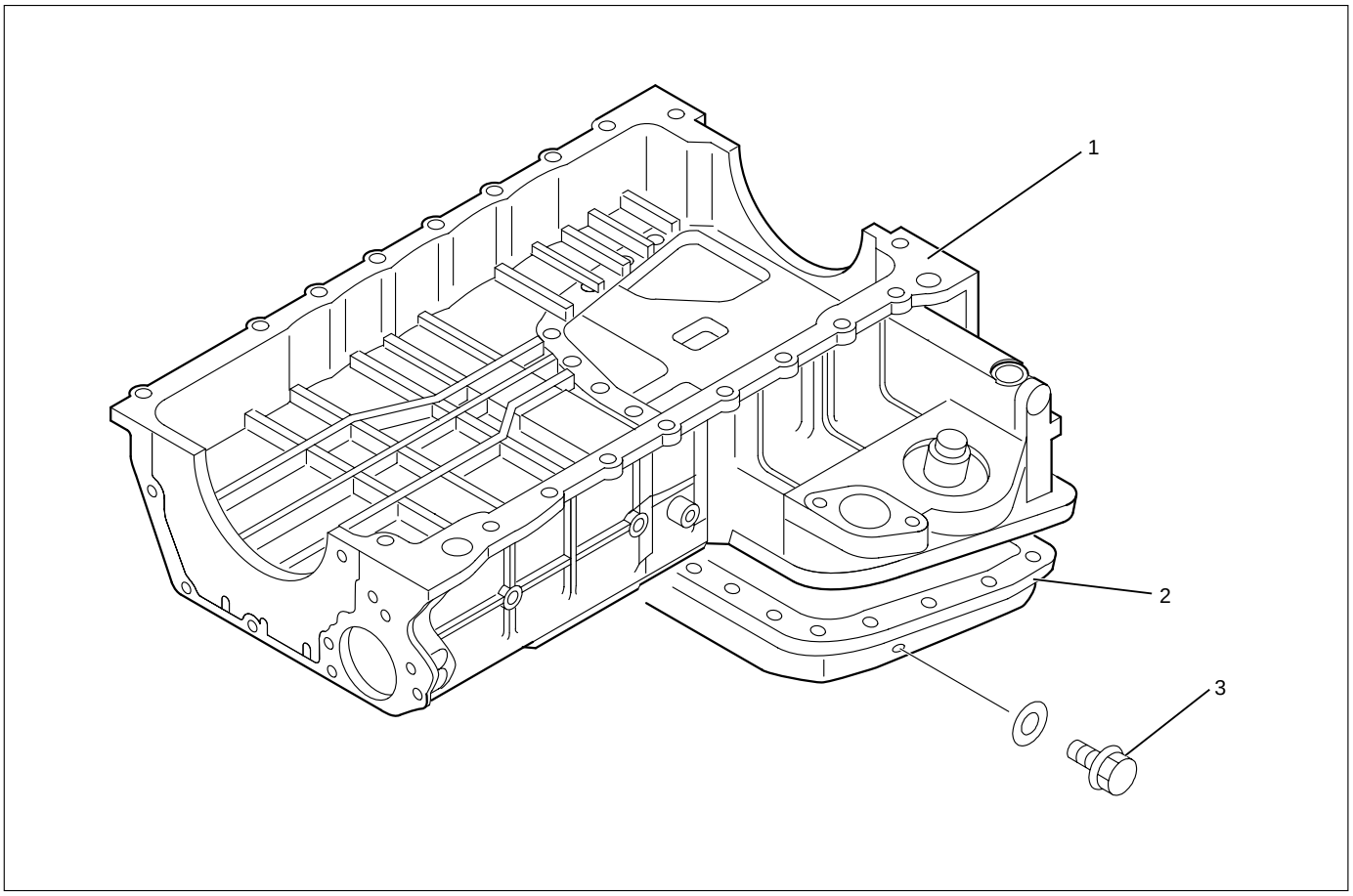

012RW029

Legend
(1) Crank Case
(2) Oil Pan
(3) Drain Plug

REMOVAL

1. Drain engine oil.
2. Remove transmission assembly.
3. Remove crankshaft damper pulley.
4. Remove timing belt cover, timing belt, pulley and front plate.
5. Remove timing gear case cover.
6. Remove timing gears.

NOTE: Do not forget to set lock bolt for idle gear A and lock pin for idle gear C.

7. Remove timing gear case.
8. Remove oil level gauge guide assembly.
9. Remove flywheel assembly.

CAUTION:

1) The flywheel heavy; be careful not to drop it.

2) Be careful no to let it slip because the hexagon of the bolt is thin.

10. Remove rear plate (for A/T) or flywheel housing (for MT).
11. Remove retainer.

NOTE:
1) Be careful not to damage the oil seal; it can be reused.
2) Inspect installation portion for distortion and flow on the slinger; also inspect for flow on the oil seal lip.
3) If there is some flow oil seal/slinger, replace a set.

12. Remove bolts from thrust plate of balance shaft LH then remove balance shaft.
13. Loosen crank case fixing bolts.
14. Use seal cutter to take off the liquid gasket.
    Seal cutter: 5-8840-2153-0
15. Remove crank case assembly.

CAUTION:
Do not give shock to crank case for prevention take off applied vibration insulation material on the crank case.

INSTALLATION

1. Install relief valve (if it was removed).

Torque: 30 N·m (3.1 kg·m / 22 lb ft)

2. Insert O-ring to strainer, install strainer and tighten to specified torque.

Torque: 20 N·m (2.0 kg·m / 14.5 lb ft)

3. Apply liquid gasket (TB1207B or equivalent) to surface of oil pan and tighten bolt to the specified torque.

Torque: 19 N·m (1.9 kg·m / 13.7 lb ft)

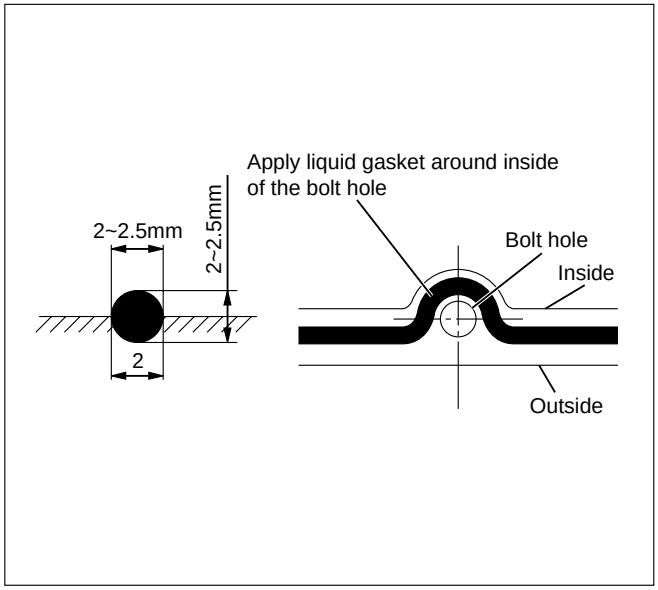

F06HX00001

4. Apply engine oil to the balance shaft and insert it into crank case.

NOTE:
- Do not damage bearing when inserting the balance shaft.
- Make sure it rotates smoothly.

5. Tighten thrust plate of balance shaft LH.

Torque: 25 N·m (2.5 kg·m / 18 lb ft)

6. Set O-ring port of oil gallery on the cylinder block.
7. Apply liquid gasket (TB1207C or equivalent) to crankcase fixing surface then tighten bolts to the specified torque.

Torque: 25 N·m (2.5 kg·m / 18 lb ft)

NOTE: Make sure there is no oil, dust or scratches on the surface coated with liquid gasket and mount within five minutes of gasket application.

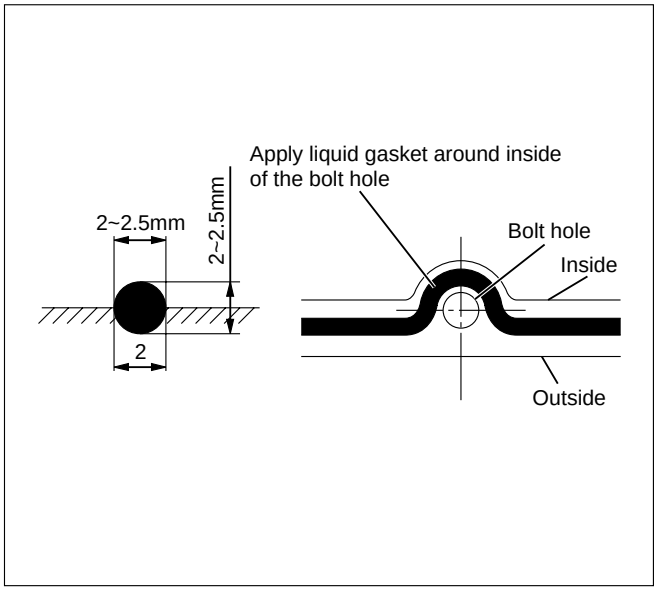

F06HX00001

8. Install retainer with oil seal.
9. Install rear plate (A/T) or flywheel housing (MT), tighten bolt to the specified torque.

Torque: 97 N·m 9.9 kg·m / 72 lb ft)

10. Install flywheel assembly with applied engine oil to the bolt, tighten the bolt using angular tightening method.

1st step: 59 N·m (6.0 kg·m / 43 lb ft)
2nd step: 60° to 90°

11. Install oil level gauge guide assembly.
12. Install timing gear case.

Torque: 20 N·m (2.5 kg·m / 14.5 lb ft)

13. Install timing gears
    Refer to “Timing Gear” in this manual.
14. Remove lock bolt from idle gear A and remove lock pin from idle gear C.
15. Install timing gear case cover.

Torque: 20 N·m (2.5 kg·m / 14.5 lb ft)

16. Install oil pump pulley.

Torque: 10 N·m (1.0 kg·m / 7.2 lb ft)

17. Install camshaft pulley tighten bolt with angular tightening method.

Torque:
1st step: 40 N·m (4.0 kg·m / 29 lb ft)
2nd step: 75°

18. Install timing belt and belt tensioner.
    Refer to “Timing Gear” in this manual.
19. Install crankshaft damper pulley.

Torque: 220 N·m (22 kg·m / 159 lb ft)

20. Fill engine oil.

CRANKSHAFT

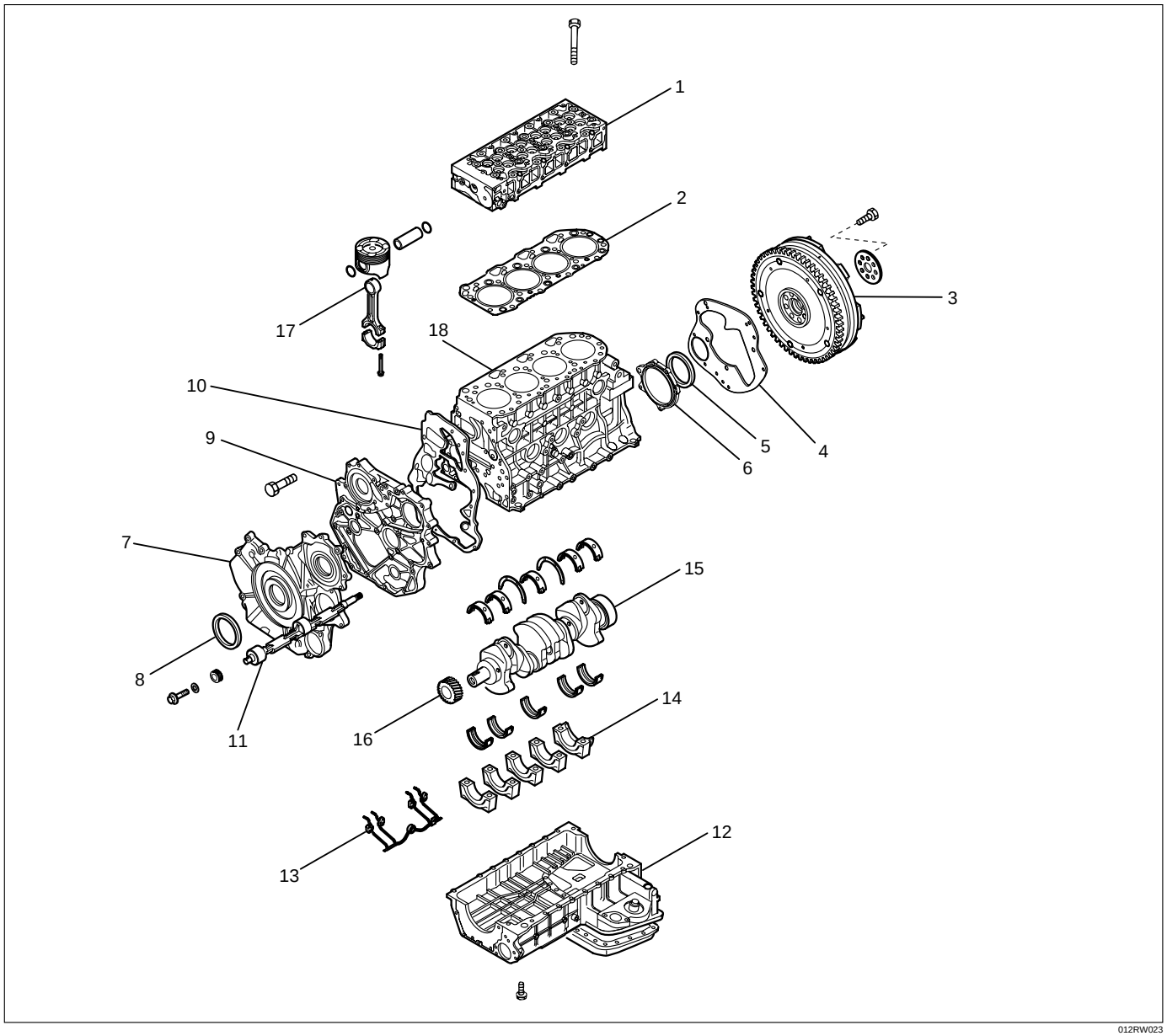

Legend

(1) Cylinder Head
(2) Cylinder Head Gasket
(3) Flywheel
(4) Cylinder Block Rear Plate (for A/T) or Flywheel Housing (for M/T)
(5) Crankshaft Rear Oil Seal
(6) Retainer
(7) Timing Gear Case
(8) Crankshaft Front Oil Seal
(9) Timing Gear Case
(10) Gasket
(11) Balance Shaft
(12) Crank Case
(13) Piston Cooling Oil Pipe
(14) Main Bearing Cap
(15) Crankshaft
(16) Crankshaft Timing Gear
(17) Piston and Connecting Rod Assembly
(18) Cylinder Block

DISASSEMBLY

1. Cylinder Head
   1) Refer to “Cylinder head” in this manual.
2. Crankshaft Front Oil Seal
   1) Use a plastic hammer and a screwdriver to tap around the oil seal to free it from the gear case cover.

      Take care not to damage the oil seal fitting surfaces.
3. Crankshaft Timing Gear
4. Timing Gear Case
5. Flywheel
6. Cylinder Block Rear Plate
7. Crankshaft Rear Oil Seal
   1) Use special tool to remove the crankshaft rear oil seal.

      Oil Seal Remover: 5-8840-2360-0

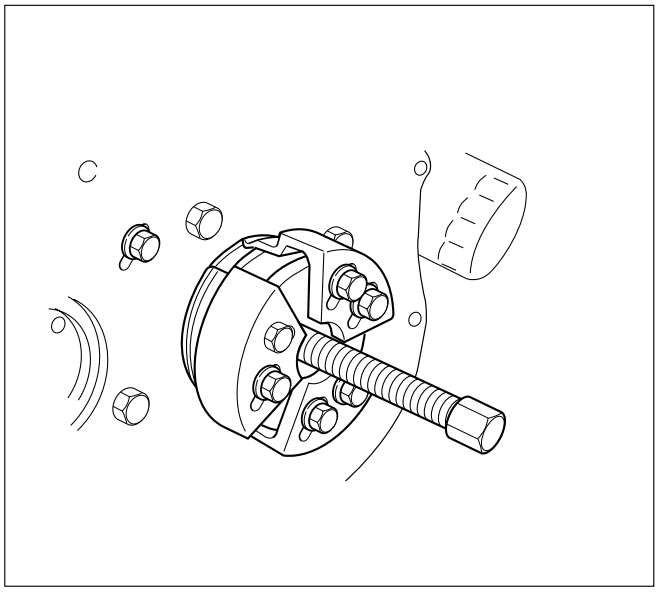

015LV002

8. Crank Case
9. Piston Cooling Oil Pipe
10. Piston and Connecting Rod Assembly
11. Main Bearing Cap Assembly
12. Crankshaft

INSPECTION AND REPAIR

Make the necessary adjustments, repairs, and part replacements if excessive wear or damage is discovered during inspection.

1. Crankshaft Thrust clearance

   Set the dial indicator as shown in the illustration and measure the crankshaft thrust clearance.
   If the thrust clearance exceeds the specified limit, replace the thrust bearing as a set.

Standard : 0.04 – 0.20 mm (0.0016 – 0.0079 in)
Limit: 0.30 mm (0.0118 in)

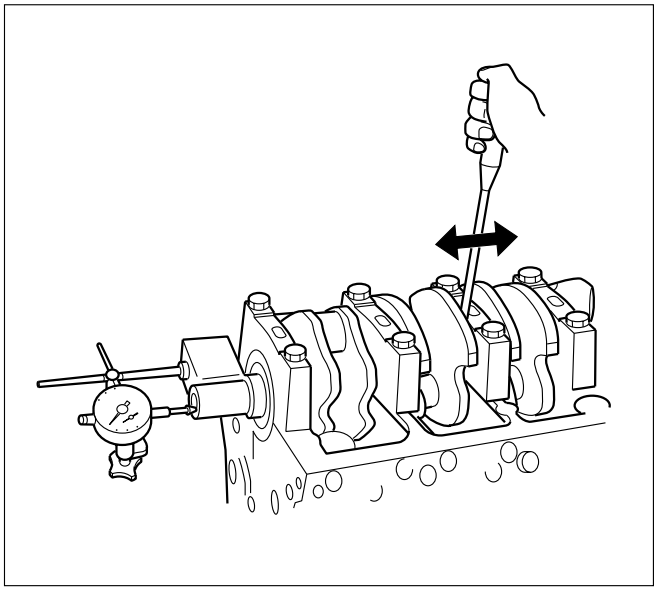

012RW063

2. Main bearing clearance
   1) Remove the main bearing caps in the sequence shown in the illustration.

      Arrange the removed main bearing caps in the cylinder number order.

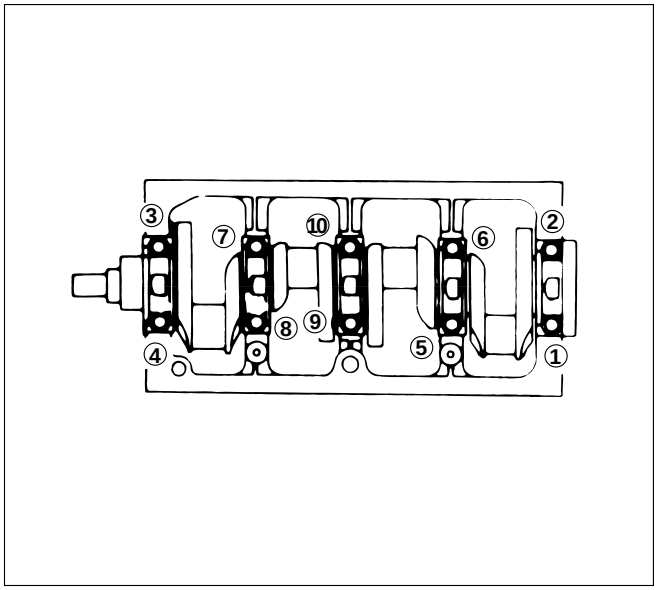

012RW026

   2) Remove the crankshaft. Remove the main bearings.
   3) Clean the upper and lower bearings as well as the crankshaft main journal.
   4) Check the bearings for damage or excessive wear.

      The bearings must be replaced as a set if damage or excessive wear is discovered during inspection.
   5) Set the upper bearings and the thrust washers to their original positions. Carefully install the crankshaft.
   6) Set the lower bearings to the bearing cap original position.

7) Apply plastigage to the crankshaft journal unit as shown in the illustration.

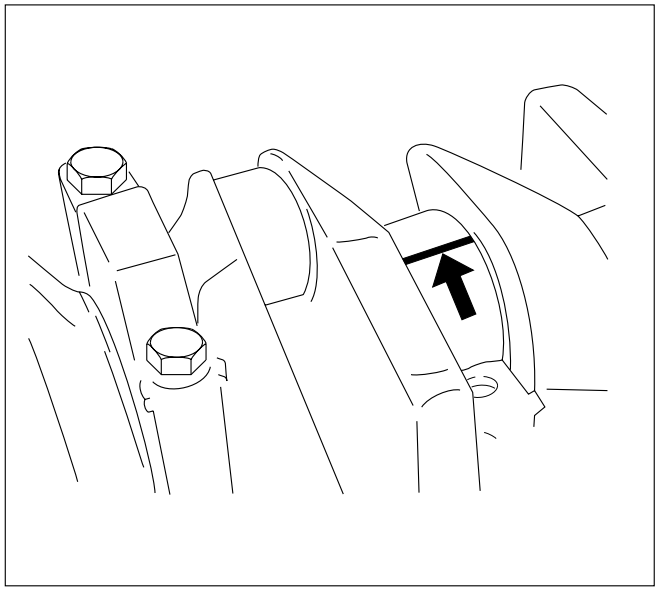

014RW055

8) Install the main bearing caps. Apply engine oil to the bolt threads and the seats. Tighten the bolts to the specified torque.

Torque: 167 N·m (17 kg·m/123 lb ft)

NOTE: Do not allow the crankshaft to rotate.

9) Remove the main bearing caps.
10) Measure the plastigage width and determine the oil clearance. If the oil clearance exceeds the specified limit, replace the main bearings as a set and/or replace the crankshaft.

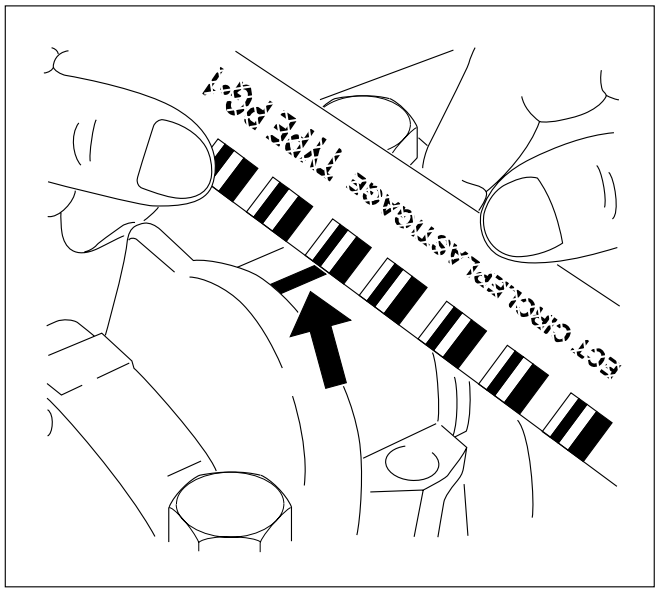

014RW077

11) Clean the plastigage from the bearings and the crankshaft.

    Remove the crankshaft and the bearings.

Standard: 0.031 – 0.063 mm (0.0012 – 0.0025 in)
Limit: 0.11 mm (0.0043 in)

3. Run-out
   1) Carefully set the crankshaft on the V-blocks.

      Slowly rotate the crankshaft and measure the runout. If the crankshaft runout exceeds the specified limit, the crankshaft must be replaced.

Standard: 0.05 mm (0.0020 in) or less
Limit: 0.08 mm (0.0031 in)

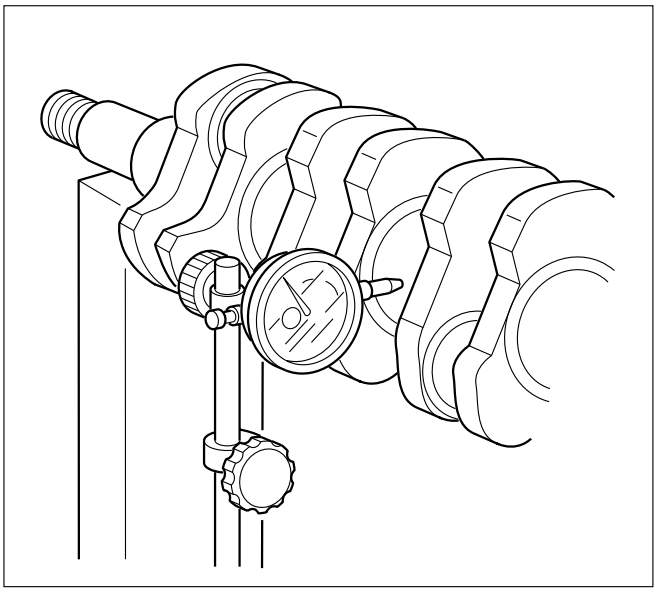

012RW068

Measure the diameter and the uneven wear of main journal and crank pin.

If the crankshaft wear exceeds the specified limit, crankshaft must be replaced.

Main journal diameter

Standard: 69.917 – 69.932 mm (2.7526 – 2.7532 in)
Limit: 69.91 mm (2.7524 in)

Crank pin diameter

Standard: 52.915 – 52.930 mm (2.0833 – 2.0839 in)
Limit: 52.90 mm (2.0827 in)

Uneven wear limit

Standard: 0.05 mm (0.0020 in) or less
Limit: 0.08 mm (0.0031 in)

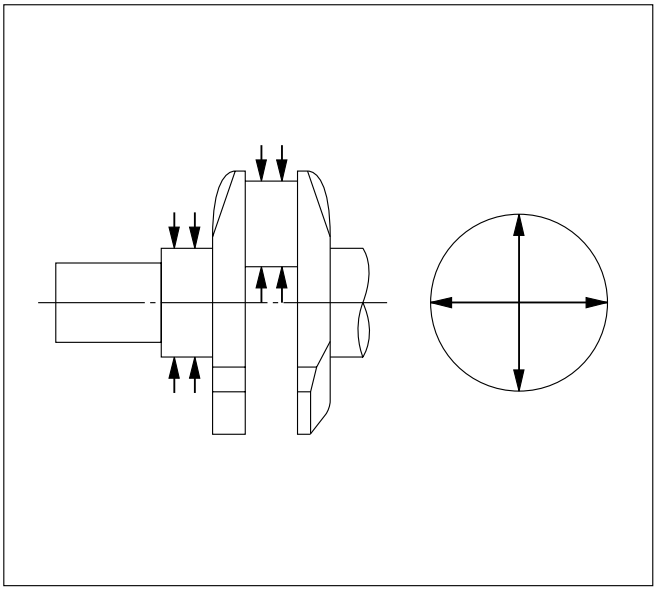

012RW045

Crankshaft inspection

Inspect the surface of the crankshaft journals and crank pins for excessive wear and damage.
Inspect the oil seal fitting surfaces for excessive wear and damage.
Inspect the oil ports for obstructions.

Crankshaft tufftriding inspection

1. Use an organic cleaner to thoroughly clean the crankshaft. There must be no traces of on the surfaces to be inspected.
2. Prepare a 5 – 10% solution of ammonium cupric chloride (dissolved in distilled water).
3. Use a syringe to apply the solution to the surface to be inspected.

   Hold the surface to be inspected perfectly horizontal to prevent the solution from running.

NOTE: Do not allow the solution to come in contact with the oil ports and their surrounding area (Approximately 10 mm).

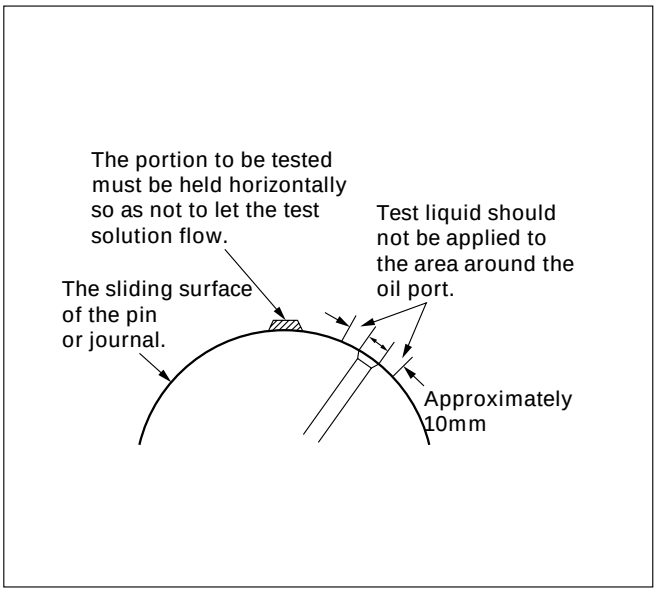

F06MV020

Judgment

1. Wait for thirty or forty seconds.

   If there is no discoloration after thirty or forty seconds, the crankshaft is usable.

   If discoloration appears (the surface being tested will become the color of copper), the crankshaft must be replaced.
2. Steam clean the crankshaft surface immediately after completing the test.

NOTE: The ammonium cupric chloride solution is highly corrosive. Because of this, it is imperative that the surfaces being tested be cleaned immediately after completing the test.

CRANKSHAFT BEARING SECTION

When installing new crankshaft bearings, refer to the selection table below.
Select and install the new crankshaft bearings, paying close attention to the cylinder body journal hole diameter grade mark and the crankshaft journal diameter grade mark.

NOTE: Although all upper journal bearings (cylinder body side) have oil grooves and holes, all lower bearings (bearing cap side) have no groove and hole. Play close attention to the distinction during the installation procedure.

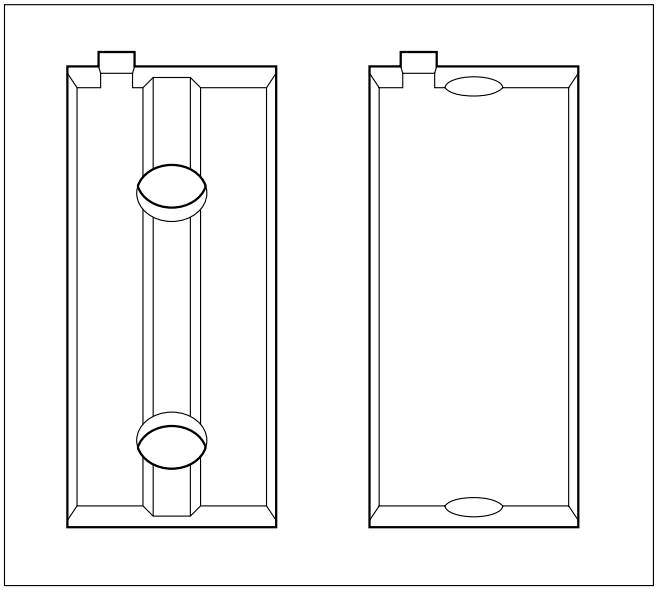

012RW038

Crankshaft Bearing Bore Grade Mark Position

Crankshaft bearing bore grade marks 1 or 2 are stamped on the rear right hand side of the cylinder body.

Example:

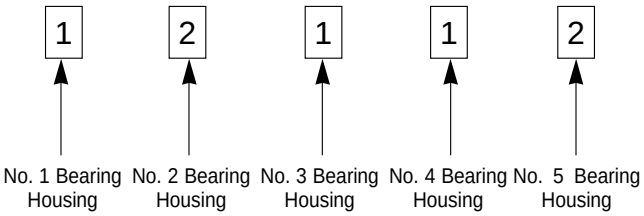

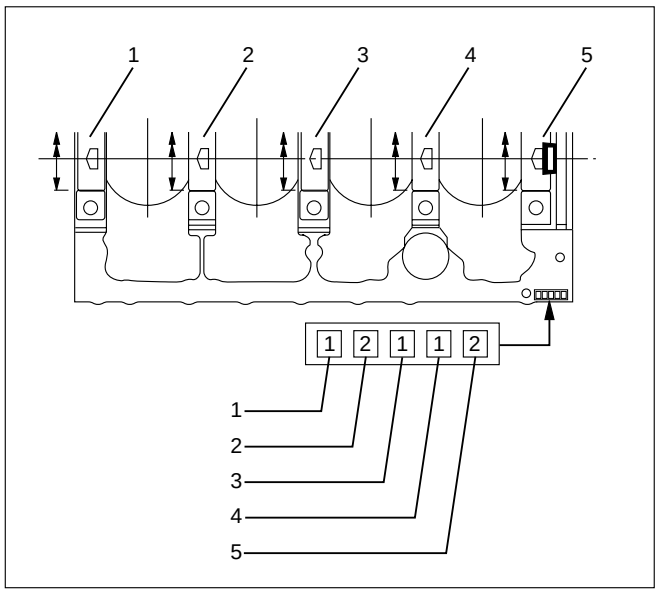

012RW114

Legend

(1) No. 1 Main bearing bore grade
(2) No. 2 Main bearing bore grade
(3) No. 3 Main bearing bore grade
(4) No. 4 Main bearing bore grade
(5) No. 5 Main bearing bore grade

Crankshaft Journal Grade Mark Position

The crankshaft journal grade marks (1 or –) are stamped on each crankshaft journal wave.
The crankshaft journal and bearing clearance must be the same for each position after installation of the crankshaft and the crankshaft bearings.

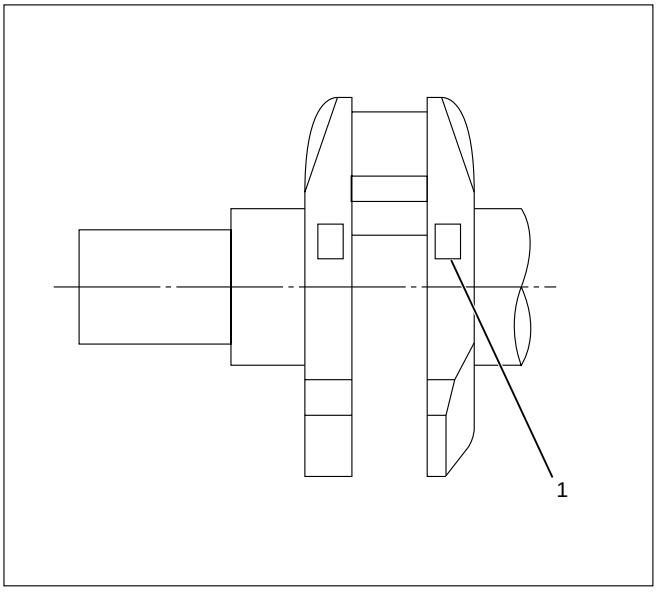

015RW078

Legend

(1) Crankshaft journal outside diameter grade

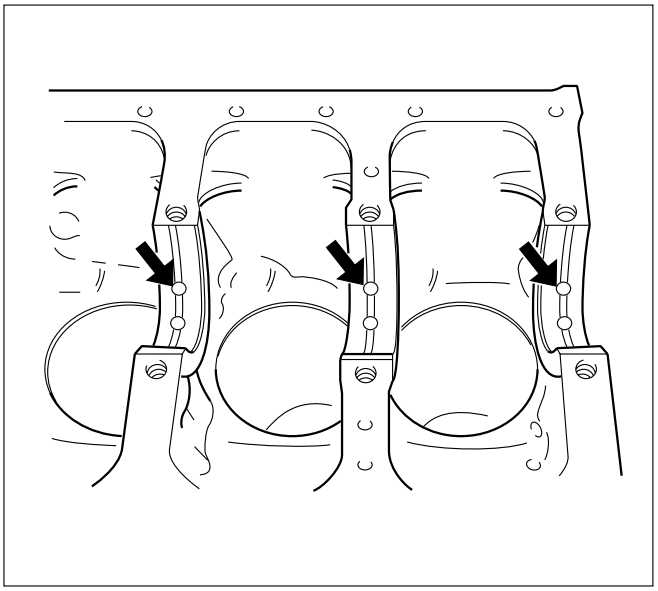

012RW069

Main Bearing Bore Diameter mm(in)		Crankshaft Main Journal Diameter mm(in)		Crankshaft Bearing	Oil Clearance mm(in)
Grade	Inside Diameter	Grade	Outside Diameter		
1	73.992 – 74.000 (2.9131 – 2.9134)	1 or -	69.927 – 69.932 (2.7530 – 2.7532)	4	0.045 – 0.061 (0.0018 – 0.0024)
		2 or - -	69.922 – 69.927 (2.7528 – 2.7530)	4	0.050 – 0.066 (0.0020 – 0.0026)
		3 or - - -	69.917 – 69.922 (2.7526 – 2.7528)	5	0.052 – 0.068 (0.0020 – 0.0027)
2	73.983 – 73.992 (2.9127 – 2.9131)	1 or -	69.927 – 69.932 (2.7530 – 2.7532)	2	0.042 – 0.059 (0.0017 – 0.0023)
		2 or - -	69.922 – 69.927 (2.7528 – 2.7530)	3	0.044 – 0.061 (0.0017 – 0.0024)
		3 or - - -	69.917 – 69.922 (2.7526 – 2.7528)	4	0.046 – 0.063 (0.0018 – 0.0025)
3	73.975 – 73.983 (2.9124 – 2.9127)	1 or -	69.927 – 69.932 (2.7530 – 2.7532)	1	0.037 – 0.053 (0.0015 – 0.0021)
		2 or - -	69.922 – 69.927 (2.7528 – 2.7530)	2	0.039 – 0.055 (0.0015 – 0.0022)
		3 or - - -	69.917 – 69.922 (2.7526 – 2.7528)	2	0.044 – 0.060 (0.0017 – 0.0024)

REASSEMBLY

1. Crankshaft
   1) Install the main bearings to the cylinder body and the main bearing caps.
   2) Be sure that they are positioned correctly.
   3) Apply new engine oil to the upper and lower main bearing faces.
   4) Carefully mount the crankshaft.
   5) Apply engine oil to the thrust washer.
   6) Assemble the thrust washer to the No. 3 bearing journal. The oil grooves must face the crankshaft.

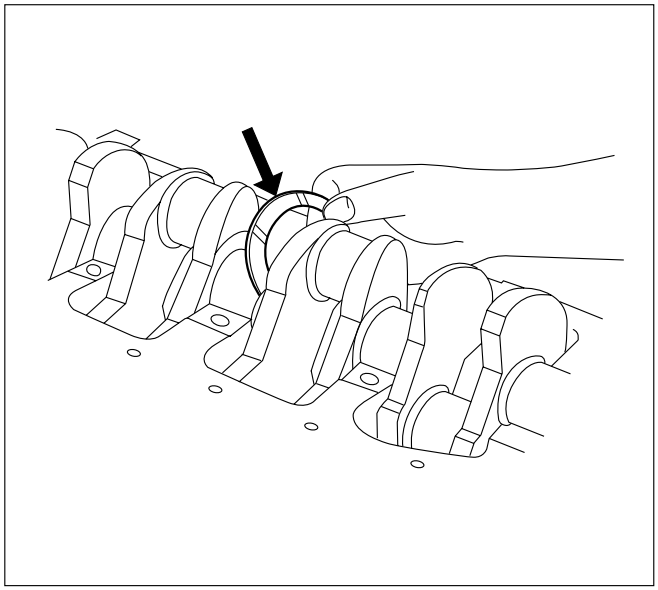

012RW047

   7) Install the bearing caps with the bearing cap head arrow mark facing the front of the engine.
   8) Apply engine oil to the crankshaft bearing cap bolts.
   9) Tighten the crankshaft bearing cap bolts to the specified torque a little at a time in the sequence shown in the illustration.

Torque: 167 N·m (17.0 kg·m/123 lb ft)

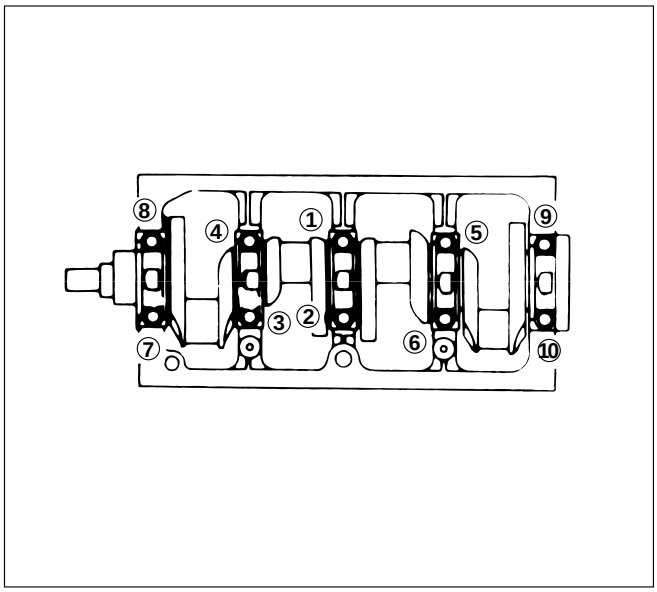

012RW027

NOTE: Check to see that the crankshaft turns smoothly by rotating it manually.

3. Piston and Connecting Rod Assembly
   1) Apply engine oil to the cylinder bores, the connecting rod bearings and the crankshaft pins and each piston ring and piston.
   2) Align the front mark (2) of piston and front mark (3) of connecting rod then assemble them.

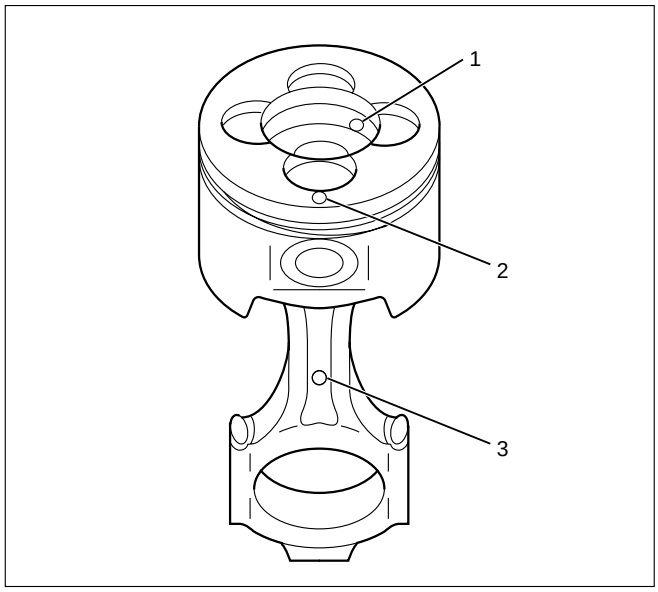

015RW051

   3) The N mark of the piston ring is faced toward the top, check to see that the piston ring end gap is correctly positioned.

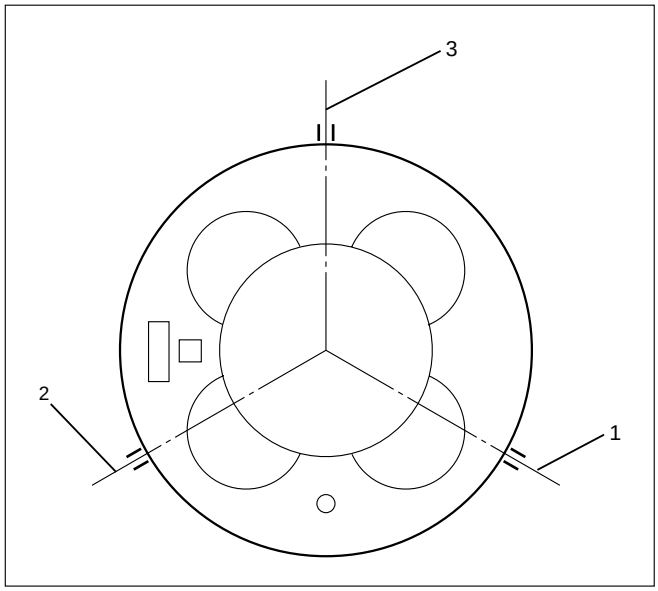

015RW083

Legend
(1) 1st piston ring end gap
(2) 2nd piston ring end gap
(3) Oil ring end gap

   4) Insert the piston/connecting rod assemblies into each cylinder with the piston ring compressor.

      The front marks must be facing the front of the engine.

      Piston Ring Compressor: 5-8840-9018-0
   5) Match the numbered caps with the numbers on the connecting rods. Align the punched marks on the connecting rods and caps.
   6) Apply engine oil to the threads and seating faces of the nuts.
   7) Tighten the cap nuts in 2 steps, using angular tightening method as shown in the following specifications.

1st step: 29 N·m (3.0 kg·m/22 lb ft)
2nd step: 45°– 60°

After tightening the cap nuts, check to see that the crankshaft rotates smoothly

4. Piston Cooling Oil Pipe

   If the piston cooling oil pipe is forcibly assembled, the end of the oil jet may bend. It could make it impossible to supply oil to the piston cooling holes, which will sometimes cause piston seizure.

   Sufficient care should be taken to pipe assembly work.

   1) Tighten the bolt and oil jet plug to the specified torque.

Torque:

M6: 8 N·m (0.8 kg·m/6 lb ft)
M8: 20 N·m (2.0 kg·m/14.5 lb ft)

Oiling Jet Plug: 30 N·m (3.1 kg·m/22 lb ft)

5. Crank case
   1) Refer to “Crank case” in this manual.
6. Apply liquid gasket (TB-1207C or equivalent) to retainer then install it to rear end of cylinder block within 5 minutes.
7. Crankshaft Rear Oil Seal
   1) Tighten the adapter to the crankshaft rear and section with 2 bolts.
   2) Insert the oil seal into the peripheral section of the adapter.
   3) Insert the sleeve into the adapter and tighten it with a bolt (M12 x 1.75L = 70) until the adapter hits the sleeve.
   4) Remove the adapter and the sleeve.
   5) Check the dimension of the oil seal setting from rear end of crankshaft.

Standard Dimension = 12.5 ± 0.3 mm

Oil Seal Installer: 5-8840-2359-0

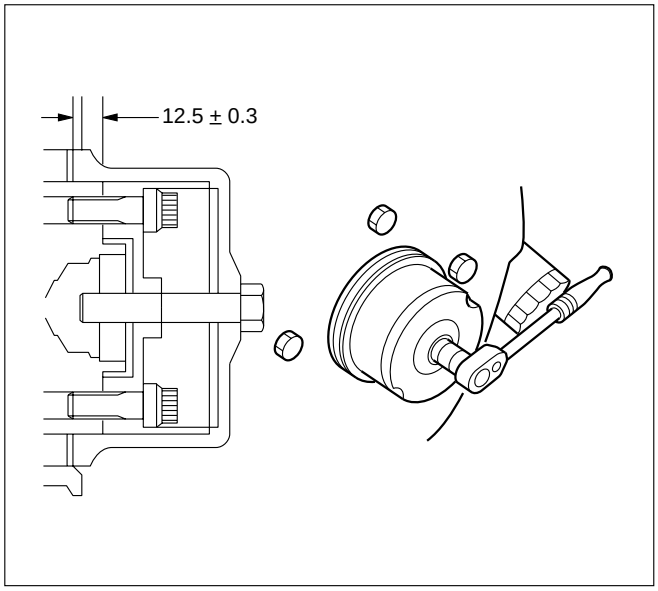

012RW067

8. Cylinder Block Rear Plate (A/T)
   Align the rear plate with the cylinder block dowel pins.
   Tighten the rear plate to the specified torque.

Torque: 97 N·m (9.9 kg·m/72 lb ft)

9. Flywheel housing (M/T)
   Align the flywheel housing with the cylinder block dowel pins.
   Tighten the bolt to the specified torque.

Torque: 97 N·m (9.9 kg·m/72 lb ft)

10. Flywheel
    1) Thoroughly clean and remove the oil from the threads of crankshaft and flywheel fixing surface.
    2) Mount the flywheel on the crankshaft and then install the washer.
    3) Align the timing mark, cut out on the flywheel is at lowest position for M/T model and identification hole on the boss is highest position for A/T model when cylinder No. 1 is at the TDC.

For M/T Model

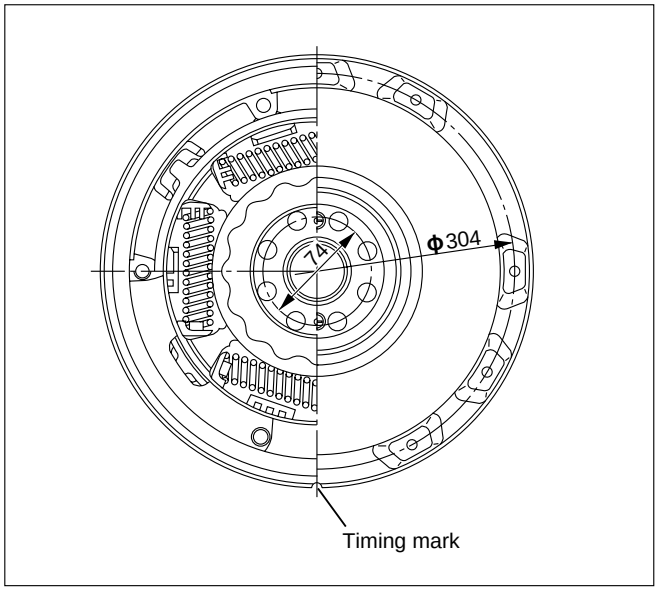

015RW120

For A/T model

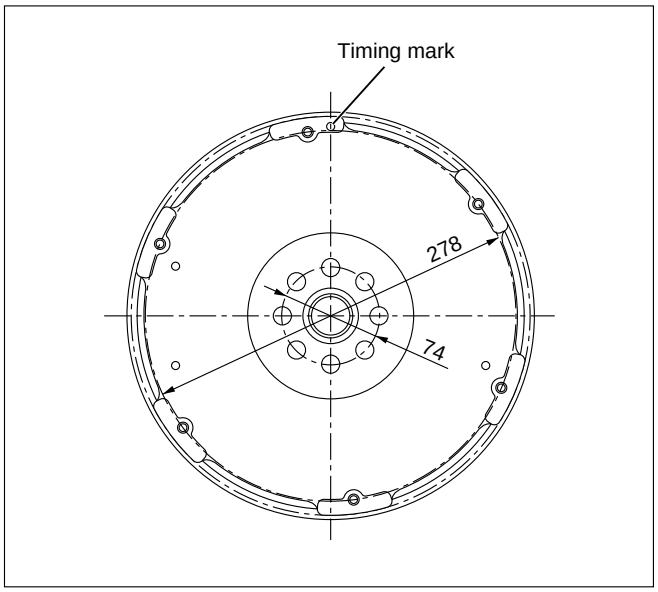

015RW121

4) Tighten the flywheel bolts in 2 steps using angular tightening method.

Torque: 1st step 60 N·m (6.1 kg·m/44 lb ft)
Torque: 2nd step 60° – 90°

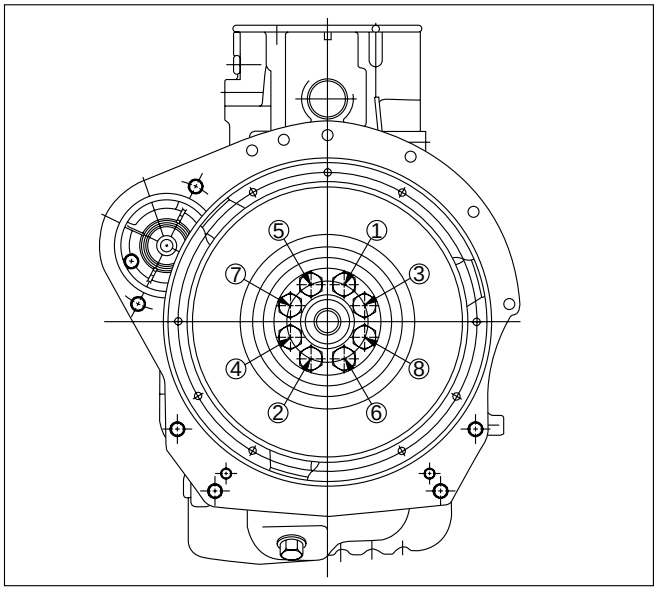

201RW021

11. Timing Gear Case
    1) Cut away the gasket protruding between the cylinder block and the crank case fitting surfaces (as shown in the illustration).

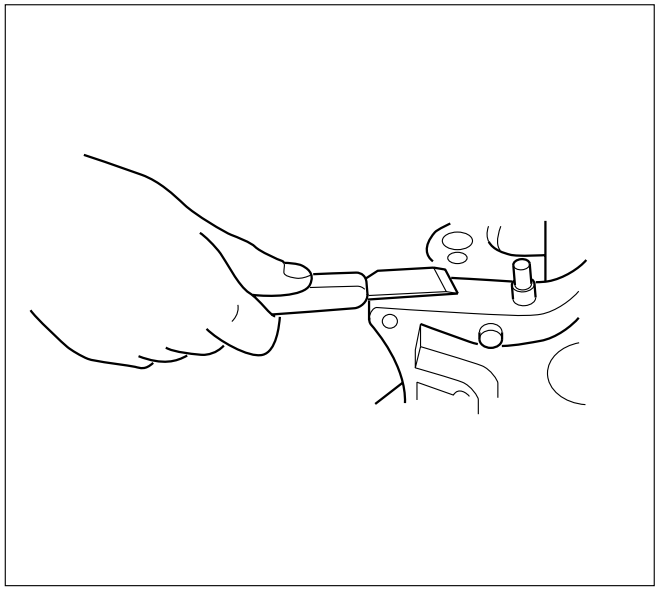

012RW064

2) Apply liquid gasket (TB1207B or equivalent) between the cylinder block and the crankcase fitting surfaces.
3) Install the timing gear case to the cylinder body.
4) Tighten the timing gear case bolt together with the timing gear case gasket to the specified torque.

Torque: 20 N·m (2.0 kg·m/14.5 lb·ft)

12. Crankshaft Gear
    1) Set key to crankshaft key groove.
    2) The timing mark on the crankshaft gear must be facing outward.
    3) Use the crankshaft gear installer to install the crankshaft gear.

       Crankshaft installer: 9-8522-0021-0

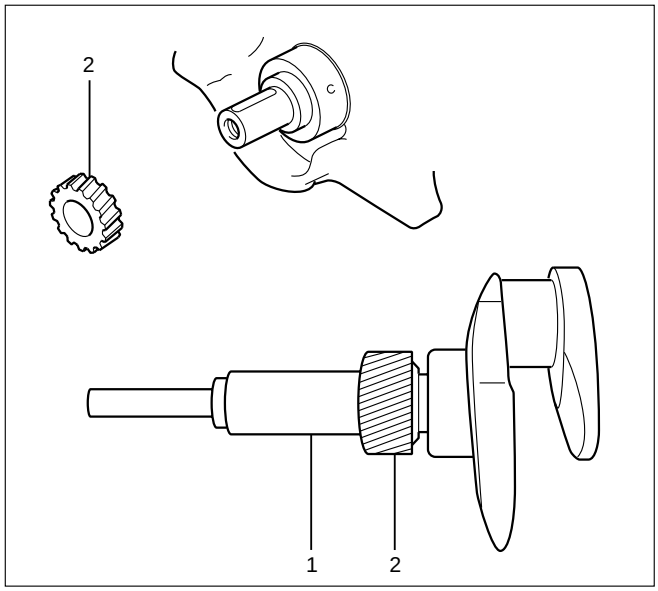

012RW066

Legend
(1) Crankshaft Gear Installer
(2) Crankshaft Gear

13. Installation of the Timing Gear
    1) Align teeth on the scissors gear and lock them before install timing gear.
    2) Align timing marks on each timing gear and assemble them.
    3) Refer to timing gear detail in this manual.

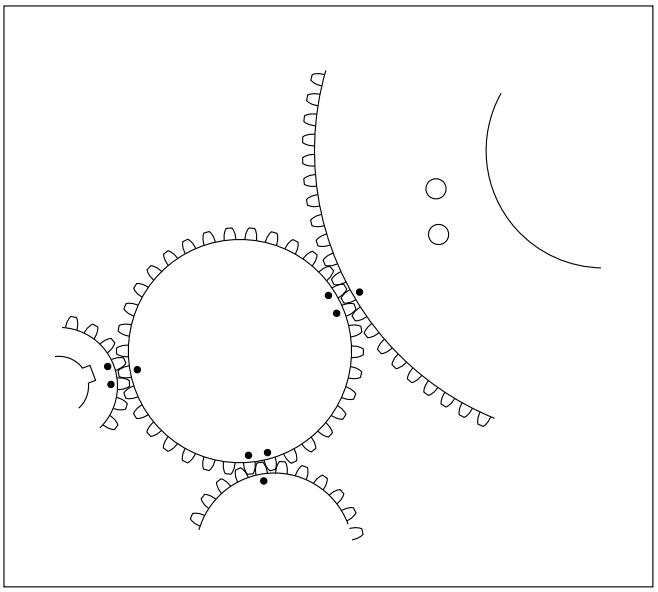

012RW024

14. Timing Gear Case Cover
    1) Remove lock bolt from idle gear A and remove lock pin from idle gear C.
    2) Install oil pump gear oil seal before assembling timing gear case cover.
    3) Clean fitting surface and apply liquid gasket (TB1207C or equivalent) to fitting surface.

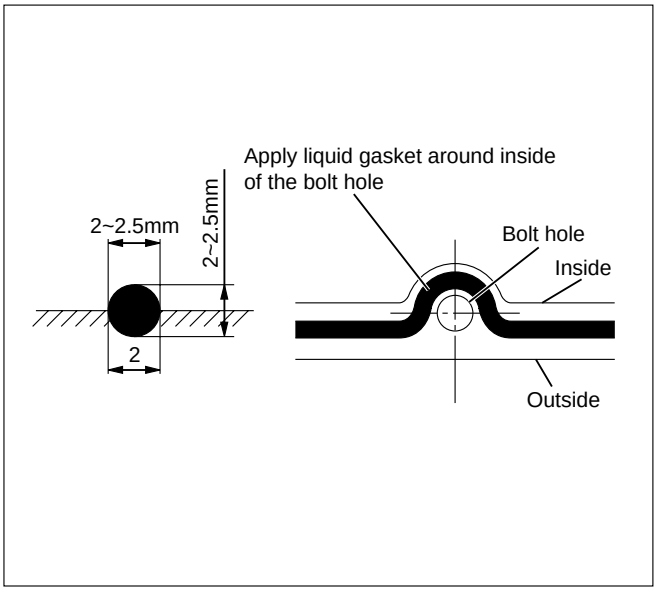

F06HX00001

4) Tighten bolts to specified torque.

Torque: 20 N·m (2.0 kg·m/14.5 lb ft)

15. Crankshaft Front Oil Seal
    1) Set oil seal with special tool.
    2) Install front oil seal to timing gear case cover.

    Crankshaft Front Oil Seal Installer: 5-8840-2061-0

    3) Remove special tool and check oil seal position from front surface of timing gear case.

Oil Seal Position: 0.5 – 2.5 mm (0.0197 – 0.0984 in)

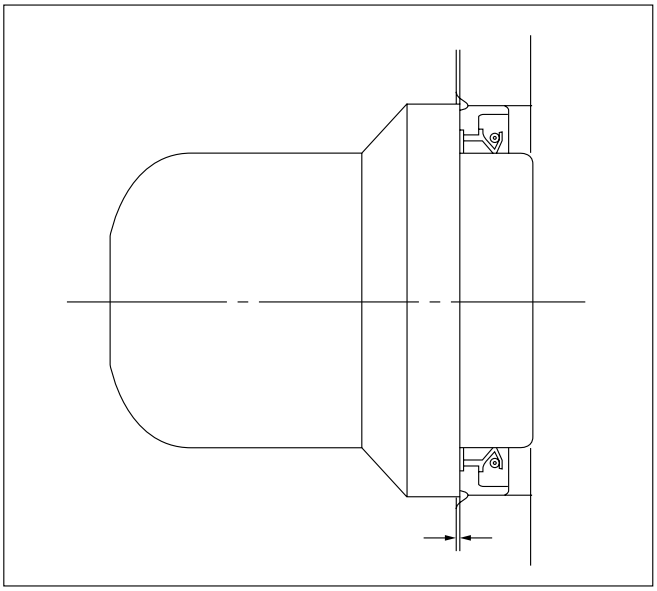

015RW074

16. Cylinder Head
    1) Refer to “Cylinder head” in this manual.

PISTON AND CONNECTING ROD

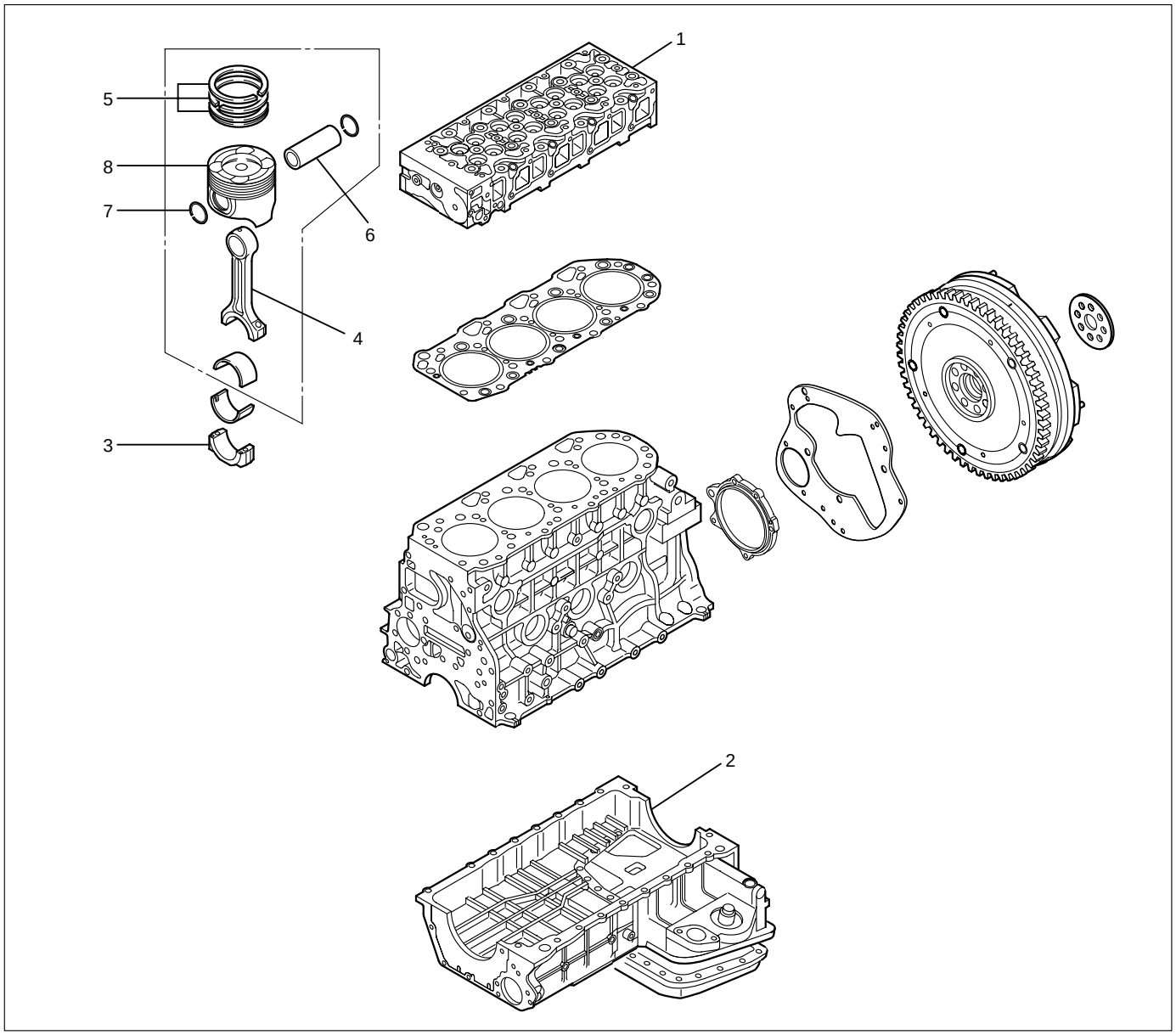

012RW061

Legend

(1) Cylinder Head Assembly
(2) Crank Case
(3) Connecting Rod Bearing Cap
(4) Connecting Rod
(5) Piston Ring
(6) Piston Pin
(7) Piston Pin Snap Ring
(8) Piston

DISASSEMBLY

1. Cylinder Head Assembly
   1) Refer to “Cylinder head” in this manual.
2. Crank Case Assembly
   1) Refer to “Crank Case” in this manual.
3. Connecting Rod Bearing Cap
4. Piston and Connecting Rod
   1) Remove carbon deposits from the upper portion of the cylinder wall with a scraper before removing the piston and connecting rod.
5. Piston Ring
   Remove the piston rings with a piston ring expander.
   Arrange the removed piston rings in the cylinder number order.

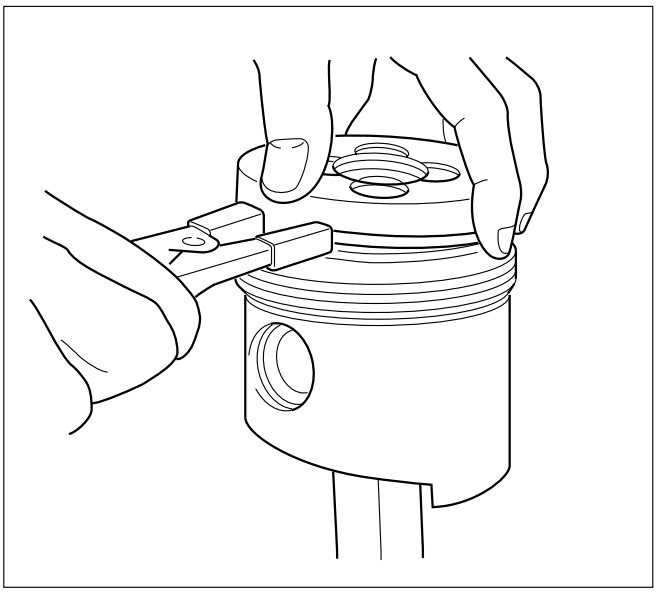

015RW082

6. Piston Pin Snap Ring
   1) Use a pair of pliers to remove the piston pin snap rings.

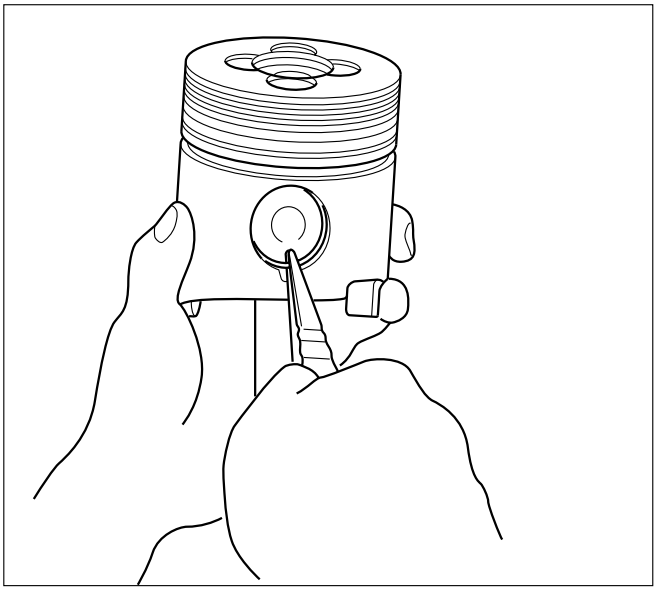

015RW077

7. Piston Pin
   1) Remove piston pin from piston assembly.

NOTE: Keep the parts removed from each cylinder separate. All parts must be reinstalled in their original positions.

8. Piston
9. Connecting Rod

INSPECTION AND REPAIR

PISTON AND PISTON RING

Pistons

Carefully clean away all the carbon adhering to the piston head and the piston ring grooves.

NOTE: Never use a wire brush to clean the pistons. Damage will result. Visually check each piston for cracking, scoring, and other signs of excessive wear. If any of the above conditions are present, the piston must be replaced.

Piston Diameter

1. Measure the piston outside diameter with micrometer at the piston grading position.
   Piston Grading Position: 69.75 mm (2.7461 in) from piston head

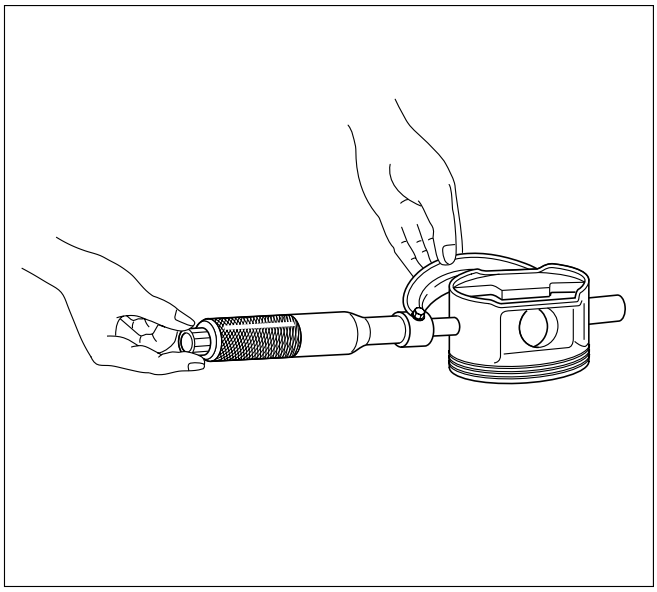

015LV014

Piston Outside Diameter mm(in)

Grade Mark	Outside Diameter
A	95.320 – 95.329 (3.7527 – 3.7531)
B	95.330 – 95.339 (3.7531 – 3.7535)
C	95.340 – 95.349 (3.7535 – 3.7539)

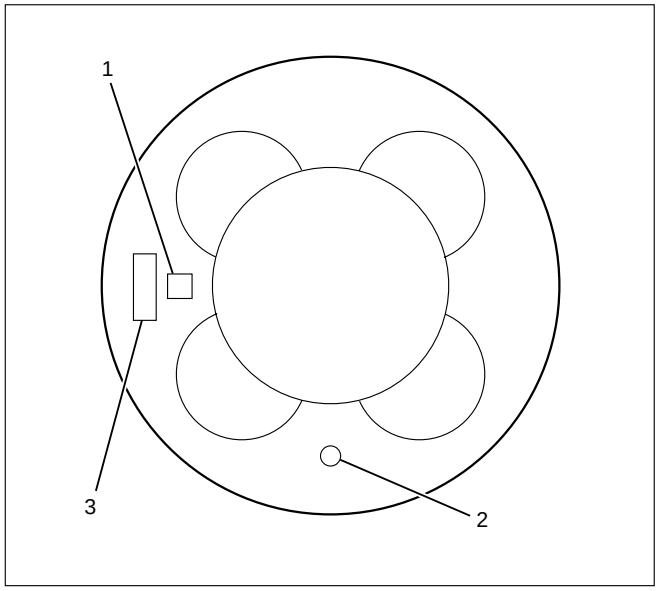

015RW080

Legend
(1) Piston Grade
(2) Piston Front Mark
(3) Part Number

The grade for piston outside diameter is stamped on the piston head.

Measure the cylinder bore diameter at measuring points.

If the piston clearance does not conform to the specified value, the pistons most be replaced.

Piston Clearance:
0.092 – 0.110 mm (0.0036 – 0.0043 in)

Cylinder Bore Diameter mm(in)

Grade Mark	Cylinder Bore Diameter
A	95.421 – 95.430 (3.7567 – 3.7571)
B	95.431 – 95.440 (3.7571 – 3.7575)
C	95.441 – 95.450 (3.7575 – 3.7579)

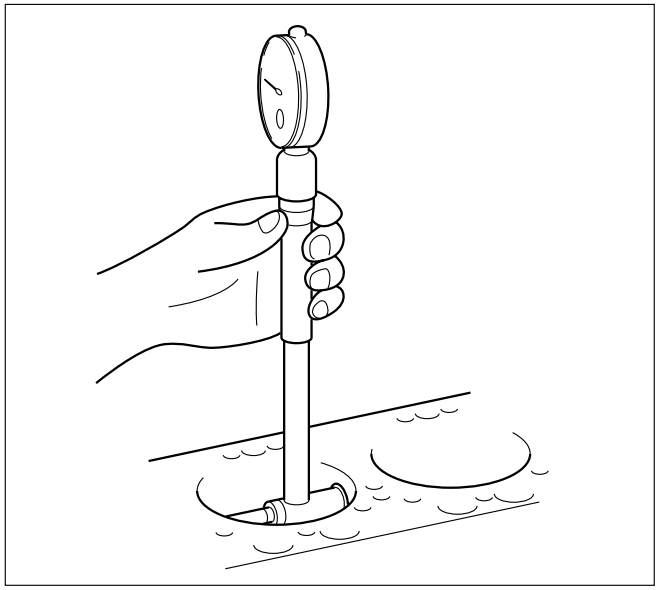

012RW071

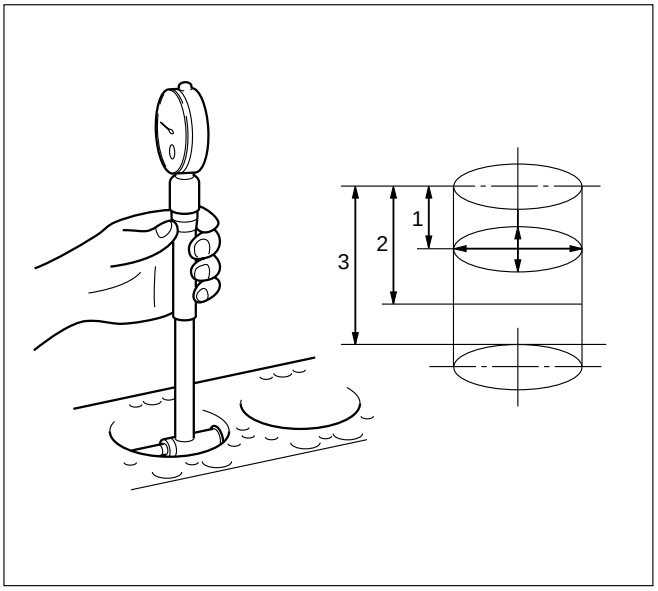

012RW117

Legend
Measuring point 1 = 20 mm
2 = 90 mm
3 = 160 mm

Piston rings

Any worn or damaged part discovered during engine overhaul must be replaced with a new one.

1. Ring end gap measurement
   1) Insert the piston ring into the cylinder bore.

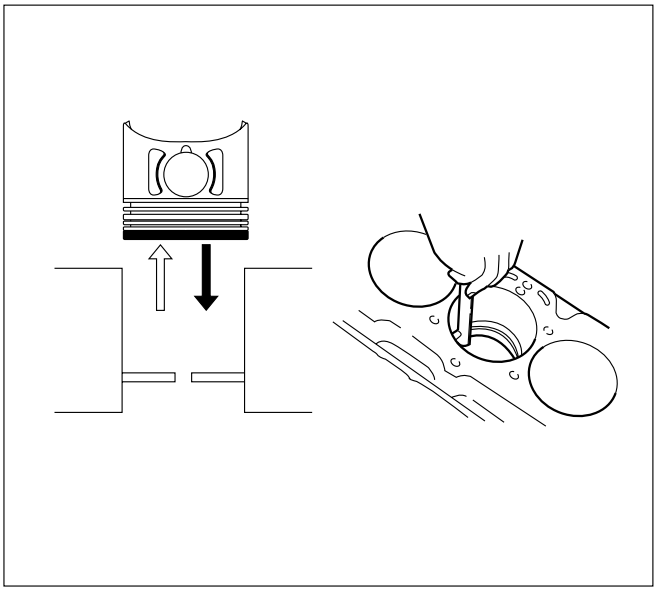

012RW051

   2) Push the ring by the piston, at the right angle to the wall, into the point at which the cylinder bore diameter is the smallest.
   3) Measure the ring end gap.

NOTE: The piston ring is stamped with a discerning mark on the upper face of piston ring.

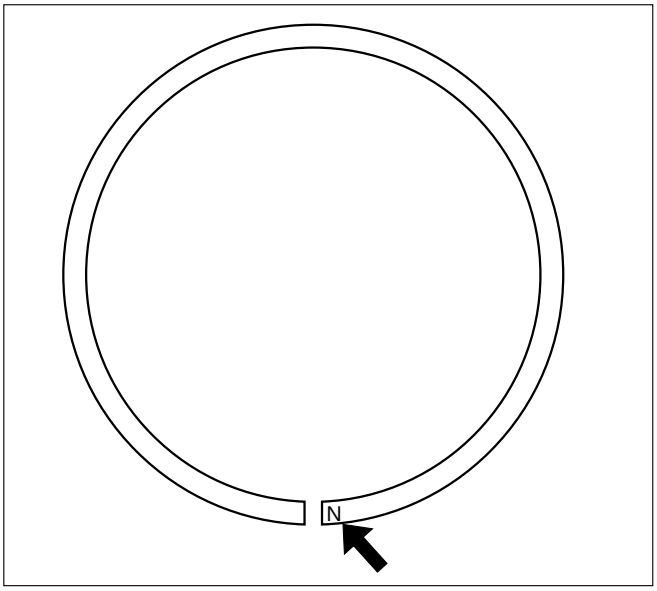

012RW037

Discerning Mark

Piston Ring	Discerning Mark
1st compression ring	1N
2nd compression ring	2N

Ring End Gap mm(in)

Piston Ring	Standard Gap	Limit
1st compression ring	0.25 – 0.40 (0.0098 – 0.0157)	1.5 (0.0590)
2nd compression ring	0.20 – 0.35 (0.0079 – 0.0138)	
Oil ring	0.10 – 0.30 (0.0039 – 0.0118)	

2. Measure the clearance between the piston ring groove and the piston ring with a feeler gauge. If the piston ring groove/piston ring clearance exceeds the specified limit, the piston and/or piston rings must be replaced.

mm(in)

		Standard	Limit
Compression ring	1st	0.05 – 0.09 (0.0020 – 0.0035)	0.15 (0.0059)
	2nd	0.05 – 0.09 (0.0020 – 0.0035)	
Oil ring		0.03 – 0.07 (0.0012 – 0.0028)	

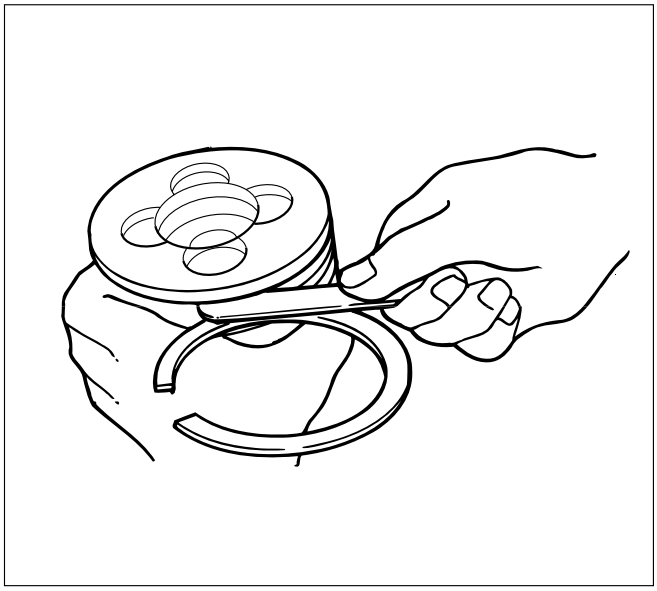

015RW076

Piston pin

Visually inspect the piston pin for cracks, flaws, and other damage and replace if necessary.

1. Use a micrometer to measure the piston pin outside diameter in both directions at three different positions. If the measurement exceeds the specified limit, the piston pin must be replaced.

Standard: 30.995 – 31.000 mm (1.2212 – 1.2214 in)
Limit: 30.97 mm (1.2202 in)

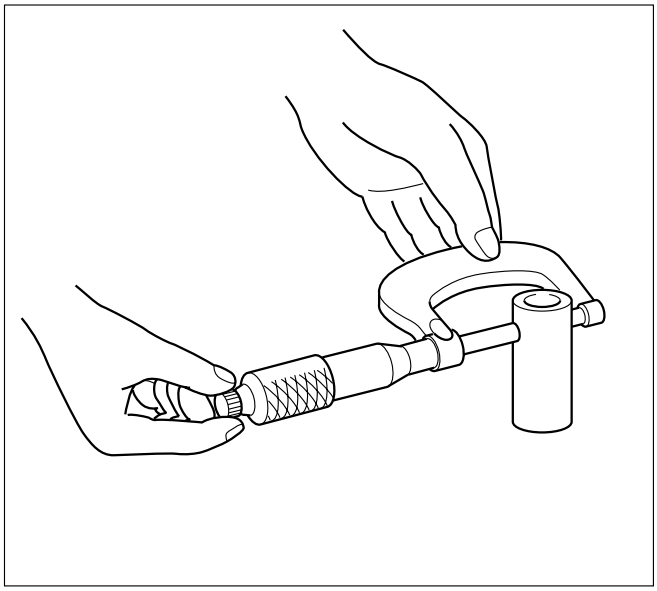

012RW082

2. Measure the inside diameter of the connecting rod small end. If the clearance between the small end and pin does not conform to the specified value, the connecting rod or bushing and pin must be replaced.

Standard: 0.008 – 0.020 mm (0.0003 – 0.0008 in)
Limit: 0.05 mm (0.0020 in)

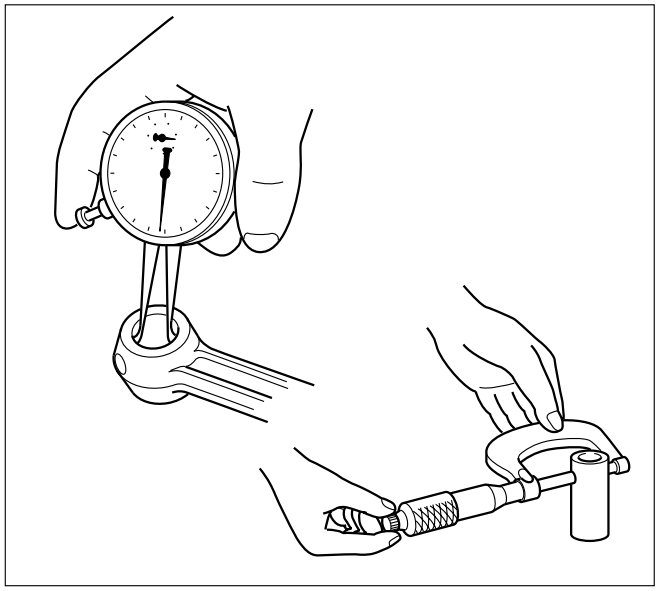

012RW074

3. Insert the piston pin into the piston and rotate it. If the pin rotates smoothly with no backlash, the clearance is normal. If there is backlash or roughness, measure the clearance. If the clearance exceeds the specified limit, the piston and the piston pin must be replaced.

Standard: 0.005 – 0.018 mm (0.0002 – 0.0007 in)
Limit: 0.04 mm (0.0016 in)

Bushing replacement

Removal: Use a suitable bar and bench press or hammer

Installation: Align the bushing with a connecting rod oil port. After installing a new bushing, finish the bushing bore with a pin hole grinder.

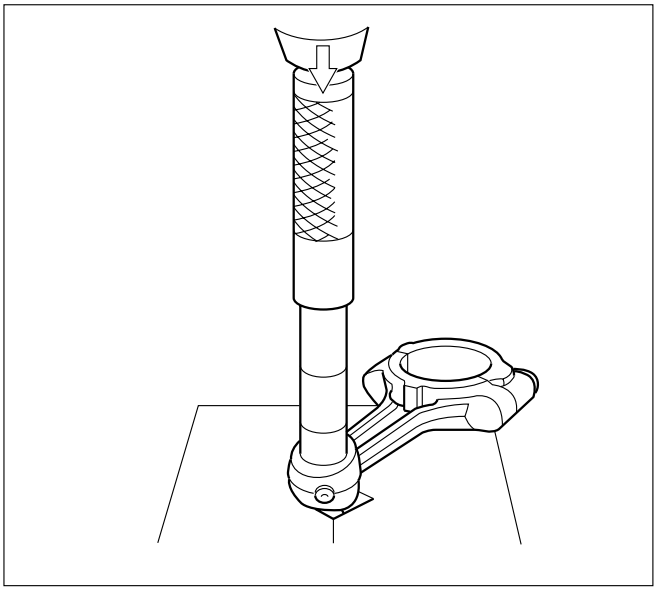

012RW123

Connecting rods

1. Check the connecting rod alignment with a connecting rod aligner.

   If either the bend or the twist exceeds the specified limit, the connecting rod must be replaced.

   Bend per 100 mm (3.937 in)
   Standard: 0.08 mm (0.0031 in) or less
   Limit: 0.20 mm (0.0079 in)

   Twist per 100 mm (3.937 in)
   Standard: 0.05 mm (0.0020 in) or less
   Limit: 0.15 mm (0.0059 in)

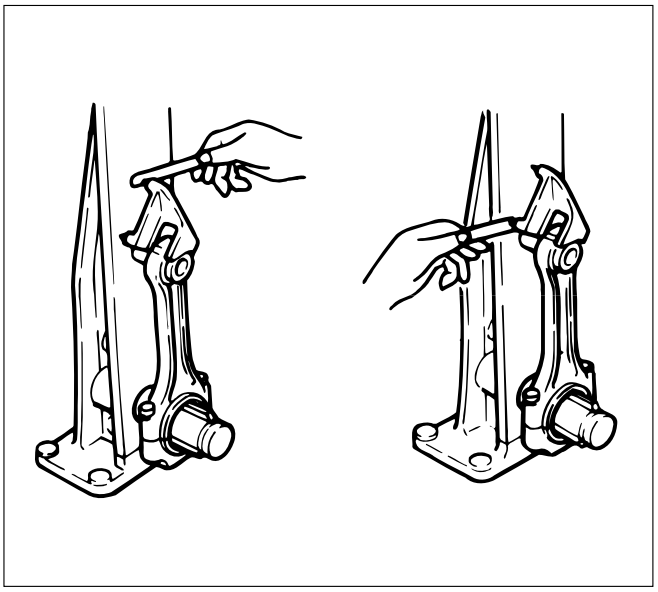

012RW001

2. Measure the connecting rod thrust clearance.

   Use a feeler gauge to measure the thrust clearance at the big end of the connecting rod.

   If the clearance exceeds the specified limit, the connecting rod must be replaced.

   Standard: 0.230 mm (0.0091 in)
   Limit: 0.350 mm (0.0138 in)

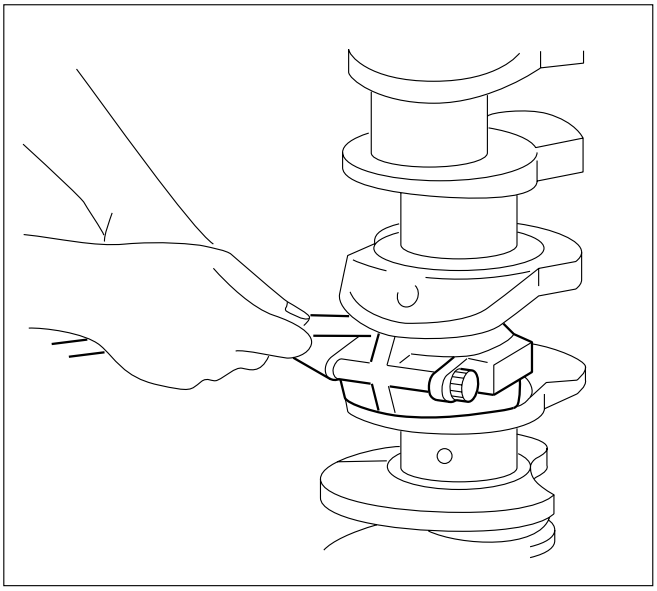

012RW075

3. Measure the oil clearance between the connecting rod and the crankshaft.
   1) Remove the connecting rod cap nuts and the rod caps.

      Arrange the removed rod caps in the cylinder number order.
   2) Clean the rod bearings and the crankshaft pins.
   3) Carefully check the rod bearings.

      If even one bearing is found to be damaged or badly worn, the entire bearing assembly must be replaced as a set. Reinstall the bearings in their original positions.

      Apply plastigage to the crank pin.

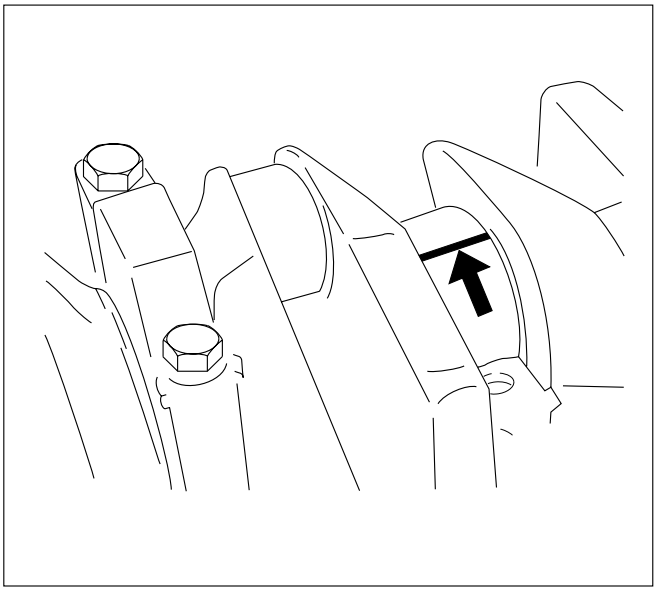

014RW055

   4) Reinstall the rod caps to their original positions.
   5) Tighten the cap nuts in 2 steps, using angular tightening method as shown in the following specifications.

1st step: 29 N·m (3.0 kg·m/22 lb ft)
2nd step: 45°– 60°

NOTE: Do not allow the crankshaft to rotate

   6) Remove the rod caps.
   7) Measure the smallest width of the plastigage and determine the oil clearance. If the oil clearance exceeds the limit, replace the rod bearings as a set.
   8) Clean the plastigage from the bearings and the crankshaft pins

Standard: 0.022 – 0.042 mm (0.0009 – 0.0017 in)
Limit: 0.100 mm (0.0039 in)

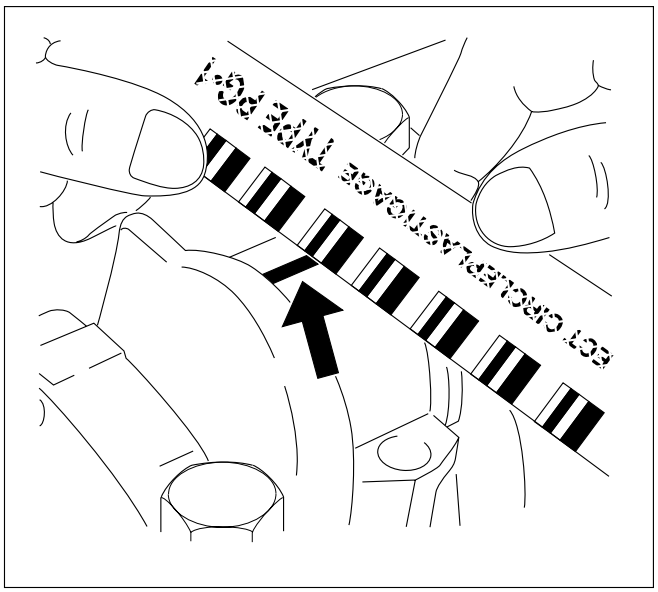

014RW077

REASSEMBLY

1. Connecting Rod
2. Piston
3. Piston Pin
   1) Apply a coat of engine oil to the piston pin and the piston pin hole.
4. Piston Pin Snap Ring
   1) Try to insert the piston pin into the piston pin hole with normal finger pressure.
   2) Weight each piston and connecting rod assembly.
   3) Select piston and connecting rod combinations so that the weight variation of the different four assemblies is held within the specified limits.

Variance in weight after assembly: Less than 3g (0.1058 oz)

NOTE: When changing piston/connecting rod combinations, do not change the piston/piston pin combination.

   4) Attach the piston to the connecting rod with the piston front mark (2) and the connecting rod front mark (3) on the same side.

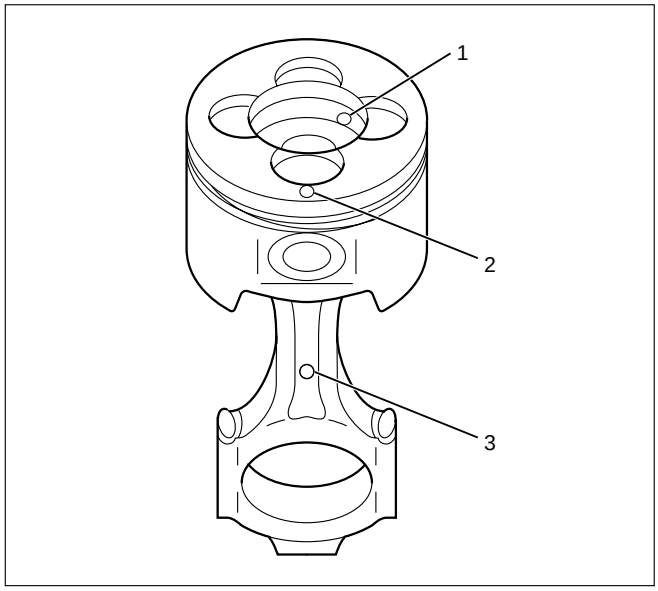

015RW051

5. Piston Ring
   1) Install the piston rings with the piston ring expander.
      The compression ring must be set with the 1N, 2N mark facing up.
   2) Discerning mark is stamped as shown in the illustration (1).

Marked 1N: 1st compression ring

Marked 2N: 2nd compression ring

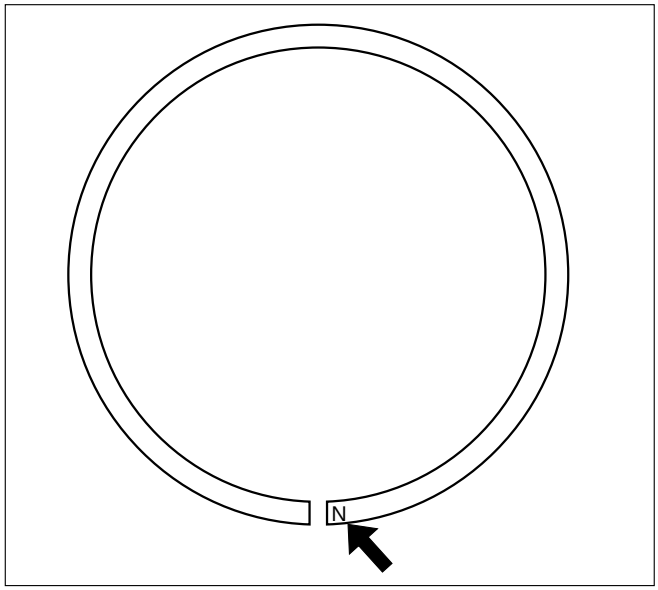

012RW037

   3) Install piston rings in the following sequence.

1) Oil ring
   (1) After installing the expander ring then assemble the oil ring.
2) 2nd compression ring
3) 1st compression ring
   1) The compression ring must be set with the 1N or 2N mark facing up.
   2) 1st compression ring:1N
   3) 2nd compression ring: 2N
   4) After installation, apply engine oil to the entire circumference of the piston rings.
      Check to see that all the rings rotate smoothly.

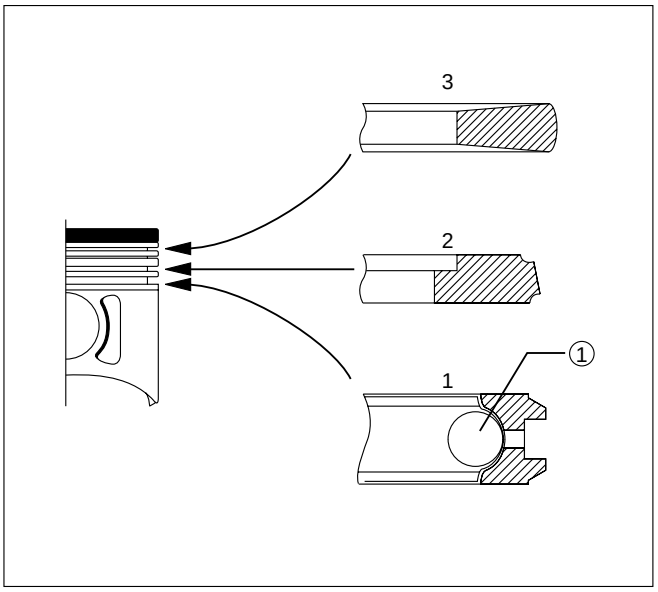

012RW058

   5) Insert the bearings into the connecting rods and caps.
      Apply new engine oil to the bearing faces.
      Cap side bearings have no oil hole.
      Connecting rod side bearing's oil hole should be aligned with oil hole on the connecting rod.

6. Piston and Connecting Rod
   1) Apply engine oil to the cylinder bores, the connecting rod bearings and the crankshaft pins.
   2) Check to see that the piston ring end gaps are correctly positioned.

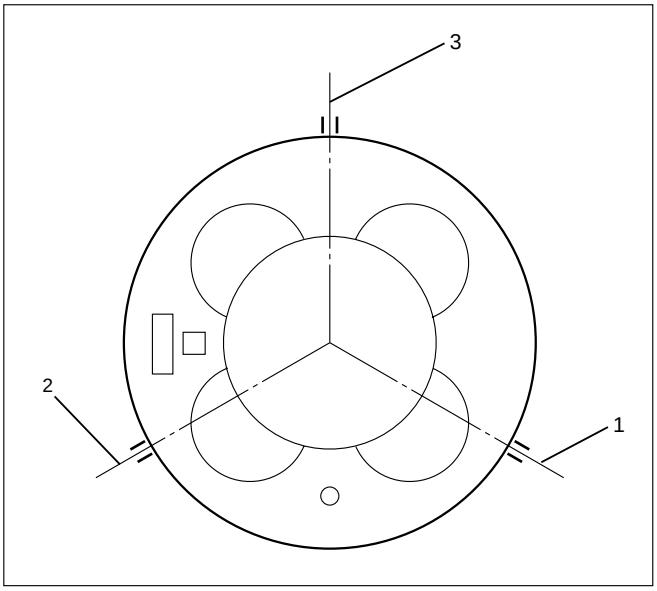

015RW083

Legend
(1) 1st compressor ring gap
(2) 2nd compressor ring gap
(3) Oil ring gap

3) Insert the piston/connecting rod assemblies into each cylinder with the piston ring compressor.
4) The front marks must be facing the front of the engine.

Piston Ring Compressor : 5-8840-9018-0

7. Connecting Rod Bearing Cap
   1) Apply engine oil to thread and seat of bearing cap bolts.
   2) Tighten the cap bolts in 2 steps, using angular tightening method as shown in the following specifications.

1st step: 29 N·m (3.0 kg·m/22 lb ft)
2nd step: 45°– 60°

After tightening the cap bolts, check to see that the crankshaft rotates smoothly.

8. Crank Case Assembly
   1) Refer to “Crank Case” in this manual.
9. Cylinder Head Assembly
   1) Refer to “Cylinder head” in this manual.

CYLINDER BLOCK

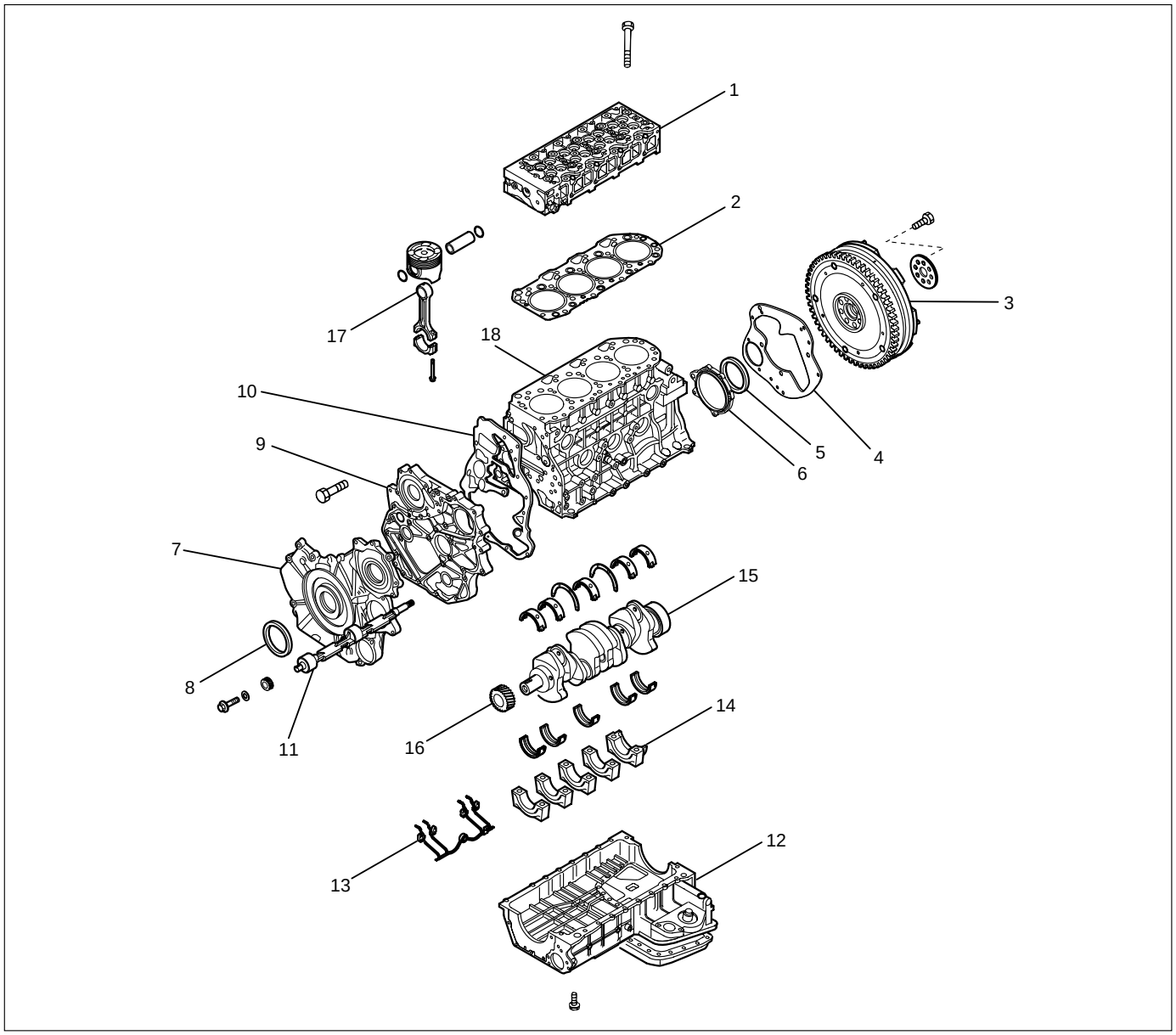

012RW023

Legend

(1) Cylinder Head
(2) Cylinder Head Gasket
(3) Flywheel
(4) Cylinder Block Rear Plate (A/T)
Flywheel Housing (M/T)
(5) Crankshaft Rear Oil Seal
(6) Retainer
(7) Timing Gear Case Cover
(8) Crankshaft Front Oil Seal
(9) Timing Gear Case
(10) Gasket
(11) Balance Shaft
(12) Crank Case
(13) Piston Cooling Oil Pipe
(14) Main Bearing Cap
(15) Crankshaft
(16) Crankshaft Timing Gear
(17) Piston and Connecting Rod Assembly
(18) Cylinder Block

DISASSEMBLY

1. Cylinder Head Assembly
   Refer to “Cylinder Head” in this manual.
2. Cylinder Head Gasket.
3. Flywheel
4. Cylinder Block Rear Plate (A/T), or Flywheel housing (M/T).
5. Crankshaft Rear Oil Seal.
   Install the special tool as shown in the illustration and remove the oil seal.
   Oil Seal Remover: 5-8840-2360-0

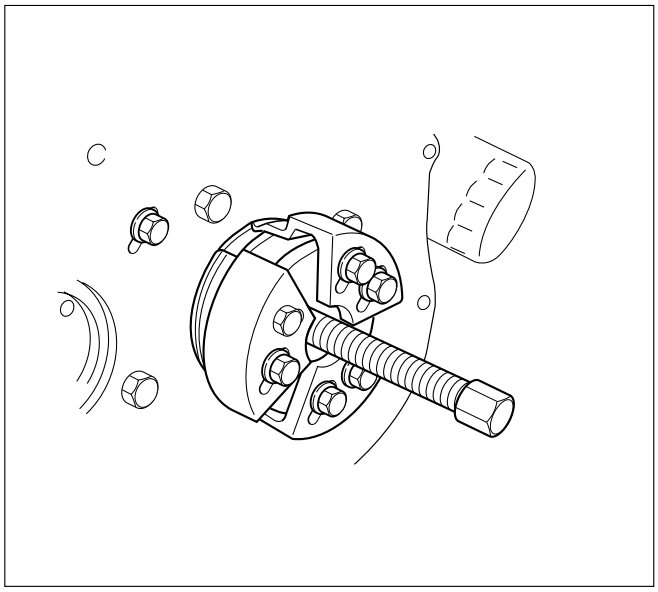

015RV002

6. Retainer
7. Timing Gear Case Cover
8. Crankshaft Front Oil Seal
   1) Use a plastic hammer and a screwdriver to tap around the oil seal to free it from the gear case cover.
9. Timing Gears
   Refer to “Timing Gear” in this manual.
10. Timing gear case
11. Gasket
12. Balance shaft right
13. Crank case assembly
14. Piston cooling oil pipe
15. Piston assembly
16. Main bearing cap
17. Crankshaft assembly
18. Cylinder block side cover right and left
19. Cylinder block

INSPECTION AND REPAIR

Make the necessary adjustments, repairs, and part replacements if excessive wear or damage is discovered during inspection.

1. Remove the cylinder head gasket and any other material adhering to the upper surface of the cylinder block.
   Be very careful not to allow any material to accidentally drop into the cylinder block.
   Be very careful not to scratch the cylinder block.
2. Carefully remove liquid gasket, which was used when assembled, from gear case, rear oil seal retainer and crank case.
3. Wipe the cylinder block clean and visually check it.
4. Use a straight edge and a feeler gauge to measure the four sides and the two diagonals of the cylinder block upper face.
   If the measured values exceed the limit, the cylinder block must be replaced.

Limit: 0.20 mm (0.0079 in)

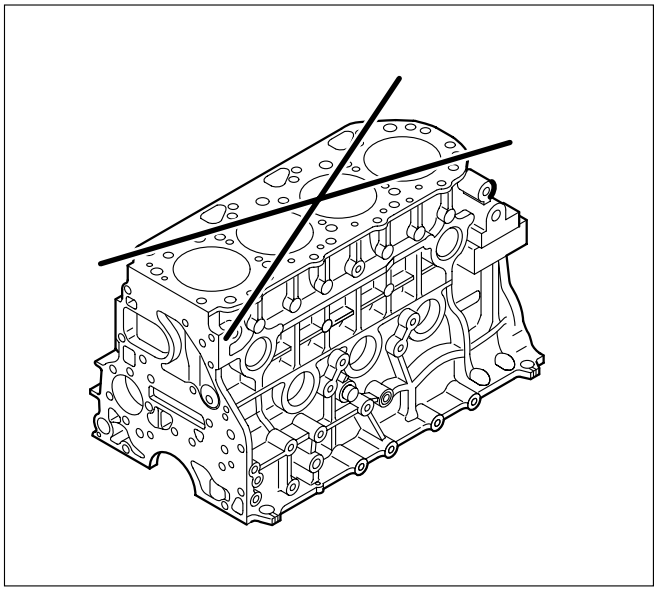

012RW122

Cylinder Bore Measurement

1. Use a cylinder gauge to measure the cylinder bore measuring direction for thrust and radial at measuring points.

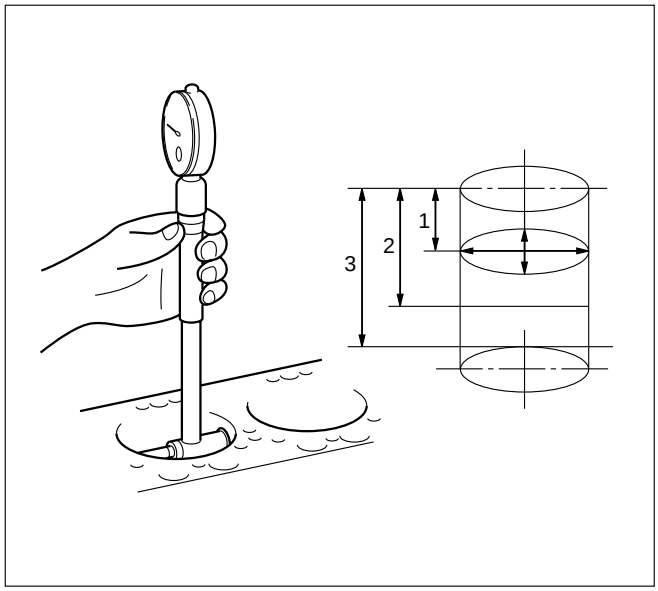

012RW117

Legend

Measuring Point 1; 20 mm
2; 90 mm
3; 160 mm

2. Select the right piston grade by the averaged cylinder bore measurement (maximum and minimum value eliminated).

Cylinder bore diameter mm(in)

Grade mark	Standard
A	95.421 – 95.430 (3.7567 – 3.7571)
B	95.431 – 95.440 (3.7571 – 3.7575)
C	95.441 – 95.450 (3.7575 – 3.7579)

3. If measured values exceed the limit, replace or adjust the cylinder block honing or boring.

Limit 95.950 mm (3.7776 in)

4. Boring of the cylinder bore is allowed until it is 0.5 mm (0.0197 in) diameter and oversized piston is available as a service part.

Boring Cylinder Block

1. Use an oversized piston on the basis of above mentioned cylinder using the largest inside diameter.
2. Measure the piston outside diameter at right angles with piston pin at a piston grade measuring point 69.75 mm (2.7461 in) from piston top surface and calculate a inside diameter for cylinder boring.
3. Calculation of cylinder bore boring.

   D + C – H (mm)

   D; Outside diameter piston (mm)

   C; Clearance between Cylinder bore and piston 0.092 – 0.110 mm (0.0036 – 0.0043 in)

   H; Honing allowance

   Less than 0.03 mm (0.0012 in)

   The oversize pistons are available three grades.
4. Honing the cylinder bore after boring.
5. Measure cylinder bore after honing.

   Difference between each cylinder bore

Less than 0.02 mm (0.0008 in)

Cylinder bore and piston grade (After boring) mm(in)

Grade Mark	Oversize Piston	Bore
	Outside Diameter	Diameter
A	95.820 – 95.829 (3.7724 – 3.7728)	95.921 – 95.930 (3.7764 – 3.7768)
B	95.830 – 95.839 (3.7728 – 3.7732)	95.931 – 95.940 (3.7768 – 3.7772)
C	95.840 – 95.849 (3.7732 – 3.7736)	95.941 – 95.950 (3.7772 – 3.7776)

REASSEMBLY

1. Cylinder Block
2. Piston Cooling Oil Pipe
   1) Fix the cooling jet pipes with knock pins on the cylinder block.
   2) Install the oil pipe for piston cooling in the cylinder block, tightening a relief valve (1) and four joint bolts (2) to the specified torque.

      If oil jet pipe is forcibly assembled, the end of oil jet may bend. It could make it impossible to supply oil to the piston cooling hole, sometimes causing piston seizure.

      Sufficient care should be taken to pipe assembly work.

Oil pipe fixing bolts

M8: 20 N·m (2.0 kg·m/14 lb ft)
M6: 8 N·m (0.8 kg·m/69 lb in)

Relief valve fixing bolts : 30 N·m (3.1 kg·m/22 lb ft)

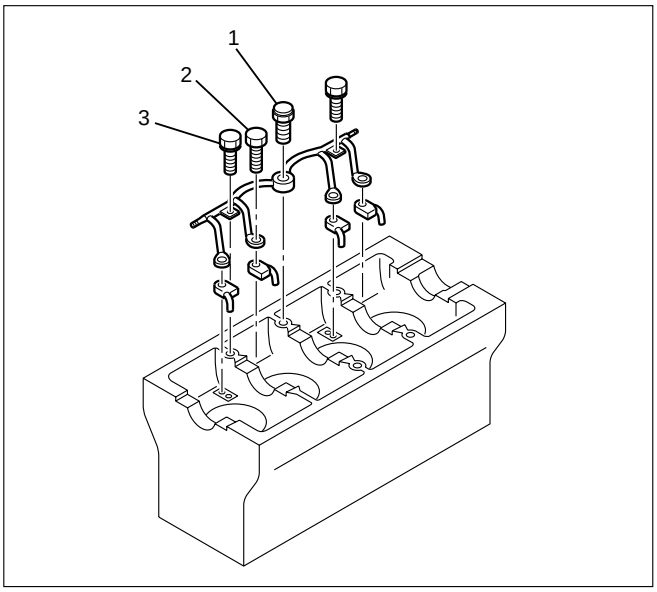

012RW076

CAUTION: After installing the piston assembly, check and see that there is appropriate clearance between pistons and oil jet pipes by rotating crankshaft slowly.

3. Crankshaft
   1) Install the main bearings to the cylinder body and the main bearing caps.
   2) Be sure that they are positioned correctly.
   3) Apply new engine oil to the upper and lower main bearing faces.
   4) Carefully mount the crankshaft.

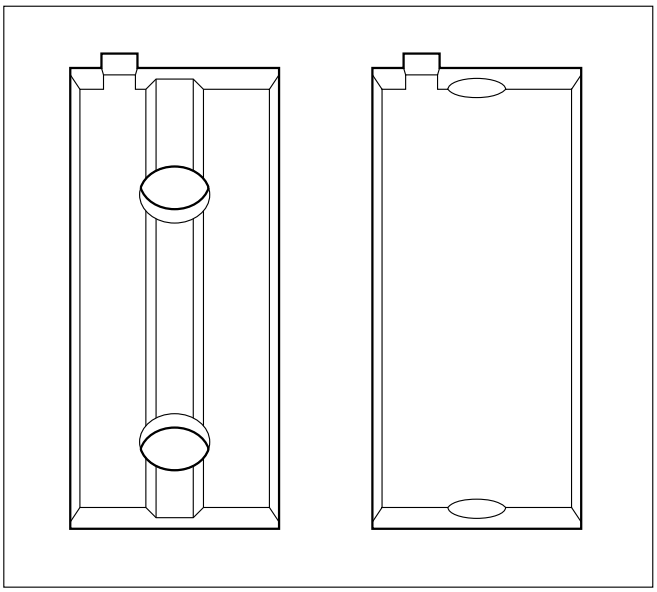

012RW038

   5) Apply engine oil to the thrust washer.
   6) Assemble the thrust washer to the No. 3 bearing journal. The oil grooves must face the crankshaft.

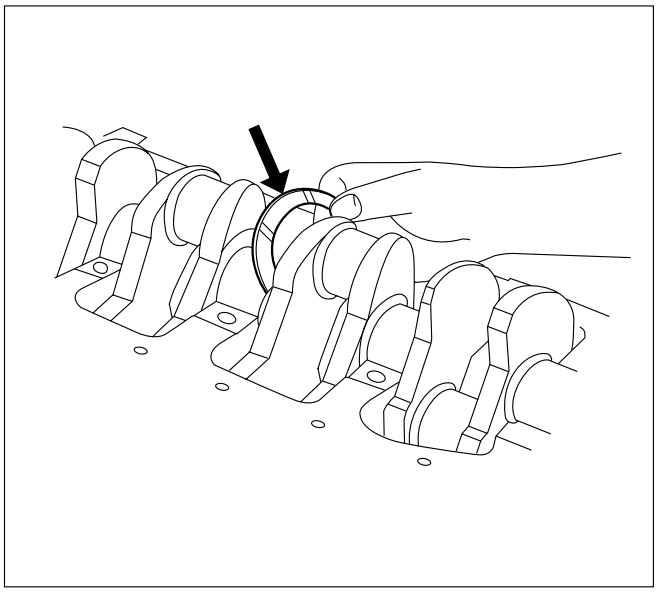

012RW047

4. Main Bearing Cap Assembly
   1) Install the bearing caps with the bearing cap head arrow mark facing the front of the engine.

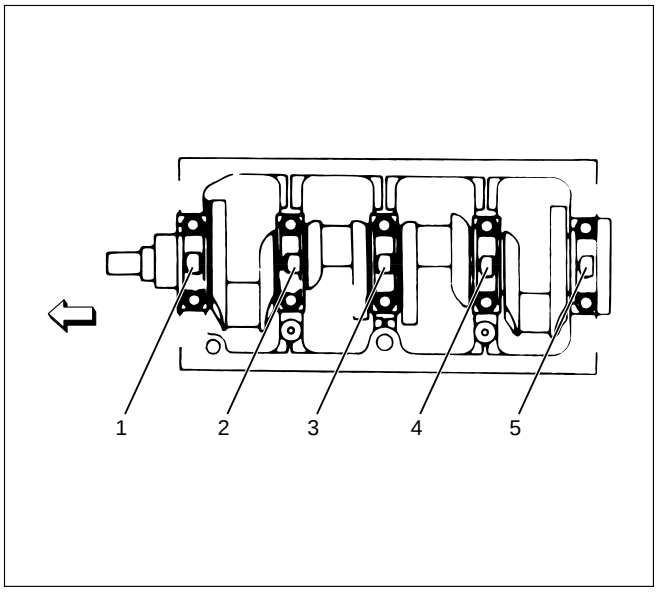

012RW025

   2) Apply engine oil to the crankshaft bearing cap bolts.
   3) Tighten the crankshaft bearing cap bolts to the specified torque a little at a time in the sequence shown in the illustration.

Torque: 167 N·m (17.0 kg·m/123 lb ft)

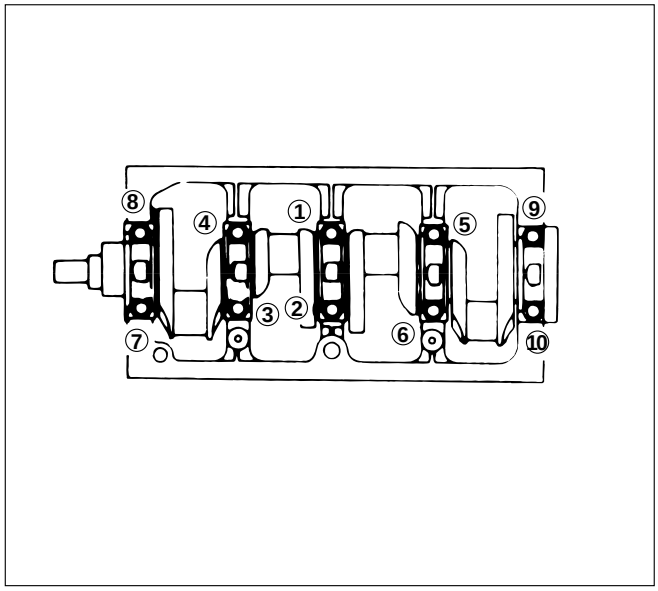

012RW027

NOTE: Check to see that the crankshaft turns smoothly by rotating it manually.

4. Piston Assembly
   1) Refer to “Piston and connecting rod” in this manual.
5. Cylinder Block Side Cover Right and Left
6. Balance Shaft Right.
7. Timing Gear Case
   1) Cut out the liquid gasket forced out from between the contact surface of cylinder block and crankshaft.

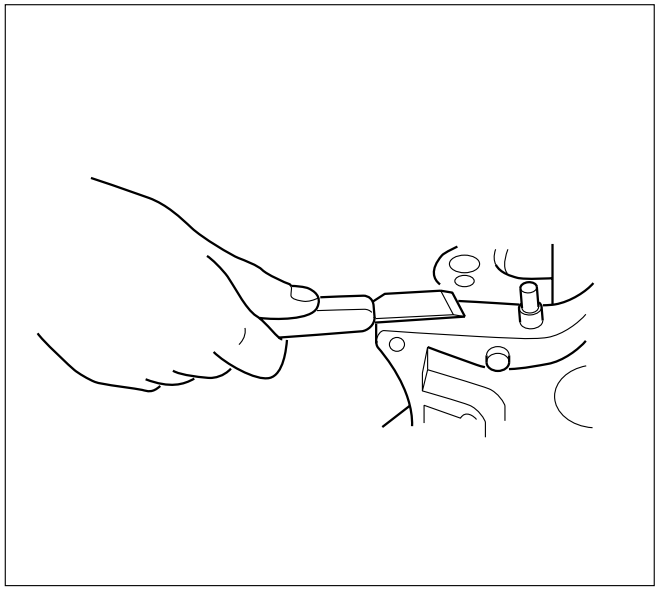

012RW064

   2) Apply liquid gasket (TB1207B or equivalent) to the fitting surface of the cylinder block and crankcase.
   3) Install timing gear case with gasket to cylinder block and tighten to specified torque.

Torque: 20 N·m (2.0 kg·m/14.5 lb ft)

8. Crankshaft Gear
   Force key into crankshaft and force in crankshaft gear along the key groove using a special tool (1) with the crank gear (2) timing mark facing outside.

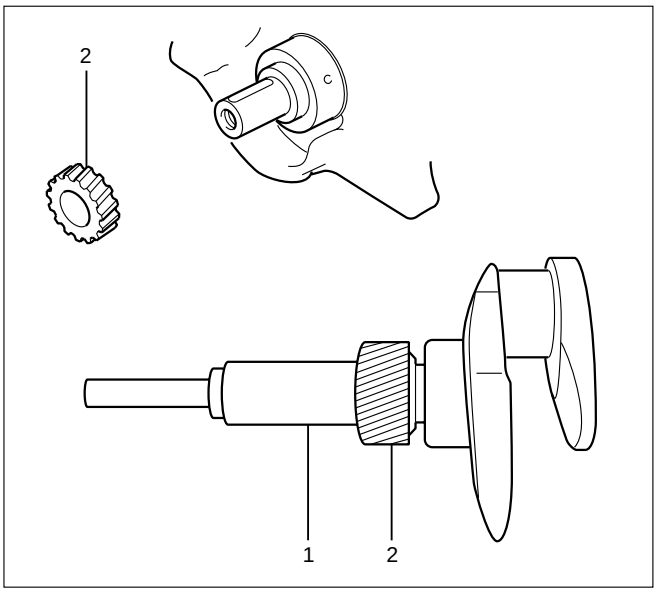

012RW066

9. Install timing gear align the timing mark on each timing gear.
   For alignment of timing marks refer to “Timing Gear” in this manual.

NOTE: Remove the locking bolt or pin from idle gear A and idle gear C.

10. Assembling the gear case cover.
    1) Install the oil seal on the oil pump assembly before installing the gear case cover.
    2) Apply liquid gasket to timing gear case.

NOTE: Be sure to apply liquid gasket evenly.

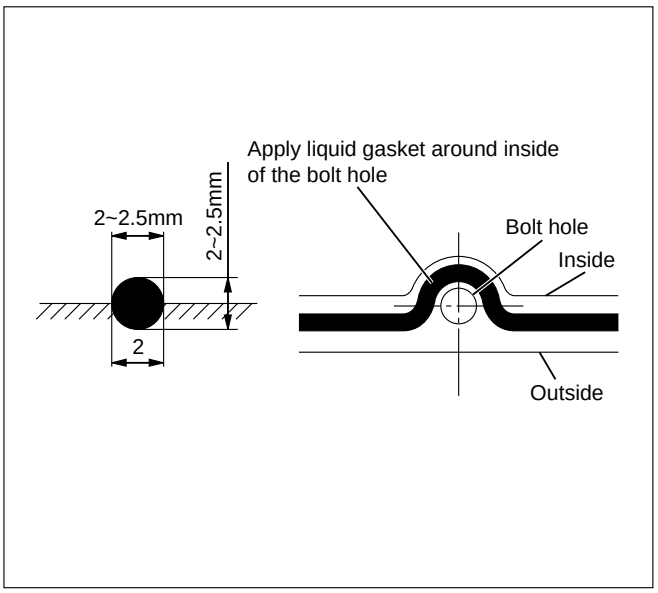

F06HX00001

11. Use the special tool to install the crankshaft front oil seal to timing gear case.
    Front Oil Seal Installer: 5-8840-2061-0

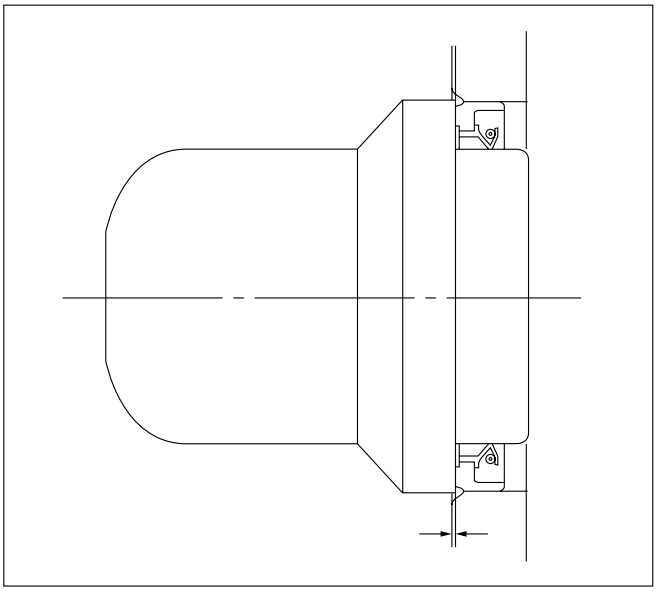

015RW074

    1) Check fit-of the oil seal and gear case cover at the front end.

Standard: 0.5 – 2.5 mm (0.0197 – 0.0984 in)

NOTE: Apply engine oil to oil seal lip before installation of the seal.

12. Install the oil pan assembly to original position and tighten to specified torque.

Torque: 22 N·m (2.2 kg·m/15.9 lb ft)

13. Crankshaft Rear Oil Seal
    1) Tighten the adapter to the crankshaft rear end with 2 bolts.
    2) Insert the oil seal into the adapter.
    3) Insert the sleeve into the adapter and tighten it with a bolt (M12 x 1.75L = 70) until the adapter hits the sleeve.
    4) Remove the adapter and the sleeve.
    5) With the seal pressed in, check the dimension of the oil seal outside end and crankshaft end.

Standard Dimension = 12.5 ± 0.3 mm

Oil Seal Installer: 5-8840-2359-0

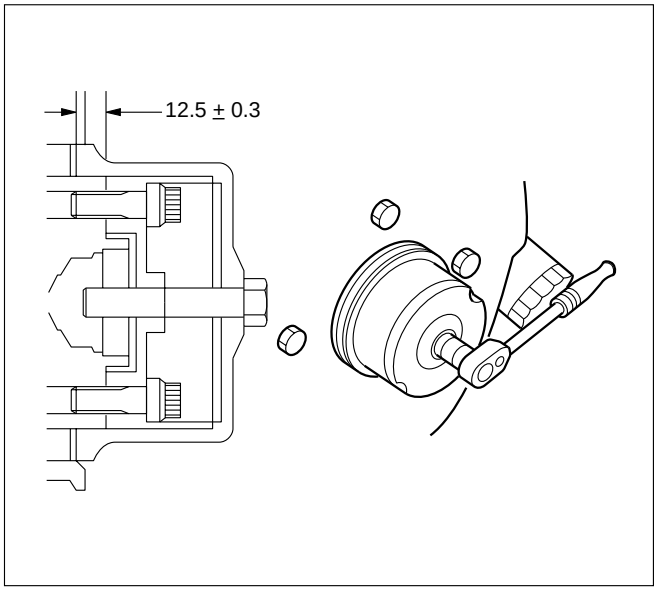

012RW067

14. Cylinder Block Rear Plate (A/T Model)
    1) Tighten the cylinder block rear plate fixing bolts to the specified torque.

Torque: 97 N·m (9.9 kg·m/72 lb ft)

15. Flywheel Housing (M/T Model)
    1) Install flywheel housing aligned with the dowel pin on the cylinder block.
    2) Tighten the flywheel housing fixing bolts to the specified torque.

Torque: 97 N·m (9.9 kg·m/72 lb ft)

16. Flywheel
    1) Refer to “Crankshaft” in this manual.
17. Cylinder Head Assembly
    1) Refer to “Cylinder Head” in this manual.

OIL PUMP ASSEMBLY

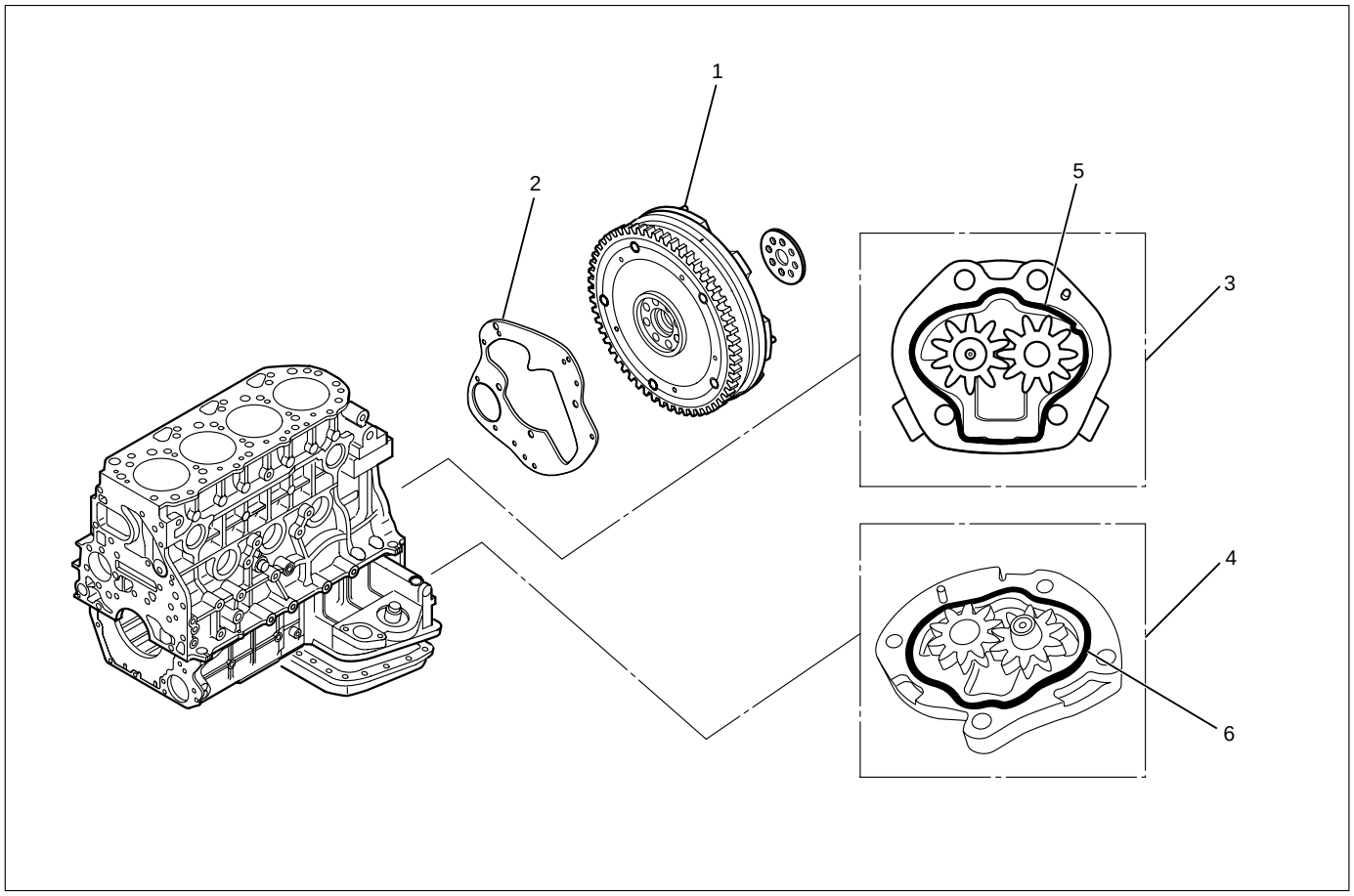

012RW097

Legend

(1) Flywheel
(2) Rear Plate (A/T)
(3) First Oil Pump Assembly
(4) Second Oil Pump Assembly
(5) O-Ring (For first oil pump)
(6) O-Ring (For second oil pump)

REMOVAL

1. Disconnect battery ground cable
2. Lift up car
3. Drain engine oil

NOTE: Install drain plug with new gasket.

4. Flywheel
5. Rear Plate (A/T) or Flywheel Housing (M/T)
6. First Oil Pump Assembly and Second Oil Pump Assembly
   1) Remove oil pump assembly from cylinder block and crankcase.

INSTALLATION

1. First oil pump assembly
   1) Set O-ring to oil pump.
   2) Install oil pump drive gear to the rear end of the balance shaft RH.
   3) Apply engine oil to pump gear, install pump gear to rear end of cylinder block with specified torque.

Torque: 20 N·m (2.0 kg·m/14.5 lb ft)

2. Second oil pump assembly
   1) Set O-ring to oil pump.
   2) Install oil pump drive gear to the rear end of the balance shaft LH.
   3) Apply engine oil to pump gear, install pump gear to rear end of crank case with specified torque.

Torque: 20 N·m (2.0 kg·m/14.5 lb ft)

3. Install rear plate (A/T) or flywheel housing (M/T)

Torque: 97 N·m (9.9 kg·m/72 lb ft)

4. Install flywheel
   1) Apply engine oil to bolt and tighten with angular tightening method.

First step: 59 N·m (6.0 kg·m/43 lb ft)
Second step: 60° to 90°

OIL FILTER CARTRIDGE

REMOVAL

1. Place a receptacle beneath the oil filter to contain the drained oil.
2. Remove the oil filter cartridge using filter wrench.
   Filter wrench : 5-8840-0203-0

INSTALLATION

1, Lightly apply oil to the O-ring of oil filter cartridge.
2. Turn the new oil filter cartridge by hand until the sealing face is fitted against the O-ring.
3. Use the filter wrench to turn the oil filter an additional one and 1/8 turns.
4. Start the engine and check for oil leakage from oil filter.

OIL COOLER

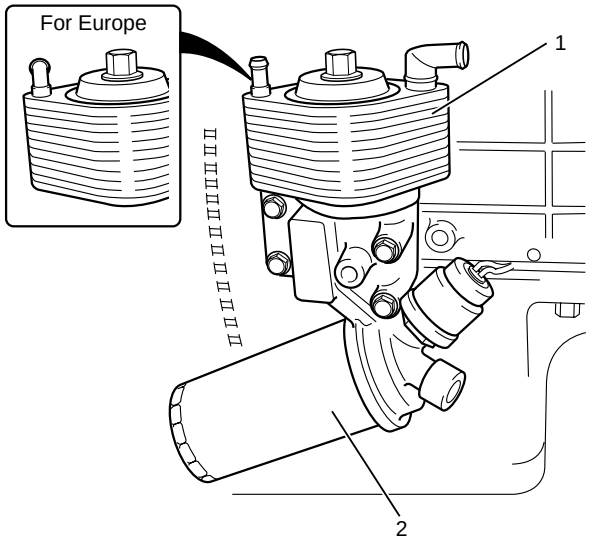

050R200001

Legend
(1) Oil Cooler Assembly
(2) Oil Filter Cartridge

REMOVAL

1. Disconnect battery ground cable
2. Drain engine coolant
3. Remove front exhaust pipe
4. Remove heat protector
5. Remove exhaust valve assembly
6. Oil cooler assembly
   1) Remove water hoses from inlet and outlet pipe.
   2) Put rag beneath side of oil cooler to prevent oil leaking.
   3) Remove fixing bolts and oil cooler assembly.

INSTALLATION

1. Oil Cooler
   1) Tighten oil cooler fixing bolt to the specified torque and connect water hose.

Torque: 29 N·m (3.0 kg·m/22 lb ft)

2. Exh. Valve Assembly
   1) Install exhaust valve assembly with gasket and tighten fixing bolts to the specified torque.

Torque: 27 N·m (2.7 kg·m/20 lb ft)

3. Heat Protector
4. Front Exhaust Pipe
   1) Install front exhaust pipe and tighten fixing bolts to the specified torque.

Exh. Valve Side: 67 N·m (6.8 kg·m/50 lb ft)
Intermediate Pipe Side: 43 N·m (4.4 kg·m/32 lb ft)

5. Fill engine coolant.
6. Connect battery ground cable.
7. Start engine and check for oil and water leakage carefully.

ENGINE COOLING

CONTENTS

General Description 6B–2
On-Vehicle Service 6B–6
Water Pump 6B–6
Thermostat 6B–7
Radiator 6B–9
Drive Belt Adjustment 6B–11

GENERAL DESCRIPTION

COOLANT FLOW

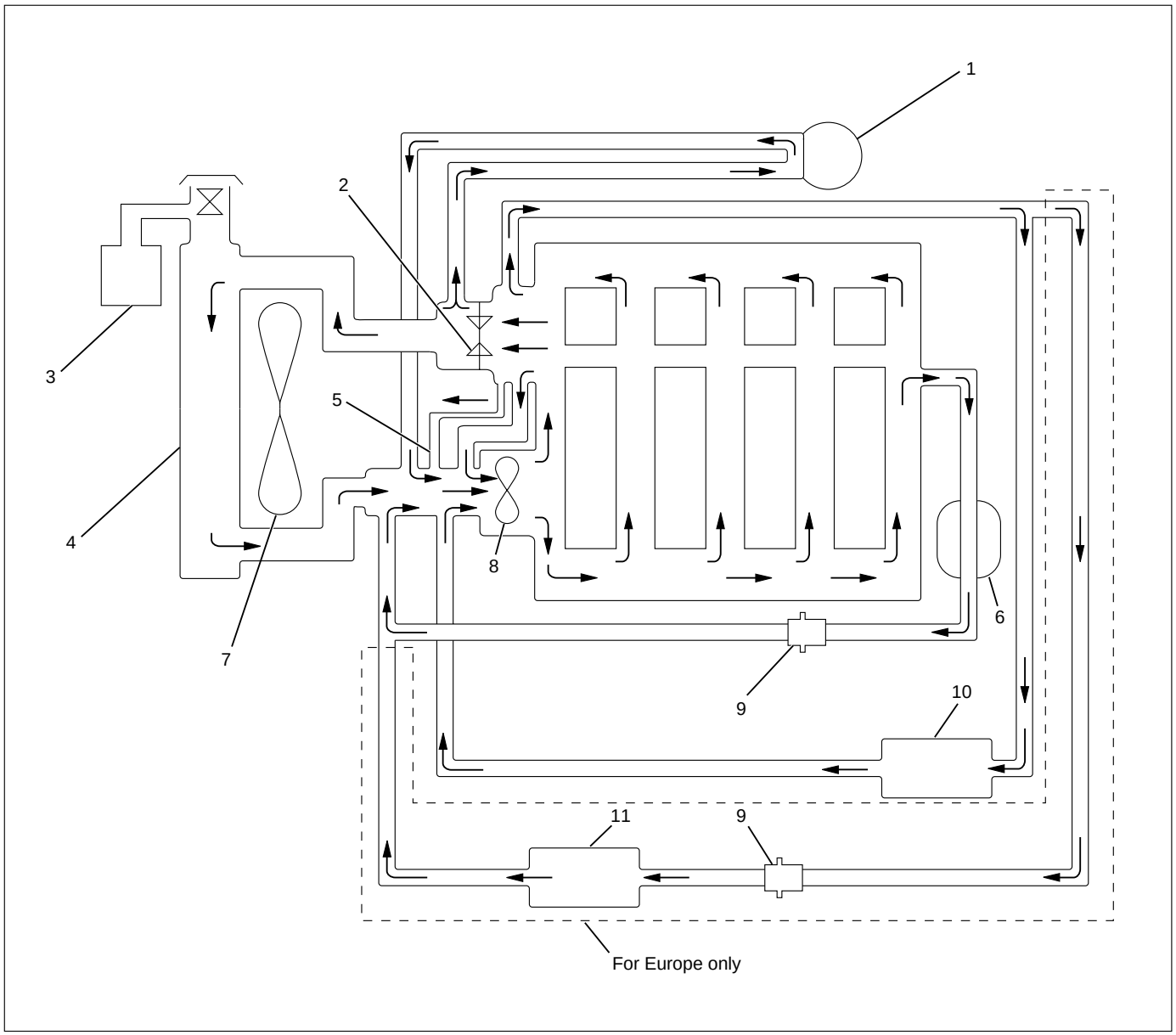

032R200001

Legend

(1) Turbocharger
(2) Thermostat
(3) Reservoir Tank
(4) Radiator
(5) Bypass
(6) Oil Cooler
(7) Cooling fan
(8) Water Pump
(9) Thermo Valve
(10) Car Heater
(11) EGR Cooler

The cooling system is a pressurized coolant forced circulation type which consists of water pump, thermostat, cooling fan, radiator and other components.

The circulating coolant cools the lubricating oil in the oil cooler and turbocharger.

WATER PUMP

The coolant pump is a centrifugal impeller type and is driven by V type drive belt.

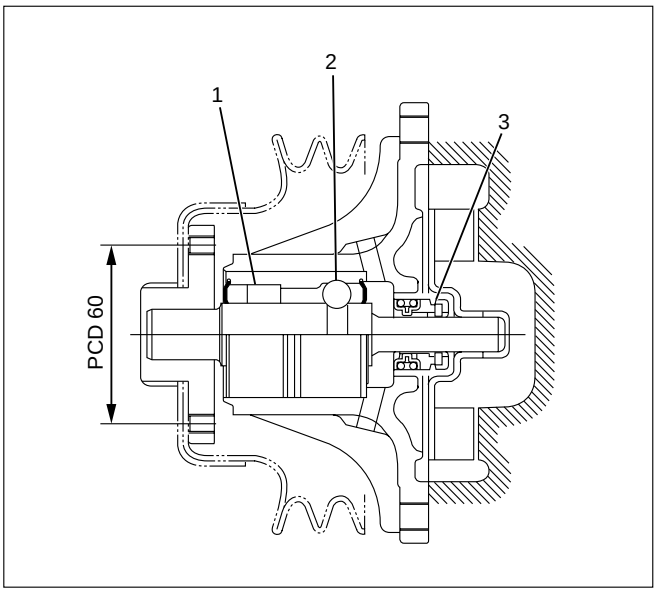

A06RW024

Legend
(1) Roller Bearing
(2) Ball Bearing
(3) Seal Unit

THERMOSTAT

The thermostat is a wax pellet type with a jiggle valve and is installed in the thermostat housing.

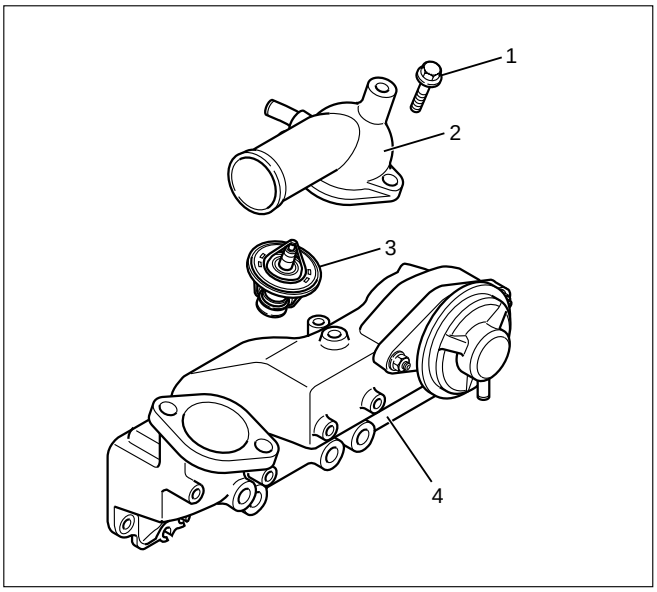

032RW002

Legend
(1) Bolt
(2) Thermostat Housing
(3) Thermostat
(4) Intake Manifold

RADIATOR

The radiator is a tube type with corrugated fins. In order to raise the boiling point of coolant, the radiator is fitted with a cap in which the valve is operated under the pressure.

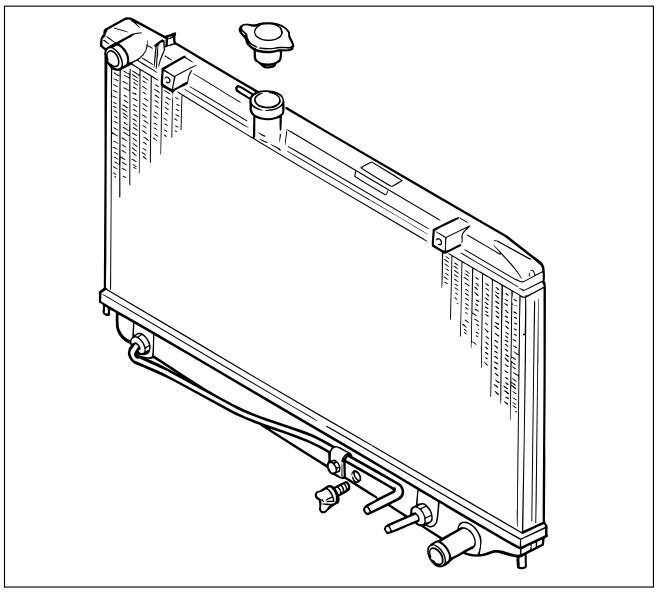

110RS001

ANTI-FREEZE SOLUTION

- Relation between Mixing ratio and Freezing point

  Freezing temperature of the engine coolant varies with the ratio of anti-freeze solution in water.

  Proper mixing ratio can be determined by refering to the chart. Supplemental inhibitors or additives claiming to increase cooling capability that have not been specifically approved by Isuzu are not recommended for addition to the cooling system.

- Calculation of mixing ratio

  Mixing ratio (%)

$$= \frac{\text{Anti-freeze solution (Lit/qt.)}}{\text{Anti-freeze solution (Lit/qt.) + Water (Lit/qt.)}} \times 100$$

  For example

  In case total coolant capacity = 10 l

  It is necessary to mix about 35% anti-freeze solution at ambient temperature minus 20°C.

  Capacity of anti-freeze solution:

$$\frac{35}{100} \times 10 = 3.5 \text{ l}$$

  Water capacity: 10 l – 3.5 l = 6.5 l

  Therefore, you prepare the water 6.5 l and anti-freeze solution 3.5 l, then mix them to get total 10 l coolant.

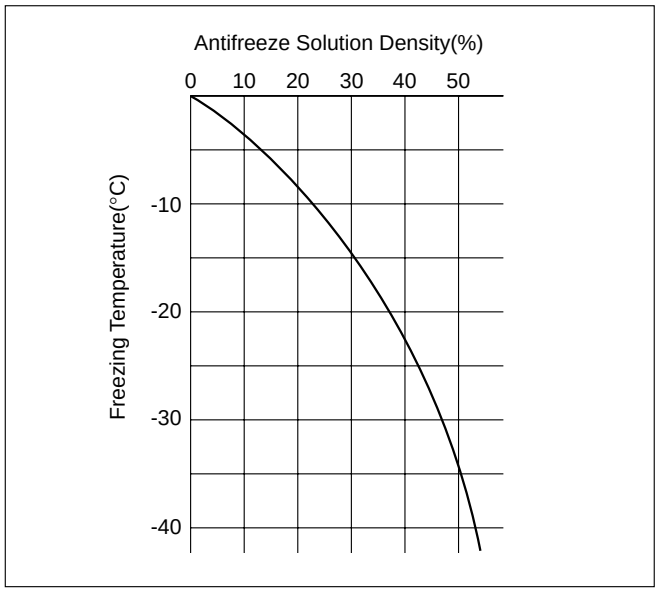

B06RW018

- Mixing ratio

  Check the specific gravity of engine coolant in the cooling system in temperature ranges from 0° C to 50° C using a suction type hydrometer, then determine the density of the coolant by referring to the table at below.

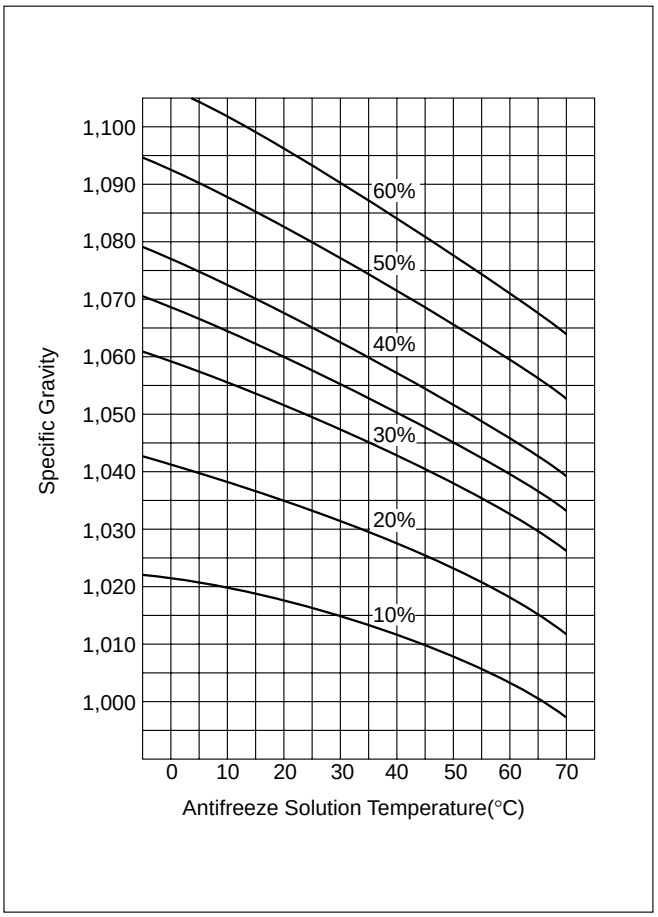

B06RW017

ENGINE COOLANT CHANGE PROCEDURE

1. To change engine coolant, make sure that the engine is cool.

WARNING:
When the coolant is heated to a high temperature, be sure not to loosen or remove the radiator cap. Otherwise you might get scalded by hot vapor or boiling water. To open the radiator cap, put a piece of thick cloth on the cap and loosen the cap slowly to reduce the pressure once the coolant has become cooler.

2. Open radiator cap and drain the cooling system by loosening the drain valve on the radiator and on the cylinder body.

NOTE: For best results it is suggested that the engine cooling system be flushed at least once a year. It is advisable to flush the interior of the cooling system including the radiator before using anti-freeze (ethylene-glycol based).
Replace damaged rubber hoses as the engine anti-freeze coolant is liable to leak out even minor cracks.
Isuzu recommends using Isuzu genuine anti-freeze (ethylene-glycol based) or equivalent, for the cooling system and not add any inhibitors or additives.

CAUTION:
A failure to correctly fill the engine cooling system in changing or topping off coolant may sometimes cause the coolant to overflow from the filler neck even before the engine and radiator are completely full.
If the engine runs under this condition, shortage of coolant may possibly result in engine overheating. To avoid such trouble, the following precautions should be taken in filling the system.

3. To refill engine coolant, pour coolant up to filler neck using a filling hose which is smaller in outside diameter than the filler neck. Otherwise air between the filler neck and the filling hose will block entry, preventing the system from completely filling up.
4. Keep a filling rate of 9 liter/min. or less. Filling over this maximum rate may force air inside the engine and radiator.

   And also, the coolant overflow will increase, making it difficult to determine whether or not the system is completely full.
5. After filling the system full, pull out the filling hose and check to see if air trapped in the system is dislodged and the coolant level goes down. Should the coolant level go down, repeat topping-off until there is no more drop in the coolant level.
6. Directly after filling the radiator, fill the reservoir to the maximum level.
7. Install and tighten radiator cap and start the engine. After idling for 2 to 3 minutes, stop the engine and reopen radiator cap. If the water level is lower, replenish.

WARNING:
When the coolant is heated to a high temperature, be sure not to loosen or remove the radiator cap. Otherwise you might get scalded by hot vapor or boiling water. To open the radiator cap, put a piece of thick cloth on the cap and loosen the cap slowly to reduce the pressure once the coolant has become cooler.

8. After tightening radiator cap, warm up the engine at about 2,000 rpm.

   Set heater adjustment to the highest temperature position, and let the coolant circulate also into heater water system.
9. Check to see the thermostat has opened by the needle position of a water thermometer, conduct a 5-minute idle again and stop the engine.
10. When the engine has been cooled, check filler neck for water level and replenish if required. Should extreme shortage of coolant be found, check the coolant system and reservoir tank hose for leakage.
11. Fill the coolant into the reservoir tank up to “MAX” line.

ON-VEHICLE SERVICE

WATER PUMP

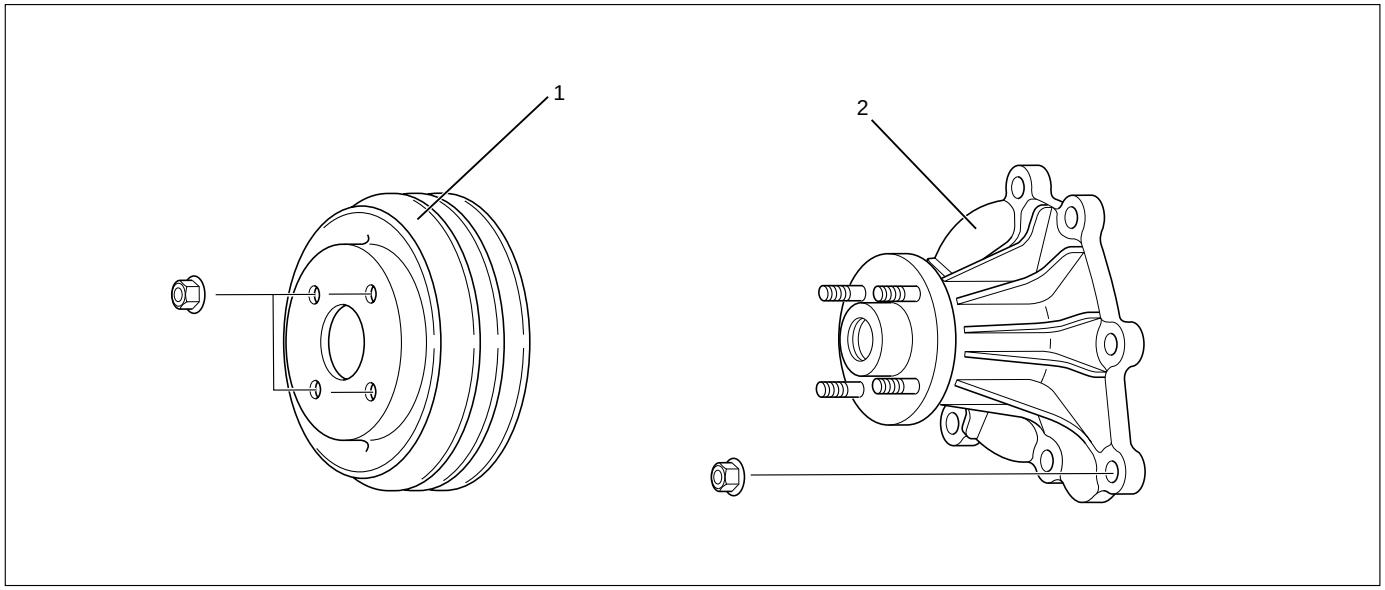

030RW009

Legend
(1) Fan Pulley
(2) Water Pump Assembly

REMOVAL

1. Drain coolant.
2. AC Generator Drive Belt
   1) Loosen AC Generator mounting bolt, adjust plate lock bolt, and remove the drive belt.
3. Cooling Fan Assembly
   1) Remove lock nut and take out cooling fan assembly with cooling fan clutch.
4. Water Pump Assembly

INSPECTION

Make necessary repair and parts replacement if excessive wear or damage is found during inspection. Should any of the following problems occur, the entire water pump assembly must be replaced.

1) Cracks in the water pump body
2) Coolant leakage from the seal unit
3) Excessive play in radial direction or abnormal noise
4) Excessive play in thrust direction
   Limit : 0.2mm (0.008in) or less
5) Cracks or corrosion in the impeller

INSTALLATION

1. Gasket
   1) Set gasket to gear case.
2. Water Pump Assembly
   1) Install water pump assembly, and tighten to specified torque.

Torque: 20 N·m (2.0 kg·m/14.5 lb ft)

3. Cooling Fan Assembly
   1) Install cooling fan assembly, and tighten to specified torque.

Torque: 8 N·m (0.8 kg·m/5.8 lb ft)

4. AC Generator Drive Belt
   1) Install AC Generator drive belt and adjust belt tension.

Torque: 40 N·m (4.1 kg·m/29.7 lb ft)
For ACG to bracket

20 N·m (2.0 kg·m/14.5 lb ft)
For ACG to adjust plate

5. Fill coolant to specified capacity.

THERMOSTAT

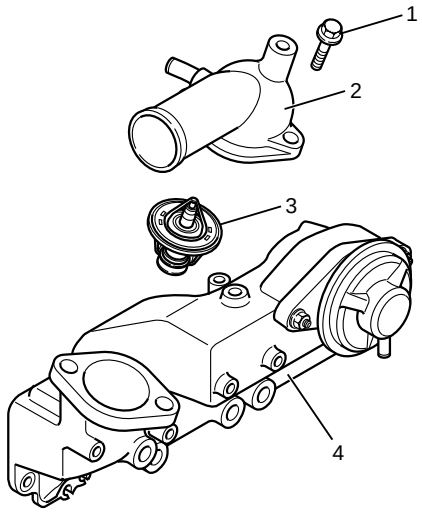

035RW002

Legend

(1) Bolt
(2) Thermostat Housing
(3) Thermostat
(4) Intake Manifold

REMOVAL

1. Disconnect battery ground cable.
2. Drain coolant from the radiator and engine.
3. Thermostat housing
   1) Remove mounting bolt and remove thermostat housing together with radiator hose.
4. Gasket
5. Thermostat

INSPECTION

Make necessary repair and parts replacement if excessive wear or damage is found during inspection.
Submerge the thermostat assembly in the water.
Place wooden blocks on the bottom of the water container.
Do not heat the thermostat directly.
Gradually increase the water temperature. Stir the water so that the entire water is the same temperature.

1) Make sure that valve begins to open at the specified temperature.

Valve Opening Temperature: 85°C (185°F)

2) Make sure that valve opens fully at the specified temperature.

Valve Full Open Temperature: 100°C (212°F)

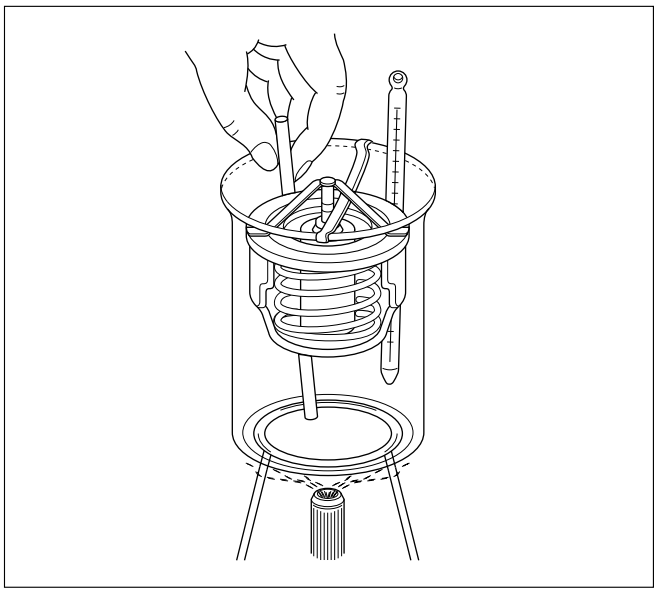

031RS003

INSTALLATION

1. Thermostat
   1) The jiggle valve of the thermostat must face the cylinder head side.
2. Gasket
3. Install thermostat housing and tighten bolt to the specified torque.

Torque: 20 N·m (2.0 kg·m/14.5 lb ft)

4. Reconnect water hose
   1) Fill coolant to full level.
   2) Reconnect battery ground cable.
5. Start the engine check for coolant leakage.

RADIATOR

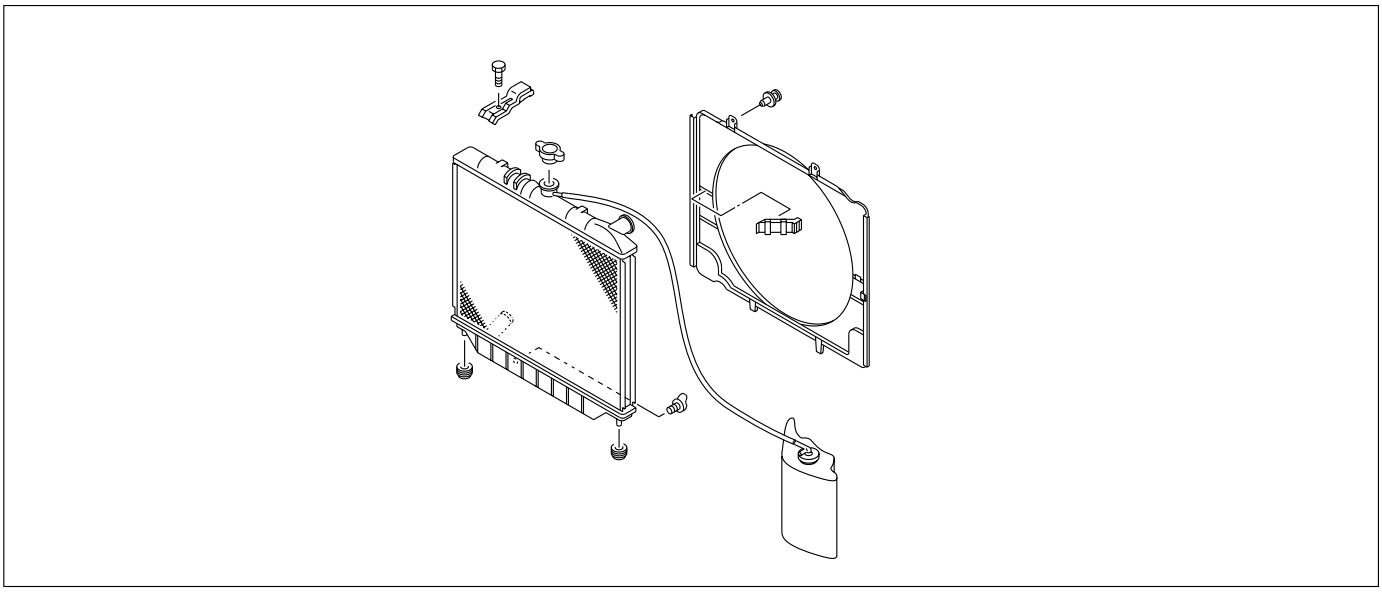

110RW017

REMOVAL

1. Disconnect battery ground cable
2. Loosen drain plug to drain coolant.
3. Radiator Hose
   1) Disconnect lower hose and upper hose from the engine.
4. Fan Guide
   1) Remove clips on both sides and the bottom lock.
5. Reservoir Tank Hose
   1) Disconnect the hose from radiator.
6. Bracket
7. Radiator Assembly
   1) Remove the radiator assembly upward by the hoses taking care not to damage the radiator core by the fan blade.
   2) Remove rubber cushions on both sides of the bottom.

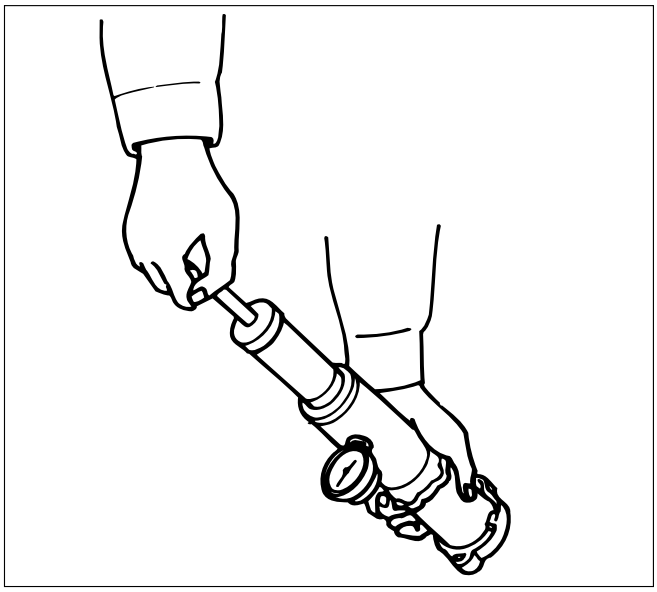

110RS006

INSPECTION

Radiator Cap

1) Measure the valve opening pressure with the radiator cap tester. Replace the radiator cap if it exceeds the standard.

Valve opening pressure: 93.2 – 122.7 kPa (0.95 – 1.25 kg/cm^2 / 13.5 – 17.8 psi)

Check the condition of the negative pressure valve in the center of the valve seat side of the cap. If the valve seat does not move smoothly due to rust or dust, clean and replace the radiator cap.

Radiator Core

1) Deformed radiator fins could reduce radiation effects, resulting in overheating. Straighten the fins. In such a case, take care not to damage the fin roots.
2) Remove dust and other foreign materials.

Flushing the Radiator

1) Wash the inside of radiator and the coolant passage with water and a neutral detergent. Remove all scales and rust.

Checking for Coolant Leakage

1) Check the cooling system for leakage with the radiator cap tester by applying 196.0 kPa (28.4 psi) air pressure from filler neck to inside the radiator.

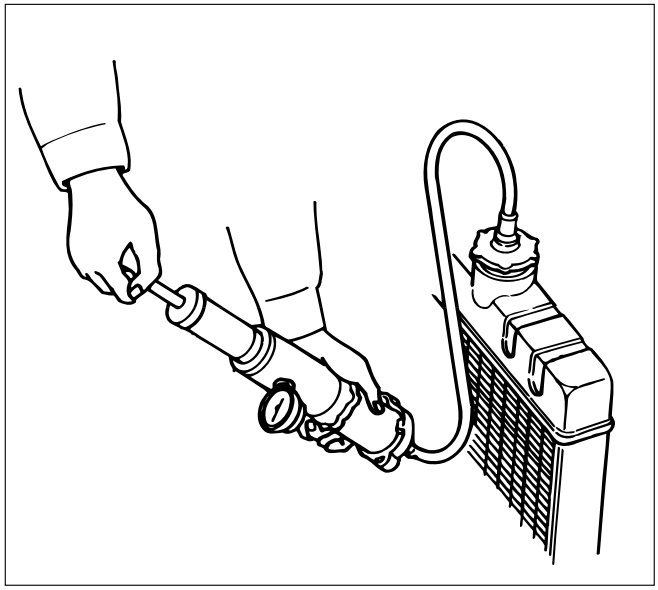

110RS005

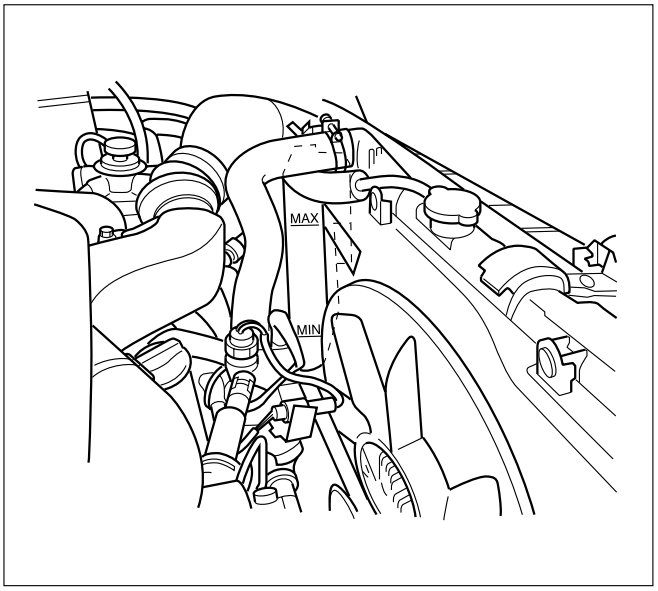

012RW080

INSTALLATION

1. Radiator Assembly
   1) Install rubber cushions on both sides of radiator bottom.
   2) Install radiator assembly with hose, taking care not to damage the radiator core by a fan blade.
2. Bracket
   1) Support the radiator upper tank with the bracket and fix the radiator.
3. Reserve Tank Hose
4. Fan Guide, Lower
5. Radiator Hose
   1) Connect inlet hose and outlet hose to the engine.
   2) Connect battery ground cable.
   3) Pour coolant up to filler neck of radiator, and up to MAX mark of reserve tank.
   4) Start engine to warm up, and check for coolant level. Replenish coolant if it does not reach the radiator filler neck, and tighten the cap completely.

DRIVE BELT ADJUSTMENT

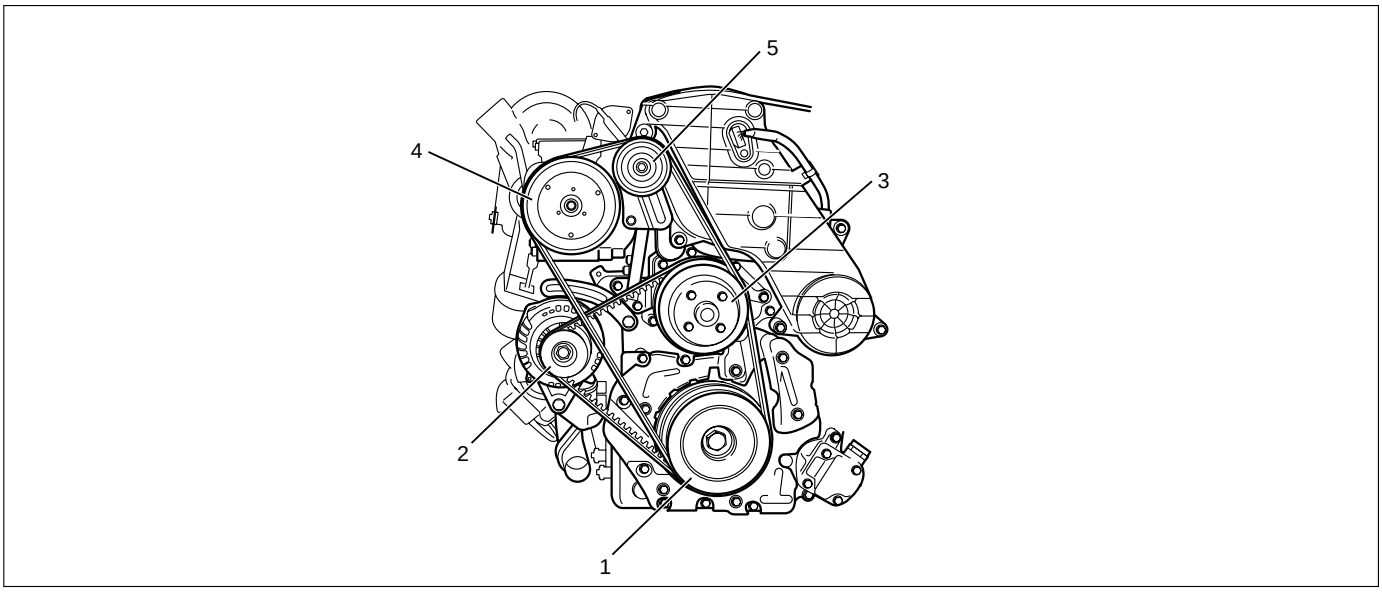

012RW085

Legend
(1) Crankshaft Pulley
(2) A.C. Generator
(3) Cooling Fan Pulley
(4) A/C Compressor
(5) Belt Tensioner Pulley

INSPECTION

Check drive belts for wear or damage, and replace with new ones as necessary. Check belts for tension, and adjust as necessary.

1) Check drive belt tension.
2) Push the middle of belt with a force of 98 N (10 kg/22 lb) and check each belt for deflection.

Standard deflection:

For A.C. generator & fan pulley drive belt
Initial tension : 8 – 12 mm (0.31 – 0.47 in)
Tension at readjustment : Same as above.

For A/C compressor drive belt
Initial tension : 7 – 10 mm (0.28 – 0.38 in)
Tension at readjustment : 5 – 8 mm (0.20 – 0.31 in)

TENSION ADJUSTMENT

1) Loosen AC generator mounting bolt to move AC generator, adjust belt tension and tighten to the specified torque.

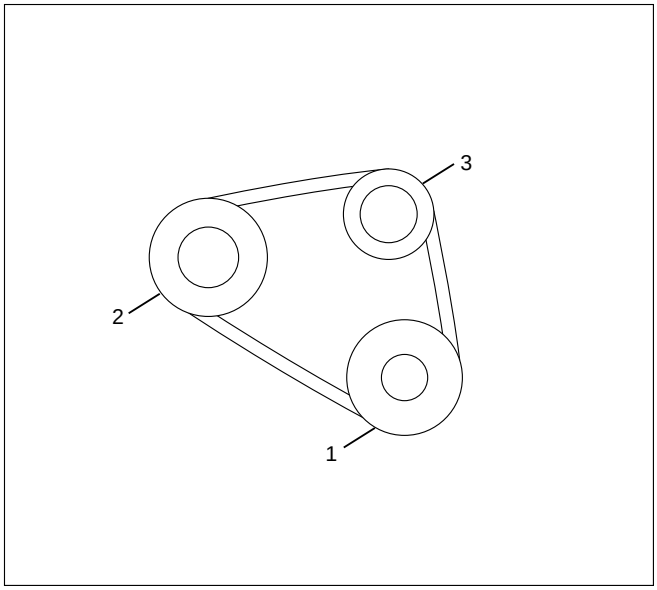

012RW084

Legend
(1) Crankshaft Pulley
(2) A.C. Generator Pulley
(3) Cooling Fan Pulley

Torque:

For A.C. Generator fixing bolt
40 N·m (4.1 kg·m/29.7 lb ft)

For Adjusting plate fixing bolt
24 N·m (2.4 kg·m/17.4 lb ft)

For Adjusting plate lock bolt
19 N·m (1.9 kg·m/13.7 lb ft)

2) Adjust the A/C compressor drive belt by tightening the belt tensioner bolt.

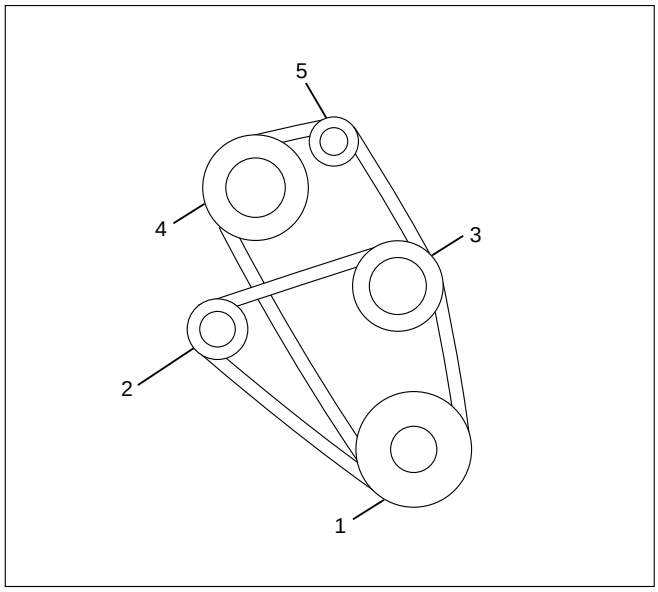

012RW110

Legend

(1) Crankshaft Pulley
(2) A.C. Generator Pulley
(3) Cooling Fan Pulley
(4) A/C Compressor Pulley
(5) Belt Tensioner Pulley

ENGINE FUEL

CONTENTS

General Description 6C–1
On-Vehicle Service 6C–7
Fuel Filter Assembly 6C–7
Fuel Filter Cartridge 6C–7
Injector 6C–9
Fuel Pump Pipe 6C–13
High Pressure Oil Pump 6C–15
Fuel Tank 6C–20
Fuel Gauge Unit 6C–21
Fuel Filler Cap 6C–21

GENERAL DESCRIPTION

To realize the compatibility between low exhaust emission and high engine output, an HEUI (Hydraulically actuated Electronically controlled Unit Injector) system, has been introduced. This system is comprised of a hydraulic system, fuel system, and electronic control system, using a high-pressure oil pump in place of the conventional fuel injection pump. The oil pressurized by means of this pump and by signals from the ECM (Electronic Control Module) actuates the fuel injector provided for each cylinder. Inside of the fuel injector, fuel pressure is increased due to the high-pressure oil. The ECM detects the driving state of the vehicle, forms, signals sent by engine and other part sensors, which determines the optimum fuel injection amount and timing, thus controlling the fuel injectors. Thus high engine output, good fuel economy, and low exhaust emission are realized.

When working on the fuel system, there are several things to keep in mind:

1) Any time the fuel system is being worked on, disconnect the negative battery cable except for those tests where battery voltage is required.
2) Always keep a dry chemical (Class B) fire extinguisher near the work area.
3) Replace all pipes with the same pipe and fittings that were removed.

   Clean and inspect “O” rings. Replace where required.
4) Always relieve the line pressure before servicing any fuel system components.
5) Do not attempt repairs on the fuel system until you have read the instructions and checked the pictures relating to that repair.
6) After maintenance work, push priming pump and send enough fuel to the fuel system before starting the engine.

NOTE: In comparison with the conventional engine, the capacity of fuel passage in the 4JX1 engine is larger. It takes the priming pump more time to fill the engine with fuel.

FUEL FLOW

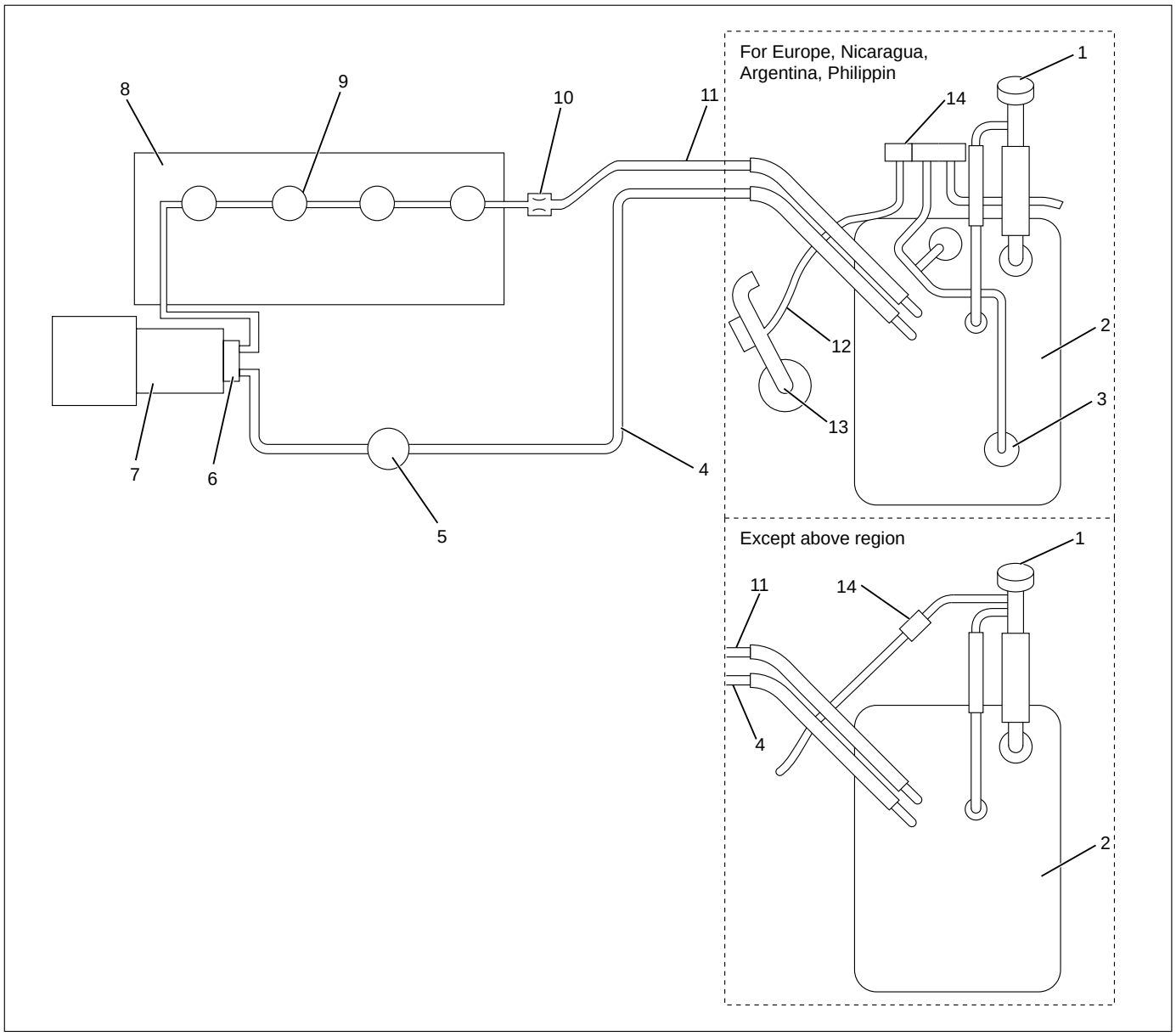

040R200001

Legend

(1) Fuel Filler Cap
(2) Fuel Tank
(3) Rollover Valve
(4) Fuel Supply Pipe
(5) Fuel Filter with Priming Pump
(6) Fuel Pump
(7) High Pressure Oil Pump
(8) Cylinder Head
(9) Injector
(10) Orifice
(11) Fuel Return Pipe
(12) Fuel Tank Pressure Release Hose
(13) Intake Air Duct
(14) Fuel Tank Pressure Control Valve

FUEL PUMP

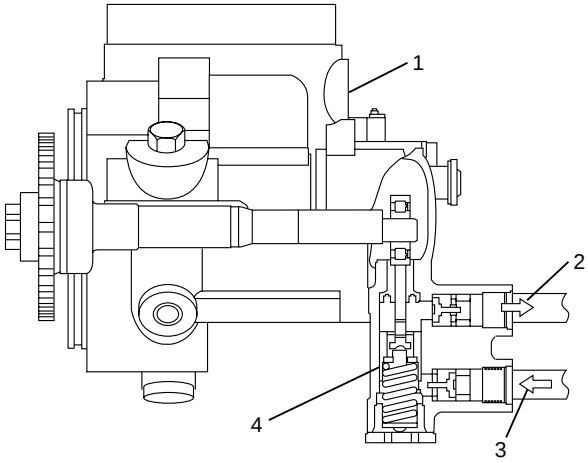

140RW041

Legend

(1) High Pressure Oil Pump
(2) To Injector
(3) From Fuel Tank
(4) Fuel Pump

HIGH PRESSURE OIL PUMP, OIL FLOW

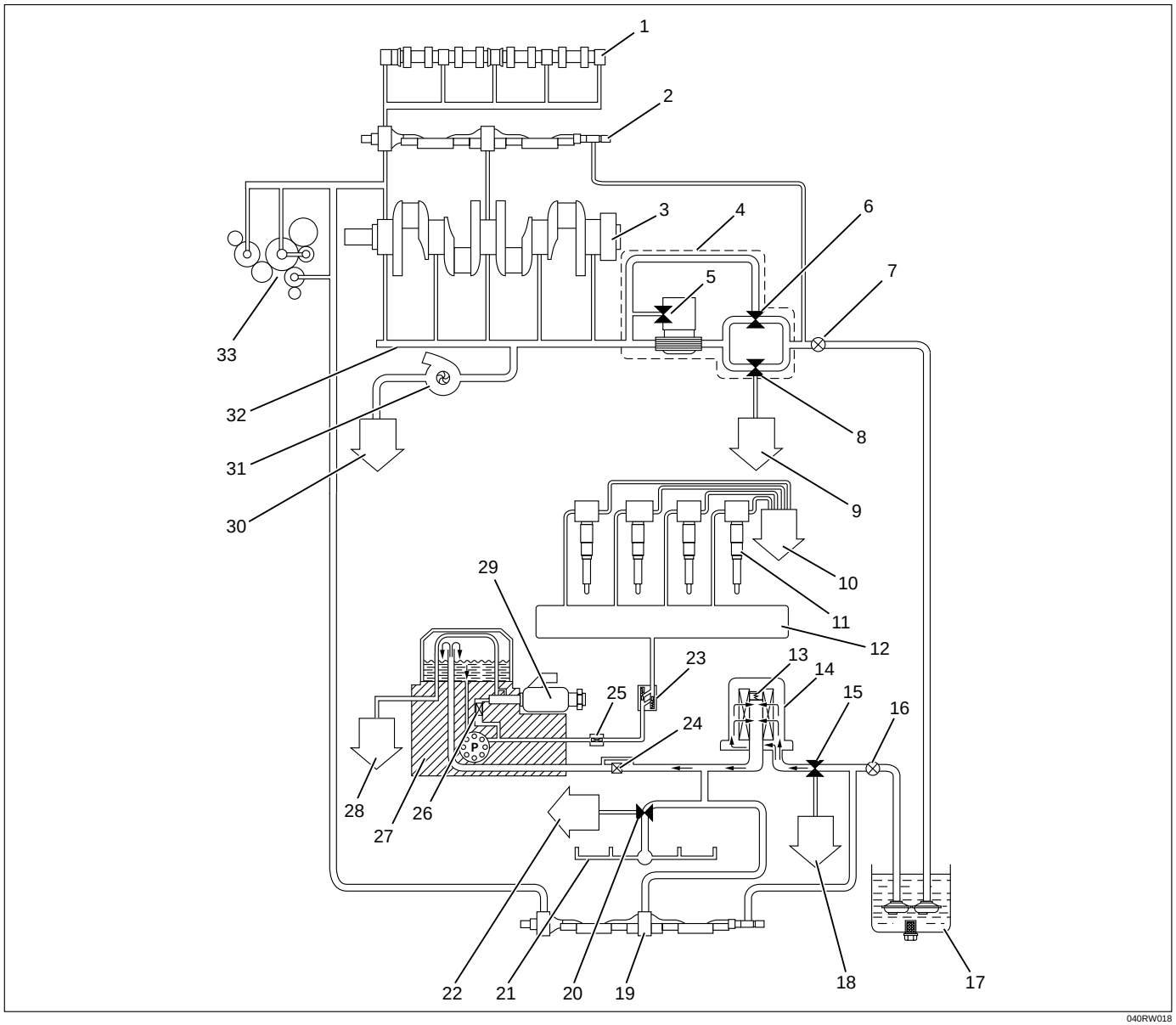

Legend

(1) Camshaft
(2) Balance Shaft
(3) Crankshaft
(4) Oil Cooler and Oil Filter Assembly
(5) Oil Filter Relief Valve 98 Kpa (1 kg/cm^2/14.2 Psi)
(6) Oil Cooler Relief Valve 245 Kpa (2.5 kg/cm^2/ 36 Psi)
(7) First Oil Pump
(8) Main Oil Relief Valve 588 Kpa (6 kg/cm^2/ 85 Psi)
(9) To Oil Pan
(10) To Oil Pan
(11) Injector
(12) Oil Rail
(13) Sub Oil Filter Relief Valve 98 Kpa (1 kg/cm^2/ 14.2 Psi)
(14) Sub Oil Filter
(15) Relief Valve 588 Kpa (6 kg/cm^2/ 85 Psi)
(16) Second Oil Pump
(17) Oil Pan
(18) To Oil Pan
(19) Balance Shaft
(20) Cooling Jet Relief Valve 245 Kpa (2.5 kg/cm^2/ 36 Psi)
(21) Cooling Jet
(22) To Oil Pan
(23) Two Way Check Valve
(24) Nipple Filter
(25) Edge Filter
(26) Edge Filter
(27) High Pressure Oil Pump Assembly
(28) To Oil Pan
(29) Pressure Control Valve
(30) To Oil Pan
(31) Turbocharger
(32) Oil Gallery
(33) Timing Gear Train

FUEL FILTER

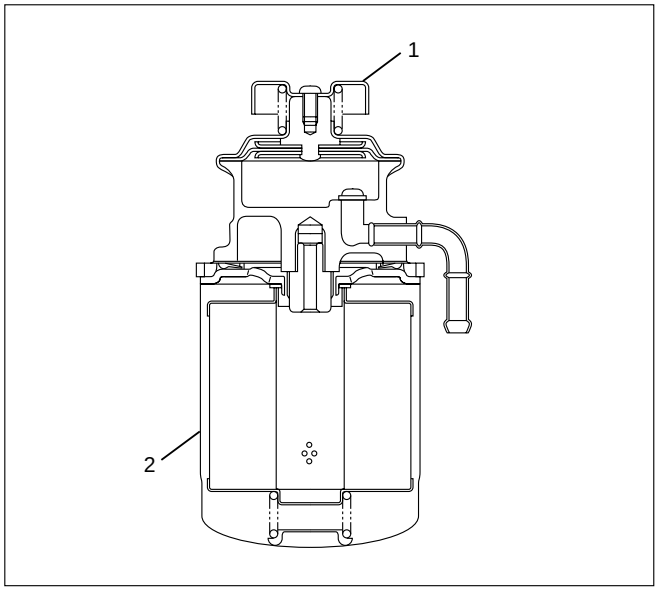

041RW017

Legend
(1) Priming Pump
(2) Fuel Filter Cartridge

A cartridge type fuel filter is used along with the piston type fuel pump on the high pressure oil pump.
The fuel filter removes foreign material from the fuel before it reaches the fuel pump.
A diaphragm type priming pump is installed at the top of the fuel filter. It is used during the air bleeding procedures.

INJECTOR ASSEMBLY

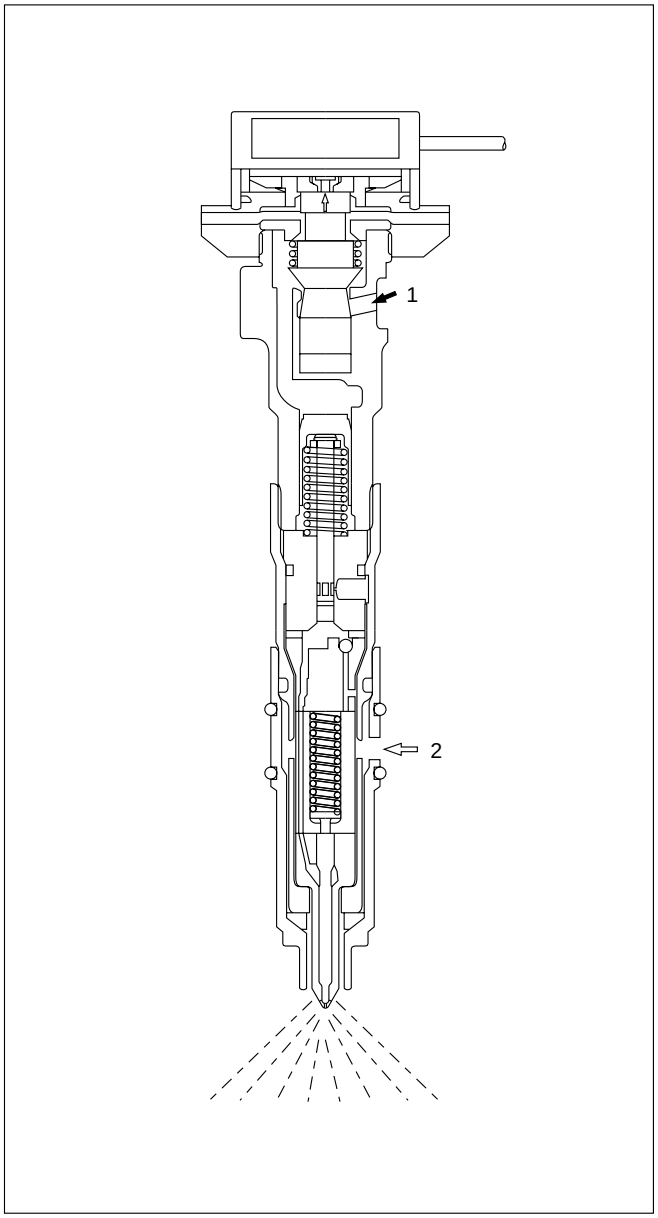

055RW018

Legend
(1) Oil Passage
(2) Fuel Passage

1. Construction of Fuel Injector

   The fuel injector is comprised of the solenoid section, hydraulic line, and fuel line. Fuel injection is controlled by the continuity time signal and continuity start timing signal sent by the ECM (Electronic Control Module) to the solenoid.

2. Working of Fuel Injector

   1) The ECM detects the working of the engine from its input signals, such as engine speed accelerator throttle opening, and engine coolant temperature, sending the optimal signals to the solenoid.

2) With the current carried to the solenoid, a poppet valve is opened by means of an armature to let high-pressure engine oil into the injector.
3) Under the oil pressure, the piston and plunger are depressed to compress the fuel. The pressure of the compressed fuel is increased over the pressure of high-pressure engine oil by the ratio (about 7 : 1) of piston top to plunger bottom.
4) The injection nozzle end needle is lifted under the increased pressure of the fuel for fuel injection.
5) With current stopped from the ECM, the poppet valve is closed which holds up the high-pressure engine oil and lets the oil used to compress fuel out of the injector through its drain hole.

ON-VEHICLE SERVICE

FUEL FILTER ASSEMBLY

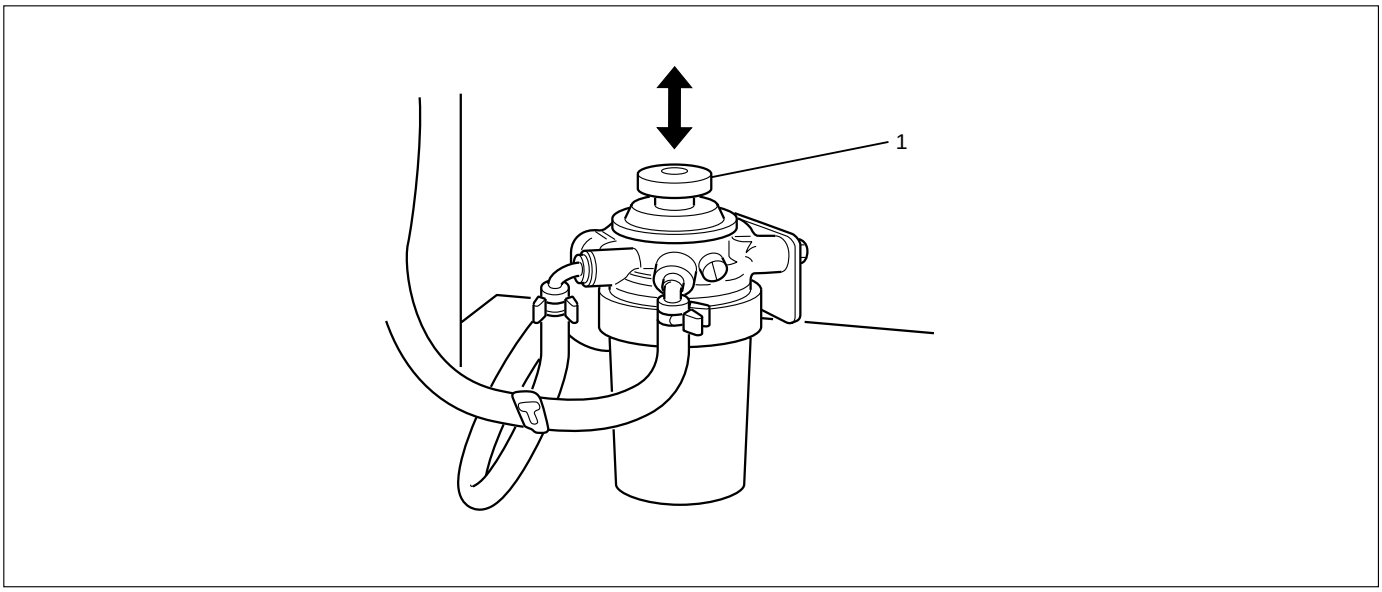

012RW111

Legend
(1) Priming Pump

REMOVAL

1. Disconnect battery ground cable.
2. Fuel Filler cap
3. Fuel Hose
   1) Disconnect fuel hose from filter body.
      Plug the hose ends to prevent fuel spillage.
4. Remove the Bolt on Fuel Filter Bracket
5. Remove Fuel Filter Assembly

INSTALLATION

1. Install the fuel filter assembly
2. Tighten the Fuel Filter Bracket Fixing Bolt
3. Fuel Hose
   1) Connect hoses to filter body.
4. Fuel Filler Cap
   1) Connect the battery ground cable.
   2) Feed fuel to the fuel pump by priming, and bleed the air from fuel system.

FUEL FILTER CARTRIDGE

DISASSEMBLY

1. Drain fuel completely from the fuel filter.
2. Protect the filter body with cloth and lightly grip with a vise.
3. Remove the cartridge using a filter wrench.
   Filter wrench: 5-8840-0203-0

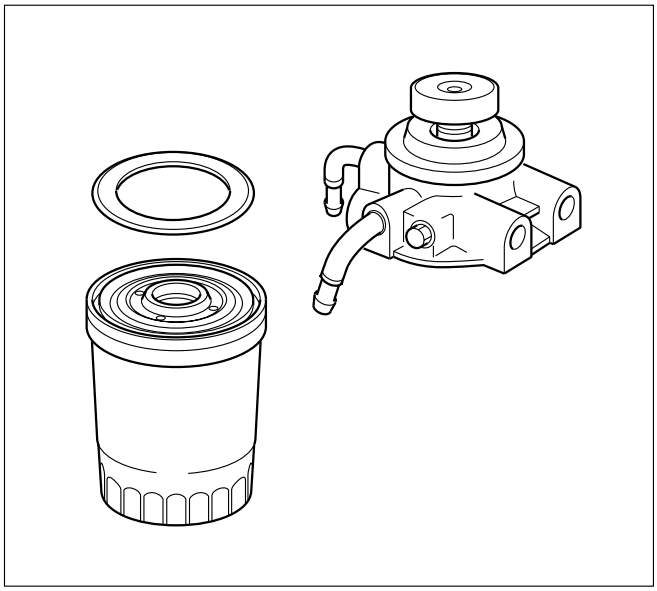

012RW112

REASSEMBLY

1. Clean the cartridge mounting surface of the filter body so that the cartridge can be secured.
   Apply engine oil thinly to new cartridge O-ring.
2. To facilitate bleeding, fill the new cartridge with light oil.
3. Tighten the cartridge until O-ring comes in contact with the seal, taking care not to spill the light oil.
4. Retighten 1/3 – 2/3 using a filter wrench.
   Filter wrench: 5-8840-0203-0

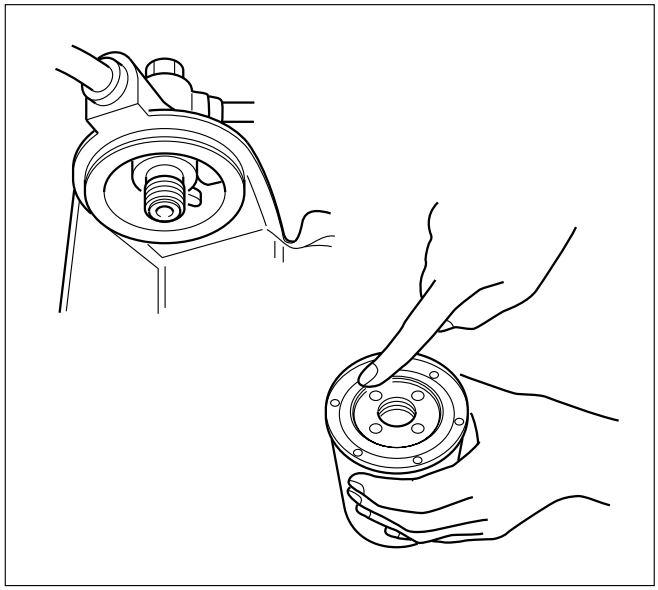

012RW078

Bleeding

1. Loosen air bleeding plug.
2. Operate priming pump to bleed the air in the fuel line.
3. Operate the priming pump until the fuel is overflow from air bleeding plug.
4. Tighten the air bleeding plug.
5. Start the engine, and if it is not started in 10 seconds or less, repeat the bleeding steps.
6. Make sure of no fuel leakage, and tighten the priming pump.

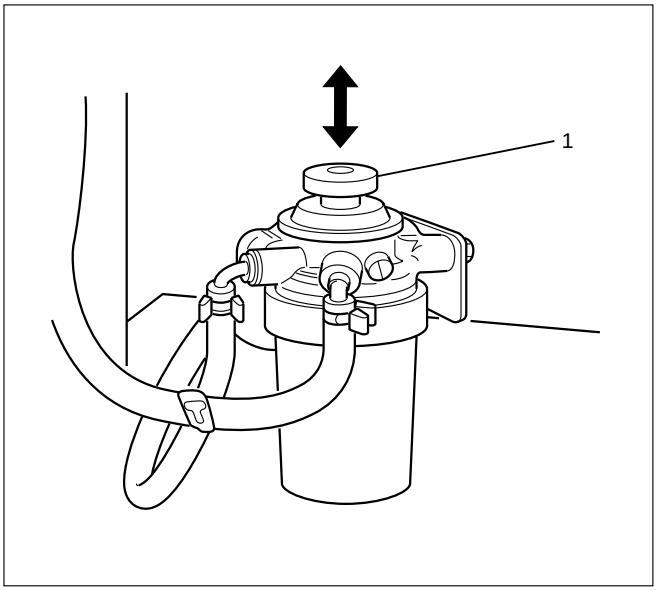

012RW111

Legend
(1) Priming Pump

NOTE: In comparison with the conventional engine, the capacity of fuel passage in the 4JX1 engine is larger. It takes the priming pump more time to fill the engine with fuel.

INJECTOR

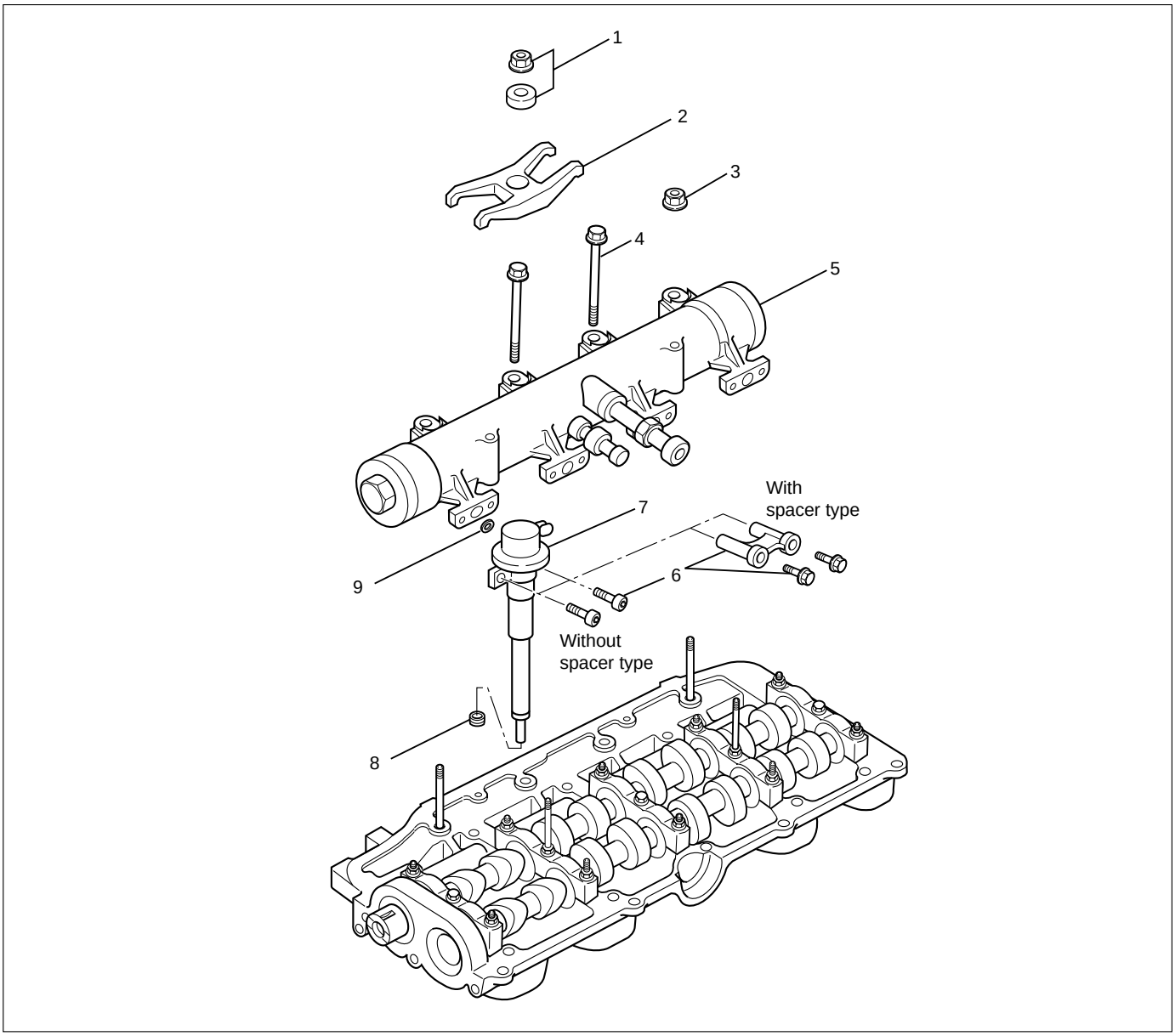

012R200006

Legend

(1) Nut and Washer
(2) Injector Clamp
(3) Nut
(4) Bolt
(5) Oil Rail Assembly
(6) Spacer (If equipped) and Bolt
(7) Injector Assembly
(8) Gasket
(9) O-Ring

REMOVAL

Prior to removal, be sure to confirm and record the group code of the injector installed using Tech2.

1. Disconnect battery ground cable.
2. Remove air cleaner cover and air duct.
3. Remove intercooler.
   Refer to “Intercooler” in this manual.
4. Remove PCV hose and pipe.
5. Remove cylinder head noise insulator cover.
6. Remove high pressure oil pipe.

CAUTION:

1) Sleeve nut should be loosened with cloth tied around to prevent oil from spurting due to the remaining pressure.

2) High oil pressure pipe should be disconnected with cloth tied around the intake manifold glow plug to prevent oil from flowing out of the oil rail.

7. Loosen eye bolt of fuel pipe at fuel pump side.

NOTE: Cloth should be put around the loosened eye bolt to prevent fuel from flowing out.

8. Remove fuel return hose at chassis side.
9. Remove PCV hose to cylinder head cover.
10. Remove cylinder head cover.
11. Drain the oil from oil rail assembly.

NOTE: Do not drop O-ring

12. Record the grade code of injector for each cylinder that is indicated on the upper portion of injector.
    There are nine kinds of grade code available, one alphabet letter and one numeral letter.

Grade code

Category number
A – 1
A – 2
A – 3
B – 1
B – 2
B – 3
C – 1
C – 2
C – 3

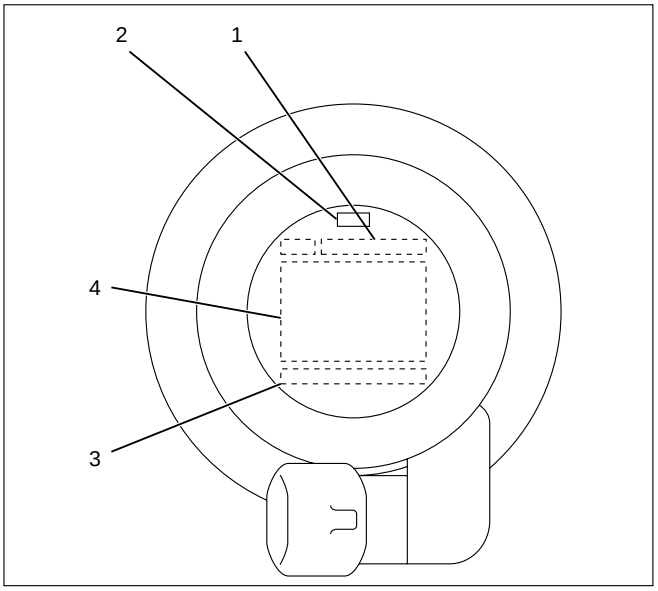

Legend
(1) Part Number
(2) Category Number (Grade code)
(3) Serial Number
(4) Bar Code

13. Remove harness connector from each injector.
14. Loosen nuts and bolts for oil rail.
15. Remove injector fixing bolts.
16. Remove injector clamp.
17. Remove injector assembly.

INSTALLATION

1. Install oil rail, tighten temporarily
2. Install injector assembly.

NOTE:

1) Do not forget to install O-ring between injector and oil rail.
2) Use new O-ring
3) Clean O-ring groove and fitting surface of parts.
4) Apply engine oil to O-ring.

3. Install injector fixing bolts, tighten temporarily.
4. Install injector clamp, tighten nut temporarily.
5. Tighten injector fixing bolts to the specified torque.

Torque: 6.5 N·m (0.7 kg·m / 5.1 lb ft)

6. Tighten injector clamp nut to the specified torque with special method.

Torque: 30 N·m (3.1 kg·m / 22.4 lb ft) then loosen a time again tighten as following torque.

Torque: 25 N·m (2.4 kg·m / 17.4 lb ft)

7. Tighten oil rail to the specified torque.

Torque: 20 N·m (2.0 kg·m / 14.5 lb ft)

8. Install injector harness assembly, reconnect harness connecter to injector.
9. Record the identification marking of injector for each cylinder that is indicated on the upper portion of injector.

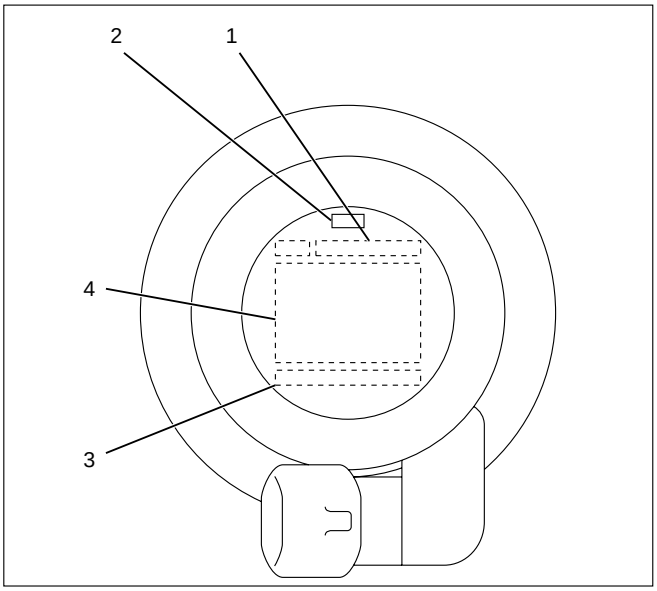

055RW00001

Legend
(1) Part Number
(2) Category Number (Grade code)
(3) Serial Number
(4) Bar Code

10. Install cylinder head assembly.
    Refer to “Cylinder Head” in this manual.
11. Fill with about 300cc of engine oil from the high pressure oil pipe installation port of the oil rail using an oil filler.
    If assembled without filling the oil rail with oil, the time for engine starting will be longer.
12. Immediately install high pressure oil pipe and tighten to specified torque.

Torque: 80 N·m (8.1 kg·m / 57.9 lb ft)

13. Install cylinder head noise insulator cover.
    Refer to “Cylinder Head” in this manual.
14. Install intercooler assembly.
    Refer to “Intercooler” in this manual.
15. Install air cleaner cover and air duct.
16. Use TECH2 to rewrite injector data to ECM.
    For rewriting method refer to section “Data Programming in Case of ECM Change” of section 6E 4JX1 engine driveability and emissions in this manual.

NOTE:
1) On completion of servicing, bleed air from the engine inside fuel passage by means of the priming pump. (The priming pump should be operated more times than in the case of conventional engines.)
2) As air is in the oil rail, it takes more time to start the engine. Rough idling may occur while the air is being bled completely after engine start, but it does not indicate trouble.
   The air will be bled and normal engine status will be reached while the vehicle is driven for about 5 km or engine is operated for about 5 minutes at 1500 to 2000 rpm.
3) The injector spare part will be provided for group number B1, B2 and B3 only.

Injector Grade code Programming (Injector Change)

In case of an injector change, the injector grade code (category number) must be programmed by Tech-2.

Programming Procedure

1. Connect the Tech-2 to the vehicle DLC.
2. Turn the starter switch to the “ON” position.
3. Select the “Diagnosis” from the Main menu.
4. Select the “Programming” from the Application menu.

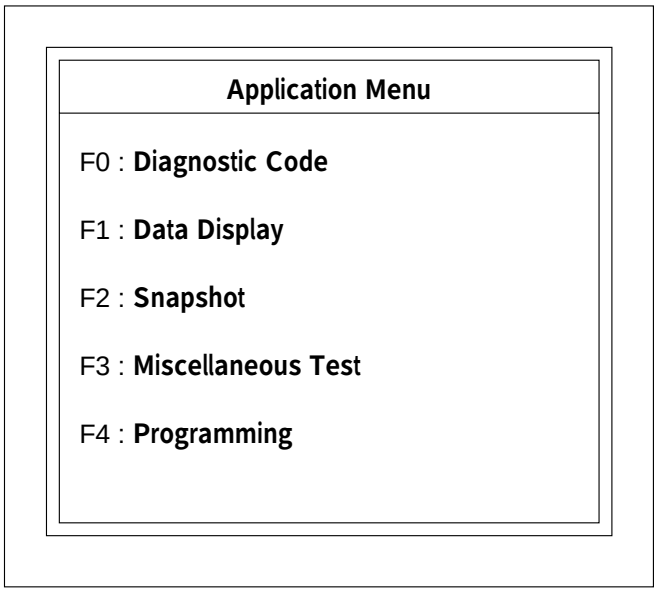

035RW00002

5. Select “Programming Trim Date” from Programming menu.
6. Select the injector change from Programming Trim Date menu.
7. Select the cylinder number which changed injector.

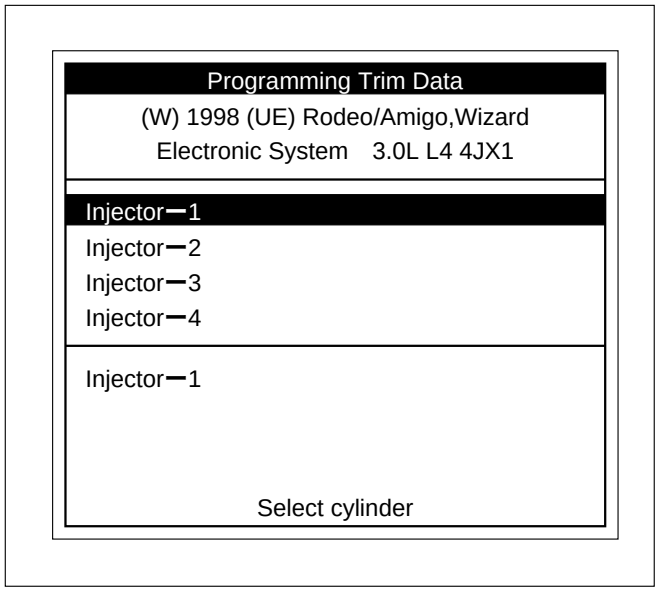

035RW00003

8. Appoint and select the grade code (Category number) of injector.

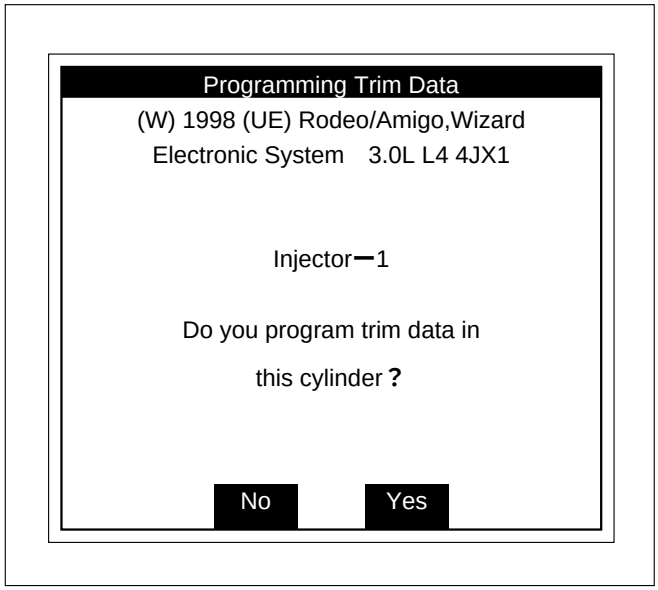

035RW00004

9. Confirm the completion of injector programming.

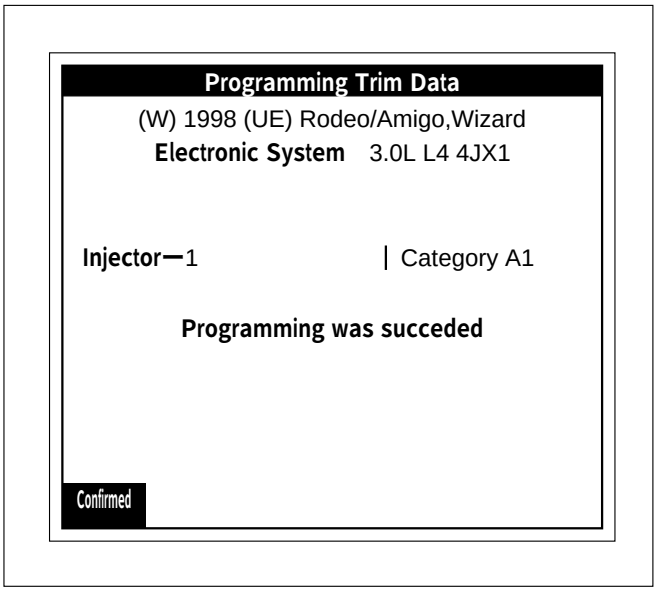

035RW00005

Note; The injector grade code (category number) is indicated on the new (service part) injector.

FUEL PUMP PIPE

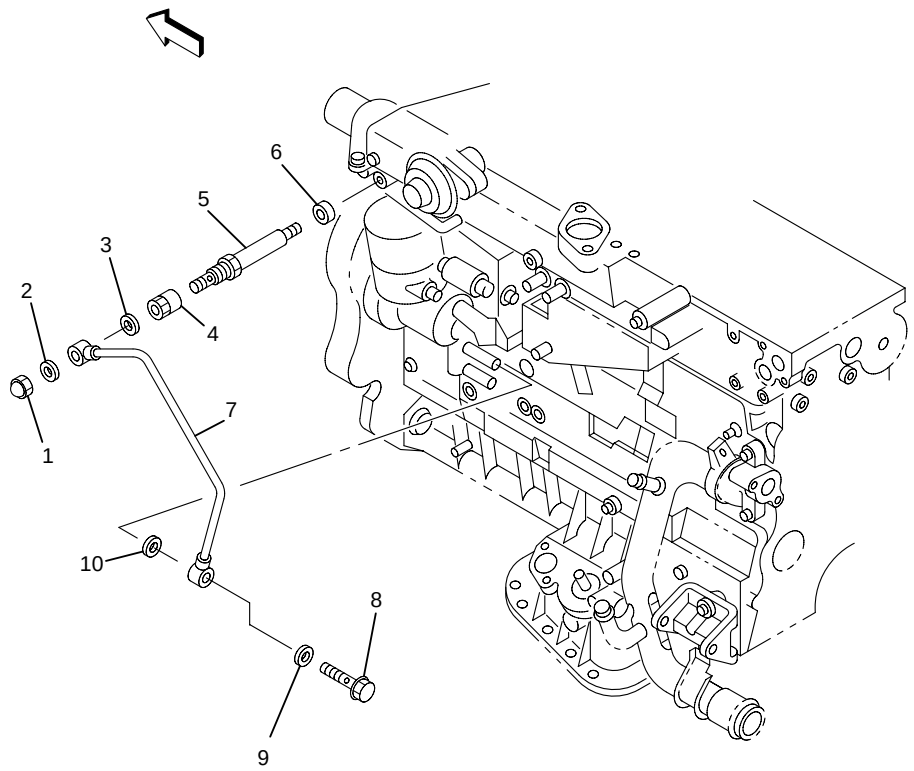

040R200002

Legend

(1) Cap Nut
(2) Gasket
(3) Gasket
(4) Pipe Nut
(5) Adapter
(6) Gasket
(7) Fuel Pump Pipe
(8) Eye Bolt
(9) Gasket
(10) Gasket

REMOVAL

1. Remove eye bolt.
2. Remove cap nut.

NOTE: The eye bolt and cap nut should be disconnected with cloth tied around them to prevent flowing out of fuel.

3. Remove fuel pump pipe.
4. Remove pipe nut.
5. Remove adapter.

INSTALLATION

1. Apply engine oil to the thread, then install adapter with new gasket.

Torque : 16 N·m (1.6 kg·m/12 lb ft)

NOTE: Be careful not to enter the foreign material.

2. Apply engine oil to the thread, then install pipe nut.

Torque : 10 N·m (1.0 kg·m/87 lb ft)

NOTE: Do not apply oil to cap nut side.

3. Install fuel pump pipe, new gaskets and cap nut to adapter temporarily. Do not tighten the cap nut.
4. Install eye bolt with new gasket then tighten to specified torque.

Torque : 29 N·m (3.0 kg·m/22 lb ft)

NOTE:
1) Do not apply oil to the eye bolt.
2) Do not bend the fuel pump pipe.

5. Tifhten cap nut to specified torque.

Torque : 13 N·m (1.3 kg·m/113 lb ft)

NOTE: Do not apply oil to the cap nut.

6. Start the engine, check that the fuel leakage is not found.

HIGH PRESSURE OIL PUMP

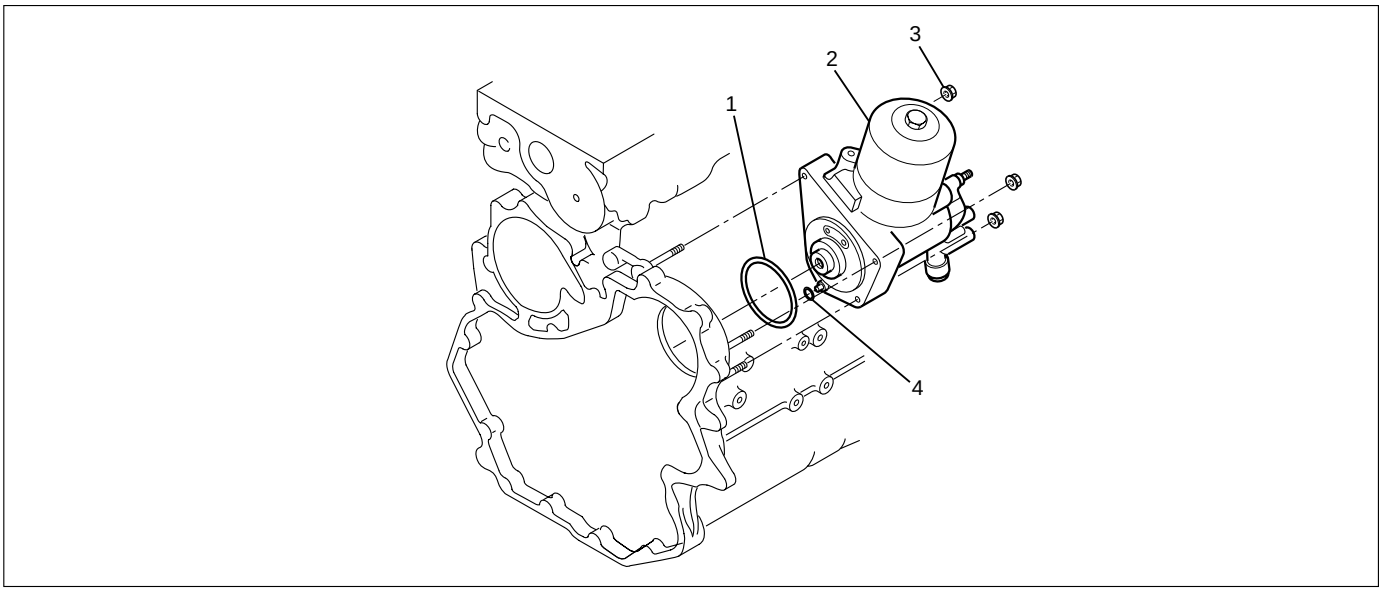

040RW007

Legend
(1) O-Ring
(2) High Pressure Oil Pump Assembly
(3) Nut
(4) O-Ring

REMOVAL

1. Disconnect battery ground cable.
2. Remove air cleaner cover and air duct
3. Intercooler assembly
   Refer to “Intercooler” in this manual.
4. Remove high pressure oil pipe
5. Timing belt cover
   Disconnect CMP sensor cable.
   Remove CMP sensor bracket.
6. Tensioner
7. Timing Belt
8. Remove high pressure oil pump timing pulley
9. Remove crankshaft damper pulley
10. Remove timing gear case cover
11. Remove idle gear A
    Before removing idle gear A, set two bolts to the sub gear of idle gear A and turn it to align the teeth of idle gear A main gear.
    Then lock them by bolts as shown in the illustration.

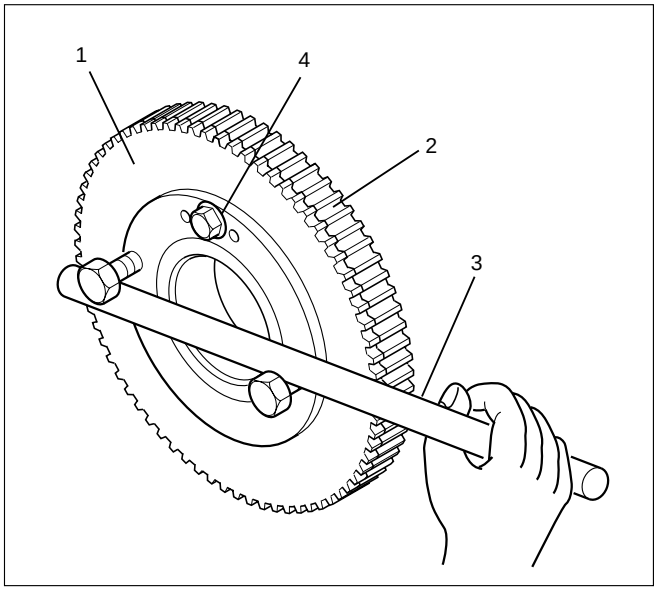

014RW177

Legend
(1) Idle gear A sub gear
(2) Idle gear A main gear
(3) Bar
(4) Lock bolt

12. Remove high pressure oil pump
13. Remove high pressure oil pump assembly

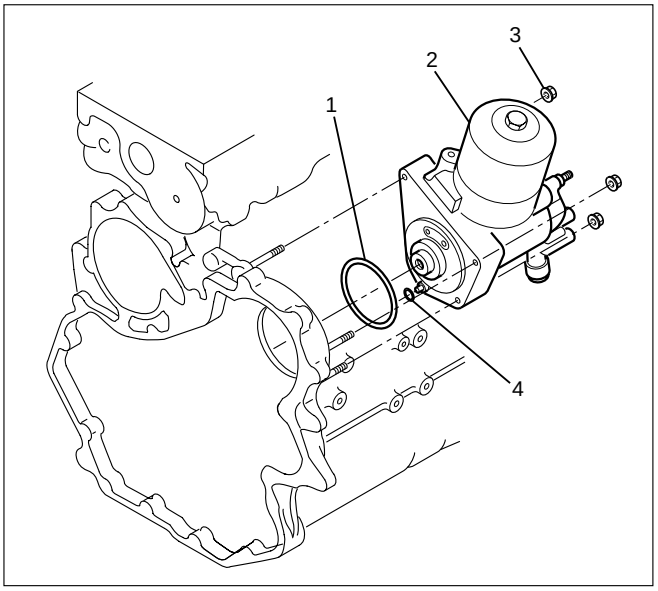

040RW007

Legend

(1) O-ring
(2) High pressure oil pump
(3) Nut
(4) O-ring

INSPECTION AND REPAIR

The high pressure oil pump is made precisely, therefore, disassembly is not recommended.

INSTALLATION

1. Set O-ring to high pressure oil pump assembly.
   Install the pump assembly into the rear of timing gear case.
   Tighten nut to specified torque.

Torque: 20 N·m (2.0 kg·m/14.5 lb ft)

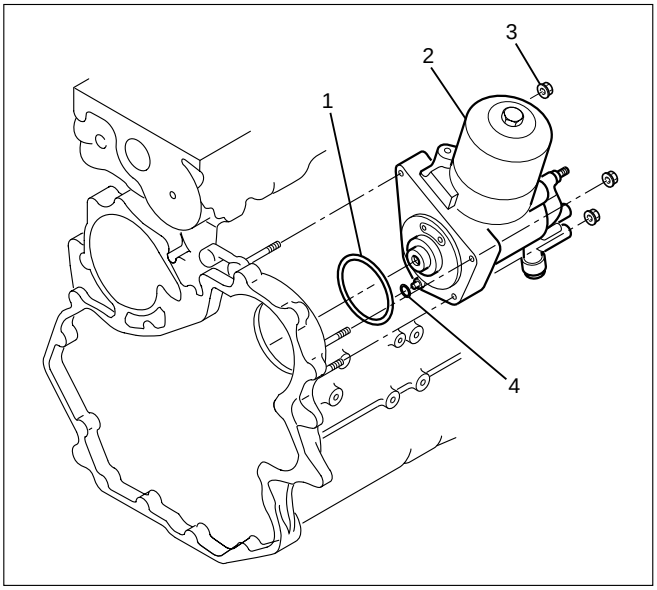

040RW007

Legend
(1) O-ring
(2) High Pressure Oil Pump Assembly
(3) Nuts
(4) O-ring

2. Tighten high pressure oil pump assembly bracket together with two way valve bracket.

Torque: 27 N·m (2.8 kg·m/20.2 lb ft)

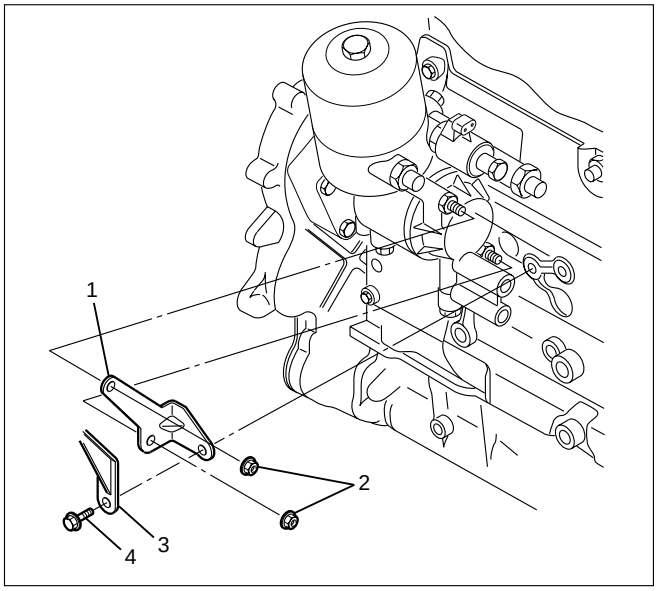

040RW006

Legend
(1) High Pressure Oil Pump Assembly
(2) Nut
(3) Two Way Valve Bracket
(4) Bolt

3. Install the pump gear to align timing mark with idle gear A.
   Tighten high pressure pump gear fixing bolt to the specified torque.
   Apply engine oil to thread and seat of bolt.

Torque: 75 N·m (7.6 kg·m/55 lb ft)

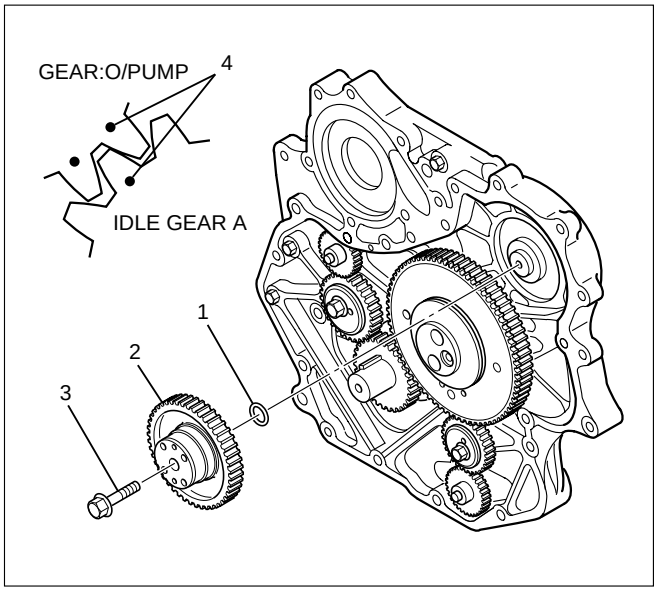

040RW005

Legend
(1) O-ring
(2) Pump Gear
(3) Bolt
(4) Timing Mark

4. Remove lock bolt of idle gear A.
5. Install timing gear case cover.
   Refer to “Timing gear” in this manual.
6. Install front plate.

Torque: 20 N·m (2.0 kg·m/14.5 lb ft)

7. Install timing pulley of high pressure oil pump.

Torque: 10 N·m (1.0 kg·m/7.2 lb ft)

8. Install timing belt and tighten timing belt tensioner assembly.
   Refer to “Cylinder head” in this manual.

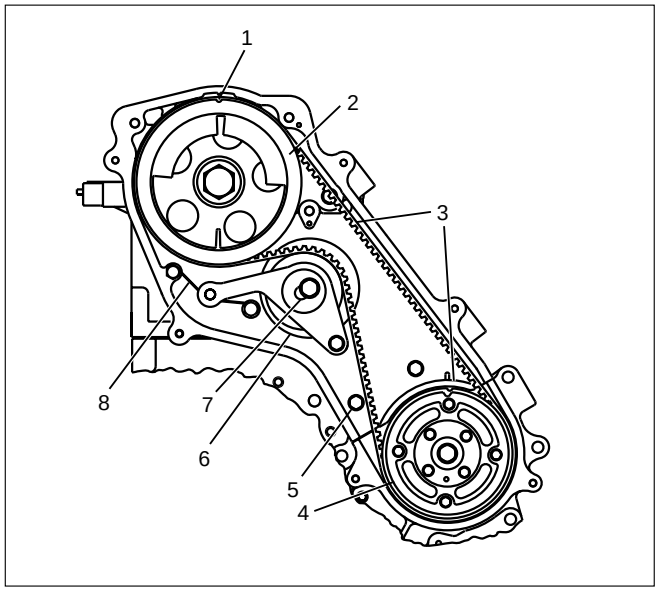

F06RW055

Legend

(1) Align Mark
(2) Camshaft Pulley
(3) Timing Belt
(4) High Pressure Oil Pump Pulley
(5) Bolt
(6) Tensioner Assembly
(7) Tensioner Bolt
(8) Tensioner Spring

9. Install CMP sensor bracket.

Torque: 20 N·m (2.0 kg·m/14.5 lb ft)

10. Connect CMP sensor cable.
11. Install timing belt cover.

Torque: 9 N·m (0.9 kg·m/6.5 lb ft)

12. Fill with about 300 cc of engine oil from the high pressure oil pipe installation port of the oil rail using an oil filler.
    If assembled without filling the oil rail with oil, the time for engine starting will be longer.
13. Immediately install high pressure oil pipe and tighten to specified torque.

NOTE:

1) Use new O-ring.
2) Clean O-ring groove and fitting surface of parts.
3) Apply engine oil to O-ring.

Torque: 80 N·m (8.1 kg·m/57.9 lb ft)

14. Install the crankshaft damper pulley with specified torque.

Torque: 220 N·m (22 kg·m/159 lb ft)

15. Install the intercooler assembly.
    Refer to “Intercooler” in this manual.
16. Install air cleaner cover and air duct.

HIGH PRESSURE OIL PIPE INSTALLATION

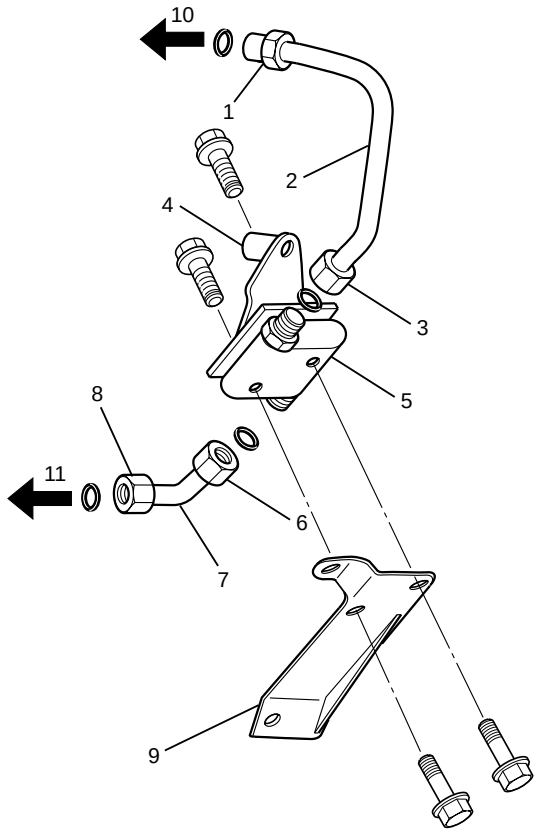

052R200001

Legend

(1) Union Nut F
(2) Pipe B
(3) Union Nut E
(4) Upper Bracket
(5) Two Way Valve
(6) Union Nut D
(7) Pipe A
(8) Union Nut C
(9) Lower Bracket
(10) To Oil Rail
(11) To High Pressure Oil Pump

1. Install upper bracket to two way valve, tighten them temporarily.
2. Install pipe A to two way valve, tighten pipe A temporarily with union nut D.
3. Install two way valve assembly to cylinder block, tighgten with union nut C temporarily.
4. Install pipe B to two way valve, tighten union nut E and union nut F temporarily.
5. Tighten upper bracket to specified torque.

Torque : 20 N·m (2.0 kg·m/14.5 lb ft)

6. Tighten union nut in the following order, union nut C, D, F, and E to the specified torque.

Torque : 80 N·m (8.1 kg·m/57.9 lb ft)

7. Tighten lower bracket to the specified torque.

Torque : 20 N·m (2.0 kg·m/14.5 lb ft)

NOTE: Wash inside pipe, inside union nut and O-ring seal surface to remove engine oil and foreign materials.

FUEL TANK

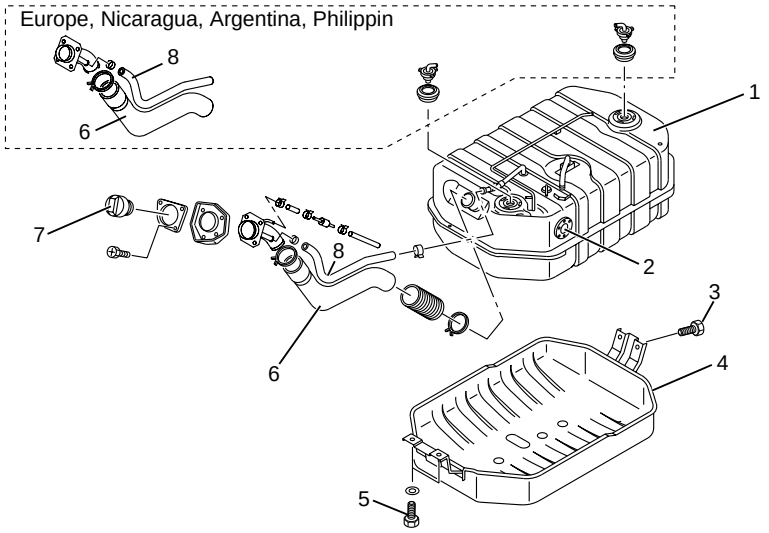

140R200032

Legend

(1) Fuel Tank Assembly
(2) Gauge Unit
(3) Bolt
(4) Under Cover
(5) Bolt
(6) Fuel Filler Hose
(7) Fuel Filler Cap
(8) Breather Hose

REMOVAL

1. Disconnect battery ground cable.
2. Remove fuel filler cap.
3. Drain fuel.
   After drain the fuel tighten the drain plug with specified torque.

Torque : 20 N·m (2.0 kg·m/14 lb ft)

4. Remove fuel filler hose and let air pull off hose.
5. Remove breather hose.
6. Remove fuel feed hose and fuel return hose.
7. Disconnect harness connector from fuel gauge unit.
8. Remove under cover.
9. Remove fuel tank assembly.

INSTALLATION

1. Fuel tank assembly.
   1) Place a flange on right side of tank on the bracket.
   2) Install a flange to left side of the bracket from the bottom, and tighten bolts to the specified torque.

Torque : 36 N·m (3.7 kg·m/26.8 lb ft)

2. Install fuel hose and fuel return hose.
3. Install the breather hose.
4. Reconnect harness connector to fuel gauge unit.
5. Install under cover.
6. Install fuel filler hose and let air pull off hose.
7. Fill fuel tank with fuel and tighten filler cap.
8. Reconnect battery ground cable.

FUEL GAUGE UNIT

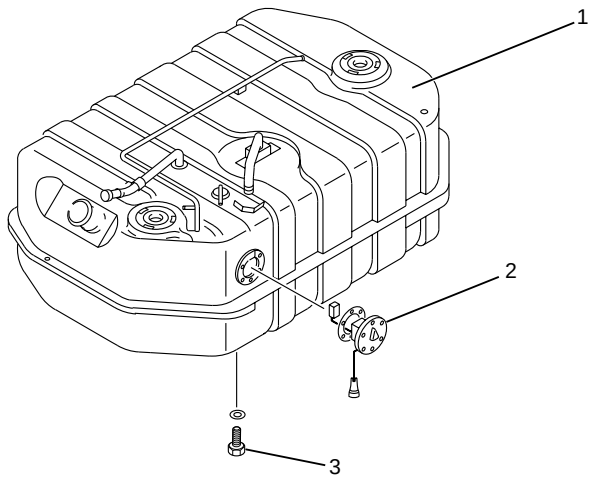

140R200033

Legend
(1) Fuel Tank Assembly
(2) Fuel Gauge Unit
(3) Drain Plug

REMOVAL

1. Disconnect battery ground cable.
2. Loosen fuel filler cap.
3. Drain fuel.
   After drain the fuel tighten the drain plug with specified torque.

Torque : 20 N·m (2.0 kg·m/14 lb ft)

4. Disconnect harness connector from fuel gauge unit.
5. Fuel Gauge Unit
   1) Remove the fixing screws, then the fuel gauge unit.

INSTALLATION

1. Fuel Gauge Unit
2. Connect the harness connector to the fuel gage unit.
3. Fill the tank with fuel and tighten fuel filler cap.
4. Connect battery ground cable.

FUEL FILLER CAP

The fuel filler cap contains a vacuum valve. If a negative pressure develops in the fuel tank, the external valve of the fuel filler cap opens to allow the fresh air to flow into the fuel tank through the vacuum valve.

INSPECTION

Check the seal ring in the filler cap for presence of any abnormality and for seal condition.
Replace the filler cap, if abnormal.

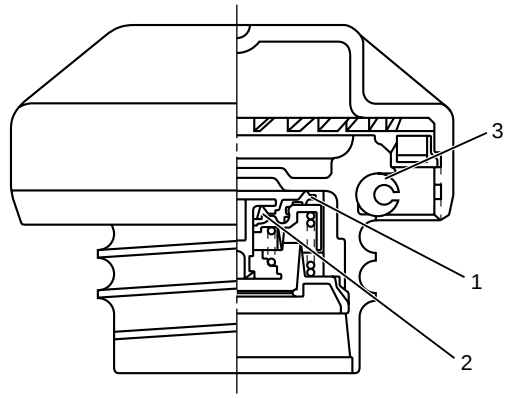

060R200247

Legend
(1) Vacuum Valve
(2) Pressure Valve
(3) Seal Ring

MEMO

ENGINE ELECTRICAL

CONTENTS

Battery 6D–1
General Description 6D–1
Diagnosis 6D–1
On Vehicle Service 6D–3
Main Data and Specification 6D–4
Starting System 6D–5
General Description 6D–5
On Vehicle Service 6D–7
Starter 6D–7
Unit Repair 6D–8
Charging System 6D–15
General Description 6D–15
Diagnosis 6D–16
Unit Repair 6D–17
Main Data and Specification 6D–22
QOS4 Preheating System. 6D–23
General Description 6D–23
System Diagram 6D–23
Inspection of QOS4 System Operation . . 6D–24

BATTERY
GENERAL DESCRIPTION

There are six battery fluid caps at the top of the battery. These are covered by a paper label.
The battery is completely sealed except for the six small vent holes at the side. These vent holes permit the escape of small amounts of gas generated by the battery.
This type of battery has the following advantages over conventional batteries:

1. There is no need to add water during the entire service life of the battery.
2. The battery protects itself against overcharging.
   The battery will refuse to accept an excessive charge.
   (A conventional battery will accept an excessive charge, resulting in gassing and loss of battery fluid.)
3. The battery is much less vulnerable to self-discharge than a conventional type battery.

DIAGNOSIS

1. VISUAL INSPECTION (Step 1)

Inspect the battery for obvious physical damage, such as a cracked or broken case, which would permit electrolyte loss.
Replace the battery if obvious physical damage is discovered during inspection.
Check for any other physical damage and correct it as necessary. If not, proceed to Step 2.

2. HYDROMETER CHECK (Step 2)

There is a built-in hydrometer (Charge test indicator) at the top of the battery. It is designed to be used during diagnostic procedures.
Before trying to read the hydrometer, carefully clean the upper battery surface.
If your work area is poorly lit, additional light may be necessary to read the hydrometer.

a. BLUE RING OR DOT VISIBLE – Go to Step 4.
b. BLUE RING OR DOT NOT VISIBLE – Go to Step 3.

3. FLUID LEVEL CHECK (Step 3)

The fluid level should be between the upper level line and lower level line on side of the battery.

a. CORRECT FLUID LEVEL – Charge the battery.
b. BELOW LOWER LEVEL – Replace battery.

4. VOLTAGE CHECK (Step 4)

(1) Put voltmeter test leads to battery terminals.
   a. VOLTAGE IS 12.4V OR ABOVE – Go to Step 5.
   b. VOLTAGE IS UNDER 12.4V – Go to procedure (2) below.
(2) Determine fast charge amperage from specification. (See Main Data and Specifications in this section.)
   Fast charge battery for 30 minutes at amperage rate no higher than specified value.
   Take voltage and amperage readings after charge.
   a. VOLTAGE IS ABOVE 16V AT BELOW 1/3 OF AMPERAGE RATE – Replace battery.

b. VOLTAGE IS ABOVE 16V AT ABOVE 1/3 OF AMPERAGE RATE – Drop charging voltage to 15V and charge for 10 – 15 hours.

Then go to Step 5.

c. VOLTAGE IS BETWEEN 12V AND 16V – Continue charging at the same rate for an additional 3-1/2 hours. Then go to Step 5.

d. VOLTAGE IS BELOW 12V – Replace battery.

5. LOAD TEST (Step 5)

(1) Connect a voltmeter and a battery load tester across the battery terminals.

(2) Apply 300 ampere load for 15 seconds to remove surface charge from the battery.

Remove load.

(3) Wait 15 seconds to let battery recover. Then apply specified load from specifications (See Main Data and Specifications in this section).

Read voltage after 15 seconds, then remove load.

a. VOLTAGE DOES NOT DROP BELOW THE MINIMUM LISTED IN FOLLOWING TABLE – The battery is good and should be returned to service.

b. VOLTAGE IS LESS THAN MINIMUM LISTED – Replace battery.

ESTIMATED TEMPERATURE		MINIMUM VOLTAGE
°F	°C	
70	21	9.6
60	16	9.5
50	10	9.4
40	4	9.3
30	–1	9.1
20	–7	8.9
10	–12	8.7
0	–18	8.5
The battery temperature must be estimated by feel and by the temperature the battery has been exposed to for the preceding few hours.		

ON-VEHICLE SERVICE

BATTERY CHARGING

Observe the following safety precautions when charging the battery:

1. Never attempt to charge the battery when the fluid level is below the lower level line on the side of the battery. In this case, the battery must be replaced.
2. Pay close attention to the battery during the charging procedure.

   Battery charging should be discontinued or the rate of charge reduced if the battery feels hot to the touch.

   Battery charging should be discontinued or the rate of charge reduced if the battery begins to gas or spew electrolyte from the vent holes.
3. In order to more easily view the hydrometer blue dot or ring, it may be necessary to jiggle or tilt the battery.
4. Battery temperature can have a great effect on battery charging capacity.
5. The sealed battery used on this vehicle may be either quick-charged or slow-charged in the same manner as other batteries.

   Whichever method you decide to use, be sure that you completely charge the battery. Never partially charge the battery.

JUMP STARTING

JUMP STARTING WITH AN AUXILIARY (BOOSTER) BATTERY

CAUTION: Never push or tow the vehicle in an attempt to start it. Serious damage to the emission system as well as other vehicle parts will result.

Treat both the discharged battery and the booster battery with great care when using jumper cables. Carefully follow the jump starting procedure, being careful at all times to avoid sparking.

WARNING: Failure to carefully follow the jump starting procedure could result in the following:

1. **Serious personal injury, particularly to your eyes.**
2. **Property damage from a battery explosion, battery acid, or an electrical fire.**
3. **Damage to the electronic components of one or both vehicles.**

Never expose the battery to an open flame or electrical spark. Gas generated by the battery may catch fire or explode. Remove any rings, watches, or other jewelry before working around the battery. Protect your eyes by wearing an approved set of goggles.
Never allow battery fluid to come in contact with your eyes or skin.
Never allow battery fluid to come in contact with fabrics or painted surfaces.
Battery fluid is a highly corrosive acid.
Should battery fluid come in contact with your eyes, skin, fabric, or a painted surface, immediately and thoroughly rinse the affected area with clean tap water.
Never allow metal tools or jumper cables to come in contact with the positive battery terminal, or any other metal surface of the vehicle. This will protect against a short circuit.
Always keep batteries out of the reach of young children.

JUMP STARTING PROCEDURE

1. Set the vehicle parking brake.

   If the vehicle is equipped with an automatic transmission, place the selector lever in the “PARK” position.

   If the vehicle is equipped with a manual transmission place the shift lever in the “NEUTRAL” position.

   Turn “OFF” the ignition.

   Turn “OFF” all lights and any other accessory requiring electrical power.
2. Look at the built-in hydrometer.

   If the indication area of the built-in hydrometer is completely clear, do not try to jump start.
3. Attach the end of one jumper cable to the positive terminal of the booster battery.

   Attach the other end of the same cable to the positive terminal of the discharged battery.

   Do not allow the vehicles to touch each other.

   This will cause a ground connection, effectively neutralizing the charging procedure.

   Be sure that the booster battery has a 12 volt rating.
4. Attach one end of the remaining cable to the negative terminal of the booster battery.

   Attach the other end of the same cable to a solid engine ground (such as the A/C compressor bracket or the generator mounting bracket) of the vehicle with the discharged battery.

   This ground connection must be at least 450 mm (18 in) from the battery of the vehicle whose battery is being charged.

WARNING: Never attach the end of the jumper cable directly to the negative terminal of the dead battery.

5. Start the engine of the vehicle with the good battery.

   Make sure that all unnecessary electrical accessories have been turned “OFF”.
6. Start the engine of the vehicle with the dead battery.
7. To remove the jumper cables, follow the above directions in the reverse order.

   Be sure to first disconnect the negative cable from the vehicle with the discharged battery.

REMOVAL AND INSTALLATION OF THE BATTERY

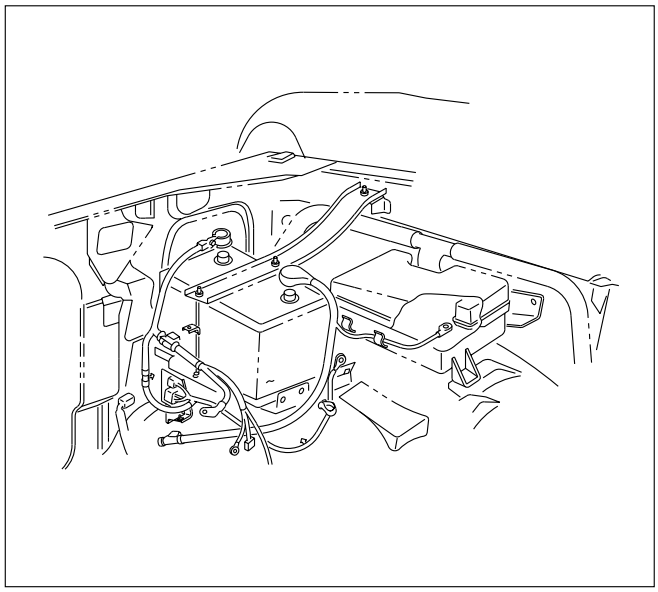

065RW029

REMOVAL

1. Negative cable
2. Positive cable
3. Retainer screw and rods
4. Retainer
5. Battery

INSTALLATION

To install the battery, follow the removal procedure in the reverse order, noting the following points:

1. Make sure that the rod is hooked on the body side.

MAIN DATA AND SPECIFICATIONS

Model (JIS)	80D26R–MF	75D26R–MF
Voltage (V)	12	12
Cold-Cranking Performance (Amp)	582	490
Reserve Capacity (Min)	133	123
Load Test (Amp)	300	300
Fast Charge Maximum Amperage (Amp)	6.5	6.5

STARTING SYTEM

GENERAL DESCRIPTION

STARTING CIRCUIT

The cranking system consists of a battery, starter, starter switch, starter relay, etc. and these main components are connected as shown in the illustration.

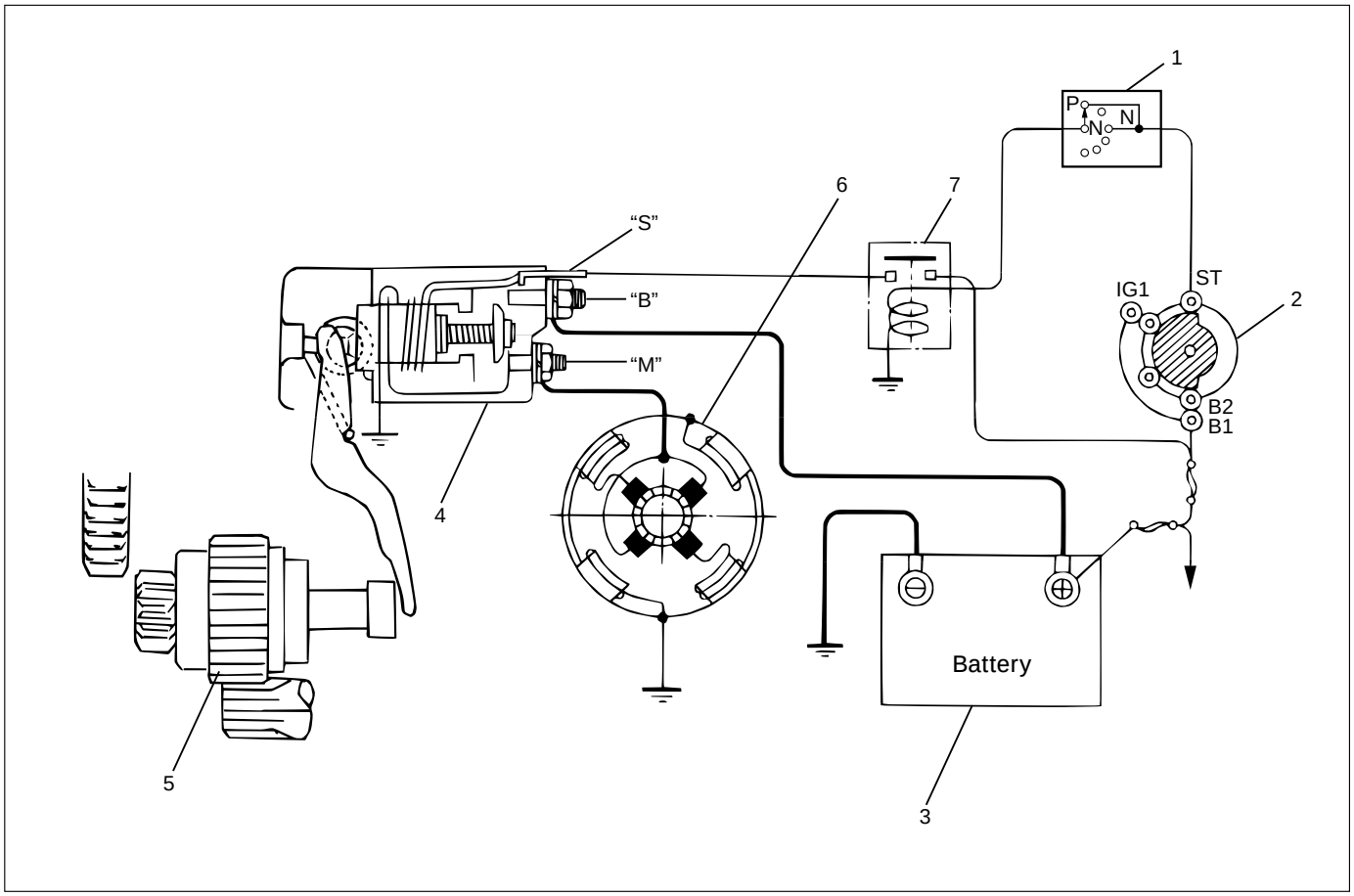

065RW039

Legend

(1) Inhibitor Switch
(2) Starter Switch
(3) Battery
(4) Magnetic Switch
(5) Pinion Clutch
(6) Starter Motor
(7) Starter Relay

STARTER

The starting system employs a magnetic type reduction starter in which the motor shaft is also used as a pinion shaft. When the starter switch is turned on, the contacts of the magnetic switch are closed, and the armature rotates. At the same time, the plunger is activated, and the pinion is pushed forward by the shift lever to mesh with ring gear.

Then, the ring gear runs to start the engine. When the engine starts and the starter switch is turned off, the plunger returns, the pinion is disengaged from the ring gear, and the armature stops rotation. When the engine speed is higher than the pinion, the pinion idles, so that the armature is not driven.

RELATION BETWEEN STARTER SWITCH AND STARTER

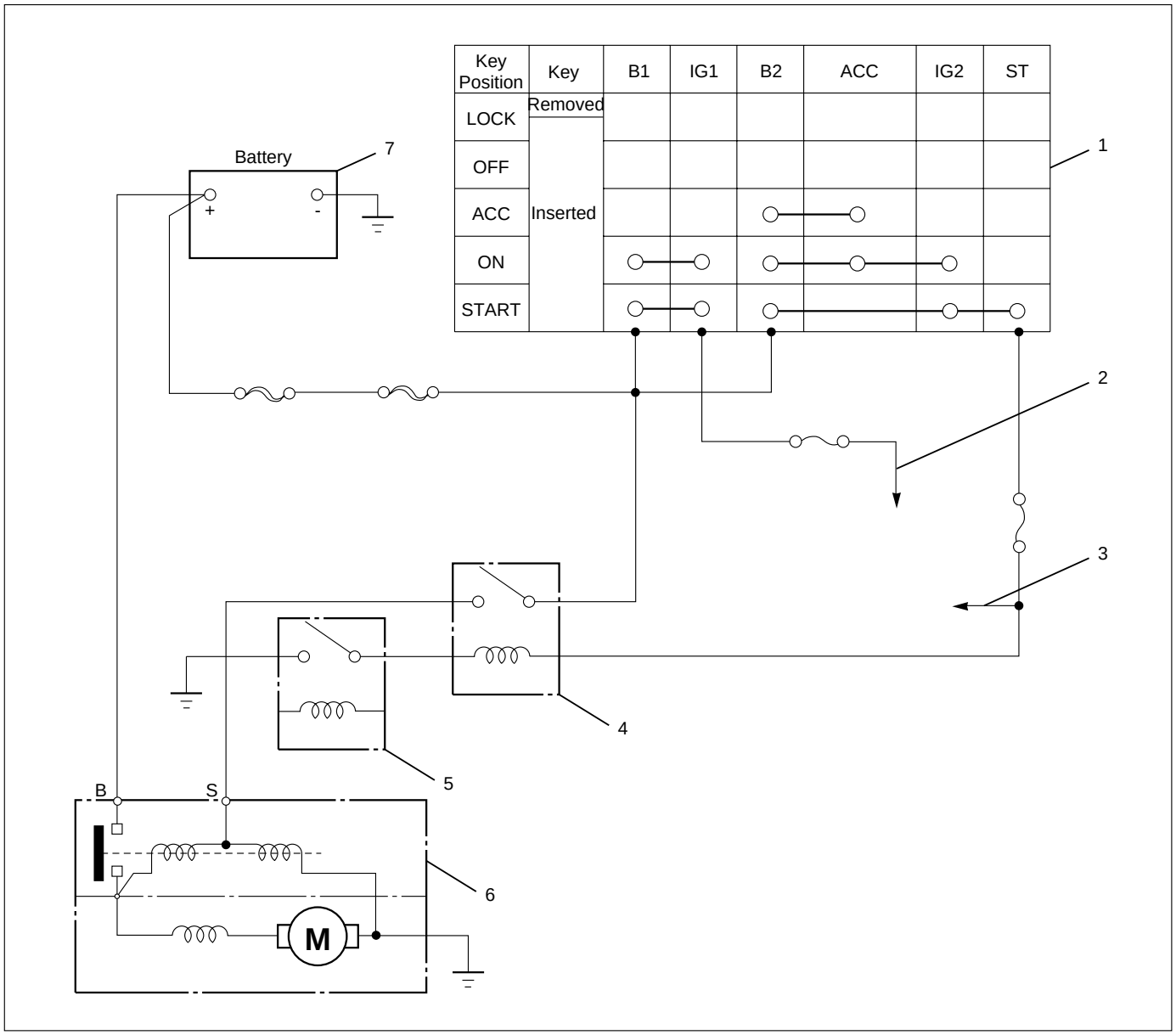

065R200029

Legend

(1) Starter Switch
(2) To Generator
(3) To QOS4 Control
(4) Starter Relay
(5) Immobilizer Relay (for Europe)
(6) Magnetic Switch
(7) Battery

ON-VEHICLE SERVICE

STARTER

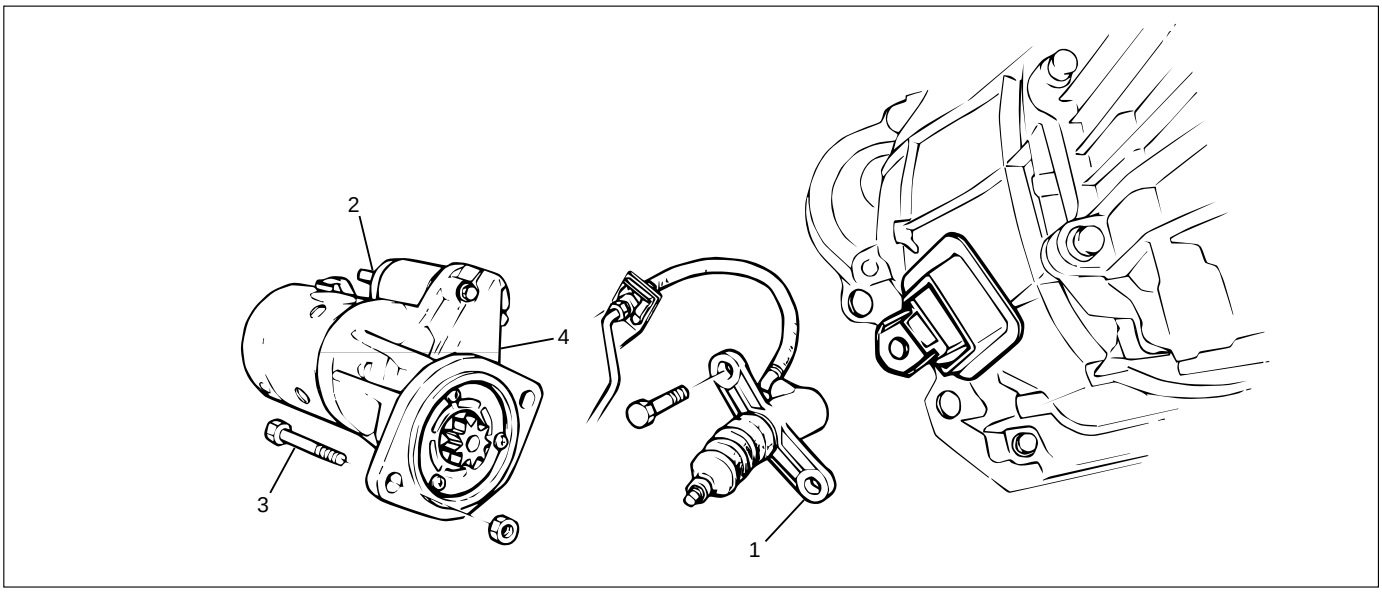

065RW00003

Legend
(1) Clutch Slave Cylinder
(2) Magnetic Switch
(3) Bolt
(4) Starter Assembly

REMOVAL

1 Battery ground cable
2 Remove the slave cylinder and bind with wire it to the frame.
3 Disconnect the connector from terminals “B” and “S”.
4. Remove mounting bolts
5. Remove starter assembly

INSTALLATION

1. Install starter assembly, tighten the fixing bolt and nut to the specified torque.

Torque: 94 N·m (9.6 kg·m/69 lb ft)

2. Reconnect the starter terminals.

CAUTION: When installing the starter motor wiring, do not allow the S-circuit wiring to obstruct the B-circuit terminal.

Install the wiring exactly as shown on the attached illustration.

If S-circuit wiring obstructs the B-circuit terminal, harness cover breakage and short circuiting may occur.

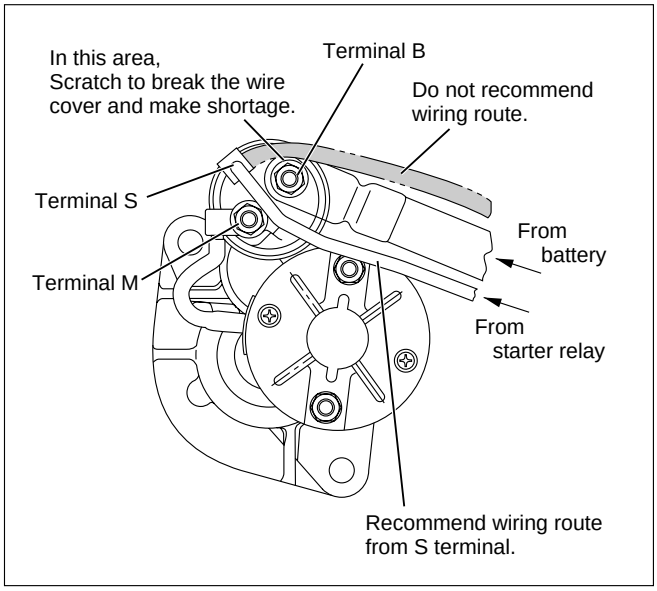

065RW00002

2-1. Install the wire harness from the battery to the terminal “B” with tightening torque 8.6 N·m (0.88 kg·m/6.4 lb·ft).
2-2. Cover the terminal “B” together with wire harness.
2-3. Connect the wire harness from starter relay to the terminal “S”.

3. Install the clutch slave cylinder, tighten the fixing bolt and nut to the specified torque.

Torque: 78 N·m (8.0 kg·m/58 lb·ft)

UNIT REPAIR

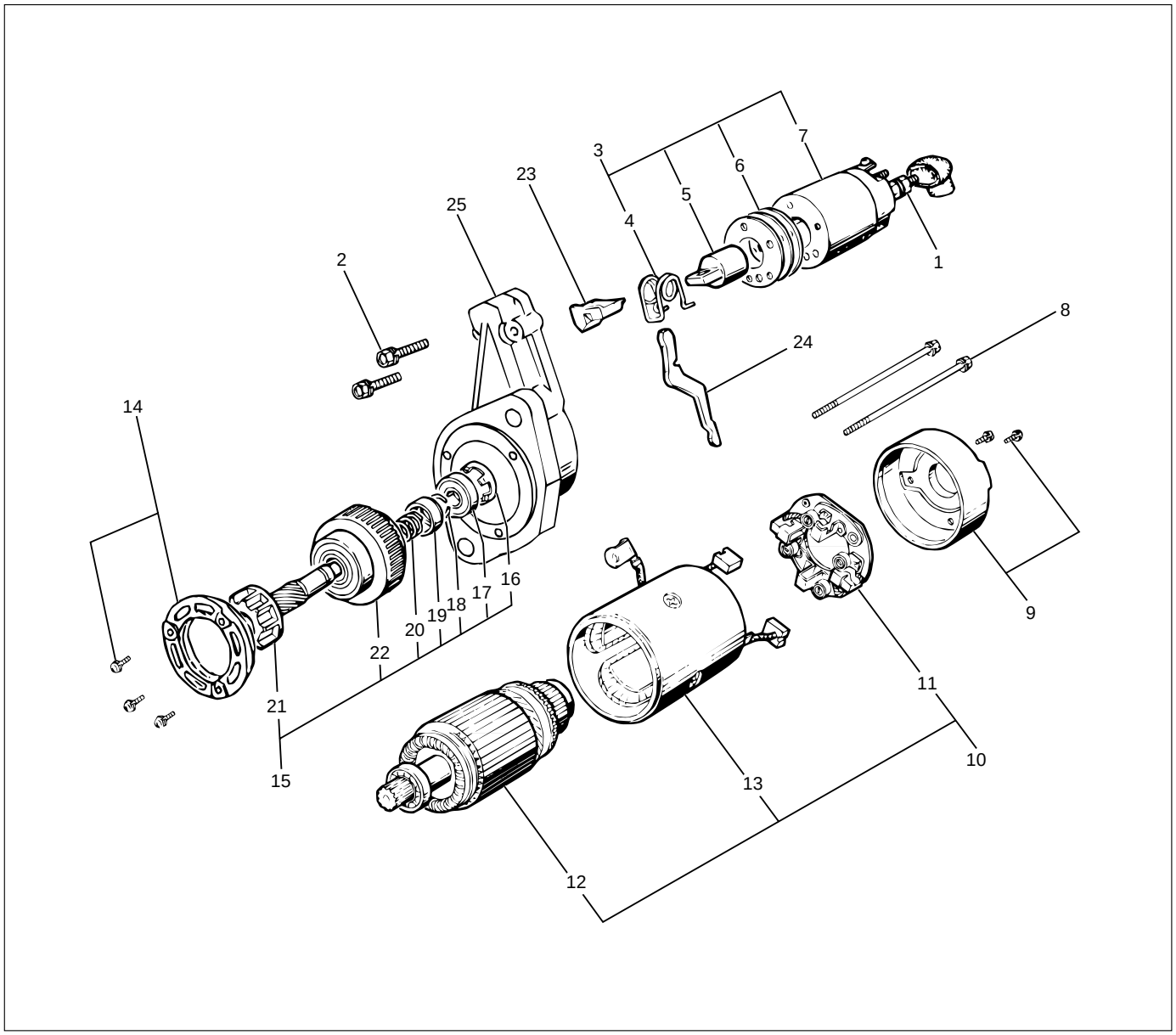

065RW040

Legend

(1) Terminal
(2) Bolt
(3) Magnetic Switch
(4) Torsion Spring
(5) Plunger
(6) Shim
(7) Magnetic Switch
(8) Through Bolt
(9) Rear Cover
(10) Motor Assembly
(11) Brush Holder
(12) Armature
(13) Yoke Assembly
(14) Bearing Retainer
(15) Pinion Assembly
(16) Bearing Holder
(17) Bearing
(18) Clip
(19) Stopper
(20) Spring
(21) Pinion Shaft
(22) Clutch
(23) Dust Cover
(24) Shift Lever
(25) Gear Case

DISASSEMBLY

1. Terminal Nut
   1) Loosen the nut on terminal “M” of magnetic switch and disconnect the connector cable.

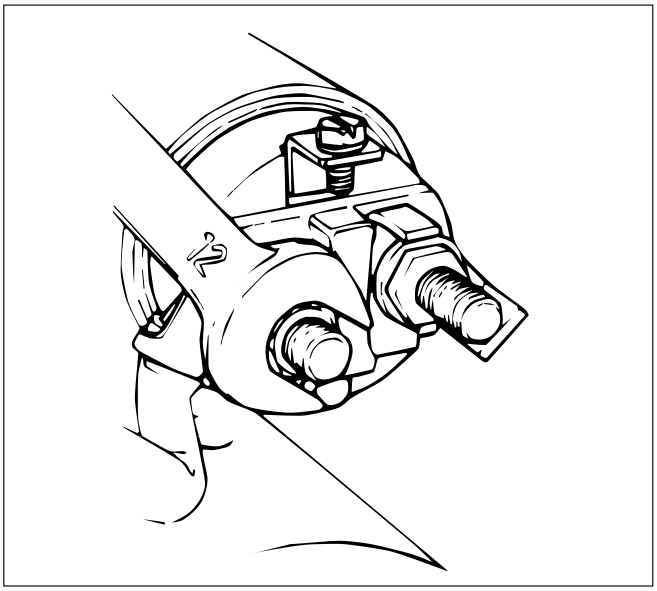

065RW044

2. Bolt (2 pcs)
3. Magnetic Switch Assembly
4. Torsion Spring
   1) Remove torsion spring from magnetic switch assembly.
5. Plunger
6. Shim
7. Magnetic Switch
8. Through Bolt
9. Rear Cover
   1) Remove the through bolts, then remove the rear cover.

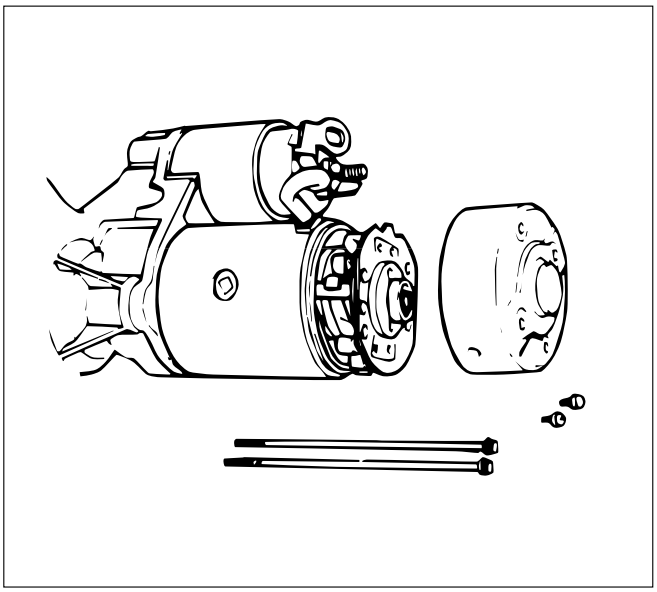

065RW043

10. Motor Assembly
11. Brush Holder
    1) Raise a brush spring to detach the negative side of the brushes (2 pcs) from the commutator face and remove the positive side of brushes (2 pcs) from the positive side of brushes (2 pcs) from the brush holder.

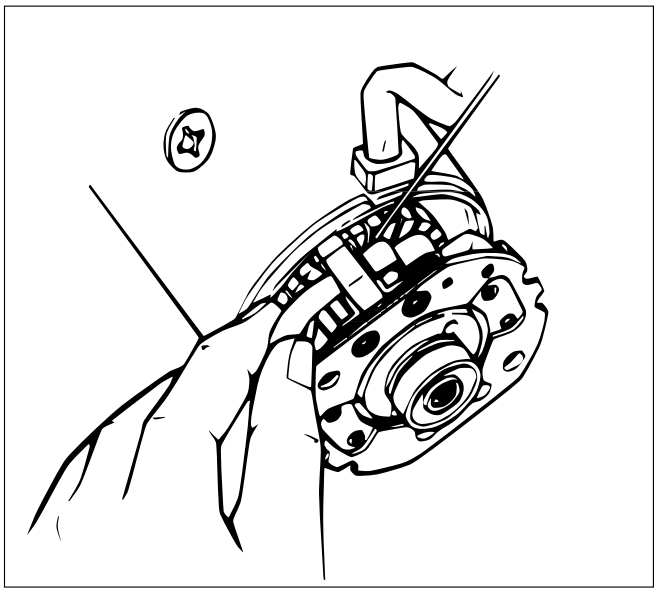

065RW042

12. Armature
13. Yoke Assembly
14. Bearing Retainer
15. Pinion Assembly
16. Bearing Holder
17. Bearing
18. Pinion Stopper Clip
    1) Remove the stopper clip using a screw driver of equivalent size.
19. Pinion Stopper
20. Return Spring
21. Pinion Shaft
22. Clutch
23. Dust Cover
24. Shift Lever
25. Gear Case

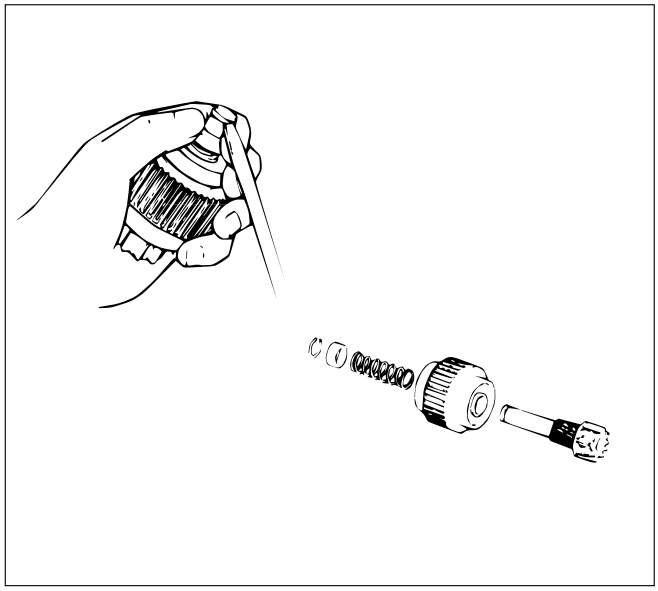

065RW041

INSPECTION AND REPAIR

Repair or replace necessary parts if extreme wear or damage is found during inspection.

Armature

1) Measure the outer diameter of commutator, and replace with a new one if it is out of the limit.

Standard: 38.0 mm (1.50 in)
Limit: 36.5 mm (1.44 in)

2) Check for continuity between commutator and segments. Replace commutator if there is no continuity (i.e., disconnected).

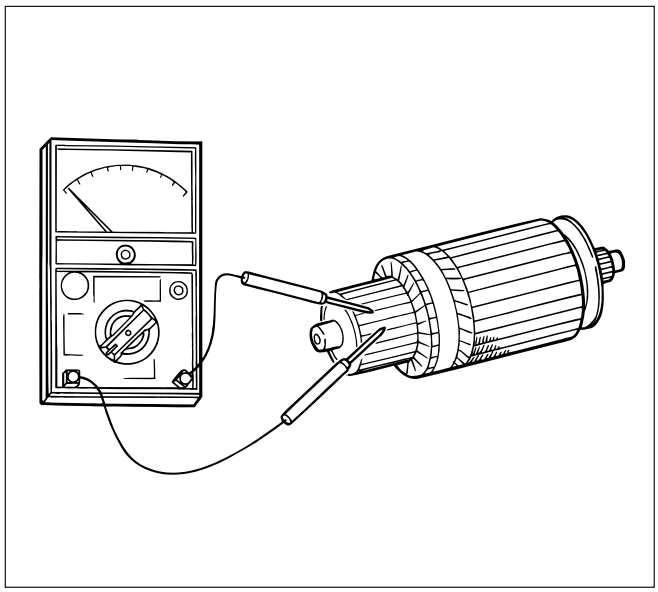

065RS015

3) Check for continuity between commutator and shaft. Also, check for continuity between commutator and armature core, armature core and shaft. Replace commutator if there is continuity (i.e., internally grounded).

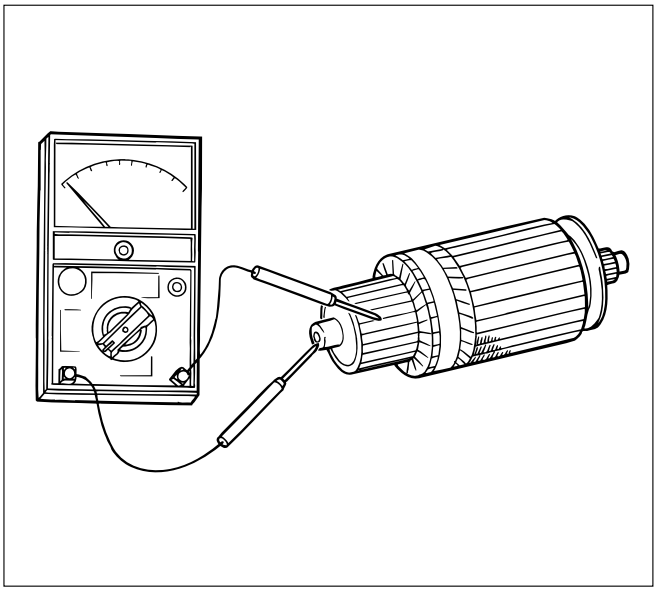

065RS016

4) Measure runout of armature core and commutator with a dial gage. Repair or replace, if it exceeds the limit.

Armature

Standard: 0.05 mm (0.002 in) Max.
Limit: 0.1 mm (0.004 in)

Commutator

Standard: 0.05 mm (0.002 in) Max.
Limit: 0.1 mm (0.004 in)

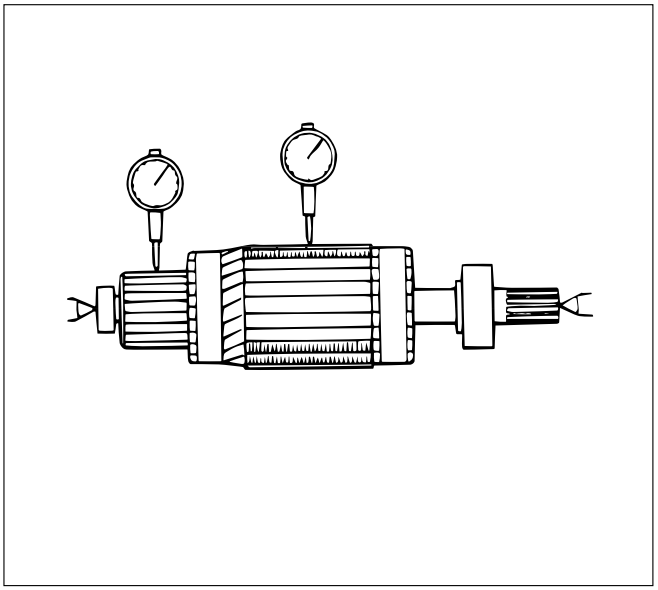

045RW045

5) Polish the commutator surface with sand paper #500 to #600 if it is rough.

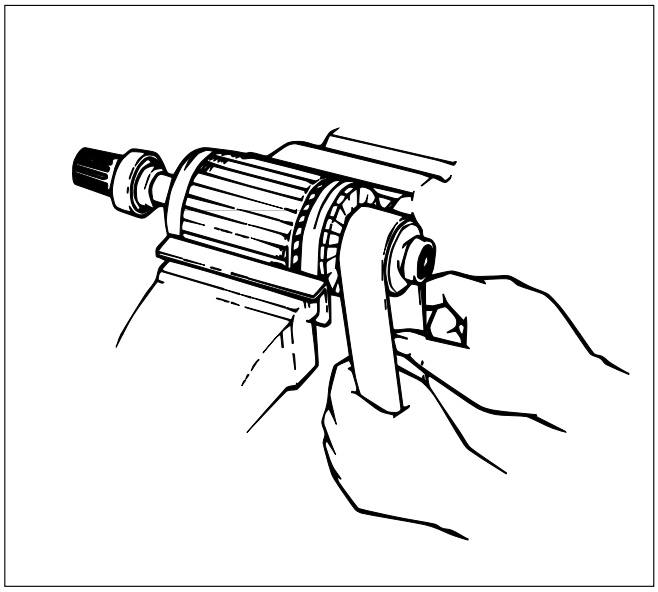

065RW105

6) Measure the depth of insulator in commutator. Repair, if it is below the limit.

Standard: 0.5 – 0.8 mm (0.02 – 0.03 in)

Limit: 0.2 mm (0.008 in)

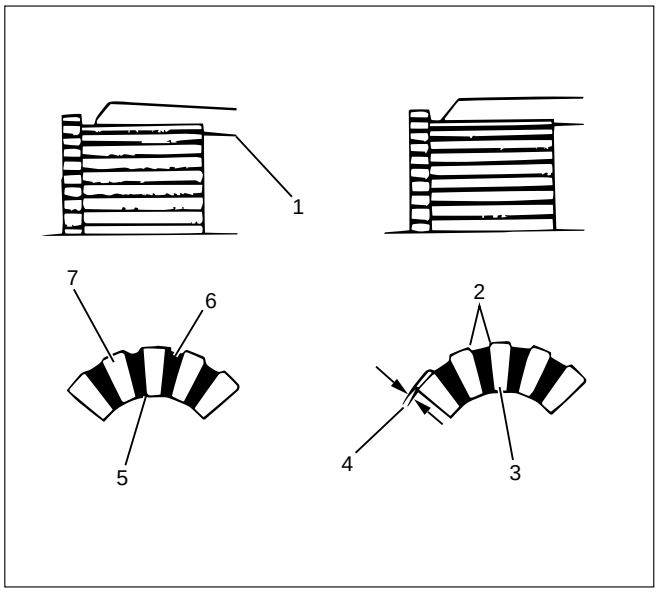

065RW102

Legend

(1) Steel Saw
(2) Chamfer
(3) Correct Condition
(4) Depth of Insulator
(5) Incorrect Condition
(6) Insulator
(7) Commutator Segment

Brush

1) Measure the length of brush.
   Replace with a new one, if it is below the limit.

Standard: 18.0 mm (0.71 in)

Limit: 11.0 mm (0.43 in)

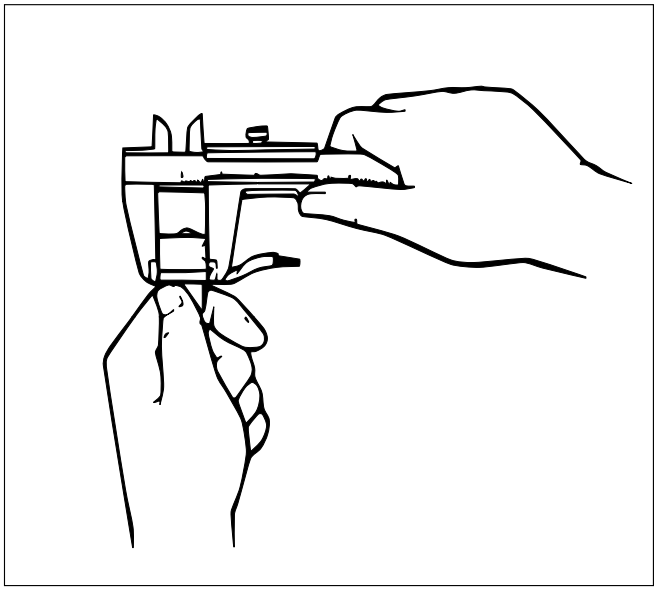

065RW103

Brush holder

1) Check for continuity between brush holder (+) and base (–). Replace, if there is continuity (i.e., insulation is broken).

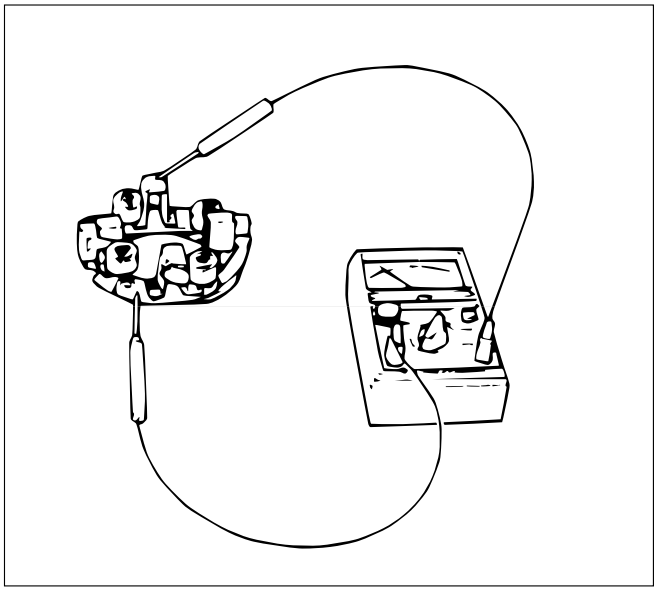

065RW104

2) Inspect the brush springs for wear, damage or other abnormal conditions.

Standard: 28 – 35 N (2.9 – 3.6 kg/6.4 – 7.9 lb)

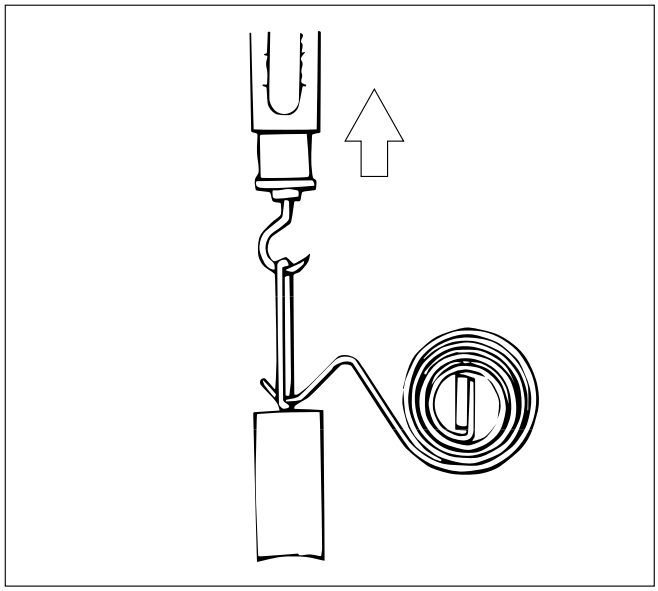

065RW052

Magnetic switch

1) Continuity of shunt coil

   Check for continuity between terminals S and coil case.

   Replace, if there is not continuity (i.e., coil is disconnected.)

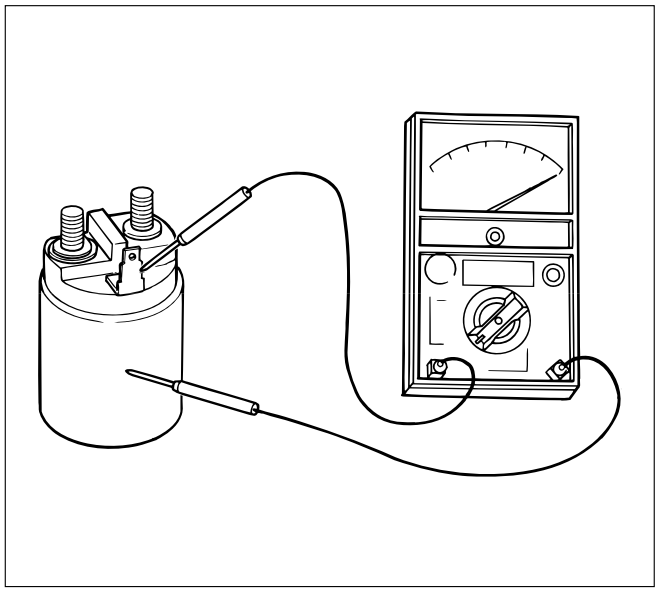

065RW016

2) Continuity of series coil

   Check for continuity between terminals S and M.

   Replace, if there is no continuity (i.e., coil is disconnected).

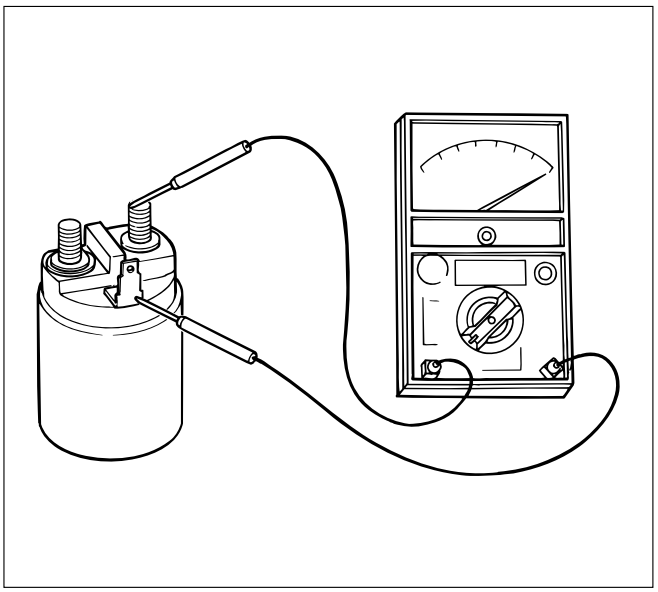

065RW017

3) Continuity of contacts

   With the plunger faced downward, push down the magnetic switch. In this state, check for continuity between terminals B and M. Replace, if there is no continuity (i.e., contacts are faulty).

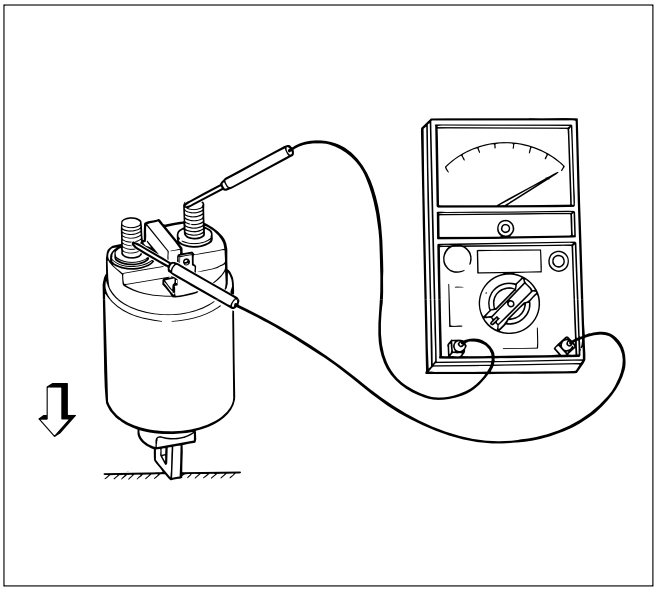

065RW018

Pinion

1) Check by hand to see if the pinion rotates smoothly in the dirve direction, or if it is locked when it is rotated reversely.
   If not, replace the pinion.

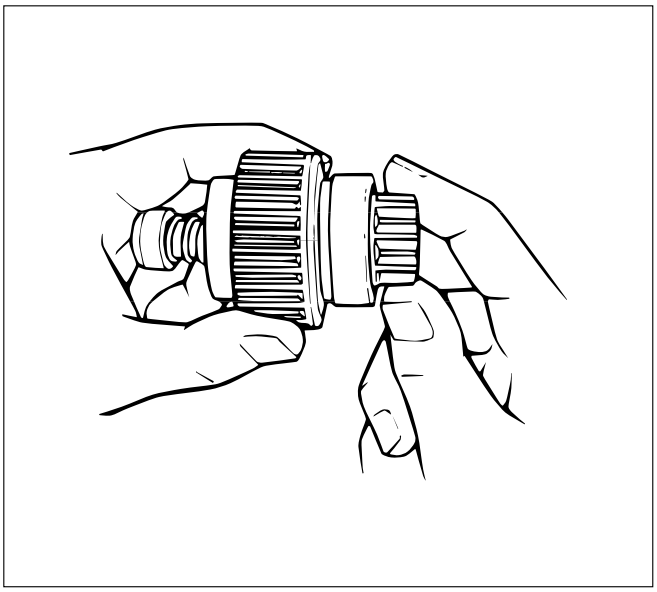

065RW048

Yoke assembly

1) Check the magnet inside the yoke.
   Replace the yoke assembly if it is broken.

REASSEMBLY

To install, follow the removal steps in the reverse order, noting the following points:

Grease application places

1) Gears in reduction gear
2) Shift lever operating portion
3) Sliding potion of pinion
4) Plunger sliding portion of magnetic switch

Pinion jump-out dimension

1) Connect the (+) cable of battery to terminal S and the (–) cable to terminal M. Turn the switch on, and measure pinion travel dimension “L” in thrust direction from the jump-out position.

In measuring the dimension, pull the pinion out a little in the arrow direction.

Dimension L: 0.3 – 1.5 mm (0.01 – 0.06 in)

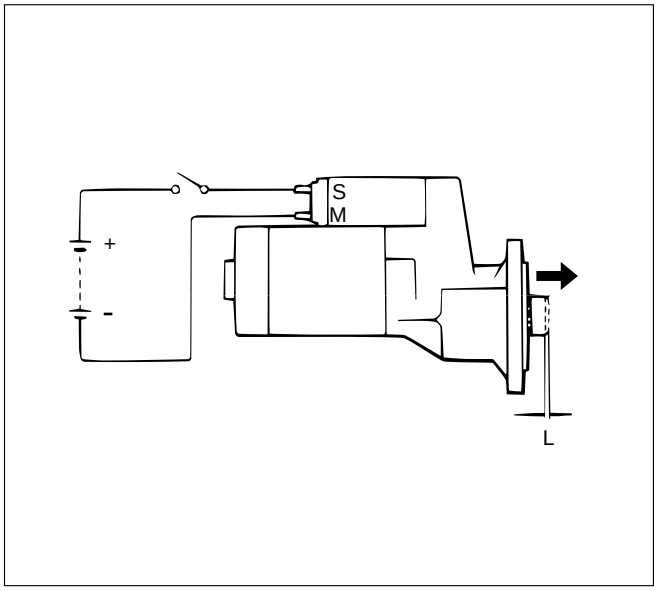

065RW054

If the measured value is out of standard, adjust the of shims.

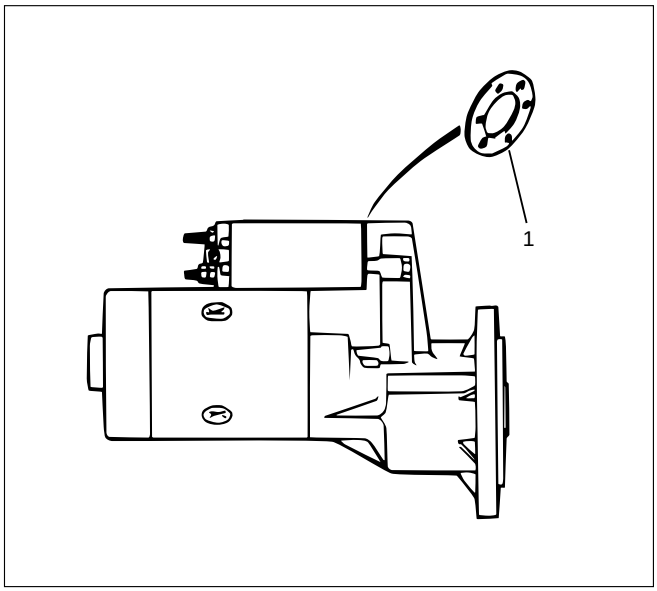

065RW053

Legend
(1) Shim

MAGNETIC SWITCH

Pull-out test

Connect the magnetic switch to the battery as shown. The negative side to the “M” terminal and the magnetic switch body (housing); the positive side to the “S” terminal. If the pinion has been ejected, the pull-in coil is satisfactory.

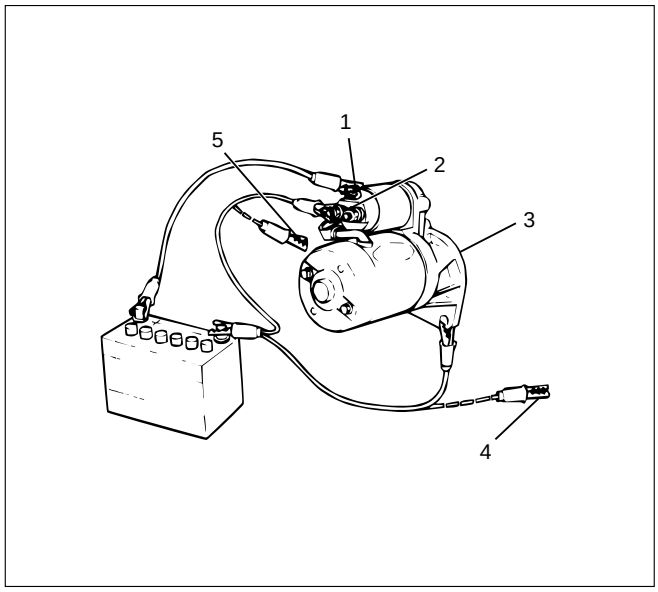

065RW055

Legend
(1) Terminal “S”
(2) Terminal “M”
(3) Starter
(4) For Return Test
(5) For Hold-In Test

Hold-in test

1. Next disconnect the “M” terminal.
2. The pinion should remain in the ejected position.

Return test

When the switch body is disconnected, the pinion should return quickly.

CHARGING SYSTEM

GENERAL DESCRIPTION

The charging system is the IC integral regulator charging system and its main components are connected as shown in Figure.
The regulator is a solid state type and it is mounted along with the brush holder assembly inside the generator installed on the rear end cover.

The generator does not require particular maintenance such as voltage adjustment. The rectifier connected to the stator coil has nine diodes to transform A.C. voltage into D.C. voltage. This D.C. voltage is connected to the output terminal of generator.

GENERATOR

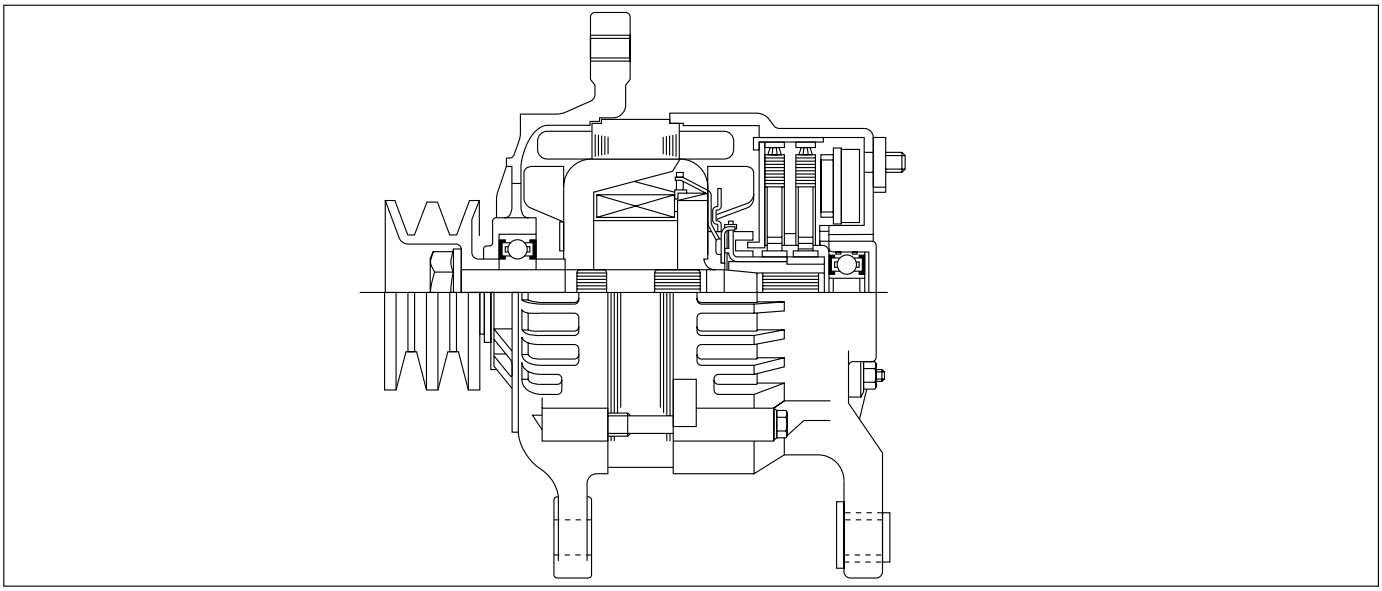

A06RW001

CHARGING CIRCUIT

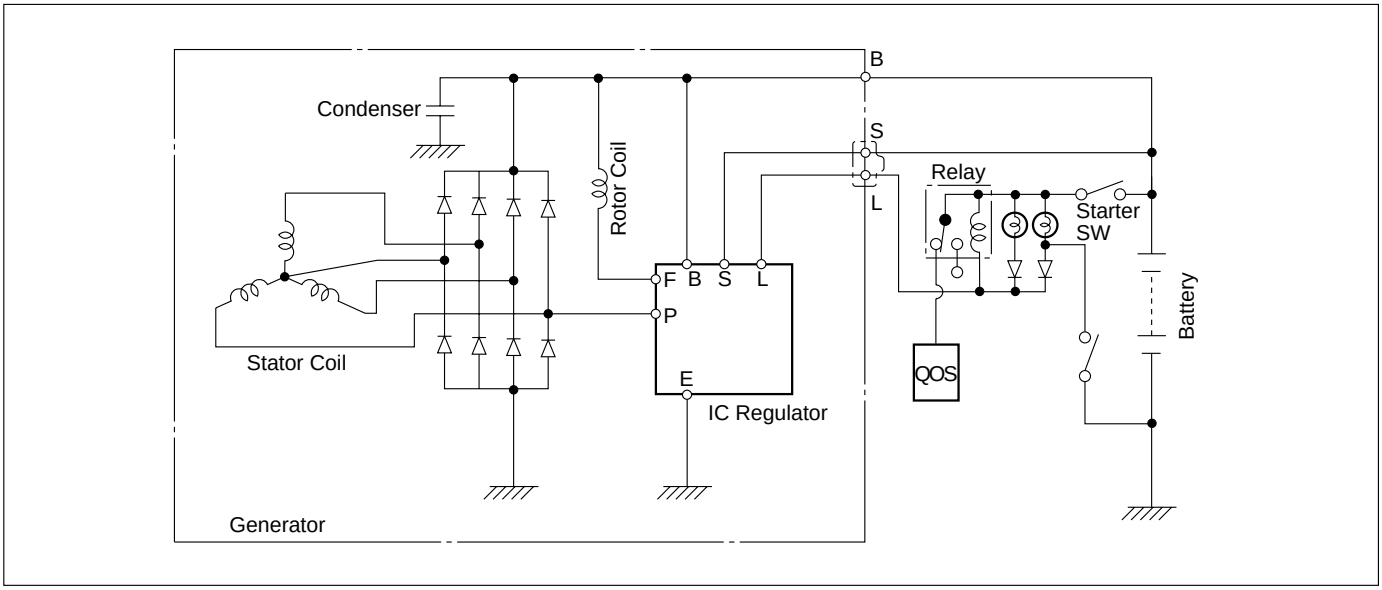

065R200028

DIAGNOSIS

GENERAL ON-VEHICLE INSPECTION

The operating condition of the charging system is indicated by the charge warning lamp. The warning lamp comes on when the starter swtich is turned to “ON” position. The charging system operates normally if the lamp goes off when the engine starts. If the warning lamp shows abnormality or if undercharged or overcharged battery condition is suspected, perform diagnosis by checking the charging system as follows:

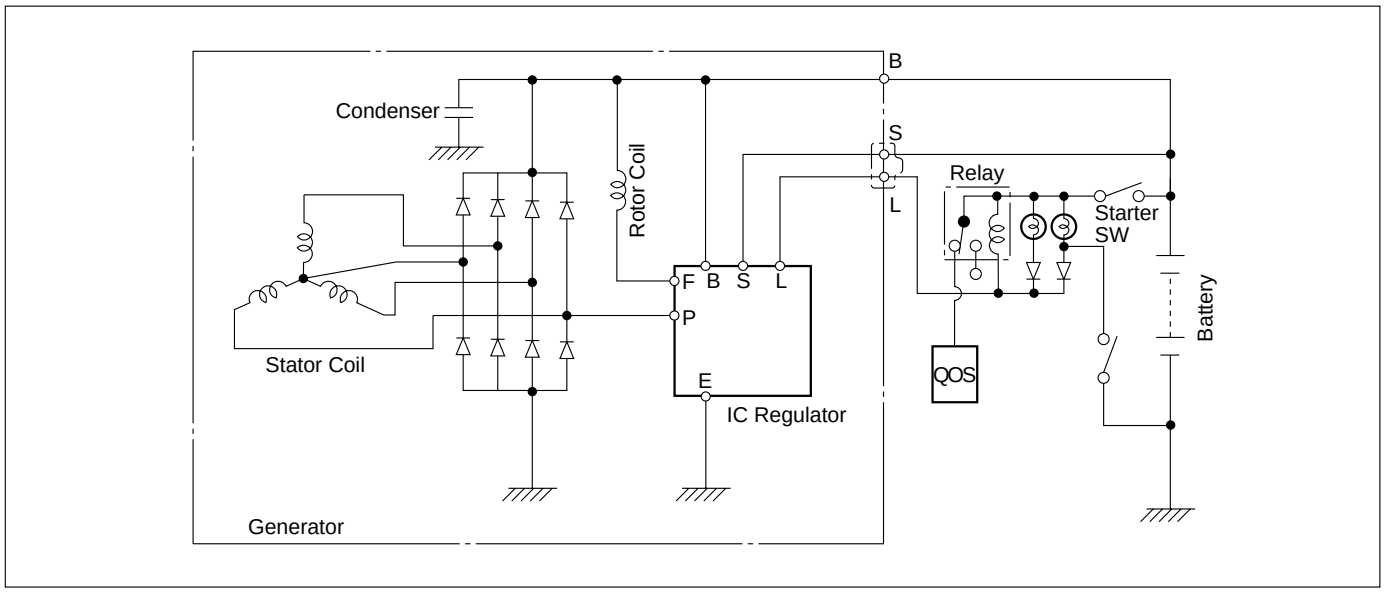

065R200028

1. Check visually the belt and wiring connector.
2. With the engine in stop status, turn the starter switch to “ON” position and observe the warning lamp.
   1) If lamp does not come on:
      Disconnect wiring connector from generator, and ground terminal “L” on connector side.
   2) If lamp comes on:
      Repair or replace the generator.

UNIT REPAIR

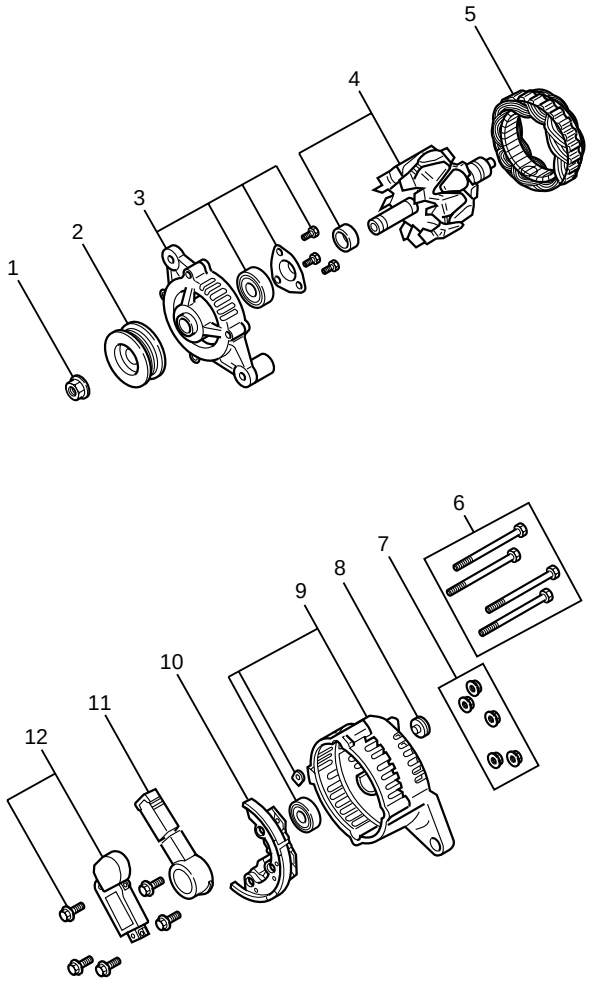

066RW022

Legend

(1) Pulley Nut
(2) Pulley
(3) Front Cover Assembly
(4) Rotor Assembly
(5) Stator Assembly
(6) Through Bolt
(7) Nut
(8) Terminal Insulator Plate
(9) Rear Cover Assembly
(10) Diode
(11) Brush Holder
(12) Regulator Assembly

DISASSEMBLY

1. Remove the through bolt.

   Insert the tip of a pry bar into the gaps between the front cover and the stator core.

   Pry apart and separate the front cover, rotor, the rear cover and stator.

NOTE: Take care not to scratch or otherwise damage the stator coil with pry bar.

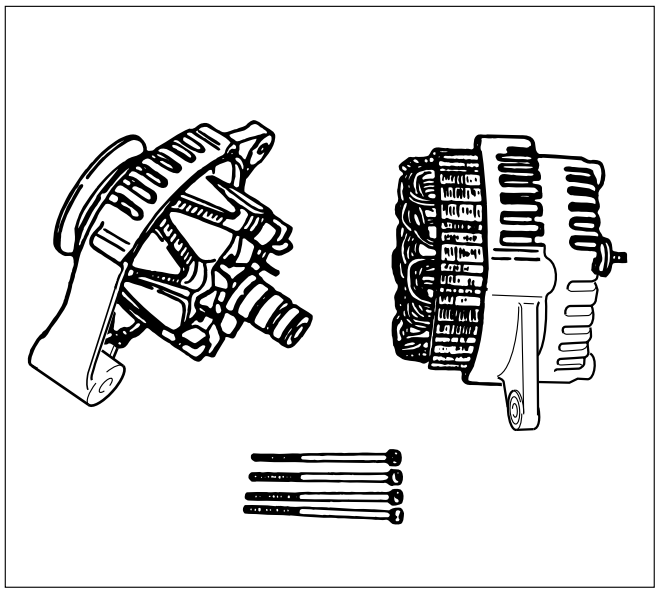

F06RT021

2. Clamp the rotor in a vise and then remove the nut and pulley.
3. Remove the rotor assembly from front cover.

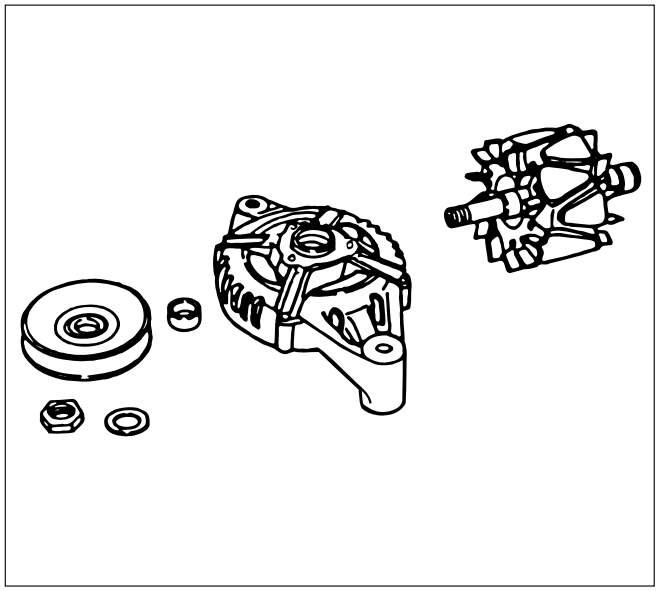

F06RT022

4. Remove screws with bearing retainer from front cover and remove bearing.

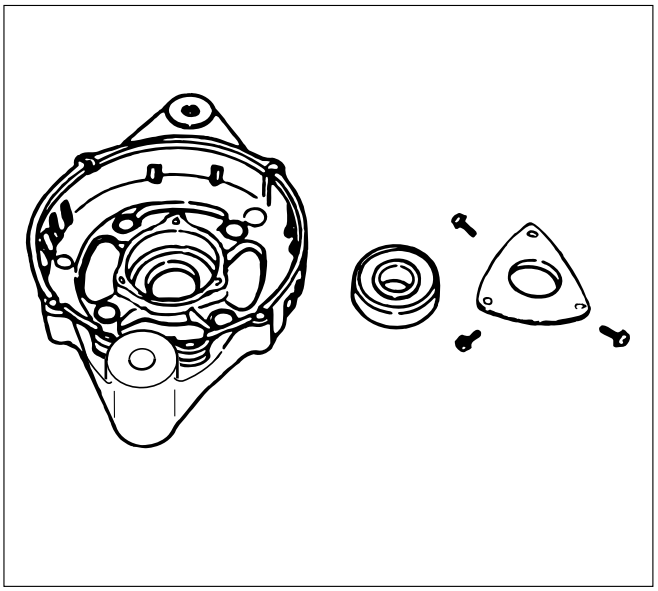

F06RT023

5. Remove the mounting nuts holding the “B ” terminal, the diode, and the brush holder.
6. Separate the rear cover from the stator.

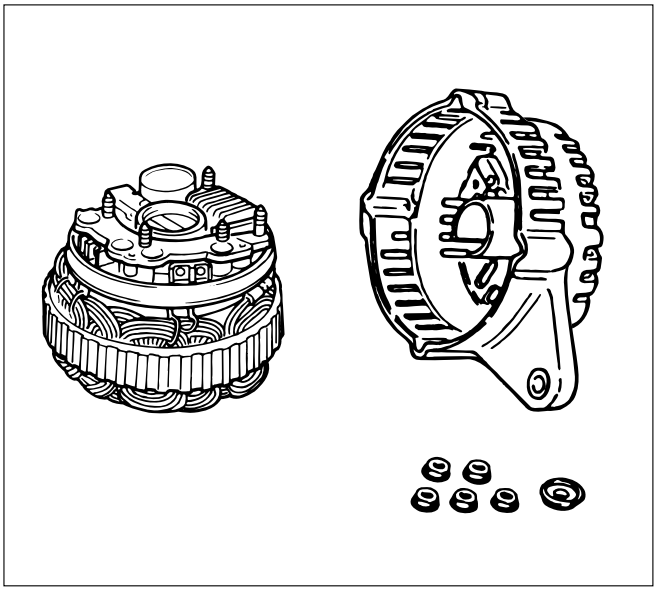

F06RT024

7. Remove bolts which secure stator terminal to rectifier terminal, and remove stator.

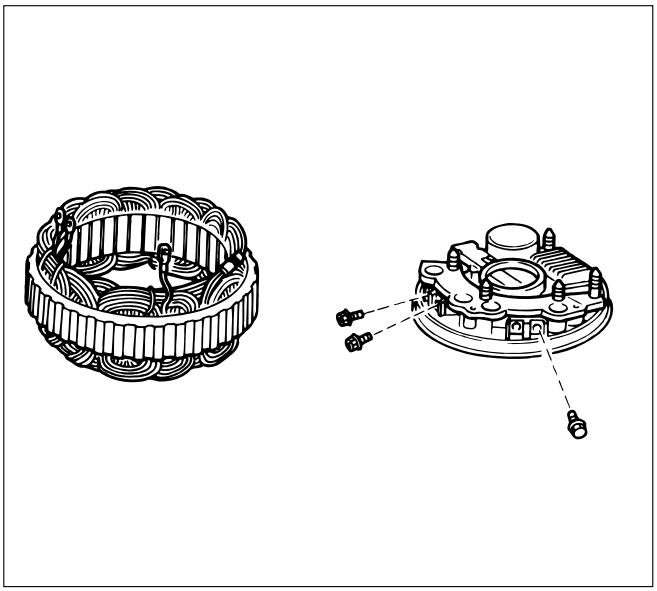

066RS030

8. Remove Bolts which secure regulator, rectifier and brush-holder, and separate these parts.

NOTE: Do not apply a shock or load to regulator, rectifier and brush holder.

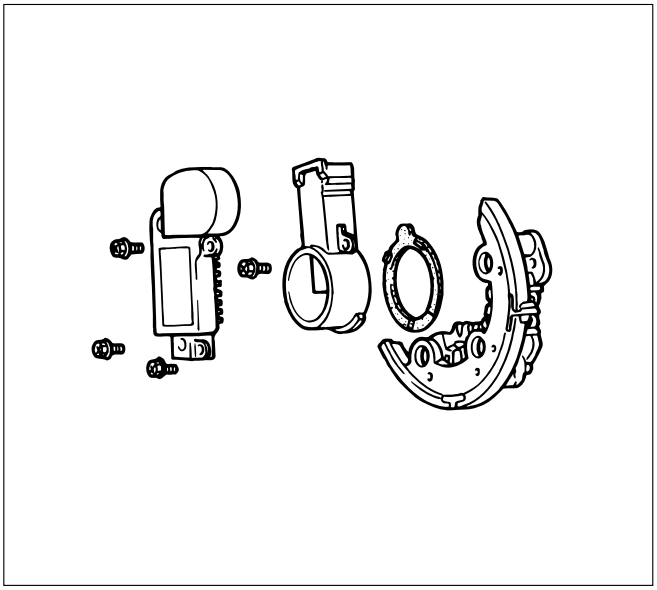

066RW025

INSPECTION AND REPAIR

Repair or replace necessary parts if extreme wear or damage is found during inspection.

Rotor Assembly

1. Check the face of the slip rings for contamination and roughness. If found to be scored, dress with a fine sandpaper (#500 – 600). If found to be contaminated, clean with a cloth saturated with alcohol.
2. Measure the outside diameter of the slip rings.

Standard: 27 mm (1.06 in)
Limit: 26 mm (1.02 in)

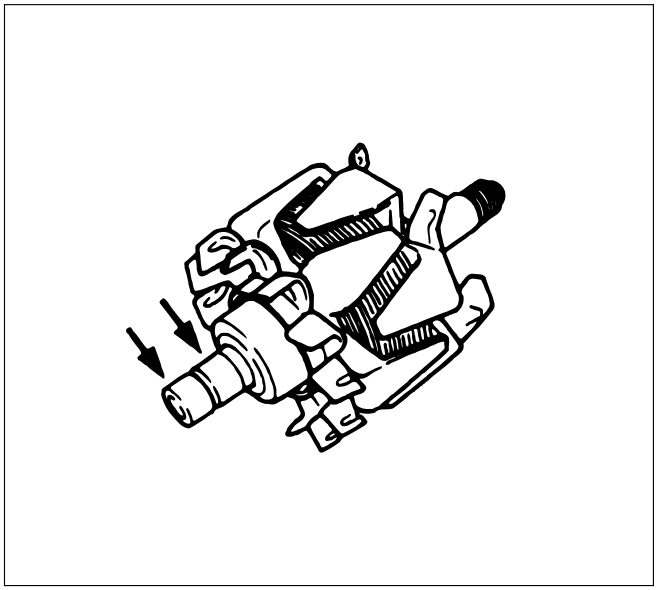

066RS032

3. Check resistance between slip rings, and replace if there is no continuity.

Standard: 3.75 Ω or less

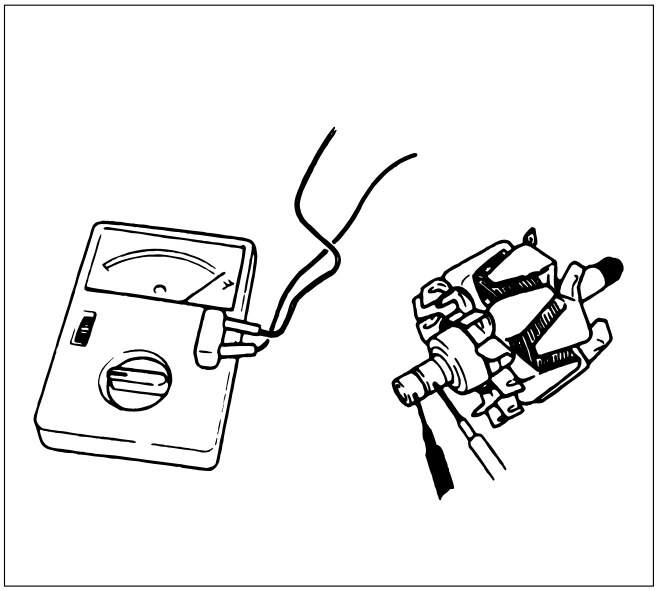

066RS033

4. Check for continuity between slip ring and rotor core.
   In case of continuity, replace the rotor assembly.

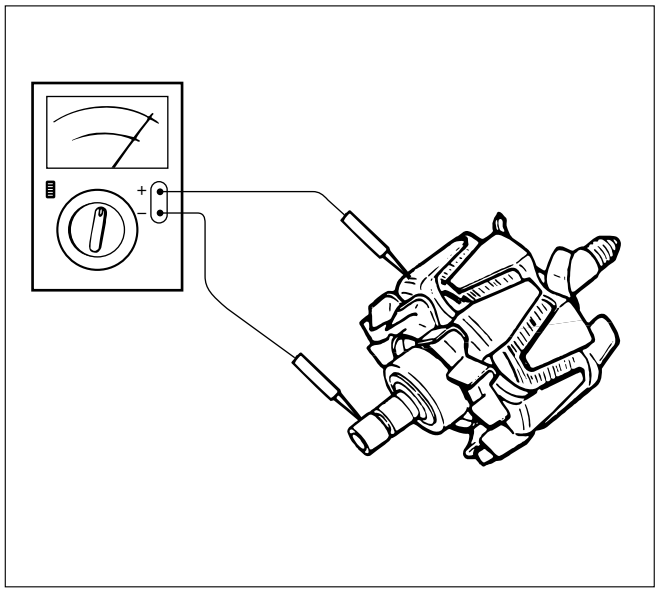

066RS017

Stator Coil

1. Check for continuity across the stator coils. If no continuity exists, replace the coils.
   Resistance value at 20°C

Standard: Approx 0.07Ω

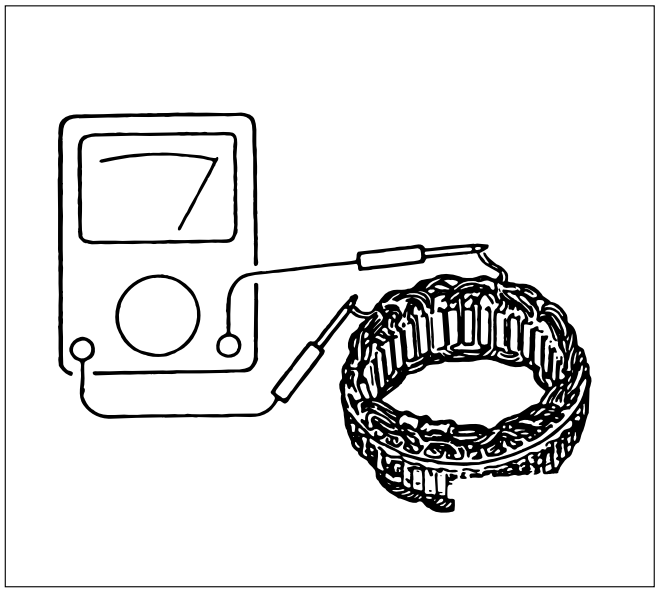

066RS034

2. Check for continuity across one of the stator coils and stator core. If a continuity exists, replace the coil.

Standard: More than 1MΩ

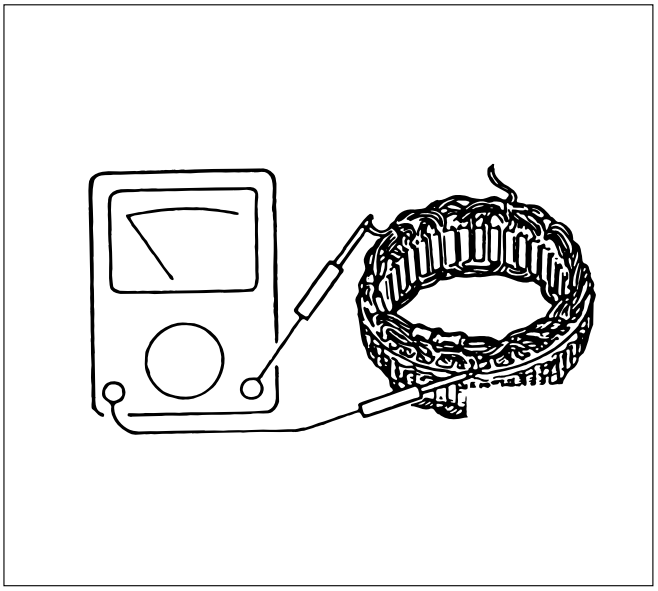

066RS035

Brush

Measure the brush length.
If more than limit, replace the brush.

Standard: 18.0 mm (0.709 in)
Limit: 5.5 mm (0.217 in)

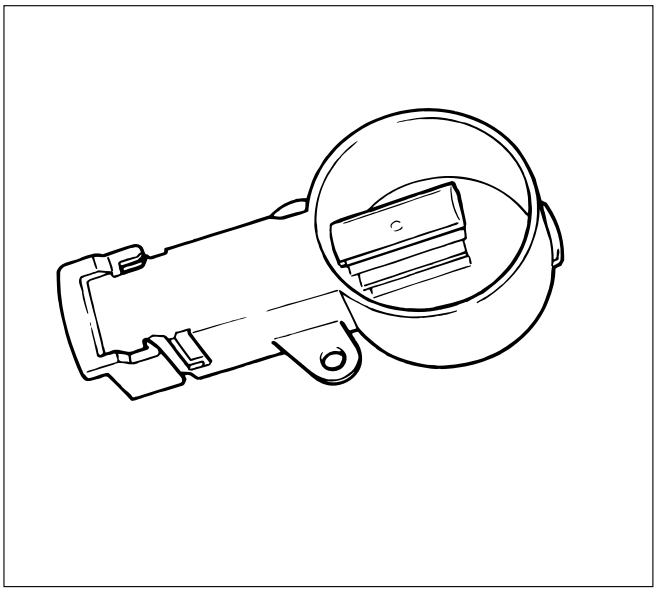

066RW024

Rectifier Assembly

1. Measure the resistance between each diode terminal and aluminum diode fin in forward and reverse directions with the connection of the tester leads switched. The diodes are normal if resistance is nearly zero ohms in one direction and is infinitely high in the other direction.
2. If a diode has no resistance or equal resistance in both directions, it is defective and should be replaced together with the holder.

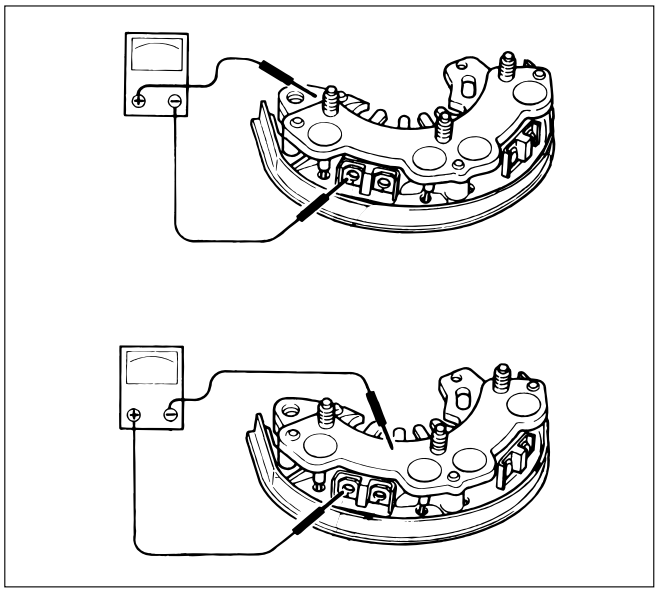

066RS036

IC Regulator Assembly

Connect a variable resistor, two 12V batteries, a fixed resistor, and a voltmeter to the IC regulator as shown in illustration.

a. Measuring equipment specifications
1. Fixed resistor (R1) : 10 Ohms / 3W
2. Variable resistor (Rv) : 0 – 300 Ohms / 12W
3. Batteries (BAT1, BAT2) : 12V (2 Batteries)
4. DC voltmeter : 0 – 50V / 0.5 steps (4 Check points)

b. Measuring procedure
1. Measure the voltage “V1” across the first battery (BAT1). If the reading is between 10 and 13 volts, the battery is normal.
2. Measure the voltage “V3” across both the batteries (BAT1, BAT2). If the reading is between 20 and 26 bolts, the batteries are normal.
3. Gradually increase the resistance of the variable resistor from zero. Measure the voltage “V2” (the voltage across the F and E terminals).

   Check to see that the voltage across “V1” changes at this time. If there is no change, the voltage regulator is faulty and must be replaced.
4. Measure the voltage at “V4” (the voltage across the variable resistor center tap and terminal E with the variable resistor resistance held constant). The measure voltage should be within the specified (14.4 ± 0.3 volts) limits. If it is not, the regulator must be replaced.

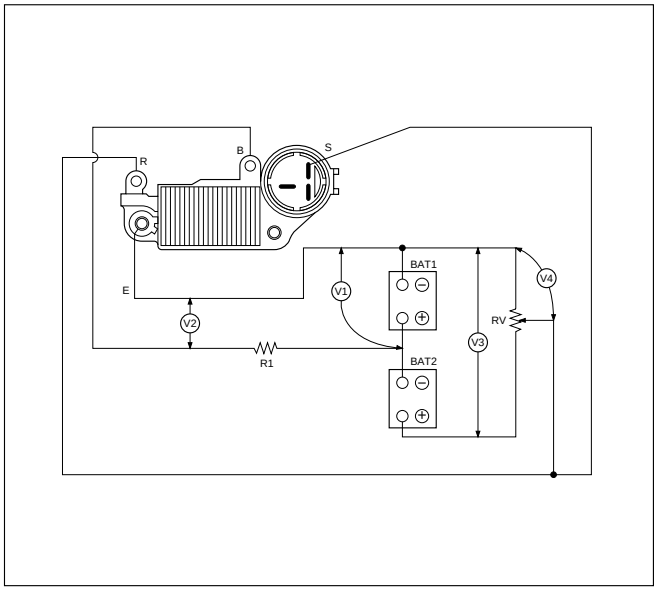

066RW029

Reassembly

To reassemble, follow the disassembly steps in the reverse order, noting the following points:

NOTE:

1) Never make battery connections with polarities reversed, or battery will be shorted via the diodes. This will cause damage to the diodes.
2) Do not connect generator B terminal to ground; it is connected directly to the battery.

   This cable will burn if it is connected to ground.
3) Make sure to disconnect the positive (+) terminal of the battery when quick-charging battery.

   Diodes may be damaged due to abnormal pulse voltage generated by the quick charger.
4) When reassembling the front section to rear section, insert a stiff wire into hole in the rear face of the rear cover from the outboard side to support the brush in raised position, then insert the front section to which rotor is assembled.
5) Reassemble parts carefully to be sure they fit into their original position, paying attention to the insulated portions.
6) Wipe insulating tubes, washers and plates clean and install them in position carefully to avoid getting oil or grease on them.

1. Using a press with a socket wrench attached, reassemble rotor and rear end cover assembly in the front cover.

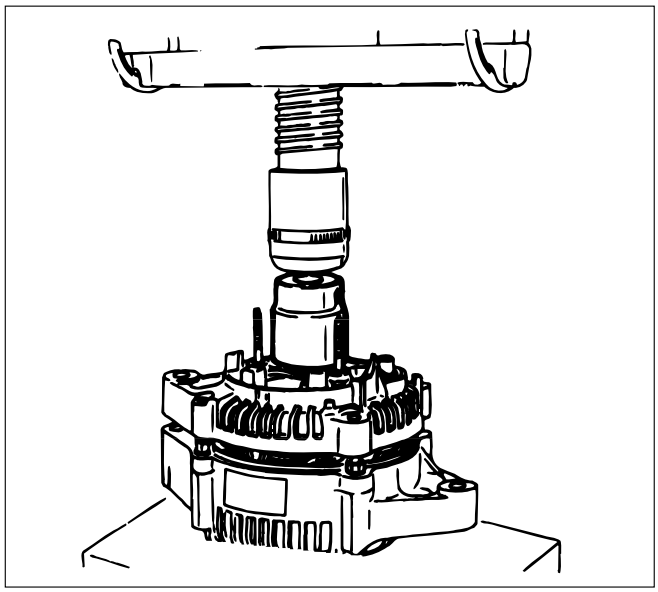

066RS022

2. Install pulley on the rotor.
   Secure the pulley directly in the vise between two copper plates, and tighten nut to the specified torque.

Torque: 111 N·m (82 lb ft)

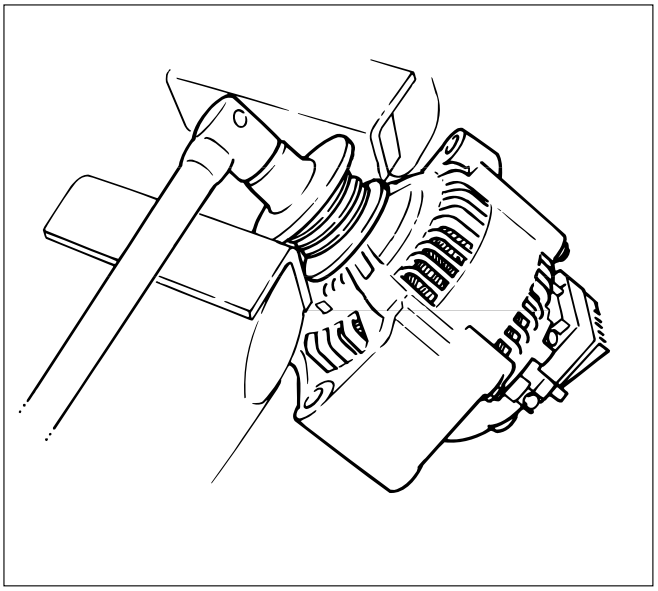

066RS010

MAIN DATA AND SPECIFICATIONS

General Specifications

Model		LR190-750B	LR-1100-731
Battery voltage	V	12	
Rated output	A	90	100
Direction of rotation (as viewed from pulley side)		Clockwise	
Rated rotation speed	rpm	5,000	
Maximum speed	rpm	18,000	

QOS4 PREHEATING SYSTEM

GENERAL DESCRIPTION

QOS4 preheating system features a quick-on glow plug with thermometer control of the glowing time and the afterglow time function.

The system consists of the ECM, indicator lamp, ECT sensor, vehicle speed sensor, relay and temperature self-control type glow plugs.

With the employment of the ECT sensor, the glow time changes according to the engine coolant temperature, thus allowing optimum starting conditions to be obtained.

The after glow time function is controlled by ECM.

NOTE:
Refer to DTC P0380 and P0381 of 6E section.

SYSTEM DIAGRAM

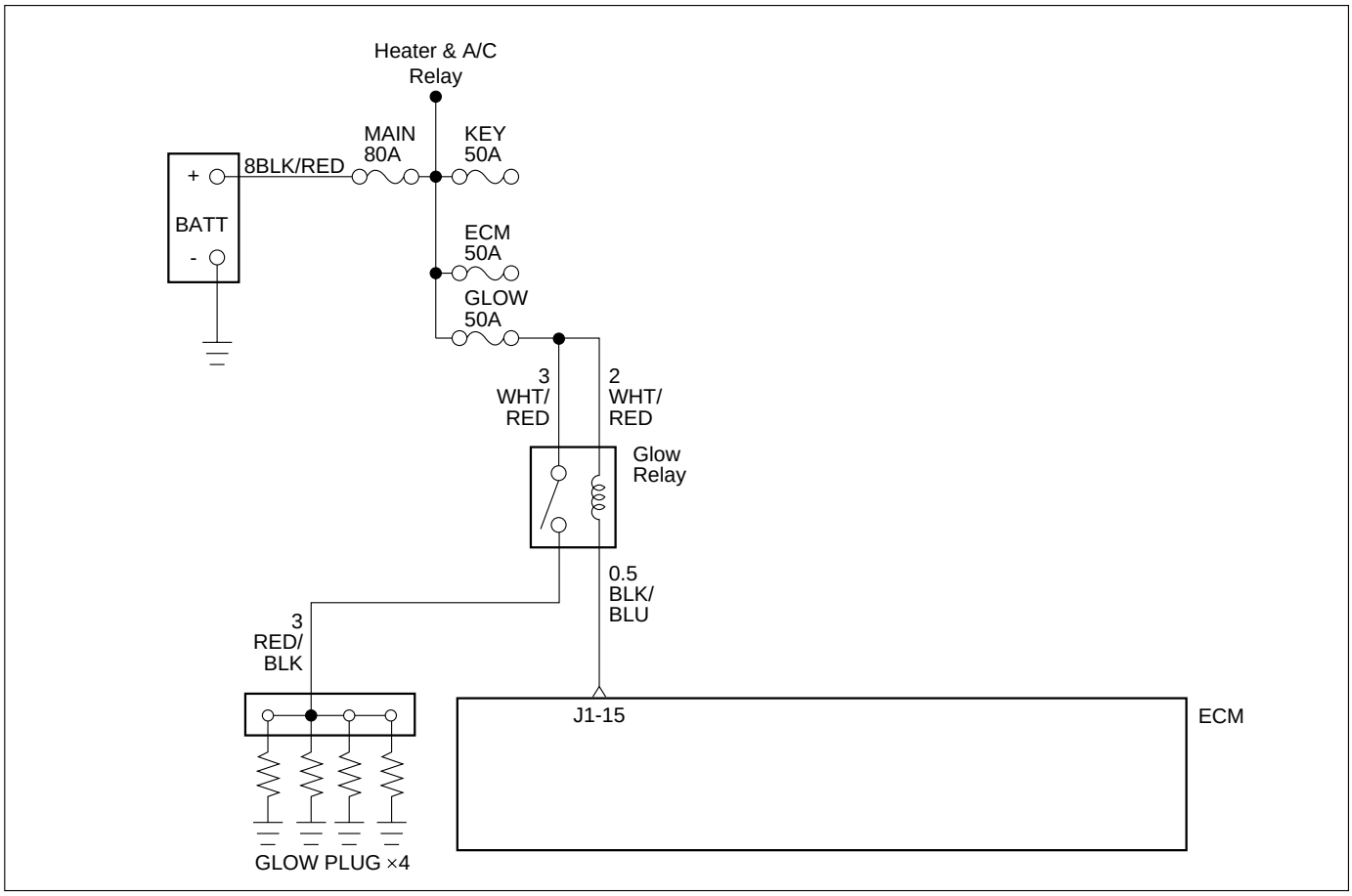

060RW132

INSPECTION ON QOS4 SYSTEM OPERATION

1 Inspection on Quick Heating Operation

1. Disconnect ECT-sensor connection on the thermostat housing

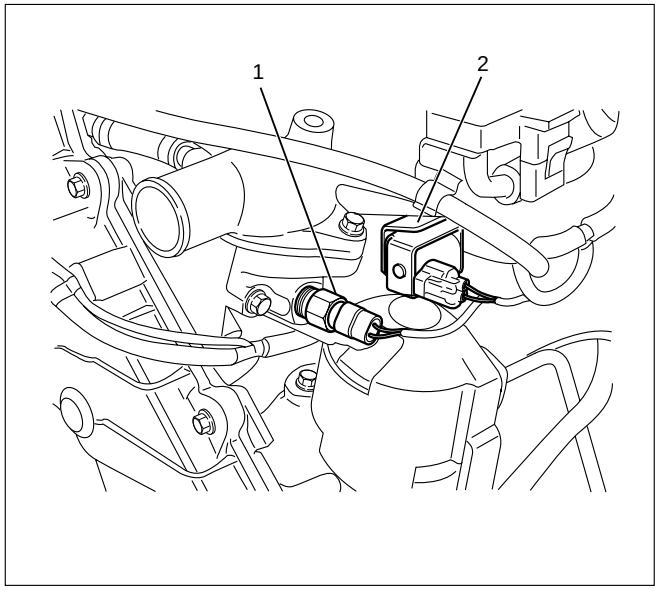

060RW166

Legend
(1) ECT Sensor
(2) EVRV

2. Connect the circuit tester between glow plug and engine earth.
3. Inspect the following items with starter switch set to ON position (but do not start the engine).
   1) The glow indicator shall light for about 5 sec.
   2) The circuit tester shall indicate power supply voltage for 180 sec.
      If above specifications are not satisfied, inspect wire harness, glow relay and ECT-sensor. If satisfied, inspect glow plug.

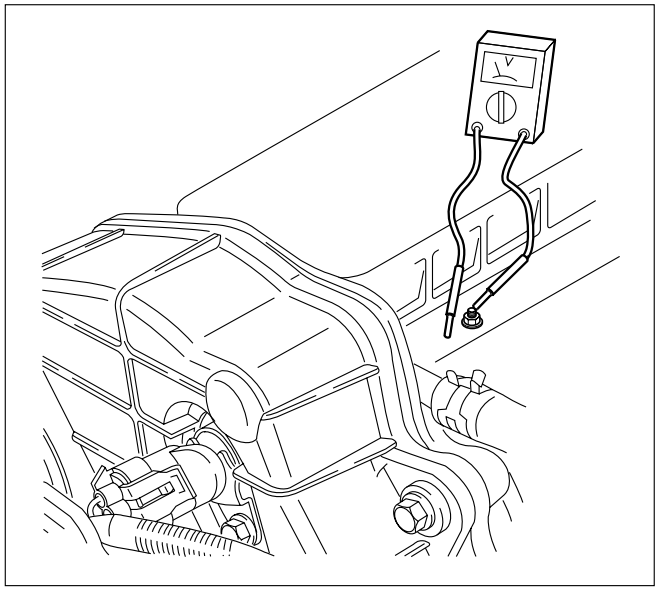

065RW035

2 Inspection on Afterglow Operation

1. Disconnect ECT-sensor connection on the thermostat housing

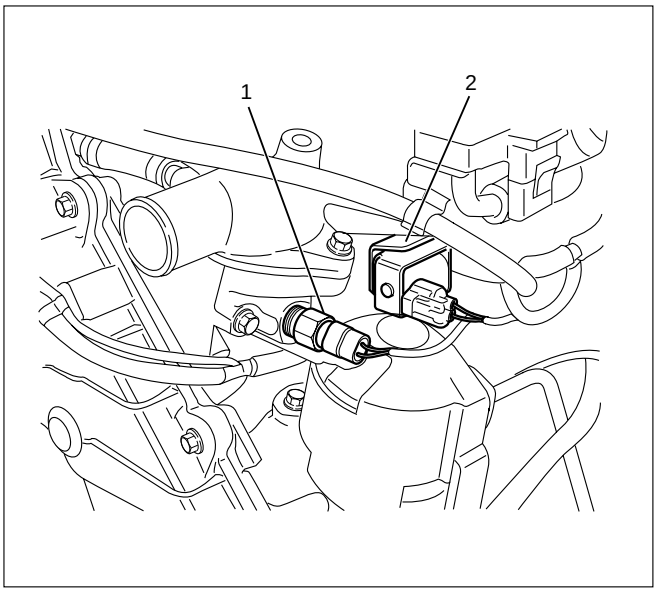

060RW166

Legend
(1) ECT Sensor
(2) EVRV

2. Connect the circuit tester between glow plug and engine earth.
3. Inspect the following item with the engine started.
   1) The circuit tester shall indicate about 12 volts after 180 seconds of engine start.
   - If above specifications are not satisfied, inspect battery voltage, engine earth, wiring harness, glow plug, and ECM.

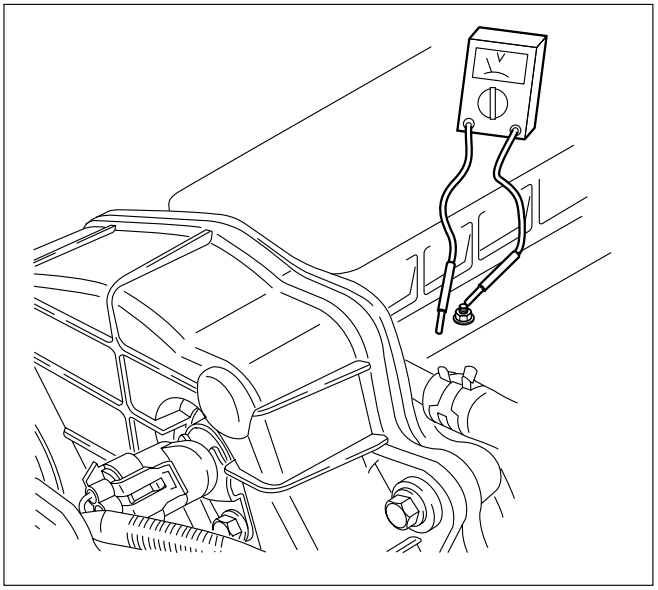

065RW035

ECT SENSOR

Measure the resistance depending on the water temperature.

Temperature (°C)	Current (mA)	Resistance (kΩ)
20 ± 1	1.0	2.0 – 3.0
50 ± 1	1.0	0.6 – 1.0

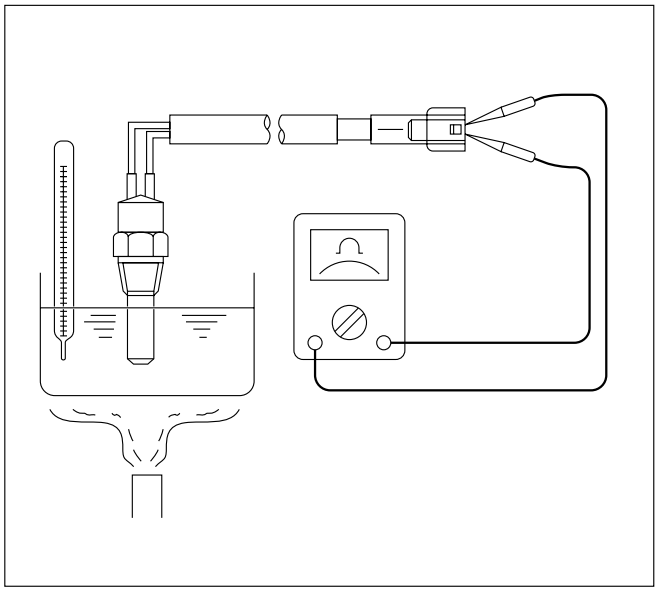

065RW058

When installing the ECT sensor, apply sealant (Loctite #262 or equivalent) to prevent water leakage.

Torque: 8 N·m (0.8 kg·m/69 lb in)

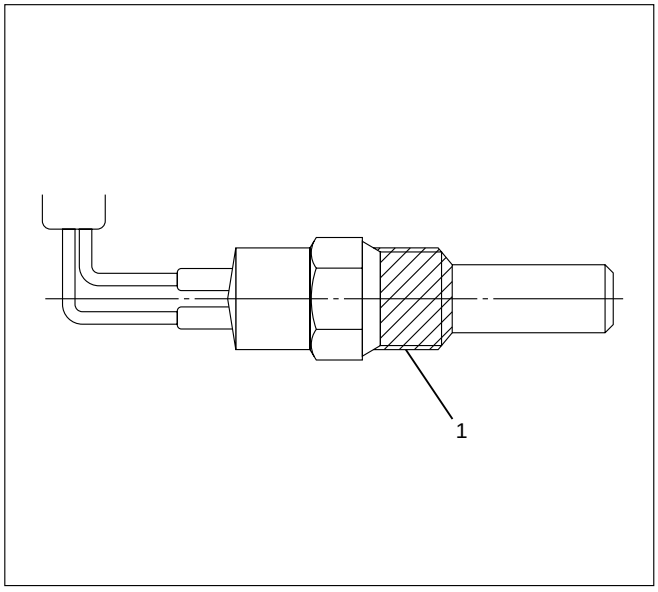

065RW060

Legend
(1) Sealing Material

GLOW PLUG

Inspect the resistance

Resistance at normal temperature: 0.8 – 1.0 Ω

Torque: 23 N·m (2.3 kg·m/17 lb·ft)

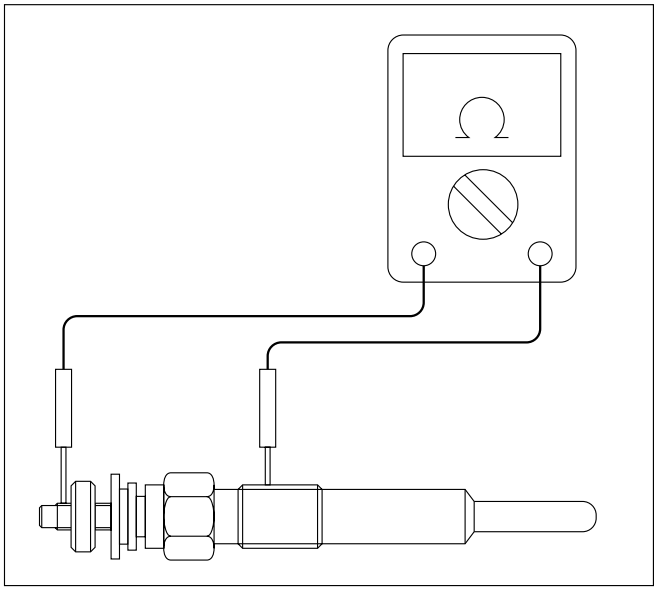

065RW061

GLOW PLUG RELAY

Inspect the continuity

(2) – (4)	No Continuity
(1) – (3)	Continuity

If battery voltage is applied to the terminal between (1) – (3)

(2) – (4)	Continuity

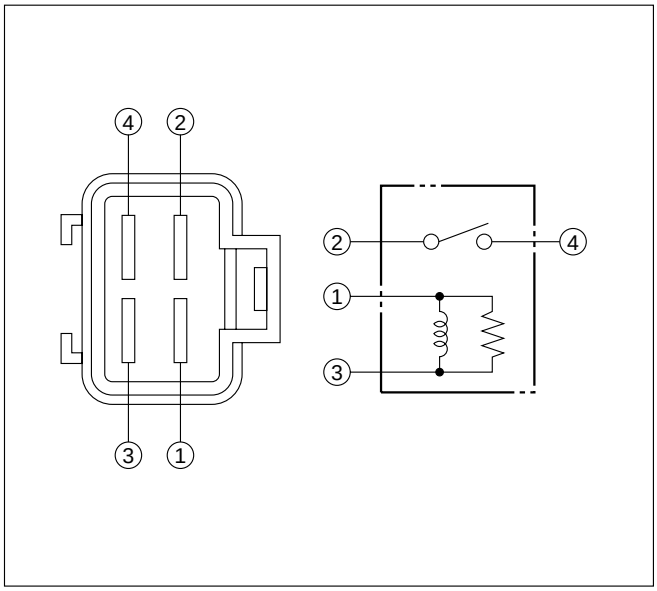

065RW037

MEMO

4JX1–TC 3.0L ENGINE DRIVEABILITY AND EMISSIONS

CONTENTS

Specification 6E–7
Tightening Specifications 6E–7
Diagrams and Schematics 6E–8
ECM Wiring Diagram (1 of 6) 6E–8
ECM Wiring Diagram (2 of 6) 6E–9
ECM Wiring Diagram (3 of 6) 6E–10
ECM Wiring Diagram (4 of 6) 6E–11
ECM Wiring Diagram (5 of 6) 6E–12
ECM Wiring Diagram (6 of 6) 6E–13
ECM Pinouts 6E–14
ECM Pinout Table, 32-Way Connector – J1 RED – Upper 6E–14
ECM Pinout Table, 32-Way Connector – J1 RED – Lower 6E–15
ECM Pinout Table, 32-Way Connector – J2 BLUE – Upper 6E–16
ECM Pinout Table, 32-Way Connector – J2 BLUE – Lower 6E–17
ECM Pinout Table, 5-Way Connector – J3 6E–18
Component Locator 6E–19
Sensors and Miscellaneous Component Locators 6E–21
Abbreviations Charts 6E–23
Diagnosis 6E–24
Strategy-Based Diagnostics 6E–24
Strategy-Based Diagnostics 6E–24
DTC Stored 6E–24
No DTC 6E–24
No Matching Symptom 6E–24
Intermittents 6E–24
No Trouble Found 6E–24
Verifying Vehicle Repair 6E–24
General Service Information 6E–25
Serviceability Issues 6E–25
Visual/Physical Engine Compartment Inspection 6E–25
Basic Knowledge of Tools Required 6E–25
Serial Data Communications 6E–25
Class II Serial Data Communications 6E–25
On-Board Diagnostic (OBD) 6E–25
On-Board Diagnostic Tests 6E–25
Comprehensive Component Monitor Diagnostic Operation 6E–25
Common OBD Terms 6E–26
The Diagnostic Executive 6E–26
DTC Types 6E–26
Verifying Vehicle Repair 6E–27
Reading Flash Diagnostic Trouble Codes . 6E–27
Reading Diagnostic Trouble Codes Using a TECH 2 . . . . . 6E–28
Tech 2 Scan Tool 6E–29
Getting Started 6E–30
DTC Modes 6E–32
DTC Information Mode 6E–32
Injector Test 6E–32
EGR Valve Test 6E–32
Rail Pressure Control Valve Test 6E–32
Injector Balance Test 6E–32
Data Programming in Case of ECM Change 6E–32
Rail Pressure Sensor Programming 6E–33
Injector Group Sign Programming (Injector Change) 6E–33
On-Board Diagnostic (OBD) System Check . 6E–35
Circuit Description 6E–37
Diagnostic Aids 6E–37
Engine Control Module ECM Diagnosis 6E–39
Multiple ECM Information Sensor DTCS Set 6E–39
Circuit Description 6E–39
Diagnostic Aids 6E–39
EGR (Exhaust Gas Recirculation) Diagnosis 6E–41
Tech 2 Data Definitions and Ranges 6E–41
Typical Scan Data Values 6E–41
Test Conditions 6E–41
4JX1-TC Engine (Automatic and Manual Transmission) 6E–42
No Malfunction Indicator Lamp (MIL) 6E–44
Circuit Description 6E–44
Diagnostic Aids 6E–44
Malfunction Indicator Lamp (MIL) “ON” Steady 6E–47
Circuit description 6E–47
Diagnostic Aids 6E–47
Engine Cranks But Will Not Run 6E–49
Circuit Description 6E–49
Diagnostic Aids 6E–49
Exhaust Gas Recirculation (EGR) System Check 6E–52
Circuit Description 6E–52
ECM Diagnostic Trouble Codes 6E–54
ECM Diagnostic Trouble Codes 6E–54
Diagnostic Trouble Code (DTC) P0107 (Flash DTC 34)
MAP Sensor Circuit Low Voltage 6E–56

Circuit Description 6E–56
Action Taken When the DTC Sets 6E–56
Conditions for Clearing the MIL/DTC 6E–56
Diagnostic Aids 6E–56
Diagnostic Trouble Code (DTC) P0108 (Flash DTC 34) MAP Sensor Circuit High Voltage 6E–58
Circuit Description 6E–58
Action Taken When the DTC Sets 6E–58
Conditions for Clearing the MIL/DTC 6E–58
Diagnostic Aids 6E–58
Diagnostic Trouble Code (DTC) P0112 (Flash DTC 23) IAT Sensor Circuit Low Voltage 6E–60
Circuit Description 6E–60
Action Taken When the DTC Sets 6E–60
Conditions for Clearing the MIL/DTC 6E–60
Diagnostic Aids 6E–60
Test Description 6E–61
Intake Air Temperature Sensor 6E–61
Diagnostic Trouble Code (DTC) P0113 (Flash DTC 23) IAT Sensor Circuit High Voltage 6E–62
Circuit Description 6E–62
Action Taken When the DTC Sets 6E–62
Conditions for Clearing the MIL/DTC 6E–62
Diagnostic Aids 6E–62
Test Description 6E–63
Manifold Air Temperature Sensor 6E–63
Diagnostic Trouble Code (DTC) P0117 (Flash DTC 14) ECT Sensor Low Voltage . 6E–65
Circuit Description 6E–65
Action Taken When the DTC Sets 6E–65
Conditions for Clearing the MIL/DTC 6E–65
Diagnostic Aids 6E–65
Test Description 6E–65
Engine Coolant Temperature Sensor 6E–66
Diagnostic Trouble Code (DTC) P0118 (Flash DTC 14) ECT Sensor High Voltage . 6E–67
Circuit Description 6E–67
Action Taken When the DTC Sets 6E–67
Conditions for Clearing the MIL/DTC 6E–67
Diagnostic Aids 6E–67
Test Description 6E–68
Engine Coolant Temperature Sensor 6E–68
Diagnostic Trouble Code (DTC) P0121 (Flash DTC 33) AP Sensor Rationality 6E–70
Circuit Description 6E–70
Action Taken When the DTC Sets 6E–70
Conditions for Clearing the MIL/DTC 6E–70
Diagnostic Aids 6E–70
Diagnostic Trouble Code (DTC) P0122 (Flash DTC 21) AP Sensor Low Voltage . . . 6E–72
Circuit Description 6E–72
Action Taken When the DTC Sets 6E–72
Conditions for Clearing the MIL/DTC 6E–72
Diagnostic Aids 6E–72
Diagnostic Trouble Code (DTC) P0123 (Flash DTC 21) AP Sensor High Voltage . . . 6E–75
Circuit Description 6E–75
Action Taken When the DTC Sets 6E–75
Conditions for Clearing the MIL/DTC 6E–75
Diagnostic Aids 6E–75
Test Description 6E–75
Diagnostic Trouble Code (DTC) P0182 (Flash DTC 15) FT Sensor Low Voltage . . . 6E–78
Circuit Description 6E–78
Action Taken When the DTC Sets 6E–78
Conditions for Clearing the MIL/DTC 6E–78
Diagnostic Aids 6E–78
Test Description 6E–78
Diagnostic Trouble Code (DTC) P0183 (Flash DTC 15) FT Sensor High Voltage . . . 6E–80
Circuit Description 6E–80
Action Taken When the DTC Sets 6E–80
Conditions for Clearing the MIL/DTC 6E–80
Diagnostic Aids 6E–80
Test Description 6E–80
Diagnostic Trouble Code (DTC) P0192 (Flash DTC 63) Rail Pressure Sensor Low Voltage 6E–82
Circuit Description 6E–82
Action Taken When the DTC Sets 6E–82
Conditions for Clearing the MIL/DTC 6E–82
Diagnostic Aids 6E–82
Diagnostic Trouble Code (DTC) P0193 (Flash DTC 63) Rail Pressure Sensor High Voltage 6E–84
Circuit Description 6E–84
Action Taken When the DTC Sets 6E–84
Conditions for Clearing the MIL/DTC 6E–84
Diagnostic Aids 6E–84
Diagnostic Trouble Code (DTC) P1193 (Flash DTC 64) RPCV Circuit Open/Short . . 6E–86
Circuit Description 6E–86
Action Taken When the DTC Sets 6E–86
Conditions for Clearing the MIL/DTC 6E–86
Diagnostic Aids 6E–86
Diagnostic Trouble Code (DTC) P1194 (Flash DTC 61) Rail Pressure System Low Voltage 6E–88
Circuit Description 6E–88
Action Taken When the DTC Sets 6E–88
Conditions for Clearing the MIL/DTC 6E–88
Diagnostic Aids 6E–88
Diagnostic Trouble Code (DTC) P1195 (Flash DTC 61) Rail Pressure System High Voltage 6E–90
Circuit Description 6E–90

Action Taken When the DTC Sets 6E–90
Conditions for Clearing the MIL/DTC 6E–90
Diagnostic Aids 6E–90
Diagnostic Trouble Code (DTC) P1196 (Flash DTC 62) Rail Pressure System High Warning 6E–92
Circuit Description 6E–93
Action Taken When the DTC Sets 6E–93
Conditions for Clearing the MIL/DTC 6E–93
Diagnostic Aids 6E–93
Test Description 6E–93
Diagnostic Trouble Code (DTC) P0197 (Flash DTC 16) Oil Temp Sensor Low Voltage 6E–94
Circuit Description 6E–94
Action Taken When the DTC Sets 6E–94
Conditions for Clearing the MIL/DTC 6E–94
Diagnostic Aids 6E–94
Test Description 6E–95
Engine Oil Temperature Sensor 6E–95
Diagnostic Trouble Code (DTC) P0198 (Flash DTC 16) Oil Temp Sensor High Voltage 6E–96
Circuit Description 6E–96
Action Taken When the DTC Sets 6E–96
Conditions for Clearing the MIL/DTC 6E–96
Diagnostic Aids 6E–96
Test Description 6E–97
Engine Oil Temperature Sensor 6E–97
Diagnostic Trouble Code (DTC) P0201 (Flash DTC 51) Injector # 1 Circuit Fault ... 6E–99
Circuit Description 6E–99
Action Taken When the DTC Sets 6E–99
Conditions for Clearing the MIL/DTC 6E–99
Diagnostic Aids 6E–99
Test Description 6E–99
Injector Test 6E–99
Diagnostic Trouble Code (DTC) P0202 (Flash DTC 52) Injector # 2 Circuit Fault ... 6E–101
Circuit Description 6E–101
Action Taken When the DTC Sets 6E–101
Conditions for Clearing the MIL/DTC 6E–101
Diagnostic Aids 6E–101
Test Description 6E–101
Injector Test 6E–101
Diagnostic Trouble Code (DTC) P0203 (Flash DTC 52) Injector # 3 Circuit Fault ... 6E–103
Circuit Description 6E–103
Action Taken When the DTC Sets 6E–103
Conditions for Clearing the MIL/DTC 6E–103
Diagnostic Aids 6E–103
Test Description 6E–103
Injector Test 6E–103
Diagnostic Trouble Code (DTC) P0204 (Flash DTC 54) Injector # 4 Circuit Fault ... 6E–105
Circuit Description 6E–105
Action Taken When the DTC Sets 6E–105
Conditions for Clearing the MIL/DTC 6E–105
Diagnostic Aids 6E–105
Test Description 6E–105
Injector Test 6E–105
Diagnostic Trouble Code (DTC) P0217 (Flash DTC 22) High Coolant Temp Waring 6E–107
Circuit Description 6E–107
Action Taken When the DTC Sets 6E–107
Conditions for Clearing the MIL/DTC 6E–107
Diagnostic Aids 6E–107
Test Description 6E–107
Diagnostic Trouble Code (DTC) P1217 (Flash DTC 36) High Oil Temp Warning 6E–109
Circuit Description 6E–109
Action Taken When the DTC Sets 6E–109
Conditions for Clearing the MIL/DTC 6E–109
Diagnostic Aids 6E–109
Diagnostic Trouble Code (DTC) P0219 (Flash DTC 11) Engine Over Speed Warning 6E–111
Circuit Description 6E–111
Action Taken When the DTC Sets 6E–111
Conditions for Clearing the MIL/DTC 6E–111
Diagnostic Aids 6E–111
Diagnostic Trouble Code (DTC) P0336 (Flash DTC 43) CKP (Crank Position) Sensor Out of Synchro 6E–114
Circuit Description 6E–114
Action Taken When the DTC Sets 6E–114
Conditions for Clearing the MIL/DTC 6E–114
Diagnostic Aids 6E–114
Diagnostic Trouble Code (DTC) P0337 (Flash DTC 43) CKP (Crank Position) Sensor No Signal 6E–116
Circuit Description 6E–116
Action Taken When the DTC Sets 6E–116
Conditions for Clearing the MIL/DTC 6E–116
Diagnostic Aids 6E–116
Diagnostic Trouble Code (DTC) P0341 (Flash DTC 41) CMP (Cam Position) Sensor Out of Synchro 6E–119
Circuit Description 6E–119
Action Taken When the DTC Sets 6E–119
Conditions for Clearing the MIL/DTC 6E–119
Diagnostic Aids 6E–119
Test Description 6E–119
Diagnostic Trouble Code (DTC) P0342 (Flash DTC 41) CMP (Cam Position) Sensor No Signal 6E–122
Circuit Description 6E–122
Action Taken When the DTC Sets 6E–122
Conditions for Clearing the MIL/DTC 6E–122

Diagnostic Aids 6E–122
Test Description 6E–122
Diagnostic Trouble Code (DTC) P0380 (Flash DTC 66) Glow Relay Circuit Open/Short 6E–126
Circuit Description 6E–126
Action Taken When the DTC Sets 6E–126
Conditions for Clearing the MIL/DTC 6E–126
Diagnostic Aids 6E–126
Diagnostic Trouble Code (DTC) P0381 (Flash DTC 67) Glow Lamp Circuit Open/Short 6E–128
Circuit Description 6E–128
Action Taken When the DTC Sets 6E–128
Conditions for Clearing the MIL/DTC 6E–128
Diagnostic Aids 6E–128
Diagnostic Trouble Code (DTC) P1403 (Flash DTC 32) EGR EVRV Fault 6E–130
Circuit Description 6E–130
Diagnostic Aids 6E–130
Test Description 6E–130
Diagnostic Trouble Code (DTC) P1404 (Flash DTC 31) EGR VSV Circuit 6E–132
Circuit Description 6E–132
Diagnostic Aids 6E–132
Diagnostic Trouble Code (DTC) P0405 (Flash DTC 26) EGR Pressure Sensor Low Voltage 6E–134
Action Taken When the DTC Sets 6E–134
Conditions for Clearing the MIL/DTC 6E–134
Diagnostic Aids 6E–134
Diagnostic Trouble Code (DTC) P1405 (Flash DTC 37) EGR EVRV Circuit Open/Short 6E–136
Circuit Description 6E–136
Action Taken When the DTC Sets 6E–136
Conditions for Clearing the MIL/DTC 6E–136
Diagnostic Aids 6E–136
Diagnostic Trouble Code (DTC) P0406 (Flash DTC 26) EGR Pressure Sensor High Voltage 6E–138
Action Taken When the DTC Sets 6E–138
Conditions for Clearing the MIL/DTC 6E–138
Diagnostic Aids 6E–138
Diagnostic Trouble Code (DTC) P0475 (Flash DTC 71) EXH #1 VSV Circuit 6E–140
Circuit Description 6E–140
Action Taken When the DTC Sets 6E–140
Conditions for Clearing the MIL/DTC 6E–140
Diagnostic Aids 6E–140
Diagnostic Trouble Code (DTC) P1475 (Flash DTC 71) EXH #2 VSV Circuit Open/Short 6E–142
Circuit Description 6E–142
Action Taken When the DTC Sets 6E–142
Conditions for Clearing the MIL/DTC 6E–142
Diagnostic Aids 6E–142
Diagnostic Trouble Code (DTC) P1485 (Flash DTC 74) ITP (Intake Thorottle Position) Sensor Low Voltage 6E–144
Circuit Description 6E–144
Action Taken When the DTC Sets 6E–144
Conditions for Clearing the MIL/DTC 6E–144
Diagnostic Aids 6E–144
Diagnostic Trouble Code (DTC) P1486 (Flash DTC 74) ITP (Intake Throttle Position) Sensor High Voltage 6E–146
Circuit Description 6E–146
Action Taken When the DTC Sets 6E–146
Conditions for Clearing the MIL/DTC 6E–146
Diagnostic Aids 6E–146
Diagnostic Trouble Code (DTC) P1487 (Flash DTC 73) Intake Throttle System Circuit Open/Start 6E–148
Circuit Description 6E–148
Action Taken When the DTC Sets 6E–148
Conditions for Clearing the MIL/DTC 6E–148
Diagnostic Aids 6E–148
Diagnostic Trouble Code (DTC) P1488 (Flash DTC 72) Intake Throttle Motor Control Circuit Signal Gap 6E–150
Circuit Description 6E–150
Action Taken When the DTC Sets 6E–150
Conditions for Clearing the MIL/DTC 6E–150
Diagnostic Aids 6E–150
Diagnostic Trouble Code (DTC) P0502 (Flash DTC 24) VSS (Vehicle Speed Sensor) No Signal 6E–152
Circuit Description 6E–152
Action Taken When the DTC Sets 6E–152
Conditions for Clearing the MIL/DTC 6E–152
Test Description 6E–153
Diagnostic Trouble Code (DTC) P0510 (Flash DTC 75) Idle SW Malfunction, Open Circuit 6E–155
Circuit Description 6E–155
Action Taken When the DTC Sets 6E–155
Conditions for Clearing the MIL/DTC 6E–155
Diagnostic Aids 6E–155
Diagnostic Trouble Code (DTC) P1510 (Flash DTC 75) Idle SW Malfunction Short Circuit 6E–157
Circuit Description 6E–157
Action Taken When the DTC Sets 6E–157
Conditions for Clearing the MIL/DTC 6E–157
Diagnostic Aids 6E–157
Diagnostic Trouble Code (DTC) P0562 (Flash DTC 35) System Voltage Too Low . . 6E–159
Circuit Description 6E–159
Action Taken When the DTC Sets 6E–159

Conditions for Clearing the MIL/DTC 6E–159
Diagnostic Aids 6E–159
Diagnostic Trouble Code (DTC) P1562 (Flash DTC 35) System Voltage Too Low at Cranking 6E–160
Circuit Description 6E–160
Action Taken When the DTC Sets 6E–160
Conditions for Clearing the MIL/DTC 6E–160
Diagnostic Aids 6E–160
Diagnostic Trouble Code (DTC) P1587 (Flash DTC 25) Brake SW Malfunction 6E–161
Circuit Description 6E–161
Action Taken When the DTC Sets 6E–161
Conditions for Clearing the MIL/DTC 6E–161
Diagnostic Aids 6E–161
Diagnostic Trouble Code (DTC) P1588 (Flash DTC 25) Brake SW Malfunction 6E–163
Circuit Description 6E–163
Action Taken When the DTC Sets 6E–163
Conditions for Clearing the MIL/DTC 6E–163
Diagnostic Aids 6E–163
Diagnostic Trouble Code (DTC) P0601 (Flash DTC 55) ECM Checksum Error 6E–165
Action Taken When the DTC Sets 6E–165
Conditions for Clearing the MIL/DTC 6E–165
Diagnostic Aids 6E–165
Diagnostic Trouble Code (DTC) P0650 (Flash DTC 77) Check Engine Lam Circuit Open/Short 6E–166
Circuit Description 6E–166
Action Taken When the DTC Sets 6E–166
Conditions for Clearing the MIL/DTC 6E–166
Diagnostic Aids 6E–166
Diagnostic Trouble Code (DTC) P0654 (Flash DTC 27) Tachometer Circuit Open/Short 6E–168
Circuit Description 6E–168
Action Taken When the DTC Sets 6E–168
Conditions for Clearing the MIL/DTC 6E–168
Diagnostic Aids 6E–168
Diagnostic Trouble Code (DTC) P1655 (Flash DTC 17) Thermo Relay Circuit Open/Short 6E–170
Circuit Description 6E–170
Action Taken When the DTC Sets 6E–170
Conditions for Clearing the MIL/DTC 6E–170
Diagnostic Aids 6E–170
Diagnostic Trouble Code (DTC) P1657 (Flash DTC 76) ECM Main Relay Circuit Open/Short 6E–172
Circuit Description 6E–172
Action Taken When the DTC Sets 6E–172
Conditions for Clearing the MIL/DTC 6E–172
Diagnostic Aids 6E–172
Diagnostic Trouble Code (DTC) P1589 (Flash DTC 47) Transmission SW Circuit Open/Short 6E–174
Circuit Description 6E–174
Action Taken When the DTC Sets 6E–174
Conditions for Clearing the MIL/DTC 6E–174
Diagnostic Aids 6E–174
Symptom Diagnosis 6E–176
Default Matrix Table 6E–199
On–Vehicle Service Camshaft Position (CMP) Sensor 6E–201
Removal Procedure 6E–201
Inspection Procedure 6E–201
Installation Procedure 6E–201
Crankshaft Position (CKP) Sensor 6E–202
Removal Procedure 6E–202
Installation Procedure 6E–202
Engine Coolant Temperature (ECT) Sensor . 6E–203
Removal Procedure 6E–203
Installation Procedure 6E–203
Intake Air Temperature (IAT) Sensor 6E–203
Removal Procedure 6E–203
Installation Procedure 6E–204
Manifold Absolute Pressure (MAP) Sensor . 6E–204
Removal Procedure 6E–204
Installation Procedure 6E–205
Oil Temperature (OT) Sensor 6E–205
Removal Procedure 6E–205
Installation Procedure 6E–206
Malfunction Indicator Lamp (MIL) 6E–206
Removal and Installation Procedure 6E–206
Engine Control Module (ECM) 6E–206
Service Precaution 6E–206
Electrostatic Discharge (ESD) Damage ... 6E–206
Removal Procedure 6E–207
Installation Procedure 6E–208
EEPROM 6E–208
General Description 6E–208
Functional Check 6E–208
Intake Throttle Position (ITP) Sensor 6E–208
Removal Procedure 6E–208
Function Check 6E–209
Installation Procedure 6E–209
Vehicle Speed Sensor (VSS) 6E–210
Removal Procedure 6E–210
Inspection Procedure 6E–210
Installation Procedure 6E–210
Air Cleaner/Air Filter 6E–211
Removal Procedure 6E–211
Installation Procedure 6E–211
Accel Position (AP) Sensor 6E–211
Removal Procedure 6E–211
Installation Procedure 6E–212
Accelerator Pedal Replacement 6E–212

Removal Procedure 6E–212
Installation Procedure 6E–212
Fuel Filter Cap 6E–213
General Description 6E–213
Inspection Procedure 6E–213
Fuel Filter 6E–213
Removal and Installation Procedure 6E–213
Fuel Gauge Unit 6E–213
Removal Procedure 6E–213
Installation Procedure 6E–214
Fuel Injectors 6E–214
Removal and Installation Procedure 6E–214
Fuel Temperature Sensor 6E–214
Removal Procedure 6E–214
Installation Procedure 6E–215
Rail Pressure (RP) Sensor 6E–216
Removal Procedure 6E–216
Installation Procedure 6E–216
Fuel Tank 6E–216
Removal Procedure 6E–216
Throttle Body (TB) 6E–217
Removal Procedure 6E–217
Installation Procedure 6E–217
Air Conditioning (A/C) Relay 6E–217
Removal Procedure 6E–217
Installation Procedure 6E–217
Exhaust Gas Recirculation (EGR) Vacuum Switch Valve (VSV) 6E–217
Removal Procedure 6E–217
Installation Procedure 6E–218
Electronic Vacuum Regurating Valve (EVRV) 6E–219
Removal Procedure 6E–219
Installation Procedure 6E–220
Wiring and Connectors 6E–220
Wiring Harness Service 6E–220
Connectors and Terminals 6E–220
Wire Harness Repair: Twisted Shielded Cable 6E–220
Removal Procedure 6E–220
Installation Procedure 6E–221
Twisted Leads 6E–221
Removal Procedure 6E–221
Installation Procedure 6E–222
Weather-Pack Connector 6E–223
Tools Required 6E–223
Removal Procedure 6E–223
Installation Procedure 6E–223
Com-Pack III 6E–224
General Information 6E–224
Metri-Pack 6E–224
Tools Required 6E–224
Removal Procedure 6E–224
Installation Procedure 6E–224
General Description (ECM and Sensors) 6E–225
57X Reference ECM Input 6E–225
A/C Request Signal 6E–225
Crankshaft Position (CKP) Sensor 6E–225
Camshaft Position (CMP) Sensor and Signal 6E–225
Engine Coolant Temperature (ECT) Sensor 6E–225
Electrically Erasable Programmable Read Only Memory (EEPROM) 6E–225
Intake Air Temperature (IAT) Sensor 6E–225
Manifold Absolute Pressure (MAP) Sensor 6E–226
Engine Control Module (ECM) 6E–226
ECM Function 6E–226
ECM Components 6E–226
ECM Voltage Description 6E–226
ECM Input/Outputs 6E–226
ECM Service Precautions 6E–227
Intake Throttle Position (ITP) Sensor 6E–227
Transmission Range Switch 6E–227
Accelerator Position Sensor (AP) 6E–227
Aftermarket Electrical and Vacuum Equipment 6E–227
Electrostatic Discharge Damage 6E–227
General Description (Air Induction) 6E–228
Air Induction System 6E–228
General Description (Fuel Metering) 6E–228
Deceleration Mode 6E–228
Fuel Injector 6E–228
Fuel Metering System Components 6E–228
A/C Clutch Diagnosis 6E–228
A/C Request Signal 6E–228
General Description Exhaust Gas Recirculation (EGR) System 6E–228
EGR Purpose 6E–228
Fuse and Relay Panel (Underhood Electrical Center) RHD 6E–229
Fuse and Relay Panel (Underhood Electrical Center) LHD 6E–230

Specification

Tightening Specifications

Application	N·m	Kg·m	Lb Ft.	Lb In.
Camshaft Position Sensor Retaining Screw	9	0.9	—	78
Crankshaft Position Sensor Mounting Bolt	9	0.9	—	78
Engine Coolant Temperature Sensor	19	1.9	14	—
Throttle Body Mounting Nuts	20	2.0	14	—
VSS Retaining Bolt	16	1.6	12	—
MAP Sensor Screw	4	0.4	—	35
EGR VSV Bolts	8	0.8	—	69
Fuel Temp Sensor	19	1.9	14	—
Oil Temp Sensor Bolt	19	1.9	14	—
Rail Pressure Sensor Bolt	20	2.0	14	—

Diagrams and Schematics

ECM Wiring Diagram (1 of 6)

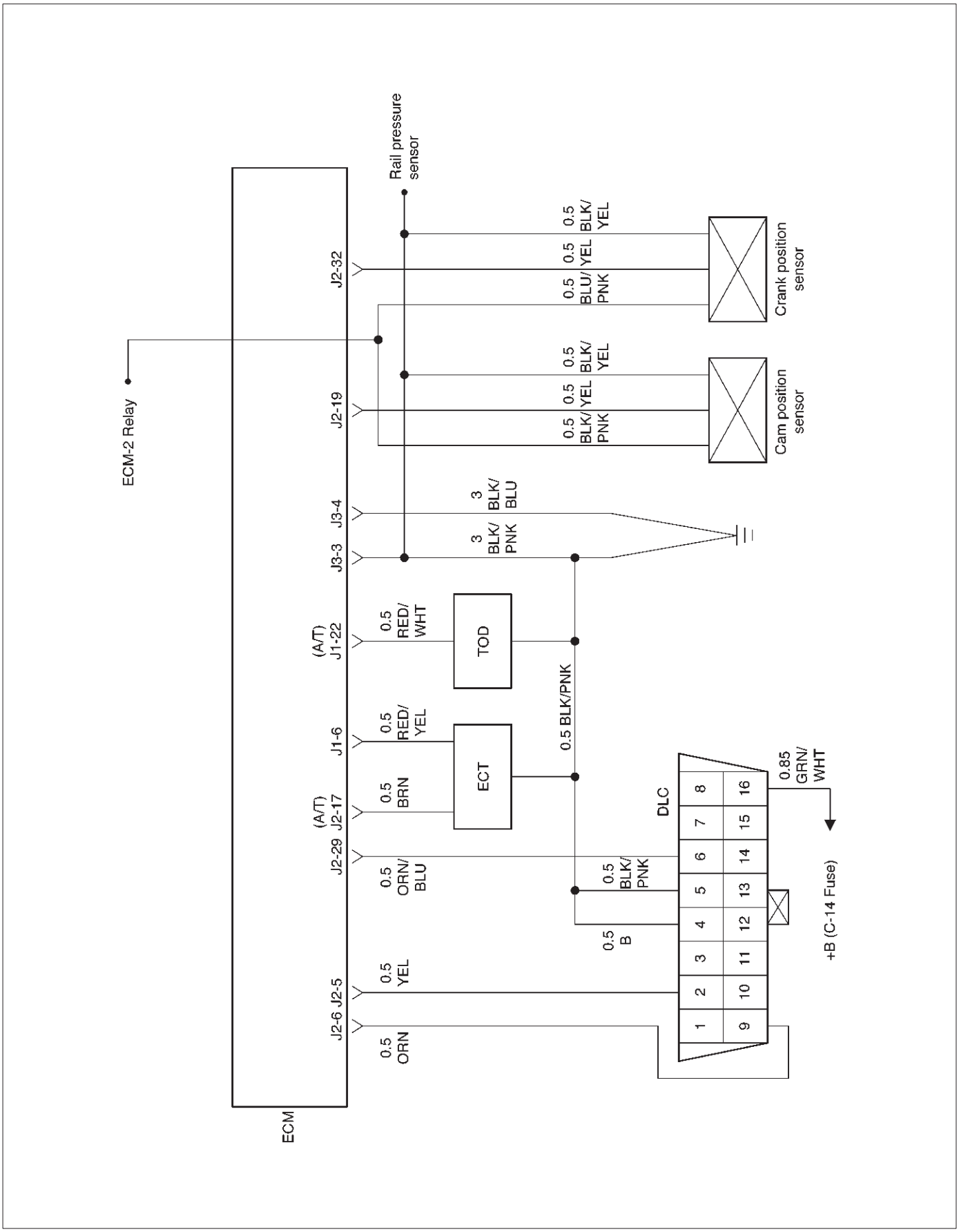

060RW127

ECM Wiring Diagram (2 of 6)

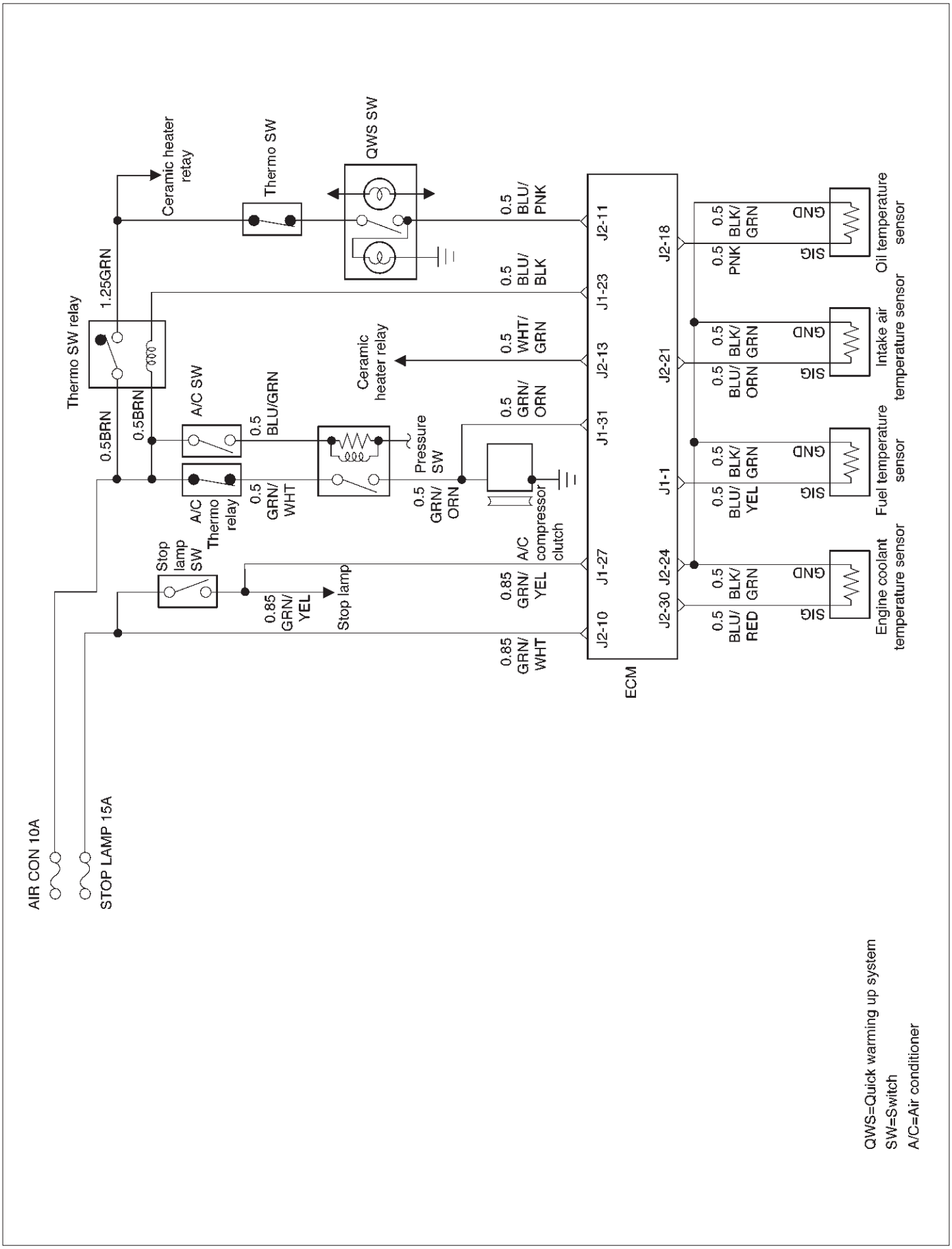

060RW125

ECM Wiring Diagram (3 of 6)

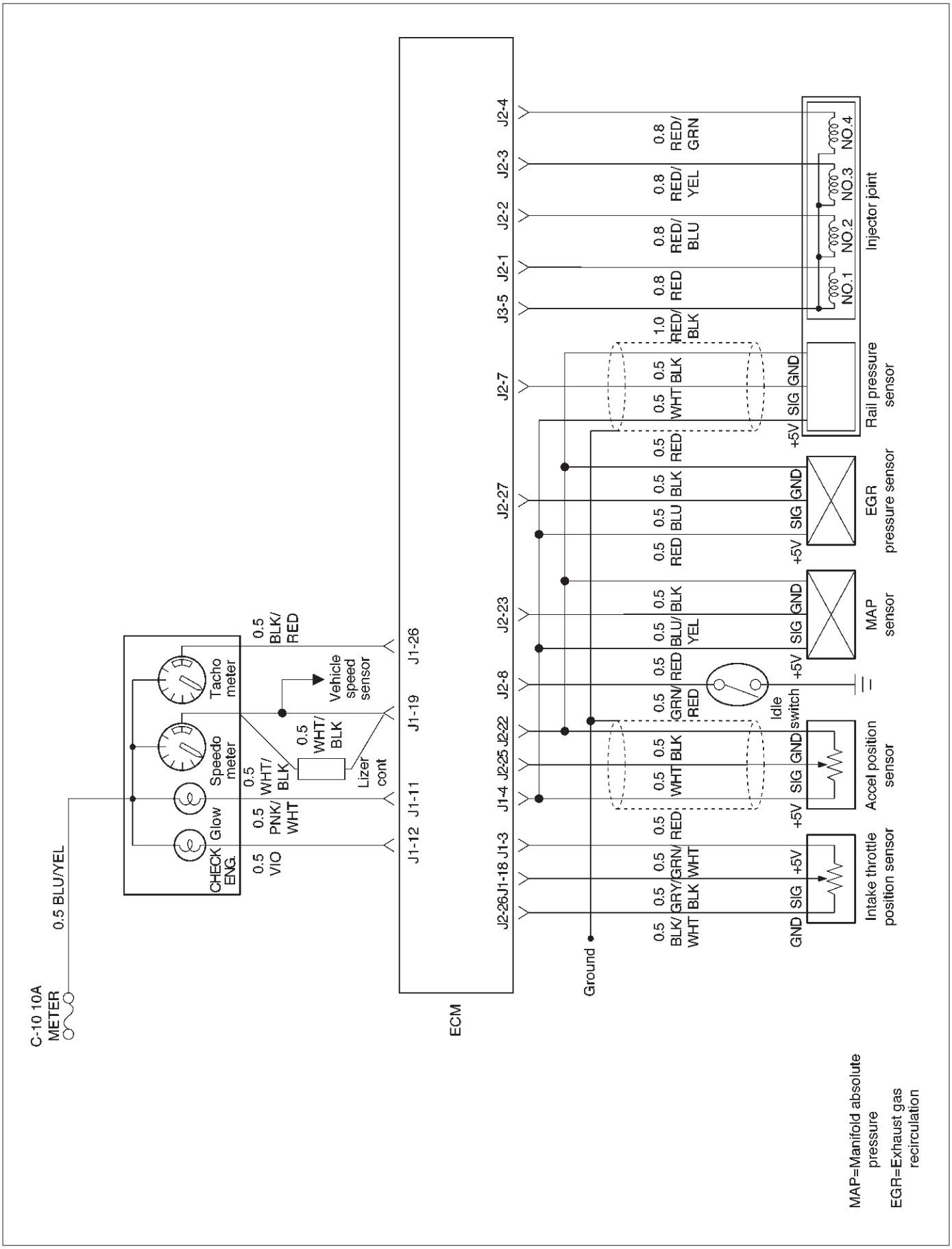

060RW126

ECM Wiring Diagram (4 of 6)

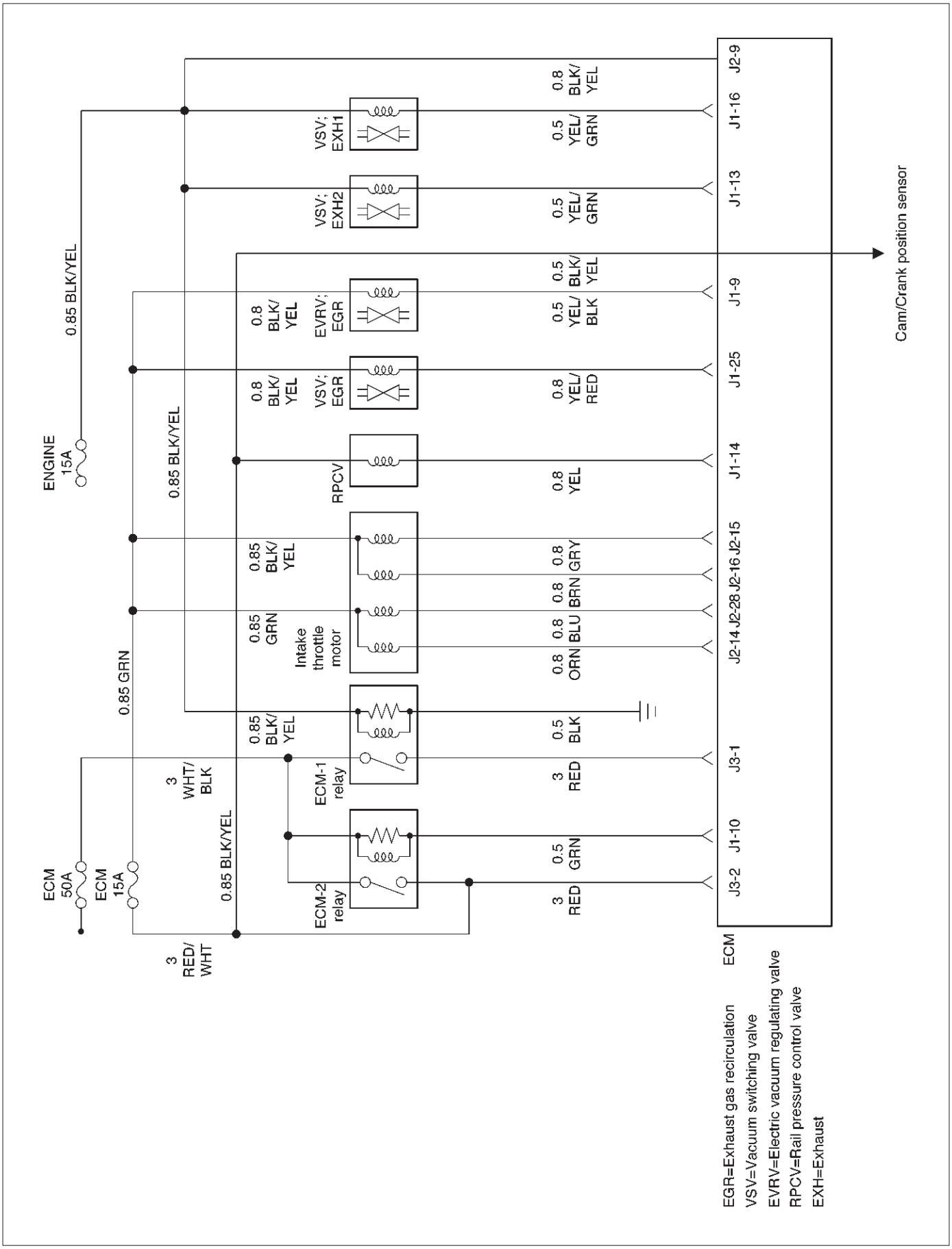

060RW128

ECM Wiring Diagram (5 of 6)

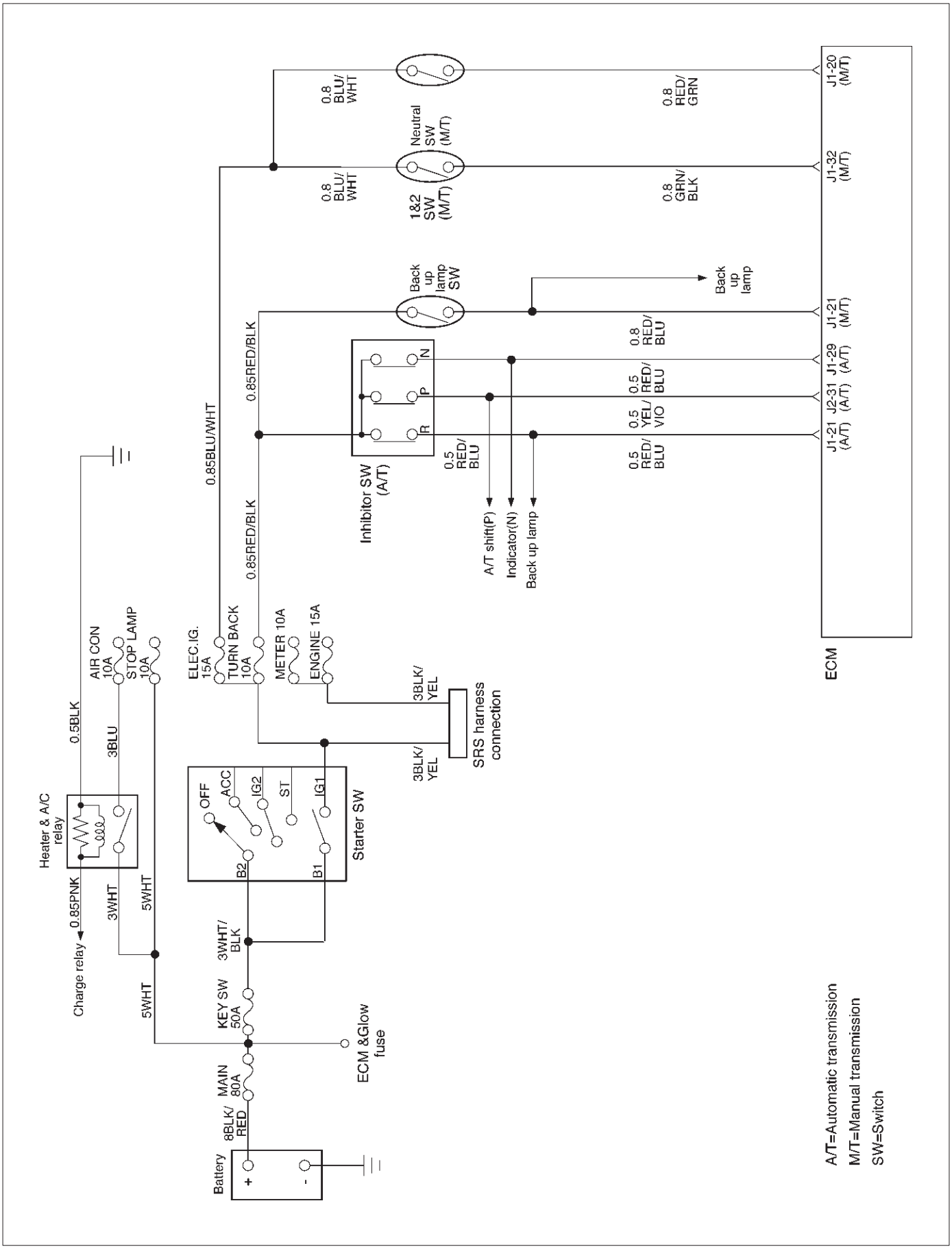

060RW123

ECM Wiring Diagram (6 of 6)

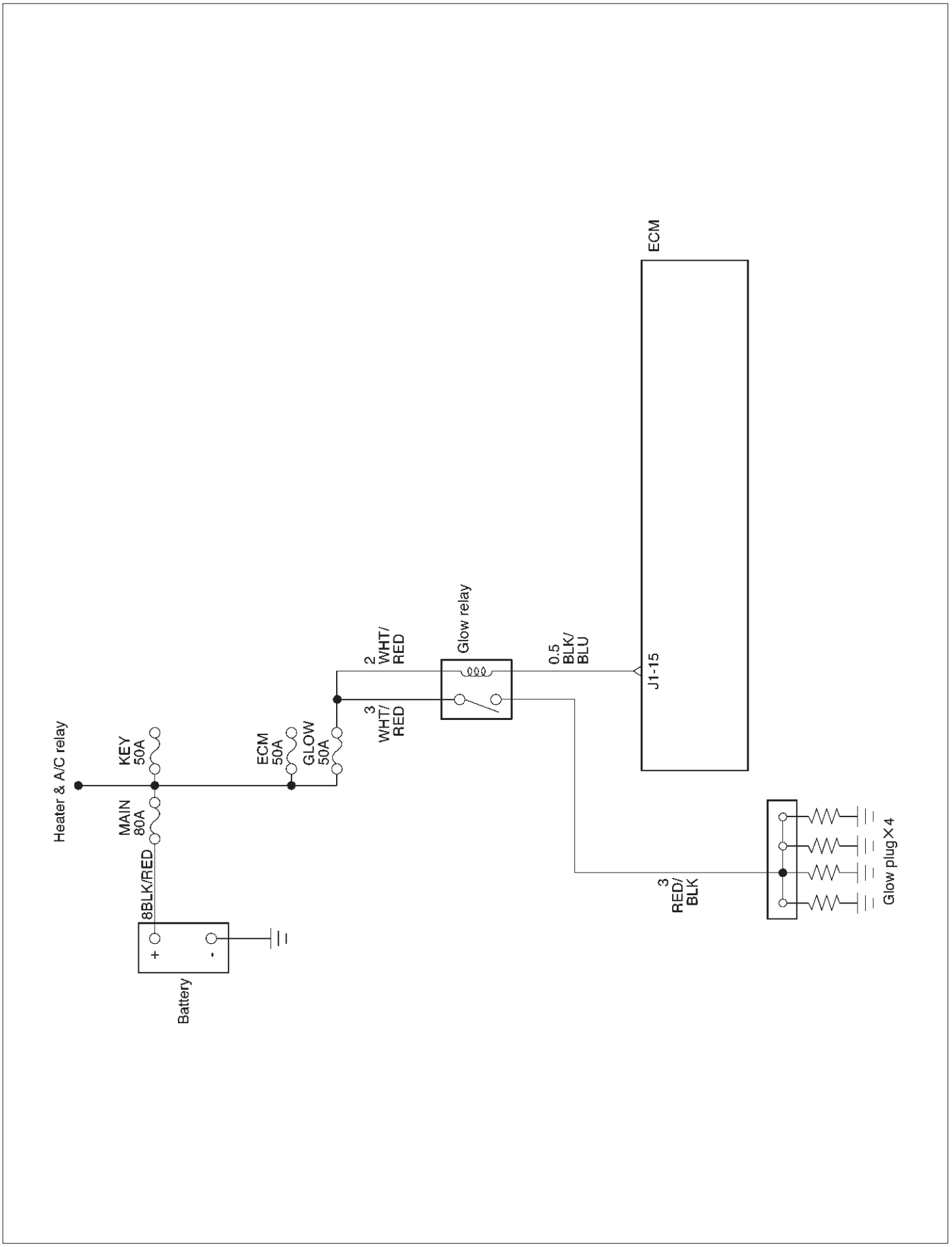

060RW124

ECM Pinouts

ECM Pinout Table, 32-Way Connector – J1 RED – Upper

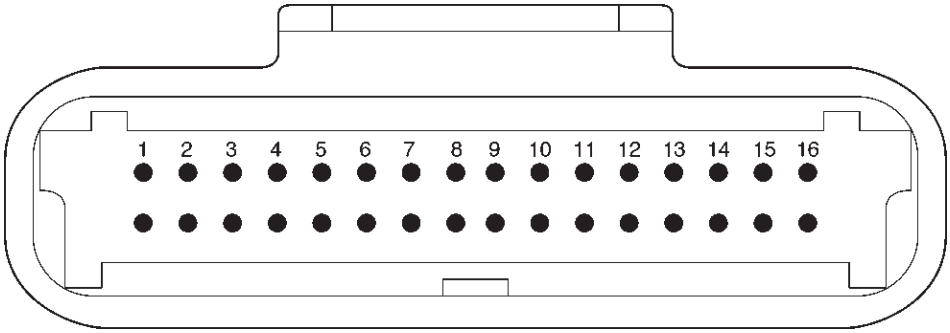

060RW138

J1 – RED	
PIN	SIGNAL
1	FUEL TEMPERATURE
2	SPARE ANALOG 1
3	+5VB1
4	+5VB2
5	SPARE ANALOG 3
6	ACCEL POS OUT 1
7	NOT USED
8	SPARE OUT 2 (TCC)
9	EVRV (EGR)
10	IGN RELAY
11	GLOW PLUG LAMP
12	DIAGNOSTIC LAMP
13	VSV (EXHAUST #2)
14	RAIL PRESS CNTRL VALVE
15	GLOW PLUG RELAY
16	VSV (EXHAUST #1)

ECM Pinout Table, 32-Way Connector – J1 RED – Lower

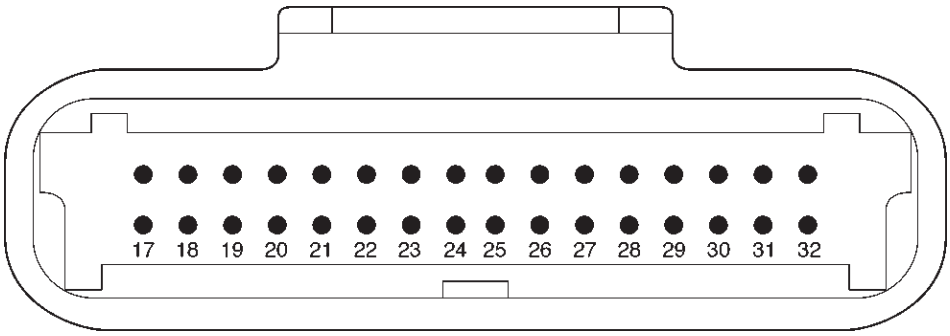

060RW137

J1 – RED	
PIN	SIGNAL
17	SPARE ANALOG 4
18	INTAKE SM POSITION
19	VEHICLE SPEED
20	MT NEUTRAL
21	REVERSE SW
22	ACCEL POS OUT 2
23	THERMO SW RELAY
24	SPARE OUT 3 (TURBO)
25	VSV (EGR)
26	TACHOMETER 1
27	BRAKE SW 1
28	NOT USED (BRAKE 2)
29	A/T NEUTRAL SW
30	NO CONNECTION
31	AC REQUEST SW
32	AT SOLENOID

ECM Pinout Table, 32-Way Connector – J2 BLUE – Upper

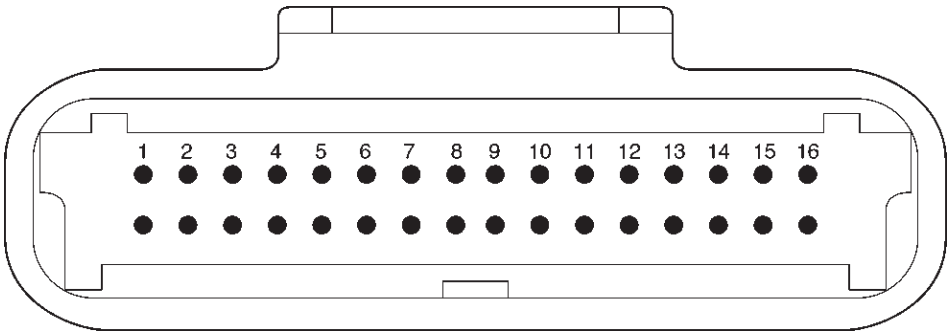

060RW138

J2 – BLUE	
PIN	SIGNAL
1	INJECTOR A RTN
2	INJECTOR B RTN
3	INJECTOR C RTN
4	INJECTOR D RTN
5	CLASS 2
6	SDATA
7	RAIL OIL PRESSURE
8	IDLE SW
9	IGN SW
10	BATTERY
11	QUICK WARM REQ. SW
12	PARTIAL IDLE SW
13	CERAMIC HTR REQUEST SW
14	INTAKE SW S2B
15	INTAKE SW S1T
16	INTAKE SW S1B

ECM Pinout Table, 32-Way Connector – J2 BLUE – Lower

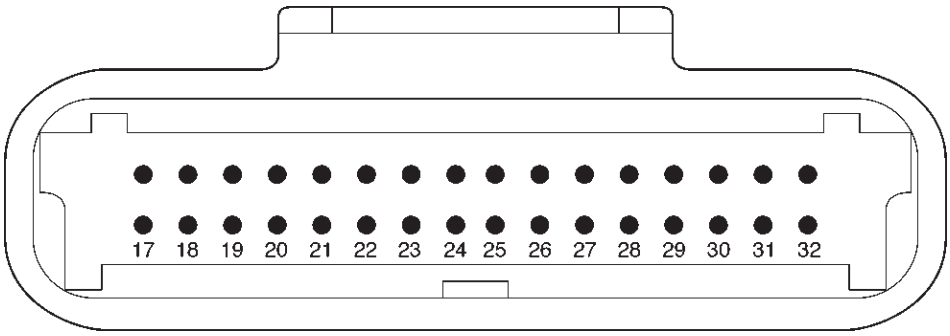

060RW137

J2 – BLUE	
PIN	SIGNAL
17	COOLANT TEMP OUT
18	OIL TEMPERATURE
19	TDC/CAM
20	SPARE ANALOG 2
21	INTAKE AIR TEMPERATURE
22	+5VRTN2
23	BOOST/INLET PRESSURE
24	+5VRTN3
25	ACCELERATOR POSITION
26	+5VRTN1
27	EGR VACUUM PRESSURE
28	INTAKE SM S2T
29	DIAGNOSTIC REQUEST SW
30	COOLANT TEMPERATURE
31	A/T PARK SW
32	CRANKSHAFT

ECM Pinout Table, 5-Way Connector – J3

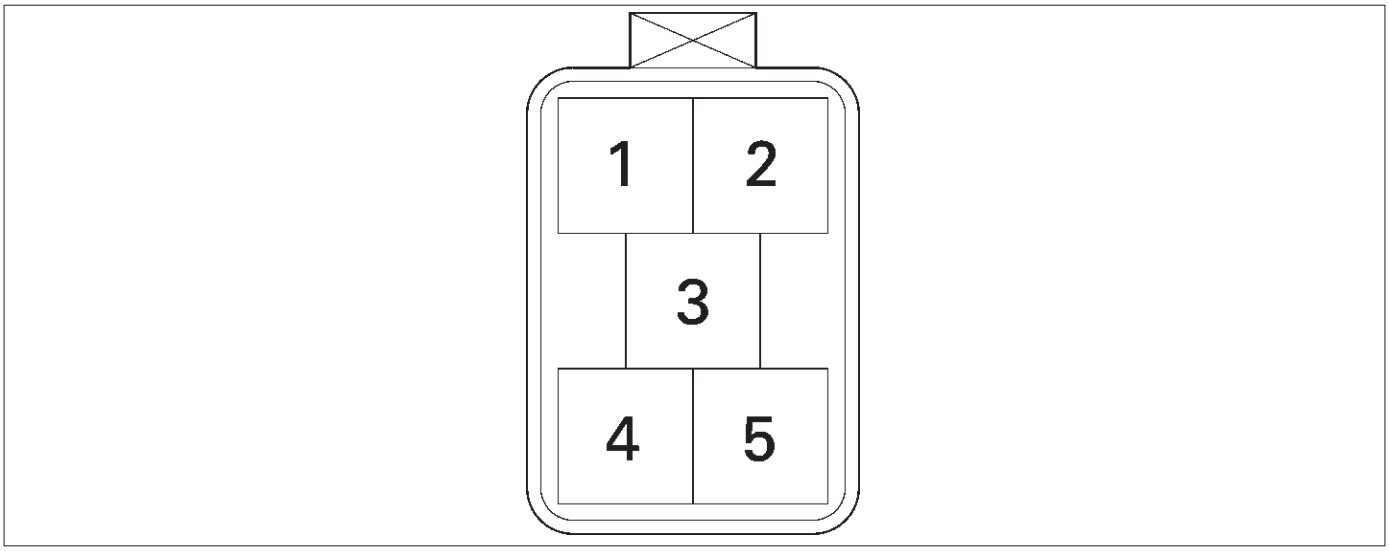

060RW139

J3	
PIN	SIGNAL
1	IGNITION
2	IGNITION
3	PWR GND
4	PWR GND
5	INJECTOR H1

Component Locator

Engine Component Locator Table

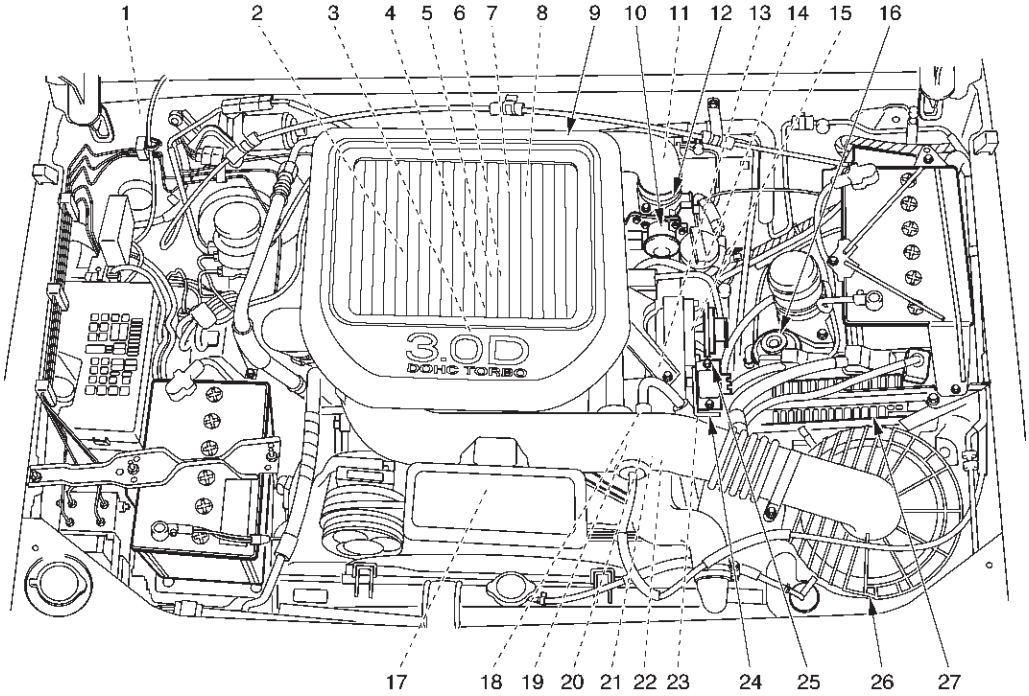

F06RW051

Number	Name	Location
1	AP (Accelerator Pedal Position) Sensor	AP Bracket
2	CKP (Crankshaft Position) Sensor	Inside the right front flywheel Housing
3	Oil Rail	Mounted on the camshaft carrier
4	Oil (Rail) Pressure Sensor	Mounted on the Oil Rail
5	OT (Oil Temperature) Sensor	Mounted on the Oil Rail
6	Fuel Injector	In the Cylinder Head Cover
7	Fuel Return Orifice	Inside the Cylinder Head
8	FT (Fuel Temperature) Sensor	Fuel Return Adaptor
9	Intercooler	On the Cylinder Head Cover
10	Intake Throttle Motor	Behind the Intake Manifold
11	Intake Throttle	Behind the Intake Manifold
12	2 Way Check Valve	Below the Intake Manifold
13	VSV (Vacuum Switching Valve)	At the left Cylinder Body
14	EGR Pressure Sensor	Below the Intake Manifold
15	Fuel Filter	At the left Engine Room
16	CMP (Camshaft Position) Sensor	On the forward of Timing Gear Case
17	IAT (Intake Air Temperature) Sensor	Below the Intake Manifold
18	ECT (Engine Coolant Temperature)	Thermostat Housing
19	High Pressure Oil Pump	On the back Timing Gear Case

Number	Name	Location
20	Rail Pressure Control Valve	In the High Pressure Oil Pump
21	Fuel Pump	In the High Pressure Oil Pump
22	EVRV	On the Intake Manifold
23	MAP (Manifold Absolute Pressure) Sensor	On the Intake Manifold
24	EGR Valve	On the Intake Manifold
25	Air Cleaner	At the left Engine Room
26	ECM	Behind the Air Cleaner

Sensors and Miscellaneous Component Locators

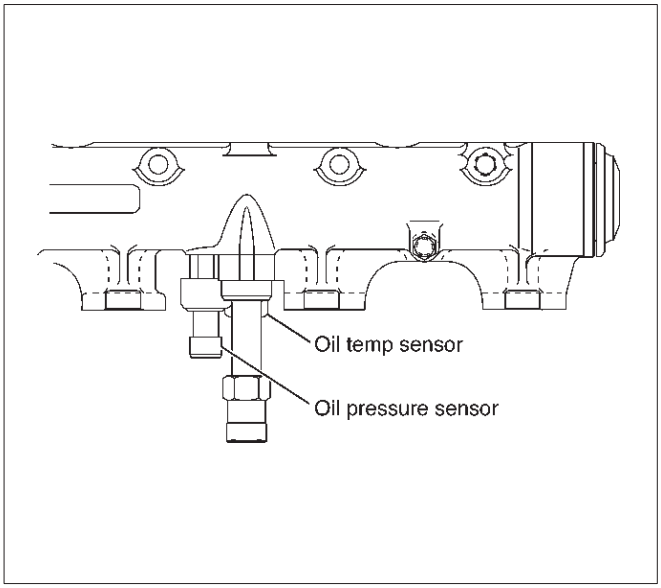

035RW115

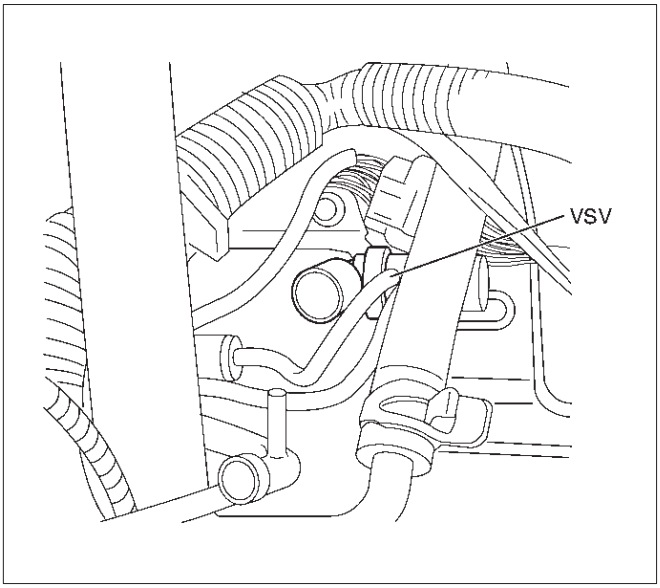

035RW118

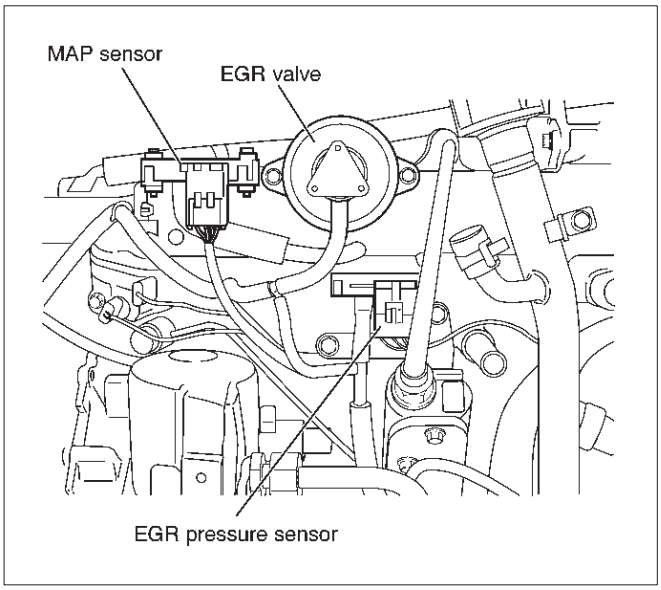

035RW117

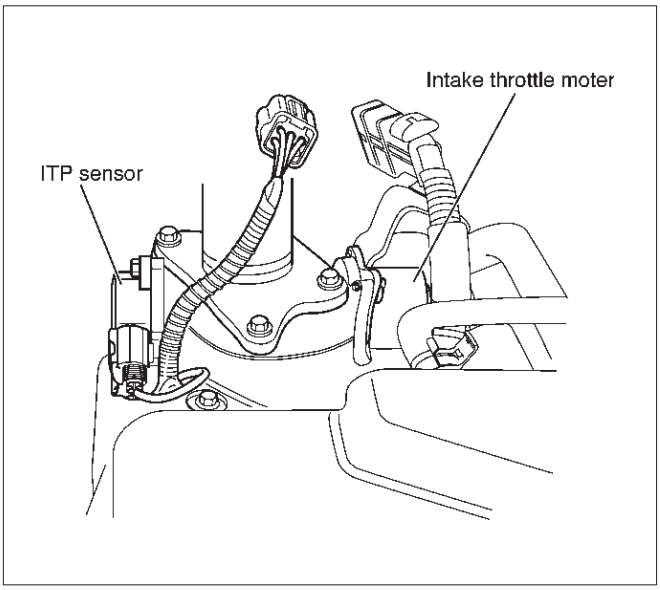

035RW119

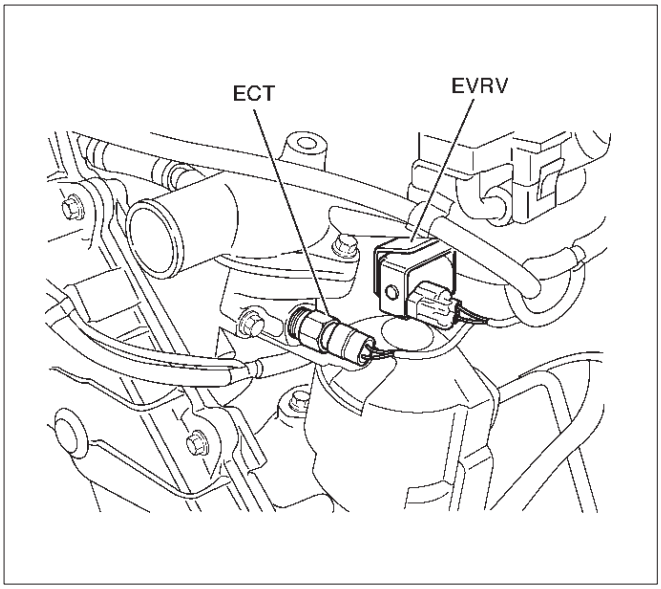

060RW179

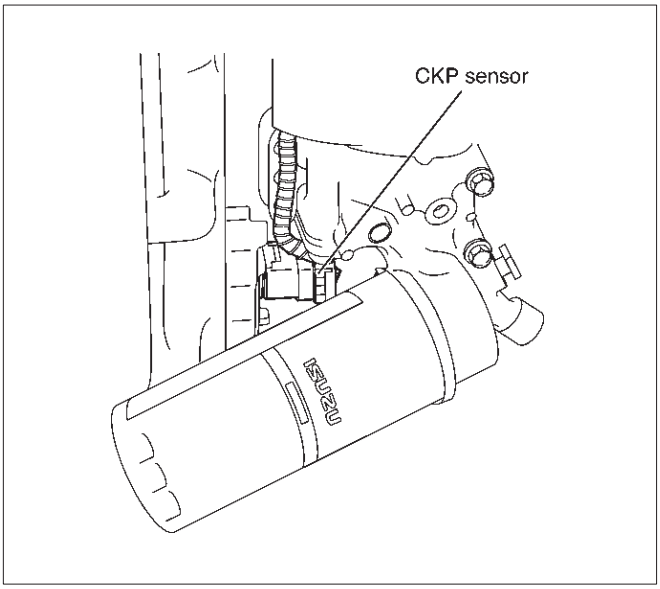

035RW120

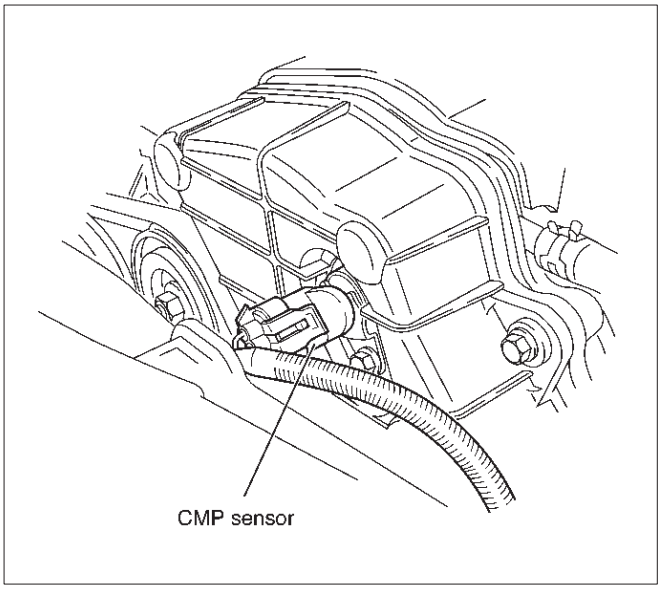

035RW121

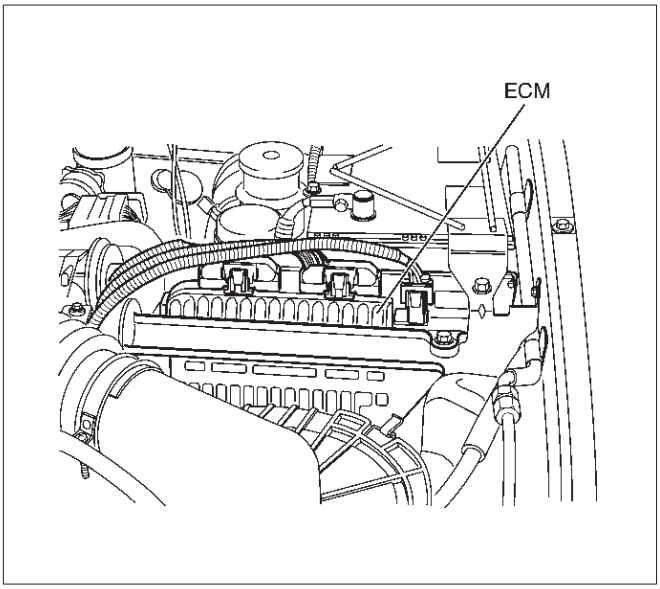

035RW107

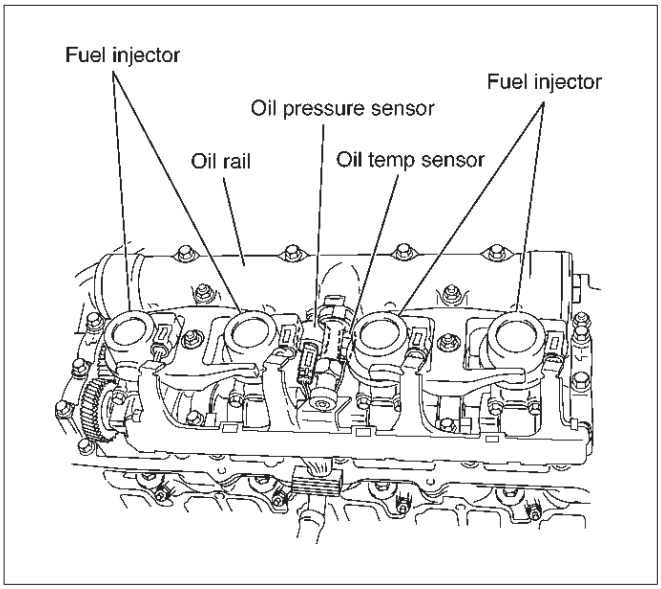

035RW122

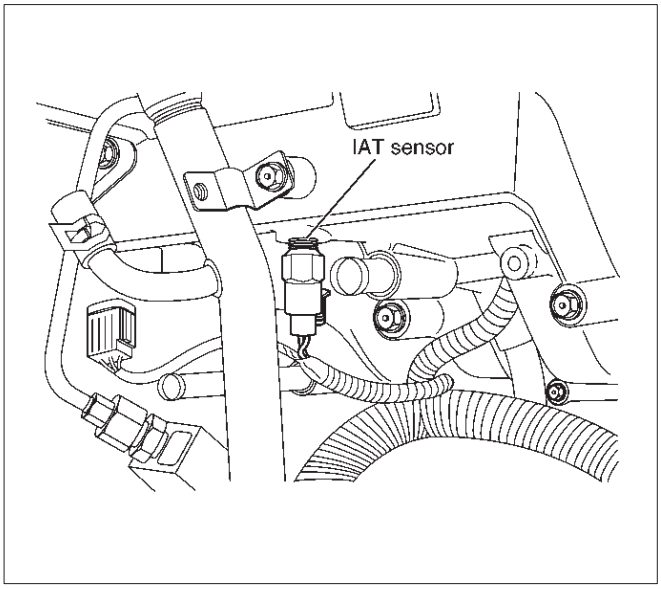

035RW116

Abbreviations Charts

List of abbreviations which may be used in this section.

Abbreviations	Term	Abbreviations	Term
A/C	Air Conditioner	BLK	Black
A/T	Automatic Transmission	BLU	Blue
ACC	Accessory	BRN	Brown
AP	Accel Position	GRN	Green
ASM	Assembly	GRY	Gray
CKP	Crank Position	LT BLU	Light Blue
CMP	Cam Position	LT GRN	Light Green
DLC	Data Link Connector	ORN	Orange
DTC	Diagnosis Trouble Code	PNK	Pink
DVM	Digital Volt Meter	RED	Red
ECM	Engine Control Module	VIO	Violet
ECT	Engine Coolant Temperature	WHT	White
EGR	Exhaust Gas Recircuration	YEL	Yellow
EVRV	Electric Vacuum Regulating Valve		
EXH	Exhaust		
FT	Fuel Temperature		
IAT	Intake Air Temperature		
IG	Ignition		
ITP	Intake Throttle Position		
M/T	Manual Transmission		
MAP	Manifold Absolute Pressure		
MIL	Mulfunction Indicator Lamp		
OBD	On-Board Diagnostic		
OT	Oil Temperature		
QOS	Quick on Start System		
QWS	Quick Warming-Up System		
RP	Rail Pressure		
RPCV	Rail Pressure Control Valve		
SRS	Supplemental Restraint System		
ST	Start		
SW	Switch		
TEMP	Temperature		
TOD	Torque on Demand		
VSS	Vehicle Speed Sensor		
VSV	Vacuum Switching Valve		
HEUI	Hydraulically Actuated Electronically Controlled Unit Injector		

Diagnosis

Strategy-Based Diagnostics

Strategy-Based Diagnostics

The strategy-based diagnostic is a uniform approach to repair all Electrical/Electronic (E/E) systems. The diagnostic flow can always be used to resolve an E/E system problem and is a starting point when repairs are necessary. The following steps will instruct the technician how to proceed with a diagnosis:

1. Verify the customer complaint.
   - To verify the customer complaint, the technician should know the normal operation of the system.
2. Perform preliminary checks.
   - Conduct a thorough visual inspection.
   - Review the service history.
   - Detect unusual sounds or odors.
   - Gather diagnostic trouble code information to achieve an effective repair.
3. Check bulletins and other service information.
   - This includes videos, newsletters, etc.
4. Refer to service information (manual) system check(s).
   - “System checks” contain information on a system that may not be supported by one or more DTCs. System checks verify proper operation of the system. This will lead the technician in an organized approach to diagnostics.
5. Refer to service diagnostics.

DTC Stored

Follow the designated DTC chart exactly to make an effective repair.

No DTC

Select the symptom from the symptom tables. Follow the diagnostic paths or suggestions to complete the repair. You may refer to the applicable component/system check in the system checks.

No Matching Symptom

1. Analyze the complaint.
2. Develop a plan for diagnostics.
3. Utilize the wiring diagrams and the theory of operation.

Call technical assistance for similar cases where repair history may be available. Combine technician knowledge with efficient use of the available service information.

Intermittents

Conditions that are not always present are called intermittents. To resolve intermittents, perform the following steps:

1. Observe history DTCs, DTC modes, and freezeframe data.
2. Evaluate the symptoms and the conditions described by the customer.
3. Use a check sheet or other method to identify the circuit or electrical system component.
4. Follow the suggestions for intermittent diagnosis found in the service documentation.

Most scan tools, such as the Tech 2 and the DVM, have data-capturing capabilities that can assist in detecting intermittents.

No Trouble Found

This condition exists when the vehicle is found to operate normally. The condition described by the customer may be normal. Verify the customer complaint against another vehicle that is operating normally. The condition may be intermittent. Verify the complaint under the conditions described by the customer before releasing the vehicle.

1. Re-examine the complaint.
   When the complaint cannot be successfully found or isolated, a re-evaluation is necessary. The complaint should be re-verified and could be intermittent as defined in *Intermittents*, or could be normal.
2. Repair and verify.
   After isolating the cause, the repairs should be made. Validate for proper operation and verify that the symptom has been corrected. This may involve road testing or other methods to verify that the complaint has been resolved under the following conditions:
   - Conditions noted by the customer.
   - If a DTC was diagnosed, verify a repair by duplicating conditions present when the DTC was set as noted in the Failure Records or Freeze Frame data.

Verifying Vehicle Repair

Verification of the vehicle repair will be more comprehensive for vehicles with OBD system diagnostics. Following a repair, the technician should perform the following steps:

IMPORTANT: Follow the steps below when you verify repairs on OBD systems. Failure to follow these steps could result in unnecessary repairs.

1. Review and record the Failure Records and the Freeze Frame data for the DTC which has been diagnosed (Freeze Frame data will only be stored for the MIL (“Check Engine” lamp) has been requested).
2. Clear the DTC(s).
3. Operate the vehicle within conditions noted in the Failure Records and Freeze Frame data.
4. Monitor the DTC status information for the specific DTC which has been diagnosed until the diagnostic test associated with that DTC runs.

General Service Information

Serviceability Issues

Non-OEM Parts

All of the OBD diagnostics have been calibrated to run with OEM parts. Accordingly, if commercially sold sensor or switch is installed, it makes a wrong diagnosis and turn on the MIL (“Check Engine” lamp).

Aftermarket electronics, such as cellular phones, stereos, and anti-theft devices, may radiate EMI into the control system if they are improperly installed. This may cause a false sensor reading and turn on the MIL (“Check Engine” lamp).

Poor Vehicle Maintenance

The sensitivity of OBD diagnostics will cause the MIL (“Check Engine” lamp) to turn on if the vehicle is not maintained properly. Restricted oil filters, fuel filters, and crankcase deposits due to lack of oil changes or improper oil viscosity can trigger actual vehicle faults that were not previously monitored prior to OBD. Poor vehicle maintenance can not be classified as a “non-vehicle fault”, but with the sensitivity of OBD diagnostics, vehicle maintenance schedules must be more closely followed.

Related System Faults

Many of the OBD system diagnostics will not run if the ECM detects a fault on a related system or component.

Visual/Physical Engine Compartment Inspection

Perform a careful visual and physical engine compartment inspection when performing any diagnostic procedure or diagnosing the cause of an emission test failure. This can often lead to repairing a problem without further steps. Use the following guidelines when performing a visual/physical inspection:

- Inspect all vacuum hoses for punches, cuts, disconnects, and correct routing.
- Inspect hoses that are difficult to see behind other components.
- Inspect all wires in the engine compartment for proper connections, burned or chafed spots, pinched wires, contact with sharp edges or contact with hot exhaust manifolds or pipes.

Basic Knowledge of Tools Required

NOTE: Lack of basic knowledge of this powertrain when performing diagnostic procedures could result in an incorrect diagnosis or damage to powertrain components. Do not attempt to diagnose a powertrain problem without this basic knowledge.

A basic understanding of hand tools is necessary to effectively use this section of the Service Manual.

Serial Data Communications

Class II Serial Data Communications

This vehicle utilizes the “Class II” communication system. Each bit of information can have one of two lengths: long or short. This allows vehicle wiring to be reduced by transmitting and receiving multiple signals over a single wire. The messages carried on Class II data streams are also prioritized. If two messages attempt to establish communications on the data line at the same time, only the message with higher priority will continue. The device with the lower priority message must wait.

On this vehicle the Tech 2 displays the actual values for vehicle parameters. It will not be necessary to perform any conversions from coded values to actual values.

On-Board Diagnostic (OBD)

On-Board Diagnostic Tests

A diagnostic test is a series of steps, the result of which is a pass or fail reported to the diagnostic executive. When a diagnostic test reports a pass result, the diagnostic executive records the following data:

- The diagnostic test has been completed since the last ignition cycle.
- The diagnostic test has passed during the current ignition cycle.
- The fault identified by the diagnostic test is not currently active.

When a diagnostic test reports a fail result, the diagnostic executive records the following data:

- The diagnostic test has been completed since the last ignition cycle.
- The fault identified by the diagnostic test is currently active.
- The fault has been active during this ignition cycle.
- The operating conditions at the time of the failure.

Comprehensive Component Monitor Diagnostic Operation

Comprehensive component monitoring diagnostics are required to operate engine properly.

Input Components:

Input components are monitored for circuit continuity and out-of-range values. This includes rationality checking. Rationality checking refers to indicating a fault when the signal from a sensor does not seem reasonable. Accel Position (AP) sensor that indicates high throttle position at low engine loads or MAP voltage. Input components may include, but are not limited to the following sensors:

- Intake Air Temperature (IAT) Sensor
- Crankshaft Position (CKP) Sensor
- Intake throttle Position (ITP) Sensor
- Engine Coolant Temperature (ECT) Sensor
- Camshaft Position (CMP) Sensor
- Manifold absolute Pressure (MAP) Sensor
- Accel Position Sensor
- Fuel Temp Sensor
- Rail Pressure Sensor
- Oil Temp Sensor
- EGR Pressure Sensor
- Vehicle Speed Sensor

Output Components:

Output components are diagnosed for proper response to control module commands. Components where functional monitoring is not feasible will be monitored for circuit continuity and out-of-range values if applicable.
Output components to be monitored include, but are not limited to, the following circuit:

- EGR VSV
- EGR EVRV
- Electronic Transmission controls
- Injector
- Intake throttle
- Glow plug
- MIL control

Refer to ECM and Sensors in General Descriptions.

Passive and Active Diagnostic Tests

A passive test is a diagnostic test which simply monitors a vehicle system or component. Conversely, an active test, actually takes some sort of action when performing diagnostic functions, often in response to a failed passive test.

Intrusive Diagnostic Tests

This is any on-board test run by the Diagnostic Management System which may have an effect on vehicle performance or emission levels.

Warm-Up Cycle

A warm-up cycle means that engine at temperature must reach a minimum of 70˚C (160˚F) *and* rise at least 22˚C (40˚F) over the course of a trip.

Freeze Frame

Freeze Frame is an element of the Diagnostic Management System which stores various vehicle information at the moment an emissions-related fault is stored in memory and when the MIL is commanded on. These data can help to identify the cause of a fault. Refer to *Storing And Erasing Freeze Fame Data* for more detailed information.

Failure Records

Failure Records data is an enhancement of the OBD Freeze Frame feature. Failure Records store the same vehicle information as does Freeze Frame, but it will store that information for any fault which is stored in on-board memory, while Freeze Frame stores information only for emission-related faults that command the MIL on.

Common OBD Terms

Diagnostic

When used as a noun, the word diagnostic refers to any on-board test run by the vehicle's Diagnostic Management System. A diagnostic is simply a test run on a system or component to determine if the system or component is operating according to specification. There are many diagnostics, shown in the following list:

- EGR
- engine speed
- vehicle speed
- ECT
- MAP
- VSV
- IAT
- ITP
- AP
- FT (Fuel Temp)
- RP (Rail Pressure)
- OT (Oil Temp)
- EGR EVRV
- Idle SW
- Brake SW

The Diagnostic Executive

The Diagnostic Executive is a unique segment of software which is designed to coordinate and prioritize the diagnostic procedures as well as define the protocol for recording and displaying their results. The main responsibilities of the Diagnostic Executive are listed as follows:

- Commanding the MIL ("Check Engine" lamp) on and off
- DTC logging and clearing
- Freeze Frame data for the first emission related DTC recorded
- Current status information on each diagnostic

Diagnostic Information

The diagnostic charts and functional checks are designed to locate a faulty circuit or component through a process of logical decisions. The charts are prepared with the requirement that the vehicle functioned correctly at the time of assembly and that there are not multiple faults present.
There is a continuous self-diagnosis on certain control functions. This diagnostic capability is complemented by the diagnostic procedures contained in this manual. The language of communicating the source of the malfunction is a system of diagnostic trouble codes. When a malfunction is detected by the control module, a diagnostic trouble code is set and the Malfunction Indicator Lamp (MIL) ("Check Engine" lamp) is illuminated.

Malfunction Indicator Lamp (MIL)

The Malfunction Indicator Lamp (MIL) looks the same as the MIL you are already familiar with "Check Engine" lamp.
Basically, the MIL is turned on when the ECM detects a DTC that will impact the vehicle emissions.

- When the MIL remains "ON" while the engine is running, or when a malfunction is suspected due to a driveability or emissions problem, a Powertrain On-Board Diagnostic (OBD) System Check must be performed. The procedures for these checks are given in On-Board Diagnostic (OBD) System Check. These checks will expose faults which may not be detected if other diagnostics are performed first.

DTC Types

Characteristic of Code

- Non-Emissions related
- Dose not request illumination of any lamp
- Stores a History DTC on the *first trip* with a fail
- Stores Fail Record when test fails
- Updates the Fail Record each time the diagnostic test fails

Storing and Erasing Freeze Frame Data and Failure Records

The data captured is called Freeze Frame data. The Freeze Frame data is very similar to a single record of operating conditions. Whenever the MIL is illuminated, the corresponding record of operating conditions is recorded to the Freeze Frame buffer.

Data from these faults take precedence over data associated with any other fault. The Freeze Frame data will not be erased unless the associated history DTC is cleared.

Each time a diagnostic test reports a failure, the current engine operating conditions are recorded in the *Failure Records* buffer. A subsequent failure will update the recorded operating conditions. The following operating conditions for the diagnostic test which failed *typically* include the following parameters:

- Engine Speed
- Engine Load
- Engine Coolant Temperature
- Vehicle Speed
- Intake Throttle Position
- MAP
- Injector Base Pulse Width
- Loop Status

Data Link Connector (DLC)

The provision for communication with the contorl module is the Data Link Connector (DLC). It is located at behind the lower front instrument panel. The DLC is used to connect to a Tech 2. Some common uses of the Tech 2 are listed below:

- Identifying stored Diagnostic Trouble Codes (DTCs).
- Clearing DTCs.
- Performing out put control tests.
- Reading serial data.

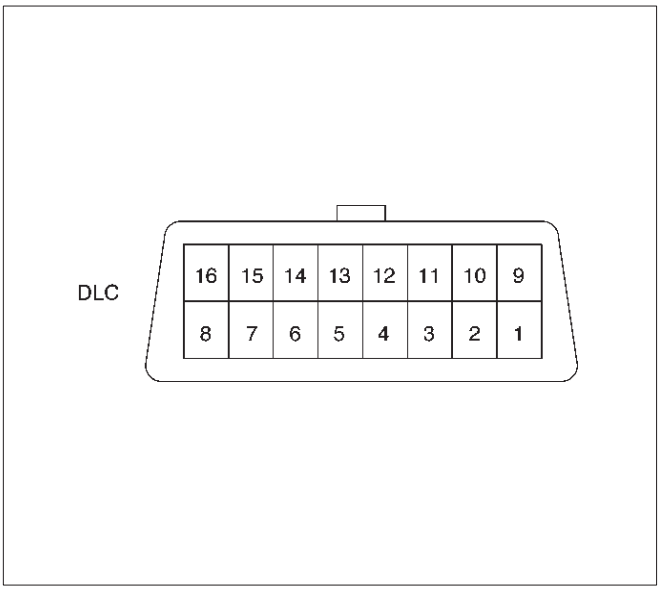

060RW046

Verifying Vehicle Repair

Verification of vehicle repair will be more comprehensive for vehicles with OBD system diagnostic. Following a repair, the technician should perform the following steps:

1. Review and record the Fail Records and/or Freeze Frame data for the DTC which has been diagnosed.
2. Clear DTC(s).
3. Operate the vehicle within conditions noted in the Fail Records and/or Freeze Frame data.
4. Monitor the DTC status information for the specific DTC which has been diagnosed until the diagnostic test associated with that DTC runs.

Following these steps are very important in verifying repairs on OBD systems. Failure to follow these steps could result in unnecessary repairs.

Reading Flash Diagnostic Trouble Codes

The provision for communicating with the Engine Control Module (ECM) is the Data Link Connector (DLC). The DLC is located in the front console box. It is used in the assembly plant to receive information in checking that the engine is operating properly before it leaves the plant.

The diagnostic trouble code(s) (DTCs) stored in the ECM's memory can be read either through a hand-held diagnostic scanner plugged into the DLC or by counting the number of flashes of the "Check Engine" Malfunction Indicator Lamp (MIL) when the diagnostic test terminal of the DLC is grounded. The DLC terminal "6" (diagnostic request) is pulled "Low" (grounded) by jumpering to DLC terminal "4", which is a ground wire.

This will signal the ECM that you want to "flash" DTC(s), if any are present. Once terminals "4" and "6" have been connected, the ignition switch must be moved to the "ON" position, with the engine not running.

The "Check Engine"MIL will indicate a DTC three times if a DTC is present. If more than one DTC has been stored

in the ECM's memory, the DTC(s) will be output from the lowest to the highest, with each DTC being displayed three times.
The DTC display will continue as long as the DLC is shorted.

Reading Diagnostic Trouble Codes Using a TECH 2

The procedure for reading diagnostic trouble code(s) is to used a diagnostic Tech 2. When reading DTC(s), follow instructions supplied by Tech 2 manufacturer.
For the 1998 model year, Isuzu dealer service departments will continue to use Tech 2.

Clearing Diagnostic Trouble Codes

IMPORTANT: Do not clear DTCs unless directed to do so by the service information provided for each diagnostic procedure. When DTCs are cleared, the Freeze Frame and Failure Record data which may help diagnose an intermittent fault will also be erased from memory.

If the fault that caused the DTC to be stored into memory has been corrected, the Diagnostic Executive will begin to count the "warm-up" cycles with no further faults detected, the DTC will automatically be cleared from the ECM memory.

To clear Diagnostic Trouble Codes (DTCs), use the Tech 2 "clear DTCs" or "clear information" function. When clearing DTCs follow instructions supplied by the Tech 2 manufacturer.
When a Tech 2 is not available, DTCs can also be cleared by disconnecting *one* of the following sources for at least thirty (30) seconds.

NOTE: To prevent system damage, the ignition key must be "OFF" when disconnecting or reconnecting battery power.

- The power source to the control module. Examples: fuse, pigtail at battery ECM connectors etc.
- The negative battery cable. (Disconnecting the negative battery cable will result in the loss of other on-board memory data, such as preset radio tuning).

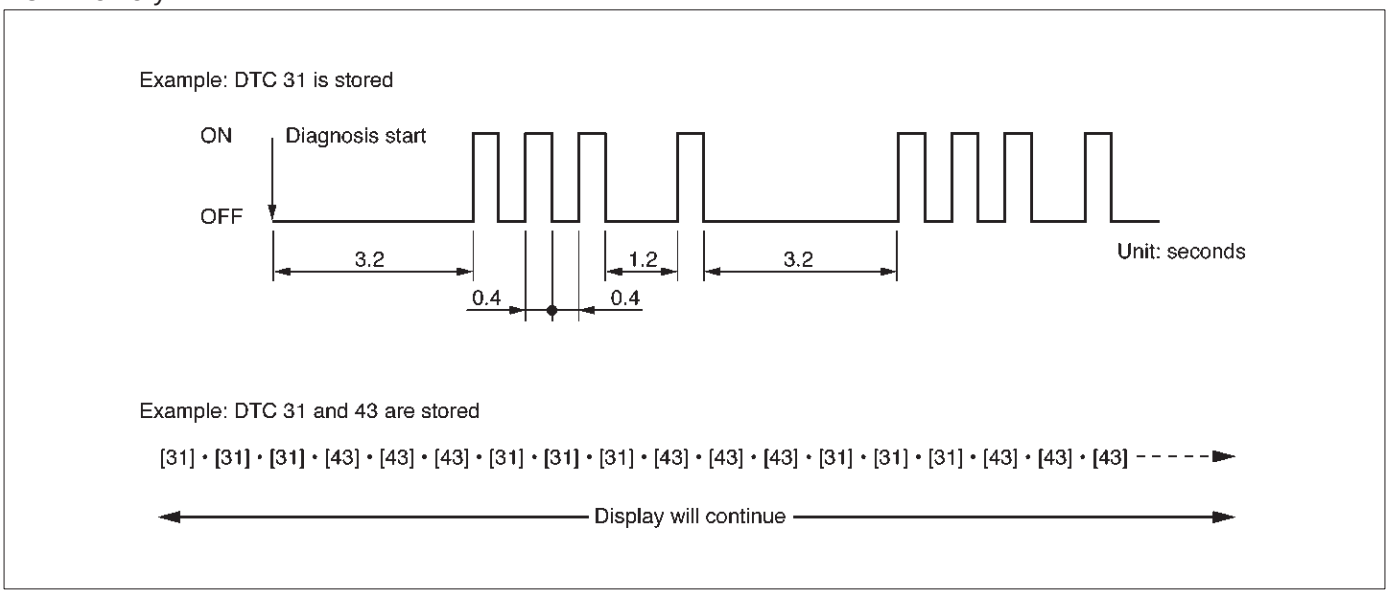

060RW169

Tech 2 Scan Tool

From 98 MY, Isuzu dealer service departments are recommended to use Tech 2. Please refer to Tech 2 user guide.

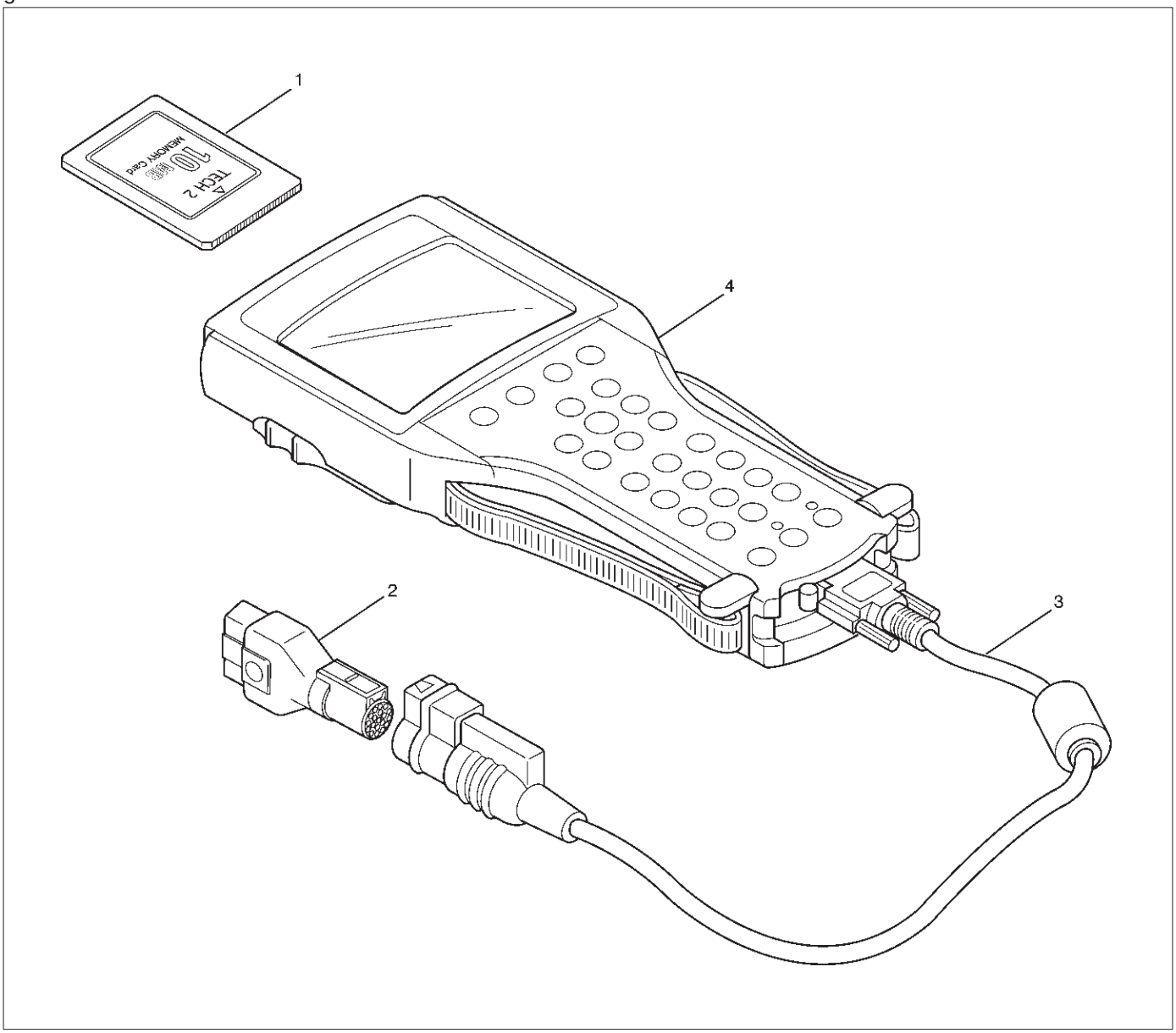

901RW257

Legend

(1) PCMCIA Card
(2) SAE 16/19 Adaptor
(3) DLC Cable
(4) Tech–2

Getting Started

- Before operating the Isuzu PCMCIA card with the Tech 2, the following steps must be performed:

1. The Isuzu 98 System PCMCIA card (1) inserts into the Tech 2 (5).
2. Connect the SAE 16/19 adapter (3) to the DLC cable (4).
3. Connect the DLC cable to the Tech 2 (5)
4. Make sure the vehicle ignition is off.
5. Connect the Tech 2 SAE 16/19 adapter to the vehicle DLC.
6. The vehicle ignition turns on.
7. Verify the Tech 2 power up display.

012RW105

NOTE: The RS232 Loop back connector is only to use for diagnosis of Tech 2 and refer to user guide of the Tech 2.

Operating Procedure

The power up screen is displayed when you power up the tester with the Isuzu systems PCMCIA card. Follow the operating procedure below.

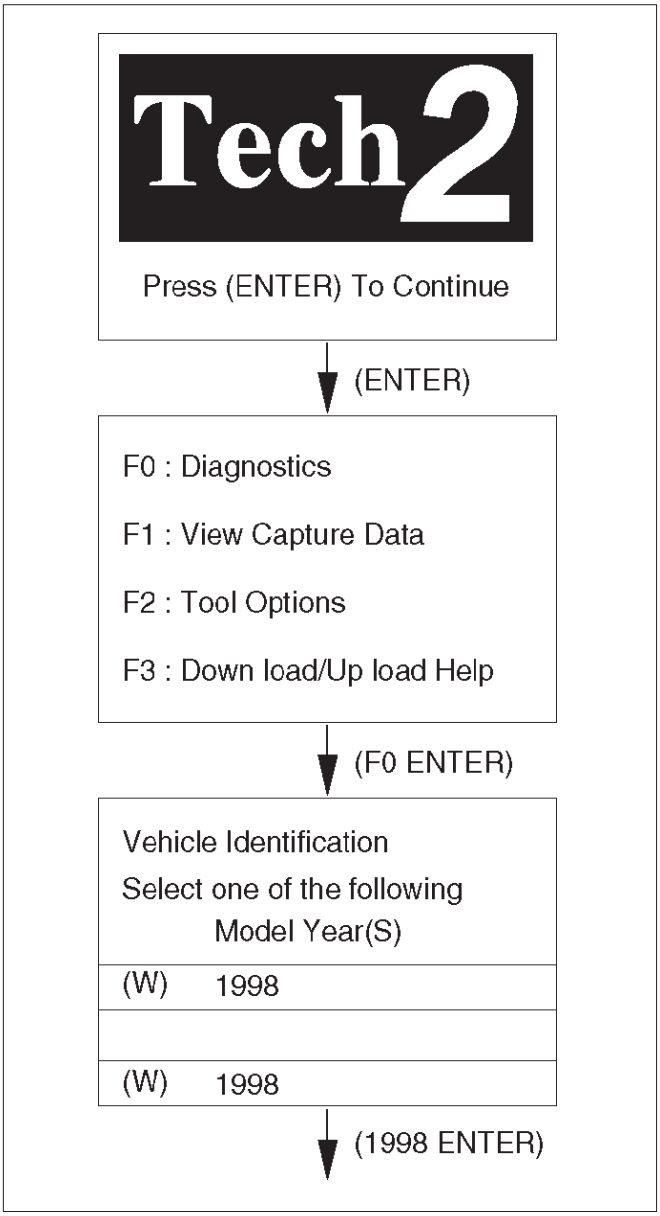

060RW014

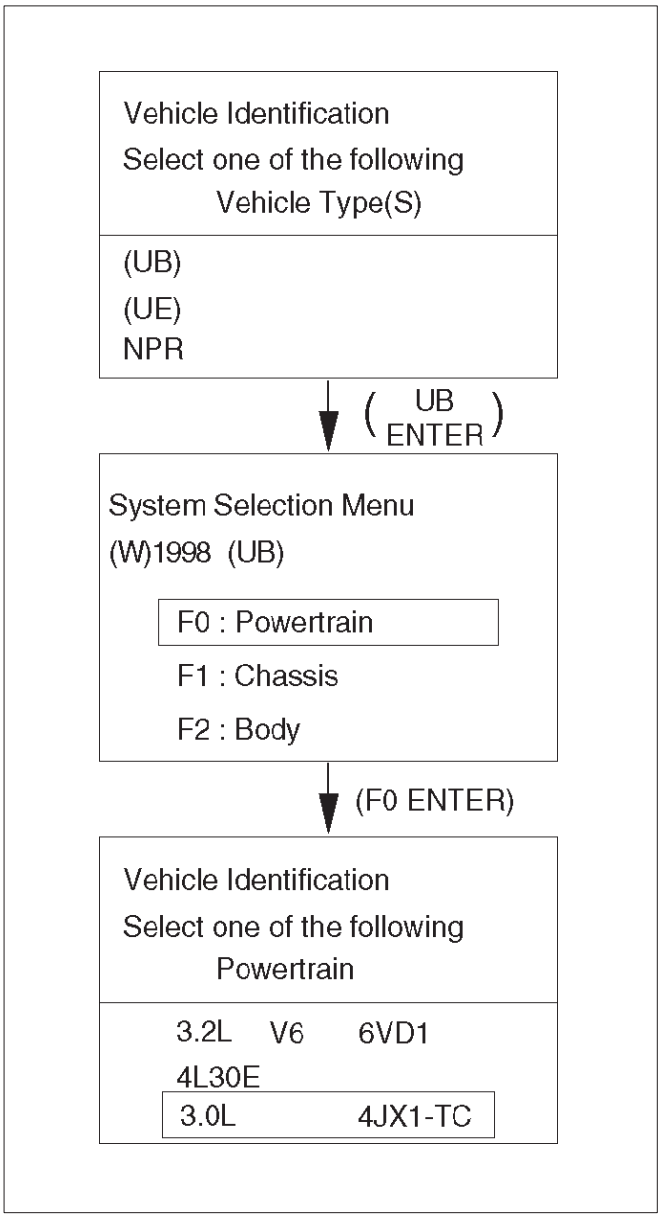

060RW120

Menu

- The following table shows, which functions are used the available equipment versions.

F0: Diagnostic Trouble Codes	
	F0: Read DTC Info Ordered By Priority
	F1: Read DTC Info As Stored By ECU
	F2: Clear DTC Information
	F3: Freeze Frame / Failure Records
F1: Data Display	
F2: Snapshot	
F3: Actuator Tests	
	F0: Checklight
	F1: Glow Time Lamp
	F2: EGR Switching Valve
	F3: Exhaust Switching Valve 1
	F4: Exhaust Switching Valve 2
F4: Miscellaneous Tests	
	F0: Throttle Motor Control
	F1: Rail Pressure Control
	F2: EGR Regulating Valve Control
	F3: Rail Pressure Control Valve
	F4: Injector Balance Test
F5: Programming	
	F0: Injector Calibration
	(F1: Rail Pressure Calibration)

DTC Modes

There are three options available in the Tech 2 DTC mode to display the enhanced information available. A description of the new modes, DTC Info, follows. After selecting DTC, the following menu appears:

- DTC Info
- Clear Info
- Read DTC Info Ordered By Priority

The following is a brief description of each of the sub menus in DTC Info. The order in which they appear here is alphabetical and not necessarily the way they will appear on the Tech 2.

DTC Information Mode

Use the DTC info mode to search for a specific type of stored DTC information.The service manual may instruct the technician to test for DTCs in a certain manner. Always follow published service procedures.

Fail This Ignition

This selection will display all DTCs that have failed during the present ignition cycle.

History

This selection will display only DTCs that are stored in the ECM's history memory. It will not display Type B DTCs that have not requested the MIL ("Check Engine" lamp). It will display all type A and B DTCs that have requested the MIL and have failed within the last 40 warm-up cycles. In addition, it will display all type C and type D DTCs that have failed within the last 40 warm-up cycles.

MIL SVC or Message Requested

This selection will display only DTCs that are requesting the MIL. Type C and type D DTCs cannot be displayed using this option. This selection will report type B DTCs only after the MIL has been requested.

Test Failed Since Code Cleared

This selection will display all active and history DTCs that have reported a test failure since the last time DTCs were cleared.

Injector Test

This test is conducted to make it sure that appropriate electric signals are being sent to injectors Nos. 1 – 4. Tech–2 must be used for this test.

Test Procedure:

1. Connect Tech–2 to the vehicle DLC.
2. Set Ignition Switch to the "ON" position.
3. Select Control Test.
4. Select Injector Test.
5. Send instructions to each injector(Switch on), making sure of injector working noise.

NOTE: If injector working noise (Clink) can hardly be confirmed, remove the engine head cover noise insulation.

Refer to Section 6A.

6. In the injector whose working noise has been confirmed, its electric circuit can be regarded as normal.
   As for the injector whose working noise has not been confirmed, its electric circuit or the injector proper is faulty.

EGR Valve Test

This test is conducted to check EGR valve for its working. This test needs Tech–2.

Test Procedure

1. Connect Tech–2 to vehicle DLC.
2. Switch on the engine.
3. Select "DIAGNOSIS" from the main menu.
4. Select Miscellaneous Test.
5. Select EGR Valve.
6. Instruct EGR Valve to check a data list.
7. If change in the data list shows a normal valve, the working of EGR Valve can be judged to be normal.

Rail Pressure Control Valve Test

This test is conducted to check RPC valve for its working. This test needs Tech–2.

Test Procedure

1. Connect Tech–2 to vehicle DLC.
2. Switch on the engine.
3. Select "DIAGNOSIS" from the main menu.
4. Select Miscellaneous Test.
5. Select Rail Pressure Control Valve.
6. Instruct RPC Valve to check a data list.
7. If change in the data list shows a normal valve, the working of RPC Valve can be judged to be normal.

Injector Balance Test

This test is conducted to make it sure that appropriate electric signals are being sent to injectors Nos. 1-4, when the engine is idling.
This test needs Tech–2.

Test Procedure

1. Connect Tech–2 to vehicle DLC.
2. The engine is running at idling condition.
3. Select "DIAGNOSIS" from the main menu.
4. Select Miscellaneous Test.
5. Select the injector Balance Test.
6. Send instructions to each injector(Switch On), making sure change of the engine vibration.
7. In the injector whose change of the vibration has been confirmed, it's electric circuit can be regarded as normal.

Data Programming in Case of ECM Change

When replacing ECM, it is necessary to confirm and record the group sign of injector beforehand. For this confirmation.

Tech–2 must be used. After ECM change, the recorded group sign should be programmed. Oil pressure sensor data also should be programmed.

- Group Sign Confirmation Procedure
  1 Connect Tech–2 to vehicle DLC.
  2 Turn Ignition Switch to the “ON” position.
  3 Select “DIAGNOSIS” from the main menu.
  4 Select programming.
  5 Select Read/store Trim Data.
  6 Confirm and record the group sign of injector.
- ECM Change
- Programming Procedure for Injector Group Sign
  1 Connect Tech–2 to vehicle DLC.
  2 Turn Ignition Switch to the “ON” position.
  3 Select “DIAGNOSIS” from the main menu.
  4 Select programming.
  5 Select ECM change.
  6 Select cylinder.
  7 Program Injector Group Sign.
  8 Confirm the completion of Injector programming.
- Programming Procedure for Oil Pressure Sensor
  1 Connect Tech–2 to vehicle DLC.
  2 Turn Ignition Switch to the “ON” position.
  3 Select “DIAGNOSIS” from the main menu.
  4 Select programming.

Rail Pressure Sensor Programming

Rail pressure sensor replacement must be programmed. This programming needs Tech–2.

Programing Procedure

1. Connect Tech–2 to vehicle DLC.
2. Turn Ignition Switch to the “ON” position.
3. Select “DIAGNOSIS” from the main menu.
4. Select Programming.
5. Select Oil Pressure Sensor change.
6. Execute Oil Pressure Sensor Program.
7. Confirm the completion of Oil Pressure Sensor Program.

Injector Group Sign Programming (Injector Change)

In case of Injector change, injector group sign must be programmed.
This programming needs Tech–2.

Programing Procedure

1. Connect Tech–2 to vehicle DLC.
2. Turn Ignition Switch to the “ON” position.
3. Select “DIAGNOSIS” from the main menu.
4. Select Programming.
5. Select Injector change.
6. Select the cylinder changed.
7. Appoint and select Injector Group Sign.
8. Confirm the completion of Injector programming.

Fuel Injection System

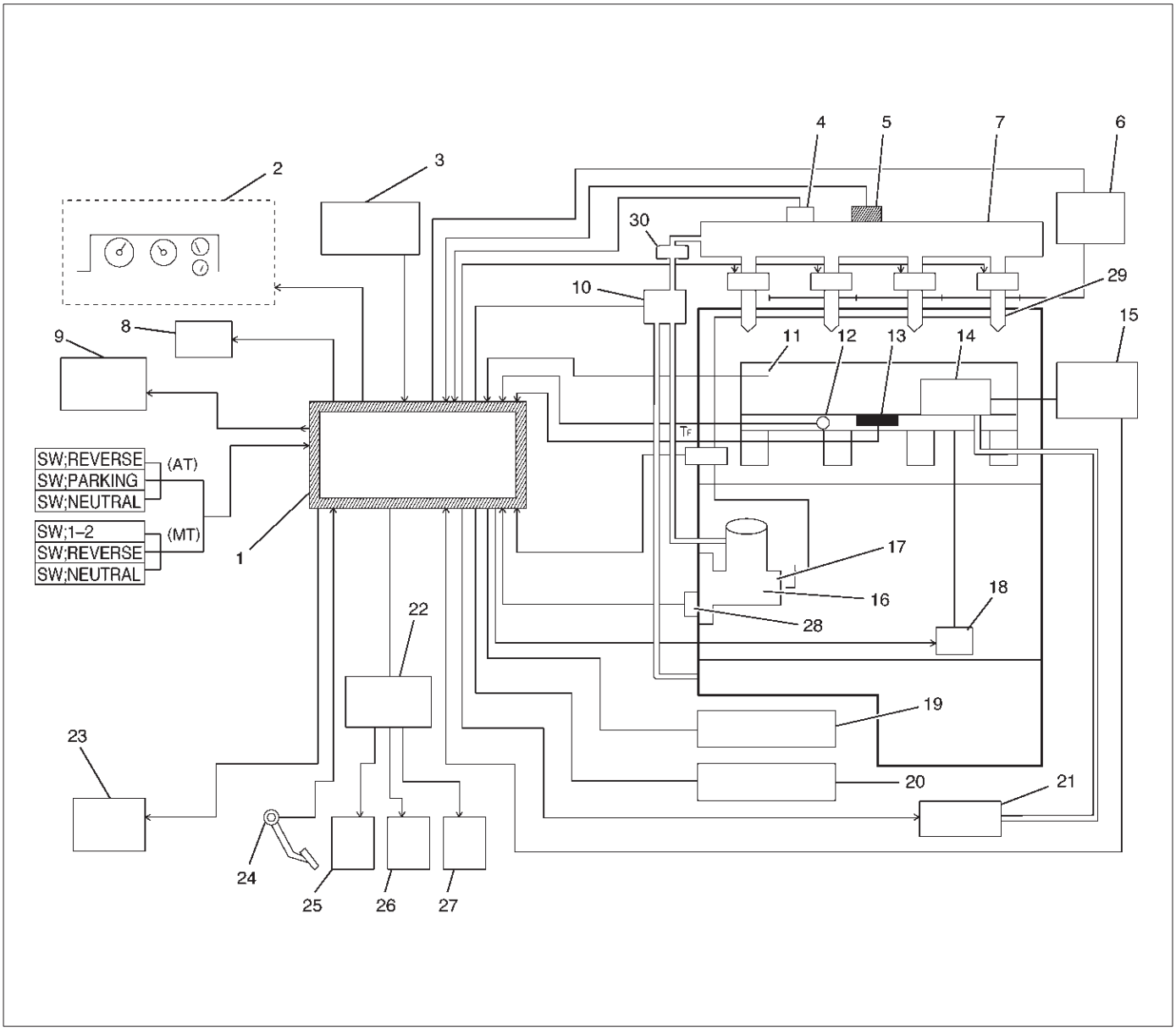

060RW178

Legend

(1) ECM
(2) Meter Panel
(3) Battery
(4) Oil Temp Sensor
(5) Rail Pressure Sensor
(6) Glow Relay
(7) Oil Rail
(8) Tech–2
(9) A/C Comp Relay
(10) RPCV
(11) Intake Air Temp Sensor
(12) Engine Coolant Temp Sensor
(13) MAP Sensor
(14) EGR Valve
(15) EGR Pressure Sensor
(16) High Pressure Oil Pump
(17) Fuel Pump
(18) VSV
(19) EXH Throttle VSV1
(20) EXH Throttle VSV2
(21) EVRV
(22) Engine Harness Connector
(23) QWS Relay
(24) APS
(25) T.O.D
(26) ECT
(27) OBD
(28) TDC
(29) Injector
(30) Edge Filter

Guid to the System

- Fuel Injection system is an HEUI (Hydraulically Actuated, Electronically Controlled, Unit, Injector) type. In this type of injector system, the oil pressurized by means of High Pressure Oil Pump (16) is fed through Rail Pressure Control Valve (10) and Oil Rail (7) to Injector (29) from which fuel is injected under this oil pressure.
  For diagnosis, therefore, the Rail Pressure as well as the Electric Circuit must be inspected.

On-Board Diagnostic (OBD) System Check

A Group

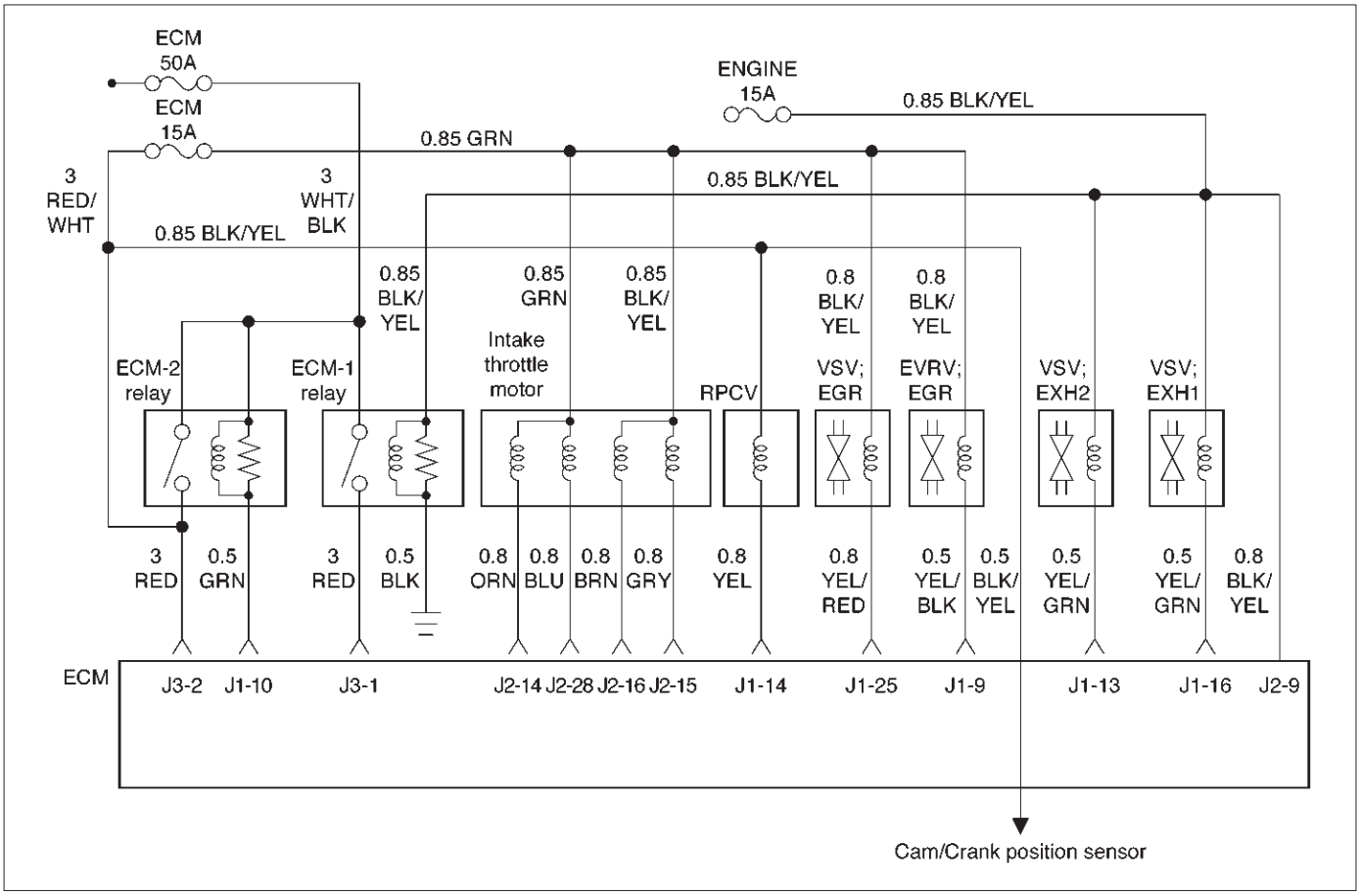

060RW135

B Group

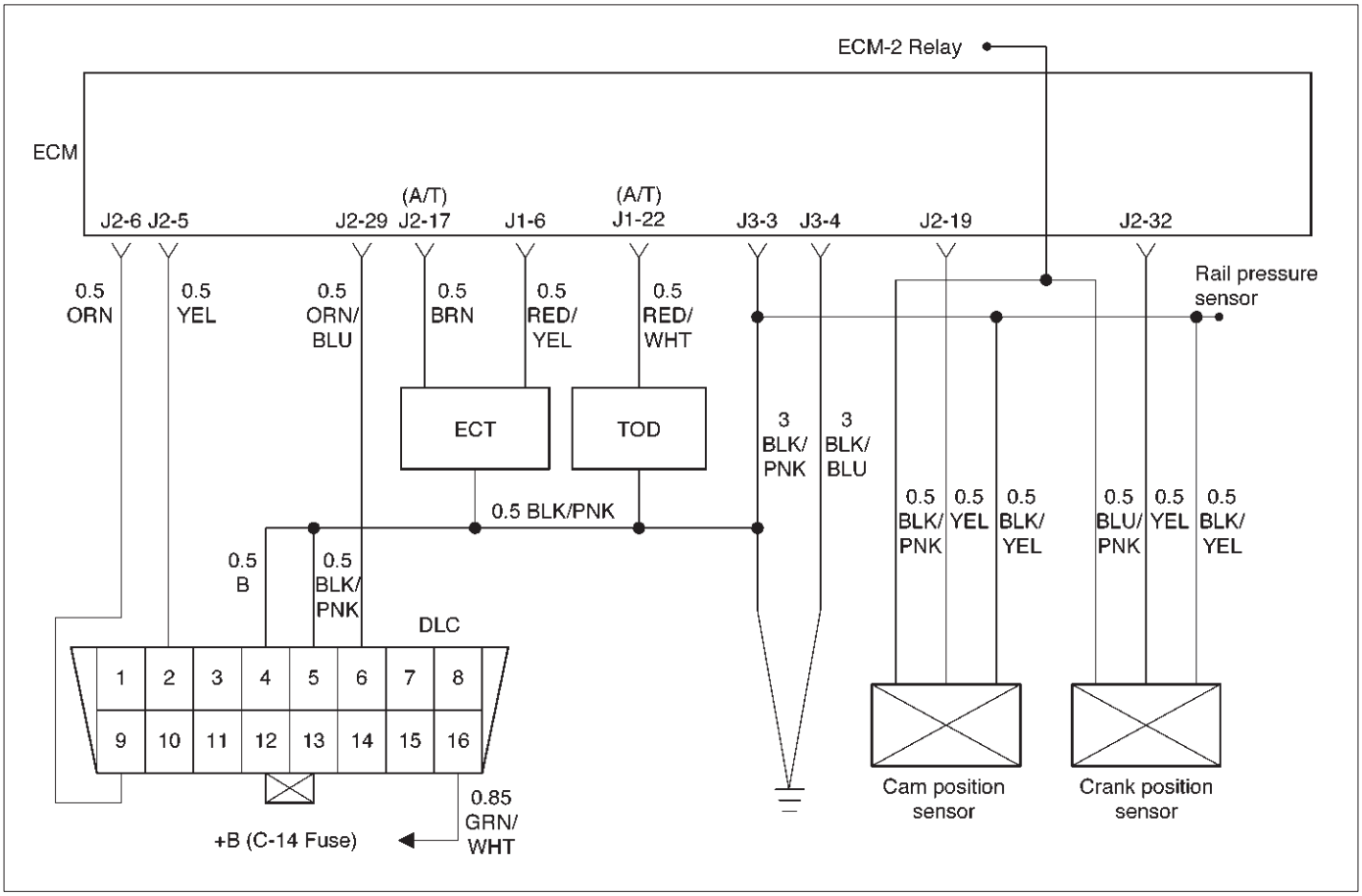

060RW133

C Group

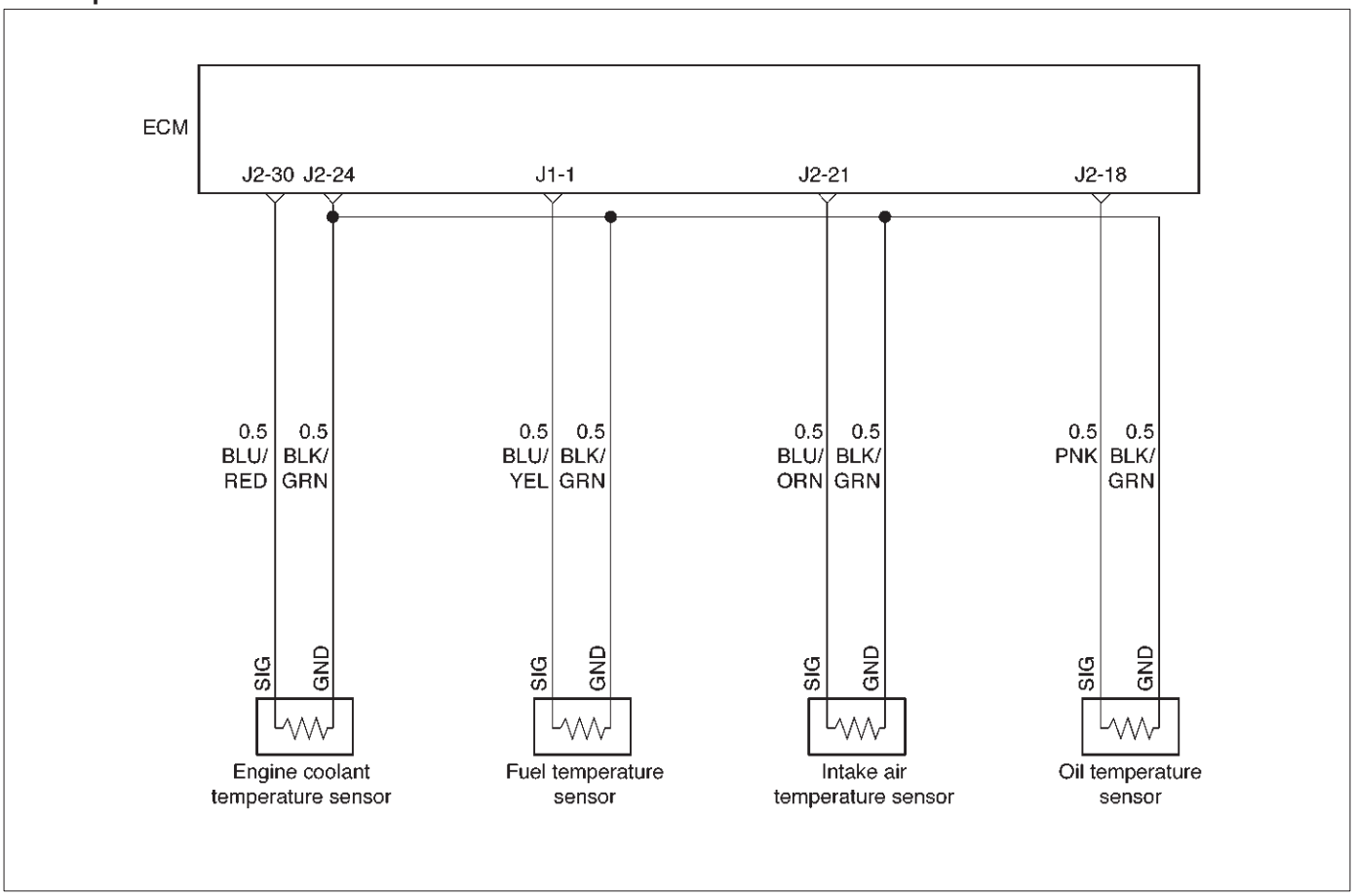

060RW129

D Group

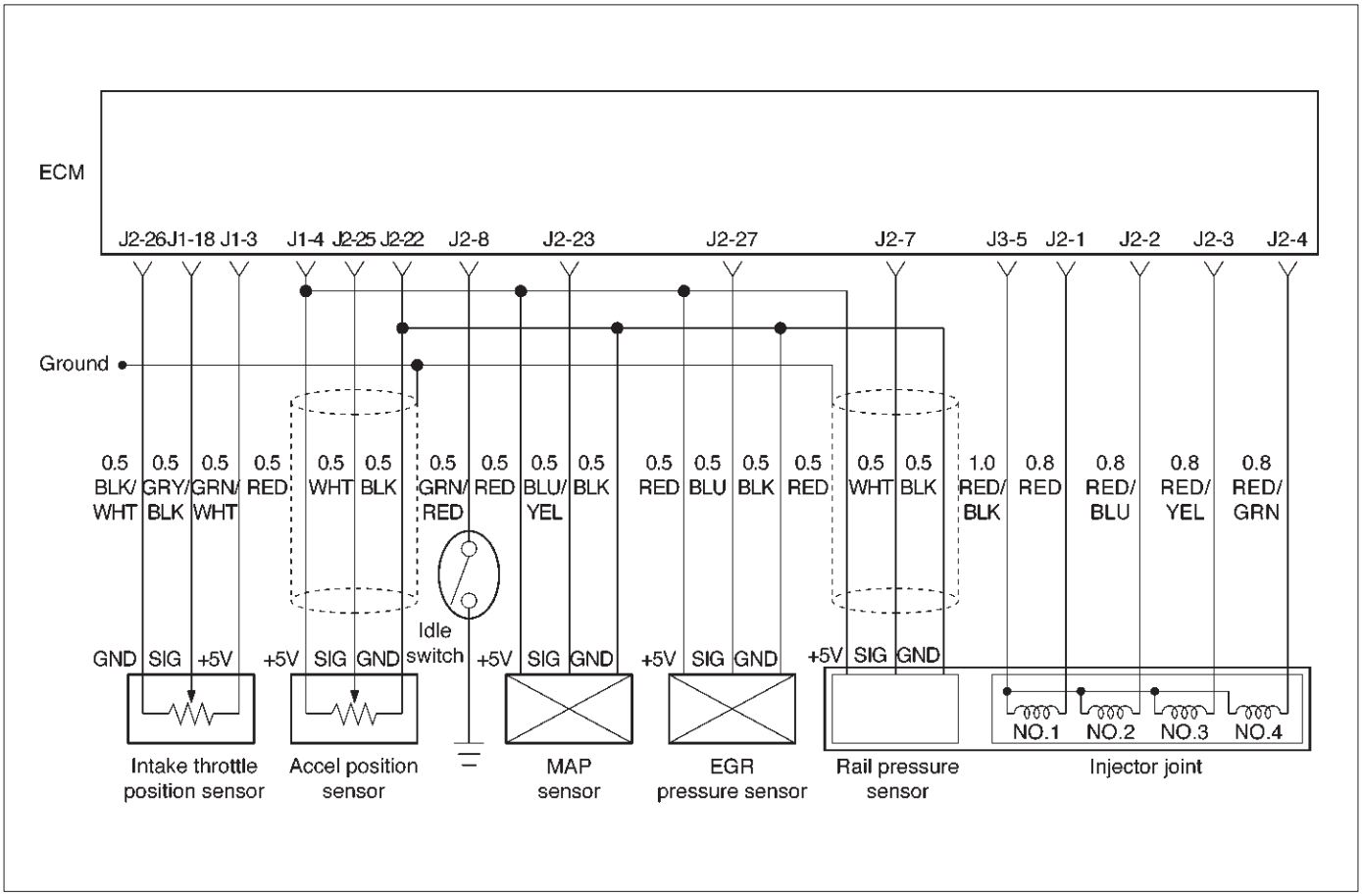

060RW134

Circuit Description

The on-board diagnostic system check is the starting point for any driveability complaint diagnosis. Before using this procedure, perform a careful visual/physical check of the ECM and engine grounds for cleanliness and tightness.

The on-board diagnostic system check is an organized approach to identifying a problem created by an electronic engine control system malfunction.

Diagnostic Aids

An intermittent may be caused by a poor connection, rubbed-through wire insulation or a wire broken inside the insulation. Check for poor connections or a damaged harness. Inspect the ECM harness and connector for improper mating, broken locks, improperly formed or damaged terminals, poor terminal-to-wire connection, and damaged harness.

Test Description

Number(s) below refer to the step number(s) on the Diagnostic Chart:

1. The MIL (“Check Engine” lamp) should be “ON” steady with the ignition “ON”/engine “OFF.” If not, Chart A-1 should be used to isolate the malfunction.
2. Checks the Class 2 data circuit and ensures that the ECM is able to transmit serial data.
3. This test ensures that the ECM is capable of controlling the MIL (“Check Engine” lamp) and the MIL (“Check Engine” lamp) driver circuit is not shorted to ground.
4. If the engine will not start, the *Cranks But Will Not Run* chart should be used to diagnose the condition.
7. A Tech 2 parameter which is not within the typical range may help to isolate the area which is causing the problem.
9. When the ECM is replaced, the characteristic data of injector and rail pressure sensor should be inputted.

On- Board Diagnostic (OBD) System Check

Step	Action	Value(s)	Yes	No
1	1. Ignition “ON,” engine “OFF.” 2. Observe the malfunction indicator lamp (MIL or “Check Engine” lamp). Is the MIL (“Check Engine” lamp)“ON?”	—	Go to *Step 2*	Go to *No MIL (“Check Engine” lamp)*
2	1. Ignition “OFF.” 2. Install a Tech 2. 3. Ignition “ON.” 4. Attempt to display ECM engine data with the Tech 2. Does the Tech 2 display ECM data?	—	Go to *Step 3*	Go to *Step 8*
3	1. Using the Tech 2 output tests function, select MIL (“Check Engine” lamp) dash lamp control and command the MIL (“Check Engine” lamp) “OFF.” 2. Observe the MIL (“Check Engine” lamp). Did the MIL (“Check Engine” lamp) turn “OFF?”	—	Go to *Step 4*	Go to *MIL (“Check Engine” lamp) On Steady*
4	Attempt to start the engine. Did the engine start and continue to run?	—	Go to *Step 5*	Go to *Cranks But Will Not Run*
5	Select “Display DTCs” with the Tech 2. Are any DTCs stored?	—	Go to *Step 6*	Go to *Step 7*
6	Are two or more of the following DTCs stored? A Group; P0337, P0342, P1193, P1404, P1405, P1488 B Group; P0337, P0342 C Group; P0112, P0117, P0182, P0197 D Group; P0107, P0405, P1194, P1485	—	Go to *Chart*, “Multiple ECM Information Sensor DTCs Set”	Go to applicable DTC table
7	Compare ECM data values displayed on the Tech 2 to the typical engine scan data values. Are the displayed values normal or close to the typical values?	—	Go to *Step 8*	Refer to indicated *Component System Checks*
8	1. Ignition “OFF,” disconnect the ECM. 2. Ignition “ON,” engine “OFF.” 3. Check the Class 2 data circuit for an open, short to ground, or short to voltage. Also, check the DLC ignition feed circuit for an open or short to ground and the DLC ground circuit for an open. 4. If a problem is found, repair as necessary. Was a problem found?	—	Go to *Step 2*	Go to *Step 9*
9	Check the Tech 2 on other vehicle. Was Tech 2 abnormal?	—	Go to *Step 11*	Go to *Step 10*
10	Replace the ECM (Refer to the Data Programming in Case of ECM change). Is the action complete?	—	Go to *Step 2*	—
11	Repair the Tech 2 or prepare another Tech 2. Is the action complete?	—	Go to *Step 2*	—

Engine Control Module ECM Diagnosis

To read and clear diagnostic trouble codes, use a Tech 2.

IMPORTANT: Use of a Tech 2 is recommended to clear diagnostic trouble codes from the ECM memory. Diagnostic trouble codes can also be cleared by turning the ignition "OFF" and disconnecting the battery power from the ECM for 30 seconds. Turning off the ignition and disconnecting the battery power from the ECM will cause all diagnostic information in the ECM memory to be cleared. Therefore, all the diagnostic tests will have to be re-run.

Since the ECM can have a failure which may affect only one circuit, following the diagnostic procedures in this section will determine which circuit has a problem and where it is.

If a diagnostic chart indicates that the ECM connections or the ECM is the cause of a problem, and the ECM is replaced, but this does not correct the problem, one of the following may be the reason:

- There is a problem with the ECM terminal connections. The terminals may have to be removed from the connector in order to check them properly.
- The problem is intermittent. This means that the problem is not present at the time the system is being checked. In this case, refer to the *Symptoms* portion of the manual and make a careful physical inspection of all components and wiring associated with the affected system.
- There is a shorted solenoid, relay coil, or harness. Solenoids and relays are turned "ON" and "OFF" by the ECM using internal electronic switches called drivers. A shorted solenoid, relay coil, or harness will not damage the ECM but will cause the solenoid or relay to be inoperative.

Multiple ECM Information Sensor DTCS Set

Circuit Description

The Engine Control Module ECM monitors various sensors to determine the engine operating conditions. The ECM controls fuel delivery, spark advance, transmission operation, and emission control device operation based on the sensor inputs.

The ECM provides a sensor ground to all of the sensors. The ECM applies 5 volts through a pull-up resistor, and determines the status of the following sensors by monitoring the voltage present between the 5-volt supply and the resistor:

- The fuel temperature (FT) sensor
- The engine coolant temperature (ECT) sensor
- The Intake air temperature (IAT) sensor

The ECM provides the following sensors with a 5-volt reference and a sensor ground signal:

- The Intake throttle position sensor
- The manifold absolute pressure sensor
- The rail pressure sensor
- The accelerator position sensor
- The oil temperature sensor
- The camshaft position sensor
- The crankshaft position sensor
- The EGR pressure sensor

The ECM monitors the signals from these sensors in order to determine their operating status.

Diagnostic Aids

IMPORTANT: Be sure to inspect ECM and engine grounds for being secure and clean.

A short to voltage in one of the sensor input circuits may cause one or more of the following DTCs to be set:

- P0337
- P0342
- P1193
- P1404
- P1405
- P1488

IMPORTANT: If a sensor input circuit has been shorted to voltage, ensure that the sensor is not damaged. A damaged sensor will continue to indicate a high or low voltage after the affected circuit has been repaired. If the sensor has been damaged, replace it.

An open in the sensor ground circuit between the ECM and the splice will cause one or more of the following DTCs to be set:

- P0337
- P0342
- P0117

A short to ground in the 5-volt reference A or B circuit will cause one or more of the following DTCs to be set:

- P0112
- P0117
- P0182
- P0197

An open in the 5-volt reference circuit A, between the ECM and the splice will cause one or more of the following DTCs to be set:

- P0107
- P0405
- P1194
- P0122

An open in the 5-volt reference circuit B, between the ECM and the splice will cause one or more of the following DTCs to be set:

- P1485

Check for the following conditions:

- **Poor connection at ECM.** Inspect the harness connectors for backed-out terminals, improper mating, broken locks, improperly formed or damage terminals, and a poor terminal-to-wire connection.
- **Damaged harness.** Inspect the wiring harness for damage. If the harness is not damaged, observe an affected sensor's displayed value on the Tech 2 with the ignition "ON" and the engine "OFF" while you move the connectors and the wiring harnesses related to the following sensors:
  - ECT Sensor

- MAP Sensor
- CMP Sensor
- CKP Sensor
- EGR Pressure Sensor
- EGR VSV
- RPCV
- IAT Sensor
- Intake Throttle Motor
- Fuel Temperature Sensor
- Oil Temperature Sensor
- Rail Pressure Sensor

Multiple ECM Information Sensor DTCs Set

Step	Action	Value(s)	Yes	No
1	Was the “On-Board Diagnostic (OBD) System Check” performed?	—	Go to *Step 2*	Go to *OBD System Check*
2	1. Turn the ignition “OFF,” disconnect the ECM. 2. Turn the ignition “ON,” check the 5 volt reference D circuit for the following conditions: ● D poor connection at the ECM. ● An open between the ECM connector and the splice. ● D short to ground. ● D short to voltage. Is there an open or short?	—	Go to *Step 3*	Go to *Step 4*
3	Repair the open or short. Is the action complete?	—	Verify repair	—
4	Check the sensor ground circuit for the following conditions: ● A poor connection at the ECM or the affected sensors. ● An open between the ECM connector and the affected sensors. Is there an open or a poor connection?	—	Go to *Step 5*	Go to *Step 6*
5	Repair the open or the poor connection. Is the action complete?	—	Verify repair	Go to *Step 6*
6	Replace the ECM (Refer to the Data Programming in Case of ECM change). Is the action complete?	—	Go to *OBD System Check*	—

EGR (Exhaust Gas Recirculation) Diagnosis

- A diagnosis of the EGR system is covered by DTC P1403.
- EGR VSV circuit diagnosis is covered by DTC P1404.
- EGR pressure sensor diagnosis is covered by DTC P405 and/or P406.
- EGR EVRV circuit diagnosis is covered by DTC P1405. Refer to the DTC charts.

Tech 2 Data Definitions and Ranges

A/C CLUTCH–Tech 2 Displays ON or OFF–
Indicates whether the A/C has commanded the A/C clutch ON.

MAP kPa — Tech 2 Range 10-105 kPa/0.00-5.00 Volts —
The manifold absolute pressure reading is determined from the MAP sensor signal monitored during key up and wide open throttle (WOT) conditions. The manifold absolute pressure is used to compensate for altitude differences and is normally displayed around “61-104” depending on altitude and manifold absolute pressure.

CMP ACT. COUNTER –Cam Position

DESIRED IDLE — Tech 2 Range 0-3187 RPM —
The idle speed that the ECM is commanding. The ECM will compensate for various engine loads based on engine coolant temperature, to keep the engine at the desired speed.

ECT — (Engine Coolant Temperature) Tech 2 Range –40˚C to 151˚C (–40˚F to 304˚F) —
The engine coolant temperature (ECT) is mounted in the coolant stream and sends engine temperature information to the ECM. The ECM applies 5 volts to the ECT sensor circuit. The sensor is a thermistor which changes internal resistance as temperature changes. When the sensor is cold (high resistance), the ECM monitors a high signal voltage and interprets that as a cold engine. As the sensor warms (decreasing resistance), the voltage signal will decrease and the ECM will interpret the lower voltage as a warm engine.

ENGINE RUN TIME — Tech 2 Range 00:00:00-99:99:99 Hrs:Min:Sec —
Indicates the time elapsed since the engine was started. If the engine is stopped, engine run time will be reset to 00:00:00.

ENGINE SPEED — Range 0-9999 RPM —
Engine speed is computed by the ECM from the 57X reference input. It should remain close to desired idle under various engine loads with engine idling.

Air Intake Valve meter POSITION — Tech 2 Range 0-100 % —

IAT (INTAKE AIR TEMPERATURE)— Tech 2 Range –40˚C to 151˚C (–40˚F to 304˚F) —
The ECM converts the resistance of the intake air temperature sensor to degrees. Intake air temperature (IAT) is used by the ECM to adjust fuel delivery and spark timing according to incoming air density.

MAP — Tech 2 Range 10-105 kPa (0.00-4.97 Volts)—
The manifold absolute pressure (MAP) sensor measures the change in the boost pressure.

MIL — Tech 2 Displays ON or OFF —
Indicates the ECM commanded state of the malfunction indicator lamp.

AP — Tech 2 Range 0%-100% —
AP (Accelerator position) angle is computed by the ECM from the AP sensor voltage. AP angle should display “0%” at idle and “100%” at wide open throttle.

AP SENSOR — Tech 2 Range 0.00-5.00 Volts —
The voltage being monitored by the ECM on the AP sensor signal circuit.

VEHICLE SPEED—Tech 2 Range 0-255 km/h (0-155 mph)–
The vehicle speed sensor signal is converted into km/h and mph for display.

Typical Scan Data Values

Use the Typical Scan Data Values Table only after the On-Board Diagnostic System Check has been completed, no DTC(s) were noted, and you have determined that the on-board diagnostics are functioning properly. Tech 2 values from a properly-running engine may be used for comparison with the engine you are diagnosing. The typical scan data values represent values that would be seen on a normally-running engine.

NOTE: A Tech 2 that displays faulty data should not be used, and the problem should be reported to the Tech 2 manufacturer. Use of a faulty Tech 2 can result in misdiagnosis and unnecessary replacement of parts.

Only the parameters listed below are referred to in this service manual for use in diagnosis. For further information on using the Tech 2 to diagnose the ECM and related sensors, refer to the applicable reference section listed below. If all values are within the typical range described below, refer to the *Symptoms* section for diagnosis.

Test Conditions

Engine running, lower radiator hose hot, transmission in park or neutral, accessaries off, brake not applied and air conditioning off.

4JX1-TC Engine (Automatic and Manual Transmission)

Tech 2 Parameter	Data List	Units Displayed	Typical Data Values (IDLE)	Typical Data Values (2500 RPM)	Refer To
Battery Voltage	Engine	Volts	12.5 ~ 14.5	13 ~ 15	General Description
Ignition Status	Engine	On/Off	On	On	General Description
Ignition Relay[2]	Engine	On/Off	On	On	General Description
Idle Switch	Engine	Inactive/ Active	—	—	DTC P0510, P1510
Manifold Absolute Pressure	Engine	KPa	96 ~ 106	110 ~ 150	General Description DTC P0107, P0108
Rail Oil Pressure	Engine	MPa	3.5 ~ 5	4.5 ~ 10	General Description DTC P0192, P0193
Desired Rail Oil Pressure	Engine	MPa	4 ~ 5	5 ~ 9	General Description DTC P0192, P0193
Fuel Temperature	Engine	˚C (˚F)	75 ~ 85	75 ~ 85	DTC P0182, P0183
Quick Warming Switch	Engine	On/Off	Off	Off	DTC P0380
Thermo Relay	Engine	On/Off	—	—	DTC P1655
Actual EGR Pressure	Engine	KPa	58 ~ 60	M/T 63 ~ 66 A/T 95 ~ 105	DTC P0405, P0406
Barometric Pressure	Engine	KPa	98 ~ 102	98 ~ 102	General Description
Relative EGR Pressure	Engine	KPa	–38 ~ –45	M/T –34 ~ –37 A/T 0	General Description
Desired EGR Pressure	Engine	KPa	–43 ~ –40	M/T 36 A/T 0	General Description
Brake Switch	Engine	Inactive/ Active	—	—	DTC P1588
Gear	Engine	—	—	—	—
Vehicle Speed	Engine	Km/h	0	0	Transmission Diagnosis
Rail Pressure Control Valve	Engine	%	17 ~ 22	18 ~ 27	DTC P1193
EGR Status	Engine	Disable/ Enable	Enable	M/T Enable A/T Disable	General Description
EGR Switching Valve	Engine	On/Off	—	—	General Description
Throttle Motor Position Sensor	Engine	Volts	3.1 ~ 3.9	0.2 ~ 0.9	DTC P1485, P1486, P1487
Throttle Motor Position	Engine	Steps	0 ~ 1.0	0 ~ 1.0	DTC P1488
Delirered Fuel Quantity	Engine	mm 3/st	6 ~ 10	6 ~ 12	General Description
Injector Status	Engine	Disable/ Enable	Enable	Enable	DTC P0201, P0202, P0203, P0204, General Description
Injector Pulse Width	Engine	ms	0.9 ~ 1.25	0.7 ~ 1.1	General Description
Injector Start Offset	Engine	˚CA	—	—	General Description

Tech 2 Parameter	Data List	Units Displayed	Typical Data Values (IDLE)	Typical Data Values (2500 RPM)	Refer To
Exhaust VSV1	Engine	On/Off	Off	Off	DTC P0475
Exhaust VSV2	Engine	On/Off	Off	Off	DTC P1475
Decelevation Fuel Cut Off	Engine	Inactive/ Active	—	—	General Description
Glow Time Lamp	Engine	On/Off	Off	Off	DTC P0381
Glow Time Relay	Engine	On/Off	Off	Off	DTC P0380
Diagnostic Request	Engine	Inactive 12V/ Active 0V	—	—	General Description
A/C Clutch	Engine	On/Off	Off	Off	General Description
Desired Idle	Engine	RPM	720	—	General Description
ECT (Engine Coolant Temp)	Engine	˚C (˚F)	80 ~ 90	80 ~ 90	General Description ECT
Engine Speed	Engine	RPM	720	2500	DTC P0219
MAT (Intake Air Temp)	Engine	˚C (˚F)	65 ~ 80	65 ~ 80	DTC P0112, P0113
MAP KPa (Manifold Absolute Pressure)	Engine	Kilopascals	—	—	General Description DTC P0107, P0108
MIL	Engine	On/Off	Off	Off	General Description
AP (Accel Position)	Engine	Percent	0	8 ~14	DTC P0121, P0122, P0123
AP (Accel Position)	Engine	Volts	0.25 ~ 0.45	0.8 ~ 1.0	DTC P0121, P0122, P0123
Rail Oil Temperature	Engine	˚C (˚F)	—	—	DTC P0197, P0198
Desired Throttle Motor Position	Engine	Steps	—	—	—
Learned Idle Fuel Quantity	Engine	mm 3/st	—	—	—

No Malfunction Indicator Lamp (MIL)

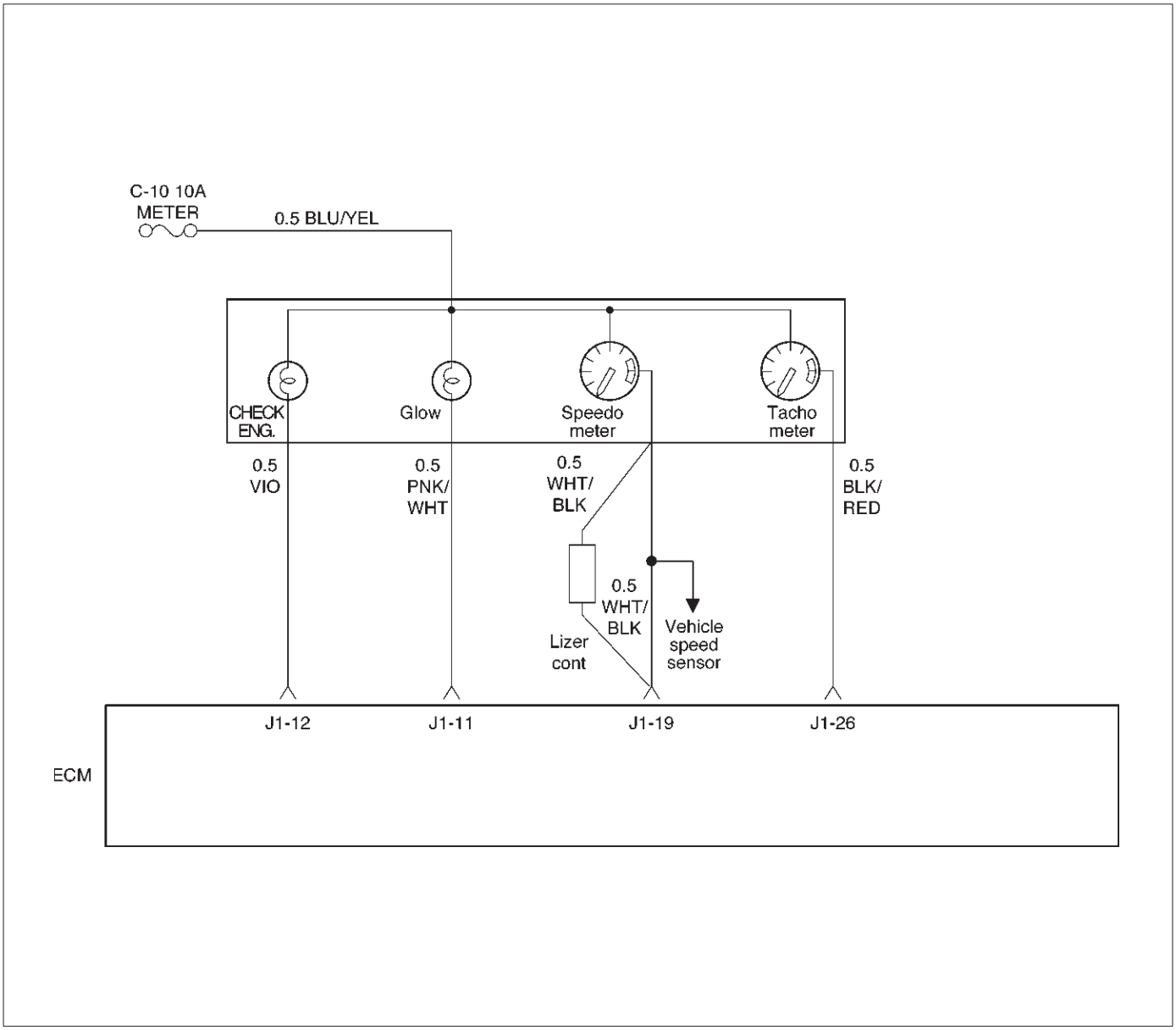

060RW136

Circuit Description

The “Check Engine” lamp (MIL) should always be illuminated and steady with the ignition “ON” and the engine stopped. Ignition feed voltage is supplied to the MIL bulb through the meter fuse. The Engine Control Module ECM turns the MIL “ON” by grounding the MIL driver circuit.

Diagnostic Aids

An intermittent MIL may be cause by a poor connection, rubbed-through wire insulation, or a wire broken inside the insulation. Check for the following items:

- Inspect the ECM harness and connections for improper mating, broken locks, improperly formed or damaged terminals, poor terminal-to-wire connection, and damaged harness.
- If the engine runs OK, check for a faulty light bulb, an open in the MIL driver circuit, or an open in the instrument cluster ignition feed.
- If the engine cranks but will not run, check for an open ECM ignition or battery feed, or a poor ECM to engine ground.

Test Description

Number(s) below refer to the step number(s) on the Diagnostic Chart.

2. A “No MIL” condition accompanied by a no-start condition suggests a faulty ECM ignition feed or battery feed circuit.

9. Using a test light connected to B+, probe each of the ECM ground terminals to ensure that a good ground is present. Refer to *ECM Terminal End View* for terminal locations of the ECM ground circuits.

12. In this step, temporarily substitute a known good relay for the ECM relay. The horn relay is nearby, and it can be verified as “good” simply by honking the horn. Replace the horn relay after completing this step.

No Malfunction Indicator Lamp (MIL)

Step	Action	Value(s)	Yes	No
1	Was the “On-Board Diagnostic (OBD) System Check” performed?	—	Go to *Step 2*	Go to *OBD System Check*
2	Attempt to start the engine. Does the engine start?	—	Go to *Step 3*	Go to *Step 6*
3	Check the meter fuse for the instrument cluster ignition feed circuit. Is the fuse OK?	—	Go to *Step 4*	Go to *Step 16*
4	Ignition “ON,” probe the ignition feed circuit at the cluster connector with a test light to ground. Is the test light “ON?”	—	Go to *Step 5*	Go to *Step 13*
5	1. Ignition “OFF.” 2. Disconnect the ECM. 3. Jumper the MIL driver circuit at the ECM connector to ground. 4. Ignition “ON.” Is the MIL “ON?”	—	Go to *Step 10*	Go to *Step 11*
6	Check the ECM ignition feed and battery feed fuses (15 A engine fuse and 15 A ECM fuse). Are both fuses OK?	—	Go to *Step 7*	Go to *Step 15*
7	1. Ignition “OFF.” 2. Disconnect the ECM. 3. Ignition “ON.” 4. Probe the ignition feed circuit at the ECM harness connector with a test light to ground. Is the test light “ON?”	—	Go to *Step 8*	Go to *Step 12*
8	Probe the battery feed circuit at the ECM harness connector with a test light to ground. Is the test light “ON?”	—	Go to *Step 9*	Go to *Step 14*
9	Check for a faulty ECM ground connection. Was a problem found?	—	Verify repair	Go to *Step 10*
10	Check for damaged terminals at the ECM. Was a problem found?	—	Verify repair	Go to *Step 17*
11	Check for an open MIL driver circuit between the ECM and the MIL. Was a problem found?	—	Verify repair	Go to *Step 18*
12	Substitute a known “good” relay for the ECM main relay. Was the malfunction fixed?	—	Verify repair	Go to *Step 13*
13	Repair the open in the ignition feed circuit. Is the action complete?	—	Verify repair	—
14	Locate and repair the open ECM battery feed circuit. Is the action complete?	—	Verify repair	—

No Malfunction Indicator Lamp (MIL) (Cont'd)

Step	Action	Value(s)	Yes	No
15	Locate and repair the short to ground in the ECM ignition feed circuit or ECM battery feed circuit. Is the action complete?	—	Verify repair	—
16	Locate and repair the short to ground in the ignition feed circuit to the instrument cluster, and replace the fuse. Is the action complete?	—	Verify repair	—
17	Replace the ECM (Refer to the Data Programming in Case of ECM change). Is the action complete?	—	Verify repair	—
18	Check the MIL driver circuit for a poor connection at the instrument panel connector. Was a problem found?	—	Verify repair	Go to *Instrument Panel* in *Electrical Diagnosis*

Malfunction Indicator Lamp (MIL) “ON” Steady

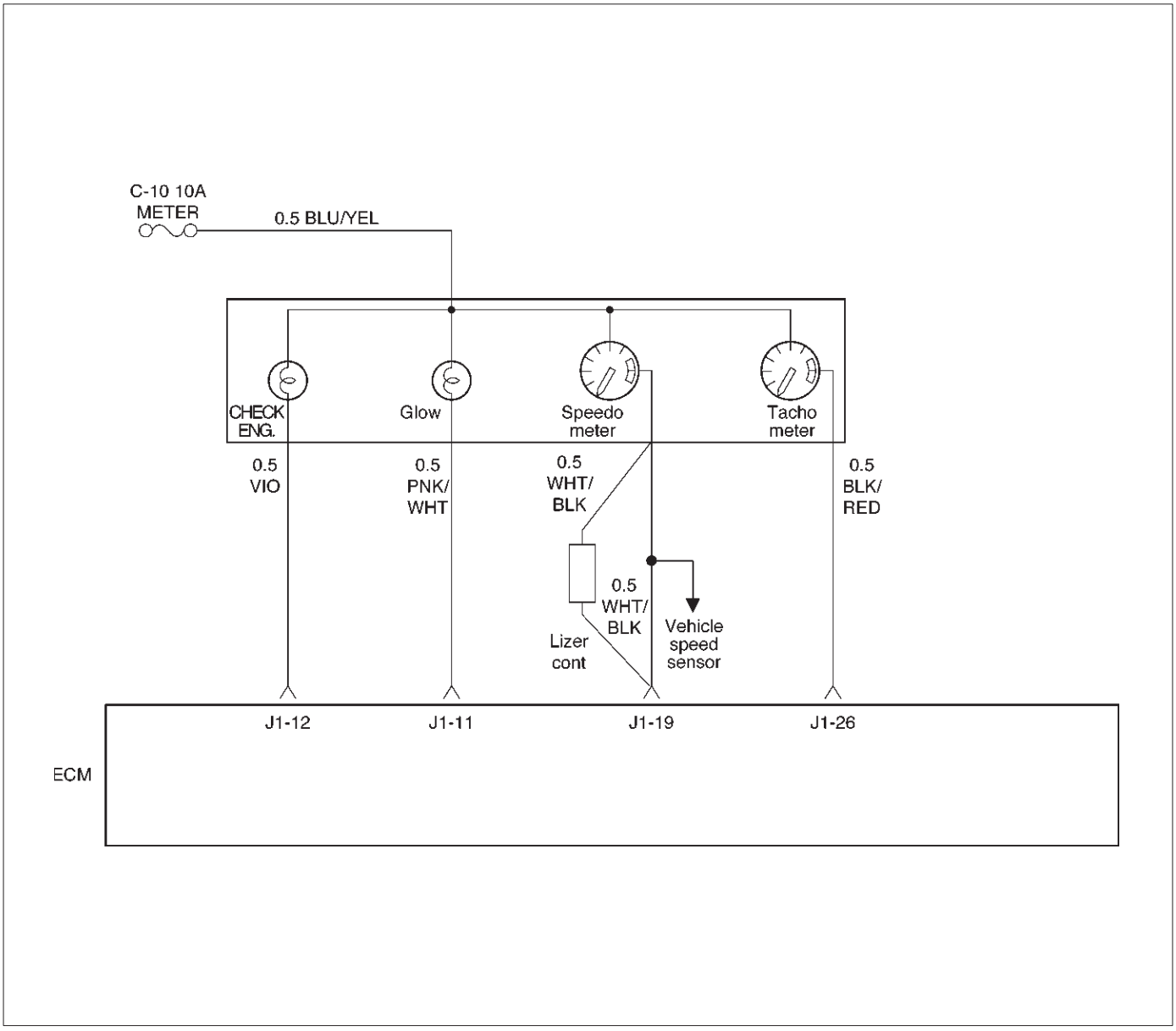

060RW136

Circuit description

The “Check Engine” lamp (MIL) should always be illuminated and steady with ignition “ON” and the engine stopped. Ignition feed voltage is supplied directly to the MIL indicator. The Engine Control Module ECM turns the MIL “ON” by grounding the MIL driver circuit.
The MIL should not remain “ON” with the engine running and no DTC(s) set. A steady MIL with the engine running and no DTC(s) suggests a short to ground in the MIL driver circuit.

Diagnostic Aids

An intermittent may be caused by a poor connection, rubbed–through wire insulation, or a wire broken inside the insulation. Check for the following items:

- Poor connection or damaged harness – Inspect the ECM harness and connectors for improper mating, broken locks, improperly formed or damaged terminals, poor terminal-to-wire connection, and damaged harness.

Test Description

Number(s) below refer to the step number(s) on the Diagnostic Chart.

2. If the MIL does not remain “ON” when the ECM is disconnected, the MIL driver wiring is not faulty.
3. If the MIL driver circuit is OK, the instrument panel cluster is faulty.

Malfunction Indicator Lamp (MIL) “ON” Steady

Step	Action	Value(s)	Yes	No
1	Was the “On-Board diagnostic (OBD) System Check” performed?	—	Go to *Step 2*	Go to *OBD System Check*
2	1. Ignition “OFF,” disconnect ECM. 2. Ignition “ON,” observe the MIL (CHECK ENGINE lamp). Is the MIL “ON?”	—	Go to *Step 3*	Go to *Step 5*
3	1. Ignition “OFF,” disconnect the instrument panel cluster. 2. Check the MIL driver circuit between the ECM and the instrument panel cluster for a short to ground. 3. If a problem is found, repair as necessary. Was the MIL driver circuit shorted to ground?	—	Go to *OBD System Check*	Go to *Step 4*
4	Replace the instrument panel cluster. Is the action complete?	—	Go to *OBD System Check*	—
5	1. Ignition “OFF,” reconnect the ECM. 2. Ignition “ON,” reprogram the ECM. Refer to *On-Vehicle Service* in *Engine Control Module and Sensor* for procedures. 3. Using the Tech 2 output controls function, select MIL dash lamp control and command the MIL “OFF.” Did the MIL turn “OFF?”	—	Go to *OBD System Check*	Go to *Step 6*
6	Replace the ECM (Refer to the Data Programming in Case of ECM change). Is the action complete?	—	Go to *OBD System Check*	—

Engine Cranks But Will Not Run

Circuit Description

In this type of injector system, the Engine Control Module (ECM) triggers the correct driver inside the injector, which then triggers the correct injector based on the 57X signal received from the crankshaft position sensor (CKP).
During crank, the ECM monitors the CKP 57X signal. The CKP signal is used to determine which cylinder will fire first. After the CKP 57X signal has been processed by the ECM, it will command all four injectors to allow a priming shot of fuel for all the cylinders. After the priming, the injectors are left "OFF" during the next four 57X reference pulses from the CKP. This allows each cylinder a chance to use the fuel from the priming shot. During this waiting period, a camshaft position (CMP) signal pulse will have been received by the ECM. The CMP signal allows the ECM to operate the injectors sequentially based on camshaft position. If the camshaft position signal is not present at start-up, the ECM will begin sequential fuel delivery with a 1-in-4 chance that fuel delivery is correct. The engine will run without a CMP signal, but will set a DTC code.

Diagnostic Aids

An intermittent problem may be caused by a poor connection, rubbed-through wire insulation or a wire broken inside the insulation. Check for the following items:

- Poor connection or damaged harness – Inspect the ECM harness and connectors for improper mating, broken locks, improperly formed or damaged terminals, poor terminal-to-wore connection, and damaged harness.
- Faulty engine coolant temperature sensor – Using a Tech 2, compare engine coolant temperature with manifold air temperature on a completely cool engine.

Test Description

Number(s) below refer to the step number(s) on the Diagnostic Chart.

4. An obvious cause of low fuel pressure would be an empty fuel tank.
5. The engine will easily start and run if a few injectors are disabled. It is not necessary to test all injectors at this time since this step is only a test to verify that all of the injectors have not been disabled by fuel contamination.
8. If there is an open or shorted driver circuit, DTCs 0201-0204 should be set.

Engine Cranks But Will Not Run

Step	Action	Value(s)	Yes	No
1	Was the "On-Board Diagnostic (OBD) System Check" performed?	—	Go to *Step 2*	Go to *OBD System Check*
2	Check the 15 A injector fuse, the 15 A engine device fuse, and the 15A ECM fuse. Was a fuse blown?	—	Go to *Step 3*	Go to *Step 4*
3	Check for a short to ground and replace the fuse. Is the action complete?	—	Verify repair	—
4	Is fuel tank empty?	—	Fill the fuel tank	Go to *Step 5*
5	Is the right fuel using?	—	Go to *Step 6*	Replace the fuel
6	Is the right engine oil using?	—	Go to *Step 7*	Replace the engine oil
7	Using the Tech–2. Is DTC P0192 or P0193 set? (Check rail pressure system)	—	Go to *DTC P0192 or DTC P0193*	Go to *Step 8*
8	Using the Tech–2. Is DTC P0201 – P0204 set? (Check inject circuit fault)	—	Go to *DTC P0201 – P0204*	Go to *Step 9*
9	Using the Tech–2. Is DTC P1657 set? (Check ECM Main relay)	—	Go to *DTC P1657*	Go to *Step 10*

Engine Cranks But Will Not Run (Cont'd)

Step	Action	Value(s)	Yes	No
10	Refer to *Engine Mechanical Diagnosis* to diagnose the following conditions: ● Faulty camshaft drive belts ● Leaking or sticky valves or rings ● Excessive valve deposits ● Weak valve springs ● Incorrect valve timing ● Leaking head gasket Is the action complete?	—	Verify repair	Go to *Step 11*
11	Observe the "Engine Speed" data display on the Tech 2 while cranking the engine. Is the engine RPM indicated? (If the Tech 2 is normally powered from the cigarette lighter socket, and if the Tech 2 display goes blank while cranking the engine, it will be necessary to power the Tech 2 directly from the vehicle battery.)	—	Go to *Step 12*	Go to *Step 17*
12	1. At the ECM (female) side of the connector mentioned in step, connect a test light between the ignition + terminal and one of the injector driver circuits at the same connector. 2. Ignition "ON." 3. Observe the test light, and repeat the test for each injector driver circuit by oscilloscope. Did the test light stay on when checking any of the 4 injector driver circuits?	—	Go to *Step 13*	Go to *Step 15*
13	1. Ignition "OFF," disconnect the ECM. 2. Ignition "ON," observe the test light. Is the test light "ON?"	—	Go to *Step 14*	Go to *Step 16*
14	Locate and repair the short to ground in the injector driver circuit. Is the action complete?	—	Verify repair	—
15	Check for an open injector driver circuit. Was a problem found?	—	Verify repair	Go to *Step 16*
16	Replace the ECM (Refer to the Data Programming in Case of ECM change). Is the action complete?	—	Verify repair	—
17	1. Raise the vehicle and disconnect the CKP sensor harness. 2. Ignition "ON." 3. With a test light to ground, probe the harness ignition feed terminal. Did the light illuminate?	—	Go to *Step 19*	Go to *Step 18*
18	Check the ignition feed wire between the sensor and the ECM for a short to ground or open circuit. Is the action complete?	—	Verify repair	—

Engine Cranks But Will Not Run (Cont'd)

Step	Action	Value(s)	Yes	No
19	1. Ignition "ON." 2. At the CKP harness connector, connect a test light between the ignition and ground terminals. Did the light illuminate?	—	Go to *Step 21*	Go to *Step 20*
20	Check the sensor ground circuit for an open or short to voltage. Is the action complete?	—	Verify repair	—
21	Check the signal circuit between the sensor and the ECM for a short to ground, short to voltage, or an open. Was a problem found?	—	Verify repair	Go to *Step 22*
22	Replace the CKP sensor. Is the action complete?	—	Verify repair	Go to *Step 16*

Exhaust Gas Recirculation (EGR) System Check

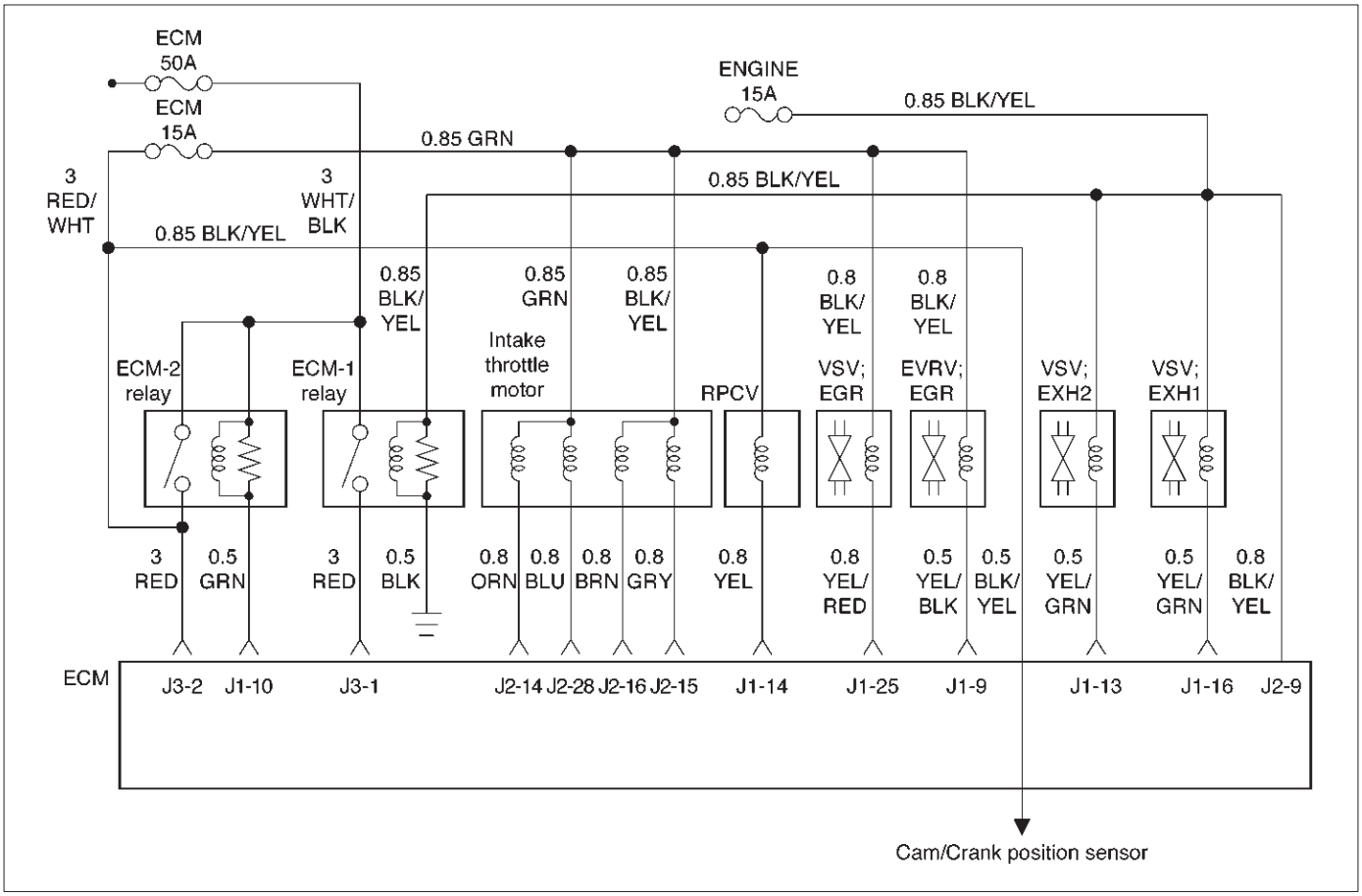

060RW135

Circuit Description

Introducing exhaust gas into the combustion chamber lowers combustion temperatures and reduces the formation of oxides of nitrogen (NOx) in the exhaust gas. Lower combustion temperatures also prevent detonation.

Diagnostic Aids

The EGR valve chart is a check of the EGR system. An EGR pintle constantly in the closed position could cause detonation and high emissions of NOx. An EGR pintle constantly in the open position would cause a rough idle.

System Check

Step	Action	Value(s)	Yes	No
1	Move the valve up and down to check the slide resistance. Is the slide resistance large?	—	Go to *Step 8*	Go to *Step 2*
2	1. Set the transmission at “Park” or “Neutral”. 2. Put the engine in warming-up operation by idling. (The engine temperature should be 80˚C or more) 3. Disconnect the vacuum hose from the EGR valve. 4. Apply a vacuum of 250 mmHg to the EGR valve by the vacuum pump (mighty pack). Does the vibration due to engine operation become larger?	—	Go to *Step 3*	Go to *Step 9*
3	1. Check if there is not any damage on the vacuum hose from the vacuum pump to the EGR valve. 2. Install the vacuum pump (mighty pack) to the EGR valve. Does the vacuum became 250 mmHg or more at that time?	250 mmHg or more	Go to *Step 4*	Go to *Step 8*
4	Install the EGR valve and the vacuum hose formally and increase the engine revolution speed to 3000 rpm. Can both EGR valve 1 and EGR valve 2 be opened and closed?	—	The system is normal	Go to *Step 5*
5	Measure the resistance of the VSV: EGR coil. Is the resistance value in the range of 30 Ω to 50 Ω?	30 ~ 50 Ω	Go to *Step 6*	Go to *Step 10*
6	Measure the resistance of the EVRV: EGR coil. Is the resistance value in the range of 10 Ω to 13 Ω?	10 ~ 13 Ω	Go to *Step 7*	Go to *Step 11*
7	Was the harness open or poor connection?	—	Go to *Step 12*	Go to *Step 13*
8	Replace the EGR valve ASM. Is the action complete?	—	Verify repair	—
9	Clean or replace the EGR valve ASM. Is the action complete?	—	Verify repair	—
10	Replace the EGR VSV. Is the action complete?	—	Verify repair	—
11	Replace the EGR EVSV. Is the action complete?	—	Verify repair	—
12	Repair the harness. Is the action complete?	—	Verify repair	—
13	Replace the ECM (Refer to the Data Programming in Case of ECM change). Is the action complete?	—	Verify repair	—

ECM Diagnostic Trouble Codes

The following table lists the diagnostic trouble codes supported a Tech 2 and to flash.If any DTCs not listed here are displayed by a Tech 2, the Tech 2 data may be faulty; notify the Tech 2 manufacturer of any DTCs displayed that are not included in the following table.

ECM Diagnostic Trouble Codes

DTC using a Tech 2	Flash DTC	Description	MIL
P0107	34	MAP Sensor Low Voltage	ON
P0108	34	MAP Sensor High Voltage	ON
P0112	23	Intake Air temp Sensor Low Voltage	ON
P0113	23	Intake Air temp Sensor High Voltage	ON
P0117	14	Engine Coolant Temp Sensor Low Voltage	ON
P0118	14	Engine Coolant Temp Sensor High Voltage	ON
P0121	33	Accel Position Sensor Rationality	ON
P0122	21	Accel Position Sensor Low Voltage	ON
P0123	21	Accel Position Sensor High Voltage	ON
P0182	15	Fuel Temp Sensor Low Voltage	ON
P0183	15	Fuel Temp Sensor High Voltage	ON
P0192	63	Rail Pressure Sensor Low Voltage	ON
P0193	63	Rail Pressure Sensor High Voltage	ON
P1193	64	RPCV Circuit Open/Short	—
P1194	61	Rail Pressure System Low Voltage	ON
P1195	61	Rail Pressure System High Voltage	ON
P1196	62	Rail Pressure System High Warning	ON
P0197	16	Oil Temp sensor Low Voltage	ON
P0198	16	Oil Temp sensor High Voltage	ON
P0201	51	Injector #1 Circuit Fault	ON
P0202	52	Injector #2 Circuit Fault	ON
P0203	53	Injector #3 Circuit Fault	ON
P0204	54	Injector #4 Circuit Fault	ON
P0217	22	High Coolant Temp Warning	ON
P1217	36	High Oil Temp Warning	ON
P0219	11	Engine Over Speed Warning	ON
P0336	43	Crank Position Sensor Out of Syncro	ON
P0337	43	Crank Position Sensor No Signal	ON
P0341	41	Cam Position Sensor Out of Syncro	ON
P0342	41	Cam Position Sensor No Signal	ON
P0380	66	Glow Relay Circuit Open/Short	—
P0381	67	Glow Lamp Circuit Open/Short	—
P1403	32	EGR EVRV Fault	—
P1404	31	EGR VSV Circuit	—
P0405	26	EGR Pressure Sensor Low Voltage	ON
P1405	37	EGR EVRV Circuit Open/Short	—
P0406	26	EGR Pressure Sensor High Voltage	ON

DTC using a Tech 2	Flash DTC	Description	MIL
P0475	71	EXH #1 VSV Circuit Open/Short	—
P1475	71	EXH #2 VSV Circuit Open/Short	—
P1485	74	Intake Throttle Position Sensor Low Voltage	ON
P1486	74	Intake Throttle Position Sensor High Voltage	ON
P1487	73	Intake Throttle System Circuit Open/Short	ON
P1488	72	Intake Throttle Motor Control Circuit Signal Gap	—
P0502	24	Vehicle Speed Sensor No Signal	ON
P0510	75	Idle SW Malfunction, Open Circuit	ON
P1510	75	Idle SW Malfunction, Short Circuit	ON
P0562	35	System Voltage Too Low	ON
P1562	35	System Voltage Too Low at Cranking	ON
P1587	25	Brake SW Malfunction [B]	—
P1588	25	Brake SW Malfunction [A]	ON
P0601	55	ECM Checksum Error	ON
P1626	56	Immobilizer No Signal	ON
P1631	56	Immobilizer Wrong Signal	ON
P1648	56	No Security Code Entered	ON
P1649	56	Immobilizer Function not Programmed	ON
P0650	77	Check Engine Lamp Circuit Open/Short	—
P0654	27	Techometer Circuit Open/Short	—
P1655	17	Thermo Relay Circuit Open/Short	—
P1657	76	ECM Main Relay Circuit Open/Short	—
P1589	47	TransMission SW Circuit Open/Short	—

Diagnostic Trouble Code (DTC) P0107 (Flash DTC 34) MAP Sensor Circuit Low Voltage

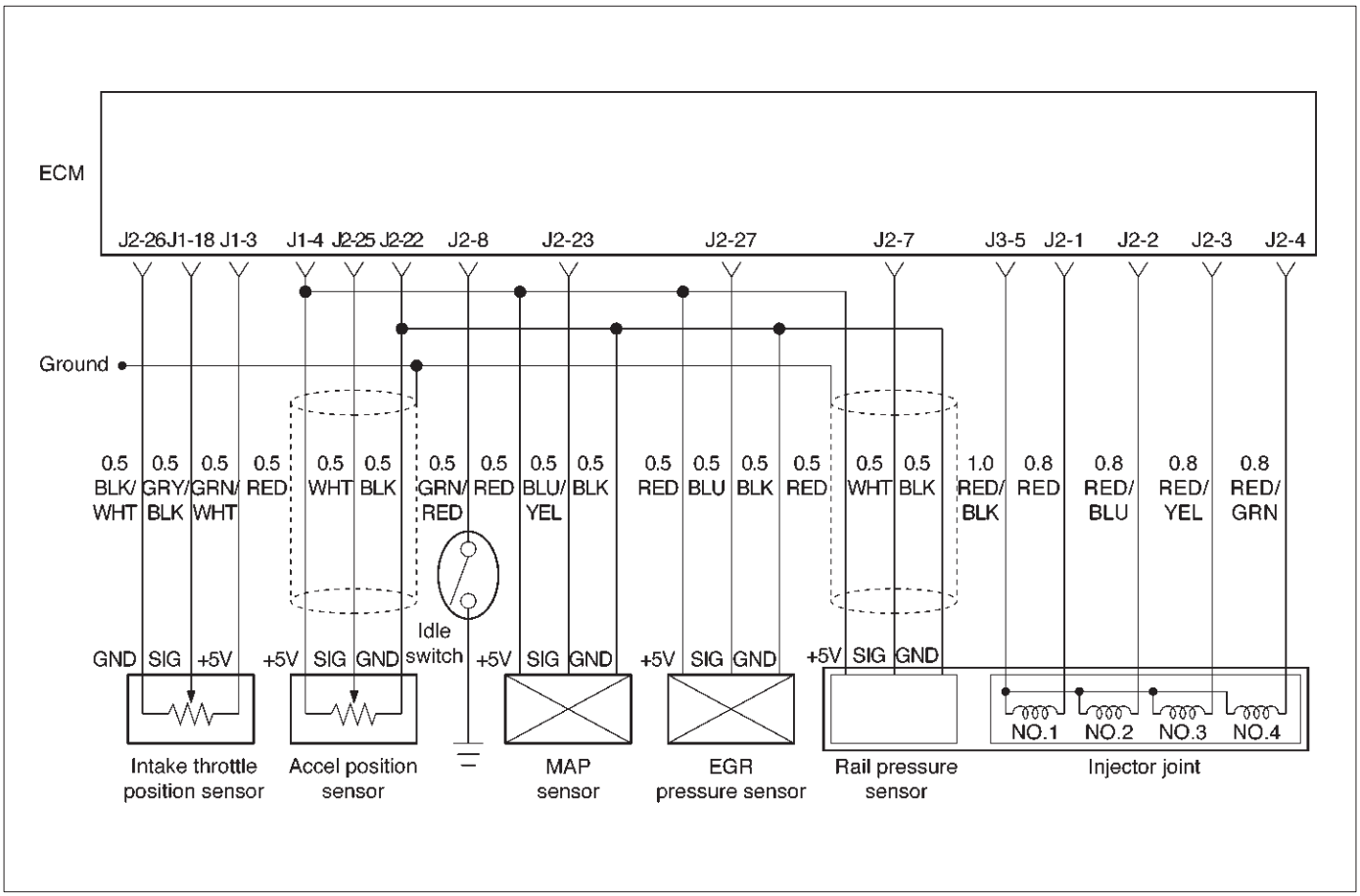

060RW134

Circuit Description

The manifold absolute pressure (MAP) sensor responds to changes in intake manifold pressure (vacuum).
The ECM monitors the MAP signals for voltages outside the normal range of the MAP sensor. If the ECM detects a MAP signal voltage that is excessively low, DTC P0107 will be set.

Action Taken When the DTC Sets

- The ECM will illuminate the malfunction indicator lamp (MIL) the first time the fault is detected.
- The ECM will store conditions which were present when the DTC was set as Freeze Frame and in the Failure Records data.

Conditions for Clearing the MIL/DTC

- DTC P0107 can be cleared by using the Tech 2 “Clear Info” function or by disconnecting the ECM battery feed.

Diagnostic Aids

Check for the following conditions:

- Turn on the ignition switch and stop the engine. At this time, the boost pressure will be equal to the atmospheric pressure and the signal voltage will increase.
- Check for intermittent codes.
- The MAP sensor shares a ground with the ECT sensor, and the Transmission Fluid Temperature sensor.
- Poor connection at ECM – Inspect harness connectors for backed-out terminals, improper mating, broken locks, improperly formed or damaged terminals, and poor terminal-to-wire connection.
- Damaged harness – Inspect the wiring harness for damage. If the harness appears to be OK, observe the MAP display on the Tech 2 while moving connectors and wiring harnesses related to the sensor. A change in the display will indicate the location of the fault.

If DTC P0107 cannot be duplicated, the information included in the Failure Records data can be useful in determining vehicle mileage since the DTC was last set. If it is determined that the DTC occurs intermittently, performing the DTC P0107 Diagnostic Chart may isolate the cause of the fault.

DTC P0107 – MAP Sensor Circuit Low Voltage

Step	Action	Value(s)	Yes	No
1	Was the “On-Board Diagnostic (OBD) System Check” performed?	—	Go to *Step 2*	Go to *OBD System Check*
2	Put the engine into an idling status. Is the MAP voltage value displayed on the Tech 2 below the specified value?	0.25 V	Go to *Step 3*	Refer to *Diagnostic Aids* and *Symptom Diagnosis*
3	1. Turn off the ignition switch. 2. Remove the sensor connector connection. 3. Jumper between harness pins “red” and “blue” wires. 4. Turn on the ignition switch “ON”. Is the MAP voltage reading above the specified value?	4 V	Go to *Step 5*	Go to *Step 4*
4	1. Turn off the ignition switch. 2. Remove the jumper wire. 3. Connect the relay & solenoid checker (5-8840-0386-0) to the battery voltage, then check the MAP signal circuit (blue wire). 4. Turn on the ignition switch. Is the value displayed on the Tech 2 above the specified value?	4 V	Go to *Step 6*	Go to *Step 7*
5	Check the terminal connection at the MAP sensor and repair or replace terminal if necessary. Is the action complete?	—	Verify repair	—
6	Repair the 5V power circuit (red) harness or Replace the ECM (Refer to the Data Programming in Case of ECM change). Is the action complete?	—	Verify repair	—
7	Repair the signal circuit (blue) harness or Replace the ECM (Refer to the Data Programming in Case of ECM change). Is the action complete?	—	Verify repair	—

Diagnostic Trouble Code (DTC) P0108 (Flash DTC 34) MAP Sensor Circuit High Voltage

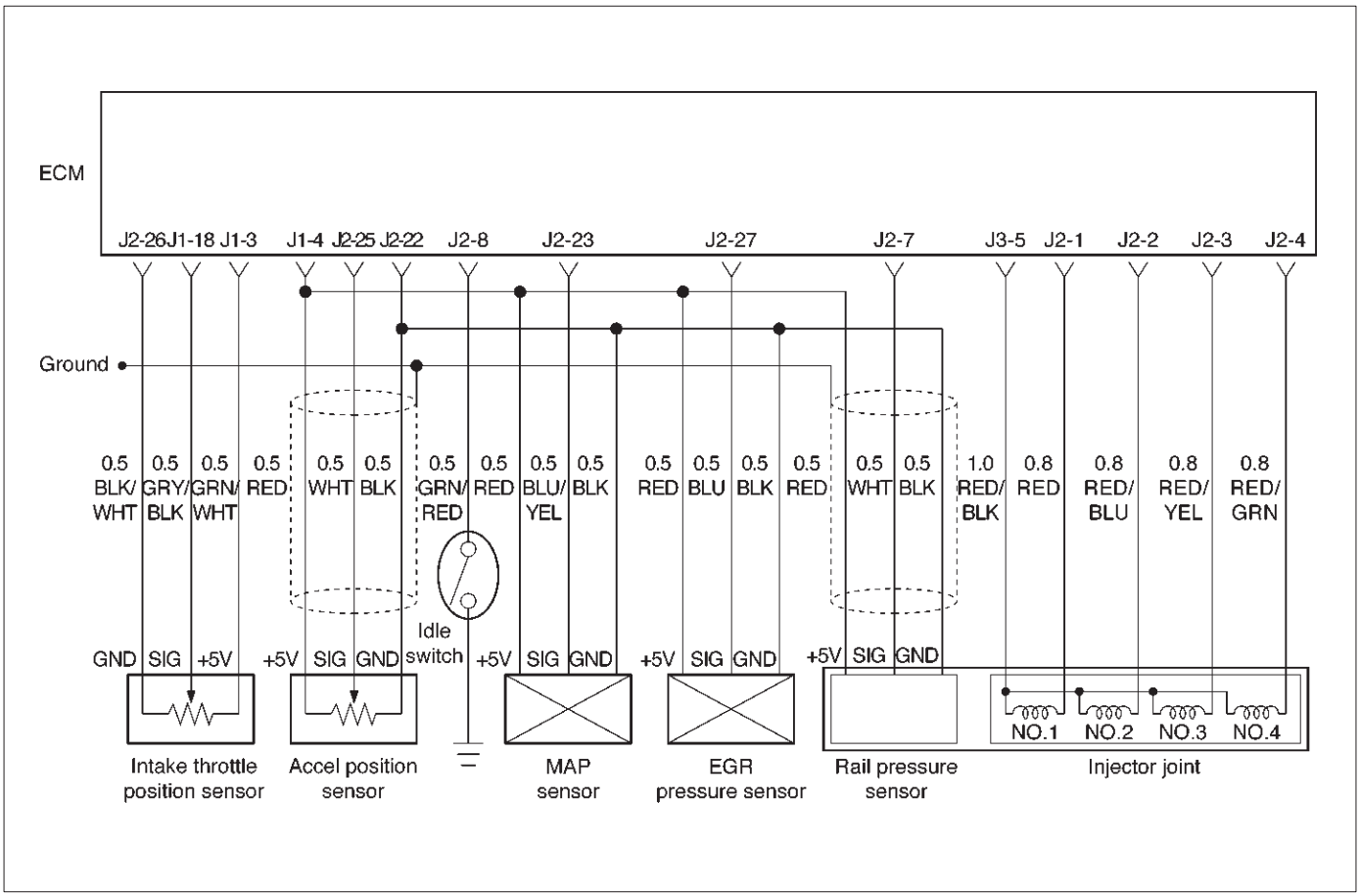

060RW134

Circuit Description

The manifold absolute pressure (MAP) sensor responds to changes in intake manifold pressure (vacuum).
The ECM monitors the MAP signals for voltages outside the normal range of the MAP sensor. If the ECM detects a MAP signal voltage that is excessively high, DTC P0108 will be set.

Action Taken When the DTC Sets

- The ECM will illuminate the malfunction indicator lamp (MIL) the first time the fault is detected.
- The ECM will store conditions which were present when the DTC was set as Freeze Frame and in the Failure Records data.

Conditions for Clearing the MIL/DTC

- DTC P0108 can be cleared by using the Tech 2 “Clear Info” function or by disconnecting the ECM battery feed.

Diagnostic Aids

Check for the following conditions:

- Turn on the ignition switch and stop the engine. At this time, the boost pressure will be equal to the atmospheric pressure and the signal voltage will increase.
- Poor connection at ECM – Inspect harness connectors for backed-out terminals, improper mating, broken locks, improperly formed or damaged terminals, and poor terminal-to-wire connection.
- Damaged harness – Inspect the wiring harness for damage. If the harness appears to be OK, observe the MAP display on the Tech 2 while moving connectors and wiring harnesses related to the sensor. A change in the display will indicate the location of the fault.

If DTC P0108 cannot be duplicated, the information included in the Failure Records data can be useful in determining vehicle mileage since the DTC was last set. If it is determined that the DTC occurs intermittently.

Sensor Circuit High Voltage

Step	Action	Value(s)	Yes	No
1	Was the “On-Board Diagnostic (OBD) System Check” performed?	—	Go to *Step 2*	Go to *OBD System Check*
2	Put the engine into an idling status. Is the MAP voltage value displayed on the Tech 2 above the specified value?	4 V	Go to *Step 3*	Go to *Step 4*
3	1. Turn off the ignition switch. 2. Remove the sensor connector connection. 3. Turn on the ignition switch “ON”. Is the MAP voltage value displayed on the Tech 2 below the specified value?	1 V	Go to *Step 5*	Go to *Step 6*
4	Is the MAP voltage value displayed on the Tech 2 below the specified value?	1 V	Refer to *Chart P0107*	Refer to *Diagnostic Aids* and *Symptom Diagnosis*
5	Connect the relay and solenoid checker (5-8840-0386-0) to the battery voltage, then check the sensor grounding circuit. Does the checker lamp come on?	—	Go to *Step 7*	Go to *Step 8*
6	A voltage short circuit occurs in the MAP signal circuit or this circuit is shorted with the 5V power circuit. Repair the harness or Replace the ECM (Refer to the Data Programming in Case of ECM change). Is the action complete?	—	Verify repair	—
7	Replace the MAP sensor hose or the MAP sensor. Is the action complete?	—	Verify repair	—
8	Repair the harness for open ground circuit. Is the action complete?	—	Verify repair	—

Diagnostic Trouble Code (DTC) P0112 (Flash DTC 23) IAT Sensor Circuit Low Voltage

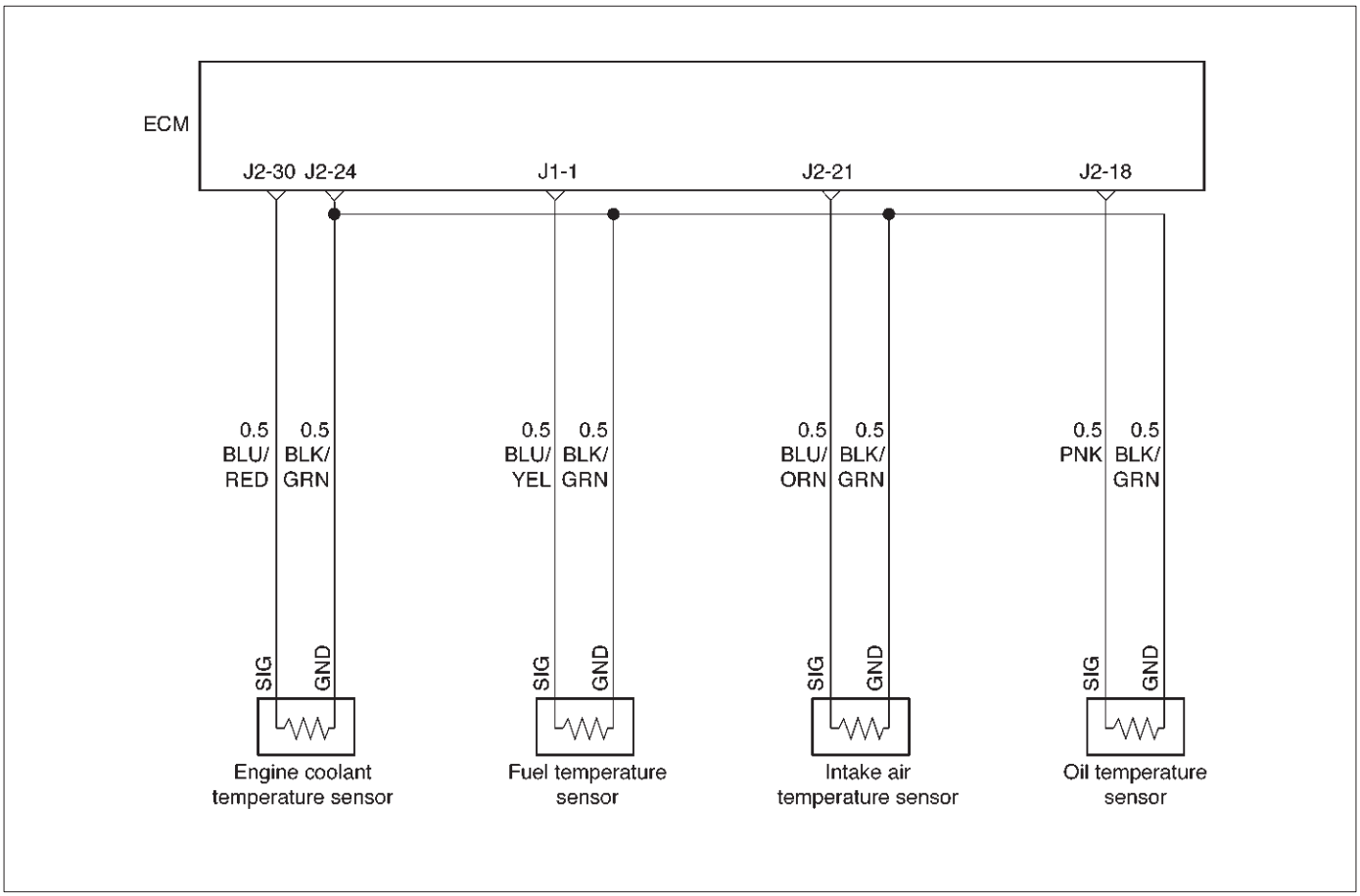

060RW129

Circuit Description

The Intake air temperature (IAT) sensor is a thermistor which measures the temperature of the air entering the engine. The Engine Control Module ECM applies 5 volts through a pull-up resistor to the IAT sensor. When the intake air is cold, the sensor resistance is high and the ECM will monitor a high signal voltage on the IAT signal circuit. If the intake air is warm, the sensor resistance is lower, causing the ECM to monitor a lower voltage. DTC P0112 will set when the ECM detects an excessively low signal voltage on the Intake air temperature sensor signal circuit.

Action Taken When the DTC Sets

- The ECM will illuminate the malfunction indicator lamp (MIL) the first time the fault is detected.
- The ECM will store conditions which were present when the DTC was set as Freeze Frame and in the Failure Records data.

Conditions for Clearing the MIL/DTC

- DTC P0112 can be cleared by using the Tech 2 “Clear Info” function or by disconnecting the ECM battery feed.

Diagnostic Aids

Check for the following conditions:

- Poor connection at ECM – Inspect harness connectors for backed-out terminals, improper mating, broken locks, improperly formed or damaged terminals, and poor terminal-to-wire connection.
- Damaged harness – Inspect the wiring harness for damage. If the harness appears to be OK, observe the IAT display on the Tech 2 while moving connectors and wiring harnesses related to the IAT sensor. A change in the IAT display will indicate the location of the fault.

If DTC P0112 cannot be duplicated, the information included in the Failure Records data can be useful in determining vehicle mileage since the DTC was last set.

Test Description

Number(s) below refer to the step number(s) on the Diagnostic Chart:

2. Verifies that the fault is present.
3. If DTC P0112 can be repeated only by duplicating the Failure Records condition, refer to the *Temperature vs. Resistance Value* table. The table may be used to test the IAT sensor at various temperatures to evaluate the possibility of a "shifted" sensor that may be stored above or below a certain temperature. If this is the case, replace the IAT sensor. If the IAT sensor appears to be OK, the fault is intermittent; refer to *Diagnostic Aids*.

Intake Air Temperature Sensor

˚C	˚F	Ohms
Temperature vs. Resistance Values (approximate)		
25	77	2796
15	59	4450
5	41	7280

DTC P0112 – IAT Sensor Low Voltage

Step	Action	Value(s)	Yes	No
1	Was the "On-Board Diagnostic (OBD) System Check" performed?	—	Go to *Step 2*	Go to *OBD System Check*
2	1. Ignition "ON," engine "OFF." 2. Using a Tech 2, monitor the intake air temperature (IAT). Is the intake air temperature greater than the specified value?	148˚C (283˚F)	Go to *Step 4*	Go to *Step 3*
3	1. Ignition "ON," engine "OFF." Review and record Tech 2 Failure Records data. 2. Operate the vehicle within Failure Records conditions as noted. 3. Using a Tech 2, monitor the " DTC" info for DTC P0112. Does the Tech 2 indicate DTC P0112 failed this ignition?	—	Refer to *Test Description*	Refer to *Diagnostic Aids*
4	1. Ignition "OFF." 2. Disconnect the IAT sensor electrical connector. 3. Ignition "ON." 4. Observe the manifold air temperature on the Tech 2. Is the manifold air temperature below the specified value?	–38˚C (–36˚F)	Go to *Step 6*	Go to *Step 5*
5	1. Ignition "OFF." 2. Disconnect the ECM electrical connectors. 3. Check the IAT sensor signal circuit for a short to ground. Is the IAT sensor signal circuit shorted to ground?	—	Verify repair	Go to *Step 7*
6	Replace the IAT sensor. Is the action complete?	—	Verify repair	—
7	Replace the ECM (Refer to the Data Programming in Case of ECM change). Is the action complete?	—	Verify repair	—

Diagnostic Trouble Code (DTC) P0113 (Flash DTC 23) IAT Sensor Circuit High Voltage

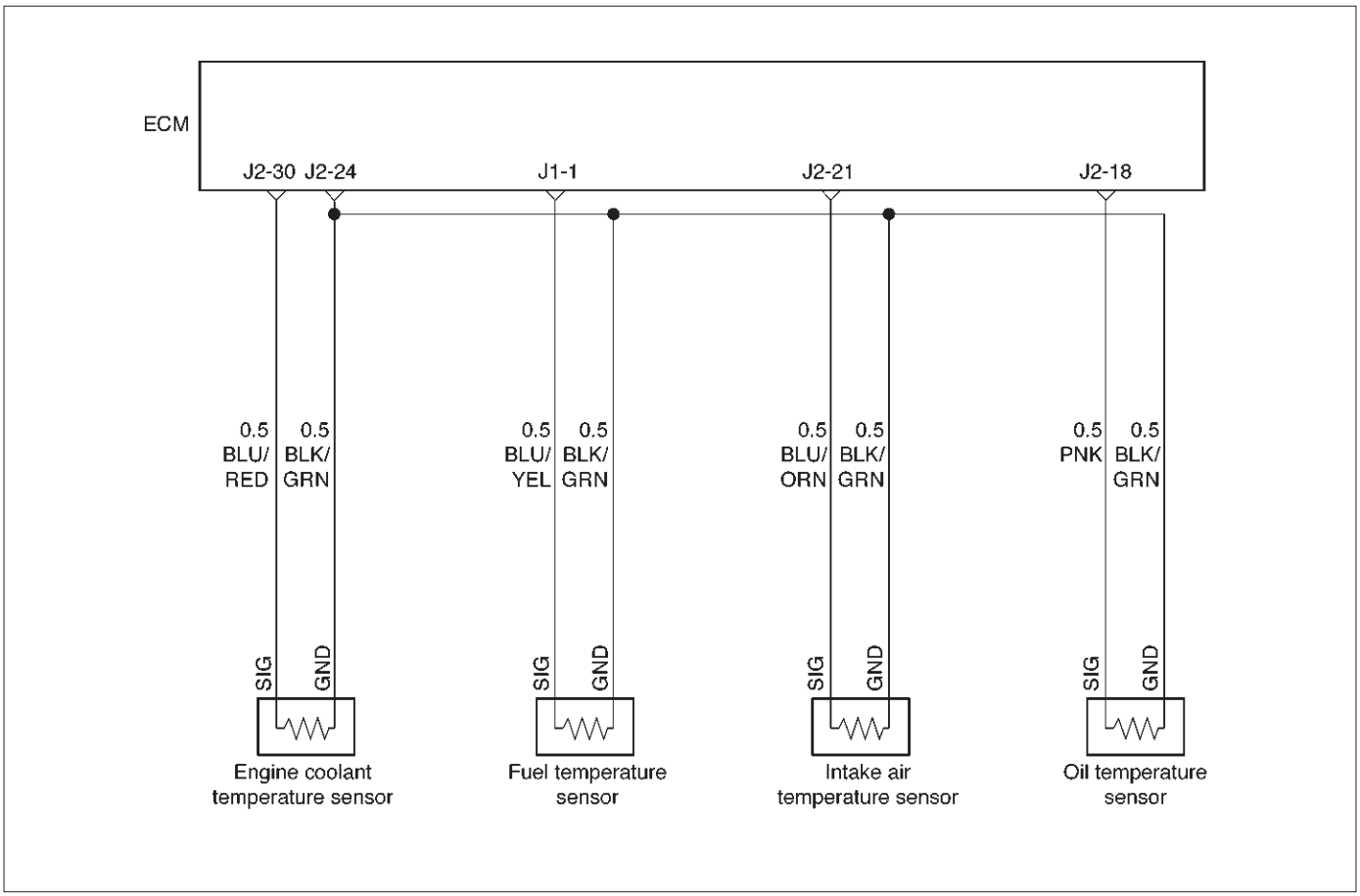

060RW129

Circuit Description

The intake air temperature (IAT) sensor is a thermistor which measures the temperature of the air entering the engine. The Engine Control Module ECM applies 5 volts through a pull-up resistor to the IAT sensor. When the intake air is cold, the sensor resistance is high and the ECM will monitor a high signal voltage on the IAT signal circuit. If the intake air is warm, the sensor resistance is lower causing the ECM to monitor a lower voltage. DTC P0113 will set when the ECM detects an excessively high signal voltage on the intake air temperature sensor signal circuit.

Action Taken When the DTC Sets

- The ECM will illuminate the malfunction indicator lamp (MIL) the first time the fault is detected.
- The ECM will store conditions which were present when the DTC was set as Freeze Frame and in the Failure Records data.

Conditions for Clearing the MIL/DTC

- DTC P0113 can be cleared by using the Tech 2 “Clear Info” function or by disconnecting the ECM battery feed.

Diagnostic Aids

Check for the following conditions:

- Poor connection at ECM – Inspect harness connectors for backed-out terminals, improper mating, broken locks, improperly formed or damaged terminals, and poor terminal-to-wire connection.
- Damaged harness – Inspect the wiring harness for damage. If the harness appears to be OK, observe the IAT display on the Tech 2 while moving connectors and wiring harnesses related to the IAT sensor. A change in the IAT display will indicate the location of the fault.

If DTC P0113 cannot be duplicated, the information included in the Failure Records data can be useful in determining vehicle mileage since the DTC was last set.

Test Description

Number(s) below refer to the step number(s) on the Diagnostic Chart:

2. Verifies that the fault is present.
3. If DTC P0113 can be repeated only by duplicating the Failure Records conditions, refer to the "Temperature vs. Resistance Values" table. The table may be used to test the MAT sensor at various temperatures to evaluate the possibility of a "shifted" sensor that may be open above or below a certain temperature. If this is the case, replace the MAT sensor. If the MAT sensor appears to be OK, the fault is intermittent; refer to *Diagnostic Aids*.

Manifold Air Temperature Sensor

˚C	˚F	Ohms
Temperature vs. Resistance Values (approximate)		
25	77	2796
15	59	4450
5	41	7280

DTC P0113 –IAT Sensor Circuit High Voltage

Step	Action	Value(s)	Yes	No
1	Was the "On-Board Diagnostic (OBD) System Check" performed?	—	Go to *Step 2*	Go to *OBD System Check*
2	Ignition "ON," engine "OFF." Observe the "Intake Air Temp" display on the Tech 2. Is the "Intake Air Temp" below the specified value?	–38˚C (–36˚F)	Go to *Step 4*	Go to *Step 3*
3	1. Ignition "ON," engine "OFF." 2. Review and record Tech 2 Failure Records data parameters. 3. Operate the vehicle within Failure Records conditions as noted. 4. Using a Tech 2, monitor " DTC" info for DTC P0113. Does the Tech 2 indicate DTC P0113 failed?	—	Refer to *Test Description*	Refer to *Diagnostic Aids*
4	1. Ignition "OFF." 2. Disconnect the IAT sensor electrical connector. 3. Jumper the IAT signal circuit and the sensor ground circuit together at the IAT sensor harness connector. 4. Ignition "ON." 5. Observe the "Intake Air Temp" display on the Tech 2. Is the "Intake Air Temp" at the specified value?	140˚C (284˚F)	Go to *Step 6*	Go to *Step 5*
5	1. Jumper the IAT signal circuit at the IAT sensor harness connector to chassis ground. 2. Observe the "Intake Air Temp" display on the Tech 2. Is the "Intake Air Temp" at the specified value?	140˚C (284˚F)	Go to *Step 7*	Go to *Step 8*
6	Check for poor connections at the IAT sensor and replace terminals if necessary. Did any terminals require replacement?	—	Verify repair	Go to *Step 10*
7	1. Ignition "OFF." 2. Disconnect the ECM, and check the IAT sensor ground circuit for an open. 3. If the IAT sensor ground circuit is open, repair it as necessary. Was the IAT sensor ground circuit open?	—	Verify repair	Go to *Step 9*

DTC P0113 –IAT Sensor Circuit High Voltage (Cont'd)

Step	Action	Value(s)	Yes	No
8	1. Ignition "OFF." 2. Disconnect the ECM, and check the IAT signal circuit for an open. 3. If the IAT sensor signal circuit is open, repair it as necessary. Was the IAT signal circuit open?	—	Verify repair	Go to *Step 9*
9	Check for a poor sensor ground or IAT signal circuit terminal connection at the ECM and replace terminal(s) if necessary. Did any of the terminals need to be replaced?	—	Verify repair	Go to *Step 11*
10	Replace the IAT sensor. Is the action complete?	—	Verify repair	—
11	Replace the ECM (Refer to the Data Programming in Case of ECM change). Is the action complete?	—	Verify repair	—

Diagnostic Trouble Code (DTC) P0117 (Flash DTC 14) ECT Sensor Low Voltage

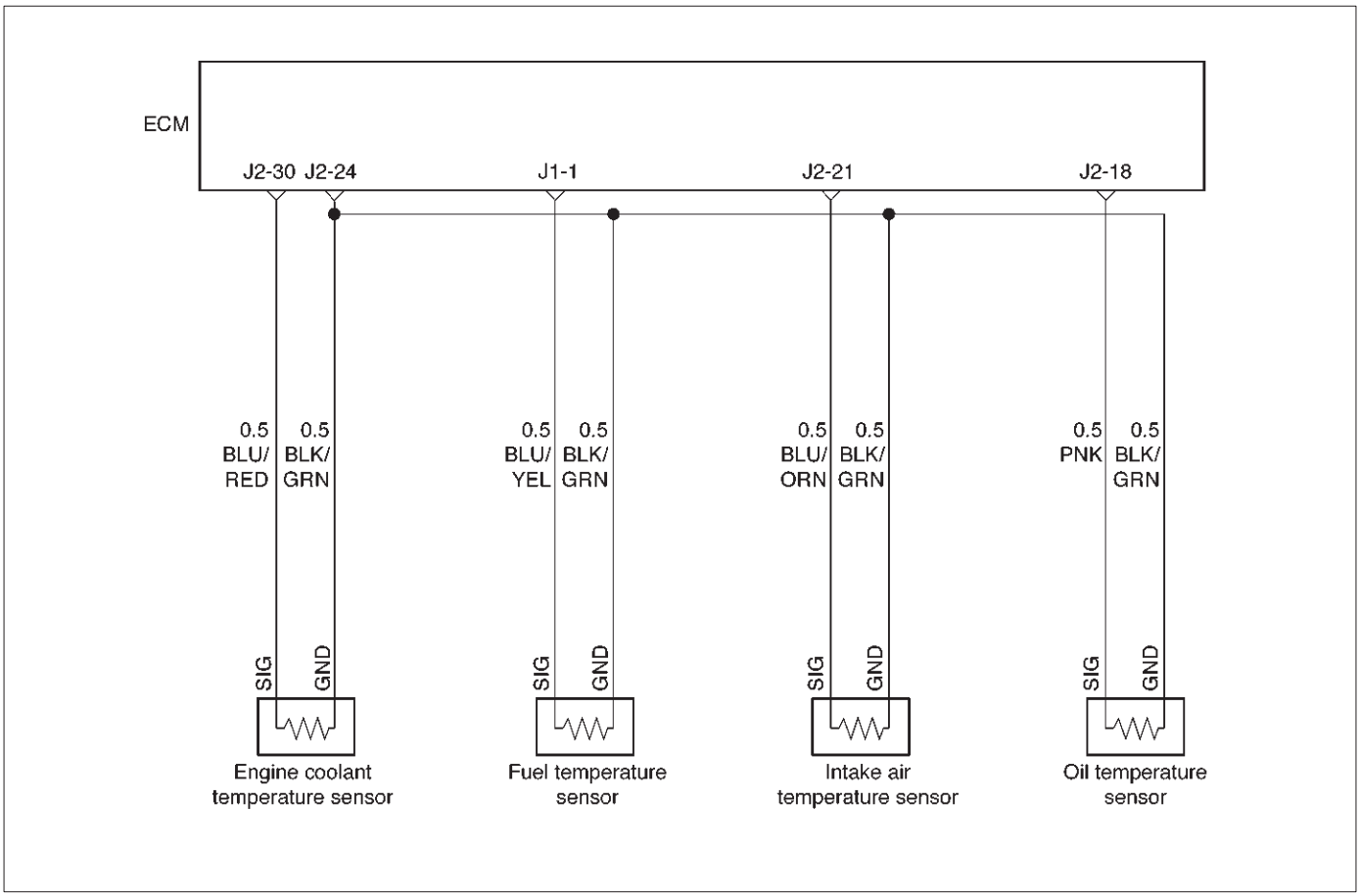

060RW129

Circuit Description

The engine coolant temperature (ECT) sensor is a thermistor mounted on a coolant crossover pipe at the rear of the engine. The Engine Control Module ECM applies a voltage (about 5 volts) through a pull-up resistor to the ECT signal circuit. When the engine coolant is cold, the sensor (thermistor) resistance is high, therefore the ECM will measure a high signal voltage. As the engine coolant warms, the sensor resistance becomes lower, and the ECT signal voltage measured at the ECM drops.

Action Taken When the DTC Sets

- The ECM will store conditions which were present when the DTC was set as Freeze Frame and in the Failure Records data.

Conditions for Clearing the MIL/DTC

- DTC P0117 can be cleared by using the Tech 2 “Clear Info” function or by disconnecting the ECM battery feed.

Diagnostic Aids

Check for the following conditions:

- Poor connection at ECM – Inspect harness connectors for backed-out terminals, improper mating, broken locks, improperly formed or damaged terminals, and poor terminal-to-wire connection.
- Damaged harness – Inspect the wiring harness for damage. If the harness appears to be OK, observe the ECT display on the Tech 2 while moving connectors and wiring harnesses related to the ECT sensor. A change in the ECT display will indicate the location of the fault.

If DTC P0117 cannot be duplicated, the information included in the Failure Records data can be useful in determining vehicle mileage since the DTC was last set. If it is determined that the DTC occurs intermittently.

Test Description

Number(s) below refer to the step number(s) on the Diagnostic Chart.

2. Verifies that the fault is present.
3. If DTC P0117 can be repeated only by duplicating the Failure Records conditions, refer to the “Temperature vs. Resistance Values” table. The table may be used to test the ECT sensor at various temperatures to evaluate the possibility of a “shifted” sensor that may be shorted above or below a certain temperature. If this is the case, replace the ECT sensor. If the ECT sensor appears to be OK, the fault is intermittent; refer to *Diagnostic Aids*.

Engine Coolant Temperature Sensor

˚C	˚F	Ohms
Temperature vs. Resistance Values (approximate)		
25	77	2796
15	59	4450

DTC P0117 – ECT Sensor Low Voltage

Step	Action	Value(s)	Yes	No
1	Was the “On-Board Diagnostic (OBD) System Check” performed?	—	Go to *Step 2*	Go to *OBD System Check*
2	1. Ignition “ON,” engine “OFF.” 2. Observe the “Eng Cool Temp” display on the Tech 2. Is the “Eng Cool Temp” below the specified value?	139˚C (282˚F)	Go to *Step 4*	Go to *Step 3*
3	1. Ignition “ON,” engine “OFF.” 2. Review and record Tech 2 Failure Records data. 3. Operate the vehicle within Failure Records conditions as noted. 4. Using a Tech 2, monitor “ DTC” info for DTC P0117. Does the Tech 2 indicate DTC P0117 failed this ignition?	—	Go to *Step 4*	Refer to *Diagnostic Aids*
4	1. Disconnect the ECT sensor electrical connector. 2. Observe the “Eng Cool Temp” display on the Tech 2. Is the “Eng Cool Temp” at the specified value?	–39˚C (–38˚F)	Go to *Step 6*	Go to *Step 5*
5	1. Ignition “OFF.” 2. Disconnect the ECM and check the ECT signal circuit for a short to ground or a short to the sensor ground circuit. 3. If the ECT signal circuit is shorted. repair it as necessary. Was the ECT signal circuit shorted to ground?	—	Verify repair	Go to *Step 7*
6	Replace the ECT sensor. Is the action complete?	—	Verify repair	—
7	Replace the ECM (Refer to the Data Programming in Case of ECM change). Is the action complete?	—	Verify repair	—

Diagnostic Trouble Code (DTC) P0118 (Flash DTC 14) ECT Sensor High Voltage

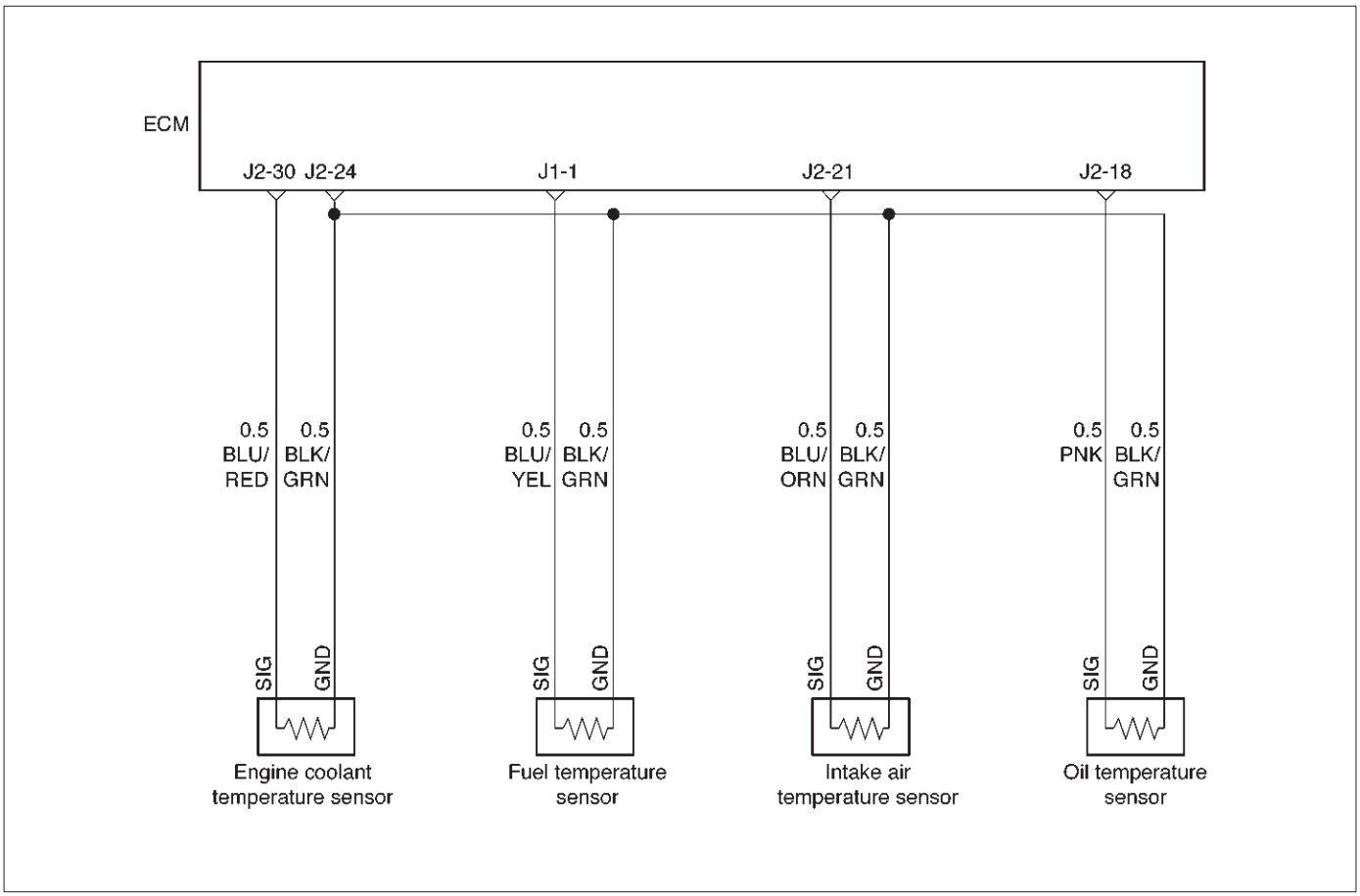

060RW129

Circuit Description

The engine coolant temperature (ECT) sensor is a thermistor mounted in on a coolant crossover pipe at the rear of the engine. The Engine Control Module ECM applies a voltage (about 5 volts) through a pull-up resistor to the ECT signal circuit. When the engine coolant is cold, the sensor (thermistor) resistance is high, therefore the ECM will measure a high signal voltage. As the engine coolant warms, the sensor resistance becomes less, and the ECT signal voltage measured at the ECM drops.

Action Taken When the DTC Sets

- The ECM will store conditions which were present when the DTC was set as Freeze Frame and in the Failure Records data.

Conditions for Clearing the MIL/DTC

- DTC P0118 can be cleared by using the Tech 2 “Clear Info” function or by disconnecting the ECM battery feed.

Diagnostic Aids

Check for the following conditions:

- Poor connection at ECM – Inspect harness connectors for backed-out terminals, improper mating, broken locks, improperly formed or damaged terminals, and poor terminal-to-wire connection.
- Damaged harness – Inspect the wiring harness for damage. If the harness appears to be OK, observe the ECT display on the Tech 2 while moving connectors and wiring harnesses related to the ECT sensor. A change in the ECT display will indicate the location of the fault.

If DTC P0118 cannot be duplicated, the information included in the Failure Records data can be useful in determining vehicle mileage since the DTC was last set.

Test Description

Number(s) below refer to the step number(s) on the Diagnostic Chart.

2. Verifies that the fault is present.

3. If DTC P0118 can be repeated only by duplicating the Failure Records conditions, refer to the "Temperature vs. Resistance Value" table. The table may be used to test the ECT sensor at various temperatures to evaluate the possibility of a "shifted" sensor that may be shorted above or below a certain temperature. If this is the case, replace the ECT sensor. If the ECT sensor appears to be OK, the fault is intermittent; refer to *Diagnostic Aids*.

Engine Coolant Temperature Sensor

˚C	˚F	Ohms
Temperature vs. Resistance Values (approximate)		
80	176	332
25	77	2796
15	59	4450

DTC P0118 – ECT Sensor High Voltage

Step	Action	Value(s)	Yes	No
1	Was the "On-Board Diagnostic (OBD) System Check" performed?	—	Go to *Step 2*	Go to *OBD System Check*
2	1. Ignition "ON," engine "OFF." 2. Observe the "Eng Cool Temp" display on the Tech 2. Is the "Eng Cool Temp" below the specified value?	–39˚C (–38˚F)	Go to *Step 4*	Go to *Step 3*
3	1. Ignition "ON," engine "OFF." 2. Review and record Tech 2 Failure Records data. 3. Operate the vehicle within Failure Records conditions as noted. 4. Using a Tech 2, monitor the " DTC" info for DTC P0118. Does the Tech 2 indicate DTC P0118 failed?	—	Refer to *Test Description*	Refer to *Diagnostic Aids*
4	1. Disconnect the ECT sensor electrical connector. 2. Jumper the ECT signal circuit and the sensor ground circuit together at the ECT sensor harness connector. 3. Observe the "Eng Cool Temp" display on the Tech 2. Is the "Eng Cool Temp" at the specified value?	140˚C (284˚F)	Go to *Step 6*	Go to *Step 5*
5	1. Jumper the ECT signal circuit at the ECT sensor harness connector to chassis ground. 2. Observe the "Eng Cool Temp" display on the Tech 2. Is the "Eng Cool Temp" at the specified value?	140˚C (284˚F)	Go to *Step 7*	Go to *Step 8*
6	Check for poor connections at the ECT sensor and replace terminals if necessary. Did any terminals require replacement?	—	Verify repair	Go to *Step 10*
7	1. Ignition "OFF." 2. Disconnect the ECM, and check the ECT sensor ground circuit for an open. 3. If the ECT sensor ground circuit is open, repair it as necessary. Was the ECT sensor ground circuit open?	—	Verify repair	Go to *Step 9*

DTC P0118 – ECT Sensor High Voltage (Cont'd)

Step	Action	Value(s)	Yes	No
8	1. Ignition "OFF." 2. Disconnect the ECM, and check the ECT signal circuit for an open. 3. If the ECT sensor signal circuit is open, repair it as necessary. Was the ECT signal circuit open?	—	Verify repair	Go to *Step 9*
9	Check for a poor sensor ground or ECT signal circuit terminal connection at the ECM and replace terminal(s) if necessary. Did any of the terminals need to be replaced?	—	Verify repair	Go to *Step 11*
10	Replace the ECT sensor. Is the action complete?	—	Verify repair	—
11	Replace the ECM (Refer to the Data Programming in Case of ECM change). Is the action complete?	—	Verify repair	—

Diagnostic Trouble Code (DTC) P0121 (Flash DTC 33) AP Sensor Rationality

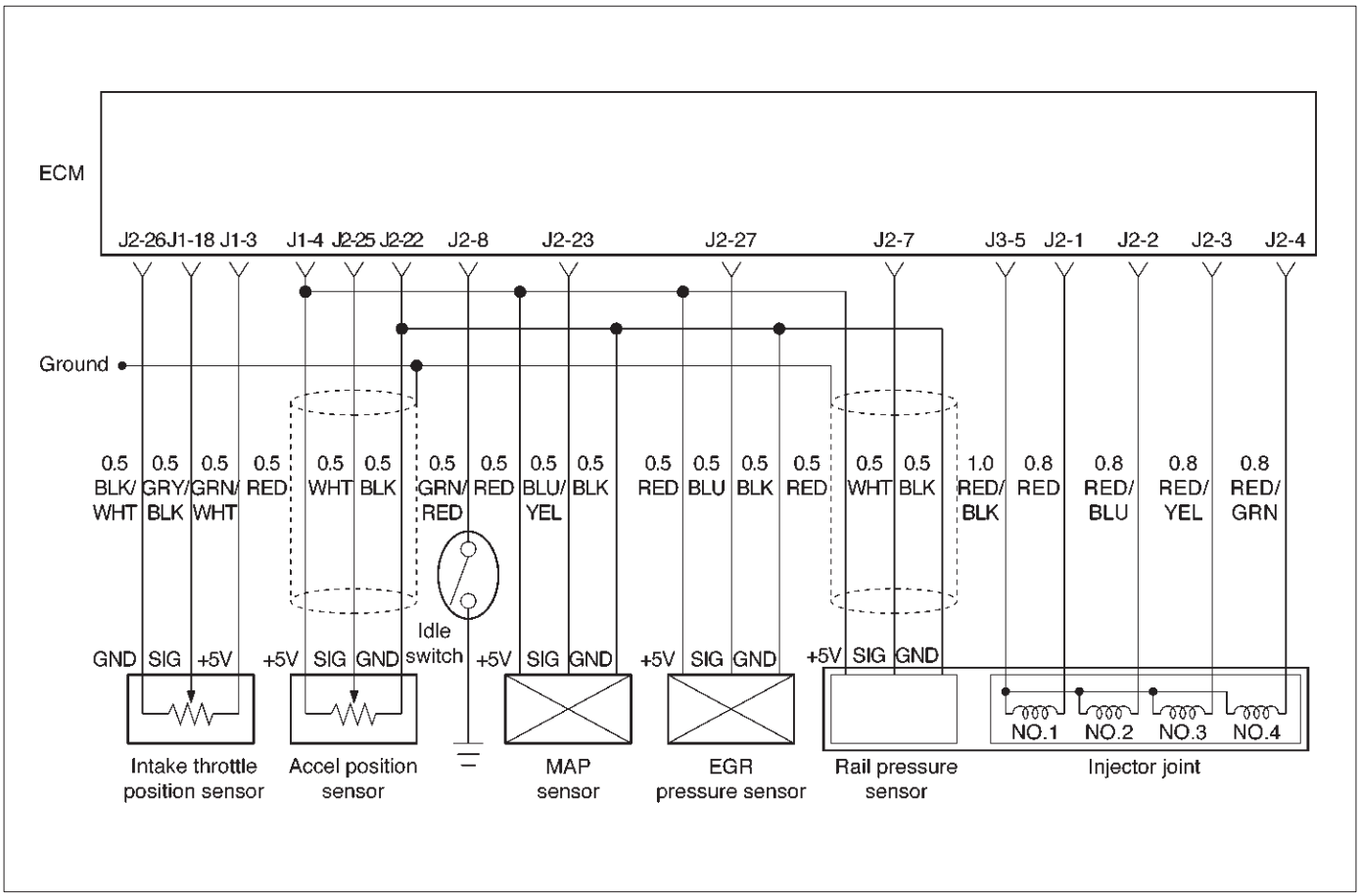

060RW134

Circuit Description

The accel position (AP) sensor circuit provides a voltage signal that changes relative to throttle blade angle.
The AP signal is one of the most important inputs used by the Engine Control Module ECM for fuel volume control and many of the ECM-controlled outputs. If the ECM detects an out-of-range condition, DTC P0121 will set.

Action Taken When the DTC Sets

- The ECM will illuminate the malfunction indicator lamp (MIL) after fault is detected.
- The ECM will store conditions which were present when the DTC was set as Freeze Frame and in the Failure Records data.

Conditions for Clearing the MIL/DTC

- DTC P0121 can be cleared by using the Tech 2 “Clear info ” function or by disconnecting the ECM battery feed.

Diagnostic Aids

Check for the following conditions:

- Poor connection at ECM – Inspect harness connectors for backed-out terminals, improper mating, broken locks improperly formed or damaged terminals, and poor terminal-to-wire connection.
- Damaged harness – Inspect the wiring harness for damage. If the harness appears to be OK, observe the ECT display on the Tech 2 while moving connectors and wiring harnesses related to the sensor. A change in the display will indicate the location of the fault.

If DTC P0121 cannot be duplicated, the information included in the Failure Records data can be useful in determining vehicle mileage since the DTC was last set.

DTC P0121 –AP Sensor Rationality

Step	Action	Value(s)	Yes	No
1	Was the “On-Board Diagnostic (OBD) System Check” performed?	—	Go to *Step 2*	Go to *OBD System Check*
2	Check the Idle SW. Was the Idle SW circuit open or darmage?	—	Replace the Idle SW circuit	Go to *Step 3*
3	Observe the AP angle reading on the Tech 2 while slowly opening the throttle. Does the AP angle increase steadily and evenly from the closed throttle value to the wide open throttle value?	Closed throttle = 0% Wide open throttle = 100%	Refer to *Diagnostic Aids*	Go to *Step 4*
4	1. Disconnect the AP sensor. 2. Observe the AP sensor reading on the Tech 2. Is the AP sensor reading near the specified value?	0 V	Go to *Step 5*	Go to *Step 6*
5	1. Connect a test light between the 5 volt reference “J2” circuit and the AP sensor signal circuit at the AP sensor harness connector. 2. Observe the AP sensor reading on the Tech 2. Is the AP sensor reading at the specified value?	5 V	Go to *Step 8*	Go to *Step 7*
6	Check the following items: 1. AP signal circuit for a short to voltage. 2. AP sensor ground circuit for high resistance between the ECM and the AP sensor. 3. AP sensor ground circuit for a poor connection. 4. If a problem is found, repair wiring harness as necessary. Was a problem found?	—	Verify repair	Go to *Step 9*
7	Check the following items: 1. AP signal circuit or 5 volt reference “J2” circuit for a poor connection. 2. AP signal circuit or 5 volt reference “J2” circuit for high resistance between the ECM and the AP sensor. 3. If a problem is found, repair wiring harness as necessary. Was a problem found?	—	Verify repair	Go to *Step 9*
8	Replace the AP sensor. Is the action complete?	—	Verify repair	—
9	Replace the ECM (Refer to the Data Programming in Case of ECM change). Is the action complete?	—	Verify repair	—

Diagnostic Trouble Code (DTC) P0122 (Flash DTC 21)
AP Sensor Low Voltage

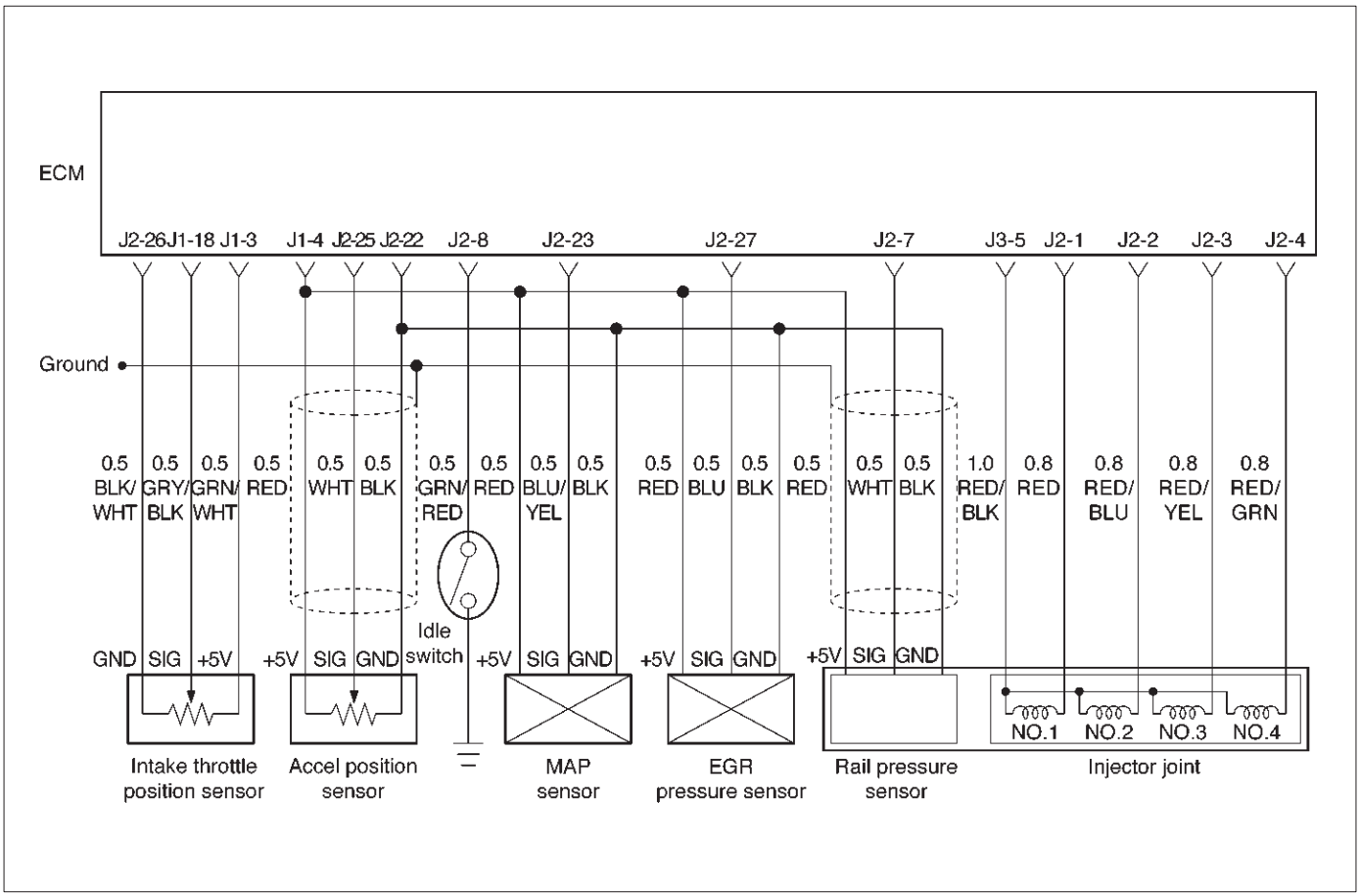

060RW134

Circuit Description

The accelerator position (AP) sensor circuit provides a voltage signal that changes relative to throttle blade angle.

The AP signal is used by the Engine Control Module ECM for fuel volume control and many of the ECM-controlled outputs.

Action Taken When the DTC Sets

- The ECM will store conditions which were present when the DTC was set as Freeze Frame and in the Failure Records data.

Conditions for Clearing the MIL/DTC

- DTC P0122 can be cleared by using the Tech 2 “Clear Info” function or by disconnecting the ECM battery feed.

Diagnostic Aids

Check for the following conditions:

- Poor connection at ECM – Inspect harness connectors for backed-out terminals, improper mating, broken locks, improperly formed or damaged terminals, and poor terminal-to-wire connection.
- Damaged harness – Inspect the wiring harness for damage. If the harness appears to be OK, observe the throttle position display on the Tech 2 while moving connectors and wiring harnesses related to the TP sensor. A change in the display will indicate the location of the fault.

If DTC P0122 cannot be duplicated, the information included in the Failure Records data can be useful in determining vehicle mileage since the DTC was last set.

DTC P0122 –AP Sensor Low Voltage

Step	Action	Value(s)	Yes	No
1	Was the “On-Board Diagnostic (OBD) System Check” performed?	—	Go to *Step 2*	Go to *OBD System Check*
2	Check the AP sensor signal circuit. Was the AP sensor signal circuit open or darmage?	—	Replace the APS circuit	Go to *Step 3*

DTC P0122 –AP Sensor Low Voltage (Cont'd)

Step	Action	Value(s)	Yes	No
3	1. Ignition "ON," engine "OFF." 2. With the throttle closed, observe the "AP Sensor" display on the Tech 2. Is the "AP Sensor" below the specified value?	0.1 V	Go to *Step 5*	Go to *Step 4*
4	1. Ignition "ON," engine "OFF." 2. Review and record Tech 2 Failure Records data. 3. Operate the vehicle within Failure Records conditions as noted. 4. Using a Tech 2, monitor the "DTC" info for DTC P0122. Does the Tech 2 indicate DTC P0122 failed?	—	Go to *Step 5*	Refer to *Diagnostic Aids*
5	1. Ignition "OFF." 2. Disconnect the AP sensor electrical connector. 3. Jumper the 5 volt reference "J2" circuit and the AP signal together at the AP sensor harness connector. 4. Ignition "ON." Observe the "AP Sensor" display on the Tech 2. Is the "AP Sensor" at the specified value?	5 V	Go to *Step 11*	Go to *Step 6*
6	1. Disconnect jumper. 2. Connect a test light between B+ and the AP sensor signal circuit at the AP sensor harness connector. Observe the "AP Sensor" display on the Tech 2. Is the "AP Sensor" at the specified value?	5 V	Go to *Step 7*	Go to *Step 9*
7	1. Ignition "OFF." 2. Disconnect the ECM and check the 5 volt reference "A" circuit for an open or short to ground. 3. If the 5 volt reference "J2" circuit is open or shorted to ground, repair it as necessary. Was the 5 volt reference "J2" circuit open or shorted to ground?	—	Verify repair	Go to *Step 8*
8	Check the 5 volt reference "J2" circuit for a poor connection at the ECM and replace the terminal if necessary. Did the terminal require replacement?	—	Verify repair	Go to *Step 13*
9	1. Ignition "OFF." 2. Disconnect the ECM, and check the AP signal circuit for an open, short to ground, or short to the sensor ground circuit. 3. If the AP sensor signal circuit is open or shorted to ground, repair it as necessary. Was the AP signal circuit open or shorted to ground?	—	Verify repair	Go to *Step 10*
10	Check the AP sensor signal circuit for a poor connection at the ECM and replace the terminal if necessary. Did the terminal require replacement?	—	Verify repair	Go to *Step 13*
11	Check the AP sensor signal circuit for a poor connection at the AP sensor and replace the terminal if necessary. Did the terminal require replacement?	—	Verify repair	Go to *Step 12*

DTC P0122 –AP Sensor Low Voltage (Cont'd)

Step	Action	Value(s)	Yes	No
12	Replace the AP sensor. Is the action complete?	—	Verify repair	—
13	Replace the ECM (Refer to the Data Programming in Case of ECM change). Is the action complete?	—	Verify repair	—

Diagnostic Trouble Code (DTC) P0123 (Flash DTC 21) AP Sensor High Voltage

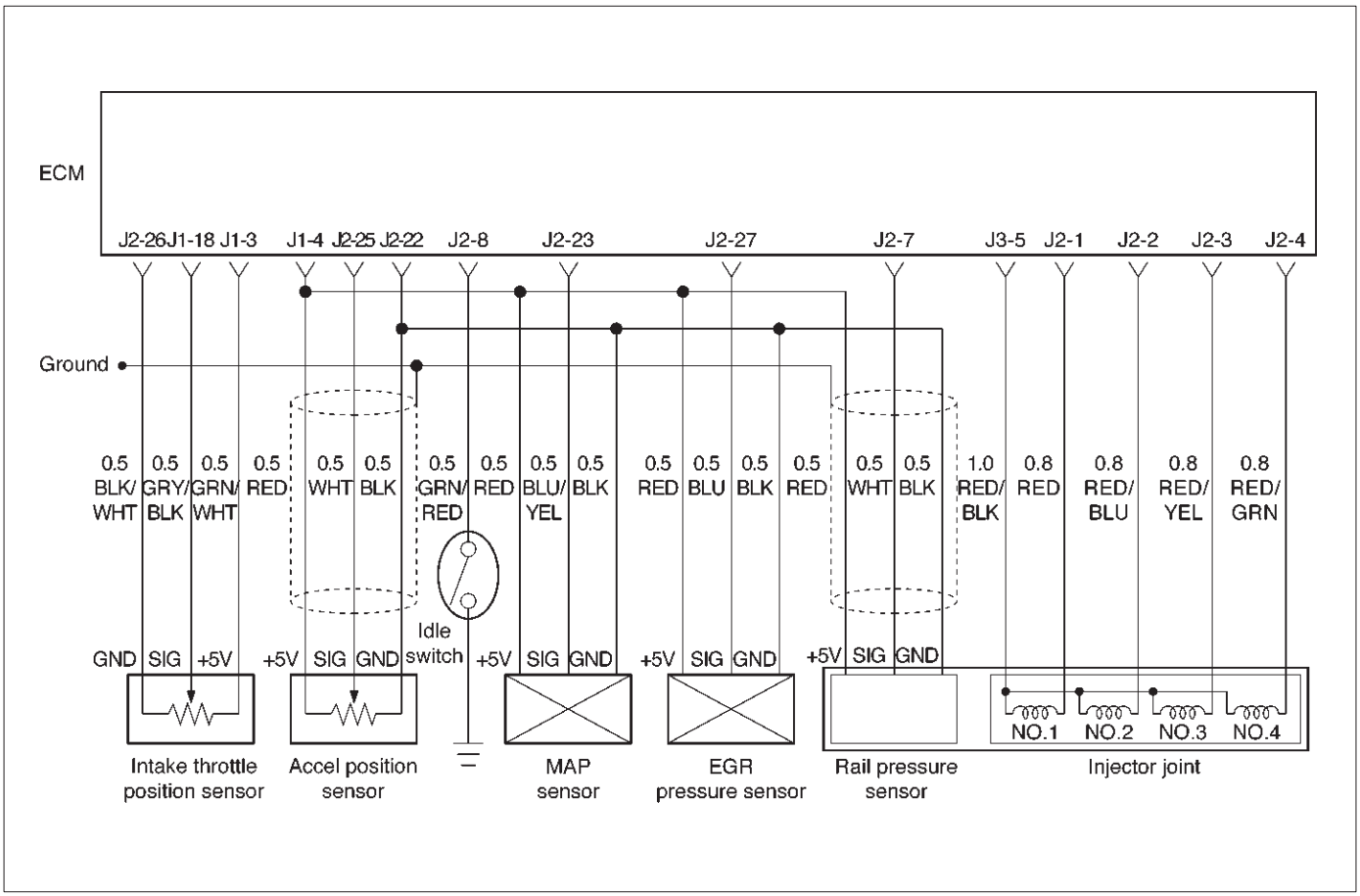

060RW134

Circuit Description

The accelerator position (AP) sensor circuit provides a voltage signal that changes relative to throttle blade angle.

The TP signal is one of the most important inputs used by the Engine Control Module ECM for fuel volume control and many of the ECM-controlled outputs.

Action Taken When the DTC Sets

- The ECM will store conditions which were present when the DTC was set as Freeze Frame and in the Failure Records data.

Conditions for Clearing the MIL/DTC

- DTC P0123 can be cleared by using the Tech 2 “Clear Info” function or by disconnecting the ECM battery feed.

Diagnostic Aids

Check for the following conditions:

- Poor connection at ECM – Inspect harness connectors for backed-out terminals, improper mating, broken locks, improperly formed or damaged terminals, and poor terminal-to-wire connection.
- Damaged harness – Inspect the wiring harness for damage. If the harness appears to be OK, observe the AP sensor display on the Tech 2 while moving connectors and wiring harnesses related to the TP sensor. A change in the display will indicate the location of the fault.
- Faulty AP sensor – With the ignition key “ON,” engine “OFF,” observe the AP sensor display on the Tech 2 while slowly depressing the accelerator to wide open throttle. If a voltage over 4.88 volts is seen at any point in normal accelerator travel, replace the AP sensor.

If DTC P0123 cannot be duplicated, the information included in the Failure Records data can be useful in determining vehicle mileage since the DTC was last set.

Test Description

Number (s) below refer to the step number(s) on the Diagnostic Chart.

8. Components that share the AP sensor 5 volt reference “A” circuit include the following device:

DTC P0123 – AP Sensor High Voltage

Step	Action	Value(s)	Yes	No
1	Was the “On-Board Diagnostic (OBD) System Check” performed?	—	Go to *Step 2*	Go to *OBD System Check*
2	Check the AP sensor signal circuit. Was the AP sensor signal circuit open or darmage?	—	Replace the APS circuit	Go to *Step 3*
3	1. Ignition “ON,” engine “OFF.” 2. With the throttle closed, observe the “AP Sensor” display on the Tech 2. Is the “AP Sensor” above the specified value?	4.5 V	Go to *Step 5*	Go to *Step 4*
4	1. Ignition “ON,” engine “OFF.” 2. Review and record Tech 2 Failure Records data. 3. Operate the vehicle within Failure Records conditions as noted. 4. Using a Tech 2, monitor “DTC” info for DTC P0123. Does the Tech 2 indicate DTC P0123 failed.	—	Go to *Step 5*	Refer to *Diagnostic Aids*
5	1. Disconnect the AP sensor electrical connector. 2. Observe the “AP Sensor” display on the Tech 2. Is the “AP Sensor” near the specified value?	0 V	Go to *Step 6*	Go to *Step 7*
6	Probe the sensor ground circuit at the AP sensor harness connector with a test light connected to B+. Is the test light “ON?”	—	Go to *Step 8*	Go to *Step 11*
7	1. Ignition “OFF,” disconnect the ECM. 2. Ignition “ON,” engine “OFF.” 3. Check for a short to voltage on the AP sensor signal circuit. 4. If the AP sensor signal circuit is shorted, repair it as necessary. Was the AP sensor signal circuit shorted?	—	Verify repair	Go to *Step 13*
8	1. Ignition “ON.” 2. Monitor the “AP Sensor” Tech 2 display while disconnecting each of the components that share the 5 volt reference “J2” circuit (one at a time). 3. If the “AP Sensor” Tech 2 display changes, replace the component that caused the display to change when disconnected. Does disconnecting any of these components cause the “AP Sensor” display to change?	—	Verify repair	Go to *Step 9*
9	1. Ignition “OFF,” disconnect the ECM. 2. Ignition “ON,” engine “OFF.” 3. Check for a short to B+ on the 5 volt reference “A” circuit. 4. If the 5 volt reference “J2” circuit is shorted, repair it as necessary. Was the 5 volt reference “J2” circuit shorted?	—	Verify repair	Go to *Step 10*
10	Check for poor electrical connections at the AP sensor and replace terminals if necessary. Did any terminals require replacement?	—	Verify repair	Go to *Step 12*

DTC P0123 – AP Sensor High Voltage (Cont'd)

Step	Action	Value(s)	Yes	No
11	1. Ignition "OFF." 2. Disconnect the ECM, and check for an open sensor ground circuit to the AP sensor. 3. If a problem is found, repair it as necessary. Was the sensor ground circuit to the AP sensor open?	—	Verify repair	Go to *Step 13*
12	Replace the AP sensor. Is the action complete?	—	Verify repair	—
13	Replace the ECM (Refer to the Data Programming in Case of ECM change). Is the action complete?	—	Verify repair	—

Diagnostic Trouble Code (DTC) P0182 (Flash DTC 15) FT Sensor Low Voltage

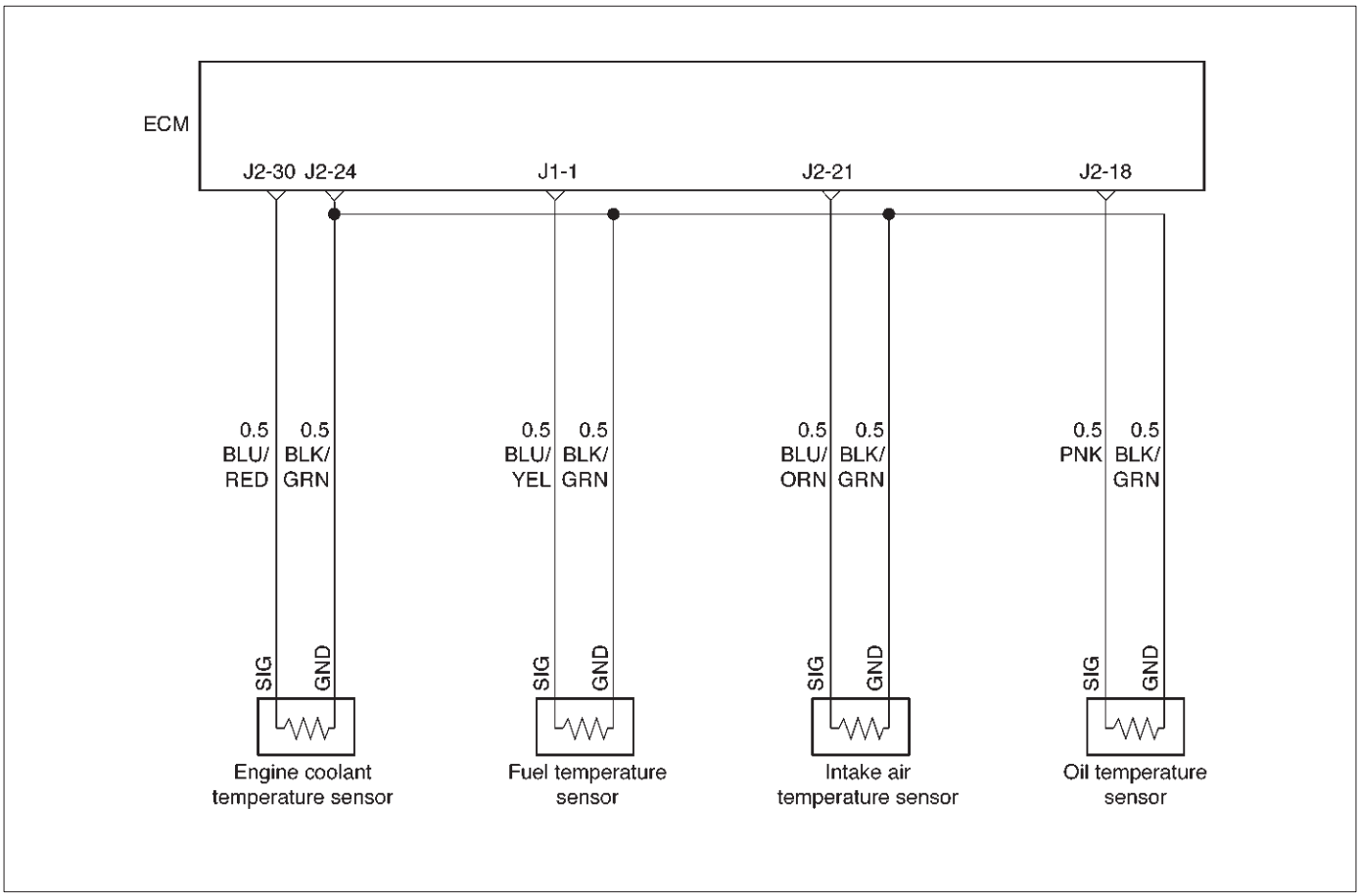

060RW129

Circuit Description

The fuel temperature (FT) sensor is a thermistor mounted on a coolant crossover pipe at the rear of the engine. The Engine Control Module ECM applies a voltage (about 5 volts) through a pull-up resistor to the FT signal circuit. When the fuel is cold, the sensor (thermistor) resistance is high, therefore the ECM will measure a high signal voltage. As the fuel warms, the sensor resistance becomes lower, and the FT signal voltage measured at the ECM drops.

Action Taken When the DTC Sets

- The ECM will store conditions which were present when the DTC was set as Freeze Frame and in the Failure Records data.

Conditions for Clearing the MIL/DTC

- DTC P0182 can be cleared by using the Tech 2 “Clear Info” function or by disconnecting the ECM battery feed.

Diagnostic Aids

Check for the following conditions:

- Poor connection at ECM – Inspect harness connectors for backed-out terminals, improper mating, broken locks, improperly formed or damaged terminals, and poor terminal-to-wire connection.
- Damaged harness – Inspect the wiring harness for damage. If the harness appears to be OK, observe the FT display on the Tech 2 while moving connectors and wiring harnesses related to the FT sensor. A change in the FT display will indicate the location of the fault.

If DTC P0182 cannot be duplicated, the information included in the Failure Records data can be useful in determining vehicle mileage since the DTC was last set. If it is determined that the DTC occurs intermittently.

Test Description

Number(s) below refer to the step number(s) on the Diagnostic Chart.

2. Verifies that the fault is present.

DTC P0182 – FT Sensor Low Voltage

Step	Action	Value(s)	Yes	No
1	Was the “On-Board Diagnostic (OBD) System Check” performed?	—	Go to *Step 2*	Go to *OBD System Check*
2	1. Ignition “ON,” engine “OFF.” 2. Observe the “Fuel Temp” display on the Tech 2. Is the “Fuel Temp” below the specified value?	139˚C (282˚F)	Go to *Step 4*	Go to *Step 3*
3	1. Ignition “ON,” engine “OFF.” 2. Review and record Tech 2 Failure Records data. 3. Operate the vehicle within Failure Records conditions as noted. 4. Using a Tech 2, monitor “ DTC” info for DTC P0182. Does the Tech 2 indicate DTC P0182 failed this ignition?	—	Go to *Step 4*	Refer to *Diagnostic Aids*
4	1. Disconnect the FT sensor electrical connector. 2. Observe the “Fuel Temp” display on the Tech 2. Is the “Fuel Temp” at the specified value?	–39˚C (–38˚F)	Go to *Step 6*	Go to *Step 5*
5	1. Ignition “OFF.” 2. Disconnect the ECM and check the FT signal circuit for a short to ground or a short to the sensor ground circuit. 3. If the FT signal circuit is shorted. repair it as necessary. Was the FT signal circuit shorted to ground?	—	Verify repair	Go to *Step 7*
6	Replace the FT sensor. Is the action complete?	—	Verify repair	—
7	Replace the ECM (Refer to the Data Programming in Case of ECM change). Is the action complete?	—	Verify repair	—

Diagnostic Trouble Code (DTC) P0183 (Flash DTC 15) FT Sensor High Voltage

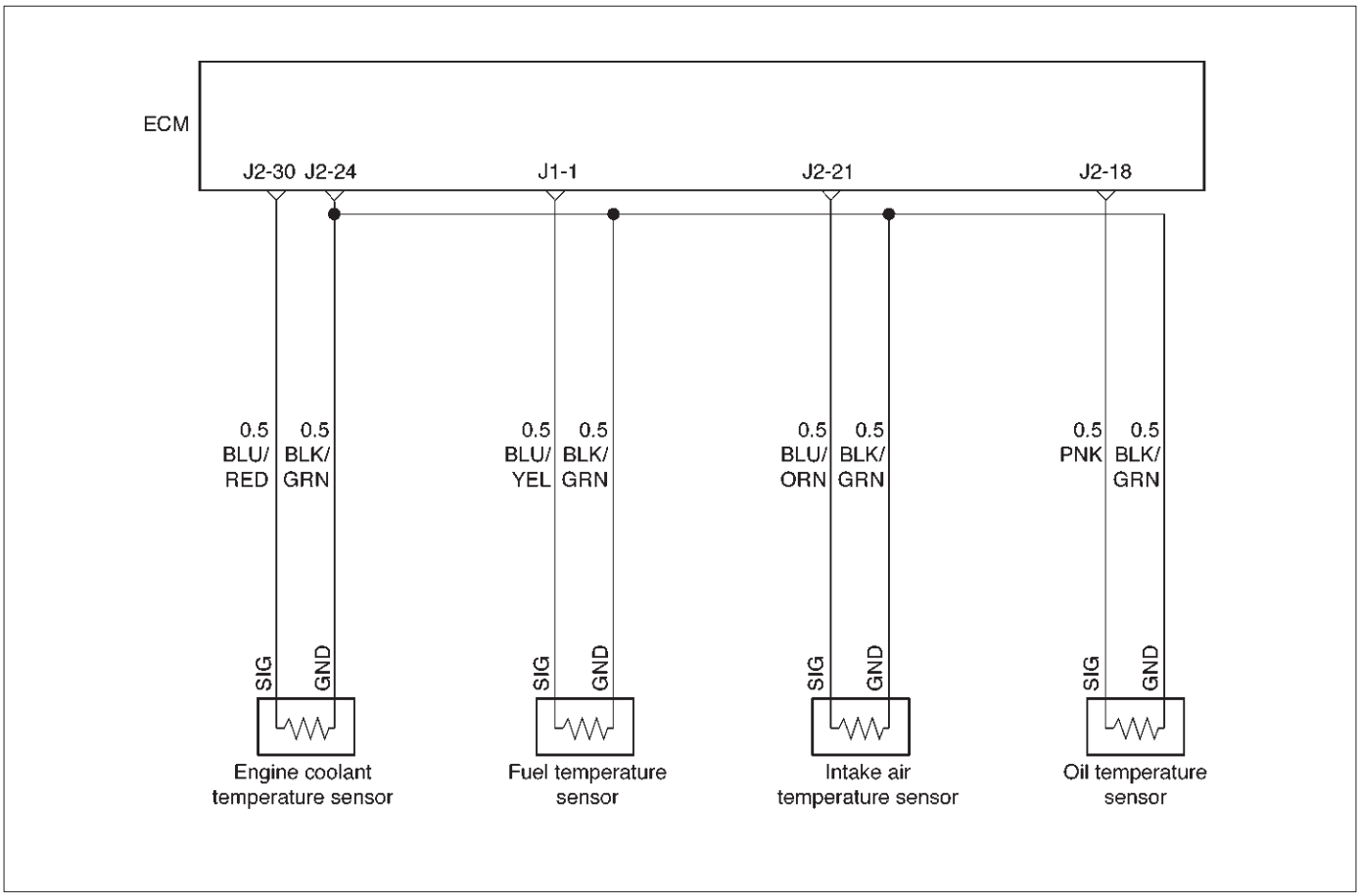

060RW129

Circuit Description

The fuel temperature (FT) sensor is a thermistor mounted in on a coolant crossover pipe at the rear of the engine. The Engine Control Module ECM applies a voltage (about 5 volts) through a pull-up resistor to the FT signal circuit. When the fuel is cold, the sensor (thermistor) resistance is high, therefore the ECM will measure a high signal voltage. As the fuel warms, the sensor resistance becomes less, and the FT signal voltage measured at the ECM drops.

Action Taken When the DTC Sets

- The ECM will store conditions which were present when the DTC was set as Freeze Frame and in the Failure Records data.

Conditions for Clearing the MIL/DTC

- DTC P0183 can be cleared by using the Tech 2 “Clear Info” function or by disconnecting the ECM battery feed.

Diagnostic Aids

Check for the following conditions:

- Poor connection at ECM – Inspect harness connectors for backed-out terminals, improper mating, broken locks, improperly formed or damaged terminals, and poor terminal-to-wire connection.
- Damaged harness – Inspect the wiring harness for damage. If the harness appears to be OK, observe the FT display on the Tech 2 while moving connectors and wiring harnesses related to the FT sensor. A change in the FT display will indicate the location of the fault.

If DTC P0182 cannot be duplicated, the information included in the Failure Records data can be useful in determining vehicle mileage since the DTC was last set.

Test Description

Number(s) below refer to the step number(s) on the Diagnostic Chart.

2. Verifies that the fault is present.

DTC P0183 – FT Sensor High Voltage

Step	Action	Value(s)	Yes	No
1	Was the “On-Board Diagnostic (OBD) System Check” performed?	—	Go to *Step 2*	Go to *OBD System Check*
2	1. Ignition “ON,” engine “OFF.” 2. Observe the “Fuel Temp” display on the Tech 2. Is the “Fuel Temp” below the specified value?	–39˚C (–38˚F)	Go to *Step 4*	Go to *Step 3*
3	1. Ignition “ON,” engine “OFF.” 2. Review and record Tech 2 Failure Records data. 3. Operate the vehicle within Failure Records conditions as noted. 4. Using a Tech 2, monitor the “ DTC” info for DTC P0183. Does the Tech 2 indicate DTC P0183 failed?	—	Refer to *Test Description*	Refer to *Diagnostic Aids*
4	1. Disconnect the FT sensor electrical connector. 2. Jumper the FT signal circuit and the sensor ground circuit together at the FT sensor harness connector. 3. Observe the “Fuel Temp” display on the Tech 2. Is the “Fuel Temp” at the specified value?	140˚C (284˚F)	Go to *Step 6*	Go to *Step 5*
5	1. Jumper the FT signal circuit at the FT sensor harness connector to chassis ground. 2. Observe the “Fuel Temp” display on the Tech 2. Is the “Fuel Temp” at the specified value?	140˚C (284˚F)	Go to *Step 7*	Go to *Step 8*
6	Check for poor connections at the FT sensor and replace terminals if necessary. Did any terminals require replacement?	—	Verify repair	Go to *Step 10*
7	1. Ignition “OFF.” 2. Disconnect the ECM, and check the FT sensor ground circuit for an open. 3. If the FT sensor ground circuit is open, repair it as necessary. Was the FT sensor ground circuit open?	—	Verify repair	Go to *Step 9*
8	1. Ignition “OFF.” 2. Disconnect the ECM, and check the FT signal circuit for an open. 3. If the FT sensor signal circuit is open, repair it as necessary. Was the FT signal circuit open?	—	Verify repair	Go to *Step 9*
9	Check for a poor sensor ground or FT signal circuit terminal connection at the ECM and replace terminal(s) if necessary. Did any of the terminals need to be replaced?	—	Verify repair	Go to *Step 11*
10	Replace the FT sensor. Is the action complete?	—	Verify repair	—
11	Replace the ECM (Refer to the Data Programming in Case of ECM change). Is the action complete?	—	Verify repair	—

Diagnostic Trouble Code (DTC) P0192 (Flash DTC 63) Rail Pressure Sensor Low Voltage

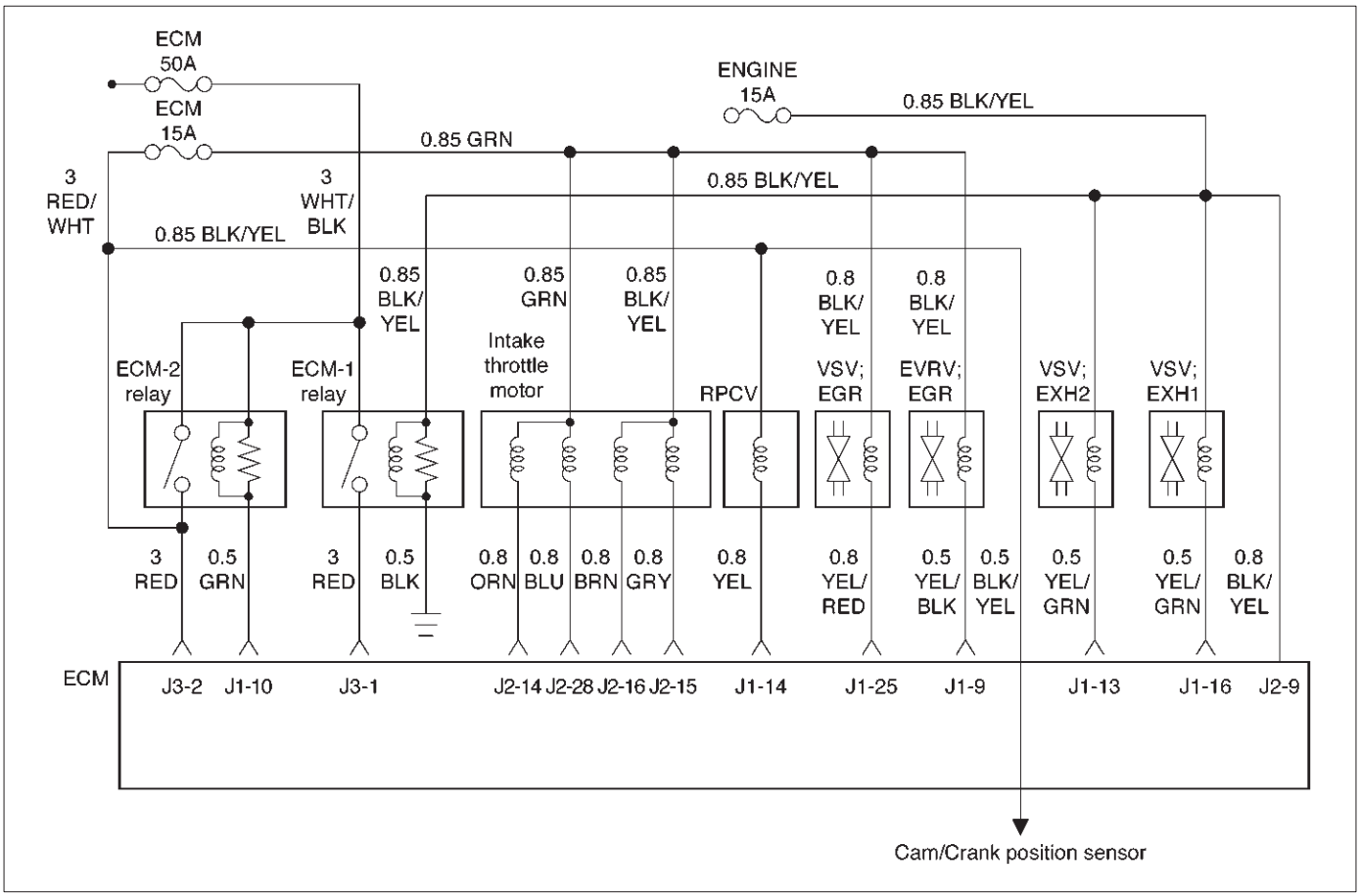

060RW135

Circuit Description

The rail pressure (RP) sensor responds to changes in oil manifold pressure.

The ECM monitors the RP signals for voltages outside the normal range of the RP sensor. If the ECM detects a RP signal voltage that is excessively low, DTC P0192 will be set.

Action Taken When the DTC Sets

- The ECM will store conditions which were present when the DTC was set as Freeze Frame and in the Failure Records data.

Conditions for Clearing the MIL/DTC

- DTC P0192 can be cleared by using the Tech 2 “Clear Info” function or by disconnecting the ECM battery feed.

Diagnostic Aids

Check for the following conditions:

- Poor connection at ECM – Inspect harness connectors for backed-out terminals, improper mating, broken locks, improperly formed or damaged terminals, and poor terminal-to-wire connection.
- Damaged harness – Inspect the wiring harness for damage. If the harness appears to be OK, observe the RP display on the Tech 2 while moving connectors and wiring harnesses related to the sensor. A change in the display will indicate the location of the fault.

If DTC P0192 cannot be duplicated, the information included in the Failure Records data can be useful in determining vehicle mileage since the DTC was last set. If it is determined that the DTC occurs intermittently, performing the DTC P0192 Diagnostic Chart may isolate the cause of the fault.

DTC P0192 – RP Sensor Low Voltage

Step	Action	Value(s)	Yes	No
1	Was the “On-Board Diagnostic (OBD) System Check” performed?	—	Go to *Step 2*	Go to *OBD System Check*
2	1. Ignition “ON,” engine “OFF.” 2. Review and record Tech 2 Failure Records data. 3. Operate the vehicle within Failure Records conditions as noted. 4. Using a Tech 2, monitor “DTC” info for DTC P0192. Does the Tech 2 indicate DTC P0192 failed?	—	Go to *Step 3*	Refer to *Diagnostic Aids*
3	Check the RP sensor signal circuit. Was the RP sensor signal circuit open or darmage?	—	Replace the RP circuit.	Go to *Step 4*
4	1. Ignition “OFF.” 2. Disconnect the ECM and check the 5 volt reference “J1” circuit for an open or short to ground. 3. If the 5 volt reference “J1” circuit is open or shorted to ground, repair it as necessary. Was the 5 volt reference “J1” circuit open or shorted to ground?	—	Verify repair	Go to *Step 5*
5	Check the 5 volt reference “J1” circuit for a poor connection at the ECM and replace the terminal if necessary. Did the terminal require replacement?	—	Verify repair	Go to *Step 6*
6	1. Ignition “OFF.” 2. Disconnect the ECM, and check the RP signal circuit for an open, short to ground, or short to the sensor ground circuit. 3. If the RP sensor signal circuit is open or shorted to ground, repair it as necessary. Was the RP signal circuit open or shorted to ground?	—	Verify repair	Go to *Step 7*
7	Check the RP sensor signal circuit for a poor connection at the ECM and the RP sensor; replace the terminal if necessary. Did the terminal require replacement?	—	Verify repair	Go to *Step 8*
8	Replace the RP sensor (Refer to the RP sensor programming). Is the action complete?	—	Verify repair	Go to *Step 9*
9	Replace the ECM (Refer to the Data Programming in Case of ECM change). Is the action complete?	—	Verify repair	—

Diagnostic Trouble Code (DTC) P0193 (Flash DTC 63) Rail Pressure Sensor High Voltage

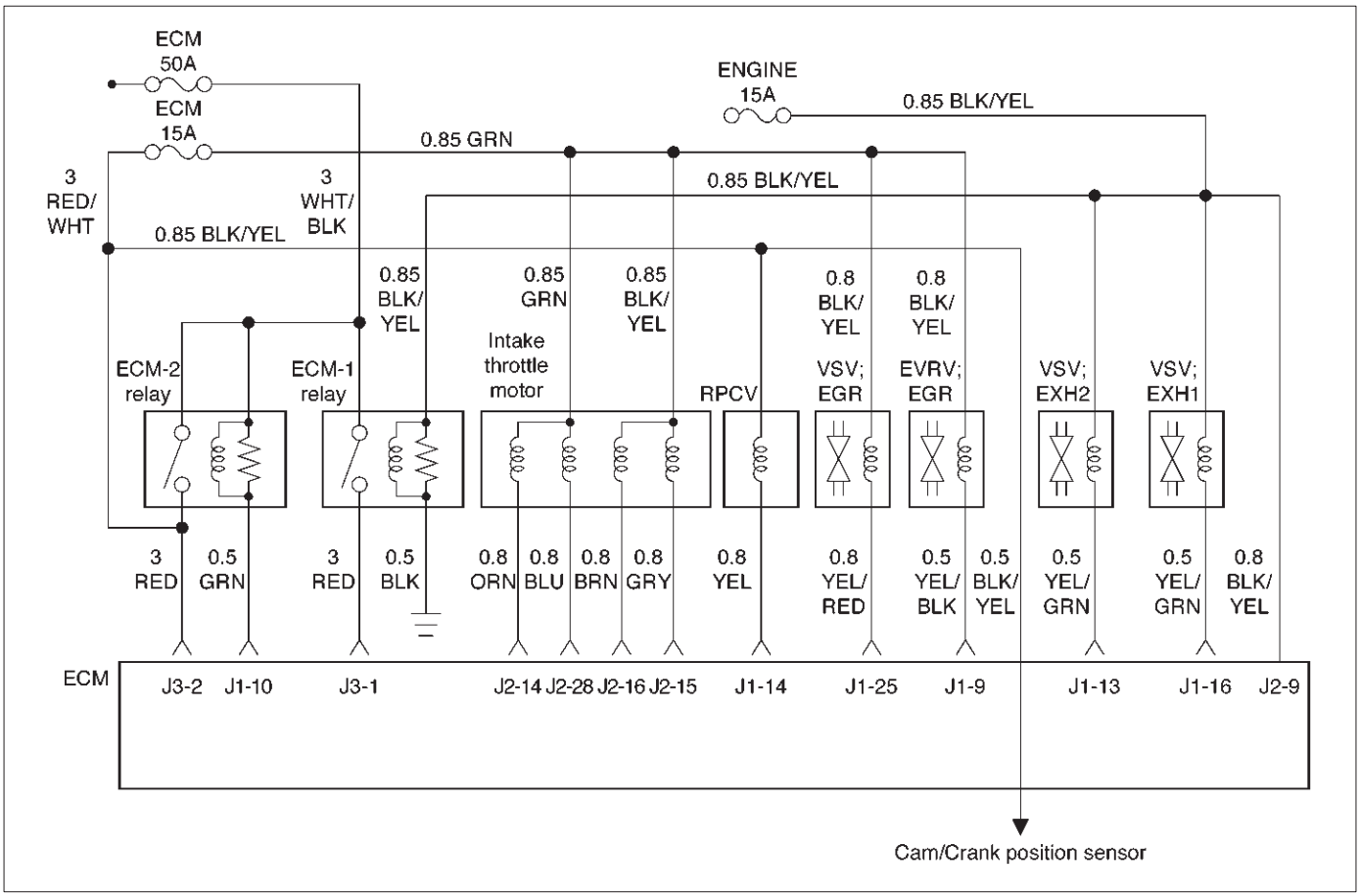

060RW135

Circuit Description

The rail pressure (RP) sensor responds to changes in oil manifold pressure.

The ECM monitors the RP signals for voltages outside the normal range of the RP sensor. If the ECM detects a RP signal voltage that is excessively high, DTC P0193 will be set.

Action Taken When the DTC Sets

- The ECM will store conditions which were present when the DTC was set as Freeze Frame and in the Failure Records data.

Conditions for Clearing the MIL/DTC

- DTC P0193 can be cleared by using the Tech 2 “Clear Info” function or by disconnecting the ECM battery feed.

Diagnostic Aids

Check for the following conditions:

- Poor connection at ECM – Inspect harness connectors for backed-out terminals, improper mating, broken locks, improperly formed or damaged terminals, and poor terminal-to-wire connection.
- Damaged harness – Inspect the wiring harness for damage. If the harness appears to be OK, observe the RP display on the Tech 2 while moving connectors and wiring harnesses related to the sensor. A change in the display will indicate the location of the fault.

If DTC P0193 cannot be duplicated, the information included in the Failure Records data can be useful in determining vehicle mileage since the DTC was last set. If it is determined that the DTC occurs intermittently, performing the DTC P0193 Diagnostic Chart may isolate the cause of the fault.

DTC P0193 – RP Sensor High Voltage

Step	Action	Value(s)	Yes	No
1	Was the “On-Board Diagnostic (OBD) System Check” performed?	—	Go to *Step 2*	Go to *OBD System Check*
2	1. Ignition “ON,” engine “OFF.” 2. Review and record Tech 2 Failure Records data. 3. Operate the vehicle within Failure Records conditions as noted. 4. Using a Tech 2, monitor “ DTC” info for DTC P0108. Does the Tech 2 indicate DTC P0108 failed this ignition?	—	Go to *Step 3*	Refer to *Diagnostic Aids*
3	Check the RP sensor signal circuit. Was the RP sensor signal circuit open or darmage?	—	Replace the RP circuit	Go to *Step 4*
4	Probe the sensor ground circuit with a test light to B+. Is the test light “ON?”	—	Go to *Step 5*	Go to *Step 7*
5	1. Check the RP signal circuit for a short to voltage or a short to the 5 volt reference “J1” circuit. 2. If the RP sensor signal circuit is shorted, repair circuit as necessary. Was the RP sensor signal circuit shorted?	—	Verify repair	Go to *Step 6*
6	1. Check for a poor sensor ground terminal connection at the RP sensor electrical connector. 2. If a problem if found, replace the faulty terminal. Did the terminal require replacement?	—	Verify repair	Go to *Step 7*
7	1. Check for a poor sensor ground terminal connection at the ECM. 2. If a problem is found, replace the faulty terminal. Did the terminal require replacement?	—	Verify repair	Go to *Step 8*
8	1. Check the continuity of the RP sensor ground circuit. 2. If the RP sensor ground circuit measures over 5 ohms, repair open or poor connection. Was a condition found and corrected?	—	Verify repair	Go to *Step 9*
9	Replace the ECM (Refer to the Data Programming in Case of ECM change). Is the action complete?	—	Verify Repair	—

Diagnostic Trouble Code (DTC) P1193 (Flash DTC 64) RPCV Circuit Open/Short

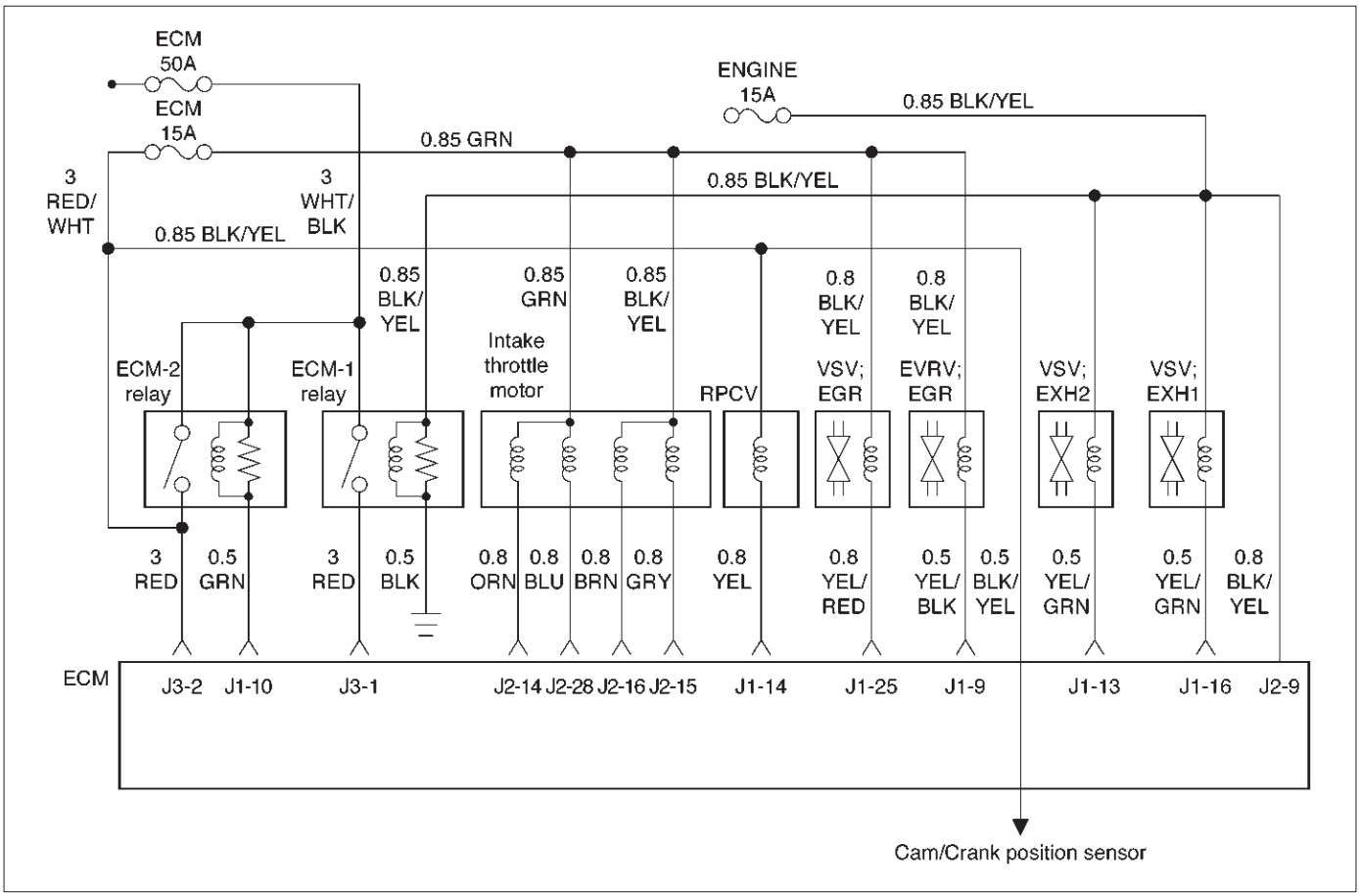

060RW135

Circuit Description

The rail pressure control valve (RPCV) is built in the high pressure oil circuit.
RPCV is an important device which is used to control oil pressure in the HEUI system.
The circuit receives current through Engine 15A fuse from the battery, current flowing in the order of RPCV.

Action Taken When the DTC Sets

- The ECM will store conditions which were present when the DTC was set as Freeze Frame and in the Failure Records data.

Conditions for Clearing the MIL/DTC

- DTC P1193 can be cleared by using the Tech 2 “Clear Info” function or by disconnecting the ECM battery feed.

Diagnostic Aids

Check for the following conditions:

- Poor connection at ECM – Inspect harness connectors for backed-out terminals, improper mating, broken locks, improperly formed or damaged terminals, and poor terminal-to-wire connection.
- Damaged harness – Inspect the wiring harness for damage. If the harness appears to be OK, observe the RPCV display on the Tech 2 while moving connectors and wiring harnesses related to the RPCV. A change in the RPCV display will indicate the location of the fault.

If DTC P1193 cannot be duplicated, the information included in the Failure Records data can be useful in determining vehicle mileage since the DTC was last set. If it is determined that the DTC occurs intermittently.

DTC P1193 – RPCV Circuit Open/Short

Step	Action	Value(s)	Yes	No
1	Was the “On-Board Diagnostic (OBD) System Check” performed?	—	Go to *Step 2*	Go to *OBD System Check*
2	1. Ignition “ON,” engine “ON.” 2. Observe the “Rail Oil Pressure” display on the Tech 2. Is the “Rail Oil Pressure” below the specified value?	3.5 ~ 5 Mpa	Go to *Step 4*	Go to *Step 3*
3	Replace the RPCV. Is the action complete?	—	Go to *Step 2*	—
4	1. Engine “On”. 2. Using the Tech 2, operate “RPCV”. 3. Check the combustion noise. Was the combustion noise change?	—	—	Go to *Step 5*
5	Check the RPCV circuit. (Fuse 15A to J1-14) Was the RPCV circuit damaged?	—	Go to *Step 6*	Go to *Step 7*
6	Repair the RPCV circuit. Is the action complete?	—	Verify repair	—
7	Replace the ECM (Refer to the Data Programming in Case of ECM change). Is the action complete?	—	Verify repair	Go to *Step 8*
8	Replace the high pressure oil pump. Is the action complete?	—	Verify repair	—

Diagnostic Trouble Code (DTC) P1194 (Flash DTC 61) Rail Pressure System Low Voltage

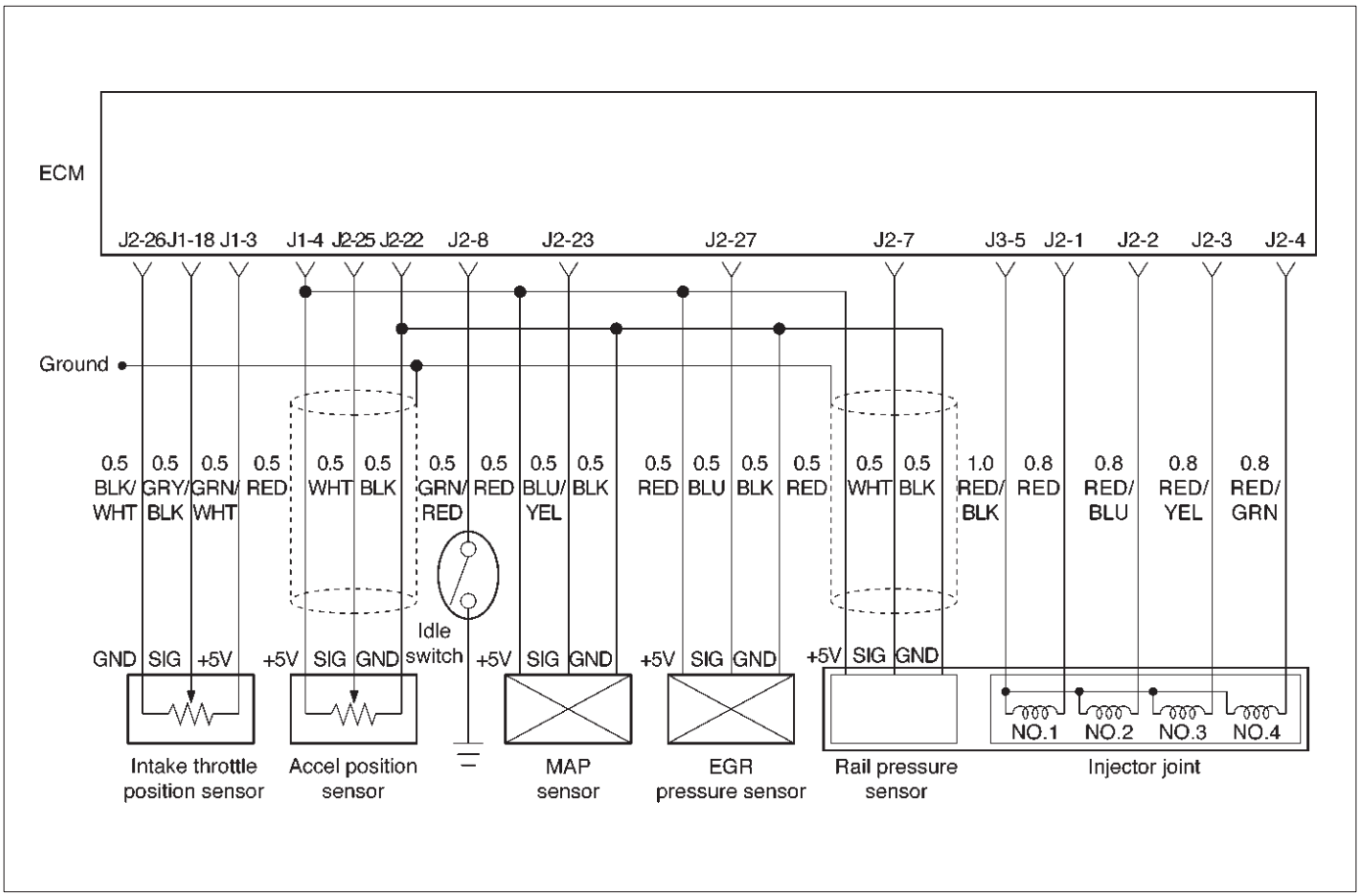

060RW134

Circuit Description

The rail pressure (RP) sensor responds to changes in oil rail pressure.

The ECM monitors the RP signals for voltages outside the normal range of the RP sensor. If the ECM detects a RP signal voltage that is excessively low, DTC P1194 will be set.

Action Taken When the DTC Sets

- The ECM will store conditions which were present when the DTC was set as Freeze Frame and in the Failure Records data.

Conditions for Clearing the MIL/DTC

- DTC P1194 can be cleared by using the Tech 2 “Clear Info” function or by disconnecting the ECM battery feed.

Diagnostic Aids

Check for the following conditions:

- Check for intermittent codes.
- Poor connection at ECM – Inspect harness connectors for backed-out terminals, improper mating, broken locks, improperly formed or damaged terminals, and poor terminal-to-wire connection.
- Damaged harness – Inspect the wiring harness for damage. If the harness appears to be OK, observe the MAP display on the Tech 2 while moving connectors and wiring harnesses related to the sensor. A change in the display will indicate the location of the fault.

If DTC P1194 cannot be duplicated, the information included in the Failure Records data can be useful in determining vehicle mileage since the DTC was last set. If it is determined that the DTC occurs intermittently, performing the DTC P1194 Diagnostic Chart may isolate the cause of the fault.

DTC P1194 – RP System Low Voltage

Step	Action	Value(s)	Yes	No
1	Was the “On-Board Diagnostic (OBD) System Check” performed?	—	Go to *Step 2*	Go to *OBD System Check*
2	1. Engine is running. 2. Review and record Tech 2 Failure Records data. 3. Operate the vehicle within Failure Records conditions as noted. 4. Using a Tech 2, monitor “DTC” info for DTC P1194. Does the Tech 2 indicate DTC P1194 failed?	—	Go to *Step 3*	Refer to *Diagnostic Aids*
3	Connect a test light between B+ and the RP sensor signal circuit at the RP sensor harness connector. Is the RP value near the specified value.	5 V	Go to *Step 4*	Go to *Step 6*
4	1. Ignition “OFF.” 2. Disconnect the ECM and check the 5 volt reference “J2” circuit for an open or short to ground. 3. If the 5 volt reference “J2” circuit is open or shorted to ground, repair it as necessary. Was the 5 volt reference “J2” circuit open or shorted to ground?	—	Verify repair	Go to *Step 5*
5	Check the 5 volt reference “J2” circuit for a poor connection at the ECM and replace the terminal if necessary. Did the terminal require replacement?	—	Verify repair	Go to *Step 6*
6	1. Ignition “OFF.” 2. Disconnect the ECM, and check the RP signal circuit for an open, short to ground, or short to the sensor ground circuit. 3. If the RP sensor signal circuit is open or shorted to ground, repair it as necessary. Was the RP signal circuit open or shorted to ground?	—	Verify repair	Go to *Step 7*
7	Check the RP sensor signal circuit for a poor connection at the ECM and the RP sensor; replace the terminal if necessary. Did the terminal require replacement?	—	Verify repair	Go to *Step 8*
8	Replace the ECM (Refer to the Data Programming in Case of ECM change). Is the action complete?	—	Verify repair	Go to *Step 9*
9	Check the 2 way valve. Was the 2 way valve darmage?	—	Replace the 2 way valve	Go to *Step 10*
10	Replace the RPCV. Is the action complete?	—	Verify repair	Go to *Step 11*
11	Replace the RP sensor. Is the action complete?	—	Verify repair	—

Diagnostic Trouble Code (DTC) P1195 (Flash DTC 61) Rail Pressure System High Voltage

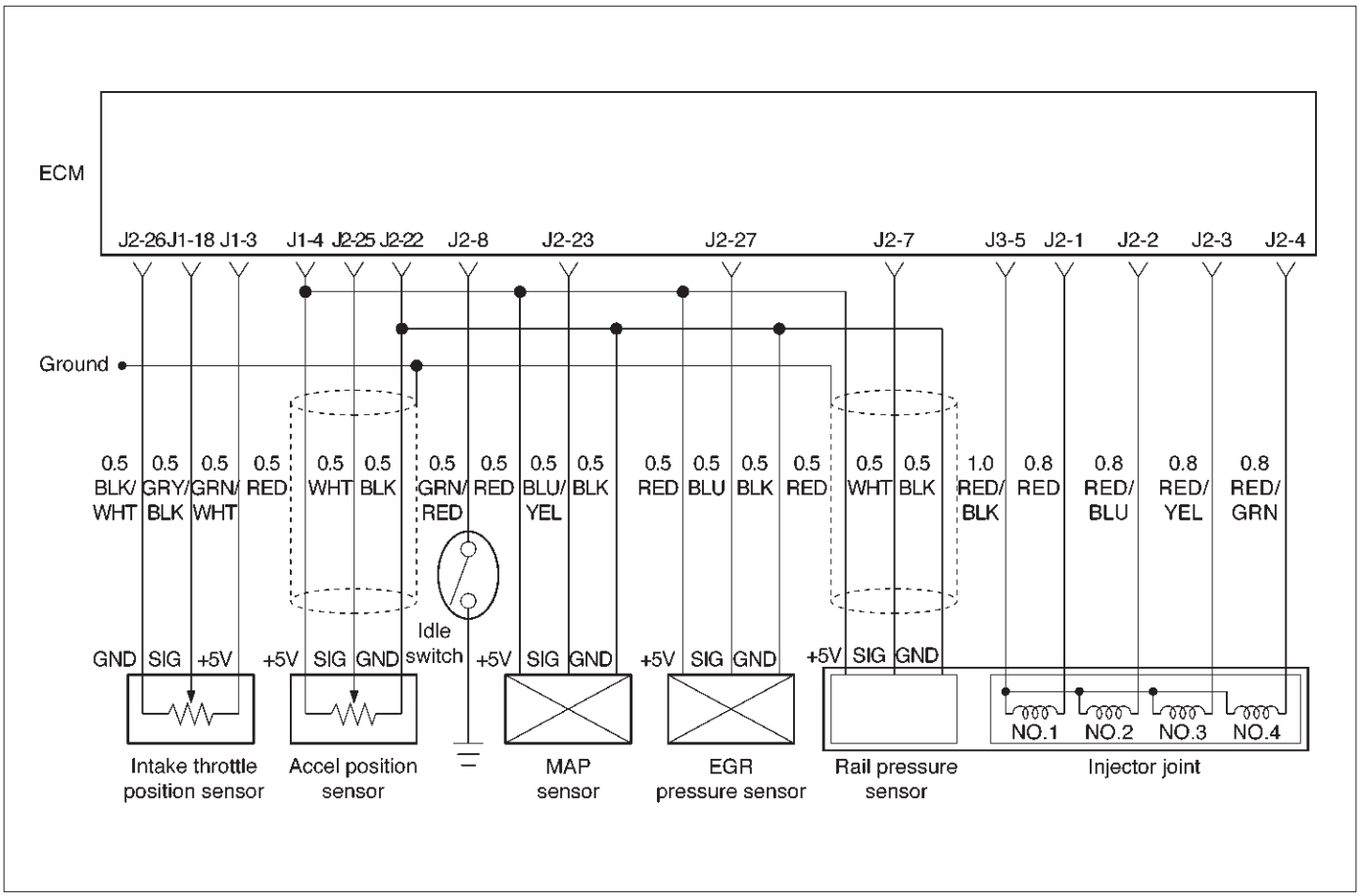

060RW134

Circuit Description

The rail pressure (RP) sensor responds to changes in oil rail pressure.

The ECM monitors the RP signals for voltages outside the normal range of the RP sensor. If the ECM detects a RP signal voltage that is excessively low, DTC P1195 will be set.

Action Taken When the DTC Sets

- The ECM will store conditions which were present when the DTC was set as Freeze Frame and in the Failure Records data.

Conditions for Clearing the MIL/DTC

- DTC P1195 can be cleared by using the Tech 2 “Clear Info” function or by disconnecting the ECM battery feed.

Diagnostic Aids

Check for the following conditions:

- Check for intermittent codes.
- Poor connection at ECM – Inspect harness connectors for backed-out terminals, improper mating, broken locks, improperly formed or damaged terminals, and poor terminal-to-wire connection.
- Damaged harness – Inspect the wiring harness for damage. If the harness appears to be OK, observe the MAP display on the Tech 2 while moving connectors and wiring harnesses related to the sensor. A change in the display will indicate the location of the fault.

If DTC P1195 cannot be duplicated, the information included in the Failure Records data can be useful in determining vehicle mileage since the DTC was last set. If it is determined that the DTC occurs intermittently, performing the DTC P1195 Diagnostic Chart may isolate the cause of the fault.

DTC P1195 – RP System High Voltage

Step	Action	Value(s)	Yes	No
1	Was the “On-Board Diagnostic (OBD) System Check” performed?	—	Go to *Step 2*	Go to *OBD System Check*
2	1. Engine is running. 2. Review and record Tech 2 Failure Records data. 3. Operate the vehicle within Failure Records conditions as noted. 4. Using a Tech 2, monitor “DTC” info for DTC P1195. Does the Tech 2 indicate DTC P1195 failed?	—	Go to *Step 3*	Refer to *Diagnostic Aids*
3	Connect a test light between B+ and the RP sensor signal circuit at the RP sensor harness connector. Is the RP value near the specified value.	0 V	Go to *Step 4*	Go to *Step 6*
4	1. Ignition “OFF.” 2. Disconnect the ECM and check the ground circuit for an open. Was the ground circuit open?	—	Verify repair	Go to *Step 5*
5	Check the ground circuit for a poor connection at the ECM and replace the terminal if necessary. Did the terminal require replacement?	—	Verify repair	Go to *Step 6*
6	Check the RP sensor signal circuit for a poor connection at the ECM and the RP sensor; replace the terminal if necessary. Did the terminal require replacement?	—	Verify repair	Go to *Step 7*
7	Replace the ECM (Refer to the Data Programming in Case of ECM change). Is the action complete?	—	Verify repair	Go to *Step 8*
8	Check the 2 way valve. Was the 2 way valve darmage?	—	Replace the 2 way valve	Go to *Step 9*
9	Replace the RPCV. Is the action complete?	—	Verify repair	Go to *Step 10*
10	Replace the RP sensor. Is the action complete?	—	Verify repair	—

Diagnostic Trouble Code (DTC) P1196 (Flash DTC 62) Rail Pressure System High Warning

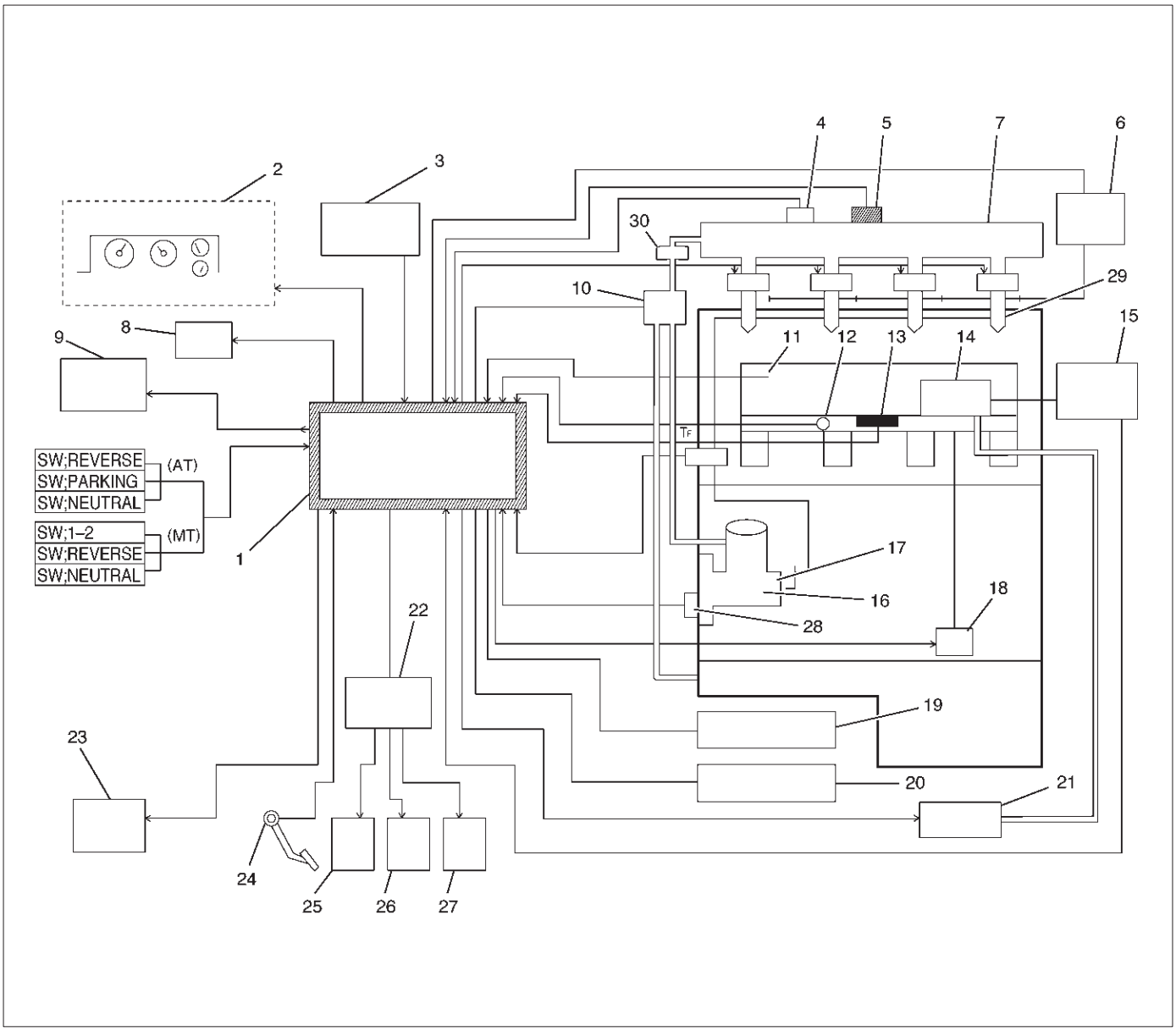

060RW178

Legend

(1) ECM
(2) Meter Panel
(3) Battery
(4) Oil Temp Sensor
(5) Rail Pressure Sensor
(6) Glow Relay
(7) Oil Rail
(8) Tech–2
(9) A/C Comp Relay
(10) RPCV
(11) Intake Air Temp Sensor
(12) Engine Coolant Temp Sensor
(13) MAP Sensor
(14) EGR Valve
(15) EGR Pressure Sensor
(16) High Pressure Oil Pump
(17) Fuel Pump
(18) VSV
(19) EXH Throttle VSV1
(20) EXH Throttle VSV2
(21) EVRV
(22) Engine Harness Connector
(23) QWS Relay
(24) AP Sensor
(25) T.O.D
(26) ECT
(27) OBD
(28) TDC
(29) Injector
(30) Edge Filter

Circuit Description

The rail pressure control valve (RPCV) is built in the high pressure oil circuit.
RPCV is an important device which is used to control oil pressure in the HEUI system.
The circuit receives current through Engine 15A fuse from the battery, current flowing in the order of RPCV.

Action Taken When the DTC Sets

- The ECM will store conditions which were present when the DTC was set as Freeze Frame and in the Failure Records data.

Conditions for Clearing the MIL/DTC

- DTC P1196 can be cleared by using the Tech 2 “Clear Info” function or by disconnecting the ECM battery feed.

Diagnostic Aids

Check for the following conditions:

- Poor connection at ECM – Inspect harness connectors for backed-out terminals, improper mating, broken locks, improperly formed or damaged terminals, and poor terminal-to-wire connection.
- Damaged harness – Inspect the wiring harness for damage. If the harness appears to be OK, observe the Rail Pressure Control display on the Tech 2 while moving connectors and wiring harnesses related to the Rail Pressure Control. A change in the Rail Pressure Control display will indicate the location of the fault.

If DTC P1196 cannot be duplicated, the information included in the Failure Records data can be useful in determining vehicle mileage since the DTC was last set. If it is determined that the DTC occurs intermittently.

Test Description

Number(s) below refer to the step number(s) on the Diagnostic Chart.

2. Verifies that the fault is present.

DTC P1196 – RP System High Warning

Step	Action	Value(s)	Yes	No
1	Was the “On-Board Diagnostic (OBD) System Check” performed?	—	Go to *Step 2*	Go to *OBD System Check*
2	1. Engine is running. 2. Observe the “Rail Pressure Control” display on the Tech 2. Is the action correct?	—	Go to *Step 4*	Go to *Step 3*
3	Replace the RPCV. Is the action complete?	—	Verify repair	Go to *Step 4*
4	1. Engine is running. 2. Review and record Tech 2 Failure Records data. 3. Operate the vehicle within Failure Records conditions as noted. 4. Using a Tech 2, monitor “ DTC” info for DTC P1196. Does the Tech 2 indicate DTC P1196 failed this ignition?	—	Go to *Step 5*	—
5	1. Check the 2 way valve. 2. Observe the “RP Control” display on the Tech 2. Is the action correct?	—	Go to *Step 4*	Go to *Step 6*
6	Replace the 2 way valve. Is the action complete?	—	Verify repair	—

Diagnostic Trouble Code (DTC) P0197 (Flash DTC 16) Oil Temp Sensor Low Voltage

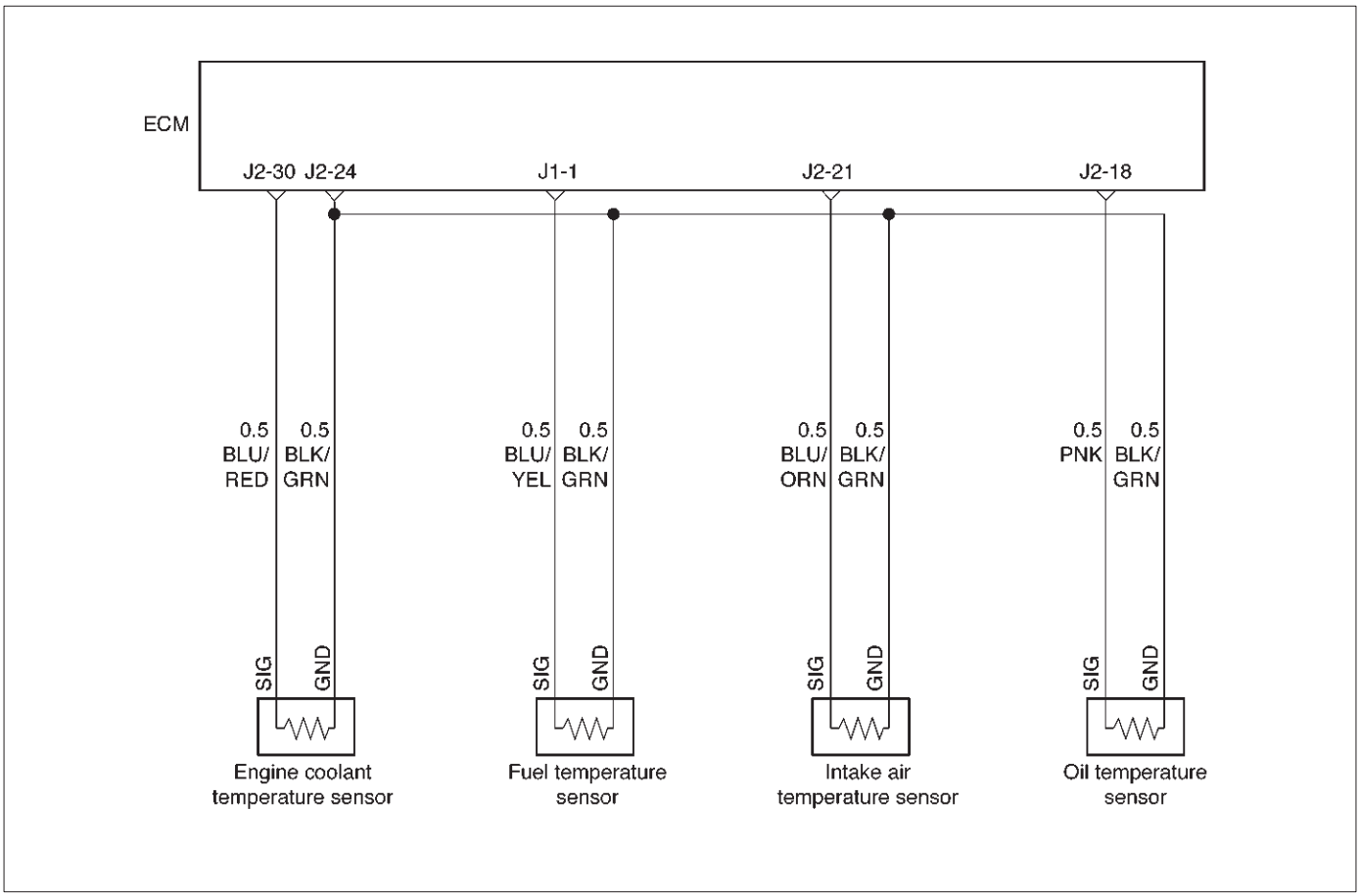

060RW129

Circuit Description

The engine oil temperature (OT) sensor is a thermistor mounted in the oil rail. The Engine Control Module ECM applies a voltage (about 5 volts) through a pull-up resistor to the ECT signal circuit. When the engine oil is cold, the sensor (thermistor) resistance is high, therefore the ECM will measure a high signal voltage. As the engine oil warms, the sensor resistance becomes lower, and the OT signal voltage measured at the ECM drops.

Action Taken When the DTC Sets

- The ECM will store conditions which were present when the DTC was set as Freeze Frame and in the Failure Records data.

Conditions for Clearing the MIL/DTC

- DTC P0197 can be cleared by using the Tech 2 “Clear Info” function or by disconnecting the ECM battery feed.

Diagnostic Aids

Check for the following conditions:

- Poor connection at ECM – Inspect harness connectors for backed-out terminals, improper mating, broken locks, improperly formed or damaged terminals, and poor terminal-to-wire connection.
- Damaged harness – Inspect the wiring harness for damage. If the harness appears to be OK, observe the OT display on the Tech 2 while moving connectors and wiring harnesses related to the OT sensor. A change in the OT display will indicate the location of the fault.

If DTC P0197 cannot be duplicated, the information included in the Failure Records data can be useful in determining vehicle mileage since the DTC was last set. If it is determined that the DTC occurs intermittently.

Test Description

Number(s) below refer to the step number(s) on the Diagnostic Chart.

2. Verifies that the fault is present.

3. If DTC P0197 can be repeated only by duplicating the Failure Records conditions, refer to the "Temperature vs. Resistance Values" table. The table may be used to test the OT sensor at various temperatures to evaluate the possibility of a "shifted" sensor that may be shorted above or below a certain temperature. If this is the case, replace the OT sensor. If the OT sensor appears to be OK, the fault is intermittent; refer to *Diagnostic Aids*.

Engine Oil Temperature Sensor

˚C	˚F	Ohms
Temperature vs. Resistance Values (approximate)		
80	176	332
25	77	2796
15	59	4450

DTC P0197 – OT Sensor Low Voltage

Step	Action	Value(s)	Yes	No
1	Was the "On-Board Diagnostic (OBD) System Check" performed?	—	Go to *Step 2*	Go to *OBD System Check*
2	1. Ignition "ON," engine "OFF." 2. Observe the "Eng Oil Temp" display on the Tech 2. Is the "Eng Oil Temp" below the specified value?	139˚C (282˚F)	Go to *Step 4*	Go to *Step 3*
3	1. Ignition "ON," engine "OFF." 2. Review and record Tech 2 Failure Records data. 3. Operate the vehicle within Failure Records conditions as noted. 4. Using a Tech 2, monitor " DTC" info for DTC P0197. Does the Tech 2 indicate DTC P0197 failed this ignition?	—	Go to *Step 4*	Refer to *Diagnostic Aids*
4	1. Disconnect the OT sensor electrical connector. 2. Observe the "Eng Oil Temp" display on the Tech 2. Is the "Eng Oil Temp" at the specified value?	–39˚C (–38˚F)	Go to *Step 6*	Go to *Step 5*
5	1. Ignition "OFF." 2. Disconnect the ECM and check the OT signal circuit for a short to ground or a short to the sensor ground circuit. 3. If the OT signal circuit is shorted. repair it as necessary. Was the OT signal circuit shorted to ground?	—	Verify repair	Go to *Step 7*
6	Replace the OT sensor. Is the action complete?	—	Verify repair	—
7	Replace the ECM (Refer to the Data Programming in Case of ECM change). Is the action complete?	—	Verify repair	—

Diagnostic Trouble Code (DTC) P0198 (Flash DTC 16) Oil Temp Sensor High Voltage

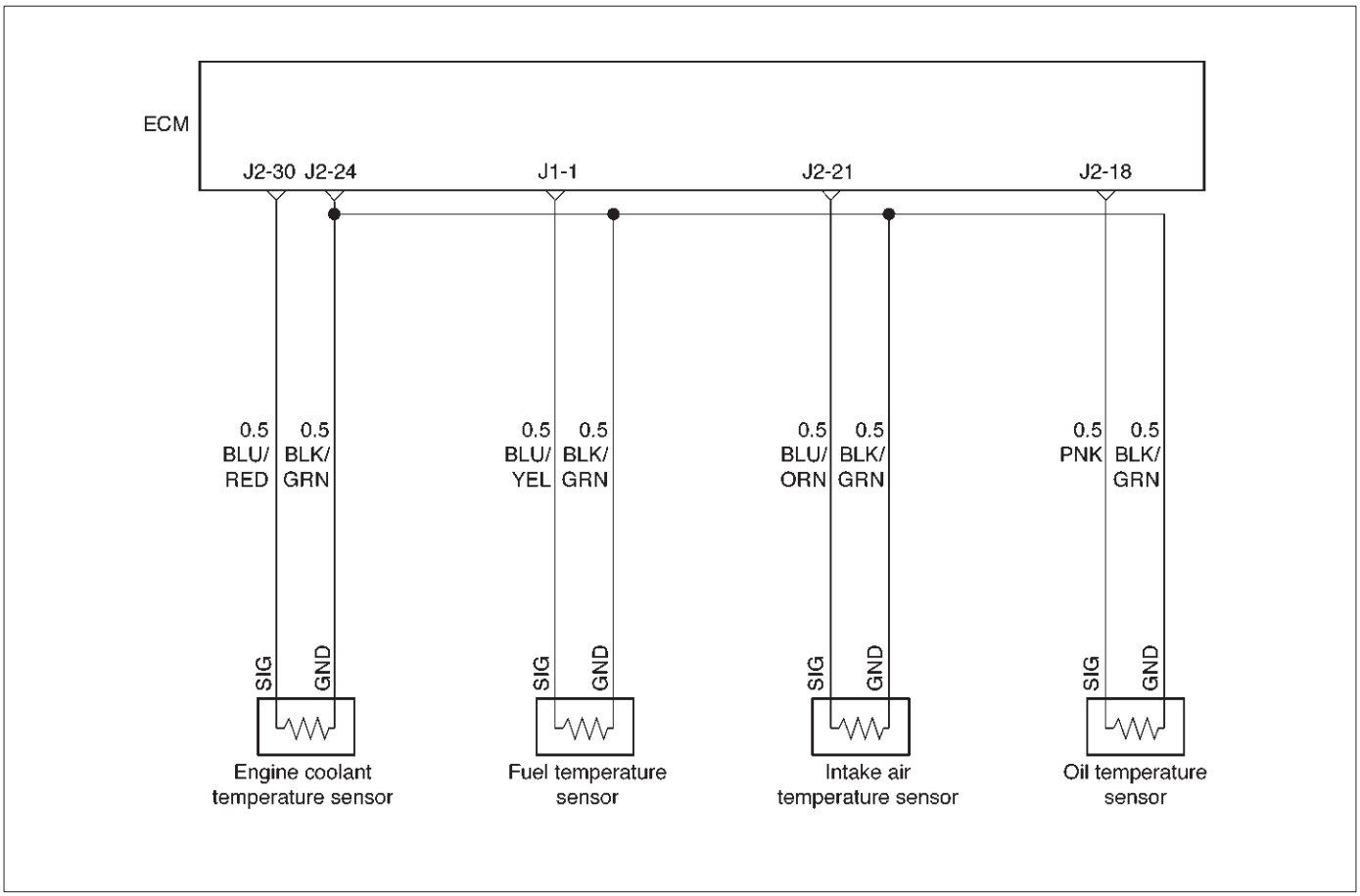

060RW129

Circuit Description

The engine oil temperature (OT) sensor is a thermistor mounted in the oil rail. The Engine Control Module ECM applies a voltage (about 5 volts) through a pull-up resistor to the ECT signal circuit. When the engine oil is cold, the sensor (thermistor) resistance is high, therefore the ECM will measure a high signal voltage. As the engine oil warms, the sensor resistance becomes lower, and the OT signal voltage measured at the ECM drops.

Action Taken When the DTC Sets

- The ECM will store conditions which were present when the DTC was set as Freeze Frame and in the Failure Records data.

Conditions for Clearing the MIL/DTC

- DTC P0198 can be cleared by using the Tech 2 “Clear Info” function or by disconnecting the ECM battery feed.

Diagnostic Aids

Check for the following conditions:

- Poor connection at ECM – Inspect harness connectors for backed-out terminals, improper mating, broken locks, improperly formed or damaged terminals, and poor terminal-to-wire connection.
- Damaged harness – Inspect the wiring harness for damage. If the harness appears to be OK, observe the OT display on the Tech 2 while moving connectors and wiring harnesses related to the OT sensor. A change in the OT display will indicate the location of the fault.

If DTC P0198 cannot be duplicated, the information included in the Failure Records data can be useful in determining vehicle mileage since the DTC was last set. If it is determined that the DTC occurs intermittently.

Test Description

Number(s) below refer to the step number(s) on the Diagnostic Chart.

2. Verifies that the fault is present.

3. If DTC P0198 can be repeated only by duplicating the Failure Records conditions, refer to the "Temperature vs. Resistance Value" table. The table may be used to test the OT sensor at various temperatures to evaluate the possibility of a "shifted" sensor that may be shorted above or below a certain temperature. If this is the case, replace the OT sensor. If the OT sensor appears to be OK, the fault is intermittent; refer to *Diagnostic Aids*.

Engine Oil Temperature Sensor

˚C	˚F	Ohms
Temperature vs. Resistance Values (approximate)		
80	176	332
25	77	2796
15	59	4450

DTC P0198 – OT Sensor High Voltage

Step	Action	Value(s)	Yes	No
1	Was the "On-Board Diagnostic (OBD) System Check" performed?	—	Go to *Step 2*	Go to *OBD System Check*
2	1. Ignition "ON," engine "OFF." 2. Observe the "Eng Oil Temp" display on the Tech 2. Is the "Eng Oil Temp" below the specified value?	–39˚C (–38˚F)	Go to *Step 4*	Go to *Step 3*
3	1. Ignition "ON," engine "OFF." 2. Review and record Tech 2 Failure Records data. 3. Operate the vehicle within Failure Records conditions as noted. 4. Using a Tech 2, monitor the " DTC" info for DTC P0198. Does the Tech 2 indicate DTC P0198 failed?	—	Refer to *Test Description*	Refer to *Diagnostic Aids*
4	1. Disconnect the OT sensor electrical connector. 2. Jumper the OT signal circuit and the sensor ground circuit together at the OT sensor harness connector. 3. Observe the "Eng Oil Temp" display on the Tech 2. Is the "Eng Oil Temp" at the specified value?	140˚C (284˚F)	Go to *Step 6*	Go to *Step 5*
5	1. Jumper the OT signal circuit at the OT sensor harness connector to chassis ground. 2. Observe the "Eng Oil Temp" display on the Tech 2. Is the "Eng Oil Temp" at the specified value?	140˚C (284˚F)	Go to *Step 7*	Go to *Step 8*
6	Check for poor connections at the OT sensor and replace terminals if necessary. Did any terminals require replacement?	—	Verify repair	Go to *Step 10*
7	1. Ignition "OFF." 2. Disconnect the ECM, and check the OT sensor ground circuit for an open. 3. If the OT sensor ground circuit is open, repair it as necessary. Was the OT sensor ground circuit open?	—	Verify repair	Go to *Step 9*

DTC P0198 – OT Sensor High Voltage (Cont'd)

Step	Action	Value(s)	Yes	No
8	1. Ignition "OFF." 2. Disconnect the OT, and check the OT signal circuit for an open. 3. If the OT sensor signal circuit is open, repair it as necessary. Was the OT signal circuit open?	—	Verify repair	Go to *Step 9*
9	Check for a poor sensor ground or OT signal circuit terminal connection at the ECM and replace terminal(s) if necessary. Did any of the terminals need to be replaced?	—	Verify repair	Go to *Step 11*
10	Replace the ECT sensor. Is the action complete?	—	Verify repair	—
11	Replace the ECM (Refer to the Data Programming in Case of ECM change). Is the action complete?	—	Verify repair	—

Diagnostic Trouble Code (DTC) P0201 (Flash DTC 51) Injector # 1 Circuit Fault

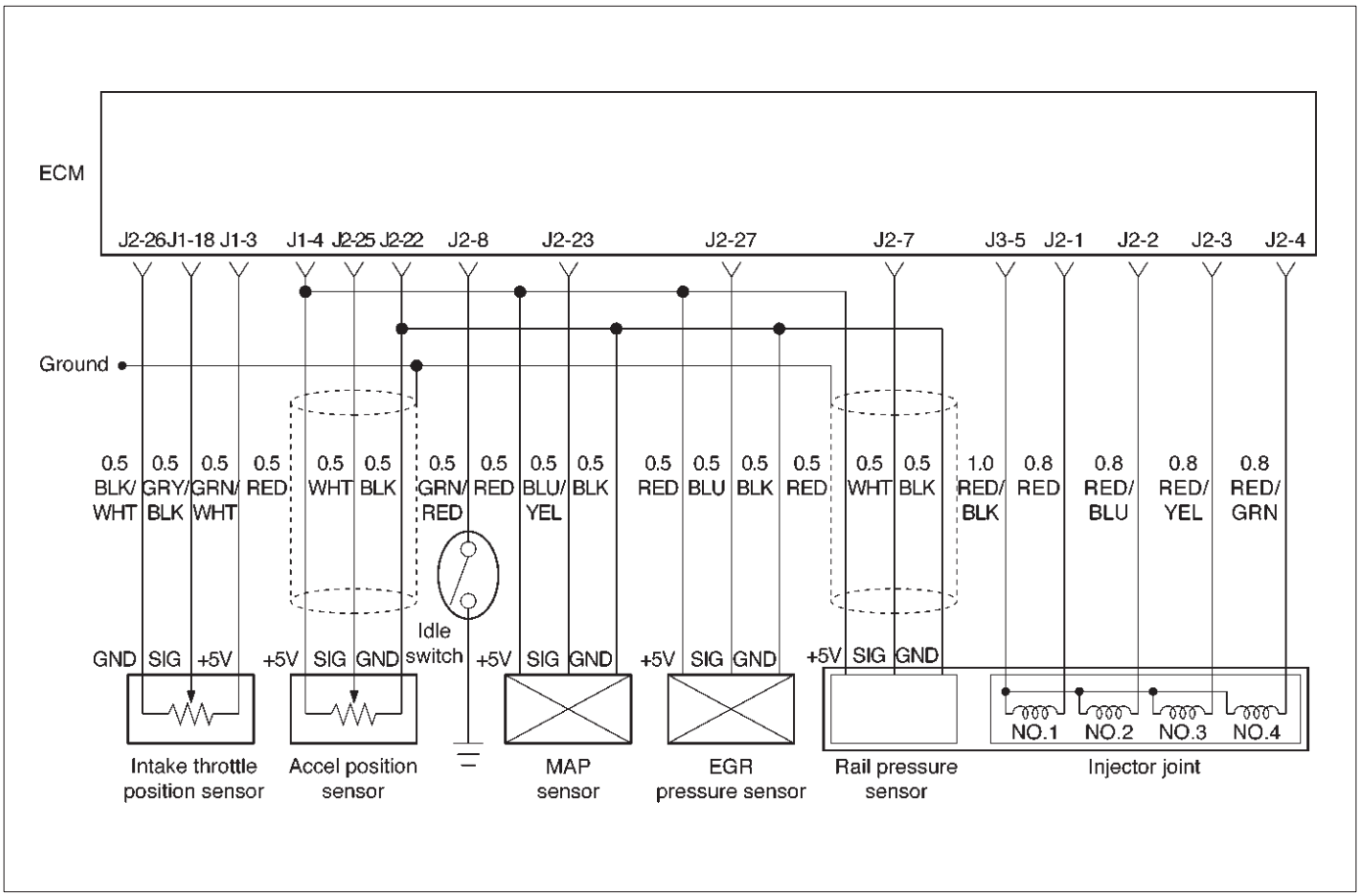

060RW134

Circuit Description

The Engine Control Module ECM has four individual injector driver circuits. Each controls an injector. When a driver circuit is grounded by the ECM, the injector is activated. The ECM monitors the current in each driver circuit. The voltage on each driver is monitored to detect a fault. If the voltage is not what the ECM expects to monitor on the circuit, a DTC is set. This DTC is also set if an injector driver is shorted to voltage or if there is an open circuit.

Action Taken When the DTC Sets

- The ECM will store conditions which were present when the DTC was set as Freeze Frame and in the Failure Records data.

Conditions for Clearing the MIL/DTC

- DTC P0201 can be cleared by using the Tech 2 “Clear Info” function or by disconnecting the ECM battery feed.

Diagnostic Aids

An injector driver circuit that is open or shorted to voltage will cause a DTC P0201 to set.

Test Description

The number(s) below refer to the step number(s) on the Diagnostic Chart.

3. This step determines if DTC P0201 is the result of a hard failure or an intermittent condition.

Injector Test

This test is conducted to make it sure that appropriate electric signals are being sent to injectors Nos. 1–4. Tech–2 must be used for this test.

Test Procedure:

1. Connect Tech–2 to the vehicle DLC.
2. Set Ignition Switch to the “ON” position.
3. Select Control Test.
4. Select Injector Test.
5. Send instructions to each injector (Switch on), making sure of injector working noise.

NOTE: If injector working noise (Clink) can hardly be confirmed, remove the engine head cover noise insulation.

Refer to Section 6A.

6. In the injector whose working noise has been confirmed, its electric circuit can be regarded as normal.

   As for the injector whose working noise has not been confirmed, its electric circuit or the injector proper is faulty.

DTC P0201 – Injector # 1 Circuit Fault

Step	Action	Value(s)	Yes	No
1	Was the “On-Board Diagnostic (OBD) System Check” performed?	—	Go to *Step 2*	Go to *OBD System Check*
2	Will the engine start?	—	Go to *Step 3*	Go to *Engine Cranks But Will Not Run* chart
3	1. Install the Tech 2. Clear the DTC. 2. Idle the engine for one minute. Does DTC P0201 reset?	—	Go to *Step 5*	Go to *Step 4*
4	1. Review the Freeze Frame data with the ignition “ON” and the engine “OFF” and note the parameters. 2. Operate the vehicle within the Freeze Frame conditions as noted. Does P0201 reset?	—	Go to *Step 5*	—
5	Check the Injector test. Does the working noise confirm?	—	Go to *Step 6*	Go to *Step 7*
6	1. Install the Tech 2. Clear the DTC. 2. Idle the engine for one minute. Dose DTC P0201 reset?	—	Verify repair	Go to *Step 7*
7	Check for an open circuit between the injector connector and the ECM. Was there an open circuit?	—	Go to *Step 8*	Go to *Step 9*
8	Repair the open circuit. Is the action complete?	—	Verify repair	—
9	Replace the ECM (Refer to the Data Programming in Case of ECM change). Is the action complete?	—	Verify repair	Go to *Step 10*
10	Replace the Injector (Refer to the Injector Group Sign Programming). Is the action complete?	—	Verify repair	—

Diagnostic Trouble Code (DTC) P0202 (Flash DTC 52) Injector # 2 Circuit Fault

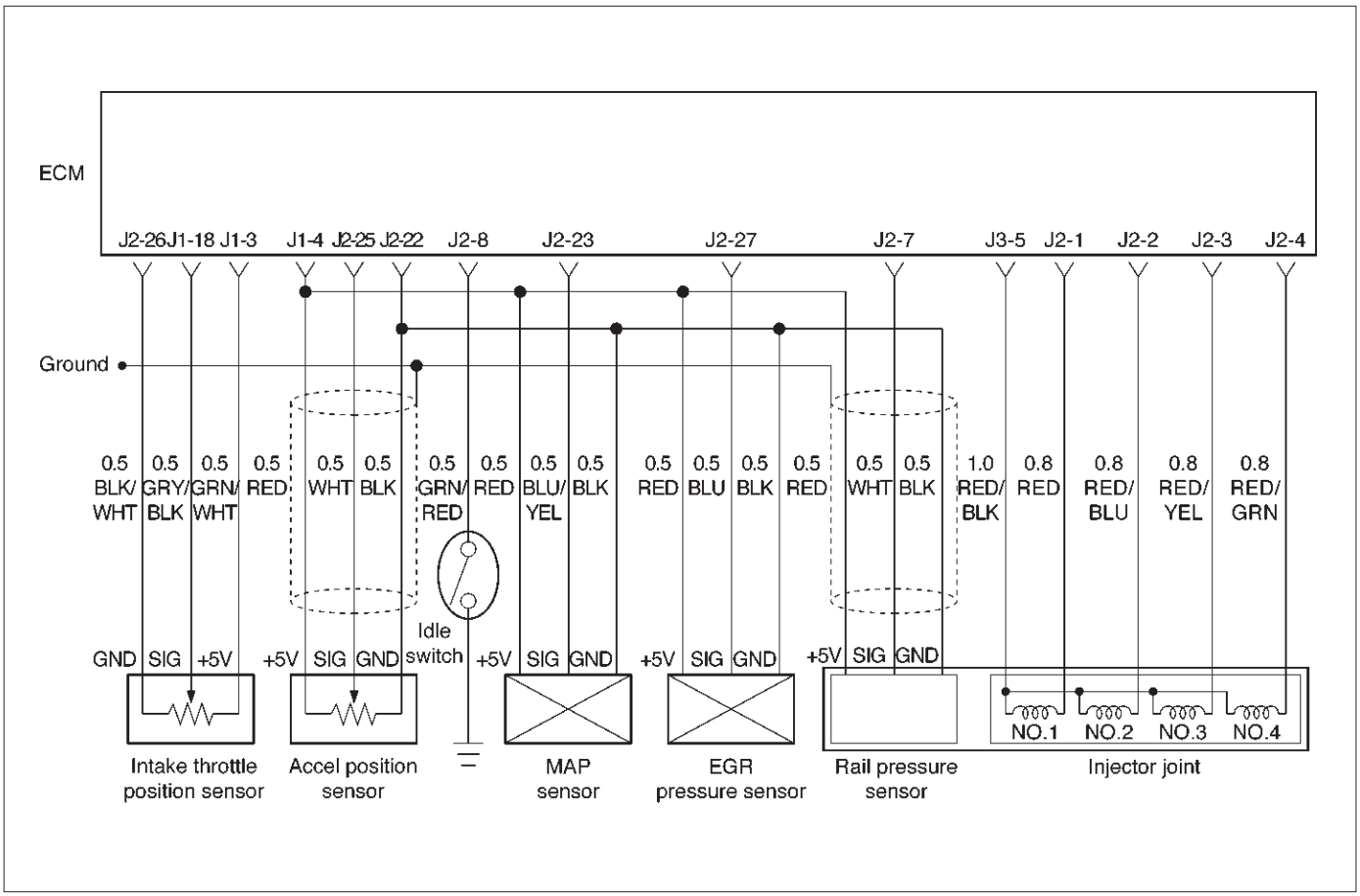

060RW134

Circuit Description

The Engine Control Module ECM has four individual injector driver circuits. Each controls an injector. When a driver circuit is grounded by the ECM, the injector is activated. The ECM monitors the current in each driver circuit. The voltage on each driver is monitored to detect a fault. If the voltage is not what the ECM expects to monitor on the circuit, a DTC is set. This DTC is also set if an injector driver is shorted to voltage or if there is an open circuit.

Action Taken When the DTC Sets

- The ECM will store conditions which were present when the DTC was set as Freeze Frame and in the Failure Records data.

Conditions for Clearing the MIL/DTC

- DTC P0202 can be cleared by using the Tech 2 “Clear Info” function or by disconnecting the ECM battery feed.

Diagnostic Aids

An injector driver circuit that is open or shorted to voltage will cause a DTC P0202 to set.

Test Description

The number(s) below refer to the step number(s) on the Diagnostic Chart.

3. This step determines if DTC P0202 is the result of a hard failure or an intermittent condition.

Injector Test

This test is conducted to make it sure that appropriate electric signals are being sent to injectors Nos. 1–4. Tech–2 must be used for this test.

Test Procedure:

1. Connect Tech–2 to the vehicle DLC.
2. Set Ignition Switch to the “ON” position.
3. Select Control Test.
4. Select Injector Test.
5. Send instructions to each injector (Switch on), making sure of injector working noise.

NOTE: If injector working noise (Clink) can hardly be confirmed, remove the engine head cover noise insulation.

Refer to Section 6A.

6. In the injector whose working noise has been confirmed, its electric circuit can be regarded as normal.

   As for the injector whose working noise has not been confirmed, its electric circuit or the injector proper is faulty.

DTC P0202 – Injector # 2 Circuit Fault

Step	Action	Value(s)	Yes	No
1	Was the “On-Board Diagnostic (OBD) System Check” performed?	—	Go to *Step 2*	Go to *OBD System Check*
2	Will the engine start?	—	Go to *Step 3*	Go to *Engine Cranks But Will Not Run* chart
3	1. Install the Tech 2. Clear the DTC. 2. Idle the engine for one minute. Does DTC P0202 reset?	—	Go to *Step 5*	Go to *Step 4*
4	1. Review the Freeze Frame data with the ignition “ON” and the engine “OFF” and note the parameters. 2. Operate the vehicle within the Freeze Frame conditions as noted. Does P0202 reset?	—	Go to *Step 5*	—
5	Check the Injector test. Does the working noise confirm?	—	Go to *Step 6*	Go to *Step 7*
6	1. Install the Tech 2. Clear the DTC. 2. Idle the engine for one minute. Dose DTC P0202 reset?	—	Verify repair	Go to *Step 7*
7	Check for an open circuit between the injector connector and the ECM. Was there an open circuit?	—	Go to *Step 8*	Go to *Step 9*
8	Repair the open circuit. Is the action complete?	—	Verify repair	—
9	Replace the ECM (Refer to the Data Programming in Case of ECM change). Is the action complete?	—	Verify repair	Go to *Step 10*
10	Replace the Injector (Refer to the Injector Group Sign Programming). Is the action complete?	—	Verify repair	—

Diagnostic Trouble Code (DTC) P0203 (Flash DTC 52) Injector # 3 Circuit Fault

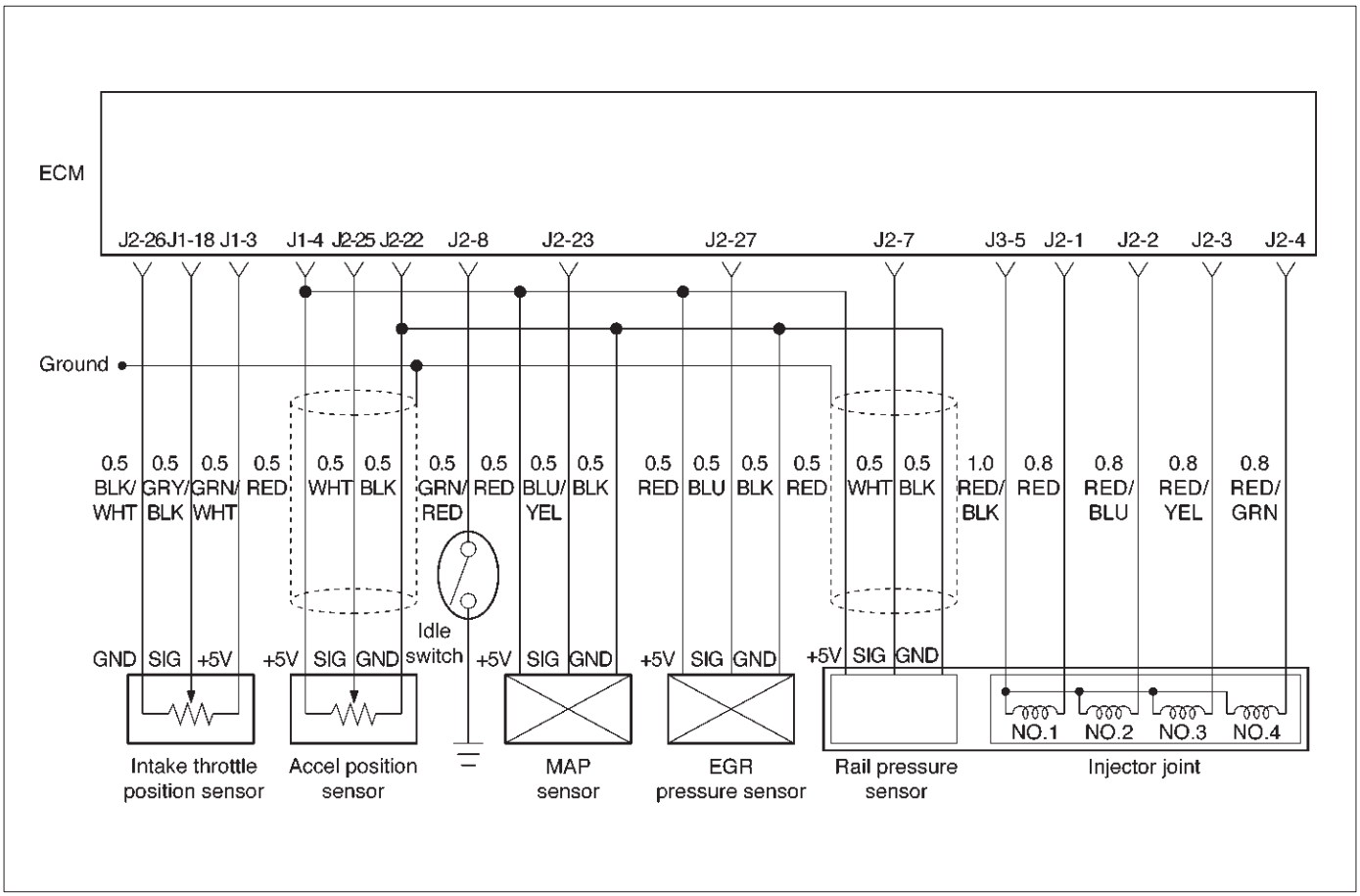

060RW134

Circuit Description

The Engine Control Module ECM has four individual injector driver circuits. Each controls an injector. When the driver circuit is grounded by the ECM, the injector is activated. The ECM monitors the current in each driver circuit. The voltage on each driver is monitored to detect a fault. If the voltage is not what the ECM expects to monitor on the circuit, a DTC is set. This DTC is also set if an injector driver is shorted to voltage or if there is an open circuit.

Action Taken When the DTC Sets

- The ECM will store conditions which were present when the DTC was set as Freeze Frame and in the Failure Records data.

Conditions for Clearing the MIL/DTC

- DTC P0203 can be cleared by using the Tech 2 “Clear Info” function or by disconnecting the ECM battery feed.

Diagnostic Aids

An injector driver circuit that is open or shorted to voltage will cause a DTC P0203 to set.

Test Description

The number(s) below refer to the step number(s) on the Diagnostic Chart.

3. This step determines if DTC P0203 is the result of a hard failure or an intermittent condition.

Injector Test

This test is conducted to make it sure that appropriate electric signals are being sent to injectors Nos. 1–4. Tech–2 must be used for this test.

Test Procedure:

1. Connect Tech–2 to the vehicle DLC.
2. Set Ignition Switch to the “ON” position.
3. Select Control Test.
4. Select Injector Test.
5. Send instructions to each injector (Switch on), making sure of injector working noise.

NOTE: If injector working noise (Clink) can hardly be confirmed, remove the engine head cover noise insulation.

Refer to Section 6A.

6. In the injector whose working noise has been confirmed, its electric circuit can be regarded as normal.

   As for the injector whose working noise has not been confirmed, its electric circuit or the injector proper is faulty.

DTC P0203 – Injector # 3 Circuit Fault

Step	Action	Value(s)	Yes	No
1	Was the “On-Board Diagnostic (OBD) System Check” performed?	—	Go to *Step 2*	Go to *OBD System Check*
2	Will the engine start?	—	Go to *Step 3*	Go to *Engine Cranks But Will Not Run* chart
3	1. Install the Tech 2. Clear the DTC. 2. Idle the engine for one minute. Does DTC P0203 reset?	—	Go to *Step 5*	Go to *Step 4*
4	1. Review the Freeze Frame data with the ignition “ON” and the engine “OFF” and note the parameters. 2. Operate the vehicle within the Freeze Frame conditions as noted. Does P0203 reset?	—	Go to *Step 5*	—
5	Check the Injector test. Does the working noise confirm?	—	Go to *Step 6*	Go to *Step 7*
6	1. Install the Tech 2. Clear the DTC. 2. Idle the engine for one minute. Dose DTC P0203 reset?	—	Verify repair	Go to *Step 7*
7	Check for an open circuit between the injector connector and the ECM. Was there an open circuit?	—	Go to *Step 8*	Go to *Step 9*
8	Repair the open circuit. Is the action complete?	—	Verify repair	—
9	Replace the ECM (Refer to the Data Programming in Case of ECM change). Is the action complete?	—	Verify repair	Go to *Step 10*
10	Replace the Injector (Refer to the Injector Group Sign Programming). Is the action complete?	—	Verify repair	—

Diagnostic Trouble Code (DTC) P0204 (Flash DTC 54) Injector # 4 Circuit Fault

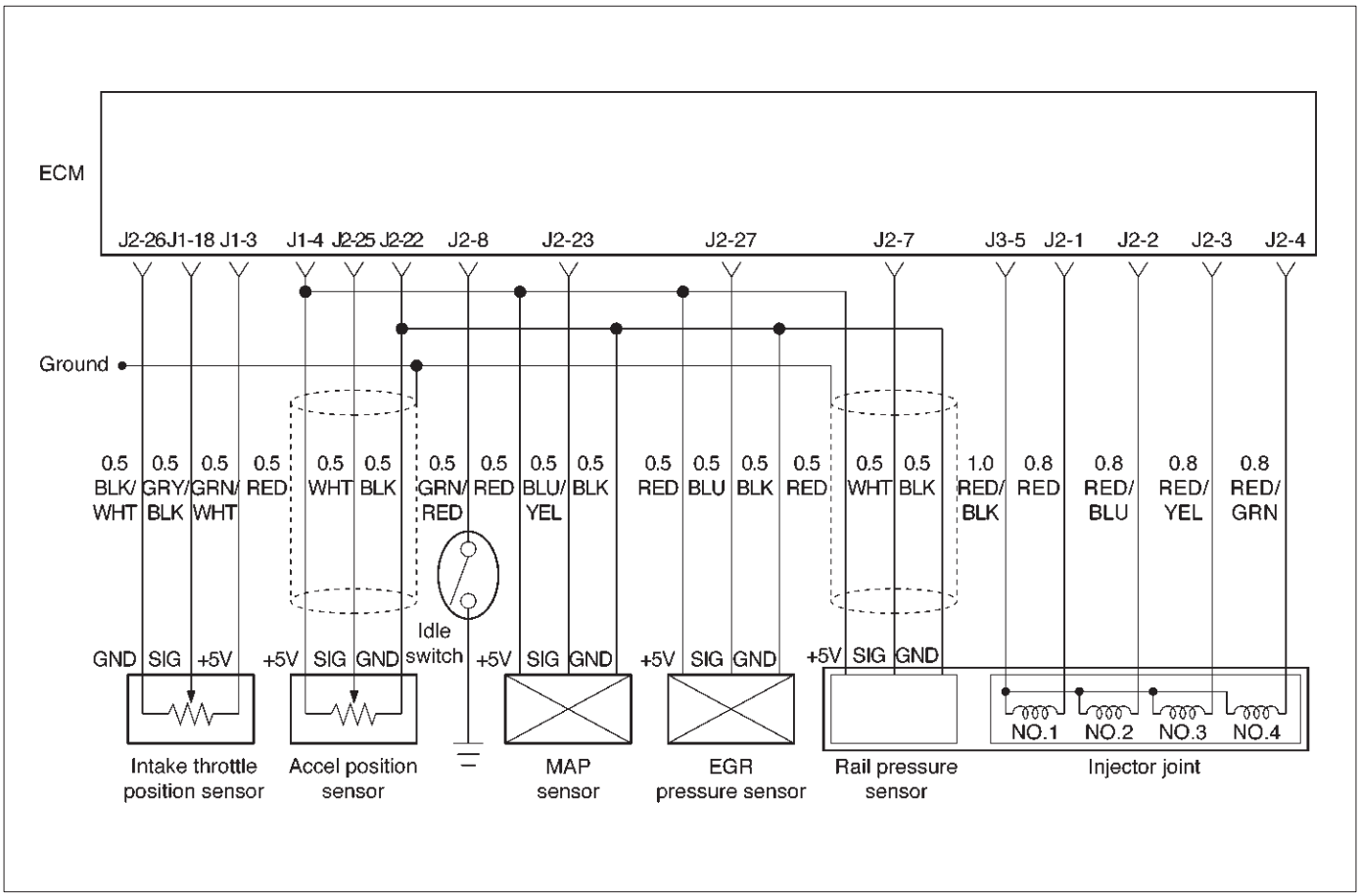

060RW134

Circuit Description

The Engine Control Module ECM has four individual injector driver circuits. Each controls an injector. When the driver circuit is grounded by the ECM, the injector is activated. The ECM monitors the current in each driver circuit. The voltage on each driver is monitored to detect a fault. If the voltage is not what the ECM expects to monitor on the circuit, a DTC is set. This DTC is also set if an injector driver is shorted to voltage or if there is an open circuit.

Action Taken When the DTC Sets

- The ECM will store conditions which were present when the DTC was set as Freeze Frame and in the Failure Records data.

Conditions for Clearing the MIL/DTC

- DTC P0204 can be cleared by using the Tech 2 “Clear Info” function or by disconnecting the ECM battery feed.

Diagnostic Aids

An injector driver circuit that is open or shorted to voltage will cause a DTC P0204 to set.

Test Description

The number(s) below refer to the step number(s) on the Diagnostic Chart.

3. This step determines if DTC P0204 is the result of a hard failure or an intermittent condition.

Injector Test

This test is conducted to make it sure that appropriate electric signals are being sent to injectors Nos. 1–4. Tech–2 must be used for this test.

Test Procedure:

1. Connect Tech–2 to the vehicle DLC.
2. Set Ignition Switch to the “ON” position.
3. Select Control Test.
4. Select Injector Test.
5. Send instructions to each injector (Switch on), making sure of injector working noise.

NOTE: If injector working noise (Clink) can hardly be confirmed, remove the engine head cover noise insulation.

Refer to Section 6A.

6. In the injector whose working noise has been confirmed, its electric circuit can be regarded as normal.

   As for the injector whose working noise has not been confirmed, its electric circuit or the injector proper is faulty.

DTC P0204 – Injector #4 Circuit Fault

Step	Action	Value(s)	Yes	No
1	Was the “On-Board Diagnostic (OBD) System Check” performed?	—	Go to *Step 2*	Go to *OBD System Check*
2	Will the engine start?	—	Go to *Step 3*	Go to *Engine Cranks But Will Not Run* chart
3	1. Install the Tech 2. Clear the DTC. 2. Idle the engine for one minute. Does DTC P0204 reset?	—	Go to *Step 5*	Go to *Step 4*
4	1. Review the Freeze Frame data with the ignition “ON” and the engine “OFF” and note the parameters. 2. Operate the vehicle within the Freeze Frame conditions as noted. Does P0204 reset?	—	Go to *Step 5*	—
5	Check the Injector test. Does the working noise confirm?	—	Go to *Step 6*	Go to *Step 7*
6	1. Install the Tech 2. Clear the DTC. 2. Idle the engine for one minute. Dose DTC P0204 reset?	—	Verify repair	Go to *Step 7*
7	Check for an open circuit between the injector connector and the ECM. Was there an open circuit?	—	Go to *Step 8*	Go to *Step 9*
8	Repair the open circuit. Is the action complete?	—	Verify repair	—
9	Is the action complete?	—	Verify repair	Go to *Step 10*
10	Replace the Injector (Refer to the Injector Group Sign Programming). Is the action complete?	—	Verify repair	—

Diagnostic Trouble Code (DTC) P0217 (Flash DTC 22) High Coolant Temp Waring

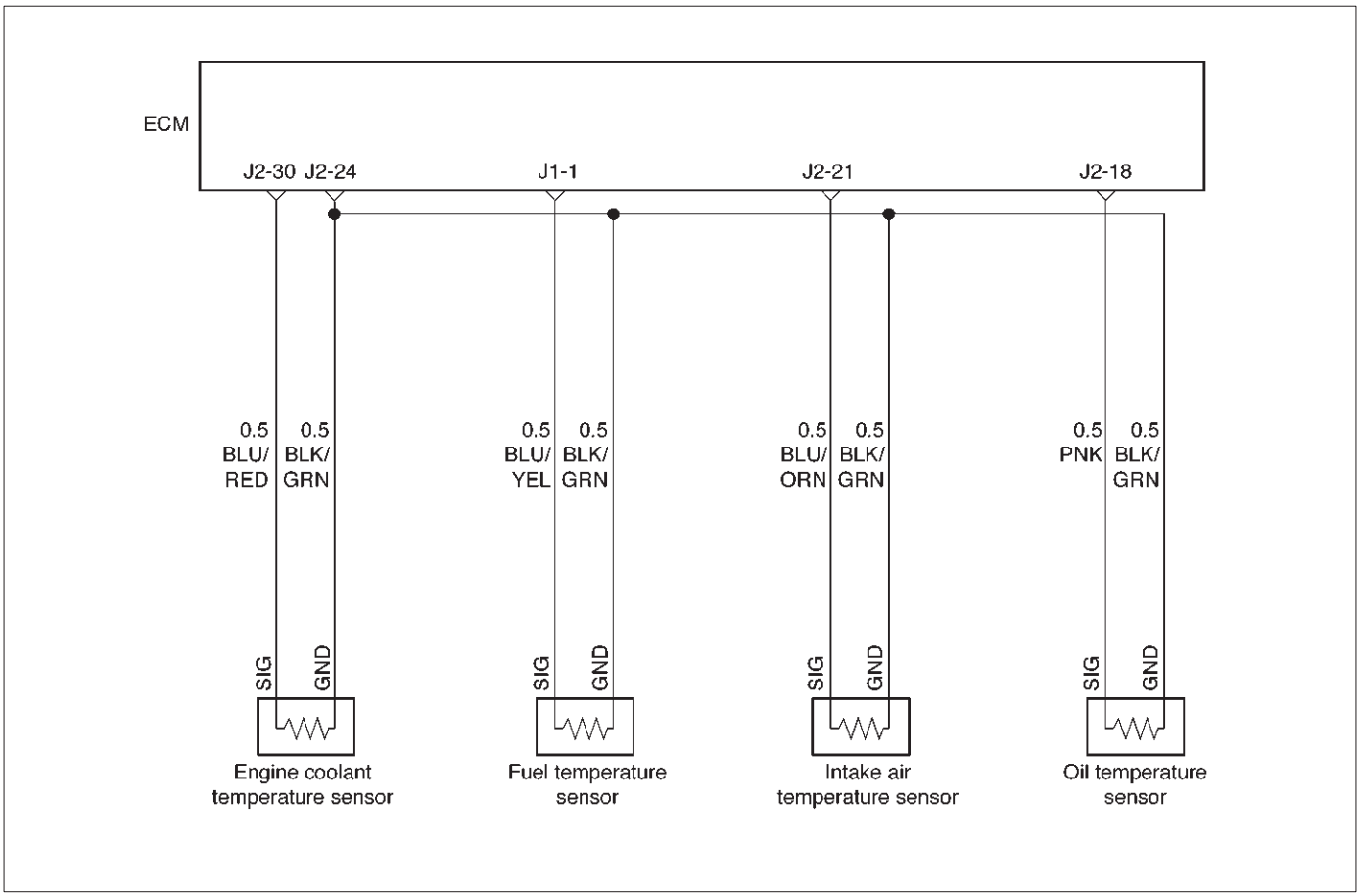

060RW129

Circuit Description

The engine coolant temperature (ECT) sensor is a thermistor mounted on a coolant crossover pipe at the rear of the engine. The Engine Control Module ECM applies a voltage (about 5 volts) through a pull-up resistor to the ECT signal circuit. When the engine coolant is cold, the sensor (thermistor) resistance is high, therefore the ECM will measure a high signal voltage. As the engine coolant warms, the sensor resistance becomes lower, and the ECT signal voltage measured at the ECM drops.

Action Taken When the DTC Sets

- The ECM will store conditions which were present when the DTC was set as Freeze Frame and in the Failure Records data.

Conditions for Clearing the MIL/DTC

- DTC P0217 can be cleared by using the Tech 2 “Clear Info” function or by disconnecting the ECM battery feed.

Diagnostic Aids

Check for the following conditions:

- Poor connection at ECM – Inspect harness connectors for backed-out terminals, improper mating, broken locks, improperly formed or damaged terminals, and poor terminal-to-wire connection.
- Damaged harness – Inspect the wiring harness for damage. If the harness appears to be OK, observe the ECT display on the Tech 2 while moving connectors and wiring harnesses related to the ECT sensor. A change in the ECT display will indicate the location of the fault.

If DTC P0217 cannot be duplicated, the information included in the Failure Records data can be useful in determining vehicle mileage since the DTC was last set. If it is determined that the DTC occurs intermittently.

Test Description

Number(s) below refer to the step number(s) on the Diagnostic Chart.

2. Verifies that the fault is present.
3. If DTC P0117 can be repeated only by duplicating the Failure Records conditions, refer to the “Temperature vs. Resistance Values” table. The table may be used to test the ECT sensor at various temperatures to evaluate the possibility of a “shifted” sensor that may be shorted above or below a certain temperature. If this is the case, replace the ECT sensor. If the ECT sensor appears to be OK, the fault is intermittent; refer to *Diagnostic Aids*.

DTC P0217 – High Coolant Temp Waring

Step	Action	Value(s)	Yes	No
1	Was the “On-Board Diagnostic (OBD) System Check” performed?	—	Go to *Step 2*	Go to *OBD System Check*
2	1. Ignition “ON,” engine “OFF.” 2. Observe the “Eng Cool Temp” display on the Tech 2. Is the “Eng Cool Temp” below the specified value?	110˚C	Go to *Step 6*	Go to *Step 3*
3	Check the engine coolant quantity Was the engine coolant appropriate quantity?	—	Go to *Step 6*	Go to *Step 4*
4	Check a leak from EC circuit. Was the EC leaked from EC circuit?	—	Go to *Step 5*	Go to *Step 6*
5	Repair the EC circuit. Is the action complete?	—	Verify repair	—
6	1. Ignition “ON,” engine “OFF.” 2. Review and record Tech 2 Failure Records data. 3. Operate the vehicle within Failure Records conditions as noted. 4. Using a Tech 2, monitor “ DTC” info for DTC P0217. Does the Tech 2 indicate DTC P0217 failed this ignition?	—	Go to *Step 7*	—
7	1. Ignition “OFF”. 2. Check the Thermostat. 3. If the Thermostat is damaged, repair it as necessary. Was the Thermostat damaged?	—	Go to *Step 8*	Go to *Step 9*
8	Replace the Thermostat. Is the action complete?	—	Verify repair	—
9	1. Check the Radiator. 2. If the Radiator is damaged, repair it as necessary. Was the Radiator damaged?	—	Go to *Step 10*	Go to *Step 11*
10	Repair the Radiator. Is the action complete?	—	Verify repair	—
11	1. Check the EC circuit in the Engine. 2. Observe the “Eng Data List” display on the Tech 2. 3. If the EC circuit in the Engine is damaged, repair it as necessary. Was the EC circuit damaged?	Refer to Data List	Go to *Step 12*	Go to *Step 6*
12	Repair the EC circuit. Is the action complete?	—	Verify repair	—

Diagnostic Trouble Code (DTC) P1217 (Flash DTC 36) High Oil Temp Warning

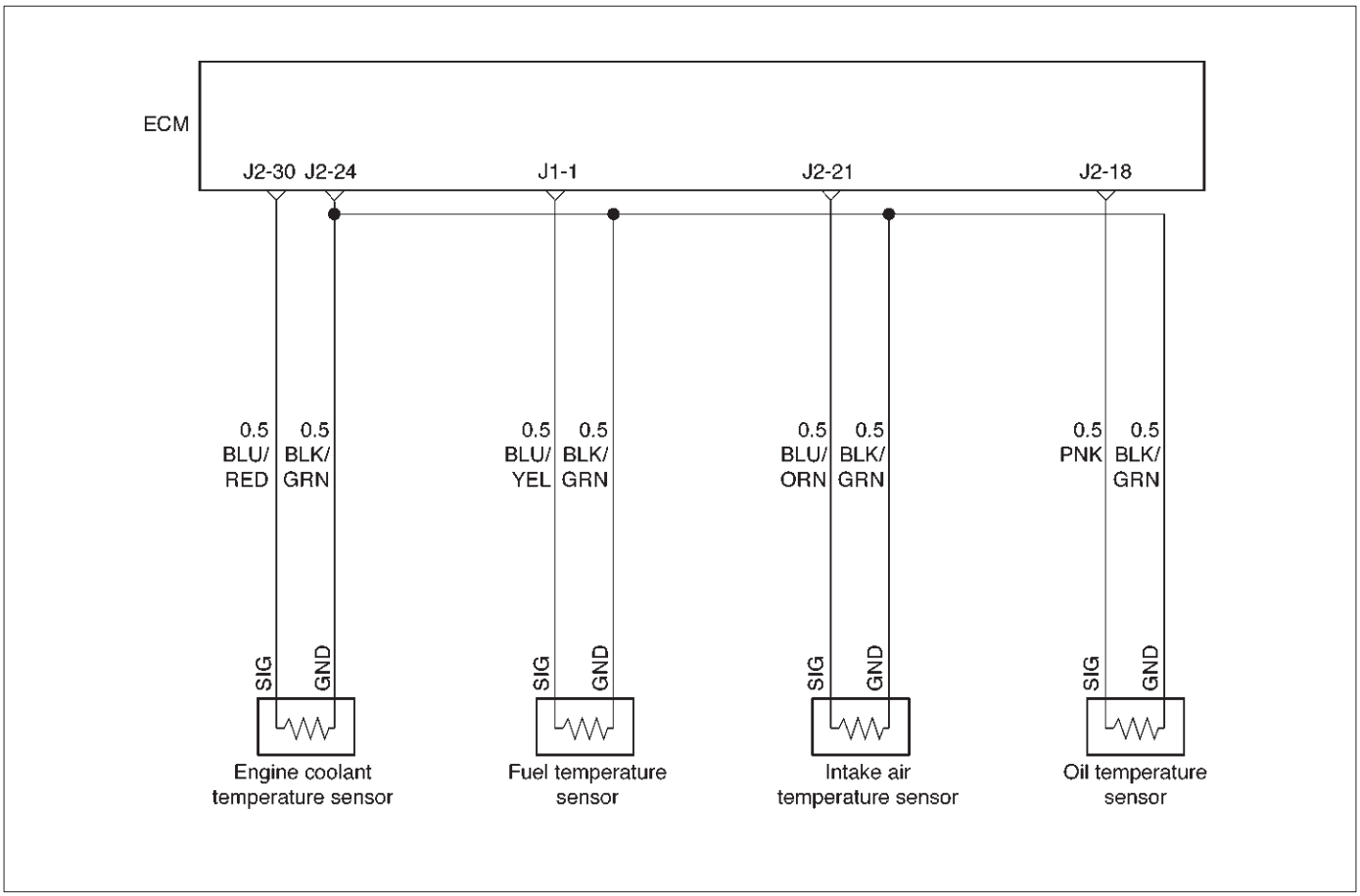

060RW129

Circuit Description

The engine oil temperature (OT) sensor is a thermistor mounted on a oil manifold. The Engine Control Module ECM applies a voltage (about 5 volts) through a pull-up resistor to the OT signal circuit. When the engine oil is cold, the sensor (thermistor) resistance is high, therefore the ECM will measure a high signal voltage. As the engine oil warms, the sensor resistance becomes lower, and the OT signal voltage measured at the ECM drops.

Action Taken When the DTC Sets

- The ECM will store conditions which were present when the DTC was set as Freeze Frame and in the Failure Records data.

Conditions for Clearing the MIL/DTC

- DTC P1217 can be cleared by using the Tech 2 “Clear Info” function or by disconnecting the ECM battery feed.

Diagnostic Aids

Check for the following conditions:

- Poor connection at ECM – Inspect harness connectors for backed-out terminals, improper mating, broken locks, improperly formed or damaged terminals, and poor terminal-to-wire connection.
- Damaged harness – Inspect the wiring harness for damage.
- High Oil Temperature Warning may sometimes be given due to High Coolant Temp Warning. On this occasion, recognize DTC P0217 and give priority to High Coolant Temp Warning.

DTC P1217 – High Oil Temp Warning

Step	Action	Value(s)	Yes	No
1	Was the “On-Board Diagnostic (OBD) System Check” performed?	—	Go to *Step 2*	Go to *OBD System Check*
2	1. Ignition “ON,” engine “OFF.” 2. Observe the “Eng Cool Temp” display on the Tech 2. Is the “Eng Cool Temp” below the specified value?	139˚C (282˚F)	Go to *Step 4*	Go to *Step 3*
3	1. Ignition “ON,” engine “OFF.” 2. Review and record Tech 2 Failure Records data. 3. Using a Tech 2, monitor “ DTC” info for DTC P0217. Does the Tech 2 indicate DTC P0217 failed this ignition?	—	Go to *Step 4*	Refer to *Diagnostic Aids*
4	1. Ignition “ON,” engine “OFF.” 2. Review and record Tech 2 Failure Records data. 3. Operate the vehicle within Failure Records conditions as noted. 4. Using a Tech 2, monitor “ DTC” info for DTC P1217. Does the Tech 2 indicate DTC P1217 failed this ignition?	—	Go to *Step 5*	Refer to *Diagnostic Aids*
5	1. Measure the engine oil quantity by oil level gage. 2. If the engine oil is shortage, fill up it as necessary. Was the engine oil is shortaged?	—	Verify repair	Go to *Step 6*
6	Replace the oil temp sensor. Is the action complete?	—	Verify repair	Go to *Step 7*
7	Replace the oil cooler. Is the action complete?	—	Verify repair	—

Diagnostic Trouble Code (DTC) P0219 (Flash DTC 11) Engine Over Speed Warning

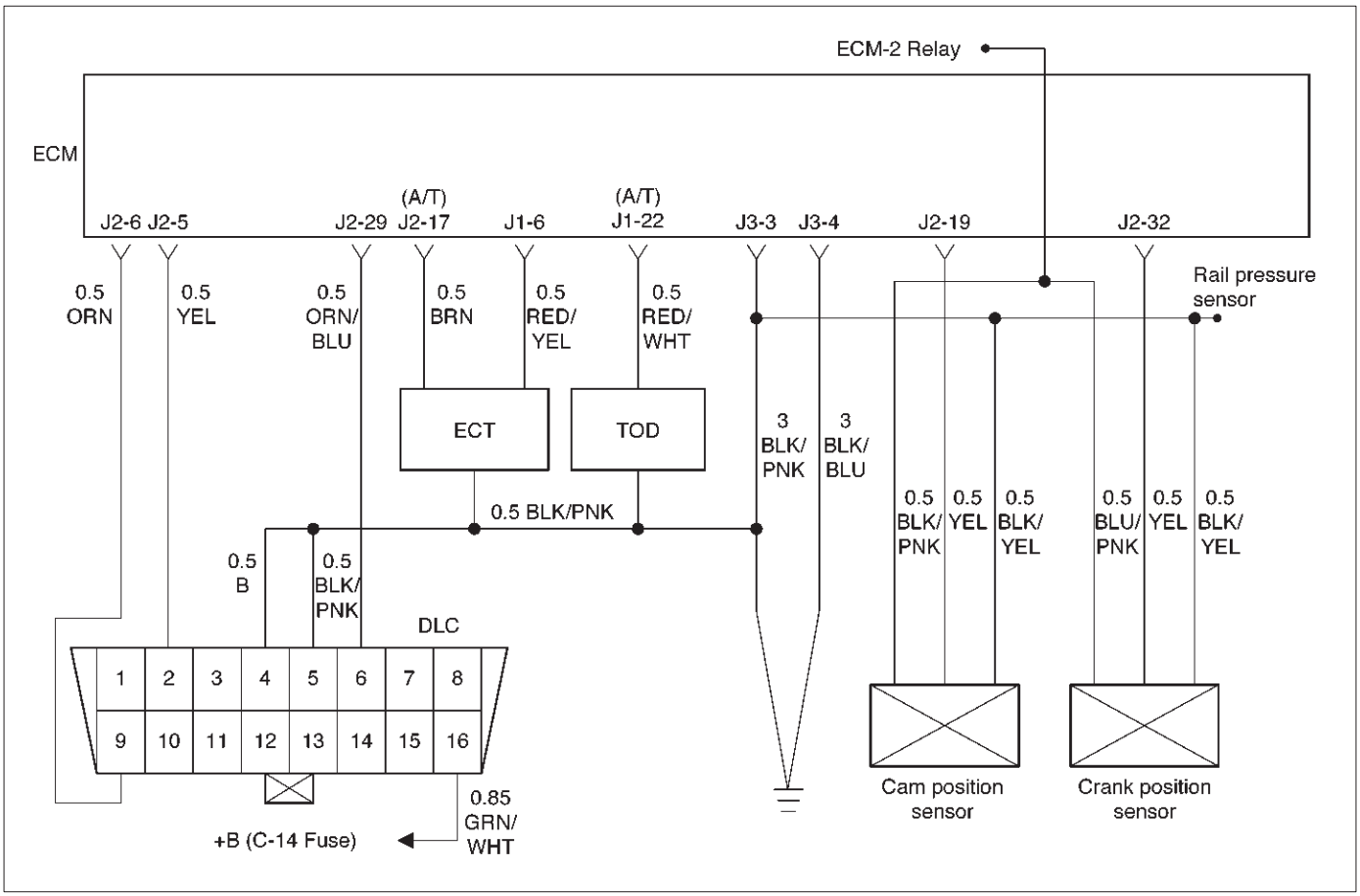

060RW133

Circuit Description

The CKP reference signal is produced by the crankshaft position (CKP) sensor. During one crankshaft revolution, CKP crankshaft reference pulses will be produced. The Engine Control Module ECM uses the CKP reference signal to calculate engine RPM and crankshaft position.

Action Taken When the DTC Sets

- The ECM will store conditions which were present when the DTC was set as Freeze Frame and in the Failure Records data.

Conditions for Clearing the MIL/DTC

- DTC P0219 can be cleared by using the Tech 2 “Clear Info” function or by disconnecting the ECM battery feed.

Diagnostic Aids

Check for:

- Poor connection – Inspect the CKP harness and connectors for improper mating, broken locks, improperly formed or damaged terminals, and poor terminal-to-wire connection.
- Damaged X57 – Inspect the X57 for damage.

DTC P0219 – Engine Over Speed Warning

Step	Action	Value(s)	Yes	No
1	Was the “On-Board Diagnostic (OBD) System Check” performed?	—	Go to *Step 2*	Go to *OBD System Check*
2	Check the responsibility. Was the driver responsibility?	—	Go to *Step 3*	Go to *Chart 4*

DTC P0219 – Engine Over Speed Warning (Cont'd)

Step	Action	Value(s)	Yes	No
3	1. Review and record Failure Records information. 2. Clear DTC P0219. 3. Start the engine and idle for 1 minute. 4. Observe DTCs. Is DTC P0219 set?	—	Go to *Step 4*	—
4	Observe the AP value displayed on the Tech 2. Is the AP value near the specified value?	(Idling 720 r.p .m) 0 %	Go to *Step 3*	Go to *Step 5*
5	Observe the Engine speed displayed on the Tech 2. Is the Engine speed near the specified value?	(Idling) 720 r. p.m	Go to *Step 7*	Go to *Step 6*
6	1. Check the CKP sensor. 2. Ignition "ON." 3. Using a DVM, verify that 5 V reference and ground are being supplied at the sensor connector (ECM side). Are 4-6 volts and ground available at the sensor?	—	Go to *Step 9*	Go to *Step 7*
7	1. Ignition "ON." 2. With a DVM, backprobe the ECM connector 5 V reference and ground connections. Are 5 V reference and ground available at the ECM?	—	Go to *Step 8*	Go to *Step 13*
8	Check 5 V reference or ground between the CKP sensor and ECM and repair the open circuit, short to ground or short to voltage. Is the action complete?	—	Verify repair	—
9	1. Ignition "OFF." 2. Disconnect the ECM and CKP sensor. 3. Check for an open or a short to ground in the CKP reference circuit between the CKP sensor connector and the ECM harness connector. 4. If a problem is found, repair as necessary. Was a problem found?	—	Verify repair	Go to *Step 10*
10	1. Reconnect the ECM and CKP sensor. 2. Connect a DVM to measure voltage on the CKP reference circuit at the ECM connector. 3. Observe the voltage while cranking the engine. Is the voltage near the specified value?	2.5 V	Go to *Step 13*	Go to *Step 11*
11	Check the connections at the CKP sensor and replace the terminals if necessary. Did any terminals require replacement?	—	Verify repair	Go to *Step 12*
12	Replace the CKP sensor. Is the action complete?	—	Verify repair	—
13	Check the connections at the ECM and replace the terminals if necessary. Did any terminals require replacement?	—	Verify repair	Go to *Step 14*

DTC P0219 – Engine Over Speed Warning (Cont'd)

Step	Action	Value(s)	Yes	No
14	Check the X57 signal plate. Is the X57 signal plate damage?	—	Go to *Step 15*	Go to *Step 3*
15	Replace the X57 signal plate. Is the action complete?	—	Verify repair	Go to *Step 2*

Diagnostic Trouble Code (DTC) P0336 (Flash DTC 43) CKP (Crank Position) Sensor Out of Synchro

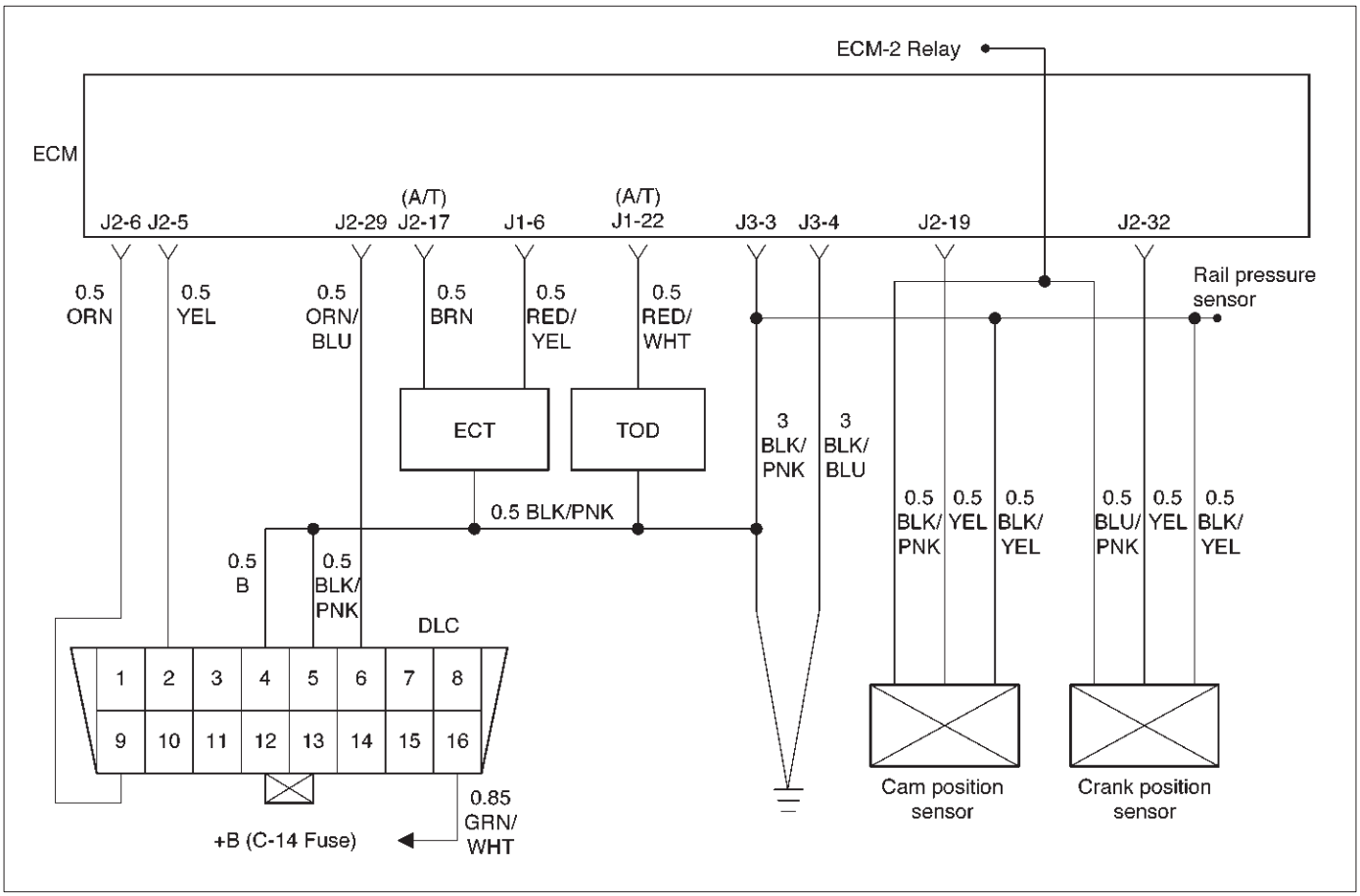

Circuit Description

The CKP reference signal is produced by the crankshaft position (CKP) sensor. During one crankshaft revolution, crankshaft pulses will be produced. The Engine Control Module ECM uses the CKP reference signal to calculate engine RPM and crankshaft position. If the ECM receives an incorrect number of pulses on the CKP reference circuit, DTC P0336 will set.

Action Taken When the DTC Sets

- The ECM will store conditions which were present when the DTC was set as Freeze Frame and in the Failure Records data.

Conditions for Clearing the MIL/DTC

- DTC P0336 can be cleared by using the Tech 2 “Clear Info” function or by disconnecting the ECM battery feed.

Diagnostic Aids

An intermittent may be caused by a poor connection, rubbed–through wire insulation or a wire broken inside the insulation. Check for:

- Poor connection – Inspect the ECM harness and connectors for improper mating, broken locks, improperly formed or damaged terminals, and poor terminal-to-wire connection.
- Damaged harness – Inspect the wiring harness for damage. If the harness appears to be OK, disconnect the ECM, turn the ignition on and observe a voltmeter connected to the CKP reference circuit at the ECM harness connector while moving connectors and wiring harnesses related to the ECM. A change in voltage will indicate the location of the fault.

Reviewing the Failure Records vehicle mileage since the diagnostic test last failed may help determine how often the condition that caused the DTC to be set occurs. This may assist in diagnosing the condition.

DTC P0336 – CKP Sensor Out of Synchro

Step	Action	Value(s)	Yes	No
1	Was the “On-Board Diagnostic (OBD) System Check” performed?	—	Go to *Step 2*	Go to *OBD System Check*
2	Attempt to start the engine. Does the engine start?	—	Go to *Step 3*	Go to *“Engine Cranks But Will Not Run”* chart
3	1. Review and record Failure Records information. 2. Clear DTC P0336. 3. Start the engine and idle for 1 minute. 4. Observe DTCs. Is DTC P0336 set?	—	Go to *Step 4*	Refer to Diagnostic Aids
4	1. Disconnect the ECM and CKP sensor. 2. Check for an open or a short to ground in the CKP reference circuit between the CKP sensor connector and the ECM harness connector. 3. If a problem is found, repair as necessary. Was a problem found?	—	Verify repair	Go to *Step 5*
5	1. Reconnect the ECM and CKP sensor. 2. Connect a DVM to measure voltage on the CKP reference circuit at the ECM connector. 3. Observe the voltage while cranking the engine. Is the voltage near the specified value?	2.5 V	Go to *Step 8*	Go to *Step 6*
6	Check the connections at the CKP sensor and replace the terminals if necessary. Did any terminals require replacement?	—	Verify repair	Go to *Step 7*
7	Replace the CKP sensor. Is the action complete?	—	Verify repair	Go to *Step 8*
8	Check connections at the ECM and replace the terminals if necessary. Did any terminals require replacement?	—	Verify repair	Go to *Step 9*
9	Replace the ECM (Refer to the Data Programming in Case of ECM change). Is the action complete?	—	Verify repair	—

Diagnostic Trouble Code (DTC) P0337 (Flash DTC 43) CKP (Crank Position) Sensor No Signal

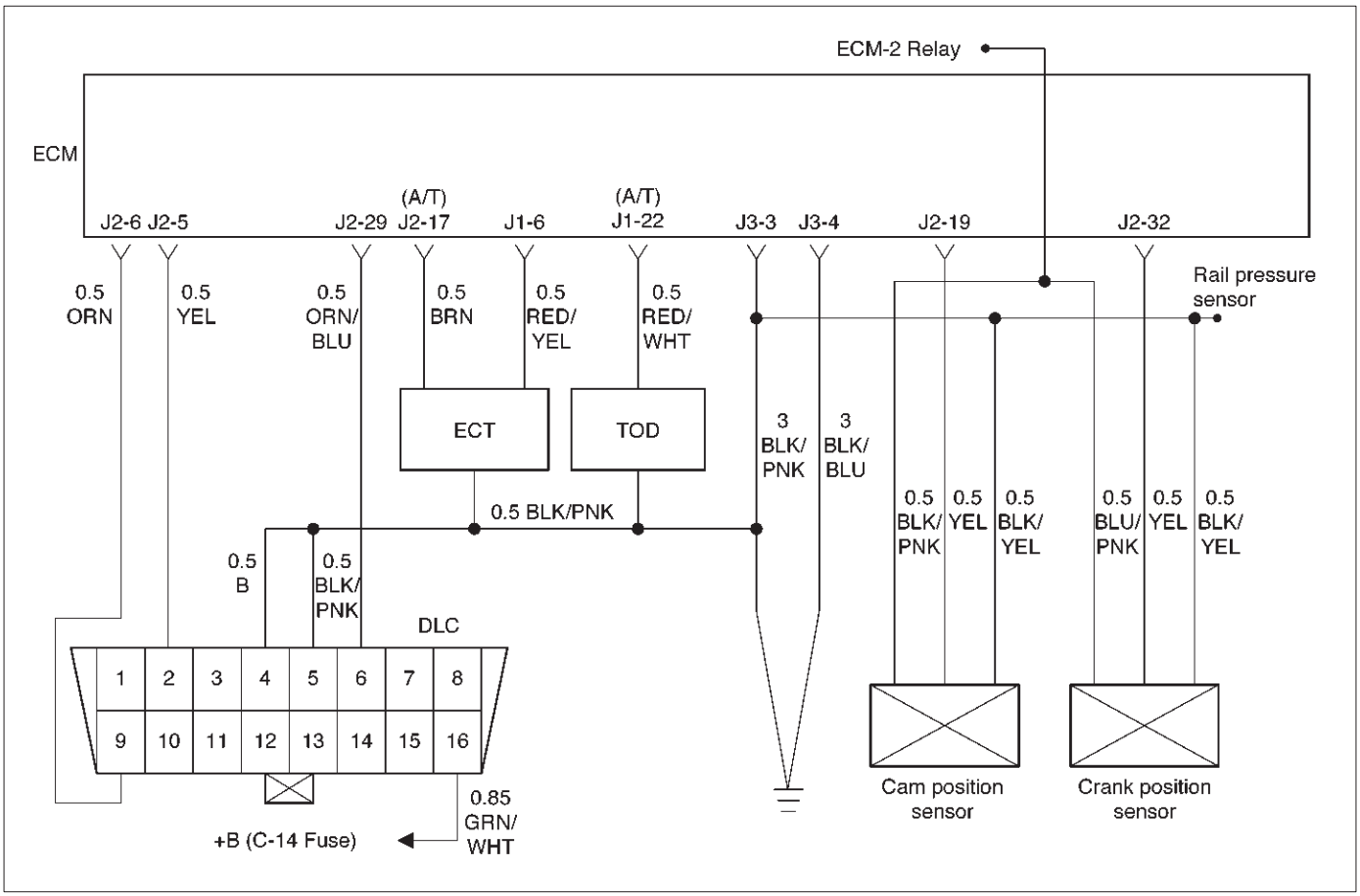

Circuit Description

The CKP reference signal is produced by the crankshaft position (CKP) sensor. During one crankshaft revolution, CKP crankshaft reference pulses will be produced. The Engine Control Module ECM uses the CKP reference signal to calculate engine RPM and crankshaft position. If the ECM does not receive pulses on the CKP reference circuit, DTC P0337 will set.

Action Taken When the DTC Sets

- The ECM will store conditions which were present when the DTC was set as Freeze Frame and in the Failure Records data.

Conditions for Clearing the MIL/DTC

- DTC P0337 can be cleared by using the Tech 2 “Clear Info” function or by disconnecting the ECM battery feed.

Diagnostic Aids

An intermittent may be caused by a poor connection, rubbed-through wire insulation or a wire broken inside the insulation. Check for:

- Poor connection – Inspect the ECM harness and connectors for improper mating, broken locks, improperly formed or damaged terminals, and poor terminal-to-wire connection.
- Damaged harness – Inspect the wiring harness for damage. If the harness appears to be OK, disconnect the ECM, turn the ignition on and observe a voltmeter connected to the CKP reference circuit at the ECM harness connector while moving connectors and wiring harnesses related to the ICM. A change in voltage will indicate the location of the fault.

Reviewing the Failure Records vehicle mileage since the diagnostic test last failed may help determine how often the condition that caused the DTC to be set occurs. This may assist in diagnosing the condition.

DTC P0337 – CKP Sensor No Signal

Step	Action	Value(s)	Yes	No
1	Was the “On-Board Diagnostic (OBD) System Check” performed?	—	Go to *Step 2*	Go to *OBD System Check*
2	Attempt to start the engine. Does the engine start?	—	Go to *Step 3*	Go to *Chart 3*
3	1. Review and record Failure Records information. 2. Clear DTC P0337. 3. Start the engine and idle for 1 minute. 4. Observe DTCs. Is DTC P0337 set?	—	Go to *Step 4*	Refer to *Diagnostic Aid*
4	1. Disconnect the CKP sensor. 2. Ignition “ON.” 3. Using a DVM, verify that 5 V reference and ground are being supplied at the sensor connector (ECM side). Are 4-6 volts and ground available at the sensor?	—	Go to *Step 7*	Go to *Step 5*
5	1. Ignition “ON.” 2. With a DVM, backprobe the ECM connector 5 V reference and ground connections. Are 5 V reference and ground available at the ECM?	—	Go to *Step 6*	Go to *Step 11*
6	Check 5 V reference or ground between the CKP sensor and ECM and repair the open circuit, short to ground or short to voltage. Is the action complete?	—	Verify repair	—
7	1. Ignition “OFF.” 2. Disconnect the ECM and CKP sensor. 3. Check for an open or a short to ground in the CKP reference circuit between the CKP sensor connector and the ECM harness connector. 4. If a problem is found, repair as necessary. Was a problem found?	—	Verify repair	Go to *Step 8*
8	1. Reconnect the ECM and CKP sensor. 2. Connect a DVM to measure voltage on the CKP reference circuit at the ECM connector. 3. Observe the voltage while cranking the engine. Is the voltage near the specified value?	2.5 V	Go to *Step 11*	Go to *Step 9*
9	Check the connections at the CKP sensor and replace the terminals if necessary. Did any terminals require replacement?	—	Verify repair	Go to *Step 10*
10	Replace the CKP sensor. Use caution and avoid hot oil that may drip out. Is the action complete?	—	Verify repair	—

DTC P0337 – CKP Sensor No Signal (Cont'd)

Step	Action	Value(s)	Yes	No
11	Check the connections at the ECM and replace the terminals if necessary. Did any terminals require replacement?	—	Verify repair	Go to *Step 12*
12	Replace the ECM (Refer to the Data Programming in Case of ECM change). Is the action complete?	—	Verify repair	—

Diagnostic Trouble Code (DTC) P0341 (Flash DTC 41) CMP (Cam Position) Sensor Out of Synchro

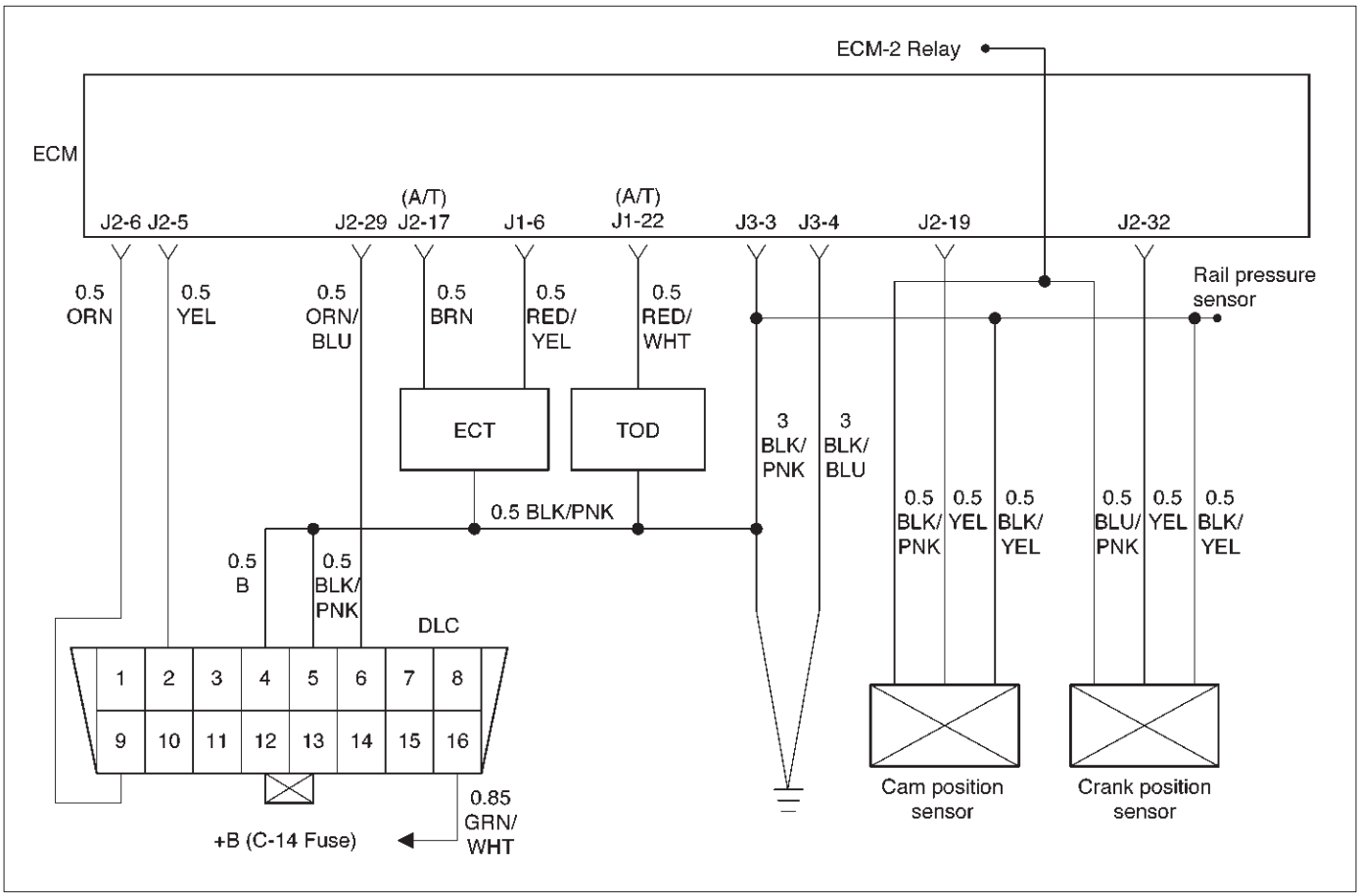

060RW133

Circuit Description

The CMP signal is produced by the camshaft position (CMP) sensor pulses when the engine is running and crankshaft position (CKP) sync pulses are also being received. The Engine Control Module ECM uses the CMP signal pulses to initiate sequential fuel injection. If the ECM receives an incorrect number of pulses on the CMP reference circuit, DTC P0341 will set.

Action Taken When the DTC Sets

- The ECM will store conditions which were present when the DTC was set as Freeze Frame and in the Failure Records data.

Conditions for Clearing the MIL/DTC

- DTC P0341 can be cleared by using the Tech 2 “Clear Info” function or by disconnecting the ECM battery feed.

Diagnostic Aids

An intermittent may be caused by a poor connection, rubbed–through wire insulation or a wire broken inside the insulation. Check for:

- Poor connection — Inspect the ECM harness and connectors for improper mating, broken locks, improperly formed or damaged terminals, and poor terminal-to-wire connection.
- Damaged harness — Inspect the wiring harness for damage. If the harness appears to be OK, disconnect the ECM, turn the ignition on and observe a voltmeter connected to the CMP signal circuit at the ECM harness connector while moving connectors and wiring harnesses related to the ICM and the CMP sensor. A change in voltage will indicate the location of the fault.

Reviewing the Failure Records vehicle mileage since the diagnostic test last failed may help determine how often the condition that caused the DTC to be set occurs. This may assist in diagnosing the condition.

Test Description

Number(s) below refer to the step number(s) on the Diagnostic Chart.

2. Ensures that the fault is present.

12. Determines whether the fault is being caused by a missing camshaft magnet or a faulty sensor. The voltage measured in this step should read around 4 volts, toggling to near 0 volts when the CMP sensor interfaces with the camshaft magnet.

DTC P0341 —CMP Sensor Out of Synchro

Step	Action	Value(s)	Yes	No
1	Was the “On-Board Diagnostic (OBD) System Check” performed?	—	Go to *Step 2*	Go to *OBD System Check*
2	1. Ignition “ON.” 2. Review and record Tech 2 Failure Records data. 3. Operate the vehicle within Failure Records conditions as noted. 4. Using a Tech 2, monitor “DTC” info for DTC P0341 until the DTC P0341 test runs. 5. Note the test result. Does the Tech 2 indicate DTC P0341 failed this ignition?	—	Go to *Step 3*	Refer to *Diagnostic Aids*
3	1. Disconnect the CMP sensor. 2. Measure the voltage between the sensor feed circuit and the sensor ground circuit at the CMP sensor harness connector. Does the voltage measure near the specified value?	4-6 V	Go to *Step 4*	Go to *Step 5*
4	Measure the voltage between the CMP sensor signal circuit and the sensor ground circuit at the CMP sensor harness connector. Does the voltage measure near the specified value?	4-6 V	Go to *Step 11*	Go to *Step 8*
5	If the voltage measured in step 3 was less than 4-6 volts, proceed directly to step 6 without completing this step. If the voltage in step 3 was greater than 4-6 V, repair the short to voltage in the CMP feed circuit. Is the action complete?	—	Verify repair	—
6	1. Check for poor connections at the camshaft position sensor. 2. If a problem is found, repair it as necessary. Was a problem found?	—	Verify repair	Go to *Step 7*
7	1. Ignition “OFF,” disconnect the ECM and the CMP sensor. 2. Check the following circuits for an open between the ignition control module and the CMP sensor: ● The sensor feed circuit. 3. If a problem is found, repair as necessary. Was a problem found?	—	Verify repair	Go to *Step 9*
8	1. Ignition “OFF,” disconnect the ECM (leave the CMP sensor disconnected). 2. Ignition “ON,” check the following circuits: ● The CMP sensor signal circuit for an open or a short to voltage. ● The CMP sensor input signal circuit for a short to ground. 3. If a problem is found, repair it as necessary. Was a problem found?	—	Verify repair	Go to *Step 9*
9	Check for a short or open in the sensor ground circuit. Was a problem found?	—	Verify repair	Go to *Step 10*

DTC P0341 —CMP Sensor Out of Synchro (Cont'd)

Step	Action	Value(s)	Yes	No
10	1. Check for poor connections at the ECM. 2. If a problem is found, repair it as necessary. Was a problem found?	—	Verify repair	Go to *Step 11*
11	Backprobe the ECM connector with a DVM to monitor voltage on the camshaft position input signal circuit while cranking the engine with the sensor connected. (Use rubber band, tape, or an assistant to keep the DVM lead in contact with the sensor terminal during this test.) Does the voltage toggle between the specified values?	4-0 V	Go to *Step 15*	Go to *Step 12*
12	1. Remove the CMP sensor from the engine front cover (leave the sensor wiring connected). 2. Place a magnet on the CMP sensor. (If you use a magnet that is too small to cover the face of the sensor, test on every part of the sensor face because only a small area will respond to this test.) Does the DVM display a voltage near the specified value?	0 V	Go to *Step 13*	Go to *Step 14*
13	Replace the faulty or missing camshaft position sensor magnet. Is the action complete?	—	Verify repair	—
14	Replace the camshaft position sensor. Is the action complete?	—	Verify repair	—
15	Replace the ECM (Refer to the Data Programming in Case of ECM change). Is the action complete?	—	Verify repair	—

Diagnostic Trouble Code (DTC) P0342 (Flash DTC 41) CMP (Cam Position) Sensor No Signal

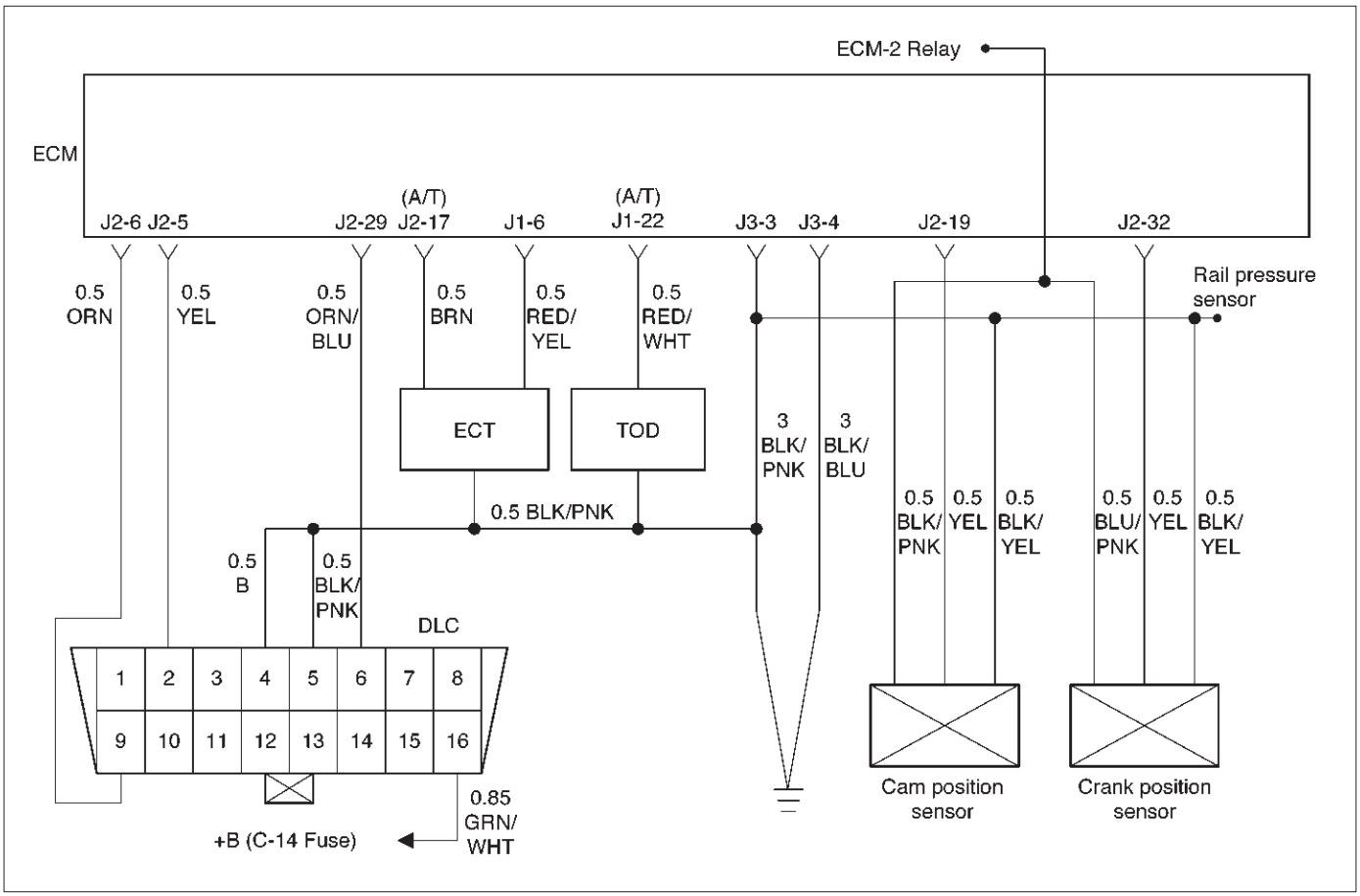

060RW133

Circuit Description

The CMP signal produced by the camshaft position (CMP) sensor pulses when the engine is running and crankshaft position (CKP) synchro pulses are also being received. The hall type CMP sensor and the CKP sensor share 5 V and ground connections at the Engine Control Module ECM. The third wire at the sensor is a signal circuit to the ECM. The ECM uses the CMP signal pulses to initiate sequential fuel injection. If the ECM does not receive pulses on the CMP reference circuit, DTC P0342 will set.

Action Taken When the DTC Sets

- The ECM will store conditions which were present when the DTC was set as Freeze Frame and in the Failure Records data.

Conditions for Clearing the MIL/DTC

- DTC P0342 can be cleared by using the Tech 2 “Clear Info” function or by disconnecting the ECM battery feed.

Diagnostic Aids

An intermittent may be caused by a poor connection, rubbed-through wire insulation or a wire broken inside the insulation. Check for:

- Poor connection – Inspect the ECM harness and connectors for improper mating, broken locks, improperly formed or damaged terminals, and poor terminal to wire connection.
- Damaged harness – Inspect the wiring harness for damage. If the harness appears to be OK, disconnect the ECM, turn the ignition on and observe a voltmeter connected to the CMP signal circuit at the ECM harness connector while moving connectors and wiring harnesses related to the ICM and the CMP sensor. A change in voltage will indicate the location of the fault.

Test Description

Number(s) below refer to the step number(s) on the Diagnostic Chart.

2. Ensures that the fault is present.

14. Determines whether the fault is being caused by a missing camshaft magnet or a faulty ECM. The voltage measured in this step should read around 4 volts, toggling to near 0 volts when the CMP sensor interfaces with the camshaft magnet.

DTC P0342 —CMP Sensor No Signal

Step	Action	Value(s)	Yes	No
1	Was the “On-Board Diagnostic (OBD) System Check” performed?	—	Go to *Step 2*	Go to *OBD System Check*
2	1. Ignition “ON.” 2. Review and record Tech 2 Failure Records data. 3. Operate the vehicle within Failure Records conditions as noted. 4. Using a Tech 2, monitor “Specific DTC” information for DTC P0342 until the DTC P0342 test runs. 5. Note test result. Does the Tech 2 indicate DTC P0342 failed this ignition?	—	Go to *Step 3*	Refer to *Diagnostic Aids*
3	1. Ignition “ON.” 2. Disconnect the CMP sensor. 3. Measure the voltage between the sensor feed circuit and the sensor ground circuit at the CMP sensor harness connector. Does the voltage measure near the specified value?	4-6 V	Go to *Step 7*	Go to *Step 4*
4	1. Ignition “OFF,” disconnect the ECM and the CMP sensor. 2. Check for poor connections at the camshaft position sensor. 3. If a problem is found, repair it as necessary. Was a problem found?	—	Verify repair	Go to *Step 5*
5	1. Check for poor connections at the ECM. 2. If a problem is found, repair it as necessary. Was a problem found?	—	Verify repair	Go to *Step 6*
6	1. Check the following circuits between the ECM and the CMP sensor: ● The sensor feed circuit. Open or short to ground? ● The sensor ground circuit. Open or short to voltage? 2. If a problem is found, repair as necessary. Was a problem found?	—	Verify repair	—
7	1. Ignition “ON,” engine “OFF.” 2. Measure the voltage between the CMP sensor signal circuit and the sensor ground circuit at the CMP sensor harness connector. Does the voltage measure near the specified value?	4-6 V	Go to *Step 8*	Go to *Step 9*

DTC P0342 —CMP Sensor No Signal (Cont'd)

Step	Action	Value(s)	Yes	No
8	1. Turn the ignition "OFF." 2. Disconnect the ECM and connect a DVM to monitor voltage on the camshaft position signal circuit at the ECM connector. 3. Ignition "ON." 4. Monitor the voltage display on the DVM while repeatedly touching the CMP sensor signal circuit at the CMP sensor connector with a test light to ground. Does the DVM voltage display switch between 0 and approximately 5 volts when the test light is touched to the CMP sensor signal circuit?	—	Go to *Step 12*	Go to *Step 9*
9	1. Ignition "OFF." 2. Leave the ECM disconnected. 3. Ignition "ON." 4. Probe the camshaft position signal circuit at the ECM connector with a test light to B+. 5. If the test light is "ON," locate and repair the short to ground in the camshaft position input signal circuit. Was either circuit shorted to ground?	—	Verify repair	Go to *Step 10*
10	1. Ignition "OFF." 2. Leave the ECM disconnected. 3. Ignition "ON." 4. Probe the camshaft position signal circuit with a test light to ground. 5. If the test light is "ON," locate and repair the short to voltage in the camshaft position input signal circuit. Was the test light "ON"?	—	Verify repair	Go to *Step 11*
11	1. Ignition "OFF," disconnect the ECM (leave the CMP sensor disconnected). 2. Ignition "ON," check the following circuit: ● The CMP sensor signal circuit for an open. 3. If a problem is found, repair it as necessary. Was a problem found?	—	Verify repair	—
12	1. Ignition "ON." 2. Remove the CMP sensor from the engine front cover (leave the sensor wiring connected). 3. Place a magnet on the CMP sensor. If you use a magnet that is too small to cover the face of the sensor, test on every part of the sensor face because only a small area will respond to this test. Does the DVM display a voltage near the specified value?	0 V	Go to *Step 14*	Go to *Step 13*
13	Replace the camshaft position sensor. Is the action complete?	—	Verify repair	—
14	1. Reinstall the CMP sensor to the engine front cover. 2. Observe the DVM connected to monitor voltage on the camshaft position signal circuit while cranking the engine. Does the voltage toggle between the specified values?	4-0 V	Go to *Step 15*	Go to *Step 16*

DTC P0342 —CMP Sensor No Signal (Cont'd)

Step	Action	Value(s)	Yes	No
15	Replace the ECM (Refer to the Data Programming in Case of ECM change). Is the action complete?	—	Verify repair	—
16	Replace faulty or missing camshaft magnet. Is the action complete?	—	Verify repair	—

Diagnostic Trouble Code (DTC) P0380 (Flash DTC 66) Glow Relay Circuit Open/Short

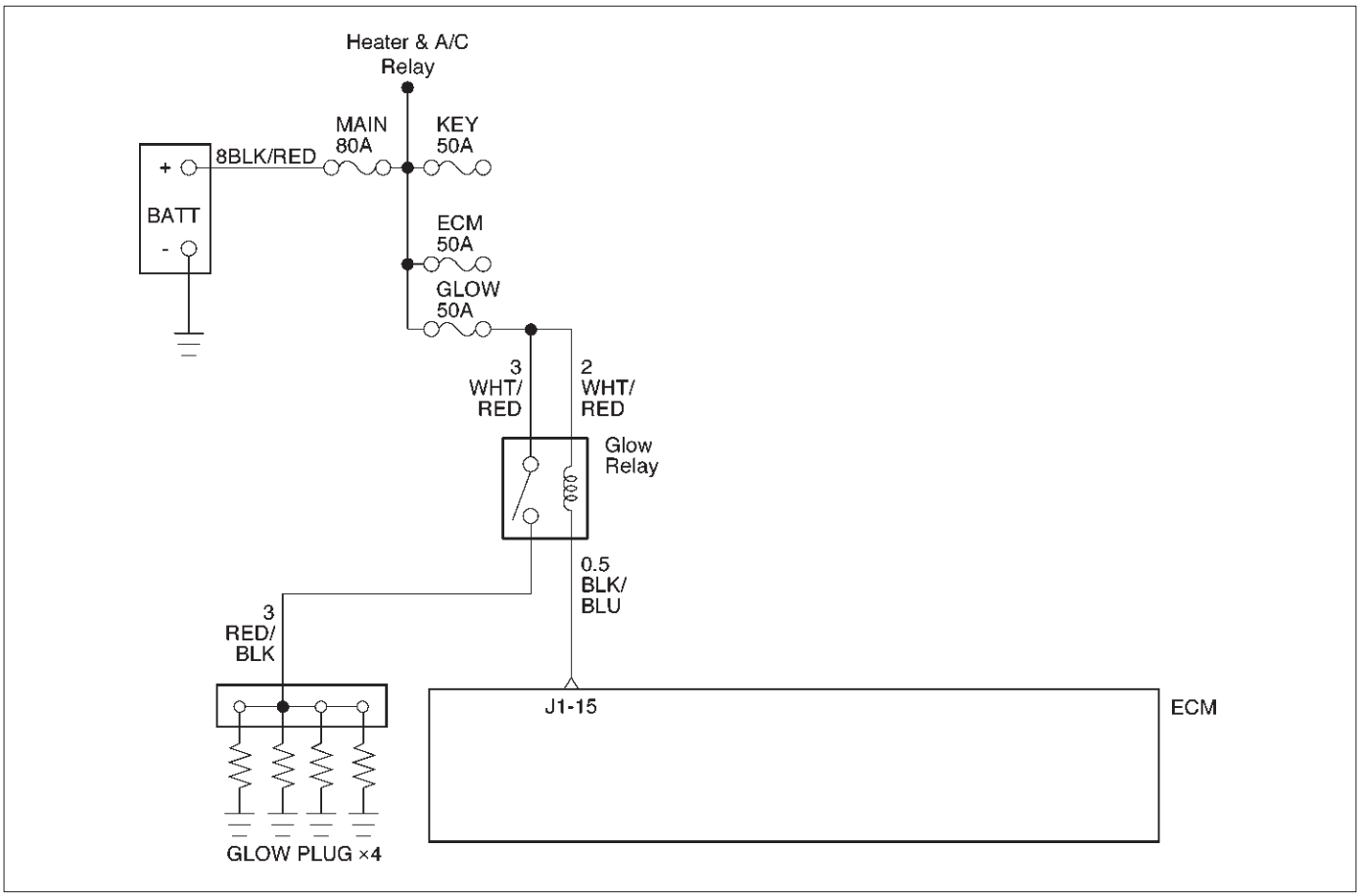

060RW132

Circuit Description

Glow relay circuit receives current through Glow 50A fuse from the battery. Glow relay is circuited to Glow plug.

Action Taken When the DTC Sets

- The ECM will store conditions which were present when the DTC was set as Freeze Frame and in the Failure Records data.

Conditions for Clearing the MIL/DTC

- DTC P0380 can be cleared by using the Tech 2 “Clear Info” function or by disconnecting the ECM battery feed.

Diagnostic Aids

An intermittent may be caused by a poor connection, rubbed-through wire insulation or a wire broken inside the insulation. Check for:

- Poor connection – Inspect the ECM harness and connectors for improper mating, broken locks, improperly formed or damaged terminals, and poor terminal-to-wire connection.
- Damaged harness – Inspect the wiring harness for damage.

DTC P0380 – Glow Relay Circuit Open/Short

Step	Action	Value(s)	Yes	No
1	Was the “On-Board Diagnostic (OBD) System Check” performed?	—	Go to *Step 2*	Go to *OBD System Check*
2	Attempt to start the engine. Does the engine start?	—	Go to *Step 3*	Go to *Chart 3*
3	1. Review and record Failure Records information. 2. Clear DTC P0380. 3. Start the engine and idle for 1 minute. 4. Observe DTCs. Is DTC P0380 set?	—	Go to *Step 4*	Refer to *Diagnostic Aid*
4	Check the glow fuse 50A. Is the glow fuse 50A damage?	—	Go to *Step 5*	Go to *Step 6*
5	Replace the glow fuse 50A. Is the action complete?	—	Verify repair	Go to *Step 6*
6	1. Ignition “OFF.” 2. Check for an open or a short to ground in the Glow relay circuit between the Glow relay connector and the ECM harness connector. 3. If a problem is found, repair as necessary. Was a problem found?	—	Verify repair	Go to *Step 7*
7	Check the connections at the Glow relay and replace the terminals if necessary. Did any terminals require replacement?	—	Verify repair	Go to *Step 8*
8	Replace the Glow relay. Is the action complete?	—	Verify repair	Go to *Step 9*
9	Check the connections at the ECM and replace the terminals if necessary. Did any terminals require replacement?	—	Verify repair	Go to *Step 10*
10	Replace the ECM (Refer to the Data Programming in Case of ECM change). Is the action complete?	—	Verify repair	—

Diagnostic Trouble Code (DTC) P0381 (Flash DTC 67) Glow Lamp Circuit Open/Short

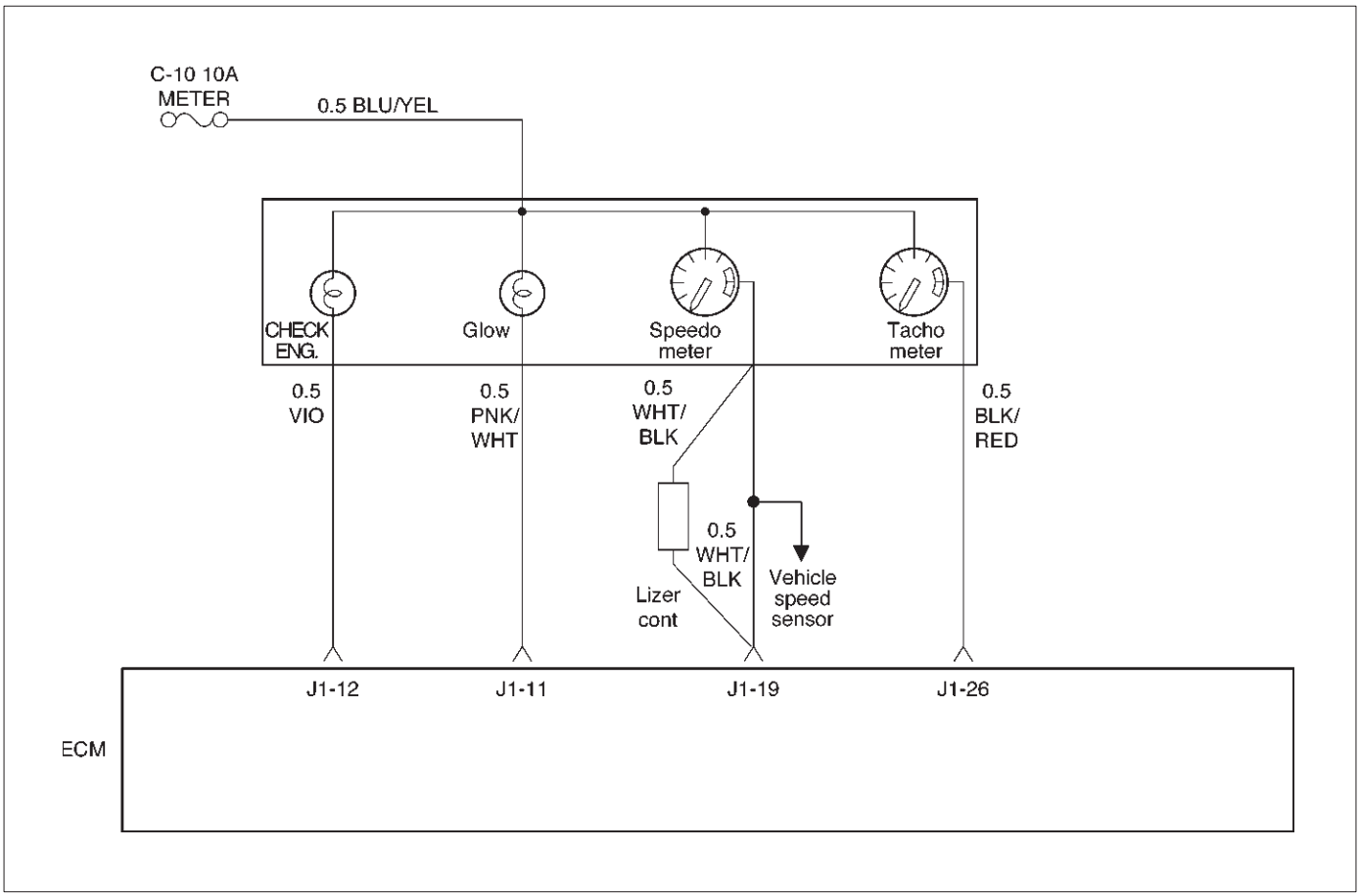

060RW136

Circuit Description

Glow Lamp Circuit receives current through Meter 10A fuse, Glow lamp being circuited to ECM.

Action Taken When the DTC Sets

- The ECM will store conditions which were present when the DTC was set as Freeze Frame and in the Failure Records data.

Conditions for Clearing the MIL/DTC

- DTC P0381 can be cleared by using the Tech 2 “Clear Info” function or by disconnecting the ECM battery feed.

Diagnostic Aids

An intermittent may be caused by a poor connection, rubbed-through wire insulation or a wire broken inside the insulation. Check for:

- Poor connection – Inspect the ECM harness and connectors for improper mating, broken locks, improperly formed or damaged terminals, and poor terminal-to-wire connection.
- Damaged harness – Inspect the wiring harness for damage.

DTC P0381 – Glow Lamp Circuit Open/Short

Step	Action	Value(s)	Yes	No
1	Was the “On-Board Diagnostic (OBD) System Check” performed?	—	Go to *Step 2*	Go to *OBD System Check*
2	1. Review and record Failure Records information. 2. Clear DTC P0381. 3. Observe DTCs. Is DTC P0381 set?	—	Go to *Step 3*	Refer to *Diagnostic Aid*
3	1. Ignition “OFF.” 2. Remove the Meter assembly. 3. Check for an open or a short to ground in the Glow Lamp circuit. 4. If a problem is found, repair as necessary. (On electric bulb of the Glow Lamp, The Glow Lamp harness circuit) Was a problem found?	—	Refer to the Meter in Electric section 8	Go to *Step 4*
4	Check the connections at the ECM and replace the terminals if necessary. Did any terminals require replacement?	—	Verify repair	Go to *Step 5*
5	Replace the ECM (Refer to the Data Programming in Case of ECM change). Is the action complete?	—	Verify repair	—

Diagnostic Trouble Code (DTC) P1403 (Flash DTC 32) EGR EVRV Fault

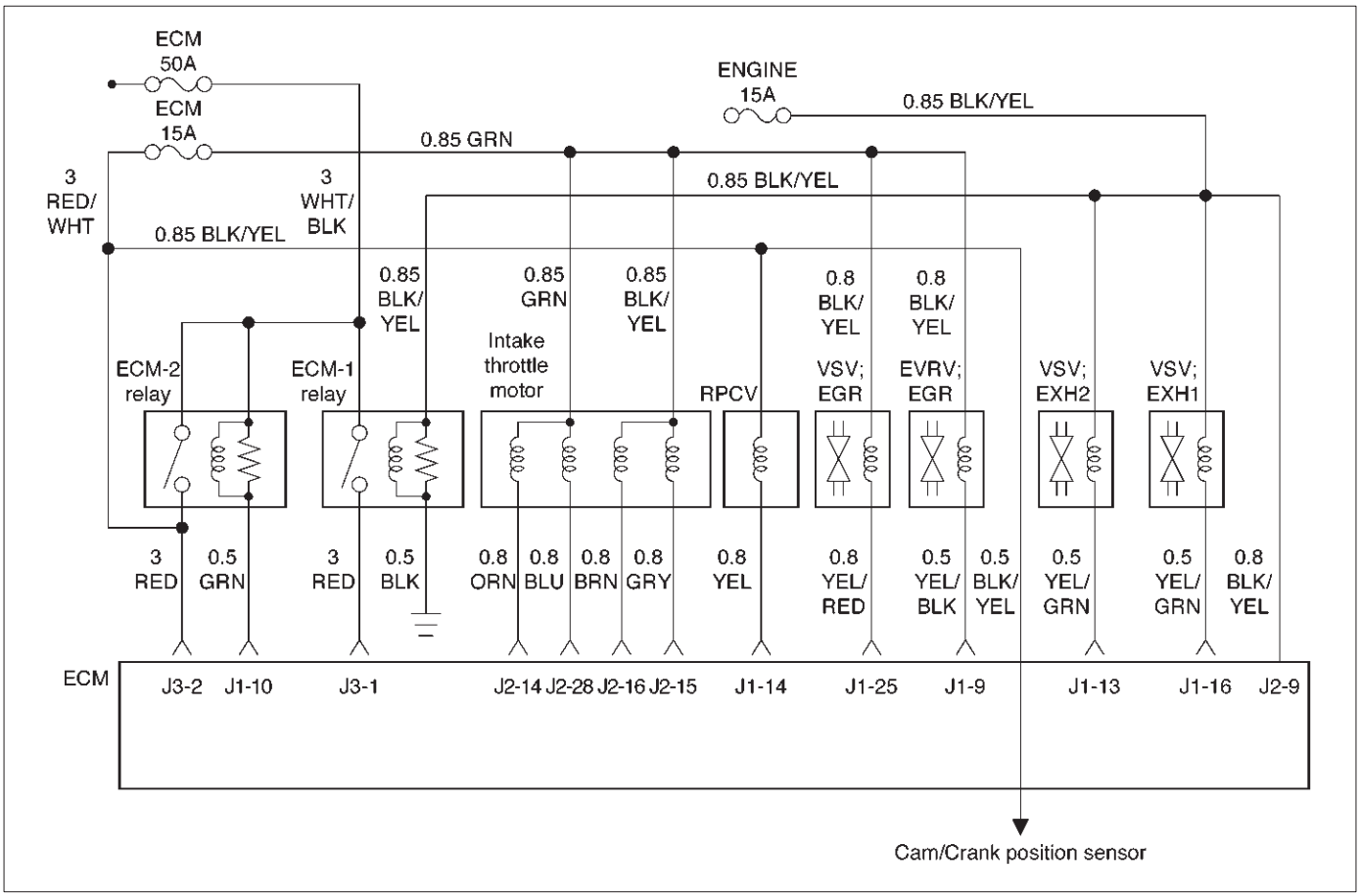

060RW135

Circuit Description

EGR EVRV Circuit has a common power source in parallel with EGR, VSV, RPCV, and Intake Throttle Motor. This may cause multiple DTCs. On such occasion, refer to “Multiple ECM Information sensor DTCs Set”.

Diagnostic Aids

Check for the following conditions:

- Poor connection or damaged EVRV – Inspect the wiring harness for damage.
- Ensure EVRV is correctly mounted. See *On-Vehicle Service*.

Reviewing the Failure Records vehicle mileage since the diagnostic test last failed may help determine how often the condition that caused the DTC to be set occurs. This may assist in diagnosing the condition.

Test Description

Number(s) below refer to the step number(s) on the Diagnostic Chart

3. A malfunctioning MAP sensor can set an EGR DTC. The MAP sensor could send a constant signal which is not low enough to set a low MAP DTC. The constant signal from the MAP sensor also may not be high enough to set a high MAP DTC. This step verifies that the MAP sensor is responding.

DTC P1403 – EGR EVRV Fault

Step	Action	Value(s)	Yes	No
1	Was the “On-Board Diagnostic (OBD) System Check” performed?	—	Go to *Step 2*	Go to *OBD System Check*
2	Check the EVRV circuit. Was the EVRV circuit darmage?	—	Replace the EVRV circuit	Go to *Step 3*
3	1. Start the engine. 2. Monitor the MAP signal with a scan tool while idling. 3. While idling, jab the accelerator pedal about halfway down and immediately let the engine return to idle. Did the MAP value on the scan tool show an immediate large change?	—	Go to *Step 5*	Go to *Step 4*
4	Replace the MAP sensor. Is the action complete?	—	Verify repair	—
5	1. Inspect the exhaust system for modification of original installed parts or leaks. 2. If a problem was found, repair exhaust system as necessary. Was a condition present that required repair?	—	Go to *Step 8*	Go to *Step 6*
6	1. Remove the EGR valve. 2. Visually and physically inspect the pintle, valve passages and the adapter for excessive deposits or any kind of a restriction. 3. If a problem is found, clean or replace EGR system components as necessary. Was a condition present that required repair?	—	Go to *Step 8*	Go to *Step 7*
7	1. Inspect the EGR passages for a blockage caused by excessive deposits or other damage. 2. If a problem is found, correct the condition as necessary. Was a condition present that required repair?	—	Go to *Step 8*	Refer to *Diagnostic Aids*
8	1. Review and record the scan tool Failure Records data. 2. Clear DTC and monitor the scan tool System Info Screen while operating the vehicle as specified in “Diagnostic Aids.” 3. Using a scan tool, monitor “DTC” info for DTC P1403 until the DTC P1403 test runs. 4. Note the test result. Does the scan tool indicate DTC P1403 failed this ignition?	—	Go to the last step completed in this diagnostic chart	Repair complete

Diagnostic Trouble Code (DTC) P1404 (Flash DTC 31)
EGR VSV Circuit

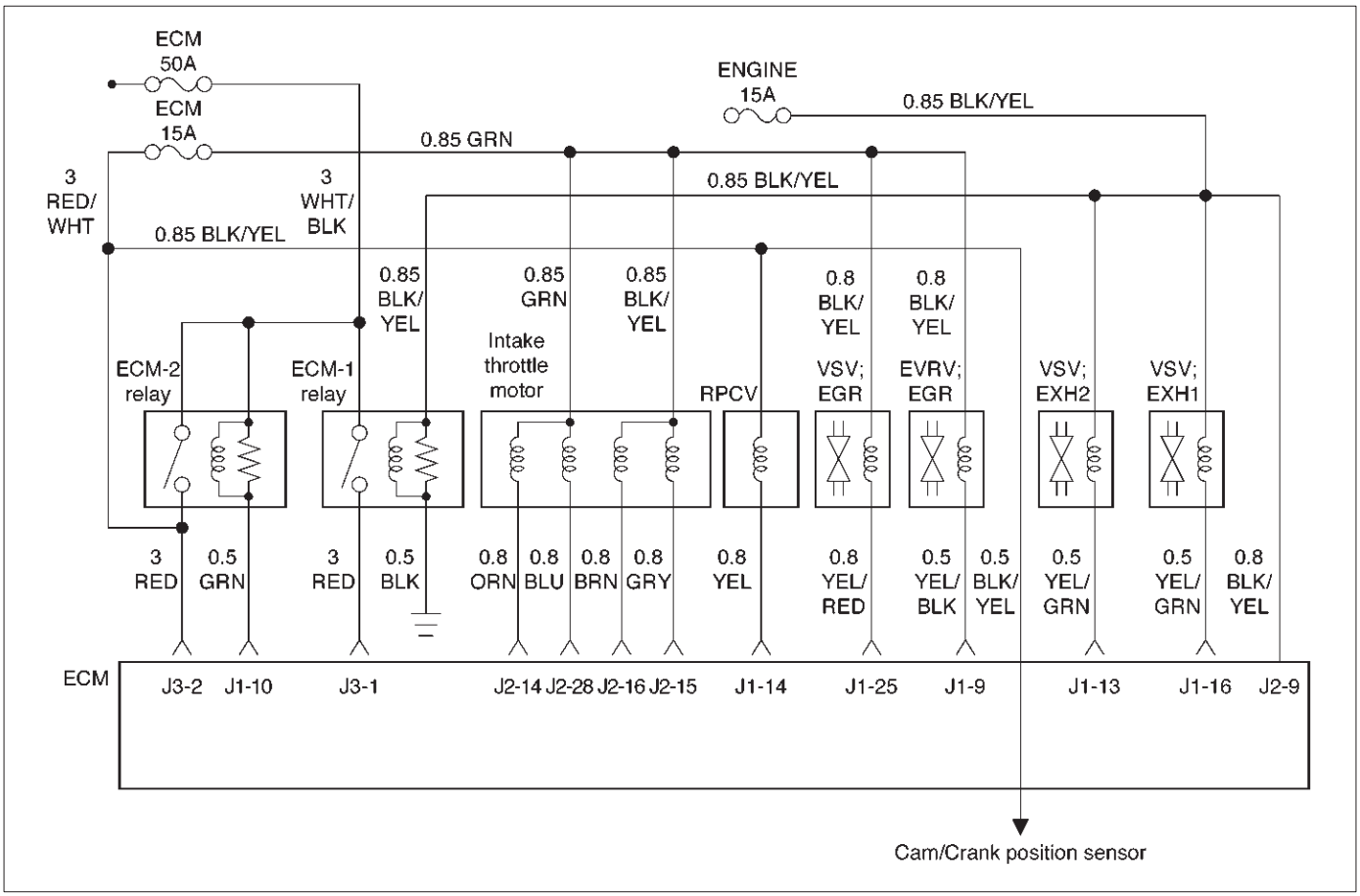

060RW135

Circuit Description

The Engine control module (ECM) monitors the EGR valve input to ensure that the valve responds properly to commands from the ECM, and to detect a fault if VSV is stuck open. When the VSV is fixing at closed and opening the ECM will set DTC P1404.

Diagnostic Aids

Check for the following conditions:

- Poor connection or damaged VSV–inspect the wiring harness for damage.

DTC P1404 – EGR VSV Circuit

Step	Action	Value(s)	Yes	No
1	Was the “On-Board Diagnostic (OBD) System Check” performed?	—	Go to *Step 2*	Go to *OBD System Check*
2	1. Ignition “ON”, engine “OFF”, review and record scan tool Failure Records data. 2. Operate the vehicle within Failure Records conditions as noted. 3. Using a scan tool, monitor “Specific DTC” info for DTC P1404 until the DTC P1404 test runs. Note the result. Does the scan tool indicates DTC P1404 failed this ignition?	—	Go to *Step 3*	Refer to *Diagnostic Aids*

DTC P1404 – EGR VSV Circuit (Cont'd)

Step	Action	Value(s)	Yes	No
3	Check the VSV circuit. Was the VSV circuit open or darmage?	—	Go to *Step 4*	Go to *Step 5*
4	Repair the opened VSV circuit or VSV. Is the action complete?	—	Verify repair	—

Diagnostic Trouble Code (DTC) P0405 (Flash DTC 26) EGR Pressure Sensor Low Voltage

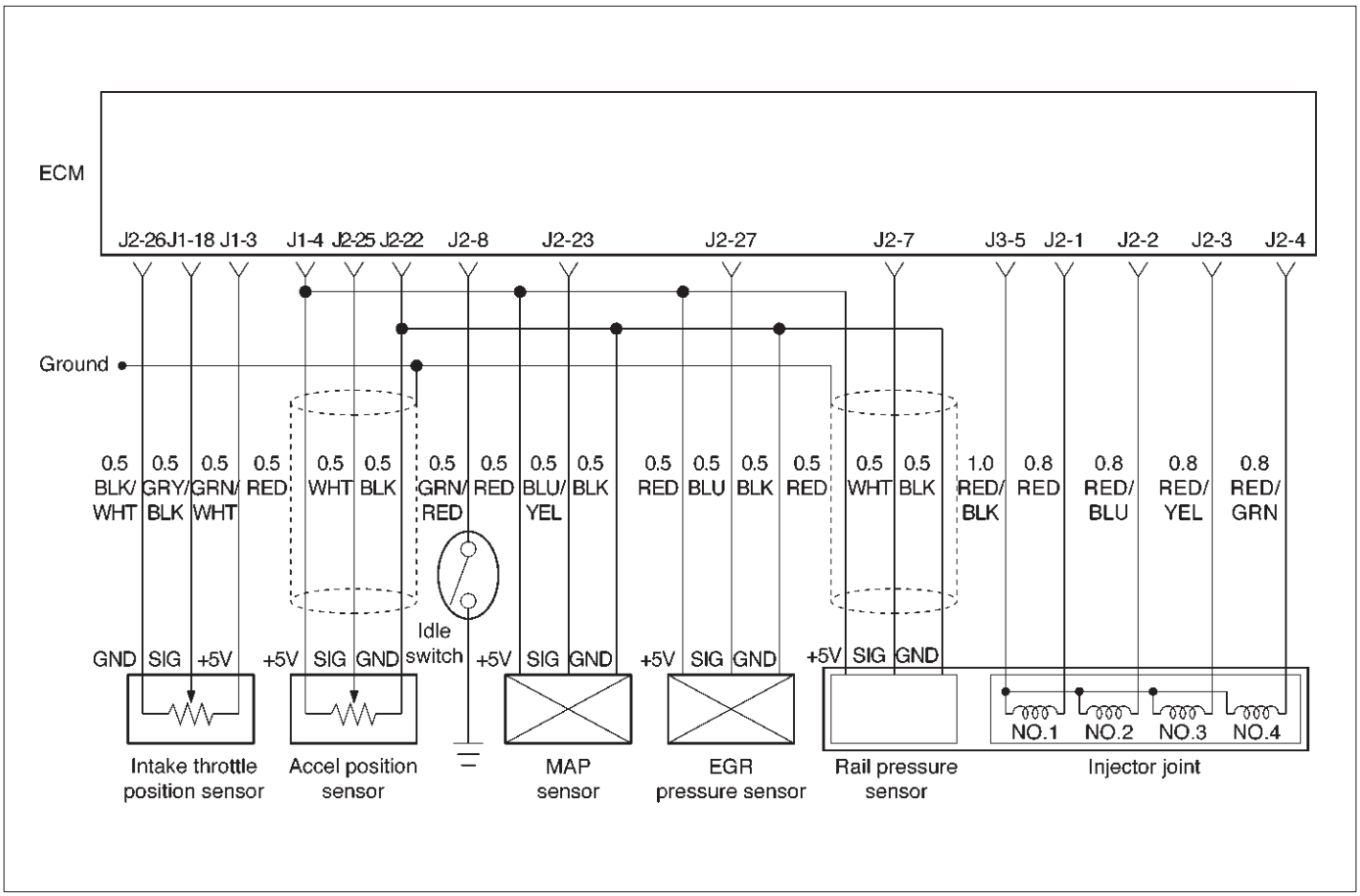

060RW134

Action Taken When the DTC Sets

- The ECM will illuminate the malfunction indicator lamp (MIL) as soon as failure detected.
- The ECM will store conditions which were present when the DTC was set as Freeze Frame and in Failure Records data.

Conditions for Clearing the MIL/DTC

- DTC P0405 can be cleared by using the scan tool “Clear Info” function or by disconnecting the ECM battery feed.

Diagnostic Aids

Check for the following conditions:

- Poor connection or damaged harness – Inspect the wiring harness for damage.

DTC P0405 – EGR Pressure Sensor Low Voltage

Step	Action	Value(s)	Yes	No
1	Was the “On-Board Diagnostic (OBD) System Check” performed?	—	Go to *Step 2*	Go to *OBD System Check*
2	Put the engine into an idling status. Is the EGR pressure sensor voltage value displayed on the Tech 2 below the specified value?	0.25 V	Go to *Step 3*	Refer to *Diagnostic Aids* and *Symptom Diagnosis*

DTC P0405 – EGR Pressure Sensor Low Voltage (Cont'd)

Step	Action	Value(s)	Yes	No
3	1. Turn off the ignition switch. 2. Remove the sensor connector connection. 3. Jumper between harness pins "red" and "blue" wires. 4. Turn on the ignition switch "ON". Is the EGR pressure sensor voltage reading above the specified value?	4 V	Go to *Step 5*	Go to *Step 4*
4	1. Turn off the ignition switch. 2. Remove the jumper wire. 3. Connect the relay & solenoid checker (5-8840-0386-0) to the battery voltage, then check the EGR pressure sensor signal circuit (blue wire). 4. Turn on the ignition switch. Is the value displayed on the Tech 2 above the specified value?	4 V	Go to *Step 6*	Go to *Step 7*
5	Check the terminal connection at the EGR pressure sensor and repair or replace terminal if necessary. Is the action complete?	—	Verify repair	—
6	Repair the 5V power circuit (red) harness or Replace the ECM (Refer to the Data Programming in Case of ECM change). Is the action complete?	—	Verify repair	—
7	Repair the signal circuit (blue) harness or Replace the ECM (Refer to the Data Programming in Case of ECM change). Is the action complete?	—	Verify repair	—

Diagnostic Trouble Code (DTC) P1405 (Flash DTC 37) EGR EVRV Circuit Open/Short

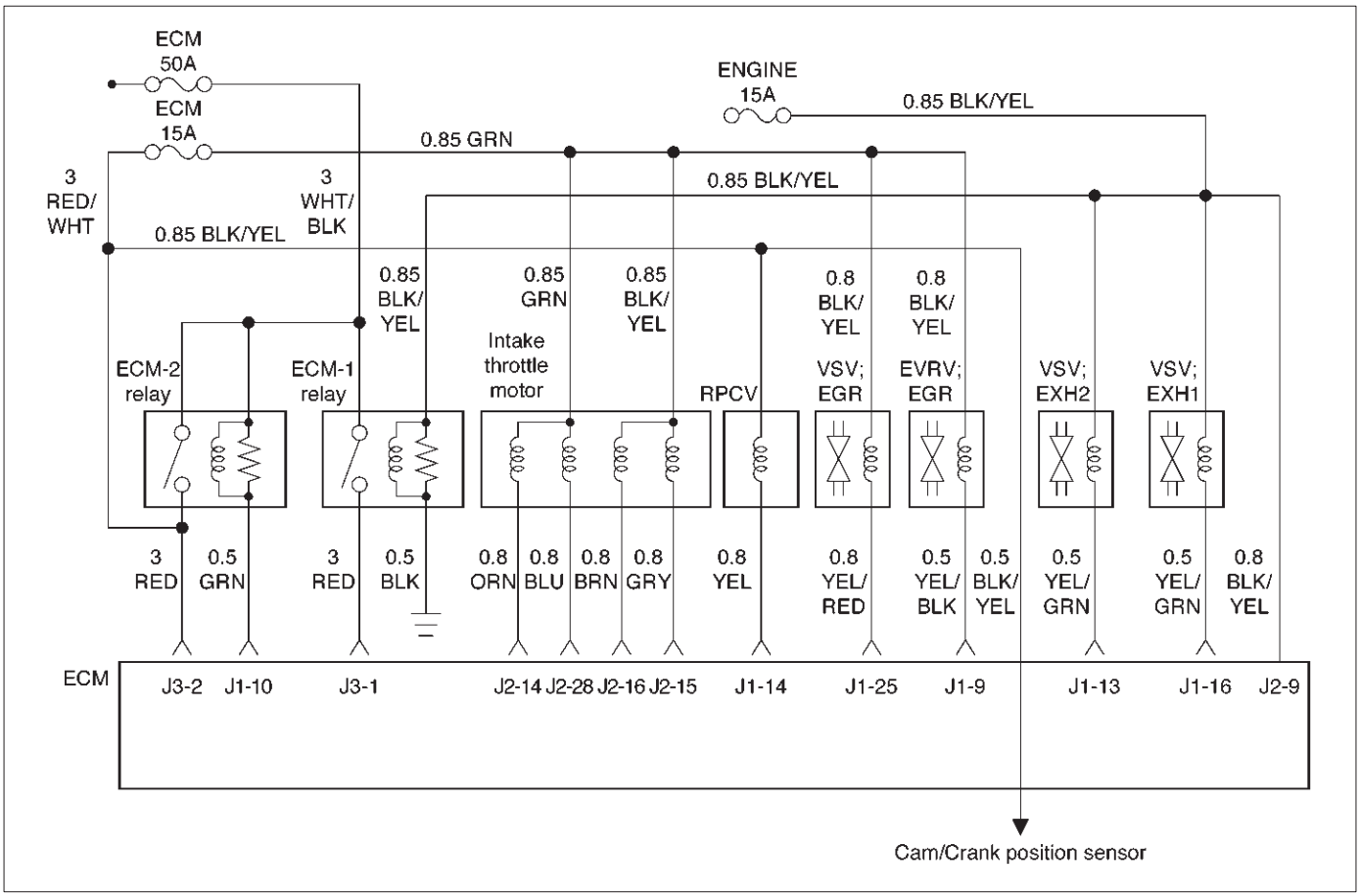

060RW135

Circuit Description

EGR EVRV Circuit has a common power source in parallel with EGR, VSV, RPCV, and Intake Throttle Motor. This may cause multiple DTCs. On such occasion, refer to “Multiple ECM Information Sensor DTCs Set”.

Action Taken When the DTC Sets

- The ECM will store conditions which were present when the DTC was set as Freeze Frame and in the Failure Records data.

Conditions for Clearing the MIL/DTC

- DTC P1405 can be cleared by using the Tech 2 “Clear Info” function or by disconnecting the ECM battery feed.

Diagnostic Aids

An intermittent may be caused by a poor connection, rubbed-through wire insulation or a wire broken inside the insulation. Check for:

- Poor connection – Inspect the ECM harness and connectors for improper mating, broken locks, improperly formed or damaged terminals, and poor terminal-to-wire connection.
- Damaged harness – Inspect the wiring harness for damage.

DTC P1405 – EGR EVRV Circuit Open/Short

Step	Action	Value(s)	Yes	No
1	Was the “On-Board Diagnostic (OBD) System Check” performed?	—	Go to *Step 2*	Go to *OBD System Check*
2	1. Review and record Failure Records information. 2. Clear DTC P1405. 3. Start the engine and idle for 1 minute. 4. Observe DTCs. Is DTC P1405 set?	—	Go to *Step 3*	Refer to *Diagnostic Aid*
3	1. Ignition “OFF.” 2. Disconnect the EVRV. 3. Check for an open or a short to ground in the EVRV circuit between the EVRV connector and the ECM harness connector. 4. If a problem is found, repair as necessary. Was a problem found?	—	Verify repair	Go to *Step 4*
4	Check the connections at the EVRV and replace the terminals if necessary. Did any terminals require replacement?	—	Verify repair	Go to *Step 5*
5	Check the connections at the ECM and replace the terminals if necessary. Did any terminals require replacement?	—	Verify repair	Go to *Step 6*
6	Replace the EVRV. Is the action complete?	—	Verify repair	Go to *Step 7*
7	Replace the ECM (Refer to the Data Programming in Case of ECM change). Is the action complete?	—	Verify repair	—

Diagnostic Trouble Code (DTC) P0406 (Flash DTC 26) EGR Pressure Sensor High Voltage

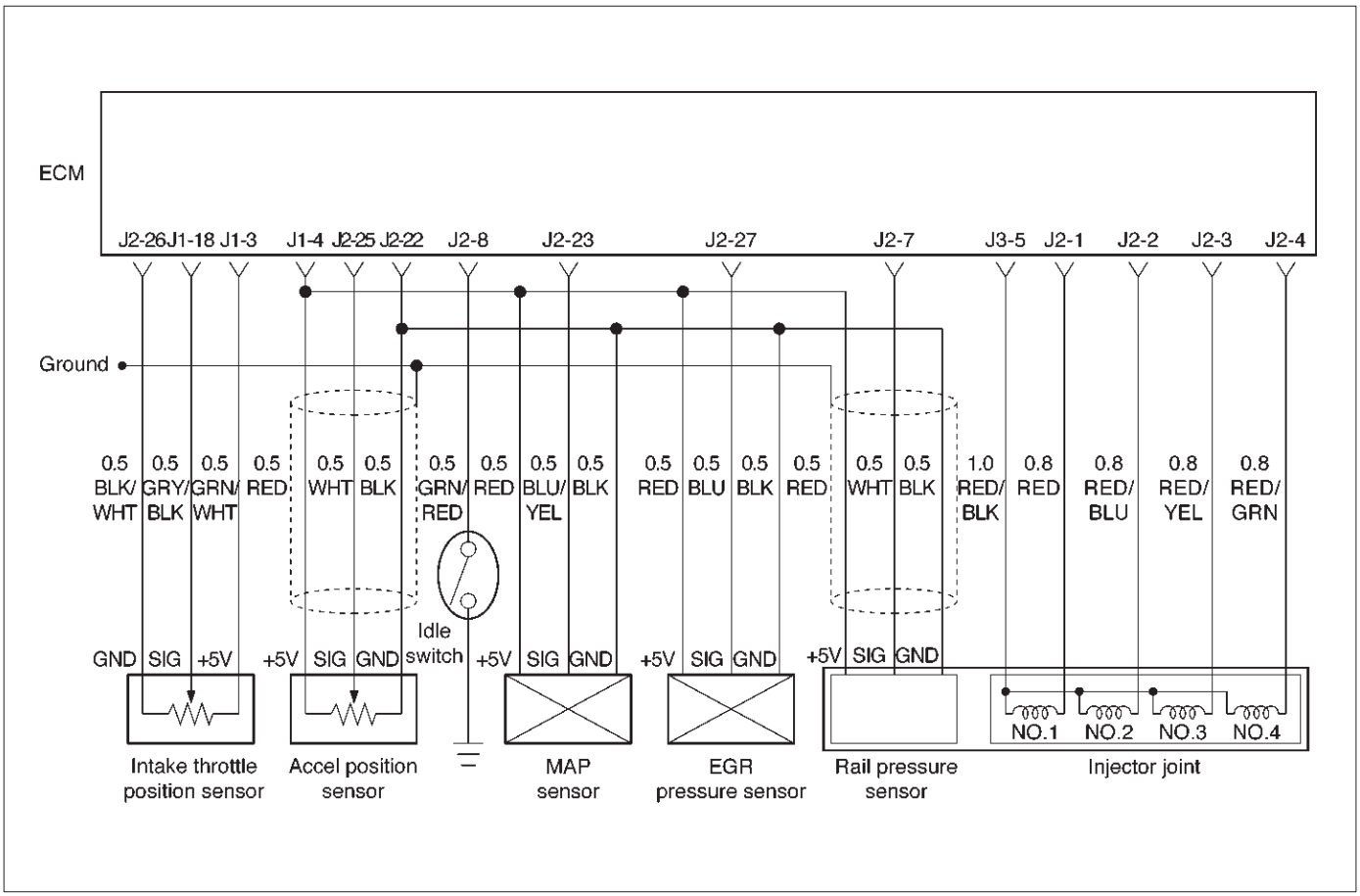

060RW134

Action Taken When the DTC Sets

- The ECM will illuminate the malfunction indicator lamp (MIL) as soon as failure detected.
- The ECM will store conditions which were present when the DTC was set as Freeze Frame and in Failure Records data.

Conditions for Clearing the MIL/DTC

- DTC P0404 can be cleared by using the scan tool “Clear Info” function or by disconnecting the ECM battery feed.

Diagnostic Aids

Check for the following conditions:

- Poor connection or damaged harness – Inspect the wiring harness for damage.

DTC P0406 – EGR Pressure Sensor High Voltage

Step	Action	Value(s)	Yes	No
1	Was the “On-Board Diagnostic (OBD) System Check” performed?	—	Go to *Step 2*	Go to *OBD System Check*
2	Put the engine into an idling status. Is the EGR pressure sensor voltage value displayed on the Tech 2 above the specified value?	4 V	Go to *Step 3*	Go to *Step 4*
3	1. Turn off the ignition switch. 2. Remove the sensor connector connection. 3. Turn on the ignition switch “ON”. Is the EGR pressure sensor voltage value displayed on the Tech 2 below the specified value?	1 V	Go to *Step 5*	Go to *Step 6*

DTC P0406 – EGR Pressure Sensor High Voltage (Cont'd)

Step	Action	Value(s)	Yes	No
4	Is the EGR pressure sensor voltage value displayed on the Tech 2 below the specified value?	1 V	Refer to *Chart P0107*	Refer to *Diagnostic Aids* and *Symptom Diagnosis*
5	Connect the relay and solenoid checker (5-8840-0386-0) to the battery voltage, then check the sensor grounding circuit. Does the checker lamp come on?	—	Go to *Step 7*	Go to *Step 8*
6	A voltage short circuit occurs in the MAP signal circuit or this circuit is shorted with the 5V power circuit. Repair the harness or Replace the ECM (Refer to the Data Programming in Case of ECM change). Is the action complete?	—	Verify repair	—
7	Replace the EGR pressure sensor hose or the EGR pressure sensor. Is the action complete?	—	Verify repair	—
8	Repair the harness for open ground circuit. Is the action complete?	—	Verify repair	—

Diagnostic Trouble Code (DTC) P0475 (Flash DTC 71) EXH #1 VSV Circuit

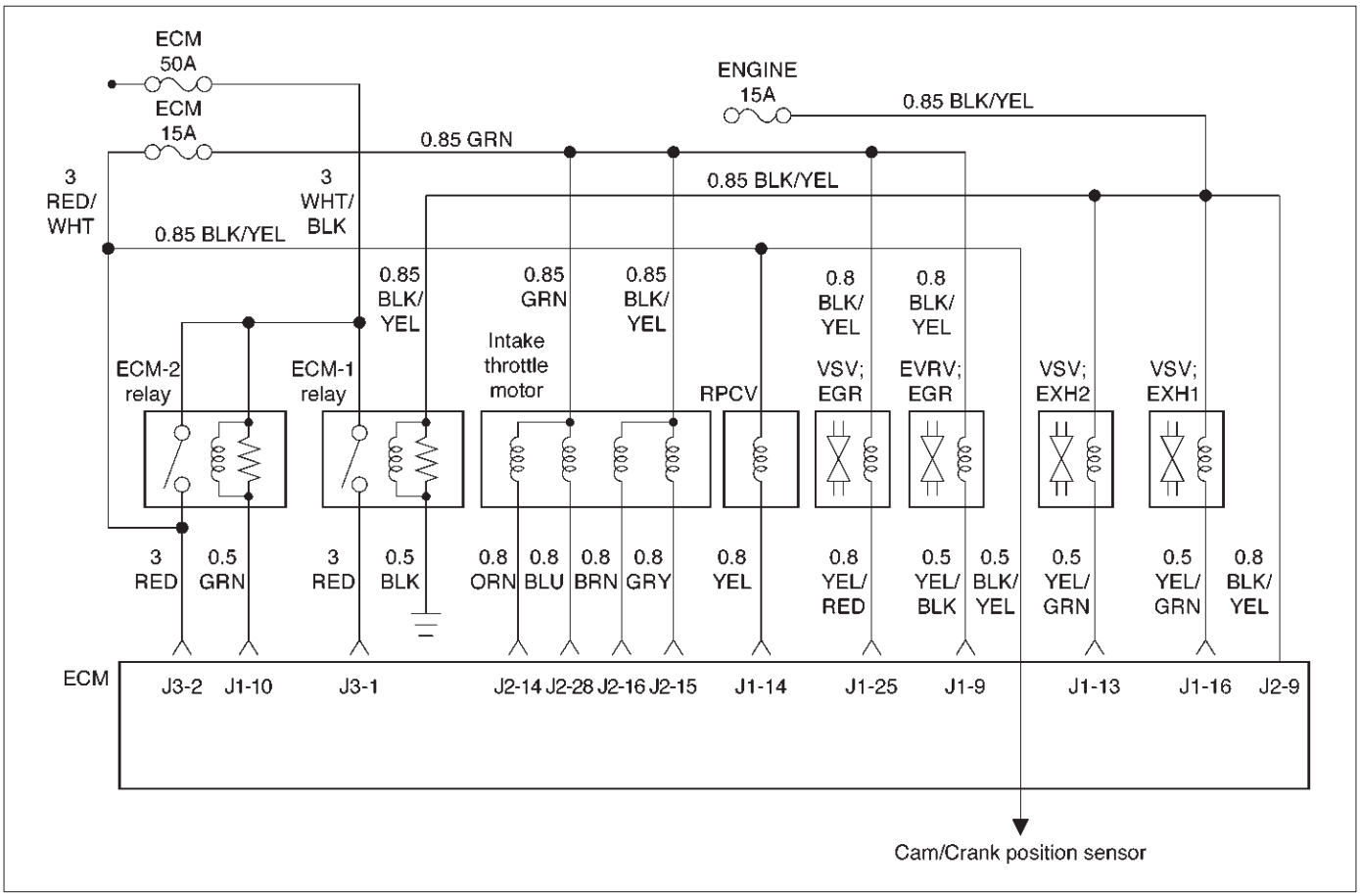

060RW135

Circuit Description

EXH. #1, #2 VSV Circuit receives current through Engine 15A fuse, #1 and #2 being connected in parallel.

Action Taken When the DTC Sets

- The ECM will illuminate the malfunction indicator lamp (MIL) the first time the fault is detected.
- The ECM will store conditions which were present when the DTC was set as Freeze Frame and in the Failure Records data.

Conditions for Clearing the MIL/DTC

- DTC P0475 can be cleared by using the Tech 2 “Clear Info” function or by disconnecting the ECM battery feed.

Diagnostic Aids

Check for the following conditions:

- Poor connection at ECM – Inspect harness connectors for backed-out terminals, improper mating, broken locks, improperly formed or damaged terminals, and poor terminal-to-wire connection.
- Damaged harness – Inspect the wiring harness for damage.

DTC P0475 – EXH #1 VSV Circuit Open/Short

Step	Action	Value(s)	Yes	No
1	Was the “On-Board Diagnostic (OBD) System Check” performed?	—	Go to *Step 2*	Go to *OBD System Check*
2	1. Ignition “ON,” engine “OFF.” Review and record Tech 2 Failure Records data. 2. Operate the vehicle within Failure Records conditions as noted. 3. Using a Tech 2, monitor the “ DTC” info for DTC P0475. Does the Tech 2 indicate DTC P0475 failed this ignition?	—	Go to *Step 3*	Refer to *Diagnostic Aids*
3	1. Ignition “OFF.” 2. Disconnect the EXH #1 VSV connectors. 3. Check the EXH #1 VSV circuit for a short to ground. Is the EXH #1 VSV circuit shorted to ground?	—	Verify repair	Go to *Step 4*
4	Replace the EXH #1 VSV. Is the action complete?	—	Verify repair	Go to *Step 5*
5	1. Ignition “ON,” engine “OFF.” Review and record Tech 2 Failure Records data. 2. Operate the vehicle within Failure Records conditions as noted. 3. Using a Tech 2, monitor the “ DTC” info for DTC P0475. Does the Tech 2 indicate DTC P0475 failed this ignition?	—	Go to *Step 6*	—
6	Replace the ECM (Refer to the Data Programming in Case of ECM change). Is the action complete?	—	Verify repair	—

Diagnostic Trouble Code (DTC) P1475 (Flash DTC 71) EXH #2 VSV Circuit Open/Short

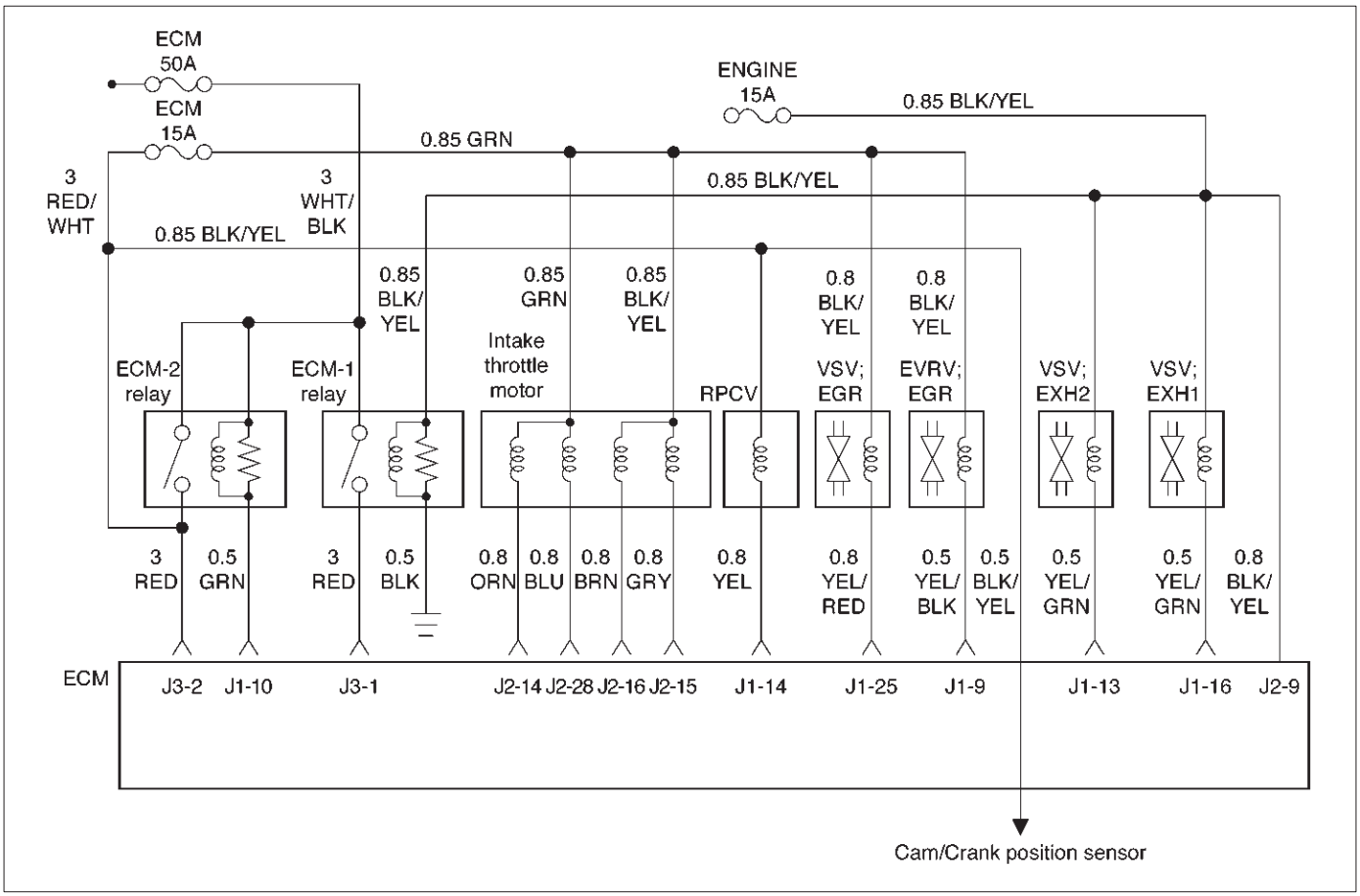

060RW135

Circuit Description

EXH. #1, #2 VSV Circuit receives current through Engine 15A fuse, #1 and #2 being connected in parallel.

Action Taken When the DTC Sets

- The ECM will illuminate the malfunction indicator lamp (MIL) the first time the fault is detected.
- The ECM will store conditions which were present when the DTC was set as Freeze Frame and in the Failure Records data.

Conditions for Clearing the MIL/DTC

- DTC P1475 can be cleared by using the Tech 2 “Clear Info” function or by disconnecting the ECM battery feed.

Diagnostic Aids

Check for the following conditions:

- Poor connection at ECM – Inspect harness connectors for backed-out terminals, improper mating, broken locks, improperly formed or damaged terminals, and poor terminal-to-wire connection.
- Damaged harness – Inspect the wiring harness for damage.

DTC P1475 – EXH #2 VSV Circuit Open/Short

Step	Action	Value(s)	Yes	No
1	Was the “On-Board Diagnostic (OBD) System Check” performed?	—	Go to *Step 2*	Go to *OBD System Check*
2	1. Ignition “ON,” engine “OFF.” Review and record Tech 2 Failure Records data. 2. Operate the vehicle within Failure Records conditions as noted. 3. Using a Tech 2, monitor the “ DTC” info for DTC P1475. Does the Tech 2 indicate DTC P1475 failed this ignition?	—	Go to *Step 3*	Refer to *Diagnostic Aids*
3	1. Ignition “OFF.” 2. Disconnect the EXH #2 connectors. 3. Check the EXH #2 circuit for a short to ground. Is the EXH #2 circuit shorted to ground?	—	Verify repair	Go to *Step 4*
4	Replace the EXH #2 VSV. Is the action complete?	—	Verify repair	Go to *Step 5*
5	1. Ignition “ON,” engine “OFF.” Review and record Tech 2 Failure Records data. 2. Operate the vehicle within Failure Records conditions as noted. 3. Using a Tech 2, monitor the “ DTC” info for DTC P1475. Does the Tech 2 indicate DTC P1475 failed this ignition?	—	Go to *Step 6*	—
6	Replace the ECM (Refer to the Data Programming in Case of ECM change). Is the action complete?	—	Verify repair	—

Diagnostic Trouble Code (DTC) P1485 (Flash DTC 74) ITP (Intake Thorottle Position) Sensor Low Voltage

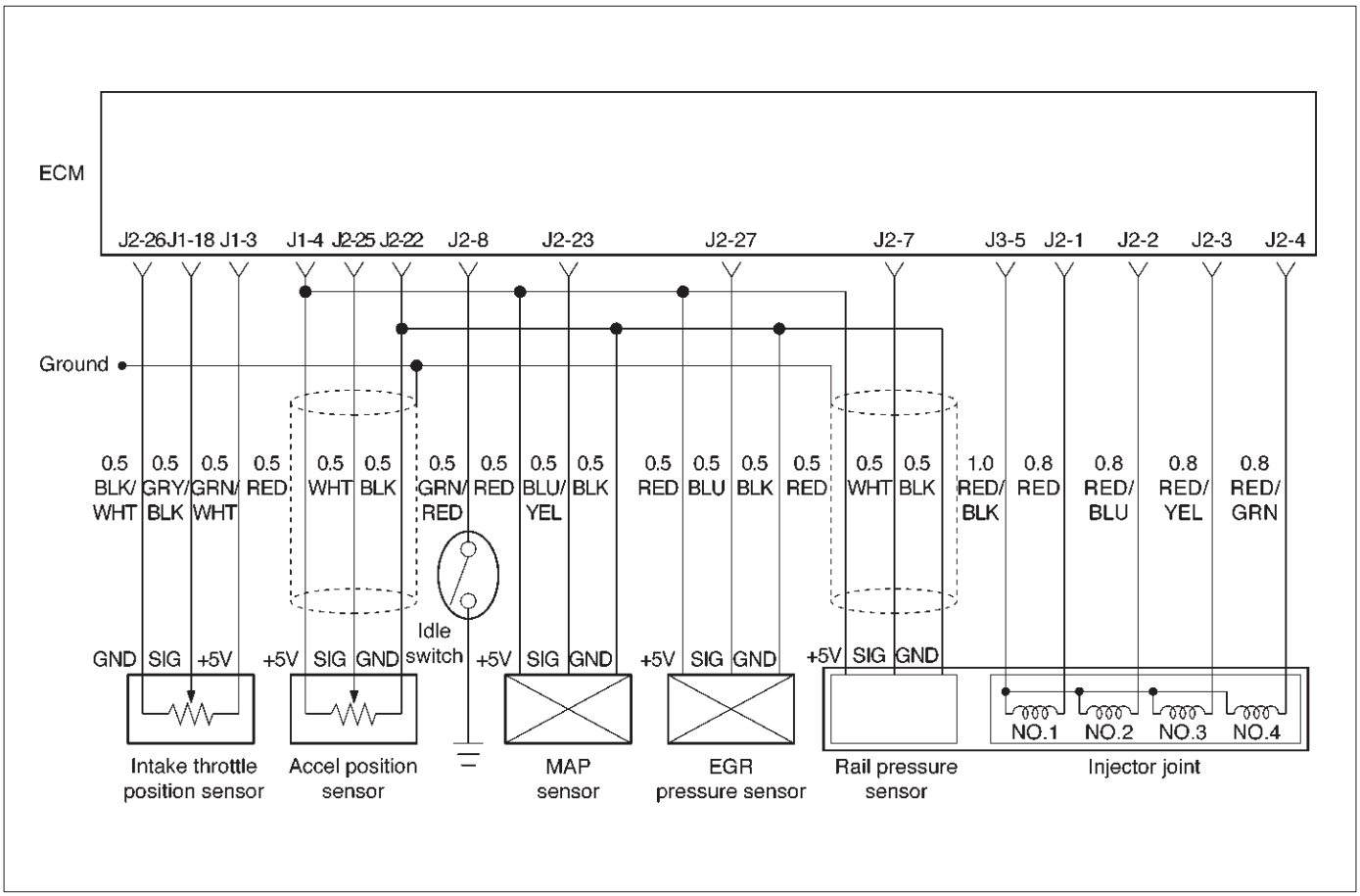

060RW134

Circuit Description

The intake throttle position (ITP) sensor circuit provides a voltage signal that changes relative to throttle blade angle.

Action Taken When the DTC Sets

- The ECM will illuminate the malfunction indicator lamp (MIL) the first time the fault is detected.
- The ECM will store conditions which were present when the DTC was set as Freeze Frame and in the Failure Records data.

Conditions for Clearing the MIL/DTC

- DTC P1485 can be cleared by using the Tech 2 “Clear Info” function or by disconnecting the ECM battery feed.

Diagnostic Aids

Check for the following conditions:

- Poor connection at ECM – Inspect harness connectors for backed-out terminals, improper mating, broken locks, improperly formed or damaged terminals, and poor terminal-to-wire connection.
- Damaged harness – Inspect the wiring harness for damage.

  If the harness appears to be OK, observe the throttle position display on the Tech 2 while moving connectors and wiring harnesses related to the ITP sensor. A change in the display will indicate the location of the fault.

If DTC P1485 cannot be duplicated, the information included in the Failure Records data can be useful in determining vehicle mileage since the DTC was last set.

DTC P1485 –ITP Sensor Low Voltage

Step	Action	Value(s)	Yes	No
1	Was the “On-Board Diagnostic (OBD) System Check” performed?	—	Go to *Step 2*	Go to *OBD System Check*
2	1. Ignition “ON,” engine “OFF.” 2. With the throttle closed by the hand, observe the “ITP Sensor” display on the Tech 2. Is the “ITP Sensor” below the specified value?	0.22 V	Go to *Step 4*	Go to *Step 3*

DTC P1485 –ITP Sensor Low Voltage (Cont'd)

Step	Action	Value(s)	Yes	No
3	1. Ignition "ON," engine "OFF." 2. Review and record Tech 2 Failure Records data. 3. Operate the vehicle within Failure Records conditions as noted. 4. Using a Tech 2, monitor the "DTC" info for DTC P1485. Does the Tech 2 indicate DTC P1485 failed?	—	Go to *Step 4*	Refer to *Diagnostic Aids*
4	Check the ITP sensor signal circuit for a poor connection at the ECM and replace the terminal if necessary. Did the terminal require replacement?	—	Verify repair	Go to *Step 5*
5	1. Ignition "ON," engine "OFF." 2. Review and record Tech 2 Failure Records data. 3. Operate the vehicle within Failure Records conditions as noted. 4. Using a Tech 2 monitor the "Specific DTC" info for DTC P1485. Dose the Tech 2 indicate DTC P1485 failed?	—	Go to *Step 6*	Refer to *Diagnostic Aids*
6	Replace the intake throttle. Is the action complete?	—	Verify repair	Go to *Step 7*
7	Replace the ECM (Refer to the Data Programming in Case of ECM change). Is the action complete?	—	Verify repair	—

Diagnostic Trouble Code (DTC) P1486 (Flash DTC 74) ITP (Intake Throttle Position) Sensor High Voltage

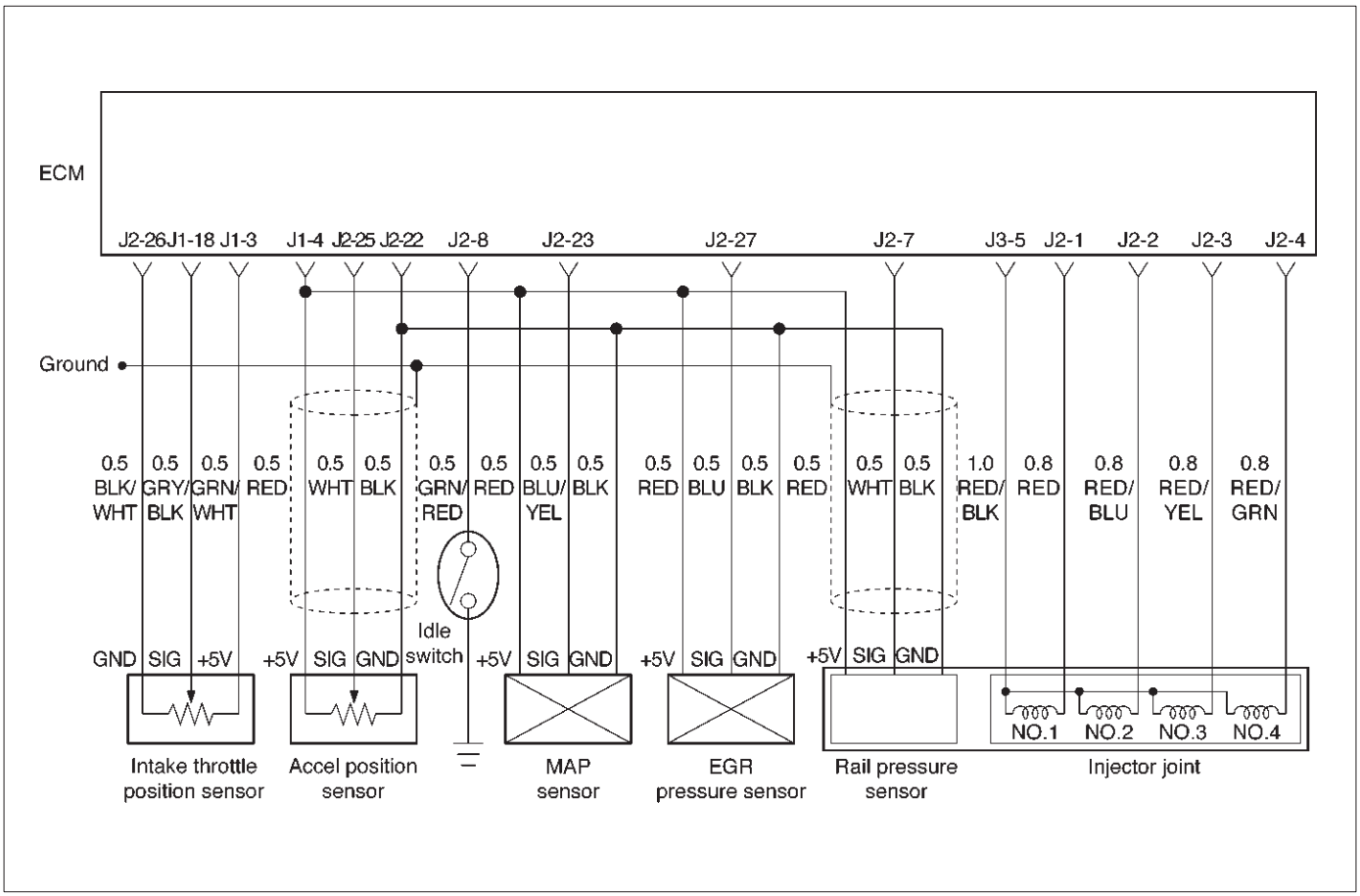

060RW134

Circuit Description

The intake throttle position (ITP) sensor circuit provides a voltage signal that changes relative to throttle blade angle.

Action Taken When the DTC Sets

- The ECM will illuminate the malfunction indicator lamp (MIL) the first time the fault is detected.
- The ECM will store conditions which were present when the DTC was set as Freeze Frame and in the Failure Records data.

Conditions for Clearing the MIL/DTC

- DTC P1486 can be cleared by using the Tech 2 “Clear Info” function or by disconnecting the ECM battery feed.

Diagnostic Aids

Check for the following conditions:

- Poor connection at ECM – Inspect harness connectors for backed-out terminals, improper mating, broken locks, improperly formed or damaged terminals, and poor terminal-to-wire connection.
- Damaged harness – Inspect the wiring harness for damage. If the harness appears to be OK, observe the ITP sensor display on the Tech 2 while moving connectors and wiring harnesses related to the TP sensor. A change in the display will indicate the location of the fault.
- Faulty TP sensor – With the ignition key “ON,” engine “OFF,” observe the TP sensor display on the Tech 2 while slowly depressing the accelerator to wide open throttle.

If DTC P1486 cannot be duplicated, the information included in the Failure Records data can be useful in determining vehicle mileage since the DTC was last set.

DTC P1486 – ITP Sensor High Voltage

Step	Action	Value(s)	Yes	No
1	Was the “On-Board Diagnostic (OBD) System Check” performed?	—	Go to *Step 2*	Go to *OBD System Check*
2	1. Ignition “ON,” engine “OFF.” 2. With the throttle closed by the hand, observe the “ITP Sensor” display on the Tech 2. Is the “ITP Sensor” above the specified value?	4.88 V	Go to *Step 4*	Go to *Step 3*
3	1. Ignition “ON,” engine “OFF.” 2. Review and record Tech 2 Failure Records data. 3. Operate the vehicle within Failure Records conditions as noted. 4. Using a Tech 2, monitor “DTC” info for DTC P1486. Does the Tech 2 indicate DTC P1486 failed.	—	Go to *Step 4*	Refer to *Diagnostic Aids*
4	Check for poor electrical connections at the ITP sensor and replace terminals if necessary. Did any terminals require replacement?	—	Verify repair	Go to *Step 5*
5	1. Ignition “ON,” engine “OFF.” 2. Review and record Tech 2 Failure Records data. 3. Operate the vehicle within Failure Records conditions as noted. 4. Using a Tech 2 monitor the “DTC” info for DTC P1486. Dose the Tech 2 indicate DTC P1486 failed.	—	Go to *Step 6*	Refer to *Diagnostic Aids*
6	Replace the intake throttle. Is the action complete?	—	Verify repair	Go to *Step 7*
7	Replace the ECM (Refer to the Data Programming in Case of ECM change). Is the action complete?	—	Verify repair	—

Diagnostic Trouble Code (DTC) P1487 (Flash DTC 73) Intake Throttle System Circuit Open/Start

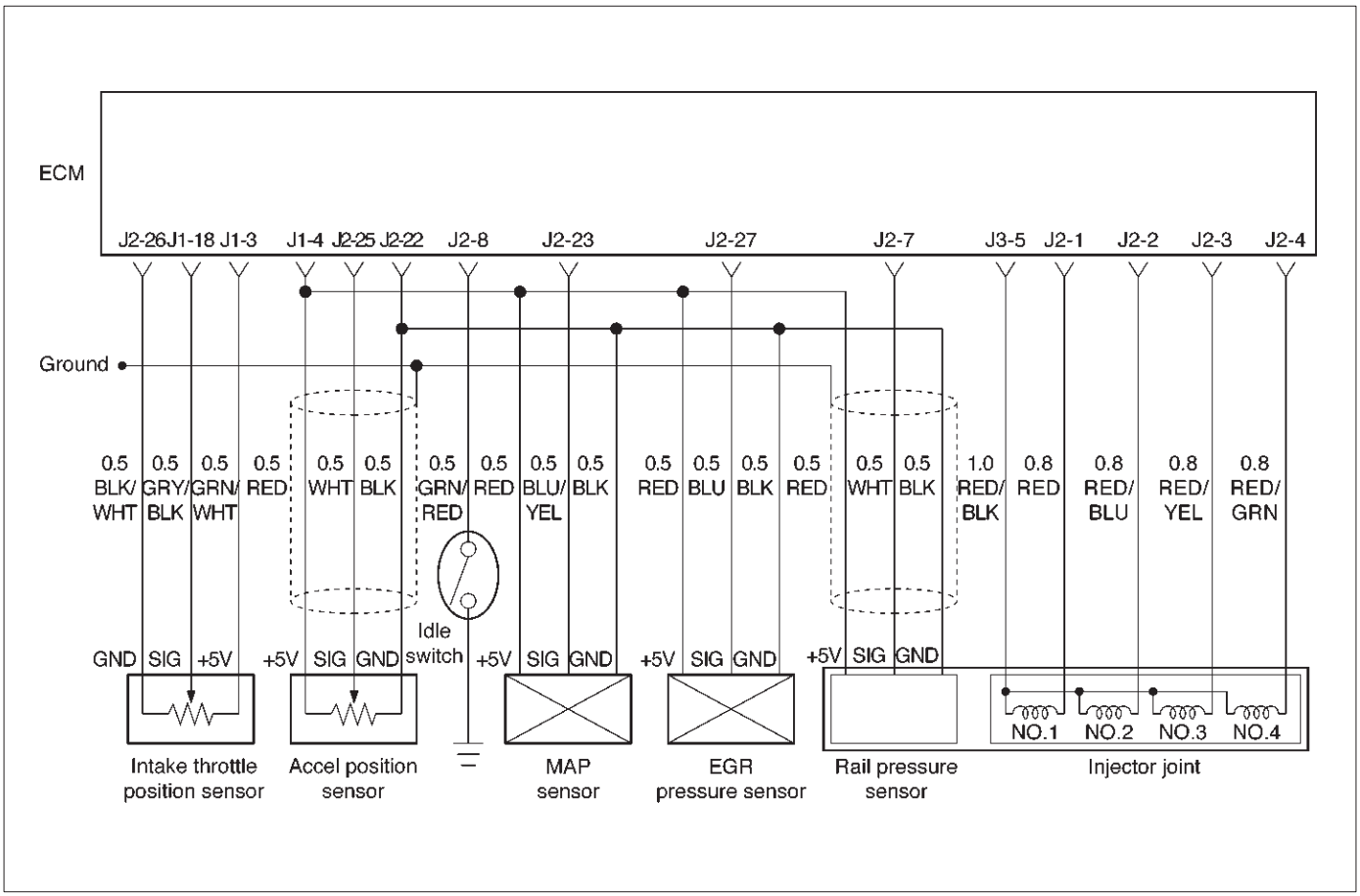

060RW134

Circuit Description

The intake throttle position (ITP) sensor circuit provides a voltage signal that changes relative to throttle blade angle.

Action Taken When the DTC Sets

- The ECM will illuminate the malfunction indicator lamp (MIL) the first time the fault is detected.
- The ECM will store conditions which were present when the DTC was set as Freeze Frame and in the Failure Records data.

Conditions for Clearing the MIL/DTC

- DTC P1487 can be cleared by using the Tech 2 “Clear Info” function or by disconnecting the ECM battery feed.

Diagnostic Aids

Check for the following conditions:

- Poor connection at ECM – Inspect harness connectors for backed-out terminals, improper mating, broken locks, improperly formed or damaged terminals, and poor terminal-to-wire connection.
- Damaged harness – Inspect the wiring harness for damage. If the harness appears to be OK, observe the throttle position display on the Tech 2 while moving connectors and wiring harnesses related to the ITP sensor. A change in the display will indicate the location of the fault.

If DTC P1487 cannot be duplicated, the information included in the Failure Records data can be useful in determining vehicle mileage since the DTC was last set.

DTC P1487 – Intake Throttle System Circuit Open/Short

Step	Action	Value(s)	Yes	No
1	Was the “On-Board Diagnostic (OBD) System Check” performed?	—	Go to *Step 2*	Go to *OBD System Check*
2	1. Ignition “ON,” engine “OFF.” 2. Review and record Tech 2 Failure Records data. 3. Operate the vehicle within Failure Records conditions as noted. 4. Using a Tech 2, monitor the “DTC” info for DTC P1487. Does the Tech 2 indicate DTC P1487 failed?	—	Go to *Step 3*	Refer to *Diagnostic Aids*
3	Check the ITP circuit for a poor connection at the ECM and ITP and replace the terminal if necessary. Did the terminal require replacement?	—	Verify repair	Go to *Step 4*
4	1. Ignition “ON,” engine “OFF.” 2. Operate the throttle by the hand. Is the action complete?	—	Verify repair	Go to *Step 5*
5	Replace the ITP Assembly. Is the action complete?	—	Verify repair	Go to *Step 6*
6	Replace the ECM (Refer to the Data Programming in Case of ECM change). Is the action complete?	—	Verify repair	—

Diagnostic Trouble Code (DTC) P1488 (Flash DTC 72) Intake Throttle Motor Control Circuit Signal Gap

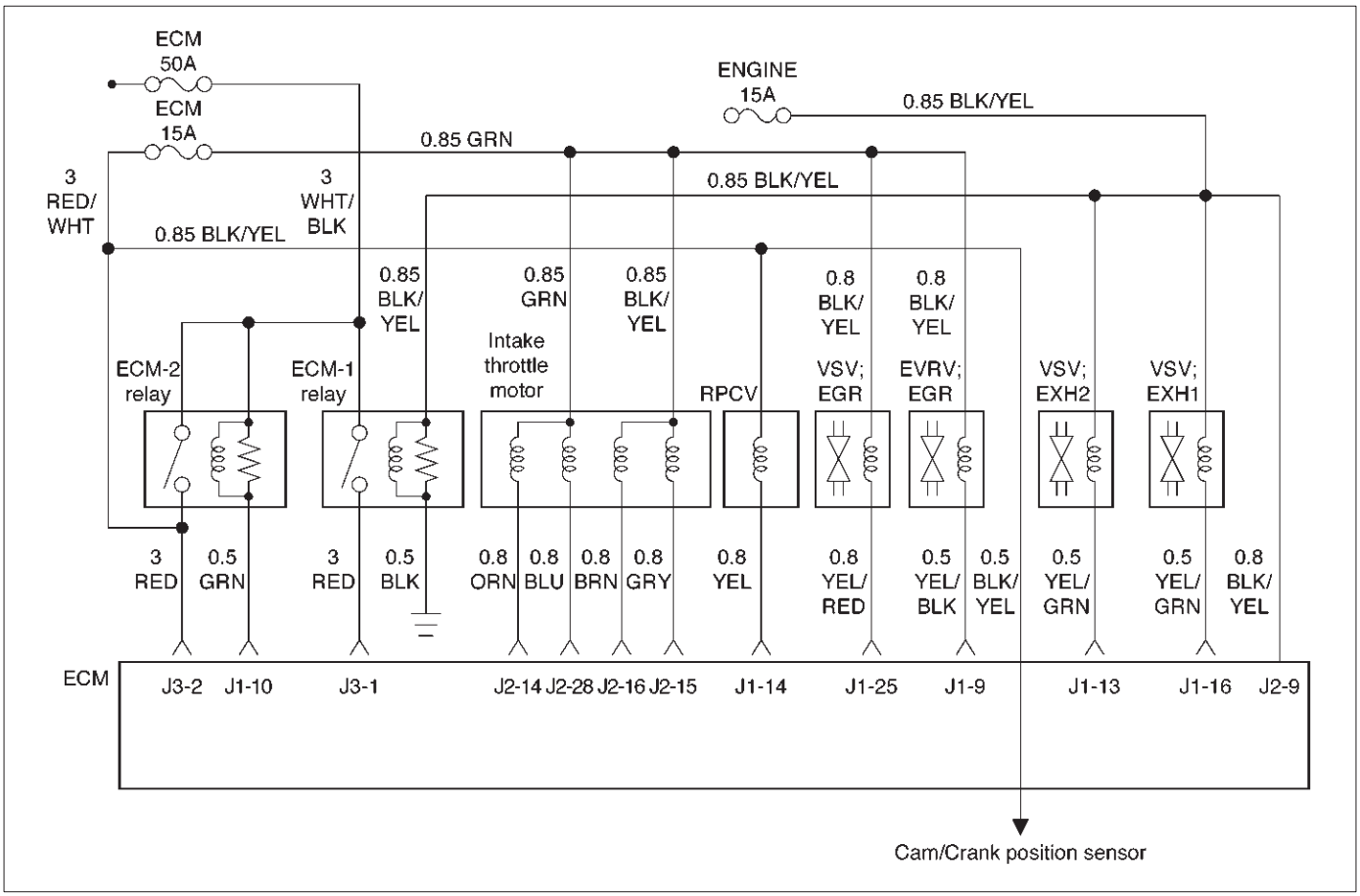

060RW135

Circuit Description

The Intake throttle position (ITP) sensor circuit provides a voltage signal that changes relative to throttle blade angle.

Action Taken When the DTC Sets

- The ECM will store conditions which were present when the DTC was set as Freeze Frame and in the Failure Records data.

Conditions for Clearing the MIL/DTC

- DTC P1488 can be cleared by using the Tech 2 “Clear Info” function or by disconnecting the ECM battery feed.

Diagnostic Aids

Check for the following conditions:

- Poor connection at ECM – Inspect harness connectors for backed-out terminals, improper mating, broken locks, improperly formed or damaged terminals, and poor terminal-to-wire connection.
- Damaged harness – Inspect the wiring harness for damage. If the harness appears to be OK, observe the throttle position display on the Tech 2 while moving connectors and wiring harnesses related to the ITP sensor. A change in the display will indicate the location of the fault.

If DTC P1488 cannot be duplicated, the information included in the Failure Records data can be useful in determining vehicle mileage since the DTC was last set.

DTC P1488 – Intake Throttle Motor Control Circuit Signal Gap

Step	Action	Value(s)	Yes	No
1	Was the “On-Board Diagnostic (OBD) System Check” performed?	—	Go to *Step 2*	Go to *OBD System Check*
2	1. Ignition “ON,” engine “OFF.” 2. With the throttle closed, observe the “ITP Sensor” display on the Tech 2. Is the “ITP Sensor” below the specified value?	0.22 V	Go to *Step 4*	Go to *Step 3*
3	1. Ignition “ON,” engine “OFF.” 2. Review and record Tech 2 Failure Records data. 3. Operate the vehicle within Failure Records conditions as noted. 4. Using a Tech 2, monitor the “Specific DTC” info for DTC P1488. Does the Tech 2 indicate DTC P1488 failed?	—	Go to *Step 4*	Refer to *Diagnostic Aids*
4	Check the ITP circuit for a poor connection at the ECM and replace the terminal if necessary. Did the terminal require replacement?	—	Verify repair	Go to *Step 5*
5	Check the Intake throttle motor circuit for a poor connection and replace the terminal if necessary. Did the terminal require replacement?	—	Verify repair	Go to *Step 6*
6	Check the ITP Assembly for a poor connection at the TP sensor and fasten the ITP Assembly if necessary. Did the ITP Assembly require repair?	—	Verify repair	Go to *Step 7*
7	Replace the ECM (Refer to the Data Programming in Case of ECM change). Is the action complete?	—	Verify repair	—

Diagnostic Trouble Code (DTC) P0502 (Flash DTC 24) VSS (Vehicle Speed Sensor) No Signal

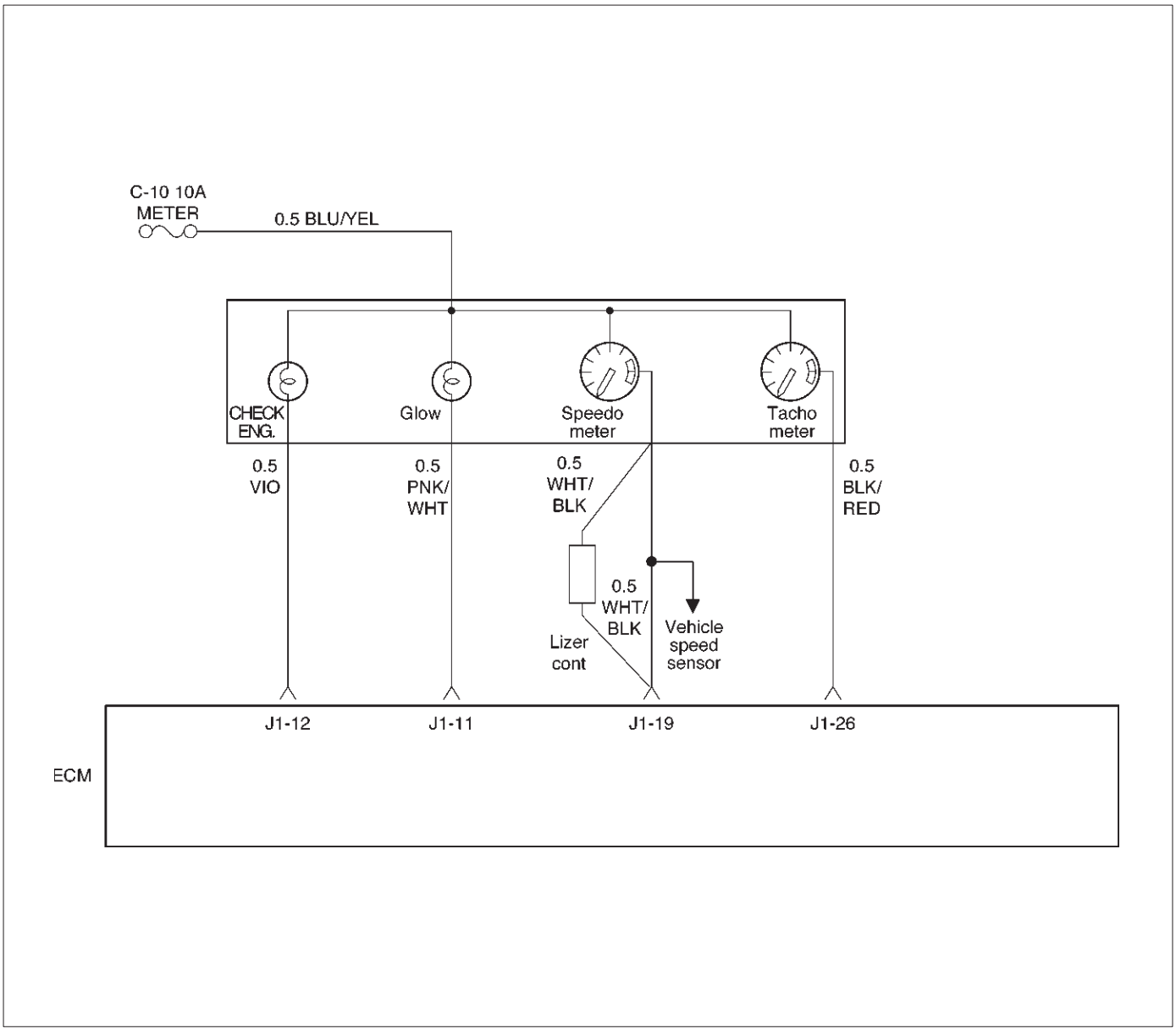

060RW136

Circuit Description

The vehicle speed sensor has a magnet rotated by the transmission output shaft. Attached to the sensor is a hall effect circuit the interacts with the magnetic field treated by the rotating magnet. A 12-volt operating supply for the speed sensor hall circuit is supplied from the meter fuse. The VSS pulses to ground the 9-volt signal sent from the engine control module (ECM) on the reference circuit. The ECM interprets vehicle speed by the number of pulses to ground per second on the reference circuit.

Action Taken When the DTC Sets

- The ECM will illuminate the malfunction indicator lamp (MIL) the first time the fault is detected.
- The ECM will store conditions which were present when the DTC was set as Freeze Frame and in the Failure Records data.

Conditions for Clearing the MIL/DTC

- DTC P0502 can be cleared by using the Tech 2 “Clear Info” function or by disconnecting the ECM battery feed.

Test Description

Number(s) below refer to the step number(s) on the Diagnostic Chart.

10. To avoid backprobing the VSS and possibly damaging a seal or terminal, the VSS output can be tested at the point where the transmission harness connected to the engine harness. The green 16-way connector is adjacent to a blue 16-way connector, and it can be easily accessed by removing the air cleaner assembly. The green 16-way connector is separated, and battery voltage is applied to the VSS through the yellow wire at one corner of the connector. The VSS output can be monitored with a DVM connected to the blue wire with a black tracer. The two wires are next to each other in the 16-way connector . The test connections are made on the transmission side of the connector, the side that is not clipped to the body sheetmetal.
11. The speedometer-to-ECM VSS signal wire is spliced to a wire leading to the cruise control module. If a short to ground or voltage is found between the ECM and speedometer, it could be located between the splice and the cruise control module.

DTC P0502 –VSS No Signal

Step	Action	Value(s)	Yes	No
1	Was the “On-Board Diagnostic (OBD) System Check” performed?	—	Go to *Step 2*	Go to *OBD System Check*
2	Does the speedometer work?	—	Go to *Step 10*	Go to *Step 3*
3	1. Disconnect the VSS connector. 2. Ignition “ON.” 3. Using a test light to battery +, probe the connector ground wire. Did the light illuminate?	—	Go to *Step 5*	Go to *Step 4*
4	Repair the sensor ground. Is the action complete?	—	Verify repair	—
5	1. Ignition “ON,” sensor disconnected. 2. Using a DVM, measure at the VSS connector between ground and voltage supply. Was the measurement near the specified value?	Battery voltage	Go to *Step 7*	Go to *Step 6*
6	Repair the open or short to ground which may have blown the meter fuse. Is the action complete?	—	Verify repair	—
7	1. Ignition “ON,” VSS disconnected. 2. Using a DVM, measure at the VSS connector between ground and the blue/black wire from the speedometer. Was the measurement near the specified value?	7.5-8 V	Go to *Step 9*	Go to *Step 8*
8	Check for an open or short circuit between the speedometer and the VSS. Was an open or short circuit located?	—	Verify repair	Go to *Step 9*
9	Replace the VSS. Is the action complete?	—	Verify repair	Go to *Step 10*
10	Replace the speedometer. Is the action complete?	—	Verify repair	Go to *Step 11*

DTC P0502 –VSS No Signal (Cont'd)

Step	Action	Value(s)	Yes	No
11	Check for an open or short between the ECM and the speedometer. Was a problem found?	—	Verify repair	Go to *Step 12*
12	Replace the ECM (Refer to the Data Programming in Case of ECM change). Is the action complete?	—	Verify repair	—

Diagnostic Trouble Code (DTC) P0510 (Flash DTC 75) Idle SW Malfunction, Open Circuit

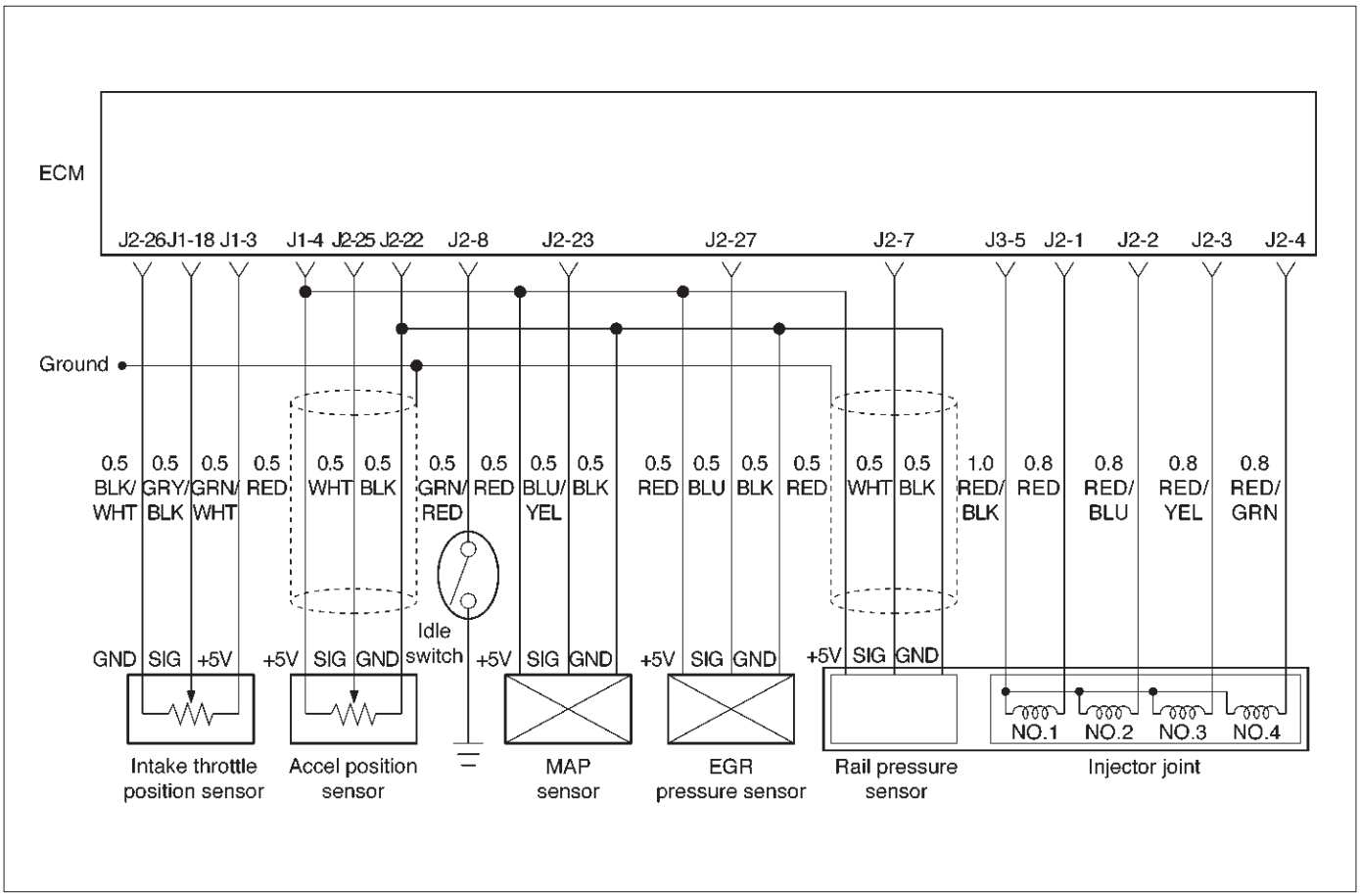

060RW134

Circuit Description

The idle switch signal is used by the Engine Control Module ECM for fuel control.

Action Taken When the DTC Sets

- The ECM will illuminate the malfunction indicator lamp (MIL) the first time the fault is detected.
- The ECM will store conditions which were present when the DTC was set as Freeze Frame and in the Failure Records data.

Conditions for Clearing the MIL/DTC

- DTC P0510 can be cleared by using the Tech 2 “Clear Info” function or by disconnecting the ECM battery feed.

Diagnostic Aids

Check for the following conditions:

- Poor connection at ECM – Inspect harness connectors for backed-out terminals, improper mating, broken locks, improperly formed or damaged terminals, and poor terminal-to-wire connection.
- Damaged harness – Inspect the wiring harness for damage. If the harness appears to be OK, observe the Idle SW display on the Tech 2 while moving connectors and wiring harnesses related to the Idle SW.

If DTC P0510 cannot be duplicated, the information included in the Failure Records data can be useful in determining vehicle mileage since the DTC was last set.

DTC P0510 – Idle SW Malfunction, Open Circuit

Step	Action	Value(s)	Yes	No
1	Was the “On-Board Diagnostic (OBD) System Check” performed?	—	Go to *Step 2*	Go to *OBD System Check*
2	1. Ignition “ON,” engine “OFF.” 2. Review and record Tech 2 Failure Records data. 3. Operate the vehicle within Failure Records conditions as noted. 4. Using a Tech 2, monitor the “DTC” info for DTC P0510. Does the Tech 2 indicate DTC P0510 failed?	—	Go to *Step 4*	Refer to *Diagnostic Aids*
3	Check the Idle SW circuit for a poor connection and repair the terminal if necessary. Did the terminal require repair?	—	Verify repair	Go to *Step 4*
4	1. Ignition “ON.” 2. Operate the accel pedal, and check the data list “ON OFF” on the Tech 2. Is the data list correct?	—	Verify repair	Go to *Step 5*
5	Replace the Idle SW. Is the action complete?	—	Verify repair	—

Diagnostic Trouble Code (DTC) P1510 (Flash DTC 75) Idle SW Malfunction Short Circuit

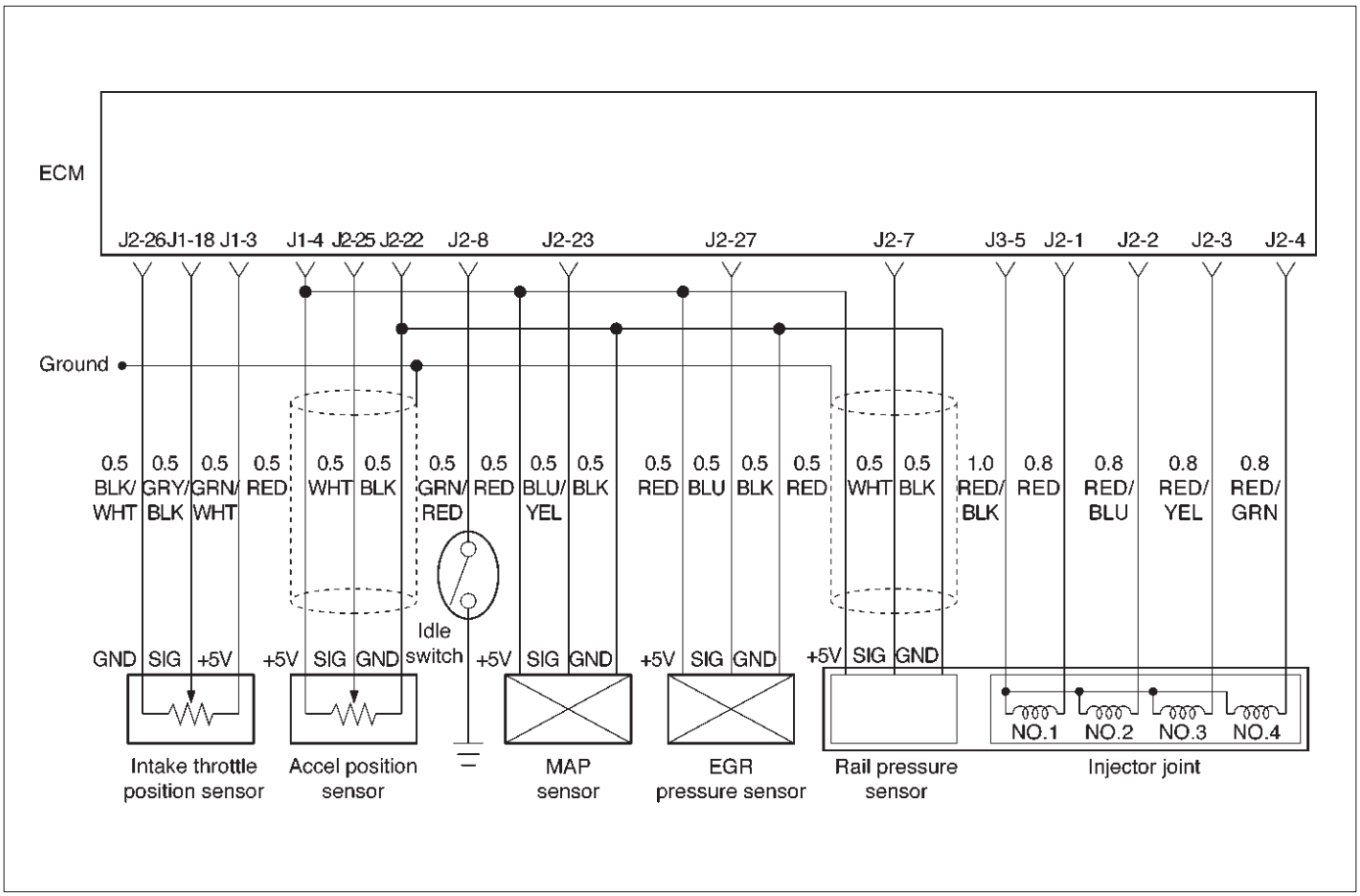

060RW134

Circuit Description

The idle switch signal is used by the Engine Control Module ECM for fuel control.

Action Taken When the DTC Sets

- The ECM will illuminate the malfunction indicator lamp (MIL) the first time the fault is detected.
- The ECM will store conditions which were present when the DTC was set as Freeze Frame and in the Failure Records data.

Conditions for Clearing the MIL/DTC

- DTC P1510 can be cleared by using the Tech 2 “Clear Info” function or by disconnecting the ECM battery feed.

Diagnostic Aids

Check for the following conditions:

- Poor connection at ECM – Inspect harness connectors for backed-out terminals, improper mating, broken locks, improperly formed or damaged terminals, and poor terminal-to-wire connection.
- Damaged harness – Inspect the wiring harness for damage. If the harness appears to be OK, observe the Idle SW display on the Tech 2 while moving connectors and wiring harnesses related to the Idle SW.

If DTC P0122 cannot be duplicated, the information included in the Failure Records data can be useful in determining vehicle mileage since the DTC was last set.

DTC P1510 – Idle SW Malfunction, Short Circuit

Step	Action	Value(s)	Yes	No
1	Was the “On-Board Diagnostic (OBD) System Check” performed?	—	Go to *Step 2*	Go to *OBD System Check*
2	1. Ignition “ON,” engine “OFF.” 2. Review and record Tech 2 Failure Records data. 3. Operate the vehicle within Failure Records conditions as noted. 4. Using a Tech 2, monitor the “DTC” info for DTC P1510. Does the Tech 2 indicate DTC P1510 failed?	—	Go to *Step 4*	Refer to *Diagnostic Aids*
3	Check the Idle SW circuit for a poor connection and repair the terminal if necessary. Did the terminal require repair?	—	Verify repair	Go to *Step 4*
4	1. Ignition “ON.” 2. Operate the accel pedal, and check the data list “ON OFF” on the Tech 2. Is the data list correct?	—	Verify repair	Go to *Step 5*
5	Replace the Idle SW. Is the action complete?	—	Verify repair	—

Diagnostic Trouble Code (DTC) P0562 (Flash DTC 35) System Voltage Too Low

Circuit Description

The engine control module (ECM) monitors the system voltage on the ignition feed terminals to the ECM. A system voltage DTC will set whenever the voltage is above a calibrated value.

Action Taken When the DTC Sets

- The ECM will not illuminate the malfunction indicator lamp (MIL).
- The ECM will store as Failure Records only conditions which were present when the DTC was set. This information will not be stored as Freeze Frame data.

Conditions for Clearing the MIL/DTC

- DTC P0563 can be cleared by using the Tech 2 “Clear Info” function or by disconnecting the ECM battery feed.

Diagnostic Aids

If the DTC sets when an accessory is operated, check for a poor connection or defective accessory.

DTC P0562 – System Voltage Too Low

Step	Action	Value(s)	Yes	No
1	Was the “On-Board Diagnostic (OBD) System Check” performed?	—	Go to *Step 2*	Go to *OBD System Check*
2	Using a DVM, measure the battery voltage at the battery. Is the battery voltage greater than the specified value?	11.5 V	Go to *Step 3*	Charge battery, then go to *Step 3*
3	1. Install a Tech 2. 2. Select “Ignition Volts” on the Tech 2. 3. Start the engine and raise the engine speed to the specified value. 4. Load the electrical system by turning on the headlights, high blower, etc. Is the ignition voltage approximately equal to the specified value?	2000 RPM 12.8-14.1 V	Go to *Step 4*	Go to *Starting/ Charging*
4	1. Ignition “OFF.” 2. Disconnect the ECM connector at the ECM. 3. Using a DVM, measure the battery voltage at the ECM connector. Is it approximately equal to battery voltage?	—	Check for excessive current draw with ignition “OFF,” engine “OFF.”	Go to *Step 5*
5	1. Check for faulty connections at the ECM harness terminals. 2. Repair as necessary. Was a repair necessary?	—	Verify repair	Go to *Step 6*
6	Check for an open battery feed circuit to the ECM. Is the action complete?	—	Verify repair	Go to *Step 7*
7	Replace the ECM (Refer to the Data Programming in Case of ECM change). Is the action complete?	—	Verify repair	—

Diagnostic Trouble Code (DTC) P1562 (Flash DTC 35) System Voltage Too Low at Cranking

Circuit Description

The engine control module (ECM) monitors the system voltage on the ignition feed terminals to the ECM. A system voltage DTC will set whenever the voltage is above a calibrated value.

Action Taken When the DTC Sets

- The ECM will illuminate the malfunction indicator lamp (MIL) at the first time of the fault is detected.

Conditions for Clearing the MIL/DTC

- DTC P0563 can be cleared by using the Tech 2 “Clear Info” function or by disconnecting the ECM battery feed.

Diagnostic Aids

If the DTC sets when an accessory is operated, check for a poor connection or defective accessory.

DTC P1562 – System Voltage Too Low at Cranking

Step	Action	Value(s)	Yes	No
1	Was the “On-Board Diagnostic (OBD) System Check” performed?	—	Go to *Step 2*	Go to *OBD System Check*
2	Using a DVM, measure the battery voltage at the battery. Is the battery voltage less than the specified value?	11.5 V	Go to *Step 3*	Go to *Step 4*
3	1. Charge the battery and clean the battery terminals. 2. Clean the battery ground cable connection if corrosion is indicated. Is the battery voltage less than the specified value?	11.5 V	Replace battery	Go to *Step 4*
4	1. Turn “OFF” all the accessories. 2. Install a Tech 2. 3. Select the ignition voltage parameter on the Tech 2. 4. Start the engine and raise the engine RPM to the specified value. Is the voltage more than 2.5 volts greater than the measurement taken in step 2 or 3?	2000 RPM	Go to *Starting/Charging*	Go to *Step 5*
5	Replace the ECM (Refer to the Data Programming in Case of ECM change). Is the action complete?	—	Verify repair	—

Diagnostic Trouble Code (DTC) P1587 (Flash DTC 25) Brake SW Malfunction

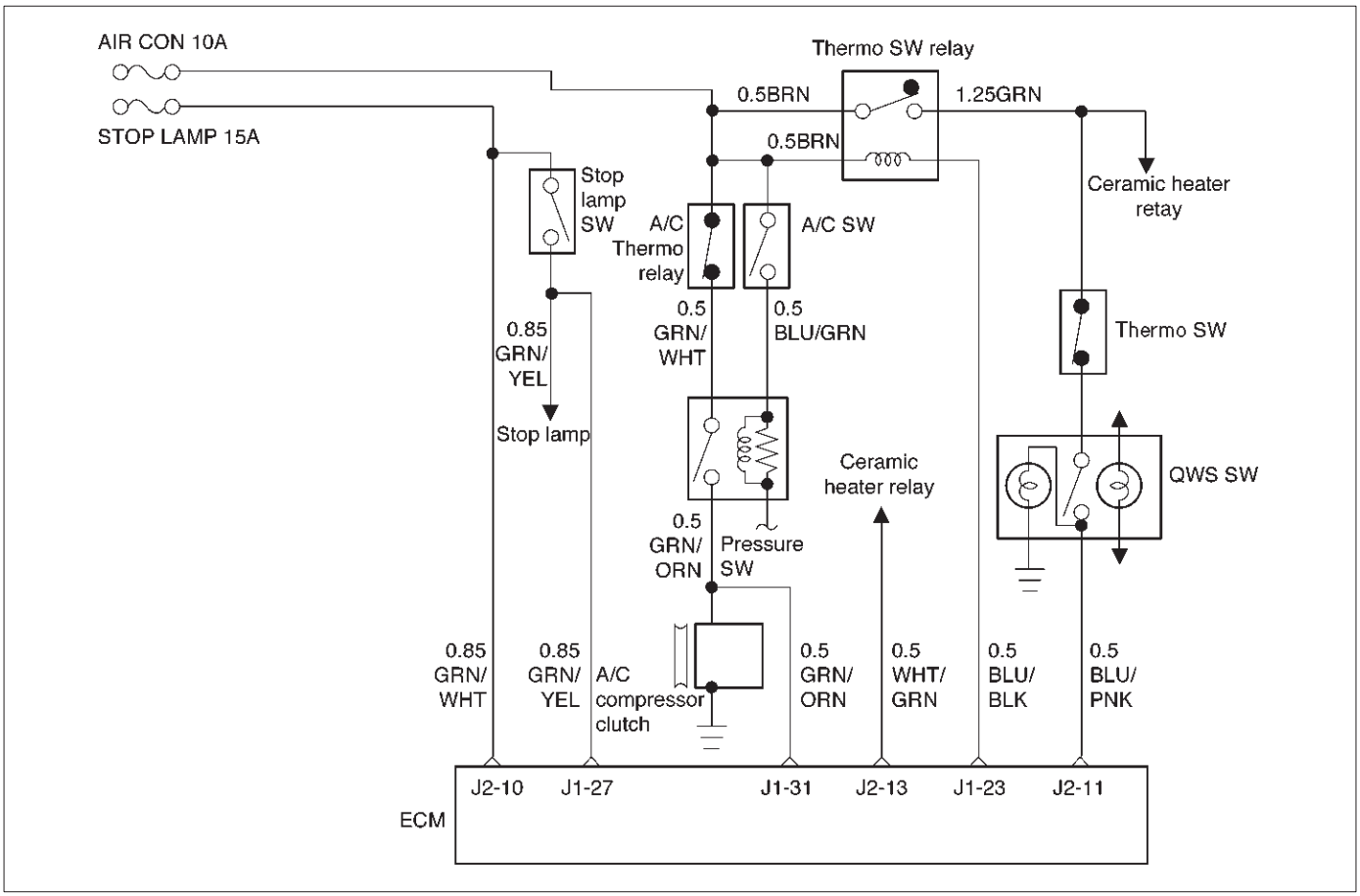

060RW130

Circuit Description

Brake Stop Lamp SW Circuit receives through Stop Lamp 10A fuse from the battery.

Action Taken When the DTC Sets

- The ECM will store conditions which were present when the DTC was set as Freeze Frame and in the Failure Records data.

Conditions for Clearing the MIL/DTC

- DTC P1587 can be cleared by using the Tech 2 “Clear Info” function or by disconnecting the ECM battery feed.

Diagnostic Aids

Check for the following conditions:

- Poor connection at ECM – Inspect harness connectors for backed-out terminals, improper mating, broken locks, improperly formed or damaged terminals, and poor terminal-to-wire connection.
- Damaged harness – Inspect the wiring harness for damage. If the harness appears to be OK, observe the Brake SW display on the Tech 2 while moving connectors and wiring harnesses related to the Brake SW. A change in the display will indicate the location of the fault.

If DTC P1587 cannot be duplicated, the information included in the Failure Records data can be useful in determining vehicle mileage since the DTC was last set.

DTC P1587 – Brake SW Malfunction

Step	Action	Value(s)	Yes	No
1	Was the “On-Board Diagnostic (OBD) System Check” performed?	—	Go to *Step 2*	Go to *OBD System Check*
2	1. Ignition “ON,” engine “OFF.” 2. Review and record Tech 2 Failure Records data. 3. Operate the vehicle within Failure Records conditions as noted. 4. Using a Tech 2, monitor the “DTC” info for DTC P1587. Does the Tech 2 indicate DTC P1587 failed?	—	Go to *Step 3*	Refer to *Diagnostic Aids*
3	Check the Brake SW circuit for a poor connection and replace the terminal if necessary. Did the terminal require replacement?	—	Verify repair	Go to *Step 4*
4	Replace the Brake SW. Is the action complete?	—	Verify repair	—

Diagnostic Trouble Code (DTC) P1588 (Flash DTC 25) Brake SW Malfunction

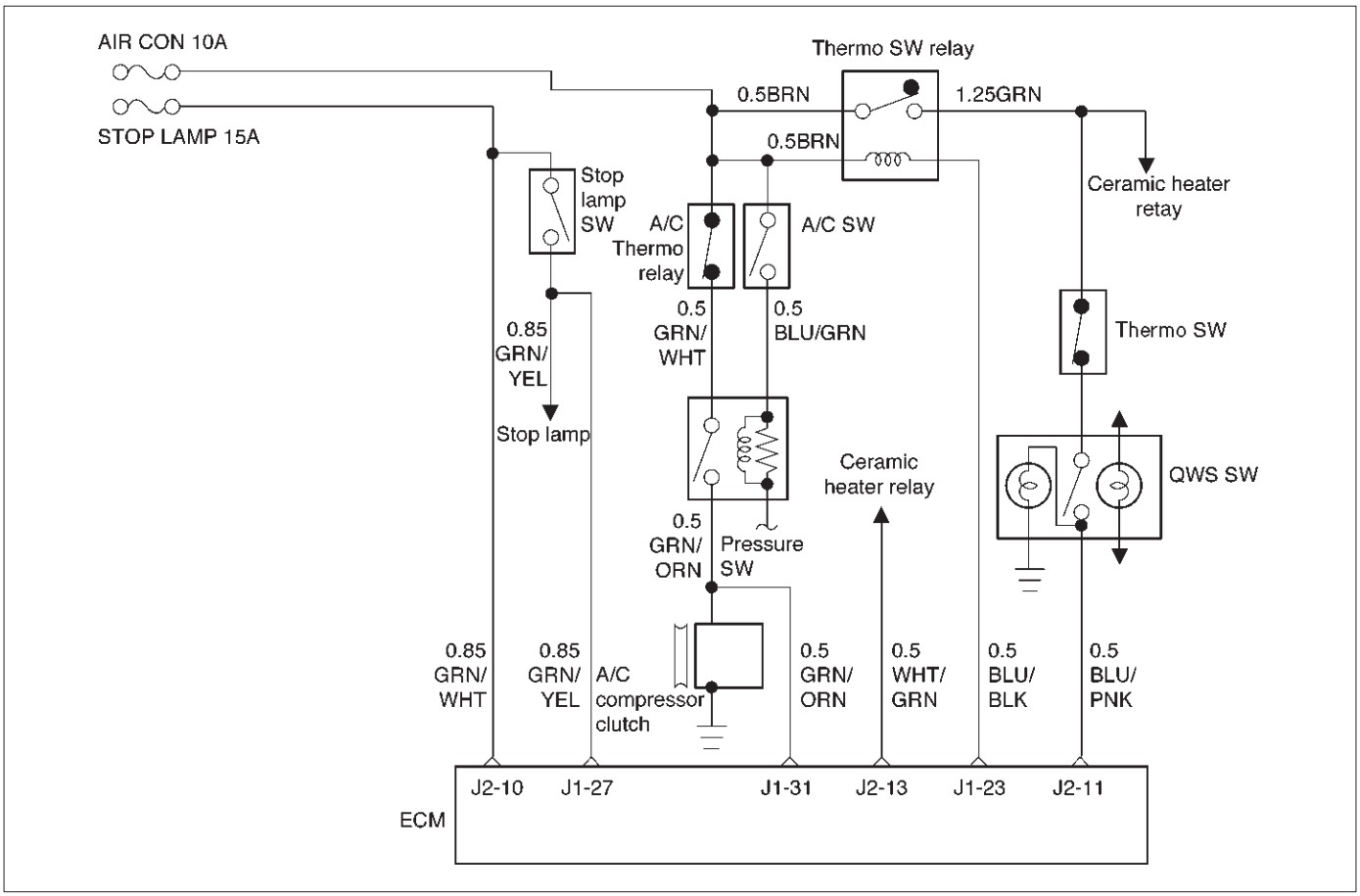

060RW130

Circuit Description

Brake Stop Lamp SW Circuit receives through Stop Lamp 10A fuse from the battery.

Action Taken When the DTC Sets

- The ECM will illuminate the malfunction indicator lamp (MIL) the first time the fault is detected.
- The ECM will store conditions which were present when the DTC was set as Freeze Frame and in the Failure Records data.

Conditions for Clearing the MIL/DTC

- DTC P1588 can be cleared by using the Tech 2 “Clear Info” function or by disconnecting the ECM battery feed.

Diagnostic Aids

Check for the following conditions:

- Poor connection at ECM – Inspect harness connectors for backed-out terminals, improper mating, broken locks, improperly formed or damaged terminals, and poor terminal-to-wire connection.
- Damaged harness – Inspect the wiring harness for damage. If the harness appears to be OK, observe the Brake SW display on the Tech 2 while moving connectors and wiring harnesses related to the Brake SW. A change in the display will indicate the location of the fault.

If DTC P1588 cannot be duplicated, the information included in the Failure Records data can be useful in determining vehicle mileage since the DTC was last set.

DTC P1588 – Brake SW Malfunction

Step	Action	Value(s)	Yes	No
1	Was the “On-Board Diagnostic (OBD) System Check” performed?	—	Go to *Step 2*	Go to *OBD System Check*
2	1. Ignition “ON,” engine “OFF.” 2. Review and record Tech 2 Failure Records data. 3. Operate the vehicle within Failure Records conditions as noted. 4. Using a Tech 2, monitor the “DTC” info for DTC P1588. Does the Tech 2 indicate DTC P1588 failed?	—	Go to *Step 3*	Refer to *Diagnostic Aids*
3	Check the Brake SW circuit for a poor connection and replace the terminal if necessary. Did the terminal require replacement?	—	Verify repair	Go to *Step 4*
4	Replace the Brake SW. Is the action complete?	—	Verify repair	—

Diagnostic Trouble Code (DTC) P0601 (Flash DTC 55) ECM Checksum Error

Action Taken When the DTC Sets

- The ECM will not illuminate the malfunction indicator lamp (MIL).
- The ECM will store conditions which were present when the DTC was set in the Failure Records data only.

Conditions for Clearing the MIL/DTC

- DTC P0601 can be cleared by using the Tech 2 “Clear Info” function or by disconnecting the ECM battery feed.

Diagnostic Aids

- DTC P0601 indicates that the contents of the EEPROM have changed since the ECM was programmed. The only possible repair is ECM replacement. Remember to program the replacement ECM with the correct software and calibration for the vehicle.

DTC P0601 – ECM Checksum Error

Step	Action	Value(s)	Yes	No
1	Was the “On-Board Diagnostic (OBD) System Check” performed?	—	Go to *Step 2*	Go to *OBD System Check*
2	Replace the ECM (Refer to the Data Programming in Case of ECM change). Is the action complete?	—	Verify repair	—

Diagnostic Trouble Code (DTC) P0650 (Flash DTC 77) Check Engine Lamp Circuit Open/Short

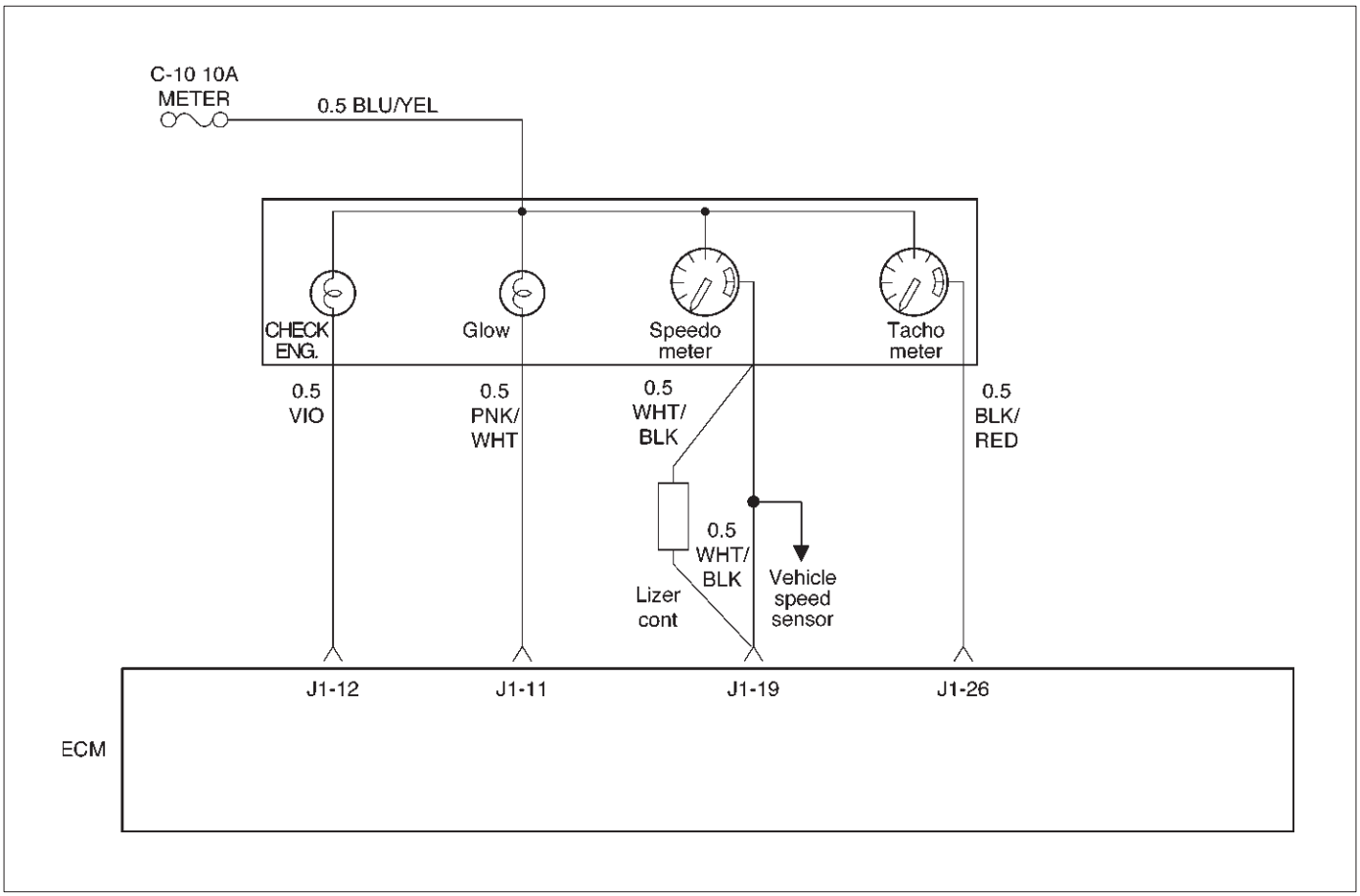

060RW136

Circuit Description

The check engine lamp circuit receives through Meter 10A fuse the battery, current flowing in the order of Meter and check engine lamp.

Action Taken When the DTC Sets

- The ECM will illuminate the malfunction indicator lamp (MIL) the first time the fault is detected.
- The ECM will store conditions which were present when the DTC was set as Freeze Frame and in the Failure Records data.

Conditions for Clearing the MIL/DTC

- DTC P0650 can be cleared by using the Tech 2 “Clear Info” function or by disconnecting the ECM battery feed.

Diagnostic Aids

Check for the following conditions:

- Poor connection at ECM – Inspect harness connectors for backed-out terminals, improper mating, broken locks, improperly formed or damaged terminals, and poor terminal-to-wire connection.
- Damaged harness – Inspect the wiring harness for damage. If the harness appears to be OK, observe the lamp test display on the Tech 2 while moving connectors and wiring harnesses related to the check engine lamp. A change in the display will indicate the location of the fault.

If the Tech 2 indicate DTCs P0650 and P0381, check the meter circuit necessarily.

DTC P0650 – Check Engine Lamp Open/Short

Step	Action	Value(s)	Yes	No
1	Was the “On-Board Diagnostic (OBD) System Check” performed?	—	Go to *Step 2*	Go to *OBD System Check*
2	1. Ignition “ON,” engine “OFF.” 2. Observe the “Lamp Test” display on the Tech 2. Is the “Lamp Test” operating?	—	Refer to *Diagnostic Aids*	Go to *Step 3*
3	1. Ignition “ON,” engine “OFF.” 2. Review and record Tech 2 Failure Records data. 3. Operate the vehicle within Failure Records conditions as noted. 4. Using a Tech 2, monitor the “DTC” info for DTC P0650. 5. If the Tech 2 indicate DTCs P0650 and P0381, check the meter circuit necessarily. Does the Tech 2 indicate DTC P0650 failed?	—	Go to *Step 4*	Refer to *Diagnostic Aids*
4	Check the Check Engine Lamp circuit for a poor connection at the Meter and replace the bulb if necessary. Did the bulb require replacement?	—	Verify repair	Go to *Step 5*
5	Using the Tech 2. Does the Tech 2 indicate DTC P0650 failed?	—	Go to *Step 6*	—
6	Check the Meter circuit for a poor connection. Did the Meter require repair?	—	Verify repair	Go to *Step 7*
7	Replace the ECM (Refer to the Data Programming in Case of ECM change). Is the action complete?	—	Verify repair	—

Diagnostic Trouble Code (DTC) P0654 (Flash DTC 27) Tachometer Circuit Open/Short

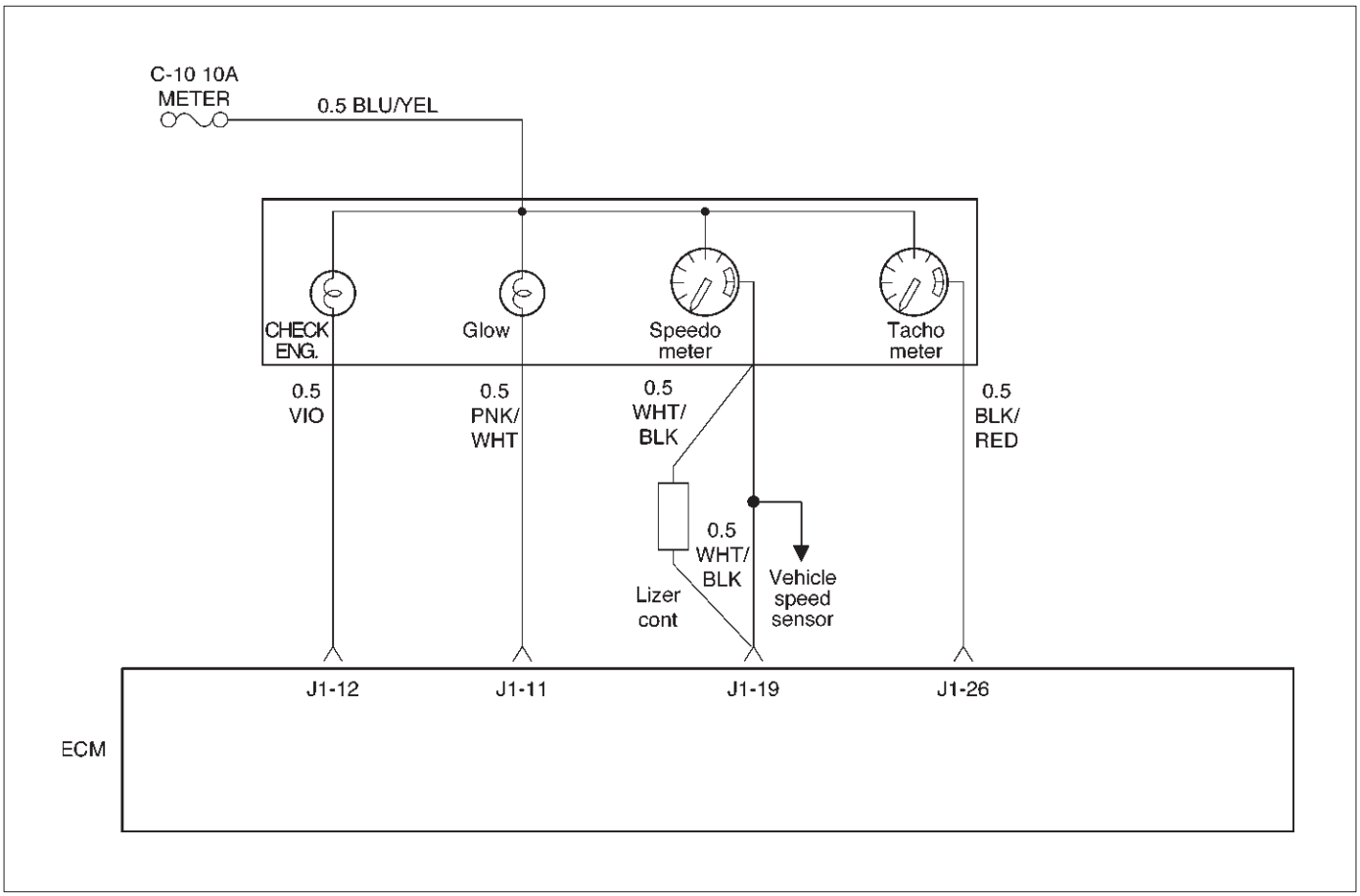

060RW136

Circuit Description

The Tach Meter circuit receives through Meter 10A fuse from the battery, current flowing in the order of Mater and the Tach Meter.

Action Taken When the DTC Sets

- The ECM will illuminate the malfunction indicator lamp (MIL) the first time the fault is detected.
- The ECM will store conditions which were present when the DTC was set as Freeze Frame and in the Failure Records data.

Conditions for Clearing the MIL/DTC

- DTC P0650 can be cleared by using the Tech 2 “Clear Info” function or by disconnecting the ECM battery feed.

Diagnostic Aids

Check for the following conditions:

- Poor connection at ECM – Inspect harness connectors for backed-out terminals, improper mating, broken locks, improperly formed or damaged terminals, and poor terminal-to-wire connection.
- Damaged harness – Inspect the wiring harness for damage.
- If the Tech 2 indicat DTCs 0654, P0650 and P0381, Check the meter circuit necessarily.

DTC P0654 – Tachometer Circuit Open/Short

Step	Action	Value(s)	Yes	No
1	Was the “On-Board Diagnostic (OBD) System Check” performed?	—	Go to *Step 2*	Go to *OBD System Check*
2	1. Ignition “ON,” engine “OFF.” 2. Review and record Tech 2 Failure Records data. 3. Operate the vehicle within Failure Records conditions as noted. 4. Using a Tech 2, monitor the “DTC” info for DTC P654. Does the Tech 2 indicate DTC P0654 failed?	—	Go to *Step 3*	Refer to *Diagnostic Aids*
3	Check the Tach meter circuit for a poor connection at the Meter and replace the terminal if necessary. Did the terminal require replacement?	—	Verify repair	Go to *Step 4*
4	Using the Tech 2. Does the Tech 2 indicate DTC P0654 failed?	—	Verify repair	Go to *Step 5*
5	Check the Tach Meter circuit for a poor connection. Did the terminal require replacement?	—	Verify repair	Go to *Step 6*
6	Replace the tachometer. Is the action complete?	—	Verify repair	Go to *Step 7*
7	Replace the ECM (Refer to the Data Programming in Case of ECM change). Is the action complete?	—	Verify repair	—

Diagnostic Trouble Code (DTC) P1655 (Flash DTC 17) Thermo Relay Circuit Open/Short

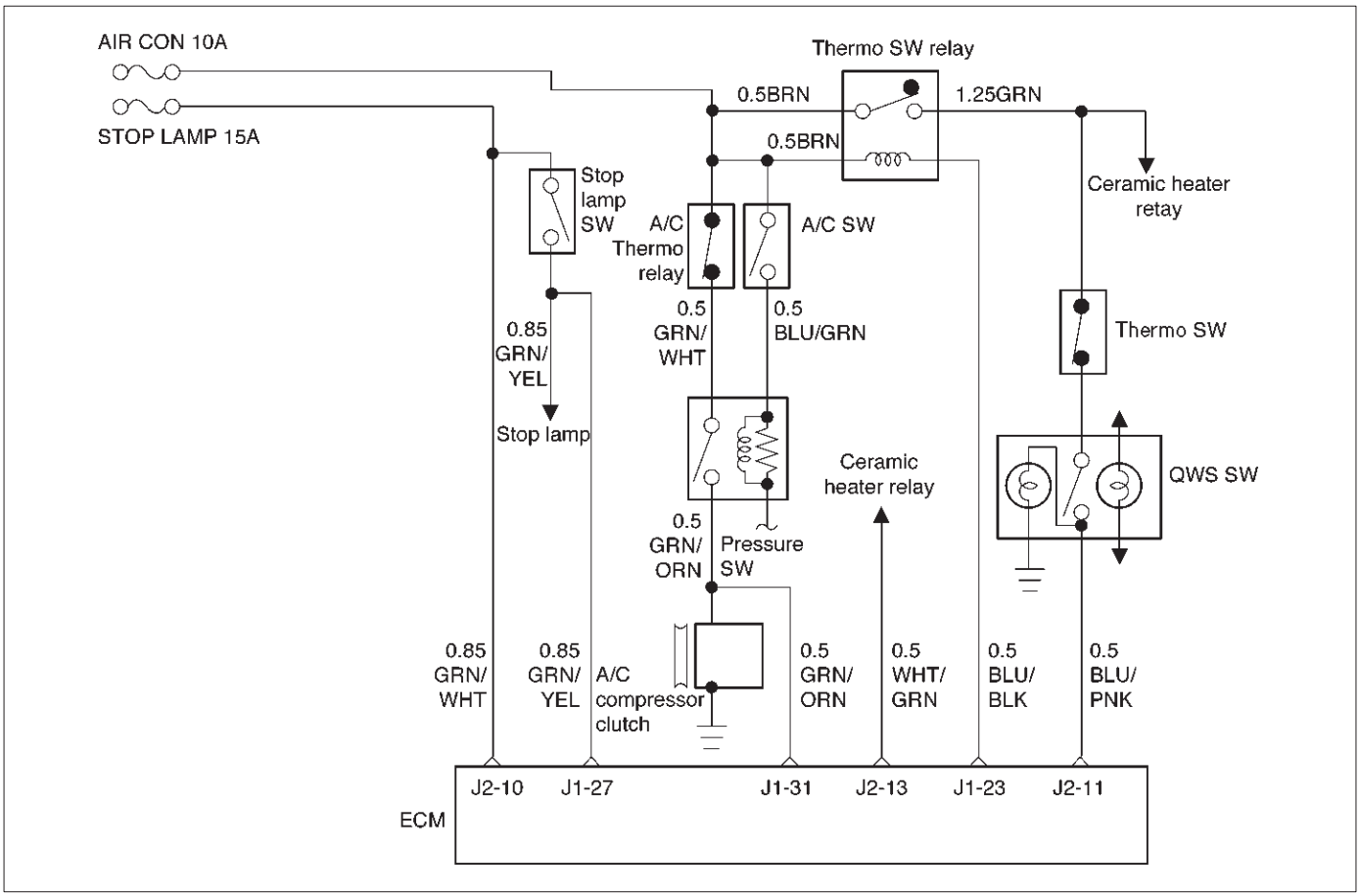

060RW130

Circuit Description

The thermo relay circuit receives current through air con 10A fuse from the battery, current flowing in the order of the thermo relay and thermo SW.

Action Taken When the DTC Sets

- The ECM will illuminate the malfunction indicator lamp (MIL) the first time the fault is detected.
- The ECM will store conditions which were present when the DTC was set as Freeze Frame and in the Failure Records data.

Conditions for Clearing the MIL/DTC

- DTC P1655 can be cleared by using the Tech 2 “Clear Info” function or by disconnecting the ECM battery feed.

Diagnostic Aids

Check for the following conditions:

- Poor connection at ECM – Inspect harness connectors for backed-out terminals, improper mating, broken locks, improperly formed or damaged terminals, and poor terminal-to-wire connection.
- Damaged harness – Inspect the wiring harness for damage.

DTC P1655 – Thermo Relay Circuit Open/Short

Step	Action	Value(s)	Yes	No
1	Was the “On-Board Diagnostic (OBD) System Check” performed?	—	Go to *Step 2*	Go to *OBD System Check*
2	1. Ignition “ON,” engine “OFF.” 2. Observe the “Batteri Voltage” display on the Tech 2. Is the “Batteri Voltage” below the specified value?	11 V	Go to *Step 4*	Go to *Step 3*
3	1. Ignition “ON,” engine “OFF.” 2. Review and record Tech 2 Failure Records data. 3. Operate the vehicle within Failure Records conditions as noted. 4. Using a Tech 2, monitor the “Specific DTC” info for DTC P1655. Does the Tech 2 indicate DTC P1655 failed?	—	Go to *Step 4*	Refer to *Diagnostic Aids*
4	Check the Thermo Relay circuit for a poor connection and replace the terminal if necessary. Did the terminal require replacement?	—	Verify repair	Go to *Step 5*
5	Check the Thermo Relay for damage. Did the Thermo Relay require replacement?	—	Verify repair	Go to *Step 6*
6	Check the Thermo Relay circuit for a poor connection at the ECM and replace the terminal if necessary. Did the terminal require replacement?	—	Verify repair	Go to *Step 7*
7	Replace the ECM (Refer to the Data Programming in Case of ECM change). Is the action complete?	—	Verify repair	—

Diagnostic Trouble Code (DTC) P1657 (Flash DTC 76) ECM Main Relay Circuit Open/Short

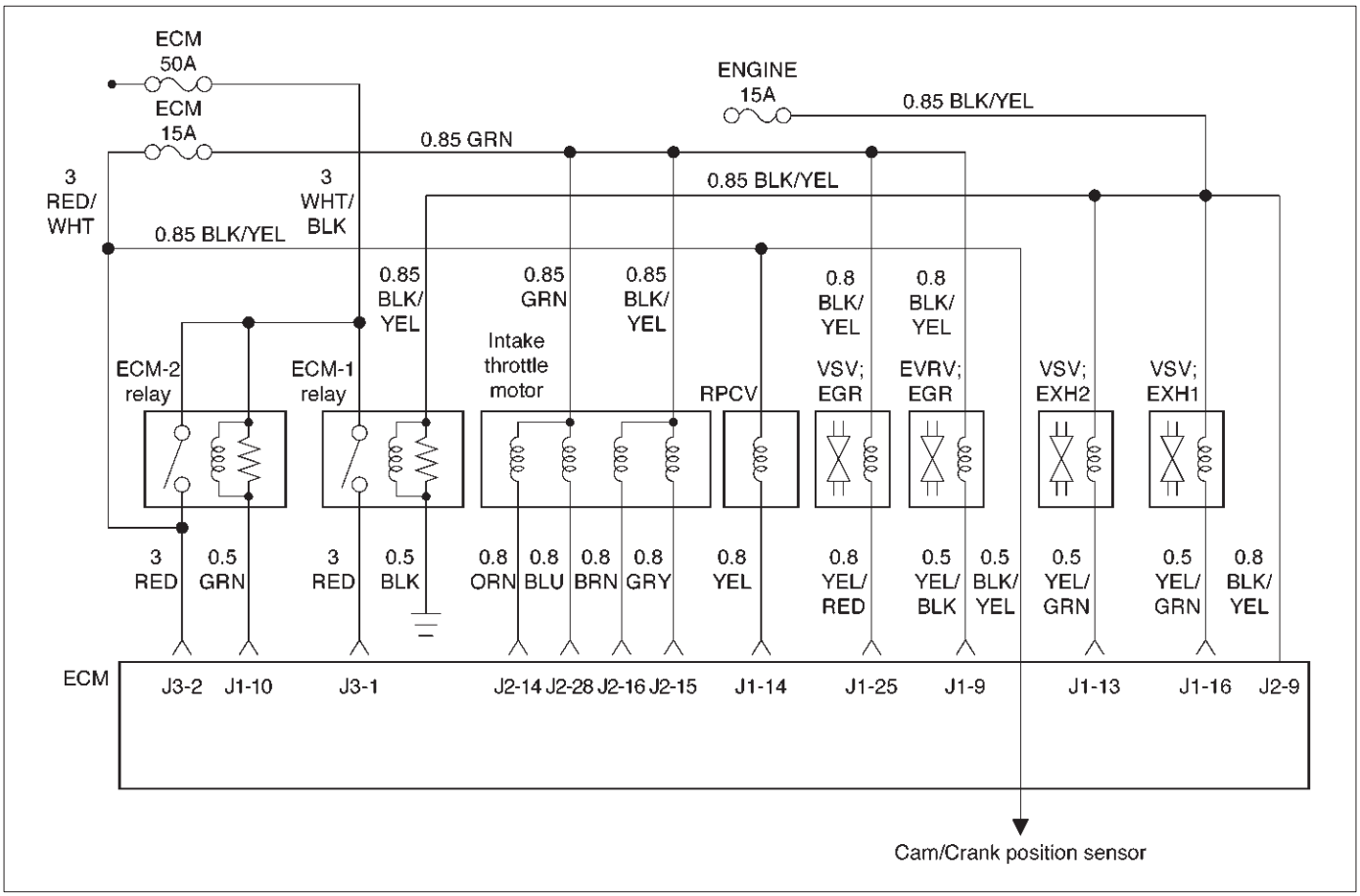

060RW135

Circuit Description

The ECM main relay circuit receives current through ECM 50A fuse from the battery, current flowing in the order of the ECM main relay and ECM.

Action Taken When the DTC Sets

- The ECM will illuminate the malfunction indicator lamp (MIL) the first time the fault is detected.
- The ECM will store conditions which were present when the DTC was set as Freeze Frame and in the Failure Records data.

Conditions for Clearing the MIL/DTC

- DTC P1657 can be cleared by using the Tech 2 “Clear Info” function or by disconnecting the ECM battery feed.

Diagnostic Aids

Check for the following conditions:

- Poor connection at ECM – Inspect harness connectors for backed-out terminals, improper mating, broken locks, improperly formed or damaged terminals, and poor terminal-to-wire connection.
- Damaged harness – Inspect the wiring harness for damage.

DTC P1657 – ECM Main Relay Circuit Open/Short

Step	Action	Value(s)	Yes	No
1	Was the “On-Board Diagnostic (OBD) System Check” performed?	—	Go to *Step 2*	Go to *OBD System Check*
2	1. Check the Fuse 50A·ECM and 15A·Eng. 2. If the Fuse is open, replace it as necessary. Was the Fuse open?	—	Verify repair	Go to *Step 3*
3	1. Ignition “ON,” engine “OFF.” 2. Review and record Tech 2 Failure Records data. 3. Operate the vehicle within Failure Records conditions as noted. 4. Using a Tech 2, monitor the “DTC” info for DTC P1657. Does the Tech 2 indicate DTC P1657 failed?	—	Go to *Step 4*	Refer to *Diagnostic Aids*
4	Check the ECM Main Relay circuit between the Fuse and the ECM Main Relay for a poor connection and repair the terminal if necessary. Did the terminal require repair?	—	Verify repair	Go to *Step 5*
5	Check the ECM Main Relay for a damage and Replace the ECM (Refer to the Data Programming in Case of ECM change) Main Relay if necessary. Did the ECM Main Relay require replacement?	—	Verify repair	Go to *Step 6*
6	Check the ECM Main Relay circuit for a poor connection at the ECM and replace the terminal if necessary. Did the terminal require replacement?	—	Verify repair	Go to *Step 7*
7	Check the ECM Main Relay Ground circuit for a poor connection and repair the terminal if necessary. Did the terminal require repair?	—	Verify repair	Go to *Step 8*
8	Check the ECM Main Relay power circuit for a poor connection and repair the terminal if necessary. Did the terminal require repair?	—	Verify repair	Go to *Step 9*
9	Replace the ECM (Refer to the Data Programming in Case of ECM change) Main Relay. Is the action complete?	—	Verify repair	Go to *Step 10*
10	Replace the ECM (Refer to the Data Programming in Case of ECM change). Is the action complete?	—	Verify repair	—

Diagnostic Trouble Code (DTC) P1589 (Flash DTC 47) Transmission SW Circuit Open/Short

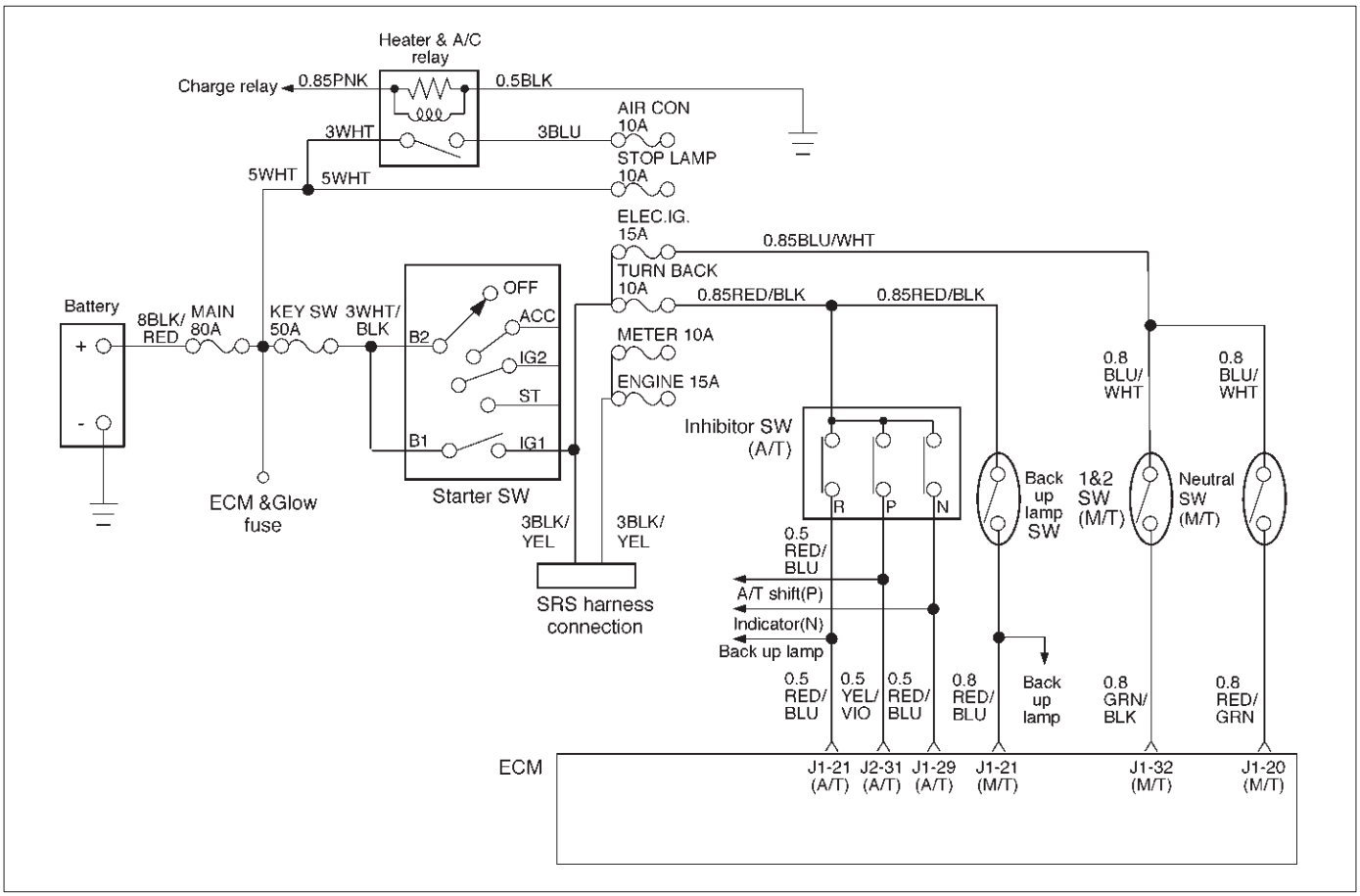

060RW131

Circuit Description

The trans mission SW circuit receives current through ELEC IG 10A fuse from the battery, current flowing in the order of the trans mission SW and ECM.

Action Taken When the DTC Sets

- The ECM will illuminate the malfunction indicator lamp (MIL) the first time the fault is detected.
- The ECM will store conditions which were present when the DTC was set as Freeze Frame and in the Failure Records data.

Conditions for Clearing the MIL/DTC

- DTC P1589 can be cleared by using the Tech 2 “Clear Info” function or by disconnecting the ECM battery feed.

Diagnostic Aids

Check for the following conditions:

- Poor connection at ECM – Inspect harness connectors for backed-out terminals, improper mating, broken locks, improperly formed or damaged terminals, and poor terminal-to-wire connection.
- Damaged harness – Inspect the wiring harness for damage. If the harness appears to be OK, observe the throttle position display on the Tech 2 while moving connectors and wiring harnesses related to the TP sensor. A change in the display will indicate the location of the fault.

If DTC P1589 cannot be duplicated, the information included in the Failure Records data can be useful in determining vehicle mileage since the DTC was last set.

DTC P1589 – Transmission Circuit Open/Short

Step	Action	Value(s)	Yes	No
1	Was the “On-Board Diagnostic (OBD) System Check” performed?	—	Go to *Step 2*	Go to *OBD System Check*
2	Check the Fuse 10A for a open circuit and replace the Fuse if necessary. Did the Fuse require replacement?	—	Verify repair	Go to *Step 3*

DTC P1589 – Transmission Circuit Open/Short (Cont'd)

Step	Action	Value(s)	Yes	No
3	1. Ignition "ON," engine "OFF." 2. Review and record Tech 2 Failure Records data. 3. Operate the vehicle within Failure Records conditions as noted. 4. Using a Tech 2, monitor the "DTC" info for DTC P1589. Does the Tech 2 indicate DTC P1589 failed?	—	Go to *Step 4 (A/T)* Go to *Step 6 (M/T)*	Refer to *Diagnostic Aids*
4	Check the Indicator Lamp correct indicated for a correct indication on the Meter. (A/T only) Did the Indicator Lamp correct indicated?	—	Go to *Step 5*	Go to *Step 8*
5	Check the Trans Mission SW signal circuit for a poor connection at the ECM and replace the terminal if necessary. Did the terminal require replacement?	—	Verify repair	Go to *Step 8*
6	Check the Trans Mission SW circuit for a poor connection at the Trans Mission SW and replace the terminal if necessary. Did the terminal require replacement?	—	Verify repair	Go to *Step 7*
7	Replace the Trans Mission SW. Is the action complete?	—	Verify repair	Go to *Step 8*
8	Replace the ECM (Refer to the Data Programming in Case of ECM change). Is the action complete?	—	Verify repair	—

Symptom Diagnosis

Preliminary Checks

Before using this section, perform the “On–Board Diagnostic (OBD) System Check” and verify all of the following items:

- The powertrain control module (ECM) and malfunction indicator lamp (MIL) (CHECK ENGINE lamp) are operating correctly.
- There are no DTC(s) stored.
- Tech–2 data is within normal operating range. Refer to *Typical Scan Data Values*.
- Verify the customer complaint and locate the correct symptom in the table of contents. Perform the procedure included in the symptom chart.

Visual/Physical Check

Several of the symptom procedures call for a careful visual/physical check. This can lead to correcting a problem without further checks and can save valuable time.

This check should include the following items:

- ECM grounds for cleanliness, tightness and proper location.
- Vacuum hoses for splits, kinks, and proper connections, as shown on the “Vehicle Emission Control Information” label. Check thoroughly for any type of leak or restriction.
- Air intake ducts for collapsed or damaged areas.
- Injector wires for cracking, hardness, and carbon tracking.
- Wiring for proper connections, pinches and cuts.

Intermittents

IMPORTANT: An intermittent problem may or may not turn on the malfunction indicator lamp (MIL) or store a DTC. DO NOT use the Diagnostic Trouble Code (DTC) charts for intermittent problems. The fault must be present to locate the problem.

Most intermittent problems are caused by faulty electrical connections or wiring. Perform a careful visual/physical check for the following conditions:

- Poor mating of the connector halves or a terminal not fully seated in the connector (backed out).
- Improperly formed or damaged terminal.
- All connector terminals in the problem circuit should be carefully checked for proper contact tension.
- Poor terminal–to–wire connection. This requires removing the terminal from the connector body to check.

Road test the vehicle with a Digital Multimeter (5-8840-0285-0) connected to a suspected circuit. An abnormal voltage when the malfunction occurs is a good indication that there is a fault in the circuit being monitored.

Use a scan tool to help detect intermittent conditions. The scan tools have several features that can be used to locate an intermittent condition. Use the following feature to find intermittent faults:

- Using a Tech–2 “Freeze Frame” buffer or “Failure Records” buffer can aid in locating an intermittent condition. Review and record the information in the freeze frame or failure record associated with the intermittent DTC being diagnosed. The vehicle can be driven within the conditions that were present when the DTC originally set.

To check for loss of diagnostic code memory, disconnect the MAP sensor and idle the engine until the MIL (CHECK ENGINE lamp) comes on. DTC P0107 should be stored and kept in memory when the ignition is turned “OFF.” If not, the ECM is faulty. When this test is completed, make sure that you clear the DTC P0107 from memory.

An intermittent MIL (CHECK ENGINE lamp) with no stored DTC may be caused by the following:

- MIL (CHECK ENGINE lamp) wire to ECM shorted to ground.
- Poor ECM grounds. Refer to the ECM wiring diagrams.

Check for improper installation of electrical options such as lights, cellular phones, etc.

Check for an open diode across the A/C compressor clutch and check for other open diodes (refer to wiring diagrams in *Electrical Diagnosis*).

If problem has not been found, refer to *ECM Connector Symptom* tables.

Hard Start Symptom

Step	Action	Value(s)	Yes	No
1	**DEFINITION:** Engine cranks, but does not start for a long time. Does eventually run, or may start but immediately stalls. Was the “On-Board Diagnostic (OBD) System Check” performed?	—	Go to *Step 2*	Go to *OBD System Check*
2	1. Perform a bulletin search. 2. If a bulletin that addresses the symptom is found, correct the condition as instructed in the bulletin. Was a bulletin found that addresses the symptom?	—	Verify repair	Go to *Step 3*
3	Was a visual/physical check performed?	—	Go to *Step 4*	Go to *Visual/Physical Check*
4	Check engine coolant temperature (ECT) sensor for shift in value. After 8 hours with the hood up and the engine not running, connect the scan tool. With the ignition “ON” and the engine not running, compare engine coolant temperature to manifold air temperature. Are ECT and MAT within the specified value of each other?	± 5˚C (± 9˚F)	Go to *Step 8*	Go to *Step 5*
5	1. Using Tech–2, display the engine coolant temperature and note the value. 2. Check the resistance of the engine coolant temperature sensor. 3. Refer to *Engine Coolant Temperature Sensor Temperature vs. Resistance* chart on *DTC P0118 Diagnostic Support* for resistance specifications. Is the resistance value near the resistance for the temperature noted?	—	Go to *Step 7*	Go to *Step 6*
6	Replace the ECT sensor. Is the action complete?	—	Verify repair	—
7	Locate and repair high resistance or poor connection in the ECT signal circuit or the ECT sensor ground. Is the action complete?	—	Verify repair	—
8	1. Injector Test Operate the each injector by Tech 2 with the ignition “ON” and check if the working noise confirm. 2. If a problem is found, check the harness or replace the injector. Is the action complete?	—	Verify repair	Go to *Step 9*
9	Check the oil rail pressure by Tech 2 at the cranking. Is the pressure near the specified value?	Less than 3 MPa	Go to *Step 10*	Go to *Step 11*
10	Check the oil leakage on the high oil pressure line. If the oil leakage is found, repair as necessary. Was the oil leakage found?	—	Verify repair	Go to *Step 11*
11	1. Check for water-or alcohol-contaminated fuel. 2. If a problem is found, repair as necessary. Was a problem found?	—	Verify repair	Go to *Step 12*

Hard Start Symptom (Cont'd)

Step	Action	Value(s)	Yes	No
12	1. Check the battery voltage. 2. If a problem is found, repair as necessary. Was a problem found?	—	Verify repair	Go to *Step 13*
13	1. Check for the following engine mechanical problems (Refer to *Engine Mechanical*): ● Low compression ● Leaking cylinder head gaskets ● Worn or incorrect camshaft ● Camshaft drive belt slipped or stripped 2. If a problem is found, repair as necessary. Was a problem found?	—	Verify repair	Go to *Step 14*
14	1. Review all diagnostic procedures within this table. 2. If all procedures have been completed and no malfunctions have been found, review/inspect the following: ● Visual/physical inspection ● Tech–2 data ● Freeze Frame data/Failure Records buffer ● All electrical connections within a suspected circuit and/or system. 3. If a problem is found, repair as necessary. Was a problem found?	—	Verify repair	Contact Technical Assistance

Surges and/or Chuggles Symptom

Step	Action	Value(s)	Yes	No
1	**DEFINITION:** Engine power variation under steady throttle or cruise. Feels like the vehicle speeds up and slows down with no change in the accelerator pedal. Was the “On-Board Diagnostic (OBD) System Check” performed?	—	Go to *Step 2*	Go to *OBD System Check*
2	1. Perform a bulletin search. 2. If a bulletin that addresses the symptom is found, correct the condition as instructed in the bulletin. Was a bulletin found that addresses the symptom?	—	Verify repair	Go to *Step 3*
3	Was a visual/physical check performed?	—	Go to *Step 4*	Go to *Visual/ Physical Check*
4	Be sure that the driver understands transmission torque converter clutch and A/C compressor operation as explained in the owner’s manual. Inform the customer how the TCC and the A/C clutch operate. Is the customer experiencing a normal condition?	—	System OK	Go to *Step 5*
5	1. Check the priming pump. Refer to *Fuel System*. 2. If a problem is found, operate the priming pump. Was a problem found?	—	Verify repair	Go to *Step 6*
6	1. Injector Test Operate the each injector by Tech 2 with the ignition “ON” and check if the working noise confirm. 2. If a problem is found, check the harness and repair as necessary. Is the action complete?	—	Verify repair	Go to *Step 7*
7	1. Check ECM grounds for the cleanliness, tightness and proper locations. Refer to the ECM wiring diagrams in *Electrical Diagnosis*. 2. If a problem is found, repair as necessary. Was a problem found?	—	Verify repair	Go to *Step 8*
8	1. Check AP sensor connections. 2. If a problem is found, replace the faulty terminals as necessary. Refer to *Electrical Diagnosis* for wiring repair procedures. Was a problem found?	—	Verify repair	Go to *Step 9*
9	1. Visually/physically check vacuum hoses for splits, kinks, and proper connections and routing as shown on the “Vehicle Emission Control Information” label. 2. If a problem is found, repair as necessary. Was a problem found?	—	Verify repair	Go to *Step 10*

Surges and/or Chuggles Symptom (Cont'd)

Step	Action	Value(s)	Yes	No
10	1. Check the exhaust system for possible restriction: ● Inspect the exhaust system for damaged or collapsed pipes. ● Inspect the muffler for heat distress or possible internal failure. ● Check for a possible plugged catalytic converter by checking the exhaust system back pressure. Refer to *Restricted Exhaust System Check*. 2. If a problem is found, repair as necessary. Was a problem found?	—	Verify repair	Go to *Step 11*
11	1. Review all diagnostic procedures within this table. 2. If all procedures have been completed and no malfunctions have been found, review/inspect the following: ● Visual/physical inspection ● Tech 2 data ● Freeze Frame data/Failure Records buffer ● All electrical connections within a suspected circuit and/or system. 3. If a problem is found, repair as necessary. Was a problem found?	—	Verify repair	Contact Technical Assistance

Lack of Power, Sluggish or Spongy Symptom

Step	Action	Value(s)	Yes	No
1	**DEFINITION:** Engine delivers less than expected power. Little or no increase in speed when accelerator pedal is pushed down part-way. Was the "On-Board Diagnostic (OBD) System Check" performed?	—	Go to *Step 2*	Go to *OBD System Check*
2	1. Perform a bulletin search. 2. If a bulletin that addresses the symptom is found, correct the condition as instructed in the bulletin. Was a bulletin found that addresses the symptom?	—	Verify repair	Go to *Step 3*
3	Was a visual/physical check performed?	—	Go to *Step 4*	Go to *Visual/ Physical Check*
4	1. Remove and check the air filter element for dirt or restrictions. Refer to *Air Intake System* in *On-Vehicle Service*. 2. Replace the air filter element if necessary. Was a repair required?	—	Verify repair	Go to *Step 5*
5	1. Check AP sensor system. Refer to *AP sensor diagnostic*. 2. If a problem is found, repair as necessary. Was a problem found?	—	Verify repair	Go to *Step 6*
6	1. Check for water-or alcohol-contaminated fuel. 2. If a problem is found, repair as necessary. Was a problem found?	—	Verify repair	Go to *Step 7*
7	1. Using a Tech 2, Injector test. 2. If a problem is found, repair as necessary. Was a problem found?	—	Verify repair	Go to *Step 8*
8	1. Check the ECM grounds for the cleanliness, tightness and proper locations. Refer to the ECM wiring diagrams in *Electrical Diagnosis*. 2. If a problem is found, repair as necessary. Was a problem found?	—	Verify repair	Go to *Step 9*
9	1. Check the exhaust system for possible restriction: • Inspect the exhaust system for damaged or collapsed pipes. • Inspect the muffler for heat distress or possible internal failure. • Check for a possible plugged catalytic converter by checking the exhaust system back pressure. Refer to *Restricted Exhaust System Check*. 2. If a problem is found, repair as necessary. Was a problem found?	—	Verify repair	Go to *Step 10*
10	1. Check the torque converter clutch (TCC) for proper operation. Refer to *Transmission Diagnosis*. 2. If a problem is found, repair as necessary. Was a problem found?	—	Verify repair	Go to *Step 11*

Lack of Power, Sluggish or Spongy Symptom (Cont'd)

Step	Action	Value(s)	Yes	No
11	1. Check for an engine mechanical problem. Check for low compression, incorrect or worn camshaft, loose timing belt, etc. Refer to *Engine Mechanical*. 2. If a problem is found, repair as necessary. Was a problem found?	—	Verify repair	Go to *Step 12*
12	1. Review all diagnostic procedures within this table. 2. If all procedures have been completed and no malfunctions have been found, review/inspect the following: ● Visual/physical inspection ● Tech 2 data ● Freeze Frame data/Failure Records buffer ● All electrical connections within a suspected circuit and/or system. 3. If a problem is found, repair as necessary. Was a problem found?	—	Verify repair	Contact Technical Assistance

Rough, Unstable, or Incorrect Idle, Stalling Symptom

Step	Action	Value(s)	Yes	No
1	**DEFINITION:** Engine runs unevenly at idle. If severe, the engine or vehicle may shake. Engine idle speed may vary in RPM. Either condition may be severe enough to stall the engine. Was the "On-Board Diagnostic (OBD) System Check" performed?	—	Go to *Step 2*	Go to *OBD System Check*
2	1. Perform a bulletin search. 2. If a bulletin that addresses the symptom is found, correct the condition as instructed in the bulletin. Was a bulletin found that addresses the symptom?	—	Go to *Step 6*	Go to *Step 3*
3	Was a visual/physical check performed?	—	Go to *Step 4*	Go to *Visual/ Physical Check*
4	1. Check the ECM grounds for cleanliness, tightness and proper routing. Refer to the ECM wiring diagrams in *Electrical Diagnosis*. 2. If a problem is found, repair as necessary. Was a problem found?	—	Verify repair	Go to *Step 5*
5	1. Check for incorrect idle speed. Ensure that the following conditions are present: ● The engine is fully warm. ● The accessories are "OFF." 2. Using a Tech 2, monitor the AP position. Is the AP position within the specified values?	0%	Go to *Step 10*	Go to *Step 9*
6	1. Visually/physically inspect for the following conditions: ● Restricted air intake system. Check for a possible collapsed air intake duct, restricted air filter element, or foreign objects blocking the air intake system. 2. If a problem is found, repair as necessary. Was a problem found?	—	Verify repair	Go to *Step 7*
7	1. Injector Test Operate the each injector by Tech 2 with the ignition "ON" and check if the working noise confirm. 2. If a problem is found, check the harness or replace the injector. Is the action complete?	—	Verify repair	Go to *Step 8*
8	1. Check the transmission range switch circuit. Use a Tech 2 and be sure the Tech 2 indicates that the vehicle is in drive with the gear selector in drive or overdrive. 2. If a problem is found, diagnose and repair the transmission range switch as necessary (Refer to *Automatic Transmission Diagnosis*). Was a problem found?	—	Verify repair	Go to *Step 9*

Rough, Unstable, or Incorrect Idle, Stalling Symptom (Cont'd)

Step	Action	Value(s)	Yes	No
9	1. Check for the following engine mechanical items. Refer to *Engine Mechanical* for diagnosis procedures: ● Low compression ● Sticking or leaking valves ● Worn camshaft lobe(s) ● Camshaft drive belt slipped or stripped ● Incorrect valve timing ● Valves clearance ● Broken valve springs 2. If a problem is found, repair as necessary. Was a problem found?	—	Verify repair	Go to *Step 10*
10	1. Check for faulty engine mounts. Refer to *Engine Mechanical* for inspection of mounts. 2. If a problem is found, repair as necessary. Was a problem found?	—	Verify repair	Go to *Step 11*
11	1. Review all diagnostic procedures within this table. 2. If all procedures have been completed and no malfunctions have been found, review/inspect the following: ● Visual/physical inspection ● Tech 2 data ● Freeze Frame data/Failure Records buffer ● All electrical connections within a suspected circuit and/or system. 3. If a problem is found, repair as necessary. Was a problem found?	—	Verify repair	Contact Technical Assistance

Poor Fuel Economy Symptom

Step	Action	Value(s)	Yes	No
1	**DEFINITION:** Fuel economy, as measured by an actual road test, is noticeably lower than expected. Also, economy is noticeably lower than it was on this vehicle at one time, as previously shown by an actual road test. (Larger than standard tires will cause odometer readings to be incorrect, and that may cause fuel economy to appear poor when it is actually normal.) Was the “On-Board Diagnostic (OBD) System Check” performed?	—	Go to *Step 2*	Go to *OBD System Check*
2	1. Perform a bulletin search. 2. If a bulletin that addresses the symptom is found, correct the condition as instructed in the bulletin. Was a bulletin found that addresses the symptom?	—	Verify repair	Go to *Step 3*
3	Was a visual/physical check performed?	—	Go to *Step 4*	Go to *Visual/ Physical Check*
4	Check owner’s driving habits. ● Is the A/C “ON” full time (defroster mode “ON”)? ● Are tires at the correct pressure? ● Are excessively heavy loads being carried? ● Is acceleration too much, too often? ● Is engine oil correct? Was a problem found?	—	Go to *Step 5*	Go to *Step 6*
5	Review the items in Step 4 with the customer and advise as necessary. Is the action complete?	—	System OK	—
6	1. Visually/physically check: Vacuum hoses for splits, kinks, and improper connections and routing as shown on the “Vehicle Emission Control Information” label. 2. If a problem is found, repair as necessary. Was a repair required?	—	Verify repair	Go to *Step 7*
7	1. Remove and check the air filter element for dirt or for restrictions. Refer to *Air Intake System*. 2. Replace the air filter element if necessary. Was a repair required?	—	Verify repair	Go to *Step 8*
8	1. Check for low engine coolant level. Refer to *Engine Cooling*. 2. If a problem is found, repair as necessary. Was a problem found?	—	Verify repair	Go to *Step 9*
9	1. Check for an incorrect or faulty engine thermostat. Refer to *Engine Cooling*. 2. If a problem is found, repair as necessary. Was a problem found?	—	Verify repair	Go to *Step 10*
10	1. Check for low engine compression. Refer to *Engine Mechanical*. 2. If a problem is found, repair as necessary. Was a problem found?	—	Verify repair	Go to *Step 11*

Poor Fuel Economy Symptom (Cont'd)

Step	Action	Value(s)	Yes	No
11	1. Check the TCC operation. Refer to *Transmission Diagnosis*. 2. If a problem is found, repair as necessary. Was a problem found?	—	Verify repair	Go to *Step 12*
12	1. Check the exhaust system for possible restriction: ● Inspect the exhaust system for damaged or collapsed pipes. ● Inspect the muffler for heat distress or possible internal failure. 2. If a problem is found, repair as necessary. Was a problem found?	—	Verify repair	Go to *Step 13*
13	Check for proper calibration of the speedometer. Does the speed indicated on the speedometer closely match the vehicle speed displayed on the Tech 2?	—	Go to *Step 15*	Go to *Step 14*
14	Diagnose and repair an inaccurate speedometer condition as necessary. Refer to *Vehicle Speed Sensor* in *Electrical Diagnosis*. Was a problem found?	—	Verify repair	—
15	1. Check the air intake system and the crankcase for air leaks. Refer to *Air Intake System* and *Crankcase Ventilation System*. 2. If a problem is found, repair as necessary. Was a problem found?	—	Verify repair	Go to *Step 16*
16	1. Review all diagnostic procedures within this table. 2. When all procedures have been completed and no malfunctions have been found, review/inspect the following: ● Visual/physical inspection ● Tech 2 data ● Freeze Frame data/Failure Records buffer ● All connections within a suspected circuit and/or system. 3. If a problem is found, repair as necessary. Was a problem found?	—	Verify repair	Go to *Step 17*
17	Perform the procedure in *Injector Test*. Was the fuel pressure normal?	—	Contact Technical Assistance	Verify repair

Excessive Exhaust Emissions or Odors Symptom

Step	Action	Value(s)	Yes	No
1	**DEFINITION:** Vehicle fails an emission test. Vehicle has excessive "rotten egg" smell. (Excessive odors do not necessarily indicate excessive emissions.) Was the "On-Board Diagnostic (OBD) System Check" performed?	—	Go to *Step 2*	Go to *OBD System Check*
2	1. Perform a bulletin search. 2. If a bulletin that addresses the symptom is found, correct the condition as instructed in the bulletin. Was a bulletin found that addresses the symptom?	—	Verify repair	Go to *Step 3*
3	Was a thorough visual/physical check performed?	—	Go to *Step 4*	Go to *Visual/ Physical Check*
4	1. Check for vacuum leaks. Check vacuum lines, intake manifold, throttle body, etc. 2. If a problem is found, repair as necessary. Were any vacuum leaks located?	—	Verify repair	Go to *Step 5*
5	1. Check the fuel cap for proper installation. 2. Secure the fuel cap if necessary. Was the fuel cap installed properly?	—	Go to *Step 6*	Verify repair
6	1. Injector Test Operate the each injector by Tech 2 with the ignition "ON" and check if the working noise confirm. 2. If a problem is found, check the harness or replace the injector. Is the action complete?	—	Verify repair	Go to *Step 7*
7	1. Refer to *Engine Cooling* for cooling system diagnosis. 2. If a problem is found, repair as necessary. Was a problem found?	—	Verify repair	Go to *Step 8*
8	1. Check for an engine mechanical problem. Perform a cylinder compression check (Refer to *Engine Mechanical*). 2. If a problem is found, repair as necessary. Was a problem found?	—	Verify repair	Go to *Step 9*
9	1. Review all diagnostic procedures within this table. 2. If all procedures have been completed and no malfunctions have been found, review/inspect the following: ● Visual/physical inspection ● Tech 2 data ● Freeze Frame data/Failure Records butter ● All electrical connections within a suspected circuit and/or system. 3. If a problem is found, repair as necessary. Was a problem found?	—	Verify repair	Contact Technical Assistance

Dieseling, Run-On Symptom

Step	Action	Value(s)	Yes	No
1	**DEFINITION:** Engine continues to run after key is turned “OFF,” but runs very rough. If engine runs smooth, check ignition switch and adjustment. Was the “On-Board Diagnostic (OBD) System Check” performed?	—	Go to *Step 2*	Go to *OBD System Check*
2	1. Perform a bulletin search. 2. If a bulletin that addresses the symptom is found, correct the condition as instructed in the bulletin. Was a bulletin found that addresses the symptom?	—	Verify repair	Go to *Step 3*
3	Was a visual/physical check performed?	—	Go to *Step 4*	Go to *Visual/ Physical Check*
4	1. Check for a short between B+ and any of the ignition feed circuits. 2. If a problem is found, repair as necessary. Was a problem found?	—	Verify repair	Go to *Step 5*
5	1. Review all diagnostic procedures within this table. 2. If all procedures have been completed and no malfunctions have been found, review/inspect the following: ● Visual/physical inspection ● Tech 2 data ● Freeze Frame data/Failure Records butter ● All electrical connections within a suspected circuit and/or system 3. If a problem is found, repair as necessary. Was a problem found?	—	Verify repair	Contact Technical Assistance

Cuts Out, Symptom

Step	Action	Value(s)	Yes	No
1	**DEFINITION:** Steady pulsation or jerking that follows engine speed; usually more pronounced as engine load increases. Was the “On-Board Diagnostic (OBD) System Check” performed?	—	Go to *Step 2*	Go to *OBD System Check*
2	1. Perform a bulletin search. 2. If a bulletin that addresses the symptom is found, correct the condition as instructed in the bulletin. Was a bulletin found that addresses the symptom?	—	Go to *Step 7*	Go to *Step 3*
3	Was a visual/physical check performed?	—	Go to *Step 4*	Go to *Visual/ Physical Check*
4	1. Check the ECM grounds for clearness, tightness and proper routing. Refer to the ECM wiring diagrams in *Electrical Diagnosis*. 2. If a problem is found, repair as necessary. Was a problem found?	—	Verify repair	Go to *Step 5*
5	1. Check for incorrect idle speed. Ensure that the following conditions are present: ● The engine is fully warm. ● The accessories are “off.” 2. Using a Tech 2, monitor the AP position. Is the AP position within the specified values?	0%	Go to *Step 6*	Go to *Step 7*
6	1. Visually/physically inspect for the following conditions: ● Restricted air intake system. Check for a possible collapsed air intake duct, restricted air filter element, or foreign objects blocking the air intake system. ● Check the Throttle body. ● Large vacuum leak. Check for a condition that causes a large vacuum leak, such as an incorrectly installed or faulty VSV or brake booster hose disconnected . 2. If a problem is found, repair as necessary. Was a problem found?	—	Verify repair	Go to *Step 7*
7	Using a Tech 2, monitor the AP angle with the engine idling. Is the AP angle at the specified value and steady?	0%	Go to *Step 8*	Refer to *DTC P0123* for further diagnosis
8	1. Check the transmission range switch circuit. Use a Tech 2 and be sure the Tech 2 indicates that the vehicle is in drive with the gear selector in drive or overdrive. 2. If a problem is found, diagnose and repair the transmission range switch as necessary. Was a problem found?	—	Verify repair	Go to *Step 9*

Cuts Out, Symptom (Cont'd)

Step	Action	Value(s)	Yes	No
9	1. Injector Test Operate the each injector by Tech 2 with the ignition "ON" and check if the working noise confirm. 2. If a problem is found, check the harness or replace the injector. Is the action complete?	—	Verify repair	Go to *Step 10*
10	1. Check the following engine mechanical items. Refer to *Engine Mechanical* for diagnosis procedures: ● Low compression ● Sticking or leaking valves ● Worn camshaft lobe(s) ● Camshaft drive belt slipped or stripped ● Incorrect valve timing ● Broken valve springs 2. If a problem is found, repair as necessary. Was a problem found?	—	Verify repair	Go to *Step 11*
11	1. Check for faulty motor mounts. Refer to *Engine Mechanical* for inspection of mounts. 2. If a problem is found, repair as necessary. Was a problem found?	—	Verify repair	Go to *Step 12*
12	1. Review all diagnostic procedures within this table. 2. If all procedures have been completed and no malfunctions have been found, review/inspect the following: ● Visual/physical inspection ● Tech 2 data ● Freeze Frame data/Failure Records butter ● All electrical connections within a suspected circuit and/or system 3. If a problem is found, repair as necessary. Was a problem found?	—	Verify repair	Contact Technical Assistance

Starter Motor Doesn't Rotate

Step	Action	Value(s)	Yes	No
1	**DEFINITION:** As starter motor doesn't rotate, engine is not cranked. 1. Perform a bulletin search. 2. If a bulletin that addresses the symptom is found, correct the condition as instructed in the bulletin. Was the bulletin found?	—	Verify repair	Go to *Step 2*
2	Was a visual/physical check performed?	—	Go to *Step 3*	Go to *Visual/ Physical Check*
3	1. Check battery cord terminal for looseness & poor contact due to corrosion. 2. Check battery voltage. 3. If a problem is found, repair as necessary. Was a problem found?	—	Verify repair	Go to *Step 4*
4	1. Check fan belt for looseness & damage. 2. If a problem is found, adjust or replace as necessary. Was a problem found?	—	Verify repair	Go to *Step 5*
5	1. Check fuse bull link for disconnection & short. 2. If a problem is found, repair as necessary. Was a problem found?	—	Verify repair	Go to *Step 6*
6	1. Check generator for mount & damage (Refer to Engine Mechanical). 2. If a problem is found, repair as necessary. Was a problem found?	—	Verify repair	Go to *Step 7*
7	1. Check starter SW and starter relay for looseness and damage. 2. If a problem is found, repair as necessary. Was a problem found?	—	Verify repair	Go to *Step 8*
8	1. Check starter motor for mount and damage. (Refer to *Engine Mechanical*) 2. If a problem is found, repair as necessary. Was a problem found?	—	Verify repair	Go to *Step 9*
9	1. Review all diagnostic procedures within this table. 2. If all procedures have been completed and no malfunctions have been found, review/inspect the following: • Visual/physical inspection • Tech 2 data • Freeze Frame data/Failure Records butter • All electrical connections within a suspected circuit and/or system 3. If a problem is found, repair as necessary. Was a problem found?	—	Verify repair	Contact Technical Assistance

Starting Difficulty In Case Fuel Doesn't Come to Injector

Step	Action	Value(s)	Yes	No
1	**DEFINITION:** Engine is cranked, but not started for a long time. Steps soon. Was OBD System check performed?	—	Go to *Step 2*	Go to *OBD System Check*
2	1. Perform a bulletin research. 2. If a bulletin that addresses the symptom is found, correct the condition as instructed in the bulletin. Was a bulletin found?	—	Verify repair	Go to *Step 3*
3	Was a visual/physical check performed?	—	Go to *Step 4*	Go to *Visual/ Physical Check*
4	Check fuel shortage. If short, replenish. Was fuel short?	—	Verify replenish	Go to *Step 5*
5	1. Check fuel pipeline for leak. 2. If a problem is found, repair as necessary. Was a problem found?	—	Verify repair	Go to *Step 6*
6	1. Check fuel pipeline & filter for deformation & clogging. 2. If a problem is found, repair as necessary. Was a problem found?	—	Verify repair	Go to *Step 7*
7	1. Check fuel pump for damage. 2. If a problem is found, repair as necessary. Was a problem found?	—	Verify repair	Go to *Step 8*
8	Check the Injector test by Tech 2. Does the working noise confirm?	—	Go to *Step 11*	Go to *Step 9*
9	1. Check the injector connector for damage. 2. Check the injector harness for damage. 3. If a problem is found, repair as necessary. Was a problem found?	—	Verify repair	Go to *Step 10*
10	Replace the injector. (Refer to the *injector group sign programming)* Is the action complete?	—	Verify repair	—
11	1. Indicate RPCV Data List by Tech 2 to check operation. Perform RPCV test. 2. If a problem is found, replace RP sensor or RPCV as necessary. Was a problem found?	—	Verify repair	Go to *Step 12*

Starting Difficulty In Case Fuel Doesn't Come to Injector (Cont'd)

Step	Action	Value(s)	Yes	No
12	1. Review all diagnostic procedures within this table. 2. If all procedures have been completed and no malfunctions have been found, review/inspect the following: ● Visual/physical inspection ● Tech 2 data ● Freeze Frame data/Failure Records butter ● All electrical connections within a suspected circuit and/or system 3. If a problem is found, repair as necessary. Was a problem found?	—	Verify repair	Contact Technical Assistance

Lubrication System Trouble

Step	Action	Value(s)	Yes	No
1	**DEFINITION:** In road tests oil pressure doesn't rise, or oil is foul to excess. Was OBD System check performed?	—	Go to *Step 2*	Go to *OBD System Check*
2	1. Perform a bulletin research. 2. If a bulletin that addresses the symptom is found, correct the condition as instructed in the bulletin. Was a bulletin found?	—	Verify repair	Go to *Step 3*
3	1. Check if a correct engine oil is used. 2. If a problem is found, change engine oil. Was a problem found?	—	Verify repair	Go to *Step 4*
4	1. Check the oil pressure meter for damage. 2. Check the oil unit harness and connector for damage. 3. If a problem is found, repair as necessary. Was a problem found?	—	Verify repair	Go to *Step 5*
5	1. Check oil pipe connections for leakage. 2. If a problem is found, repair as necessary. Was a problem found?	—	Verify repair	Go to *Step 6*
6	1. Check oil filter for clogging. 2. If a problem is found, repair as necessary. Was a problem found?	—	Verify repair	Go to *Step 7*
7	1. Check valve clearance. 2. If a problem is found, adjust as necessary. Was a problem found?	—	Verify repair	Go to *Step 8*
8	1. Check camshaft bearing for wear. 2. If a problem is found, repair as necessary. Was a problem found?	—	Verify repair	Go to *Step 9*
9	1. Check crankshaft & connecting rod bearings for wear. 2. If a problem is found, repair as necessary. Was a problem found?	—	Verify repair	Go to *Step 10*
10	1. Check oil pump for damage. 2. If a problem is found, repair as necessary. Was a problem found?	—	Verify repair	Go to *Step 11*

Lubrication System Trouble (Cont'd)

Step	Action	Value(s)	Yes	No
11	1. Check cylinder head & cam carrier gaskets for damage. 2. If a problem is found, repair or replace as necessary. Was a problem found?	—	Verify repair	Go to *Step 12*
12	1. Review all diagnostic procedures within this table. 2. If all procedures have been completed and no malfunctions have been found, review/inspect the following: ● Visual/physical inspection ● Tech 2 data ● Freeze Frame data/Failure Records butter ● All electrical connections within a suspected circuit and/or system 3. If a problem is found, repair as necessary. Was a problem found?	—	Verify repair	Contact Technical Assistance

QOS System Doesn't Work

Step	Action	Value(s)	Yes	No
1	Was OBD System check performed?	—	Go to *Step 2*	Go to *OBD System Check*
2	Check glawplug indicator light. If bulb is broken, replace. Was a problem found?	—	Verify repair	Go to *Step 3*
3	1. Connect a circuit tester between glawplug & engine ground. 2. With ignition on and engine off, check if the glaw indicator and circuit tester indicate power voltage for 9 to 13 sec. If not indicated, repair terminal & wire harness. Was repair needed?	—	Verify repair	Go to *Step 4*
4	1. Connect a circuit tester between glawplug and engine ground. 2. With engine on, check if voltage continues for 180 sec. If not, inspect and repair glaw relay. Was repair needed?	—	Verify repair	Go to *Step 5*
5	1. Remove the glawplug, and if damaged, replace. 2. Check glawplug resistance. Was resistance as specified?	0.8 – 1Ω	Go to *Step 7*	Go to *Step 6*
6	Replace glawplug. Was measure completed?	—	Verify repair	Go to *Step 7*
7	1. Review all diagnostic procedures within this table. 2. If all procedures have been completed and no malfunctions have been found, review/inspect the following: ● Visual/physical inspection ● Tech 2 data ● Freeze Frame data/Failure Records butter ● All electrical connections within a suspected circuit and/or system 3. If a problem is found, repair as necessary. Was a problem found?	—	Verify repair	Contact Technical Assistance

Much Black Smoke in Exhaust Gas

Step	Action	Value(s)	Yes	No
1	**DEFINITION:** In road tests, much black smoke is mixed. Was OBD System check performed?	—	Go to *Step 2*	Go to *OBD System Check*
2	1. Perform a bulletin research. 2. If a bulletin that addresses the symptom is found, correct the condition as instructed in the bulletin. Was a bulletin found?	—	Verify repair	Go to *Step 3*
3	1. Check if a correct fuel is used. 2. If a problem is found, change fuel. Was a problem found?	—	Verify repair	Go to *Step 4*
4	1. Check air cleaner element for clogging. 2. If a problem is found, repair or replace as necessary. Was a problem found?	—	Verify repair	Go to *Step 5*
5	1. Connect Tech 2 to the vehicle. 2. Monitor data list to check injector function. 3. If a problem is found, repair as necessary. Was a problem found?	—	Verify repair	Go to *Step 6*
6	1. Connect Tech 2 to the vehicle. 2. Monitor RPCV test to check rpcv function. 3. If a problem is found, repair as necessary. Was a problem found?	—	Verify repair	Go to *Step 7*
7	1. Check valve clearance. 2. If a problem is found, adjust as necessary. Was a problem found?	—	Verify repair	Go to *Step 8*
8	1. Review all diagnostic procedures in this table. 2. If all procedures have been completed and no malfunctions have been found, review/inspect the following: ● Visual/physical check ● Tech 2 data list ● Freeze Frame data ● All electrical connections in suspected circuits & systems 3. If a problem is found, repair as necessary. Was a problem found?	—	Verify repair	Contact Technical Assistance

Excess Engine Oil Consumption

Step	Action	Value(s)	Yes	No
1	**DEFINITION:** Oil consumption measured in road tests is higher than expected. Was OBD System check performed?	—	Go to *Step 2*	Go to *OBD System Check*
2	1. Perform a bulletin research. 2. If a bulletin that addresses the symptom is found, correct the condition as instructed in the bulletin. Was a bulletin found?	—	Verify repair	Go to *Step 3*
3	1. Check if a correct engine oil is used. 2. If a problem is found, change engine oil. Was a problem found?	—	Verify repair	Go to *Step 4*
4	1. Check oil pipe connections for leakage. 2. If a problem is found, repair as necessary. Was a problem found?	—	Verify repair	Go to *Step 5*
5	1. Check oil seals and gaskets for leakage. 2. If a problem is found, repair as necessary. Was a problem found?	—	Verify repair	Go to *Step 6*
6	1. Connect Tech 2 to the vehicle. 2. Perform RPCV test to check its function. 3. If a problem is found, repair as necessary. Was a problem found?	—	Verify repair	Go to *Step 7*
7	1. Check piston ring for damage & groove wear. 2. If a problem is found, repair as necessary. Was a problem found?	—	Verify repair	Go to *Step 8*
8	1. Check valve stem, valve guide and oil controller for wear. 2. If a problem is found, repair as necessary. Was a problem found?	—	Verify repair	Go to *Step 9*
9	1. Check camshaft carrier & cylinder head gaskets for blow-by. 2. If a problem is found, repair or replace as necessary. Was a problem found?	—	Verify repair	Go to *Step 10*
10	1. Review all the diagnostic procedures in this table. 2. If all procedures have been completed and no malfunctions have been found, review/inspect the following: ● Visual/physical check ● Tech 2 data list ● Freeze Frame data ● All electrical connections in suspected circuits & systems 3. If a problem is found, repair as necessary. Was a problem found?	—	Verify repair	Contact Technical Assistance

Default Matrix Table

Service Procedure Default Strategy

A referral strategy has been established to assist the technician with additional information when the cause of the failure cannot be determined. If no problem is found after performing diagnostics, then refer to the default matrix table for further diagnostic information.

Default Matrix Table

Strategy Based Diagnostic Charts	Initial Diagnosis	Default Section(s)
On-Board Diagnostic (OBD) System Check	Vehicle does not enter diagnostics.	Chassis Electrical
On-Board Diagnostic (OBD) System Check	Vehicle enters diagnostics and communicates with the Tech 2. MIL is “ON” in diagnostics. Engine does not start and run.	HEUI System Check
On-Board Diagnostic (OBD) System Check	Engine starts and runs, no ECM codes set. Customer complains of vibration.	—
On-Board Diagnostic (OBD) System Check	Engine starts and runs, no ECM codes set. Customer complains of harsh or soft shift, poor performance, delayed or no engagement into drive or reverse, transmission fluid leak, transmission noise or vibration, or improper TCC operation.	Automatic Transmission
ECM Power and Ground Check	On-Board Diagnostic (OBD) System Check.	Chassis Electrical
ECM Power and Ground Check	On-Board Diagnostic (OBD) System Check. ECM power and ground circuits OK. Data link voltage incorrect.	Chassis Electrical
On-Board Diagnostic (OBD) System Check	Engine starts and runs, no ECM codes set. Customer complains of harsh or soft shift, poor performance, delayed or no engagement into drive or reverse, transmission fluid leak, transmission noise or vibration, or improper TCC operation.	Automatic Transmission

Symptoms	Initial Diagnosis	Default Section(s)
Intermittents	1. On-board diagnostic (OBD) system check. 2. Careful visual/physical inspections.	Chassis Electrical
Hard Starts	1. OBD system check. 2. Sensors (ECT, MAP, EGR, AP) ; output chart. 3. Fuel system electrical test, fuel system diagnosis. 4. Injector system.	Engine Mechanical, Injector System Check, Exhaust System Diagnosis
Surges and/or Chuggles	1. OBD system check. 2. Fuel system diagnosis. 3. Injector system.	Calibration ID “Broadcast” /Service Bulletins, Ignition System Check, Generator Output, Exhaust System Diagnosis
Lack of Power, Sluggish or Spongy	1. OBD system check. 2. Fuel system diagnosis. 3. Injector system.	Refer to *Exhaust System* in *Engine Exhaust*, TCC Operation, Calibration ID/Service Bulletins

Symptoms	Initial Diagnosis	Default Section(s)
Hesitation, Sag, Stumble	1. OBD system check. 2. AP. 3. MAP output check. 4. Fuel system diagnosis. 5. Injector system.	Generator Output Voltage (refer to *Chassis Electrical*), Calibration ID/Service Bulletins, Ignition System Check
Rough, Unstable, or Incorrect Idle, Stalling	1. OBD system check. 2. Fuel injector test.	MAP Output Check, Throttle Linkage, A/C Clutch Control Circuit Diagnosis, Calibration ID/Service Bulletins, Generator Output Voltage (refer to *Chassis Electrical*), Exhaust Diagnosis
Poor Fuel Economy	1. OBD system check. 2. Careful visual/physical inspection. 3. Injector system. 4. Cooling system.	TCC Operation, Exhaust System (refer to *Engine Exhaust*)
Engine Cranks But Will Not Run	1. OBD system check.	Fuel System Electrical Diagnosis, Fuel System Diagnosis, Fuel Injector Test.
Excessive Exhaust Emissions or Odors	1. OBD system check. 2. Emission test. 3. Cooling system. 4. Fuel system diagnosis. 5. Fuel injector test. 6. Injector system. 7. MAP output check.	Exhaust Diagnosis, Calibration ID/Service Bulletins
Dieseling, Run-On	1. OBD system check. 2. Careful visual/physical inspection. 3. Fuel system diagnosis.	—

On–Vehicle Service Camshaft Position (CMP) Sensor

Removal Procedure

1. Disconnect the negative battery cable.
2. Disconnect the electrical connector to the CMP sensor.

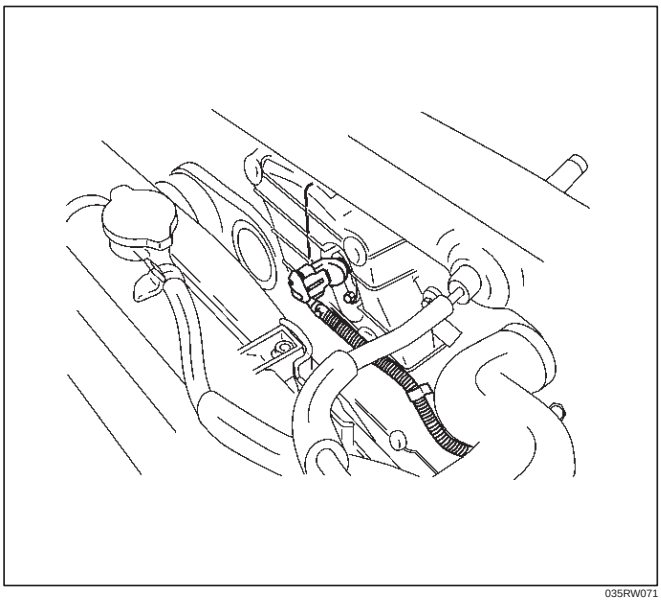

035RW071

3. Remove the CMP sensor retaining bolt from the cylinder head cover.

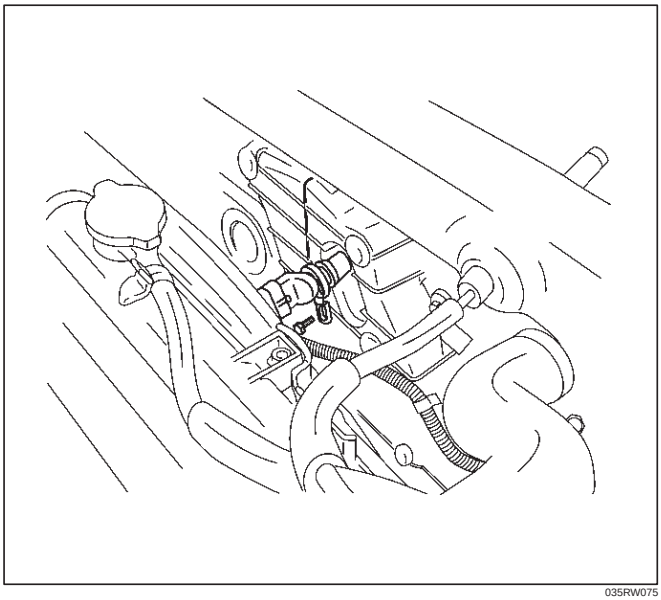

035RW075

Inspection Procedure

1. Inspect the sensor O-ring for cracks or leaks.
2. Replace the O-ring if it is worn or damaged.
3. Lubricate the new O-ring with engine oil.
4. Install the lubricated O-ring.

Installation Procedure

1. Install the CMP sensor in the cylinder head cover.
2. Install the CMP sensor retaining bolt.

Tighten

- **Tighten the retaining bolt to 9 N·m (78 lb in.).**

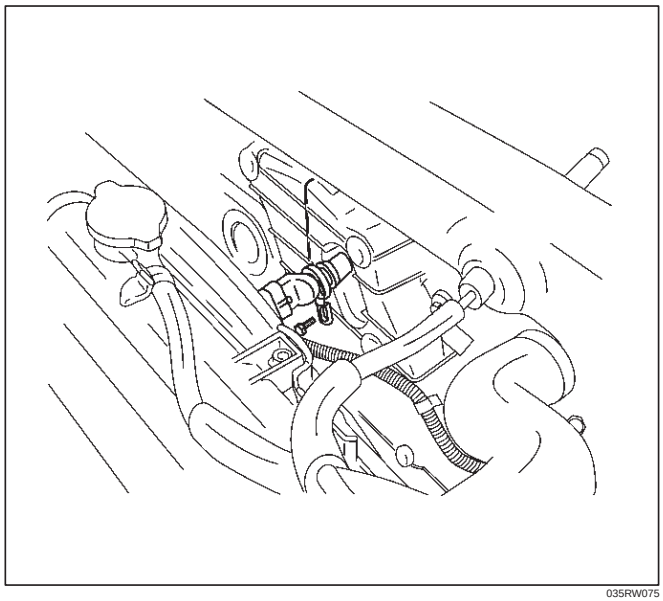

035RW075

3. Connect the electrical connector to the CMP sensor.

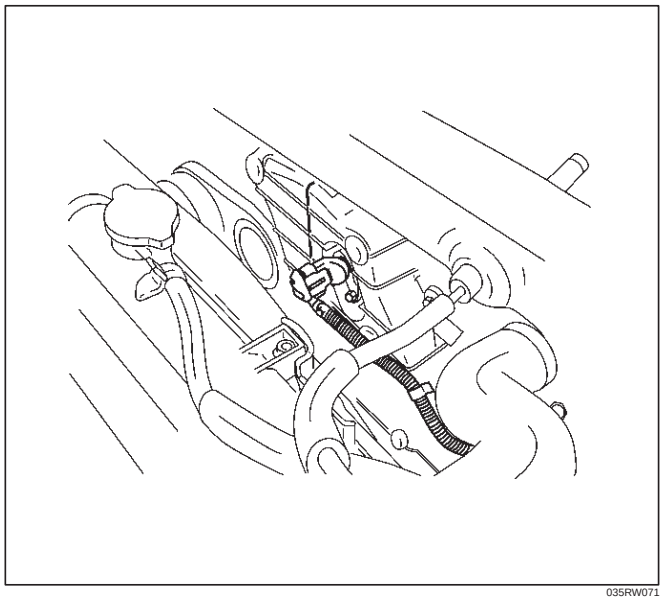

035RW071

4. Connect the negative battery cable.

Crankshaft Position (CKP) Sensor

Removal Procedure

1. Disconnect the negative battery cable.
2. Remove the under cover.

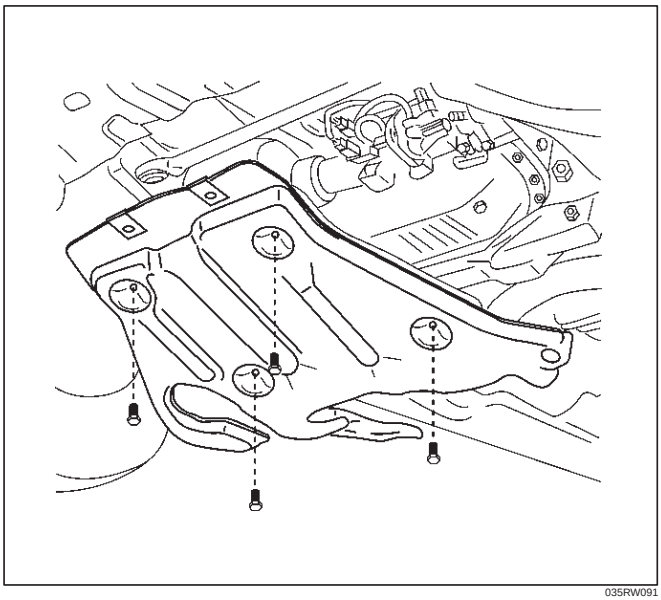

035RW091

3. Disconnect the electrical connector to the CKP sensor.
4. Remove one bolt and the CKP sensor from the left side of the engine block.

NOTE: Use caution to avoid any hot oil that might drip out.

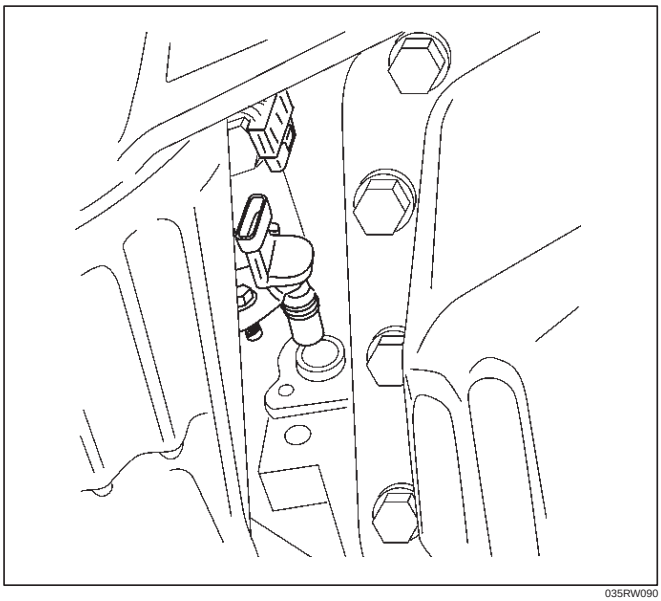

035RW090

Inspection Procedure

1. Inspect the sensor O-ring for cracks or leaks.
2. Replace the O-ring if it is worn or damaged.
3. Lubricate the new O-ring with engine oil.
4. Install the lubricated O-ring.

Installation Procedure

1. Install the CKP sensor in the engine block.
2. Install the CKP sensor mounting bolt.

Tighten

- **Tighten the mounting bolt to 9 N·m (78 lb in.).**

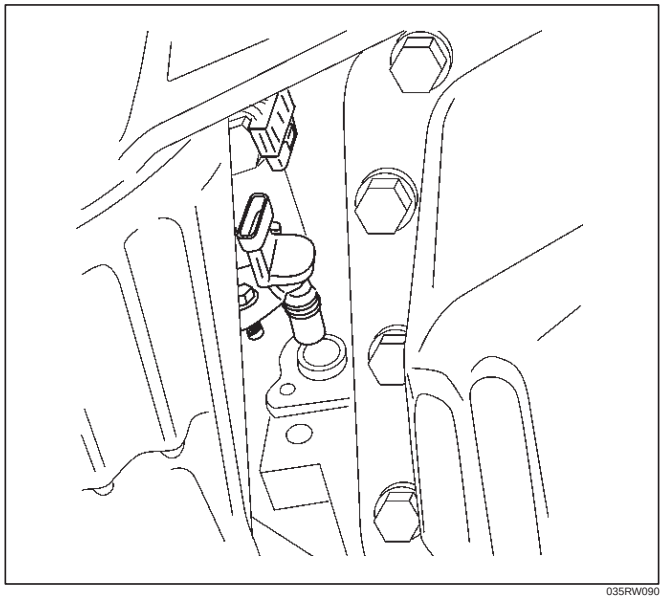

035RW090

3. Connect the electrical connector to the CKP sensor.
4. Install the under cover.

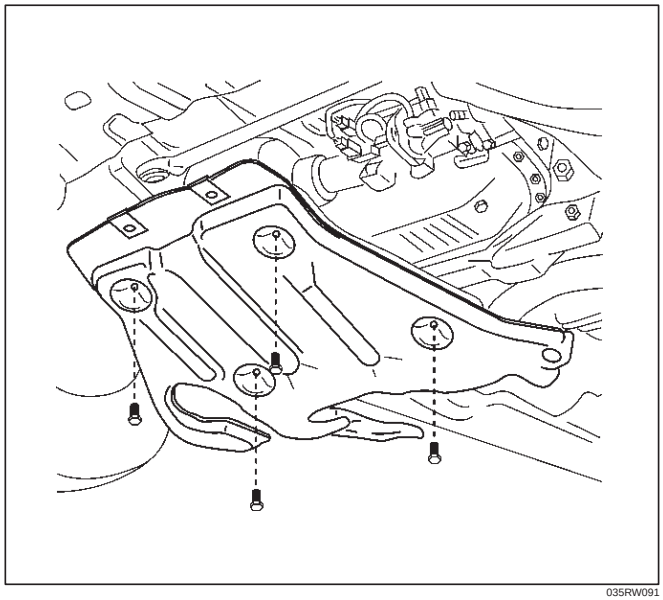

035RW091

5. Connect the negative battery cable.

Engine Coolant Temperature (ECT) Sensor

Removal Procedure

NOTE: Care must be taken when handling the engine coolant temperature (ECT) sensor. Damage to the ECT sensor will affect proper operation of the fuel injection system.

1. Disconnect the negative battery cable.
2. Drain the radiator coolant. Refer to *Draining and Refilling Cooling System* in *Engine Cooling*.
3. Disconnect the electrical connector.
4. Remove the ECT sensor from the front side of the intake manifold.

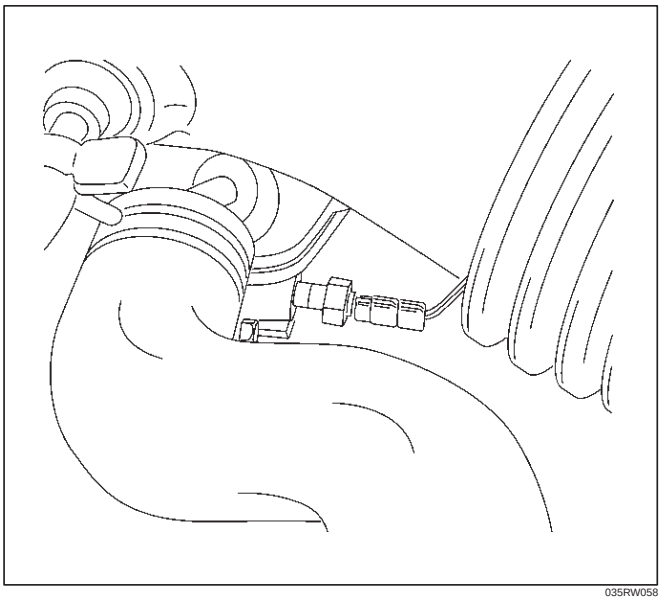

035RW058

Installation Procedure

1. Apply sealer (LOCTITE 262) or the equivalent to the threads of the ECT sensor.
2. Install the ECT sensor in the front side of the intake manifold.

Tighten

- **Tighten the ECT sensor to 19 N·m (14 lb ft.).**

3. Connect the electrical connector.

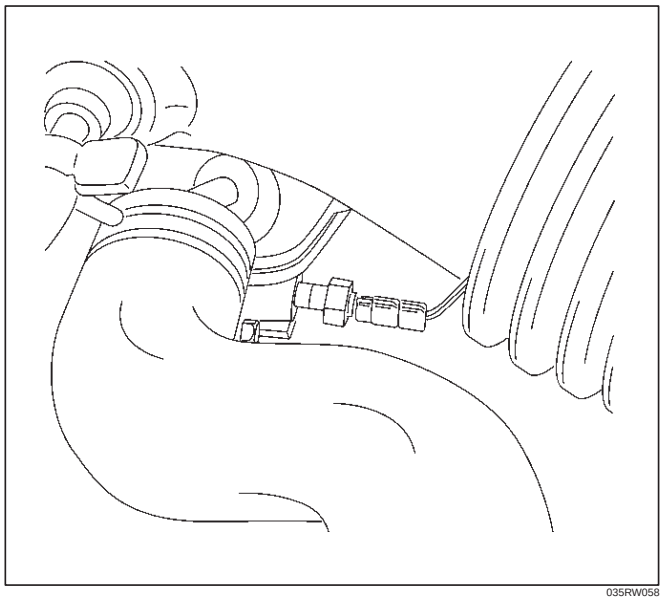

035RW058

4. Fill the radiator with coolant. Refer to *Draining and Refilling Cooling System* in *Engine Cooling*.
5. Connect the negative battery cable.

Intake Air Temperature (IAT) Sensor

Removal Procedure

1. Disconnect the negative battery cable.
2. Disconnect the electrical connector from the IAT sensor.
3. Remove the IAT sensor from the intake air duct by using a rocking motion while pulling the sensor.

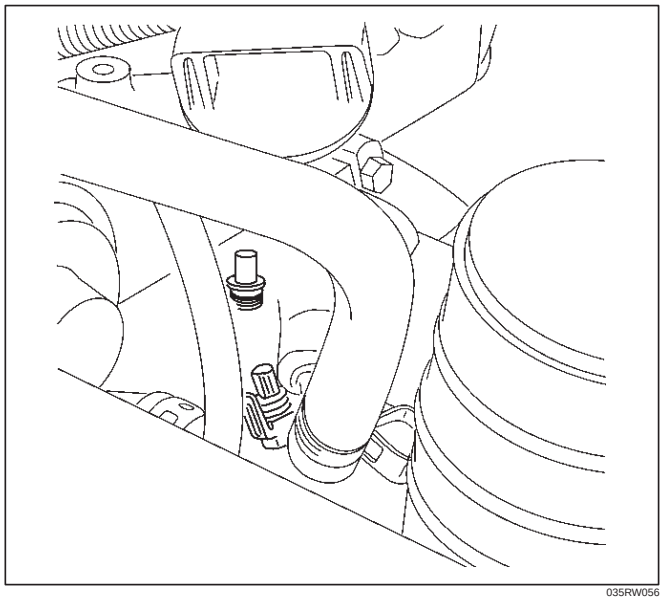

035RW056

Installation Procedure

1. Install the IAT sensor into the grommet in the intake air duct.

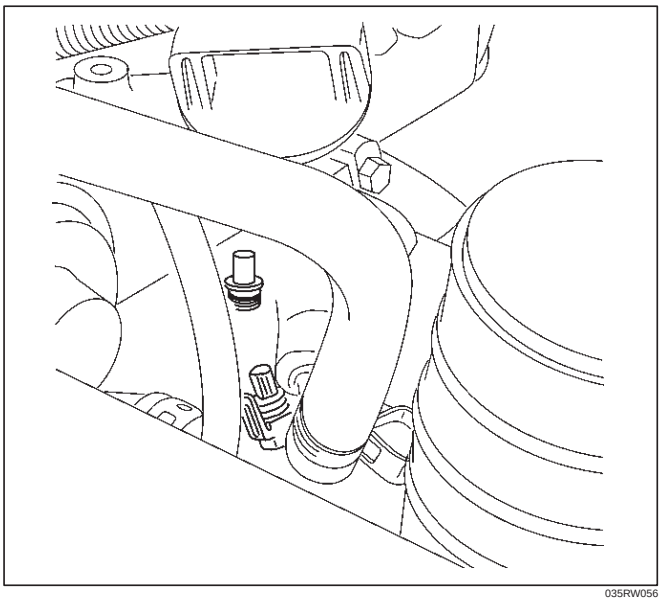

035RW056

2. Correct the IAT electrical connector.
3. Connect the negative battery cable.

Manifold Absolute Pressure (MAP) Sensor

Removal Procedure

1. Disconnect the negative battery cable.
2. Disconnect the EGR valve.

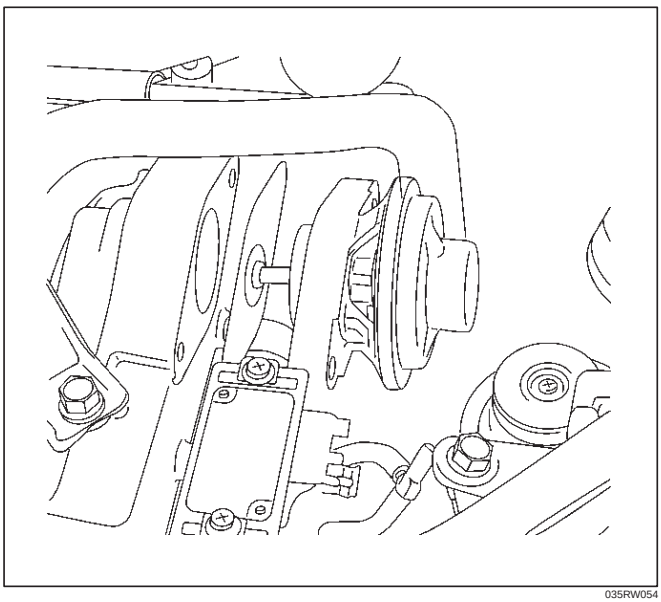

035RW054

3. Disconnect the MAP sensor connector from the MAP sensor.

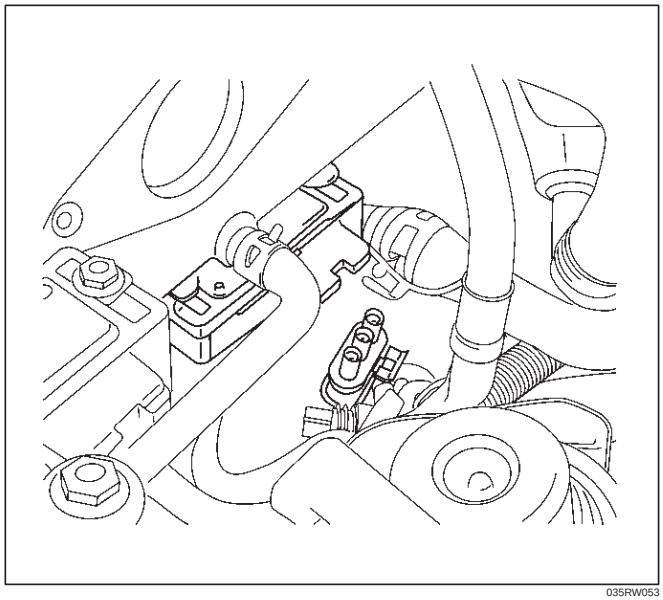

035RW053

4. Remove the bolts and the MAP sensor from the intake manifold.

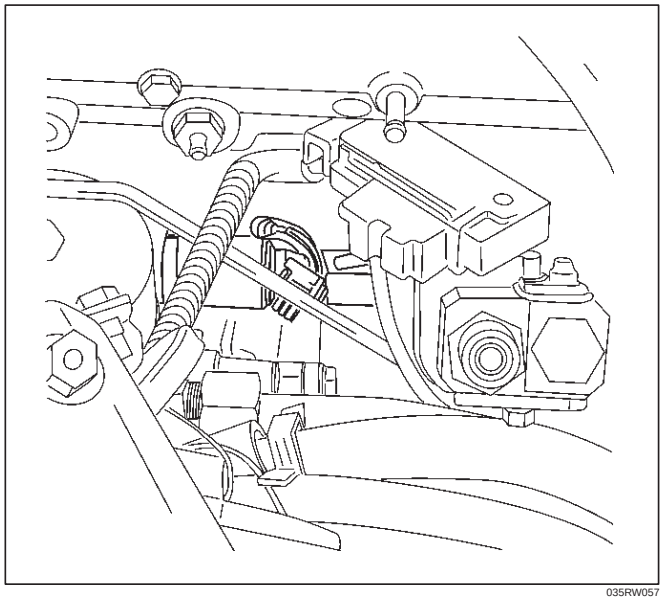

035RW057

Installation Procedure

1. Install the MAP sensor and bolts on the intake manifold.

Torque: 4 N·m (35 lb in)

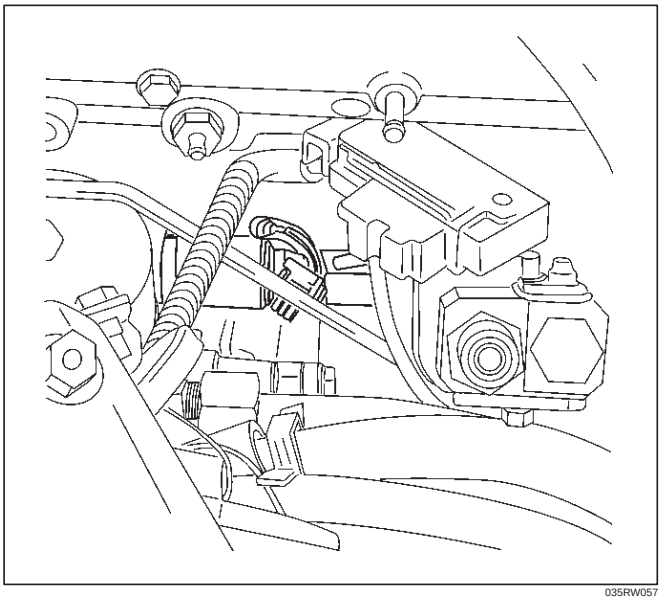

035RW057

2. Connect the MAP sensor connector.

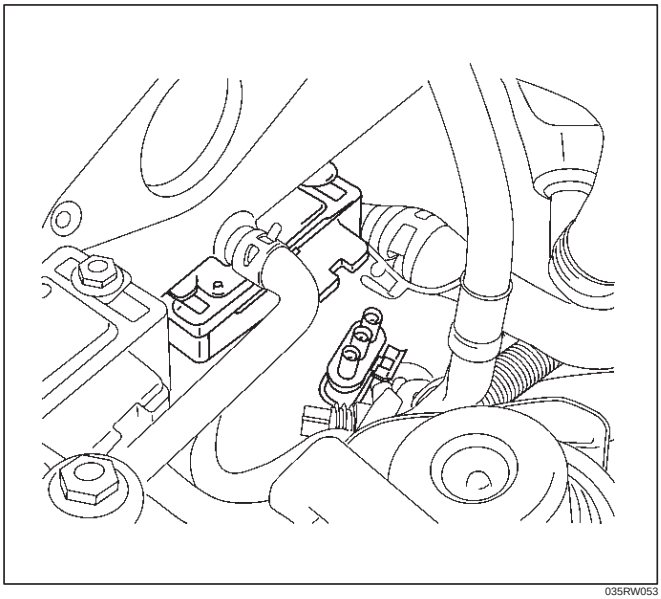

035RW053

3. Connect the EGR valve.

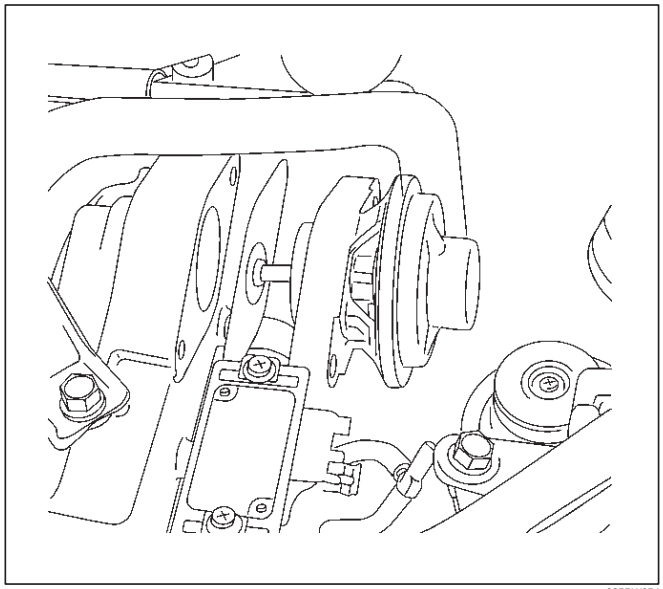

035RW054

4. Connect the negative battery cable.

Oil Temperature (OT) Sensor

Removal Procedure

1. Disconnect the negative battery cable.
2. Remove the battery.

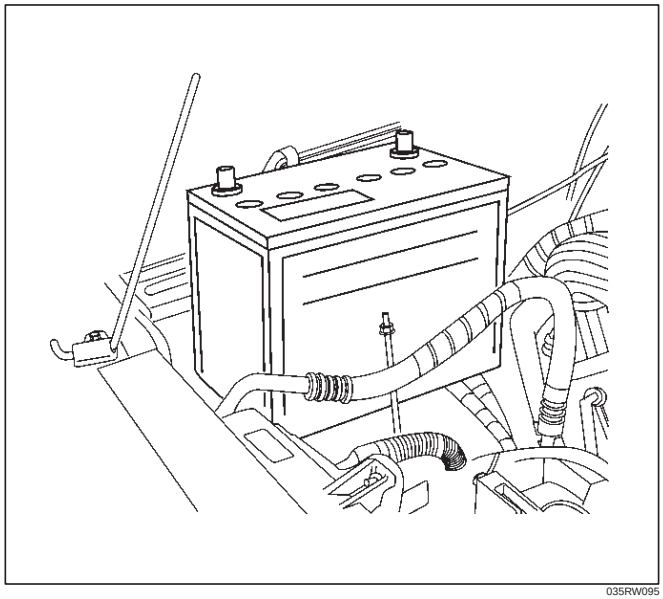

035RW095

3. Disconnect the electrical connector from the OT sensor.
4. Remove the OT sensor.

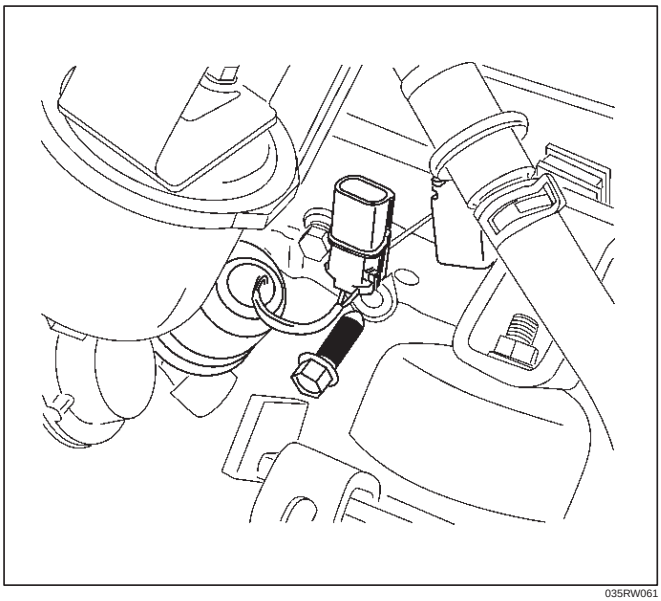

035RW061

Installation Procedure

1. Install the OT sensor.

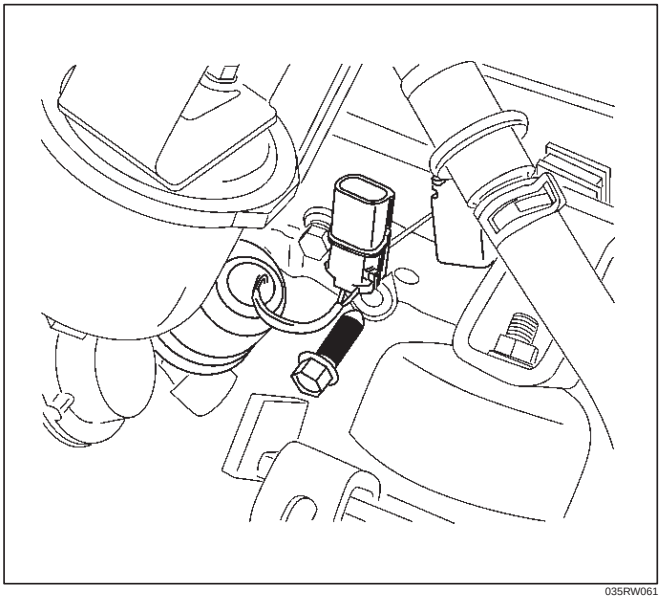

035RW061

2. Connect the OT sensor electrical connector.
3. Install the battery.

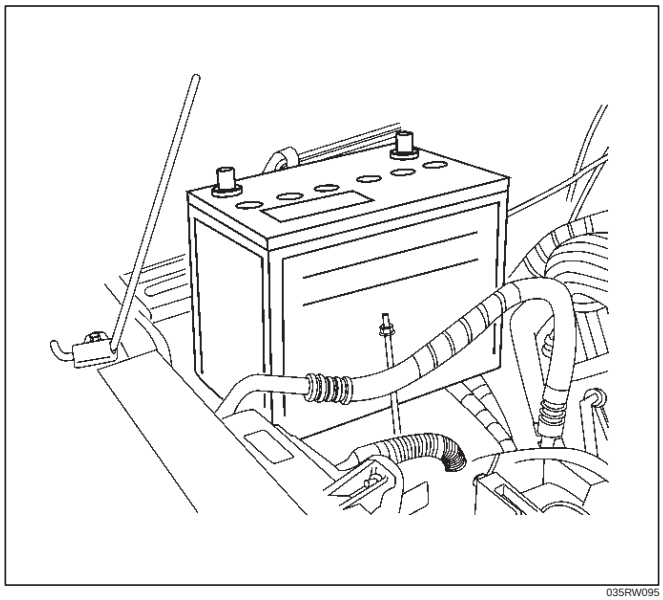

035RW095

4. Connect the negative battery cable.

Malfunction Indicator Lamp (MIL)

Removal and Installation Procedure

Refer to Meter in Electrical section.

Engine Control Module (ECM)

Service Precaution

NOTE: To prevent possible electrostatic discharge damage to the ECM, do not touch the connector pins or soldered components on the circuit board.

When replacing the ECM to prevent possible electro damage, follow these guidelines:
Before removing the ECM, disconnect the negative battery cable.
Before install the ECM, install the negative battery cable.

Electrostatic Discharge (ESD) Damage

Electronic components used in the control systems are often designed to carry very low voltage. Electronic components are susceptible to damage caused by electrostatic discharge. Less than 100 volts of static electricity can cause damage to some electronic components. By comparison, it takes as much as 4,000 volts for a person to even feel the zap of a static discharge.
There are several ways for a person to become statically charged. The most common methods of charging are by friction and by induction. An example of charging by friction is a person sliding across a car seat.
Charging by induction occurs when a person with well insulated shoes stands near a highly charged object and momentarily touches ground. Charges of the same polarity are drained off leaving the person highly charged with the opposite polarity. Static charges can cause

damage, therefore, it is important to use care when handling and testing electronic components.

NOTE: To prevent possible Electrostatic Discharge damage, follow these guidelines:

- Do not touch the control module connector pins or soldered components on the control module circuit board.
- Do not open the replacement part package until the part is ready to be installed.
- Before removing the part from the package, ground the package to a known good ground on the vehicle.
- If the part has been handled while sliding across the seat, or while sitting down from a standing position, or while walking a distance, touch a known good ground before installing the part.

NOTE: To prevent internal ECM damage, the ignition must be in the “OFF” position in order to disconnect or reconnect power to the ECM (for example: battery cable, ECM pigtail, ECM fuse, jumper cables, etc.).

IMPORTANT: When replacing the production ECM with a service ECM, it is important to transfer the broadcast code and production ECM number to the service ECM label. This will allow positive identification of ECM parts throughout the service life of the vehicle. Do not record this information on the metal ECM cover.

IMPORTANT: The ignition should always be in the “OFF” position in order to install or remove the ECM connectors.

Service of the ECM should normally consist of either replacement of the ECM. If the diagnostic procedures call for the ECM to be replaced, the ECM should be checked first to ensure it is the correct part. If it is, remove the faulty ECM and install the new service ECM.

DTC P0601 indicates the check sum error.

Removal Procedure

1. Disconnect the negative battery cable.
2. Disconnect the ECM connector.

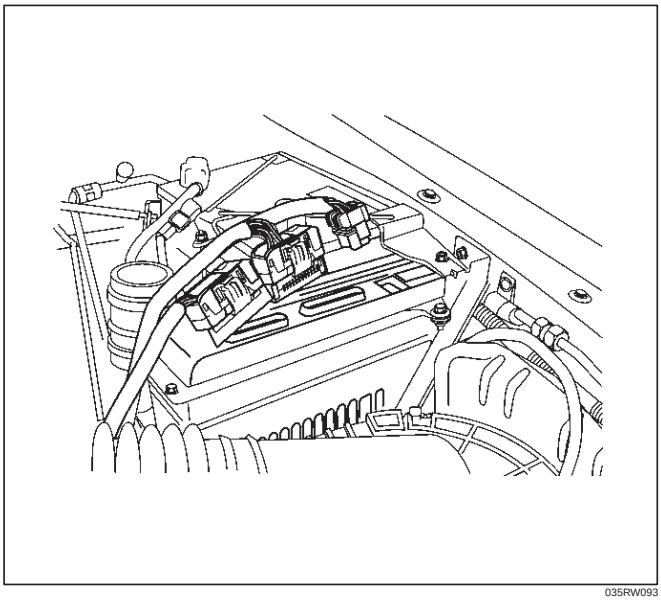

035RW093

3. Remove the bolts ECM bracket and battery bracket.

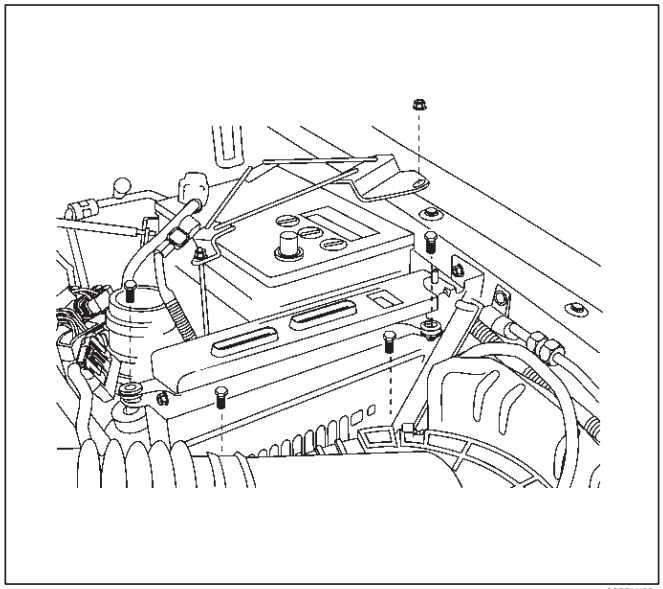

035RW094

4. Remove the ECM.

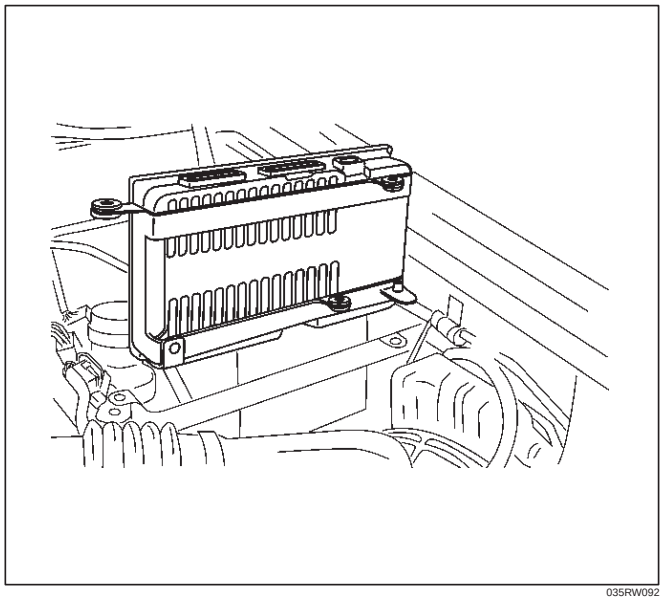

035RW092

Installation Procedure

1. Install the ECM.

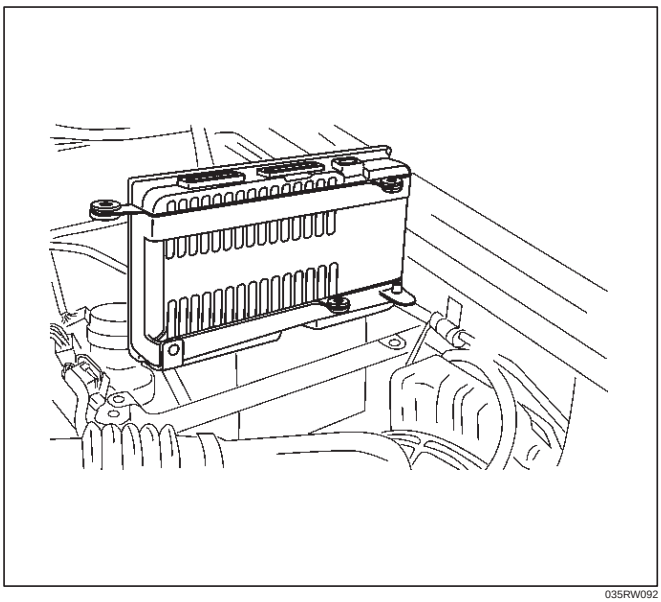

035RW092

2. Install the bolts, ECM bracket and battery bracket.

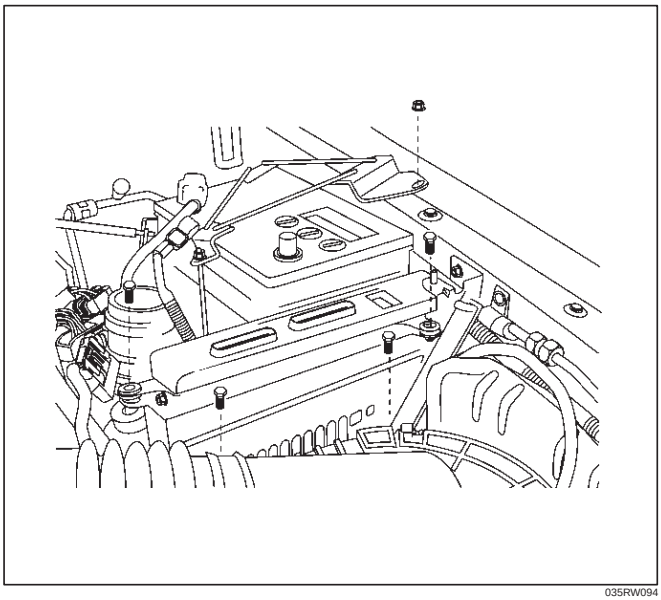

035RW094

3. Connect the ECM connector.

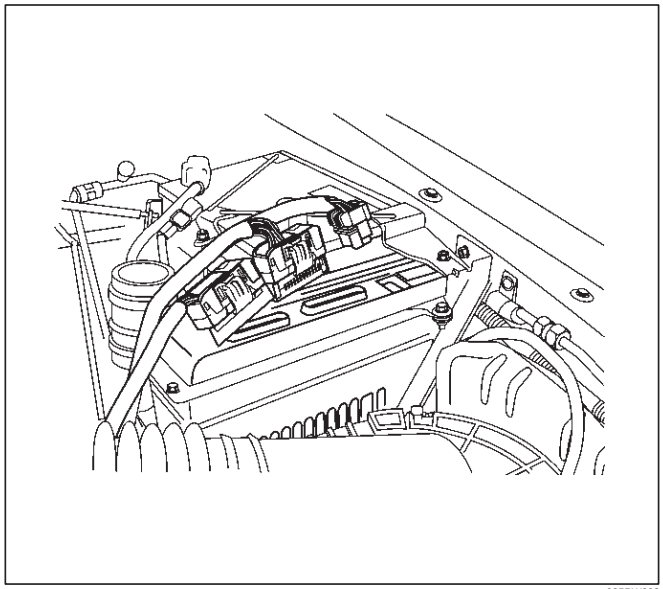

035RW093

4. Connect the negative battery cable.

If the ECM is replaced, the new ECM will need to be programmed.

EEPROM

General Description

The Electronically Erasable Programmable Read Only Memory (EEPROM) is a permanent memory that is physically soldered within the ECM. The EEPROM contains program and calibration information that the ECM needs to control powertrain operation.

Functional Check

1. Perform the On-Board Diagnostic System Check.
2. Start the engine and run for one minute.
3. Scan for DTCs using the Tech 2.

Intake Throttle Position (ITP) Sensor

Removal Procedure

1. Disconnect the negative battery cable.

2. Remove the cover of the intercooler.

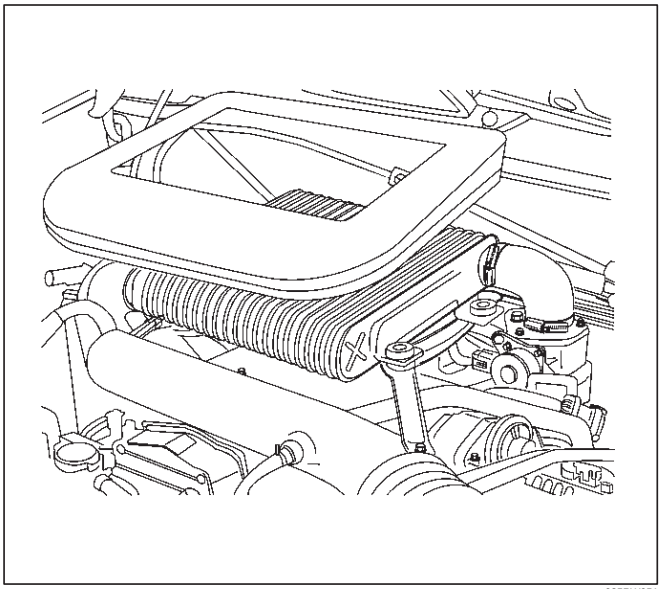

035RW051

3. Remove the bolts and the left side bracket to the intercooler.
4. Remove the air duct with bracket from the intercooler.
5. Remove the throttle body from the intake manifold.
6. Disconnect the ITP sensor electrical connector and throttle motor control connector.
7. Remove the bolts and the ITP sensor from the throttle body.

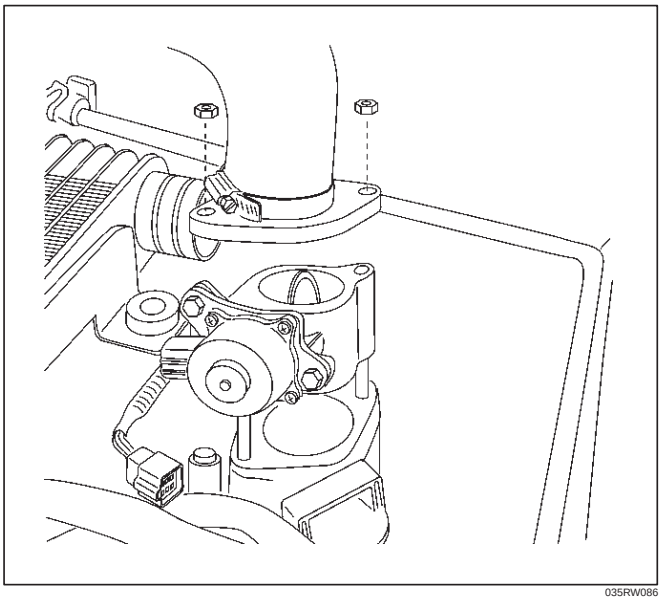

035RW086

NOTE: Do not clean the ITP sensor by soaking it in solvent. The sensor will be damaged as a result.

Function Check

Use a Tech 2 to check the ITP sensor output voltage at closed throttle.

- The voltage should be under 0.85 volt.
- If the reading is greater than 0.85 volt, check the throttle shaft to see if it is binding.
- If the throttle shaft is not binding and the throttle cable is properly adjusted, install a new ITP sensor.

Installation Procedure

1. Install the ITP sensor on the throttle body with the bolts.

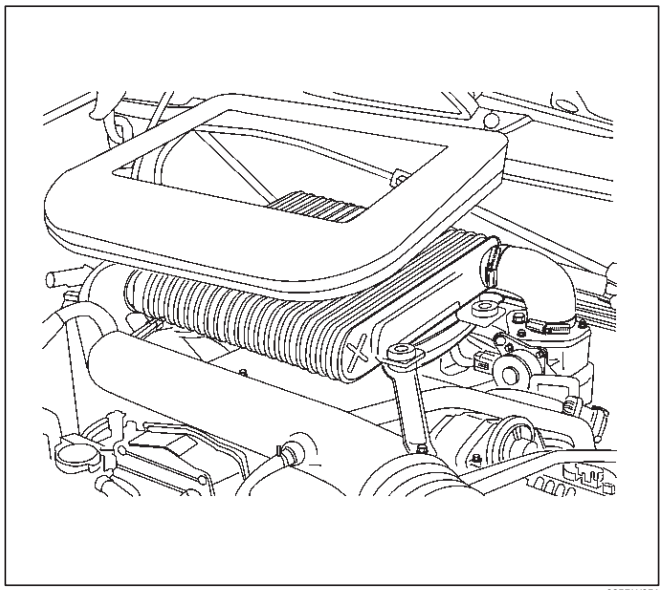

035RW051

2. Install the throttle body to the intake manifold and the air duct with bracket between throttle body and intercooler.

Torque: 20 N·m (14 lb ft)

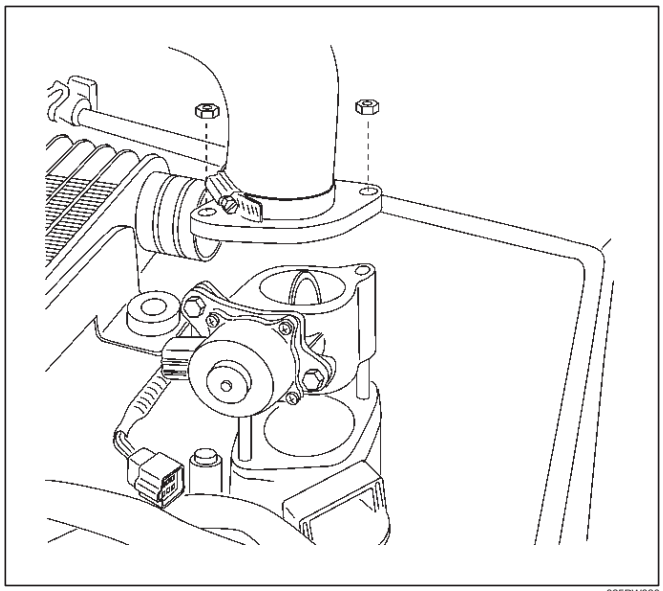

035RW086

3. Connect the ITP sensor electrical connector and throttle motor control connector.
4. Install the bracket to the intercooler.
5. Install the cover of intercooler.
6. Install the negative battery cable.

Vehicle Speed Sensor (VSS)

Removal Procedure

CAUTION: The VSS is located on the right side of the transfer case just ahead of the rear propeller shaft and very close to the exhaust pipes. Be sure that the exhaust pipes are cool enough to touch before trying to remove the VSS. If the pipes are hot, you could be burned.

1. Disconnect the negative battery cable.
2. Disconnect the VSS electrical connector.

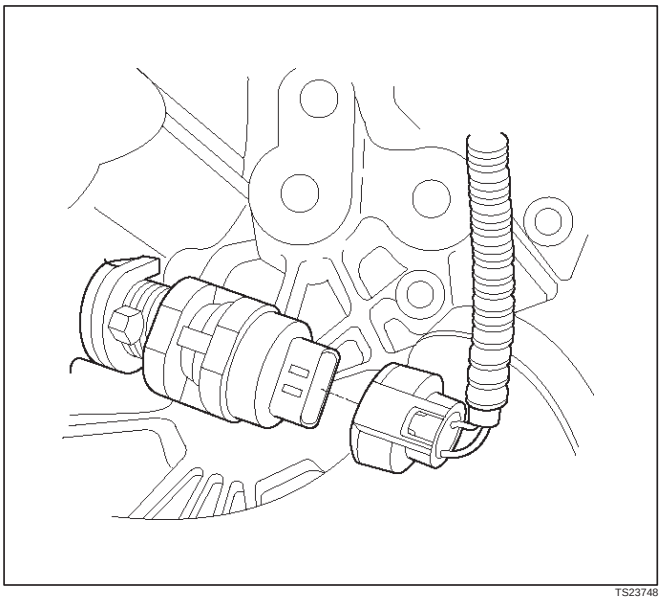

TS23748

3. Remove the bolt and the clamp securing the VSS in place.

IMPORTANT: Have a container ready to catch any fluid that leaks out when the VSS is removed from the transfer case.

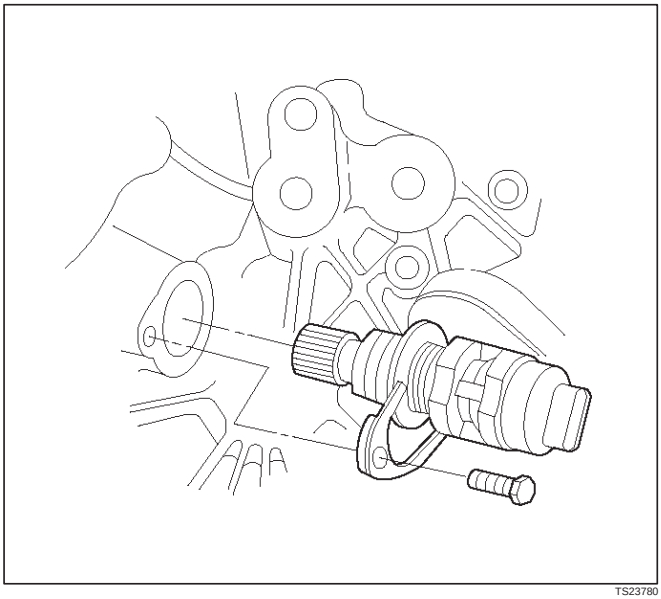

TS23780

4. Remove the VSS from the transfer case by wiggling it slightly and pulling it straight out.

Inspection Procedure

1. Inspect the electrical connector for signs of corrosion or warping. Replace the VSS if the electrical connector is corroded or warped.
2. Inspect the VSS driven gear for chips, breaks, or worn condition. Replace the VSS if the driven gear is chipped, broken or worn.
3. Inspect the O-ring for wear, nicks, tears, or looseness. Replace the O-ring if necessary.

Installation Procedure

1. Install the VSS in the transfer case with the notch for the connector facing the rear.
2. Secure the VSS in place with the clamp and the bolt.

Tighten

- **Tighten the bolt to 16 N·m (12 lb ft.).**

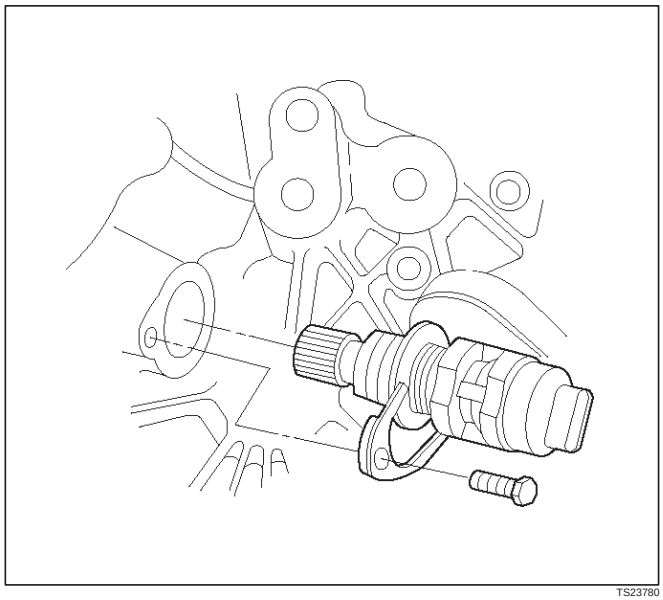

TS23780

3. Connect the VSS electrical connector.

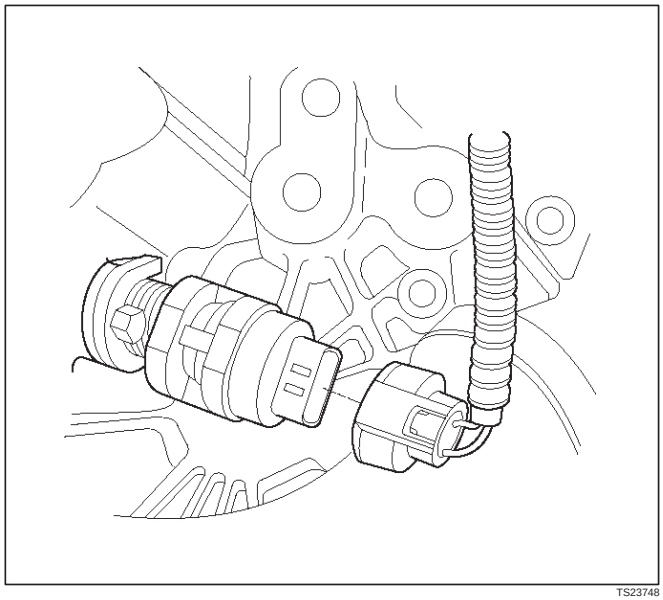

TS23748

4. Check the transfer case oil level. Add fluid if necessary.

5. Connect the negative battery cable.

Air Cleaner/Air Filter

Removal Procedure

1. Loosen the clamp between the air cleaner lid and the duct.
2. Release the four latches securing the lid to the air cleaner housing.
3. Remove the air cleaner lid.
4. Remove the air filter element.

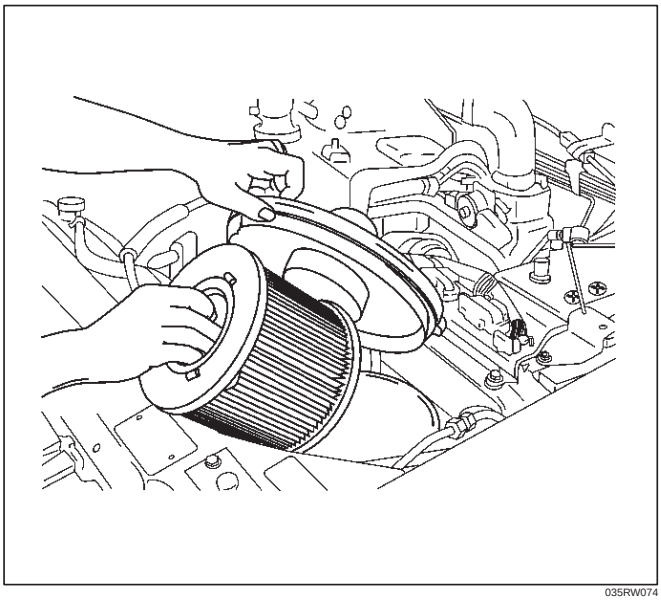

035RW074

5. Remove the retaining bolts and the air cleaner housing from the vehicle.

Installation Procedure

1. Install the air cleaner housing in the vehicle with the retaining bolts.
2. Install the air filter element in the air cleaner housing.

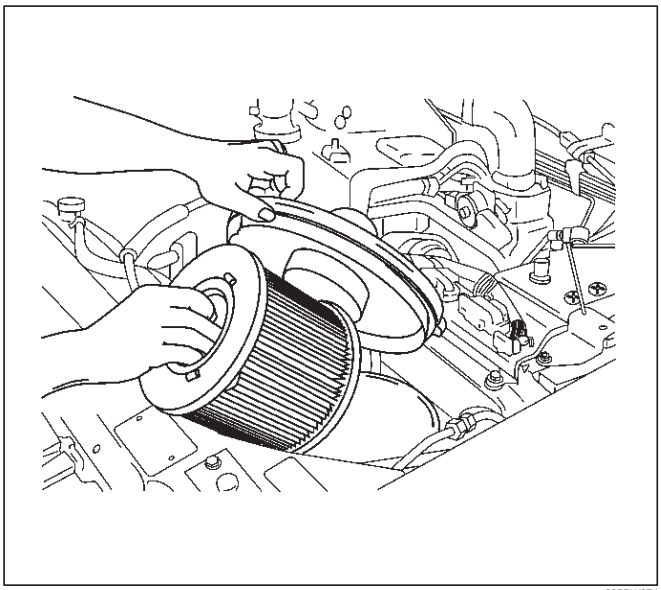

035RW074

3. Install the air cleaner lid on the air duct and the air cleaner housing.
4. Tighten the clamp and secure the four latches between the lid and the air cleaner housing.

Accel Position (AP) Sensor

Removal Procedure

1. Disconnect the negative battery cable.
2. Disconnect the electrical connector to the AP sensor.
3. Remove the bolts and the accelerator pedal assembly from the bulkhead.

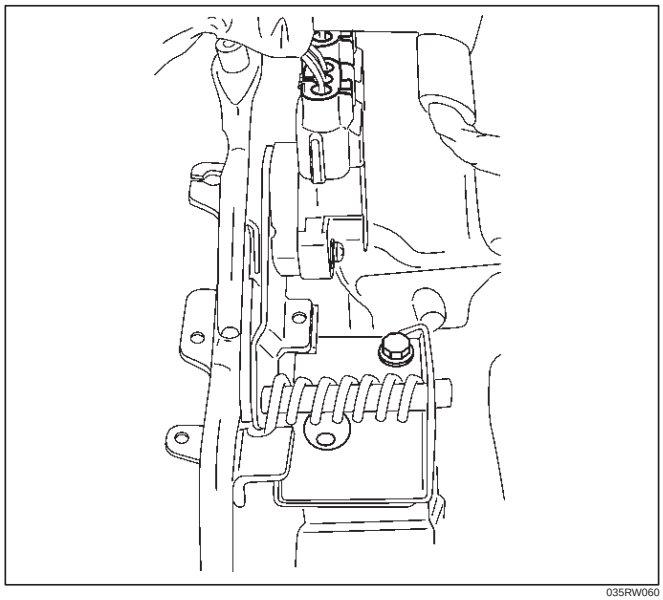

035RW060

4. Remove the bolts and AP sensor from the accelerator pedal assembly.

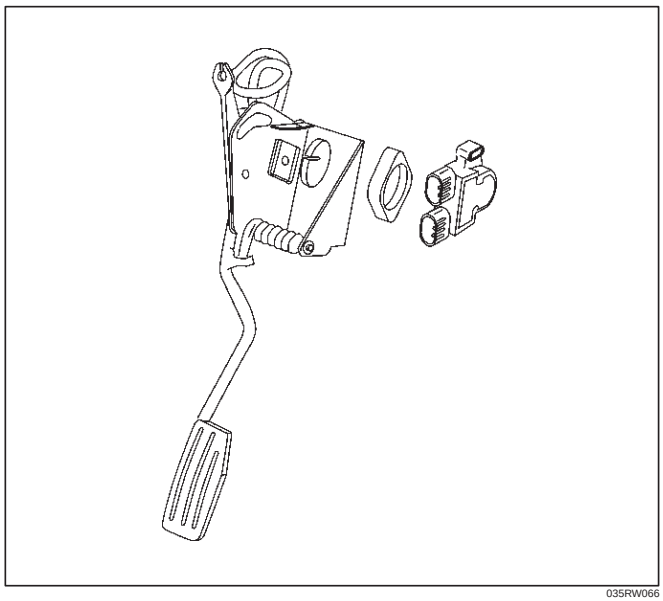

035RW066

Installation Procedure

1. Install the AP sensor to the accelerator pedal assembly.

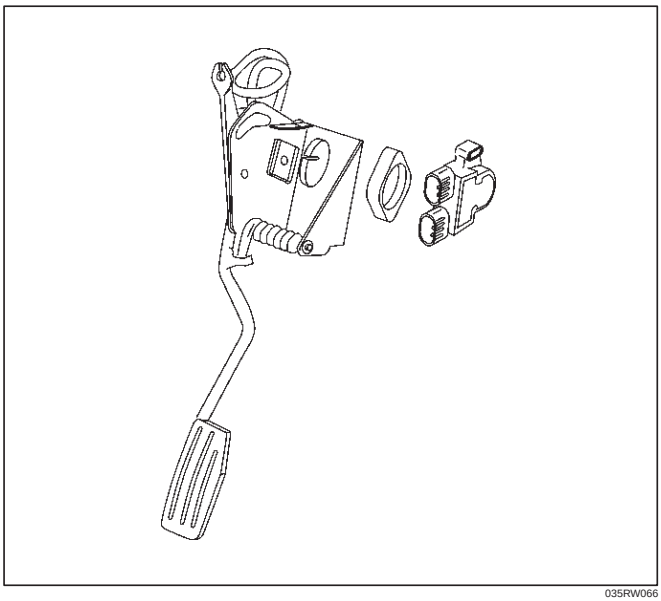

035RW066

2. Install the accelerator pedal assembly to the bulkhead.
3. Connect the electrical connector to the AP sensor.

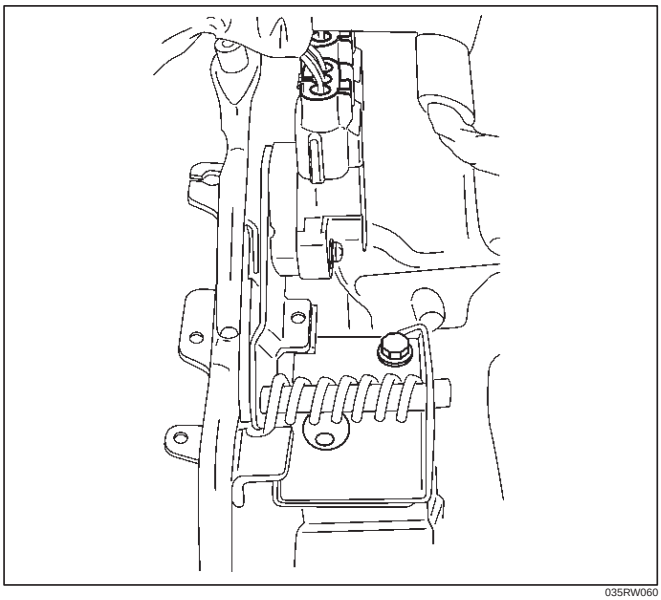

035RW060

4. Connect the negative battery cable.

Accelerator Pedal Replacement

Removal Procedure

1. Disconnect the negative battery cable.
2. Disconnect the electrical connector to the AP sensor.
3. Remove the bolts and the accelerator pedal assembly from the bulkhead.

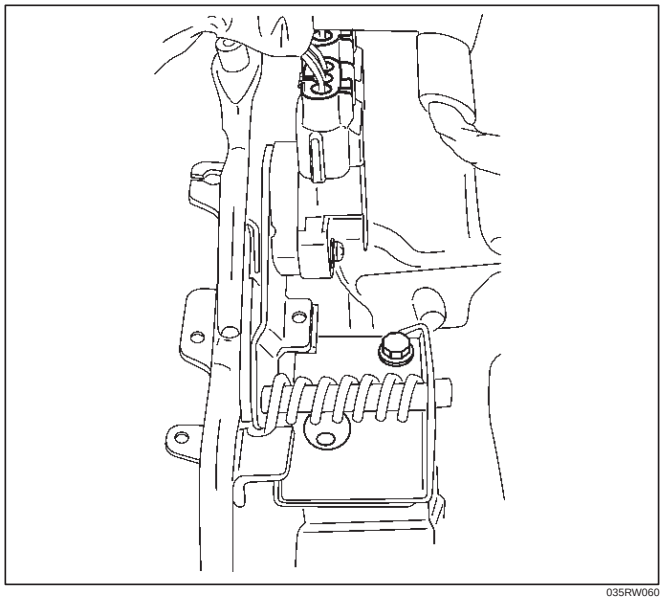

035RW060

4. Remove the bolts and AP sensor from the accelerator pedal assembly.

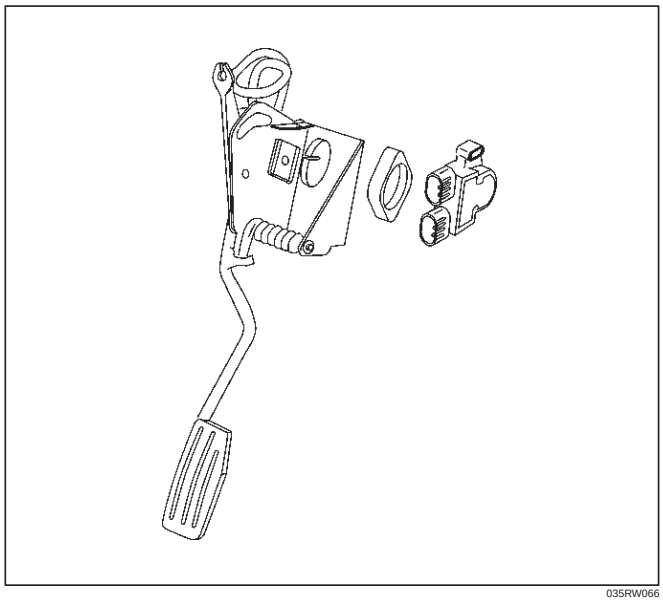

035RW066

Installation Procedure

1. Install the AP sensor to the accelerator pedal assembly.
2. Install the accelerator pedal assembly to the bulkhead.

3. Connect the electrical connector to the AP sensor.

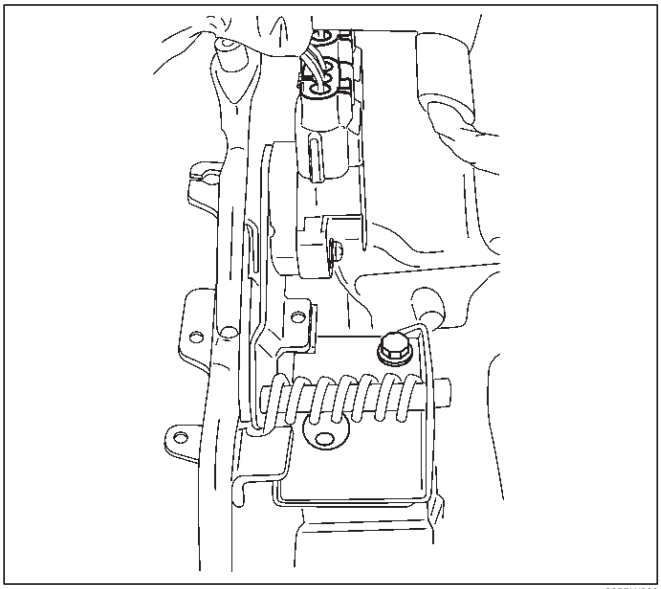

035RW060

4. Connect the negative battery cable.

Fuel Filter Cap

General Description

The fuel filler cap includes a vacuum valve and a pressure valve.
If high vacuum or high pressure occurs in the fuel tank, each valve works to adjust the pressure in order to prevent damage to the tank at the EGR valve.

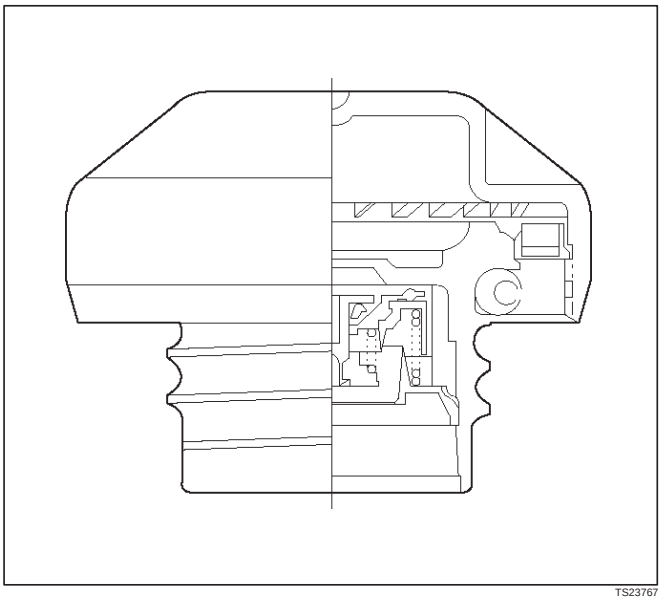

TS23767

Inspection Procedure

NOTE: Replace the fuel filler cap with the same type of filler cap that was originally installed on the vehicle.

- Check the seal ring in the filler cap for any abnormality and for seal condition.
- Replace the filler cap if any abnormality is found.

Fuel Filter

Removal and Installation Procedure

Refer to the Engine fuel in the 4JX1 Engine section.

Fuel Gauge Unit

Removal Procedure

1. Disconnect the negative battery cable.
2. Loosen the fuel filler cap.
3. Drain the fuel from the tank.

Tighten

- **Tighten the drain plug to 20 N·m (14 lb ft.).**

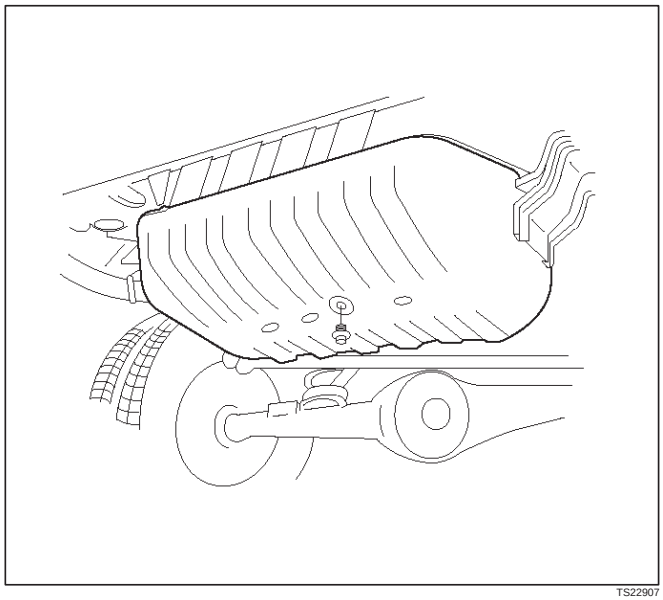

TS22907

4. Disconnect the wiring connector from the fuel gauge unit.

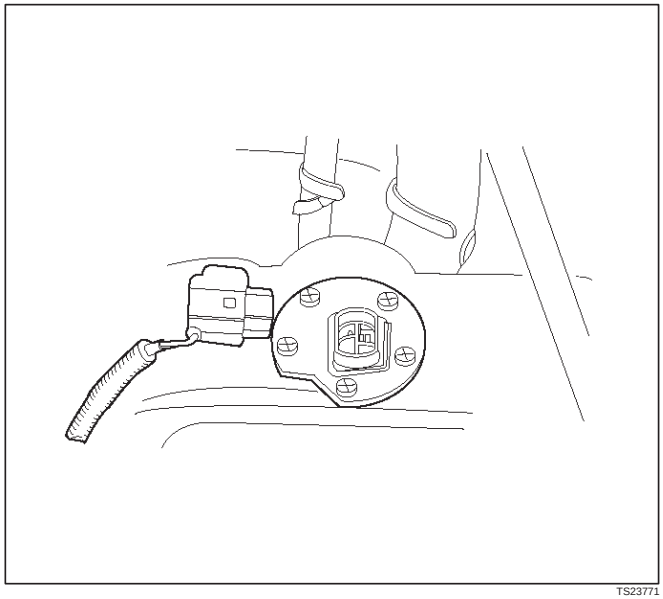

TS23771

5. Remove the fuel gauge unit retaining screws.

6. Remove the fuel gauge unit.
   - Cover or plug the fuel tank to prevent dust, dirt, or debris from entering the tank.

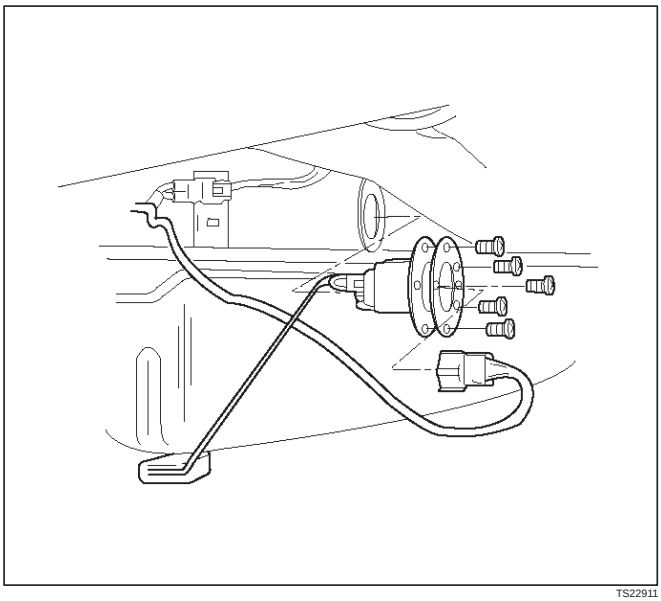

TS22911

Installation Procedure

1. Install the fuel gauge unit.
2. Install the fuel gauge unit retaining screws.

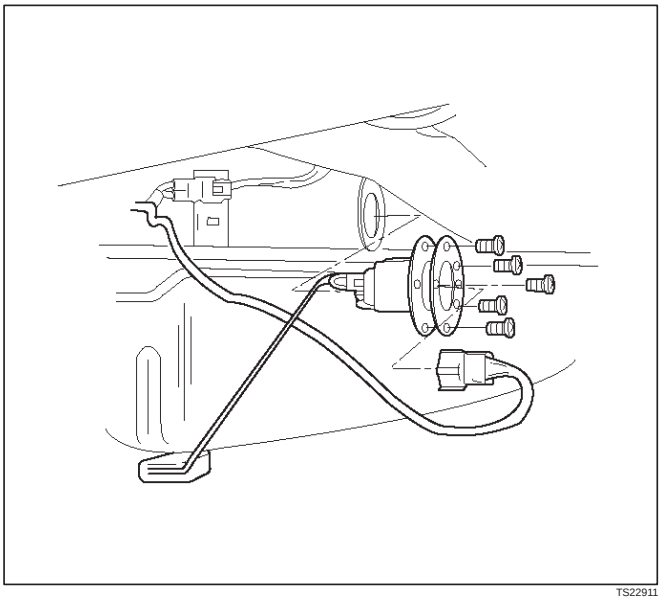

TS22911

3. Connect the wiring connector to the fuel gauge unit.

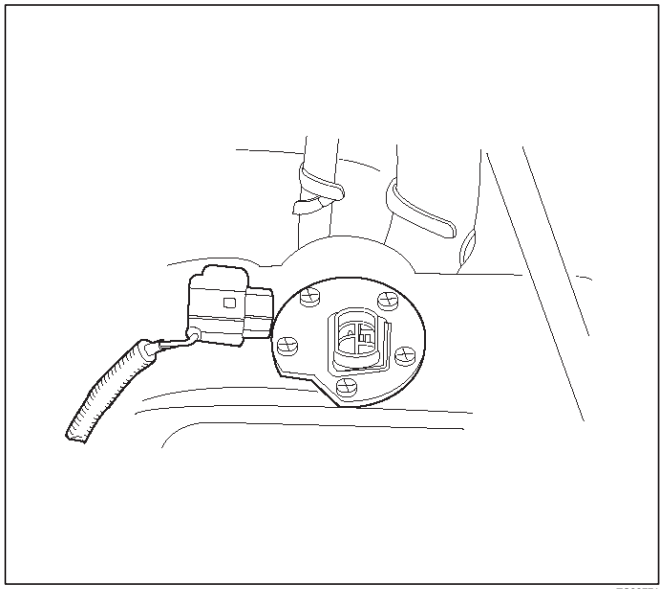

TS23771

4. Fill the fuel tank with fuel.
   - Tighten the fuel filler cap.
   - Check for leaks at the fuel gauge unit gasket.
5. Connect the negative battery cable.

Fuel Injectors

Removal and Installation Procedure

Refer to Engine Fuel in 4JX1 Engine Section.

Fuel Temperature Sensor

Removal Procedure

CAUTION: To reduce the risk of fire and personal injury, it is necessary to relieve the fuel system pressure before servicing the fuel system components.

CAUTION: After relieving the system pressure, a small amount of fuel may be released when servicing fuel lines or connections. Reduce the chance of personal injury by covering the fuel line fittings with a shop towel before disconnecting the fittings. The towels will absorb any fuel that may leak out. When the disconnect is completed, place the towel in an approved container.

1. Disconnect the negative battery cable.
2. Remove the intercooler assembly.
3. Remove the cylinder head. Refer to engine mechanical section.

4. Remove the rear side engine hanger.

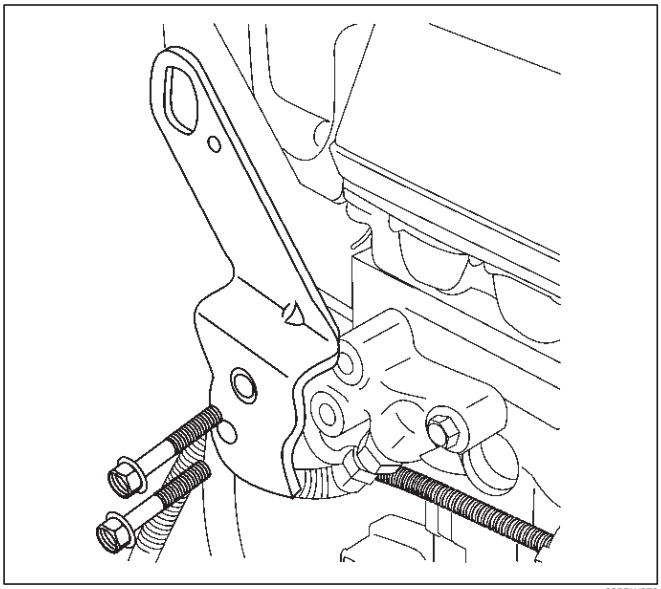

035RW070

5. Remove the fuel return adapter.

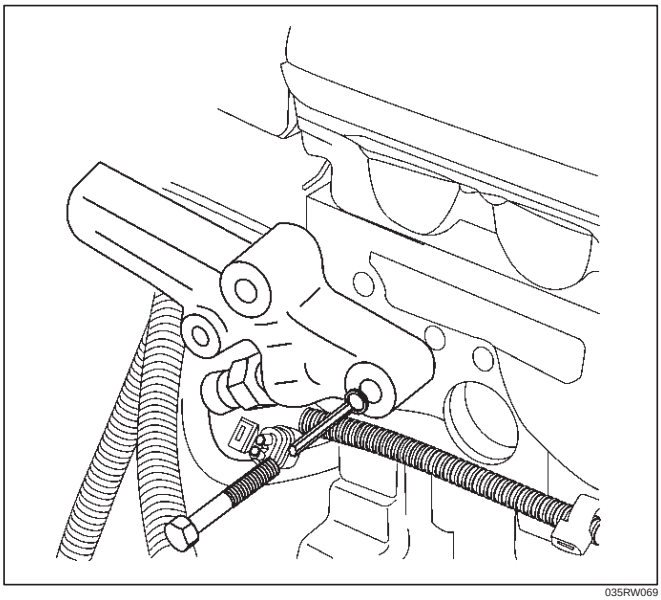

035RW069

6. Remove the fuel pressure sensor from the fuel return adapter.

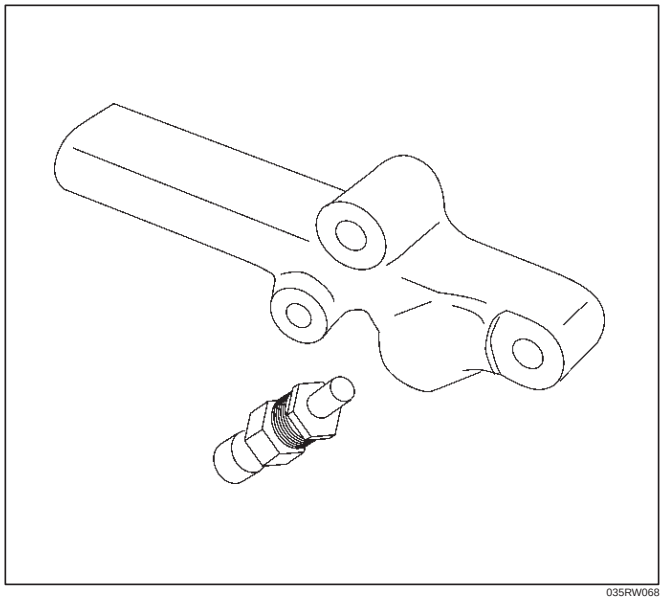

035RW068

Installation Procedure

1. Install the fuel pressure sensor in the fuel return adapter.

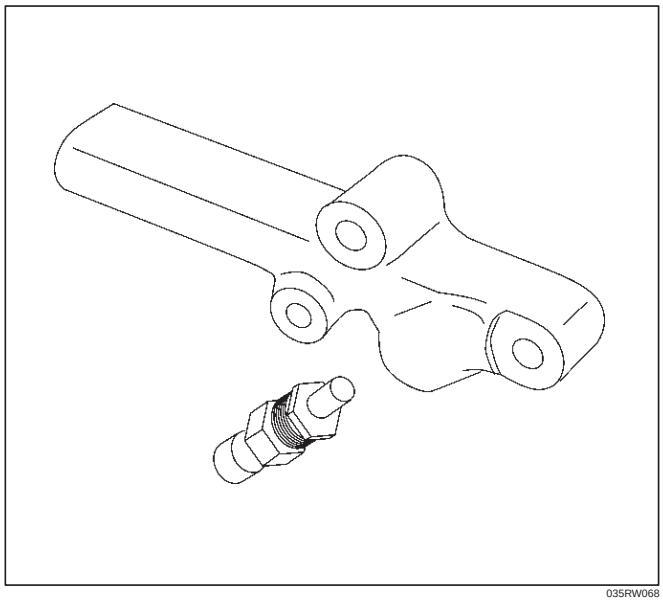

035RW068

2. Install the fuel return adapter.

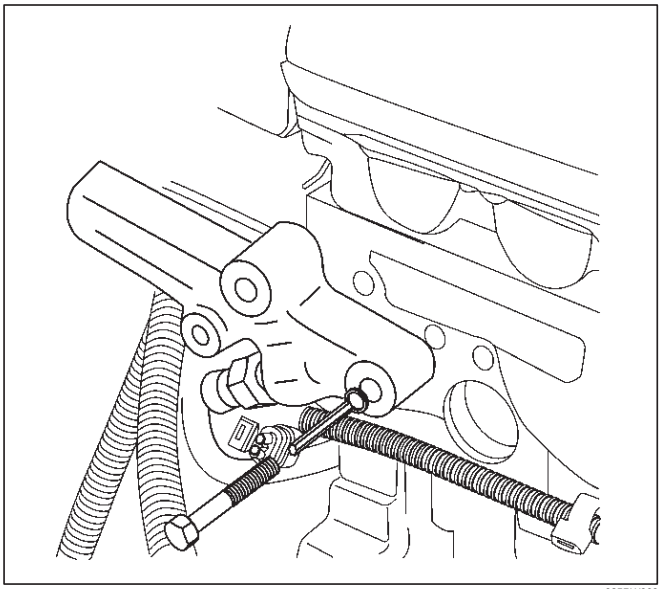

035RW069

3. Install the rear side engine hanger. Tighten the rear side engine hanger fixing bolts to specified torque.

Torque: 19 N·m (14 lb ft)

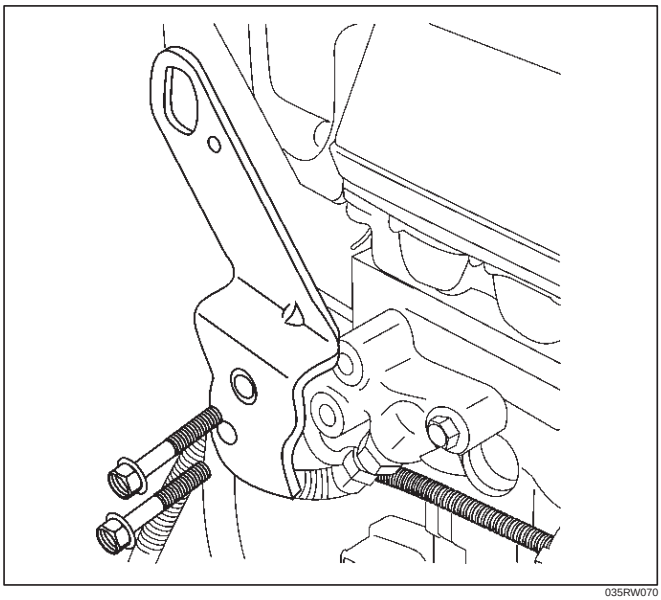

035RW070

4. Install the cylinder head. Refer to engine mechanical section.
5. Install the intercooler assembly.
6. Connect the negative battery cable.

Rail Pressure (RP) Sensor

Removal Procedure

1. Disconnect the negative battery cable.
2. Remove the air cleaner cover and air duct.
3. Remove the intercooler assembly.
4. Remove the injector oil pipe.
5. Remove the intake throttle valve.
6. Remove the cylinder head cover noise inselation.
7. Remove the cylinder head cover.
8. Remove the RP sensor.

Installation Procedure

- Refer to the *RP Sensor Programming*.

1. Install the RP sensor.
2. Install the cylinder head cover.
3. Install the cylinder head cover noise inselation.
4. Install the intake throttle valve.
5. Install the injector oil pipe.
6. Install the intercooler assembly and tighten intercooler assembly fixing bolts to specified torque.

Torque: 20 N·m (14 lb ft)

7. Install the air cleaner cover and air duct.
8. Connect the negative battery cable.

Fuel Tank

Removal Procedure

Refer to*Engine Fuel in 4JX1 Engine section.*

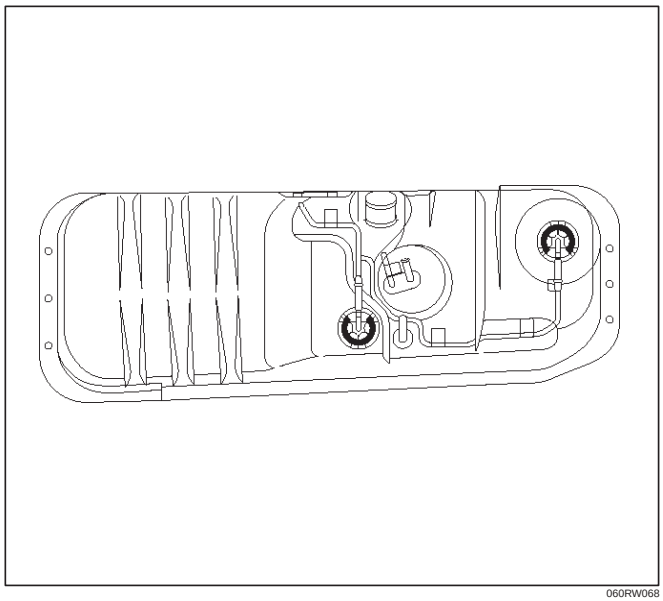

060RW068

Throttle Body (TB)

Removal Procedure

1. Disconnect the negative battery cable.
2. Remove the cover of the intercooler.

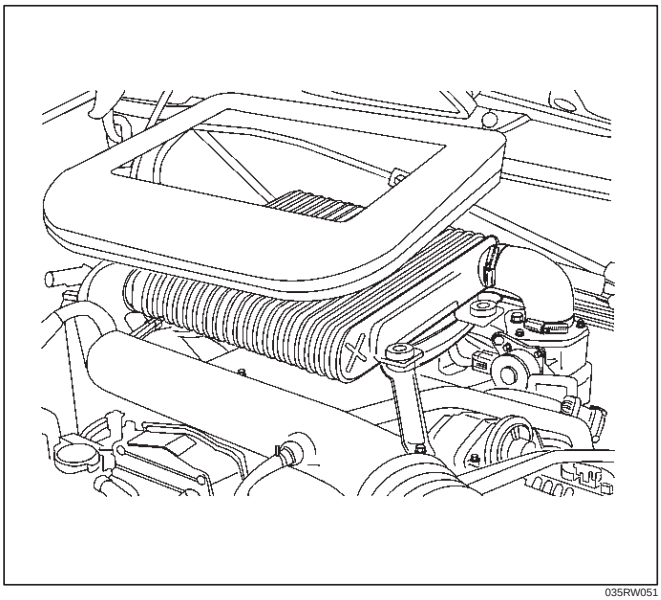

035RW051

3. Remove the bolts and the left side bracket to the intercooler.
4. Remove the air duct with bracket from the intercooler.

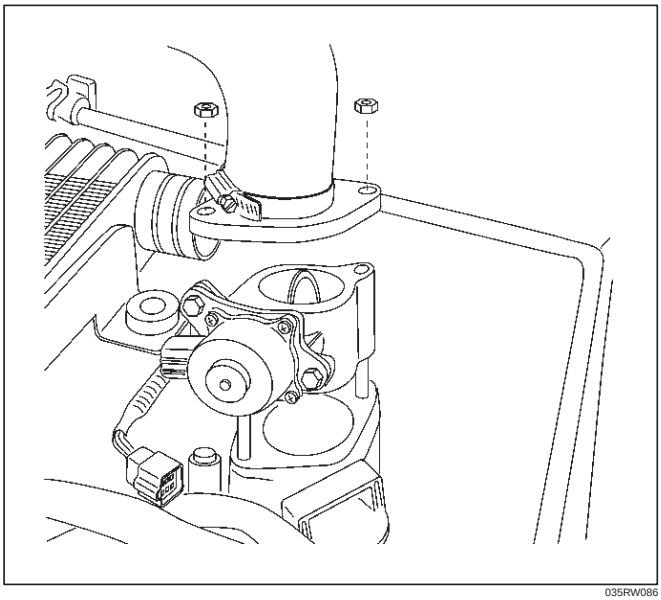

035RW086

5. Remove the throttle body assembly from the intake manifold.
6. Disconnect the ITP sensor electrical connector.

Installation Procedure

NOTE: Do not use solvent of any type when you clean the gasket surfaces on the intake manifold and the throttle body assembly. The gasket surfaces and the throttle body assembly may be damaged as a result.

- If the throttle body gasket needs to be replaced, remove any gasket material that may be stuck to the mating surfaces of the manifold.
- Do not leave any scratches in the aluminum casting.

1. Install the throttle body assembly to the intake manifold and the air duct with bracket between throttle body and intercooler.

Torque: 20 N·m (14 lb ft)

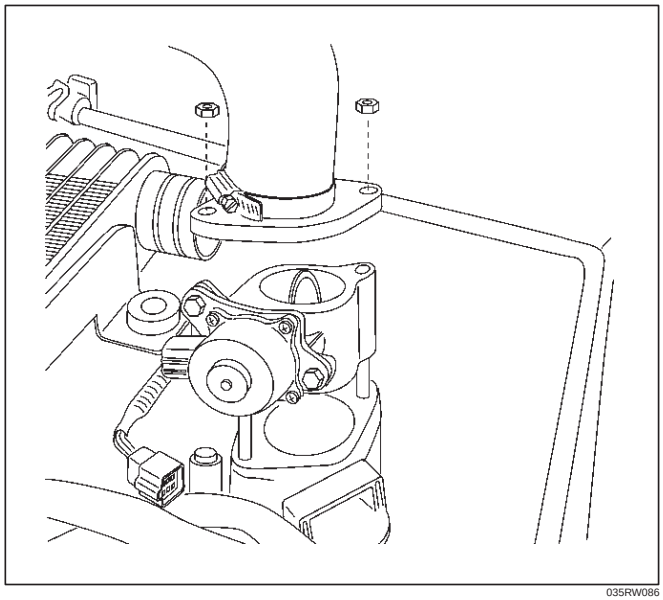

035RW086

2. Connect the ITP sensor electrical connector and throttle motor control connector.
3. Install the bracket to the intercooler.
4. Install the cover of intercooler.
5. Connect the negative battery cable.

Air Conditioning (A/C) Relay

Removal Procedure

1. Remove the fuse and relay box cover from under the hood.
2. Consult the diagram on the cover to determine which is the correct relay.
3. Pull the relay straight up and out of the fuse and relay box.

Installation Procedure

1. Insert the relay into the correct place in the fuse and relay box with the catch slot facing forward.
2. Press down until the catch engages.
   - An audible “click” will be heard.
3. Install the fuse and relay box cover.

Exhaust Gas Recirculation (EGR) Vacuum Switch Valve (VSV)

Removal Procedure

1. Disconnect the negative battery cable.

2. Disconnect the EGR VSV connector and vacuum hose from the EGR VSV.

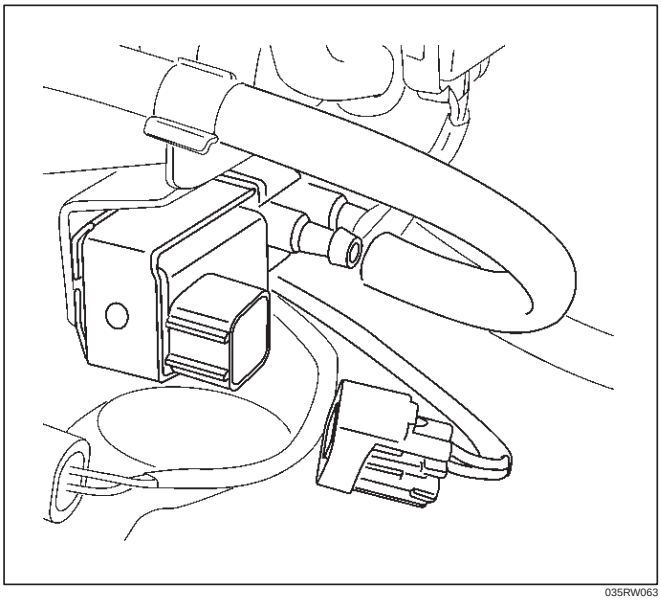

035RW063

3. Remove the MAP sensor assembly and EGR VSV.

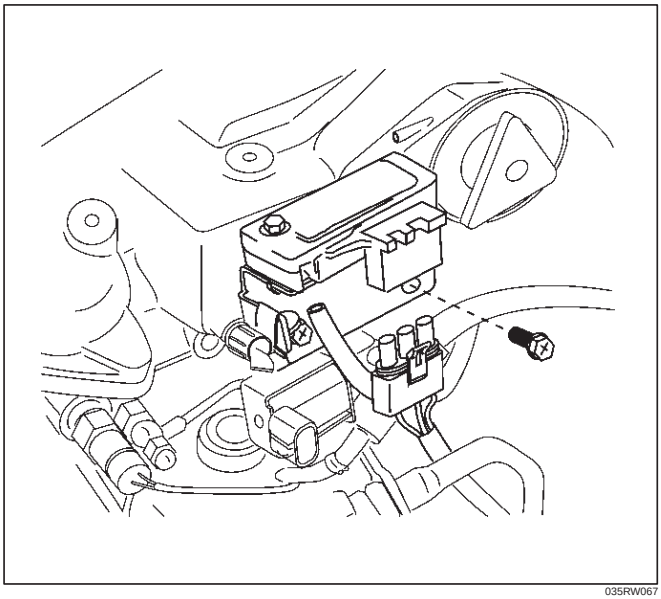

035RW067

4. Remove the EGR VSV from the MAP sensor bracket.

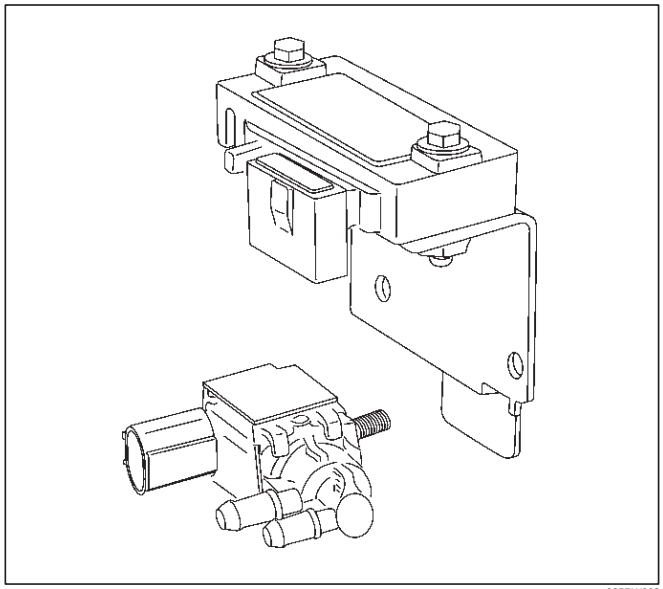

035RW062

Installation Procedure

1. Install the EGR VSV and tighten nut to specified torque.

Torque: 8 N·m (69 lb in)

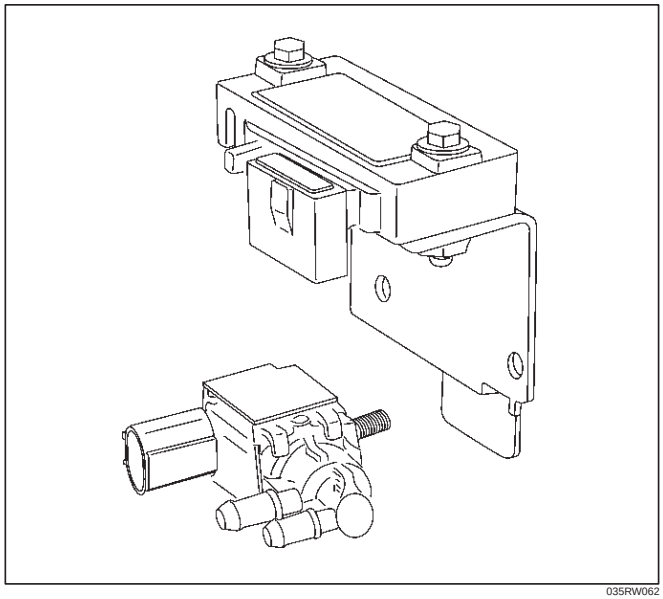

035RW062

2. Install the MAP sensor assembly and EGR VSV and tighten MAP sensor bracket fixing bolts specified torque.

Torque: 9 N·m (78 lb in)

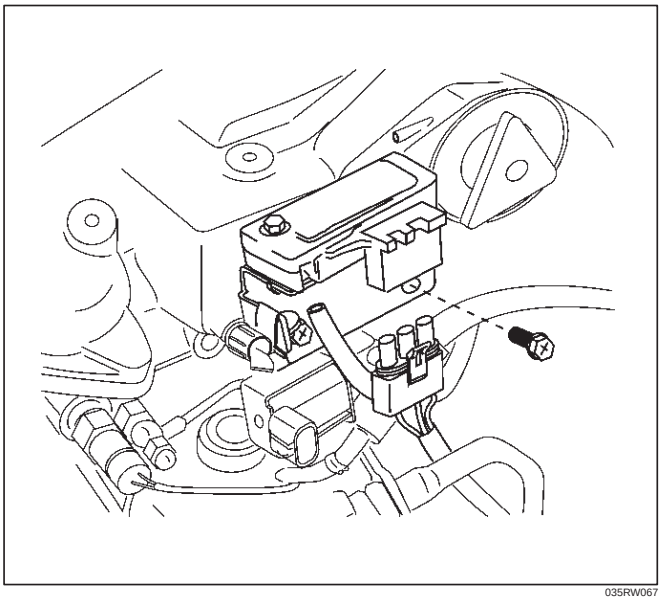

035RW067

3. Connect the EGR VSV connector and vacuum hose in the EGR VSV.

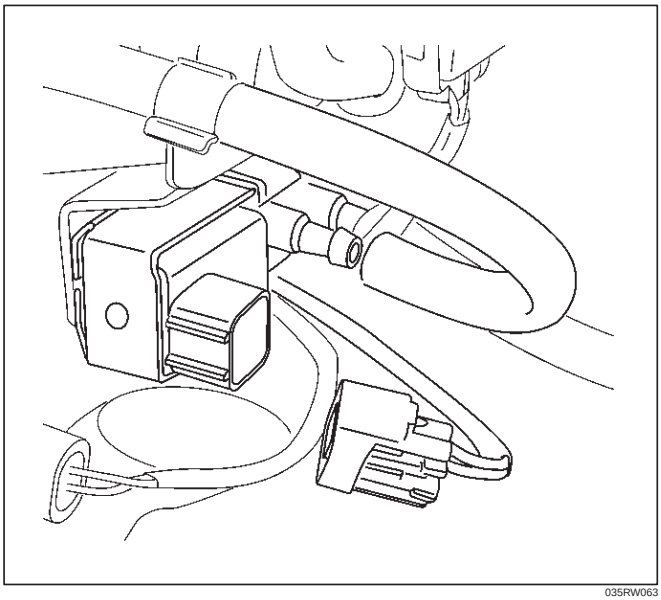

035RW063

4. Connect the negative battery cable.

Electronic Vacuum Regurating Valve (EVRV)

Removal Procedure

1. Disconnect the negative battery cable.
2. Disconnect the EVRV hose and the EVRV connector.

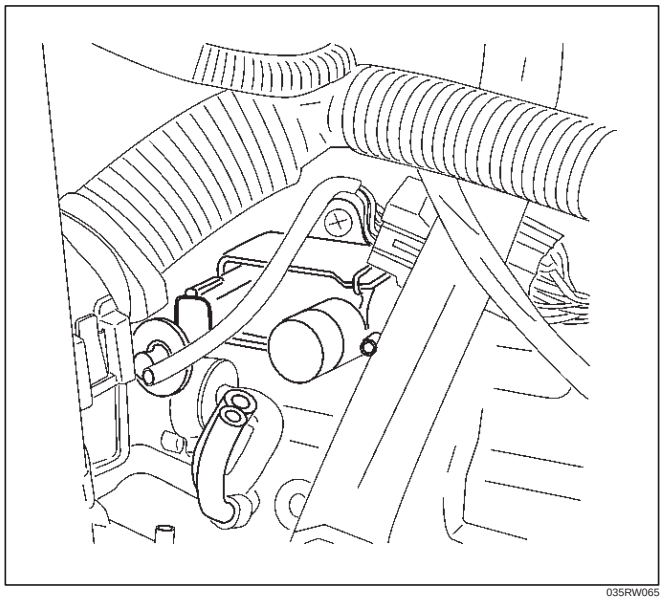

035RW065

3. Remove the EVRV.

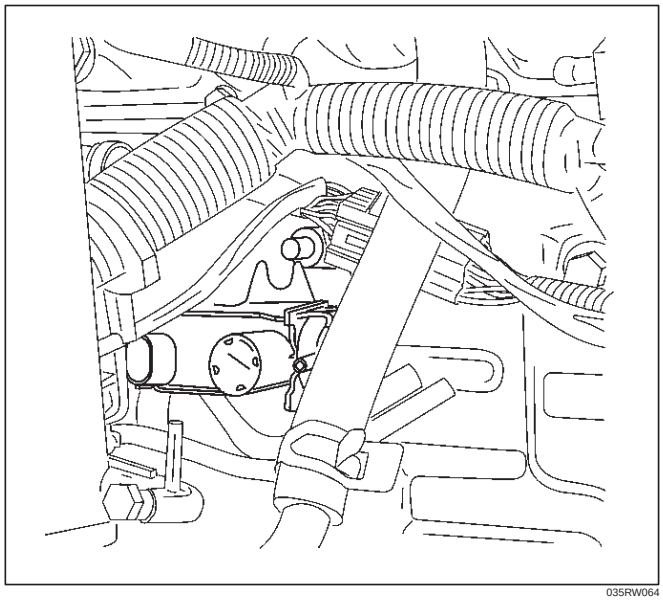

035RW064

Installation Procedure

1. Install the EVRV.

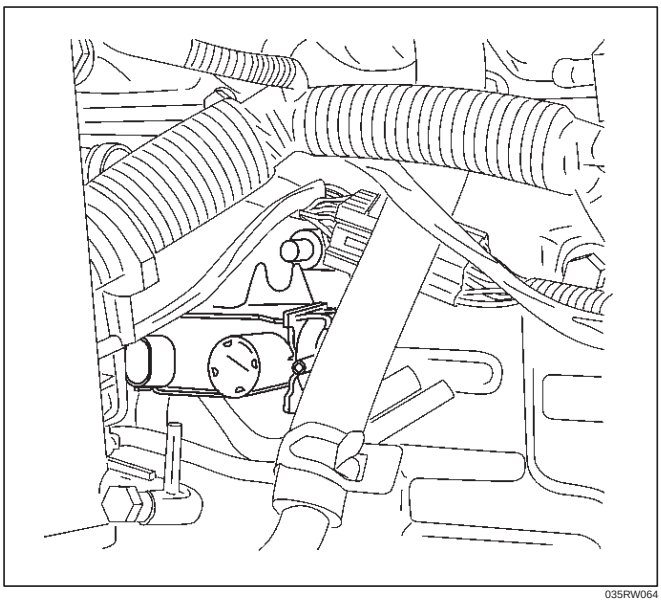

035RW064

2. Connect the EVRV hose and the EVRV connector.

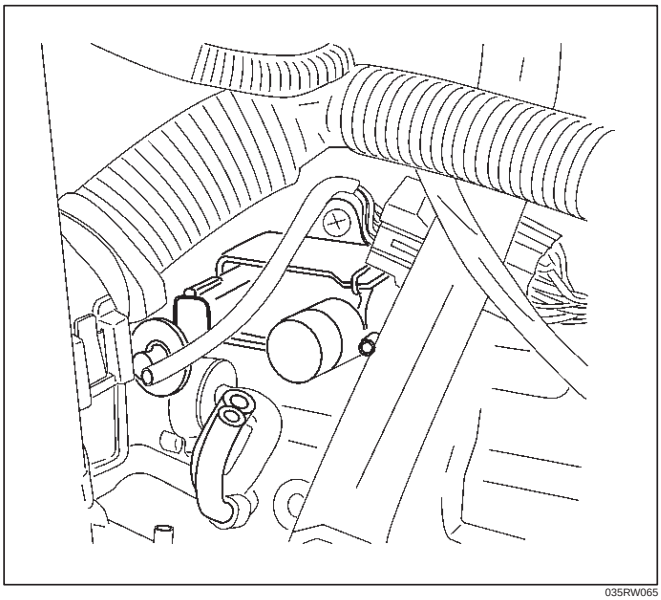

035RW065

3. Connect the negative battery cable.

Wiring and Connectors

Wiring Harness Service

The ECM harness electrically connects the ECM to the various solenoids, switches and sensors in the vehicle engine compartment and passenger compartment.
Replace wire harnesses with the proper part number replacement.
Because of the low amperage and voltage levels utilized in powertrain control systems, it is essential that all wiring in environmentally exposed areas be repaired with crimp and seal splice sleeves.

The following wire harness repair information is intended as a general guideline only. Refer to *Chassis Electrical* for all wire harness repair procedures.

Connectors and Terminals

Use care when probing a connector and when replacing terminals. It is possible to short between opposite terminals. Damage to components could result. Always use jumper wires between connectors for circuit checking. NEVER probe through Weather-Pack seals. Use an appropriate connector test adapter kit which contains an assortment of flexible connectors used to probe terminals during diagnosis. Use an appropriate fuse remover and test tool for removing a fuse and to adapt the fuse holder to a meter for diagnosis.
Open circuits are often difficult to locate by sight because oxidation or terminal misalignment are hidden by the connectors. Merely wiggling a connector on a sensor, or in the wiring harness, may temporarily correct the open circuit. Intermittent problems may also be caused by oxidized or loose connections.
Be certain of the type of connector/terminal before making any connector or terminal repair. Weather-Pack and Com-Pack III terminals look similar, but are serviced differently.

Wire Harness Repair: Twisted Shielded Cable

Removal Procedure

1. Remove the outer jacket.
2. Unwrap the aluminum/mylar tape. Do not remove the mylar.

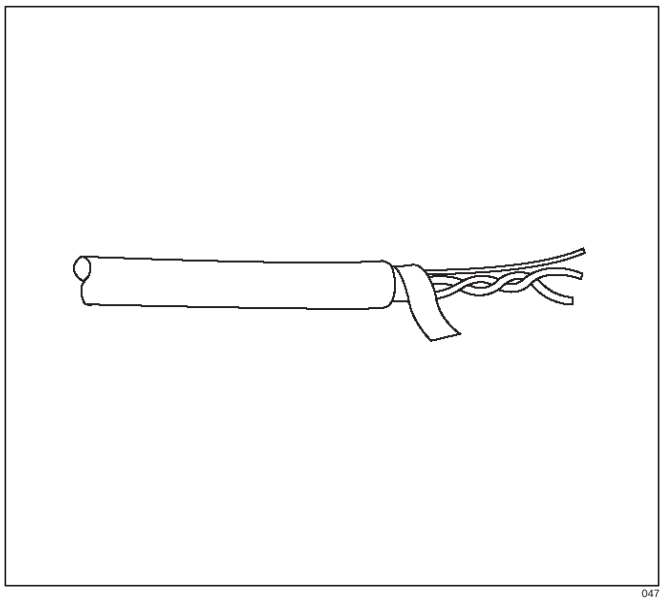

047

3. Untwist the conductors.
4. Strip the insulation as necessary.

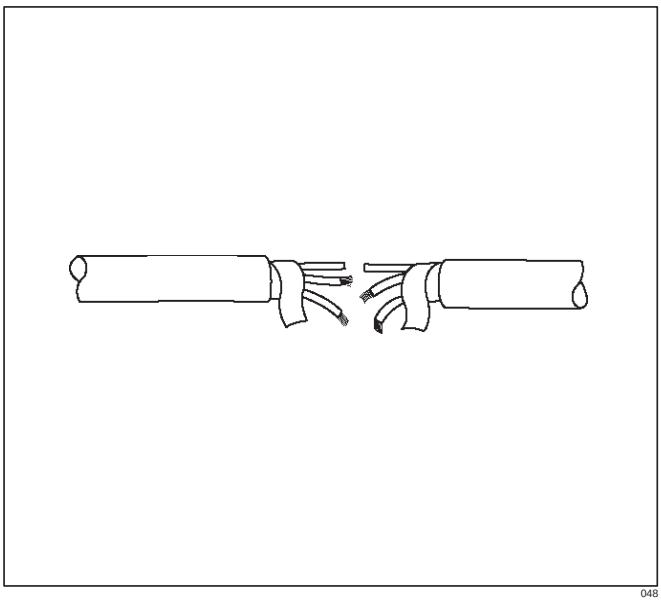

048

Installation Procedure

1. Splice the wires using splice clips and rosin core solder.
2. Wrap each splice to insulate.
3. Wrap the splice with mylar and with the drain (uninsulated) wire.

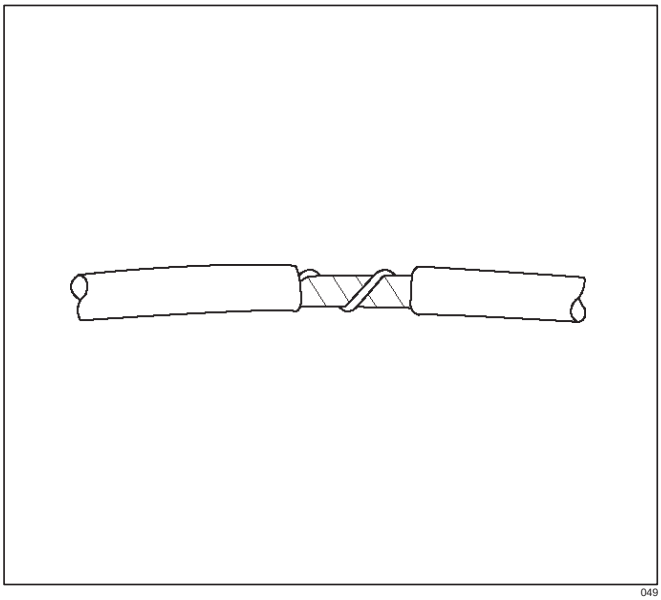

049

4. Tape over the whole bundle to secure.

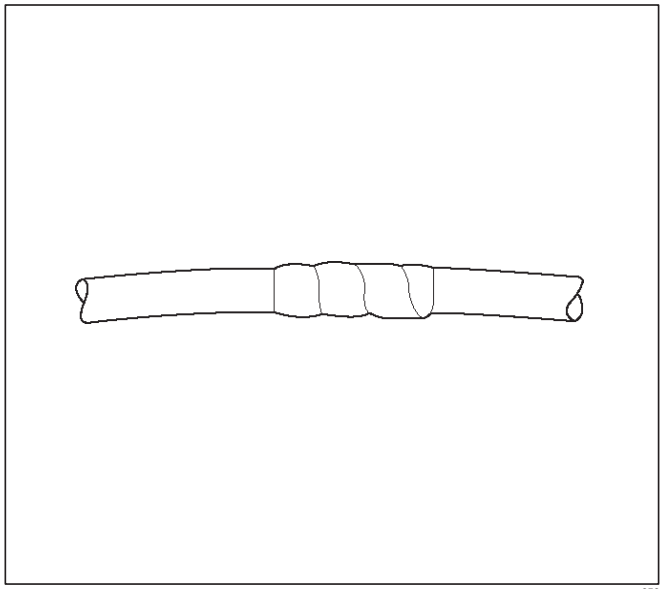

050

Twisted Leads

Removal Procedure

1. Locate the damaged wire.
2. Remove the insulation as required.

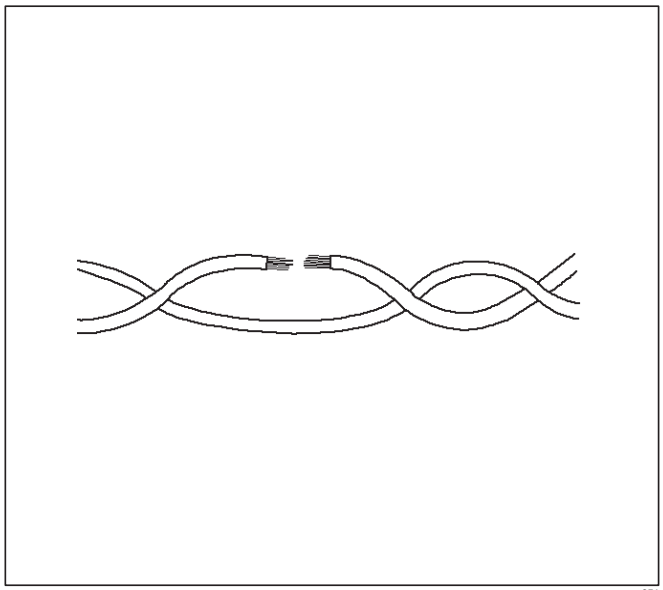

051

Installation Procedure

1. Use splice clips and rosin core solder in order to splice the two wires together.

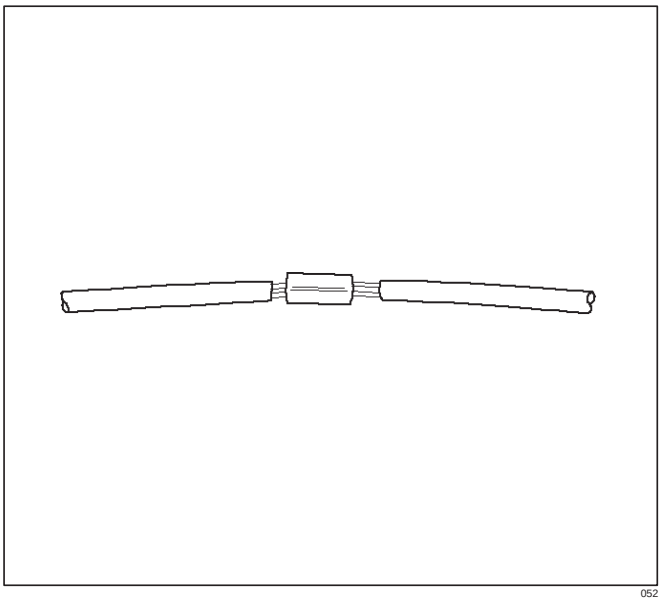

052

2. Cover the splice with tape in order to insulate it from the other wires.

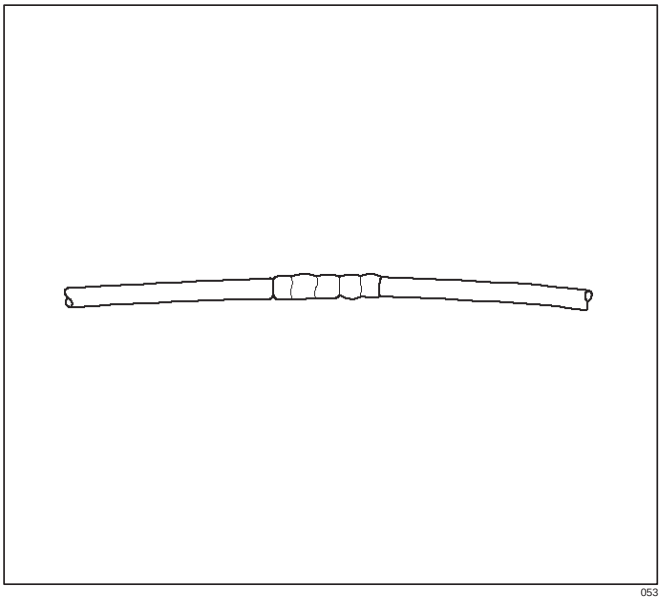

053

3. Twist the wires as they were before starting this procedure.

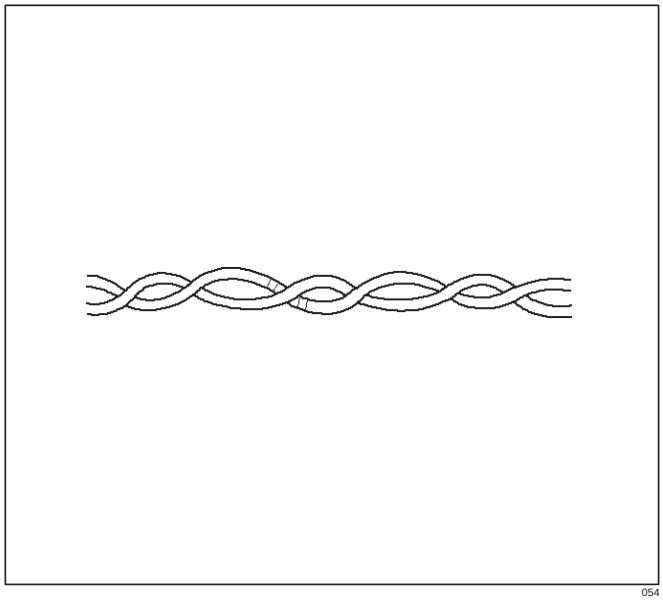

054

4. Tape the wires with electrical tape. Hold in place.

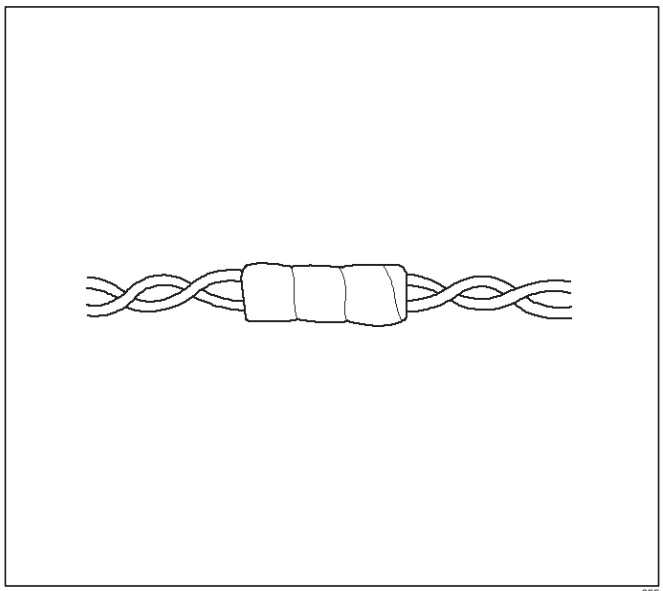

055

Weather-Pack Connector

Tools Required

5-8840-0388-0 Weather-Pack II Terminal Remover

Removal Procedure

A Weather-Pack connector can be identified by a rubber seal at the rear of the connector. This engine room connector protects against moisture and dirt, which could from oxidation and deposits on the terminals. This protection is important, because of the low voltage and the low amperage found in the electronic systems.

1. Open the secondary lock hinge on the connector.

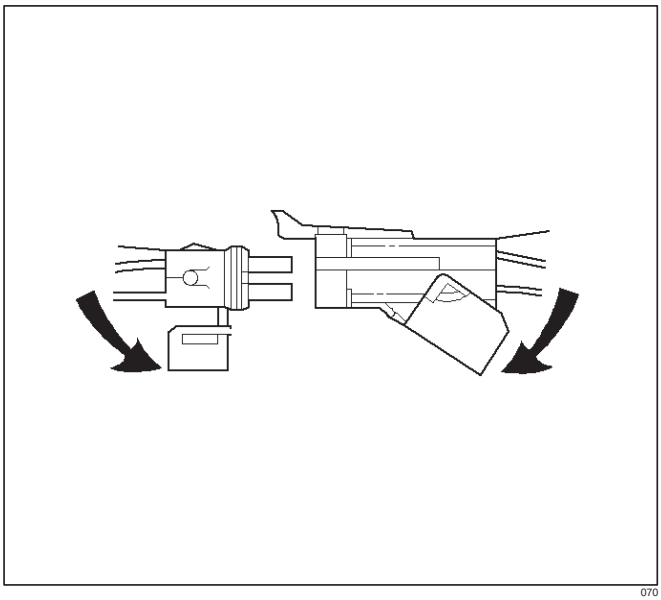

070

2. Use tool 5-8840-0388-0 or the equivalent to remove the pin and the sleeve terminals. Push on 5-8840-0388-0 to release.

NOTE: Do the use an ordinary pick or the terminal may be bent or deformed. Unlike standard blade terminals, these terminals cannot be straightened after they have been improperly bent.

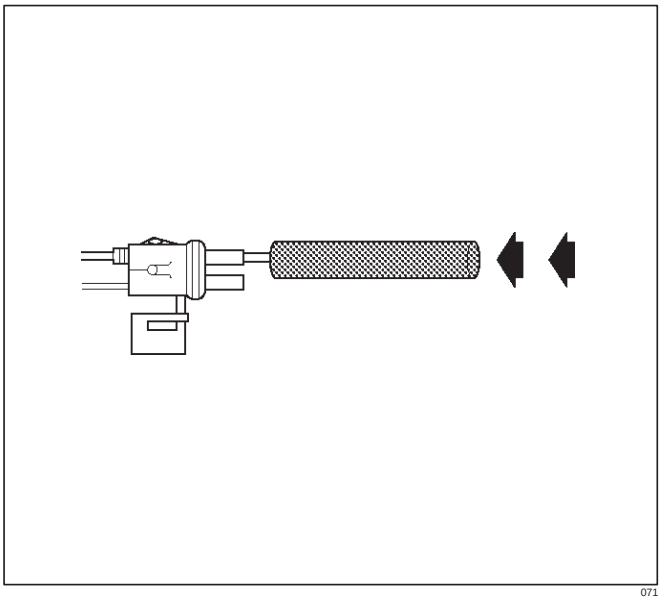

071

3. Cut the wire immediately behind the cable seal.

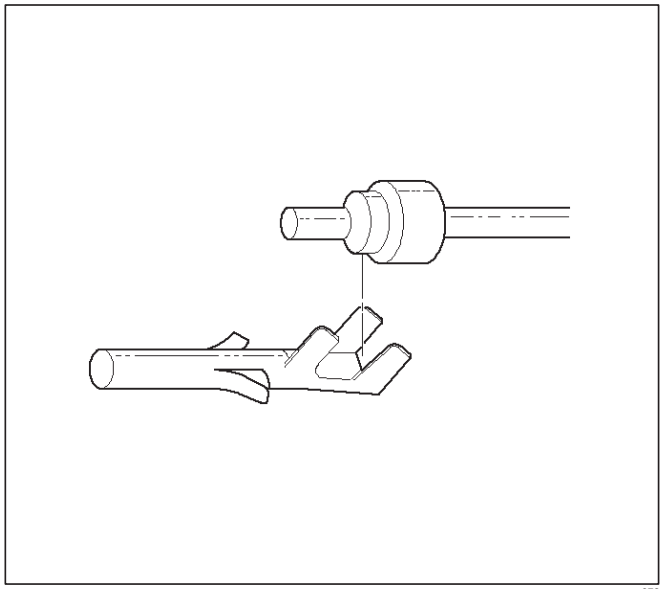

072

Installation Procedure

Make certain the connectors are properly seated and all of the sealing rings are in place when you reconnect the leads. The secondary lock hinge provides a backup locking feature for the connector. The secondary lock hinge is used for added reliability. This flap should retain the terminals even if the small terminal lock tangs are not positioned properly.

Do not replace the Weather-Pack connections with standard connections. Read the instructions provided with the Weather-Pack connector and terminal packages.

1. Replace the terminal.
2. Slip the new seal onto the wire.
3. Strip 5 mm (0.2”) of insulation from the wire.
4. Crimp the terminal over the wire and the seal.

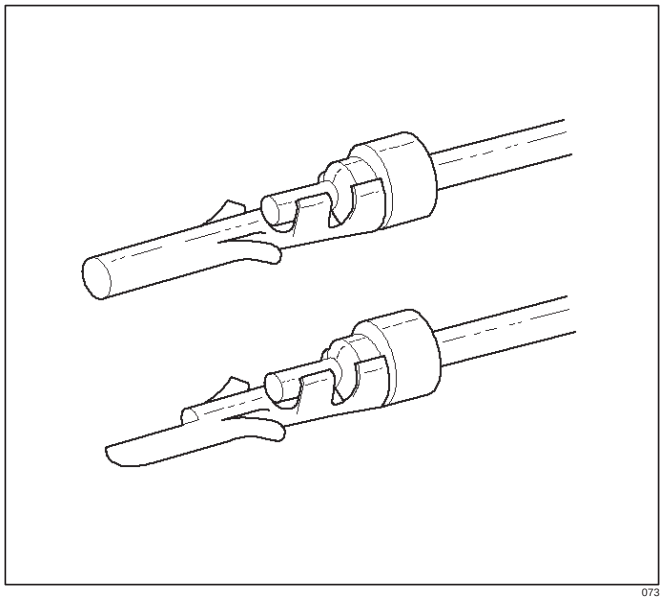

073

5. Push the terminal and the connector to engage the locking tangs.

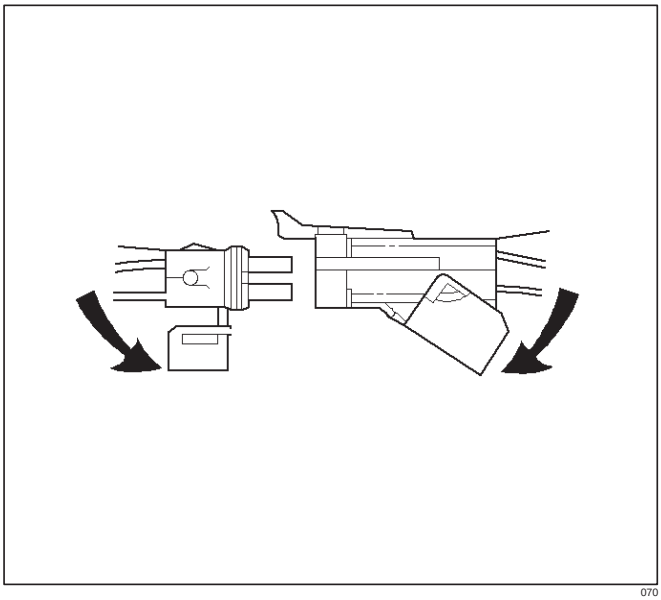

070

6. Close the secondary locking hinge.

Com-Pack III

General Information

The Com-Pack III terminal looks similar to some Weather-Pack terminals. This terminal is not sealed and is used where resistance to the environment is not required. Use the standard method when repairing a terminal. Do not use the Weather-Pack terminal tool 5-8840-0388-0 or equivalent. These will damage the terminals.

Metri-Pack

Tools Required

5-8840-0632-0 Terminal Remover

Removal Procedure

Some connectors use terminals called Metri-Pack Series 150. These may be used at the engine coolant temperature (ECT) sensor.

1. Slide the seal (1) back on the wire.
2. Insert the 5-8840-0632-0 tool or equivalent (3) in order to release the terminal locking tang (2).

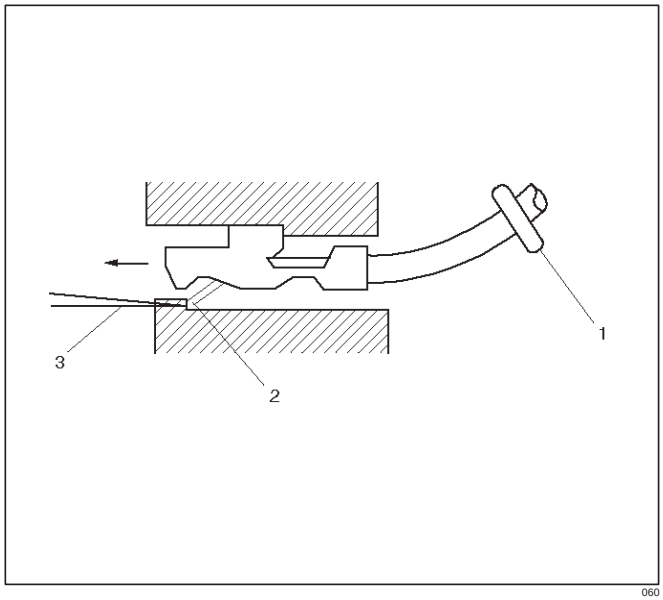

060

3. Push the wire and the terminal out through the connector. If you reuse the terminal, reshape the locking tang.

Installation Procedure

Metri-Pack terminals are also referred to as “pull-to-seat” terminals.

1. In order to install a terminal on a wire, the wire must be inserted through the seal (2) and through the connector (3).
2. The terminal (1) is then crimped onto the wire.

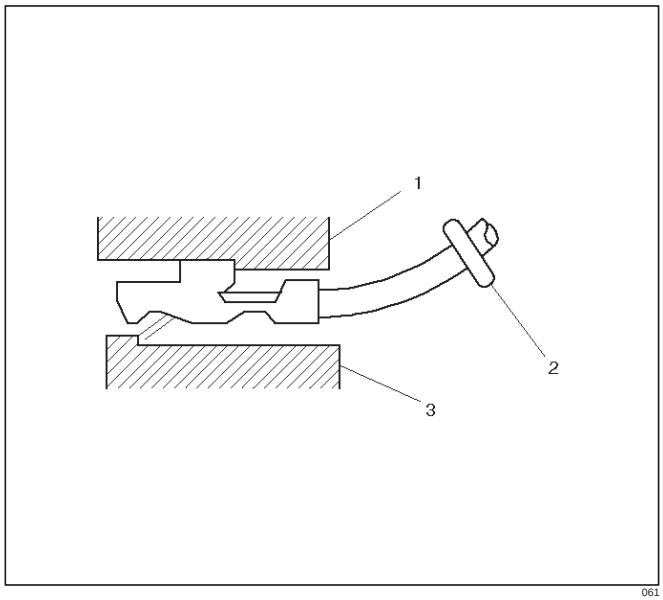

061

3. Then the terminal is pulled back into the connector to seat it in place.

General Description (ECM and Sensors)

57X Reference ECM Input

The engine control module (ECM) uses this signal from the crankshaft position (CKP) sensor to calculate engine RPM and crankshaft position at all engine speeds. The ECM also uses the pulses on this circuit to initiate injector pulses. If the ECM receives no pulses on this circuit, DTC P0337 will set. The engine will not start and run without using the 57X reference signal.

A/C Request Signal

This signal tells the ECM when the A/C mode is selected at the A/C control head.
Refer to *A/C Clutch Circuit Diagnosis* for A/C wiring diagrams and diagnosis for the A/C electrical system.

Crankshaft Position (CKP) Sensor

The crankshaft position (CKP) sensor provides a signal used by the engine control module (ECM) to calculate the ignition sequence. The CKP sensor initiates the 57X reference pulses which the ECM uses to calculate RPM and crankshaft position.
Refer to *Electronic Ignition System* for additional information.

Camshaft Position (CMP) Sensor and Signal

The camshaft position (CMP) sensor sends a CMP signal to the ECM. The ECM uses this signal as a “cylinder distinction” to trigger the injectors in the power order. If the ECM detects an incorrect CMP signal while the engine is running, DTC P0341 will set, and the ECM triggers the injectors in the power order.
Refer to *DTC P0341*.

Engine Coolant Temperature (ECT) Sensor

The engine coolant temperature (ECT) sensor is a thermistor (a resistor which changes value based on temperature) mounted in the engine coolant stream. Low coolant temperature produces a high resistance of 100,000 ohms at –40˚C (–40˚F). High temperature causes a low resistance of 70 ohms at 130˚C (266˚F). The ECM supplies a 5-volt signal to the ECT sensor through resistors in the ECM and measures the voltage. The signal voltage will be high when the engine is cold and low when the engine is hot. By measuring the voltage, the ECM calculates the engine coolant temperature. Engine coolant temperature affects most of the systems that the ECM controls.
The Tech 2 displays engine coolant temperature in degrees. After engine start-up, the temperature should rise steadily to about 85˚C (185˚F). It then stabilizes when the thermostat opens. If the engine has not been run for several hours (overnight), the engine coolant temperature and intake air temperature displays should be close to each other. A hard fault in the engine coolant sensor circuit will set DTC P0117 or DTC P0118.

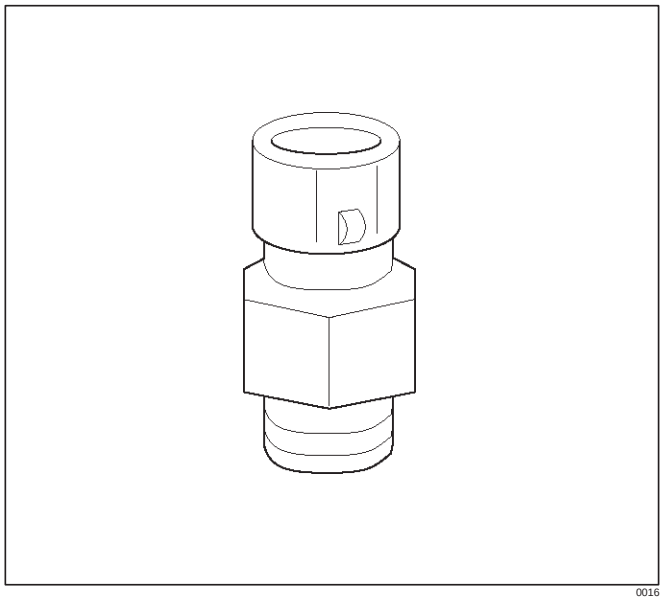

Electrically Erasable Programmable Read Only Memory (EEPROM)

The electrically erasable programmable read only memory (EEPROM) is a permanent memory chip that is physically soldered within the ECM. The EEPROM contains the program and the calibration information that the ECM needs to control powertrain operation.
Unlike the PROM used in past applications, the EEPROM is not replaceable. If the ECM is replaced, the new ECM will need to be programmed. Equipment containing the correct program and calibration for the vehicle is required to program the ECM.

Intake Air Temperature (IAT) Sensor

The intake air temperature (IAT) sensor is a thermistor which changes its resistance based on the temperature of air entering the engine. Low temperature produces a high resistance of 100,000 ohms at –40˚C (–40˚F). High temperature causes low resistance of 70 ohms at 130˚C (266˚F) . The ECM supplies a 5-volt signal to the sensor through a resistor in the ECM and monitors the signal voltage. The voltage will be high when the incoming air is cold. The voltage will be low when the incoming air is hot. By measuring the voltage, the ECM calculates the incoming air temperature.
The Tech 2 displays the temperature of the air entering the engine. The temperature should read close to the ambient air temperature when the engine is cold and rise as underhood temperature increases. If the engine has not been run for several hours (overnight), the IAT sensor temperature and engine coolant temperature should read close to each other. A fault in the IAT sensor circuit will set DTC P0112 or DTC P0113.

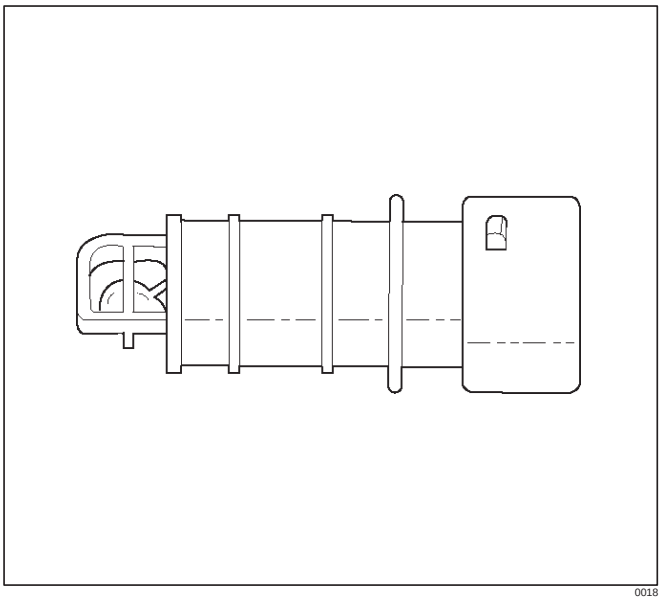

Manifold Absolute Pressure (MAP) Sensor

The manifold absolute pressure (MAP) sensor responds to changes in intake manifold pressure. The MAP sensor signal voltage to the ECM varies from below 2 volts at idle (high vacuum) to above 4 volts.

The MAP sensor is used to determine the following:

- Boost pressure for injector control.
- Barometric pressure (BARO).

If the ECM detects a voltage that is lower than the possible range of the MAP sensor, DTC P0107 will be set. A signal voltage higher than the possible range of the sensor will set DTC P0108. An intermittent low or high voltage will set DTC P1107 or DTC P1106, respectively. The ECM can detect a shifted MAP sensor. The ECM compares the MAP sensor signal to a calculated MAP based on throttle position and various engine load factors. If the ECM detects a MAP signal that varies excessively above or below the calculated value, DTC P0106 will set.

Engine Control Module (ECM)

The engine control module (ECM) is located in the engine room.

The ECM constantly observes the information from various sensors. The ECM controls the systems that affect vehicle performance. The ECM performs the diagnostic function of the system. It can recognize operational problems, alert the driver through the MIL (Service Engine Soon lamp), and store diagnostic trouble codes (DTCs). DTCs identify the problem areas to aid the technician in making repairs.

ECM Function

The ECM supplies 5, 12 and 110 volts to power various sensors or switches. The power is supplied through resistances in the ECM which are so high in value that a test light will not light when connected to the circuit. In some cases, even an ordinary shop voltmeter will not give an accurate reading because its resistance is too low. Therefore, a digital voltmeter with at least 10 megohms input impedance is required to ensure accurate voltage readings. The ECM controls output circuits such as the injectors, glow relays, etc., by controlling the ground or the power feed circuit through transistors or through either of the following two devices:

- Output Driver Module (ODM)
- Quad Driver Module (QDM)

ECM Components

The ECM is designed to maintain exhaust emission levels to government mandated standards while providing excellent driveability and fuel efficiency. The ECM monitors numerous engine and vehicle functions via electronic sensors such as the crankshaft position (CKP) sensor, and vehicle speed sensor (VSS). The ECM also controls certain engine operations through the following:

- Fuel injector control
- Rail pressure control

ECM Voltage Description

The ECM supplies a buffered voltage to various switches and sensors. It can do this because resistance in the ECM is so high in value that a test light may not illuminate when connected to the circuit. An ordinary shop voltmeter may not give an accurate reading because the voltmeter input impedance is too low. Use a 10-megohm input impedance digital voltmeter to assure accurate voltage readings.

The input/output devices in the ECM include analog-to-digital converters, signal buffers, counters, and special drivers. The ECM controls most components with electronic switches which complete a ground circuit when turned “ON.” These switches are arranged in groups of 4 and 7, called either a surface-mounted quad driver module (QDM), which can independently control up to 4 output terminals, or QDMs which can independently control up to 7 outputs. Not all outputs are always used.

ECM Input/Outputs

Inputs – Operating Conditions Read

- Air Conditioning “ON” or “OFF”
- Engine Coolant Temperature
- Crankshaft Position
- Electronic Ignition
- Manifold Absolute Pressure
- Battery Voltage
- Intake Throttle Position
- Vehicle Speed
- Fuel Temperature
- Oil Temperature
- Intake Air Temperature
- EGR boost pressure
- Oil rail pressure
- Camshaft Position
- Accelerator position

Outputs – Systems Controlled

- Exhaust Gas Recirculation (EGR)
- Injector Control
- QWS

- QOS
- Diagnostics
  - Malfunction Indicator Lamp (Service Engine Soon lamp)
  - Data Link Connector (DLC)
  - Data Output

ECM Service Precautions

The ECM is designed to withstand normal current draws associated with vehicle operation. Avoid overloading any circuit. When testing for opens and shorts, do not ground or apply voltage to any of the ECM's circuits unless instructed to do so. These circuits should only be tested using digital voltmeter. The ECM should remain connected to the ECM or to a recommended breakout box.

Intake Throttle Position (ITP) Sensor

ITP sensor is a potentiometer type and installed to the intake throttle valve body. A voltage of 5V is applied constantly from ECM to ITP sensor thereby to determine by change in voltage the opening of the intake throttle valve during warming up.

Transmission Range Switch

IMPORTANT: The vehicle should not be driven with the transmission range switch disconnected; idle quality will be affected.

The four inputs from the transmission range switch indicate to the ECM which position is selected by the transmission selector lever.
For more information on the transmission on the transmission range switch, refer to *Automatic Transmission*.

Accelerator Position Sensor (AP)

AP sensor is a potentiometer type and installed to accelerator pedal bracket. A voltage of 5V constantly applied from ECM to the sensor thereby to determine the accelerator pedaling angle by change in voltage. Further, this sensor is provided with an accelerator switch, which is set off only when the accelerator pedal is stepped on.

Aftermarket Electrical and Vacuum Equipment

Aftermarket (add-on) electrical and vacuum equipment is defined as any equipment which connects to the vehicle's electrical or vacuum systems that is installed on a vehicle after it leaves the factory. No allowances have been made in the vehicle design for this type of equipment.

NOTE: No add-on vacuum equipment should be added to this vehicle.

NOTE: Add-on electrical equipment must only be connected to the vehicle's electrical system at the battery (power and ground).

Add-on electrical equipment, even when installed to these guidelines, may still cause the powertrain system to malfunction. This may also include equipment not connected to the vehicle electrical system such as portable telephones and radios. Therefore, the first step in diagnosing any powertrain problem is to eliminate all aftermarket electrical equipment from the vehicle. After this is done, if the problem still exists, it may be diagnosed in the normal manner.

Electrostatic Discharge Damage

Electronic components used in the ECM are often designed to carry very low voltage. Electronic components are susceptible to damage caused by electrostatic discharge. Less than 100 volts of static electricity can cause damage to some electronic components. By comparison, it takes as much as 4000 volts for a person to feel even the zap of a static discharge.

TS23793

There are several ways for a person to become statically charged. The most common methods of charging are by friction and induction.

- An example of charging by friction is a person sliding across a vehicle seat.
- Charge by induction occurs when a person with well insulated shoes stands near a highly charged object and momentary touches ground. Charges of the same polarity are drained off leaving the person highly charged with the opposite polarity. Static charges can cause damage, therefore it is important to use care when handling and testing electronic components.

NOTE: To prevent possible electrostatic discharge damage, follow these guidelines:

- Do not touch the ECM connector pins or soldered components on the ECM circuit board.
- Do not open the replacement part package until the part is ready to be installed.
- Before removing the part from the package, ground the package to a known good ground on the vehicle.
- If the part has been handled while sliding across the seat, while sitting down from a standing position, or while walking a distance, touch a known good ground before installing the part.

General Description (Air Induction)

Air Induction System

The air induction system filters contaminants from the outside air, and directs the progress of the air as it is drawn into the engine. A remote-mounted air cleaner prevents dirt and debris in the air from entering the engine. The air duct assembly routes filtered air to the throttle body. Air enters the engine by to following steps:

1. Through the throttle body.
2. Into the intake manifold.
3. Through the cylinder head intake ports.
4. Into the cylinders.

General Description (Fuel Metering)

Deceleration Mode

The ECM reduces the amount of fuel injected when it detects a decrease in the Accelerator position.

Fuel Injector

Fuel injector comprises the solenoid, hydraulic line, and fuel line. Fuel injection is controlled by the continuity time signal and continuity start timing signal from ECM to the solenoid

ECM determines the running conditions of engine by input signals such as engine speed. Accelerator throttle valve opening, and engine coolant temperature, thereby to send the solenoid the best suited signal to the engine status. When current is carried to the solenoid, the armature opens the poppet valve to alow high pressure oil to run into the injector. Under the pressure of the oil, the piston and plunger are depressed to compress the fuel in the combustion chamber of the plunger. Specifically, the pressure of the fuel compressed is increased by a piston top/ plunger bottom area ratio over the pressure of high pressure oil, thereby lifting the fuel nozzle end needle for injecting fuel.

Fuel Metering System Components

The fuel metering system is made up of the following parts:

- The fuel injectors.
- The intake throttle body.
- The Accelerator position (AP) sensor
- The ECM.
- The crankshaft position (CKP) sensor.
- The camshaft position (CMP) sensor.

Basic System Operation

Fuel is supplied through fuel filter to the fuel pump.

The fuel pump is installed to the oil pump, and fuel is forced, through the fuel pump outlet, pipe and cylinder head inside, into the fuel injector.

An orifice is provided at the rear fuel outlet of cylinder head to control the pressure of oil.

The injector is controlled by ECM which gives opening/closing commands to the solenoid installed on the top of the injector. Opening/closing operation of the pressurized engine oil circuit of the injector controls fuel injection quantity, fuel injection timing, etc.

A/C Clutch Diagnosis

A/C Request Signal

This signal tells the ECM when the A/C mode is selected at the A/C control head. The ECM uses this to adjust the idle speed.

Refer to *A/C Clutch Circuit Diagnosis* for A/C wiring diagrams and diagnosis for A/C electrical system.

General Description Exhaust Gas Recirculation (EGR) System

EGR Purpose

The exhaust gas recirculation (EGR) system is use to reduce emission levels of oxides of nitrogen (NOx). NOx emission levels are caused by a high combustion temperature. The EGR system lowers the NOx emission levels by decreasing the combustion temperature.

The ECM uses information from the following sensors to control EGR valve boost pressure.

- ECT
- ITP
- Engine Speed
- AP sensor

Fuse and Relay Panel (Underhood Electrical Center) RHD

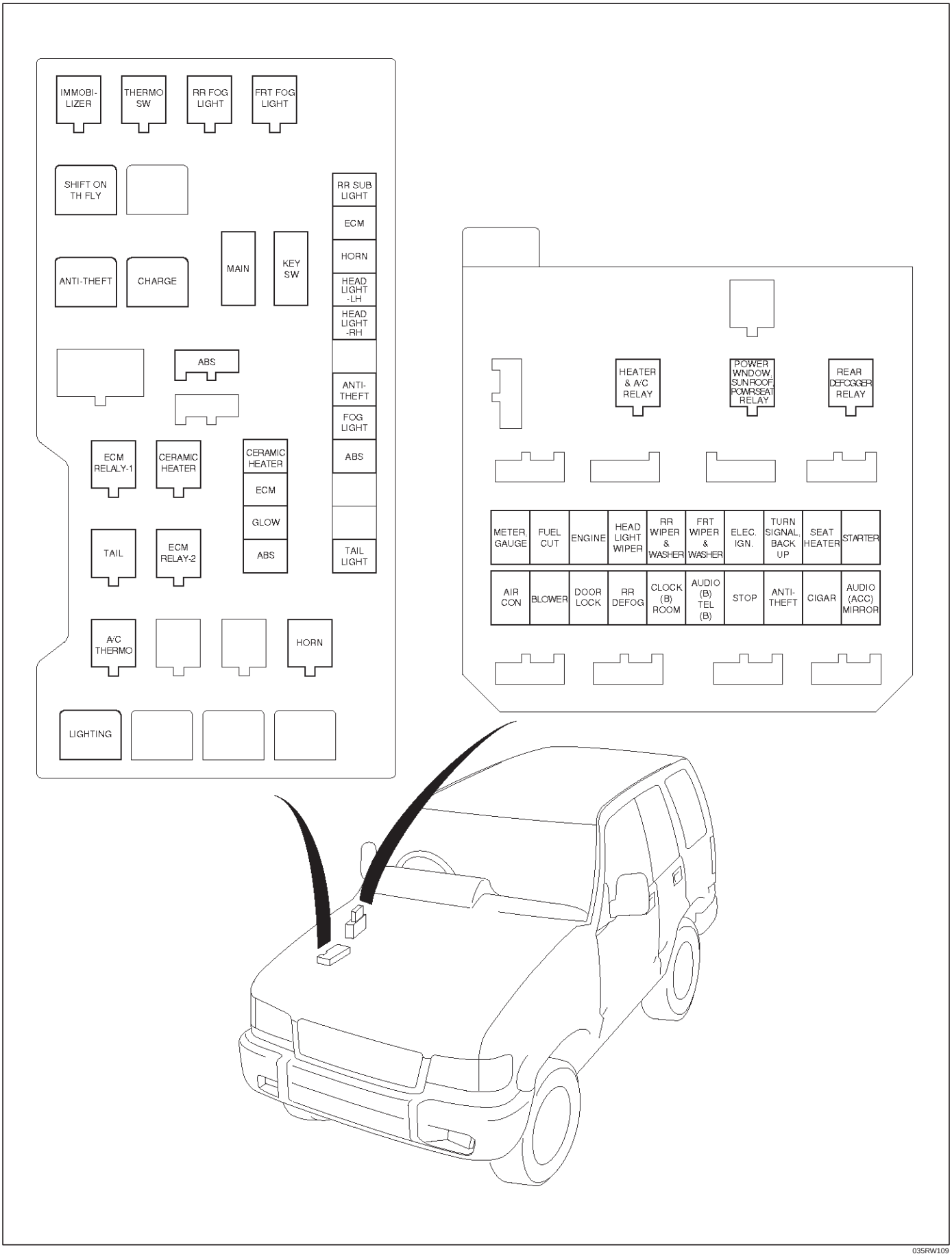

035RW109

Fuse and Relay Panel (Underhood Electrical Center) LHD

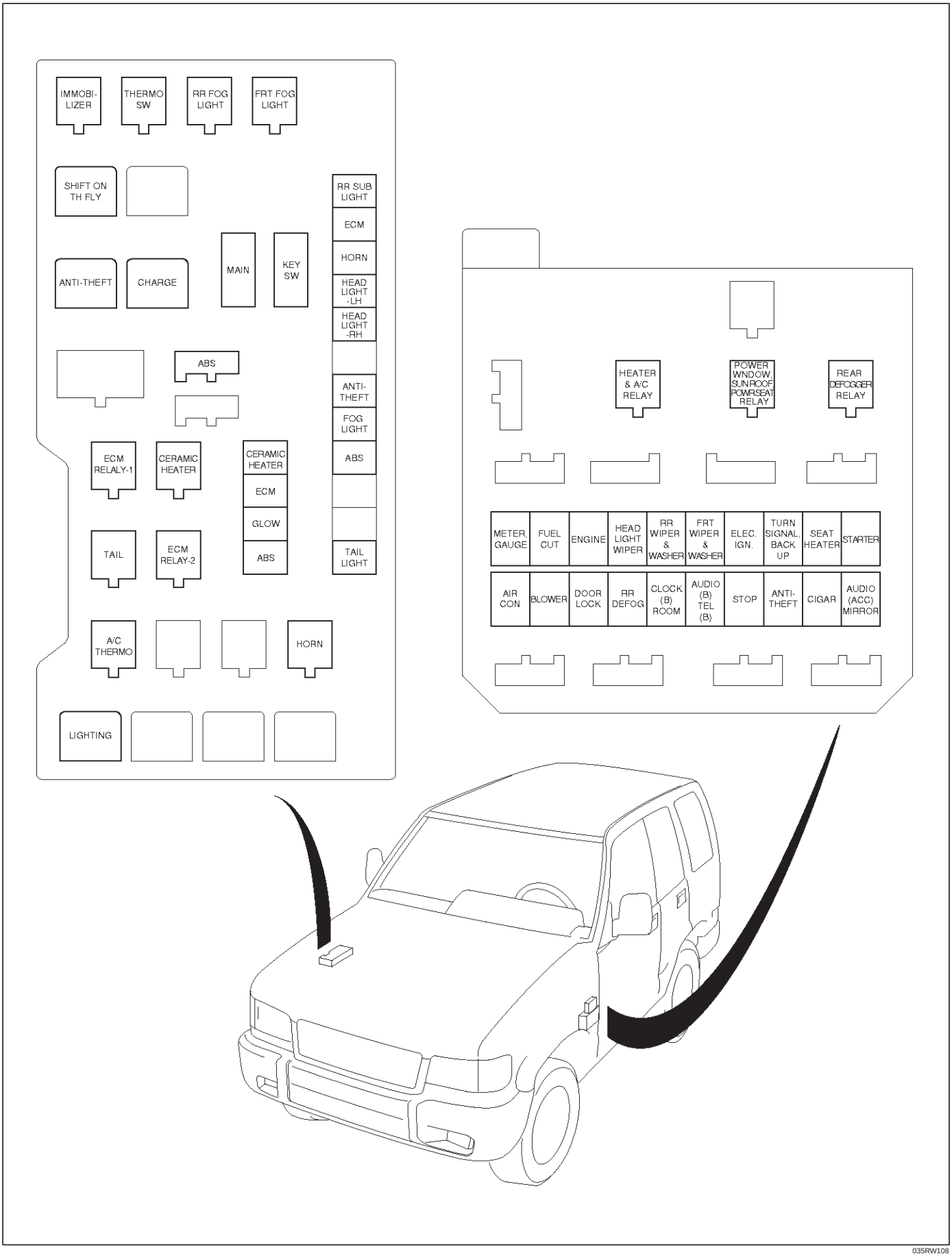

035RW108

ENGINE EXHAUST

CAUTION: Exhaust system components must have enough clearance from the underbody to prevent overheating of the floor pan and possible damage to the passenger compartment, insulation and trim materials.

CONTENTS

General Description 6F–2
Hangers 6F–2
Gasket 6F–2
On-Vehicle Service 6F–3
Front Exhaust Pipe 6F–3
Center Exhaust Pipe 6F–5
Exhaust Silencer 6F–6
Rear Exhaust Pipe 6F–7

GENERAL DESCRIPTION

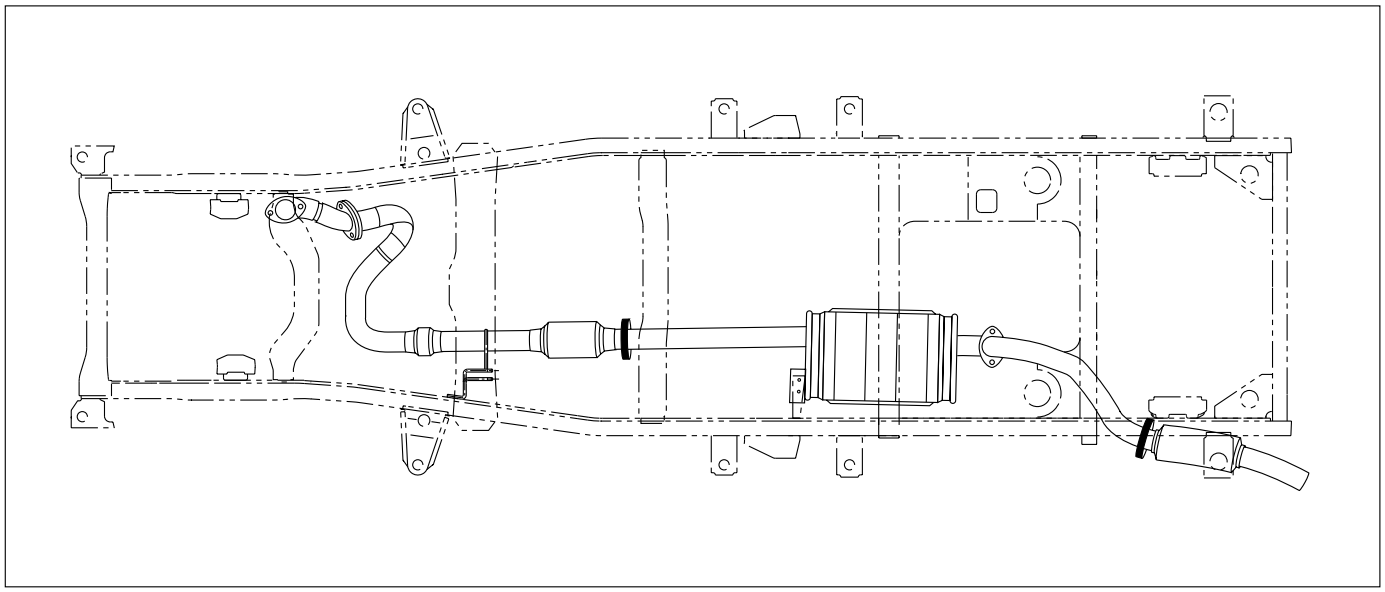

150RW070

When inspecting or replacing exhaust system components, make sure there is adequate clearance from all points on the underbody to prevent overheating of the floor pan and possible damage to the passenger compartment insulation and trim materials.

Check complete exhaust system and nearby body areas and rear compartment lid for broken, damaged, missing or mispositioned parts, open seams, holes loose connections or other deterioration which could permit exhaust fumes to seep into the rear compartment or passenger compartment. Dust or water in the rear compartment may be an indication of a problem in one of these areas. Any faulty areas should be corrected immediately.

HANGERS

Various types of hangers are used to support exhaust system(s). These include conventional rubber straps, rubber rings, and rubber blocks.

The installation of exhaust system supports is very important, as improperly installed supports can cause annoying vibrations which can be difficult to diagnose.

GASKET

The gasket must be replaced whenever a new exhaust pipe, muffler or exhaust throttle is installed.

ON-VEHICLE SERVICE

Rattles and noise vibrations in the exhaust system are usually caused by misalignment of parts. When aligning the system, leave all bolts or nuts loose until all parts are properly aligned; then tighten, working from front to rear.

1. Check connections for looseness or damage, especially for exhaust gas leakage.
2. Check clamps and rubbers for weakness, cracks or damage.
3. If any part of the converter heat shield is damaged or dented to the extent that it contacts the catalyst, repair or replace.
4. Check for dents or damage and for any holes or cracks caused by corrosion.

FRONT EXHAUST PIPE

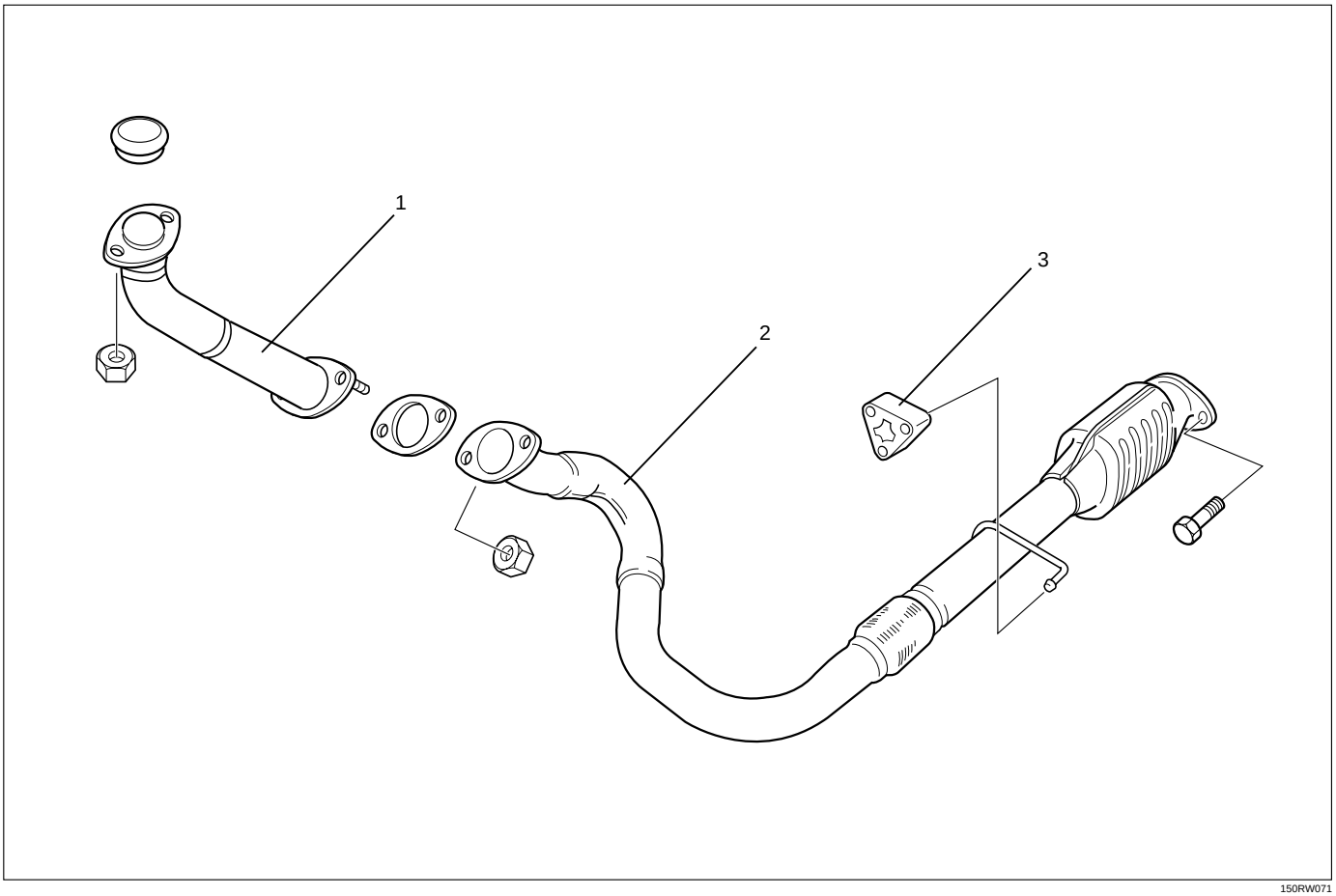

150RW071

Legend

(1) Front exhaust pipe
(2) Center exhaust pipe
(3) Mounting rubber

REMOVAL

1. Battery negative cable.
2. Raise the vehicle and support with suitable safety stands.
3. Remove front exhaust pipe fixing nuts from engine side.
4. Remove fixing nuts between front exhaust pipe and center exhaust pipe, remove front exhaust pipe.
5. Disconnect center exhaust pipe and silencer, remove center exhaust pipe.
6. Remove fixing nuts from connection part of tail pipe, remove mounting rubber and remove silencer bracket, silencer.
7. Remove mounting rubber for tail pipe, remove tail pipe.

INSTALLATION

1. Install front exhaust pipe and tighten it temporarily.
2. Tighten fixing nuts of front exhaust pipe to the specified torque. (for engine side)

Torque: 67 N·m (6.8 kg·m/50 lb ft)

3. Tighten fixing nuts of front exhaust pipe to the specified torque. (for center pipe side)

Torque: 43 N·m (4.4 kg·m/32 lb ft)

4. Install silencer and tighten silencer bracket nuts to the specified torque.

Torque: 16 N·m (1.6 kg·m/12 lb ft)

5. Install tail pipe and tighten it.

Torque: 43 N·m (4.4 kg·m/32 lb ft)

6. Install mounting rubbers.

CENTER EXHAUST PIPE

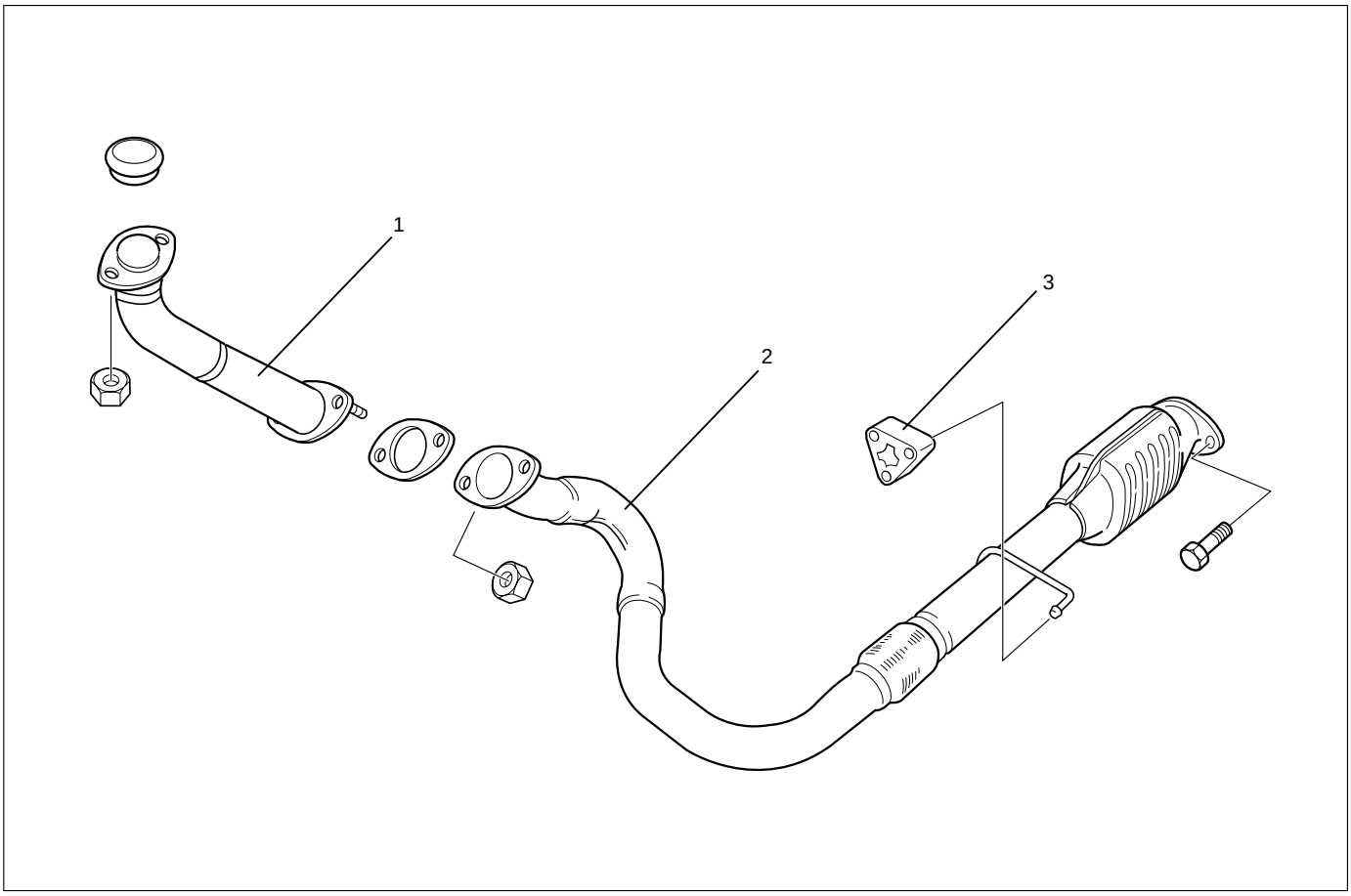

150RW071

Legend

(1) Front Exhaust Pipe
(2) Center Exhaust Pipe
(3) Mounting Rubber

REMOVAL

1. Battery negative cable.
2. Raise the vehicle and support with suitable safety stands.
3. Remove mounting rubber.
4. Remove fixing nuts from silencer side.
5. Remove fixing nuts from front exhaust pipe.
6. Remove center exhaust pipe assembly.

INSTALLATION

1. Place center exhaust pipe in the original position then tighten fixing nuts temporarily.
2. Install mounting rubber.
3. Tighten front exhaust pipe side nuts to the specified torque.

Torque : 43 N·m (4.4 kg·m/32 lb ft)

4. Tighten silencer side nuts to the specified torque.

Torque : 43 N·m (4.4 kg·m/32 lb ft)

EXHAUST SILENCER

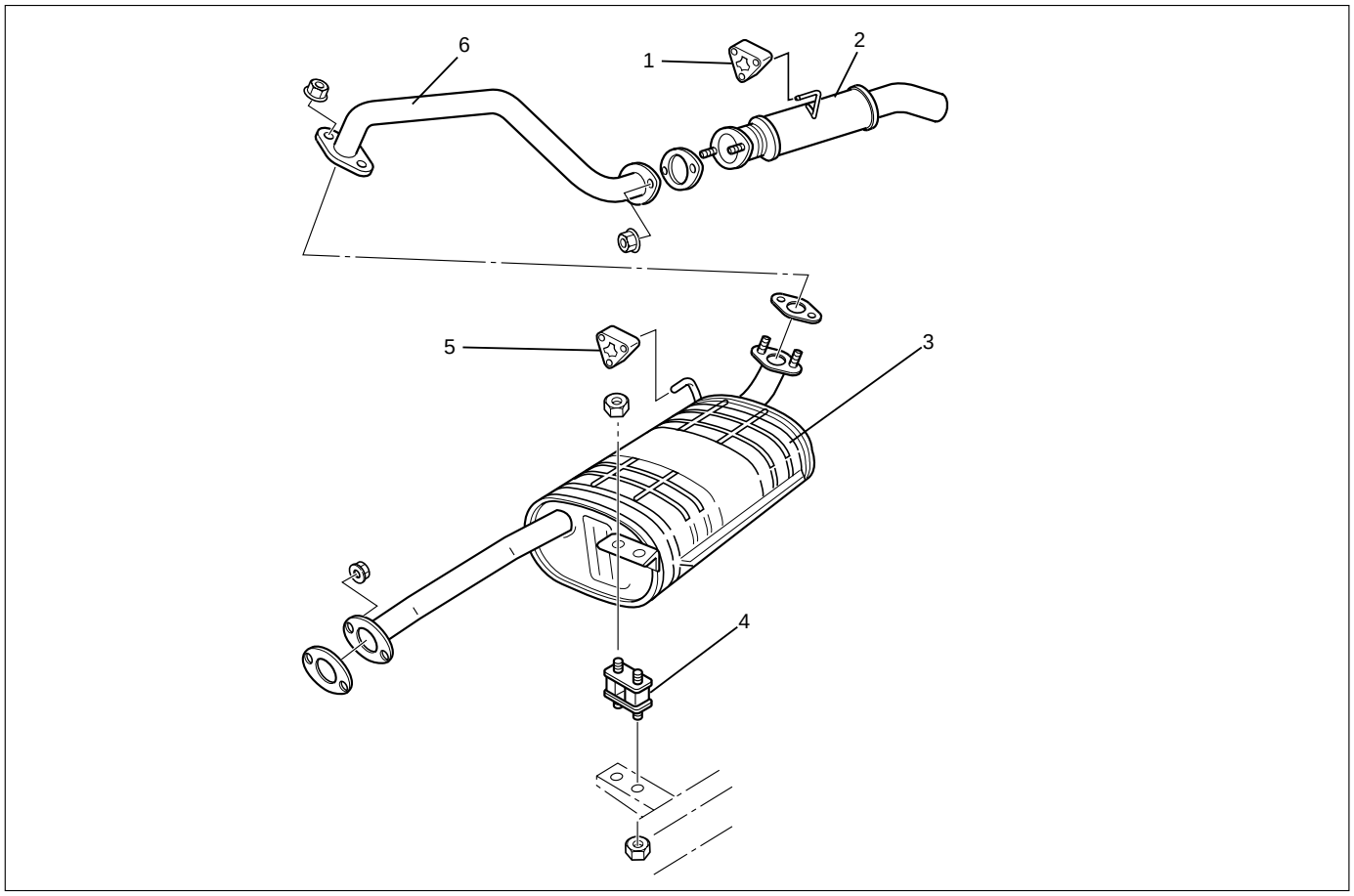

150RW072

Legend

(1) Mounting Rubber
(2) Post Silencer
(3) Silencer
(4) Mounting Bracket
(5) Mounting Rubber
(6) Tail Pipe

REMOVAL

1. Battery negative cable.
2. Raise the vehicle and support with suitable safety stands.
3. Remove mounting rubber from silencer.
4. Remove silencer mounting bracket.
5. Remove fixing nuts between center exhaust pipe and silencer.
6. Remove fixing nuts from tail pipe flange.
7. Remove silencer assembly.

INSTALLATION

1. Place silencer assembly in the original installation position, tighten both side (front and rear) nuts temporarily.
2. Tighten silencer mounting bracket to the specified torque.

Torque : 16 N·m (1.6 kg·m/12 lb ft)

3. Tighten center exhaust pipe side nuts to the specified torque.

Torque : 43 N·m (4.4 kg·m/32 lb ft)

4. Tighten tail pipe side nuts to the specified torque.

Torque : 43 N·m (4.4 kg·m/32 lb ft)

5. Install silencer mounting rubber.

REAR EXHAUST PIPE

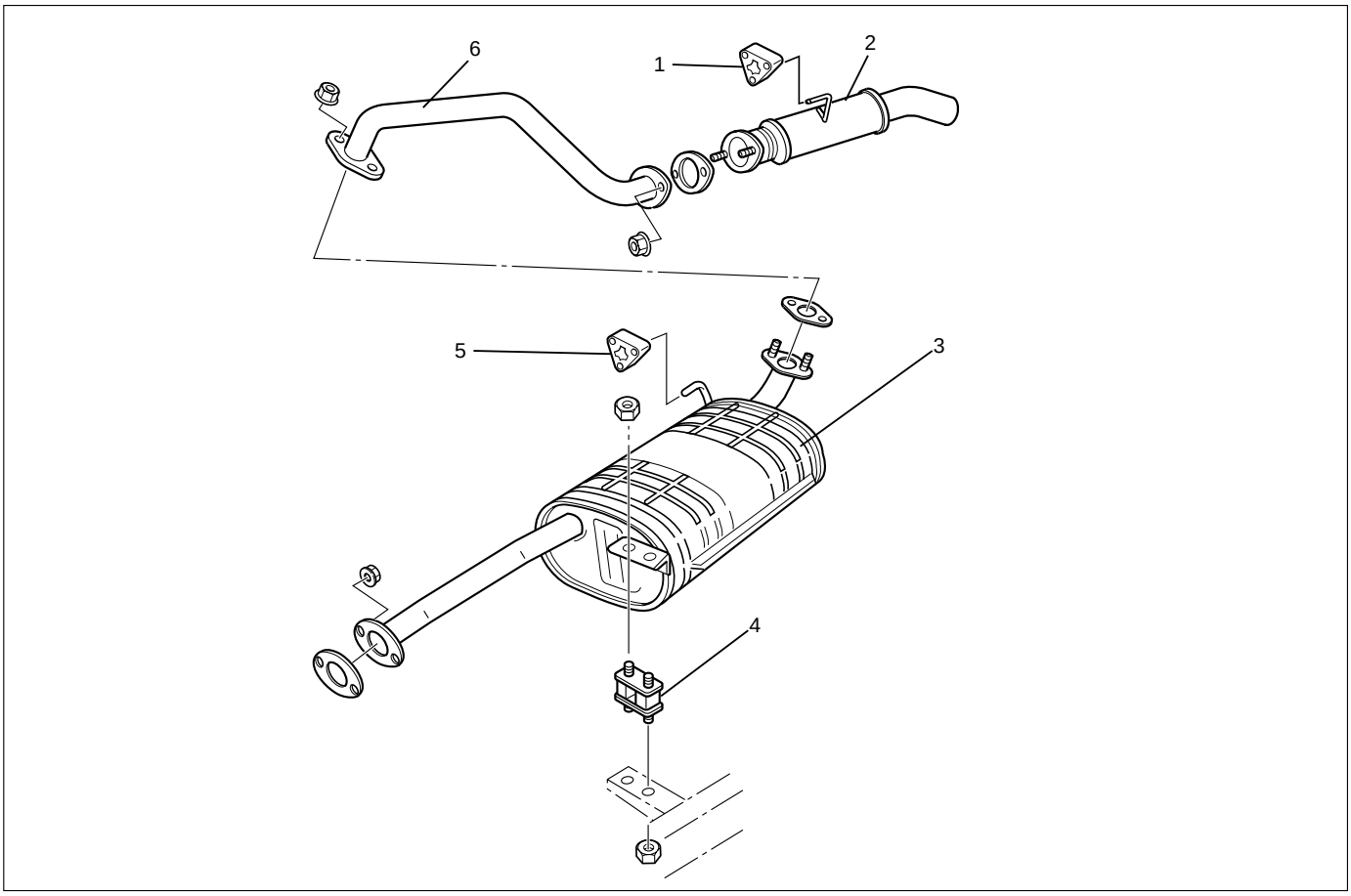

150RW072

Legend

(1) Mounting Rubber
(2) Post Silencer
(3) Silencer
(4) Mounting Bracket
(5) Mounting Rubber
(6) Tail Pipe

REMOVAL

1. Battery negative cable.
2. Raise the vehicle and support with suitable safety stands.
3. Remove mounting rubber from post silencer.
4. Remove fixing nuts at silencer side.
5. Remove tail pipe together with post silencer.
6. Remove fixing nuts between tail pipe and post silencer which separates them.

INSTALLATION

1. Install tail pipe and post silencer and tighten them to the specified torque.

Torque : 43 N·m (4.4 kg·m/32 lb ft)

2. Place tail pipe together with post silencer to original position and tighten fixing nuts at silencer side.

Torque : 43 N·m (4.4 kg·m/32 lb ft)

3. Install mounting rubber for post silencer.
4. Lower the vehicle.
5. Reconnect battery negative cable.

MEMO

ENGINE LUBRICATION

CONTENTS

General Description 6G–2
Lubrication Chart 6G–2
Oil Flow 6G–3
Oil Pump Specification 6G–3
Oil Filter Specification 6G–3
Sub Oil Filter Specification 6G–4
Oil Pump 6G–5
Oil Cooler Assembly 6G–6
Oil Cooler Specification. 6G–6
Oil Filter 6G–6
Sub Oil Filter 6G–6

GENERAL DESCRIPTION

LUBRICATION CHART

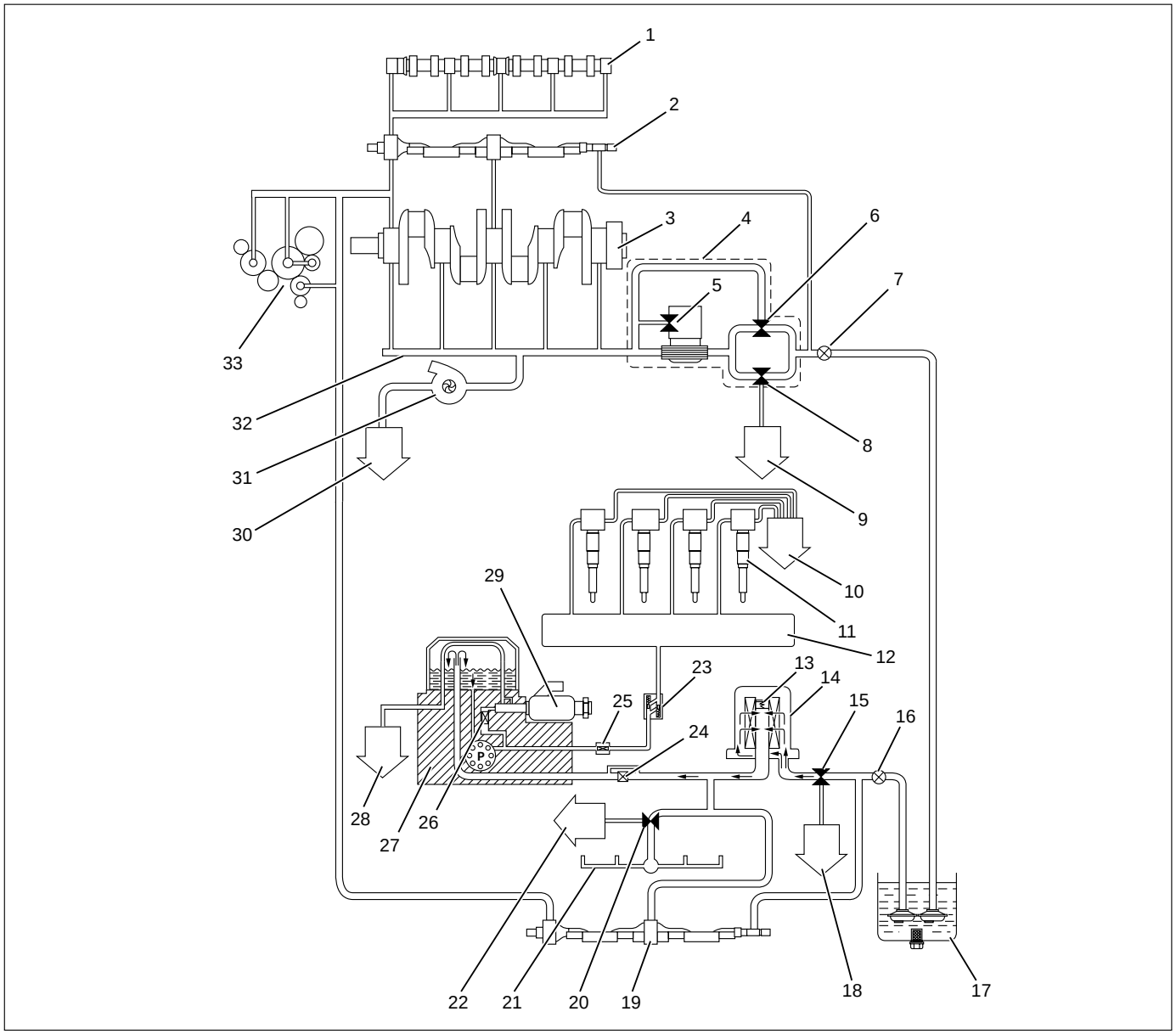

040RW018

Legend

(1) Camshaft
(2) Balance Shaft
(3) Crankshaft
(4) Oil Cooler and Oil Filter Assembly
(5) Oil Filter Relief Valve 98 Kpa (1 kg/cm^2/14.2 Psi)
(6) Oil Cooler Relief Valve 245 Kpa (2.5 kg/cm^2/ 36 Psi)
(7) First Oil Pump
(8) Main Oil Relief Valve 588 Kpa (6 kg/cm^2/ 85 Psi)
(9) To Oil Pan
(10) To Oil Pan
(11) Injector
(12) Oil Rail
(13) Sub Oil Filter Relief Valve 98 Kpa (1 kg/cm^2/ 14.2 Psi)
(14) Sub Oil Filter
(15) Relief Valve 588 Kpa (6 kg/cm^2/ 85 Psi)
(16) Second Oil Pump
(17) Oil Pan
(18) To Oil Pan
(19) Balance Shaft
(20) Cooling Jet Relief Valve 245 Kpa (2.5 kg/cm^2/ 36 Psi)
(21) Cooling Jet
(22) To Oil Pan
(23) Two Way Check Valve
(24) Nipple Filter

(25) Edge Filter
(26) Edge Filter
(27) High Pressure Oil Pump Assembly
(28) To Oil Pan
(29) Pressure Control Valve
(30) To Oil Pan
(31) Turbocharger
(32) Oil Gallery
(33) Timing Gear Train

To meet a newly adopted electronically controlled fuel injection system using engine oil two oil pumps have been provided to increase circulating oil capacity.
The first oil pump serves mainly to lubricate the engine parts, while the second mainly serves the fuel injectors and partially cools the pistons.
The oil cooler is provided on the first oil pump side and uses engine coolant.

OIL FLOW

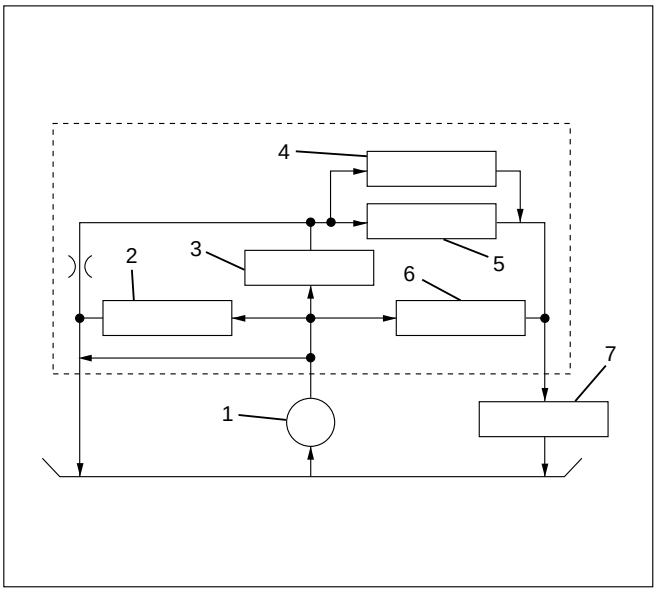

050RW010

Legend
(1) Oil Pump
(2) Regulator Valve
(3) Oil Cooler
(4) Oil Filter Relief Valve
(5) Full Flow Filter
(6) Oil Cooler Relief Valve
(7) Gallery

OIL PUMP SPECIFICATIONS

	First	Second
Pump Revolution	8800 rpm	
Delivery Pressure	392 Kpa (4.0 kg/cm^2/57 psi)	
Delivery Capacity	>48.8 l/min	>37.1 l/min

OIL FILTER SPECIFICATIONS

Filtration Method	Full flow Paper
Filtration Area	0.32 m^2
Relief Valve opening pressure	981 Kpa (10 kg/cm^2/142 psi)

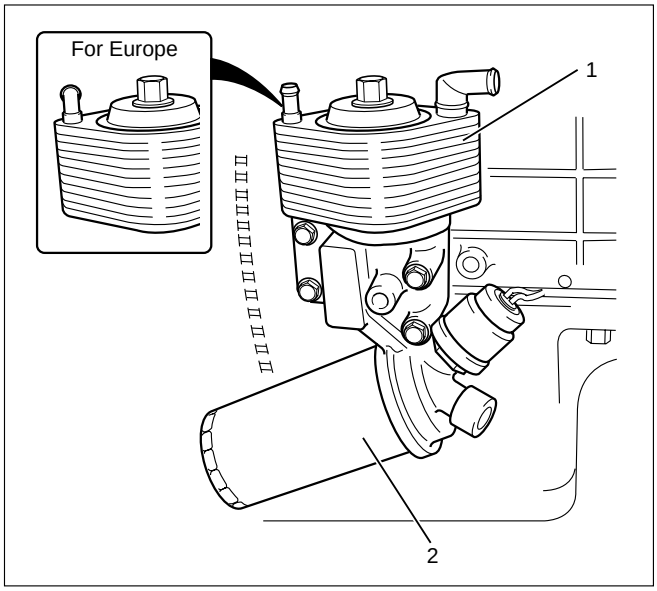

050R200001

Legend
(1) Oil cooler assembly
(2) Oil filter assembly

SUB OIL FILTER SPECIFICATIONS

Filtration Method	Full flow Paper
Filtration Area	0.12 m^2
Relief Valve opening pressure	981 Kpa (10 kg/cm^2/142 psi)

The sub oil filter requires no servicing until the replacement interval is reached.
The element is designed to provide special filtering efficiency until it becomes due for replacement.
It is recommended to check and replace the sub filter when the engine is being overhauled or if it is broken inside the engine.

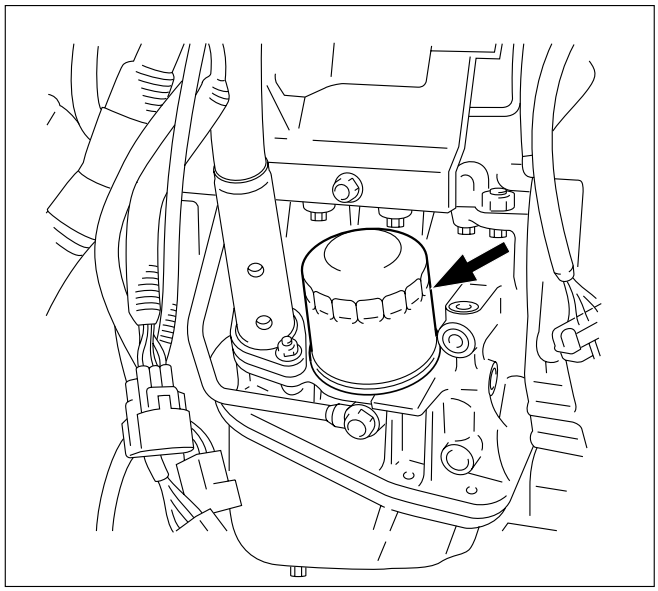

442RW004

OIL PUMP

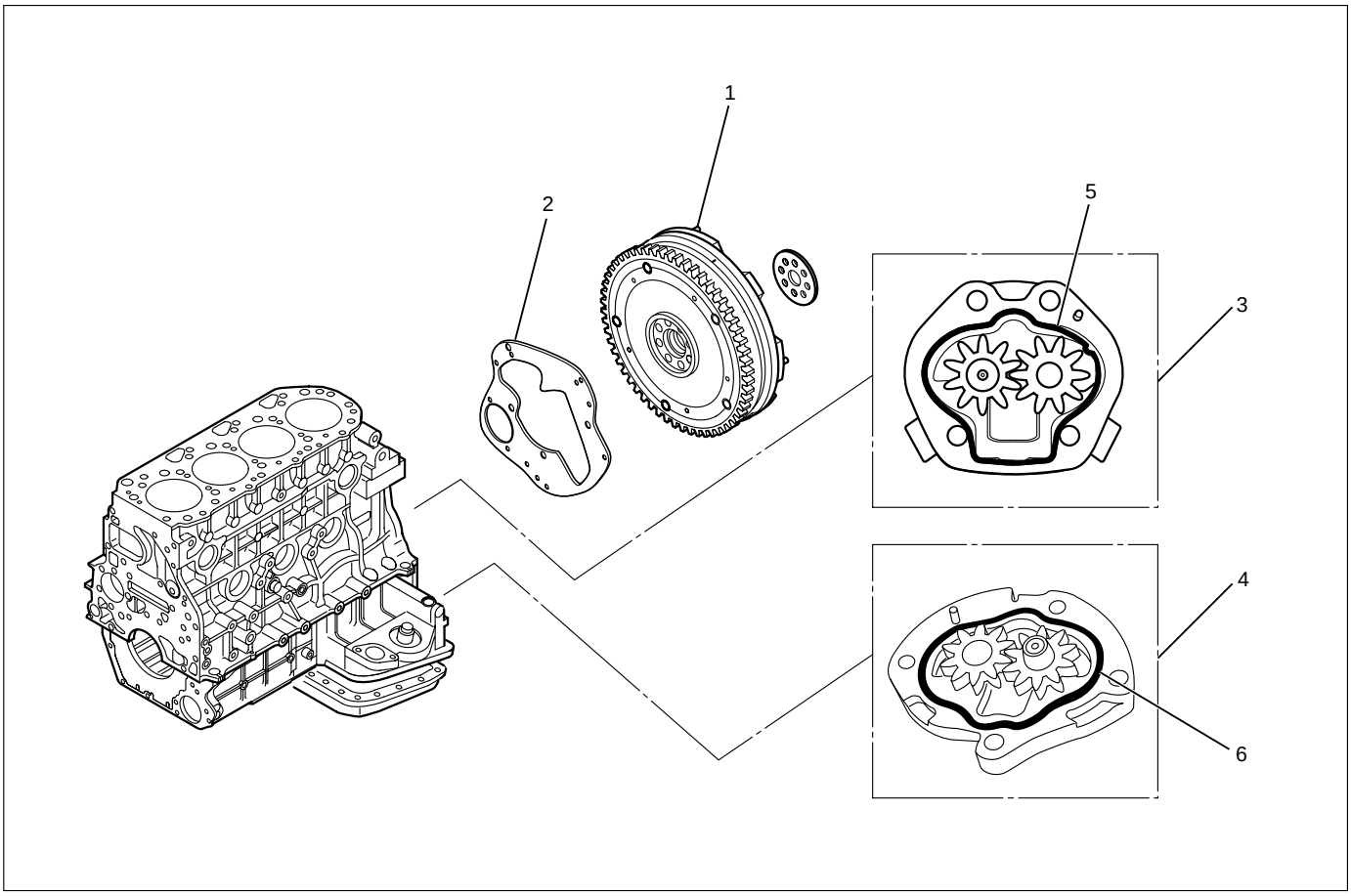

012RW097

Legend

(1) Flywheel
(2) Rear Plate
(3) First Oil Pump
(4) Second Oil Pump
(5) O-ring (For 1st oil pump)
(6) O-ring (For 2nd oil pump)

REMOVAL

1. Remove battery ground cable.
2 Raise the vehicle and support with suitable safety stand.
3. Drain engine oil.
4. Remove flywheel assembly.
5. Remove rear plate (For A/T) or flywheel housing (For MT).
6. Remove first oil pump assembly from cylinder block and second oil pump assembly from crank case.

INSPECTION AND REPAIR

1. Inspect flaws and/or wear on the teeth surface.
2. Inspect abnormal wear journal on the gear and in the drive spline.
3. If problem is found during inspection, the worn parts must be replaced.

INSTALLATION

1. Install first oil pump.
   1) Set O-ring to oil pump.
   2) Install oil pump drive gear to the end of balance shaft RH.
   3) Apply engine oil to oil pump gear and install gear to the end surface of cylinder block.

Torque: 20 N·m (2.0 kg·m / 14.5 lb ft)

2. Install second oil pump.
   1) Set O-ring to oil pump.
   2) Install oil pump drive gear to the end of balance shaft LH.
   3) Apply engine oil to oil pump gear and install gear to the end surface of crankcase.

Torque: 20 N·m (2·0 kg.m / 14.5 lb ft)

OIL COOLER ASSEMBLY

REMOVAL

1. Disconnect battery ground cable.
2. Drain engine coolant.
3. Remove front exhaust pipe.
4. Remove heat protector.
5. Remove exhaust valve assembly.
6. Oil cooler assembly.
   1) Remove water hose from water inlet and outlet side.
   2) Cloth should be put under the oil cooler to prevent oil from flowing out.
   3) Loosen fixing bolt then remove oil cooler assembly.

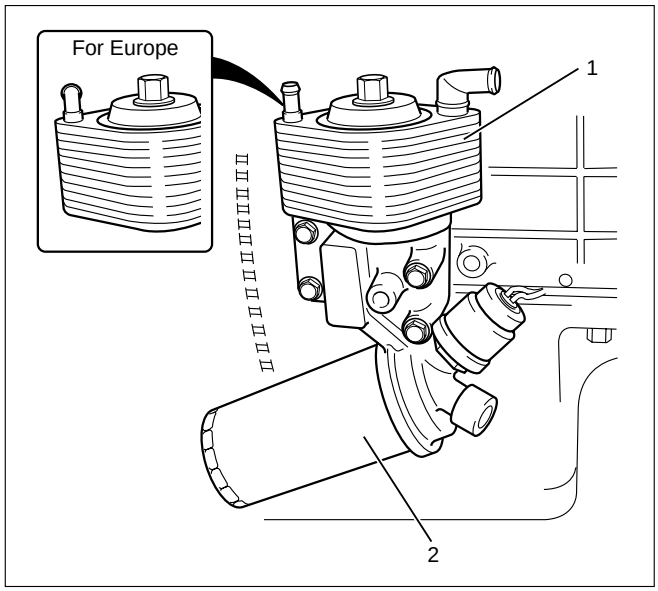

050R200001

Legend
(1) Oil cooler assembly
(2) Oil filter assembly

INSPECTION AND REPAIR

1. Inspect for corrosion, wear, and breaks on the oil cooler core.
2. If a problem is found on the oil cooler core, the oil cooler assembly must be replaced.

INSTALLATION

1. Oil cooler assembly
   1) Tighten oil cooler fixing bolt to the specified torque and install water hoses.

Torque: 29 N·m (3.0 kg·m / 21.7 lb ft)

2. Install exhaust valve assembly to turbocharger assembly and tighten to the specified torque.

Torque: 27 N·m (2.7 kg·m / 19.5 lb ft)

3. Install front exhaust pipe to the exhaust valve.

Torque:

67 N·m (6.8 kg·.m / 49.2 lb ft)
(At exhaust valve side)

43 N·m (4.4 kg·m / 32 lb ft)
(At center exhaust pipe side)

4. Install heater protector.
5. Fill engine coolant.
6. Connect battery ground cable.
7. Start engine and carefully check for leakage of oil and coolant.

OIL COOLER SPECIFICATIONS

Cooling method	Water cooled Multi plate type
Heat exchange Area	0.323 m^2
Heat exchange capacity	>11,300 kcl/h
Relief Valve opening pressure	245 Kpa (2.5 kg/cm^2/36 psi)

OIL FILTER

REMOVAL

1. Put container under the oil filter to prevent oil from the oil filter from flowing out.
2. Use filter wrench to remove oil filter.
   Filter wrench: 5-8840-0203-0

INSTALLATION

1. Apply engine oil thinly to oil filter O-ring.
2. Tighten oil filter by hand until O-ring comes in contact with the sealing surface.
3. Use filter wrench to tighten oil filter one turn and 1/8 turn.
4. Start engine and carefully check for oil leakage from oil filter.

SUB OIL FILTER

The sub oil filter requires no servicing until the replacement interval is reached.
The element is designed to provide special filtering efficiency until it becomes due for replacement.
It is recommended to check and replace the sub oil filter when the engine is being overhauled or if it is broken inside the engine.

ENGINE SPEED CONTROL

CONTENTS

General Description 6H–2
Accelerator Pedal 6H–3

GENERAL DESCRIPTION

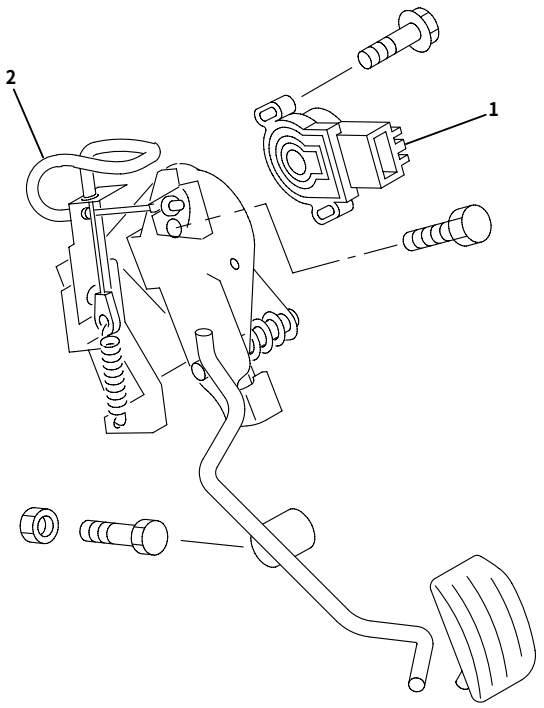

101R200006

Legend

(1) Accerator Position Sensor
(2) Return Cable

Engine control has been changed from the control cable system to an electronically controlled TP (Throttle Position) sensor.
The TP sensor is a potentiometer (Variable resistance) type and installed to the accelerator pedal bracket.
A voltage of 5 V is always applied from the ECM (Electronic Control Module) to the TP sensor so that the operating angle of the accelerator pedal can be detected from a change in voltage.
Further, this sensor is equipped with an accelerator switch which sends signals to the ECM when the accelerator pedal is stepped on.
This switch remains on and turns off only when the accelerator pedal is stepped on.

All vehicles have no throttle cable, and therefore, a return spring is provided on the accelerator pedal and a return cable assembly having the sliding resistance of a cable is used to give the pedal a feeling.
To meet the newly adopted electronic control system, the idling control button has been dropped.

ACCELERATOR PEDAL

REMOVAL

1. Remove harness connector from accel position (AP) sensor.
2. Remove accelerator pedal assembly from chassis.

INSPECTION AND REPAIR

1. Check moving condition of accelerator pedal, if not smooth working, apply oil to the pivot etc.
2. Check tightening condition of accel position (AP) sensor, if not completely tightened, it should be tightened additionally.

INSTALLATION

1. Install accelerator pedal assembly to chassis.
2. Connect harness connector to accel position (AP) sensor.

MEMO

INDUCTION

CONTENTS

General Description 6J–2
Air Cleaner 6J–3
Turbocharger 6J–4
Intercooler 6J–9
Intake Throttle Valve 6J–10
Intake Manifold 6J–11
Main Data and Specifications 6J–12

GENERAL DESCRIPTION

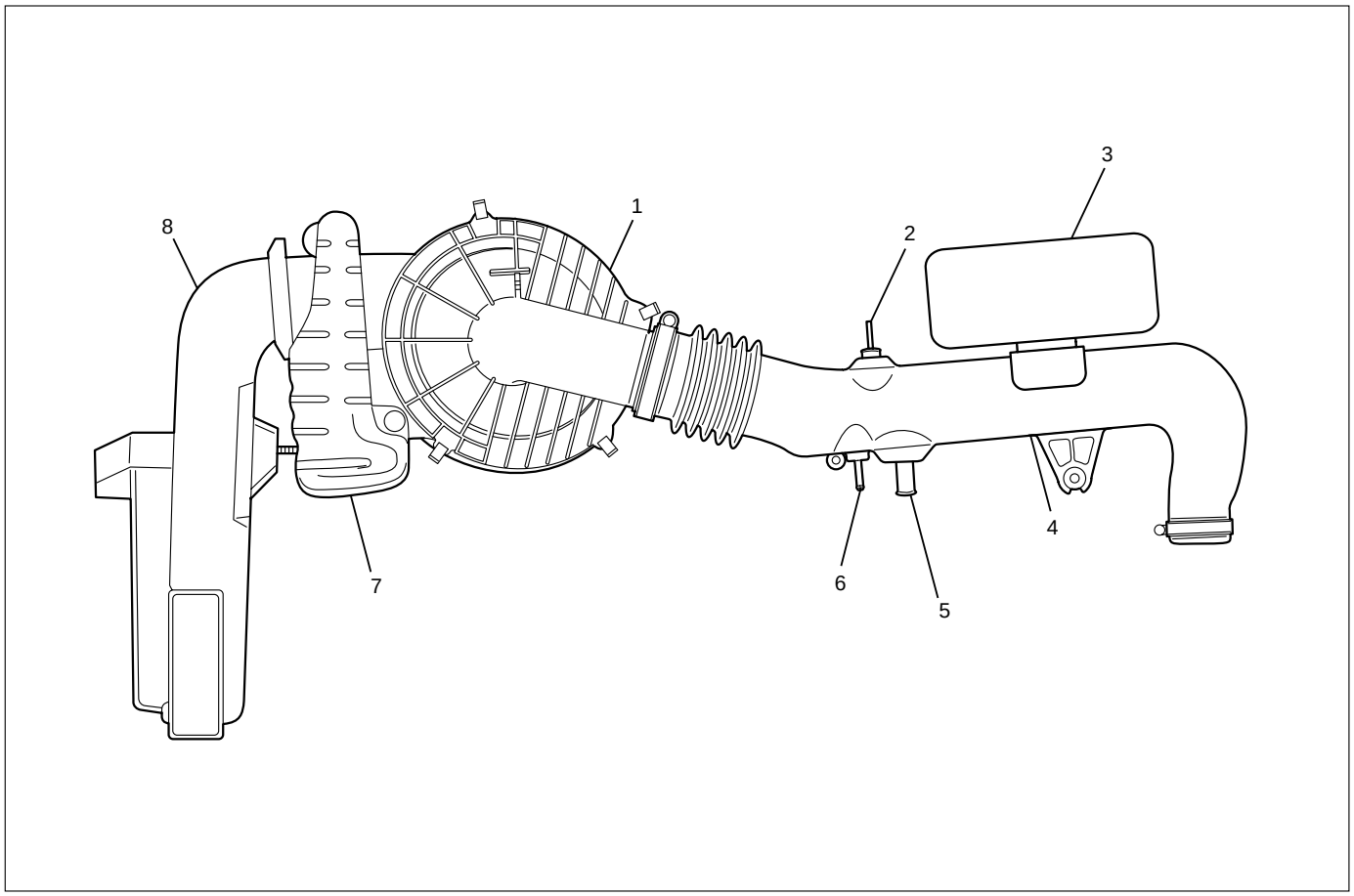

130R200003

Legend

(1) Air Cleaner
(2) Connector for Fuel Tank Breather Hose
(3) Resonator
(4) Air Duct
(5) Connector for PCV Hose
(6) Connector for EGR VSV Hose
(7) Air Duct
(8) Air Duct

There is a large intake silencer provided at the entrance of the air cleaner. Air cleaner element is a viscous type which features high filtration efficiency.
A resonator is used also in the air duct between the air cleaner and turbocharger to reduce air intake noise. The air taken in flows through the turbocharger to the intercooler where the air is cooled and then taken in the cylinder through the intake manifold.

AIR CLEANER

REMOVAL

1. Remove air cleaner cover with air duct.
2. Remove air cleaner element.

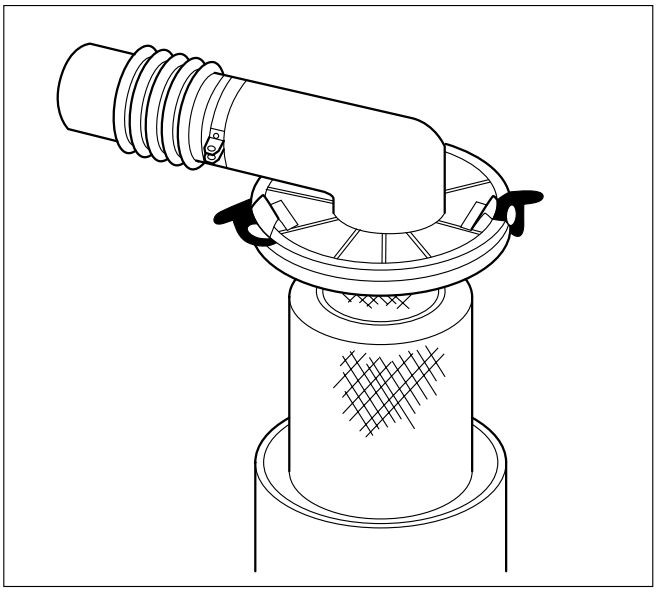

130RW010

INSPECTION

Check air cleaner element for clogs, chokes and breaks, and if any problem is found during inspection, the element must be replaced.

INSTALLATION

1. Air cleaner element
2. Air cleaner cover with air duct.
   1) Put air cleaner cover in original position and tighten it with the clip.

TURBOCHARGER

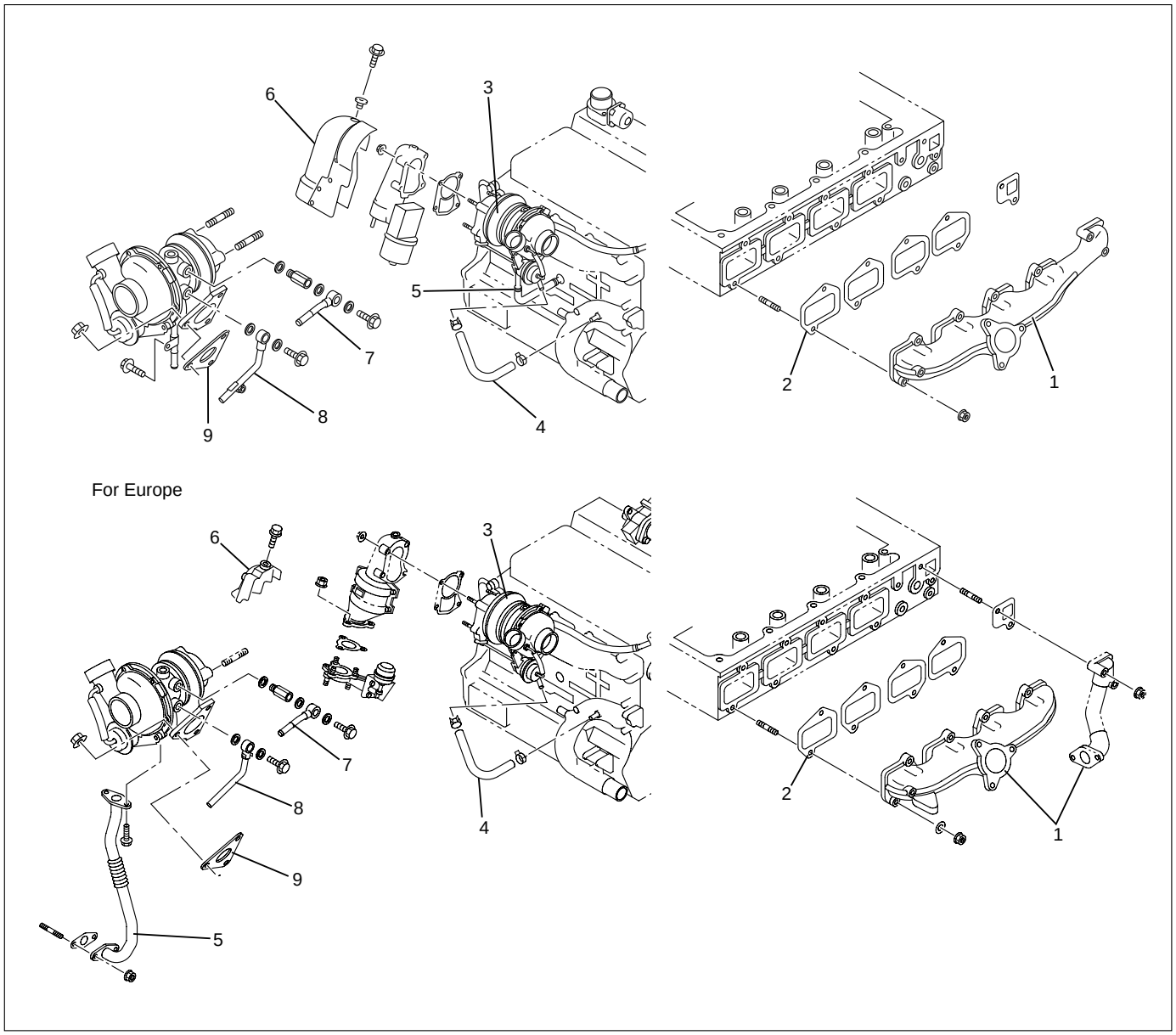

025R200004

Legend

(1) Exhaust Manifold
(2) Gasket
(3) Turbocharger Assembly
(4) Water Hose
(5) Water Hose
(6) Heat Protector
(7) Oil Pipe
(8) Oil Pipe
(9) Gasket

REMOVAL

1. Remove battery.
2. Drain engine coolant.
3. Remove air cleaner cover and air duct.
4. Remove intercooler assembly.
   Refer to “Intercooler” in this manual.
5. Remove water pipe from water inlet of turbocharger.
6. Remove oil pipe.
   1) Remove fixing bolts from oil inlet of turbocharger then remove oil pipe.
   2) Plug open port of turbocharger to prevent foreign materials from entering the turbocharger.
7. Remove oil drain pipe from turbocharger.
8. Remove water outlet pipe from turbocharger.
9. Remove heat protector.
10. Remove exhaust valve assembly.
11. Remove turbocharger fixing nuts from exhaust manifold then remove turbocharger assembly.

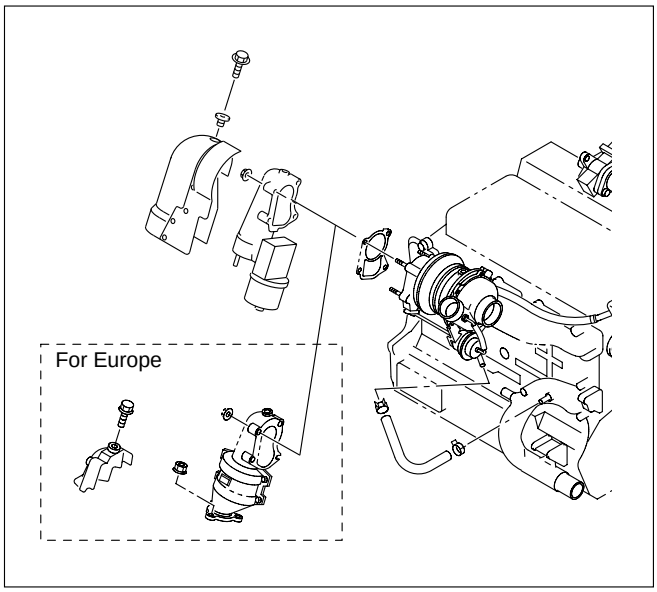

025R200006

INSPECTION AND REPAIR

Make the necessary adjustments, repairs and part replacements if excessive wear or damage is discovered during inspection.
Minor servicing operations are described in this section. Contact the nearest IHI SERVICE FACILITY for major repairs and maintenance.
Refer to IHI SERVICE NETWORK at the end of this section for the location of your area's IHI SERVICE FACILITY.
Turbine shaft end play.

1) Set a dial indicator to the turbine shaft end.
2) Apply a force of 11.8 N (1.2 kg / 2.6 lb) alternately to the compressor wheel and and the turbine wheel end.
3) Read the dial indicator.

Turbine End Play

Standard: 0.03 – 0.06 mm (0.0012 – 0.0024 in)
Limit: 0.09 mm (0.0035 in)

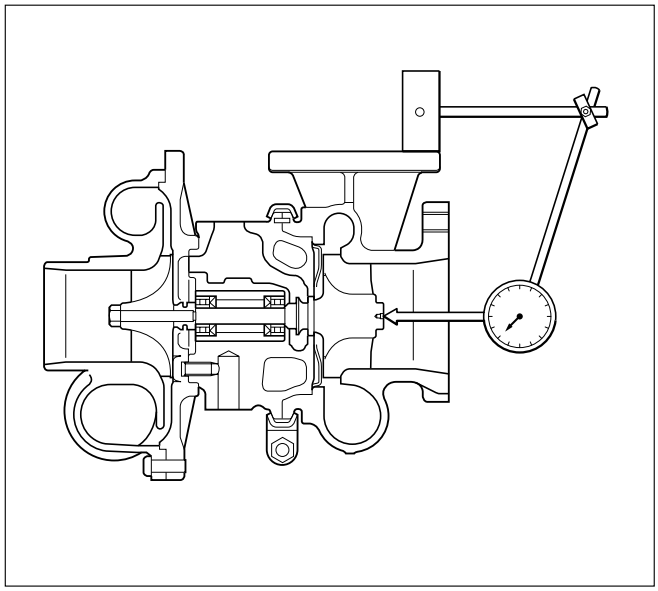

036RW008

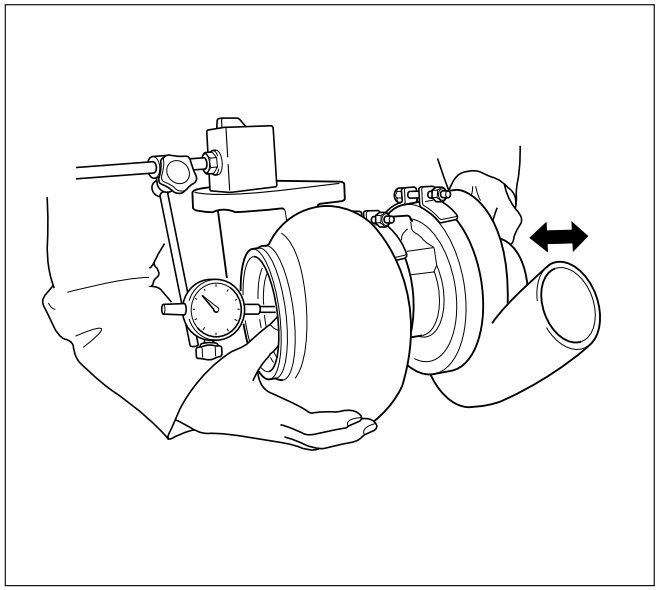

036RW010

Turbine shaft and bearing clearance

1) Set a dial indicator to the turbine shaft center through the center housing oil drain port.
2) Move the turbine shaft from side to side.
3 Read the dial indicator.

Turbine Shaft and Bearing Clearance

Standard: 0.056 - 0.127 mm (0.0022 - 0.0050 in)
Limit: 0.14 mm (0.0055 in)

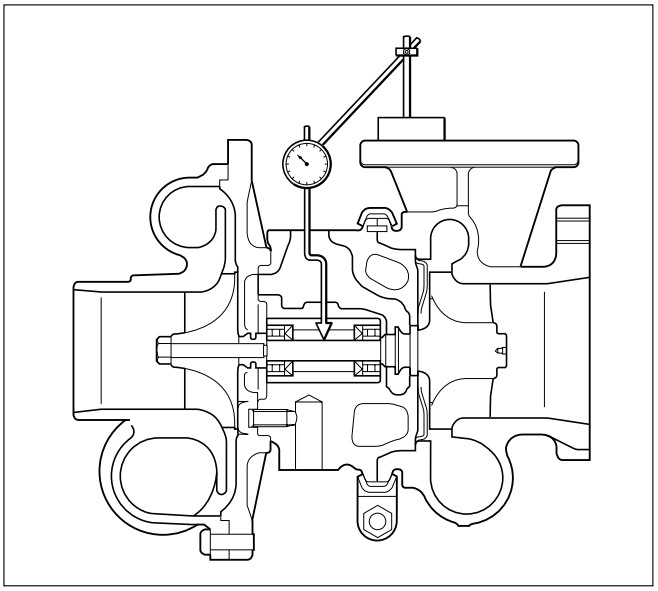

036RW009

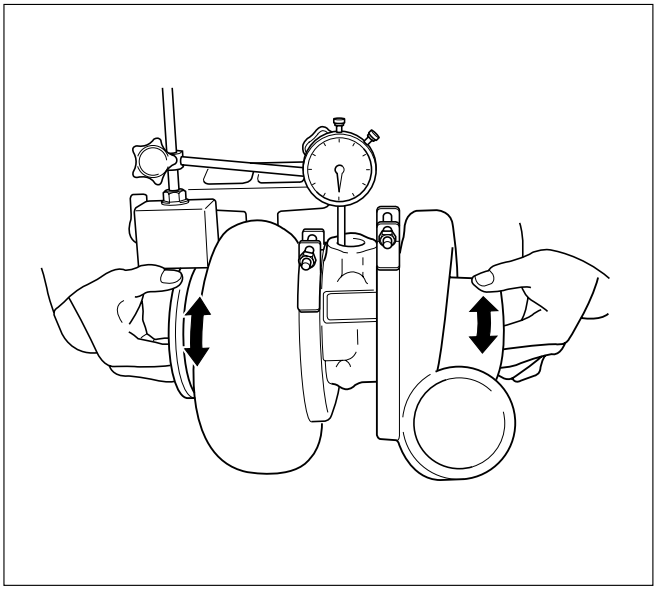

036RW007

Waste gate operation

1) Remove hose from waste gate actuator side and install pressure gauge (1) to the waste gate actuator.
2) Operate pump of pressure gauge while engine is stopped.
3) Read pressure at the control rod (2) move 2mm.

Pressure: 106 – 115 kPa
(796 – 862 mmHg/ 15.4 – 16.7 PSi)

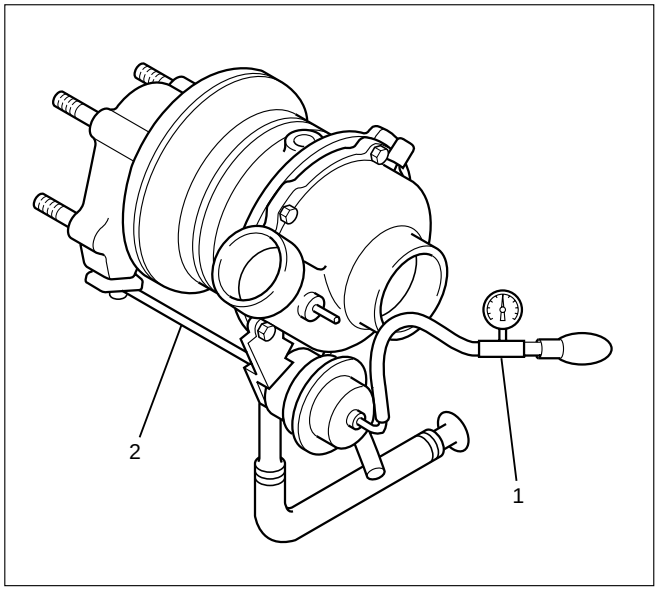

036RW011

Legend
(1) Pressure gauge
(2) Waste gate control rod

4) Check for cracks or breaks on the hose, if a problem is found, the hose must be replaced.

CAUTION: Do not apply more than 120 Kpa (900 mmHg / 18.7 PSi) to waste gate actuator.

INSTALLATION

1. Install turbocharger assembly to exhaust manifold, tighten to the specified torque.

Torque: 27 N·m (2.7 kg·m / 19.5 lb ft)

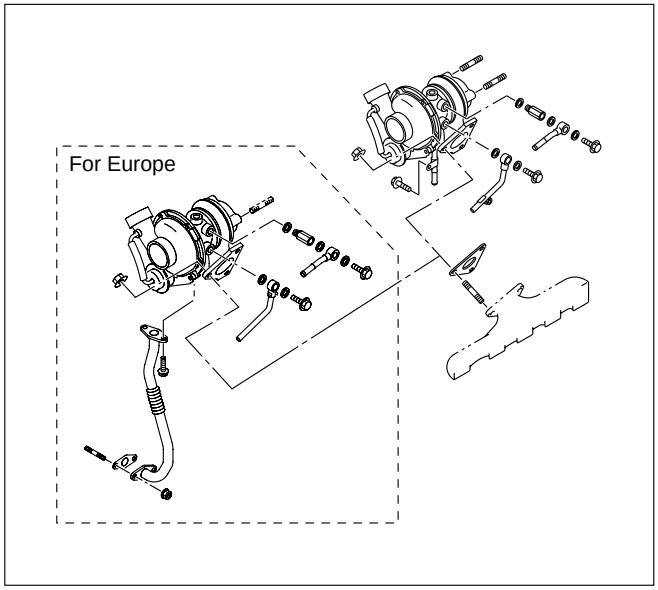

025R200007

2. Install exhaust valve assembly to outlet of turbocharger, tighten bolts to the specified torque.

Torque: 27 N·m (2.7 kg·m / 19.5 lb ft)

3. Install heat protector.
4. Water inlet pipe.
   1) Tighten water inlet pipe with new gasket.

Torque: 9 N·m (0.9 kg·m / 6.5 lb ft)

5. Oil drain pipe.
   1) Tighten oil drain pipe with new gasket.

Torque: 9 N·m (0.9 kg·m / 6.5 lb ft)

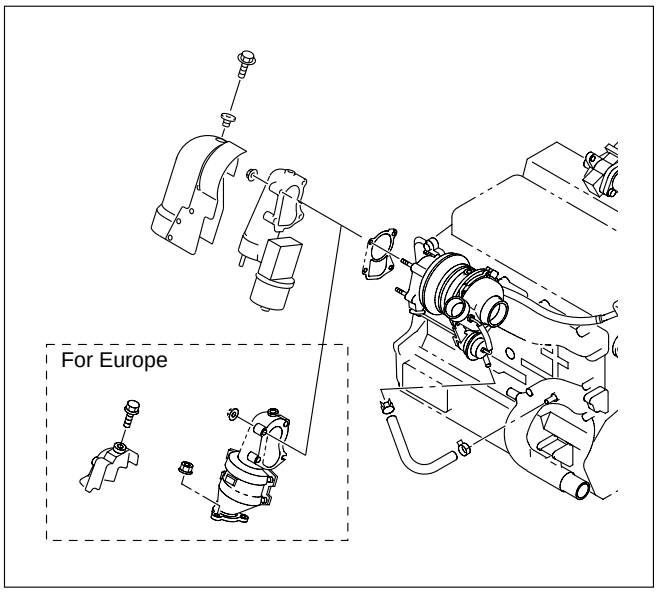

025R200006

6. Oil inlet pipe.
   1) Apply about 100 cc engine oil to turbocharger housing before installing the oil pipe.
   2) Turn the turbine shaft by hand to lubricate the bearing.
   3) Install the oil inlet pipe with a new gasket, tighten bolt to the specified torque.

Torque: 22 N·m (2.2 kg·m / 15.9 lb ft) For M10

Torque: 54 N·m (5.5 kg·m / 39.8 lb ft) For M14

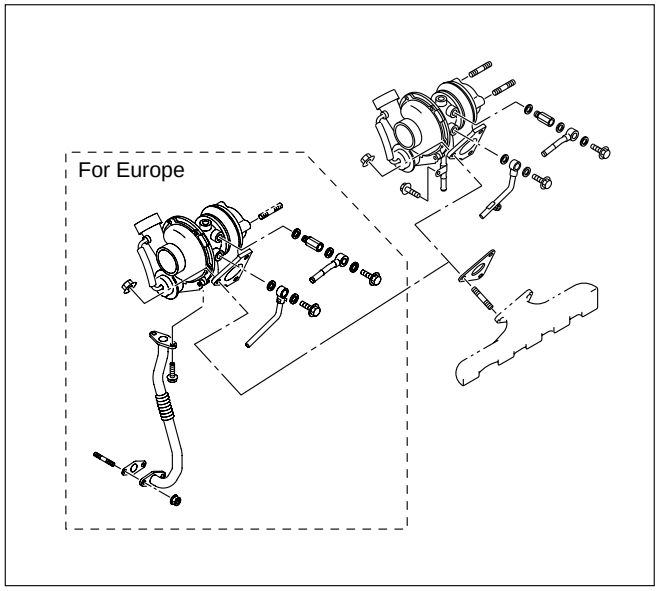

025R200007

7. Water inlet pipe.
   1) Install water inlet pipe with a new gasket, tighten bolts to the specified torque.

Torque: 9 N·m (0.9 kg·m / 6.5 lb ft)

8. Install intercooler assembly.
   Refer to “Intercooler” in this manual.
9. Install air cleaner cover with air duct.
10. Fill engine coolant to full level.
11. Install battery and connect battery cable.

INTERCOOLER

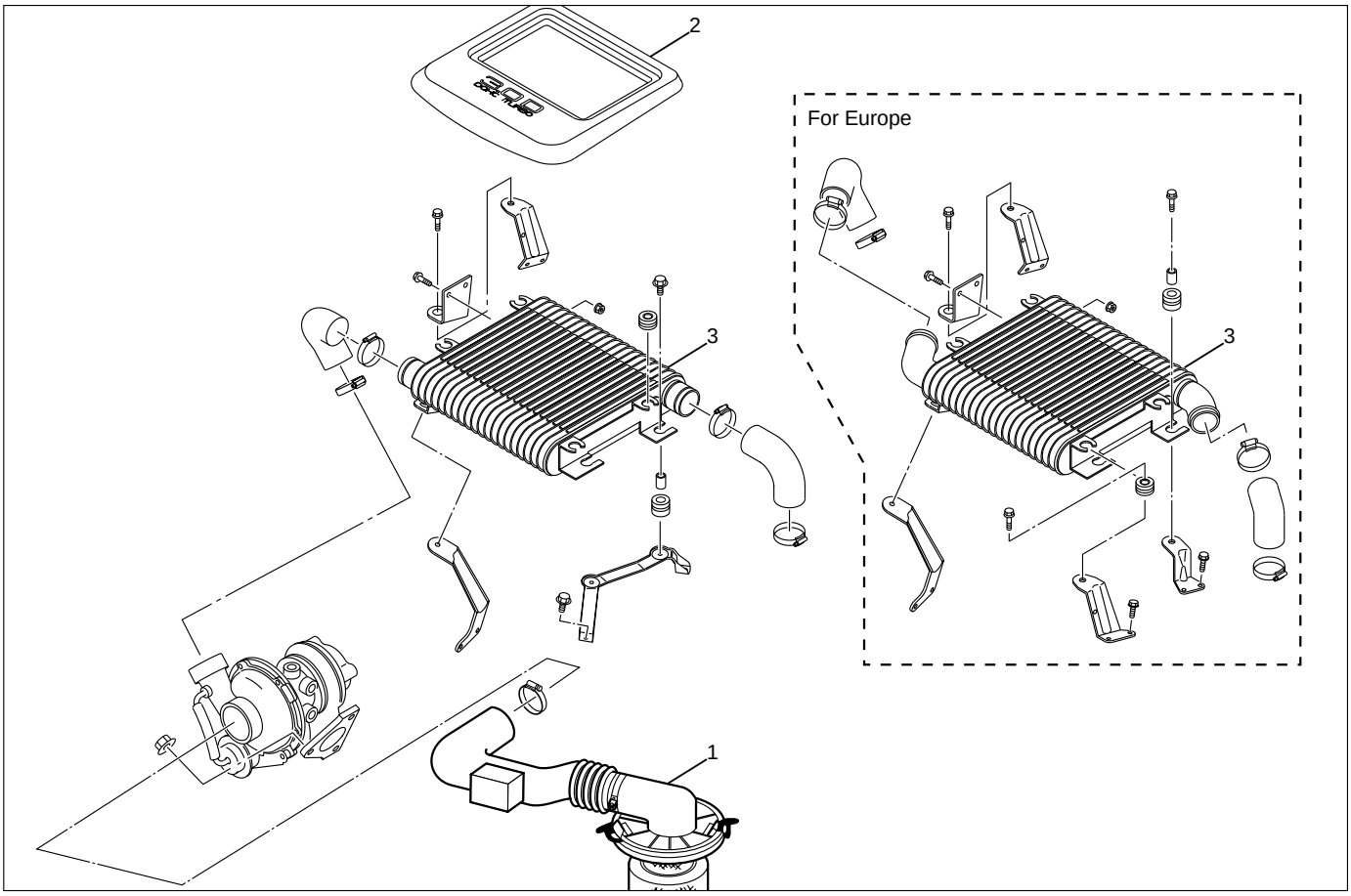

135R200003

Legend

(1) Air Cleaner Cover and Air Duct
(2) Intercooler Cover
(3) Intercooler Assembly

REMOVAL

1. Disconnect battery ground cable.
2. Remove air cleaner cover with air duct.
3. Remove intercooler cover.
4. Intercooler assembly.
   1) Remove rubber hose from intercooler outlet side.
   2) Remove rubber hose from intercooler inlet side.
   3) Remove four fixing bolts and remove intercooler assembly.

INSPECTION AND REPAIR

1. Visual check for clogs in the fins.
2. Check for brokens on the tube.
3. If any problem on the intercooler is observed during inspection, clean or replace the intercooler.

INSTALLATION

1. Intercooler assembly.
   1) Connect outlet hose to intake manifold.
      Tighten hose clamp to the specified torque.

Torque: 4 N·m (0.4 kg·m / 3 lb ft)

   2) Connect inlet hose to the turbocharger outlet side.
      Tighten hose clamp to the specified torque.

Torque: 4 N·m (0.4 kg·m / 3 lb ft)

   3) Install intercooler assembly, tighten fixing bolts to the specified torque.

Torque: 20 N·m (2.0 kg·m / 14.5 lb ft)

2. Install intercooler cover.
3. Install air cleaner cover and air duct.
4. Connect battery ground cable.

INTAKE THROTTLE VALVE

REMOVAL

1. Remove intercooler assembly.
   Refer to “Intercooler” in this manual.
2. Remove harness connector from motor and ITP sensor.
3. Loosen the two fixing nuts and remove the throttle valve assembly.

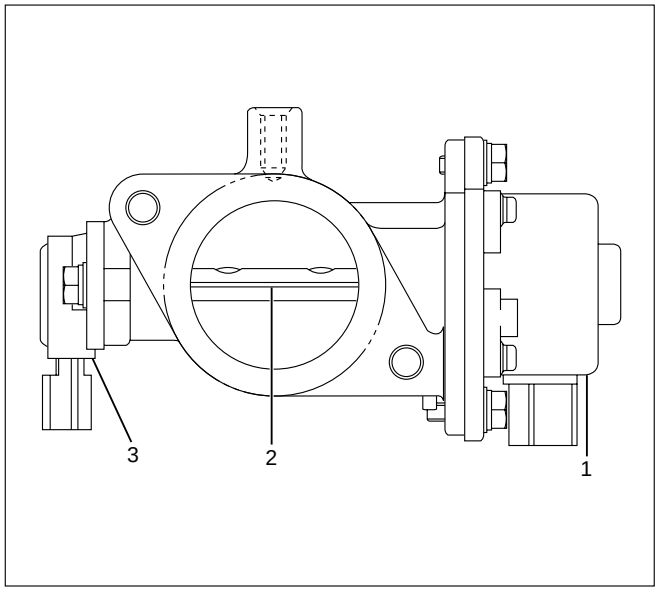

025RW032

Legend
(1) Motor
(2) Intake Throttle Valve
(3) ITP sensor

INSPECTION AND REPAIR

1. Check for catching somwhere on the throttle valve.
2. If some problem is discovered during inspection on the throttle valve, the throttle valve must replace.

INSTALLATION

1. Put gasket on the intake manifold and install throttle valve.
2. Tighten nuts to the specified torque.

Torque: 20 N·m (2.0 kg·m / 14.5 lb ft)

3. Reconnect harness connector to motor and ITPsensor.
4. Install intercooler assembly.

INTAKE MANIFOLD

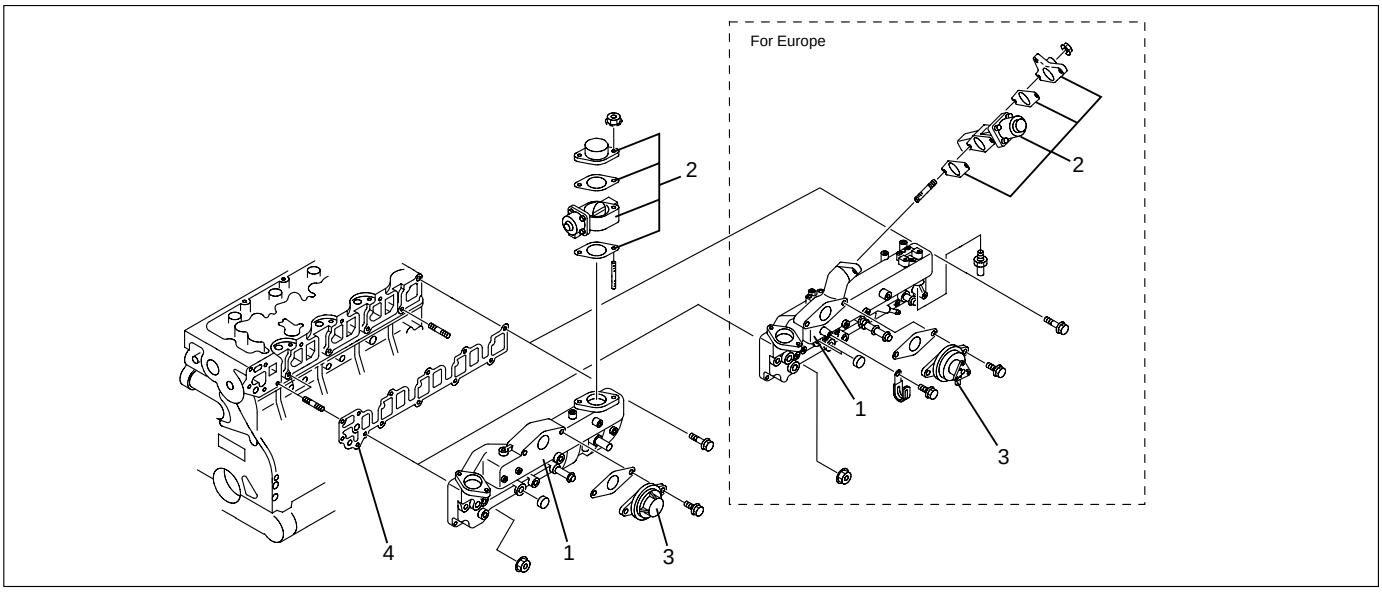

025R200005

Legend
(1) Intake Manifold
(2) Throttle Valve Assembly
(3) EGR Valve
(4) Gasket

REMOVAL

1. Drain engine coolant and remove water hose from thermostat housing
2. Remove intercooler assembly.
3. Remove bracket fixing bolt of oil level gauge guide tube.
4. Remove PCV hose.
5. Remove hoses from EGR valve, EGR vacuum sensor and outlet of heater unit.
6. Disconnect harness connector from MAP sensor, EGR vacuum sensor, ETC sensor, Water temperature unit, IAT sensor and EVRV.
7. Remove high pressure oil pipe.
8. Remove two way check valve.
9. Remove fuel pipe.
10. Remove fixing bolts and nuts of intake manifold, remove intake manifold assembly.

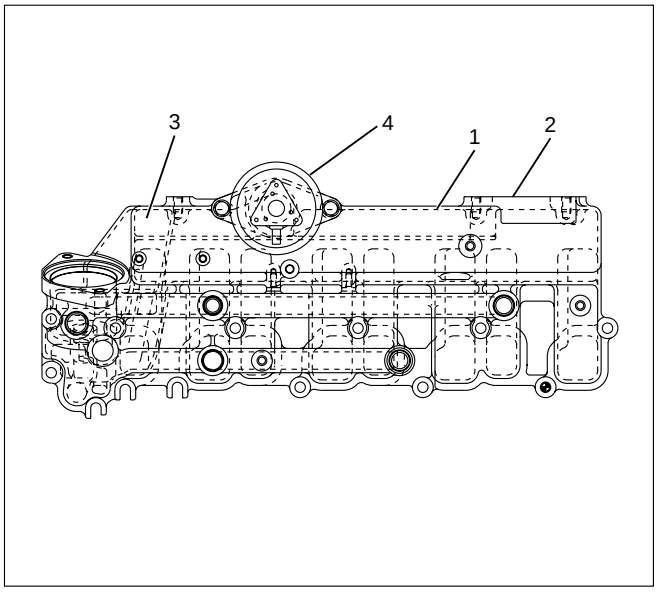

025RW031

Legend
(1) Intake manifold
(2) Fixing portion of throttle valve
(3) EGR passage
(4) EGR valve

INSPECTION AND RAPAIR

1. Visually check for cracks/clogs inside intake manifold.
2. If foreign material is observed, it should be taken out, and if there are some cracks on the intake manifold, it must be replaced.

INSTALLATION

1. Install the intake manifold assembly, tighten bolts and to the specified torque.

Torque: 20 N·m (2.0 kg·m / 14.5 lb ft) for bolt
Torque: 20 N·m (2.0 kg·m / 14.5 lb ft) for nut

2. Install fuel pipe.

Torque: 4 N·m (0.4 kg·m / 2.9 lb ft) for M16 nut (Apply engine oil)

Torque: 13 N·m (1.3 kg·m / 9.4 lb ft) for M10 cap nut

Torque: 14 N·m (1.4 kg·m / 10 lb ft) for M10 (Apply engine oil)

3. Install two way check valve.

Torque: 20 N·m (2.0 kg·m / 14.5 lb ft)

4. Fill with about 300 cc of engine oil from the high pressure oil pipe installation port of the oil rail using an oil filler.

   If assembled without filling the oil rail with oil, the time for engine starting will be longer.
5. Install high pressure oil pipe, then tighten sleeve nut to the specified torque.

Torque: 29 N·m (3.0 kg·m / 21.7 lb ft)

6. Reconnect harness connector to MAP sensor, EGR vacuum sensor, ETC sensor, Water thermo unit, IAT sensor and EVRV sensor.
7. Install hoses to EGR valve, EGR vacuum sensor and Water outlet of heater.
8. Connect PCV hose.
9. Install oil level gauge guide and fix it.
10. Install intercooler assembly.

    Refer to “Intercooler” in this manual.
11. Install water hose to thermostat housing and fill with engine coolant.

MAIN DATA AND SPECIFICATIONS

Model of Turbocharger	IHI RHF5
Turbine Maximum Speed	180,000 rpm
Maximum Inlet Gas Temperature	800 °C (1472 °F)
Vibration Peak (G) criteria	Maximum 4 (G) at Turbine Rotor Speed 140,000 rpm
Tolerance Limit of Compressor Blade Height	Less then 0.5 mm (0.0197 in)

IHI SERVICE NETWORK

For inquiries relating to turbochargers, please contact your ISUZU distributor or the nearest IHI Turbocharger Service Facility.

HEADQUARTERS

ISHIKAWAJIMA HARIMA HEAVY INDUSTRIES CO., LTD. (IHI)
General Machinery Division
Tokyo Chuo Building 1-6-2 Marunouchi Chiyoda-ku
Tokyo 100-0005 JAPAN
TEL: 81-(3)-3286-2405 to 2407 (3 lines)
FAX: 81-(3)-3286-2430

CHINA

IHI BEIJING OFFICE
Room 705, China World Trade Center, No. 1 Jian Guo Men Wai Avenue
Beijing, People's R epublic of CHINA
TEL: 86-(1)-505-4997, 0408
FAX: 86-(1)-505-4350
TLX: 210343 IHIPK CN

TAIWAN

IHI TAIPEI OFFICE
Room 1202, Chia Hsin Building, No. 96 Chung Shan
North Road, Section 2, Taipei, TAIWAN
TEL: 886-(2)-542-5520, 5521, 5523
FAX: 886-(2)-542-4362
TLX: 11320 IHICO

THAILAND

IHI BANGKOK OFFICE
8th Floor, Thaniya Building, 62 Silom Road, Bangkok, THAILAND
TEL: 66-(2)-236-3490, 7356, 9099
FAX: 66-(2)-236-7340
TLX: 82375 IHICO TH

MALAYSIA

IHI KUALA LUMPUR OFFICE
Letter Box No. 52, 22nd Floor, UBN Tower,
10 Jin. P. Ramlee 50250 Kuala Lumpur, MALAYSIA
TEL: 60-(3)-232-1255, 1271
FAX: 60-(3)-232-1418
TLX: IHI KLMA 20257

INDONESIA

IHI JAKARTA OFFICE
9th Floor, Skyline Building JI. M.H. Thamrin, No. 9, Jakarta, INDONESIA
TEL: 62-(21)-32-2147, 390-2211
FAX: 62-(21)-32-3273
TLX: 44175 IHIJKT

TRANSMISSION

AUTOMATIC TRANSMISSION (4L30–E)

CONTENTS

Service Precaution 7A–3
Construction 7A–3
Range Reference Chart 7A–4
Normal Operation Of 1998 4L30–E Transmission 7A–5
Diagnosis 7A–5
Driver Information 7A–5
General Diagnosis Procedure 7A–8
Preliminary Inspection Chart 7A–9
Checking Transmission Fluid Level and Condition 7A–10
Test Driving 7A–11
Mechanical / Hydraulic Diagnosis Check Trans Indicator Chart 7A–12
Mechanical / Hydraulic Diagnosis Symptoms Index 7A–13
Stall Test 7A–23
Line Pressure Test 7A–23
Shift Speed Chart 7A–24
Lockup Speed Chart 7A–26
Changing Transmission Fluid 7A–27
Selector Lever 7A–27
Inspection 7A–27
Removal 7A–28
Installation 7A–28
Mode Switch 7A–29
Removal 7A–29
Installation 7A–29
Transmission (With Transfer Case) 7A–31
Transmission And Associated Parts 7A–31
Removal 7A–31
Installation 7A–33
Solenoid (Main Case Valve Body) 7A–36
Removal 7A–36
Installation 7A–36
Solenoid (Adapter Case Valve Body) 7A–37
Removal 7A–37
Installation 7A–37
Valve Body Assembly (Main Case) 7A–38
Removal 7A–38
Installation 7A–38
Valve Body Assembly (Adapter Case) 7A–40
Removal 7A–40
Installation 7A–40
Powertrain Control Module (PCM) 7A–40
Removal 7A–40
Installation 7A–40
Speed Sensor (Extension Housing) 7A–41
Removal 7A–41
Installation 7A–41
Transmission Oil Temperature Sensor (Adapter Case) 7A–41
Removal 7A–41
Installation 7A–42
Front Oil Seal (Converter Housing) 7A–42
Removal 7A–42
Installation 7A–42
Rear Oil Seal (Extension Housing) 7A–43
Removal 7A–43
Installation 7A–43
Transmission (4L30–E) 7A–43
Disassembly 7A–43
Reassembly 7A–47
Converter Housing And Oil Pump Assembly 7A–57
Disassembled View 7A–57
Disassembly 7A–57
Inspection And Repair 7A–57
Reassembly 7A–57
Oil Pump 7A–58
Disassembled View 7A–58
Disassembly 7A–58
Inspection And Repair 7A–58
Reassembly 7A–58
Main Case Valve Body 7A–59
Disassembled View 7A–59
Disassembly 7A–59
Inspection And Repair 7A–60
Reassembly 7A–60
Adapter Case Valve Body 7A–61
Disassembled View 7A–61
Disassembly 7A–61
Inspection And Repair 7A–61
Reassembly 7A–61
Third Clutch And Sprag Unit 7A–63
Disassembled View 7A–63
Disassembly 7A–63
Inspection And Repair 7A–64
Reassembly 7A–64
Third Clutch 7A–65

Disassembled View 7A–65
Disassemble 7A–65
Inspection And Repair 7A–65
Reassembly 7A–65
Sprag Unit 7A–67
Disassembled View 7A–67
Disassembly 7A–67
Inspection And Repair 7A–67
Reassembly 7A–67
Second Clutch 7A–68
Disassembled View 7A–68
Disassembly 7A–68
Inspection And Repair 7A–69
Reassembly 7A–69
3–4 Accumulator Piston 7A–70
Disassembled View 7A–70
Disassembly 7A–70
Inspection And Repair 7A–70
Reassembly 7A–71
Reverse Clutch Piston And Center Support . 7A–72
Disassembled View 7A–72
Disassembly 7A–72
Inspection And Repair 7A–73
Reassembly 7A–73
Overrun Clutch And Turbine Shaft 7A–74
Disassembled View 7A–74
Disassembly 7A–74
Inspection And Repair 7A–75
Reassembly 7A–75
Main Data And Specification 7A–77
Special Tools 7A–81
4L30–E Parts List 7A–84

Service Precaution

WARNING: IF SO EQUIPPED WITH A SUPPLEMENTAL RESTRAINT SYSTEM (SRS), REFER TO THE SRS COMPONENT AND WIRING LOCATION VIEW IN ORDER TO DETERMINE WHETHER YOU ARE PERFORMING SERVICE ON OR NEAR THE SRS COMPONENTS OR THE SRS WIRING. WHEN YOU ARE PERFORMING SERVICE ON OR NEAR THE SRS COMPONENTS OR THE SRS WIRING, REFER TO THE SRS SERVICE INFORMATION. FAILURE TO FOLLOW WARNINGS COULD RESULT IN POSSIBLE AIR BAG DEPLOYMENT, PERSONAL INJURY, OR OTHERWISE UNNEEDED SRS SYSTEM REPAIRS.

CAUTION: Always use the correct fastener in the proper location. When you replace a fastener, use ONLY the exact part number for that application. ISUZU will call out those fasteners that require a replacement after removal. ISUZU will also call out the fasteners that require thread lockers or thread sealant. UNLESS OTHERWISE SPECIFIED, do not use supplemental coatings (Paints, greases, or other corrosion inhibitors) on threaded fasteners or fastener joint interfaces. Generally, such coatings adversely affect the fastener torque and the joint clamping force, and may damage the fastener. When you install fasteners, use the correct tightening sequence and specifications. Following these instructions can help you avoid damage to parts and systems.

Construction

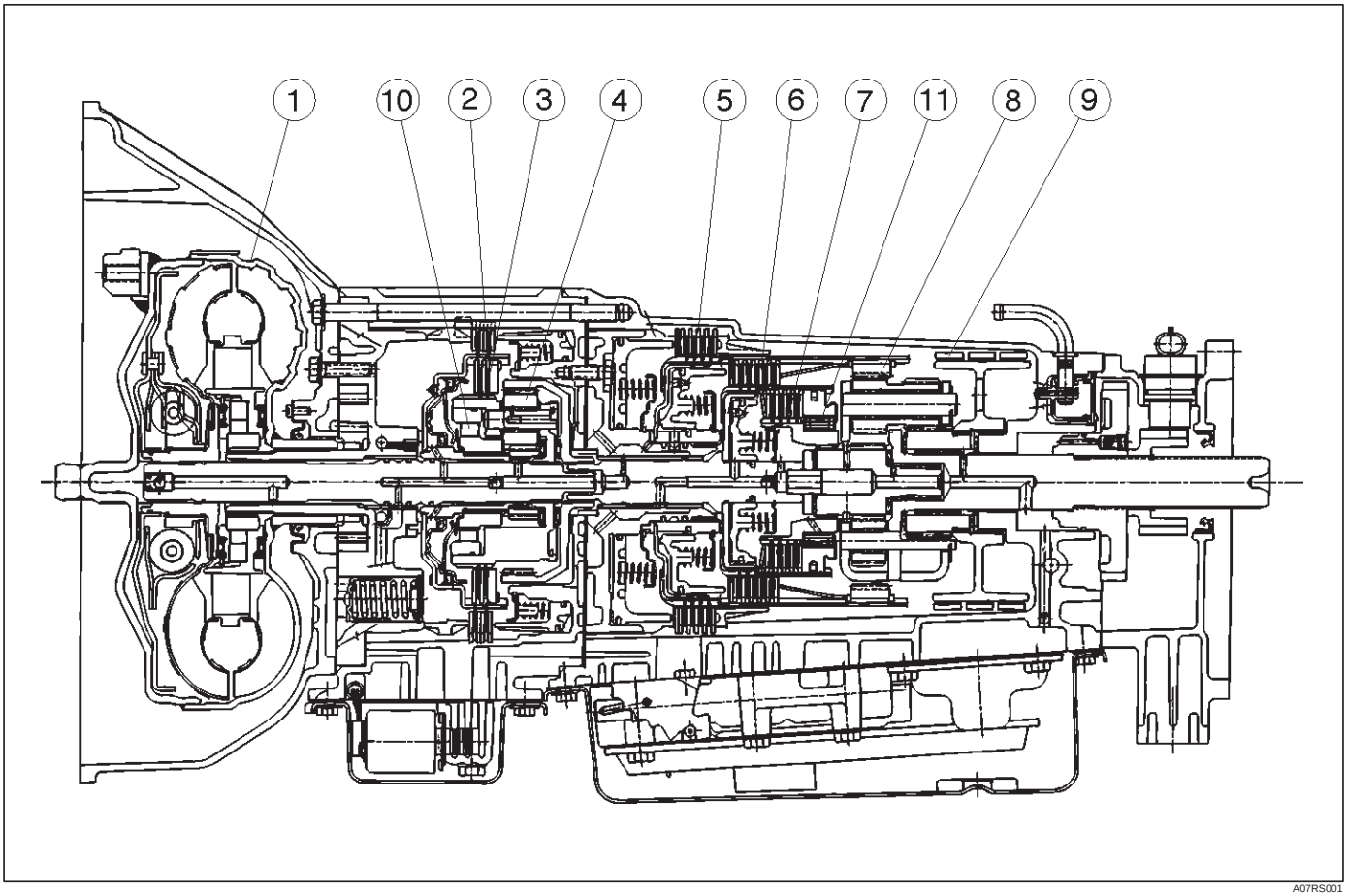

A07RS001

Legend

(1) Torque Converter Clutch (TCC)
(2) Fourth Clutch (C4)
(3) Overrun Clutch (OC)
(4) Overdrive Unit
(5) Reverse Clutch (RC)
(6) Second Clutch (C2)
(7) Third Clutch (C3)
(8) Ravigneaux Planetary Gear Set
(9) Brake Band (B)
(10) Overdrive Free Wheel (One Way Clutch) (OFW)
(11) Sprag Free Wheel (One Way Clutch) (PFW)

Range Reference Chart

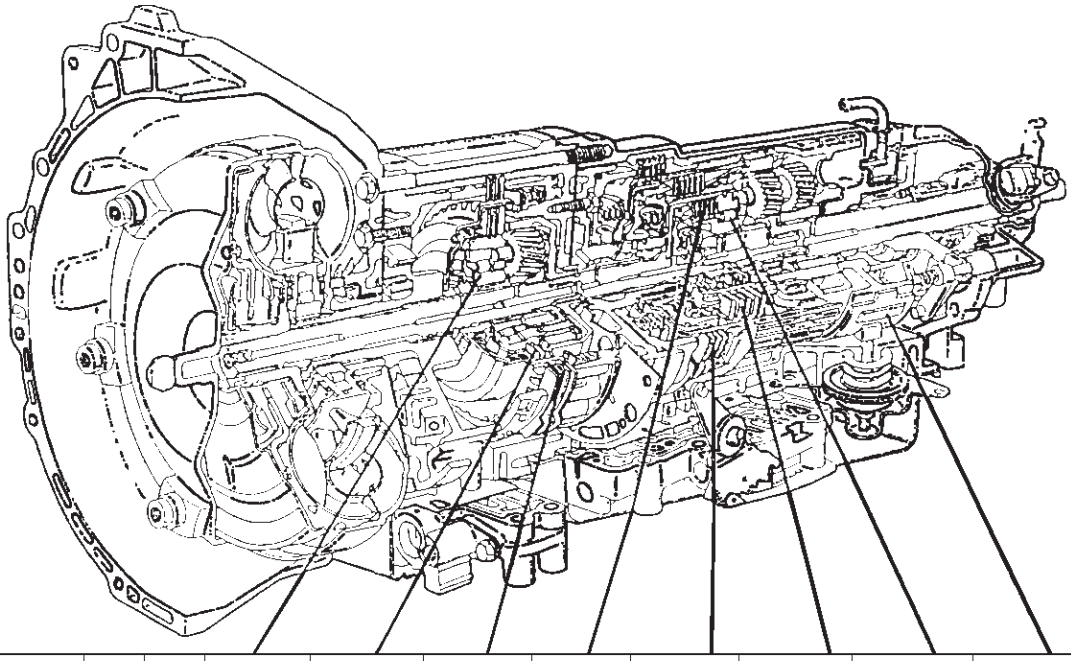

RANGE	GEAR	SOL A N.C.	SOL B N.O.	O/DRIVE ROLLER CLUTCH (OFW)	OVERRUN CLUTCH (OC)	FOURTH CLUTCH (C4)	THIRD CLUTCH (C3)	REVERSE CLUTCH (RC)	SECOND CLUTCH (C2)	PRINCIPLE SPRAG ASSEMBLY (PFW)	BAND ASSEMBLY (B)	ENGINE BRAKING
P-N		OFF	ON		APPLIED							NO
R	REVERSE	OFF	ON	LD	APPLIED			APPLIED		LD		NO
D	1ST	OFF	ON	LD	APPLIED					LD	APPLIED	NO
	2ND	ON	ON	LD	APPLIED				APPLIED	FW	APPLIED	YES
	3RD	ON	OFF	LD	APPLIED		APPLIED		APPLIED	NE		YES
	4TH	OFF	OFF	FW		APPLIED	APPLIED		APPLIED	NE		YES
3	1ST	OFF	ON	LD	APPLIED					LD	APPLIED	NO
	2ND	ON	ON	LD	APPLIED				APPLIED	FW	APPLIED	YES
	3RD	ON	OFF	LD	APPLIED		APPLIED		APPLIED	NE		YES
2	1ST	OFF	ON	LD	APPLIED		APPLIED			LD	APPLIED	YES
	2ND	ON	ON	LD	APPLIED				APPLIED	FW	APPLIED	YES
L	1ST	OFF	ON	LD	APPLIED		APPLIED			LD	APPLIED	YES

LD : LOCKED IN DRIVE FW : FREEWHEELING NE : NOT EFFECTIVE

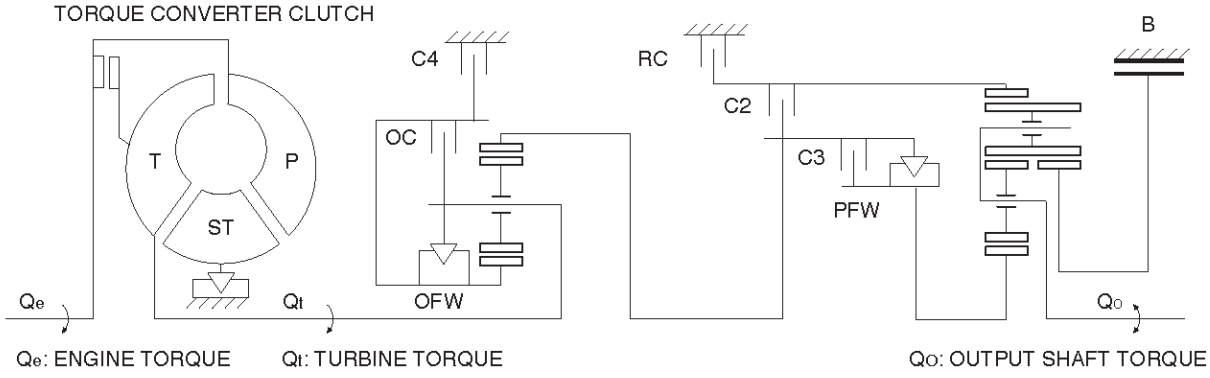

C07RT010

Normal Operation Of 1998 4L30–E Transmission

Torque Converter Clutch (TCC) Application Conditions:

The TCC is normally applied in 2nd, 3rd and 4th gears only when all of the following conditions exist:

— The engine coolant temperature is above 70˚C (158˚F).

— The brake pedal is released.

— The shift pattern requests TCC apply.

Moreover, TCC is always applied in 2nd, 3rd and 4th gears when the transmission oil temperature is above 135˚C (275˚F).

This mode should be canceled at 125˚C (257˚F).

ATF Warning Lamp

The ATF warning lamp will be constantly on (not flashing) if the transmission oil temperature is above 140˚C (284˚F).

The ATF warning lamp goes off again when the transmission oil temperature is below 130˚C (266˚F).

Special Shift Pattern When The Engine Is Cold:

A special shift pattern is activated when the engine coolant temperature is below 70˚C (158˚F). (3–4 shifts, for example, are delayed for small throttle openings and will occur a few MPH higher.)

Diagnosis

Introduction

The systematic troubleshooting information covered by this Section offers a practical and systematic approach to diagnosing 4L30–E transmission, using information that can be obtained from road tests, electrical diagnosis, oil pressure checks or noise evaluation.

The key to correcting a complaint is to make use of all of the available symptoms and logically letting them direct you to the cause.

When dealing with automatic transmission complaints, it is best to gather as many symptoms as possible before making the decision to remove the transmission from the vehicle.

Frequently, the correction of the complaint does not require removal of the transmission from the vehicle.

Driver Information

To analyze the problem fill out a complete description of the owner’s complaint.

Please draw a circle around the right information and complete the following form. (The next page is an example of a completed form). You can draw a circle around many numbers if you are not sure.

A - Today's date :	Month :	Day :	Year : .....
B - End User Name, Address :			
C - Date of Problem :	Month :	Day :	Year : .....
D - Mileage : ..... Miles / Km	**E - With Ignition ON is CHECK TRANS Indicator :** 1- Flashing 2- Not Flashing	**F - Car load when problem occured :** 1 - Towing a trailer 2- ..... people OR ..... Kg	
G - Weather conditions when problem : 1- Clear 2- Cloudy 3- Rain 4- Snow 5- Unstable 6-Any	**H - Weather Temperature when problem:** 1- Hot 2- Warm 3- Cool 4- Cold 5- Unstable 6- Any	**I - Road Conditions when problem :** 1- Any 2- Inter City 3- Outside City 4- Highway 5 - Uphill 6- Downhill 7- Unpaved 8- Snow 9 - Others :	**J - Frequency of the Problem :** 1- Always 2- Occasional : ..... times/day, ... times/month 3- Only Once 4- Others :
K - Engine Condition : 1- Always 2- At Cold 3- During Warming up 4- After Warming or Hot 5- Others	**L - Engine Speed when the problem occured :** 1- Idling 2- Starting 3- Stalling 4- High RPM 5- Low RPM	**M - Transmission Condition when it occured :** 1- Any 2- Idling 3- Starting 4- Driving 5- Accelerating 6-Coasting 7- In corner 8- Shifting	

N - If there is a Transmission driveability problem BEFORE THE CHECK TRANS INDICATOR WAS FLASHING :

1- No Power	in Range : All - P - R - N - D - 3 - 2 - L	during a : upshift : 1-2 / 2-3 / 3-4 or downshift : 4-3 / 3-2 / 2-1
2- No shift	in Range : All - P - R - N - D - 3 - 2 - L	during a : upshift : 1-2 / 2-3 / 3-4 or downshift : 4-3 / 3-2 / 2-1
3- Shift Shock	in Range : All - P - R - N - D - 3 - 2 - L	during a : upshift : 1-2 / 2-3 / 3-4 or downshift : 4-3 / 3-2 / 2-1
4- Shift Slip	in Range : All - P - R - N - D - 3 - 2 - L	during a : upshift : 1-2 / 2-3 / 3-4 or downshift : 4-3 / 3-2 / 2-1
5- Shift Delayed	in Range : All - P - R - N - D - 3 - 2 - L	during a : upshift : 1-2 / 2-3 / 3-4 or downshift : 4-3 / 3-2 / 2-1
6- Shift Point too high	in Range : All - P - R - N - D - 3 - 2 - L	during a : upshift : 1-2 / 2-3 / 3-4 or downshift : 4-3 / 3-2 / 2-1
7- Shift Point too low	in Range : All - P - R - N - D - 3 - 2 - L	during a : upshift : 1-2 / 2-3 / 3-4 or downshift : 4-3 / 3-2 / 2-1
8- TCC Shudder	in Range : All - P - R - N - D - 3 - 2 - L	during a : upshift : 1-2 / 2-3 / 3-4 or downshift : 4-3 / 3-2 / 2-1
9- Noise	in Range : All - P - R - N - D - 3 - 2 - L	during a : upshift : 1-2 / 2-3 / 3-4 or downshift : 4-3 / 3-2 / 2-1
Noise type : 1- Buzz 2- Whine 3- Clunk 4- Rattle 5- Whistle // 6- light 7-medium 8- heavy		
10- Other :	in Range : All - P - R - N - D - 3 - 2 - L	during a : upshift : 1-2 / 2-3 / 3-4 or downshift : 4-3 / 3-2 / 2-1

O - Other customer concern and comments

P - Isuzu Vehicle Code :	.....	**Q - VIN Number**	.....
R - Date of Vehicle Registration	Month :	Day :	Year : .....
S - Trans. model :	.....	**T - A/T Serial Number :**	.....
U - Your name :	.....		

V - Dealer Name, Address, Phone

F07RT036

Example of form completed.

A - Today's date :	Month : April.....	Day : .13.....	Year : .1994.....
B - End User Name, Address :	Dave Smith 6584, Arlington road Plymouth MI 48170 USA		
C - Date of Problem :	Month : April.....	Day : .8.....	Year : .1994.....
D - Mileage : 12230..Mile / Km	E - With Ignition ON is CHECK TRANS Indicator : (1-) Flashing 2- Not Flashing	F - Car load when problem occured : 1 - Towing a trailer 2- ..2..... people OR ..... Kg	
G - Weather conditions when problem : 1- Clear 2- Cloudy 3- Rain 4- Snow 5- Unstable (6-) Any	H - Weather Temperature when problem: 1- Hot 2- Warm 3- Cool 4- Cold 5- Unstable (6-) Any	I - Road Conditions when problem : 1- Any 2- Inter City 3- Outside City (4-) Highway 5 - Uphill 6- Downhill 7- Unpaved ~~8- Snow~~ 9 - Others	J - Frequency of the Problem : 1- Always (2-) Occasional : ..... times/day, ...3... times/month 3- Only Once 4- Others :
K - Engine Condition : 1- Always 2- At Cold 3- During Warming up (4-) After Warming or Hot 5- Others	L - Engine Speed when the problem occured : 1- Idling 2- Starting 3- Stalling (4-) High RPM 5- Low RPM	M - Transmission Condition when it occured : 1- Any 2- Idling 3- Starting 4- Driving (5-) Accelerating (6-) Coasting 7- In corner (8-) Shifting	this means do not take this into account

N - If there is a Transmission driveability problem BEFORE THE CHECK TRANS INDICATOR WAS FLASHING :

1- No Power	in Range : All - P - R - N - D - 3 - 2 - L	during a : upshift : 1-2 / 2-3 / 3-4 or downshift : 4-3 / 3-2 / 2-1
2- No shift	in Range : All - P - R - N - D - 3 - 2 - L	during a : upshift : 1-2 / 2-3 / 3-4 or downshift : 4-3 / 3-2 / 2-1
(3-) Shift Shock	in Range : All - P - R - N - (D-) 3 - 2 - L	during a (upshift :) 1-2 / 2-3 / (3-4) or (downshift :) (4-3) / 3-2 / 2-1
4- Shift Slip	in Range : All - P - R - N - D - 3 - 2 - L	during a : upshift : 1-2 / 2-3 / 3-4 or downshift : 4-3 / 3-2 / 2-1
5- Shift Delayed	in Range : All - P - R - N - D - 3 - 2 - L	during a : upshift : 1-2 / 2-3 / 3-4 or downshift : 4-3 / 3-2 / 2-1
6- Shift Point too high	in Range : All - P - R - N - D - 3 - 2 - L	during a : upshift : 1-2 / 2-3 / 3-4 or downshift : 4-3 / 3-2 / 2-1
7- Shift Point too low	in Range : All - P - R - N - D - 3 - 2 - L	during a : upshift : 1-2 / 2-3 / 3-4 or downshift : 4-3 / 3-2 / 2-1
8- TCC Shudder	in Range : All - P - R - N - D - 3 - 2 - L	during a : upshift : 1-2 / 2-3 / 3-4 or downshift : 4-3 / 3-2 / 2-1
9- Noise	in Range : All - P - R - N - D - 3 - 2 - L	during a : upshift : 1-2 / 2-3 / 3-4 or downshift : 4-3 / 3-2 / 2-1
Noise type : 1- Buzz 2- Whine 3- Clunk 4- Rattle 5- Whistle // 6- light 7-medium 8- heavy		
10- Other :	in Range : All - P - R - N - D - 3 - 2 - L	during a : upshift : 1-2 / 2-3 / 3-4 or downshift : 4-3 / 3-2 / 2-1

O - Other customer concern and comments :

(This is just an example). Shift shock very harsh overall during a downshift. Not sure if it's the 4-3 or 3-2.

P - Isuzu Vehicle Code :	94 UCR	Q - VIN Number	4S2CV58ZXM4324047
R - Date of Vehicle Registration	Month : November.	Day : ....18.....	Year : ..1993.....
S - Trans. model :	4L30-E	T - A/T Serial Number :	96 358 654
U - Your name :	Joe Spring		

V - Dealer Name, Address, Phone

Kent Helfrich

Home-town ISUZU

900 - 999 - 9999

F07RT037

General Diagnosis Procedure

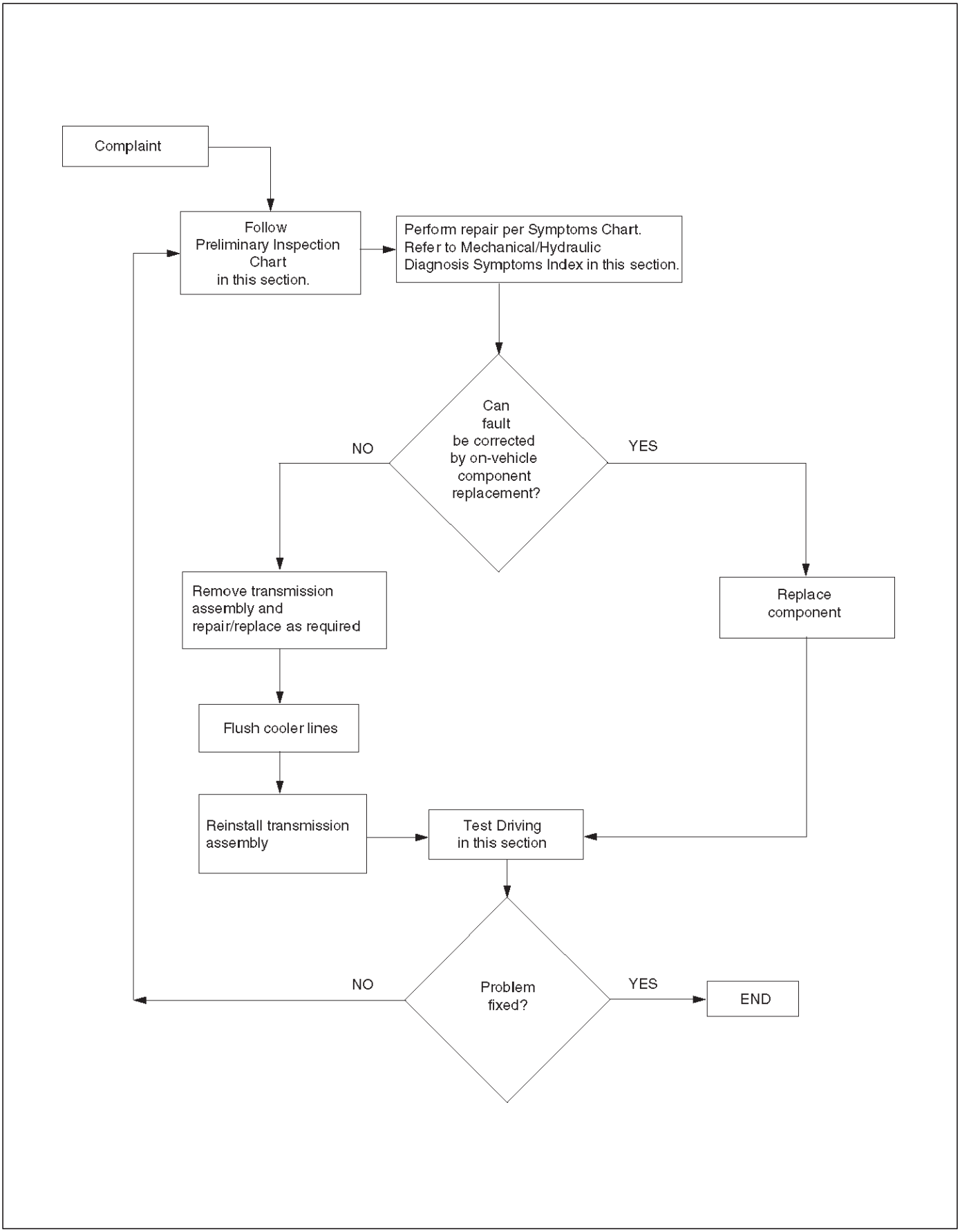

F07RT038

Preliminary Inspection Chart

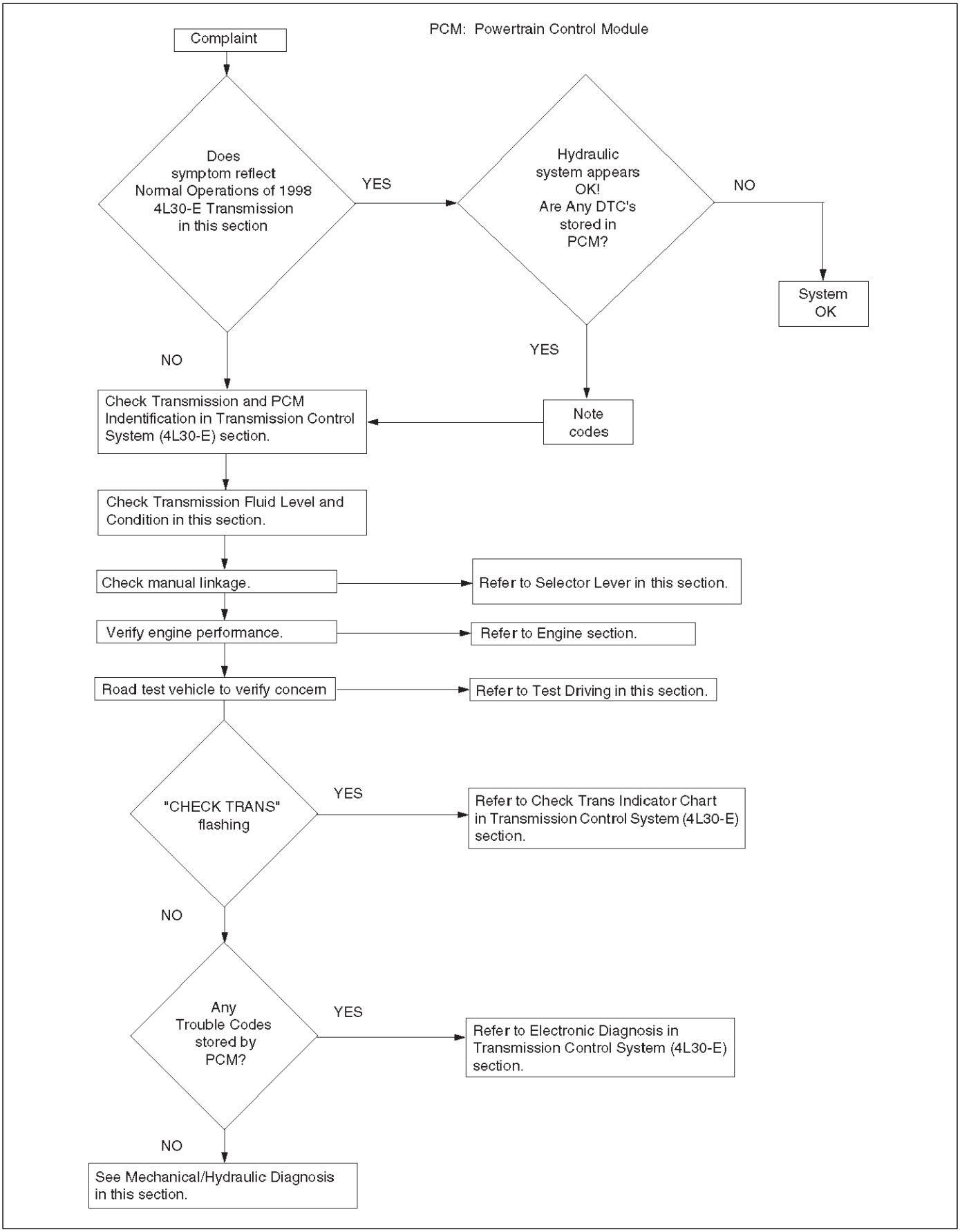

F07RT039

Checking Transmission Fluid Level and Condition

Checking fluid level and condition (color and odor) at regular intervals will provide early diagnosis information about the transmission. This information may be used to correct a condition that, if not detected early, could result in major transmission repairs.

IMPORTANT: When new, automatic transmission fluid is red in color. As the vehicle is driven, the transmission fluid will begin to look darker in color. The color may eventually appear light brown.

A dark brown color with burnt odor may indicate excessive fluid deterioration and signal a need for fluid change.

Fluid Level

When adding or changing fluid, use only DEXRON ®–III. Refer to Maintenance and Lubrication in General Information section for maintenance information and servicing interval.

CAUTION: DO NOT OVERFILL.

Overfilling will cause foaming, loss of fluid, abnormal shifting and possible damage to the transmission.

1. Park the vehicle on level ground and apply the parking brake firmly.
2. Check fluid level with engine running at idle.

NOTE: Be sure that transmission fluid temperature is below 30˚C (86˚F).

3. Move the selector lever through all gear ranges.
4. Move the selector lever to “Park”.
5. Let engine idle for 3 minutes and open the overfill screw (1).
6. Add released transmission fluid until it flows out over the overfill screw opening.
7. Let engine idle until a fluid temperature between 32˚C (90˚F) and 57˚C (135˚F) is reached, then close the overfill screw (1).

Torque: 38 N•m (3.9 kg·m/28 lb ft)

NOTE: To prevent fluid leaks, the overfill screw and oil drain screws gasket must be replaced each time these screws are removed.

NOTE: Check transmission fluid temperature with scan tool.

Minimum fluid level → 57˚C (135˚F)

Maximum fluid level → 32˚C (90˚F)

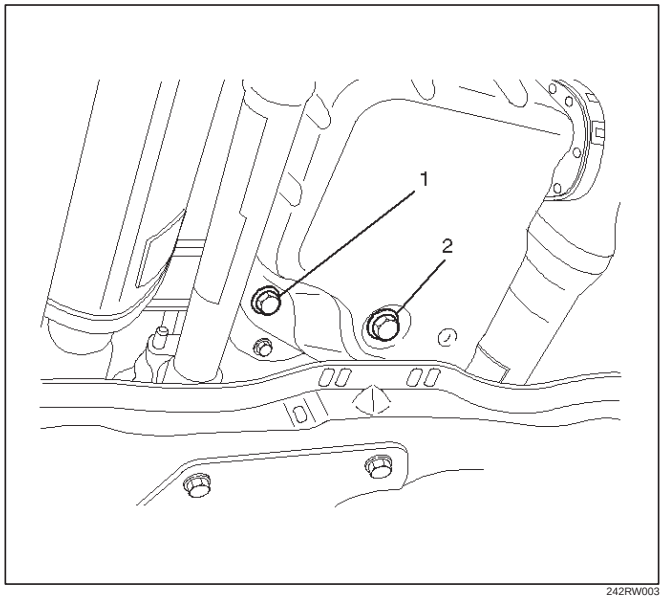

242RW003

CAUTION: Do not open overfill screw with engine stopped.

CAUTION: DO NOT CHECK FLUID LEVEL UNDER THESE CONDITIONS:

- Immediately after driving at sustained highway speeds.
- In heavy city traffic during hot weather.
- If vehicle is towing a trailer.

If the vehicle has been operated under these conditions, shut the engine off and allow the vehicle to “cool” for thirty (30) minutes. After the cool down period, restart the vehicle and continue from step 2 above.

Fluid Condition

	FLUID CONDITION			
	NORMAL*		CONTAMINATED	
COLOR	RED OR LIGHT BROWN	BROWN	NON–TRANSPARENT / PINK	BROWN
DRAIN REQUIRED?	NO	YES	YES	YES
CONTAMINATION	NONE	Very small amount of foreign material in bottom of pan	Contamination by coolant or other source	Large pieces of metal or other foreign material in bottom of pan
CORRECT LEVEL AND CONDITION	1. LOW LEVEL: A. Add fluid to obtain proper level & check for external leaks. B. Correct cause of leak. 2. HIGH LEVEL: – Remove excess fluid	– Remove both pans – Change filter – Flush cooler – Add new fluid – Check level	– Repair/replace radiator cooler – Transmission overhaul required – Check for: ● Damaged plates and seals ● Contaminated solenoids – Flush cooler – Add new fluid – Check level	– Transmission overhaul required – Flush cooler and cooler lines – Add new fluid – Check level

*Fluid should be changed according to maintenance schedule.

Test Driving

Some 4L30–E automatic transmission complaint will require a test drive as a part of the diagnostic procedure. Some codes will not set unless the vehicle is moving. The purpose of the test drive is to duplicate the customer's complaint condition and set a current Powertrain Control Module (PCM) trouble code. Perform this procedure before each 4L30–E automatic transmission repair, and again after repairs are made.

IMPORTANT:

- Duplicate the condition under which the customer's complaint was observed.
- Depending on the complaint, the line pressure gauge and the scan tool may be required during the test drive.
- During the test drive, it is important to record all necessary data from the areas being monitored, for use in diagnosis. Also listen for and note any unusual noises.

The following procedure should be used to test drive 4L30–E automatic transmission complaint vehicles:

1. Turn the ignition ON without starting the engine. Check that the "CHECK TRANS" lamp comes on for approximately 2 to 3 seconds and then goes out and remains out.
   - If the lamp is flashing, GOTO Check Trans Indicator in Transmission Control System (4L30–E) section.
   - If no serial data is present, GOTO OBD System Check. Refer to Driveability and Emissions in Engine section.
   - If the lamp stays ON or stays OFF, GOTO "Check Trans" Check in Transmission Control System (4L30–E) section.
2. Drive the vehicle. During the test drive, be sure that the transmission achieves normal operating temperature (approx. 20 minutes).
   Allow the transmission to go through all of its gear ranges, checking shift timing and firmness. Duplicate the owner's complaint condition as closely as possible during the test drive.
3. If, during the test drive, the "CHECK TRANS" lamp comes on, use the scan tool to check for trouble codes.
4. If, during the test drive, a problem is felt, but the "CHECK TRANS" lamp does not come on and no trouble codes are present, drive the vehicle with the PCM disconnected (manually shifting the vehicle).
   - In Manual L, the vehicle operates in first gear.
   - In Manual 2, the vehicle operates in third gear.
   - In Manual 3 or "D", the vehicle operates in fourth gear.

   If the problem still exists with the PCM disconnected, refer to Mechanical/Hydraulic Diagnosis in this section.
5. If no problem has been found at this point, check all underhood connections that supply power to the PCM and ignition fuses. Physically and visually inspect all the PCM harness connectors for loose or corroded terminals. Inspect the PCM ground points.

Mechanical / Hydraulic Diagnosis Check Trans Indicator Chart

Preform Preliminary Inspection First!

When the “CHECK TRANS” indicator is flashing, it indicates that a problem related to the transmission, the Powertrain Control Module (PCM), or the vehicle harness has occurred.

The system is now operating in a “BACKUP MODE” where the risk of further damaging the transmission has been reduced. The vehicle may be shifted manually.
If the initial problem is intermittent or seldom, switching the engine OFF/ON might allow normal operation again until the problem reoccurs.

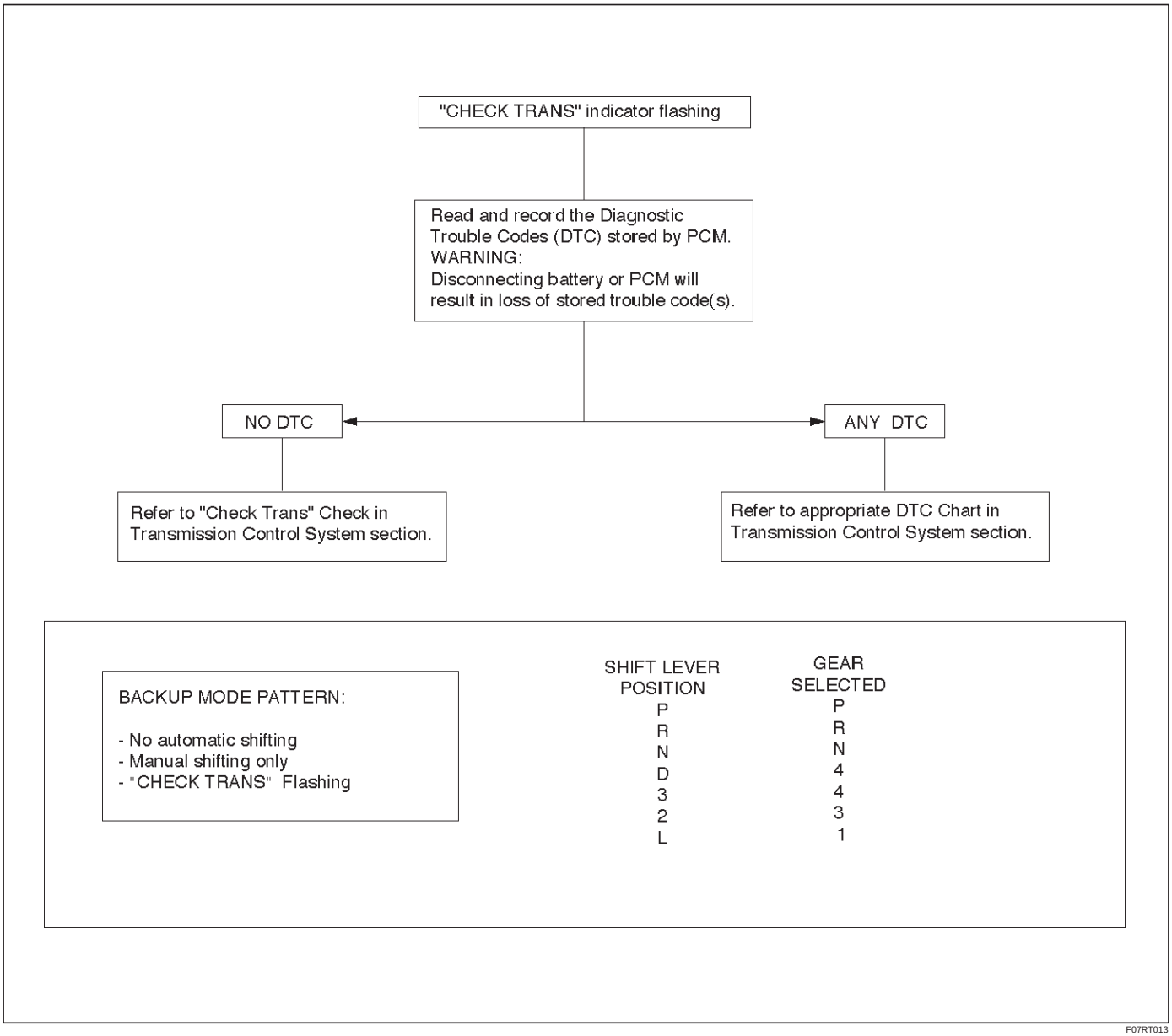

F07RT013

Mechanical / Hydraulic Diagnosis Symptoms Index

Perform Preliminary Inspection First!

CHART	SYMPTOMS
1	NO ENGINE START IN NEUTRAL OR PARK
2	NO FORWARD GEARS IN ANY RANGE/NO REVERSE
3	NO ENGINE BRAKE IN ANY RANGE
4	POOR SHIFTING IN ALL GEARS (ALL HARSH OR ALL SOFT)
5a	DELAYS IN DRIVE AND REVERSE
5b	DELAYS IN REVERSE ONLY
6	DIAGNOSTIC TROUBLE CODE (DTC) P0730
7	HARSH 1–2 SHIFT
8	HARSH 3–4 SHIFT
9a	3–2 DOWNSHIFT COMPLAINT
9b	HARSH SHIFT WHEN SHIFTING INTO “D” OR ACCELERATING FROM STOP
9c	COASTDOWN HARSH SHIFT OR CLUNK AT 3–2 DOWNSHIFT
10	INTERMITTENT 4TH TO 2ND GEAR DOWNSHIFT AT STEADY SPEED
11	ENGINE FLARE AT SHIFTING DURING TURNING ONLY
12	ENGINE FLARE DURING 1–2 OR 2–3 SHIFT
13	SHUDDER ONLY DURING TORQUE CONVERTER CLUTCH (TCC) APPLYING
14	POSSIBLE CAUSES OF TRANSMISSION NOISE
15a	POSSIBLE CAUSES OF LOW LINE PRESSURE
15b	POSSIBLE CAUSES OF HIGH LINE PRESSURE
16	POSSIBLE CAUSES OF TRANSMISSION FLUID LEAKS

NOTE: Numbers with parenthesis on the following charts refer to Parts List at end of this section.

Chart 1: No Engine Start In Neutral Or Park

Step	Action	Yes	No
1	Does engine start when shift lever moved from drive to neutral mostly in hot condition?	Go to Step 2	Go to Step 3
2	Does engine start in park at any condition?	Re–test vehicle	Go to Step 4
3	Does engine also not start in neutral when shift lever moved from park to neutral?	Go to Step 4	Go to Step 5
4	Check mode switch (63) setting. Readjust if necessary. Problems fixed?	Re–test vehicle	Go to Step 5
5	Check start circuit of mode switch (63) open in neutral. Was open found?	Locate and repair open(s)	Replace mode switch (63)

Chart 2: No Forward Gears In Any Range/No Reverse

Step	Action	Yes	No
1	Check line pressure. Refer to Line Pressure Test in this section. Was line pressure normal?	Go to Step 2	Use Chart 15a: Possible Causes of Low Line Pressure in this section
2	1. Check internal linkage: – Manual linkage (58) not moving manual valve (326). 2. Check for internal mechanical damage: – Turbine shaft (506) broken loose. – Overrun roller clutch (516) broken loose. Was the problem found?	Repair or replace	—

Chart 3: No Engine Brake In Any Range

Step	Action	Yes	No
1	Check line pressure. Refer to Line Pressure Test in this section. Was line pressure normal?	Go to Step 2	Use Chart 15a: Possible Causes of Low Line Pressure in this section
2	1. Check for overrun clutch leaks caused by: – Damaged piston lip (513) – Check ball defective (504) 2. Check for overrun lockout valve (705) stuck by foreign material. 3. Check for leaks at turbine shaft (506) caused by: – Teflon seal rings damaged (508) – Excessive wear of turbine shaft bearing surfaces. Was the problem found?	Repair or replace	—

Chart 4: Poor Shifting In All Gears (All Harsh Or All Soft)

Step	Action	Yes	No
1	Check line pressure. Refer to Line Pressure Test in this section. Was line pressure normal?	Go to Step 2	Go to Step 3
2	1. Check for these conditions which could affect clutch apply time: – Defective band apply solenoid (323). – Defective servo or/and accumulator piston. – Excessive clutch piston travel. 2. Check of possible causes of internal leaks: – Cut or damaged sealing ring(s) – Damaged sealing gasket(s) – Check ball missing or out of location in 2nd and 3rd clutch pistons. 3. Check for caused of burned clutch plates or band. Was the problem found?	Repair or replace	—
3	Was the line pressure high?	Go to Step 4	Use Chart 15a: Possible Causes of Low Line Pressure in this section
4	Were DTCs P0560 and P0705 set?	Diagnose those DTC(s) first	Use Chart 15b: Possible Causes of High Line Pressure in this section

Chart 5a: Delays In Drive And Reverse

NOTE: A short delay (less than 3 seconds) when first engaging drive or reverse after allowing vehicle to sit overnight is normal.

Step	Action	Yes	No
1	Check line pressure. Refer to Line Pressure Test in this section. Was line pressure normal?	More than 3 second delay in drive and reverse with engine off 1 hour or less. Teflon seals (508) on turbine shaft damaged. Repair	Use Chart 15a: Possible Causes of Low Line Pressure in this section.

Chart 5b: Delays In Reverse Only

Step	Action	Yes	No
1	Check line pressure. Refer to Line Pressure Test in this section. Was line pressure normal?	Go to Step 2	Use Chart 15a: Possible Causes of Low Line Pressure in this section.
2	Main case valve body gasket (88) damaged. – Reverse check ball (85) in valve body (84) missing or out of location. – Check for restrictions at valve body transfer plate orifice. Was the problem found?	Repair	—

Chart 6: Diagnostic Trouble Code (DTC) P0730

Step	Action	Yes	No
1	Check line pressure. Refer to Line Pressure Test in this section. Was line pressure normal?	Go to Step 2	Use Chart 15b: Possible Causes of High Line Pressure in this section
2	1. 1st and 2nd gear missing or 3rd and 4th gear missing. Check appropriate shift valve. If OK replace solenoid. 2. No engine brake in any range (All ranges in Drive and Reverse are OK). Check for suspected conditions modifying delays to clutch apply: – Overrun clutch seal damaged. – Excessive overrun clutch piston travel. – Defective 3–4 accumulator piston. – Causes of internal leaks. – Causes of burned clutch plates. 3. 1st and 4th gear missing or 2nd and 3rd gear missing. Shift solenoid A stuck. Replace shift solenoid A. 4. DTC P0730 is set in D range 1st gear above 3500 rpm. Go to Step 3. 5. DTC P0730 is set in D range 3rd gear between 55-80 mph. NOTE: Perform this test within safe and legal limits. Check for suspected conditions modifying delays to clutch apply: – 4th clutch seal damaged. – Excessive 4th clutch piston travel. – Defective 3–4 accumulator piston. – Causes of internal leaks. – Causes of burned clutch plates. Was the problem found?	Repair or replace	—
3	Check 3rd gear in “D” in winter mode. Does vehicle move?	Shift solenoid A stuck. Replace shift solenoid A.	Go to Step 4
4	Check for suspected conditions modifying delays to clutch apply: – 2nd clutch seal damaged. – Excessive 2nd clutch piston travel. – Defective accumulator piston. – Causes of internal leaks. – Check ball missing or out of location in 2nd clutch. – Seals cut, damaged or missing. – Gaskets defective. – Causes of burned clutch plates. Was the problem found?	Repair or replace	—

Chart 7: Harsh 1–2 Shift

Step	Action	Yes	No
1	Check line pressure. Refer to Line Pressure Test in this section. Was line pressure normal?	Check for 1–2 accumulator valve (320) stuck by foreign material in main case valve body.	Use Chart 15b: Possible Causes of High Line Pressure in this section.

Chart 8: Harsh 3–4 Shift

Step	Action	Yes	No
1	Check line pressure. Refer to Line Pressure Test in this section. Was line pressure normal?	Go to Step 2	Use Chart 15b: Possible Causes of High Line Pressure in this section
2	1. Check for 3–4 accumulator valve (407) stuck in adapter case valve body (401). 2. Check for 3–4 accumulator piston (18) stuck in adapter case (20). Was the problem found?	Repair or replace	—

Chart 9a: 3–2 Downshift Complaint

Step	Action	Yes	No
1	Check line pressure. Refer to Line Pressure Test in this section. Was line pressure normal?	Go to Step 2	Use Chart 15a: Possible Causes of Low Line Pressure in this section
2	Does DTC P1850 set?	Diagnose P1850 first	Replace band apply solenoid (PWM) (323)

Chart 9b: Harsh Shift When Shifting Into “D” Or Accelerating From Stop

Step	Action	Yes	No
1	Check line pressure. Refer to Line Pressure Test in this section. Was line pressure normal?	Go to Step 2	Use Chart 15b: Possible Causes of High Line Pressure in this section
2	Does DTC P1850 set?	Diagnose P1850 first	Replace band apply solenoid (PWM) (323)

Chart 9c: Coastdown Harsh Shift Or Clunk At 3–2 Downshift

Step	Action	Yes	No
1	Check line pressure. Refer to Line Pressure Test in this section. Was line pressure normal?	Go to Step 2	Use Chart 15b: Possible Causes of High Line Pressure in this section
2	Does DTC P1850 set?	Diagnose P1850 first	Replace band apply solenoid (PWM) (323)

Chart 10: Intermittent 4TH TO 2ND Gear Downshift At Steady Speed

Step	Action	Yes	No
1	Check for consistent speed sensor reading with scan tool. Was the reading correct?	Replace mode switch for intermittent contact.	Go to Step 2
2	1. Check for wiring harness damage or short to ground. If OK, go to (2). 2. Check transmission speed sensor connections. If OK, go to (3). 3. Replace transmission speed sensor. Was the replacement complete?	—	Replace speed sensor.

Chart 11: Engine Flare At Shifting During Turning Only (Usually With Warm Engine)

Step	Action	Yes	No
1	Check for oil leaks at transmission. Was the problem found?	Replace transmission oil filter and gasket	—

Chart 12: Engine Flare During 1–2 Or 2–3 Shift

Step	Action	Yes	No
1	Check line pressure. Refer to Line Pressure Test in this section. Was line pressure normal?	Go to Step 2	Use Chart 15a: Possible Causes of Low Line Pressure in this section
2	1. Check for a stuck 1–2 accumulator valve (320). 2. Check for servo piston (106) leaks. 3. Check for a stuck band apply solenoid (323). Was line pressure normal?	Repair or replace	—

Chart 13: Shudder Only During Torque Converter Clutch (TCC) Applying

Step	Action	Yes	No
1	1. TCC shudder is one of the most commonly misdiagnosed conditions in an automatic transmission. The key to diagnosing TCC shudder is to note when it happens and under what conditions. Once the TCC has been fully applied, it is nearly impossible to make it shudder. TCC shudder (short burst of noise normally less than 1 second) will only occur during clutch applying. It is not a steady state condition. 2. Drive until whole drivetrain is at normal operating temperature. – On 4WD vehicles, the test must be performed with transfer case selector lever in “2H” position. – Shudder is a short burst of noise normally less than 1 second in duration, and can be induced by the following maneuver: 3. From coast condition at 50 mph in “D” range (Normal mode), depress the throttle to 1/4-1/3 throttle. If present, shudder will occur within 5 seconds together with TCC application.(The scan tool may be used to determine the exact time of TCC applying) Was the problem found?	Replace transmission fluid and filter (remove both pans) and flush cooler lines. Replace converter assembly and O-ring on turbine shaft	Perform mechanical inspection of other drivetrain components.

Chart 14: Possible Causes Of Transmission Noise

CAUTION: Before checking transmission for what is believed to be transmission noise, ensure presence and positioning of insulating plugs, pads etc. Also make sure that noise does not come from other drivetrain components.

Condition	Possible cause	Correction
Whine or Buzz	Oil level low	Fill with ATF, check for external leaks.
	Plugged or restricted oil filter	Inspect oil filter. Replace oil filter or ATF as necessary.
	Damaged oil filter gasket	Replace oil filter gasket.
Knocking noise from front of transmission.	Loose bolts (Converter to flex plate)	Tighten to specifications.
	Cracked or broken flex plate	Replace flex plate.
	Converter damaged	Replace converter.
Knocking noise while driving, mostly on acceleration.	Transmission mount loose or broken	Tighten mount bolts or replace transmission mount.
	Cooler line mounts loose or broken	Tighten or replace cooler line mounts.
	Cooler lines touching body or frame	Repair or replace as necessary.
Knocking noise when vehicle is stationary.	Loose flex plate mounting bolts	Tighten to specifications.
	Cracked or broken flex plate	Replace flex plate.
	Damaged converter	Replace converter.

Chart 15a: Possible Causes of Low Line Pressure

Step	Action	Yes	No
1	Check oil level. Was the problem found?	Fill with ATF	Go to Step 2
2	Check for defective throttle position sensor. Was the problem found?	Replace throttle position sensor	Go to Step 3
3	Check for plugged, loose, or damaged oil filter (79). Was the problem found?	Inspect oil filter, tighten bolts or replace oil filter (79)	Go to Step 4
4	Check for a stuck force motor plunger (404). (Adapter case valve body) Was the problem found?	Replace force motor plunger (404)	Go to Step 5
5	Check for a stuck feed limit valve (412). (Adapter case valve body) Was the problem found?	Replace feed limit valve (412)	Go to Step 6
6	Check for loose converter bolts (4 & 5). Was the problem found?	Tighten converter bolts (4 & 5)	Go to Step 7
7	Check for a stuck pressure regulator valve (208). (Oil pump) Was the problem found?	Replace pressure regulator valve (208)	Go to Step 8
8	Check for a stuck boost valve (205).(Oil pump) Was the problem found?	Replace boost valve (205)	Go to Step 9
9	Check for blocked intermediate oil passages to pressure regulator valve. (Oil pump) Was the problem found?	Replace oil pump	Go to Step 10
10	Check for defective oil pump (9, 201, 202 & 209). Was the problem found?	Replace oil pump	Go to Step 11
11	Check for internal leaks. – Check balls missing or out of location in valve bodies – Seals cut or damaged – Gaskets defective, etc. Was the problem found?	Install balls, or correct ball location Replace seals Replace gaskets	—

Chart 15b: Possible Causes Of High Line Pressure

NOTE: If transmission is operating in backup mode, high line pressure will be present.

Step	Action	Yes	No
1	Check for defective throttle position sensor. Was the problem found?	Replace throttle position sensor.	Go to Step 2.
2	Check for a stuck force motor plunger (404). (Open circuit/intermittent) (Adapter case valve body) Was the problem found?	Replace force motor plunger (404)	Go to Step 3
3	Check for a stuck feed limit valve (412). (Adapter case valve body) Was the problem found?	Replace force motor plunger (412)	Go to Step 4
4	Check converter bolts (4 & 5). Was the problem found?	Tighten converter bolts (4 & 5)	Go to Step 5
5	Check for a stuck pressure regulator valve (208). (Oil pump) Was the problem found?	Replace pressure regulator valve (208)	Go to Step 6
6	Check for a stuck boost valve (205). (Oil pump) Was the problem found?	Replace boost valve (205)	Go to Step 7
7	Check for internal leaks. – Check balls missing or out of location in valve bodies – Seals cut or missing – Gaskets defective, etc. Was the problem found?	Install balls, or correct ball location Replace seals Replace gaskets	—

Chart 16: Possible Causes Of Transmission Fluid Leaks

Before attempting to correct an oil leak, the actual source of the leak must be determined. In many cases, the source of the leak may be difficult to determine due to “wind flow” around the engine and transmission.
The suspected area should be wiped clean before inspecting for the source of the leak.

Oil leaks around the engine and transmission are generally carried toward the rear of the vehicle by the air stream. In determining the source of an leak, the following two checks should be made:

1. With the engine running, check for external line pressure leaks.
2. With the engine off, check for oil leaks due to the raised oil level caused by drainback of converter oil into the transmission.

Possible Causes Of Fluid Leaks Due To Sealing Malfunction

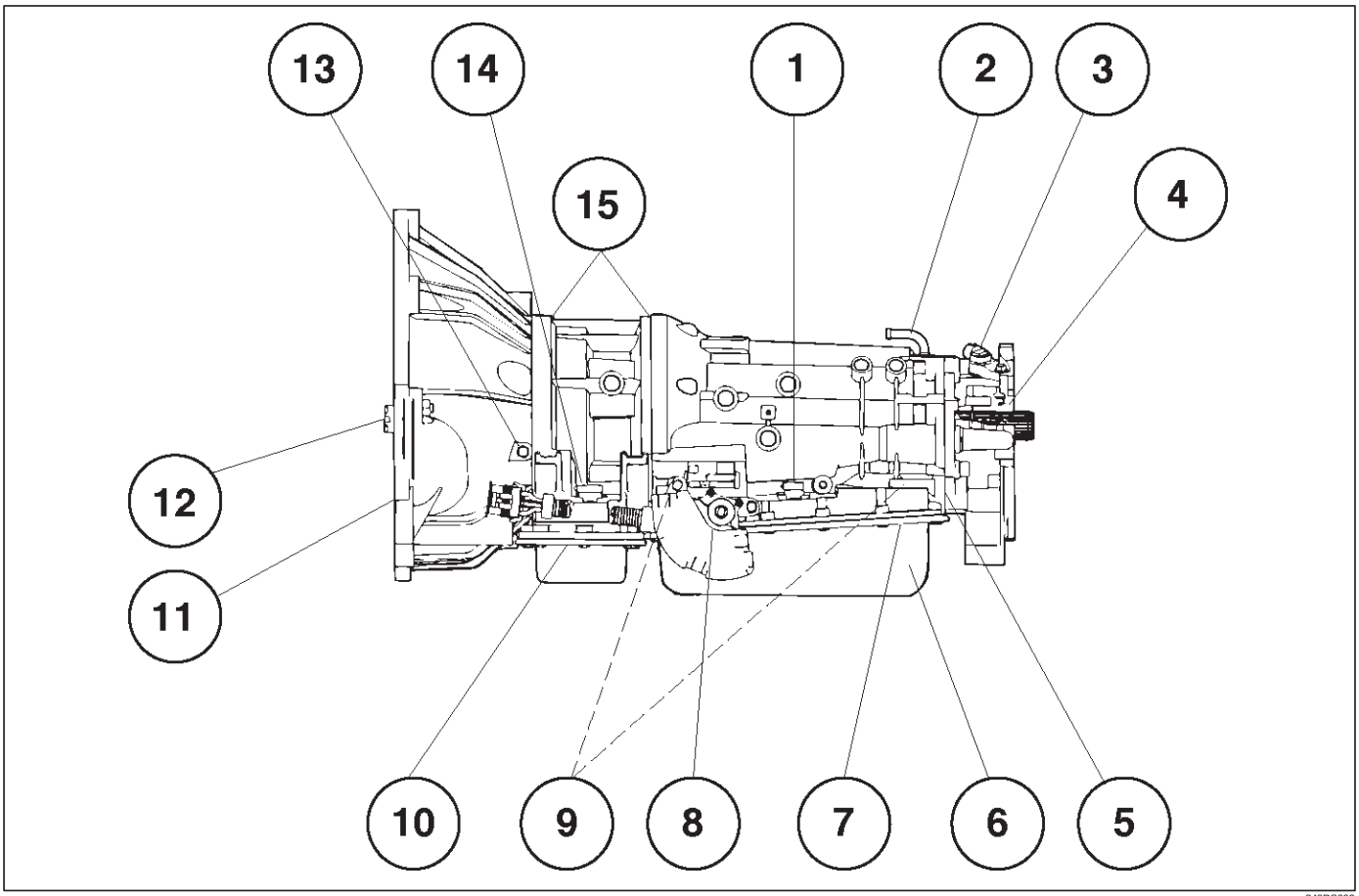

240RS002

Legend

(1) Electrical Connector (Main Case) Seal
(2) Transmission Vent (Breather)
(3) Speed Sensor O–Ring
(4) Extension (Adapter) Lip Seal
(5) Extension (Adapter) to Main Case Gasket
(6) Oil Drain Plug Gasket
(7) Oil Pan Gasket (Main Case)
(8) Selector Shaft Seal
(9) Oil Cooler Connectors (2)
(10) Oil Pan Gasket (Adapter Case)
(11) Converter housing attaching bolts not correctly torqued
(12) Converter Housing Lip Seal
(13) Line Pressure Tap Plug
(14) Electrical Connector (Adapter Case) Seal
(15) Adapter Case Seal Rings (2)

Stall Test

The stall test allows you to check the transmission for internal abrasion and the one way clutch for slippage. Torque converter performance can also be evaluated.
The stall test results together with the road test results will identify transmission components requiring servicing or adjustment.

Stall Test Procedure:

1. Check the level of the engine coolant, the engine oil, and the automatic transmission fluid. Replenish if necessary.
2. Block the wheels and set the parking brake.
3. Connect a tachometer to the engine.
4. Start the engine and allow it to idle until the engine coolant temperature reaches 70 – 80˚C (158 – 176˚F).
5. Hold the brake pedal down as far as it will go.
6. Place the selector in the “D” range.
7. Gradually push the accelerator pedal to the floor.
   The throttle valve will be fully open.
   Note the engine speed at which the tachometer needle stabilizes.

Stall Speed : 2,100 ±150 rpm

NOTE: Do not continuously run this test longer than 5 seconds.

8. Release the accelerator pedal.
9. Place the selector in the “N” range.
10. Run the engine at 1,200 rpm for one minute.
    This will cool the transmission fluid.
11. Repeat Steps 7 – 10 for the “3”, “2”, “L” and “R” ranges.

Line Pressure Test

The line pressure test checks oil pump and control valve pressure regulator valve function. It will also detect oil leakage.

Line Pressure Test Procedure:

1. Check the level of the engine coolant, the engine oil, and the automatic transmission fluid.
   Replenish if required.
2. Block the wheels and set the parking brake.
3. Remove the pressure detection plug at the left side of the transmission case.
   Set 5–8840–0004–0 pressure gauge and adapter to the pressure detection plug hole.

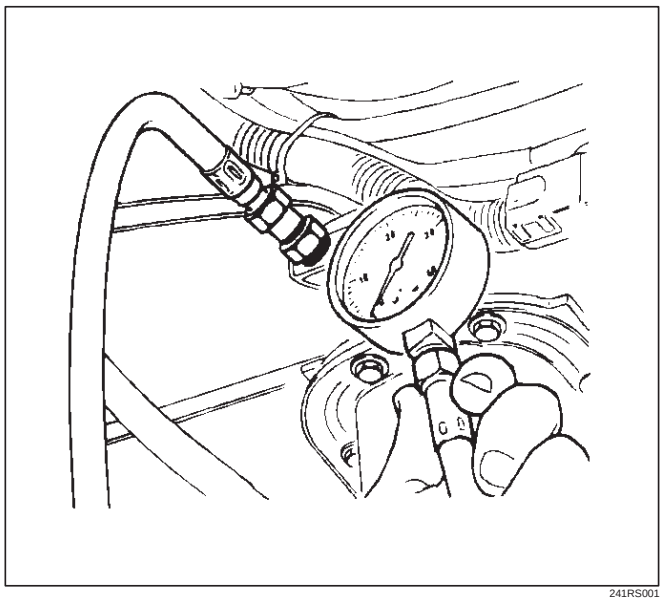

241RS001

4. Start the engine and allow it to idle until the engine coolant temperature reaches 70 – 80˚C (158 – 176˚F).
5. Hold the brake pedal down as far as it will go.
6. Place the selector in the “D” range.
7. Note the pressure gauge reading with the engine idling.
8. Gradually push the accelerator pedal to the floor. The throttle valve will be fully open.
   Note the pressure gauge reading with the accelerator pedal fully depressed.

NOTE: Do not continuously run this test longer than 5 seconds.

9. Release the accelerator pedal.
10. Place the selector in the “N” range.
11. Run the engine at 1,200 rpm for one minute.
    This will cool the transmission fluid.
12. Repeat Steps 7 – 11 for the “3”, “2”, “L”, and “R” ranges.
13. Install a pressure detection plug to the transmission case, applying recommended thread locking agent (LOCTITE 242) or its equivalent to thread of plug. Make sure that thread is cleaned before applying locking agents.
14. Tighten the pressure detection plug to the specified torque.

Torque: 9 – 14N·m (0.9 – 1.4 kg·m/7 – 10 lb ft)

MODE	LEVER POSITION	ENGINE SPEED	LINE PRESSURE		FORCE MOTOR CURRENT
			kPa	PSI	
NORMAL/POWER	D,3,2,L	IDLE	312–363	45.2–52.6	VARIABLE
WINTER	D	IDLE	312 – 363	45.2 – 52.6	0.9 – 1.0A
NORMAL/POWER WINTER	REVERSE	IDLE	419 – 486	60.7 – 70.5	0.9 – 1.0A
NORMAL/POWER	D, 3, 2, L	STALL SPEED	1,236 – 1,320	179.3 – 191.4	0.1 – 0.2A
WINTER	D	STALL SPEED	1,236 – 1,320	179.3 – 191.4	0.1 – 0.2A
NORMAL/POWER WINTER	REVERSE	STALL SPEED	1,634 – 1,743	236.9 – 252.8	0.1 – 0.2A

Shift Speed Chart

Transfer gear ratio:	High: 1.000
Rear axle ratio:	4.555

“Normal mode”

Upshift

Range	Throttle opening	1 → 2 (First Gear) (Second Gear) Km/h (mph)	2 → 3 (Second Gear) (Third Gear) Km/h (mph)	3 → 4 (Third Gear) (Fourth Gear) Km/h (mph)
D (Drive)	Fully opened	37 ~ 43 (23 ~ 27)	76 ~ 82 (47 ~ 51)	125 ~ 131 (78 ~ 81)
	Half throttle	29 ~ 35 (18 ~ 22)	54 ~ 60 (34 ~ 37)	107 ~ 113 (66 ~ 70)
3 (Third)	Fully opened	37 ~ 43 (23 ~ 27)	76 ~ 82 (47 ~ 51)	—
	Half throttle	29 ~ 35 (18 ~ 22)	54 ~ 60 (34 ~ 37)	—
2 (Second)	Fully opened	37 ~ 43 (23 ~ 27)	—	—
	Half throttle	29 ~ 35 (18 ~ 22)	—	—

Downshift

Range	Throttle opening	1 ← 2 (First Gear) (Second Gear) Km/h (mph)	2 ← 3 (Second Gear) (Third Gear) Km/h (mph)	3 ← 4 (Third Gear) (Fourth Gear) Km/h (mph)
D (Drive)	Fully opened	14 ~ 20 (9 ~ 12)	69 ~ 75 (43 ~ 47)	107 ~ 113 (66 ~ 70)
	Half throttle	13 ~ 19 (8 ~ 12)	30 ~ 36 (19 ~ 22)	61 ~ 67 (38 ~ 42)
	Fully closed	12 ~ 18 (7 ~ 11)	20 ~ 26 (12 ~ 16)	27 ~ 33 (17 ~ 20)
3 (Third)	Fully opened	14 ~ 20 (9 ~ 12)	69 ~ 75 (43 ~ 47)	—
	Half throttle	13 ~ 19 (8 ~ 12)	30 ~ 36 (19 ~ 22)	—
	Fully closed	12 ~ 18 (7 ~ 11)	20 ~ 26 (12 ~ 16)	—
2 (Second)	Fully opened	14 ~ 20 (9 ~ 12)	82 ~ 88 (51 ~ 55)	—
	Half throttle	13 ~ 19 (8 ~ 12)	82 ~ 88 (51 ~ 55)	—
	Fully closed	12 ~ 18 (7 ~ 11)	82 ~ 88 (51 ~ 55)	—
L (First)	—	36 ~ 42 (22 ~ 26)	—	—

“Power mode”

Upshift

Range	Throttle opening	1 → 2 (First Gear) (Second Gear) Km/h (mph)	2 → 3 (Second Gear) (Third Gear) Km/h (mph)	3 → 4 (Third Gear) (Fourth Gear) Km/h (mph)
D (Drive)	Fully opened	41 ~ 47 (25 ~ 29)	79 ~ 85 (49 ~ 53)	125 ~ 131 (78 ~ 81)
	Half throttle	36 ~ 42 (22 ~ 26)	69 ~ 75 (43 ~ 47)	119 ~ 125 (74 ~ 78)
3 (Third)	Fully opened	41 ~ 47 (25 ~ 29)	79 ~ 85 (49 ~ 53)	—
	Half throttle	36 ~ 42 (22 ~ 26)	69 ~ 75 (43 ~ 47)	—
2 (Second)	Fully opened	41 ~ 47 (25 ~ 29)	—	—
	Half throttle	36 ~ 42 (22 ~ 26)	—	—

Downshift

Range	Throttle opening	1 ← 2 (First Gear) (Second Gear) Km/h (mph)	2 ← 3 (Second Gear) (Third Gear) Km/h (mph)	3 ← 4 (Third Gear) (Fourth Gear) Km/h (mph)
D (Drive)	Fully opened	28 ~ 34 (17 ~ 21)	70 ~ 76 (43 ~ 47)	115 ~ 121 (71 ~ 75)
	Half throttle	20 ~ 26 (12 ~ 16)	46 ~ 52 (29 ~ 32)	90 ~ 96 (56 ~ 60)
	Fully closed	12 ~ 18 (7 ~ 11)	22 ~ 28 (14 ~ 17)	43 ~ 50 (27 ~ 31)
3 (Third)	Fully opened	28 ~ 34 (17 ~ 21)	70 ~ 76 (43 ~ 47)	—
	Half throttle	20 ~ 26 (12 ~ 16)	46 ~ 52 (29 ~ 32)	—
	Fully closed	12 ~ 18 (7 ~ 11)	22 ~ 28 (14 ~ 17)	—
2 (Second)	Fully opened	28 ~ 34 (17 ~ 21)	82 ~ 88 (51 ~ 55)	—
	Half throttle	20 ~ 26 (12 ~ 16)	82 ~ 88 (51 ~ 55)	—
	Fully closed	12 ~ 18 (7 ~ 11)	82 ~ 88 (51 ~ 55)	—
L (First)	—	36 ~ 42 (22 ~ 26)	—	—

“Winter mode”

D range, winter mode ON → OFF	27 ~ 33 Km/h (17 ~ 20 mph)

Lockup Speed Chart

Transfer gear ratio:	High: 1.000
Rear axle ratio:	4.555

	Mode	Lockup ON			Lockup OFF		
		2nd Km/h (mph)	3rd Km/h (mph)	4th Km/h (mph)	2nd Km/h (mph)	3rd Km/h (mph)	4th Km/h (mph)
D range Throttle opening 6%	Normal	69 ~ 75 (43 ~ 47)	63 ~ 69 (39 ~ 43)	70 ~ 76 (43 ~ 47)	64 ~ 70 (40 ~ 43)	43 ~ 49 (27 ~ 30)	65 ~ 71 (40 ~ 44)
	Power	69 ~ 75 (43 ~ 47)	73 ~ 79 (45 ~ 49)	73 ~ 79 (45 ~ 49)	64 ~ 70 (40 ~ 43)	65 ~ 71 (40 ~ 44)	69 ~ 75 (43 ~ 47)

Changing Transmission Fluid

There is no need to change the transmission fluid unless the transmission is used under one or more of the following heavy duty conditions.

A. Repeated short trips

B. Driving on rough roads

C. Driving on dusty roads

D. Towing a trailer

If the vehicle is used under these conditions, change the fluid every 20,000 miles (32,000 km.)

More over, the remaining life percentage of ATF can be estimated by using Tech 2 as an auxiliary tool to judge the right time for ATF replacement.

The remaining life percentage is calculated from ATF'S heat history. When it is close to 0%, ATF replacement is recommended.

1. Place a large drain pan under the oil pan.
2. Remove the transmission oil drain screw (2) and drain fluid.
3. Tighten drain screw (2).

   Torque: 38 N•m (3.9 kg·m/28 lb ft)

4. Remove the transmission overfill screw (1) and fill transmission through overfill screw opening, using DEXRON®–III ATF.

NOTE: Add transmission fluid until it flows out over the overfill screw opening.

5. Let engine idle until a fluid temperature between 32˚C (90˚F) and 57˚C (135˚F) is reached.
6. Add transmission fluid until it flows out over the overfill screw opening, then close the overfill screw (1).

   Torque: 38 N•m (3.9 kg·m/28 lb ft)

NOTE: To prevent fluid leaks, the overfill screw and oil drain screws gasket must be replaced each time these screws are removed.

NOTE: Check transmission fluid temperature with service scan tool.

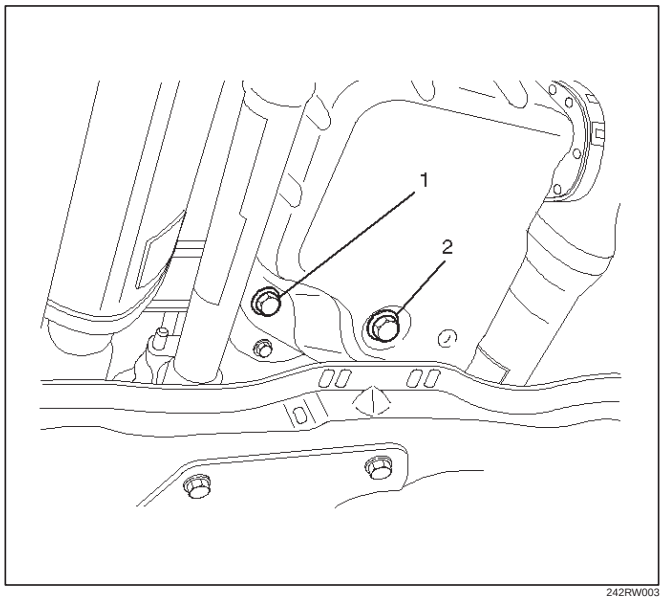

242RW003

Selector Lever

Inspection

1. Make sure that when the shifter control lever is shifted from "P" to "L", a "clicking" can be felt at each shift position. Make sure that the gear corresponds to that of the position plate indicator.
2. Check to see if the shifter lever can be shifted as shown in illustration.

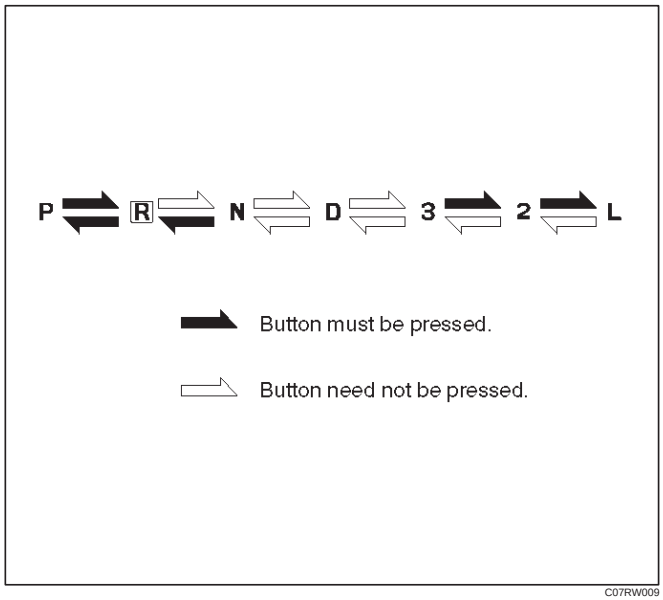

C07RW009

Removal

1. Disconnect battery ground cable.
2. Remove transfer control lever knob.
3. Remove front console.
   - Disconnect wiring harness connectors from front console.
4. Disconnect shift lock cable (1) from the selector lever assembly side.

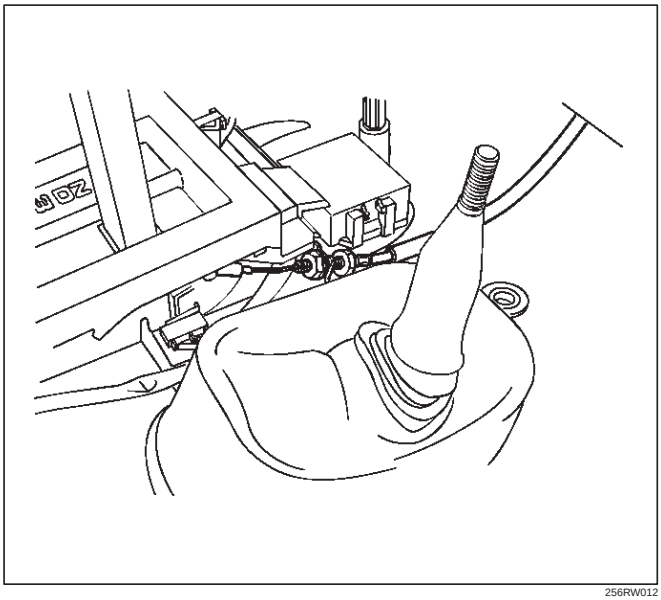

256RW012

5. Disconnect shift control rod (2) from the selector lever assembly side.

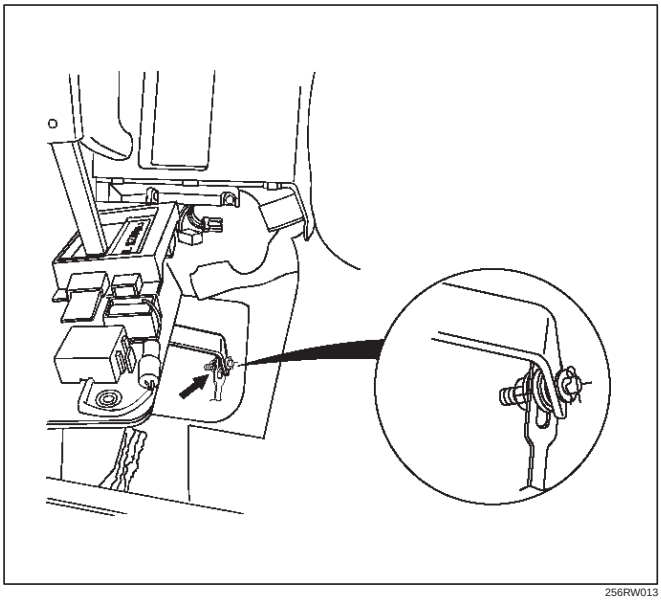

256RW013

6. Disconnect wiring harness connectors from the selector lever assembly.
7. Remove selector lever assembly.

Installation

To install, follow the removal steps in the reverse order, noting the following points:

Adjustment of select lever and control rod

1. Place the vehicle on a level surface.

NOTE: If the vehicle is not on level surface, the shift select cable set positions will vary with the movement of engine. To prevent possible misadjustment of the cable, the vehicle must be placed on a level surface.

2. Install the shift control rod (1) to the transmission select lever (2), and then place the lever in the “N” position.
3. Set select lever in the “N” position.
4. Push select lever forward (“R” position side) and secure it (using a rubber band (3), etc.) so that the pin comes into contact with the wall of the detent plate.
5. Install the shift control rod (1) to the selector lever arm (4).

   Torque: 32 N•m (3.3 kg·m/24 lb ft)

NOTE: Do not apply oil to the threaded portions.

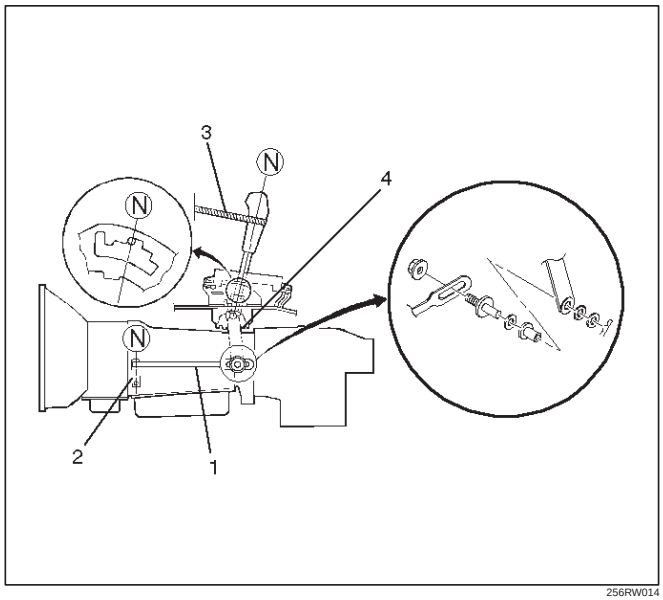

256RW014

6. After adjustment, make sure that the selector lever operates normally, and that each selector position is properly indicated. (The red mark shows through the window.)

Adjustment of shift lock cable

1. Set ignition key in “LOCK” position and selector lever in “P” position.
2. Adjust cable screw cap on selector lever side to provide a gap (slack for cable) of 1 – 2 mm between rod on steering lock side and stopper.

   Adjust cap as follows:

   a. Pull screw cap (1) in arrow direction to remove inner cable slack.
   b. With cable kept as (a), adjust gap between nut (2) and bracket to 5 mm (0.2 in).
   c. Lock inner cable by turning nut (3) while holding nut (2) in place.

   Torque : 3.7 N•m (38 kg·cm/33 lb in)

NOTE: Clean the cable threads, and do not apply oil to them.

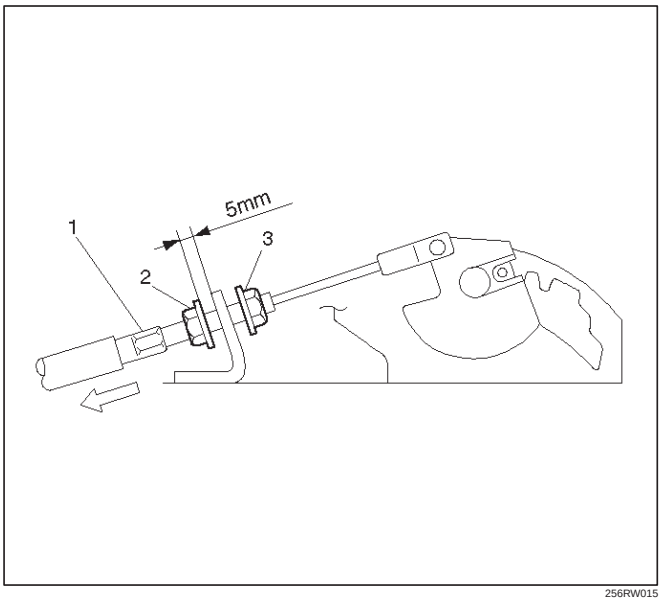

256RW015

3. Check the shift lock operation:
   a. Selector lever should not move out of “P” position with ignition key in “Lock” position.
   b. Selector lever can be moved out of “P” position with ignition key in “ON” position only when brake pedal is depressed.
   c. Ignition key can be turned to “LOCK” position only when selector lever is in “P” position (key can be pulled out).

   If (a) and (c) fail, readjust cable. If (b) fails, readjust connector wiring and brake pedal switch.

Mode Switch

Removal

1. Place selector lever in neutral.
2. Disconnect battery ground cable.
3. Remove mode switch cover (1).
4. Disconnect selector lever (2) from the mode switch.
5. Disconnect transmission harness from the mode switch connector (3).
6. Remove bracket with mode switch connector from the transmission case.
7. Remove mode switch connector (3) from the bracket (4).
8. Remove two mode switch bolts and nut then remove mode switch (5).

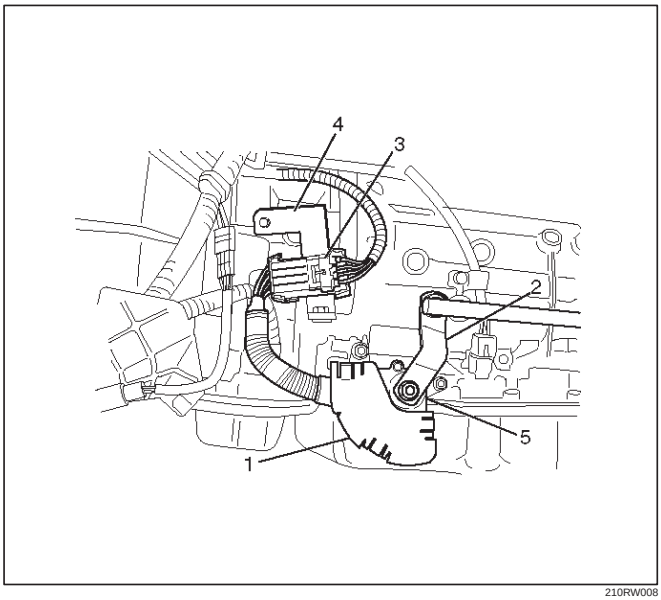

210RW008

Installation

To install, follow the removal steps in the reverse order, noting the following points;

1. Torque

   Mode switch bolt: 13 N•m (1.3 kg·m/113 lb in)

   Selector lever nut: 23 N•m (2.3 kg·m/17 lb ft)

2. Mode switch setting procedure

   Perform either of the following adjustment procedures:

   Procedure 1

   a. Place selector lever in neutral.
   b. Remove selector lever from the mode switch.
   c. Remove the mode switch cover.
   d. Loosen the two 10 mm screws.
   e. Rotate the mode switch until the slot in the mode switch housing aligns with the selector shaft bushing, and insert a 3/32 in. (2.4 mm) drill bit or punch (1) into the slot.
   f. Tighten the screws to 13 N·m (1.3 kg·m/113 lb in).
   g. After completing adjustment, snap the mode switch cover into place.
   h. Reinstall the selector lever.

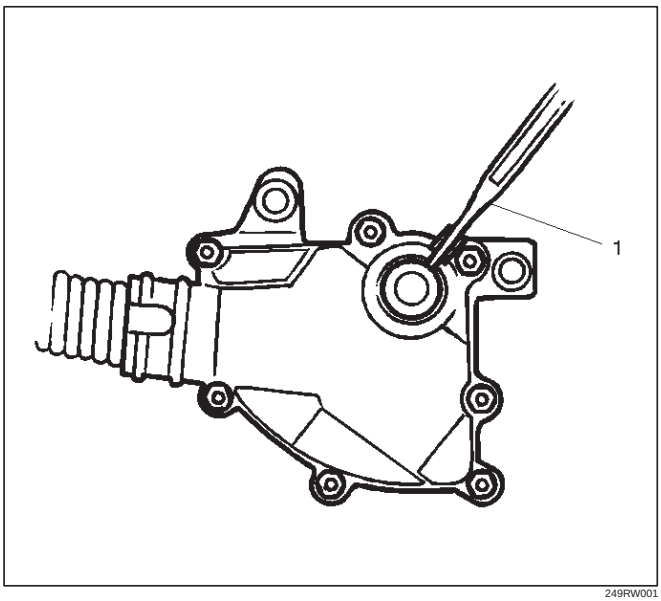

249RW001

Procedure 2

a. Place selector lever in neutral.
b. Disconnect transmission harness connector from mode switch connector.
c. Remove mode switch connector with bracket from the transmission case.
d. Connect multimeter (resistance mode) to terminals 1(E) and 4(H) on mode switch connector.
e. Loosen two mounting screws.
f. Rotate mode switch slightly in both directions to determine the range (approx. 5 degrees) of electrical contact.
g. Position mode switch in middle of contact range.
h. Tighten two mounting screws.
i. Remove multimeter and install mode switch harness connector with bracket to the transmission case.
j. Connect transmission harness connector to mode switch connector.

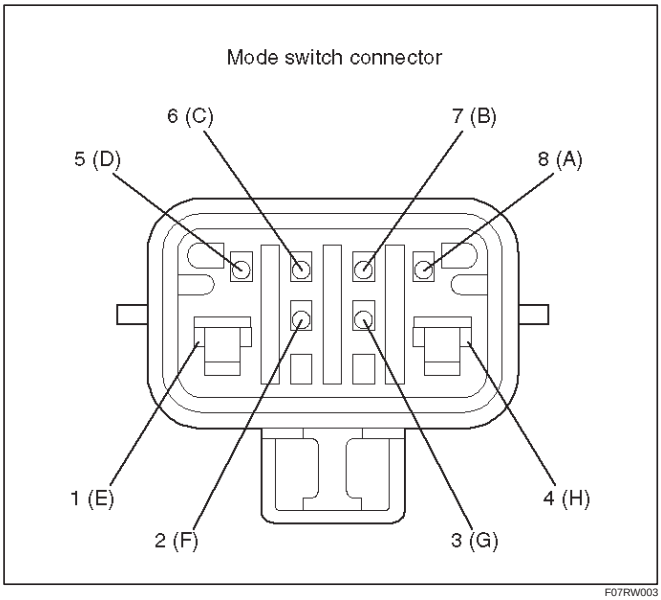

F07RW003

Transmission (With Transfer Case)

Transmission And Associated Parts

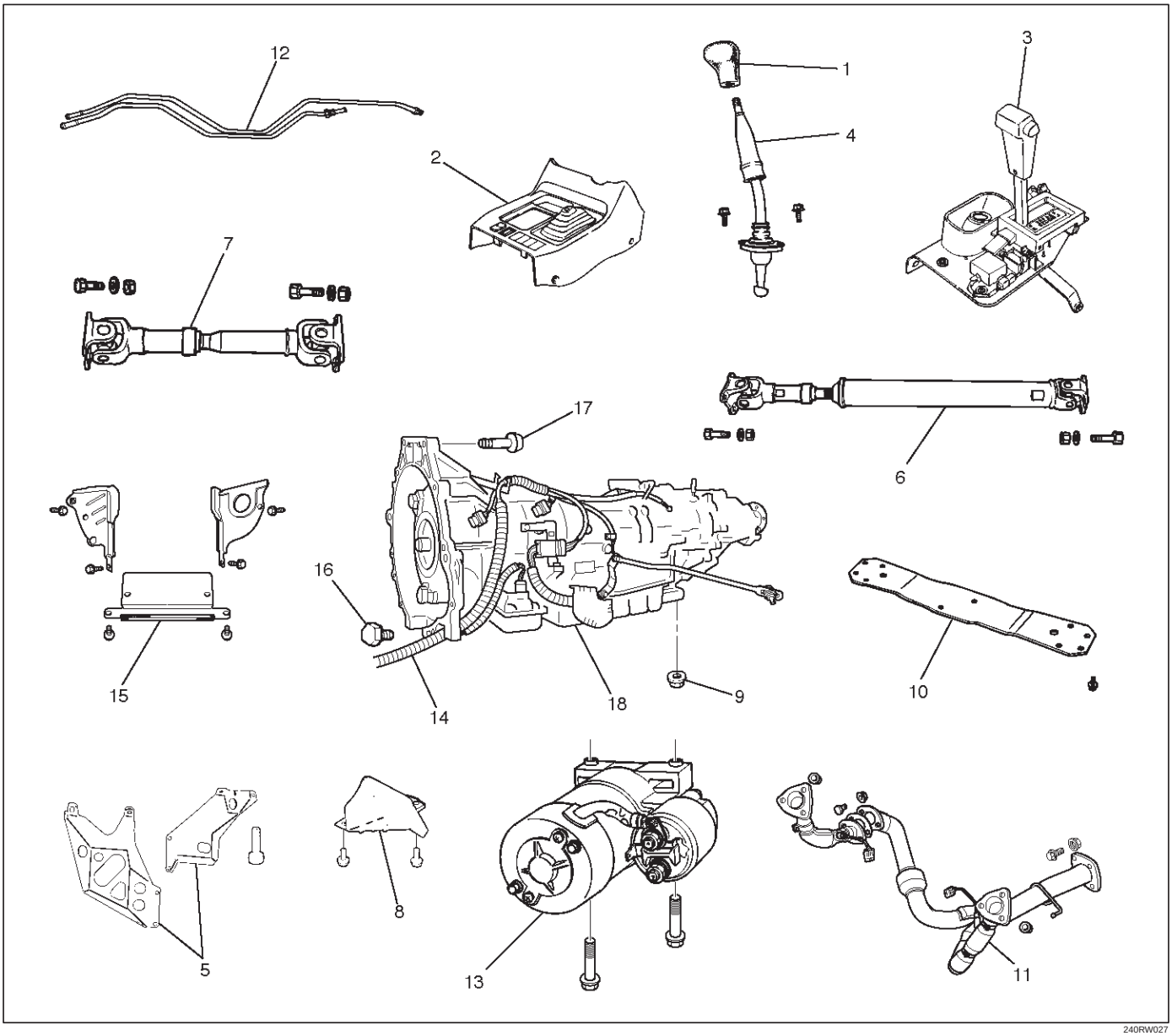

240RW027

Legend

(1) Transfer Control Lever Knob
(2) Front Console
(3) Selector Lever Assembly
(4) Transfer Control Lever
(5) Transfer and Exhaust Protector
(6) Rear Propeller Shaft
(7) Front Propeller Shaft
(8) Harness Protector
(9) Rear Mount Nut
(10) Third Crossmember
(11) Exhaust Pipe
(12) Transmission Oil Cooler Pipe
(13) Starter
(14) Transmission Harness Connector
(15) Under Cover
(16) Torque Converter Bolt
(17) Engine Transmission Bolt
(18) Transmission Assembly

Removal

NOTE: Before remove transmission and transfer assembly from vehicle, change the tansfer mode to 2WD using push button on dash panel.

1. Remove engine hood.
2. Disconnect battery ground cable.
3. Remove transfer control lever knob (1) and disconnect wiring harness connectors, then remove front console (2).

4. Disconnect shift lock cable from the selector lever assembly side.

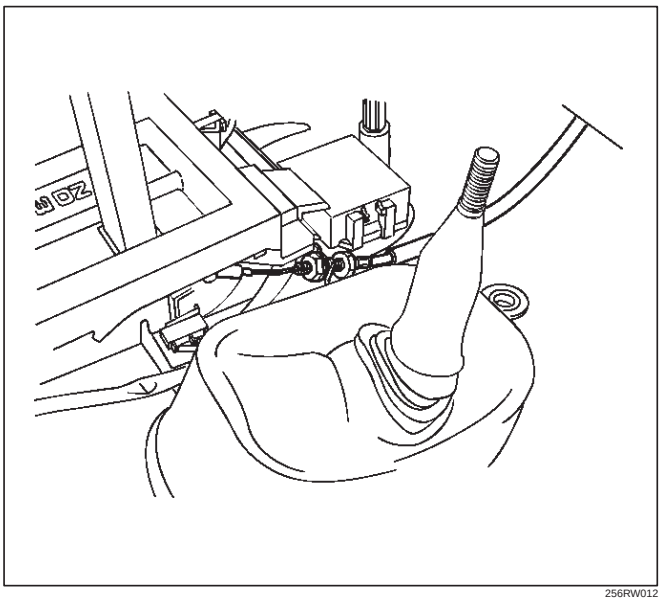

256RW012

5. Disconnect wiring harness connectors.
6. Disconnect shift control rod from the selector lever assembly side.

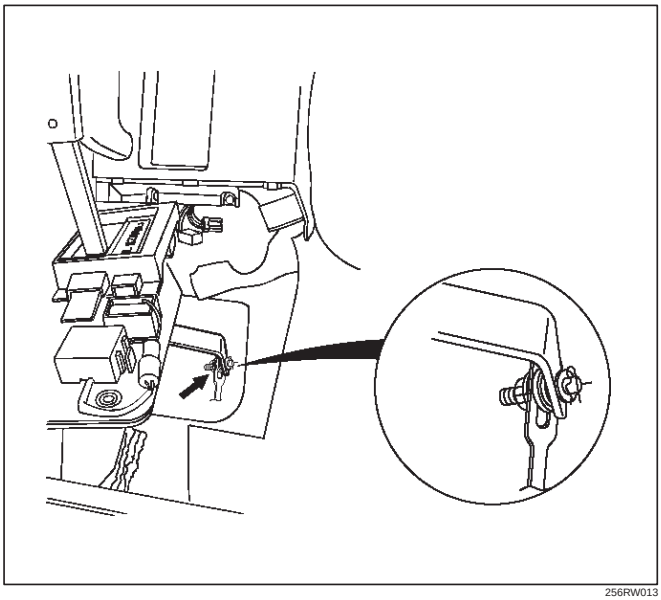

256RW013

7. Remove selector lever assembly (3).
8. Remove transfer control lever (4).
9. Remove transfer and exhaust protector (5).
10. Remove rear propeller shaft (6).
11. Remove front propeller shaft (7).
12. Remove harness protector (8).
13. Support transfer case with a jack and remove two rear mount nuts (9) from the 3rd crossmember side.
14. Remove eight third crossmember bolts and third crossmember (10).
15. Disconnect one oxygen sensor connector from the transmission harness.

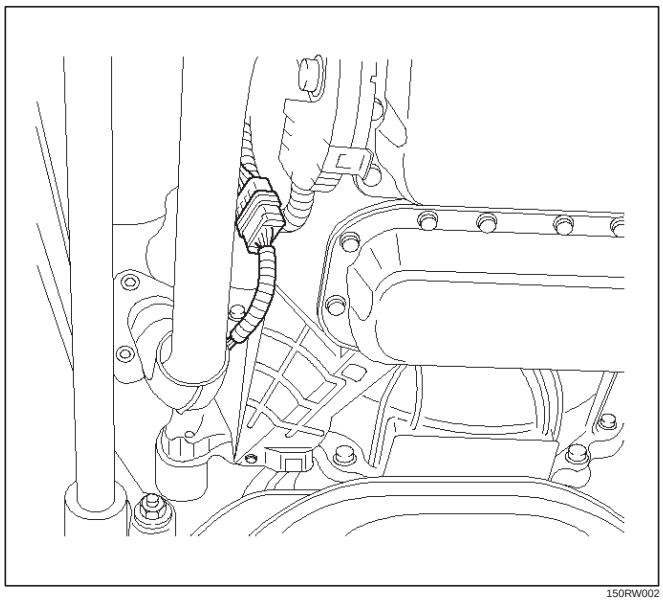

150RW002

16. Remove exhaust pipe (11).
17. Disconnect transmission oil cooler pipe (12) from A/T side.
18. Remove oil pipe clamp from torque converter housing bracket.

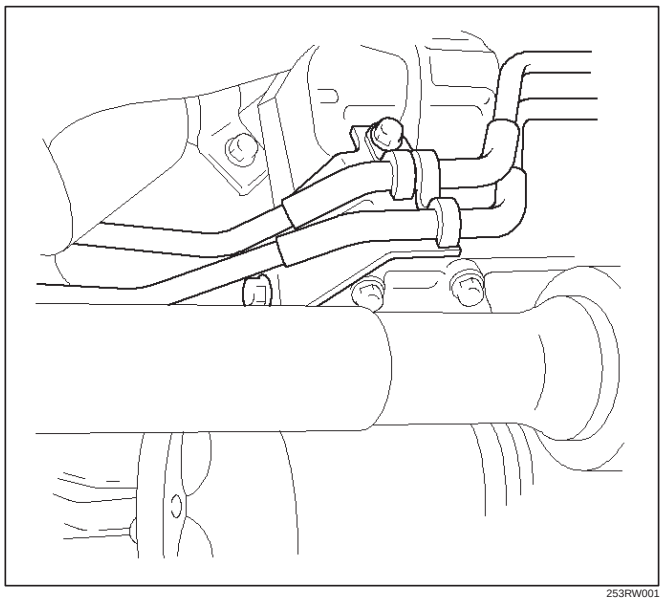

253RW001

19. Loosen oil pipe clamp bolt at the engine mount side.
20. Remove starter (13).
21. Disconnect fuel pipe clamp bracket from transmission side.
22. Disconnect transmission harness connectors (14) from transmission, and transfer.
23. Remove flywheel under covers (3 pieces) (15) from transmission case.
24. Lower the front of the transmission a little, then remove flywheel torque converter fixing bolts (6 pieces) (16) by turning crankshaft.
25. Support the transmission with a transmission jack, and hoist engine with a chain block.
26. Remove engine transmission fixing bolts (17).

27. Remove transmission assembly (18).

Installation

1. Slowly raise transmission jack until front of the transmission is aligned with rear of the engine, then install transmission assembly.

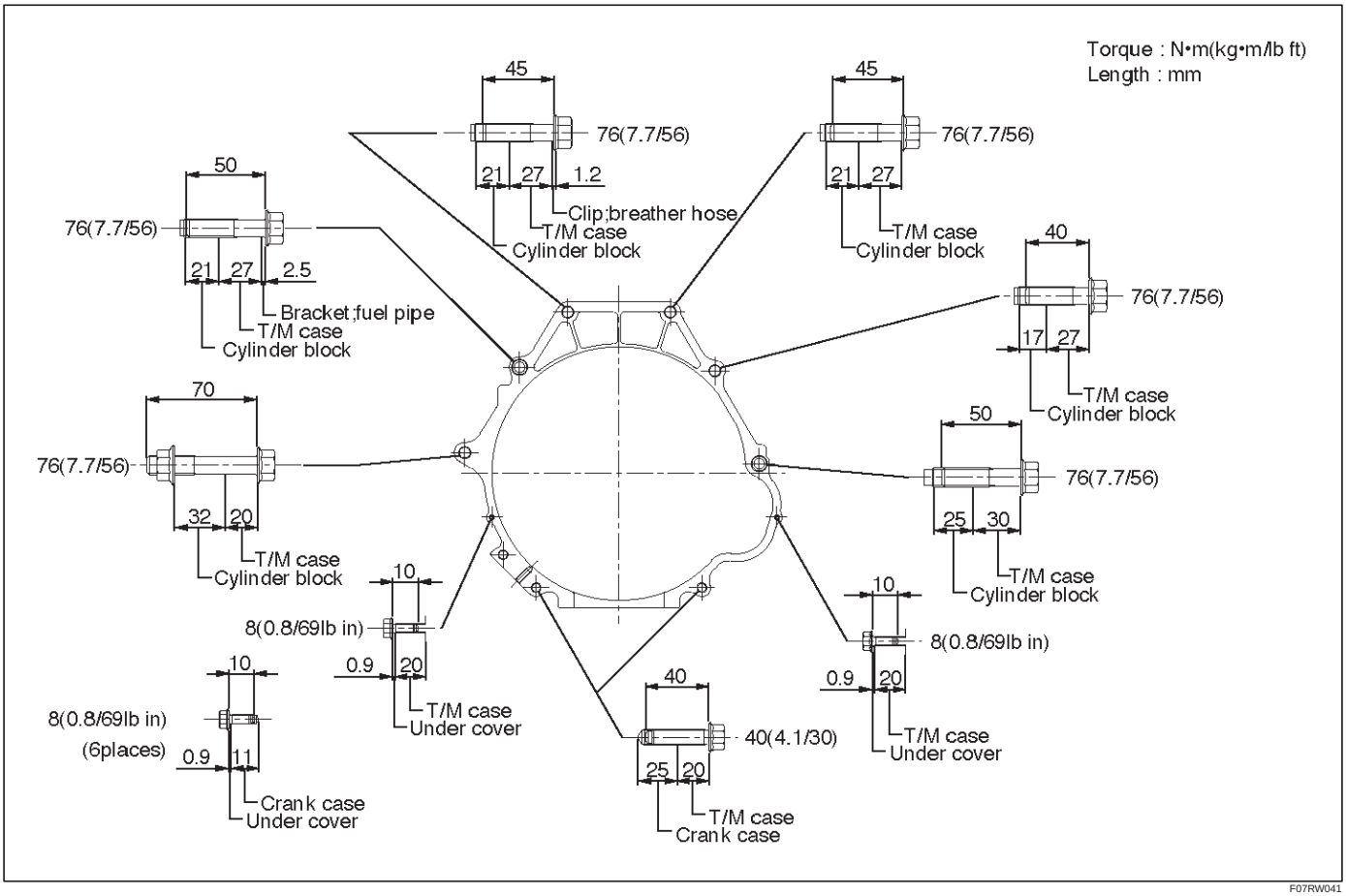

F07RW041

2. Tighten engine transmission bolts to the specified torque.

3. Support transfer case with a jack, and remove the transmission jack.
4. Install flywheel torque converter bolts (6 pieces) by turning crankshaft.

Torque: 54 N•m (5.5 kg·m/40 lb ft)

NOTE: Do not reuse the flywheel torque converter bolt.

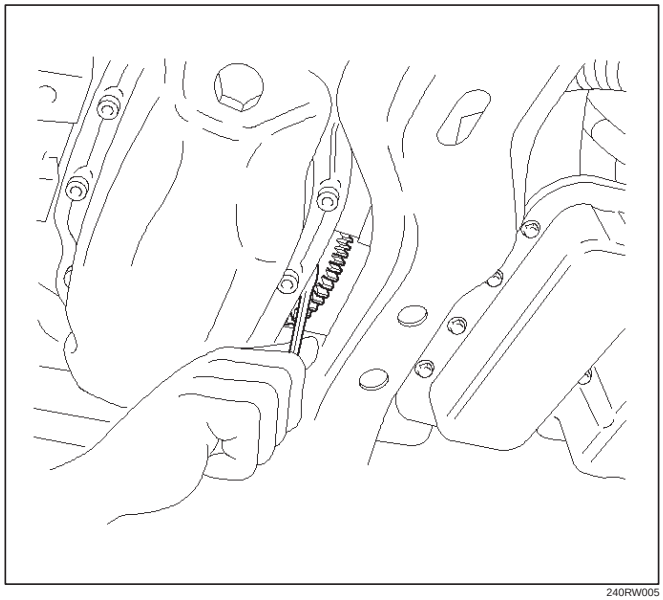

240RW005

5. Install the flywheel under cover (3 pieces), and tighten the bolts to the specified torque.

   Torque: 8 N•m (0.8 kg·m/69 lb in)

6. Install the starter, and tighten the bolts to the specified torque.

   Torque: 40 N•m (4.1 kg·m/30 lb ft)

7. Connect transmission harness connectors to transmission, and transfer.
8. Connect fuel pipe bracket to transmission side.

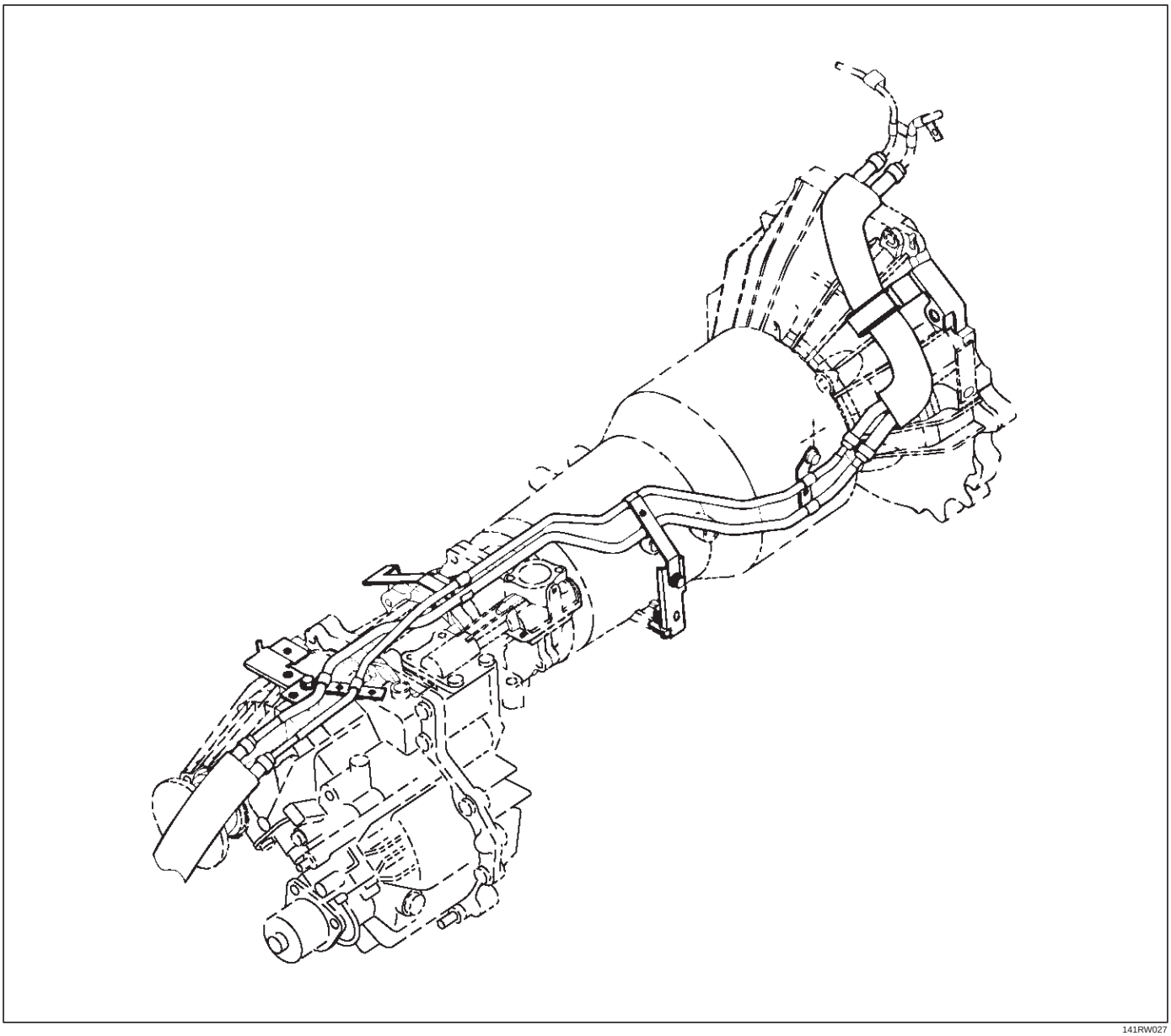

141RW027

9. Install transmission oil cooler pipe to transmission.

   Torque: 54 N•m (5.5 kg·m/40 lb ft)

10. Install oil pipe clamp to torque converter housing bracket.
11. Tighten oil pipe clamp bolt at engine mount side.
12. Install exhaust pipe, and tighten the bolts to the specified torque.

    Exh. pipe to exh. manifold 67 N•m (6.8 kg·m/49 lb ft)

    Exh. pipe flange bolt 43 N•m (4.4 kg·m/32 lb ft)

13. Connect one oxygen sensor connector to the transmission harness.
14. Install third crossmember, and tighten the bolts to the specified torque.

    Torque: 50 N•m (5.1 kg·m/37 lb ft)

15. Install rear mount nuts, and tighten the nuts to the specified torque.

    Torque: 50 N•m (5.1 kg·m/37 lb ft)

16. Remove the jack from the transfer case.

17. Install harness protector.

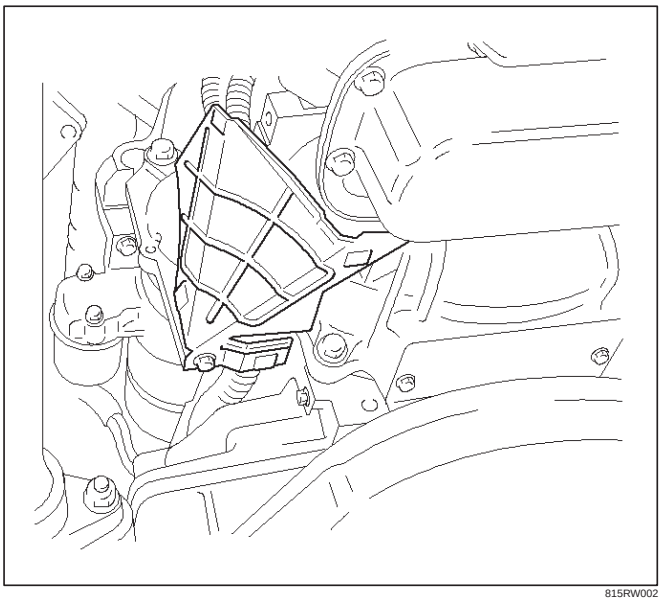

815RW002

18. Install the front propeller shaft, and tighten the bolts to the specified torque.

    Torque: 63 N•m (6.4 kg·m/46 lb ft)

19. Install the rear propeller shaft, and tighten the bolts to the specified torque.

    Torque: 63 N•m (6.4 kg·m/46 lb ft)

20. Install the transfer and exhaust protectors, tand tighten the bolts to the specified torque.

    Torque: 37 N•m (3.8 kg·m/27 lb ft)

21. Install the transfer control lever.
22. Install the selector lever assembly.
23. Connect the shift control rod to selector lever assembly.
24. Connect the wiring harness connectors.
25. Connect the shift lock cable to selector lever assembly. Refer to Selector Lever in this section.
26. Connect the wiring harness connectors to front console.
27. Install the front console.
28. Install the transfer control lever knob.
29. Connect the battery ground cable.
30. Install the engine hood.

Solenoid (Main Case Valve Body)

Removal

1. Raise the vehicle and support it on jack stands.
2. Disconnect battery ground cable.
3. Remove transfer and exhaust protectors.
4. Drain fluid.
5. Remove exhaust pipe and disconnect oxygen sensor connector.
6. Support transfer case with a jack and remove third crossmember.
7. Remove sixteen 10 mm screws, main case oil pan, magnet, and gasket.
8. Remove three 13 mm screws, oil filter.
9. Disconnect wiring harness from band control solenoid and shift solenoids. Pull only on connectors, not on wiring harness.
10. Remove spring pin for shift solenoid A, shift solenoid B, and band control solenoid respectively, using suitable pliers taking care not to damage solenoids.

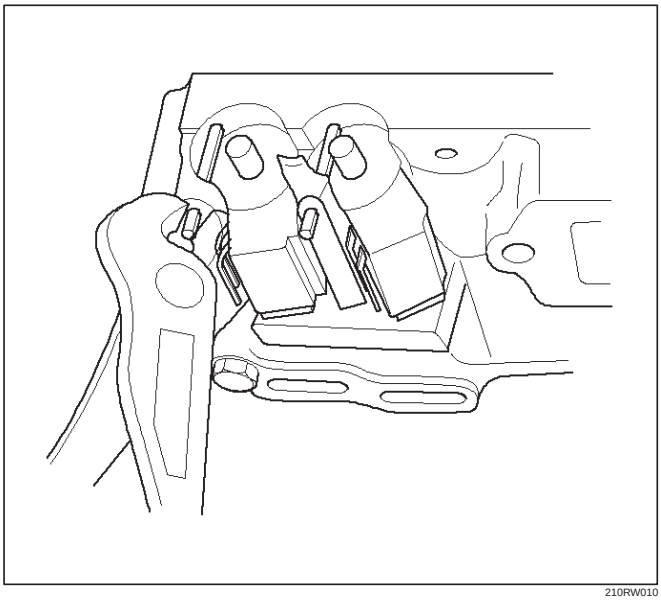

210RW010

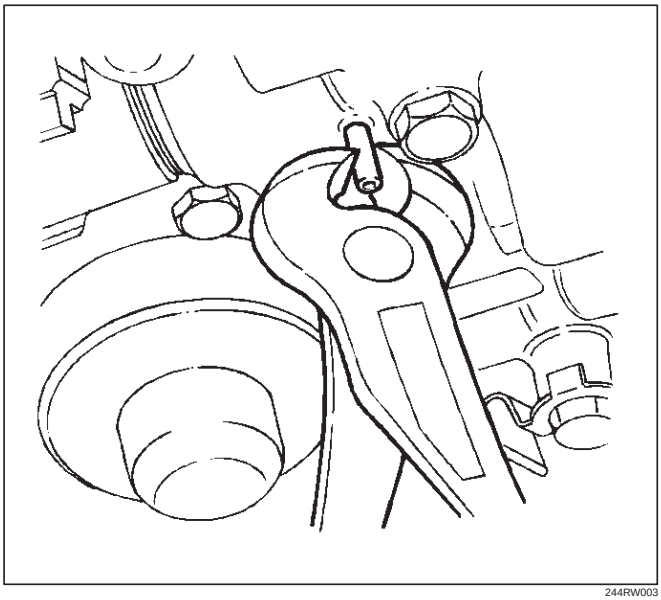

244RW003

11. Remove shift solenoid A, shift solenoid B, band control solenoid, and gaskets from main case valve body. Do not pull on wiring harness. Remove solenoids by grasping the metal tip.

Installation

1. Install shift solenoid A, shift solenoid B, band control solenoid with new gaskets to main case valve body respectively.
2. Carefully install spring pin with hammer to avoid damage to valve body, etc.

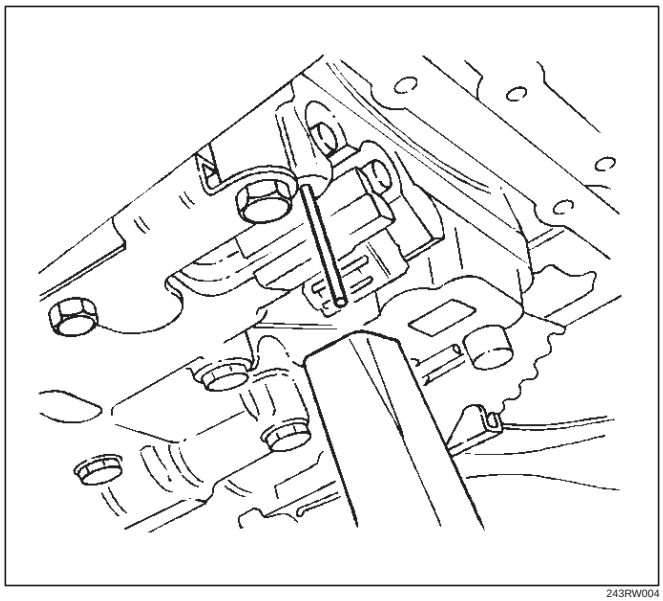

243RW004

3. Connect wiring harness to solenoids.
4. Install oil filter with a new gasket and the three 13 mm screws. Tighten the screws to the specified torque.

   Torque: 20 N•m (2.0 kg·m/15 lb ft)

5. Install magnet, main case oil pan with new gasket, sixteen 10 mm screws. Tighten the screws to the specified torque.

   Torque: 11 N•m (1.1 kg·m/96 lb in)

6. Install third crossmember and rear mount nuts. Tighten the nuts and bolts to the specified torque.

   Third crossmember bolt: 50 N•m (5.1 kg·m/37 lb ft)

   Rear mount nut: 50 N•m (5.1 kg·m/37 lb ft)

7. Install exhaust pipe and connect oxygen sensor connector. Tighten the bolts to the specified torque.

   Exhaust pipe flange bolt torque: 43 N•m (4.4 kg·m/32 lb ft)

8. Install the transfer and exhaust protectors. Tighten the bolts to the specified torque.

   Torque: 37 N•m (3.8 kg·m/27 lb ft)

9. Fill transmission through the overfill screw hole of oil pan, using ATF DEXRON®–III. Refer to Changing Transmission Fluid in this section.
10. Connect the battery ground cable.

Solenoid (Adapter Case Valve Body)

Removal

1. Raise the vehicle and support it on jack stands.
2. Disconnect battery ground cable.
3. Drain fluid.
4. Remove transfer and exhaust protectors.
5. Remove exhaust pipe and disconnect oxygen sesnor connector.
6. Remove adapter case oil pan twelve fixing 10 mm screws, adapter case oil pan, and gasket.

NOTE: Oil pan still contains transmission fluid. Place a large drain container under the oil pan and drain the fluid carefully.

7. Disconnect wiring harness from force motor solenoid and converter clutch solenoid. Pull only on connectors, not on wiring harness.
8. Remove 11 mm bolt and converter clutch solenoid with two O–rings.

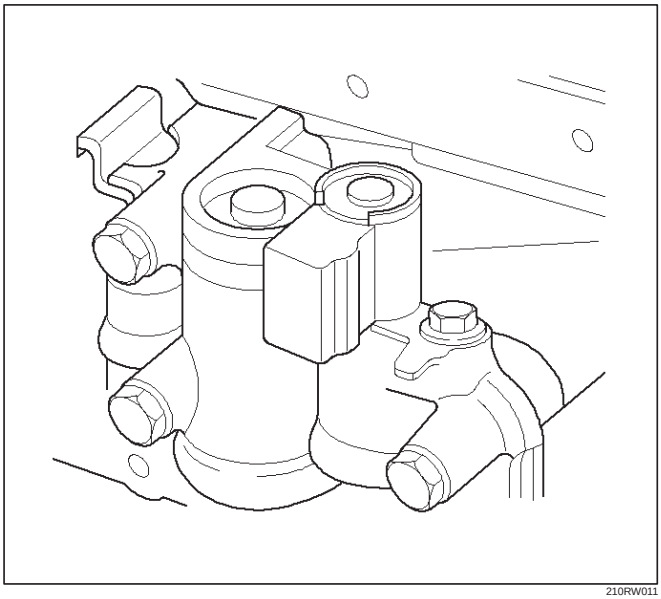

210RW011

9. Remove 11 mm bolt, retainer, and force motor solenoid.

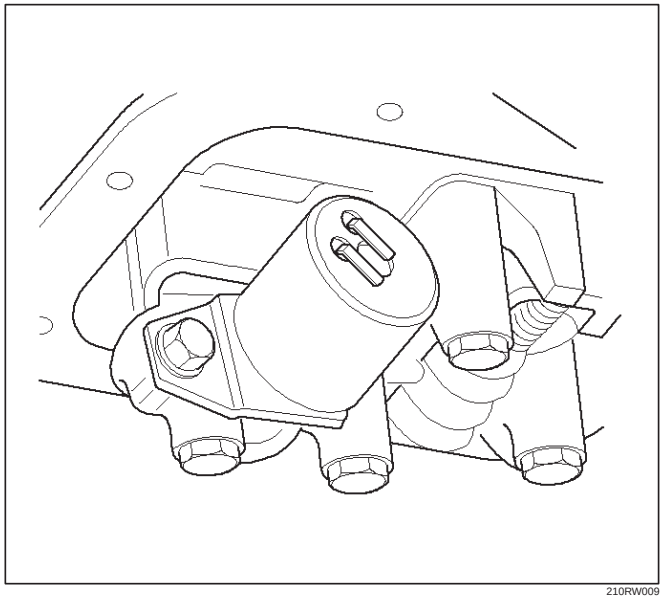

210RW009

Installation

1. Install force motor solenoid, retainer, and 11 mm bolt to adapter case valve body. Tighten the bolt to the specified torque.

   Torque: 10 N•m (1.0 kg·m/87 lb in)

2. Install converter clutch solenoid with two O– rings, and 11 mm bolt to adapter case valve body. Tighten the bolt to the specified torque.

   Torque : 10 N•m (1.0 kg·m/87 lb in)

3. Connect wiring harness assembly to solenoids.
4. Install adapter case oil pan, new gasket, and twelve 10 mm screws. Tighten the screws to the specified torque.

   Torque : 11 N•m (1.1 kg·m/96 lb in)

5. Install exhaust pipe and connect oxygen sensor connector. Tighten the bolt to the specified torque.

   Exhaust pipe flange bolt torque :
   43 N•m (4.4 kg·m/32 lb ft)

6. Install transfer and exhaust protectors. Tighten the bolt to the specified torque.

   Torque : 37 N•m (3.8 kg·m/27 lb ft)

7. Fill transmission through overfill screw hole oil pan, using ATF DEXRON®–III. Refer to Changing Transmission Fluid in this section.
8. Connect battery ground cable.

Valve Body Assembly (Main Case)

Removal

1. Raise the vehicle and support it on jack stands.
2. Disconnect battery ground cable.
3. Remove transfer and exhaust protectors.
4. Drain fluid.
5. Remove exhaust pipe and disconnect oxygen sensor connector.
6. Support transfer case with a jack and remove third crossmember.
7. Remove sixteen 10 mm screws, main case oil pan, magnet and gasket.
8. Remove three 13 mm oil filter fixing screws, then remove oil filter.
9. Remove two 13 mm manual detent fixing screws, then remove roller and spring assembly.
10. Disconnect wiring harness from band control solenoid and shift solenoids. Pull only on connectors, not on wiring harness.
11. Remove four 13 mm servo cover fixing screws, then remove servo cover and gasket.
12. Remove seven 13 mm valve body fixing screws.
    - Disconnect the ground wire from the main case valve body.
13. Remove main case valve body with manual valve link and transfer plate. Note the position of the link (long end into valve, short end into range selector lever).
14. Remove transfer plate gasket from main case.
15. Remove two check balls from main case.

Installation

1. Install two check balls to main case.

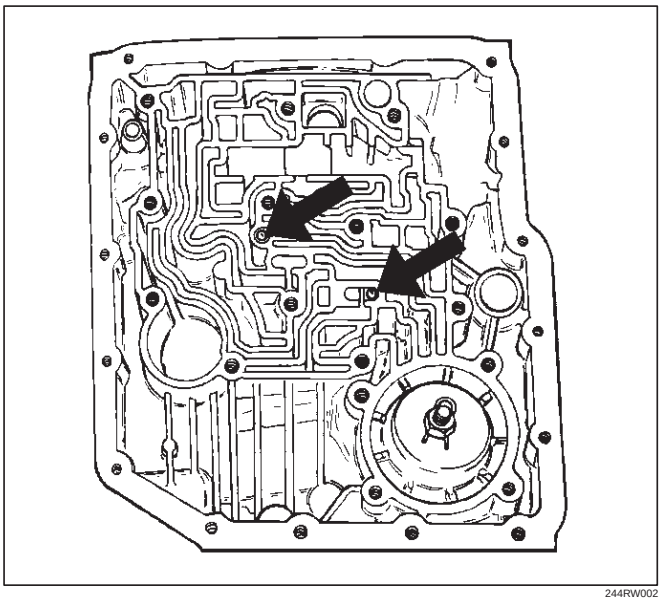

244RW002

2. Inspect electrical 4 pin connector and seal of main case. Replace if necessary.
3. Use two 5–8840–0022–0 (J–25025–B) guide pin to install main case.
   - Install valve body assembly and manual valve link.

NOTE: Valve must be extended as the short end of manual valve link is connected to the range selector lever. Long end of link goes into valve.

4. Install seven 13 mm screws, and tighten them to the specified torque.

   Torque: 20 N•m (2.0 kg·m/15 lb ft)

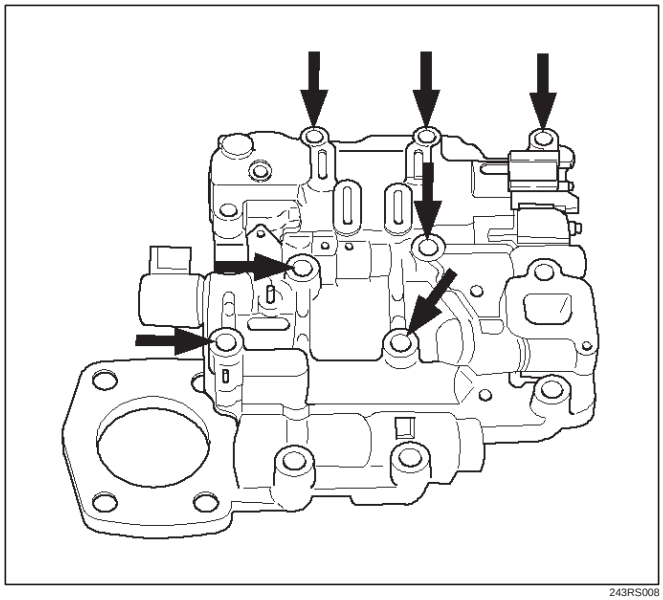

243RS008

5. Install 8.5 mm connector of ground wire the head of this valve body bolt and reinstall it. Tighten the bolt to the specified torque.

   Torque: 20 N•m (2.0 kg·m/15 lb ft)

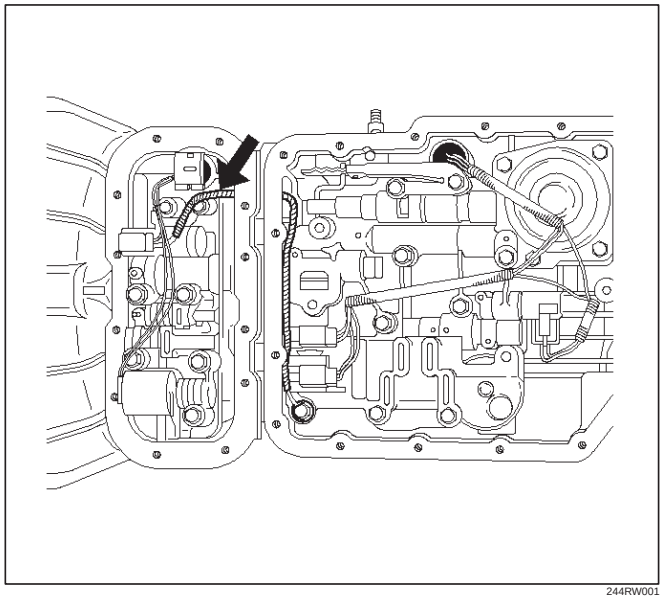

244RW001

6. Remove two guide pins from main case.
7. Install servo cover gasket, cover, and four 13 mm screws. Tighten the screws to the specified torque.

   Torque: 25 N•m (2.6 kg·m/18 lb ft)

8. Connect wiring harness to band control and shift solenoids.
9. Install roller and spring assembly to manual detent.
   - Install two 13 mm screws, and tighten them to the specified torque.

   Torque: 20 N•m (2.0 kg·m/15 lb ft)
10. Install oil filter and three 13 mm screws. Tighten the screws to the specified torque.

    Torque : 20 N•m (2.0 kg·m/15 lb ft)
11. Install oil pan gasket, magnet, oil pan and sixteen 10 mm screws. Tighten the screws to the specified torque.

    Torque: 11 N•m (1.1 kg·m/96 lb in)
12. Install third crossmember and rear mount. Tighten the bolts and nuts to the specified torque.

    Torque

    Third crossmember bolt:
    50 N•m (5.1 kg·m/37 lb ft)

    Rear mount nut: 50 N•m (5.1 kg·m/37 lb ft)
13. Install exhaust pipe and connect oxygen sensor connector. Tighten the bolts to the specified torque.

    Exhaust pipe flange bolt torque:
    43 N•m (4.4 kg·m/32 lb ft)
14. Install transfer and exhaust protectors. Tighten the bolts to the specified torque.

    Torque: 37 N•m (3.8 kg·m/27 lb ft)
15. Fill transmission through overfill screw hole of oil pan, using ATF DEXRON®–III, refer to Changing Transmission Fluid in this section.
16. Connect battery ground cable.

Valve Body Assembly (Adapter Case)

Removal

1. Raise the vehicle and support it on jack stands.
2. Disconnect battery ground cable.
3. Drain fluid.
4. Remove transfer and exhaust protectors.
5. Remove exhaust pipe and disconnect oxygen sensor connector.
6. Remove twelve 10 mm adapter case oil pan fixing screws, adapter case oil pan, and gasket.

NOTE: Oil pan still contains transmission fluid. Place a large drain container under the oil pan.

Drain the fluid carefully.

7. Disconnect wiring harness from force motor solenoid and converter clutch solenoid. Pull only on connectors, not on wiring harness.
8. Remove seven 13 mm screws from adapter case valve body assembly, then remove transfer plate, two gaskets, and adapter case valve body.

Installation

1. Inspect electrical 5 pin connector and seal of adapter case. Replace if necessary.
2. Install gasket, transfer plate, and gasket.
3. Install adapter case valve body and seven 13 mm screws. Tighten the screws to the specified torque.

   Torque: 20 N•m (2.0 kg·m/15 lb ft)
4. Connect wiring harness assembly to converter clutch solenoid and force motor.
5. Install oil pan gasket, oil pan, and twelve 10 mm screws. Tighten the screws to the specified torque.

   Torque: 11 N•m (1.1 kg·m/96 lb in)
6. Install exhaust pipe and connect oxygen sensor connector. Tighten the bolts to the specified torque.

   Exhaust pipe flange bolt torque:
   43 N•m (4.4 kg·m/32 lb ft)
7. Install transfer and exhaust protectors. Tighten the bolts to the specified torque.

   Torque: 37 N•m (3.8 kg·m/27 lb ft)
8. Fill transmission through the overfill screw hole of oil pan, using ATF DEXRON®–III. Refer to Changing Transmission Fluid in this section.
9. Connect battery ground cable.

Powertrain Control Module (PCM)

Removal

1. Disconnect battery ground cable.
2. Remove front console.
3. Disconnect PCM wiring harness connectors from PCM.
4. Remove three PCM retaining screws.
5. Remove two brackets from PCM.

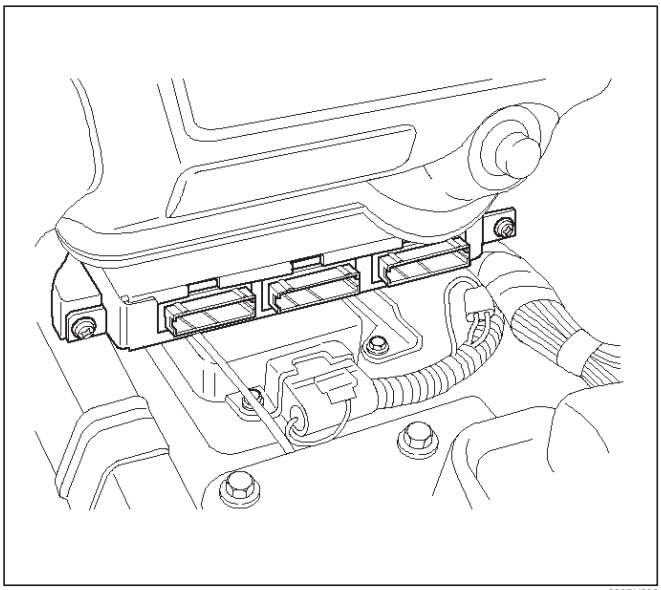

826RV006

Installation

1. Install two brackets to PCM.
2. Install three PCM retaining screws.
3. Connect PCM wiring harness connectors to PCM.
4. Install front console.
5. Connect battery ground cable.

Speed Sensor (Extension Housing)

Removal

1. Disconnect battery ground cable.
2. Remove front console.
3. Remove selector lever assembly.
4. Disconnect speed sensor harness connector from speed sensor.
5. Remove one 10 mm screw and speed sensor with O–ring.

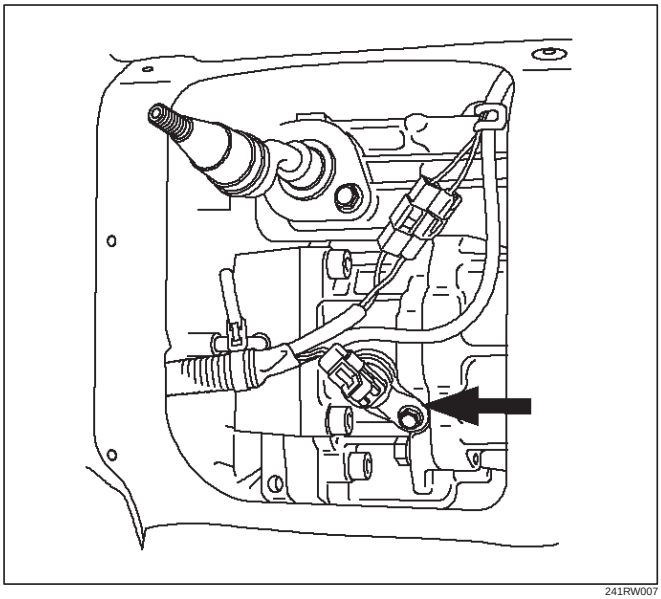

241RW007

Installation

1. Inspect the speed sensor O–ring, and replace it if necessary.
2. Install speed sensor assembly and 10 mm screw.

   Torque: 9 N•m (0.9 kg·m/78 lb in)
3. Connect speed sensor harness connector to speed sensor.
4. Install selector lever assembly.
   - Adjust shift lock cable. Refer to Selector Lever in this section.
5. Install front console.
6. Connect battery ground cable.

Transmission Oil Temperature Sensor (Adapter Case)

Removal

1. Raise the vehicle and support it on jack stands.
2. Disconnect battery ground cable.
3. Drain fluid.
4. Remove transfer and exhaust protectors.
5. Remove exhaust pipe and disconnect oxygen sensor connector.
6. Remove twelve 10 mm adapter case oil pan fixing screws, adapter case oil pan, and gasket.

NOTE: Oil pan still contains transmission fluid. Place a large drain container under the oil pan, and drain the fluid carefully.

7. Disconnect wiring harness from force motor solenoid, converter clutch solenoid, and 5 pin connector of adapter case. Pull only on connectors, not on wiring harness.
8. Disconnect ground wire from converter clutch solenoid wiring harness connector.
9. Remove wiring harness assembly (transmission oil temperature sensor).

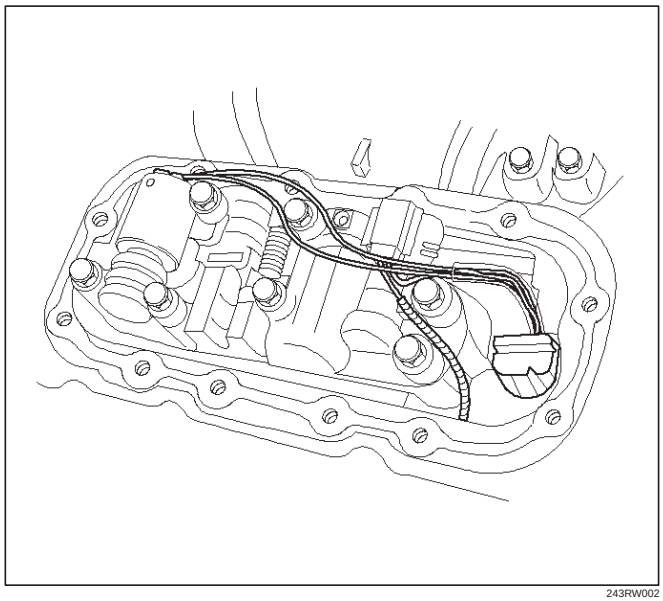

243RW002

Installation

1. Connect ground wire to converter clutch solenoid wiring harness connector of the wiring harness assembly.
2. Install wiring harness assembly to converter clutch solenoid, force motor, and 5 pin connector of adapter case.
3. Install oil pan gasket, oil pan, and twelve 10 mm fixing screws. Tighten the screws to the specified torque.

   Torque: 11 N•m (1.1 kg·m/96 lb in)
4. Install exhaust pipe and connect oxygen sensor connector. Tighten the bolts to the specified torque.

   Exhaust pipe flange bolt torque:
   43 N•m (4.4 kg·m/32 lb ft)
5. Install transfer and exhaust protectors. Tighten the bolts to the specified torque.

   Torque: 37 N•m (3.8 kg·m/27 lb ft)
6. Fill transmission through the overfill screw hole of oil pan, using ATF DEXRON®–III.
   Refer to Changing Transmission Fluid in this section.
7. Connect battery ground cable.

Front Oil Seal (Converter Housing)

Removal

1. Remove transmission assembly with transfer case from the vehicle. Refer to Transmission (with Transfer Case) in this section.
2. Remove torque converter from converter housing.
3. Remove three screws and oil seal ring from converter housing.

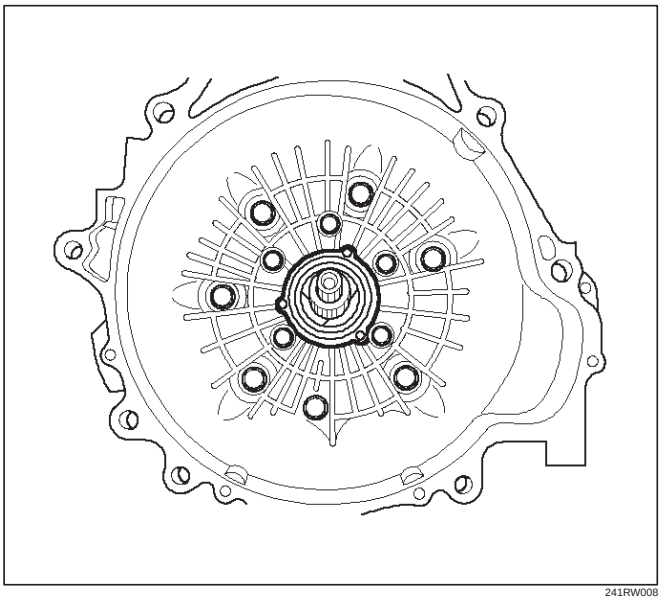

241RW008

Installation

1. Apply clean ATF to the new oil seal ring lip.
   - Install oil seal ring to converter housing. Tighten the screws to the specified torque.

   Torque: 3 N•m (0.3 kg·m/26 lb in)
2. Install torque converter to converter housing.
3. Install transmission assembly with transfer case to the vehicle. Refer to Transmission (with Transfer Case) in this section.

Rear Oil Seal (Extension Housing)

Removal

1. Remove transfer case assembly from the vehicle. Refer to Transfer Case in Drive Line/Axle section.
2. Remove rear oil seal from transmission extension housing.

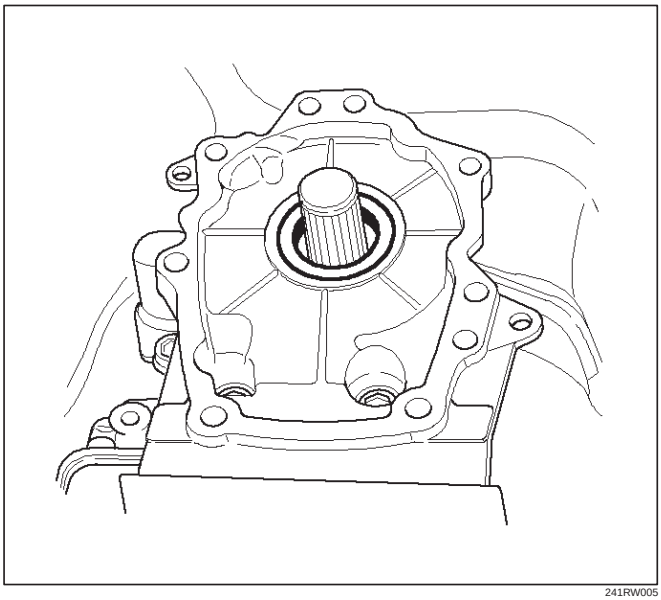

241RW005

Installation

1. Use 5–8840–2282–0 (J–36797) extension housing oil seal installer, and install the rear oil seal to the transmission extension housing.
2. Install the transfer case assembly to the vehicle. Refer to Transfer Case in Drive Line/Axle section.

Transmission (4L30–E)

Disassembly

NOTE: During the disassembly and reassembly, perform the following:

- Wash each part thoroughly, and blow air through each oil passage and groove to eliminate blockage.
- Seal rings, roll pins, and gaskets should be replaced.
- When assembling the components, apply DEXRON®–III Automatic Transmission Fluid (ATF) to each seal, rotating part, and sliding part.
- Do not dip part facings, such as clutch or brake drive plates, in cleaner when washing it.
  Also, always coat parts with new ATF two or three times after cleaning with solvent.

1. Remove torque converter (1).
   - Drain fluid from torque converter.
   - Attach 5–8840–2278–0 (J–8763–02) holding fixture to the transmission and set it on 5–8840–0003–0 (J–3289–20) holding fixture base.

NOTE: Do not overtighten the tool, as case damage may result.

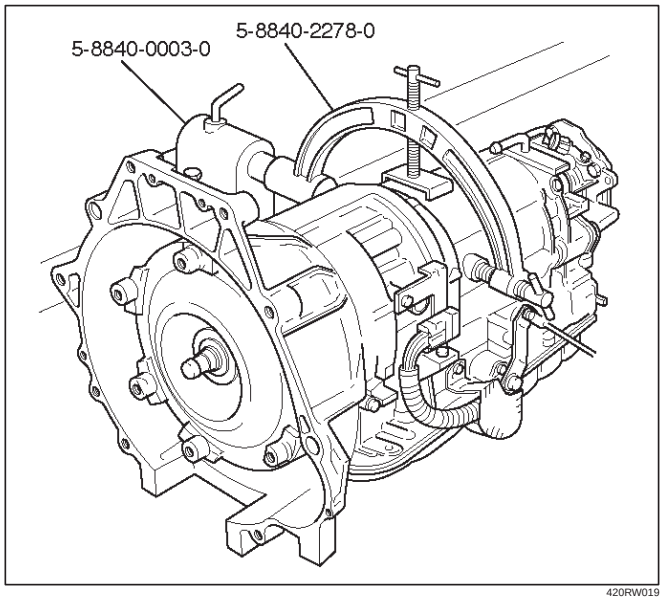

420RW019

2. Remove O–ring (2) from turbine shaft.
3. Remove two 10mm mode switch screws, selector lever nut, cover, and mode switch (3).
4. Remove twelve 10mm adapter case oil pan (4) fixing screws, adapter oil pan, and gasket.
5. Disconnect electrical wiring connections (5) from solenoids and 5 pin connector of adapter case. Pull on connectors only, not on wiring harness.

6. Remove seven 13mm adapter case valve body (6) fixing screws, adapter case valve body assembly, transfer plate, and two gaskets.
   - Remove wiring harness and 5 pin connector.
7. Remove sixteen 10mm main case oil pan (7) fixing screws, main oil pan, magnet, and gasket.
8. Remove three 13mm oil filter (8) fixing screws and oil filter.
9. Remove two 13mm manual detent (9) fixing screws, roller and spring, and manual detent.
10. Disconnect wiring harness assembly (10) from band apply solenoid, shift solenoids, and main case 4 pin connector.
    Pull on connectors only, not on wiring harness.
11. Remove four 13mm servo cover (11) fixing screws, servo cover, and gasket.
12. Remove seven 13mm valve body screws and ground wire from main case.
    - Remove wiring harness assembly (5) from the adapter case side.
    - Remove main valve body assembly (12) with manual valve link and transfer plate. Note the position of the link (long end into valve, short end into range selector lever).
    - Remove 4 pin connector.
    - Remove gasket transfer plate from main case.
13. Remove two check balls (13) from main case.

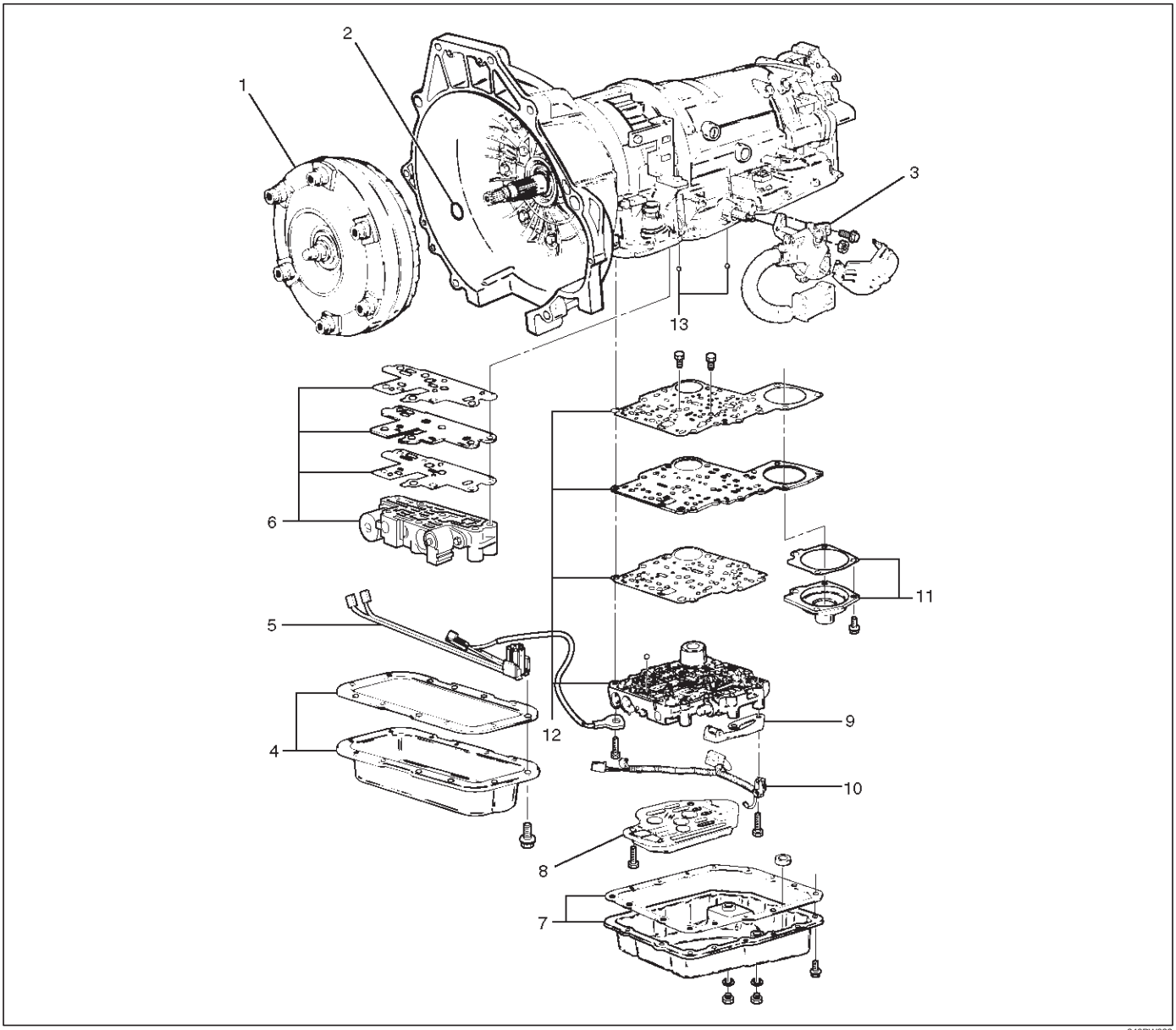

240RW022

14. Turn transmission to vertical position to drain fluid. Return back to horizontal position when drained.
    - Install 5–8840–0501–0 (J–23075) servo piston spring compressor with offset to the rear of case.
    - Compress servo piston assembly.
    - Remove servo piston retaining ring (14).
    - Slowly release servo piston assembly (15).
    - Remove tool.
15. Remove servo piston assembly (15), return spring (16), and servo apply rod (17).

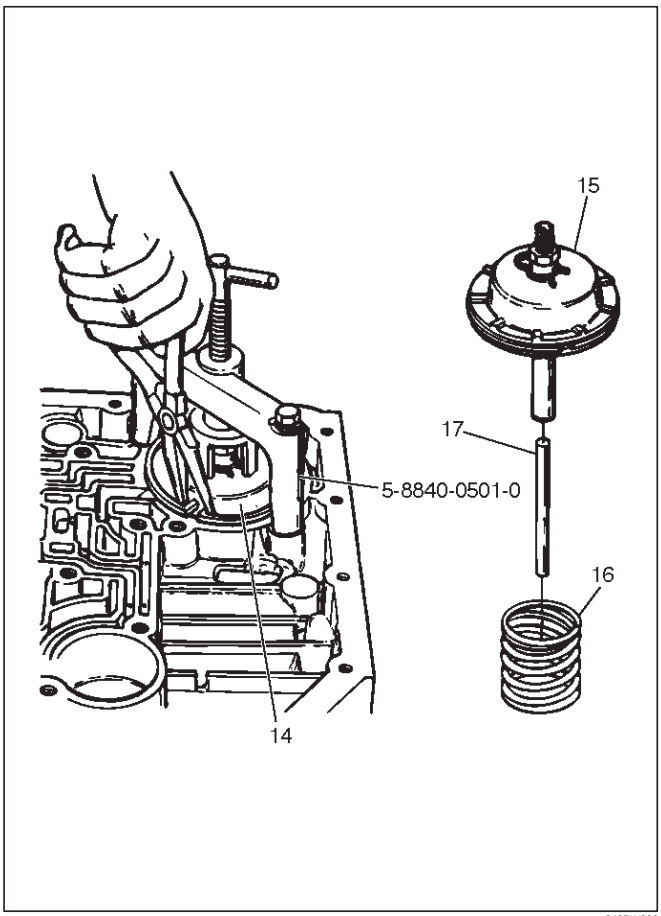

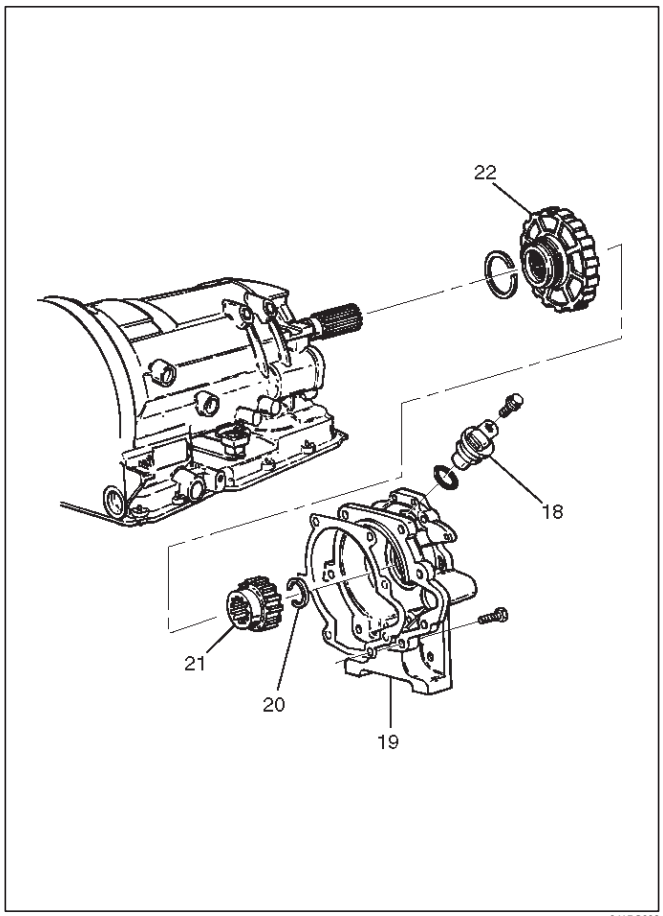

16. Rotate transmission to horizontal position, pan side down.
    - Remove one 10mm screw, and speed sensor (18) with “O” ring.
17. Remove seven 8mm extension housing hexagon socket head screws, extension housing assembly (19), and gasket.
18. Remove retaining ring (20).

NOTE: Use extra long, needle- nose pliers.

19. Remove speed wheel (21).
20. Remove wheel parking lock (with seal ring) (22).
21. Rotate transmission to vertical position, converter housing up.
    - Loosen the converter housing and oil pump assembly fixing screws, but do not remove the five 13 mm inner screws if oil pump disassembly is required.
    - Remove seven outer screws.
    - Remove converter housing and oil pump assembly (23).
22. Remove gasket (24).
23. Remove selective thrust washer (25).

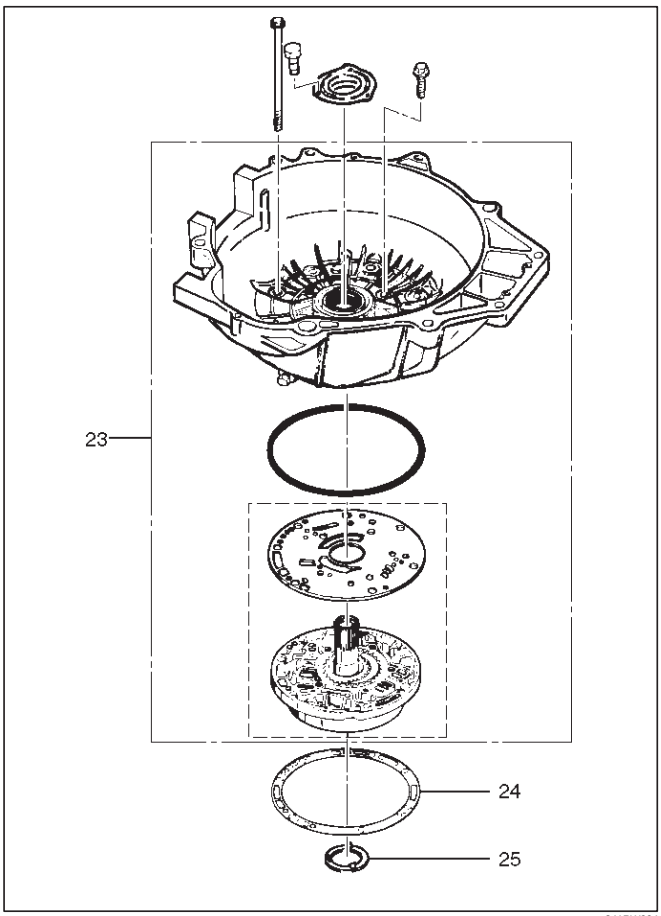

241RW004

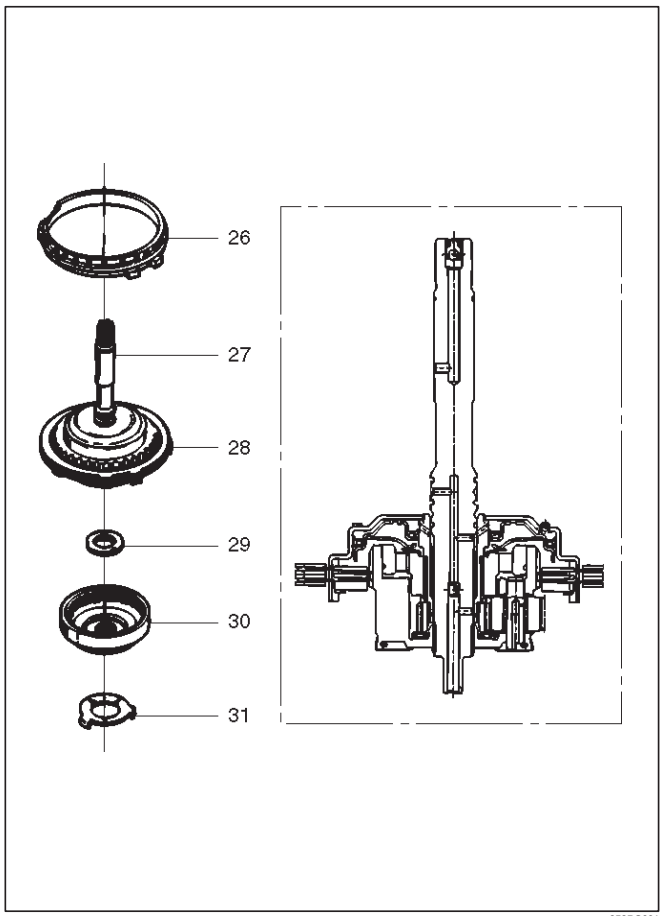

252RS001

24. Remove fourth clutch retainer (26).
25. Grasp turbine shaft and lift out the overrun clutch housing assembly (27) and fourth clutch plates (28).
26. Remove thrust bearing assembly (29).
27. Remove overdrive internal gear (30).
28. Remove thrust washer (31).
29. Remove adapter case and center support assembly (with fourth clutch piston) (32).
30. Remove seal ring (33).
31. Remove selective thrust washer (34) and two O–ring seals (35) from main case.
32. Use 5–8840–0195–0 (J–23327) and 5–8840–2263–0 (J–23327–90) compressor to compress the fourth clutch spring retainer and springs (37).
    - Release snap ring (36) from groove.
    - Remove clutch compressor and snap ring (36).
33. Remove retainer and spring assembly (37).
34. Insert two converter housing/main case screws to hold adapter case while pulling out fourth clutch piston (38).
    - Remove fourth clutch piston assembly (38) from the adapter case.
    - Remove converter housing/main case screws.
35. Grasp intermediate shaft, twist and pull out the second and third clutch drum assemblies with reverse clutch plates while holding onto output shaft (39).

36. Separate second (40) and third clutch (41) assemblies.
37. Remove thrust washer (42).
38. Remove reverse clutch plates (43 and 44) and reverse clutch pressure plate (45).
39. Remove bearing (46) and washer (47).
40. Remove planetary carrier assembly (48).
41. Remove thrust bearing (49).
42. Remove reaction sun gear (50)
43. Remove needle bearing (51).
44. Remove brake drum (52).
45. Remove brake band (53).
46. Remove thrust bearing (54).

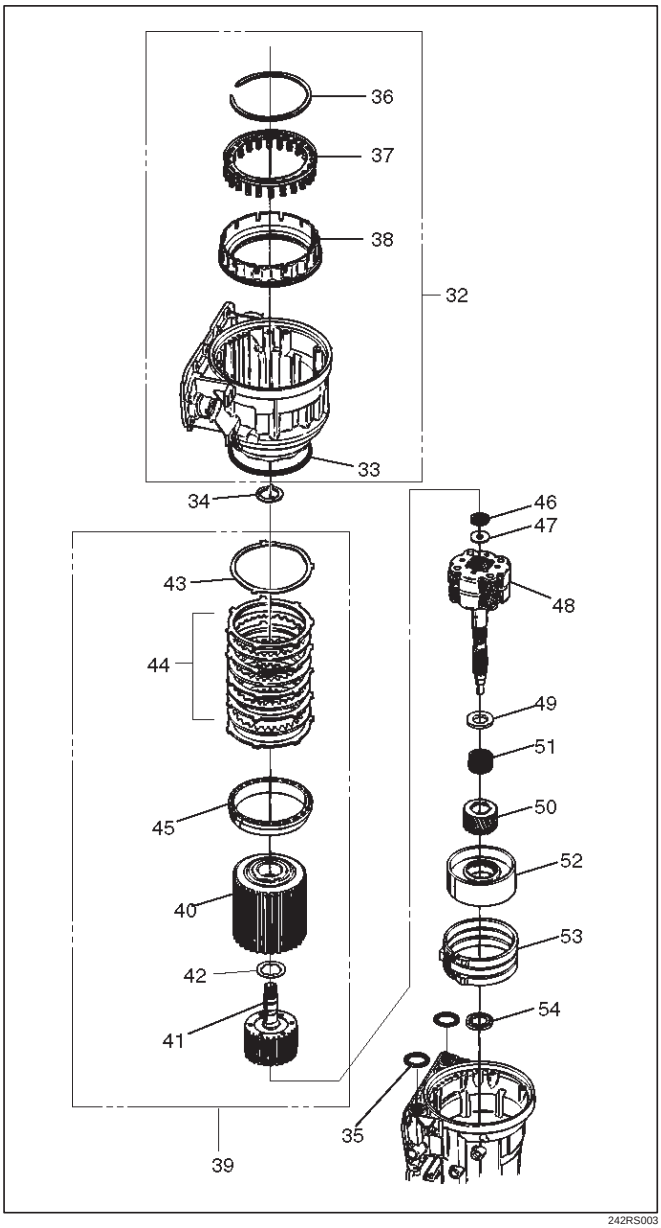

242RS003

47. Rotate case to horizontal position, valve body side facing up.
    - Remove spring pin (55), using cutting pliers, then remove parking lock and selector lever assembly (56).

NOTE: Insert wire in the center of the spring pin to prevent it from collapsing during removal. Be aware of pin height. Protect machined face of main case.

48. Remove parking lock and range selector lever 17 mm nut (57).
49. Remove parking lock and range selector lever (56), and actuator assembly.
50. Remove selector shaft (58).

NOTE: Inspect the shaft for burrs before removing to prevent damaging seal. If necessary, remove burrs by lightly sanding with an oilstone.

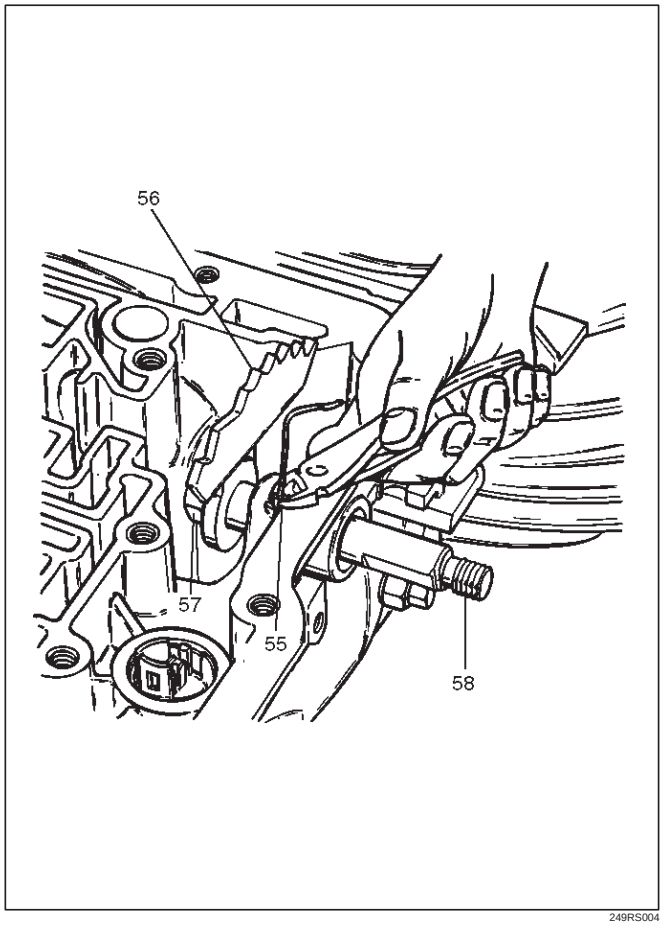

249RS004

Reassembly

1. Inspect selector shaft seal, and replace it if necessary.

NOTE: Use a seal installer when replacing the seal.

- Install selector shaft.

NOTE: Spring pin groove must be positioned inside the case.

2. Install spring pin. Be sure the selector shaft can move freely. Do not push the pin flush with the case surface. Leave enough height for removal.
3. Install actuator assembly (1).
4. Install parking lock and range selector lever (2) and new 17 mm nut. Tighten the nut to the specified torque.

Torque: 22 N•m (2.2 kg·m/16 lb ft)

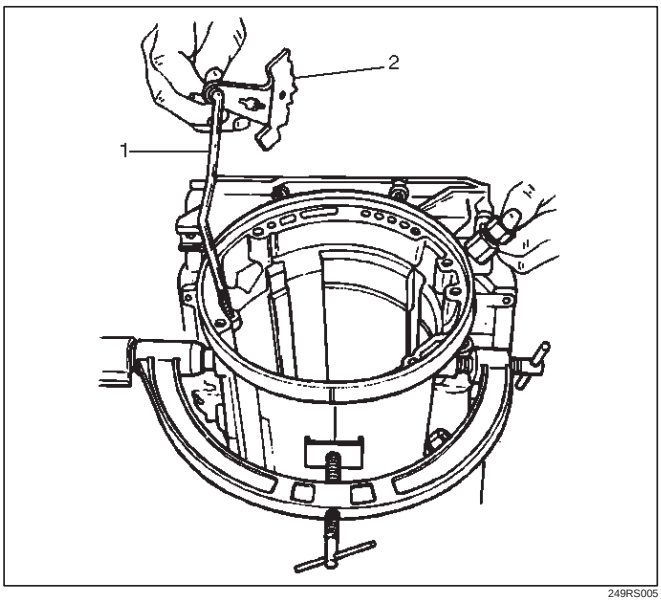

249RS005

5. Rotate main case to vertical position, extension end facing down.
   - Install brake band assembly (3).

NOTE: Be sure to align servo pin area with the servo hole.

6. Install thrust bearing (4).

NOTE: The case bushing acts as a guide for the thrust bearing.

7. Install brake drum (5).
8. Install reaction sun gear (6).
9. Install needle bearing (7).
10. Inspect planetary carrier assembly (8) for wear and damage. If necessary replace it.
    - Measure pinion end play clearance with a feeler gauge.

    Clearance: 0.13mm–0.89mm (0.005 in–0.035 in)

    If clearance is outside specified value, replace the planetary carrier assembly.

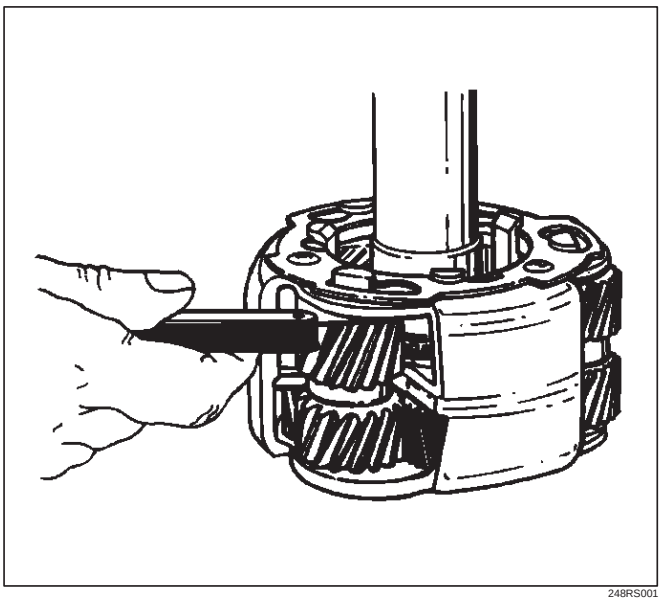

248RS001

11. Install the thrust bearing (9) on the output shaft.

NOTE: Use petroleum jelly to hold the thrust bearing in place.

12. Align planetary pinions. Each pinion is marked with double points to indicate the master tooth space and exactly opposite with a single point to indicate the master tooth. The markings on the planetary carrier consist of double lines which are to be lined up with the double points on two opposite pinions; the single lines are to be lined up with the single points on the other two pinions.
    - After all four pinions are lined up, slide on the third clutch assembly. Rotate third clutch and check mark alignment. Considering that the ring gear tooth between the double points of one planetary pinion is tooth number 1, count the teeth to check that the single points on the two adjacent pinions are between teeth 23 and 24 of the ring gear, and that the ring gear tooth between the double points of the opposite pinion is tooth number 46. If the ring gear and pinions are not lined up, remove, and realign them.
13. Install planetary carrier (8) with third clutch (12).

NOTE: Do not force. When properly aligned, the parts will fit together easily.

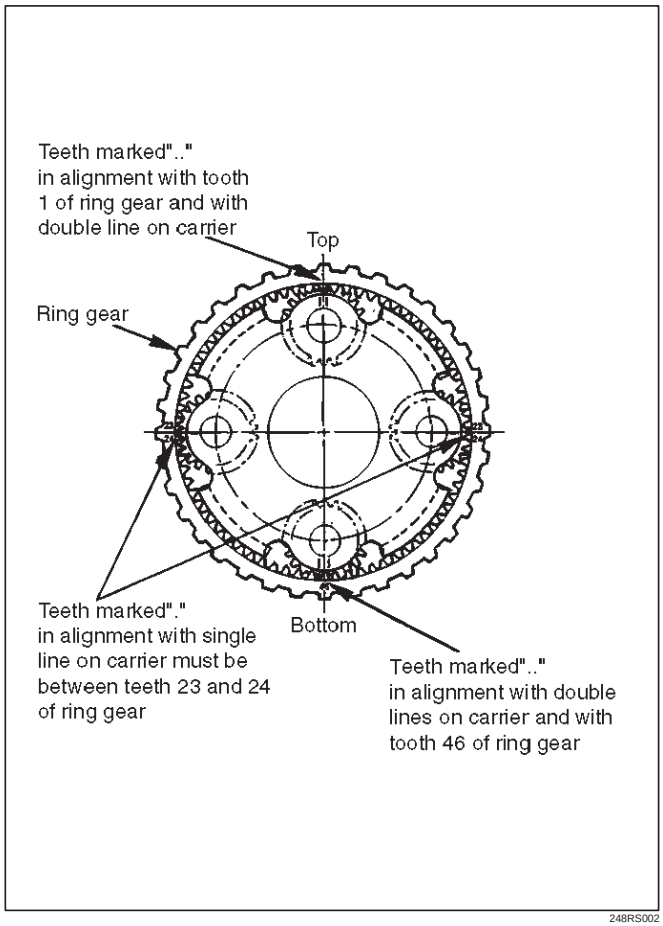

248RS002

14. Remove the third clutch (12).
15. Install bearing (11) and washer (10).

NOTE: Use petroleum jelly to hold the washer and bearing in place.

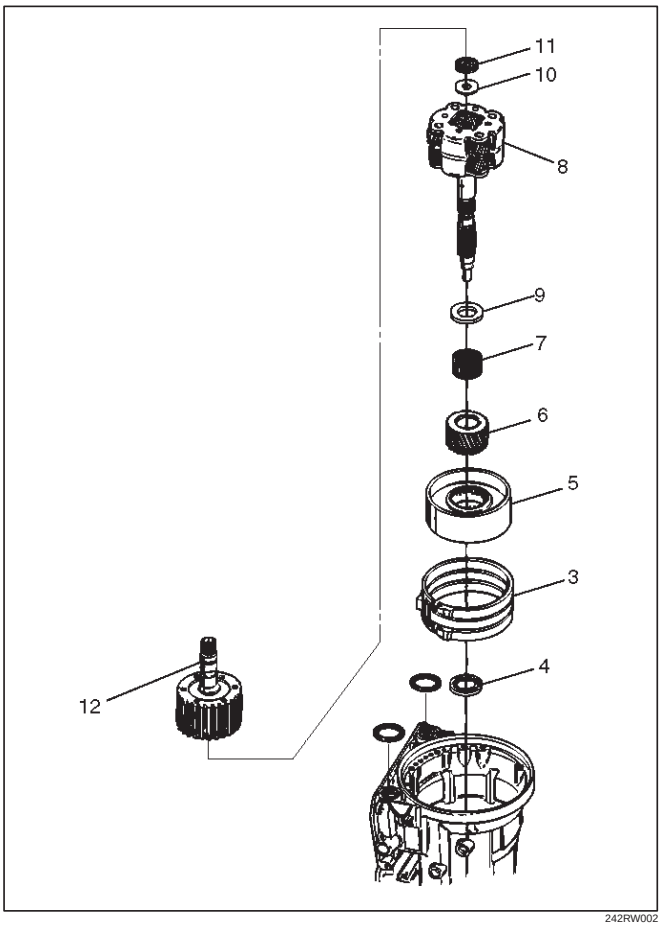

242RW002

16. Carefully align the second clutch plate inner tangs.
    - Install thrust washer, tangs pointing downward, and locating tang positioned in slot on second clutch hub.

NOTE: Use petroleum jelly to hold thrust washer in place.

17. Install third clutch and intermediate shaft assembly (13) into the second clutch drum (14).
18. Install second and third clutch assemblies into the main case. Twist output shaft and clutch assemblies to ensure proper fit.

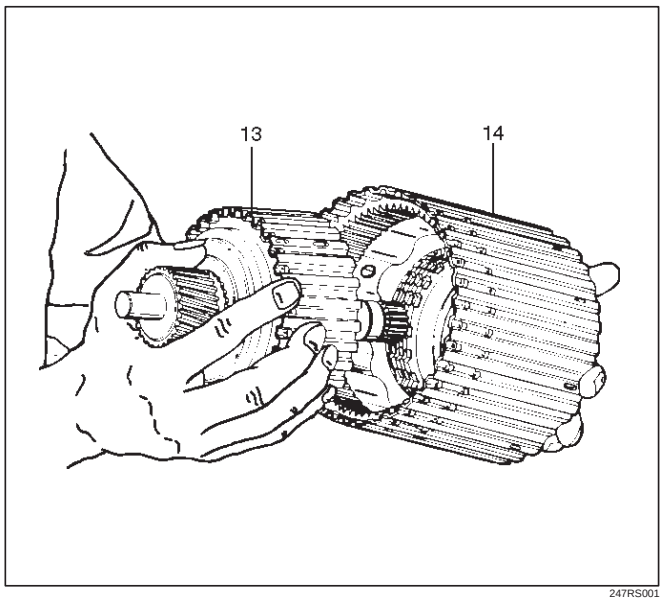

247RS001

19. Install pressure plate (15) with lip side up, tang facing valve body face.
20. Install reverse clutch plates. Start with a steel plate (17) and alternate with a lined plate (16).
21. Install waved clutch plate (18) with center tang facing valve body side.

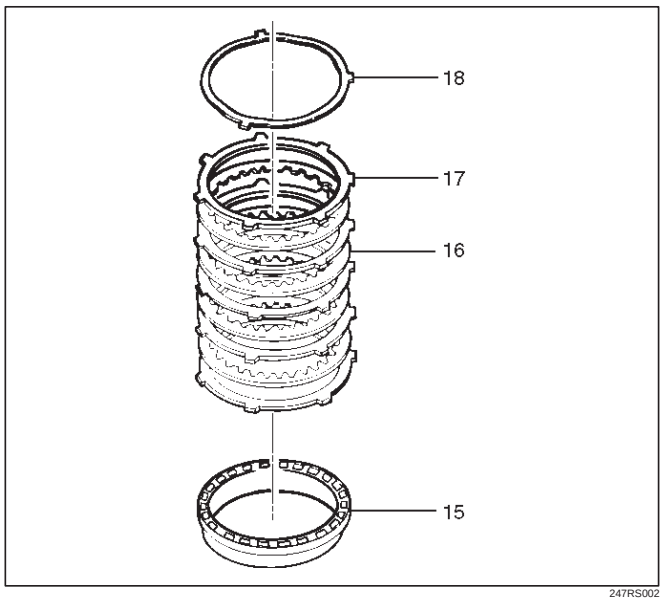

247RS002

22. Second clutch end play measurement
    1. Install the 5–8840–2262–0 (J–23085–A) Selective washer gauging tool (with spacer ring) on the case flange and against the intermediate shaft.
    2. Position the inner shaft of the gauging tool against the thrust surface of the second clutch hub.
    3. Tighten thumb screw. Remove the tool.
    4. Fit the spacer ring on the inner shaft of the tool.
    5. Measure the gap, and select the appropriate washer as shown in the chart.

Selective Thrust Washer	
Gap: mm(in)	**Color**
1.53 – 1.63 (0.060 – 0.064)	Yellow
1.72 – 1.82 (0.068 – 0.072)	Red
1.91 – 2.01 (0.075 – 0.079)	Black
2.10 – 2.20 (0.083 – 0.087)	Natural
2.29 – 2.39 (0.090 – 0.094)	Green
2.48 – 2.58 (0.098 – 0.102)	Blue
FOLLOWING THE PROCEDURE SHOULD RESULT IN FINAL END–PLAY FROM 0.36 mm TO 0.79 mm (0.014 in TO 0.031 in)	

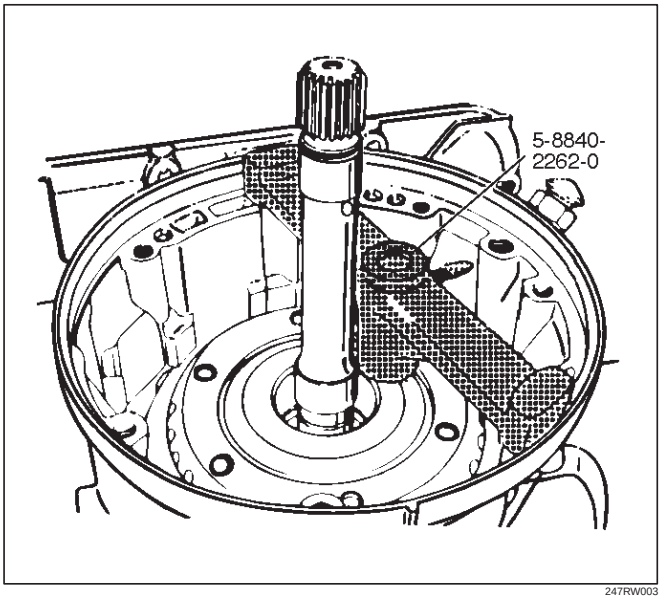

247RW003

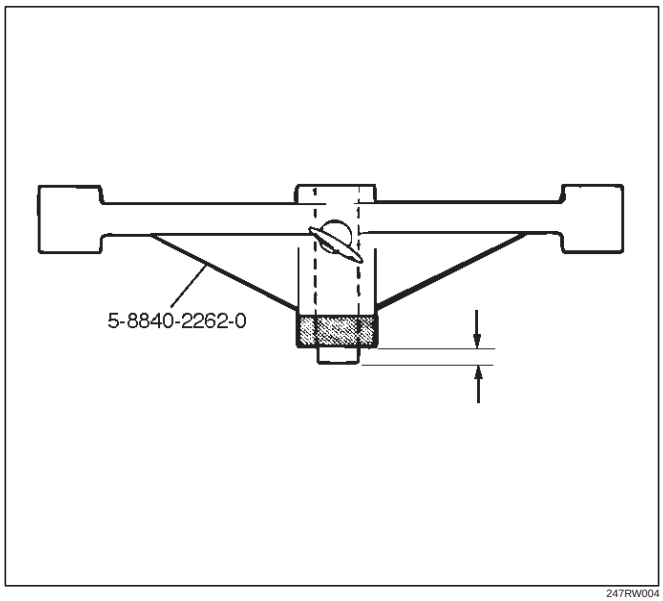

247RW004

23. Inspect fourth clutch piston seals and replace if necessary.
    - Lubricate 5–8840–2267–0 (J–38554) fourth clutch piston fitter and install it on fourth clutch piston (19).
    - Install fourth clutch piston (19) in adapter case (20).
    - Remove fitter.

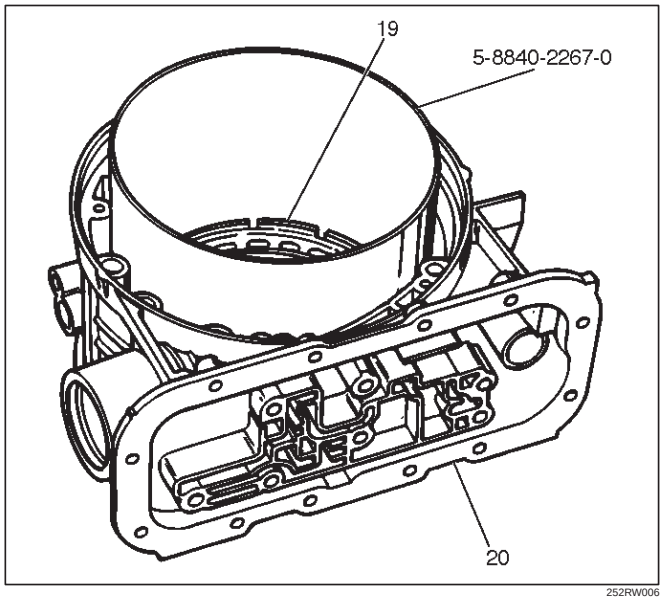

252RW006

24. Install retainer and spring assembly (22) into fourth clutch piston (21).

25. Install snap ring (23) in adapter case.
    - Install 5–8840–0195–0 (J–23327) and 5–8840–2263–0 (J–23327–90) fourth clutch spring compressor.
    - Seat snap ring in groove.
    - Remove compressor.

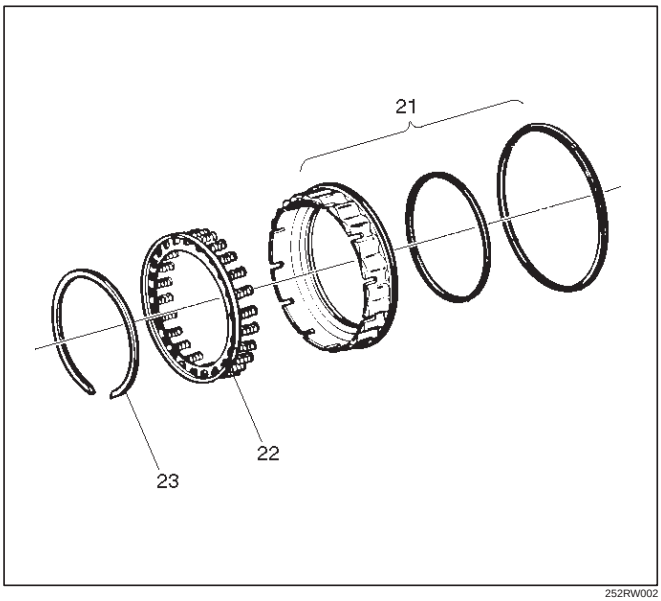

252RW002

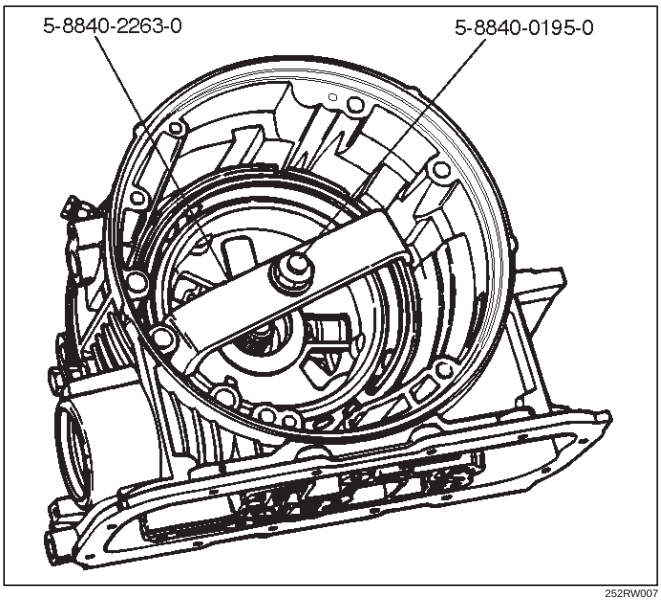

252RW007

26. Install selective washer using petroleum jelly.
27. Install two O–ring seals (24) in main case and adapter case/main case seal ring (25).
28. Install 5–8840–2268–0 (J–38588) guide pins.
    - Install adapter case and center support assembly to main case.

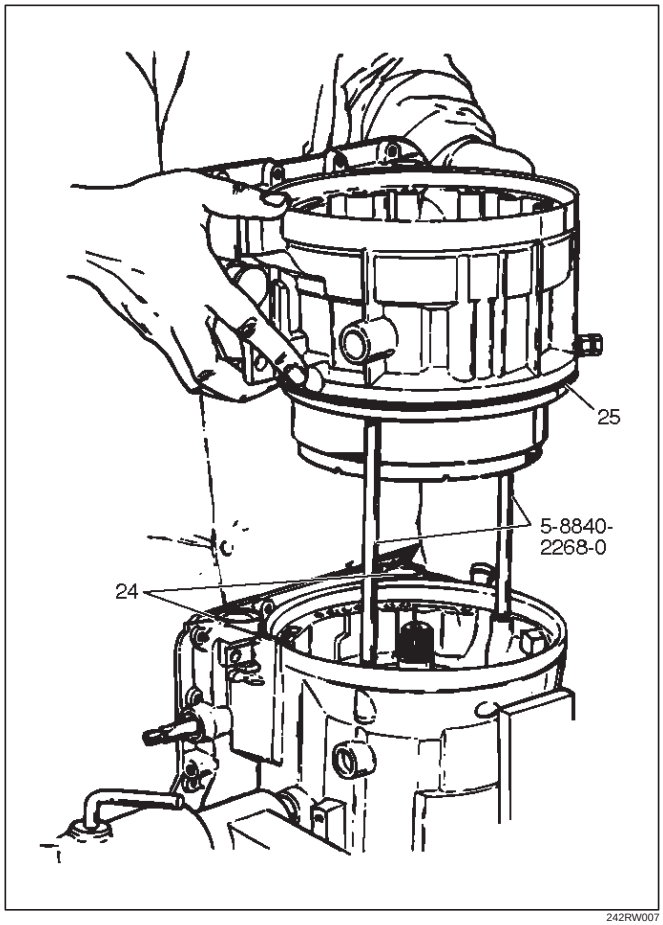

242RW007

29. Install thrust washer (26) into adapter case, with tangs pointing downwards.
30. Preassemble overdrive internal gear (27) and thrust bearing assembly (28) onto the turbine shaft and overrun clutch assembly.

NOTE: Install bearing assembly, black side up. Use petroleum jelly to keep assembly in place.

31. Install overdrive carrier (30) and internal gear assembly into adapter case.
32. Install fourth clutch plates (29) in the following order: Steel, Lined, Steel, Steel, Lined, Steel. Steel plates go in with short tang facing towards valve body surface.

33. Install fourth clutch retainer (31) with the notch facing up and positioned towards valve body surface.

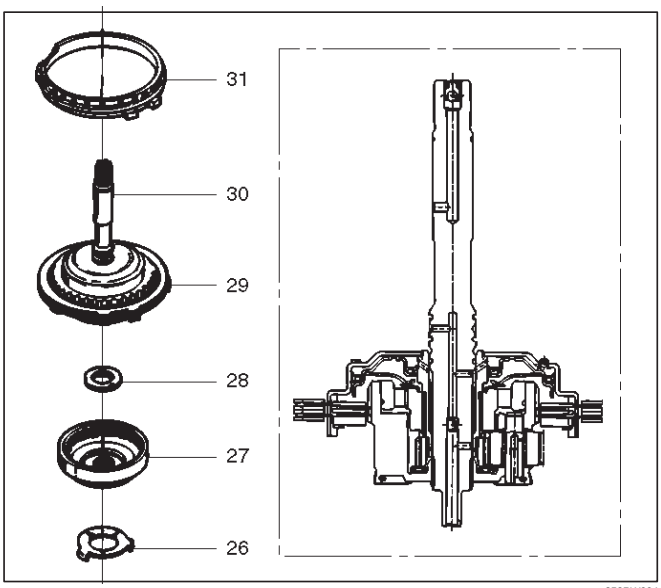

252RW004

34. Overdrive clutch end play measurement
    1. Install the 5–8840–2262–0 (J–23085–A) selective washer gauging tool on the adapter case flange and against the input shaft.
    2. Position the inner shaft of the tool against the thrust surface of the overrun clutch housing.
    3. Tighten thumb screw. Remove the tool.
    4. Measure gap. Select appropriate size washer as shown in the chart.
    5. Set selective thrust washer aside.

Selective Thrust Washer	
Gap: mm(in)	**Color**
1.53 – 1.63 (0.060 – 0.064)	Yellow
1.72 – 1.82 (0.068 – 0.072)	Red
1.91 – 2.01 (0.075 – 0.079)	Black
2.10 – 2.20 (0.083 – 0.087)	Natural
2.29 – 2.39 (0.090 – 0.094)	Green
2.48 – 2.58 (0.098 – 0.102)	Blue
FOLLOWING THE PROCEDURE SHOULD RESULT IN FINAL END–PLAY FROM 0.1 mm TO 0.8 mm (0.004 in TO 0.03 in)	

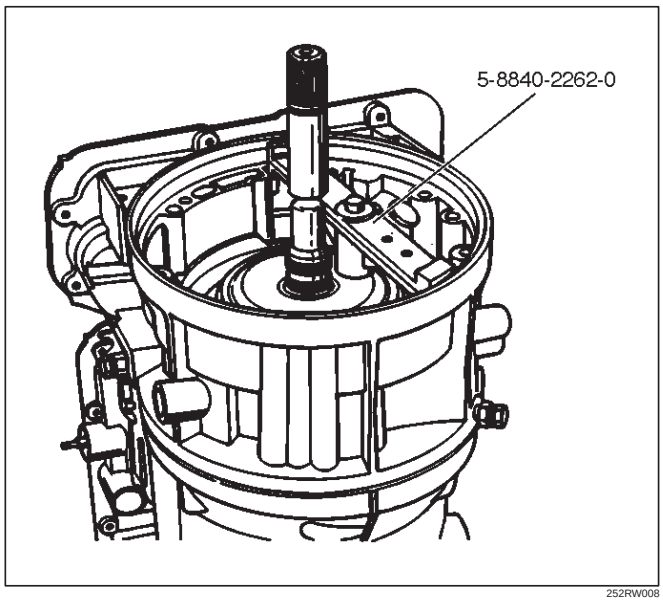

252RW008

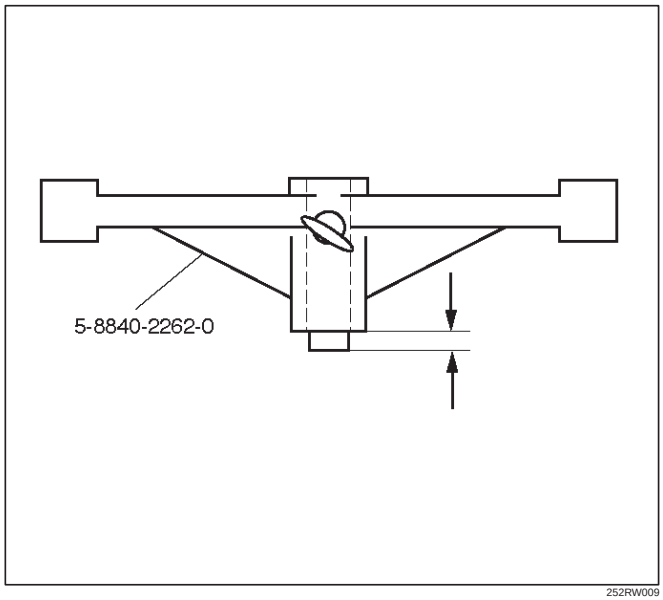

252RW009

35. Install selective washer (32).

NOTE: Use petroleum jelly to hold selective washer in place.

36. Install gasket (33).
37. Install converter housing and oil pump assembly (34) to adapter case.
    - Fit and tighten seven outer 13 mm screws.

    Torque: 39 N•m (4.0 kg·m/29 lb ft)

- Ensure free rotation of pump using 5–8840–2273–0 (J–23082–01) oil pump rotation tool.

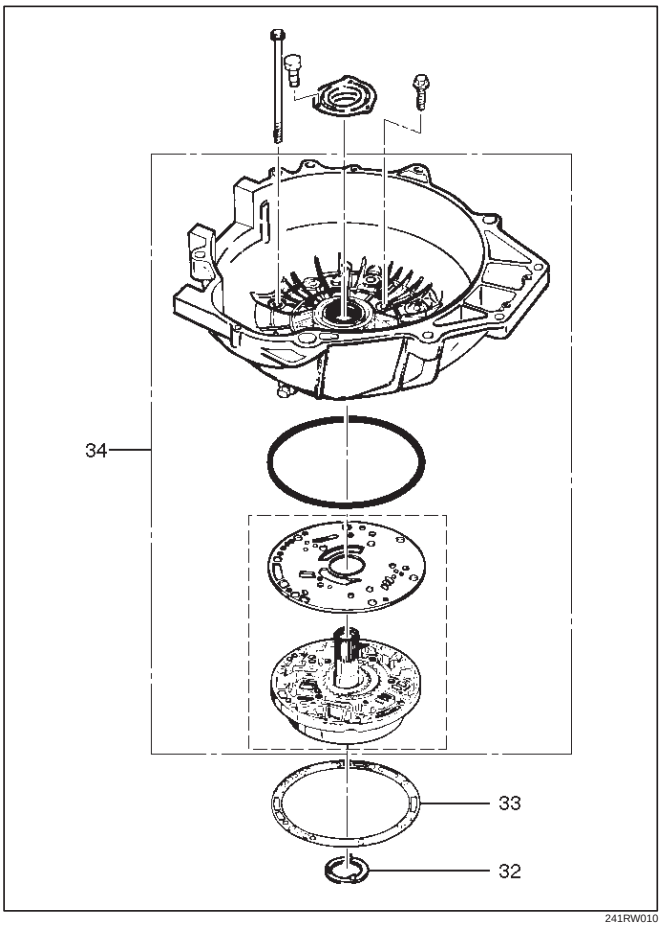

38. Overdrive clutch end play measurement.
    1. Fit 5–8840–2271–0 (J–25022) and 5–8840–0618–0 (J–24773–1) turbine shaft puller on turbine shaft.
    2. Position axial play checking tool on converter housing mating face.
    3. Pull turbine shaft upwards with puller until first resistance is met. (due to weight of overdrive assembly).
    4. Maintain shaft in this position and set indicator to zero.
    5. Pull turbine shaft further upwards with puller. Read end play shown on indicator.

End play: 0.1mm – 0.8mm (0.004 in – 0.031in)

6. Remove axial play checking tool and puller.

NOTE: If end play is not correct, repeat selective washer selection.

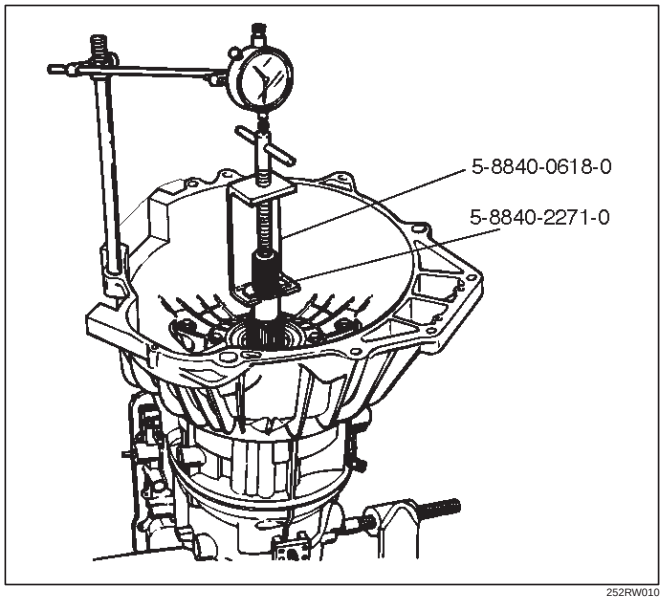

39. Inspect extension housing oil seal and replace if necessary, using 5–8840–2282–0 (J–36797) extension housing oil seal installer.
    - Rotate transmission to horizontal position, with valve body side down.
    - Inspect parking wheel seal ring. Replace if necessary.
    - Install wheel parking lock assembly (35).
40. Install speed wheel (36) and snap ring (37).

NOTE: Use extra long, needle-nose pliers.

41. Install gasket onto extension assembly with a thin coating of oil.
    - Install extension housing assembly (38), and align parking pawl shaft.
    - Install actuator assembly into extension assembly.
    - Install seven 8 mm hexagon socket head screws.

Torque: 32 N•m (3.3 kg·m/24 lb ft)

42. Inspect speed sensor O–ring. Replace if necessary.
    - Install speed sensor assembly (39) and 10 mm screw.

Torque: 9 N•m (0.9 kg·m/78 lb in)

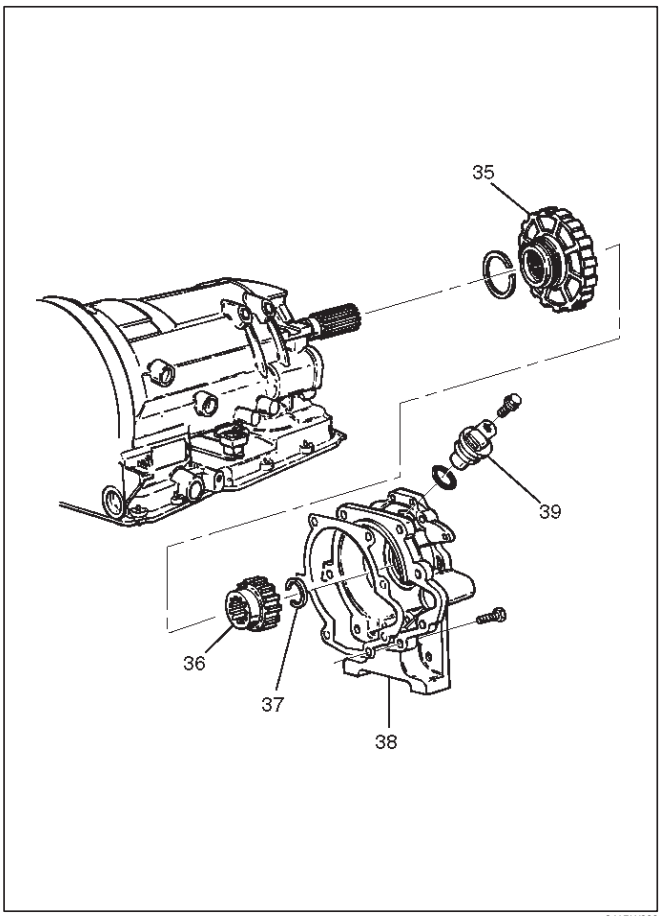

241RW009

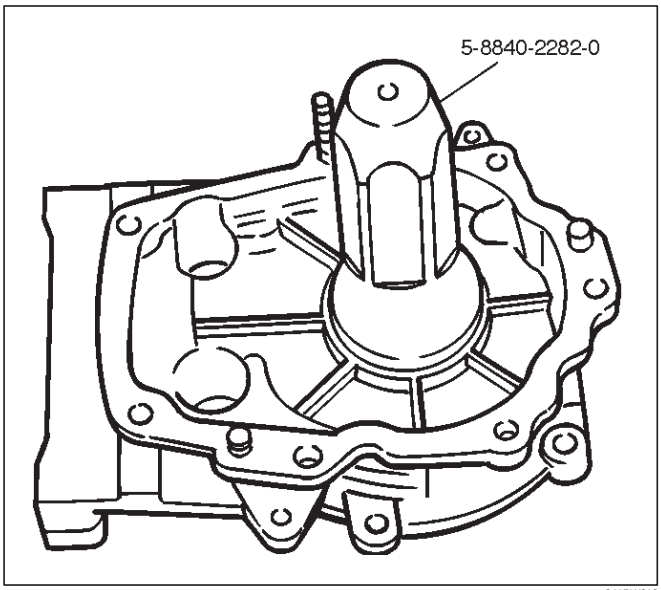

241RW019

43. Main case end play measurement.
    1. Attach axial play checking tool on the extension housing and set indicator to zero on output shaft.
    2. Manually push output shaft upwards.

    End play: 0.36mm – 0.80mm (0.014 in – 0.031in)

    3. Remove axial play checking tool.
    4. If end play is not correct, repeat selective washer selection.

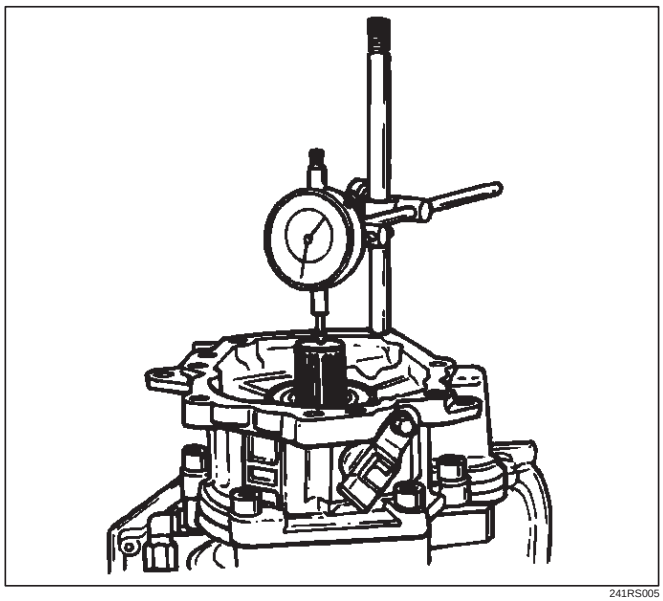

241RS005

44. Inspect servo piston seal ring. Replace if necessary.
    - Ensure brake band is correctly positioned. Rotate output shaft if necessary.
    - Install 5–8840–2274–0 (J–38428) servo piston fitter in servo bore.
    - Install apply rod (40), round end toward band, return spring (41) and piston assembly (42).
45. Install the 5–8840–0501–0 (J–23075) servo spring compressor with offset to rear of case.
    - Compress servo piston seal ring, using fitter while tightening the tool screw.
    - Install servo piston retaining ring (43).
    - Remove tool.
    - Adjust the brake band by tightening the servo adjusting screw to 4.5 N·m torque. Be certain the lock nut is loose, then back–off the screw five turns exactly. Hold piston sleeve with wrench and tighten lock nut to 18.5 N·m torque. Be certain the adjusting screw does not turn.

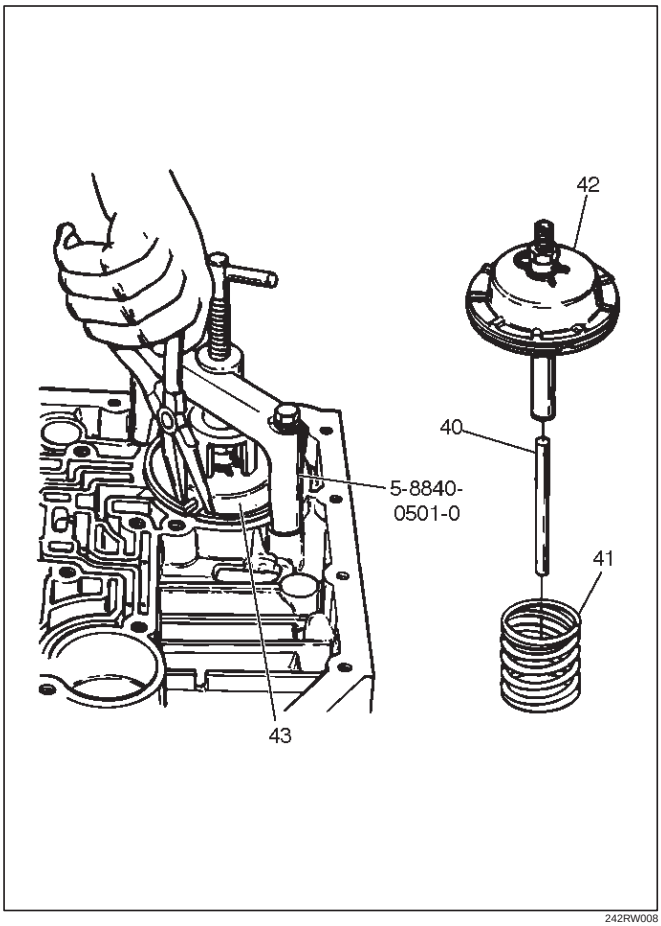

242RW008

46. Install two check balls (44).

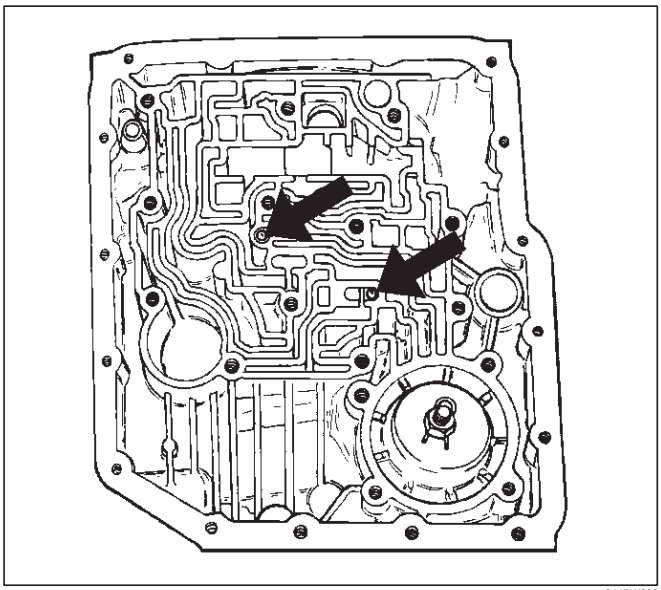

244RW002

47. Inspect main case electrical connector and seal, replace if necessary.
    - Install electrical 4 pin connector/main case and wiring harness.
48. Install two 5–8840–0022–0 (J–25025–B) guide pins into main case.
    - Install main case valve body complete assembly (45) and manual valve link.

NOTE: Valve must be extended as the short end of manual valve link is connected to the range selector lever. Long end of link goes into valve.

- Install seven 13 mm screws.

Torque: 20 N•m (2.0 kg·m/15 lb ft)

- Pass ground wire of adapter case wiring harness assembly through the hole joining adapter fluid area and main case fluid area.
- Assemble 8.5 mm connector of ground wire under the head of this valve body bolt and reinstall it.
- Remove two guide pins.

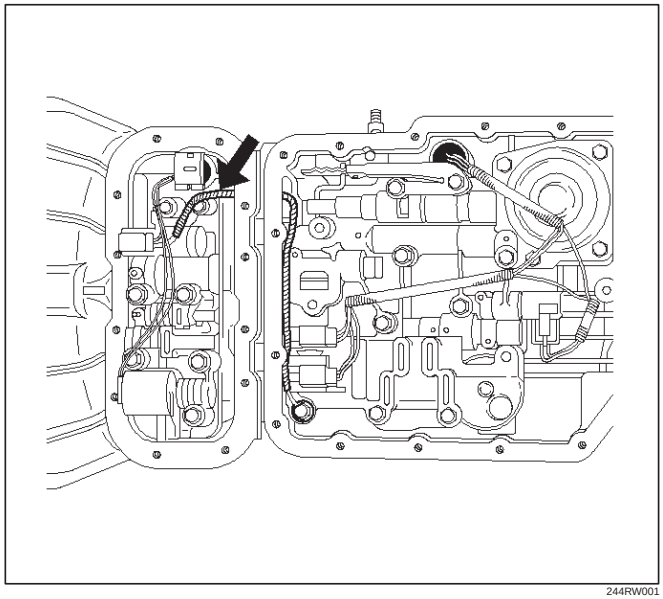

244RW001

49. Install servo cover gasket, cover (46) and four 13 mm screws.

    Torque: 25 N•m (2.6 kg·m/18 lb ft)
50. Connect wiring harness (47) to band control, shift solenoids, and main case 4 pin connector.
51. Install manual detent roller and spring assembly (48) with clip.
    - Install two 13 mm screws.

    Torque: 20 N•m (2.0 kg·m/15 lb ft)
52. Install oil filter (49), and three 13 mm screws.

    Torque: 20 N•m (2.0 kg·m/15 lb ft)
53. Install oil pan gasket, magnet, main oil pan (50), and sixteen 10 mm screws.

    Torque: 11 N•m (1.1 kg·m/96 lb in)
54. Inspect adapter case electrical connector and seal. Replace if necessary.
    - Install electrical five pin connector and harness assembly (52) in bottom of adapter case.
55. Install gasket, transfer plate, and gasket.
    - Install adapter case valve body (51) and seven 13 mm screws.

    Torque: 20 N•m (2.0 kg·m/15 lb ft)

56. Connect wiring harness harness assembly (52) to converter clutch solenoid, force motor, and 5 pin connector.
57. Install oil pan gasket, adapter case oil pan (53), and twelve 10 mm screws.

    Torque: 11 N•m (1.1 kg·m/96 lb in)

    - Rotate transmission, with bottom pan facing down.
58. Install mode switch (54), two 10 mm screws, selector lever nut, and cover.

    10 mm screw

    Torque: 13 N•m (1.3 kg·m/113 lb in)

    Nut

    Torque: 23 N•m (2.3 kg·m/17 lb ft)

    - Adjust using setting tool, refer to Mode Switch in this section.
59. Install O–ring (55) on turbine shaft.
60. Install torque converter (56)

    The converter assembly must be replaced under any of the following conditions:

    a. Evidence of damage to the pump assembly.
    b. Metal particles are found after flushing the cooler lines.
    c. External leaks in hub weld area.
    d. Converter pilot broken, damaged, or poor fit into crankshaft.
    e. Converter hub scored or damaged.
    f. Internal failure in stator.
    g. Contamination from engine coolant.
    h. Excess end play.

    - Rotate transmission, bell housing up. Spin converter to insure proper fit.
61. Fill transmission through the overfill screw hole of oil pan, using ATF DEXRON®–III. Refer to Changing Transmission Fluid in this section.

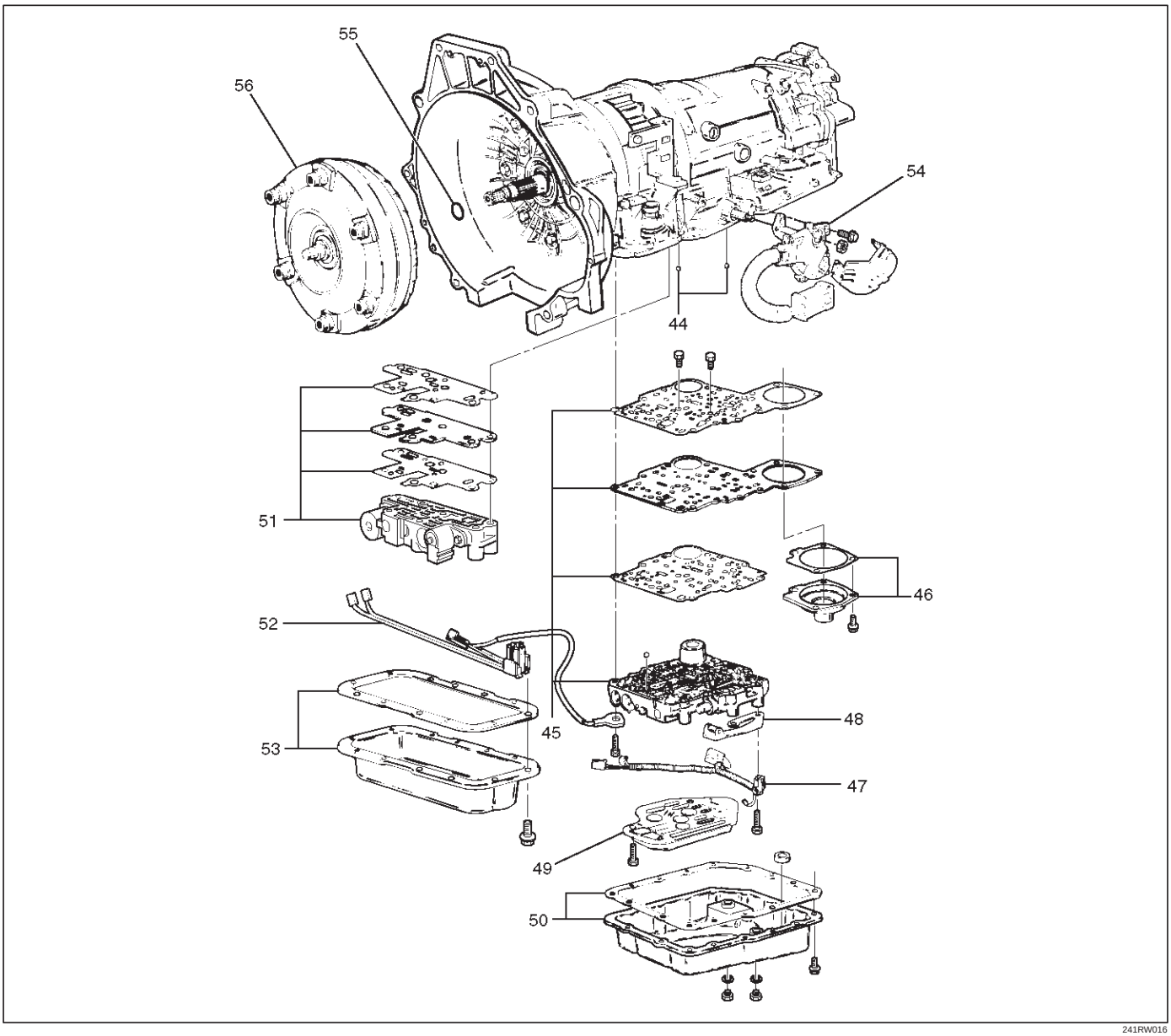

241RW016

Converter Housing And Oil Pump Assembly

Disassembled View

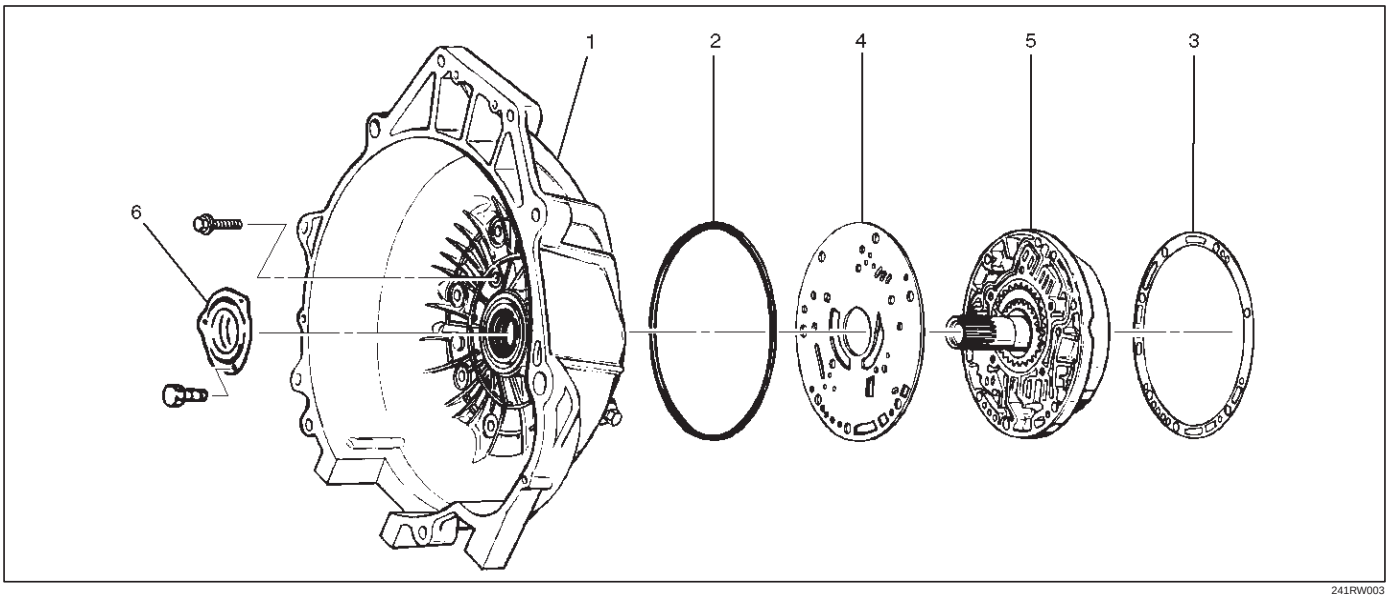

241RW003

Legend

(1) Converter Housing
(2) Outer Seal Ring
(3) Gasket
(4) Wear Plate
(5) Oil Pump Assembly
(6) Oil Seal Ring

Disassembly

1. Remove oil pump assembly from converter housing.
2. Remove outer seal ring.
3. Remove gasket.
4. Remove wear plate.
5. Remove oil seal ring.

Inspection And Repair

Visual Check:

If any damage, deformation, or local wear is found in a converter housing, outer seal ring, wear plate, or oil seal ring, replace it.

Reassembly

1. Install wear plate onto oil pump assembly.
2. Install converter housing onto complete oil pump assembly. Align with two short 5–8840–2268–0 (J–38588) guide pins on outer bolt holes.
   - Loosely install five 13mm bolts.
   - Center converter housing using 5–8840–2272–0 (J–38557) centering tool.
   - Tighten five inner 13mm bolts in an alternating pattern.

   Torque: 20 N•m (2.0 kg·m/15 lb ft)

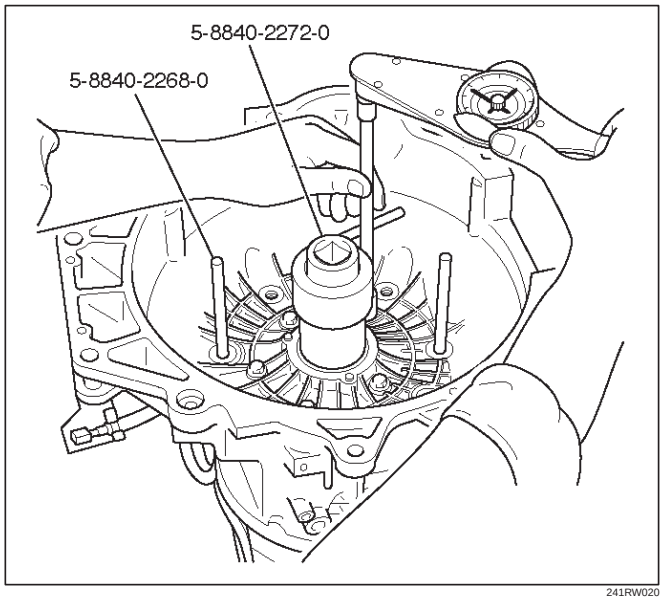

241RW020

3. Install oil seal ring (3 screws).

   Torque: 3 N•m (0.3 kg·m/26 lb in)
4. Install gasket.
5. Install outer seal ring.

Oil Pump

Disassembled View

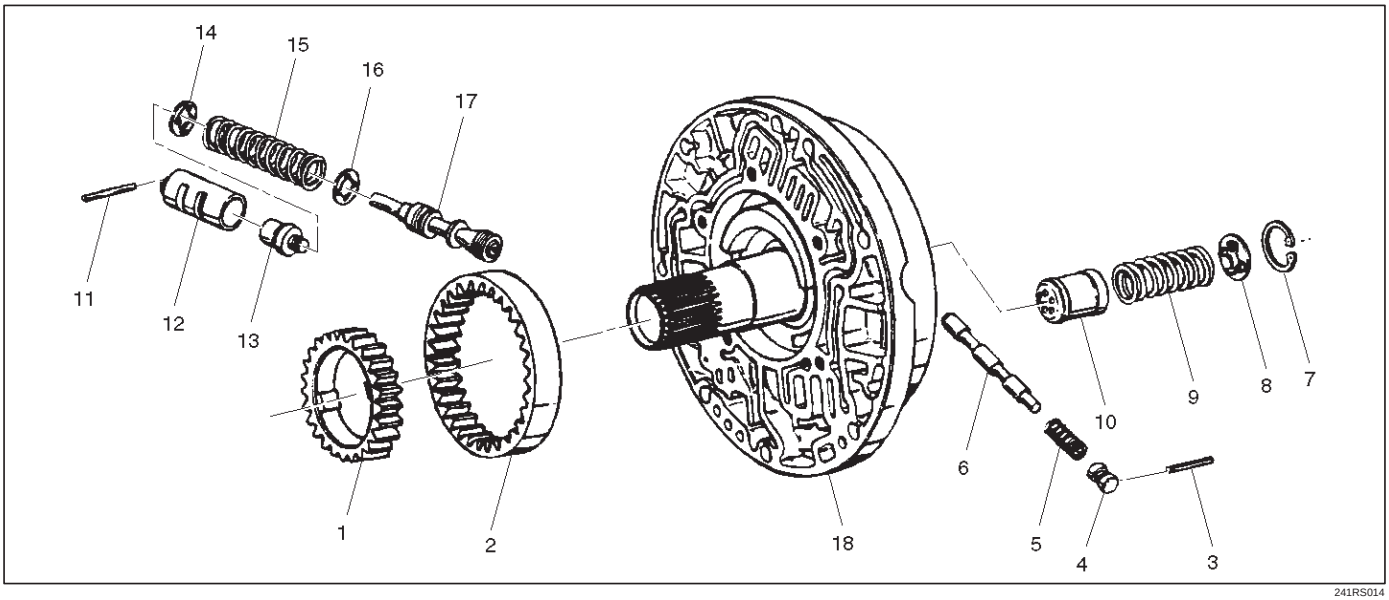

241RS014

Legend

(1) Oil Pump Drive Gear
(2) Oil Pump Driven Gear
(3) Pin
(4) Plug
(5) Spring
(6) Converter Clutch Control Valve
(7) Snap Ring
(8) Spring Seat
(9) Spring
(10) Throttle Signal Accumulator Piston
(11) Sleeve Pin
(12) Sleeve
(13) Boost Valve
(14) Spring Seat
(15) Valve Spring
(16) Spring Seat
(17) Pressure Regulator valve
(18) Oil Pump Assembly

Disassembly

1. Remove oil pump drive gear (1) and driven gear (2).
2. Remove pin (3) from oil pump assembly (18).
3. Remove plug (4), spring (5), and converter clutch control valve (6).
4. Remove snap ring (7) from oil pump assembly (18).
5. Remove spring seat (8), spring (9), and throttle signal accumulator piston (10).
6. Remove sleeve pin (11) from oil pump assembly (18).
7. Remove sleeve (12), boost valve (13), spring seat (14), valve spring (15), spring seat (16), and pressure regulator valve (17).

Inspection And Repair

Visual Check:

If any damage, deformation or wear is found, replace the damaged part.

Reassembly

1. Lubricate and preinstall pressure regulator spring seat (16) on valve (17), with the flat side against shoulder.
2. Install pressure regulator valve (17) and spring seat (16) assembly, valve spring (15), and spring seat (14) with the flat side away from spring to oil pump assembly (18).
3. Assemble boost valve (13) into sleeve (12).
4. Install boost valve and sleeve assembly, and sleeve pin (11) to oil pump assembly (18).
5. Install throttle signal accumulator piston (10), spring (9), and spring seat (8), with the flat side away from the spring, and snap ring (7) to oil pump assembly (18).
6. Install converter clutch control valve (6), spring (5), plug (4), and pin (3) to oil pump assembly (18).
7. Install oil pump driven gear (2) and drive gear (1).

Main Case Valve Body

Disassembled View

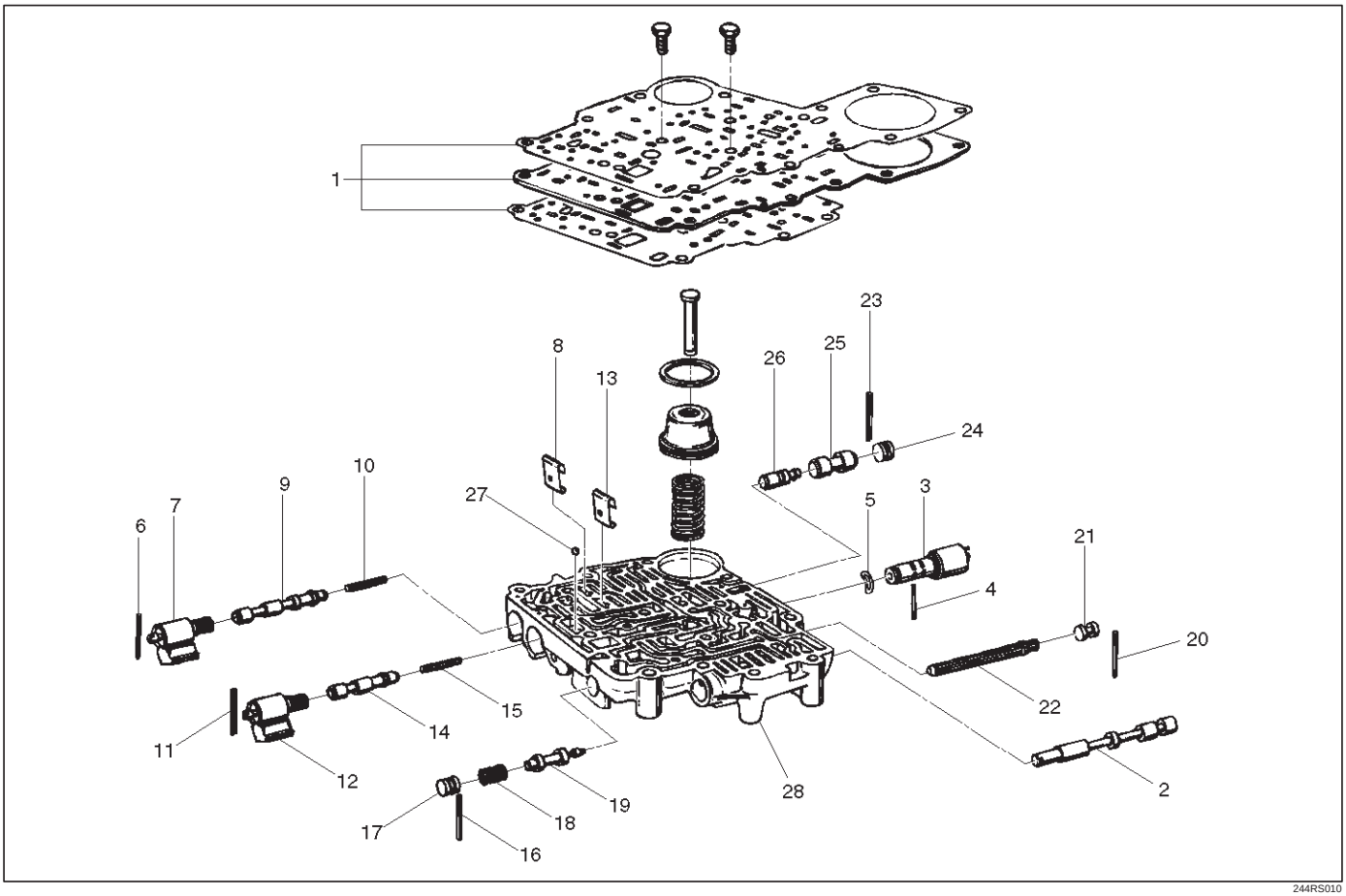

244RS010

Legend

(1) Gaskets and Transfer Plate
(2) Manual Valve
(3) Band Control Solenoid
(4) Pin
(5) Waved Washer
(6) Spring Pin
(7) Solenoid A
(8) Retainer
(9) 1–2/3–4 Shift Valve
(10) Spring
(11) Spring Pin
(12) Solenoid B
(13) Retainer
(14) 2–3 Shift Valve
(15) Spring
(16) Spring Pin
(17) Plug
(18) Spring
(19) Low Pressure Control Valve
(20) Spring Pin
(21) Plug
(22) Band Control Screen Assembly
(23) Spring Pin
(24) Plug
(25) 1–2 Accumulator Valve
(26) 1–2 Accumulator Control Valve
(27) Check Ball
(28) Main Case Valve Body

Disassembly

1. Remove two 11mm bolts from valve body (28), then remove gaskets and transfer plate (1).
2. Remove manual valve (2).
3. Push in band control solenoid (3) to compress waved washer (5), and remove pin (4).
4. Remove band control solenoid (3) and waved washer (5).
5. Remove spring pin (6) with a 3 mm dia punch.
6. Remove solenoid A (7) by grasping the metal tip. Do not grasp the connector housing.
7. Remove retainer (8), 1–2/3–4 shift valve (9), and spring (10).
8. Remove spring pin (11) with a 3 mm dia punch.
9. Remove solenoid B (12) by grasping the metal tip. Do not grasp the connector housing.

10. Remove retainer (13), 2–3 shift valve (14), and spring (15).
11. Remove spring pin (16), plug (17), spring (18), and low pressure control valve (19).
12. Remove spring pin (20), plug (21), and band control screen assembly (22).
13. Remove spring pin (23), plug (24), 1–2 accumulator valve (25), and 1–2 accumulator control valve (26).
14. Remove check ball (27) from valve body (28).

Inspection And Repair

Inspect for the following, and replace any damaged or worn parts:

1. Damage or wear to each valve.
2. Damage in oil passeges.
3. Cracks or damage to valve body.
4. Valve operations.
5. Spring fatigue.

Reassembly

1. Install 1–2 accumulator control valve (26), 1–2 accumulator valve (25), plug (24), and spring pin (23).
2. Install band control screen assembly (22), plug (21), and spring pin (20).
3. Install low pressure control valve (19), spring (18), plug (17), and spring pin (16).
4. Install spring (15), 2–3 shift valve (14), retainer (13), solenoid B (12), and spring pin (11).
5. Install spring (10), 1–2/3–4 shift valve (9), retainer (8), solenoid A (7), and spring pin (6).
6. Install waved washer (5), band control solenoid (3), and pin (4).
7. Install manual valve (2).
8. Install check ball (27) to valve body (28).
9. Install gasket (valve body/transfer plate) and transfer plate using two 5–8840–2270–0 (J–3387–2) guide pins.
   - Install two 11mm bolts.

   Torque: 13 N•m (1.3 kg·m/113 lb in)

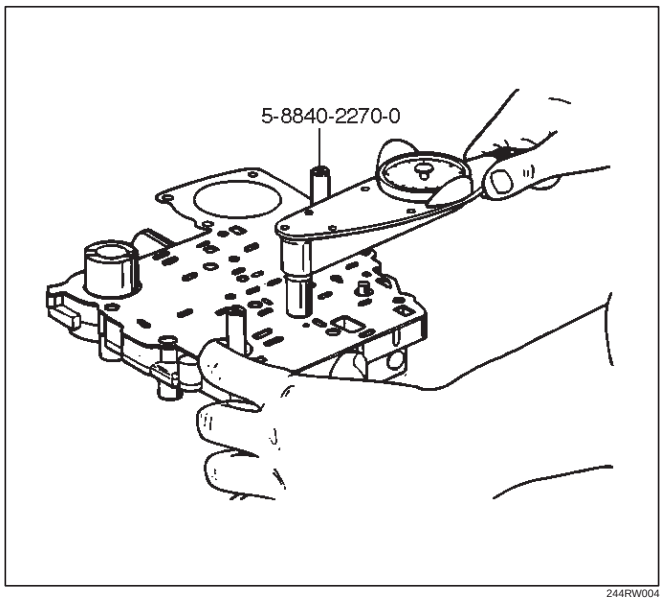

244RW004

- Install gasket (transfer plate/main case).

Adapter Case Valve Body

Disassembled View

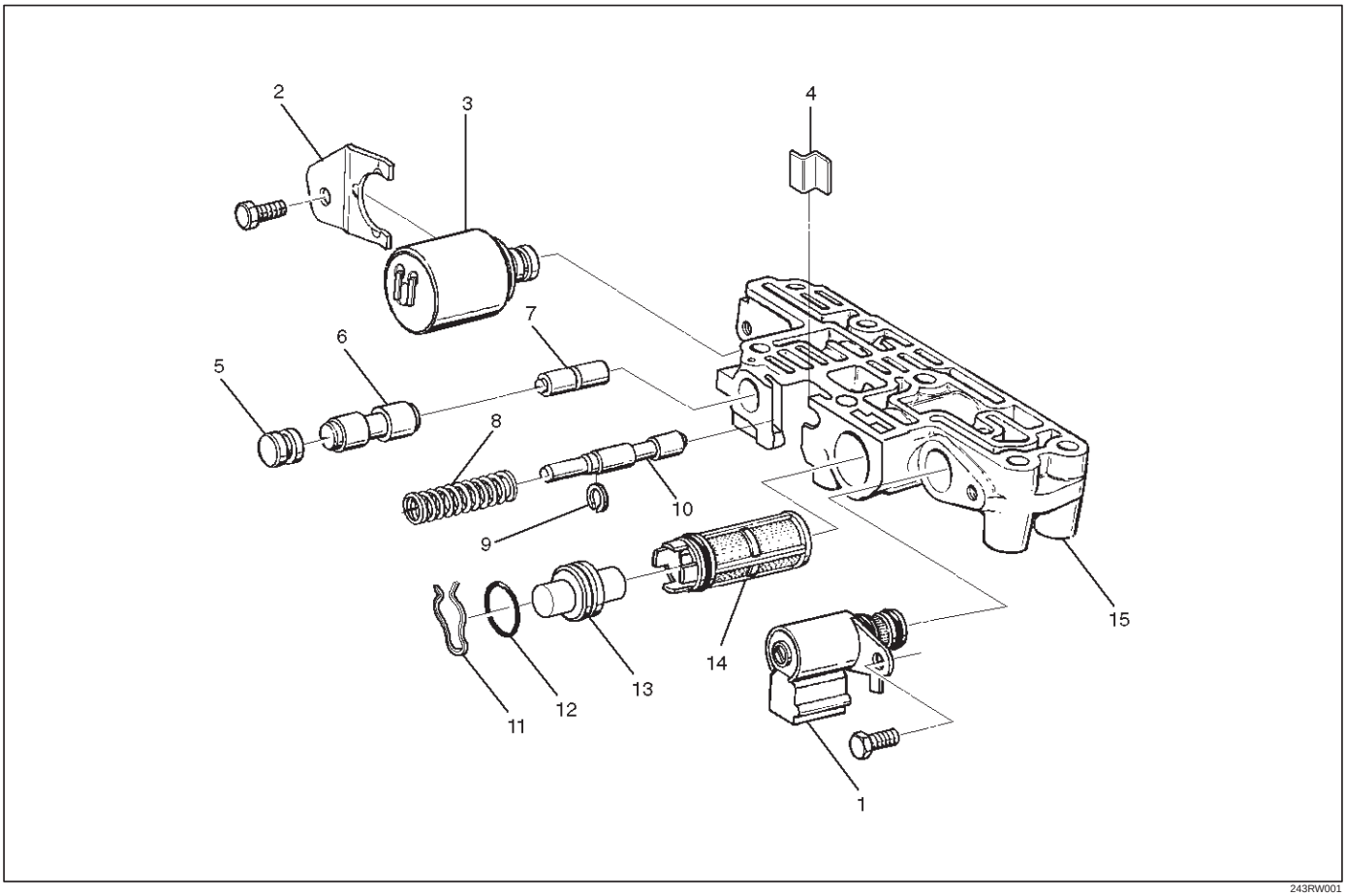

243RW001

Legend

(1) Converter Clutch Solenoid Assembly
(2) Retainer
(3) Force Motor Solenoid
(4) Retainer
(5) Plug
(6) 3/4 Accumulator Valve
(7) 3/4 Accumulator Control Valve
(8) Spring
(9) Retaining Ring
(10) Feed Limit Valve
(11) Plug Retainer
(12) O–Ring
(13) Plug
(14) Force Motor Screen Assembly
(15) Adapter Case Valve Body

Disassembly

1. Remove 11mm bolt from valve body.
   - Remove converter control solenoid assembly (1).
2. Remove 11mm bolt and retainer (2) from valve body.
   - Remove force motor solenoid (3).
3. Remove retainer (4), plug (5), 3/4 accumulator valve (6), and 3/4 accumulator control valve (7).
4. Remove spring (8), retaining ring (9), and feed limit valve (10).
5. Remove plug retainer (11), O–ring (12), plug (13), and force motor screen assembly (14).
   - Use 5 mm bolt to pull plug.

Inspection And Repair

Inspect for the following, and replace any damaged or worn parts:

1. Damage or wear to each valve.
2. Damage in oil passeges.
3. Cracks or damage to valve body.
4. Valve operations.
5. Spring fatigue.

Reassembly

1. Install force motor screen assembly (14), plug (13), O–ring (12), and plug retainer (11).
2. Install feed limit valve (10), retaining ring (9), and spring (8).

3. Install 3/4 accumulator control valve (7), 3/4 accumulator valve (6), plug (5), and retainer (4).
4. Install force motor solenoid (3).
   - Place solenoid terminals pointing towards mating face.
   - Install retainer (2) and bolt.

   Torque: 10 N•m (1.0 kg·m/87 lb in)
5. Install converter clutch solenoid assembly with two O–rings (1) to valve body.
   - Install bolt.

   Torque: 10 N•m (1.0 kg·m/87 lb in)

Third Clutch And Sprag Unit

Disassembled View

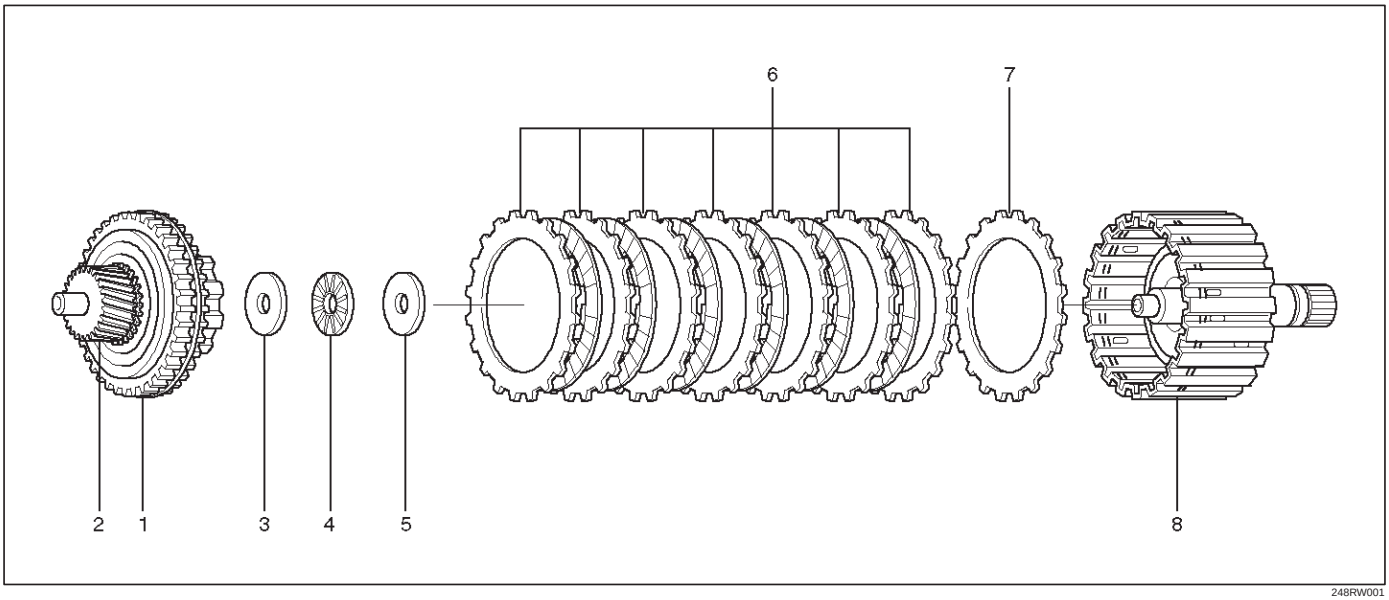

248RW001

Legend

(1) Retaining Ring
(2) Input Sun Gear and Sprag Unit Assembly
(3) Retaining Washer
(4) Bearing
(5) Thrust Washer
(6) Clutch Plates
(7) Third Clutch Spring Cushion Plate
(8) Third Clutch Drum Assembly

Disassembly

1. Place the third clutch drum and intermediate shaft assembly upright, using the overdrive internal gear as a support.
2. Locate the ends of the retaining ring. Depress one end of the ring using a small screwdriver instead of the depressor handle provided with the tool 5-8840-2258-0 (J-38450-A). Slide one blade down between the third clutch drum and the retaining ring.
3. Remove a screwdriver and repeat this step for the other end of retaining ring.
4. Install the remaining four blades approximately (five) notches apart using a screwdriver to depress the retaining ring.
5. Pull up on input sun gear and sprag unit assembly (1 and 2) to release the retaining ring from third clutch drum assembly (8).
6. Remove the tool blades.

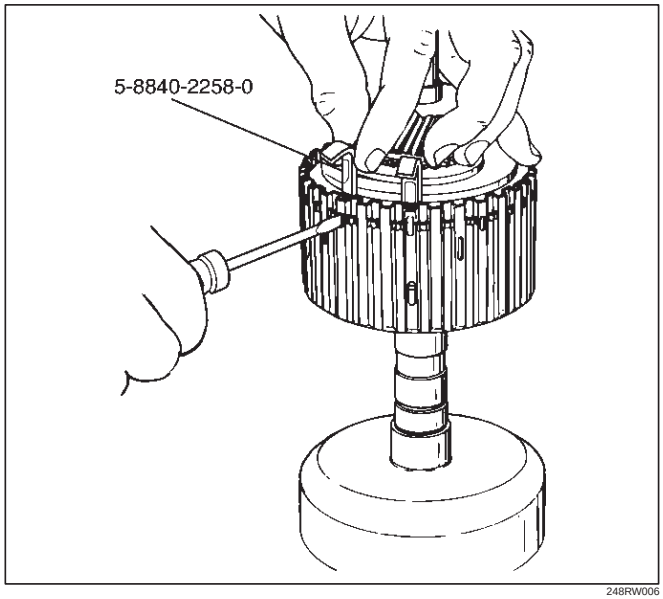

248RW006

7. Remove retaining washer (3), bearing (4), thrust washer (5), and clutch plates (6 and 7) form the third clutch drum assembly (8).

Inspection And Repair

Visual Check:

If any damage, deformation or wear is found, replace the damaged part.

Reassembly

1. Place third clutch drum and intermediate shaft assembly upright, using the overdrive internal gear as a support.
2. Install third clutch spring cushion plate (7), bevel face down.
3. Install third clutch plates (6) into third clutch drum assembly (8). Start with the steel clutch plate and alternate with lined plates.
4. Install thrust washer (5), bearing (4), and retaining washer (3).
5. Fully engage the hub splines of the input sun gear and sprag unit assembly (2) into the third clutch inner tangs.
   - Simultaneously rotate the outer sprag race to engage into the third clutch drum assembly (8).
6. Place 5-8840-2258-0 (J-38450-A) blades between the retaining ring and the third clutch drum approximately (five) notches apart, and one blade at each end of the retaining ring (1). Push down on sprag assembly until the assembly is seated into the third clutch drum assembly (8).
7. Remove the tool blades and engage retaining ring into groove of third clutch drum.

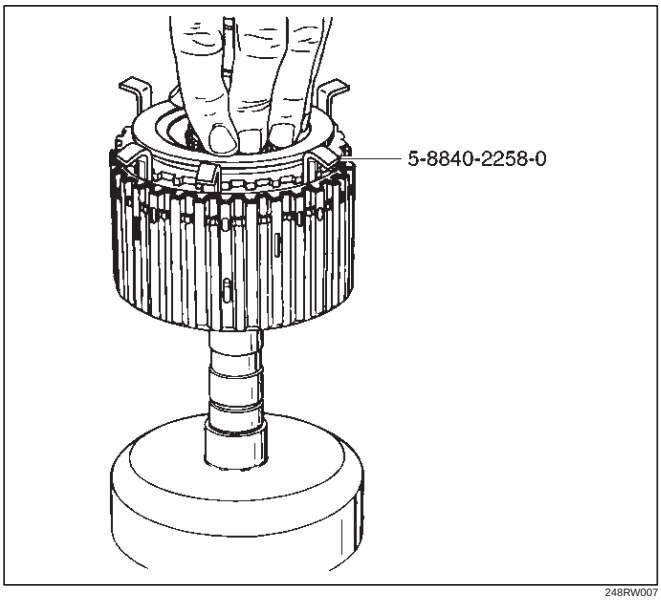

248RW007

Third Clutch

Disassembled View

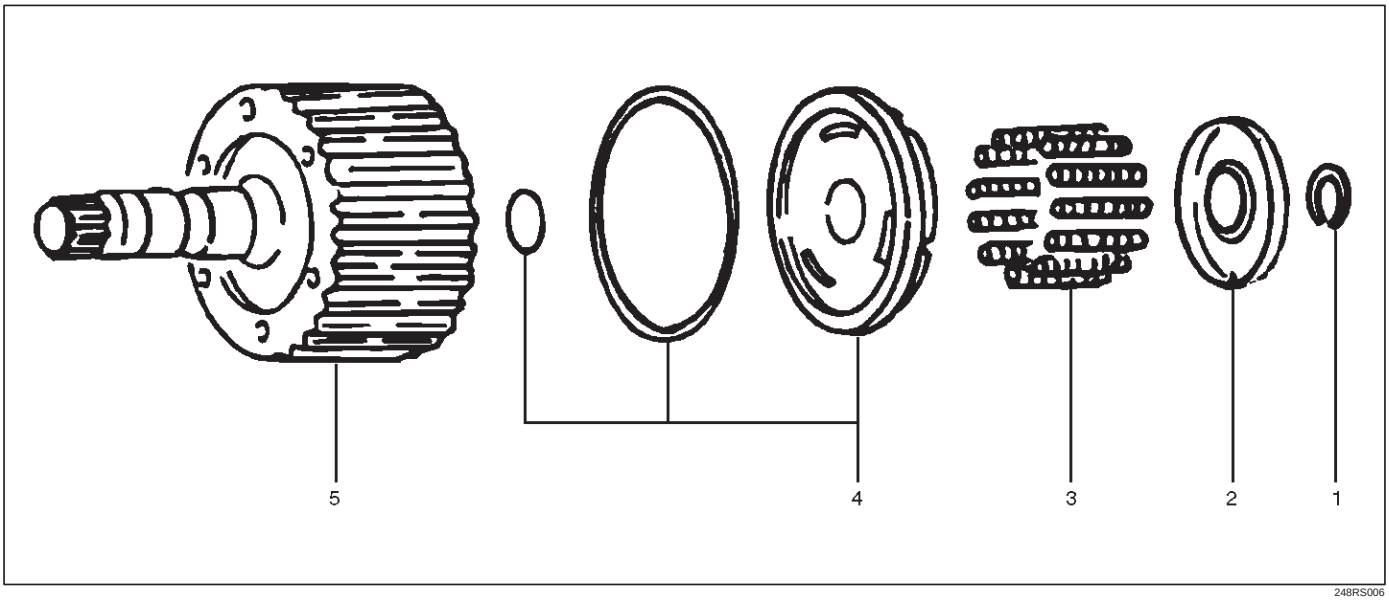

248RS006

Legend

(1) Retaining Ring
(2) Spring Seat
(3) Springs
(4) Piston Assembly
(5) Third Clutch Drum

Disassemble

1. Compress spring seat using the 5–8840–0501–0 (J–23075) spring compressor and 5–8840–2259–0 (J–23075–12) adapter tool.

NOTE: Do not over–stress the springs and seat. This will cause damage to the spring seat.

- Remove the tool.
- Remove retaining ring (1).

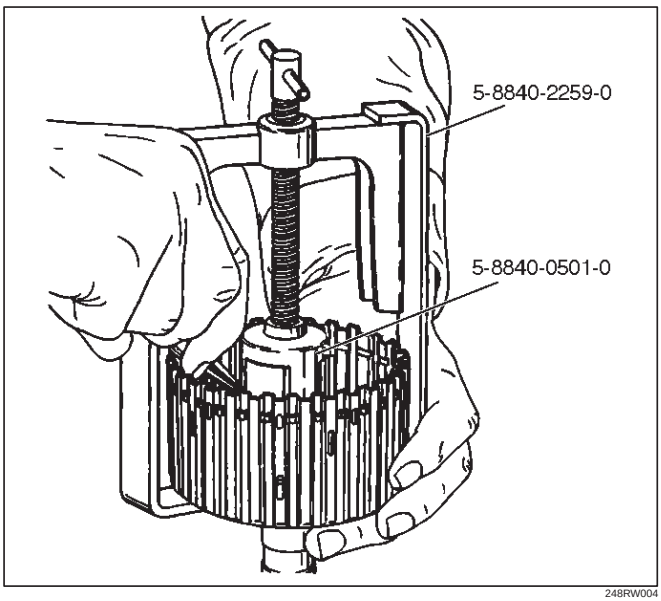

248RW004

2. Release the spring seat (2).

NOTE: Do not let the spring seat catch in the ring groove.

- Remove spring seat (2) and springs (3).

3. Remove piston assembly (4) from third clutch drum (5).

Inspection And Repair

Visual check:

If any damage, deformation or wear is found, replace the damaged part.

Operation check:

Shake the piston and listen for check ball movement indicates proper check ball operation. Replace the piston if the check ball is missing or falls out.

Reassembly

1. The lip of the piston seal must point toward the front of the transmission. Lubricate the seal lip with transmission fluid.
   - Install piston assembly (4) into the third clutch drum (5). Use the 5–8840–2260–0 (J–23084) third clutch piston installer to protect the outer seal during installation.
   - Remove the seal installer.

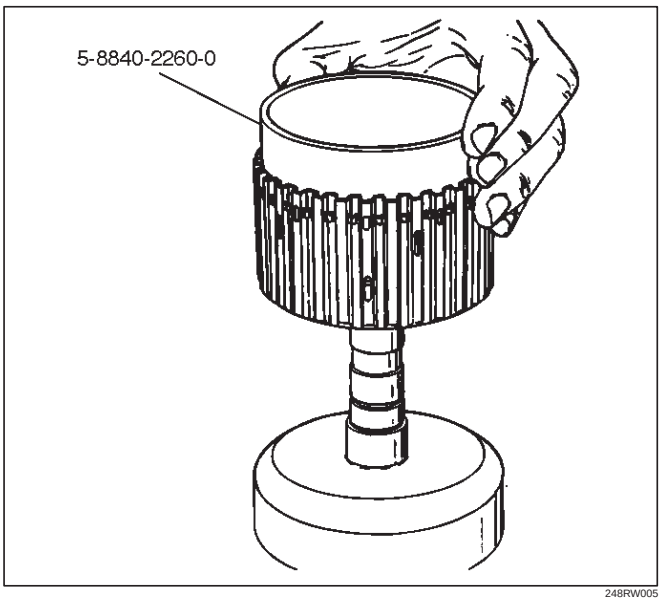

248RW005

2. Install twelve springs (3) and spring seat (2).
3. Place retaining ring (1) onto spring seat.
   - Compress the piston springs, using the 5–8840–0501–0 (J–23075) piston spring compressor and 5–8840–2259–0 (J–23075–12) adapter.

CAUTION: Do not over stress the springs and seat. Do not let the spring seat catch in the ring groove. This may cause damage to the spring seat.

- Install spring seat retaining ring (1).
- Remove the piston spring compressor and adapter.

Sprag Unit

Disassembled View

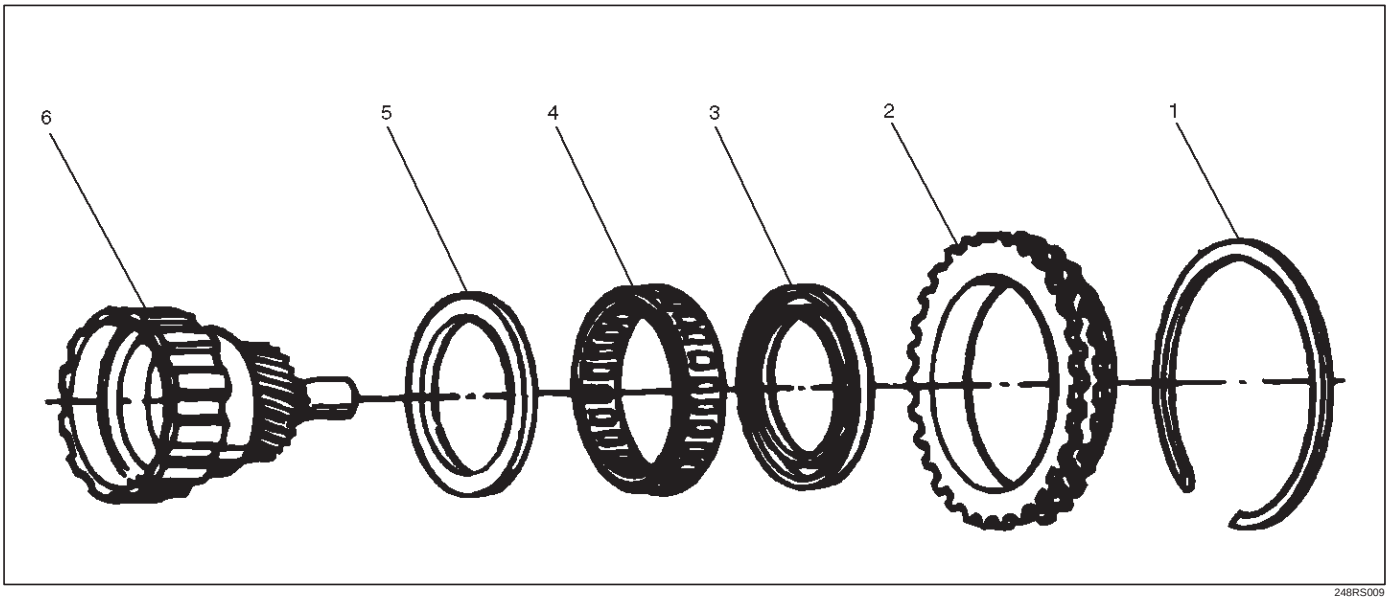

248RS009

Legend

(1) Retaining Ring
(2) Sprag Outer Race
(3) Ring
(4) Sprag Assembly
(5) Ring
(6) Third Clutch Hub and Sun Gear Assembly

Disassembly

1. Remove the sprag outer race, retaining ring, and sprag assembly from the third clutch hub and sun gear assembly.
2. Remove the rings and sprag assembly from the sprag outer race.

Inspection And Repair

Visual Check:

If any damage, deformation or wear is found, replace the damaged part.

Reassembly

NOTE: Flared shoulder of the sprag cage faces the sun gear. This procedure must be followed exactly to be sure that the sprag assembly is installed properly.

1. Install rings and sprag assembly onto the third clutch hub and sun gear.
2. Install sprag outer race and retaining ring assembly over the sprag cage assembly.
   - Place third clutch hub and sun gear assembly on a flat surface, sun gear facing up. Place sprag outer race and sprag assembly over the sun gear assembly, push down and turn the input sun counterclockwise at the same time.

NOTE: Check correct rotation by holding the sun gear in your left hand and turning the outer race. The outer sprag race should turn freely towards you and should lock turning away from you.

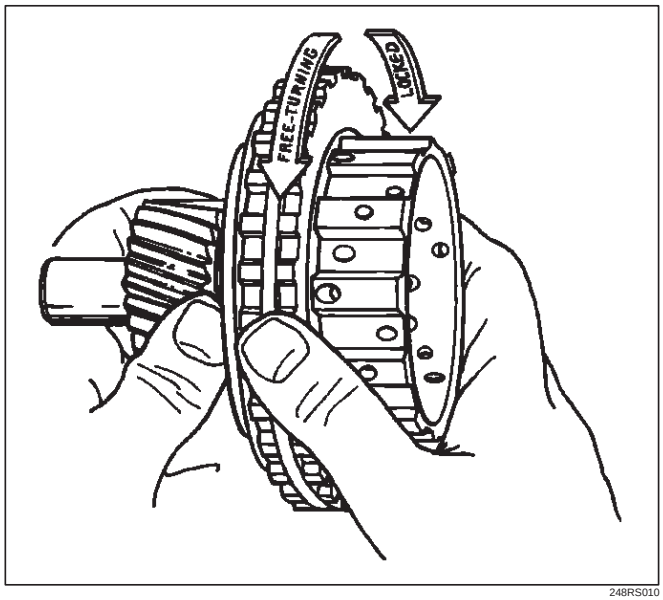

248RS010

Second Clutch

Disassembled View

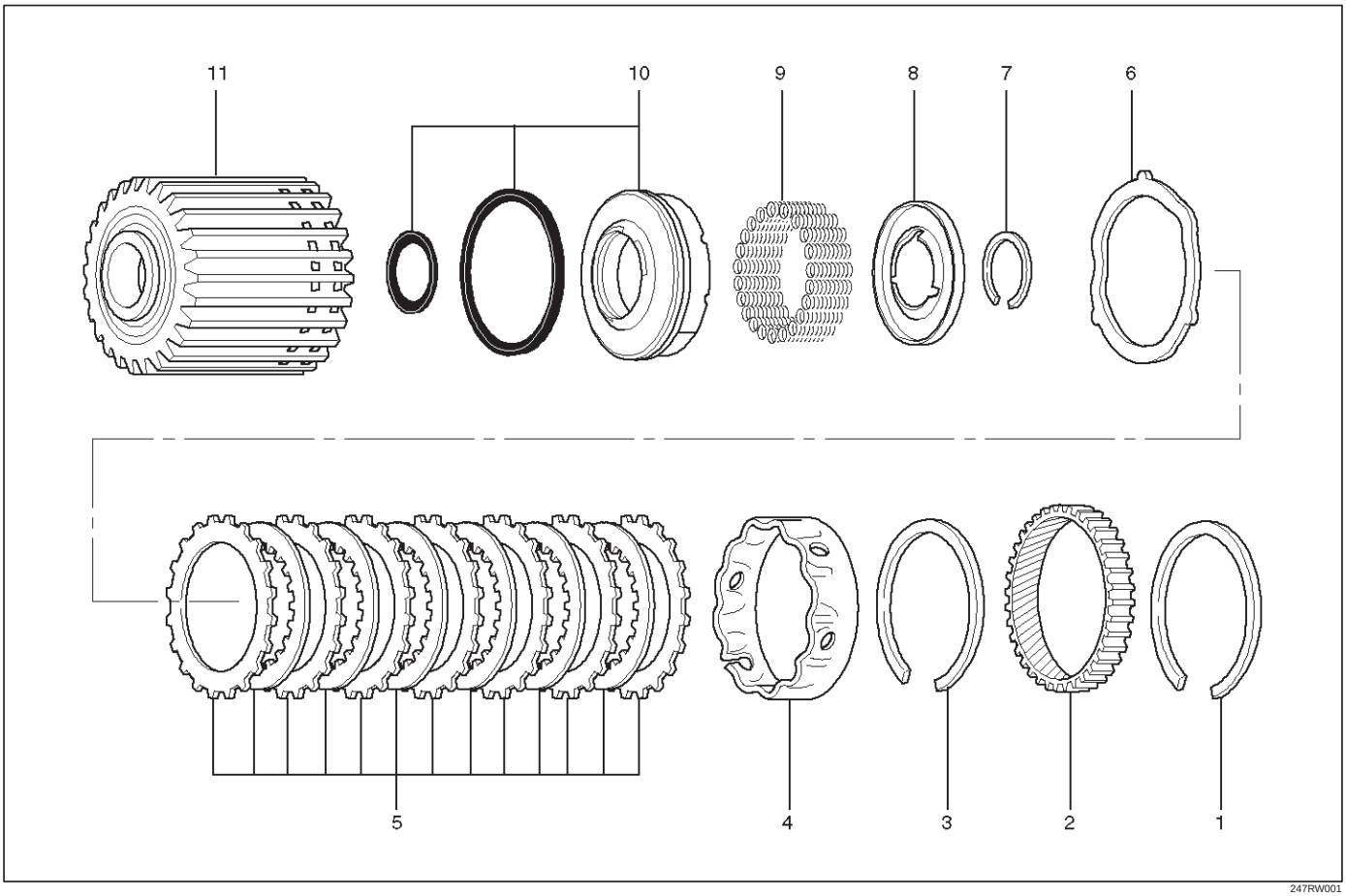

247RW001

Legend

(1) Retaining Ring
(2) Ring Gear
(3) Retaining Ring
(4) Spacer
(5) Clutch Plates
(6) Waved Washer
(7) Retaining Ring
(8) Spring Seat
(9) Springs
(10) Piston Assembly
(11) Second Clutch Drum

Disassembly

1. Remove retaining ring (1) from second clutch drum (11).
2. Remove ring gear (2), retaining ring (3), and spacer (4).
3. Remove clutch plates (5) and waved washer (6).
4. Remove retaining ring (7) using 5–8840–0195–0 (J–23327) compressor to compress the spring seat (8).
5. Remove spring seat (8), springs (9) and piston assembly (10) from second clutch drum (11).

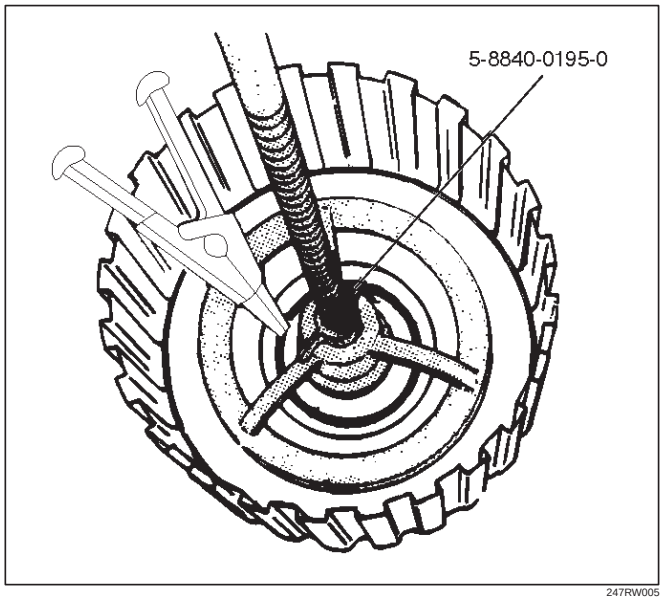

247RW005

Inspection And Repair

Visual Check:

If any damage, deformation or wear is found, replace the damaged part.

Operation Check:

Shake the piston and listen for check ball movement. Movement indicates proper check ball operation. Replace the piston if the check ball is missing or falls out.

Reassembly

1. Install piston assembly (10) into the second clutch drum (11).
   - Lubricate the lip seal with transmission fluid. Use the 5–8840–2261–0 (J–23080–A) second clutch piston installer to protect the outer piston lip seal.

NOTE: Lip of the seal should point toward front of transmission.

- Remove the installer.

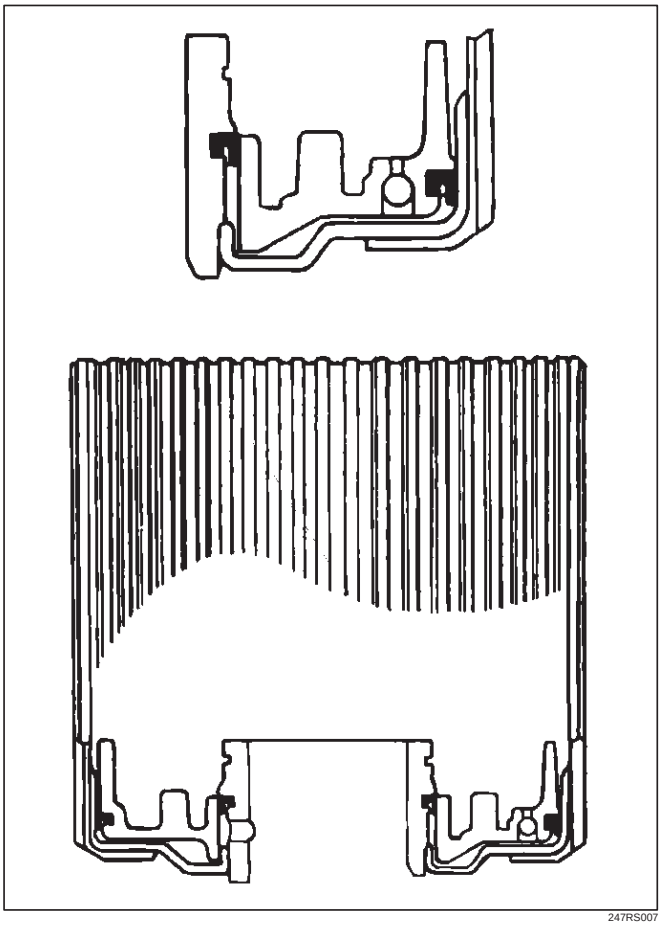

247RS007

2. Install twenty–two piston springs (9) and spring seat (8) on the second clutch piston (10). Place retaining ring (7) onto spring seat.
   - Use the 5–8840–0195–0 (J–23327) compressor to compress the piston springs.

NOTE: Do not let spring seat catch in ring groove.

- Remove the compressor.

3. Install waved plate (6) and clutch plates (5). Start with a steel plate and alternate with lined plates.
   - Align second clutch inner tangs.
4. Install spacer (4), with the fluted end toward clutch plates.
5. Install retaining ring (3), ring gear (2) and retaining ring (1).

3–4 Accumulator Piston

Disassembled View

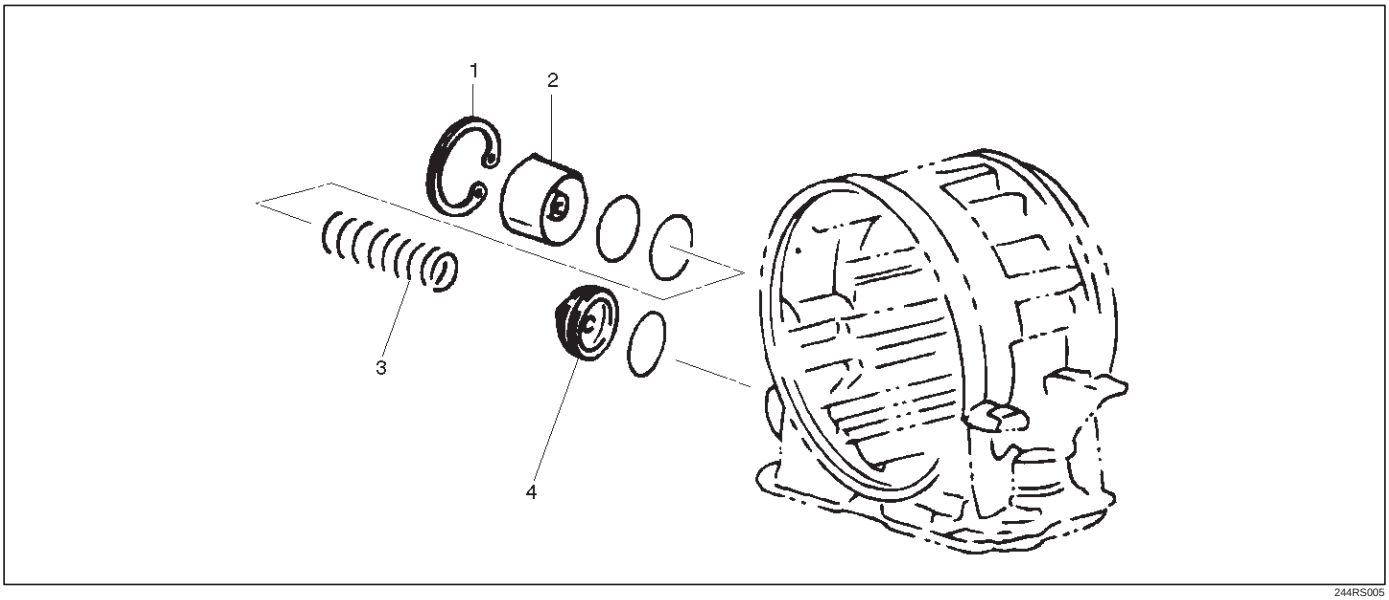

244RS005

Legend

(1) Snap Ring
(2) Cover
(3) Spring
(4) Piston Assembly

Disassembly

1. Install the 5–8840–2277–1 (J–38559–A) cover compressor on adapter case.
   - Compress piston cover then remove snap ring.

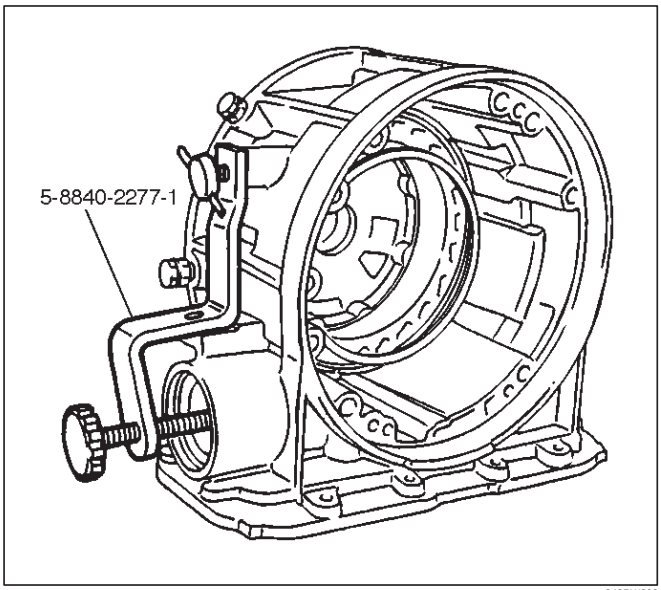

242RW009

2. Install the 5–8840–2403–0 (J–41096) cover remover and 5–8840–2266–0 (J–38584) adapter to center hole of cover.
   - Use the 5–8840–0019–0 and 5–8840–2000–0 (J–23907) slide hammer to remove cover.
3. Remove spring and piston assembly.

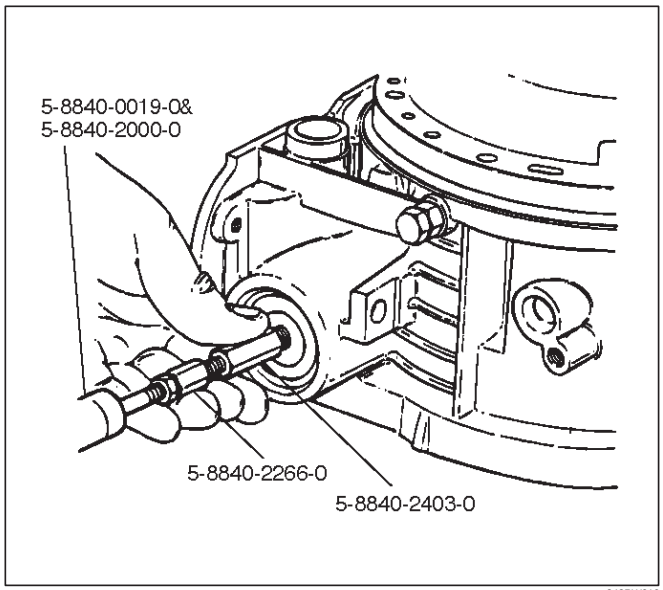

242RW010

Inspection And Repair

Visual Check:

If any damage, deformation or wear is found, replace the damaged part.

Reassembly

1. Place the 5–8840–2264–0 (J–38553) piston fitter into adaptor case and push the piston into position, using suitable diameter tube.
   - Remove the piston fitter.

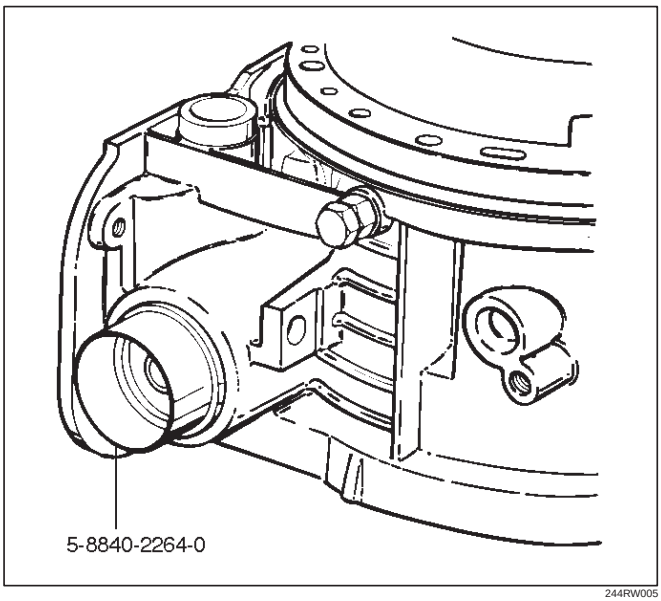

244RW005

2. Install spring and cover.
3. Install snap ring, using the 5–8840–2277–1 (J–38559–A) compressor tool.
   - Install snap ring in groove.
   - Remove the compressor tool.

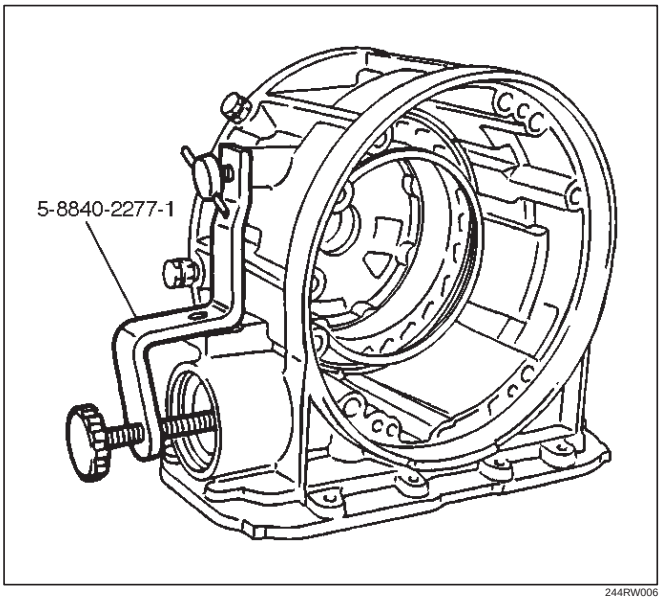

244RW006

Reverse Clutch Piston And Center Support

Disassembled View

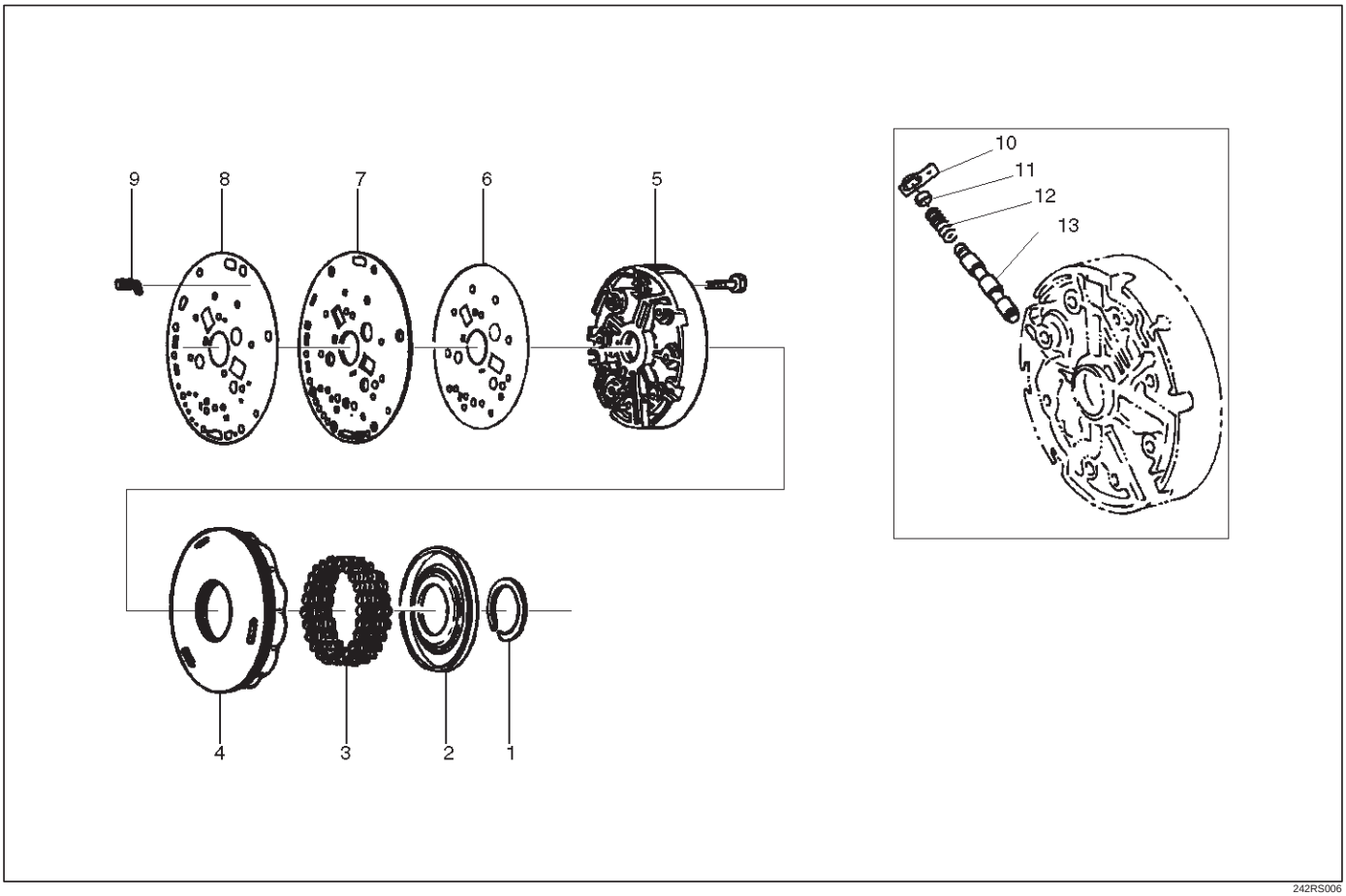

Legend

(1) Retaining Ring
(2) Spring Seat
(3) Springs
(4) Piston Assembly
(5) Center Support
(6) Gasket
(7) Transfer Plate
(8) Gasket
(9) Restrictor
(10) Retainer Plate
(11) Plug
(12) Spring
(13) Overrun Lock Out Valve

Disassembly

1. Install the 5–8840–0195–0 (J–23327) compressor tool on spring seat, then compress the spring seat.
   - Remove retaining ring (1).

NOTE: Do not over–stress the springs and seat, as this will cause damage to the spring seat.

- Remove the compressor tool.

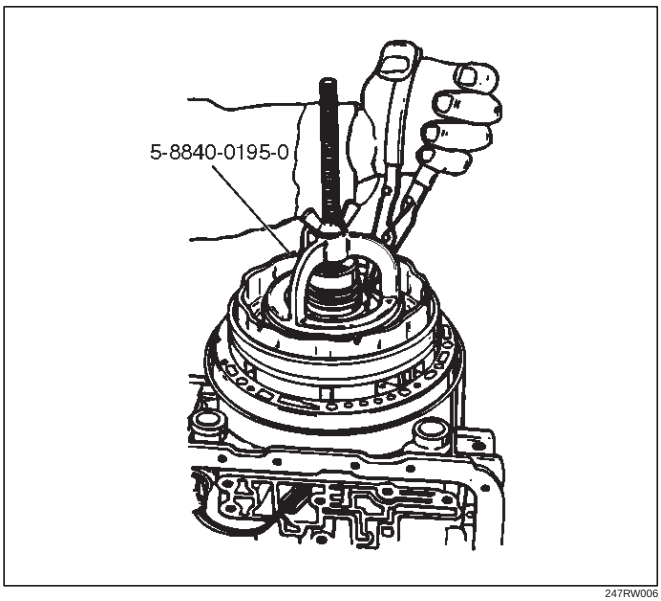

247RW006

2. Remove spring seat (2) and springs (3).
3. Remove piston assembly (4).
4. Remove 8 bolts from center support (5), then remove center support (5) from adapter case.
5. Remove gasket transfer plate/outer support (6), center support transfer plate (7), and gasket transfer plate/adapter case (8).
6. Remove restrictor (9) from adapter case housing.
7. Remove retainer plate (10), plug (11), spring (12), and overrun lock out valve (13) from center support (5).

Inspection And Repair

Visual Check:

If any damage, deformation or wear is found, replace the damaged part.

Reassembly

1. Install overrun lock out valve (13) and spring (12) to center support.

NOTE: Ensure correct assembly of valve. The spring should be located over the long small diameter end.

2. Install plug (11) and retainer plate (10).
3. Place restrictor (9) in the lube overdrive channel in the adapter case housing.

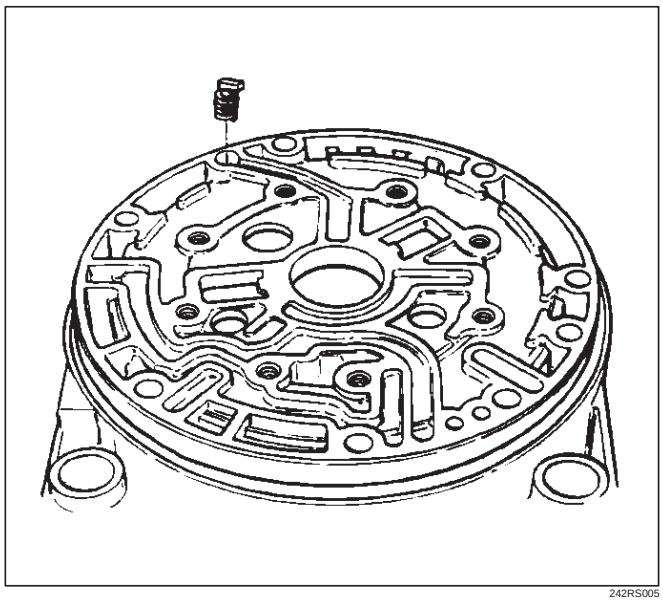

242RS005

4. Install gasket transfer plate/adapter case (8), center support transfer plate (7), and gasket transfer plate/center support (6).
5. Install center support (5) with 8 bolts.

Torque : 25 N•m (2.5 kg·m/18 lb ft)

6. Install piston assembly (4) into center support (5).
7. Install twenty four springs (3), spring seat (2), and retaining ring (1).
   - Install the 5–8840–0195–0 (J–23327) compressor and compress spring seat (2) and springs (3), then seat snap ring (1) in groove.
   - Remove the tool.

Overrun Clutch And Turbine Shaft

Disassembled View

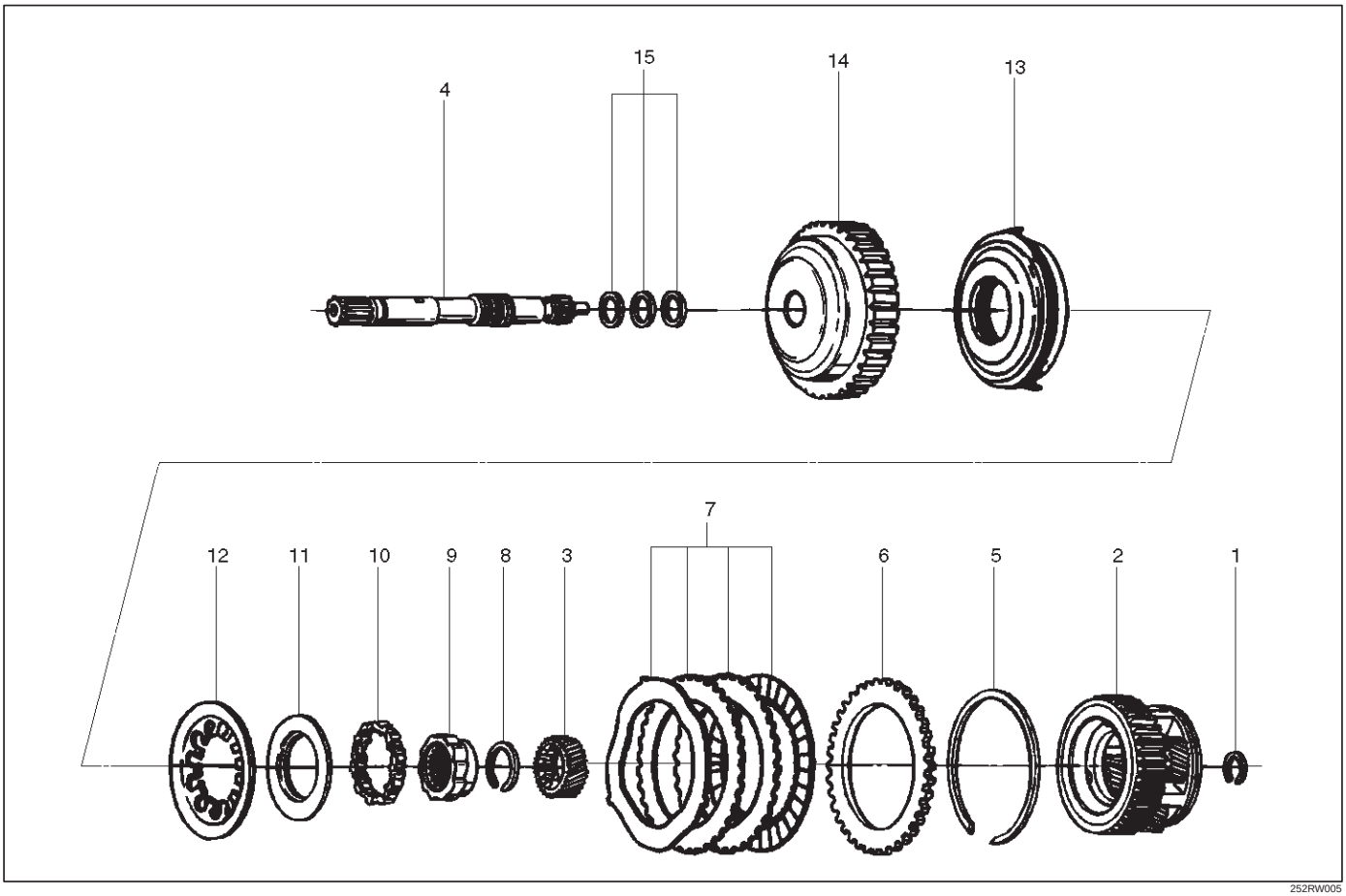

252RW005

Legend

(1) Snap Ring
(2) Overdrive Carrier Assembly
(3) Sun Gear
(4) Turbine Shaft
(5) Snap Ring
(6) Backing Plate
(7) Clutch Plates
(8) Snap Ring
(9) Overrun Roller Clutch Cam
(10) Roller Clutch Assembly
(11) Overrun Clutch Release Spring Retainer
(12) Diaphragm Spring
(13) Piston Assembly
(14) Overrun Clutch Drum
(15) Turbine Shaft Seal Rings

Disassembly

1. Position overrun clutch assembly upright, using the overdrive internal gear as a support.
   - Remove snap ring (1).

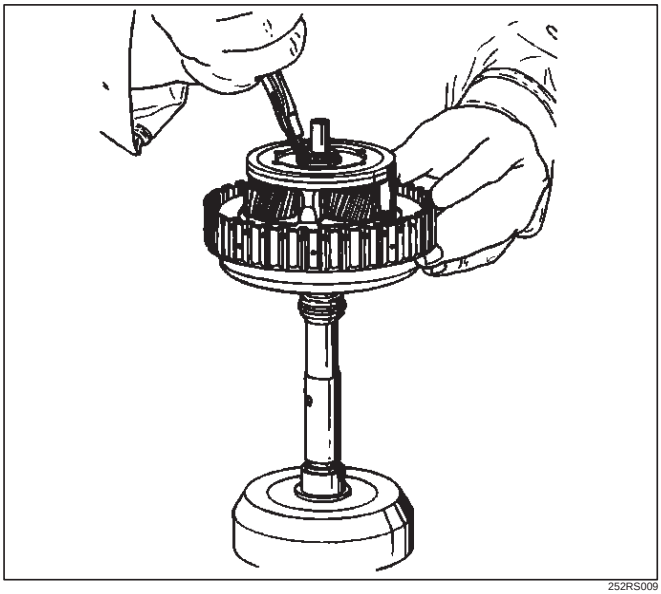

252RS009

2. Remove overdrive carrier assembly (2), sun gear (3) and turbine shaft (4).
3. Remove snap ring (5), backing plate (6), and clutch plates (7).
4. Compress diaphragm spring with the 5–8840–2275–0 (J–23327–91) compressor, then remove snap ring (8).

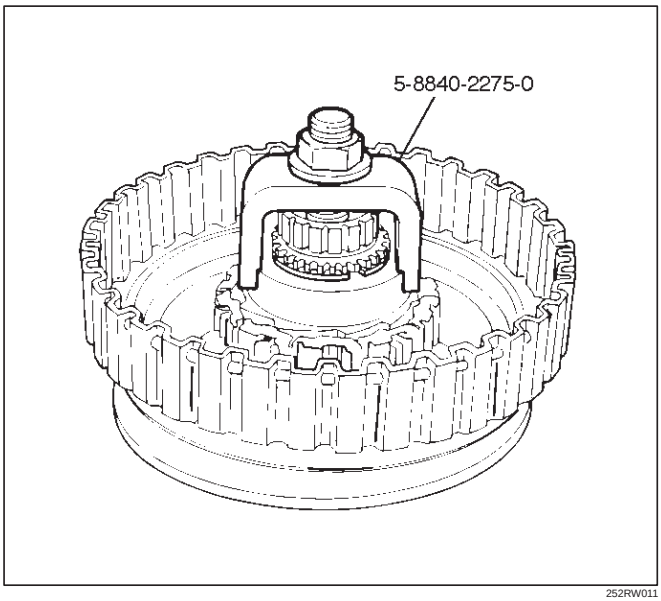

252RW011

5. Remove overrun roller clutch cam (9) and roller clutch assembly (10).
6. Remove overrun clutch release spring retainer (11) and diaphragm spring (12).
7. Remove piston assembly (13) from overrun clutch drum (14).
8. Remove turbine shaft seal rings (15).

Inspection And Repair

Overdrive Carrier Check

- Check pinion end play with a feeler gauge.

Clearance: 0.24mm–0.64mm (0.0094in–0.025in)

If clearance is outside specified value, replace overdrive carrier assembly.

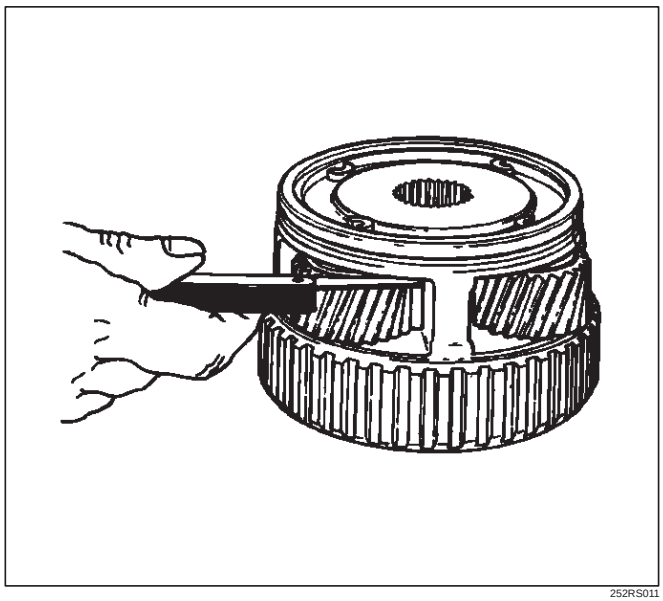

252RS011

Visual Check:

If any damage, deformation or local wear is found, replace the damaged part.

Reassembly

1. Install turbine shaft seal rings (15) with grease (petroleum jelly).

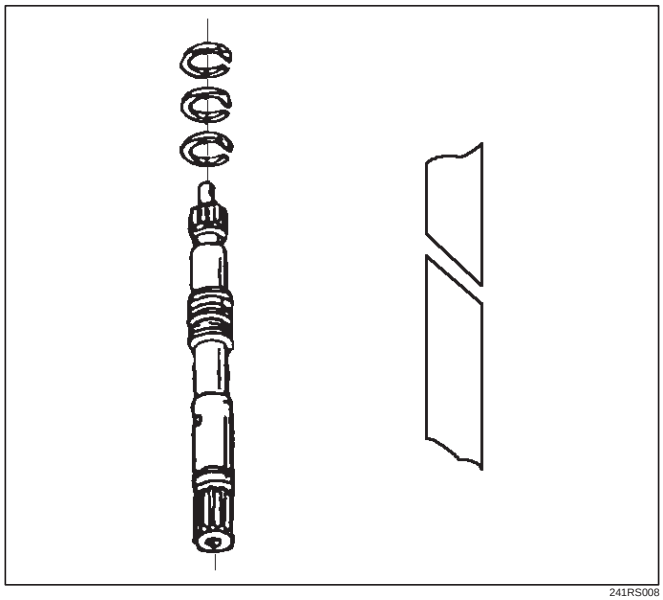

241RS008

2. Install the 5–8840–2269–0 (J–38555) inner installer on the drum (14).
   - Pre–install piston assembly into 5–8840–2269–0 (J–38555) outer installer.
   - Install overrun clutch piston assembly (13). Use the outer installer while pushing piston into drum (14).
   - Remove the installer.

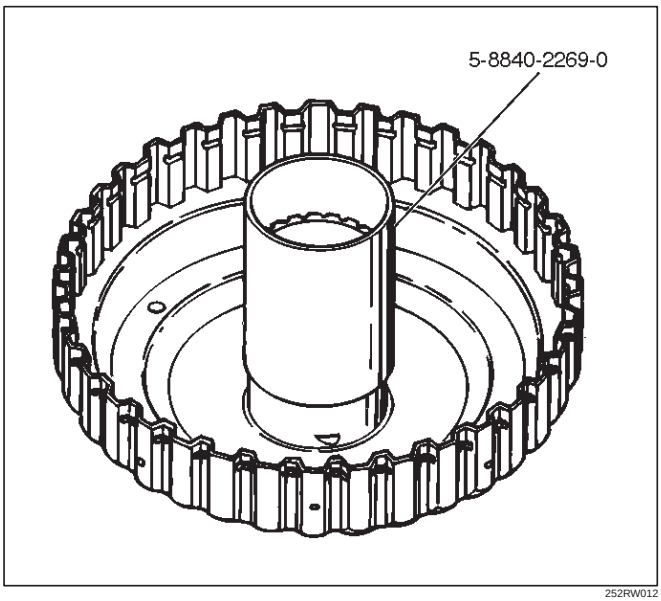

252RW012

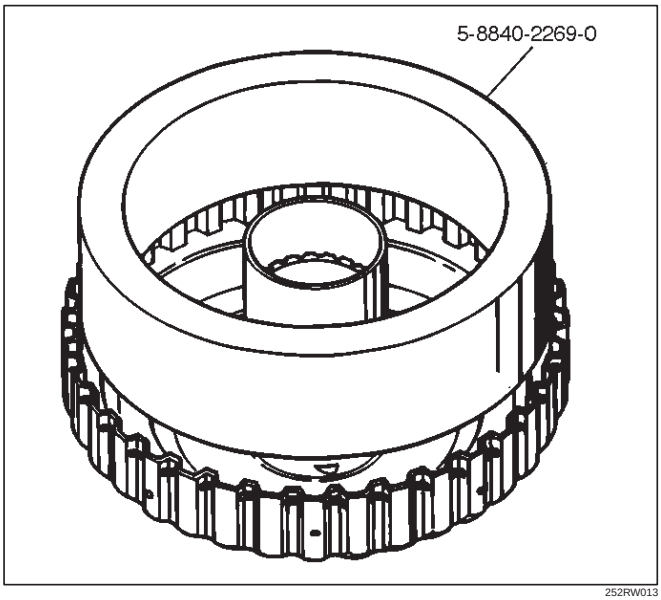

252RW013

3. Install diaphragm spring (12).
4. Install overrun clutch release spring retainer (11) (lip faces upwards), overrun roller clutch assembly (10), and cam (9).
5. Place snap ring loosely on spring retainer.
   - Hold the 5–8840–2275–0 (J–23327–91) compressor in a vise and compress piston return spring with compressor.
   - Set snap ring (8) in ring groove.
   - Remove the compressor.
6. Install clutch plates (7), start with steel plate and alternate with lined plates.
7. Install backing plate (6).
8. Install snap ring (5).
9. Install overdrive sun gear with countersink pointing downwards.
10. Install the overdrive carrier assembly (2).

NOTE: Turn the assembly in a counter–clockwise direction only until roller clutch enters the outer race. After installation, rotate the assembly and listen for loose rollers.

11. Install turbine shaft (4) and snap ring (1).

Main Data And Specification

General Specifications

				Remarks
Model			THM 4L30–E	
Engine			V6 3.2L 6VD1	DOHC
Type			Automatic four speed overdrive in 4th gear lock–up clutch torque converter	
Control systems	Shift control		Hydraulic	
	Shift pattern		Electronic	
	Shift quality		Electronic	
	Lock–up clutch		Electronic	
Gear ratio	1st		2.856	
	2nd		1.618	
	3rd		1.000	
	4th (O/D)		0.723	
	Reverse		2.000	
Gear set			Noiseless, high torque capability	
Oil used	Name		ATF DEXRON®–III	
	Q'ty liter (qt)		8.6 (9.1)	
Torque converter			2,100 ± 150	Stall speed (rpm)
	Reverse clutch	RC	4	Number of discs
	Second clutch	C2	6	
	Third clutch	C3	6	
	Brake band		Double wrap	
	Fourth clutch	C4	2	Number of discs
	Overrun clutch	OC	1	
	Overdrive	OFW	10	Number of rollers
	Principal	PFW	26	Number of sprags
	Ravigneaux planetary gear set	Input sun gear	30	Number of teeth
		Pinion gear	19	
		Long pinion	23	
		Ring gear	90	
		Long pinion	19	
		Output sun gear	46	
	Overdrive planetary gear set	Sun gear	31	
		Pinion gear	24	
		Ring gear	81	

Torque Specifications

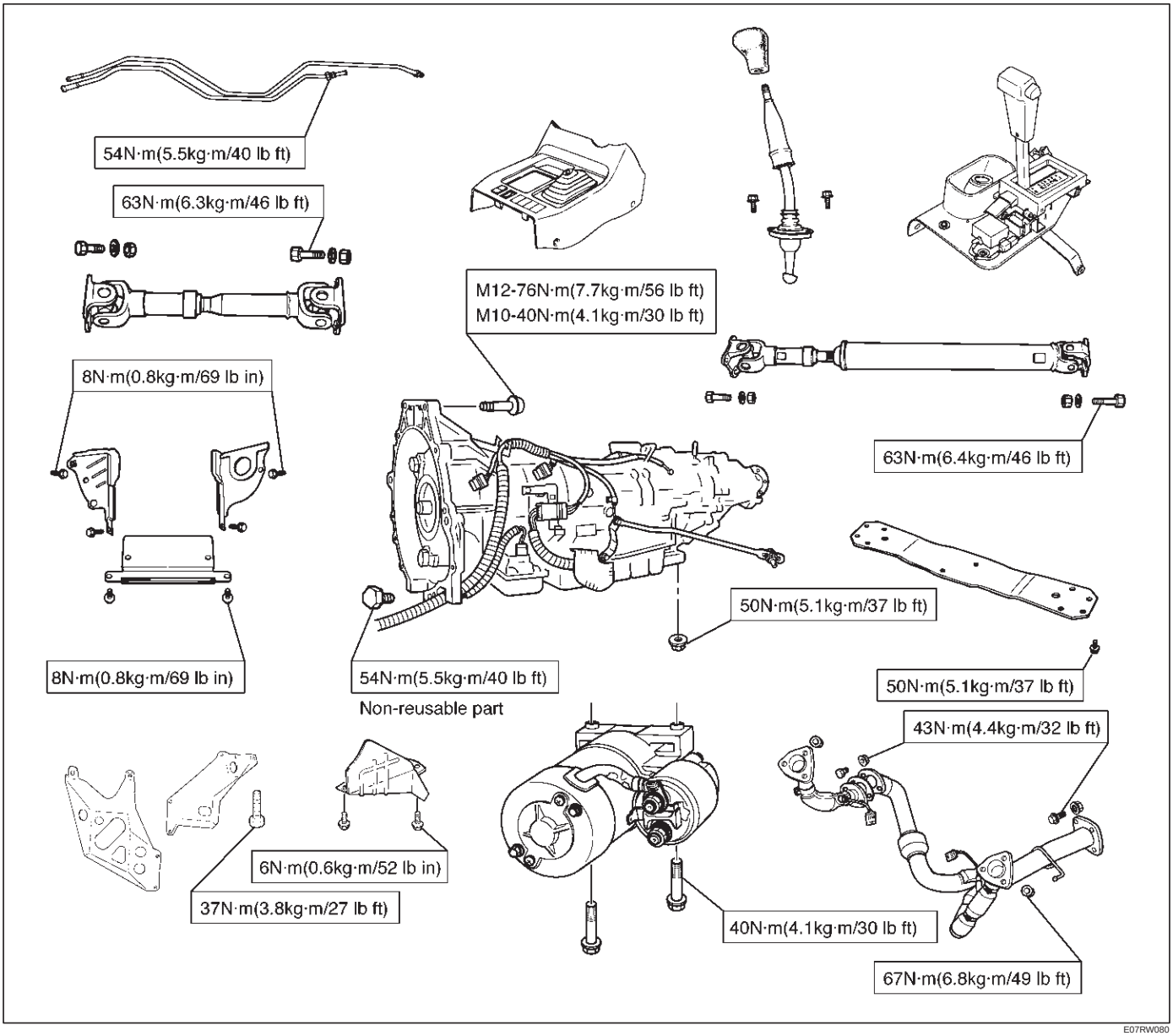

E07RW080

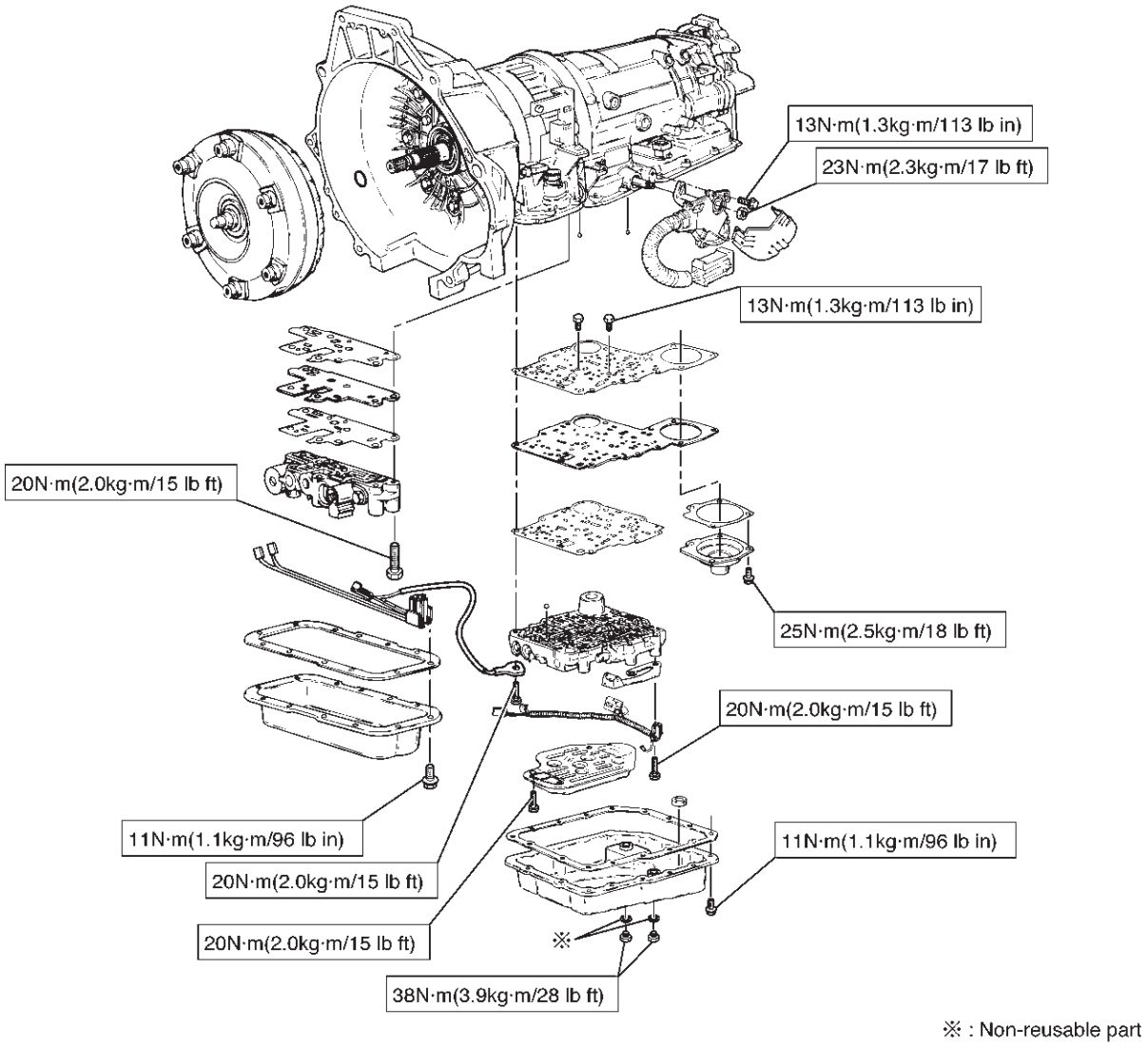
13N·m(1.3kg·m/113 lb in)
23N·m(2.3kg·m/17 lb ft)
13N·m(1.3kg·m/113 lb in)
20N·m(2.0kg·m/15 lb ft)
25N·m(2.5kg·m/18 lb ft)
20N·m(2.0kg·m/15 lb ft)
11N·m(1.1kg·m/96 lb in)
11N·m(1.1kg·m/96 lb in)
20N·m(2.0kg·m/15 lb ft)
20N·m(2.0kg·m/15 lb ft)
※
38N·m(3.9kg·m/28 lb ft)
※ : Non-reusable part

E07RW079

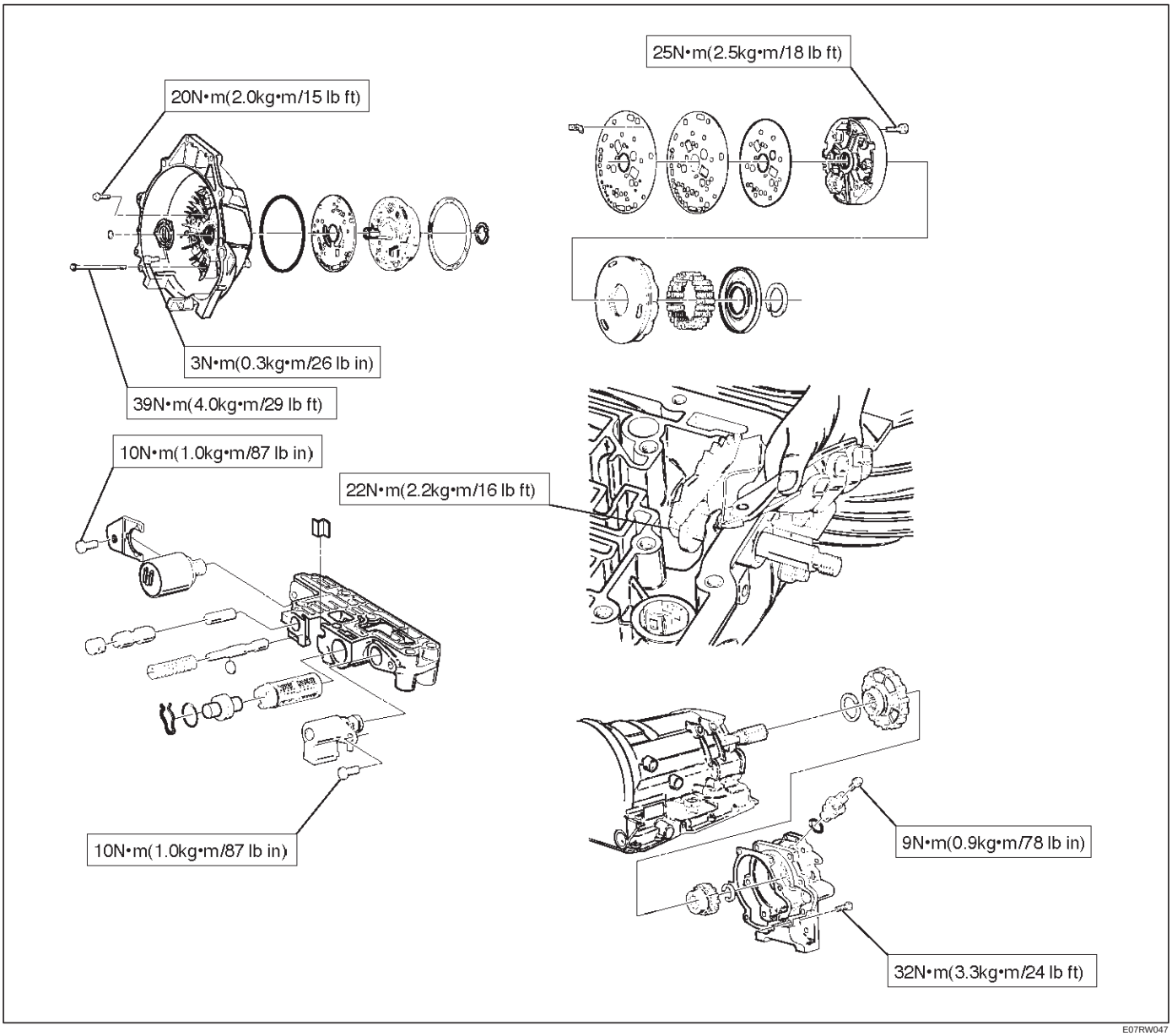
25N•m(2.5kg•m/18 lb ft)
20N•m(2.0kg•m/15 lb ft)
3N•m(0.3kg•m/26 lb in)
39N•m(4.0kg•m/29 lb ft)
10N•m(1.0kg•m/87 lb in)
22N•m(2.2kg•m/16 lb ft)
10N•m(1.0kg•m/87 lb in)
9N•m(0.9kg•m/78 lb in)
32N•m(3.3kg•m/24 lb ft)

E07RW047

Special Tools

ILLUSTRATION	TOOL NO. TOOL NAME
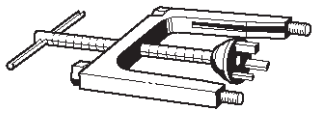 901RT071	5–8840–0501–0 **(J–23075)** Spring compressor (For servo piston)
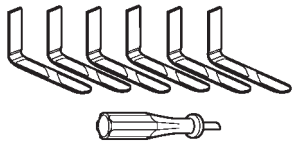 901RX007	5–8840–2258–0 **(J–38450–A)** Third clutch snap ring compressor
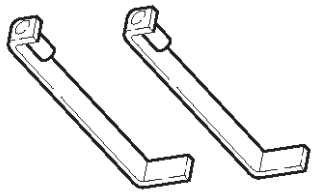 901RT073	5–8840–2259–0 **(J–23075–12)** Third clutch spring compressor adapter (Use with 5–8840–0501–0 (J–23075))
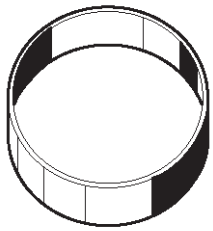 901RT074	5–8840–2260–0 **(J–23084)** Third clutch piston installer
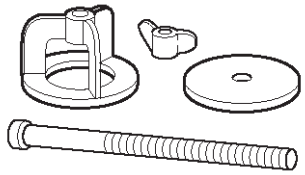 901RT075	5–8840–0195–0 **(J–23327)** Third clutch spring compressor
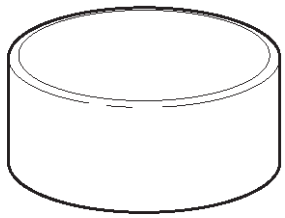 901RT076	5–8850–2261–0 **(J–23080–A)** Second clutch piston installer

ILLUSTRATION	TOOL NO. TOOL NAME
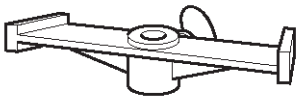 901RT077	5–8840–2262–0 **(J–23085–A)** Selective washer gauging tool
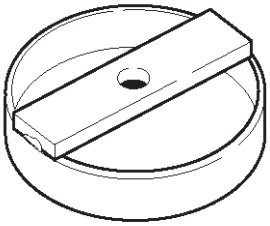 901RT078	5–8840–2263–0 **(J–23327–90)** Fourth clutch spring compressor (Use with 5–8840–0195–0 (J–23327))
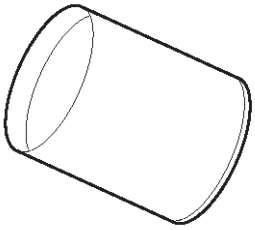 901RT079	5–8840–2264–0 **(J–38553)** 3/4 Accumulator piston fitter
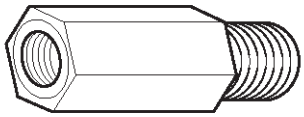 901RT080	5–8840–2403–0 **(J–41096)** Cover remover (Use with 5–8840–2266–0 (J–38584))
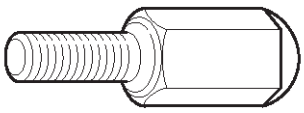 901RT081	5–8840–2266–0 **(J–38584)** Slide hammer adapter (Use with 5–8840–0019–0 (J–23907))
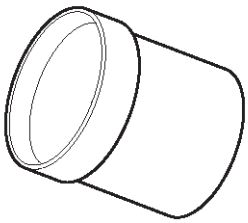 901RT082	5–8840–2267–0 **(J–38554)** Fourth clutch piston fitter

ILLUSTRATION	**TOOL NO.** TOOL NAME
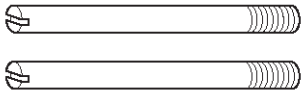 901RT083	5–8840–2268–0 **(J–38588)** Guide pins; adapter case to main case
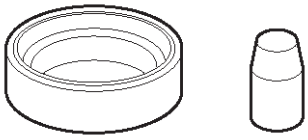 901RT084	5–8840–2269–0 **(J–38555)** Overrun clutch piston seal installer set
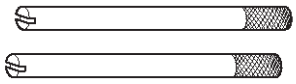 901RT085	5–8840–2270–0 **(J–3387–2)** Guide pins; gasket and transfer plate to valve body
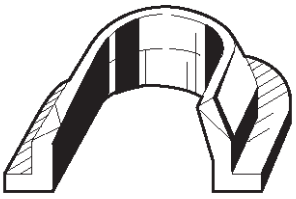 901RT086	5–8840–2271–0 **(J–25022)** Turbine shaft puller (Use with 5–8840–0618–0 (J–24773–1))
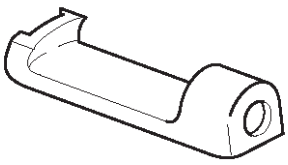 901RT087	5–8840–0196–0 **(J–23129)** Oil seal remover (Use with 5–8840–2266–0 (J–23907) and 5–8840–0019–0 (J–38584))
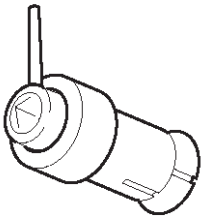 901RT088	5–8840–2272–0 **(J–38557)** Oil pump centering tool

ILLUSTRATION	**TOOL NO.** TOOL NAME
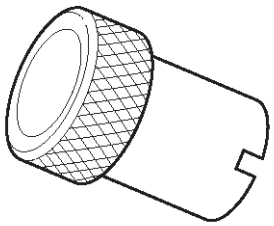 901RT089	5–8840–2273–0 **(J–23082–01)** Oil pump rotation tool
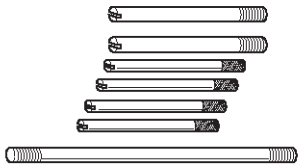 901RT090	5–8840–0022–0 **(J–25025–B)** Guide pins; valve body to main case
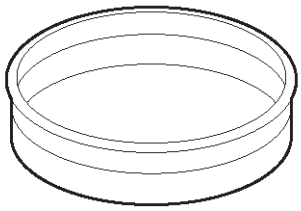 901RT091	5–8840–2274–0 **(J–38428)** Servo piston fitter
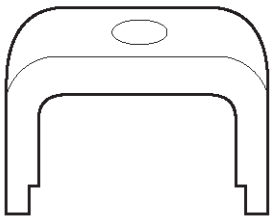 901RT092	5–8840–2275–0 **(J–23327–91)** Overrun clutch spring compressor
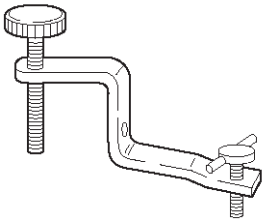 901RT093	5–8840–2277–1 **(J–38559–A)** 3/4 Accumulator piston cover compressor
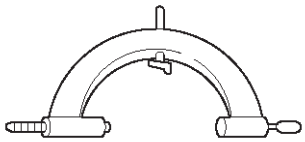 901RT094	5–8840–2278–0 **(J–8763–02)** Holding fixture

ILLUSTRATION	**TOOL NO.** TOOL NAME
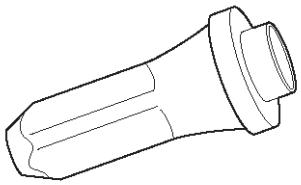 901RT095	5–8840–2282–0 **(J–36797)** A/T extension housing oil seal installer (Inside)
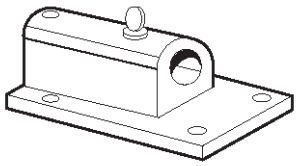 901RT096	5–8840–0003–0 **(J–3289–20)** Holding fixture base
 901RT097	5–8840–0004–0 Pressure gauge
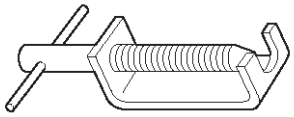 901RT098	5–8840–0618–0 **(J–24773–1)** End play fixture (Use with 5–8840–2271–0 (J–25022))
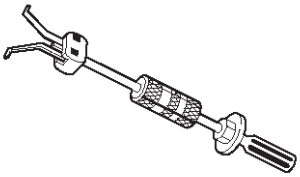 901RT099	5–8840–0019–0 & 5–8840–2000–0 **(J–23907)** Slide hammer

4L30–E Parts List

Case And Associated Parts

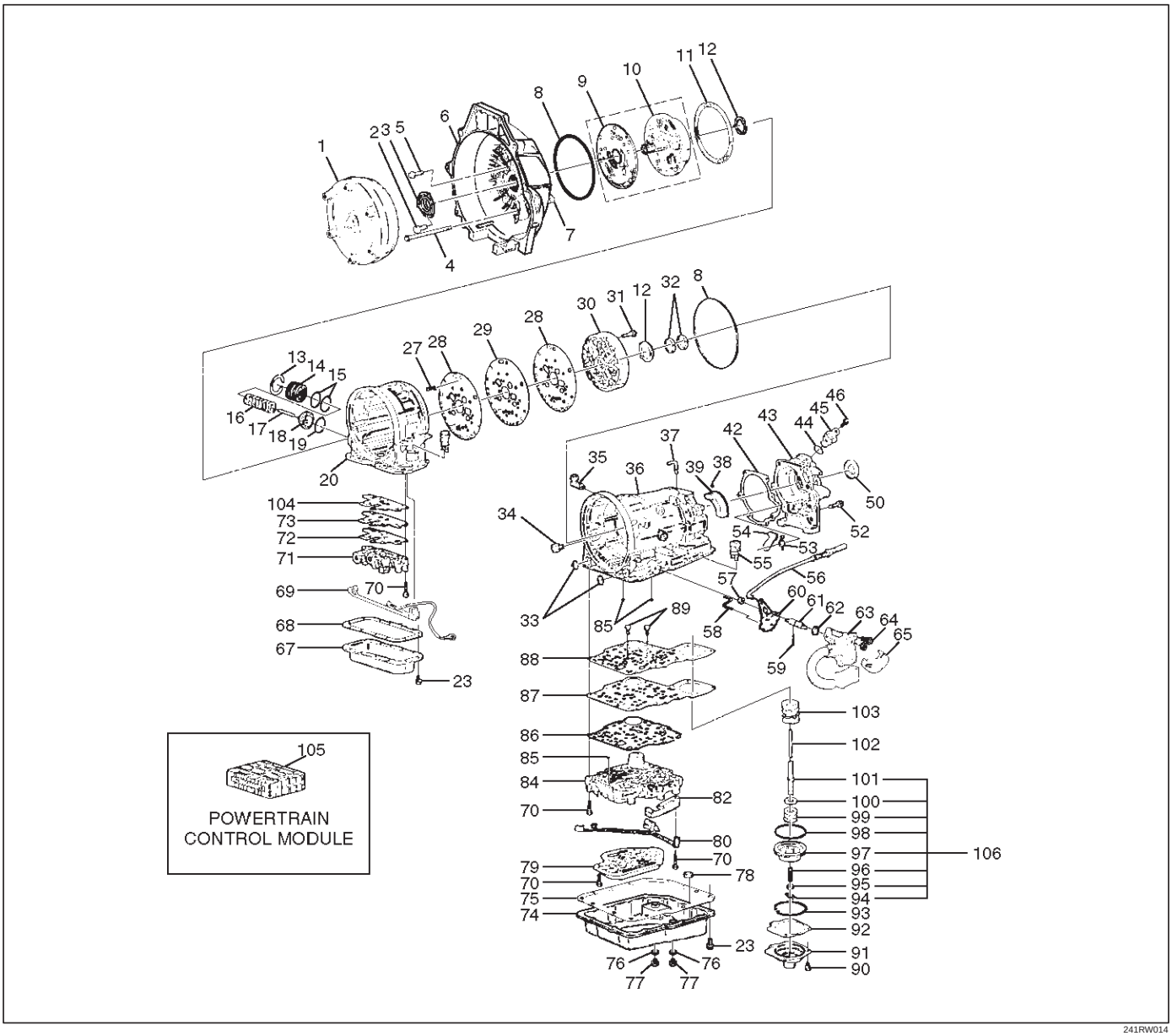

241RW014

Legend

(1) Torque Converter
(2) Screw, Seal Ring Assembly
(3) Seal Ring Assembly, Converter Housing
(4) Screw, Converter Housing/Main Case
(5) Screw, Converter Housing/Oil Pump
(6) Housing, Converter
(7) Plug, Converter Housing
(8) Seal, O–Ring
(9) Wear Plate, Oil Pump Body
(10) Pump Assembly, Oil
(11) Gasket
(12) Washer, Thrust Selective
(13) Ring, Snap
(14) Cover, 3–4 Accumulator Piston
(15) Seal, O–Ring, 3–4 Accumulator
(16) Spring, 3–4 Accumulator Piston
(17) Pin, 3–4 Accumulator Piston
(18) Piston, 3–4 Accumulator
(19) Ring, 3–4, Accumulator Piston
(20) Case, Adapter
(22) Connector, Electrical/Adapter Case
(23) Screw, Pan
(27) Restrictor, Oil
(28) Gasket, Transfer Plate/Adapter
(29) Plate, Transfer Adapter/Center Support
(30) Support Assembly, Center
(31) Screw, Center Support
(32) Ring, Oil Seal
(33) Seal, O–Ring Main Case
(34) Fitting, Cooler
(35) Fitting Assembly, Cooler
(36) Case, Main
(37) Breather, Pipe

(38) Seal, O–Ring
(39) Reservoir
(42) Gasket, Extension Case
(43) Extension Assembly
(44) Seal, O–Ring/Speed Sensor
(45) Sensor Assembly, Speed
(46) Screw, Speed Sensor
(50) Seal, Extension Assembly
(52) Screw, Extension/Main Case
(53) Spring, Parking Pawl Lock
(54) Pawl, Parking Lock
(55) Connector, Electrical/Main Case
(56) Actuator Assembly, Parking Lock
(57) Nut, Parking Lock Lever
(58) Link, Manual Valve
(59) Pin, Spring
(60) Lever, Parking Lock and Range Selector
(61) Shaft, Selector
(62) Seal, Selector Shaft
(63) Mode Switch Assembly
(64) Screw and Conical Washer Assembly
(65) Shield, Mode Switch
(67) Pan, Bottom/Adapter Case
(68) Gasket, Bottom Pan/Adapter Case
(69) Harness Assembly, Adapter Case
(70) Screw, Valve Body
(71) Valve Body Assembly, Adapter Case
(72) Gasket, Adapter Valve Body
(73) Plate, Adapter Valve Body/Transfer
(74) Pan, Bottom/Main Case
(75) Gasket, Bottom Pan/Main Case
(76) Gasket, Oil Drain or Overfill Screw
(77) Screw, Oil Drain or Overfill
(78) Magnet, Chip Collector
(79) Filter Oil
(80) Harness Assembly, Main Case
(82) Roller and Spring Assembly, Manual Detent
(84) Valve Body Assembly, Main Case
(85) Ball, Check
(86) Gasket, Main V.B./Transfer Plate
(87) Plate, Main V.B./Transfer
(88) Gasket, Transfer/Main Case
(89) Screw, Transfer Plate on V.B.
(90) Screw, Servo Cover
(91) Cover, Servo Piston
(92) Gasket, Cover/Servo Piston
(93) Ring, Retaining Servo Piston
(94) Clip, Servo Piston
(95) Nut, Servo Screw
(96) Screw, Servo Piston
(97) Piston, Servo
(98) Seal, Ring/Servo Piston
(99) Spring, Cushion/Servo Piston
(100) Seat, Cushion Spring
(101) Sleeve, Servo Piston Adjust
(102) Rod, Apply/Servo Piston
(103) Spring, Return/Servo Piston
(104) Gasket, Adapter Case/Transfer Plate
(105) Powertrain Control Module
(106) Servo Piston Assembly

Pump Assembly

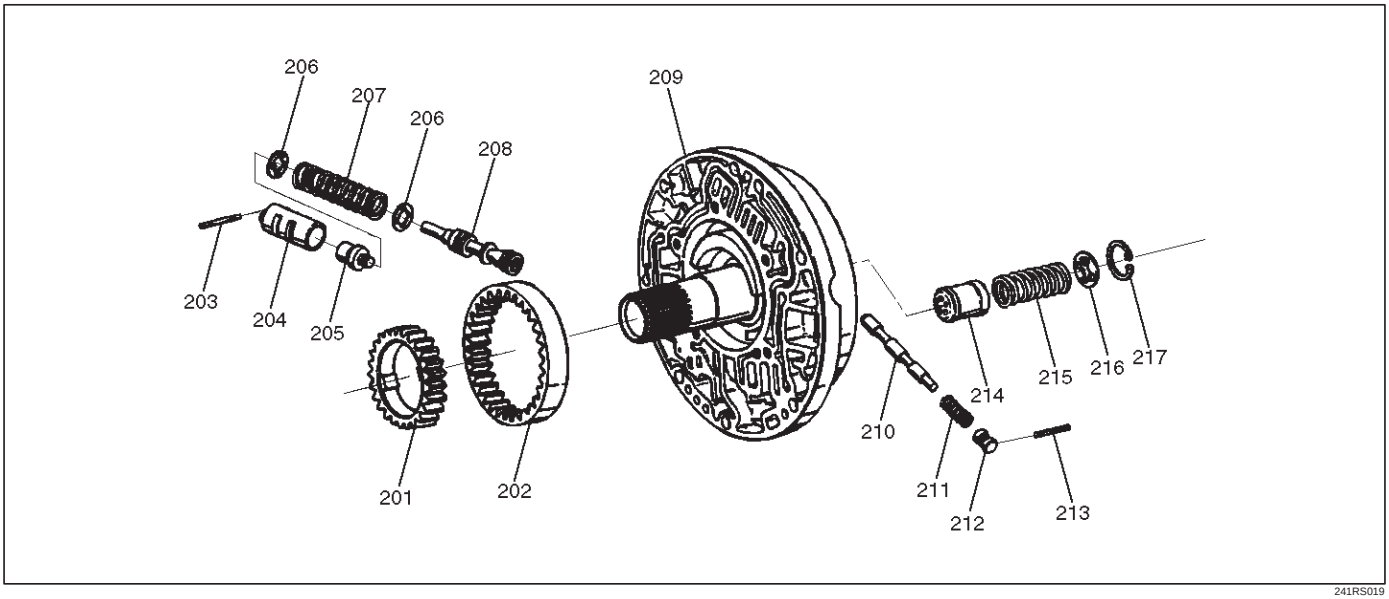

241RS019

Legend

(201) Gear, Oil Pump Drive
(202) Gear, Oil Pump Driven
(203) Pin, Boost Valve Sleeve
(204) Sleeve, Boost Valve
(205) Valve, Boost
(206) Seat, Spring/Pressure Regulator Valve
(207) Spring, Pressure Regulator Valve
(208) Valve, Pressure Regulator
(209) Pump Assembly, Oil
(210) Valve, Converter Clutch Control
(211) Spring, Converter Clutch Control Valve
(212) Plug, Converter Clutch Control Valve
(213) Pin, Spring
(214) Piston, Throttle Signal Accumulator
(215) Spring, Throttle Signal Accumulator
(216) Seat, Spring/Throttle Signal Accumulator
(217) Ring, Snap/Throttle Signal Accumulator

Valve Body Assemblies

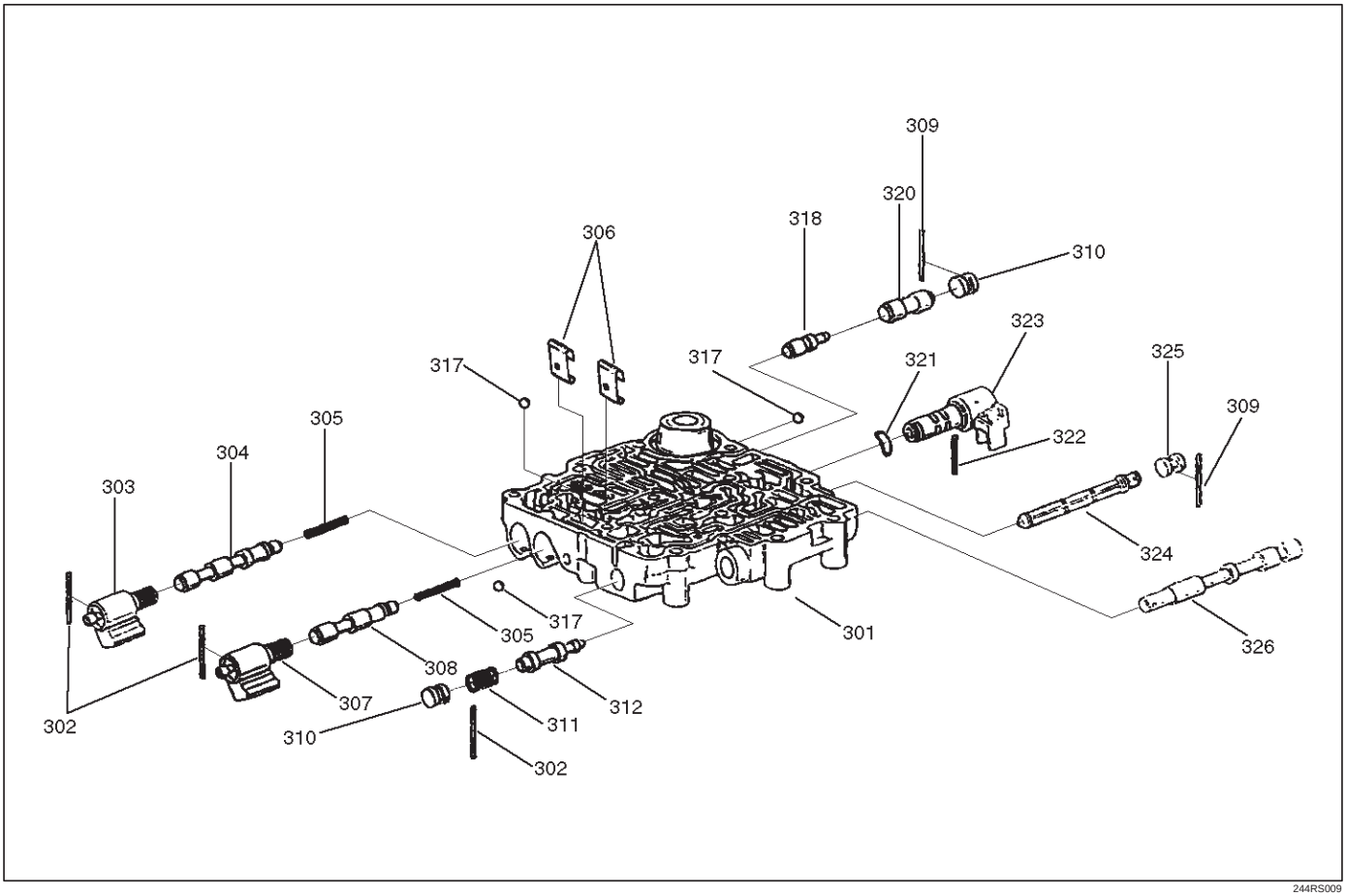

244RS009

Legend

(301) Body, Valve Main Case
(302) Pin, Spring
(303) Solenoid Assembly, ON/OFF N.C.
(304) Valve, 1–2 and 3–4 Shift
(305) Spring, 1–2 and 3–4 (2–3) Shift
(306) Retainer, Valve
(307) Solenoid Assembly, ON/OFF N.O.
(308) Valve, 2–3 Shift
(309) Pin, Spring
(310) Plug, Valve Bore
(311) Spring, Valve Low Pressure Control
(312) Valve, Low Pressure Control
(317) Ball, Check
(318) Valve, 1–2 Accumulator Control
(320) Valve, 1–2 Accumulator
(321) Washer, Waved PWM Solenoid
(322) Pin, Solenoid PWM
(323) Solenoid Assembly, Band Control PWM
(324) Screen Assembly, PWM Solenoid
(325) Plug, Screen
(326) Valve, Manual

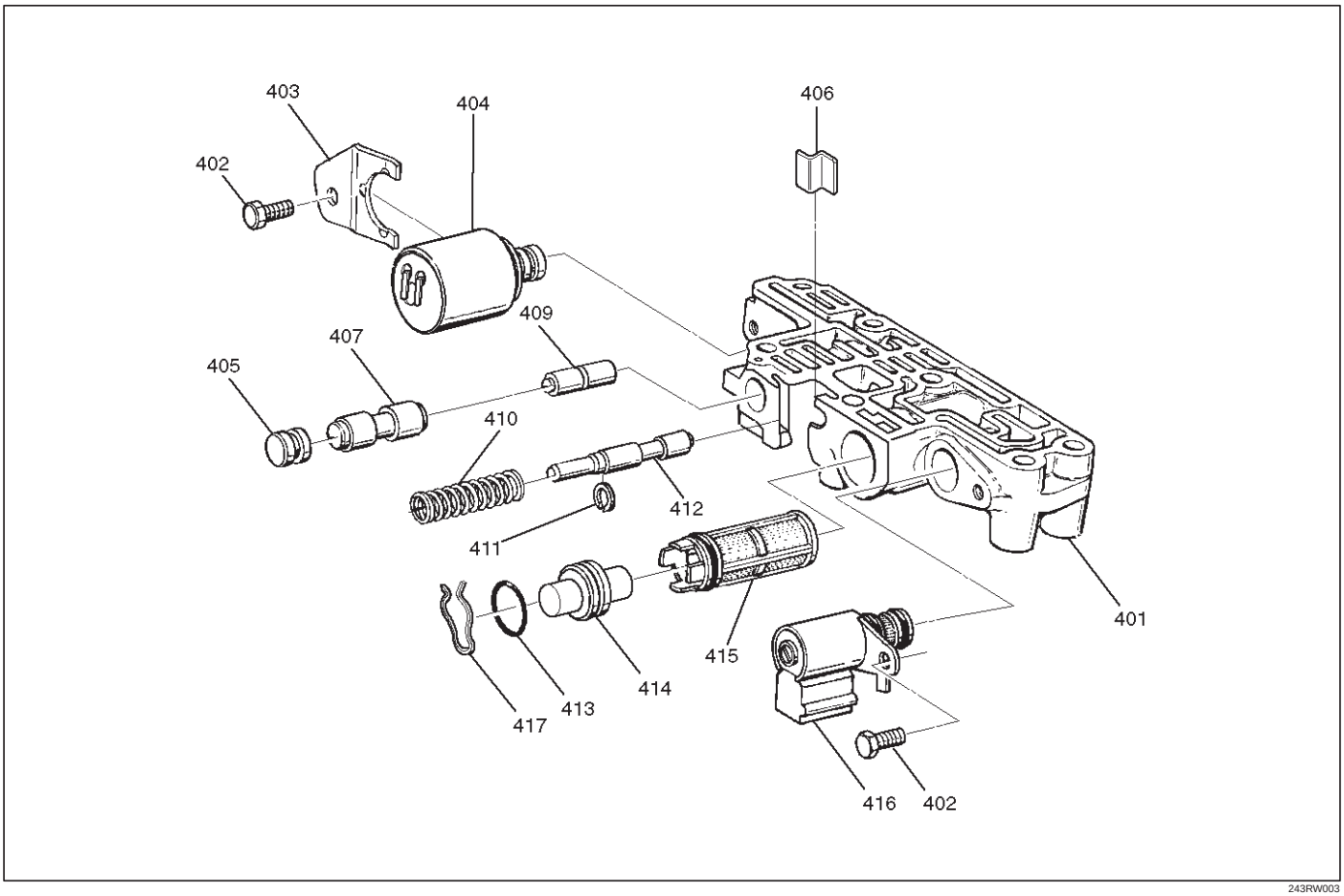

243RW003

Legend

(401) Body, Valve/Adapter Case
(402) Screw, Solenoid Force Motor
(403) Retainer, Force Motor
(404) Solenoid, Force Motor
(405) Plug, 3–4 Accumulator
(406) Plug and Spring Retainer
(407) Valve, 3–4 Accumulator
(409) Valve, 3–4 Accumulator Control
(410) Spring, Feed Limit Valve
(411) Ring, Retainer
(412) Valve, Feed Limit
(413) Seal, O–Ring Plug Filter
(414) Plug, Screen
(415) Screen Assembly, Force Motor
(416) Solenoid, Torque Conv. Clutch ON/OFF N.C.
(417) Plug Retainer

Overdrive Internal Components

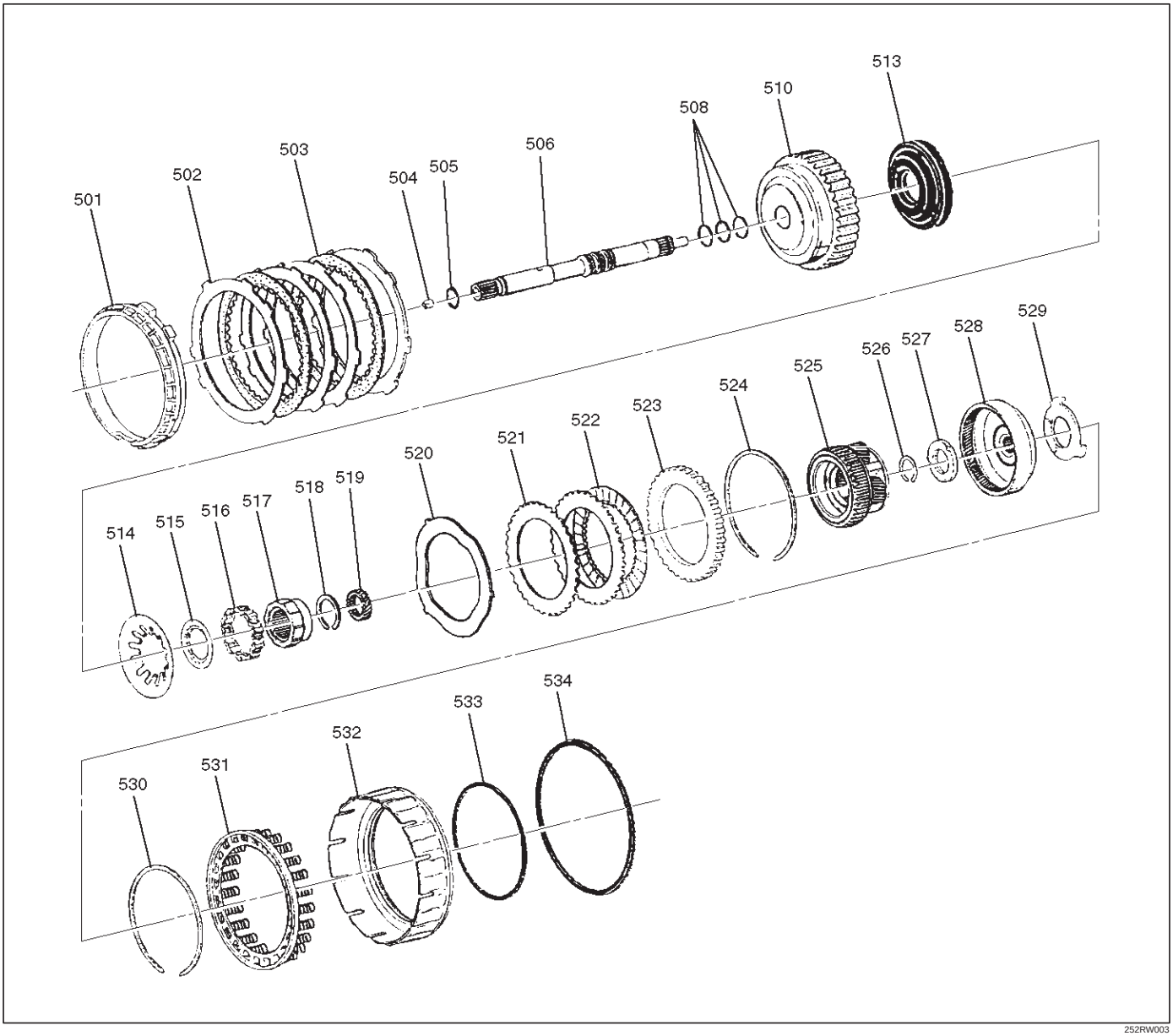

252RW003

Legend

(501) Retainer, 4th Clutch
(502) Plate, 4th Clutch (Steel)
(503) Plate Assembly, 4th Clutch (Lined)
(504) Retainer And Ball Assembly, Check Valve
(505) Seal, O–Ring/Turbine Shaft
(506) Shaft, Turbine
(508) Ring, Oil Seal/Turbine Shaft
(510) Housing, Overrun Clutch
(513) Piston, Overrun Clutch
(514) Spring, Overrun Clutch Release
(515) Retainer, Release Spring/Overrun Clutch
(516) Roller Assembly, Overdrive Clutch
(517) Cam, Overdrive Roller Clutch
(518) Ring, Snap/Overrun Clutch Hub
(519) Gear, Overdrive Sun
(520) Plate, Waved/Overrun Clutch
(521) Plate, Overrun Clutch (Steel)
(522) Plate Assembly, Overrun Clutch (Lined)
(523) Plate, Backing/Overrun Clutch
(524) Ring, Snap/Overrun Clutch Housing
(525) Carrier Assembly, Overdrive Complete
(526) Ring, Snap/Turbine Shaft/Carrier
(527) Bearing Assembly, Thrust
(528) Gear, Overdrive Internal
(529) Washer, Thrust/Internal Gear/Support
(530) Ring, Snap/Adapter/4th Clutch Spring
(531) Retainer and spring assembly, 4th clutch
(532) Piston, 4th Clutch
(533) Seal, 4th Clutch Piston (Inner)
(534) Seal, 4th Clutch Piston (outer)

Internal Components

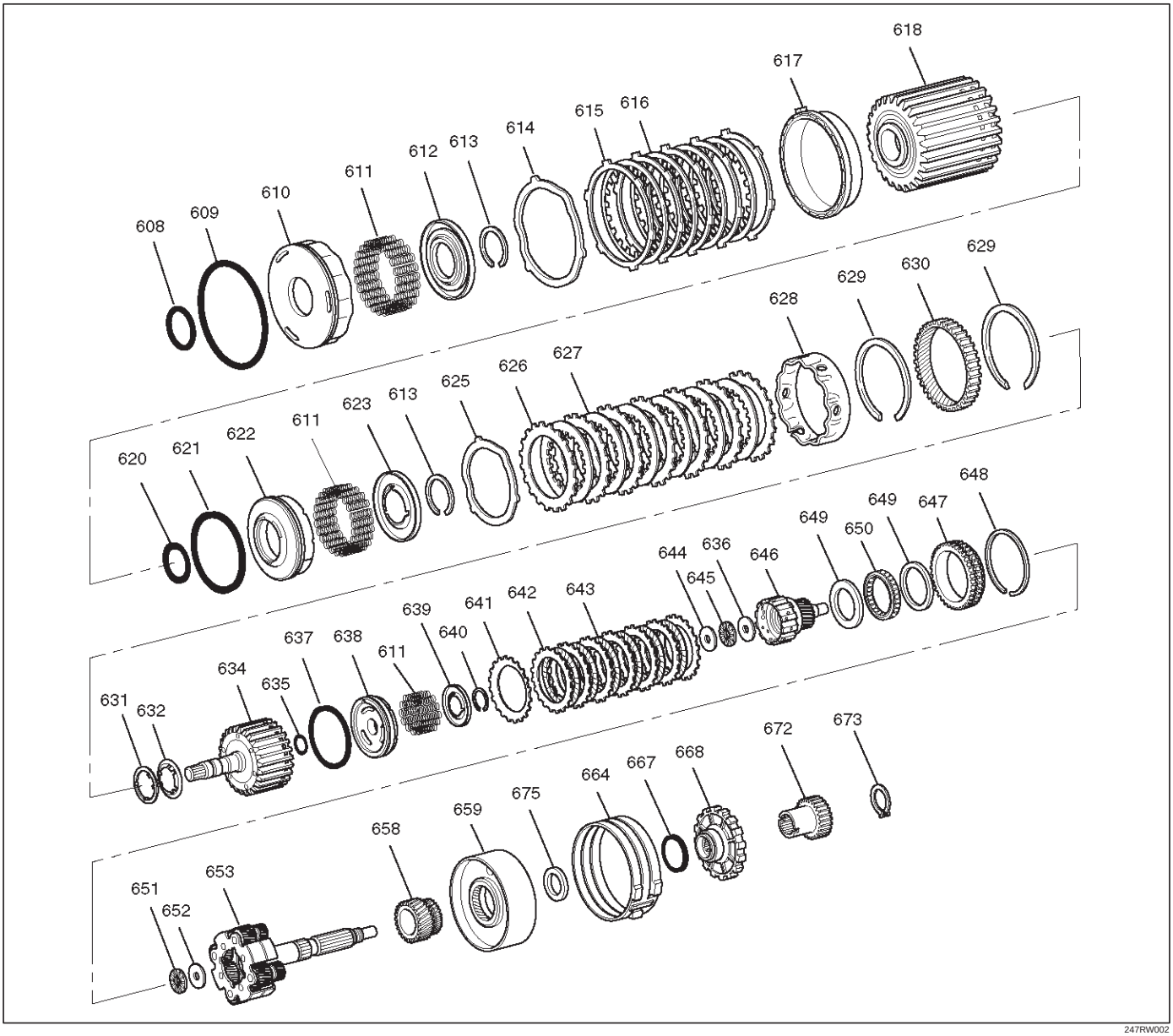

247RW002

Legend

(608) Seal, Reverse Clutch Piston (Inner)
(609) Seal, Reverse Clutch Piston (Outer)
(610) Piston, Reverse Clutch
(611) Spring, Piston Clutch
(612) Seat, Spring/Reverse Clutch
(613) Ring, Retaining
(614) Plate, Waved/Reverse Clutch
(615) Plate, Reverse Clutch (Steel)
(616) Plate Assembly, Reverse Clutch (Lined)
(617) Plate, Reverse Clutch Pressure/Selective
(618) Drum Assembly, 2nd Clutch
(620) Seal, 2nd Clutch Piston (Inner)
(621) Seal, 2nd Clutch Piston (Outer)
(622) Piston, 2nd Clutch
(623) Seat, Spring/2nd Clutch
(625) Plate, Waved/2nd Clutch
(626) Plate, 2nd Clutch (Steel)
(627) Plate Assembly, 2nd Clutch (Lined)
(628) Spacer, 2nd Clutch
(629) Ring, Retaining
(630) Gear, Ring
(631) Washer, Thrust/2nd Clutch/3rd Clutch
(632) Thrust Washer, Clutch Hub
(634) Drum Assembly, 3rd Clutch
(635) Seal, 3rd clutch piston (Inner)
(636) Washer, Retaining
(637) Seal, 3rd Clutch Piston (Outer)
(638) Piston 3rd Clutch
(639) Seat, Spring/3rd Clutch
(640) Ring, Retaining
(641) Plate, Spring Cushion/3rd Clutch
(642) Plate, 3rd Clutch (Steel)
(643) Plate Assembly, 3rd Clutch (Lined)
(644) Washer, Thrust/Input Sun
(645) Bearing, Input Shaft/Gear Assembly

(646) Gear Assembly, Input Sun
(647) Race Assembly, Sprag
(648) Ring, Retaining/Sprag
(649) Ring, Retaining
(650) Cage Assembly, Sprag
(651) Bearing, Output Shaft/Input Sun
(652) Washer, Output Shaft/Input Sun
(653) Carrier Assembly, Planetary
(658) Gear, Reaction Sun
(659) Drum, Reaction Sun
(664) Band Assembly, Brake
(667) Seal, Ring/Wheel Parking Lock
(668) Wheel, Parking Lock
(672) Wheel, Speed
(673) Ring, Retaining
(675) Bearing, Thrust Assembly

Center Support Assembly

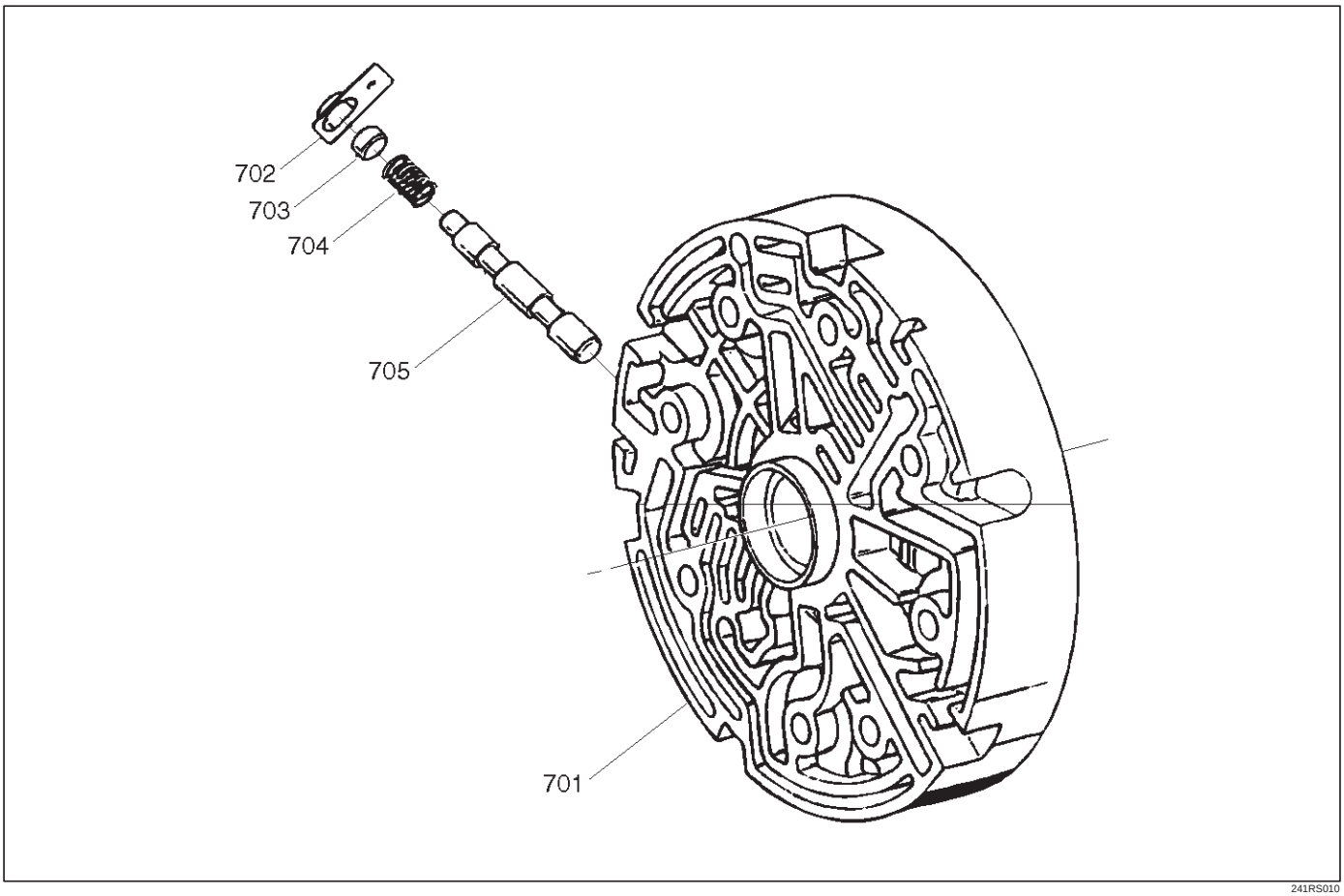

241RS010

Legend
(701) Center Support
(702) Retainer Plate
(703) Plug, Lockout
(704) Spring, Overrun Lockout
(705) Valve, Overrun Lockout

TRANSMISSION

TRANSMISSION CONTROL SYSTEM (4L30–E)

CONTENTS

Service Precaution 7A1–2
General Description 7A1–2
Shift Control 7A1–6
Band Apply Control 7A1–6
Torque Converter Clutch Control 7A1–6
Line Pressure Control 7A1–6
On–Board Diagnostic System 7A1–6
Fail Safe Mechanism 7A1–6
Torque Management Control 7A1–6
ATF Warning Control 7A1–6
ABS Control (If equipped) 7A1–6
Winter Drive Mode 7A1–9
Backup Mode 7A1–9
Functions of Input / Output Components . . 7A1–10
Diagnosis 7A1–11
Check Trans Indicator 7A1–11
Diagnostic Check 7A1–11
“Check Trans” Check 7A1–12
Tech2 OBD II Connection 7A1–13
OBD II Diagnostic Management System . . 7A1–18
16 – Terminal Data Link Connector (DLC) . 7A1–19
Malfunction Indicator Lamp (MIL) 7A1–20
Types Of Diagnostic Trouble Codes (DTCs) 7A1–20
Clear DTC 7A1–20
DTC Check 7A1–21
PCM Precaution 7A1–21
Information On PCM 7A1–21
Intermittent Conditions 7A1–21
Transmission And PCM Identification 7A1–22
Diagnostic Trouble Code (DTC) Identification 7A1–24
DTC P0218 Transmission Fluid Over Temperature 7A1–25
Conditions For Setting The DTC 7A1–25
Action Taken When The DTC Sets 7A1–25
Conditions For Clearing The DTC 7A1–25
Diagnostic Aids 7A1–25
Test Description 7A1–25
DTC P0560 System Voltage Malfunction . . . 7A1–27
DTC P0705 Transmission Range Switch (Mode Switch) Illegal Position 7A1–30
DTC P0706 Transmission Range Switch (Mode Switch) Performance 7A1–33
DTC P0712 Transmission Fluid Temperature (TFT) Sensor Circuit Low Input 7A1–36
DTC P0713 Transmission Fluid Temperature (TFT) Sensor Circuit High Input 7A1–39
DTC P0719 TCC Brake Switch Circuit High (Stuck On) 7A1–42
DTC P0722 Transmission Output Speed Sensor (OSS) Low Input 7A1–45
DTC P0723 Transmission Output Speed Sensor (OSS) Intermittent 7A1–48
DTC P0730 Transmission Incorrect Gear Ratio 7A1–51
DTC P0748 Pressure Control Solenoid (PCS) (Force Motor) Circuit Electrical 7A1–54
DTC P0753 Shift Solenoid A Electrical 7A1–56
DTC P0758 Shift Solenoid B Electrical 7A1–59
DTC P1790 ROM Transmission Side Bad Check Sum 7A1–63
DTC P1792 EEPROM Transmission Side Bad Check Sum 7A1–64
DTC P1835 Kickdown Switch Always On . . . 7A1–65
DTC P1850 Brake Band Apply Solenoid Malfunction 7A1–67
DTC P1860 TCC Solenoid Electrical 7A1–71

Service Precaution

WARNING: IF SO EQUIPPED WITH A SUPPLEMENTAL RESTRAINT SYSTEM (SRS), REFER TO THE SRS COMPONENT AND WIRING LOCATION VIEW IN ORDER TO DETERMINE WHETHER YOU ARE PERFORMING SERVICE ON OR NEAR THE SRS COMPONENTS OR THE SRS WIRING. WHEN YOU ARE PERFORMING SERVICE ON OR NEAR THE SRS COMPONENTS OR THE SRS WIRING, REFER TO THE SRS SERVICE INFORMATION. FAILURE TO FOLLOW WARNINGS COULD RESULT IN POSSIBLE AIR BAG DEPLOYMENT, PERSONAL INJURY, OR OTHERWISE UNNEEDED SRS SYSTEM REPAIRS.

CAUTION: Always use the correct fastener in the proper location. When you replace a fastener, use ONLY the exact part number for that application. ISUZU will call out those fasteners that require a replacement after removal. ISUZU will also call out the fasteners that require thread lockers or thread sealant. UNLESS OTHERWISE SPECIFIED, do not use supplemental coatings (Paints, greases, or other corrosion inhibitors) on threaded fasteners or fastener joint interfaces. Generally, such coatings adversely affect the fastener torque and the joint clamping force, and may damage the fastener. When you install fasteners, use the correct tightening sequence and specifications. Following these instructions can help you avoid damage to parts and systems.

General Description

The 4L30–E is a 4–speed fully automatic transmission. It uses a microcomputer as a control unit to judge running conditions including throttle opening rate and vehicle speed, then it sets the shifting point in the optimum timing so that best driving performance can be achieved.
In addition, the built–in shift mode select function can select three shift modes according to the driver's preference:

- Normal mode –Normal shift pattern.
- Winter mode –Starts in 3rd gear to reduce slippage on ice or snow.
- Power mode has a delayed upshift for when more powerful acceleration is required.

Also, the built–in fail safe function ("backup mode") assures driving performance even if the vehicle speed sensor, throttle signal or any solenoid fails.
Further, the self–diagnostic function conducts diagnosis in a short time when the control system fails, thus improving serviceability.
The major features of 4L30–E are as follows:

- A compact structure consisting of 2 sets of planetary gears and flat torque converter.
- Electronic control selects the optimum shift mode according to the driving conditions.
- Electronic control maintains the optimum hydraulic pressure for clutch, band brake as well as transmission so that shift feeling is improved.
- Two sets of planetary gears reduce friction of power train.

  Also, a lockup mechanism in the torque converter reduces fuel consumption.
- Wide gear ratio and high torque rate of torque converter provide excellent starting performance.

Electronic Control Diagram

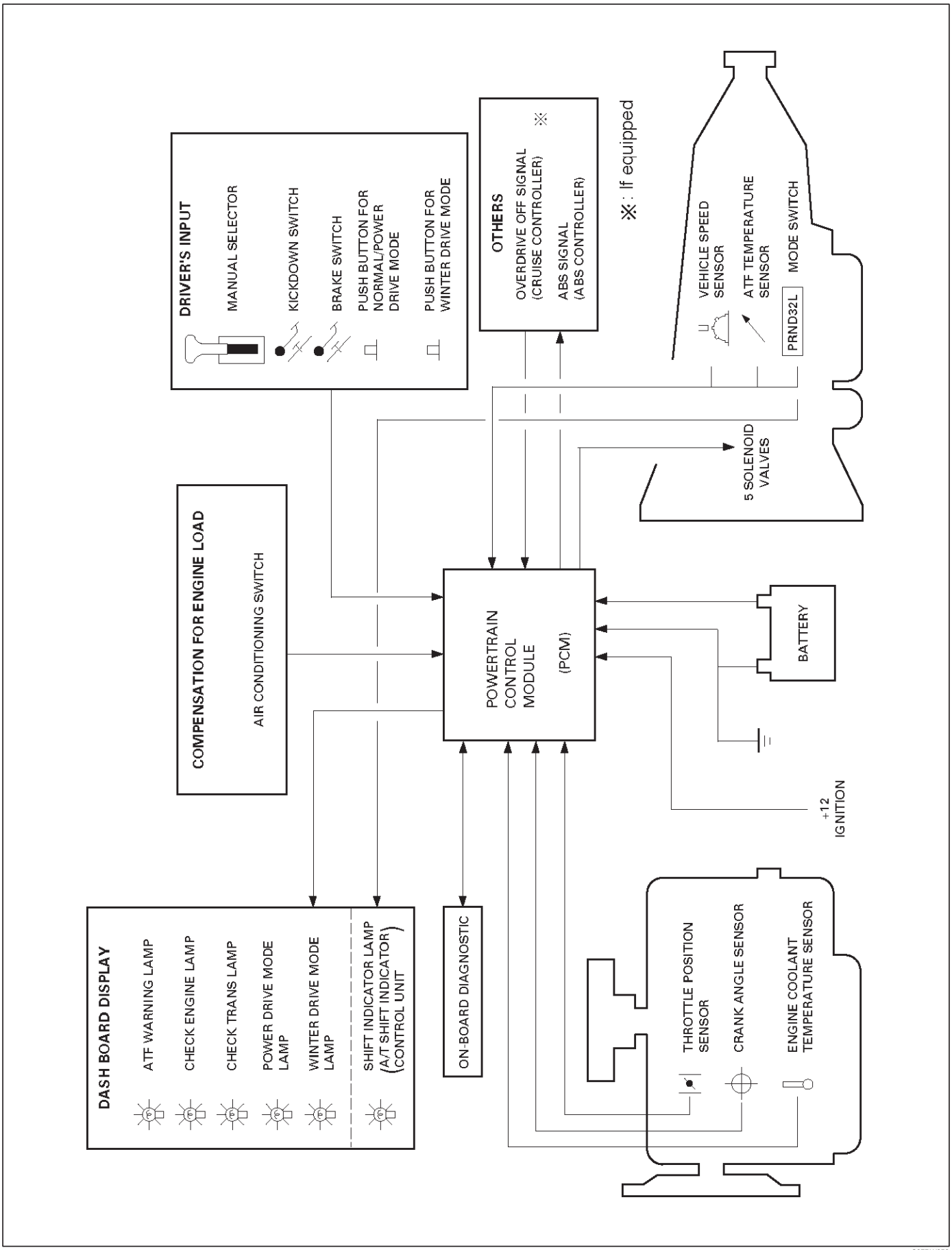

C07RW052

Powertrain Control Module (PCM)

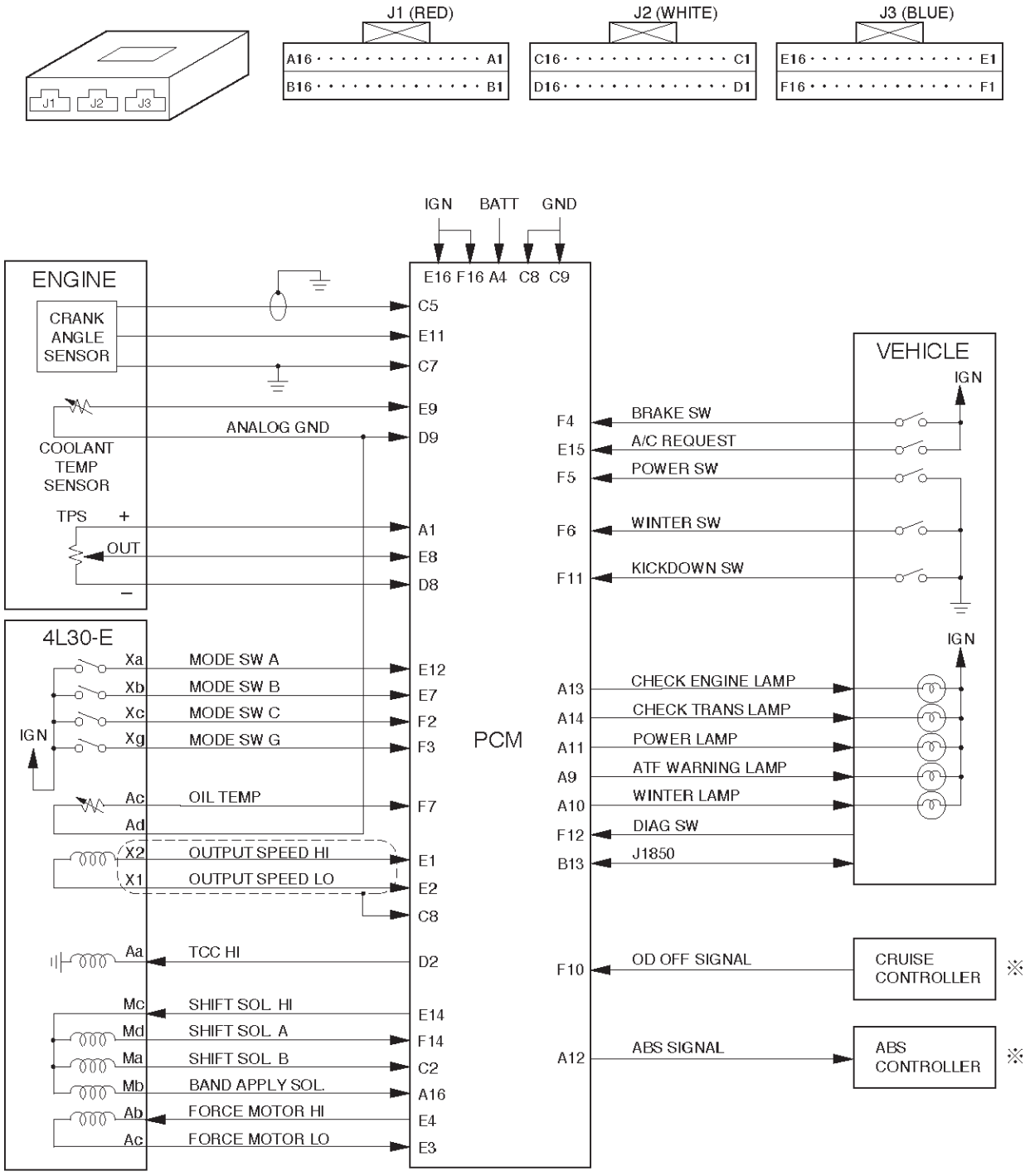

TPS: Throttle Position Sensor
TCC: Torque Converter Clutch
ABS: Anti-Lock Brake System
※: If equipped

C07RW051

Control System Diagram

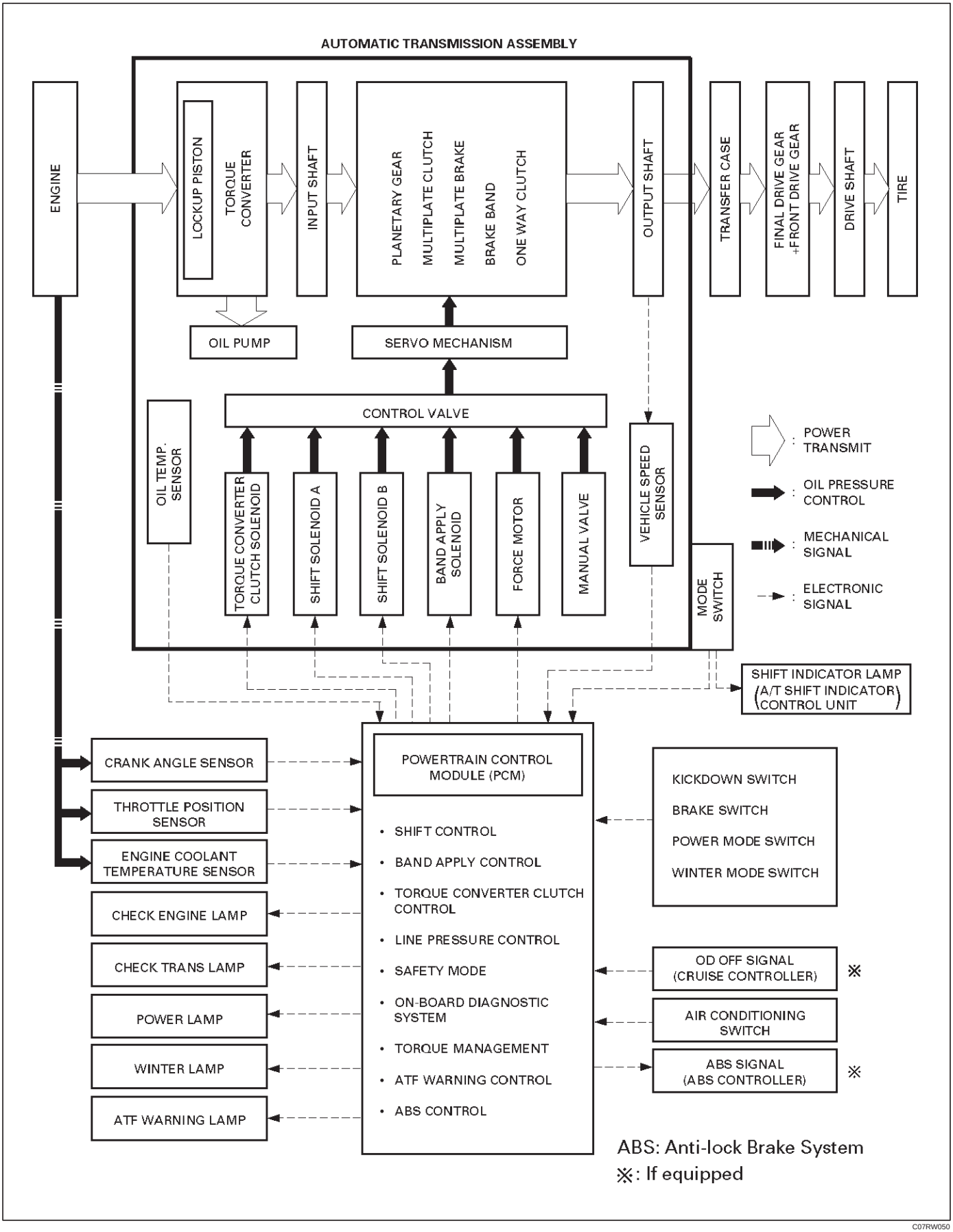

C07RW050

Shift Control

The transmission gear is shifted according to the shift pattern selected by the driver. In shifting gears, the gear ratio is controlled by the ON/ OFF signal using the shift solenoid A and the shift solenoid B.

Band Apply Control

The band apply is controlled when in the 3–2 downshift (engine overrun prevention) and the garage shift (shock control).
The band apply solenoid is controlled by the signal from the Pulse Width Modulation (PWM) to regulate the flow of the oil.

Torque Converter Clutch Control

The clutch ON/OFF is controlled by moving the converter clutch valve through shifting Torque Converter Clutch (TCC) solenoid using the ON/OFF signal.

Line Pressure Control

The throttle signal allows the current signal to be sent to the force motor. After receiving the current signal, the force motor activates the pressure regulator valve to regulate the line pressure.

On–Board Diagnostic System

Several malfunction displays can be stored in the Powertrain Control Module (PCM) memory, and read out of it afterward.
The serial data lines, which are required for the testing of the final assembly and the coupling to other electronic modules, can be regulated by this function.

Fail Safe Mechanism

If there is a problem in the transmission system, the PCM will go into a “backup” mode.
The vehicle can still be driven, but the driver must use the select lever to shift gears.

Torque Management Control

The transmission control side sends the absolute spark advance signal to the engine control side while the transmission is being shifted. This controls the engine spark timing in compliance with the vehicle running condition to reduce the shocks caused by the change of speed.

ATF Warning Control

The oil temperature sensor detects the ATF oil temperature to control the oil temperature warning, TCC, and the winter mode.

ABS Control (If equipped)

When the select lever is at “L” or “R” range, a signal is sent to the ABS controller as one of the ABS control conditions.

Shift Mode Control

① Mode Type

Mode Type	Select lever position
Normal drive mode (NOR)	Entire range (excluding "R")
Power drive mode (PWR)	Entire range (excluding "R")
Winter drive mode	"D", "N", "R" and "P" range

② Mode selection

	SWITCH (SW)		LAMP	
Mode Type	POW/NOR. SW	WINTER SW	POWER DRIVE LAMP	WINTER DRIVE LAMP
Normal drive mode (NOR)	OFF	OFF	OFF	OFF
Power drive mode (PWR)	ON	OFF	ON	OFF
Winter drive mode	ON/OFF	ON	OFF	ON

However, the winter switch prevails over the PWR/NOR switch.
The mode becomes normal drive mode when the winter switch is operated from ON to OFF.

③ Comparison of mode

(1) The normal drive mode is set at the normal shift points.

(2) The shift points of the power drive mode are shifted to the higher speed side, compared to the normal drive mode.

(3) The winter drive mode is a special mode used exclusively for starting in third gear.

Shift diagram

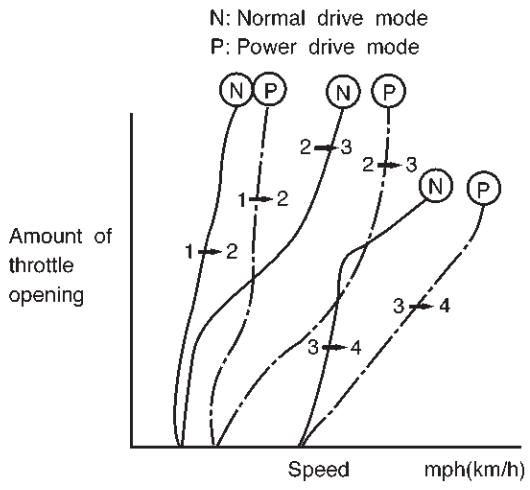

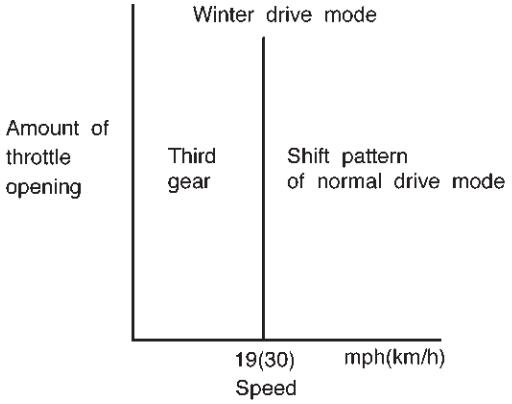

C07RW079

Gear Shift Control

① Shift pattern

SELECT LEVER RANGE	SHIFT PATTERN
D (Drive)	1⇄2TCC ⇄3TCC ⇄4TCC
3 (Third)	1⇄2TCC ⇄3TCC ←4TCC
2 (Second)	1⇄2TCC ←3TCC
L (First)	1←2

TCC = Torque Converter Clutch

② Gear position

The gear is selected by ON/OFF of two solenoids.

Gear \ SOL	A	B
4 (Fourth)	×	×
3 (Third)	○	×
2 (Second)	○	○
1 (First)	×	○
P (park) R (Reverse) N (Neutral)	×	○

○ = ON

× = OFF

Shift solenoid A (Normally closed) ON → PRESSURE TO SHIFT VALVE

Shift solenoid B (Normally open) OFF → PRESSURE TO SHIFT VALVE

③ Selecting gear pisition

Seven types of positions can be selected according to 5 signals from the mode switch as below.

SELECT LEVER RANGE	MODE SW TERMINALS				
	5(D)	8(A)	7(B)	6(C)	3(G)
P (park)	•	•			•
R (Reverse)	•	•	•		
N (Neutral)	•		•		•
D (Drive)	•		•	•	
3 (Third)	•	•	•	•	•
2 (Second)	•	•		•	
L (First)	•			•	•

• = Continuity

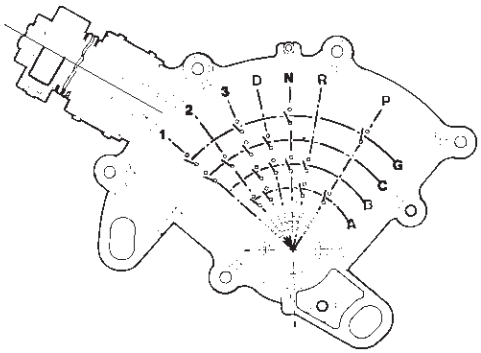

F07RT034

Winter Drive Mode

1. **Operation**
   The winter switch will operate when switched on after all of the following conditions are present:
   a. The gear select position is “D”, “N”, “R” and “P” range.
   b. Vehicle speed is 7 mph (11 km/h) or less.
   c. Transmission oil temperature is 120˚C (248˚F) or less.
   d. Kickdown switch is off.
   e. Accelerator opening is at 8% or less.
2. **Cancel Release**
   1. Cancellation by driver
      a. Turning off the winter drive mode switch
      b. Shifting select position to “3”, “2”, or “L” (Winter drive mode is not canceled by selecting “D”, “N”, “R”, or “P”)
      c. Ignition key is turned off.
   2. Automatic cancellation
      a. When vehicle runs at 21mph (34 km/h) or more for 1 second or more
      b. When transmission oil temperature reaches 140˚C (284˚F) or above

NOTE: The mode returns to normal drive mode or power drive mode after the winter drive mode is canceled.

Backup Mode

If a major system failure occurs which could affect safety or damage the transmission under normal vehicle operation, the diagnostic system detects the fault and overrides the Powertrain Control Module (PCM).
The “CHECK TRANS” light flashes to alert the driver, and the transmission must be manually shifted as follows:

Select lever position	Gear Ratio Selected
D	4 (Fourth)
Manual 3	4 (Fourth)
Manual 2	3 (Third)
Manual L	1 (First)
R	Reverse

Shifts are firmer to prevent clutch slip and consequent wear. The fault should be corrected as soon as possible.

Functions of Input / Output Components

Components			Function
INPUT SIGNAL	Speed sensor (fixed to transmission (T/M))		Senses rotation of output shaft and feeds the data to Powertrain Control Module (PCM).
	Throttle position sensor (TPS) (fixed to engine)		Senses the extent of throttle valve opening and the speed of the throttle valve lever motion to open the valve. Feeds the data to PCM.
	Brake Switch (SW) (fixed to brake pedal)		Senses whether the driver has pressed the brake pedal or not and feeds the information to PCM.
	Kickdown SW (fixed to accelerator pedal)		Senses whether the driver has pushed the accelerator pedal fully or not, and feeds the information to PCM.
	Mode SW (fixed to T/M)		Senses the select lever position, and feeds the information to PCM.
	Power drive SW (fixed to front console)		Senses whether the driver has selected the power mode, and feeds the information to PCM.
	T/M oil temp. sensor		Senses the T/M oil temperature and feeds the data to PCM
	Engine coolant temperature sensor		Senses the engine coolant temperature, and feeds the data to PCM.
	Engine speed signal		Feeds the signals monitoring engine speed to PCM from crank angle sensor.
	Air conditioning information		Senses whether the air conditioner has been switched on or not, and feeds the information to PCM.
	Winter switch (fixed to front console)		Senses whether the driver has selected the winter mode, and feeds the information to PCM.
	Cruise controller * (Overdrive OFF signal)		Downshift takes place when Overdrive OFF signal is received from auto cruise control unit.
OUTPUT SIGNAL	SOLENOID	Shift solenoid A, B	Selects shift point and gear position suited to the vehicle running condition on the basis of PCM output.
		Band apply solenoid	Controls oil flow suited to the vehicle running condition on the basis of PCM output.
		Torque Converter Clutch solenoid	Controls clutch engagement/disengagement suited to the vehicle running condition on the basis of PCM output.
		Force motor (Pressure regulator valve)	Adjusts the oil pump delivery pressure to line pressure suited to the vehicle running condition on the basis of PCM output.
	Power drive mode lamp		Informs the driver whether the vehicle is in power mode or not.
	Winter drive mode lamp		Informs the driver whether the vehicle is in winter mode or not.
	T/M monitor lamp (“CHECK TRANS”)		Informs the driver of failure in the system.
	ATF warning lamp		Lights when ATF oil temperature rises.
	ABS signal *		When the select lever is at “Reverse” or “L” range, sends a signal to the ABS controller as one of the ABS control conditions.

* If equipped

Diagnosis

Electronic Diagnosis

How To Diagnose The Problem

1. To avoid incorrect diagnostics, this book needs to be followed accurately. Unless stated, do not jump directly to a section that could contain the solution. Some important information may be missed.
2. The sections in CAPITALS and bold are the main sections that can be found in the contents.
3. The GOTO **“SECTION”** means to continue to check going to the “section”.
4. The GOTHROUGH **“SECTION”** means to go through the “section” and then to go back to the place the GOTHROUGH was written.
5. BASIC ELECTRIC CIRCUITS:
   You should understand the basic theory of electricity. This includes the meaning of voltage, amps, ohms, and what happens in a circuit with an open or shorted wire. You should also be able to read and understand wiring diagrams.

Check Trans Indicator

Find CHECK TRANS indicator and verify if it is

A. Flashing: GOTO **DIAGNOSTIC CHECK.**
B. Staying on: GOTHROUGH **CHECK TRANS CHECK**.
C. Is never ON when the ignition key is turned on: GOTHROUGH **CHECK TRANS CHECK**
D. Is ON during 2 to 3 seconds at ignition but OFF after: Normal operation. No DTC or malfunction.

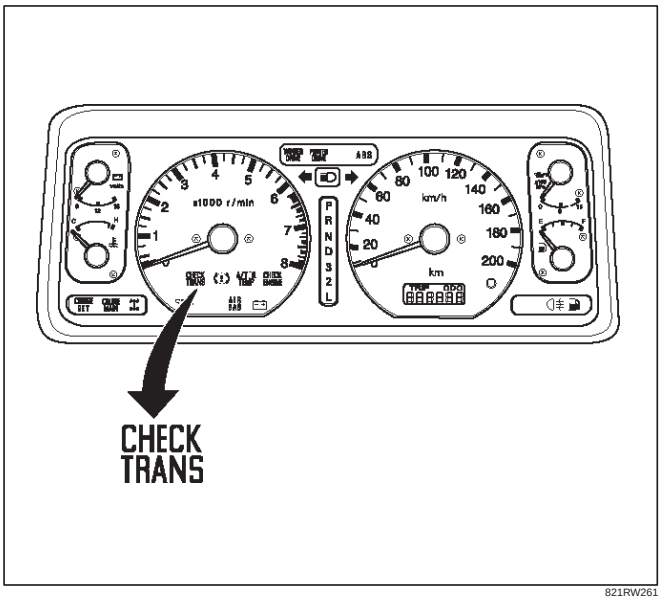

821RW261

Diagnostic Check

This test determines if the transmission or its inputs, outputs, connections, or sensors are failing.

1. Connect the Tech2: GOTHROUGH **Tech2 OBD II CONNECTION**.
2. Turn on the ignition but not the engine.
3. Push “F2” on Tech2 to see the Diagnostic Trouble Code (DTC):
4. Do you have a DTC?
   YES: write down all code numbers and do the **DTC CHECK**
   NO: the DTC can not help you finding the problem.
   1. GOTHROUGH **“CHECK TRANS” CHECK**
   2. IF it is flashing and the flash is 0.2 seconds ON and 0.2 seconds OFF, this means that you should have a DTC stored. Please recheck GOTO **DIAGNOSTIC CHECK** and if you find the same problem, replace the Powertrain Control Module (PCM).

Normal

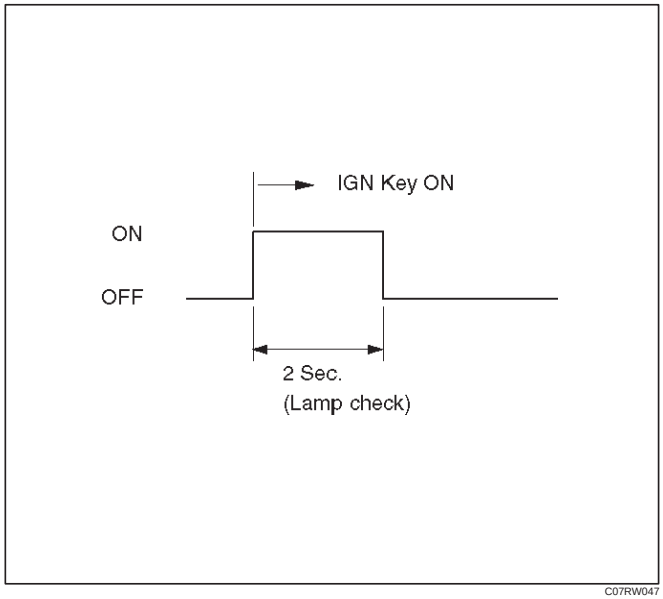

C07RW047

Abnormal

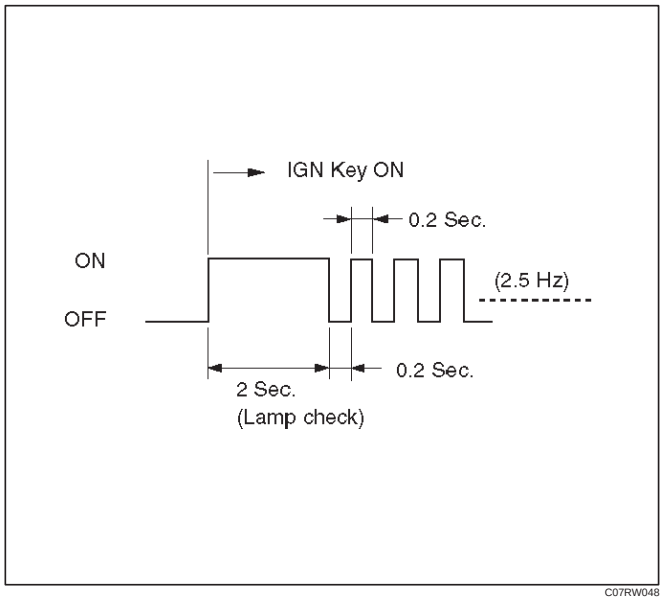

C07RW048

“Check Trans” Check

1. Indicator it is ON during 2 to 3 seconds at ignition (or when the engine is cranked) but it is OFF after the engine starts. The indicator is working normally GOTO **DIAGNOSTIC CHECK**.

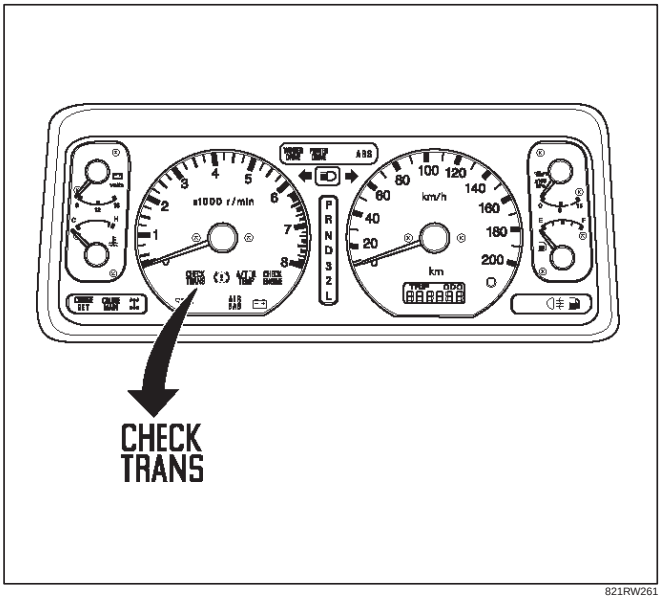

821RW261

Normal

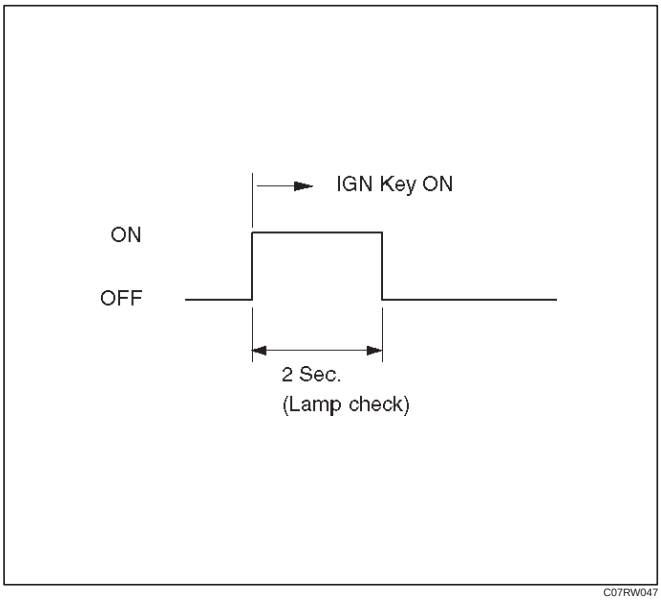

C07RW047

2. Indicator it is flashing and the flash is 0.2 seconds ON and 0.2 seconds OFF always when ignition is on (engine cranked or not). This means that there is a malfunction. GOTO **DIAGNOSTIC**

Abnormal

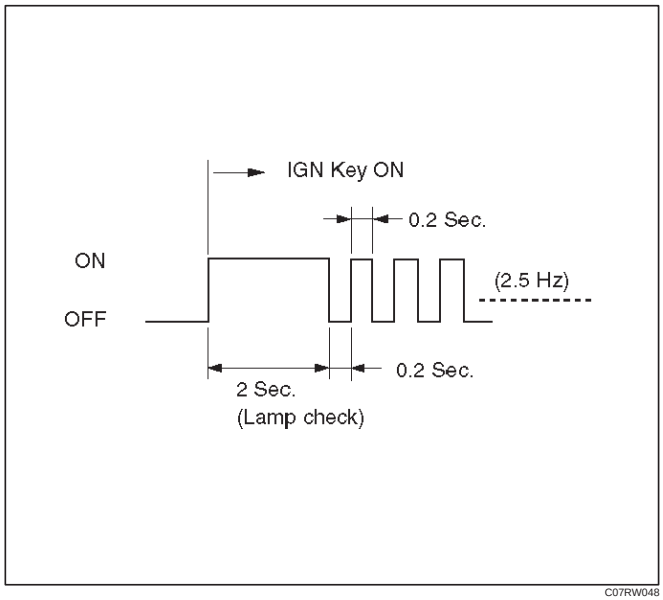

C07RW048

3. Indicator it is staying ON always when Ignition is ON.
   1. This means that connection between the lamp and the PCM is shorted to ground.
   2. Verify if instrument panel terminal 3 of connector I–9 is shorted to ground.
   3. Verify if the PCM connector J1 (RED) terminal A14 is shorted to ground.
   4. Verify that the instrument panel terminal 15 of connector I–9 is connected to battery.
   5. IF problem solved: GOTO **CHECK TRANS INDICATOR**.

   NO:Replace Powertrain Control Module (PCM).
4. Indicator it is staying OFF with the ignition ON (engine OFF).
   1. This means that connection between the lamp and the PCM is shorted to battery or opened.
   2. Verify if instrument panel terminal 3 of connector I–9 is shorted to battery or open.
   3. Verify if the PCM connector J1 (RED) terminal A14 is shorted to battery or open.
   4. Verify that the instrument panel terminal 15 of connector I–9 is connected to battery. If not, check the fuses and the connections voltage.
   5. IF problem solved: GOTO **CHECK TRANS INDICATOR**.

   NO: Replace Powertrain Control Module (PCM).

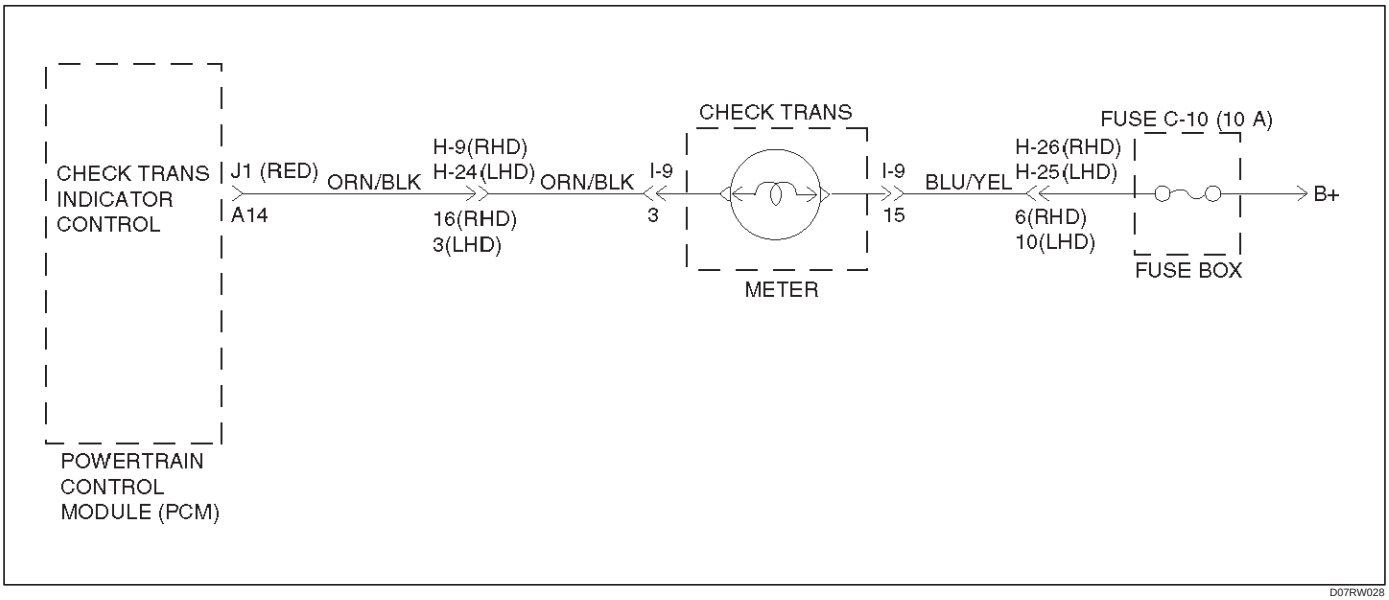

D07RW028

Tech2 OBD II Connection

In order to access OBD II Powertrain Control Module (PCM) data, use of the Tech2 scan tool is required.

1. The electronic diagnosis equipment is composed of:
   1. Tech2 (3000094) hand–held scan tool, and DLC cable (3000095).

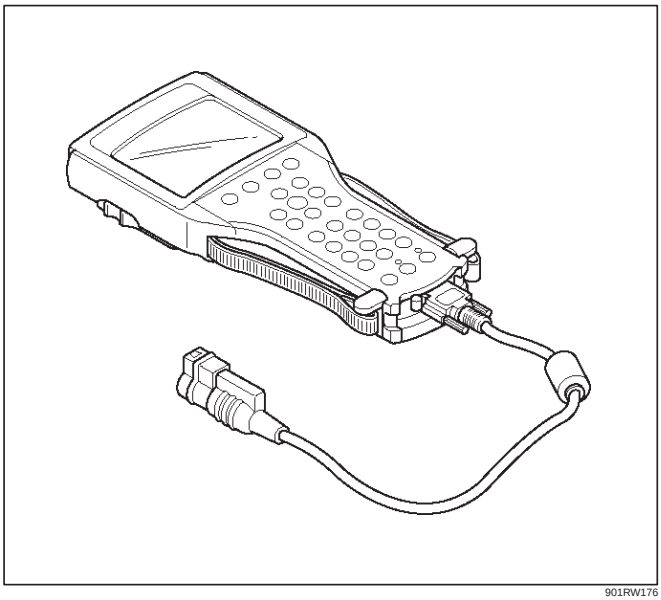

901RW176

   2. SAE 16/19 adapter (3000098) (1), RS 232 loop back connector (3000112) (2), and PCMCIA card (3000117) (3).

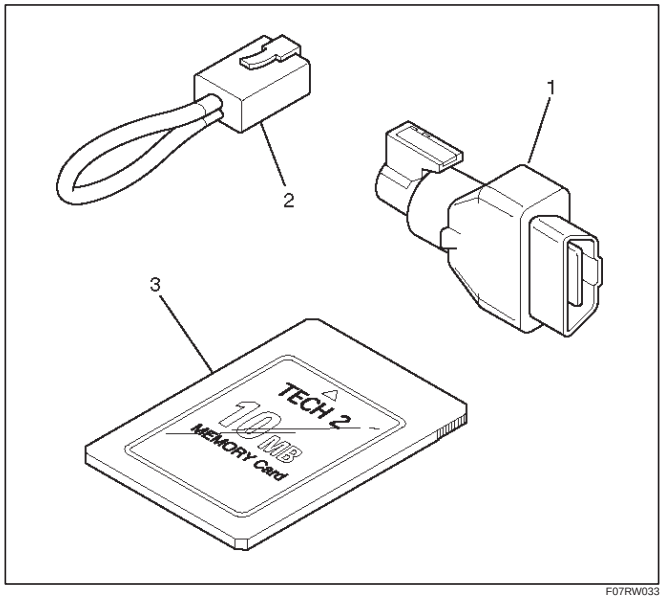

F07RW033

2. Connecting the TECH2

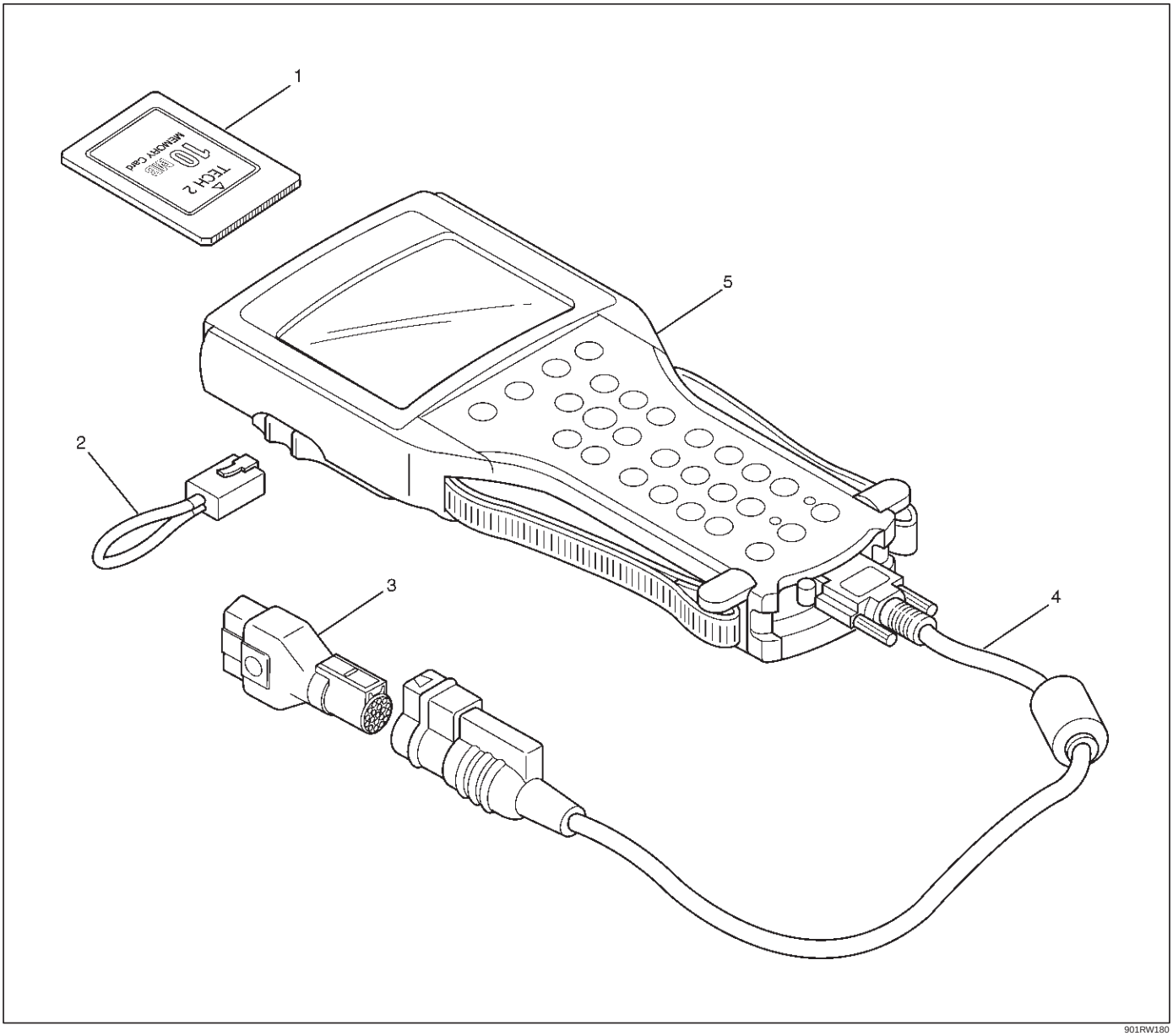

Legend

(1) PCMCIA Card
(2) RS 232 Loop Back Connector
(3) SAE 16/19 Adapter
(4) DLC Cable
(5) Tech2

- Before operating the Isuzu PCMCIA card with the Tech 2, the following steps must be performed:

1. The Isuzu 98 System PCMCIA card (1) inserts into the Tech 2 (5).
2. Connect the SAE 16/19 adapter (3) to the DLC cable (4).
3. Connect the DLC cable to the Tech 2 (5)
4. Make sure the vehicle ignition is off.

5. Connect the Tech 2 SAE 16/19 adaptor to the vehicle DLC.

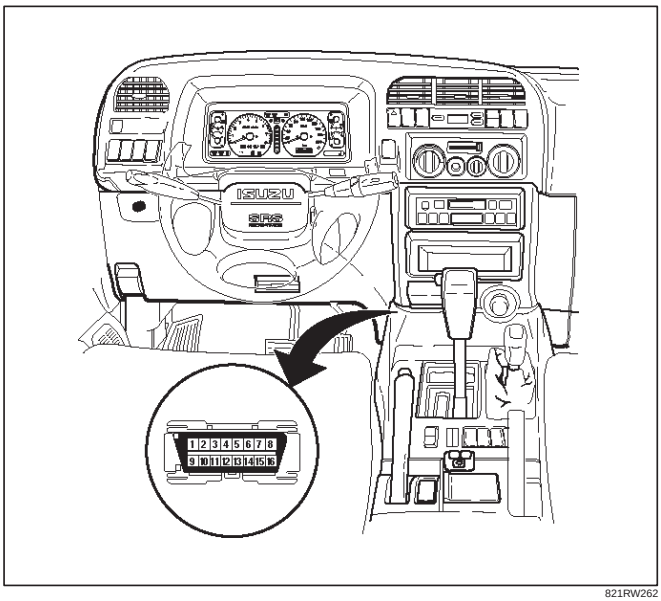

821RW262

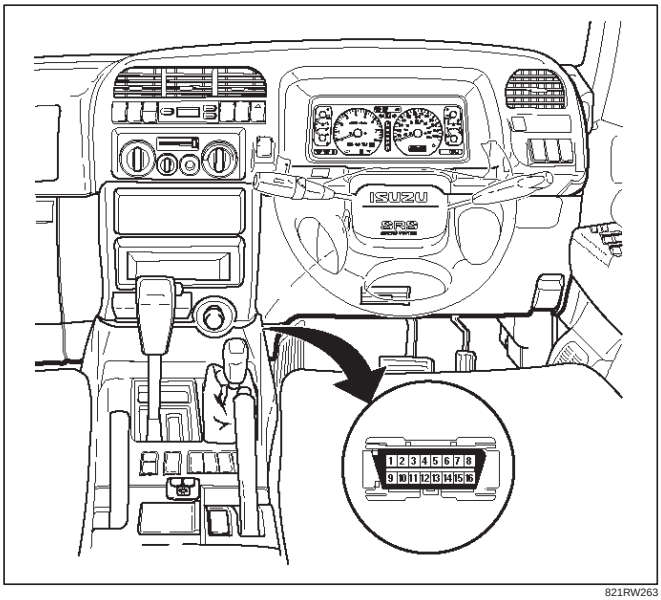

821RW263

6. The vehicle ignition turns on.
7. Verify the Tech 2 power up display.

060RW009

NOTE: The RS232 Loop back connector is only to use for diagnosis of Tech 2 and refer to user guide of the Tech 2.

8. The power up screen is displayed when you power up the tester with the Isuzu systems PCMCIA card. Follow the operating procedure below.

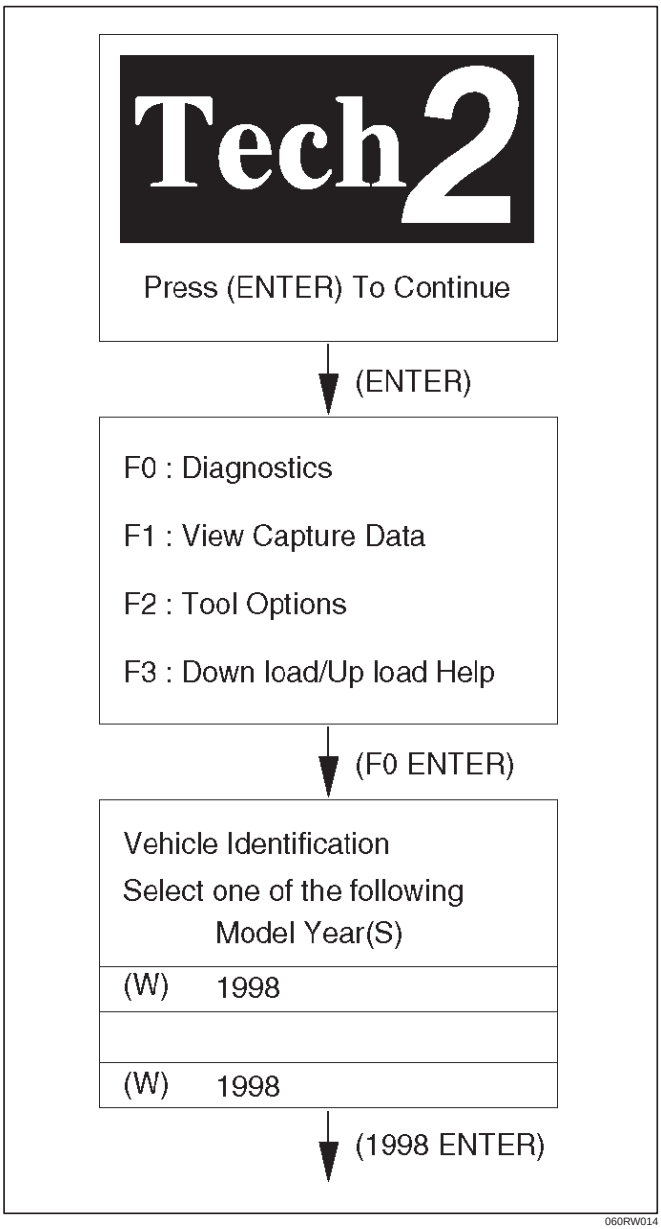
Tech2
Press (ENTER) To Continue
(ENTER)
F0 : Diagnostics
F1 : View Capture Data
F2 : Tool Options
F3 : Down load/Up load Help
(F0 ENTER)
Vehicle Identification
Select one of the following
Model Year(S)
(W) 1998
(W) 1998
(1998 ENTER)
060RW014

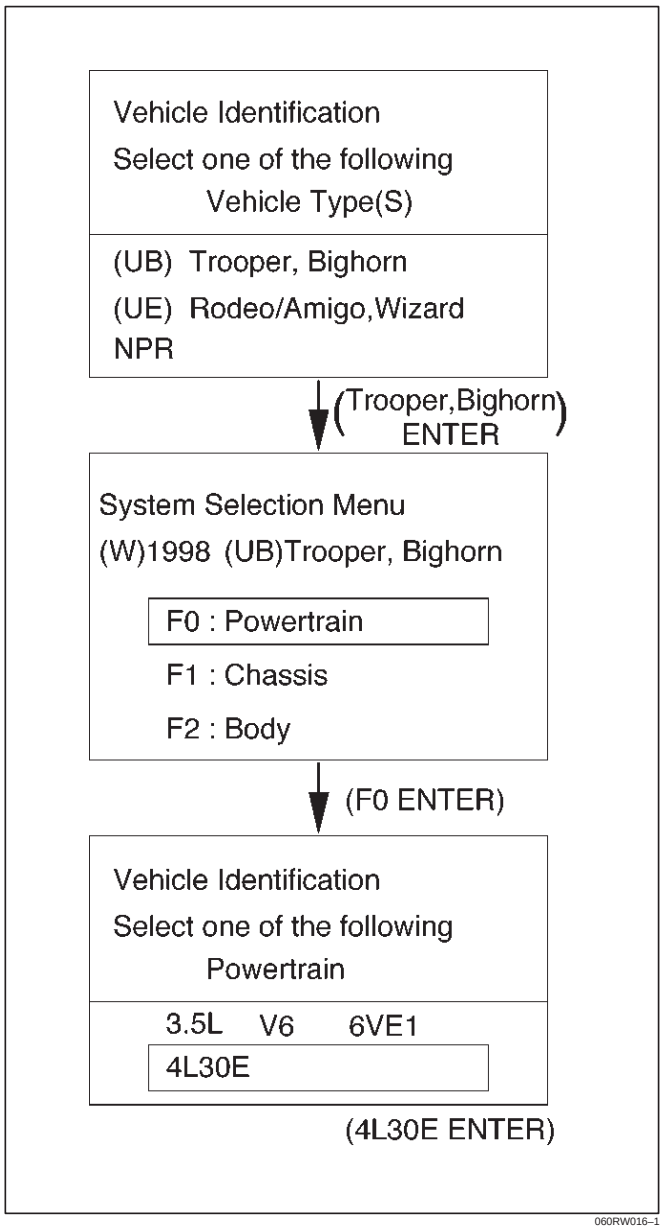
Vehicle Identification
Select one of the following
Vehicle Type(S)
(UB) Trooper, Bighorn
(UE) Rodeo/Amigo,Wizard
NPR
(Trooper,Bighorn ENTER)
System Selection Menu
(W)1998 (UB)Trooper, Bighorn
F0 : Powertrain
F1 : Chassis
F2 : Body
(F0 ENTER)
Vehicle Identification
Select one of the following
Powertrain
3.5L V6 6VE1
4L30E
(4L30E ENTER)
060RW016–1

Menu

- The following table shows, which functions are used the available equipment versions.

F0: Diagnostic Trouble Codes
F0: Read DTC Info Ordered By Priority
F1: Clear DTC Information
F2: DTC Information
F0: History
F1: MIL SVS or Message Requested
F2: Last Test Failed
F3: Test Failed Since Code Cleared
F4: Not Ran Since Code Cleared
F5: Failed This Ignition
F1: Data Display

3. DVOM
   When instructed to use a voltmeter or ohmmeter within a troubleshooting procedure, use only a high impedance DVOM (Digital Volt Ohmmeter) such as J–39200 or equivalent.

OBD II Diagnostic Management System

Powertrain Control Module (PCM) Location

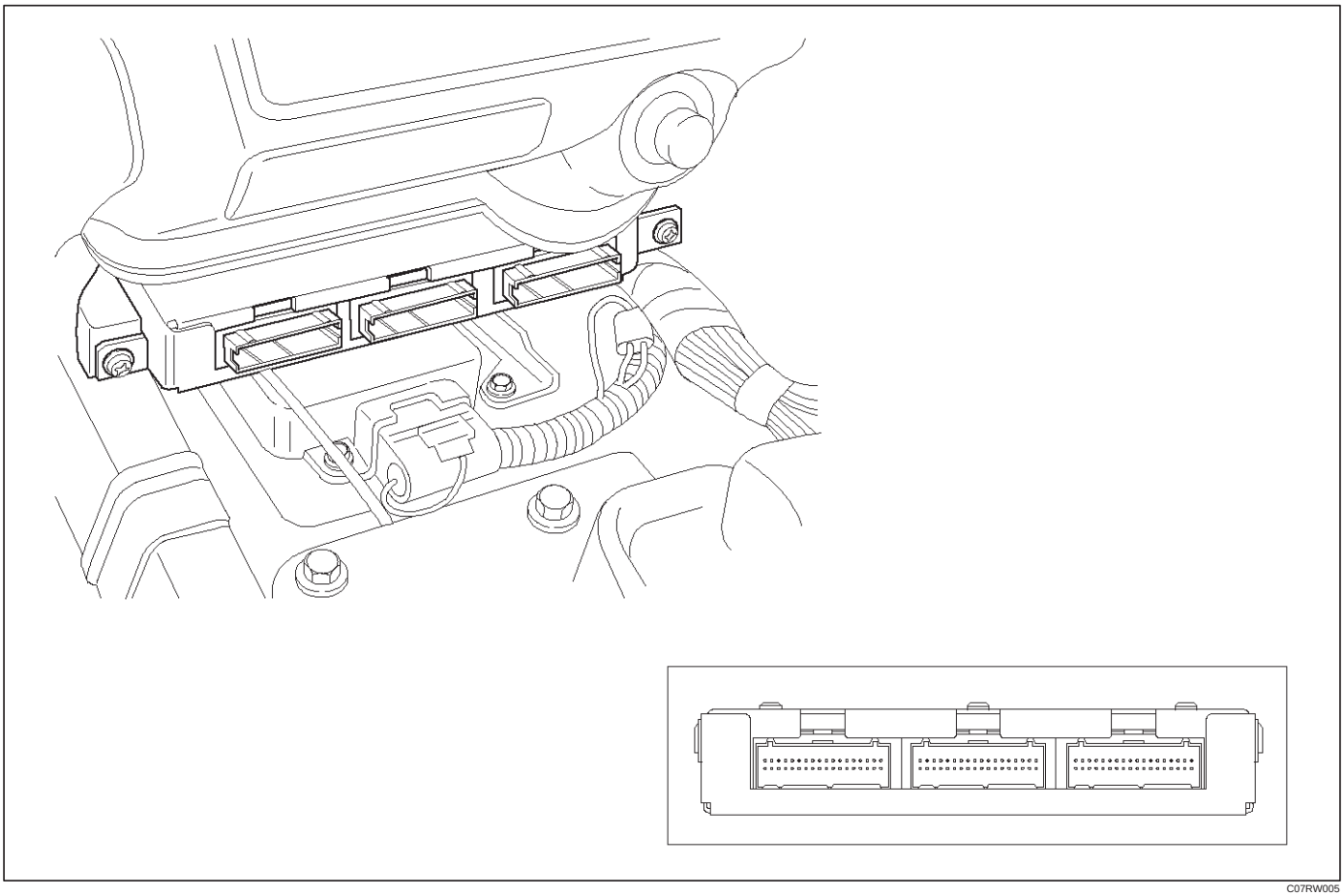

C07RW005

Class 2 Serial Data Bus

OBD II technology requires a much more sophisticated PCM than does OBD I technology. The OBD II PCM diagnostic management system not only monitors systems and components that can impact emissions, but they also run active tests on these systems and components. The decision making functions of OBD II PCMs have also greatly increased. To accommodate this expansion in diagnostic complexity, Isuzu engineers have designed the Class 2 serial data bus, which meets SAE J1850 recommended practice for serial data.

"Serial Data" refers to information which is transferred in a linear fashion – over a single line, one bit at a time. A "Data Bus" is an electronic pathway through which serial data travels.

TROOPER previously used a 5 volt data bus called UART, which is an acronym for "Universal Asynchronous Receive and Transmit". When neither the vehicle's control module nor the diagnostic tool, such as a Tech2, are "talking," the voltage level of the bus at rest is 5 volts. The two computers talk to each other at a rate of 8,192 bits per second, by toggling or switching the voltage on the data bus from 5 volts to ground.

Class 2 data, which is used on OBD II vehicles, is quite different. Data is transferred at a rate of 10.4 kilobits per second, and the voltage is toggled between zero and 7 volts.

C07RT006

Class 2 data is also pulse width modulated. Each bit of information can have one of two lengths: long or short. On the other hand, UART data bits come in only one length (short). The pulse width modulation of Class 2 data allows better utilization of the data line.
The message carried on Class 2 data streams are also prioritized. This means that if two devices try to communication on the data line at the same time, only the higher priority message will continue. The device with the lower priority message must wait.

NOTE: The Class 2 data wire is always terminal 2 of the new 16–terminal Data Link Connector (DLC).

16 – Terminal Data Link Connector (DLC)

OBD II standardizes Data Link Connector (DLC) configurations. The DLC, formerly referred to as the ALDL, will be a 16–terminal connector found on the lower left side of the driver's side instrument panel. All manufacturers must conform to this 16–terminal standard.

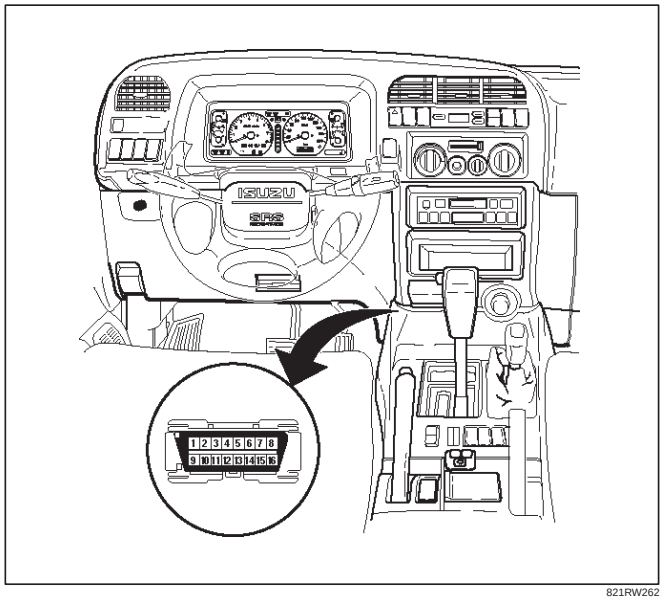

821RW262

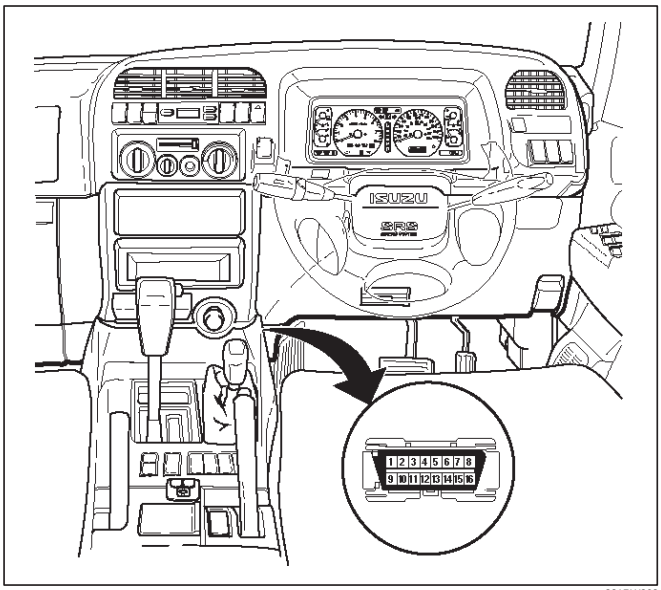

821RW263

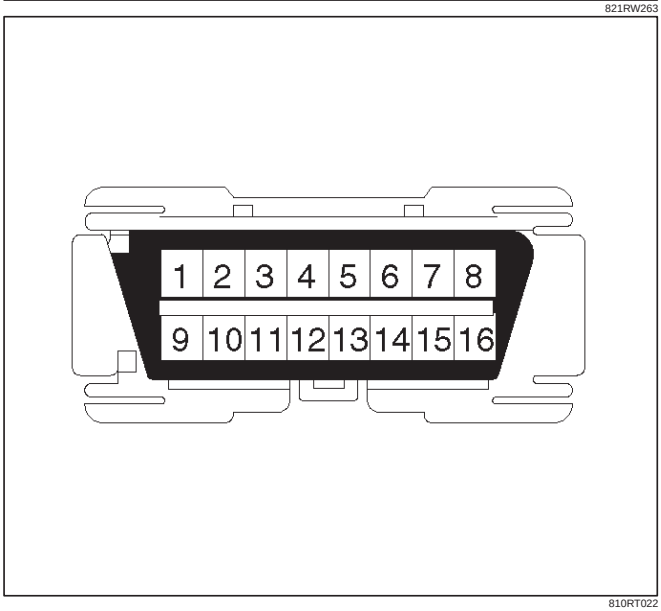

810RT022

PIN 1 – (Not used)
PIN 2 – J1850 Bus + L line on 2–wire systems, or single wire (Class 2)
PIN 3 – (Not used)
PIN 4 – Chassis ground pin
PIN 5 – Signal ground pin
PIN 6 – PCM diagnostic enable
PIN 7 – (Not used)
PIN 8 – (Not used)
PIN 9 – Primary UART
PIN 10 – (Not used)
PIN 11 – (Not used)
PIN 12 – ABS diagnostic or CCM diagnostic enable
PIN 13 – SIR diagnostic enable
PIN 14 – (Not used)
PIN 15 – (Not used)
PIN 16 – Battery power from vehicle unswitched (4 AMP MAX.)

Malfunction Indicator Lamp (MIL)

The Malfunction Indicator Lamp (MIL) looks the same as the MIL you are already familiar with (“CHECK ENGINE” lamp). However, OBD II requires that it illuminate under a strict set of guidelines. Basically, the MIL is turned on when the PCM detects a DTC that will impact the vehicle’s emissions.

The MIL is under the control of the Diagnostic Executive. The MIL will be turned on if a component or system which has an impact on vehicle emissions indicates a malfunction or fails to pass an emissions–related diagnostic test. It will stay on until the system or component passes the same test, for three consecutive trips, with no emissions–related faults.

Types Of Diagnostic Trouble Codes (DTCs)

The Diagnostic Executive classifies Diagnostic Trouble Codes (DTCs) into certain categories. Each type has different requirements to set the code, and the Diagnostic Executive will only illuminate the Malfunction Indicator Lamp (MIL) for emissions–related DTCs. DTCs fall into four categories: A, B, C, and D; only types A and B are emission–related The following descriptions define these categories:

TYPE A

Will store the DTC and turn on the MIL (“Check Engine” lamp) on the first trip in which an emission–related diagnostic test has run and reported a “test failed” to the Diagnostic Executive.

TYPE B

Will store the DTC and turn on the MIL on the second consecutive trip in which an emission–related diagnostic test has run and reported a “test failed” to the Diagnostic Executive. After one failure, the type B DTC is “armed,” or prepared to store a history code and turn on the MIL if a second failure occurs. One passed test will disarm a type B DTC. Some special conditions apply to misfire and fuel trim DTCs. For a type B DTC to store and turn on the MIL, two ignition cycles are required.

TYPE C

Will store the DTC and turn on a “SERVICE” lamp (“Check Trans” lamp) on the first trip that a non–emission–related diagnostic test has run and reported a “test failed” to the Diagnostic Executive. This type of DTC will be used in future applications.

TYPE D

Will store a DTC but will not turn on the MIL on the first trip that a non–emission–related diagnostic test has run and reported a “test failed” to the Diagnostic Executive. These codes can be very helpful for vehicle service when the driver may comment about a condition, but the MIL did not turn on.

Clear DTC

NOTE: If you clear the DTC (Diagnostic Trouble Codes) you will not be able to read any codes recorded during the last occurrence.

NOTE: To use the DTC again to identify a problem, you will need to reproduce the fault or the problem. This may require a new test drive or just turning the ignition on (this depends on the nature of the fault).

1. IF you have a Tech2:
   1. Connect the Tech2 if it is still not connected GOTHROUGH **Tech2 OBD II CONNECTION.**
   2. Push “F4” and answer “Yes” to the question “Do you really want to clear the codes?”
      a. When a malfunction remains as it is the Tech2 displays “4L30E CODES NOT CLEARED”. This means that the problem is still there or that the recovery was not done. Please **GOTO DTC CHECK.**
      b. When a malfunction has been repaired and the recovery is done. The Tech2 displays “4L30E CODES CLEARED”.
2. IF you have no Tech2:
   To clear the DTC, remove Fuse “Stop, A/T CONT” (C–14, 15A) for at least 10 seconds.

DTC Check

1. Diagnostic Trouble Codes (DTC) have been identified by Tech2.
2. You have written the list of the DTCs. The order of the malfunctions has no meanings for this PCM. Usually only one or two malfunctions should be set for a given problem.
3. Check directly the DTCs you identified. The DTCs are sorted by number. Refer to Diagnostic Trouble Code (DTC) Identification in this section.

PCM Precaution

The PCM can be damaged by:

1. Electrostatic discharge
2. The short circuit of some terminals to voltage or to ground.

Electrostatic Discharge Damage Description:

1. Electronic components used to control systems are often designed to carry very low voltage, and are very susceptible to damage caused by electrostatic discharge. It is possible for less than 100 volts of static electricity to cause damage to some electronic components. By comparison, it takes as much as 4,000 volts for a person to even feel the zap of a static discharge.
2. There are several ways for a person to become statically charged. The most common methods of charging are by friction and induction. An example of charging by friction is a person sliding across a car seat, in which a charge of as much as 25,000 volts can build up. Charging by induction occurs when a person with well insulated shoes stands near a highly charged object and momentarily touches ground. Charges for the same polarity are drained off, leaving the person highly charged with the opposite polarity. Static charges of either type can cause damage, therefore, it is important to use care when handling and testing electronic components.

NOTICE: **To prevent possible electrostatic discharge damage:**

1. Do not touch the PCM connector pins or soldered components on the PCM circuit board.
2. Be sure to follow the guidelines listed below if servicing any of these electronic components:
3. Do not open the replacement part package until it is time to install the part.
4. Avoid touching electrical terminals of the part.
5. Before removing the part from its package, ground the package to a known good ground on the vehicle.
6. Always touch a known good ground before handling the part. This step should be repeated before installing the part if the part has been handled while sliding across the seat, while sitting down from a standing position or while walking some distance.

Information On PCM

1. The Powertrain Control Module (PCM) is located in the center console and is the control center of the electronic transmission control system.
2. The PCM must be maintained at a temperature below 185˚F (85˚C) at all times. This is most essential if the vehicle is put through a paint baking process. The PCM will become inoperative if its temperature exceeds 85˚C (185˚F). Therefore, it is recommended that the PCM be removed or that temporary insulation be placed around the PCM during the time the vehicle is in a paint oven or other high temperature process.
3. The PCM is designed to process the various inputs and then respond by sending the appropriate electrical signals to control transmission upshift, downshift, shift feel and torque converter clutch engagement.
4. The PCM constantly interprets information from the various sensors, and controls the systems that affect transmission and vehicle performance. By analyzing operational problems, the PCM is able to perform a diagnostic function by displaying DTC(s) and aid the technician in making repairs.

Intermittent Conditions

If the Tech2 displays a diagnostic trouble code as intermittent, or if after a test drive a DTC does not reappear though the detection conditions for this DTC are present, the problem is most likely a faulty electrical

connection or loose wiring. Terminals and grounds should always be the prime suspect. Intermittents rarely occur inside sophisticated electronic components such as the PCM.

Use the DTC information to understand which wires and sensors are involved.

When an intermittent problem is encountered, check suspect circuits for:

1. Poor terminal to wire connection.
2. Terminals not fully seated in the connector body (backed out).
3. Improperly formed or damaged terminals.
4. Loose, dirty, or corroded ground connections:
   HINT: Any time you have an intermittent in more than one circuit, check whether the circuits share a common ground connection.
5. Pinched or damaged wires.
6. Electro–Magnetic Interference (EMI):
   HINT: Check that all wires are properly routed away from spark plug wires, distributor wires, coil, and generator. Also check for improperly installed electrical options, such as lights, 2–way radios, etc.

Use the F3 SNAPSHOT mode of the Tech2 to help isolate the cause of an intermittent fault. The snapshot mode will record information before and after the problem occurs. Set the snapshot to “trigger” on the suspect DTC. If you notice the reported symptom during the test drive, trigger the snapshot manually.

After the snapshot has been triggered, command the Tech2 to play back the flow of data recorded from each of the various sensors. Signs of an intermittent fault in a sensor circuit are sudden unexplainable jump in data values out of the normal range.

Transmission And PCM Identification

The chart below contains a list of all important information concerning rear axle ratio, Powertrain Control Module (PCM), and transmission identification.

VEHICLE		Rr axle Ratio	PCM	TRANSMISSION		
Type	Engine		ISUZU Parts No.	Calibration Code	Isuzu Part No.	Model Code
Isuzu / Trooper	3.2L V6	4.555	8–16254–949–0 8–16254–749–0 8–16253–989–0	G20	8–96018–272–3	FP (4X4)

Isuzu Trooper

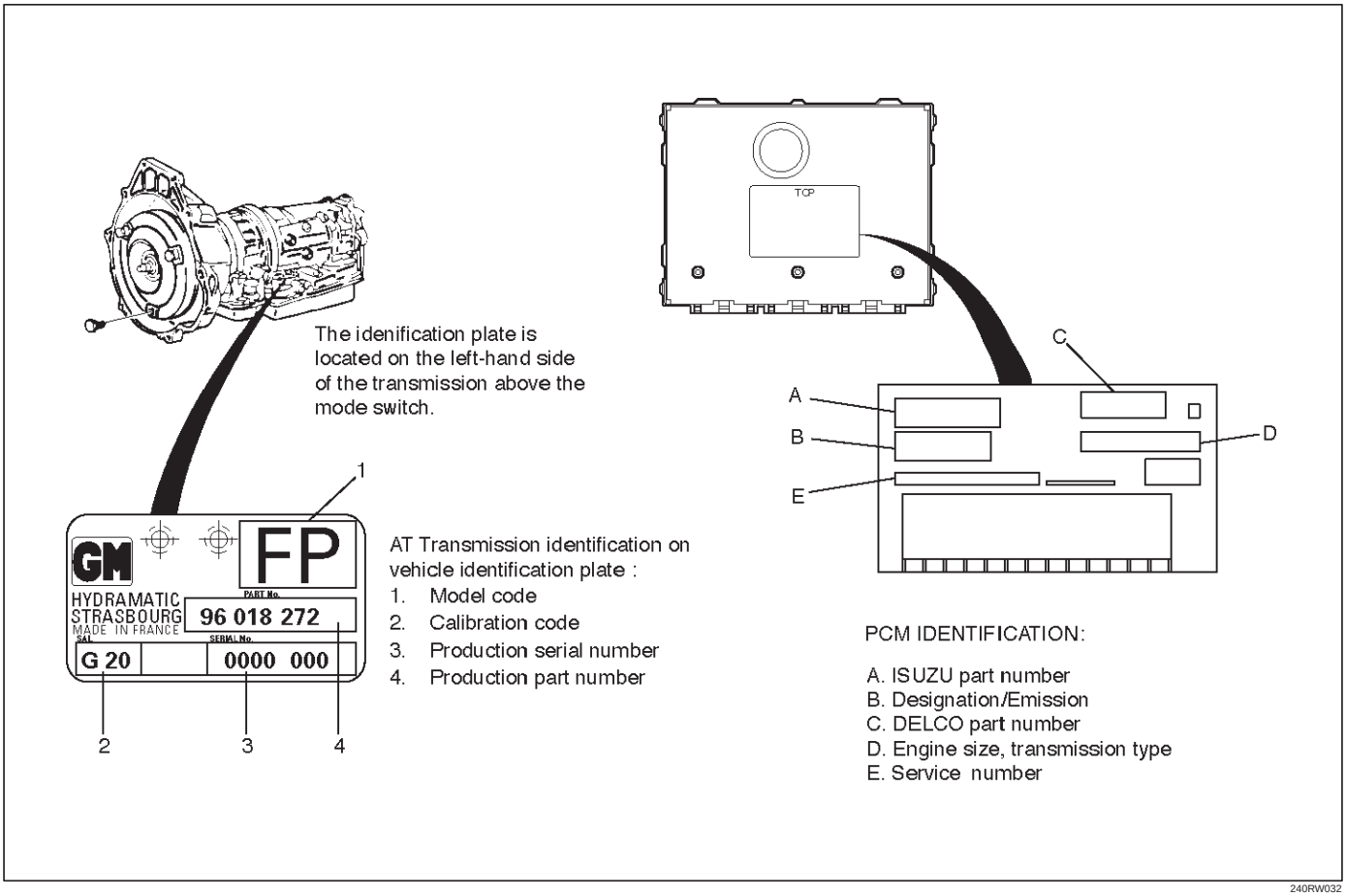

240RW032

Diagnostic Trouble Code (DTC) Identification

DTC NUMBER	DTC NAME	DTC TYPE	“CHECK TRANS”
P0218	Transmission Fluid Over Temperature	D	
P0560	System Voltage Malfunction	C	Flash
P0705	Transmission Range Switch (Mode Switch) Illegal Position	D	
P0706	Transmission Range Switch (Mode Switch) Performance	D	
P0712	Transmission Fluid Temperature Sensor Circuit Low Input (TFT)	D	
P0713	Transmission Fluid Temperature (TFT) Sensor Circuit High Input	D	
P0719	TCC Brake Switch Circuit High (Stuck ON)	D	
P0722	Transmission Output Speed Sensor (OSS) Low Input	C	Flash
P0723	Transmission Output Speed Sensor (OSS) Intermittent	C	Flash
P0730	Transmission Incorrect Gear Ratio Flash	C	Flash
P0748	Pressure Control Solenoid (PCS) (FORCE MOTOR) Circuit Electrical	C	Flash
P0753	Shift Solenoid A Electrical	C	Flash
P0758	Shift Solenoid B Electrical	C	Flash
P1790	ROM Transmission Side Bad Check Sum	C	Flash
P1792	EEPROM Transmission Side Bad Check Sum	C	Flash
P1835	Kickdown Switch Always ON	D	
P1850	Brake Band Apply Solenoid Malfunction	D	
P1860	TCC Solenoid Electrical	D	

DTC TYPE	DEFINITION
C	Flashing Check Trans on 1st failure
D	No lamps

NOTE: On the following charts, refer to the Powertrain Control Module (PCM) section for the Wiring System, and the Body and Accessories section for circuit diagram details, parts location, and connector configuration.

DTC P0218 Transmission Fluid Over Temperature

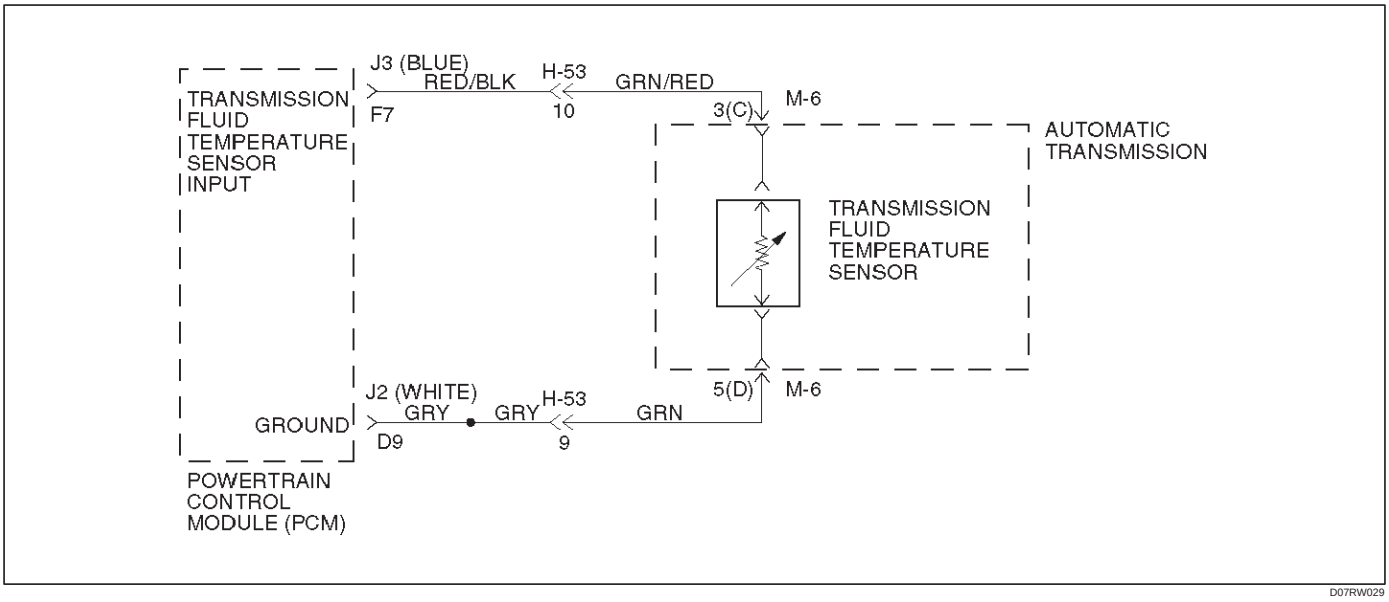

Circuit Description

The Transmission Fluid Temperature (TFT) sensor is a thermister that controls the signal voltage to the PCM. The PCM supplies a 5–volt reference to the sensor on circuit RED/BLK–GRN/RED. When the transmission fluid is cold, the sensor resistance is high and the PCM will sense high signal voltage. As the fluid temperature warms to a normal transmission operating temperature of 100˚C (212˚F), the sensor resistance becomes less and the voltage decreases to 1.5 to 2.0 volts.
This DTC detects a high transmission temperature for a long period of time. This is a type “D” DTC.

Conditions For Setting The DTC

- No TFT DTCs P0712 or P0713.
- TFT is greater than 135˚C (275˚F).
- All conditions met for 21 seconds.

Action Taken When The DTC Sets

- Hot mode TCC Shift Pattern.
- The PCM will not illuminate the CHECK TRANS Lamp.
- ATF Lamp ON. (TFT is greater than 145˚C (293˚F).)
- Disable E–side TCC OFF request.

Conditions For Clearing The DTC

- The DTC can be cleared from the PCM history by using a scan tool.
- The DTC will be cleared from history when the vehicle has achieved 40 warm–up cycles without a failure reported.
- The PCM will cancel the DTC default actions when the fault no longer exists and the ignition is cycled “off” long enough to power down the PCM.

Diagnostic Aids

- Inspect the wiring for poor electrical connections at the PCM and at the transmission 16–way connector. Look for possible bent, backed out, deformed, or damaged terminals. Check for weak terminal tension as well.

  Also check for a chafed wire that could short to bare metal or other wiring. Inspect for a broken wire inside the insulation.
- When diagnosing for a possible intermittent short or open condition, move the wiring harness while observing test equipment for a change.
- Check harness routing for a potential short to ground in circuit RED/BLK–GRN/RED.
- Scan tool TFT sensor temperature should rise steadily to about 100˚C (212˚F), then stabilize.
- Check for a “skewed” (mis–scaled) sensor by comparing the TFT sensor temperature to the ambient temperature after a vehicle cold soak. A “skewed” sensor can cause delayed garage shifts or TCC complaints.
- Check for a possible torque converter stator problem.
- Verify customer driving habits, trailer towing, etc.

Test Description

The numbers below refer to the step numbers on the diagnostic chart.

3. This test checks for a “skewed” sensor or shorted circuit.
4. This test simulates a TFT DTC P0713.

DTC P0218 Transmission Fluid Over Temperature

Step	Action	Yes	No
1	Perform the following checks: ● Check for possible engine system problems. ● Transmission fluid checking procedure. Refer to Checking Transmission Fluid Level and Condition in Automatic Transmission (4L30–E) Section. Were the checks performed?	Go to Step 2	—
2	1. Install the scan tool. 2. With the engine “off”, turn the ignition switch “on”. NOTE: Before clearing DTC(s), use the scan tool to record “Failure Records” for reference, as data will be lost when “Clear Info” function is used. 3. Record the DTC “Failure Records”. Is the TFT sensor signal voltage less than 0.33 volts?	Go to Step 3	Go to Diagnostic Aids
3	1. Turn the ignition “off”. 2. Disconnect the transmission 16–way connector H–53 (additional DTCs may set). Is the TFT sensor signal voltage greater than 4.92 volts?	Go to Internal Wiring Harness Check.	Go to Step 4
4	Inspect/repair circuit RED/BLK–GRN/RED for a short to ground. Was a problem found?	Go to Step 6	Go to Step 5
5	1. Inspect the PCM for poor connections. 2. Replace the PCM if no poor connections were found. Is the replacement complete?	Go to Step 6	—
6	1. After the repair is complete, use the scan tool to select “DTC”, then “Clear Info” function and ensure the following conditions are met: TFT is less than 125˚C (257˚F) for at least 10 seconds. 2. Review the scan tool “DTC Info”. Has the last test failed or is the current DTC displayed?	Begin diagnosis again Go to Step 1	Repair verified Exit DTC table

DTC P0560 System Voltage Malfunction

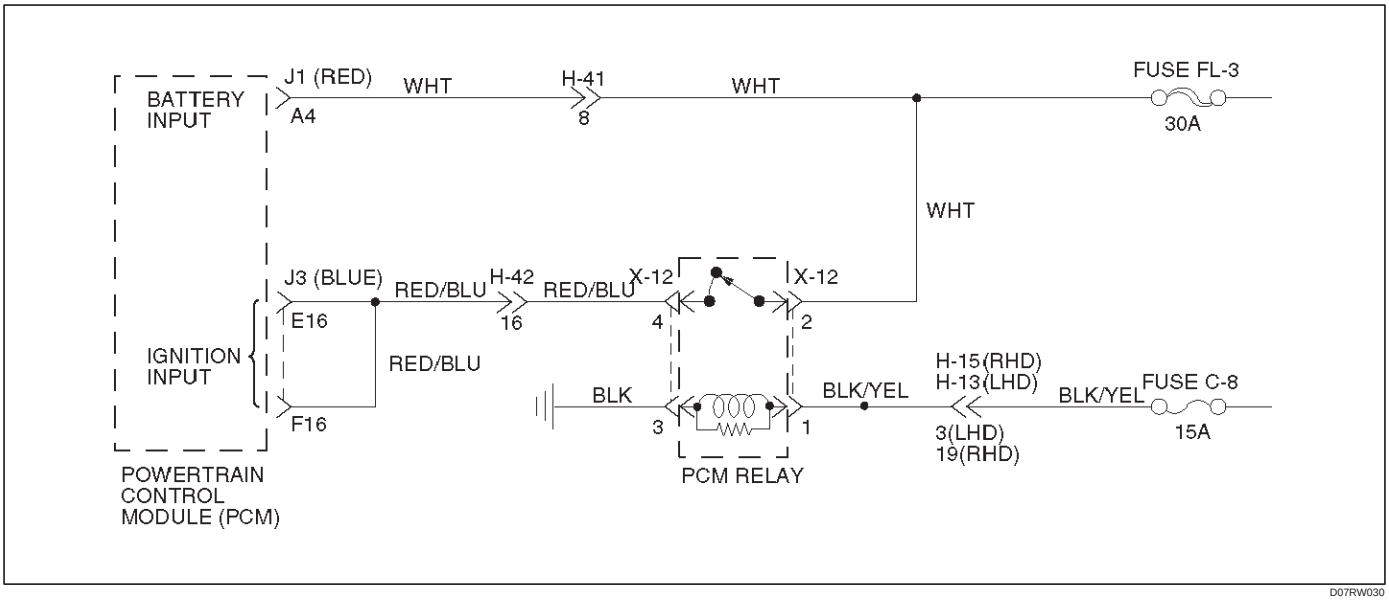

Circuit Description

Circuit WHT is the battery voltage feed for the PCM. Circuit RED/BLU is the ignition voltage feed for the PCM. This DTC detects a low voltage or a high voltage. This is a type “C” DTC.

Conditions For Clearing The DTC

System Voltage Low:

- Engine speed is greater than 1,000 rpm.
- System voltage is less than 10 volts at a maximum transmission temperature of 150˚C (302˚F).
- System voltage is less than 7.3 volts at a minimum transmission temperature of –40˚C (–40˚F).
- All conditions met for 4 seconds.

System Voltage High:

- System voltage is greater than 16 volts for 2 seconds.

Action Taken When The DTC Sets

- Fixed to 4th gear.
- Maximum line pressure.
- Inhibit TCC engagement.
- The PCM will illuminate the CHECK TRANS Lamp.

Conditions For Clearing The DTC

- The DTC can be cleared from the PCM history by using a scan tool.
- The PCM will turn off the CHECK TRANS Lamp after three consecutive ignition cycles without a failure reported.
- The DTC will be cleared from history when the vehicle has achieved 40 warmup cycles without a failure reported.
- The PCM will cancel the DTC default actions when the fault no longer exists and the ignition is cycled “off” long enough to power down the PCM.

Diagnostic Aids

- Charging the battery with a battery charger and jump starting an engine may set DTC(s). If DTC(s) set when an accessory is operated, check for faulty connections or excessive current draw.
- Check for faulty connections at the starter solenoid or fusible link.
- Check for loose/damaged terminals at generator.
- Check belt wear/tension.

Test Description

The numbers below refer to the step numbers on the diagnostic chart.

4. This test checks charging system voltage.
5. This test checks battery voltage input at the PCM.
7. This test checks ignition voltage input at the PCM.

DTC P0560 System Voltage Malfunction

Step	Action	Yes	No
1	1. Install the scan tool. 2. With the engine “off”, turn the ignition switch “on”. NOTE: Before clearing DTC(s), use the scan tool to record “Failure Records” for reference, as data will be lost when the “Clear Info” function is used. 3. Record the DTC “Failure Records”. Note: If any other DTCs are present, refer to their applicable diagnostic charts before continuing. 4. Using the J–39200 DVOM, measure the battery voltage across the battery terminals. Record the measurement for future reference. Is the voltage higher than 10.5 volts?	Go to Step 2	Go to Engine Electrical in Engine section
2	Start the engine and warm to normal operating temperature. Is the generator/check engine light “on”?	Go to Starting and Charging System in Engine section	Go to Step 3
3	1. Increase the engine speed to 1,000–1,500 rpm. 2. Observe scan tool system voltage. Is the system voltage within 13–15 volts.	Go to Step 4	Go to Starting and Charging System in Engine section
4	1. Turn the ignition switch “off”. 2. Disconnect the J1(RED) and J3 (BLUE) PCM connector (additional DTCs will set). 3. With the engine “off”, turn the ignition switch “on”. 4. Using the J39200 DVOM, measure the battery voltage input at PCM connector terminals J1–A4 and J3–E16. Is there a voltage variance between the voltage measured at the battery (taken in Step 1) and at terminals J1–A4 and J3–E16 that is greater than 0.5 volts?	Go to Step 5	Go to Step 6
5	Repair the high resistance condition in circuit WHT. Was the circuit repaired?	Go to Step 10	—
6	1. Disconnect the J3 (BLUE) PCM connector. 2. Measure the ignition voltage input at PCM connector terminals J3–E16 and J3–F16. Is there a voltage variance between the voltage measured at the battery (taken in Step 1) and at terminals J3–E16 and J3–F16 that is greater than 0.5 volts?	Go to Step 7	Go to Step 8
7	Repair the high resistance condition is circuit RED/BLU. Was the circuit repaired?	Go to Step 10	—
8	Check PCM connector terminals J1–A4, J3–E16 and J3–F16 for bent, damaged, or backed out connector pins. Also check for weak terminal tension. Was a problem found?	Go to Step 10	Go to Step 9

DTC P0560 System Voltage Malfunction (Cont'd)

Step	Action	Yes	No
9	Replace the PCM. Is the replacement complete?	Go to Step 10	—
10	1. After the repair is complete, use the scan tool to select "DTC", then "Clear Info" function and operate the vehicle under the following conditions: Start the vehicle and warm to normal operating temperature. The PCM must see a system voltage between 10 and 16 volts. 2. Review the scan tool "DTC Info". Has the last test failed or is the current DTC displayed?	Begin diagnosis again Go to Step 1	**Repair verified** **Exit DTC table**

DTC P0705 Transmission Range Switch (Mode Switch) Illegal Position

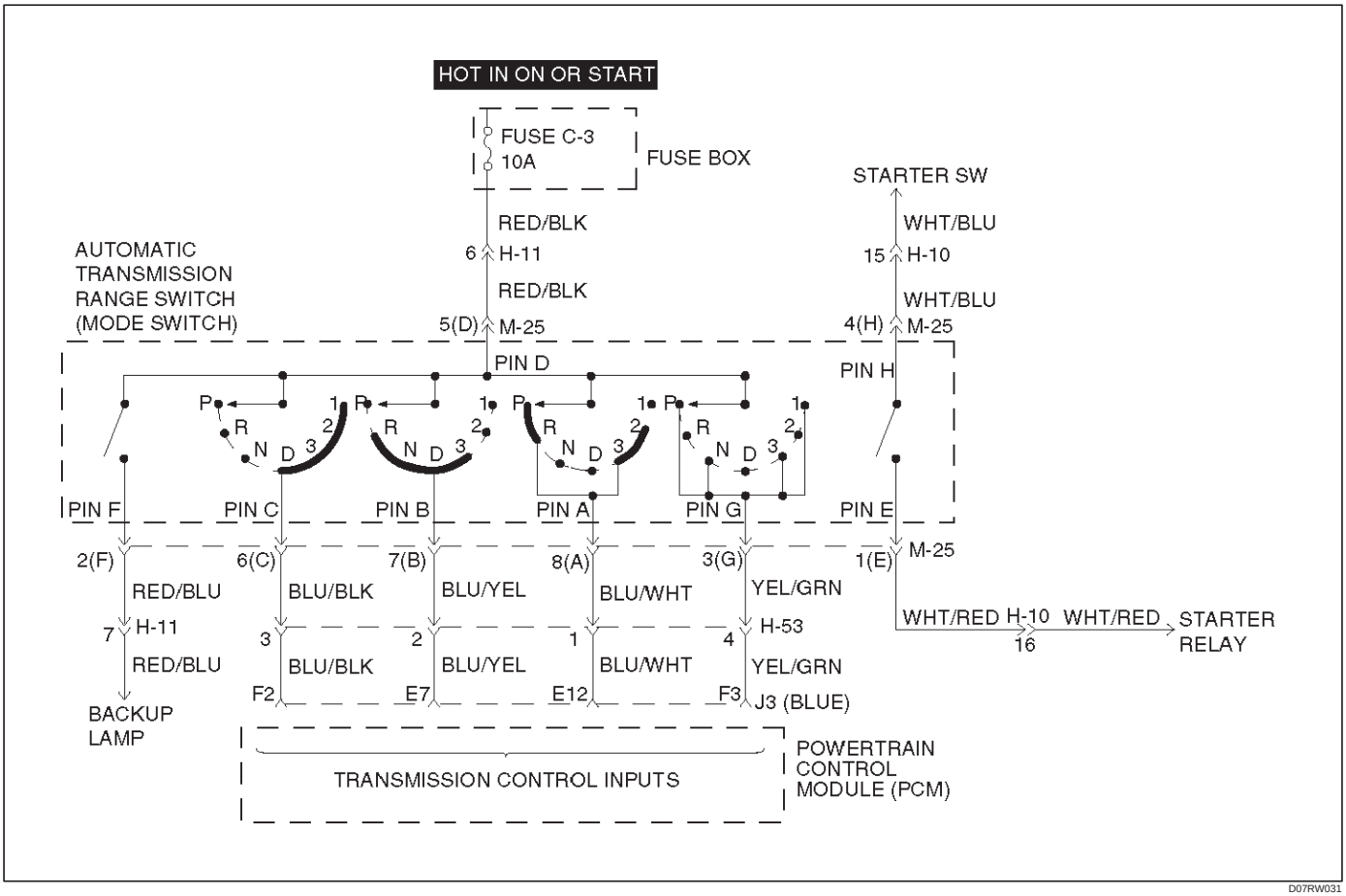

Circuit Description

- The range switch supplies the Powertrain Control Module (PCM) with information regarding the selector lever position: P, R, N, D 3, 2 or L. The selector lever position is indicated by the state of four ON/OFF contracts. The range switch is located on one side of the transmission. It is on the transmission manual shaft and is fixed to the main case.
- The range switch is also used to provide the information P or N to the engine crank wiring. The engine can be cranked only if connector M–25 terminal 4(H) is connected to terminal 1(E) which is connected to ground.
- The range switch is also used to provide the backup lamp power in reverse. This is why the range switch is supplied through a 10A fuse (C–3). This fuse can burn due to a short circuit in the backup lamp.

This DTC detects when a fuse is open or the range switch circuit does not work. This is a type “D” DTC.

Conditions For Setting The DTC

- Range switch illegal positions met for 5 seconds.

Action Taken When The DTC Sets

- Default to D position.
- Inhibit torque management.
- Maximum line pressure.
- The PCM will not illuminate the CHECK TRANS Lamp.

Conditions For Clearing The DTC

- The DTC can be cleared from the PCM history by using a scan tool.
- The DTC will be cleared from history when the vehicle has achieved 40 warmup cycles without a failure reported.
- The PCM will cancel the DTC default actions when the fault no longer exists and the ignition is cycled “off” long enough to power down the PCM.

Diagnostic Aids

- Refer to accompanying chart for the normal range signals and the illegal combinations.
- Inspect the wiring for poor electrical connections at the PCM and at the transmission 8–way connector. Look for possible bent, backed out, deformed or damaged terminals. Check for weak terminal tension as well. Also check for a chafed wire that could short to bare metal or other wiring. Inspect for a broken wire inside the insulation.
- When diagnosing for a possible intermittent short or open condition, move the wiring harness while observing test equipment for a change.

- Refer to the “Range Switch Logic Table” or “Functional Test Procedure” for further information.

Test Description

The numbers below refer to the step numbers on the diagnostic chart:

2. This test checks the indicated range signal to the manual valve actually selected.
5. This test checks for continuity between each selected range switch connector terminals.

Range Switch Logic Table

Range Position	Range Switch Pin			
	A	B	C	P(G)
Park	ON	OFF	OFF	ON
Reverse	ON	ON	OFF	OFF
Neutral	OFF	ON	OFF	ON
D4	OFF	ON	ON	OFF
D3	ON	ON	ON	ON
2	ON	OFF	ON	OFF
L	OFF	OFF	ON	ON
Illegal	OFF	OFF	OFF	OFF
Illegal	OFF	OFF	OFF	ON

DTC P0705 Transmission Range Switch (Mode Switch) Illegal Position

Step	Action	Yes	No
1	Perform the following checks: ● The transmission linkage from the select lever to the manual valve is adjusted properly. ● Diagnostic circuit check. Were the checks performed?	Go to Step 2	—
2	1. Install the scan tool. 2. With the engine “off”, turn the ignition switch “on”. NOTE: Before clearing DTC(s), use the scan tool to record “Failure Records” for reference, as data will be lost when the “Clear Info” function is used. 3. Record the DTC “Failure Records”. 4. Select each transmission range: D1, D2, D3, D4, N, R, and P. Does each selected transmission range match the scan tool “Range Switch” display?	Go to Diagnostic Aids	Go to Step 3
3	Are all range switch pin displays incorrect?	Go to Step 4	Go to Step 5
4	Check fuse and wiring to the 8–way connector terminal 5(D) for opens. Refer to Mode Switch in Automatic Transmission (4L30–E) section. If no problem was found, replace the range switch. Is the replacement complete?	Go to Step 8	—
5	1. Disconnect the 8–way range switch connector. 2. Using ohmmeter, check continuity between terminal 5(D) and respectively terminals 3(G), 6(C), 7(B) and 8(A) of the 8–way range switch connector. 3. Move shift selector lever through all positions and compare results with “Range Switch Logic Table”. Is one range switch pin display incorrect?	Go to Step 6	Go to Step 7
6	Check the affected wiring and connector, and repair. Is the repair complete?	Go to Step 8	—

DTC P0705 Transmission Range Switch (Mode Switch) Illegal Position (Cont'd)

Step	Action	Yes	No
7	Check the Powertrain Control Module (PCM) connectors for poor connection. If no problem was found, replace the PCM. Is the replacement complete?	Go to Step 8	—
8	1. After the repair is complete, use the scan tool to select "DTC", then "Clear Info" function and road test the vehicle. 2. Review the scan tool "DTC Info". Has the last test failed or is the current DTC displayed?	Begin diagnosis again Go to Step 1	Repair verified Exit DTC table

DTC P0706 Transmission Range Switch (Mode Switch) Performance

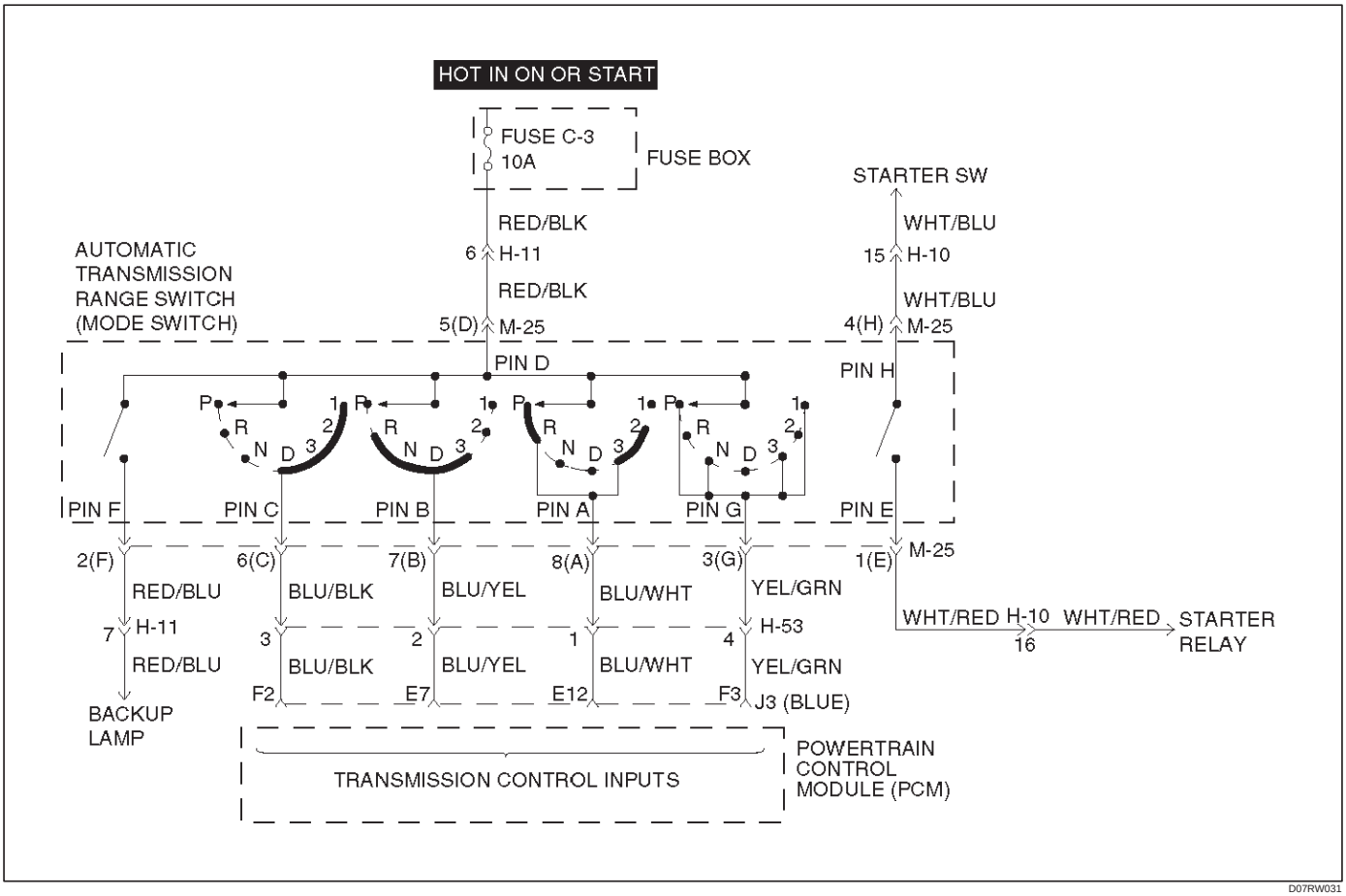

Circuit Description

- The range switch supplies the Powertrain Control Module (PCM) with information regarding the selector lever position: P, R, N, D, 3, 2 or L. The selector lever position is indicated by the state of four ON/OFF contracts. The range switch is located on one side of the transmission. It is on the transmission manual shaft and is fixed to the main case.
- The range switch is also used to provide the information P or N to the engine crank wiring. The engine can be cranked only if connector M–25 terminal 4(H) is connected to terminal 1(E) which is connected to ground.
- The range switch is also used to provide the backup lamp power in reverse. This is why the mode switch is supplied through a 10A fuse (C–3). This fuse can burn due to a shot circuit in the backup lamp.
- This DTC detects an invalid state of the range switch or the range switch circuit by deciphering the range switch inputs. This is a type “D” DTC.

Conditions For Setting The DTC

This DTC will set if any of the following conditions occurs:

Condition 1 (“R” bad position):

- Engine is running.
- No output speed DTCP0722, P0723.
- Output speed greater then 3,200 RPM.
- Range switch indicates “R”.
- All conditions met for 4 seconds.

Condition 2 (“P” or “N” bad position):

- Engine is running.
- No TPS codes.
- Engine speed is less than 3,000 RPM.
- TP angle is greater than 20%.
- Range switch indicates “P” or “N”.
- All conditions met for 4 seconds.

Action Taken When The DTC Sets

- Default to “D” position.
- The PCM will not illuminate the CHECK TRANS Lamp.

Conditions For Clearing The DTC

- The DTC can be cleared from the PCM history by using a scan tool.
- The DTC will be cleared from history when the vehicle has achieved 40 warmup cycles without a failure reported.
- The PCM will cancel the DTC default actions when the fault no longer exists and the ignition is cycled “off” long enough to power down the PCM.

Diagnostic Aids

- Refer to the accompanying chart for the normal range signals and the illegal combinations.
- Inspect the wiring for poor electrical connections at the PCM and at the transmission 8–way connector. Look for possible bent, backed out, deformed or damaged terminals. Check for weak terminal tension as well. Also check for a chafed wire that could short to bare metal or other wiring. Inspect for a broken wire inside the insulation.
- When diagnosing for a possible intermittent short or open condition, move the wiring harness while observing test equipment for a change.
- Refer to the “Range Switch Logic Table” or “Functional Test Procedure” for further information.

Test Description

The numbers below refer to the step numbers on the diagnostic chart:

2. This test checks the indicated range signal to the manual valve actually selected.
5. This test checks for continuity between each selected range switch connector terminals.

Range Switch Logic Table

Range Position	Range Switch Pin			
	A	B	C	P(G)
Park	ON	OFF	OFF	ON
Reverse	ON	ON	OFF	OFF
Neutral	OFF	ON	OFF	ON
D4	OFF	ON	ON	OFF
D3	ON	ON	ON	ON
2	ON	OFF	ON	OFF
L	OFF	OFF	ON	ON
Illegal	OFF	OFF	OFF	OFF
Illegal	OFF	OFF	OFF	ON

DTC P0706 Transmission Range Switch (Mode Switch) Performance

Step	Action	Yes	No
1	Perform the following checks: ● The transmission linkage from the select lever to the manual valve is adjusted properly. ● Diagnostic circuit check. Were the checks performed?	Go to Step 2	—
2	1. Install the scan tool. 2. With the engine “off”, turn the ignition switch “on”. NOTE: Before clearing DTC(s), use the scan tool to record “Failure Records” for reference, as data will be lost when the “Clear Info” function is used. 3. Record the DTC “Failure Records”. 4. Select each transmission range: D1, D2, D3, D4, N, R, and P. Does each selected transmission range match the scan tool “Range Switch” display?	Go to Diagnostic Aids	Go to Step 3
3	Are all range switch pin displays incorrect?	Go to Step 4	Go to Step 5
4	Check fuse and wiring to the 8–way connector terminal 5(D) for opens. Refer to Mode Switch in Automatic Transmission (4L30–E) section. If no problem was found, replace the range switch. Is the replacement complete?	Go to Step 8	—
5	1. Disconnect the 8–way range switch connector. 2. Using ohmmeter, check continuity between terminal 5(D) and respectively terminals 3(G), 6(C), 7(B) and 8(A) of the 8–way range switch connector. 3. Move shift selector lever through all positions and compare results with “Range Switch Logic Table”. Is one range switch pin display incorrect?	Go to Step 6	Go to Step 7
6	Check the affected wiring and connector, and repair. Is the repair complete?	Go to Step 8	—

DTC P0706 Transmission Range Switch (Mode Switch) Performance (Cont'd)

Step	Action	Yes	No
7	Check the Powertrain Control Module (PCM) connectors for poor connection. If no problem was found, replace the PCM. Is the replacement complete?	Go to Step 8	—
8	1. After the repair is complete, use the scan tool to select "DTC", then "Clear Info" function and road test the vehicle. 2. Review the scan tool "DTC Info". Has the last test failed or is the current DTC displayed?	Begin diagnosis again Go to Step 1	Repair verified Exit DTC table

DTC P0712 Transmission Fluid Temperature (TFT) Sensor Circuit Low Input

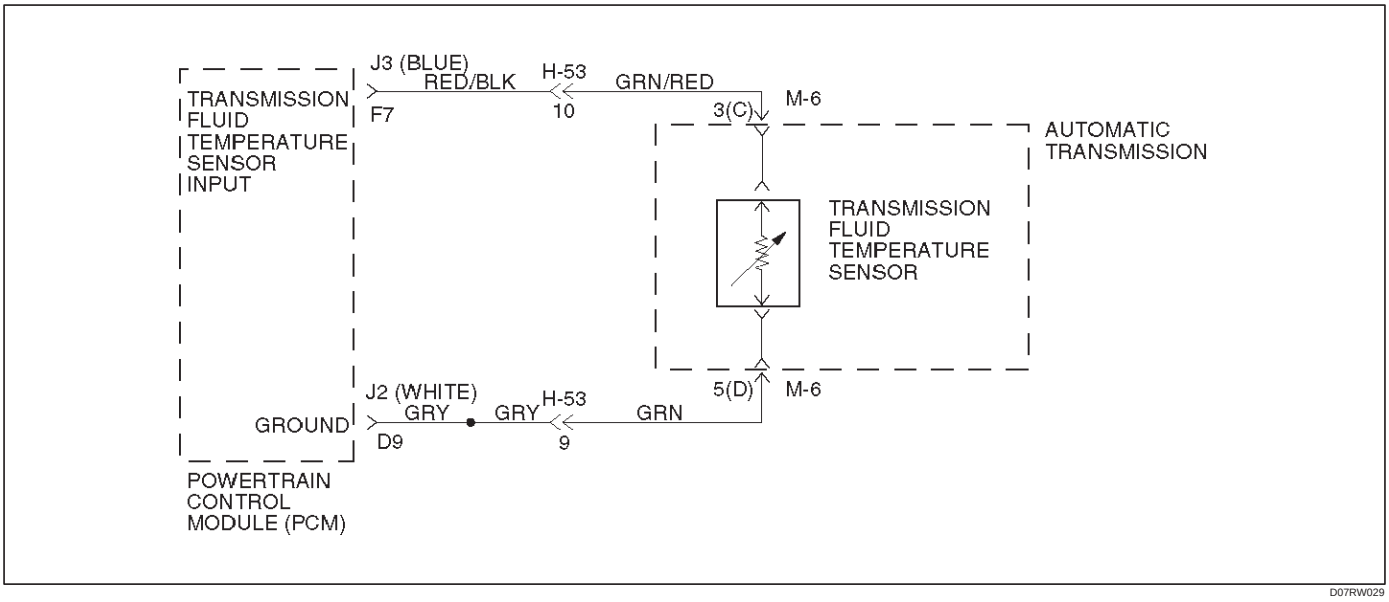

Circuit Description

The TFT sensor is a thermister that controls the signal voltage to the PCM. The PCM supplies a 5–volt reference signal to the sensor on circuit RED/BLK–GRN/RED. When the transmission fluid is cold, the sensor resistance is high. The PCM detects high signal voltage. As the transmission fluid temperature increases to the normal operating temperature of 100˚C (212˚F), the sensor resistance becomes less and the voltage decreases to 1.5 to 2 volts. With transmission fluid over temperature and DTC P0218 also set, check the transmission cooling system.

This DTC detects a continuous short to ground in the TFT signal circuit or the TFT sensor. This is a type “D” DTC.

Conditions For Setting The DTC

- Battery voltage is between 10 and 16 volts.
- Ignition is “on”.
- TFT sensor indicating a voltage less than 0.4 volts.
- All conditions met for 20 seconds.

Action Taken When The DTC Sets

- Transmission default temperature will be:

  80˚C (176˚F) if engine temperature code is set.

  100˚C (212˚F) if engine temperature is warm.

  80˚C (176˚F) if engine run time is greater than 5 minutes.

  21˚C (69.8˚F) if engine run time is less than 5 minutes.
- The PCM will not illuminate the CHECK TRANS Lamp.

Conditions For Clearing The DTC

- The DTC can be cleared from the PCM history by using a scan tool.
- The DTC will be cleared from history when the vehicle has achieved 40 warmup cycles without a failure reported.
- The PCM will cancel the DTC default actions when the fault no longer exists and the ignition is cycled “off” long enough to power down the PCM.

Diagnostic Aids

- Check harness routing for a potential short to ground in circuit RED/BLK–GRN/RED. Scan tool TFT display should rise steadily to about 100˚C (212˚F), then stabilize.
- Inspect the wiring for poor electrical connection at the PCM and at the transmission 16–way connector. Look for possible bent, backed out, deformed or damaged terminals. Check for weak terminal tension as well. Also check for a chafed wire that could short to bare metal or other wiring. Inspect for a broken wire inside the insulation.
- When diagnosing for a possible intermittent short or open condition, move the wiring harness while observing test equipment for a change.
- The temperature to resistance value scale may be used to test the TFT sensor at the various temperature levels to evaluate the possibility of a “skewed” (mis–scaled) sensor.

  A “skewed” sensor could result in delayed garage shifts or TCC complaints.
- Verify customer driving habits, trailer towing, etc.

Test Description

The numbers below refer to the step numbers on the diagnostic chart:

3. This test checks for a short to ground or a “skewed” sensor.
4. This test checks for an internal fault within the transmission by creating an open.

Resistance Chart

˚C	˚F	Resistance (kΩ)
–40	–40	672
0	32	65
20	68	25
80	176	2.5
120	248	0.78
150	304	0.37

DTC P0712 Transmission Fluid Temperature (TFT) Sensor Circuit Low Input

Step	Action	Yes	No
1	Perform the transmission fluid checking procedure. Refer to Checking Transmission Fluid Level and Condition in Automatic Transmission (4L30–E) section. Was the fluid checking procedure performed?	Go to Step 2	Refer to Checking Transmission Fluid Level and Condition in Automatic Transmission (4L30–E) section
2	1. Install the scan tool. 2. With the engine “off”, turn the ignition switch “on”. NOTE: Before clearing DTC(s), use the scan tool to record “Freeze Frame” and “Failure Records” for reference, as data will be lost when the “Clear Info” function is used. 3. Record the DTC “Freeze Frame” and “Failure Records”. Does the scan tool display a TFT sensor signal voltage less than 0.4 volts?	Go to Step 3	Go to Diagnostic Aids
3	1. Turn the ignition “off”. 2. Disconnect the transmission 16–way connector H–53. 3. Turn the ignition “on”. Does the TFT signal voltage change to match the voltage 4.92 volts?	Go to Step 4	Go to Step 9
4	Using the J39200 DVOM, measure the resistance between terminals 3(C) and 5 (D). Is the resistance within specifications? (See Resistance Chart.)	Go to Diagnostic Aids	Go to Step 5
5	1. Disconnect the transmission 5–way connector M–6. 2. Using the J39200 DVOM, measure the resistance between terminals 3(C) and 5(D). Is the resistance within specifications? (See Resistance Chart.)	Go to Diagnostic Aids	Go to Step 6
6	1. Remove the transmission oil pan. Refer to Transmission Oil Temperature Sensor (Adapter Case) in Automatic Transmission (4L30–E) section. 2. Check the internal wiring harness for a short to ground. Was a problem found?	Go to Step 8	Go to Step 7
7	1. Disconnect the internal wiring harness at the TFT sensor. 2. Measure the resistance of the TFT sensor. Is the resistance within specifications? (See Resistance Chart.)	Go to Diagnostic Aids	Go to Step 8
8	Replace the TFT Sensor. Is the replacement complete?	Go to Step 12	—

DTC P0712 Transmission Fluid Temperature (TFT) Sensor Circuit Low Input (Cont'd)

Step	Action	Yes	No
9	Check circuit RED/BLK–GRN/RED for a short to ground. Was a problem found?	Go to Step 12	Go to Step 10
10	Check the PCM for faulty connections. Was a problem found?	Go to Step 12	Go to Step 11
11	Replace the PCM. Refer to Powertrain Control Module (PCM) in Automatic Transmission (4L30–E) section. Is the replacement complete?	Go to Step 12	—
12	1. After the repair is complete, use the scan tool to select "DTC", then "Clear Info" function and ensure the following conditions are met: TFT sensor indicates a voltage greater than 0.33 volts for 2 seconds. 2. Review the scan tool "DTC info". Has the last test failed or is the current DTC displayed?	Begin diagnosis again Go to Step 1	Repair verified Exit DTC table

DTC P0713 Transmission Fluid Temperature (TFT) Sensor Circuit High Input

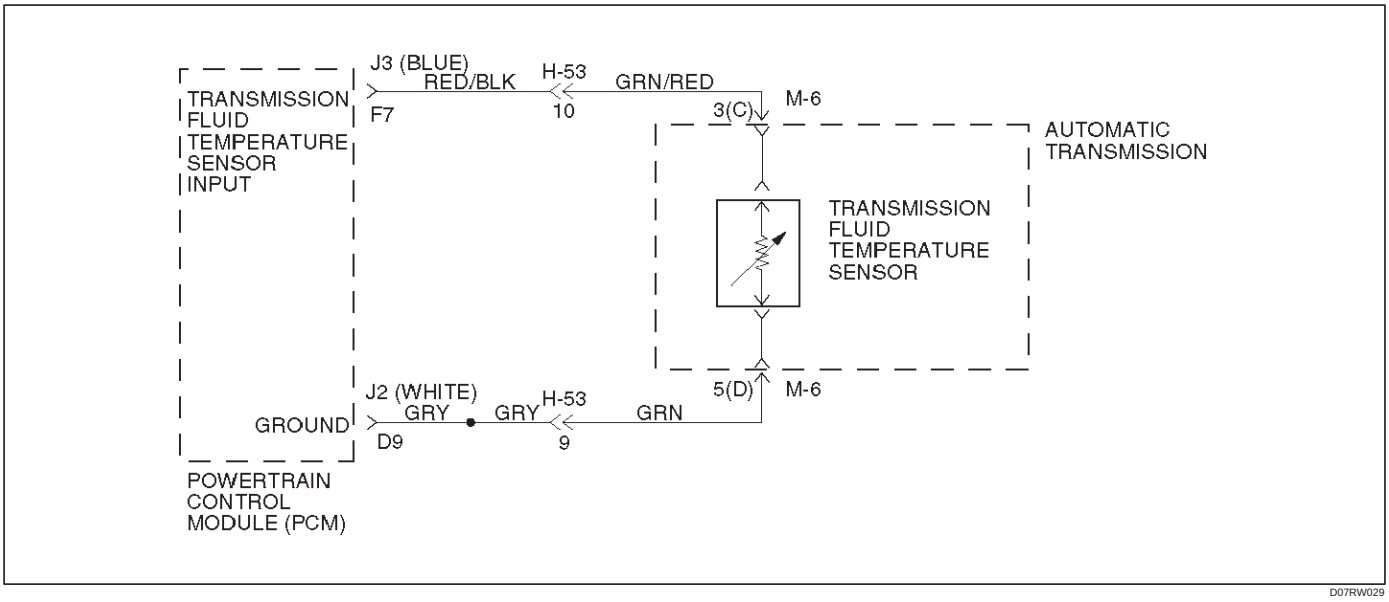

Circuit Description

The TFT sensor is a thermistor that controls the signal voltage to the PCM. The PCM supplies a 5–volt reference signal to the sensor on circuit RED/BLK–GRN/RED. When the transmission fluid is cold, the sensor resistance is high and the PCM will sense high signal voltage. As the transmission fluid temperature warms to the normal operating temperature of 100˚C (212˚F), the sensor resistance becomes less and the voltage decreases to about 1.5 to 2 volts.

This DTC detects a continuous open or short to power in the TFT signal circuit or the TFT sensor. This is a type “D” DTC.

Conditions For Setting The DTC

- Battery voltage is between 10 and 16 volts.
- Ignition is “on”.
- TFT sensor indicating a voltage greater than 4.86 volts.
- All conditions met for 20 seconds.

Action Taken When The DTC Sets

- Transmission default temperature will be:

  80˚C (176˚F) if engine temperature code is set.

  100˚C (212˚F) if engine temperature is warm.

  80˚C (176˚F) if engine run time is greater than 5 minutes.

  21˚C (69.8˚F) if engine run time is less than 5 minutes.
- The PCM will not illuminate the CHECK TRANS Lamp.

Conditions For Clearing The DTC

- The DTC can be cleared from the PCM history by using a scan tool.
- The DTC will be cleared from history when the vehicle has achieved 40 warmup cycles without a failure reported.
- The PCM will cancel the DTC default actions when the fault no longer exists and the ignition is cycled “off” long enough to power down the PCM.

Diagnostic Aids

- Inspect the wiring for poor electrical connection at the PCM and at the transmission 16–way connector. Look for possible bent, backed out, deformed or damaged terminals. Check for weak terminal tension as well. Also check for a chafed wire that could short to bare metal or other wiring. Inspect for a broken wire inside the insulation.
- When diagnosing for a possible intermittent short or open condition, move the wiring harness while observing test equipment for a change.
- Scan tool displays transmission fluid temperature in degrees. After transmission is operating, the temperature should rise steadily to about 100˚C (212˚F), then stabilize.
- The temperature to resistance value scale may be used to check the TFT sensor at the various temperature levels to evaluate the possibility of a “skewed” (mis–scaled) sensor.

  A “skewed” sensor could result in hard shifts or TCC complaints.

Test Description

The numbers below refer to the step numbers on the diagnostic chart:

3. This check verifies problem in the TFT sensor circuit.
4. This test simulates a TFT sensor DTC P0712. If the PCM recognizes the low signal voltage (high temperature), and the scan tool displays 146˚C (295˚F) or greater, the PCM and wiring are OK.

5. This test checks the TFT sensor and internal wiring harness.

Resistance Chart

˚C	˚F	Resistance (kΩ)
–40	–40	672
0	32	65
20	68	25
80	176	2.5
120	248	0.78
150	304	0.37

DTC P0713 Transmission Fluid Temperature (TFT) Sensor Circuit High Input

Step	Action	Yes	No
1	Perform the transmission fluid checking procedure. Refer to Checking Transmission Fluid Level and Condition in Automatic Transmission (4L30–E) section. Was the fluid checking procedure performed?	Go to Step 2	Refer to Checking Transmission Fluid Level and Condition in Automatic Transmission (4L30–E) section
2	1. Install the scan tool. 2. With the engine “off”, turn the ignition switch “on”. NOTE: Before clearing DTC(s), use the scan tool to record “Failure Records” for reference, as data will be lost when the “Clear Info” function is used. 3. Record the DTC “Freeze Frame” and “Failure Records”. Does the scan tool display a TFT sensor signal voltage greater than 4.86 volts?	Go to Step 3	Go to Diagnostic Aids
3	1. Turn the ignition “off”. 2. Disconnect the transmission 16–way connector H–53. 3. Install a fused jumper wire from terminal 3(C) to 5(D) on the engine harness. 4. Turn the ignition “on”. Does the TFT signal voltage drop to less than 0.4 volts?	Go to Step 4	Go to Step 9
4	1. Turn the ignition “off”. 2. Using the J39200 DVOM, measure the resistance between terminals 3(C) and 5(D). Is the resistance within specifications? (See Resistance Chart.)	Go to Diagnostic Aids	Go to Step 5
5	1. Disconnect the transmission 5–way connector M–6. 2. Using the J39200 DVOM, measure the resistance between terminals 3(C) and 5(D). Is the resistance within specifications? (See Resistance Chart.)	Go to Diagnostic Aids	Go to Step 6
6	1. Remove the transmission oil pan. 2. Check the internal wiring harness for an open. Refer to Transmission Oil Temperature Sensor (Adapter Case) in Automatic Transmission (4L30–E) section. Was a problem found and corrected?	Go to Step 13	Go to Step 7
7	1. Disconnect the internal wiring harness at the TFT sensor. 2. Measure the resistance of the TFT sensor. Is the resistance within specifications? (See Resistance Chart.)	Go to Diagnostic Aids	Go to Step 8

DTC P0713 Transmission Fluid Temperature (TFT) Sensor Circuit High Input (Cont'd)

Step	Action	Yes	No
8	Replace TFT sensor. Refer to Transmission Oil Temperature Sensor (Adapter Case) in Automatic Transmission (4L30–E) section. Is the replacement complete?	Go to Step 13	—
9	Check circuit RED/BLK–GRN/RED for an open or short to B+. Was a problem found?	Go to Step 13	Go to Step 10
10	Check circuit GRY–GRN for an open. Was a problem found?	Go to Step 13	Go to Step 11
11	Check the PCM for faulty or intermittent connections. Was a problem found?	Go to Step 13	Go to Step 12
12	Replace the PCM. Refer to Powertrain Control Module (PCM) in Automatic Transmission (4L30–E) section. Is the replacement complete?	Go to Step 13	—
13	1. After the repair is complete, use the scan tool to select "DTC", then "Clear Info" function and ensure the following conditions are met: 2. TFT sensor indicates a voltage less than 4.92 volts for 2 seconds. 3. Review the scan tool "DTC Info". Has the last test failed or is the current DTC displayed?	Begin diagnosis again Go to Step 1	Repair verified Exit DTC table

DTC P0719 TCC Brake Switch Circuit High (Stuck On)

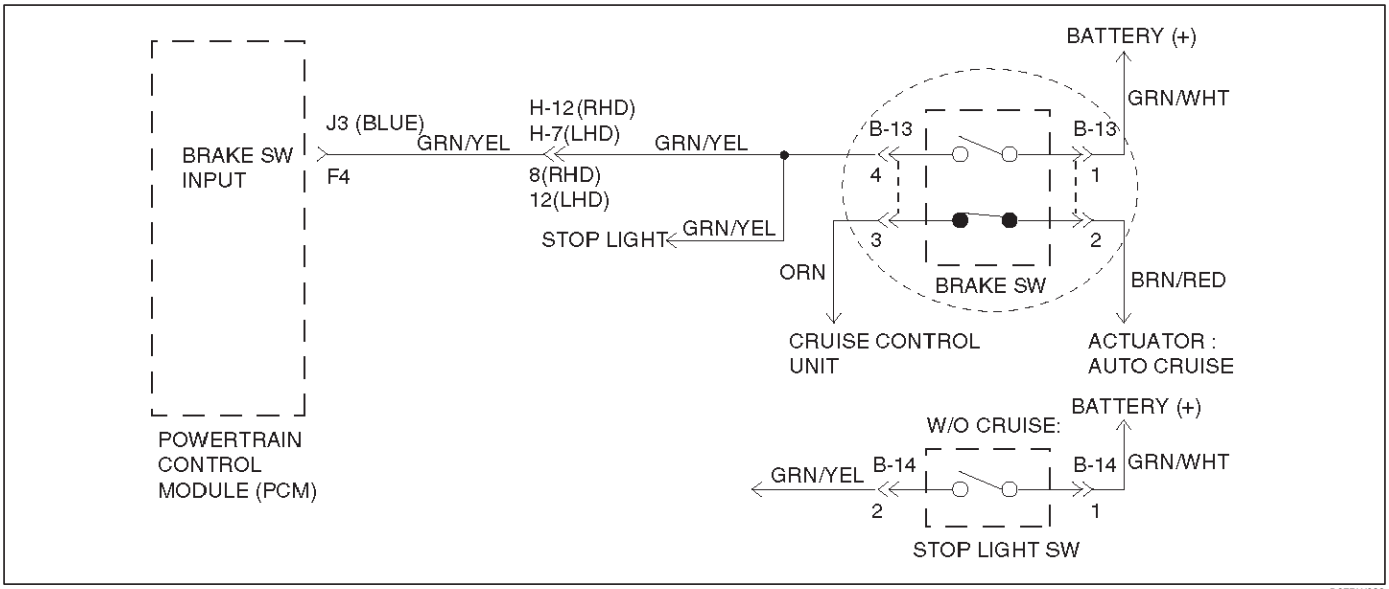

D07RW032

Circuit Description

The TCC brake switch is used to indicate brake pedal status. The normally opened brake switch signal voltage circuit is opened.

Brake switch supplies a B+ signal on circuit GRN/YEL to the PCM when the brakes are applied. The PCM uses this signal to deenergize the TCC solenoid when the brakes are applied.

This DTC detects a closed brake switch during accelerations. This is a type “D” DTC.

Conditions For Setting The DTC

- No OSS DTCs P0722 or P0723.
- The PCM detects a closed brake switch/circuit (12 volts) for 2 seconds, and the following events occur seven consecutive times: vehicle speed is less than 8 km/h (5 mph); then vehicle speed is between 8 and 32 km/h (5 and 20 mph) for 4 seconds; then vehicle speed is greater than 32 km/h (20 mph) for 4 seconds.

Action Taken When The DTC Sets

- If throttle opening is greater than 10% and vehicle speed is greater than 45 km/h (28 mph), then disregard brake switch contingency for TCC off mode.
- The PCM will not illuminate the CHECK TRANS Lamp.

Conditions For Clearing The DTC

- The DTC can be cleared from the PCM history by using a scan tool.
- The DTC will be cleared from history when the vehicle has achieved 40 warmup cycles without a failure reported.
- The PCM will cancel the DTC default actions when the fault no longer exists and the ignition is cycled “off” long enough to power down the PCM.

Diagnostic Aids

- Inspect the wiring for poor electrical connections at the PCM and TCC brake switch. Look for possible bent, backed out, deformed or damaged terminals. Check for weak terminal tension as well. Also check for a chafed wire that could short to bare metal or other wiring. Inspect for a broken wire inside the insulation.
- When diagnosing for a possible intermittent short or open condition, move the wiring harness while observing test equipment for a change.
- Check customer driving habits and/or unusual driving conditions (i.e. stop and go, highway).
- Check brake switch for proper mounting and adjustment.

Test Description

The numbers below refer to the step numbers on the diagnostic chart:

3. This test checks for voltage at the brake switch.
6. This test checks the brake switch.
9. This test checks circuit GRN/YEL at the PCM.

DTC P0719 TCC Brake Switch Circuit High (Stuck On)

Step	Action	Yes	No
1	1. Install the scan tool. 2. With the engine “off”, turn the ignition switch “on”. If ABS code is set, check applicable fuse. NOTE: Before clearing DTC(s), use the scan tool to record “Failure Records” for reference, as data will be lost when the “Clear Info” function is used. 3. Record the DTC “Failure Records”. 4. Apply then release the brake pedal. Does the scan tool display “TCC Brake Switch” as “closed” with the brake pedal applied, and then display “open” when the brake pedal is released?	Go to Diagnostic Aids	Go to Step 2
2	1. Connect the test light to ground. 2. Back probe ignition feed circuit terminal B13–1 at the brake switch. Is the test light “on”?	Go to Step 3	Go to Step 4
3	1. Connect the test light to ground. 2. Back probe circuit terminal B13–4 at the brake switch. Is the test light “off”?	Go to Step 7	Go to Step 5
4	Repair the open in battery feed circuit terminal B13–1 to the brake switch. If fuse is open, check circuit terminal B13–4 for a short to ground. Is the repair complete?	Go to Step 13	—
5	Disconnect brake switch connector B–13 and ignition switch “on”. Is the test light “on”?	Go to Step 8	Go to Step 6
6	Check the brake switch short (B13–1 and B13–4). Was a problem found?	Go to Step 9	Go to Step 10
7	Check circuit terminal B13–4 for a short to voltage. Ignition switch “on”. Is the test light “on”?	Go to Step 8	Go to Step 10
8	1. Disconnect the J3 (BLUE) PCM connector. 2. Check circuit terminal B13–4 for a short to voltage. Was a problem found?	Go to Step 13	Go to Step 10
9	Replace the brake switch. Is the replacement complete?	Go to Step 13	—
10	1. Turn the ignition “off”. 2. Reconnect the J3 (BLUE) PCM connector. 3. Turn the ignition “on”. Does the scan tool display “TCC Brake Switch” as “open” with the brake applied, then display “closed” with the brake pedal released?	Go to Diagnostic Aids	Go to Step 11
11	Check the PCM for faulty or intermittent connections. Was a problem found and corrected?	Go to Step 13	Go to Step 12

DTC P0719 TCC Brake Switch Circuit High (Stuck On) (Cont'd)

Step	Action	Yes	No
12	Replace the PCM. Refer to Powertrain Control Module (PCM) in Automatic Transmission (4L30–E) section. Is the replacement complete?	Go to Step 13	—
13	1. After the repair is complete, use the scan tool to select "DTC", then "Clear Info" function and ensure the following conditions are met: The PCM brake switch signal must indicate 0 volts for 1 seconds with the brake pedal applied. 2. Review the scan tool "DTC Info". Has the last test failed or is the current DTC displayed?	Begin diagnosis again Go to Step 1	Repair verified Exit DTC table

DTC P0722 Transmission Output Speed Sensor (OSS) Low Input

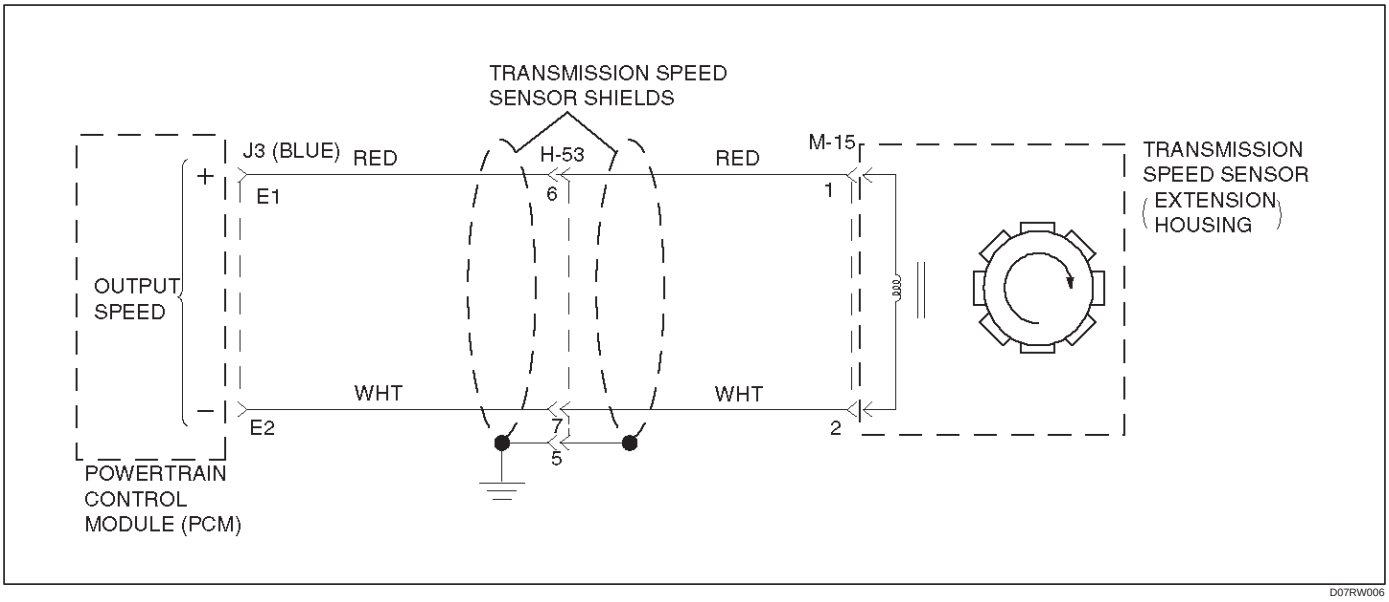

Circuit Description

Output speed information is provided to the PCM by the OSS, which is a permanent magnet (PM) generator. The PM generator produces a pulsing AC voltage. The AC voltage level and number of pulses increases as the speed of the vehicle increases. The PCM then converts the pulsing voltage to output speed, which is used for calculations. The vehicle speed can be displayed with a scan tool.

This DTC detects a low output speed when there is a high engine speed in a drive gear range. This is a type “C” DTC.

Conditions For Setting The DTC

- No MAP DTCs P0107 or P0108, P0106, P1106, P1107.
- No TPS DTCs P0122 or P0123.
- Not in Park or Neutral.
- TP angle is greater than 10%.
- Engine vacuum is between 0 and 70kPa.
- Engine speed is between 3,000 and 7,000 rpm.
- Transmission output speed is less than 0 rpm.
- All conditions met for 5 seconds.

Action Taken When The DTC Sets

- Fixed to 4th gear.
- Maximum line pressure.
- Inhibit TCC engagement.
- The PCM will illuminate the CHECK TRANS Lamp.

Conditions For Clearing The MIL/DTC

- The PCM will turn off the CHECK TRANS Lamp after three consecutive ignition cycles without a failure reported.
- The DTC can be cleared from the PCM history by using a scan tool. The DTC will be cleared from history when the vehicle has achieved 40 warmup cycles without a failure reported.
- The PCM will cancel the DTC default actions when the fault no longer exists and the ignition is cycled “off” long enough to power down the PCM.

Diagnostic Aids

- An OSS DTC P0722 will set when no output speed is at detected at start off.
- Inspect the wiring for poor electrical connection at the PCM. Look for possible bent, backed out, deformed or damaged terminals. Check for weak terminal tension as well. Also check for a chafed wire that could short to bare metal or other wiring. Inspect for a broken wire inside the insulation.
- When diagnosing for a possible intermittent short or open condition, move the wiring harness while observing test equipment for a change.

Test Description

The numbers below refer to the step numbers on the diagnostic chart:

5. This test checks the OSS circuit.
6. This test checks the integrity of the OSS.
8. This test checks the 5–volt and ground circuit of the PCM.

DTC P0722 Transmission Output Speed Sensor (OSS) Low Input

Step	Action	Yes	No
1	1. Install the scan tool. 2. With the engine “off”, turn the ignition switch “on”. NOTE: Before clearing DTC(s), use the scan tool to record “Failure Records” for reference, as data will be lost when the “Clear Info” function is used. 3. Record the DTC “Failure Records”. 4. Raise the drive wheels. 5. Start the engine. 6. Place the transmission in any drive range. With the drive wheels rotating, does the “Trans Output Speed” increase with the drive wheel speed?	Go to Diagnostic Aids	Go to Step 2
2	Does the speedometer work?	Go to Step 3	Go to Step 4
3	Check for the most current and/or incorrect calibration. Is the calibration current?	Go to Step 16	Go to Step 4
4	1. Turn the ignition “off”. 2. Disconnect the J3 (BLUE) PCM connector. 3. Using the J39200 DVOM, measure the resistance between harness connector terminals J3–E1 and J3–E2. Is the reading 3,000 ohms?	Go to Step 5	Go to Step 6
5	1. Select AC volts. 2. Rotate the rear wheels, ensuring the driveshaft is turning. Is the voltage greater than 0.5 volts?	Go to Step 7	Go to Step 8
6	Inspect circuits RED and WHT for a poor connection or an open circuit. Was a problem found?	Go to Step 17	Go to Step 8
7	1. Reconnect the J3 (BLUE) PCM connector. 2. Disconnect the OSS harness from the OSS. 3. With the engine “off”, turn the ignition “on”. 4. Using the J 39200 DVOM, measure the voltage at the OSS harness connector terminals M15–1 and M15–2. Is the reading between 4.0 to 5.1 volts?	Go to Step 16	Go to Step 10
8	1. Remove the OSS. 2. Check the output shaft speed sensor rotor for damage or misalignment. Refer to Speed Sensor (Extension Housing) in Automatic Transmission (4L30–E) section. Was a problem found?	Go to Step 17	Go to Step 9
9	Replace the OSS. Is the replacement complete?	Go to Step 17	—
10	Was the reading in step 8 less than 4.0 volts?	Go to Step 12	Go to Step 11
11	Was the reading in Step 8 greater than 5.1 volts?	Go to Step 15	—
12	Using the J 39200 DVOM to chassis ground, measure the voltage on circuit RED. Is the reading between 4.0 to 5.1 volts?	Go to Step 13	Go to Step 14
13	Repair the open in circuit WHT. Is the repair complete?	Go to Step 17	—
14	Check circuit RED for a short to ground or open. Was a problem found and corrected?	Go to Step 17	Go to Step 16

DTC P0722 Transmission Output Speed Sensor (OSS) Low Input (Cont'd)

Step	Action	Yes	No
15	Repair the short to B+ in circuit RED. Is the repair complete?	Go to Step 17	—
16	Replace the PCM. Refer to Powertrain Control Module (PCM) in automatic Transmission (4L30–E) section. Is the replacement complete?	Go to Step 17	—
17	1. After the repair is complete, use the scan tool to select "DTC", then "Clear Info" function and operate the vehicle under the following conditions: Transmission output speed is greater than 101 rpm for 3 seconds. 2. Review the scan tool "DTC Info". Has the last test failed or is the current DTC displayed?	Begin diagnosis again Go to Step 1	Repair verified Exit DTC table

DTC P0723 Transmission Output Speed Sensor (OSS) Intermittent

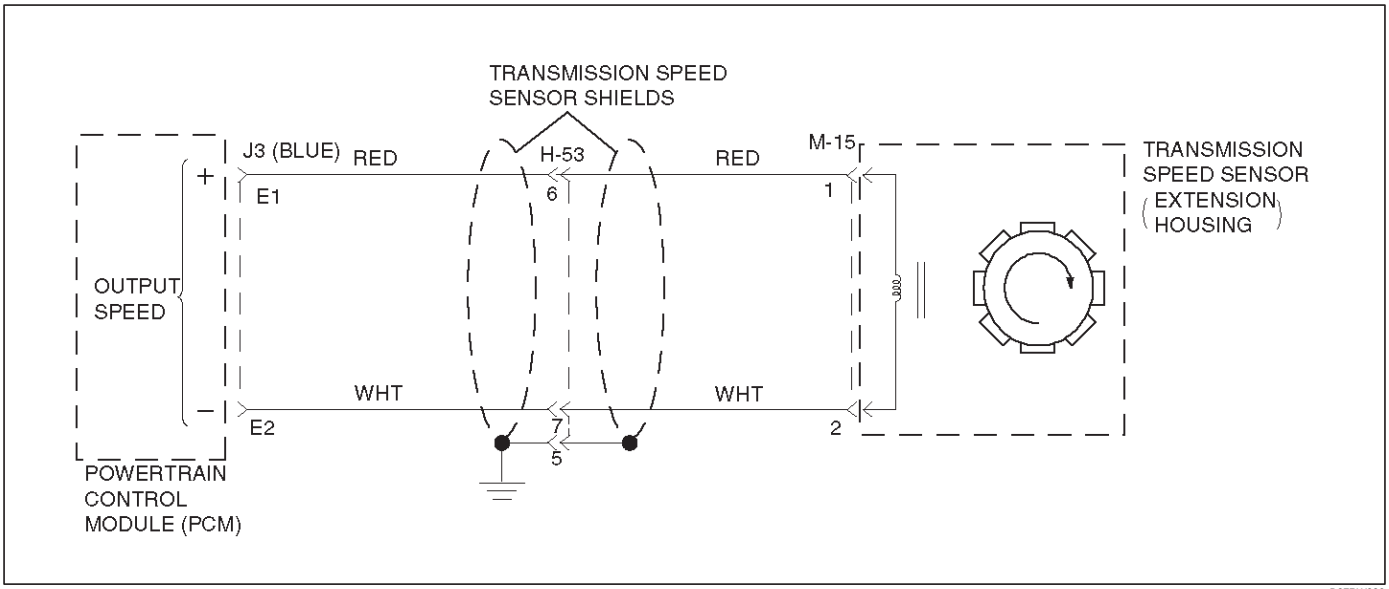

Circuit Description

Output speed information is provided to the PCM by the OSS, which is a permanent magnet (PM) generator. The PM generator produces a pulsing AC voltage. The AC voltage level and number of pulses increases as the speed of the vehicle increases. The PCM then converts the pulsing voltage to output speed, which is used for calculations. The vehicle speed can be displayed with a scan tool.

This DTC detects a low output speed when there is a high engine speed in a drive gear range. This is a type “C” DTC.

Conditions For Setting The DTC

In Park or Neutral:

- Transmission output speed change is greater than 10,000 rpm.
- Conditions met for 6 seconds.
- Engine running time is greater than 2 seconds.

Not in Park or Neutral:

- Transmission output speed change is greater than 512 rpm.
- Conditions met for 0.075 seconds
- Engine running time is greater than 2 seconds.
- Engine vacuum is less than 70 kPa.
- Output speed is greater than 1,380 rpm for 1 second.
- NORAW–NOLAST < 60 rpm for 6 seconds.

  NORAW: Latest raw data of output shaft speed.

  NOLAST: Filtered pervious data of output speed.

Action Taken When The DTC Sets

- Fixed to 4th gear.
- Maximum line pressure.
- Inhibit TCC engagement.
- The PCM will illuminate the CHECK TRANS Lamp.

Conditions For Clearing The MIL/DTC

- The PCM will turn off the CHECK TRANS Lamp after three consecutive ignition cycles without a failure reported.
- The DTC can be cleared from the PCM history by using a scan tool.
- The DTC will be cleared from history when the vehicle has achieved 40 warmup cycles without a failure reported.
- The PCM will cancel the DTC default actions when the fault no longer exists and the ignition is cycled “off” long enough to power down the PCM.

Diagnostic Aids

- A OSS DTC P0723 will set when output speed has been detected and is lost.
- Inspect the wiring for poor electrical connection at the PCM. Look for possible bent, backed out, deformed or damaged terminals. Check for weak terminal tension as well. Also check for a chafed wire that could short to bare metal or other wiring. Inspect for a broken wire inside the insulation.
- When diagnosing for a possible intermittent short or open condition, move the wiring harness while observing test equipment for a change.

Test Description

The numbers below refer to the step numbers on the diagnostic chart:

5. This test checks the OSS circuit.
6. This test checks the integrity of the OSS.
8. This test checks the 5–volt and ground circuit of the PCM.

DTC P0723 Transmission Output Speed Sensor (OSS) Intermittent

Step	Action	Yes	No
1	1. Install the scan tool. 2. With the engine “off”, turn the ignition switch “on”. NOTE: Before clearing DTC(s), use the scan tool to record “Failure Records” for reference, as data will be lost when the “Clear Info” function is used. 3. Record the DTC “Failure Records”. 4. Raise the drive wheels. 5. Start the engine. 6. Place the transmission in any drive range. With the drive wheels rotating, does the “Trans Output Speed” increase with the drive wheel speed?	Go to Diagnostic Aids	Go to Step 2
2	Does the speedometer work?	Go to Step 3	Go to Step 4
3	Check for the most current and/or incorrect calibration. Is the calibration current?	Go to Step 16	Go to Step 4
4	1. Turn the ignition “off”. 2. Disconnect the J3 (BLUE) PCM connector. 3. Using the J39200 DVOM, measure the resistance between harness connector terminals J3–E1 and J3–E2. Is the reading 3,000 ohms?	Go to Step 5	Go to Step 6
5	1. Select AC volts. 2. Rotate the rear wheels, ensuring the driveshaft is turning. Is the voltage greater than 0.5 volts?	Go to Step 7	Go to Step 8
6	Inspect circuits RED and WHT for a poor connection or an open circuit. Was a problem found?	Go to Step 17	Go to Step 8
7	1. Reconnect the J3 (BLUE) PCM connector. 2. Disconnect the OSS harness from the OSS. 3. With the engine “off”, turn the ignition “on”. 4. Using the J 39200 DVOM, measure the voltage at the OSS harness connector terminals M15–1 and M15–2. Is the reading between 4.0 to 5.1 volts?	Go to Step 16	Go to Step 10
8	1. Remove the OSS. 2. Check the output shaft speed sensor rotor for damage or misalignment. Refer to Speed Sensor (Extension Housing) in Automatic Transmission (4L30–E) section. Was a problem found?	Go to Step 17	Go to Step 9
9	Replace the OSS. Is the replacement complete?	Go to Step 17	—
10	Was the reading in step 8 less than 4.0 volts?	Go to Step 12	Go to Step 11
11	Was the reading in Step 8 greater than 5.1 volts?	Go to Step 15	—
12	Using the J 39200 DVOM to chassis ground, measure the voltage on circuit RED. Is the reading between 4.0 to 5.1 volts?	Go to Step 13	Go to Step 14
13	Repair the open in circuit WHT. Is the repair complete?	Go to Step 17	—
14	Check circuit RED for a short to ground or open. Was a problem found and corrected?	Go to Step 17	Go to Step 16

DTC P0723 Transmission Output Speed Sensor (OSS) Intermittent (Cont'd)

Step	Action	Yes	No
15	Repair the short to B+ in circuit RED. Is the repair complete?	Go to Step 17	—
16	Replace the PCM. Refer to Powertrain Control Module (PCM) in Automatic Transmission (4L30–E) section. Is the replacement complete?	Go to Step 17	—
17	1. After the repair is complete, use the scan tool to select "DTC", then "Clear Info" function and operate the vehicle under the following conditions: Transmission output speed is greater than 101 rpm for 3 seconds. 2. Review the scan tool "DTC Info". Has the last test failed or is the current DTC displayed?	Begin diagnosis again Go to Step 1	Repair verified Exit DTC table

DTC P0730 Transmission Incorrect Gear Ratio

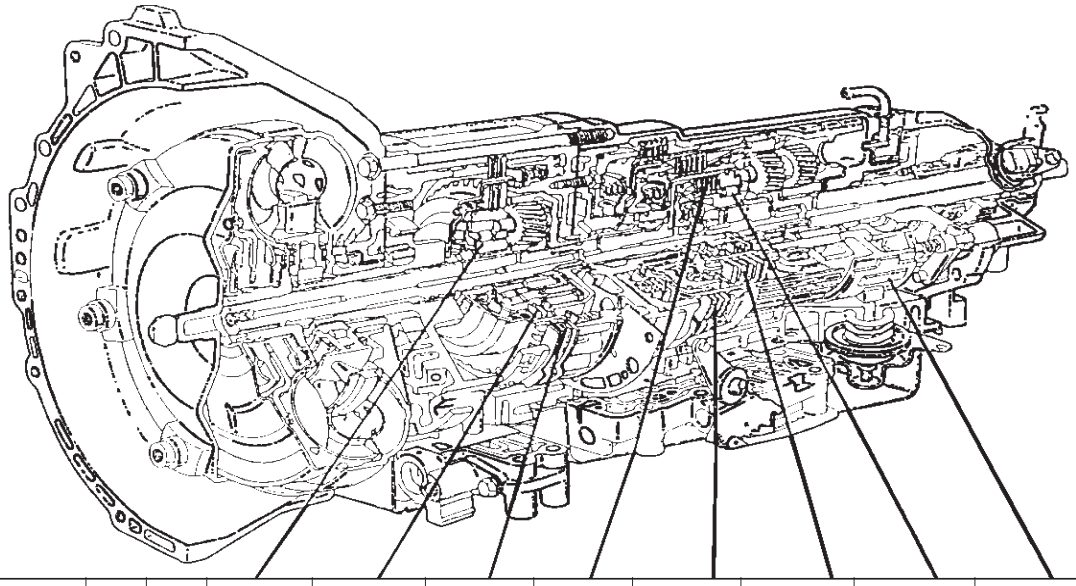

RANGE	GEAR	SOL A N.C.	SOL B N.O.	O/DRIVE ROLLER CLUTCH (OFW)	OVERRUN CLUTCH (OC)	FOURTH CLUTCH (C4)	THIRD CLUTCH (C3)	REVERSE CLUTCH (RC)	SECOND CLUTCH (C2)	PRINCIPLE SPRAG ASSEMBLY (PFW)	BAND ASSEMBLY (B)	ENGINE BRAKING
P-N		OFF	ON		APPLIED							NO
R	REVERSE	OFF	ON	LD	APPLIED			APPLIED		LD		NO
D	1ST	OFF	ON	LD	APPLIED					LD	APPLIED	NO
	2ND	ON	ON	LD	APPLIED				APPLIED	FW	APPLIED	YES
	3RD	ON	OFF	LD	APPLIED		APPLIED		APPLIED	NE		YES
	4TH	OFF	OFF	FW		APPLIED	APPLIED		APPLIED	NE		YES
3	1ST	OFF	ON	LD	APPLIED					LD	APPLIED	NO
	2ND	ON	ON	LD	APPLIED				APPLIED	FW	APPLIED	YES
	3RD	ON	OFF	LD	APPLIED		APPLIED		APPLIED	NE		YES
2	1ST	OFF	ON	LD	APPLIED		APPLIED			LD	APPLIED	YES
	2ND	ON	ON	LD	APPLIED				APPLIED	FW	APPLIED	YES
L	1ST	OFF	ON	LD	APPLIED		APPLIED			LD	APPLIED	YES

LD : LOCKED IN DRIVE FW : FREEWHEELING NE : NOT EFFECTIVE

D07RT015

Circuit Description

- The Powertrain Control Module (PCM) calculates the slippage of the converter and transmission based upon the engine speed, the output speed, and the current gear ratio.
- The slippage of the converter at a high enough engine speed is low. The transmission should not slip more than a given value when there is no shift.
- This DTC detects a slip at each gear. This is a type “C” DTC.

Conditions For Setting The DTC

- No Output Speed Sensor DTC(s) P0722, P0723.
- Not in Park, Neutral, or Reverse.
- Engine speed is greater than 3,500 rpm.
- 3 seconds since upshift.
- 3 seconds since downshift.
- 3 seconds since garage shift (N→D).
- And one of the following conditions occur:
  - Slip is greater than 508 rpm in 1st gear.
  - Slip is greater than 468 rpm in 2nd gear.
  - Slip is greater than 449 rpm on 3rd gear.
  - Slip is greater than 440 rpm on 4th gear.
- All conditions met for 5.5 seconds.

Action Taken When The DTC Sets

- Maximum line pressure.
- The PCM will illuminate the CHECK TRANS Lamp.

Conditions For Clearing The DTC/CHECK TRANS Lamp

- The PCM will turn “off” the CHECK TRANS Lamp after three consecutive ignition cycles without a failure reported.
- The DTC can be cleared from PCM memory by using a scan tool.
- The DTC can also be cleared from memory when the vehicle has made 40 warmup cycles without a failure reported.
- The PCM will cancel the DTC Actions Taken items when the fault conditions no longer exist and the ignition is cycles “off” long enough to power down the PCM.

Diagnostic Aids

- Check for intermittent output speed sensor circuit problems.
- Check for possible incorrect calibration. (PCM part No., tire specification, and rear axle ratio)

Test Description

The numbers below refer to the step numbers on the diagnostic chart:

3. This step checks for possible low fluid level causing slipping resulting in an undefined gear ratio.
4. This step checks for correct gear ratios for commanded gears.
5. This step checks for low line pressure.

DTC P0730 Transmission Incorrect Gear Ratio

Step	Action	Yes	No
1	Visually inspect the transmission cooling system for fluid leaks. ● Refer to Chart 16: Possible Causes of Transmission Fluid Leaks of Mechanical/Hydraulic Diagnosis Symptoms Index in Automatic Transmission (4L30–E) section Was condition found and corrected?	Go to Step 6	Go to Step 2
2	Refer to Checking Transmission Fluid Level and Condition in Automatic Transmission (4L30–E) section. Has transmission fluid checking procedure been performed?	Go to Step 3	Go to Checking Transmission Fluid Level and Condition in Automatic Transmission (4L30–E) section
3	1. Install the scan tool. 2. Turn the ignition switch to the “on” position. 3. Engine not running. NOTE: Before clearing DTC(s) use the scan tool to record the “Failure Records” for reference, as data will be lost when the “Clear Info” function is used. 4. Record the Failure Record data. 5. Use the scan tool snapshot mode to record transmission gear ratios. 6. Drive vehicle in transmission gear ranges 1, 2, 3, and D with the engine speed is greater than 3,500 rpm for 5.5 seconds. 7. Record each transmission gear. 1st:2.73 – 2.99 2nd:1.54 – 1.71 3rd:0.93 – 1.05 4th:0.66 – 0.78 Does commanded gear ratio match ranges as shown?	Refer to Diagnostic Aids	Go to Step 4
4	Perform line pressure check. ● Refer to Line Pressure Test in Automatic Transmission (4L30–E) section. Was condition found and corrected?	Go to Step 6	Go to Step 5

DTC P0730 Transmission Incorrect Gear Ratio (Cont'd)

Step	Action	Yes	No
5	Check for possible clutch slippage. ● Refer to Chart 6: Diagnostic Trouble Code (DTC) P0730 of Mechanical/Hydraulic Diagnosis Symptoms Index in Automatic Transmission (4L30–E) section. Was condition found and corrected?	Go to Step 6	—
6	1. After the repair is complete, use the scan tool to select "DTC", then "Clear info" function. 2. Operate the vehicle under the following conditions: ● Drive the vehicle in D4 with the engine speed greater than 3,500 rpm to obtain anyone of the following gear ratios for seven seconds. 1st 1:2.73 – 1:2.99 2nd 1:1.54 – 1:1.71 3rd 1:0.93 – 1:1.05 4th 1:0.66 – 1:0.78 Has the last test failed?	Begin diagnosis again Go to Step 1	Repair verified Exit DTC table

DTC P0748 Pressure Control Solenoid (PCS) (Force Motor) Circuit Electrical

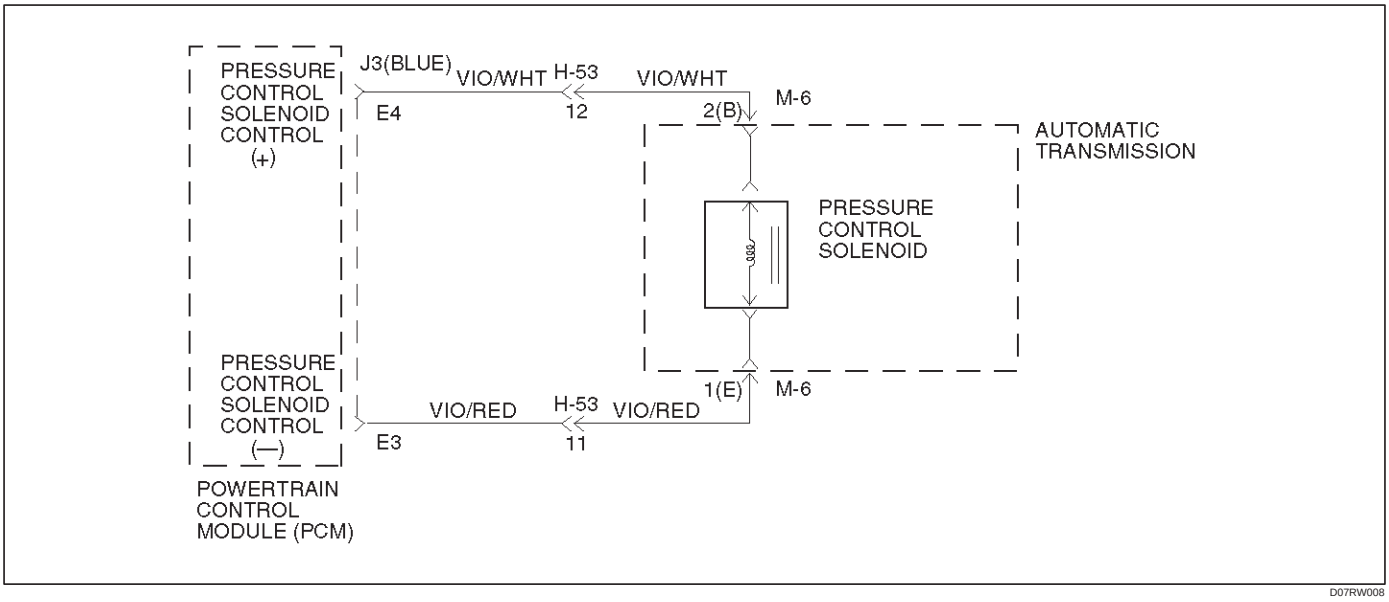

Circuit Description

The PCS is a PCM–controlled device used to regulate transmission line pressure. The PCM compares TPS voltage, engine rpm, and other inputs to determine the line pressure appropriate for a given load. The PCM will regulate the pressure by applying a varying amperage to the PCS. The applied amperage can vary from 0.1 to 1 amp, and is monitored by the PCM.

This DTC detects a continuous open or short to ground in the PCS circuit or the PCS. This is a type “C” DTC.

Conditions For Setting The DTC

- Battery voltage is between 10 and 16 volts.
- The PCM detects that the different between commanded and actual current is 200 milliampere (mA) for over 1 second.

Action Taken When the DTC Sets

- Maximum line pressure.
- The PCM will illuminate the CHECK TRANS Lamp.

Conditions For Clearing The DTC/CHECK TRANS Lamp

- The PCM will turn “off” the CHECK TRANS Lamp after three consecutive ignition cycles without a failure reported.
- The DTC can be cleared from PCM history by using a scan tool.
- The DTC will be cleared from memory when the vehicle has achieved 40 warmup cycles without a failure reported.
- The PCM will cancel the DTC default actions when the fault no longer exists and the ignition is cycled “off” long enough to power down the PCM.

Diagnostic Aids

- Inspect the wiring for poor electrical connection at the PCM and at the transmission 5–way connector. Look for possible bent, backed out, deformed or damaged terminals. Check for weak terminal tension as well. Also check for a chafed wire that could short to bare metal or other wiring. Inspect for a broken wire inside the insulation.
- When diagnosing for a possible intermittent short or open condition, move the wiring harness while observing test equipment for a change.

Test Description

The numbers below refer to the step numbers on the diagnostic chart:

2. This test checks the ability of the PCM to command the PCS.
3. This test checks the PCS and internal wiring harness for incorrect resistance.

DTC P0748 Pressure Control Solenoid (PCS) (Force Motor) Circuit Electrical

Step	Action	Yes	No
1	1. Install the scan tool. 2. With the engine “off”, turn the ignition switch “on”. NOTE: Before clearing DTC(s), use the scan tool to record “Failure Records” for reference, as data will be lost when the “Clear Info” function is used. 3. Record the DTC “Failure Records”. 4. While the engine is operating, put the transmission in Park. 5. Using the scan tool, apply 0.1 amp through 1.0 amp while observing “PC Ref. Current” and “PC Act. Current”. Is the “PC Act. Current” reading always within 0.16 amp?	Go to Diagnostic Aids	Go to Step 2
2	1. Turn the ignition “off”. 2. Disconnect the transmission 5–way connector M–6. 3. Using the J39200 DVOM, measure the resistance between terminals M6–2(B) and M6–1(E). Is the resistance within 3–7 ohms?	Go to Step 6	Go to Step 3
3	1. Remove the transmission oil pan. Refer to Solenoid (Adapter Case Valve Body) in Automatic Transmission (4L30–E) section. 2. Disconnect the internal wiring harness at the PCS. 3. Measure the resistance of the PCS. Is the resistance within 3–7 ohms?	Go to Step 5	Go to Step 4
4	Replace the PCS. Is the replacement complete?	Go to Step 9	—
5	Repair the internal wiring harness for an open. Is the repair complete?	Go to Step 9	—
6	Inspect/repair circuits J3–E4, M6–2(B), J3–E3, and M6–1(E). Was a problem found?	Go to Step 9	Go to Step 7
7	Inspect/repair circuits J3–E4, M6–2(B), J3–E3, and M6–1(E) for a short to ground or poor connections. Was a problem found?	Go to Step 9	Go to Step 8
8	Replace the PCM. Refer to Powertrain Control Module (PCM) in Automatic Transmission (4L30–E) section. Is the replacement complete?	Go to Step 9	—
9	1. After the repair is complete, use the scan tool to select “DTC”, then “Clear Info” function and ensure the following conditions are met: The PCS duty cycle is not at its electrical high or low limit. 2. Review the scan tool “DTC Info”. Has the last test failed or is the current DTC displayed?	Begin diagnosis again Go to Step 1	Repair verified Exit DTC table

DTC P0753 Shift Solenoid A Electrical

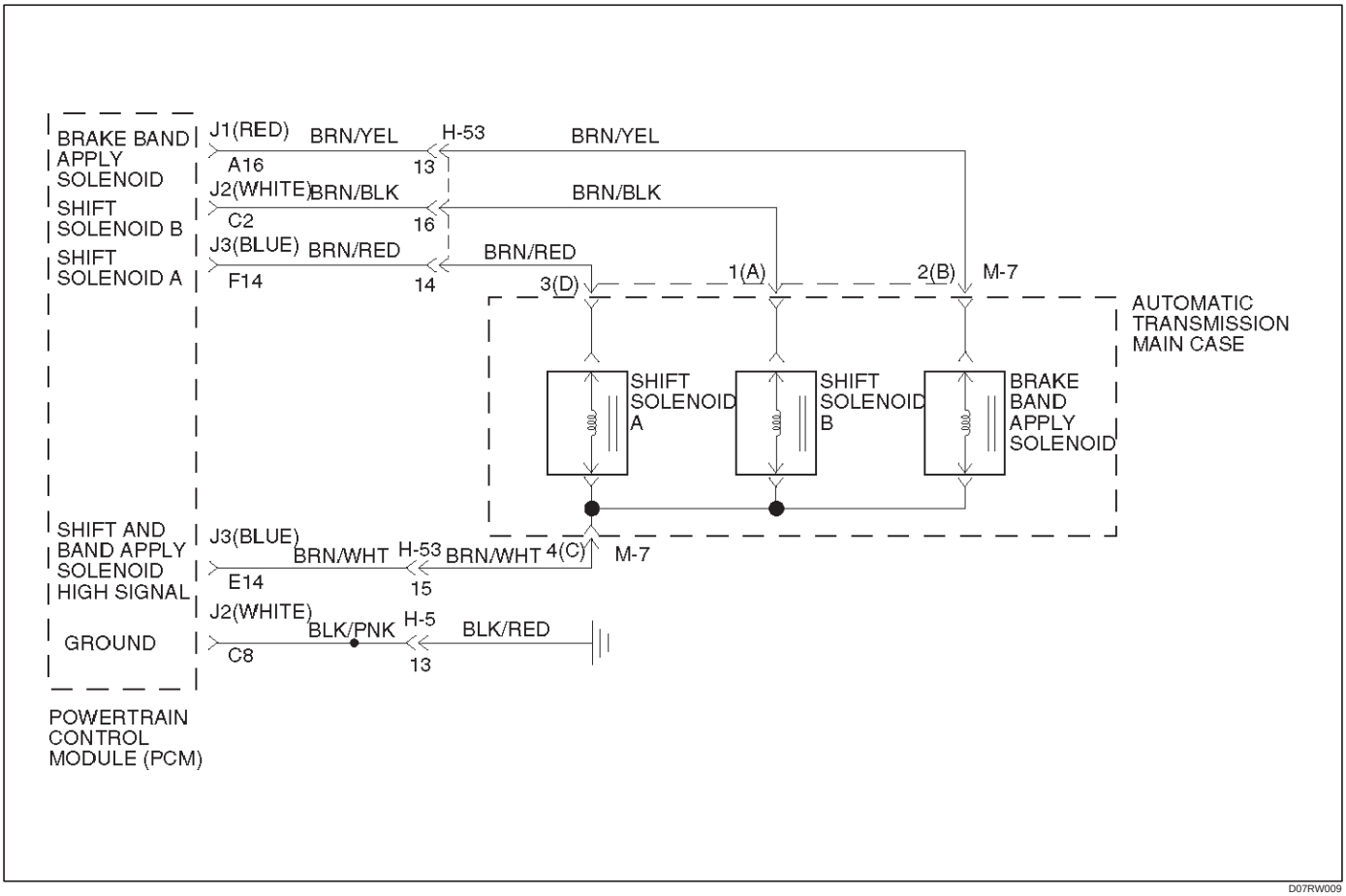

Circuit Description

- The shift solenoid A is a simple on/off solenoid located in the main case valve body. The solenoid is the normally closed type. In second or third gear, the Powertrain Control Module (PCM) energizes the solenoid to open a fluid inlet port. When the port is open, fluid pressure actuates the shift valve.
- The solenoid is activated by current. This current is produced by applying a voltage to one side (the High side) and a ground to the other side (Low side).
- The High Side Driver (HSD) is a circuit of the PCM that acts as a switch between the solenoids and the supply voltage. The High side of the solenoid is permanently supplied with voltage, except in BACKUP MODE or when ignition is off the HSD is turned off.

This DTC detects a continuous open or short to ground in the shift solenoid A circuit or the shift solenoid A. This is a type “C” DTC.

Conditions For Setting The DTC

- Ignition is “on”, Engine “run”.
- Battery voltage is between 10 and 16 volts.
- The PCM commands the solenoid “on” and the voltage remains high (B+) or the PCM commands the solenoid “off” and the voltage remains low (zero volts).
- All conditions met for 0.33 seconds.

Action Taken When The DTC Sets

- Maximum line pressure.
- Immediate landing to 4th gear.
- Inhibit TCC engagement.
- The PCM will illuminate the CHECK TRANS Lamp.

Conditions For Clearing The MIL/DTC

- The PCM will turn off the CHECK TRANS Lamp after three consecutive ignition cycles without a failure reported.
- The DTC can be cleared from the PCM history by using a scan tool.
- The DTC will be cleared from history when the vehicle has achieved 40 warmup cycles without a failure reported.
- The PCM will cancel the DTC default actions when the fault no longer exists and the ignition is cycled “off” long enough to power down the PCM.

Diagnostic Aids

- Inspect the wiring for poor electrical connection at the PCM and at the transmission 16–way connector. Look for possible bent, backed out, deformed or damaged terminals. Check for weak terminal tension as well. Also check for a chafed wire that could short to bare metal or other wiring. Inspect for a broken wire inside the insulation.

- When diagnosing for a possible intermittent short or open condition, move the wiring harness while observing test equipment for a change.
- An open ignition feed circuit can cause multiple DTCs to set.

Test Description

The numbers below refer to the step numbers on the diagnostic chart:

3. This test checks for power to the shift solenoid A from the ignition through the PCM.
5. This test measures the resistance of the component.
9. This test checks the function of the shift solenoid A and the transmission internal wiring harness.

Shift Solenoid Status Chart

Gear	Shift solenoid A	Shift solenoid B
1st	OFF	ON
2nd	ON	ON
3rd	ON	OFF
4th	OFF	OFF

DTC P0753 Shift Solenoid A Electrical

Step	Action	Yes	No
1	1. Install the scan tool. 2. With the engine “on”, turn the ignition switch “on”. NOTE: Before clearing DTC(s), use the scan tool to record “Failure Records” for reference, as data will be lost when the “Clear Info” function is used. 3. Record the DTC “Failure Records”. Were DTCs P0753, P0758, P1860 set?	Go to Step 2	Go to Diagnostic Aids
2	1. Turn the ignition “on”. 2. Using the J39200 DVOM, measure the voltage between PCM connector terminals J3–E14 and J2–C8 (GND). Is the voltage within 10–12 volts?	Go to Step 3	Go to Step 4
3	1. Turn the ignition “off”. 2. Disconnect the J3 (BLUE) PCM connector. 3. Turn the ignition “on”. 4. Using the J39200 DVOM, measure the voltage between PCM connector terminals J3–F14 and ground. Is the voltage within 10 – 12 volts?	Go to Step 10	Go to Step 4
4	1. Turn the ignition “off”. 2. Disconnect the J3 (BLUE) PCM connector. 3. Using the J39200 DVOM, measure the resistance between PCM connector terminals J3–E14 and J3–F14. Is the resistance within 18 – 20 ohms?	Go to Step 5	Go to Step 6
5	1. Disconnect the J1 (RED) and J2 (WHITE) PCM connectors. 2. Using the J39200 DVOM, check a continuity between PCM terminals J3–F14 and ground. Is there a continuity?	Go to Step 11	Go to Step 7
6	1. Disconnect the 16–way harness connector H–53. 2. Using the J39200 DVOM, measure the resistance between terminals H53–14 and H53–15. Is the resistance within 18–20 ohms?	Go to Step 13	Go to Step 8
7	Using the J39200 DVOM, check a continuity between J3 (BLUE) PCM terminal E14 and ground. Is there a continuity?	Go to Step 12	Go to Step 9
8	1. Disconnect the transmission main case 4 pin connector M–7. 2. Using the J39200 DVOM, measure the resistance between terminals M7–3(D) and M7–4(C). Is the resistance within 18–20 ohms?	Go to Step 14	Go to Step 15

DTC P0753 Shift Solenoid A Electrical (Cont'd)

Step	Action	Yes	No
9	Check every connection at the PCM connector. Was a problem found?	Go to Step 17	Go to Step 16
10	The wiring harness between PCM connector terminals J3–F14 and transmission harness terminal M7–3(D) is shorted to voltage. Was a problem found and corrected?	Go to Step 18	—
11	The wiring harness between PCM connector terminal J3–F14 and transmission harness terminal M7–3(D) is shorted to ground. Was a problem found and corrected?	Go to Step 18	—
12	The wiring harness between PCM connector terminals J3–E14 and transmission harness terminal M7–4(C) is shorted to ground. Was a problem found and corrected?	Go to Step 18	—
13	The wiring harness between PCM connector J3 and transmission 16–way connector H–53 is open or poor connection. Was a problem found and corrected?	Go to Step 18	—
14	The wiring harness between transmission 16–way connector H–53 and transmission main case connector M–7 is open or has a poor connection. Was a problem found and corrected?	Go to Step 18	—
15	The shift solenoid A is faulty. Replace the shift solenoid A. Refer to Solenoid (Main Case Valve Body) in Automatic Transmission (4L30–E) section. Is the replacement complete?	Go to Step 18	—
16	The PCM may be faulty. Replace the PCM. Refer to Powertrain Control Module (PCM) in Automatic Transmission (4L30–E) section. Is the replacement complete?	Go to Step 18	—
17	Repair the PCM connector connection. Was a problem found and corrected?	Go to Step 18	—
18	1. After the repair is complete, use the scan tool to select "DTC", then "Clear Info" function and operate the vehicle under the following conditions: ● The shift solenoid A is commanded "on" and voltage drops to zero. ● The shift solenoid A is commanded "off" and voltage increases to B+. 2. Review the scan tool "DTC Info". Has the last test failed or is the current DTC displayed?	Begin diagnosis again Go to Step 1	Repair verified Exit DTC table

DTC P0758 Shift Solenoid B Electrical

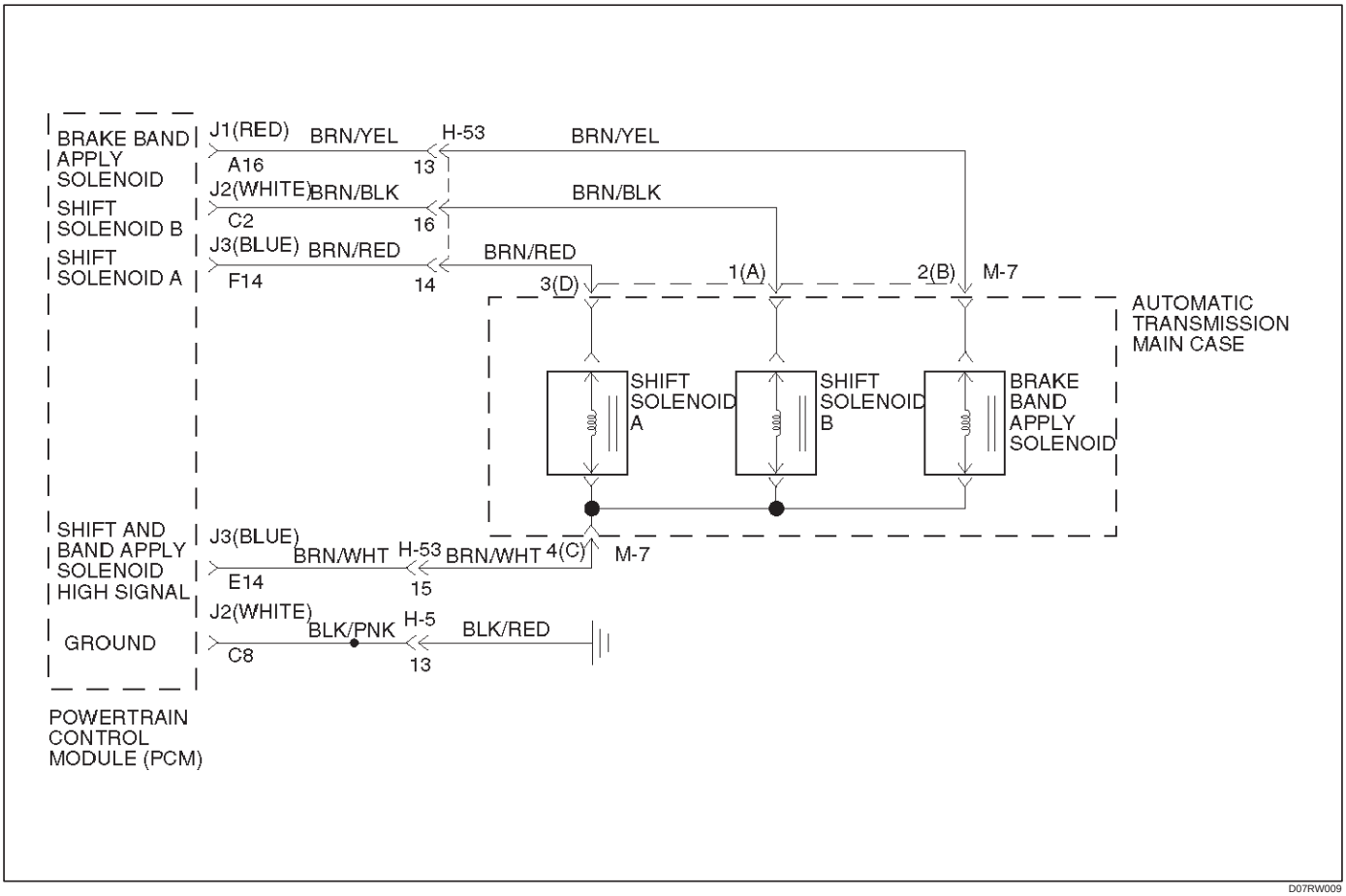

Circuit Description

- The shift solenoid B is a simple on/off solenoid located in the main case valve body. It is normally open. When the port is open, fluid pressure actuates the shift valve. In first or second gear, the Powertrain Control Module (PCM) energizes the solenoid to close a fluid inlet port.
- The solenoid is activated by current. This current is procuded by applying a voltage to one side (the High side) and a ground to the other side (Low side).
- The High Side Driver (HSD) is a circuit of the PCM that acts as a switch between the solenoids and the supply voltage. The High side of the solenoid is permanently supplied with voltage. In BACKUP MODE or when the ignition is off, the HSD is turned off.

This DTC detects a continuous open or short to ground in the shift solenoid B circuit or shift solenoid B. This is a type “C” DTC.

Conditions For Setting The DTC

- Ignition is “on”, Engine “run”.
- Battery voltage is between 10 and 16 volts.
- The PCM commands the solenoid “on” and the voltage remains high (B+)or the PCM commands the solenoid “off” and the voltage remains low (zero volts).
- All conditions met for 0.33 seconds.

Action Taken When The DTC Sets

- Fixed to 4th gear.
- Maximum line pressure.
- Inhibit TCC engagement.
- The PCM will illuminate the CHECK TRANS Lamp.

Conditions For Clearing The MIL/DTC

- The PCM will turn off the CHECK TRANS Lamp after three consecutive ignition cycles without a failure reported.
- The DTC can be cleared from the PCM history by using a scan tool.
- The DTC will be cleared from history when the vehicle has achieved 40 warmup cycles without a failure reported.
- The PCM will cancel the DTC default actions when the fault no longer exists and the ignition is cycled “off” long enough to power down the PCM.

Diagnostic Aids

- Inspect the wiring for poor electrical connections at the PCM and at the transmission 16–way connector. Look for possible bent, backed out, deformed or damaged terminals. Check for weak terminal tension as well. Also check for a chafed wire that could short to bare metal or other wiring. Inspect for a broken wire inside the insulation.

- When diagnosing for a possible intermittent short or open condition, move the wiring harness while observing test equipment for a change.

Test Description

The numbers below refer to the step numbers on the diagnostic char:

5. This test measures the resistance of the component.
7. This test checks the function of the shift solenoid B and the transmission internal wiring harness.
11. This test checks for power to the shift solenoid B from the ignition through the PCM.

Shift Solenoid Status Chart

Gear	Shift solenoid A	Shift solenoid B
1st	OFF	ON
2nd	ON	ON
3rd	ON	OFF
4th	OFF	OFF

DTC P0758 Shift Solenoid B Electrical

Step	Action	Yes	No
1	1. Install the scan tool. 2. With the engine “on”, turn the ignition switch “on”. NOTE: Before clearing DTC(s), use the scan tool to record “Failure Records” for reference, as data will be lost when the “Clear Info” function is used. 3. Record the DTC “Failure Records”. Were DTCs P0753, P0758, P1860 set?	Go to Step 3	Go to Step 2
2	1. The engine “on”. 2. Apply brake pedal and select transmission range “D”. 3. Press and hold down the winter switch and select transmission mode “winter”. Does the scan tool display DTC P0758 at 3rd gear?	Go to Step 7	Go to Diagnostic Aids
3	1. Turn the ignition “off”. 2. Disconnect the J2 (WHITE) and J3 (BLUE) PCM connectors. 3. Turn the ignition “on”. 4. Using the J39200 DVOM, measure the voltage between PCM connector terminals J2–C2 and J2–C8. Is the voltage within 10 – 12 volts?	Go to Step 14	Go to Step 4
4	1. Turn the ignition “off”. 2. Using the J39200 DVOM, measure the resistance between PCM connector terminals J2–C2 and J3–E14. Is the resistance within 18 – 20 ohms?	Go to Step 15	Go to Step 5
5	1. Disconnect the transmission 16–way connector H–53. 2. Using the J39200 DVOM, measure the resistance between terminals H53–16 and H53–15. Is the resistance within 18 – 20 ohms?	Go to Step 16	Go to Step 6
6	1. Disconnect the transmission main case connector M–7. 2. Using the J39200 DVOM, measure the resistance between terminals M7–1(A) and M7–4(C). Is the resistance within 18 – 20 ohms?	Go to Step 17	Go to Step 18
7	1. Turn the ignition “off”. 2. Disconnect the J2 (WHITE) and J3 (BLUE) PCM connectors. 3. Using the J39200 DVOM, measure the resistance between PCM connector terminals J2–C2 and J3–E14. Is the resistance within 18 – 20 ohms?	Go to Step 8	Go to Step 9
8	Using the J39200 DVOM, check a continuity between PCM connector terminal J2–C2 and ground. Is there a continuity?	Go to Step 19	Go to Step 10

DTC P0758 Shift Solenoid B Electrical (Cont'd)

Step	Action	Yes	No
9	1. Disconnect the transmission 16–way connector H–53. 2. Using the J39200 DVOM, measure the resistance between terminals H53–16 and H53–15. Is the resistance within 18–20 ohms?	Go to Step 20	Go to Step 11
10	Using the J39200 DVOM, check a continuity between PCM connector terminal J3–E14 and ground. Is there a continuity?	Go to Step 21	Go to Step 12
11	1. Disconnect the transmission main case connector M–7. 2. Using the J39200 DVOM, measure the resistance between terminals M7–1(A) and M7–4(C). Is the resistance within 18 – 20 ohms?	Go to Step 22	Go to Step 23
12	Check every connection of the PCM and transmission 16–way connector H–53. Was a problem found and corrected?	Go to Step 25	Go to Step 13
13	1. Connect the J2 (WHITE) and J3 (BLUE) PCM connectors to the PCM. 2. Turn the ignition "on", the engine "on". 3. Repeat Step 3. Does the scan tool display DTC P0758 at 3rd gear?	Go to Step 24	Go to Diagnostic Aids
14	The wiring harness between PCM connector terminal J2–C2 and transmission main case terminal M7–1(A) is shorted to voltage. Was a problem found and corrected?	Go to Step 25	—
15	The PCM internal terminal J2–C2 is shorted to voltage. Replace the PCM. Refer to Powertrain Control Module (PCM) in Automatic Transmission (4L30–E) section. Is the replacement complete?	Go to Step 25	—
16	The wiring harness between PCM connector and transmission 16–way connector is shorted. Was a problem found and corrected?	Go to Step 25	—
17	The wiring harness between transmission 16–way connector and transmission main case connector is shorted. Was a problem found and corrected?	Go to Step 25	—
18	The shift solenoid B is faulty, or the internal wiring harness from the shift solenoid B is shorted. Was a problem found and corrected?	Go to Step 25	—
19	The wiring harness between PCM connector terminal J2–C2 and transmission main case connector terminal M7–1(A) is shorted to ground. Was a problem found and corrected?	Go to Step 25	—
20	The wiring harness between PCM connector terminal J2–C2 and transmission 16–way connector terminal H53–16, or between PCM connector terminal J3–E14 and 16–way connector terminal H53–15 is open. Was a problem found and corrected?	Go to Step 25	—

DTC P0758 Shift Solenoid B Electrical (Cont'd)

Step	Action	Yes	No
21	The wiring harness between PCM connector terminal J3–E14 and transmission main case connector terminal M7–4(C) is shorted to ground. Was a problem found and corrected?	Go to Step 25	—
22	The wiring harness between transmission 16–way connector terminal H53–16 and transmission main case connector terminal M7–1(A), or between H53–15 and M7–4(C) is open. Was a problem found and corrected?	Go to Step 25	—
23	The internal wiring harness from the shift solenoid B is open, or the shift solenoid B is faulty. Was a problem found and corrected?	Go to Step 25	—
24	Replace the PCM. Is the replacement complete?	Go to Step 25	—
25	1. After the repair is complete, use the scan tool to select "DTC", then "Clear Info" function and operate the vehicle under the following conditions: ● The shift solenoid B is commanded "on" and voltage drop to zero. ● The shift solenoid B is commanded "off" and voltage increases to B+. 2. Review the scan tool "DTC Info". Has the last test failed or is the current DTC displayed?	Begin diagnosis again Go to Step 1	Repair verified Exit DTC table

DTC P1790 ROM Transmission Side Bad Check Sum

Circuit Description

Transmission Side Read Only Memory (ROM) and Electronically Erasable Programmable Read Only Memory (EEPROM) is an electronic circuit that controls the transmission control in the Powertrain Control Module (PCM).
This DTC detects a check sum error. This is a type “C” DTC.

Conditions For Setting The DTC

- Detects check sum error for 1 second.

Action Taken When The DTC Sets

- Maximum line pressure.
- Immediate landing to 4th gear.
- Inhibit TCC engagement.
- The PCM will illuminate the CHECK TRANS Lamp.

Conditions For Clearing The MIL/DTC

- The PCM will turn off the CHECK TRANS Lamp after three consecutive ignition cycles without a failure reported.
- The DTC can be cleared from the PCM history by using a scan tool.
- The DTC will be cleared from history when the vehicle has achieved 40 warmup cycles without a failure reported.
- The PCM will cancel the DTC default actions when the fault no longer exists and the ignition is cycled “off” long enough to power down the PCM.

DTC P1790 ROM Transmission Side Bad Check Sum

Step	Action	Yes	No
1	1. Install the scan tool. 2. With the engine “off”, turn the ignition switch “on”. NOTE: Before clearing DTC(s), use the scan tool to record “Failure Records” for reference, as data will be lost when the “Clear Info” function is used. 3. Record the DTC “Failure Records”. Was DTC P1790 set?	Go to Step 4	Go to Step 2
2	Was DTC P1792 set?	Go to Step 3	—
3	1. Remove the PCM. Refer to Powertrain Control Module (PCM) in Automatic Transmission (4L30–E) section. 2. Using the ITCS, make a reprogramming the transmission EEPROM. Was the reprogramming complete?	Go to Step 5	—
4	Replace the PCM. Is the replacement complete?	Go to Step 5	—
5	1. After the repair is complete, use the scan tool to select “DTC”, then “Clear Info” function and operate the vehicle. 2. Review the scan tool “DTC Info”. Has the last test failed or is the current DTC displayed?	Begin diagnosis again Go to Step 1	Repair verified Exit DTC table

DTC P1792 EEPROM Transmission Side Bad Check Sum

Circuit Description

Transmission Side Read Only Memory (ROM) and Electronically Erasable Programmable Read Only Memory (EEPROM) is an electronic circuit that controls the transmission control in the Powertrain Control Module (PCM).
This DTC detects a check sum error. This is a type “C” DTC.

Conditions For Setting The DTC

- Detects check sum error for 1 second.

Action Taken When The DTC Sets

- Maximum line pressure.
- Immediate landing to 4th gear.
- Inhibit TCC engagement.
- The PCM will illuminate the CHECK TRANS Lamp.

Conditions For Clearing The MIL/DTC

- The PCM will turn off the CHECK TRANS Lamp after three consecutive ignition cycles without a failure reported.
- The DTC can be cleared from the PCM history by using a scan tool.
- The DTC will be cleared from history when the vehicle has achieved 40 warmup cycles without a failure reported.
- The PCM will cancel the DTC default actions when the fault no longer exists and the ignition is cycled “off” long enough to power down the PCM.

DTC P1792 EEPROM Transmission Side Check Bad Check Sum

Step	Action	Yes	No
1	1. Install the scan tool. 2. With the engine “off”, turn the ignition switch “on”. NOTE: Before clearing DTC(s), use the scan tool to record “Failure Records” for reference, as data will be lost when the “Clear Info” function is used. 3. Record the DTC “Failure Records”. Was DTC P1790 set?	Go to Step 4	Go to Step 2
2	Was DTC P1792 set?	Go to Step 3	—
3	1. Remove the PCM. Refer to Powertrain Control Module (PCM) in Automatic Transmission (4L30–E) section. 2. Using the ITCS, make a reprogramming the transmission EEPROM. Was the reprogramming complete?	Go to Step 5	—
4	Replace the PCM. Is the replacement complete?	Go to Step 5	—
5	1. After the repair is complete, use the scan tool to select “DTC”, then “Clear Info” function and operate the vehicle. 2. Review the scan tool “DTC Info”. Has the last test failed or is the current DTC displayed?	Begin diagnosis again Go to Step 1	Repair verified Exit DTC table

DTC P1835 Kickdown Switch Always On

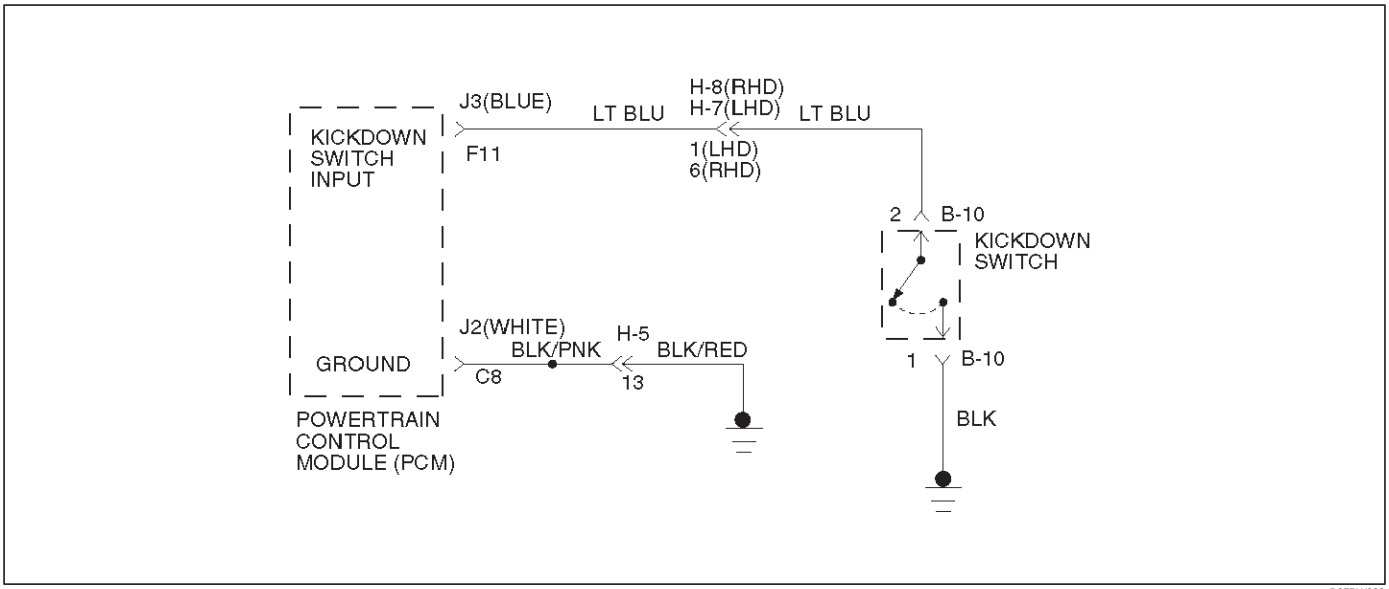

D07RW033

Circuit Description

- When the driver presses the accelerator pedal down fully, the kickdown switch closes, sending a ground signal to the Powertrain Control Module (PCM).
- This information is used to perform shifts at high engine speed.
- When the kickdown switch is closed, the Throttle Position Sensor (TPS) is already is at 100%.
- This DTC detects a closed kickdown switch when TP angle is less than 70%.
- This is a type “D” DTC.

Conditions For Setting The DTC

- No TPS DTCs P0122 or P0123.
- TP angle is less than 70%.
- Kickdown switch is “on”.
- All conditions met for 1 second.

Action Taken When The DTC Sets.

- Kickdown mode control is off.
- The PCM will not illuminate the CHECK TRANS Lamp.

Conditions For Clearing The DTC

- The DTC can be cleared from the PCM history by using a scan tool.
- The DTC will be cleared from history when the vehicle has achieved 40 warmup cycles without a failure reported.
- The PCM will cancel the DTC default actions when the fault no longer exists and the ignition is cycled “off” long enough to power down the PCM.

Diagnostic Aids

- Check the wiring harness for a short to ground between the PCM and kickdown switch.
- Check the kickdown switch for failure.
- Check kickdown adjustment.

Test Description

The numbers below refer to the step numbers on the diagnostic chart:

2. This test checks for short to ground or kickdown switch failure.
4. This test checks for regulation kickdown switch.

DTC P1835 Kickdown Switch Always On

Step	Action	Yes	No
1	1. Install the scan tool. 2. With the engine “on”, turn the ignition switch “on”. NOTE: Before clearing DTC(s), use the scan tool to record “Failure Records” for reference, as data will be lost when the “Clear Info” function is used. 3. Record the DTC “Failure Records”. Does the scan tool display “Kickdown switch” “low” (closed switch)?	Go to Step 2	Go to Step 3
2	1. Turn the ignition “off”. 2. Disconnect the J3 (BLUE) PCM connector. 3. Using the J39200 DVOM, check a continuity between PCM connector terminal J3–F11 and ground. Is there a continuity?	Go to Step 4	Go to Step 7
3	The TP angle goes from 0% to 100% with the accelerator pedal depressed. Is the kickdown switch “on” when TP angle is below 70%?	Go to Step 5	Go to Diagnostic Aids
4	1. Disconnect the kickdown switch connector B–10. 2. Using the J39200 DVOM, check a continuity between terminals B10–1 and B10–2. Is there a continuity?	Go to Step 6	Go to Step 8
5	Adjust the kickdown switch. Is the kickdown switch “on” when TP angle is above 95%?	Go to Step 9	—
6	Replace the kickdown switch. Is the replacement complete?	Go to Step 9	—
7	Replace the PCM. Refer to Powertrain Control Module (PCM) in Automatic Transmission (4L30–E) section. Is the replacement complete?	Go to Step 9	—
8	Repair the short to ground in circuit LT BLUE. Is the repair complete?	Go to Step 9	—
9	1. After the repair is complete, use the scan tool to select “DTC”, then “Clear Info” function and ensure the following condition is met: The torque converter stator temperature switch circuit does not indicate a hot mode when the transmission fluid temperature is less than 60˚C (140˚F) for at least 5 seconds. 2. Review the scan tool “DTC Info”. Has the last test failed or is the current DTC displayed?	Begin diagnosis again Go to Step 1	Repair verified Exit DTC table

DTC P1850 Brake Band Apply Solenoid Malfunction

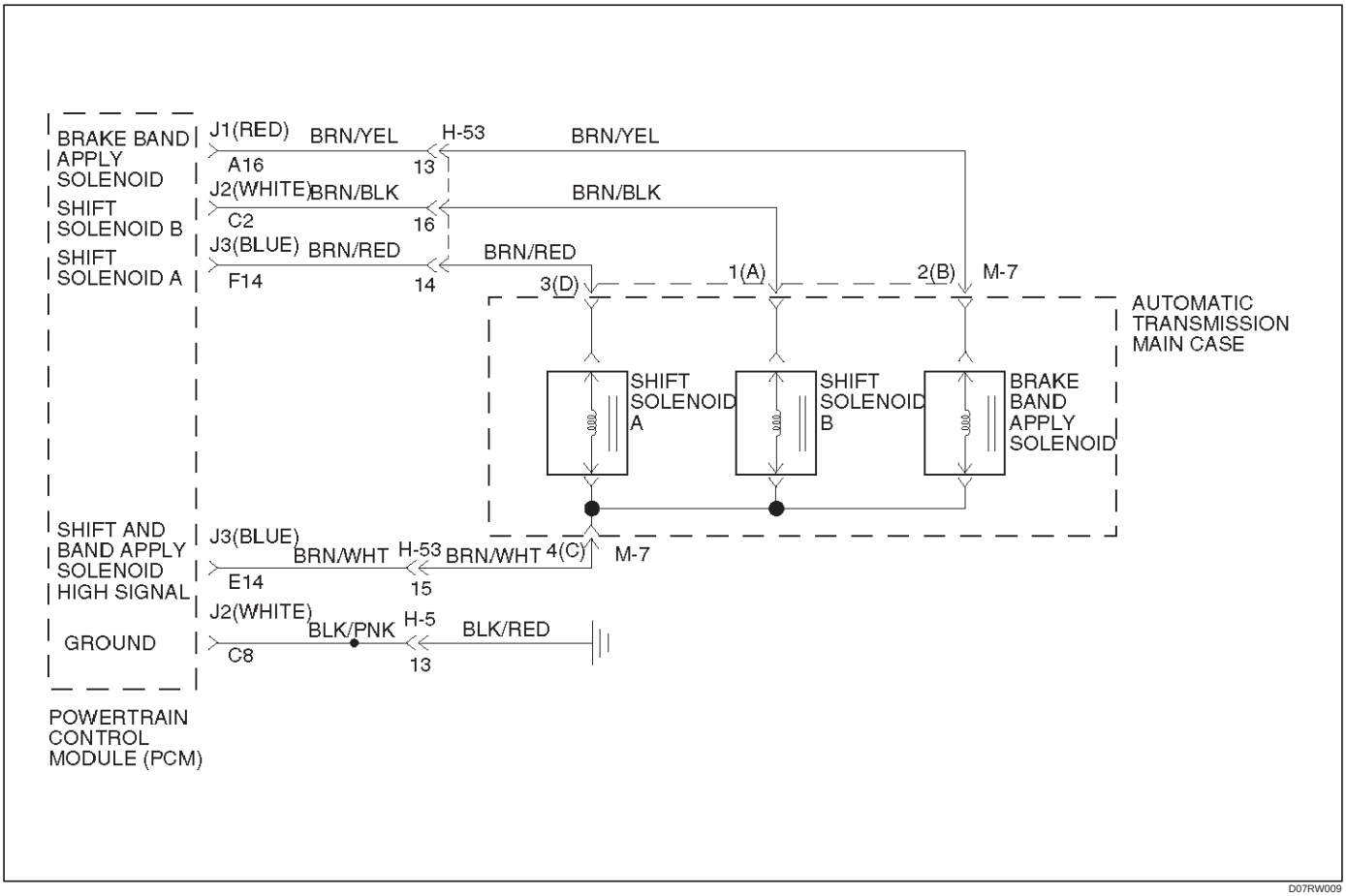

Circuit Description

- The brake band apply solenoid is a normally open solenoid which controls the flow of fluid for brake band application. The Powertrain Control Module (PCM) uses Pulse Width Modulation (PWM) and changes the duty cycle to control the solenoid. The PCM turns the solenoid on (energized) and off (deenergized) at a constant frequency. The length of time the solenoid is energized during each on/off cycle is called the pulse width. By varying or “modulating” the pulse width, the solenoid output pressure is changed. Since the solenoid is normally open, increasing the pulse width increases the duty cycle and decreases the output pressure. PWM control provides smooth band application without an accumulator. The band is only applied in first and second gears.
- In the event of an electrical failure (open), the solenoid regulates at the maximum oil flow (0% duty cycle).
- The solenoid is activated by current. This current is produced by applying a voltage to one side (the High side) and a ground to the other side (Low side).
- The High Side Driver (HSD) is a circuit of the PCM that acts as a switch between the solenoids and the supply voltage. The High side of the solenoid is permanently supplied with voltage. When the ignition is off, the HSD is turned off.

This DTC detects a continuous open or short to ground in the brake band apply solenoid circuit or the brake band apply solenoid. This is a type “D” DTC.

Conditions For Setting The DTC

- Battery voltage is between 10 and 16 volts.
- Ignition is “on”, Engine “run”.
- The PCM commands the solenoid “on” and the voltage remains high (B+) or the PCM commands the solenoid “off” and the voltage remains low (zero volts).
- All conditions met in 1.3 seconds.

Action Taken When The DTC Sets

- Inhibit brake band apply solenoid.
- The PCM will not illuminate the CHECK TRANS Lamp.

Conditions For Clearing The DTC

- The DTC can be cleared from the PCM history by using a scan tool.
- The DTC will be cleared from history when the vehicle has achieved 40 warmup cycles without a failure reported.
- The PCM will cancel the DTC default actions when the fault no longer exists and the ignition is cycled “off” long enough to power down the PCM.

Diagnostic Aids

- Inspect the wiring for poor electrical connection at the PCM and at the transmission 16–way connector. Look for possible bent, backed out, deformed or damaged terminals. Check for weak terminal tension as well. Also check for a chafed wire that could short to bare metal or other wiring. Inspect for a broken wire inside the insulation.
- When diagnosing for a possible intermittent short or open condition, move the wiring harness while observing test equipment for a change.

Test Description

The numbers below refer to the step numbers on the diagnostic chart:

3. This test checks for power to the brake band apply solenoid from the ignition through the PCM.
4. This test checks the resistance of the transmission internal wiring harness and brake band apply solenoid.
5. This test checks the ability of the PCM and wiring to control the ground circuit.

DTC P1850 Brake Band Apply Solenoid Malfunction

Step	Action	Yes	No
1	1. Install the scan tool. 2. With the engine “on”, turn the ignition switch “on”. NOTE: Before clearing DTC(s), use the scan tool to record “Failure Records” for reference, as data will be lost when the “Clear Info” function is used. 3. Record the DTC “Failure Records”. Were DTCs P0753, P0758 set?	Go to Step 2	Go to Step 3
2	Using the J39200 DVOM, back probe between PCM connector terminals J3–E14 and J2–C8. Is the voltage between 10 to 12 volts?	Go to Step 4	Go to Step 5
3	1. Turn the ignition “off”. 2. Disconnect the J1 (RED) and J3 (BLUE) PCM connectors. 3. Using the J39200 DVOM, measure the resistance between PCM connector terminals J1–A16 and J3–E14. Is the resistance within 10–12 ohms?	Go to Step 11	Go to Step 12
4	Using the J39200 DVOM, back probe between PCM connector terminals J1–A16 and J2–C8. Is the voltage between 10 to 12 volts?	Go to Step 25	Go to Step 3
5	1. Turn the ignition “off”. 2. Disconnect the J1 (RED) and J3 (BLUE) PCM connectors. 3. Using the J39200 DVOM, check continuity between PCM terminal J3–E14 and ground. Is there a continuity?	Go to Step 6	Go to Step 8
6	1. Disconnect the transmission 16–way connector H–53. 2. Using the J39200 DVOM, check continuity between connector H53–13 and ground. Is there a continuity?	Go to Step 7	Go to Step 16
7	1. Disconnect the transmission main case connector M–7. 2. Using the J39200 DVOM, check continuity between the terminal M7–2(B) and ground. Is there a continuity?	Go to Step 17	Go to Step 18
8	1. Disconnect the J1 (RED) PCM Connector. 2. Using the J39200 DVOM, measure the resistance between PCM connector terminals J1–A16 and J3–E14. Is the resistance within 10–12 ohms?	Go to Step 25	Go to Step 9
9	1. Disconnect the transmission 16–way connector H–53. 2. Using the J39200 DVOM, measure the resistance between terminal H53–13 and H53–15. Is the resistance within 10–12 ohms?	Go to Step 16	Go to Step 10

DTC P1850 Brake Band Apply Solenoid Malfunction (Cont'd)

Step	Action	Yes	No
10	1. Disconnect the transmission main case connector M–7. 2. Using the J39200 DVOM, measure the resistance between terminals M7–2(B) and M7–4(C). Is the resistance within 10–12 ohms?	Go to Step 19	Go to Step 20
11	Using the J39200 DVOM, check continuity between PCM terminal J1–A16 and ground. Is there a continuity?	Go to Step 13	Go to Step 25
12	1. Disconnect the transmission 16–way connector H–53. 2. Using the J39200 DVOM, measure the resistance between terminal H53–13 and H53–15. Is the resistance within 10–12 ohms?	Go to Step 23	Go to Step 14
13	1. Disconnect the transmission 16–way connector H–53. 2. Using the J39200 DVOM, check continuity between terminal H53–13 and ground. Is there a continuity?	Go to Step 15	Go to Step 21
14	1. Disconnect the transmission main case connector M–7. 2. Using the J39200 DVOM, measure the resistance between terminals M7–2(B) and M7–4(C). Is the resistance within 10–12 ohms?	Go to Step 24	Go to Step 20
15	1. Disconnect the transmission main case connector M–7. 2. Using the J39200 DVOM, check continuity between the terminal M7–2(B) and ground. Is there a continuity?	Go to Step 17	Go to Step 22
16	The wiring harness between PCM terminal J3–E14 and transmission 16–way connector terminal H53–15 is open. Was a problem found and corrected?	Go to Step 26	—
17	The brake band apply solenoid is faulty, or the internal wiring harness from the brake band apply solenoid is shorted to ground. Was a problem found and corrected?	Go to Step 26	—
18	The wiring harness between the transmission 16–way connector terminal H53–15 and the transmission main case connector terminal M7–4(C) is shorted to ground. Was a problem found and corrected?	Go to Step 26	—
19	The wiring harness between the transmission 16–way connector terminal H53–15 and the transmission main case connector terminal M7–4(C) is open. Was a problem found and corrected?	Go to Step 26	—
20	The brake band apply solenoid is faulty, or the internal wiring harness from the brake band apply solenoid is open. Was a problem found and corrected?	Go to Step 26	—
21	The wiring harness between the PCM connector terminal J1–A16 and transmission 16–way connector terminal H53–13 is shorted to ground. Was a problem found and corrected?	Go to Step 26	—
22	The wiring harness between the transmission 16–way connector terminal H53–13 and the transmission main case connector terminal M7–2(B) is shorted to ground. Was a problem found and corrected?	Go to Step 26	—

DTC P1850 Brake Band Apply Solenoid Malfunction (Cont'd)

Step	Action	Yes	No
23	The wiring harness between the PCM connector terminal J1–A16 and the 16–way connector terminal H53–13 is open. Was a problem found and corrected?	Go to Step 26	—
24	The wiring harness between the transmission 16–way connector terminal H53–13 and the transmission main case connector terminal M7–2(B) is open. Was a problem found and corrected?	Go to Step 26	—
25	Check every connection at the PCM. If OK, replace the PCM. Refer to Powertrain Control Module (PCM) in Automatic Transmission (4L30–E) section. Is the replacement complete?	Go to Step 26	—
26	1. After the repair is complete, use the scan tool to select "DTC", then "Clear Info" function and ensure the following conditions are met: ● The brake band apply solenoid is commanded "on" and the volts drop to zero. ● The brake band apply solenoid is commanded "off" and the volts increase to B+. 2. Review the scan tool "DTC Info". Has the last test failed or is the current DTC displayed?	Begin diagnosis again Go to Step 1	Repair verified Exit DTC table

DTC P1860 TCC Solenoid Electrical

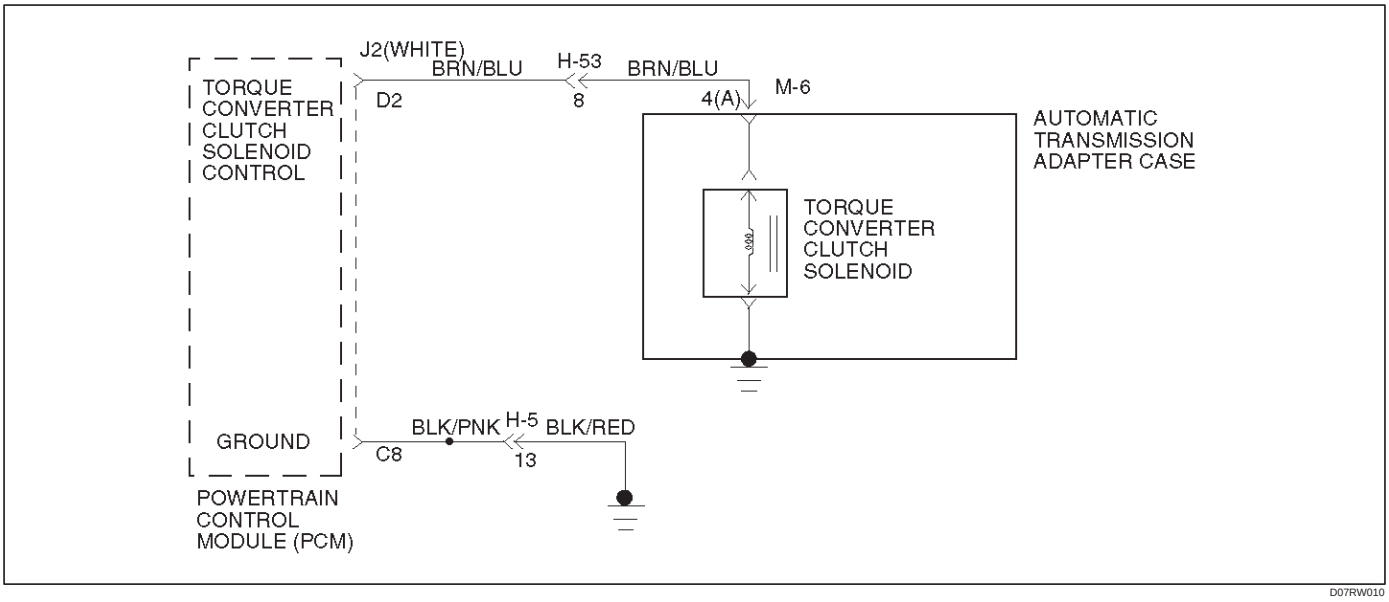

Circuit Description

The PCM allows current to flow through the solenoid coil according to the duty cycle (percentage of “on” and “off” time). This current flow through the solenoid coil creates a magnetic field that magnetizes the solid core. The magnetized core attracts the check ball to seat against spring pressure. This blocks the exhaust for the TCC signal fluid and allows 2–3 drive fluid to feed to TCC signal circuit. The TCC signal fluid pressure acts on the TCC regulator valve to regulate line pressure and to apply fluid pressure to the torque converter clutch shift valve. When the TCC shift valve is in the apply position, regulated apply fluid pressure is directed through the TCC valve to apply the torque converter clutch. The TCC solenoid is used in conjunction with the TCC solenoid to regulate fluid to the torque converter. The TCC solenoid is attached to the valve body within the transmission.

This DTC detects a continuous open or short to ground or ignition in the TCC circuit or the TCC solenoid. This is a type “D” DTC.

Conditions For Setting The DTC

- Battery voltage is between 10 and 16 volts.
- No shift solenoid A DTC P0753.
- No shift solenoid B DTC P0758.
- Ignition is “on”, Engine “run”.
- The PCM commands the solenoid “on” and the voltage remains low (zero volts).
- The PCM commands the solenoid “off” and the voltage remains high (B+).
- All conditions met for 0.25 seconds.

Action Taken When The DTC Sets

- Inhibit TCC engagement.
- The PCM will not illuminate the CHECK TRANS Lamp.

Conditions For Clearing The MIL/DTC

- The DTC can be cleared from the PCM history by using a scan tool.
- The DTC will be cleared from history when the vehicle has achieved 40 warmup cycles without a failure reported.
- The PCM will cancel the DTC default actions when the fault no longer exists and the ignition is cycled “off” long enough to power down the PCM.

Diagnostic Aids

- Inspect the wiring for poor electrical connections at the PCM and at the transmission 16–way connector. Look for possible bent, backed out, deformed or damaged terminals. Check for weak terminal tension as well. Also check for a chafed wire that could short to bare metal or other wiring. Inspect for a broken wire inside the insulation.
- When diagnosing for a possible intermittent short or open condition, move the wiring harness while observing test equipment for a change.

Test Description

The numbers below refer to the step numbers on the diagnostic chart:

3. This test checks for voltage to the solenoid.
4. This test checks the ability of the PCM and wiring to control the ignition circuit.
9. This test checks the resistance of the TCC solenoid and the internal wiring harness.

DTC P1860 TCC Solenoid Electrical

Step	Action	Yes	No
1	1. Install the scan tool. 2. With the engine “on”, turn the ignition switch “on”. NOTE: Before clearing DTC(s), use the scan tool to record “Failure Records” for reference, as data will be lost when the“Clear Info” function is used. 3. Record the DTC “Failure Records”.	Go to Step 2	Go to Step 3
2	Using the J39200 DVOM, back probe between PCM connector terminals J2–D2 and J2–C8. Is the voltage 0 ?	Go to Step 4	Go to Step 5
3	1. Apply brake pedal and select transmission range “D”. 2. Do a test drive, and increase the vehicle speed to TCC “on” at 4th. Does the scan tool display DTC P1860 at TCC “ON”?	Go to Step 9	Go to Diagnostic Aids
4	1. Turn the ignition “off”. 2. Disconnect the J2 (WHITE) PCM connector. 3. Using the J39200 DVOM, measure the resistance between PCM connector terminals J2–D2 and J2–C8. Is the resistance within 18 – 20 ohms?	Go to Step 6	Go to Step 7
5	The wiring harness between PCM connector terminal J2–D2 and transmission adapter case connector terminal M6–4(A) is shorted to voltage. Was a problem found and corrected?	Go to Step 18	Go to Step 19
6	Intermittent condition. Check the wiring harness and terminals between PCM connector J2 and transmission adapter case connector M–6. Was a problem found and corrected?	Go to Step 18	Go to Step 19
7	1. Disconnect the transmission 16–way connector H–53. 2. Using the J39200 DVOM, measure the resistance between terminal H53–8 and ground. Is the resistance within 18 – 20 ohms?	Go to Step 15	Go to Step 8
8	1. Disconnect the transmission adapter case connector M–6. 2. Using the J39200 DVOM, measure the resistance between terminal M6–4(A) and ground. Is the resistance within 18 – 20 ohms?	Go to Step 16	Go to Step 17
9	1. Turn the ignition “off”. 2. Disconnect the J2 (WHITE) PCM connector. 3. Using the J39200 DVOM, measure the resistance between terminals J2–D2 and J2–C8. Is the resistance within 18 – 20 ohms?	Go to Step 18	Go to Step 10
10	1. Disconnect the transmission 16–way connector H–53. 2. Using the J39200 DVOM, measure the resistance between terminal H53–8 and ground. Is the resistance within 18–20 ohms?	Go to Step 12	Go to Step 11
11	1. Disconnect the transmission adapter case connector M–6. 2. Using the J39200 DVOM, measure the resistance between terminal M6–4(A) and ground. Is the resistance within 18–20 ohms?	Go to Step 13	Go to Step 14

DTC P1860 TCC Solenoid Electrical (Cont'd)

Step	Action	Yes	No
12	The wiring harness between PCM connector terminal J2–D2 and transmission 16–way connector terminal H53–8 is shorted to ground. Was a problem found and corrected?	Go to Step 20	—
13	The wiring harness between transmission 16–way connector H–53 and adapter case connector M–6 is shorted to ground. Was a problem found and corrected?	Go to Step 20	—
14	The TCC solenoid is faulty, or the internal wiring harness from the TCC solenoid is shorted to ground. Was a problem found and corrected?	Go to Step 20	—
15	The wiring harness between PCM connector terminal J2–D2 and transmission 16–way connector terminal H53–8 is open. Was a problem found and corrected?	Go to Step 20	—
16	The wiring harness between transmission 16–way connector terminal H53–8 and adapter case terminal M6–4(A) is open. Was a problem found and corrected?	Go to Step 20	—
17	The TCC solenoid is faulty, or the internal wiring harness from the TCC solenoid is open. Was a problem found and corrected?	Go to Step 20	—
18	Check every connection at the PCM. If OK, replace the PCM. Refer to Powertrain Control Module (PCM) in Automatic Transmission (4L30–E) section. Is the replacement complete?	Go to Step 20	—
19	Check the PCM connector terminal J2–D2, transmission 16–way connector terminal H53–8 and transmission adapter case connector terminal M6–4(A). Was a problem found and corrected?	Go to Step 20	—
20	1. After the repair is complete, use the scan tool to select "DTC", then "Clear Info" function and ensure the following conditions are met: ● The TCC solenoid is commanded "on" and the volts increase to B+. ● The TCC solenoid is commanded "off" and the volts drop to zero. 2. Review the scan tool "DTC Info". Has the last test failed or is the current DTC displayed?	Begin diagnosis again Go to Step 1	Repair verified Exit DTC table

TRANSMISSION

MANUAL TRANSMISSION

CONTENTS

Service Precaution 7B–1
General Description 7B–2
Diagnosis 7B–4
Manual Transmission Assembly 7B–5
Transmission and Associated Parts 7B–5
Removal 7B–6
Installation 7B–11
Rear Oil Seal (Transfer Adapter) 7B–17
Removal 7B–17
Installation 7B–17
Transmission (AR-5) 7B–18
Disassembled View 7B–18
Disassembly 7B–21
Inspection 7B–39
Reassembly 7B–41
Main Data and Specifications 7B–68
General Specifications 7B–68
Torque Specifications 7B–69
Special Tools 7B–72

Service Precaution

WARNING: IF SO EQUIPPED WITH A SUPPLEMENTAL RESTRAINT SYSTEM (SRS), REFER TO THE SRS COMPONENT AND WIRING LOCATION VIEW IN ORDER TO DETERMINE WHETHER YOU ARE PERFORMING SERVICE ON OR NEAR THE SRS COMPONENTS OR THE SRS WIRING. WHEN YOU ARE PERFORMING SERVICE ON OR NEAR THE SRS COMPONENTS OR THE SRS WIRING, REFER TO THE SRS SERVICE INFORMATION. FAILURE TO FOLLOW WARNINGS COULD RESULT IN POSSIBLE AIR BAG DEPLOYMENT, PERSONAL INJURY, OR OTHERWISE UNNEEDED SRS SYSTEM REPAIRS.

CAUTION: Always use the correct fastener in the proper location. When you replace a fastener, use ONLY the exact part number for that application. ISUZU will call out those fasteners that require a replacement after removal. ISUZU will also call out the fasteners that require thread lockers or thread sealant. UNLESS OTHERWISE SPECIFIED, do not use supplemental coatings (Paints, greases, or other corrosion inhibitors) on threaded fasteners or fastener joint interfaces. Generally, such coatings adversely affect the fastener torque and the joint clamping force, and may damage the fastener. When you install fasteners, use the correct tightening sequence and specifications. Following these instructions can help you avoid damage to parts and systems.

General Description

(6VE1)

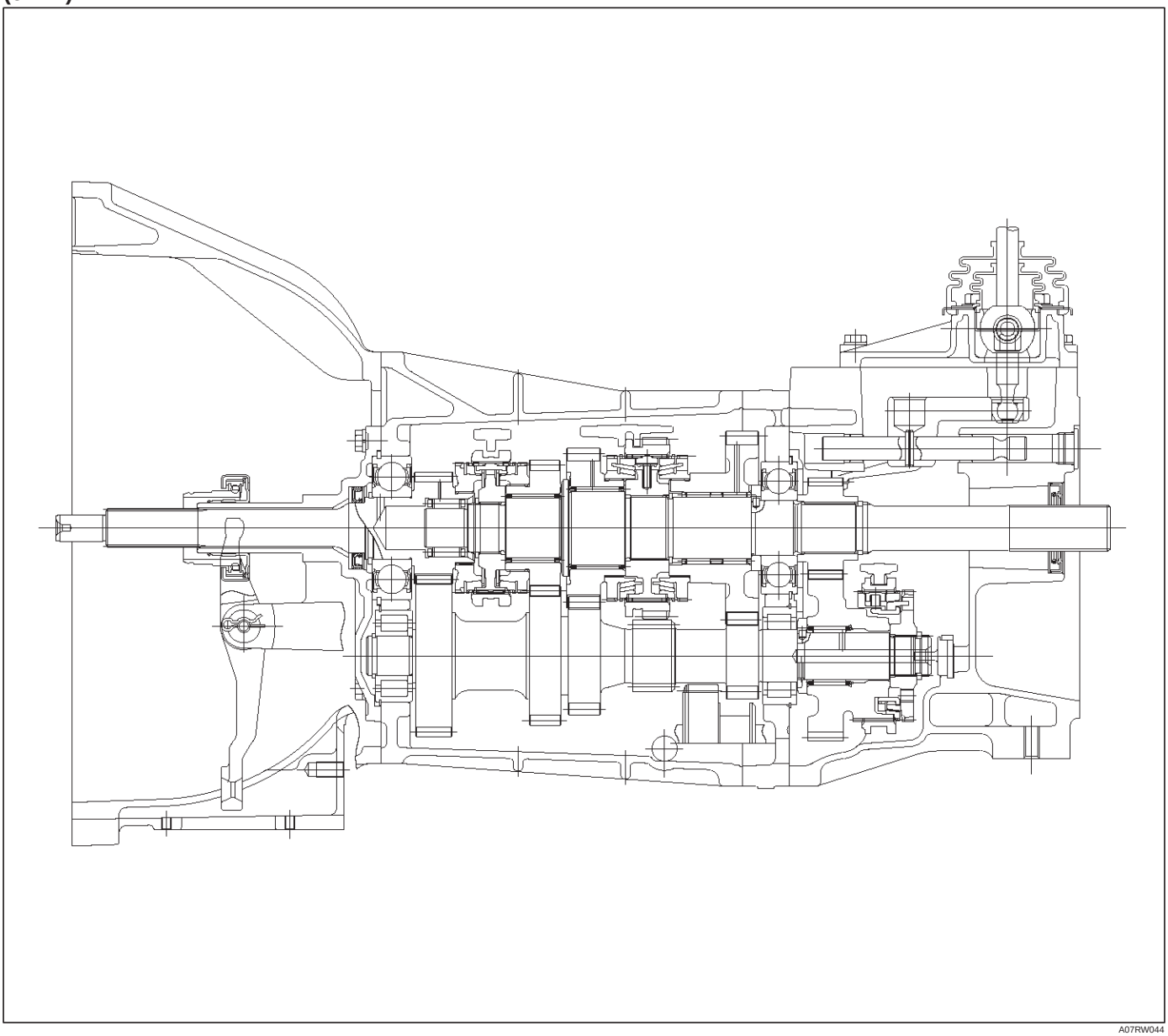

A07RW044

(4JX1)

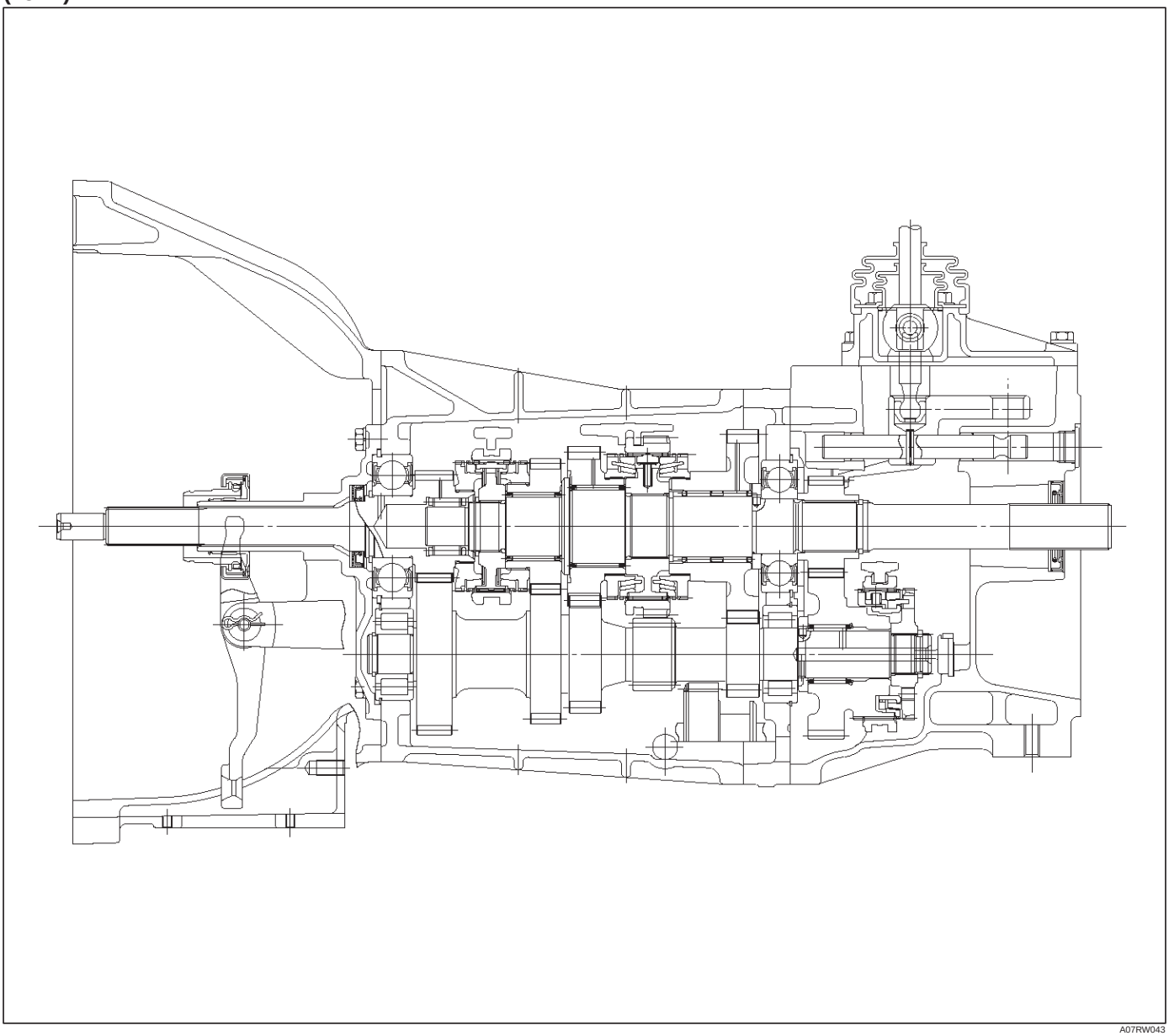

A07RW043

Diagnosis

Condition	Possible cause	Correction
Abnormal noise	Flywheel pilot bearing worn	Replace
	Bearings worn or broken (Mainshaft, counter shaft, and transfer shaft)	Replace
	Gear tooth contact surfaces worn or scuffed (Mainshaft, counter shaft, reverse idler gear and transfer gears)	Replace
	Splines worn (Mainshaft, synchronizer clutch hub)	Replace
	Gear or bearing thrust face seized	Replace
	Lack of backlash between meshing gears	Replace
Hard Shifting	Improper clutch pedal free play	Readjust
	Change lever sliding portions worn	Repair or replace Regrease
	Shift block, shift rod and/or control box sliding faces worn	Replace
	Shift arm and synchronizer sleeve groove worn	Replace worn parts
	Thrust washer, collar, and/or gear thrust faces worn (Mainshaft and counter shaft thrust play)	Replace worn parts
	Synchronizer parts worn	Replace
Walking or Jumping out of gear	Detent ball worn	Replace
	Detent spring weakened or broken	Replace
	Shift rod and/or control box sliding faces worn	Replace
	Shift arm and synchronizer sleeve groove worn	Replace worn parts
	Thrust washer, collar, and/or gear thrust faces worn (Mainshaft and counter shaft thrust play)	Replace worn parts
	Bearings worn or broken	Replace
	Splines worn (Mainshaft, synchronizer hub)	Replace
	Synchronizer spring weakened or broken	Replace
Oil leakage	Loose drain plug(s) and/or filler plug(s)	Tighten Replenish oil
	Defective or improperly installed gasket(s)	Replace
	Oil seal worn or scratched	Replace

Manual Transmission Assembly

Transmission and Associated Parts

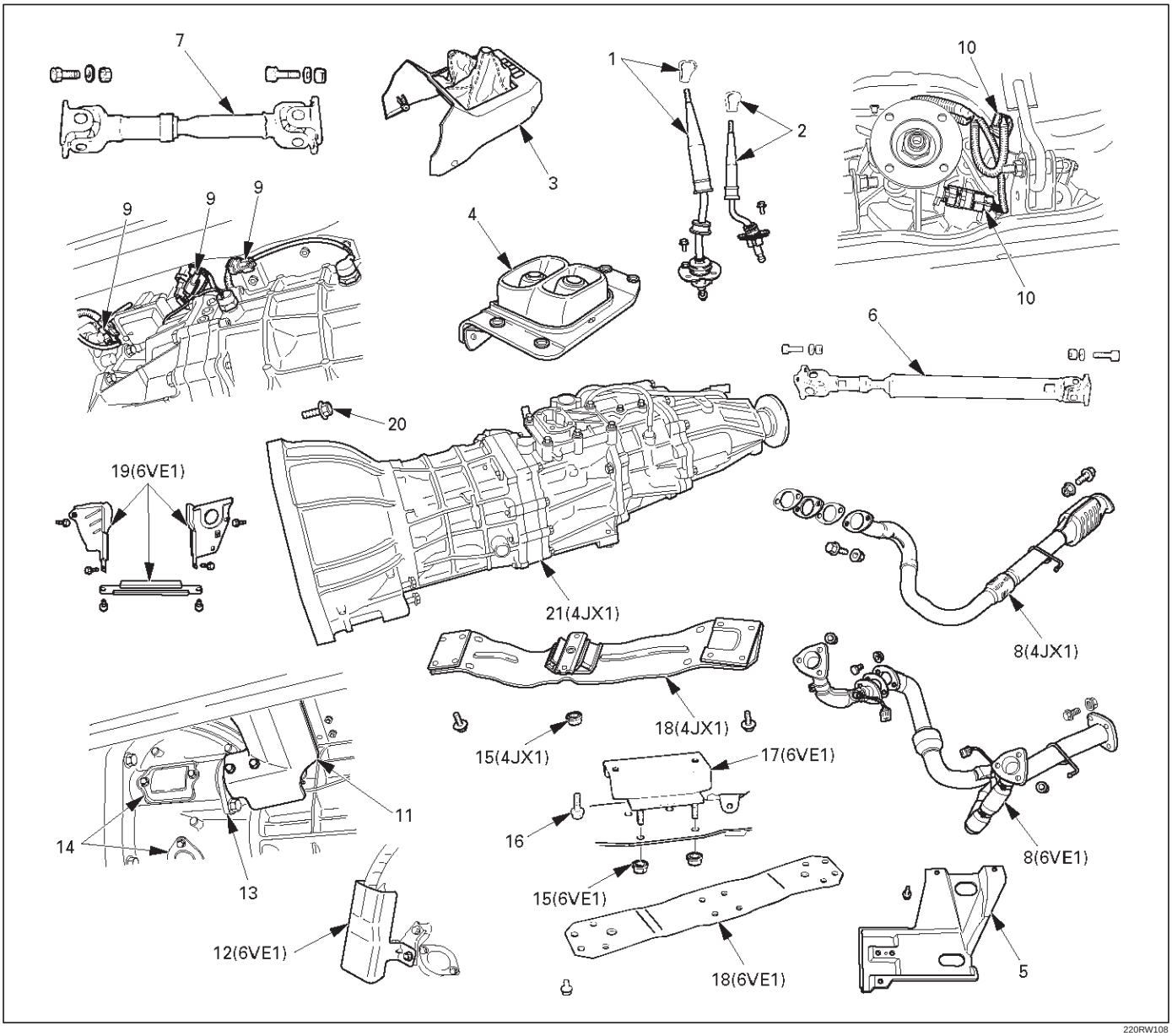

Legend

(1) Gear Control Lever and Knob
(2) Transfer Control Lever and Knob
(3) Front Console Assembly
(4) Grommet Assembly
(5) Transfer Protector
(6) Rear Propeller Shaft
(7) Front Propeller Shaft
(8) Exhaust Pipe
(9) Backup Lamp, 4WD Indicator, and 1–2 Indicator Switch Harness Connector
(10) Speedometer Sensor and 2WD–4WD Actuator Harness Connector
(11) Slave Cylinder Heat Protector
(12) Harness Heat Protector
(13) Slave Cylinder
(14) Dust Cover
(15) Engine Rear Mount Nut
(16) Engine Rear Mount Bolt
(17) Engine Rear Mount
(18) Third Crossmember
(19) Flywheel Under Cover
(20) Transmission Retaining Bolt
(21) Transmission Assembly with Transfer Case

Removal

NOTE: Before remove the transmission and transfer assembly from the vehicle, change the transfer mode to 2WD using push button on dash panel.

1. Remove engine hood.
2. Disconnect battery ground cable.
3. Remove the gear control lever knob.
4. Remove the front console assembly.
5. Remove the grommet assembly.
6. Remove the transmission control lever and transfer control lever.

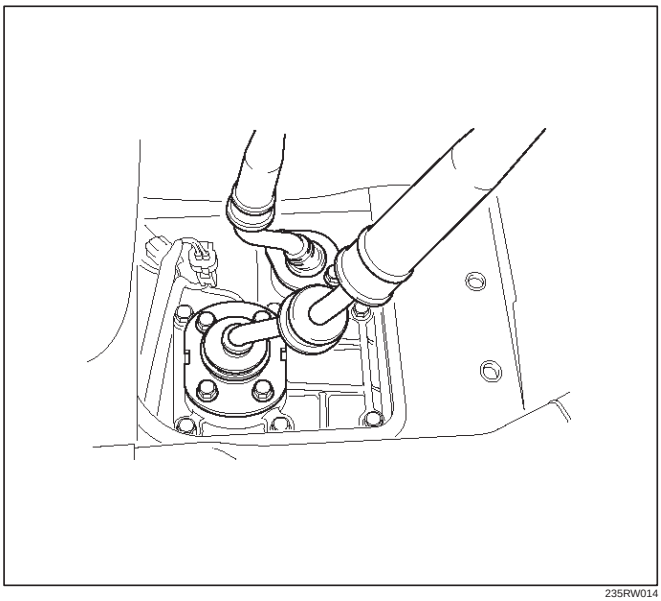

235RW014

7. Raise and support the vehicle with suitable jack stand.
8. Remove transfer protector.
9. Remove the rear propeller shaft.

NOTE: Apply alignment marks on the flange at the both front and rear side.

(4JX1)

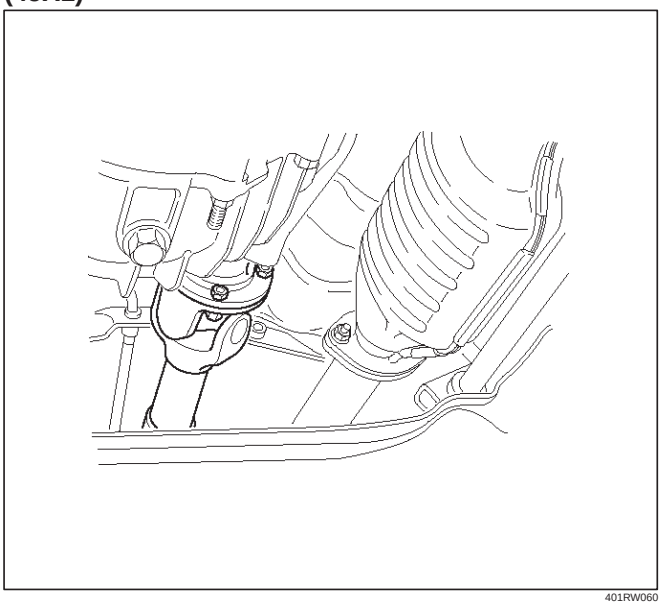

401RW060

10. Remove the front propeller shaft.

NOTE: Apply alignment marks on the flange at both the front and rear sides.

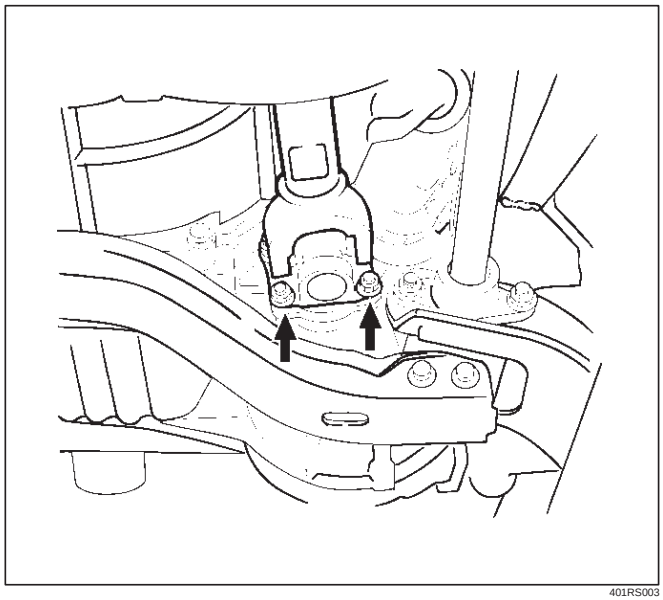

401RS003

11. Disconnect two oxygen sensor connectors from the transmission harness (6VE1).
12. Remove the front and 3 way exhaust pipe (6VE1). Remove the exhaust pipe with catalytic converter (4JX1).

(4JX1)

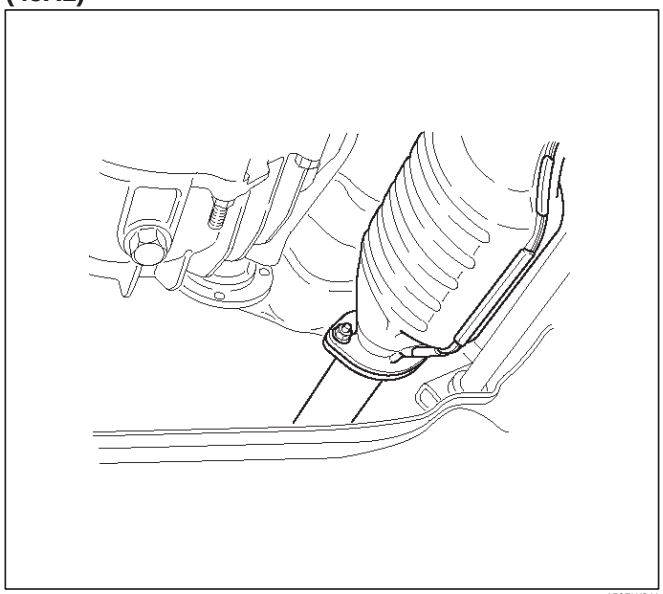

150RW041

13. Disconnect the backup lamp switch, 4WD indicator switch and 1–2 indicator switch harness connectors.

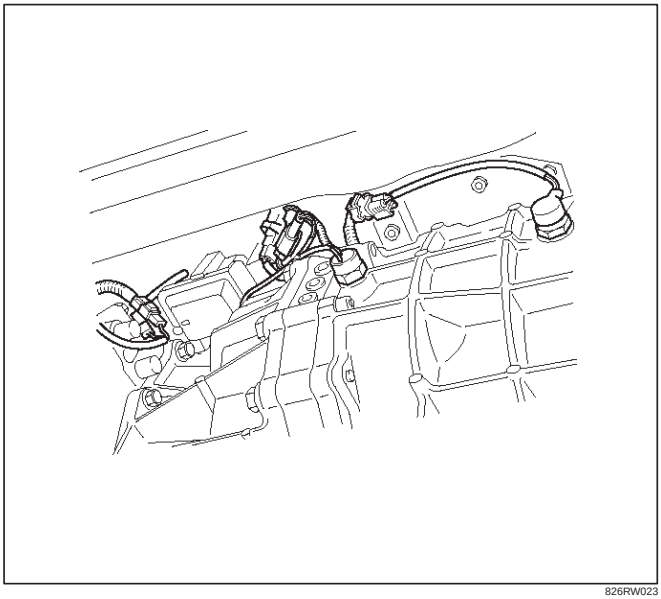

826RW023

14. Disconnect the speedometer sensor and 2WD-4WD actuator harness connectors.

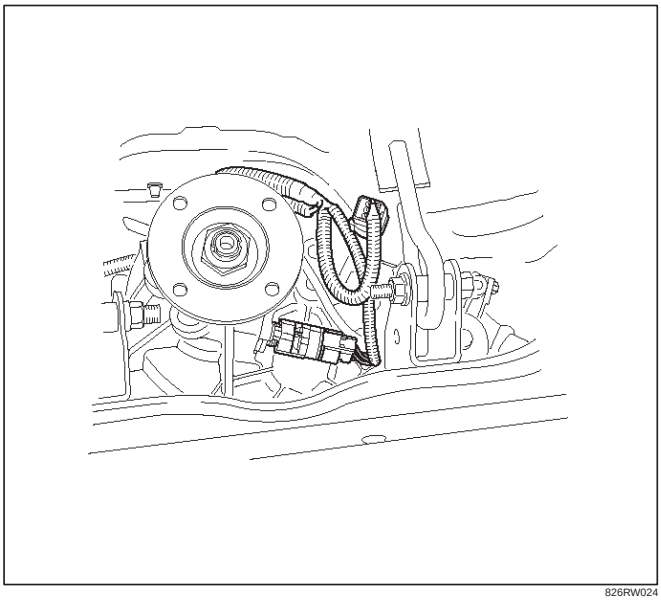

826RW024

15. Remove four fuel pipe bracket from the transmission case (6VE1).

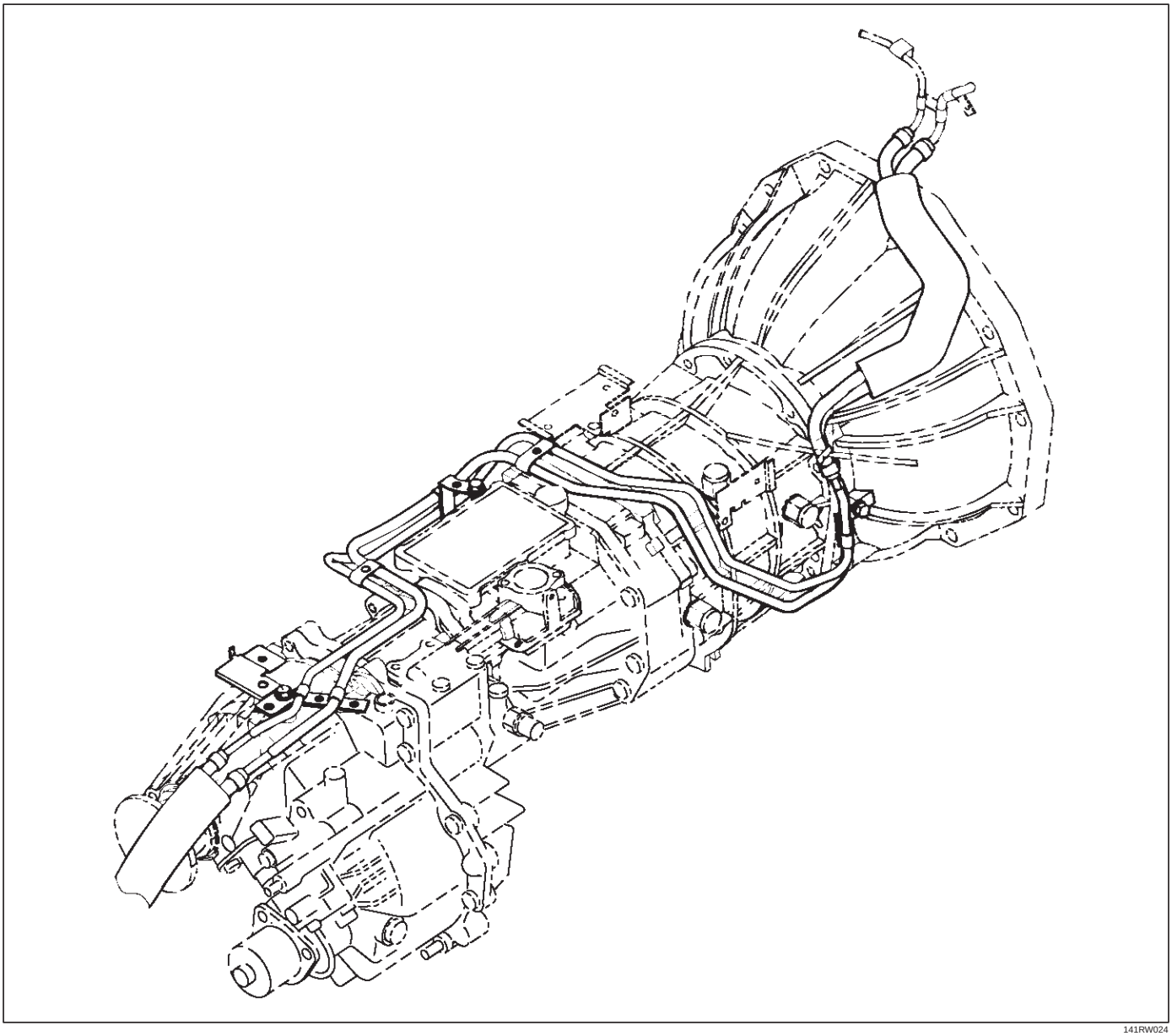

141RW024

16. Remove the slave cylinder heat protector.
17. Remove the harness heat protector (6VE1).

(6VE1)

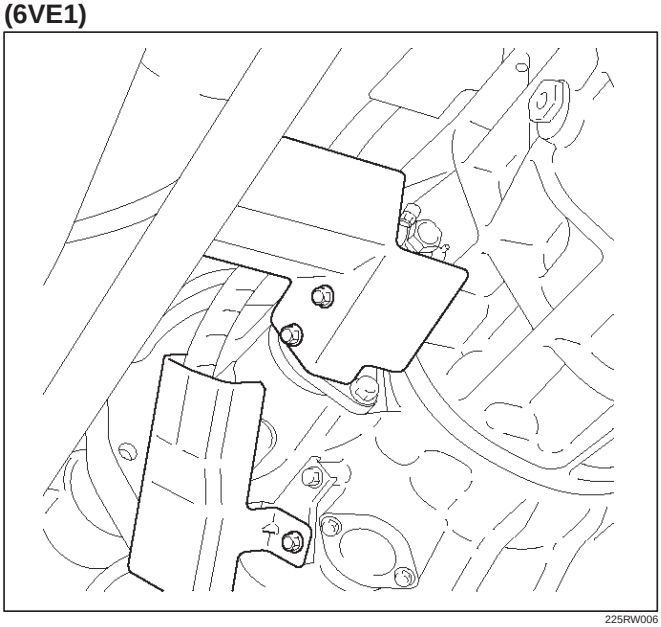

225RW006

18. Remove two transmission harness clamps and bracket (6VE1).
19. Remove the slave cylinder.

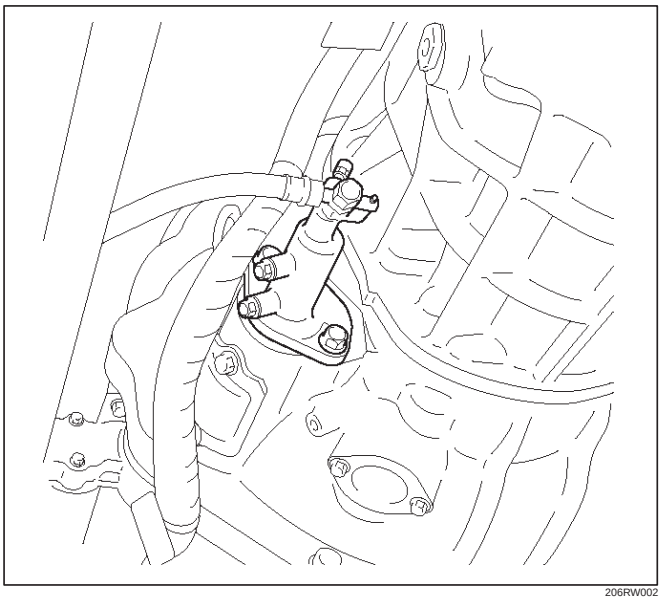

206RW002

20. Remove the two dust cover from transmission case.
21. Support the transfer case with a jack.
22. Remove two engine rear mount nuts.

(6VE1)

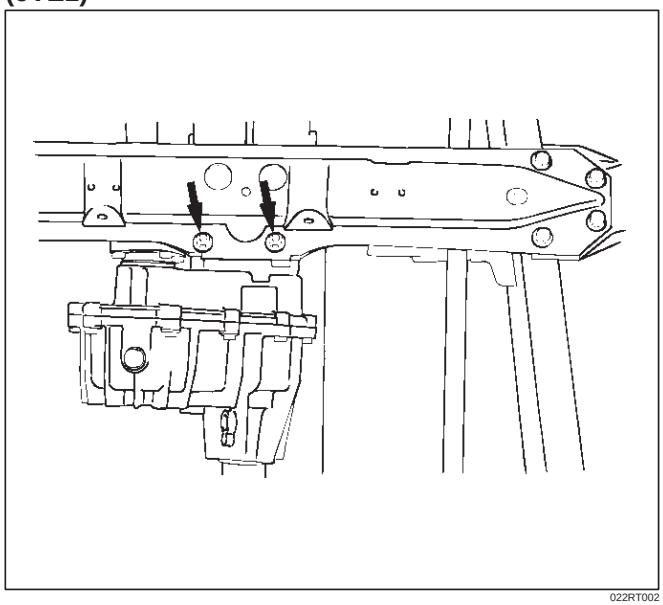

022RT002

23. Remove third crossmember (6VE1).
24. Remove third crossmember with rear mount rubber (4JX1).

(4JX1)

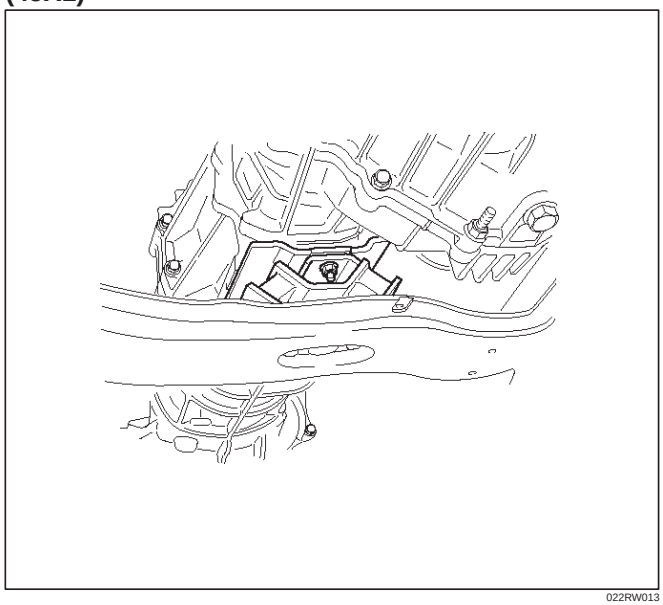

022RW013

25. Remove two engine rear mount bolts (6VE1).
26. Remove the rear mount from the transmission (6VE1).
27. Remove three flywheel under cover (6VE1).

28. Support the transmission with a transmission jack and then remove jack from the transfer case side.

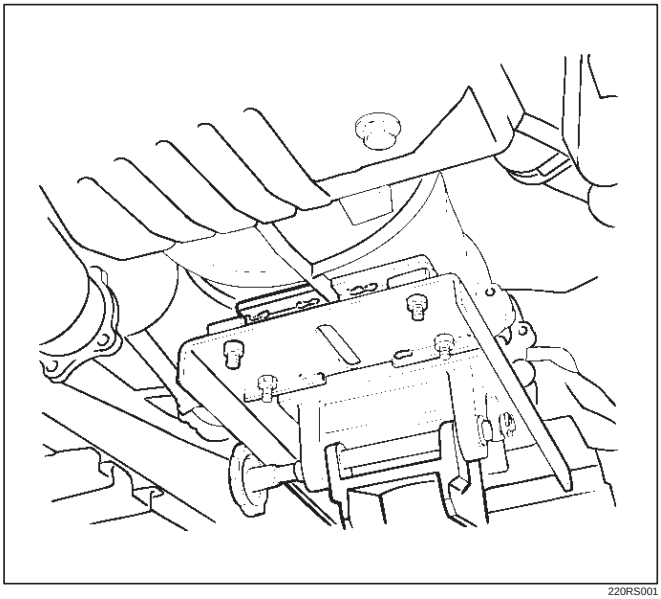

220RS001

29. Use the clutch release bearing remover 5–8840–2291–0 (J–39207) to disconnect the clutch release bearing from the clutch pressure plate.

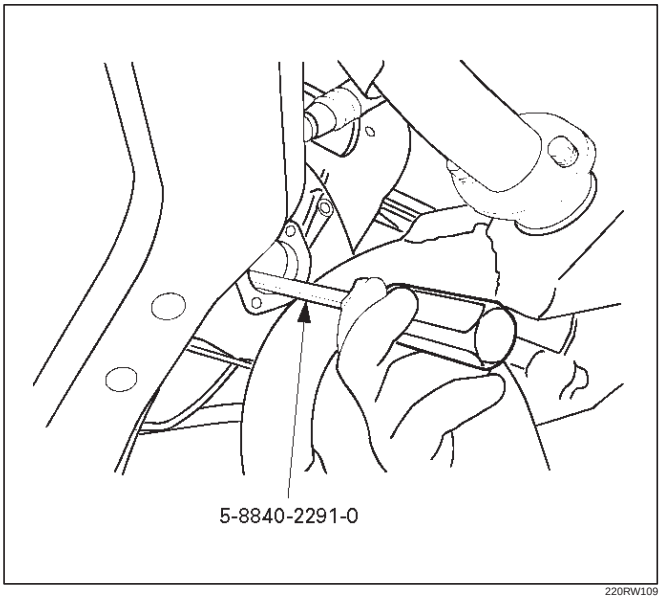

220RW109

Release bearing disconnection

1. Pull the shift fork toward the transmission to press the clutch release bearing against the clutch.
2. Insert the clutch release bearing remover between the wedge collar and the release bearing.
3. Turn the remover to separate the release bearing.

NOTE: Be sure not to insert the remover between the wedge collar and the clutch.

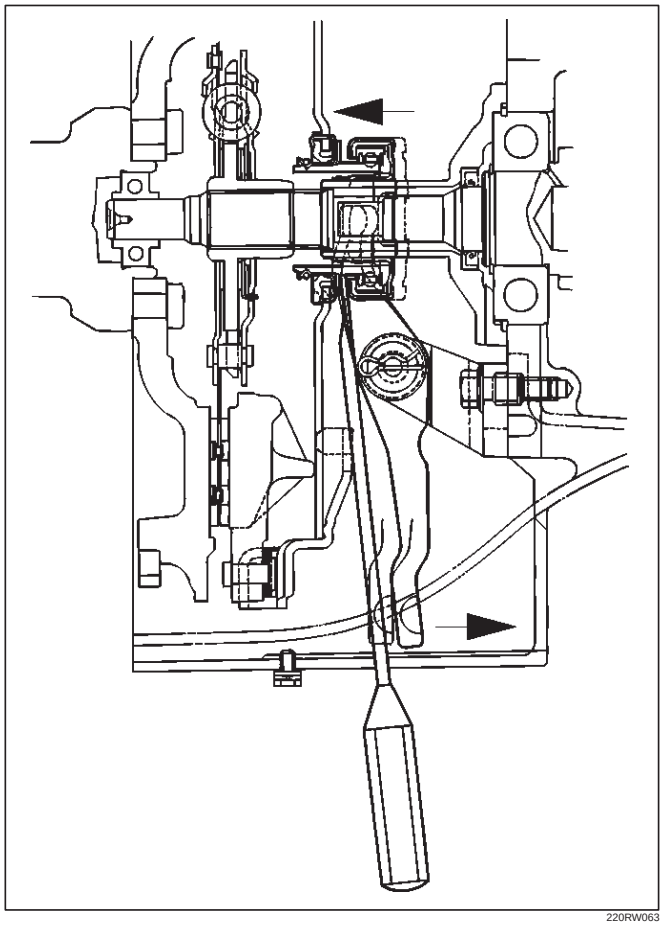

220RW063

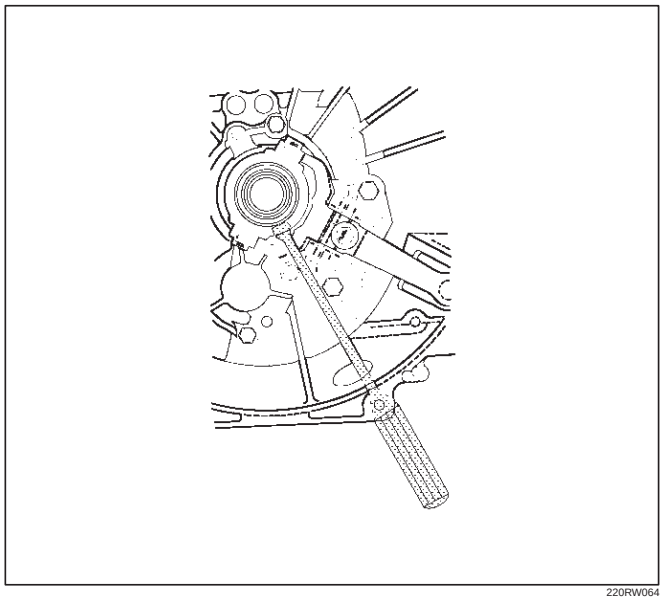

220RW064

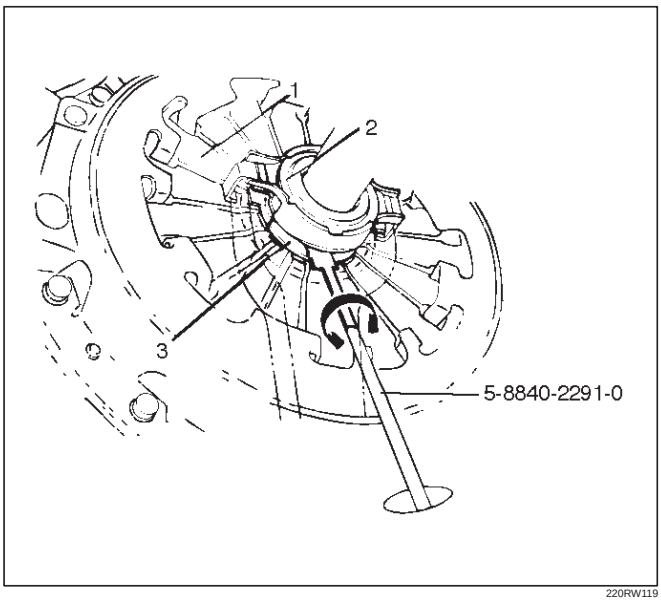

220RW119

Legend

(1) Pressure Plate Assembly
(2) Release Bearing
(3) Wedge Collar

30. Remove the transmission retaining nuts and bolts.
31. Remove the transmission assembly with transfer case from the vehicle.

NOTE: Remove the transfer case from the transmission assembly if the transmission disassembly required.

Refer to Transfer Case in Drive Line/Axle section.

Installation

1. Apply a thin coat of molybdenum disulfide grease to the top gear shaft spline.
2. Slowly operate the transmission jack until the front of transmission is aligned with the rear of the engine.
   The slope of the engine and the transmission must be the same.
3. Align the top gear shaft spline with the clutch driven plate spline.

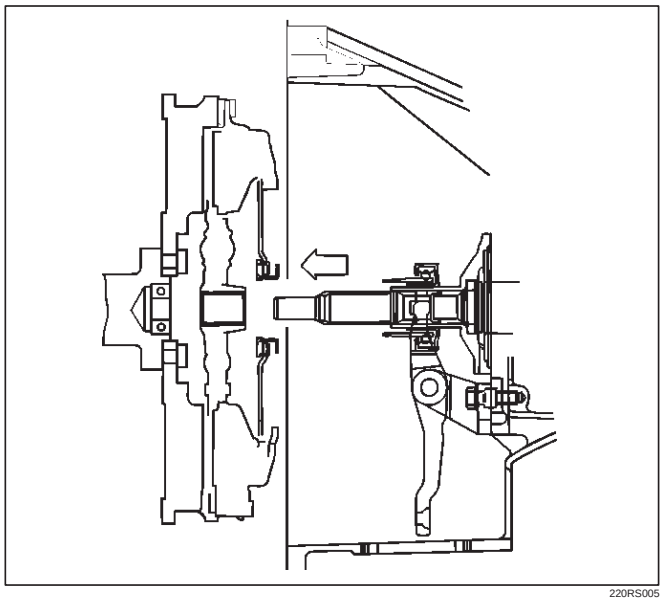

220RS005

4. Install the transmission to the engine.
   Tighten the transmission retaining nuts and bolts.

(6VE1)

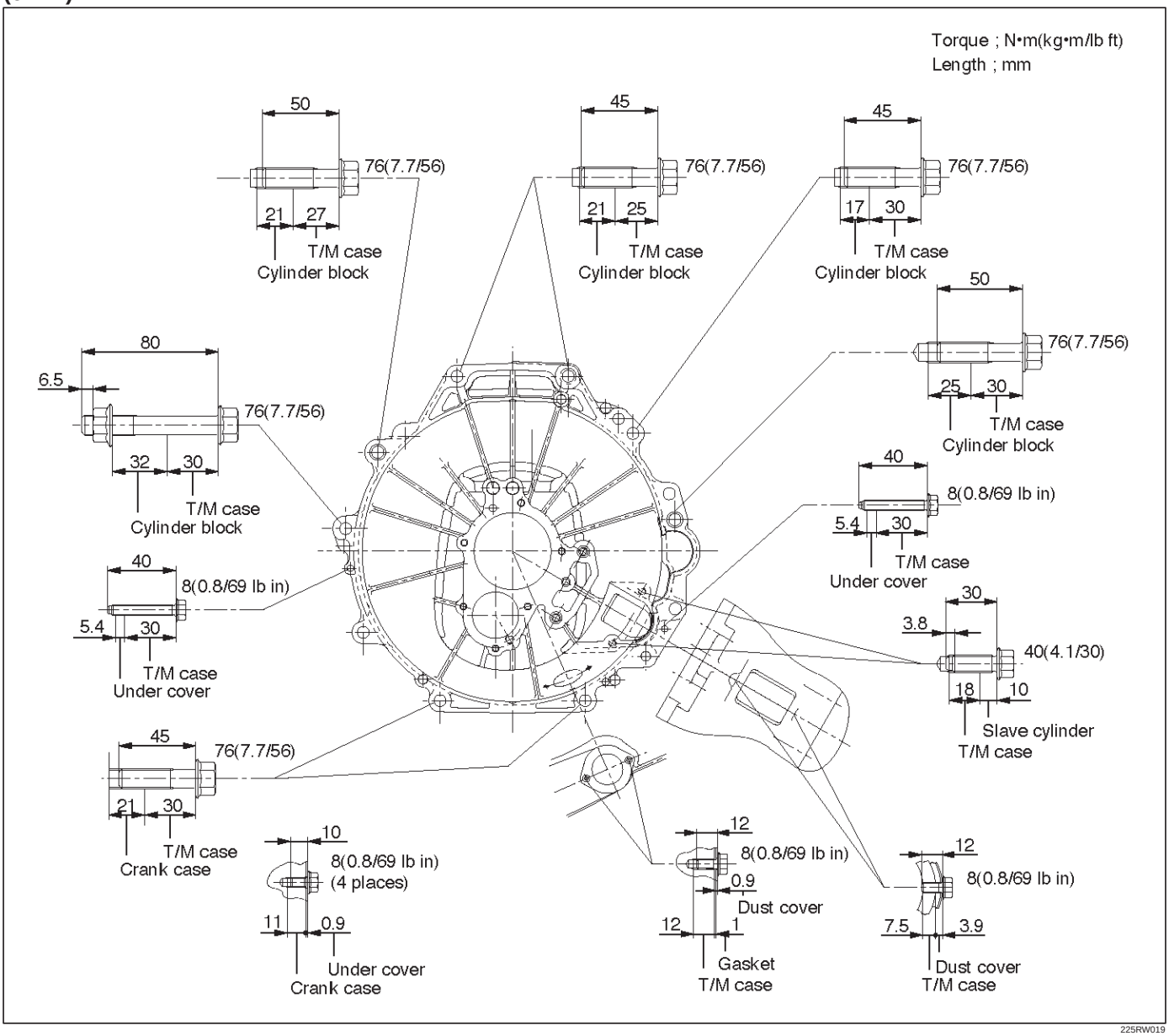

225RW019

(4JX1)

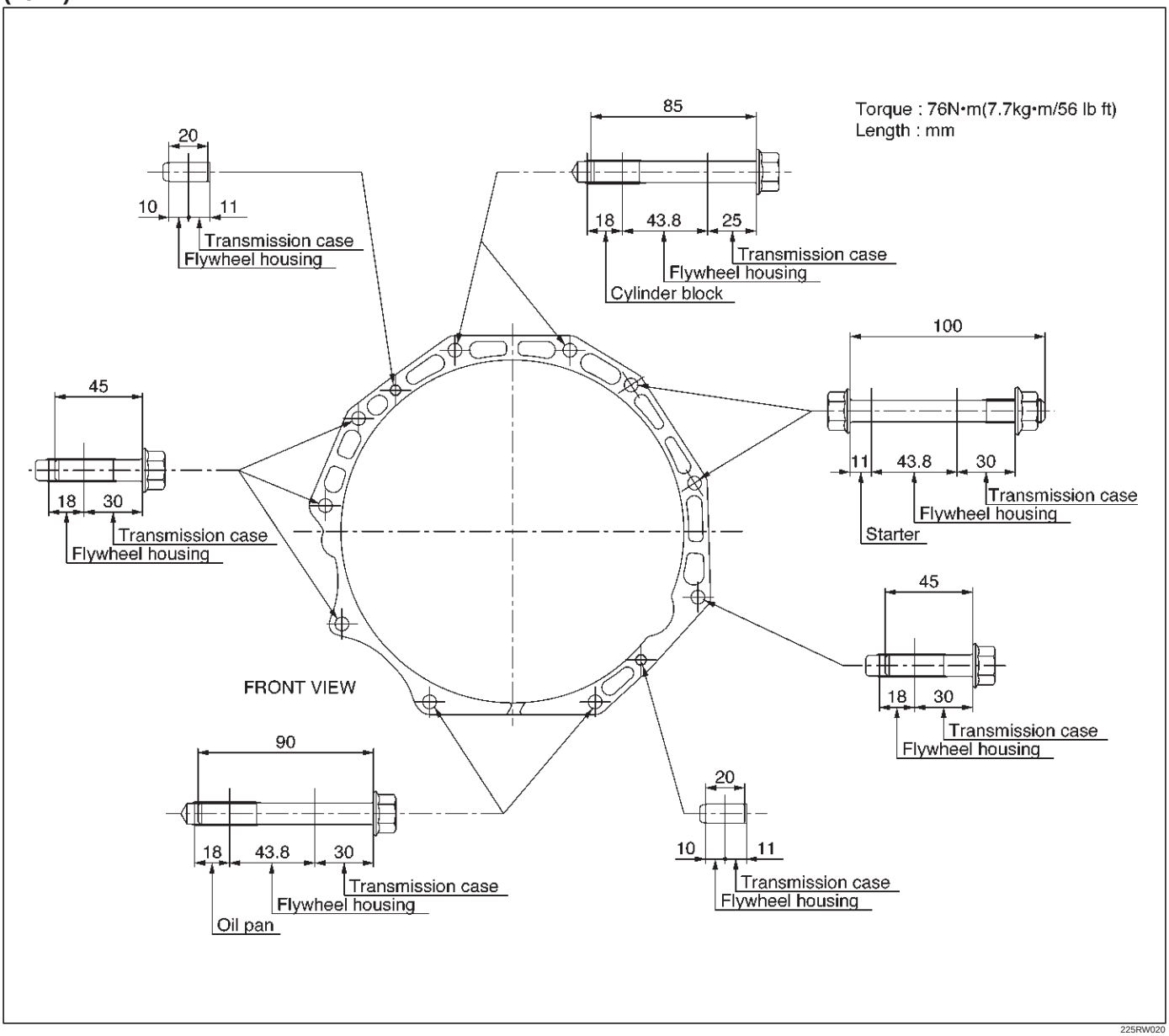

225RW020

5. Apply a force of about 113N (26 lb) to the tip of the shift fork in the direction of the transmission to engage the clutch pressure plate and release bearing.

NOTE: A clicking sound is heard when the release bearing and the tip of the diaphragm spring engage each other.

Check to see if they are securely engaged by pushing the tip of the shift fork toward the engine while applying a force of about 25 N (5.5 lb). If the shift fork will not move, then they are securely engaged.

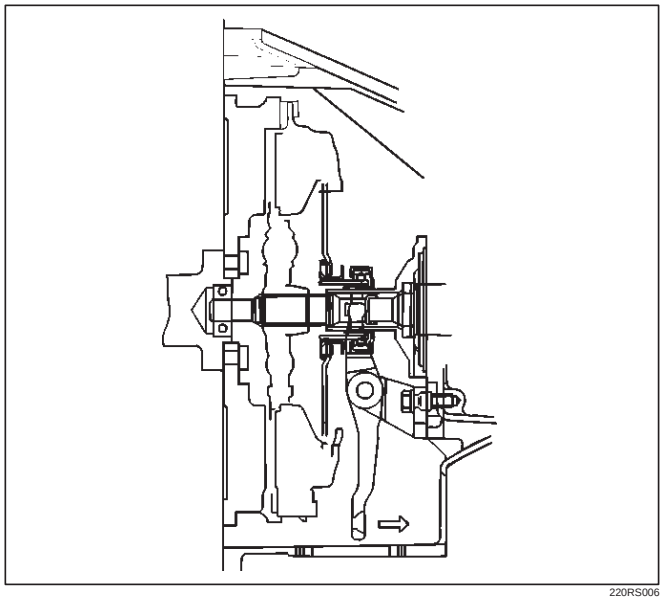

220RS006

6. Install three flywheel under cover (6VE1).

7. Install the engine rear mount to the transmission case and tighten the fixing bolts specified torque (6VE1).

   Torque: 41 N·m (4.2kg·m/30 lb ft)

8. Install the third crossmember to the frame and tighten the fixing bolts specified torque.

   Torque: 50 N·m (5.1kg·m/37 lb ft)

9. Tighten the engine rear mount nuts specified torque.

   Torque: 50 N·m (5.1kg·m/37 lb ft)

10. Remove the transmission jack.
11. Apply the grease to top hole portion of the shift fork.
12. Install the slave cylinder and tighten the fixing bolts specified torque.

    Torque: 43 N·m (4.4kg·m/32 lb ft)

13. Install the clutch dust cover to the clutch housing and tighten the fixing bolts specified torque.

    Torque: 8 N·m (0.8kg·m/69 lb in)

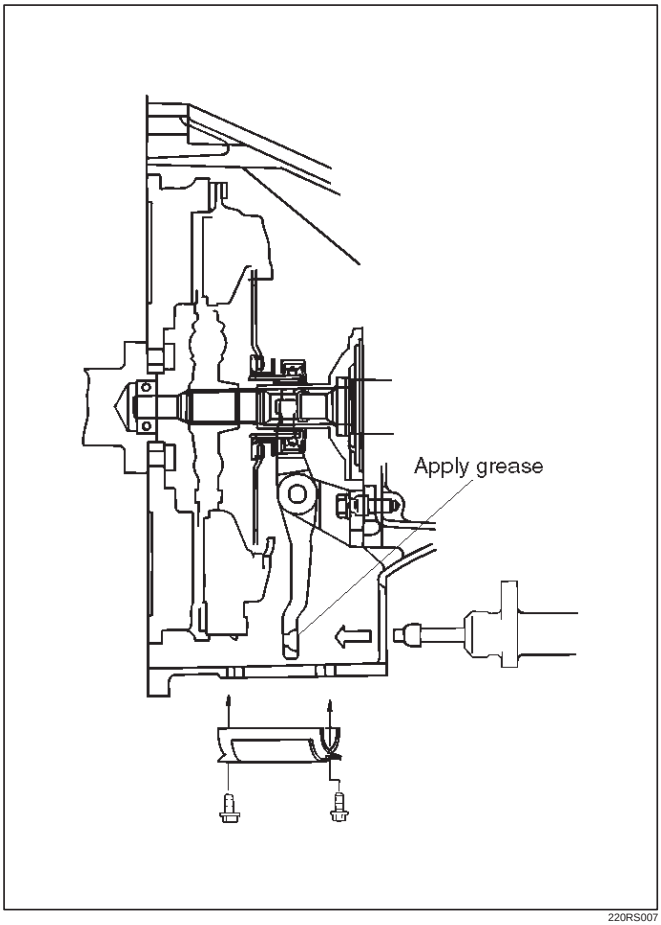

220RS007

14. Install the slave cylinder heat protector to the slave cylinder.
15. Install bracket and two transmission harness clamps to the transmission case (6VE1).
16. Install harness heat protector (6VE1).

(6VE1)

225RW006

17. Install four fuel pipe bracket (6VE1).

141RW024

18. Connect the speedometer sensor and 2WD–4WD actuator harness connector.

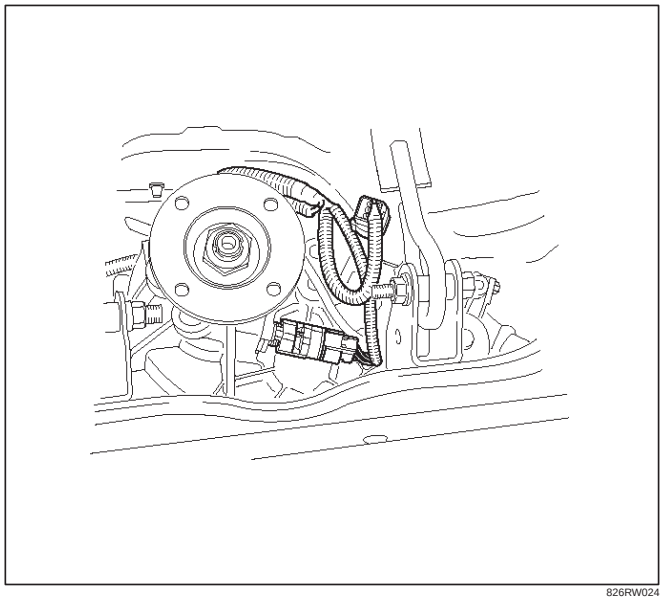

826RW024

19. Connect the backup lamp switch, 4WD indicator switch, and 1-2 indicator switch harness connectors.

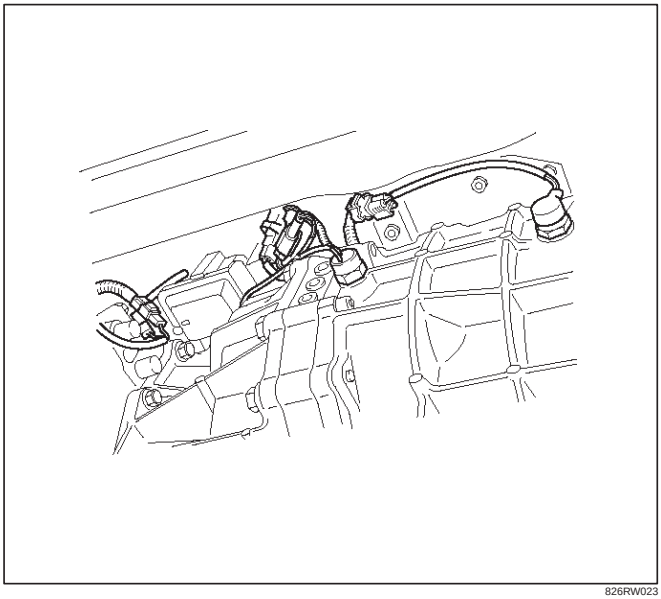

826RW023

20. Install the front and 3 way exhaust pipe (6VE1).
    Install the exhaust pipe with catalytic converter (4JX1).

    Torque:

    Exhaust pipe to exhaust manifold:
    67 N·m (6.8 kg·m/49 lb ft)

    Exhaust pipe flange bolt:
    43 N·m (4.4 kg·m/32 lb ft)

(4JX1)

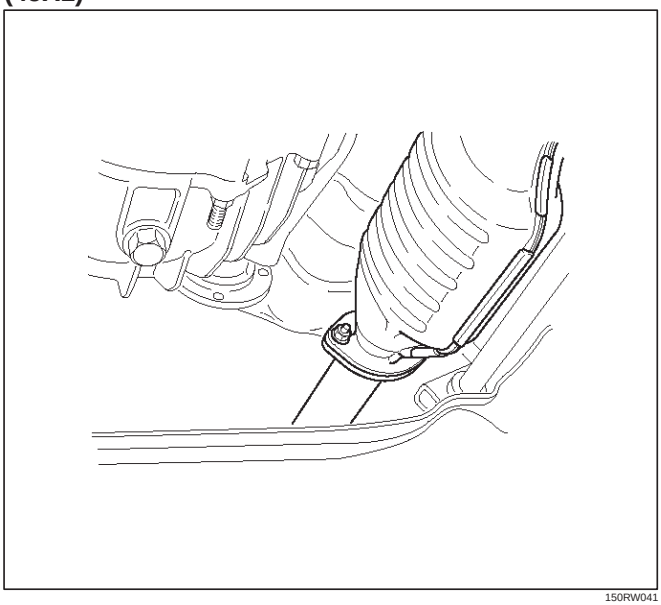

150RW041

21. Connect two oxygen sensor connectors to the transmission harness (6VE1).
22. Install the front propeller shaft and tighten the fixing bolts and nuts specified torque.

    Torque: 63 N·m (6.4 kg·m/46 lb ft)

23. Install the rear propeller shaft and tighten the fixing bolts and nuts specified torque.

    Torque: 63 N·m (6.4 kg·m/46 lb ft)

24. Install transfer protector and tighten the fixing bolts specified torque.

    Torque: 37 N·m (3.8 kg·m/27 lb ft)

25. Install the transmission control lever and transfer control lever.

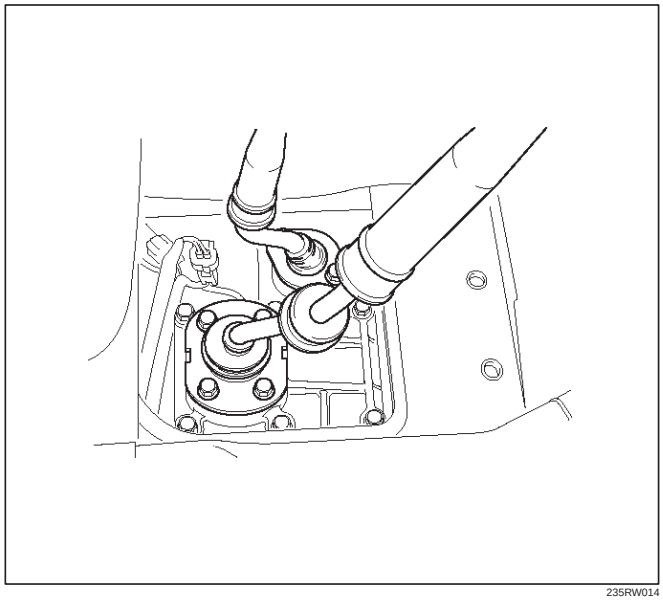

235RW014

26. Install the grommet assembly.
27. Install the front console assembly.
28. Install the gear control lever knob.
29. Connect battery ground cable.
30. Install engine hood.

Rear Oil Seal (Transfer Adapter)

Removal

1. Remove the transfer case assembly from the vehicle. Refer to Transfer Case in Drive Line/Axle section.
2. Remove the rear oil seal from the transfer adapter.

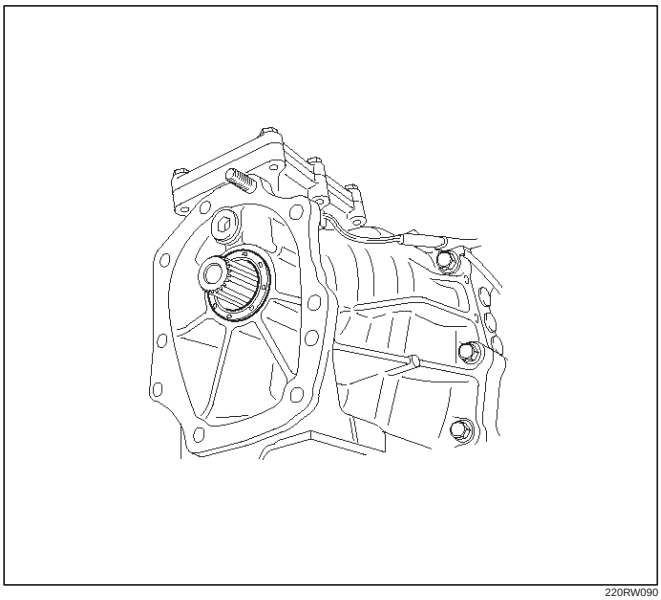

220RW090

Installation

1. Use 5–8840–2558–0 (J–42802) transfer adapter oil seal installer, and install the rear oil seal to the transfer adapter.
2. Apply grease to the oil seal lip.
3. Install the transfer case assembly to the vehicle. Refer to Transfer Case in Drive Line/Axle section.

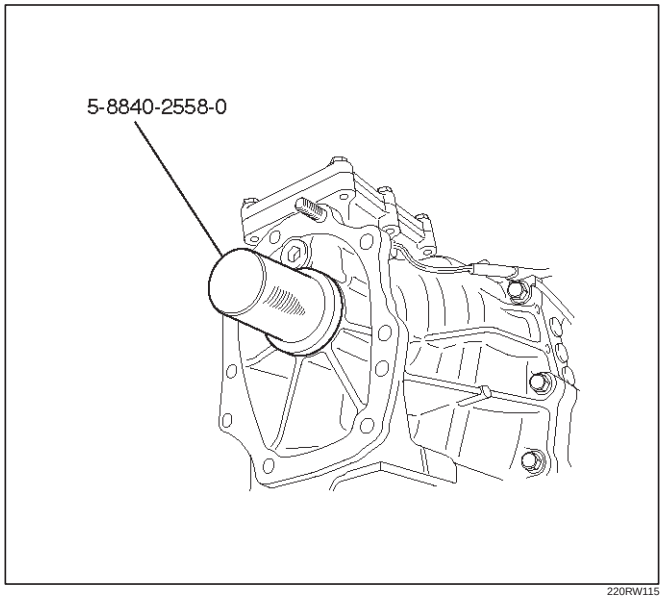

220RW115

Transmission (AR-5)

Disassembled View

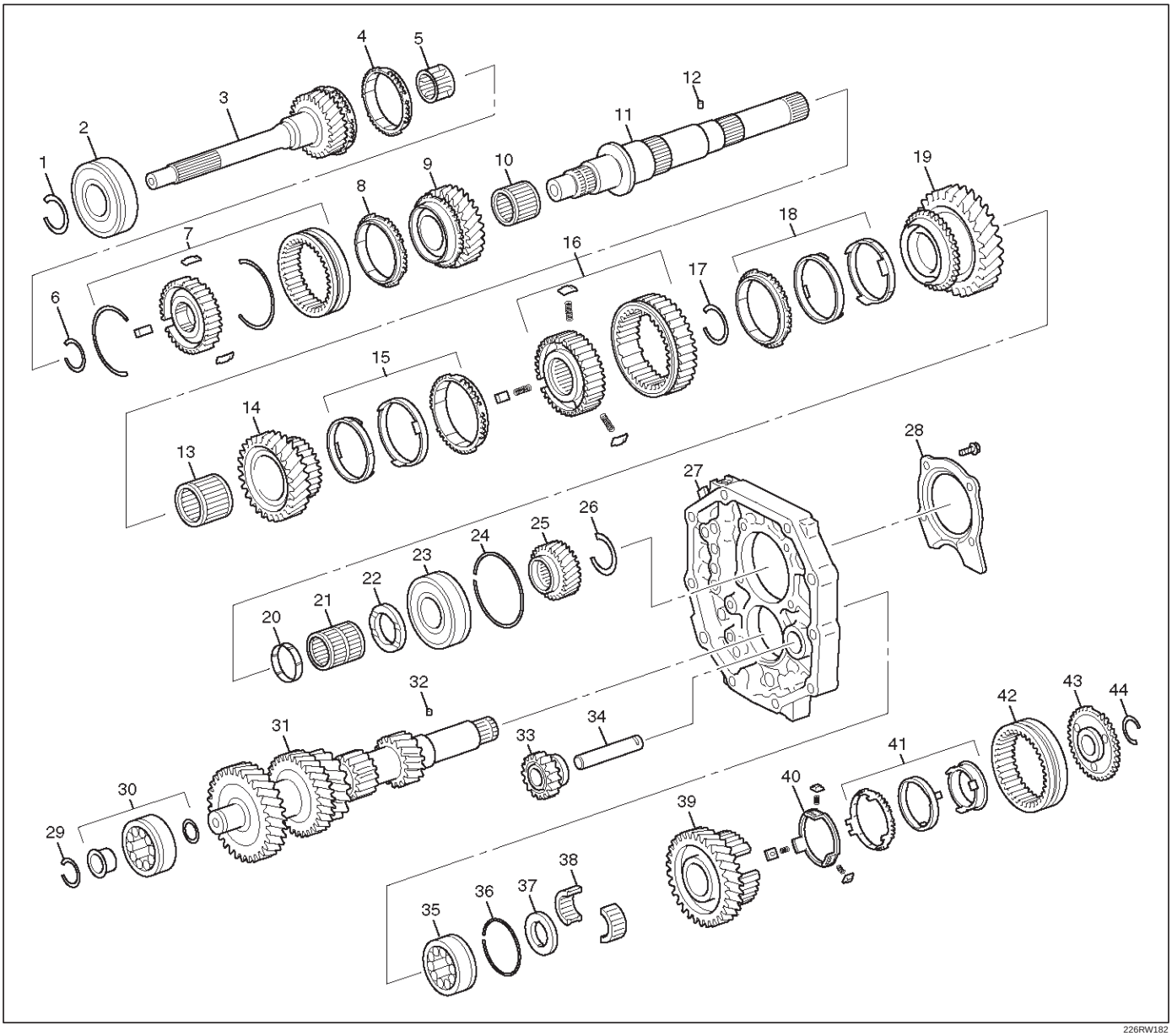

226RW182

Legend

(1) Snap Ring
(2) Bearing
(3) Top Gear Shaft
(4) Block Ring
(5) Roller Bearing
(6) Snap Ring
(7) Clutch Hub No.2 Assembly
(8) 3rd Block Ring
(9) 3rd Gear
(10) 3rd Gear Needle Roller Bearing
(11) Mainshaft
(12) Thrust Washer Pin
(13) 2nd Gear Needle Roller Bearing
(14) 2nd Gear
(15) Synchronizer Assembly
(16) Clutch Hub No.1 Assembly
(17) Snap Ring
(18) Synchronizer Assembly
(19) 1st Gear
(20) 1st Gear Bearing Spacer
(21) 1st Gear Needle Roller Bearing
(22) 1st Gear Thrust Washer
(23) Mainshaft Bearing
(24) Snap Ring
(25) 5th Gear
(26) Snap Ring
(27) Intermediate Plate
(28) Bearing Retainer
(29) Snap Ring
(30) Front Bearing Assembly
(31) Counter Gear Shaft

(32) Thrust Washer Pin
(33) Reverse Idle Gear
(34) Reverse Idle Gear Shaft
(35) Counter Gear Shaft Center Bearing
(36) Snap Ring
(37) Thrust Washer
(38) Roller Bearing
(39) Counter 5th Gear
(40) Reverse Block Ring
(41) Synchronizer Assembly
(42) Hub Sleeve No.3
(43) 5th Gear Spline Piece
(44) Snap Ring

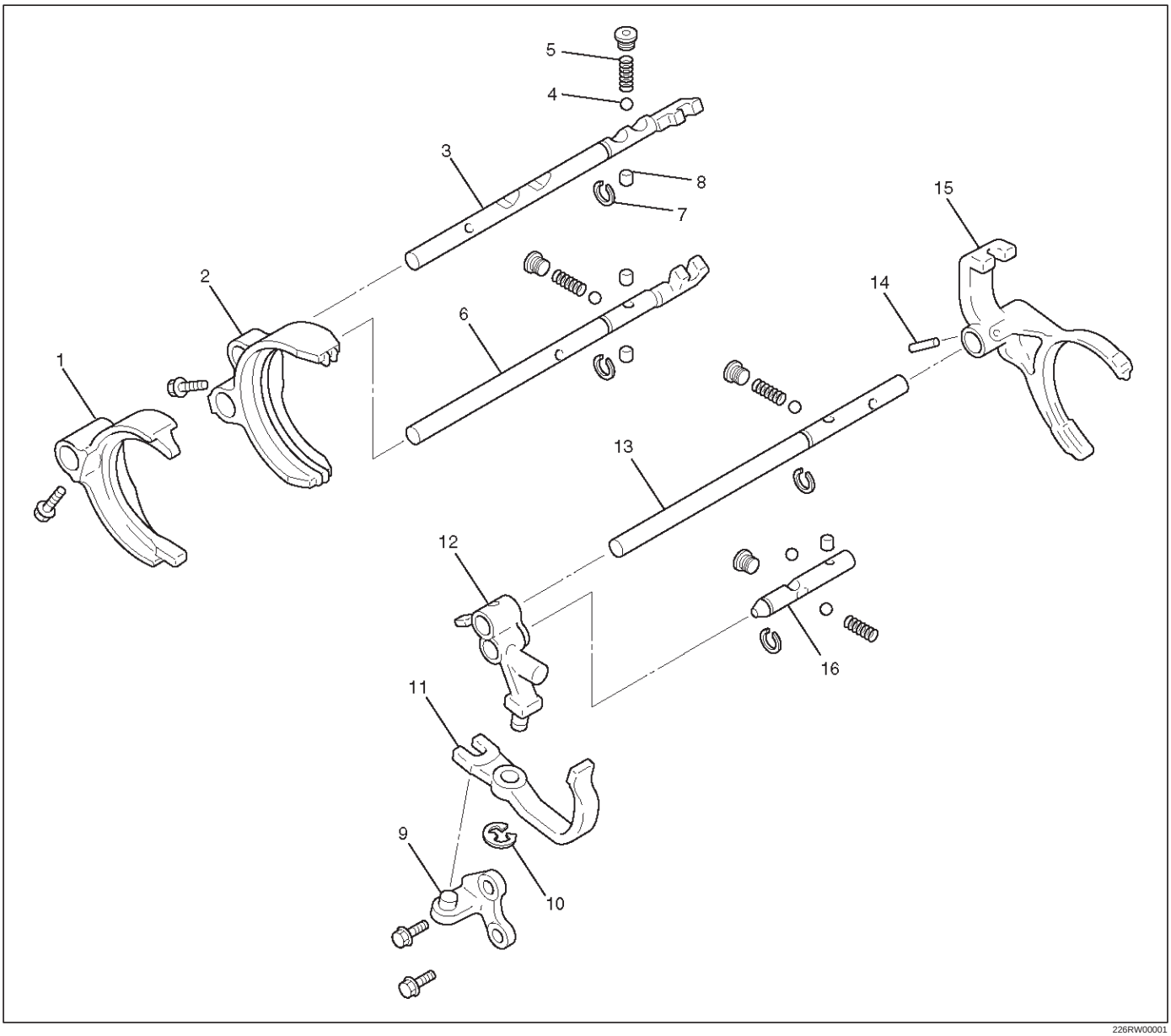

226RW00001

Legend

(1) 3rd-4th Shift Arm
(2) 1st-2nd Shift Arm
(3) 3rd-4th Shift Rod
(4) Ball
(5) Spring
(6) 1st-2nd Shift Rod
(7) Snap Ring
(8) Interlock Pin
(9) Reverse Shift Arm Bracket
(10) E–Ring
(11) Reverse Shift Arm No.2
(12) Reverse Shift Arm No.1
(13) 5th Reverse Shift Rod
(14) Spring Pin
(15) 5th Shift Arm
(16) Reverse Shift Rod

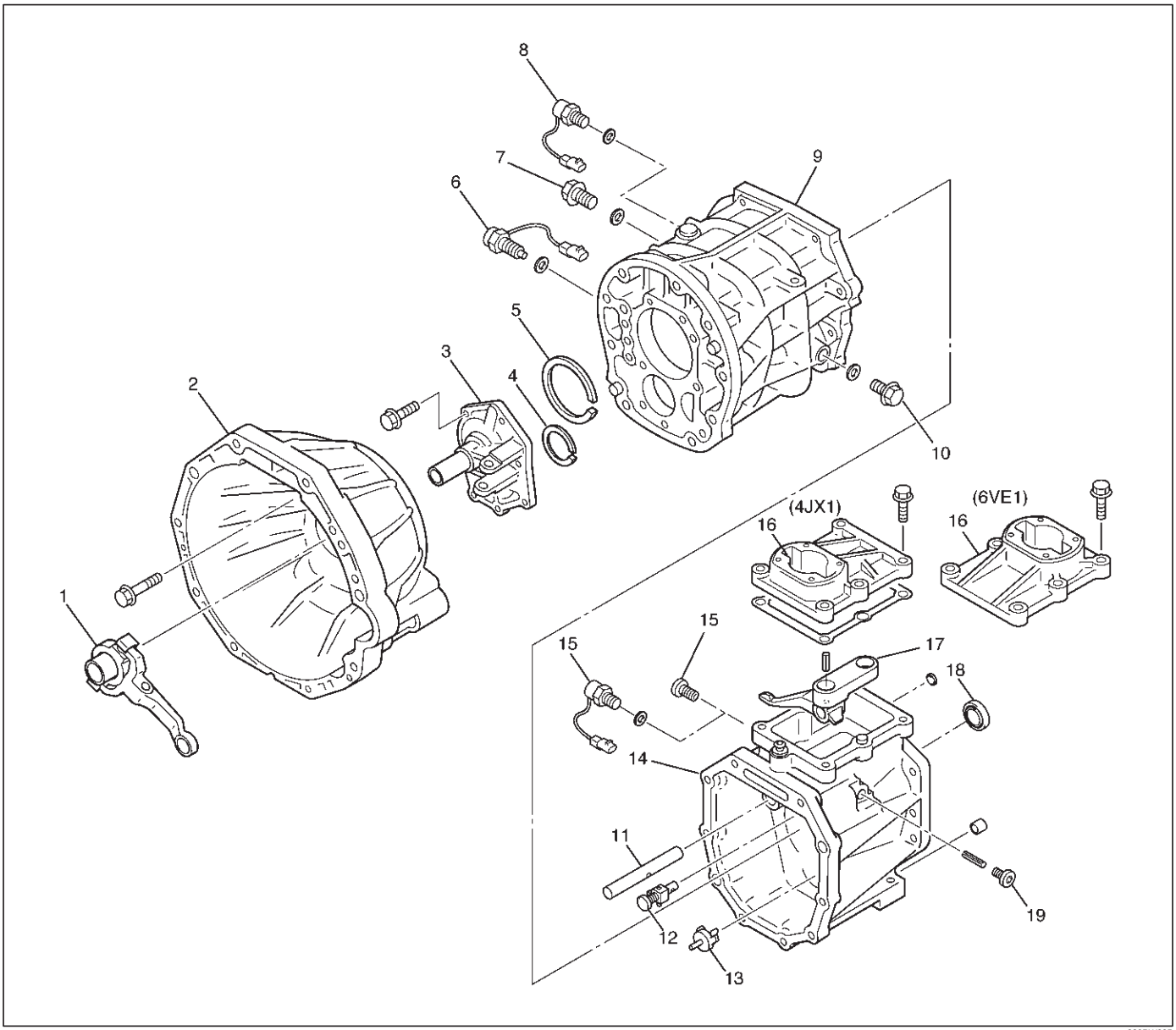

220RW095

Legend

(1) Release Bearing and Shift Fork
(2) Clutch Housing
(3) Front Cover
(4) Snap Ring
(5) Snap Ring
(6) 1st and 2nd Switch
(7) Drain Plug
(8) Backup Light Switch
(9) Transmission Case
(10) Filler Plug
(11) Gear Control Rod
(12) Reverse Restrict Pin
(13) Oil Receiver Pipe
(14) Transfer Adapter
(15) Plug (6VE1) or Neutral Switch (4JX1)
(16) Gear Control Box
(17) Shift Lever Housing
(18) Oil Seal
(19) Plug

Disassembly

1. Remove the drain plug and filler plug.
   1. Remove the drain plug (1) and gasket.
   2. Remove the filler plug (2) and gasket.

(6VE1)

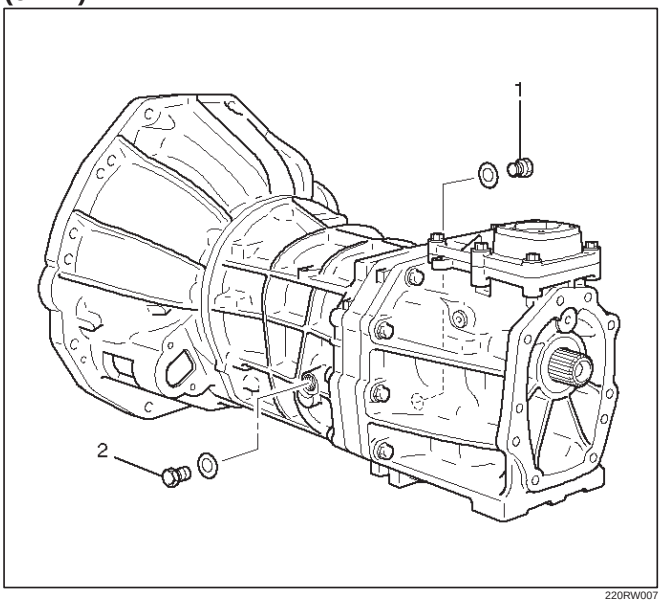

220RW007

2. Remove the clutch release bearing and shift fork.
   1. Remove the clutch release bearing (3) from the front cover.
   2. Remove the split pin (4). Remove the shaft from the under. Remove the shift fork (5).

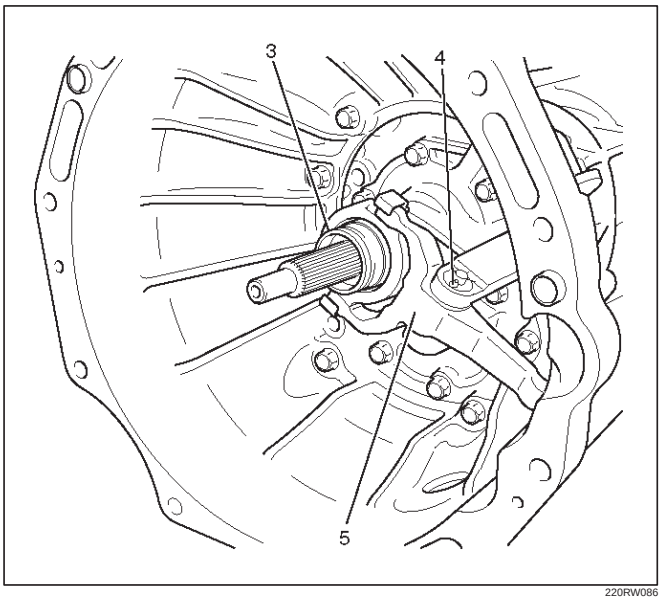

220RW086

3. Remove the switch.
   1. Remove backup light switch (6) and gasket.
   2. Remove neutral switch (7) and gasket (4JX1).
   3. Remove 1st and 2nd switch (8) and gasket.

(4JX1)

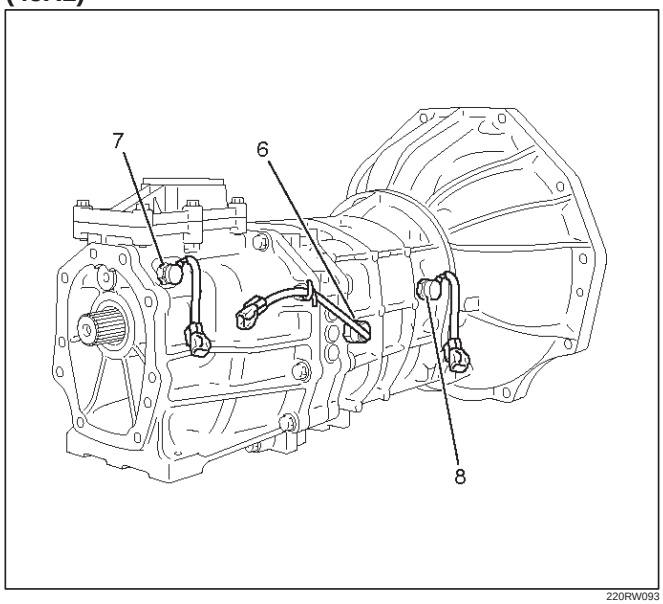

220RW093

4. Remove the clutch housing.
   1. Remove the 9 bolts.

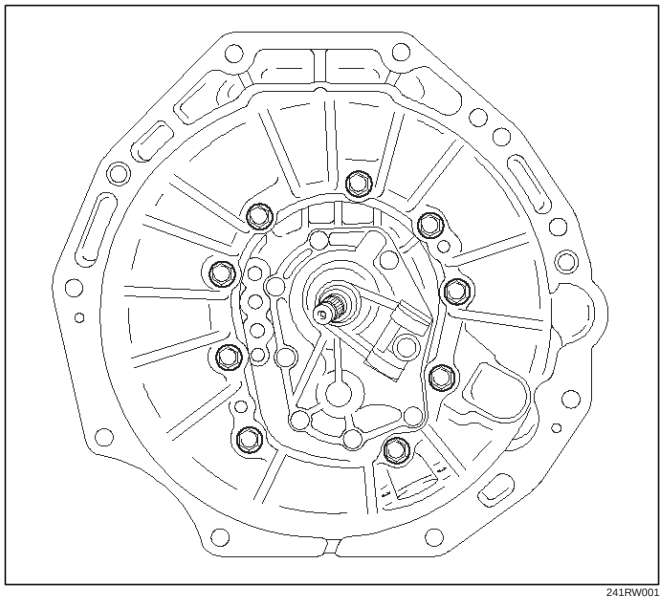

241RW001

2. Using a plastic hammer, carefully tap the clutch housing.

(6VE1)

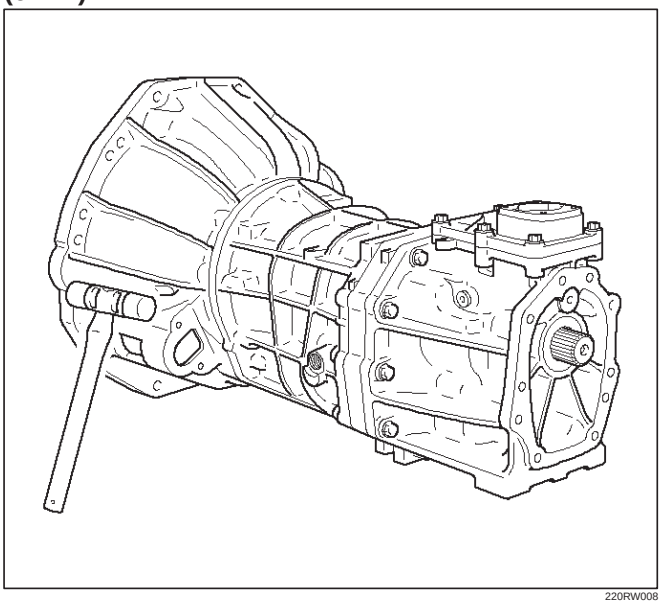

220RW008

5. Remove gear control box and gasket.
   1. Remove the 6 bolts, gear control box and gasket.

(6VE1)

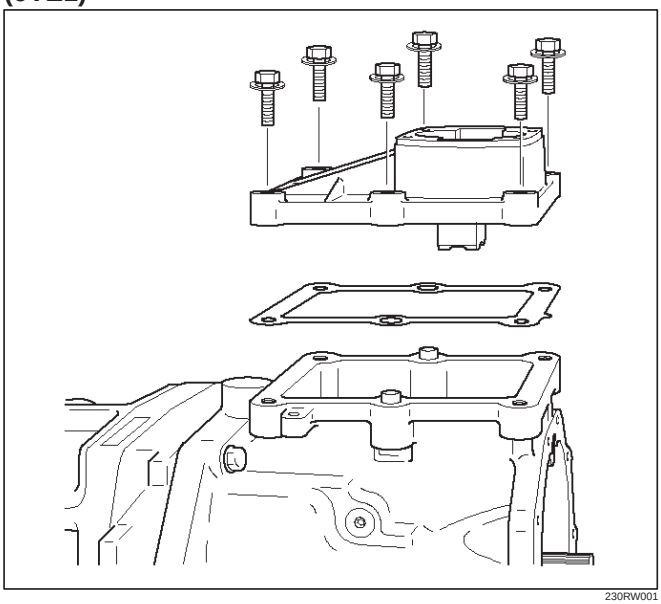

230RW001

6. Remove transfer adapter.
   1. Using a hexagon wrench, remove the plug (1).

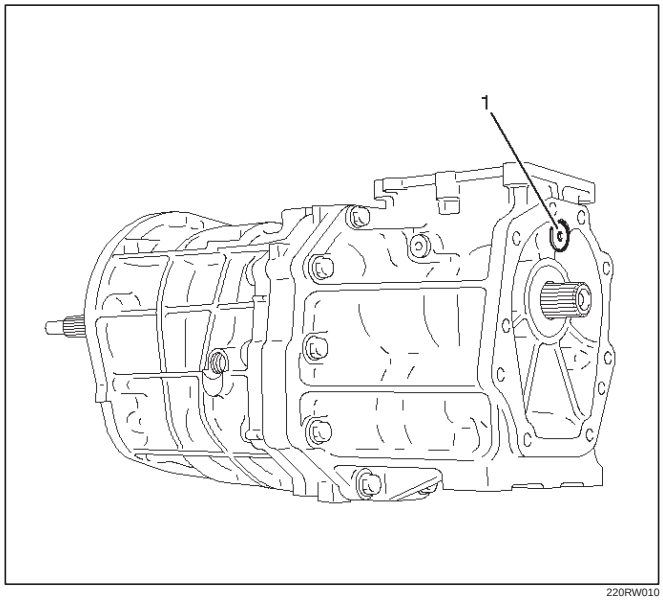

220RW010

   2. Using a pin punch and hammer, drive out the slotted spring pin (2).

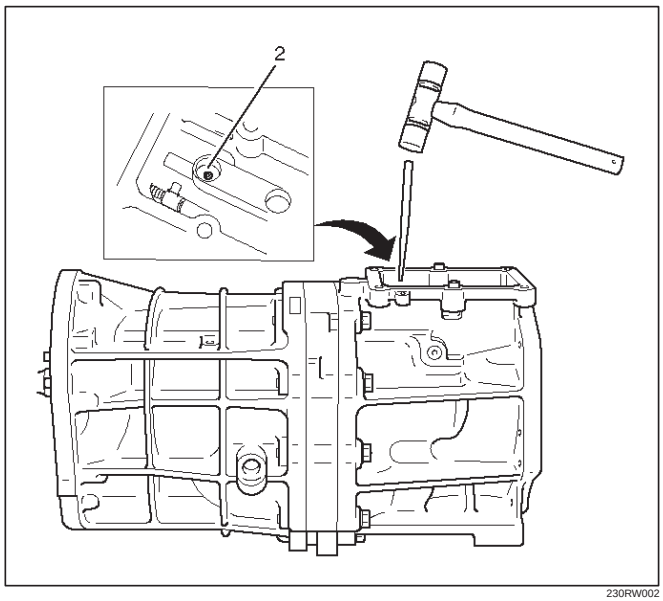

230RW002

3. Using the M8 × 1.25 bolt, remove the gear control rod and the shift lever hausing.

NOTE: Turn the M8 bolt a few times, before remove the gear control rod.

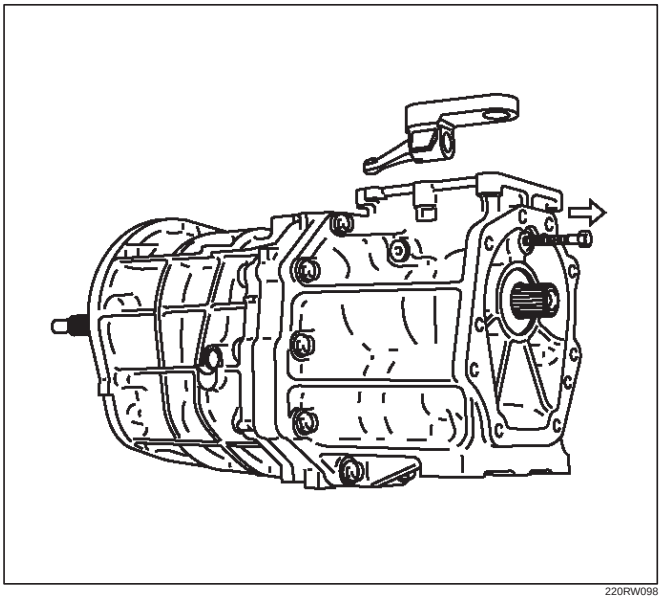

220RW098

4. Remove the 10 bolts and clamp.

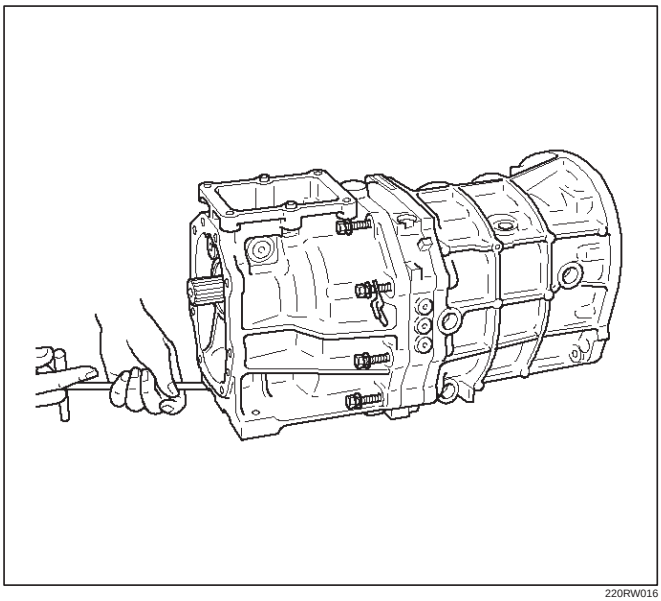

220RW016

5. Using a plastic hammer, tap the transfer adapter.

NOTE:

- Be careful not to lose the pin.
- Cover the mainshaft splines with adhesive tape. This will prevent damage to the oil seal lip.

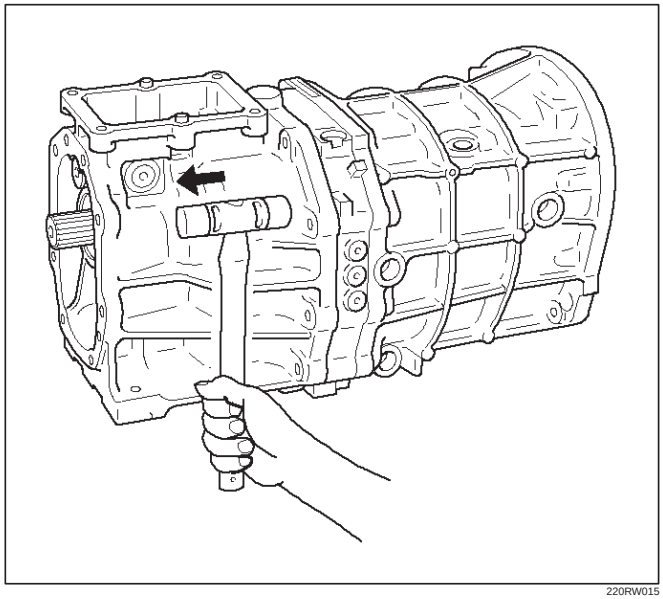

220RW015

7. Disassemble the transfer adapter assembly.
   1. Using a torx socket wrench(T40), remove the plug.

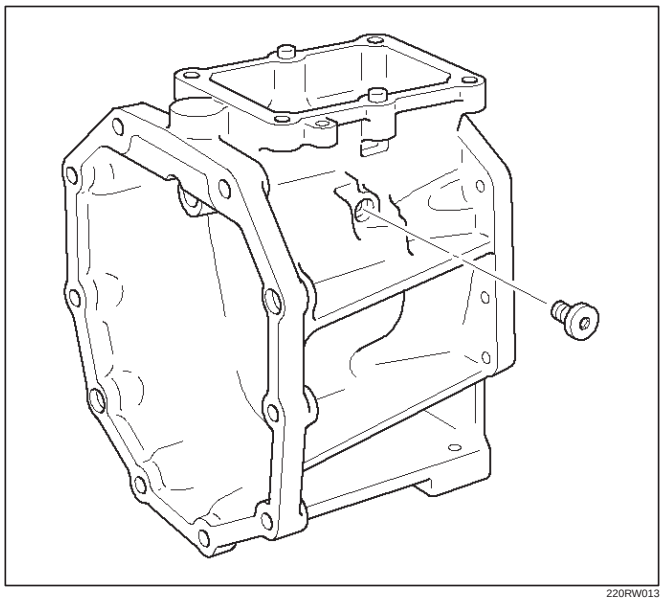

220RW013

2. Using a pin punch and hammer, drive out the slotted spring pin. Remove the reverse restrict pin.

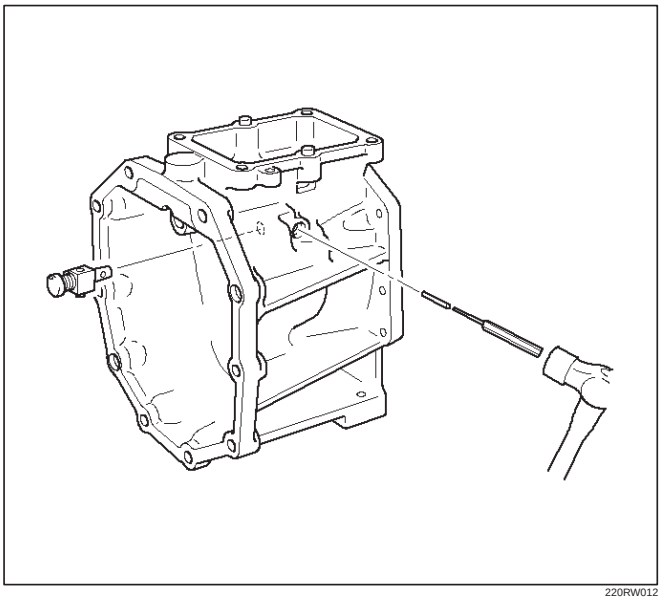

220RW012

3. Remove the oil receiver pipe.

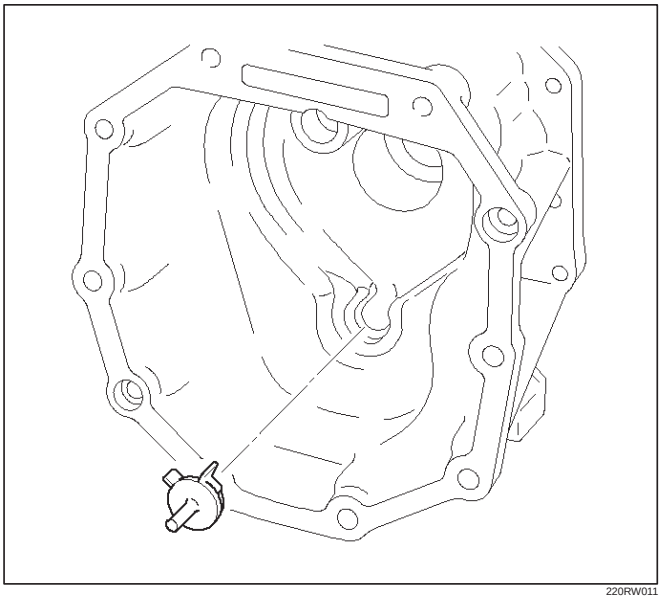

220RW011

4. Remove the oil seal.
5. Using socket hexagon wrench, remove the plug.

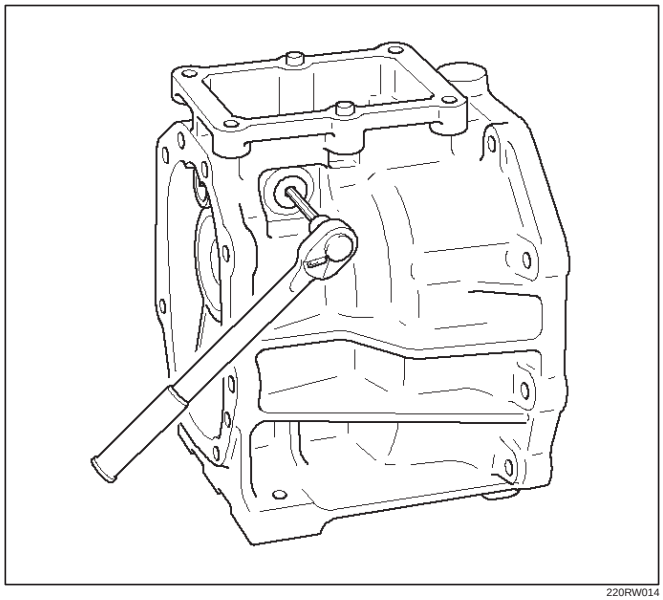

220RW014

8. Remove the front cover.
   1. Remove the 8 bolts.

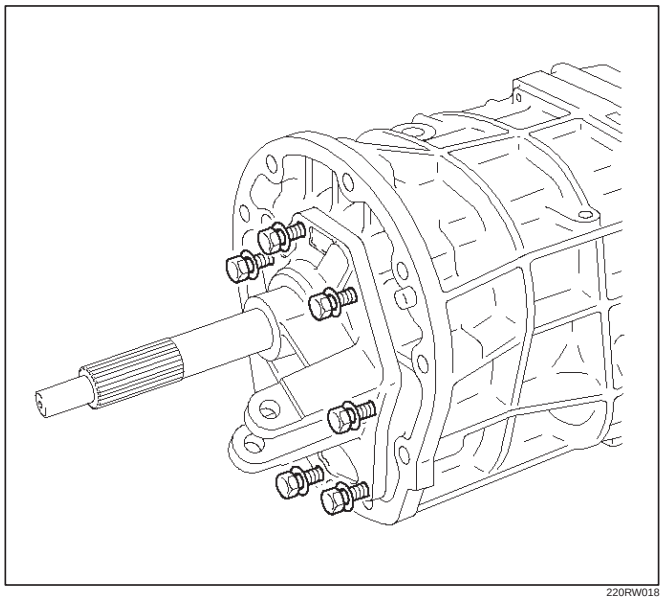

220RW018

2. Using a plastic hammer, carefully tap the front cover.

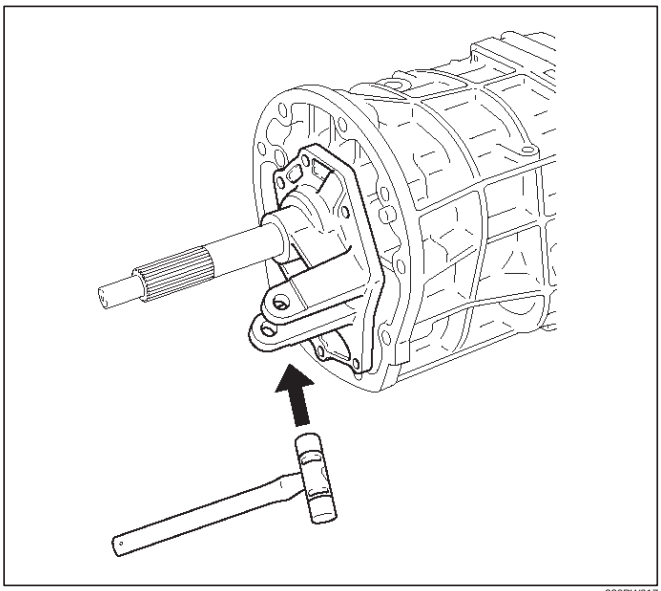

220RW017

9. Remove the front cover oil seal.
   1. Mount the front cover through the aluminum plate in a vise.
   2. Using screwdriver, remove oil seal (1).

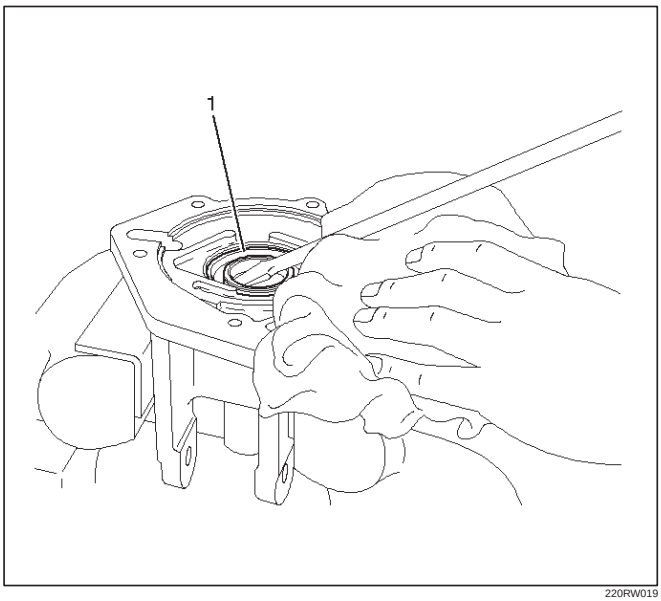

220RW019

10. Remove the transmission case.
    1. Using a snap ring expander, remove the 2 snap rings (1)(2).

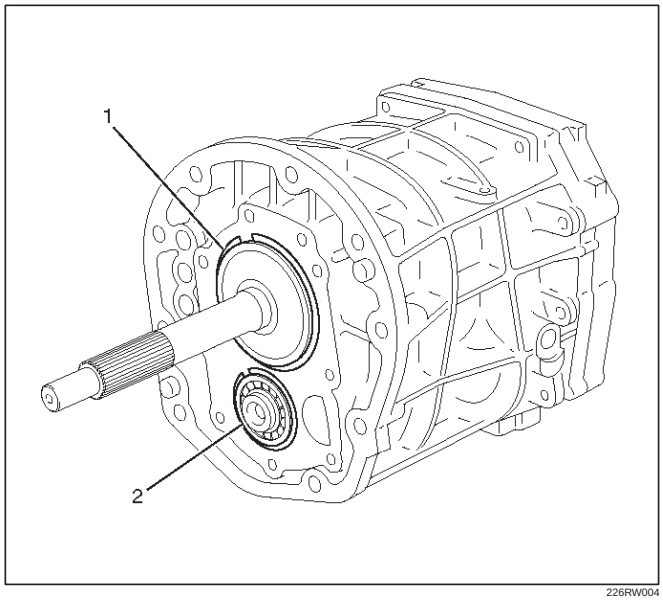

226RW004

    2. Using a plastic hammer, carefully tap the transmission case.

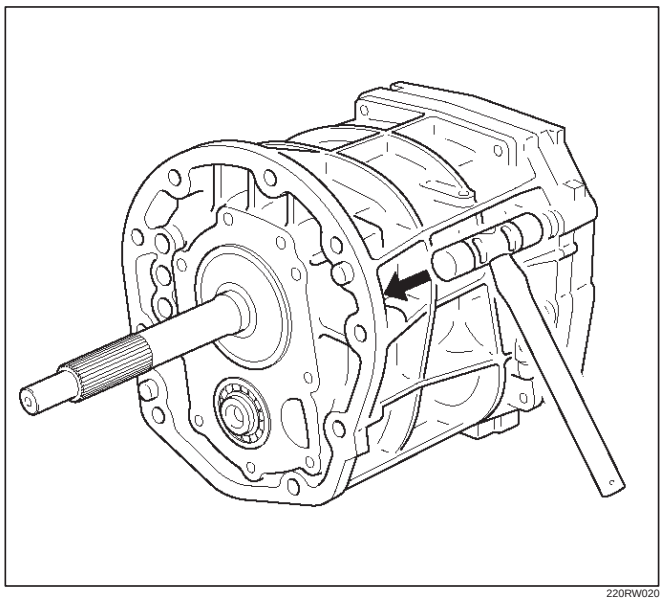

220RW020

11. Mount the intermediate plate.
    1. Mount the intermediate plate through the aluminum plate in a vise.

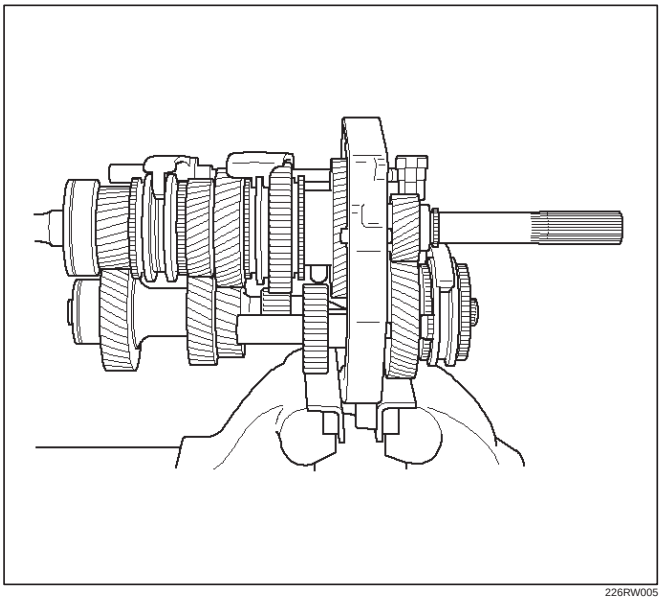

226RW005

12. Remove the slotted spring pin.
    1. Using a pin punch and hammer, drive out the pin from the arm.

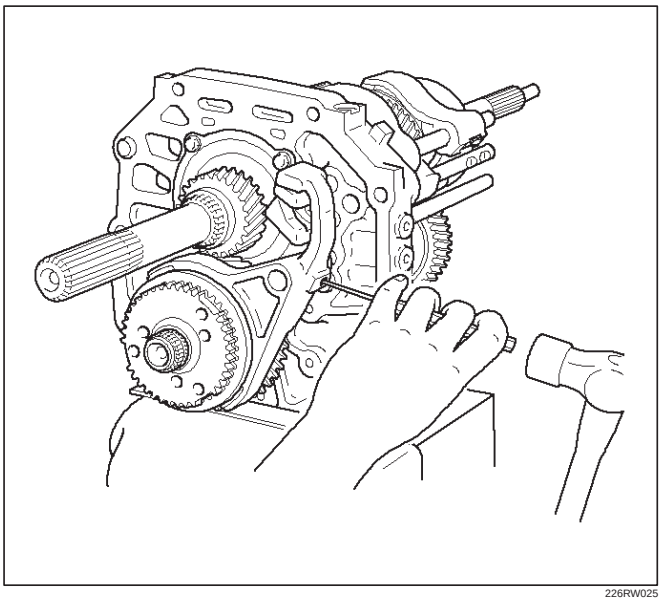

226RW025

13. Remove the shift arm set bolt.
    1. Remove the 2 bolts from the shift arm.

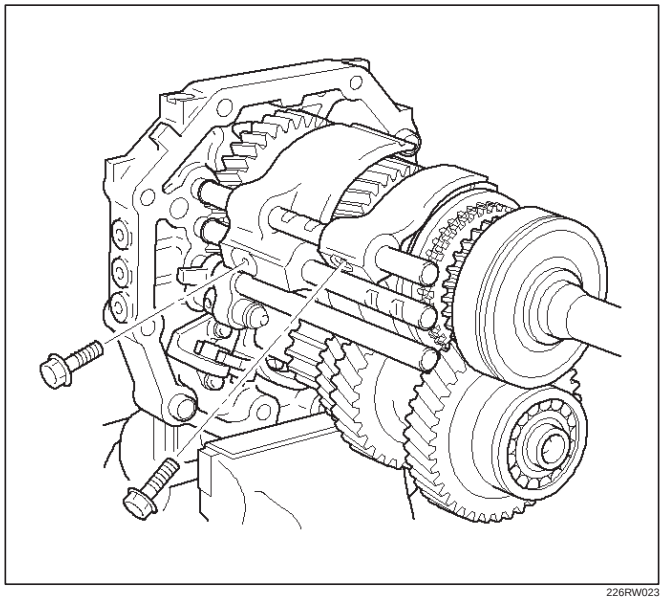

226RW023

14. Remove the counter 5th gear.
    1. Using 2 screwdrivers and hammer, tap out the snap ring.

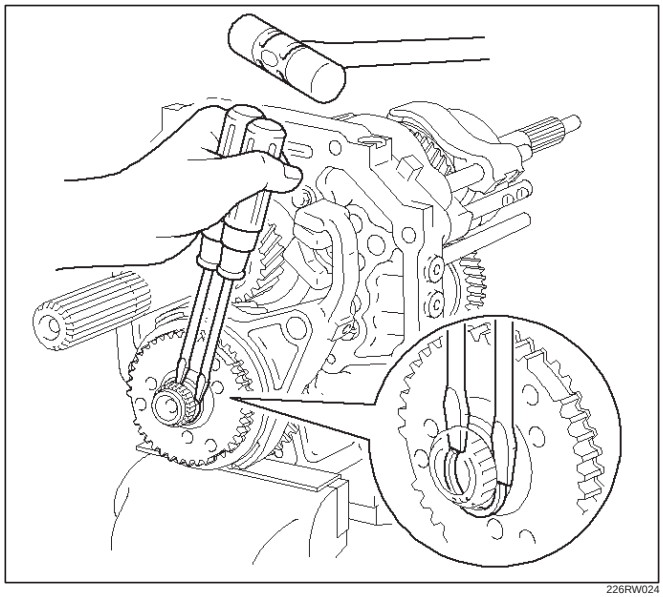

226RW024

2. Using remover 5–8840–2550–0 (J–42794) and attachment 5–8840–2560–0 (J–42988), remove the 5th gear spline piece.

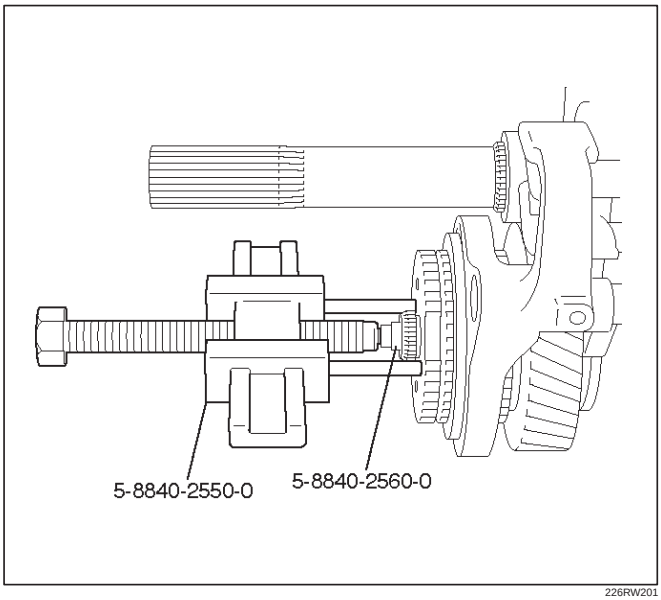

226RW201

3. Remove the hub sleeve No.3, block ring set, counter 5th gear, bearing and 5th shift arm.

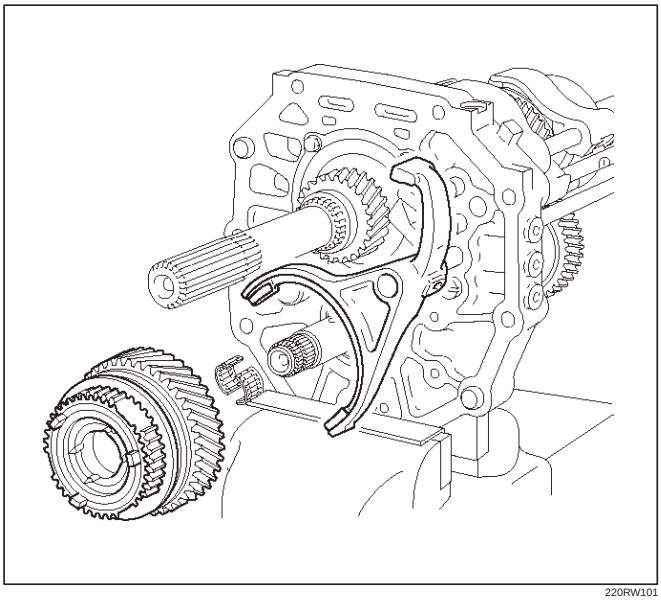

220RW101

4. Remove the synchronizer pull ring, synchronizer cone ring, and synchronizer outer ring from hub sleeve No.3.

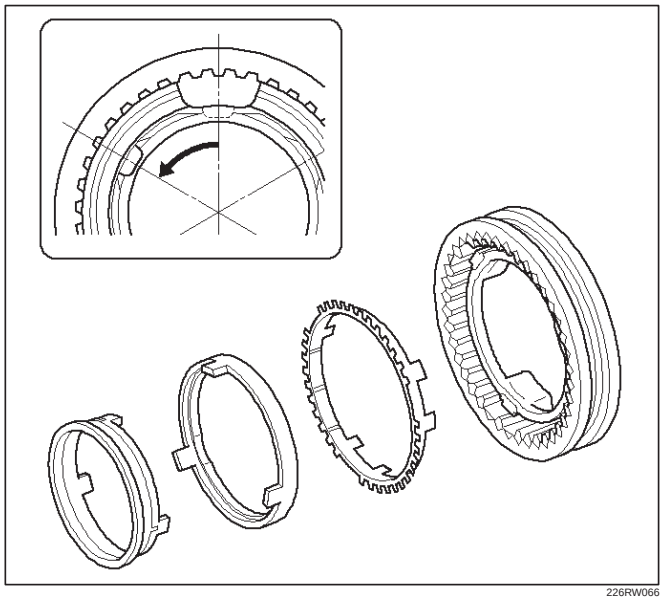

226RW066

5. Remove the reverse block ring from the hub sleeve No.3. Remove the 3 inserts and 3 compression springs.

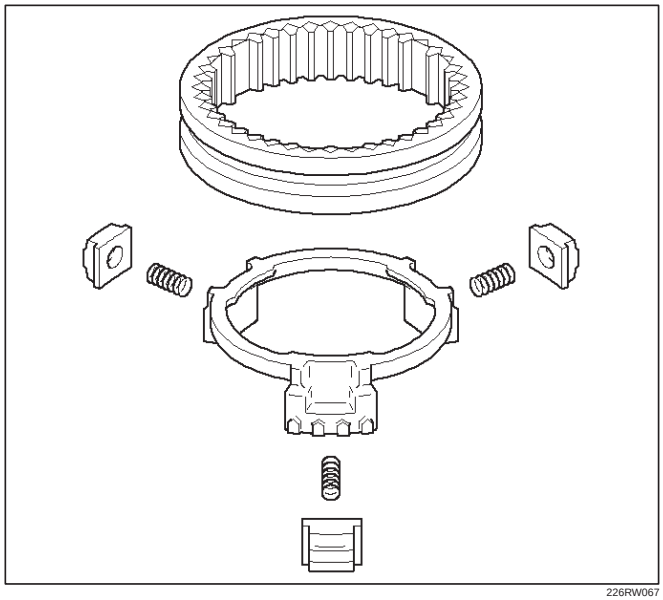

226RW067

15. Remove the thrust washer.
    1. Remove the thrust washer from counter gear shaft.
    2. Remove the thrust washer pin from counter gear shaft.

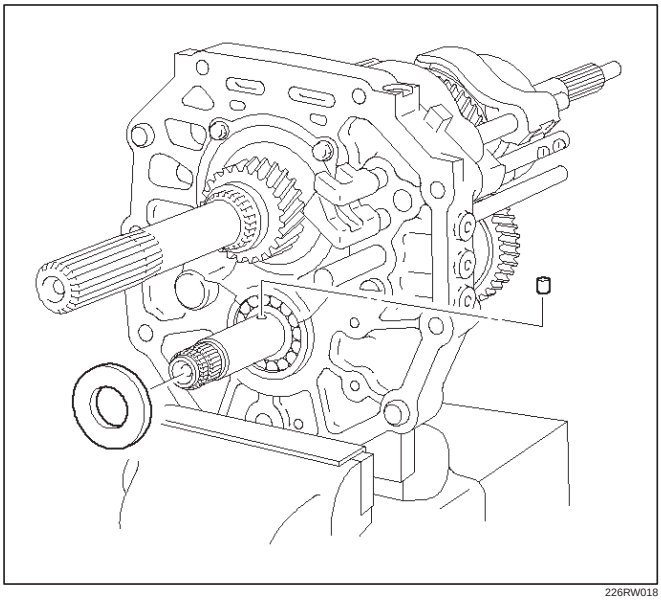

226RW018

16. Remove the bearing plate.
    1. Remove the 4 bolts and bearing retainer.

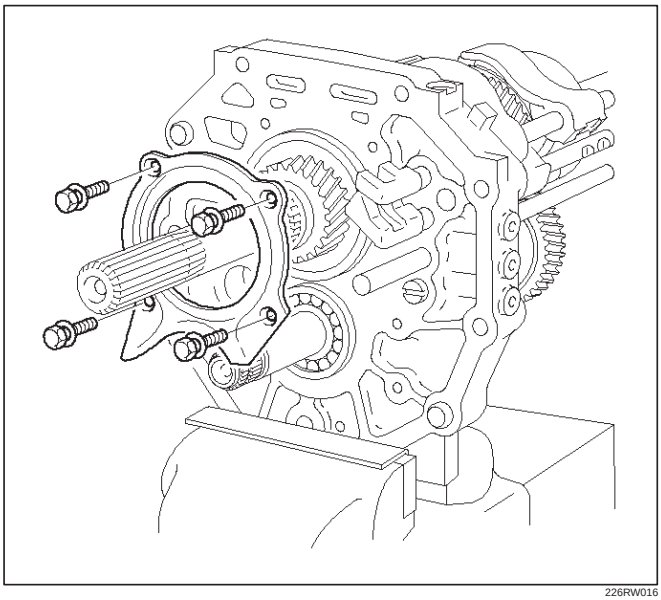

226RW016

17. Remove the reverse idle gear.
    1. Pull out the shaft foward the rear and remove the reverse idle gear.

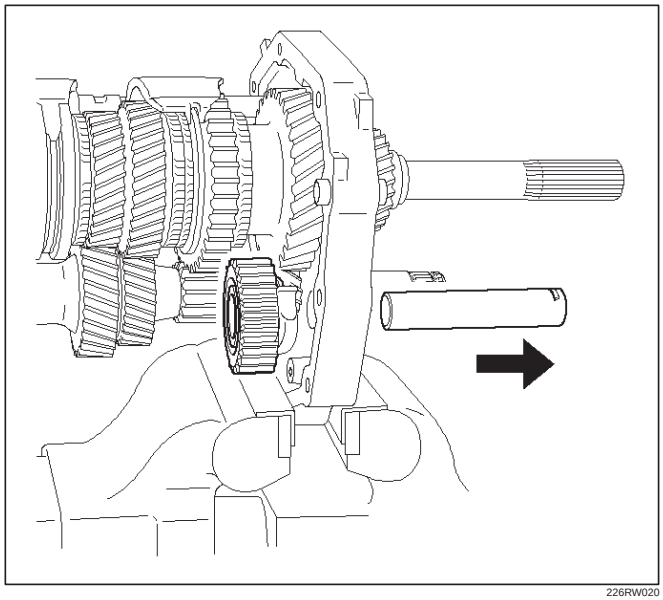

226RW020

18. Remove the counter gear shaft.
    1. Using snap ring plier, remove counter gear shaft center bearing snap ring.

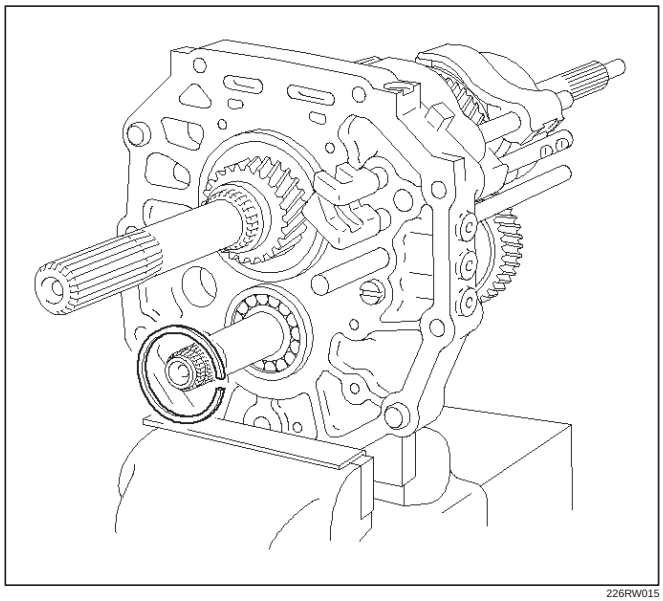

226RW015

2. Using remover 5–8840–2551–0 (J–42795) and attachment 5–8840–2560–0 (J–42988), remove counter gear shaft center bearing.

NOTE: Be careful not to drop the counter gear, when removing the bearing.

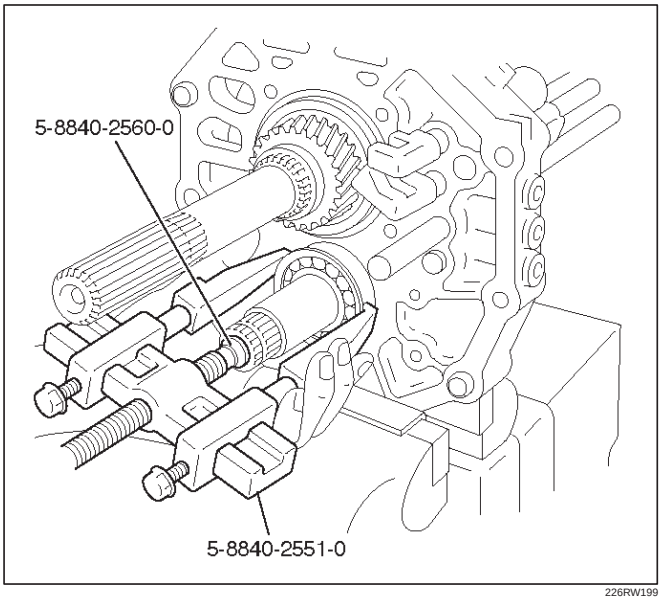

226RW199

3. Remove the counter gear from intermediate plate.

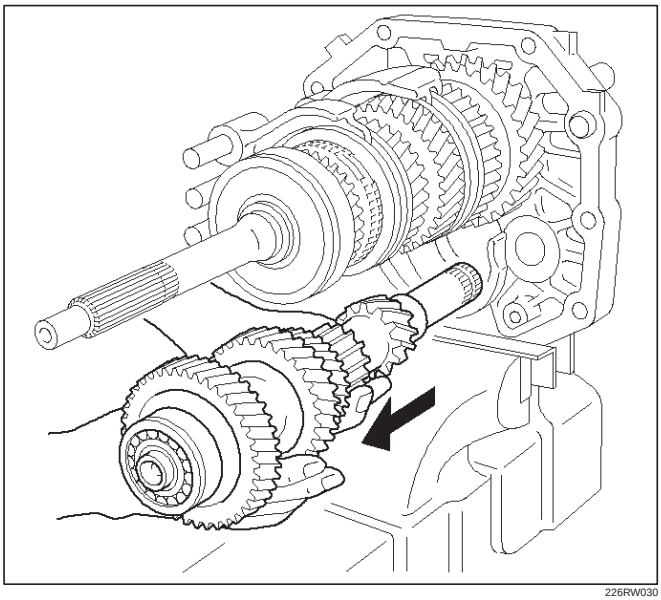

226RW030

19. Disassemble the counter gear shaft assembly.
    1. Using snap ring pliers, remove the counter gear shaft front bearing snap ring.

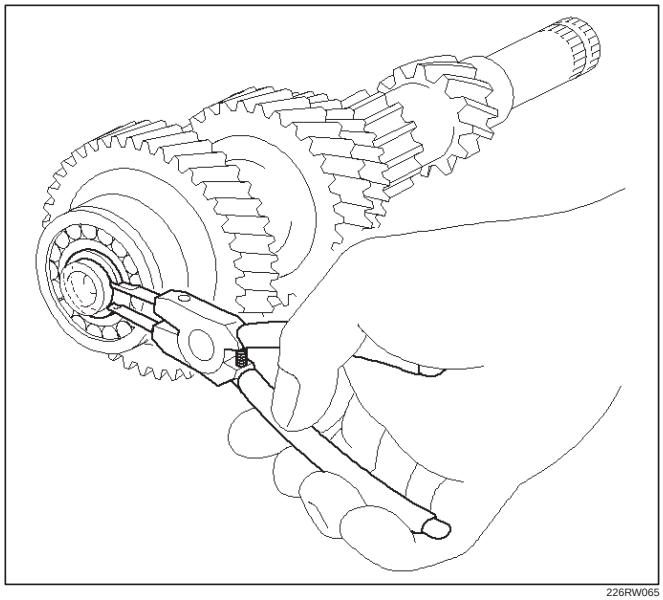

226RW065

2. Using bearing separator 5–8840–0015–0 (J–22912–01) and a press, remove the bearing.

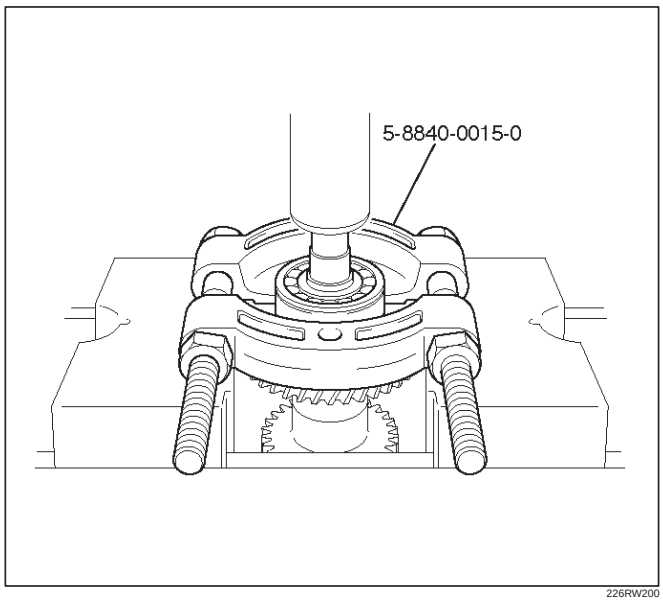

226RW200

20. Remove the top gear shaft.
    1. Remove the top gear shaft from mainshaft.

NOTE: Don’t fall needle roller bearing.

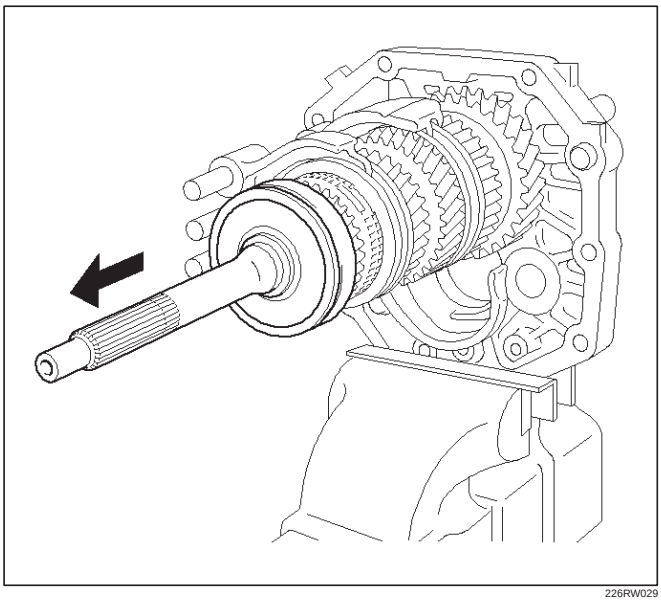

226RW029

2. Remove the 4th block ring and roller bearing.

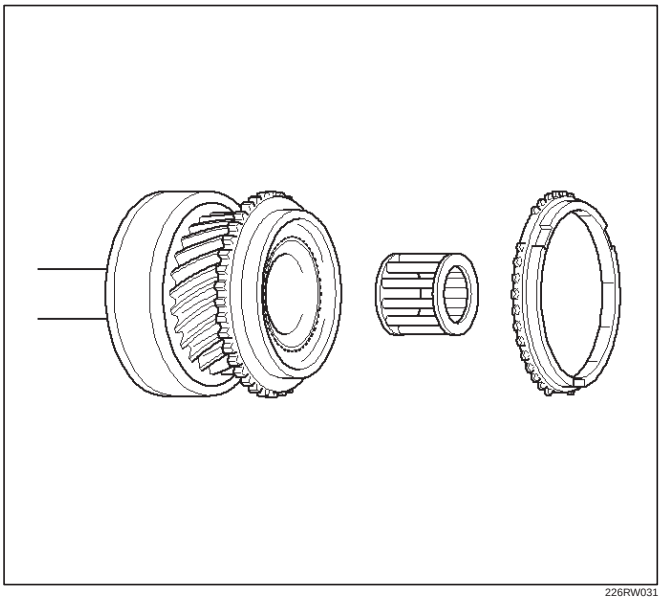

226RW031

21. Disassemble the top gear shaft assembly.
    1. Check for wear or damage.

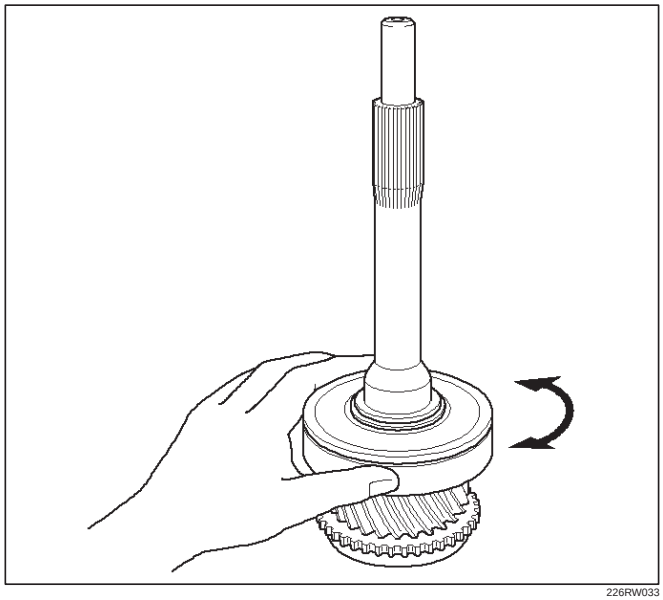

226RW033

2. Remove the front bearing shaft snap ring.

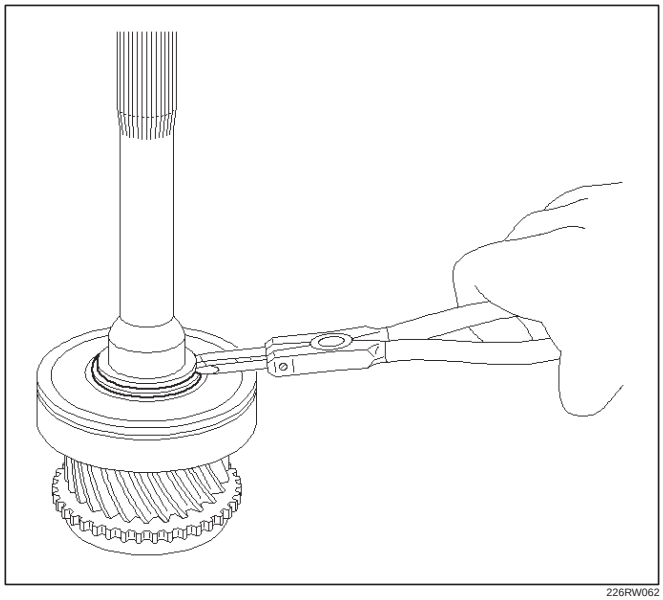

226RW062

3. Using bearing separator 5–8840–0015–0 (J–22912–01) and a press, remove the bearing.

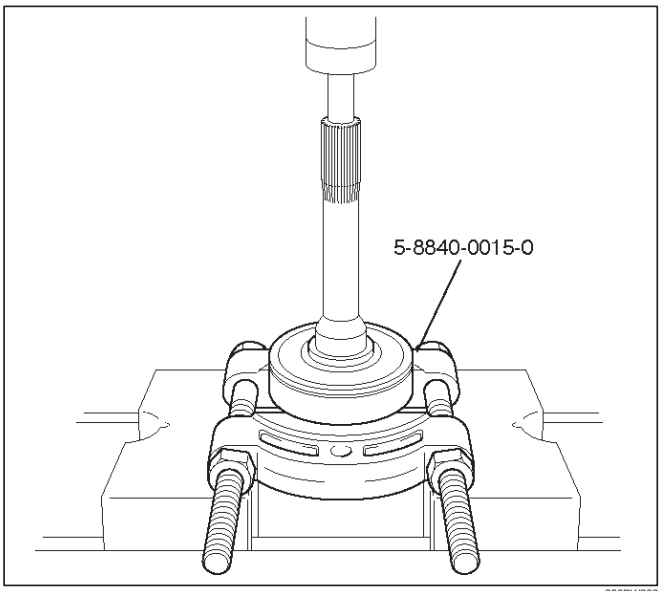

226RW202

22. Remove the mainshaft.
    1. Remove mainshaft bearing snap ring.

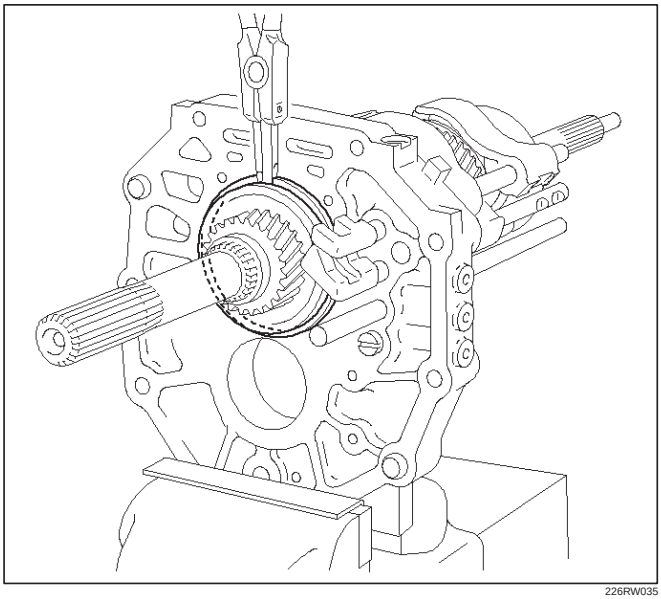

226RW035

2. Using a plastic hammer, tap the 5th-reverse shift rod at the reverse shift side.

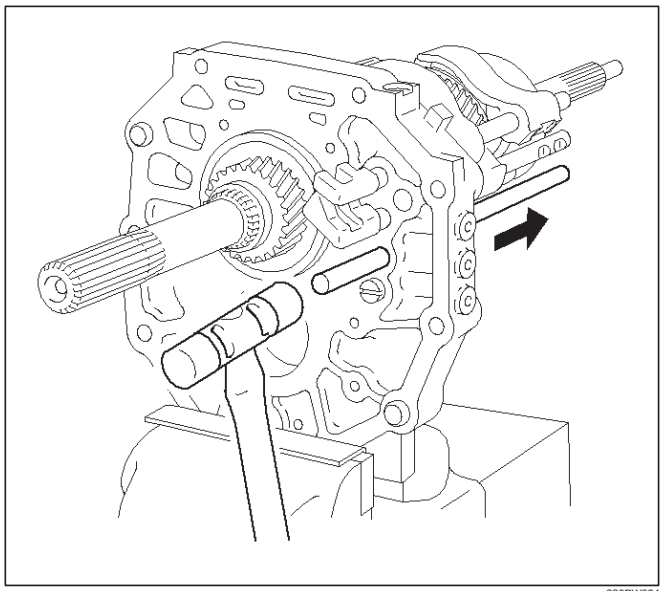

226RW034

3. Remove the intermediate plate from a vise.
4. Remove the mainshaft, 1st-2nd shift arm and 3rd-4th shift arm.

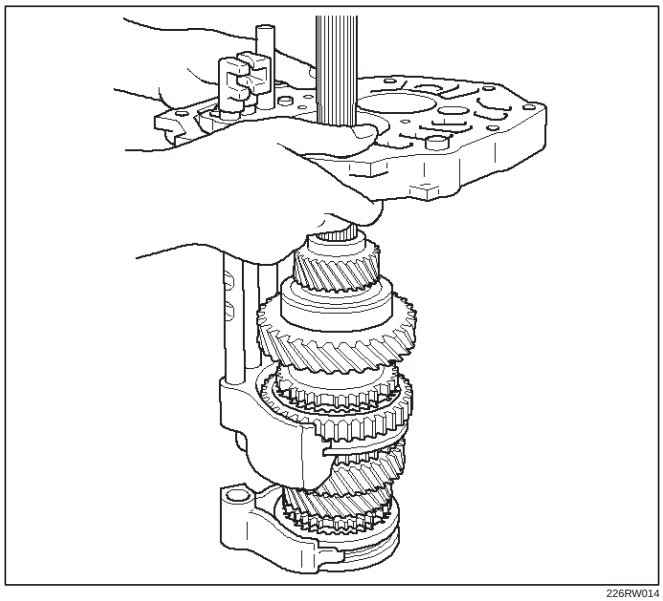

226RW014

23. Disassemble the mainshaft assembly.
    1. Inspect each gear thrust clearance.
        1. Using thickness gauge, inspect thrust clearance (1st gear, 3rd gear).

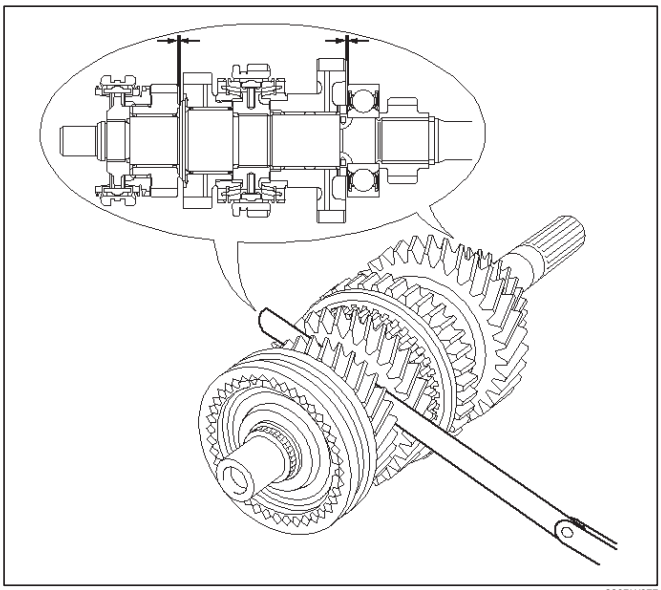

226RW077

        2. Mount the mainshaft through the aluminum plate in a vise.
        3. Using a dial indicator, measure each gear thrust clearance.

Gear	Standard Clearanse
1st	0.15 – 0.45 mm (0.0059 – 0.0177 in)
2nd	0.10 – 0.25 mm (0.0039 – 0.0098 in)
3rd	0.10 – 0.25 mm (0.0039 – 0.0098 in)

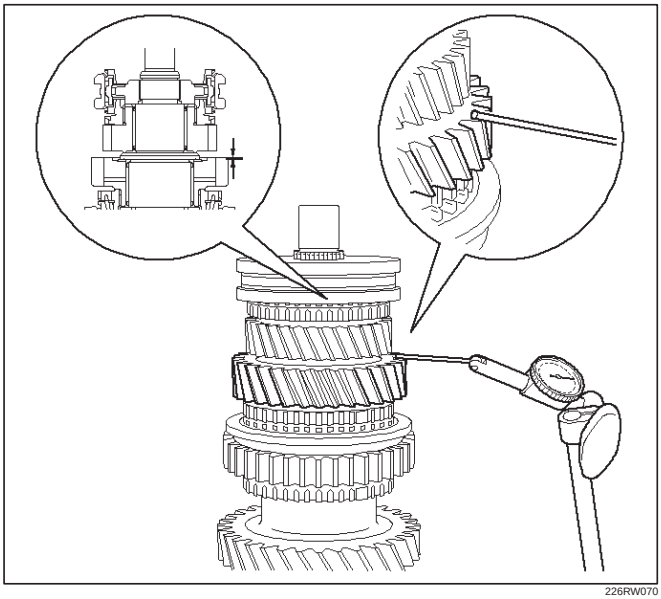

226RW070

    2. Inspect each gear radial clearance
        1. Using a dial indicator, measure the radial clearance of each gear.

Gear	Standard Clearanse
1st	0.020 – 0.074 mm (0.00078 – 0.00291 in)
2nd	0.015 – 0.068 mm (0.00059 – 0.00268 in)
3rd	0.015 – 0.068 mm (0.00059 – 0.00268 in)

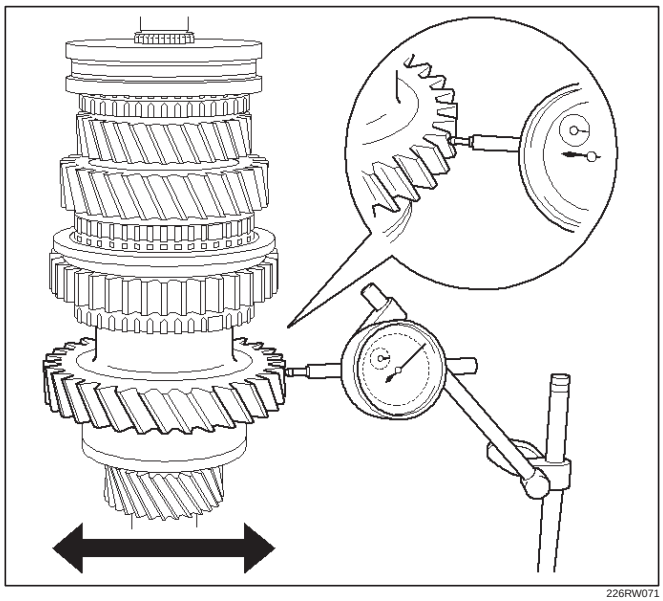

226RW071

    3. Using 2 screwdrivers and hammer, tap out the snap ring.

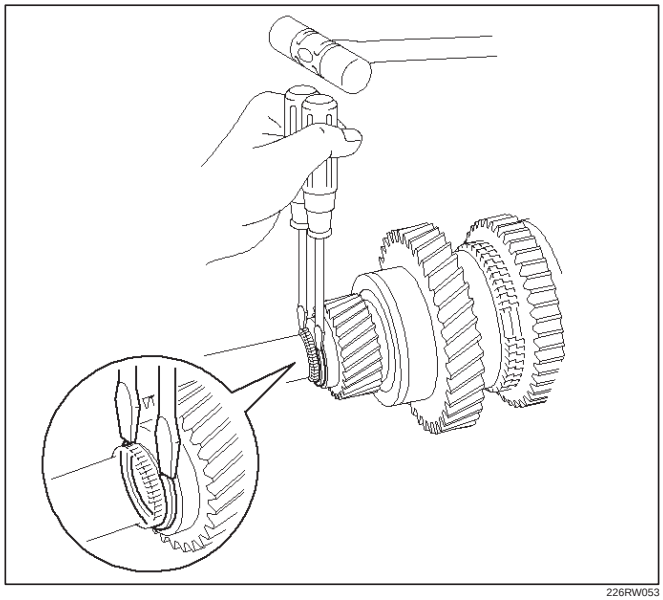

226RW053

4. Using bearing separator 5–8840–0015–0 (J–22912–01) and a press, remove the following parts.
   1. 5th gear (1).
   2. Mainshaft bearing (2).
   3. 1st gear thrust washer (3).
   4. 1st gear (4).

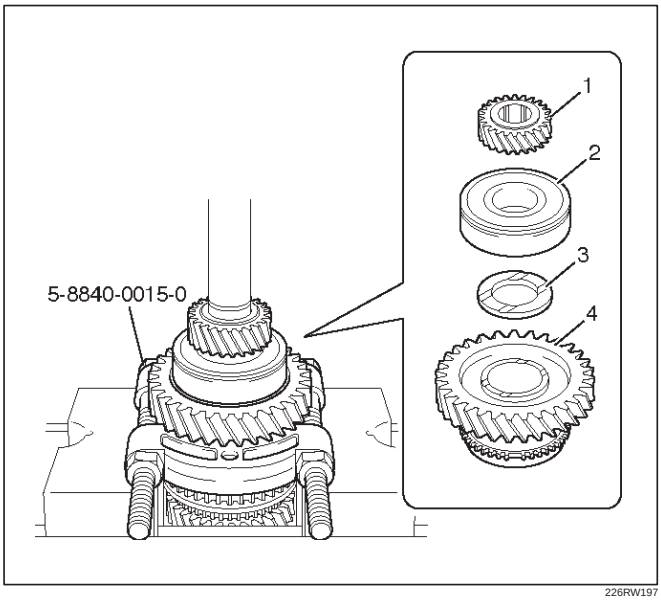

226RW197

5. Remove following parts from mainshaft.
   1. Synchronizer assembly (1).
   2. 1st gear thrust washer pin (3).
   3. 1st gear needle roller bearing (4).
   4. 1st gear bearing spacer (2).

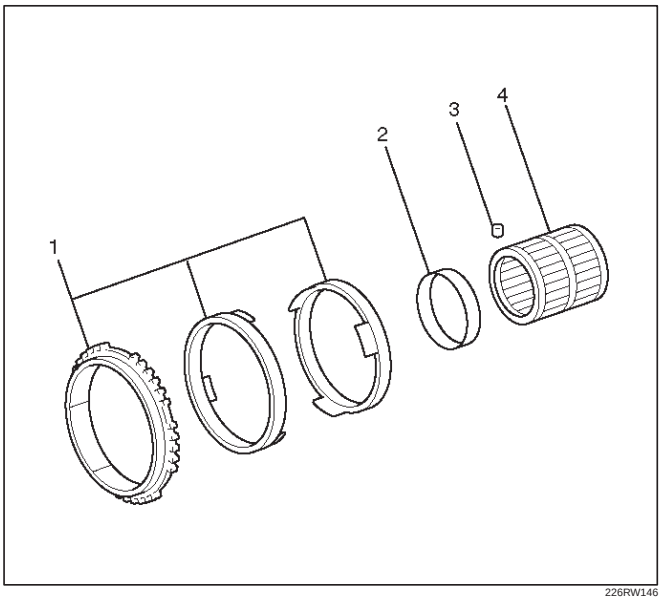

226RW146

6. Using 2 screwdrivers and hammer, tap out snap ring.

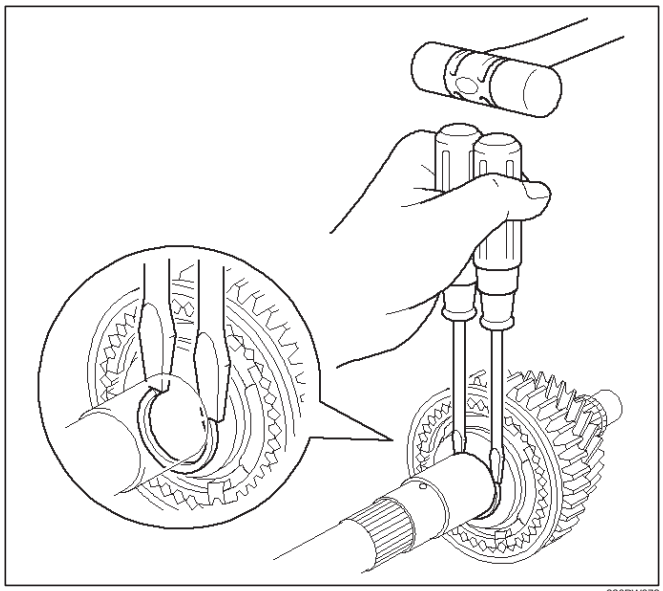

226RW073

7. Using bearing separator 5–8840–0015–0 (J–22912–01) and a press, remove the following parts.
   1. Clutch hub No.1 assembly (1).
   2. Synchronizer assembly (2).
   3. 2nd gear (3).
   4. 2nd gear needle roller bearing (4).

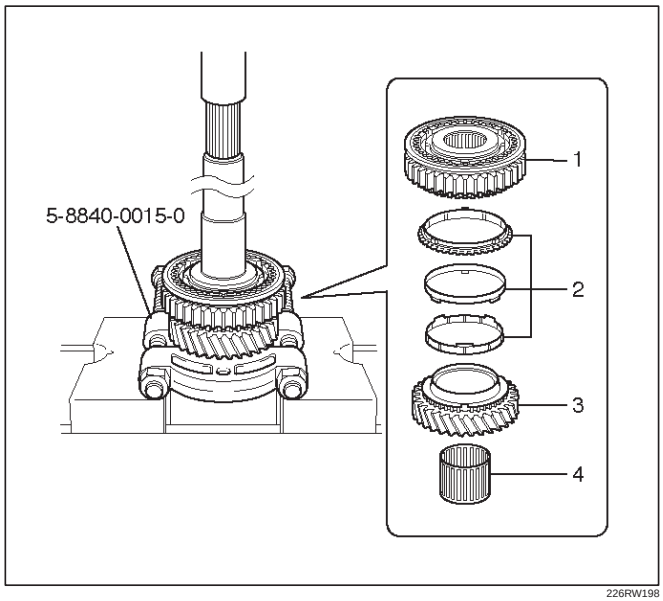

226RW198

8. Remove the reverse gear from clutch hub No.1.
9. Remove the 3 inserts and 3 compression springs.
   - When removing the inserts, push the insert spring with a screwdriver.

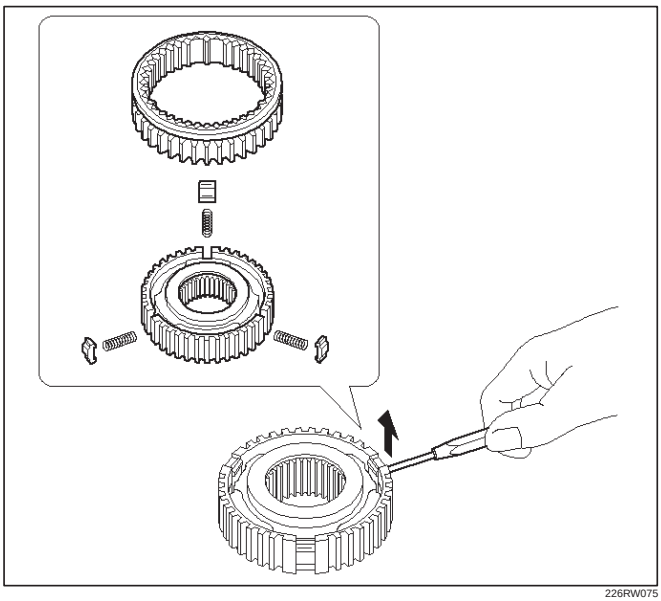

226RW075

10. Remove the snap ring.

NOTE: Don't damage the bearing surface.

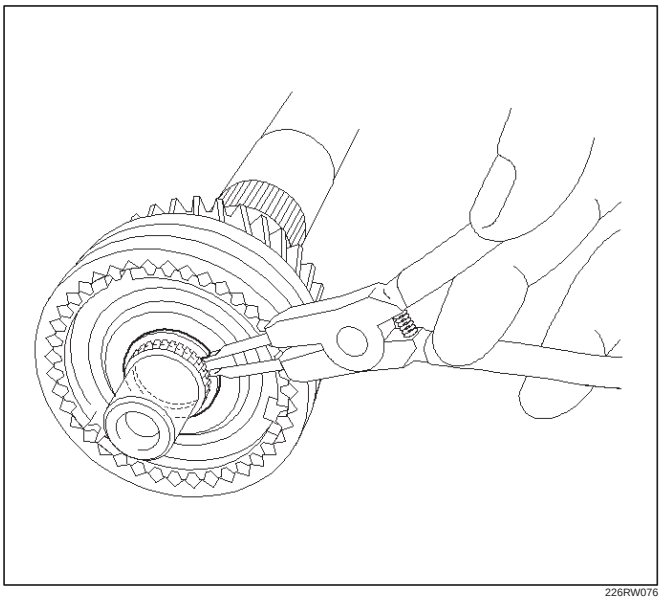

226RW076

11. Using a press, remove following parts.
    1. Clutch hub No.2 assembly (1).
    2. 3rd block ring (2).
    3. 3rd gear (3).
    4. 3rd gear needle roller bearing (4).

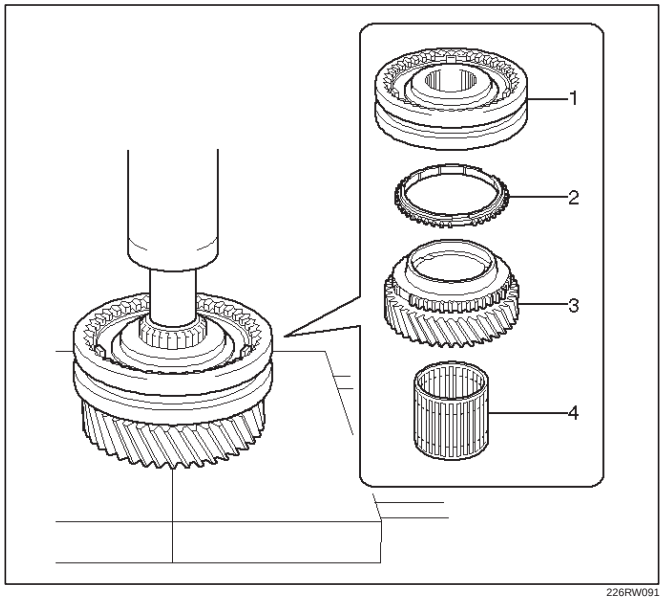

226RW091

12. Using screwdriver, remove the 2 insert springs, hub sleeve No.2, clutch hub No.2 and 3 inserts.

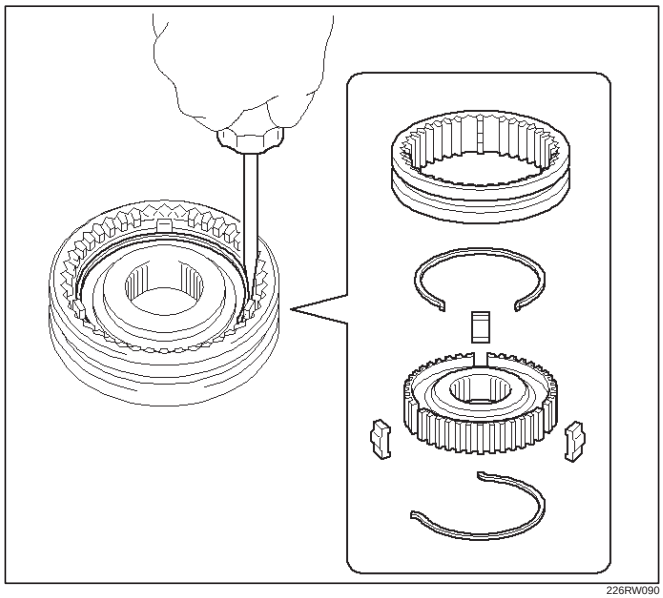

226RW090

24. Remove the shift parts and interlock parts.
    1. Mount the intermediate plate through the aluminum plate in a vise.
    2. Using a plastic hammer, tap the 5th shift rod on the neutral.

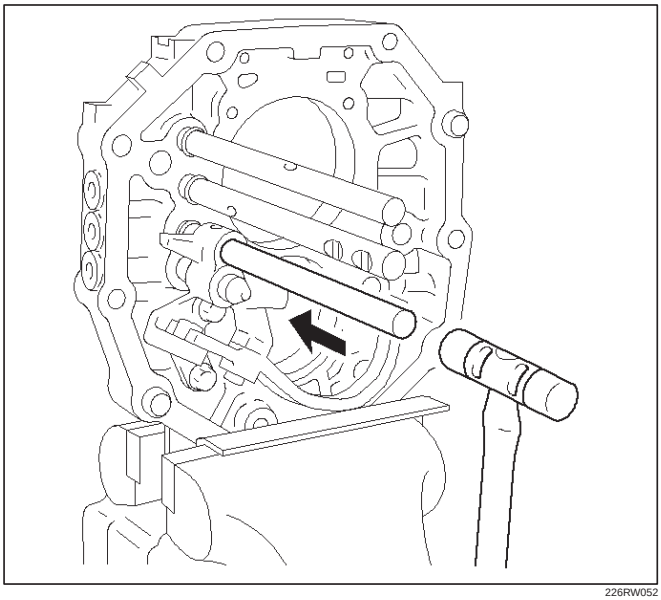

226RW052

    3. Using a torx socket wrench(T40), remove the 4 plugs.

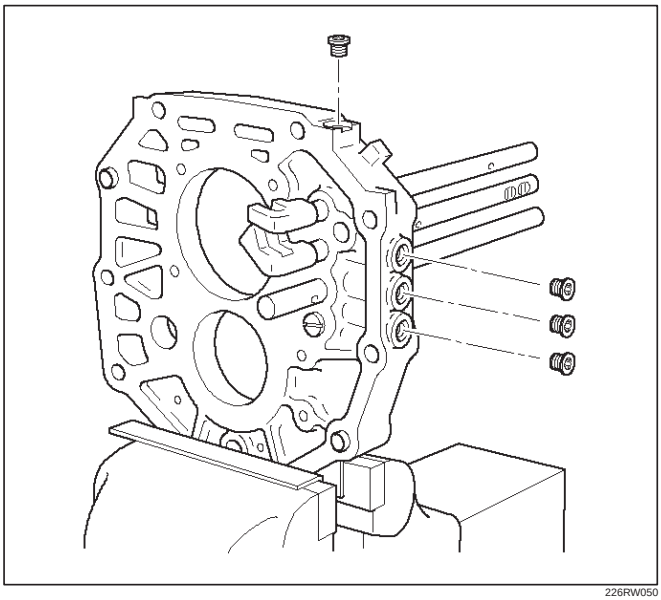

226RW050

    4. Using a magnetic finger, remove 3 springs and balls.

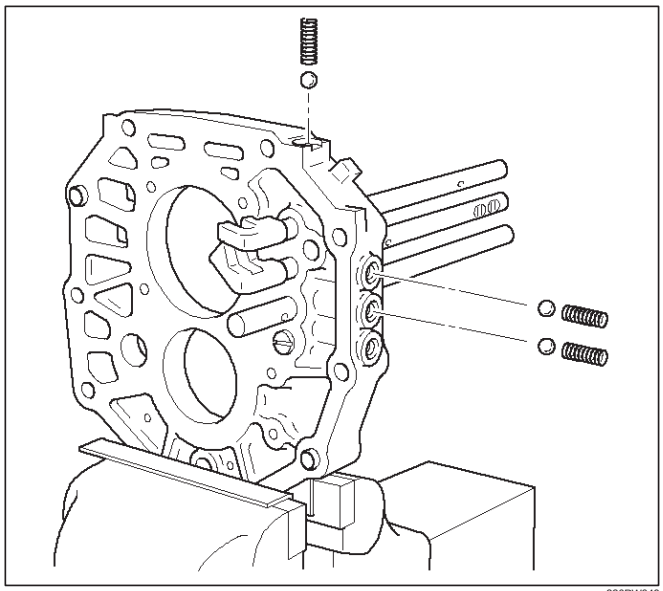

226RW049

    5. Using 2 screwdrivers and a hammer, remove 2 snap rings from each shift fork rod.

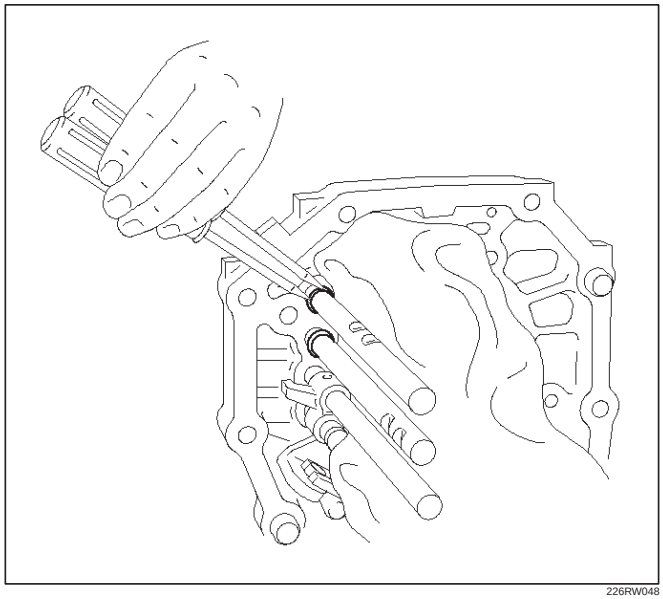

226RW048

6. Pull out the 3rd–4th shift rod at the rear.

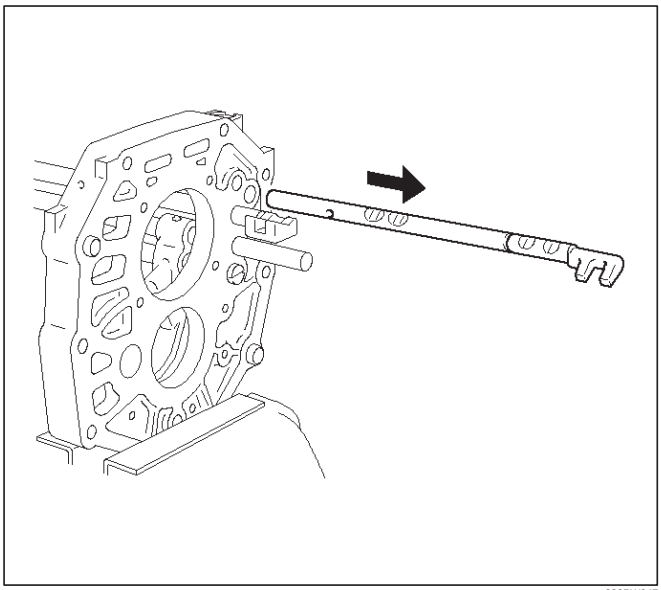

226RW047

7. Using a magnetic finger, remove the interlock pin and straight pin.

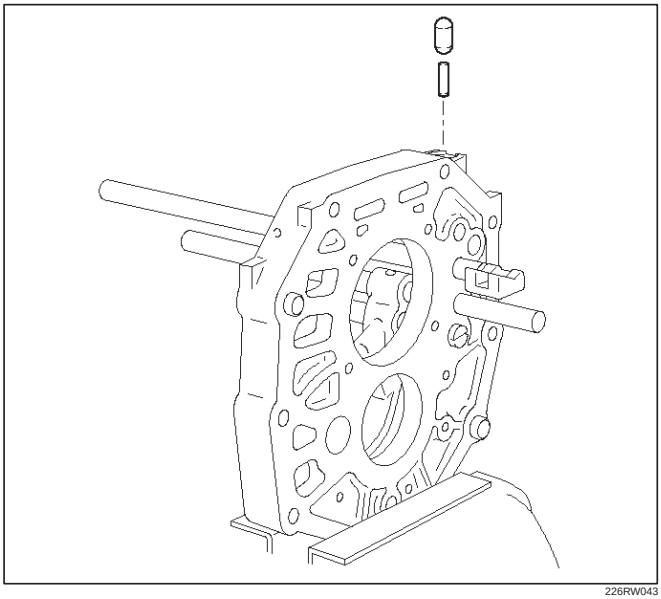

226RW043

8. Pull out the 1st–2nd shift rod at the rear.

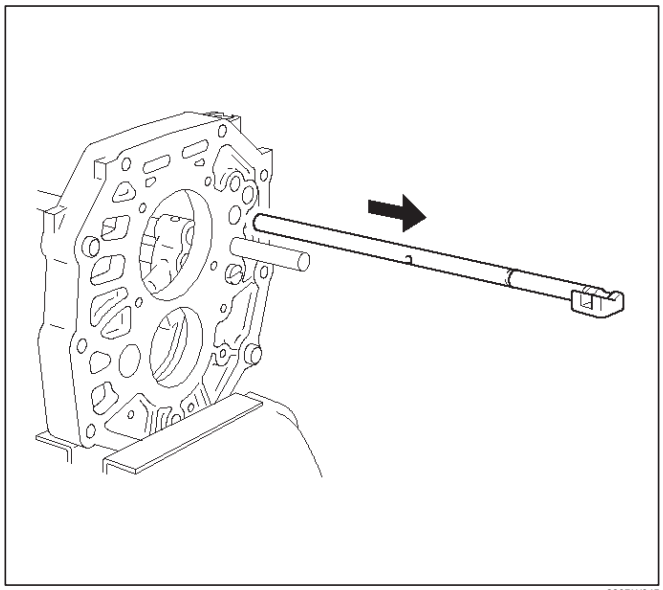

226RW045

9. Using a magnetic finger, remove the interlock pin.

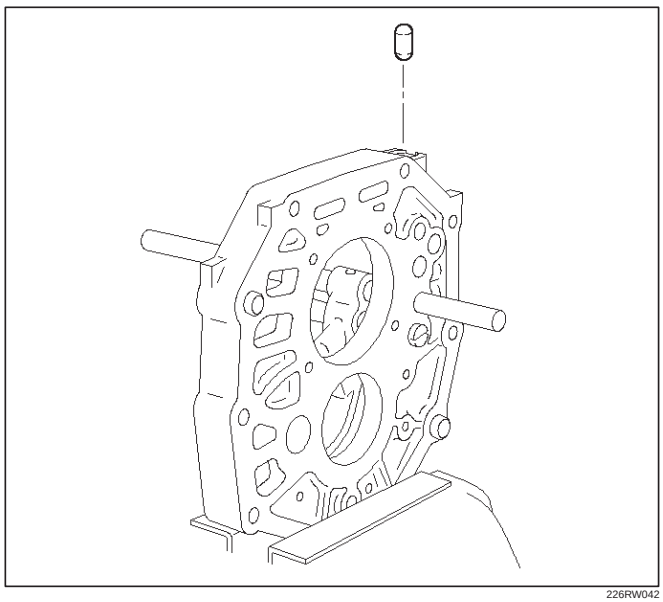

226RW042

10. Using 2 screwdrivers and a hammer, remove 2 snap rings.

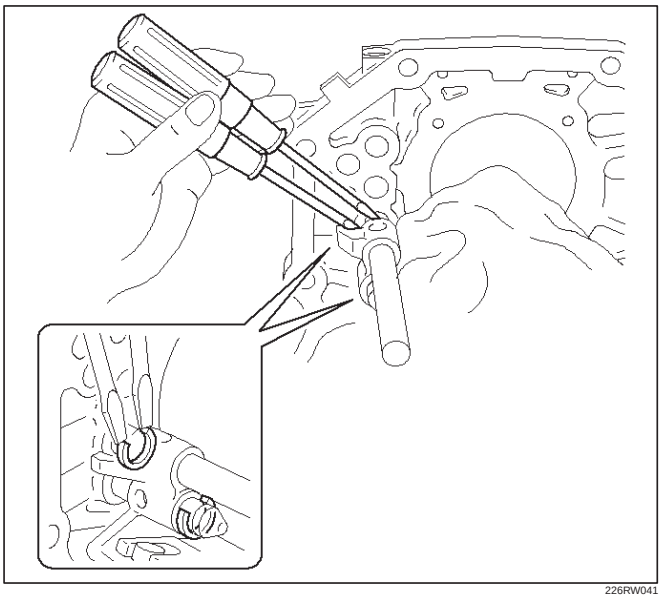

226RW041

11. Pull out the 5th-reverse shift rod at the front.

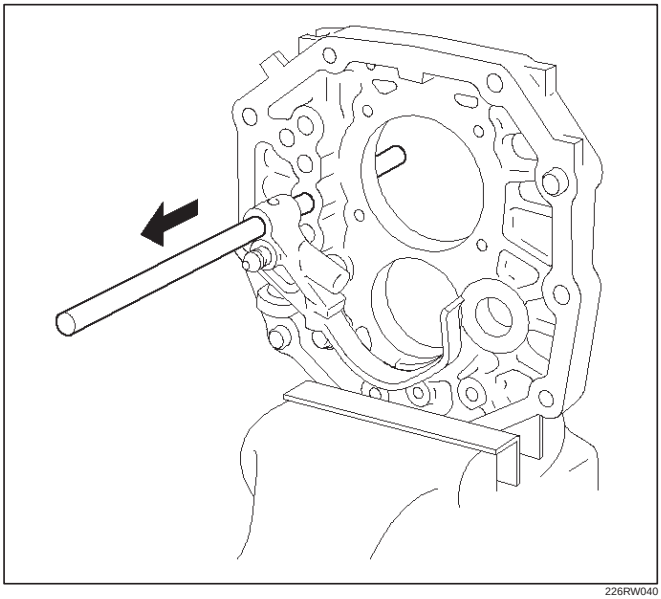

226RW040

12. Using a magnetic finger, remove the interlock pin from the intermediate plate. Remove the ball from the reverse shift arm No.1.

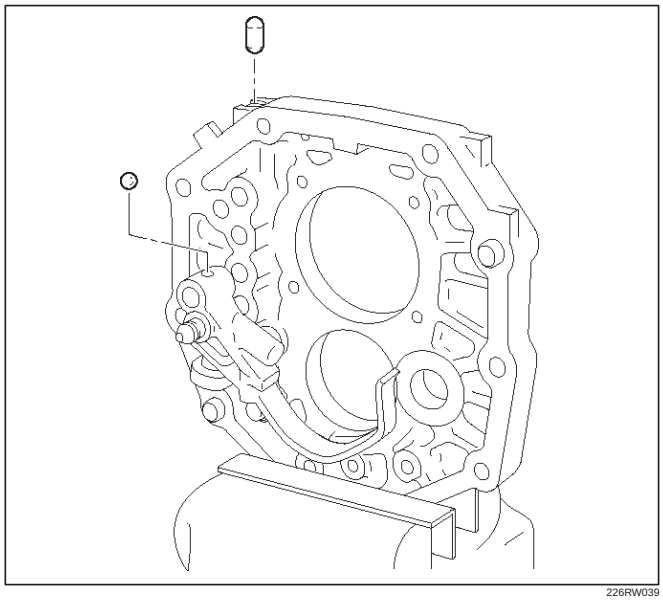

226RW039

13. Pull out at the rear reverse shift rod, reverse shift arm No.1 and reverse shift arm No.2 at the same time.

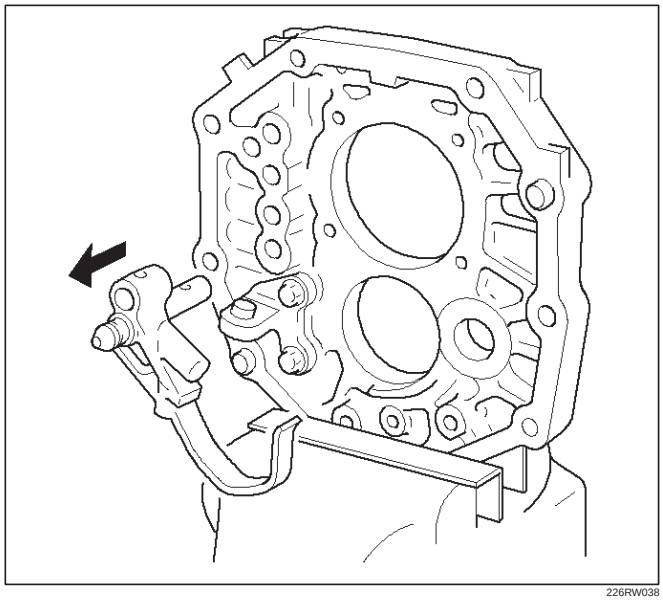

226RW038

14. Pull out reverse shift rod from reverse shift arm No.1.

NOTE: Be sure remove at the rear.

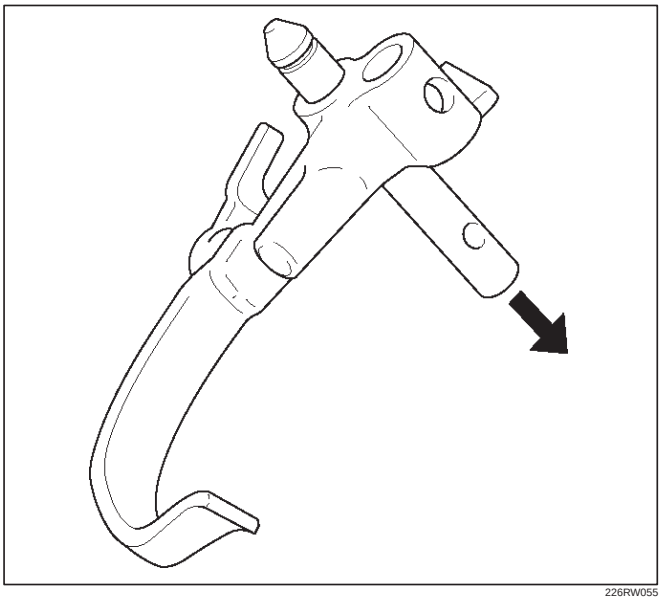

226RW055

15. Using a magnetic finger, remove the ball and spring from reverse shift arm No.1.

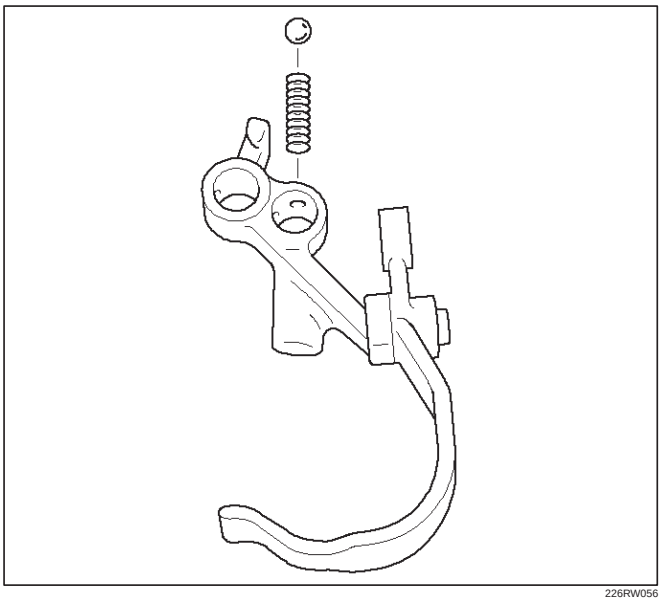

226RW056

16. Remove the reverse shift arm No.2 E–ring. Remove the reverse shift arm No.2 from reverse shift arm No.1.

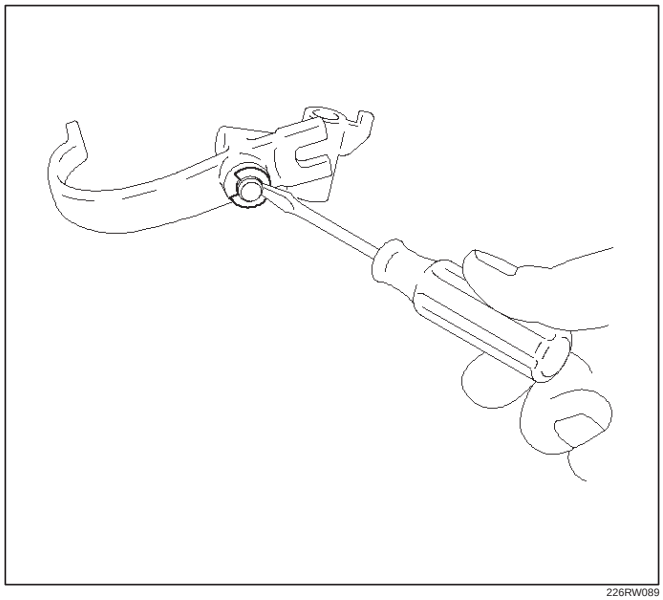

226RW089

17. Remove the 2 bolts and reverse shift arm bracket.

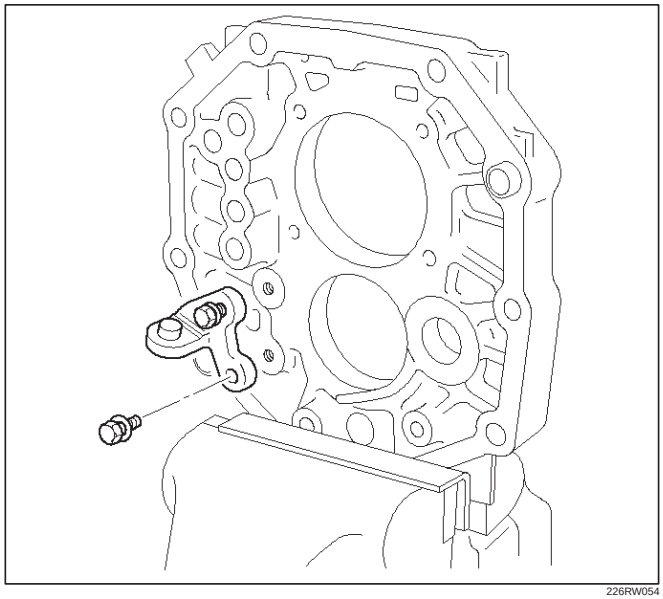

226RW054

Inspection

1. Counter 5th gear radial clearance.
   1. Install the following parts to the counter gear shaft.
      1. Counter 5th gear thrust washer pin (1).
      2. Counter 5th gear thrust washer (2).
      3. Counter 5th gear needle bearing(3).
      4. Counter 5th gear (4).

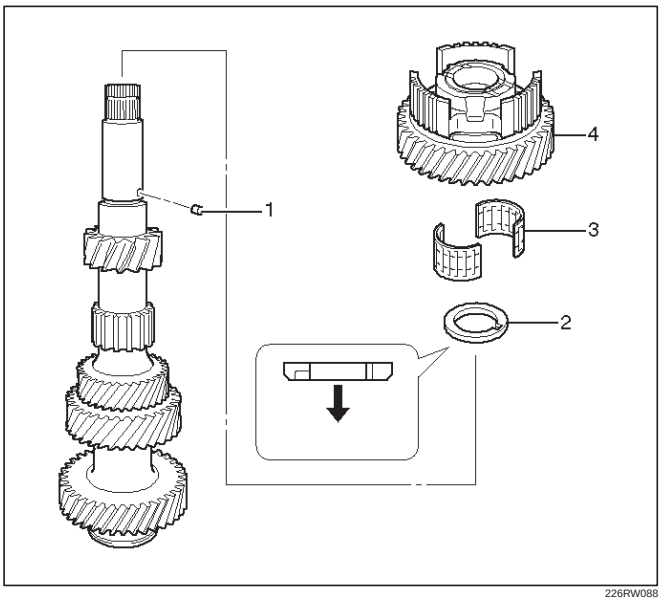

226RW088

   2. Mount the counter gear shaft through the aluminum plate in vise.
   3. Using a dial indicator, measure the counter 5th gear radial clearance.

Standard: 0.015 – 0.068 mm (0.00059 – 0.00268 in)

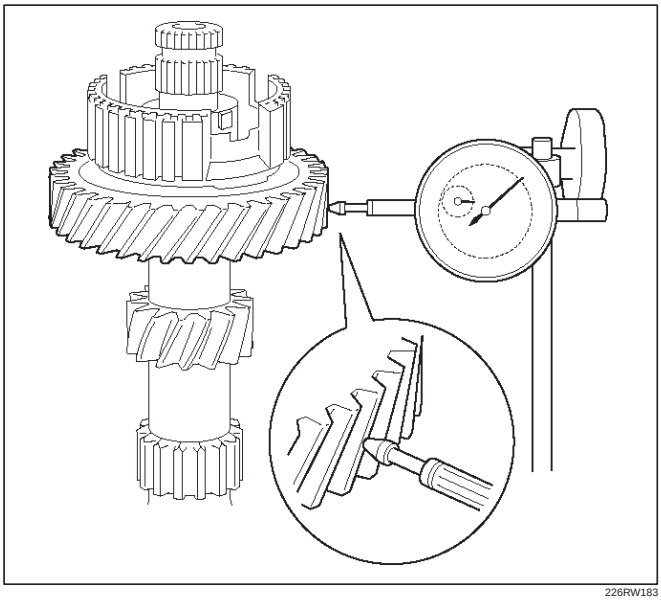

226RW183

   4. Using a inside dial indicator, measure the gear inside diameter.

Standard: 38.015 – 38.040 mm (1.49665 – 1.49763 in)

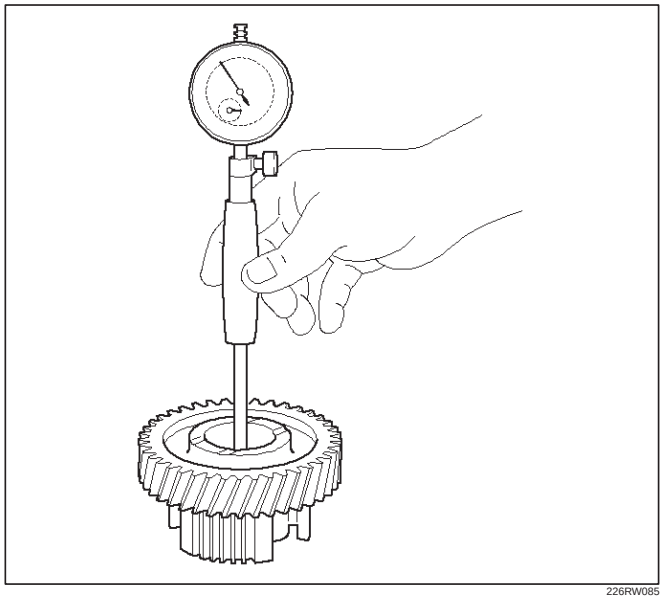

226RW085

2. 5th-reverse shift arm and hub sleeve No.3 clearance.
   1. Using a vernier caliper, measure the 5th-reverse shift arm thickness.

Reference: 10.2 mm (0.402 in)

   2. Using a vernier caliper, measure the center groove of hub sleeve No.3. Calculate the clearance between the hub sleeve No.3 and shift arm.

Standard: 0.26 – 0.84 mm (0.0102 – 0.0331 in)

Reference: Center groove dimension 10.5mm (0.413 in)

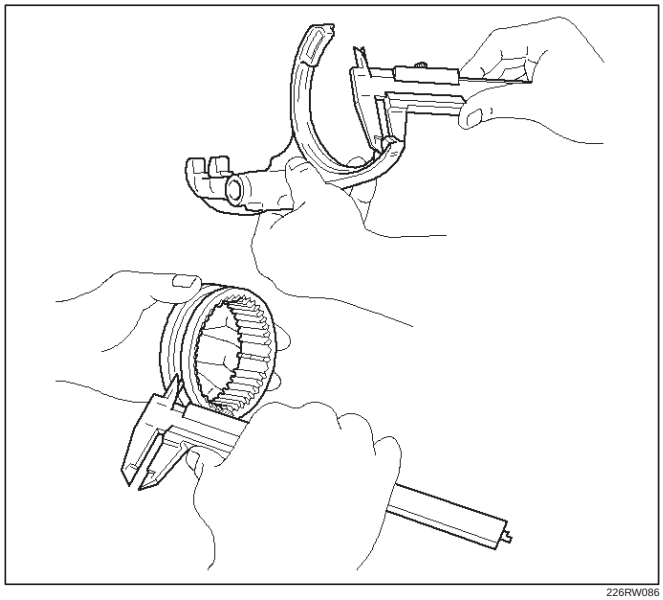

226RW086

3. Reverse block ring set.
   1. Using a thickness gauge, measure the clearance between the counter 5th gear spline piece and reverse block ring.

Standard: 0.7 – 1.7 mm (0.028 – 0.067 in)

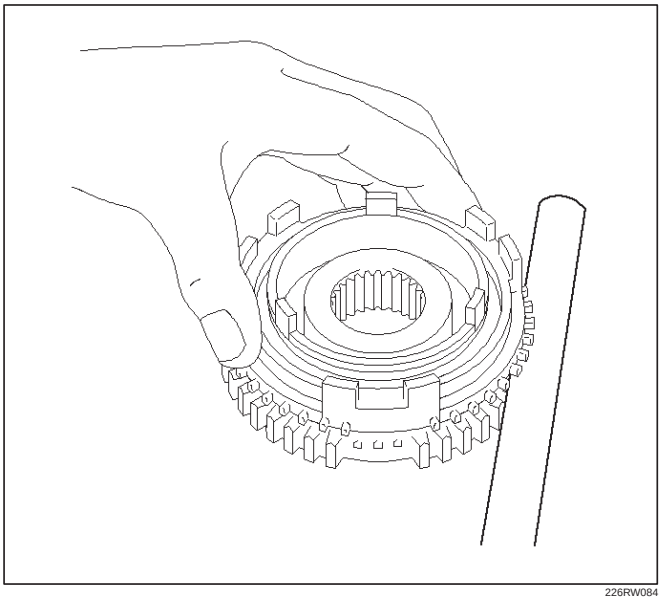

226RW084

4. Reverse idle gear and reverse idle gear shaft.
   1. Mount the reverse idle gear and reverse idle gear shaft in a vise.
   2. Using a dial indicator, measure the reverse idle gear radial clearance.

Standard: 0.040 – 0.082 mm (0.0016 – 0.0032 in)

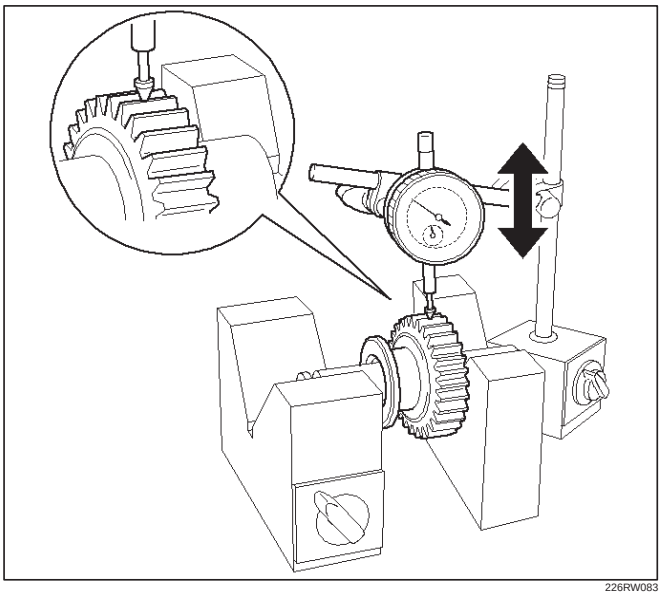

226RW083

   3. If the clearance exceeds the maximum, measure the gear inside diameter and shaft diameter.

Standard

Shaft Diameter: 23.979 – 24.000 mm (0.94405 – 0.94488 in)

Gear Diameter: 24.040 – 24.061 mm (0.94645 – 0.94728 in)

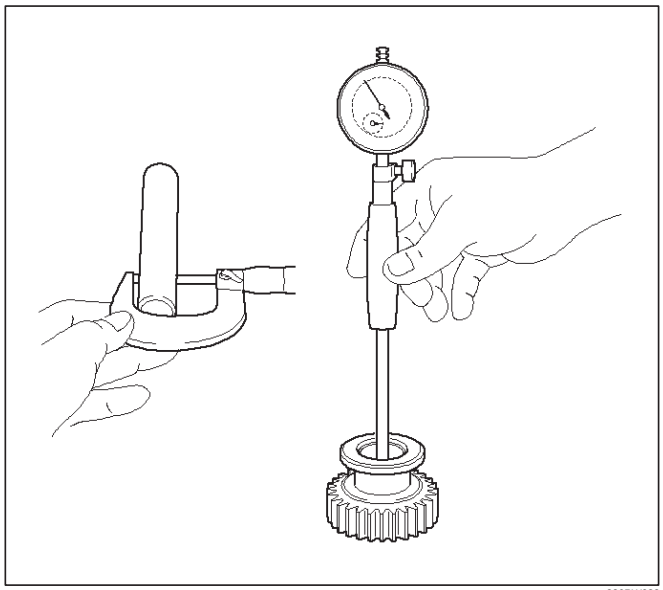

226RW082

5. Reverse shift arm No.2 thrust clearance.
   1. Using a thickness gauge, measure the clearance between the reverse idle gear and shift arm No.2.

Standard: 0.05 – 0.35 mm (0.002 – 0.014 in)

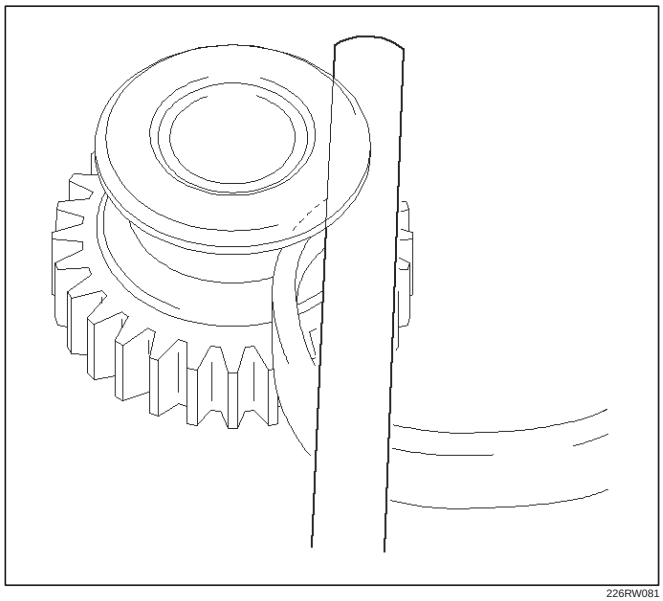

226RW081

Reassembly

1. Install the top gear shaft assembly.
   1. Using installer 5–8840–2559–0 (J–42904) and a press, install a new bearing.

NOTE: Outer race snap ring groove (1) toward front.

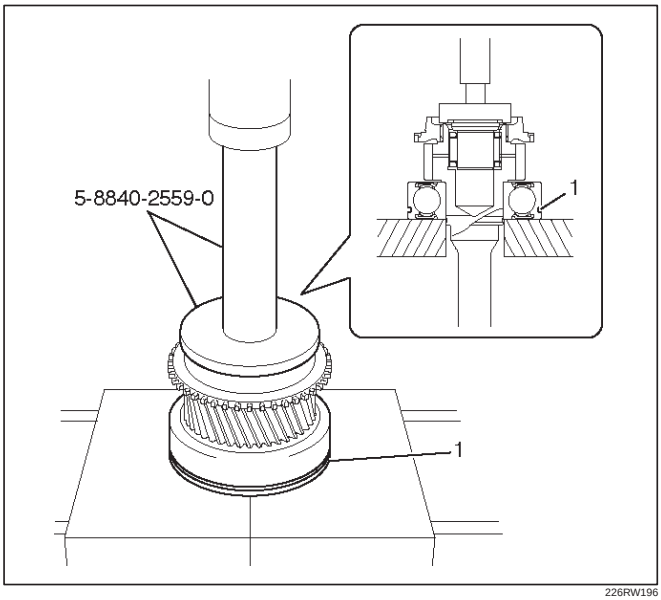

226RW196

   2. Select a snap ring that will allow minimum axial play.

Mark	Thickness
A	2.10 – 2.15 mm (0.083 – 0.085 in)
B	2.15 – 2.20 mm (0.085 – 0.087 in)
C	2.20 – 2.25 mm (0.087 – 0.089 in)
D	2.25 – 2.30 mm (0.089 – 0.091 in)
E	2.30 – 2.35 mm (0.091 – 0.093 in)
F	2.35 – 2.40 mm (0.093 – 0.095 in)
G	2.40 – 2.45 mm (0.095 – 0.097 in)

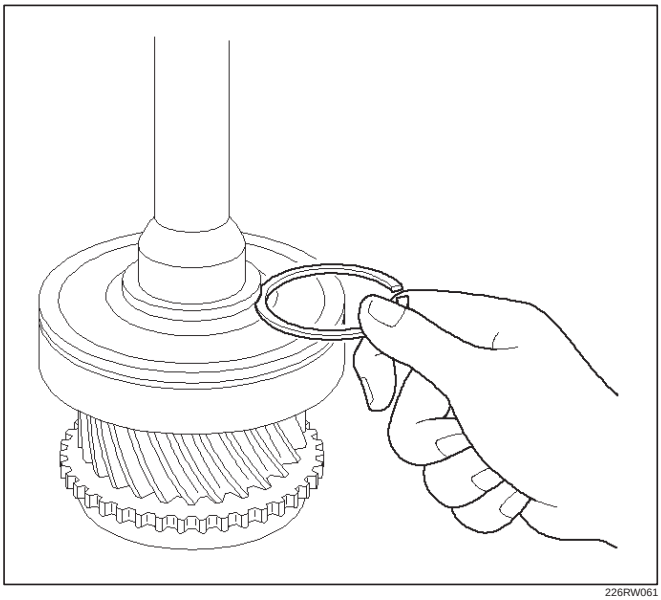

226RW061

   3. Using a snap ring expander, install the new snap ring.

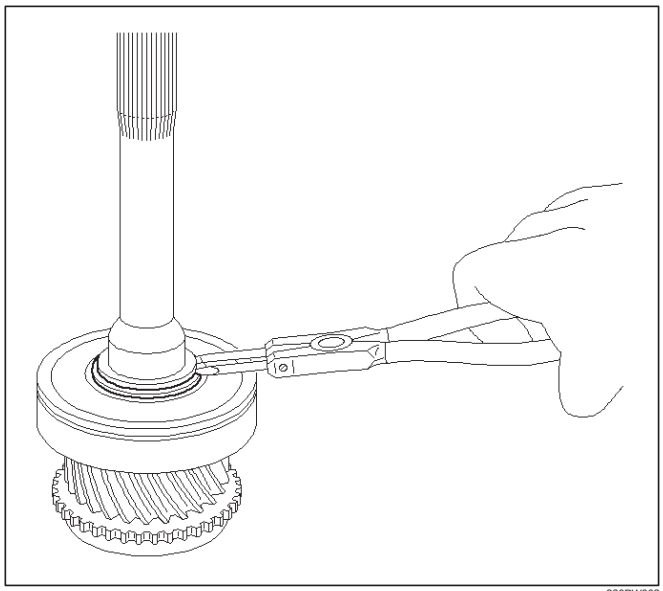

226RW062

   4. Install the 4th block ring.

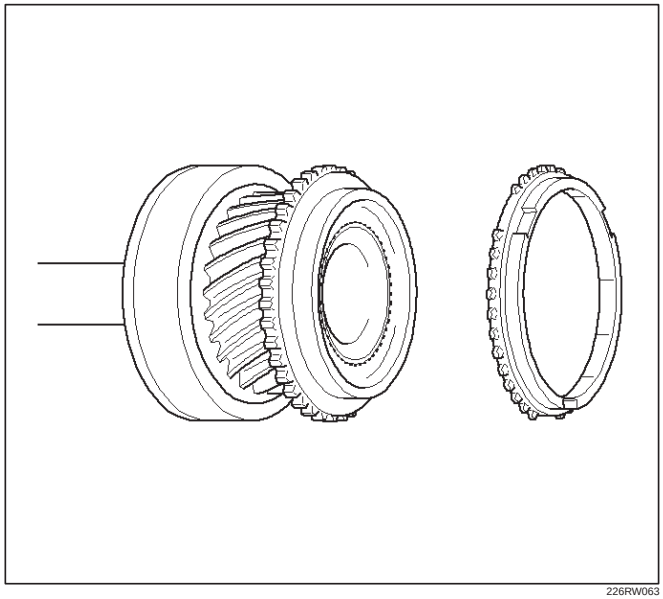

226RW063

5. Using a thickness gauge, measure the clearance between the 4th block ring back and gear spline end.

Standard: 0.75 – 1.65 mm (0.030 – 0.065 in)

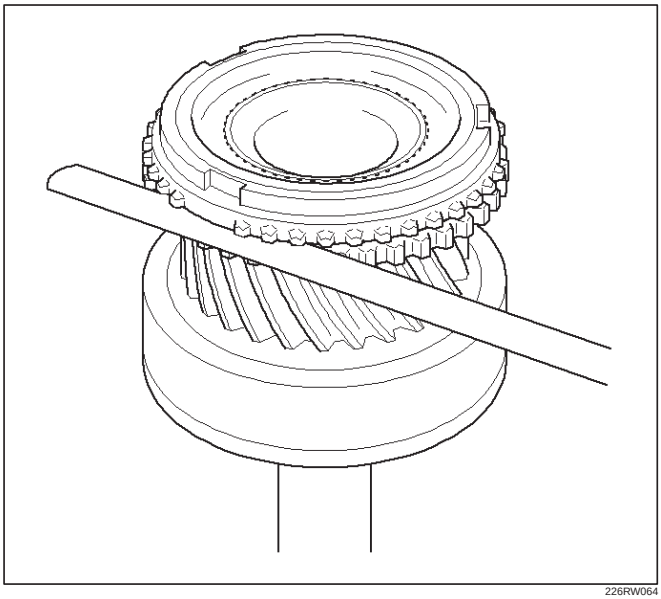

226RW064

6. Check the braking effect of the block ring. Turn the block ring in one direction while pushing it to the gear cone. Check that the ring locks. If it does not lock, replace the block ring.

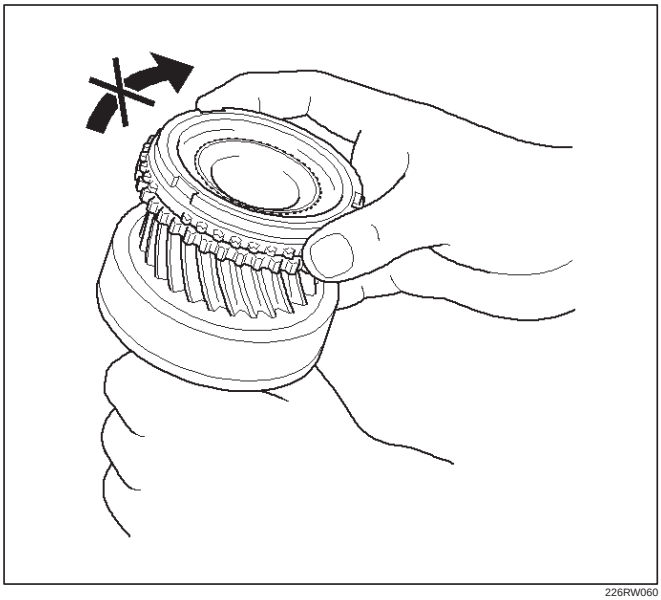

226RW060

7. Install the needle roller bearing.

2. Reassemble the mainshaft assembly.

NOTE: Apply all parts with engine oil before installing them.

3. Inspect block ring

1. Using a thickness gauge, measure the clearance between the synchronizer ring back and gear spline end.

Gear	Standard Clearanse
1st	0.80 – 1.60 mm (0.032 – 0.063 in)
2nd	0.65 – 1.75 mm (0.026 – 0.069 in)
3rd	0.75 – 1.65 mm (0.030 – 0.065 in)

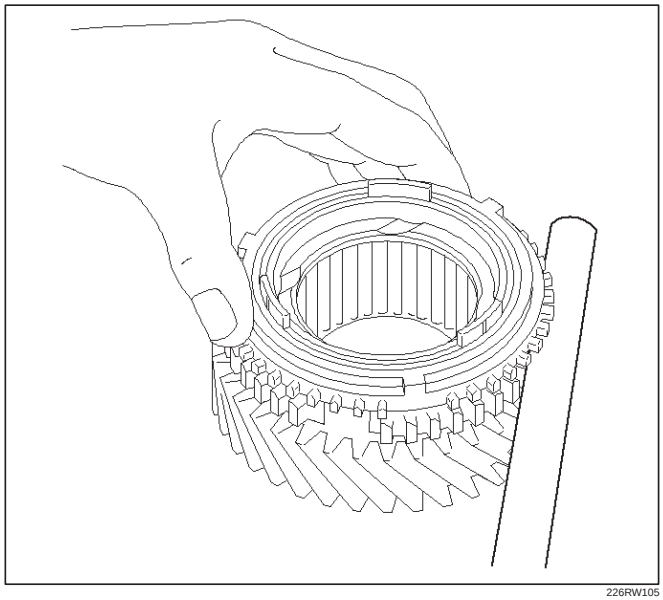

226RW105

2. Turn the synchronizer ring in one direction while pushing it to the gear cone. Check that the ring locks.

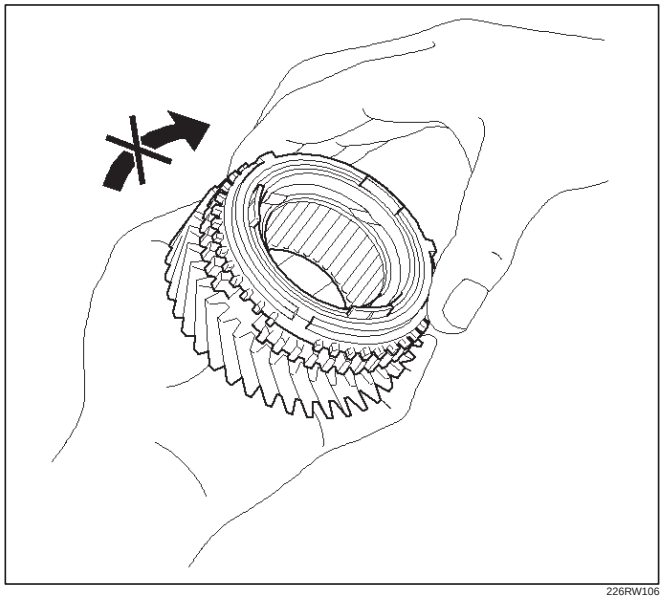

226RW106

4. Inspect hub sleeve and shift arm.

1st–2nd shift arm

1. Using a vernier caliper, measure center groove of the 1st–2nd shift arm.

Reference: 5.28 mm (0.208 in)

2. Using a vernier caliper, measure flange of the reverse gear. Calculate the clearance between the reverse gear and shift arm.

Reference: Reverse gear flange thickness 5.0 mm. (0.197 in)

Standard: 0.15 – 0.41 mm (0.006 – 0.016 in)

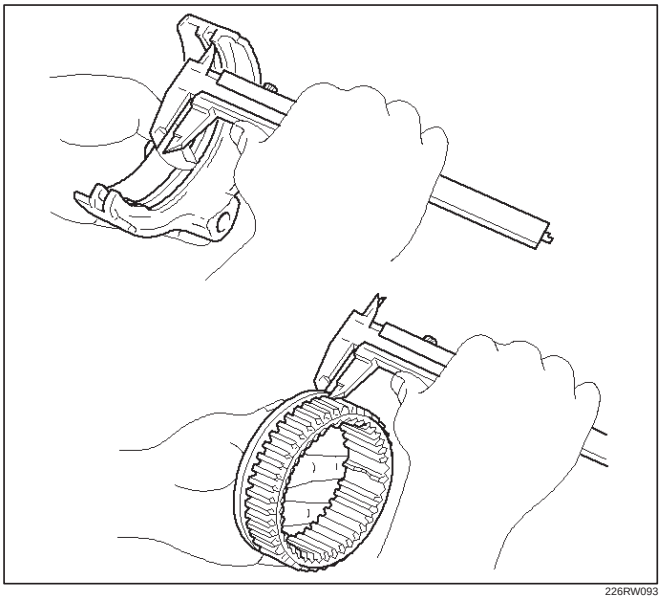

226RW093

3rd–4th shift arm

1. Using a vernier caliper, measure tip of the shift arm thickness.

Reference: 10.0mm (0.39 in)

2. Using a vernier caliper, measure center groove of the hub sleeve No.2. Calculate the clearance between the hub sleeve No.2 and shift arm.

Reference: Center groove dimension 10.2 mm (0.402 in)

Standard: 0.15 – 0.35 mm (0.006 – 0.014 in)

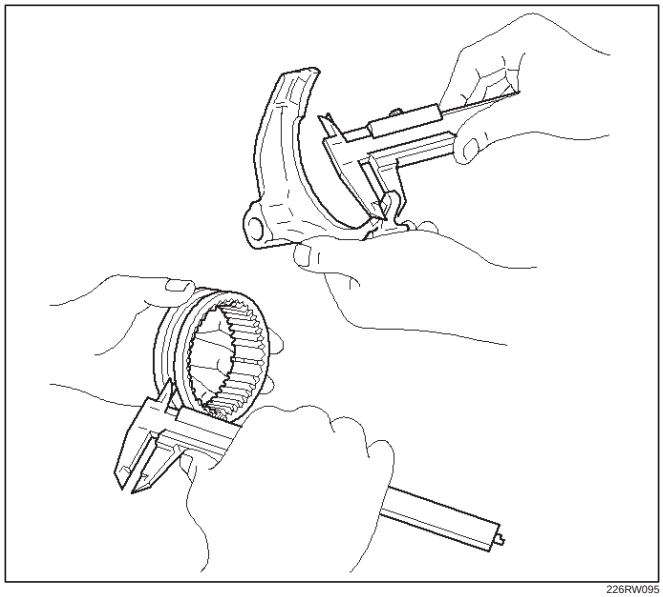

226RW095

5. Inspect clutch hub and hub sleeve.
   1. Check for wear or damage.
   2. Install the hub sleeve to the clutch hub, and check sliding smoothly.

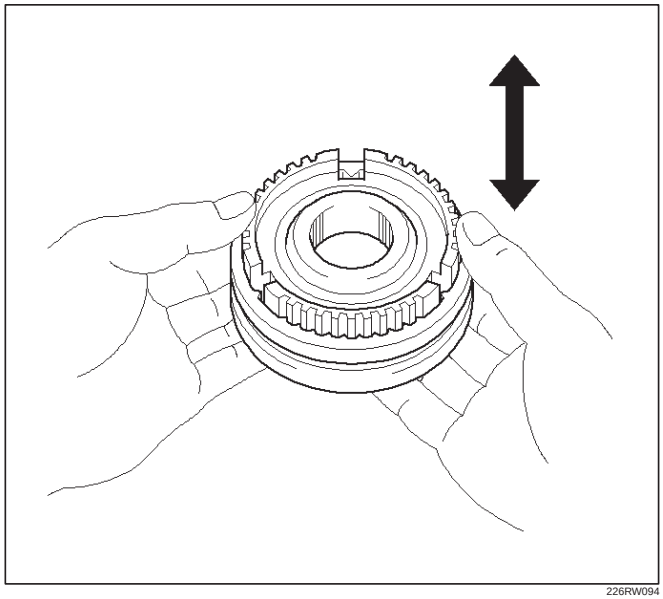

226RW094

6. Inspect gear inside diameter.
   1. Using a inside dial indicator, measure the gear inside diameter.

Gear	Standard Diameter
1st	46.015 – 46.040 mm (1.8116 – 1.8126 in)
2nd	53.015 – 53.040 mm (2.0872 – 2.0882 in)
3rd	44.015 – 44.040 mm (1.7329 – 1.7339 in)

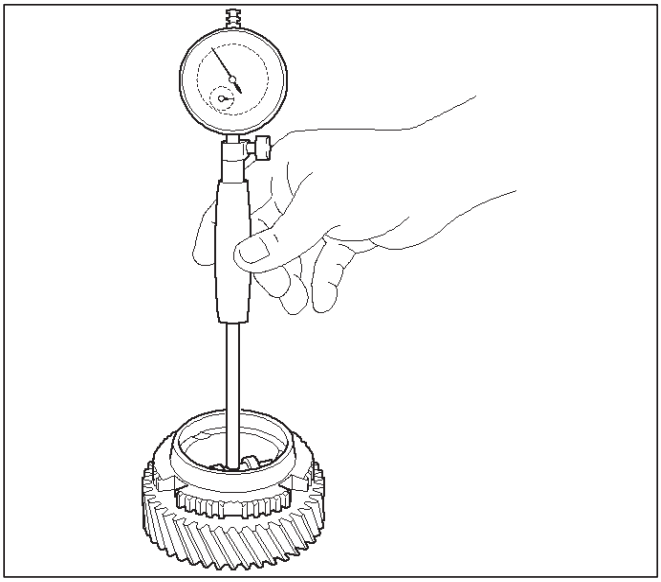

226RW096

7. Inspect mainshaft.
   1. Using a micrometer, measure the outer diameter of the mainshaft journal.

Measure Position	Standard
A	37.984 – 38.000 mm (1.4954 – 1.4961 in)
B	46.984 – 47.000 mm (1.8498 – 1.8504 in)
C	38.979 – 38.995 mm (1.5346 – 1.5352 in)

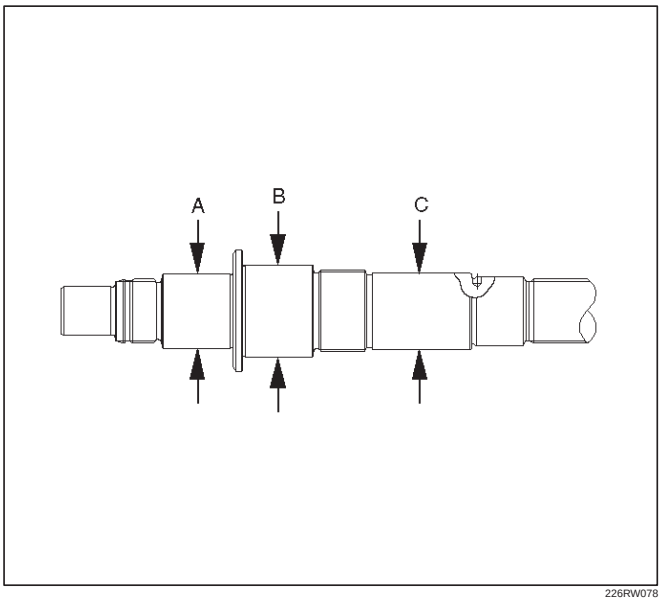

226RW078

   2. Using a micrometer, measure the mainshaft flange thickness.

Standard: 5.0 mm (0.197 in)

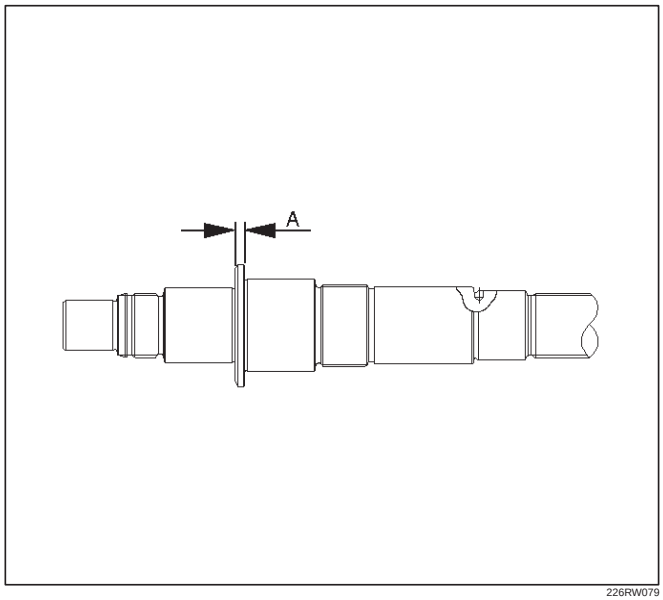

226RW079

   3. Install the mainshaft to V-blocks.
   4. Use a dial indicator to measure the mainshaft central portion run-out.

Standard: less than 0.015 mm (0.0006 in)

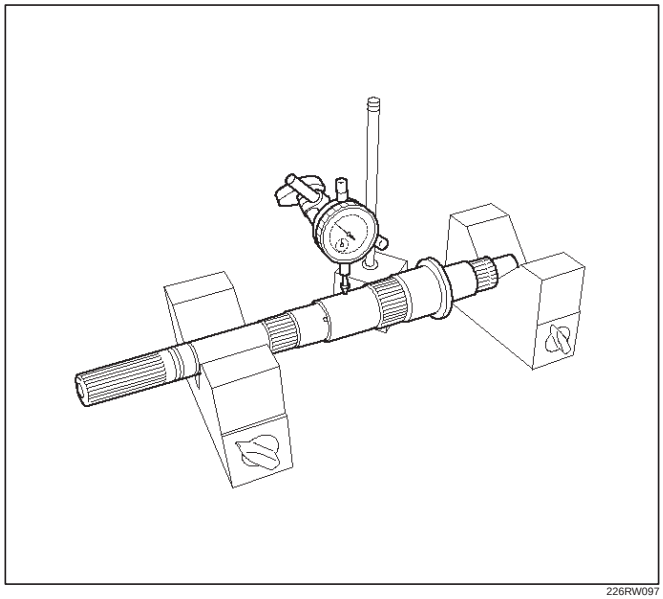

226RW097

8. Install 3rd gear.
   1. Install the 3rd gear needle bearing, 3rd gear and 3rd block ring to the mainshaft.

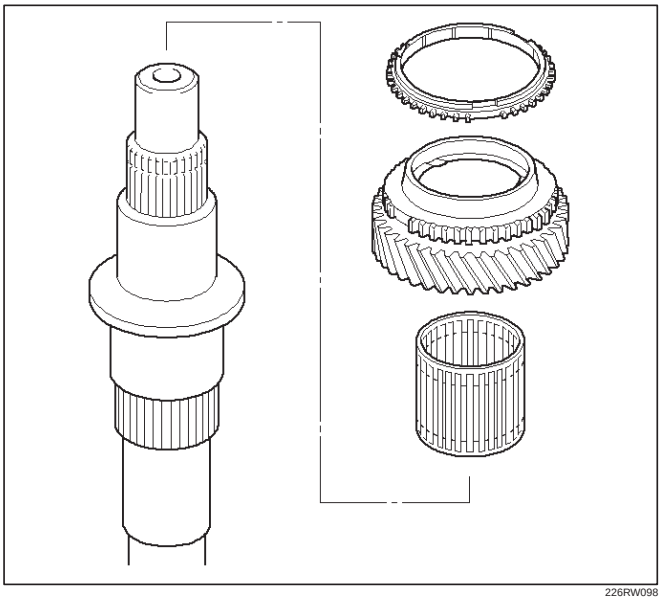

226RW098

9. Install the clutch hub No.2.
   1. Install the clutch hub No.2 and hub sleeve No.2.

NOTE: Be careful the direction of the clutch hub No.2, as shown.

   2. Using a screwdriver, install 3 inserts and 2 springs.

NOTE: Position the insert springs so that their end gaps are not in line.

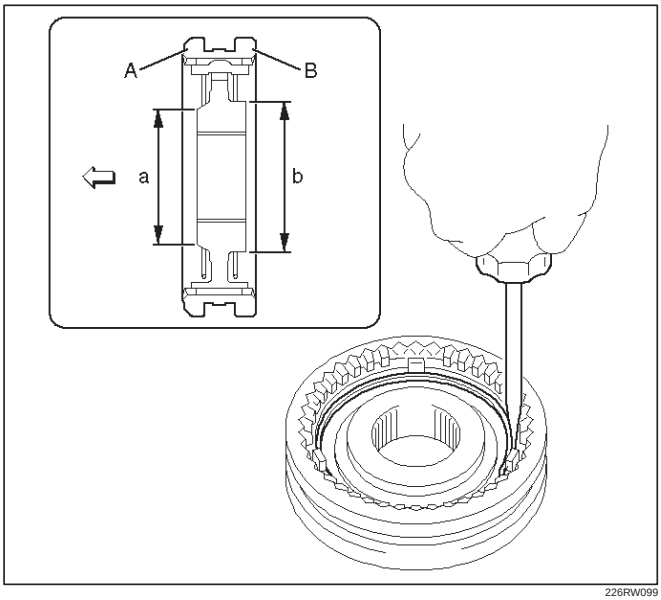

226RW099

   3. Using installer 5–8840–2553–0 (J–42797) and a press, install the clutch nob No.2 and hub sleeve No.2 to the mainshaft.

NOTE:

- Align the brock ring slots with the inserts.
- Check that the gear rotates smoothly.

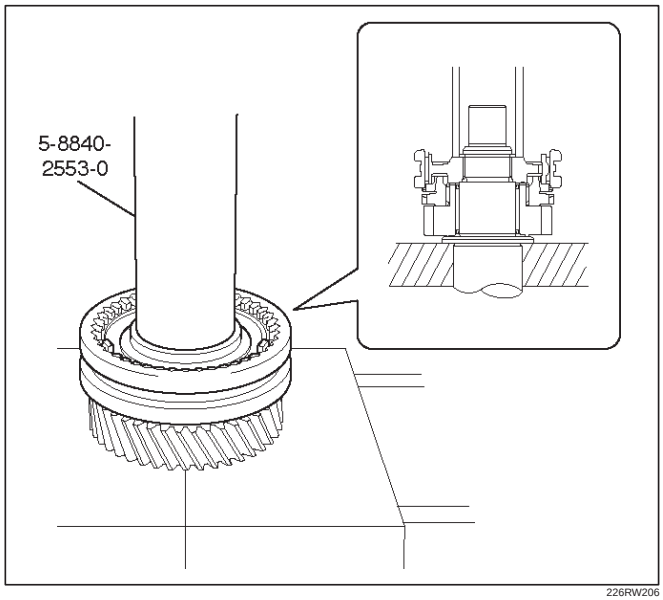

226RW206

   4. Select a snap ring that will allow minimum axial play.

Mark	Thickness
A	1.80 – 1.85 mm (0.071 – 0.073 in)
B	1.85 – 1.90 mm (0.073 – 0.075 in)
C	1.90 – 1.95 mm (0.075 – 0.077 in)
D	1.95 – 2.00 mm (0.077 – 0.079 in)
E	2.00 – 2.05 mm (0.079 – 0.081 in)
F	2.05 – 2.10 mm (0.081 – 0.083 in)
G	2.10 – 2.15 mm (0.083 – 0.085 in)

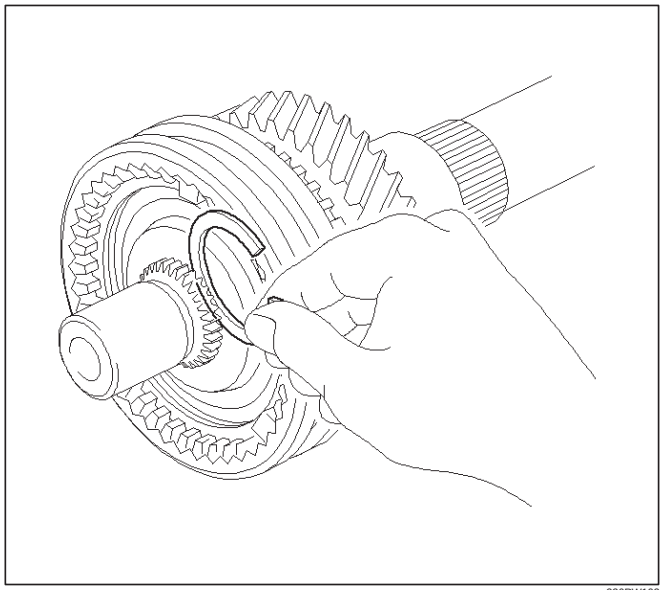

226RW102

5. Using a snap ring expander, install the new snap ring.

NOTE: Be careful not to damage the bearing surface.

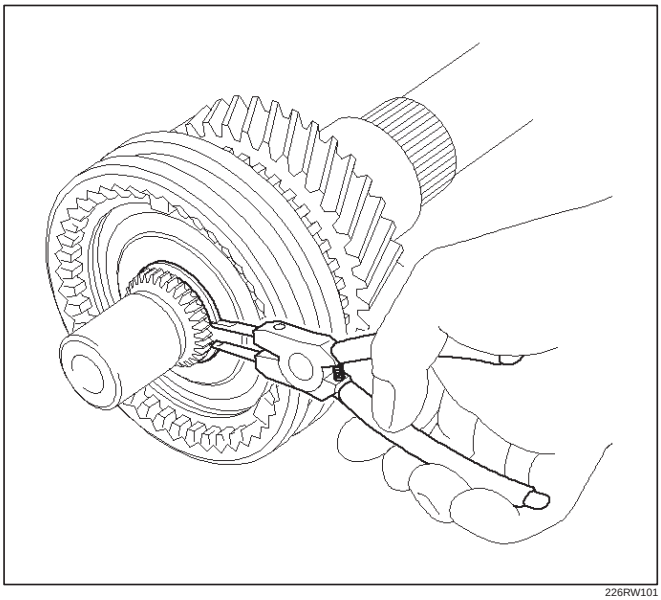

226RW101

6. Using a thickness gauge, inspect the 3rd gear thrust clearance.

Standard: 0.10 – 0.25mm (0.004 – 0.010 in)

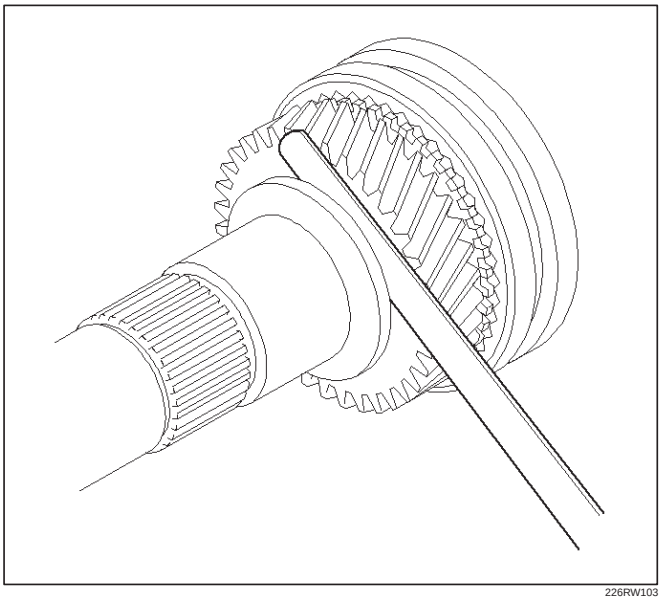

226RW103

10. Install the 2nd gear.
    1. Install the synchronizer ring set No.1 to the 2nd gear.

NOTE: Align the nail of middle ring with gear spline slots.

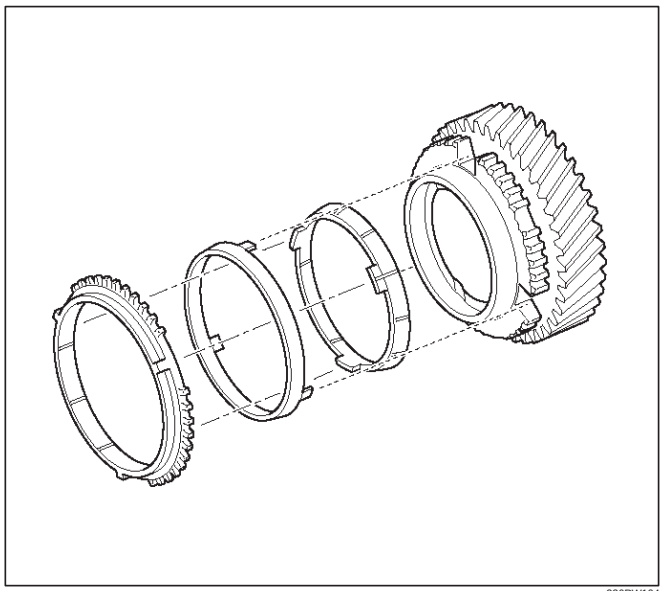

226RW104

2. Install the needle roller bearing, 2nd gear and 2nd gear block ring set to the mainshaft.

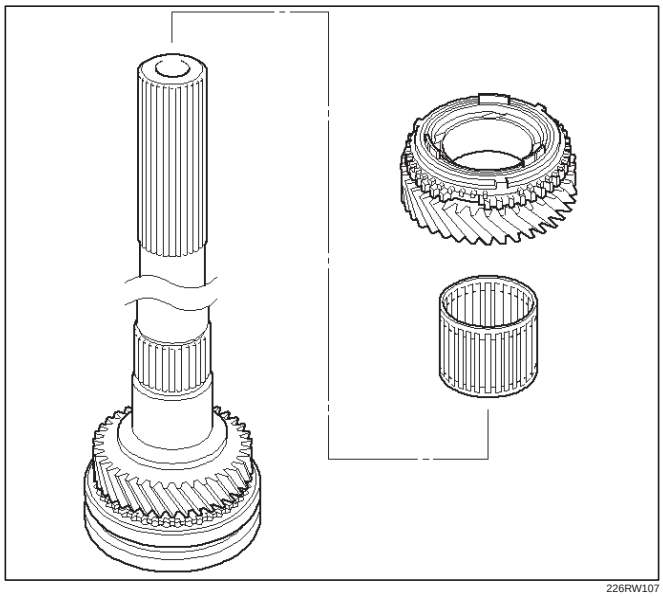

226RW107

11. Install the clutch hub No.1.
    1. Install the 3 inserts and 3 insert springs to the clutch hub No.1.
       Reference: While pushing the insert spring with a screwdriver, install the inserts.

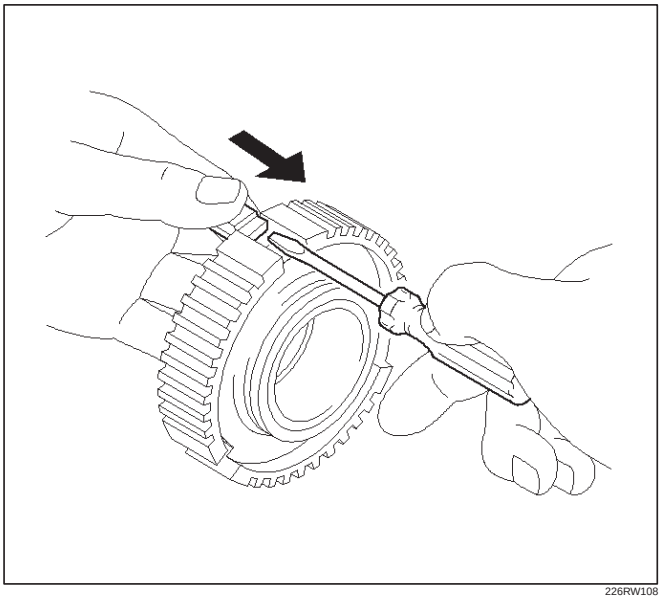

226RW108

    2. Install the clutch hub No.1 to the reverse gear.

NOTE: Check the clutch hub No.1 installing direction, as shown.

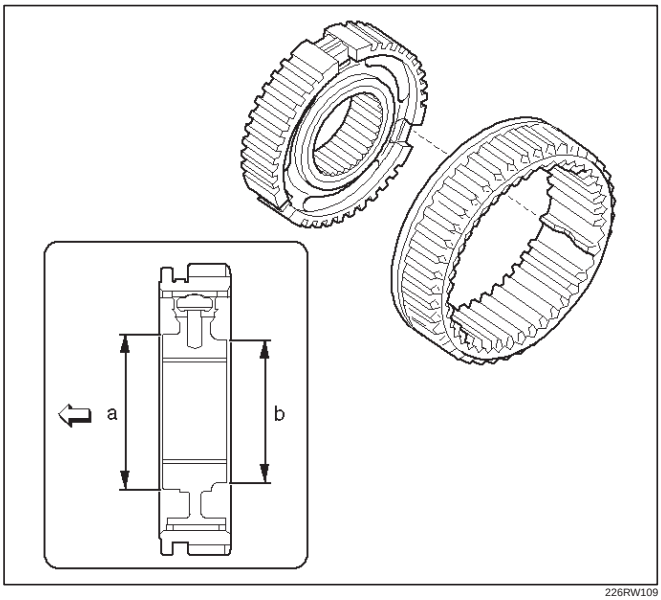

226RW109

    3. Using installer 5–8840–2554–0 (J–42798) and a press, install the hub No.1 by retaining the reverse gear.

NOTE:

- Align the projection of inner ring with hub No.1 slots.
- Check that the gear rotates smoothly.

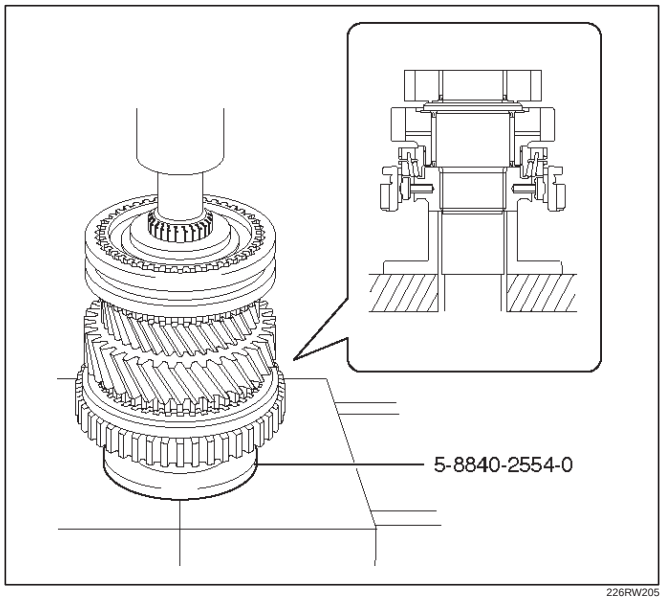

226RW205

    4. Select a snap ring that will allow minimum axial play.

Mark	Thickness
A	2.30 – 2.35 mm (0.091 – 0.093 in)
B	2.35 – 2.40 mm (0.093 – 0.095 in)
C	2.40 – 2.45 mm (0.095 – 0.097 in)
D	2.45 – 2.50 mm (0.097 – 0.098 in)
E	2.50 – 2.55 mm (0.098 – 0.100 in)
F	2.55 – 2.60 mm (0.100 – 0.102 in)
G	2.60 – 2.65 mm (0.102 – 0.104 in)

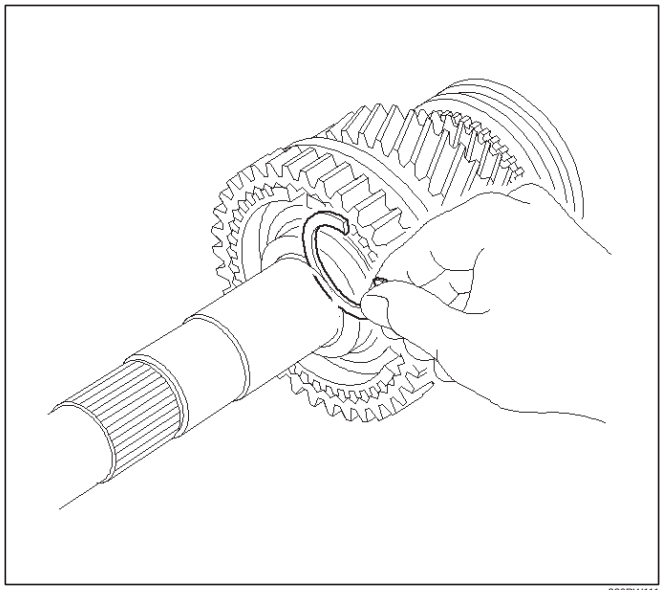

226RW111

5. Using a screwdriver and hammer, install the snap ring.

NOTE: Be careful not to damage the bearing surface.

6. Check that the gear rotates smoothly.

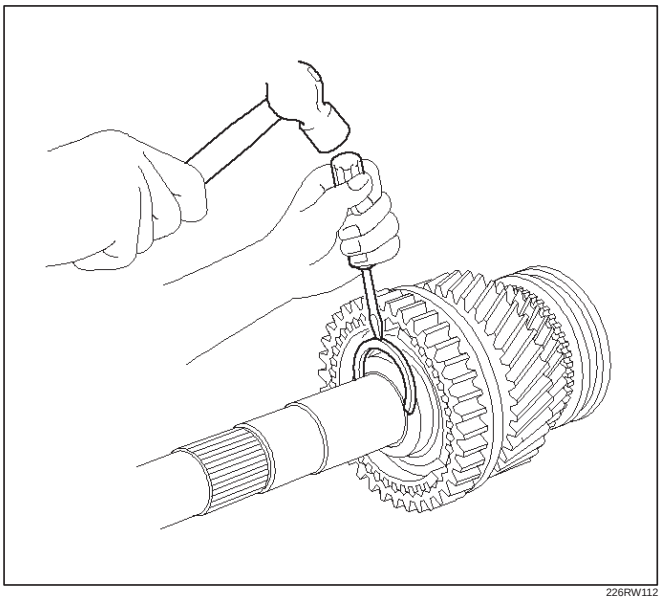

226RW112

7. Using a dial indicator, measure the 2nd gear thrust clearance.

Standard: 0.10 – 0.25mm (0.004 – 0.010 in)

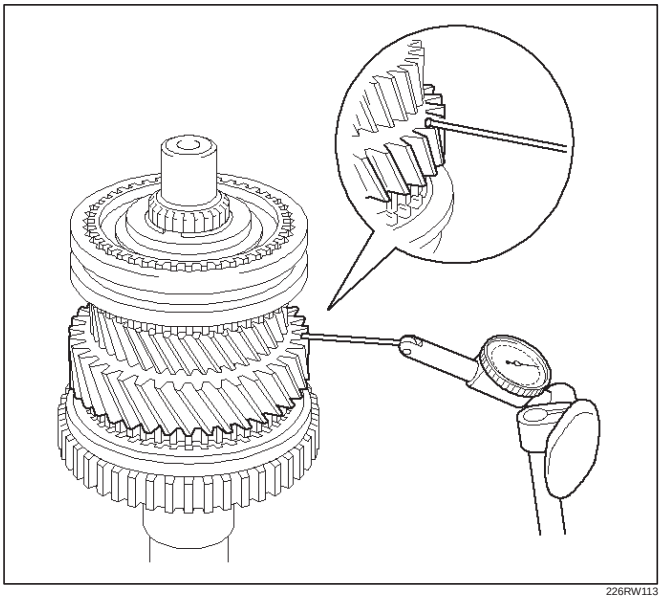

226RW113

12. Install the 1st gear.

1. Install the following parts:
   1. 1st gear bearing spacer (4).
   2. 1st gear needle roller bearing (3).
   3. Synchronizer assembly (2).
   4. 1st gear (1).

NOTE:

- Align the projection of inner ring with hub No.1 slots.
- Check that the gear rotates smoothly.

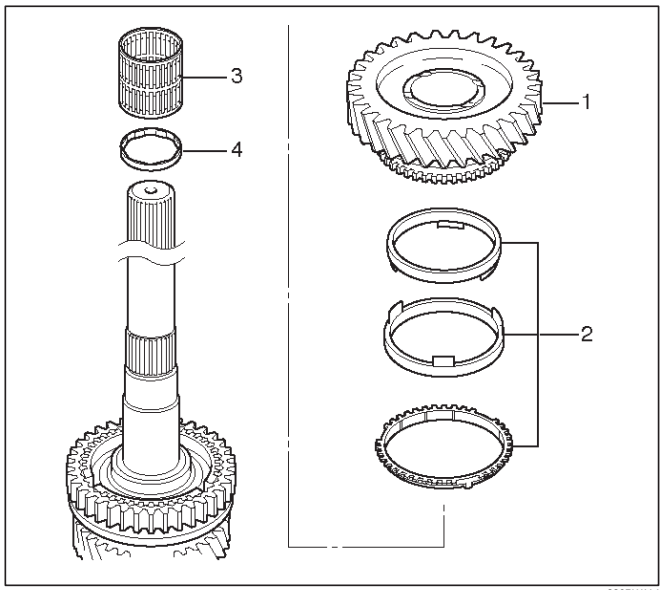

226RW114

2. Install the 1st gear thrust washer pin and 1st gear thrust washer to the mainshaft.

NOTE: Align the straight pin with the thrust washer slot.

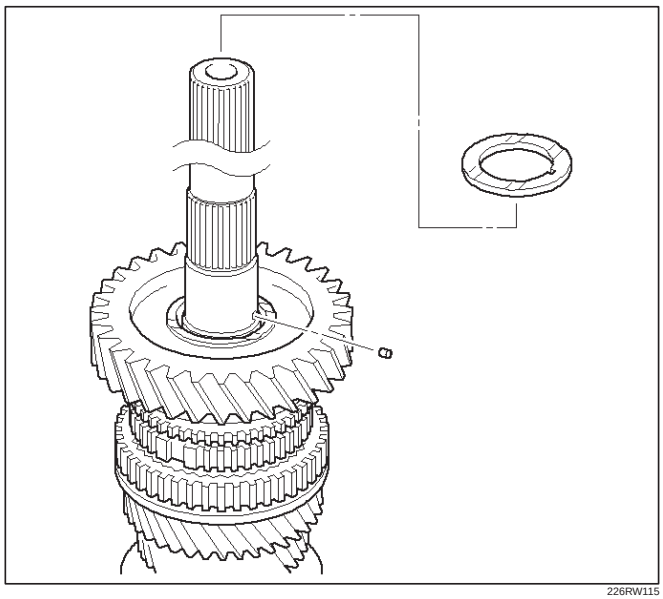

226RW115

13. Install the mainshaft center bearing.
    1. Using installer 5–8840–2555–0 (J–42799) and a press, install the mainshaft center bearing.

NOTE: Center bearing snap ring groove toward rear.

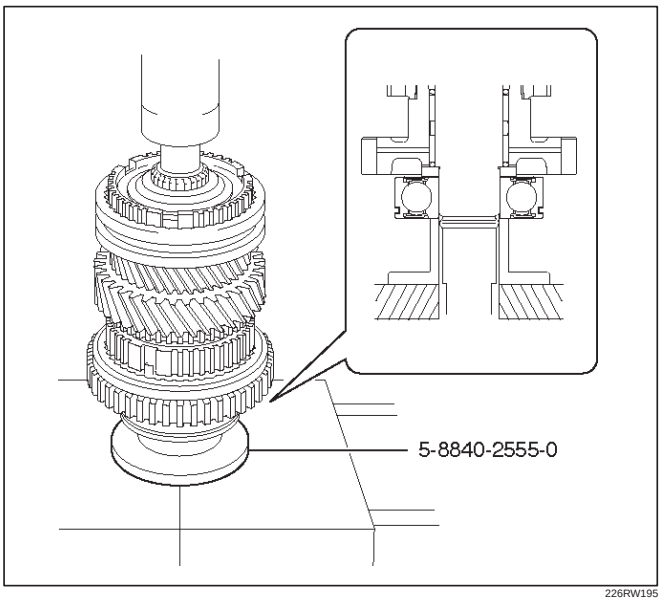

226RW195

    2. Using a thickness gauge, measure 1st gear thrust clearance.

Standard: 0.10 – 0.45mm (0.004 – 0.018 in)

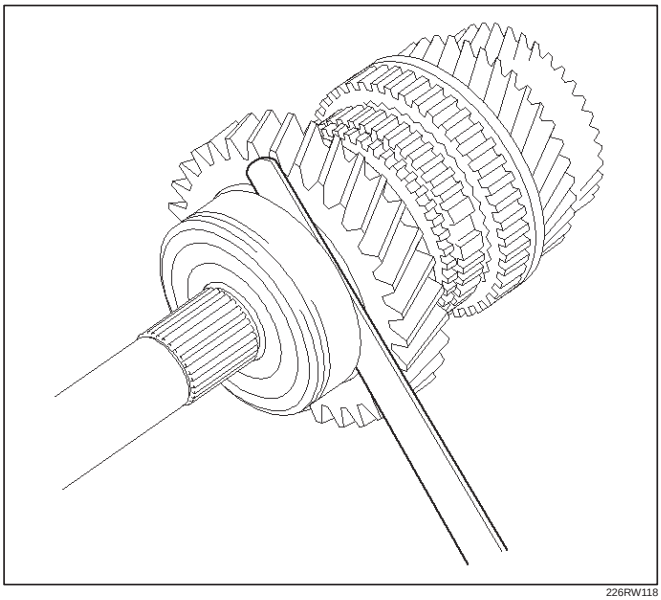

226RW118

14. Install the 5th gear.
    1. Using installer 5–8840–2555–0 (J–42799) and a press, install the 5th gear.
    2. Select a snap ring that will allow minimum axial play.

Mark	Thickness
C	2.75 – 2.80 mm (0.108 – 0.110 in)
D	2.80 – 2.85 mm (0.110 – 0.112 in)
E	2.85 – 2.90 mm (0.112 – 0.114 in)
F	2.90 – 2.95 mm (0.114 – 0.116 in)
G	2.95 – 3.00 mm (0.116 – 0.118 in)
H	3.00 – 3.05 mm (0.118 – 0.120 in)
J	3.05 – 3.10 mm (0.120 – 0.122 in)
K	3.10 – 3.15 mm (0.122 – 0.124 in)
L	3.15 – 3.20 mm (0.124 – 0.126 in)
M	3.20 – 3.25 mm (0.126 – 0.128 in)
N	3.25 – 3.30 mm (0.128 – 0.130 in)
P	3.30 – 3.35 mm (0.130 – 0.132 in)

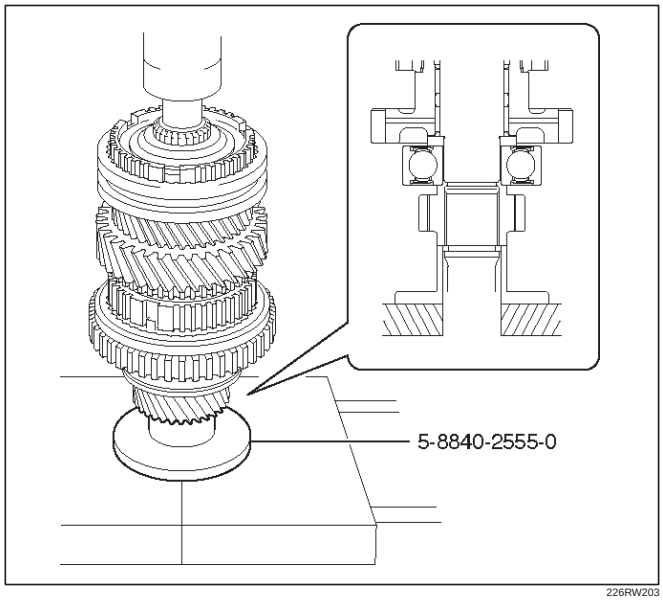

226RW203

    3. Using a screwdriver and hammer, install the new snap ring.

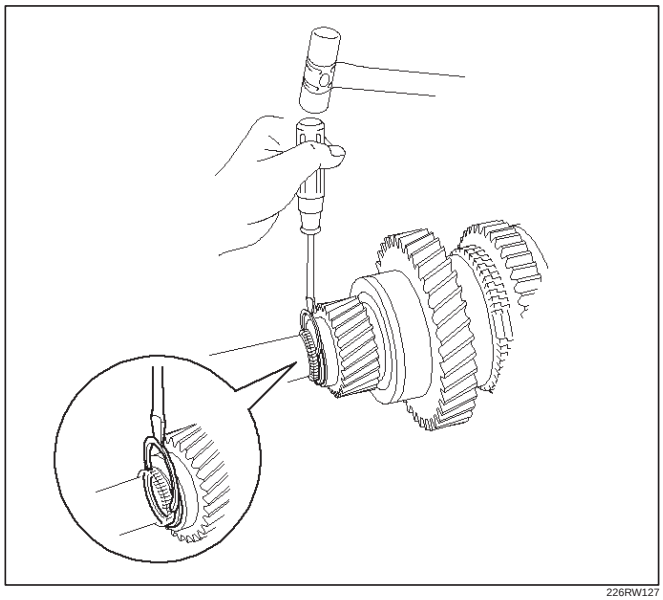

226RW127

15. Inspect each gear radial clearance.
    1. Mount the mainshaft through the aluminum plate in a vise.
    2. Using a dial indicator, measure the radial clearance of each gear.

Gear	Standard Clearanse
1st	0.020 – 0.073 mm (0.0008 – 0.0029 in)
2nd	0.015 – 0.068 mm (0.0006 – 0.0027 in)
3rd	0.015 – 0.068 mm (0.0006 – 0.0027 in)

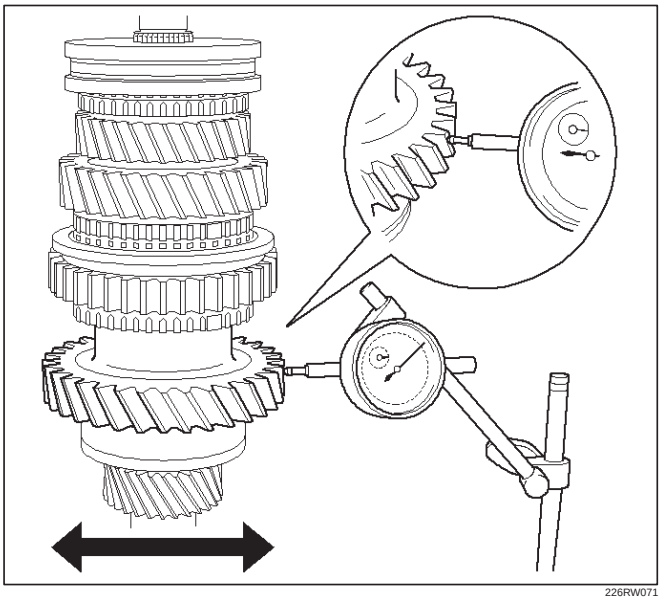

226RW071

16. Install the counter gear shaft.
    1. Check the new counter front bearing inner race and the side race, as shown.
    2. Using installer 5–8840–2556–0 (J–42800) and a press, install the counter gear shaft front bearing.

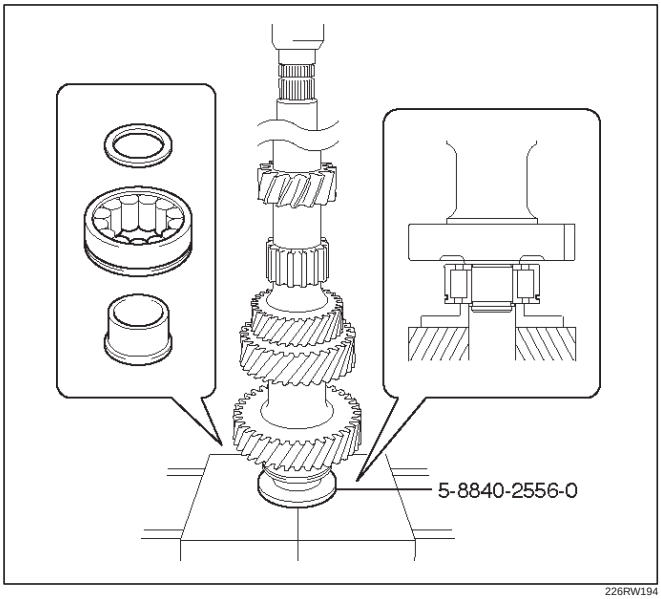

226RW194

    3. Select a snap ring that will allow minimum axial play.

Mark	Thickness
A	2.00 – 2.05 mm (0.079 – 0.081 in)
B	2.05 – 2.10 mm (0.081 – 0.083 in)
C	2.10 – 2.15 mm (0.083 – 0.085 in)
D	2.15 – 2.20 mm (0.085 – 0.087 in)
E	2.20 – 2.25 mm (0.087 – 0.089 in)
F	2.25 – 2.30 mm (0.089 – 0.091 in)

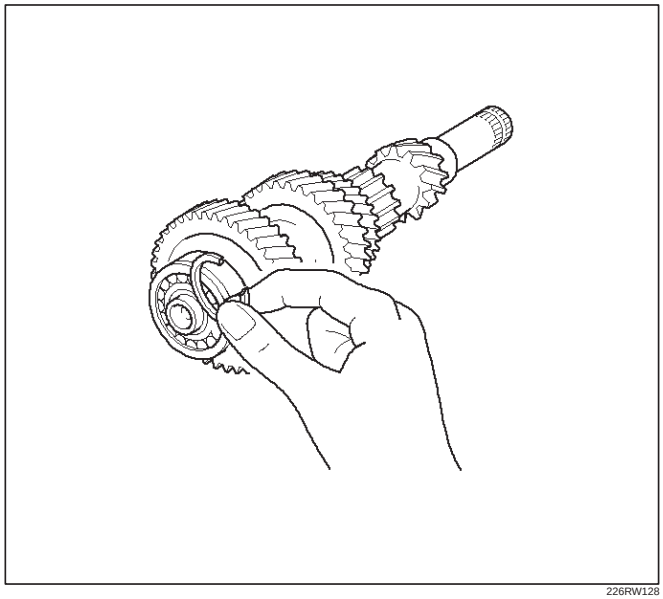

226RW128

    4. Using a snap ring expander, install the new snap ring.

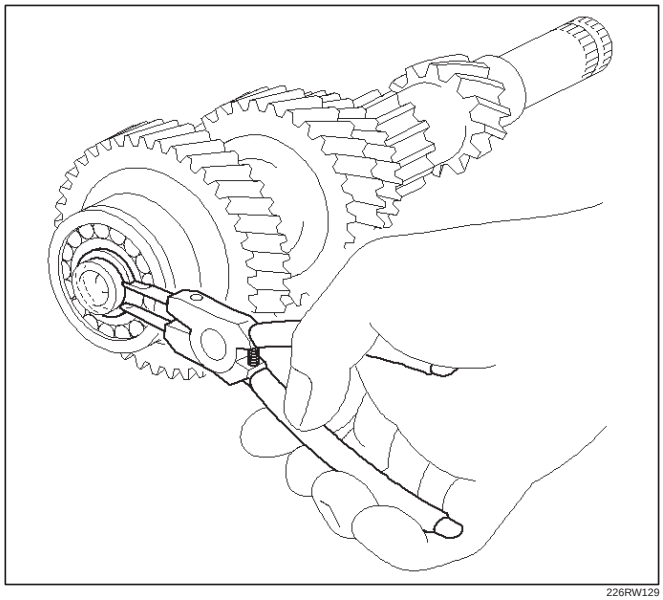

226RW129

17. Install the front cover.
    1. Using installer 5–8840–2557–0 (J–42801), grip 5–8840–0007–0 (J–8092) and a hammer, drive in a new oil seal.

    Drive in depth (from cover end): 11.7 ± 0.5 mm (0.46 ± 0.02 in)

    2. Apply grease to the seal lip.

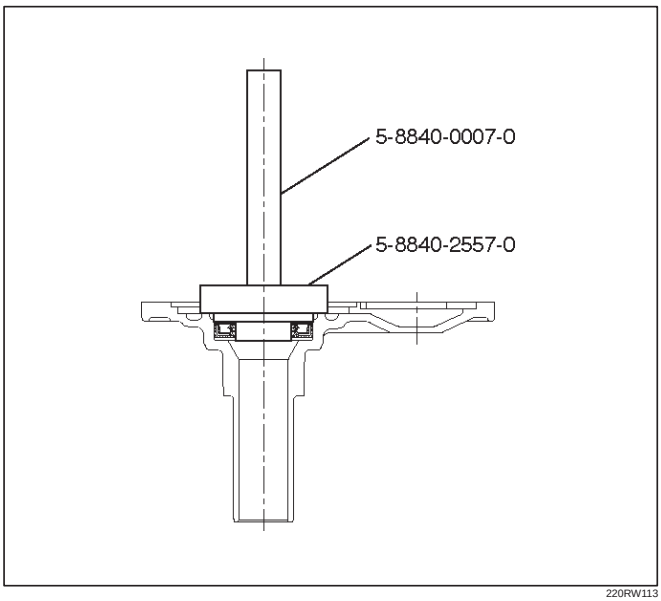

220RW113

18. Install the transfer adapter.
    1. Using installer 5–8840–2558–0 (J –42802), and a hammer drive in a new oil seal.

    Drive in depth (from transfer adapter): 10.95 ± 0.5 mm (0.431 ± 0.02 in)

    2. Apply grease to the oil seal lip.

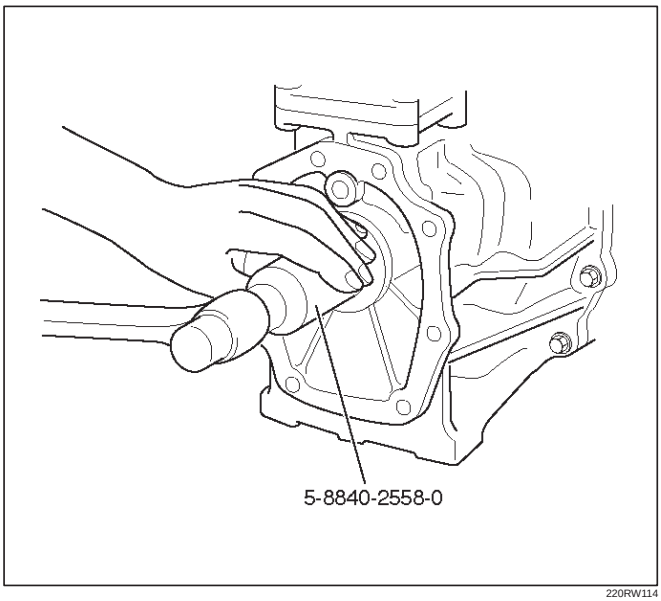

220RW114

3. Install the oil receiver pipe.

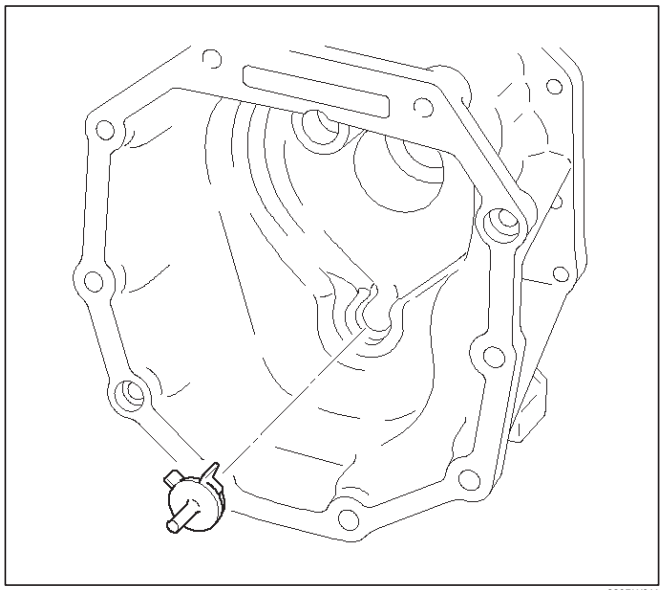

220RW011

4. Install the reverse restrict to the transfer adapter.

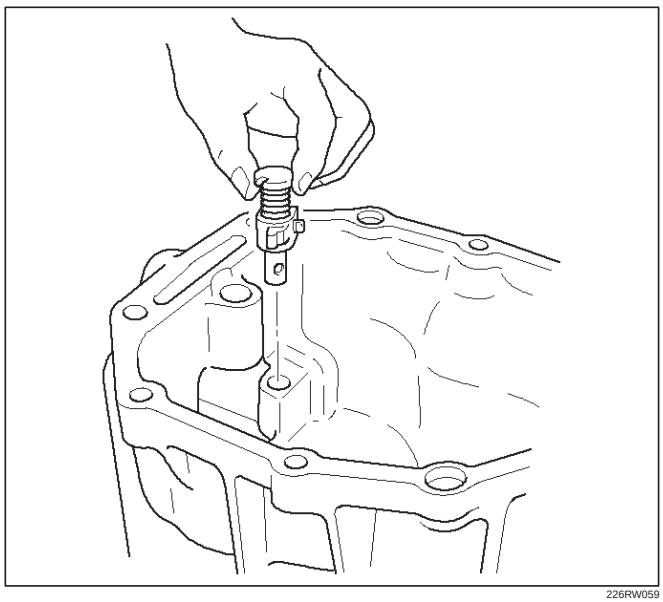

226RW059

5. Using a pin punch and hammer, drive in the slotted spring pin.

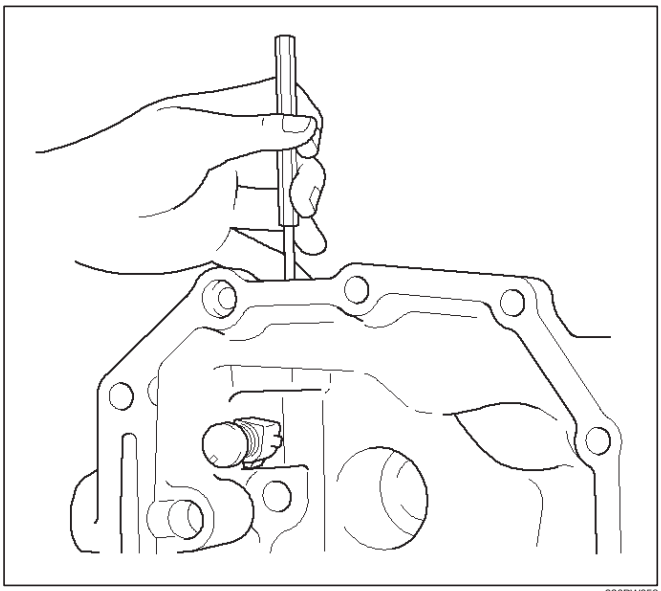

226RW058

6. Clean up the plug and plug hole.
7. Apply sealant to the plug threads. (THREE BOND 1344 or equivalent)
8. Using a torx socket wrench(T40), install and torque the plug.

Torque: 19 N·m (1.9 kg·m/14 lb ft)

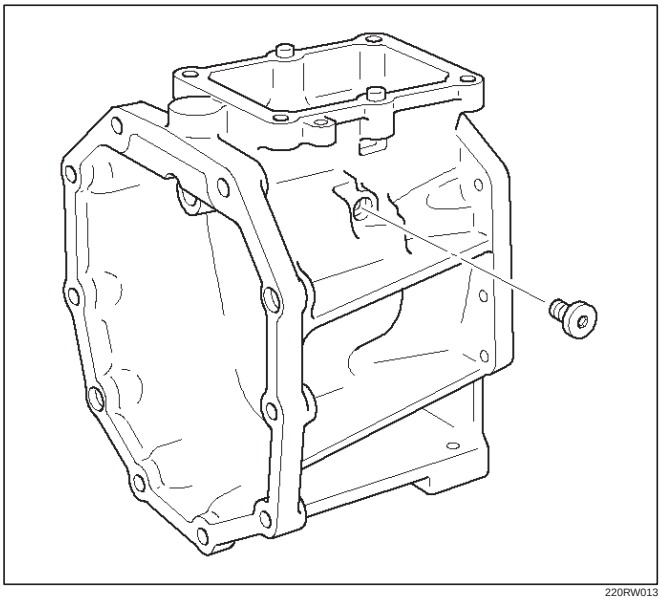

220RW013

9. Using hexagon wrench, install and torque the plug.

Torque: 37 N·m (3.8 kg·m/27 lb ft)

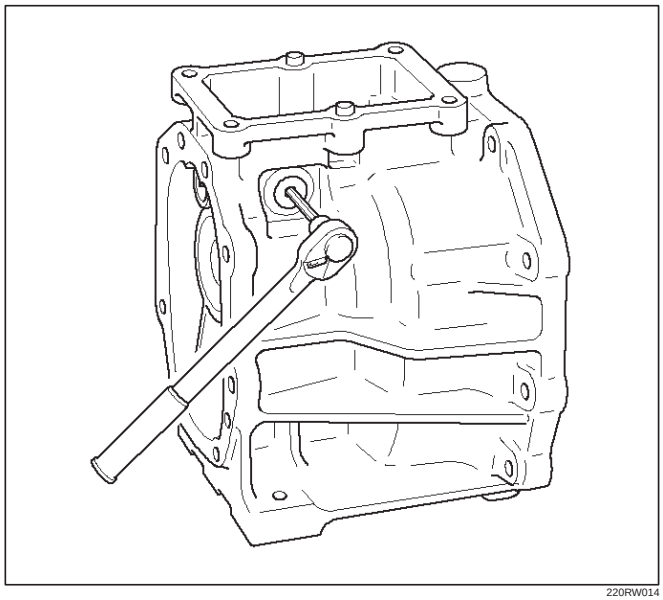

220RW014

19. Install the reverse shift arm No.1 and reverse shift arm No.2.
    1. Mount the intermediate plate through the aluminum plate in a vise.

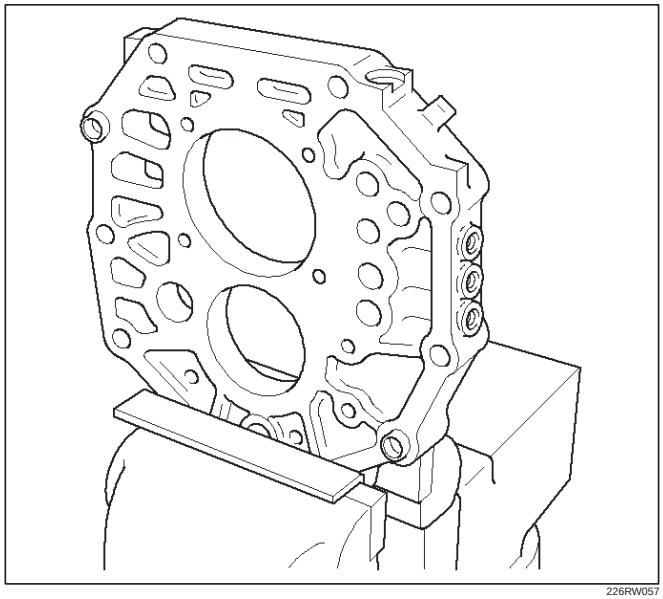

226RW057

2. Using 2 bolts, install reverse shift arm bracket.

Torque: 18 N·m (1.8 kg·m/13 lb ft)

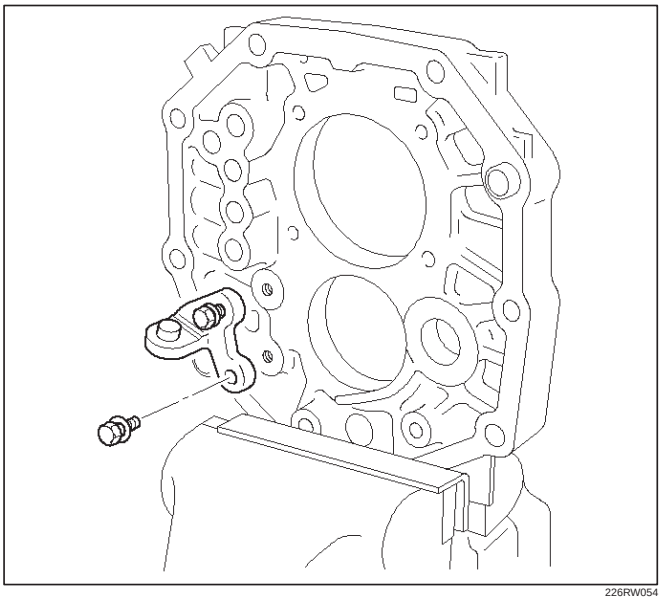

226RW054

3. Install reverse shift arm No.2 to the reverse shift arm No.1. Using screwdriver and a hammer, install the new E-ring.

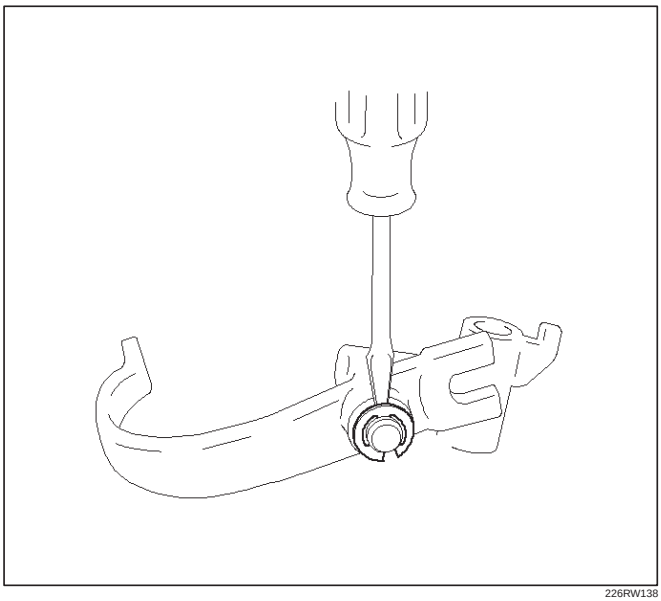

226RW138

4. Install reverse shift arm No.2 to the reverse shift arm bracket.

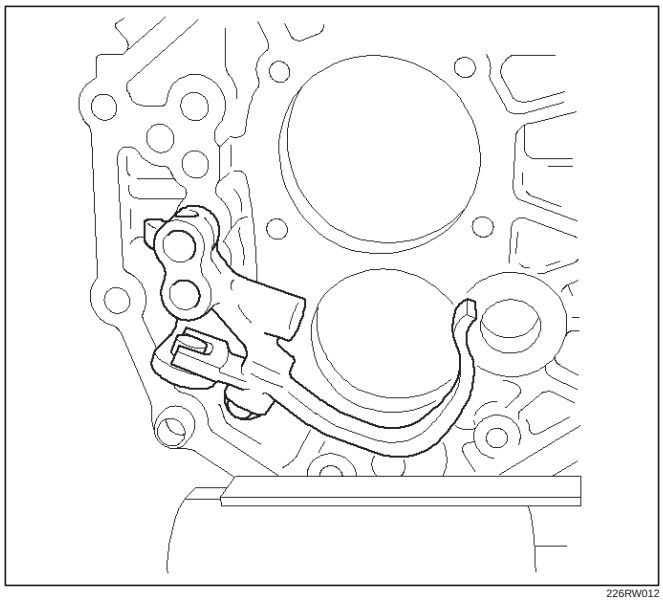

226RW012

20. Install the reverse shift rod.
    1. Install the reverse shift arm No.1 compression spring and ball to the reverse shift arm No.1.

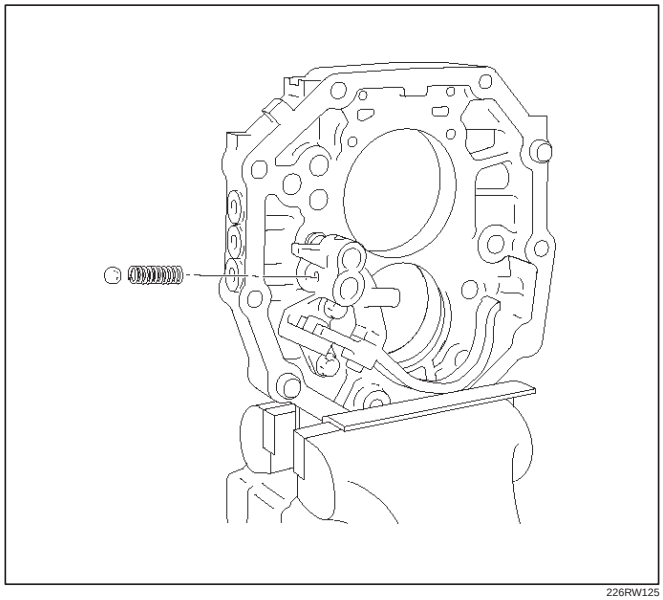

226RW125

2. Install the reverse shift rod from the rear side by pushing the ball on using a screwdriver.

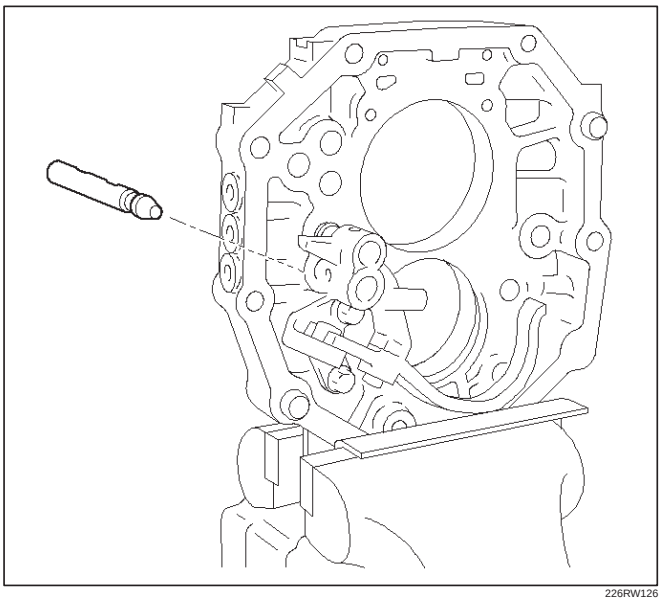

226RW126

21. Install the reverse-5th shift rod.
    1. Install the reverse shift arm No.1 lock ball to the reverse shift arm No.1.
    2. Install the interlock pin to the intermediate plate.

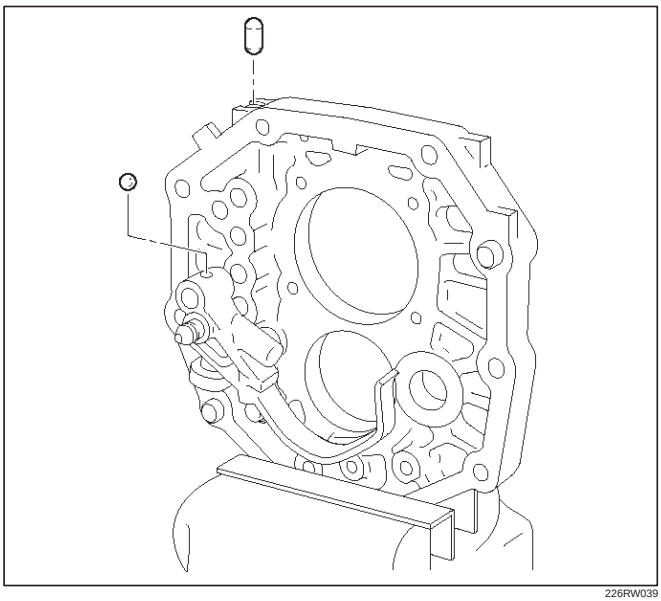

226RW039

3. Put in the reverse-5th shift rod from the front.

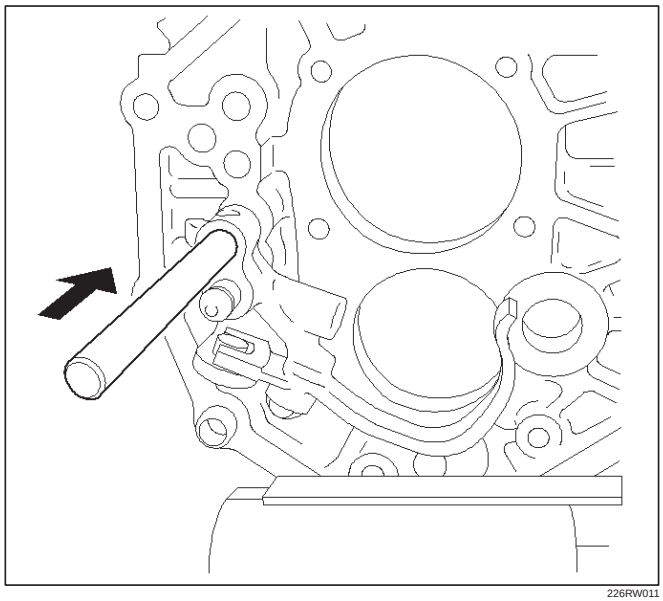

226RW011

4. Using a screwdriver and a hammer, install the 2 new shift rod snap rings to the 5th-reverse shift rod and reverse shift rod.

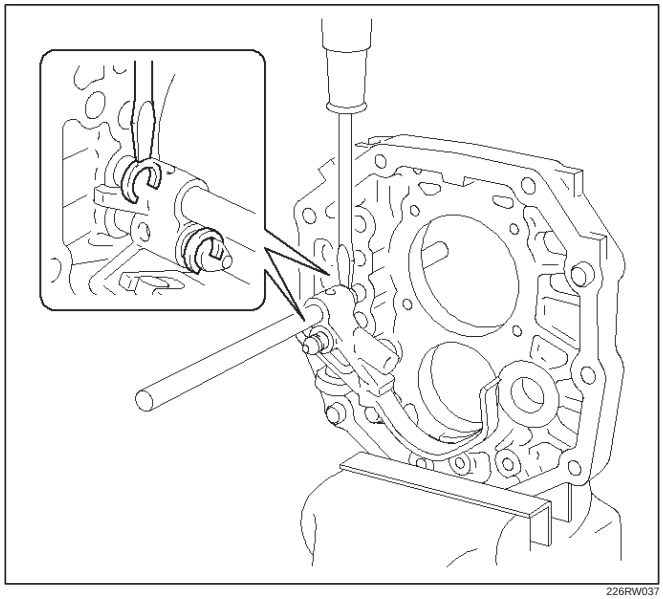

226RW037

22. Install 1st–2nd shift rod.
    1. Install the interlock pin to the intermediate plate.

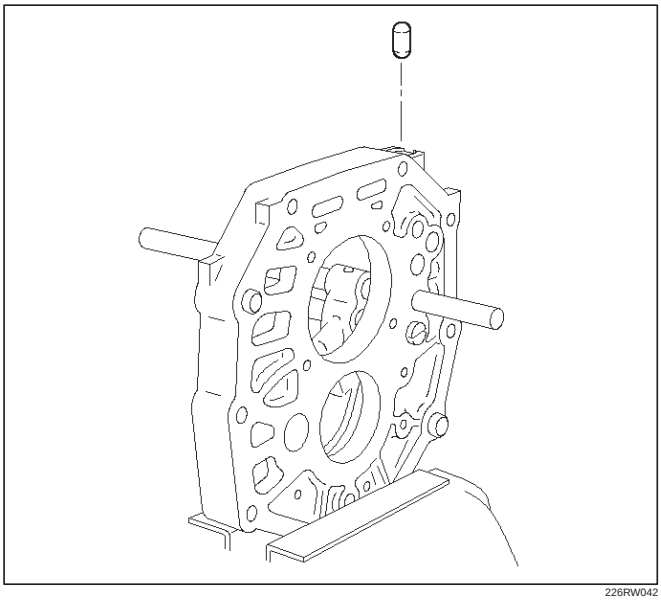

226RW042

    2. Put in the 1st–2nd shift rod from the rear.

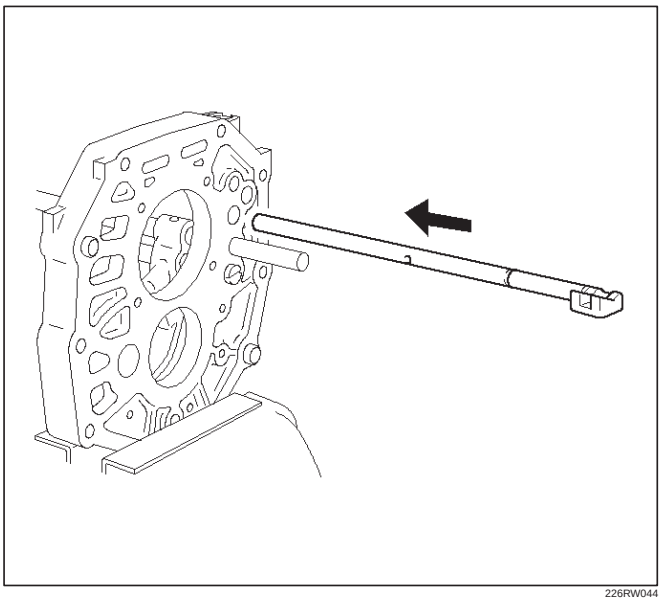

226RW044

23. Install 3rd–4th shift rod.
    1. Install the straight pin and interlock pin to the intermediate plate.

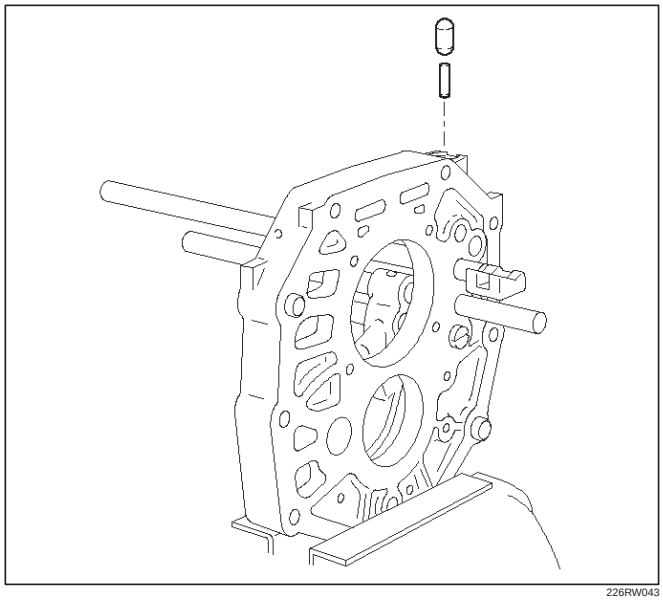

226RW043

    2. Put in the 3rd–4th shift rod from the rear.

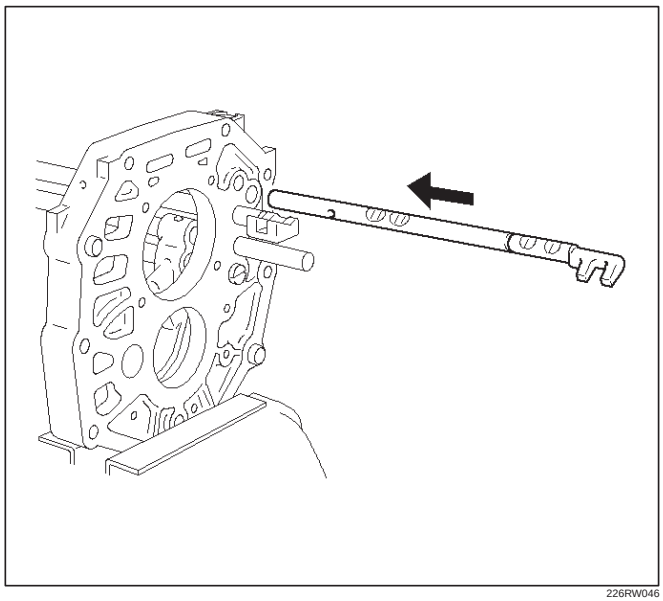

226RW046

24. Install the interlock parts.
    1. Using a screwdriver and hammer, 2 new shift rod snap rings to the 1st–2nd and 3rd–4th shift rod.

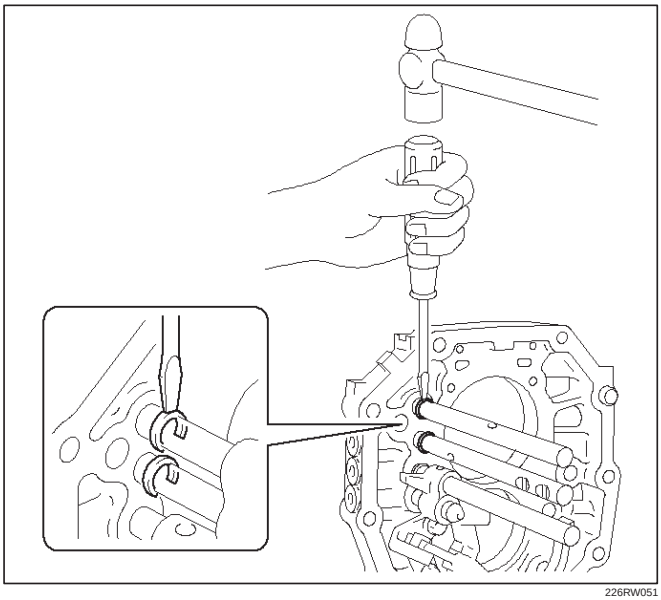

226RW051

    2. Install the 3 shift detent ball and springs to the intermediate plate.

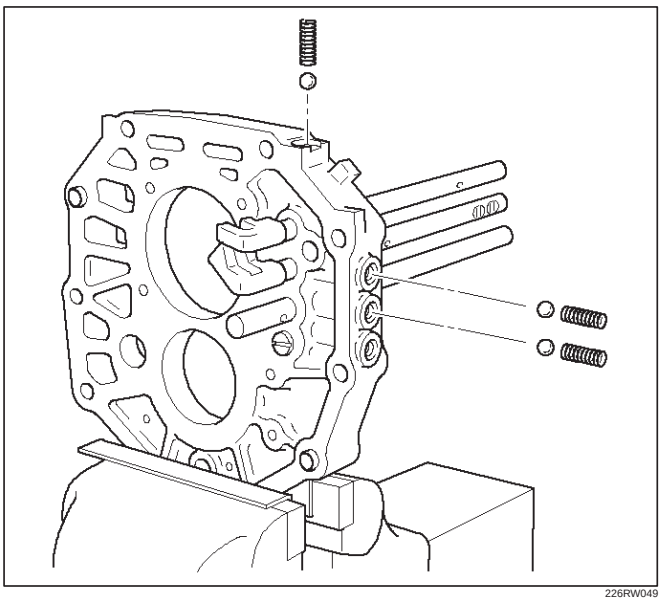

226RW049

    3. Clean up the plug hole.
    4. Apply sealant to the plug threads.
       sealant: THREE BOND 1344 or equivalent
    5. Using a torx socket wrench(T40), install and torque the 4 plugs.

Torque: 19 N·m (1.9 kg·m/14 lb ft)

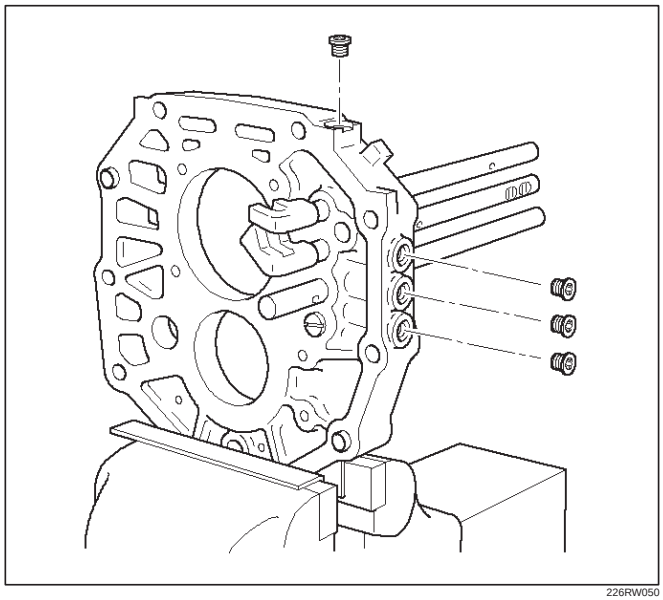

226RW050

25. Install mainshaft assembly.

NOTE: Coat all parts with gear oil before installing them.

    1. Using a plastic hammer, tap the 5th-reverse shift rod at the reverse shift.

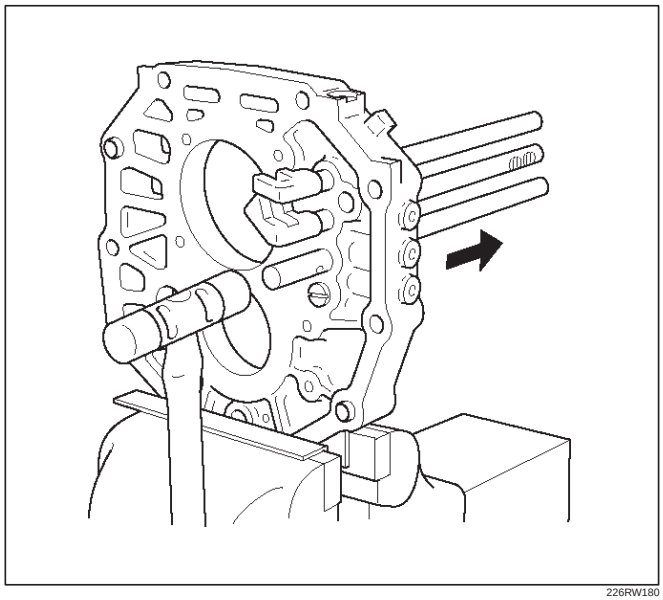

226RW180

2. Install the shift arm No.1 and No.2 to the mainshaft.

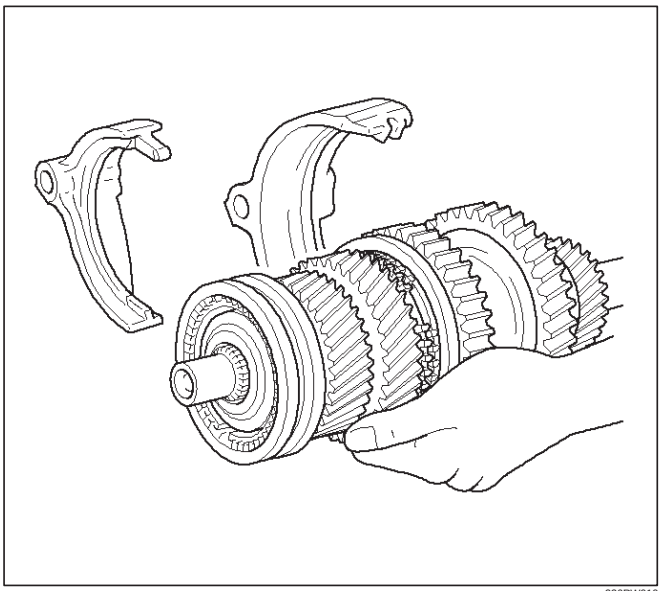

226RW010

3. Using a plastic hammer, tap the intermediate plate and install the mainshaft. Through the shift arm No.1 and No.2 to the shift rod.

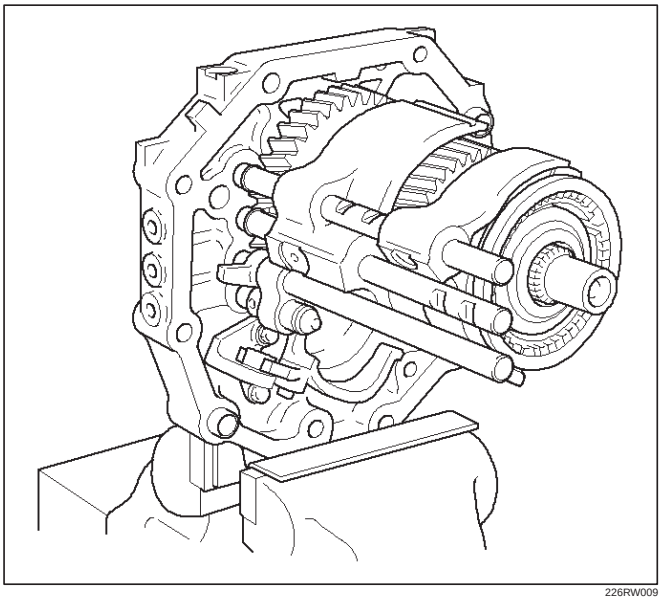

226RW009

4. Using a snap ring expander, install the snap ring.

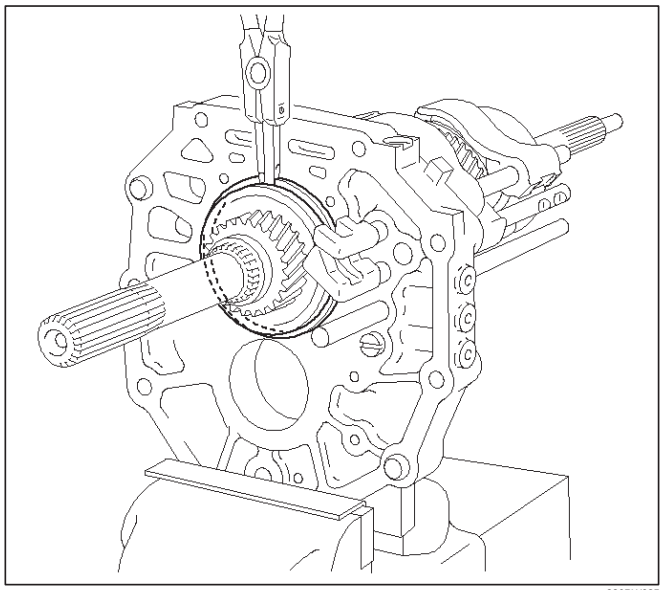

226RW035

5. Using a plastic hammer, tap the 5th-reverse shift rod at the neutral shift.

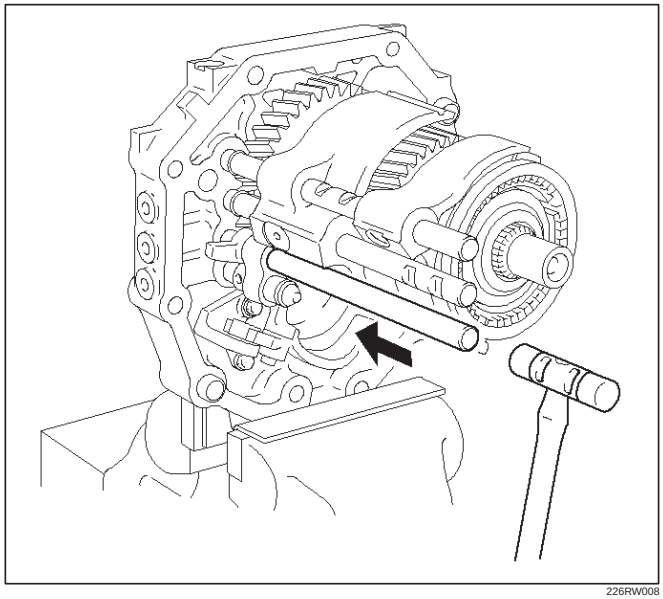

226RW008

26. Install the top gear shaft.
    1. Align the projection of the hub No.2 with the synchronizer ring slots, and install the top gear shaft assembly to the mainshaft.
    2. Check that the gear rotates smoothly.

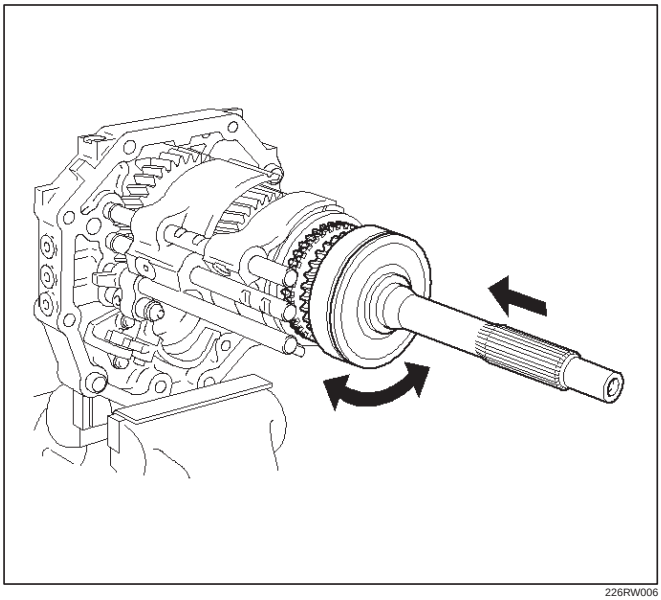

226RW006

27. Install the counter gear shaft.
    1. Temporarily install the counter gear shaft to the intermediate plate.

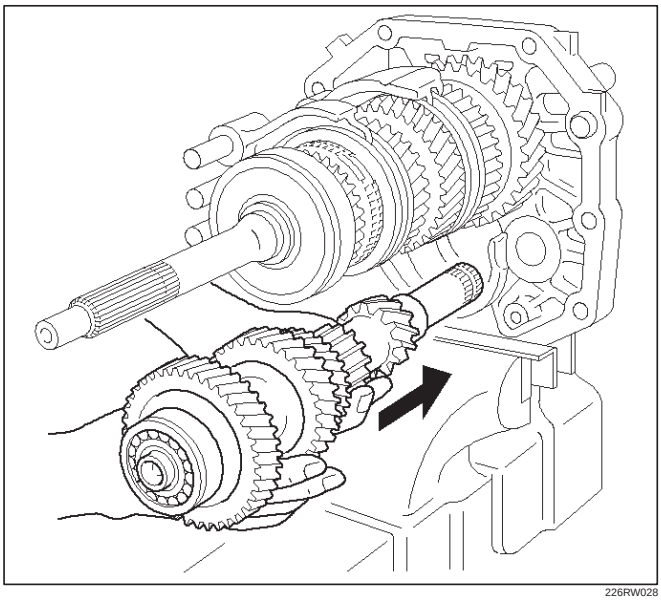

226RW028

    2. Using installer 5–8840–2552–0 (J–42796) and a hammer, drive in the center bearing as shown.

NOTE: Outer race snap ring groove toward rear.

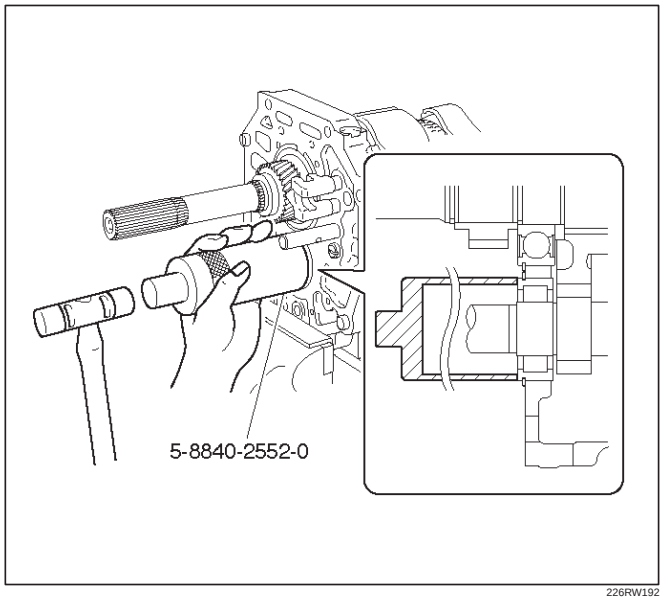

226RW192

Reference: Drive in the counter rear bearing by tapping on the front end of the counter shaft.

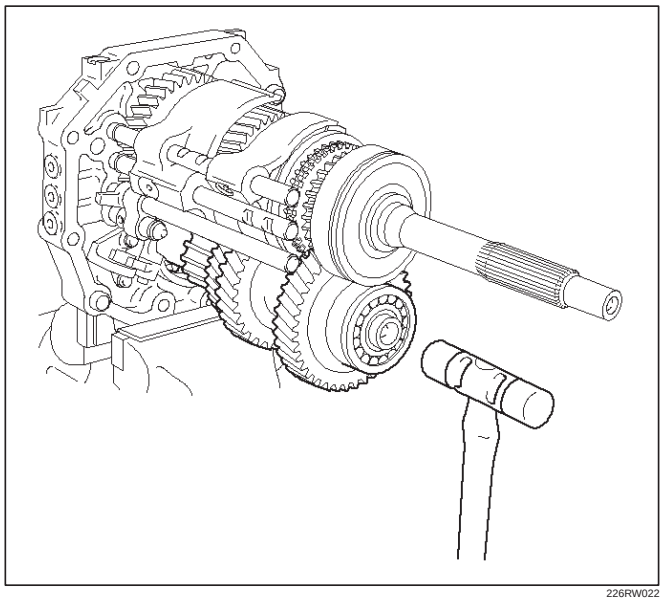

226RW022

28. Install the reverse idle gear.
    1. Install the reverse idle gear and reverse idle gear shaft.

NOTE:

- Insert the reverse idle gear shaft with the slot toward rear.
- Install the reverse idle gear with the reverse shift arm No.2.

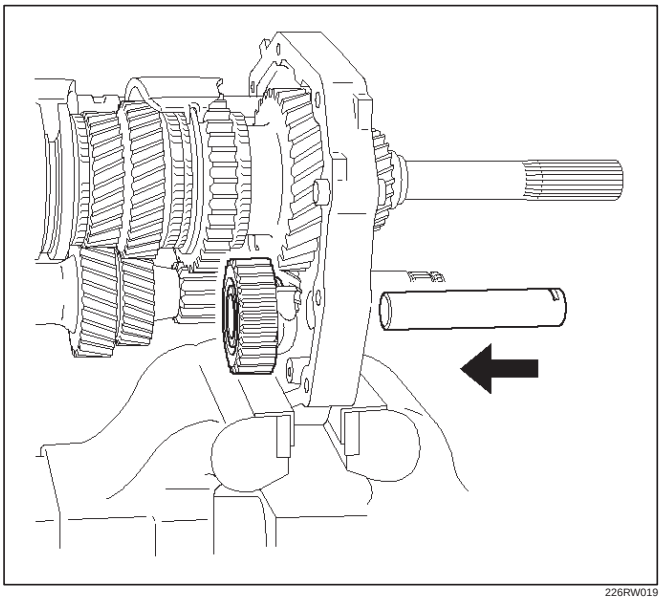

226RW019

29. Install the bearing plate.
    1. Align the bearing plate to groove of the reverse idle gear shaft.

Torque: 13 N·m (1.3 kg·m/113 lb in)

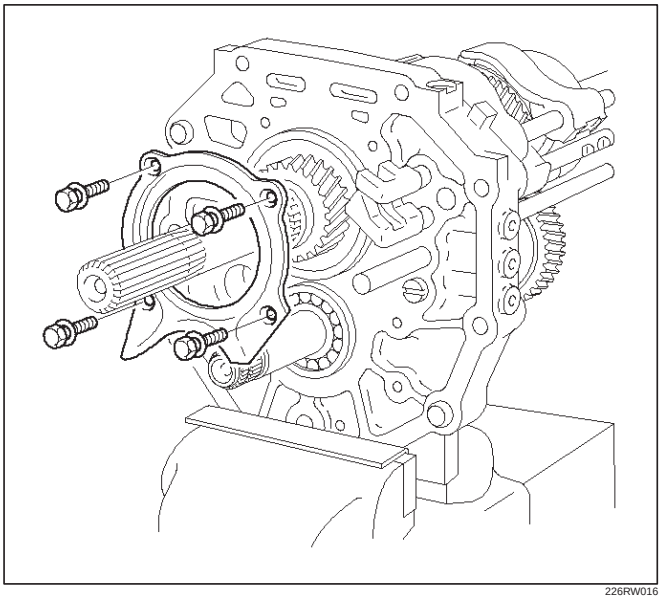

226RW016

30. Install the 5th gear thrust washer.
    1. Install the 5th gear thrust washer pin to the counter gear shaft.
    2. Install the 5th gear thrust washer to the counter gear shaft.

NOTE: Thrust washer must be assembled with the chamfered face of the washer toward the front.

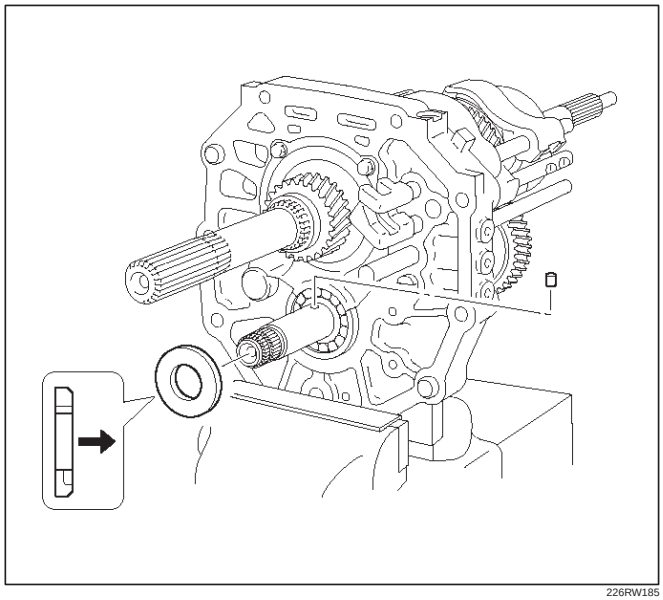

226RW185

31. Install the counter 5th gear.
    1. Install the 3 inserts and 3 compression springs to the reverse block ring.
       Reference: Push the 3 inserts with the 3 compression springs to the reverse synchronizer ring.

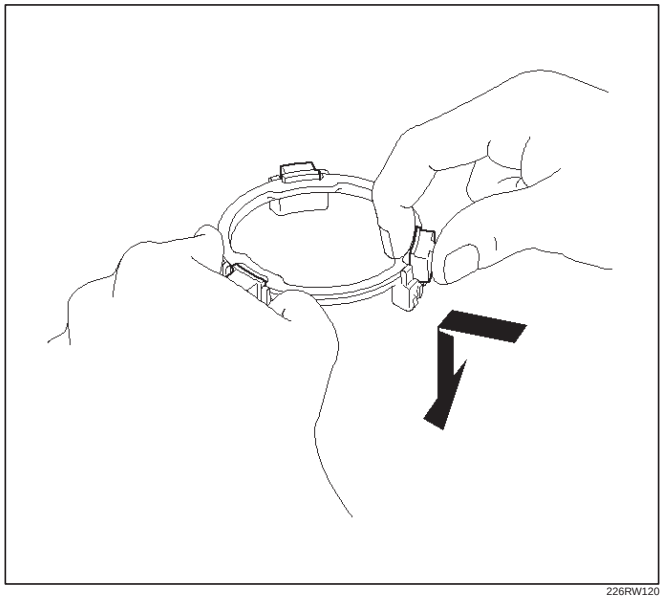

226RW120

2. Install the synchronizer outer ring, synchronizer cone ring, and synchronizer pull ring to the reverse block ring.

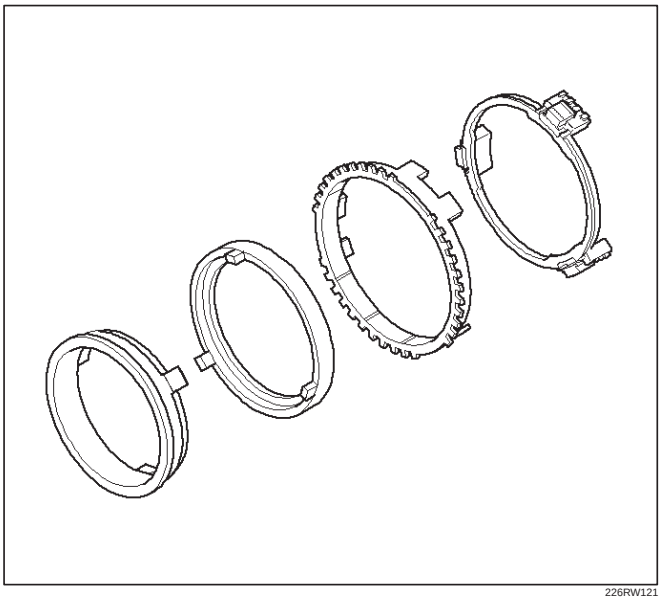

226RW121

3. Turn to 30 degree the reverse synchronizer pull ring.

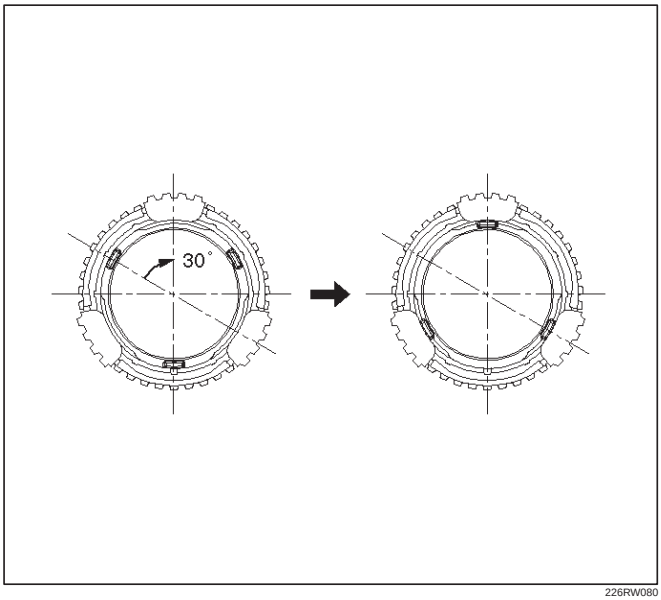

226RW080

4. Install the hub sleeve No.3 and reverse block ring set to the counter 5th gear.

NOTE: Check the hub sleeve No.3 direction, as shown.

Reference: While pushing the 3 inserts, install the synchronizer ring assembly to the hub sleeve No.3.

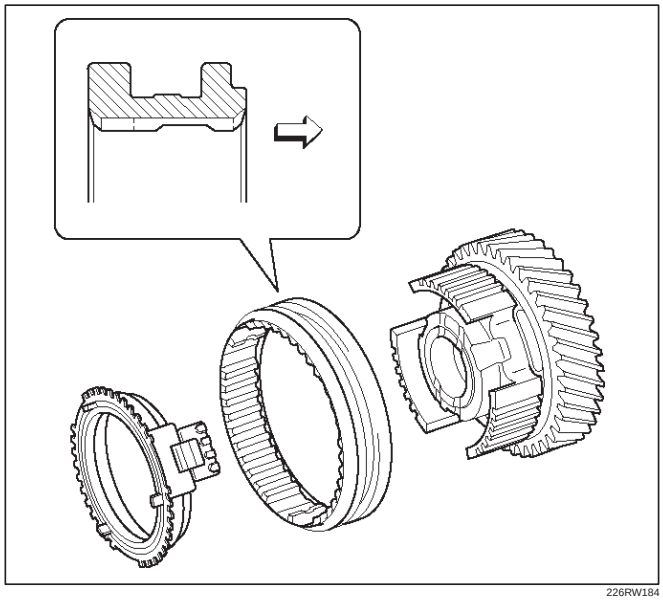

226RW184

5. Slide the hub sleeve No.3.

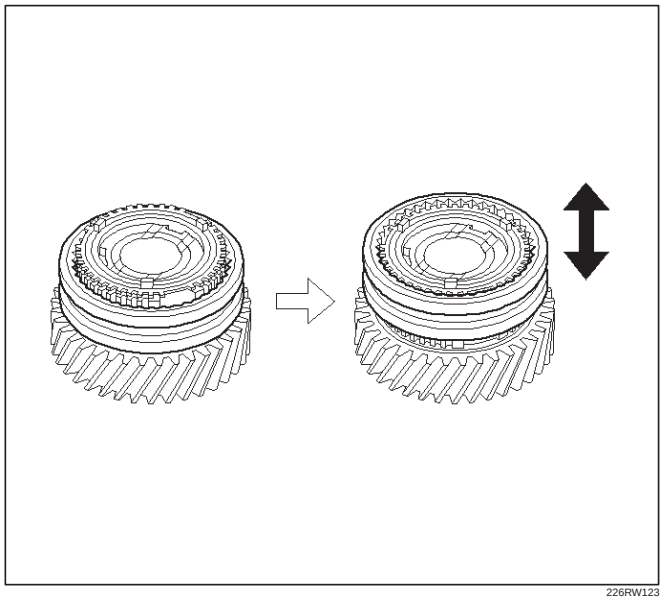

226RW123

6. Install the counter 5th gear bearing, counter 5th gear and reverse block ring set to the counter gear shaft, through the 5th reverse shift arm to the 5th reverse shift rod.

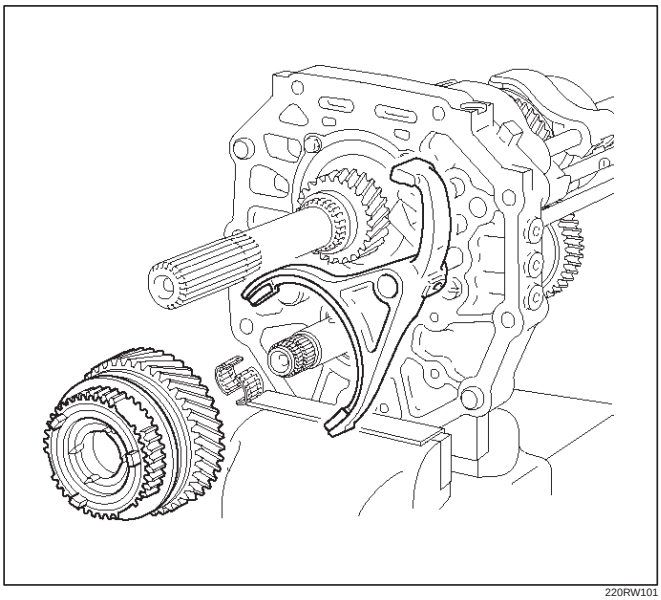

220RW101

7. Using installer 5–8840–2552–0 (J–42796) and a press, install counter 5th gear spline piece.

NOTE:

- Align the projection of the cone ring to the holes of the 5th gear spline piece.
- Check that the gear rotates smoothly.

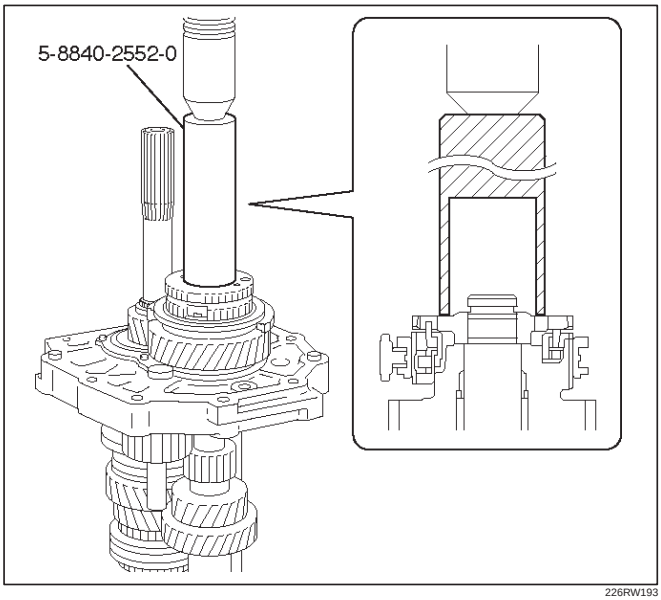

226RW193

8. Using thickness gauge, measure the counter 5th gear thrust clearance.

Standard: 0.10 – 0.35mm (0.004 – 0.014 in)

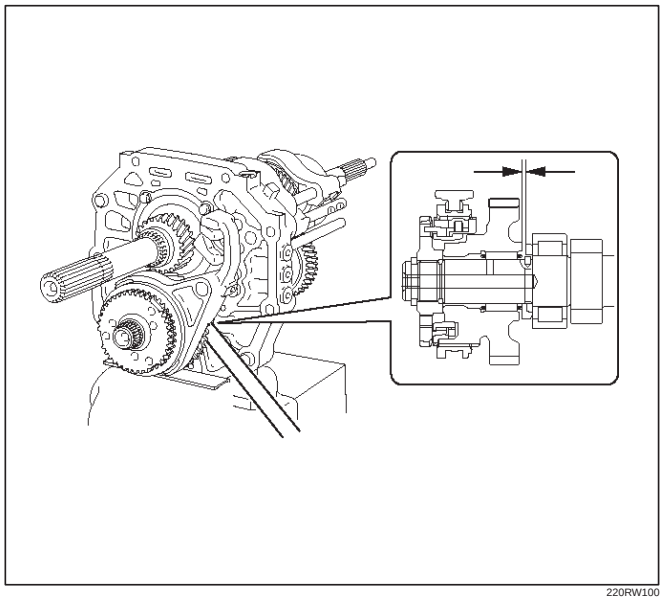

220RW100

9. Select a snap ring that will allow minimum axial play.

Mark	Thickness
A	2.80 – 2.85 (0.110 – 0.112 in)
B	2.85 – 2.90 (0.112 – 0.114 in)
C	2.90 – 2.95 (0.114 – 0.116 in)
D	2.95 – 3.00 (0.116 – 0.118 in)
E	3.00 – 3.05 (0.118 – 0.120 in)
F	3.05 – 3.10 (0.120 – 0.122 in)
G	3.10 – 3.15 (0.122 – 0.124 in)

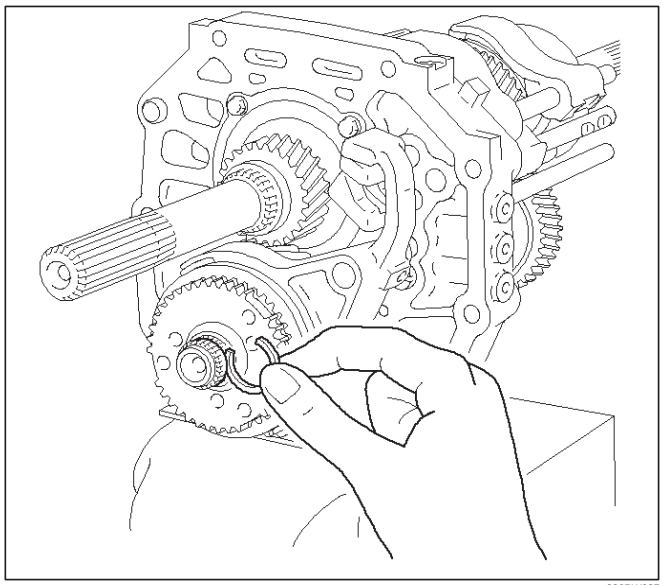

226RW027

10. Install the new snap ring.

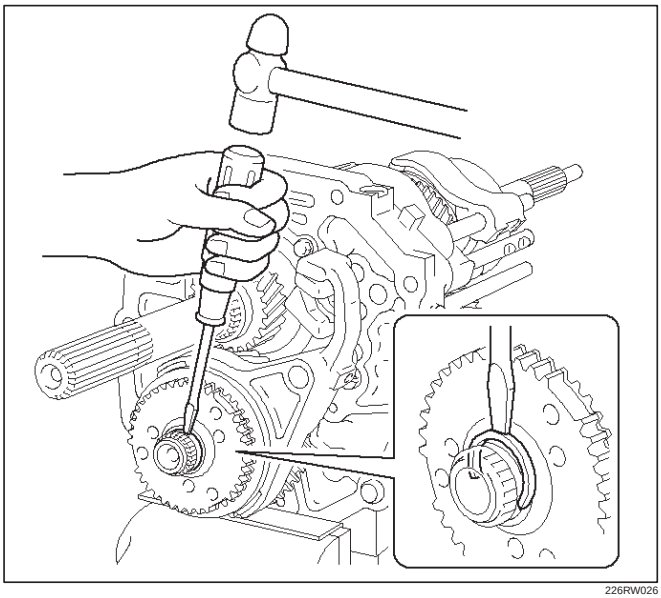

226RW026

32. Install the shift arm bolts.
    1. Install and torque the 2 shift arm bolts.

Torque: 20 N·m (2.0 kg·m/14 lb ft)

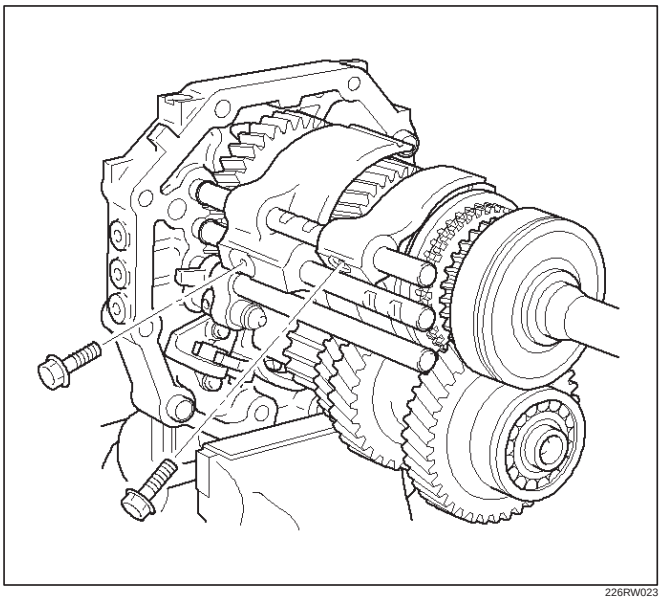

226RW023

33. Install the shift arm slotted pin.
    1. Using a pin punch and a hammer, drive in the slotted pin to the shift arm.

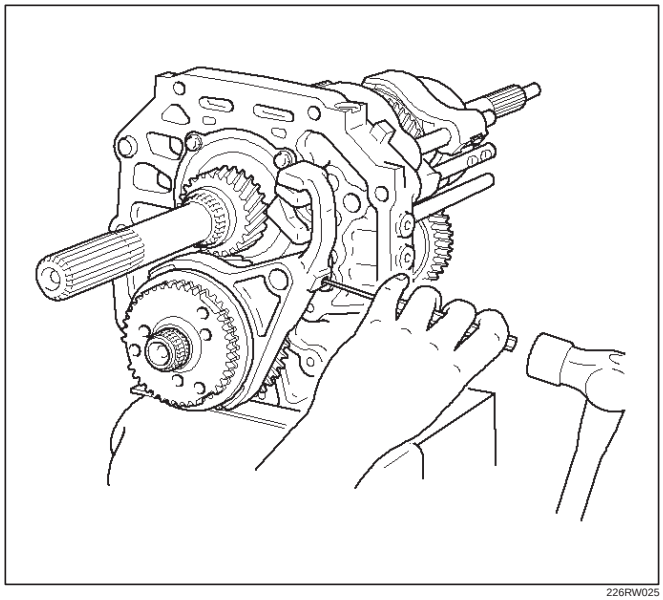

226RW025

34. Install the transmission case.
    1. Clean up the fitting surface.
    2. Apply recommended liquid gasket (THREE BOND 1281 or equivalent), as shown.

NOTE:

- Don’t dry the liquid gasket.

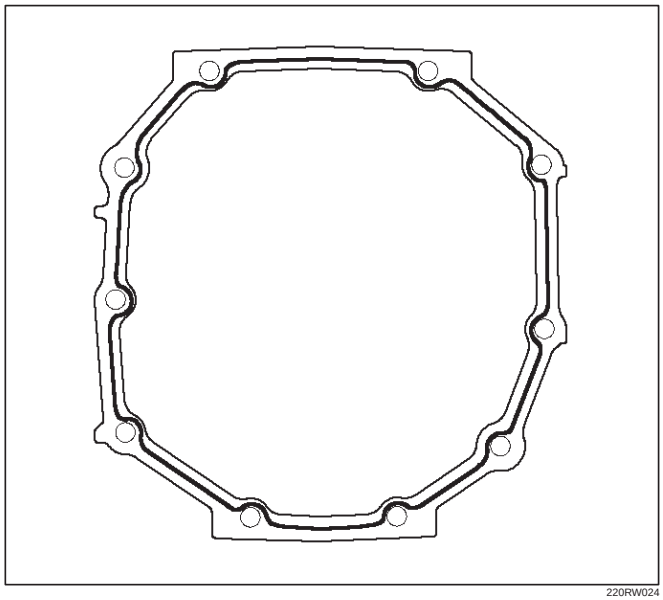

220RW024

3. Stand the transmission by the wood blocks.
4. Using a plastic hammer, tap the transmission case and attach it to the intermediate plate.

NOTE: Be careful not to add over force to bearing.

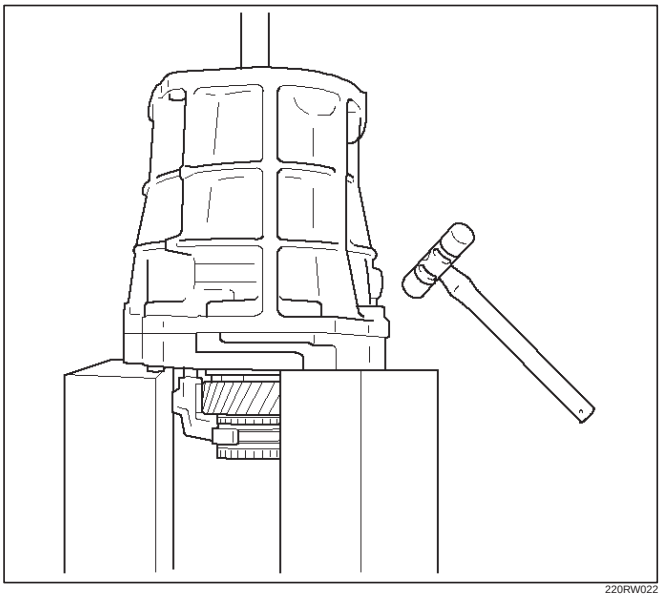

220RW022

5. Using a snap ring expander, install the front bearing shaft snap ring (1) and counter gear shaft bearing snap ring (2).

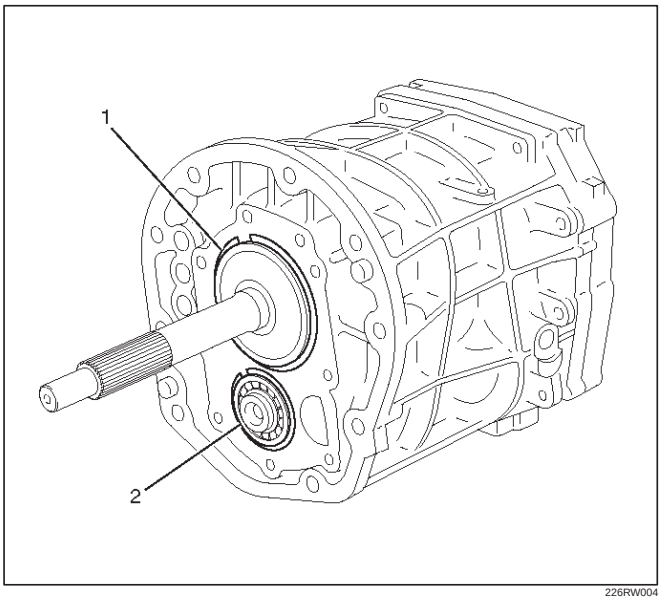

226RW004

6. Turn over the transmission.

35. Install the front cover.
1. Clean up the fitting surface.
2. Apply recommended liquid gasket (THREE BOND 1281 or equivalent), as shown.

NOTE:

- Don't dry the liquid gasket.

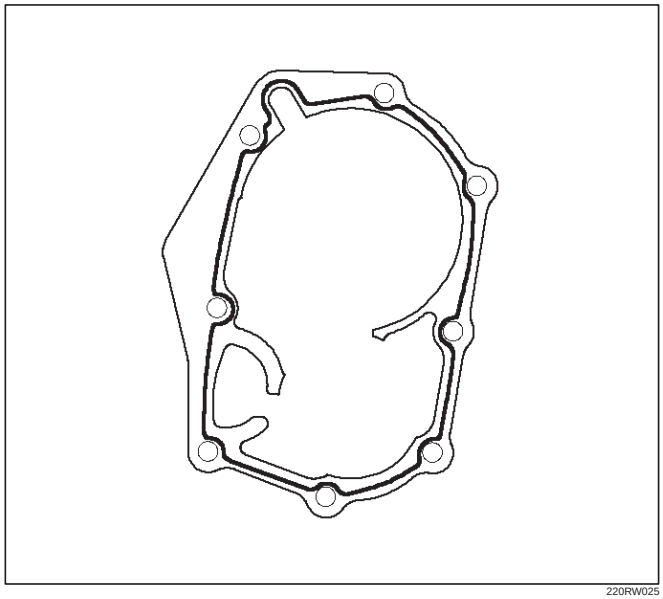

220RW025

3. Clean up and dry the bolts.
4. Apply thread sealant (THREE BOND 1344 or equivalent) to the 8 bolts.
5. Using 8 bolts, install the front cover to the transmission case.

Torque: 17 N·m (1.7 kg·m/12 lb ft)

NOTE:

- Tighten the all bolts evenly.
- Be careful not to damage the oil seal.

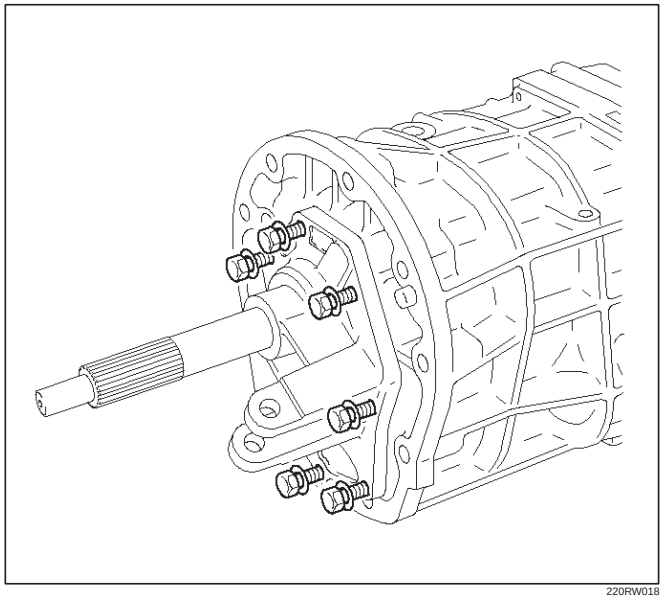

220RW018

6. Check that the top gear shaft and mainshaft rotate.

36. Install the transfer adapter.
    1. Clean up the fitting surface.
    2. Apply recommended liquid gasket (THREE BOND 1281 or equivalent), as shown.

NOTE:

- Don’t dry the liquid gasket.

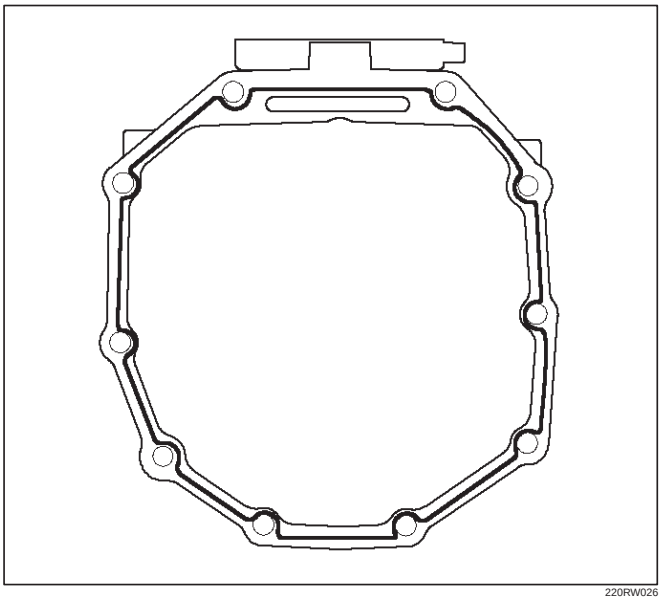

220RW026

3. Using a plastic hammer, tap the transfer adapter and attach it to the intermediate plate.

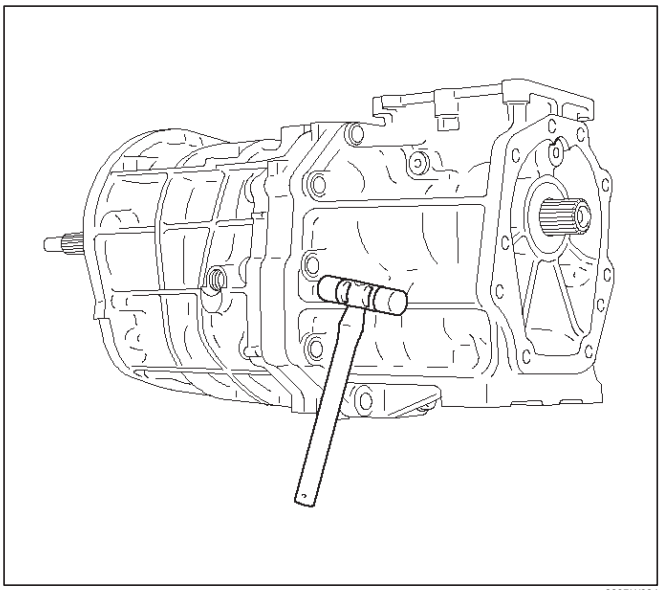

220RW034

4. Using 10 bolts, install the transfer adapter.

Torque: 37 N·m (3.8 kg·m/27 lb ft)

NOTE:

- Tighten the all bolts evenly.
- Don’t damage the lip of the oil seal.
- Install the wire clamp (9) to the transfer adapter.

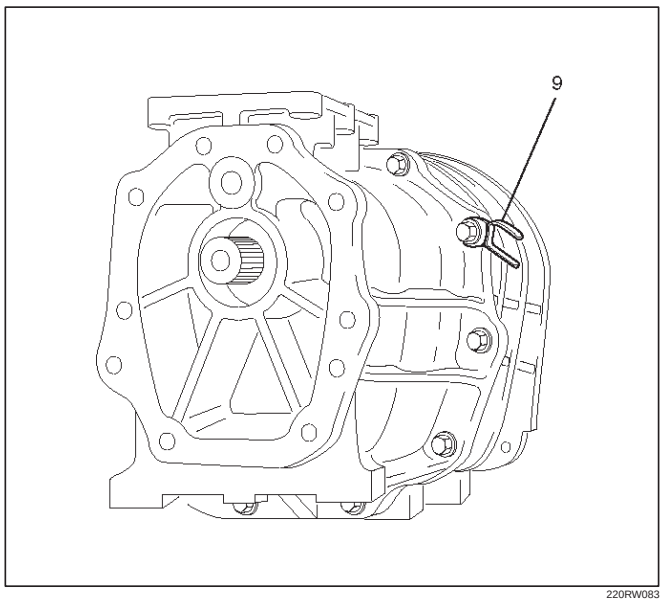

220RW083

37. Install the gear control box.
    1. Align the projection of the shift lever housing to the shaft rod groove, and install the gear control rod.

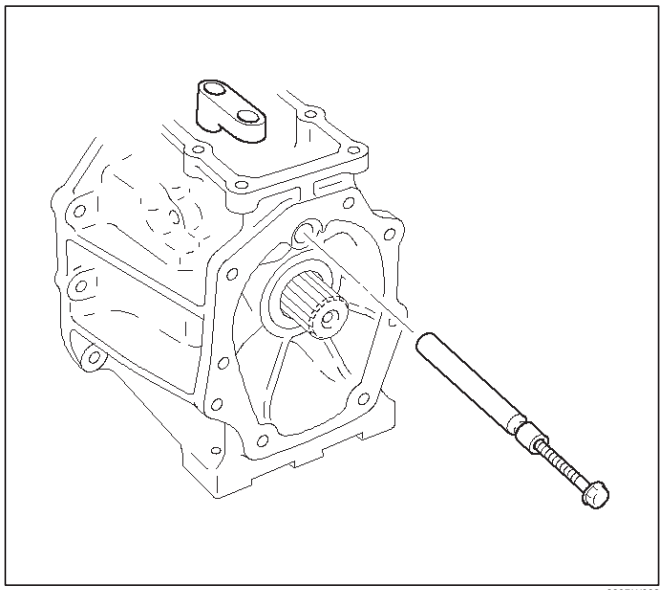

230RW003

2. Using a pin punch and hammer, drive in the slotted spring pin (2) to the shift lever housing.

NOTE: Be carefull not to drop the slotted spring pin.

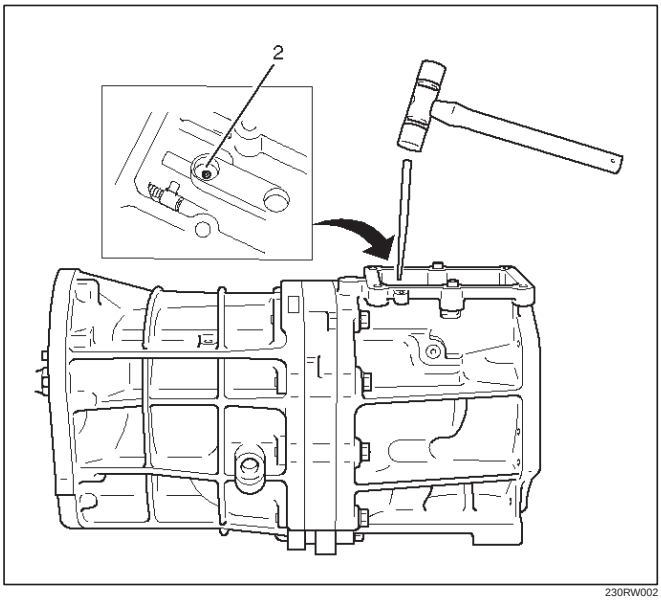

230RW002

3. Apply sealant (THREE BOND 1344 or equivalent) to the plug (1) thread.
4. Using hexagon wrench, install and torque the plug (1).

Torque: 18 N·m (1.8 kg·m/13 lb ft)

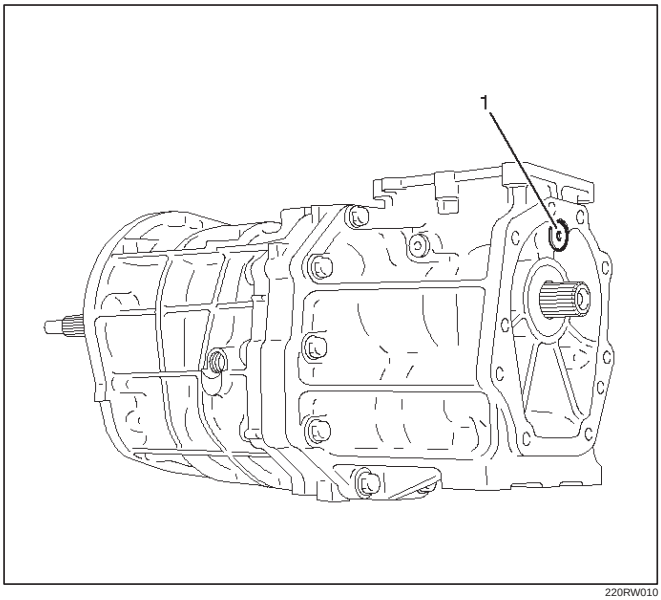

220RW010

5. Clean up the bolts and bolt hole.
6. Using 6 bolts, install the gear control box through the gasket.

Torque 18 N·m (1.8 kg·m/13 lb ft)

(6VE1)

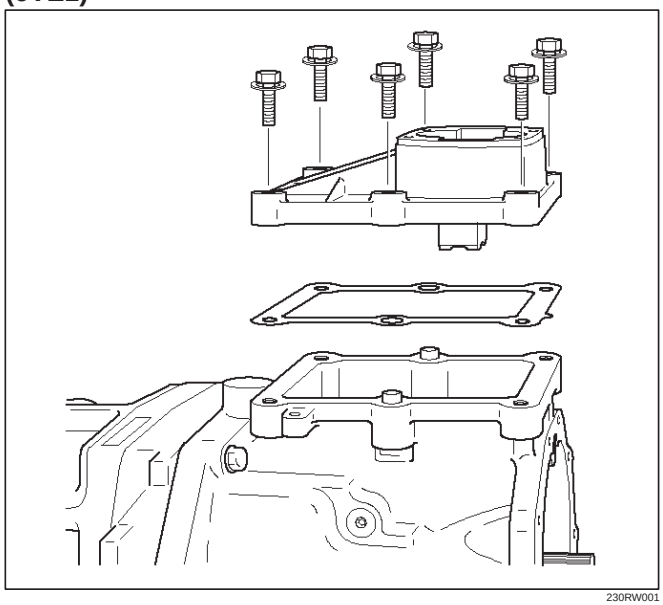

230RW001

(4JX1)

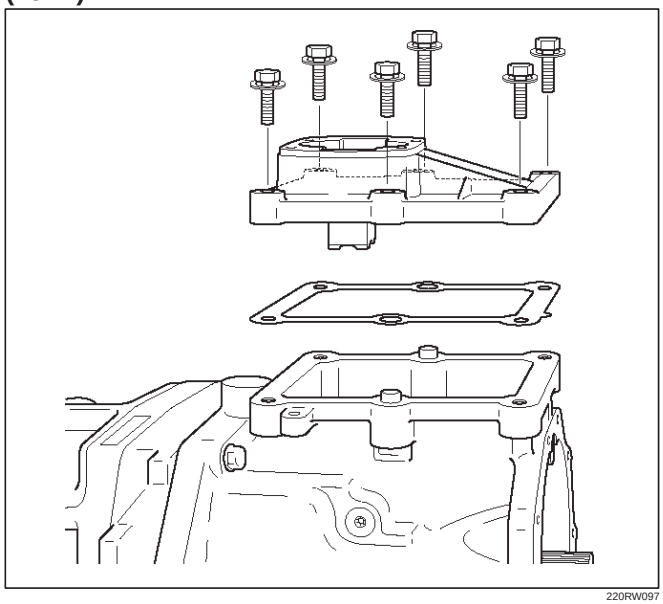

220RW097

38. Install clutch housing.
    1. Install the clutch housing to the transmission case.

    Torque: 36 N·m (3.7 kg·m/27 lb ft)

NOTE: Tighten the all bolts evenly.

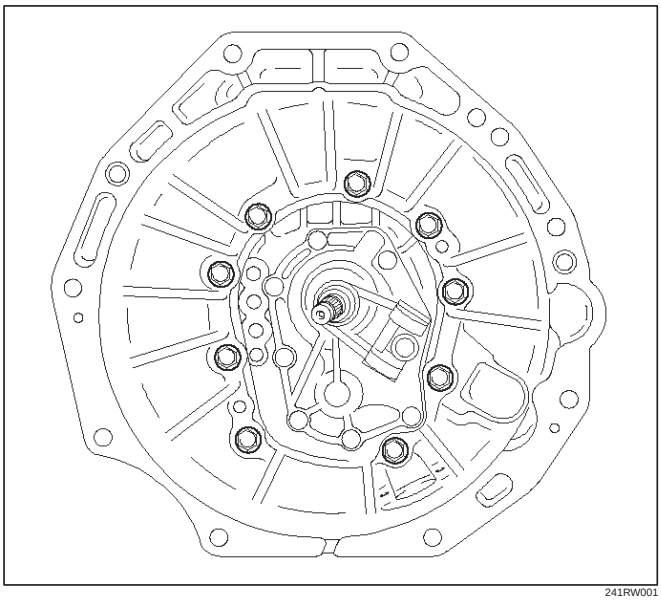

241RW001

39. Install the switches.
    1. Install the new gasket to the 1st and 2nd switch.
    2. Install the 1st and 2nd switch assembly (8).

    Torque: 39 N·m (4.0 kg·m/29 lb ft)

    3. Install the new gasket to the backup light switch.
    4. Install the backup light switch assembly (6).

    Torque: 44 N·m (4.5 kg·m/33 lb ft)

    5. Install the new gasket to the neutral switch.
    6. Install the neutral switch (7) to the transfer adapter (4JX1).

    Torque: 37 N·m (3.8 kg·m/27 lb ft)

(4JX1)

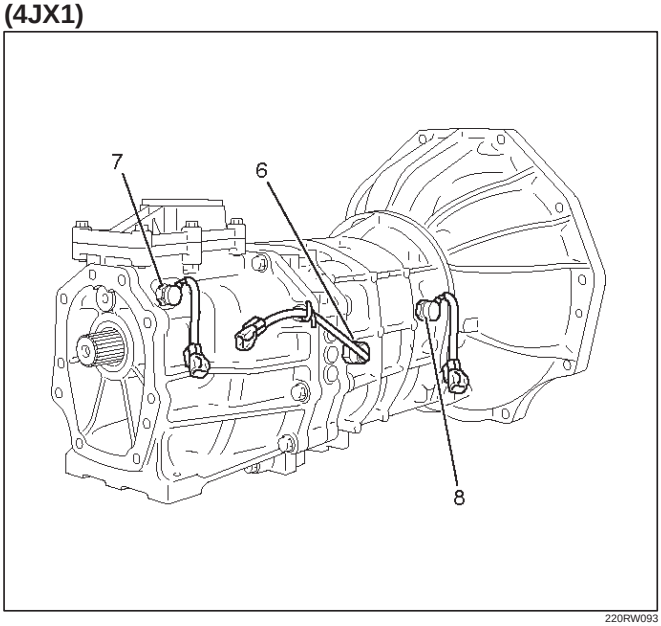

220RW093

40. Install the clutch release bearing (3) and clutch shift fork (5).
    1. Apply the clutch release grease.
        1. Fitting surface of the cylinder push rod.
        2. Fitting surface of the release bearing hub.
        3. The hole of the fork split pin (4).
    2. Apply the clutch release grease.
        1. The spline surface of the top gear shaft.
    3. Install the clutch shift fork (5).
    4. Install the snap pin.
    5. Install the clutch release bearing (3) to the clutch shift fork (5).

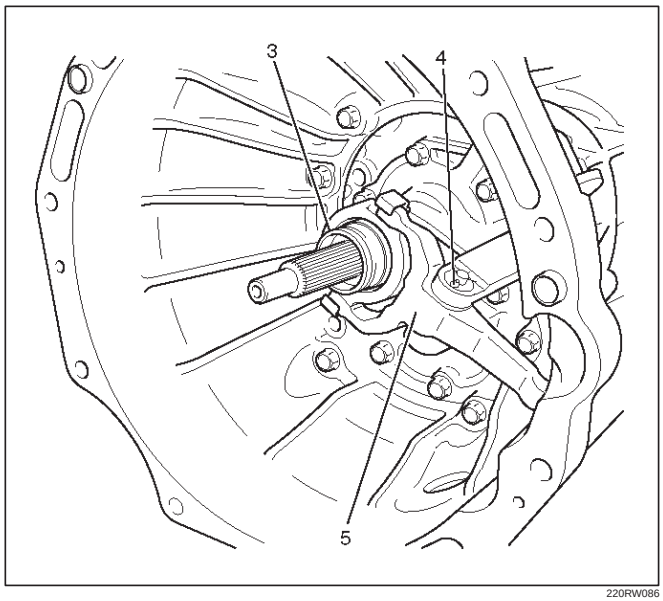

220RW086

41. Install the drain plug and filler plug.
    1. Install the drain plug (1) through the new gasket.

    Torque: 37 N·m (3.8 kg·m/27 lb ft)

    2. Install the filler plug (2) through the new gasket.

    Reference: Plug after the gear oil fill in.
    Torque: 37 N·m (3.8 kg·m/27 lb ft)

(6VE1)

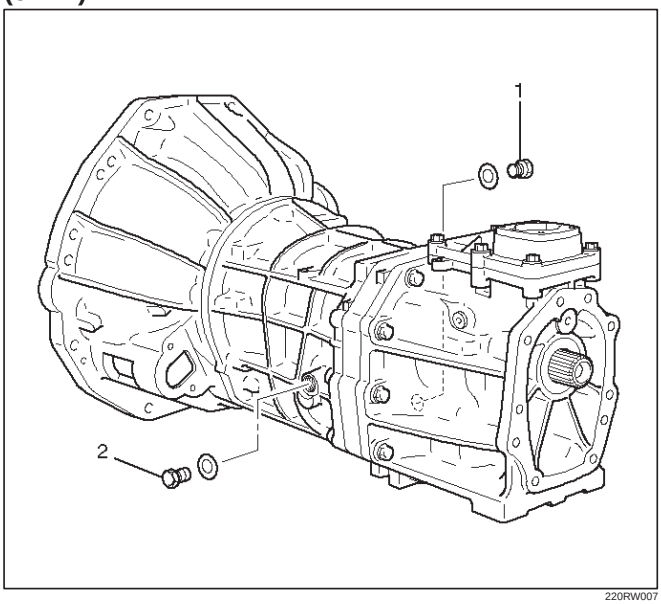

220RW007

Main Data and Specifications

General Specifications

Transmission type		Fully synchronized forward and reverse gears
Control method		Direct control with the gear shift lever on the floor
Gear ratio	1st	3.954
	2nd	2.330
	3rd	1.436
	4th	1.000
	5th	0.788
	Rev	3.918
Oil capacity lit (US qt)		2.7 (2.86)
Type of lubricant		Engine oil : Refer to the chart in “SECTION 0”

Torque Specifications

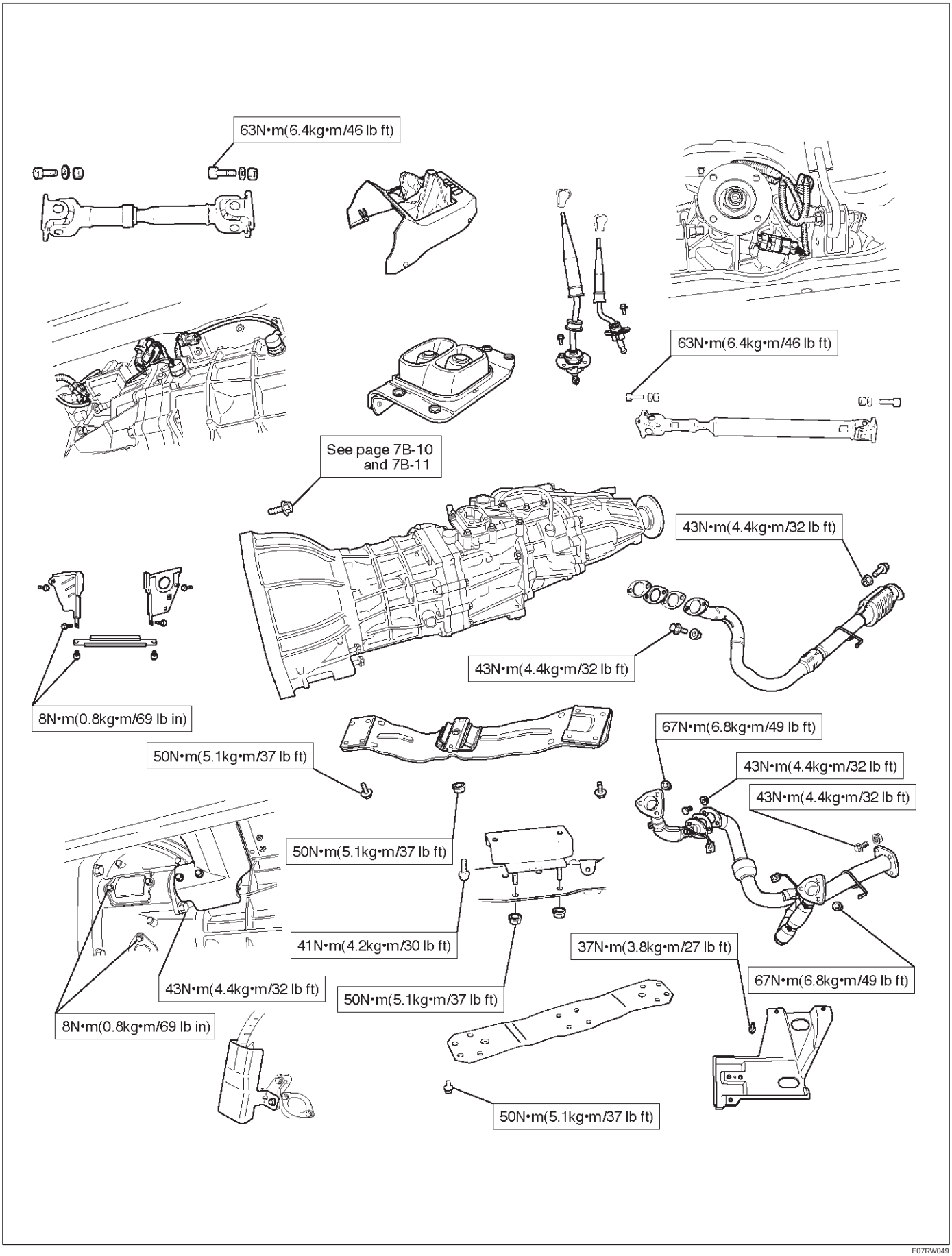

E07RW049

Torque Specifications (Cont'd)

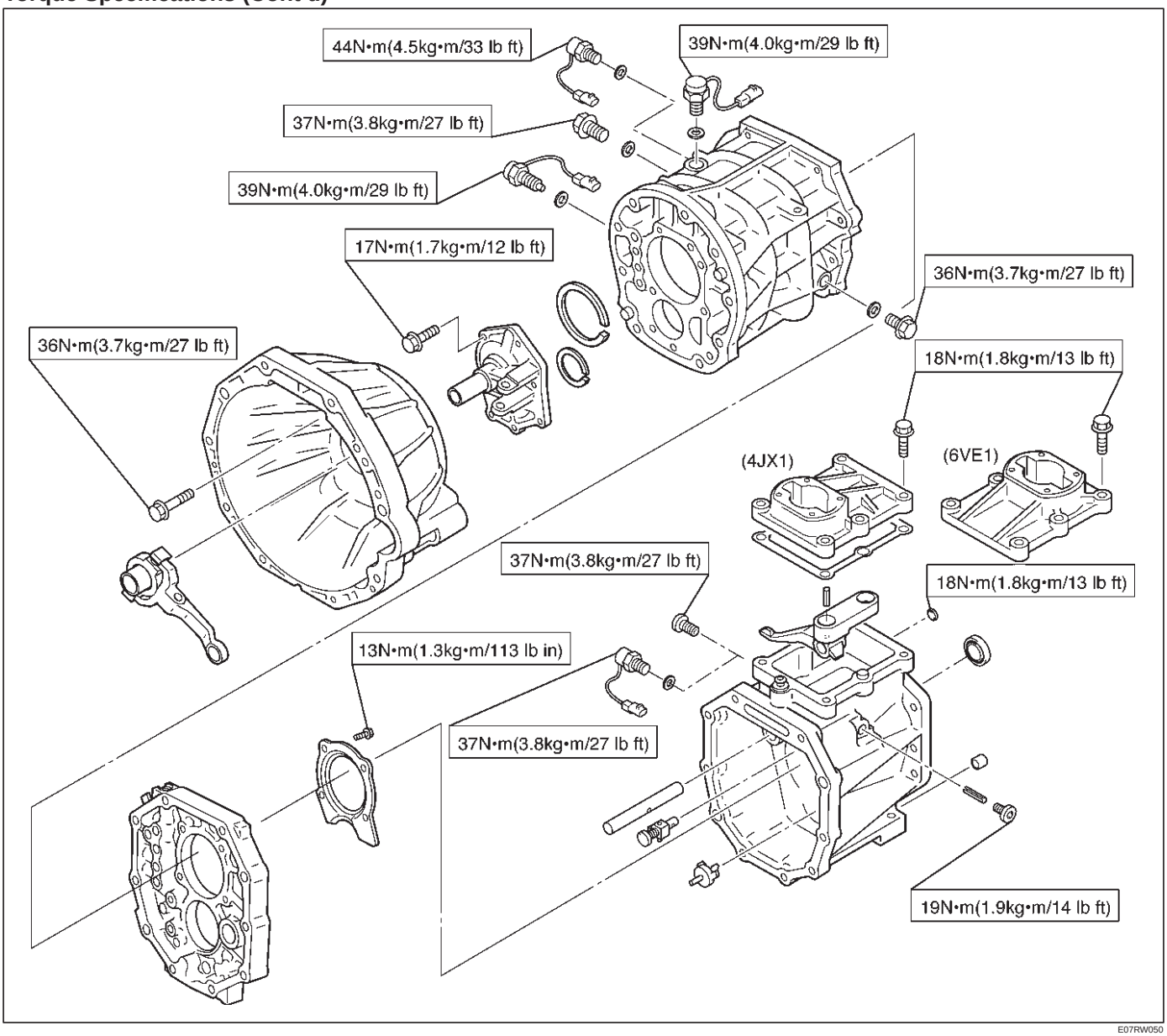

E07RW050

Torque Specifications (Cont'd)

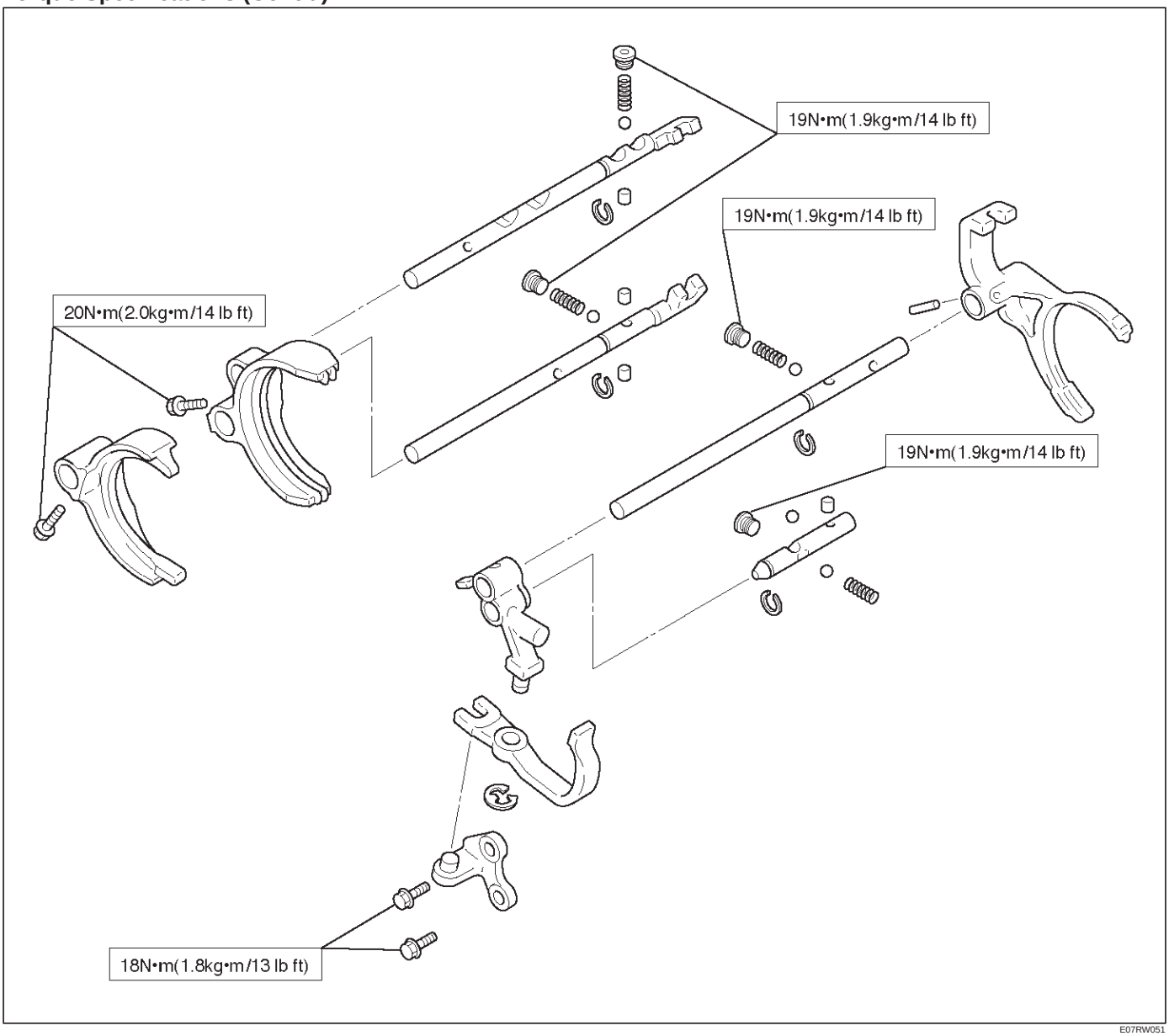

E07RW051

Special Tools

ILLUSTRATION	TOOL NO. TOOL NAME
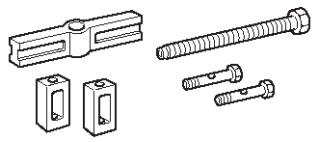 901RW201	**5–8840–2550–0** **(J–42794)** Gear spline pieace remover
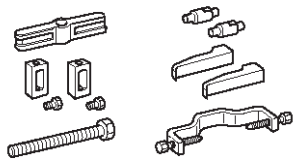 901RW202	**5–8840–2551–0** **(J–42795)** Center bearing remover
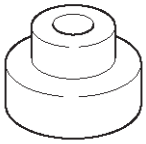 901RW203	**5–8840–2560–0** **(J–42988)** Attachment
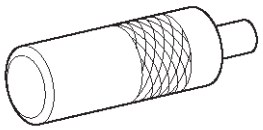 901RW204	**5–8840–2552–0** **(J–42796)** Counter gear shaft center bearing installer
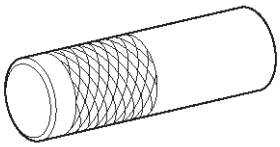 901RW205	**5–8840–2553–0** **(J–42797)** Clutch hub (No.2) installer
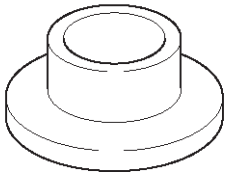 901RW206	**5–8840–2554–0** **(J–42798)** Clutch hub (No.1) installer

ILLUSTRATION	TOOL NO. TOOL NAME
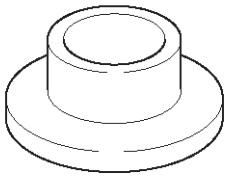 901RW206	**5–8840–2555–0** **(J–42799)** Installer
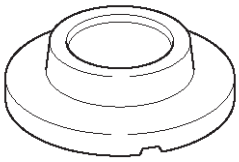 901RW207	**5–8840–2556–0** **(J–42800)** Counter gear shaft front bearing installer
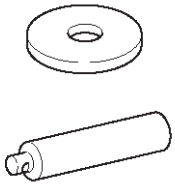 901RW208	**5–8840–2559–0** **(J–42904)** Top gear shaft front bearing installer
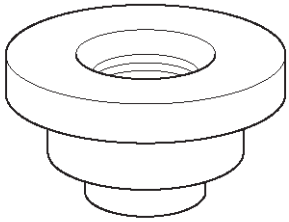 901RS296	**5–8840–2557–0** **(J–42801)** Front rerainer oil seal installer
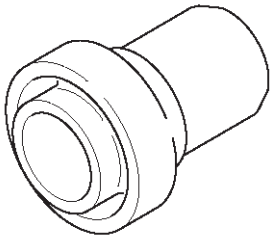 901RW095	**5–8840–2558–0** **(J–42802)** Transfer adapter oil seal installer
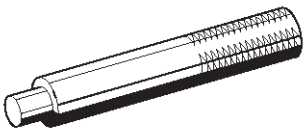 901RS218	**5–8840–0007–0** **(J–8092)** Driver handle

Special Tools (Cont'd)

ILLUSTRATION	**TOOL NO.** TOOL NAME
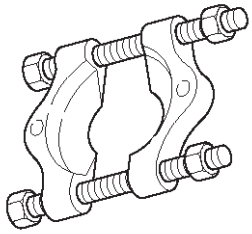	**5–8840–0015–0** **(J–22912–01)** Bearing separator

SECTION 7B1
MANUAL TRANSMISSION

TABLE OF CONTENTS

PAGE

4 x 2 Model Transmission ..... 7B1— 2
Main Data and Specifications ..... 7B1— 2
General Description ..... 7B1— 3
Torque Specifications ..... 7B1— 4
Recommended Liquid Gasket ..... 7B1— 6
Removal and Installation ..... 7B1— 7
Disassembly ..... 7B1— 16
Inspection and Repair ..... 7B1— 26
Reassembly ..... 7B1— 31
4 x 4 Model Transmission ..... 7B1— 46
Main Data and Specifications ..... 7B1— 46
General Description ..... 7B1— 47
Torque Specifications ..... 7B1— 48
Recommended Liquid Gasket ..... 7B1— 50
Removal and Installation ..... 7B1— 51
Disassembly ..... 7B1— 61
Inspection and Repair ..... 7B1— 81
Reassembly ..... 7B1— 87
Troubleshooting ..... 7B1—112

4 x 2 MODEL TRANSMISSION

MAIN DATA AND SPECIFICATIONS

Models		MUA 5C	MUA 5S
Transmission type		Fully synchronized 5-forward and revers gears.	
Gear ratio	1st	3.767	4.357
	2nd	2.248	2.502
	3rd	1.404	1.501
	4th	1.000	1.000
	5th	0.809	0.809
	Rev.	3.873	3.970
Oil capacity	lit (US gal.)	2.95 (0.78)	

GENERAL DESCRIPTION

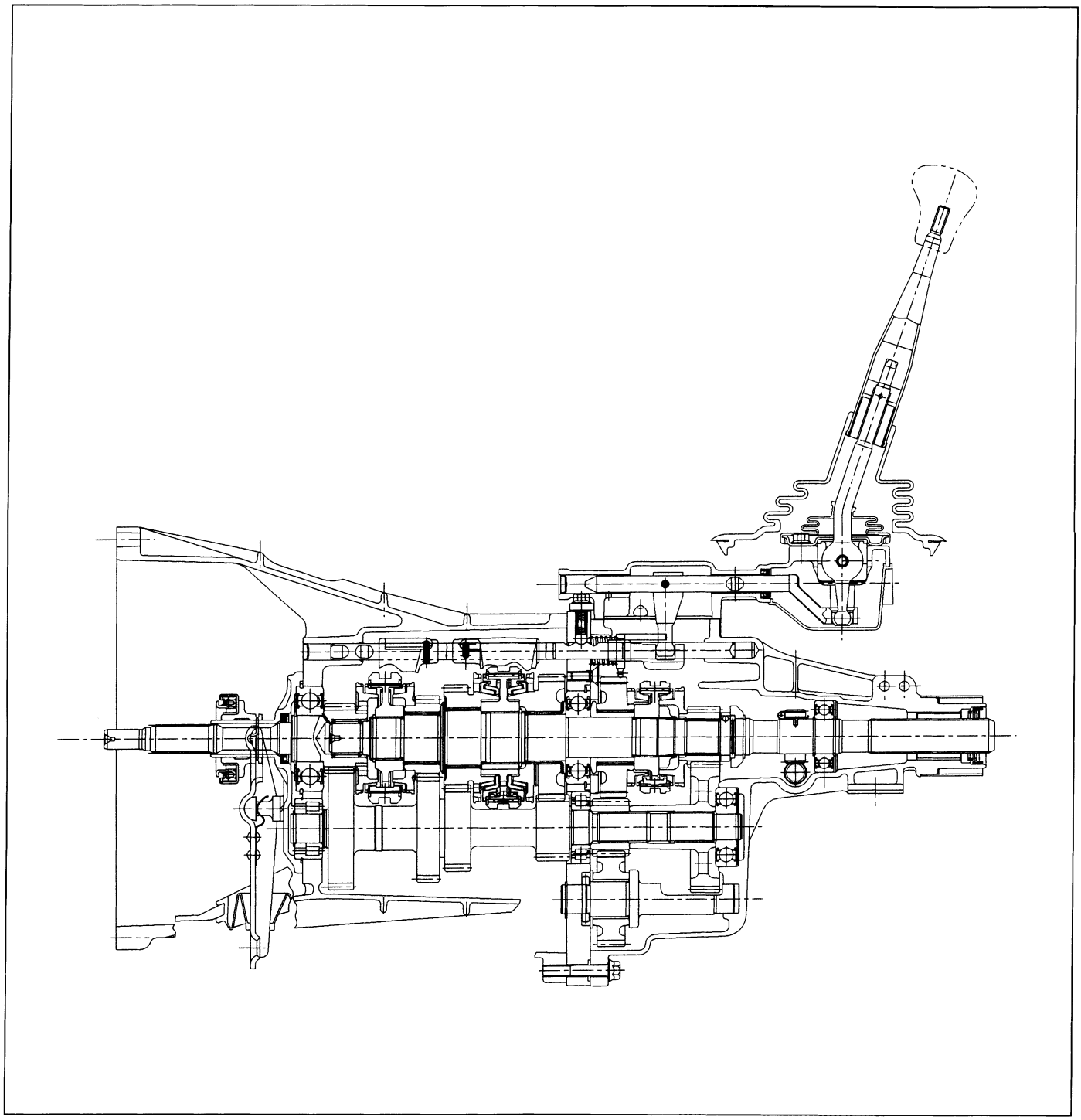

A07LV003

The transmission is designed for the quietest possible operation.

A longer center distance (77.5 mm (3.05 in)) provides increased durability.

Principle parts of the transmission are the integral clutch housing, the intermediate plate, the rear cover, and the gears.

The gear control box is built-in to the rear cover.

TORQUE SPECIFICATIONS

STANDARD BOLTS

The torque values given in the following table should be applied where a particular torque is not specified.

N·m (kg·m / lb·ft)

	Strength Class	4.8/4T	7T	8.8		9.8/9T
				Refined	Non-Refined	
	Bolt Identification	4	7	8	8	9
	Bolt Diameter× Pitch (mm)	No mark	—			
Standard Hex. Head Bolt	M6 × 1.0	6 (0.6 / 52 lb·in)	7 (0.7 / 61 lb·in)	8 (0.8 / 69 lb·in)		–
	M8 × 1.25	13 (1.3 / 113 lb·in)	17 (1.7 / 12)	20 (2.0 / 14)		24 (2.4 / 17)
	M10 × 1.25	27 (2.8 / 20)	37 (3.8 / 27)	42 (4.3 / 31)		50 (5.1 / 37)
	M12 × 1.25	61 (6.3 / 45)	76 (7.8 / 56)	87 (8.9 / 64)		95 (9.7 / 70)
	M14 × 1.5	96 (9.8 / 71)	116 (11.8 / 85)	133 (13.6 / 98)		142 (14.5 / 105)
	M16 × 1.5	130 (13.3 / 96)	170 (17.3 / 125)	193 (19.7 / 143)		200 (20.4 / 148)
	M18 × 1.5	188 (19.2 / 139)	244 (24.9 / 180)	278 (28.3 / 205)		287 (29.3 / 212)
	M20 × 1.5	258 (26.3 / 190)	337 (34.4 / 249)	385 (39.3 / 284)		396 (40.4 / 292)
	M22 × 1.5	332 (33.9 / 245)	453 (46.3 / 335)	517 (52.7 / 381)		530 (54.1 / 391)
	M24 × 2.0	449 (45.8 / 331)	570 (58.2 / 421)	651 (66.3 / 480)		692 (70.6 / 511)
	* M10 × 1.5	26 (2.7 / 20)	36 (3.7 / 27)	41 (4.2 / 30)		48 (4.9 / 35)
	* M12 × 1.75	57 (5.8 / 42)	71 (7.2 / 52)	80 (8.2 / 59)		89 (9.1 / 66)
	* M14 × 2.0	89 (9.1 / 66)	110 (11.2 / 81)	125 (12.7 / 92)		133 (13.6 / 98)
	* M16 × 2.0	124 (12.7 / 92)	162 (16.5 / 119)	185 (18.9 / 137)		191 (19.5 / 141)
Flange Bolt	M6 × 1.0	7 (0.7 / 61 lb·in)	8 (0.8 / 69 lb·in)	9 (0.9 / 78 lb·in)		–
	M8 × 1.25	15 (1.5 / 11)	19 (1.9 / 14)	22 (2.2 / 16)		26 (2.7 / 20)
	M10 × 1.25	31 (3.2 / 23)	41 (4.2 / 30)	47 (4.8 / 35)		56 (5.7 / 41)
	M12 × 1.25	69 (7.0 / 51)	85 (8.7 / 63)	97 (9.9 / 72)		106 (10.8 / 78)
	M14 × 1.5	104 (10.6 / 77)	126 (12.8 / 93)	144 (14.6 / 106)		154 (15.7 / 114)
	M16 × 1.5	145 (14.8 / 127)	188 (19.2 / 139)	214 (21.8 / 158)		221 (22.5 / 163)
	M18 × 1.5	–	–	–		–
	M20 × 1.5	–	–	–		–
	M22 × 1.5	–	–	–		–
	M24 × 2.0	–	–	–		–
	* M10 × 1.5	30 (3.1 / 22)	40 (4.1 / 30)	46 (4.7 / 34)		54 (5.5 / 40)
	* M12 × 1.75	64 (6.5 / 47)	78 (8.0 / 58)	89 (9.1 / 66)		99 (10.1 / 73)
	* M14 × 2.0	97 (9.9 / 72)	119 (12.1 / 88)	135 (13.8 / 99.7)		144 (14.7 / 107)
	* M16 × 2.0	137 (14.0 / 101)	178 (18.2 / 132)	203 (20.7 / 150)		210 (21.5 / 155)

The asterisk * indicates that the bolts are used for female-threaded parts that are made of soft materials such as casting, etc.

FLARE NUTS

N·m (kg·m / lb·ft)

Pipe diameter mm (in)	Torque	Pipe diameter mm (in)	Torque
4.76 (0.187)	16 (1.6 / 12)	10.00 (0.394)	54 (5.5 / 40)
6.35 (0.250)	26 (2.7 / 20)	12.00 (0.472)	88 (9.0 / 65)
8.00 (0.315)	44 (4.5 / 33)	15.00 (0.591)	106 (10.8 / 78)

SPECIAL PARTS FIXING NUTS AND BOLTS

kg·m(lb.ft/N·m)

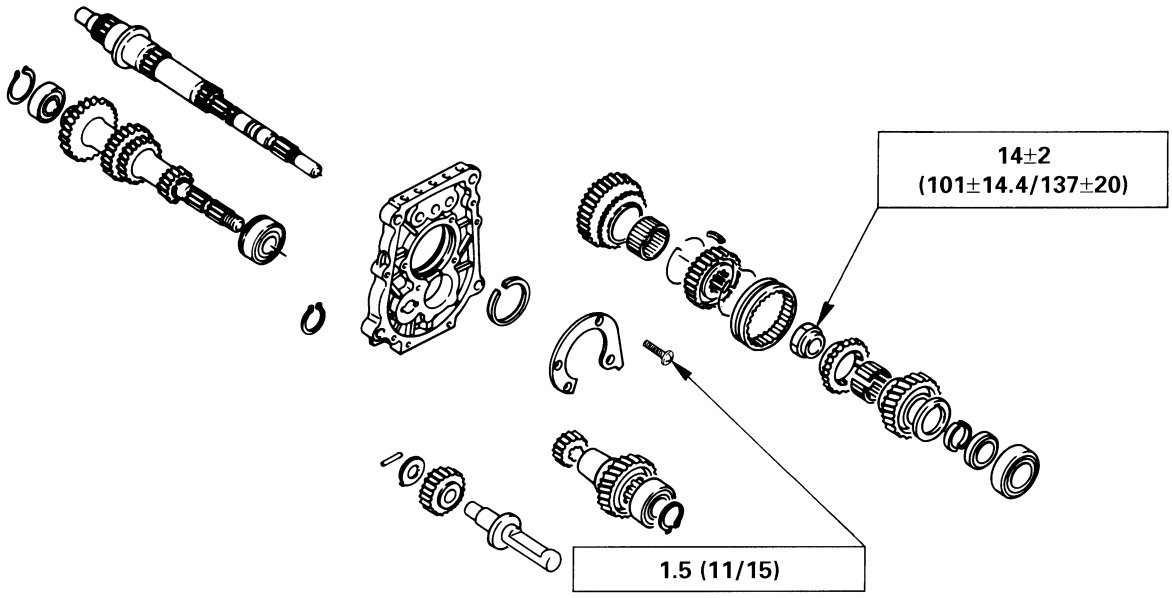

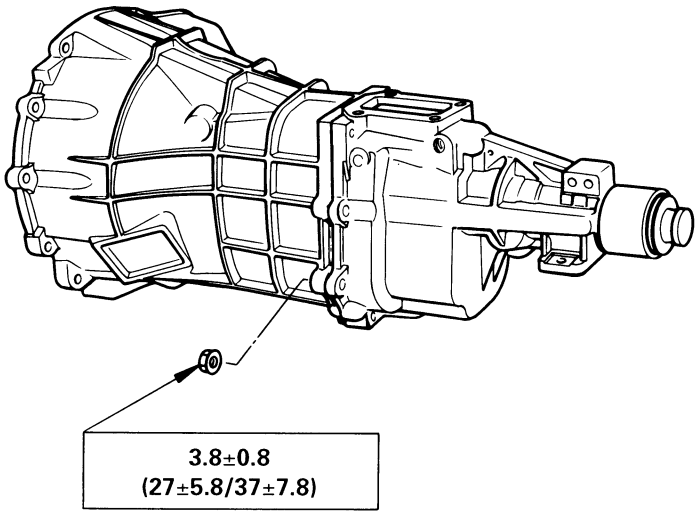

RECOMMENDED LIQUID GASKET

Type	Brand Name	Manufacturer	Remarks
RTV* Silicon Base	ThreeBond 1207B ThreeBond 1207C	Three Bond Three Bond	For Engine Repairs
	ThreeBond 1215 ThreeBond 1281	Three Bond Three Bond	For Axle Case and Transmission Repairs
Water Base	ThreeBond 1141E	Three Bond	For Engine Repairs
Solvent	ThreeBond 1104 BelcoBond 4 BelcoBond 401 BelcoBond 402	Three Bond Isuzu Isuzu Isuzu	For Engine Repairs
Anerobic	LOCTITE 515 LOCTITE 518	Loctite Loctite	All

* RTV : Room Temperature Vulcanizer

Note:

1. **It is very important that the liquid gaskets listed above or their exact equivalent be used on the vehicle.**
2. **Be careful to use the specified amount of liquid gasket.**
   Follow the manufacturer's instructions at all times.
3. **Be absolutely sure to remove all lubricants and moisture from the connecting surfaces before applying the liquid gasket.**
   The connecting surfaces must be perfectly dry.
4. **LOCTITE 515 and LOCTITE 518 harden upon contact with a metal surface.**
   Do not apply LOCTITE 515 or LOCTITE 518 between two metal surfaces having a clearance of greater than 0.25 mm (0.01 in). Poor adhesion will result.

REMOVAL AND INSTALLATION

Read this Section carefully before performing any removal and installation procedure. This Section gives you important points as well as the order of operation. Be sure that you understand everything in this Section before you begin.

Important Operations — Removal

Battery Cable

Disconnect the negative (–) cable from the battery terminal.

Engine Hood

Apply setting marks to the engine hood and the engine hood hinges before removing the engine hood.

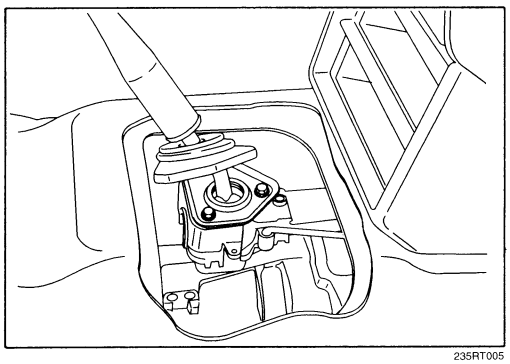

Gear Shift Lever

1. Place the gear shift lever in the neutral position.
2. Remove the gear shift lever knob.
3. Remove the front console assembly.
4. Remove the gear shift lever grommet and dust cover.
5. Remove the gear shift lever cover bolts.
6. Remove the gear shift lever.

Note:
Cover the shift lever hole to prevent the entry of foreign material into the transmission.

Lifting the Vehicle

1. Jack up the vehicle.
2. Place chassis stands at the front and the rear of the vehicle.

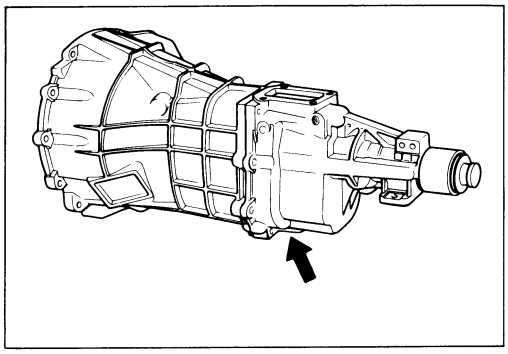

Transmission Oil Draining

1. Remove the transmission oil drain plug.
2. Replace the drain plug after draining the oil.

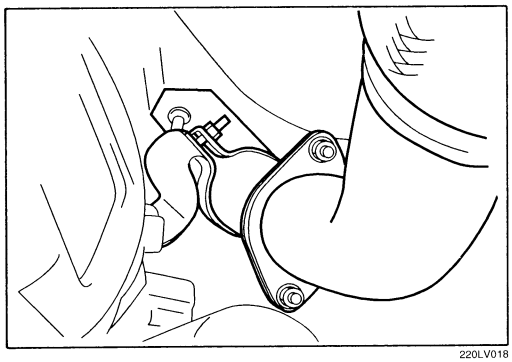

Exhaust Pipe

1. Remove the exhaust pipe bracket from the transmission case.
2. Remove the front exhaust pipe and 2nd-3rd exhaust pipe.

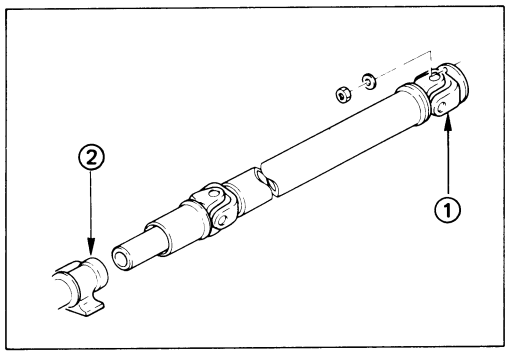

Rear Propeller Shaft (Single Shaft Type)

1. Remove the propeller shaft flange yoke at the drive pinion side ①.
2. Remove the propeller shaft from the transmission main shaft spline ②.

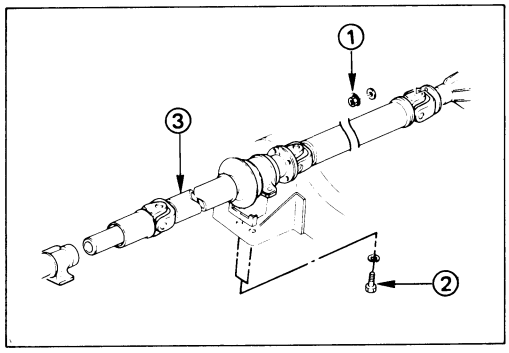

Rear Prppeller Shaft (Dual Shaft Type)

1. Apply setting marks to the 2nd propeller shaft flange yoke.
   This will prevent mispositioning during the installation procedure.
2. Remove the 2nd propeller shaft flange yoke bolts at the drive pinion side ①.
3. Remove the center bearing retainer bolts ②.
4. Remove the 1st propeller shaft ③ with the center bearing and the 2nd propeller shaft.
   Pull the 1st propeller shaft toward the rear of the vehicle unit the spline yoke is free of the transmission main shaft.

Harness Connector

Disconnect the back up light switch connector and the speedometer sensor connector.

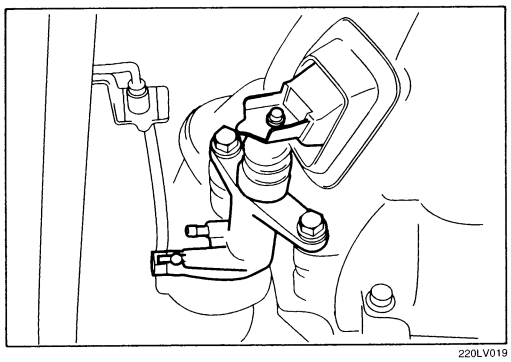

Slave Cylinder

Remove the slave cylinder from the transmission case.

Engine Lifting Hanger

1. Attach the engine lifting hanger to the front portion of the engine.
2. Attach the lifting wire to both ends of the engine lifting hanger.

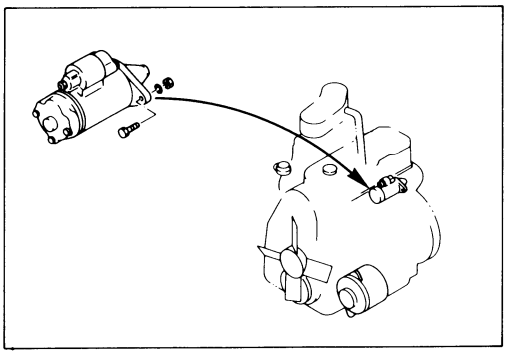

Starter Motor

Remove the starter motor from the engine rear plate.

Flywheel Under Cover (6VD1)

Remove flywheel under cover bolts.

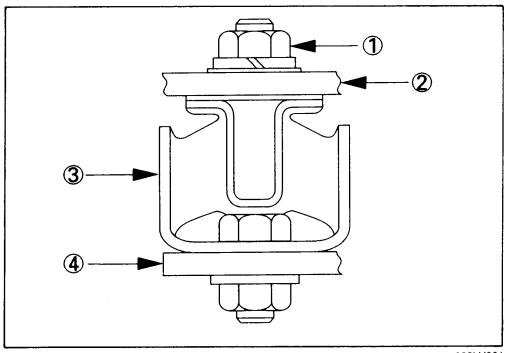

022LV001

Transmission

1. Support the transmission with a transmission jack.
2. Remove the engine rear mounting rubber nuts ① from the transmission ②.
3. Remove the rear mounting rubber ③ from the No.3 crossmember ④.
4. Remove the gear control box from the transmission.

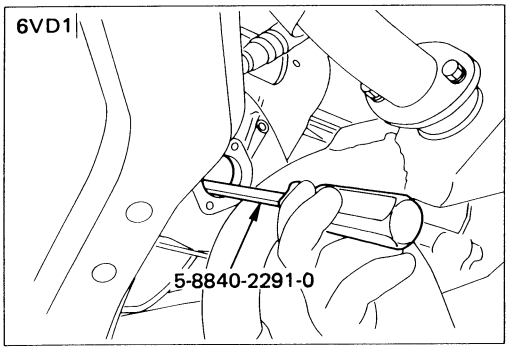

5. Use the remover for disconnect the clutch release bearing from the clutch pressure plate (6VD1).

   Clutch release bearing remover : 5-8840-2291-0 (J-39207)

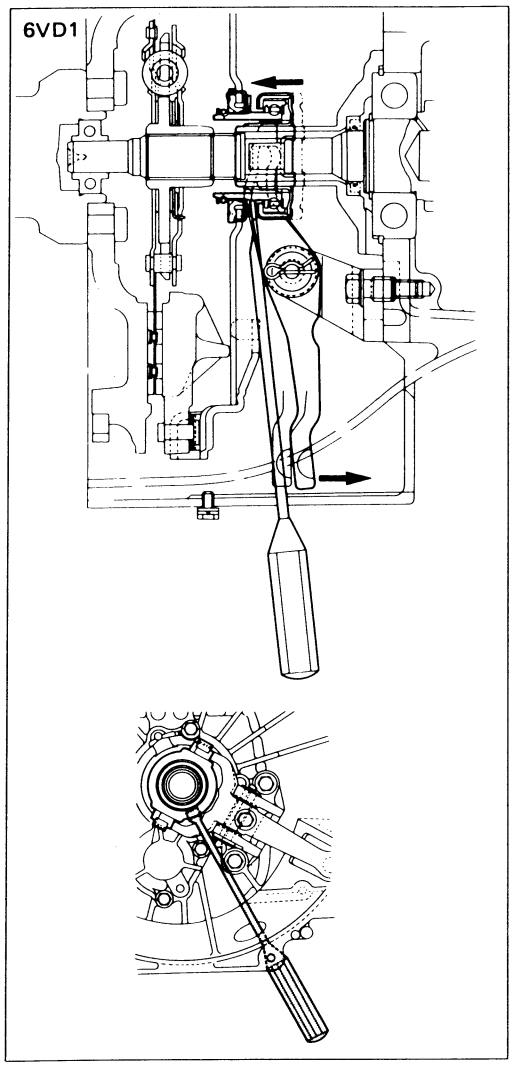

Release Bearing Disconnection (6VD1)

① Pull the shift fork toward the transmission to press the clutch release bearing against the clutch.
② Insert the clutch release bearing remover between the wedge collar and the release bearing.
③ Turn the remover to separate the release bearing.

NOTE:
Be sure not to insert the remover between the wedge collar and the clutch.

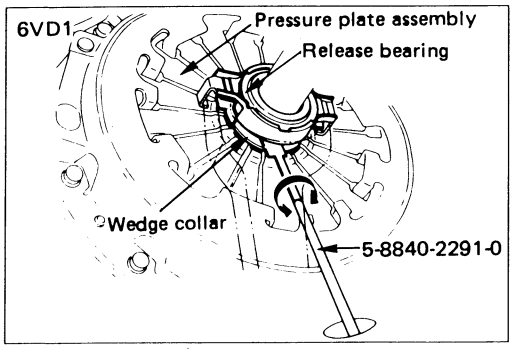

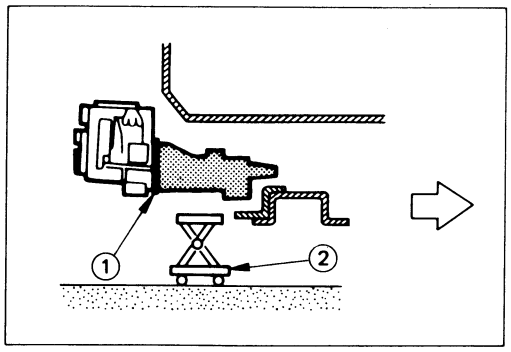

6. Remove the transmission from the engine.

   The removal of the transmission will require the cooperative efforts of two mechanics.

   1) Remove the transmission nuts and bolts ① from the engine rear plate.
   2) Place a transmission jack ② beneath the transmission.

      Do not raise the transmission jack.

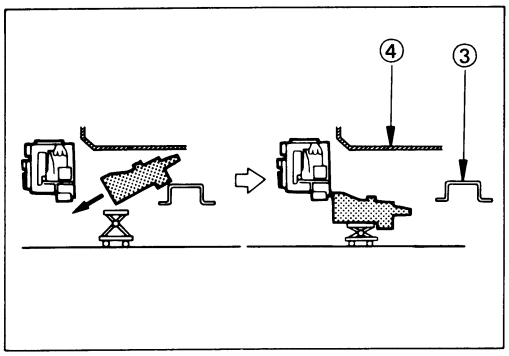

3) Manually move the transmission as far as possible toward the rear of the vehicle (into the space between the No.3 crossmember ③ and the floor panel ④.

4) Lower the clutch housing end of the transmission toward the transmission jack.

   The rear of the transmission is supported by the No. 3 crossmember at this time.

5) Firmly grasp the transmission rear cover (1st mechanic).

   Raise the transmission jack toward the transmission (2nd mechanic).

   Carefully lower the transmission onto the transmission jack.

   The transmission must be centered on the transmission jack.

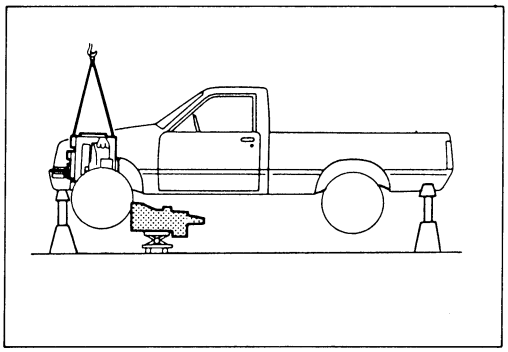

7. Carefully pull the transmission jack with the transmission from beneath the vehicle.

Important Operations — Installation

Follow the removal procedure in the reverse order to perform the installation procedure. Pay careful attention to the important points during the installation procedure.

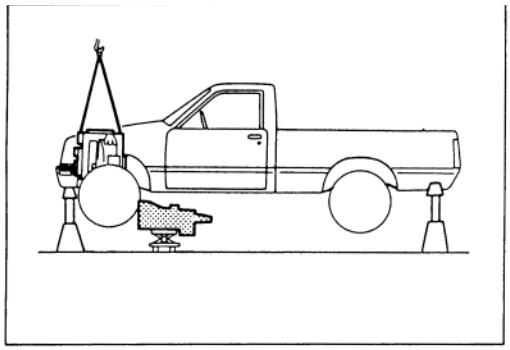

Transmission

1. Apply a thin coat of molybdenum disulfide grease to the top gear shaft spline.
2. Place the transmission on a transmission jack.
3. Carefully move the transmission jack and transmission into position behind the engine.

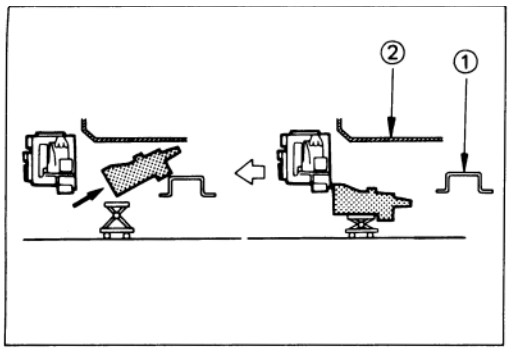

4. Slowly operate the transmission jack to raise the transmission until the rear of the transmission is at the same level as the No.3 crossmember ①.
5. Manually support the transmission rear cover.

   Move the transmission into position between the No.3 crossmember and the floor panel ②.

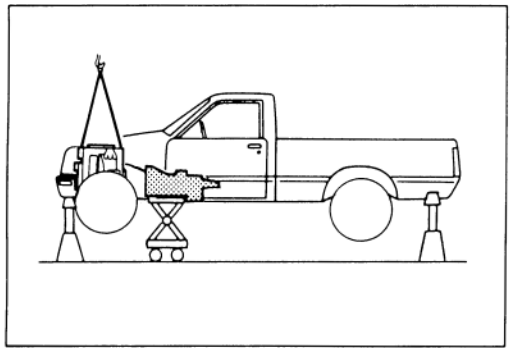

6. Slowly raise the transmission jack until the front of the transmission is aligned with the rear of the engine.

   The slope of the engine and the transmission must be the same.
7. Install the gear control box to the transmission.

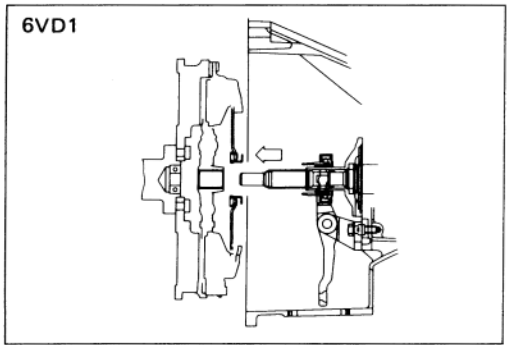

8. Align the top gear shaft spline with the clutch drive plate spline.
9. Install the transmission to the engine.

   Tighten the transmission nuts and bolts to the specified torque.

Transmission Nut and Bolt Torque	kg·m(lb·ft/N·m)
M10: 4.1 ± 1.0 (30 ± 7.2/40 ± 10)	
M12: 8.0 ± 1.6 (58 ± 12/78 ± 16)	

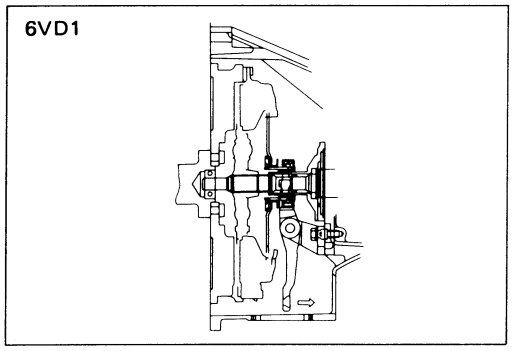

10. Apply a force of 59–78N (6–8 kg / 13.2–17.6 lb) to the tip of the shift fork in the direction of the transmission to engage the clutch pressure plate and release bearing (6VD1).

NOTE (6VD1):
A click sound is heard when the release bearing and the tip of the diaphragm spring engage each other.
Check to see if they are securely engaged by pushing the tip of the shift fork toward the engine while applying a force of about 25N (2.5 kg / 5.5 lb). If the shift fork will not move, then they are securely engaged.

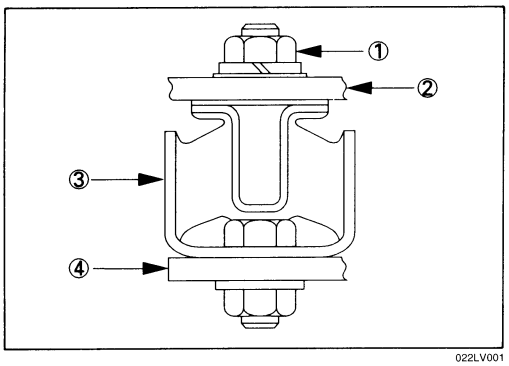

11. Install the rear mounting rubber ③ to the transmission ②.
    Install the rear mounting rubber ③ to the No.3 cross-member ④.
12. Tighten the rear mounting rubber nuts ① to the specified torque.

Rear Mounting Rubber Nut Torque	kg·m(lb·ft/N·m)
4.2 ± 0.5 (30 ± 3.6/41 ± 4.9)	

Mounting Bolt Torque	kg·m(lb·ft/N·m)
5.1 ± 0.6 (37 ± 4.3/50 ± 6)	

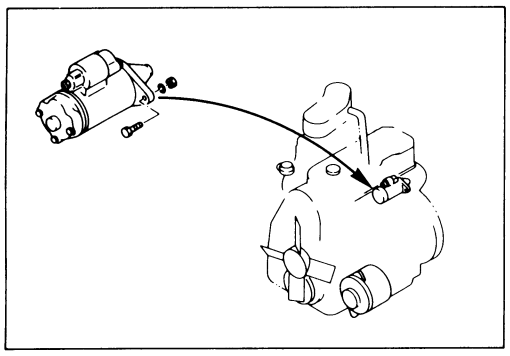

Starter Motor

1. Install the starter motor to the engine rear plate.
2. Tighten the starter motor bolts to the specified torque.

Starter Motor Bolt Torque	kg·m(lb·ft/N·m)
8.0 ± 1.6 (58 ± 12/78 ± 16)	

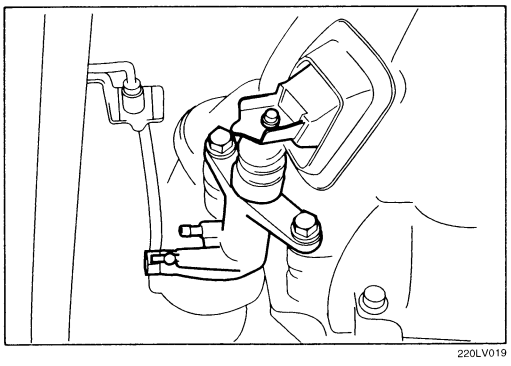

Slave Cylinder

Install the slave cylinder to the transmission case.

Slave Cylinder Bolt Torque	kg·m(lb·ft/N·m)
4.1 ± 1.0 (30 ± 7.2/40 ± 10)	

Harness Connector

Connect the back up light switch connector and speedometer sensor connector.

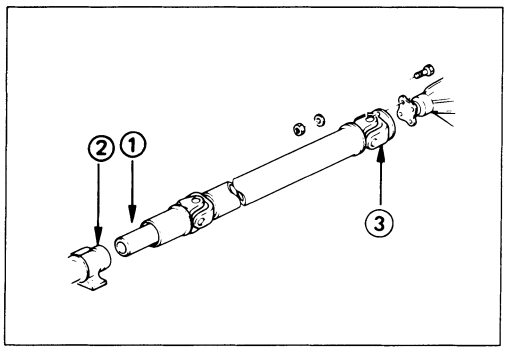

Rear Propeller Shaft (Single Shaft Type)

1. Insert the splined yoke ① with the propeller shaft into the transmission main shaft spline ②.
2. Install the propeller shaft flange yoke ③ to the drive pinion side.
3. Tighten the propeller shaft flange yoke bolt to the specified torque.

Propeller Shaft Flange Yoke Bolt Torque kg·m(lb·ft/N·m)
6.4 ± 0.4 (46.3 ± 2.9/62.7 ± 3.9)

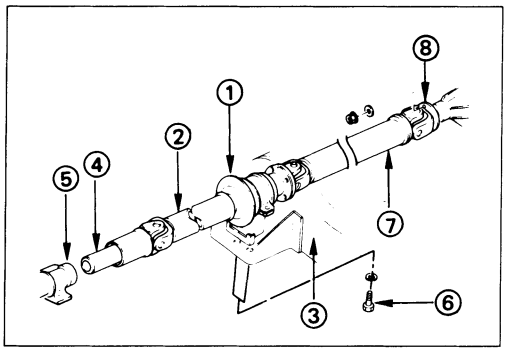

Rear Propeller Shaft (Dual Shaft Type)

1. Place the center bearing and retainer ① together with the 1st propeller shaft ② and 2nd propeller shaft ⑦ on the No.4 crossmember ③.
2. Insert the splined yoke ④ into the transmission main shaft spline ⑤.
3. Tighten the center bearing retainer bolts ⑥ to the specified torque.

Center Bearing Retainer Bolt Torque kg·m(lb·ft/N·m)
6.2 ± 1.2 (44.8 ± 8.7/60.8 ± 11.8)

4. Connect the 2nd propeller shaft ⑦ and drive pinion side ⑧.

   Be sure to align the setting marks applied at disassembly.
5. Tighten the coupling bolts to the specified torque.

Propeller Shaft Flange Yoke Bolt Torque kg·m(lb·ft/N·m)
6.4 ± 0.4 (46.3 ± 2.9/62.7 ± 3.9)

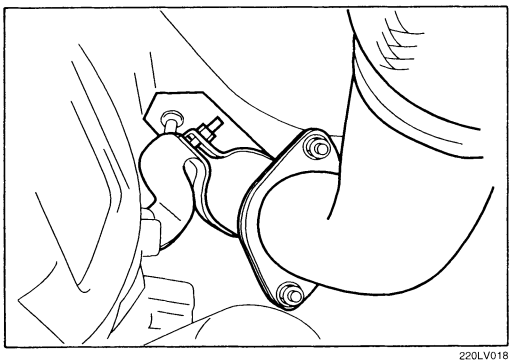

Exhaust Pipe

1. Install the front exhaust pipe and 2nd-3rd exhaust pipe.
2. Install the exhaust pipe bracket to the transmission case.

Gear Shift Lever

1. Replenish the transmission case with the specified engine oil.

Transmission Case Oil	lit(US/UK gt.)
2.95 (3.12/2.6)	

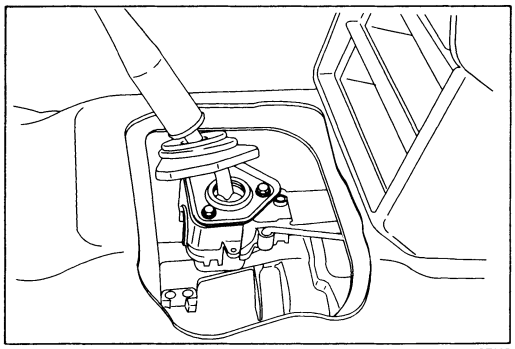

2. Install the gear shift lever to the gear control box.
3. Tighten the gear shift lever cover bolts to the specified torque.

Shift Lever Cover Bolt Torque	kg·m(lb·ft/N·m)
2.0 ± 0.2 (14.5 ± 1.5/19.6 ± 1.96)	

4. Install the dust cover and the grommet.
5 Install the front console assembly.
6. Install the gear shift lever knob.

Lowering the Vehicle

1. Place a jack beneath the vehicle.
2. Raise the jack to remove the chassis stands.
3. Lower the vehicle to the ground.

Engine Hood

Align the setting marks (applied at removal) on the engine hood and the engine hood hinges to install the engine hood.

Battery Cable

Connect the negative (–) cable to the battery terminal.

DISASSEMBLY

MAJOR COMPONENTS

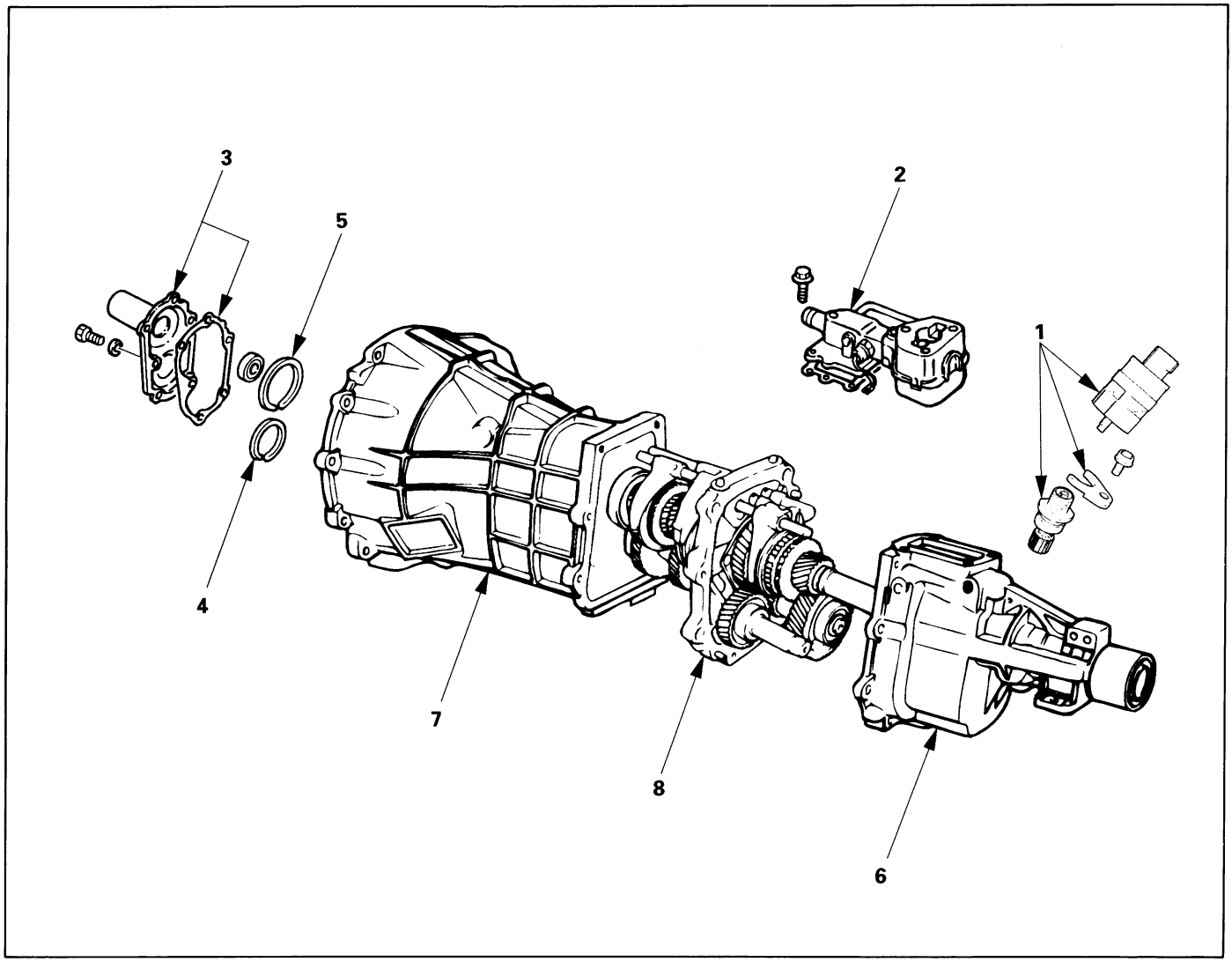

220LV004

Disassembly Steps

- ▲ 1. Speedometer sensor and speedometer driven gear
- 2. Gear control box assembly
- ▲ 3. Front cover with oil seal
- ▲ 4. Counter front bearing snap ring
- ▲ 5. Front bearing snap ring
- 6. Rear cover with oil seal
- 7. Transmission case
- 8. Intermediate plate with gear assembly

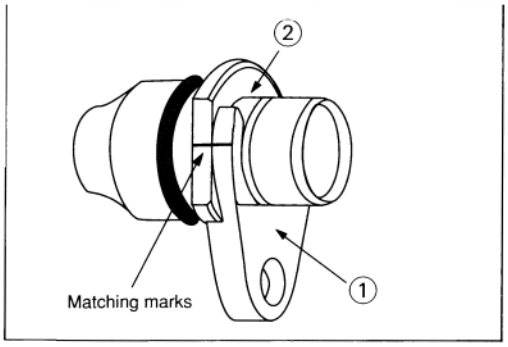

Important Operations

1. Speedometer Sensor and Speedometer Driven Gear

Mark the plate ① and bush ② alignment for reassembly.

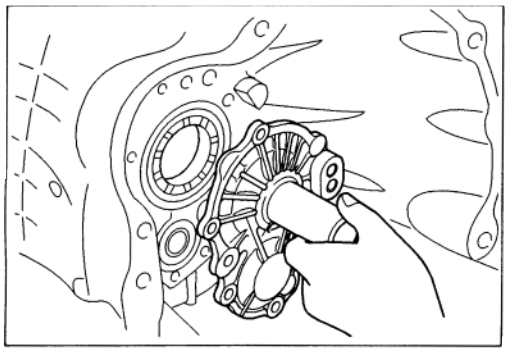

3. Front Cover with Oil Seal

Remove the front cover with oil seal from the transmission case

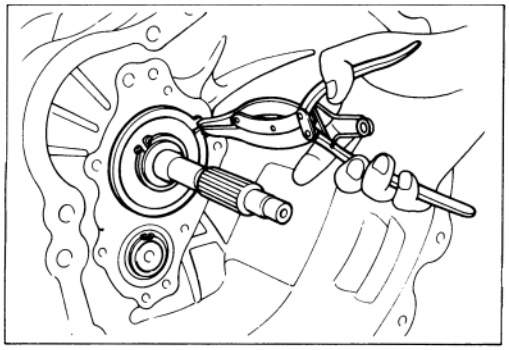

4. Counter Front Bearing Snap Ring

5. Front Bearing Snap Ring

Use a pair of snap ring pliers to remove the snap ring.

MINOR COMPONENTS

INTERMEDIATE PLATE AND GEAR ASSEMBLY, DETENT, SHIFT ARM ASSEMBLY, AND INTERLOCK PIN

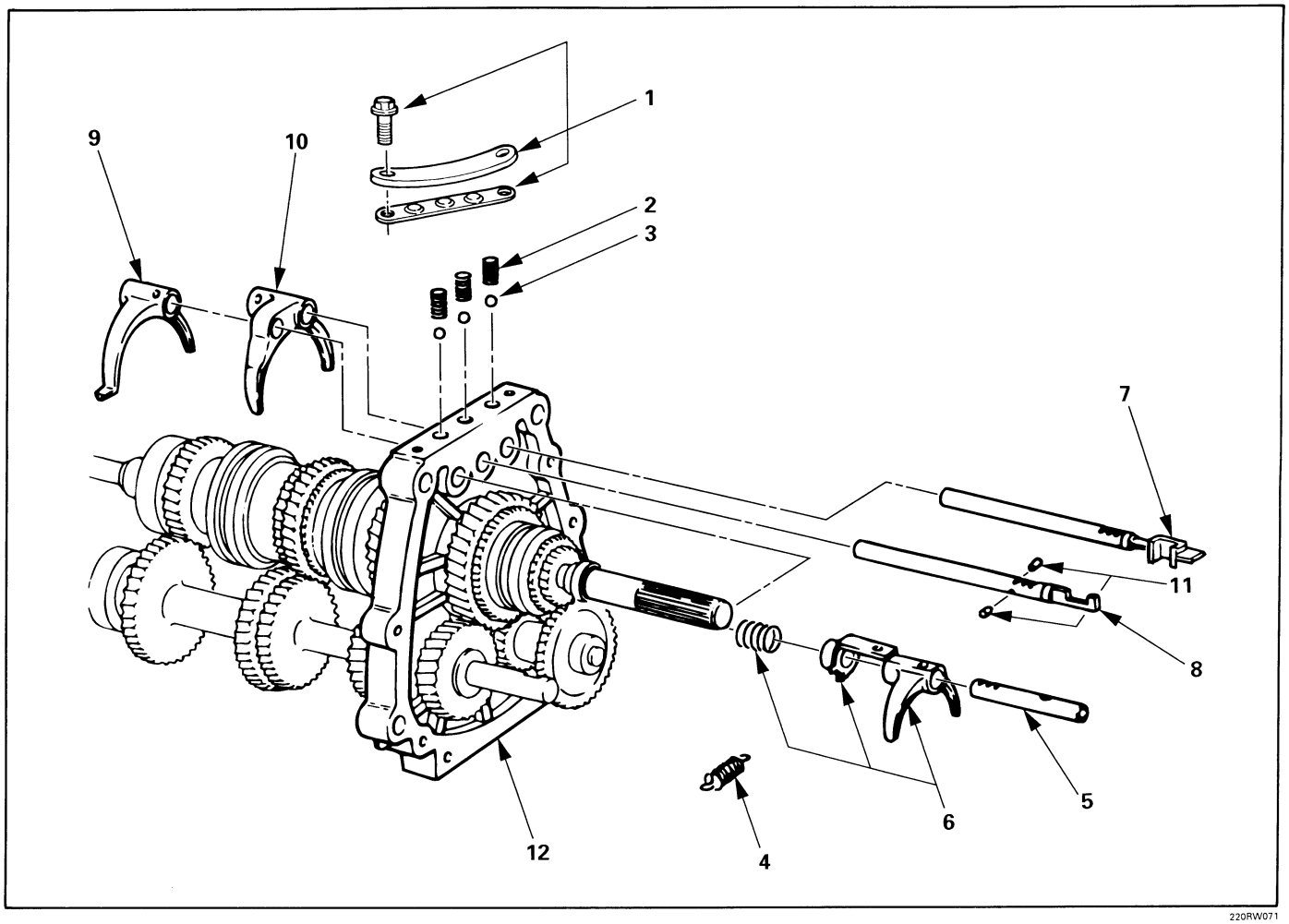

Disassembly Steps

1. Detent spring plate and gasket
2. Detent spring
▲ 3. Detent ball
4. Spring
5. Rev-5th shift rod
6. Rev-5th shift arm and reverse inhibitor
7. 1st-2nd shift rod
▲ 8. 3rd-4th shift rod
▲ 9. 3rd-4th shift arm
▲ 10. 1st-2nd shift arm
11. Interlock pin
12. Intermediate plate and gear assembly

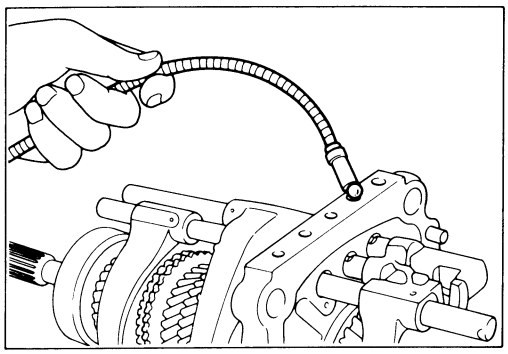

Important Operations

3. Detent Ball

Use a magnetic hand to remove the detent balls from the intermediate plate.

Take care not to lose the detent balls.

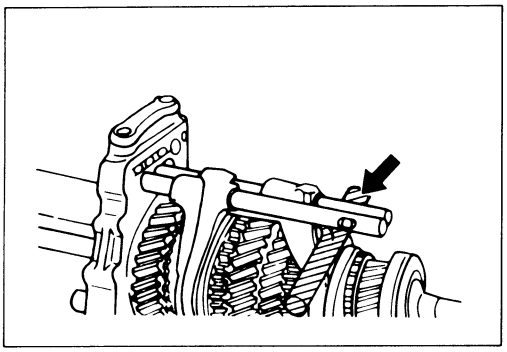

8. 3rd-4th Shift Rod

9. 3rd-4th Shift Arm

10. 1st-2nd Shift Arm

1) Hold a round bar against the shift arm end.

   This will prevent damage to other components.

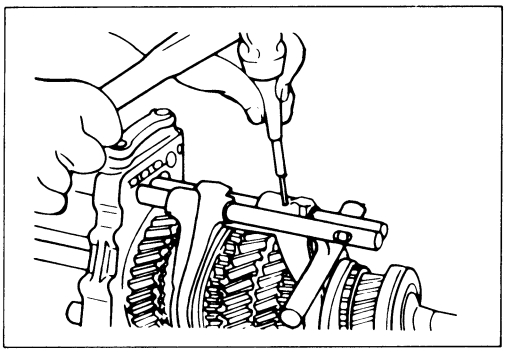

2) Use a spring pin remover to remove the shift arm spring pin from the shift arm and the shift rod.
3) Move the 3rd-4th shift rod forward.

   Take care not to lose the interlock pins.

REVERSE GEAR AND 5TH GEAR

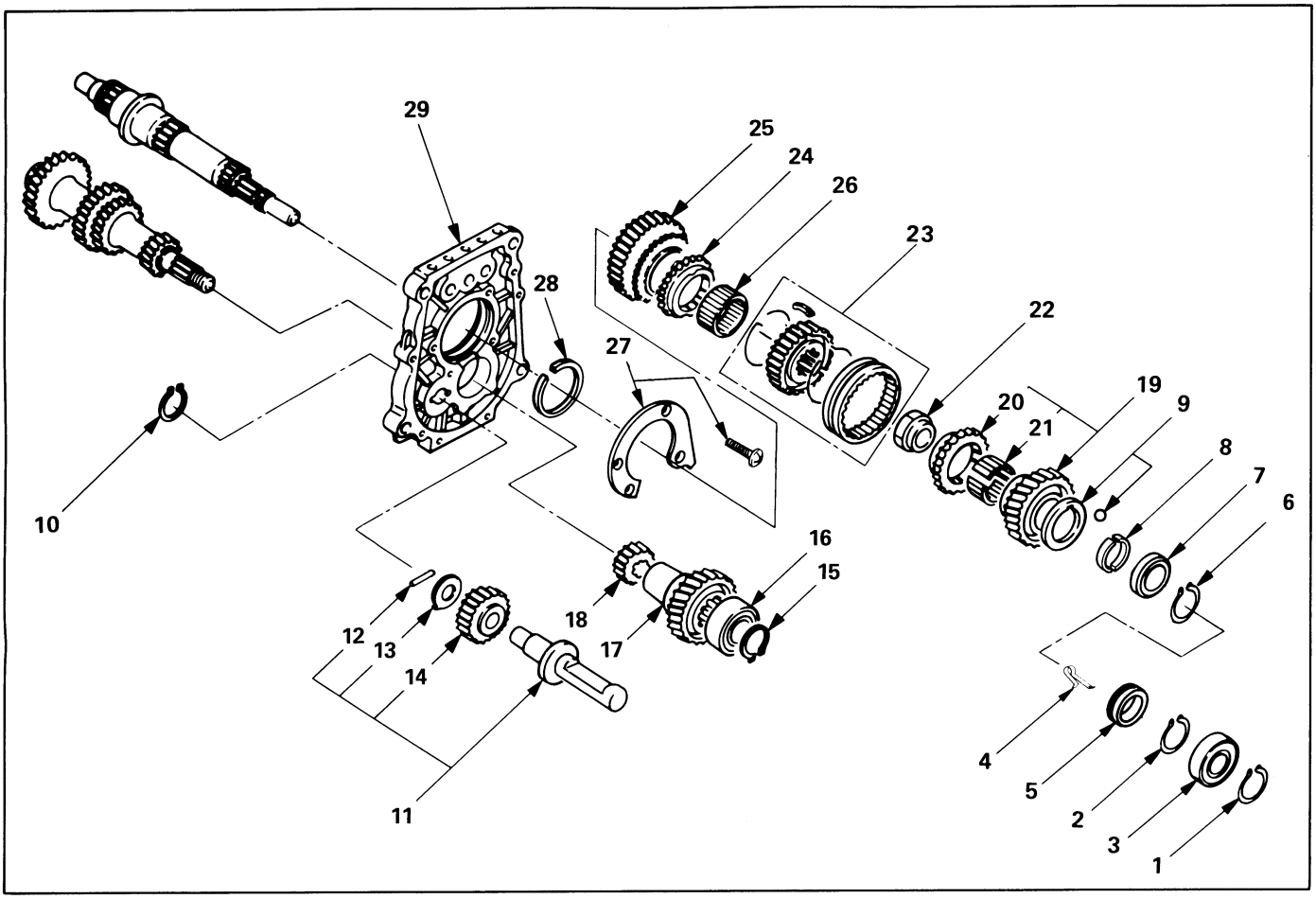

Disassembly Steps

1. Bearing snap ring
2. Bearing snap ring
▲ 3. Ball bearing
4. Clip
5. Speedometer drive gear
6. Retainer snap ring
7. Retaining ring
8. Thrust plate
9. Thrust washer and lock ball
▲ 10. Reverse gear snap ring
11. Reverse shaft
12. Idler shaft pin
13. Thrust washer
14. Reverse idler gear
15. Bearing snap ring
▲ 16. Ball bearing
▲ 17. Counter 5th gear
18. Counter reverse gear
19. 5th gear
20. 5th block ring
▲ 21. Needle bearing
▲ 22. Mainshaft nut
▲ 23. Rev-5th synchronizer assembly
▲ 24. Reverse block ring
▲ 25. Reverse gear
26. Needle bearing
▲ 27. Bearing plate and screw
▲ 28. Bearing snap ring
▲ 29. Intermediate plate

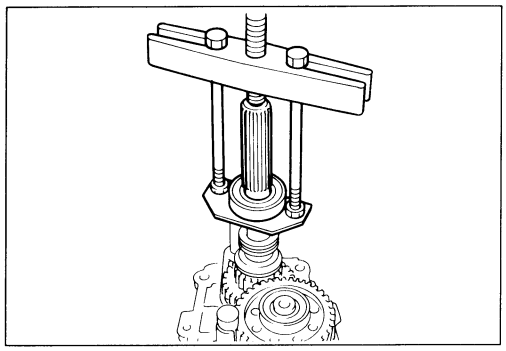

Important Operations

3. Ball Bearing

Set the bearing remover to the bearing and the mainshaft end to remove the bearing.

Bearing Remover : 5-8840-2155-0 (J-32717)
Puller : 5-8840-2027-0

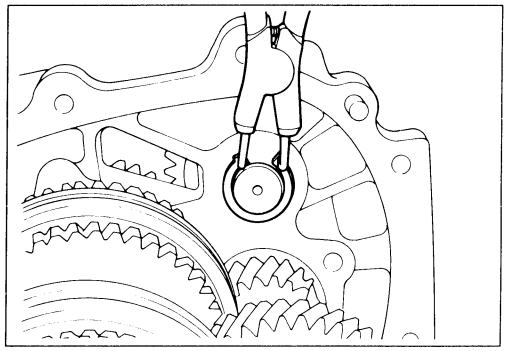

10. Reverse Gear Snap Ring

Use a pair of snap ring pliers to remove the snap ring.

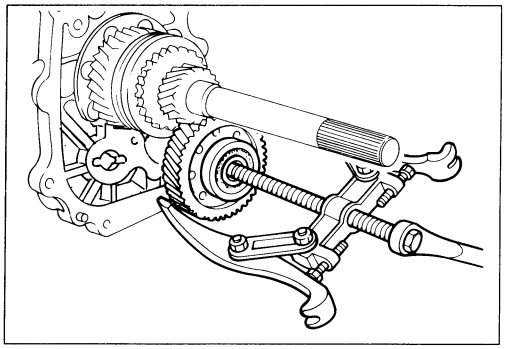

16. Ball Bearing
17. Counter 5th Gear

Use the bearing remover to remove the bearing.

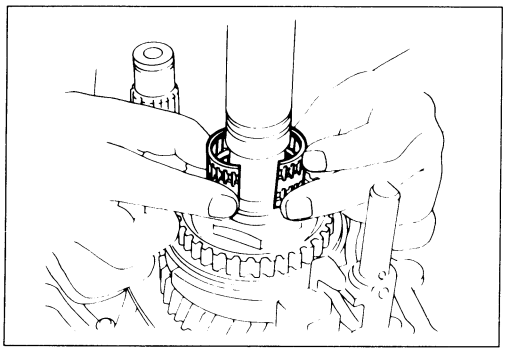

21. Needle Bearing

Remove the needle bearing (2 piece type).

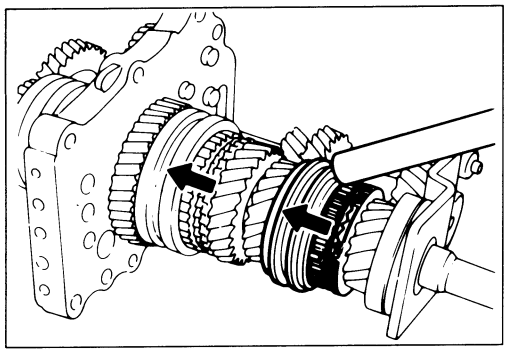

22. Mainshaft Nut

1) Engage the 3rd - 4th synchronizer with the 3rd gear.
2) Engage the 1st-2nd synchronizer with the 1st gear.
3) Attach the holding fixture to the mainshaft and the counter gear.

   Holding Fixture: 5-8840-2160-0 (J-37224)

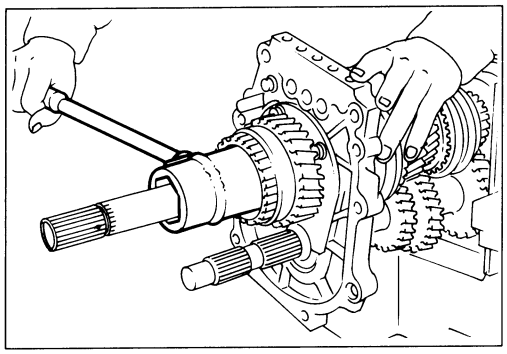

4) Use the mainshaft nut wrench to remove the mainshaft nut.

   Wrench: 5-8840-2156-0 (J-37219)

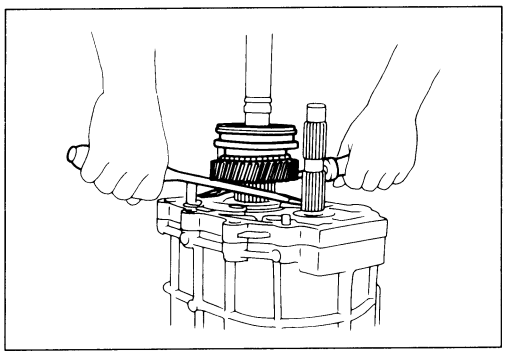

23. Rev.-5th Synchronizer Assembly

24. Reverse Ring

25. Reverse Gear

Use screw drivers between the reverse gear and bearing plate to remove the Rev.-5th synchronizer assembly together with reverse ring and gear.

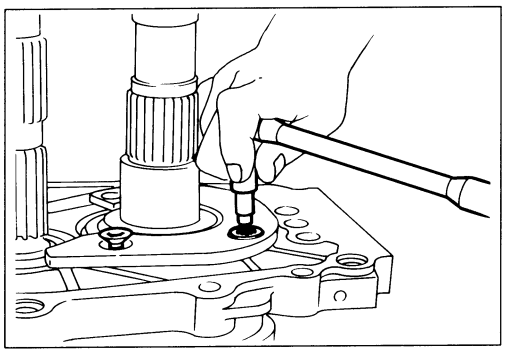

27. Bearing Plate and Screw

Use the torx bit wrench to remove the bearing plate screw from the intermediate plate.

Torx Bit Wrench: 5-8840-0047-0 (J-37225 : T45)

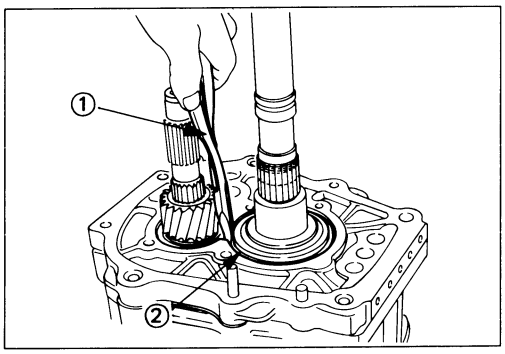

28. Bearing Snap Ring

29. Intermediate Plate

1) Insert the snap ring pliers into the mainshaft bearing snap ring hole.
2) Use the snap ring pliers ① to force open the mainshaft bearing snap ring ②.

   Hold the snap ring open with the pliers.
3) Push the intermediate plate toward the rear of the transmission to remove it.

   The ball bearing snap ring will come free.

TOP GEAR SHAFT, MAIN GEAR SHAFT, AND COUNTER GEAR

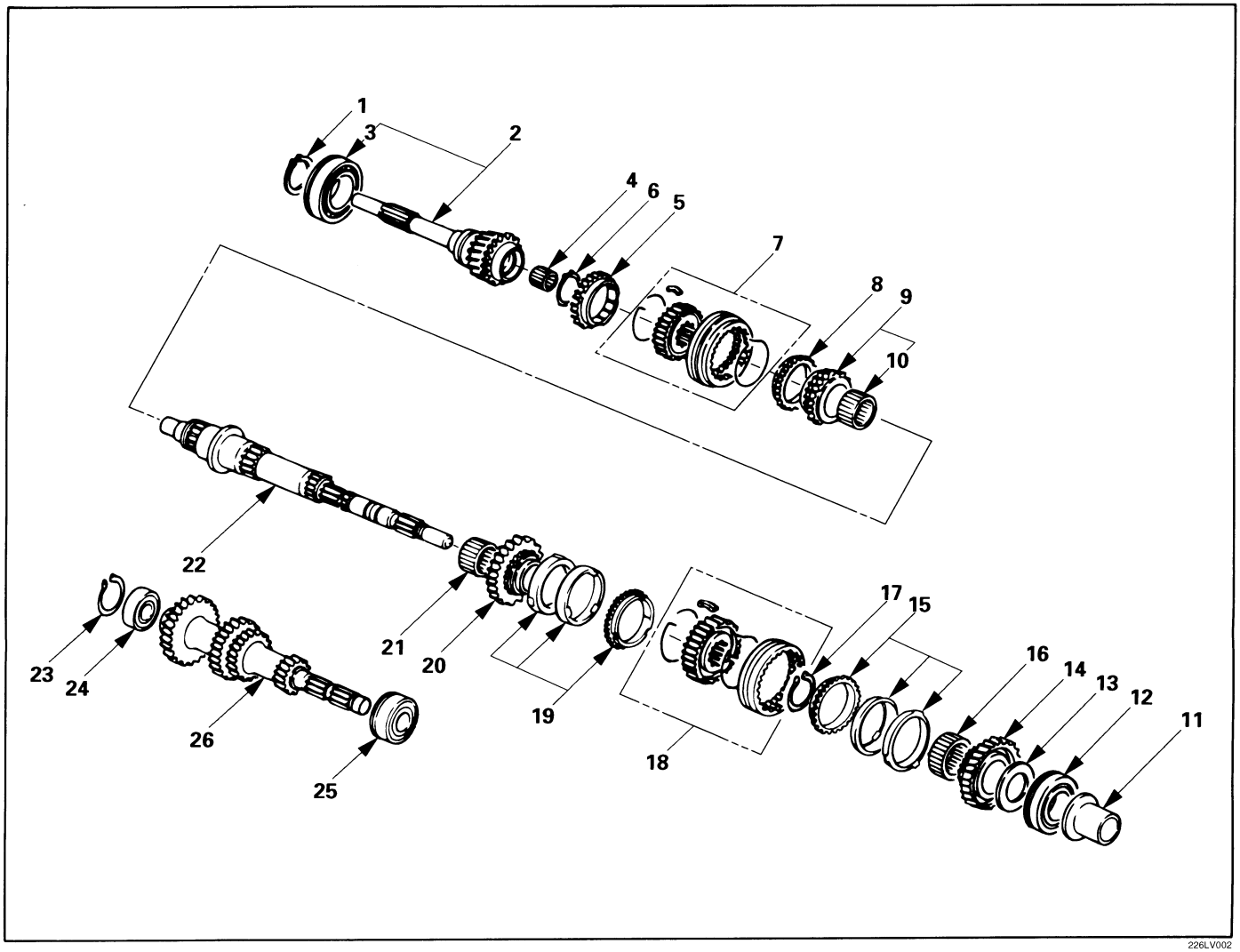

Disassembly Steps

1. Top gear shaft snap ring
2. Top gear shaft
3. ▲ Top gear ball bearing
4. Needle bearing
5. Top block ring
6. ▲ Mainshaft snap ring
7. ▲ 3rd-4th synchronizer assembly
8. 3rd block ring
9. 3rd gear
10. Needle bearing
11. ▲ Needle bearing collar
12. ▲ Mainshaft ball bearing
13. ▲ 1st gear thrust bearing and plate
14. ▲ 1st gear
15. 1st block ring (set)
16. Needle bearing
17. ▲ Clutch hub snap ring
18. ▲ 1st-2nd synchronizer assembly
19. ▲ 2nd block ring (set)
20. ▲ 2nd gear
21. Needle bearing
22. Mainshaft
23. Bearing snap ring
24. ▲ Counter gear front bearing
25. Counter gear center bearing
26. Counter gear

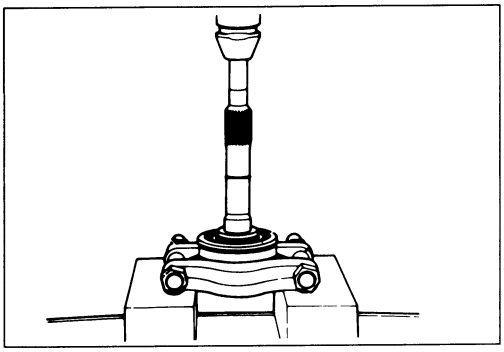

Important Operations

3. Top Gear Ball Bearing

Use a bench press and the bearing replacer to remove the ball bearing.

Bearing Replacer : 5-8840-0015-0 (J-22912-01)

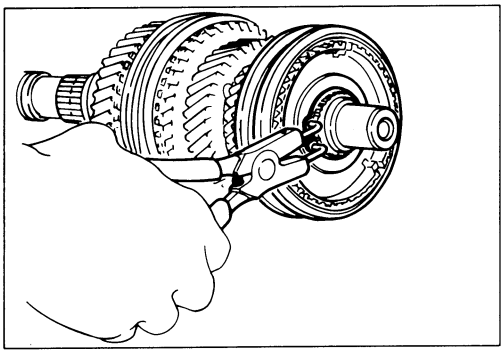

6. Mainshaft Snap Ring

Use a pair of snap ring pliers to remove the snap ring.

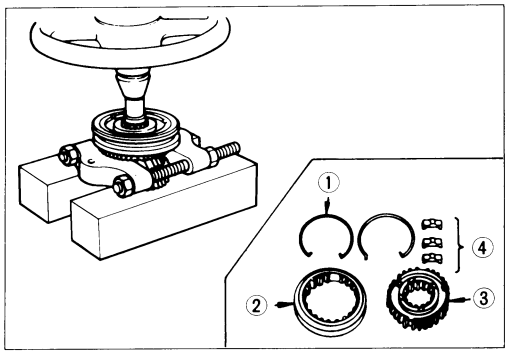

7. 3rd-4th Synchronizer Assembly

1) Use a bench press and the bearing replacer to remove the synchronizer assembly as a set.
2) Disassemble the synchronizer assembly.
   ① Springs
   ② Sleeve
   ③ Clutch Hub
   ④ Inserts

Note:

Mark the hub and sleeve alignment for reassembly.

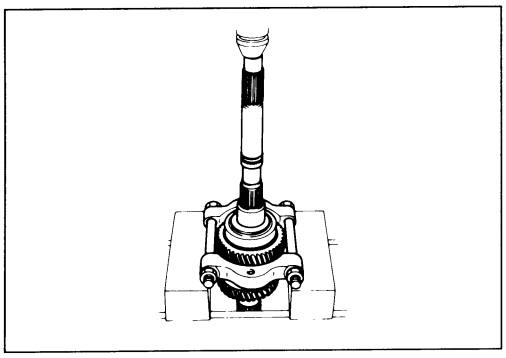

11. Needle Bearing Collar

12. Mainshaft Ball Bearing

13. 1st Gear Thrust Bearing and Plate

14. 1st Gear

Use a bench press and the bearing replacer to remove the ball bearing.

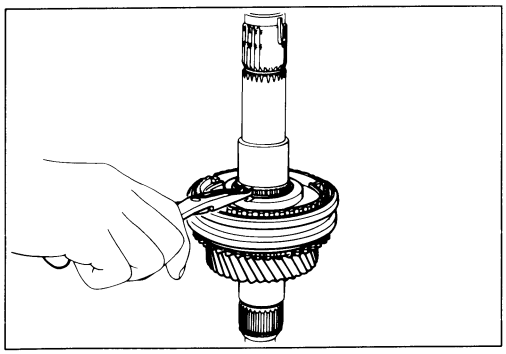

17. Clutch Hub Snap Ring

Use a pair of snap ring pliers to remove the snap ring.

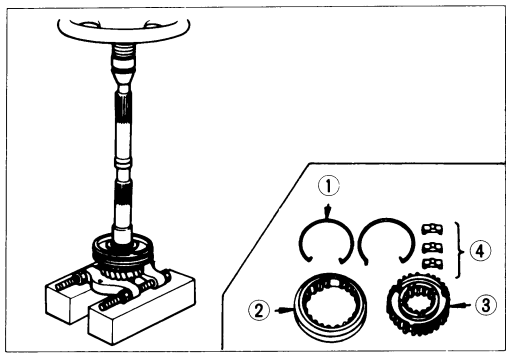

18. 1st-2nd Synchronizer Assembly

19. 2nd Block Ring (Set)

20. 2nd Gear

1) Use a bench press and the bearing remover to remove the 2nd gear together with synchronizer assembly.

   Remover: 5-8840-0015-0 (J-22912-01)

2) Disassemble the synchronizer assembly.

   ① Springs
   ② Sleeve
   ③ Clutch Hub
   ④ Inserts

Note:

Mark the hub and sleeve alignment for reassembly.

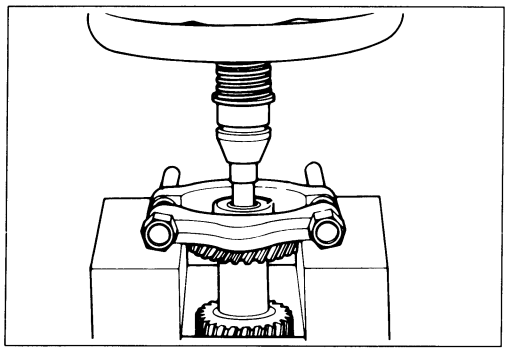

24. Counter Gear Front Bearing

Use a bench press and the bearing remover to remove the bearing.

Bearing Remover : 5-8840-0015-0 (J-22912-01)

INSPECTION AND REPAIR

Make the necessary adjustments, repairs, and part replacements if excessive wear or damage is discovered during inspection.

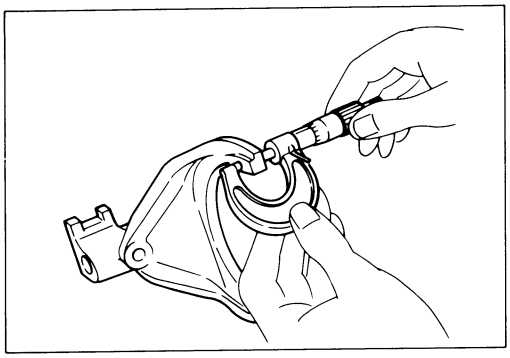

SHIFT ARM THICKNESS

Use a micrometer to measure the shift arm thickness.
If the measured value is less than the specified limit, the shift arm must be replaced.

Shift Arm Thickness — mm(in)

	Standard	Limit
1st–2nd	9.60–9.85 (0.378–0.388)	9.0 (0.354)
3rd–4th Rev.–5th	9.60–9.80 (0.378–0.386)	

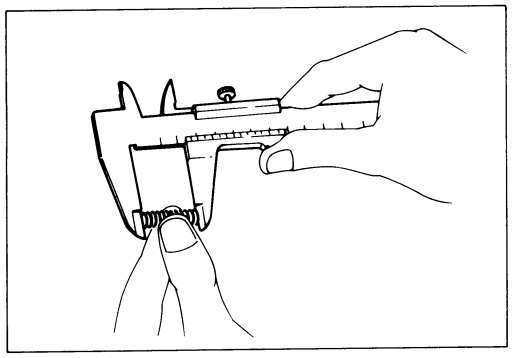

DETENT SPRING FREE LENGTH

Use a venier caliper to measure the detent spring free length.

If the measured value is less than the specified limit, the detent spring must be replaced.

Detent Spring Free Length — mm(in)

Standard	Limit
26.8 (1.06)	26.2 (1.03)

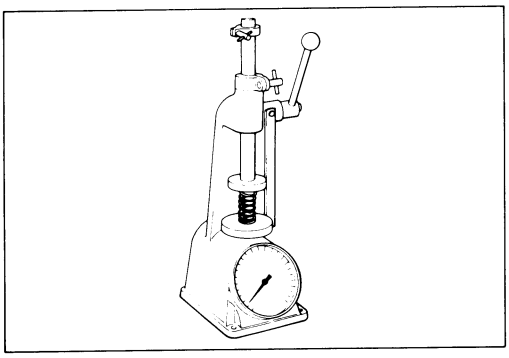

DETENT SPRING TENSION

Use a spring tester to measure the detent spring tension.

If the measured value is less than the specified standard, the detent spring must be replaced.

Detent Spring Tension — kg(lb/N)

Compressed Height	Standard
20 mm (0.787 in)	8.9–9.9 (19.6–21.8/87.2–97)

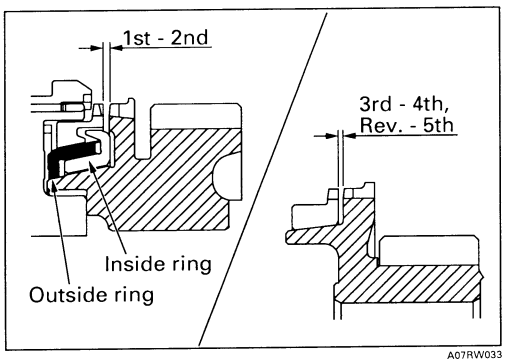

BLOCK RING AND DOG TEETH CLEARANCE

Use a thickness gauge to measure the clearance between the block ring and the dog teeth.

If the measured value exceeds the specified limit, the block ring must be replaced.

Block Ring and Dog Teeth Clearance — mm(in)

Standard	Limit
1.5 (0.059)	0.8 (0.032)

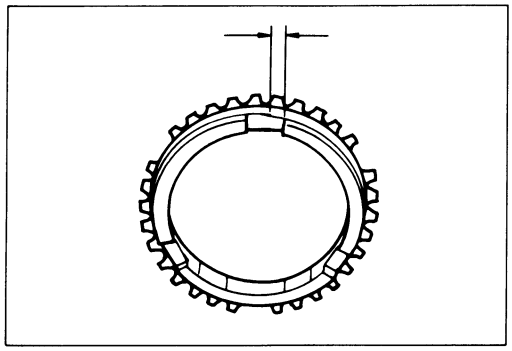

BLOCK RING AND INSERT CLEARANCE

Use a vernier caliper or thickness gauge to measure the clearance between the block ring and the insert.

If the measured value exceeds the specified limit, the block ring and the insert must be replaced.

Block Ring and Insert Clearance mm(in)

	Standard	Limit
3rd-4th	3.46–3.74 (0.136–0.147)	4.0 (0.158)
1st-2nd	4.34–4.66 (0.171–0.183)	4.9 (0.193)
Rev.-5th	3.59–3.91 (0.141–0.154)	4.1 (0.161)

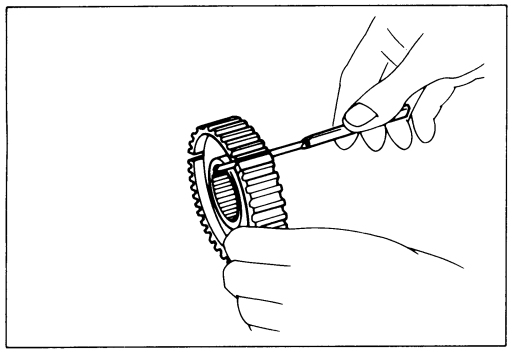

CLUTCH HUB AND INSERT CLEARANCE

Use a thickness gauge to measure the clearance between the clutch hub and the insert.

If the measured value exceeds the specified limit, the clutch hub and the insert must be replaced.

Clutch Hub and Insert Clearance mm(in)

	Standard	Limit
3rd-4th	0.01-0.19 (0.0004-0.0075)	0.4 (0.016)
1st-2nd Rev.-5th	0.09-0.31 (0.0035-0.0122)	

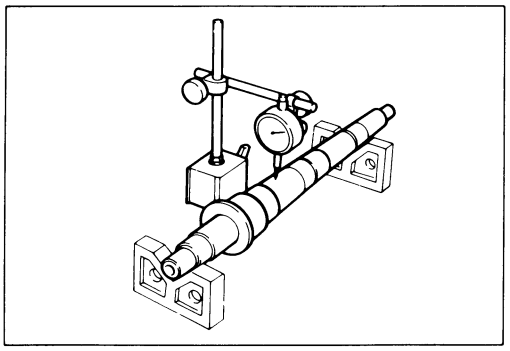

MAINSHAFT RUN-OUT

1. Install the mainshaft to a grinding machine.
2. Use a dial indicator to measure the mainshaft central portion run-out.

   If the measured mainshaft run-out exceeds the specified limit, the mainshaft must be replaced.

Mainshaft Run Out mm(in)

Limit
0.05 (0.0020)

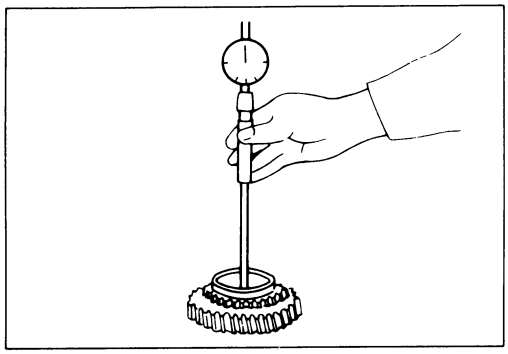

GEAR INSIDE DIAMETER

Use an inside dial indicator to measure the gear inside diameter.

If the measured value is less than the specified limit, the gear must be replaced.

Gear Inside Diameter mm(in)

	Standard	Limit
1st 3rd	45.000-45.013 (1.771-1.772)	45.100 (1.776)
2nd	52.000-52.013 (2.047-2.048)	52.100 (2.051)
Rev.	48.000-48.013 (1.889-1.890)	48.100 (1.894)
5th	32.000-32.013 (1.259-1.260)	32.100 (1.264)

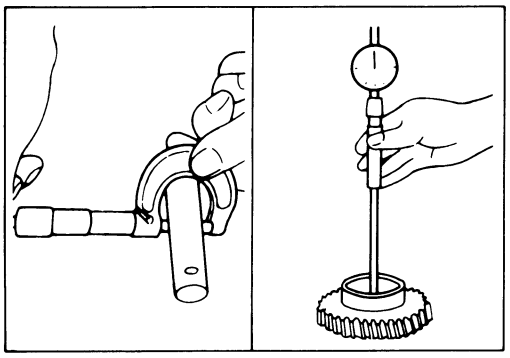

REVERSE IDLER GEAR AND IDLER GEAR SHAFT CLEARANCE

1. Use a micrometer to measure the idler gear shaft diameter.
2. Use an inside dial indicator to measure the idler gear inside diameter.
3. Calculate the idler gear and idler gear shaft clearance.

   Idler gear inside diameter – idler gear shaft diameter = idler gear and idler gear shaft clearance.

   If the measured value exceeds the specified limit, the idler gear and/or the idler gear shaft must be replaced.

Idler Gear and Idler Gear Shaft Clearance mm(in)

Standard	Limit
0.041 – 0.074 (0.0016 – 0.0029)	0.150 (0.0059)

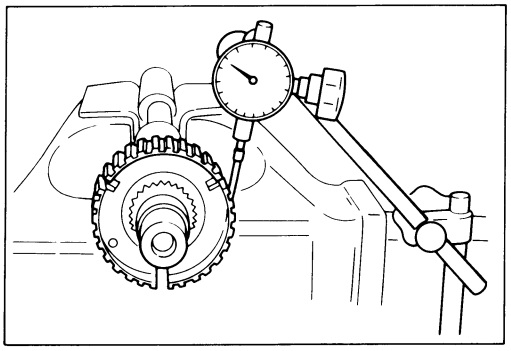

CLUTCH HUB SPLINE PLAY

1. Set a dial indicator to the clutch hub to be measured.
2. Move the clutch hub as far as possible to both the right and the left.

   Note the dial indicator reading.

   If the measured value exceeds the specified limit, the clutch hub must be replaced.

Clutch Hub Spline Play — mm(in)

	Standard	Limit
1st-2nd 3rd-4th	0-0.1 (0-0.0039)	0.2 (0.0079)
Rev.-5th	0-0.2 (0-0.0079)	0.3 (0.0118)

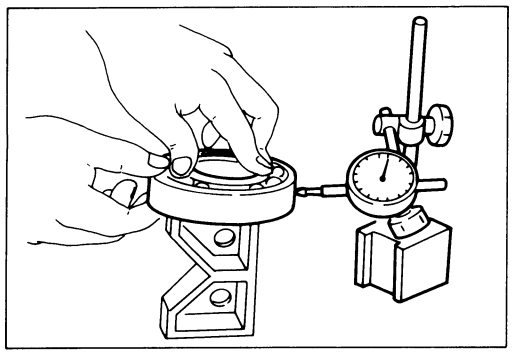

BALL BEARING PLAY

Use a dial indicator to measure the ball bearing play.

Ball Bearing Play — mm(in)

Limit
0.2 (0.0079)

FRONT COVER OIL SEAL

Oil Seal Replacement

Oil Seal Removal

Use a screwdriver to pry the oil seal from the front cover.

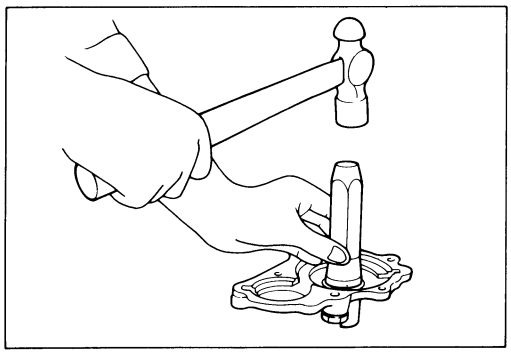

Oil Seal Installation

1. Use the oil seal installer to install the oil seal to the front cover.

   Oil Seal Installer : 5-8840-0026-0 (J-26540)
2. Apply gear oil to the oil seal lip.

REAR COVER OIL SEAL

Oil Seal Replacement

Oil Seal Removal

Use a screwdriver to pry the oil seal from the rear cover.

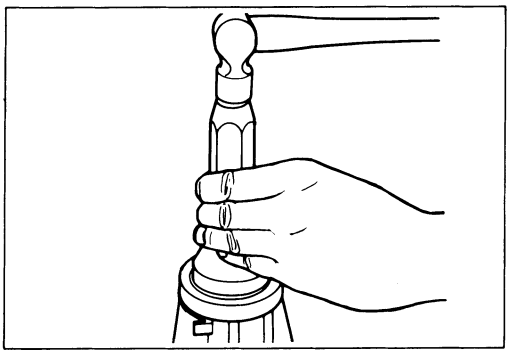

Oil Seal Installation

1. Use the oil seal installer to install the oil seal to the rear cover.

   Oil Seal Installer : 5-8522-0050 (J-29769)

2. Apply engine oil to the oil seal lip.

REASSEMBLY

MINOR COMPONENTS

TOP GEAR SHAFT, MAIN GEAR SHAFT, AND COUNTER GEAR

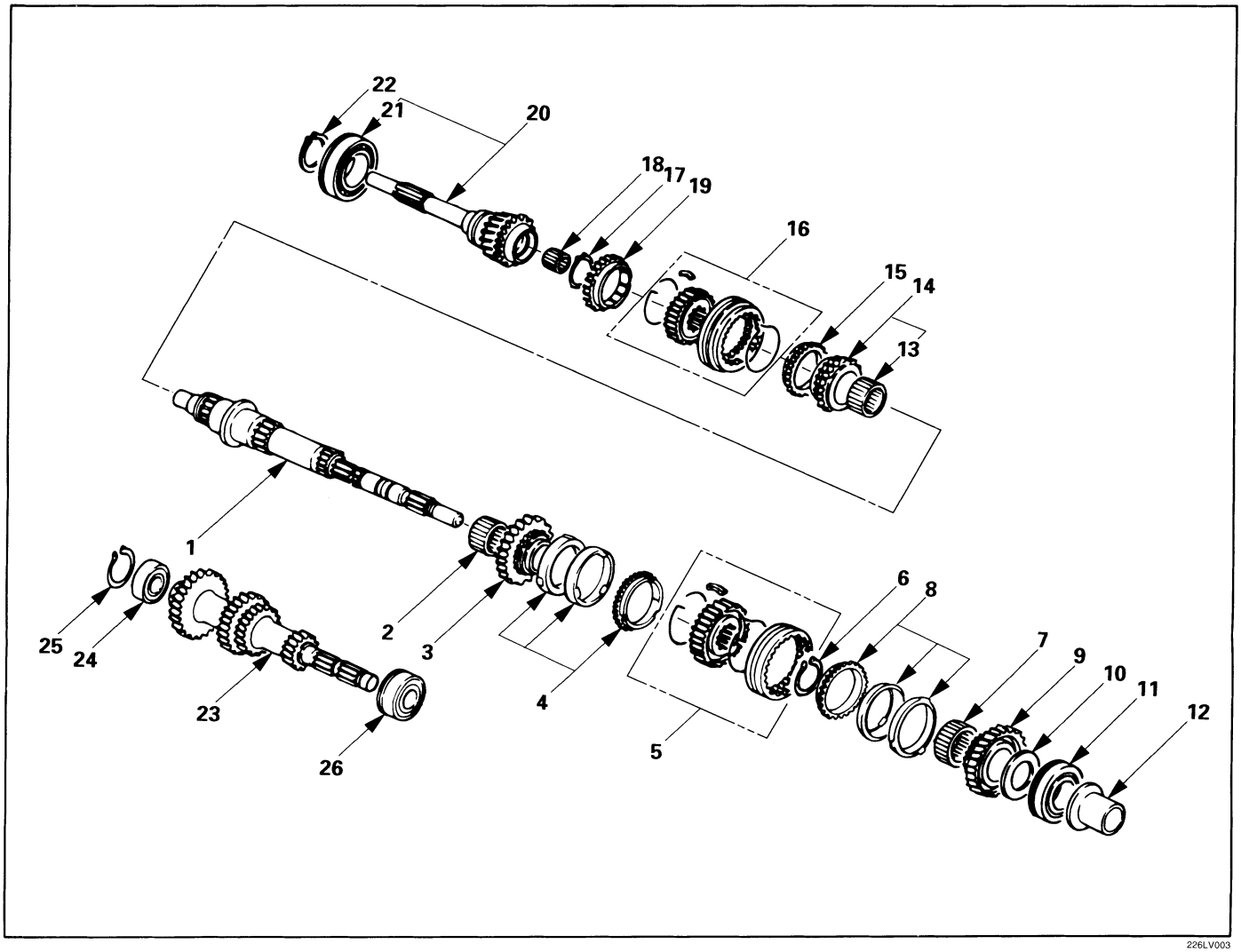

Reassembly Steps

1. Mainshaft
▲ 2. Needle bearing
▲ 3. 2nd gear
4. 2nd block ring (set)
▲ 5. 1st-2nd synchronizer assembly
▲ 6. Clutch hub snap ring
▲ 7. Needle bearing
8. 1st block ring (set)
▲ 9. 1st gear
▲ 10. 1st gear thrust bearing and plate
▲ 11. Mainshaft ball bearing
▲ 12. Needle bearing collar
▲ 13. Needle bearing
▲ 14. 3rd gear
15. 3rd block ring
▲ 16. 3rd-4th synchronizer assembly
▲ 17. Mainshaft snap ring
18. Needle bearing
19. Top block ring
20. Top gear shaft
▲ 21. Top gear ball bearing
▲ 22. Top gear shaft snap ring
23. Counter gear
▲ 24. Counter gear front bearing
25. Snap ring
26. Counter gear center bearing

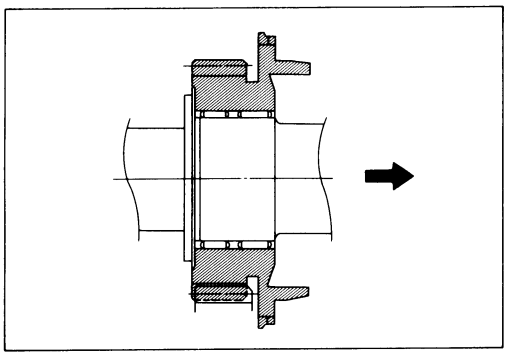

Important Operations

2. Needle Bearing

3. 2nd Gear

1) Apply engine oil to the needle bearing and the 2nd gear thrust surfaces.
2) Install the needle bearing and the 2nd gear to the mainshaft.

   The 2nd gear dog teeth must be facing the transmission rear side.

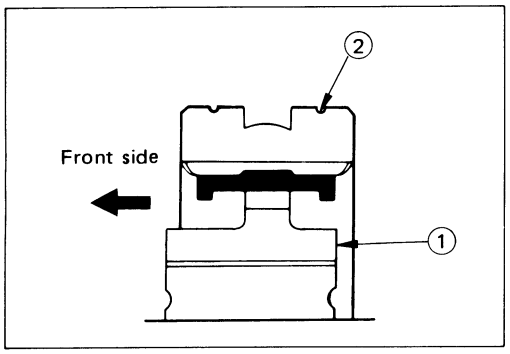

5. 1st-2nd Synchronizer Assembly

1) Turn the clutch hub face ① shallow toward the sleeve small groove ② on the outer circumference.

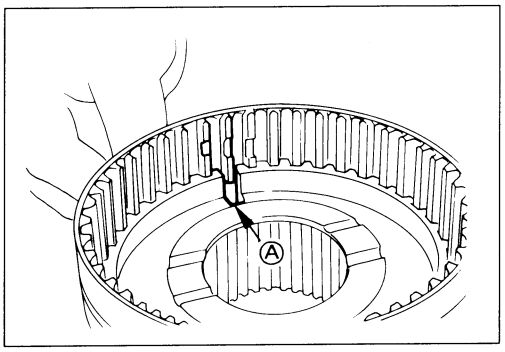

Note:
The clutch hub groove Ⓐ must be aligned with the key groove of sleeve.

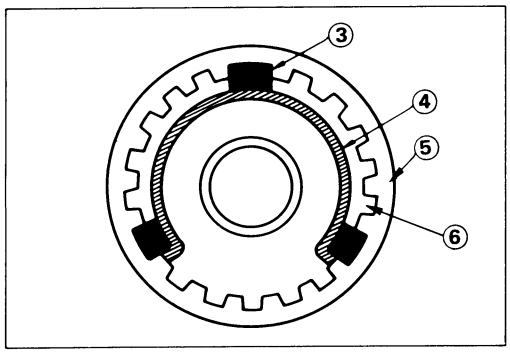

2) Check that the inserts ③ fit snugly into the block ring insert grooves.
3) Check that the insert springs ④ are fitted to the inserts as shown in the illustration.
4) Check that the clutch hub ⑤ and the sleeve ⑥ slide smoothly.
5) Install the synchronizer assembly to the mainshaft.

   The clutch hub face (with the heavy boss) must be facing the 2nd gear side.

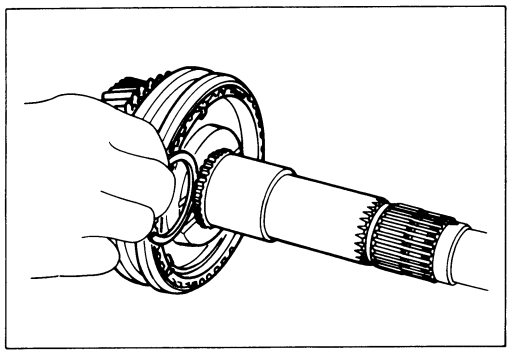

6. Clutch Hub Snap Ring

1) Select the snap ring which will provide the minimum clearance between the 1st-2nd clutch hub and the snap ring.

   There are three snap ring sizes available.

   The snap rings are color-coded to indicate their thickness.

Clutch Hub and Snap Ring Clearance	mm(in)
Standard	
0 — 0.1 (0 — 0.0039)	

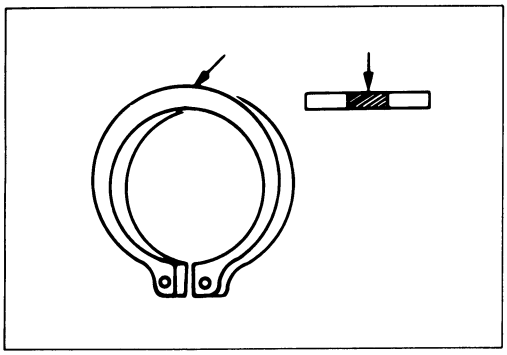

Snap Ring Availability mm(in)

Thickness	Color-Coding
1.80 (0.071)	White
1.85 (0.073)	Yellow
1.90 (0.075)	Blue

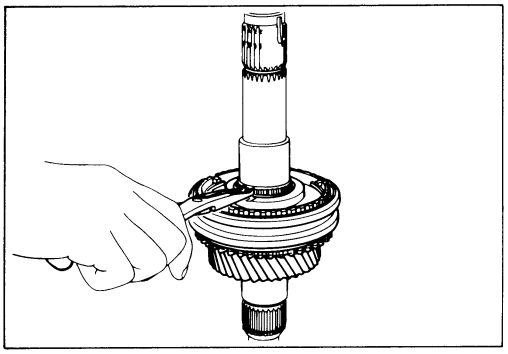

2) Use a pair of snap ring pliers to install the snap ring to the mainshaft.

   Snap Ring Pliers

   The snap ring must be fully inserted into the mainshaft snap ring groove.

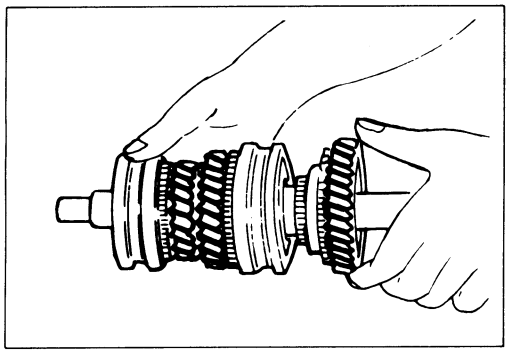

7. Needle Bearing

9. 1st Gear

1) Apply engine oil to the needle bearing and the 1st gear thrust surfaces.
2) Install the needle bearing and the 1st gear to the mainshaft.

   The 1st gear dog teeth must be facing the transmission front side.

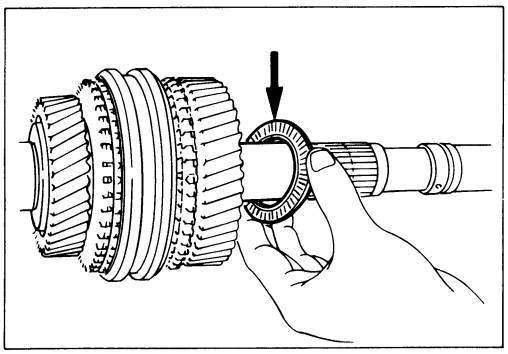

10. 1st Gear Thrust Bearing and Plate

Install the thrust bearing and the race to the main shaft.

The thrust bearing side must be facing the transmission front side.

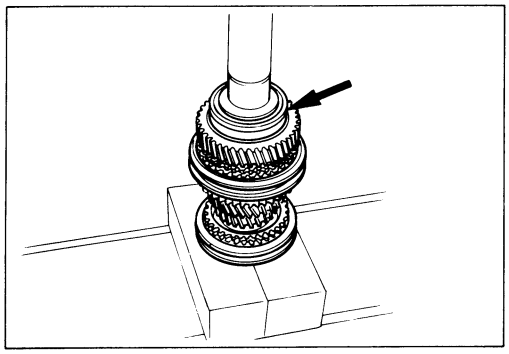

11. Mainshaft Ball Bearing

12. Needle Bearing Collar

1) Apply engine oil to the ball bearing and the mainshaft.
2) Install the ball bearing and collar to the mainshaft. The ball bearing snap ring groove must be facing the transmission rear side.
3) Use a bench press to slowly force the collar into place.

   Installer : 5-8840-2195-0 (J-6133-01)

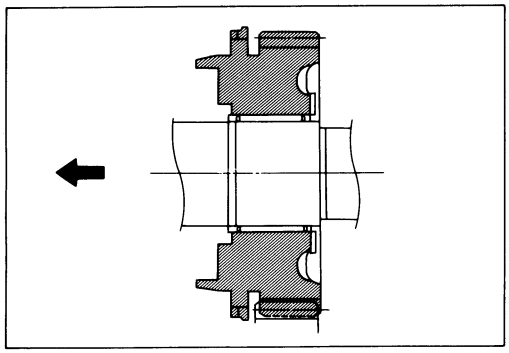

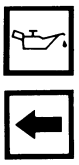

13. Needle Bearing

14. 3rd Gear

1) Apply engine oil to the needle bearing and the 3rd gear thrust surfaces.
2) Install the needle bearing and the 3rd gear to the mainshaft.

   The 3rd gear dog teeth must be facing the transmission front side.

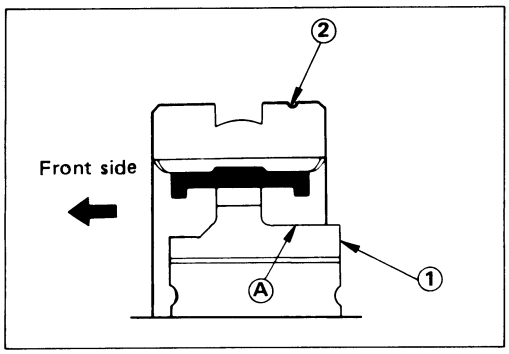

16. 3rd-4th Synchronizer Assembly

1) Turn the clutch hub face ① with the heavy boss Ⓐ toward the sleeve small groove ② on the outer circumference.

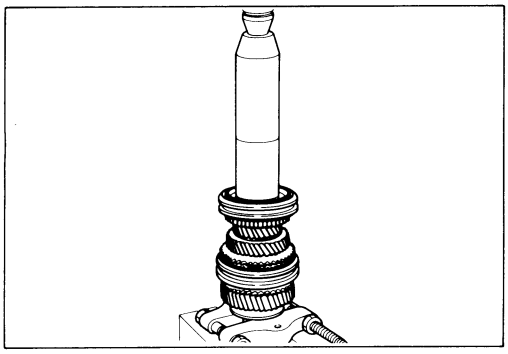

2) Check that the inserts fit snugly into the block ring insert grooves.
3) Check that the insert springs are fitted to the inserts as shown in the illustration.
4) Check that the clutch hub and the sleeve slide smoothly.
5) Install the synchronizer assembly to the main shaft.

   The clutch hub face (with the heavy boss) must be facing the 3rd gear side.

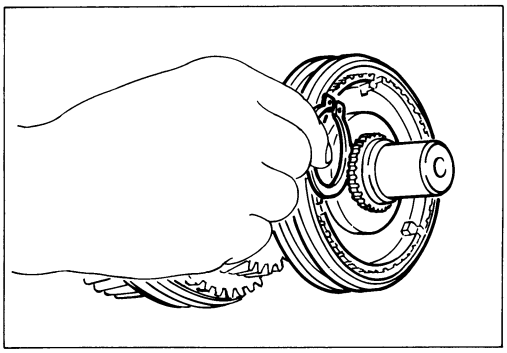

17. Mainshaft Snap Ring

1) Select the snap ring which will provide the minimum clearance between the 3rd-4th clutch hub and the snap ring.

   There are three snap ring sizes available.

   The snap rings are color-coded to indicate their thickness.

Clutch Hub and Snap Ring Clearance — mm(in)

Standard
0 — 0.1 (0 — 0.0039)

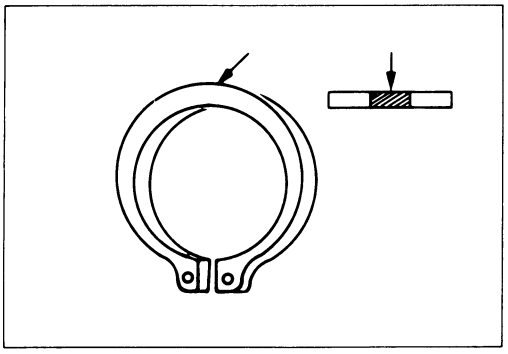

Snap Ring Availability — mm(in)

Thickness mm(in)	Color-Coding
1.80 (0.071)	White
1.85 (0.073)	Yellow
1.90 (0.075)	Blue

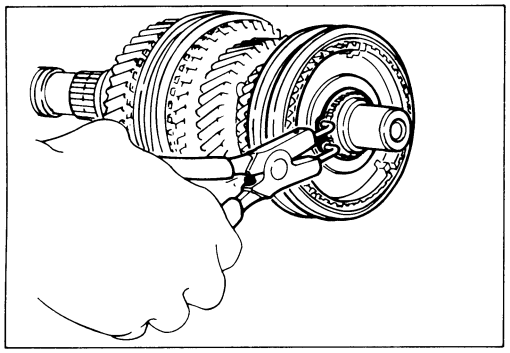

2) Use a pair of snap ring pliers to install the snap ring to the mainshaft.

   The snap ring must be fully inserted into the mainshaft snap ring groove.

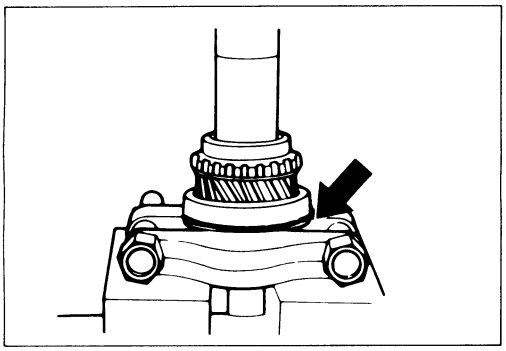

21. Top Gear Ball Bearing

22. 4th Gear Shaft Snap Ring

1) Use a bench press to install the top gear shaft ball bearing to the mainshaft.

   The snap ring groove must be facing the transmission front side.

2) Use a pair of snap ring pliers to install the snap ring to the bearing.

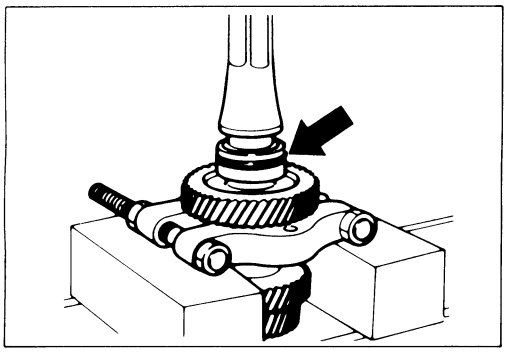

24. Counter Gear Front Bearing

Use a bench press to install the counter gear front bearing to the mainshaft.

The snap ring groove must be facing the transmission front side.

Bearing Installer: 5-8840-2194-0 (J-35283)

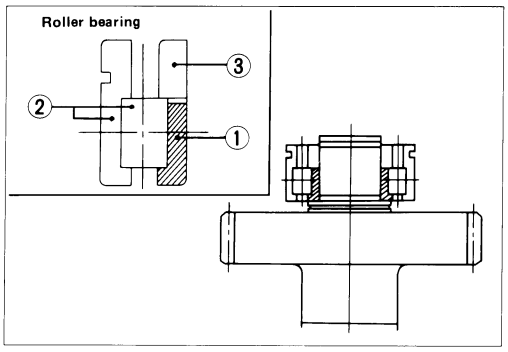

1) Apply engine oil to the bearing and install the inner race ① and outer race with roller ② in the proper direction to the mainshaft.
2) Then install the inner race ③ with taper side turned to outer race ②.

Note:
The inner race ③ should be installed with stamp on die face side turned to the front side of transmission.

REVERSE GEAR AND 5TH GEAR

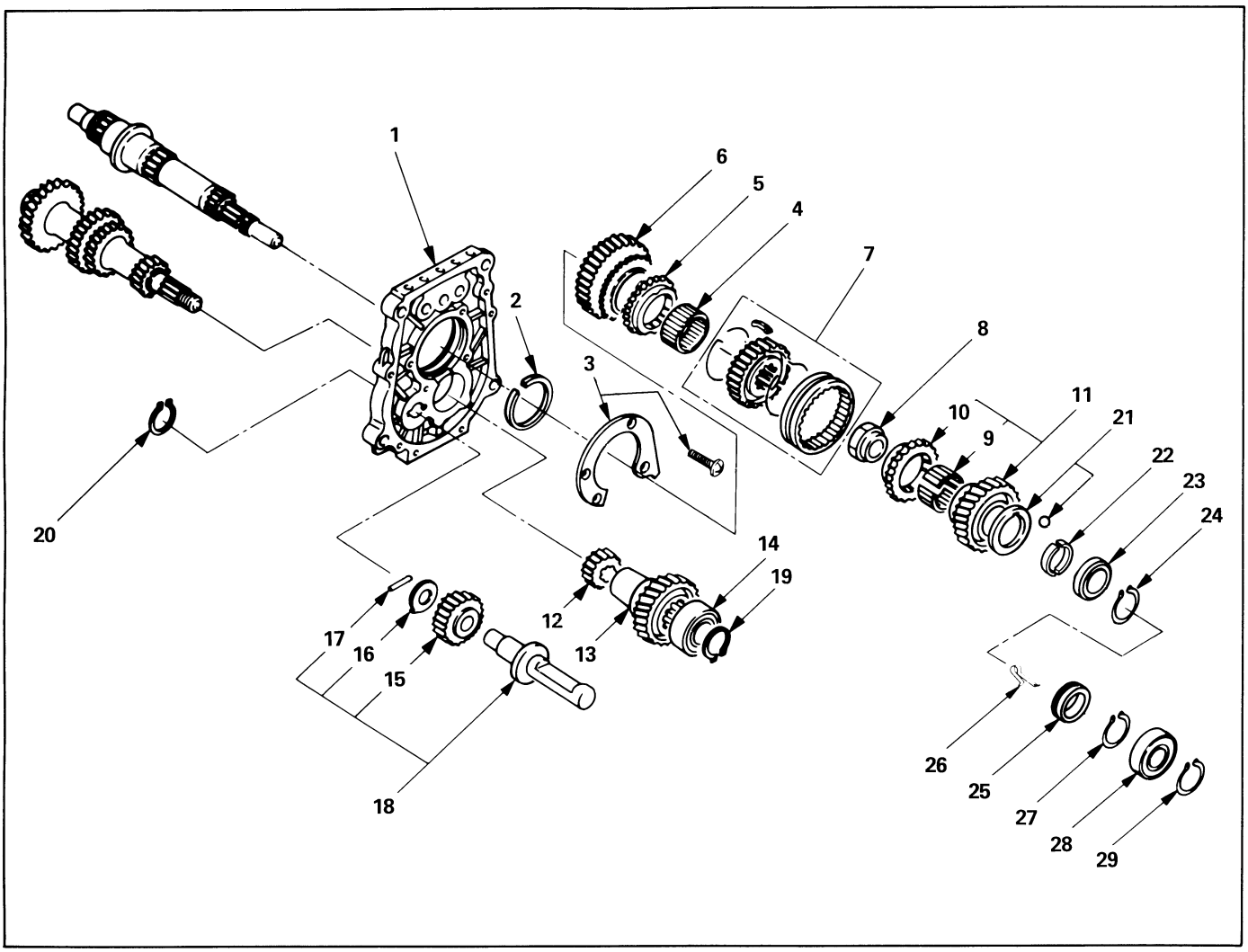

Reassembly Steps

- ▲ 1. Intermediate plate
- 2. Bearing snap ring
- ▲ 3. Bearing plate and screw
- 4. Needle bearing
- 5. Reverse block ring
- 6. Reverse gear
- ▲ 7. Rev.-5th synchronizer assembly
- ▲ 8. Mainshaft nut
- 9. Needle bearing
- 10. 5th block ring
- 11. 5th gear
- ▲ 12. Counter reverse gear
- 13. Counter 5th gear
- 14. Ball bearing
- 15. Reverse idler gear
- 16. Thrust washer
- 17. Idler shaft pin
- 18. Reverse idler shaft
- ▲ 19. Bearing snap ring
- ▲ 20. Reverse gear snap ring
- ▲ 21. Thrust washer and lock ball
- 22. Thrust plate
- 23. Retaining ring
- 24. Retainer snap ring
- 25. Speedometer drive gear
- 26. Clip
- 27. Bearing snap ring
- ▲ 28. Ball bearing
- 29. Bearing snap ring

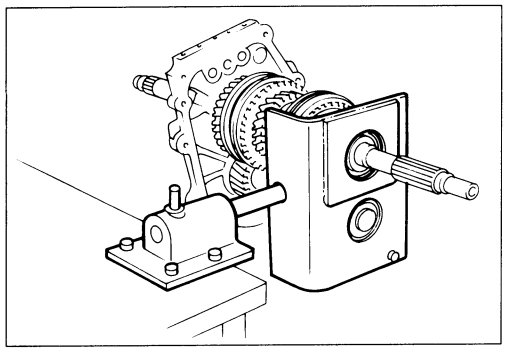

Important Operations

1. Intermediate Plate

1) Mesh the counter gear with the mainshaft assembly.
2) Install the holding fixture to the mainshaft and the counter gear.

   Holding Fixture: 5-8840-2160-0 (J-37224)
   Holding Base: 5-8840-0003-0 (J-3289-20)
3) Place the holding fixture (with the mainshaft and the countershaft) in a vise.
4) Install the intermediate plate.

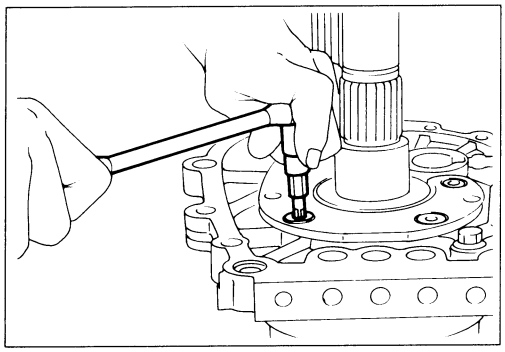

3. Bearing Plate and Screw

1) Apply recommended thread locking agents or its equivalent to each of the bearing plate screw threads.
2) Tighten the screws to the specified torque.

   Torx Bit Wrench: 5-8840-0047-0 (J-37225 : T45)

Bearing Plate Screw Torque	kg·m (lb·ft/N·m)
1.5 (11/15)	

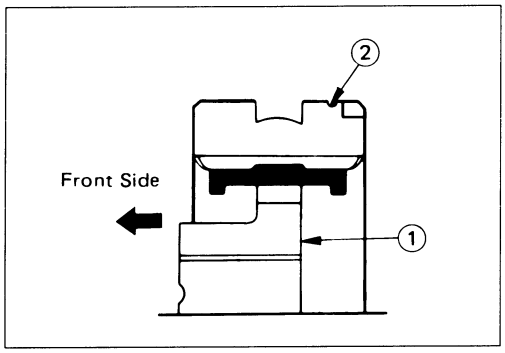

7. Rev-5th Synchronizer Assembly

1) Turn the clutch hub face ① toward the sleeve small groove ② on the outer circumference.
2) Install the synchronizer assembly to the mainshaft.

   The clutch hub face (with the heavy boss) must be facing the reverse gear side.

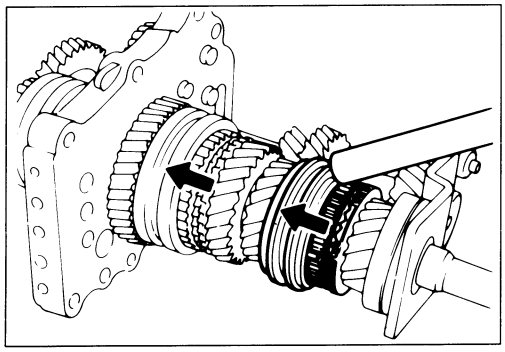

8. Mainshaft Nut

1) Mesh the 1st-2nd synchronizer with both the 1st and 3rd gears (double engagement).

   This will prevent the mainshaft from turning.

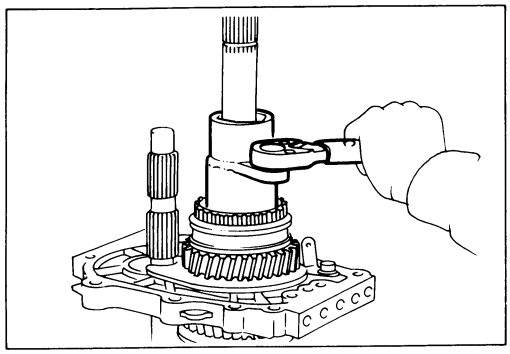

2) Install the mainshaft hub nut.
3) Use the mainshaft nut wrench to tighten the mainshaft nut to the specified torque.

   Wrench: 5-8840-2156-0 (J-37219)

Mainshaft Nut Torque	kg·m(lb·ft/N·m)
14 ± 2 (101 ± 14.2/137 ± 20)	

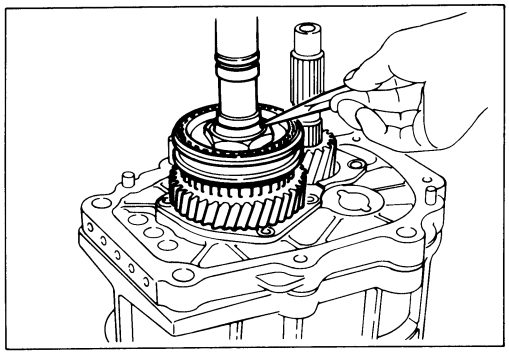

4) Use a punch to caulk the mainshaft nut.

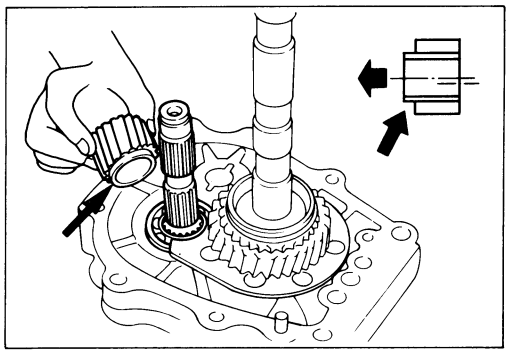

12. Counter Reverse Gear

1) Apply engine oil to the counter reverse gear and the reverse gear.
2) Install the counter reverse gear to the counter gear.

   Note the projection at either side of the counter reverse gear.

   The larger projection must be facing the intermediate plate.

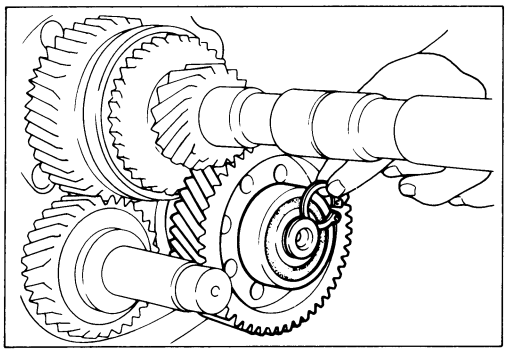

19. Bearing Snap Ring

1) Select the snap ring which will provide the minimum clearance between the ball bearing and the snap ring.

   There are six snap ring sizes available.

   The snap rings are color-coded to indicate their thickness.

Ball Bearing and Snap Ring Clearance	mm(in)
Standard	
0 — 0.15 (0 — 0.0059)	

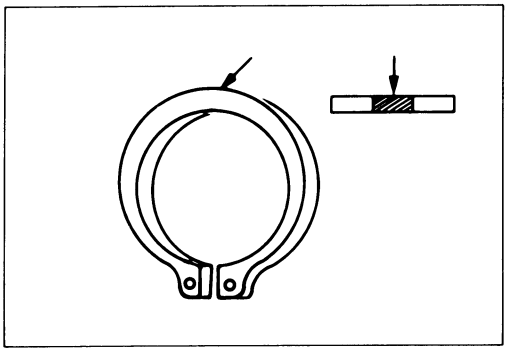

Snap Ring Availability mm(in)

Thickness mm(in)	Color-Coding
1.1 (0.043)	White
1.2 (0.047)	Yellow
1.3 (0.051)	Blue
1.4 (0.055)	Pink
1.5 (0.059)	Green
1.6 (0.063)	Brown

2) Use a pair of snap ring pliers to install the snap ring to the counter 5th gear.
Snap Ring Pliers
The snap ring must be fully inserted into the reverse idler shaft snap ring groove.

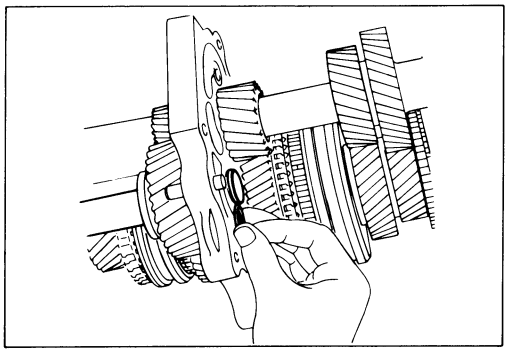

20. Reverse Gear Snap Ring

1) Select the snap ring which will provide the minimum clearance between the intermediate plate and the snap ring.
There are three snap ring sizes available.
The snap rings are color-coded to indicate their thickness.

Intermediate Plate and Snap Ring Clearance mm(in)

Standard
0 — 0.15 (0 — 0.0059)

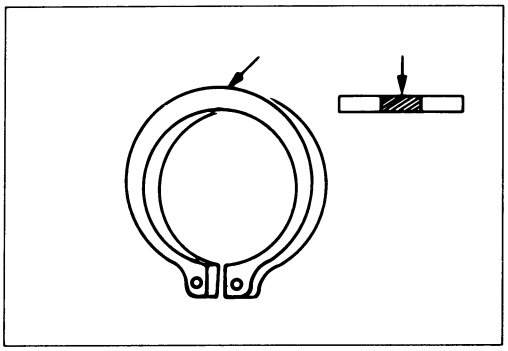

Snap Ring Availability mm(in)

Thickness mm(in)	Color-Coding
1.2 (0.047)	White
1.3 (0.051)	Yellow
1.4 (0.055)	Blue

2) Use a pair of snap ring pliers to install the snap ring to the reverse idler shaft.
Snap Ring Pliers
The snap ring must be fully inserted into the reverse idler shaft snap ring groove.

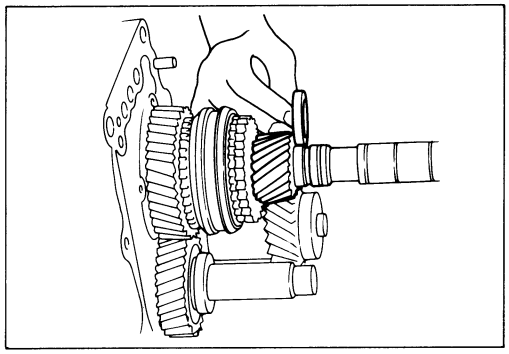

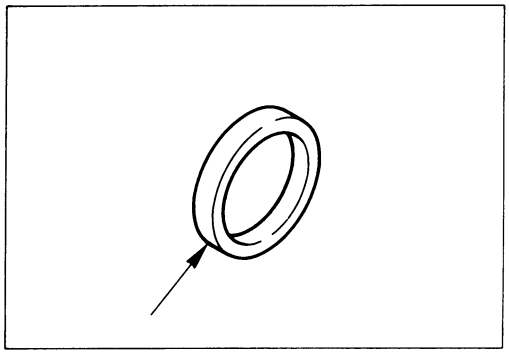

21. Thrust Washer and Lock Ball

1) Use a thickness gauge to measure the clearance between the 5th gear and the thrust washer.

5th Gear and Thrust Washer Clearance mm(in)
Standard
0.10 – 0.25 (0.0039 – 0.0098)

If required, replace the existing thrust washer with a new thrust washer to bring the clearance to specification.

There are four thrust washer sizes available.
The snap rings are color-coded to indicate their thickness.

Thrust Washer Availability mm(in)

Thickness	Color-Coding
7.9 (0.311)	White
8.0 (0.315)	Yellow
8.1 (0.319)	Green
8.2 (0.323)	Blue

2) Apply grease to the thrust washer and the lock ball.
3) Install the thrust washer and the lock ball.

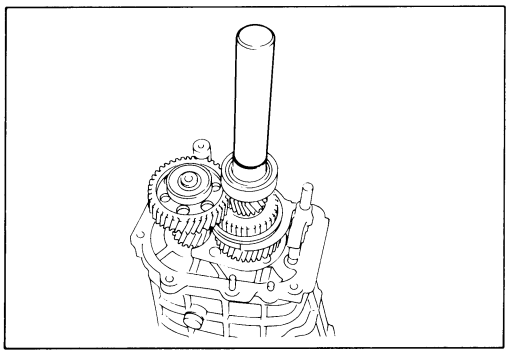

28. Ball Bearing

Use the installer to install the ball bearing to the mainshaft.

Installer: 5-8840-2159-0 (J-37223)

INTERMEDIATE PLATE AND GEAR ASSEMBLY, DETENT, SHIFT ARM ASSEMBLY, AND INTERLOCK PIN

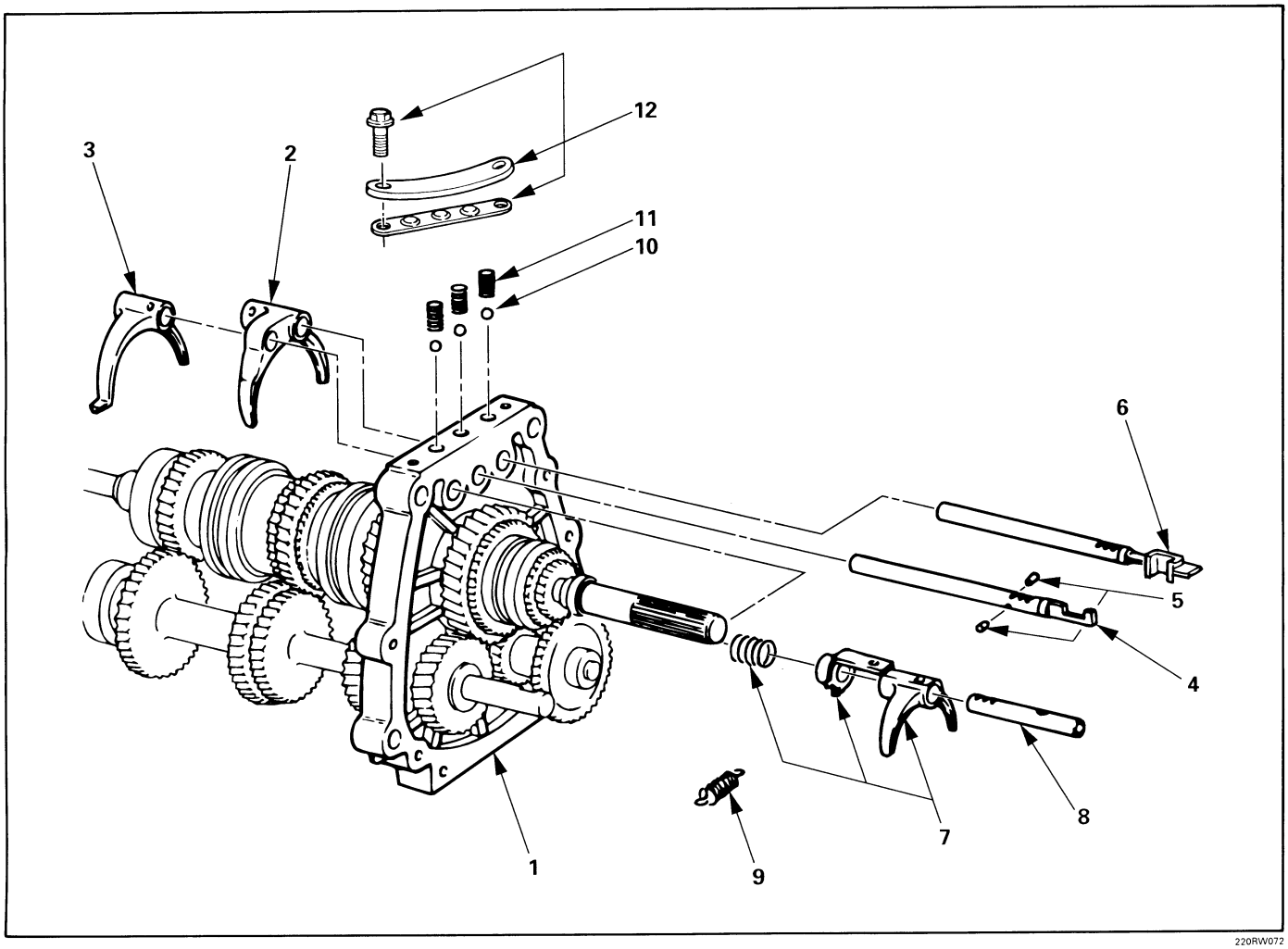

Reassembly Steps

1. Intermediate plate and gear assembly
2. 1st-2nd shift arm
3. 3rd-4th shift arm
4. ▲ 3rd-4th shift rod
5. ▲ Interlock pin
6. 1st-2nd shift rod
7. Rev-5th shift arm and reverse inhibitor
8. Rev-5th shift rod
9. Spring
10. Detent ball
11. Detent spring
12. ▲ Detent spring plate and gasket

Important Operations

4. 3rd-4th Shift Rod

5. Interlock Pin

1) Install the interlock pin to the shift rod.
2) Install the shift rod together with the interlock pin to the intermediate plate.

   Do not allow the interlock pin to fall from the shift rod.

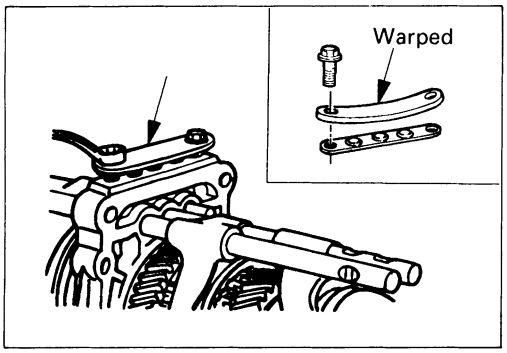

12. Detent Spring Plate and Gasket

1) Install the new-detent plate and new gasket onto the transmission case into the correct direction.
2) Tighten the detent spring plate bolts to the specified torque.

Detent Spring Plate Bolt Torque	kg·m(lb·ft/N·m)
2.0 ± 0.4 (14 ± 3/20 ± 4)	

MAJOR COMPONENTS

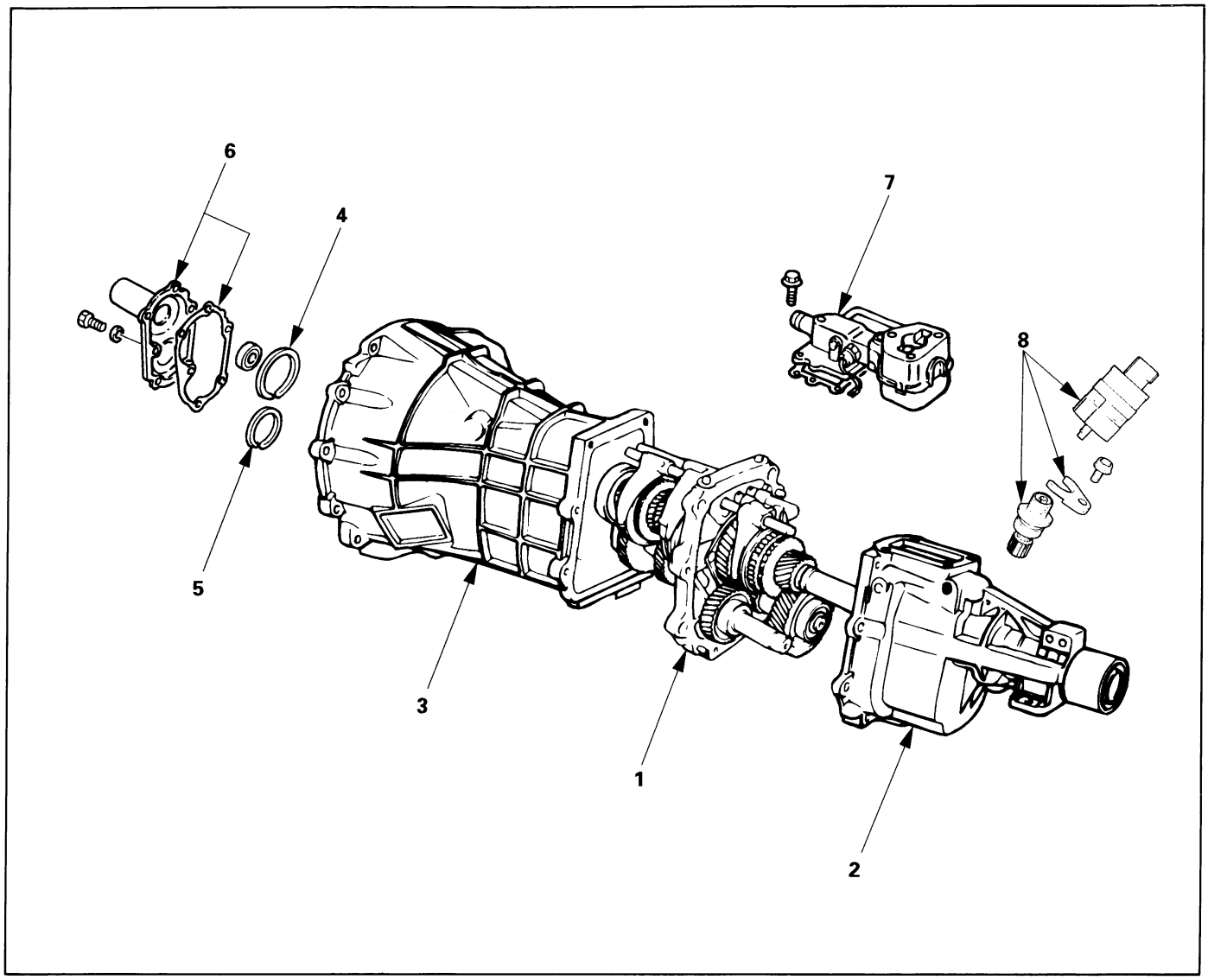

Reassembly Steps

- ▲ 1. Intermediate plate with gear assembly
- ▲ 2. Rear cover with oil seal
- ▲ 3. Transmission case
- ▲ 4. Front bearing snap ring
- ▲ 5. Counter front bearing snap ring
- ▲ 6. Front cover with oil seal
- ▲ 7. Gear control box assembly
- 8. Speedometer driven gear and speedometer sensor

Important Operations

1. Intermediate Plate with Gear Assembly

1) Apply a light coat of oil to the transmission case top gear shaft ball bearing fitting faces and the shift rods.

   This will facilitate smooth installation.

2) Install the intermediate plate assembly.

3) Pull out the top gear shaft until the ball bearing snap ring groove protrudes from the transmission case front cover fitting face.

   Avoid subjecting the mainshaft to sudden shock or stress.

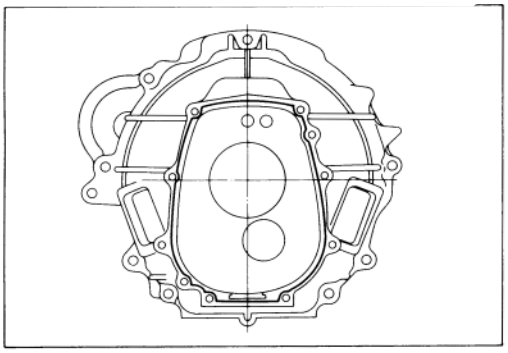

2. Rear Cover with Oil Seal

3. Transmission Case

1) Apply recommended liquid gasket or its equivalent to the transmission case and rear cover fitting surfaces.

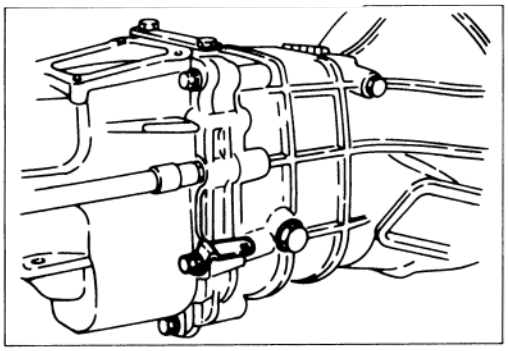

2) Install the rear cover and the transmission case to the intermediate plate.

3) Tighten the rear cover bolts to the specified torque.

Rear Cover Bolt Torque	kg·m (lb·ft/N·m)
	3.8 ± 0.8 (27 ± 5.8 / 37 ± 7.8)

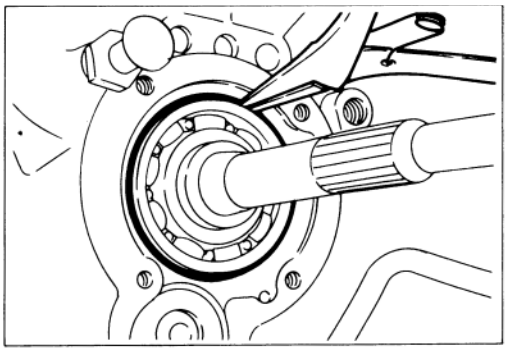

4. Front Bearing Snap Ring

5. Counter Front Bearing Snap Ring

Use a pair of snap ring pliers to install the snap rings to the mainshaft.

The snap rings must be fully inserted into the ball bearing snap ring groove.

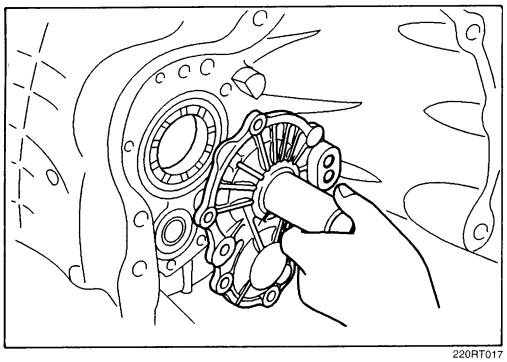

220RT017

6. Front Cover with Oil Seal

1) **Apply recommended liquid gasket or its equivalent to the through bolt threads.**
2) Install the new gasket and the front cover to the transmission case

   Take care not to damage the oil seal.
3) **Tighten the front cover bolts to the specified torque.**

Front Cover Bolt Torque	kg·m (lb·ft/N·m)
1.9 ± 0.4 (13.7 ± 2.9/18.6 ± 3.9)	

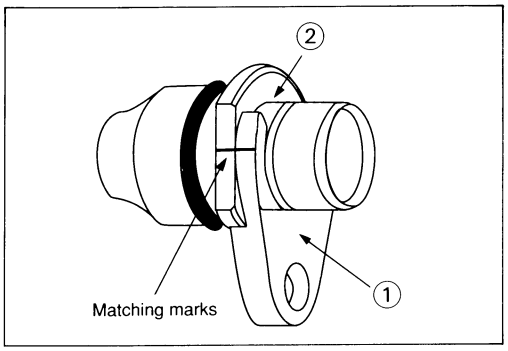

7. Speedometer Driven Gear and Speedometer Sensor

1) Install the O-ring to the speedometer driven gear bushing.
2) Install the driven gear to the speedometer driven gear bushing.
3) Align the matching marks on plate ① and bush ②, then tighten the bolt.

Bolt Torque	kg·m (lb·ft/N·m)
1.5 (10.8/14.7)	

4) Install the speedometer sensor.

Speedometer Sensor Torque	kg·m (lb·ft/N·m)
2.8 (20/27)	

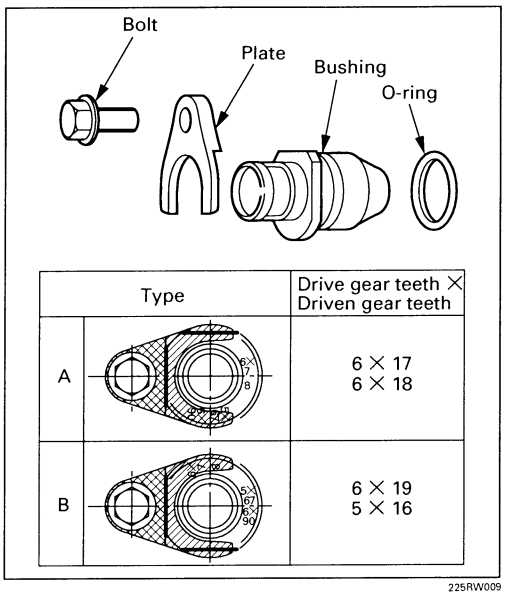

225RW009

4 x 4 MODEL TRANSMISSION

MAIN DATA AND SPECIFICATIONS

			MUA 5C	MUA 5S
Transmission type			Fully synchronized 5-forward and reverse gears.	
Transfer case type			Constant mesh type Low-High and 2H-4H gears.	
Gear ratio :	Transmissior	1st	3.767	4.357
		2nd	2.248	2.502
		3rd	1.404	1.501
		4th	1.000	1.000
		5th	0.809	0.809
		Rev.	3.873	3.970
	Transfer	High	1.000	
		Low	2.050	
Oil capacity :	Transmission	lit (US gal.)	2.95 (0.78)	
:	Transfer	lit (US gal.)	1.45 (0.38)	

GENERAL DESCRIPTION

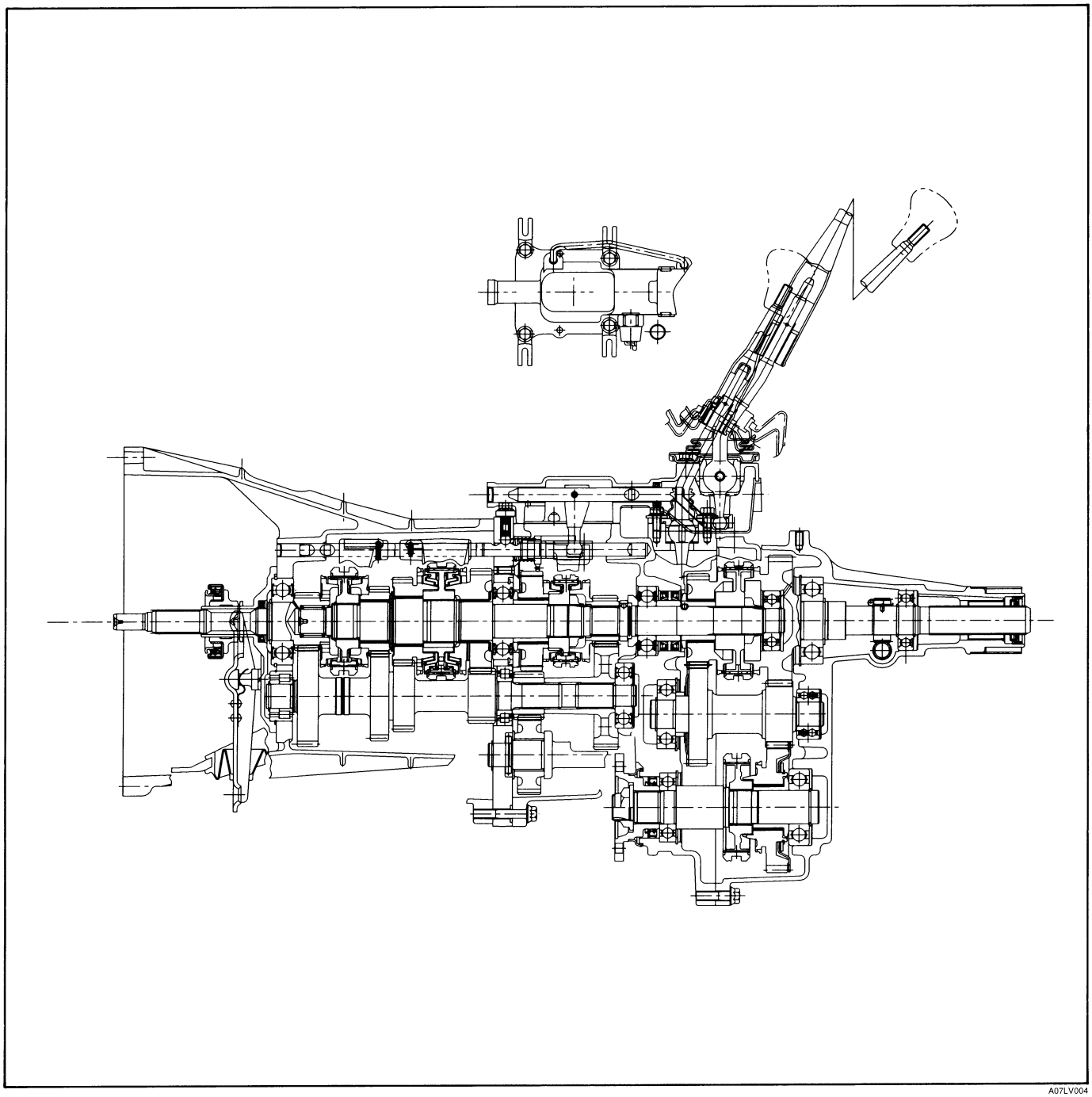

A07LV004

The transmission is designed for the quietest possible operation.

A longer center distance (77.5 mm (3.05 in)) provides increased durability.

Principle parts of the transmission are the integral clutch housing, the intermediate plate, the rear cover, and the gears.

The gear control box is built-in to the transfer case.

Transfer gear ratio is 1 : 2.050.

TORQUE SPECIFICATIONS

STANDARD BOLTS

The torque values given in the following table should be applied where a particular torque is not specified.

N·m (kg·m / lb·ft)

	Strength Class	4.8/4T	7T	8.8		9.8/9T
				Refined	Non-Refined	
	Bolt Identification	4	7	8	8	9
	Bolt Diameter× Pitch (mm)	No mark	—			
Standard Hex. Head Bolt	M6 × 1.0	6 (0.6 / 52 lb·in)	7 (0.7 / 61 lb·in)	8 (0.8 / 69 lb·in)		–
	M8 × 1.25	13 (1.3 / 113 lb·in)	17 (1.7 / 12)	20 (2.0 / 14)		24 (2.4 / 17)
	M10 × 1.25	27 (2.8 / 20)	37 (3.8 / 27)	42 (4.3 / 31)		50 (5.1 / 37)
	M12 × 1.25	61 (6.3 / 45)	76 (7.8 / 56)	87 (8.9 / 64)		95 (9.7 / 70)
	M14 × 1.5	96 (9.8 / 71)	116 (11.8 / 85)	133 (13.6 / 98)		142 (14.5 / 105)
	M16 × 1.5	130 (13.3 / 96)	170 (17.3 / 125)	193 (19.7 / 143)		200 (20.4 / 148)
	M18 × 1.5	188 (19.2 / 139)	244 (24.9 / 180)	278 (28.3 / 205)		287 (29.3 / 212)
	M20 × 1.5	258 (26.3 / 190)	337 (34.4 / 249)	385 (39.3 / 284)		396 (40.4 / 292)
	M22 × 1.5	332 (33.9 / 245)	453 (46.3 / 335)	517 (52.7 / 381)		530 (54.1 / 391)
	M24 × 2.0	449 (45.8 / 331)	570 (58.2 / 421)	651 (66.3 / 480)		692 (70.6 / 511)
	* M10 × 1.5	26 (2.7 / 20)	36 (3.7 / 27)	41 (4.2 / 30)		48 (4.9 / 35)
	* M12 × 1.75	57 (5.8 / 42)	71 (7.2 / 52)	80 (8.2 / 59)		89 (9.1 / 66)
	* M14 × 2.0	89 (9.1 / 66)	110 (11.2 / 81)	125 (12.7 / 92)		133 (13.6 / 98)
	* M16 × 2.0	124 (12.7 / 92)	162 (16.5 / 119)	185 (18.9 / 137)		191 (19.5 / 141)
Flange Bolt	M6 × 1.0	7 (0.7 / 61 lb·in)	8 (0.8 / 69 lb·in)	9 (0.9 / 78 lb·in)		–
	M8 × 1.25	15 (1.5 / 11)	19 (1.9 / 14)	22 (2.2 / 16)		26 (2.7 / 20)
	M10 × 1.25	31 (3.2 / 23)	41 (4.2 / 30)	47 (4.8 / 35)		56 (5.7 / 41)
	M12 × 1.25	69 (7.0 / 51)	85 (8.7 / 63)	97 (9.9 / 72)		106 (10.8 / 78)
	M14 × 1.5	104 (10.6 / 77)	126 (12.8 / 93)	144 (14.6 / 106)		154 (15.7 / 114)
	M16 × 1.5	145 (14.8 / 127)	188 (19.2 / 139)	214 (21.8 / 158)		221 (22.5 / 163)
	M18 × 1.5	–	–	–		–
	M20 × 1.5	–	–	–		–
	M22 × 1.5	–	–	–		–
	M24 × 2.0	–	–	–		–
	* M10 × 1.5	30 (3.1 / 22)	40 (4.1 / 30)	46 (4.7 / 34)		54 (5.5 / 40)
	* M12 × 1.75	64 (6.5 / 47)	78 (8.0 / 58)	89 (9.1 / 66)		99 (10.1 / 73)
	* M14 × 2.0	97 (9.9 / 72)	119 (12.1 / 88)	135 (13.8 / 99.7)		144 (14.7 / 107)
	* M16 × 2.0	137 (14.0 / 101)	178 (18.2 / 132)	203 (20.7 / 150)		210 (21.5 / 155)

The asterisk * indicates that the bolts are used for female-threaded parts that are made of soft materials such as casting, etc.

FLARE NUTS

N·m (kg·m / lb·ft)

Pipe diameter mm (in)	Torque	Pipe diameter mm (in)	Torque
4.76 (0.187)	16 (1.6 / 12)	10.00 (0.394)	54 (5.5 / 40)
6.35 (0.250)	26 (2.7 / 20)	12.00 (0.472)	88 (9.0 / 65)
8.00 (0.315)	44 (4.5 / 33)	15.00 (0.591)	106 (10.8 / 78)

SPECIAL PARTS FIXING NUTS AND BOLTS

kg·m(lb.ft/N·m)

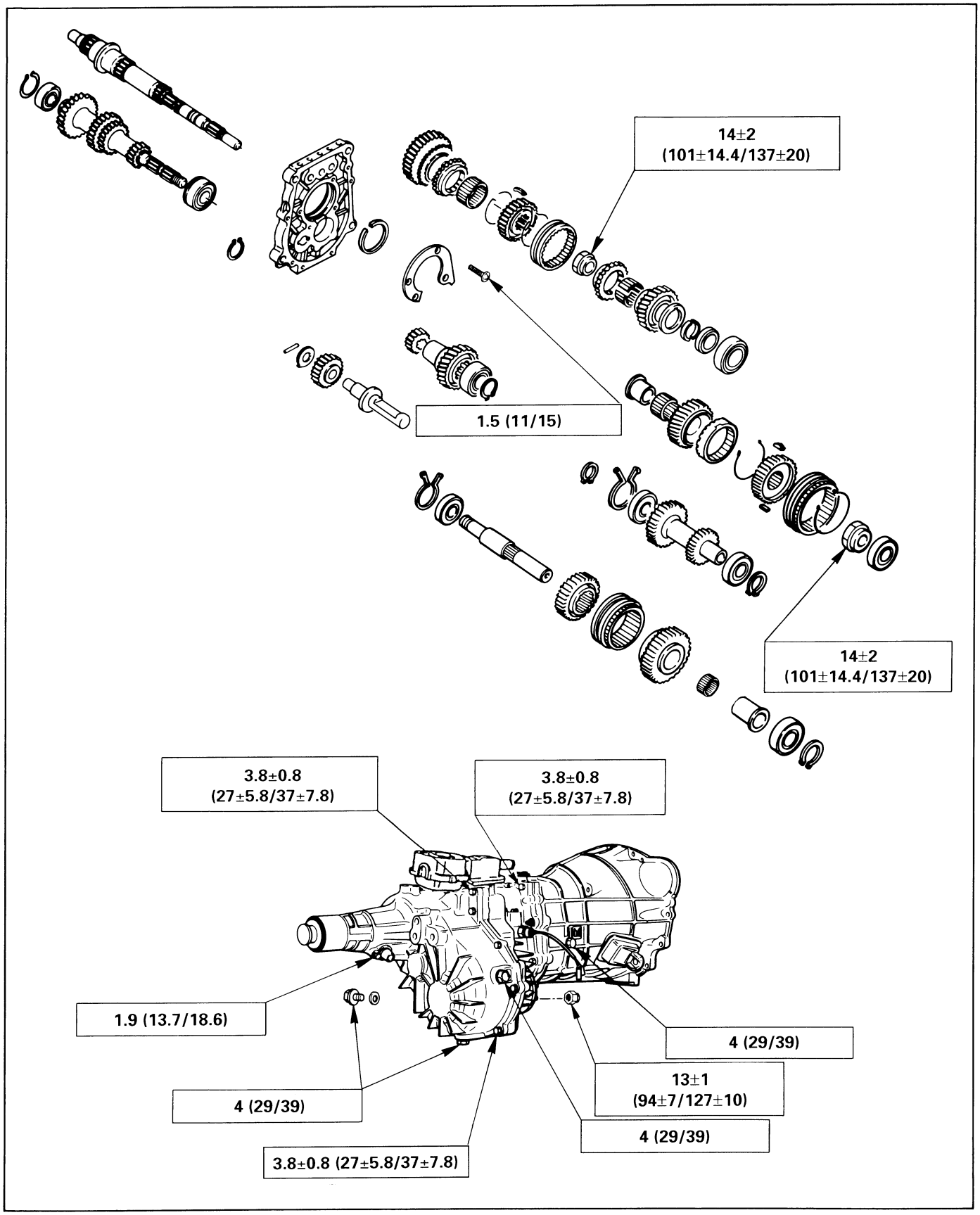

RECOMMENDED LIQUID GASKET

Type	Brand Name	Manufacturer	Remarks
RTV* Silicon Base	ThreeBond 1207B ThreeBond 1207C	Three Bond Three Bond	For Engine Repairs
	ThreeBond 1215 ThreeBond 1281	Three Bond Three Bond	For Axle Case and Transmission Repairs
Water Base	ThreeBond 1141E	Three Bond	For Engine Repairs
Solvent	ThreeBond 1104 BelcoBond 4 BelcoBond 401 BelcoBond 402	Three Bond Isuzu Isuzu Isuzu	For Engine Repairs
Anerobic	LOCTITE 515 LOCTITE 518	Loctite Loctite	All

* RTV : Room Temperature Vulcanizer

Note:

1. **It is very important that the liquid gaskets listed above or their exact equivalent be used on the vehicle.**
2. **Be careful to use the specified amount of liquid gasket.**
   Follow the manufacturer's instructions at all times.
3. **Be absolutely sure to remove all lubricants and moisture from the connecting surfaces before applying the liquid gasket.**
   The connecting surfaces must be perfectly dry.
4. **LOCTITE 515 and LOCTITE 518 harden upon contact with a metal surface.**
   Do not apply LOCTITE 515 or LOCTITE 518 between two metal surfaces having a clearance of greater than 0.25 mm (0.01 in). Poor adhesion will result.

REMOVAL AND INSTALLATION

Read this Section carefully before performing any removal and installation procedure. This Section gives you important points as well as the order of operation. Be sure that you understand everything in this Section before you begin.

Important Operations – Removal

Battery Cable

Disconnect the negative (–) cable from the battery terminal.

Engine Hood

Apply setting marks to the engine hood and the engine hood hinges before removing the engine hood.

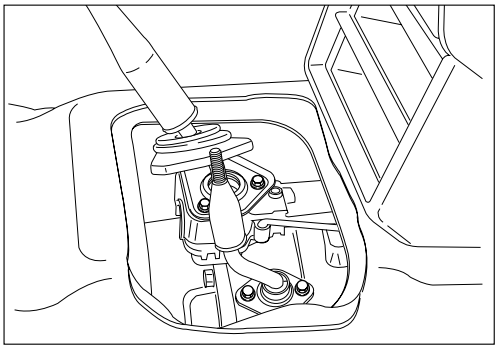

235RT004

Gear Shift Lever and Transfer Change Lever

1. Place the gear shift lever in the neutral position.
2. Place the transfer change lever in the “H” position.
3. Remove the gear shift lever knob and transfer change lever konb.
4. Remove the center console assembly and front console assembly.
5. Remove the grommet and dust cover.
6. Remove the gear shift lever cover bolt.
7. Remove the gear shift lever.
8. Remove the transfer change lever retainer bolts.
9. Remove the transfer change lever and O-ring.

Note:

Cover the shift lever and change lever holes to prevent the entry of foreign material into the transmission.

Lifting the Vehicle

1. Jack up the vehicle.
2. Place chassis stands at the front and the rear of the vehicle.

Transfer Case Protector (Except 00 Year or Subsequent ones)

Remove the transfer case protector from the transmission mounting member and the side member.

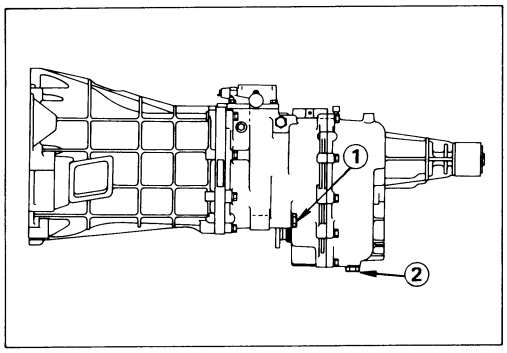

Transmission and Transfer Case Oil Draining

1. Remove the transmission oil drain plug ①.
2. Remove the transfer case oil drain plug ②.
3. Replace the drain plug(s) after draining the oil.

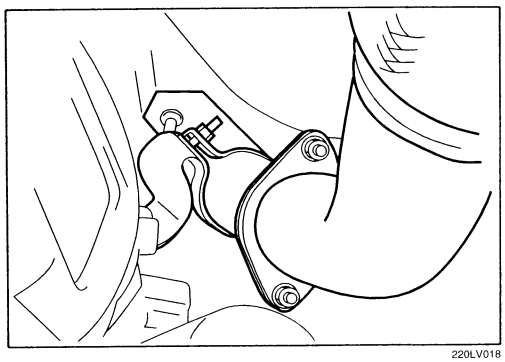

Exhaust Pipe

1. Remove the exhaust pipe bracket from the transmission case.
2. Remove the front exhaust pipe and 2nd-3rd exhaust pipe.

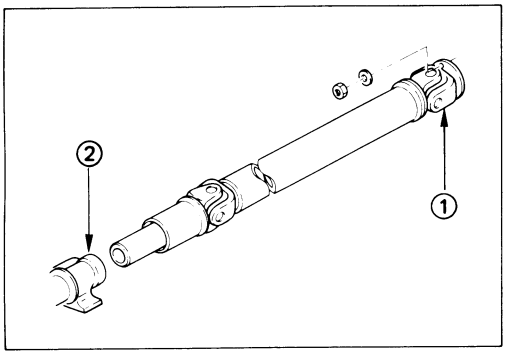

Rear Propeller Shaft (Single Shaft Type)

1. Remove the propeller shaft flange yoke at the drive pinion side ①.
2. Remove the propeller shaft from the transmission main shaft spline ②.

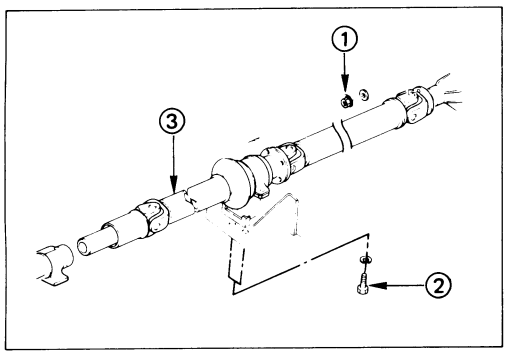

Rear Propeller Shaft (Dual Shaft Type)

1. Apply setting marks to the 2nd propeller shaft flange yoke.
   This will prevent mispositioning during the installation procedure.
2. Remove the 2nd propeller shaft flange yoke bolts at the drive pinion side ①.
3. Remove the center bearing retainer bolts ②.
4. Remove the 1st propeller shaft ③ with the center bearing and the 2nd propeller shaft.
   Pull the 1st propeller shaft toward the rear of the vehicle until the spline yoke is free of the transmission main shaft.

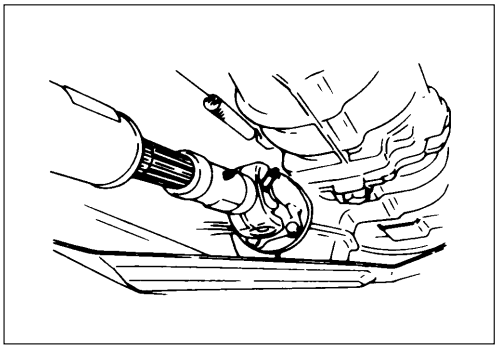

Front Propeller Shaft

Remove the splined yoke flange bolt at the transfer case side.

Do not allow the splined yoke to fall away from the front propeller shaft.

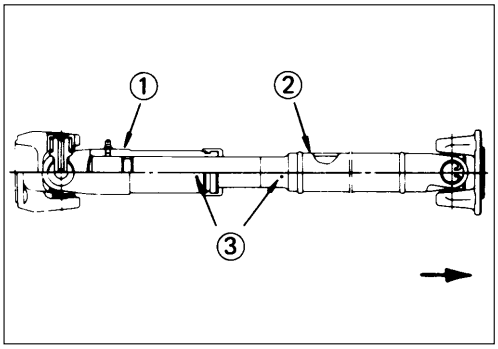

If the splined yoke should fall away from the front propeller shaft, align the setting marks ③ on the splined yoke ① and the propeller shaft ② to reassemble the two parts.

The setting marks ③ are punched circles approximately 3 mm (0.12 in) in diameter.

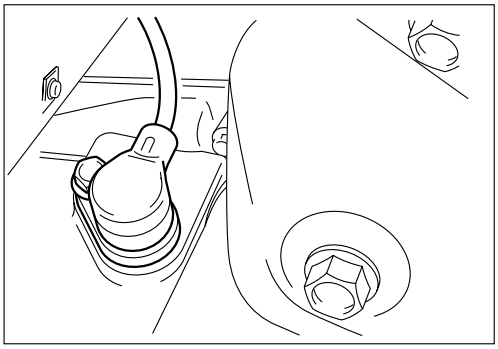

220R200001

TDC Sensor (4JA1TC Model)

Disconnect the TDC sensor from the transmission housing.

Harness Connector

Disconnect the 4WD switch connectors, back up light switch connector and the speedometer sensor connector.

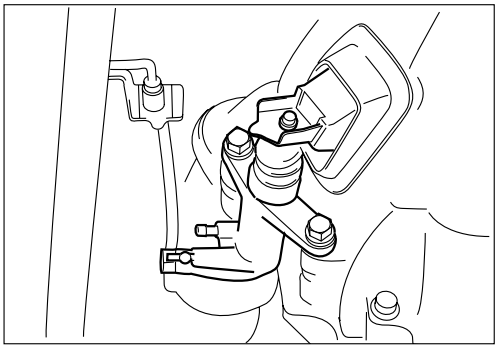

220LV019

Slave Cylinder

Remove the slave cylinder from the transmission case.

Engine LIfting Hanger

1. Attach the engine lifting hanger to the front portion of the engine.
2. Attach the lifting wire to both ends of the engine lifting hange.

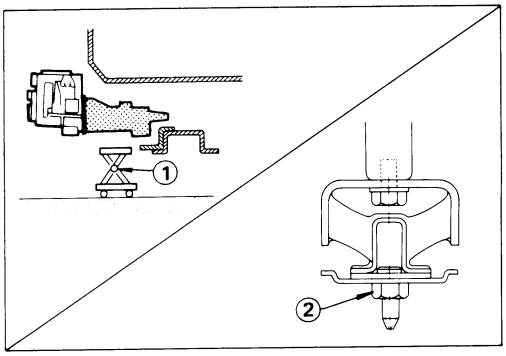

Engine Rear Mounting and Mounting Member

1. Support the transmission with a transmission jack ①.
2. Remove the engine rear mounting nuts ②.
3. Remove the engine rear mounting bolts.
4. Loosen the mounting member bolts.
5. Remove the mounting member from the sidemembers.
6. Remove the engine rear mounting.

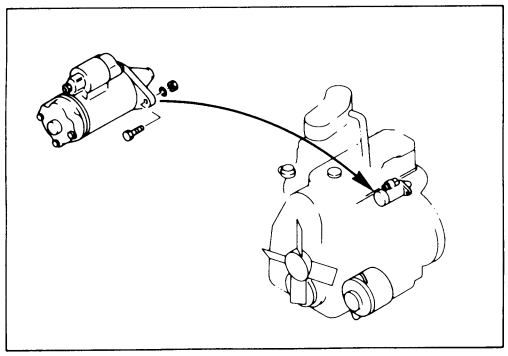

Starter Motor

Remove the starter motor from the engine rear plate.

Flywheel Under Cover (6VD1)

Remove flywheel under cover bolts.

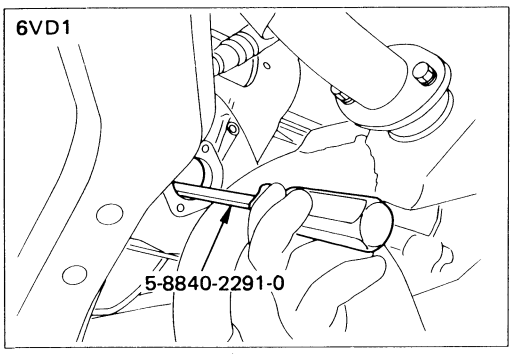

Transmission with Transfer

1. Use the remover for disconnect the clutch release bearing from the clutch pressure plate (6VD1).

   Clutch release bearing remover: 5-8840-2291-0 (J-39207)

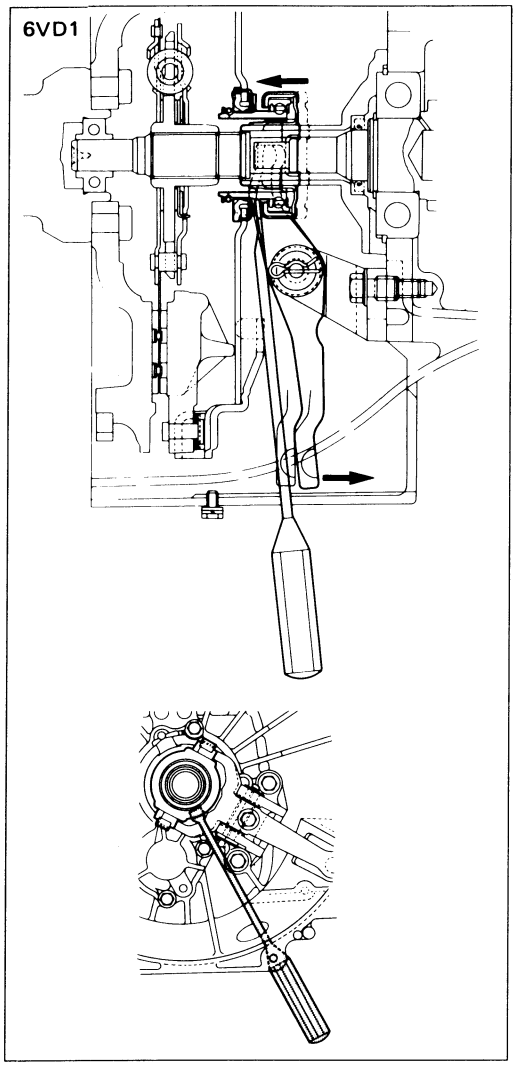

Release Bearing Disconnection (6VD1)

① Pull the shift fork toward the transmission to press the clutch release bearing against the clutch.
② Insert the clutch release bearing remover between the wedge collar and the release bearing.
③ Turn the remover to separate the release bearing.

NOTE:
Be sure not to insert the remover between the wedge collar and the clutch.

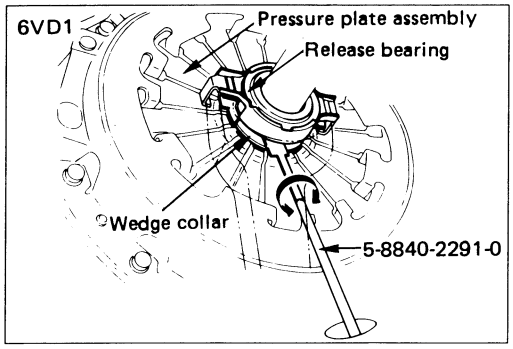

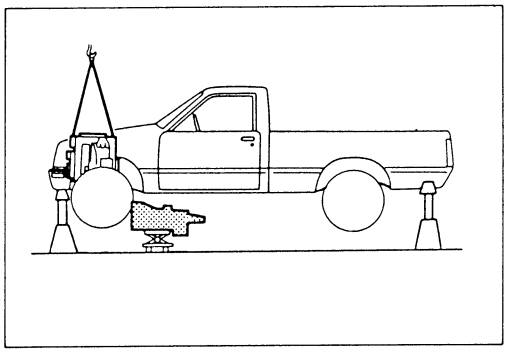

2. Remove the transmission nuts and bolts from the engine rear plate.
3. Carefully pull the transmission with the transmission jack toward the rear of the vehicle.
4. Operate the transmission jack to slowly lower the transmission.

Important Operations — Installation

Follow the removal procedure in the reverse order to perform the installation procedure. Pay careful attention to the important points during the installation procedure.

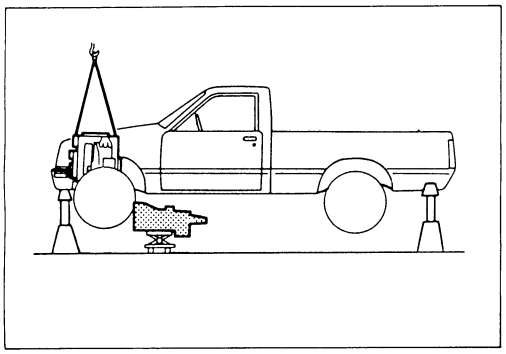

Transmission with Transfer

1. Apply a thin coat of molybdenum disulfide grease to the top gear shaft spline.
2. Place the transmission on a transmission jack.
3. Carefully move the transmission jack and transmission into position behind the engine.

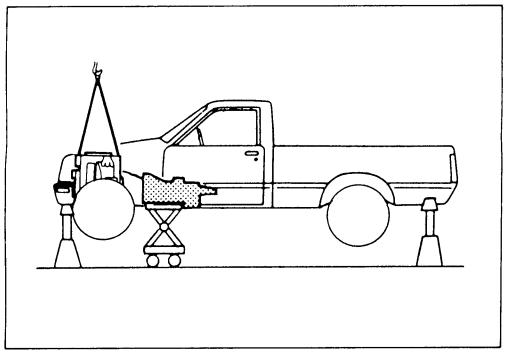

4. Slowly raise the transmission jack until the front of the transmission is aligned with the rear of the engine.

   The slope of the engine and the transmission must be the same.

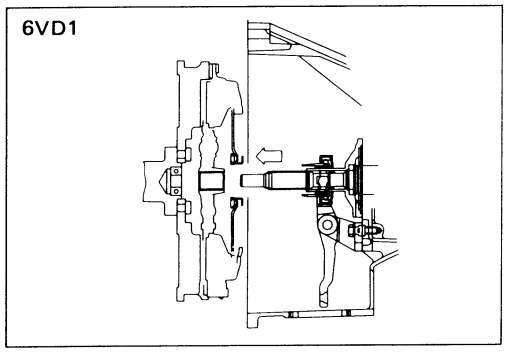

5. Align the top gear shaft spline with the clutch driven plate spline.
6. Install the transmission to the engine.

   Tighten the transmission nuts and bolts to the specified torque.

Transmission Nut and Bolt Torque	kg·m(lb·ft/N·m)
M10: 4.1 ± 1.0 (30 ± 7.2/40 ± 10)	
M12: 8.0 ± 1.6 (58 ± 12/78 ± 16)	

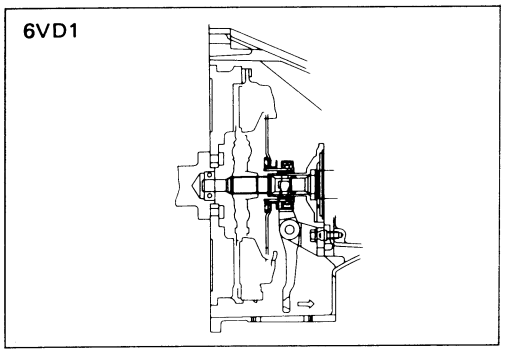

7. Apply a force of 59–78N (6–8 kg / 13.2–17.6 lb) to the tip of the shift fork in the direction of the transmission to engage the clutch pressure plate and release bearing (6VD1).

NOTE (6VD1):
A click sound is heard when the release bearing and the tip of the diaphragm spring engage each other.
Check to see if they are securely engaged by pushing the tip of the shift fork toward the engine while applying a force of about 25N (2.5 kg / 5.5 lb). If the shift fork will not move, then they are securely engaged.

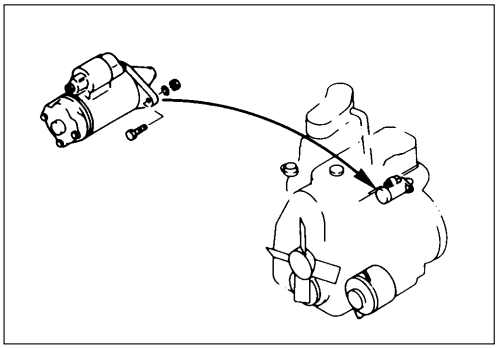

Starter Motor

1. Install the starter motor to the engine rear plate.

Starter Motor Bolt Torque	kg·m (lb·ft/N·m)
8.0 ± 1.6 (58 ± 12/78 ± 16)	

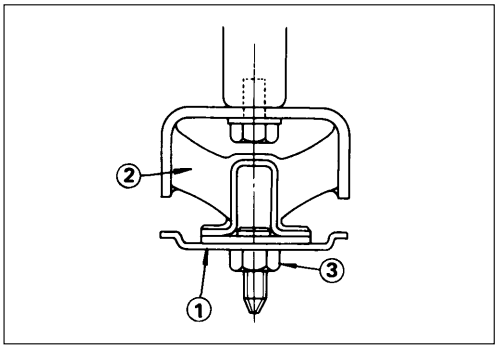

Engine Rear Mounting and Mounting Member

1. Install the engine rear mounting to the transmission.

Rear Mounting Bolt Torque	kg·m (lb·ft/N·m)
4.2 ± 0.5 (30 ± 3.6/41 ± 4.9)	

2. Install the mounting member ① to the mounting rubber ②.

Mounting Rubber Nut Torque	kg·m (lb·ft/N·m)
5.1 ± 0.6 (37 ± 4.3/50 ± 6)	

3. Install the mounting member to the sidemembers.

Mounting Member Bolt Torque	kg·m (lb·ft/N·m)
5.1 ± 0.6 (37 ± 4.3/50 ± 6)	

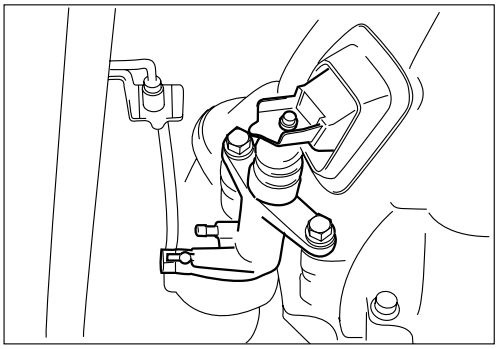

220LV019

Slave Cylinder

Install the slave cylinder to the transmission case.

Slave Cylinder Bolt Torque	kg·m (lb·ft/N·m)
4.1 ± 1.0 (30 ± 7.2/40 ± 10)	

Harness Connector

Disconnect the 4WD switch connectors back up light switch connector and speedometer sensor connector.

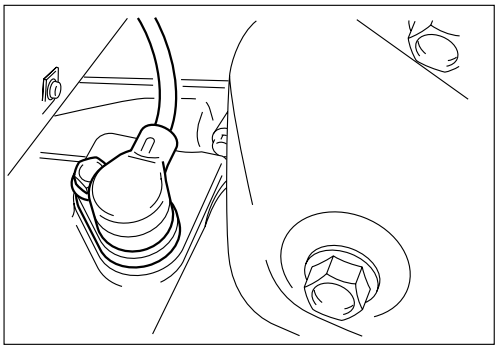

220R200001

TDC Sensor (4JA1TC Model)

Connect the TDC sensor from the transmission housing.

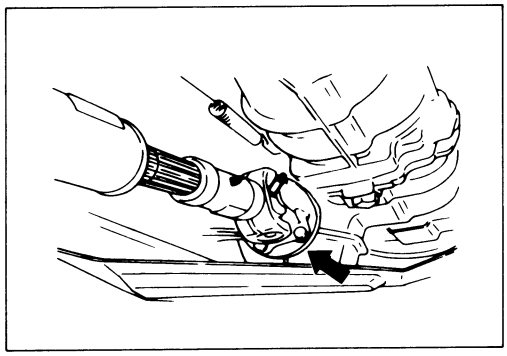

Front Propeller Shaft

1. Connect the propeller shaft flange yoke to the matching flange.
2. Tighten the propeller shaft flange yoke bolt to the specified torque.

Propeller Shaft Flange Yoke Bolt Torque kg·m (lb·ft/N·m)
6.4 ± 0.4 (46.3 ± 2.9/62.7 ± 3.9)

Note:

If the splined yoke and the front propeller shaft have accidentally separated, align their setting marks and recouple them.
Refer to "FRONT PROPELLER SHAFT REMOVAL".

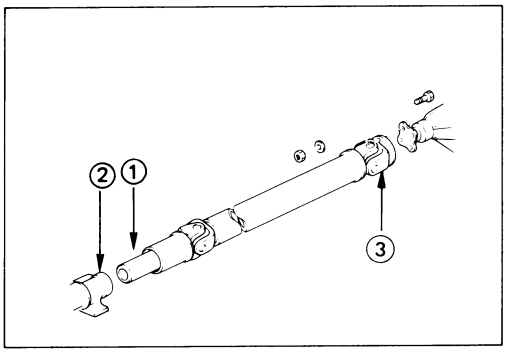

Rear Propeller Shaft (Single Shaft Type)

1. Insert the splined yoke ① with the propeller shaft into the transmission main shaft spline ②.
2. Install the propeller shaft flange yoke ③ to the drive pinion side.
3. Tighten the propeller shaft flange yoke bolt to the specified torque.

Propeller Shaft Flange Yoke Bolt Torque kg·m (lb·ft/N·m)
6.4 ± 0.4 (46.3 ± 2.9/62.7 ± 3.9)

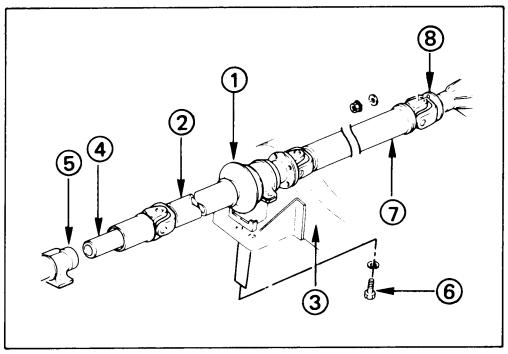

Rear Propeller Shaft (Dual Shaft Type)

1. Place the center bearing ① together with the 1st propeller shaft ② and 2nd propeller shaft ⑦ on the No.4 crossmember ③.
2. Insert the splined yoke ④ into the transmission main shaft spline ⑤.
3. Tighten the center bearing retainer bolts ⑥ to the specified torque.

Center Bearing Retainer Bolt Torque kg·m(lb·ft/N·m)
6.2 ± 1.2 (44.8 ± 8.7/60.8 ± 11.8)

4. Connect the 2nd propeller shaft ⑦ and drive pinion side ⑧.

   Be sure to align the setting marks applied at disassembly.

5. Tighten the coupling bolts to the specified torque.

Propeller Shaft Flange Yoke Bolt Torque kg·m(lb·ft/N·m)
6.4 ± 0.4 (46.3 ± 2.9/62.7 ± 3.9)

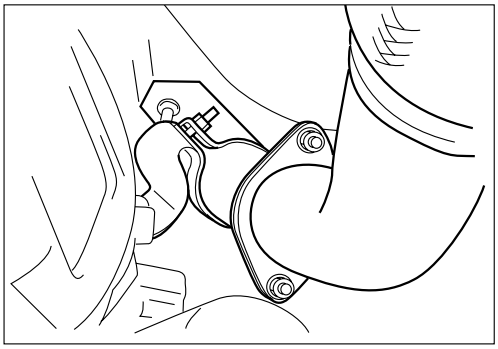

220LV018

Exhaust Pipe

1. Connect the front exhaust pipe and 2nd-3rd exhaust pipe.
2. Install the exhaust pipe bracket to the transmission case.

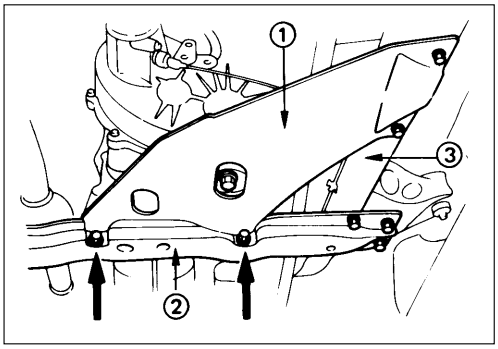

Transfer Case Protector (Except 00 Year or Subsequent ones)

1. Install the transfer case protector ① to the mounting member ② and the sidemebers ③.
2. Tighten the transfer case protector bolts to the specified torque.

Transfer Case Protector Bolt Torque	kg·m (lb·ft/N·m)
3.7 ± 1.0 (26.8 ± 7.2/36.3 ± 9.8)	

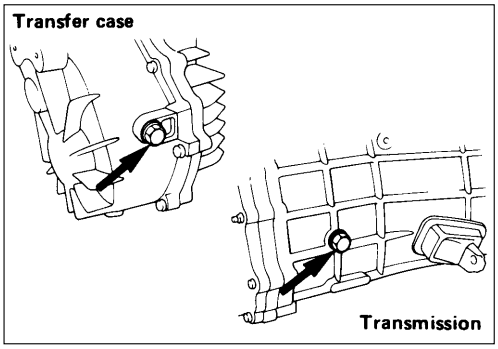

Gear Shift Lever and Transfer Change Lever

1. Replenish the transmission case and the transfer case with the specified engine oil.

Transmission and Transfer Case Oil	lit (US/UK qt.)
Transmission Case	2.95 (3.12/2.6)
Transfer Case	1.45 (1.53/1.28)

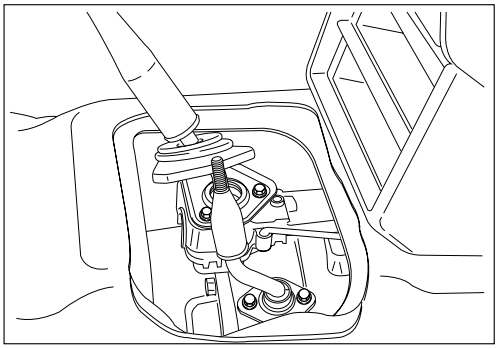

235RT004

2. Install the gear shift lever to the gear control box.

Shift Lever Cover Bolt Torque	kg·m (lb·ft/N·m)
2.0 ± 0.2 (14.5 ± 1.5/19.6 ± 1.96)	

3. Install the dust cover.
4. Insert the transfer change lever to the transfer case.

Change Lever Retainer Bolt Torque	kg·m (lb·ft/N·m)
2.0 ± 0.2 (14.5 ± 1.5/19.6 ± 1.96)	

5. Install the grommet.
6. Install the front console assembly and center console assembly.
7. Install the gear shift lever and the transfer change lever knobs.

Lowering the Vehicle

1. Place a jack beneath the vehicle.
2. Raise the jack to remove the chassis stands.
3. Lower the vehicle to the ground.

Engine Hood

Align the setting marks (applied at removal) on the engine hood and the engine hood hinges to install the engine hood.

Battery Cable

Connect the negative (–) cable to the battery terminal.

DISASSEMBLY

EXTERAL COMPONENTS

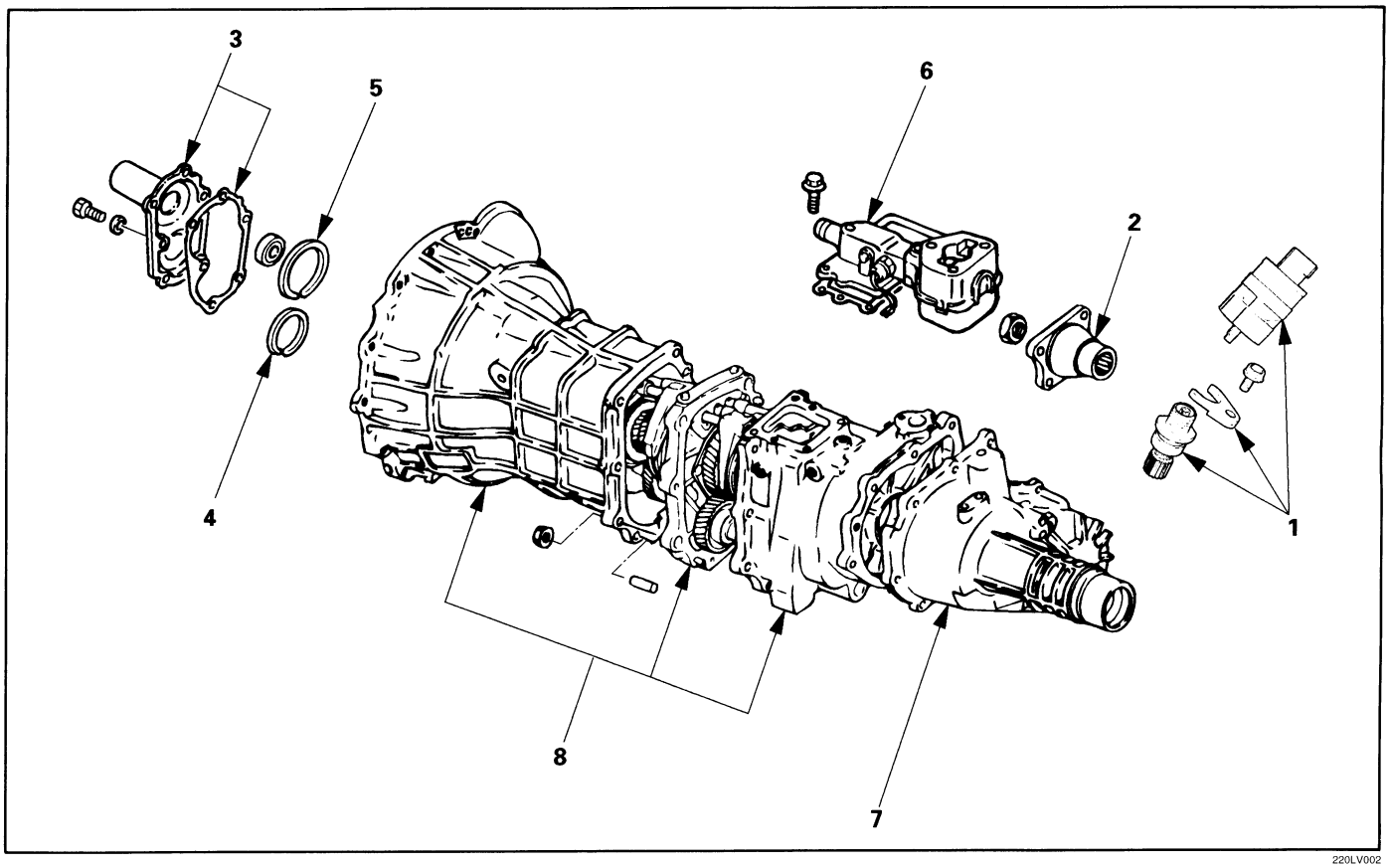

Disassembly Steps

- ▲ 1. Speedometer sensor and speedometer driven gear
- ▲ 2. Transfer flange
- ▲ 3. Front cover with oil seal
- ▲ 4. Counter gear snap ring
- ▲ 5. Bearing snap ring
- 6. Gear control box assembly
- 7. Transfer rear case assmbly
- 8. Transmission and transfer case assembly

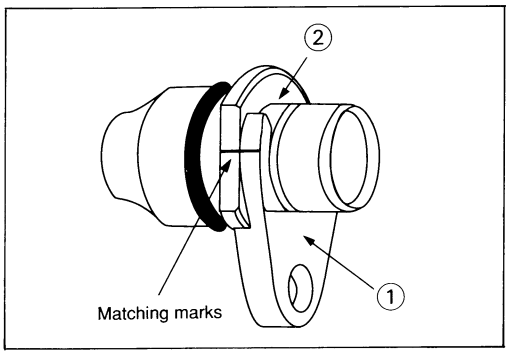

Important Operations

1. Speedometer Sensor and Speedometer Driven Gear

Mark the plate ① and bush ② alignment for reassembly.

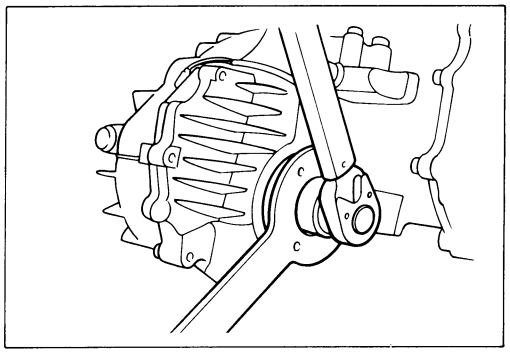

2. Transfer Flange

Use the transfer flange holder to remove the transfer flange.

Transfer Flange Holder: 5-8840-2157-0 (J-37221)

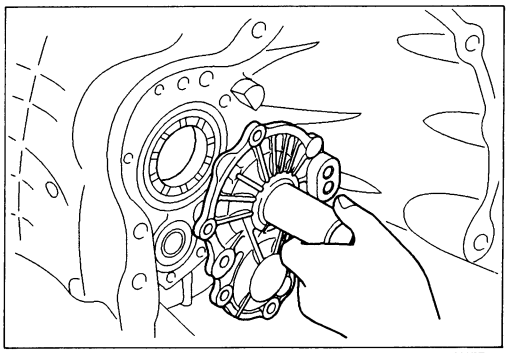

220RT017

3. Front Cover with Oil Seal

Remove the front cover with oil seal from the transmission case.

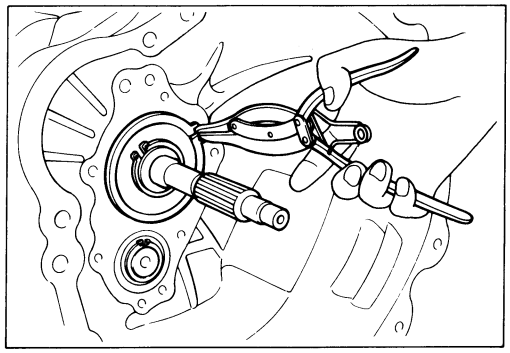

4. Counter Gear Snap Ring

5. Bearing Snap Ring

Use a pair of snap ring pliers to remove the snap ring.

MAJOR COMPONENT (TRANSFER CASE)

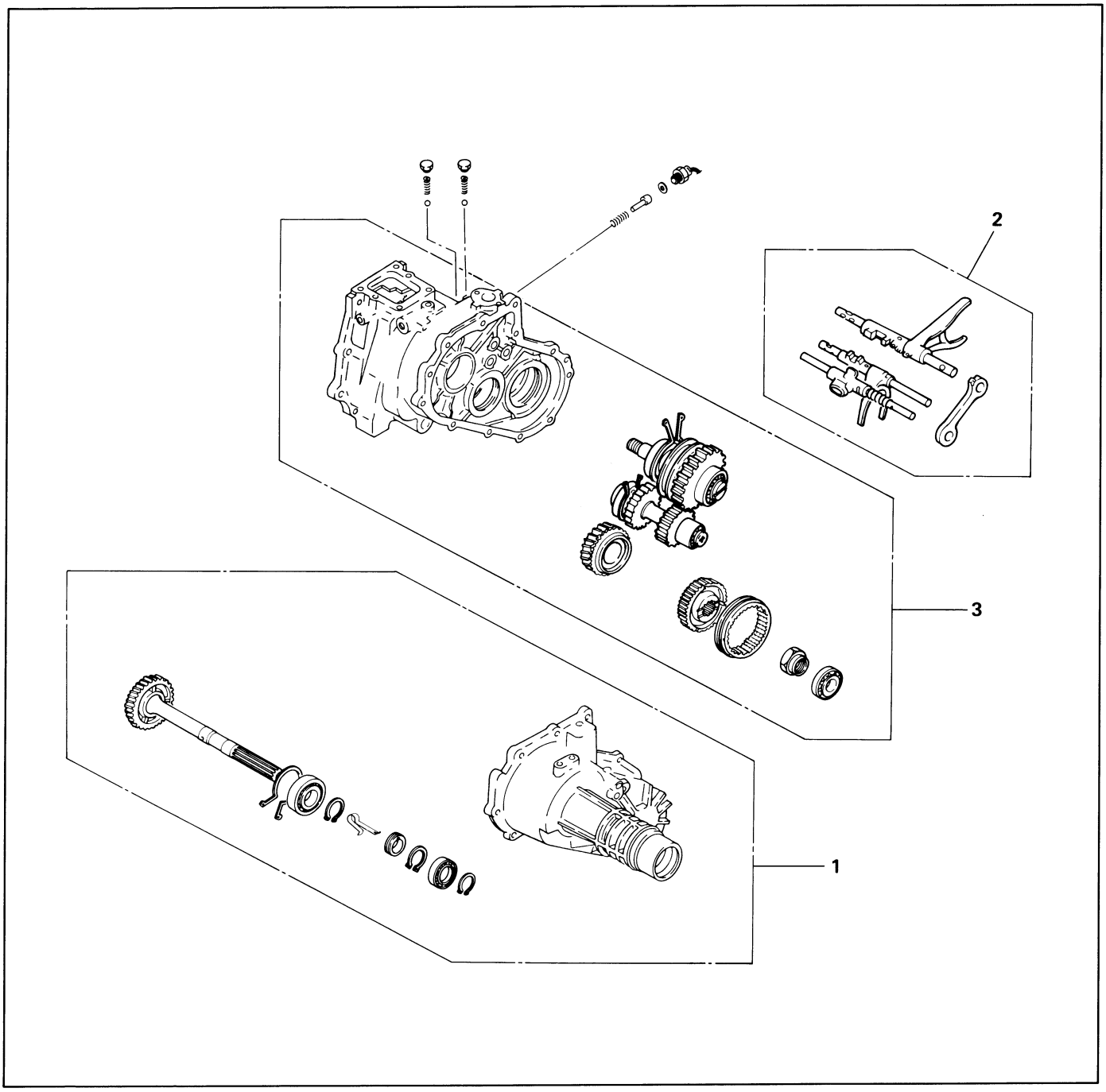

Disassembly Steps

1 Transfer rear case assembly
2. Shift fork assembly & interlock pin & detent assembly
3. Transfer case assembly

MAJOR COMPONENT (TRANSMISSION)

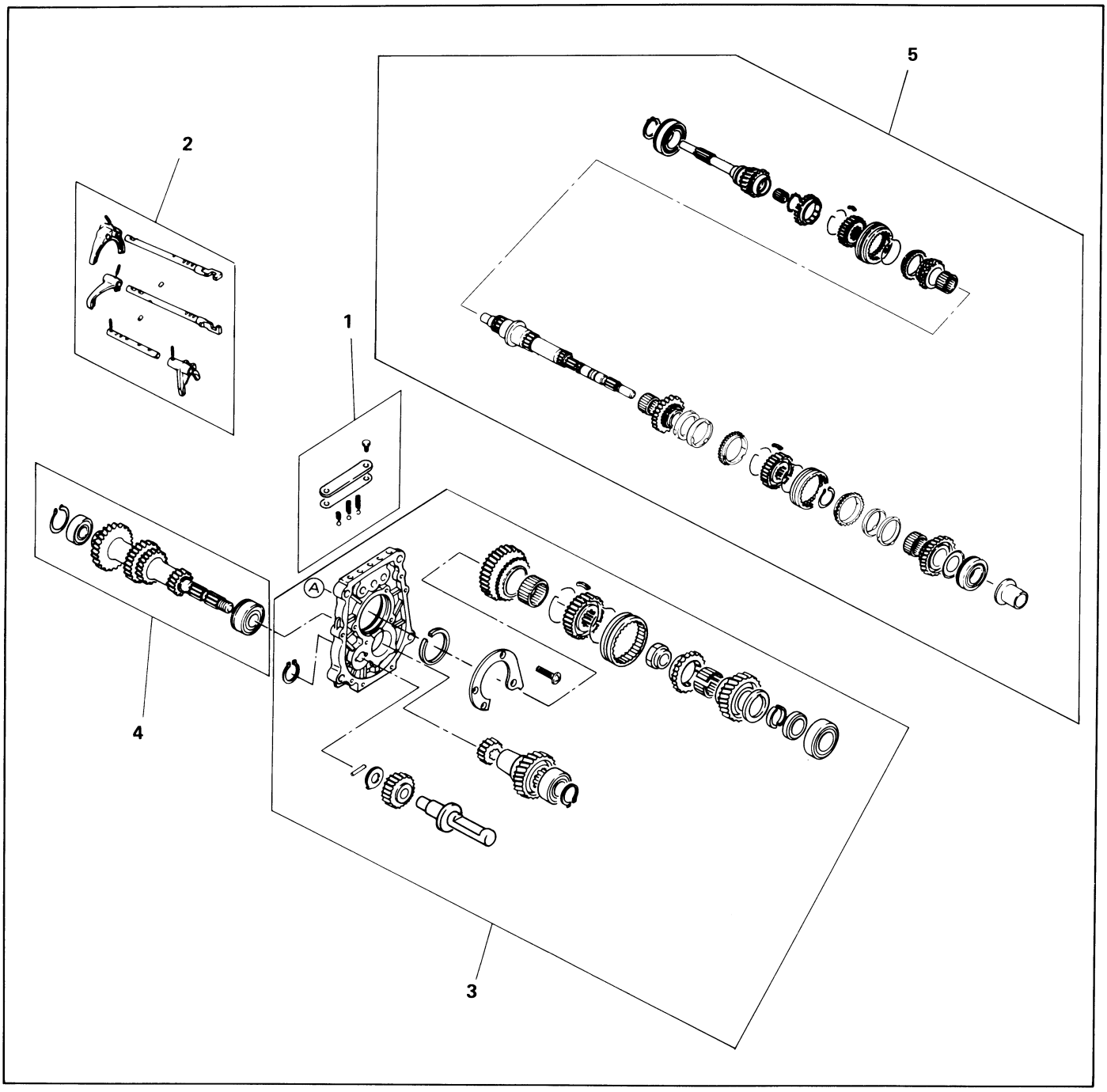

Disassembly Steps

1 Detent assembly
2. Shift fork assembly & interlock pin
3. Rev. and 5th gear assembly
4. Counter gear shaft assembly
5. Top & main gear shaft assembly

MINOR COMPONENT

TRANSFER REAR CASE ASSEMBLY

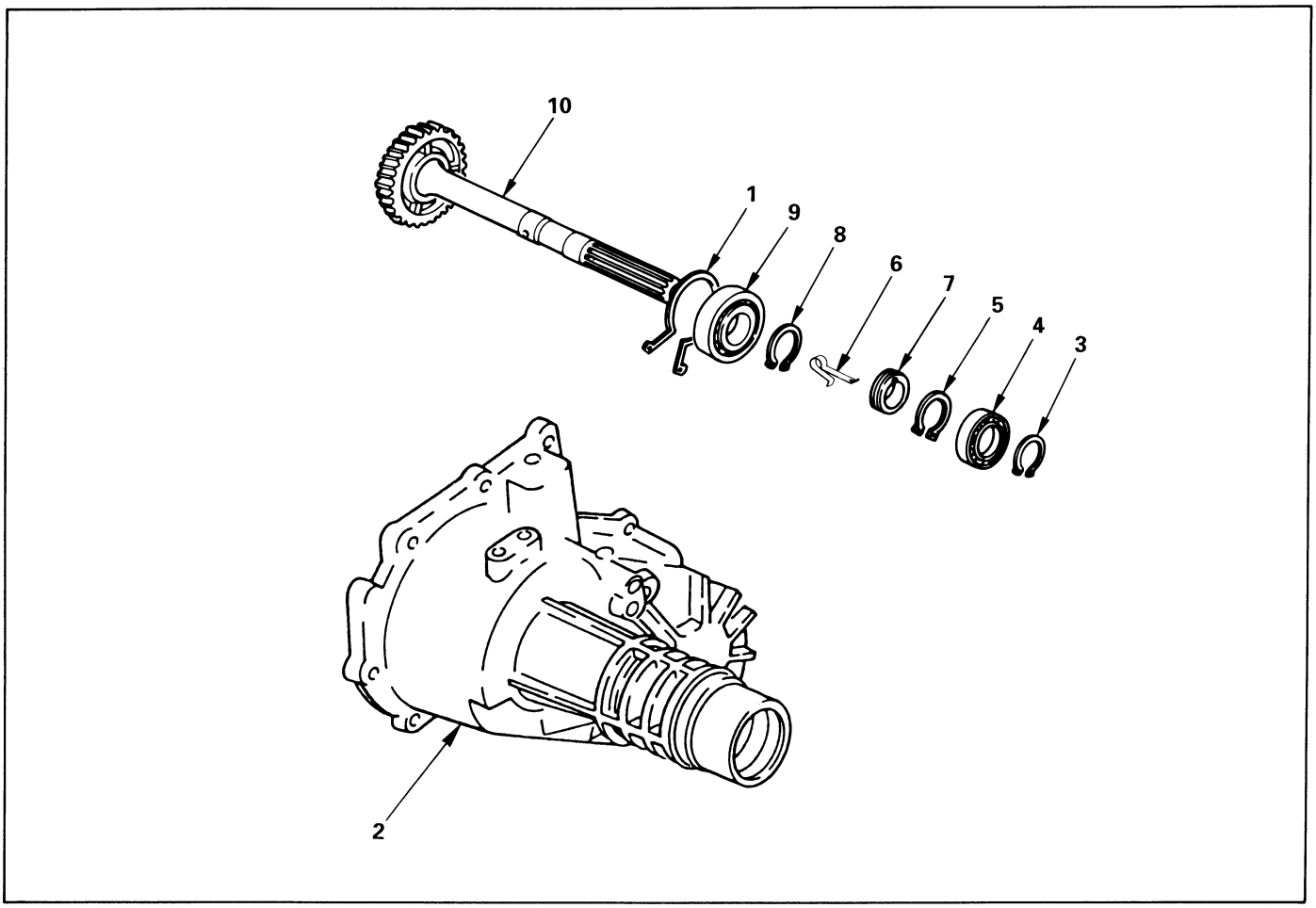

Disassembly Steps

▲ 1. Bearing snap ring
2. Transfer rear case
3. Bearing snap ring
▲ 4. Ball bearing
5. Bearing snap ring
6. Clip
7. Speedometer drive gear
8. Bearing snap ring
▲ 9. Ball bearing
10. Rear output shaft

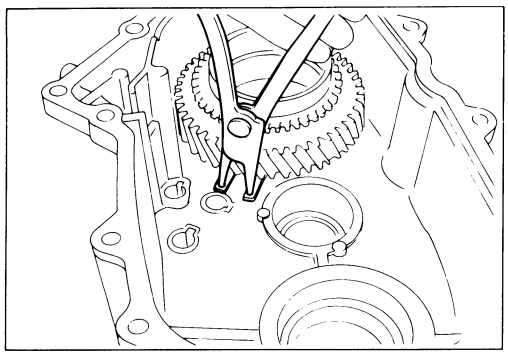

Important Operations

1. Bearing Snap Ring

Use a pair of snap ring pliers to remove the snap ring.

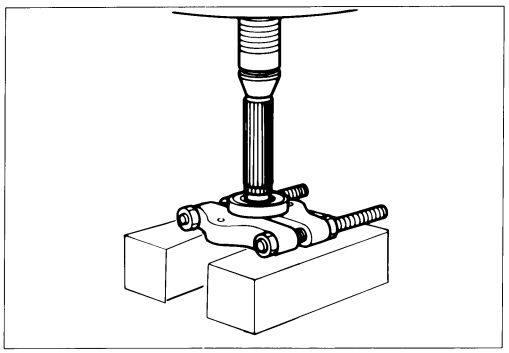

4. Ball Bearing

Use a bench press and the bearing remover to remove the ball bearing.

Bearing Remover: 5-8840-0015-0 (J-22912-01)

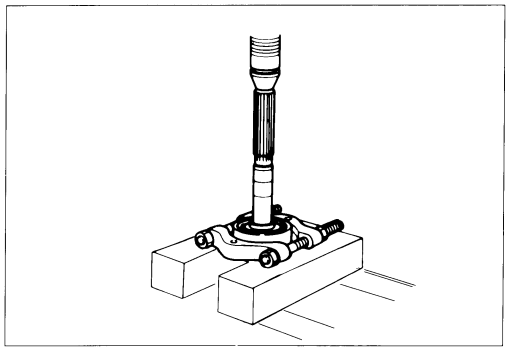

9. Ball Bearing

Use a bench press and the bearing remover to remove the ball bearing.

DETENT, SHIFT ARM ASSEMBLY AND INTERLOCK PIN

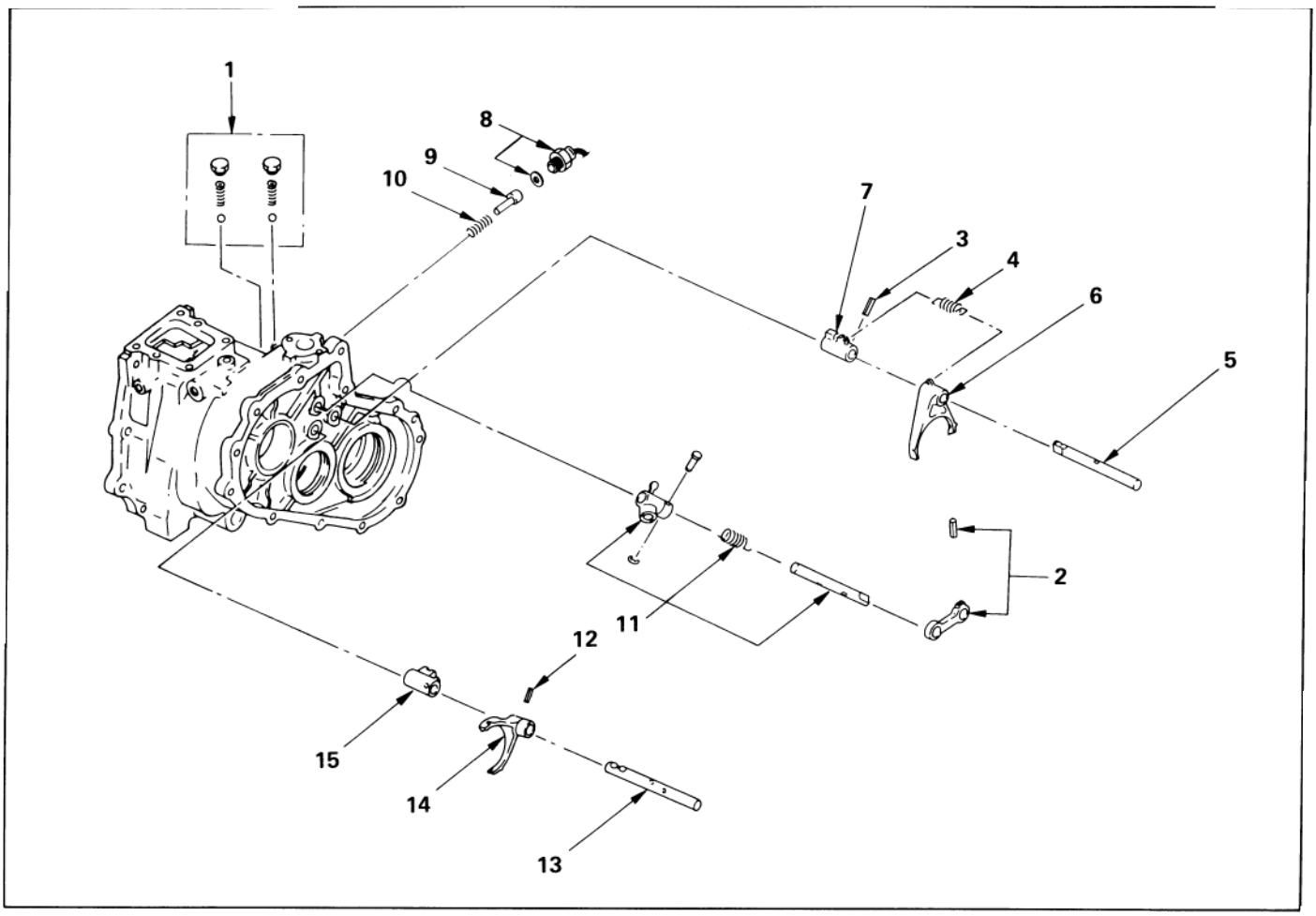

Disassembly Steps

1. Detent ball, spring and plug
▲ 2. Pin and bridge
3. Pin
4. Spring
▲ 5. 2WD-4WD shift rod
6. Shift arm
7. Shift block
8. 4WD indicator switch
▲ 9. Interlock pin
10. Spring
11. Select rod assembly
12. Pin
▲ 13. High-low shift rod
14. Shift arm
15. Shift block

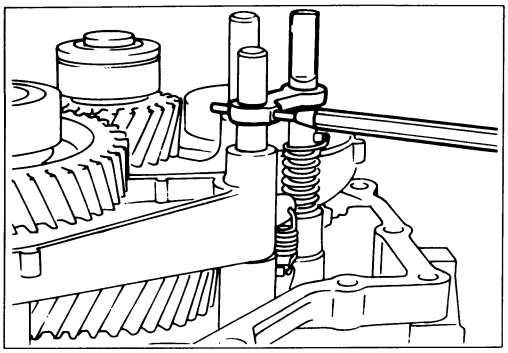

Important Operations

2. Bridge

Use a spring pin remover to remove the spring from the bridge.

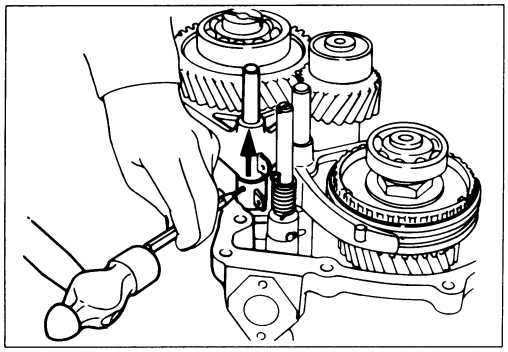

5. 2WD-4WD Shift Rod

1) Engage the 2nd-4th sleeve with the front output gear.
2) Remove the spring pin from the block.
3) Remove the shift rod.

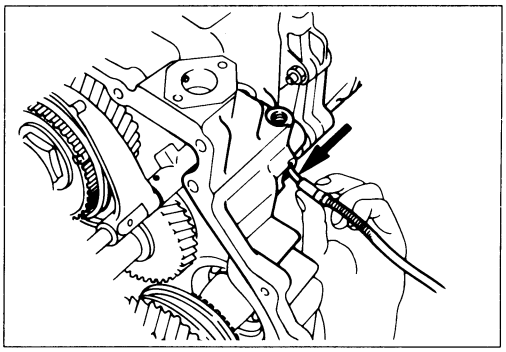

9. Interlock Pin

Use a magnetic tool to remove the interlock pin from the transfer case.

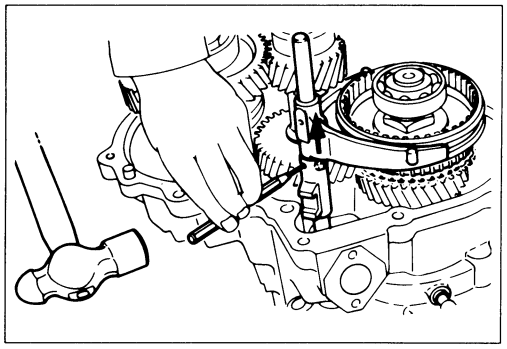

13. High-Low Shift Rod

Use a spring pin remover to remove the shift arm spring from the shift arm and the shift rod.

TRANSFER CASE ASSEMBLY AND MAINSHAFT GEAR

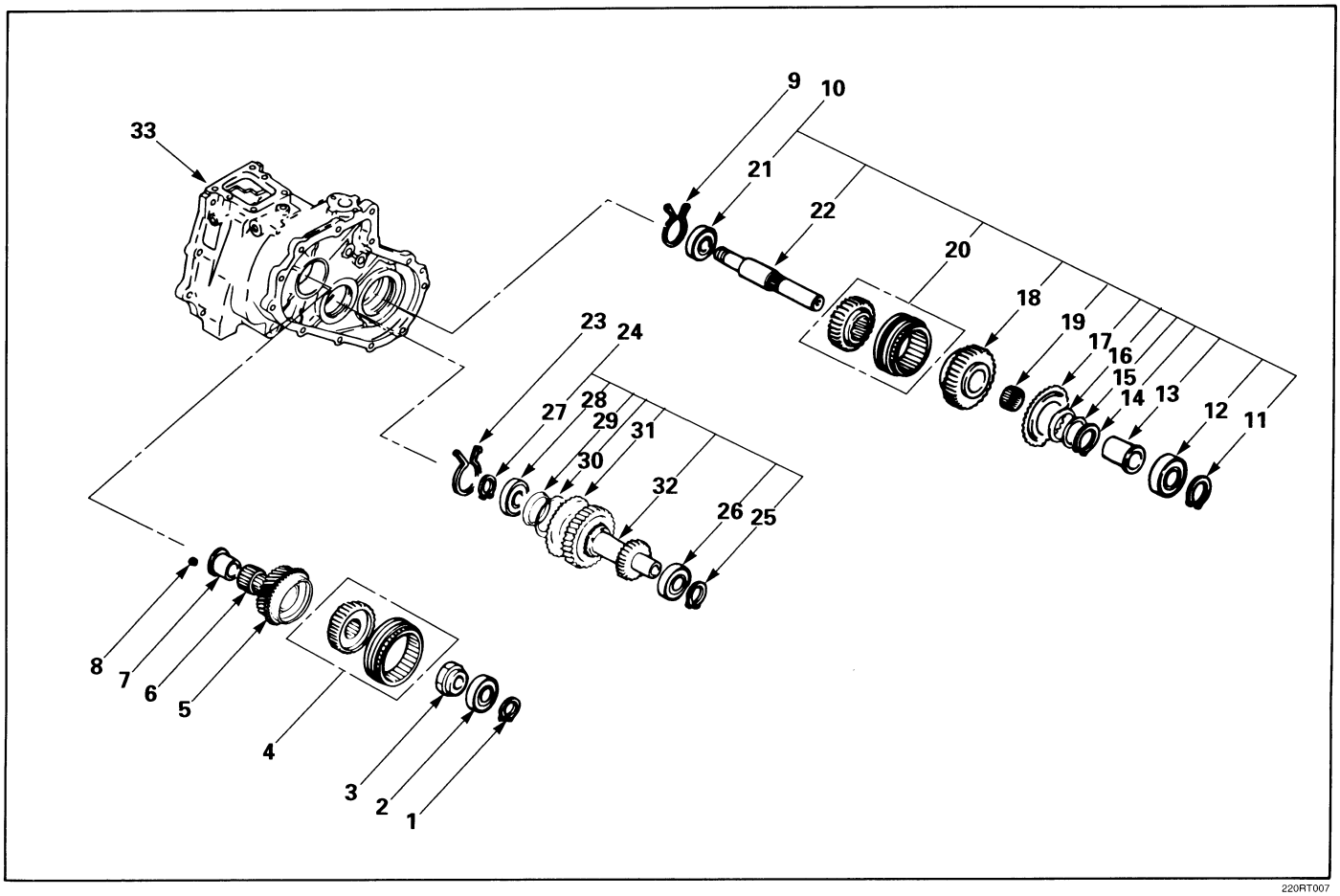

Disassembly Steps

1. Bearing snap ring
▲ 2. Mainshaft end ball bearing
▲ 3. Mainshaft end lock nut
▲ 4. High-low clutch hub and sleeve
▲ 5. Transfer input gear
6. Needle bearing
▲ 7. Bearing collar
8. Ball
▲ 9. Bearing snap ring
10. Front output gear assembly
11. Bearing snap ring
▲ 12. Ball bearing
13. Bearing collar
▲ 14. Anti-lash plate snap ring
15. Spacer
16. Belleville spring
17. Sub gear (Anti-lash plate)
18. Front output gear
19. Needle bearing
20. Clutch hub and sleeve
▲ 21. Ball bearing
22. Front output shaft
23. Bearing snap ring
24. Counter gear assembly
25. Bearing snap ring
▲ 26. Ball bearing
27. Bearing snap ring
▲ 28. Ball bearing
29. Spacer
30. Belleville spring
31. Sub gear (Anti-lash plate)
32. Counter gear
33. Transfer case

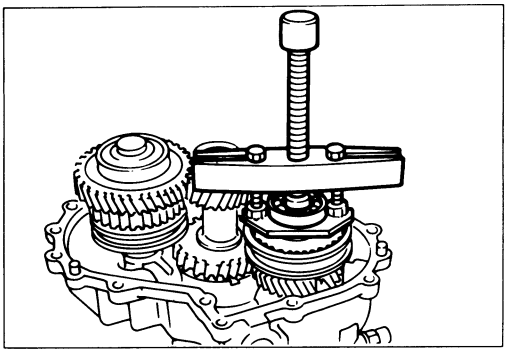

Important Operations

2. Mainshaft End Ball Bearing

Use a bearing remover to remove the ball bearing.

Remover : 5-8840-2155-0 (J-37217)
Puller : 5-8840-2027-0

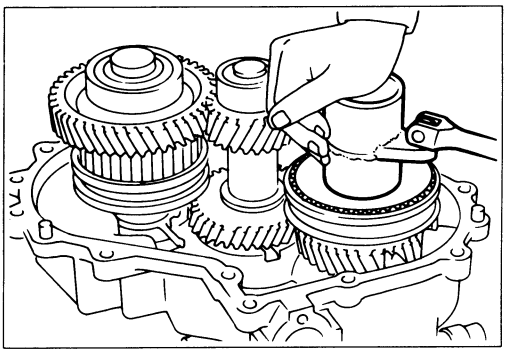

3. Mainshaft End Lock Nut

1) Engage the 3rd-top synchronizer with the 3rd gear.
2) Engage the low-2nd synchronizer with the low gear.
3) Use the lock nut wrench to remove the lock nut.
   Lock Nut Wrench: 5-8840-2156-0 (J-37219)

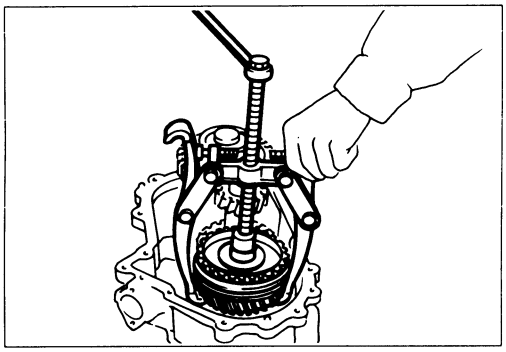

4. High-Low Clutch Hub and Sleeve

5. Transfer Input Gear

Use the universal puller to remove the high-low synchronizer assembly, the high-low block ring, and the transfer input gear.

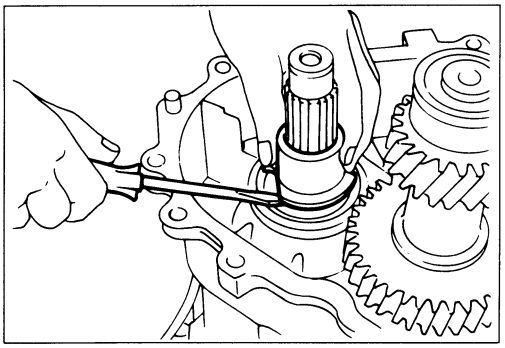

7. 8.Bearing Collar and Ball

Using screw driver to remove the bearing collar.

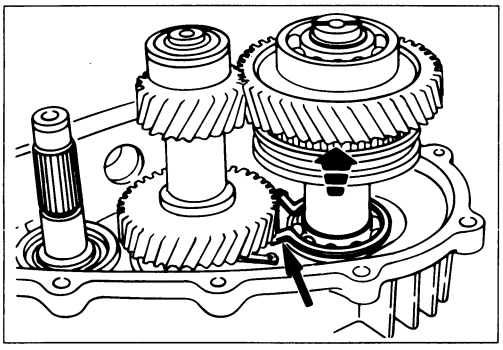

9. Bearing Snap Ring

Use a pair of snap ring pliers to expand the bearing snap ring.

Use a plastic hammer to tap the front output gear assembly free.

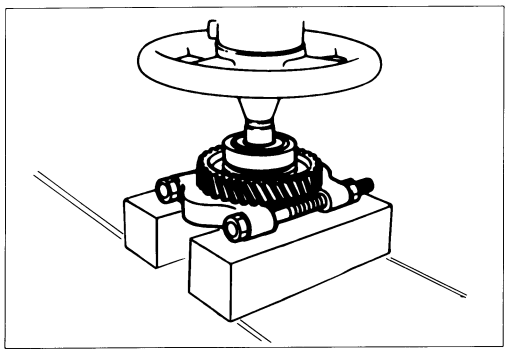

12. Ball Bearing

Use a bench press and the ball bearing remover to remove the ball bearing.

Bearing Remover: 5-8840-0015-0 (J-22912-01)

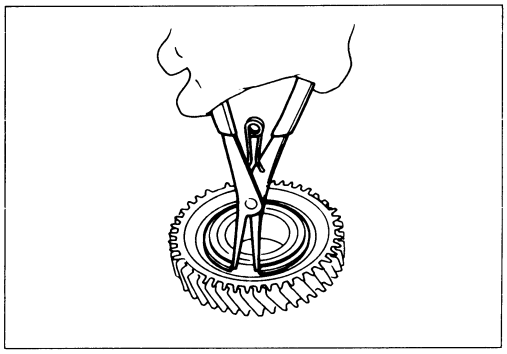

14. Anti-lash Plate Snap Ring

Use a pair of pliers to remove the snap ring.

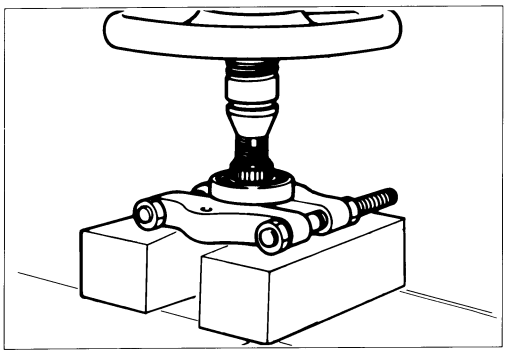

21. Ball Bearing

Use a bench press and the bearing remover to remove the ball bearing.

Bearing Remover: 5-8840-0015-0 (J-22912-01)

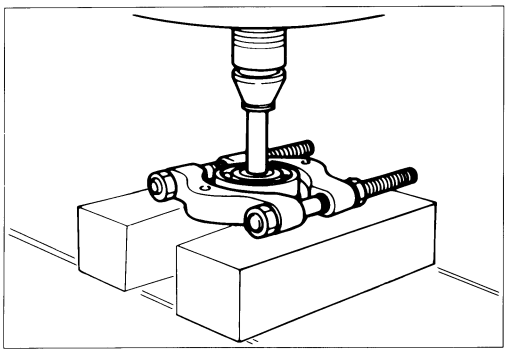

26. Ball Bearing
28. Ball Bearing

Use a bench press and the bearing remover to remove the ball bearings.

MINOR COMPONENT

INTERMEDIATE PLATE AND GEAR ASSEMBLY, DETENT, SHIFT ARM ASSEMBLY, AND INTERLOCK PIN

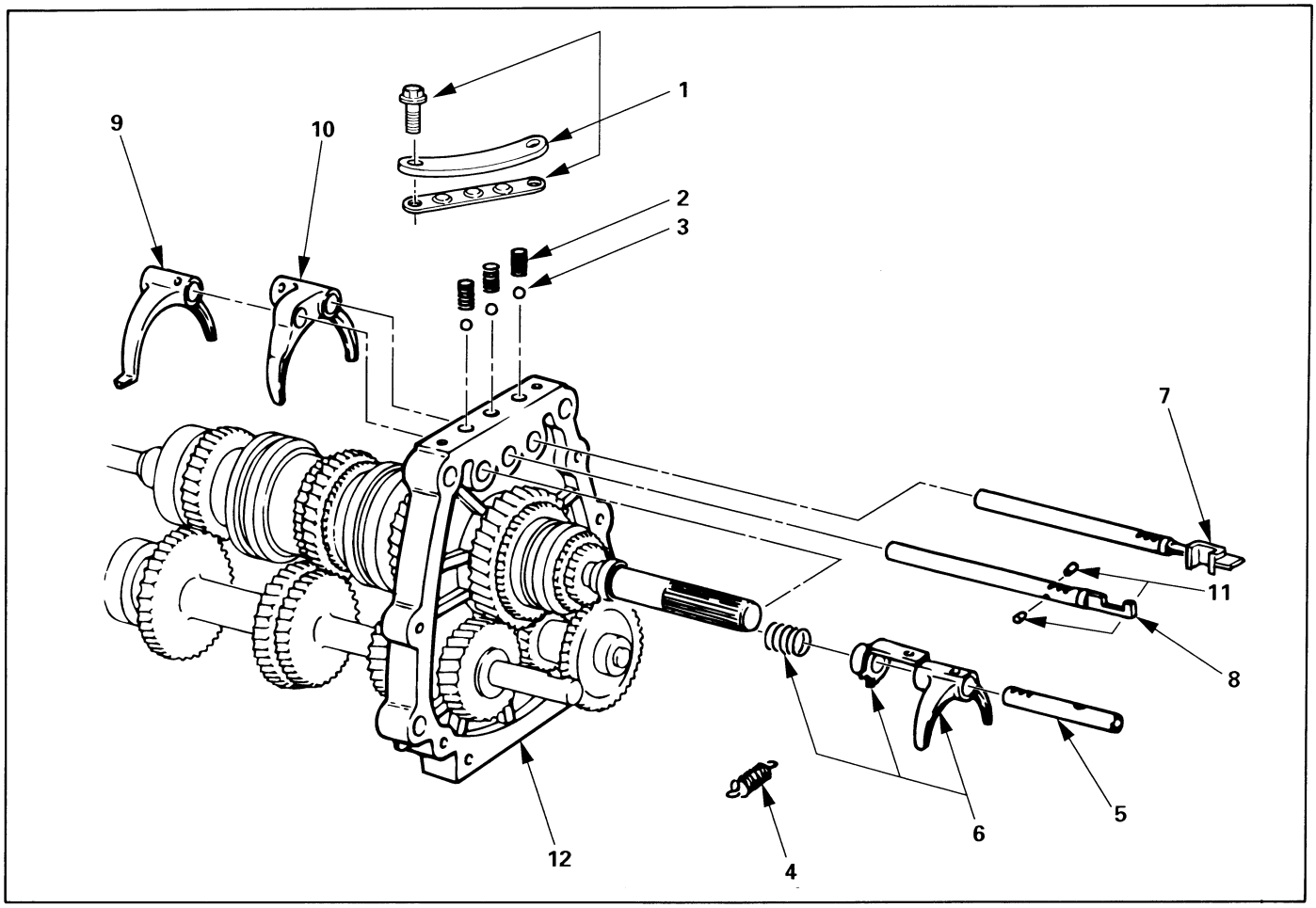

220RW071

Disassembly Steps

1. Detent spring plate and gasket
2. Detent spring
3. ▲ Detent ball
4. Spring
5. Rev-5th shift rod
6. Rev-5th shift arm and reverse inhibitor
7. 1st-2nd shift rod
8. ▲ 3rd-4th shift rod
9. ▲ 3rd-4th shift arm
10. ▲ 1st-2nd shift arm
11. ▲ Interlock pin
12. Intermediate plate and gear assembly

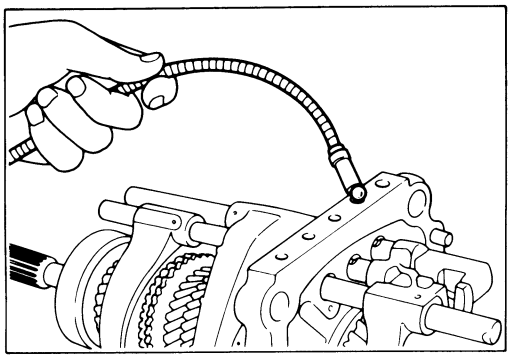

Important Operations

3. Detent Ball

Use a magnetic tool to remove the detent balls from the intermediate plate.

Take care not to lose the detent balls.

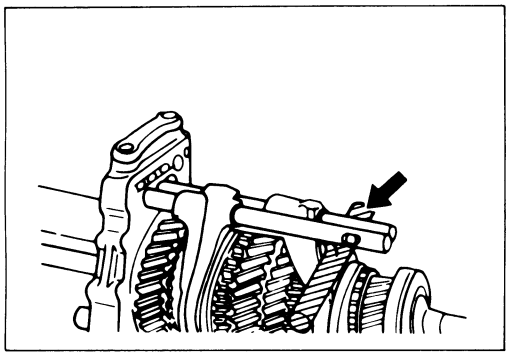

8. 3rd-4th Shift Rod

9. 3rd-4th Shift Arm

10. 1st-2nd Shift Arm

1) Hold a round bar against the shift arm end.

   This will prevent damage to other components.

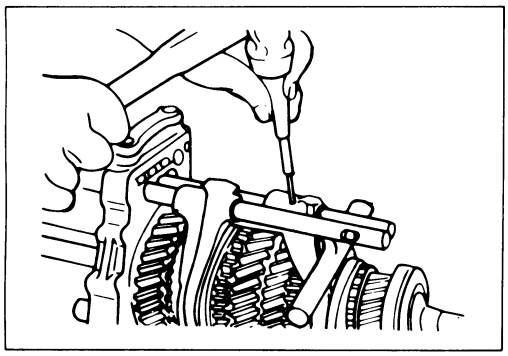

2) Use a spring pin remover to remove the shift arm spring pin from the shift arm and the shift rod.

   Discard the used spring pin.

3) Move the 3rd-4th shift rod forward.

   Take care not to lose the interlock pins.

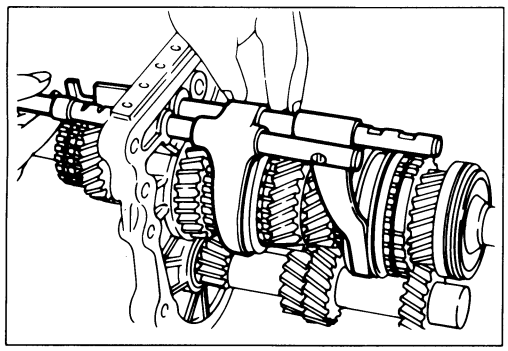

11. Interlock Pin

Carefully remove the reverse shifter rod forward to avoid losing the interlock pins.

Note:

Remove the shifter rods carefully. Interlock pins are located between the shifter rod in the intermediate plate.

REVERSE GEAR AND 5TH GEAR

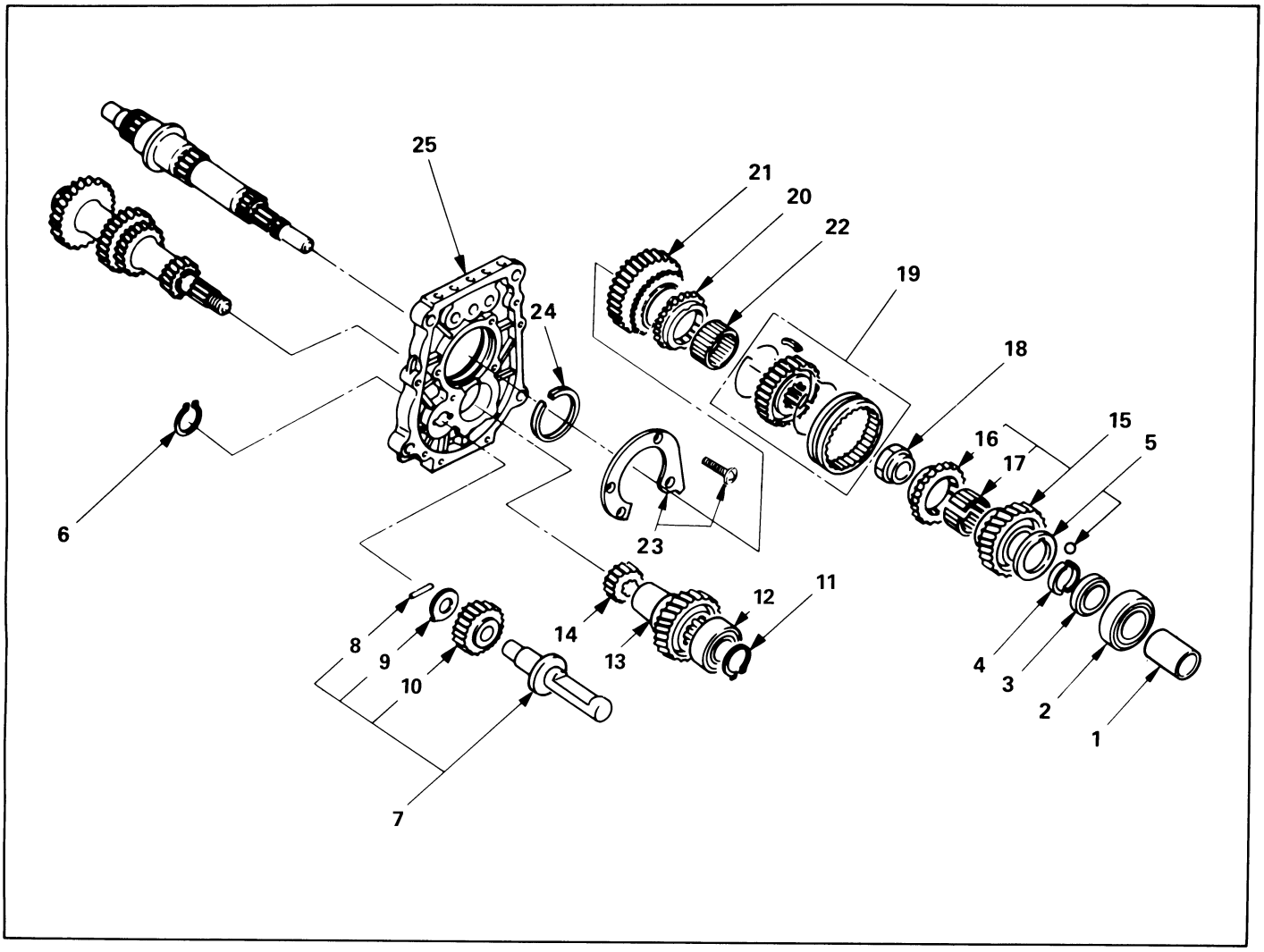

Disassembly Steps

- ▲ 1. Oil seal collar
- ▲ 2. Bearing
- ▲ 3. Retainer
- 4. Thrust plate
- 5. Thrust washer and lock ball
- ▲ 6. Reverse idler gear snap ring
- 7. Reverse idler shaft
- 8. Idle shaft pin
- 9. Thrust washer
- 10. Reverse idler gear
- 11. Bearing snap ring
- ▲ 12. Ball bearing
- ▲ 13. Counter 5th gear
- 14. Counter reverse gear
- 15. 5th gear
- 16. 5th block ring
- ▲ 17. Needle bearing
- ▲ 18. Clutch hub nut
- ▲ 19. Rev-5th synchronizer assembly
- ▲ 20. Reverse block ring
- ▲ 21. Reverse gear
- 22. Needle bearing
- ▲ 23. Bearing plate and screw
- ▲ 24. Bearing snap ring
- ▲ 25. Intermediate plate

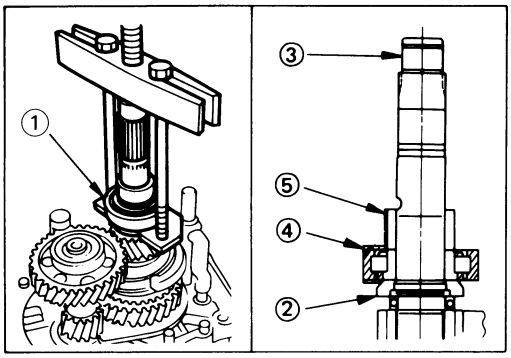

Important Operations

1. Oil Seal Collar

2. Bearing

3. Retainer

1) Set the retaining ring remover ① to the retainer ② and the mainshaft end ③.
2) Remove the retainer together with the bearing ④ and the oil seal collar ⑤.

The universal puller may be used in place of the retaining ring remover.

Retainer Remover: 5-8840-2158-0 (J-37222)

Universal Puller: 5-8840-2027-0

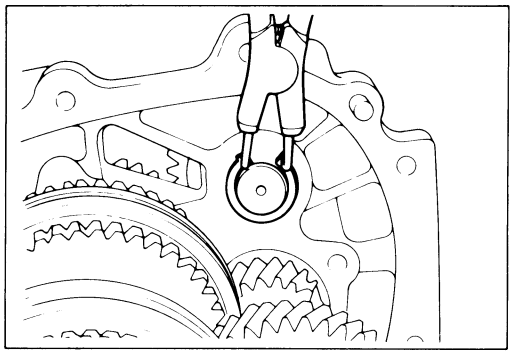

6. Reverse Idler Gear Snap Ring

Use a pair of snap ring pliers to remove the snap ring.

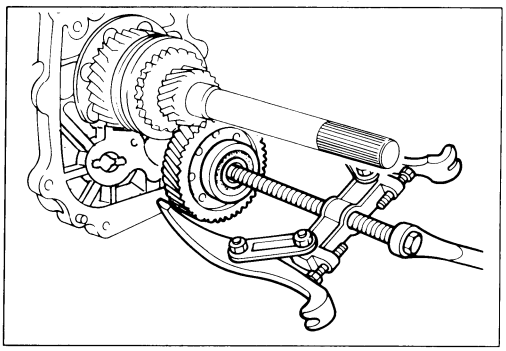

12. Ball Bearing

13. Counter 5th Gear

Use the bearing remover to remove the ball bearing.

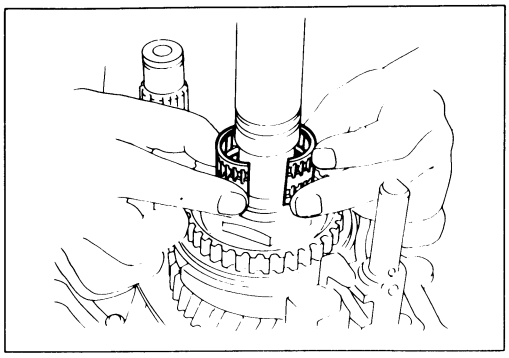

17. Needle Bearing

Remove the needle bearing (2 piece type).

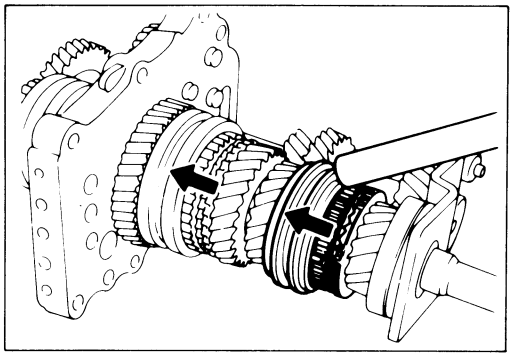

18. Clutch Hub Nut

1) Engage the 3rd-4th synchronizer with the 3rd gear.
2) Engage the 1st-2nd synchronizer with the 1st gear.
3) Attach the holding fixture together with the holding base to the mainshaft front bearing and the counter gear front bearing.

   Holding Fixture: 5-8840-2160-0 (J-37224)

   Holding Base: 5-8840-0003-0 (J-3289-20)

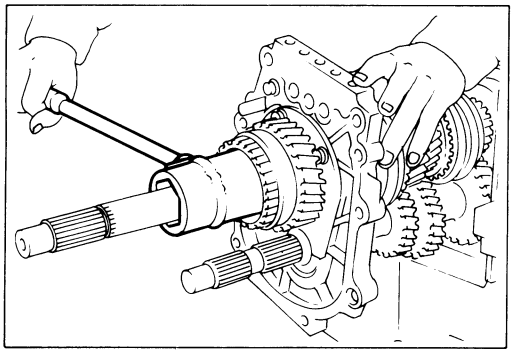

4) Use the hub nut wrench to remove the hub nut.

   Hub Nut Wrench: 5-8840-2156-0 (J-37219)

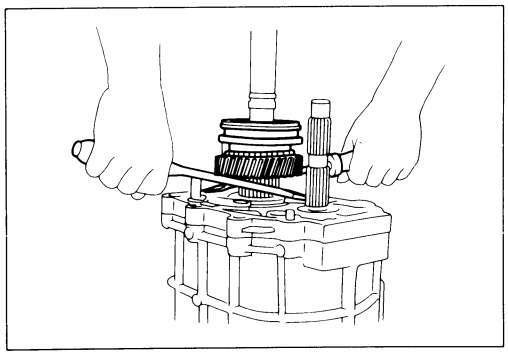

19. Rev.-5th Synchronizer Assembly

20. Reverse Ring

21. Reverse Gear

Use screw drivers between the reverse gear and bearing plate to remove the Rev.-5th synchronizer assembly together with reverse ring and gear.

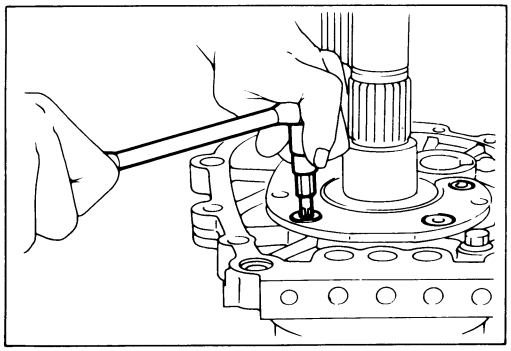

23. Bearing Plate and Screw

Use the Torx bit to remove the bearing plate screw from the intermediate plate.

Torx Bit Wrench: 5-8840-0047-0 (J-37225) (T45)

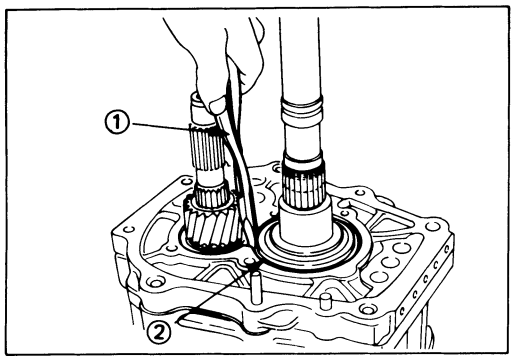

24. Ball Bearing Snap Ring

25. Intermediate Plate

1) Insert the snap ring pliers into the mainshaft bearing snap ring hole.
2) Use the snap ring pliers ① to force open the mainshaft bearing snap ring ②.

   Hold the snap ring open with the pliers.
3) Push the intermediate plate toward the rear of the transmission to remove it.

   The ball bearing snap ring will come free.

TOP GEAR SHAFT, MAIN GEAR SHAFT, AND COUNTER GEAR

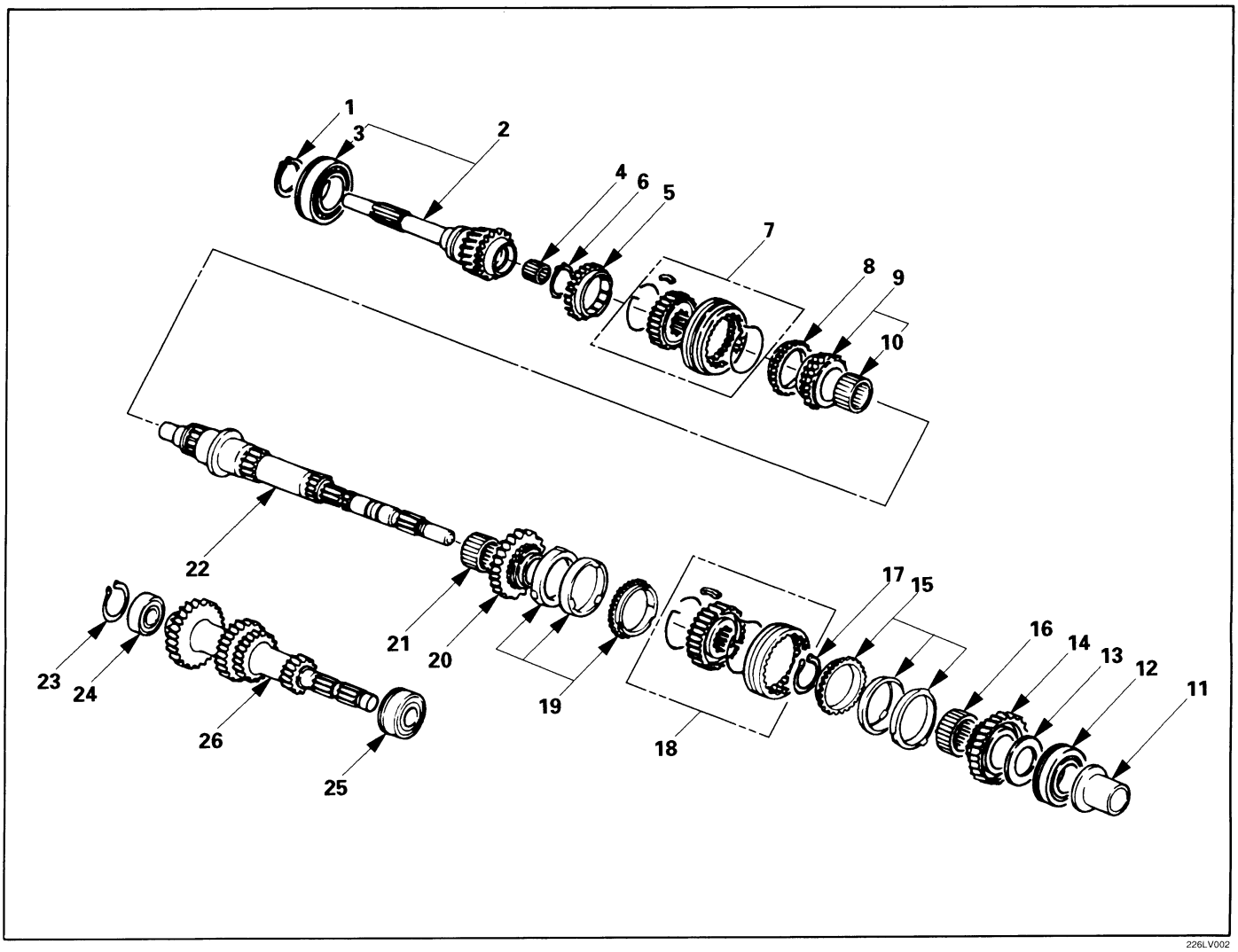

Disassembly Steps

1. Top gear shaft snap ring
2. Top gear shaft
▲ 3. Top gear ball bearing
4. Needle bearing
5. Top block ring
▲ 6. Mainshaft snap ring
▲ 7. 3rd-4th synchronizer assembly
8. 3rd block ring
9. 3rd gear
10. Needle bearing
▲ 11. Needle bearing collar
▲ 12. Mainshaft ball bearing
▲ 13. 1st gear thrust bearing
▲ 14. 1st gear
15. 1st block ring (set)
16. Needle bearing
▲ 17. Clutch hub snap ring
▲ 18. 1st-2nd synchronizer assembly
▲ 19. 2nd block ring (set)
▲ 20. 2nd gear
21. Needle bearing
22. Mainshaft
23. Bearing snap ring
▲ 24. Counter gear front bearing
25. Counter gear center bearing
26. Counter gear

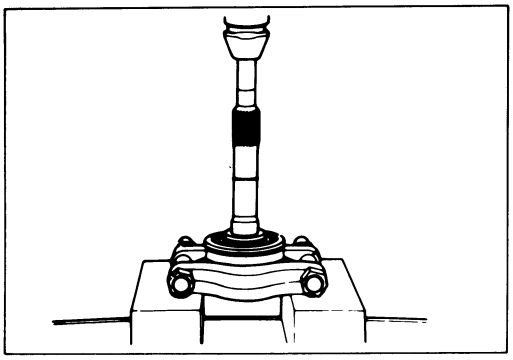

Important Operations

3. Top Gear Ball Bearing

Use a bench press and the bearing remover to remove the ball bearing.

Bearing Remover : 5-8840-0015-0 (J-22912-01)

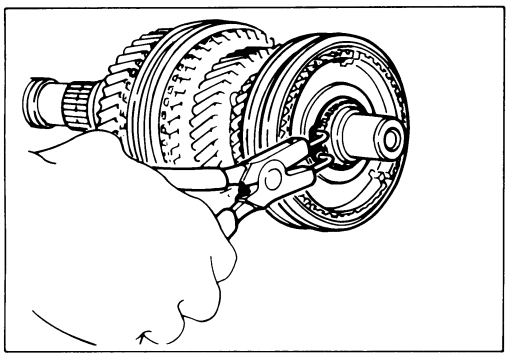

6. Mainshaft Snap Ring

Use a pair of snap ring pliers to remove the snap ring.

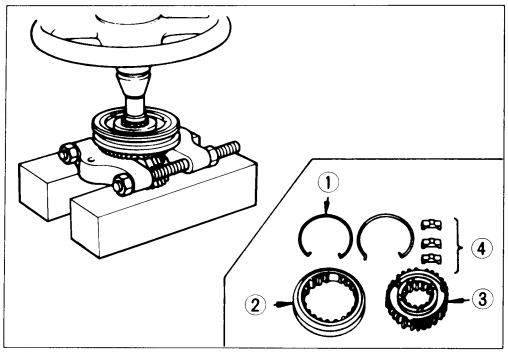

7. 3rd-4th Synchronizer Assembly

1) Use a bench press and the bearing replacer to remove the synchronizer assembly as a set.
2) Disassemble the synchronizer assembly.
   ① Springs
   ② Sleeve
   ③ Clutch Hub
   ④ Inserts

Note:

Mark the hub and sleeve alignment for reassembly.

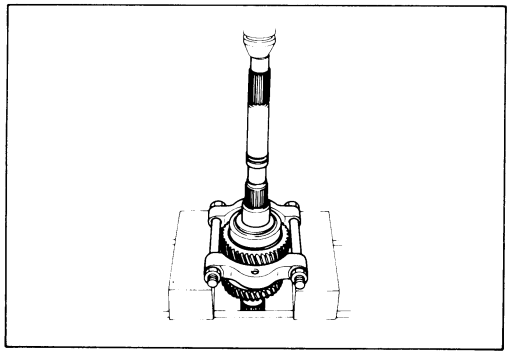

11. Needle Bearing Collar
12. Mainshaft Ball Bearing
13. 1st Gear Thrust Bearing
14. 1st Gear

Use a bench press and the bearing remover to remove the ball bearing.

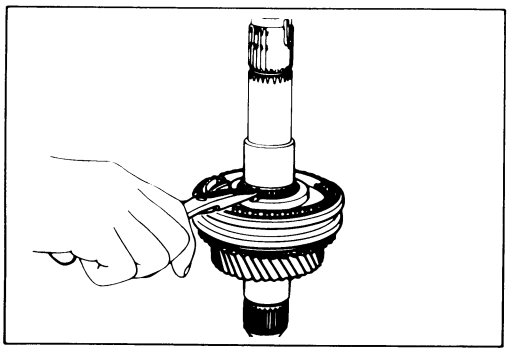

17. Clutch Hub Snap Ring

Use a pair of snap ring pliers to remove the snap ring.

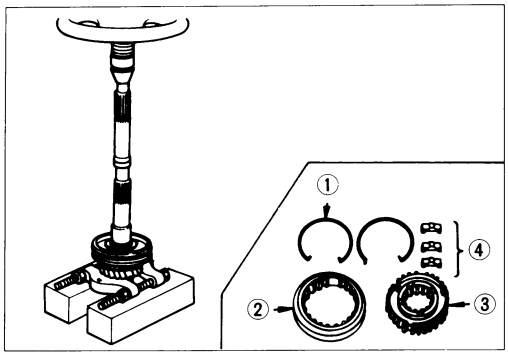

18. 1st-2nd Synchronizer Assembly

19. 2nd Block Ring (Set)

20. 2nd Gear

1) Use a bench press and the bearing remover to remove the ball bearing 2nd gear together with synchronizer assembly.

   Remover: 5-8840-0015-0 (J-22912-01)

2) Disassemble the synchronizer assembly.

   ① Springs
   ② Sleeve
   ③ Clutch Hub
   ④ Inserts

Note:

Mark the hub and sleeve alignment for reassembly.

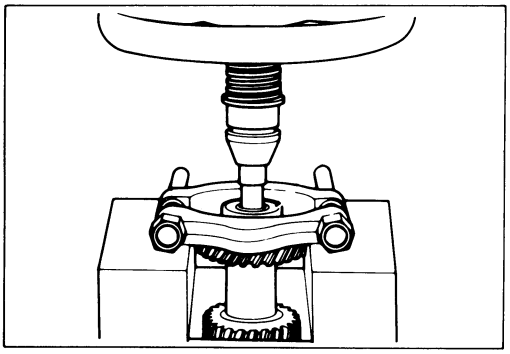

24. Counter Gear Front Bearing

Use a bench press and the bearing remover to remove the bearing.

Bearing Remover: 5-8840-0015-0 (J-22912-01)

INSPECTION AND REPAIR

Make the necessary adjustments, repairs, and part replacements if excessive wear or damage is discovered during inspection.

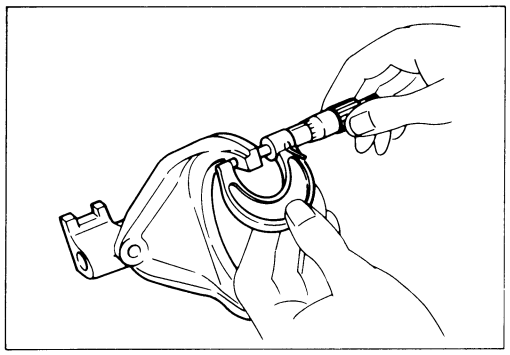

SHIFT ARM THICKNESS

Use a micrometer to measure the shift arm thickness.

If the measured value is less than the specified limit, the shift arm must be replaced.

Shift Arm Thickness — mm(in)

		Standard	Limit
1st–2nd Transfer	4x4/4x2 High/Low	9.60–9.85 (0.378–0.388)	9.0 (0.354)
3rd–4th Rev.–5th		9.60–9.80 (0.378–0.386)	

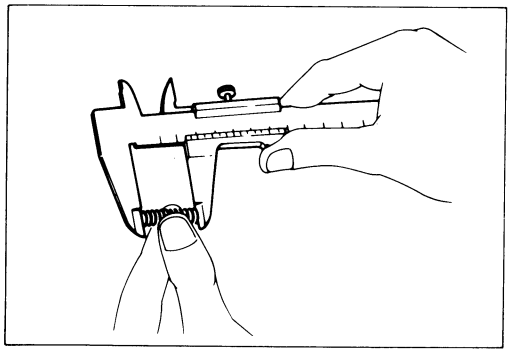

DETENT AND INTERLOCK SPRINGS FREE LENGTH

Use a venier caliper to measure the springs free length.

If the measured value is less than the specified limit, the springs must be replaced.

Springs Free Length — mm(in)

		Standard	Limit
(Detent Ball)	Transmission	26.8 (1.06)	26.2 (1.03)
	Transfer case	23.4 (0.92)	22.8 (0.90)
(Interlock Pin)	Transfer case	15.9 (0.626)	15.3 (0.602)

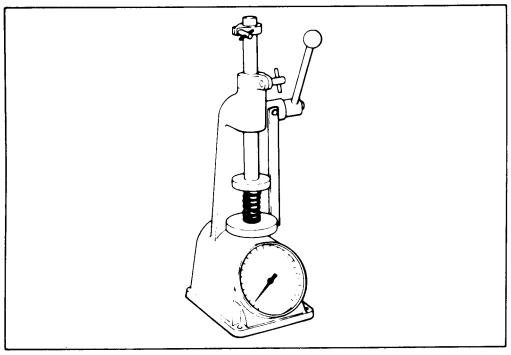

DETENT SPRING TENSION

Use a spring tester to measure the springs tension. If the measured value is less than the specified standard, the springs must be replaced.

Springs Tension — kg(lb/N)

		Compressed Height	Standard
(Detent Ball)	Transmission	20 mm (0.787 in)	8.9—9.9 (19.6—21.8/ 87.2—97)
	Transfer case	18.7 mm (0.736 in)	7.0–9.0 (15.4–19.8/ 68.6–88.2)
(Interlock Pin)	Transfer case	11.5 mm (0.453 in)	1.0 (2.2/9.8)

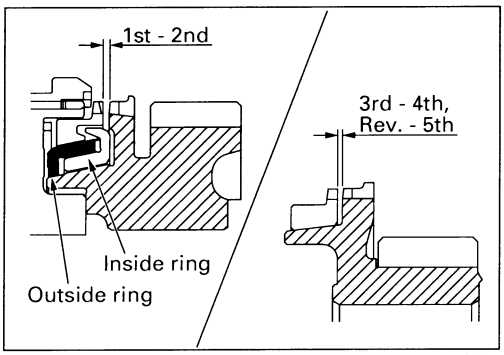

A07RW033

BLOCK RING AND DOG TEETH CLEARANCE

Use a thickness gauge to measure the clearance between the block ring and the dog teeth.

If the measured value exceeds the specified limit, the block ring must be replaced.

Block Ring and Dog Teeth Clearance — mm(in)

Standard	Limit
1.5 (0.059)	0.8 (0.032)

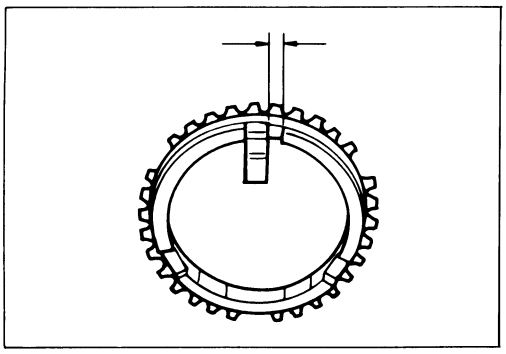

BLOCK RING AND INSERT CLEARANCE

Use a vernier caliper to measure the clearance between the block ring and the insert.

If the measured value exceeds the specified limit, the block ring and the insert must be replaced.

Block Ring and Insert Clearance — mm(in)

	Standard	Limit
3rd-4th	3.46–3.74 (0.136–0.147)	4.0 (0.158)
1st-2nd	4.34–4.66 (0.171–0.183)	4.9 (0.193)
Transfer	2.46–2.74 (0.097–0.108)	3.0 (0.118)
Rev.-5th	3.59–3.91 (0.141–0.154)	4.1 (0.161)

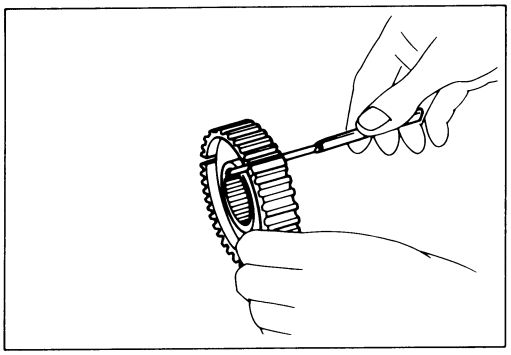

CLUTCH HUB AND INSERT CLEARANCE

Use a thickness gauge to measure the clearance between the clutch hub and the insert.

If the measured value exceeds the specified limit, the clutch hub and the insert must be replaced.

Clutch Hub and Insert Clearance — mm(in)

	Standard	Limit
3rd-4th	0.01-0.19 (0.0004-0.0075)	0.3 (0.012)
1st-2nd Rev.-5th	0.09-0.31 (0.0035-0.0122)	0.4 (0.016)

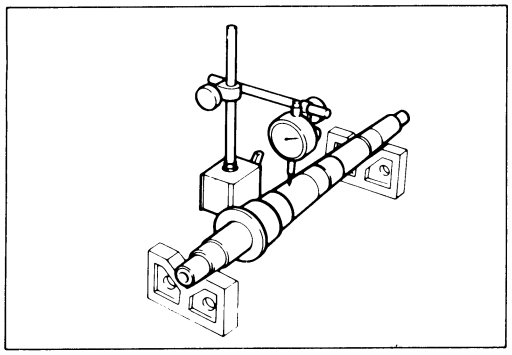

MAINSHAFT RUN-OUT

1. Install the mainshaft to a grinding machine.
2. Use a dial indicator to measure the mainshaft central portion run-out.
   If the measured mainshaft run-out exceeds the specified limit, the mainshaft must be replaced.

Mainshaft Run Out — mm(in)

Limit
0.05 (0.0020)

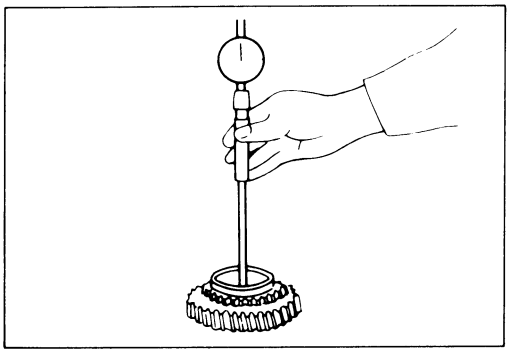

GEAR INSIDE DIAMETER

Use an inside dial indicator to measure the gear inside diameter.

If the measured value is less than the specified limit, the gear must be replaced.

Gear Inside Diameter — mm(in)

	Standard	Limit
1st 3rd	45.000-45.013 (1.771-1.772)	45.100 (1.776)
2nd	52.000-52.013 (2.047-2.048)	52.100 (2.051)
Rev. Transfer	48.000-48.013 (1.889-1.890)	48.100 (1.894)
5th	32.000-32.013 (1.259-1.260)	32.100 (1.264)

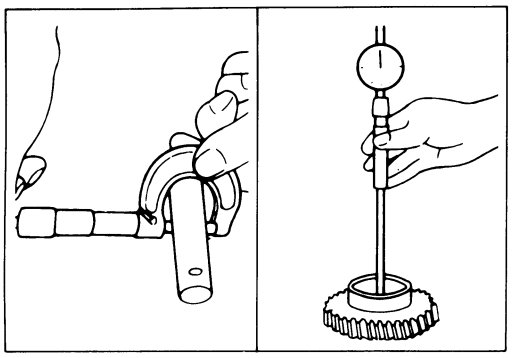

REVERSE IDLER GEAR AND IDLER GEAR SHAFT CLEARANCE

1. Use a micrometer to measure the idler gear shaft diameter.
2. Use an inside dial indicator to measure the idler gear inside diameter.
3. Calculate the idler gear and idler gear shaft clearance.

   Idler gear inside diameter – idler gear shaft diameter = idler gear and idler gear shaft clearance.

   If the measured value exceeds the specified limit, the idler gear and/or the idler gear shaft must be replaced.

Idler Gear and Idler Gear Shaft Clearance mm(in)

Standard	Limit
0.041 – 0.074 (0.0016 – 0.0029)	0.150 (0.0059)

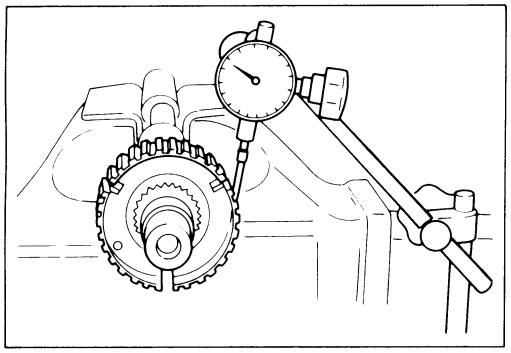

CLUTCH HUB SPLINE PLAY

1. Set a dial indicator to the clutch hub to be measured.
2. Move the clutch hub as far as possible to both the right and the left.

   Note the dial indicator reading.

   It the measured value exceeds the specified limit, the clutch hub must be replaced.

Clutch Hub Spline Play mm(in)

	Standard	Limit
1st—2nd 3rd—4th Transfer 4×2/4×4 High/Low	0 — 0.1 (0 — 0.0039)	0.2 (0.0079)
Rev.—5th	0 — 0.2 (0 — 0.0079)	0.3 (0.0118)

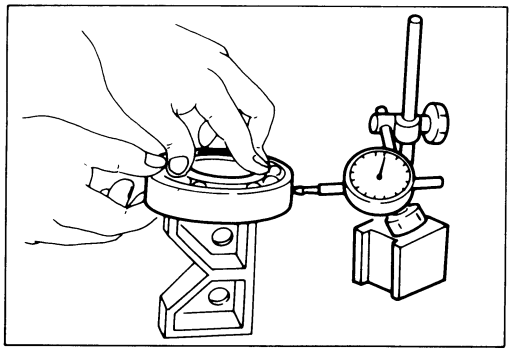

BALL BEARING PLAY

Use a dial indicator to measure the ball bearing play.

Ball Bearing Play mm(in)

Limit
0.2 (0.0079)

FRONT COVER OIL SEAL

Oil Seal Replacement

Oil Seal Removal

Use a screwdriver to pry the oil seal from the front cover.

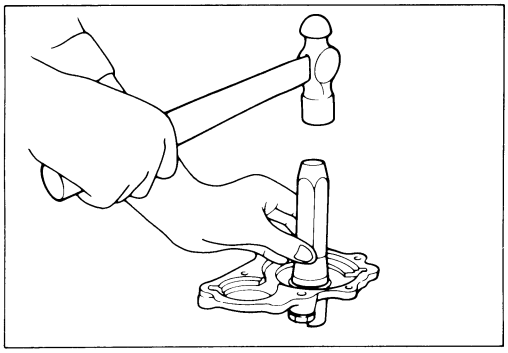

Oil Seal Installation

1. Use the oil seal installer to install the oil seal to the front cover.

   Oil Seal Installer : 5-8840-0026-0 (J-26540)
2. Apply gear oil to the oil seal lip.

REAR COVER OIL SEAL

Oil Seal Replacement

Oil Seal Removal

Use a screwdriver to pry the oil seal from the rear cover.

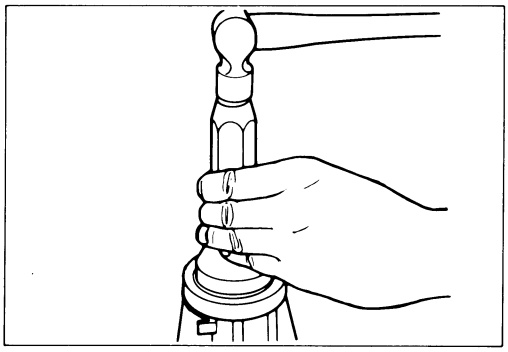

Oil Seal Installation

1. Use the oil seal installer to install the oil seal to the rear cover.

   Oil Seal Installer : 5-8522-0050 (J-29769)
2. Apply engine oil to the oil seal lip.

TRANSFER CASE MAINSHAFT OIL SEAL

Oil Seal Replacement

Oil Seal Removal

Use a screwdriver to pry the oil seal from the transfer case.

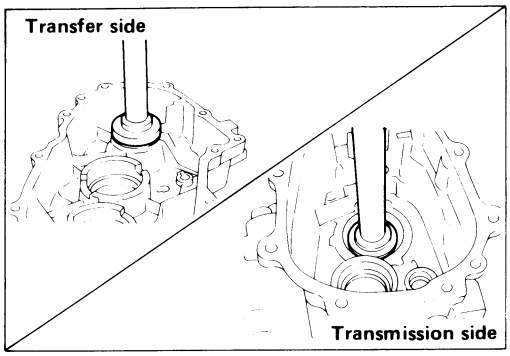

Oil Seal Installation

1. Use the oil seal installer to install the oil seal to the transfer case.

   Oil Seal Installer : 5-8840-2193-0 (J-37488)
   Drive Handle : 5-8840-0007-0 (J-8092)

2. Apply engine oil to the oil seal lip.

TRANSFER CASE FRONT OUTPUT SHAFT OIL SEAL

Oil Seal Replacement

Oil Seal Removal

Use a screwdriver to pry the oil seal from the transfer case.

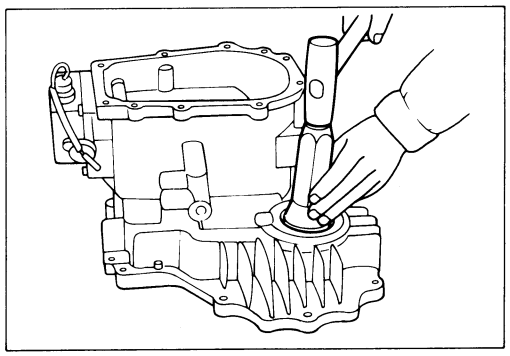

Oil Seal Installation

1. Use the oil seal installer to install the oil seal to the transfer case.

   Oil Seal Installer : 5-8840-2161-0 (J-37226)

2. Apply engine oil to the oil seal lip.

REASSEMBLY

MAJOR COMPONENT (TRANSMISSION)

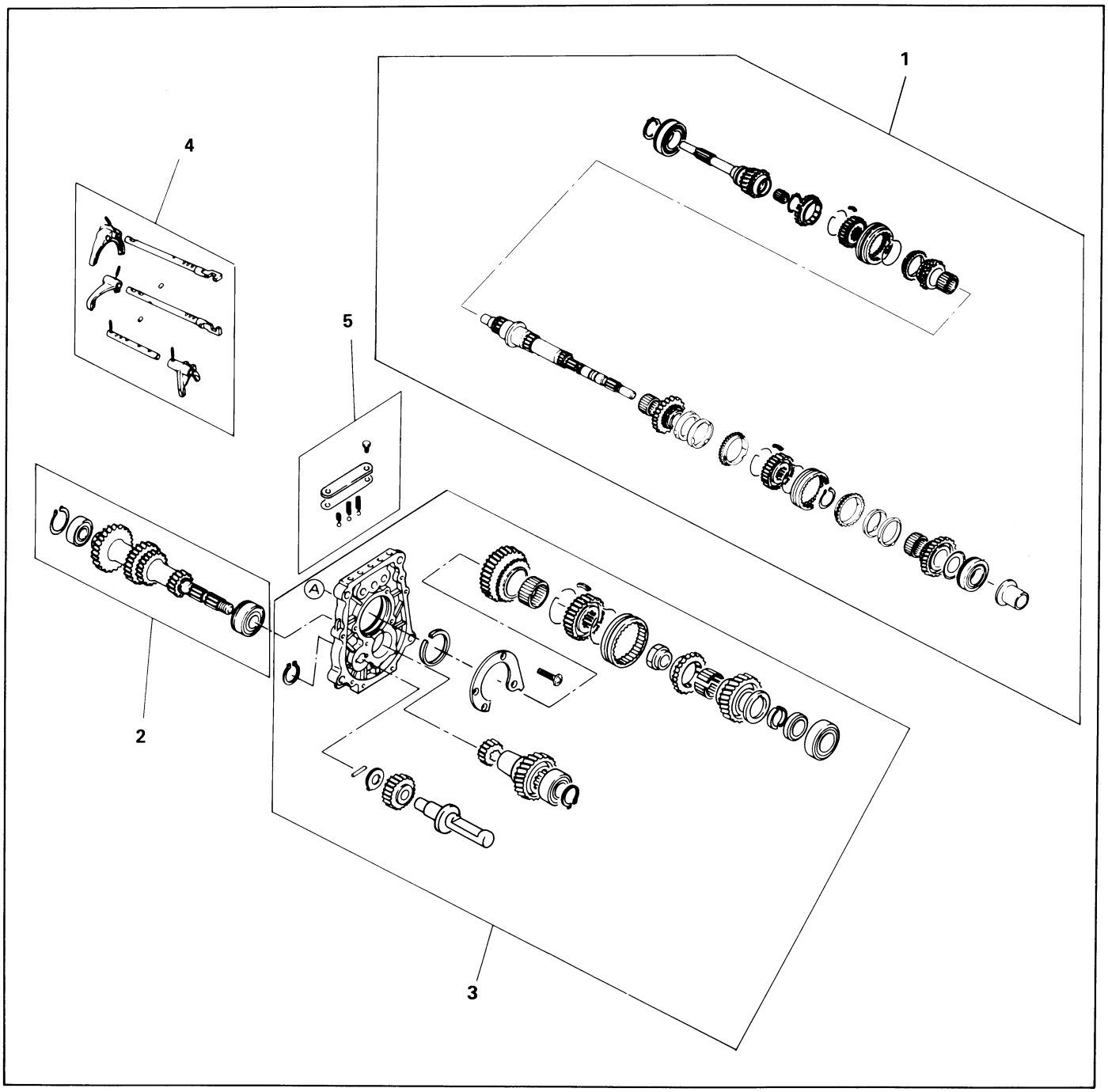

Reassembly Steps

1 Top & main gear shaft assembly
2. Counter gear shaft assembly
3. Rev. and 5th gear assembly
4. Shift arm assembly & interlock pin
5. Detent assembly

MAJOR COMPONENT (TRANSFER CASE)

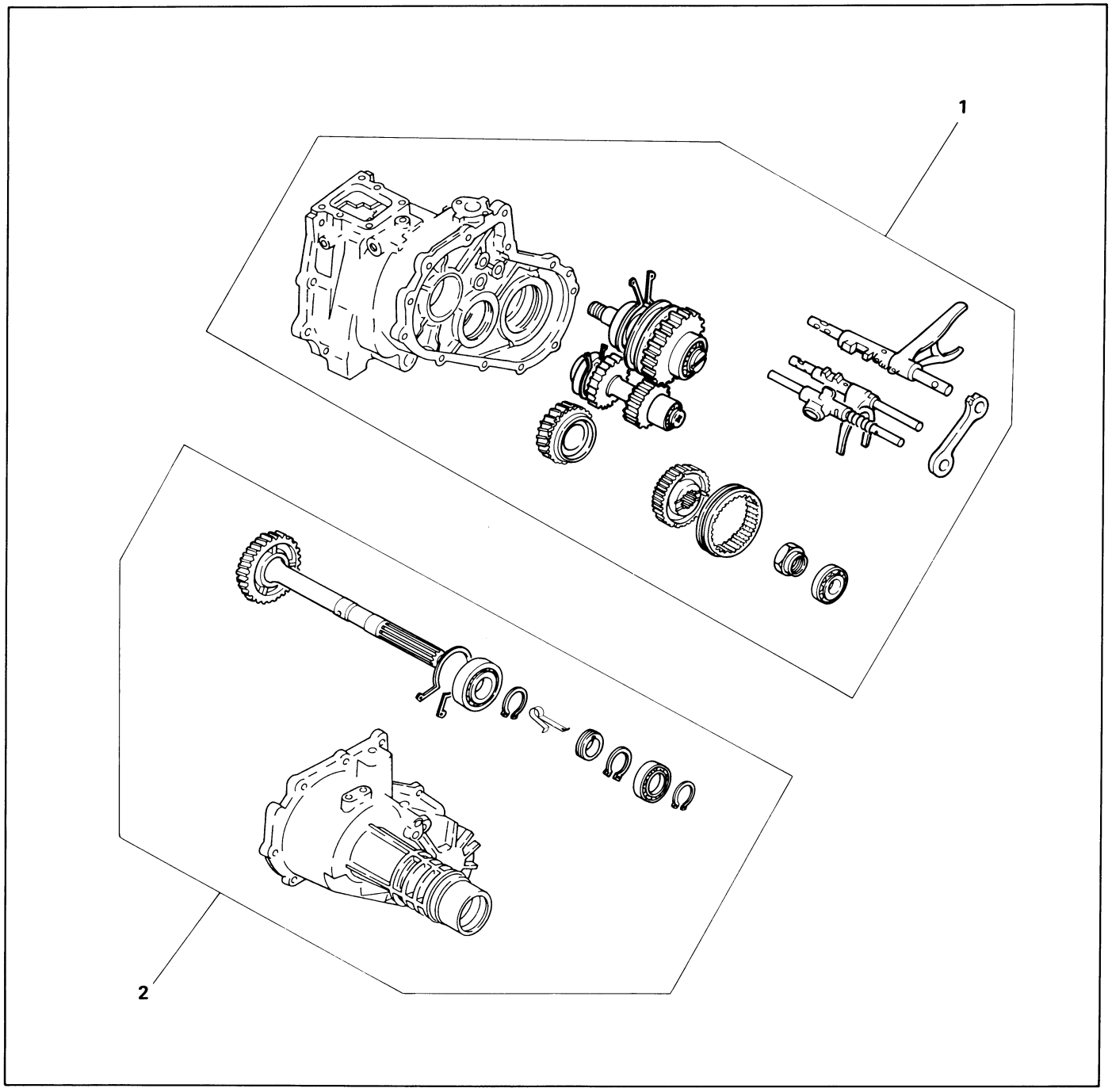

Reassembly Steps

1 Transfer case assembly
2. Transfer rear case assembly

MINOR COMPONENT (TRANSMISSION)

INTERMEDIATE PLATE AND GEAR ASSEMBLY TOP GEAR SHAFT, MAIN SHAFT GEAR AND COUNTER GEAR

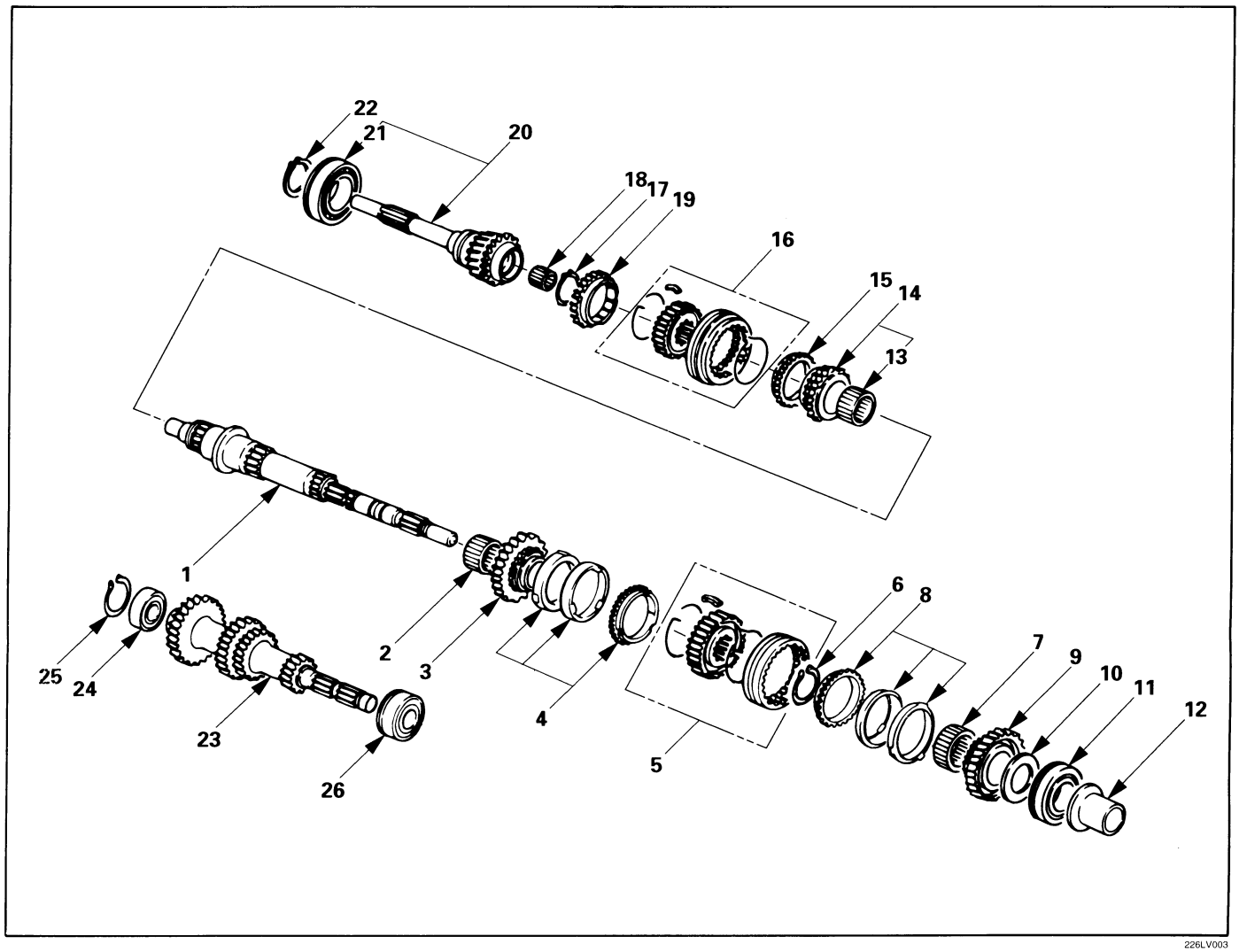

Reassembly Steps

1. Mainshaft
▲ 2. Needle bearing
▲ 3. 2nd gear
4. 2nd block ring (set)
▲ 5. 1st—2nd synchronizer assembly
▲ 6. Clutch hub snap ring
▲ 7. Needle bearing
8. 1st block ring (set)
▲ 9. 1st gear
▲ 10. 1st gear thrust bearing
▲ 11. Mainshaft ball bearing
▲ 12. Needle bearing collar
▲ 13. Needle bearing
▲ 14. 3rd gear
15. 3rd block ring
▲ 16. 3rd—4th synchronizer assembly
▲ 17. Mainshaft snap ring
18. Needle bearing
19. Top block ring
20. Top gear shaft
▲ 21. Ball bearing
▲ 22. Top gear shaft snap ring
23. Counter gear
▲ 24. Counter gear front bearing
25. Snap ring
26. Counter gear center bearing

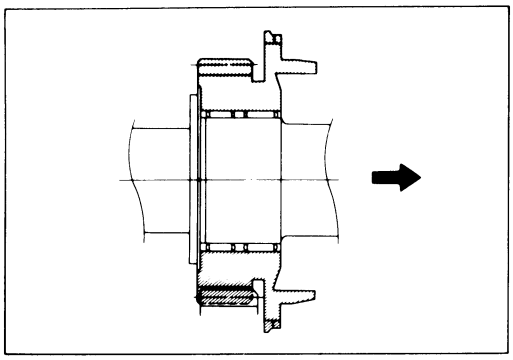

Important Operations

2. Needle Bearing

3. 2nd Gear

1) Apply engine oil to the needle bearing and the 2nd gear thrust surfaces.
2) Install the needle bearing and the 2nd gear to the mainshaft.
   The dog teeth of the 2nd gear must be facing the rear side of the transmission.

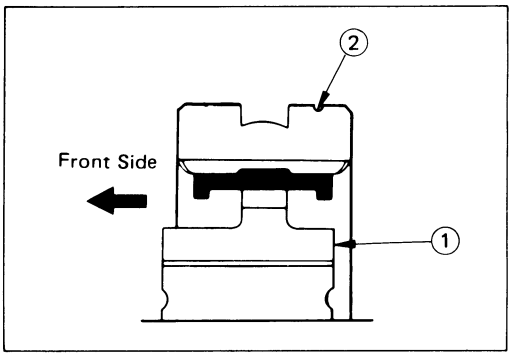

5. 1st—2nd Synchronizer Assembly

1) Turn the shallow clutch hub face ① toward the side of the sleeve with small groove ② on the outer circumference.

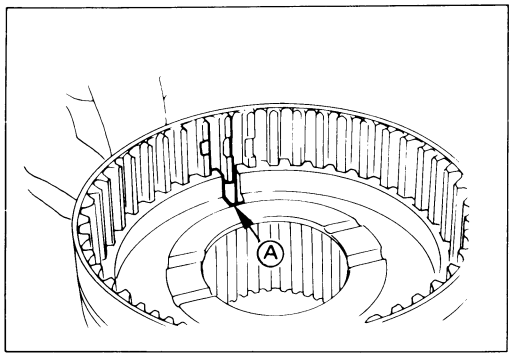

Note:
The clutch hub groove Ⓐ must be aligned with the key groove of sleeve.

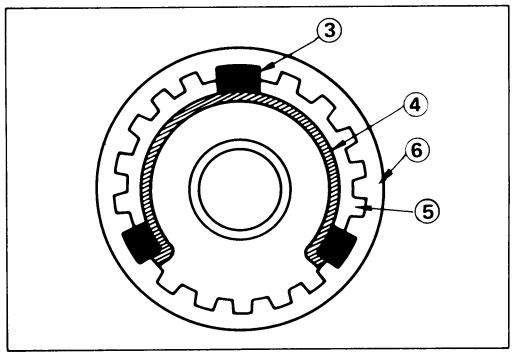

2) Check that the inserts ③ fit snugly into the block ring insert grooves.
3) Check that the insert springs ④ are fitted to the inserts as shown in the illustration.
4) Check that the clutch hub ⑤ and the sleeve ⑥ slide smoothly.
5) Install the synchronizer assembly to the mainshaft.
   The clutch hub face (with the heavy boss) must be facing the 2nd gear side.

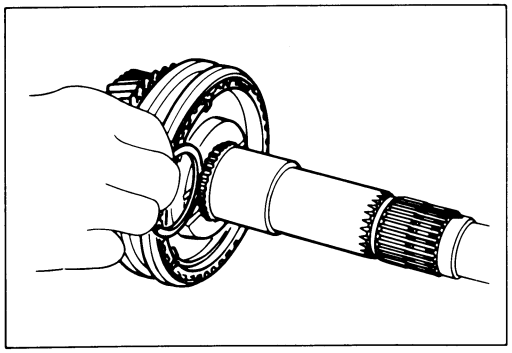

6. Clutch Hub Snap Ring

1) Select the snap ring which will provide the minimum clearance between the 1st/2nd clutch hub and the snap ring.
   There are three snap ring sizes available.
   The snap rings are color-coded to indicate their thickness.

Clutch Hub and Snap Ring Clearance	mm(in)
Standard	
0 – 0.1 (0.0039)	

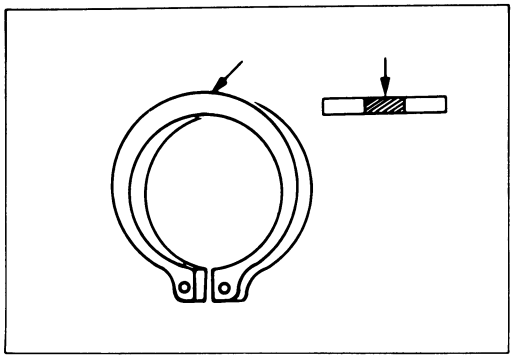

Snap Ring Avalilability

Thickness mm(in)	Color-Coding
1.80 (0.071)	White
1.85 (0.073)	Yellow
1.90 (0.075)	Blue

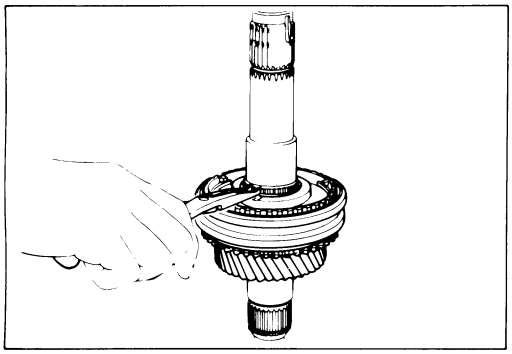

2) Use a pair of snap ring pliers to install the snap ring to the mainshaft.

The snap ring must be fully inserted into the mainshaft snap ring groove.

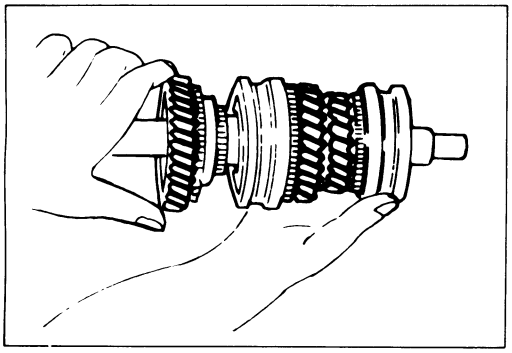

7. Needle Bearing

9. 1st Gear

1) Apply engine oil to the needle bearing and the 1st gear thrust surfaces.
2) Install the needle bearing and the 1st gear to the mainshaft.

The 1st gear dog teeth must be facing the transmission front side.

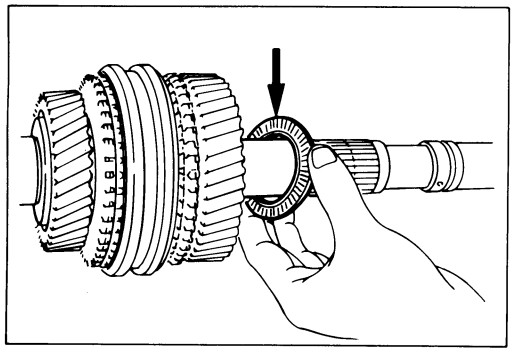

10. 1st Gear Thrust Bearing

Install the thrust bearing to the mainshaft.

The thrust bearing side must be facing the transmission front side.

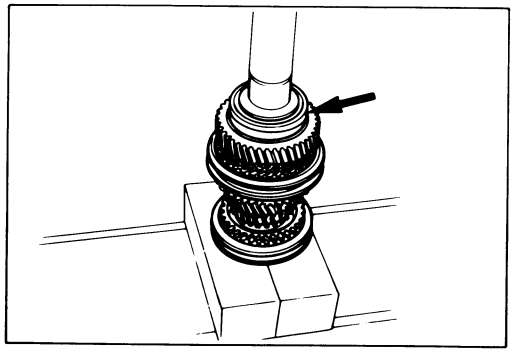

11. Mainshaft Ball Bearing

12. Needle Bearing Collar

1) Apply engine oil to the ball bearing and the mainshaft.
2) Install the ball bearing and collar to the mainshaft. The ball bearing snap ring groove must be facing the transmission rear side.
3) Use a bench press to slowly force the collar into place.

Installer: 5-8840-2195-0 (J-6133-01)

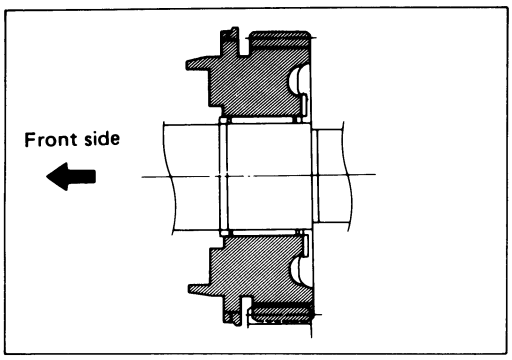

13. Needle Bearing

14. 3rd Gear

1) Apply engine oil to the needle bearing and the 3rd gear thrust surfaces.
2) Install the needle bearing and the 3rd gear to the mainshaft.

   The dog teeth of the 3rd gear must be facing the front side of the transmission.

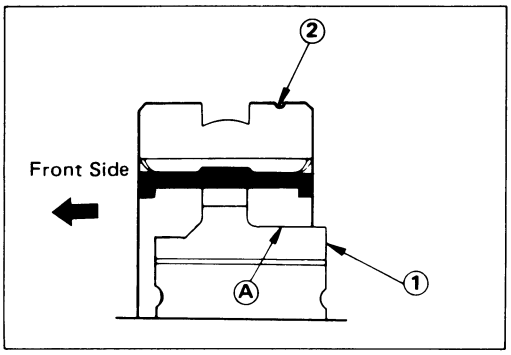

16. 3rd—4th Synchronizer Assembly

1) Turn the clutch hub face ① with the heavy boss Ⓐ toward the side of the sleeve with small groove ② on the outer circumference.

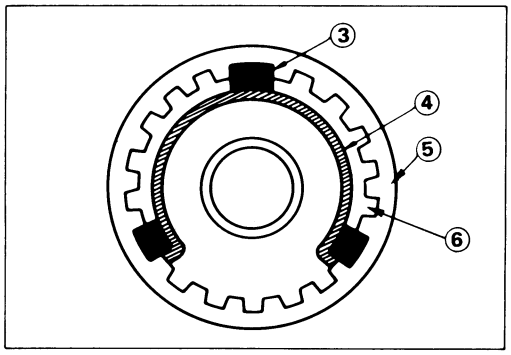

2) Check that the inserts ③ fit snugly into the block ring insert grooves.
3) Check that the insert springs ④ are fitted to the inserts as shown in the illustration.
4) Check that the clutch hub ⑤ and the sleeve ⑥ slide smoothly.
5) Install the synchronizer assembly to the mainshaft.

   The clutch hub face (with the heavy boss) must be facing the 3rd gear side.

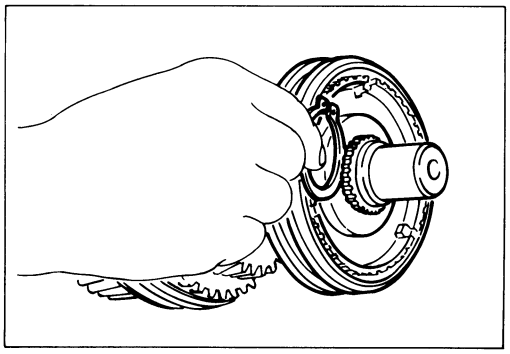

17. Mainshaft Snap Ring

1) Select the snap ring which will provide the minimum clearance between the 3rd—4th clutch hub and the snap ring.

   There are three snap ring sizes available.

   The snap rings are color-coded to indicate their thickness.

Clutch Hub and Snap Ring Clearance	mm(in)
Standard	
0 – 0.1 (0.0039)	

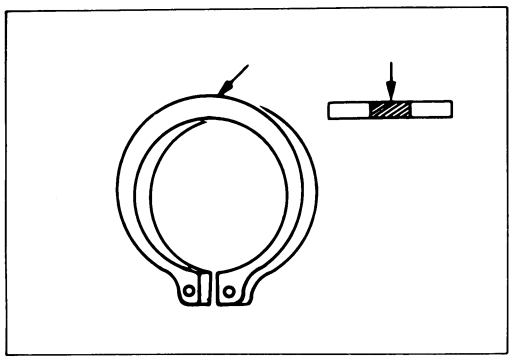

Snap Ring Availability mm(in)

Thickness	Color-Coding
1.80 (0.071)	White
1.85 (0.073)	Yellow
1.90 (0.075)	Blue

2) Use a pair of snap ring pliers to install the snap ring to the mainshaft.
3) The snap ring must be fully inserted into the mainshaft snap ring groove.

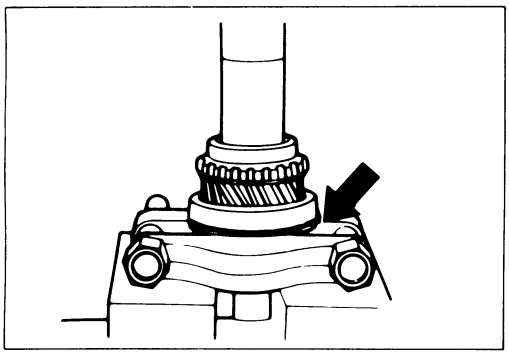

21. Ball Bearing

22. Top Gear Shaft Snap Ring

1) Use a bench press to install the top gear shaft ball bearing to the mainshaft.

   The snap ring groove must be facing the transmission front side.
2) Use a pair of snap ring pliers to install the snap ring to the bearing.

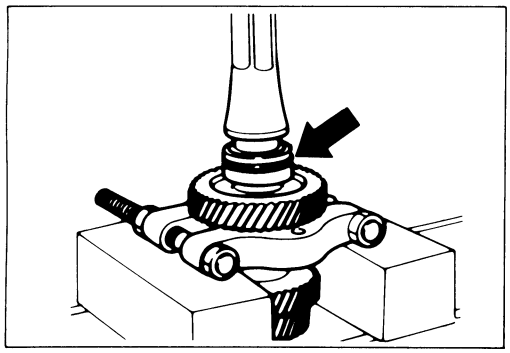

24. Counter Gear Front Bearing

Use a bench press to install the counter gear front ball bearing to the mainshaft.

The snap ring groove must be facing the transmission front side.

Bearing installer : 5-8840-2194-0 (J-35283)

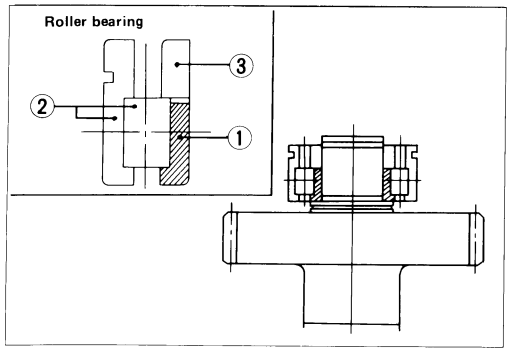

1) Apply engine oil to the bearing and install the inner race ① and outer race with roller ② in the proper direction to the mainshaft.
2) Then install the inner race ③ with taper side turned to outer race ②.

Note:
The inner race ③ should be installed with stamp on die face side turned to the front side of transmission.

REVERSE GEAR AND 5TH GEAR

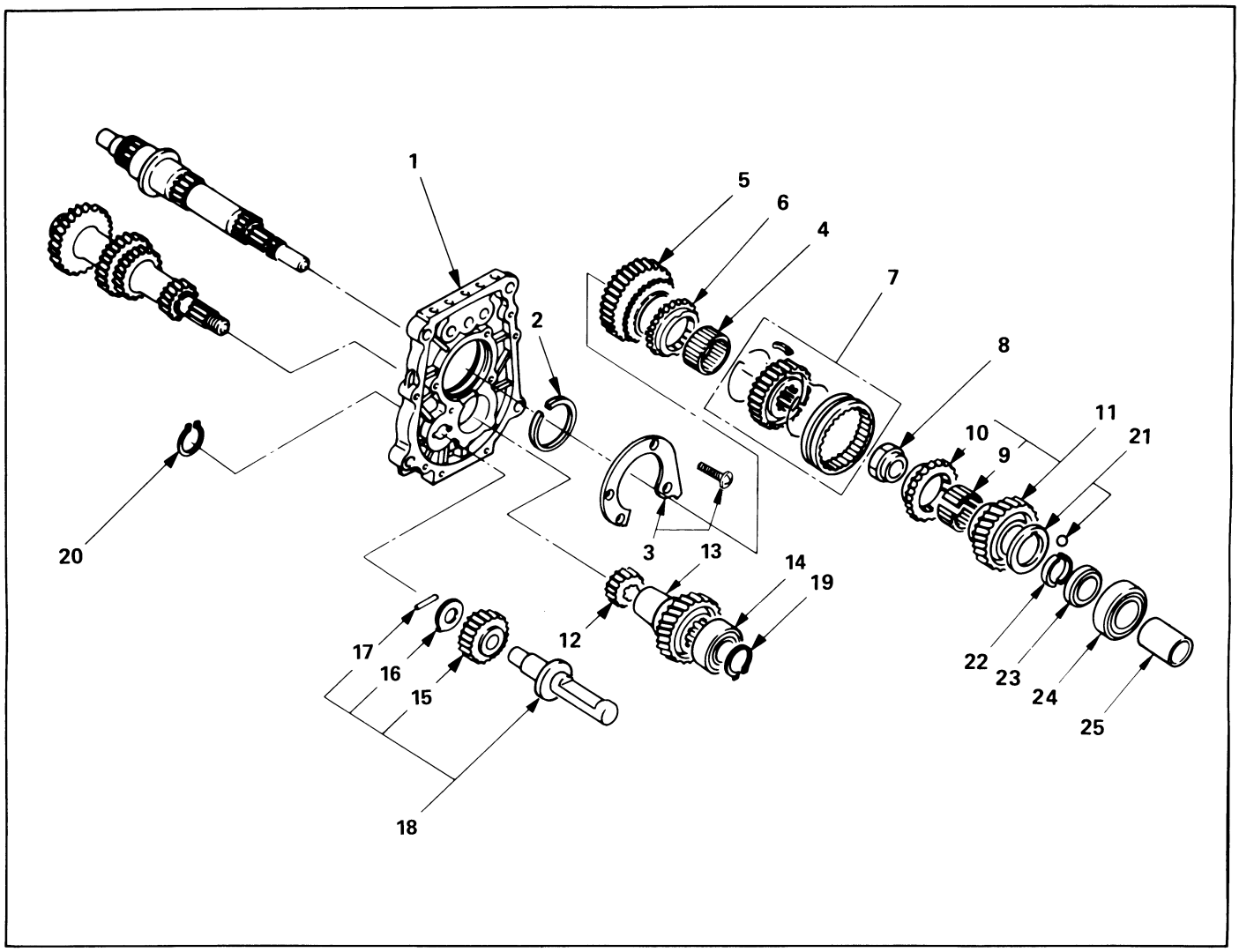

Reassembly Steps

- ▲ 1. Intermediate plate
- 2. Bearing snap ring
- ▲ 3. Bearing plate and screw
- 4. Needle bearing
- 5. Mainshaft reverse gear
- 6. Reverse block ring
- ▲ 7. Rev.-5th synchronizer assembly
- ▲ 8. Clutch hub nut
- 9. Needle bearing
- 10. 5th block ring
- 11. 5th gear
- ▲ 12. Counter reverse gear
- 13. Counter 5th gear
- 14. Ball bearing
- 15. Reverse idler gear
- 16. Thrust washer
- 17. Idler shaft pin
- 18. Reverse idler shaft
- ▲ 19. Bearing snap ring
- ▲ 20. Reverse gear snap ring
- ▲ 21. Thrust washer and lock ball
- 22. Thrust plate
- 23. Retainer
- ▲ 24. Roller bearing
- 25. Oil seal collar

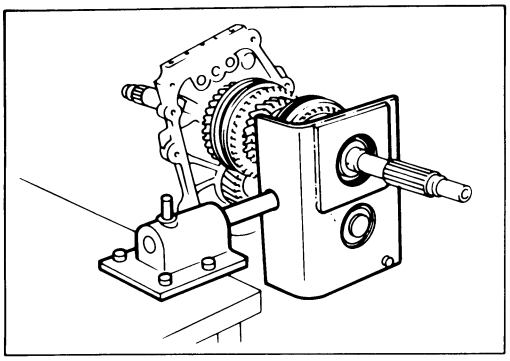

Important Operations

1. Intermediate Plate

1) Mesh the counter gear with the mainshaft assembly.
2) Install the holding fixture to the mainshaft and the counter gear.

   Holding Fixture : 5-8840-2160-0 (J-37224)

   Holding base : 5-8840-0003-0 (J-3289-20)
3) Place the holding fixture (with the mainshaft and the counter shaft) in a vise.
4) Install the intermediate plate.

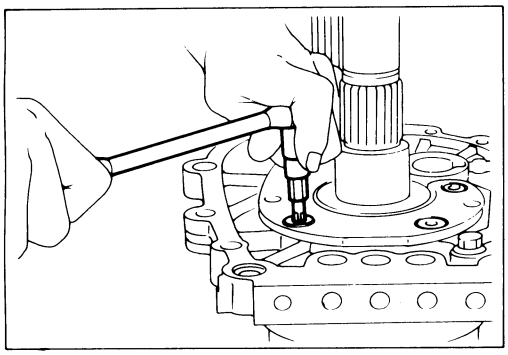

3. Bearing Plate and Screw

1) Apply recommended thread locking agents or its equivalent to each of the plate screw threads.
2) Use the wrench to tighten the screws to the specified torque.

   Torx Bit Wrench : 5-8840-0047-0 (J-37225) (T45)

Plate Screw Torque	kg·m (lb·ft/N·m)
	1.5 (11/15)

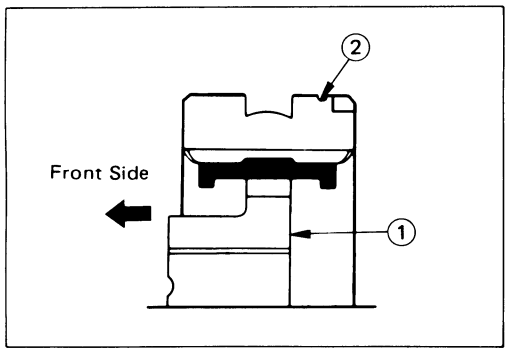

7. Rev.—5th Synchronizer Assembly

1) Turn the clutch hub face ① toward the side of the sleeve with small groove ② on the outer circumference.

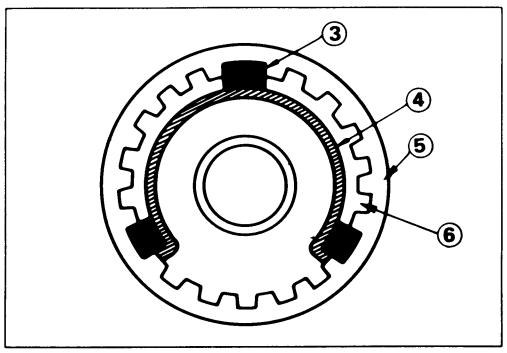

2) Check that the inserts ③ fit snugly into the block ring insert grooves.
3) Check that the insert springs ④ are fitted to the inserts as shown in the illustration.
4) Check that the clutch hub ⑤ and the sleeve ⑥ slide smoothly.
5) Install the synchronizer assembly to the mainshaft.

   The clutch hub face (with the heavy boss) must be facing the reverse gear side.

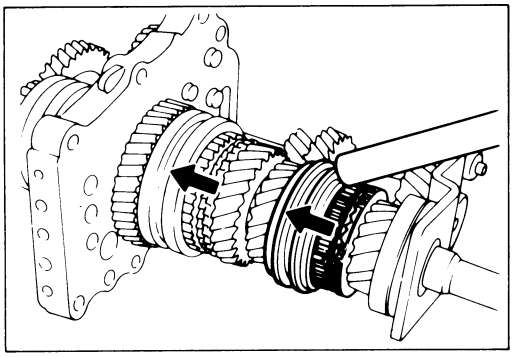

8. Clutch Hub Nut

1) Mesh the 1st—2nd synchronizer with both the 1st and 3rd gears (double engagement).

   This will prevent the mainshaft from turning.

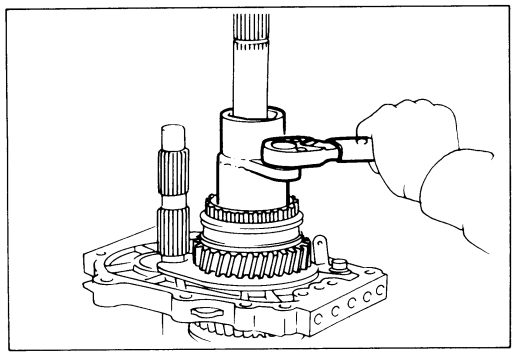

2) Install the mainshaft lock nut.
3) Use the lock nut wrench to tighten the lock nut to the specified torque.

   Wrench: 5-8840-2156-0 (J-37219)

Hub Nut Torque	kg·m(lb.ft/N·m)
14 ± 2 (101 ± 14.4/137 ± 20)	

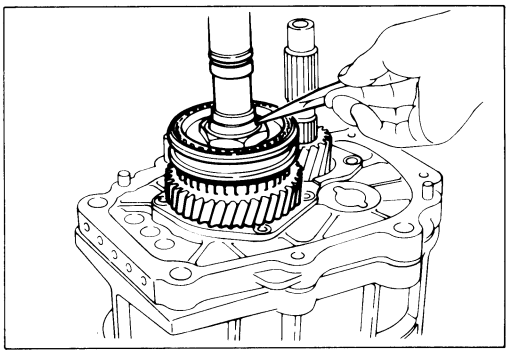

4) Use a punch to stake the lock nut.

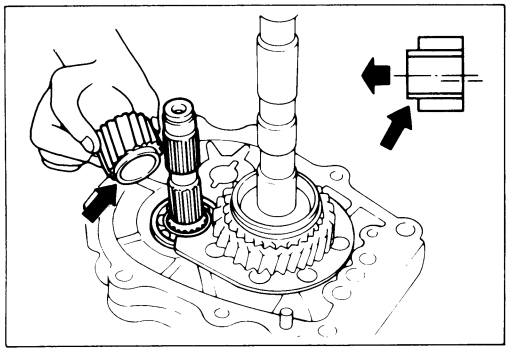

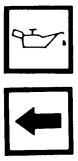

12. Counter Reverse Gear

1) Apply engine oil to the counter reverse gear and the reverse gear.
2) Install the counter reverse gear to the counter gear.

   The reverse gear projection must be facing the side of the intermediate plate.

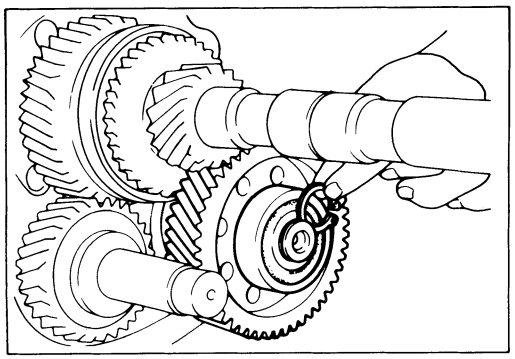

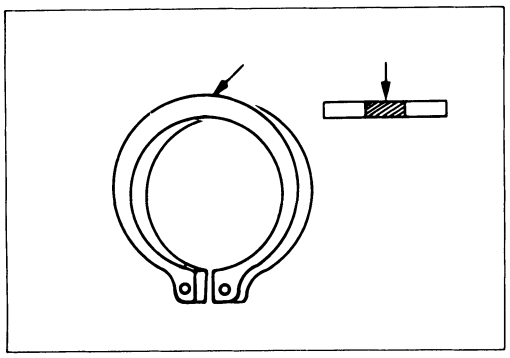

19. Bearing Snap Ring

1) Select the snap ring which will provide the minimum clearnance between the ball bearing and the snap ring.

   There are six snap ring sizes available.

   The snap rings are color-coded to to indicate their thickness.

Ball Bearing and Snap Ring Clearance mm(in)

Standard	0 – 0.15 (0 – 0.0059)

Snap Ring Availability mm(in)

Thickness mm(in)	Color-Coding
1.1 (0.043)	White
1.2 (0.047)	Yellow
1.3 (0.051)	Blue
1.4 (0.055)	Pink
1.5 (0.059)	Green
1.6 (0.063)	Brown

2) Use a pair of snap ring pliers to install the snap ring to the counter 5th gear.
   The snap ring must be fully inserted into the counter 5th gear snap ring groove.

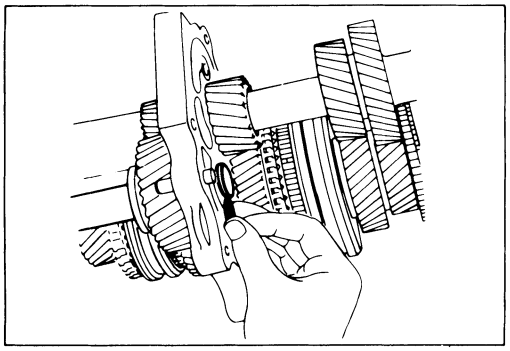

20. Reverse Gear Snap Ring

1) Select the snap ring which will provide the minimum clearance between the intermediate plate and the snap ring.
   There are three snap ring sizes available.
   The snap rings are color-coded to indicate their thickness.

Intermediate Plate and Snap Ring Clearance mm(in)

Standard	0 – 0.15 (0 – 0.0059)

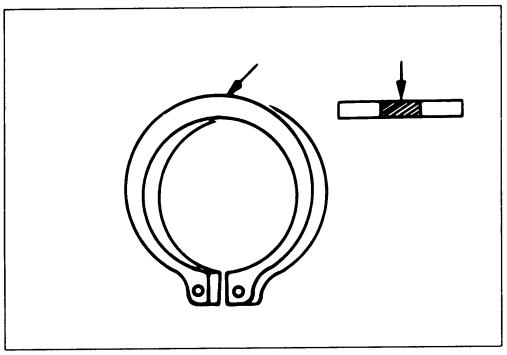

Snap Ring Availability mm(in)

Thickness mm(in)	Color-Coding
1.2 (0.047)	White
1.3 (0.051)	Yellow
1.4 (0.055)	Blue

2) Use a pair of snap ring pliers to install the snap ring to the reverse idler shaft.
The snap ring must be fully inserted into the reverse idler shaft snap ring groove.

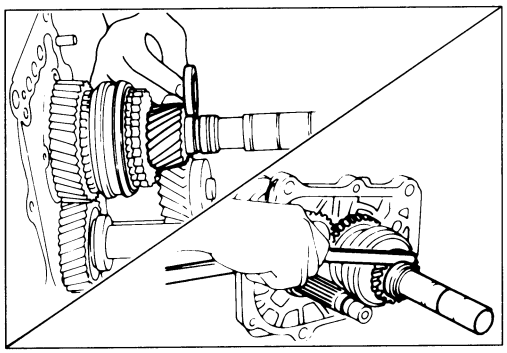

21. Thrust Washer and Lock Ball

1) Use a thickness gauge to measure the clearance between the 5th gear and the thrust washer.

5th Gear and Thrust Washer Clearance mm(in)

Standard
0.10 – 0.25 (0.0039 – 0.0098)

If required, replace the exsisting thrust washer with a new thrust washer to bring the clearance to specification.

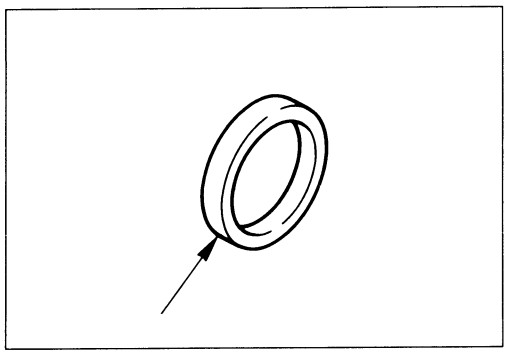

There are four thrust washer sizes available.

The snap rings are color-coded to indicate their thickness.

Thrust Washer Availability mm(in)

Thickness	Color-Coding
7.9 (0.311)	White
8.0 (0.315)	Yellow
8.1 (0.319)	Green
8.2 (0.323)	Blue

2) Apply grease to the thrust washer and the lock ball.
3) Install the thrust washer and the lock ball to the mainshaft.

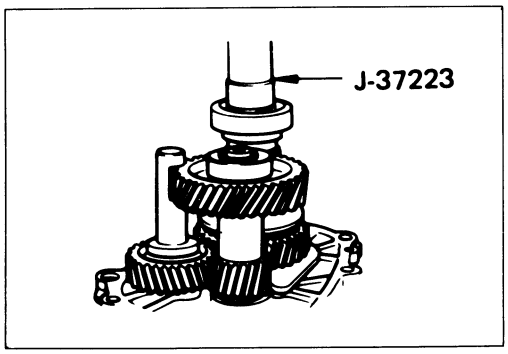

24. Roller Bearing

Apply engine oil to the bearing inner and outer circumference.

Use the installer to install the roller bearing to the mainshaft.

Installer : 5-8840-2159-0 (J-37223)

Note:

Be sure the bearing is installed in the direction it was removed from.

DETENT, SHIFT ARM ASSEMBLY AND INTERLOCK PIN

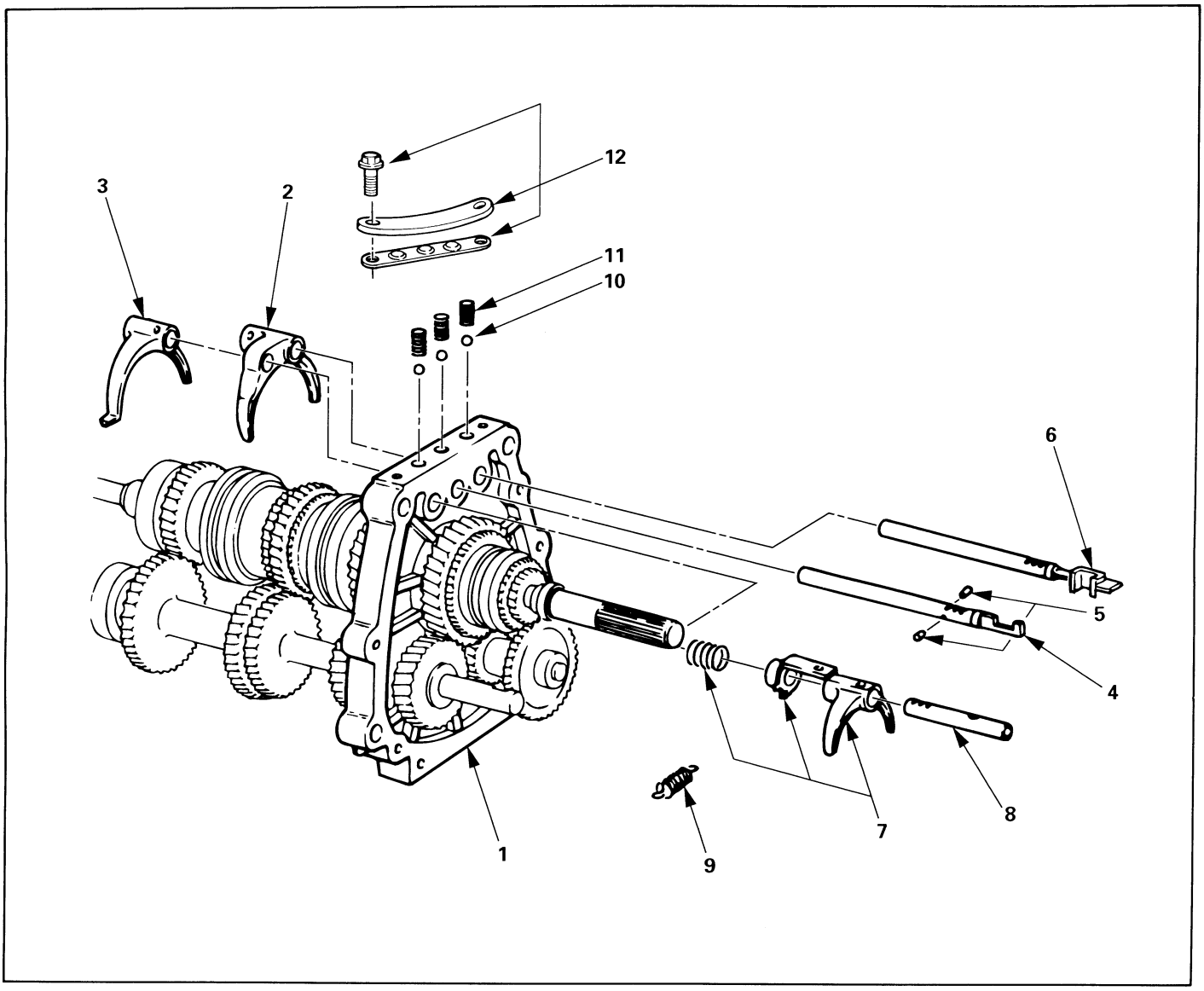

Reassembly Steps

1. Intermediate plate and gear assembly
▲ 2. 1st—2nd shift arm
▲ 3. 3rd—4th shift arm
▲ 4. 3rd—4th shift rod
▲ 5. Interlock pin
6. 1st—2nd shift rod
7. Rev.—5th shift arm and inhibiter
8. Rev.—5th shift rod
9. Spring
10. Detent ball
11. Detent spring
▲ 12. Detent spring plate and gasket

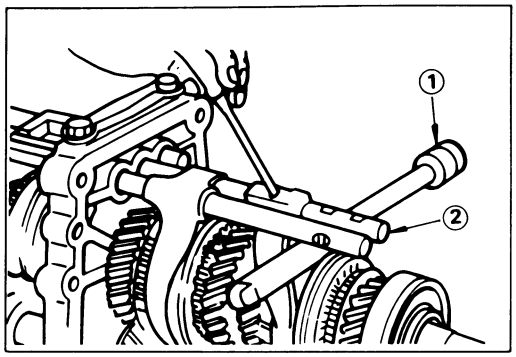

Important Operations

2. 1st—2nd Shift Arm

3. 3rd—4th Shift Arm

Hold a round bar ① against the shift rod end lower face ② to protect it against damage.

Install the new spring pin.

Never reinstall the used spring pin.

4. 3rd—4th Shift Rod

5. Interlock pin

1) Install the interlock pin to the shift rod.
2) Install the shift rod together with the interlock pin to the intermediate plate.

   Do not allow the interlock pin to fall from the shift rod.

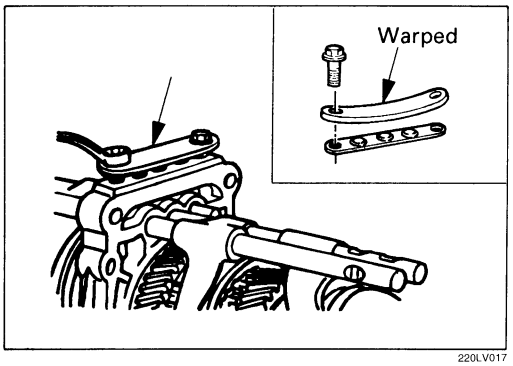

12. Detent Spring Plate and Gasket

1) Install the new-detent plate and new gasket onto the transmisson case into the correct direction.
2) Tighten the detent spring plate bolts to specified torque.

Detent Spring Plate Bolt Torque	kg·m(lb.ft/N·m)
2.0 ± 0.4 (14 ± 3/20 ± 4)	

MINOR COMPONENT

TRANSFER CASE ASSEMBLY

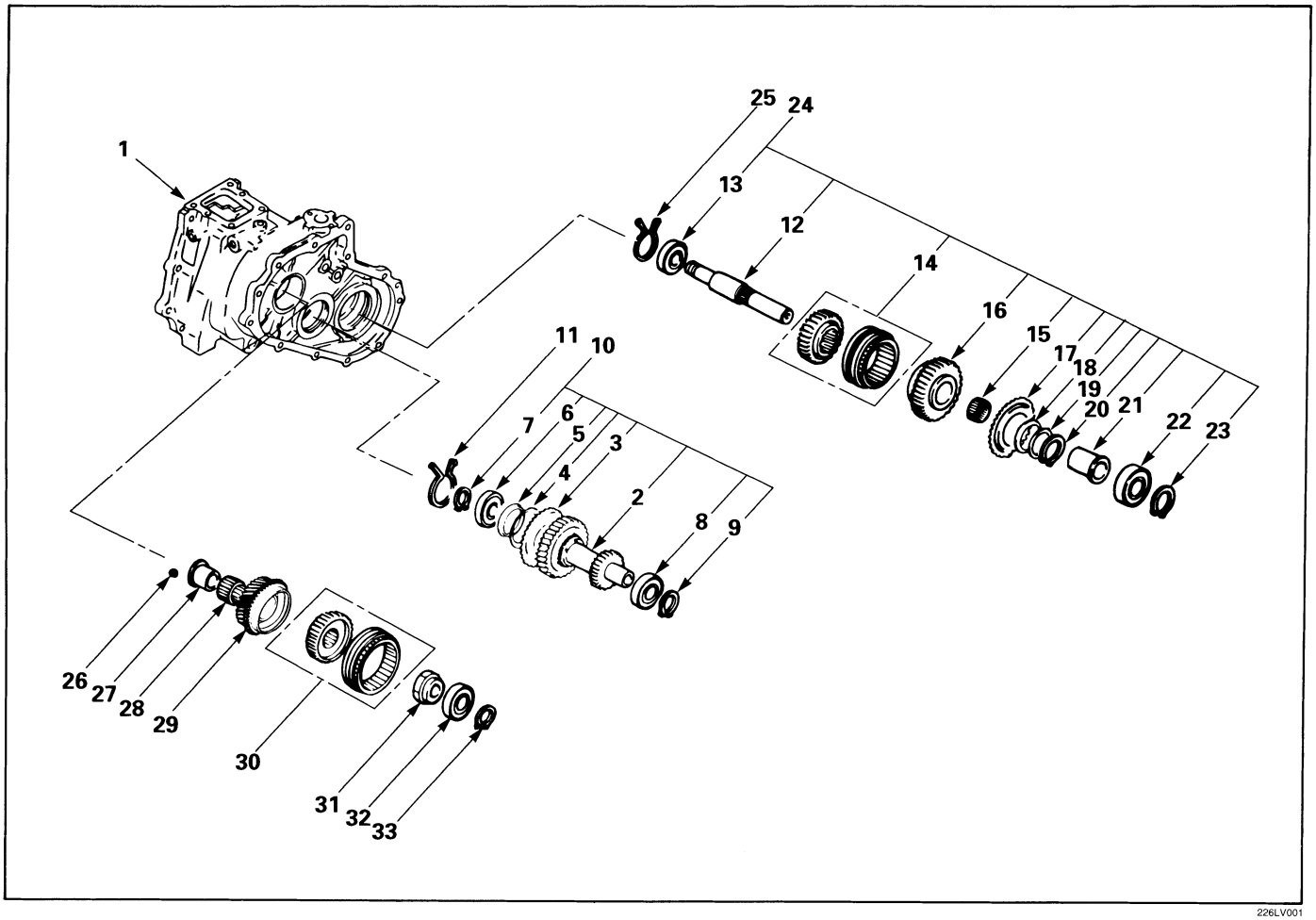

226LV001

Reassembly Steps

- ▲ 1. Transfer case
- ▲ 2. Counter gear
- ▲ 3. Sub gear (Anti-lash plate)
- 4. Belleville spring
- 5. Spacer
- 6. Ball bearing
- ▲ 7. Snap ring
- 8. Ball bearing
- 9. Snap ring
- 10. Counter gear assembly
- 11. Bearing snap ring
- 12. Front output shaft
- 13. Ball bearing
- 14. Clutch hub and sleeve
- 15. Needle bearing
- ▲ 16. Front output gear
- ▲ 17. Sub gear (Anti-lash plate)
- ▲ 18. Belleville spring
- ▲ 19. Spacer
- ▲ 20. Anti-lash plate snap ring
- ▲ 21. Bearing collar
- 22. Ball bearing
- ▲ 23. Snap ring
- 24. Front output gear assembly
- 25. Bearing snap ring
- 26. Ball
- 27. Bearing collar
- 28. Needle bearing
- 29. Transfer input gear
- ▲ 30. High-low clutch hub and sleeve
- ▲ 31. Mainshaft end lock nut
- ▲ 32. Ball bearing
- 33. Snap ring

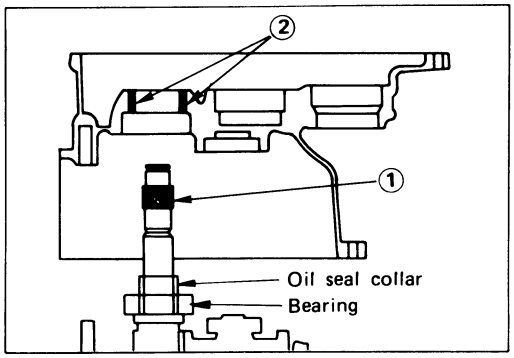

Important Operations

1. Transfer Case

1) Cover the shaft spline with adhesive tape ①.
   This will prevent damage to the oil seal lip ②.

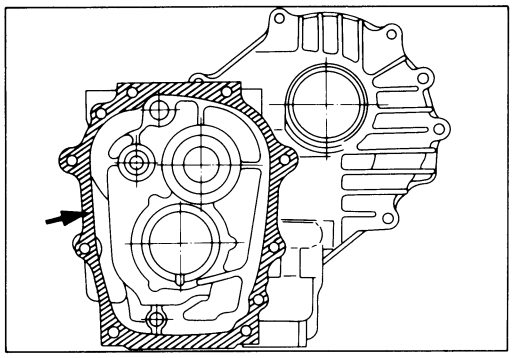

2) Apply recommend liquid gasket or its equivalent to the transfer case fitting surfaces.
3) Tighten the transfer case bolts to the specified torque a little at a time.

Transfer Case Bolt Torque	kg·m (lb·ft/N·m)
3.8 ± 0.8 (27 ± 5.8 / 37 ± 7.8)	

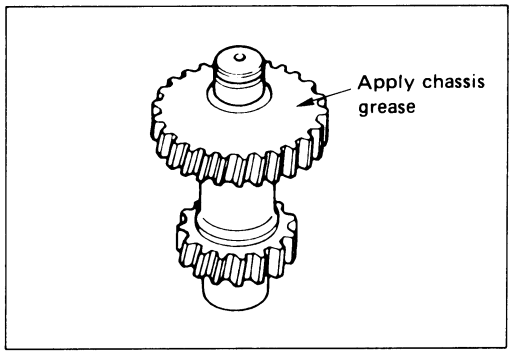

2. Counter Gear

3. Sub Gear (Anti-lash Plate)

Apply chassis grease to the sub-gear and the counter gear thrust surfaces.

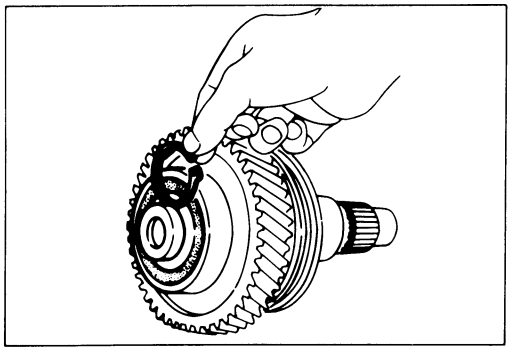

7. Snap Ring

1) Select a snap ring that will allow the minimum axial play.
2) Use a pair of snap ring pliers to install the snap ring to the counter gear.

Bearing and Snap Ring Clearance	mm(in)
Standard	
0 – 0.1 (0 – 0.0039)	

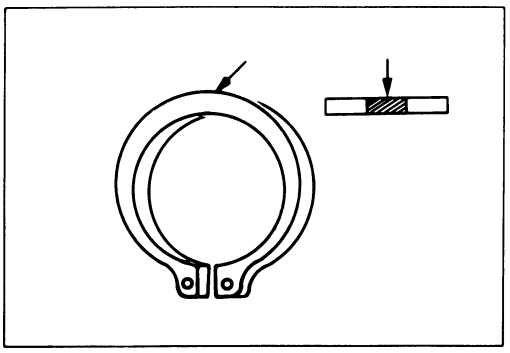

Snap Ring Availability	mm(in)
Thickness	Color-Coding
1.50 (0.059)	White
1.55 (0.061)	Yellow
1.60 (0.063)	Blue

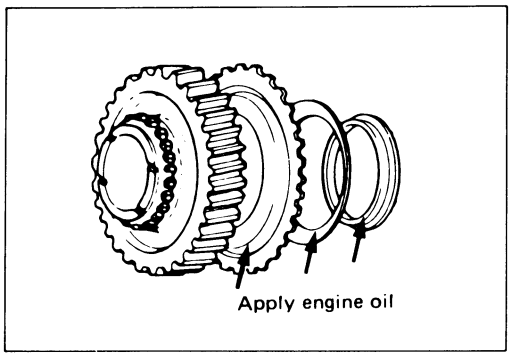

16. Front Output Gear

17. Sub Gear (Anti-lash Plate)

18. Belleville Spring

19. Spacer

Apply engine oil to the thrust surfaces of the sub-gear, the belleville spring, and the spacer.

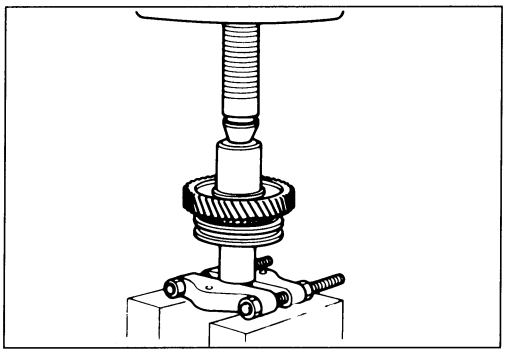

20. Anti-lash Plate Snap Ring

21. Bearing Collar

Use a bench press to install the needle bearing and collar together with the front output gear.

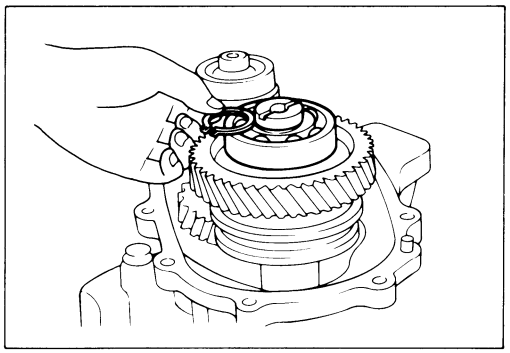

23. Snap Ring

1) Select a snap ring that will allow the minimum axial play.
2) Use a pair of snap ring pliers to install the snap ring to the output shaft.

Bearing and Snap Ring Clearance mm(in)
Standard
0 – 0.1 (0 – 0.0039)

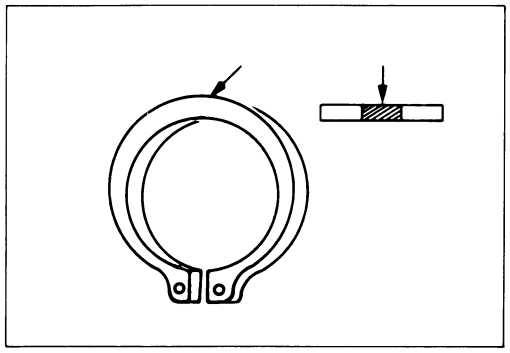

Snap Ring Availability mm(in)

Snap Ring Thickness	Color Coding
1.55 (0.061)	White
1.60 (0.063)	Yellow
1.65 (0.065)	Blue
1.70 (0.067)	Pink
1.75 (0.069)	Green
1.80 (0.071)	Brown
1.85 (0.073)	Red
1.90 (0.075)	Orange

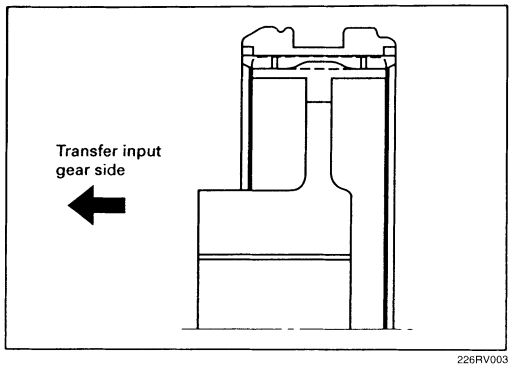

30. High-Low Clutch Hub and Sleeve

The clutch hub face with the heavy bass must be facing the transfer input gear side.

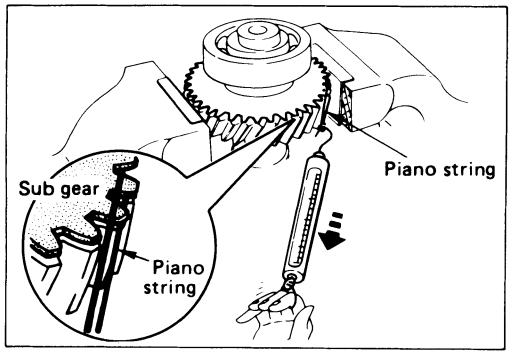

Sub Gear (Anti-lash Plate) Preload

1) Hook a length of piano wire over one of the sub-gear teeth.
2) Attach the other end of the piano wire to a spring balancer.
3) Measure the sub-gear preload.

Sub-Gear Preload	kg(lb/N)
Standard	
6 – 10 (13 – 22/59 – 98)	

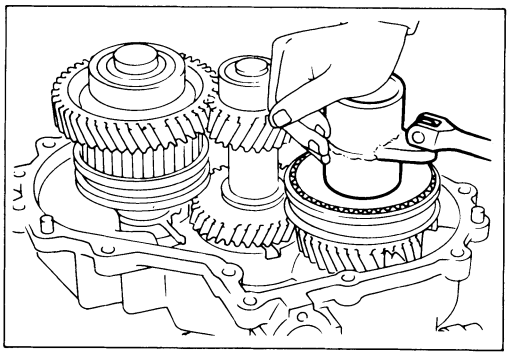

32. Mainshaft End Lock Nut

1) Use the lock nut wrench to tighten the mainshaft end lock nut to the specified torque.

   Lock Nut Wrench : J-37219

Mainshaft End Lock Nut Torque	kg·m (lb·ft/N·m)
14 ± 2 (101 ± 14.4/137 ± 20)	

2) Stake the lock nut.

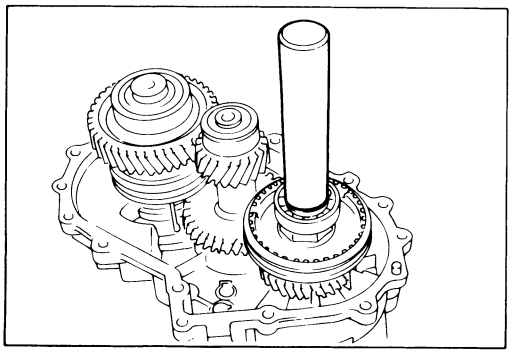

33. Ball Bearing

Use the ball bearing installer to install the ball bearing.

Installer: 5-8840-2159-0 (J-37223)

DETENT, SHIFT ARM ASSEMBLY AND INTERLOCK PIN

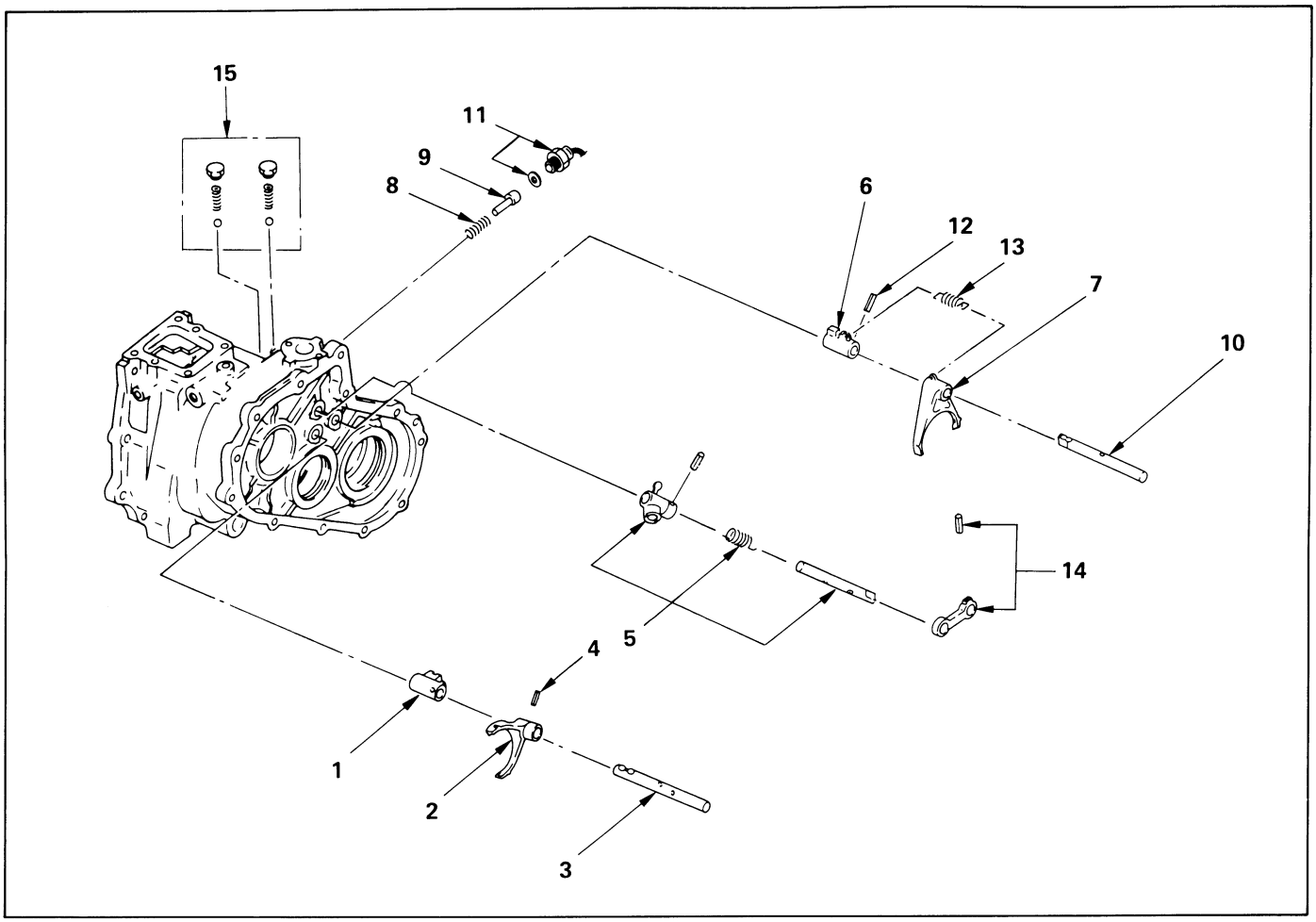

Reassembly Steps

1. Shift block
2. Shift arm
3. ▲ High-low shift rod
4. ▲ Spring pin
5. Select rod assembly
6. Shift block
7. Shift arm
8. Spring
9. ▲ Interlock pin
10. ▲ 2WD-4WD shift rod
11. ▲ 4WD indicator switch
12. ▲ Spring pin
13. Spring
14. Pin and bridge
15. ▲ Detent ball, spring and plug

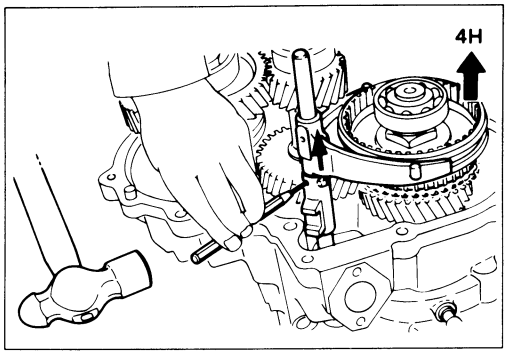

Important Operations

3. High-Low Shift Rod

4. Spring Pin

1) Engage the High-Low sleeve with 4H side.
2) Install the spring pin to the shift block.

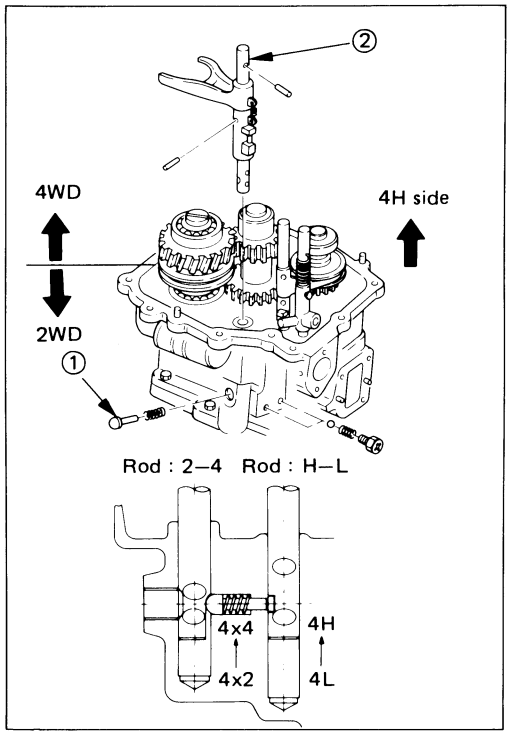

9. Interlock Pin

10. 2WD-4WD Shift Rod

1) Engage the High-Low synchronizers with 4H side and install the interlock pin 1 in proper direction.
2) Install the shift rod: 2WD-4WD 2 with the interlock pin pushed it in.

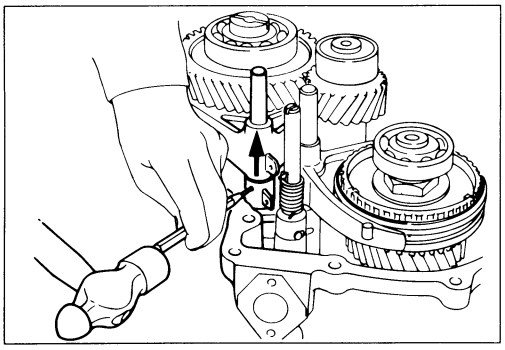

12. Spring Pin

1) Engage the 2WD-4WD sleeve with the 4WD side and install the spring pin.

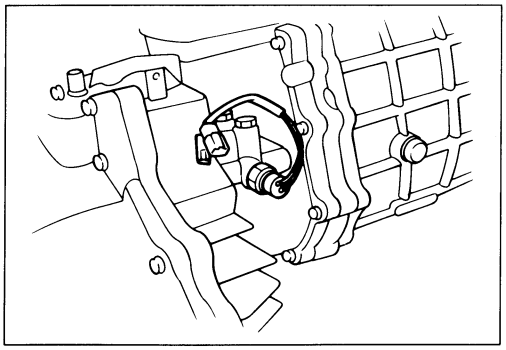

11. 4WD Indicator Switch

Tighten the switch to the specified torque.

Switch Torque	kg·m(lb.ft/N·m)
	4 (29.0/39.2)

15. Detent Ball, Spring and Plug

Tighten the plugs to the specified torque.

Plug Torque	kg·m(lb.ft/N·m)
	1.9 ± 0.4 (13.7 ± 2.9/18.6 ± 3.9)

TRANSFER REAR CASE ASSEMBLY

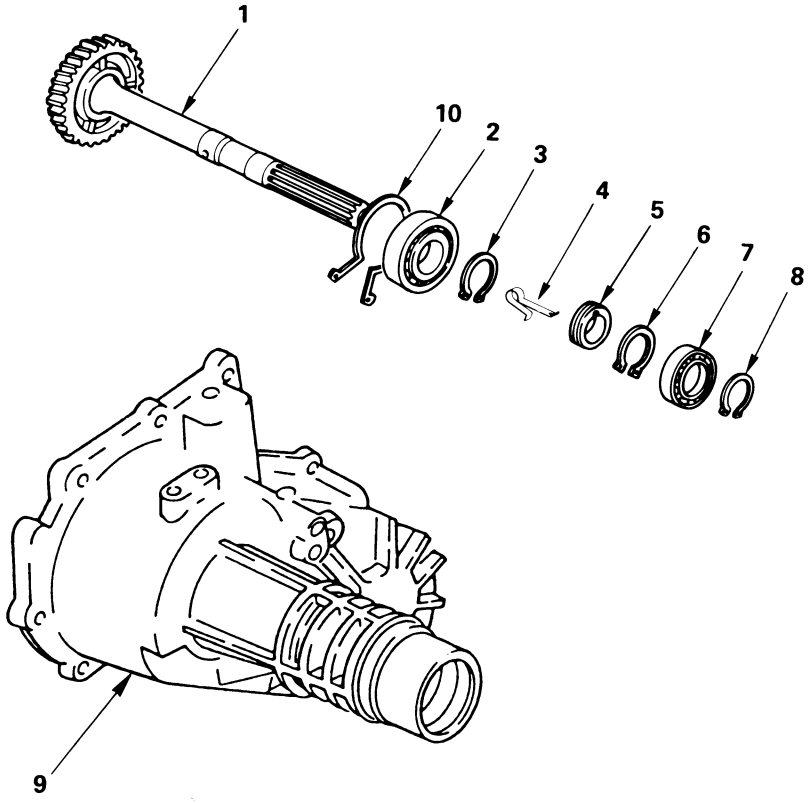

Reassembly Steps

1. Rear output shaft
▲ 2. Ball bearing
3. Bearing snap ring
▲ 4. Clip
5. Speedometer drive gear
6. Bearing snap ring
▲ 7. Ball bearing
8. Bearing snap ring
9. Rear case
10. Bearing snap ring

Important Operations

2. Ball Bearing

Use the ball bearing installer and the adapter to install the ball bearing.

Ball Bearing Installer : 5-8840-2159-0 (J-37223)

Adapter : 5-8840-2192-1 (J-37486-A)

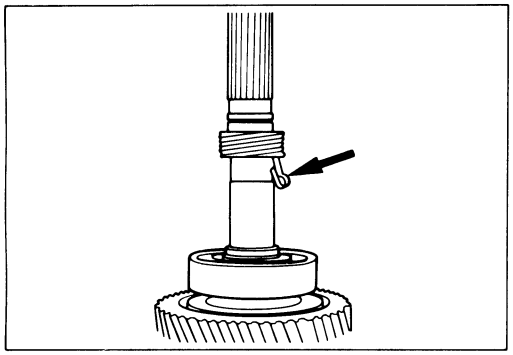

4. Clip

Install the clip to the drive gear groove.

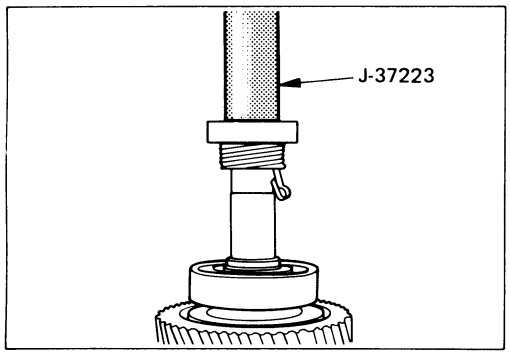

7. Ball Bearing

Use the ball bearing installer to install the ball bearing.

Ball Bearing Installer : 5-8840-2159-0 (J-37223)

REASSEMBLY

EXTERNAL COMPONENTS

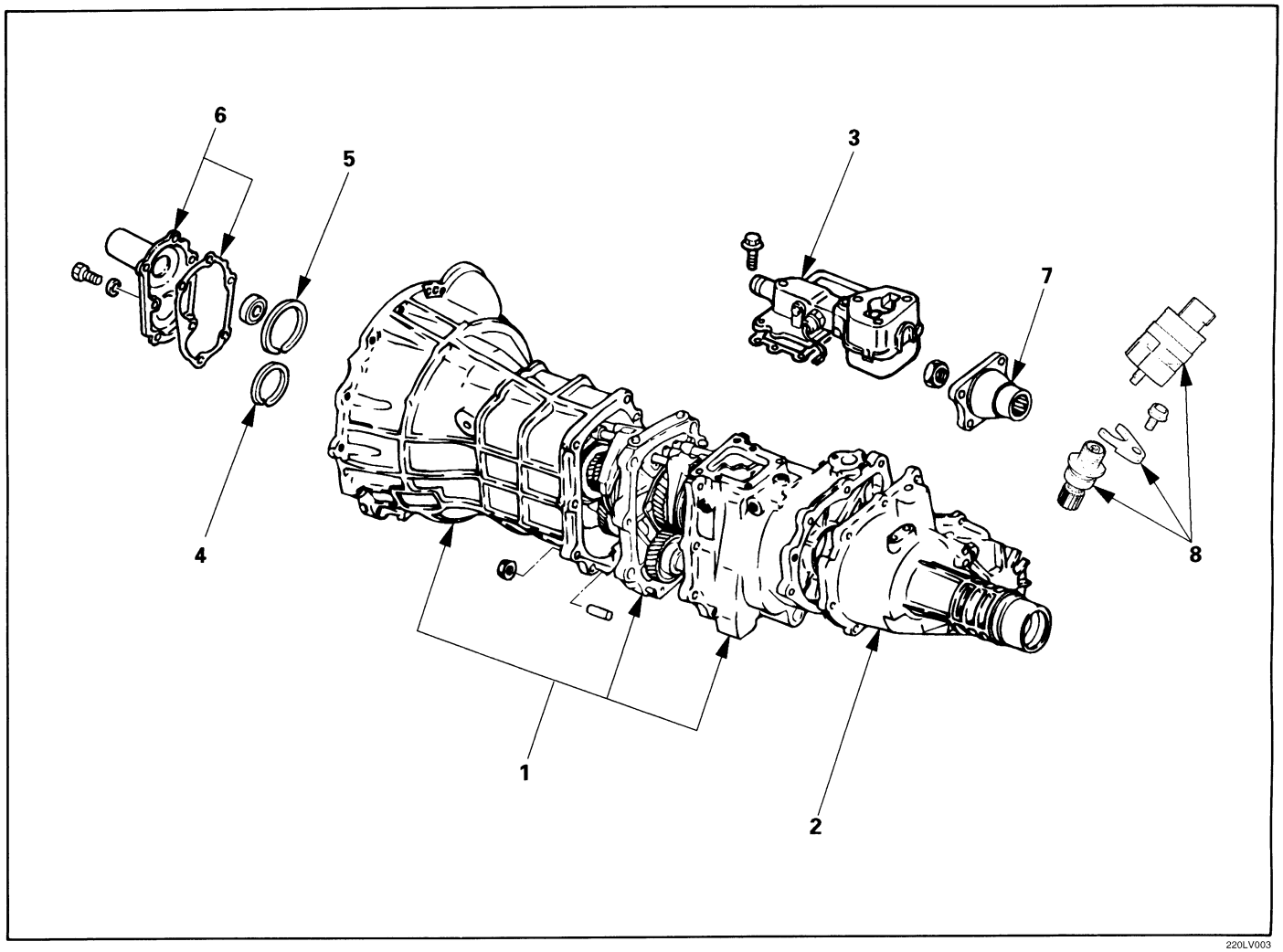

220LV003

Reassembly Steps

1. Transmission and transfer assembly
2. ▲ Transfer rear case assembly
3. Gear control box assembly
4. ▲ Counter gear snap ring
5. ▲ Bearing snap ring
6. ▲ Front cover with oil seal
7. ▲ Transfer flange
8. ▲ Speedometer driven gear and speedometer sensor

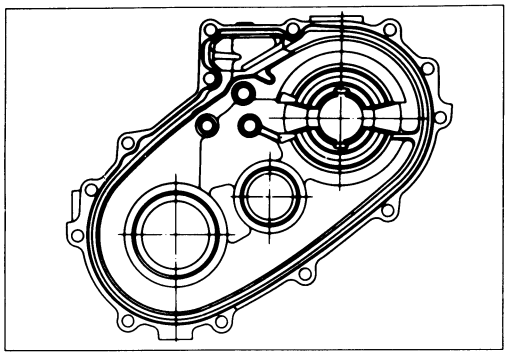

Important Operations

2. Transfer Rear Case Assembly

1) Apply recommended liquid gasket or its equivalent to the transfer rear case fitting faces.

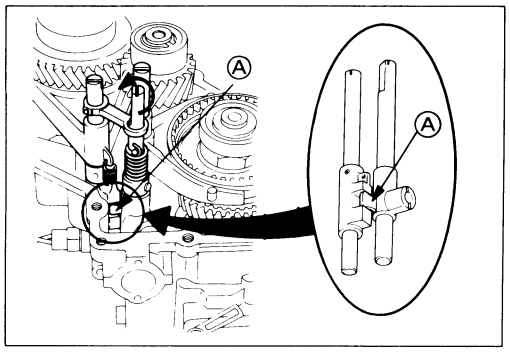

2) Apply the following steps before fitting the transfer rear case.
   ① Shift the High-Low synchronizer to the 4H side.
   ② Turn the select rod counterclockwise so that the select block projection Ⓐ may enter into the 2WD-4WD shift block.

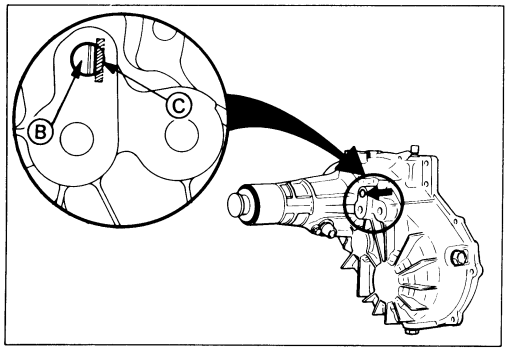

When the rear case is fitted under this condition ②, the direction of the cut-away portion of select rod head Ⓑ aligns with that of the rear case hole's stopper Ⓒ.

3) Tighten the rear transfer rear case bolts to the specified torque.

Transfer Case Bolt Torque	kg·m (lb·ft/N·m)
3.8 ± 0.8 (27 ± 5.8 / 37 ± 7.8)	

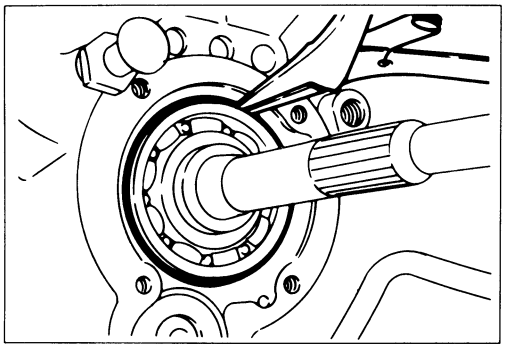

4. Counter Gear Snap Ring

5. Bearing Snap Ring

Use a pair of snap ring pliers to install the snap ring to the mainshaft.

The snap ring must be fully inserted into the ball bearing snap ring groove.

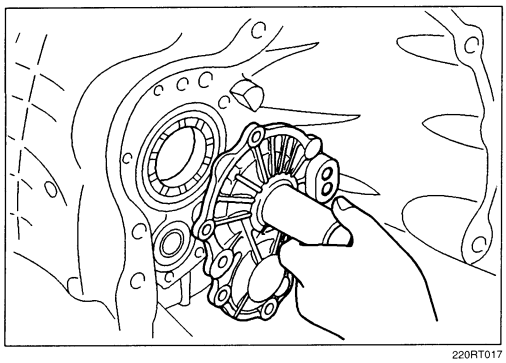
220RT017

6. Front Cover with Oil Seal

1) Apply recommended liquid gasket or its equivalent to the through bolt threads.
2) Install the new gasket and the front cover with oil seal to the transmission case.

   Take care not to damage the oil seal.
3) Tighten the front cover bolts to the specified torque.

Front Cover Bolt Torque	kg·m (lb·ft/N·m)
1.9 ± 0.4 (13.7 ± 2.9/18.6 ± 3.9)	

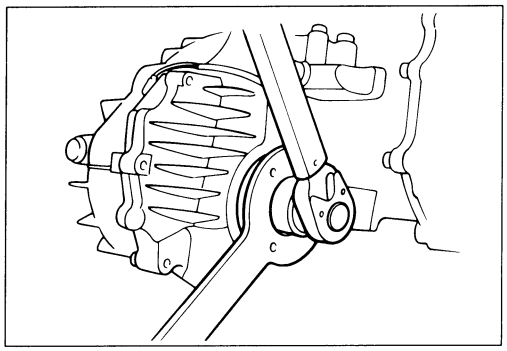

7. Transfer Flange

1) Use the flange holder to install the flange to the rear transfer case.

   Flange Holder : 5-8840-2157-0 (J-27221)
2) Tighten the transfer flange bolts to the specified torque.

Transfer Flange Bolt Torque	kg·m(lb.ft/N·m)
14 ± 2 (101 ± 14.4/ 137 ± 20)	

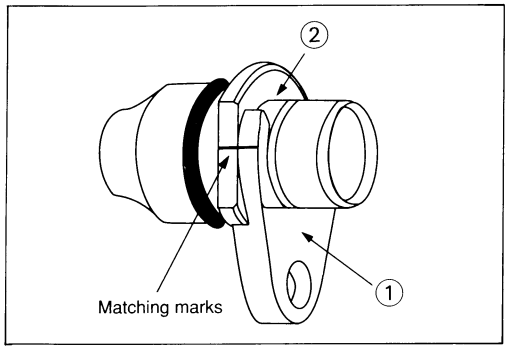

8. Speedometer Driven Gear and Speedometer Sensor

1) Install the O-ring to the speedometer driven gear bushing.
2) Install the driven gear to the speedometer driven gear bushing.
3) Align the matching marks on plate ① and bush ② then tighten the bolt.

Bolt Torque	kg·m (lb·ft/N·m)
1.5 (10.8/14.7)	

4) Install the speedmeter sensor.

	kg·m (lb·ft/N·m)
2.8 (20/27)	

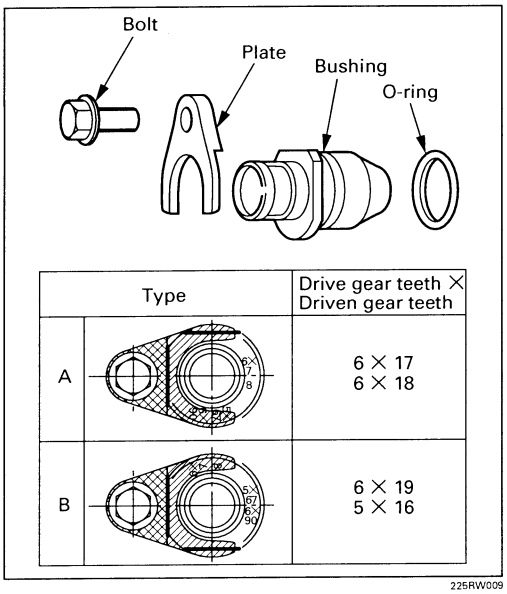

225RW009

TROUBLESHOOTING

Refer to this Section to quickly diagnose and repair engine problems. Each troubleshooting chart has three headings arranged from left to right.

(1) Checkpoint (2) Trouble Cause (3) Countermeasure

This Section is divided into four sub-sections:

1. Abnormal Noise
   1) Noise in Neutral
   2) Noisy Operation
2. Head Shifting
3. Walking or Jumping Out of Gear
4. Oil Leakage

1. ABNORMAL NOISE

1) NOISY IN NEUTRAL

Checkpoint		Trouble Cause	Countermeasure
Gear oil	NG	Insufficient or improper gear oil	Replenish or replace the gear oil
OK			
Flywheel pilot bearing	NG	Worn flywheel pilot bearing	Replace the flywheel pilot
OK			
Bearings (Mainshaft, counter-shaft, and transfer shaft)	NG	Worn or broken bearing(s)	Replace the bearing(s)
OK			
Gears (Mainshaft, counter-shaft, reverse idler gear and transfer gears	NG	Worn or scuffed gear tooth contact surfaces	Replace the gear(s)
OK			
Mainshaft splines Synchronizer clutch hub splines	NG	Worn splines	Replace the main shaft and the synchronizer clutch hub
OK			
Transmission	NG	Transmission misalignment	Realign the transmission

2) NOISY OPERATION

Checkpoint		Trouble Cause	Countermeasure
Gear oil (Metallic rattling)	NG	Insufficient or improper gear oil	Replenish or replace the gear oil
OK			
Bearings (Hissing, thumping or bumping)	NG	Worn or broken bearing(s)	Replace the bearing(s)
OK			
Gears (Growling, humming, or grinding)	NG	Worn, chipped, or cracked gear(s)	Replace the gear(s)
OK			
Gears (Squealing at high speeds)	NG	Free running gears seizing on the thrust face or the inner face	Replace the gear(s)
OK			
Gears (Gear whining)	NG	Lack of backlash between meshing gears	Replace the gear(s)

2. HARD SHIFTING

Checkpoint		Trouble Cause	Countermeasure
Gear oil	NG	Insufficient or improper gear oil	Replenish or replace the gear oil
OK			
Clutch pedal free play	NG	Improper clutch pedal free play	Readjust the clutch pedal free play
OK			
Change lever operation	NG	Hard operating change lever caused insufficient grease	Repair or regrease the change lever assembly
OK			
Change lever play	NG	Worn change lever sliding portions	Repair or replace the applicable parts and regrease
OK			
Shift block sleeve movement	NG	Sleeve movement failure	Repair or replace the sleeve
OK			
Shift rod and quadrant box sliding faces, and other parts	NG	Worn shift rod and/or sliding faces	Replace the shift rod and/ or the quadrant box

Continued on the next page

Continued from the previous page

Checkpoint		Trouble Cause	Countermeasure
Shift arm and synchronizer sleeve	NG	Worn shift arm and/or synchronizer sleeve groove	Replace the worn parts
Mainshaft and countershaft thrust play	NG	Worn thrust washer, collar, and/or gear thrust faces	Replace the worn parts
Synchronizer assembly	NG	Worn synchronizer parts	Replace the worn parts

OK

OK

OK

3. WALKING OR JUMPING OUT OR GEAR

Checkpoint		Trouble Cause	Countermeasure
Change lever play	NG	Insufficient stroke caused by sliding position wear and excessive play	Replace the worn parts
OK			
Detent ball	NG	Worn detent ball	Replace the detent ball
OK			
Detent spring	NG	Detent spring weak or broken	Repair or replace the detent spring
OK			
Shift rod and quadrant box sliding faces	NG	Worn shift rod and/or sliding faces	Replace the shift rod and/or the quadrant box
OK			
Shift arm and synchronizer sleeve	NG	Worn shift arm and/or synchronizer sleeve groove	Replace the worn parts
OK			
Mainshaft and countershaft thrust play	NG	Worn thrust washer, collar, and/or gear thrust faces	Replace the worn parts

Continued on the next page

Continued from the previous page

Checkpoint		Trouble Cause		Countermeasure
Bearings (Mainshaft, countershaft, and individual gears)	NG	Worn or broken bearing(s)		Replace the bearing(s)
Mainshaft splines Synchronizer clutch hub splines	NG	Worn splines		Replace the main shaft and the synchronizer clutch hub
Synchronizer assembly	NG	Weak or broken spring		Replace the spring

OK

OK

OK

4. OIL LEAKAGE

Checkpoint		Trouble Cause	Countermeasure
Oil level	NG	Oil level too high	Drain the oil to the correct level
OK			
Gear oil	NG	Improper gear oil	Replace the gear oil
OK			
Drain plug and/or filler plug	NG	Loose plug(s)	Tighten the plug(s) and replenish the oil
OK			
Gaskets	NG	Defective or improperly installed gasket(s)	Replace the gasket(s)
OK			
Air breather	NG	Air breather not installed Air breather clogged	Install the air breather Replace the air breather
OK			
Front cover oil seal	NG	Worn or scratched oil seal	Replace the oil seal
OK			
Rear cover oil seal	NG	Worn or scratched oil seal	Replace the oil seal

TRANSMISSION

CLUTCH

CONTENTS

Service Precaution 7C–1
General Description 7C–2
Diagnosis 7C–8
Clutch Assembly 7C–9
Clutch Assembly and Associated Parts . . . 7C–9
Removal 7C–9
Inspection and Repair 7C–10
Installation 7C–15
Clutch Control 7C–17
Clutch Control Parts 7C–17
Removal 7C–18
Inspection and Repair 7C–18
Installation 7C–19
Adjustment 7C–19
Master Cylinder 7C–22
Disassembled View 7C–22
Disassembly 7C–23
Inspection and Repair 7C–23
Reassembly 7C–23
Slave Cylinder 7C–24
Disassembled View 7C–24
Disassembly 7C–24
Inspection and Repair 7C–24
Reassembly 7C–25
Damper Cylinder 7C–26
Disassembled View 7C–26
Disassembly 7C–26
Inspection and Repair 7C–26
Reassembly 7C–26
Main Data and Specifications 7C–27
General Specifications 7C–27
Torque Specifications 7C–27
Special Tools 7C–30

Service Precaution

WARNING: IF SO EQUIPPED WITH A SUPPLEMENTAL RESTRAINT SYSTEM (SRS), REFER TO THE SRS COMPONENT AND WIRING LOCATION VIEW IN ORDER TO DETERMINE WHETHER YOU ARE PERFORMING SERVICE ON OR NEAR THE SRS COMPONENTS OR THE SRS WIRING. WHEN YOU ARE PERFOMING SERVICE ON OR NEAR THE SRS COMPONENTS OR THE SRS WIRING, REFER TO THE SRS SERVICE INFORMATION. FAILURE TO FOLLOW WARNINGS COULD RESULT IN POSSIBLE AIR BAG DEPLOYMENT, PERSONAL INJURY, OR OTHERWISE UNNEEDED SRS SYSTEM REPAIRS.

CAUTION: Always use the correct fastner in the proper location. When you reolace a fastener, use ONLY the exact part number for that application. ISUZU will call out those fasteners that requir a replacement after removal. ISUZU will also call out the fasteners that requir thread lockers or thread sealant. UNLESS OTHERWISE SPECIFIED , do not use supplemental coatings (Paints, greases, or other corrosion inhibitors) on threaded fastners or fastner joint interfaces. Generally,such coatings adversely affect the fastner torque and the joint clamping force, and may damage the fastner. When you install fasteners, use the correct tightening sequence and specifications. Following these instructions can help you avoid damage to parts and systems.

Master Cylinder

(6VE1 LHD)

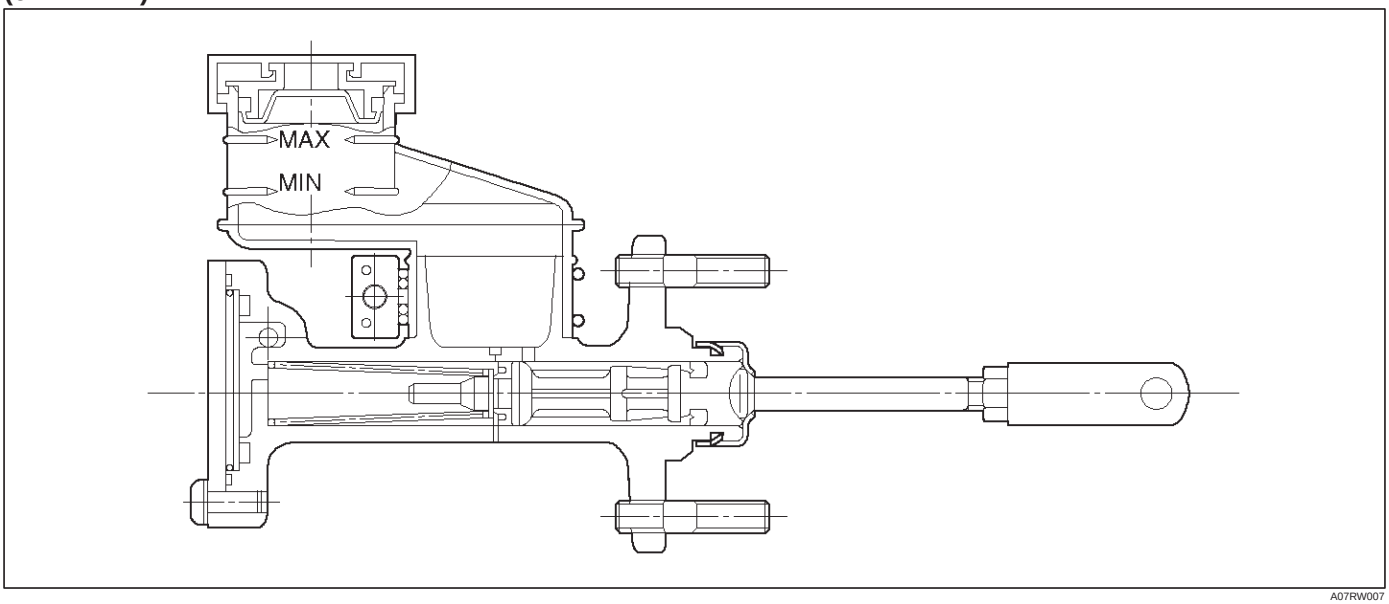

A07RW007

(6VE1 RHD)

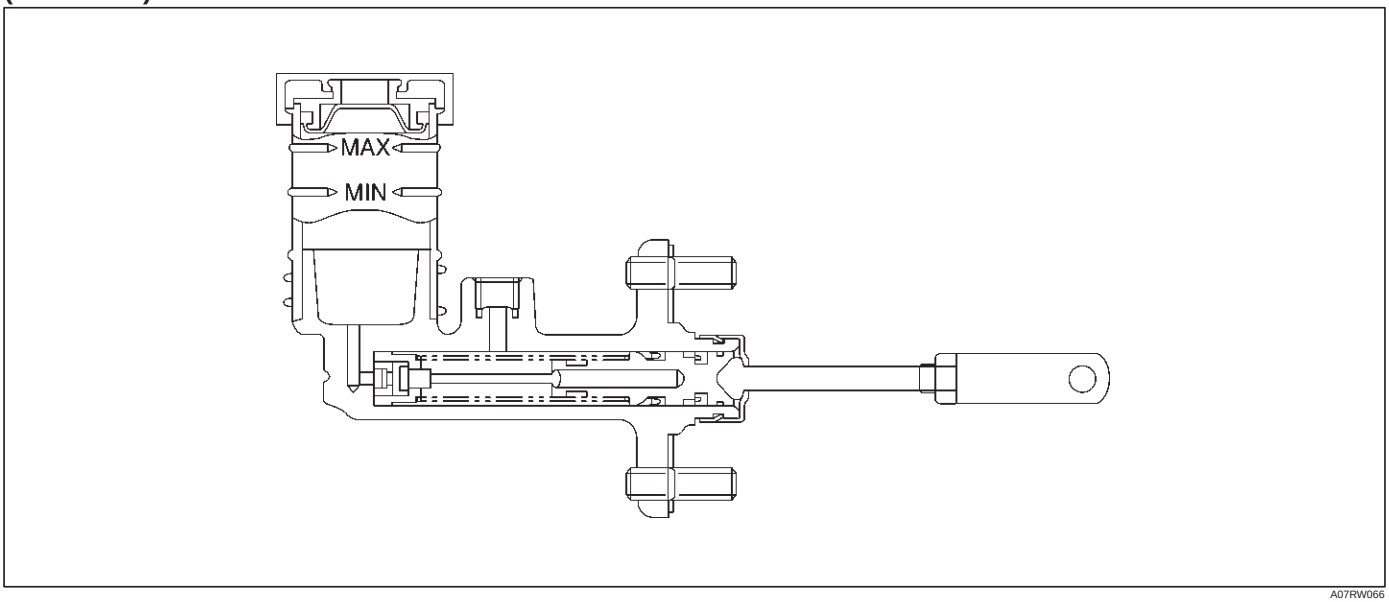

A07RW066

(4JX1)

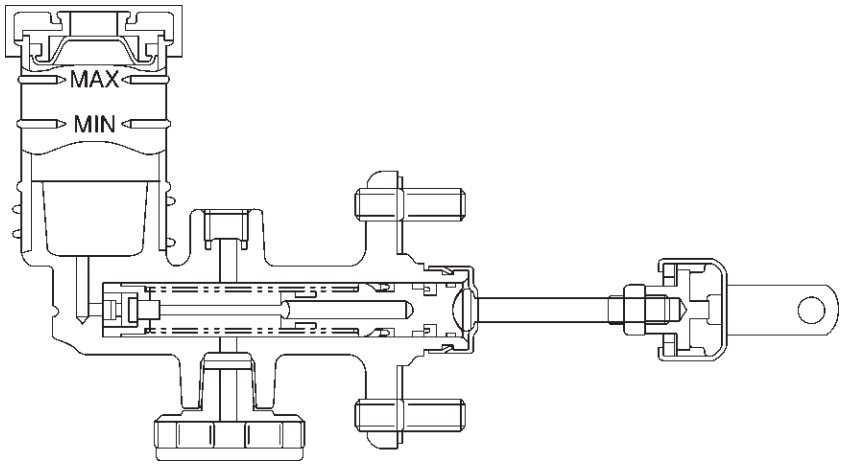

A07RW067

Damper Cylinder

(Except 6VE1 LHD)

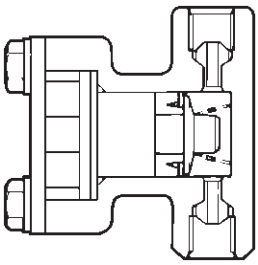

A07RS004

In order to reduce the occurrence of noises at the clutch hydraulic system, the damper cylinder is used in the clutch hydraulic line between the master cylinder and slave cylinder.

Slave Cylinder

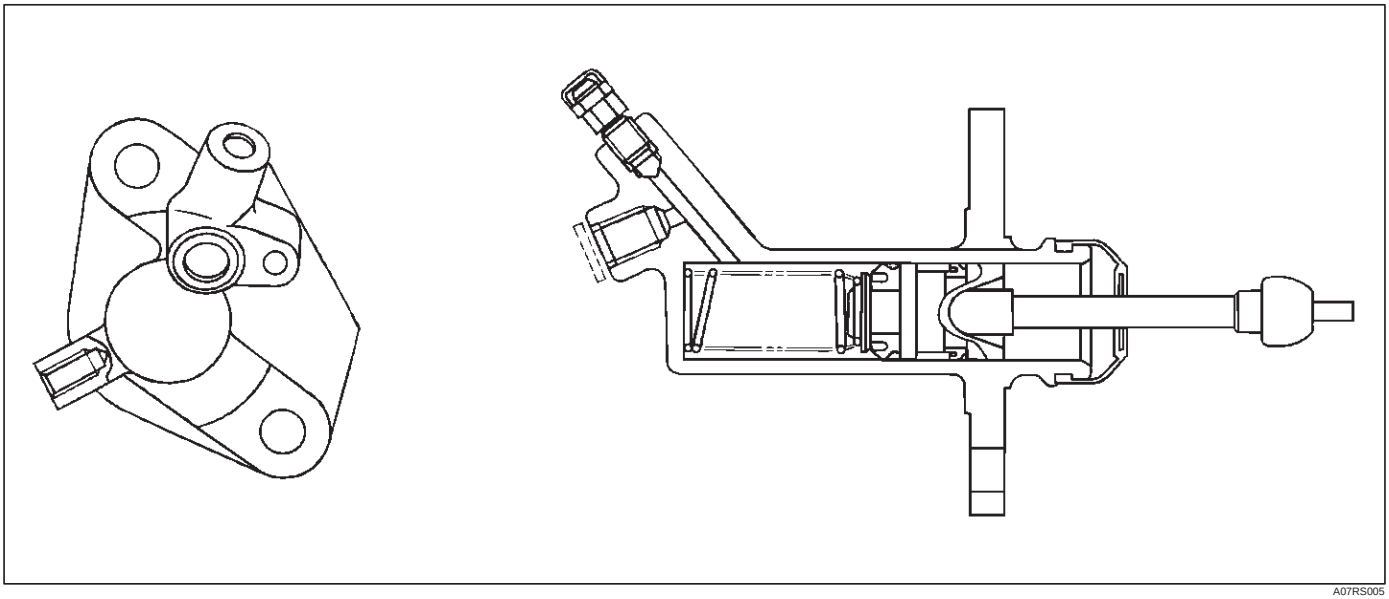

A07RS005

Pressure Plate Assembly

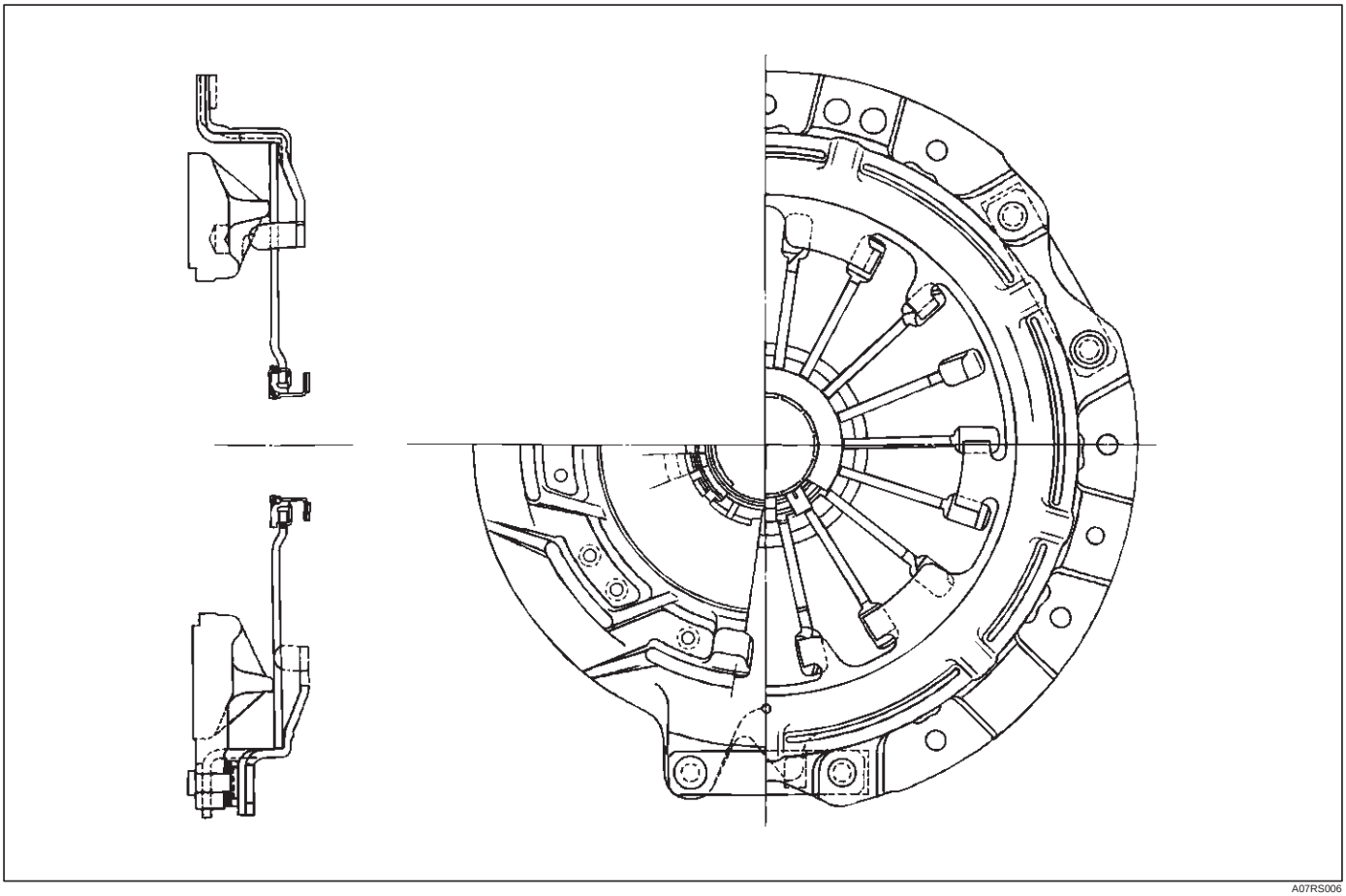

A07RS006

Driven Plate Assembly

(6VE1)

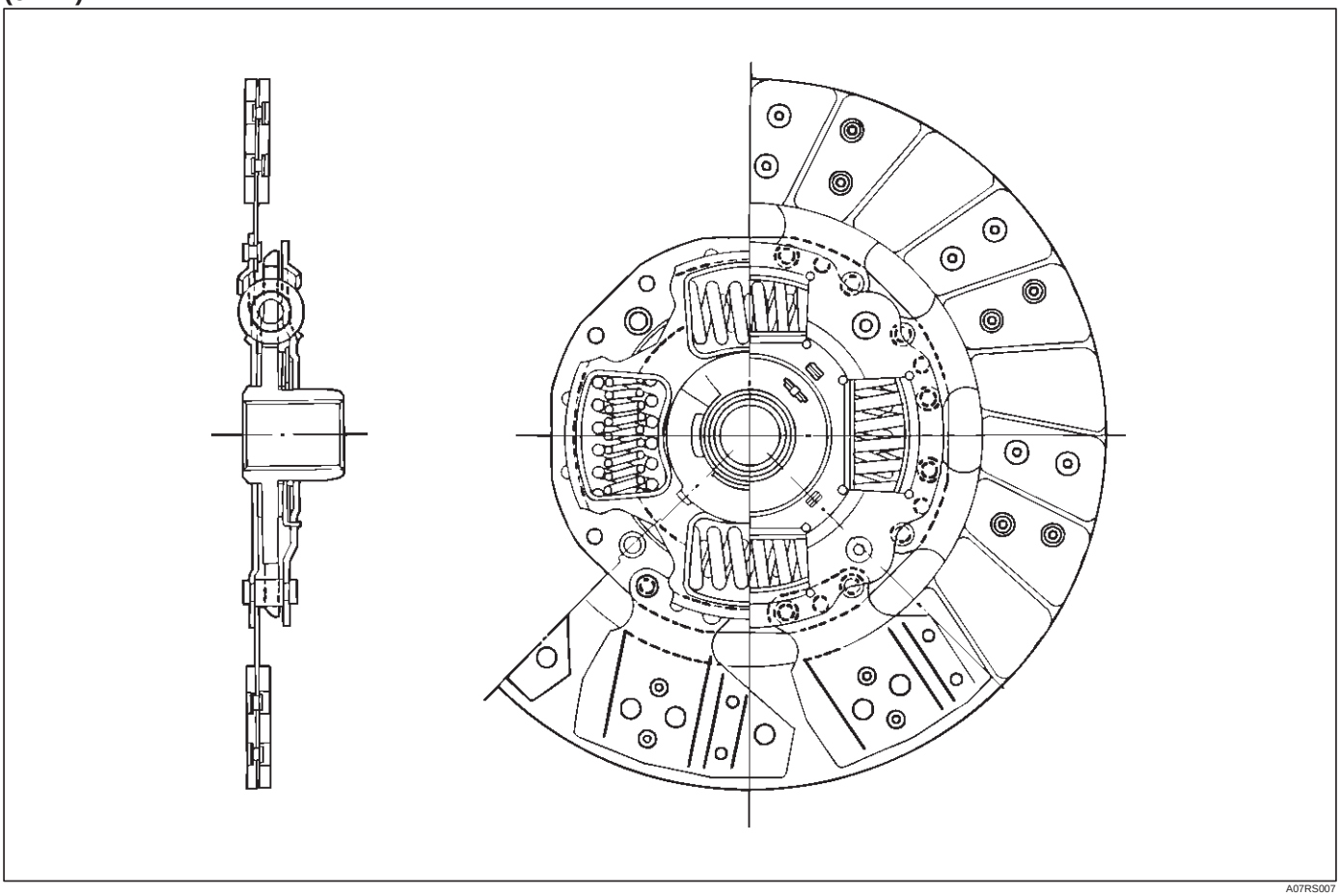

A07RS007

(4JX1)

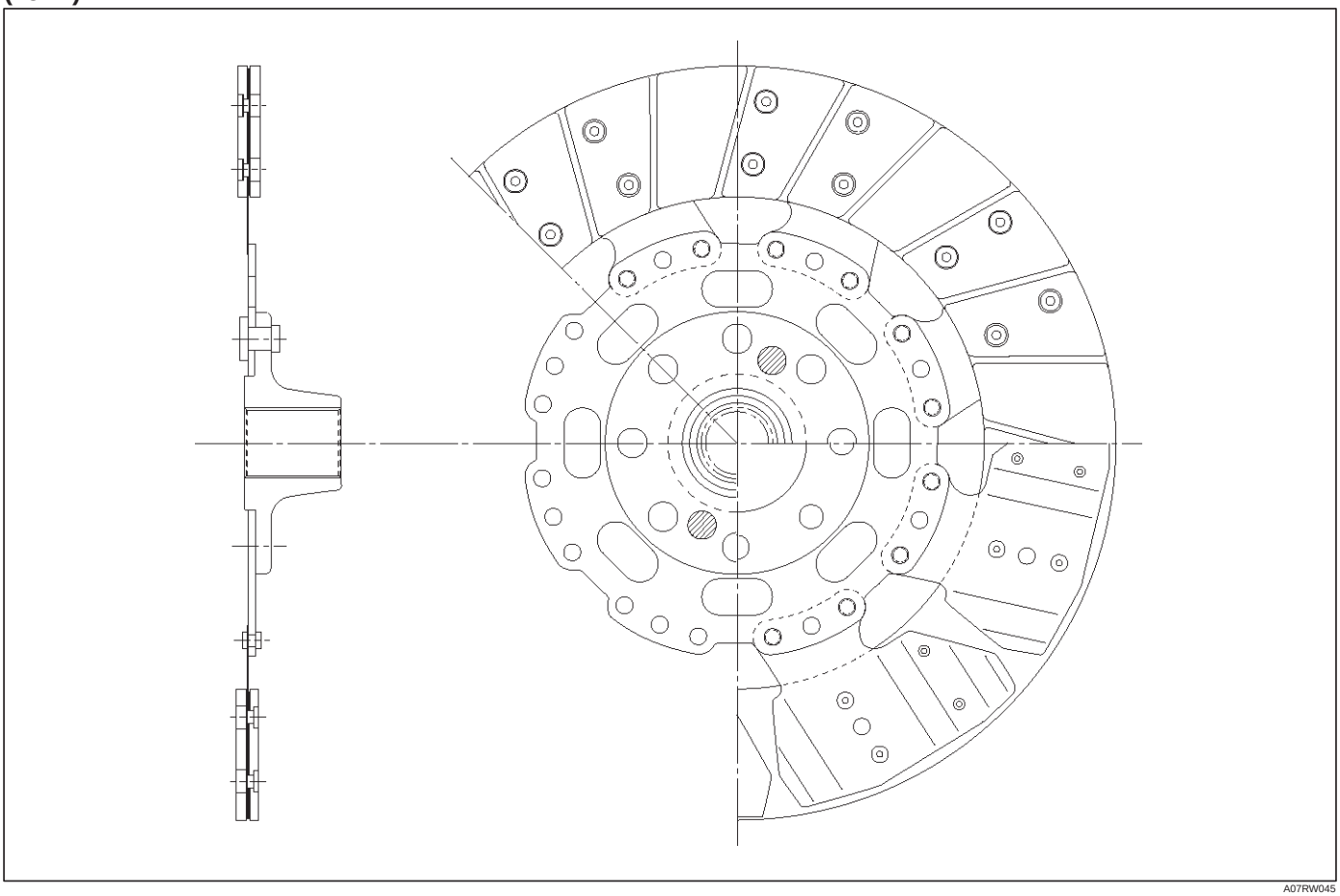

A07RW045

Diagnosis

Condition	Possible cause	Correction
Dragging	Fluid leakage.	Repair
	Air in hydraulic line.	Bleed
	Master cylinder and slave cylinder seals worn.	Replace master cylinder. Replace slave cylinder seals.
	Driven plate warped.	Replace driven plate.
	Diaphragm spring weakened or tip of fingers worn.	Replace pressure plate
	Driven plate sticking on splines.	Lubricate with grease or replace.
	Clutch spline worn.	Repair
	Release bearing worn or damaged.	Replace release bearing.
Slipping	Driven plate facing worn or oil–soaked.	Replace driven plate and check for leaks.
	Diaphragm spring weakened.	Replace pressure plate.
	Pressure plate or flywheel warped.	Correct or replace.
	Master cylinder and slave cylinder seals worn.	Replace master cylinder. Replace slave cylinder seals.
Chattering	Engine mounts loose or damaged.	Tighten or replace.
	Driven plate facing warped.	Replace driven plate.
	Surface of facing hardened.	Replace driven plate
	Driven plate facing oil soaked.	Replace driven plate and check for leaks.
	Damper springs weakened or broken.	Replace.
	Pressure plate or flywheel warped.	Correct or replace.
Noisy	Replace bearing binding.	Correct, or replace if damaged, and lubricate.
	Replace bearing worn or damaged.	Replace release bearing.
	Release bearing poorly lubricated.	Lubricate.
	Pilot bearing worn.	Replace pilot bearing.
	Damper springs weakened or broken.	Replace driven plate.
	Rivets of driven plate exposed.	Replace driven plate.
Replace driven plate.	Hydraulic line blocked.	Clean out or replace.
	Master or slave cylinders binding.	Repair or replace as needed.

Clutch Assembly

Clutch Assembly and Associated Parts

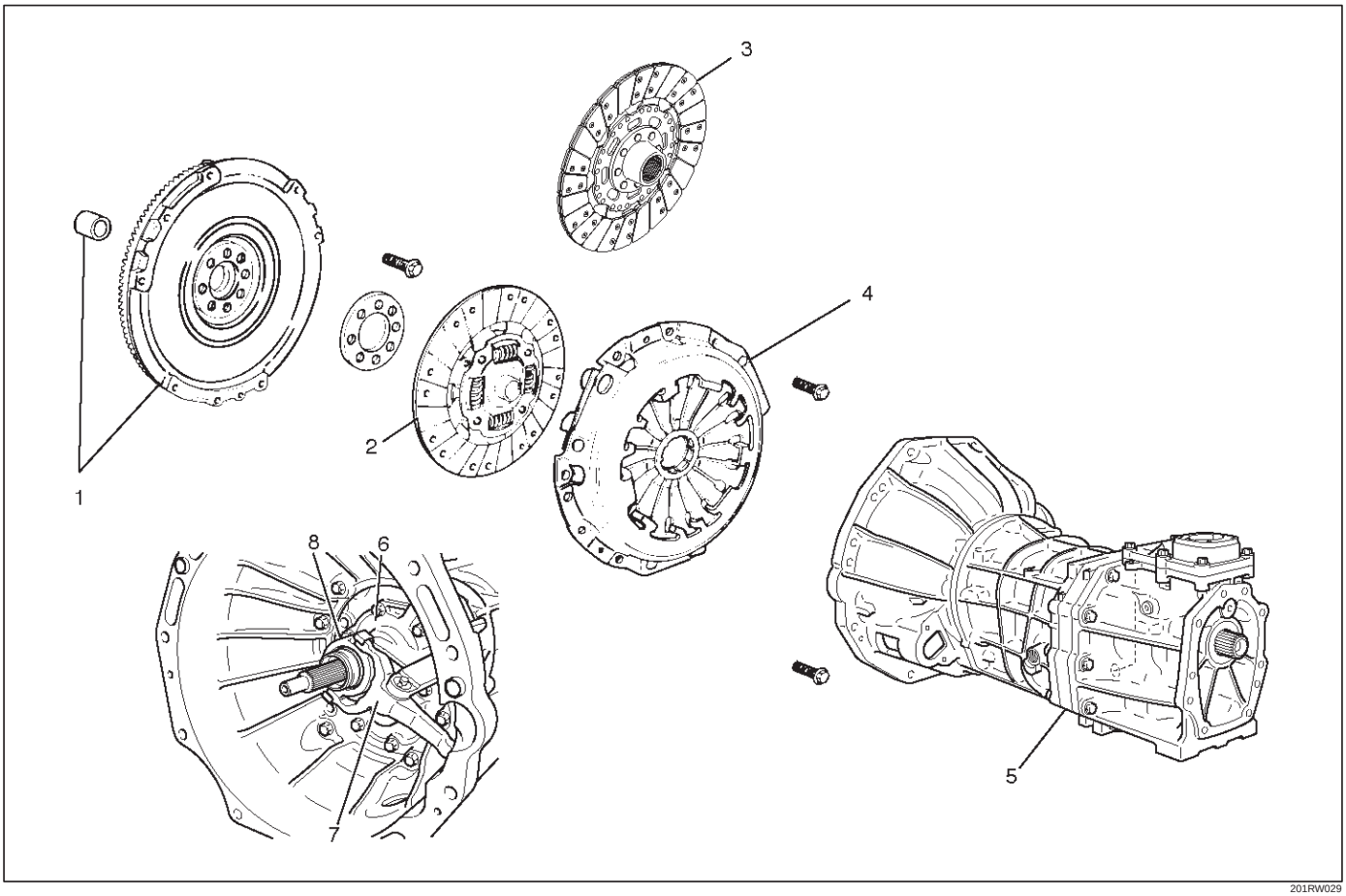

201RW029

Legend

(1) Flywheel Assembly and Crankshaft Bearing
(2) Driven Plate Assembly (6VE1)
(3) Driven Plate Assembly (4JX1)
(4) Pressure Plate Assembly
(5) Transmission Assembly
(6) Front Cover
(7) Shift Fork
(8) Release Bearing

Removal

1. Remove transmission assembly, refer to ”MANUAL TRANSMISSION” of Section 7B for ”Removal AND INSTALLATION” procedure.
2. Mark the flywheel, clutch cover and pressure plate lug for alignment when installing.
3. Remove pressure plate assembly (3).
4. Remove driven plate assembly (1) or (2). Use the pilot aligner 5-85253-001-0 (J-24547) to prevent the driven plate assembly from falling free.

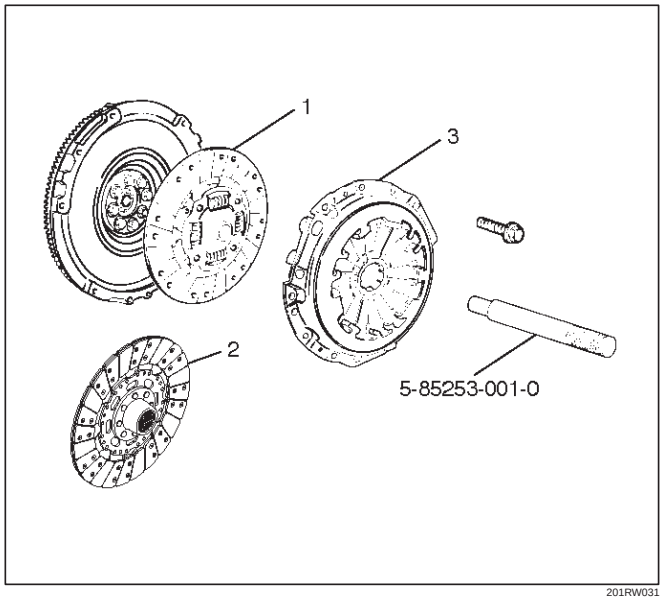

201RW031

5. Mark the flywheel, clutch cover and pressure plate lug for alignment when installing.
6. Remove the release bearing (3) from the transmission case .
7. Remove the shift fork snap pin.
8. Remove the shift fork pin and shift fork (4) from the front cover.
9. Remove the front cover bolts.
10. Remove the front cover (5) from the transmission case.

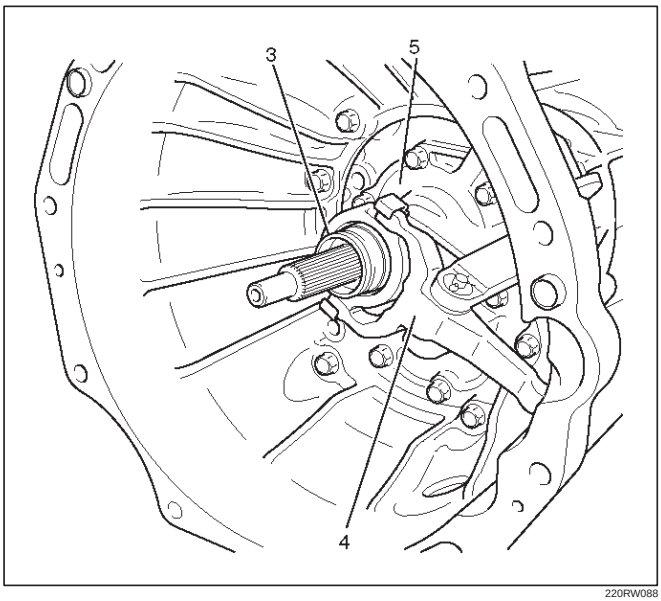

220RW088

11. Remove flywheel assembly and crankshaft bearing. Do not remove except for replacement.
12. Use the remover 5–8840–2000–0 (J–5822) and sliding hammer 5–8840–0019–0 (J–23907) to remove the crankshaft bearing

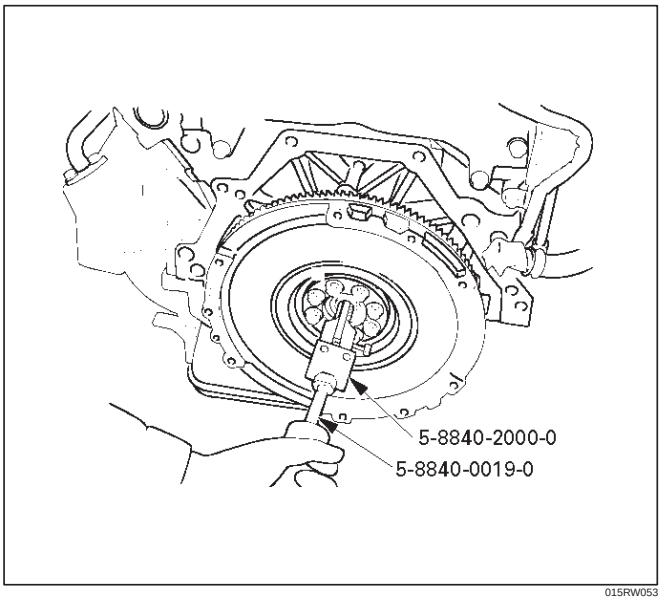

015RW053

Inspection and Repair

Make necessary correction or parts replacement if wear, damage, or any other abnormal condition are found through inspection.

Pressure Plate Assembly

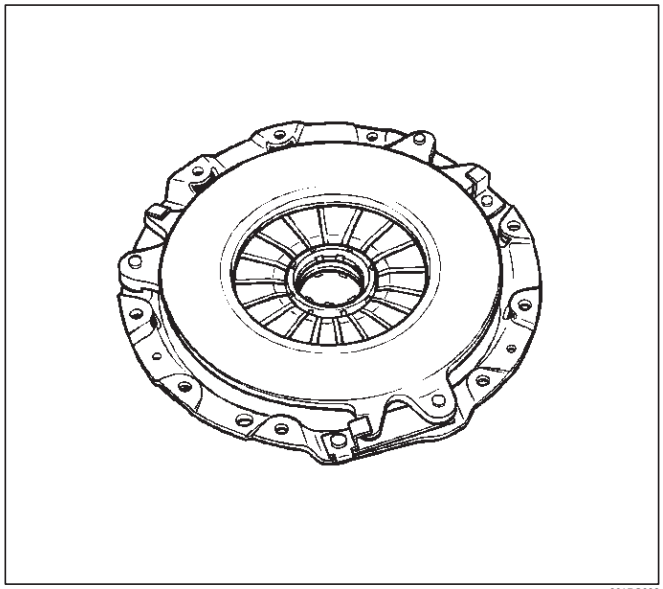

201RS002

1. Visually check the pressure plate friction surface for excessive wear and heat cracks.
2. If excessive wear or deep heat cracks are present, the pressure plate must be replaced.

Pressure Plate Warpage

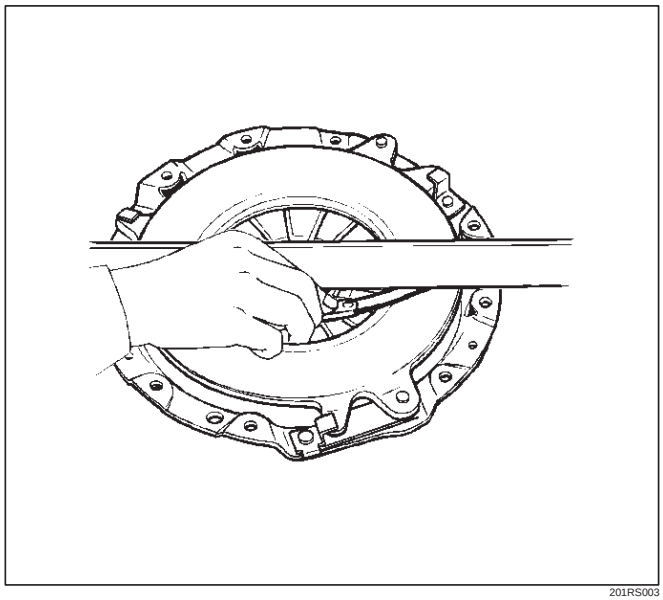

201RS003

1. Use a straight edge and a feeler gauge to measure the pressure plate friction surface flatness in four directions.
2. If any of the measured values exceeds the specified limit, the pressure plate must be replaced.

Pressure Plate Warpage

Limit: 0.3 mm (0.012 in)

Clutch Cover

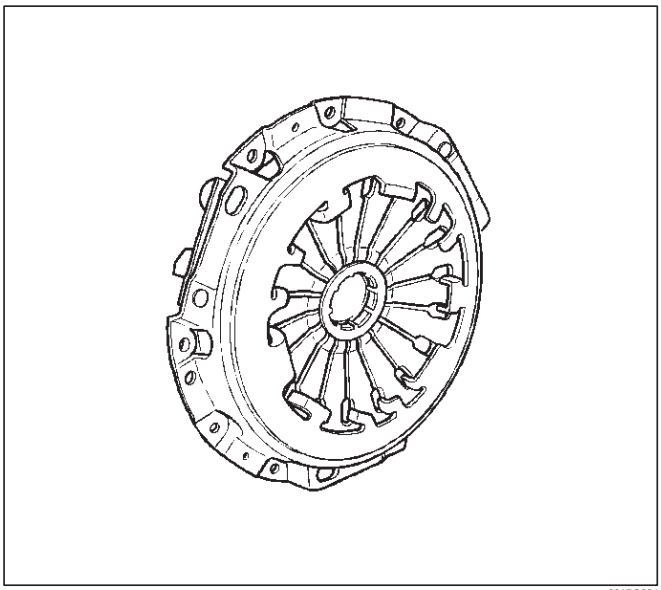

201RS004

1. Visually check the entire clutch cover for excessive wear, cracking, and other damage.
2. The clutch cover must be replaced if any of these conditions are present.

Clutch Set Force

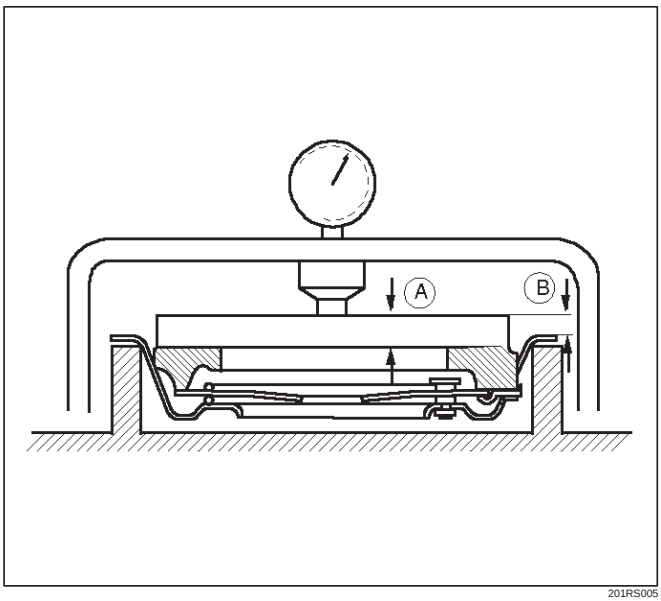

201RS005

1. Invert the pressure plate assembly.
2. Place a new driven plate over the pressure plate. A metal sheet with “A” thickness of 8.3 mm (0.327 in) may be used in place of the driven plate.
3. Compress the pressure plate assembly until the distance “B” becomes 12 mm (0.472 in).
4. Note the pressure gauge reading.
5. If the measured value is less than the specified limit, the pressure plate assembly must be replaced.

Clutch Set Force

Standard: 7208 N (1621 lb)

Limit: 6468 N (1454 lb)

Diaphragm Spring Finger Height

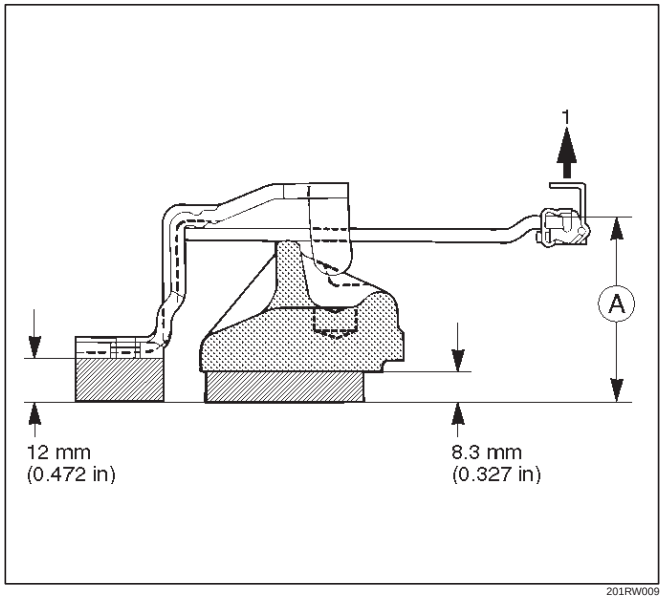

201RW009

Legend

(1) Release Side

1. Place a new driven plate or a 8.3 mm (0.327 in) spacer beneath the pressure plate.
2. Fully compress the pressure plate and diaphragm spring.
3. There are two ways to do this.
4. Use a bench press to press down on the assembly from the top.
5. Tighten the fixing bolts.

NOTE: Preload on diaphragm spring finger must be 49 – 98 N (11 – 22 lb) in direction of release, when clutch cover assembly is bolted to the flywheel.

6. Measure the spring height from base to spring tip “A”. If the measured value exceeds the specified limit, the pressure plate assembly must be replaced.

Diaphragm Spring Finger Height

Standard: 49.9 mm – 51.9 mm (1.965 in – 2.043 in)

Driven Plate Assembly

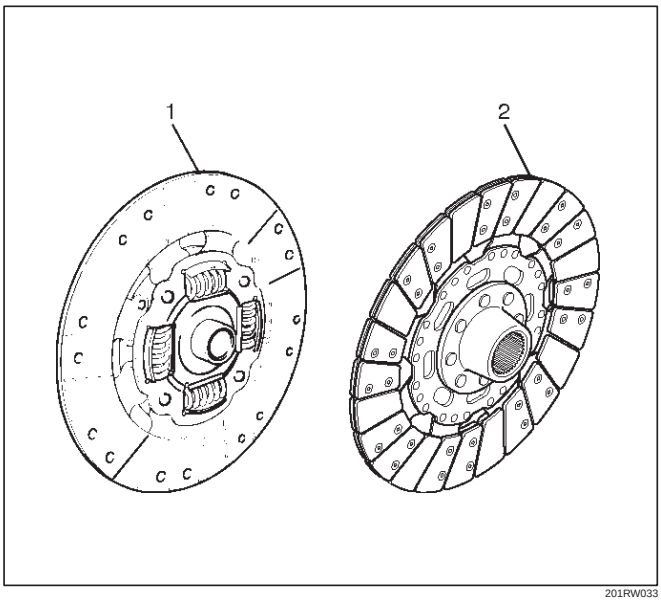

Legend

(1) Driven Plate Assembly (6VE1)
(2) Driven Plate Assembly (4JX1)

1. Visually check the torsion spring for looseness, breakage, and weakening.
2. If any of these conditions are discovered, the driven plate assembly must be replaced.
3. Visually check the facing surfaces for cracking and excessive scorching.
4. Visually inspect the facing surfaces for the presence of oil or grease.
5. If any of these conditions are discovered, the facing must be cleaned or replaced.
6. Check that the driven plate moves smoothly on the transmission top gear shaft spline.
7. Minor ridges on the top gear shaft spline may be removed with an oil stone.

Driven Plate Warpage

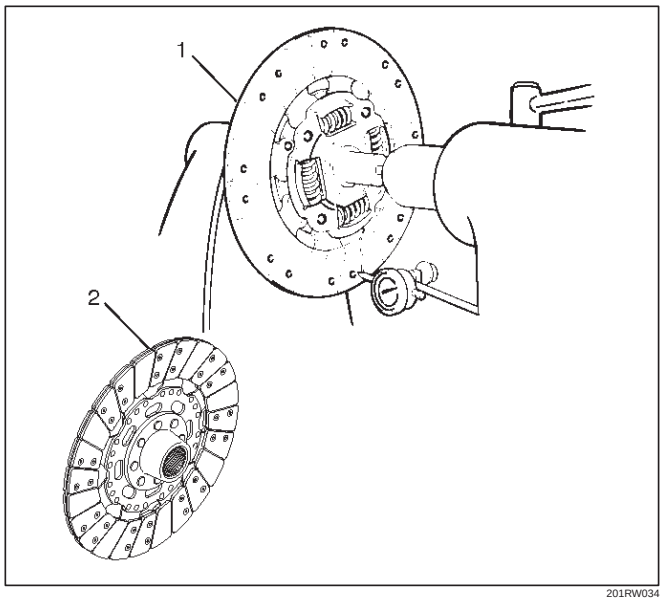

Legend

(1) Driven Plate Assembly (6VE1)
(2) Driven Plate Assembly (4JX1)

1. Insert the clutch pilot aligner into the driven plate splined hub.
2. The clutch pilot aligner J-24547 must be held perfectly horizontal.
3. Set a dial indicator to the driven plate outside circumference.
4. Slowly turn the driven plate.
5. Read the dial indicator as you turn the driven plate.
6. If the measured value exceeds the specified limit, the driven plate assembly must be replaced.

Driven Plate Warpage

Standard: 0.7 mm (0.028 in)

Limit: 1.0 mm (0.039 in)

Driven Plate Splined Hub Spline Wear

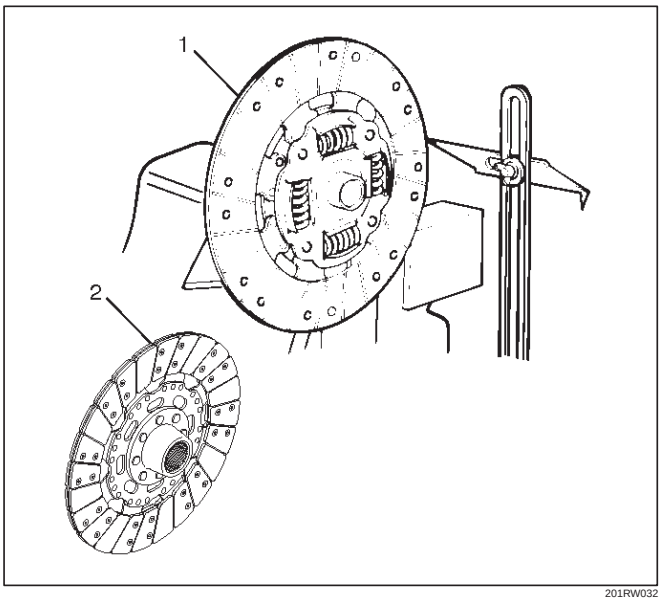

201RW032

Legend

(1) Driven Plate Assembly (6VE1)
(2) Driven Plate Assembly (4JX1)

1. Clean the driven plate splined hub.
2. Install the driven plate to the transmission top gear shaft spline.
3. Set a surface gauge to the driven plate outside circumference.
4. Slowly turn the driven plate counterclockwise.
5. Measure the spline rotation play as you turn the driven plate.
6. If the measured value exceeds the specified limit, the driven plate assembly must be replaced.

Driven Plate Splined Hub Spline Wear

Standard: 0.5 mm (0.020 in)

Limit: 1.0 mm (0.039 in)

Rivet Head Depression

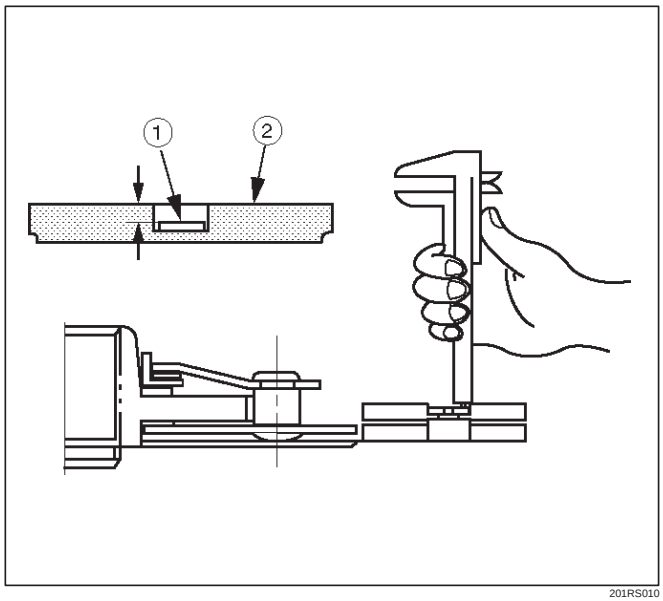

201RS010

1. Use a depth gauge or a straight edge with steel rule to measure the rivet head depression 1 from the facing surface 2.
2. Be sure to measure the rivet head depression on both sides of the driven plate.
3. If the measured value is less than the specified limit, the driven plate assembly must be replaced.

Rivet Head Depression

Standard:

	Flywheel side	Pressure plate side
6VE1	1.95mm (0.077 in)	1.95mm (0.077 in)
4JX1	1.60mm (0.063 in)	1.60mm (0.063 in)

Limit: 0.2 mm (0.008 in)

Release Bearing

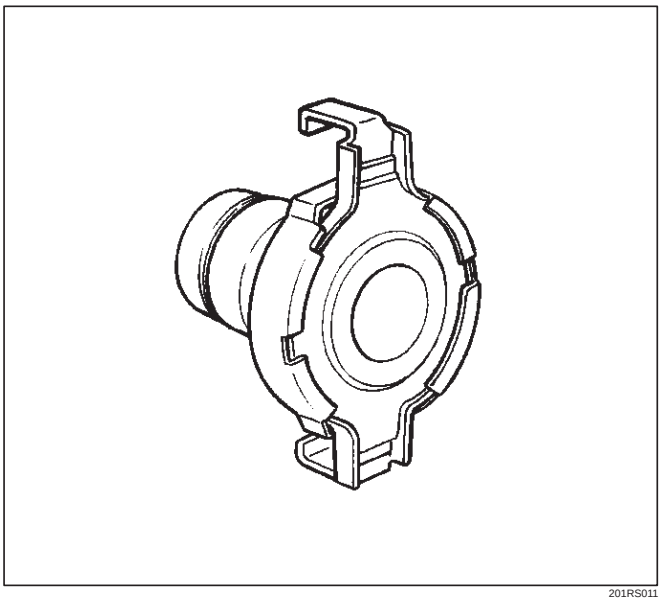

201RS011

1. Visually check the release bearing for excessive play, noise and breakage.
2. If any of these conditions are discovered, the release bearing must be replaced.
3. When replacing the release bearing, replace both the wedge collar and wire ring at the same time.

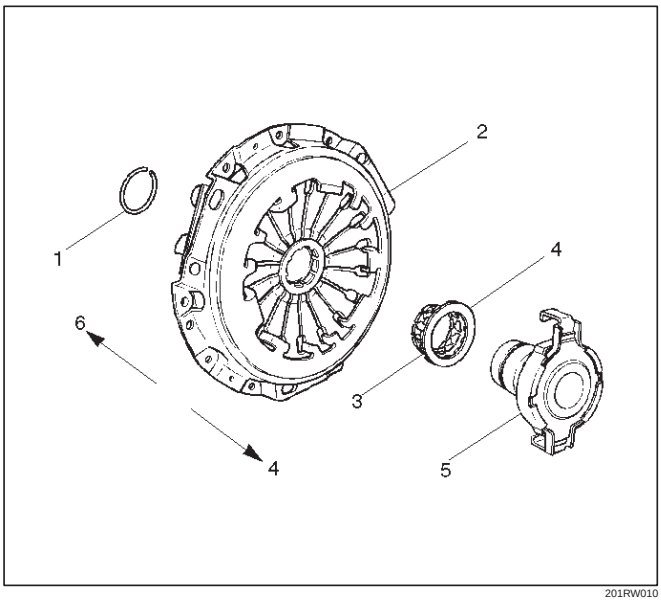

201RW010

Legend

(1) Wire Ring
(2) Pressure Plate Assembly
(3) Wedge Collar
(4) T/M Side
(5) Release Bearing
(6) Engine Side

Wedge Collar

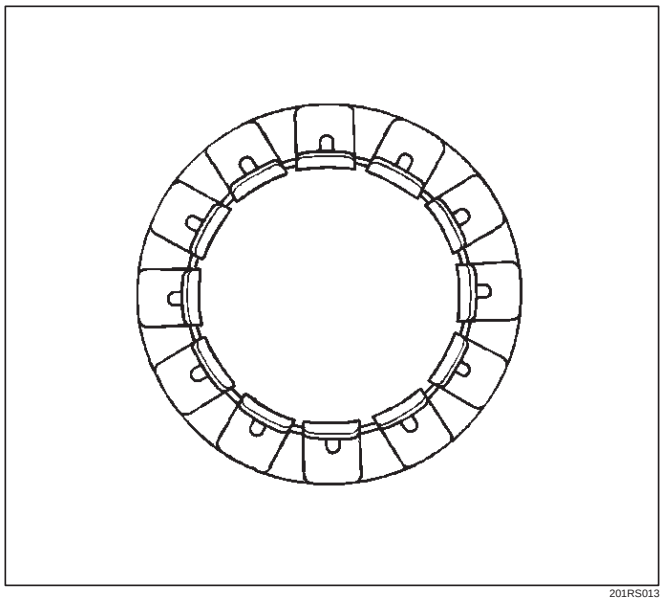

201RS013

1. Visually check the surfaces of the wedge collar making contact with the release bearing for excessive wear and damage.
2. Replace any exhibiting excessive wear or damage.

Shift Fork

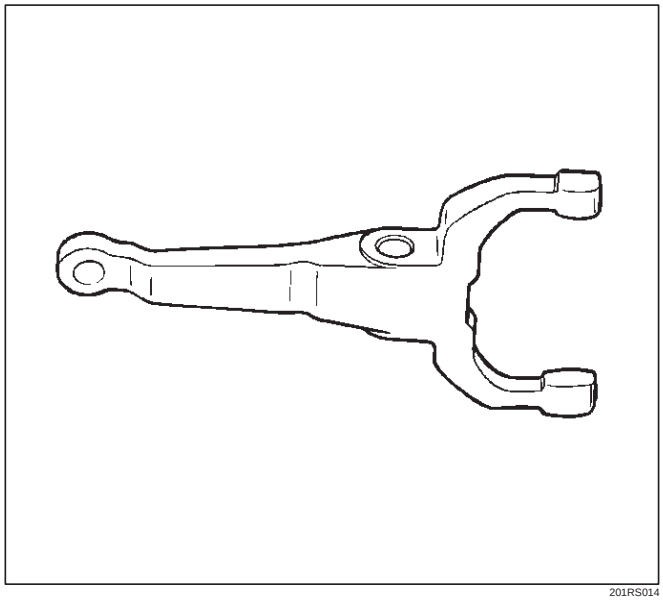

201RS014

1. Visually check the surfaces of the shift fork making contact with the release bearing for excessive wear and damage.
2. Remove any minor stepping or abrasion from shift fork with an oil stone.
3. Replace any exhibiting excessive wear or damage.

Installation

To install, follow the removal steps in the reverse order, noting the following points:

1. Install flywheel assembly and crankshaft bearing. Use the installer 5-8840-0125-0 (J-26516-A) and driver handle 5-8840-0007-0 (J-8092) to install the crankshaft bearing then clean and lubricate with grease.

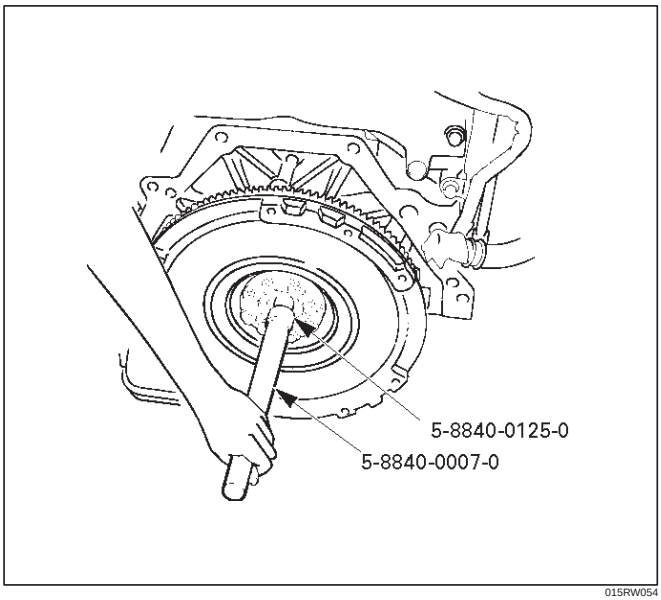

015RW054

2. Install new flywheel fixing bolts in the order illustrated and tighten them to the specified torque.

   Torque:

   6VE1: 54 N·m (5.5 kg·m/40 lb ft)

   4JX1: 60 N·m (6.1 kg·m/44 lb ft)+60°

NOTE: Do not reuse the bolt and do not apply oil or thread lock to the bolt.

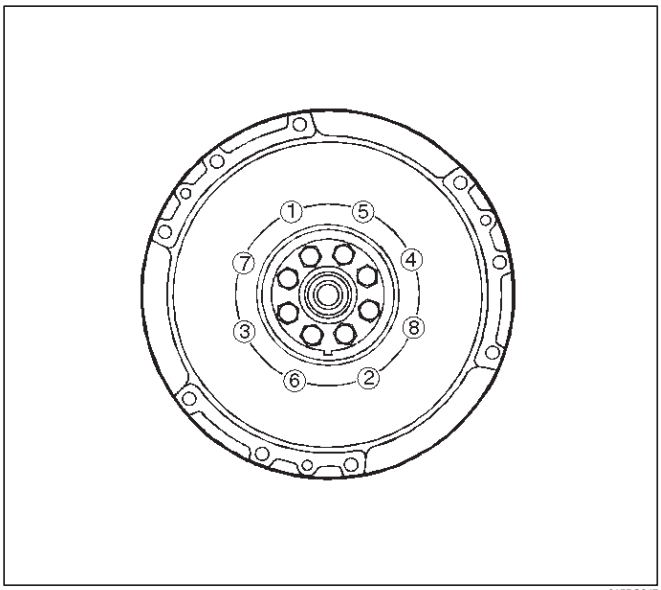

015RS047

3. Install the front cover (5) to the transmission case.
4. Tighten eight front cover bolts to the specified torque.

   Torque: 17 N·m (1.7 kg·m/12 lb ft)

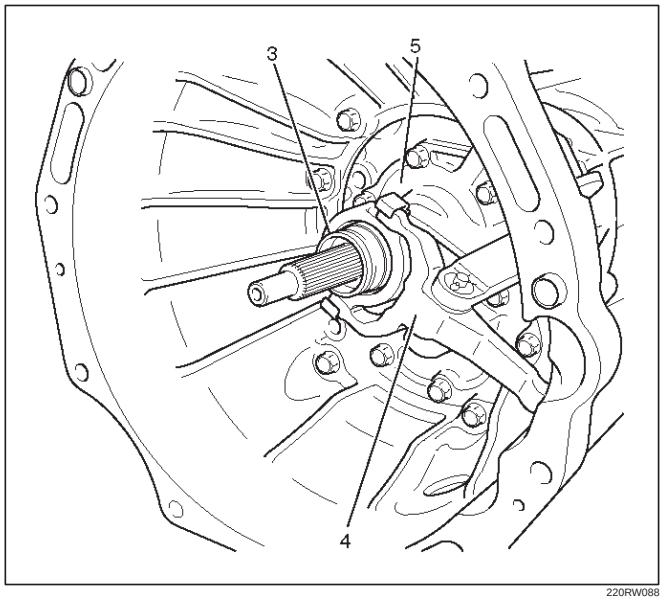

220RW088

5. Apply molybednum disulfide type grease to the pin hole inner circumferences and thrust surfaces.
6. Attach the shift fork to the front cover and insert the pin from below of the front cover.
7. Install the washer and snap pin.

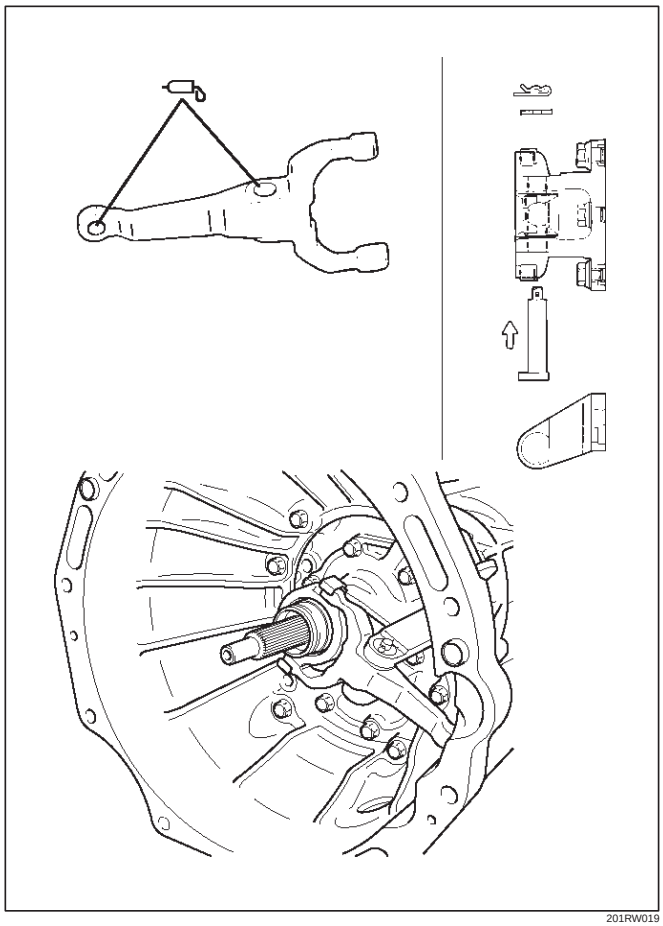

201RW019

8. Apply molybdenum disulfide type grease to the areas shown in illustration.

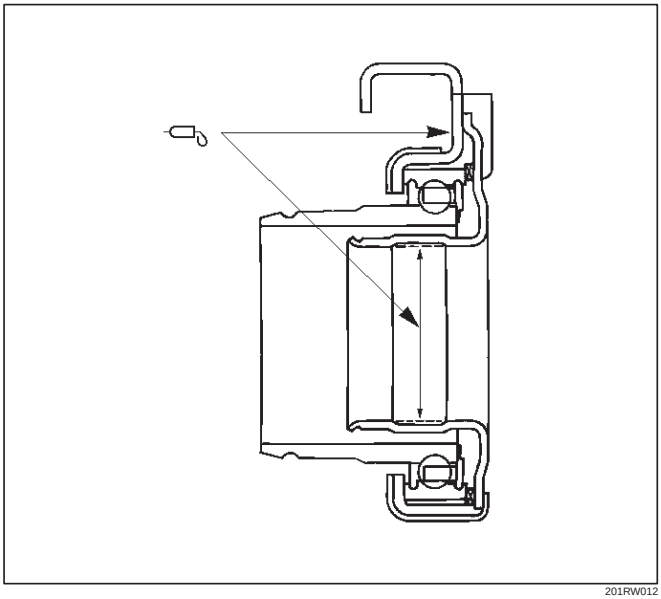

201RW012

9. Install the release bearing in the proper direction.

NOTE: Ensure release bearing is properly positioned during installation, as shown in illustration.

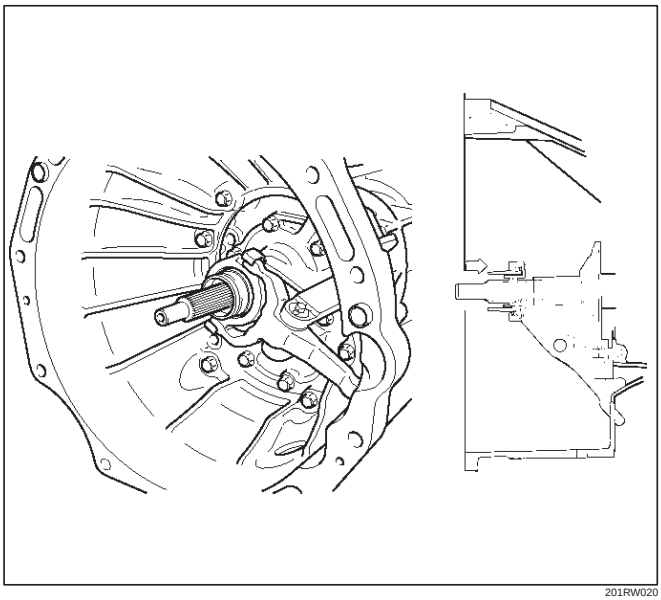

201RW020

10. Install driven plate assembly. Use the pilot aligner 5-85253-001-0 (J-24547) to install the driven plate assembly.

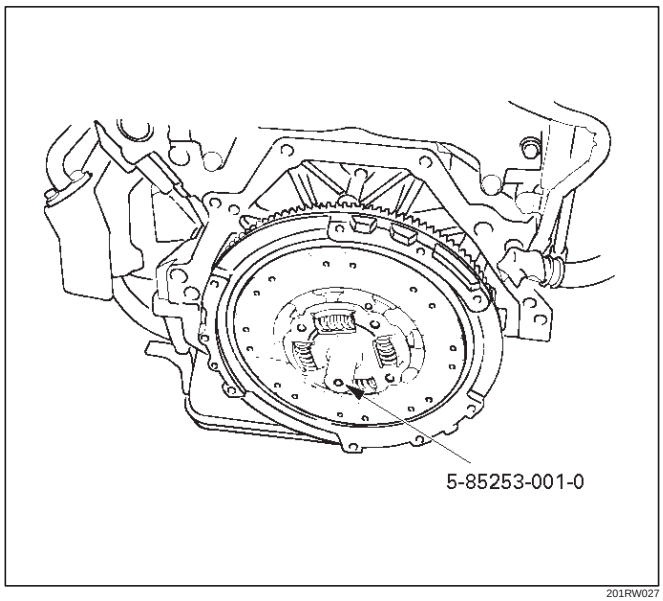

201RW027

11. Install pressure plate assembly and tighten the bolts holding the pressure plate assembly in the order shown in illustration.

Torque: 18 N·m (1.8 kg·m/13 lb ft)

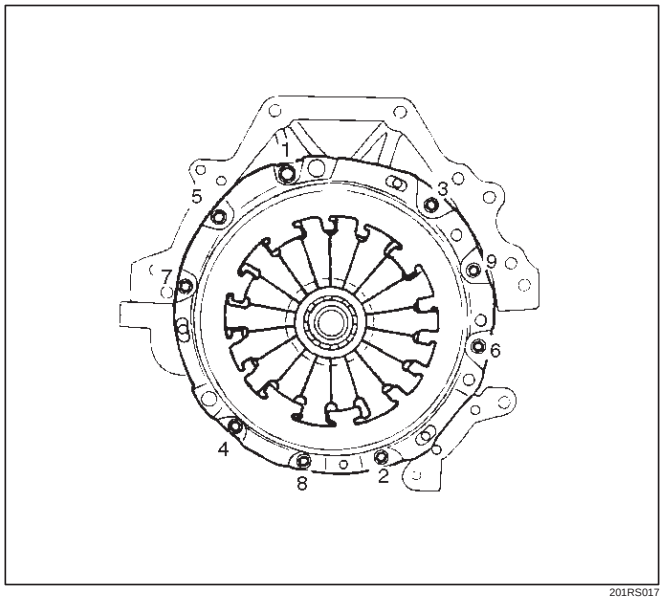

201RS017

12. Remove the aligner.

NOTE: Do not strike the aligner with a hammer to remove it.

13. Install transmission assembly.

Clutch Control

Clutch Control Parts

(6VE1 LHD)

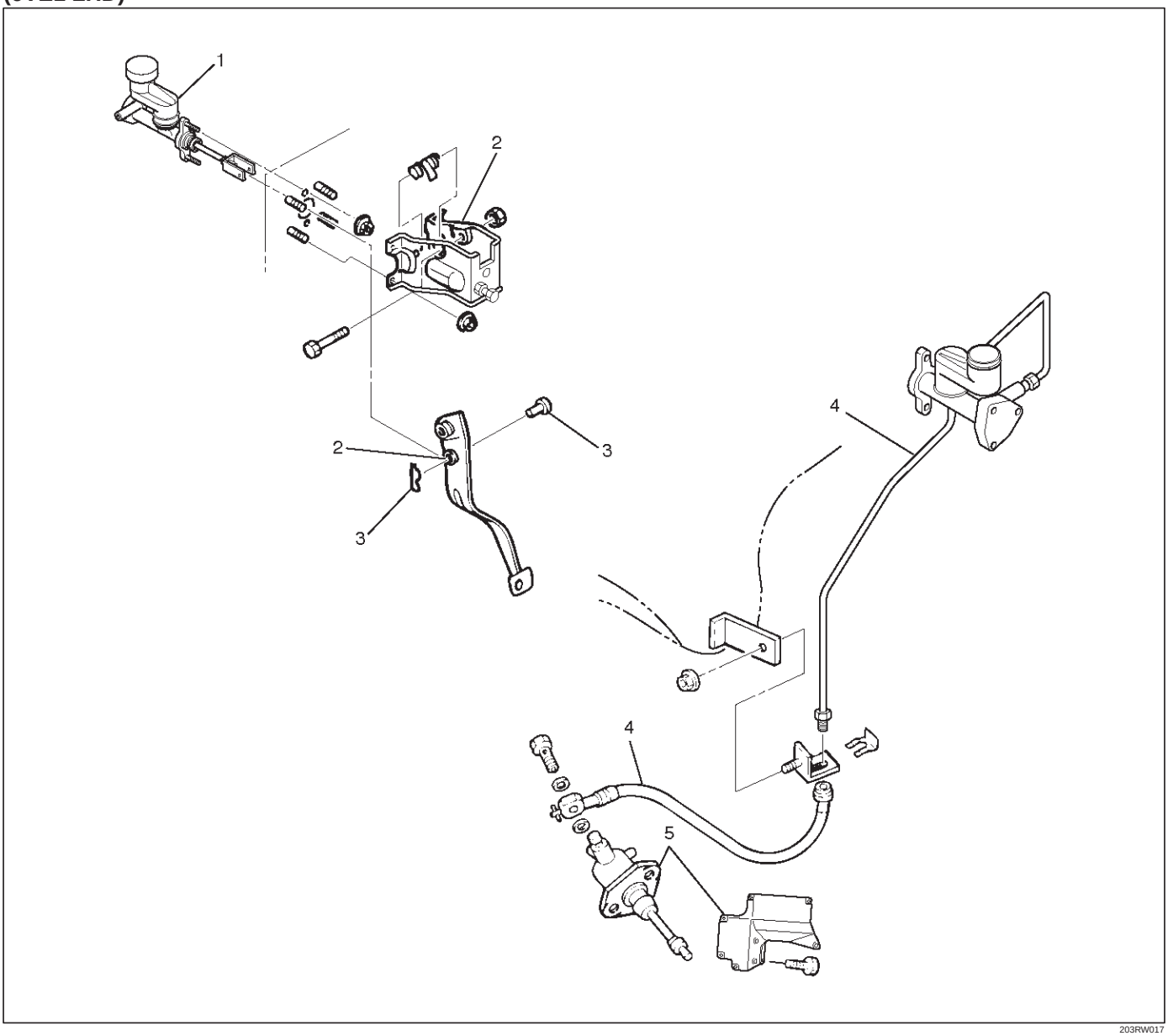

203RW017

Legend

(1) Master Cylinder Assembly
(2) Pedal Assembly
(3) Pin and Jaw Joint Pin
(4) Oil Line Pipe
(5) Slave Cylinder Assembly and Heat Protector

(Except 6VE1 LHD)

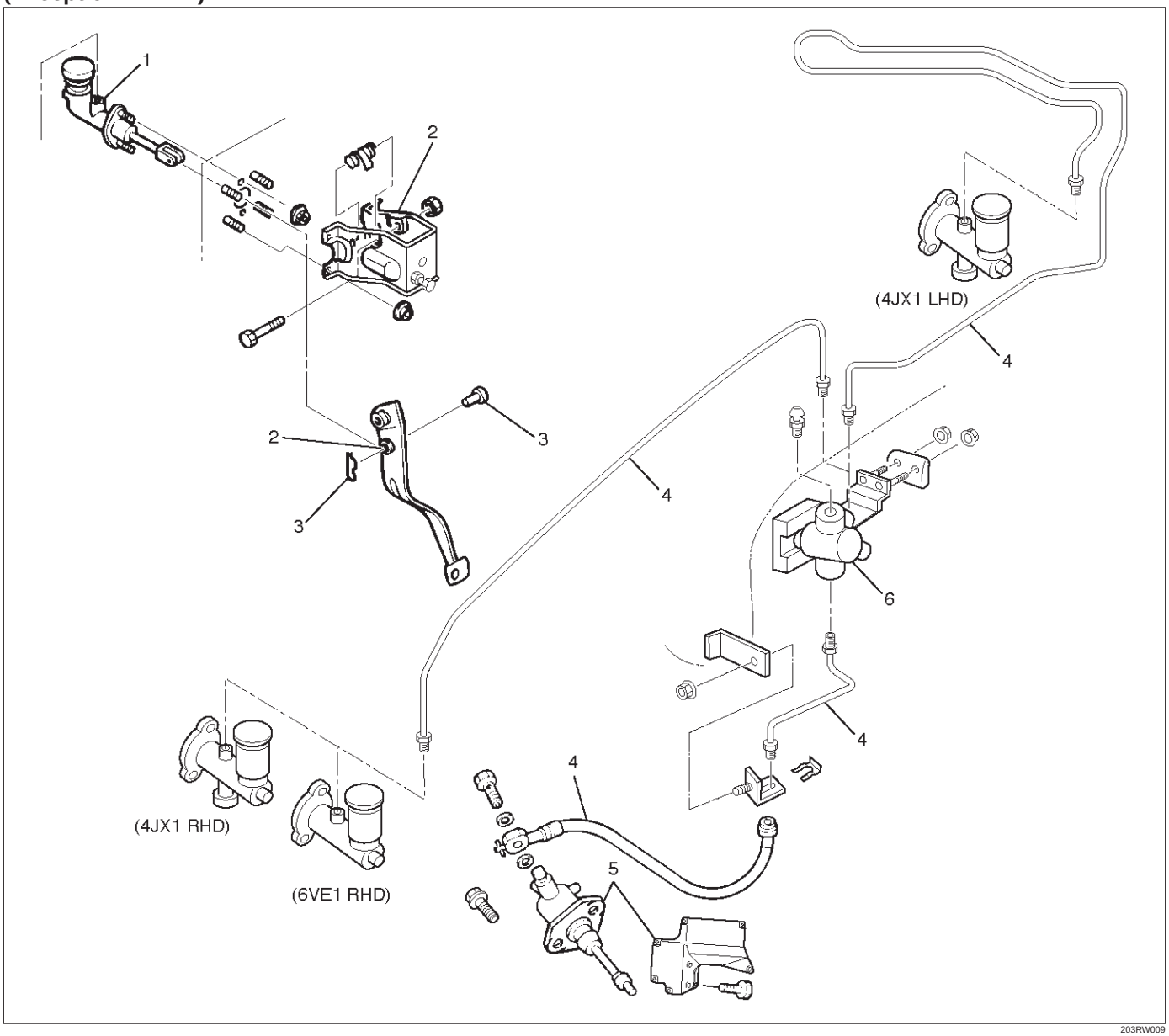

Legend

(1) Master Cylinder Assembly
(2) Pedal Assembly
(3) Pin and Joint Pin
(4) Oil Line Pipe
(5) Slave Cylinder Assembly and Heat Protector
(6) Damper Cylinder Assembly

Removal

1. Remove pin and jaw joint pin.
2. Remove pedal assembly.
3. Remove oil line pipe.
4. Remove slave cylinder assembly and heat protector.
5. Remove master cylinder assembly.
6. Remove damper cylinder assembly (except V6 LHD).

Inspection and Repair

Make necessary adjustments, repairs, and part replacement if wear, damage or other problems are discovered during inspection.

Installation

1. Install damper cylinder assembly (except V6 LHD).
2. Install master cylinder assembly.
3. Install slave cylinder assembly and heat protector.
4. Install oil line pipe.
5. Install pedal assembly.
6. Install pin and jaw joint pin.

Adjustment

Clutch Pedal Adjustment

1. Loosen the clutch pedal adjusting bolt so that there is enough gap between the clutch pedal and the adjusting bolt to allow push rod adjustment.

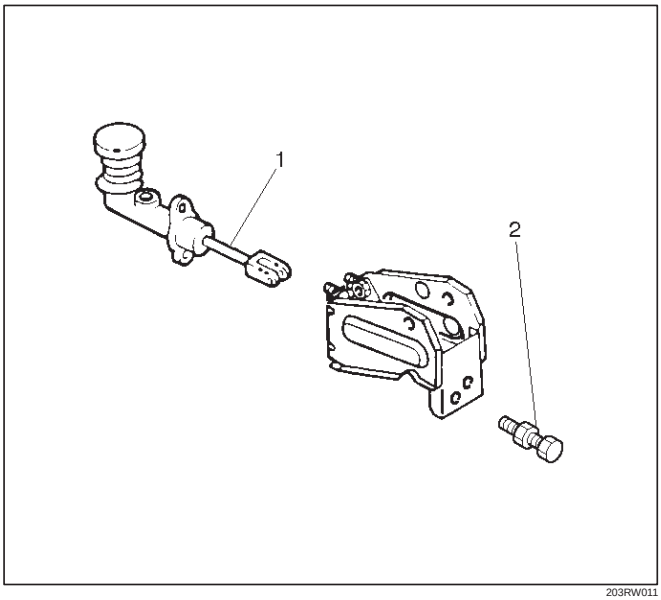

203RW011

Legend
(1) Push Rod
(2) Adjusting Bolt

2. Loosen clutch master cylinder push rod lock nut. Turn push rod by hand to set clutch pedal height (5) to within specification.

Clutch pedal height (5):

LHD: 217 mm – 227 mm (8.543 in – 8.937 in)

RHD:

(6VE1) 238.5 mm – 248.5 mm (9.390 in – 9.783 in)

(4JX1) 231 mm – 241 mm (9.094 in – 9.488 in)

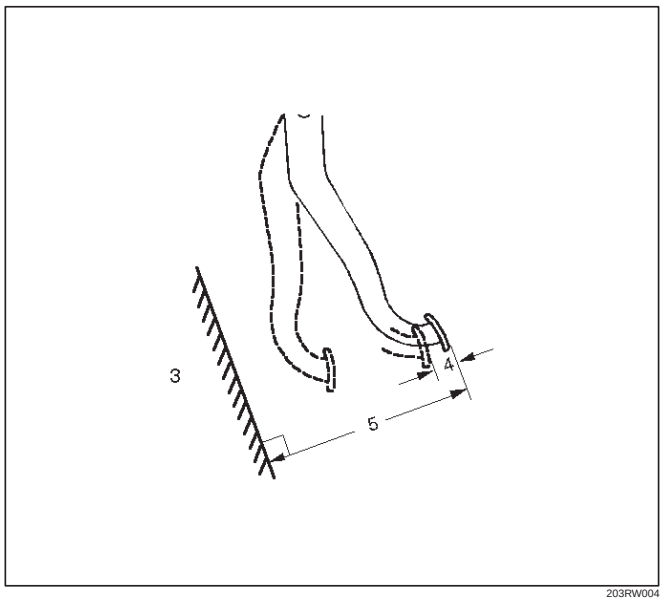

203RW004

Legend
(3) Floor Panel
(4) Pedal Free Play
(5) Clutch Pedal Height

3. Tighten push rod lock nut.
4. Adjusting bolt adjustment.
   1. Turn the adjusting bolt until it just touches the clutch pedal arm.

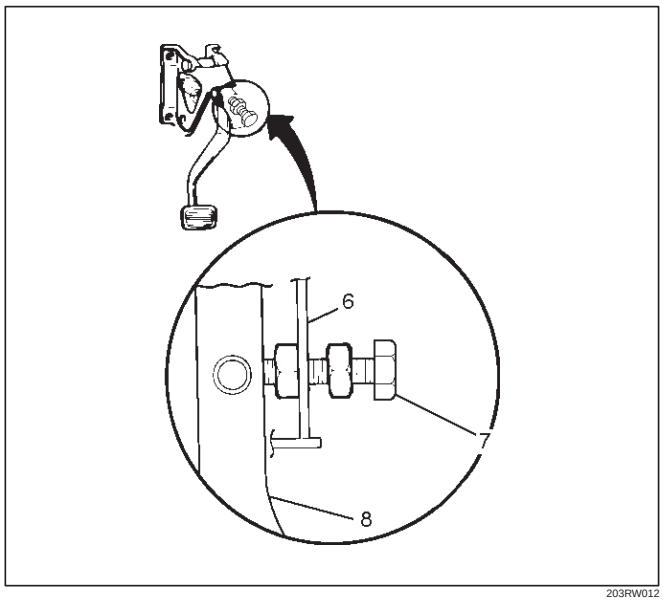

203RW012

Legend
(6) Blacket
(7) Adjusting Bolt
(8) Clutch Pedal Arm

2. Adjust clutch padel adjusting bolt by backing it out half a turn, and measure the clearance (δ) between the clutch pedal arm and the adjusting bolt.

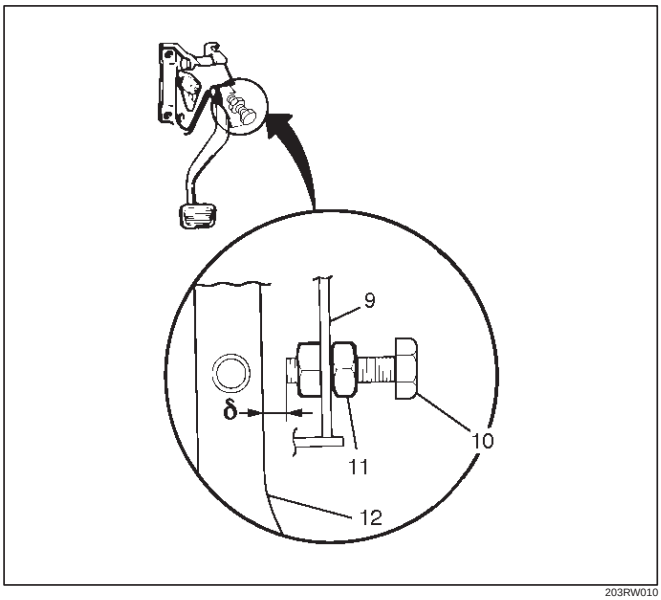

203RW010

Legend

(9) Bracket
(10) Clutch Pedal Adjusting Bolt
(11) Lock Nut
(12) Clutch Pedal Arm

3. Lock the lock nut.

Clutch Switch and Clutch Pedal Clearance (δ)

0.5 mm – 1.5 mm (0.020 in – 0.059 in)

5. After adjusting the clutch pedal height, push the clutch pedal by hand rightly to check the clutch pedal free play (4) to within specification.

Pedal Free Play (4)

5 mm – 15 mm (0.20 in – 0.59 in)

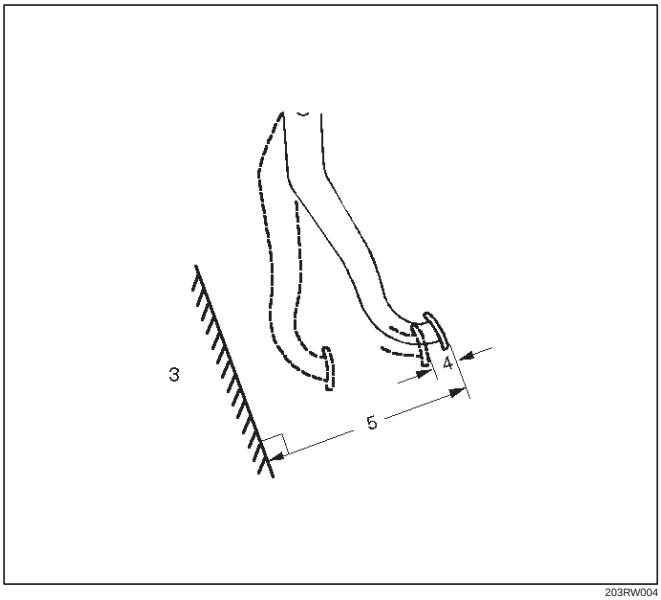

203RW004

6. Clutch pedal engagement height inspection:
   1. Operate the parking brake lever and block the wheels.
   2. Start the engine, fully step on the clutch pedal, and move the shift lever to 1st position.
   3. With the engine idling, release the clutch pedal slowly and measure its stroke just prior to its clutching position.

Clutch Pedal Engagement Height (14)

MIN. 30 mm (1.18 in)

7. If the measured value exceeds the specified limit, check the following points. Repair if necessary:
   - Hydraulic circuit for fluid leakage or air in circuit.
   - Clutch disc warped.
   - Diaphragm spring weakened or tip of fingers worn.
   - Driven plate sticking on sprines.
   - Release bearing worn or damaged.
   - Master cylinder and slave cylinder worn.

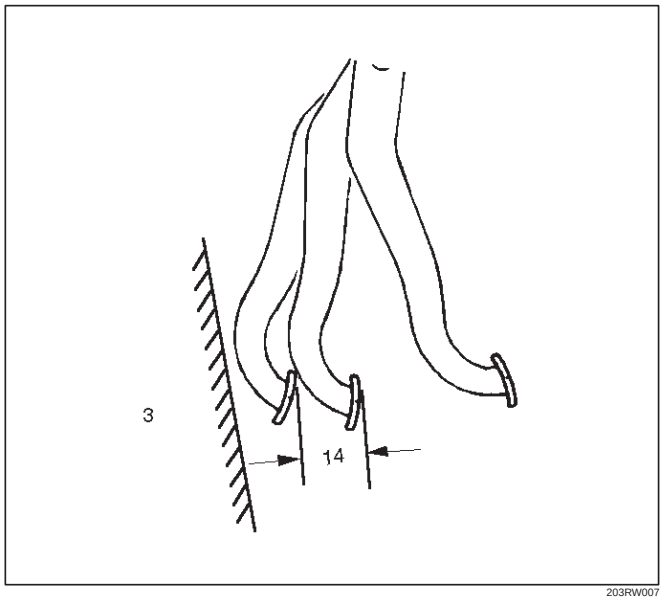

203RW007

Legend

(3) Floor Panel
(14) Clutch Pedal Engagement Height

Torque Specifications

- **Master cylinder to dash panel**
  Torque: 16 N·m (1.6 kg·m/12 lb ft)
- **Clutch pedal to dash panel**
  Torque: 21 N·m (2.1 kg·m/15 lb ft)
- **Master cylinder push rod to yoke**
  Torque: 17 N·m (1.7 kg·m/12 lb ft)
- **Clutch pipe to master cylinder**
  Torque: 20 N·m (2.0 kg·m/14 lb ft)
- **Clutch pipe to flex, hose**
  Torque:
  M 10: 16 N·m (1.6 kg·m/12 lb ft)
  M 12: 20 N·m (2.0 kg·m/14 lb ft)
- **Slave cylinder to case**
  Torque: 43 N·m (4.4 kg·m/32 lb ft)
- **Slave cylinder bleeder screw**
  Torque: 8 N·m (0.8 kg·m/69 lb in)
- **Flexible hose to slave cylinder**
  Torque: 20 N·m (2.0 kg·m/14 lb ft)
- **Clutch pipe to damper cylinder**
  Torque: 12 N·m (1.2 kg·m/104 lb in)
- **Damper cylinder bleeder screw**
  Torque: 8 N·m (0.8 kg·m/69 lb in)

Bleeding

1. Check the level of clutch fluid in the reservoir and replenish if necessary.
   Bleeding the damper cylinder (except V6 LHD model).
2. Remove the rubber cap from the bleeder screw and wipe clean the bleeder screw. Connect a vinyl tube to the bleeder screw and insert the other end of the vinyl tube into a transparent container.
3. Pump the clutch pedal repeatedly and hold it depressed.

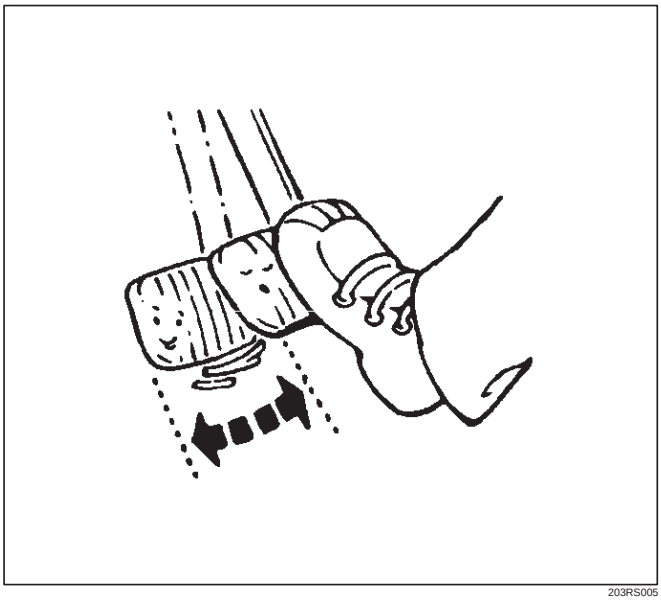

203RS005

4. Loosen the bleeder screw to release clutch fluid with air bubbles into the container, then tighten the bleeder screw immediately.
5. Release the clutch pedal carefully. Repeat the above operation until air bubbles disappear from the clutch fluid being pumped out into the container. During the bleeding operation, keep the clutch fluid reservoir filled to the specified level. Reinstall the rubber cap.
   Bleeding the slave cylinder
6. Repeat step 2 through 5 for bleeding the slave cylinder.

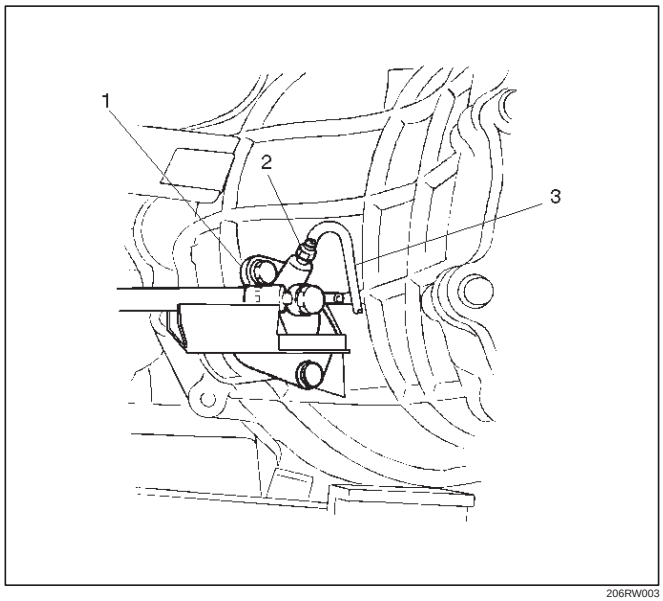

206RW003

Legend

(1) Slave Cylinder
(2) Bleeder Screw
(3) Vinyl Tube

Master Cylinder

Disassembled View

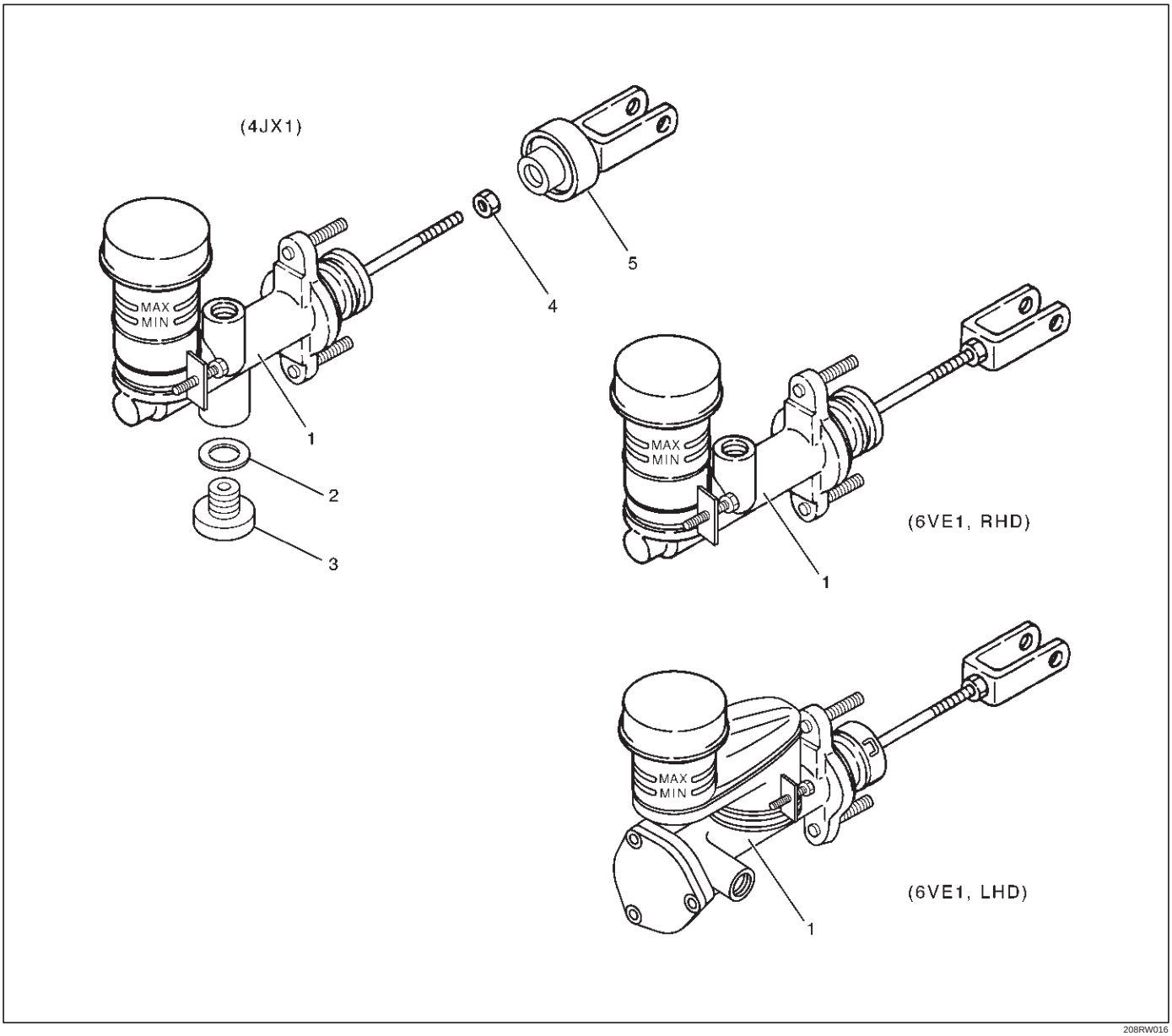

208RW016

Legend

(1) Master Cylinder Assembly
(2) Gasket
(3) Damper Cylinder Assembly
(4) Nut
(5) Push Rod Damper

Disassembly

(4JX1)

1. Remove damper cylinder assembly and gasket.
2. Remove push rod damper.

NOTE: The master cylinder assembly cannot be disassembled because of point–staked rod stopper.

Inspection and Repair

Clean and inspect the removed parts.
Make necessary parts replacement if any abnormalities such as wear, oil leaks or other damage are found through inspection.

Reassembly

To reassemble, follow the disassembly steps in the reverse order, noting the following points:

1. **Push rod set length**
   RHD: 117.5 mm (4.626 in)
   LHD: 119 mm (4.685 in)
2. **Push rod nut torque**
   17 N·m (1.7 kg·m/12 lb ft)
3. **Damper cylinder torque**
   47 N·m (4.8 kg·m/35 lb ft)

Slave Cylinder

Disassembled View

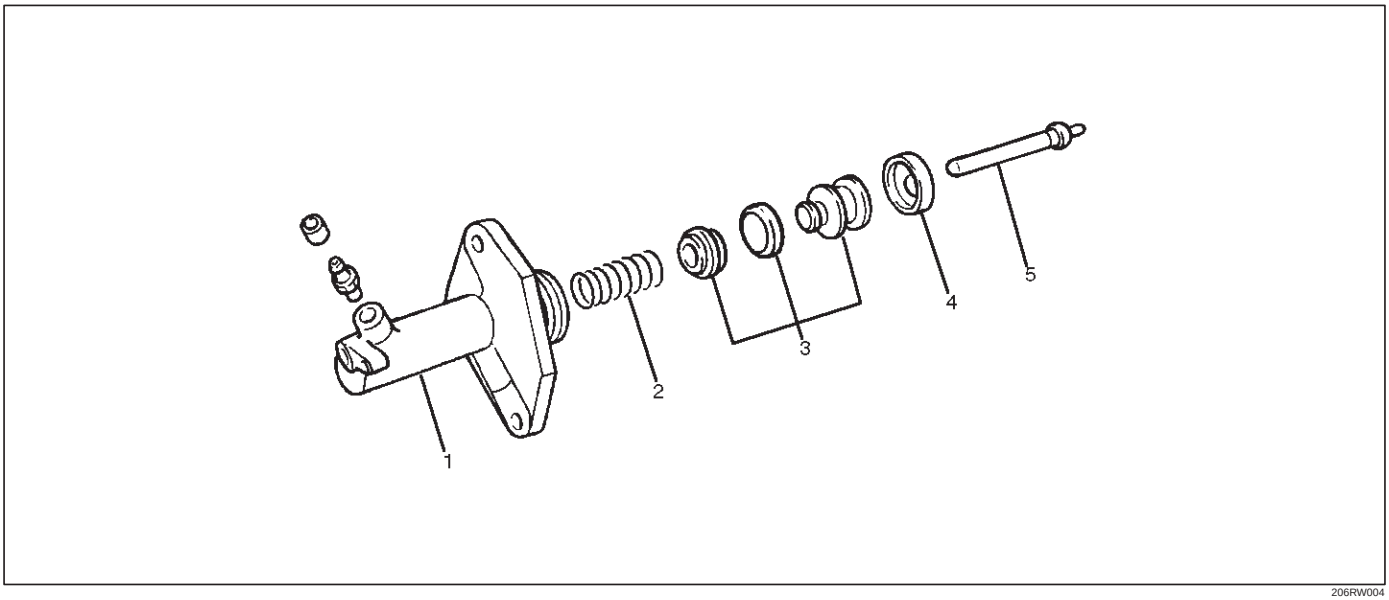

206RW004

Legend

(1) Cylinder Body
(2) Spring
(3) Piston and Piston Cup
(4) Boot
(5) Push Rod

Disassembly

1. Remove boot.
2. Remove push rod.
3. Remove piston and piston cup.
4. Remove spring.

Inspection and Repair

Make the necessary adjustments, repairs, and part replacements if excessive wear or damage is discovered during inspection.

Cylinder Body

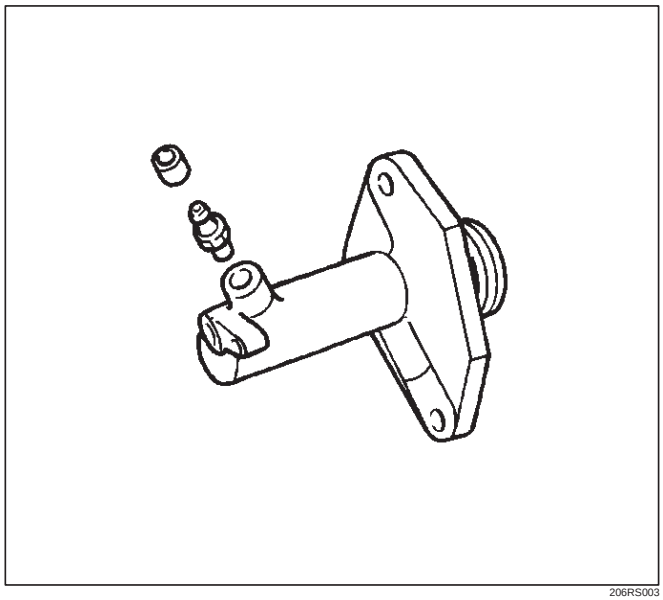

206RS003

1. Clean the cylinder body.
2. Check the fluid return port for restrictions and clean it if necessary.

Piston and Piston Cup

1. Visually inspect the disassembled piston and piston cup for excessive wear and damage.
2. Replace the inner parts with new parts shown in the illustration.

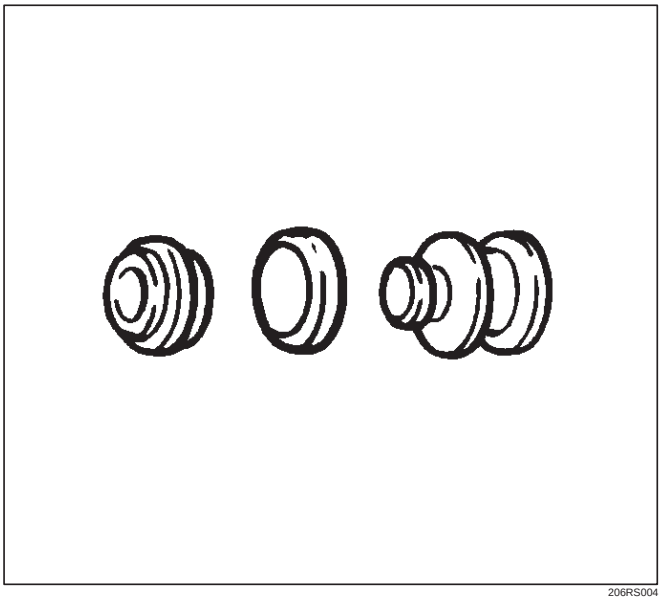

206RS004

3. Measure the clearance between slave cylinder wall and piston.
4. If the measured value exceeds the specified limit, the slave cylinder assembly must be replaced.

Standard: 0.07 mm (0.0028 in)

Limit: 0.15 mm (0.0059 in)

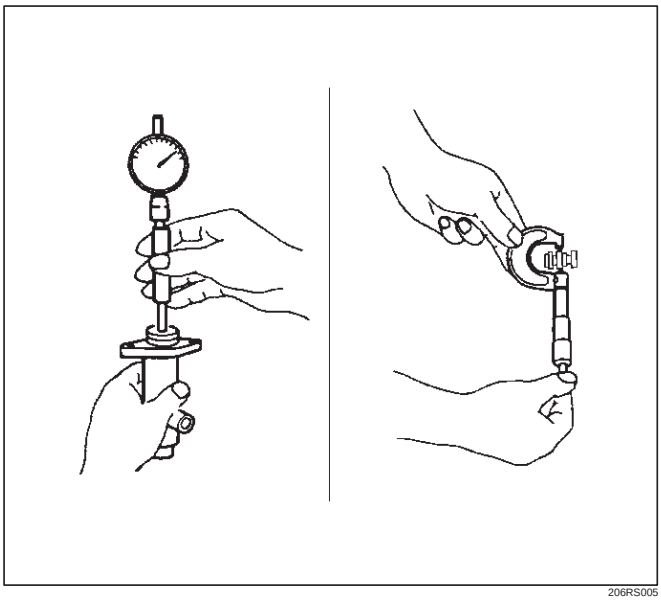

206RS005

Reassembly

To reassemble, follow the disassembly steps in the reverse order, noting the following points:

1. Before installing the parts, apply a thin coat of rubber grease.
2. Install cup in groove in piston with the lip turned to the front of cylinder. Use care so as not to scratch the cylinder.

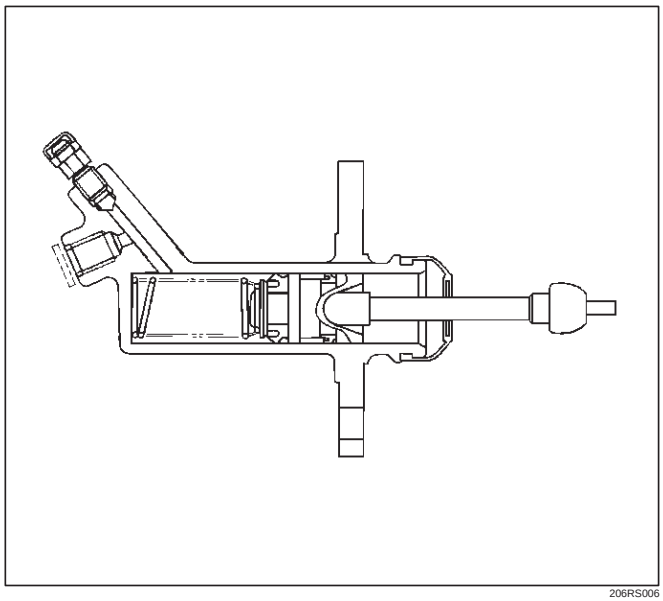

206RS006

Damper Cylinder

Disassembled View

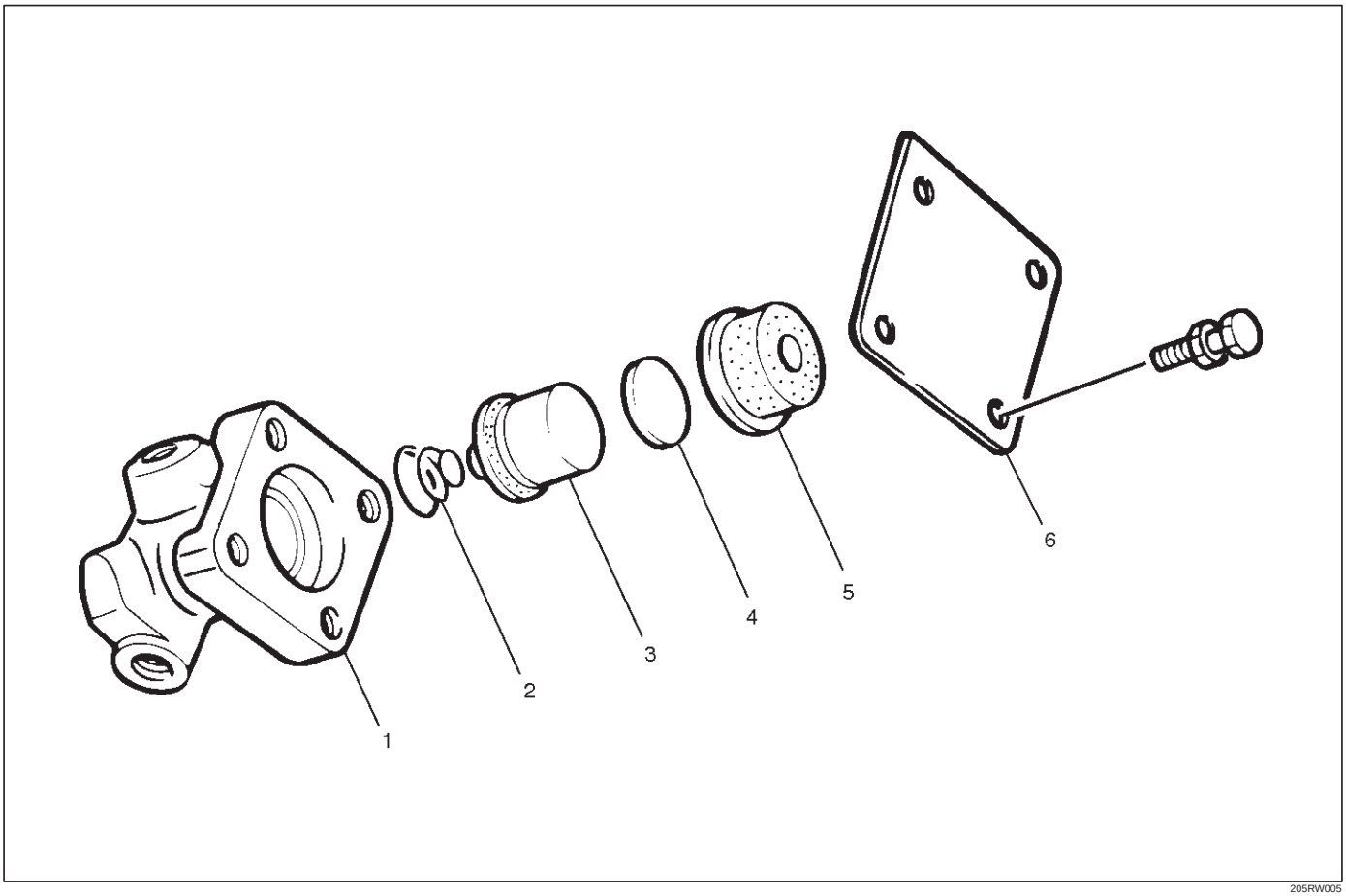

205RW005

Legend

(1) Cylinder Body
(2) Spring
(3) Piston Assembly
(4) Spacer
(5) Damper Rubber
(6) Cover and Gasket

Disassembly

1. Remove cover and gasket.
2. Remove damper rubber.
3. Remove spacer.
4. Remove piston assembly.
5. Remove spring.

Inspection and Repair

Check damper rubber and piston cup for cracks, deformation or damage.
Replace the damper cylinder assembly if necessary.

Reassembly

To assemble, follow the disassembly steps in the reverse order.

Main Data and Specifications

General Specifications

Type	Dry single plate type with diaphragm spring
Size	275 mm (10.83 in)
Pressure plate Outside diameter	332 mm (13.07 in)
Pressure plate Clamping force	7208 N (1621 lb)
Pressure plate Spring finger height	49.9 – 51.9 mm (1.965 – 2.043 in)
Driven plate Outside diameter x inside diameter	275 × 180 mm (10.83 × 6.69 in)
Thickness Clutch disengaged	8.8 mm (0.346 in)
Thickness Clutch engaged	8.3 mm (0.327 in)
Total friction area	339 ×2 cm^2 (52 ×2 in^2)
Clutch control type	Hydraulic
Clutch pedal free play	5 – 15 mm (0.20 – 0.59 in)
Clutch pedal height	LHD: 217 – 227 mm (8.543 – 8.937 in) RHD: (6VE1) 238.5 mm – 248.5 mm (9.390 in – 9.783 in) (4JX1) 231 mm – 241 mm (9.094 in – 9.488 in)
Clutch pedal stroke	152.5 – 162.5 mm (6.004 – 6.398 in) 4JX1, RHD: 145 – 155mm (5.709 – 6.102 in)

Torque Specifications

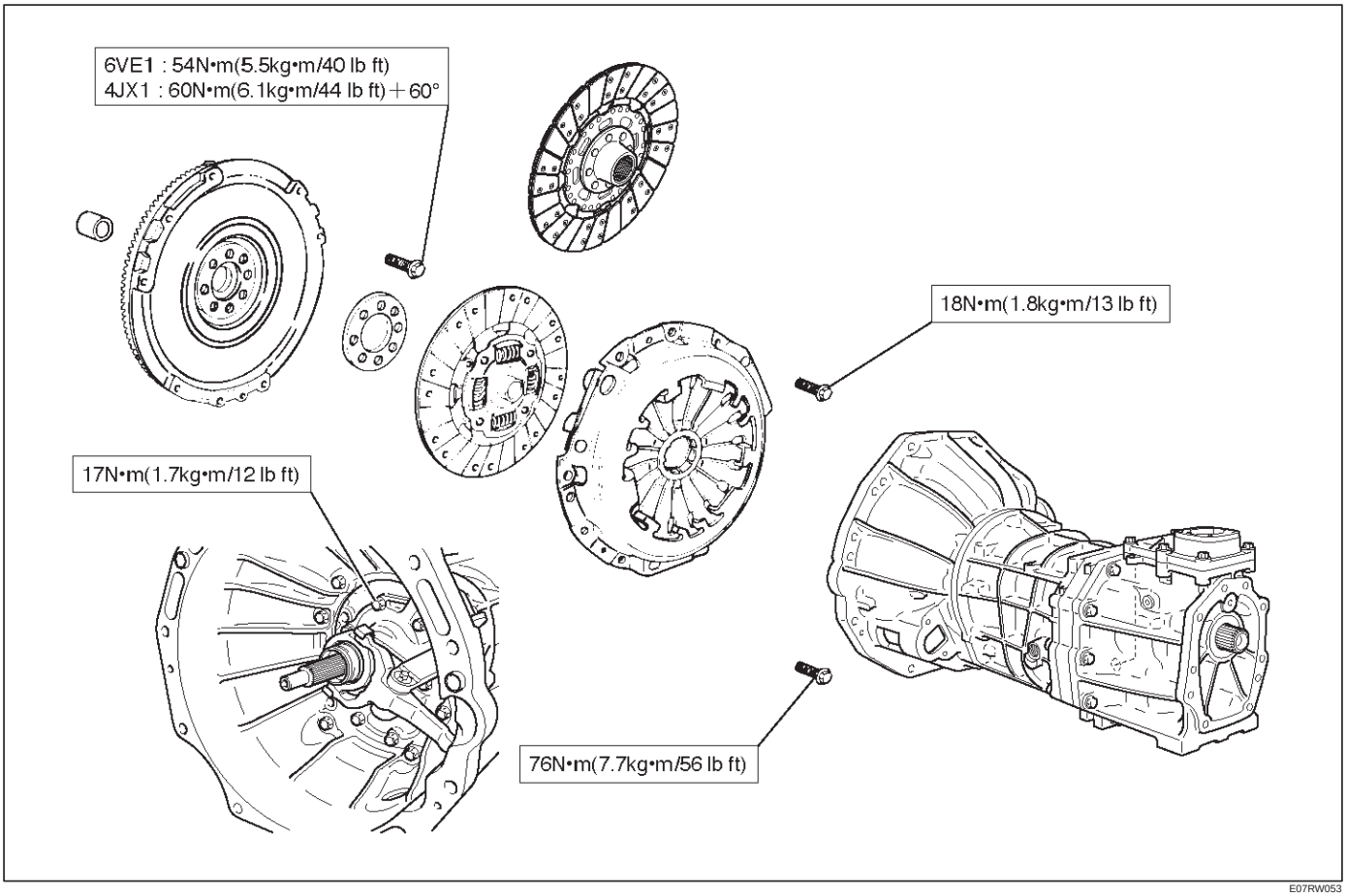

E07RW053

Torque Specifications (Cont'd)

(6VE1 LHD)

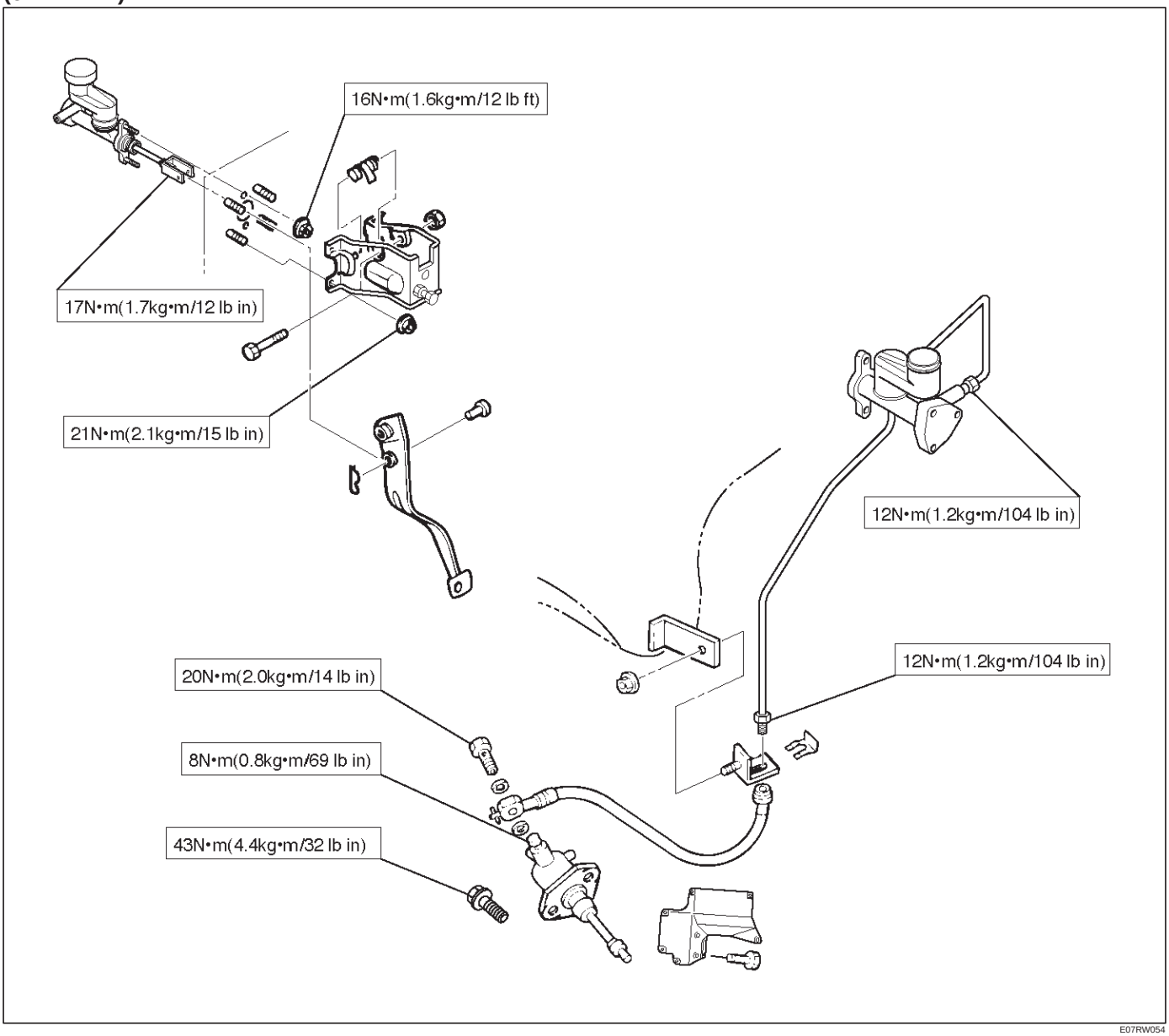

E07RW054

Torque Specifications (Cont'd)

(Except 6VE1 LHD)

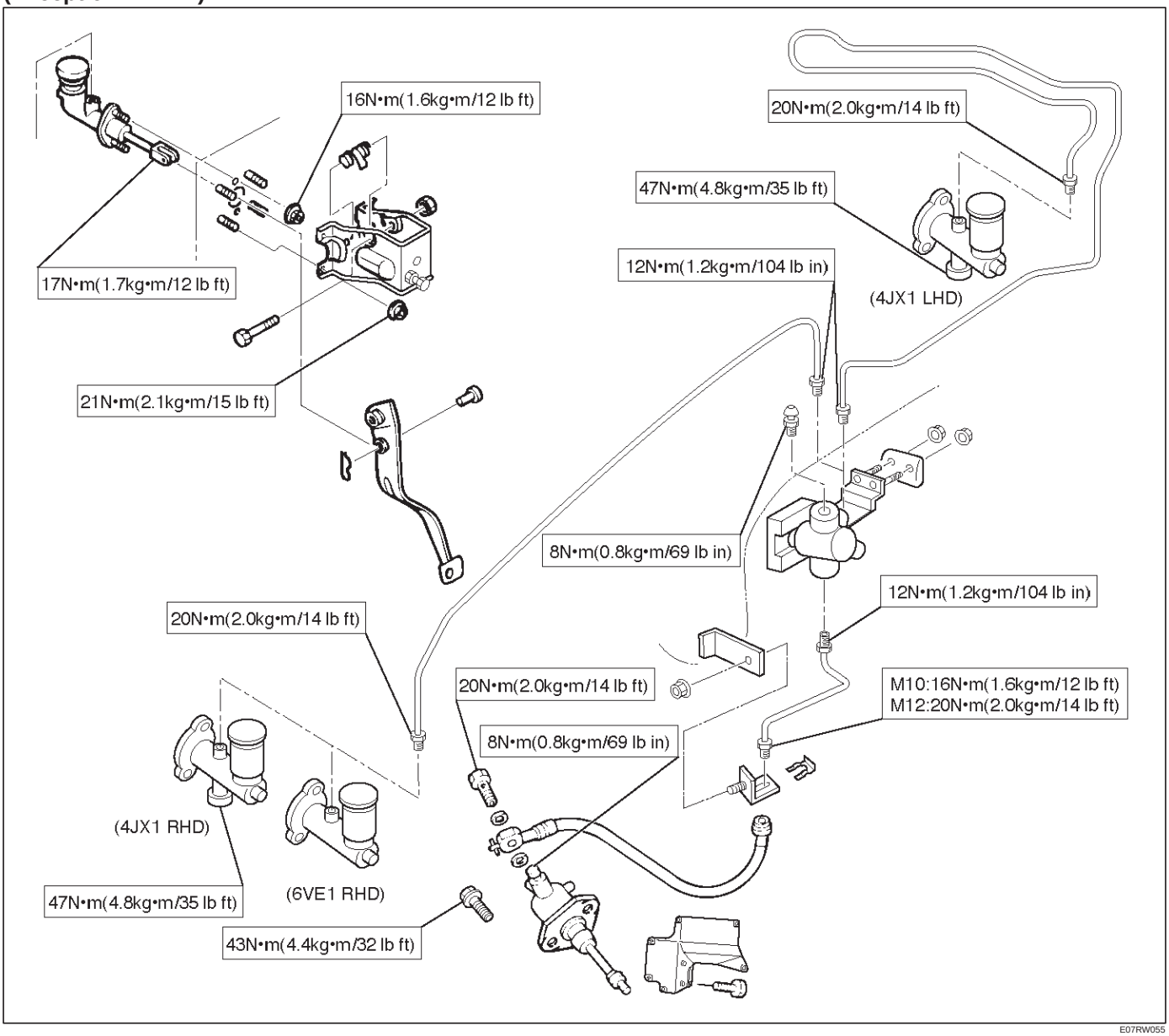

E07RW055

Special Tools

ILLUSTRATION	**TOOL NO.** TOOL NAME
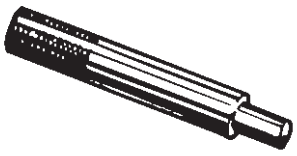 901RS265	**5-85253-001-0** **(J-24547)** Driven plate aligner
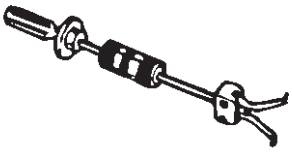 901RS266	**5-8840-2000-0 and** **5-8840-0019-0** **(J-5822 and J-23907)** Pilot bearing remover and Sliding hammer
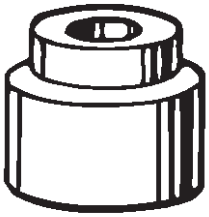 901RS267	**5-8840-0125-0** **(J-26516-A)** Crankshaft pilot bearing installer
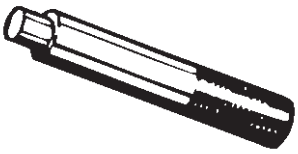 901RS268	**5-8840-0007-0** **(J-8092)** Driver handle

BODY AND ACCESSORIES

CONTENTS

Lighting System 8A
Wiper/Washer System 8B
Entertainment 8C
Wiring System 8D
Meter and Gauge 8E
Body Structure 8F
Seats 8G
Security and Locks 8H
Sun Roof/Convertible Top 8I
Exterior/Interior Trim 8J

LIGHTING SYSTEM

CONTENTS

Service Precaution 8A–2
Headlight Bulb 8A–3
Removal 8A–3
Installation 8A–3
Headlight 8A–4
Headlight and Associated Parts 8A–4
Removal 8A–4
Installation 8A–4
Headlight Adjustment 8A–4
Fog Light Bulb 8A–5
Removal 8A–5
Installation 8A–5
Fog Light Assembly 8A–6
Removal 8A–6
Installation 8A–6
Fog Light Adjustment 8A–6
Clarence Light Bulb 8A–6
Removal 8A–6
Installation 8A–6
Rear Fog Light Bulb (RHD) 8A–7
Removal 8A–7
Installation 8A–7
Taillight Bulb (Body) 8A–7
Removal 8A–7
Installation 8A–7
Taillight Bulb (Bumper) 8A–8
Removal 8A–8
Installation 8A–8
License Plate Light Bulb (Body) 8A–8
Removal 8A–8
Installation 8A–8
License Plate Light Bulb (Bumper) 8A–9
Removal 8A–9
Installation 8A–9
Stoplight Bulb 8A–9
Removal and Installation 8A–9
High Mount Stoplight 8A–10
Removal 8A–10
Installation 8A–10
Front Turn Signal Light Bulb 8A–10
Removal 8A–10
Installation 8A–10
Side Turn Signal Light Bulb 8A–11
Removal 8A–11
Installation 8A–11
Rear Turn Signal Light Bulb 8A–11
Removal 8A–11
Installation 8A–11
Backup Light Bulb 8A–12
Removal 8A–12
Installation 8A–12
Dome Light Bulb 8A–12
Removal 8A–12
Installation 8A–12
Luggage Room Light Bulb 8A–13
Removal 8A–13
Installation 8A–13
Courtesy Light Bulb 8A–13
Removal 8A–13
Installation 8A–13
Map Light Switch/Bulb 8A–14
Removal 8A–14
Installation 8A–14
Cigarette Lighter Illumination Bulb 8A–14
Removal 8A–14
Installation 8A–14
Ashtray Illumination Bulb 8A–15
Removal 8A–15
Installation 8A–15
Glove Box Illumination Bulb 8A–15
Removal 8A–15
Installation 8A–15

Vanity Mirror Illumination Bulb 8A–16
Removal 8A–16
Installation 8A–16
Starter Switch 8A–17
Removal 8A–17
Installation 8A–17
Lighting Switch (Combination Switch) 8A–18
Removal 8A–18
Installation 8A–18
Fog Light Switch 8A–19
Removal 8A–19
Installation 8A–19
Stoplight Switch (W/O Cruise Control) 8A–20
Removal 8A–20
Installation 8A–20
Brake Switch (W/Cruise Control) 8A–21
Removal 8A–21
Installation 8A–21
Turn Signal Switch (Combination Switch) . . . 8A–21
Removal and Installation 8A–21
Hazard Warning Switch 8A–22
Removal 8A–22
Installation 8A–22
Tailgate Switch 8A–23
Removal 8A–23
Installation 8A–23
Door Switch 8A–23
Removal 8A–23
Installation 8A–23
Rear Defogger Switch 8A–24
Removal 8A–24
Installation 8A–24
Seat Heater Switch 8A–25
Removal 8A–25
Installation 8A–25
Key Remind Switch (Starter Switch) 8A–25
Removal and Installation 8A–25
Illumination Controller 8A–26
Removal 8A–26
Installation 8A–26
Power/Winter Switch 8A–27
Removal 8A–27
Installation 8A–27
Main Data and Specifications 8A–28

Service Precaution

WARNING: IF SO EQUIPPED WITH A SUPPLEMENTAL RESTRAINT SYSTEM (SRS), REFER TO THE SRS COMPONENT AND WIRING LOCATION VIEW IN ORDER TO DETERMINE WHETHER YOU ARE PERFORMING SERVICE ON OR NEAR THE SRS COMPONENTS OR THE SRS WIRING. WHEN YOU ARE PERFORMING SERVICE ON OR NEAR THE SRS COMPONENTS OR THE SRS WIRING, REFER TO THE SRS SERVICE INFORMATION. FAILURE TO FOLLOW WARNINGS COULD RESULT IN POSSIBLE AIR BAG DEPLOYMENT, PERSONAL INJURY, OR OTHERWISE UNNEEDED SRS SYSTEM REPAIRS.

CAUTION: Always use the correct fastener in the proper location. When you replace a fastener, use ONLY the exact part number for that application. ISUZU will call out those fasteners that require a replacement after removal. ISUZU will also call out the fasteners that require thread lockers or thread sealant. UNLESS OTHERWISE SPECIFIED, do not use supplemental coatings (Paints, greases, or other corrosion inhibitors) on threaded fasteners or fastener joint interfaces. Generally, such coatings adversely affect the fastener torque and the joint clamping force, and may damage the fastener. When you install fasteners, use the correct tightening sequence and specifications. Following these instructions can help you avoid damage to parts and systems.

Headlight Bulb

Removal

1. Disconnect the battery ground cable.
2. Disconnect the connector.
3. Remove the cap(3) while turning it counter clockwise.
4. Remove the cover(2).
5. Pull the bulb(1) out from the headlight body.

CAUTION: The halogen bulb develops a very high temperature. Do not touch the glass portion. If any stain is on the glass surface, It will scorch and the glass will be damaged.

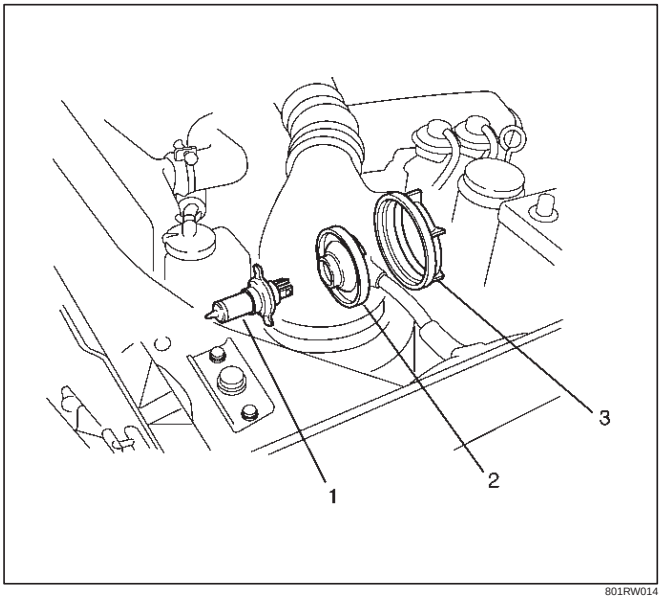

801RW014

Installation

To install, follow the removal steps in the reverse order.

Headlight

Headlight and Associated Parts

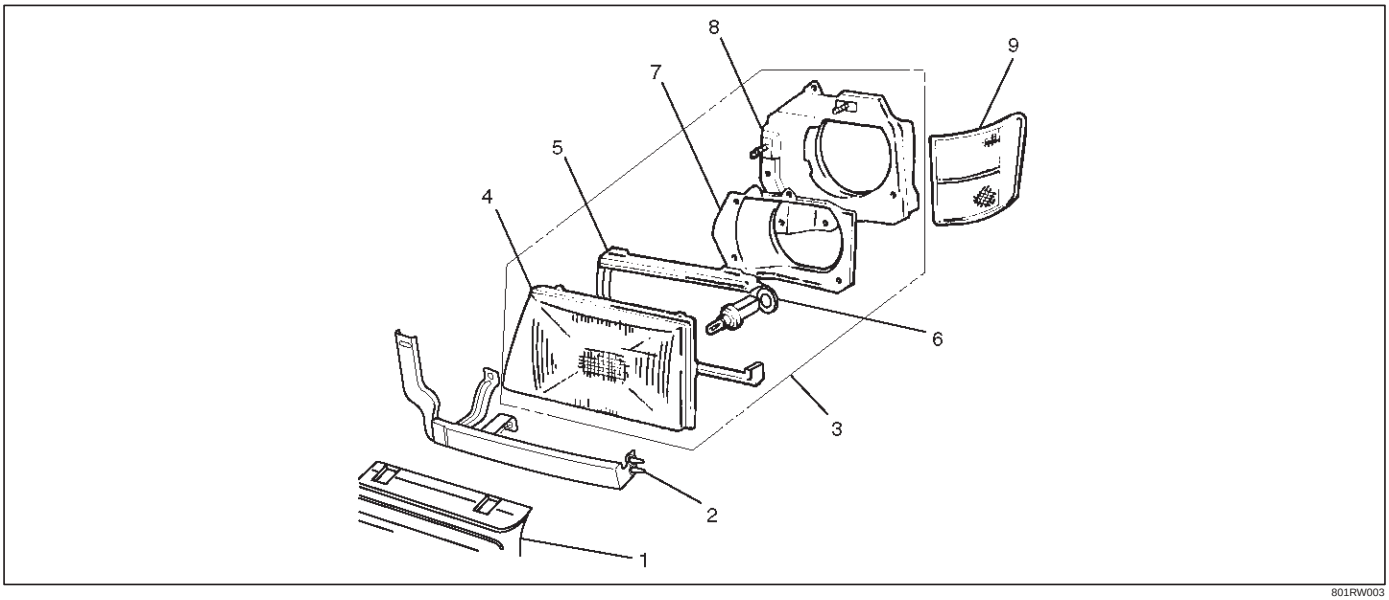

801RW003

Legend

(1) Radiator Grille
(2) Front End Lower Panel
(3) Headlight Assembly
(4) Headlight
(5) Headlight Rim
(6) Headlight Bulb
(7) Rear Cover
(8) Bracket
(9) Front Combination Light

Removal

1. Disconnect the battery ground cable.
2. Remove the screw and pull out the two projecting portions on the fender to remove the front combination light.
3. Remove five clips and two screws to remove the radiator grille.
4. Remove two screws to remove the front end lower panel(2).
5. Remove two bolts and two nuts to remove the headlight assembly (with bracket).
6. Remove the headlight bulb.
7. Remove two screws, two nuts and the spring for the headlight aim adjustment to remove the bracket.
8. Remove four screws to remove the rear cover.
9. Remove the headlight rim.
10. Remove the headlight.

Installation

To install, follow the removal steps in the reverse order.

CAUTION: After installing the headlight, be sure to adjust the headlight aim.

Headlight Adjustment

Preparation

Place the unloaded vehicle on a level surface and check to see if the inflation pressure of the tires is correct, the lenses are clean, and the battery is sufficiently charged. Adjust the aim with the headlight tester, if necessary. When adjusting, follow the procedure of the tester manufacturer's.

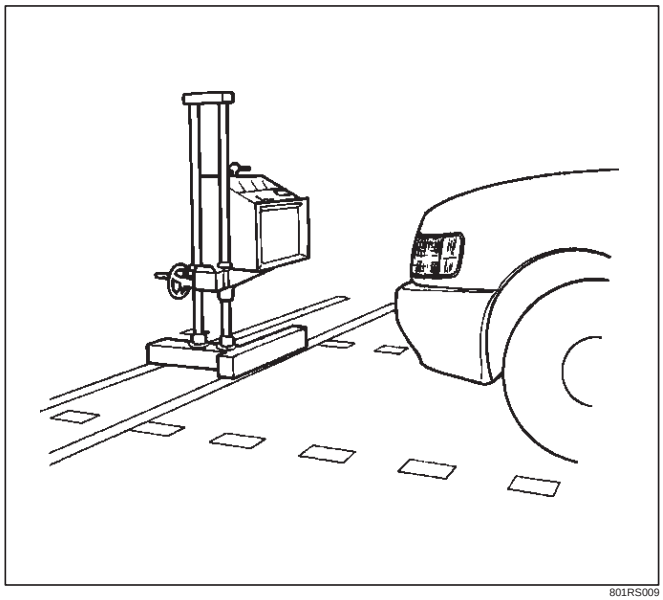

801RS009

Vertical adjustment

Use a screwdriver for vertical adjustment.

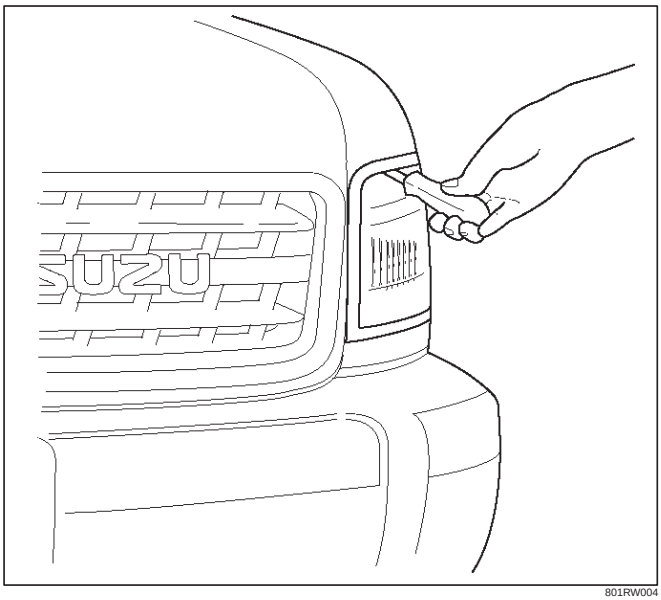

801RW004

Horizontal adjustment

Use a screwdriver for horizontal adjustment.

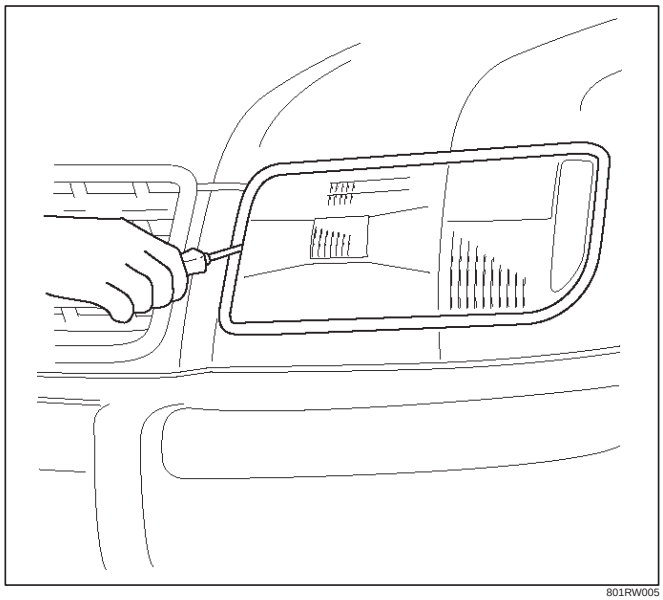

801RW005

Fog Light Bulb

Removal

1. Disconnect the battery ground cable.
2. Open the rear cover(1) of the case.
3. Remove the dust cover.
4. Disconnect the bulb connector.
5. Remove the clip(3).
6. Remove the fog light bulb(2).

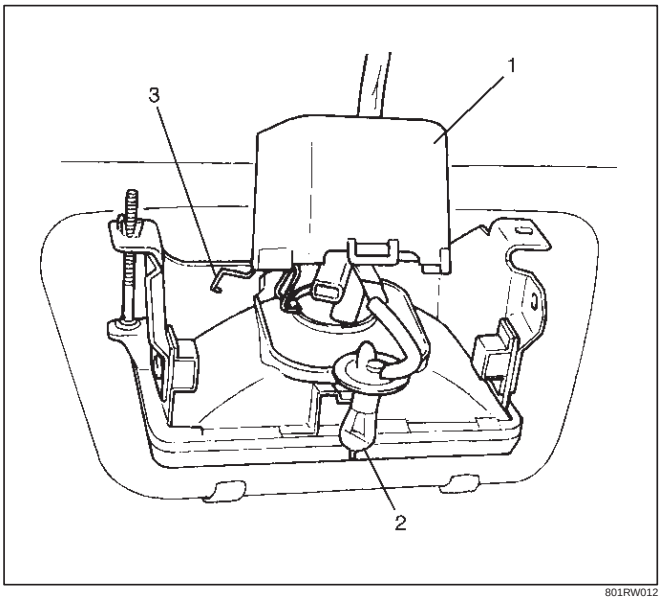

801RW012

Installation

1. Install the fog light bulb(1).
2. Install the clip(2).
3. Connect the bulb connector.
4. Install the dust cover.
5. Close the rear cover(3) of the case.

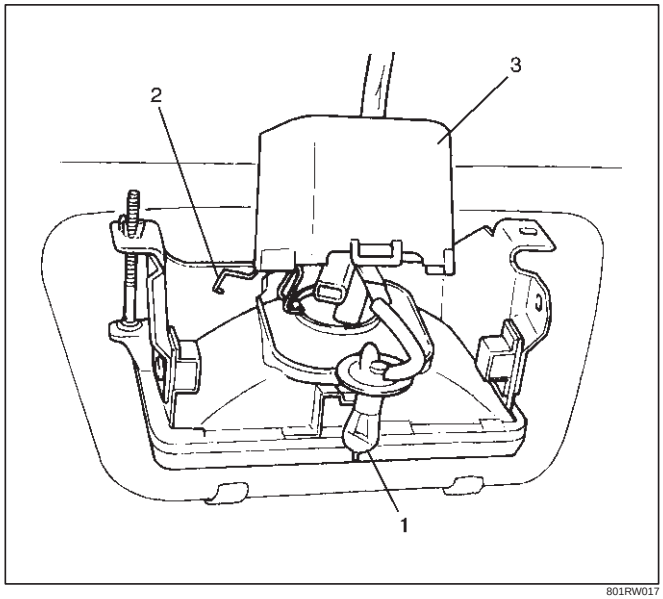

801RW017

6. Connect the battery ground cable.

Fog Light Assembly

Removal

1. Disconnect the battery ground cable.
2. Remove two nuts from the bracket.
3. Disconnect the connector.
4. Remove the fog light assembly (1).

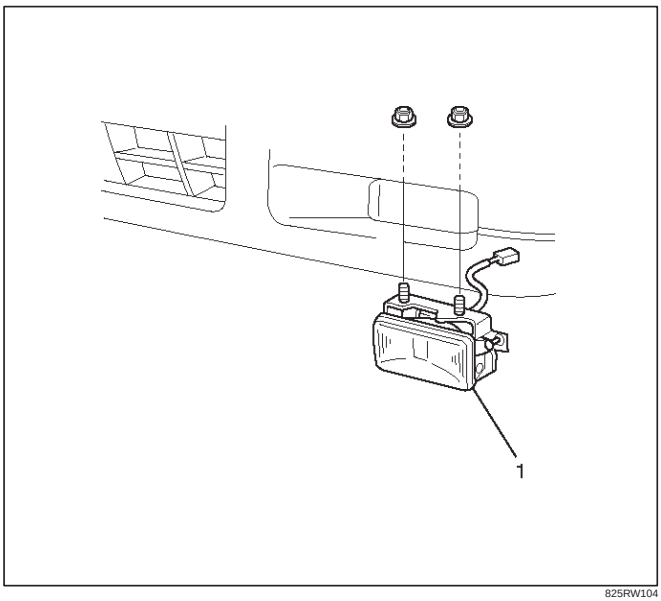

825RW104

CAUTION: After installing the fog light, be sure to adjust the fog light aim.

Fog Light Adjustment

Turn the adjusting screw with a screwdriver to adjust the aim of the fog light vertically.

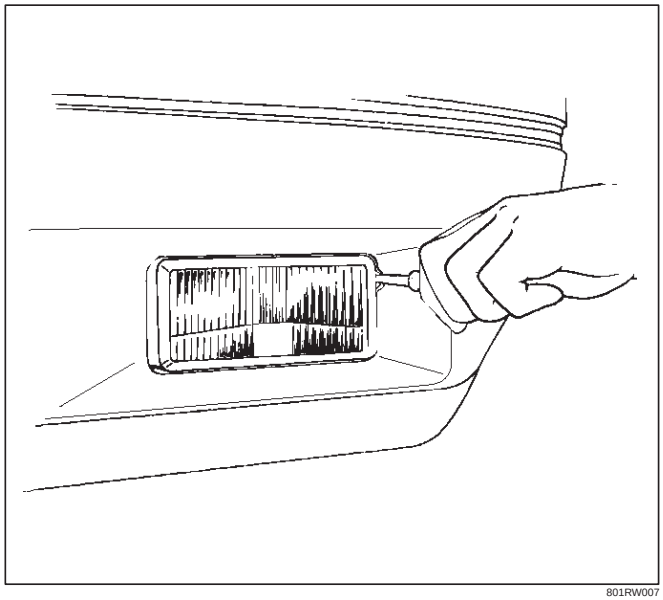

801RW007

Installation

To install, follow the removal steps in the reverse order.

Clarence Light Bulb

Removal

1. Disconnect the battery ground cable.
2. Remove the screw at the upper portion of the light bracket and then remove the bracket from the fender.
3. Remove the front combination light assembly(1).
4. Remove the front side marker light socket(2) by turning it counterclockwise.
5. Pull out the bulb(3) from the socket.

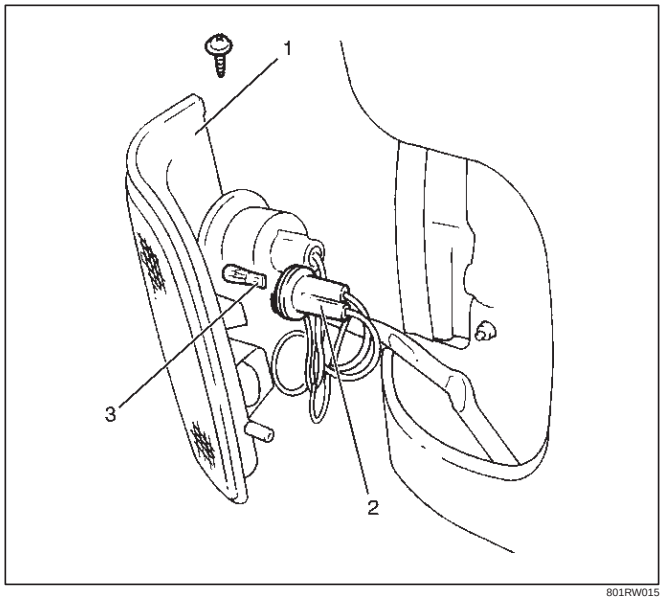

801RW015

Installation

To install, follow the removal steps in the reverse order.

Rear Fog Light Bulb (RHD)

Removal

1. Disconnect the battery ground cable.
2. Remove three screws and release locks at two locations to remove the rear combination light assembly(2).
3. Remove the socket(3) by turning it counterclockwise.
4. Turn the bulb(1) counterclockwise while pushing it to remove it from the socket.

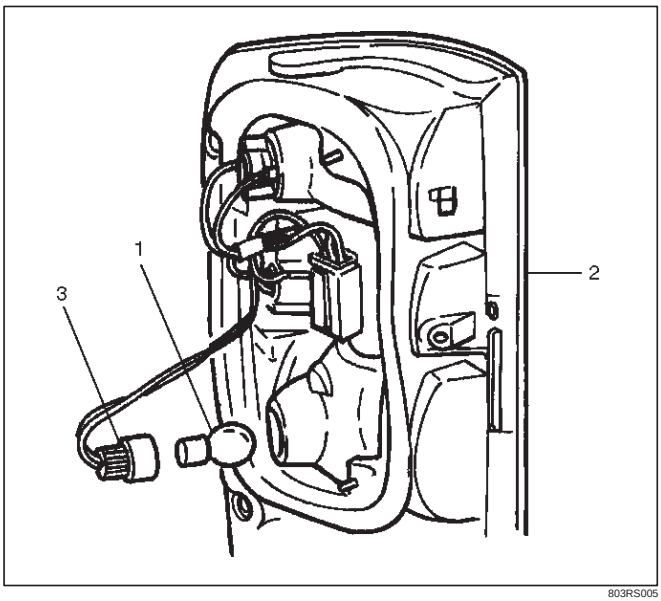

803RS005

Installation

To install, follow the removal steps in the reverse order.

Taillight Bulb (Body)

Removal

1. Disconnect the battery ground cable.
2. Remove three screws and release locks at two locations to remove the rear combination light assembly(2).
3. Remove the socket(3) by turning it counterclockwise.
4. Turn the bulb(1) counterclockwise while pushing it to remove it from the socket.

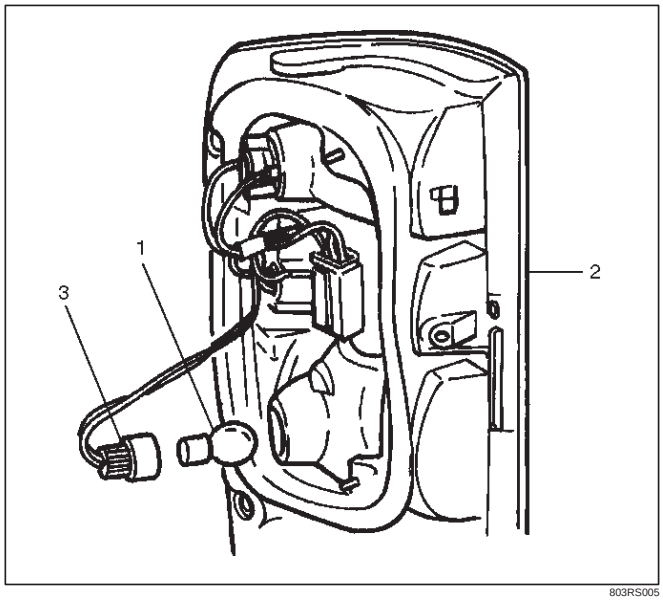

803RS005

Installation

To install, follow the removal steps in the reverse order.

Taillight Bulb (Bumper)

Removal

1. Disconnect the battery ground cable.
2. Remove two screws to remove the rear combination light assembly(2).
3. Remove the socket(1) by turning it counterclockwise.
4. Remove the bulb(3) by turning it counterclockwise while pushing.

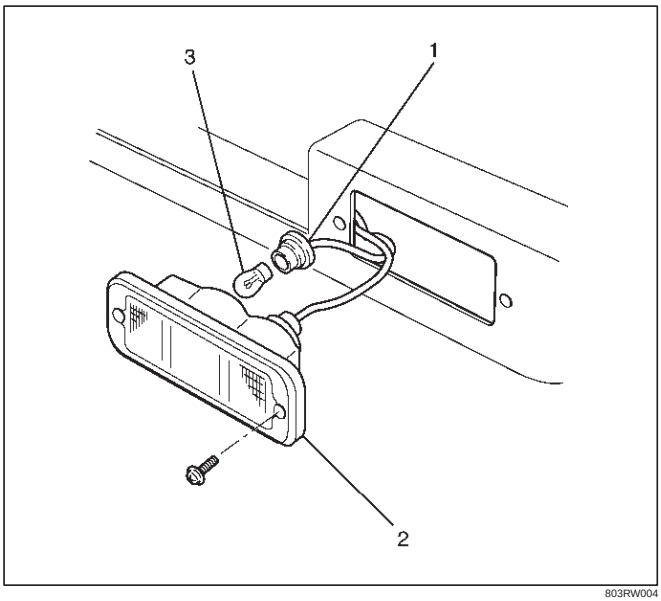

803RW004

Installation

To install, follow the removal steps in the reverse order.

License Plate Light Bulb (Body)

Removal

1. Disconnect the battery ground cable.
2. Remove two screws to remove the lens(2).
3. Pull out the bulb(1) from the socket.

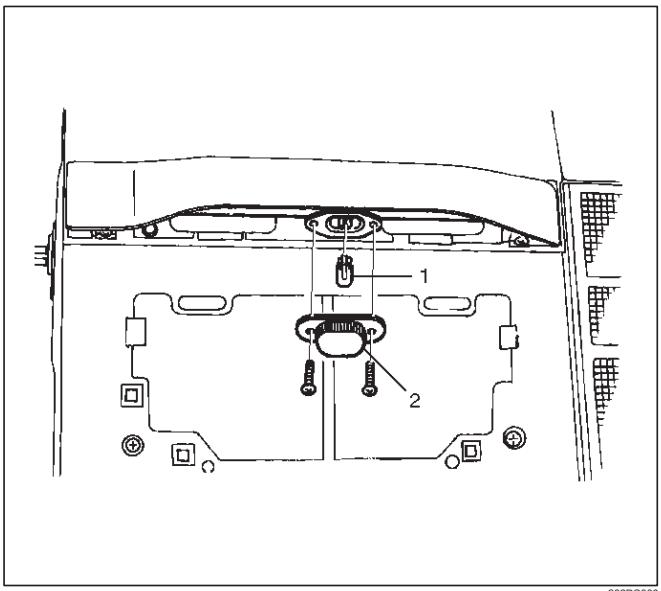

803RS006

Installation

To install, follow the removal steps in the reverse order.

License Plate Light Bulb (Bumper)

Removal

1. Disconnect the battery ground cable.
2. Remove two screws to remove the license plate light(1).
3. Pull out the bulb(3) from the socket(2).

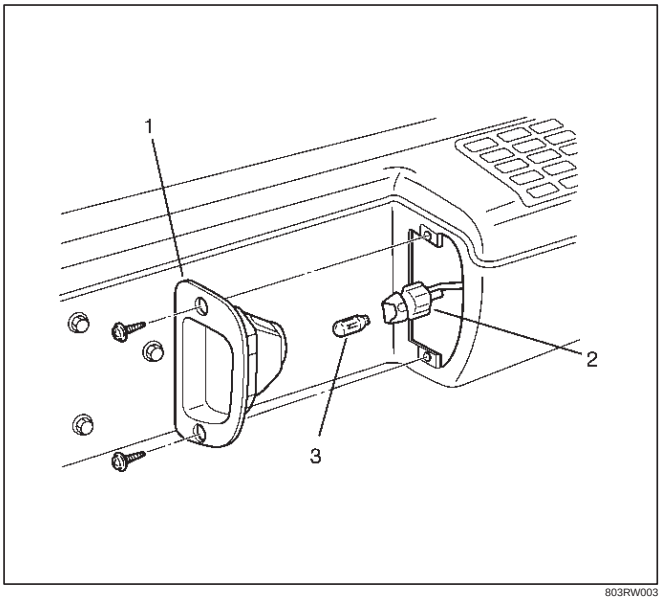

803RW003

Installation

To install, follow the removal steps in the reverse order.

Stoplight Bulb

Removal and Installation

Refer to the Taillight Bulb in this section.

High Mount Stoplight

Removal

1. Disconnect the battery ground cable.
2. Remove the clips(2).
3. Pull out the high mount stoplight(1).
4. Remove the connector.
5. Remove the high mount stoplight.

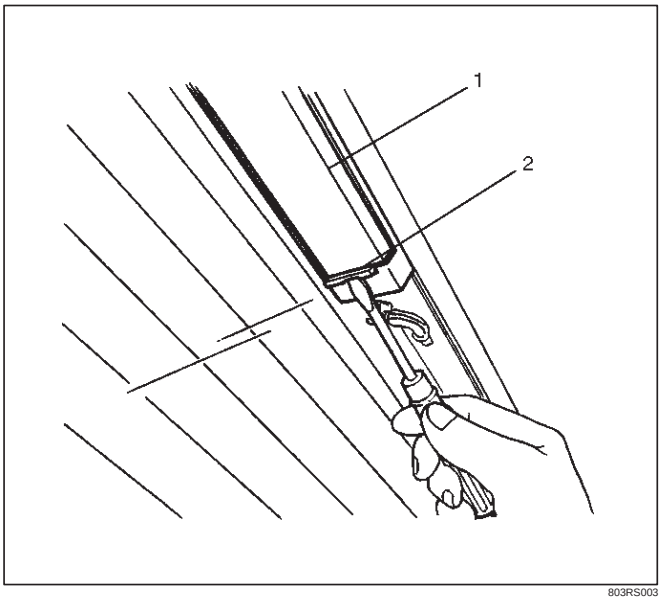

803RS003

Installation

1. Insert the clips(1)(3) into the high mount stoplight(2).
2. Reconnect the connector.
3. Install the high mount stoplight.

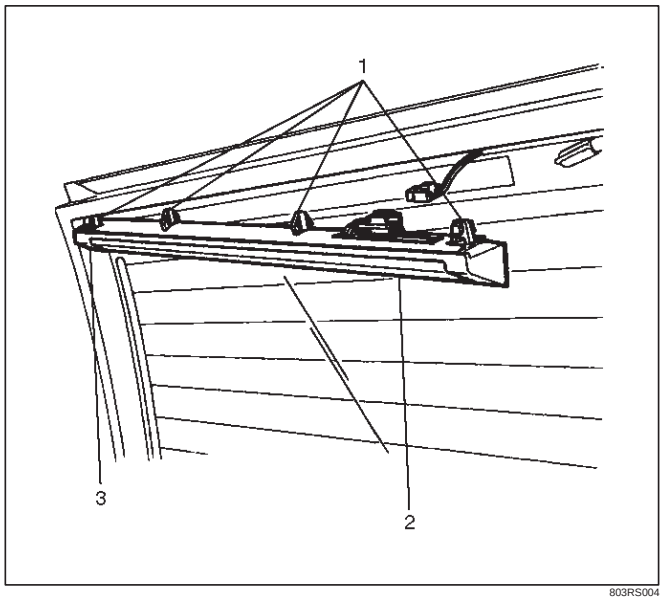

803RS004

Front Turn Signal Light Bulb

Removal

1. Disconnect the battery ground cable.
2. Remove the screw at the upper portion of the light bracket, and remove the bracket from the fender.
3. Remove the front combination light(1).
4. Remove the turn signal light socket(3) by turning it counterclockwise.
5. Remove the bulb(2) by turning it counterclockwise while pushing it at the same time.

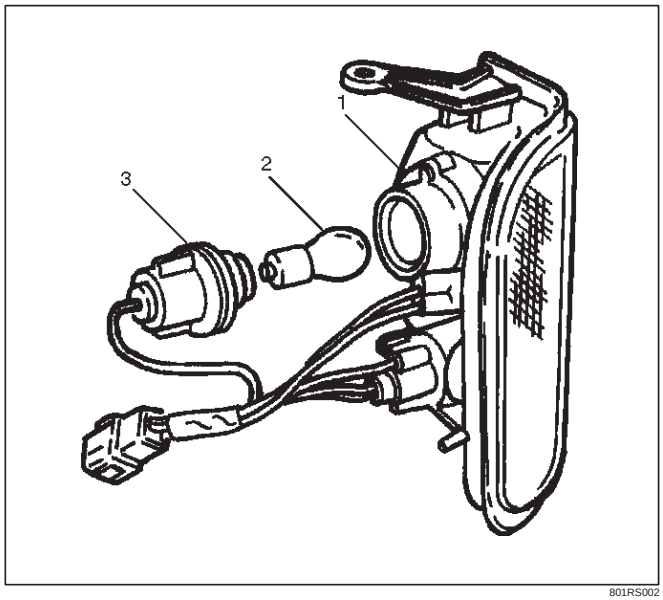

801RS002

Installation

To install, follow the removal steps in the reverse order.

Side Turn Signal Light Bulb

Removal

1. Disconnect the battery ground cable.
2. Pull the light/bulb(1) toward you while pushing the light housing in the rear direction of the vehicle to release its lock.
3. Remove the bulb by turning it counterclockwise while pushing it at the same time.

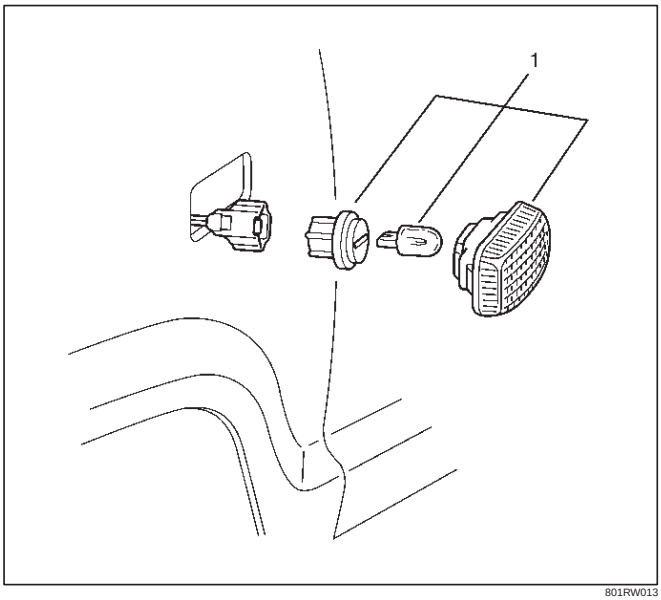

801RW013

Installation

To install, follow the removal steps in the reverse order.

Rear Turn Signal Light Bulb

Removal

1. Disconnect the battery ground cable.
2. Remove the three screws and release the lock at two positions.
3. Remove the rear combination light(3).
4. Remove the turn signal light socket/bulb(1) by turning it counterclockwise.
5. Remove the bulb(2) by turning it counterclockwise while pushing it at the same time.

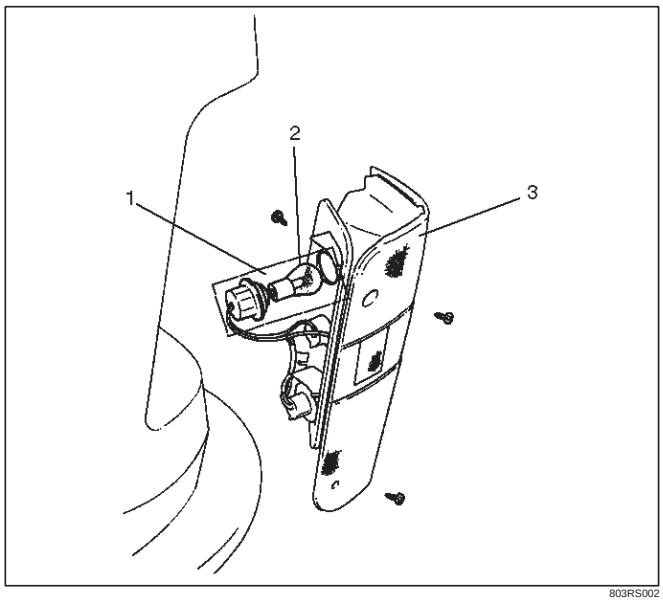

803RS002

Installation

To install, follow the removal steps in the reverse order.

Backup Light Bulb

Removal

1. Disconnect the battery ground cable.
2. Remove three screws and release the lock at two positions.
3. Remove the rear combination light(3).
4. Remove the backup light socket/bulb(1) by turning it counterclockwise.
5. Remove the bulb(2) by turning it counterclockwise while pushing it at the same time.

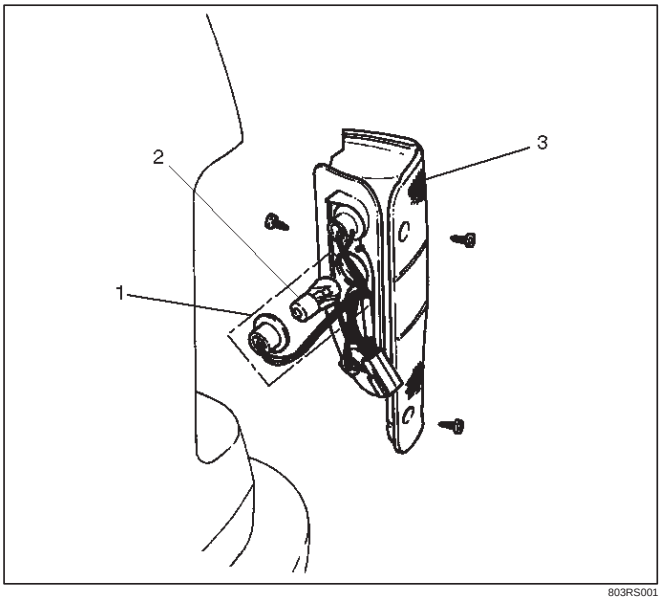

803RS001

Installation

To install, follow the removal steps in the reverse order.

Dome Light Bulb

Removal

1. Disconnect the battery ground cable.
2. Remove the lens(2) by releasing the locks at three locations.
3. Remove the bulb(1).

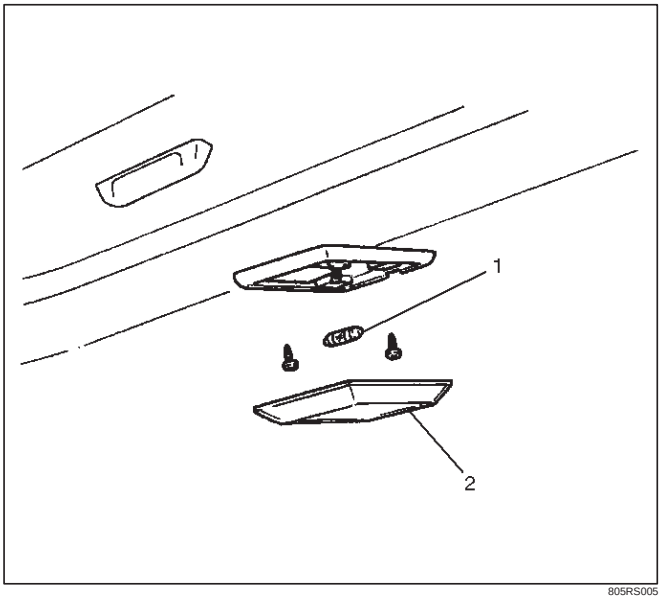

805RS005

Installation

To install, follow the removal steps in the reverse order.

Luggage Room Light Bulb

Removal

1. Disconnect the battery ground cable.
2. Remove the lens(2) by releasing the locks at four locations.
3. Remove the bulb(1).

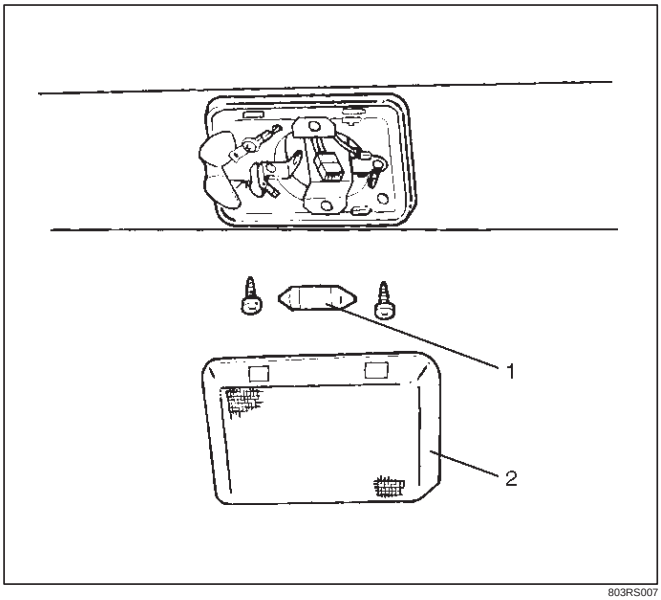

803RS007

Installation

To install, follow the removal steps in the reverse order.

Courtesy Light Bulb

Removal

1. Disconnect the battery ground cable.
2. Remove two screws to remove the lens(1).
3. Pull out the bulb(2) from the socket.

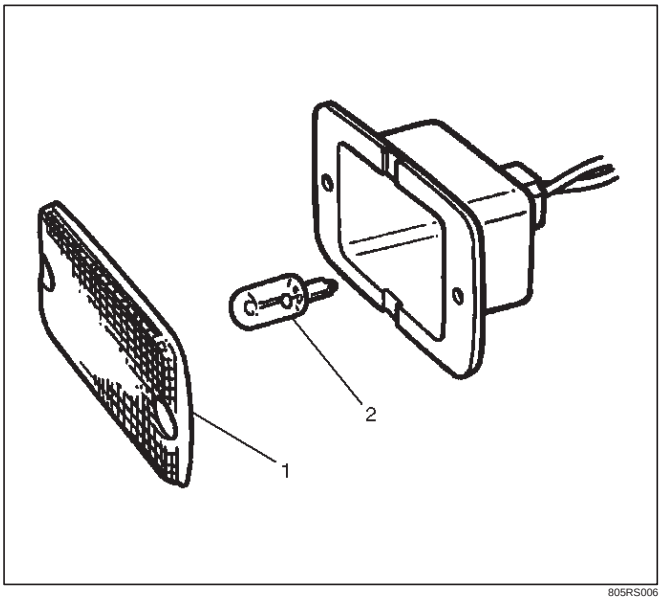

805RS006

Installation

To install, follow the removal steps in the reverse order.

Map Light Switch/Bulb

Removal

1. Disconnect the battery ground cable.
2. Pull the map light body downward to release the lock.
3. Disconnect the connectors of the map light and the sun roof switch.
4. Remove the map light switch.
5. Turn the socket counterclockwise to remove it.
6. Pull out the bulb from the socket.

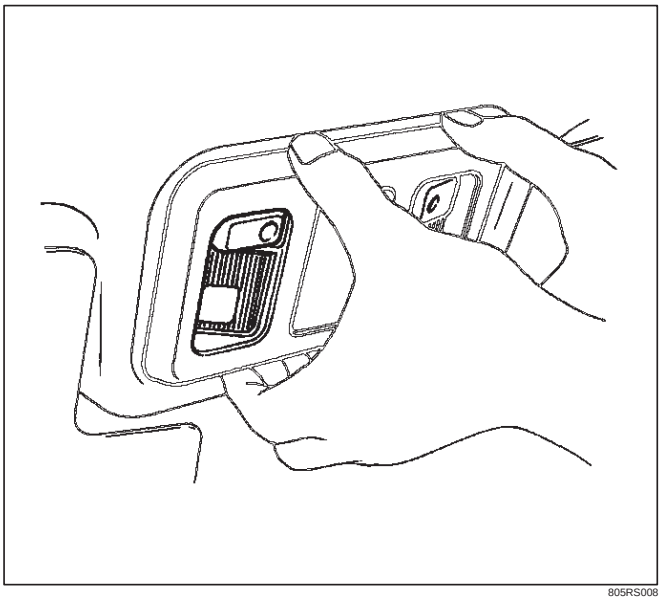

805RS008

Installation

To install, follow the removal steps in the reverse order.

Cigarette Lighter Illumination Bulb

Removal

1. Disconnect the battery ground cable.
2. Remove eight screws to remove the instrument cluster panel(2).
3. Turn the socket counterclockwise to remove it then pull out the bulb(1).

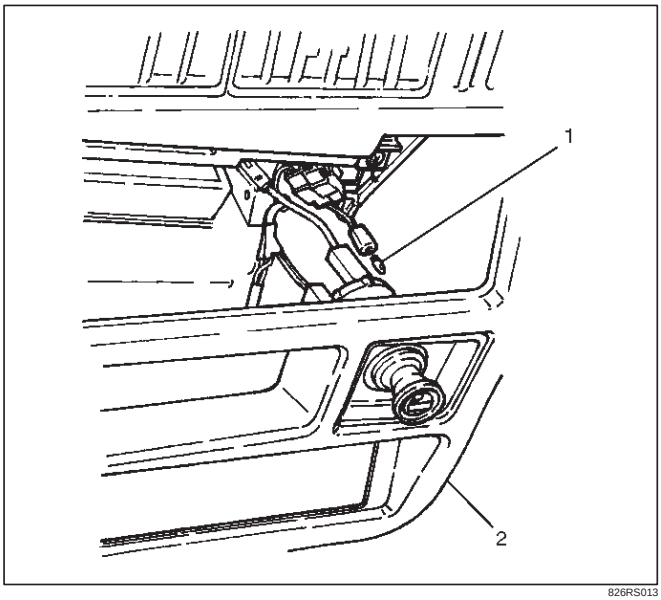

826RS013

Installation

To install, follow the removal steps in the reverse order.

Ashtray Illumination Bulb

Removal

1. Disconnect the battery ground cable.
2. Removal eight screws to remove the instrument cluster panel(1).
3. Remove the ashtray(5).
4. Remove four screws to remove the audio box(4).
5. Remove two screws to remove the ashtray guide(2).
6. Turn the socket counterclockwise to remove it then pull out the bulb(3).

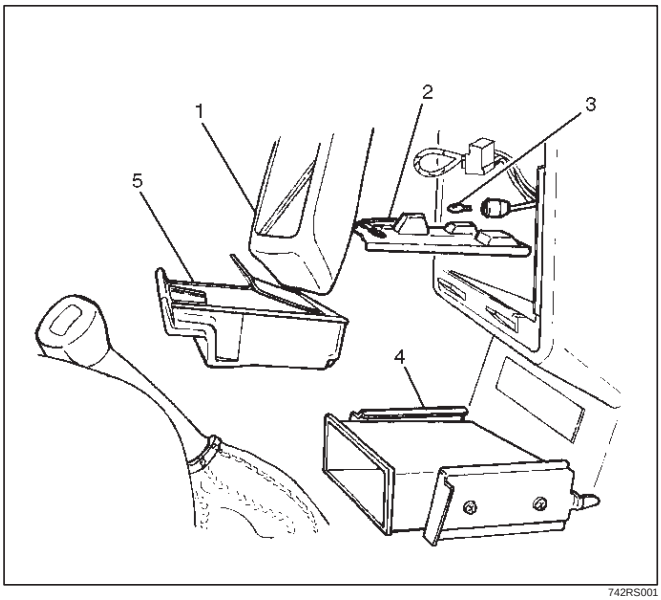

742RS001

Installation

To install, follow the removal steps in the reverse order.

Glove Box Illumination Bulb

Removal

1. Disconnect the battery ground cable.
2. Open the glove box lid, and then pull out the bulb(1).

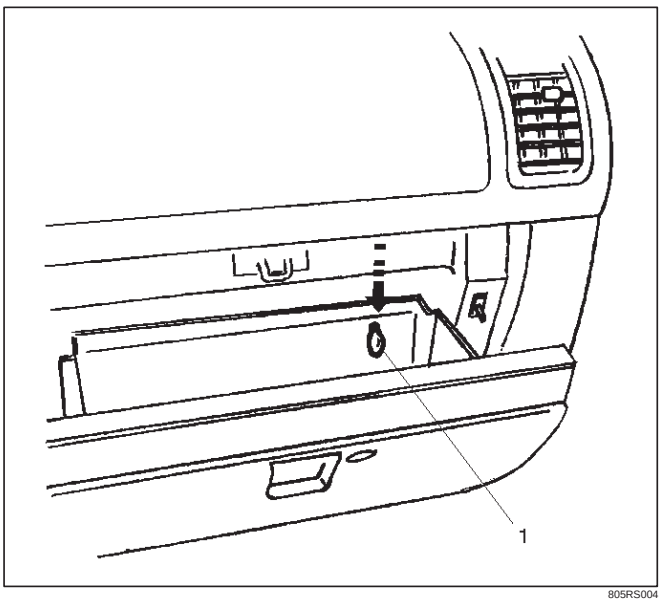

805RS004

Installation

To install, follow the removal steps in the reverse order.

Vanity Mirror Illumination Bulb

Removal

1. Disconnect the battery ground cable.
2. Remove the lens(2).
3. Remove the bulb(1).

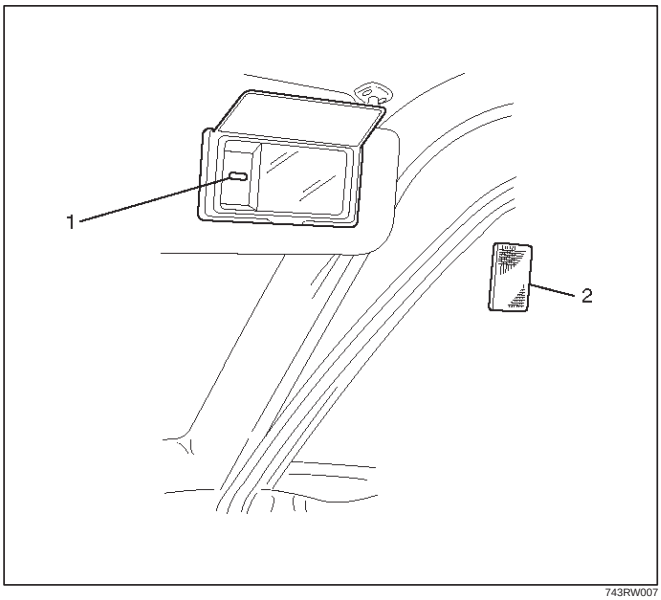

743RW007

Installation

To install, follow the removal steps in the reverse order.

Starter Switch

Removal

1. Disconnect the battery ground cable.
2. Remove the front console assembly(1).
   Refer to Instrument Panel Assembly in Body Structure section.
3. Remove the lower cluster assembly(2).
   Refer to the Instrument Panel Assembly in Body Structure section.
4. Remove the instrument panel driver lower cover assembly(3).
   Refer to the Instrument Panel Assembly in Body Structure section.

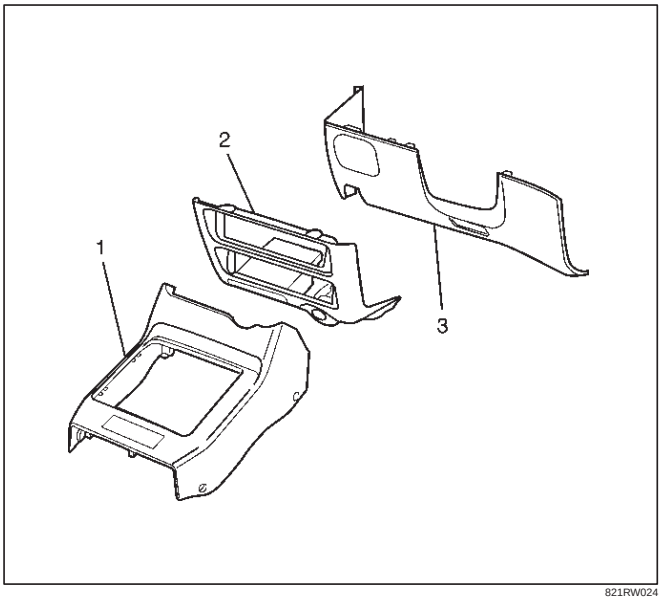

821RW024

5. Remove seven screws to remove the steering cowl(6).
6. Disconnect the connector, remove the screw(4) and then remove the starter switch(5).

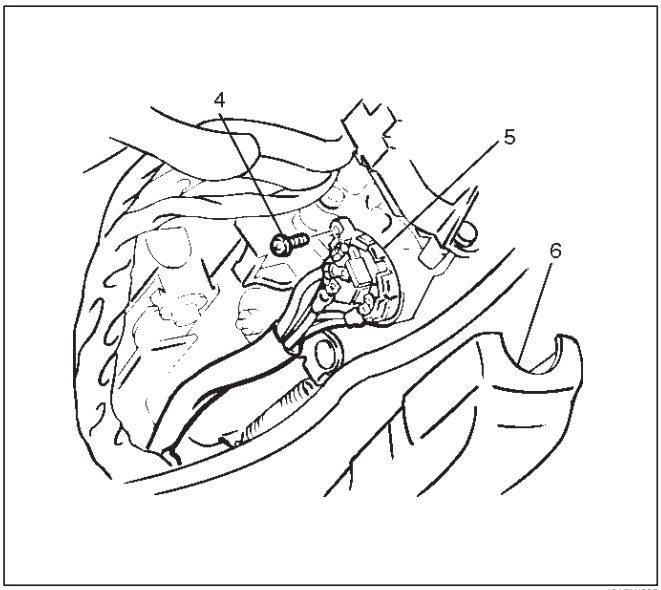

431RW005

Installation

To install, follow the removal steps in the reverse order noting the following point.

1. When installing the steering cowl(10), be sure to pass the harnesses through the route as shown in the figure so that the starter switch harness(7), the combination switch harness(8) and the inflator module harness(9) will not get caught.

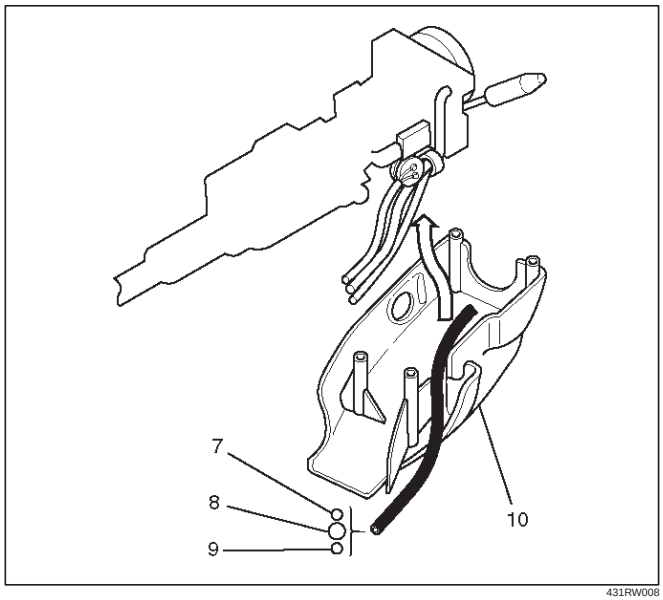

431RW008

Lighting Switch (Combination Switch)

Removal

1. Disconnect the battery ground cable.
2. Remove the instrument panel driver lower cover(5).
   Refer to the Instrument Panel Assembly in Body Structure section.
3. Remove seven screws to remove the steering cowl(4).
4. Disconnect the SDM (air bag controller) connector located at lower of the instrument panel driver lower cover.
5. Remove four fixing screws and disconnect the driver inflator module connector to remove the driver inflator module(3).

CAUTION: When carrying a live inflator module, make sure the bag opening is pointed away from you. In case of an accidental deployment, the bag will then deploy with minimal chance of injury. Never carry the inflator module by the wires or connector on the underside of the module.

When placing a live inflator module on a bench or other surface, always face the bag and trim cover up, away from the surface. This is necessary so that a free space is provided to allow the air bag to expand in the unlikely event of accidental deployment.

6. Remove the steering wheel(2).
   Refer to the Steering Wheel in Steering section.
7. Disconnect the SRS coil assembly connector, remove four fixing screws to remove the SRS coil assembly(1).
8. Disconnect the lighting switch connector, remove four fixing screws to remove the lighting switch(6).

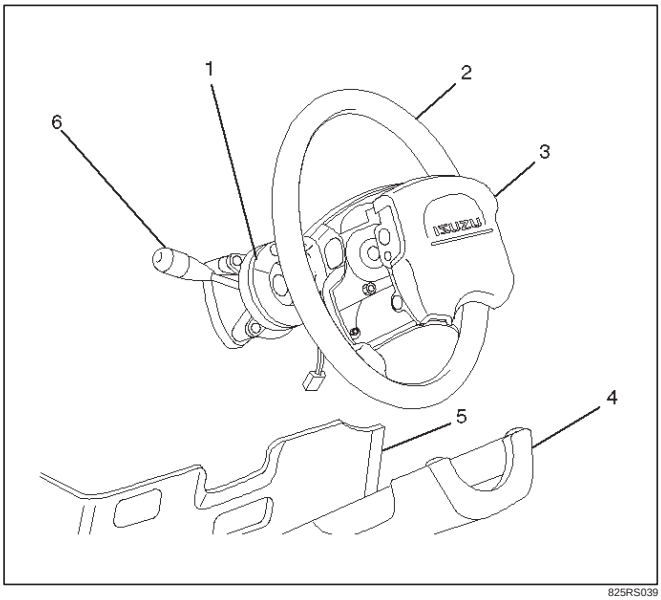

825RS039

Installation

To install, follow the removal steps in the reverse order, noting the following points.

1. Check to see if the vehicle is in the straight driving condition and turn the rotary section of the SRS coil assembly provided to the upper surface of the lighting switch (combination switch) counterclockwise fully until it stops.
   Then from where it stops, turn it back about 3 rotations to set the alignment marks(7) together before installing the steering wheel.

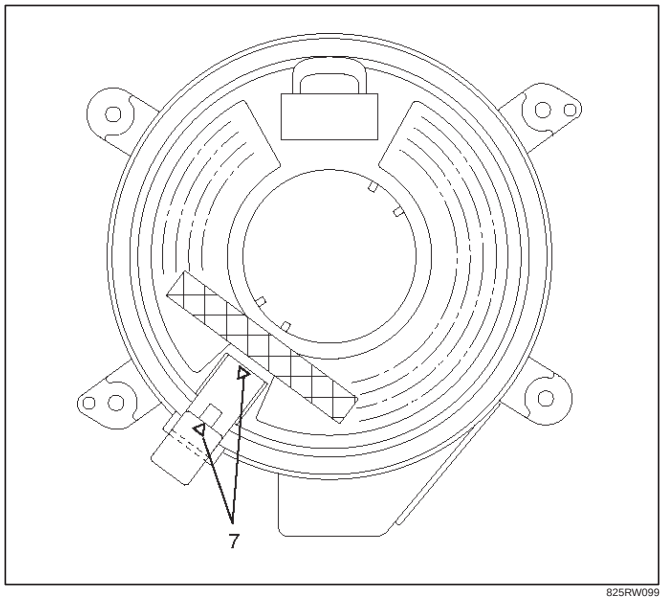

825RW099

2. Tighten the steering shaft nut to the specified torque.

   Torque: 34 N·m (3.5 kg·m/25 lb ft)

3. When connect the double lock type of inflator module connector, insert the connector completely and lock at outside.
   Imperfect locking may cause malfunction of SRS system circuit.
4. When installing the steering cowl(11), be sure to pass the harnesses through the route as shown in the figure so that the starter switch harness(8), the combination switch harness(9) and inflator module harness(10) will not get caught.

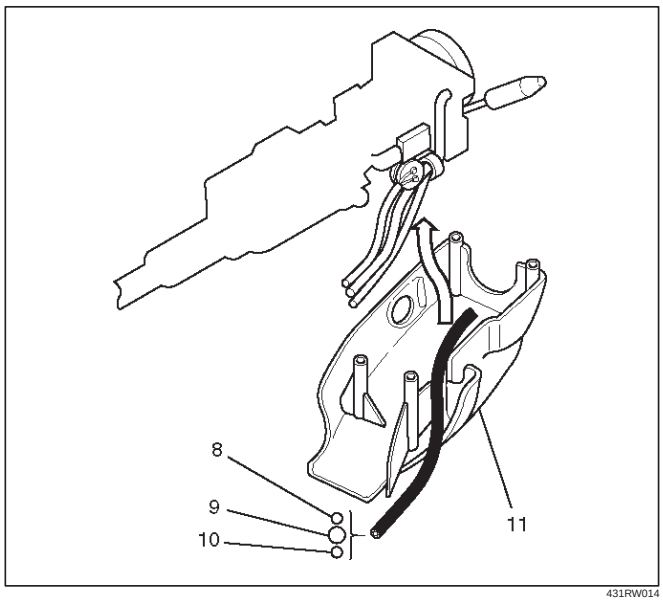

431RW014

Fog Light Switch

Removal

1. Disconnect the battery ground cable.
2. Remove the front console assembly(1).
   Refer to the Instrument Panel Assembly in Body Structure section.
3. Remove the lower cluster assembly(2).
   Refer to the Instrument Panel Assembly in Body Structure section.
4. Remove the instrument panel driver lower cover assembly(3).
   Refer to the Instrument Panel Assembly in Body Structure section.

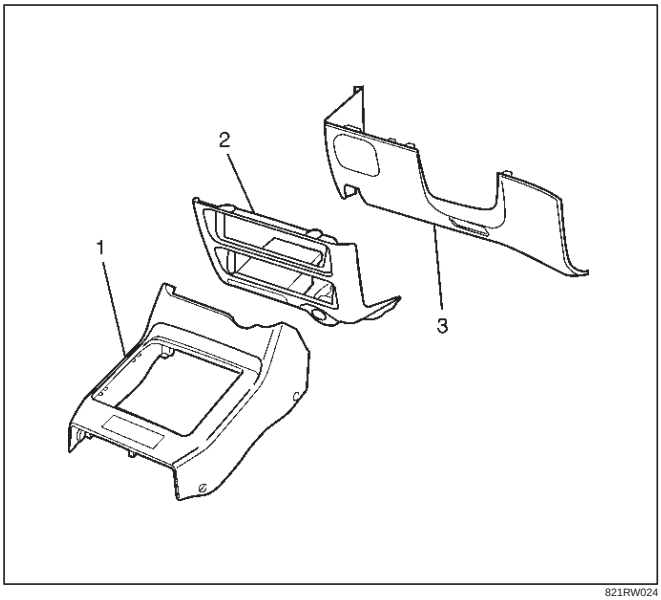

821RW024

5. Remove the instrument panel cluster assembly(4).
   Refer to the Instrument Panel Assembly in Body Structure section.
6. Disconnect the connector and push the lock from the back side of the instrument panel cluster assembly to remove the fog light switch(5).

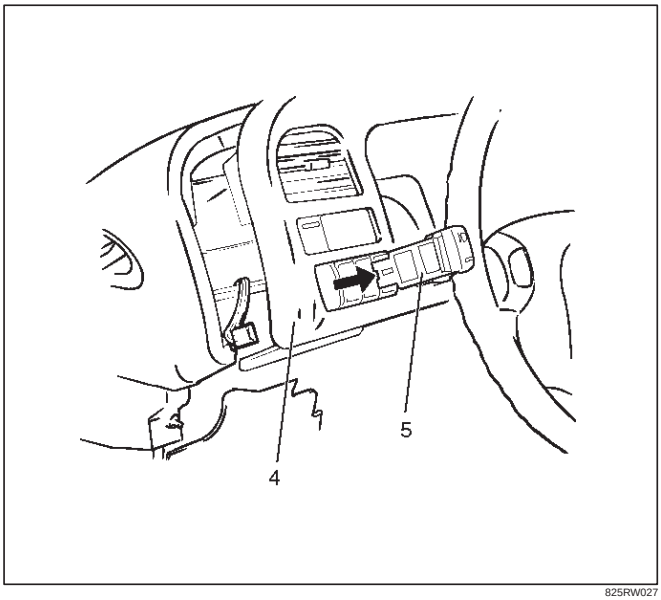

825RW027

Installation

To install, follow the removal steps in the reverse order, noting the following point:

1. Push in the switch with your fingers until the switch is locked securely.

Stoplight Switch (W/O Cruise Control)

Removal

1. Disconnect the battery ground cable.
2. Disconnect the connector(3), loosen the lock nut(1) and then remove the stoplight switch(2) by turning it.

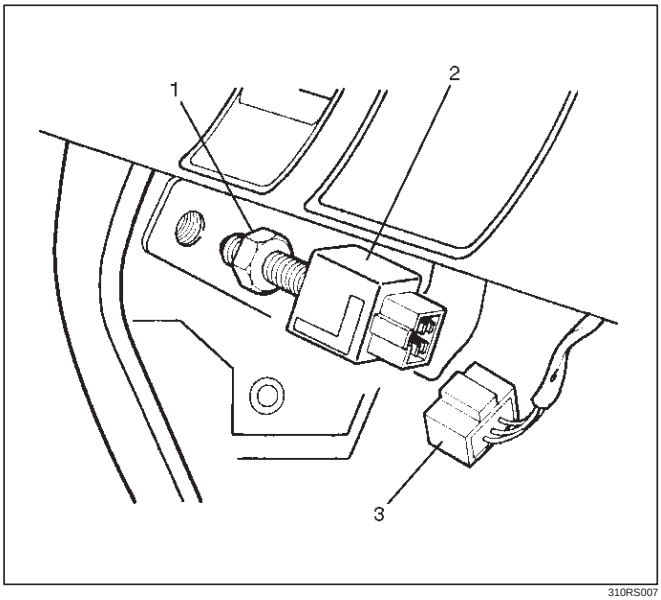

310RS007

Installation

To install, follow the removal steps in the reverse order, noting the following points.

1. Check to see if the brake pedal has been returned by the return spring to the specified position.
2. Turn the stoplight switch(1) clockwise until the tip of the threaded portion of the switch contacts the pedal arm(2).
3. Turn the switch counterclockwise until the space between the tip of the threaded portion and the pedal arm is 0.5 to 1.0 mm (0.02 – 0.04 in.).

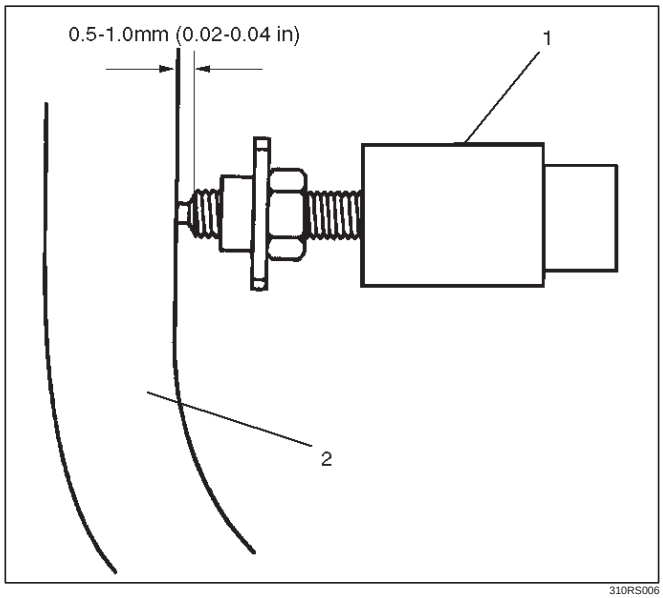

310RS006

Brake Switch (W/Cruise Control)

Removal

1. Disconnect the battery ground cable.
2. Disconnect the connector(1), loosen the lock nut(3) and then remove the brake switch(2) by turning it.

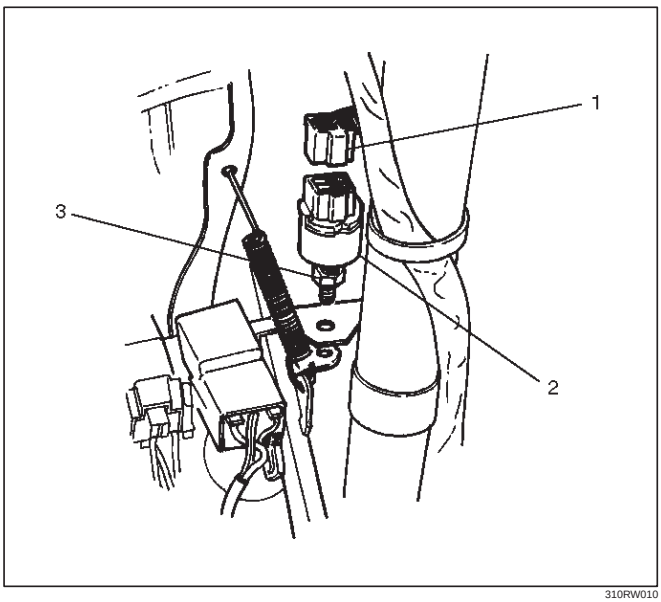

310RW010

Installation

To install, follow the removal steps in the reverse order, noting the following points.

1. Check to see if the brake pedal has been returned by the return spring to the specified position.
2. Turn the switch clockwise until the tip of the threaded portion of the brake switch contacts the pedal arm.
3. Turn the switch counterclockwise until the space between the tip of the threaded portion and the pedal arm is 0.5 to 1.0 mm (0.02 – 0.04 in.).

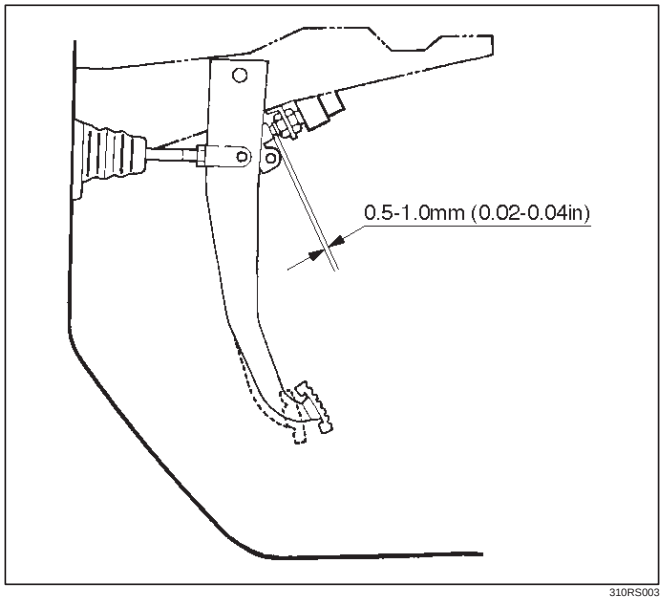

310RS003

Turn Signal Switch (Combination Switch)

Removal and Installation

Refer to the removal and installation steps of the Lighting Switch (Combination Switch) in this section.

Hazard Warning Switch

Removal

1. Disconnect the battery ground cable.
2. Remove the front console assembly(1).
   Refer to the Instrument Panel Assembly in Body Structure section.
3. Remove the lower cluster assembly(2).
   Refer to the Instrument Panel Assembly in Body Structure section.
4. Remove the instrument panel driver lower cover assembly(3).
   Refer to the Instrument Panel Assembly in Body Structure section.

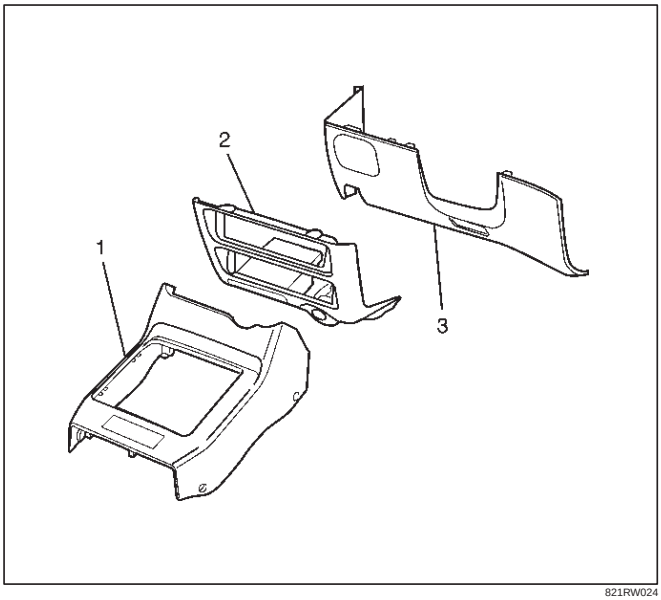

821RW024

5. Remove the instrument panel cluster assembly(4).
   Refer to the Instrument Panel Assembly in Body Structure section.
6. Disconnect the connector and push the lock from the back side of the instrument panel cluster assembly to remove the hazard warning switch(5).

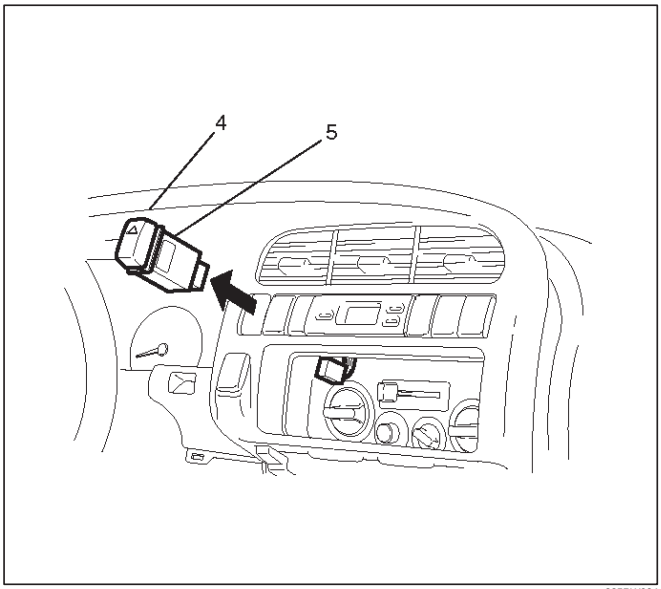

825RW024

Installation

To install, follow the removal steps in the reverse order, noting the following point.

1. Push in the switch with your fingers until it locks securely.

Tailgate Switch

Removal

1. Disconnect the battery ground cable.
2. Remove the screw and disconnect the connector(1) to remove the tailgate switch(2).

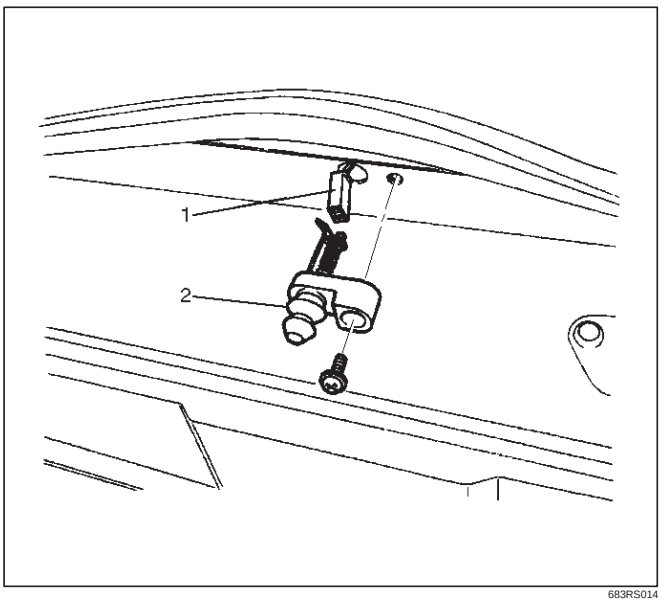

683RS014

Installation

To install, follow the removal steps in the reverse order.

Door Switch

Removal

1. Disconnect the battery ground cable.
2. Remove the screw and disconnect the connector to remove the door switch(1).

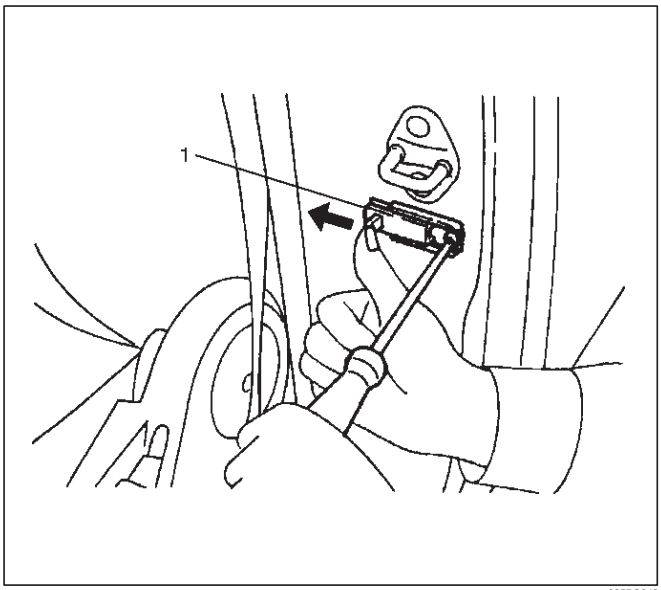

825RS043

Installation

To install, follow the removal steps in the reverse order.

Rear Defogger Switch

Removal

1. Disconnect the battery ground cable.
2. Remove the front console assembly(1).
   Refer to the Instrument Panel Assembly in Body Structure section.
3. Remove the lower cluster assembly(2).
   Refer to the Instrument Panel Assembly in Body Structure section.
4. Remove the instrument panel driver lower cover assembly(3).
   Refer to the Instrument Panel Assembly in Body Structure section.

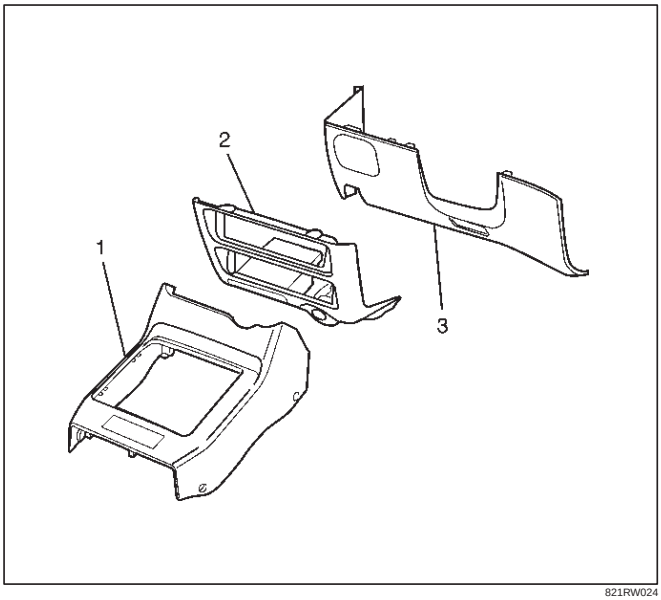

821RW024

5. Remove the instrument panel cluster assembly(4).
   Refer to the Instrument Panel Assembly in Body Structure section.
6. Disconnect the connector and push the lock from the back side of the instrument panel cluster assembly to remove the rear defogger switch(5).

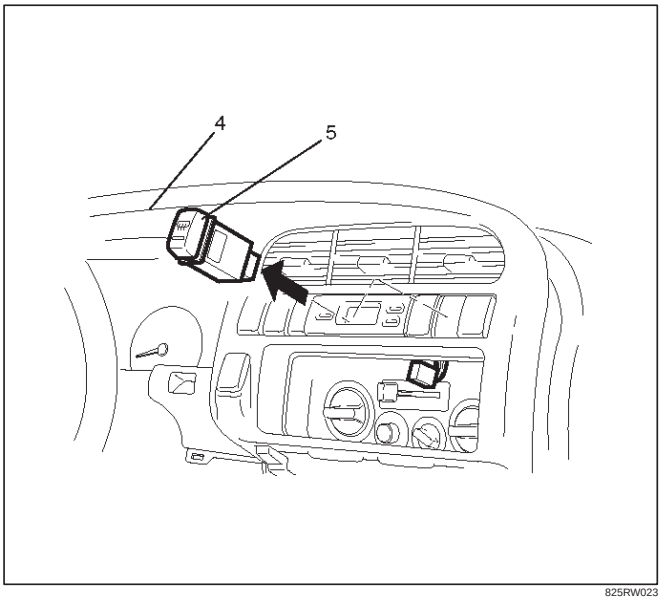

825RW023

Installation

To install, follow the removal steps in the reverse order, noting the following point.

1. Push in the switch with your fingers until it locks securely.

Seat Heater Switch

Removal

1. Disconnect the battery ground cable.
2. Remove four fixing screws and disconnect the switch connectors to remove the front console assembly(4).
3. Push the lock from the back side of the front console assembly to remove the seat heater switch(5).

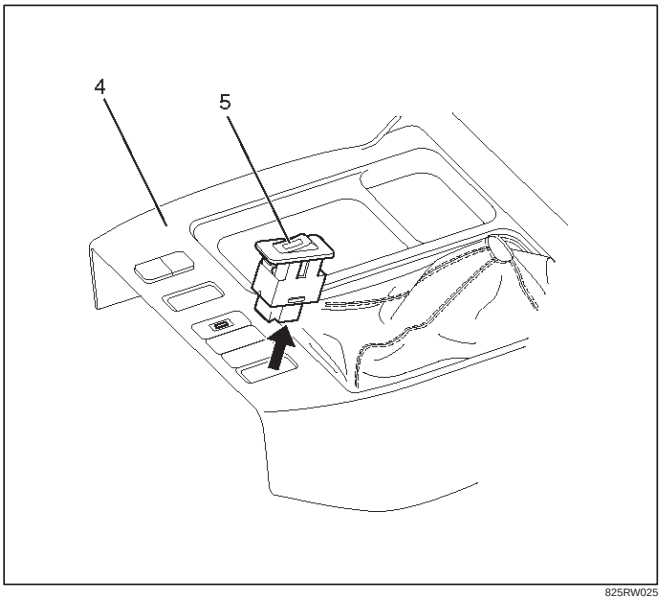

825RW025

Installation

To install, follow the removal steps in the reverse order, noting the following point.

1. Push the switch with your fingers until it locks securely.

Key Remind Switch (Starter Switch)

Removal and Installation

Refer to the removal and installation on steps of the Starter Switch in this section.

Illumination Controller

Removal

1. Disconnect the battery ground cable.
2. Remove the front console assembly(1).
   Refer to the Instrument Panel Assembly in Body Structure section.
3. Remove the lower cluster assembly(2).
   Refer to the Instrument Panel Assembly in Body Structure section.
4. Remove the instrument panel driver lower cover assembly(3).
   Refer to the Instrument Panel Assembly in Body Structure section.

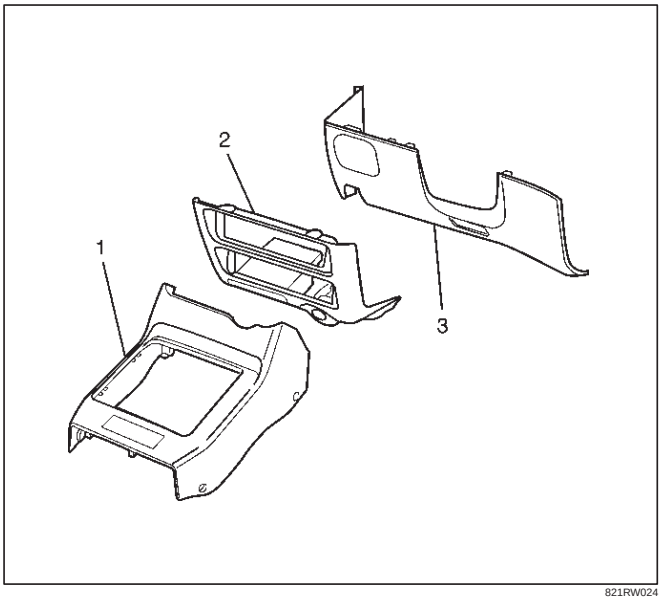

821RW024

5. Remove the instrument panel cluster assembly(4).
   Refer to the Instrument Panel Assembly in Body Structure section.
6. Disconnect the connector and push the lock from the back side of the instrument panel cluster assembly to remove the illumination controller(5).

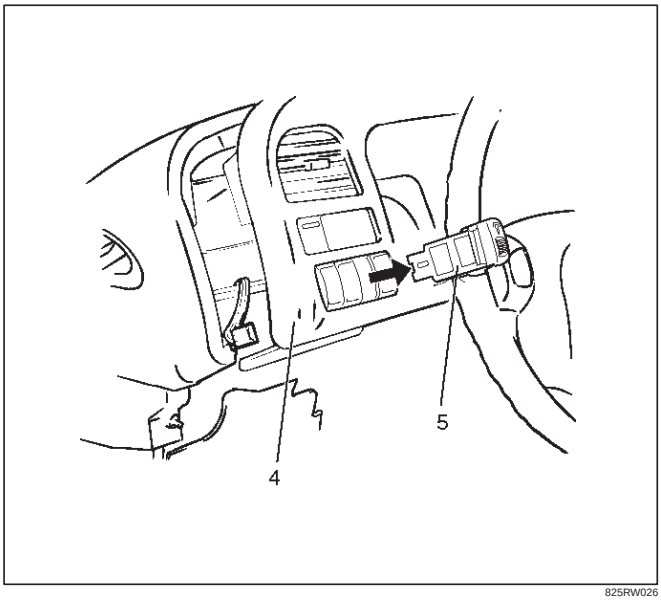

825RW026

Installation

To install, follow the removal steps in the reverse order, noting the following point.

1. Push in the switch with your fingers until the switch is locked securely.

Power/Winter Switch

Removal

1. Disconnect the battery ground cable.
2. Remove four fixing screws and disconnect the switch connectors to remove the front console assembly(4).
3. Push the lock from the back side of the front console assembly to remove the power/winter switch(5).

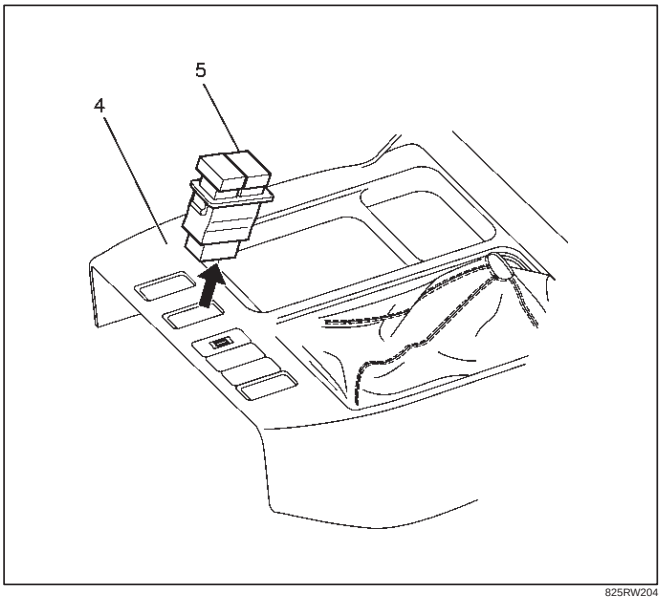

825RW204

Installation

To install, follow the removal steps in the reverse order, noting the following point.

1. Push the switch with your fingers until it locks securely.

Main Data and Specifications

Light and Bulb Specifications

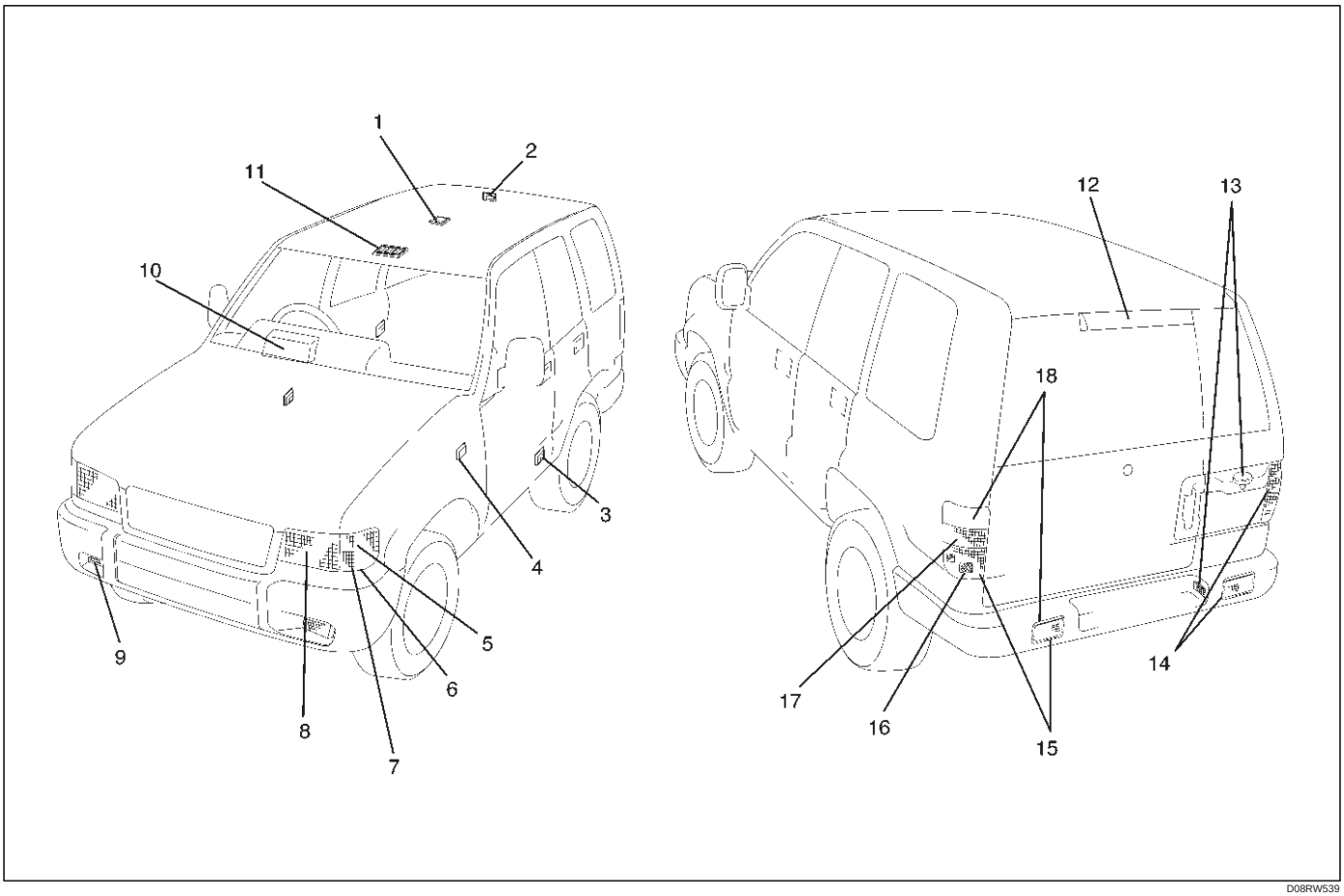

D08RW539

Legend

(1) Dome Light
(2) Luggage Room Light
(3) Courtesy Light
(4) Side Turn Signal Light
(5) Front Turn Signal Light
(6) Clearance Light
(7) Front Combination Light
(8) Headlight
(9) Fog Light
(10) Meter
(11) Map Light
(12) High Mount Step Light
(13) License Plate Light
(14) Rear combination Light
(15) Taillight/Stoplight
(16) Rear Fog Light
(17) Backup Light
(18) Rear Turn Signal Light.

Light Name			Rated Power	Number of Bulbs	Lens Color	Remarks
Headlight			60w/55w	2	White	Halogen
Front combination light	Turn signal light		21w	2	White	
	Clearance light		5w	2	Amber	
FRT fog light			55w	2	White	Halogen
Rear combination light	Bumper	Taillight/Stoplight	5w/21w	2	Red	
		Turn signal light	21w	2	Amber	
	Body	Taillight/Stoplight	5w/21w	2	Red	
		Turn signal light	21w	2	Amber	
Backup light			21w	2	White	
RR fog light			21w	2	Red	
Side turn signal light			5w	2	Amber	
License plate light	Bumper		5w	2	White	
	Body		5W	1	White	
High mount stoplight			—	—	Red	LED
Map light			5w	2	White	
Dome light			10w	1	White	
Luggage room light			8w	1	White	
Courtesy light			3.8w	2	White	
Indicator/ Warning light	A/C SW		60mA	1		
	RR defogger SW		0.84w	1		
	Mirror defogger SW		0.84w	1		
	FRT fog light SW		0.7w	1		
	RR fog light SW		0.7w	1		
	Cruise (Set)		1.4w	1		Meter
	Cruise (Main)		1.4w	1		Meter
	Check trans		3w	1		Meter
	Anti-theft		3w	1		Warning box
	Turn signal		1.4w	2		Meter
	Golw		1.4w	1		Meter
	Water sedimenter		1.4w	1		Meter
	High beam		1.4w	1		Meter
	ABS		1.4w	1		Meter
	Check engine		1.4w	1		Meter
	Low fuel		1.4w	1		Meter
	4WD		1.4w	1		Meter
	Oil Pressure		1.4w	1		Meter
	Brake system		1.4w	1		Meter
	Charge		1.4w	1		Meter
	Seat belt		2w	1		Meter
	A/T shift position		0.91w	7		Meter
	A/T oil temp		3w	1		Meter

	Power drive	1.4w	1		Meter
	Winter drive	1.4w	1		Meter
	Air bag	2w	1		Meter
Illumination Light	Engine warming SW	0.84w	1		
	FRT fog light SW	0.84w	1		
	RR fog light SW	0.84w	1		
	Glove box	1.2w	1		
	Ashtray	1.4w	1		
	Illumination controller	0.7w	1		
	Heater bezel	150mA	2		
	Hazard warning light SW	0.84w	1		
	Meter	3.4w	4		Meter ASM
	Cigar lighter	1.4w	1		
	Rear wiper & washer SW	0.84w	1		
	Rear defogger SW	0.84w	1		
	Mirror control SW	45mA	1		
	Mirror defogger SW	0.7w	1		
	Mirror folding SW	0.7w	1		
	A/T select lever	1.2w	1		
	Power & Winter SW	50mA	2		
	Cruise control main SW	0.84w	1		
	Headlight wiper SW	0.84w	1		

Torque Specifications

Application	N·m	kg·m	Lb Ft	Lb In
Steering Shaft Nut	34	3.5	25	—

WIPER / WASHER SYSTEM

CONTENTS

Service Precaution 8B–2
Windshield Wiper/Washer System 8B–2
General Description 8B–2
Windshield Wiper And Washer Switch 8B–2
Removal and Installation 8B–2
Windshield Wiper Motor 8B–2
Removal 8B–2
Installation 8B–2
Windshield Washer Motor 8B–3
Removal 8B–3
Installation 8B–3
Windshield Wiper Linkage 8B–4
Windshield Wiper Linkage and Associated Parts 8B–4
Removal 8B–4
Installation 8B–4
Windshield Wiper Arm/Blade 8B–5
Removal 8B–5
Installation 8B–5
Windshield Wiper Blade Rubber 8B–6
Removal 8B–6
Installation 8B–6
Rear Wiper/Washer System 8B–7
General Description 8B–7
Rear Wiper and Washer Switch 8B–7
Removal 8B–7
Installation 8B–7
Rear Wiper Motor 8B–8
Removal 8B–8
Installation 8B–8
Alarm & Relay Control Unit 8B–9
Removal 8B–9
Installation 8B–9
Rear Washer Motor 8B–9
Removal 8B–9
Installation 8B–9
Rear Wiper Arm/Blade 8B–10
Removal 8B–10
Installation 8B–10
Rear Washer Nozzle 8B–10
Removal 8B–10
Installation 8B–10
Rear Washer Nozzle Angle Adjustment . . . 8B–10
Rear Wiper Blade Rubber 8B–11
Removal and Installation 8B–11
Headlight Wiper/Washer 8B–11
General Description 8B–11
Headlight Wiper and Washer Switch 8B–12
Removal 8B–12
Installation 8B–12
Headlight Wiper Arm & Blade 8B–13
Removal 8B–13
Installation 8B–13
Headlight Wiper Motor 8B–13
Removal 8B–13
Installation 8B–13
Headlight Washer Motor 8B–14
Removal and Installation 8B–14
Main Data and Specifications 8B–14

Service Precaution

WARNING: IF SO EQUIPPED WITH A SUPPLEMENTAL RESTRAINT SYSTEM (SRS), REFER TO THE SRS COMPONENT AND WIRING LOCATION VIEW IN ORDER TO DETERMINE WHETHER YOU ARE PERFORMING SERVICE ON OR NEAR THE SRS COMPONENTS OR THE SRS WIRING. WHEN YOU ARE PERFORMING SERVICE ON OR NEAR THE SRS COMPONENTS OR THE SRS WIRING, REFER TO THE SRS SERVICE INFORMATION. FAILURE TO FOLLOW WARNINGS COULD RESULT IN POSSIBLE AIR BAG DEPLOYMENT, PERSONAL INJURY, OR OTHERWISE UNNEEDED SRS SYSTEM REPAIRS.

CAUTION: Always use the correct fastener in the proper location. When you replace a fastener, use ONLY the exact part number for that application. ISUZU will call out those fasteners that require a replacement after removal. ISUZU will also call out the fasteners that require thread lockers or thread sealant. UNLESS OTHERWISE SPECIFIED, do not use supplemental coatings (Paints, greases, or other corrosion inhibitors) on threaded fasteners or fastener joint interfaces. Generally, such coatings adversely affect the fastener torque and the joint clamping force, and may damage the fastener. When you install fasteners, use the correct tightening sequence and specifications. Following these instructions can help you avoid damage to parts and systems.

Windshield Wiper/Washer System

General Description

The circuit consists of the starter switch, windshield wiper & washer switch, windshield wiper motor, windshield washer motor and windshield intermittent relay.

When the wiper & washer switch is turned on with the starter switch on, the battery voltage is applied to the wiper motor to activate the wiper.
The washer motor squirts glass cleaning fluid while the washer switch is being pushed. The intermittent relay is used to control motion of the wiper.

Windshield Wiper And Washer Switch

Removal and Installation

Refer to the Lighting Switch (Combination Switch) in Lighting System section.

Windshield Wiper Motor

Removal

1. Disconnect the battery ground cable.
2. Disconnect the connector.
3. Remove 4 mounting bolts.
4. Remove the windshield wiper motor(1).

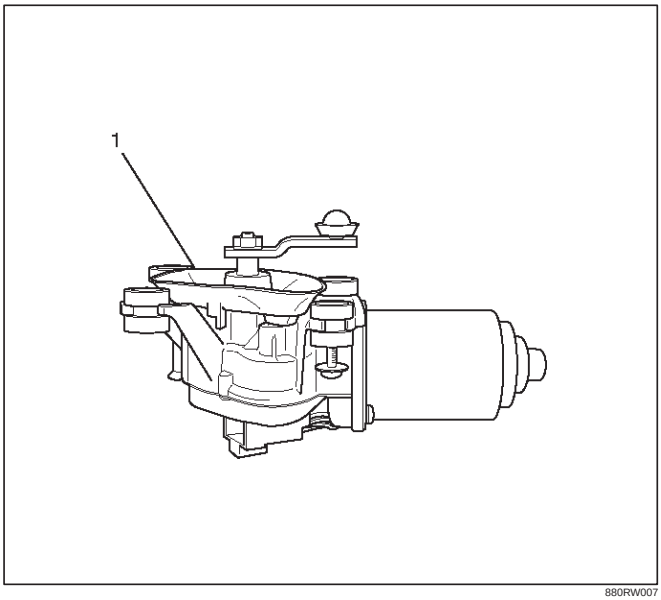

880RW007

Installation

To install, follow the removal steps in the reverse order.

Windshield Washer Motor

Removal

1. Disconnect the battery ground cable.
2. Remove the fender inner liner (right side) (1).
3. Remove the screws and then remove the front combination light(2).
4. Remove 2 screws, the filler neck and the hose.
5. Disconnect the windshield washer motor connector and remove the washer tank (4).
6. Pull the windshield washer motor(3) from the washer tank(4).

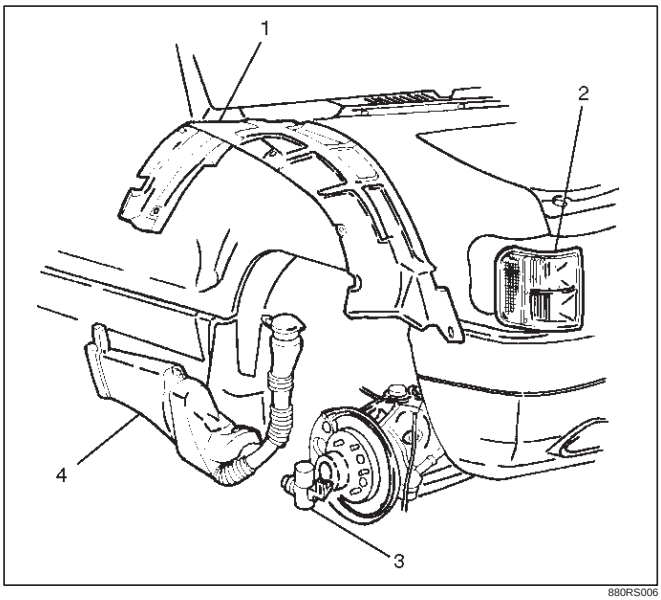

880RS006

Installation

To install, follow the removal steps in the reverse order.

Windshield Wiper Linkage

Windshield Wiper Linkage and Associated Parts

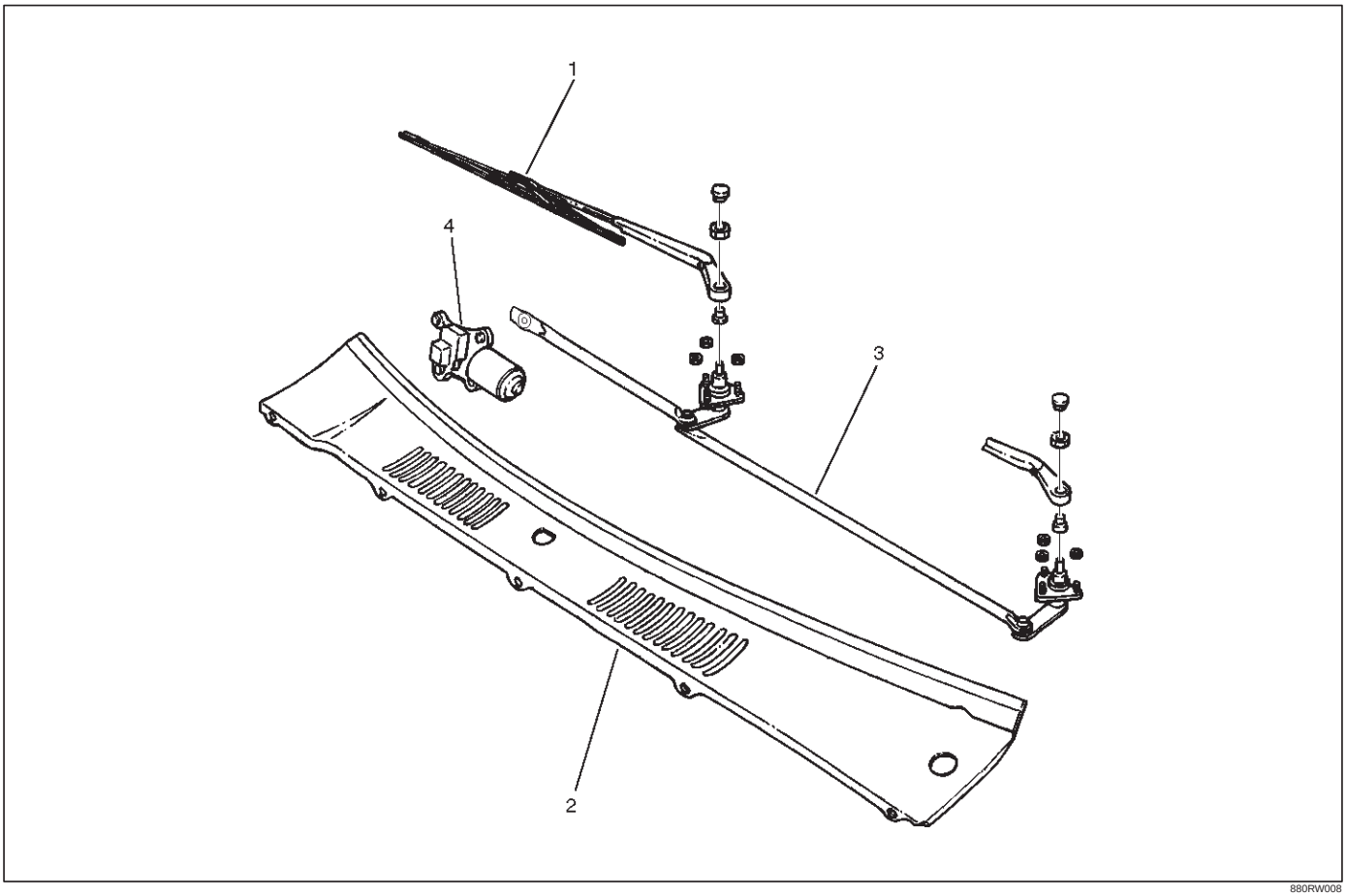

880RW008

Legend

(1) Windshield Wiper Arm/Blade
(2) Vent Cowl Cover
(3) Windshield Wiper Linkage Assembly
(4) Windshield Wiper Motor

Removal

1. Disconnect the battery ground cable.
2. Remove the windshield wiper arm/blade.
3. Remove the windshield wiper motor.
4. Remove the pivot assembly mounting nuts, fixing screws and then remove the vent cowl cover.
5. Take out the windshield wiper linkage assembly from the opening of the cowl.

Installation

To install, follow the removal steps in the reverse order.

Windshield Wiper Arm/Blade

Removal

1. Pry the cap(2) off with the tip of a screwdriver.
2. Remove the nut(3).
3. Remove the wiper/blade(1).

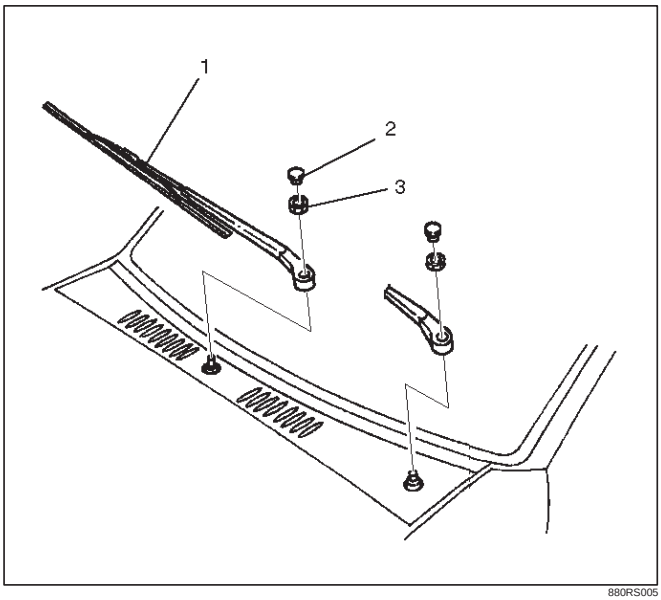

880RS005

Installation

To install, follow the removal steps in the reverse order, noting the following points.

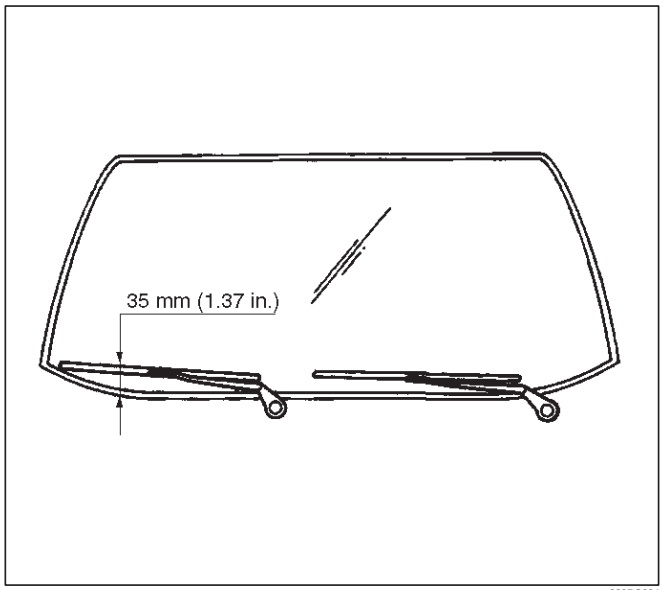

880RS004

1. Wiper arm/blade
   - Before installing the wiper arm/blade to the shaft, confirm that the motor stops at the auto-stop position.
   - Set the wiper arm/blade so that the tips of both blades are positioned about 35 mm (1.37 in) from the upper edge of the cowl cover as shown in the figure.
   - Tighten the nuts to the specified torque.

   Torque: 31 N·m (3.2 kg·m/23 lb ft)

Windshield Wiper Blade Rubber

Removal

1. Push the wiper blade lock(1) while pulling the wiper blade in the arrow direction as shown in the figure.

CAUTION: When the wiper blade has been removed, wrap the tip of the wiper arm with cloth, to avoid damaging the glass.

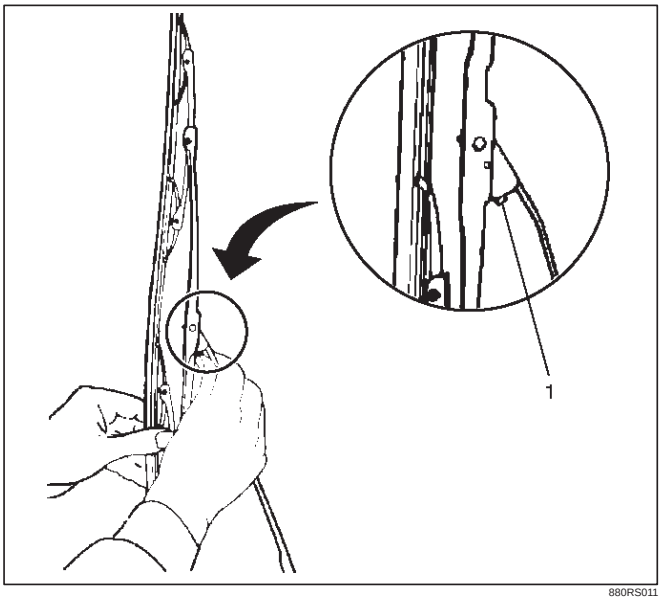

880RS011

2. Pull the end of rubber and remove the projection(3) from the click of the blade stay (2).

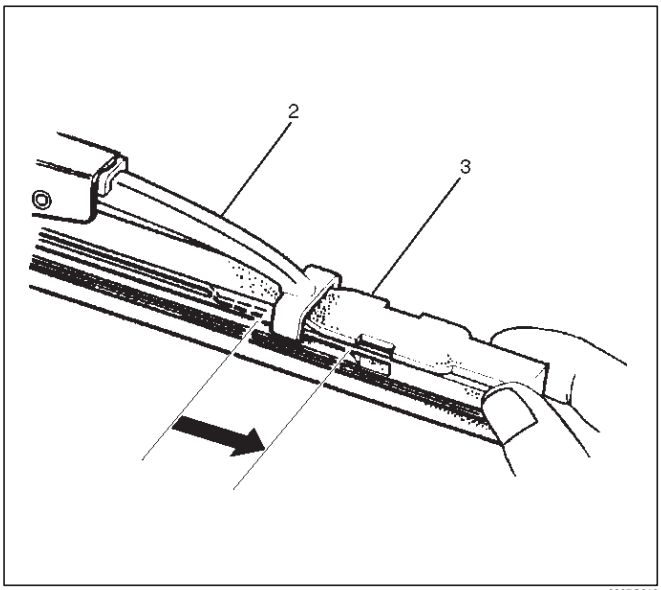

880RS010

3. Pull the rubber out in the same direction.

Installation

To install, follow the removal steps in the reverse order, noting the following points.

1. Install the click of the blade stay in the groove of the new rubber and slide it in. Complete wiper blade installation by pushing the click.

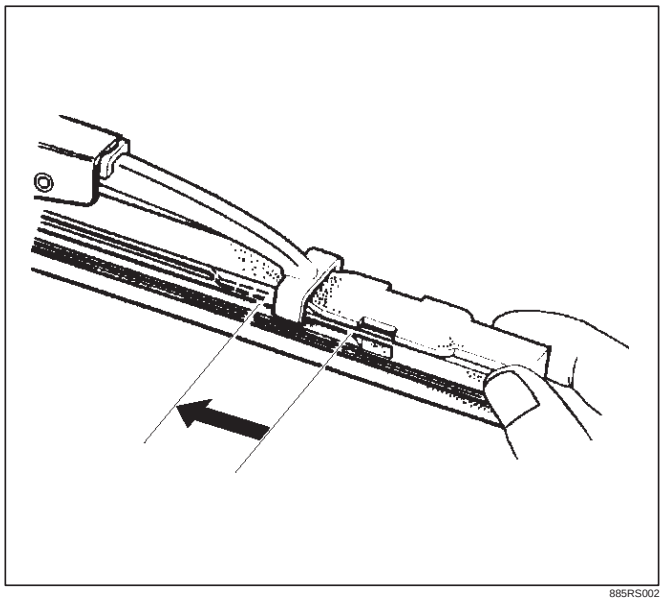

885RS002

2. Finally, check that the click of the stay has caught in the hole of the rubber.

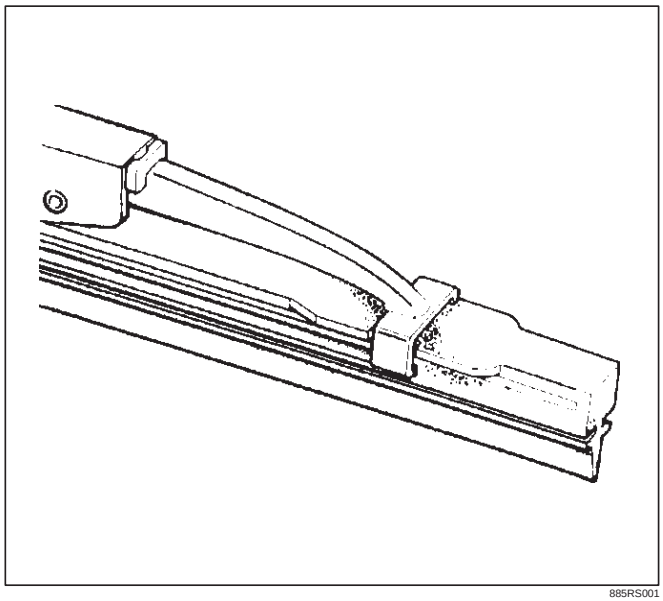

885RS001

Rear Wiper/Washer System

General Description

The circuit consists of the starter switch, rear wiper & washer switch, rear wiper motor, rear washer motor and rear intermittent relay.

When the wiper & washer switch is turned on with the starter switch on, the battery voltage is applied to the wiper motor to activate the wiper.
The washer motor squirts glass cleaning fluid while the washer switch is being pushed. The intermittent relay is used to control motion of the wiper.

Rear Wiper and Washer Switch

Removal

1. Disconnect the battery ground cable.
2. Remove the front console assembly(1).
   Refer to the Instrument Panel Assembly in Body Structure section.
3. Remove the lower cluster assembly(2).
   Refer to the Instrument Panel Assembly in Body Structure section.
4. Remove the instrument panel driver lower cover(3).
   Refer to the Instrument Panel Assembly in Body Structure section.

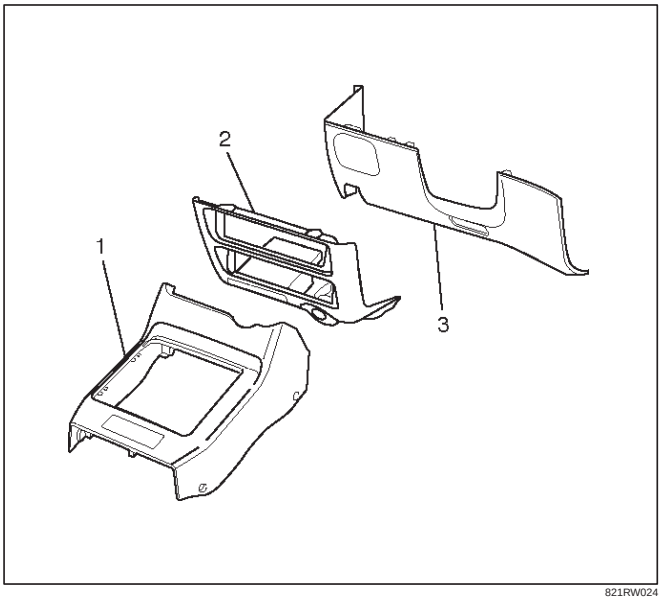

821RW024

5. Remove the instrument panel cluster assembly(4).
   Refer to the Instrument Panel Assembly in Body Structure section.
6. Disconnect the connector and push the lock from the back side of the instrument panel cluster assembly to remove the rear wiper & washer switch(5).

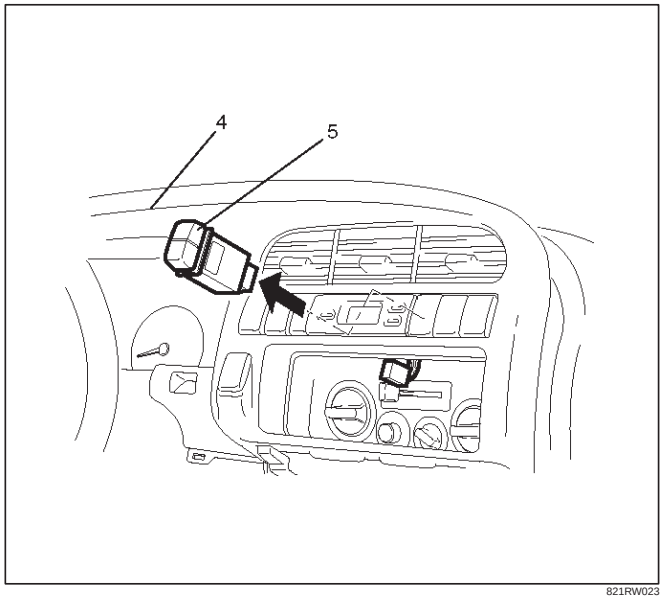

821RW023

Installation

To install, follow the removal steps in the reverse order, noting the following point:

1. Push the switch with your fingers until it locks securely.

Rear Wiper Motor

Removal

1. Disconnect the battery ground cable.
2. Remove the tailgate trim pad.
3. Remove the wiper arm/blade.
   Refer to the removal steps of the Rear Wiper Arm/Blade in this section.
4. Disconnect the connector remove the wiper shaft nut, remove the fixing screws and then remove the rear wiper motor(1).

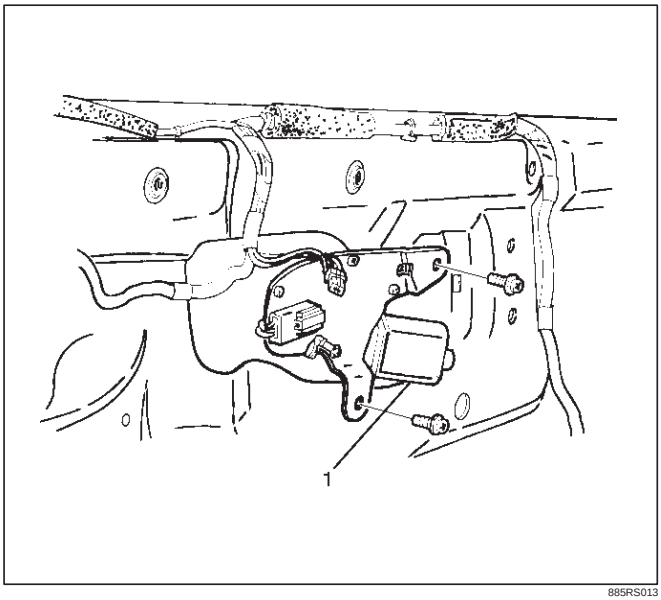

885RS013

Installation

To install, follow the removal steps in the reverse order, noting the following points.

1. Before installing the wiper arm/blade to the motor shaft, confirm that the motor stops at the auto-stop position.
2. Install the wiper arm so that the blade gets parallel to the lowermost heat wire(2) of the rear defogger (w/rear defogger), or position the blade 20 mm (0.79 in) from edge of tailgate glass (W/O rear defogger).

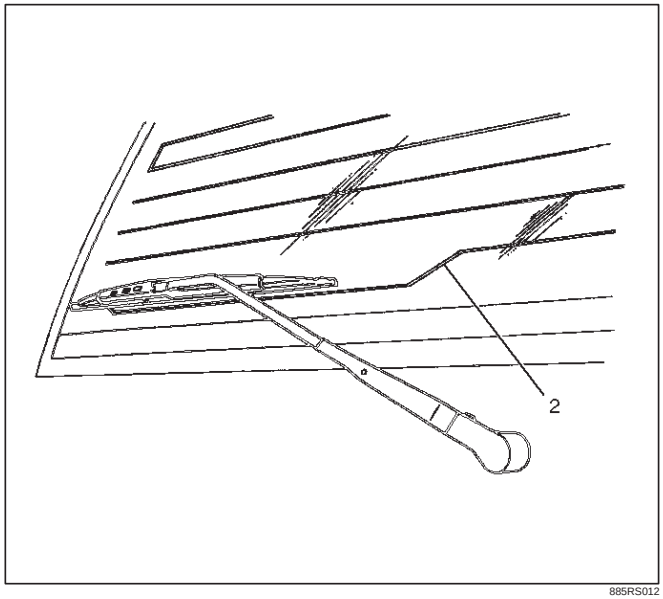

885RS012

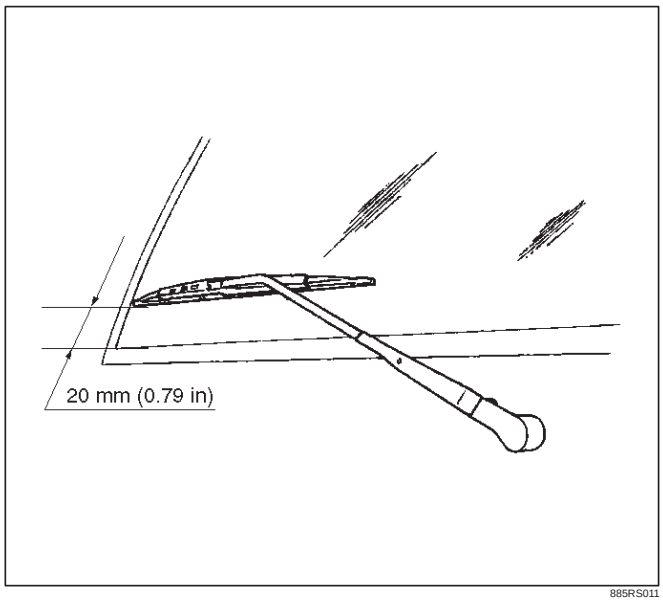

885RS011

3. Tighten the motor shaft nut to the specified torque.
   Torque: 6 N·m (0.6 kg·m/52 lb in)
4. Tighten the wiper arm nut to the specified torque.
   Torque: 9 N·m (0.9 kg·m/78 lb in)

Alarm & Relay Control Unit

Removal

1. Disconnect the battery ground cable.
2. Remove the glove box.
3. Remove the instrument panel passenger lower cover assembly.
4. Remove the passenger Knee bolster reinforcement assembly.
5. Remove the fixing bolts, disconnect the connectors and then remove the alarm & relay control unit (1).

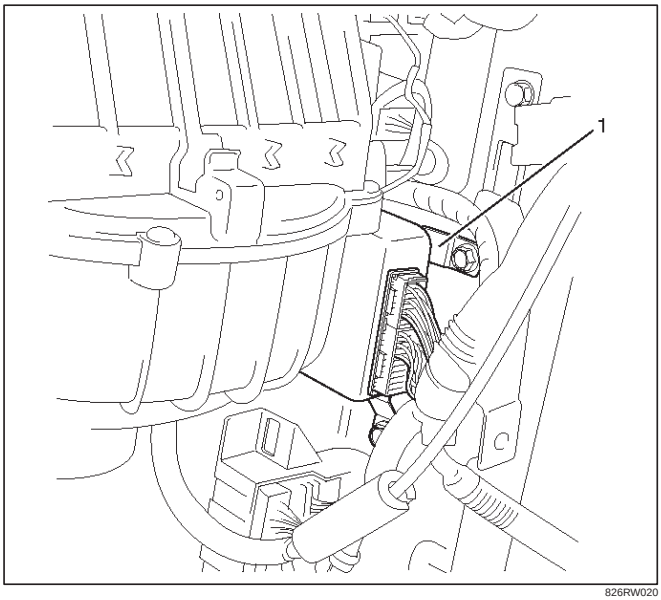

826RW020

Installation

To install, follow the removal steps in the reverse order.

Rear Washer Motor

Removal

1. Disconnect the battery ground cable.
2. Remove the tailgate trim pad(2).
3. Remove two screws, disconnect the connector, remove the washer hose and then remove the rear washer tank(3).
4. Pull out the rear washer motor(1) from the washer tank.

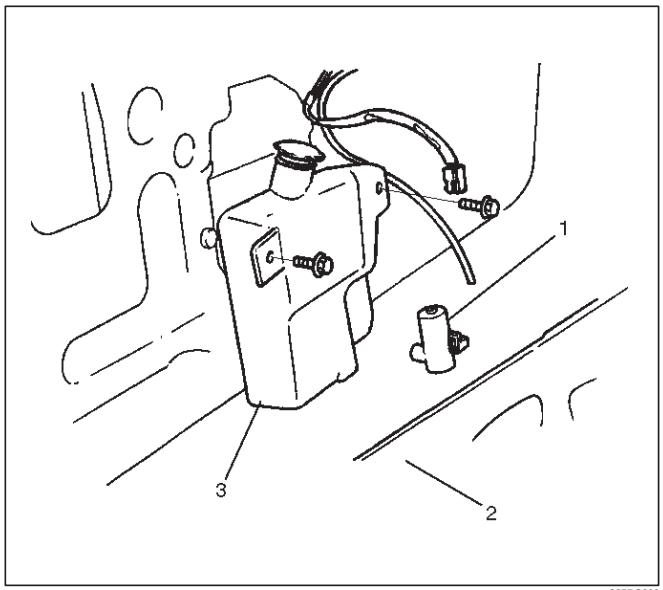

885RS009

Installation

To install, follow the removal steps in the reverse order.

Rear Wiper Arm/Blade

Removal

1. Remove the arm nut(2).
2. Remove the wiper arm/blade(1).

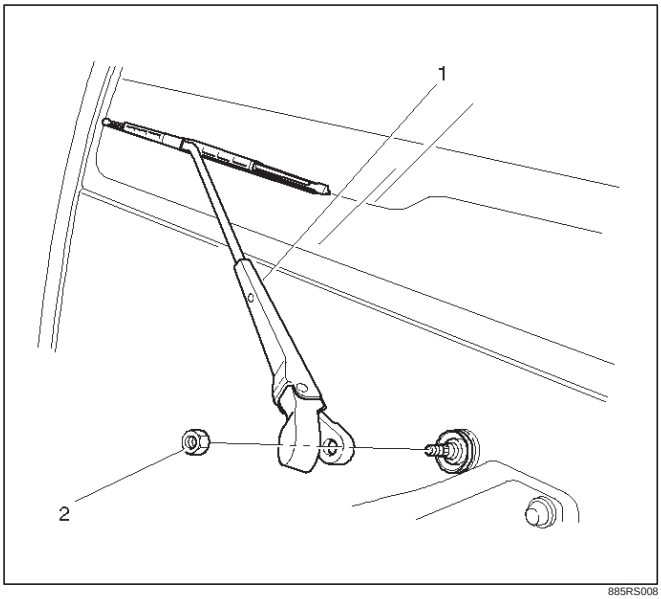

885RS008

Installation

Refer to the installation steps of the Rear Wiper Motor in Wiper/Washer System section.

Rear Washer Nozzle

Removal

1. Disconnect the hose(3).
2. Remove the lock nut(2), and then remove the washer nozzle(1).

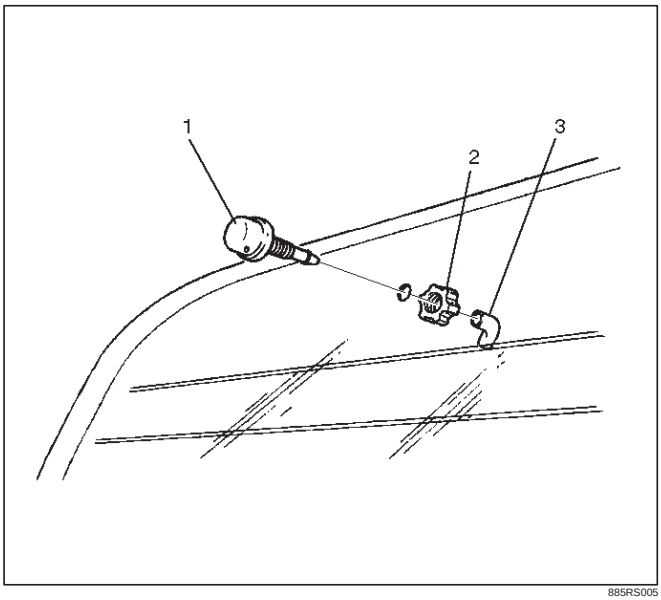

885RS005

Installation

To install, follow the removal steps in the reverse order.

Rear Washer Nozzle Angle Adjustment

Loosen the lock nut(2) of the washer nozzle(1) to adjust the injection angle of the cleaning fluid, and then retighten the lock nut(2).

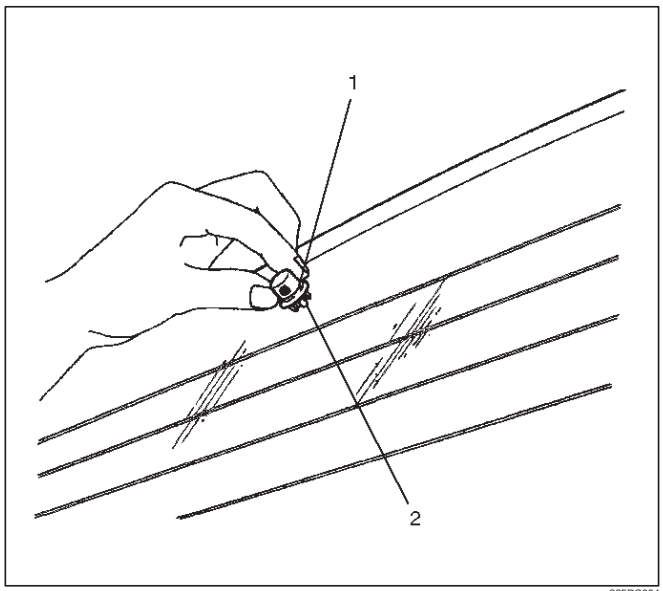

885RS004

Rear Washer Spray Pattern

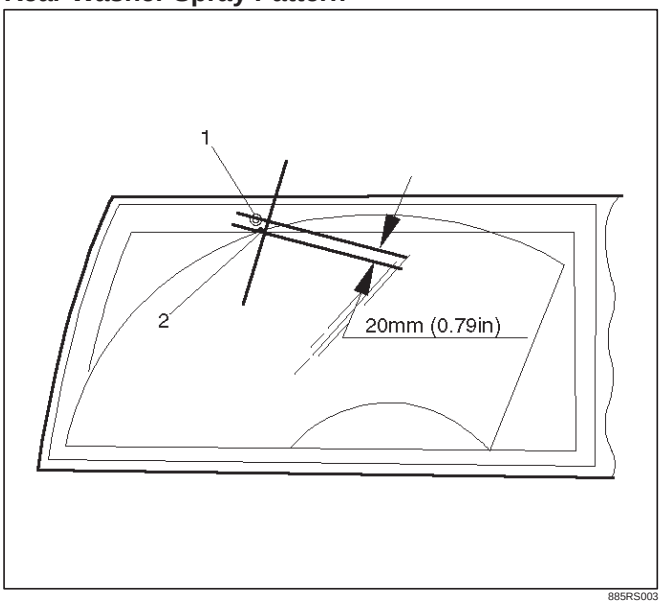

Legend
(1) Washer Nozzle
(2) Spray Target

Rear Wiper Blade Rubber

Removal and Installation

Refer to the Windshield Wiper Blade Rubber in this section.

Headlight Wiper/Washer

General Description

The circuit consists of the starter switch, headlight wiper/washer switch, headlight wiper motor and washer motor. By pushing the headlight wiper/washer switch with the starter switch on, the wiper will make 5 strokes with washer solution applied between each of the first 4 strokes, regardless of the length of time the switch is held down.
The washer nozzle is installed to the wiper blade, and the tank to which the washer motor is installed shared among the headlight washer and the windshield washer.

Headlight Wiper and Washer Switch

Removal

1. Disconnect the battery ground cable.
2. Remove the front console assembly(1).
   Refer to the Instrument Panel Assembly in Body Structure section.
3. Remove the lower cluster assembly(2).
   Refer to the Instrument Panel Assembly in Body Structure section.
4. Remove the instrument panel driver lower cover(3).
   Refer to the Instrument Panel Assembly in Body Structure section.

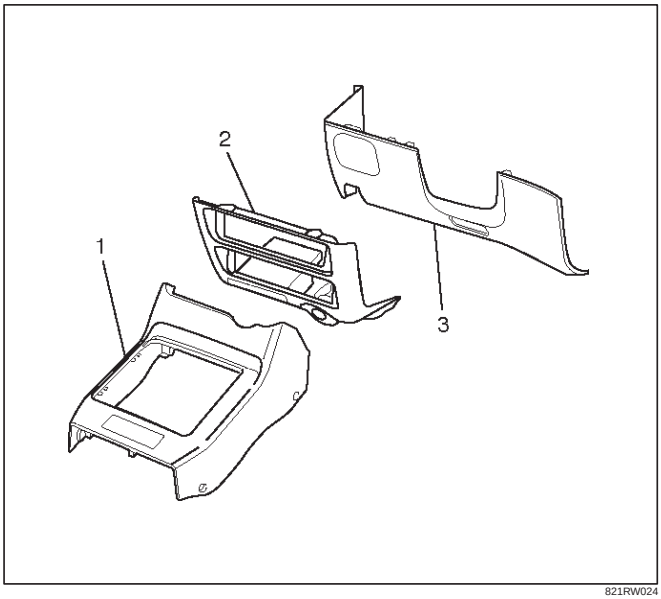

821RW024

5. Remove the instrument panel cluster assembly(4).
   Refer to the Instrument Panel Assembly in Body Structure section.
6. Disconnect the connector and push the lock from the back side of the instrument panel cluster assembly to remove the headlight wiper switch(5).

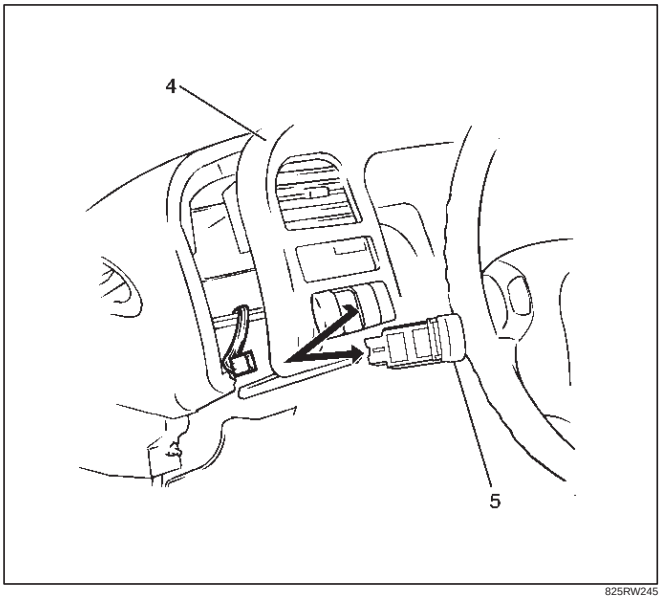

825RW245

Installation

To install, follow the removal steps in the reverse order, noting the following point:

1. Push the switch with your fingers until it locks securely.

Headlight Wiper Arm & Blade

Removal

1. Remove the wiper arm nut and the wiper arm & blade(1).
2. Disconnect the washer hose.

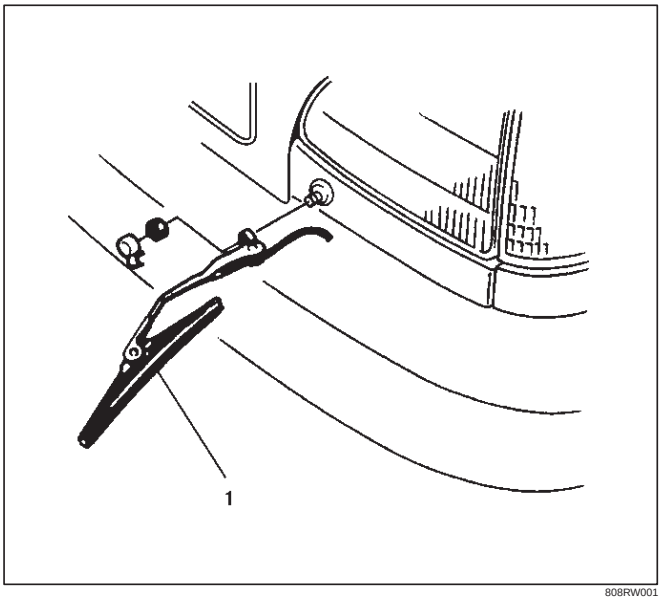

808RW001

Installation

To install, follow the removal steps in the reverse order, noting the following point:

1. Tighten the wiper arm nut to the specified torque.

   Torque: 5 N·m (0.5 kg·m/44 lb ft)

Headlight Wiper Motor

Removal

1. Disconnect the battery ground cable.
2. Remove the headlight wiper arm/blade(1).
3. Remove the headlight assembly(2).
   Refer to the Headlight removal steps in this section.
4. Remove 2 nuts and screws, the remove headlight wiper motor(3).

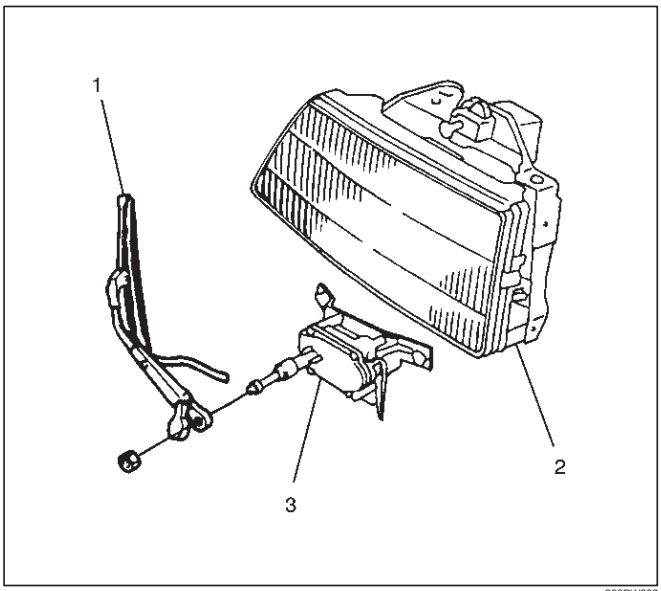

808RW002

Installation

To install, follow the removal steps in the reverse order, noting the following point:

1. Make sure that the motor stops at auto stop position prior to installing the wiper arm & blade to the motor shaft.

Headlight Washer Motor

Removal and Installation

Refer to the removal and installation steps of the windshield washer tank/motor under »Windshield Wiper/Washer And Rear Wiper/Washer” in this section.

Main Data and Specifications

Torque Specifications

Application	N·m	kg·m	Lb Ft	Lb In
Windshield Wiper Motor Shaft Nut	14	1.4	—	122
Windshield Wiper Arm Nuts	31	3.2	23	—
Rear Wiper Motor Shaft Nut	6	0.6	—	52
Rear Wiper Arm Nut	9	0.9	—	78
Headlight Wiper Arm Nuts	5	0.5	—	44

BODY AND ACCESSORIES

ENTERTAINMENT

CONTENTS

Service Precaution 8C–1
Cigarette Lighter 8C–2
General Description 8C–2
Removal 8C–2
Installation 8C–2
Digital Clock 8C–3
Removal 8C–3
Installation 8C–3
Rod Type Antenna 8C–4
Removal 8C–4
Installation 8C–4
Auto Antenna 8C–5
General Description 8C–5
Removal 8C–5
Installation 8C–5
Antenna Rod 8C–6
Removal 8C–6
Installation 8C–6
Radio 8C–7
Removal 8C–7
Installation 8C–7
Front Speaker 8C–8
Removal 8C–8
Installation 8C–8
Rear Speaker 8C–9
Removal 8C–9
Installation 8C–9

Service Precaution

WARNING: IF SO EQUIPPED WITH A SUPPLEMENTAL RESTRAINT SYSTEM (SRS), REFER TO THE SRS COMPONENT AND WIRING LOCATION VIEW IN ORDER TO DETERMINE WHETHER YOU ARE PERFORMING SERVICE ON OR NEAR THE SRS COMPONENTS OR THE SRS WIRING. WHEN YOU ARE PERFORMING SERVICE ON OR NEAR THE SRS COMPONENTS OR THE SRS WIRING, REFER TO THE SRS SERVICE INFORMATION. FAILURE TO FOLLOW WARNINGS COULD RESULT IN POSSIBLE AIR BAG DEPLOYMENT, PERSONAL INJURY, OR OTHERWISE UNNEEDED SRS SYSTEM REPAIRS.

CAUTION: Always use the correct fastener in the proper location. When you replace a fastener, use ONLY the exact part number for that application. ISUZU will call out those fasteners that require a replacement after removal. ISUZU will also call out the fasteners that require thread lockers or thread sealant. UNLESS OTHERWISE SPECIFIED, do not use supplemental coatings (Paints, greases, or other corrosion inhibitors) on threaded fasteners or fastener joint interfaces. Generally, such coatings adversely affect the fastener torque and the joint clamping force, and may damage the fastener. When you install fasteners, use the correct tightening sequence and specifications. Following these instructions can help you avoid damage to parts and systems.

Cigarette Lighter

General Description

When the cigarette lighter is pushed in with the starter switch at either “ACC” or “ON” position, a circuit is formed in the cigarette lighter case to heat the lighter coil.
The cigarette lighter is sprung back to its original position after the lighter coil is heated.

Removal

1. Disconnect the battery ground cable.
2. Remove the lower cluster assembly(1).
   Refer to the Instrument Panel Assembly removal steps in Body Structure section.
3. Disconnect the connectors, remove the socket of the illumination light, the retaining ring(7), the outer case(6), the cigarette lighter(3) and socket(4), the bezel(5) and then remove the cigarette lighter assembly(2).

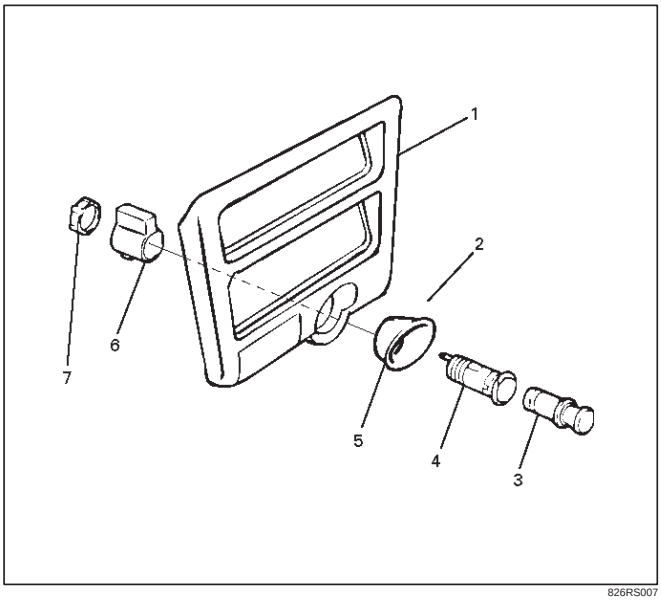

826RS007

Installation

To install, follow the removal steps in the reverse order, noting the following point.

1. When installing the bezel, align the projected portion of the socket with the notch of the bezel.

Digital Clock

Removal

1. Disconnect the battery ground cable.
2. Remove the front console assembly(1).
   Refer to the Instrument Panel Assembly in Body Structure section.
3. Remove the lower cluster assembly(2).
   Refer to the Instrument Panel Assembly in Body Structure section.
4. Remove the instrument panel driver lower cover assembly(3).
   Refer to the Instrument Panel Assembly in Body Structure section.

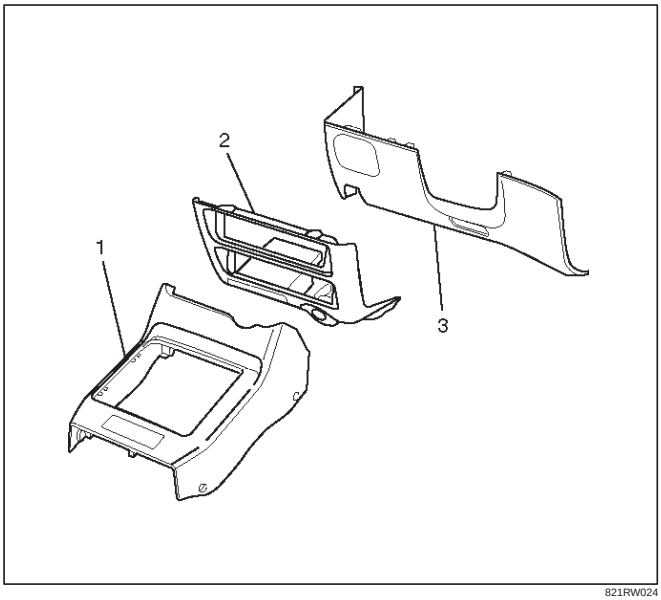

821RW024

5. Remove the instrument panel cluster assembly(4).
   Refer to the Instrument Panel Assembly in Body Structure section.
6. Disconnect the connector and push the lock from the back side of the instrument panel cluster assembly to remove the digital clock(5).

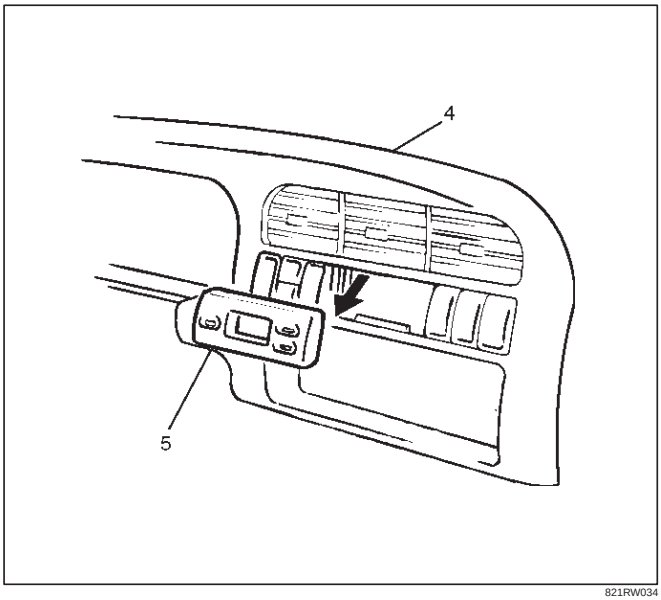

821RW034

Installation

To install, follow the removal steps in the reverse order, noting the following point.

1. Push in the switch with your fingers until it locks securely.

Rod Type Antenna

Removal

1. Disconnect the battery ground cable.
2. Turn the antenna rod(1) counterclockwise to remove it.
3. Remove three screws and nine clips to remove the fender inner liner(2).
4. Disconnect the feeder cable connector at the inside of the vehicle, remove the housing bracket screw, turn the lock nut counterclockwise to remove it together with the base mold and then remove the housing(3).

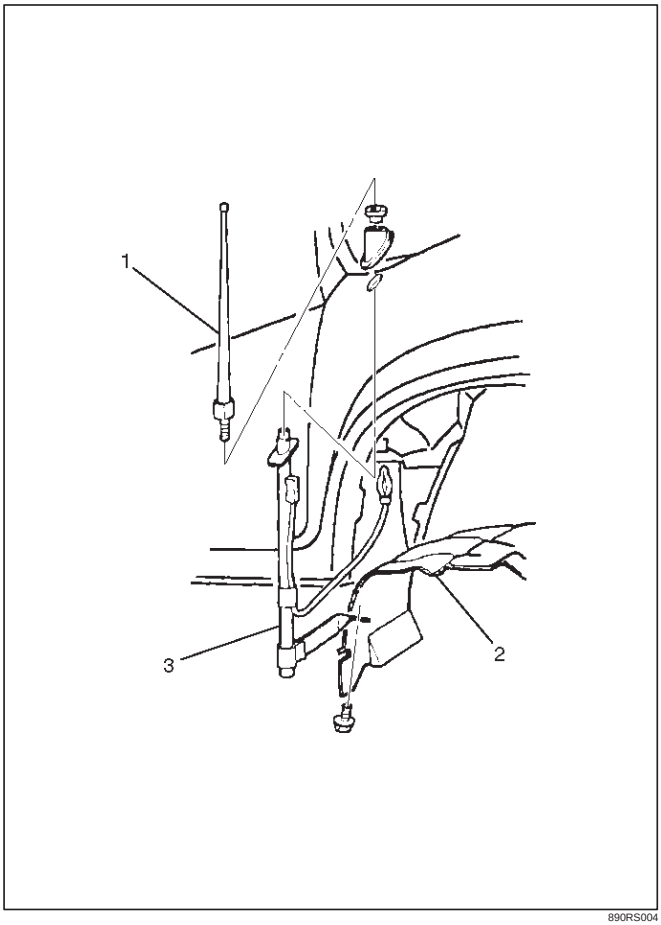

890RS004

Installation

To install, follow the removal steps in the reverse order.

Auto Antenna

General Description

The auto antenna is interlocked with the radio switch. The antenna rod goes up when the switch is on, and goes down when the switch is off. The antenna rod also goes down when the starter switch is turned off with the radio on.
The antenna rod goes up or down when the cable connected to the uppermost rod is let out or taken up by the rotation of motor.
The motor is provided with a built-in limit switch. When the up/down motion of the antenna is completed, the limit switch is activated to cut off the circuit.

Removal

1. Disconnect the battery ground cable.
2. Remove three screws and nine clips to remove the fender inner liner(4).
3. Disconnect the feeder cord and the antenna motor connector at the inside of the vehicle.
4. Remove the lock nut(1) and base mold(2).
5. After taking off the clips and screws, remove the motor bracket(5).

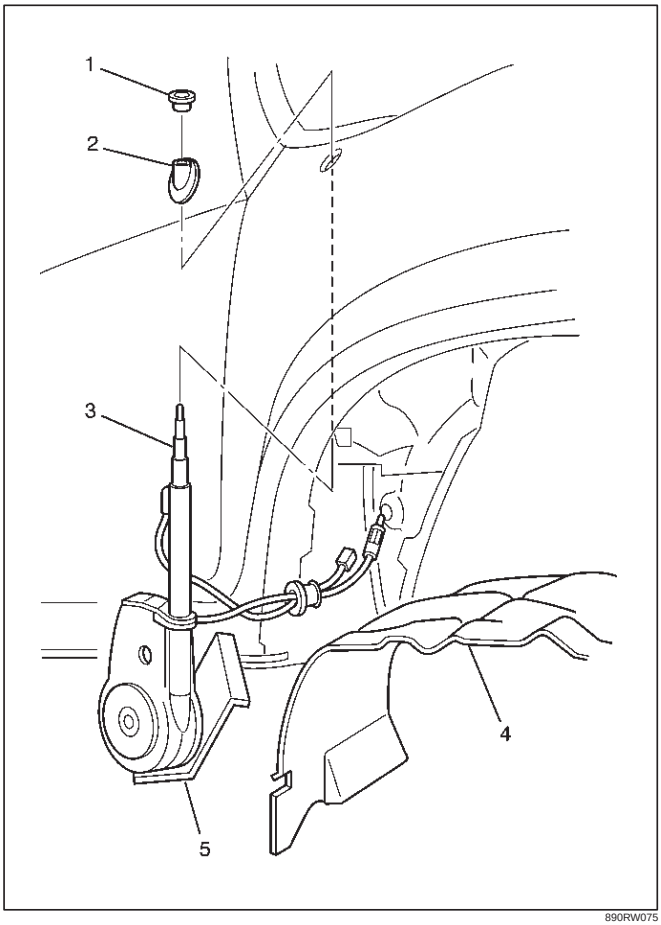

890RW075

Installation

To install, follow the removal steps in the reverse order.

Antenna Rod

Removal

1. Disconnect the battery ground cable.
2. Remove the antenna nut(1).
3. Until the lower part of the antenna rod(4) is removed from the bezel part, rotate the antenna motor in an ascending way, and expand the rod.
4. Turn the antenna top(2) counterclockwise.
5. Remove the contact sleeve(3).
6. Remove the antenna rod(4).

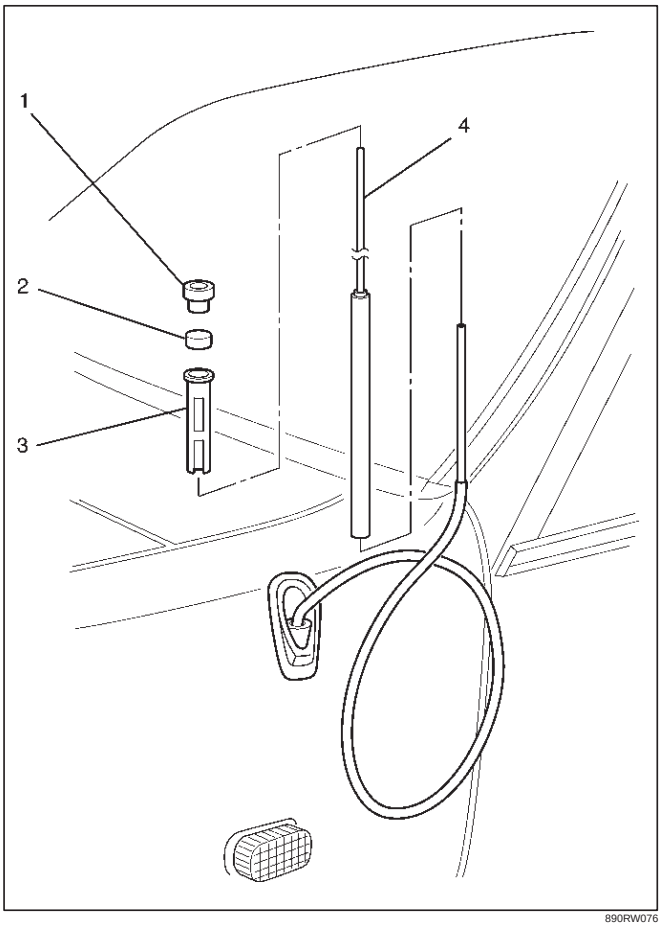

890RW076

Installation

To install, follow the removal steps in the reverse order, nothing the following points.

1. Rotate the antenna motor in a descend way, and push in vertically until the antenna rod is in the complete state of storage.
2. After ending the installation, confirm that the antenna rod works correctly.

Radio

Removal

1. Disconnect the battery ground cable.
2. Remove the front console assembly (1).
   Refer to the Instrument Panel Assembly in Body Structure section.
3. Remove the lower cluster assembly (2).
   Refer to the Instrument Panel Assembly in Body Structure section.
4. Remove the instrument panel driver lower cover assembly (3).
   Refer to the Instrument Panel Assembly in Body Structure section.

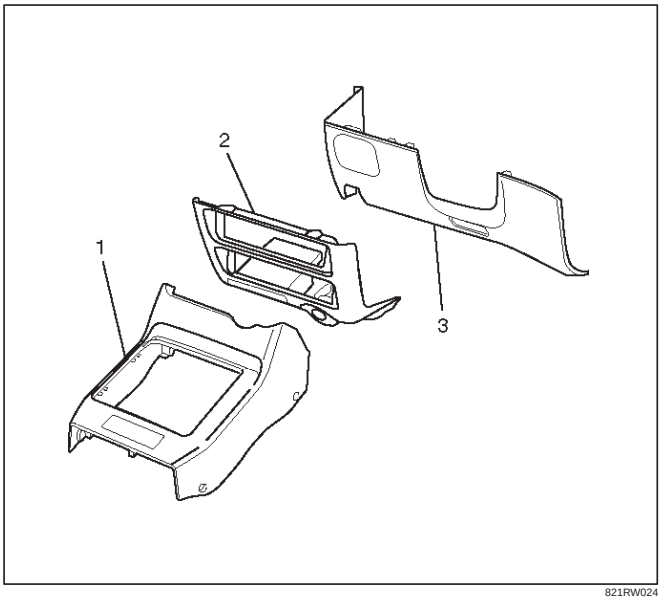

821RW024

5. Remove the instrument panel cluster assembly(4).
   Refer to the Instrument Panel Assembly in Body Structure section.
6. Remove two screws and disconnect the radio connector(5) and antenna feeder plug(6) to remove the radio(7).

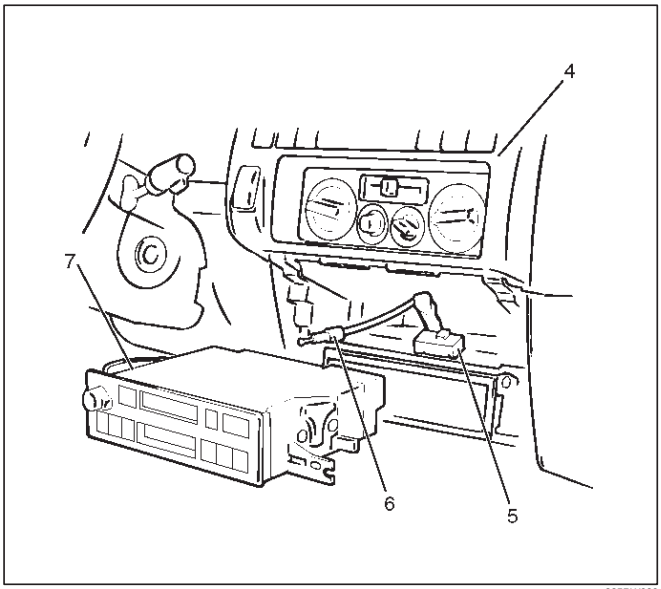

825RW039

Installation

To install, follow the removal steps in the reverse order.

Front Speaker

Removal

1. Disconnect the battery ground cable.
2. Pull the grille(1) to release the locks and then remove it.
3. Remove four screws and disconnect the connector(3) to remove the speaker(2).

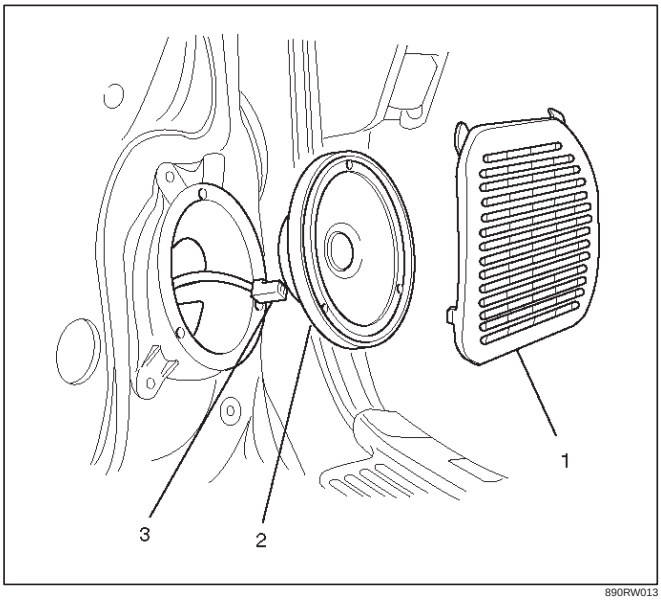

890RW013

Installation

To install, follow the removal steps in the reverse order.

Rear Speaker

Removal

1. Disconnect the battery ground cable.
2. Pull the grille(1) to release the locks and then remove it.
3. Remove four screws and disconnect the connector(3) to remove the speaker(2).

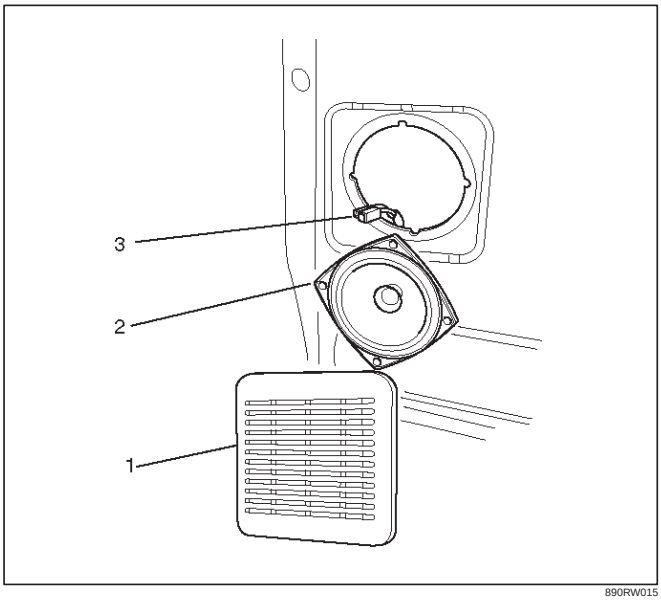

890RW015

Installation

To install, follow the removal steps in the reverse order.

MEMO

BODY AND ACCESSORIES

WIRING SYSTEM

CONTENTS

Service Precautions 8D–3
General Description 8D–4
Notes for Working on Electrical Items . . 8D–4
Symbols and Abbreviations 8D–10
Parts for Electrical Circuit 8D–12
Reading the Circuit Diagram 8D–21
Main Data and Specifications 8D–24
Fuse, Fusible Link and Circuit Breaker Location 8D–24
Relay Location 8D–27
Diode Location 8D–30
Grounding Point 8D–33
Cable Harness Routing 8D–45
Fuse Block Circuit 8D–53
Circuit Diagram 8D–54
Start and Charging 8D–67
General Description 8D–67
Circuit Diagram 8D–68
Parts Location 8D–70
Powertrain Control Module (PCM) 8D–80
General Description 8D–80
Circuit Diagram 8D–81
Parts Location 8D–93
QOSIII (4JG2) 8D–111
General Description 8D–111
Circuit Diagram 8D–112
Parts Location 8D–114
QOS and EGR System (4JG2) 8D–118
General Description 8D–118
Circuit Diagram 8D–119
Parts Location 8D–122
Headlight and Fog Light 8D–127
General Description 8D–127
Circuit Diagram 8D–128
Parts Location 8D–130
Diagnosis 8D–134
Rear Foglight 8D–150
Circuit Diagram 8D–151
Parts Location 8D–152
Headlight Leveling 8D–153
General Description 8D–153
Circuit Diagram 8D–154
Parts Location 8D–155
Diagnosis 8D–156
Clearance Light, Taillight and License Plate Light 8D–159
General Description 8D–159
Circuit Diagram 8D–160
Parts Location 8D–163
Diagnosis 8D–168
Interior Illumination Light 8D–180
General Description 8D–180
Circuit Diagram 8D–181
Parts Location 8D–185
Diagnosis 8D–192
Turn Signal Light and Hazard Warning Light 8D–193
General Description 8D–193
Circuit Diagram 8D–194
Parts Location 8D–197
Diagnosis 8D–202
Stoplight 8D–208
General Description 8D–208
Circuit Diagram 8D–209
Parts Location 8D–212
Diagnosis 8D–216
Backup Light 8D–220
General Description 8D–220
Circuit Diagram 8D–221
Parts Location 8D–223
Diagnosis 8D–227
Horn 8D–230
General Description 8D–230
Circuit Diagram 8D–231
Parts Location 8D–232
Diagnosis 8D–235
Dome Light, Luggage Room Light, Courtesy Light and Map Light 8D–237
General Description 8D–237
Circuit Diagram 8D–238
Parts Location 8D–240
Power Door Lock 8D–244
General Description 8D–244
Circuit Diagram 8D–245
Parts Location 8D–250
Diagnosis 8D–256
Power Window 8D–261
General Description 8D–261
Circuit Diagram 8D–262
Parts Location 8D–263
Diagnosis 8D–266
Cruise Control 8D–272

General Description 8D–272
Circuit Diagram. 8D–273
Parts Location 8D–275
Diagnosis. 8D–279
Anti–Lock Brake System (ABS) 8D–284
General Description 8D–284
Circuit Diagram. 8D–285
Parts Location 8D–291
A/T Shift Lock 8D–298
General Description 8D–298
Circuit Diagram. 8D–299
Parts Location 8D–300
Windshield Wiper/Washer 8D–303
General Description 8D–303
Circuit Diagram. 8D–304
Parts Location 8D–305
Diagnosis. 8D–308
Rear Wiper/Washer 8D–316
General Description 8D–316
Circuit Diagram. 8D–317
Parts Location 8D–319
Diagnosis. 8D–323
Headlight Wiper/Washer 8D–329
General Description 8D–329
Circuit Diagram. 8D–330
Parts Location 8D–332
Diagnosis. 8D–336
Rear Defogger 8D–342
General Description 8D–342
Circuit Diagram. 8D–343
Parts Location 8D–344
Diagnosis. 8D–347
Audio 8D–350
General Description 8D–350
Circuit Diagram. 8D–351
Parts Location 8D–355
Cigarette Lighter and Digital Clock 8D–359
General Description 8D–359
Circuit Diagram. 8D–360
Parts Location 8D–361
Power Door Mirror 8D–364
General Description 8D–364
Circuit Diagram. 8D–365
Parts Location 8D–368
Diagnosis. 8D–373
Anti–Theft System with Keyless Entry 8D–380
Circuit Diagram. 8D–381
Parts Location 8D–392
Diagnosis. 8D–399
Meter and Warning/Indicator Light 8D–410
General Description 8D–410
Circuit Diagram. 8D–411
Parts Location 8D–429
Diagnosis. 8D–445
A/T Shift Indicator 8D–464
General Description 8D–464
Circuit Diagram. 8D–465
Parts Location 8D–467
Heater and Air Conditioning 8D–471
General Description 8D–471
Circuit Diagram. 8D–472
Parts Location 8D–474
Sun Roof 8D–484
General Description 8D–484
Circuit Diagram. 8D–485
Parts Location 8D–486
Diagnosis. 8D–489
Seat Heater 8D–493
General Description 8D–493
Circuit Diagram. 8D–494
Parts Location 8D–495
Diagnosis. 8D–498
Power Seat 8D–500
General Description 8D–500
Circuit Diagram. 8D–501
Parts Location 8D–503
Diagnosis. 8D–507
Shift on the Fly System 8D–513
Circuit Diagram. 8D–514
Parts Location 8D–516
Torque on Demand (TOD) 8D–538
Circuit Diagram. 8D–539
Parts Location 8D–542
Supplemental Restraint System (SRS)–
AIR BAG 8D–543
General Description 8D–543
Circuit Diagram. 8D–544
Parts Location 8D–548
Connector List 8D–550

Service Precaution

WARNING: THIS VEHICLE HAS A SUPPLEMENTAL RESTRAINT SYSTEM (SRS). REFER TO THE SRS COMPONENT AND WIRING LOCATION VIEW IN ORDER TO DETERMINE WHETHER YOU ARE PERFORMING SERVICE ON OR NEAR THE SRS COMPONENTS OR THE SRS WIRING. WHEN YOU ARE PERFORMING SERVICE ON OR NEAR THE SRS COMPONENTS OR THE SRS WIRING, REFER TO THE SRS SERVICE INFORMATION. FAILURE TO FOLLOW WARNINGS COULD RESULT IN POSSIBLE AIR BAG DEPLOYMENT, PERSONAL INJURY, OR OTHERWISE UNNEEDED SRS SYSTEM REPAIRS.

CAUTION: Always use the correct fastener in the proper location. When you replace a fastener, use ONLY the exact part number for that application. ISUZU will call out those fasteners that require a replacement after removal. ISUZU will also call out the fasteners that require thread lockers or thread sealant. UNLESS OTHERWISE SPECIFIED, do not use supplemental coatings (Paints, greases, or other corrosion inhibitors) on threaded fasteners or fasteners joint interfaces. Generally, such coatings adversely affect the fastener torque and the joint clamping force, and may damage the fasteners. When you install fasteners, use the correct tightening sequence and specifications. Following these instructions can help you avoid damage to parts and systems.

General Description

The chassis electrical system is a 12–volt system with a negative ground polarity.
Wire size are appropriate to respective circuits, and classified by color. (The classification of harnesses by color is shown on the circuit diagram for ease of harness identification.)
The wire size is determined by load capacity and the length of wire required.
The vehicle harnesses are: body harness, chassis harness, engine room harness, instrument harness, transmission harness, engine ECGI harness, dome light harness, door harness, rear body harness, tailgate harness, SRS harness and battery cables.
The harnesses are protected either by tape or corrugated tube, depending on harness location.
The circuit for each system consists of the power source, wire, fuse, relay, switch, load parts and ground, all of which are shown on the circuit diagram.
In this section, each electrical device is classified by system.
For major parts shown on the circuit based on the circuit diagram for each system, a summary, diagnosis of troubles and inspection procedures are detailed.

Notes for Working on Electrical Items

Disconnecting the Battery Cable

1. All switches should be in the “OFF” position.
2. Disconnect the battery ground cable (2).
3. Disconnect the battery positive cable (1).

CAUTION: It is important that the battery ground cable be disconnected first. Disconnecting the battery positive cable first can result in a short circuit.

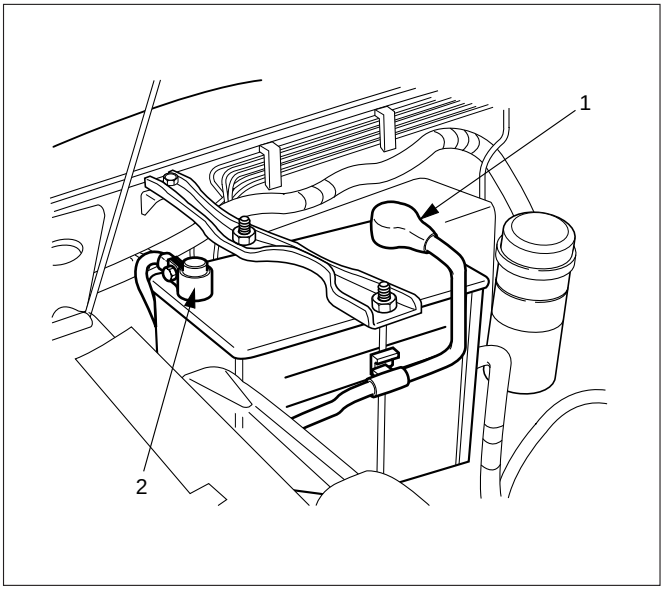

Connecting the Battery Cable

Follow the disconnecting procedure in the reverse order.

CAUTION: Clean the battery terminal and apply a light coat of grease to prevent terminal corrosion.

Disconnecting the Connector

Some connectors have a tang lock to hold the connectors together during vehicle operation.
Some tang locks are released by pulling them towards you (1).
Other tang locks are released by pressing them forward (2).
Determine which type of tang lock is on the connector being handled.

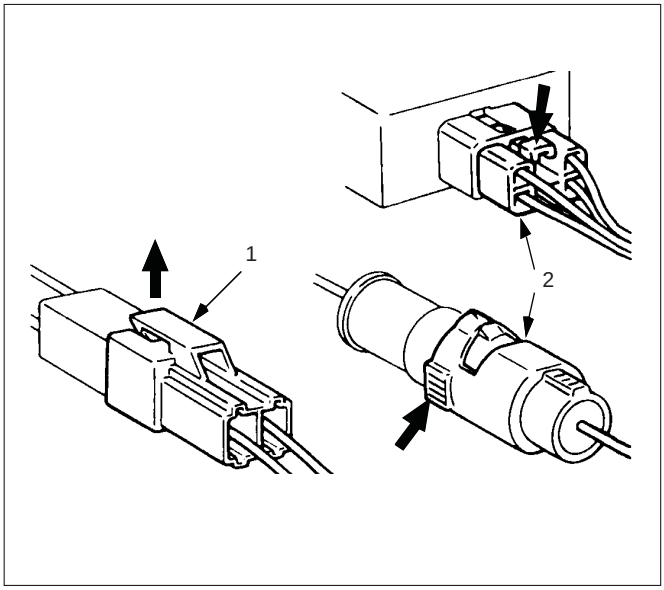

Firmly grasp both sides (male and female) of the connector (3).
Release the tang lock and carefully pull the two halves of the connector apart.
Never pull on the wires to separate the connectors (4).

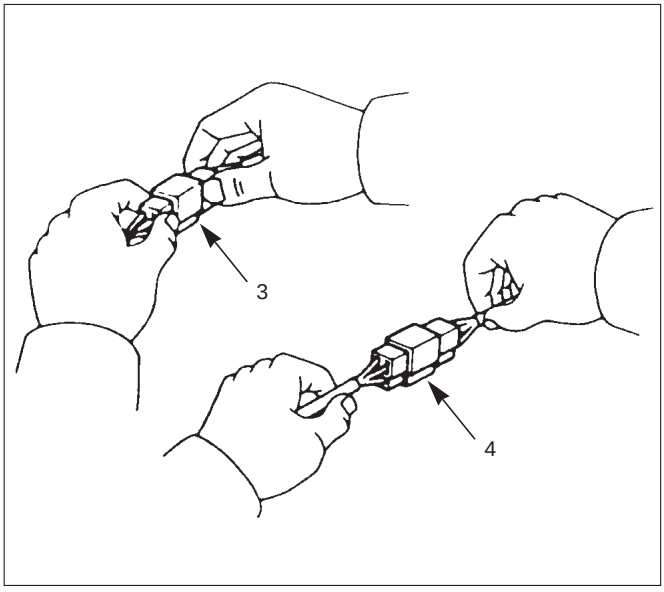

When removing the connector for relay (MR5B type) (5), unfasten the tang lock of the connector by using a screwdriver, then pull the relay out as shown in the figure.

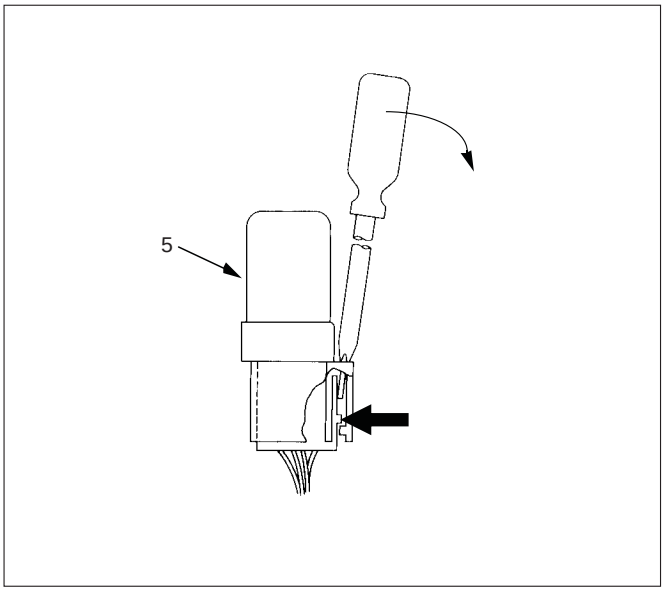

Connecting the Connector

Firmly grasp both sides (male and female) of the connectors. Be sure that both sides of the connectors are aligned with each other.
Firmly but carefully push the two sides of the connectors together until a distinct click is heard (2).
Do not connect them by force if they can not be connected smoothly (1).

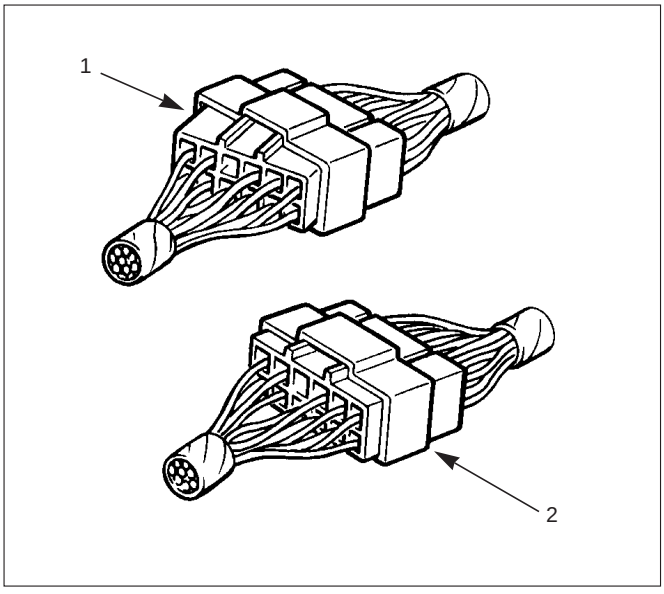

Connector Inspection

Use a circuit tester to check the connector for continuity. Insert the test probes (1) from the connector wire side.

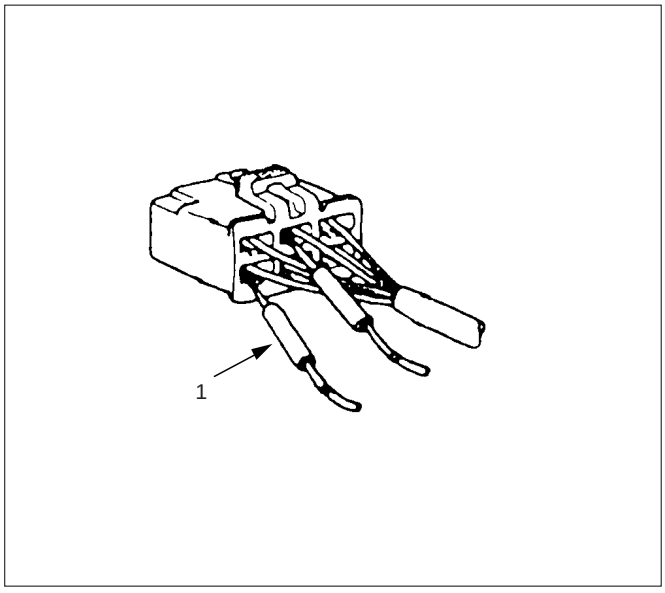

Never insert the circuit tester test probes (2) into the connector open end to test the continuity.
Broken or open connector terminals will result.

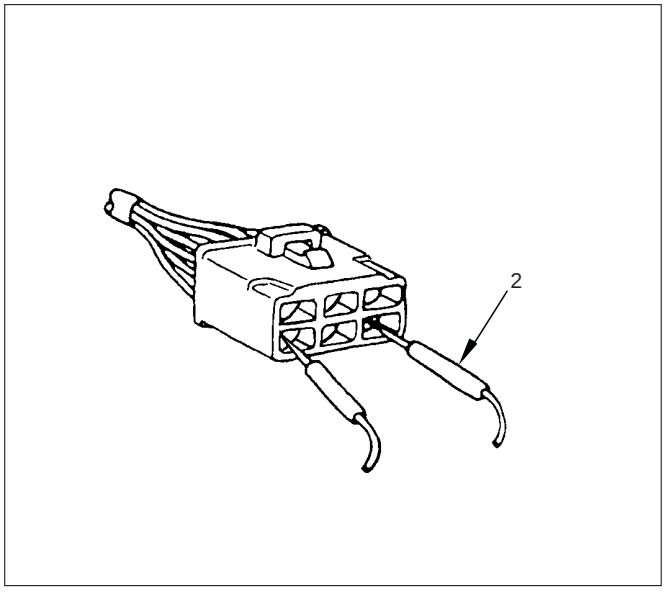

Waterproof Connector Inspection

It is not possible to insert the test probes (2) into the connector wire side of a waterproof connector.
Use one side of a connector (1) with its wires cut to make the test. Connect the test connector to the connector to be tested (3). Connect the test probes to the cut wires to check the connector continuity.

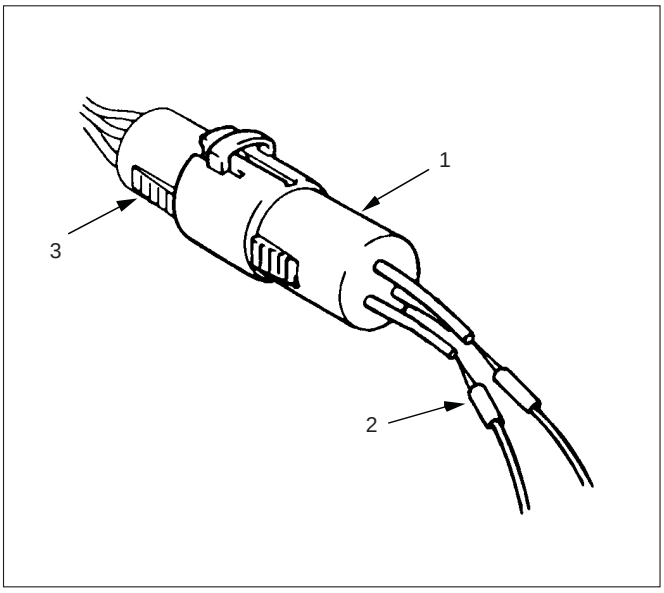

Connector Pin Removal – Connector Housing Tang Lock Type

1. Insert a slender shaft (1) into the connector housing open end (5).
2. Push the tang lock (2) up (in the direction of the arrow in the illustration).
   Pull the wire (3) with pin (4) free from the wire side of the connector.

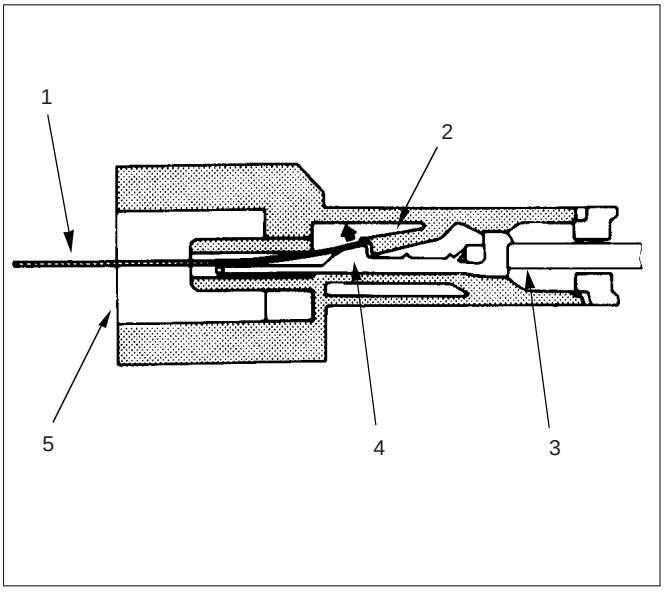

Connector Pin Removal – Pin Tang Lock Type

1. Insert a slender shaft (1) into the connector housing open end (5).
2. Push the tang lock (2) flat (toward the wire (3) side of the connector.
   Pull the wire with pin (4) free from the wire side of the connector.

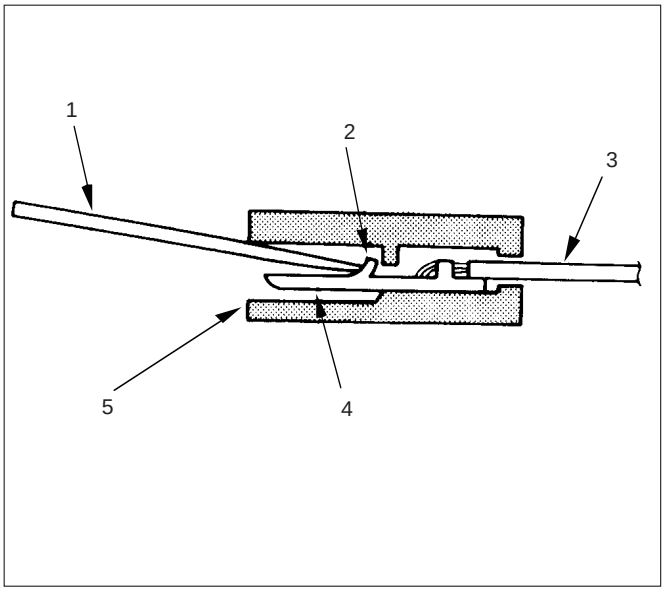

Connector Pin Insertion

1. Check that the tang lock (1) is fully up.
2. Insert the pin (3) from the connector wire (2) side.
   Push the pin in until the tang lock closes firmly.
3. Gently pull on the wires to make sure that the connector pin is firmly set in place.

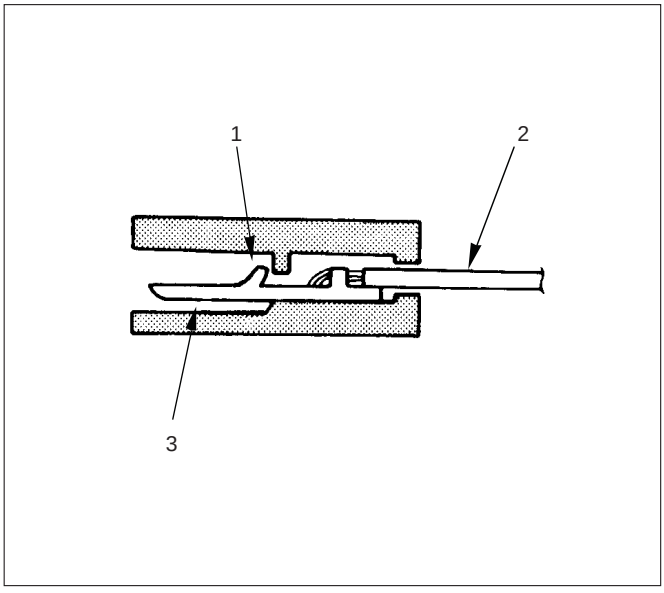

Parts Handling

Be careful when handling electrical parts. They should not be dropped or thrown, because short circuit or other damage may result.

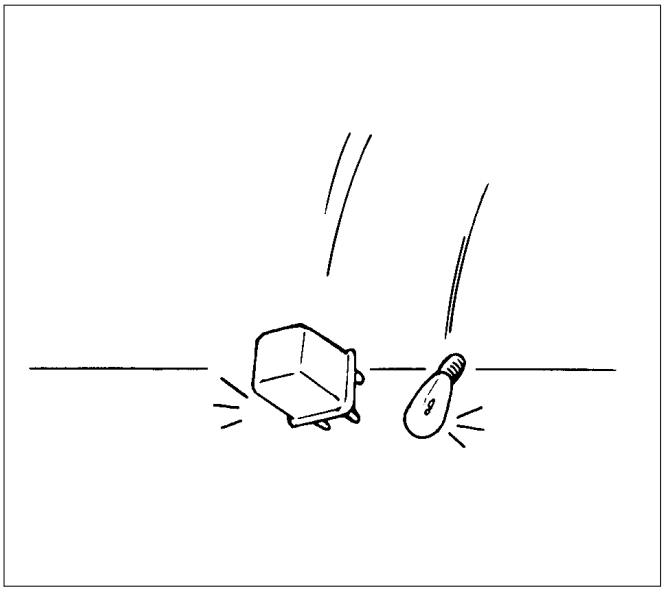

Cable Harness

1. When installing the parts, be careful not to pinch or wedge the wiring harness.
2. All electrical connections must be kept clean and tight.

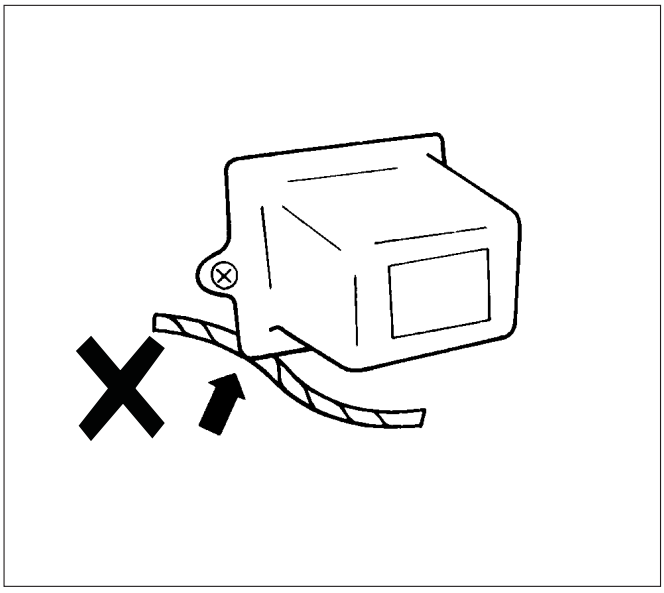

3. Use a grommet or guard tube (1) to protect the wiring harness from contacting a sharp edge or surface (2).

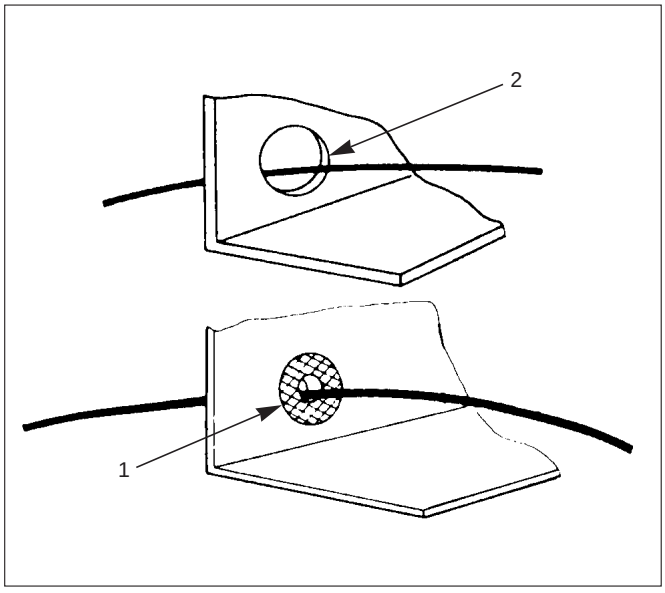

4. Position the wiring harness with enough clearance from the other parts and guard the wiring harness with a vinyl tube (2) and clips (1) to avoid direct contact.

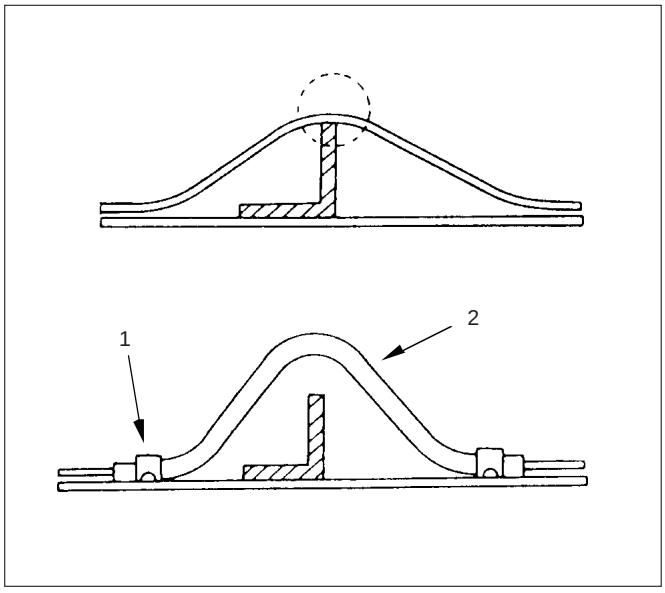

5. The wiring harness between engine and chassis should be long enough (2). Tension of the wire (1) may causes chafing or damage due to various vibrations.

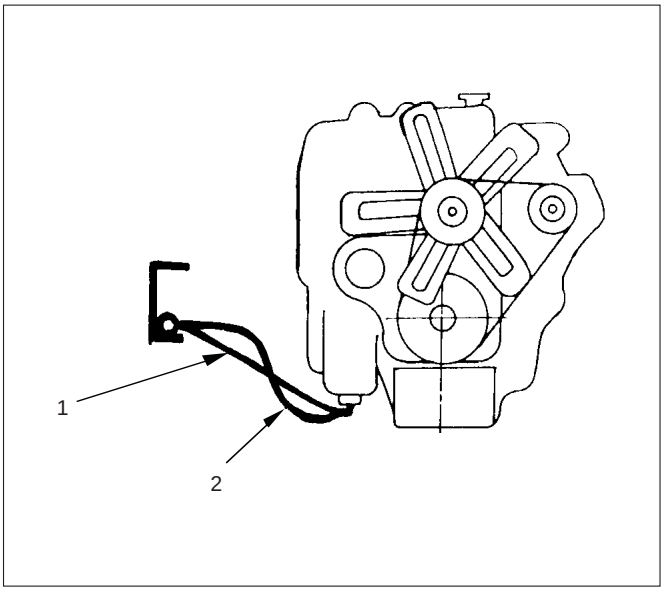

Splicing Wire

1. If the harness is taped, remove the tape. To avoid wire insulation damage, use a sewing “seam ripper” (available from sewing supply stores) to cut open the harness.

   If the harness has a black plastic conduit, simply pull out the desired wire.
2. Begin by cutting as little wire off the harness as possible. You may need the extra length of wire later if you decide to cut more wire off to change the location of a splice. You may have to adjust splice locations to make certain that each splice is at least 1–1/2” (40 mm) away from other splices, harness branches, or connectors.
3. When replacing a wire, use a wire of the same size as the original wire.

   Check the stripped wire for nicks or cut stands. If the wire is damaged, repeat the procedure on a new section of wire. The two stripped wire ends should be equal in length.
4. Select the proper clip to secure the splice.

   To determine the proper clip size for the wire being spliced, follow the directions included with your clips.

   Select the correct anvil on the crimper. (On most crimpers your choice is limited to either a small or large anvil.)

   Overlap the two stripped wire ends and hold them between your thumb and forefinger as shown in the figure.

   The center the spline clip (1) under the stripped wires and hold it in place.

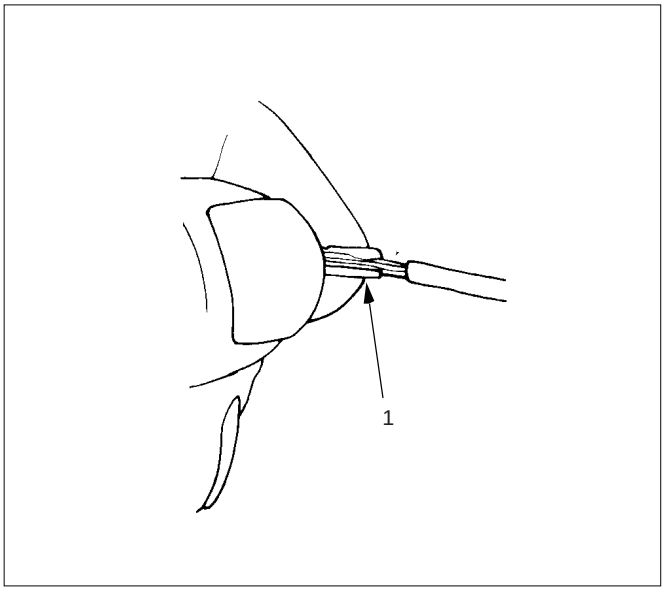

- Open the crimping tool to its full width and rest one handle on a firm flat surface.
- Center the back of the splice clip on the proper anvil and close the crimping tool to the point where the back of the splice clip touches the wings of the clip.
- Make sure that the clip and wires are still in the correct position. Then, apply steady pressure until the crimping tool closes as shown in the figure.

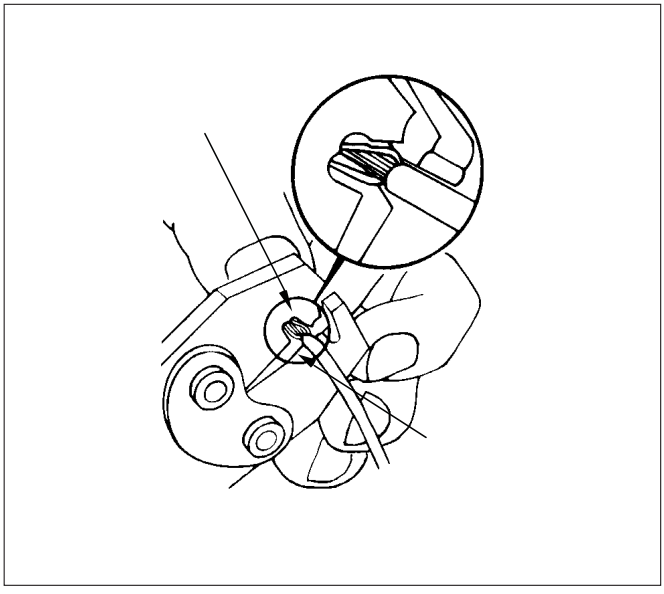

Before crimping the ends of the clip (1), be sure that:

- The wires extend beyond the clip in each direction.
- No strands of wire are cut loose, and
- No insulation is caught under the clip.

Crimp the splice again, once on each end.
Does not let the crimping tool (2) extend beyond the edge of the clip or you may damage or nick the wires as shown in the figure.

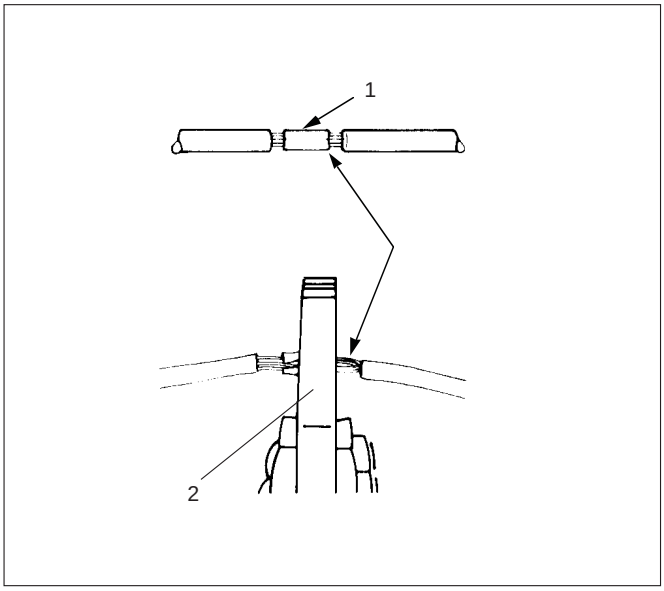

5. Apply 60/40 resin core solder to the opening in the back of the clip as shown in the figure.

   Follow the manufacturer's instructions for the solder equipment you are using.

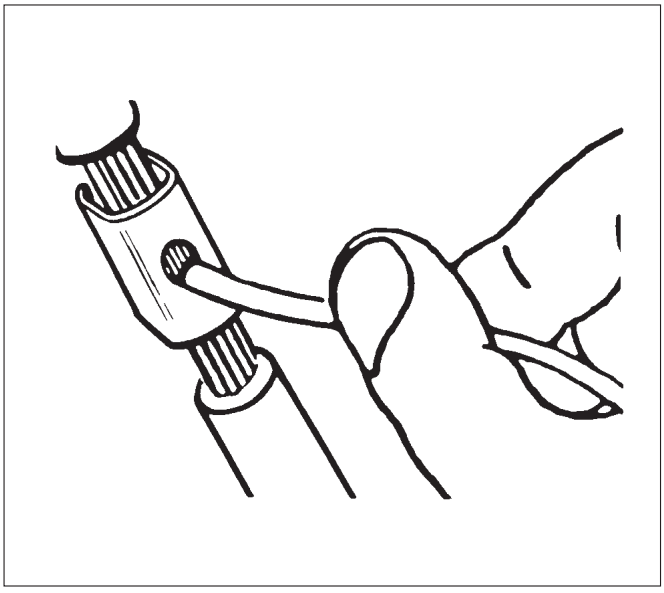

6. Center and roll the splicing tape.

   The tape should cover the entire splice.

   Roll on enough tape (1) to duplicate the thickness of the insulation on the existing wires.

   Does not flag the tape (2). Flagged tape may not provide enough insulation, and the flagged ends will tangle with the other wires in the harness as shown in the figure.

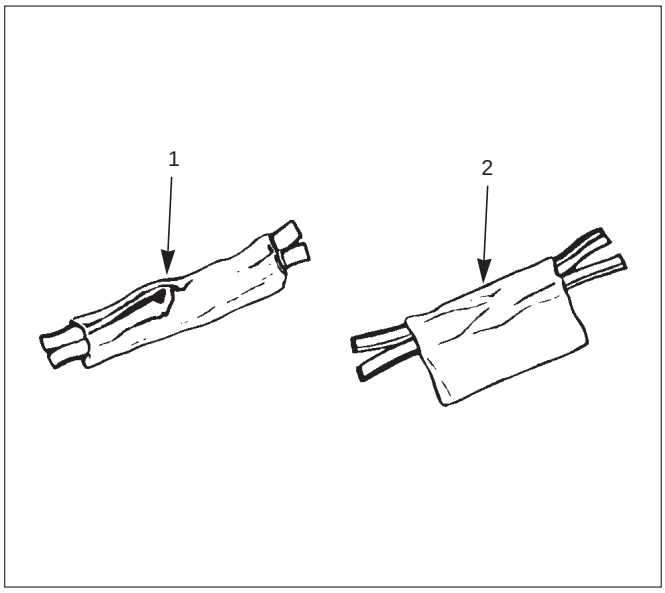

   If the wire does not belong in a conduit or other harness covering, tape the wire again. use a winding motion to cover the first piece of tape as shown in the figure.

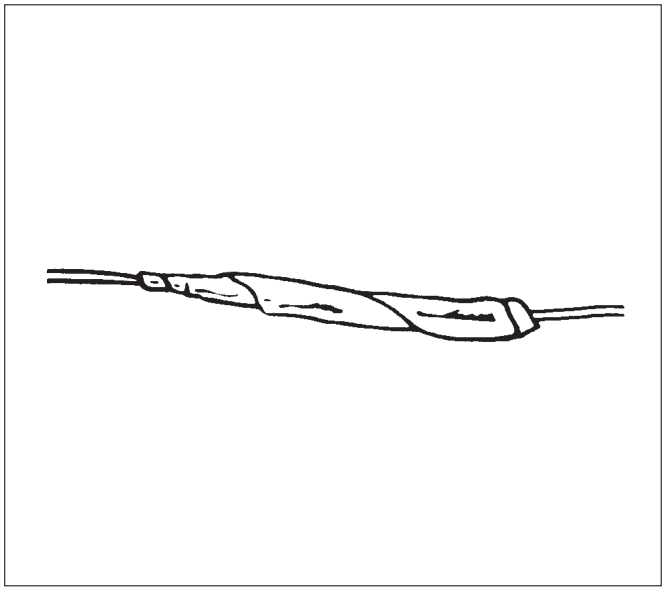

Symbols and Abbreviations

Symbols

Symbol	Meaning of Symbol	Symbol	Meaning of Symbol
	Fuse		Bulb
	Fusible link		Double filament bulb
	Fusible link wire	M	Motor
	Switch		Variable register Rheostat
	Switch		Coil (inductor), solenoid, magnetic valve
	Switch (Normal close type)		Relay
	Contact wiring		
+ −	Battery		
	Diode		Connector
	Electronic parts		Light emitting diode
	Resistor		Reed switch
	Speaker		Condenser
	Buzzer		Horn
	Circuit breaker		Vacuum switching valve

Abbreviations

Abbreviation	Meaning of Abbreviation	Abbreviation	Meaning of Abbreviation
A	Ampere (S)	kW	Kilowatt
ABS	Anti-lock brake system	LH	Left hand
ASM	Assembly	LWB	Long wheel base
AC	Alternating current	M/T	Manual transmission
A/C	Air conditioner	OD	Over drive
ACC	Accessories	OPT	Option
A/T	Automatic transmission	PCM	Powertrain control module
C/B	Circuit breaker	QOS	Quick on start
CSD	Cold start device	RH	Right hand
DIS	Direct ignition system	RR	Rear
EBCM	Electronic brake control module	SDM	Sensing and diagnostic module
ECGI	Electronic control gasoline injection	SRS	Supplemental restraint system
ECM	Engine control module	ST	Start
ECU	Electronic control unit	STD	Standard
EFE	Early fuel evaporation	SW	Switch
EGR	Exhaust gas recirculation	SWB	Short wheel base
4A/T	4-speed automatic transmission	3A/T	3-speed automatic transmission
4WD	Four-wheel drive	V	Volt
FL	Fusible link	VSV	Vacuum switching valve
FRT	Front	W	Watt (S)
H/L	Headlight	WOT	Wide open throttle
IC	Integrated circuit	W/	With
IG	Ignition	W/O	Without

Parts for Electrical Circuit

Wiring – Wire color

All wires have color–coded insulation.
Wires belonging to a system's main harness will have a single color (1). Wires belonging to a system's subcircuits will have a colored stripe (2). Striped wires use the following code to show wire size and colors.

Example: 0.5 G / R

- R — Red (Stripe color)
- G — Green (Base color)
- 0.5 — Wire size (0.5 mm^2)

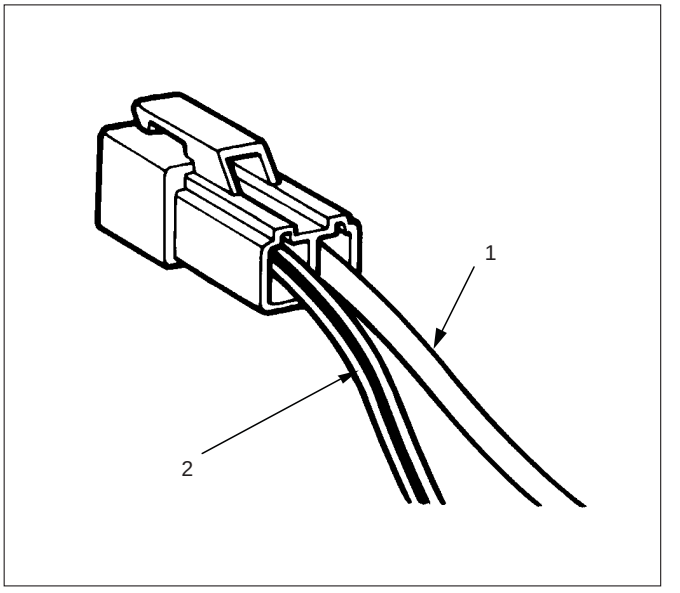

Wiring – Wire Color Coding

Abbreviations are used to indicate wire color within a circuit diagram.
Refer to the following table.

Color Coding	Meaning	Color Coding	Meaning
B	Black	BR	Brown
W	White	LG	Light green
R	Red	GR	Grey
G	Green	P	Pink
Y	Yellow	LB	Light blue
L	Blue	V	Violet
O	Orange		

Wiring – Wire Size

The size of wire used in a circuit is determined by the amount of current (amperage), the length of the circuit, and the voltage drop allowed. The following wire size and load capacity, shown below, are specified by AWG (American Wire Gauge). (Nominal size means approximate cross sectional area (1).)

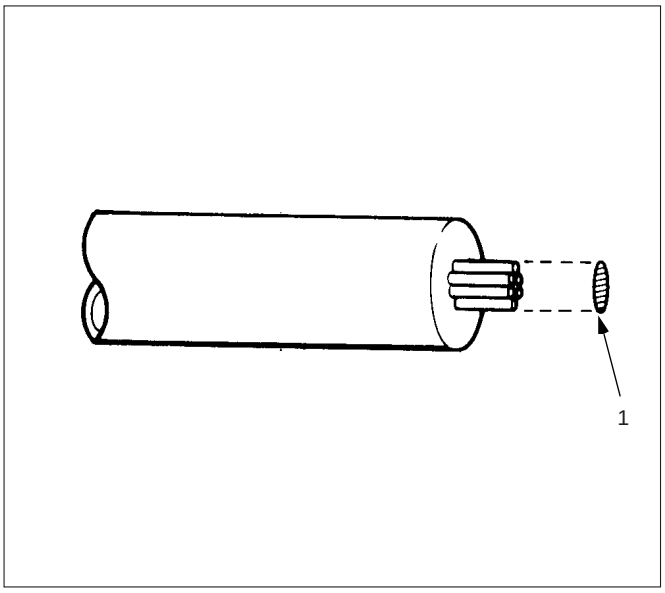

Wiring – Wire Size Table

Nominal size	Cross sectional area (mm^2)	Outside diameter (mm)	Allowable current (A)
0.3	0.372	1.5	9
0.5	0.563	1.7	12
0.85	0.885	1.9	16
1.25	1.287	2.2	21
2	2.091	2.7	28
3	3.296	3.6	37.5
5	5.227	4.4	53
8	7.952	5.5	67
15	13.36	7.0	75
20	20.61	8.2	97

Fuse

Fuses are the most common form of circuit protection used in vehicle wiring. A fuse is a thin piece of wire or strip of metal encased in a glass or plastic housing. It is wired in series with the circuit it protects. When there is an overload of current in a circuit, such as a short of a ground, the metal strip is designed to burn out and interrupt the flow of current. This prevents a surge of high current from reaching and damaging other components in the circuit.
Determine the cause of the overloaded before replacing the fuse.
The replacement fuse must have the same amperage specification as the original fuse.
Never replace a blown fuse with a fuse of a different amperage specification.
Doing so can result in an electrical fire or other serious circuit damage. A blown fuse is easily identified as shown in the figure.

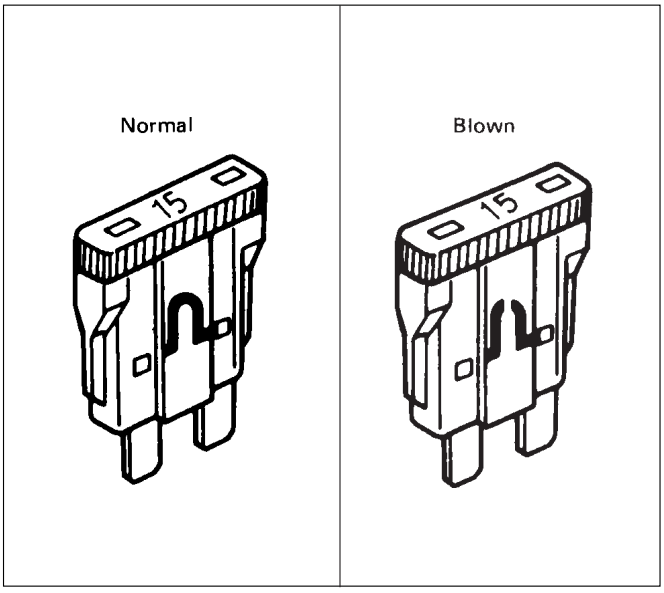

Fusible Link

The fusible link is primarily used to protect circuits where high amounts of current flow and where it would not be practical to use a fuse. For example, the starter circuit. When a current overload occurs, the fusible link melts open and interrupts the flow of current so as to prevent the rest of the wiring harness from burning.
Determine the cause of the overload before replacing the fusible link. the replacement fusible link must have the same amperage specification as the original fusible link.
Never replace a blown fusible link with fusible link of a different amperage specification. Doing so can result in an electrical fire or other serious circuit damage.
A blown fusible link is easily identified as shown in the figure.

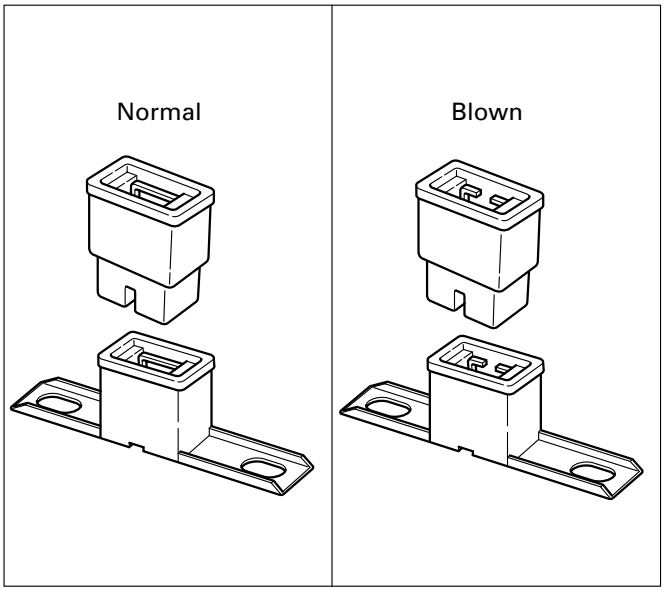

Fusible Link Specifications

Type	Rating	Case Color	Maximum Circuit Current (A)
Connector	30A	Pink	15
Connector	40A	Green	20
Bolted	50A	Red	25
Bolted	60A	Yellow	30
Bolted	80A	Black	40

Circuit Breaker

The circuit breaker is a protective device designed to open the circuit when a current load is in excess of rated breaker capacity. If there is a short or other type of overload condition in the circuit, the excessive current will open the circuit between the circuit breaker terminals. The reset knob (1) pops out when the circuit is open. Push the reset knob in place to restore the circuit after repairing it.

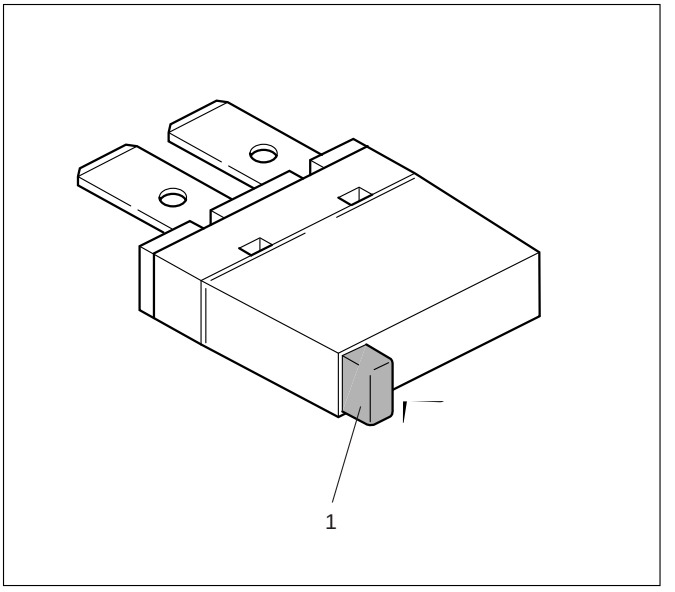

Relay

Battery and load location may require that a switch be placed some distance from either component. This means a longer wire and a higher voltage drop (1).
The installation of a relay between the battery and the load reduces the voltage drop (2).
Because the switch controls the relay, amperage through the switch can be reduced.

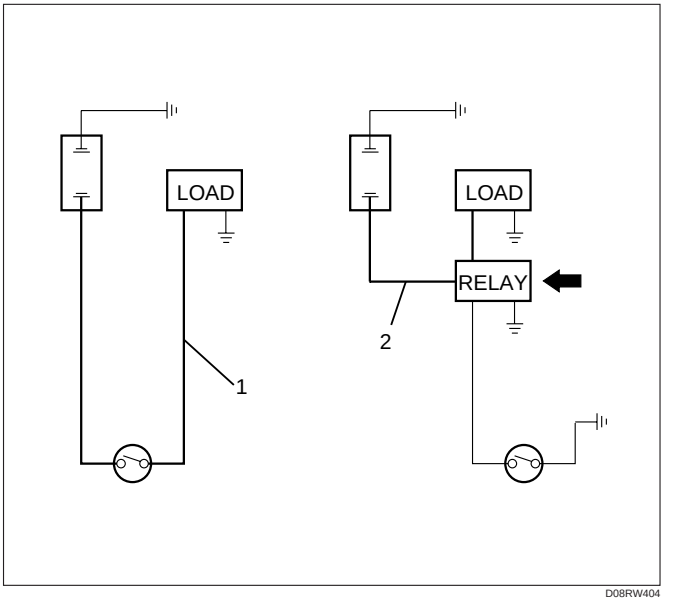

D08RW404

Relay Specifications and Configurations

Name/ Color	Rated voltage/Coil resistance	Internal circuit	Name/ Color	Rated voltage/Coil resistance	Internal circuit
1M (MR5L)/ Black	12V/ Approx. 80Ω Minimum operating voltage: 7V at 77˚F (25˚C)	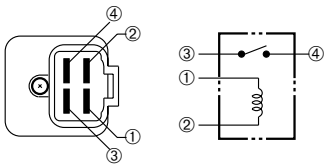	2M (MR5)/ Brown	12V/ Approx. 80Ω Minimum operating voltage: 7V at 77˚F (25˚C)	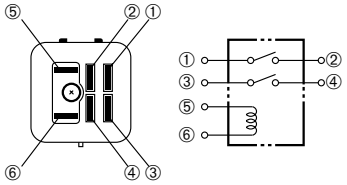
1B (MR5L)/ Grey	↑	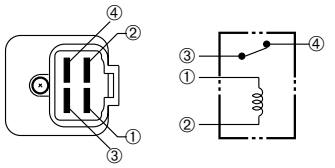	1B-1M (MR5)/ Grey	↑	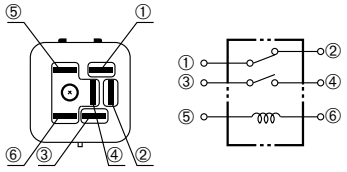
1M (MR5)/ Black (Case), Blue (Base)	↑	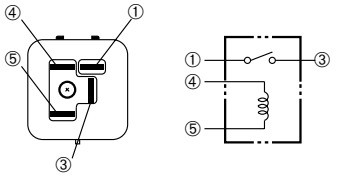	1M	↑ Minimum operating voltage: 9V at 68˚F (20˚C)	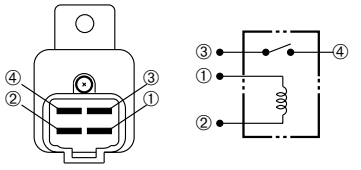
1T (MR5)/ Black/ Blue	↑	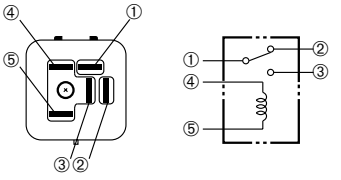	1M (MR5B)/ Black	12V Minimum operating voltage: 4.3V at 77˚F (25˚C)	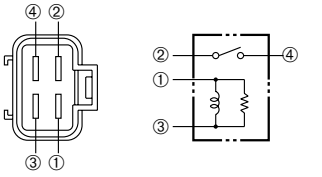
1M (Horn relay)	12V/ Minimum operating voltage: 8V at 68˚F (20˚C)	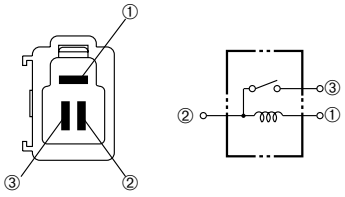			

* Relay contact shown in the wiring diagram indicates condition before actuation.

Diode – Diode Specifications and Configurations

SHAPE	MARK/ COLOR	CONSTRUCTION	CHECKING (THERE SHOULD BE CONTINUITY IN EITHER A OR B WHEN A CIRCUIT TESTER IS CONNECTED WITH DIODE TERMINAL)
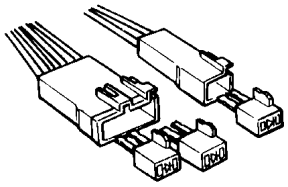	BLACK	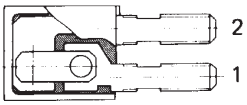	
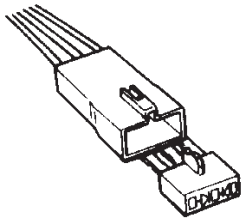	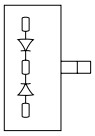 BLACK	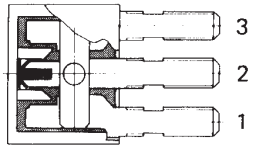	
	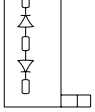 BLACK		
	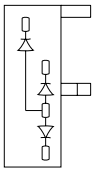 BLACK	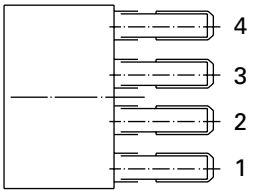	

Terminal No. 2 1

		2	1
CONNECTION PATTERN	A	⊕	⊖
	B	⊖	⊕

Terminal No. 3 2 1

		3	2	1
CONNECTION PATTERN	A	⊖	⊕	
			⊕	⊖
	B	⊕	⊖	
			⊖	⊕

Terminal No. 3 2 1

		3	2	1
CONNECTION PATTERN	A	⊖	⊕	
			⊕	⊖
	B	⊕	⊖	
			⊖	⊕

Terminal No. 4 3 2 1

		4	3	2	1
CONNECTION PATTERN	A			⊕	⊖
			⊖	⊕	
		⊖		⊕	
	B			⊖	⊕
			⊕	⊖	
		⊕		⊖	

Diode – Maximum Rating (Temp. = 77°F (25°C))

Items	Rating	Remarks
Peak reverse voltage	400V	
Transient peak reverse voltage	500V	
Average output current	1.5A	Temp. = 104°F (40°C)
Working ambient temperature	–22°F~176°F (–30°C~80°C)	
Storage temperature	–40°F~212°F (–40°C~100°C)	

Connector

The connector pin shape (2) determines whether the connector is male (3) or female (1).

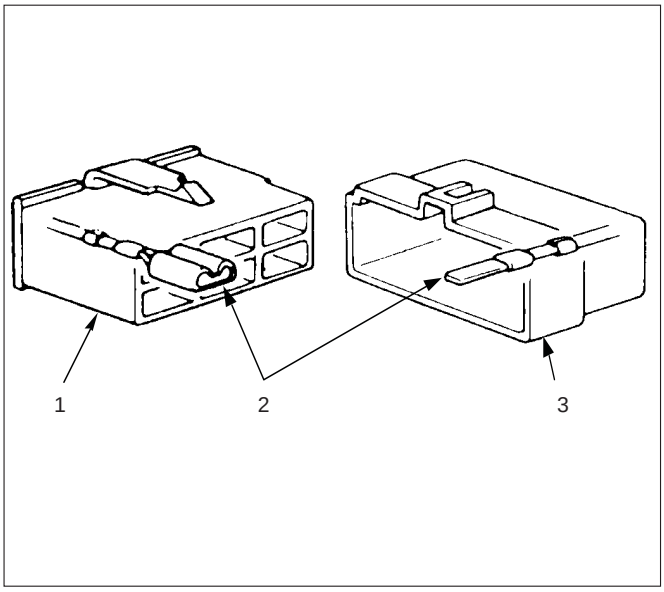

The symbol illustrated in the figure is used as connector, in the circuit of this section.

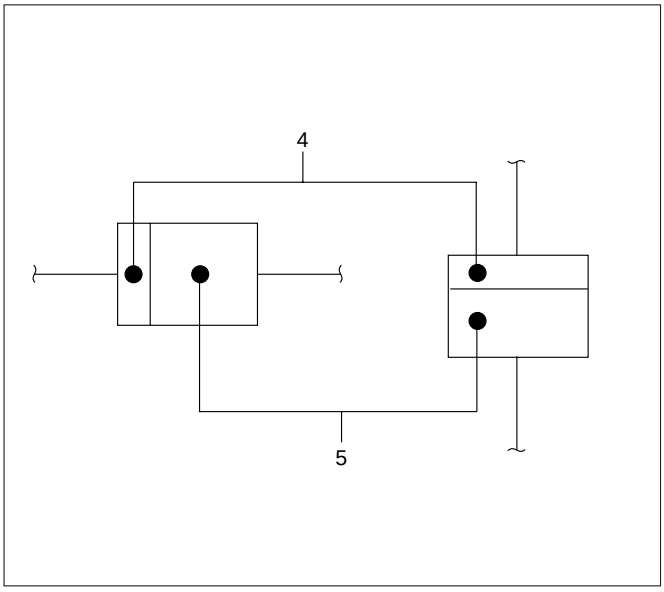

Legend
(4) Female Side Connector
(5) Male Side Connector

Connector is identified with a connector number (6)

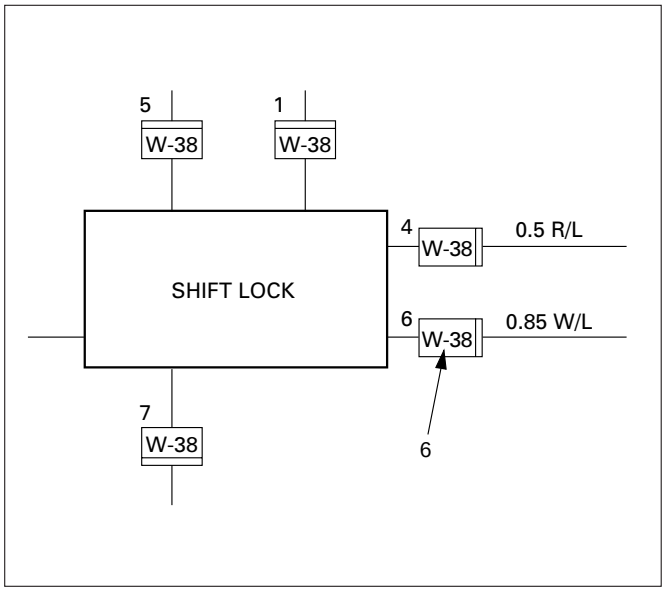

The applicable terminal number (7) is shown for each connector.

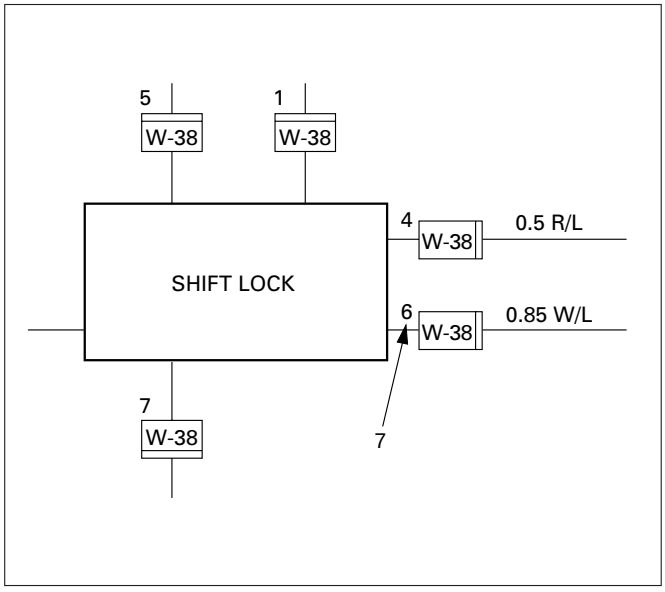

Connector terminal numbers (10) are clearly shown.
Male side connector (9) terminal numbers are in sequence from upper right to lower left.
Female side connector (8) terminal numbers are in sequence from upper left to lower right.

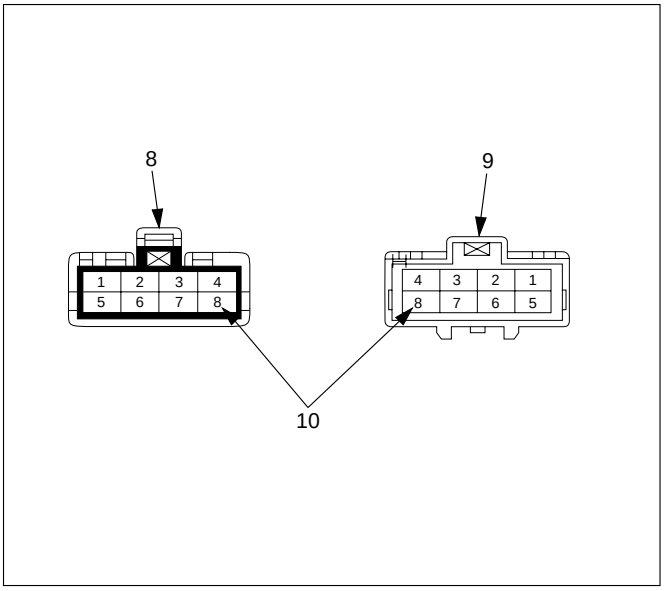

NOTE:
1. For those connectors on which specific terminal numbers or symbols are shown (such as PCM), the terminal numbers or symbols are used in the circuit diagram, irrespective of the above rule.
   Refer to the following figure.

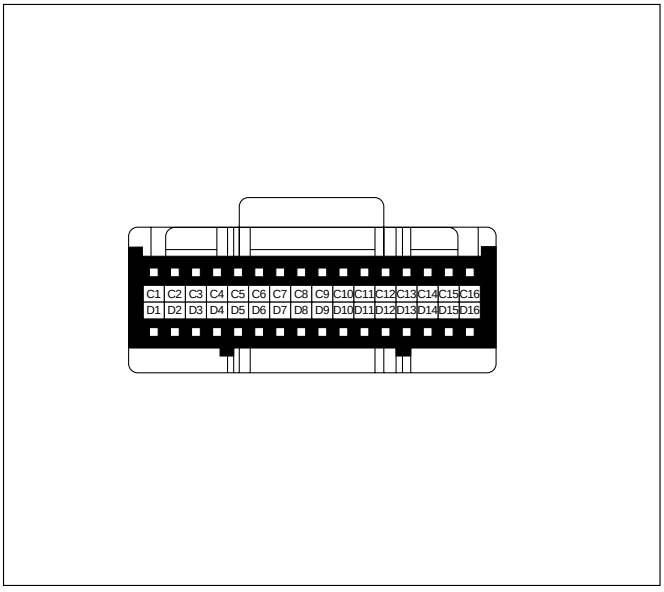

2. The connectors used for relays have their own terminal number assignment, irrespective of the above rule.
   Refer to the following figure.

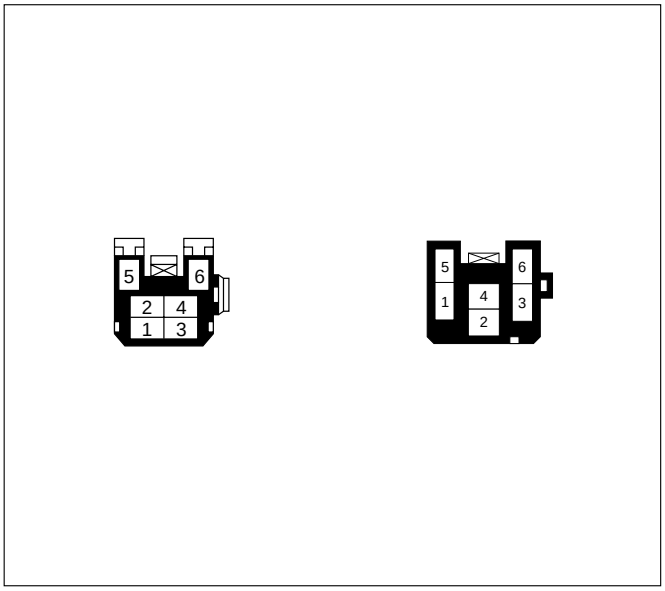

Double Lock Type Connector

Double lock type yellow color connectors are used for supplemental restraint system–air bag circuit. When removing the cable harness, disconnect the connector by unlocking at two places, outside (1) and inside (2). In such a case, do not pull the cables. Otherwise, cable disconnection may occur.
When connecting the connector, insert the connector completely and lock at outside. Imperfect locking may cause malfunction of SRS system circuit.

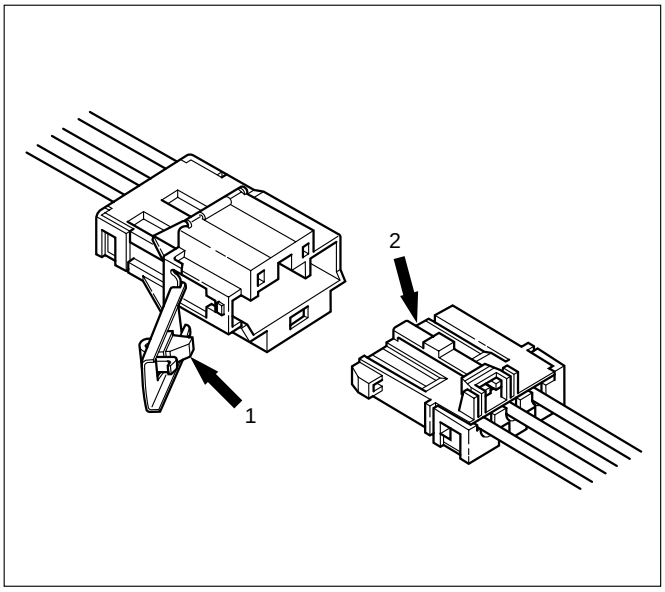

Reading the Circuit Diagram

In this section, each system has its own parts location illustration and circuit diagram.
And harness connector faces used in the circuit diagram are shown at the end of this section.

Parts Location

The parts location shows the location of the connectors (1) and the harness (2) used in each harness routing.

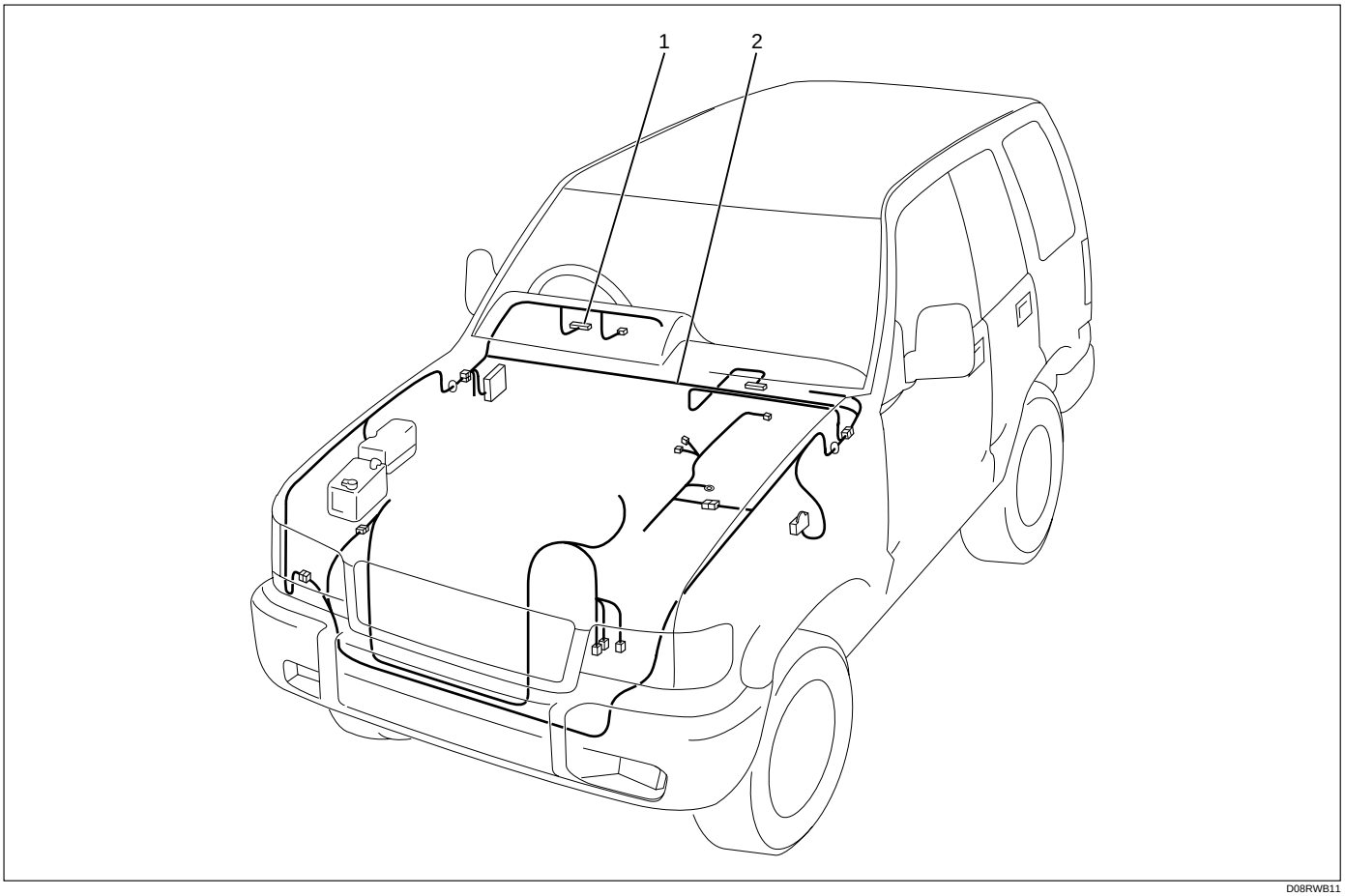

D08RWB11

Circuit Diagram

The circuit diagram shows the power supply (1), the load or loads (2) and the grounding point(s) (3).

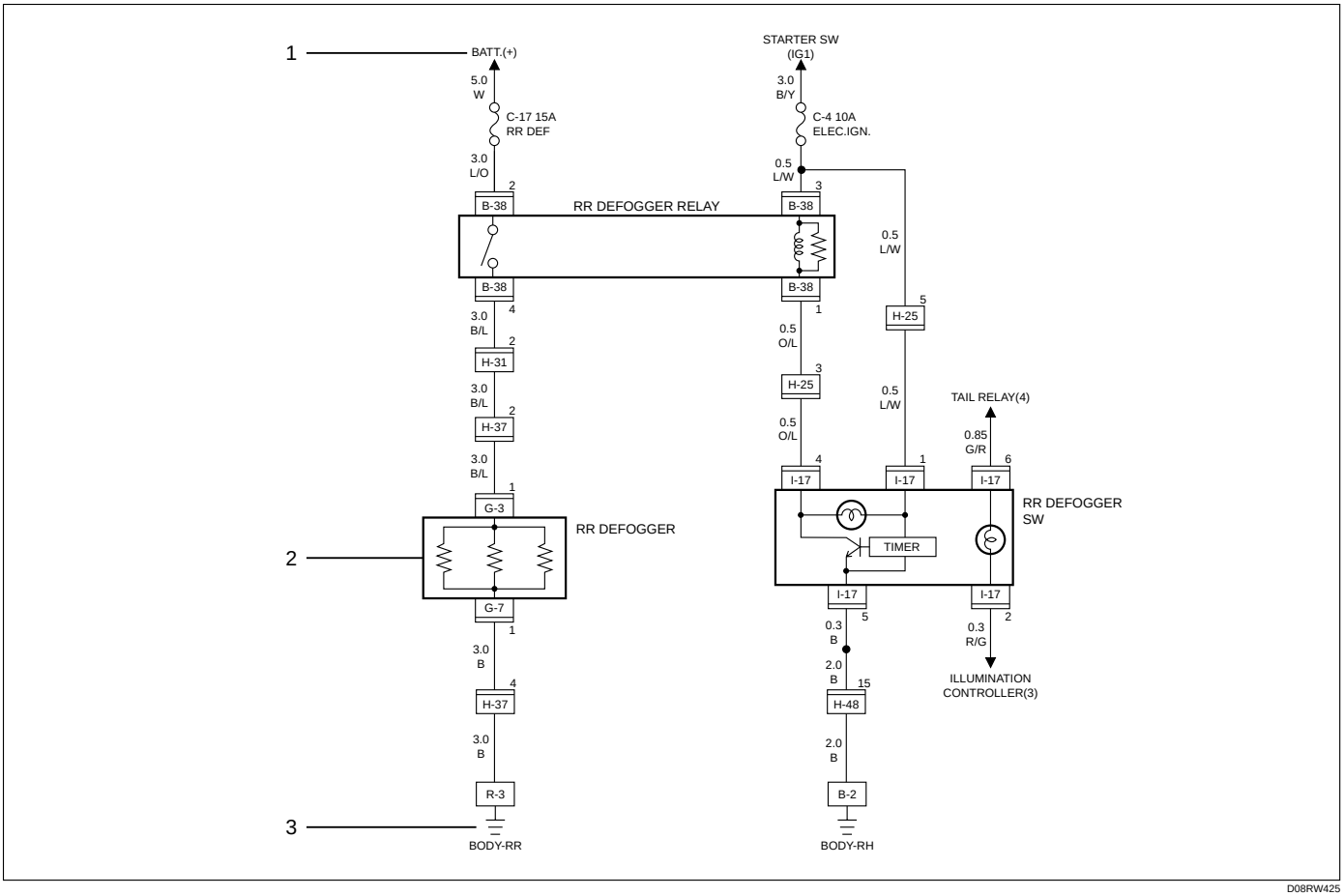

D08RW425

Harness Connector Faces

The harness connector faces show each connector's number (1), configuration (2) and the pin number (3).

No.	Connector face	No.	Connector face
B-21	NOT USED	B-31	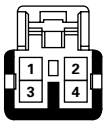
B-22	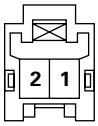	B-32	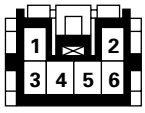 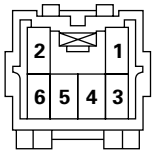
B-23	NOT USED	B-33	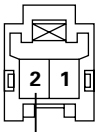

1 2 3

D08RW424

Main Data and Specifications

Fuse, Fusible Link and Circuit Breaker Location

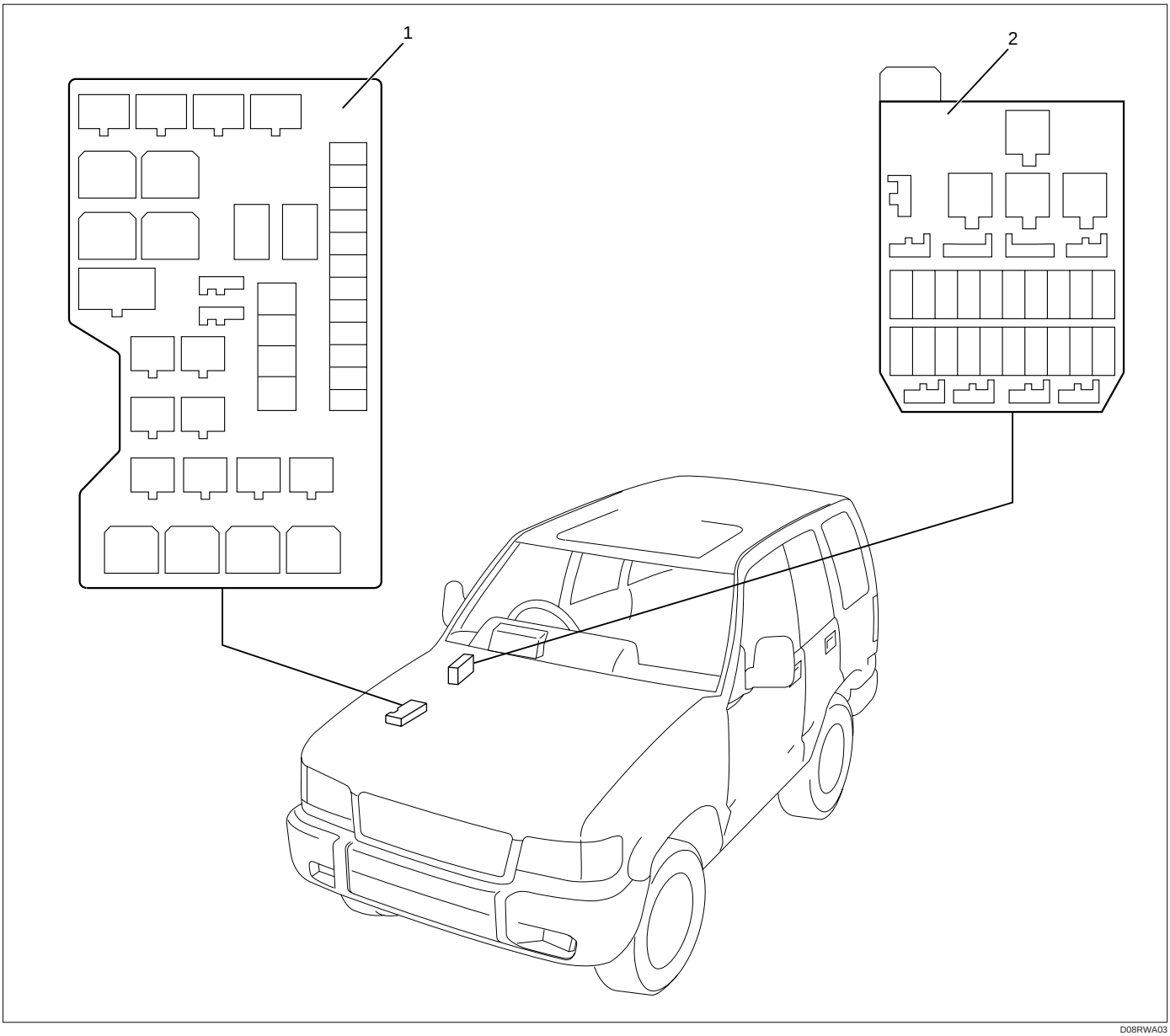

Legend
(1) Relay and Fuse Box
(2) Fuse Box

Relay & Fuse Box

RELAY AND FUSE BOX

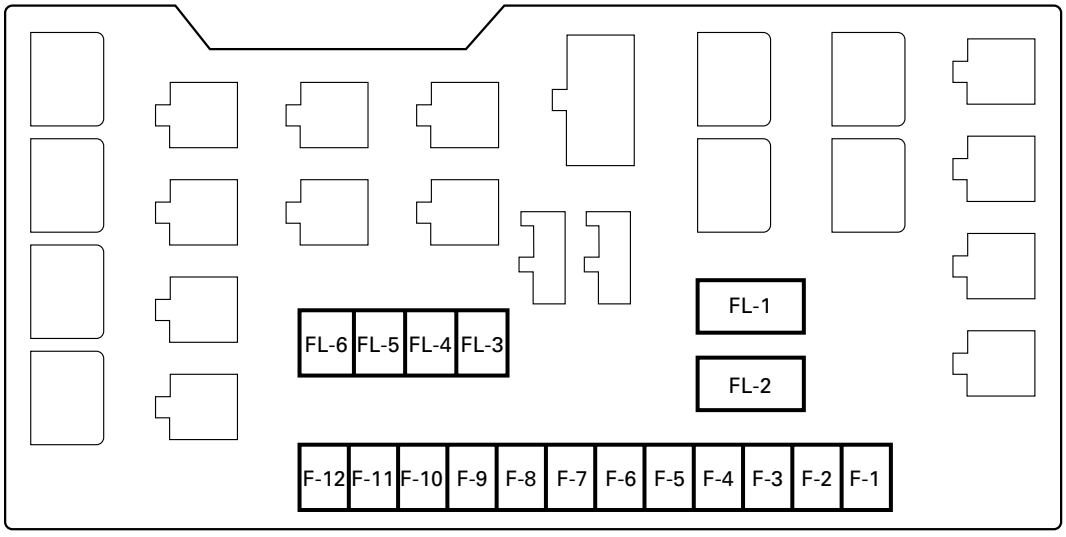

810RS027

	MODEL / No.	RHD	LHD
FUSIBLE LINK	FL-1	80A MAIN	80A MAIN
	FL-2	50A KEY SW	50A KEY SW
	FL-3	30A ECM (GASOLINE)	30A ECM (GASOLINE)
	FL-4	30A CONDENSER FAN	30A CONDENSER FAN
	FL-5	50A GLOW (4JG2)	50A GLOW (4JG2)
	FL-6	40A ABS	40A ABS
FUSE	F-1	—	—
	F-2	10A O_2 SENSOR (GASOLINE)	10A O_2 SENSOR (GASOLINE)
	F-3	15A HORN HAZARD	15A HORN HAZARD
	F-4	15A H/LAMP-LH	10A H/LAMP-LH (HI)
	F-5	15A H/LAMP-RH	10A H/LAMP-RH (HI)
	F-6	—	10A H/LAMP-LH (LOW)
	F-7	15A ANTI-THEFT	10A H/LAMP-RH (LOW)
	F-8	20A FOG	20A FOG
	F-9	20A ABS	20A ABS
	F-10	15A FUEL PUMP (GASOLINE)	15A FUEL PUMP (GASOLINE)
	F-11	—	10A TAIL-LH
	F-12	15A TAIL	10A TAIL-RH

Fuse Box

This illustration is based on RHD

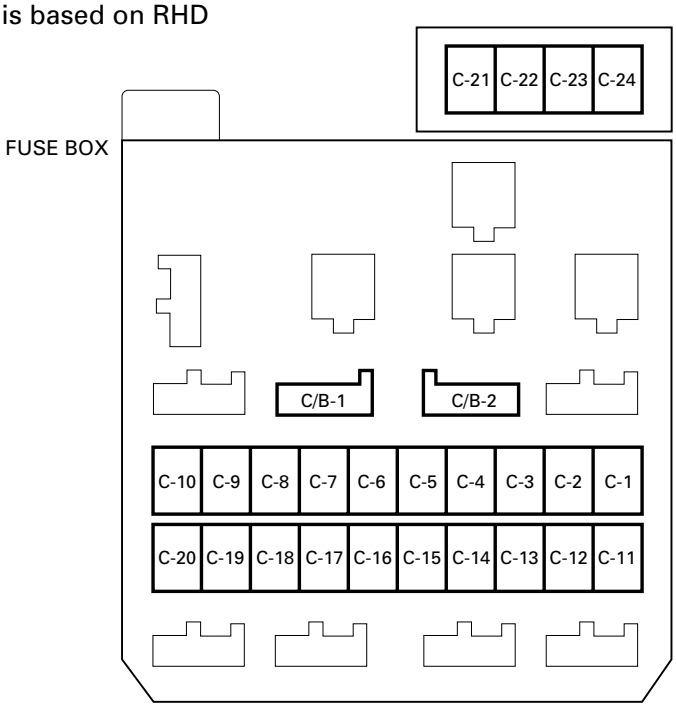

810RV026

FUSE

No.	RHD	LHD
C-1	10A STARTER RELAY	10A STARTER RELAY
C-2	15A SEAT HEATER	15A SEAT HEATER
C-3	10A TURN, BACK	10A TURN, BACK
C-4	10A ELEC. IGN.	10A ELEC. IGN.
C-5	15A FRT WIPER AND WASHER	15A FRT WIPER AND WASHER
C-6	10A RR WIPER AND WASHER	10A RR WIPER AND WASHER
C-7	10A H/LAMP WIPER	10A H/LAMP WIPER
C-8	15A ENGINE	15A ENGINE
C-9	15A IGN. COIL (GASOLINE) 15A FUEL CUT (4JG2)	15A IGN. COIL (GASOLINE) 15A FUEL CUT (4JG2)
C-10	10A METER, GAUGE	10A METER, GAUGE
C-11	10A AUDIO, MIRROR	10A AUDIO, MIRROR
C-12	20A CIGARETTE	20A CIGARETTE
C-13	10A ANTI-THEFT	10A ANTI-THEFT
C-14	15A STOP, A/T CONT.	15A STOP, A/T CONT.
C-15	20A TELEPHONE	20A TELEPHONE
C-16	10A CLOCK, ROOM	10A CLOCK, ROOM
C-17	25A RR DEFOG.	25A RR DEFOG.
C-18	20A DOOR LOCK	20A DOOR LOCK
C-19	25A BLOWER	25A BLOWER
C-20	10A AIR CON.	10A AIR CON.
C-21	10A SRS-1	10A SRS-1
C-22	—	—
C-23	—	—
C-24	—	—

CIRCUIT BREAKER

No.	RHD	LHD
C/B-1	—	—
C/B-2	30A P/W, P/S, S/R	30A P/W, P/S, S/R

Relay Location-1 (Relay and Fuse Box)

RELAY AND FUSE BOX

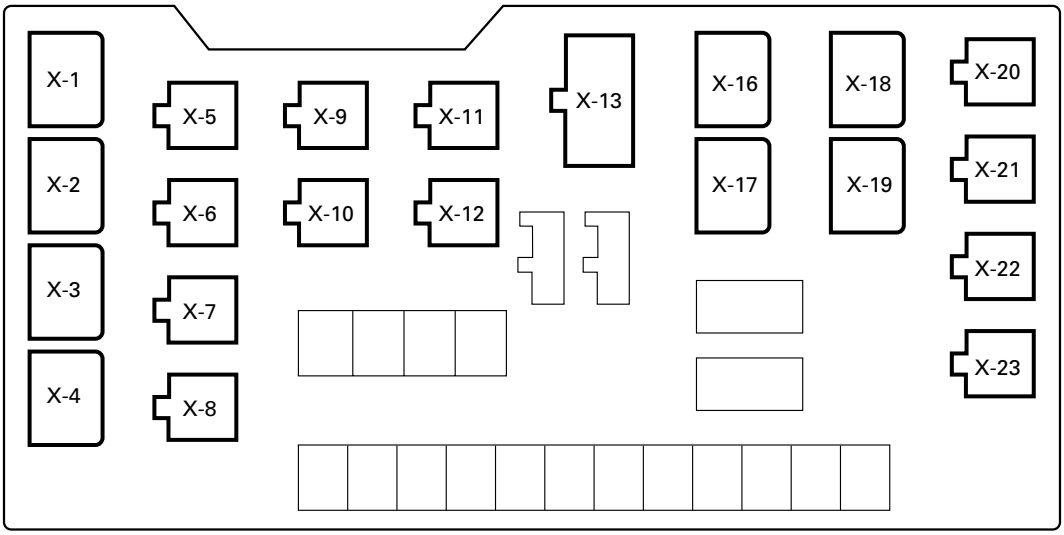

810RS029

No.	RHD	LHD
X-1	RELAY ; LIGHTING	RELAY ; LIGHTING
X-2	—	—
X-3	—	RELAY ; DIMMER
X-4	—	—
X-5	RELAY ; A/C THERMO	RELAY ; A/C THERMO
X-6	—	—
X-7	RELAY ; COMPRESSOR (GASOLINE)	RELAY ; COMPRESSOR (GASOLINE)
X-8	RELAY ; HORN	RELAY ; HORN
X-9	RELAY ; TAIL	RELAY ; TAIL
X-10	—	—
X-11	RELAY ; FUEL PUMP (GASOLINE)	RELAY ; FUEL PUMP (GASOLINE)
X-12	RELAY ; ECM MAIN (GASOLINE)	RELAY ; ECM MAIN (GASOLINE)
X-13	—	—
X-16	RELAY ; ANTI-THEFT	RELAY ; ANTI-THEFT
X-17	RELAY ; STARTER (GASOLINE) RELAY ; CHARGE (DIESEL)	RELAY ; STARTER (GASOLINE) RELAY ; CHARGE (DIESEL)
X-18	RELAY ; SHIFT ON THE FLY	RELAY ; SHIFT ON THE FLY
X-19	RELAY ; CONDENSER FAN (GASOLINE)	RELAY ; CONDENSER FAN
X-20	—	—
X-21	—	—
X-22	RELAY ; RR FOG LIGHT	—
X-23	RELAY ; FRT FOG LIGHT	RELAY ; FRT FOG LIGHT

Relay Location-2 (Fuse Box)

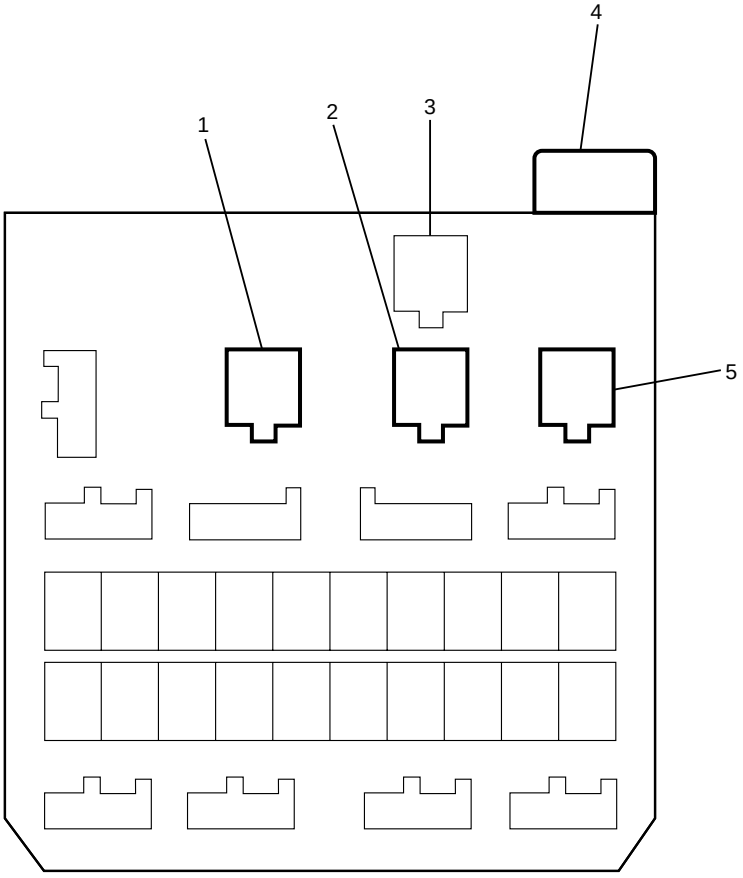

810RW330

Legend

(1) Heater & A/C Relay
(2) Power Window Relay
(3) H-63
(4) Flasher Unit
(5) Rear Defogger Relay

Relay Location-3

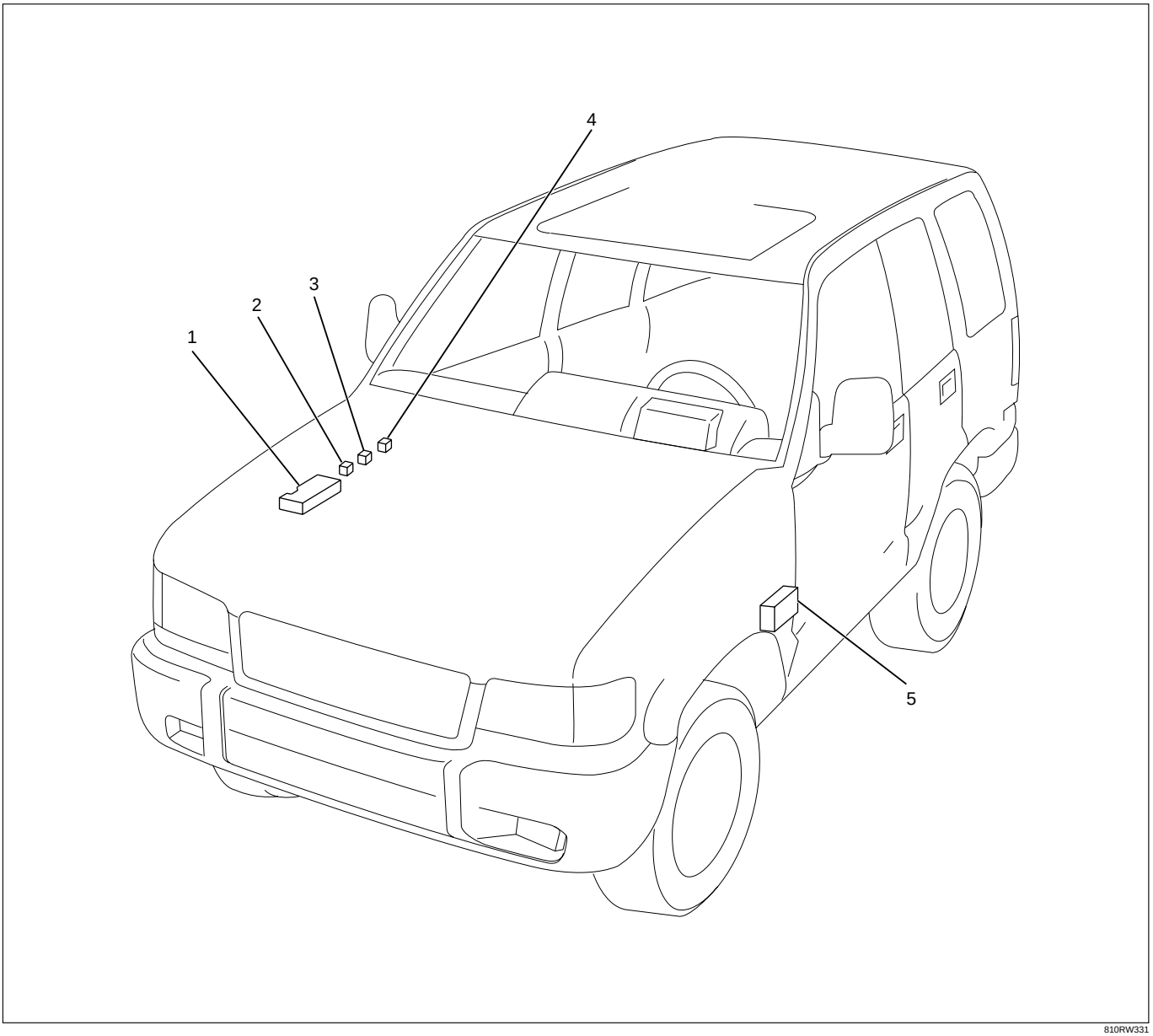

810RW331

Legend

(1) Relay and Fuse Box
(2) Glow Relay-1
(3) Glow Relay-2
(4) Starter Relay
(5) Fuse Box

Diode Location

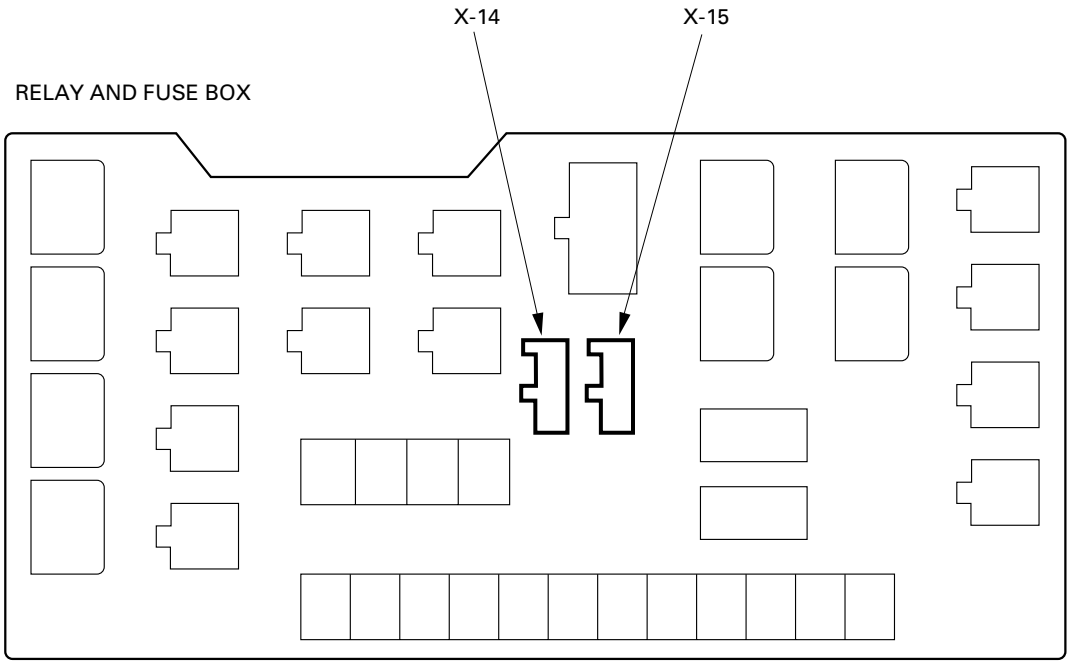

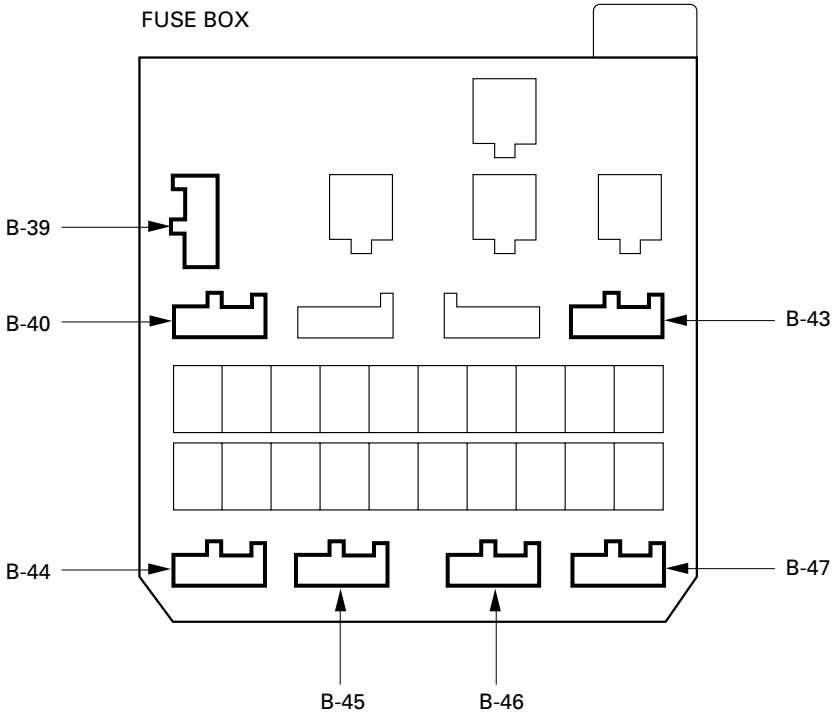

Fuse Block Circuit

RHD Models

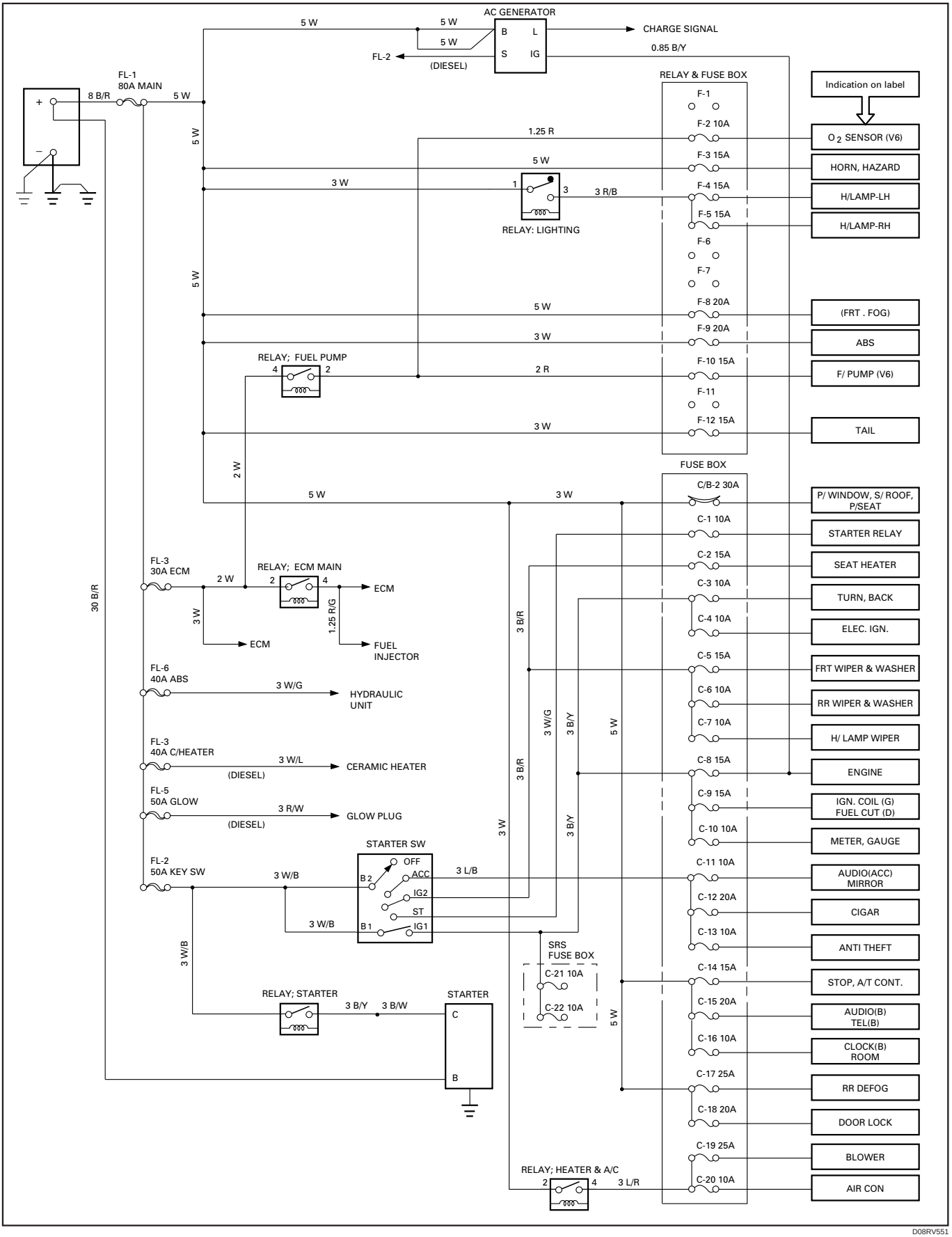

D08RV551

LHD Models

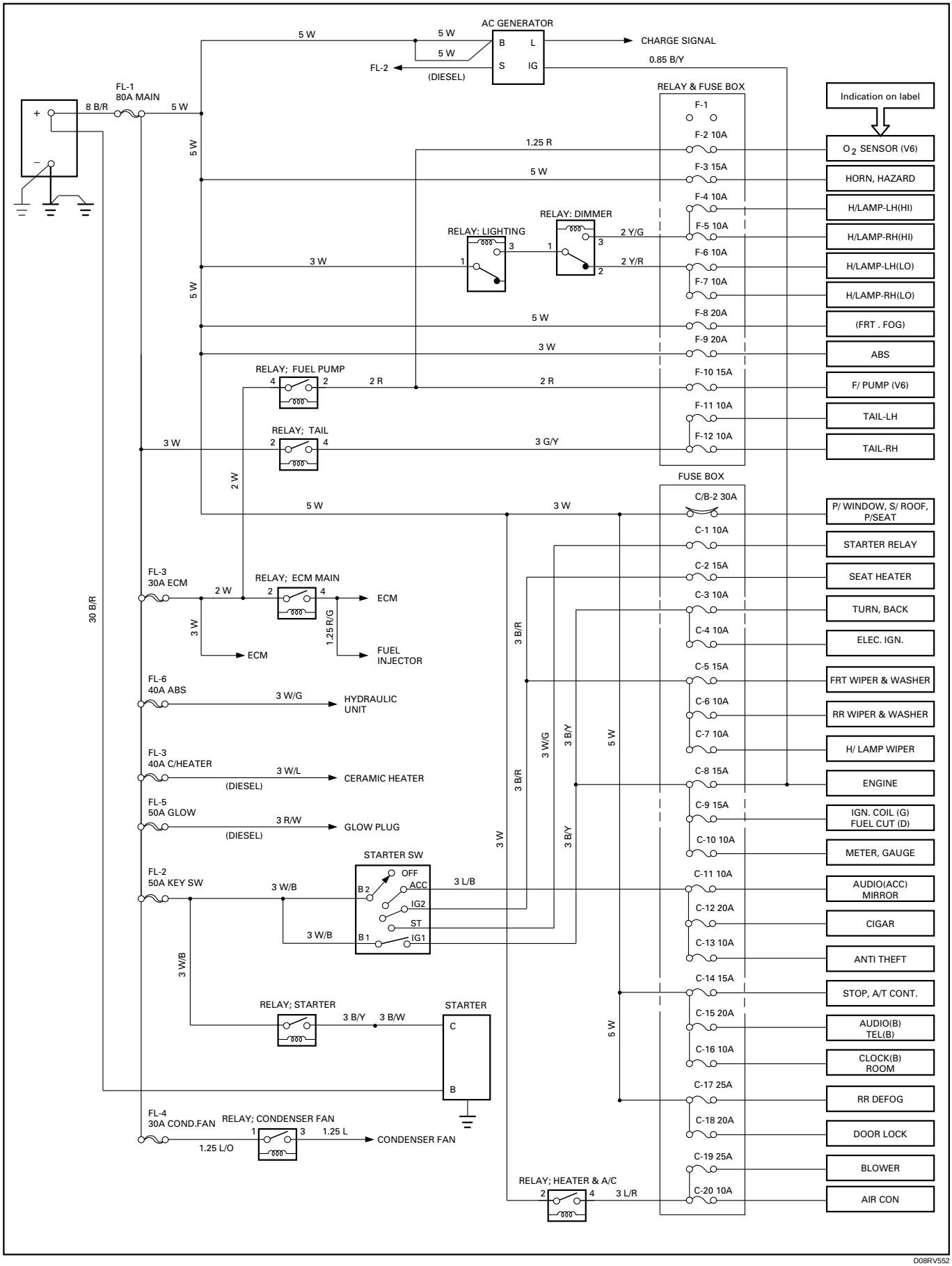
AC GENERATOR
B
L
S
IG
CHARGE SIGNAL
0.85 B/Y
5 W
5 W
5 W
FL-2
(DIESEL)
FL-1
80A MAIN
8 B/R
5 W
RELAY & FUSE BOX
F-1
F-2 10A
F-3 15A
F-4 10A
F-5 10A
F-6 10A
F-7 10A
F-8 20A
F-9 20A
F-10 15A
F-11 10A
F-12 10A
Indication on label
O2 SENSOR (V6)
HORN, HAZARD
H/LAMP-LH(HI)
H/LAMP-RH(HI)
H/LAMP-LH(LO)
H/LAMP-RH(LO)
(FRT . FOG)
ABS
F/ PUMP (V6)
TAIL-LH
TAIL-RH
1.25 R
5 W
3 W
5 W
5 W
3 W
RELAY: LIGHTING
RELAY: DIMMER
2 Y/G
2 Y/R
RELAY; FUEL PUMP
2 R
2 R
RELAY; TAIL
3 W
3 G/Y
2 W
FUSE BOX
C/B-2 30A
C-1 10A
C-2 15A
C-3 10A
C-4 10A
C-5 15A
C-6 10A
C-7 10A
C-8 15A
C-9 15A
C-10 10A
C-11 10A
C-12 20A
C-13 10A
C-14 15A
C-15 20A
C-16 10A
C-17 25A
C-18 20A
C-19 25A
C-20 10A
P/ WINDOW, S/ ROOF, P/SEAT
STARTER RELAY
SEAT HEATER
TURN, BACK
ELEC. IGN.
FRT WIPER & WASHER
RR WIPER & WASHER
H/ LAMP WIPER
ENGINE
IGN. COIL (G) FUEL CUT (D)
METER, GAUGE
AUDIO(ACC) MIRROR
CIGAR
ANTI THEFT
STOP, A/T CONT.
AUDIO(B) TEL(B)
CLOCK(B) ROOM
RR DEFOG
DOOR LOCK
BLOWER
AIR CON
30 B/R
FL-3
30A ECM
2 W
RELAY; ECM MAIN
ECM
3 W
1.25 R/G
ECM
FUEL INJECTOR
FL-6
40A ABS
3 W/G
HYDRAULIC UNIT
FL-3
40A C/HEATER
3 W/L
(DIESEL)
CERAMIC HEATER
FL-5
50A GLOW
3 R/W
(DIESEL)
GLOW PLUG
3 B/R
3 W/G
3 B/Y
5 W
3 B/R
3 B/Y
3 W
FL-2
50A KEY SW
3 W/B
STARTER SW
OFF
ACC
IG2
ST
IG1
B 2
B 1
3 L/B
3 W/B
3 W/B
RELAY; STARTER
3 B/Y
3 B/W
STARTER
C
B
5 W
FL-4
30A COND.FAN
RELAY; CONDENSER FAN
1.25 L/O
1.25 L
CONDENSER FAN
RELAY; HEATER & A/C
3 L/R
D08RV552

Grounding Point

Reference Table

(6VD1 RHD)

Connector No.	Cable harness	Location	Parts (Load)
B-1	Body harness	Body-LH	Door mirror defogger (LH), Fan SW, FRT power window & door lock SW-LH, Cruise control unit, FRT door key SW-LH, FRT door lock actuator-LH, FRT door lock SW-LH
B-2			Sun roof SW, Sun roof control unit, Safety SW, Limit SW
B-18		Body-RH	FRT door key SW-RH, FRT door lock & power window SW-RH, FRT door lock actuator & lock SW-RH, FRT door lock SW-RH, Door mirror defogger (RH), RR wiper intermittent relay, Mode SW (A/T), Starter relay
B-19			Cigar lighter, Dimmer·passing SW, Illumination controller, RR defogger SW, Flasher unit, Power window relay, Cruise main indicator light, Lighting SW, Glove box illumination light, Ashtray illumination light, Headlight wiper SW, Clock, FRT fog light SW, Variable intermittent (FRT wiper & washer SW), Kick down SW, Anti-theft controller, Turn signal indicator light, Heater & A/C relay
B-26		Body-center	RR Power window SW-RH, Mirror control SW, Mirror defogger SW, Mirror folding SW, Car telephone, Shift lock controller, POWER & WINTER SW, Seat heater, Seat heater SW, RR door lock actuator-LH, EBCM
B-28			RR power window SW-RH, Power & winter SW, Power seat SW, Tilt motor & SW, Recliner motor & SW, RR door lock actuator-RH, EBCM
1 C-16	Engine room harness	Fender-LH	Clearance light, FRT turn signal light
2 C-16			Pump & VSV, Headlight wiper timer
3 C-16			4WD SW, VSV;FRT axle, FRT axle SW
4 C-16			Headlight wiper motor
5 C-16			FRT fog light
6 C-16			O_2 Sensor, Headlight leveling actuator-RH
7 C-16			P/S pressure SW, Headlight leveling actuator-LH
8 C-16			Side turn signal light (LH)

Connector No.	Cable harness	Location	Parts (Load)
1 C-39	Engine room harness	Fender-RH	Windshield washer motor
2 C-39			Windshield wiper motor
3 C-39			Windshield intermittent relay
4 C-39			FRT fog light relay
5 C-39			Fuel pump relay, ECM main relay
6 C-39			Meter, Vehicle speed sensor (Meter), Fuel tank unit
7 C-39			Side turn signal light (RH)
8 C-39			Vehicle speed sensor, Brake fluid SW
E-28	Engine ECGI harness	Engine-common chamber	ECM, O_2 sensor
E-29			ECM, Data link connector
E-30			DIS
E-31			ECM, Data link connector, A/T Shift indicator control unit
R-3	Rear body harness	Body-RR	RR washer motor, Rear wiper motor, Luggage room light, RR defogger, High mount stoplight, Tailgate key SW, RR door lock actuator-LH, Tailgate lock actuator-LH, RR power window SW-LH
R-4			Taillight, Stoplight, RR turn signal light, Backup light, License plate light, Fuel tank unit, Fuel pump, Trailer harness connector, RR fog light
M-16	Mission harness	Engine	TCM
I-39	Instrument harness	Body-FRT	Audio
C-85	Engine room harness	Body-Center	EBCM
U-2	SRS harness	Body-FRT	SDM

(6VD1 LHD)

Connector No.	Cable harness	Location	Parts (Load)
B-1	Body harness	Body-RH	FRT power window & door lock SW-RH, FRT door key SW-RH, FRT door lock actuator-RH, Door lock SW-RH, Door mirror defogger (RH), Key & light remind buzzer (Saudi Arabia), Sun roof SW, Sun roof control unit, Safety SW, Limit SW
B-2			Seat belt warning light (Saudi Arabia), Cruise control unit, Fan SW, Turn signal indicator light, Clock, Glove box illumination light, Ashtray illumination light, RR defogger SW, Cigar lighter
B-18		Body-LH	FRT door key SW-LH, FRT door lock actuator & lock SW-LH, Door lock SW-LH, FRT door lock & power window SW-LH, Door mirror defogger (LH), RR wiper intermittent relay, Starter relay, Mode SW (A/T), Power window relay
B-19			Dimmer·passing SW, Illumination controller, RR defogger SW, Flasher unit, Cruise main indicator light, Lighting SW, Headlight wiper SW, Clock, FRT fog light SW, Variable intermittent (FRT wiper & washer SW), Anti-theft controller, Heater & A/C relay, Kick down SW
B-26		Body-center	Mirror control SW, Mirror folding SW, Mirror defogger SW, RR Door lock actuator-RH, Car telephone, Shift lock controller, POWER & WINTER SW, Seat heater, Seat heater SW, EBCM, RR power window SW-RH
B-28			EBCM, Seat belt SW (Saudi Arabia), Tilt motor & SW, Recliner motor & SW, Power seat SW
1 C-16	Engine room harness	Fender-LH	Clearance light, FRT turn signal light
3 C-16			4WD SW, VSV;FRT axle, FRT axle SW
4 C-16			Headlight wiper motor
5 C-16			FRT fog light
6 C-16			P/S pressure SW
7 C-16			O_2 Sensor
8 C-16			Side turn signal light (LH)

Connector No.	Cable harness	Location	Parts (Load)
1 C-39	Engine room harness	Fender-RH	Windshield washer motor, Side turn signal light (RH)
2 C-39			Windshield wiper motor
3 C-39			Windshield intermittent relay
4 C-39			Headlight-LH, FRT fog light relay
5 C-39			Condenser fan (Saudi Arabia)
6 C-39			Meter, Vehicle speed sensor (Meter), Fuel tank unit
7 C-39			Pump & VSV, Headlight-RH, Fuel pump relay, ECM main relay
8 C-39			High-beam indicator light, Vehicle speed sensor, Headlight wiper timer
C-85		Body-Center	EBCM
E-28	Engine ECGI harness	Engine-common chamber	ECM, O_2 sensor
E-29			ECM, Data link connector
E-30			DIS
E-31			ECM, Data link connector, A/T Shift indicator control unit
R-3	Rear body harness	Body-RR	RR washer motor, Rear wiper motor, Luggage room light, RR defogger, Tailgate key SW, Tailgate lock actuator-LH, RR Door lock actuator-LH, High mount stoplight, RR power window SW-LH
R-4			Taillight, Stoplight, RR turn signal light, License plate light, Fuel tank unit, Fuel pump, Backup light
M-16	Mission harness	Engine	TCM
I-39	Instrument harness	Body-FRT	Audio

(4JG2 RHD)

Connector No.	Cable harness	Location	Parts (Load)
B-1	Body harness	Body-LH	Door mirror defogger (LH), FRT power window & door lock SW-LH, Fan SW, FRT door key SW-LH, FRT door lock actuator-LH, FRT door lock SW-LH
B-2			Sun roof SW, Sun roof control unit, Safety SW, Limit SW
B-18		Body-RH	FRT door key SW-RH, FRT door lock & power window SW-RH, FRT door lock actuator & lock SW-RH, Door lock SW-RH, Door mirror defogger (RH), RR wiper intermittent relay, Starter relay
B-19			Headlight wiper SW, Dimmer·passing SW, Illumination controller, RR defogger SW, Flasher unit, Power window relay, Lighting SW, Glove box illumination light, Ashtray illumination light, Clock, FRT fog light SW, Variable intermittent (FRT wiper & washer SW), Cigar lighter, Vehicle speed sensor (Meter), Heater & A/C relay, Turn signal indicator light, Anti-theft controller, RR power window SW-RH
B-26		Body-center	Mirror control SW, Mirror folding SW, Mirror defogger SW, Car telephone, Seat heater, Seat heater SW, RR door lock actuator-LH, EBCM
B-28			RR power window SW-RH, EBCM, RR door lock actuator-RH, Tilt motor & SW, Power seat SW, Recliner motor & SW
1 C-16	Engine room harness	Fender-LH	Clearance light, FRT turn signal light
2 C-16			4WD SW, Fuel filter SW
3 C-16			VSV;FRT axle, FRT axle SW
4 C-16			Headlight wiper motor
5 C-16			FRT fog light
7 C-16			QOS-III control unit, Headlight wiper timer, VSV;FICD, QOS/EGR control unit, Data link connector
8 C-16			Side turn signal light (LH)

Connector No.	Cable harness	Location	Parts (Load)
1 C-39	Engine room harness	Fender-RH	Windshield washer motor
2 C-39			Windshield wiper motor
3 C-39			Windshield intermittent relay, Charge relay
4 C-39			FRT fog light relay
5 C-39			Tacho sensor
6 C-39			Vehicle speed sensor (Meter), Meter, Fuel tank unit
7 C-39			Side turn signal light (RH)
8 C-39			Vehicle speed sensor, Brake fluid SW
C-85		Body-FRT	EBCM
R-3	Rear body harness	Body-RR	RR washer motor, Rear wiper motor, Luggage room light, RR defogger, High mount stoplight, Tailgate key SW, RR door lock actuator-LH, Tailgate lock actuator-LH, RR power window SW-LH
R-4			Taillight, Stoplight, RR turn signal light, Backup light, License plate light, Fuel tank unit, RR fog light, Trailer harness connector
I-39	Instrument harness	Body-FRT	Audio

(4JG2 LHD)

Connector No.	Cable harness	Location	Parts (Load)
B-1	Body harness	Body-RH	Door mirror defogger (RH), FRT door lock key SW-RH, FRT door lock actuator-RH, Door lock SW-RH, FRT power window & door lock SW-RH, Key & light remind buzzer (Saudi Arabia), Sun roof SW, Sun roof control unit, Safety SW, Limit SW
B-2			Seat belt warning light (Saudi Arabia), Fan SW, Turn signal indicator light, Vehicle speed sensor (Meter), RR defogger SW, Clock, Cigar lighter, Glove box illumination light, Ashtray illumination light
B-18		Body-LH	FRT door lock key SW-LH, FRT door lock actuator & lock SW-LH, Door lock SW-LH, FRT door lock & power window SW-LH, Door mirror defogger (LH), RR wiper intermittent relay, Starter relay, Power window relay
B-19			Dimmer·passing SW, Illumination controller, RR defogger SW, Flasher unit, Lighting SW, Headlight wiper SW, FRT fog light SW, Variable intermittent (FRT wiper & washer SW), Heater & A/C relay, Anti-theft controller
B-26		Body-center	Mirror control SW, Mirror folding SW, Mirror defogger SW, RR power window SW-RH, Car telephone, RR door lock actuator-RH, Seat heater, Seat heater SW, EBCM
B-28			Seat belt SW (Saudi Arabia), EBCM, Tilt motor & SW, Power seat SW, Recliner motor & SW
1 C-16	Engine room harness	Fender-LH	Clearance light, FRT turn signal light
2 C-16			4WD SW, Fuel filter SW
3 C-16			VSV;FRT axle, FRT axle SW, Brake fluid SW
4 C-16			Headlight wiper motor
5 C-16			FRT fog light
7 C-16			VSV; FICD
8 C-16			Data link connector, Side turn signal light (LH), QOS-III control unit

Connector No.	Cable harness	Location	Parts (Load)
1 C-39	Engine room harness	Fender-RH	Windshield washer motor, Headlight-LH, Side turn signal light (RH)
2 C-39			Windshield wiper motor
3 C-39			Windshield intermittent relay
4 C-39			FRT fog light relay, Charge relay, Headlight-LH
5 C-39			Condenser fan (Saudi Arabia)
6 C-39			Meter, Vehicle speed sensor (Meter), Fuel tank unit
7 C-39			Headlight-RH, Tacho sensor
8 C-39			Headlight wiper timer, High-beam indicator light, Vehicle speed sensor
C-85		Body-FRT	EBCM
R-3	Rear body harness	Body-RR	RR washer motor, Rear wiper motor, Luggage room light, RR defogger, Tailgate key SW, Tailgate lock actuator-LH, RR door lock actuator-LH, RR power window SW-LH, High mount stoplight
R-4			Taillight, Stoplight, RR turn signal light, License plate light, Backup light
I-39	Instrument harness	Body-FRT	Audio

Grounding Point

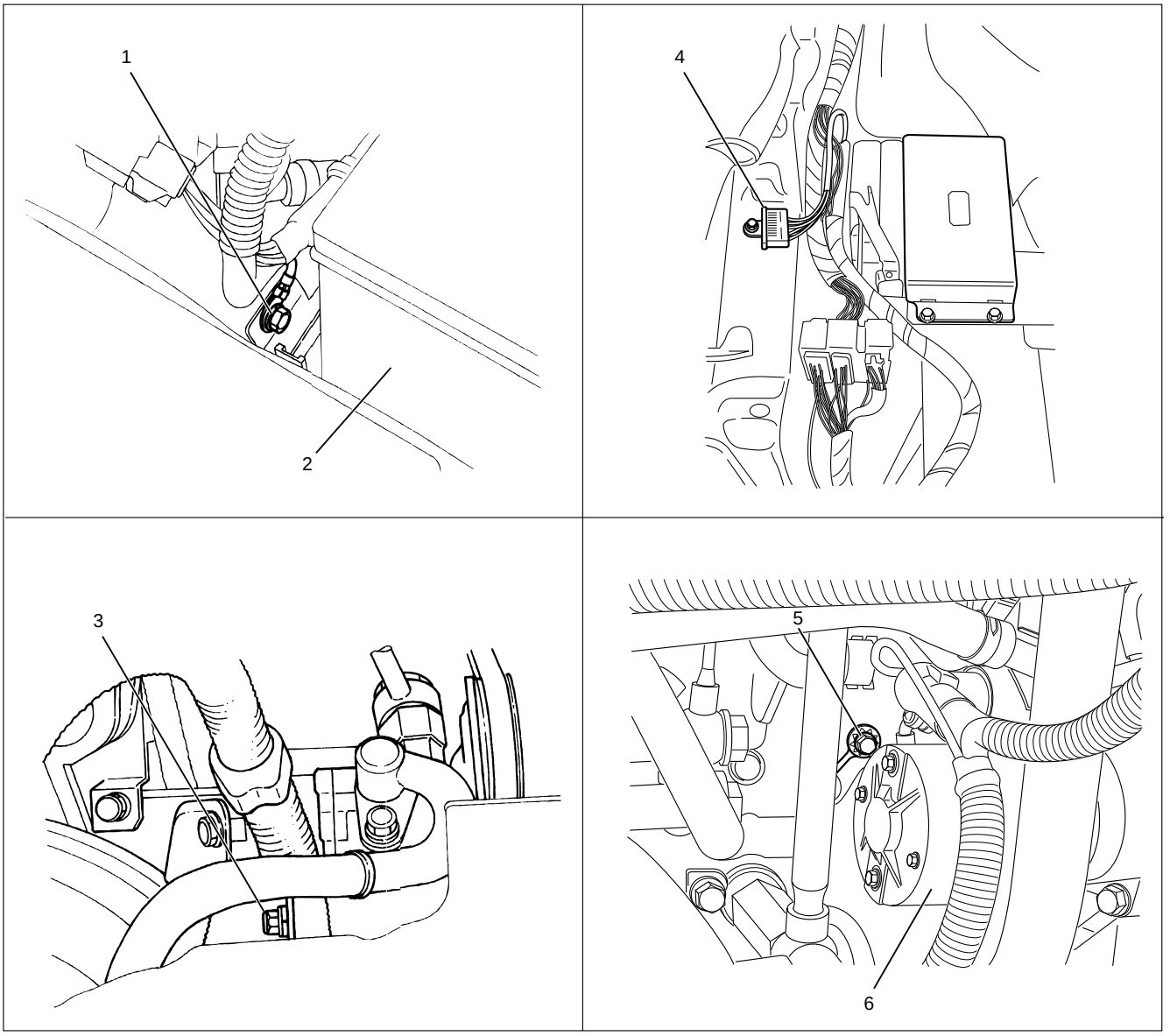

D08RWA22

Legend

(1) P-6
(2) Battery
(3) P-7
(4) C-85
(5) E-4
(6) Starter

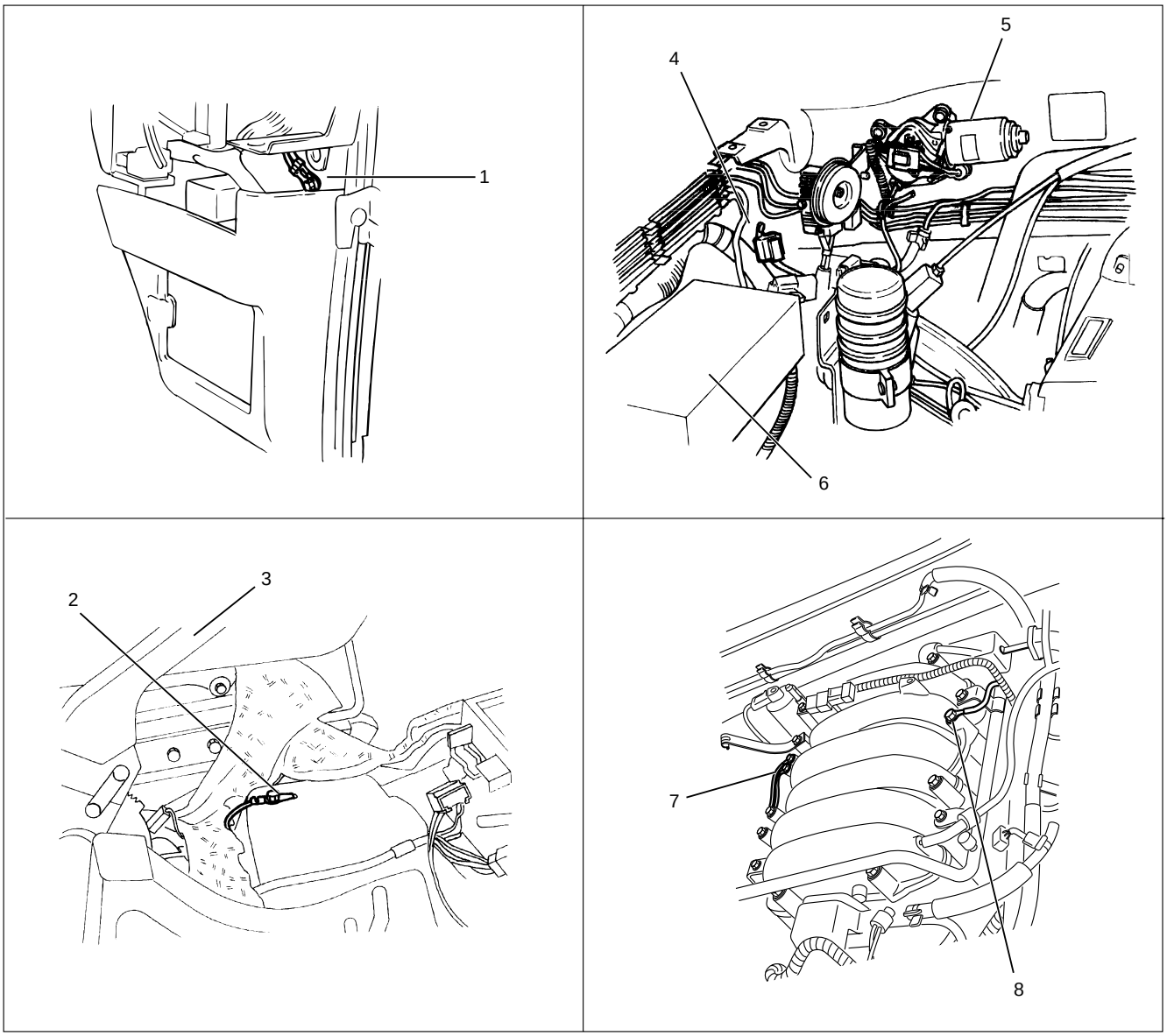

D08RWA24

Legend

(1) B-18, B-19
(2) B-26
(3) Parking Brake Lever
(4) C-39
(5) Windshield Wiper Motor
(6) Relay and Fuse Box
(7) Common Chamber: RH
(8) Common Chamber: LH

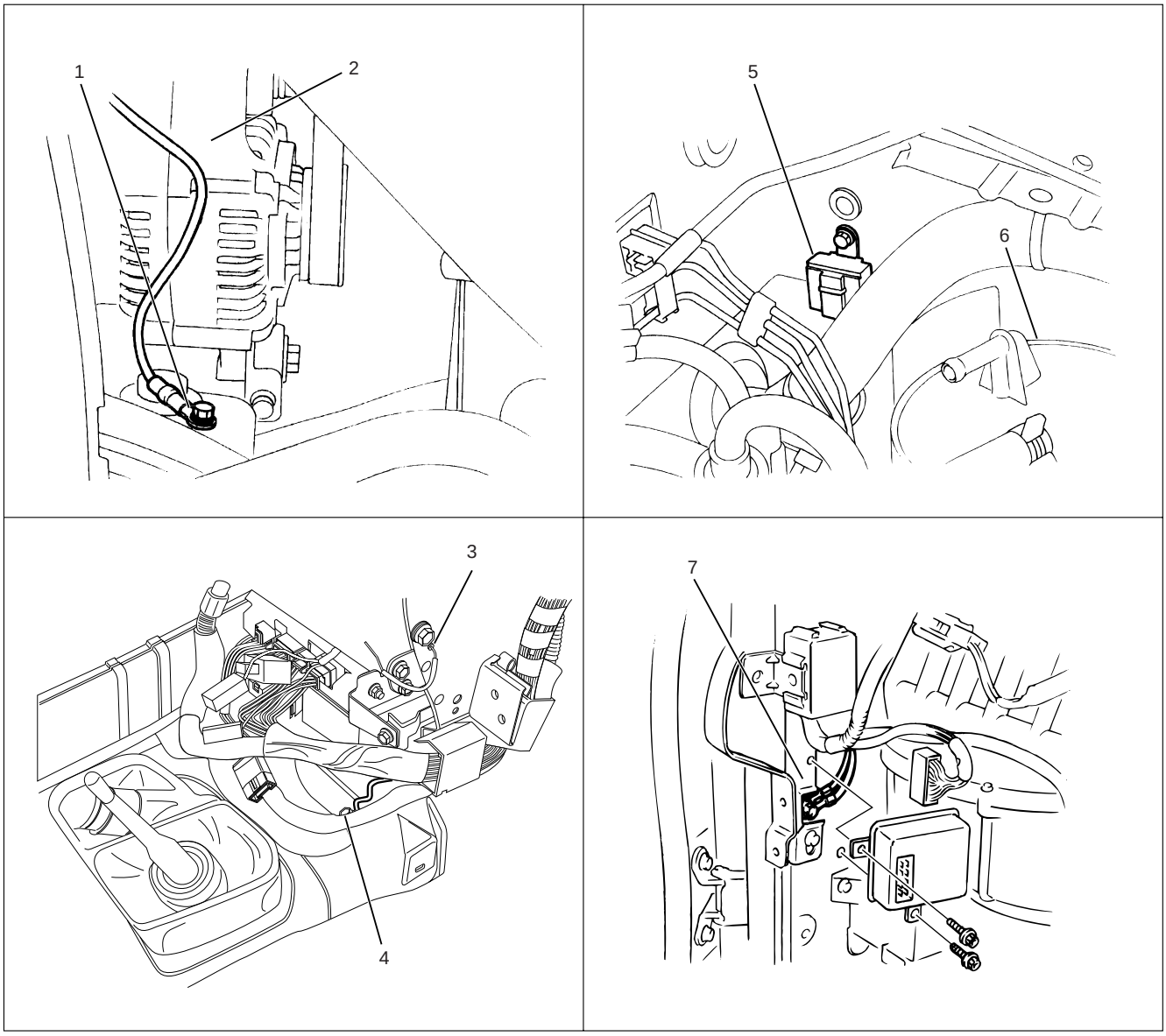

D08RWA23

Legend

(1) P-10
(2) AC Generator
(3) I-39
(4) U-2
(5) C-16
(6) Canister
(7) B-1, B-2

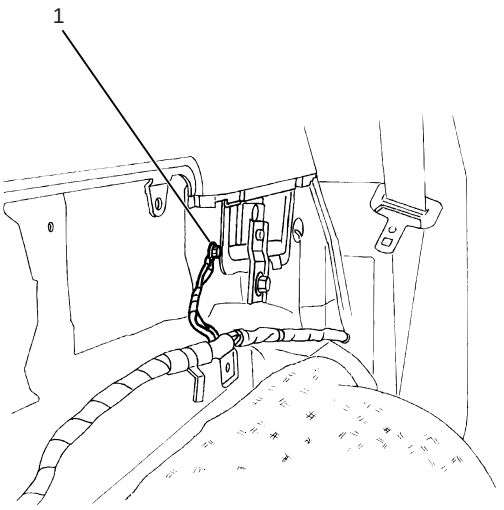

D08RWA30

Legend

(1) R-3, R-4

Cable Harness Routing (RHD) – 1

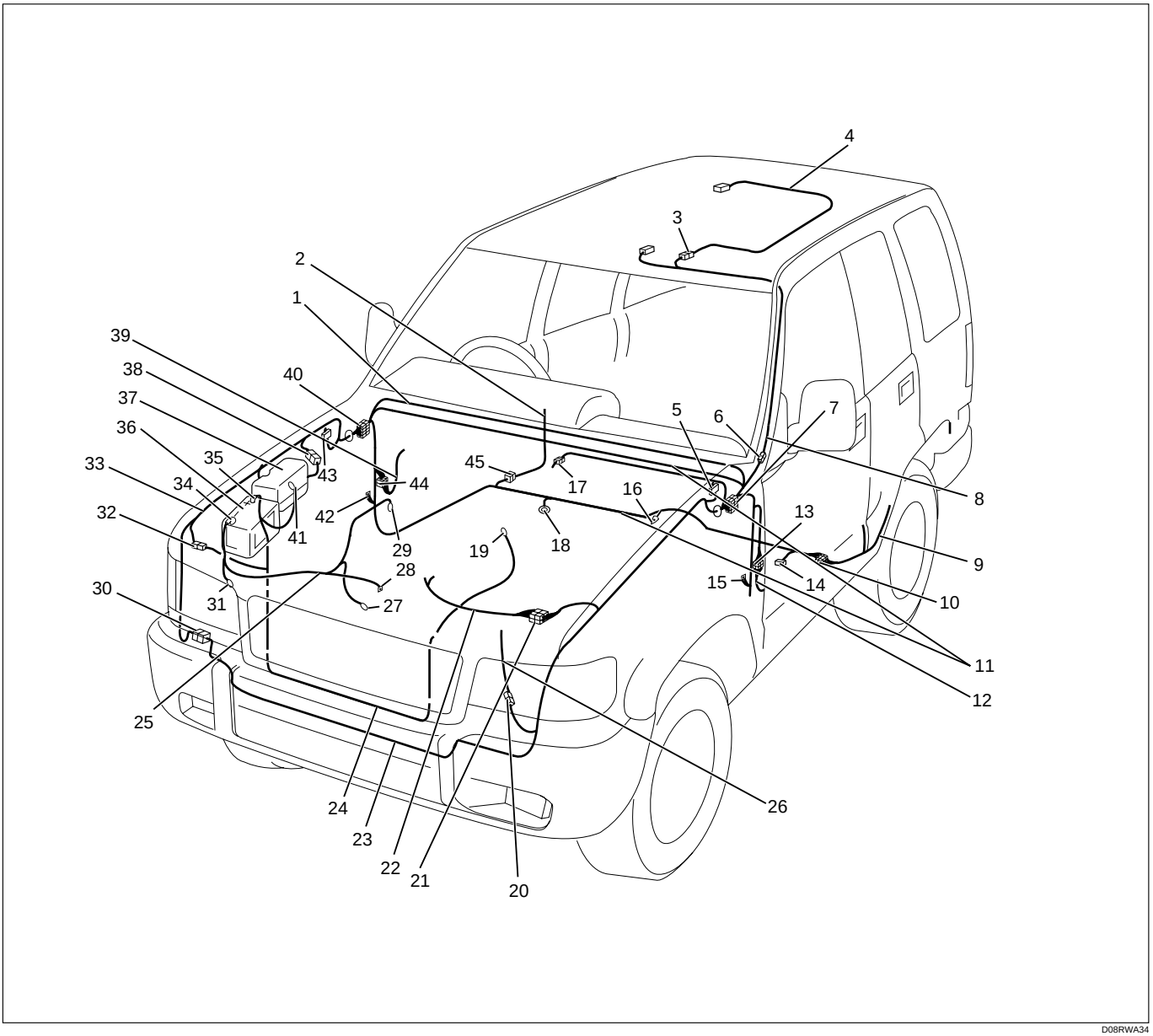

Legend

(1) Instrument Harness
(2) RR Door Extension Harness
(3) H-45
(4) Sun Roof Harness
(5) C-16
(6) H-21
(7) H-7, H-8, H-9, H-20, H-24, H-65
(8) Domelight Harness
(9) RR Body Harness
(10) H-31, H-32, H-46
(11) Body Harness
(12) FRT Door Harness
(13) H-18, H-19
(14) C-85
(15) B-1, B-2
(16) B-26
(17) H-12
(18) B-28
(19) P-4
(20) H-10, H-11, H-53
(21) H-4, H-5, H-6
(22) Engine Harness
(23) Engine Room Harness (LH)
(24) Battery Positive Cable
(25) Battery Negative Cable
(26) Transmission Harness
(27) P-7
(28) P-10
(29) P-9
(30) H-41, H-42, H-43, H-60
(31) P-6

(32) H-2, H-3 (4J**)
(33) Engine Room Harness (RH)
(34) P-5
(35) P-1
(36) Battery
(37) Relay and Fuse Box
(38) H-1, H-2, H-3 (6V*1)
(39) FRT Door Harness (RH)
(40) H-13, H-14, H-15, H-16, H-25, H-26, H-27, H-61, H-62, H-64, H-66
(41) P-2
(42) B-18, B-19
(43) C-39
(44) H-22, H-23
(45) H-47

Cable Harness Routing (RHD) – 2

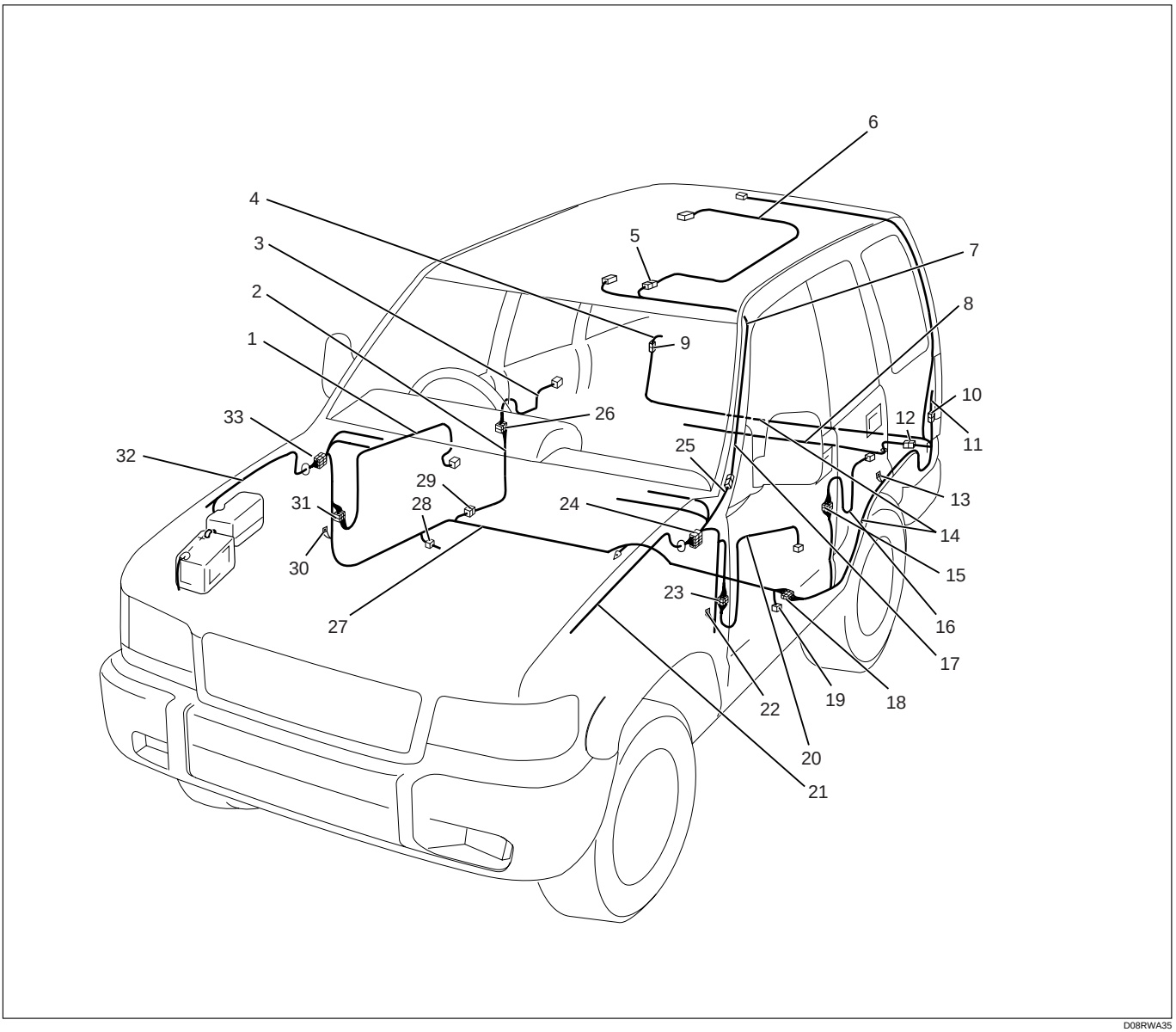

D08RWA35

Legend

(1) FRT Door Harness (RH)
(2) RR Door Extension Harness
(3) RR Door Harness (RH)
(4) Tail Gate Harness (RH)
(5) H-45
(6) Sun Roof Harness
(7) Domelight Harness
(8) Chassis Harness
(9) H-39
(10) H-37, H-38
(11) Tailgate Harness (LH)
(12) H-33
(13) R-3, R-4
(14) RR Body Harness
(15) H-28, H-29
(16) RR Door Harness (LH)
(17) Domelight Harness
(18) H-31, H-32, H-46
(19) H-58
(20) FRT Door Harness (LH)
(21) Engine Room Harness (LH)
(22) B-1, B-2
(23) H-18, H-19
(24) H-7, H-8, H-9, H-20, H-24, H-65
(25) H-21
(26) H-34, H-35
(27) Body Harness
(28) H-57
(29) H-47
(30) B-18, B-19
(31) H-22, H-23
(32) Engine Room Harness (RH)
(33) H-13, H-14, H-15, H-16, H-25, H-26, H-27, H-61, H-62, H-64, H-65

Cable Harness Routing (RHD) – 3

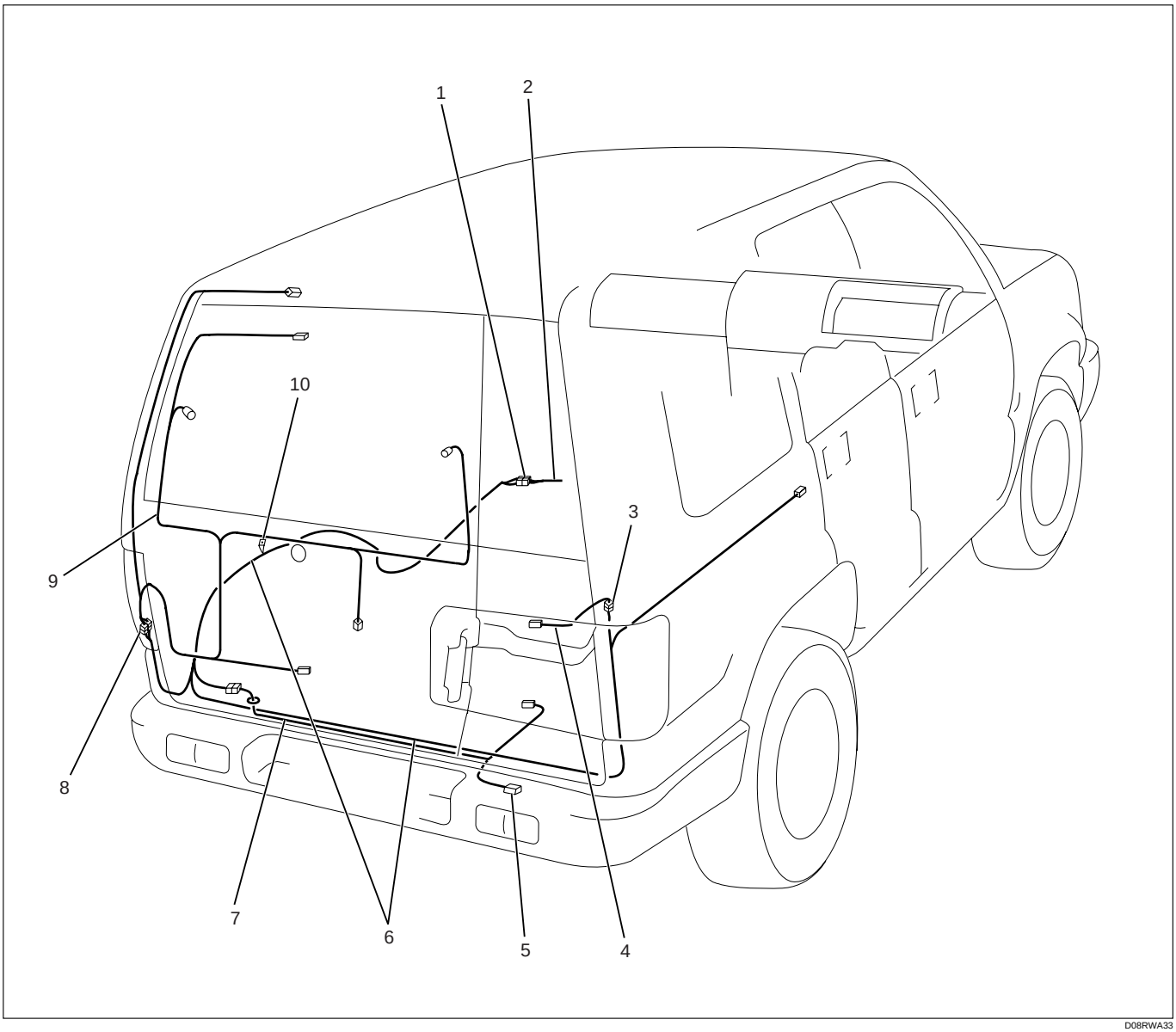

D08RWA33

Legend

(1) H-31, H-32, H-46
(2) Body Harness
(3) H-39
(4) Tail Gate Harness (RH)
(5) H-44
(6) RR Body Harness
(7) Chassis Harness
(8) H-37, H-38
(9) Tail Gate Harness (LH)
(10) R-3, R-4

Cable Harness Routing (LHD) – 1

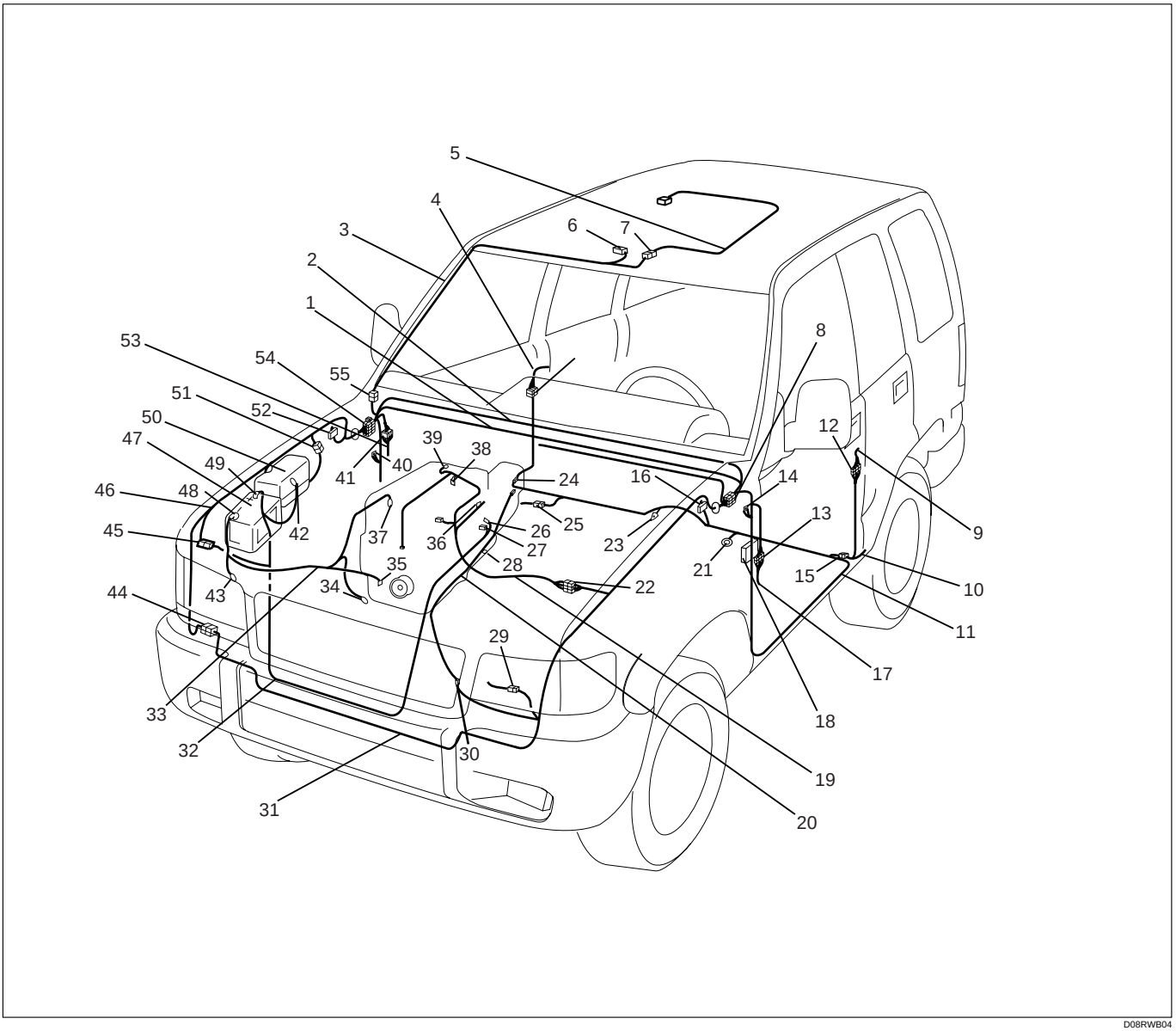

D08RWB04

Legend

(1) Body Harness
(2) Instrument Harness
(3) Domelight Harness
(4) RR Door Harness (RH)
(5) Sun Roof Harness
(6) L-1
(7) H-45
(8) H-7, H-8, H-9, H-24, H-25, H-26, H-61, H-62, H-64, H-65, H-66
(9) RR Door Harness (LH)
(10) RR Body Harness
(11) Body Harness
(12) H-28, H-29
(13) H-22, H-23
(14) B-18, B-19
(15) H-31, H-32, H-46
(16) C-16
(17) FRT Door Harness (LH)
(18) Fuse Box
(19) Engine Harness
(20) Transmission Harness
(21) B-28
(22) H-4, H-5, H-6
(23) B-26
(24) H-47
(25) H-58
(26) P-4
(27) P-3
(28) M-16
(29) H-51
(30) H-10, H-11, H-53
(31) Engine Room Harness (LH)
(32) Battery Positive Cable

(33) Battery Negative Cable
(34) P-7
(35) P-10
(36) E-16
(37) P-9
(38) E-31, E-32
(39) E-5
(40) B-1, B-2
(41) H-18, H-19
(42) P-2
(43) P-6
(44) H-41, H-42, H-43, H-60
(45) H-2, H-3 (4J∗∗)
(46) Engine Room Harness (RH)
(47) Battery
(48) P-5
(49) P-1
(50) Relay and Fuse Box
(51) H-1, H-2, H-3 (6V∗1)
(52) C-39
(53) FRT Door Harness (RH)
(54) H-12, H-13, H-14, H-15, H-16, H-20, H-48
(55) H-21

Cable Harness Routing (LHD) – 2

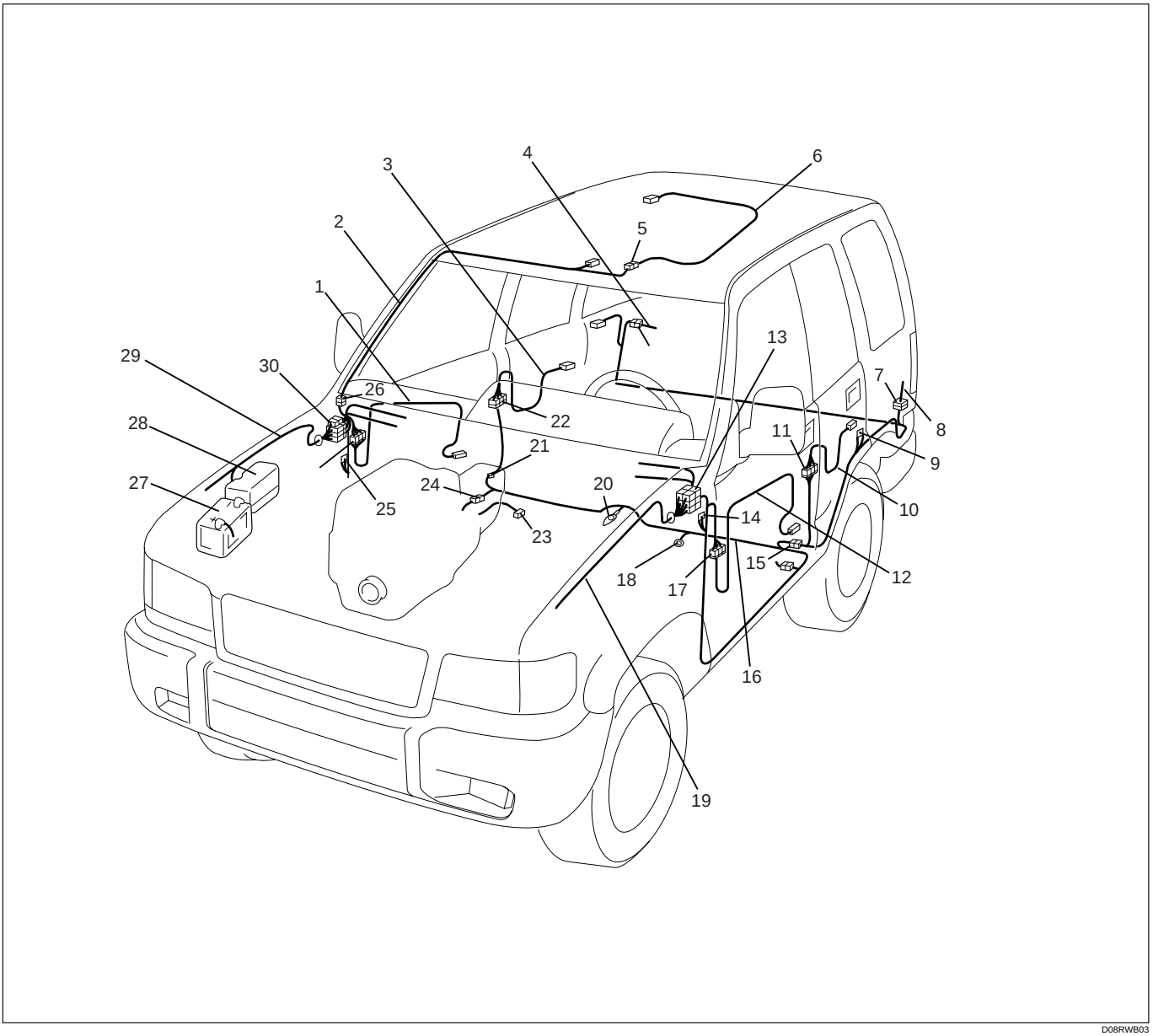

Legend

(1) FRT Door Harness (RH)
(2) Domelight Harness
(3) RR Door Harness (RH)
(4) Tail Gate Harness (RH)
(5) H-45
(6) Sun Roof Harness
(7) H-37, H-38
(8) Tail Gate Harness (LH)
(9) R-3, R-4
(10) RR Door Harness (LH)
(11) H-28, H-29
(12) FRT Door Harness (LH)
(13) H-7, H-8, H-9, H-24, H-25, H-26, H-61, H-62, H-64, H-65, H-66
(14) B-18, B-19
(15) H-31, H-32, H-46
(16) Body Harness
(17) H-22, H-23
(18) B-28
(19) Engine Room Harness (LH)
(20) B-26
(21) H-47
(22) H-34, H-35
(23) C-85
(24) H-58
(25) B-1, B-2
(26) H-21
(27) Battery
(28) Relay and Fuse Box
(29) Engine Room Harness (RH)
(30) H-12, H-13, H-14, H-15, H-16, H-20, H-48

Cable Harness Routing (LHD) – 3

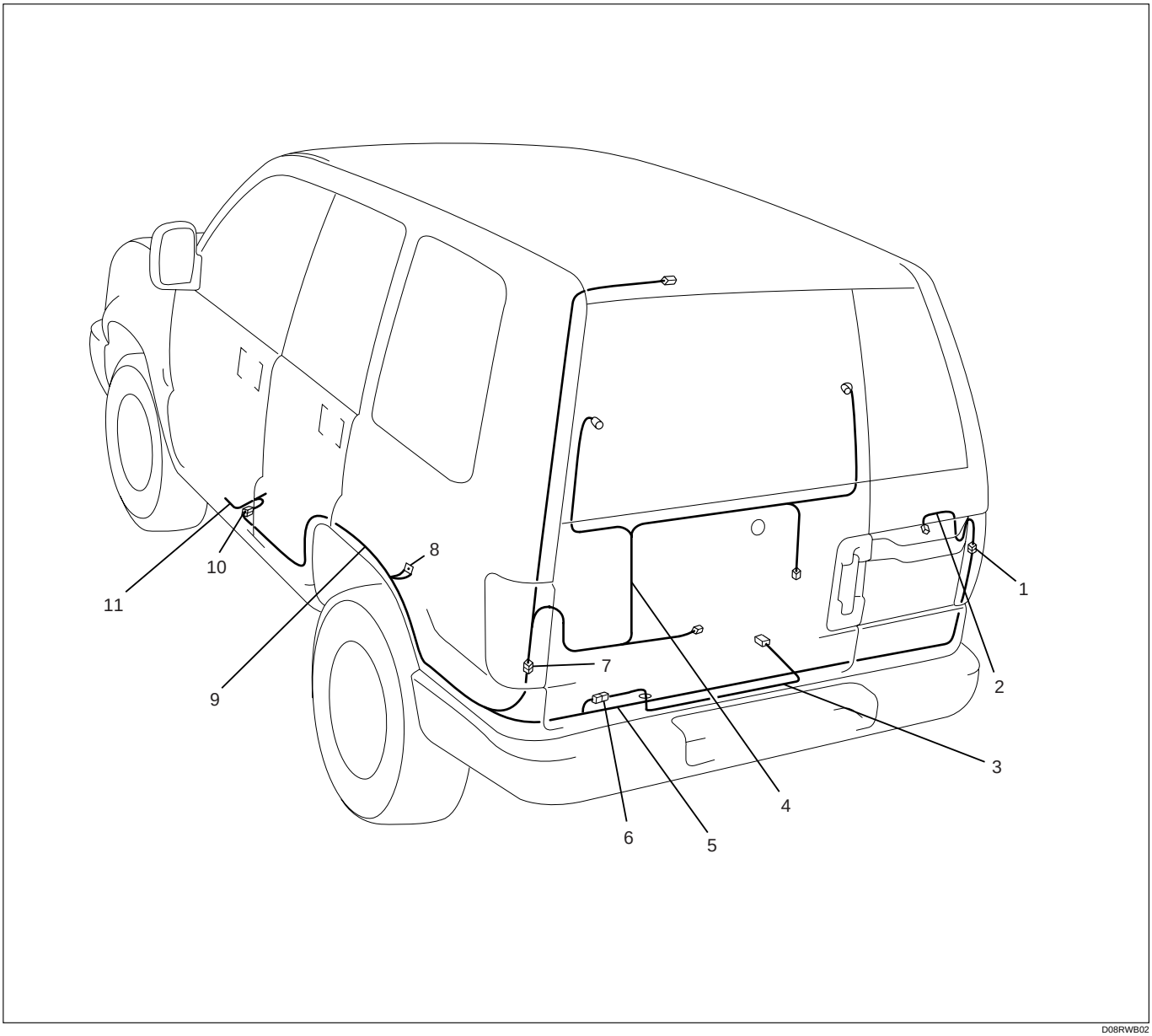

D08RWB02

Legend

(1) H-39
(2) Tail Gate Harness (RH)
(3) Chassis Harness
(4) Tail Gate Harness (LH)
(5) RR Body Harness
(6) H-33
(7) H-37, H-38
(8) R-3, R-4
(9) RR Body Harness
(10) H-31, H-32, H-46
(11) Body Harness

Fuse Block Circuit

Circuit Diagram (6V*1) – 1

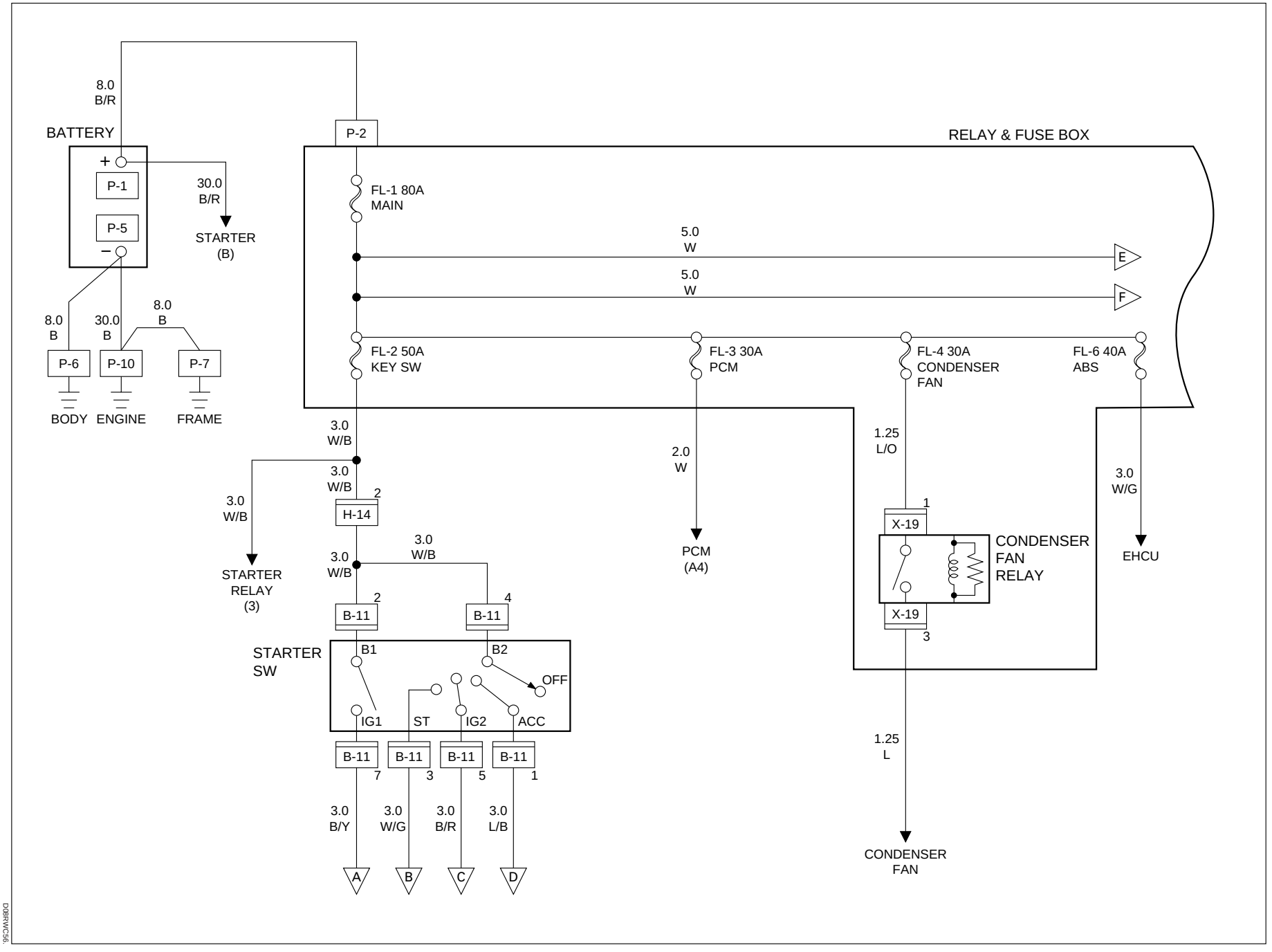

D08RWC56

Circuit Diagram (RHD 6V∗1) – 2

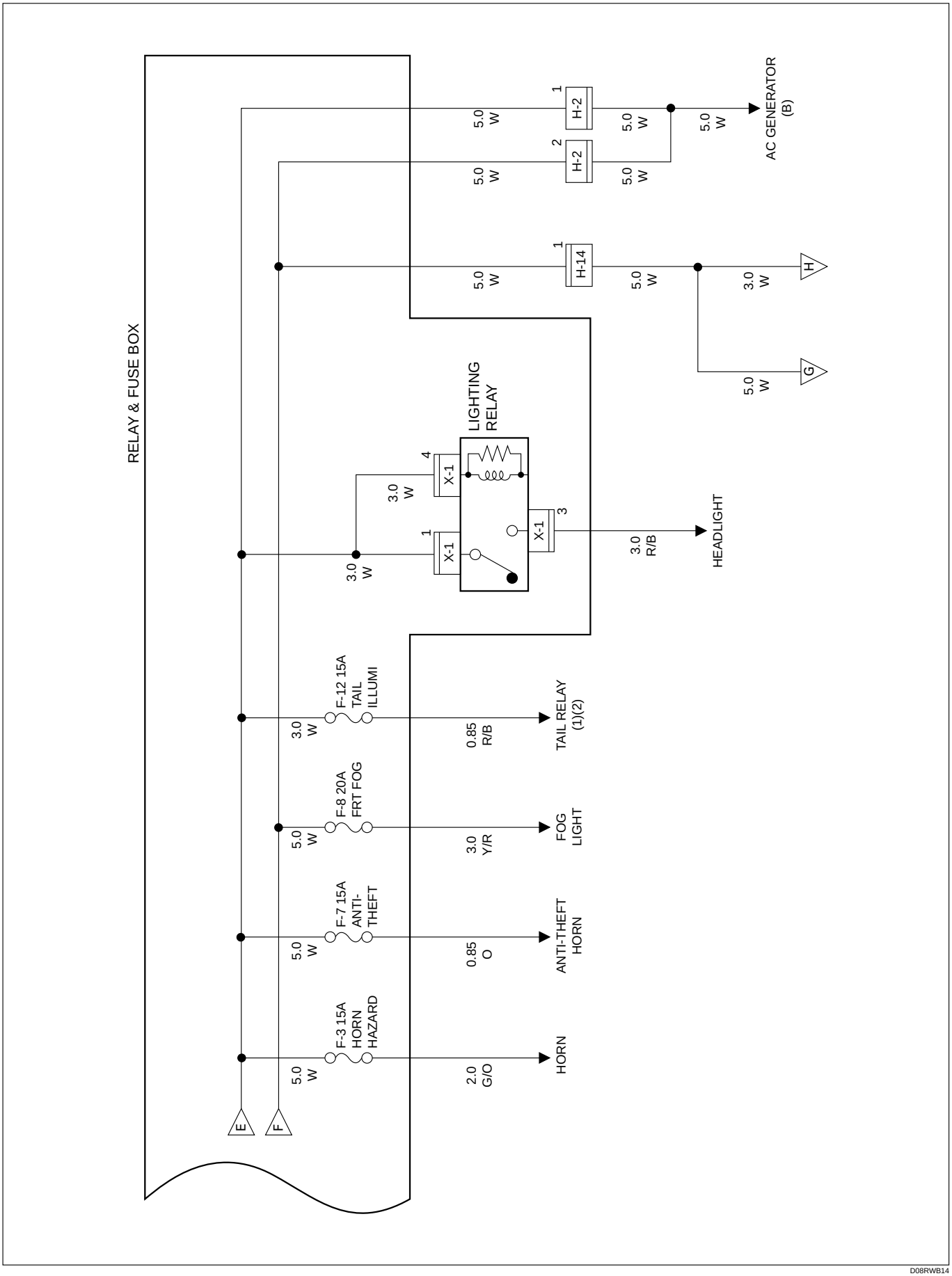

D08RWB14

Circuit Diagram (LHD 6V*1) – 2

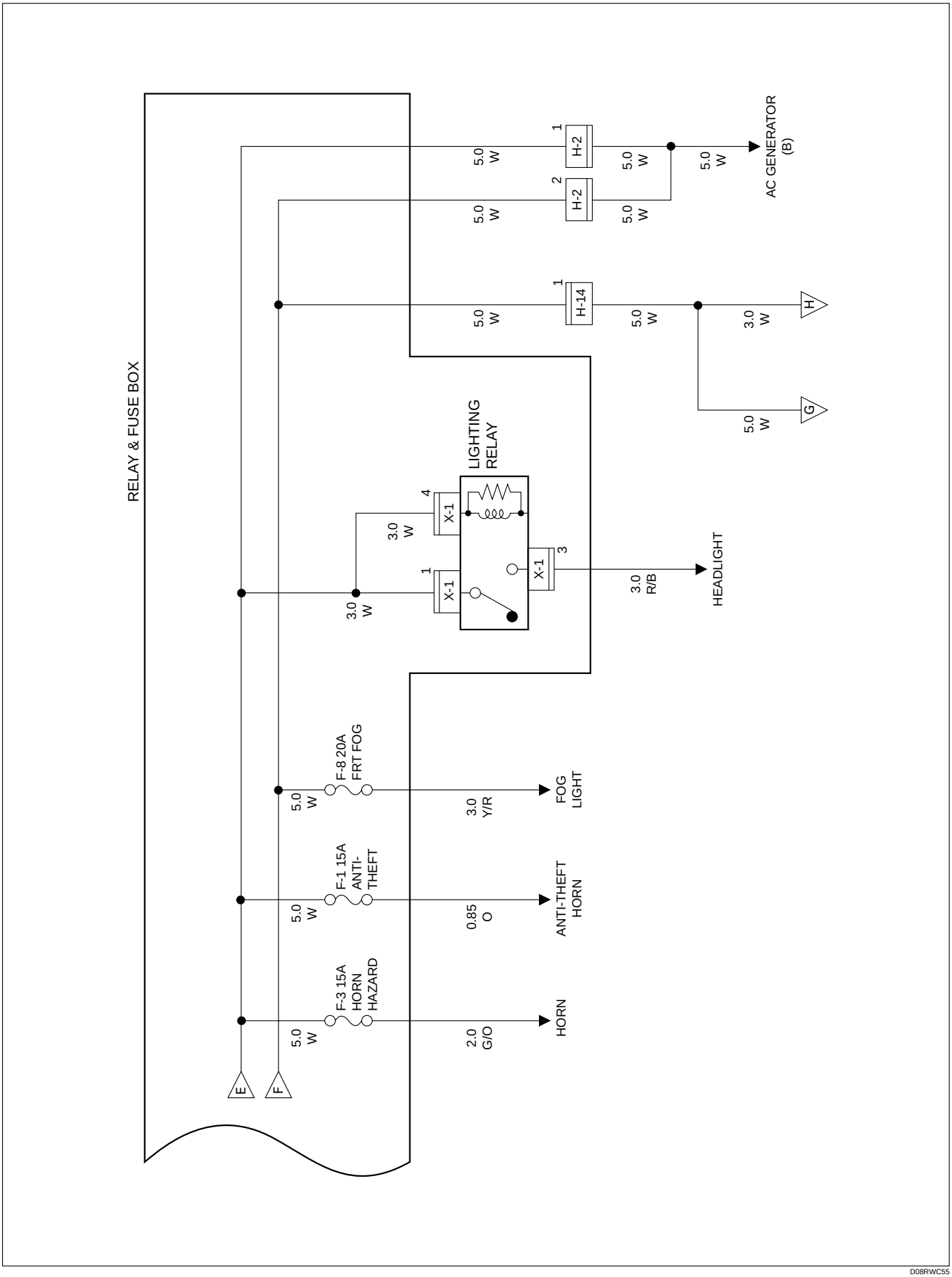

D08RWC55

Circuit Diagram (6V*1) – 3

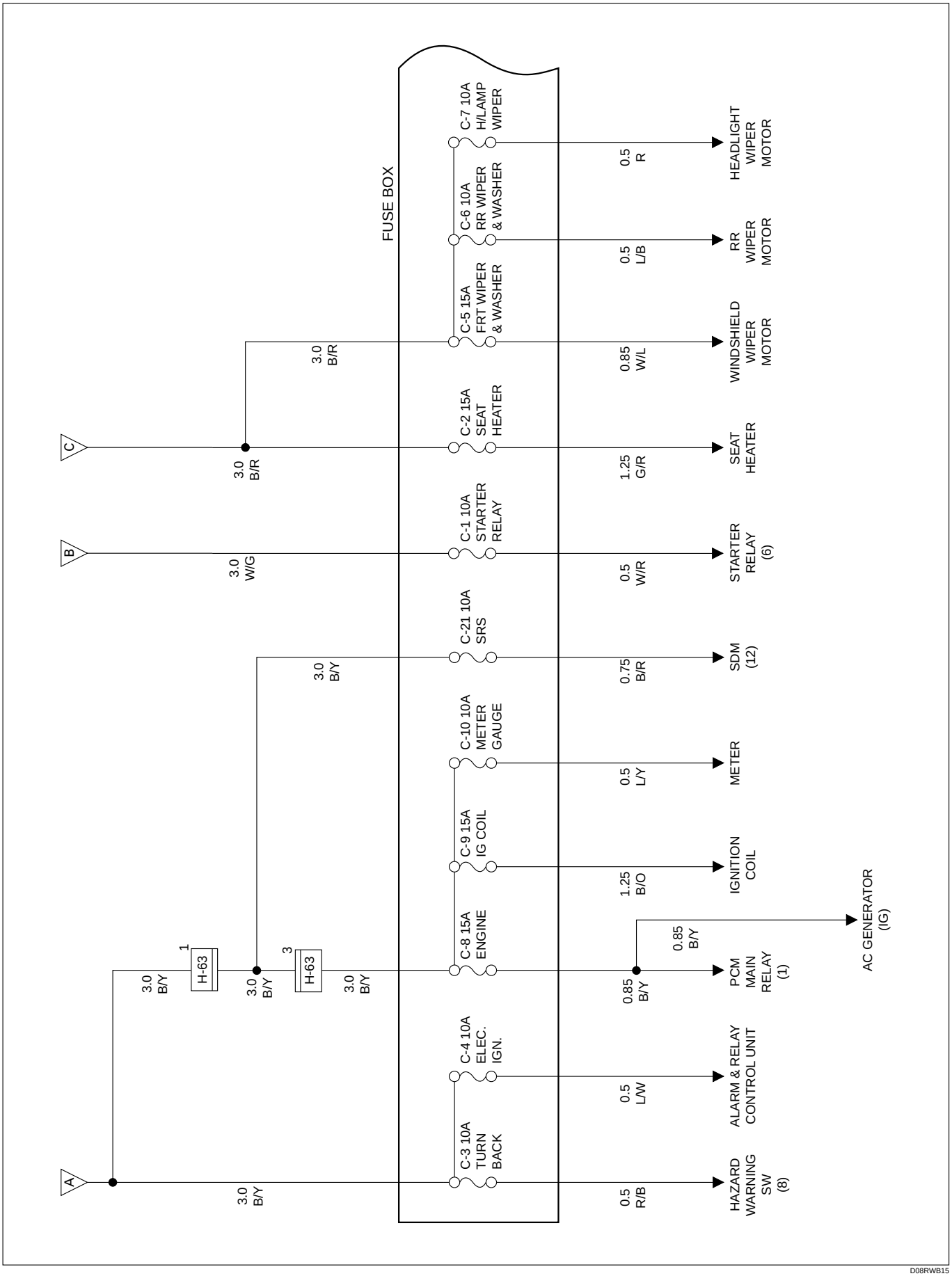

D08RWB15

Circuit Diagram (6V*1) – 4

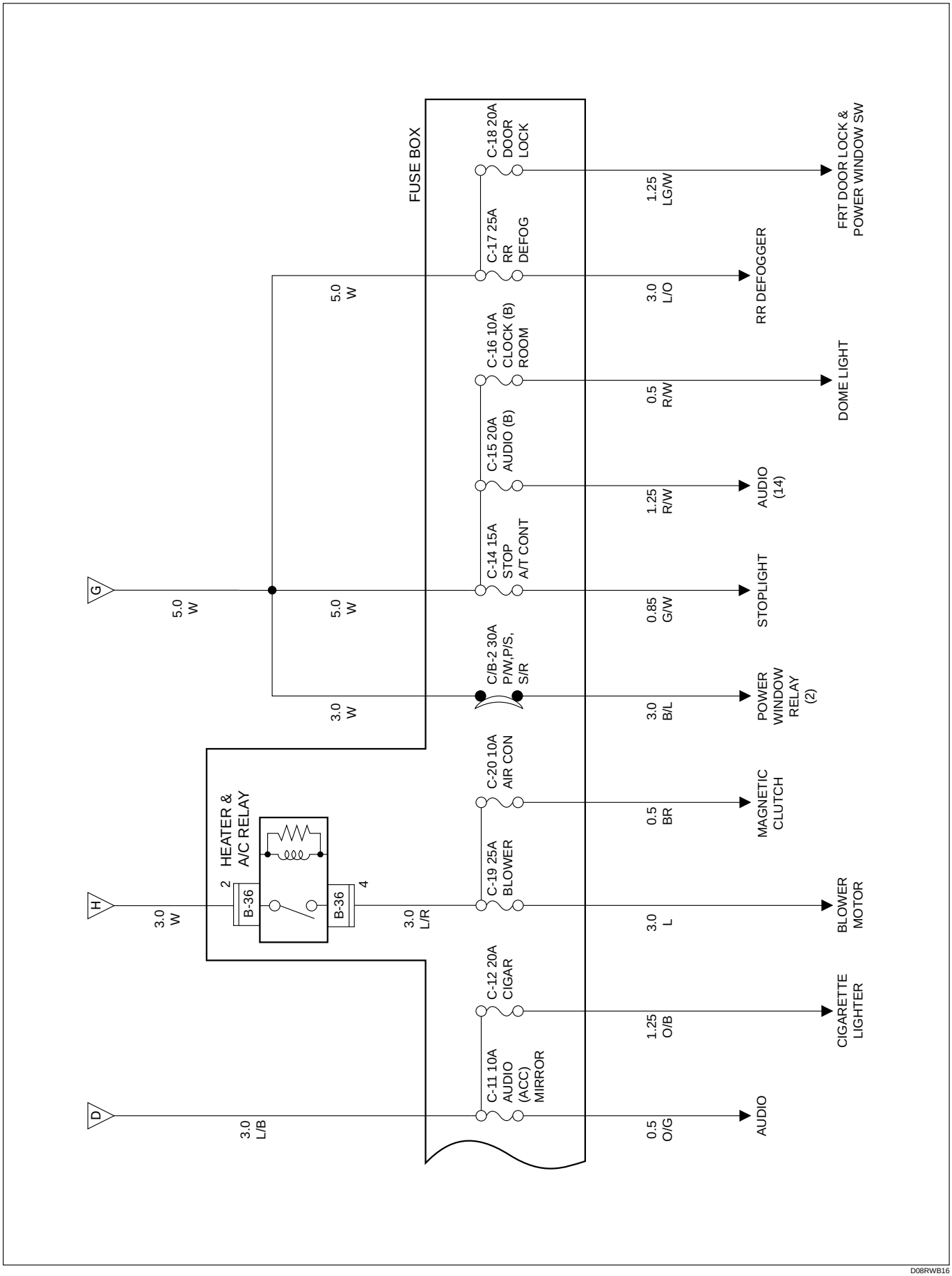

D08RWB16

Circuit Diagram (4JX1) – 1

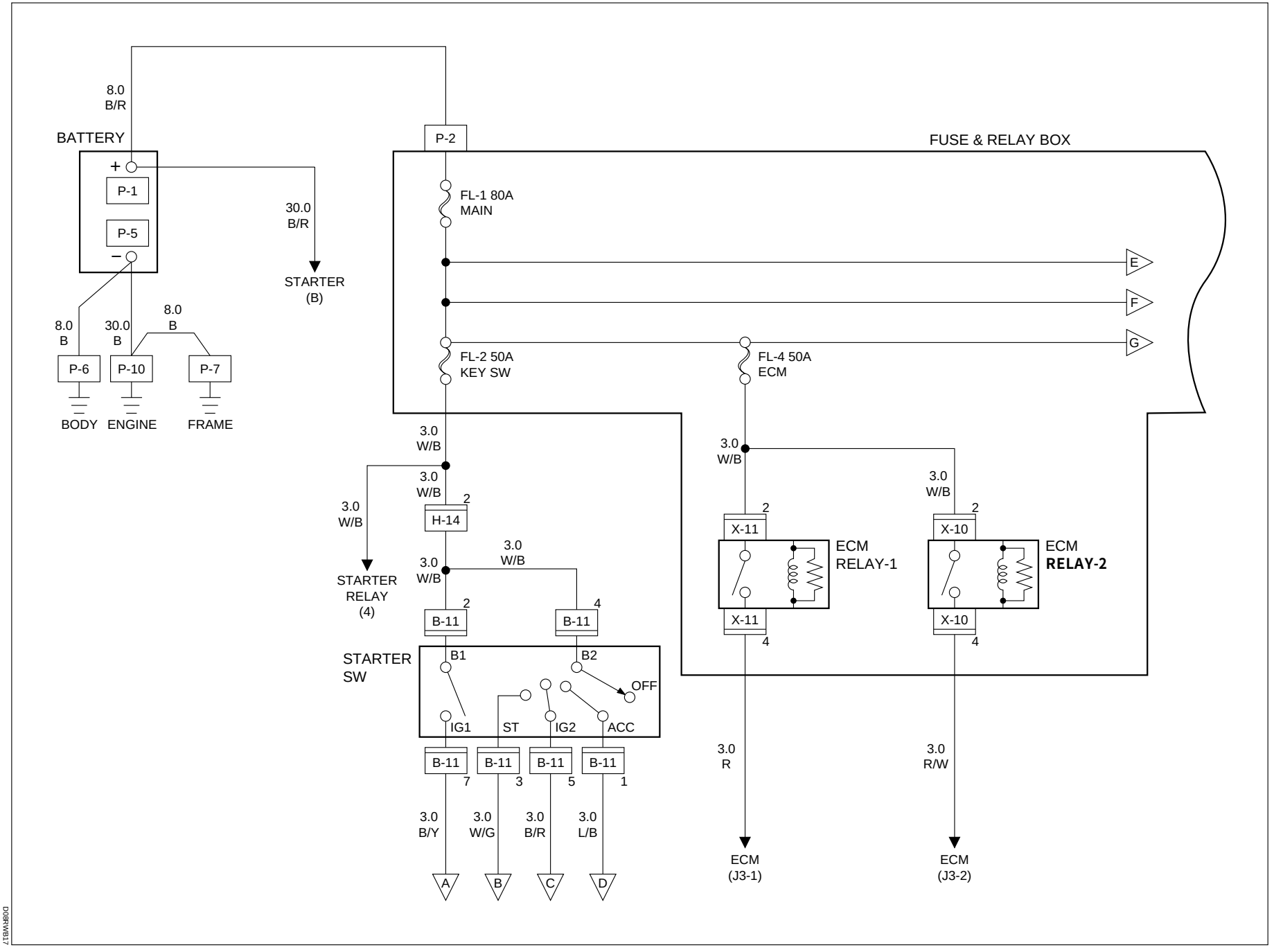

D08RWB17

Circuit Diagram (4JG2) – 1

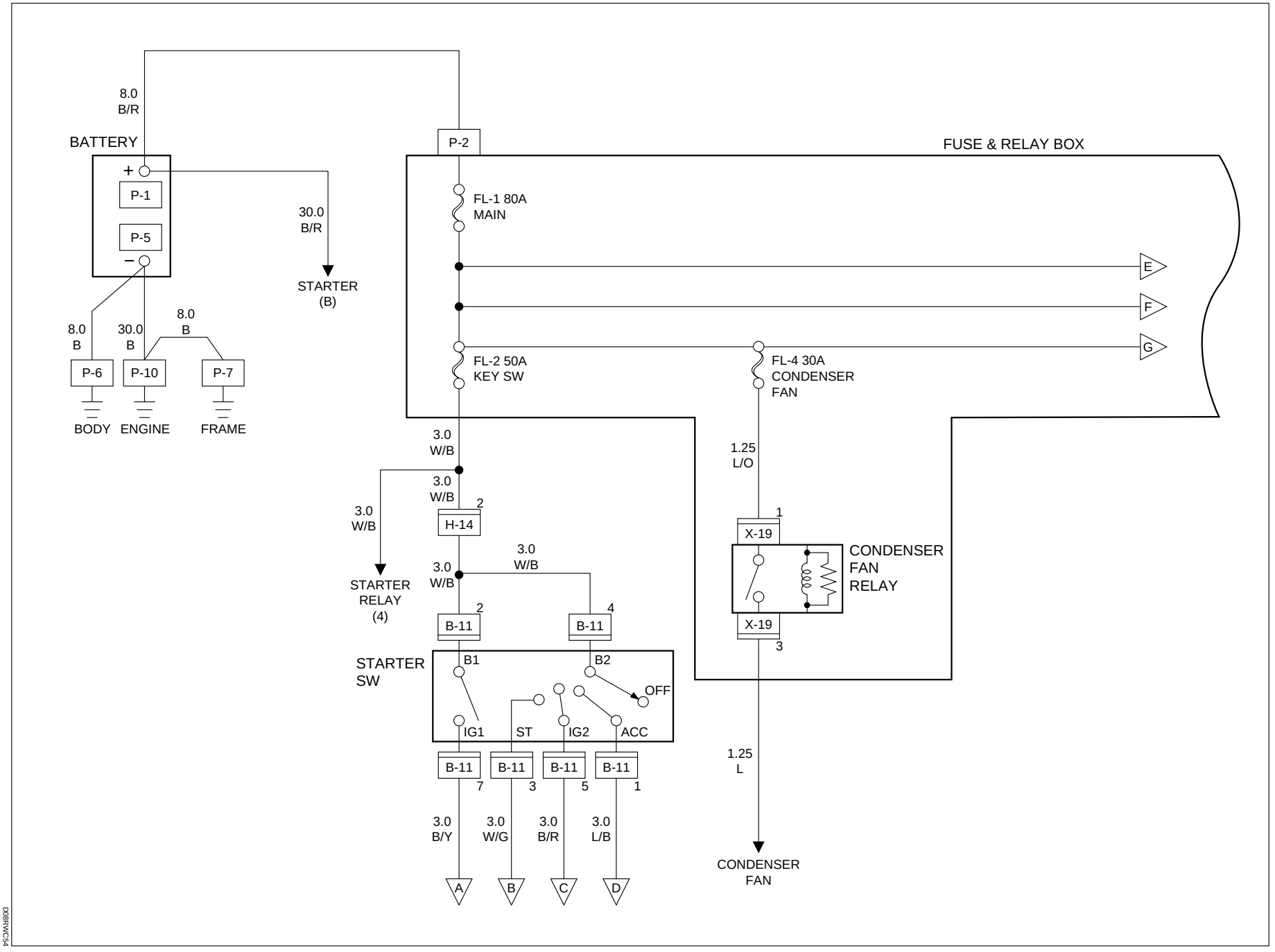

D08RWC54

Circuit Diagram (4JX1) – 2

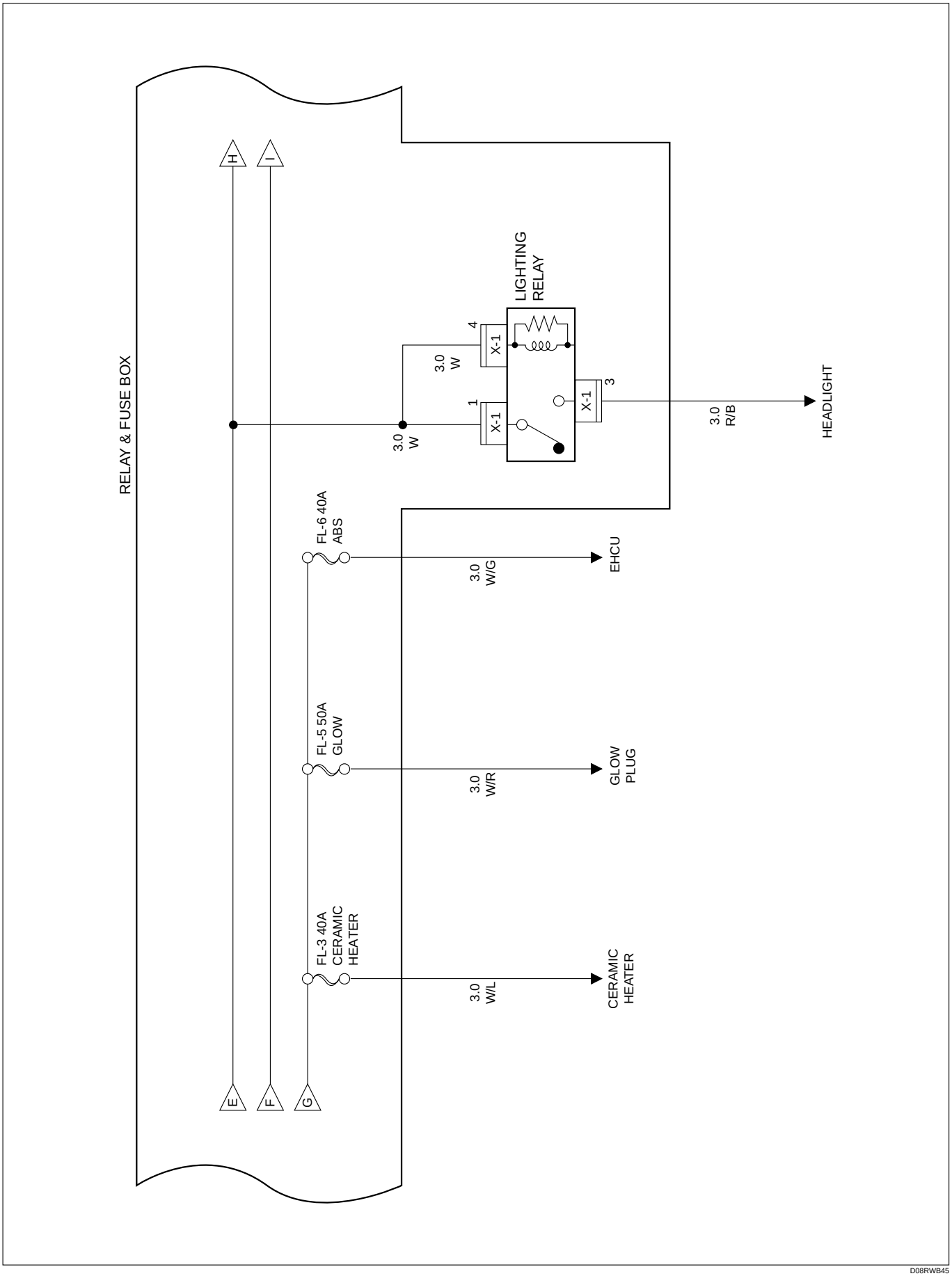

D08RWB45

Circuit Diagram (4JG2) – 2

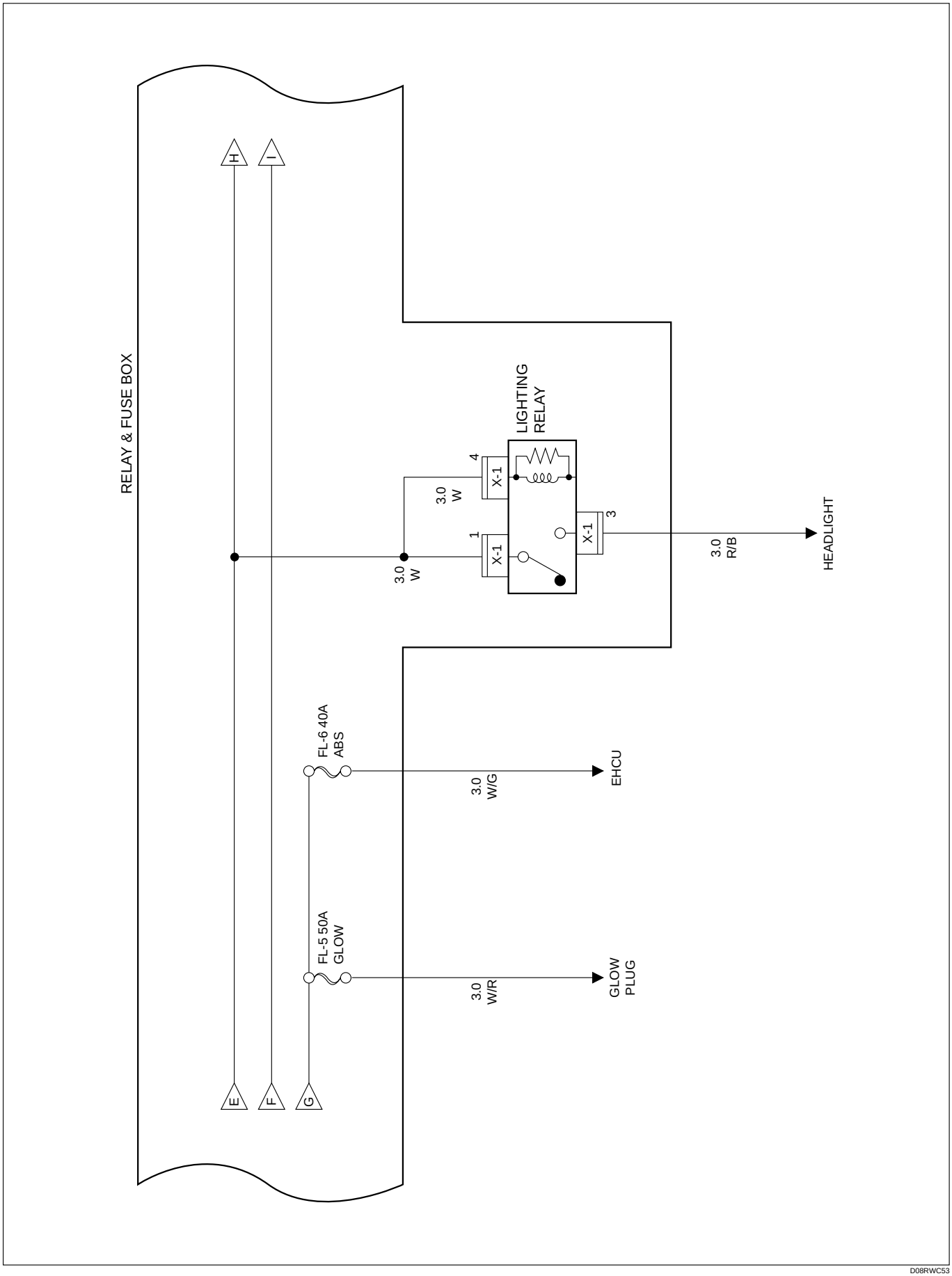

D08RWC53

Circuit Diagram (RHD Diesel) – 3

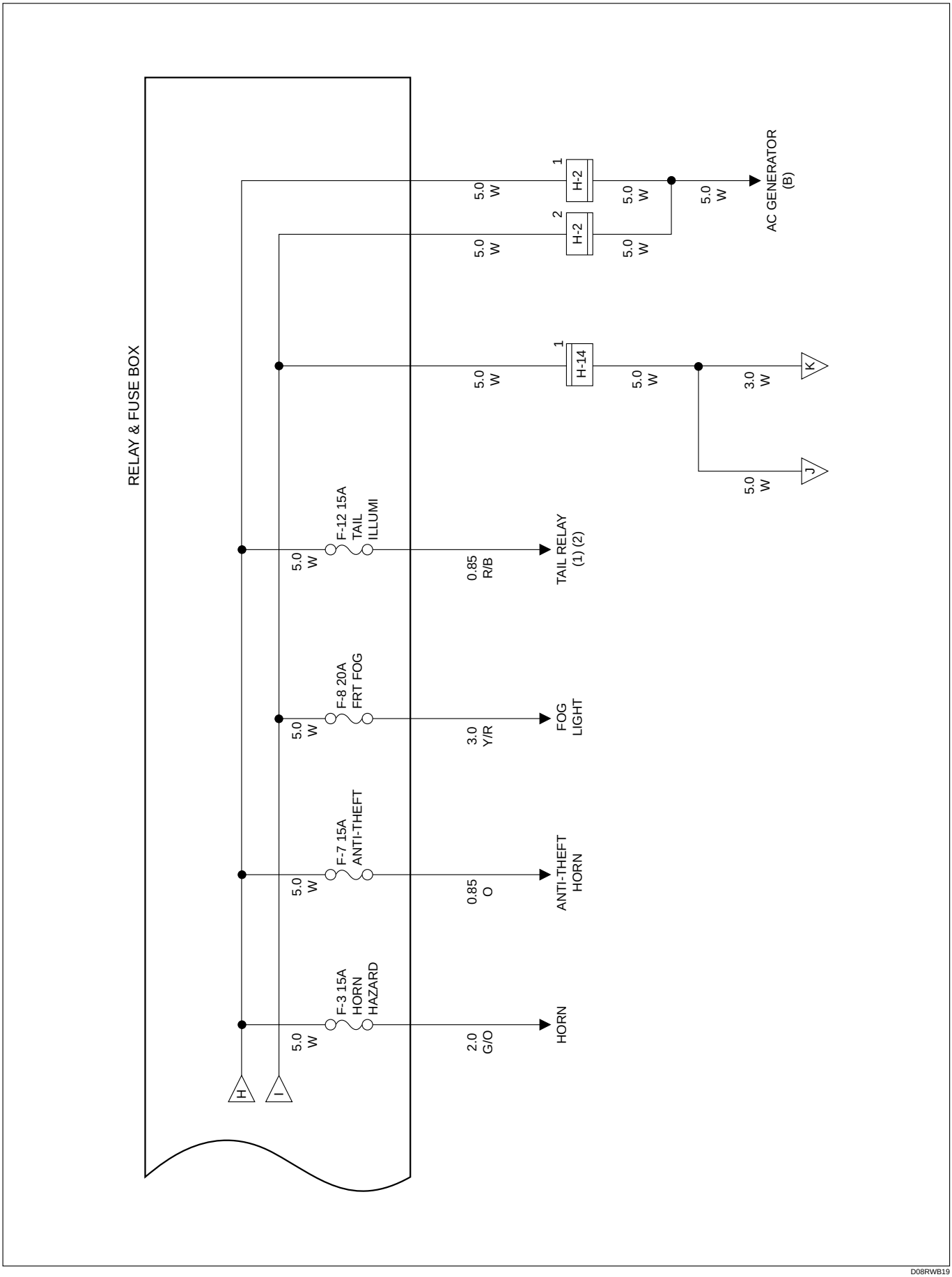

D08RWB19

Circuit Diagram (LHD Diesel) – 3

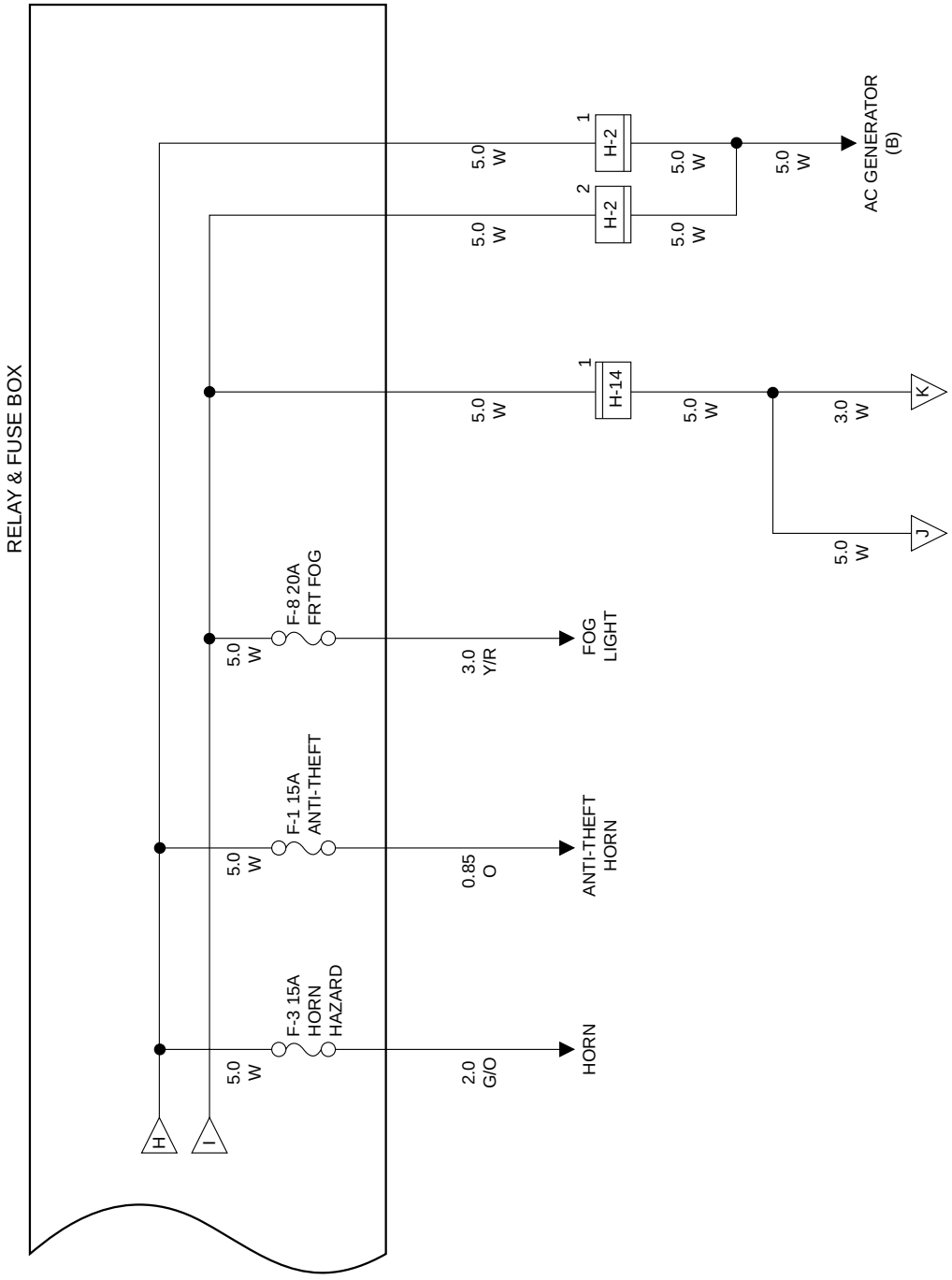

D08RWC52

Circuit Diagram (Diesel) – 4

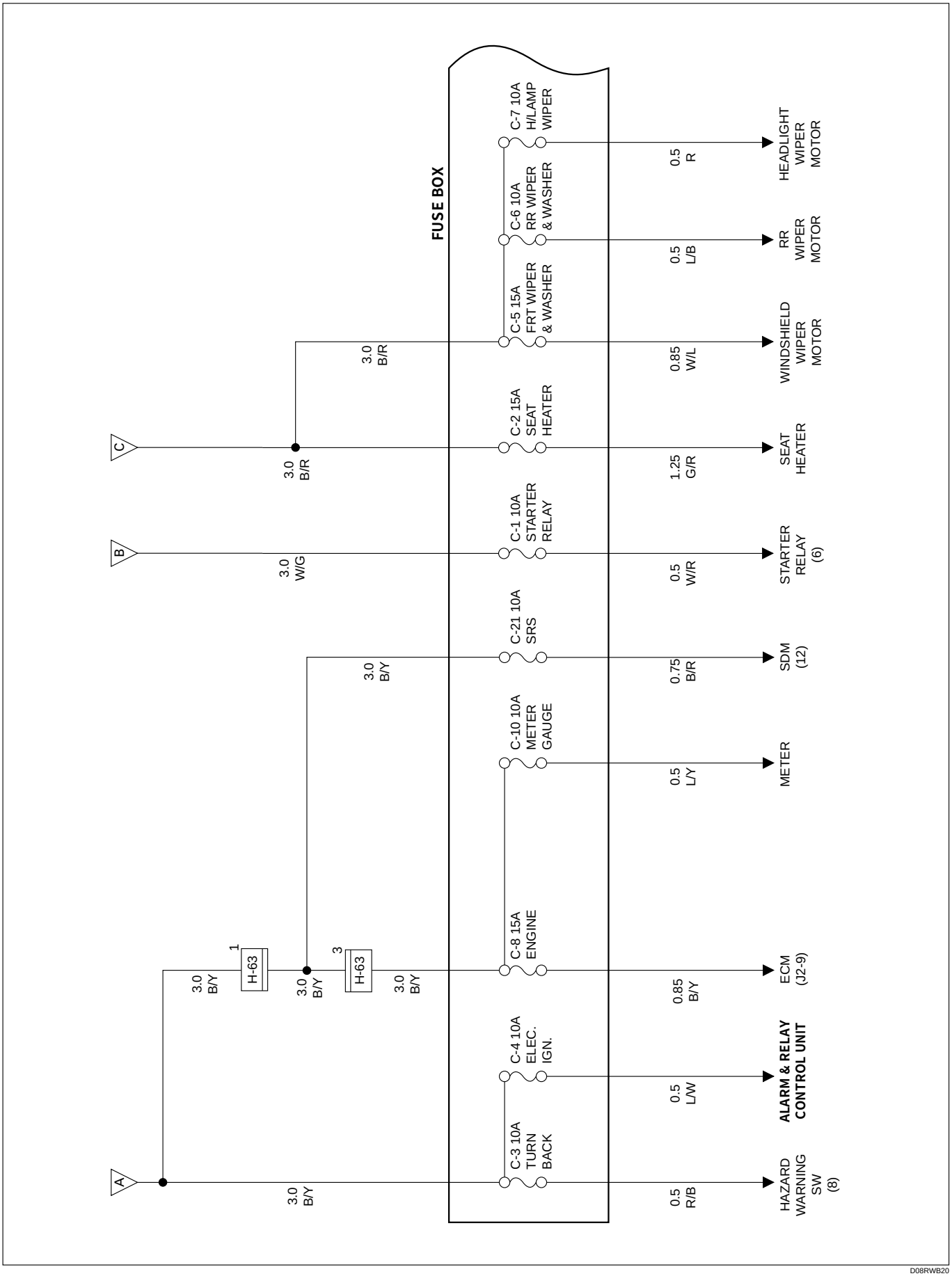

D08RWB20

Circuit Diagram (Diesel) – 5

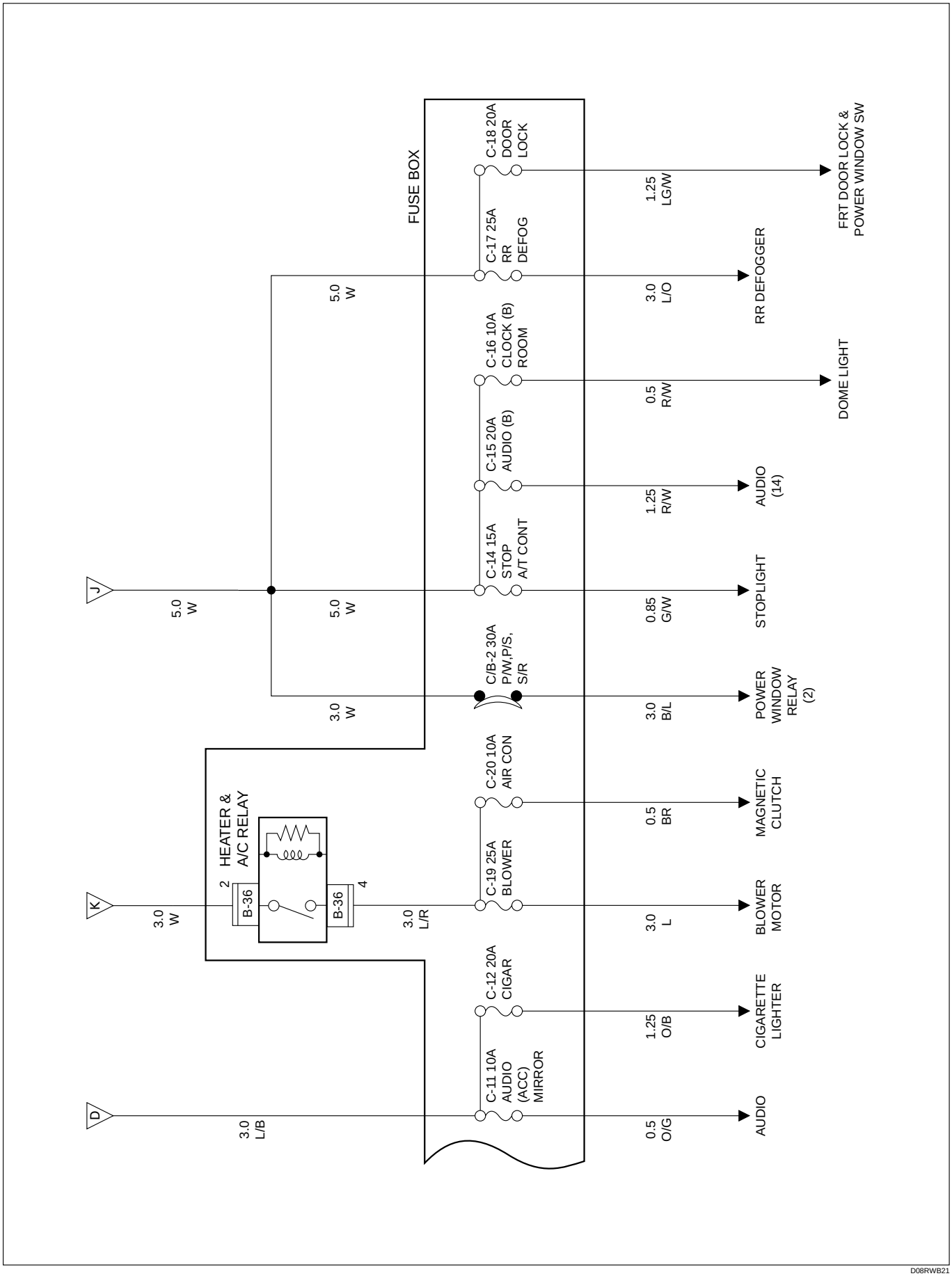

D08RWB21

Start and Charging

General Description

The system consists of the starter switch, starter, AC generator, starter relay, mode SW (A/T), charge relay (Diesel) and heater & A/C relay.
When the starter SW is set to the “ST” position with the A/T select at "P" (Parking) or "N" (Neutral) position (Mode SW "ON"), the battery voltage is applied to the starter solenoid coil through the starter relay to start the starter. At the same time, the starter relay (charge relay; Diesel) cuts off the blower motor and the A/C circuit.

Circuit Diagram (RHD 6V*1) – 1

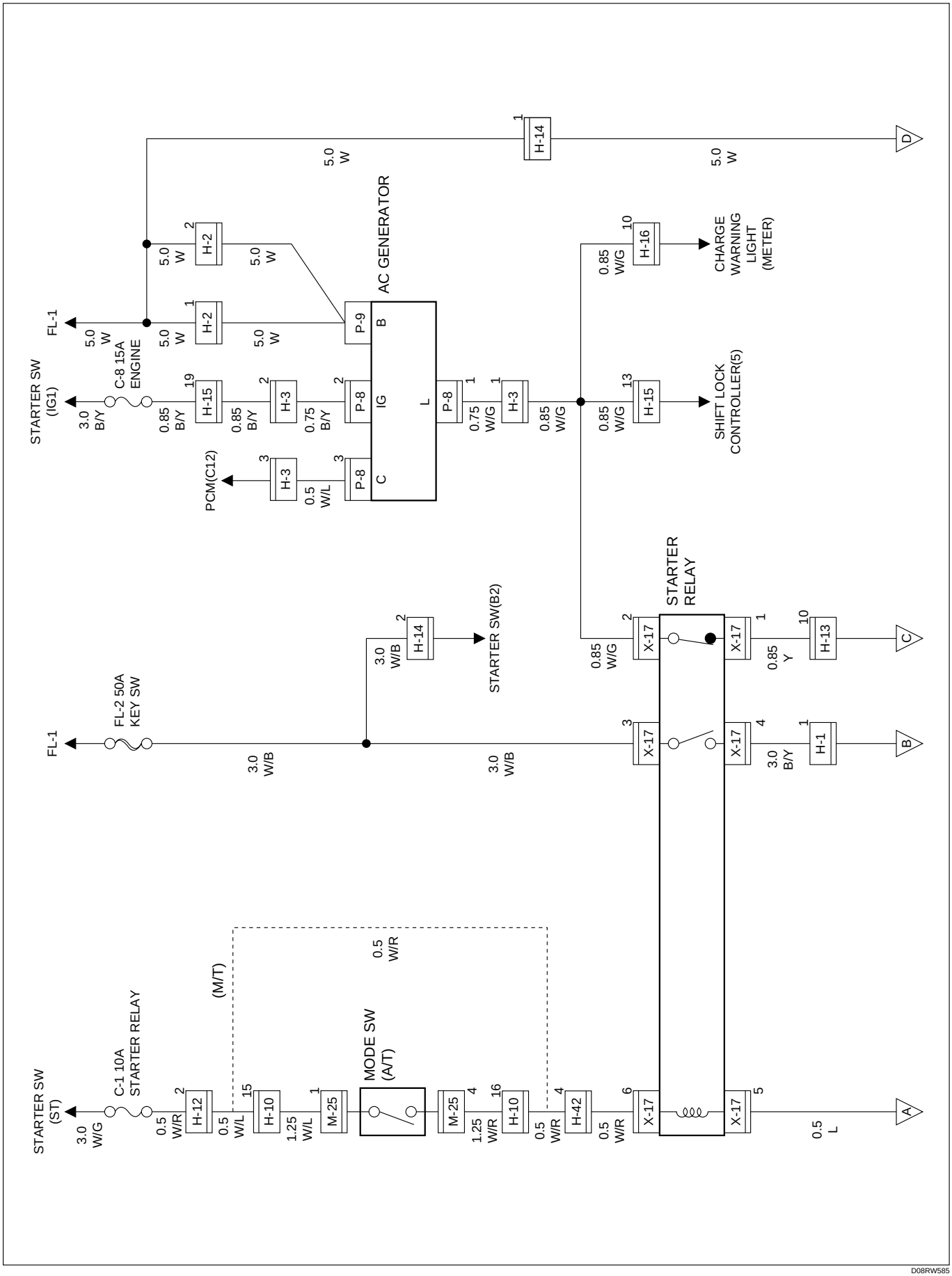

D08RW585

Circuit Diagram (RHD 6V*1) – 2

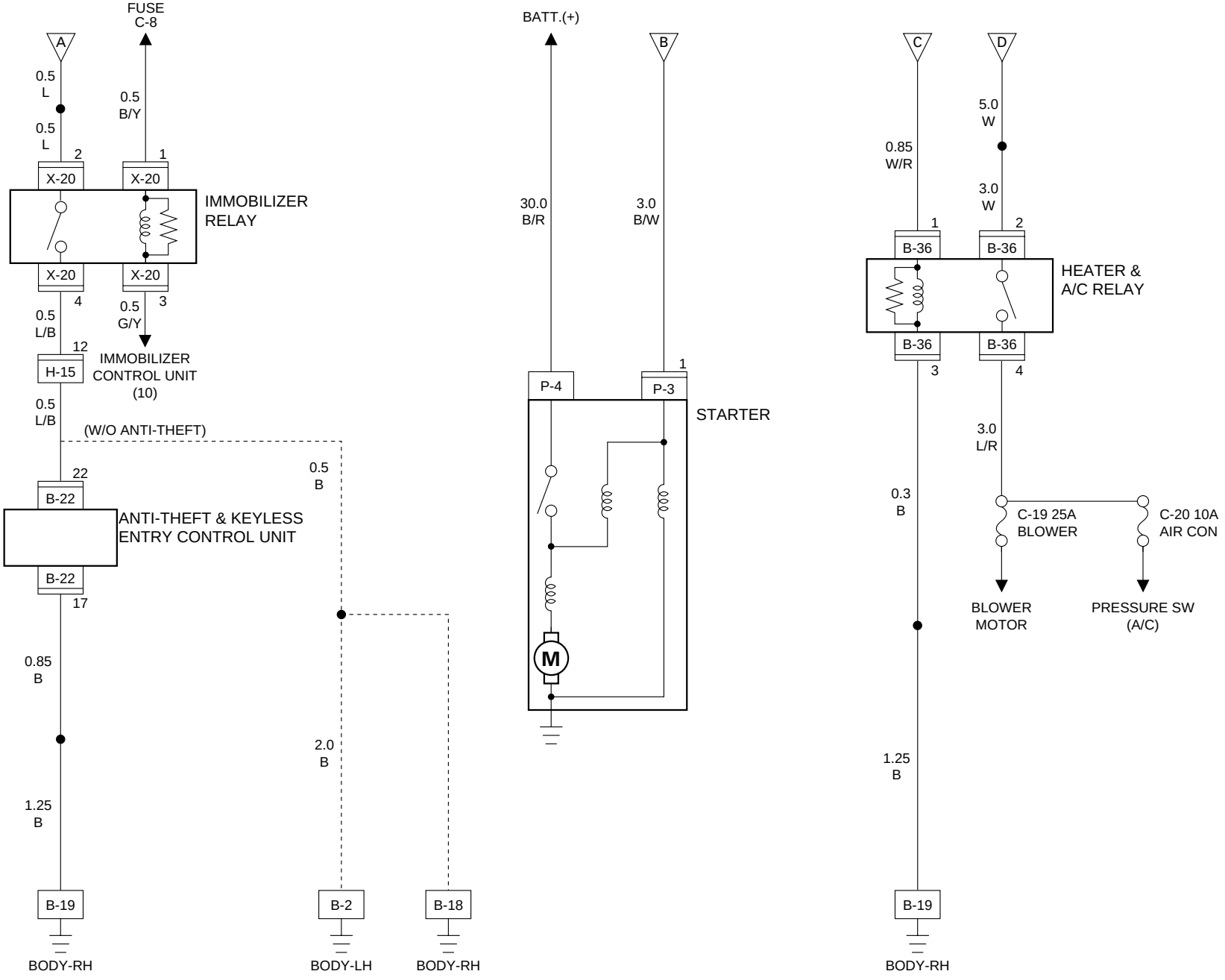

D08RW596

Parts Location (RHD 6V∗1)

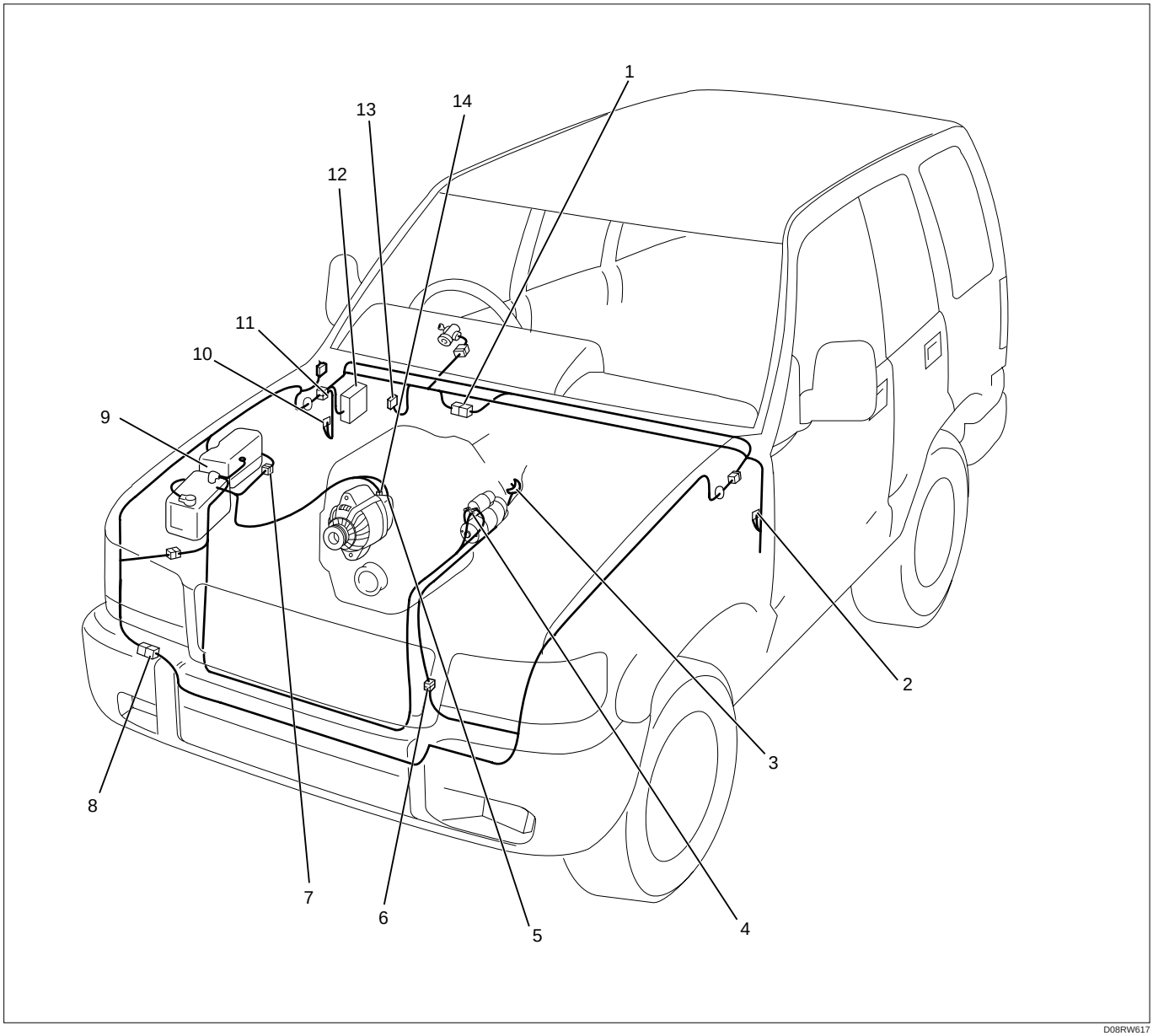

D08RW617

Legend

(1) H-12
(2) B-2
(3) M-25
(4) P-3
(5) P-9
(6) H-10
(7) H-1, H-2, H-3
(8) H-42
(9) Relay and Fuse Box (X-17, X-20)
(10) B-18, B-19
(11) H-13, H-14, H-15, H-16
(12) Fuse Box (B-36)
(13) B-20
(14) P-8

Circuit Diagram (RHD 4JG2)–1

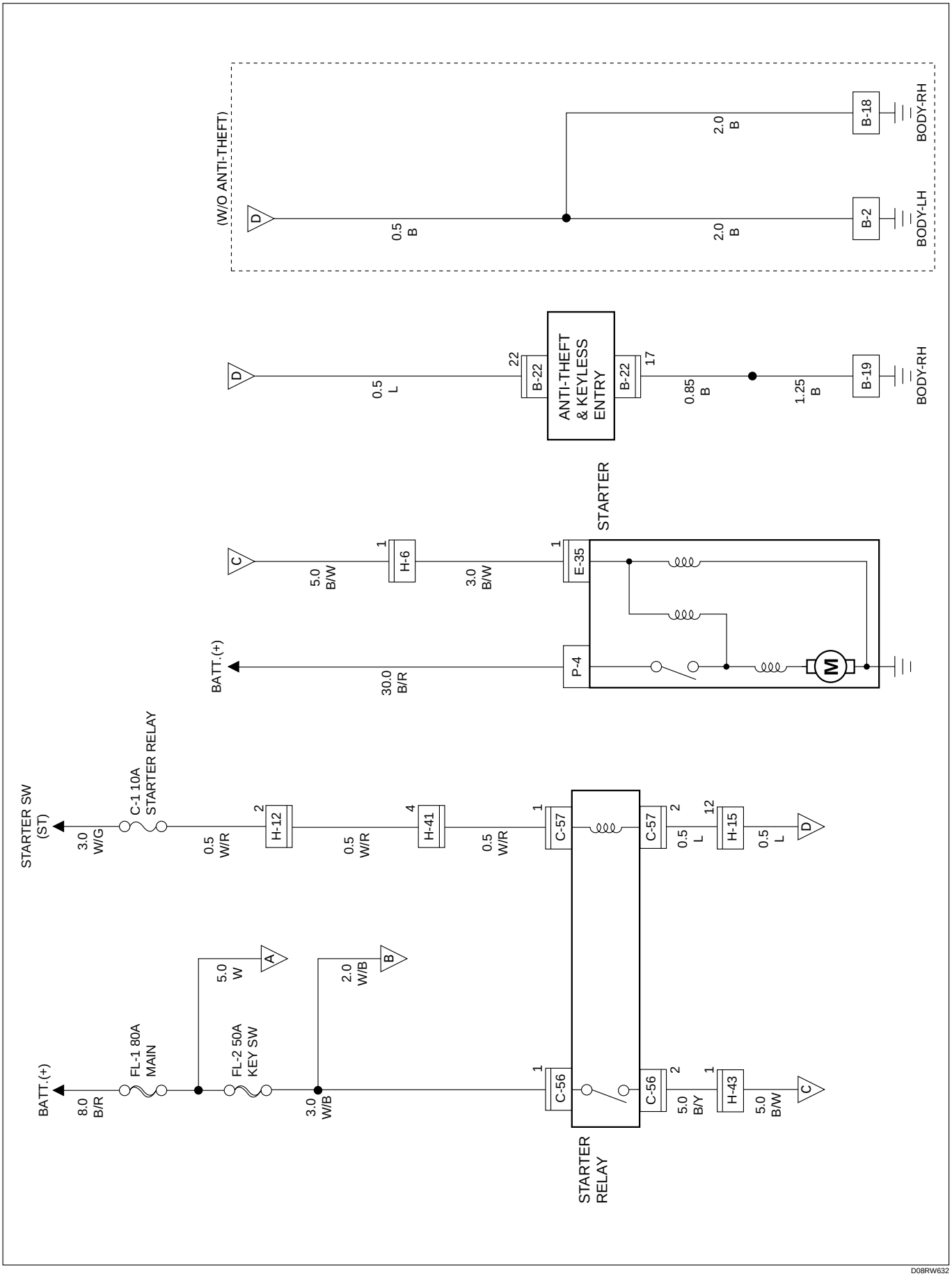

D08RW632

Circuit Diagram (RHD 4JG2) – 2

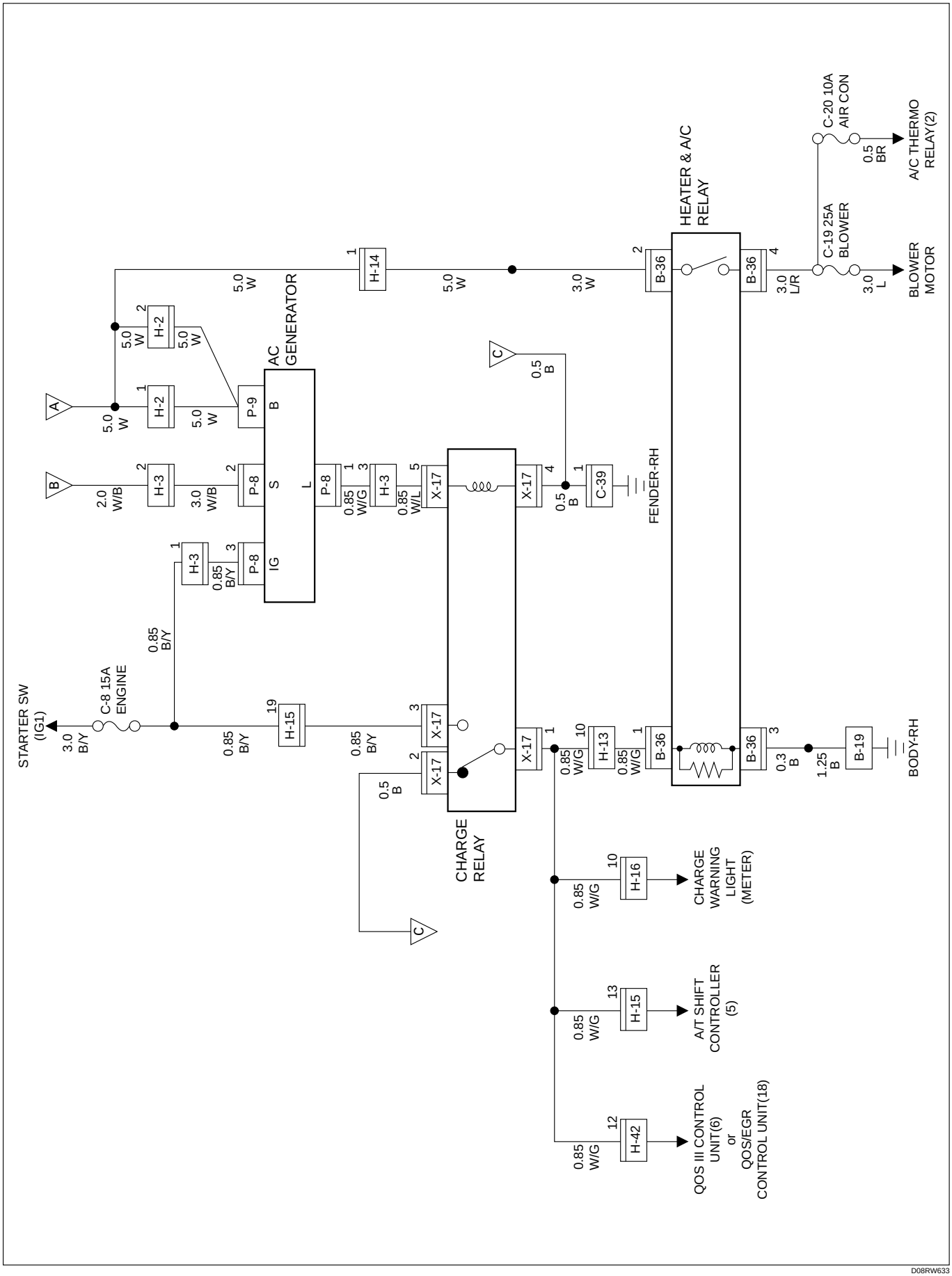

D08RW633

Parts Location (RHD 4JG2)

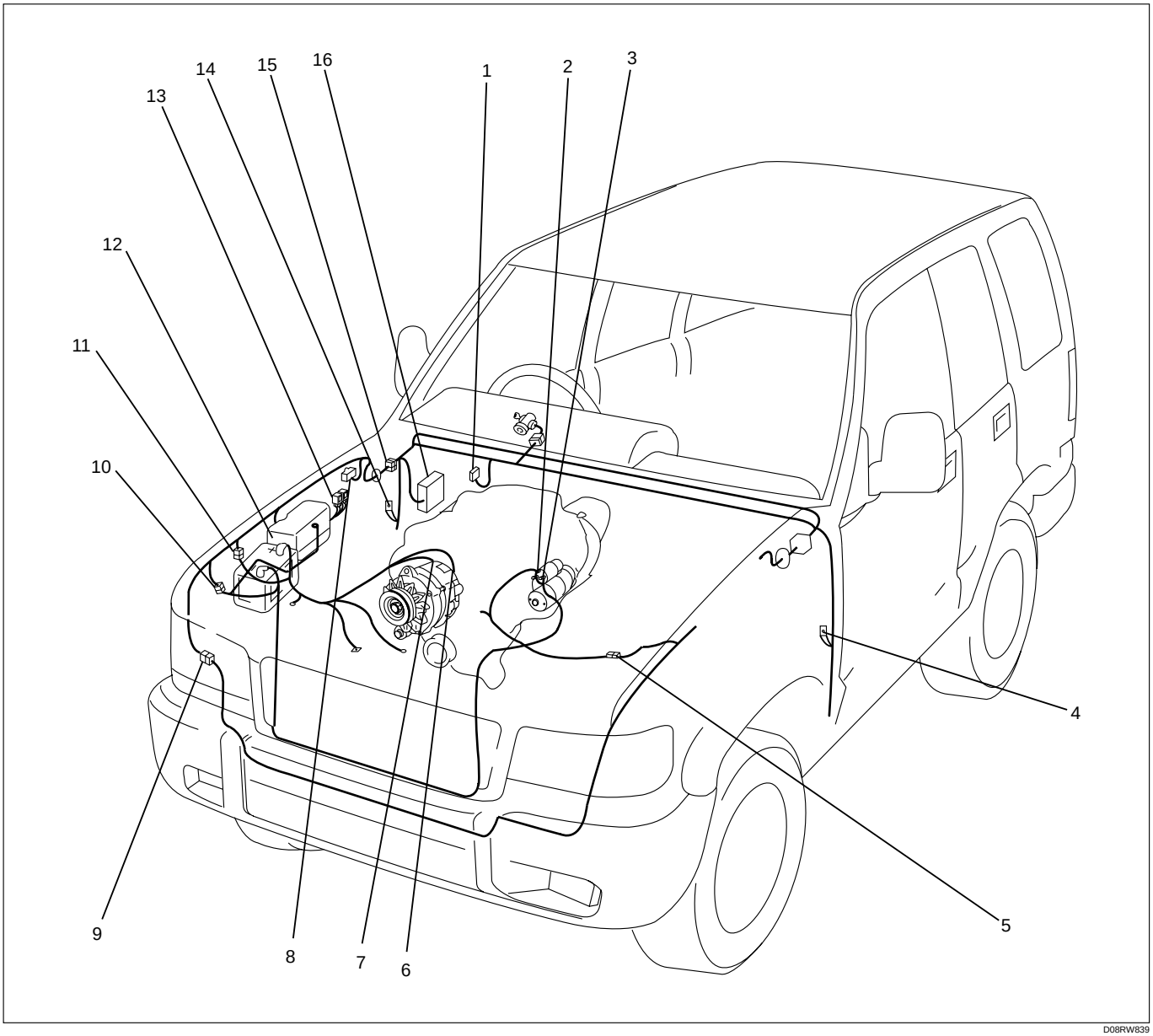

Legend

(1) B-22
(2) E-35
(3) P-4
(4) B-2
(5) H-6
(6) P-9
(7) P-8
(8) C-39
(9) H-41, H-42, H-43
(10) H-2
(11) H-3
(12) Relay and Fuse Box (X-17)
(13) C-56, C-57
(14) B-18, B-19
(15) H-12, H-13, H-14, H-15, H-16
(16) Fuse Box (B-36)

Circuit Diagram (LHD 6V*1)–1

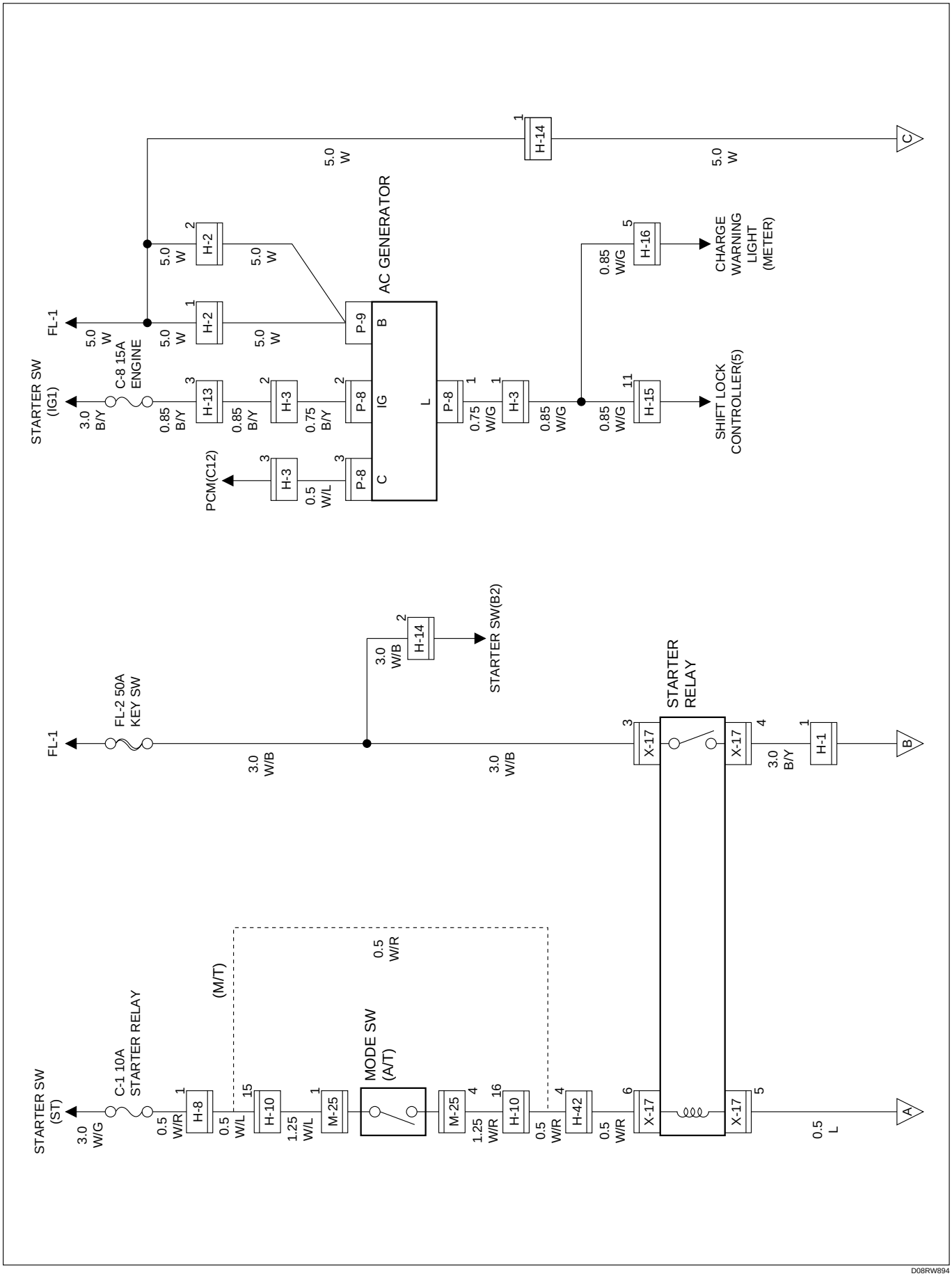

D08RW894

Circuit Diagram (LHD 6V*1) – 2

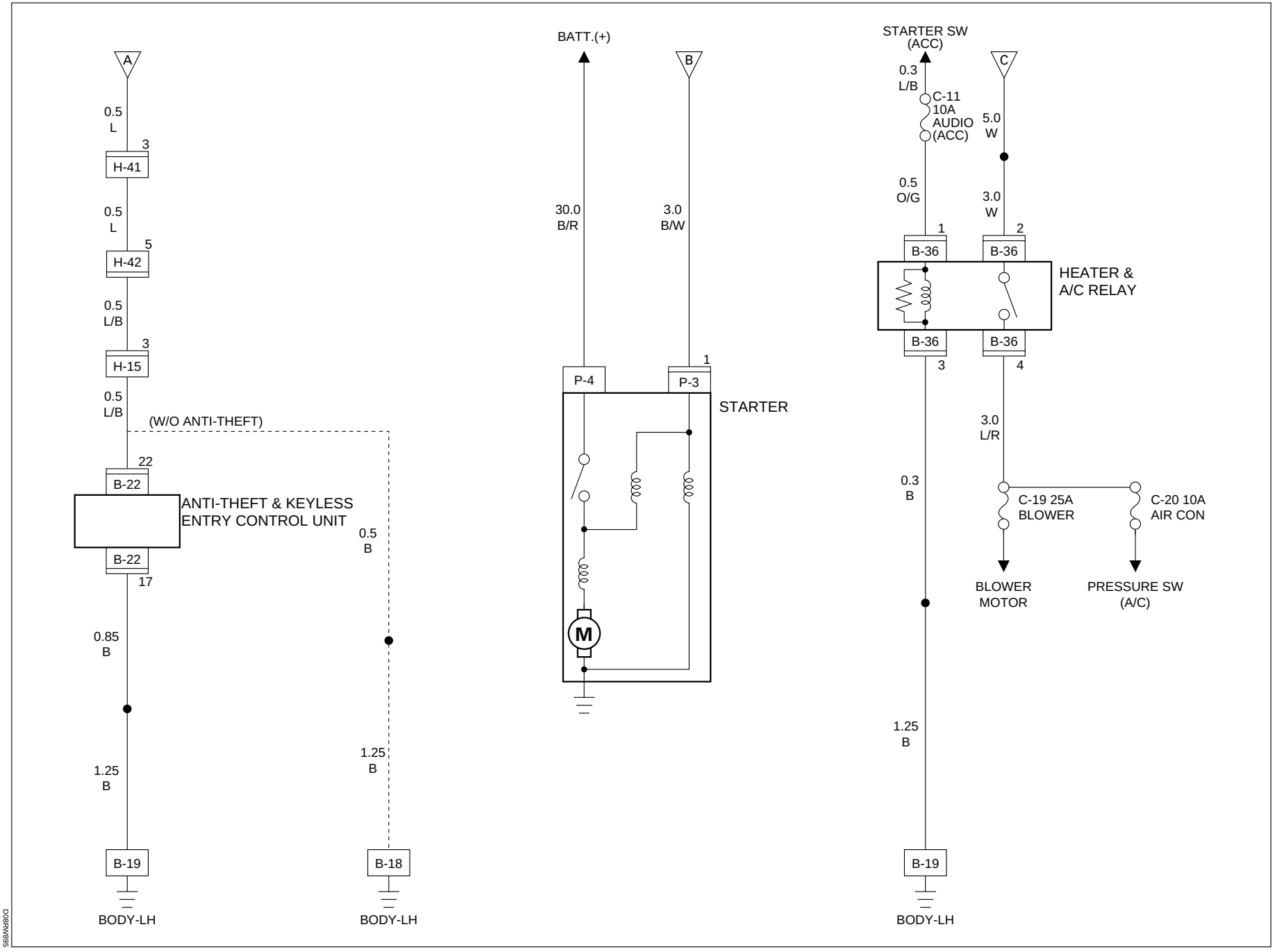

Parts Location (LHD 6V*1)

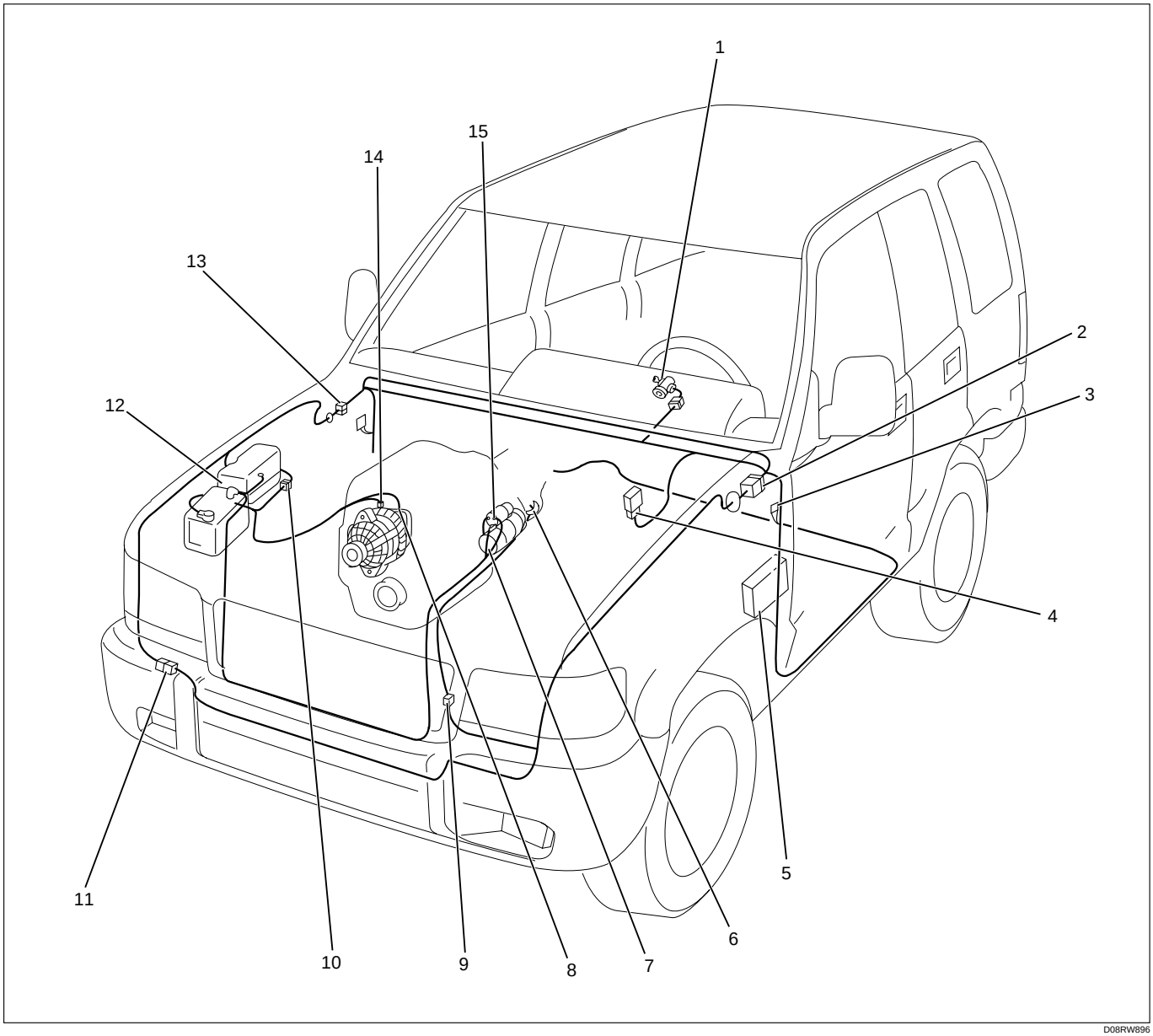

D08RW896

Legend

(1) Starter Switch
(2) H-8
(3) B-18, B-19
(4) B-20
(5) Fuse Box (B-36)
(6) M-25
(7) P-3
(8) P-9
(9) H-10
(10) H-1, H-2, H-3
(11) H-41, H-42
(12) Relay and Fuse Box (X-17)
(13) H-13, H-14, H-15, H-16
(14) P-8
(15) P-4

Circuit Diagram (LHD 4JG2)–1

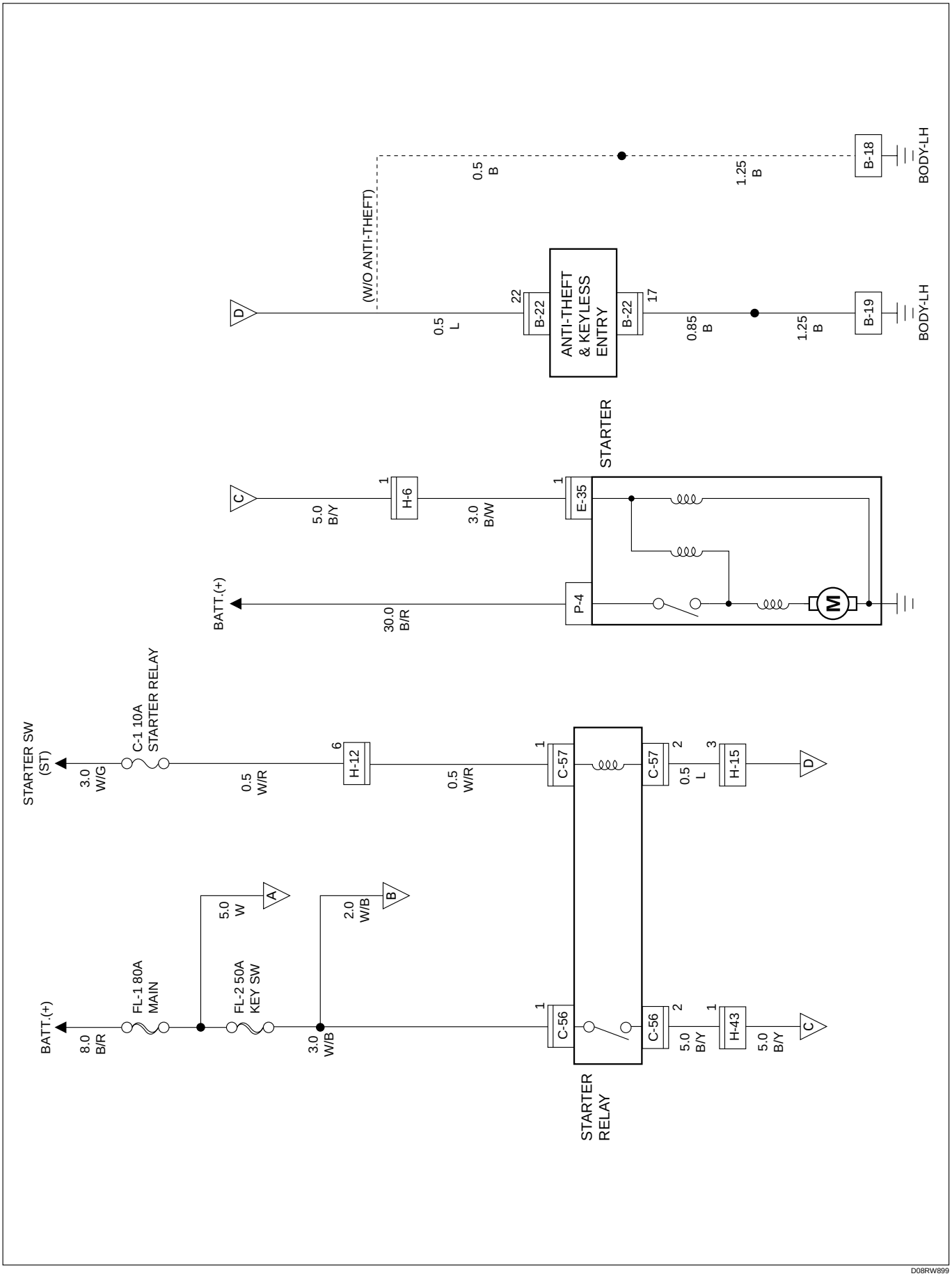

D08RW899

Circuit Diagram (LHD 4JG2)–2

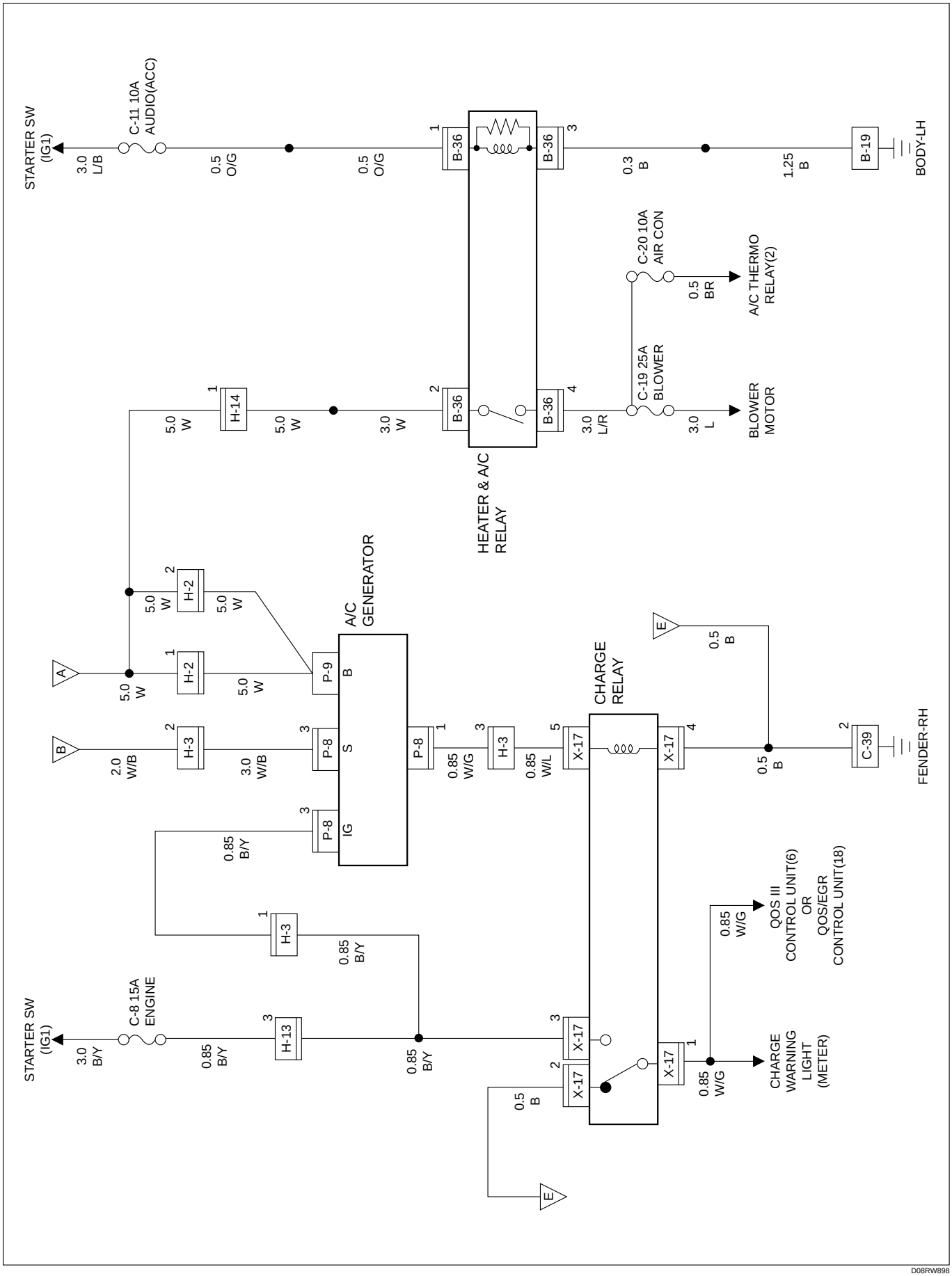

D08RW898

Parts Location (LHD 4JG2)

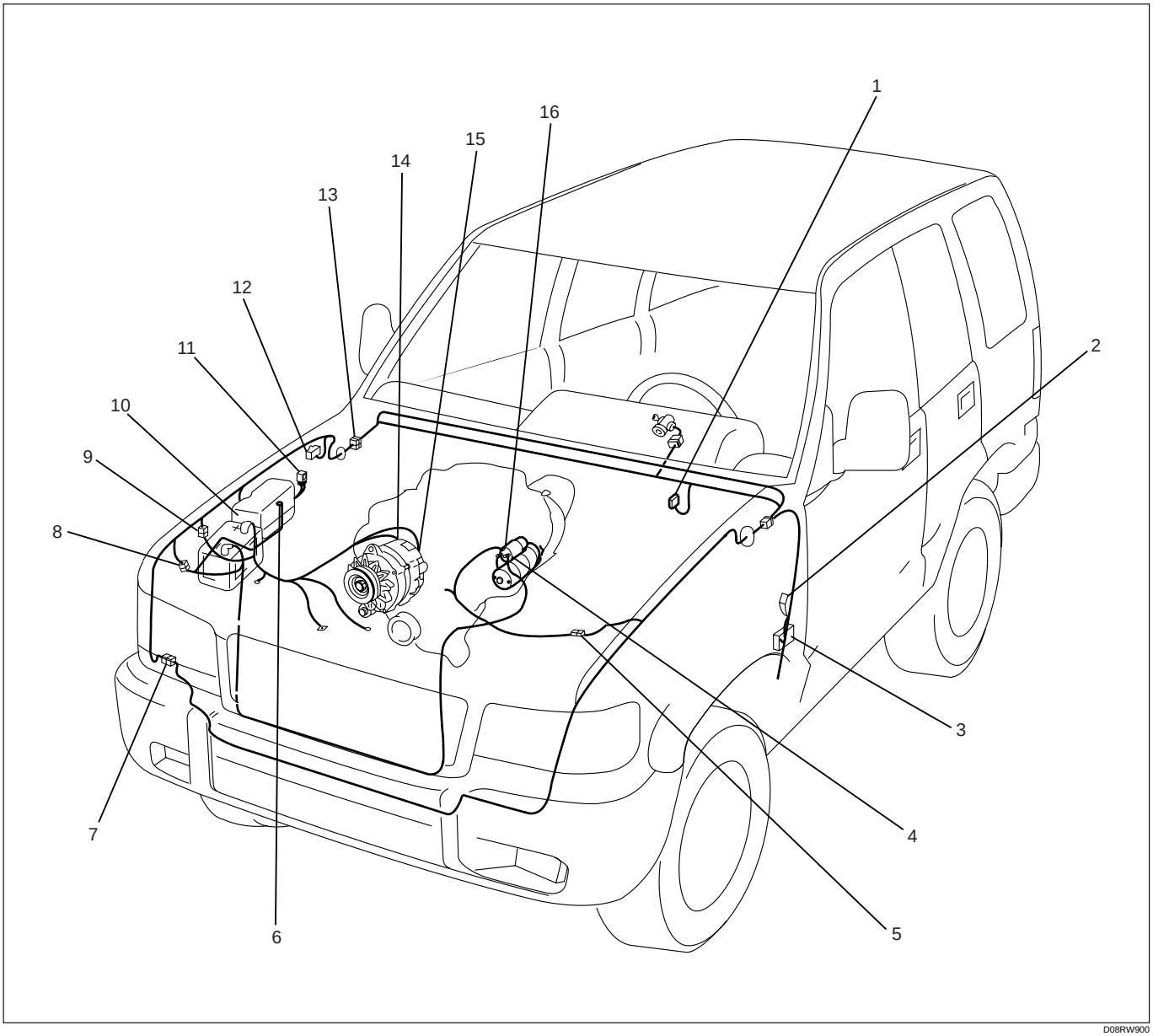

Legend

(1) B-22
(2) B-18, B-19
(3) Fuse Box (B-36)
(4) P-4
(5) H-6
(6) P-2
(7) H-43
(8) H-2
(9) H-3
(10) Relay and Fuse Box (X-17)
(11) C-56, C-57
(12) C-39
(13) H-13, H-14, H-16
(14) P-8
(15) P-9
(16) E-35

Powertrain Control Module (PCM)

General Description

The Powertrain Control Module (PCM) is located in the passenger compartment.
The PCM constantly monitors the information from various sensors, and controls the systems that affect vehicle performance.
The PCM performs the diagnostic function of the system. It can recognize operational problems, alert the driver through the Malfunction Indicator Light (MIL) and store a Diagnostic Trouble Code (DTC) or DTC(s) which identify the problem areas to aid the technician in making repairs.
The PCM is designed to process the various input informations and then sends the necessary electrical responses to control fuel delivery, spark timing and other emission control systems. The input information has an interrelation to more than one output, therefore, if the one input failed, it could affect more than one system operation.
Refer to Driveability and Emission in Engine section and Automatic Transmission in Transmission section.

Circuit Diagram (RHD 6V*1)–1

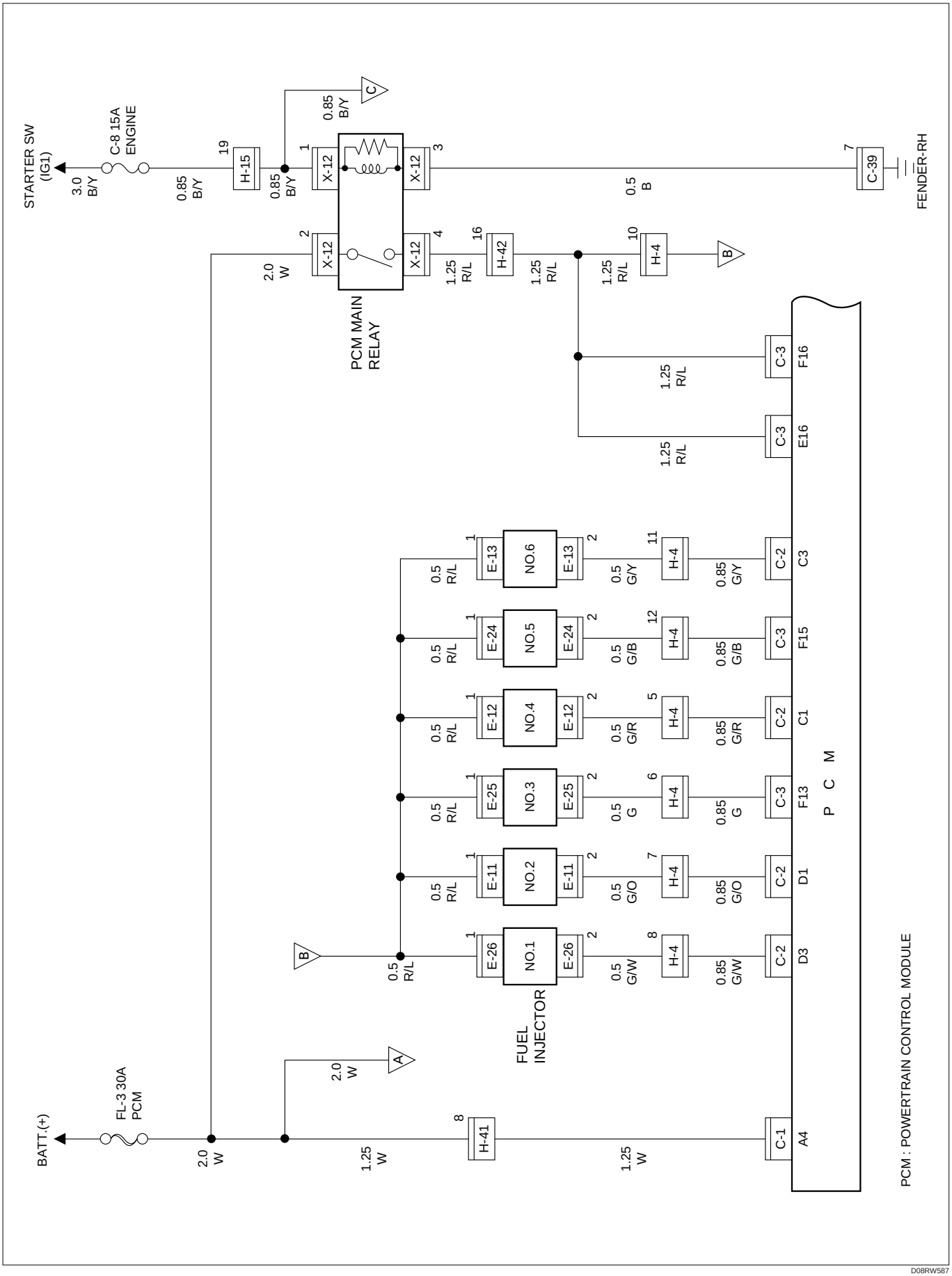

D08RW587

Circuit Diagram (RHD 6V*1)–2

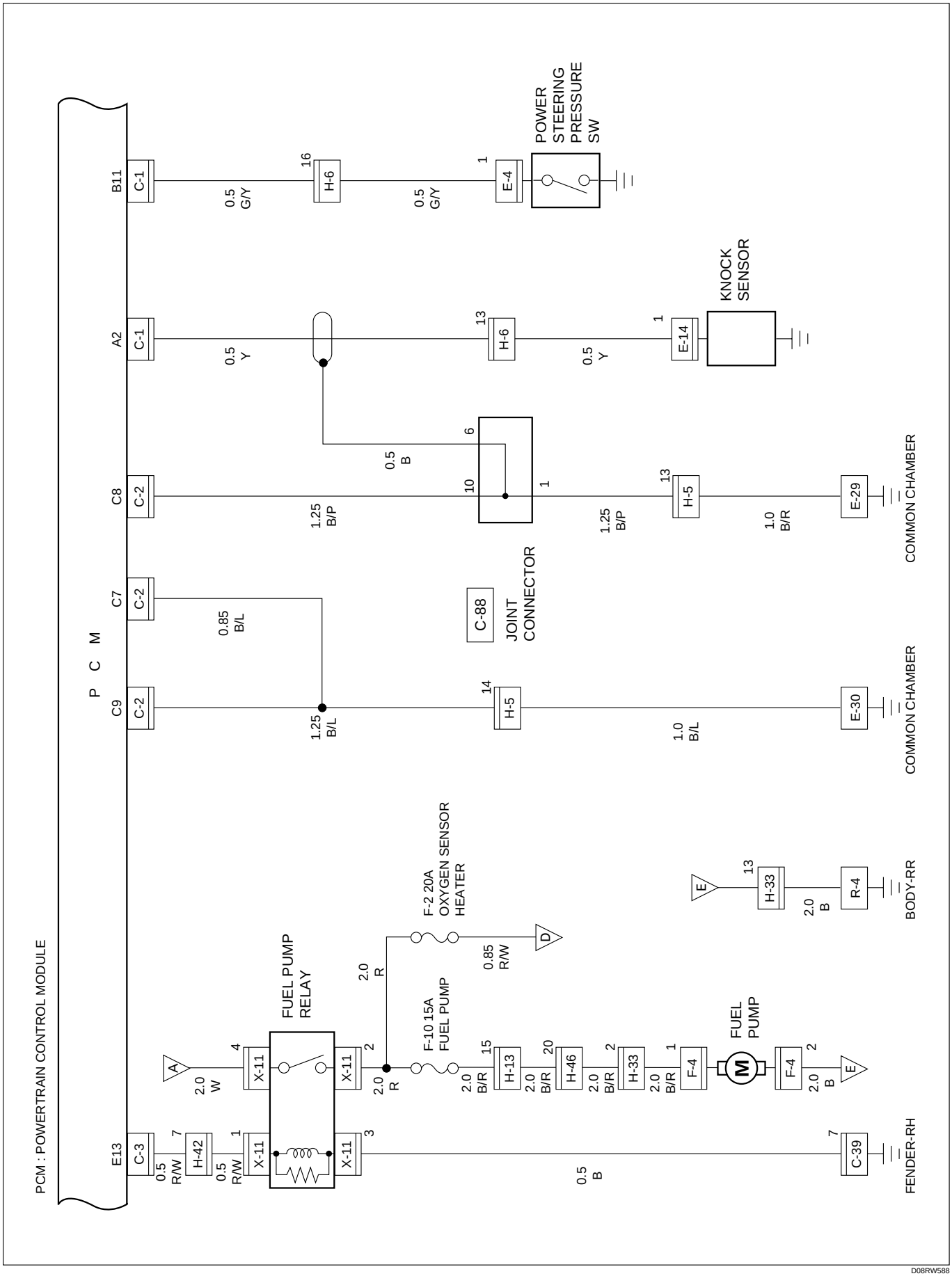

D08RW588

Circuit Diagram (RHD 6V∗1)–3

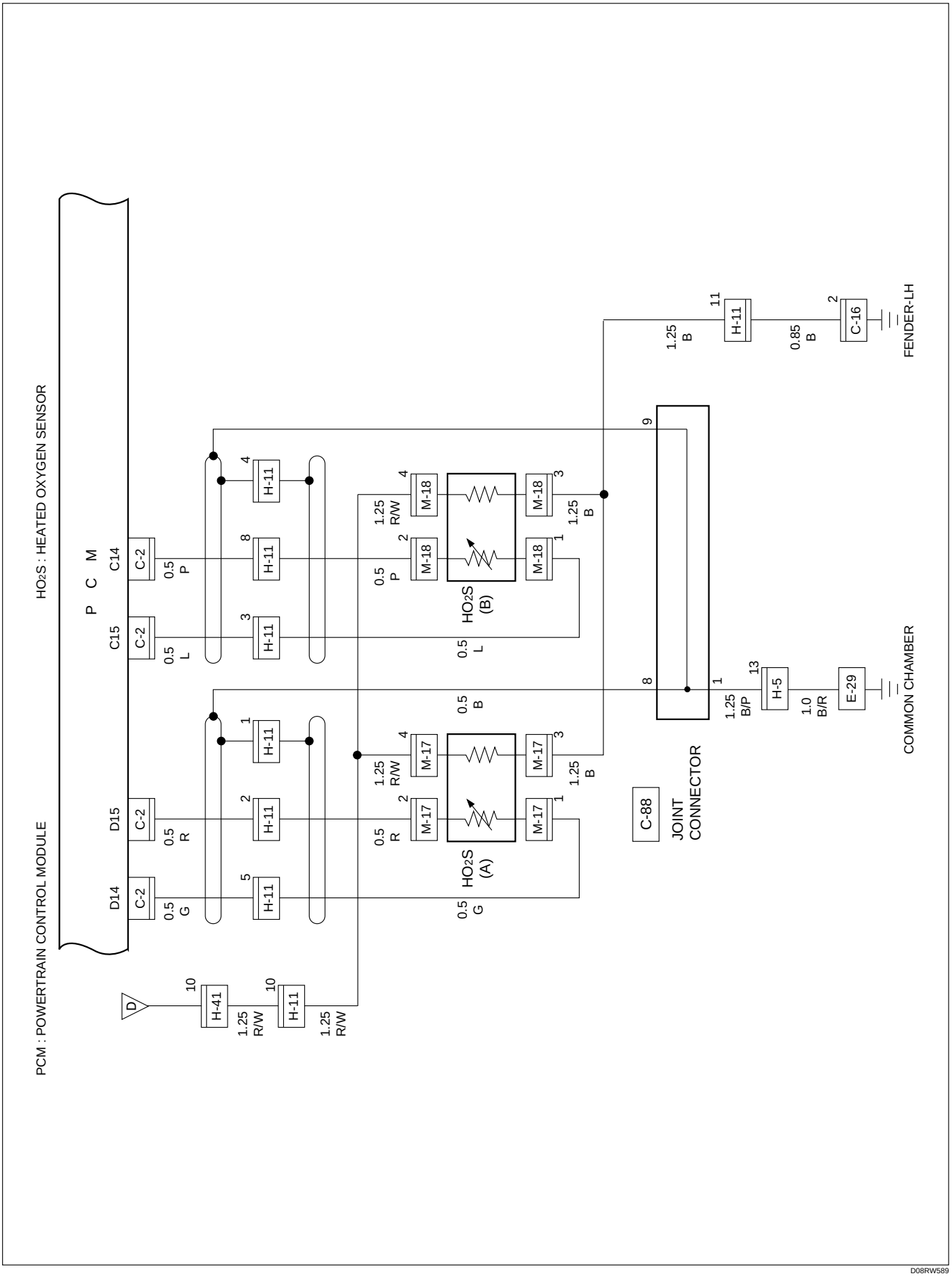

D08RW589

Circuit Diagram (RHD 6V*1)–4

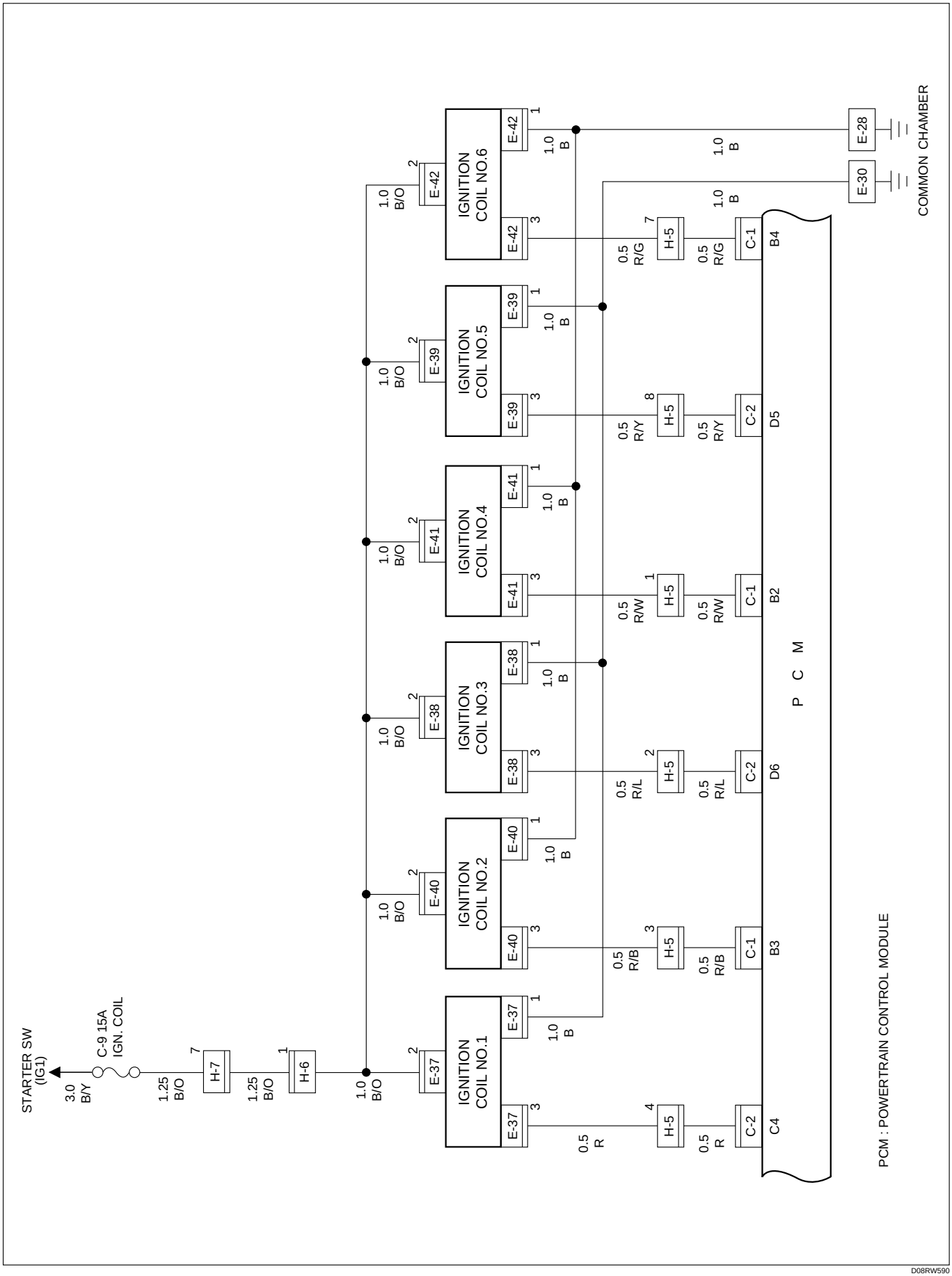

D08RW590

Circuit Diagram (RHD 6V*1)–5

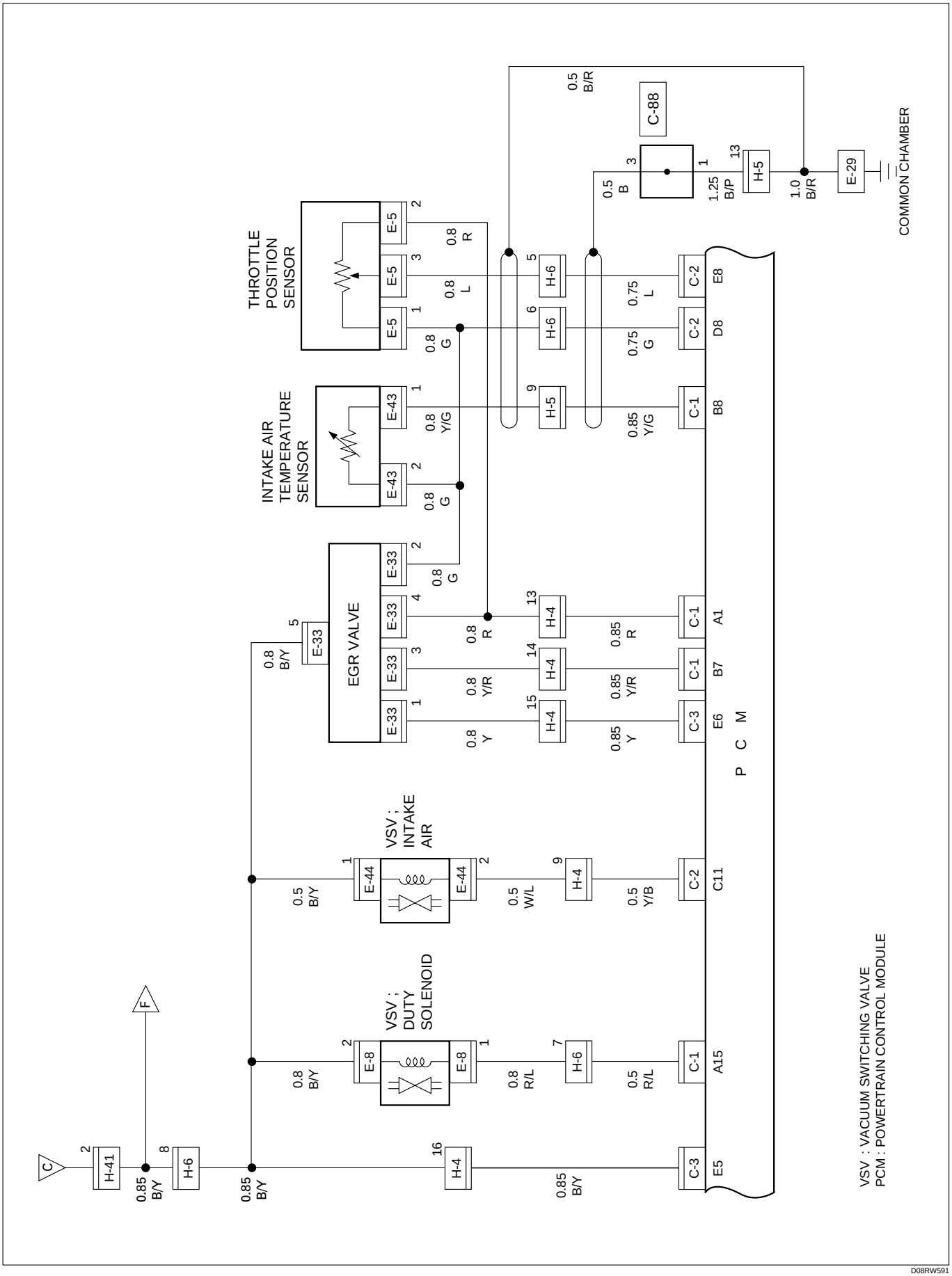

D08RW591

Circuit Diagram (RHD 6V*1)–6

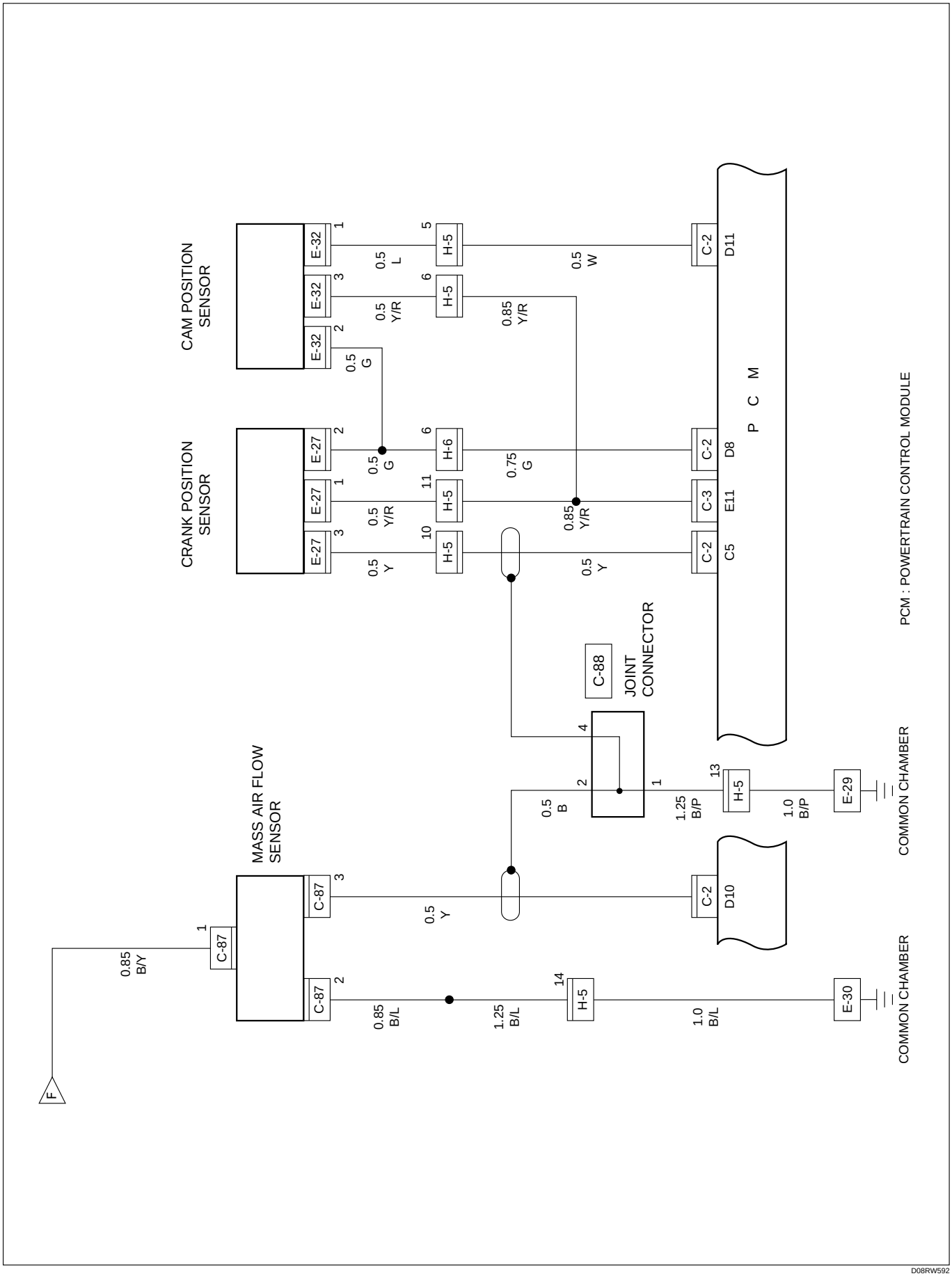

D08RW592

Circuit Diagram (RHD 6V*1)–7

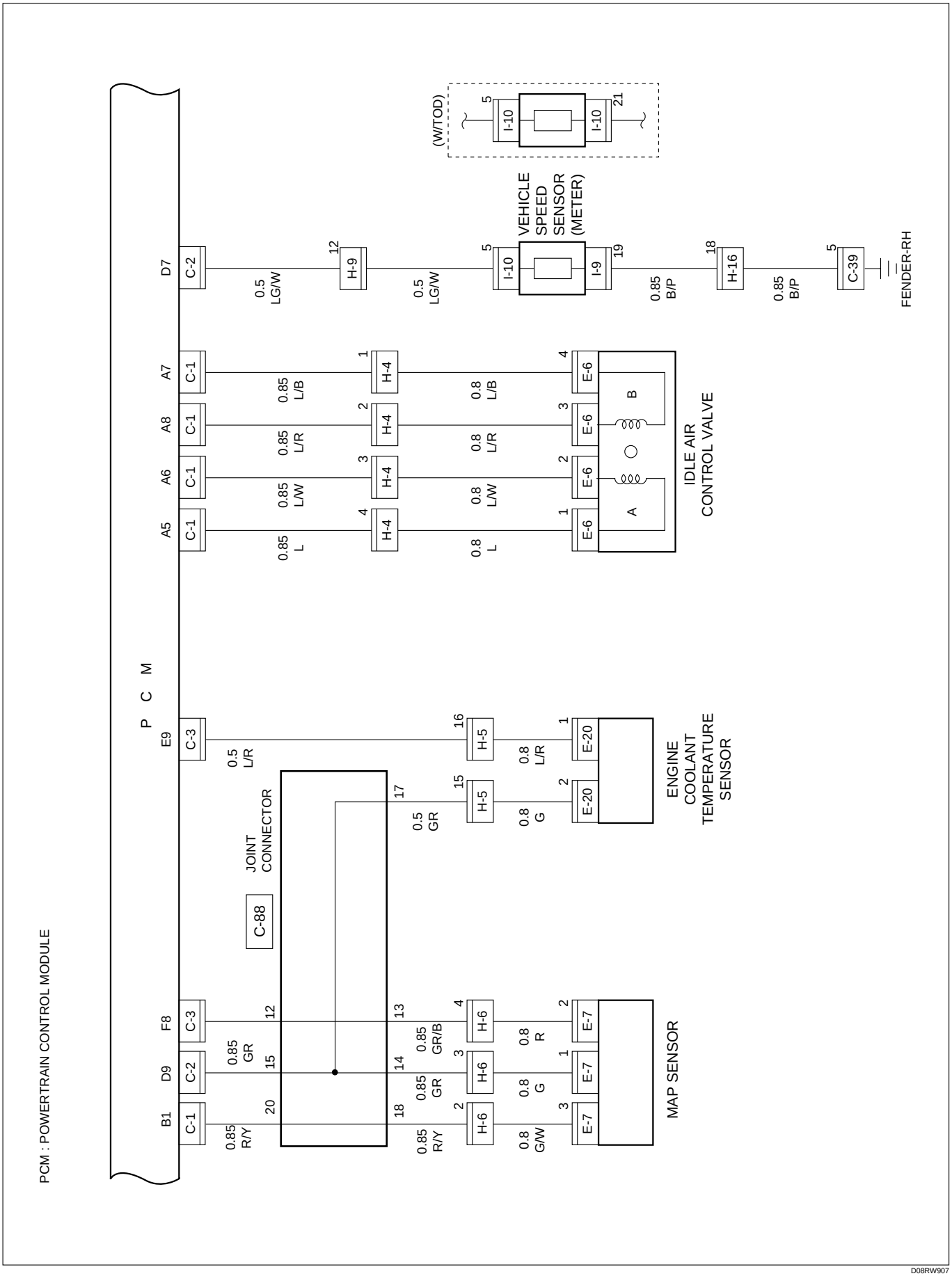

D08RW907

Circuit Diagram (RHD 6V∗1)–8

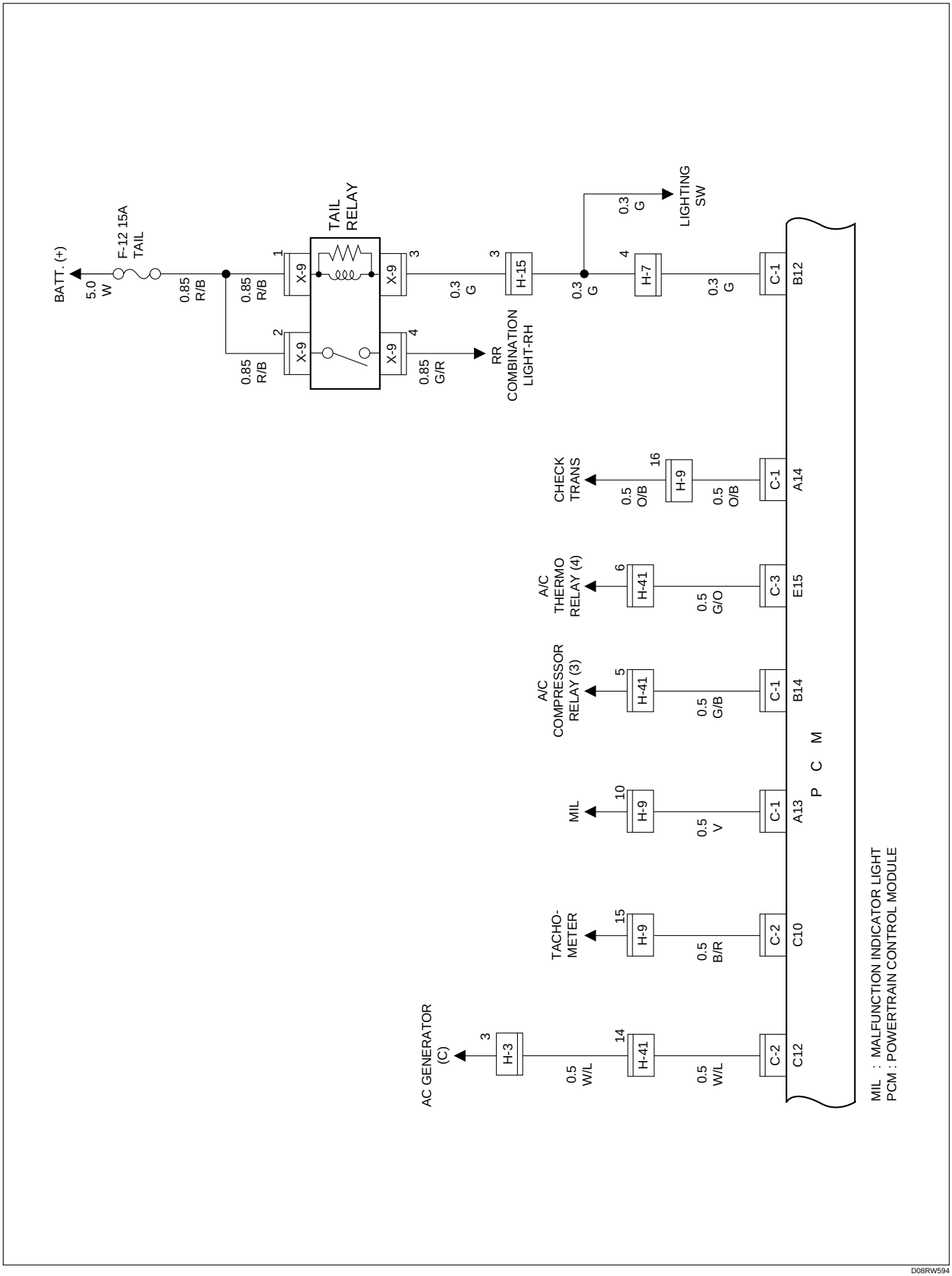

D08RW594

Circuit Diagram (RHD 6V*1)–9

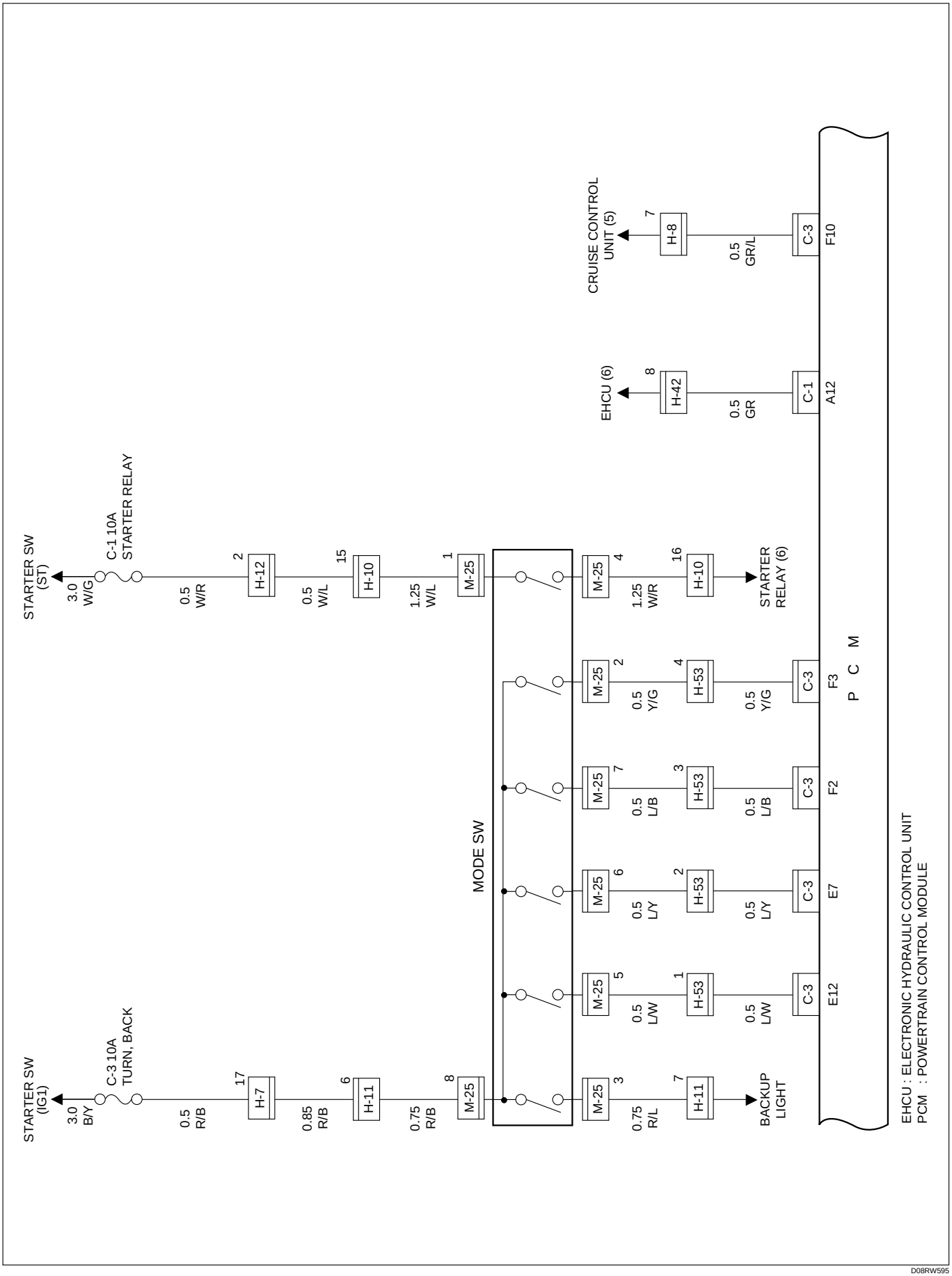

D08RW595

Circuit Diagram (RHD 6V∗1)–10

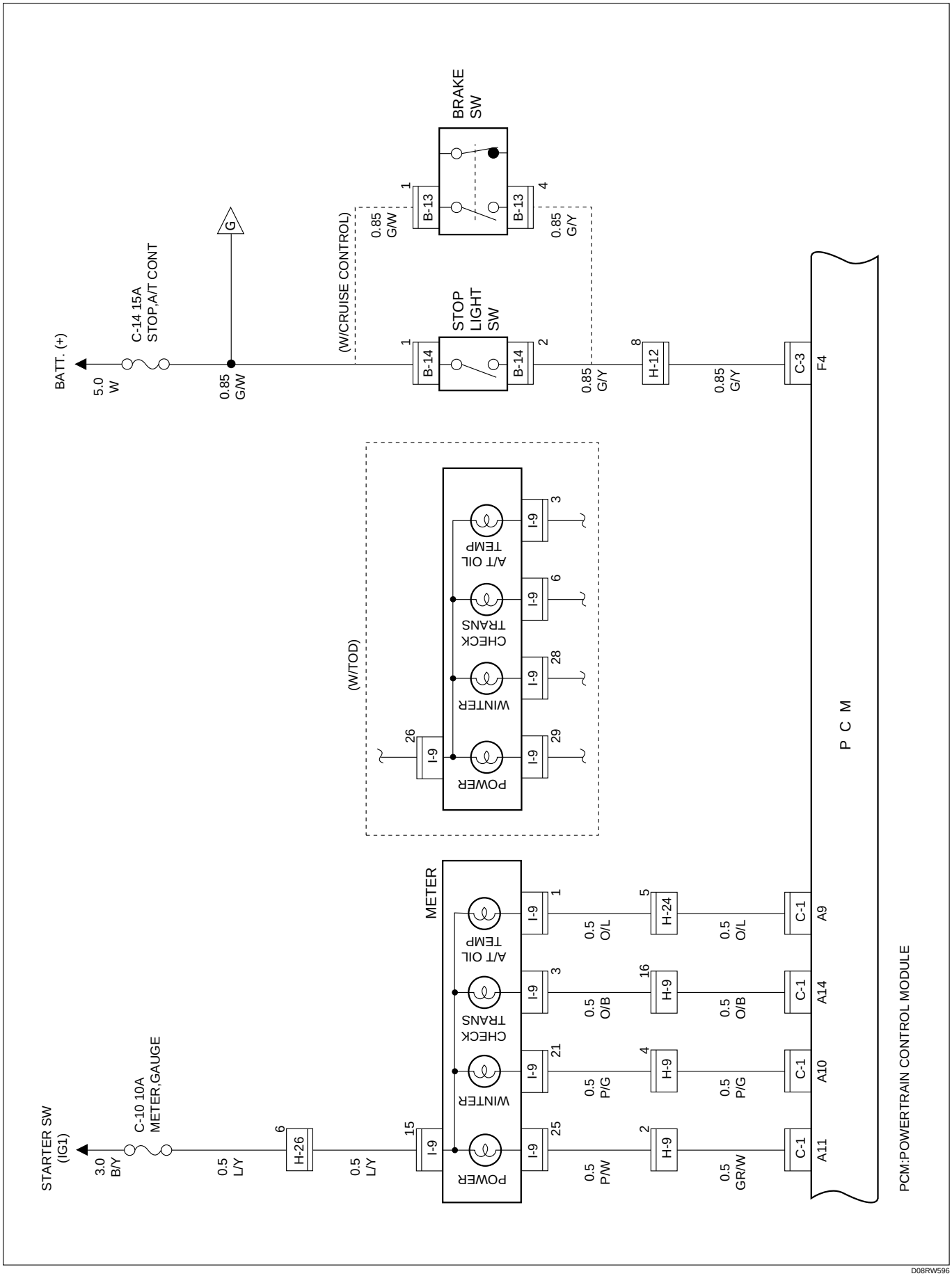

D08RW596

Circuit Diagram (RHD 6V*1)–11

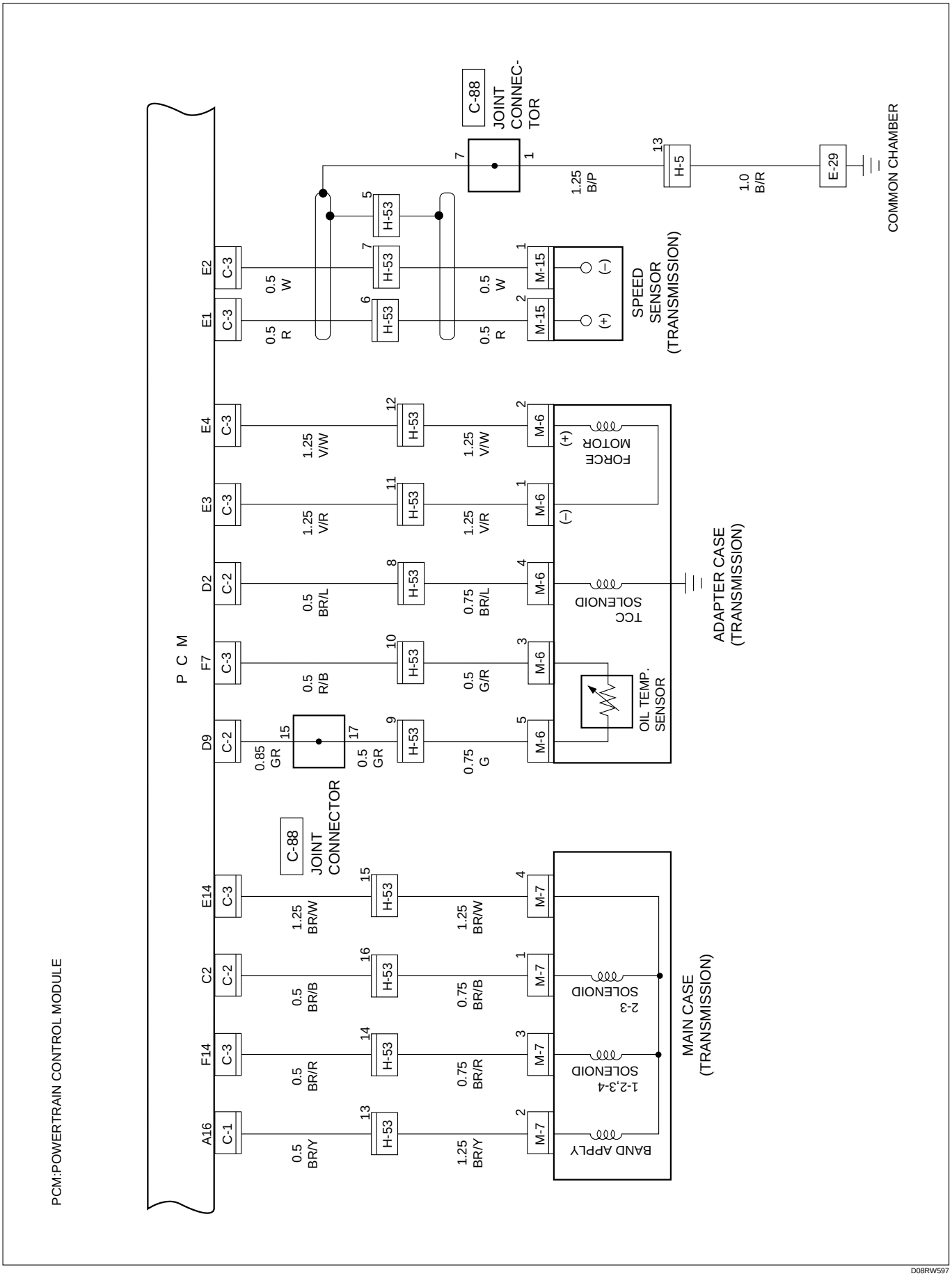

D08RW597

Circuit Diagram (RHD 6V∗1)–12

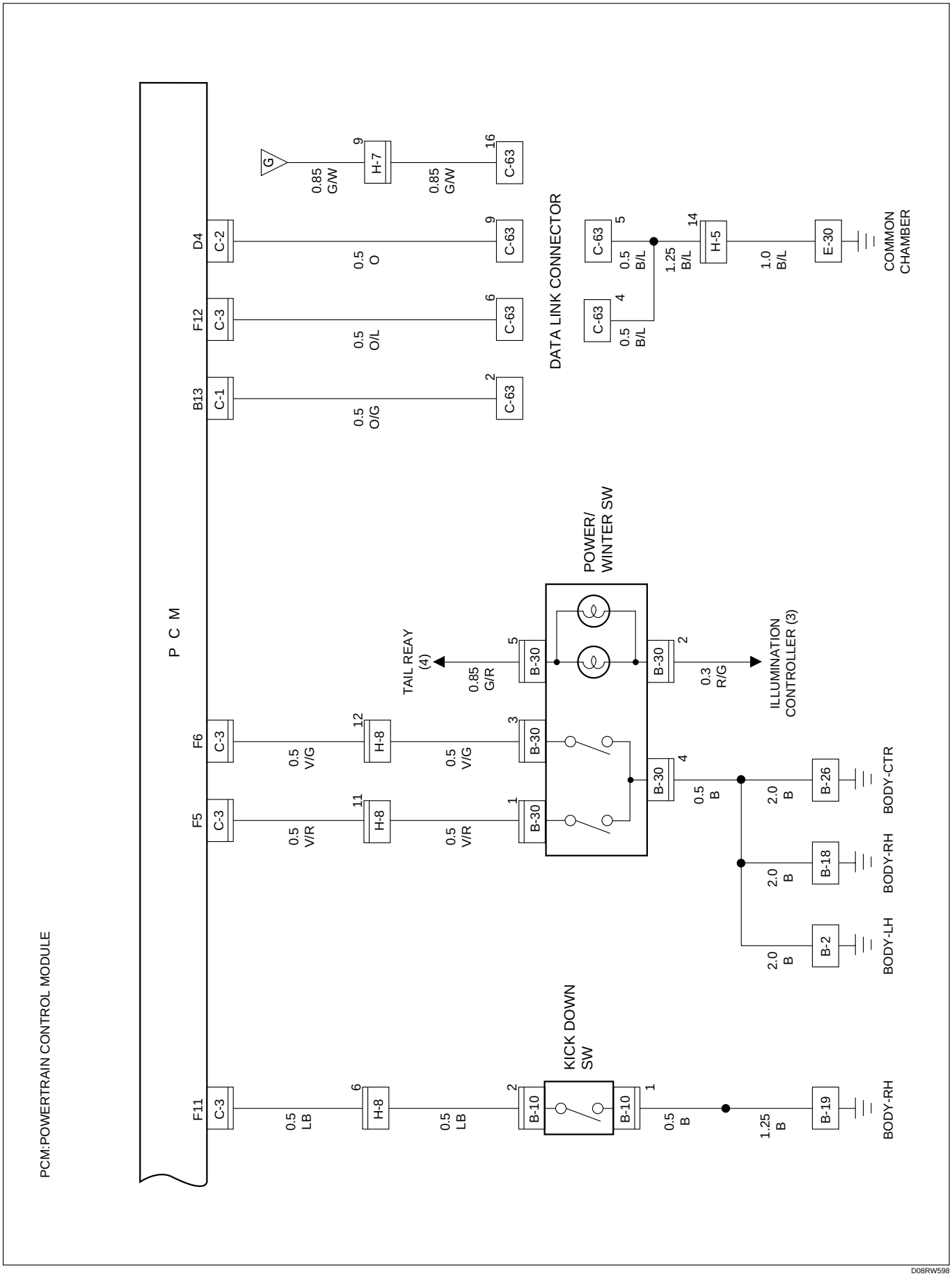

D08RW598

Parts Location (RHD 6V∗1)

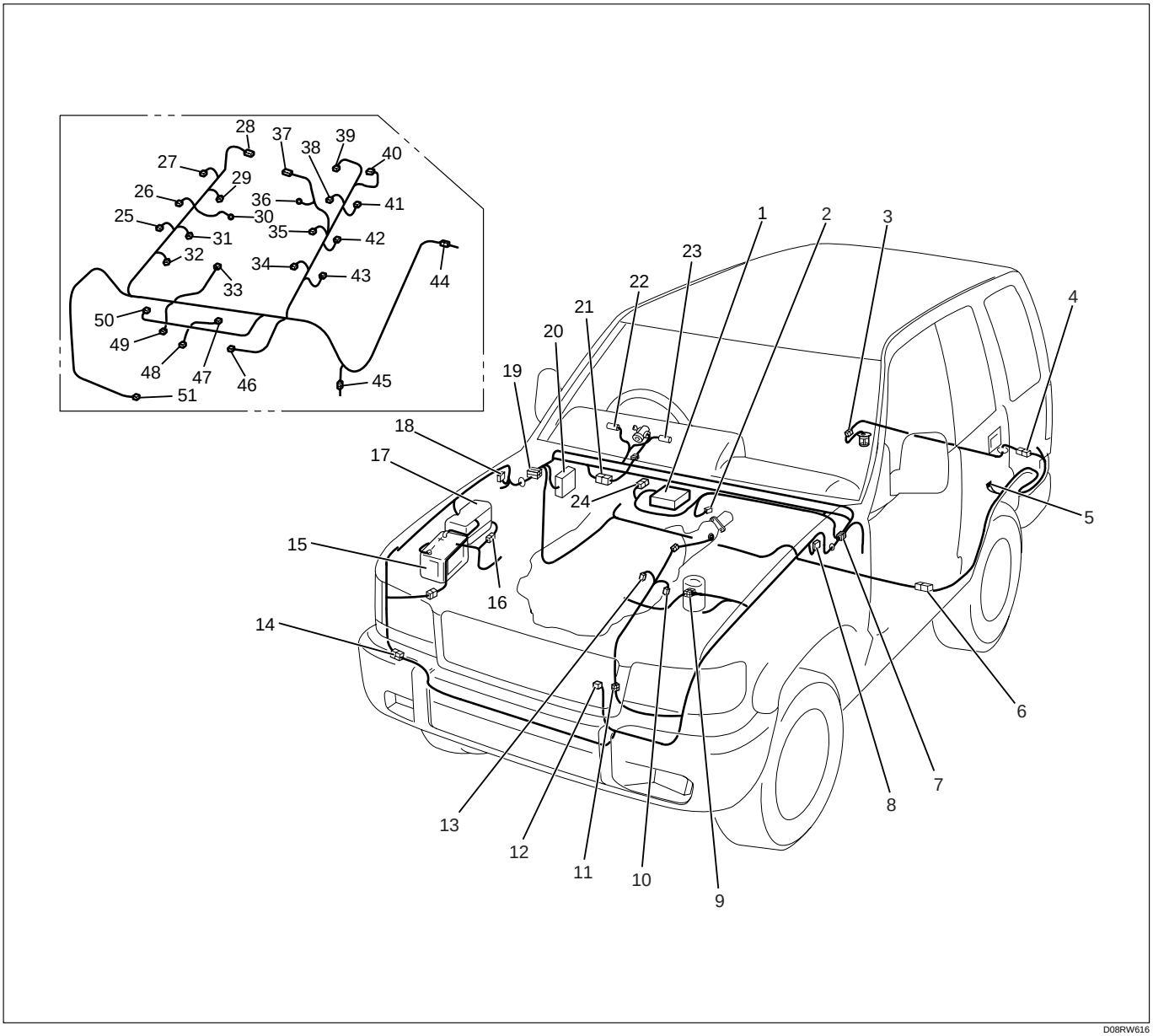

Legend

(1) PCM
(2) C-63
(3) F-4
(4) H-33
(5) R-4
(6) H-46
(7) H-7, H-8, H-9, H-24
(8) C-16
(9) H-4, H-5, H-6
(10) M-18
(11) H-10, H-11
(12) C-87
(13) M-17
(14) H-41, H-42
(15) Battery
(16) H-3
(17) Relay and Fuse Box (X-9, X-11, X-12)
(18) C-39
(19) H-13, H-15, H-16, H-26
(20) Fuse Box
(21) H-12
(22) I-10
(23) I-9
(24) C-88
(25) E-37
(26) E-38
(27) E-39
(28) E-33
(29) E-24
(30) E-30
(31) E-25

(32) E-26
(33) E-14
(34) E-11
(35) E-12
(36) E-28, E-29
(37) E-7
(38) E-13
(39) E-32
(40) E-44
(41) E-42
(42) E-41
(43) E-40
(44) H-4, H-5, H-6
(45) E-4
(46) E-8
(47) E-5
(48) E-43
(49) E-20
(50) E-6
(51) E-27

Parts Location (RHD 6V∗1) – 2

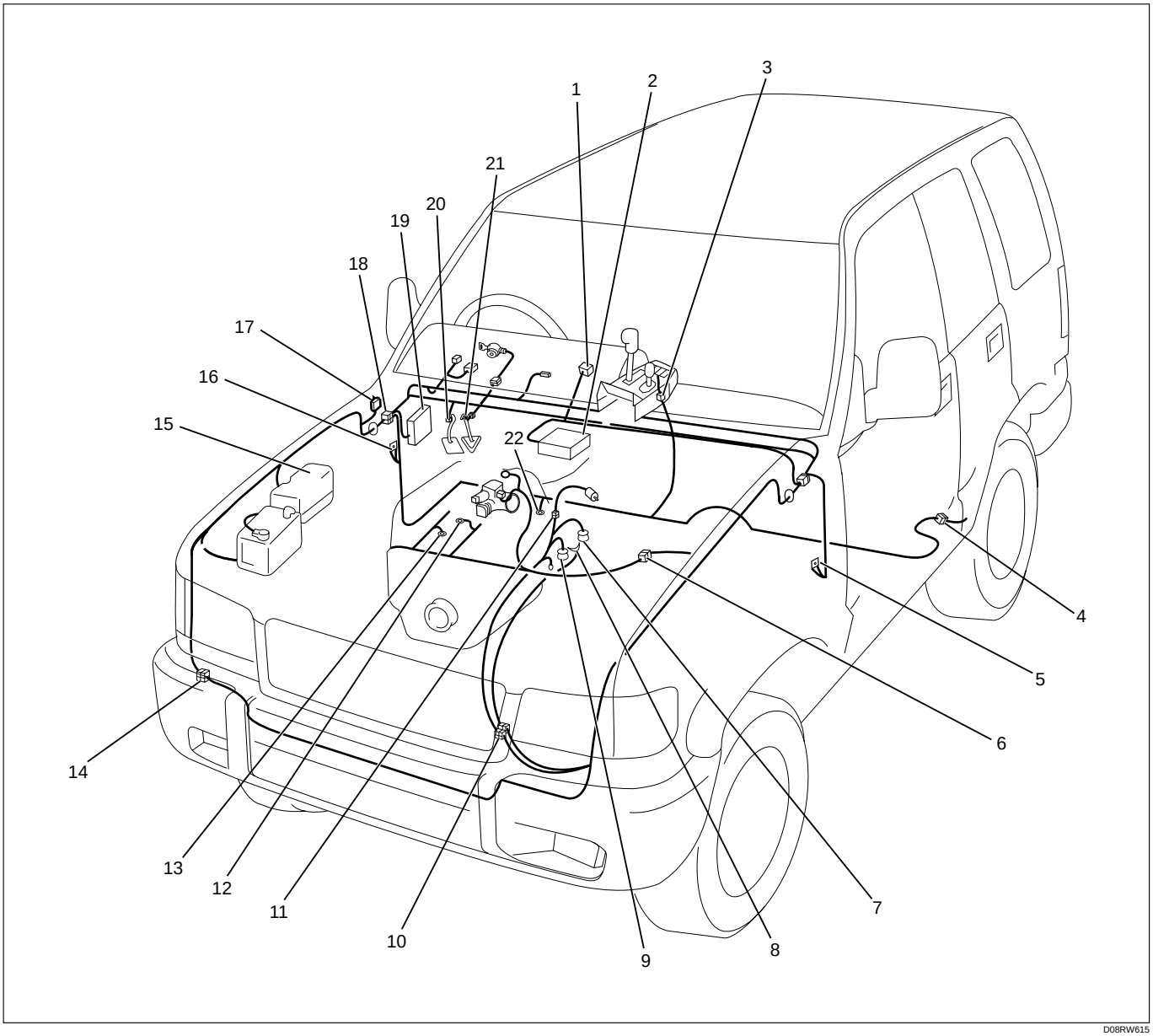

Legend

(1) C-63
(2) PCM
(3) B-30
(4) H-7, H-8, H-9, H-24
(5) B-2
(6) H-4, H-5, H-6
(7) M-7
(8) M-25
(9) M-6
(10) H-10, H-11, H-53
(11) M-15
(12) E-28, E-29
(13) E-30
(14) H-41
(15) Relay and Fuse Box
(16) B-18, B-19
(17) C-39
(18) H-13, H-15, H-16, H-26
(19) Fuse Box
(20) B-10
(21) B-13, B-14
(22) B-26

Circuit Diagram (LHD 6V*1)–1

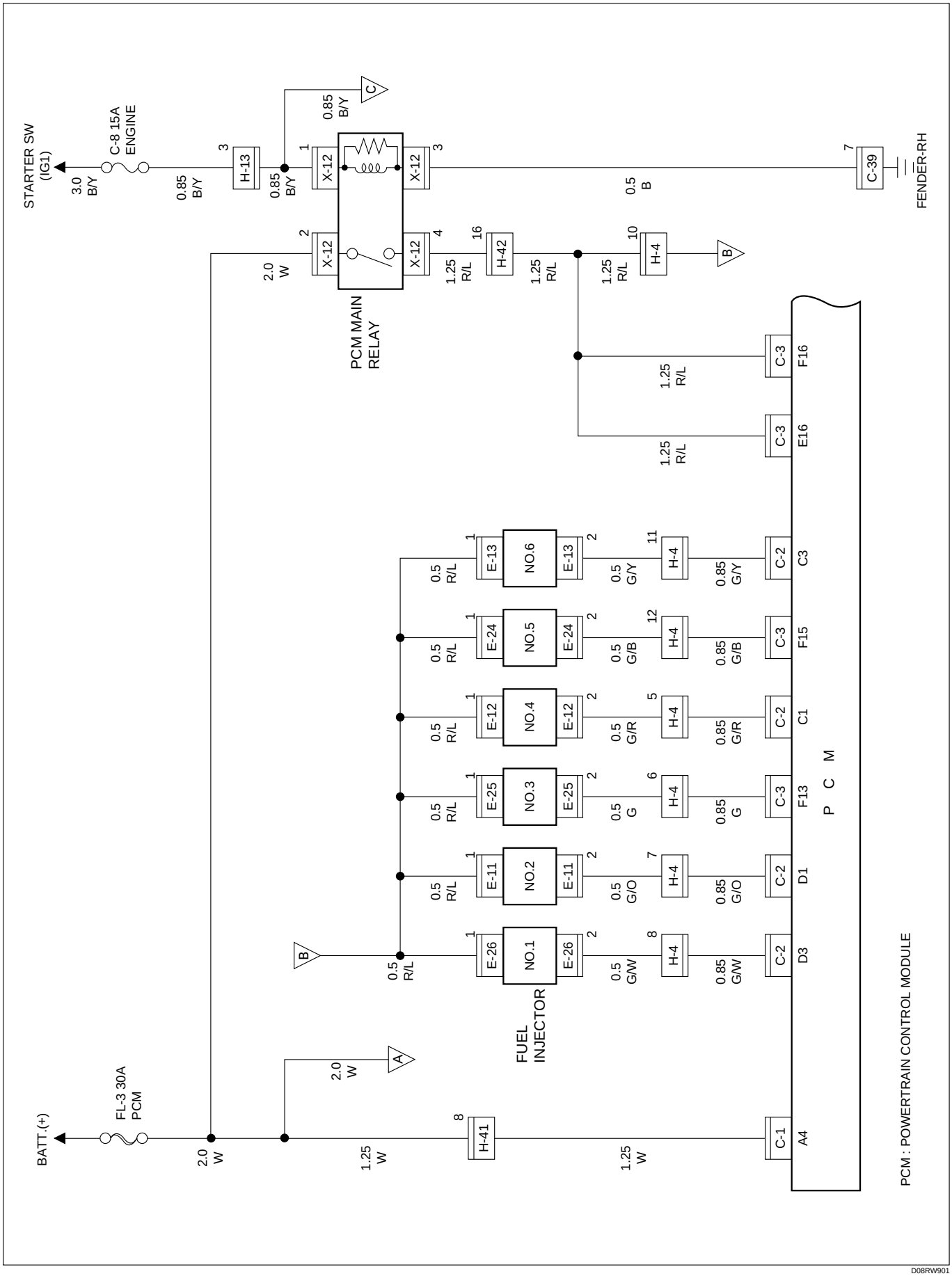

D08RW901

Circuit Diagram (LHD 6V*1)–2

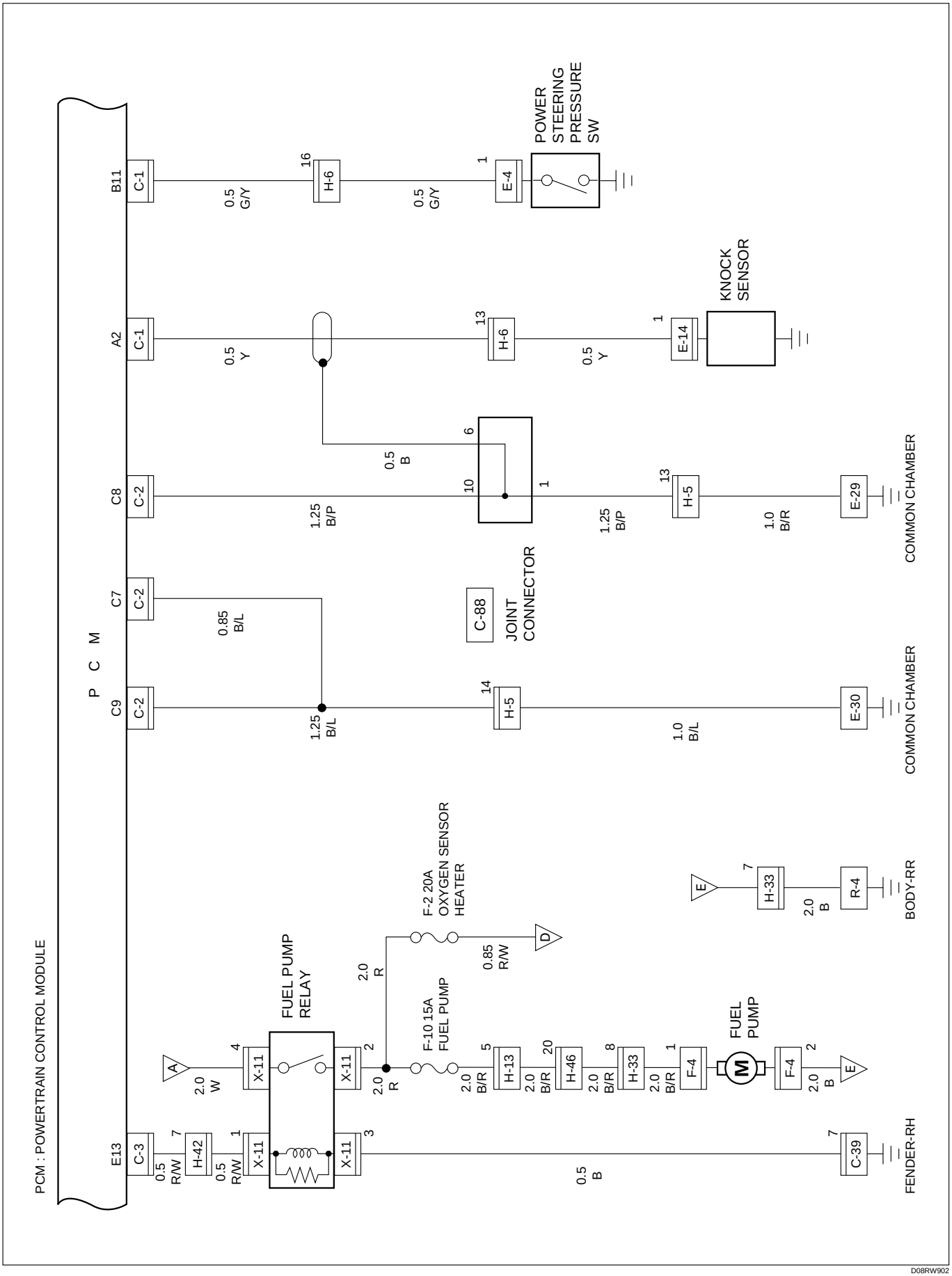

D08RW902

Circuit Diagram (LHD 6V∗1)–3

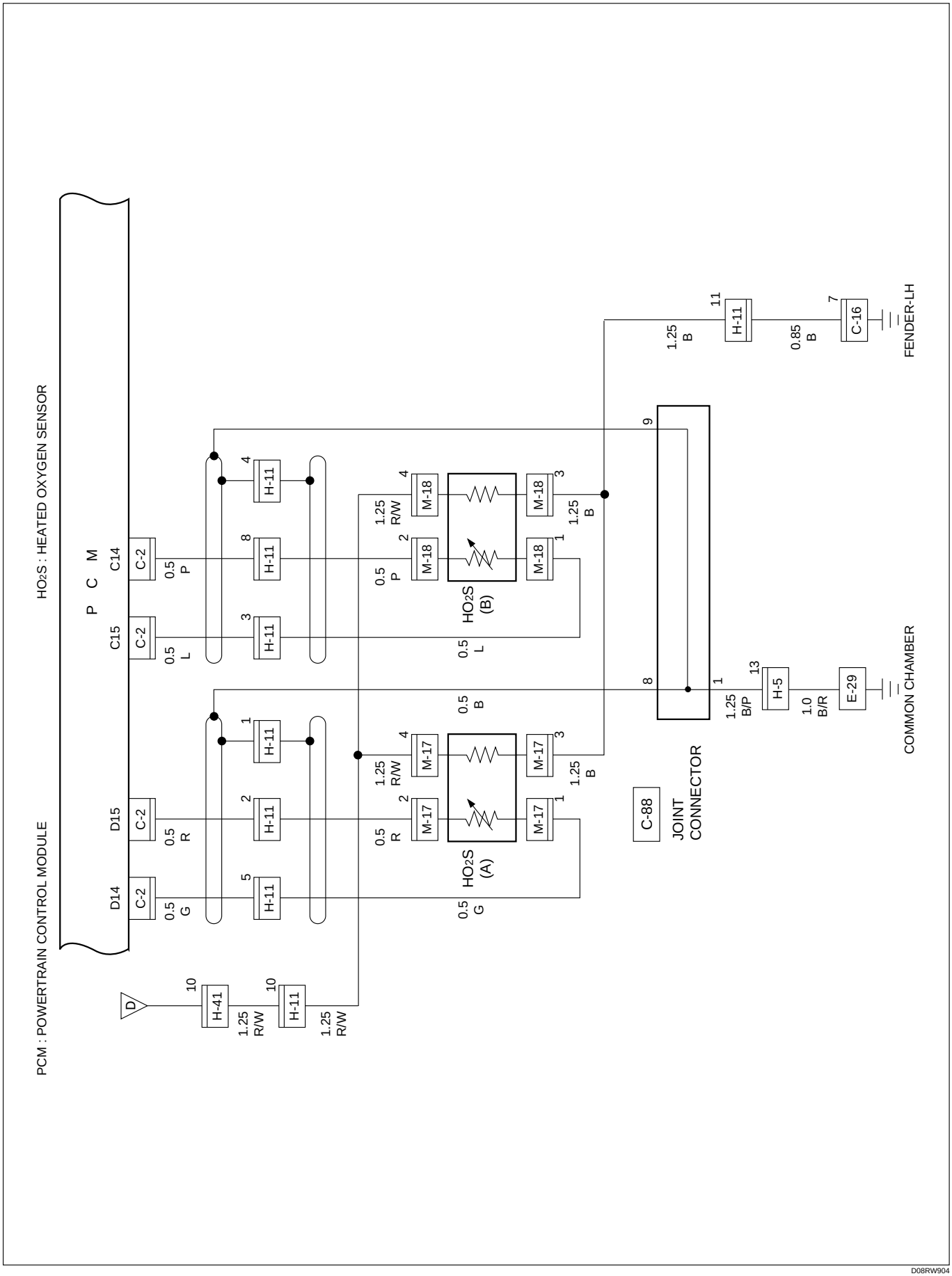

D08RW904

Circuit Diagram (LHD 6V*1)–4

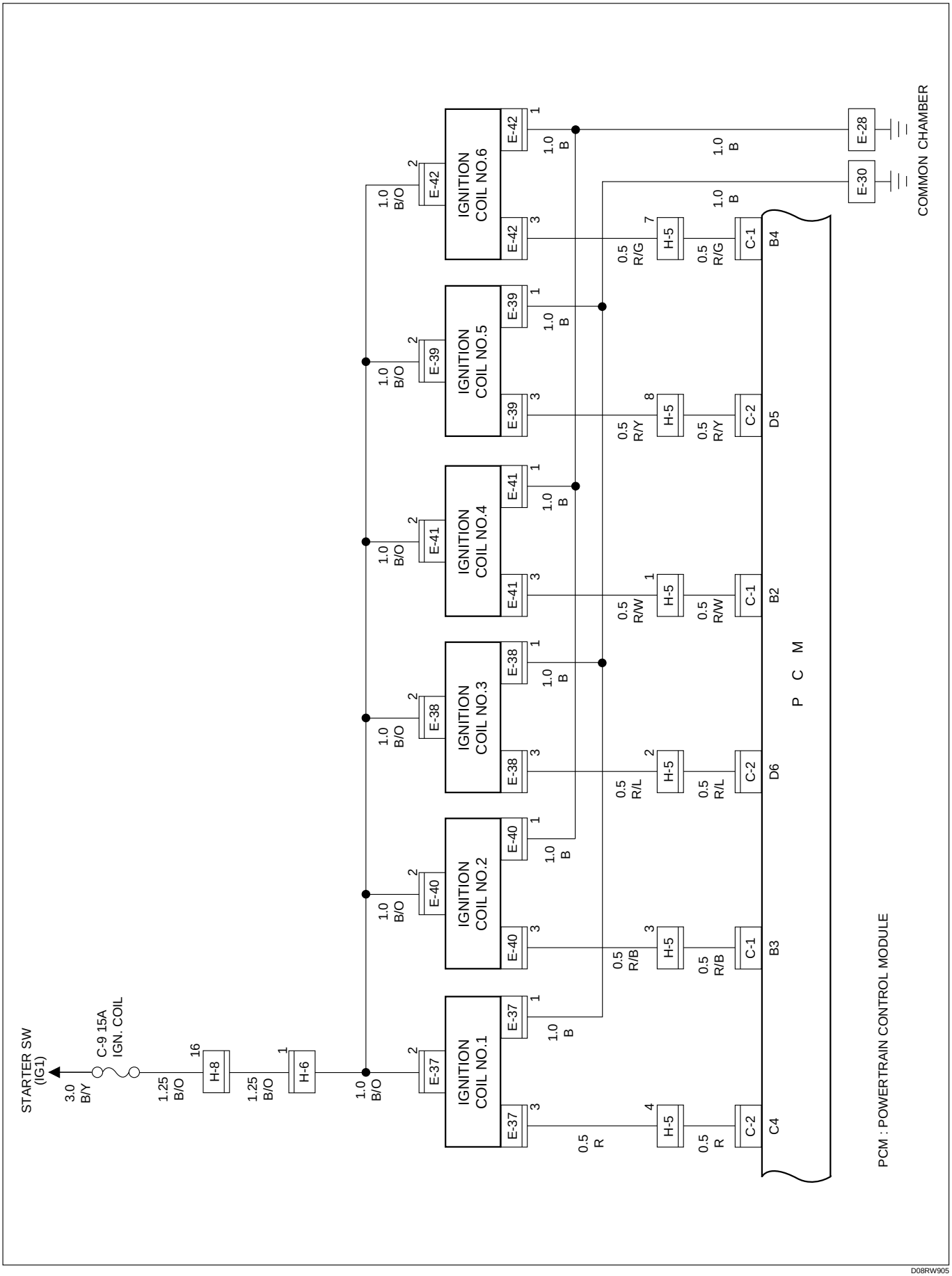

D08RW905

Circuit Diagram (LHD 6V*1)–5

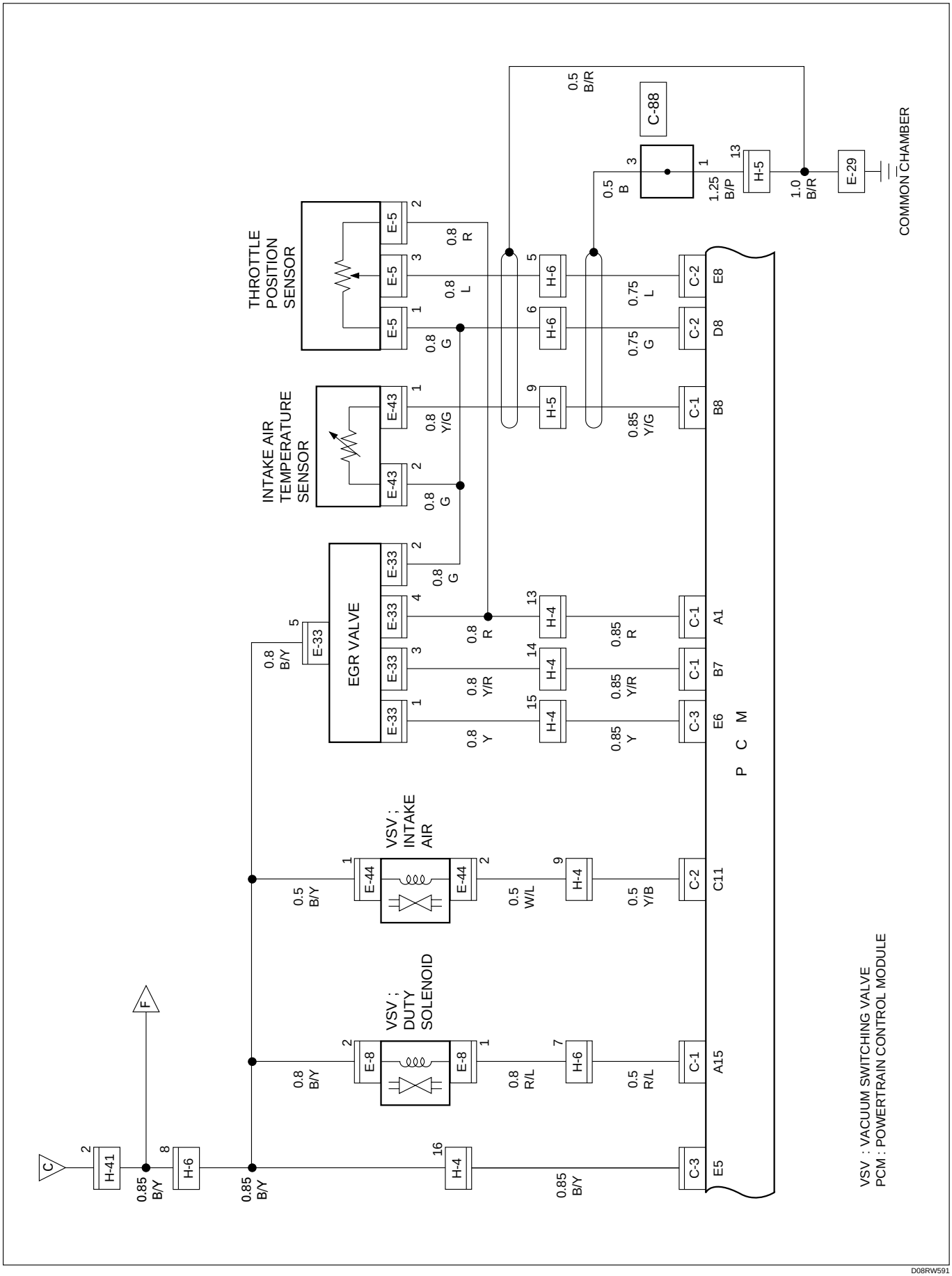

Circuit Diagram (LHD 6V*1)–6

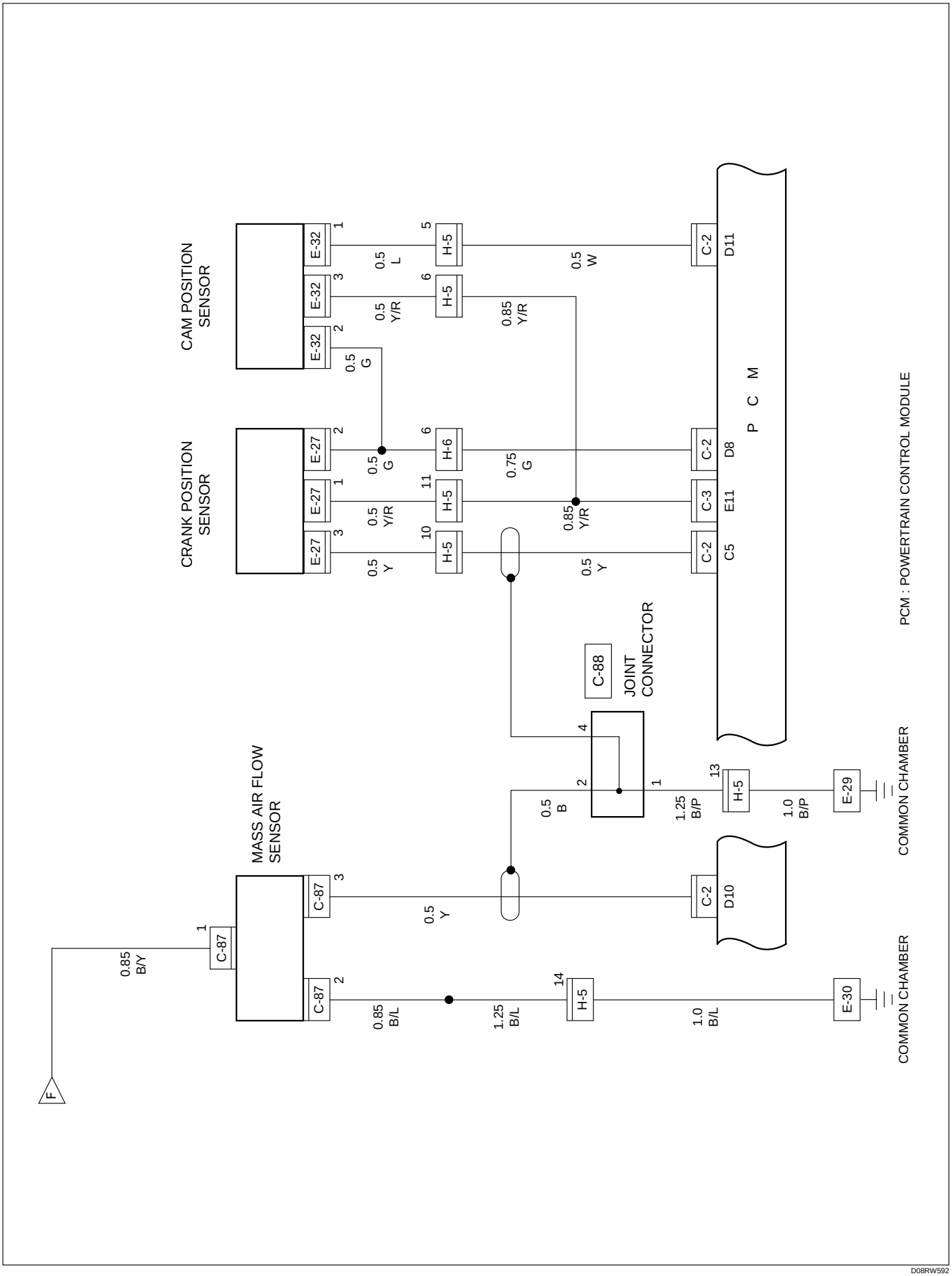

D08RW592

Circuit Diagram (LHD 6V*1)–7

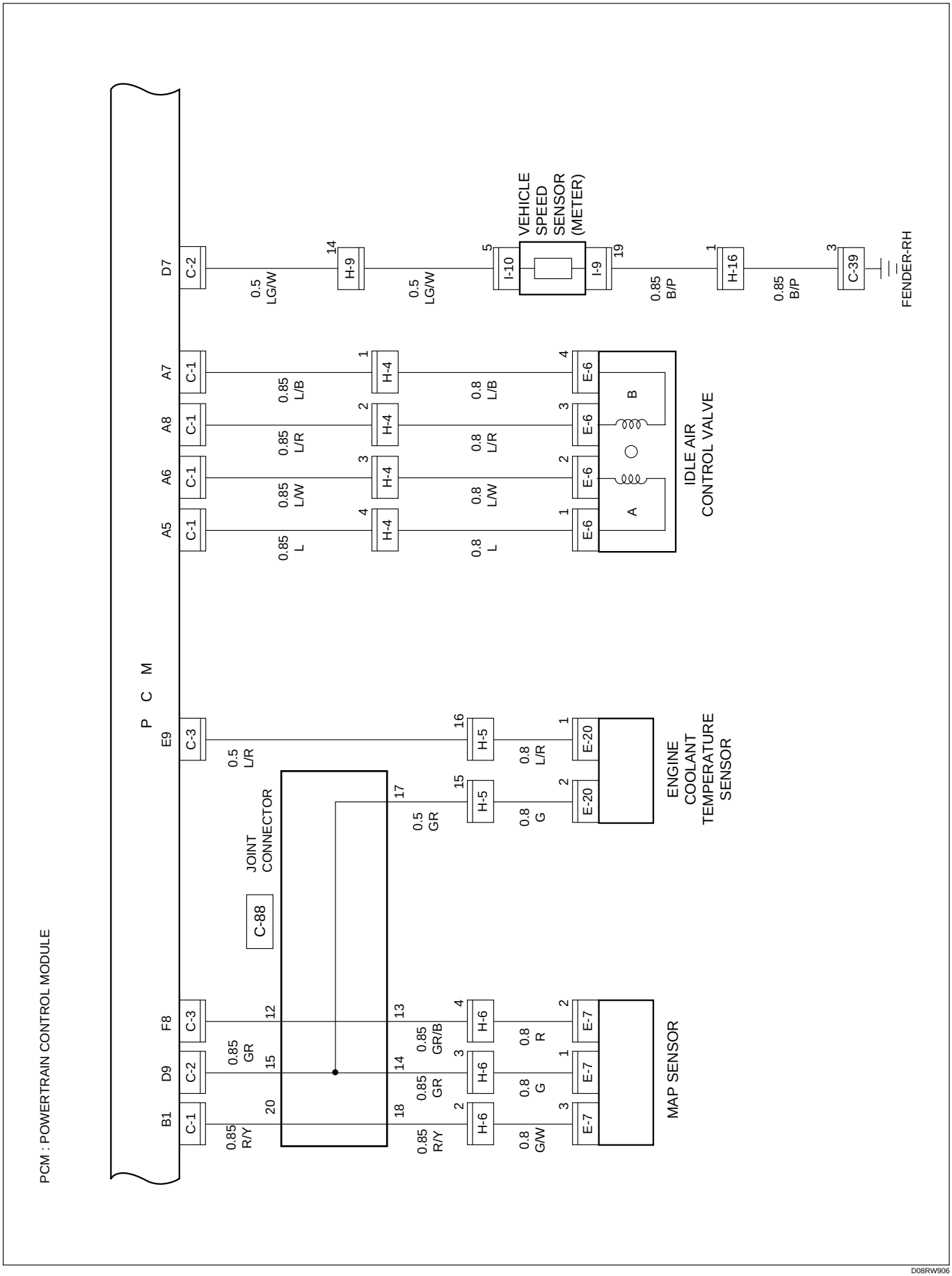

D08RW906

Circuit Diagram (LHD 6V∗1)–8

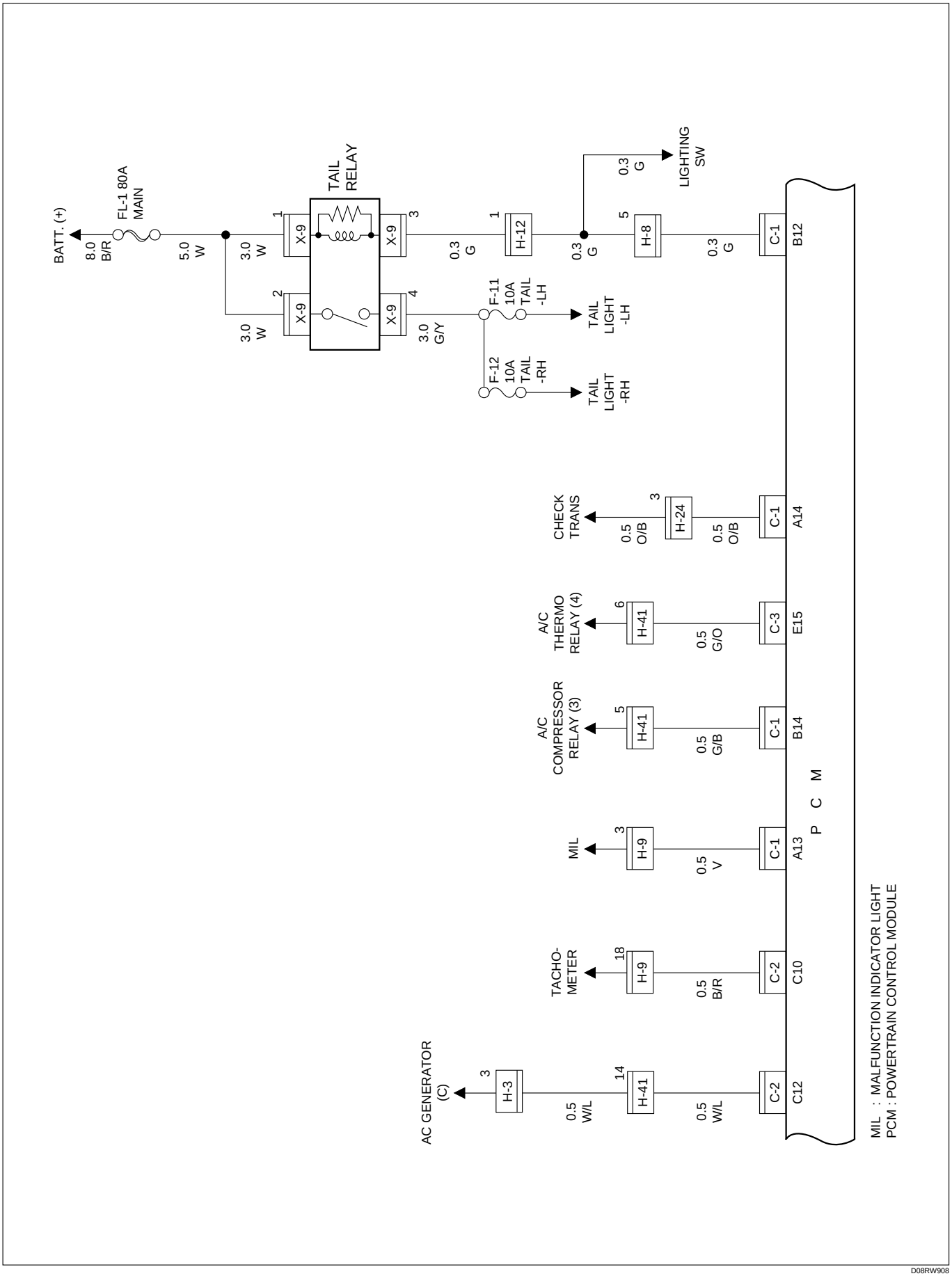

D08RW908

Circuit Diagram (LHD 6V∗1)–9

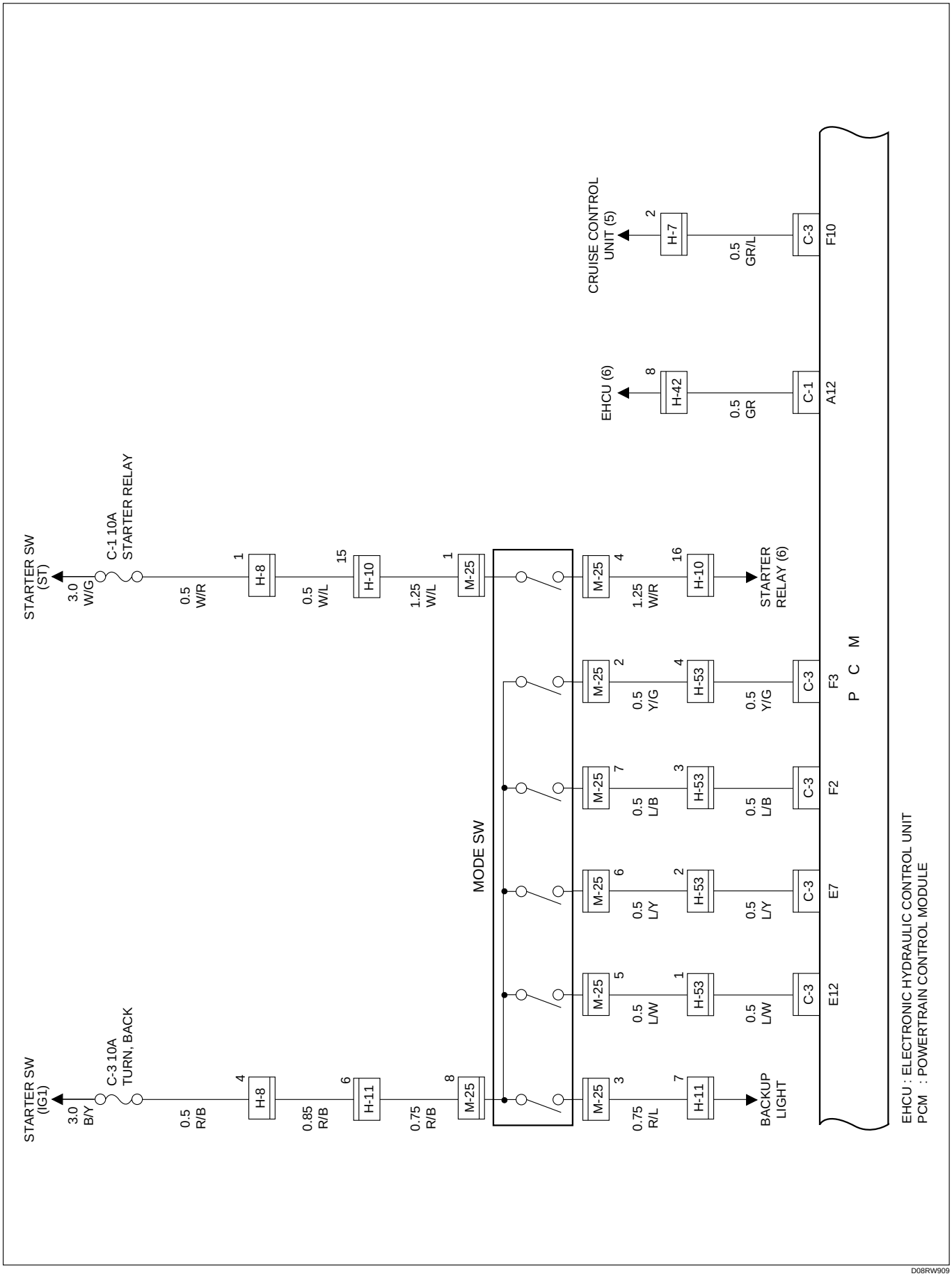

D08RW909

Circuit Diagram (LHD 6V*1)–10

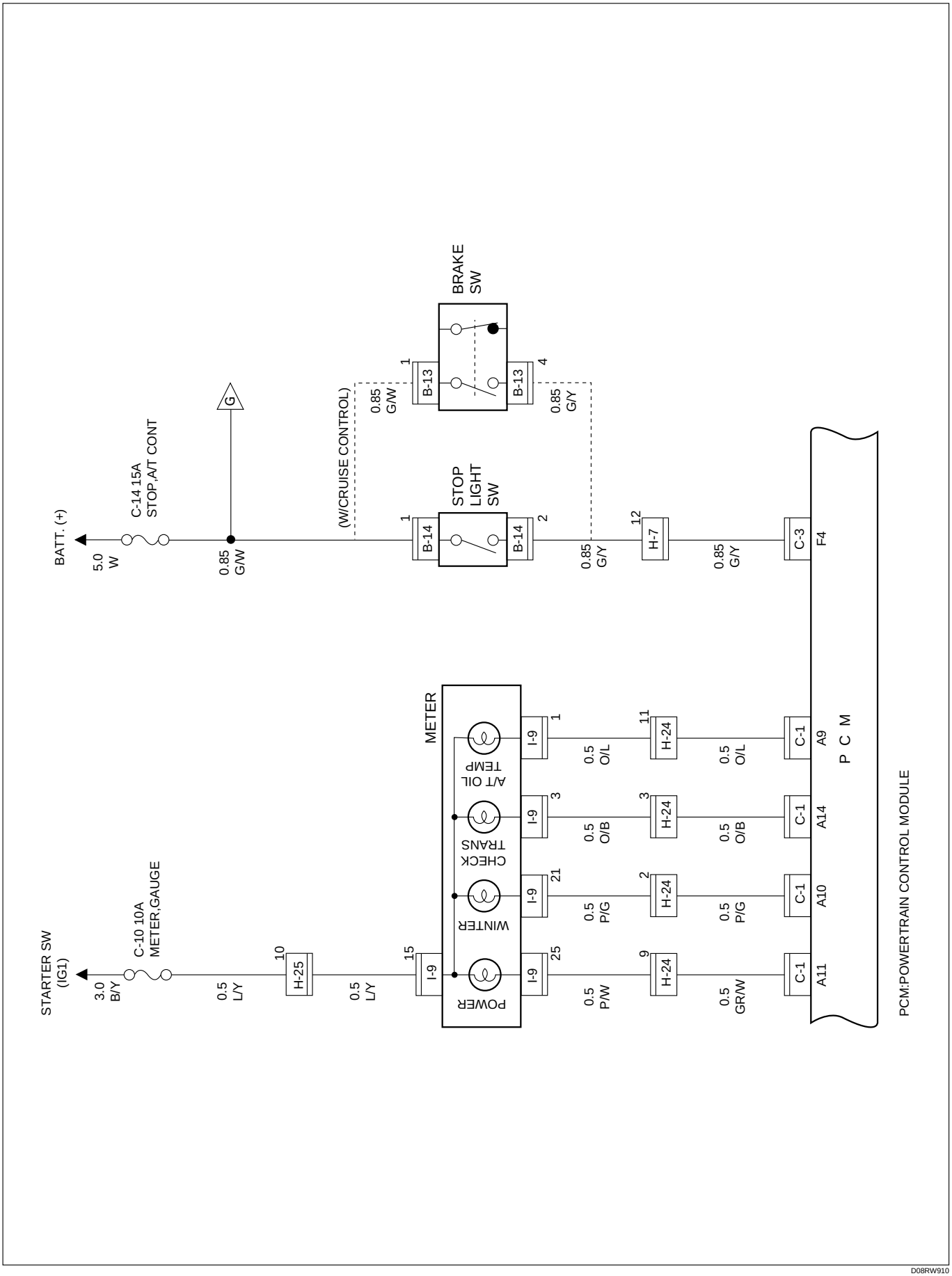

D08RW910

Circuit Diagram (LHD 6V*1)–11

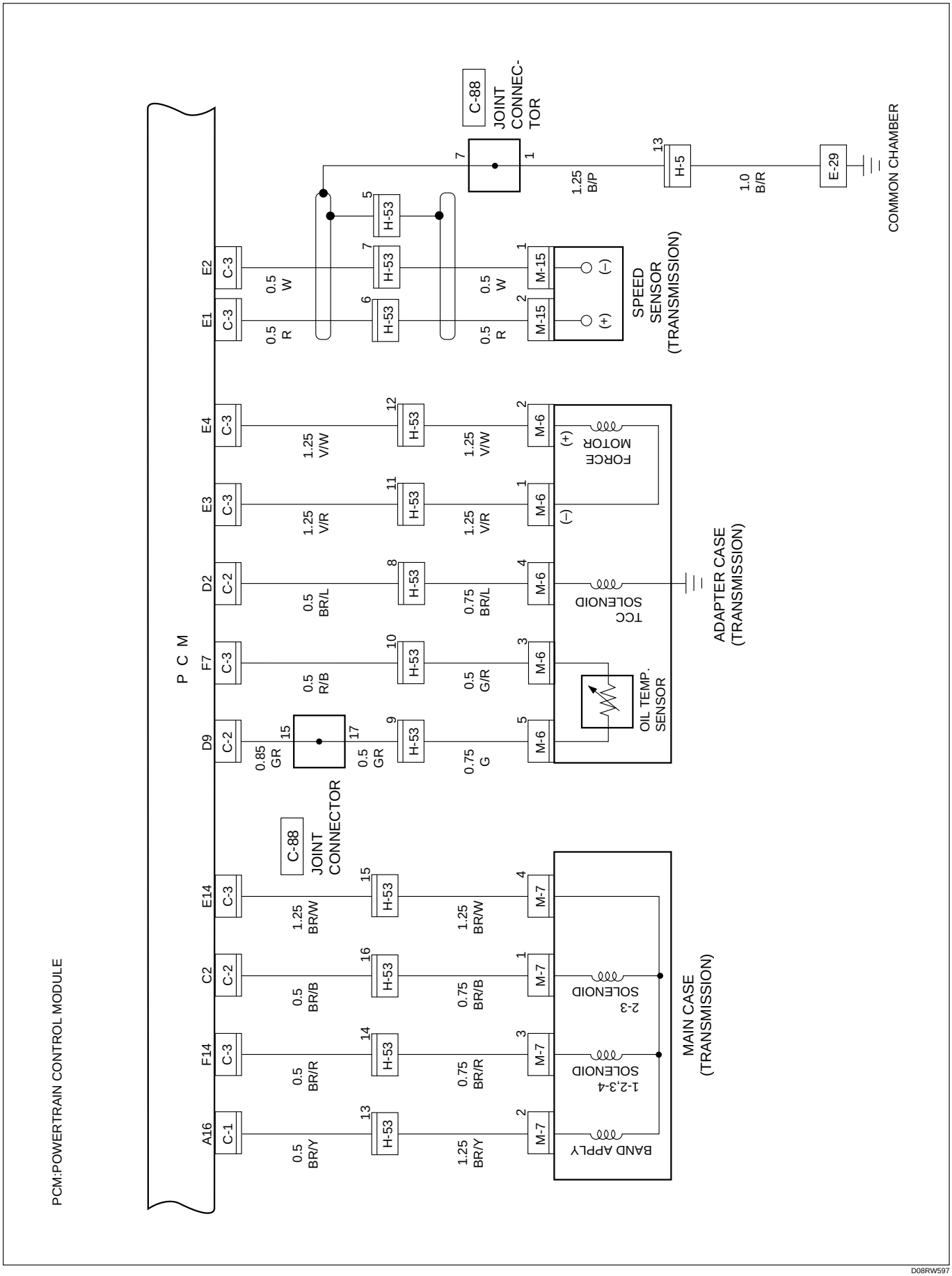

Circuit Diagram (LHD 6V*1)–12

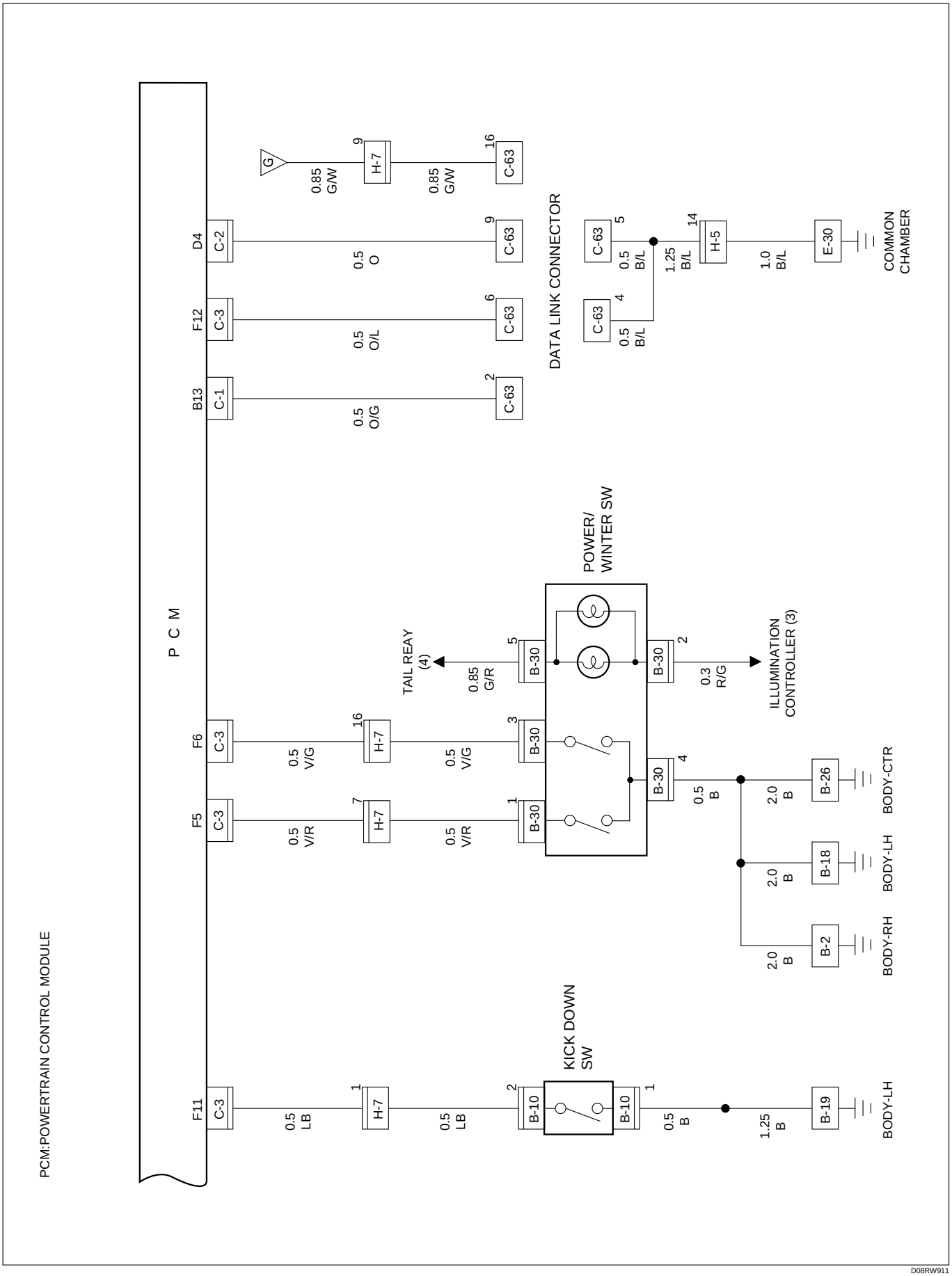

D08RW911

Parts Location (LHD 6V*1) – 1

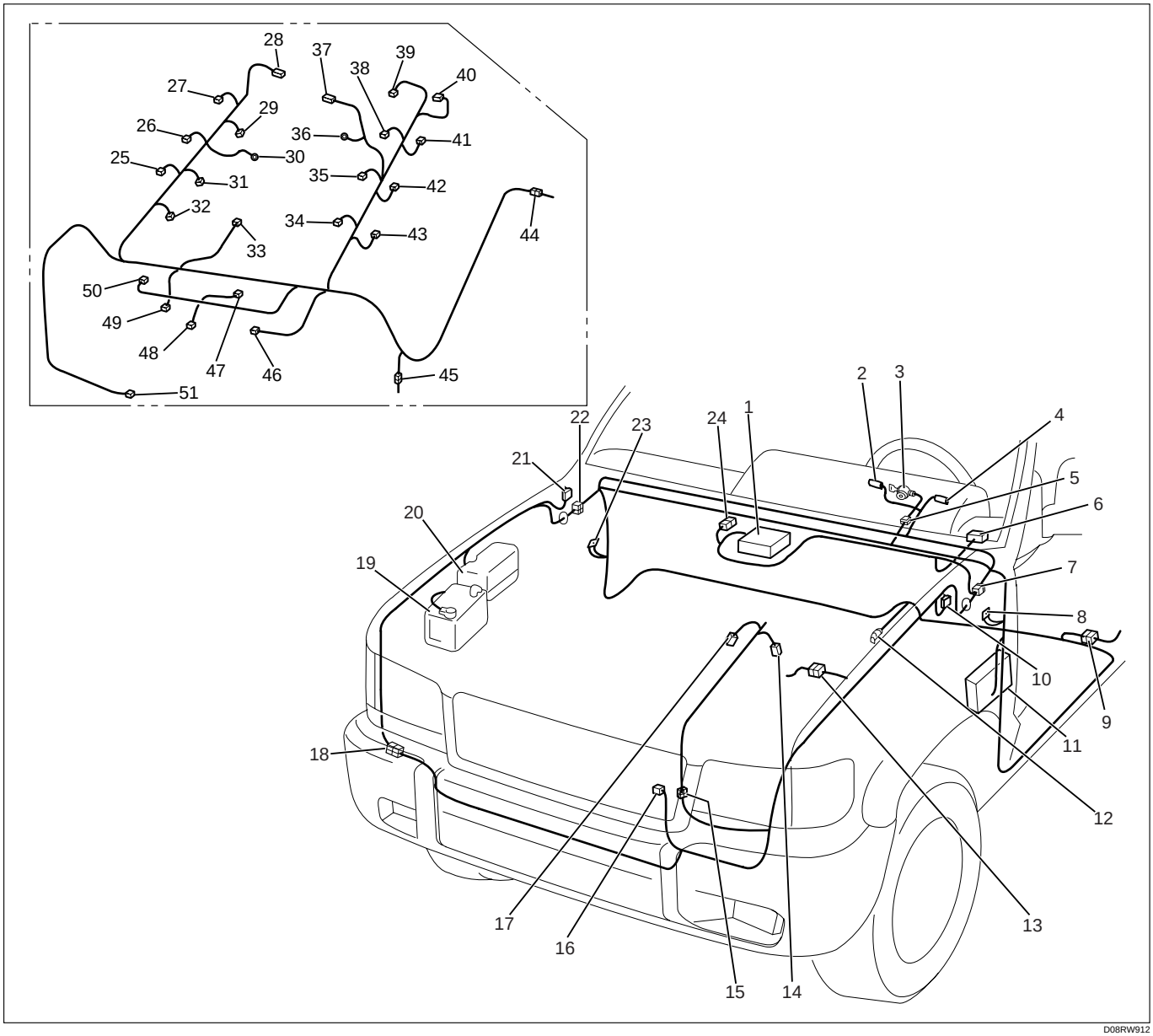

Legend

(1) PCM
(2) I-10
(3) Starter Switch
(4) I-9
(5) B-10
(6) C-63
(7) H-7, H-8, H-9, H-24
(8) B-18, B-19
(9) H-46
(10) C-16
(11) Fuse Box
(12) B-26
(13) H-4, H-5, H-6
(14) M-18
(15) H-11
(16) C-87
(17) M-17
(18) H-41, H-42
(19) Battery
(20) Relay and Fuse Box (X-12, X-11)
(21) C-39
(22) H-12, H-13, H-16
(23) B-1, B-2
(24) C-88
(25) E-37
(26) E-38
(27) E-39
(28) E-33
(29) E-24
(30) E-30
(31) E-25
(32) E-26
(33) E-14

(34) E-11
(35) E-12
(36) E-28, E-29
(37) E-7
(38) E-13
(39) E-32
(40) E-44
(41) E-42
(42) E-41
(43) E-40
(44) H-4, H-5, H-6
(45) E-4
(46) E-8
(47) E-5
(48) E-43
(49) E-20
(50) E-6
(51) E-27

Parts Location (LHD 6V∗1) – 2

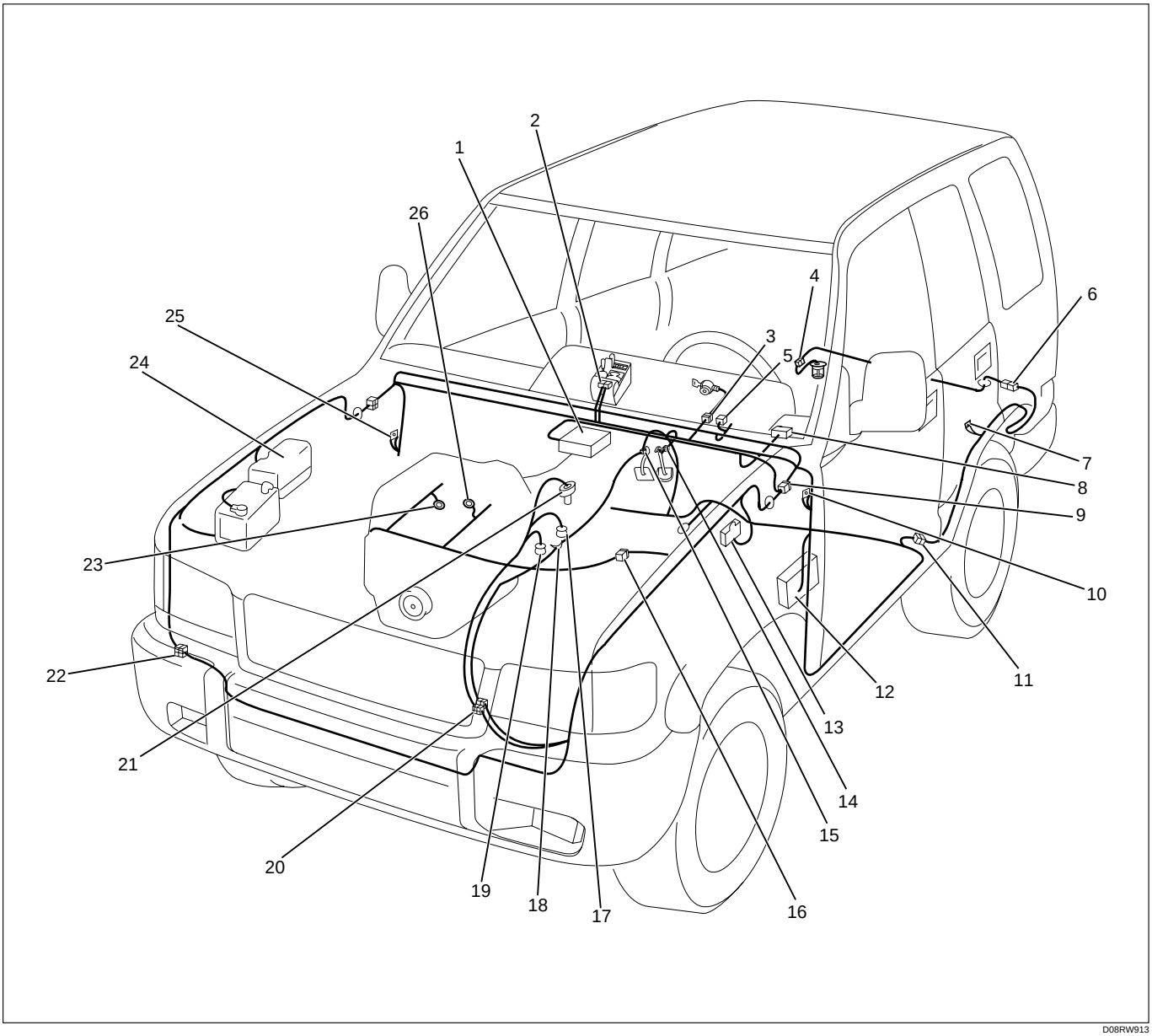

D08RW913

Legend

(1) PCM
(2) B-30
(3) B-11
(4) F-4
(5) I-9
(6) H-33
(7) R-4
(8) C-63
(9) H-7, H-8, H-9
(10) B-18, B-19
(11) H-46
(12) Fuse Box
(13) C-16
(14) B-13 or B-14
(15) B-10
(16) H-5
(17) M-7
(18) M-25
(19) M-6
(20) H-10, H-11, H-53
(21) M-15
(22) H-41
(23) E-30
(24) Relay and Fuse Box
(25) B-2
(26) E-28, E-29

QOS-III (4JG2)

General Description

The circuit consists of the starter switch, QOS-III control unit, glow relay, charge relay, fuel cut solenoid, dropping resistor, thermo sensor, glow indicator light (meter), glow plug and car speed sensor. The engine coolant temperature at the time of the engine start-up is sensed by the thermo sensor to change the glow time so that the optimum starting conditions can always be obtained.

The idling speed just after the engine start-up can also be placed in the most suitable conditions in accordance with the coolant temperature by the operation of the delay timer.

The indicator timer is activated upon the starter switch turned to the ON position, and the indicator light comes on for as much time as suitable for the engine coolant temperature at the time of the engine start-up.

Circuit Diagram (RHD)-1

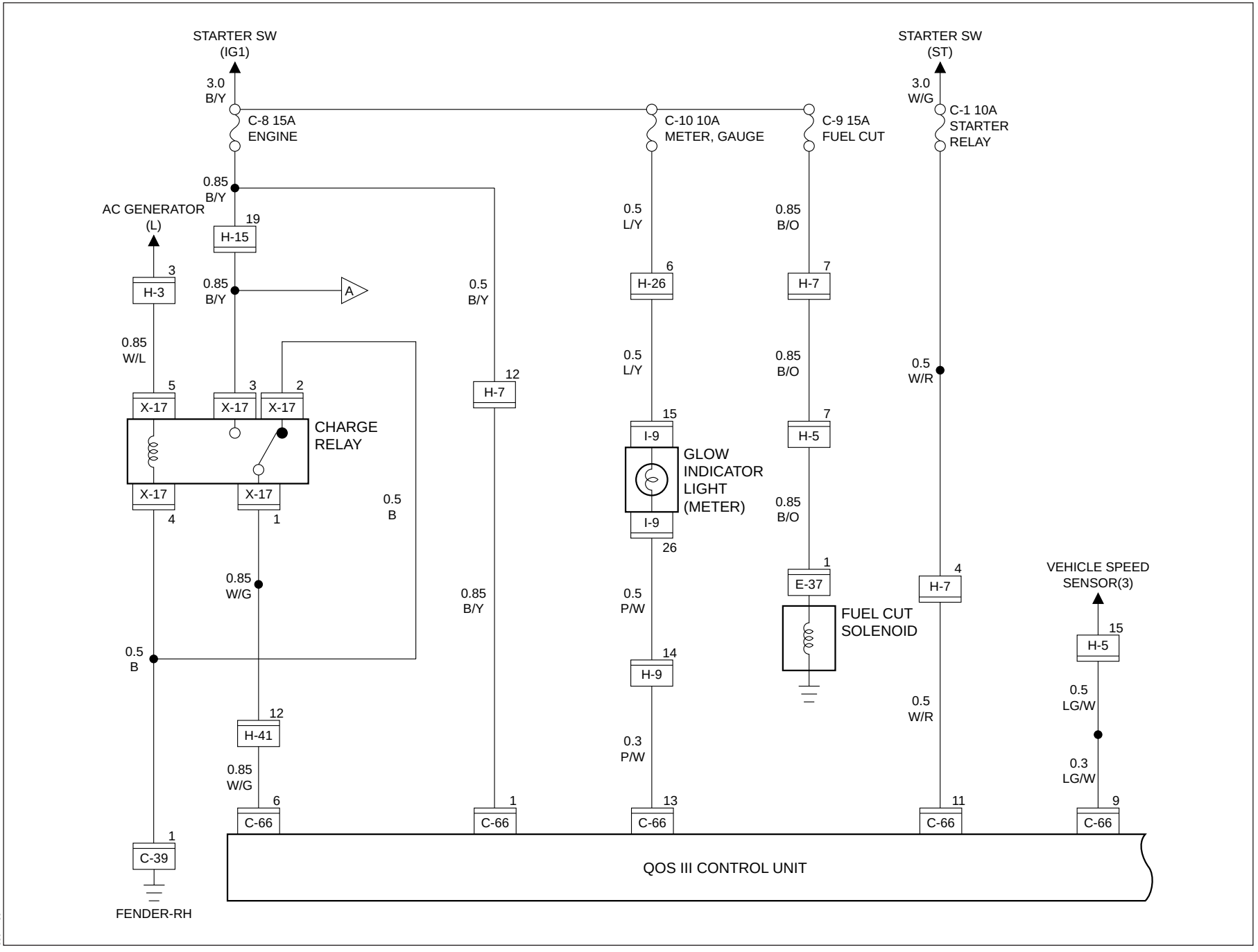

D08RW9G2

Circuit Diagram (RHD)-2

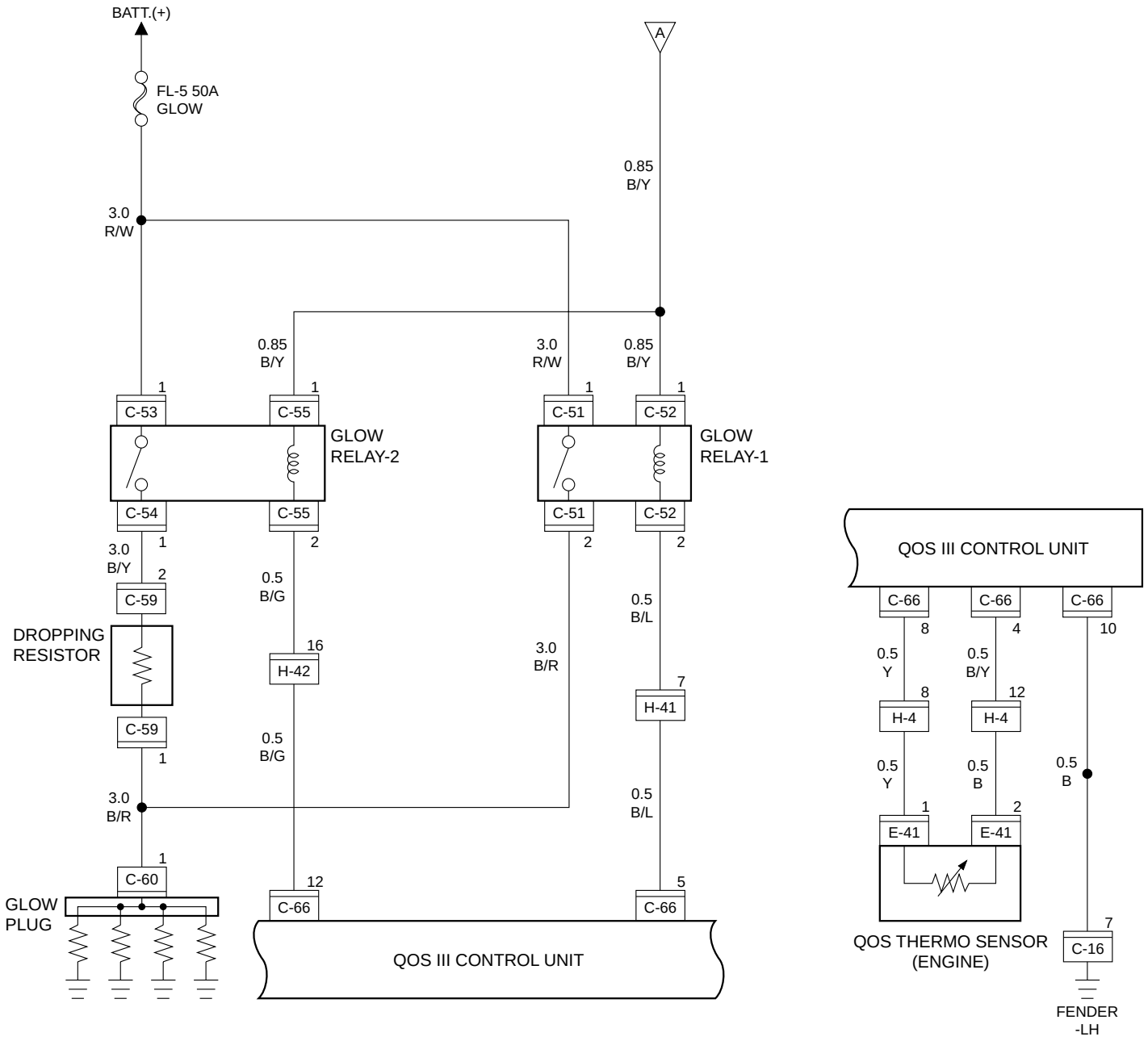

D08RW980

Parts Location (RHD)

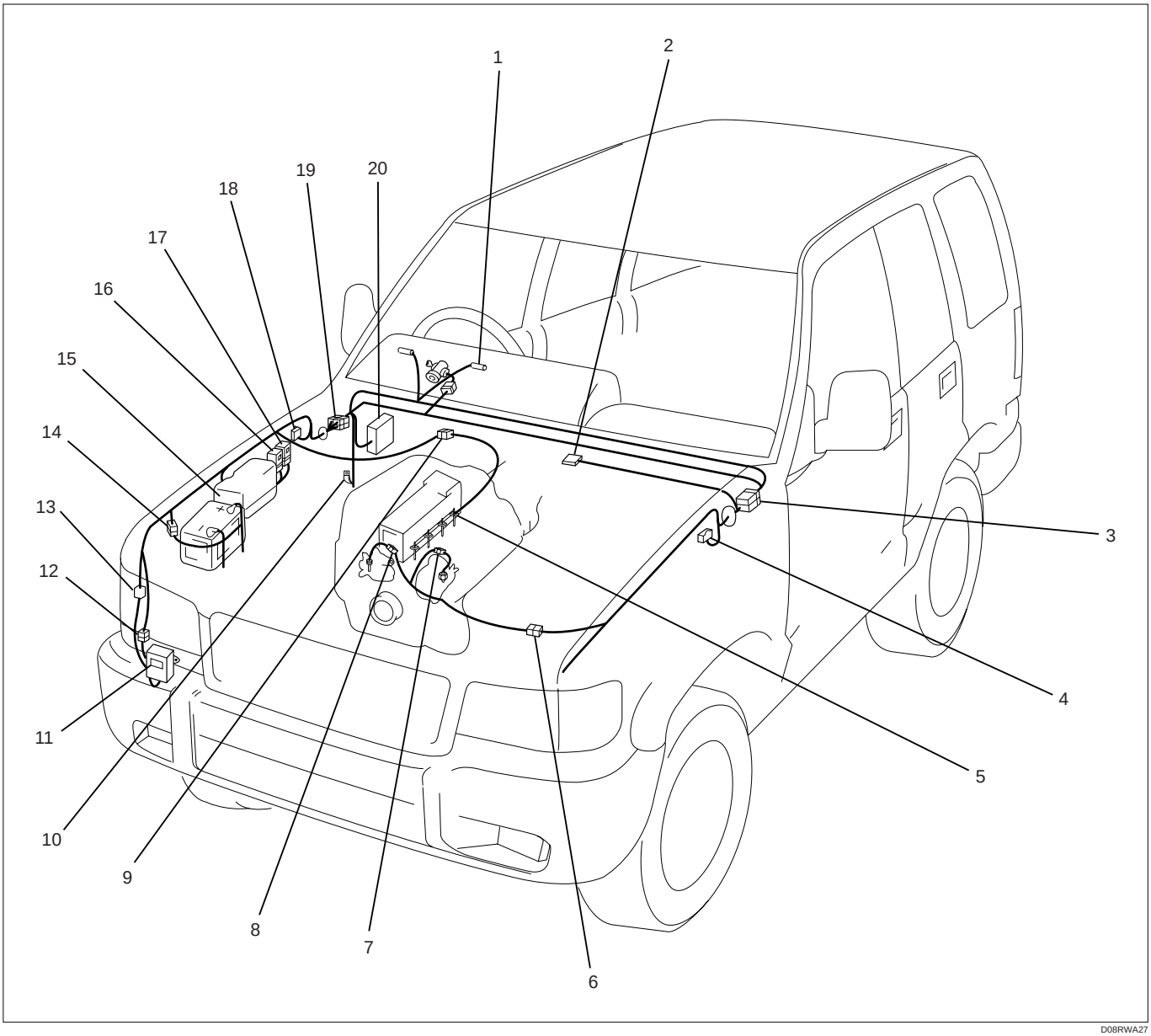

D08RWA27

Legend

(1) I-9
(2) C-66
(3) H-7, H-9
(4) C-16
(5) Glow Plug × 4
(6) H-4, H-5
(7) E-37
(8) E-41
(9) C-60
(10) B-19
(11) Dropping Resistor
(12) C-59
(13) H-41, H-42
(14) H-3
(15) Relay and Fuse Box (X-17)
(16) Glow Relay-1 (C-51, C-52)
(17) Glow Relay-2 (C-53, C-54, C-55)
(18) C-39
(19) H-15, H-26
(20) Fuse Box

Circuit Diagram (LHD)-1

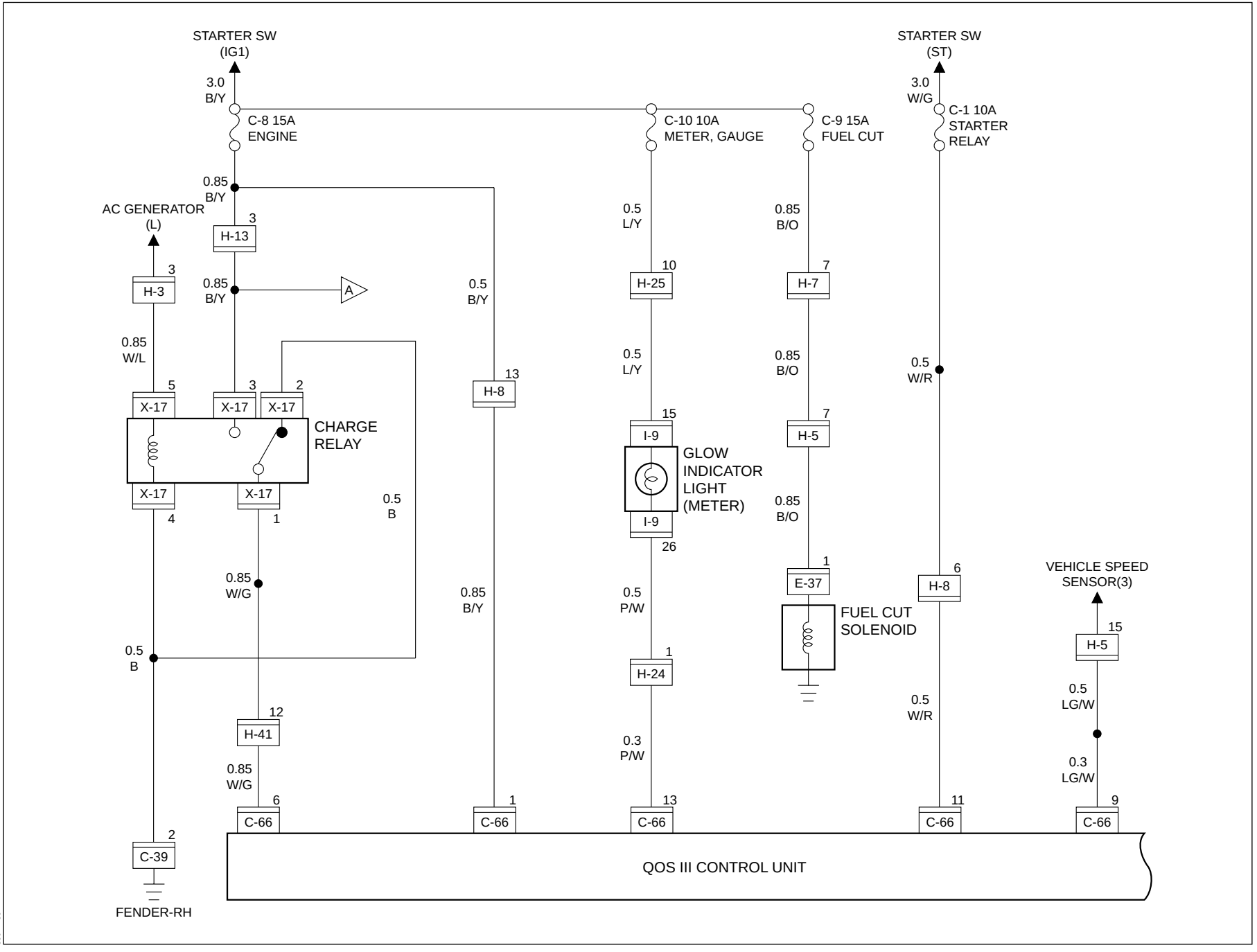

D08RM983

Circuit Diagram (LHD)-2

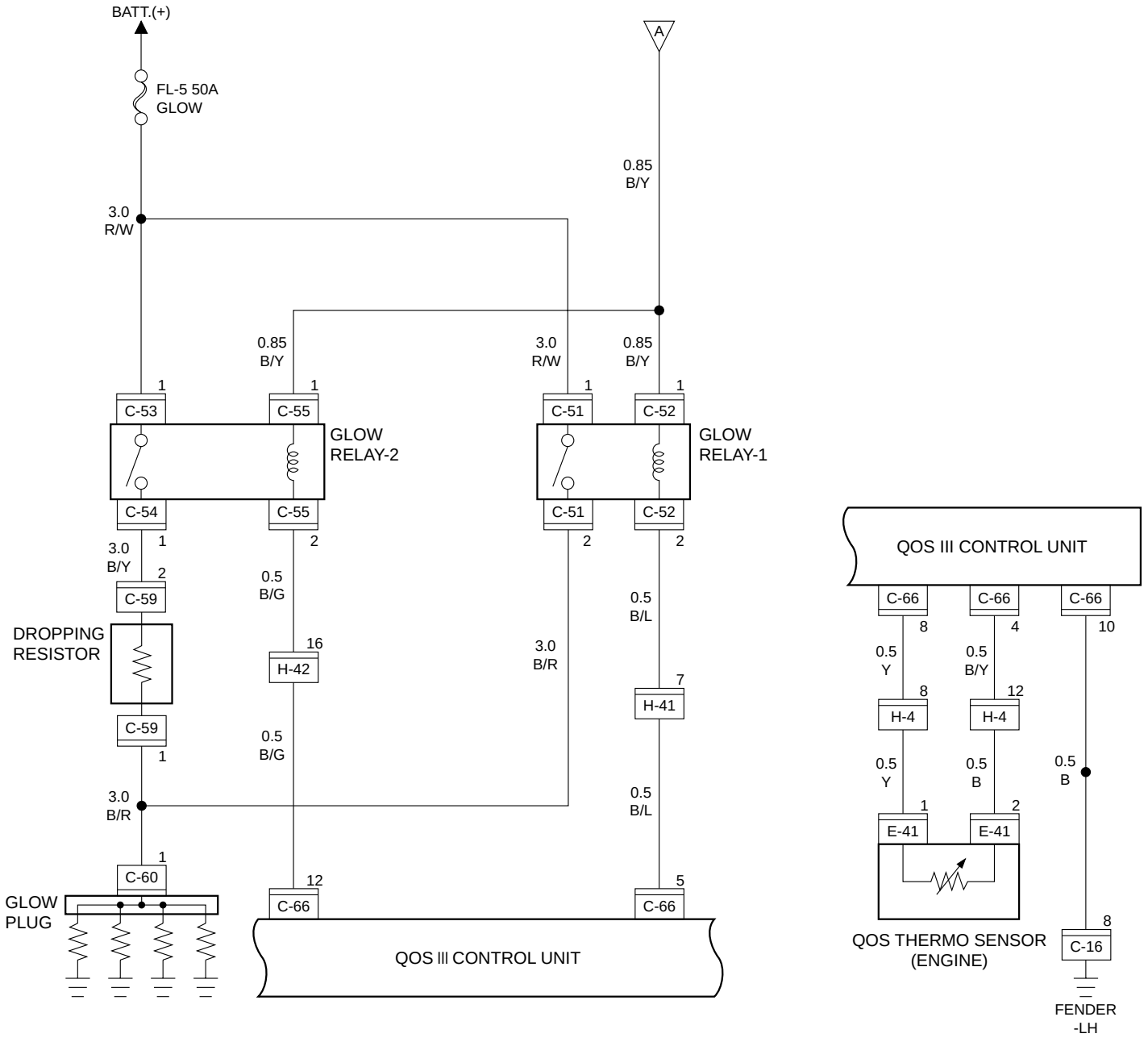

D008RW9611

Parts Location (LHD)

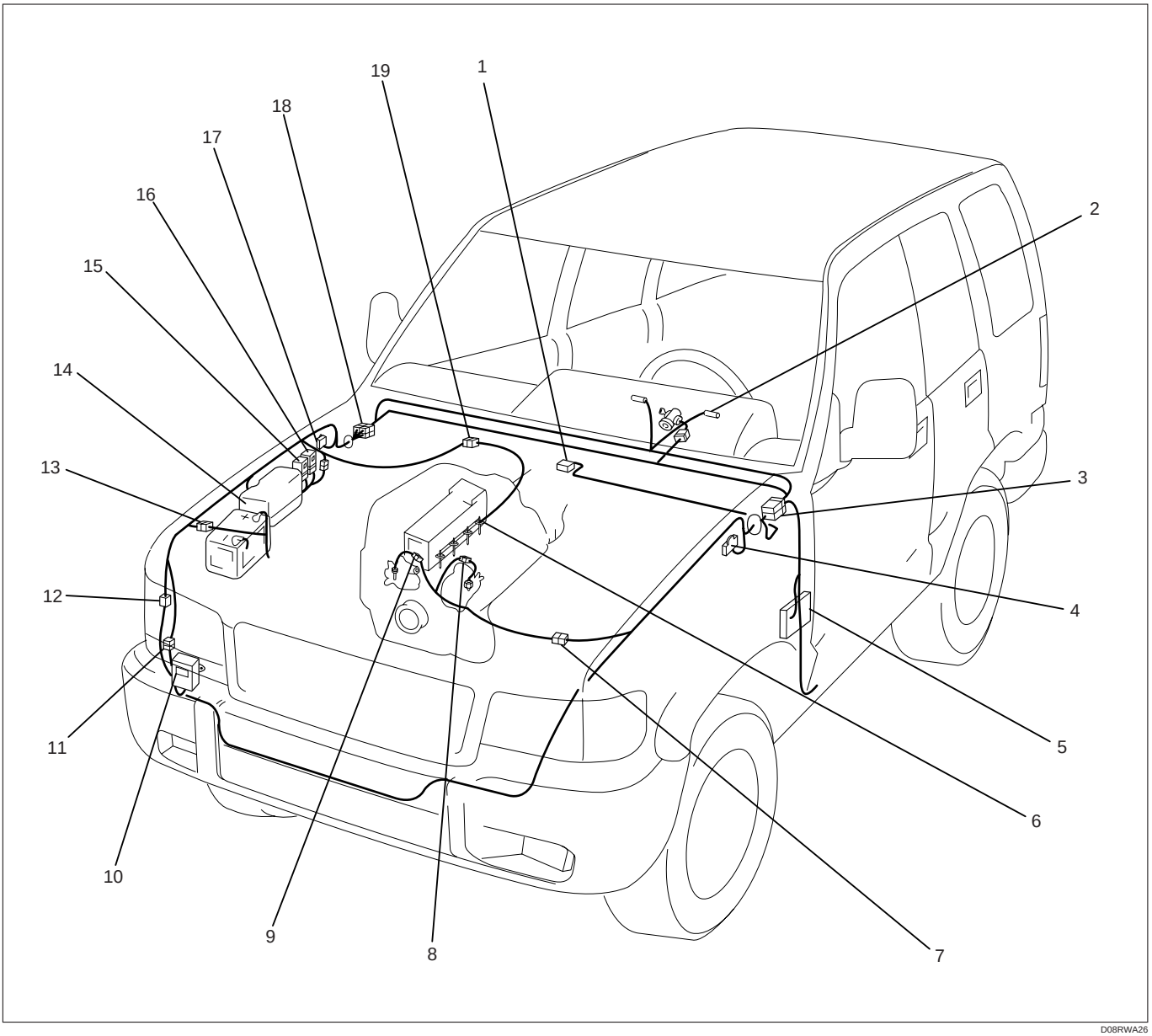

D08RWA26

Legend

(1) C-66
(2) I-9
(3) H-7, H-8, H-24, H-25
(4) C-16
(5) Fuse Box
(6) Glow Plug × 4
(7) H-4, H-5
(8) E-37
(9) E-41
(10) Dropping Resistor
(11) C-59
(12) H-41, H-42
(13) H-3
(14) Relay and Fuse Box (X-17)
(15) Glow Relay-1 (C-51, C-52)
(16) Glow Relay-2 (C-53, C-54, C-55)
(17) C-39
(18) H-13
(19) C-60

QOS and EGR System (4JG2)

General Description

The circuit consists of the starter switch, QOS/EGR control unit, glow relay, charge relay, fuel cut solenoid, dropping resistor, thermo sensor, glow indicator light (meter), glow plug, vehicle speed sensor, tacho sensor, throttle position sensor, EVRV and VSV; EGR.

The engine coolant temperature at the time of the engine start-up is sensed by the thermo sensor to change the glow time so that the optimum starting conditions can always be obtained.

The idling speed just after the engine start-up can also be placed in the most suitable conditions in accordance with the coolant temperature by the operation of the delay timer.

The indicator timer is activated upon the starter switch turned to the ON position, and the indicator light comes on for as much time as suitable for the engine coolant temperature at the time of the engine start-up.

EGR system controls the information of NOx by returning a small amount of exhaust gas from the intake manifold to the combustion chamber through the EGR valve.

Circuit Diagram (RHD)-1

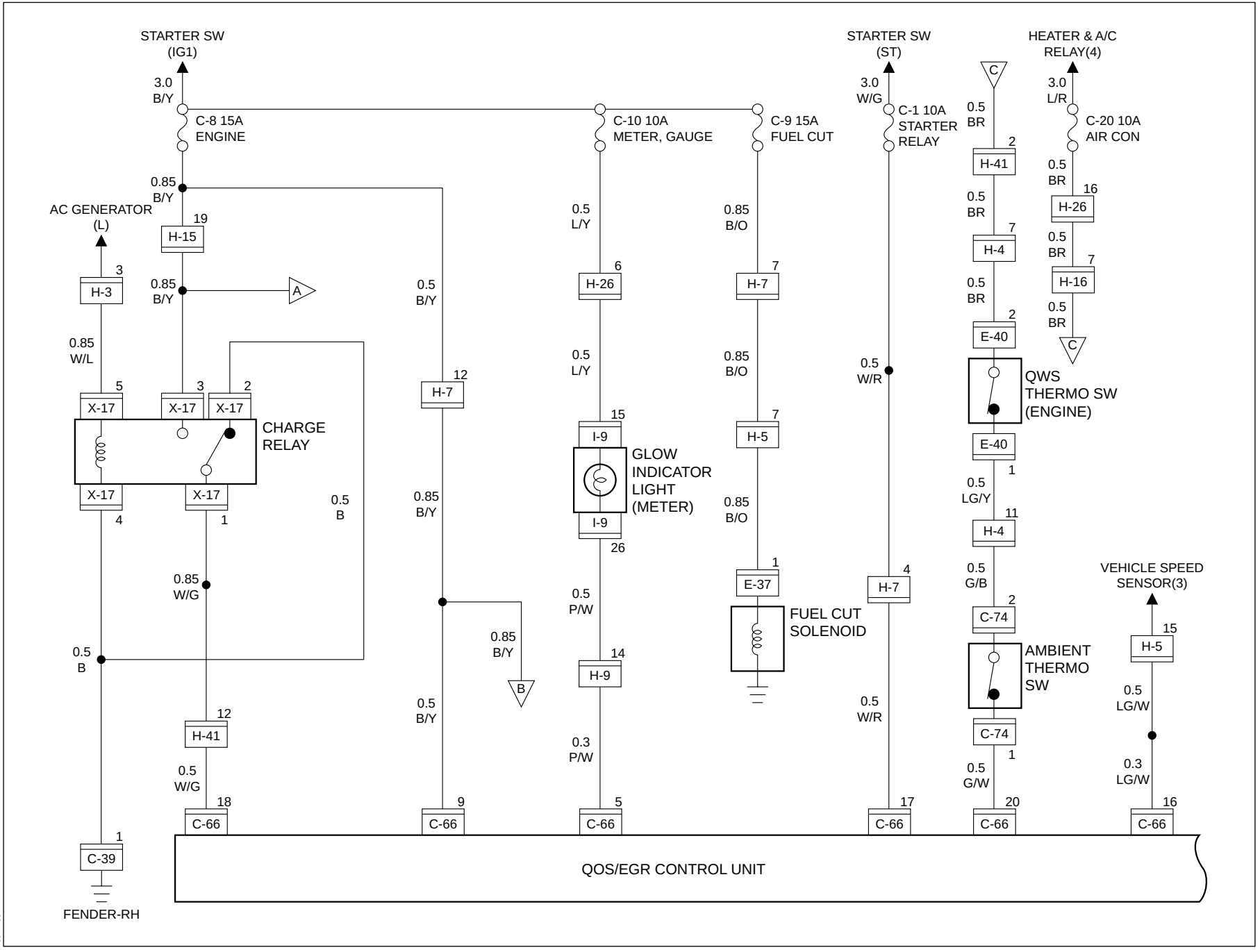

D08RW695

Circuit Diagram (RHD)-2

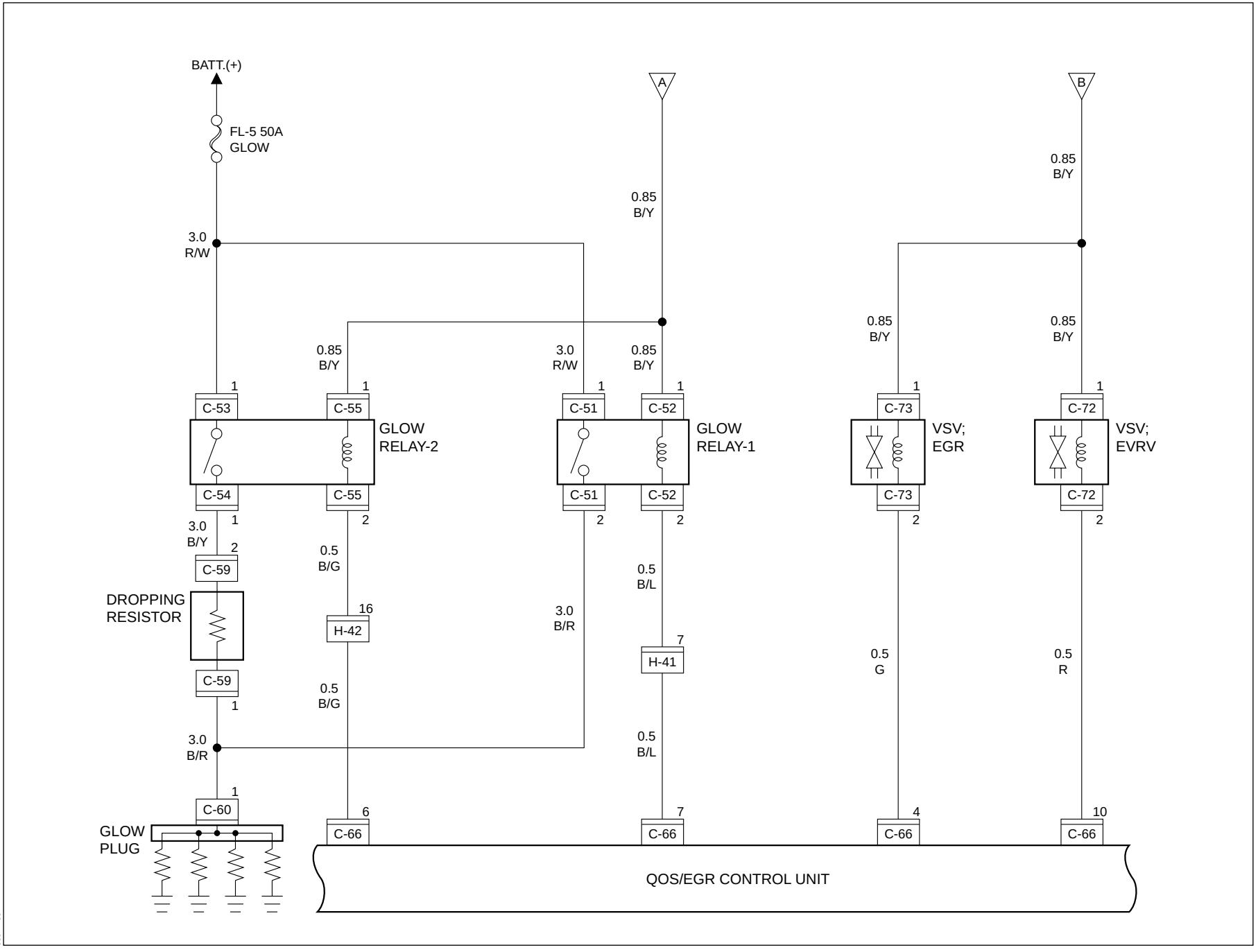

D008RW696

Circuit Diagram (RHD)-3

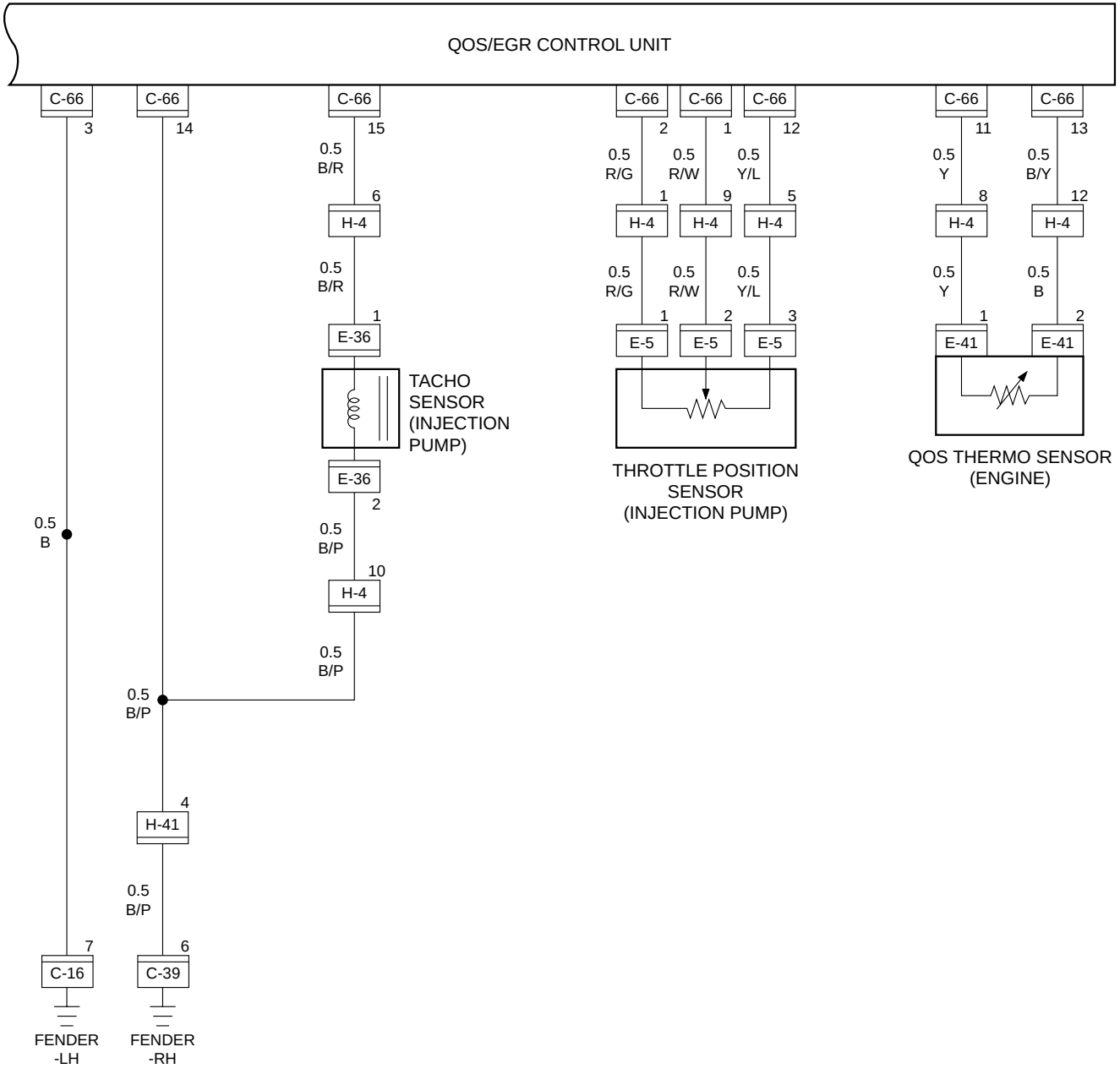

Parts Location (RHD)

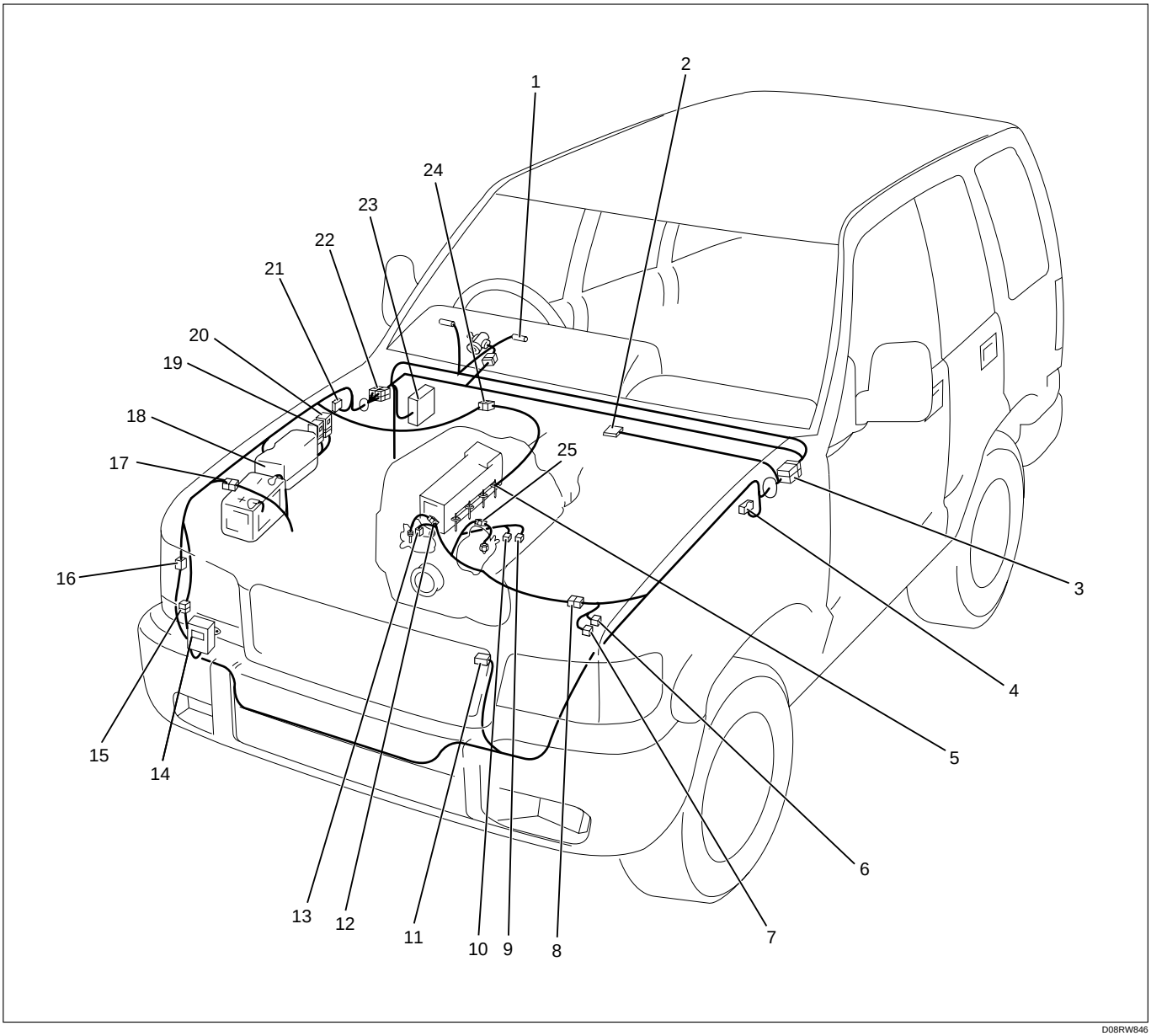

Legend

(1) I-9
(2) C-66 (QOS/EGR Control Unit)
(3) H-7, H-9
(4) C-16
(5) Glow Plug
(6) C-72
(7) C-73
(8) H-4, H-5
(9) E-36
(10) E-5
(11) C-74
(12) E-41
(13) E-40
(14) Dropping Resistor
(15) C-59
(16) H-41, H-42
(17) H-3
(18) Relay and Fuse Box (X-17)
(19) C-51, C-52 (Glow Relay-1)
(20) C-53, C-54, C-55 (Glow Relay-2)
(21) C-39
(22) H-15, H-16, H-26
(23) Fuse Box
(24) C-60
(25) E-37

Circuit Diagram (LHD)-1

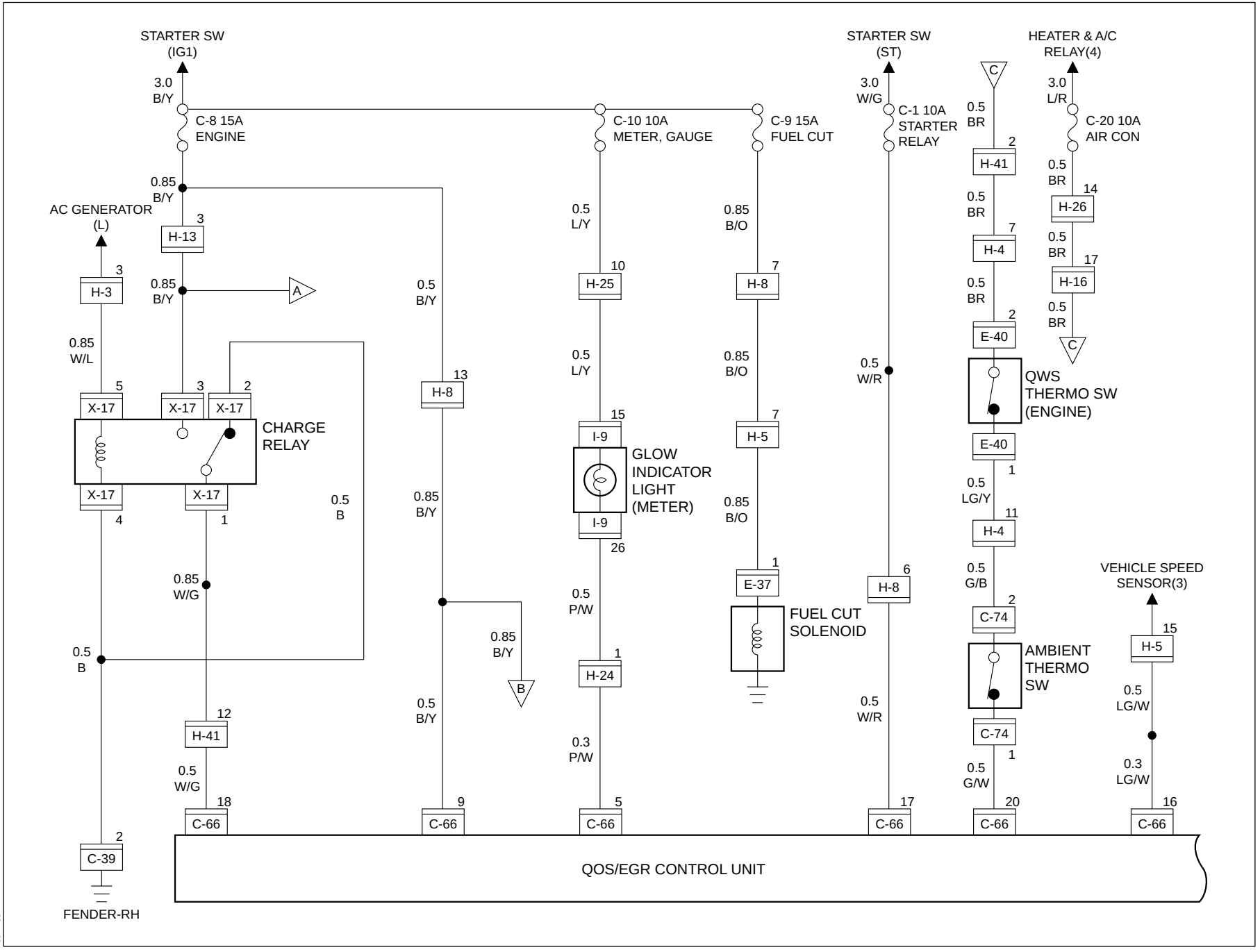

D08RW984

Circuit Diagram (LHD)-2

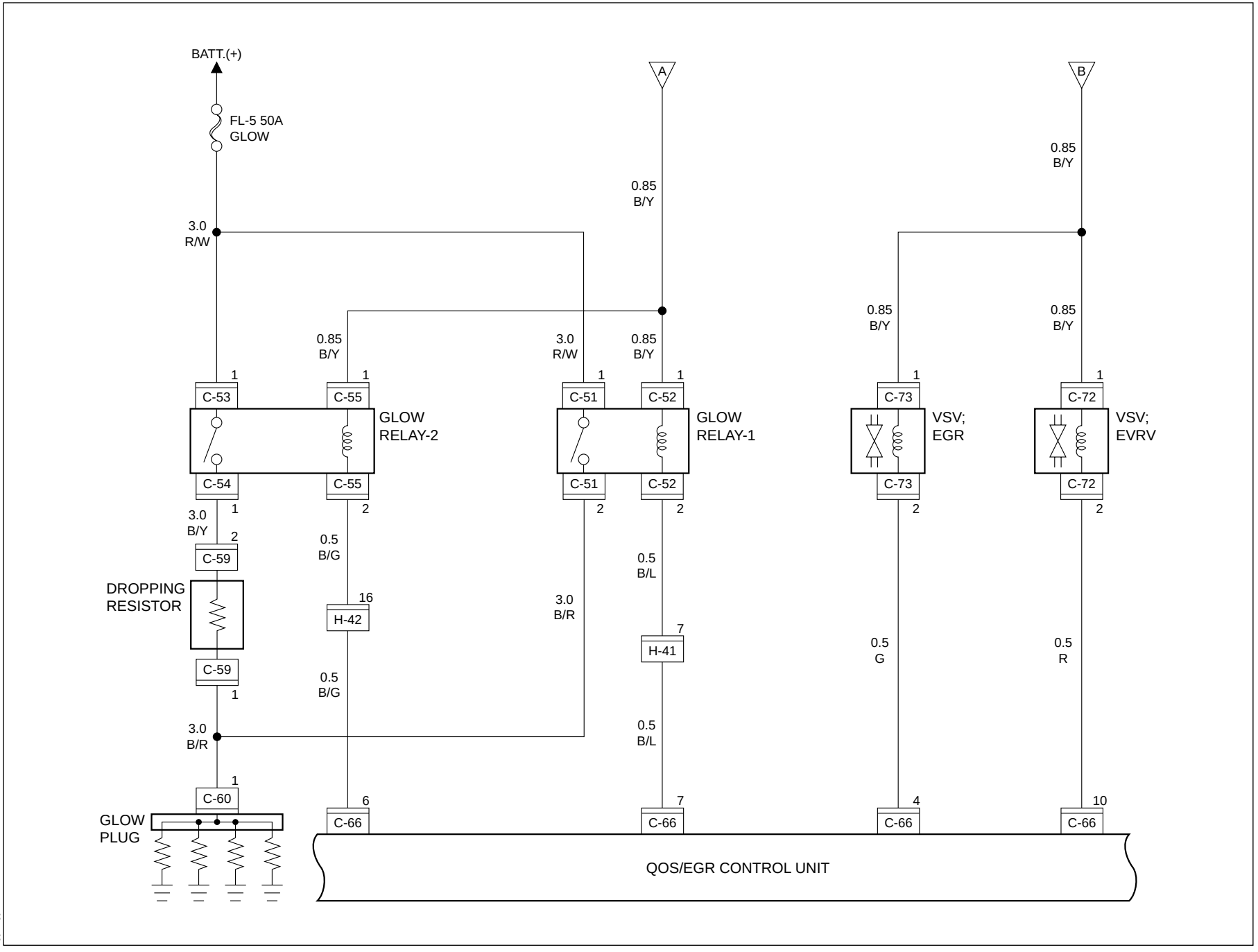

Circuit Diagram (LHD)-3

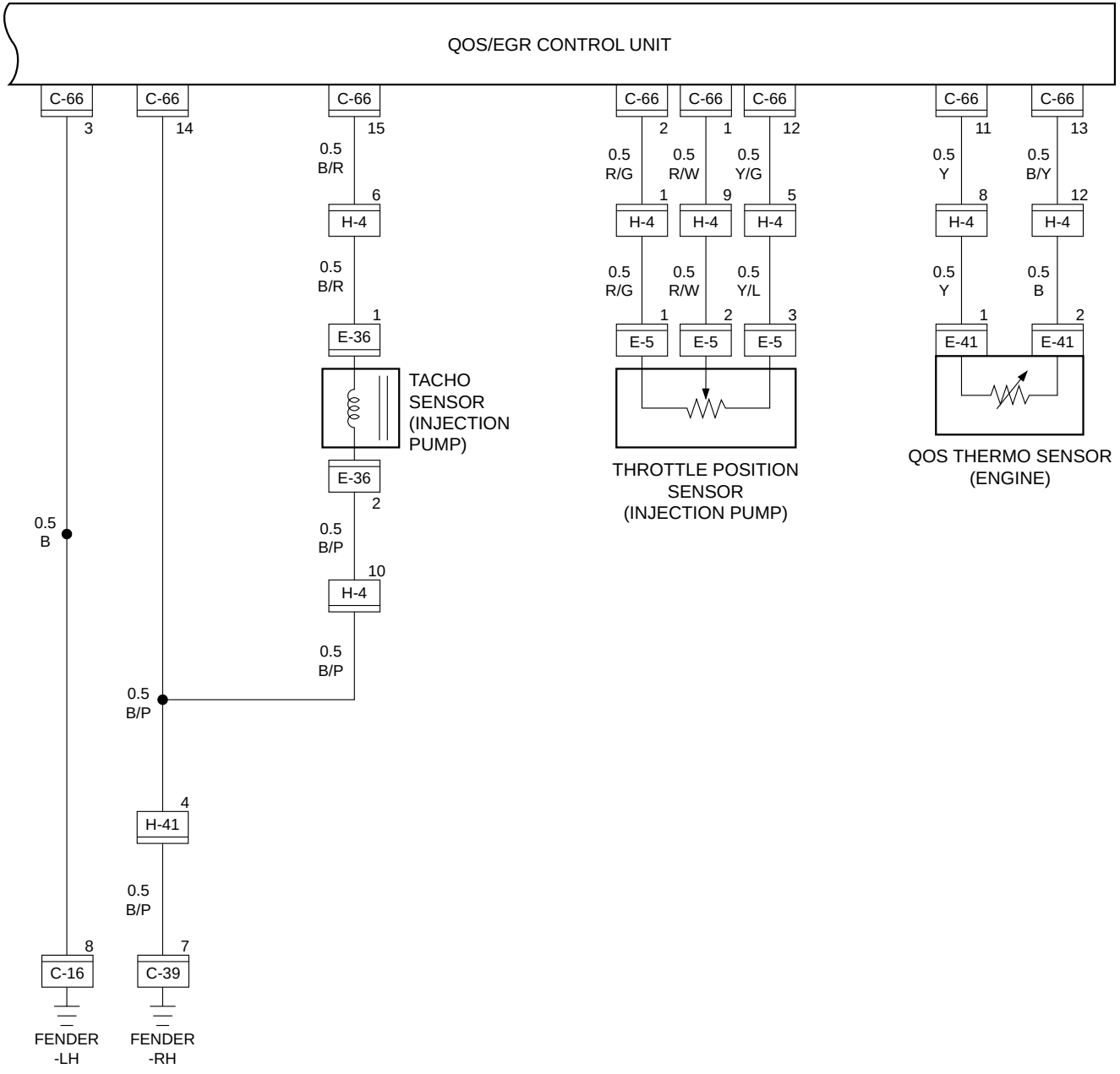

D08RW986

Parts Location (LHD)

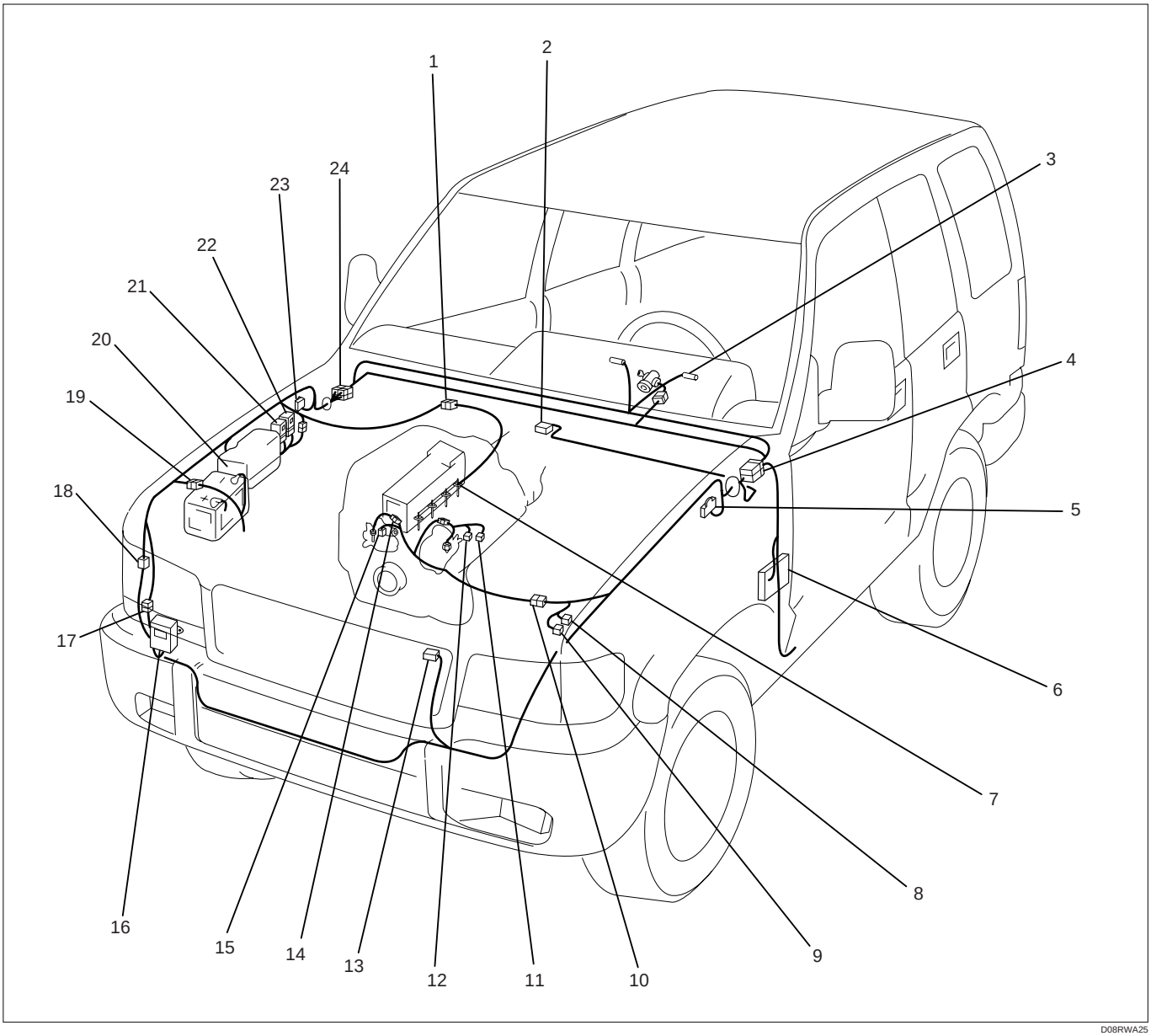

D08RWA25

Legend

(1) C-60
(2) QOS/EGR Control Unit (C-66)
(3) I-9
(4) H-8, H-24, H-25, H-26
(5) C-16
(6) Fuse Box
(7) Glow Plug × 4
(8) C-72
(9) C-73
(10) H-4, H-5
(11) E-36
(12) E-5
(13) C-74
(14) E-41
(15) E-40
(16) Dropping Resister
(17) C-59
(18) H-41, H-42
(19) H-3
(20) Relay and Fuse Box (X-17)
(21) Glow Relay-1 (C-51, C-52)
(22) Glow Relay-2 (C-53, C-54, C-55)
(23) C-39
(24) H-13, H-16

Headlight and Fog Light

General Description

The circuit consists of the headlight, FRT fog light, lighting SW, dimmer/passing SW, FRT fog light SW, high beam indicator, tail relay, lighting relay, FRT fog light relay and dimmer relay (LHD).

When the lighting SW is turned on by setting it at headlight position, the lighting relay is activated to turn on the headlight. The optical axis of the headlight can be turned up or down by operating the dimmer SW while the headlight is on.

The passing SW is independent of the lighting SW, and the optical axis of the passing light can be turned up only while the switch lever is pulled up and held in this state.

FRT fog lights turn on when the lighting SW is at clearance light or headlight position.

Circuit Diagram (RHD)-1

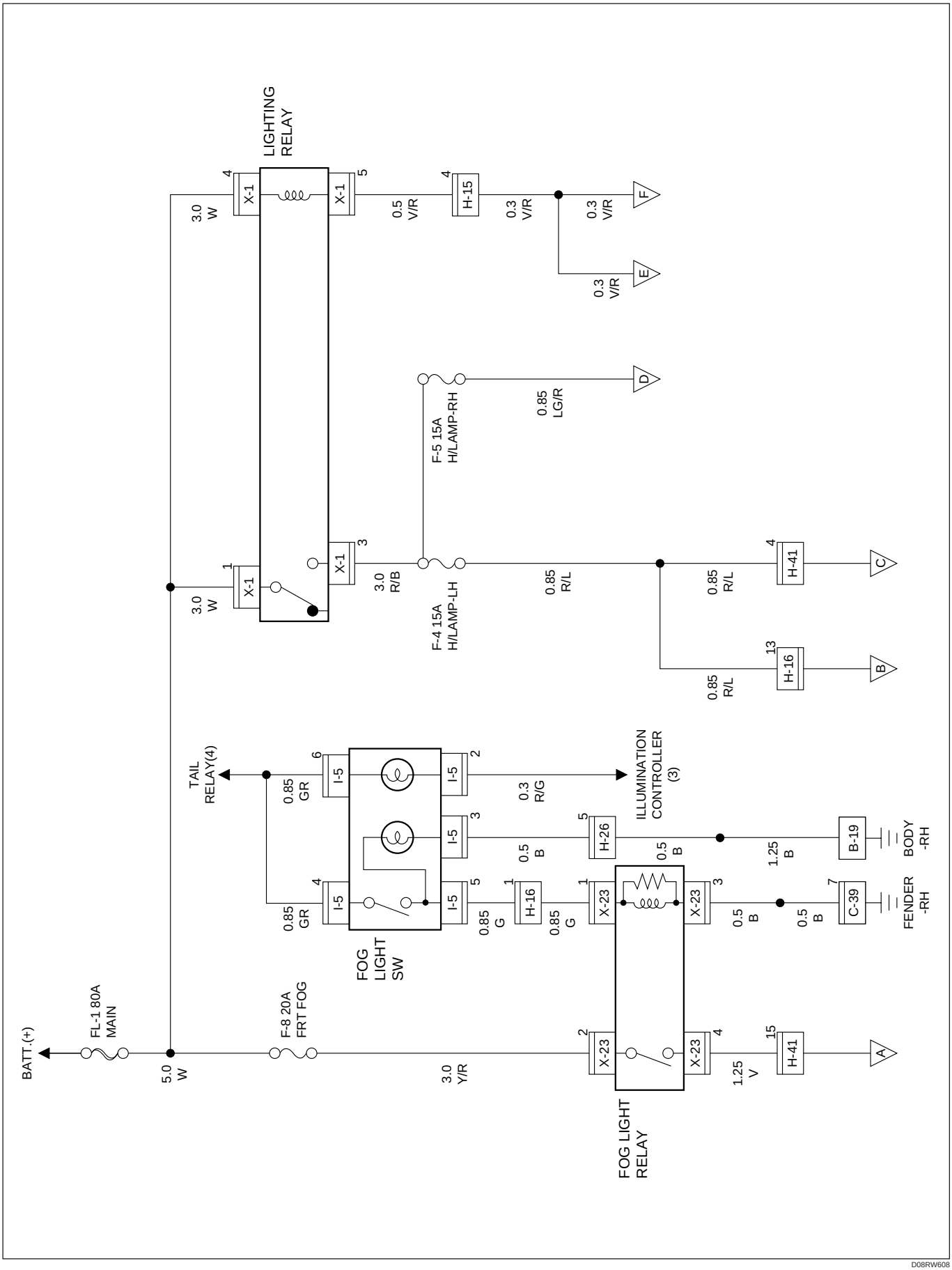

D08RW608

Circuit Diagram (RHD)-2

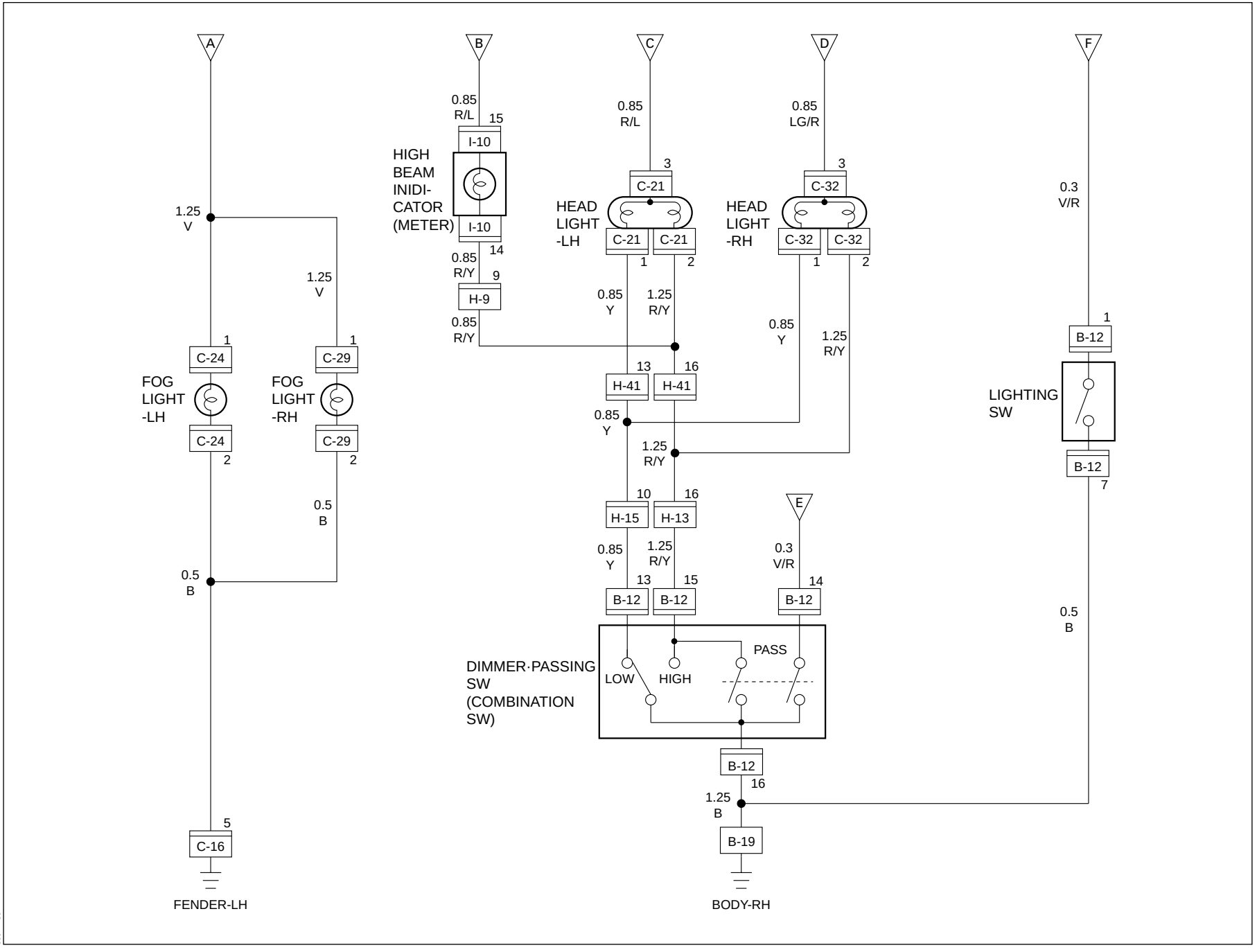

D08RW609

Parts Location (RHD)

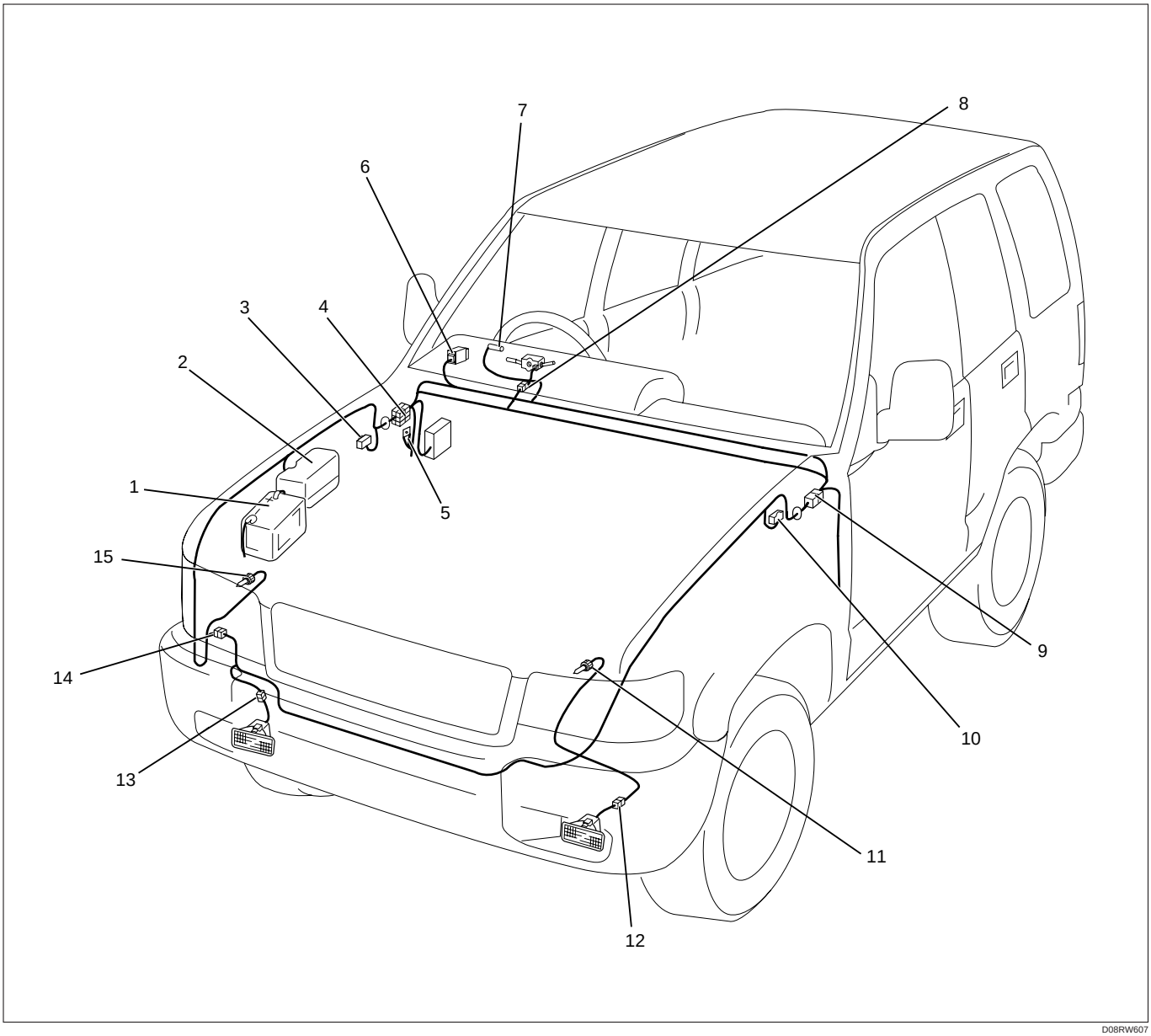

D08RW607

Legend

(1) Battery
(2) Relay and Fuse Box (X-1, X-23)
(3) C-39
(4) H-13, H-15, H-16, H-26
(5) B-19
(6) I-5
(7) I-10
(8) B-12
(9) H-9
(10) C-16
(11) C-21
(12) C-24
(13) C-29
(14) H-41, H-42
(15) C-32

Circuit Diagram (LHD)-1

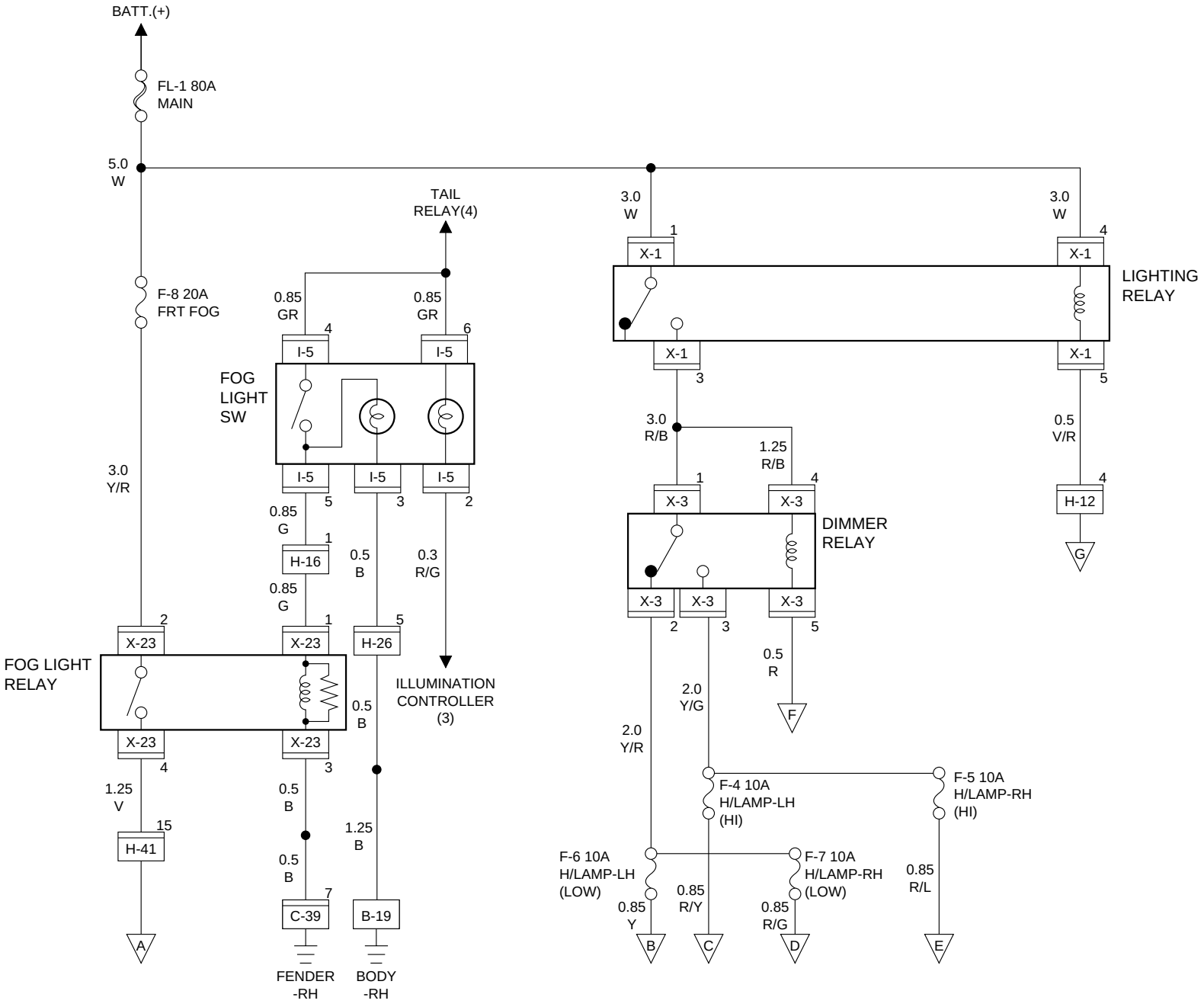

D08RW805

Circuit Diagram (LHD)-2

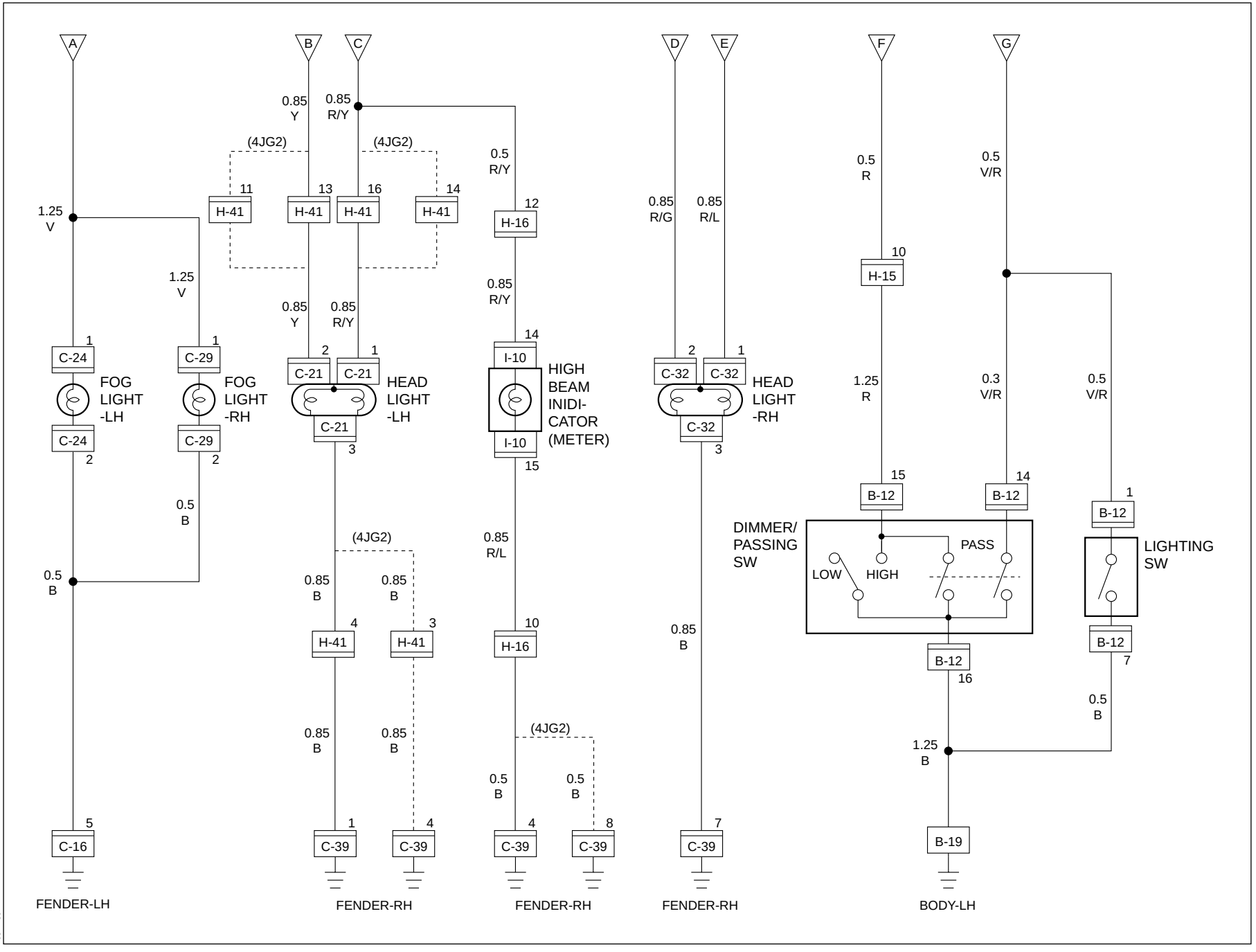

D08RW804

Parts Location (LHD)

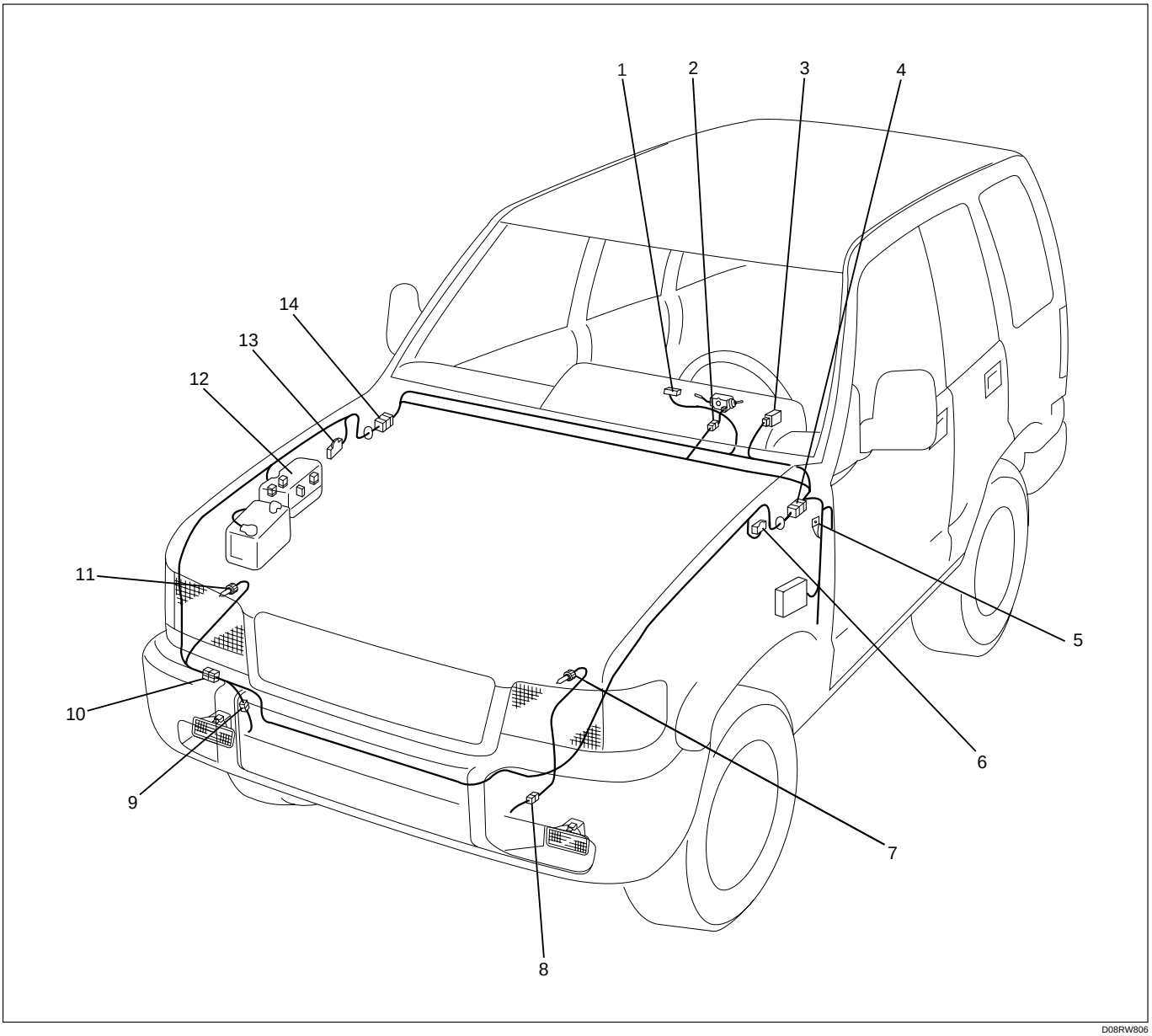

D08RW806

Legend

(1) I-10
(2) B-12
(3) I-5
(4) H-26
(5) B-19
(6) C-16
(7) C-21
(8) C-24
(9) C-29
(10) H-41, H-42
(11) C-32
(12) Relay and Fuse Box (X-1, X-3, X-23)
(13) C-39
(14) H-12, H-15, H-16

Diagnosis

Quick Chart for Check Points

1. Headlight (RHD)

Check point / Trouble mode	Fuse		Lighting relay	Lighting SW	Dimmer• Passing SW	Headlight bulb		Cable harness
	F–4 (15A)	F–5 (15A)				LH	RH	
1–1. Both Headlights inoperative			○	○	○			○
1–2. Headlight on the left (or right) side inoperative	○	○				○	○	○
1–3. Both headlights in low-beam inoperative					○			○
1–4. Headlight low-beam on the left (or right) side inoperative	○	○			○	○	○	○
1–5. Both headlights in high–beam inoperative					○			○
1–6. Headlight high-beam on the left (or right) side inoperative	○	○			○	○	○	○
1–7. Headlight beam does not change					○			○
1–8. Headlights remain on when the lighting SW is turned off			○	○				○
1–9. Headlights come on with the lighting SW at the clearance light position				○				
1–10. Passing lights inoperative					○			○

2. Headlight (LHD)

Check point / Trouble mode	Fuse				Lighting relay	Dimmer relay	Diode	Lighting SW	Dimmer• Passing SW	Headlight bulb		Cable harness
	F–4 (10A)	F–5 (10A)	F–6 (10A)	F–7 (10A)						LH	RH	
2–1. Both Headlights inoperative					○	○	○	○				○
2–2. Headlight on the left (or right) side inoperative										○	○	○
2–3. Both headlights in low-beam inoperative						○						○
2–4. Headlight low-beam on the left (or right) side inoperative			○	○						○	○	○
2–5. Both headlights in high-beam inoperative						○			○			○
2–6. Headlight high-beam on the left (or right) side inoperative	○	○								○	○	○
2–7. Headlight beam does not change						○			○			○
2–8. Headlights remain on when the lighting SW is turned off					○			○				○
2–9. Headlights come on with the lighting SW at the clearance light position								○				
2–10. Passing lights inoperative									○			○

3. FRT fog lights

Check point / Trouble mode	Fuse F–8 (15A or 20A)	FRT fog light SW	FRT fog light relay	RR fog light SW	RR fog light relay	Fog light bulb		Cable harness
						LH	RH	
3–1. Both FRT fog lights inoperative (while the clearance light is ON)	○	○	○					○
3–2. FRT fog light on the left (or rigth) side inoperative (while the clearance light is ON)						○	○	○

1-1. Both Headlights Inoperative

- IS THE LIGHTING RELAY NORMAL?

YES

- IS B-19 GROUNDED SECURELY?

NO

REPLACE THE LIGTHING RELAY

YES

- IS THE DIODE NORMAL?

NO

GROUND IT SECURELY

YES

- DISCONNECT THE LIGTHING SW CONNECTOR
- IS THE BATTERY VOLTAGE APPLIED BETWEEN THE HARNESS SIDE CONNECTOR 1 B-12 AND GROUND?

NO

REPLACE THE DIODE

YES

- REMOVE THE LIGHTING SW
- IS THERE CONTINUITY BETWEEN 1 B-12 AND 7 B-12 WHEN SETTING THE LIGHTING SW AT THE HEADLIGHT POSITION ?

NO

REPAIR A POOR CONNECTION AT THE CONNECTORS OR AN OPEN CIRCUIT BETWEEN THE FUSUBLE LINK FL-1 (80A) AND 1 B-12

YES

REPAIR A POOR CONNECTION AT THE CONNECTORS OR AN OPEN CIRCUIT BETWEEN THE HARNESS SIDE CONNECTOR 7 B-12 AND B-19

NO

REPAIR OR REPLACE THE LIGHTING SW

1-2. Headlight On The Left (Or Right) Side Inoperative

- IS THE FUSE F-4 (15A) (OR F-5 (15A)) NORMAL?

YES

- IS THE HEADLIGHT BULB ON THE LEFT (OR RIGHT) SIDE NORMAL?

YES

REPAIR A POOR CONNECTION AT THE CONNECTORS OR AN OPEN CIRCUIT BETWEEN
FUSE F-4 (15A) AND 3 C-21 (LH)
FUSE F-5 (15A) AND 3 C-32 (RH)

NO

REPLACE THE BULB

NO

REPLACE THE FUSE

1-3. Both Headlights In Low-Beam Inoperative

- DISCONNECT THE DIMMER•PASSING SW CONNECTOR (COMBINATION SW)
- WITH THE SWITCH AT THE LOW-BEAM POSITION, IS THERE CONTINUITY BETWEEN THE SW CONNECTOR TERMINALS 13 B-12 AND 16 B-12

YES

REPAIR A POOR CONNECTION AT THE CONNECTORS OR AN OPEN CIRCUIT BETWEEN
13 B-12 AND 10 H-15

NO

REPAIR OR REPLACE THE DIMMER•PASSING SW

1–4. Headlight Low-Beam On The Left (Or Right) Side Inoperative

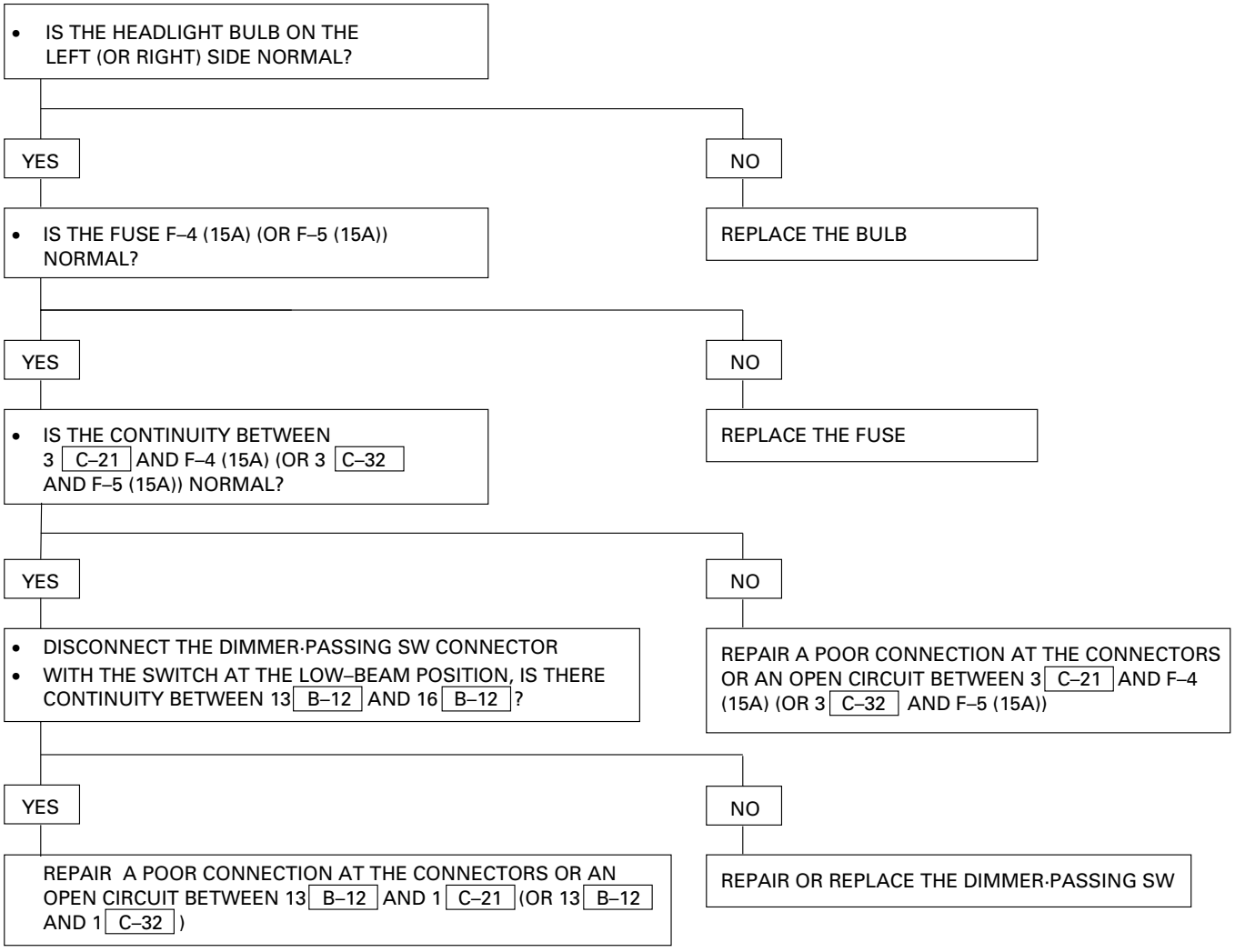

1–5. Both Headlights In High-Beam Inoperative

- DISCONNECT THE DIMMER•PASSING SW CONNECTOR (COMBINATION SW)
- WITH THE SWITCH AT HIGH-BEAM, IS THERE CONTINUITY BETWEEN THE SWITCH CONNECTOR TERMINALS 15 B-12 AND 16 B-12 ?

YES

REPAIR A POOR CONNECTION AT THE CONNECTORS OR AN OPEN CIRCUIT BETWEEN 15 B-12 AND 16 H-16

NO

REPAIR OR REPLACE THE DIMMER•PASSING SW

1–6. Headlight High-Beam On The Left (Or Right) Side Inoperative

- IS THE HEADLIGHT BULB ON THE LEFT (OR RIGHT) SIDE NORMAL?

YES

- IS THE FUSE F–4 (15A) (OR F–5 (15A)) NORMAL?

NO

REPLACE THE BULB

YES

- IS THE CONTINUITY BETWEEN 3 C–21 AND F–4 (15A) (OR 3 C–32 AND F–5 (15A)) NORMAL?

NO

REPLACE THE FUSE

YES

- DISCONNECT THE DIMMER·PASSING SW CONNECTOR
- WITH THE SWITCH AT THE HIGH–BEAM POSITION, IS THERE CONTINUITY BETWEEN 15 B–12 AND 16 B–12 ?

NO

REPAIR A POOR CONNECTION AT THE CONNECTORS OR AN OPEN CIRCUIT BETWEEN 3 C–21 AND F–4 (15A) (OR 3 C–32 AND F–5 (15A))

YES

REPAIR A POOR CONNECTION AT THE CONNECTORS OR AN OPEN CIRCUIT BETWEEN 15 B–12 AND 2 C–21 (OR 15 B–12 AND 2 C–32)

NO

REPAIR OR REPLACE THE DIMMER·PASSING SW

1-7. Headlight Beam Does Not Change

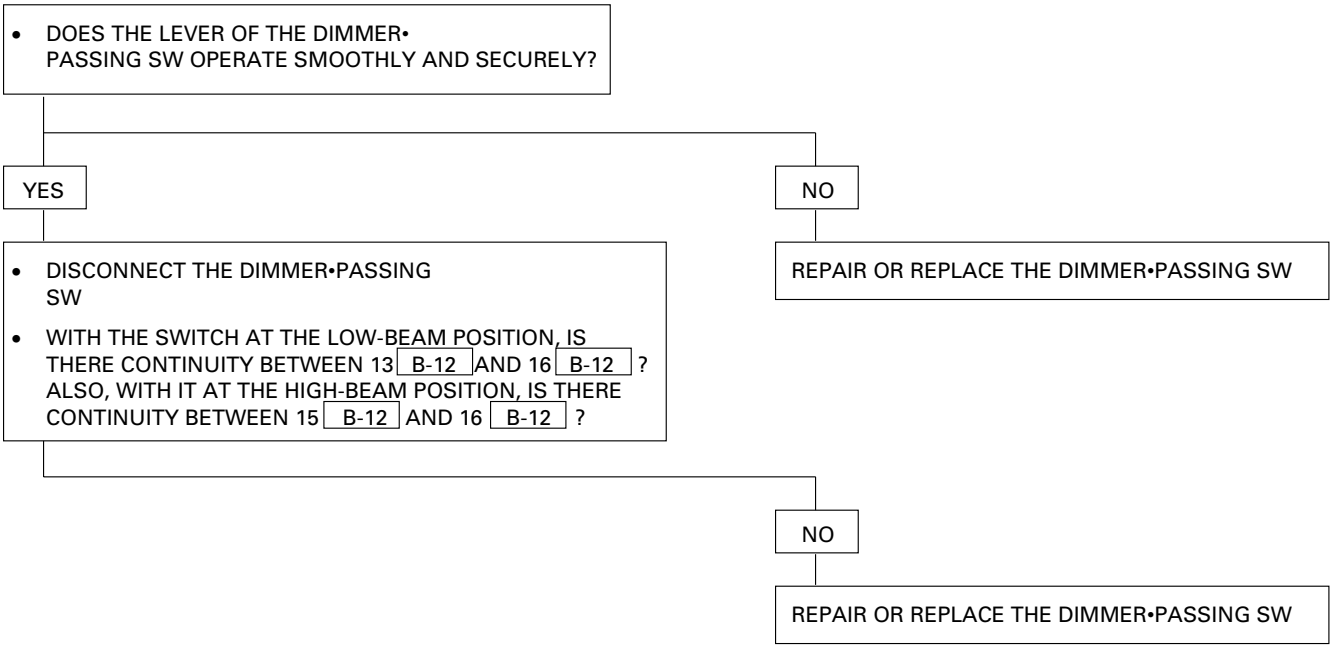

1-8. Headlights Remain On When The Lighting SW Is Turned Off

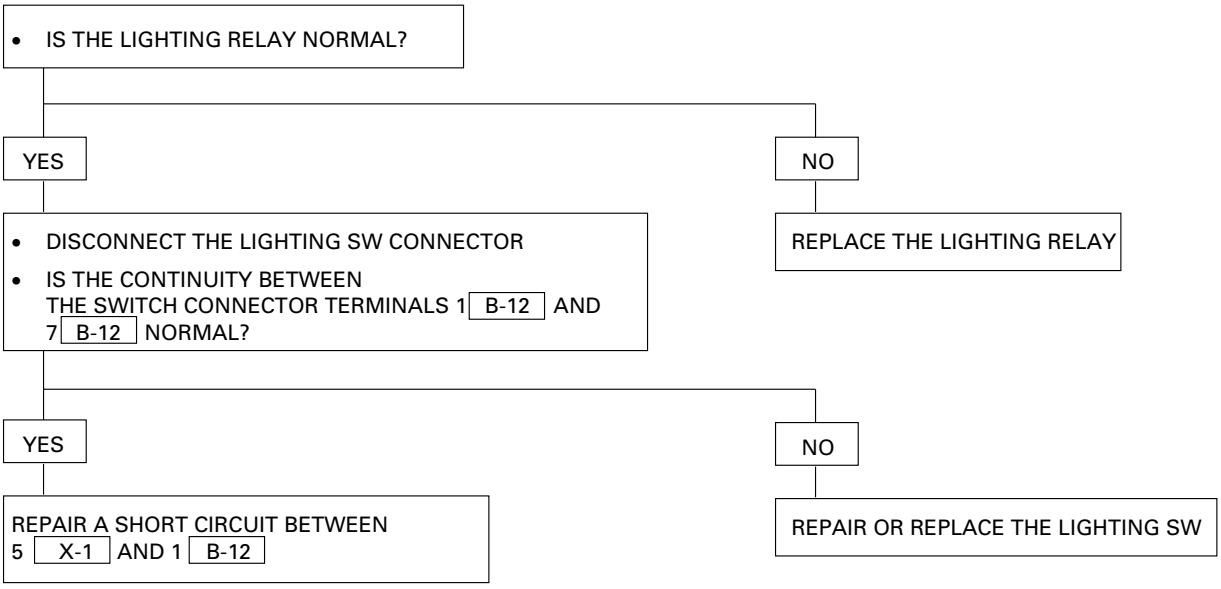

1-9. Headlights Come On With The Lighting SW At The Clearance Light Position

REPAIR OR REPLACE THE LIGHTING SW

1-10. Passing Lights Inoperative

- DISCONNECT THE DIMMER•PASSING SW CONNECTOR
- WITH THE SWITCH AT PASSING POSITION, IS THERE CONTINUITY BETWEEN THE SWITCH CONNECTOR TERMINALS 14 B-12 AND 16 B-12 , AND 15 B-12 AND 16 B-12 ?

YES

REPAIR A POOR CONNECTION AT THE CONNECTORS OR AN OPEN CIRCUIT BETWEEN 5 H-15 AND 14 B-12

NO

REPAIR OR REPLACE THE SWITCH

2-1. Both Headlights Inoperative

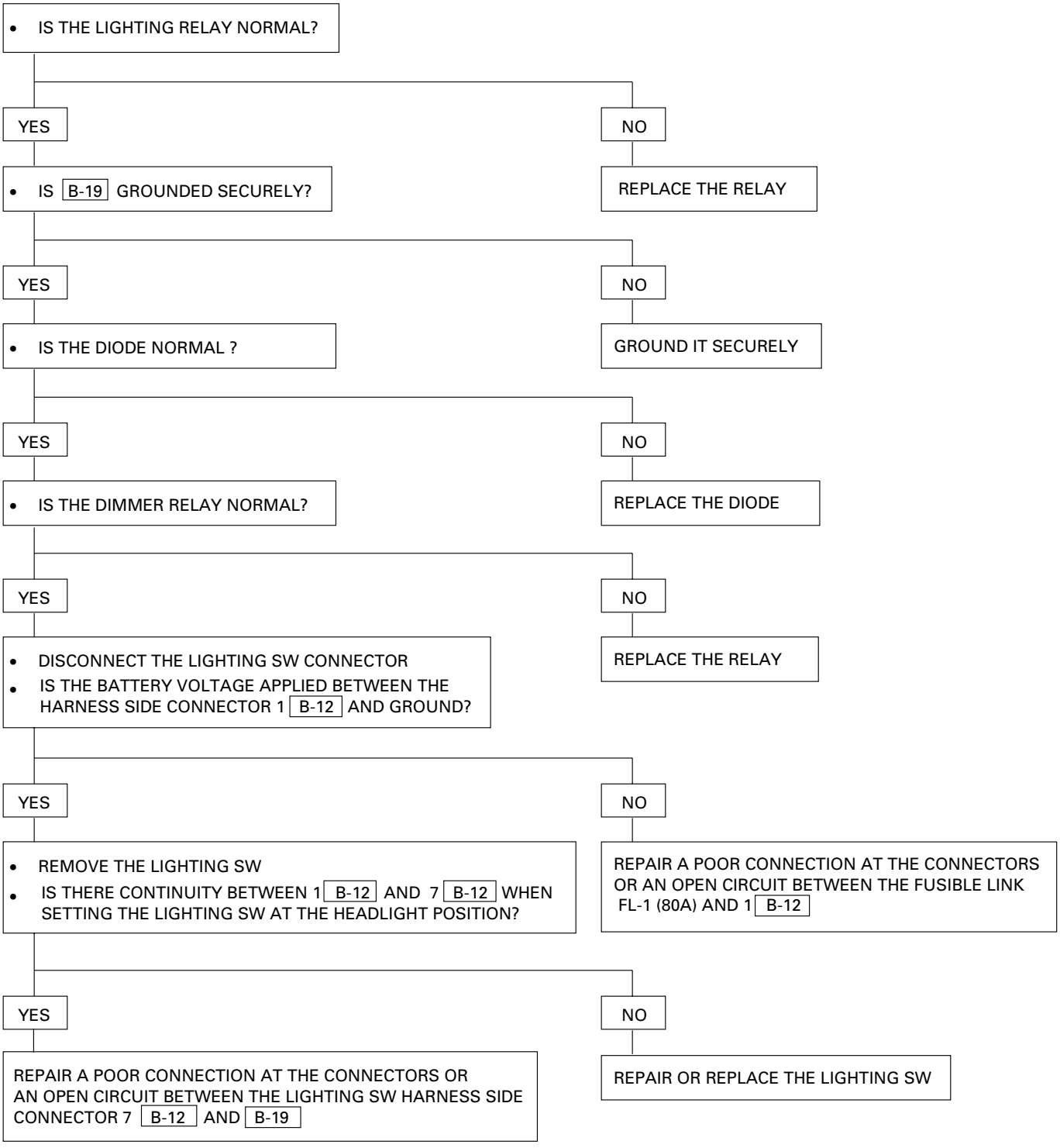

2-2. Headlight On The Left (Or Right) Side Inoperative

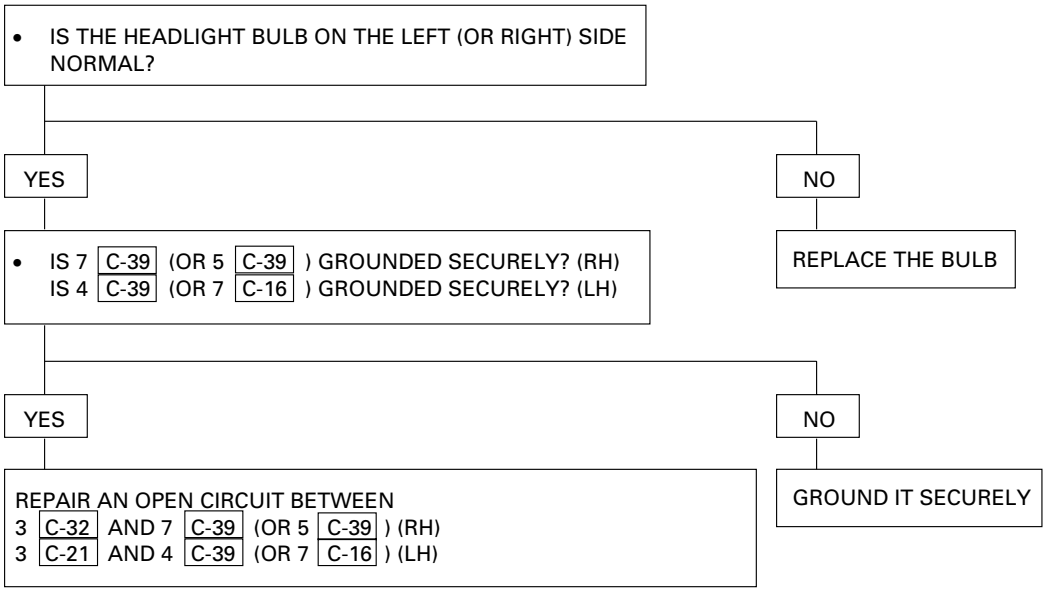

2-3. Both Headlights In Low-Beam Inoperative

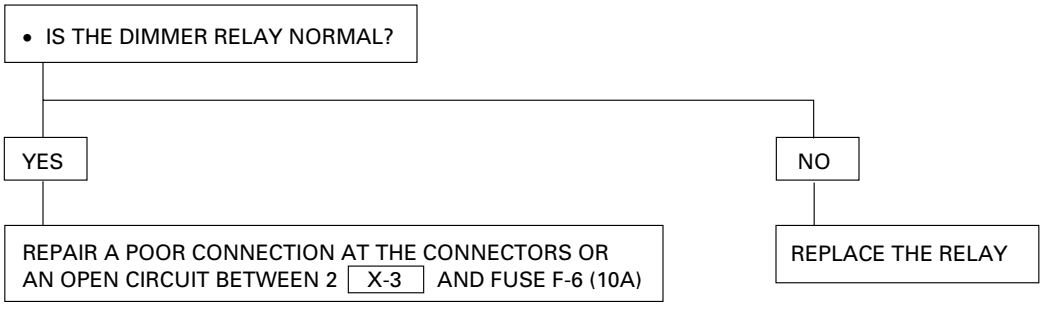

2-4. Headlight Low-Beam On The Left (Or Right) Side Inoperative

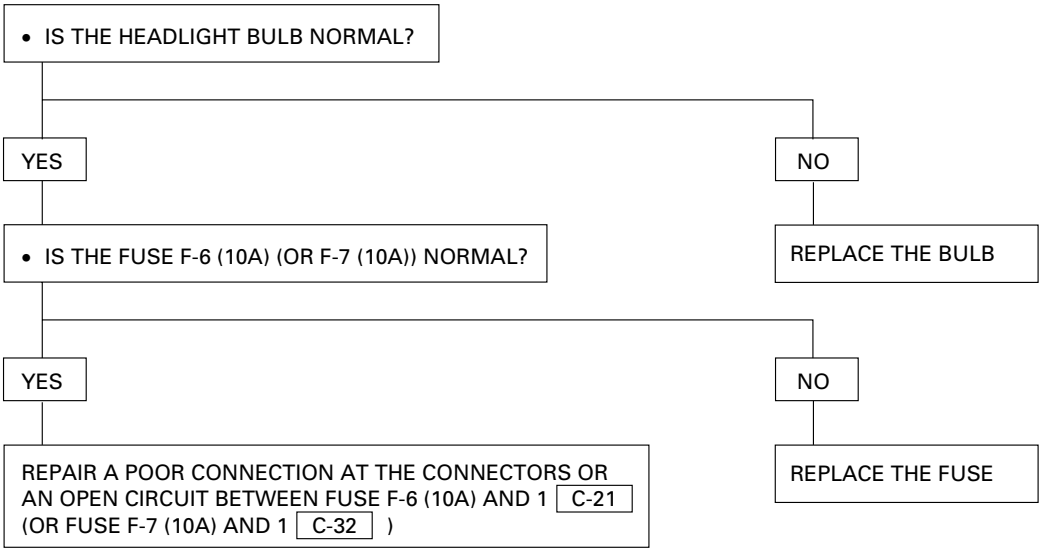

2-5. Both Headlights In High-Beam Inoperative

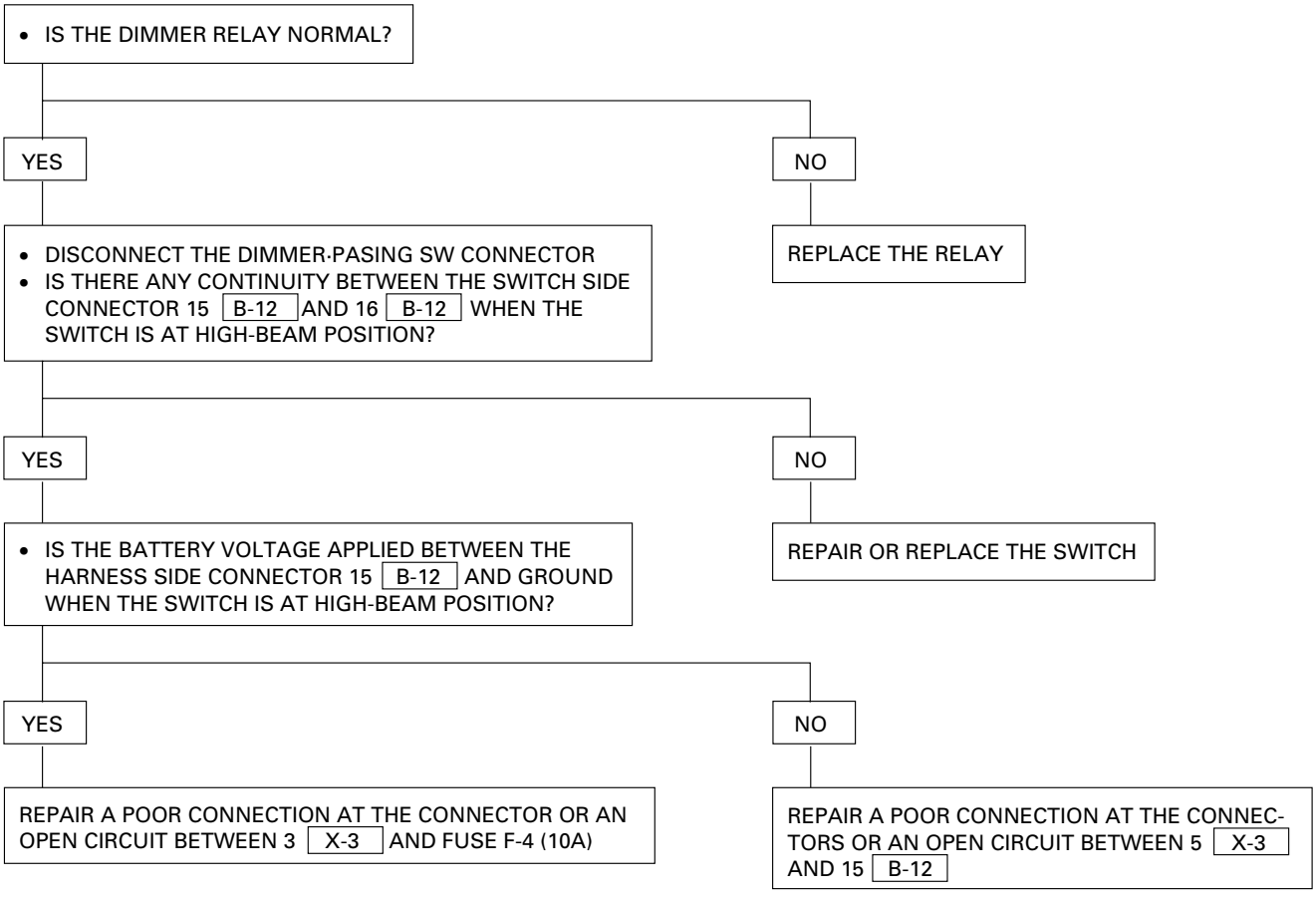

2-6. Headlight High-Beam On The Left (Or Right) Side Inoperative

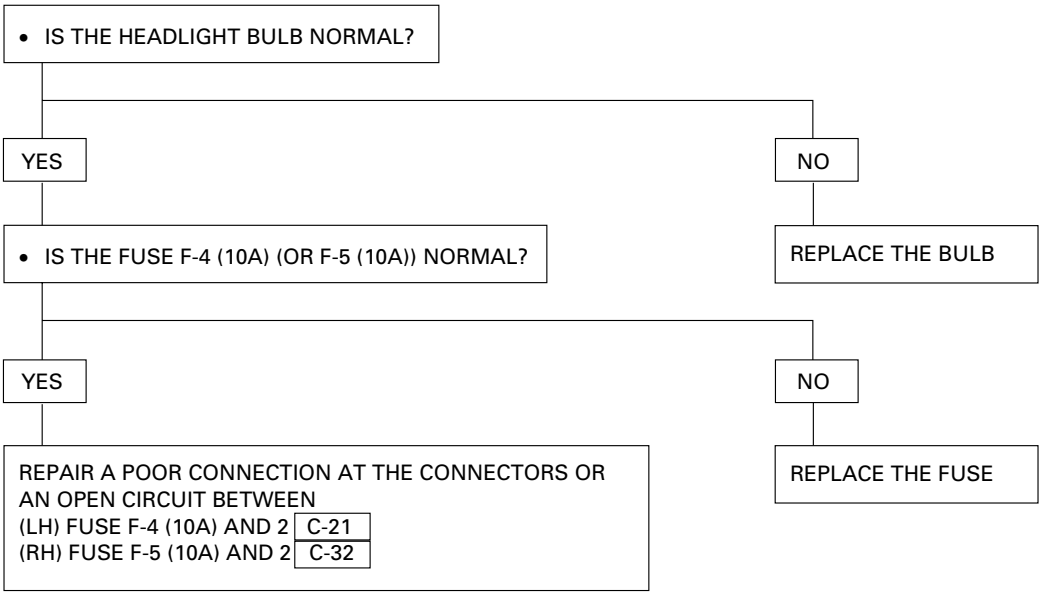

2-7. Headlight Beam Does Not Change

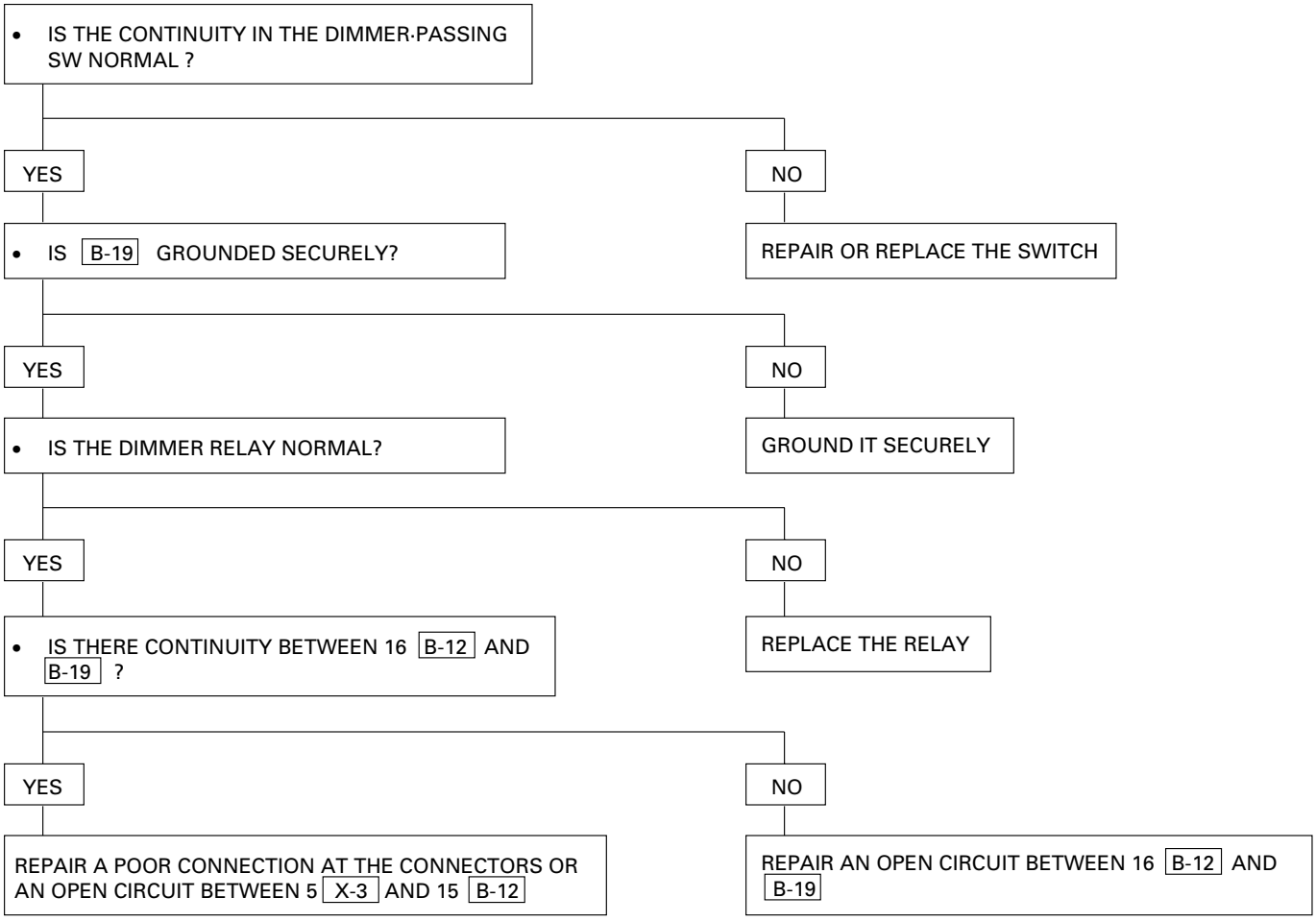

2-8. Headlights Remain On When The Lighting SW Is Turned Off

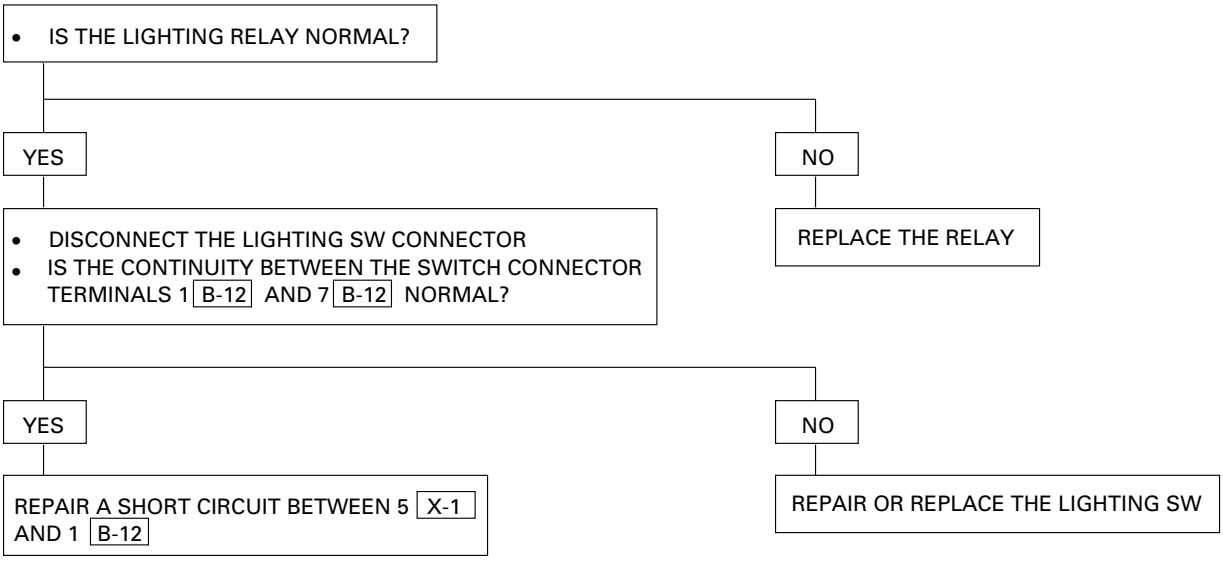

2-9. Headlights Come On When The Lighting SW At The Clearance Light Position

REPAIR OR REPLACE THE LIGHTING SW

2-10. Passing Lights Inoperative

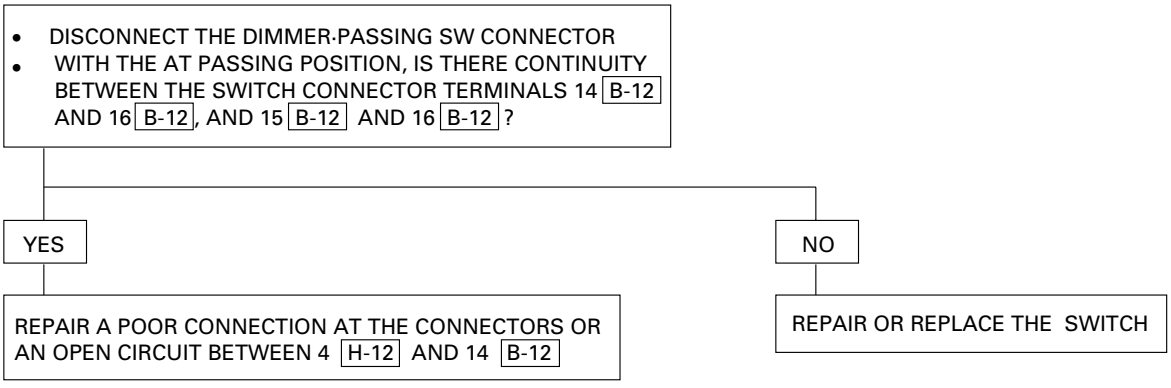

3-1. Both FRT Fog Lights Inoperative (While The Clearance Light Is On)

- IS THE FUSE F-8 (20A OR 15A) NORMAL?

YES

- IS 5 C-16 (OR 6 C-16) GROUNDED SECURELY?

YES

- REMOVE THE FRT FOG LIGHT SWITCH
- IS THE CONTINUITY IN THE SWITCH NORMAL?

YES

- WITH THE LIGHTING SWITCH AT CLEARANCE LIGHT POSITION, IS THE BATTERY VOLTAGE APPLIED BETWEEN 4 I-5 AND THE GROUND?

YES

- REMOVE THE FRT FOG LIGHT RELAY
- IS THE RELAY NORMAL?

YES

- REINSTALL THE FRT FOG LIGHT SWITCH
- WITH THE LIGHTING SWITCH AT CLEARANCE LIGHT POSITION AND FRT FOG LIGHT SWITCH AT ON POSITION, IS THE BATTERY VOLTAGE APPLIED BETWEEN I X-23 AND THE GROUND?

YES

- IS THERE CONTINUITY BETWEEN 3 X-23 AND THE GROUND?

YES

REPAIR A POOR CONNECTION AT THE CONNECTORS OR AN OPEN CIRCUIT BETWEEN 4 X-23 AND 13 H-42 (OR 4 H-41)

NO

REPAIR A POOR CONNECTION AT THE CONNECTORS OR AN OPEN CIRCUIT BETWEEN 3 X-23 AND 4 C-39

NO

REPAIR A POOR CONNECTION AT THE CONNCETORS OR AN OPEN CIRCUIT BETWEEN 5 I-5 AND 1 X-23

NO

REPAIR OR REPLACE THE RELAY

NO

REPAIR A POOR CONNECTION AT THE CONNECTORS OR AN OPEN CIRCUIT BETWEEN 4 X-9 (OR FUSE F-12) AND 4 I-5

NO

REPAIR OR REPLACE THE SWITCH

NO

GROUND IT SECURELY

NO

REPLACE THE FUSE

3-2. FRT Fog Light On The Left (Or Right) Side Inoperative (While The Clearance Light Is ON)

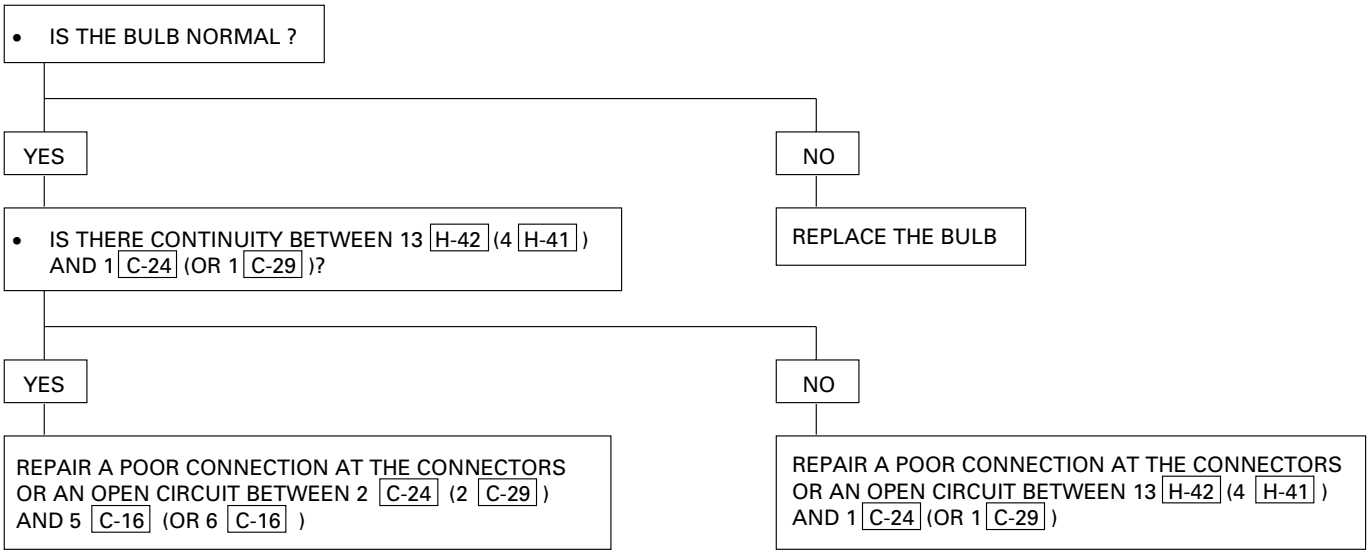

Rear Fog Light

Circuit Diagram

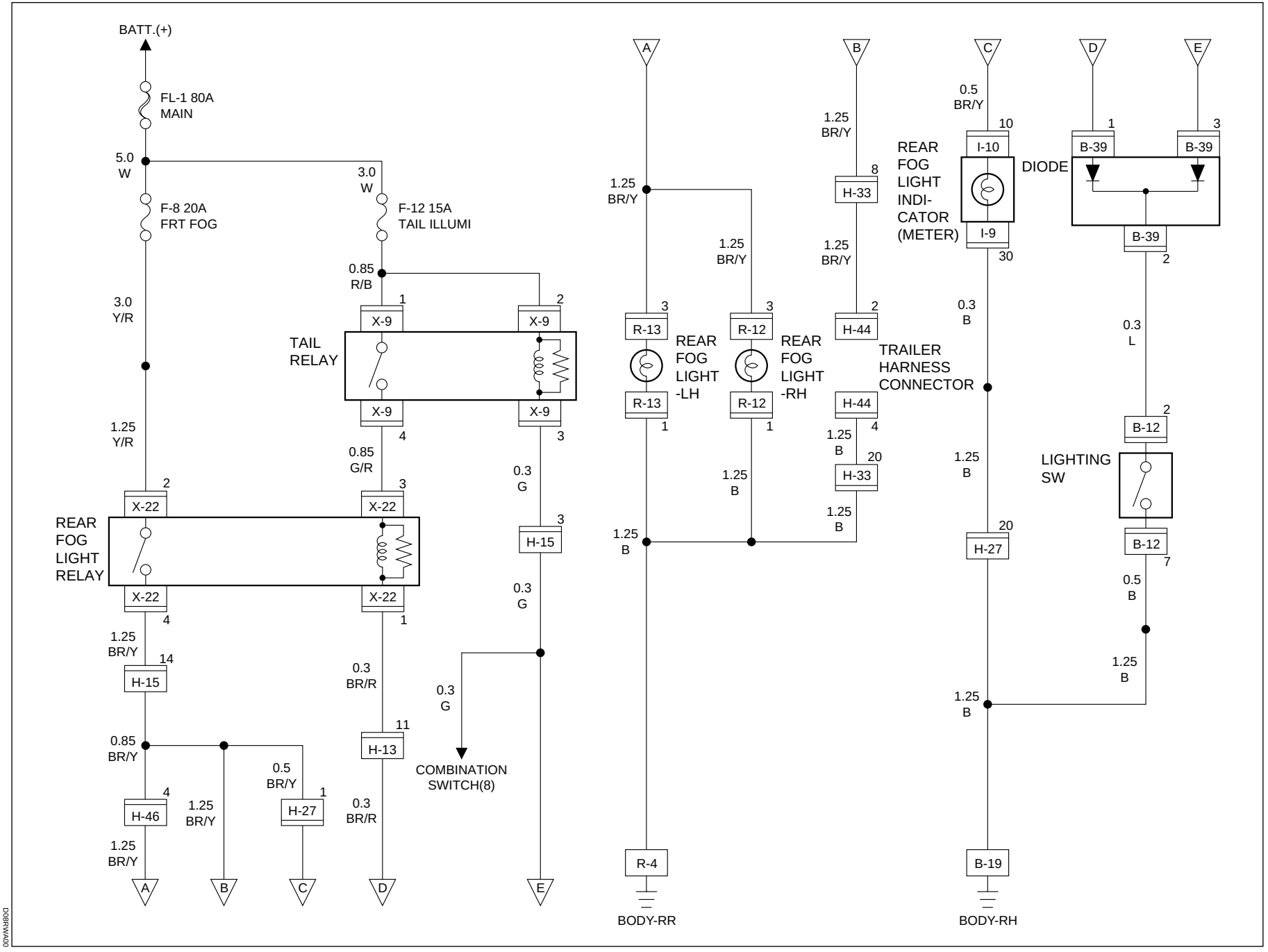

Parts Location

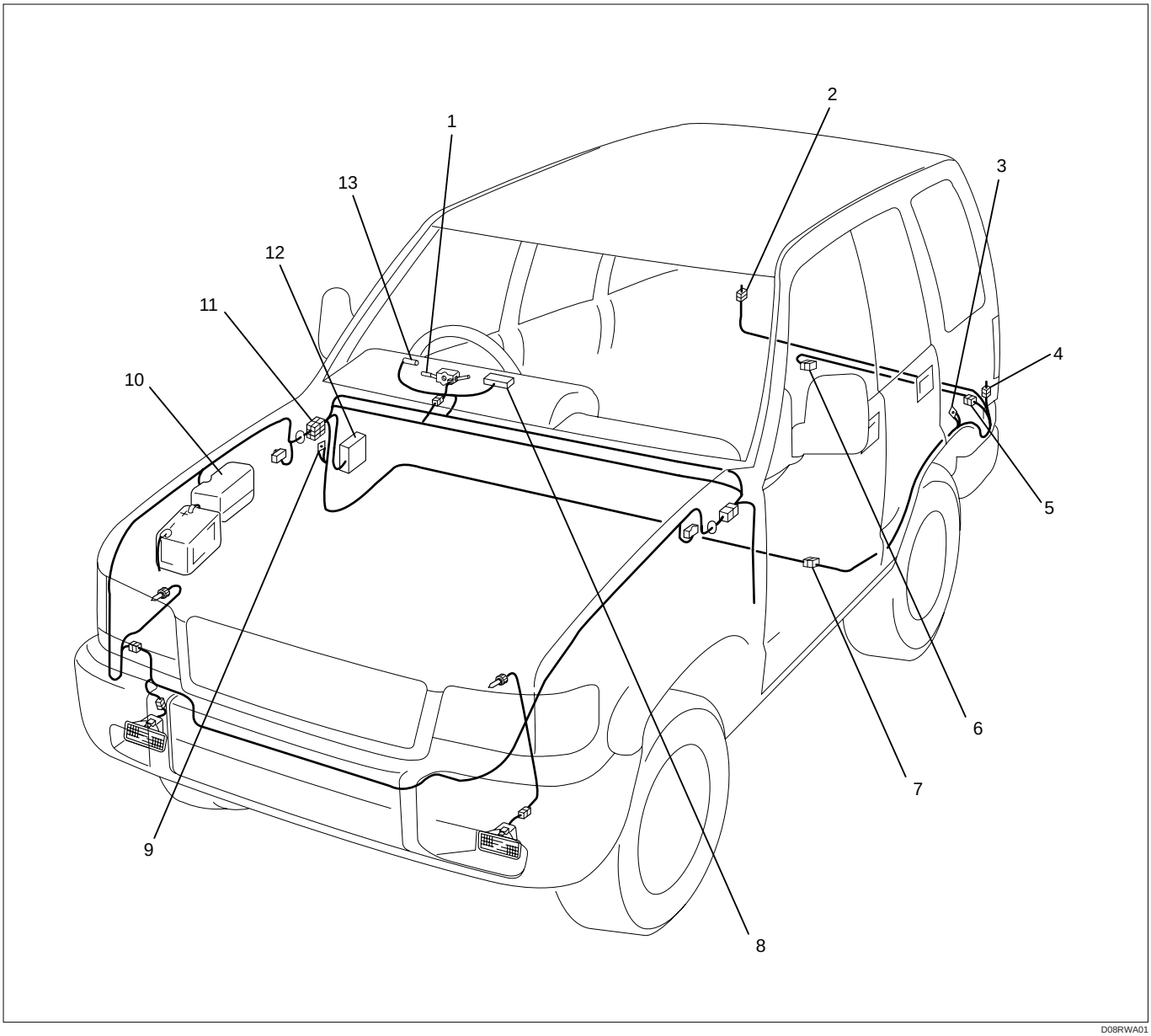

D08RWA01

Legend

(1) Lighting Switch
(2) R-12
(3) R-4
(4) R-13
(5) H-33
(6) H-44
(7) H-46
(8) I-9
(9) B-19
(10) Relay and Fuse Box (X-9, X-22)
(11) H-13, H-15, H-27
(12) Fuse Box (B-39)
(13) I-10

Headlight Leveling

General Description

The circuit consists of the headlight leveling SW and headlight leveling actuators. The actuator is made up of a motor, two relays and disk-type sensor. The sensor rotates in accordance with the rotation of the motor and stops the rotation of the motor at each position corresponding to the levels 0 to 3.

Circuit Diagram

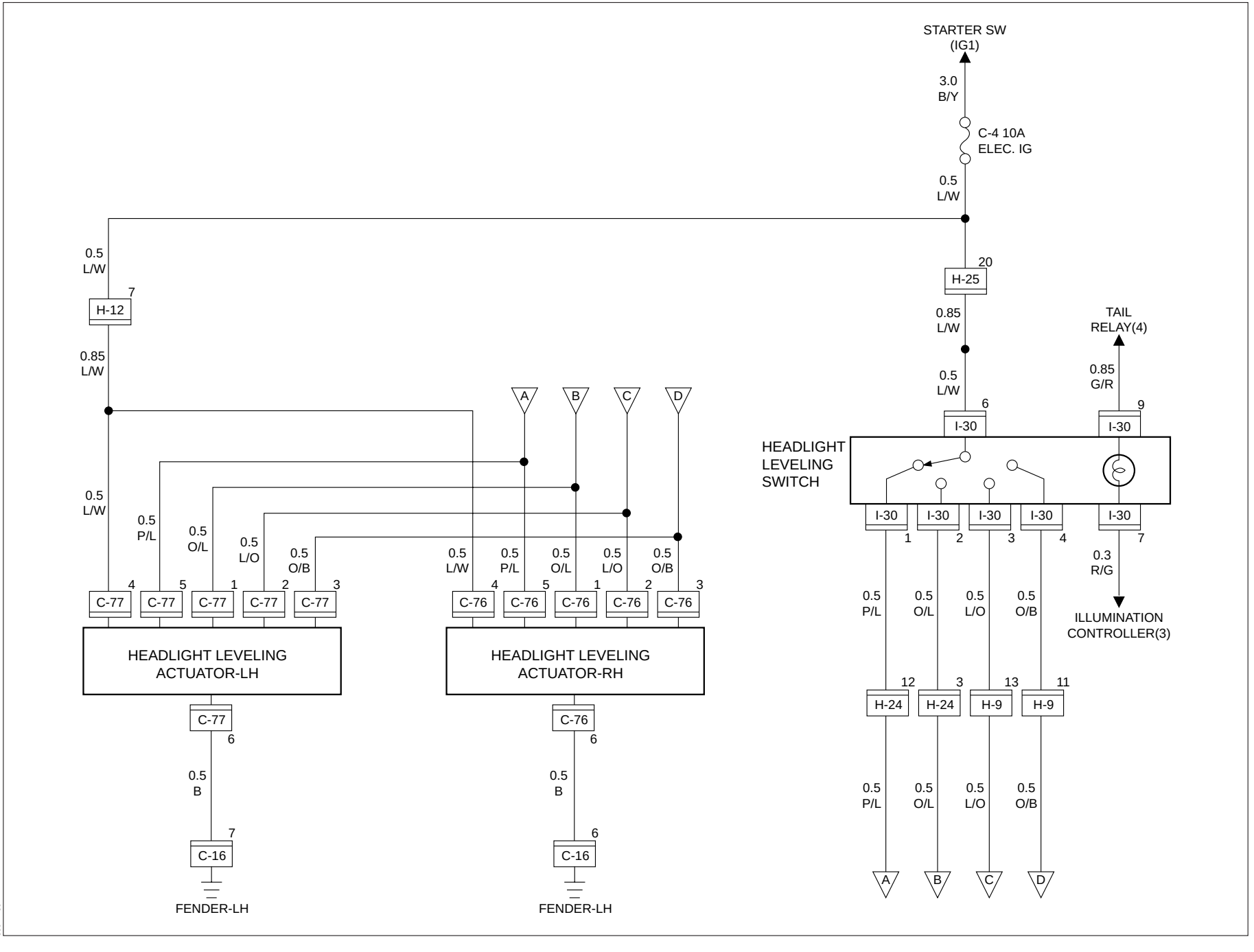

D08RW998

Parts Location

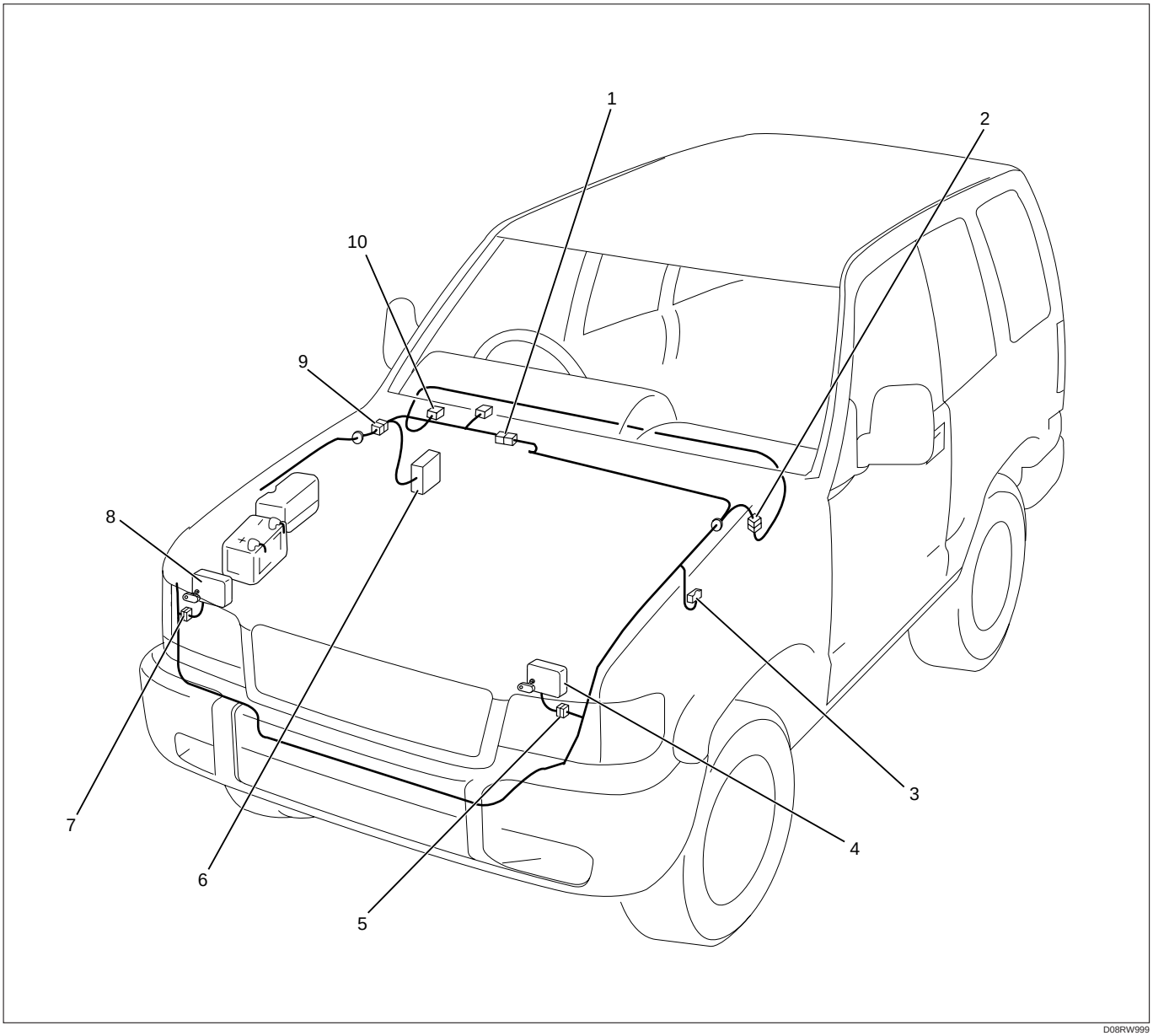

Legend

(1) H-12
(2) H-9, H-24
(3) C-16
(4) Headlight Leveling Actuator-LH
(5) C-77
(6) Fuse Box
(7) C-76
(8) Headlight Leveling Actuator-RH
(9) H-25
(10) I-30

Diagnosis

Quick Chart for Check Points

Trouble mode \ Check point	Fuse C-4 (10A)	Leveling SW	Actuator		Cable harness
			LH	RH	
1. Both actuators inoperative	○	○			○
2. Actuator on the left (or right) side inoperative			○	○	○
3. Actuator on the left (or right) side does not stop			○	○	

1. Both Actuators Inoperative

- IS THE FUSE C-4 (10A) NORMAL?

YES

- IS 6 C-16 AND 7 C-16 GROUNDED SECURELY?

YES

- IS THE CONTINUITY IN THE HEADLIGHT LEVELING SW NORMAL?

YES

REPAIR A POOR CONNECTION AT THE CONNECTORS OR OPEN CIRCUIT BETWEEN FUSE C-4 AND 6 I-30

NO

REPAIR OR REPLACE THE SWITCH

NO

GROUND THEM SECURELY

NO

REPLACE THE FUSE

2. Actuator On The Left (Or Right) Side Inoperative

- DOES THE ACTUATOR-LH (OR RH) OPERATES NORMALY WHEN THE BATTERY IS CONNECTED TO THE ACTUATOR CONNECTOR TERMINALS?

YES

REPAIR A POOR CONNECTION AT THE CONNECTORS OR A OPEN CIRCUIT BETWEEN FUSE C-4 AND 4 C-77 (OR 4 C-76)

NO

REPAIR OR REPLACE THE ACTUATOR

3. Actuator On The Left (Or Right) Side Does Not Stop

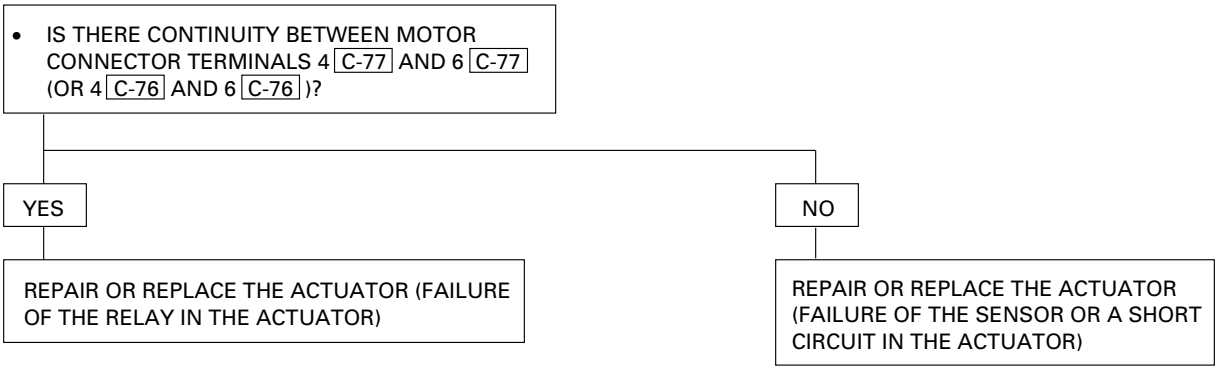

Clearance Light, Taillight and License Plate Light

General Description

The circuit consists of the lighting switch, clearance light, taillight and license plate light.
All these lights come on when the lighting switch are turned on with the switch to either clearance or headlight position.

Circuit Diagram (RHD)-1

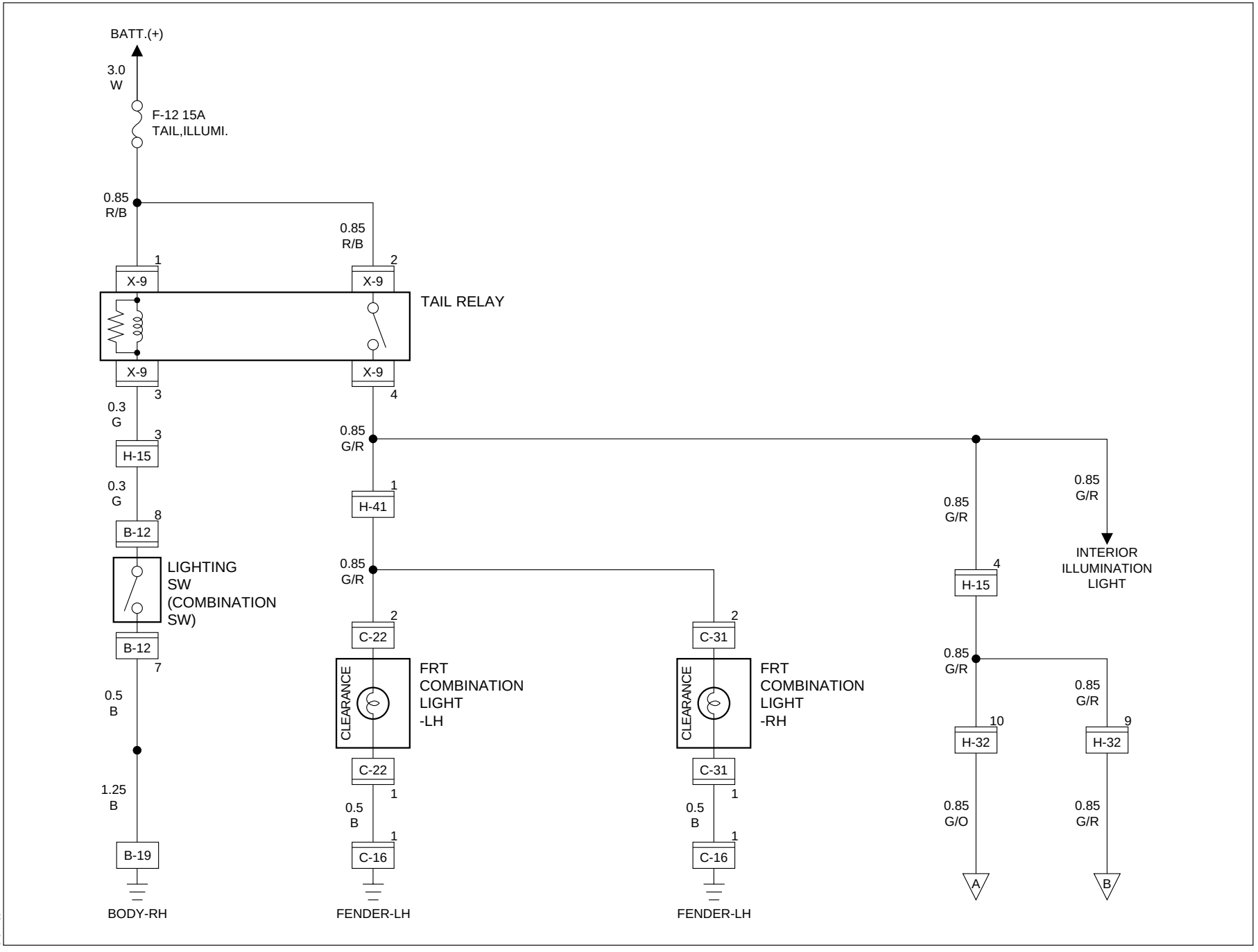

Circuit Diagram (RHD)-2

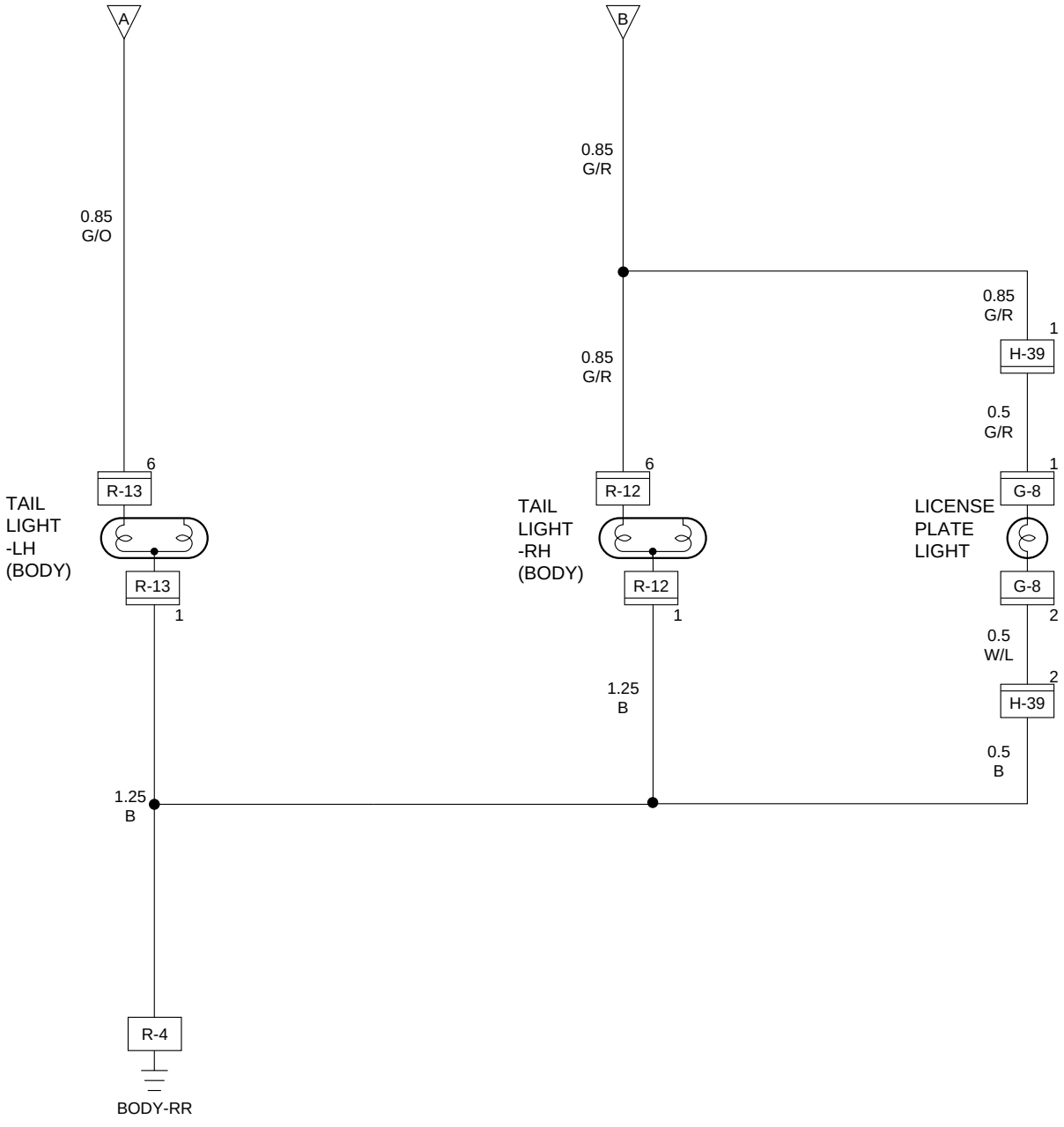

D08RW799

Circuit Diagram (Bumper Built-in Type Taillight)-2

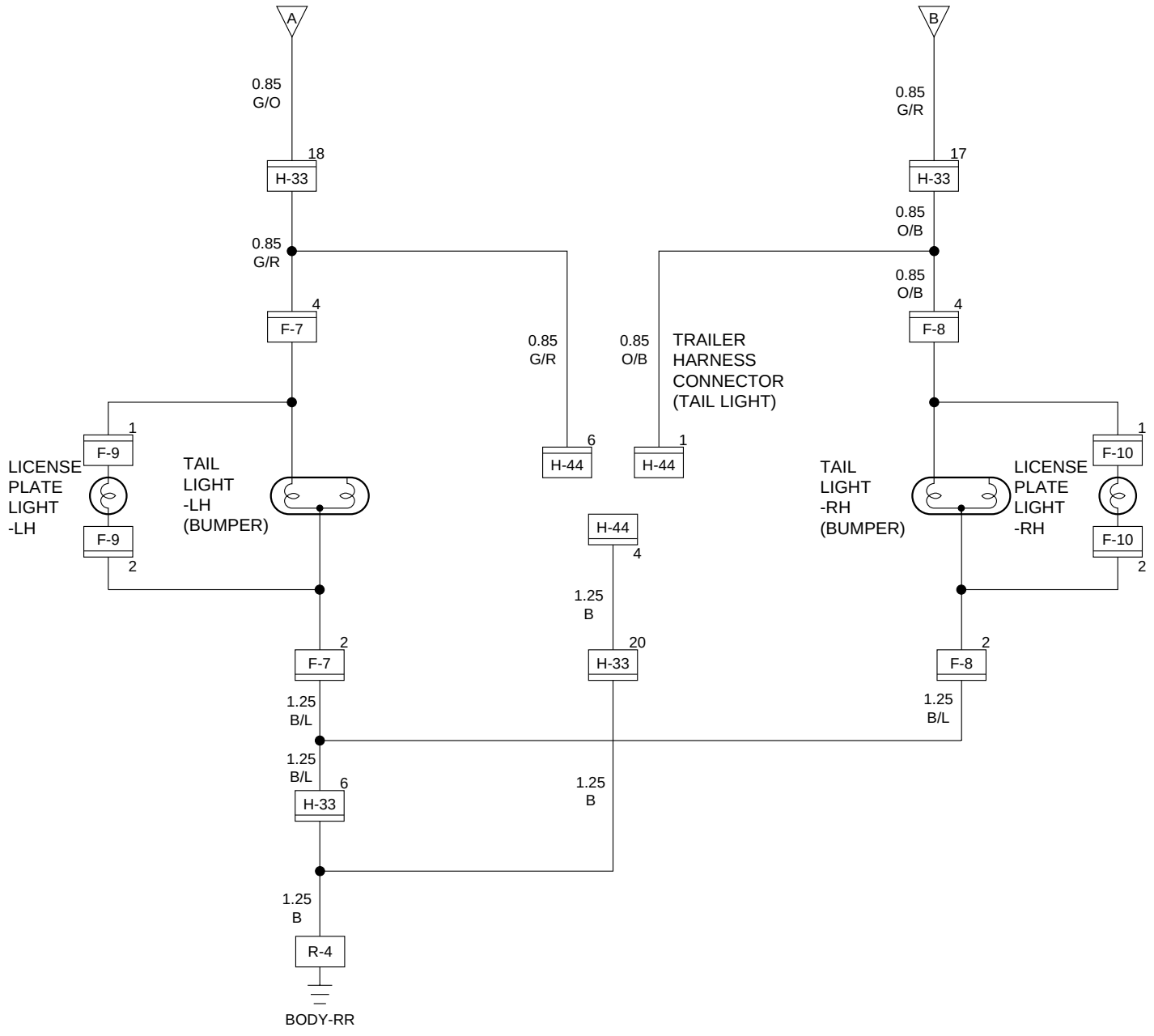

Parts Location (RHD)

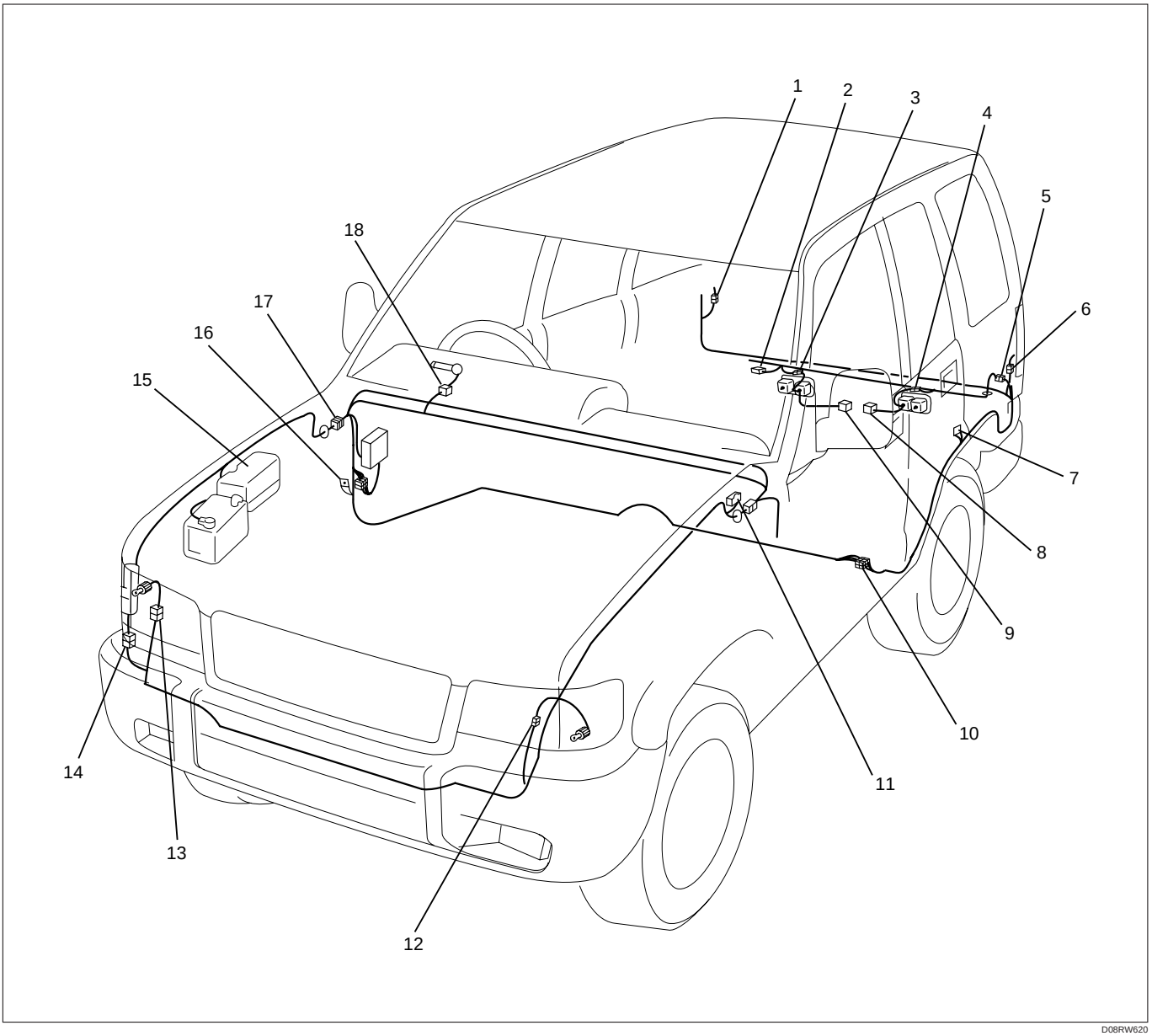

D08RW620

Legend

(1) R-12
(2) H-44
(3) F-8
(4) F-7
(5) H-33
(6) R-13
(7) R-4
(8) F-9
(9) F-10
(10) H-32
(11) C-16
(12) C-22
(13) C-31
(14) H-41
(15) Relay and Fuse Box (X-9)
(16) B-19
(17) H-15
(18) B-12

Circuit Diagram (LHD)-1

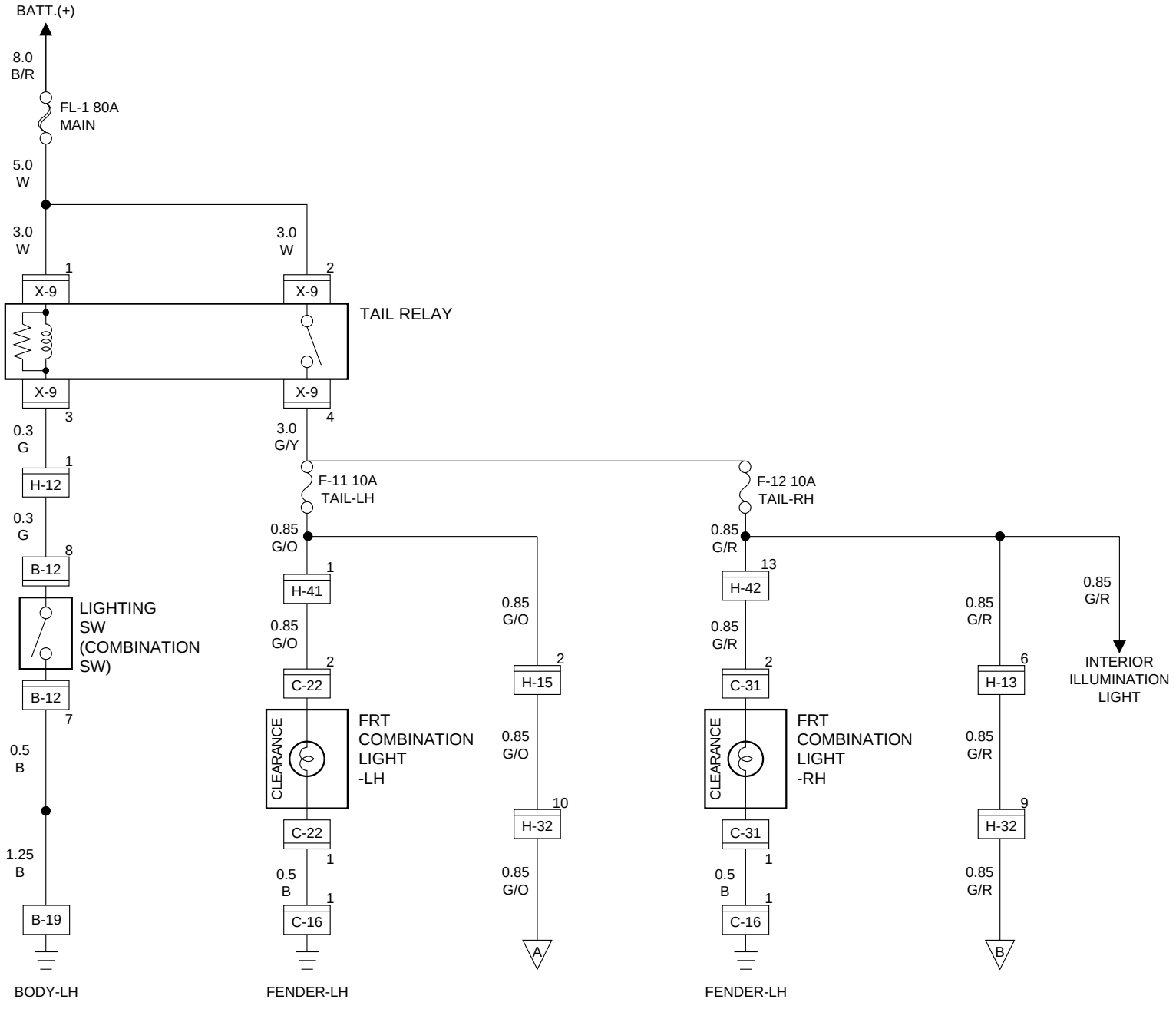

D08RW798

Circuit Diagram (LHD)-2

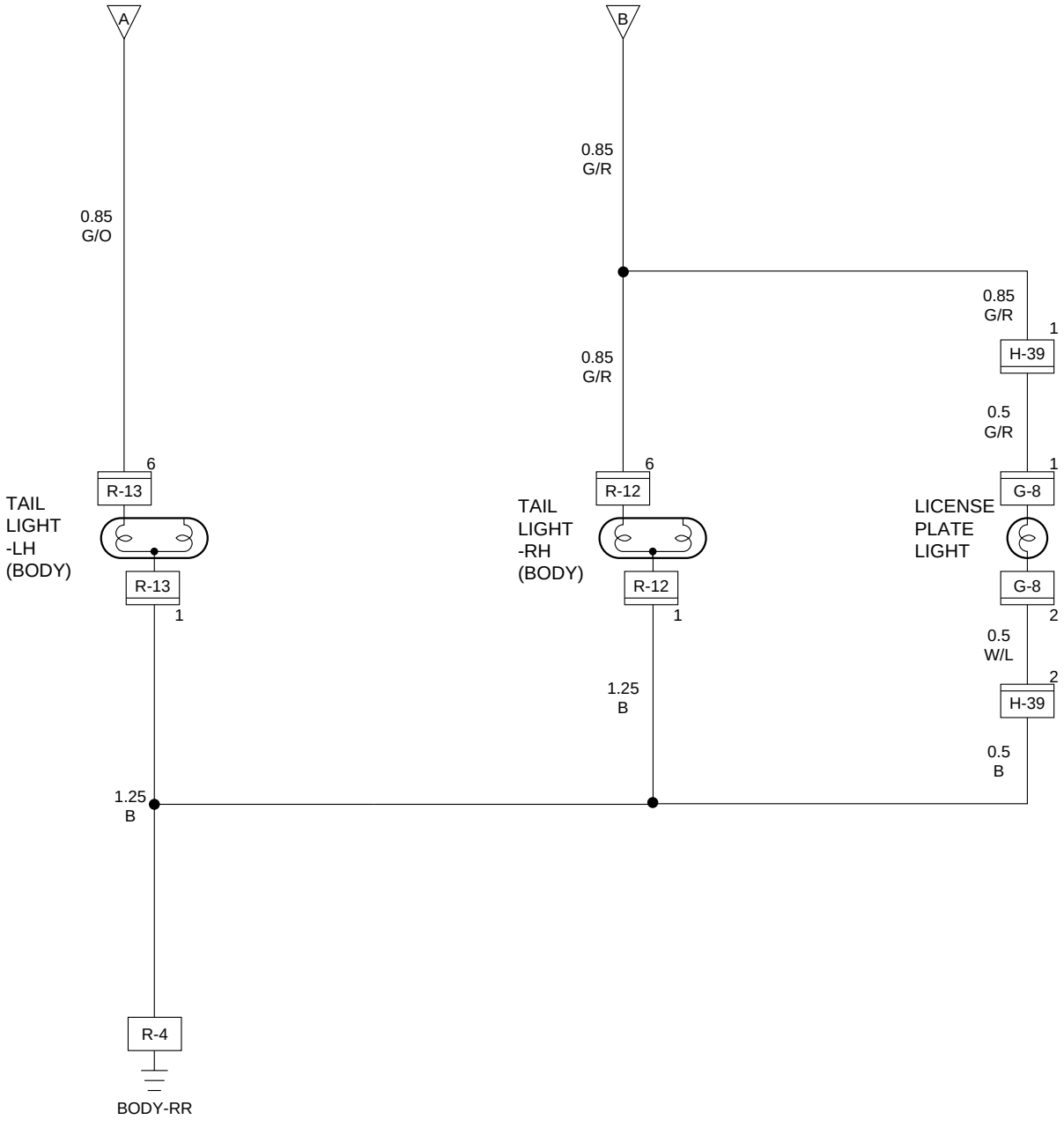

D08RW799

Circuit Diagram (Bumper Built-in Type Taillight)-2

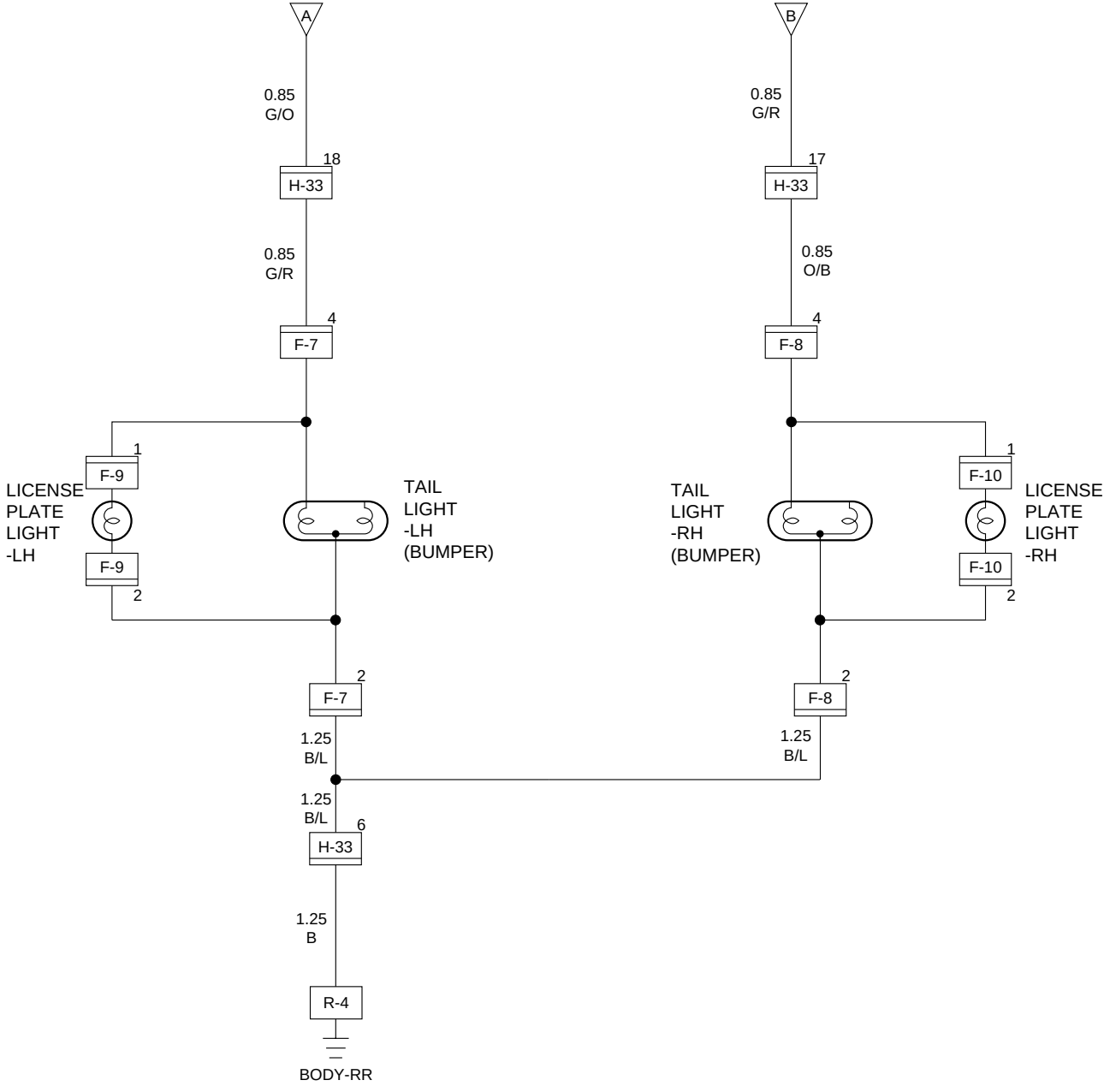

D008RW800

Parts Location (LHD)

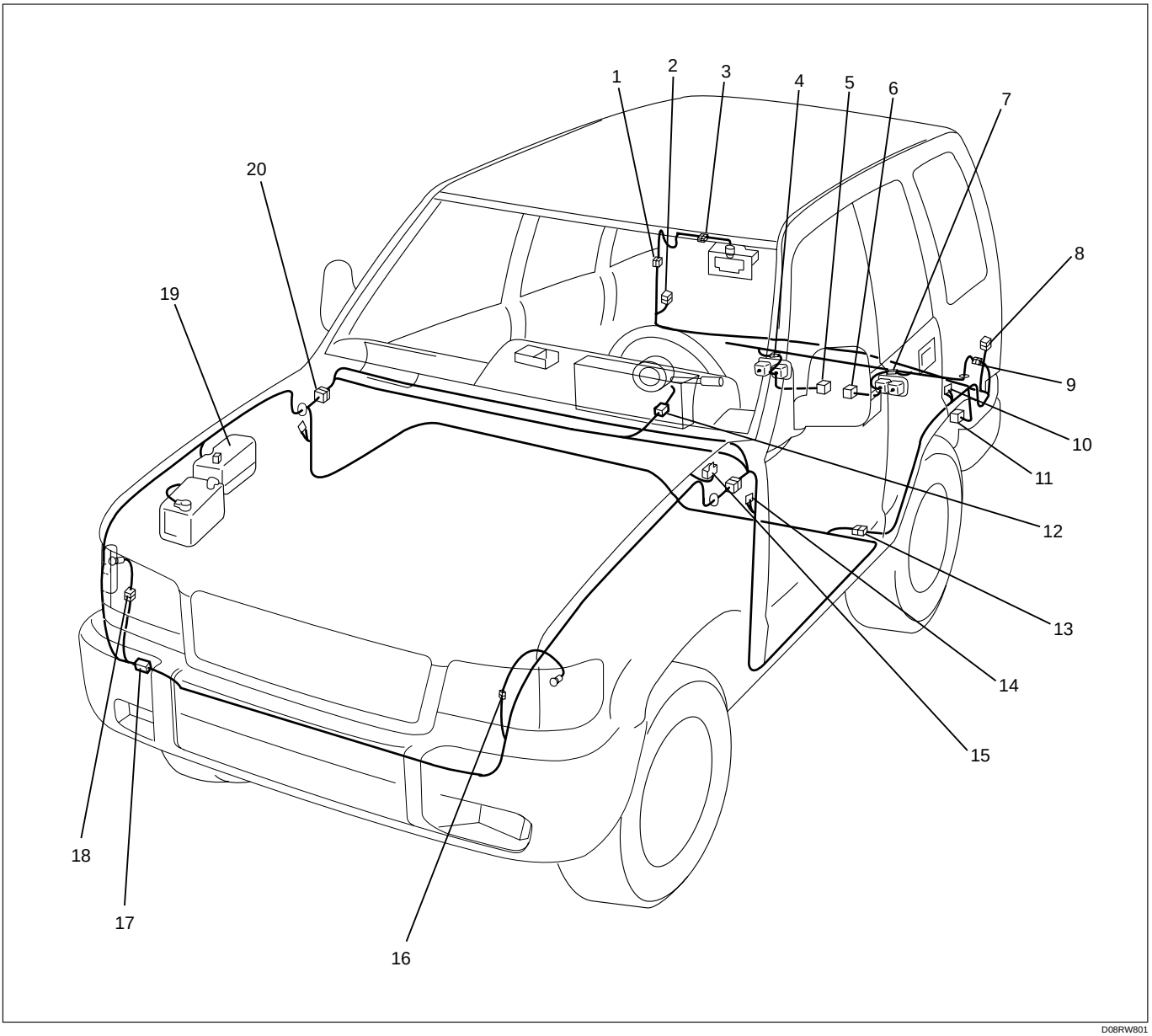

D08RW801

Legend

(1) H-39
(2) R-12
(3) G-8
(4) F-8
(5) F-10
(6) F-9
(7) F-7
(8) R-13
(9) H-33
(10) R-4
(11) H-44
(12) B-12
(13) H-32
(14) B-19
(15) C-16
(16) C-22
(17) H-41, H-42
(18) C-31
(19) Relay and Fuse Box (X-9)
(20) H-12, H-13, H-15

Diagnosis

Quick Chart for Check Point

1. RHD

Trouble mode \ Check point		Fuse F-12 (15A)	Lighting SW	Tail relay	Taillight bulb	Clearance light bulb	License plate light bulb	Cable harness
1-1 All illumination lights inoperative		○	○	○				○
1-2 Both Taillights inoperative								○
1-3 Taillight on the left (or right) side inoperative					○			○
1-4 Both clearance lights inoperative		○	○	○				○
1-5 Clearance light on the left (or right) side inoperative						○		○
1-6 License plate light inoperative	RHD-1						○	○
	RHD-2	○	○	○				○
1-7 License plate light on the left (or right) side inoperative	RHD-2						○	○

2. LHD

Trouble Mode \ Check point		Tail relay	Fuse F-11 (10A)	Fuse F-12 (10A)	Lighting SW	Taillight bulb	Clearance light bulb	License plate light bulb	Cable harness
2-1 All illumination lights inoperative		○			○				○
2-2 Both taillights inoperative									○
2-3 Taillight on the left (or right) side inoperative			○	○		○			○
2-4 Both clearance lights inoperative									○
2-5 Clearance light on the left (or right) side inoperative							○		○
2-6 License plate light inoperative	LHD-1			○				○	○
	LHD-2								○
2-7 License plate light on the left (or right) side inoperative	LHD-2		○	○				○	○
2-8 Both taillight and clearance light on the left (or right) side inoperative			○	○					○

1-1 All Illuminations Lights Inoperative

- IS FUSE F-12 (15A) NORMAL?
  - YES
    - IS THE CONTINUITY IN THE LIGHTING SWITCH NORMAL?
      - YES
        - IS TAIL RELAY (X-9) NORMAL?
          - YES
            - IS THE BATTERY VOLTAGE APPLIED BETWEEN HARNESS SIDE CONNECTOR 8 B-12 AND GROUND WHEN LIGHTING SWITCH IS "ON" ?
              - YES
                - REPAIRA POOR CONNECTION AT THE CONNECTORS OR AN OPEN CIRCUIT BETWEEN 7 B-12 AND B-19 OR BETWEEN 4 X-9 AND 1 H-41)
              - NO
                - REPAIR A POOR CONNECTION AT THE CONNECTORS OR AN OPEN CIRCUIT BETWEEN 8 B-12 AND FUSE F-12 (15A)
          - NO
            - REPAIR OR REPLACE THE RELAY
      - NO
        - REPAIR OR REPLACE THE SWITCH
  - NO
    - REPLACE THE FUSE

1-2 Both Taillights Inoperative

- DOES THE LICENSE PLATE LIGHT LIGHT UP WHEN THE LIGHTING SWITCH IS AT THE CLEARANCE LIGHT POSITION?
  - YES
    - REPAIR A POOR CONNECTION AT THE CONNECTORS OR AN OPEN CIRCUIT BETWEEN 4 H-15 AND 10 H-32
  - NO
    - GROUND R-4 SECURELY

1-3 Taillight On The Left (Or Right) Side Inoperative

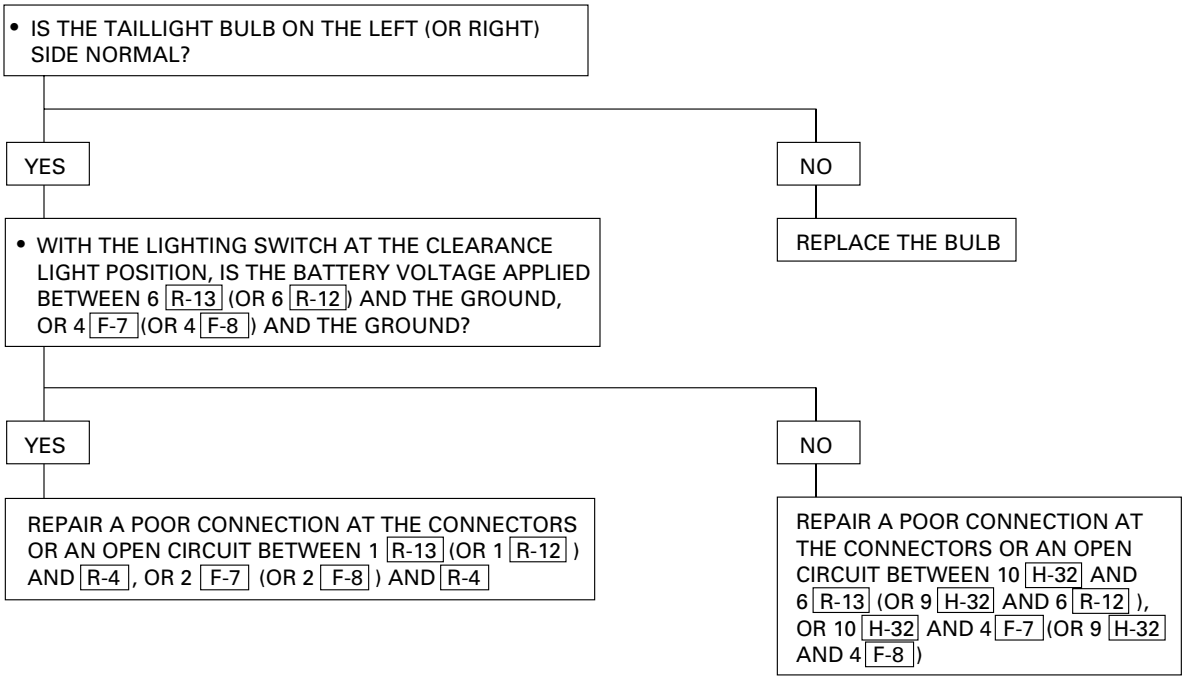

1-4 Both Clearance Lights Inoperative

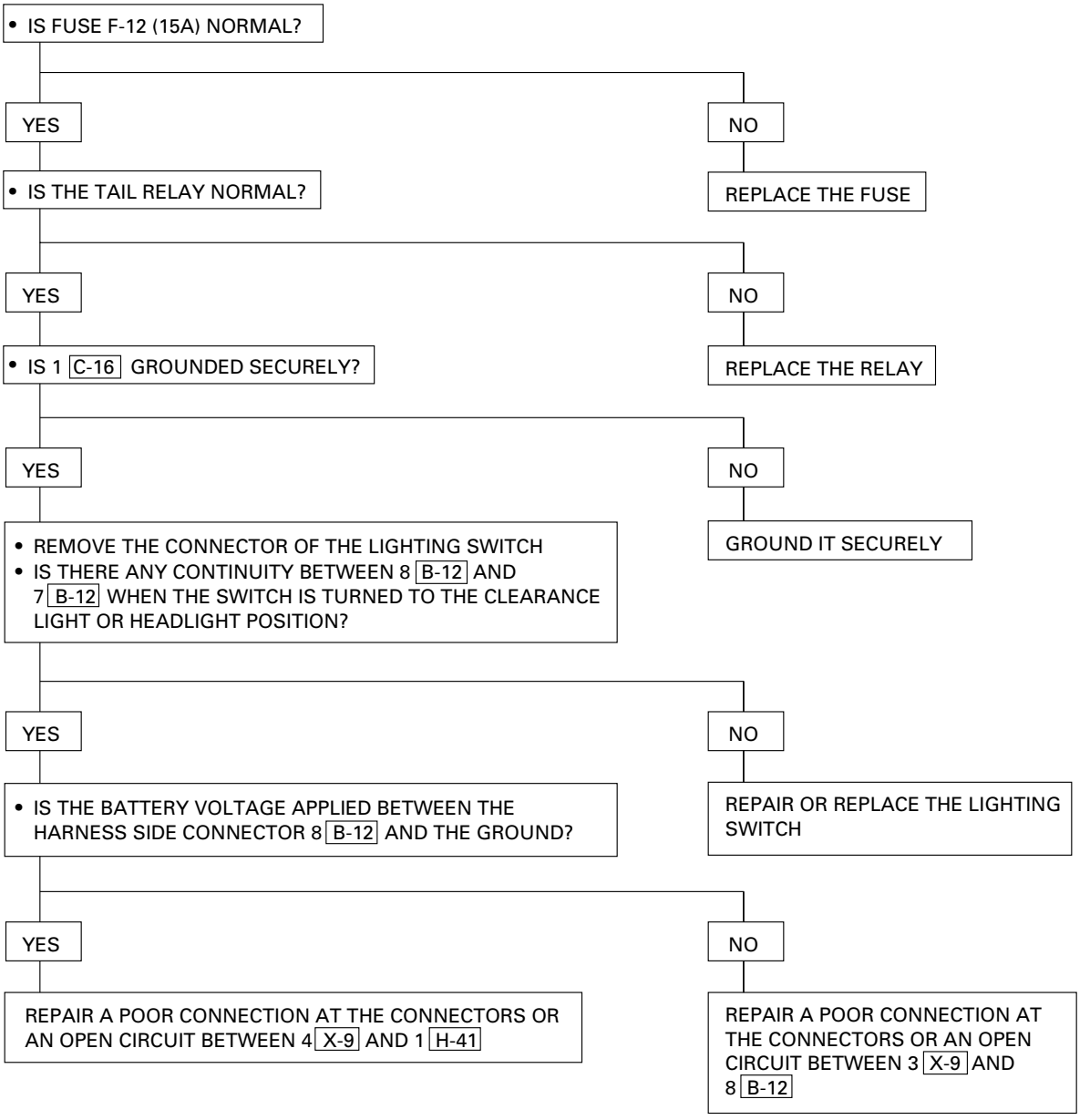

1-5 Clearance Light On The Left (Or Right) Side Inoperative

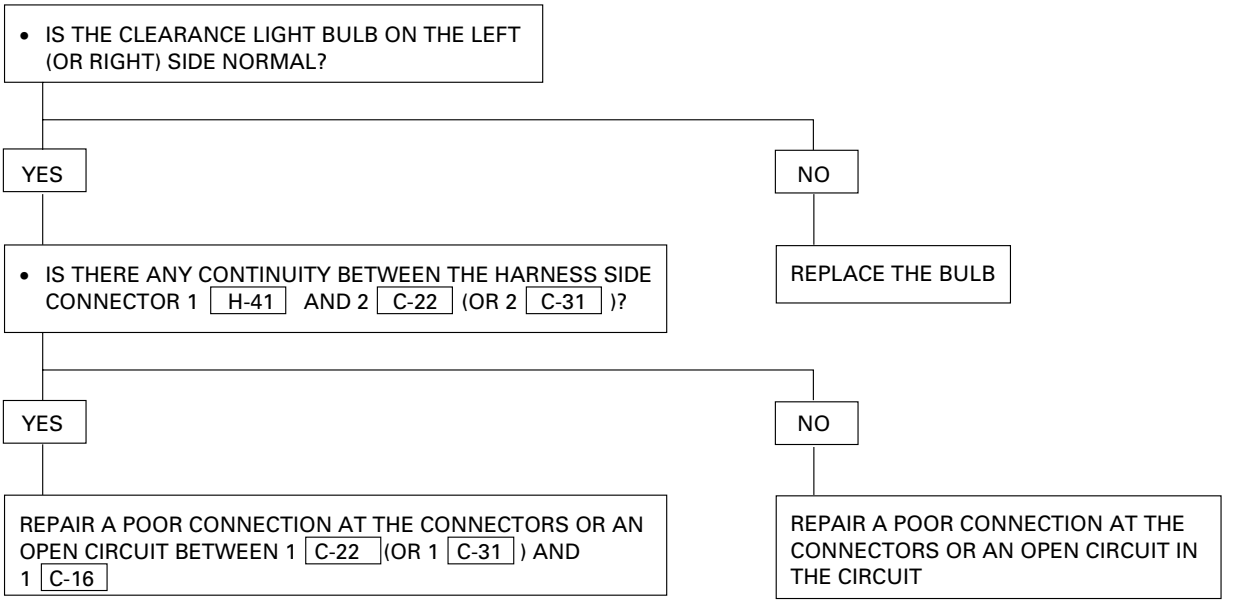

1-6 License Plate Light Inoperative

(RHD-1)

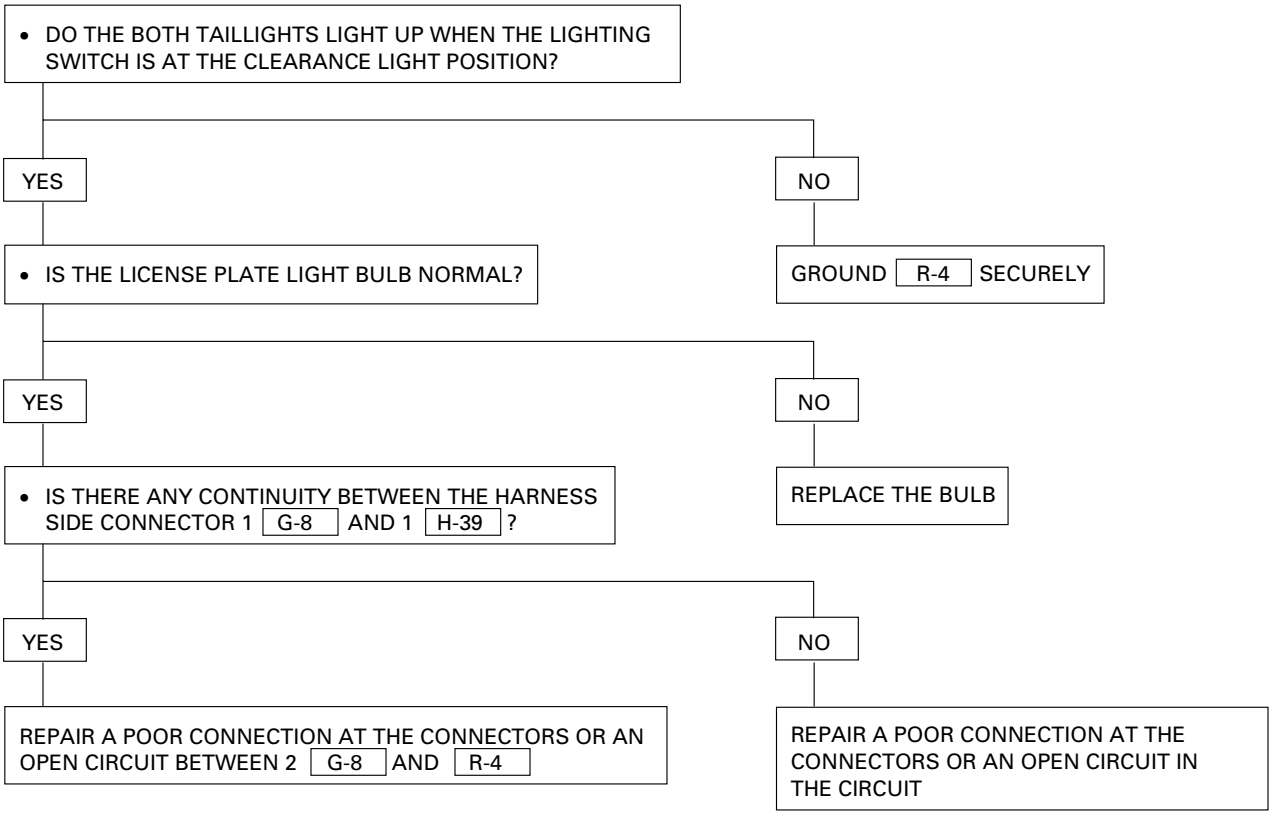

(RHD-2)

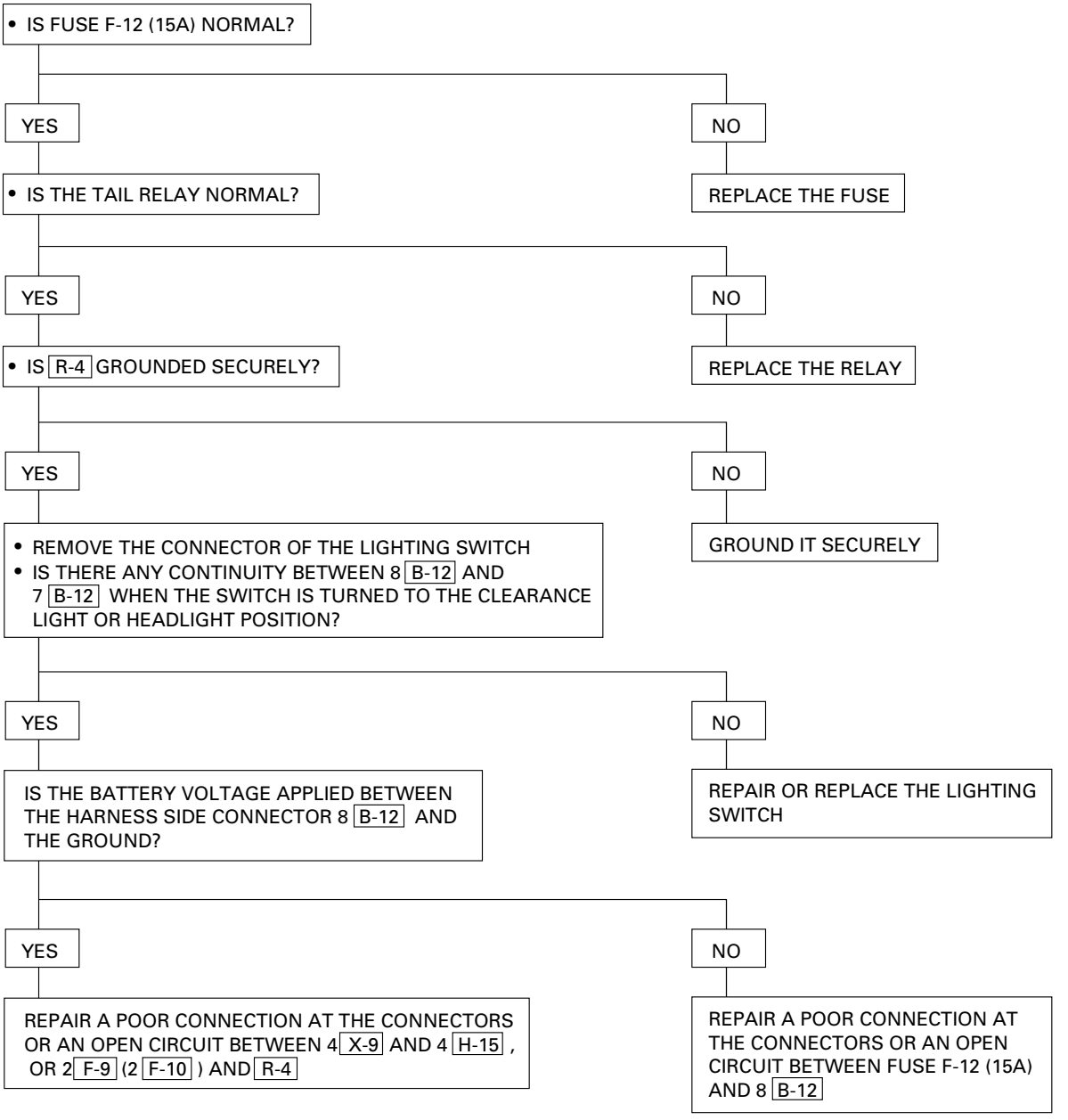
• IS FUSE F-12 (15A) NORMAL?
YES
NO
REPLACE THE FUSE
• IS THE TAIL RELAY NORMAL?
YES
NO
REPLACE THE RELAY
• IS R-4 GROUNDED SECURELY?
YES
NO
GROUND IT SECURELY
• REMOVE THE CONNECTOR OF THE LIGHTING SWITCH
• IS THERE ANY CONTINUITY BETWEEN 8 B-12 AND 7 B-12 WHEN THE SWITCH IS TURNED TO THE CLEARANCE LIGHT OR HEADLIGHT POSITION?
YES
NO
REPAIR OR REPLACE THE LIGHTING SWITCH
IS THE BATTERY VOLTAGE APPLIED BETWEEN THE HARNESS SIDE CONNECTOR 8 B-12 AND THE GROUND?
YES
NO
REPAIR A POOR CONNECTION AT THE CONNECTORS OR AN OPEN CIRCUIT BETWEEN 4 X-9 AND 4 H-15 , OR 2 F-9 (2 F-10) AND R-4
REPAIR A POOR CONNECTION AT THE CONNECTORS OR AN OPEN CIRCUIT BETWEEN FUSE F-12 (15A) AND 8 B-12

1-7 License Plate Light On The Left (Or Right) Side Inoperative (RHD-2)

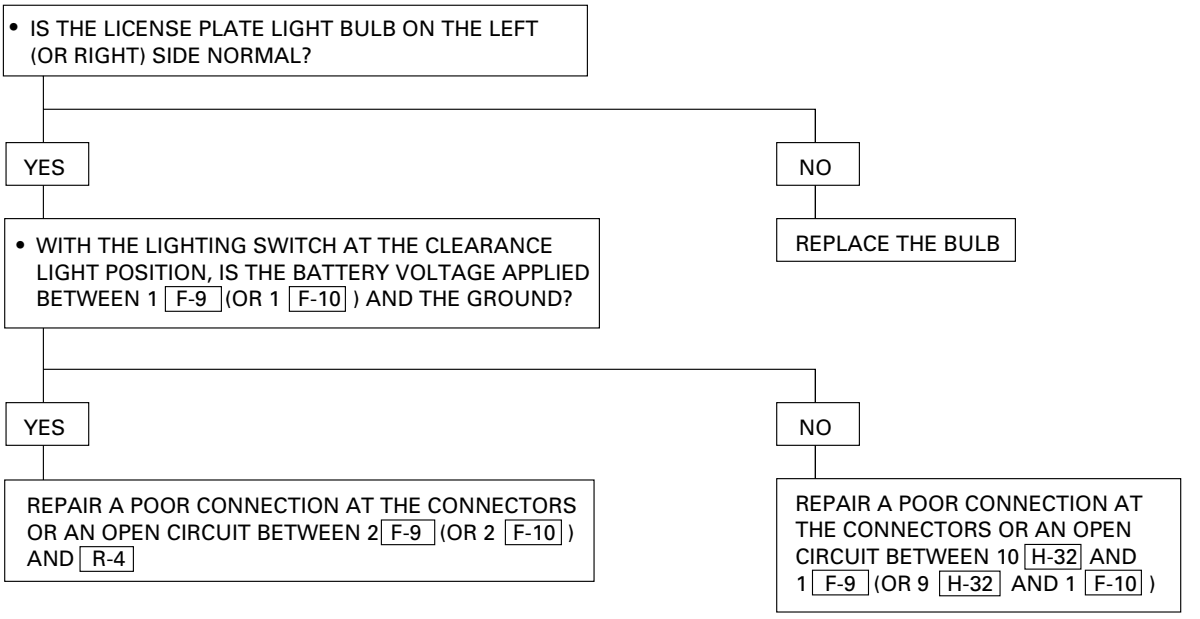

2-1 All Illumination Lights Inoperative

- IS TAIL RELAY NORMAL?
  - YES
    - IS THE CONTINUITY IN THE LIGHTING SWITCH NORMAL?
      - YES
        - IS B-19 GROUNDED SECURELY?
          - YES
            - IS THE BATTERY VOLTAGE APPLIED BETWEEN 8 B-12 AND GROUND WHEN LIGHTING SWITCH IS ON?
              - YES
                - REPAIR A POOR CONNECTION AT THE CONNECTORS OR AN OPEN CIRCUIT BETWEEN 7 B-12 AND B-19
              - NO
                - REPAIR A POOR CONNECTION AT THE CONNECTORS OR AN OPEN CIRCUIT IN THE CIRCUIT BETWEEN FUSE F-12 AND 8 B-12
          - NO
            - GROUND IT SECURELY
      - NO
        - REPAIR OR REPLACE THE SWITCH
  - NO
    - REPLACE THE RELAY

2-2 Both Taillights Inoperative

- DOES THE LICENCE PLATE LIGHT LIGHT UP WHEN THE LIGHTING SWITCH IS AT THE CLEARANCE LIGHT POSITION?
  - YES
    - REPAIR A POOR CONNECTION AT THE CONNECTORS OR AN OPEN CIRCUIT BETWEEN 1 R-13 (1 R-12) AND R-4 , OR 2 F-7 (2 F-8) AND R-4
  - NO
    - GROUND R-4 SECURELY

2-3 Taillight On The Left (Or Right) Side Inoperative

- IS FUSE F-11 (10A) (OR F-12 (10A)) NORMAL?

YES

- IS THE TAILLIGHT BULB ON THE LEFT (OR RIGHT) SIDE NORMAL?

YES

- WITH THE LIGHTING SWITCH AT THE CLEARANCE LIGHT POSITION, IS THE BATTERY VOLTAGE APPLIED BETWEEN 6 R-13 (OR 6 R-12) AND THE GROUND, OR 4 F-7 (OR 4 F-8) AND THE GROUND?

YES

REPAIR A POOR CONNECTION AT THE CONNECTORS OR AN OPEN CIRCUIT BETWEEN 1 R-13 (OR 1 R-12) AND R-4, OR 2 F-7 (OR 2 F-8) AND R-4

NO

REPAIR A POOR CONNECTION AT THE CONNECTORS OR AN OPEN CIRCUIT BETWEEN 10 H-32 AND 6 R-13 (OR 9 H-32 AND 6 R-12), OR 10 H-32 AND 4 F-7 (OR 9 H-32 AND 4 F-8)

NO

REPLACE THE BULB

NO

REPLACE THE FUSE

2-4 Both Clearance Lights Inoperative

- IS 1 C-16 (2 C-16 : 4ZE1) GROUNDED SECURELY?

YES

REPAIR A POOR CONNECTION AT THE CONNECTORS OR AN OPEN CIRCUIT BETWEEN 1 C-16 (2 C-16 : 4ZE1) AND 1 C-22 (1 C-31)

NO

GROUND IT SECURELY

2-5 Clearance Light On The Left (Or Right) Side Operative

- IS THE CLERANCE LIGHT BULB ON THE LEFT (OR RIGHT) SIDE NORMAL?

YES

- IS THERE ANY CONTINUITY BETWEEN THE HARNESS SIDE CONNECTOR
  2 C-22 AND FUSE F-11 (10A)
  2 C-31 AND FUSE F-12 (10A)

YES

REPAIR A POOR CONNECTION AT THE CONNECTORS OR AN OPEN CIRCUIT BETWEEN 1 C-22 (OR 1 C-31) AND 1 C-16 (OR 2 C-16 : 4ZE1)

NO

REPAIR A POOR CONNECTION AT THE CONNECTORS OR AN OPEN CIRCUIT IN THE CIRCUIT

NO

REPLACE THE BULB

2-6 License Plate Light Inoperative

(LHD-1)

- IS FUSE F-12 (10A) NORMAL?

YES

- DOES THE BOTH TAILLIGHT LIGHT UP WHEN THE LIGHTING SWITCH IS AT THE CLEARANCE LIGHT POSITION?

YES

- IS THE LICENCE PLATE LIGHT BULB NORMAL?

YES

- IS THERE ANY CONTINUITY BETWEEN THE HARNESS SIDE CONNECTOR
  1 G-8 AND 1 H-39 ?

YES

REPAIR A POOR CONNECTION AT THE CONNECTORS OR AN OPEN CIRCUIT BETWEEN 2 G-8 AND R-4

NO

REPAIR A POOR CONNECTION AT THE CONNECTORS OR AN OPEN CIRCUIT IN THE CIRCUIT

NO

REPLACE THE BULB

NO

GROUND R-4 SECURELY

NO

REPLACE THE FUSE

NO

(LHD-2)

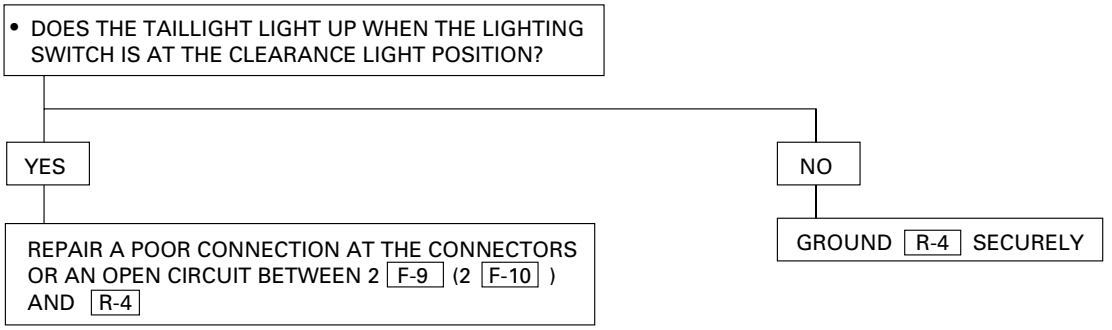

2-7 License Plate Light On The Left (Or Right) Side Inoperative

(LHD-2)

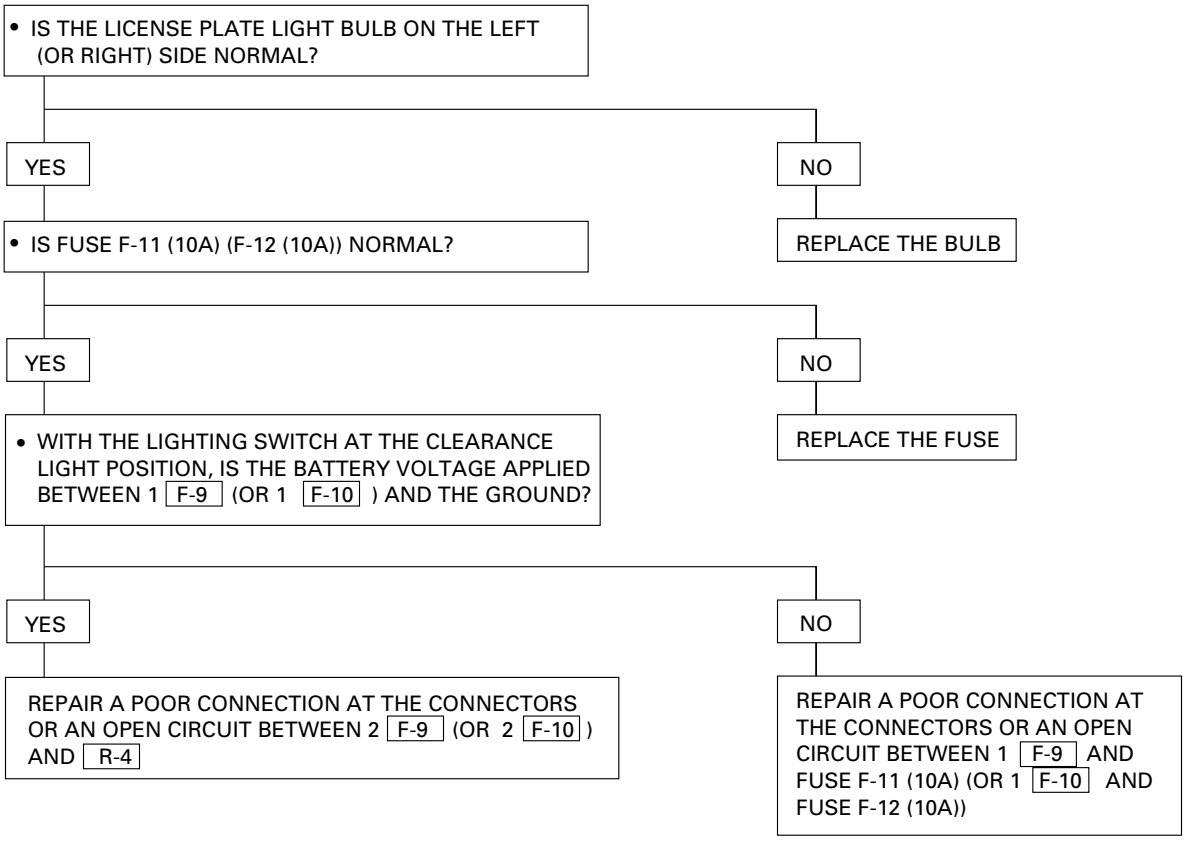

2-8 Both Taillights And Clearance Lights On The Left (Or Right) Side Inoperative

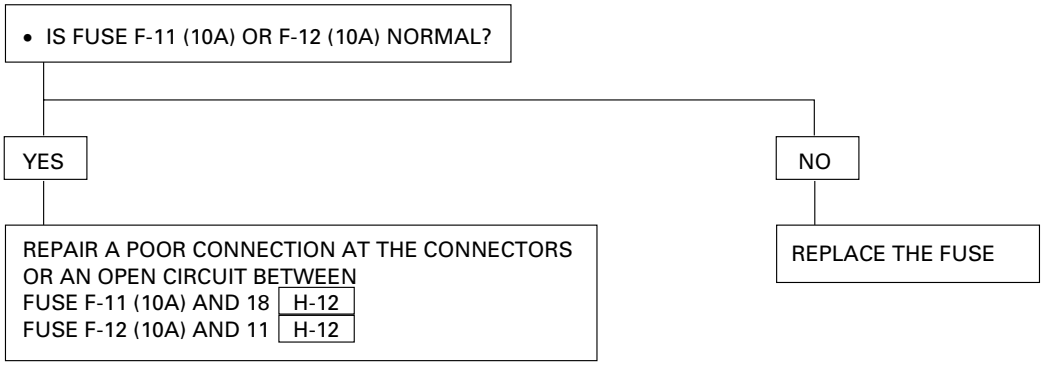

Interior Illumination Light

General Description

The circuit consists of a lighting switch, tail relay, illumination controller and illumination lights.
All these lights come on when the lighting switch is turned on with the switch turned to either parking or headlight position.
The brightness of illumination lights except the ones for ashtray, glove box and vanity mirror, can be adjusted by the illumination controller.

Circuit Diagram (RHD)-1

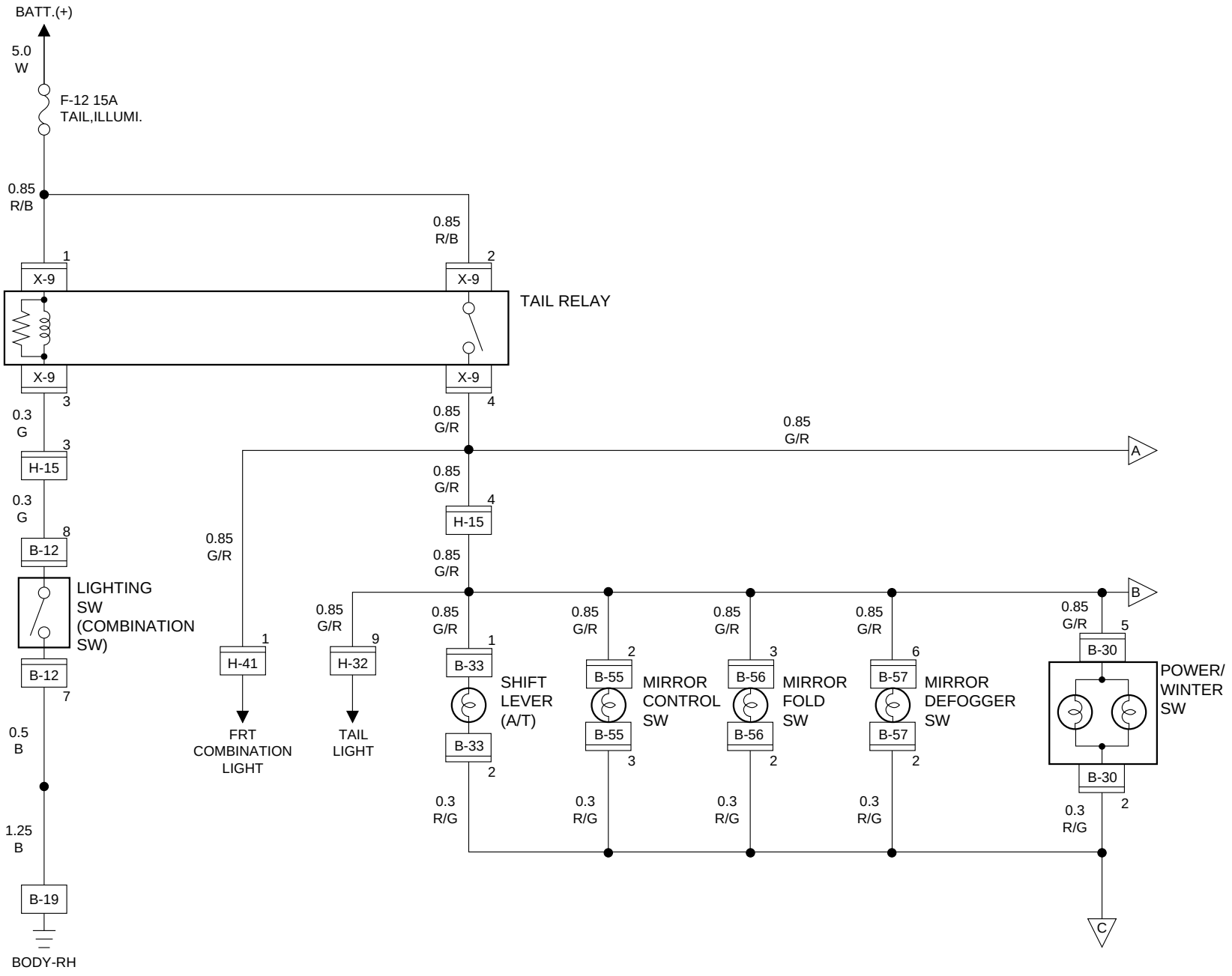

D08RW057

Circuit Diagram (RHD)-2

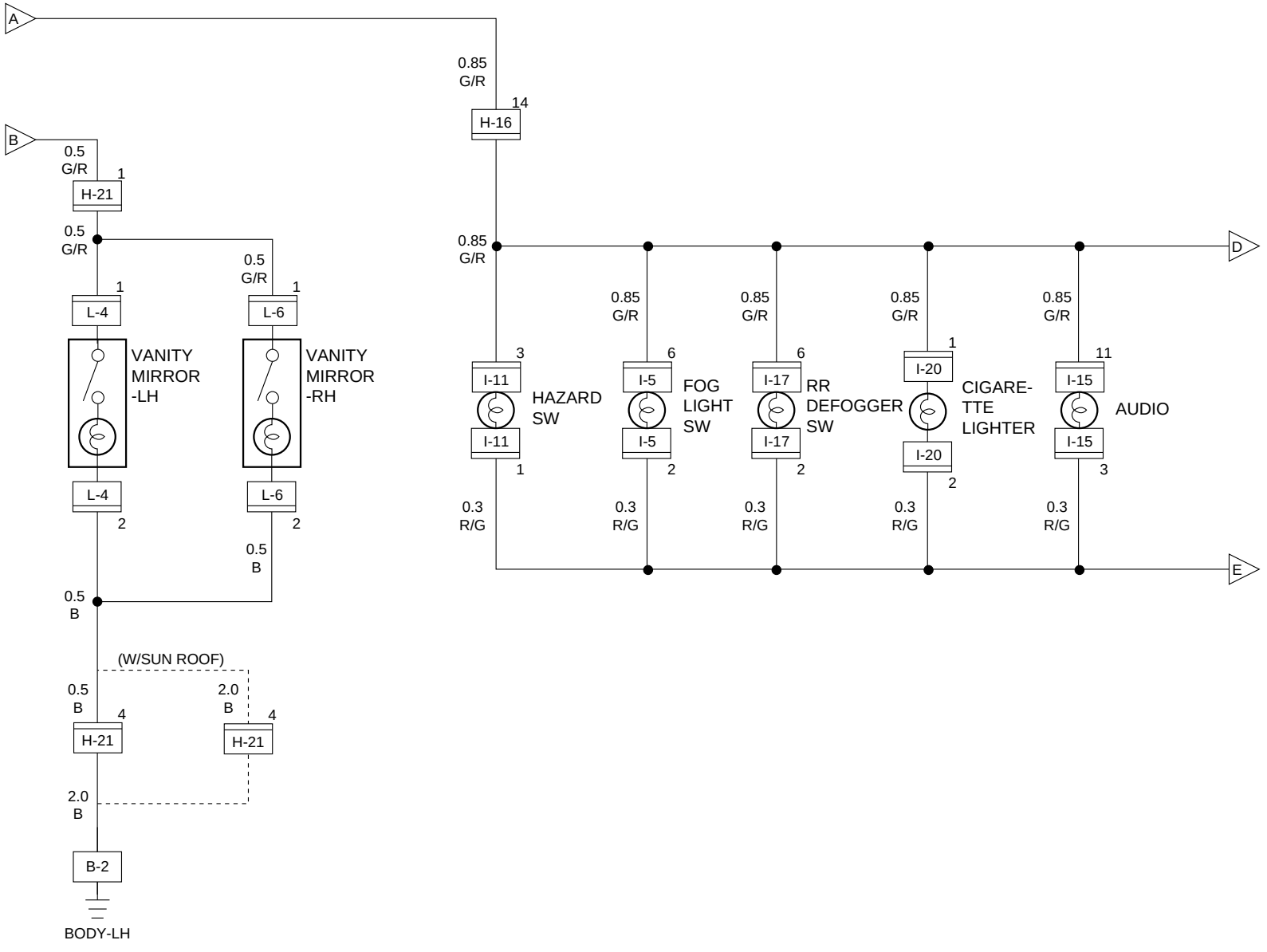

D008RW656

Circuit Diagram (RHD)-3

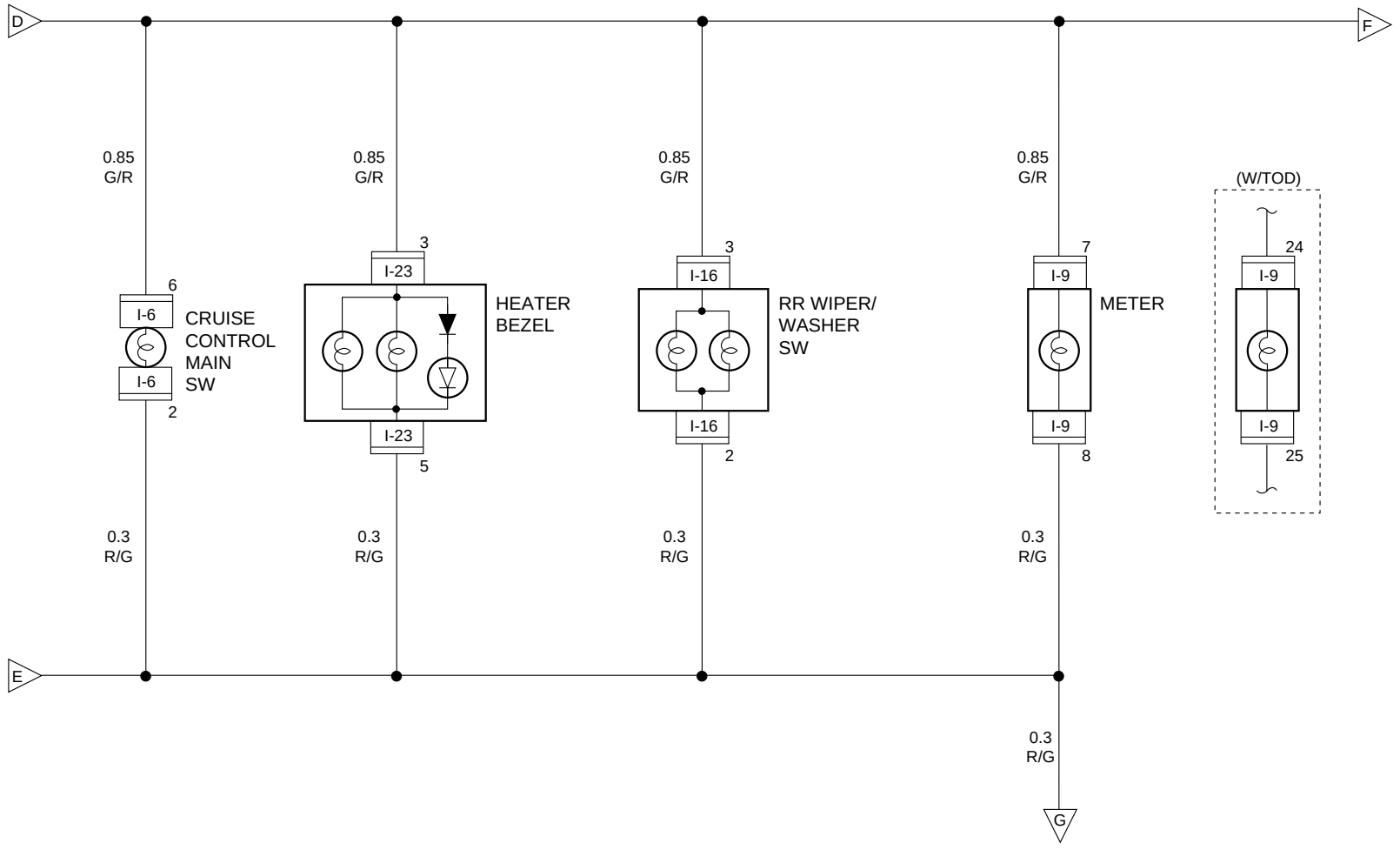

Circuit Diagram (RHD)-4

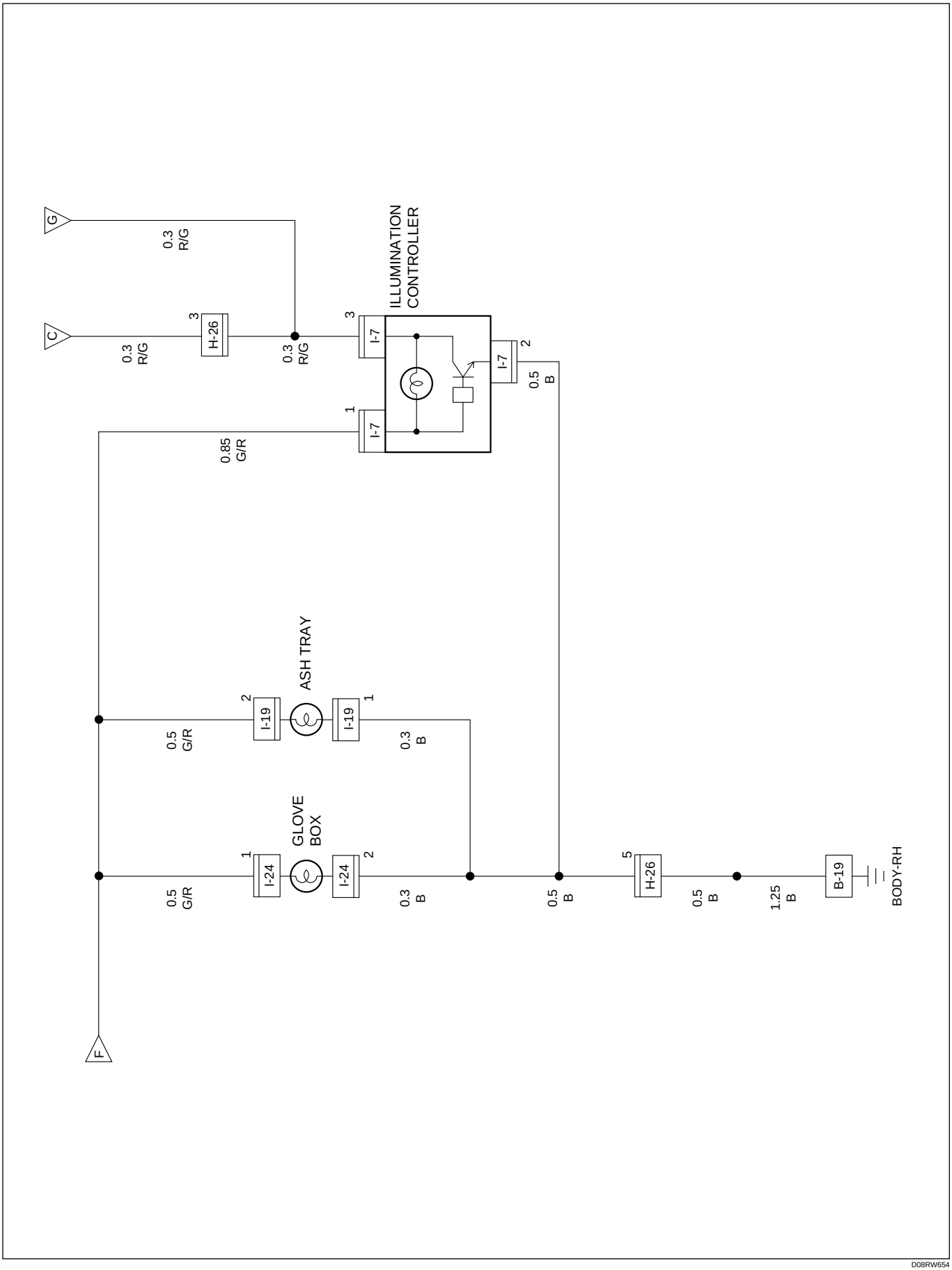

D08RW654

Parts Location (RHD)

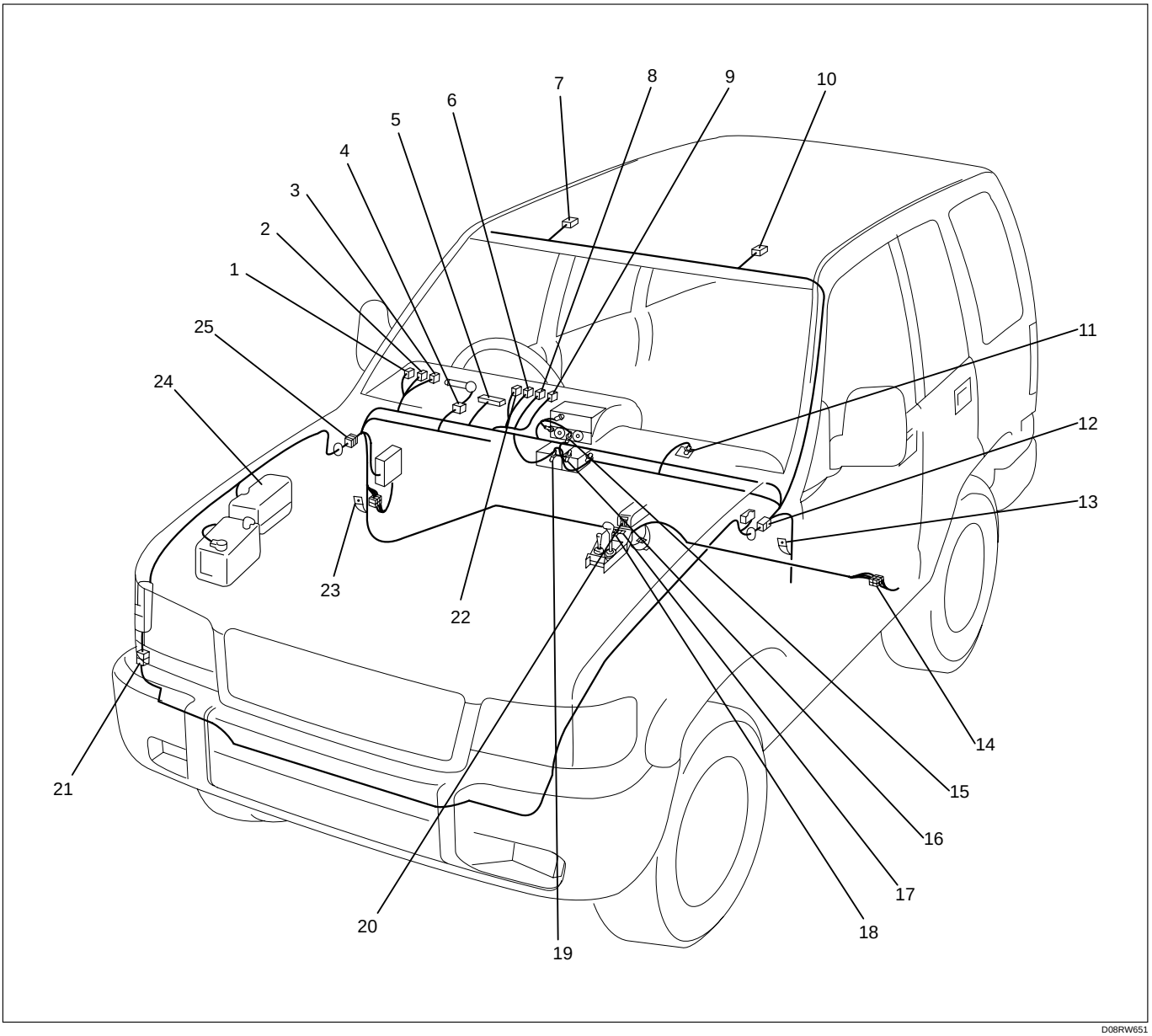

D08RW651

Legend

(1) Front Fog Light Switch (I-5)
(2) Head Light Wiper / Washer Switch (I-4)
(3) Illumination Controller
(4) B-12
(5) I-9
(6) Hazard Switch (I-11)
(7) L-6
(8) I-16
(9) I-17
(10) L-4
(11) I-24
(12) H-21
(13) B-2
(14) H-32
(15) I-23
(16) I-20
(17) B-30
(18) B-33
(19) I-19
(20) B-55, B-56, B-57
(21) H-41
(22) I-16
(23) B-19
(24) Relay and Fuse Box (X-9)
(25) H-15, H-16, H-26

Circuit Diagram (LHD)-1

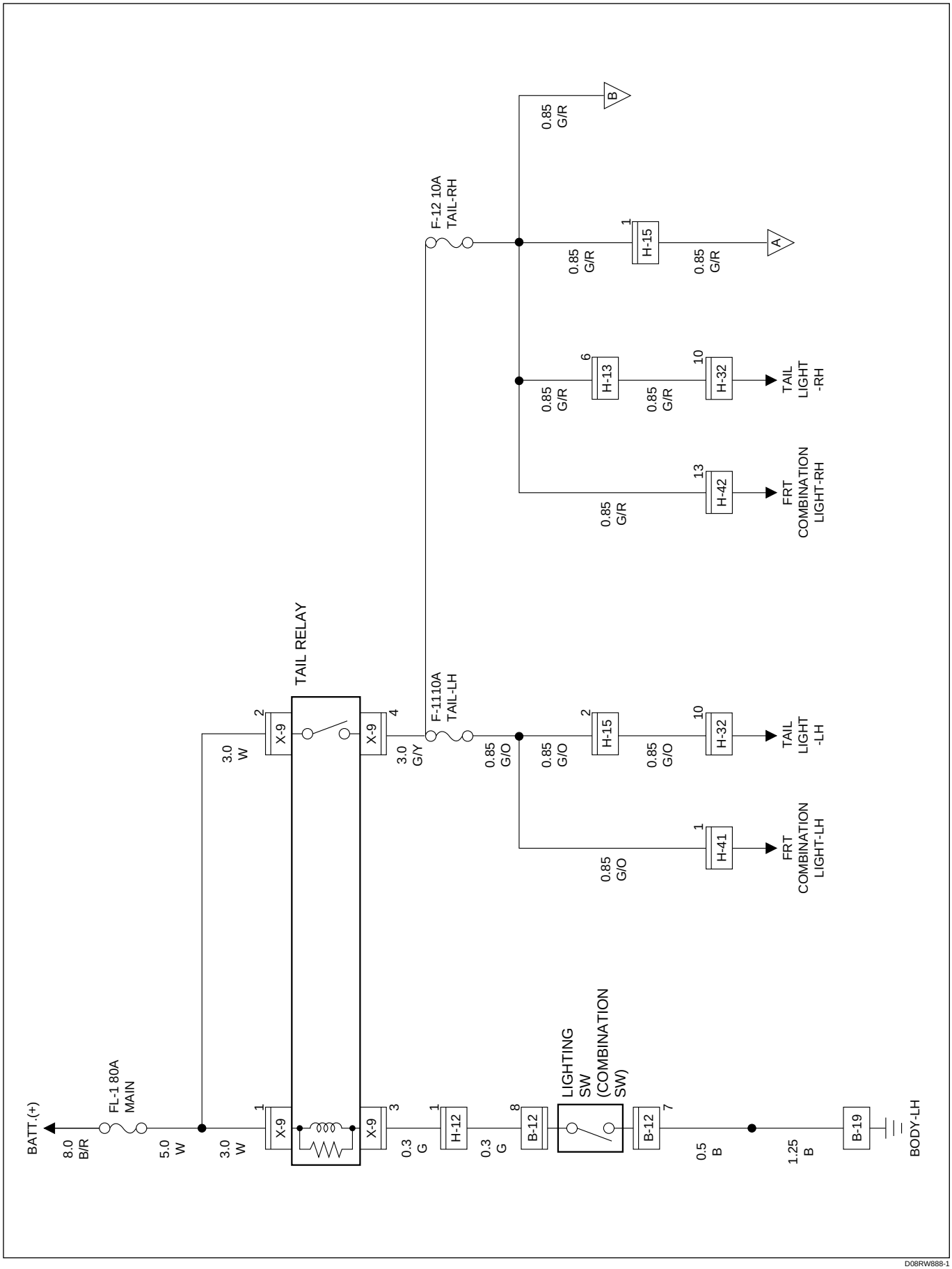

D08RW888-1

Circuit Diagram (LHD)-2

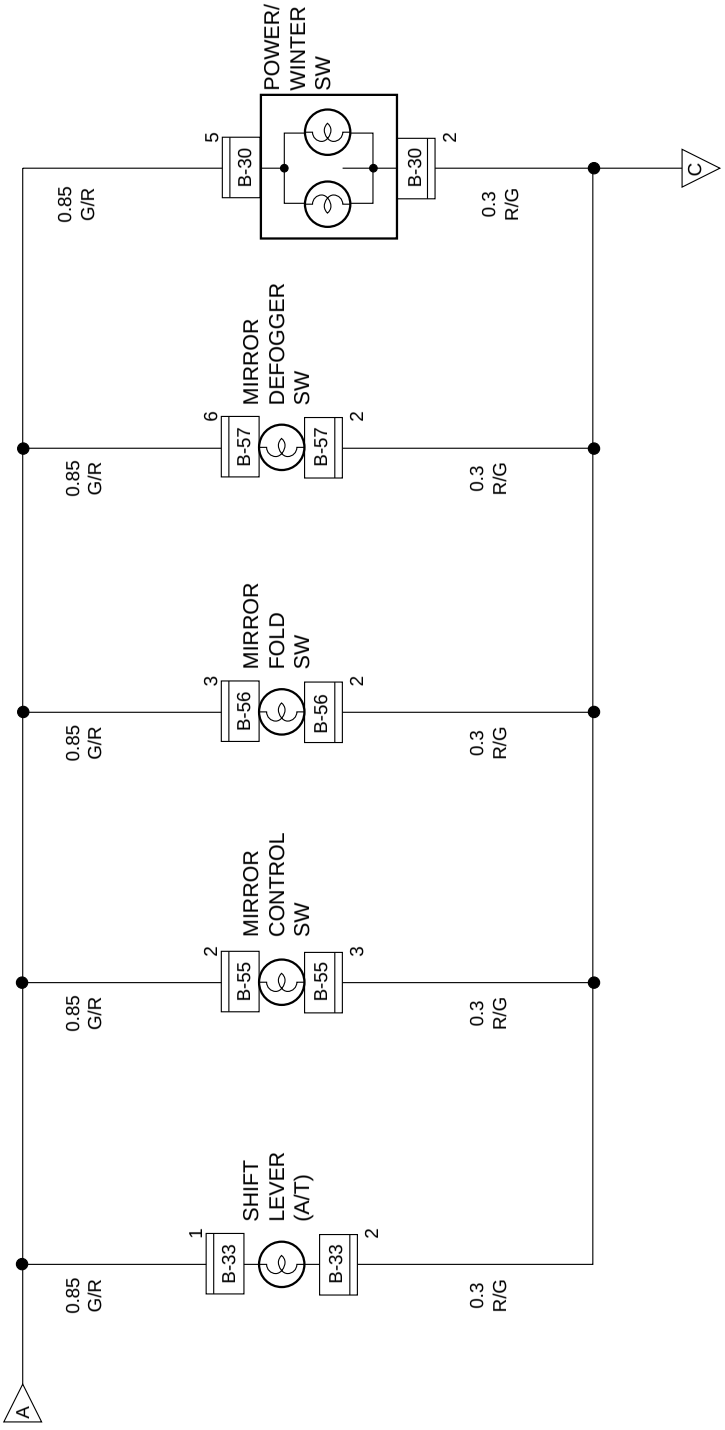

D08RW889-1

Circuit Diagram (LHD)-3

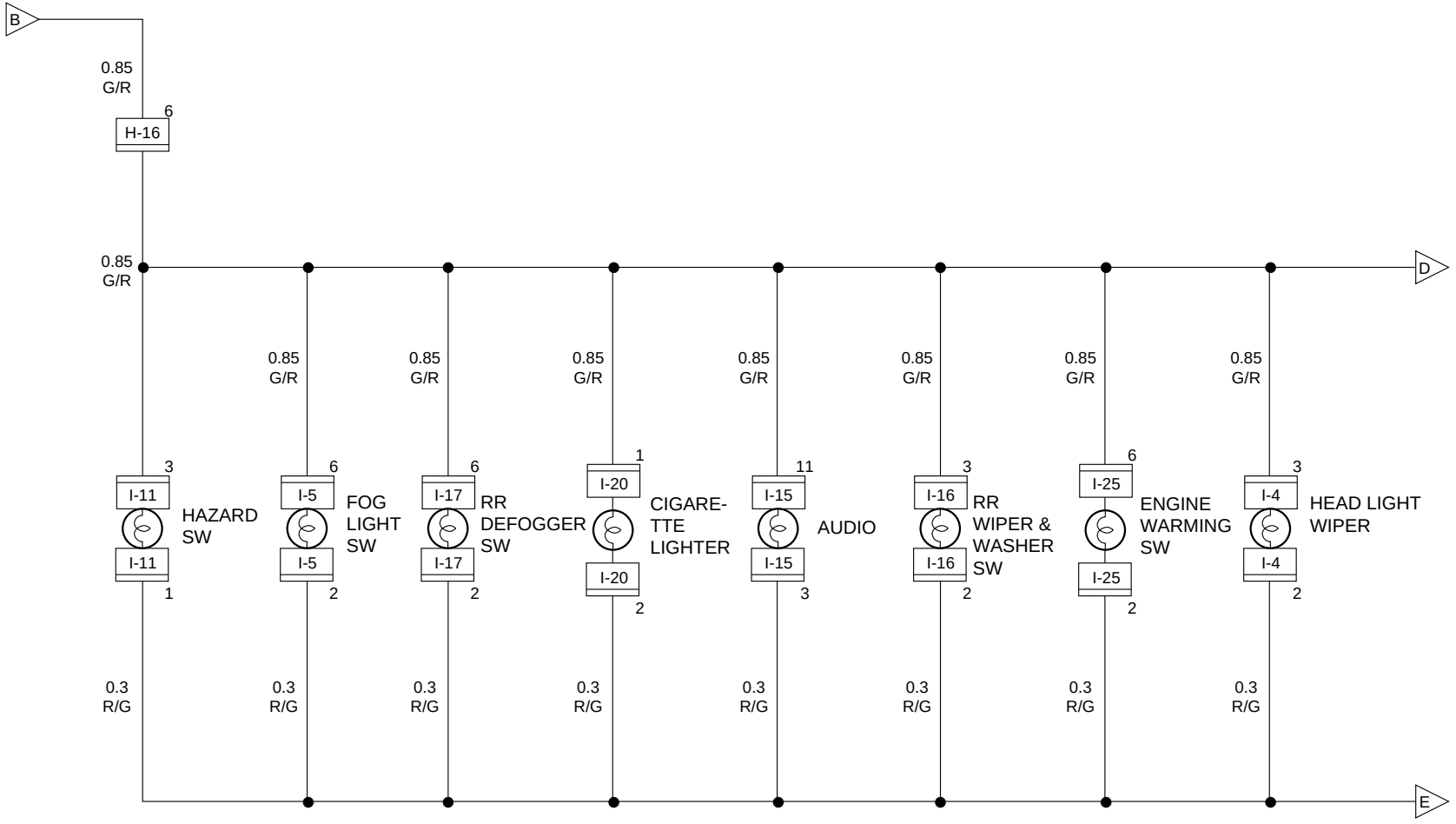

Circuit Diagram (LHD)-4

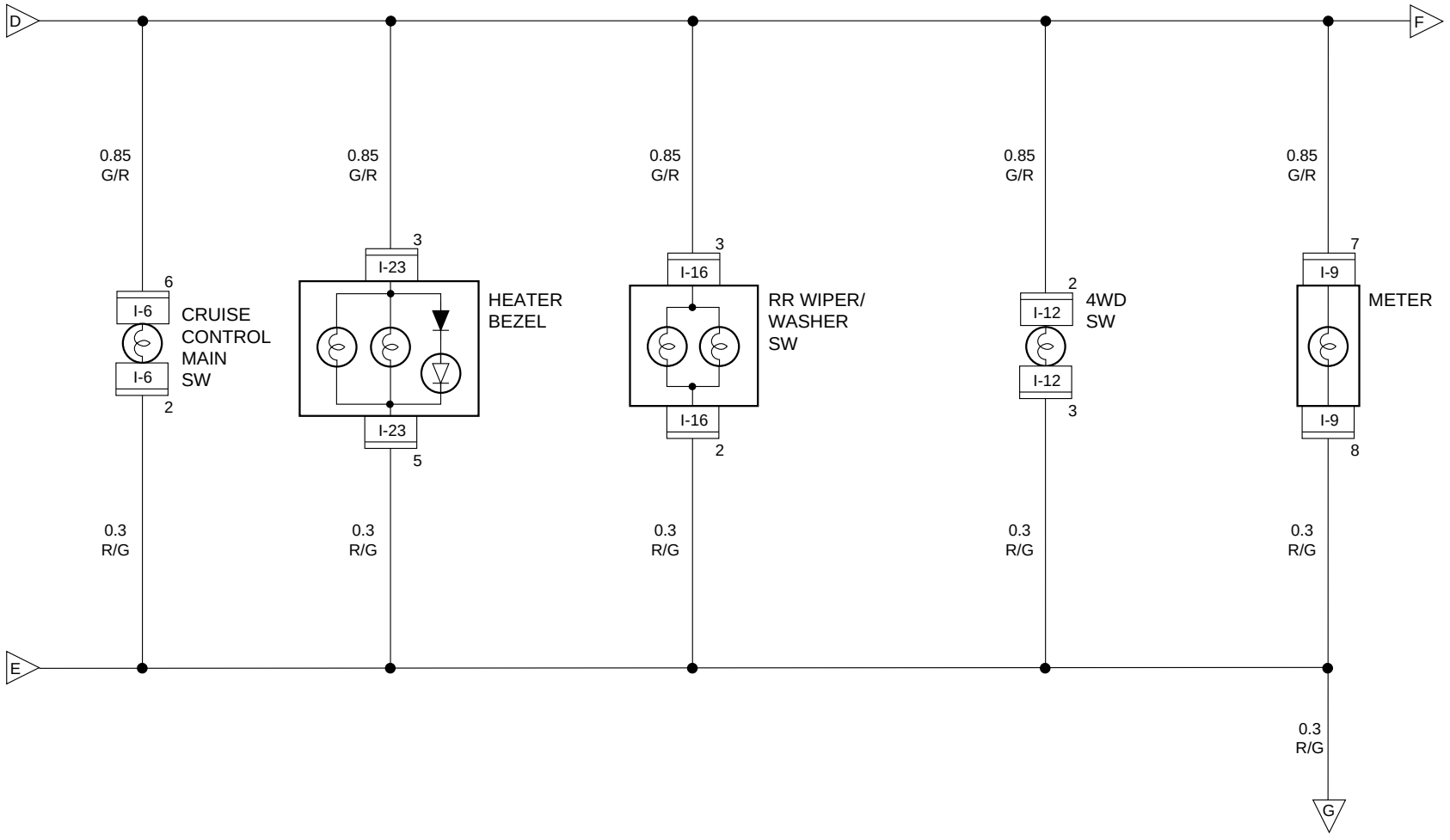

Circuit Diagram (LHD)-5

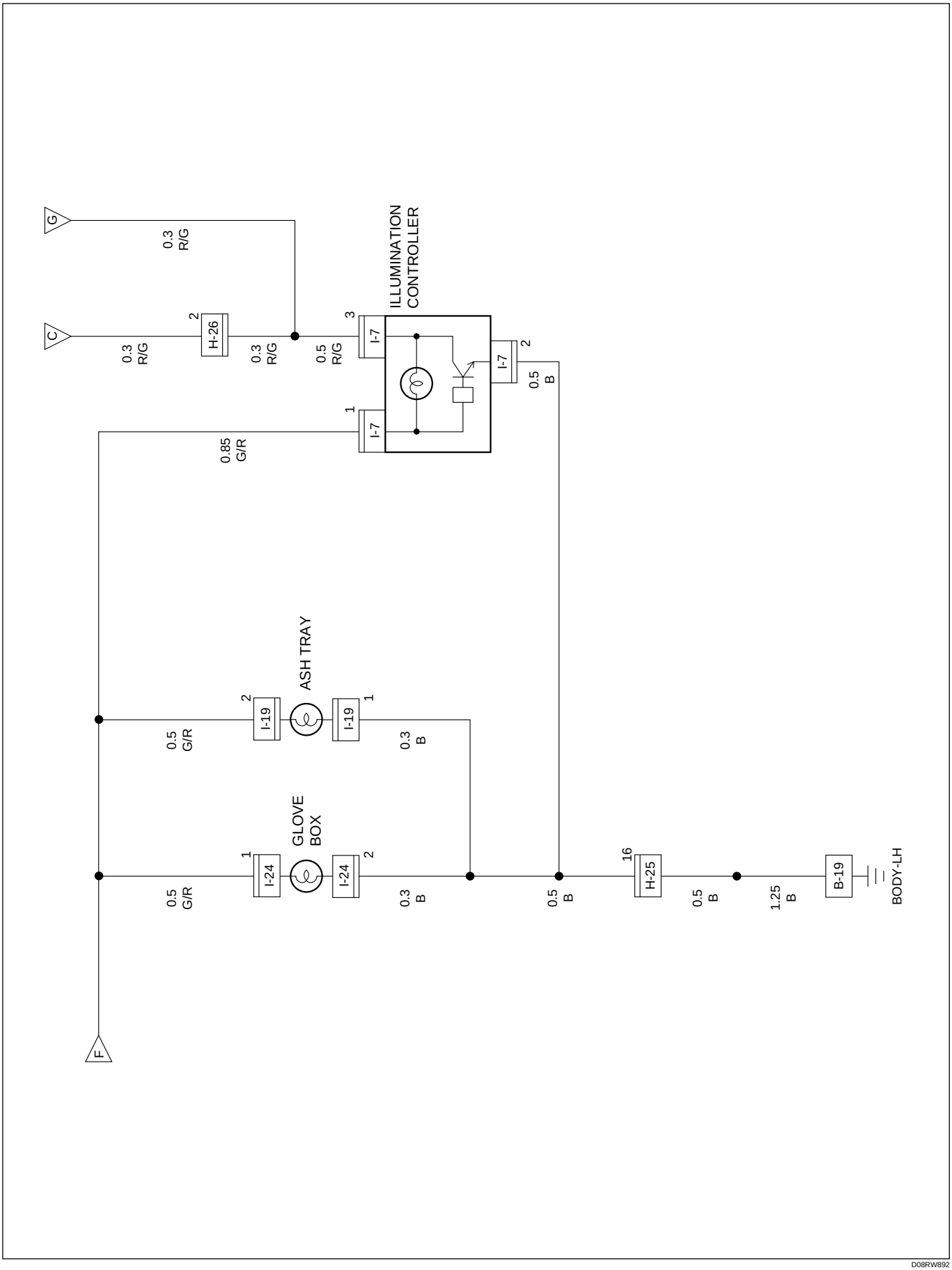

D08RW892

Parts Location (LHD)

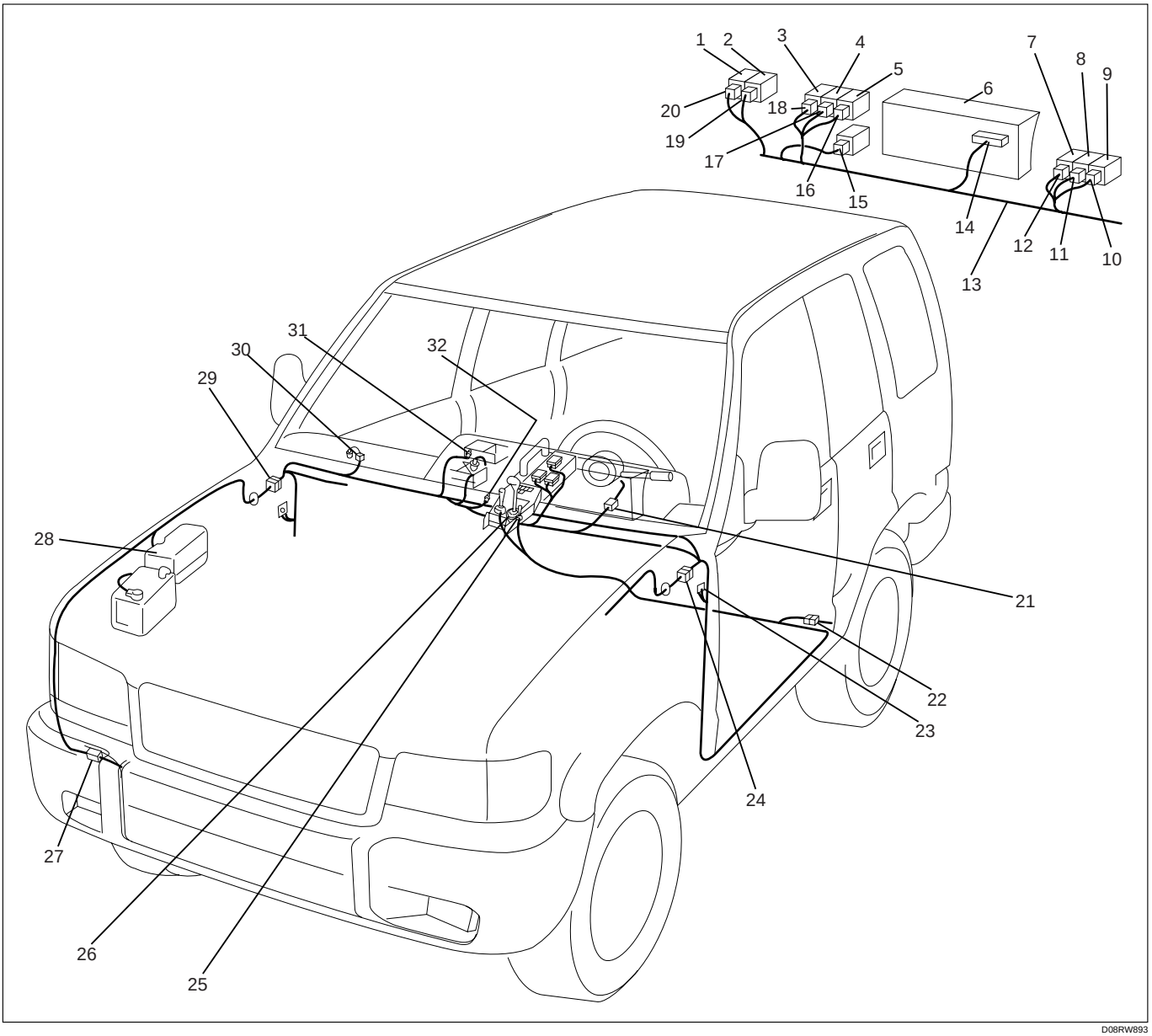

D08RW893

Legend

(1) Rear Deffoger Switch
(2) Rear Wiper / Washer Switch
(3) Engin Warming Switch
(4) 4WD Switch
(5) Hazard Switch
(6) Meter
(7) Illumination Contoroller
(8) Head Light Wiper and Washer Switch
(9) Fog Light Switch
(10) I-5
(11) I-4
(12) I-7
(13) Instrument Harness
(14) I-9
(15) I-6
(16) I-11
(17) I-12
(18) I-25
(19) I-16
(20) I-17
(21) B-12
(22) H-32
(23) B-19
(24) H-25, H-26
(25) B-33
(26) B-30
(27) H-41, H-42
(28) Relay and Fuse Box (X-9)
(29) H-13, H-15, H-16
(30) I-24
(31) I-28
(32) I-20

Diagnosis

Interior Illumination Lights Inoperative

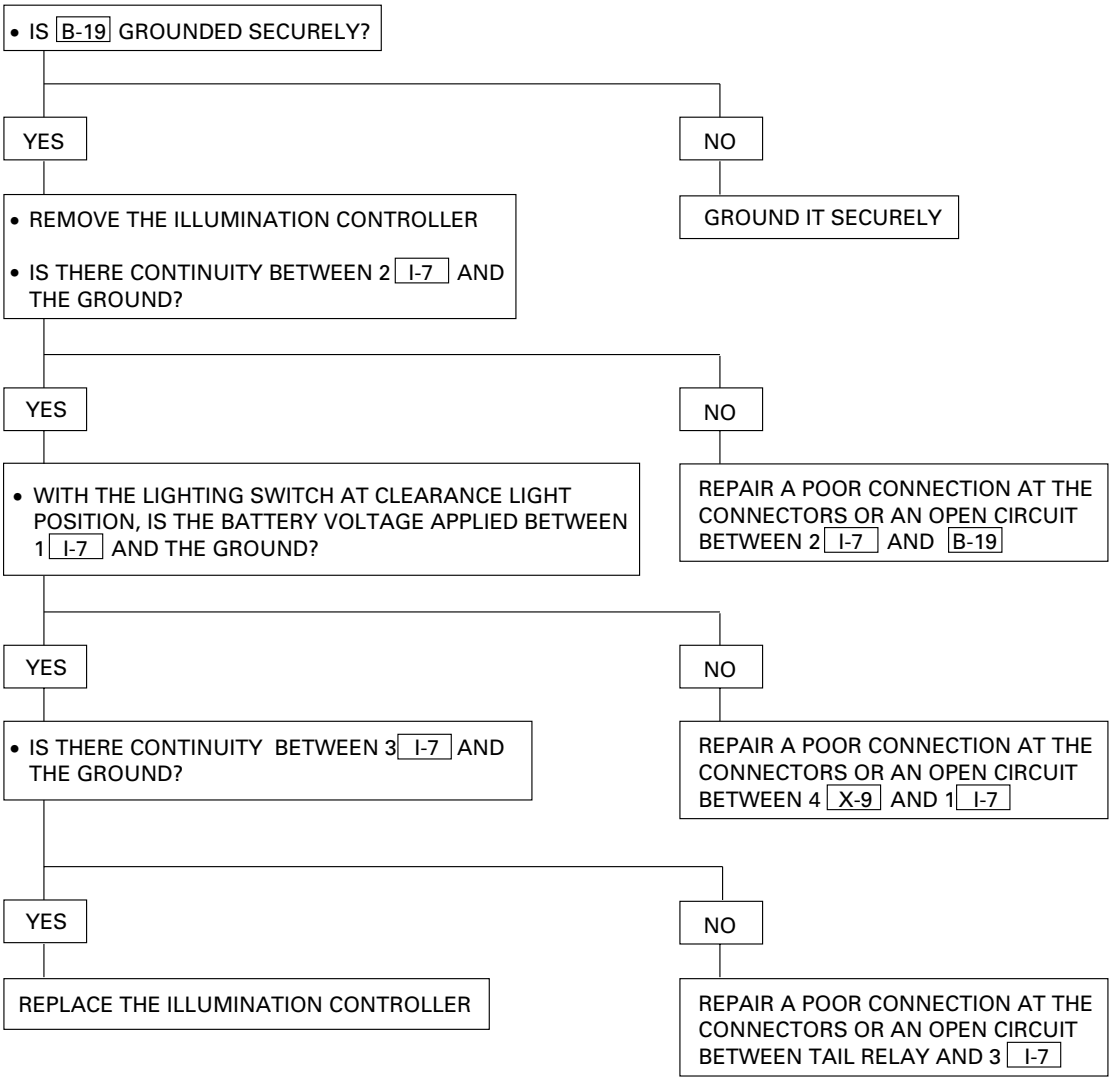

Turn Signal Light and Hazard Warning Light

General Description

The circuit consists of a turn signal switch (combination switch), turn signal light, hazard warning switch and flasher unit. When the turn signal light switch is turned on with starter switch on, turn signal light will operate. When turn signal light is flashing, indicator light in meter also starts flashing. When hazard warning switch is turned on, current flows to flasher unit through hazard warning switch to cause hazard warning light to flash independent of position of starter switch. At the same time, indicator lights in meter also start flashing.

Circuit Diagram (RHD)-1

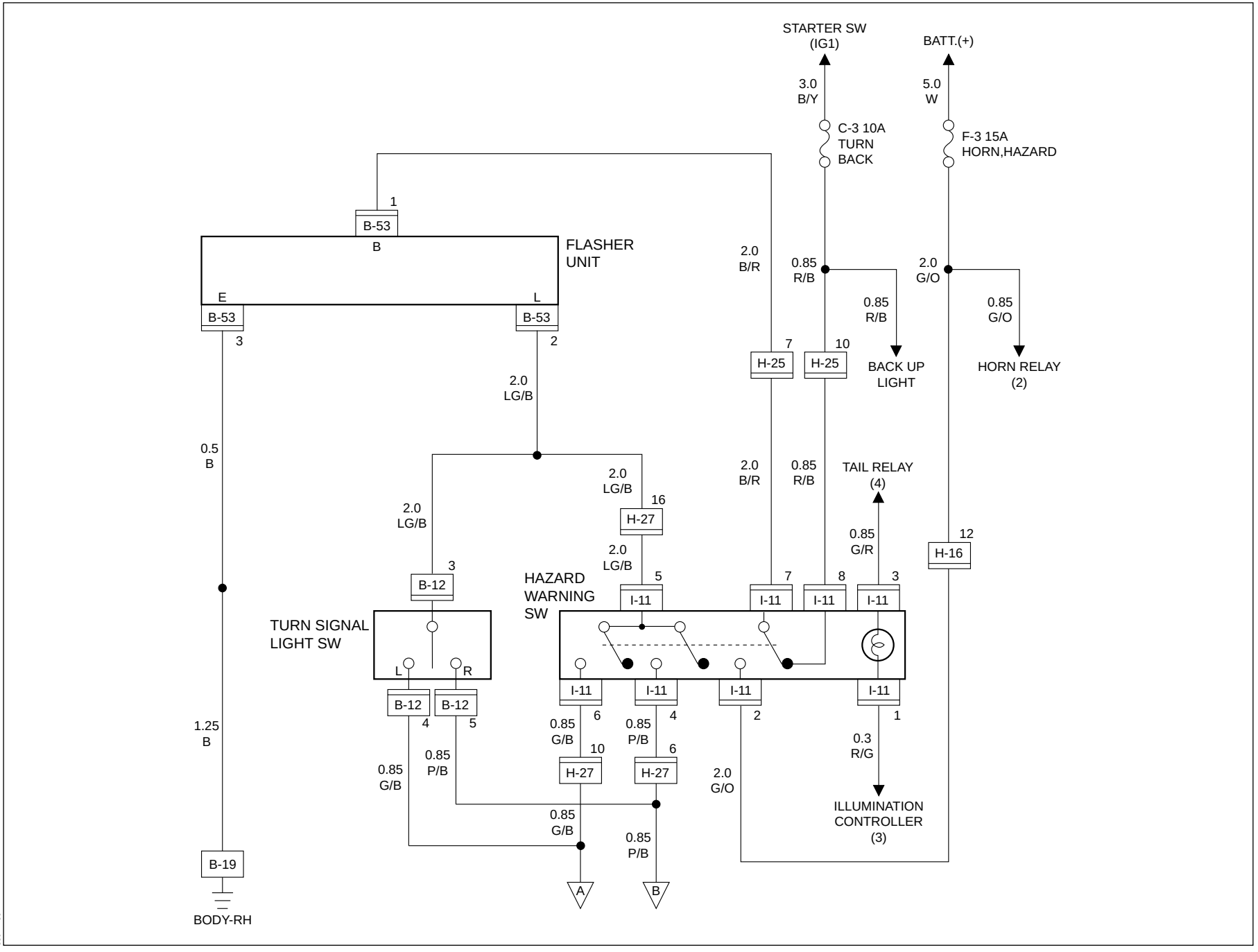

Circuit Diagram (RHD)-2

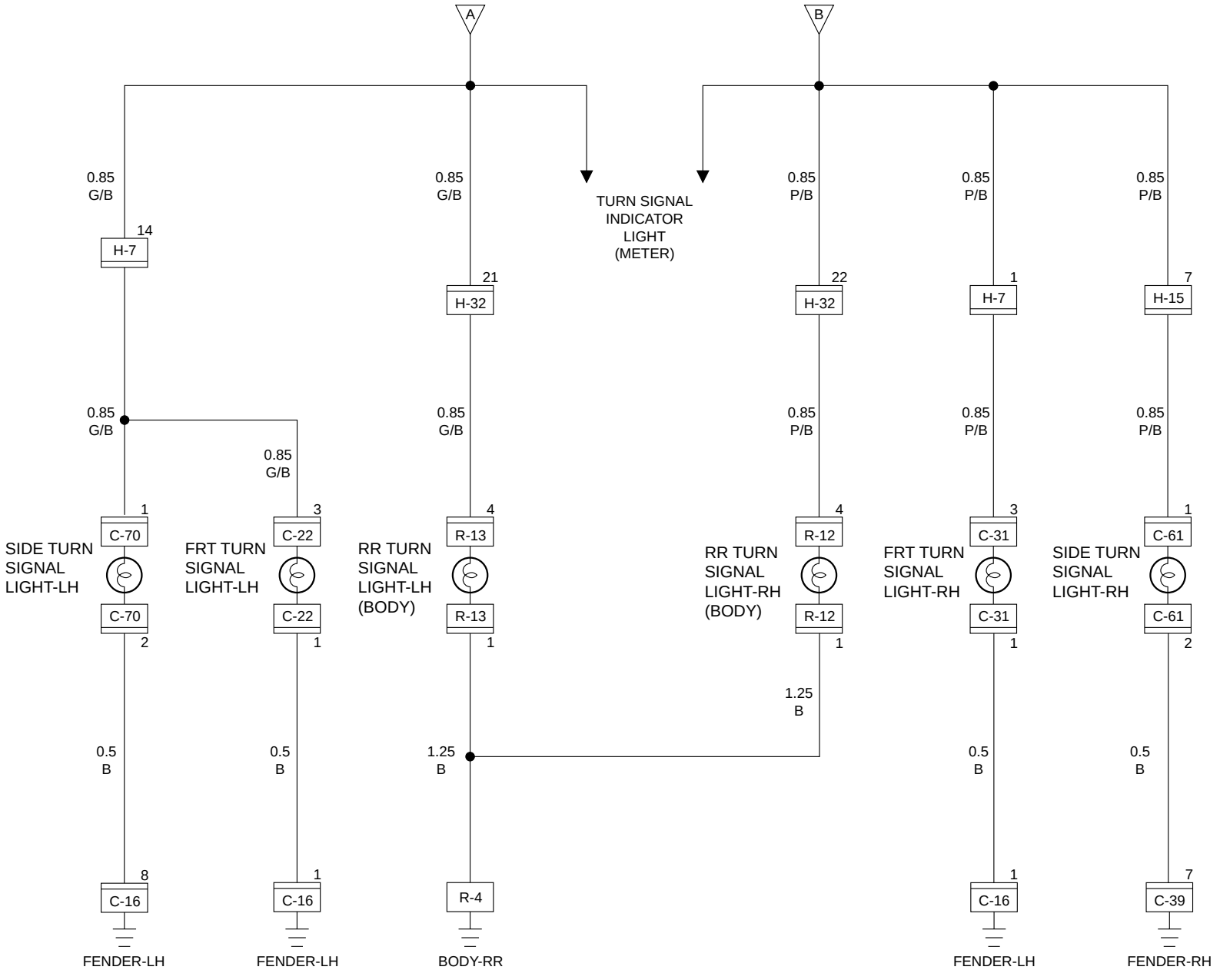

D08RWC67

Circuit Diagram (RHD W/Bumper Built-in Type RR Turn Signal Light) -2

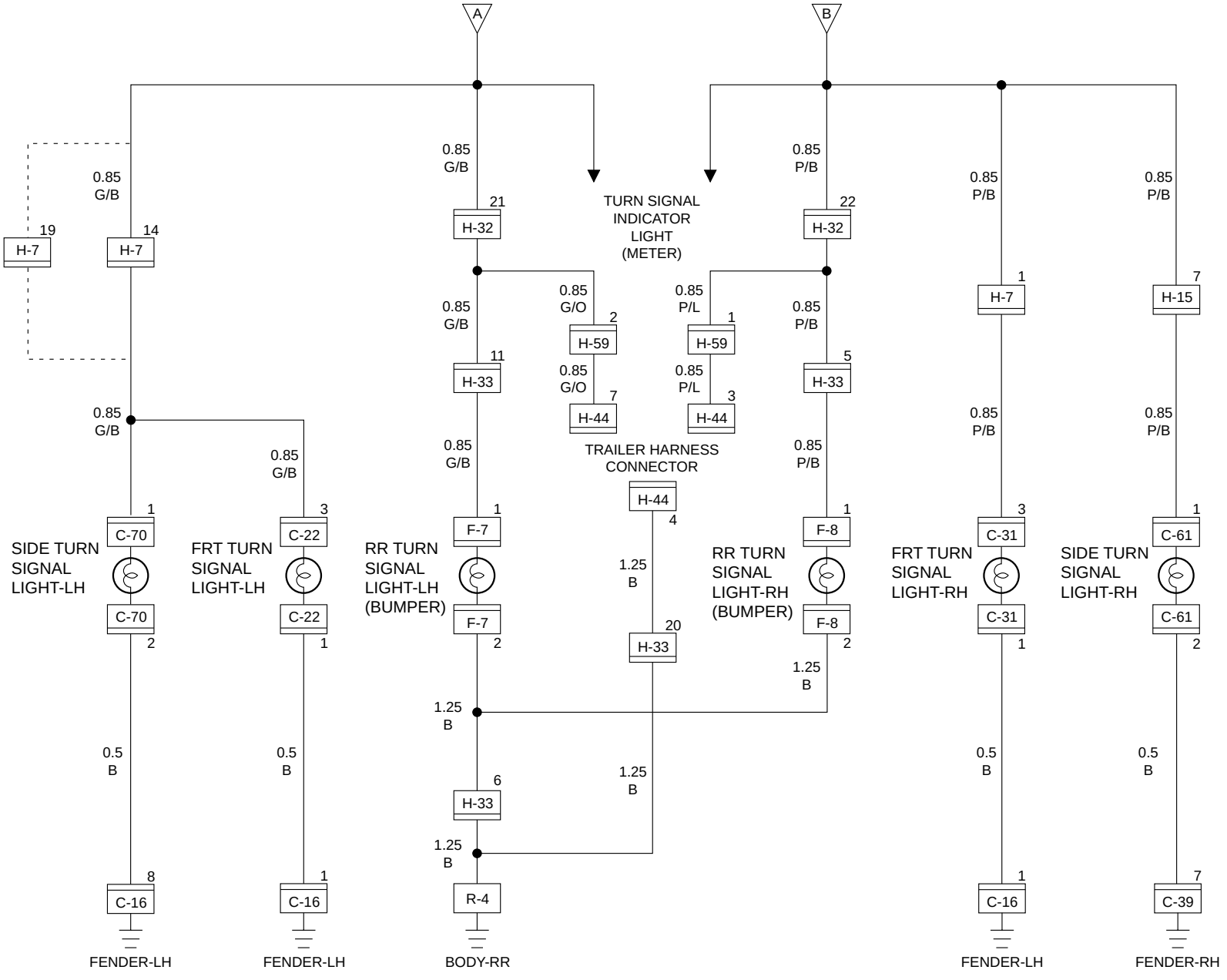

Parts Location (RHD)

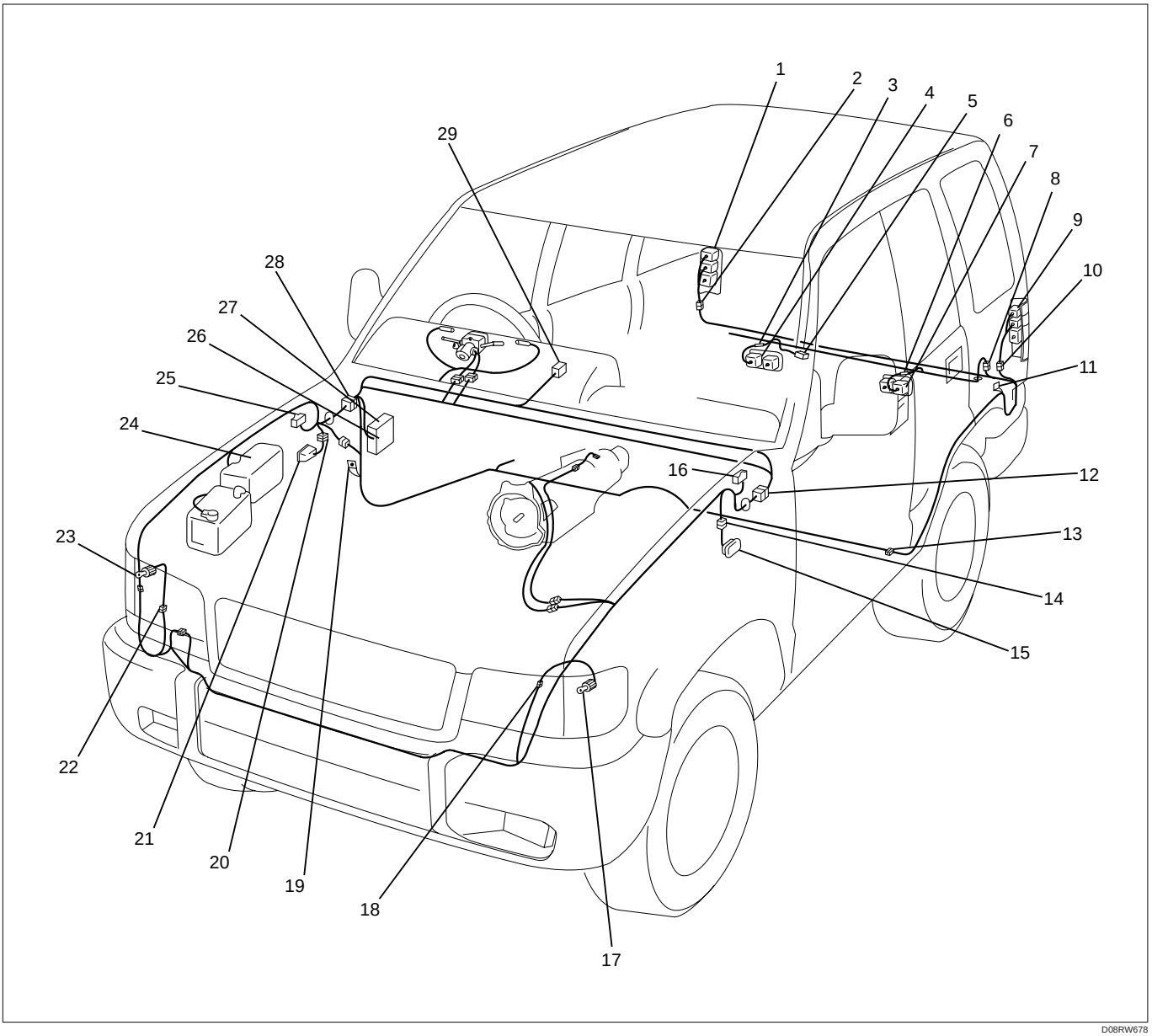

D08RW678

Legend

(1) Rear Turn Signal Light–RH (Body)
(2) R–12
(3) F–8
(4) Rear Turn Signal Light–RH (Bumper)
(5) H–44
(6) F–7
(7) Rear Turn Signal Light–LH (Bumper)
(8) H–33, H–59
(9) Rear Turn Signal Light–LH (Body)
(10) R–13
(11) R–4
(12) H–7
(13) H–32
(14) C–70
(15) Side Turn Signal Light–LH
(16) C–16
(17) Front Turn Signal Light–LH
(18) C–22
(19) B–19
(20) C–61
(21) Side Turn Signal Light–RH
(22) C–31
(23) Front Turn Signal Light–RH
(24) Relay and Fuse
(25) C–39
(26) Fuse Box (Flasher Unit)
(27) Fuse Box
(28) H–15, H–16, H–25, H–27
(29) I–11

Circuit Diagram (LHD)-1

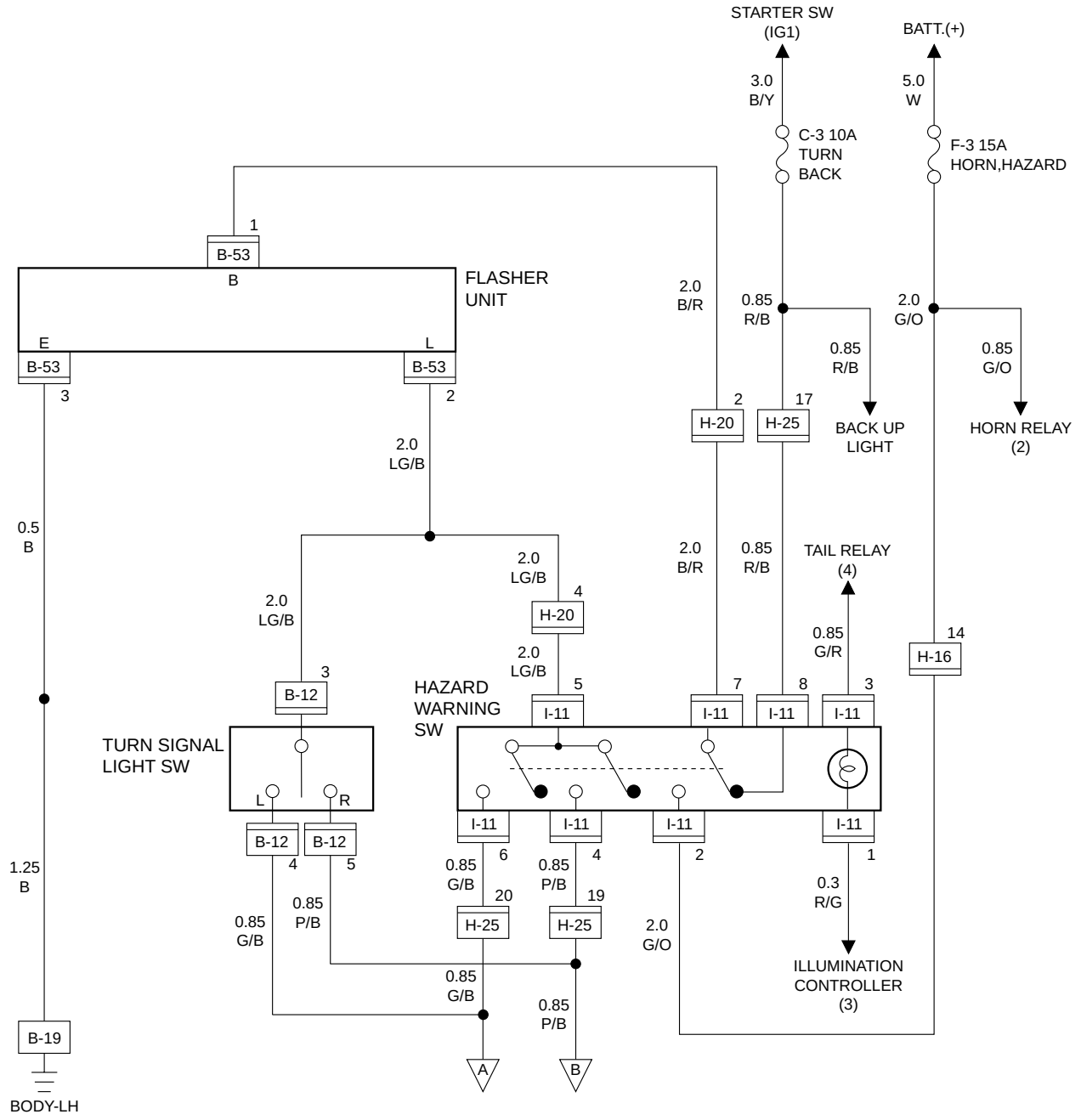

Circuit Diagram (LHD)-2

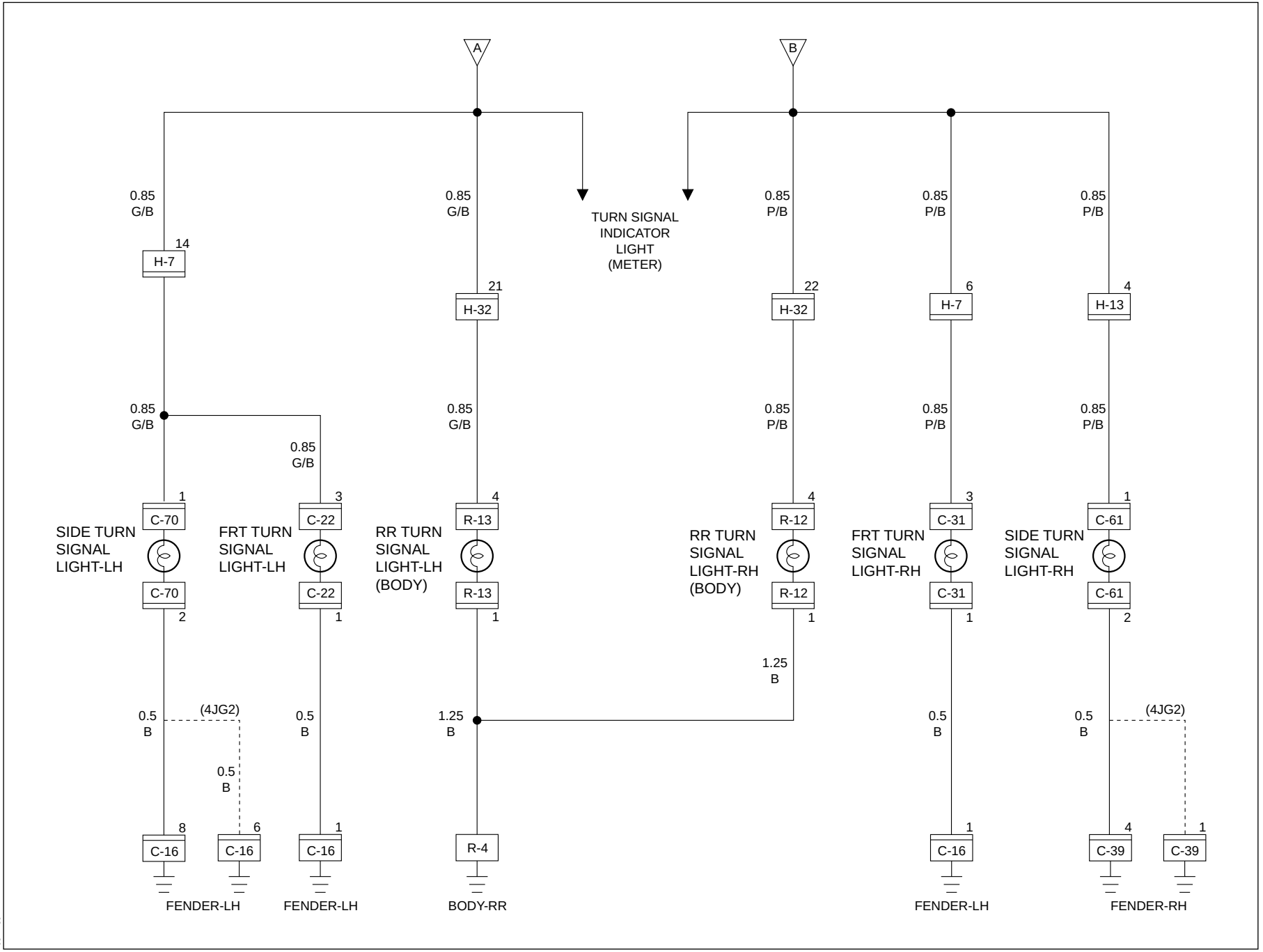

D08RW867

Circuit Diagram (LHD W/Bumper Built-in Type RR Turn signal Light)-2

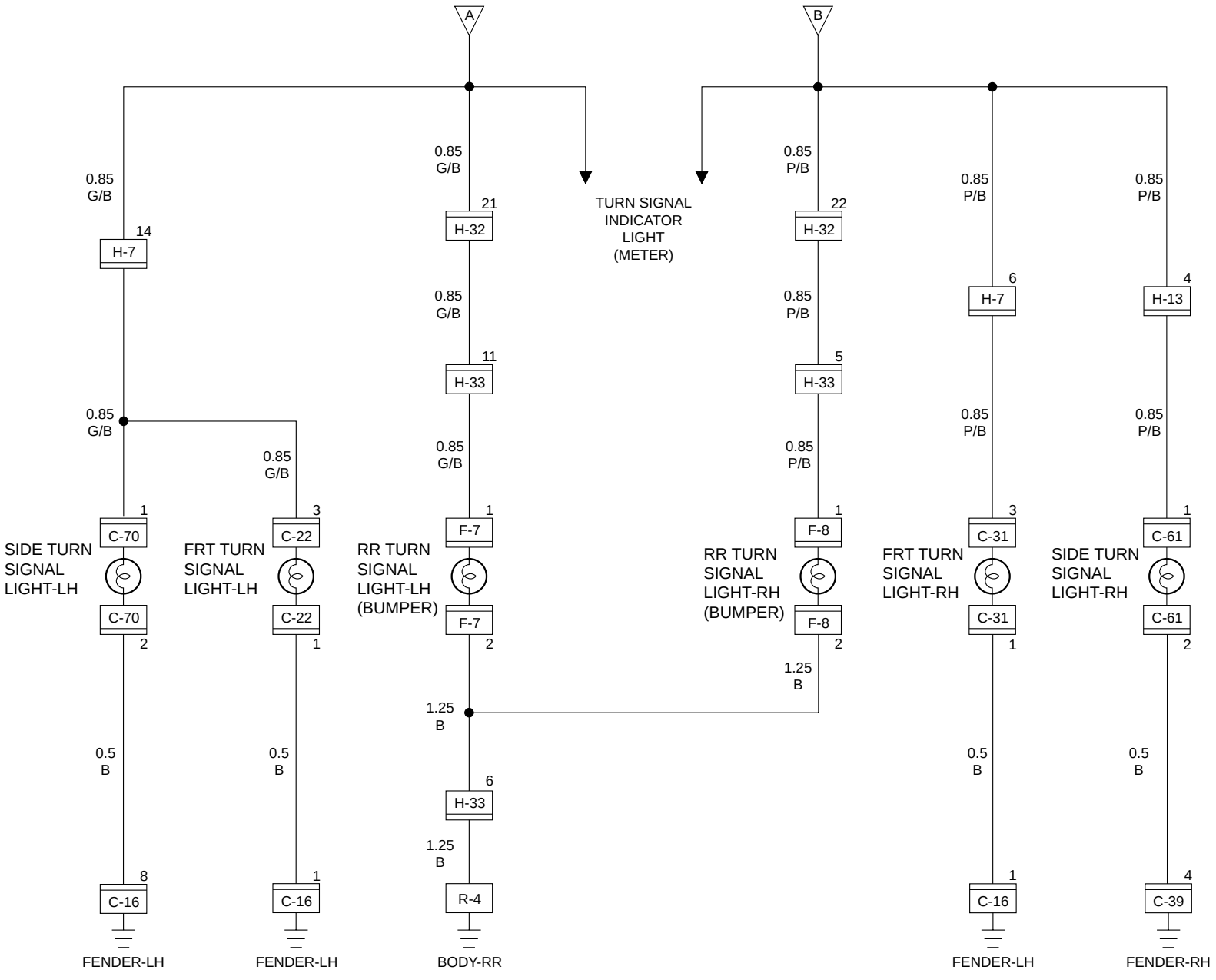

Parts Location (LHD)

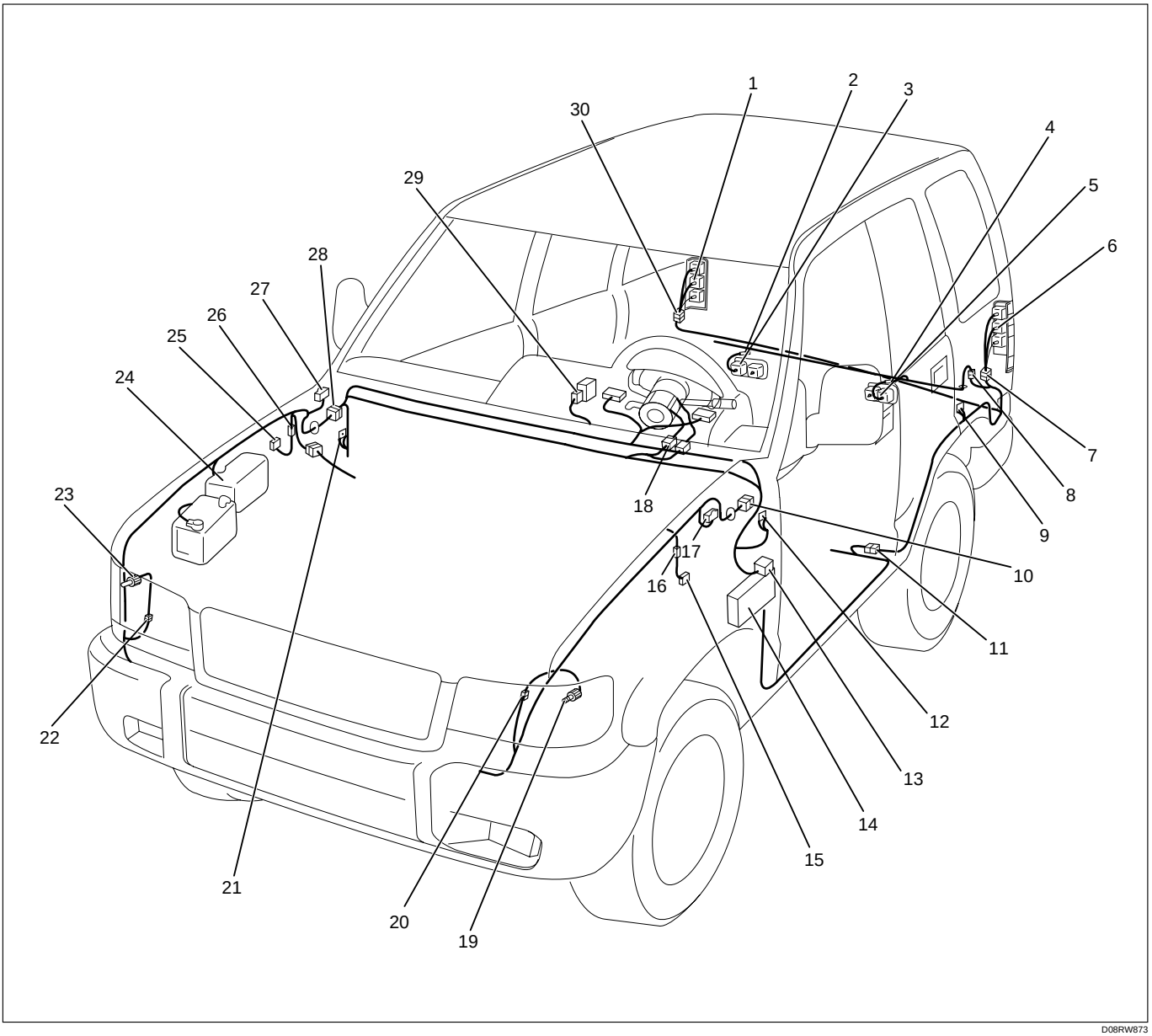

D08RW873

Legend

(1) Rear Turn Signal Light–RH (Body)
(2) F–8
(3) Rear Turn Signal Light–RH (Bumper)
(4) F–7
(5) Rear Turn Signal Light–LH (Bumper)
(6) Rear Turn Signal Light–LH (Body)
(7) R–13
(8) H–33
(9) R–4
(10) H–7, H–25
(11) H–32
(12) B–19
(13) B–53
(14) Fuse Box
(15) Side Turn Signal Light–LH
(16) C–70
(17) C–16
(18) B–12
(19) Front Turn Signal Light–LH
(20) C–22
(21) B–2
(22) C–31
(23) Front Turn Signal Light–RH
(24) Relay and Fuse Box
(25) Side Turn Signal Light–RH
(26) C–61
(27) C–39
(28) H–12, H–13, H–16, H–20
(29) I–11 (Hazard Warning Switch)
(30) R–12

Diagnosis

Quick Chart for Check Points

Check point / Trouble mode	Fuse		Turn signal SW	Hazard SW	Flasher unit	Turn signal bulb	Cable harness
	C-3 (10A)	F-3 (15A)					
1 Both turn signal lights and hazard warning lights inoperative				○	○		○
2 Turn signal light flashes too quickly						○	
3 Hazard warning lights inoperative		○		○			○
4 Turn signal lights inoperative	○		○	○			○
5 Turn signal lights on the right (or left) side inoperative			○				○
6 Hazard warning lights on the right (or left) side inoperative				○			○
7 Turn signal lights and hazard warning ligths on the right (or left) side inoperative							○

1 Both Turn Signal Lights and Hazard Warning Lights Inoperative

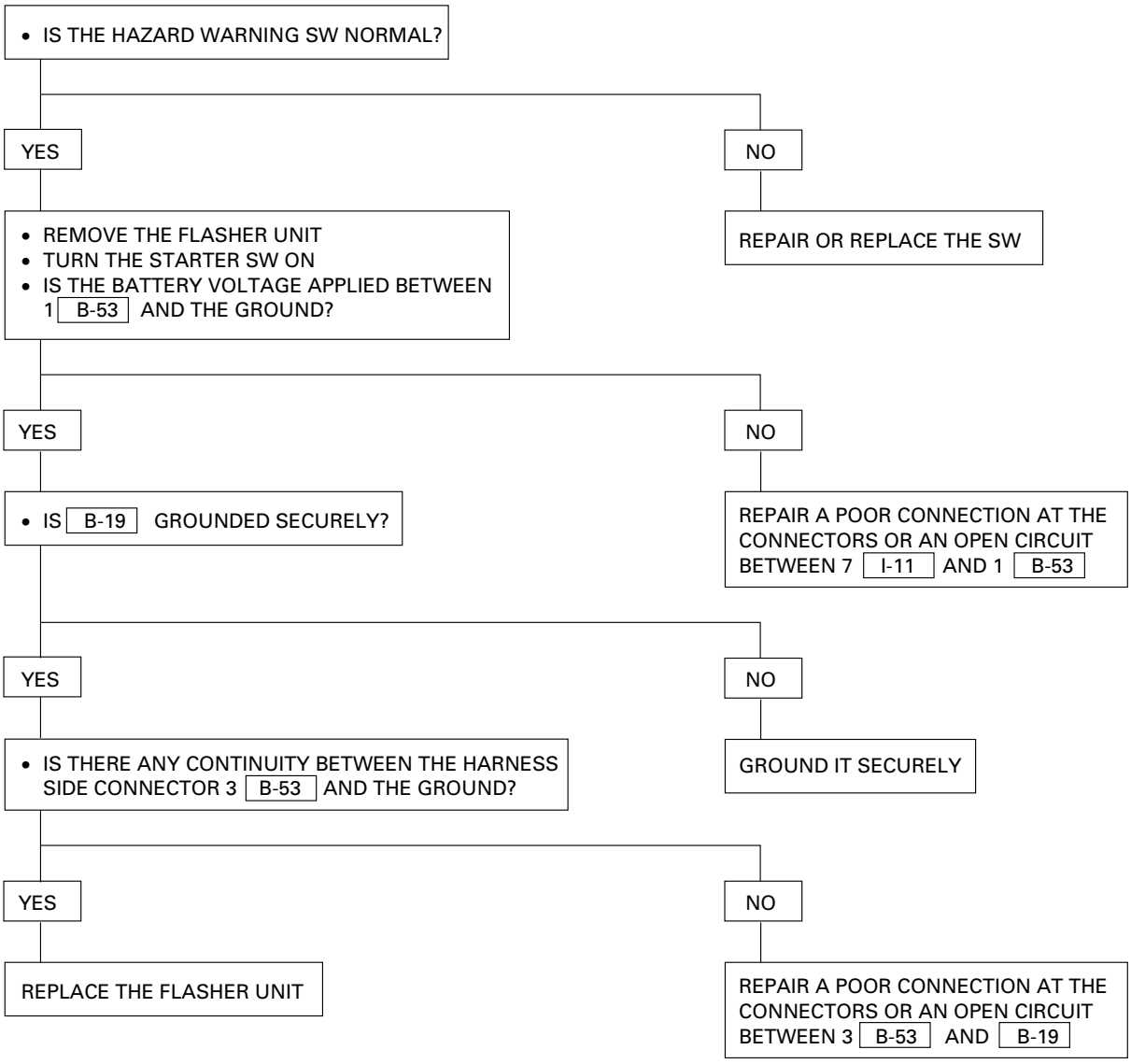

2 Turn Signal Light Flashes Too Quickly

REINSTALL OR REPLACE THE BULB, REPAIR AN OPEN CIRCUIT IN THE CIRCUIT, OR CHECK THE GROUND CONNECTION

3 Hazard Warning Lights Inoperative

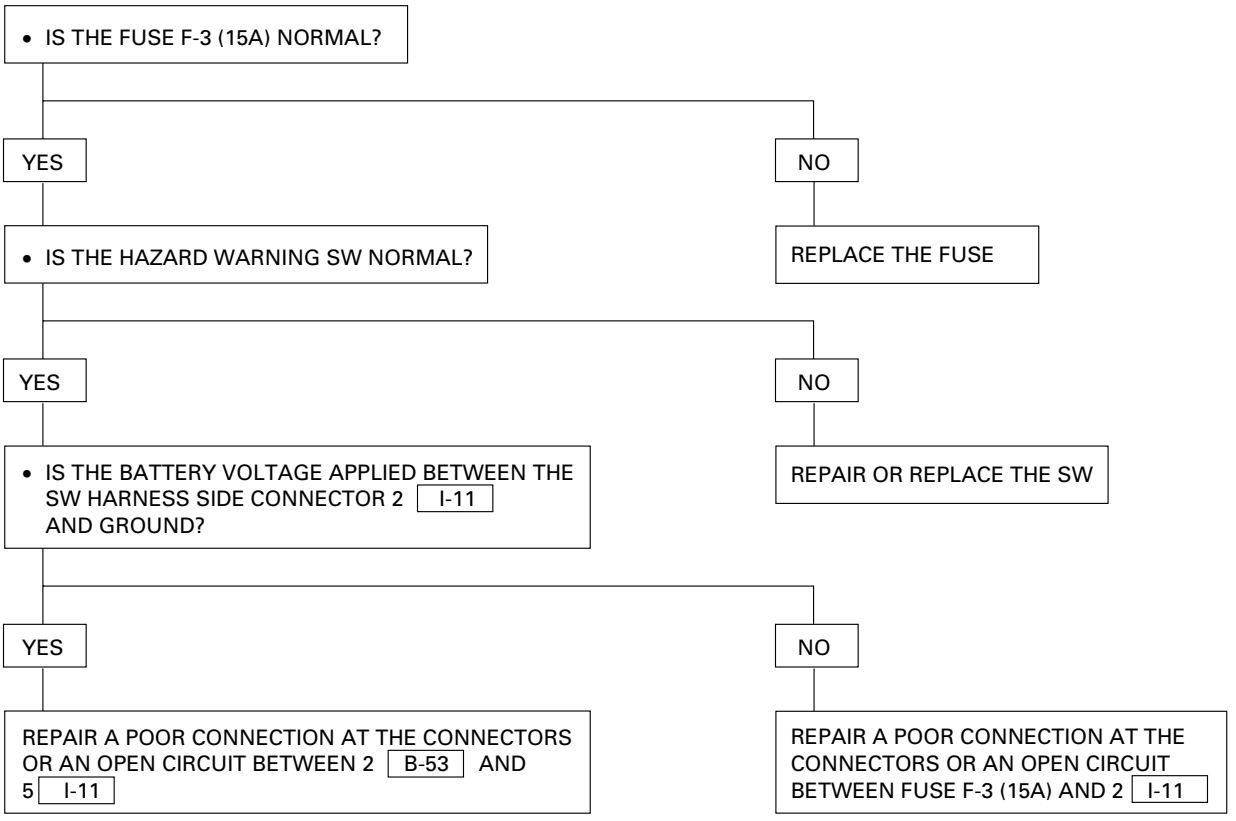

4 Turn Signal Lights Inoperative

- IS FUSE C-3 (10A) NORMAL?

YES

- DISCONNECT THE CONNECTOR OF THE HAZARD WARNING SWITCH
- TURN THE STARTER SWITCH ON.
- IS THE BATTERY VOLTAGE APPLIED BETWEEN THE HAZARD WARNING SWITCH HARNESS SIDE CONNECTOR 8 I-11 AND GROUND?

NO

REPLACE THE FUSE

YES

- WITH THE HAZARD WARNING SWITCH TURNED OFF, IS THERE ANY CONTINUITY BETWEEN THE SWITCH CONNECTORS 7 I-11 AND 8 I-11 ?

NO

REPAIR A POOR CONNECTION AT THE CONNECTORS OR AN OPEN CIRCUIT BETWEEN THE FUSE C-3 (10A) AND 8 I-11 .

YES

- DISCONNECT THE TURN SIGNAL SWITCH CONNECTOR
- IS THERE ANY CONTINUITY BETWEEN THE SWITCH CONNECTORS 3 B-12 AND 4 B-12 (WHEN TURNING TO THE LEFT), AND BETWEEN 3 B-12 AND 5 B-12 (WHEN TURNING TO THE RIGHT)?

NO

REPAIR OR REPLACE THE SWITCH

YES

REPAIR A POOR CONNECTION AT THE CONNECTORS OR AN OPEN CIRCUIT BETWEEN THE HARNESS SIDE CONNECTORS 2 B-53 AND 3 B-12 .

NO

REPAIR OR REPLACE THE SWITCH.

5 Turn Signal Lights On The Right (Or Left) Side Inoperative

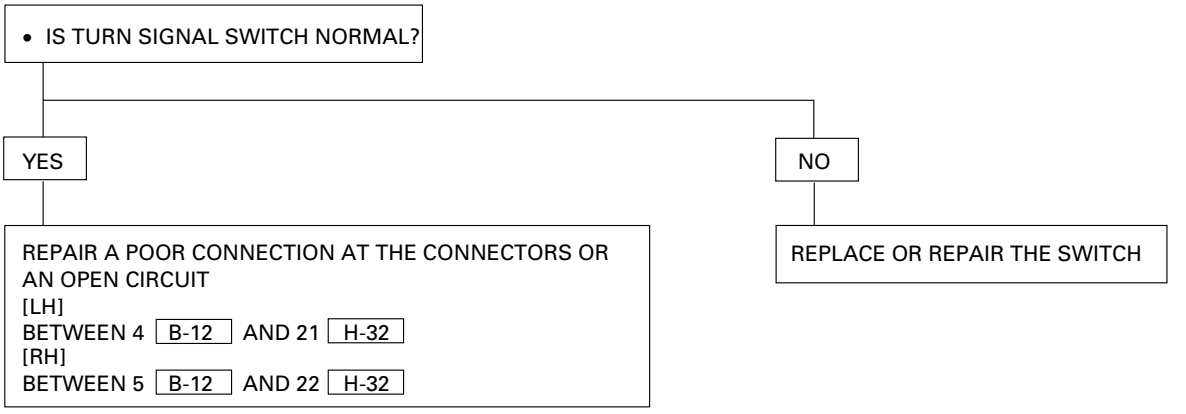

6 Hazard Warning Lights On The Right (Or Left) Side Inoperative

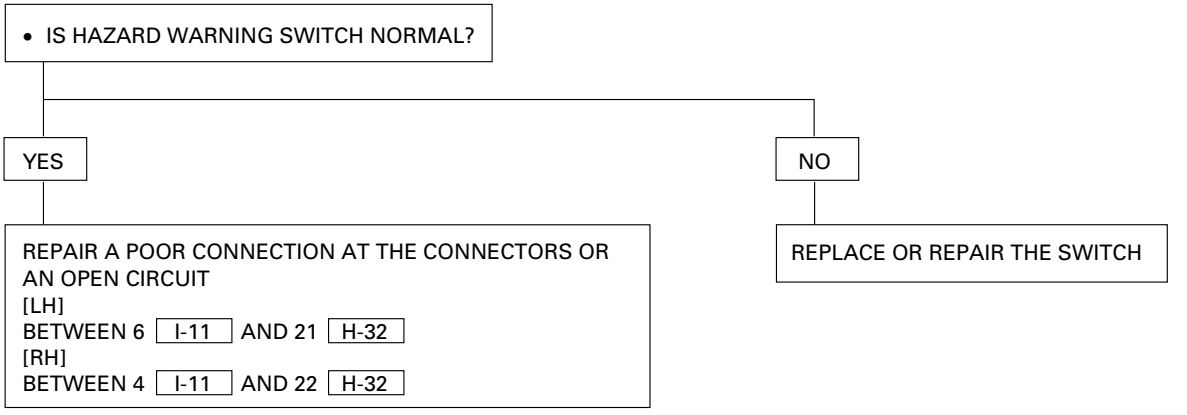

7 Turn Signal Lights and Hazard Warning Lights On The Right (Or Left) Side Inoperative

REPAIR A POOR CONNECTION AT THE CONNECTORS OR AN OPEN CIRCUIT
[LH]
BETWEEN 4 B-12 AND 21 H-32
[RH]
BETWEEN 5 B-12 AND 22 H-32

Stoplight

General Description

The circuit consists of the stoplight, stoplight switch (vehicles w/o cruise control), brake switch (vehicles w/ cruise control).
With the brake pedal depressed, the stoplight switch or the brake switch is turned on to illuminate the stoplight. The brake switch controls not only the operation of the stoplight but also the input of the cruise cancel signals to the cruise control unit.

Circuit Diagram (RHD)

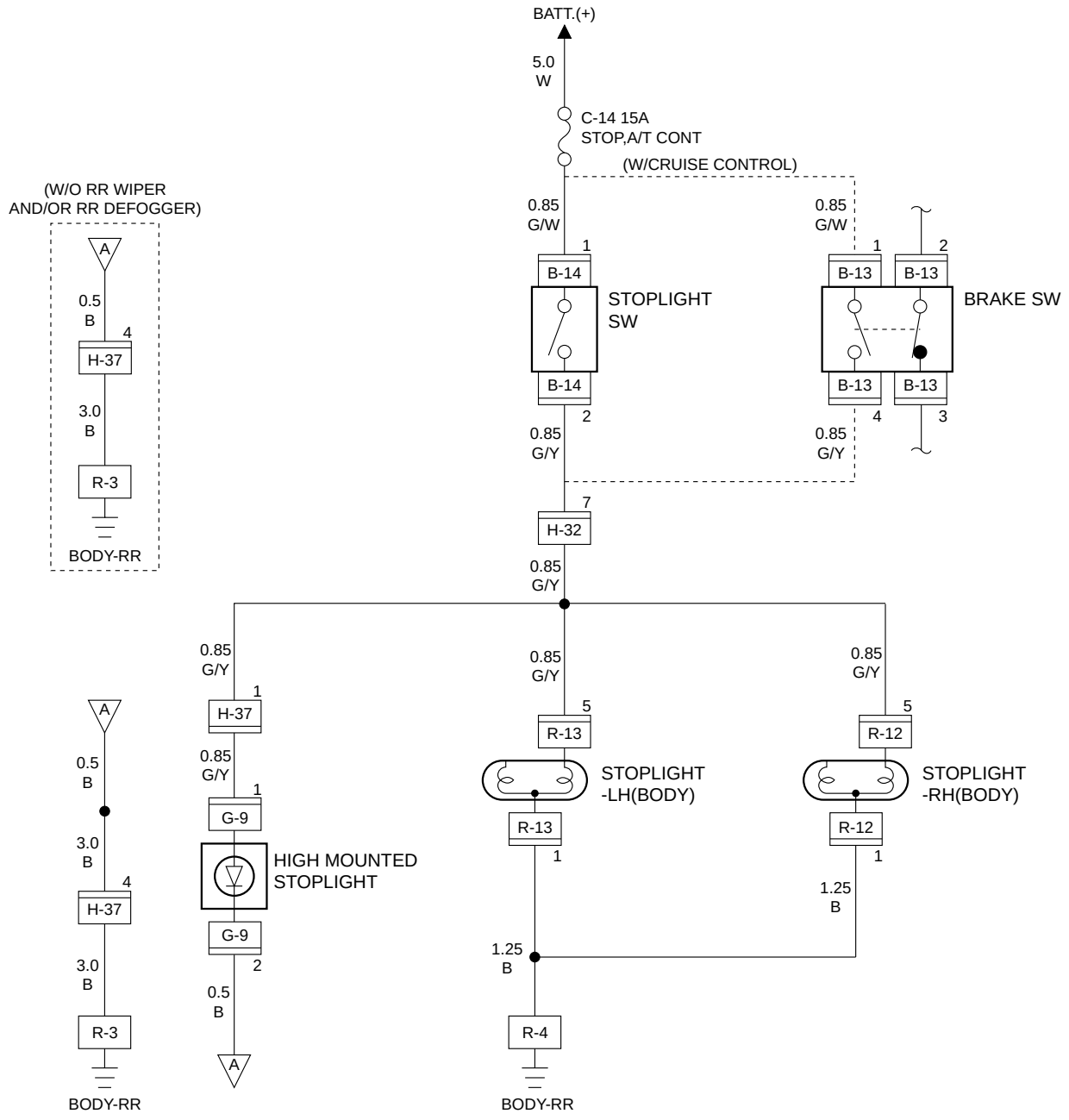

D08RW989

Circuit Diagram (RHD)-1

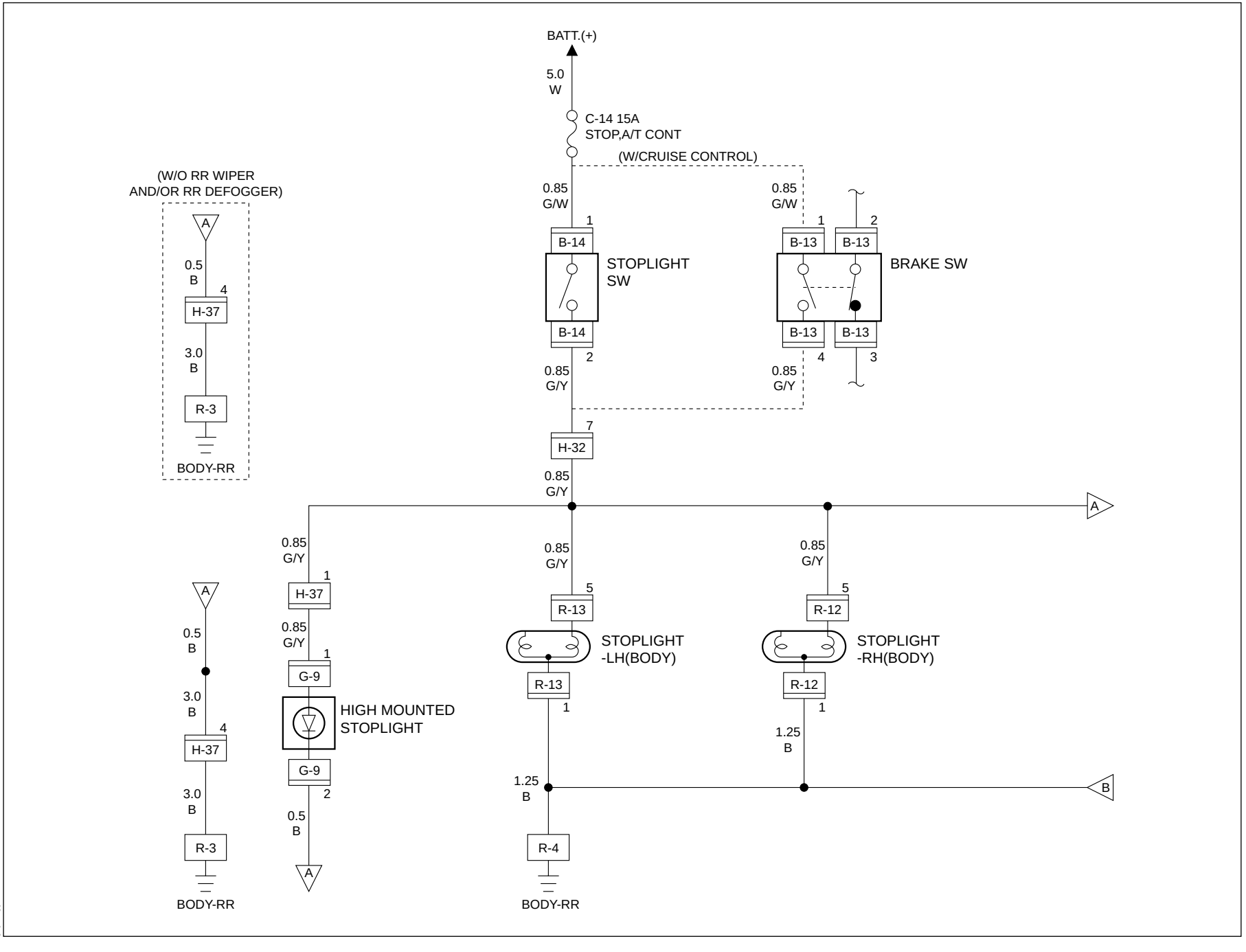

Circuit Diagram (RHD)-2

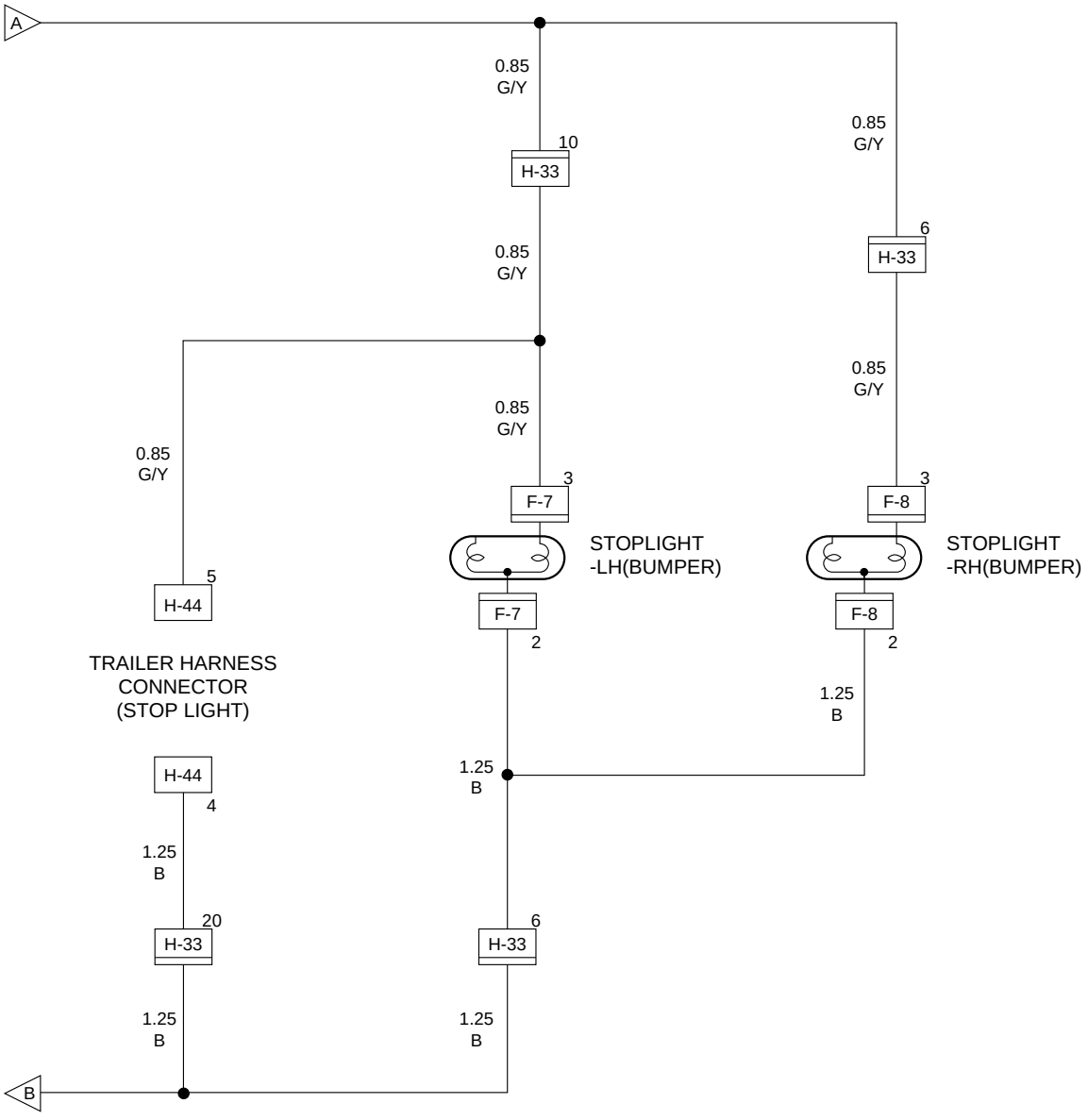

Parts Location (RHD)

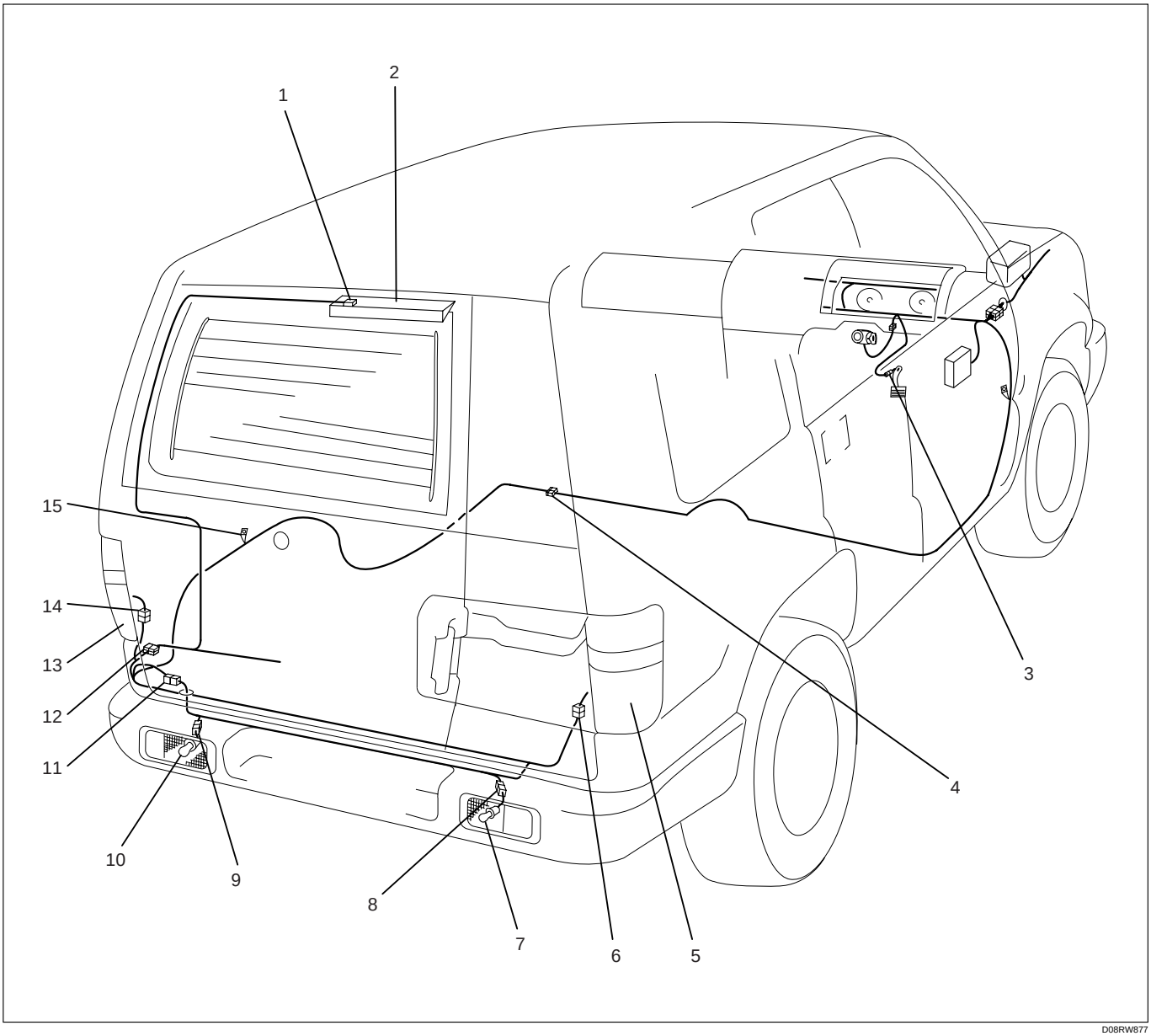

Legend

(1) G-9
(2) High Mounted Stoplight
(3) B-13 or B-14
(4) H-32
(5) Stoplight-RH (Body)
(6) R-12
(7) Stoplight-RH (Bumper)
(8) F-8
(9) F-7
(10) Stoplight-LH (Bumper)
(11) H-33
(12) H-37
(13) Stoplight-LH (Body)
(14) R-13
(15) R-3, R-4

Circuit Diagram (LHD)

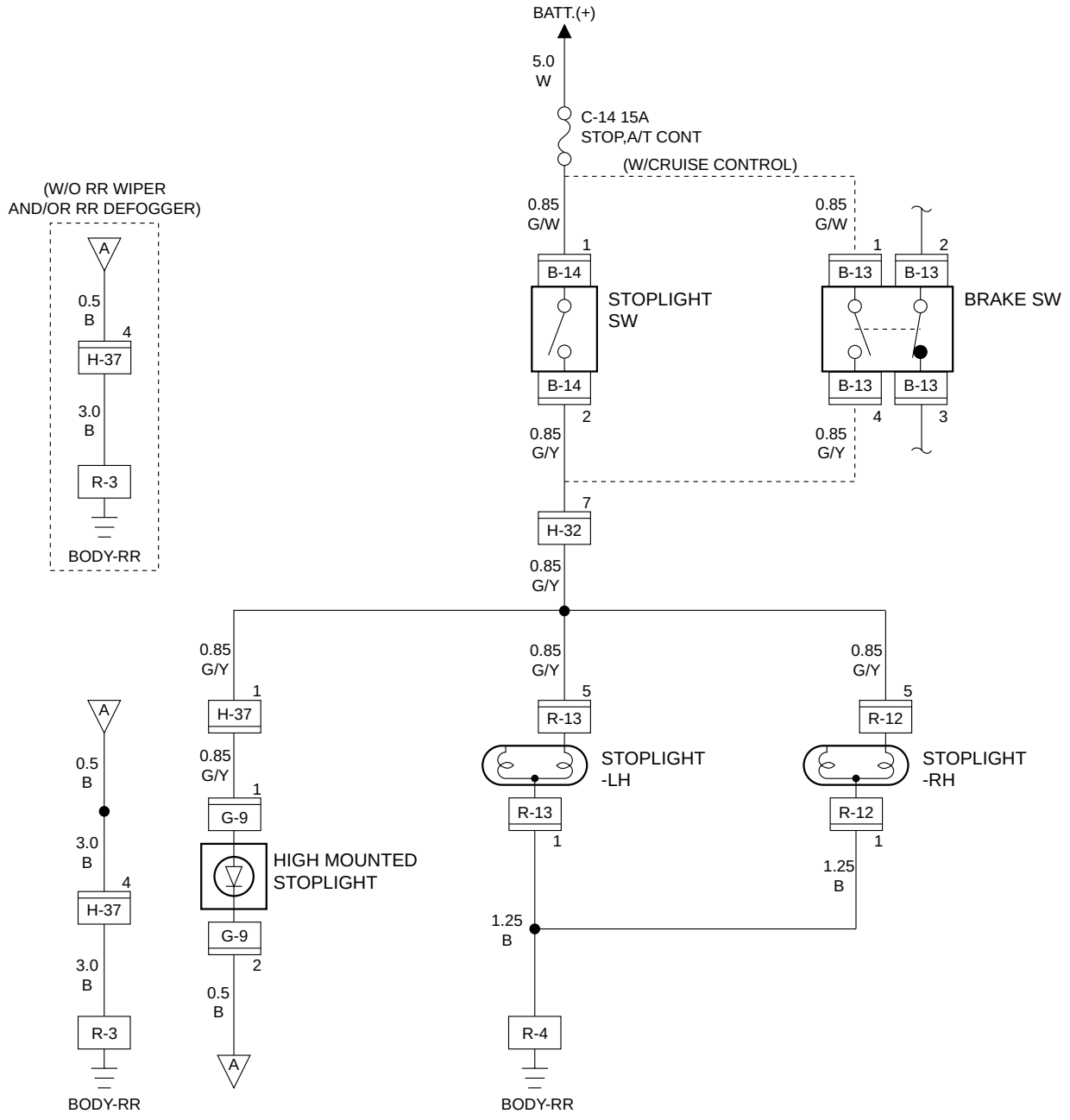

Circuit Diagram (LHD W/Bumper Built-in Type Stoplight)

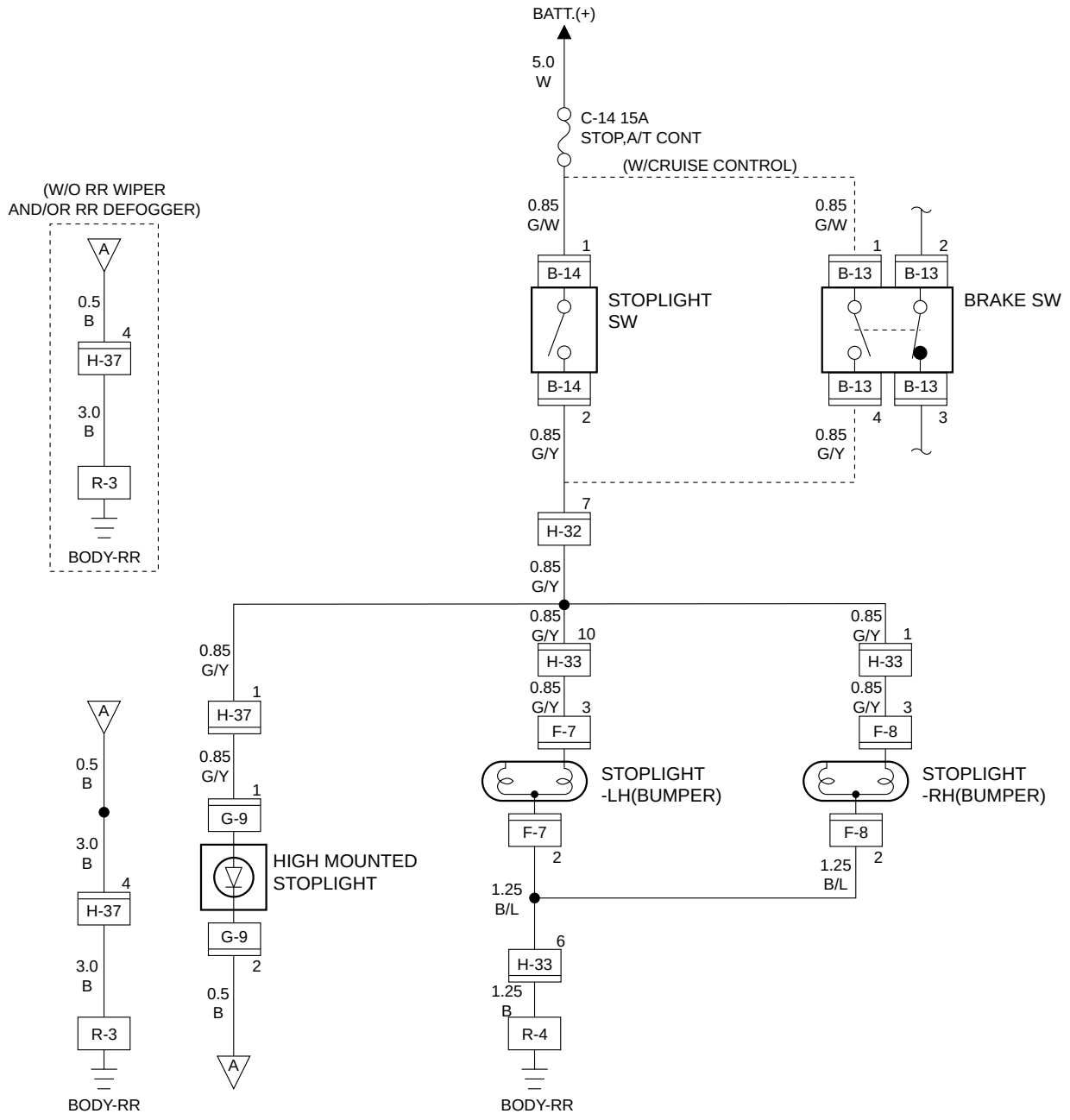

D08RW939

Parts Location (LHD)

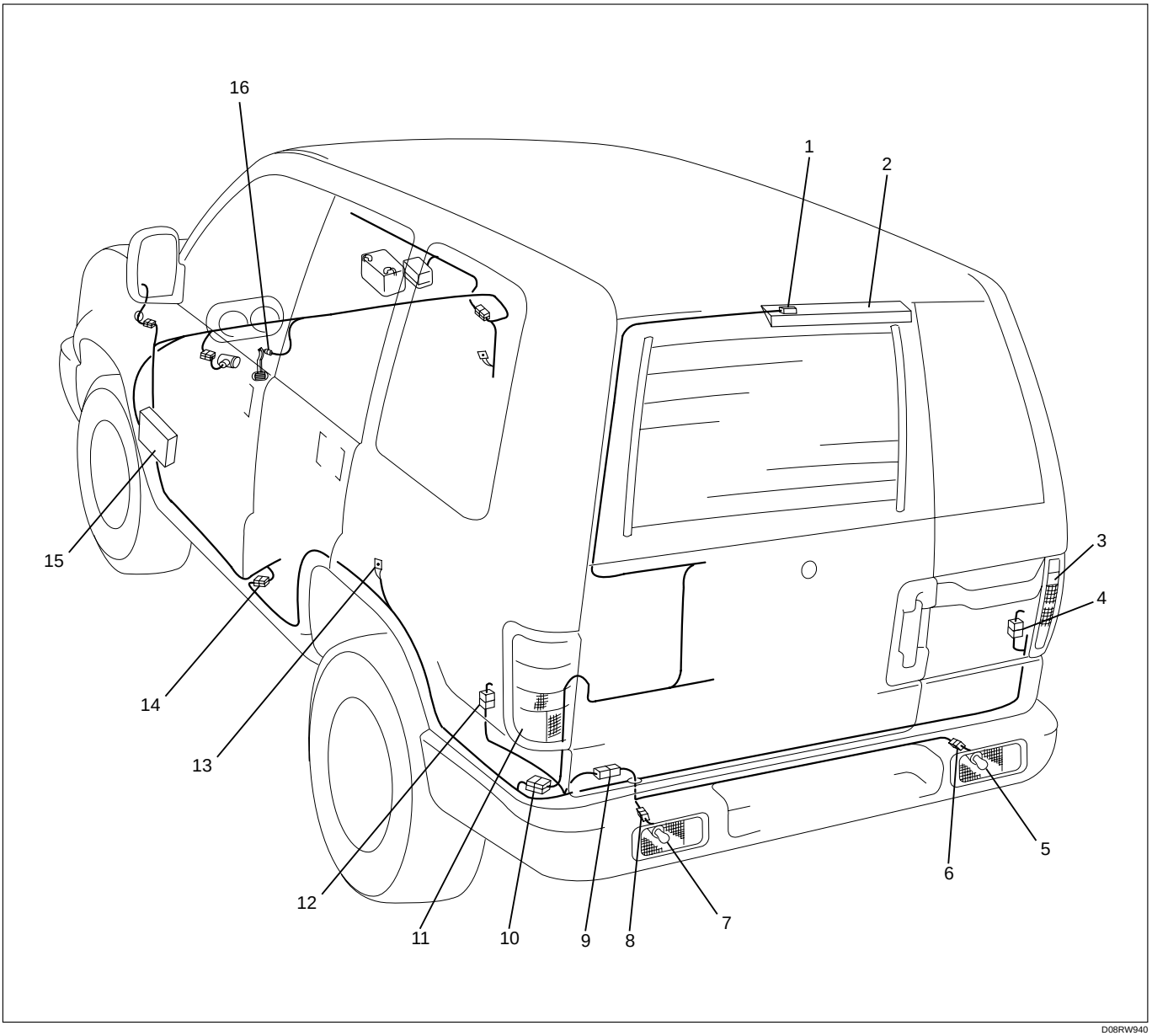

D08RW940

Legend

(1) G-9
(2) High Mounted Stoplight
(3) Stoplight-RH (Body)
(4) R-12
(5) Stoplight-RH (Bumper)
(6) F-8
(7) Stoplight-LH (Bumper)
(8) F-7
(9) H-33
(10) H-37
(11) Stoplight-LH (Body)
(12) R-13
(13) R-3, R-4
(14) H-32
(15) Fuse Box
(16) B-13 or B-14

DIAGNOSIS

Quick Chart for Check Points

Trouble mode \ Check point	Fuse C-14 (15A)	Stoplight SW or brake SW	Stoplight bulb	High mount stoplight ASM	Cable harness
1 Both stoplights inoperative	○	○			○
2 Stoplight on the left (or right) side inoperative			○		○
3 High mounted stoplight inoperative				○	○

1 Both Stoplights Inoperative

- IS FUSE C-14 (15A) NORMAL?

YES

- IS R-4 GROUNDED SECURELY?

NO

REPLACE THE FUSE

YES

- IS THE BATTERY VOLTAGE APPLIED TO 1 B-14 (1 B-13) OF THE STOPLIGHT SW (OR THE BRAKE SW)?

NO

GROUND IT SECURELY

YES

- REMOVE THE STOPLIGHT SW (OR THE BRAKE SW) CONNECTOR.
- WHEN DEPRESS THE BRAKE PEDAL, IS THERE ANY CONTINUITY BETWEEN THE 1 B-14 AND 2 B-14 (OR 1 B-13 AND 4 B-13) OF THE SWITCH?

NO

REPAIR A POOR CONNECTION AT THE CONNECTORS OR AN OPEN CIRCUIT BETWEEN THE FUSE C-14 (15A) AND 1 B-14 (1 B-13)

YES

- DOES THE PUSH ROD OF THE STOPLIGHT SW (OR THE BRAKE SW) OPERATE SMOOTHLY?

NO

REPLACE THE STOPLIGHT SW (OR BRAKE SW)

YES

REPAIR A POOR CONNECTION AT THE CONNECTORS OR AN OPEN CIRCUIT BETWEEN 2 B-14 (4 B-13) AND 7 H-32

NO

REPLACE THE STOPLIGHT SW (OR BRAKE SW)

2 Stoplight On The Left (Or Right) Side Inoperative

(Body Build-in Type Stoplight)

- IS THE STOPLIGHT BULB ON THE LEFT (OR RIGHT) SIDE NORMAL?

YES

- WITH THE STOPLIGHT SW OR BRAKE SW DEPRESSED, IS THE BATTERY VOLTAGE APPLIED BETWEEN 5 R-13 (OR 5 R-12) AND THE GROUND?

YES

REPAIR A POOR CONNECTION AT THE CONNECTORS OR AN OPEN CIRCUIT BETWEEN 1 R-13 (1 R-12) AND R-4

NO

REPAIR A POOR CONNECTION AT THE CONNECTORS OR AN OPEN CIRCUIT BETWEEN 7 H-32 AND 5 R-13 (OR 5 R-12)

NO

REPLACE THE BULB

(Bumper Build-in Type Stoplight)

- IS THE STOPLIGHT BULB ON THE LEFT (OR RIGHT) SIDE NORMAL?

YES

- WITH THE STOPLIGHT SW OR BRAKE SW DEPRESSED, IS THE BATTERY VOLTAGE APPLIED BETWEEN 3 F-7 (OR 3 F-8) AND THE GROUND?

YES

REPAIR A POOR CONNECTION AT THE CONNECTORS OR AN OPEN CIRCUIT BETWEEN 2 F-7 (2 F-8) AND R-4

NO

REPAIR A POOR CONNECTION AT THE CONNECTORS OR AN OPEN CIRCUIT BETWEEN 7 H-32 AND 3 F-7 (OR 3 F-8)

NO

REPLACE THE BULB

3 High Mounted Stoplight Inoperative

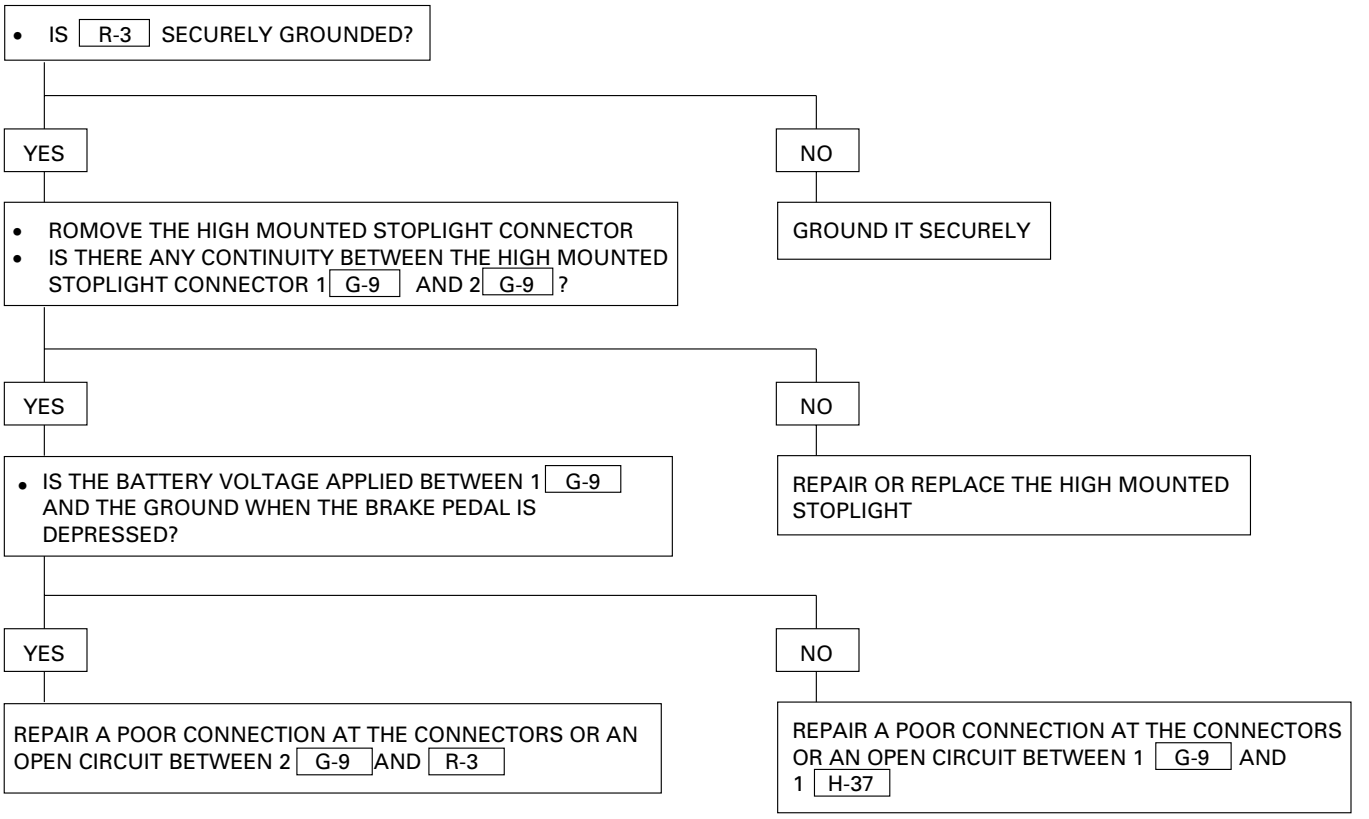

Backup Light

General Description

The circuit consists of backup light switch (M/T), mode switch (A/T) and backup light.
When shfit lever is set to “R” position, backup light switch (M/T) or mode switch (A/T) is activated to illuminate backup light.

Circuit Diagram (RHD)

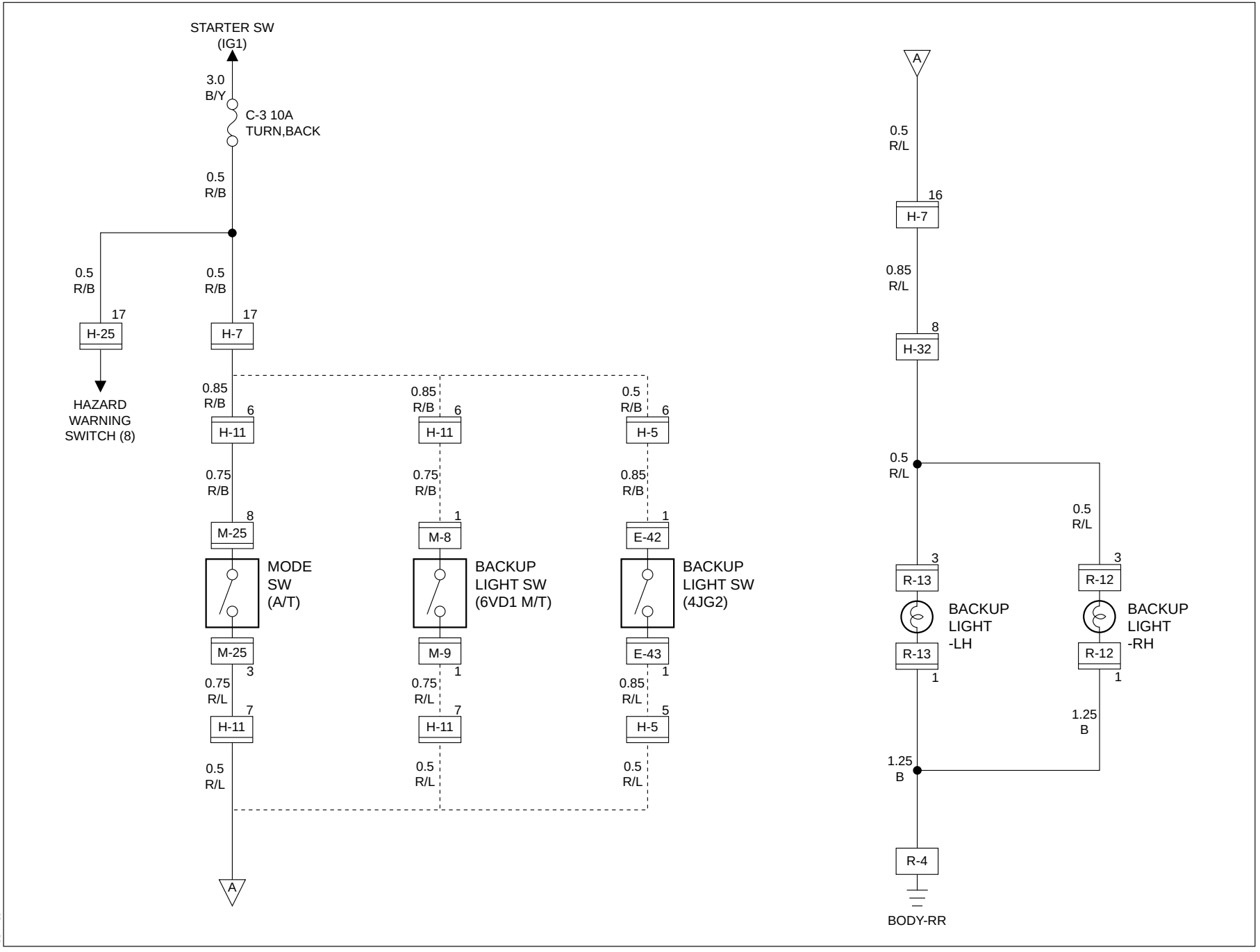

D08RWC64

Circuit Diagram (RHD W/Bumper Built-in Type RR Combination Light)

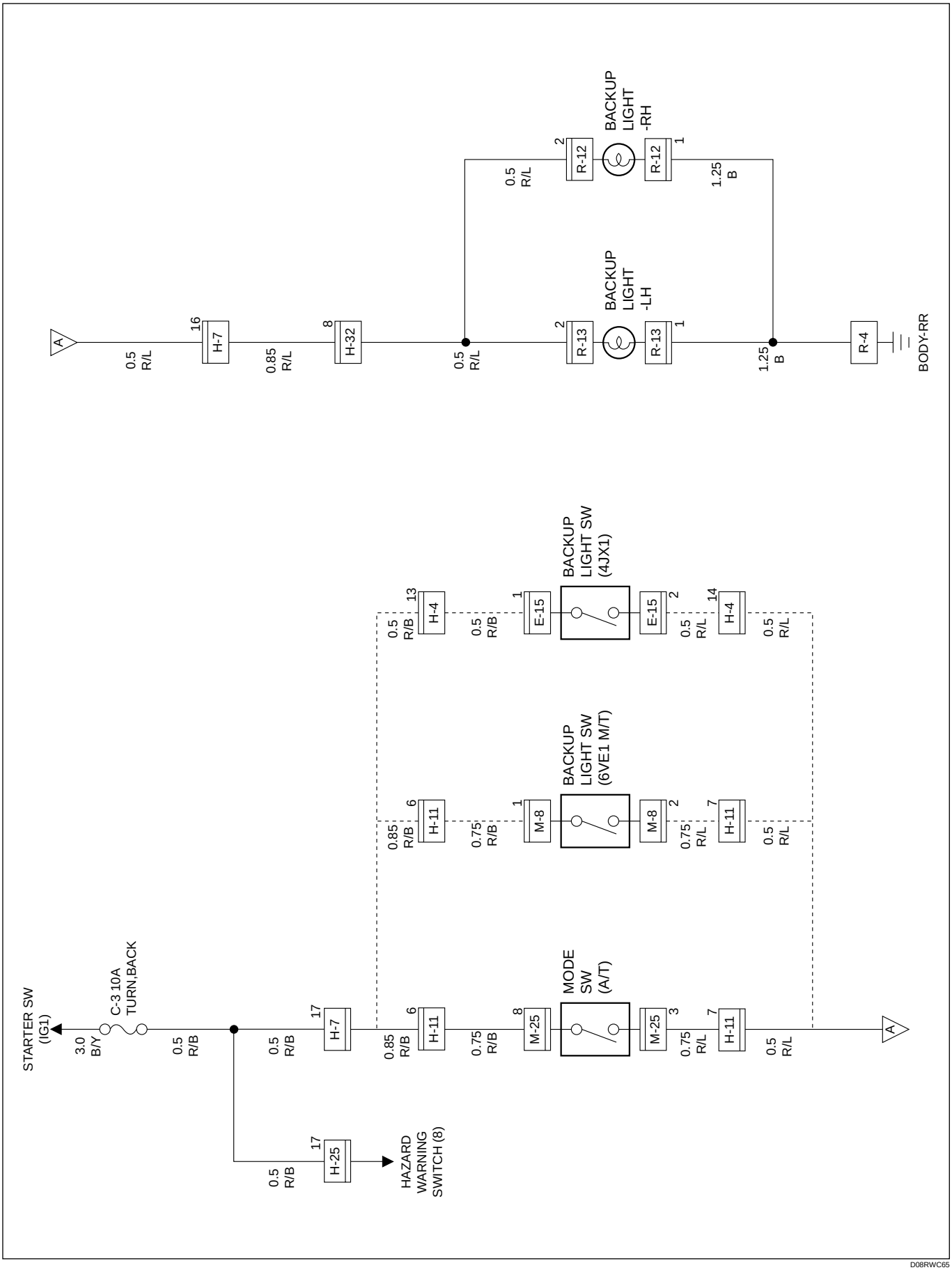

D08RWC65

Parts Location (RHD)

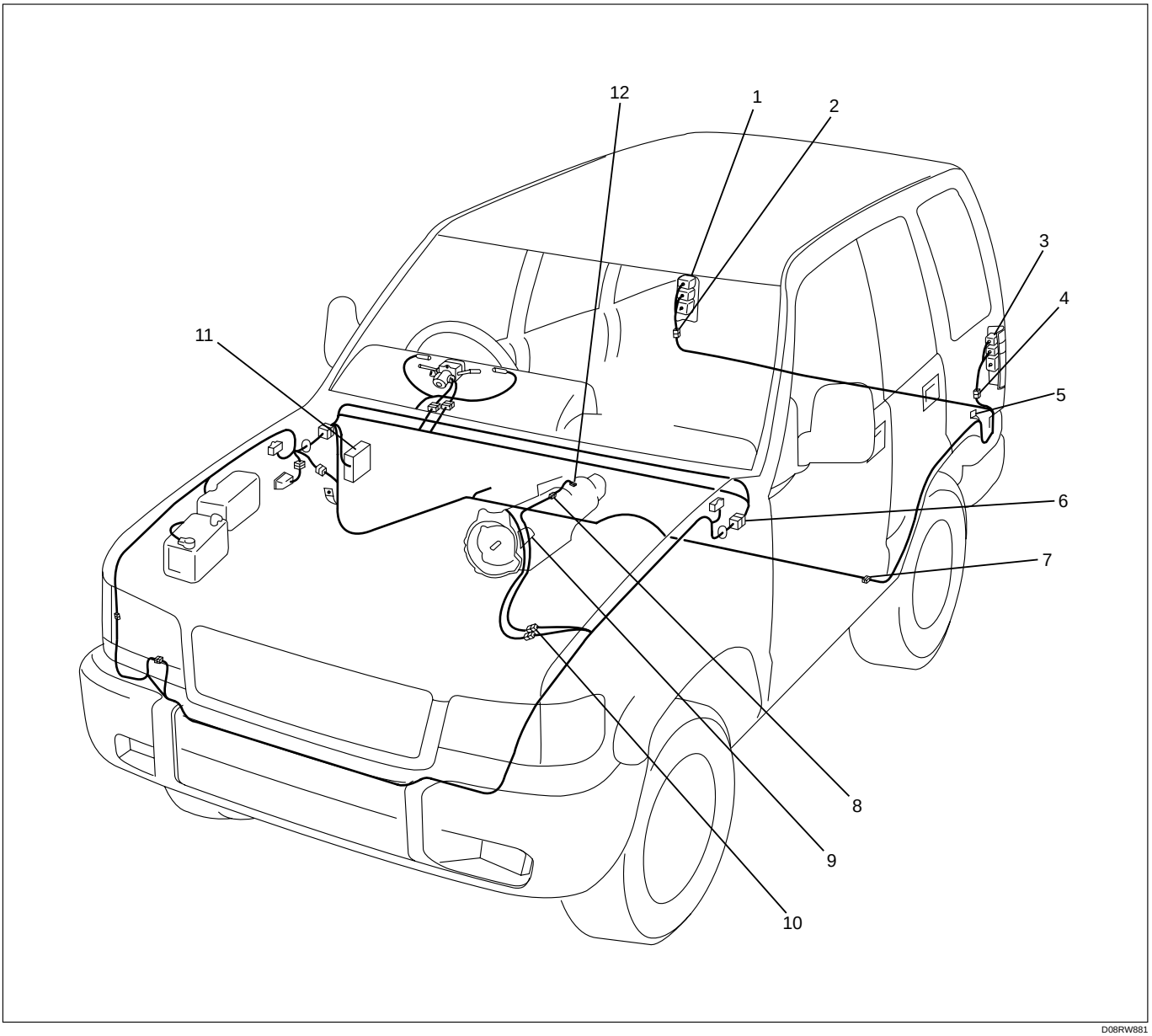

D08RW881

Legend

(1) Backup Light-RH
(2) R-12
(3) Backup Light-LH
(4) R-13
(5) R-4
(6) H-7, H-25
(7) H-32
(8) M-8 (6V*1 M/T), E-42, E-43 (4JG2)
(9) Mode Switch (A/T), M-25
(10) H-4, H-5
(11) Fuse Box
(12) Backup Light Switch (M/T)

Circuit Diagram (LHD)

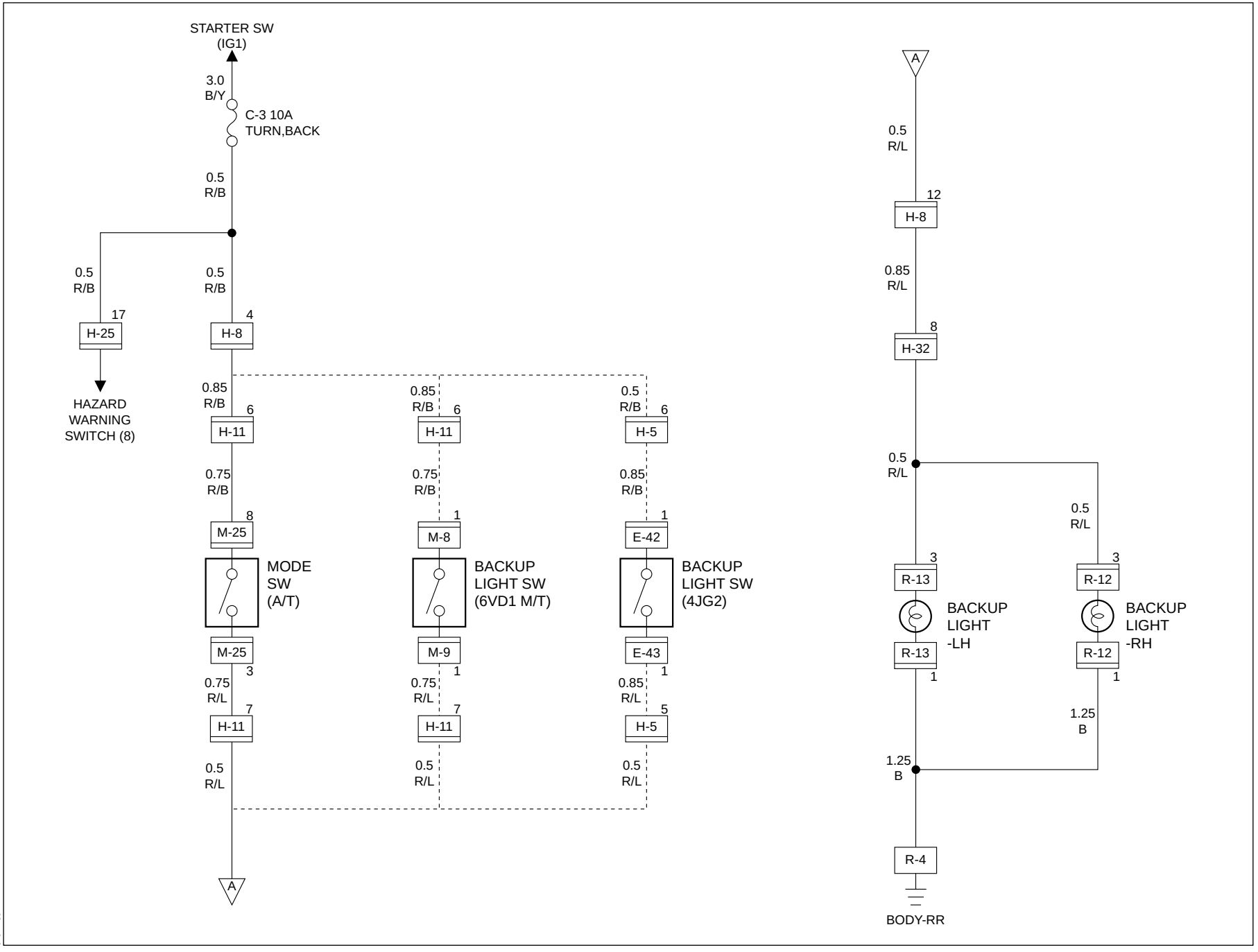

Circuit Diagram (LHD W/Bumper Built-in Type RR Combination Light)

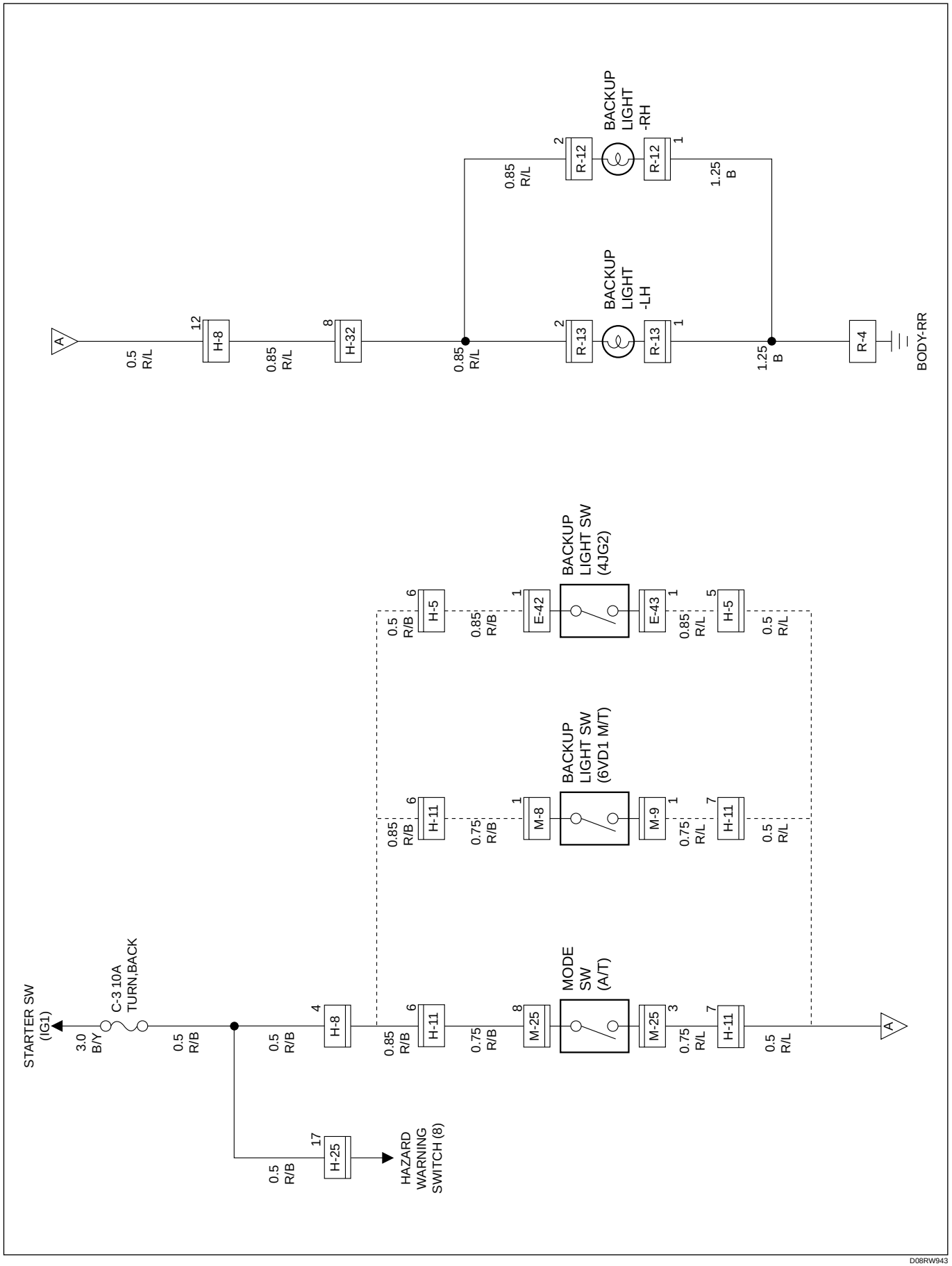

D08RW943

Parts Location (LHD)

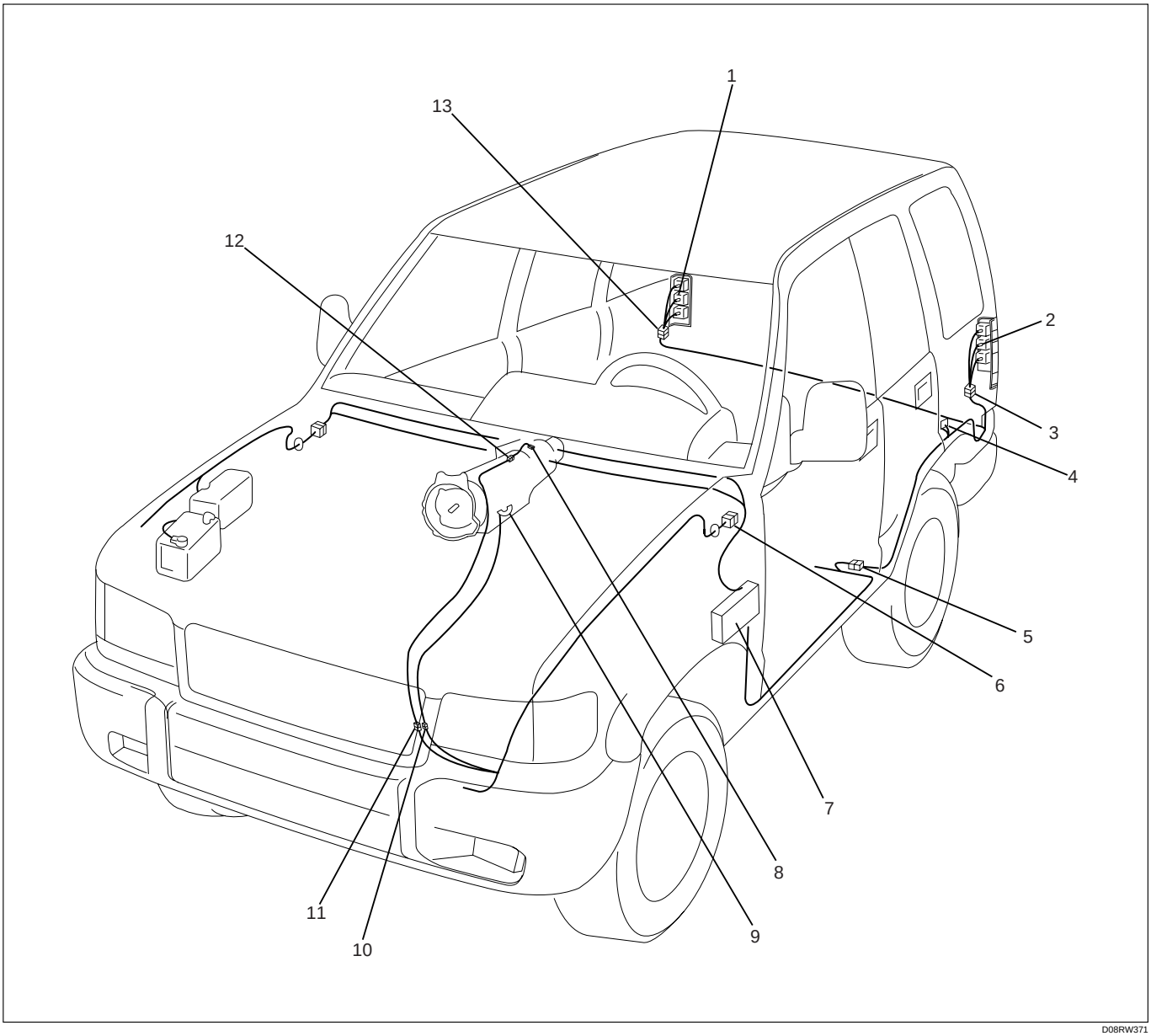

D08RW371

Legend

(1) Backup Light-RH
(2) Backup Light-LH
(3) R-13
(4) R-4
(5) H-32
(6) H-8, H-25
(7) Fuse Box
(8) Backup Light Switch (M/T)
(9) Mode Switch (A/T) M-25
(10) H-11
(11) H-5
(12) M-8, M-9, E-42, E-43
(13) R-12

Diagnosis

Quick Chart for Check Points

Trouble mode \ Check point	Fuse		Backup light SW/ Mode SW	Backup light bulb	Horn SW	Horn relay	Cable harness
	C-3 (10A)	F-3 (15A)					
1 Both backup lights inoperative	○		○				○
2 Backup light on the left (or right) side do not light up				○			○
3 Backup light remains on			○				

1 Both Backup Lights Inoperative

- IS FUSE C-3 (10A) NORMAL?

YES

- IS R-4 GROUNDED SECURELY?

YES

- TURN THE STARTER SW ON
- IS THE BATTERY VOLTAGE APPLIED BETWEEN THE MODE SW (OR BACKUP LIGHT SW) HARNESS SIDE CONNECTORS 8 M-25 (1 E-42 , 1 M-8 OR 1 E-15) AND THE GROUND?

YES

- SET THE TRANSMISSION GEAR TO THE REVERSE POSITION
- WITH THE MODE SW (OR BACKUP LIGHT SW) CONNECTOR DISCONNECTED, IS THERE CONTINUITY BETWEEN THE SW SIDE CONNECTORS 5 C-43 AND 2 C-43 (1 E-42 AND 1 E-43 OR 1 M-8 AND 1 M-9) ?

REPAIR A POOR CONNECTION AT THE CONNECTORS OR AN OPEN CIRCUIT BETWEEN 2 C-43 (1 E-43 OR 1 M-9) AND 8 H-32

NO

REPAIR OR REPLACE THE MODE SW (BACKUP LIGHT SW)

NO

REPAIR A POOR CONNECTION AT THE CONNECTORS OR AN OPEN CIRCUIT BETWEEN THE FUSE C–3 (10A) AND MODE SW (BACKUP LIGHT SW)

NO

GROUND IT SECURELY

NO

REPLACE THE FUSE

2 Backup Light On The Left (Or Right) Side Inoperative

- IS THE BACKUP LIGHT BULB ON THE LEFT (OR RIGHT) SIDE NORMAL?

YES

- WITH THE STARTER SW AND THE BACKUP LIGHT SW AT ON POSITION, IS THE BATTERY VOLTAGE APPLIED BETWEEN 3 R-13 (OR 3 R-12) AND THE GROUND OR 2 R-13 (OR 2 R-12) AND THE GROUND?

YES

REPAIR A POOR CONNECTION AT THE CONNECTORS OR AN OPEN CIRCUIT BETWEEN BACKUP LIGHT HARNESS SIDE CONNECTOR 1 R-13 (OR 1 R-12) AND R-4

NO

REPAIR A POOR CONNECTION AT THE CONNECTORS OR AN OPEN CIRCUIT BETWEEN 8 H-32 AND 3 R-13 (OR 3 R-12) OR 8 H-32 AND 2 R-13 (OR 2 R-12)

NO

REPLACE THE BULB

3 Backup Light Remains ON

REPAIR OR REPLACE THE MODE SW (BACKUP LIGHT SW)

Horn

General Description

The circuit consists of horn (high note), horn (low note), horn relay and horn switch.
When horn switch is pushed, (independent of position of starter switch) horn relay is activated to sound horns.

Circuit Diagram (RHD)

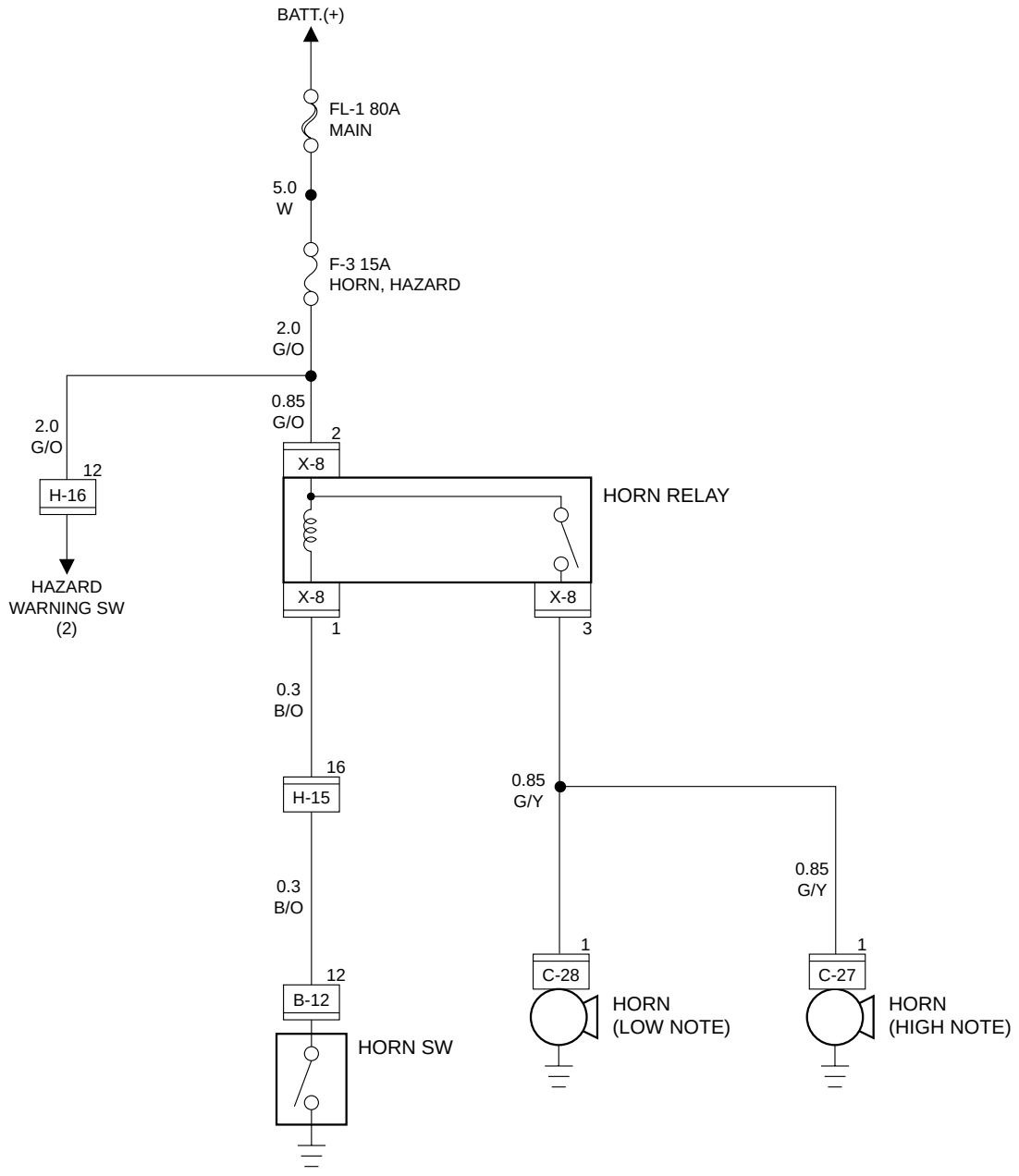

Parts Location (RHD)

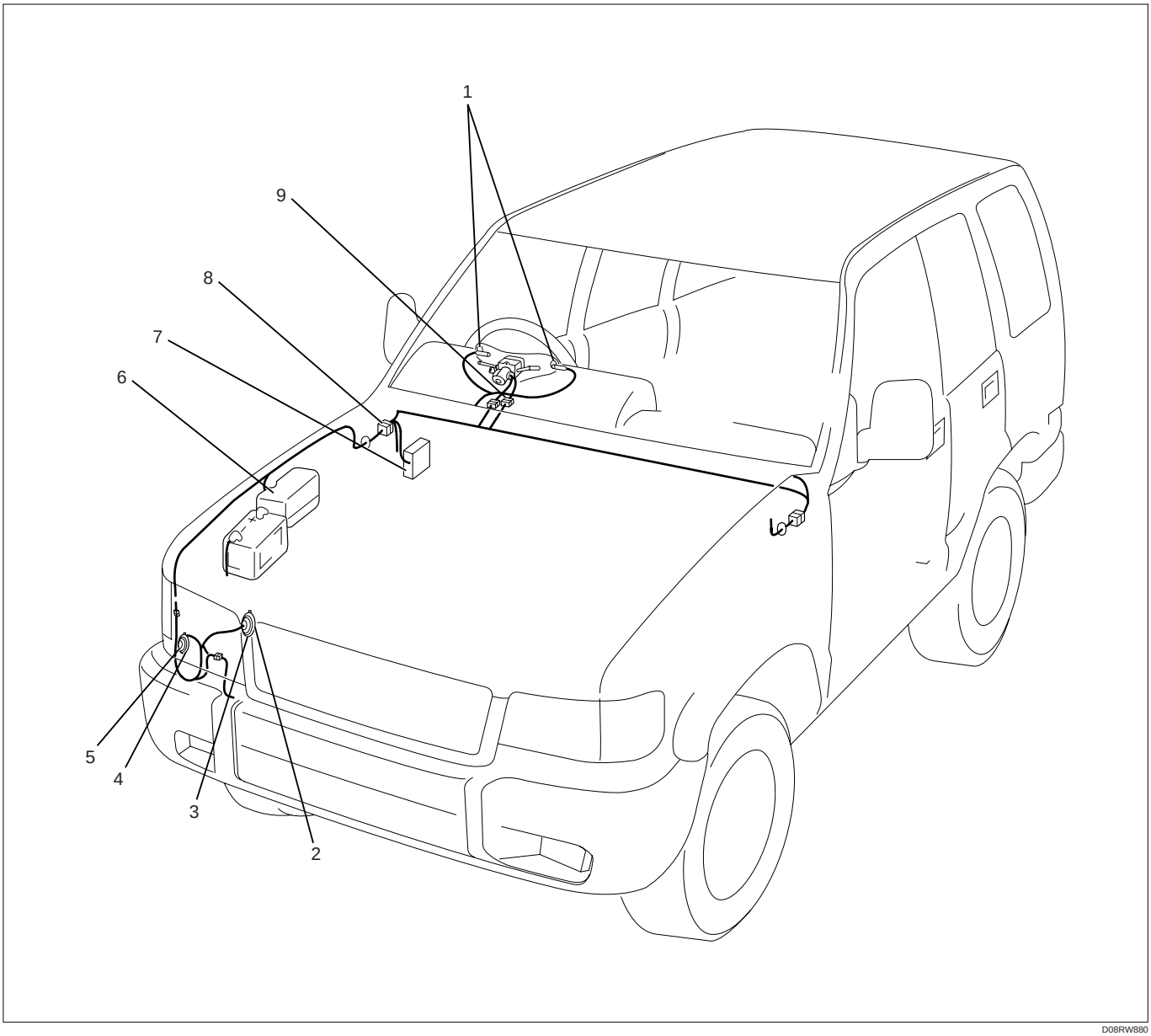

D08RW880

Legend

(1) Horn Switch
(2) Horn (Low Note)
(3) C-28
(4) C-27
(5) Horn (High Note)
(6) Relay and Fuse Box (X-8)
(7) Fuse Box
(8) H-15, H-16
(9) B-12

Circuit Diagram (LHD)

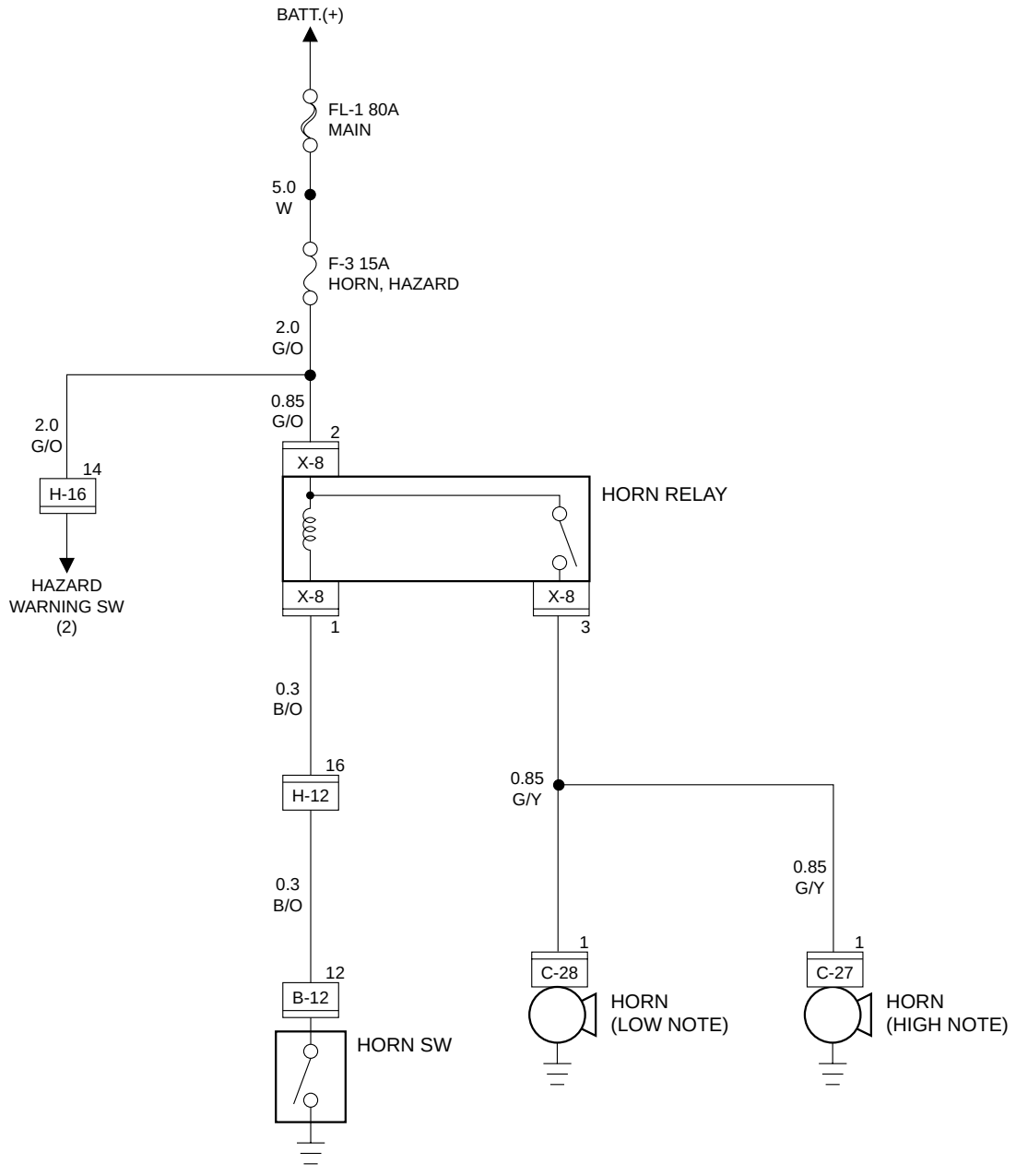

D08RW954

Parts Location (LHD)

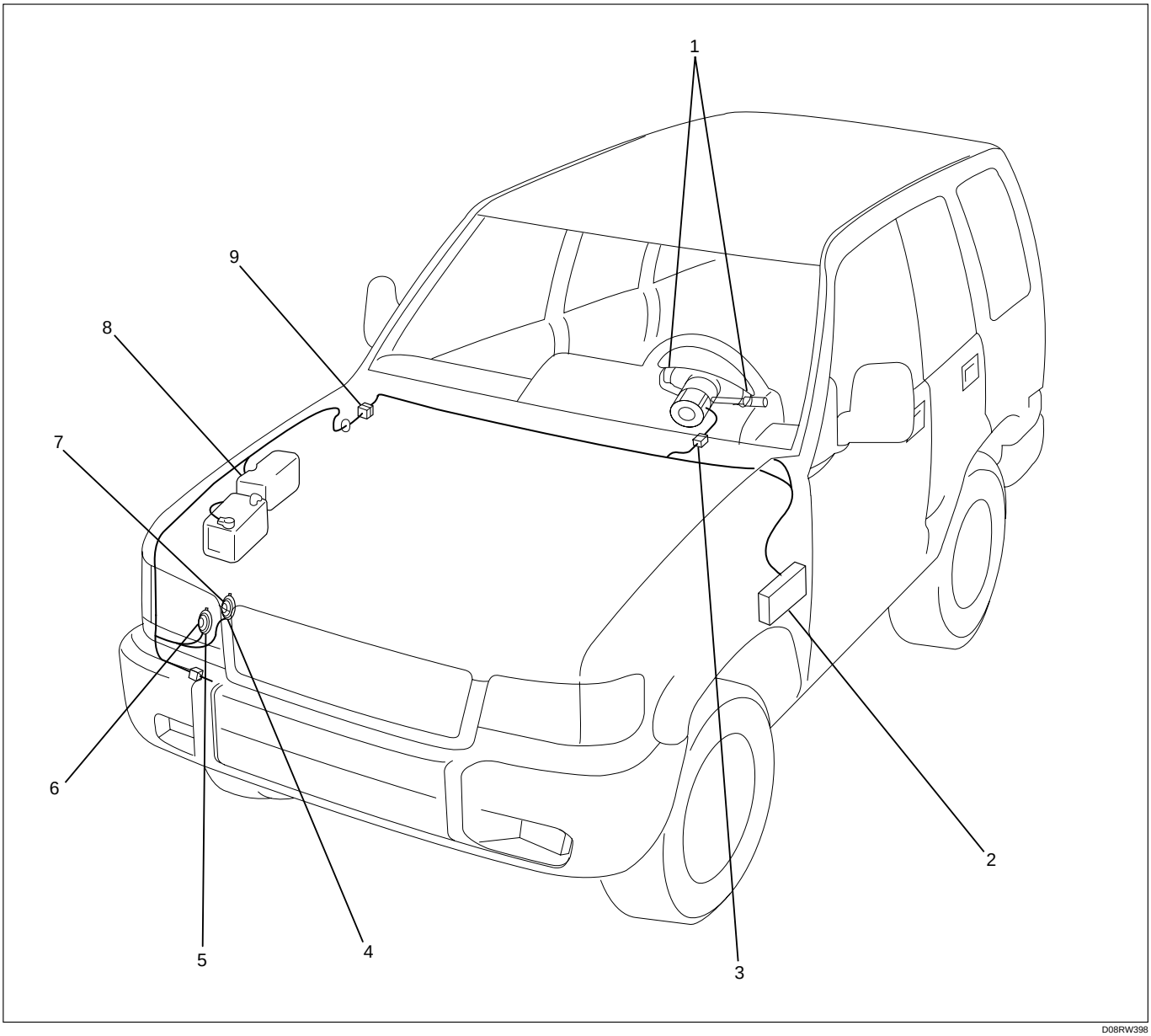

D08RW398

Legend

(1) Horn Switch
(2) Fuse Box
(3) B-12
(4) C-28
(5) C-27
(6) Horn (High Note)
(7) Horn (Low Note)
(8) Relay and Fuse Box (X-8)
(9) H-12, H-16

1 Horns Do Not Sound

- IS FUSE F-3 (15A) NORMAL?

YES → IS THE HORN RELAY NORMAL?

NO → REPLACE THE FUSE

- IS THE HORN RELAY NORMAL?

YES → IS THE BATTERY VOLTAGE APPLIED BETWEEN 2 X-8 AND THE GROUND?

NO → REPLACE THE HORN RELAY

- IS THE BATTERY VOLTAGE APPLIED BETWEEN 2 X-8 AND THE GROUND?

YES → IS THE HORN SWITCH NORMAL?

NO → REPAIR A POOR CONNECTION AT THE CONNECTORS OR AN OPEN CIRCUIT BETWEEN FUSE F-3 (15A) AND 2 X-8

- IS THE HORN SWITCH NORMAL?

YES → WITH THE HORN SWITCH DEPRESSED, IS THERE CONTINUITY BETWEEN 1 X-8 AND THE GROUND?

NO → REPAIR OR REPLACE THE SWITCH

- WITH THE HORN SWITCH DEPRESSED,
- IS THERE CONTINUITY BETWEEN 1 X-8 AND THE GROUND?

YES → REPAIR A POOR CONNECTION AT THE CONNECTORS OR AN OPEN CIRCUIT BETWEEN 3 X-8 AND 1 C-27 (1 C-28)

NO → REPAIR A POOR CONNECTION AT THE CONNECTORS OR AN OPEN CIRCUIT BETWEEN 1 X-8 AND 12 B-12

WARNING:

WHEN SERVICING A VEHICLE EQUIPPED WITH SUPPLEMENTAL RESTRAINT SYSTEM, PAY CLOSE ATTENTION TO ALL WARNINGS AND CAUTIONS.
FOR DETAILED EXPLANATION ABOUT SRS, REFER TO SECTION 9J “SUPPLEMENTAL RESTRAINT SYSTEM (SRS)” AND 3F4 “SUPPLEMENTAL RESTRAINT SYSTEM STEERING WHEEL & COLUMN”.

2 Horns Do Not Shut Off

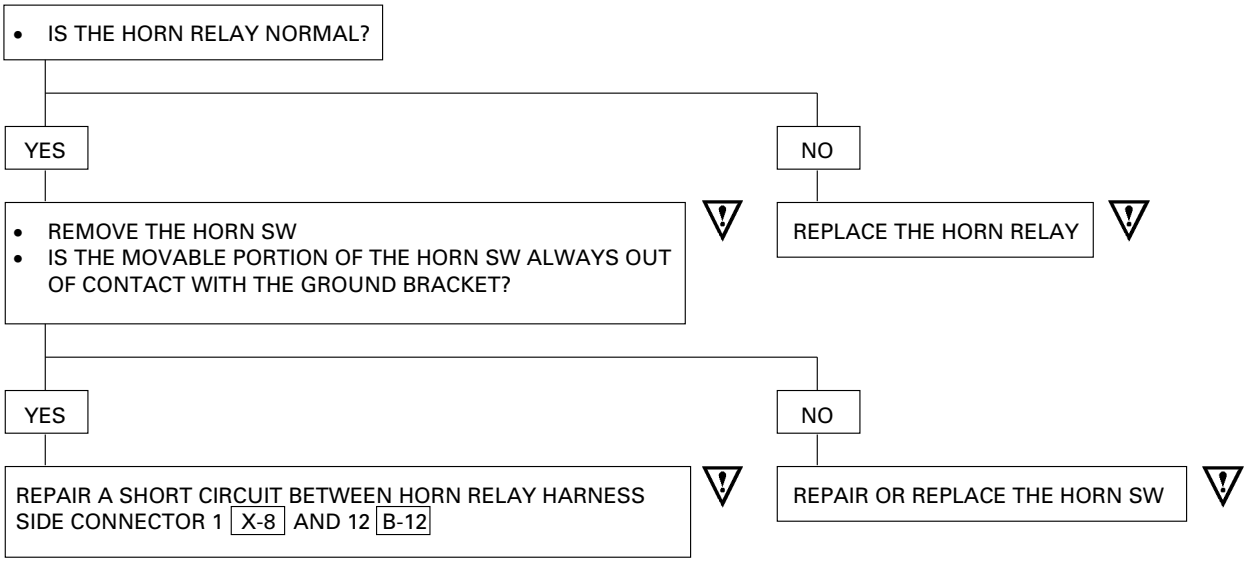

WARNING:

WHEN SERVICING A VEHICLE EQUIPPED WITH SUPPLEMENTAL RESTRAINT SYSTEM, PAY CLOSE ATTENTION TO ALL WARNINGS AND CAUTIONS.
FOR DETAILED EXPLANATION ABOUT SRS, REFER TO SECTION 9J “SUPPLEMENTAL RESTRAINT SYSTEM (SRS)” AND 3F4 “SUPPLEMENTAL RESTRAINT SYSTEM STEERING WHEEL & COLUMN”.

Dome Light, Luggage Room Light, Courtesy Light and Map Light

General Description

This circuit consists of the starter switch, door switch, dome light, luggage room light, courtesy light, map light, and alarm & relay control unit.
The dome light lights up when any one of doors except the tailgate is opened with the switch set at the door mode.
The courtesy lights for the front doors are controlled by front door switch–LH.
The luggage room light illuminates by opening the tailgate when the switch is set at the door mode.
The map light illuminates by turning the switch on.
All these lights light up by turning on respective switches regardless of the position of the starter switch key.
The buzzer in the alarm & relay control unit sounds to remind the driver to turn off the lights when the starter switch is turned off.

Circuit Diagram (RHD)-1

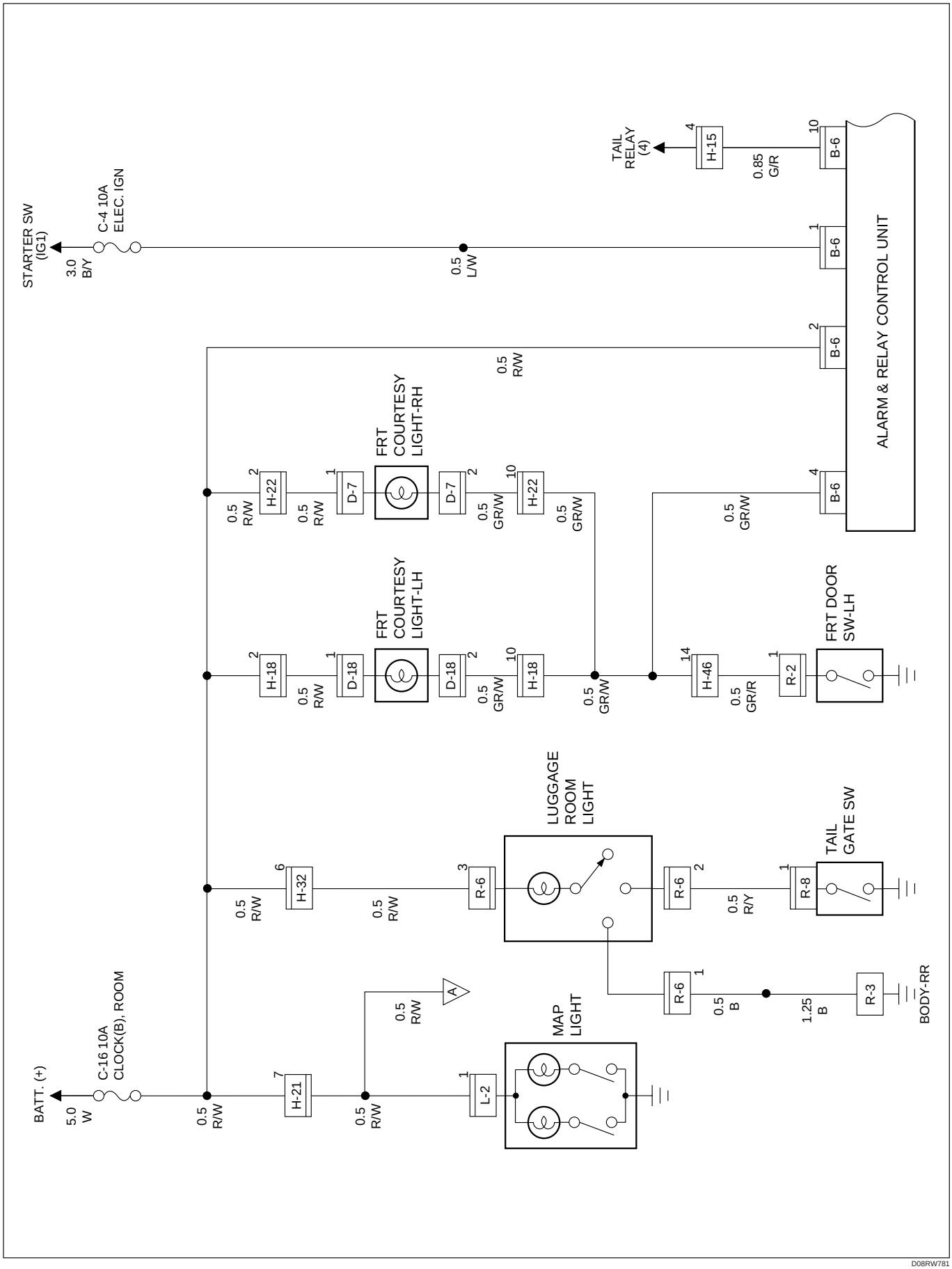

D08RW781

Circuit Diagram (RHD)-2

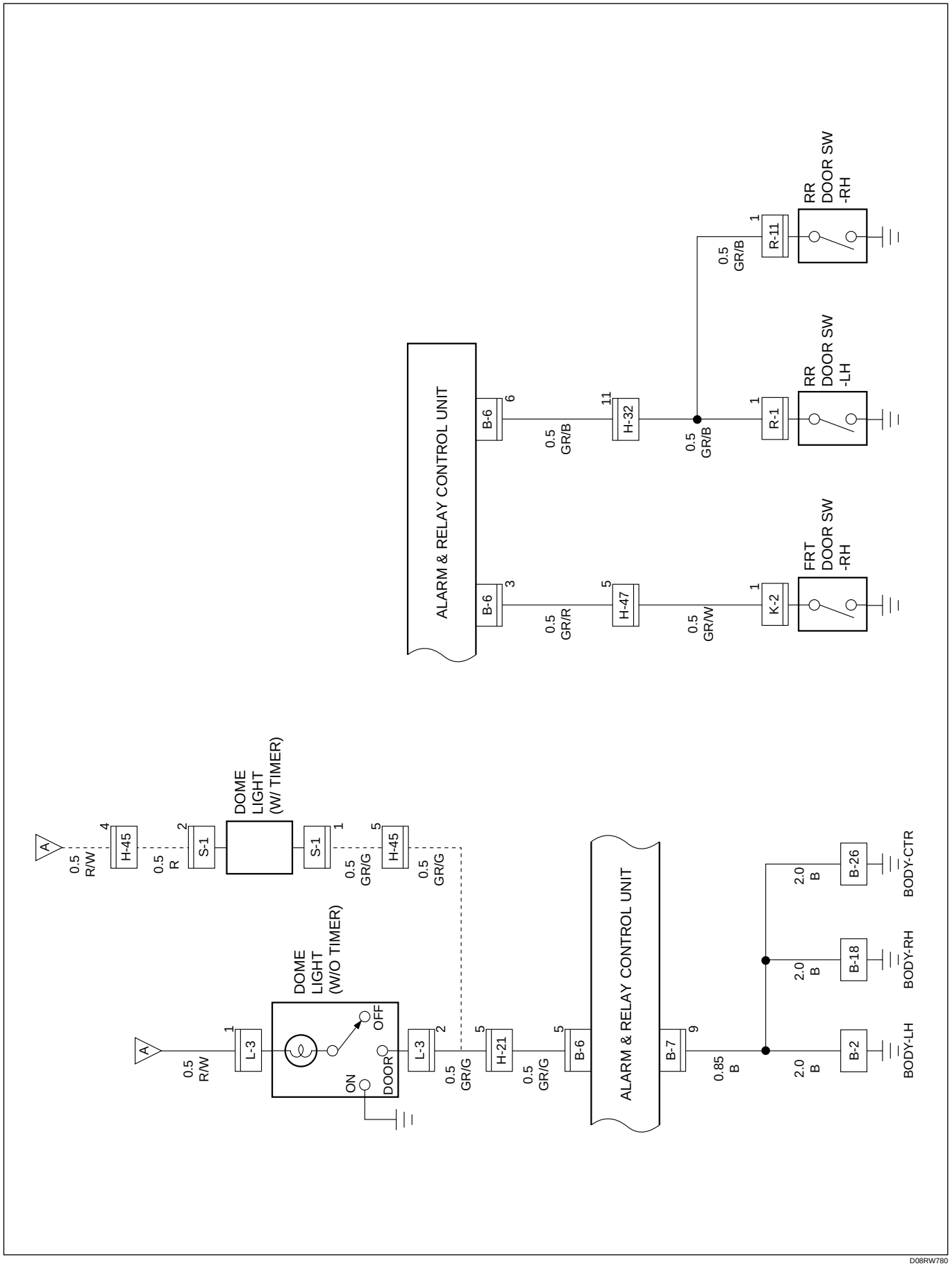

D08RW780

Parts Location (RHD)

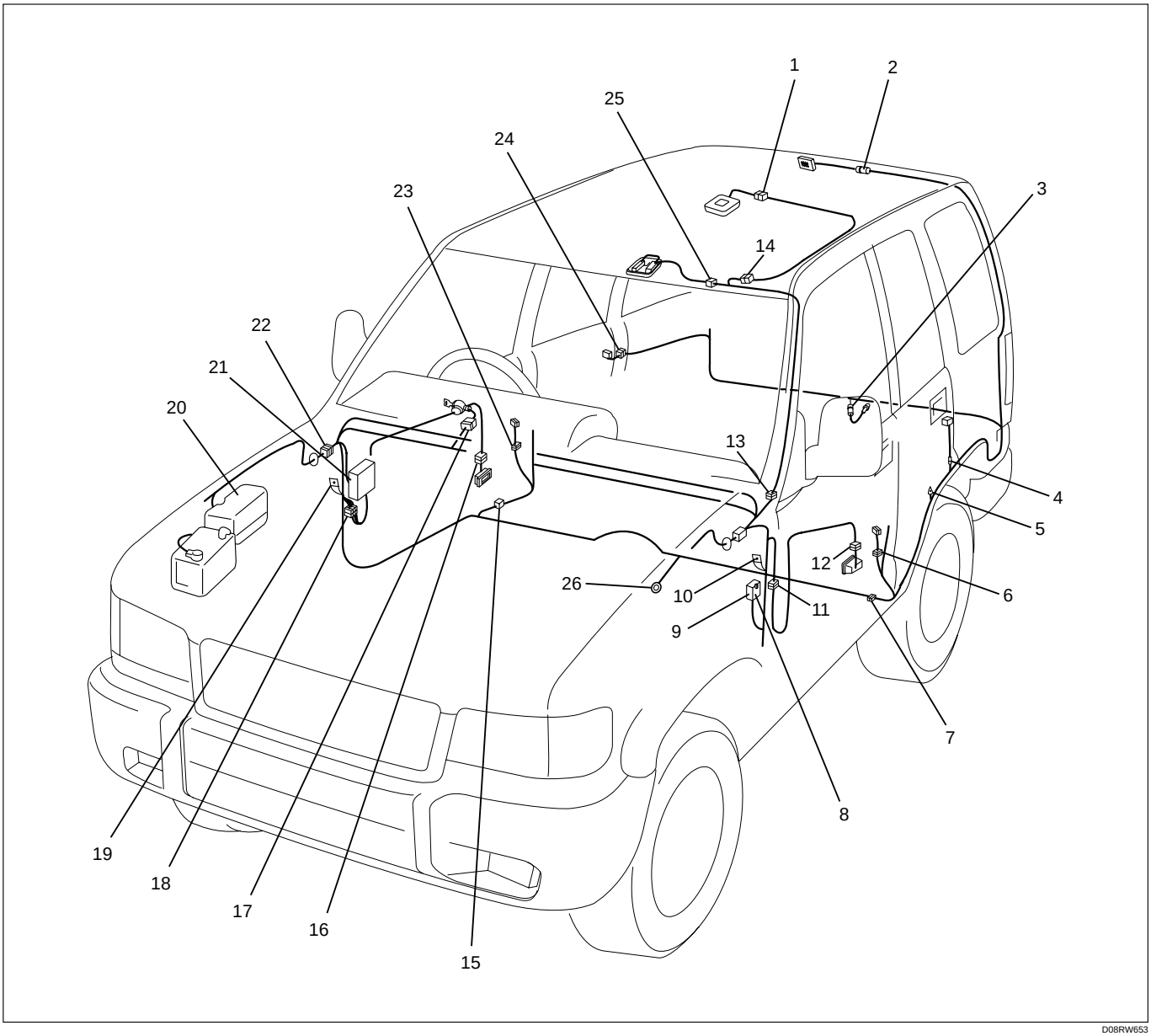

D08RW653

Legend

(1) S-1, L-3 (W/O Sun Roof)
(2) R-6
(3) R-8
(4) R-1
(5) R-3
(6) R-2
(7) H-32, H-46
(8) Alarm and Relay control Unit
(9) B-6, B-7
(10) B-2
(11) H-18
(12) D-18
(13) H-21
(14) H-45
(15) H-47
(16) D-7
(17) B-11
(18) H-22
(19) B-18
(20) Relay and Fuse Box
(21) Fuse Box
(22) H-25, H-26
(23) K-2
(24) R-11
(25) L-2
(26) B-26

Circuit Diagram (LHD)-1

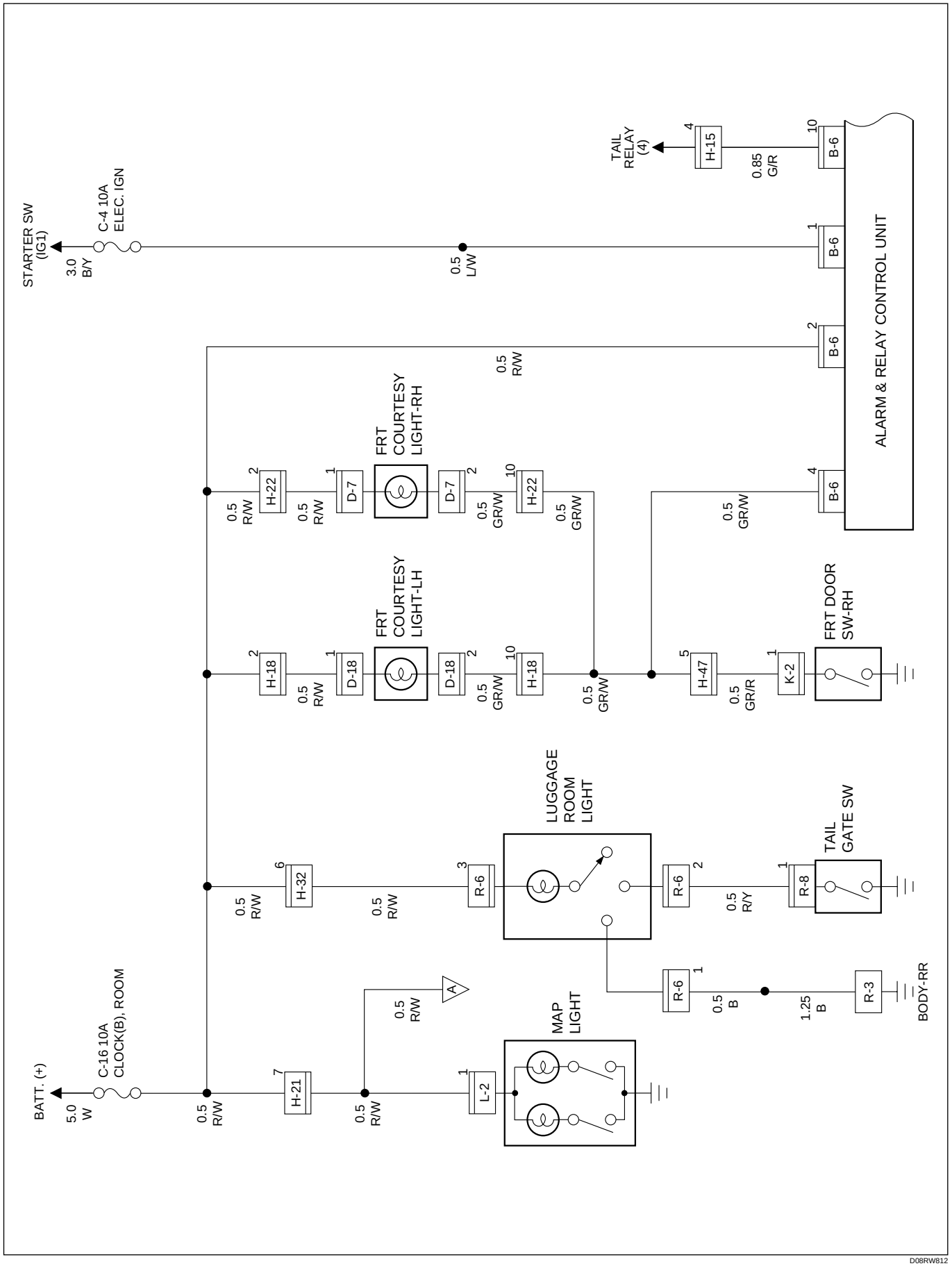

D08RW812

Circuit Diagram (LHD)-2

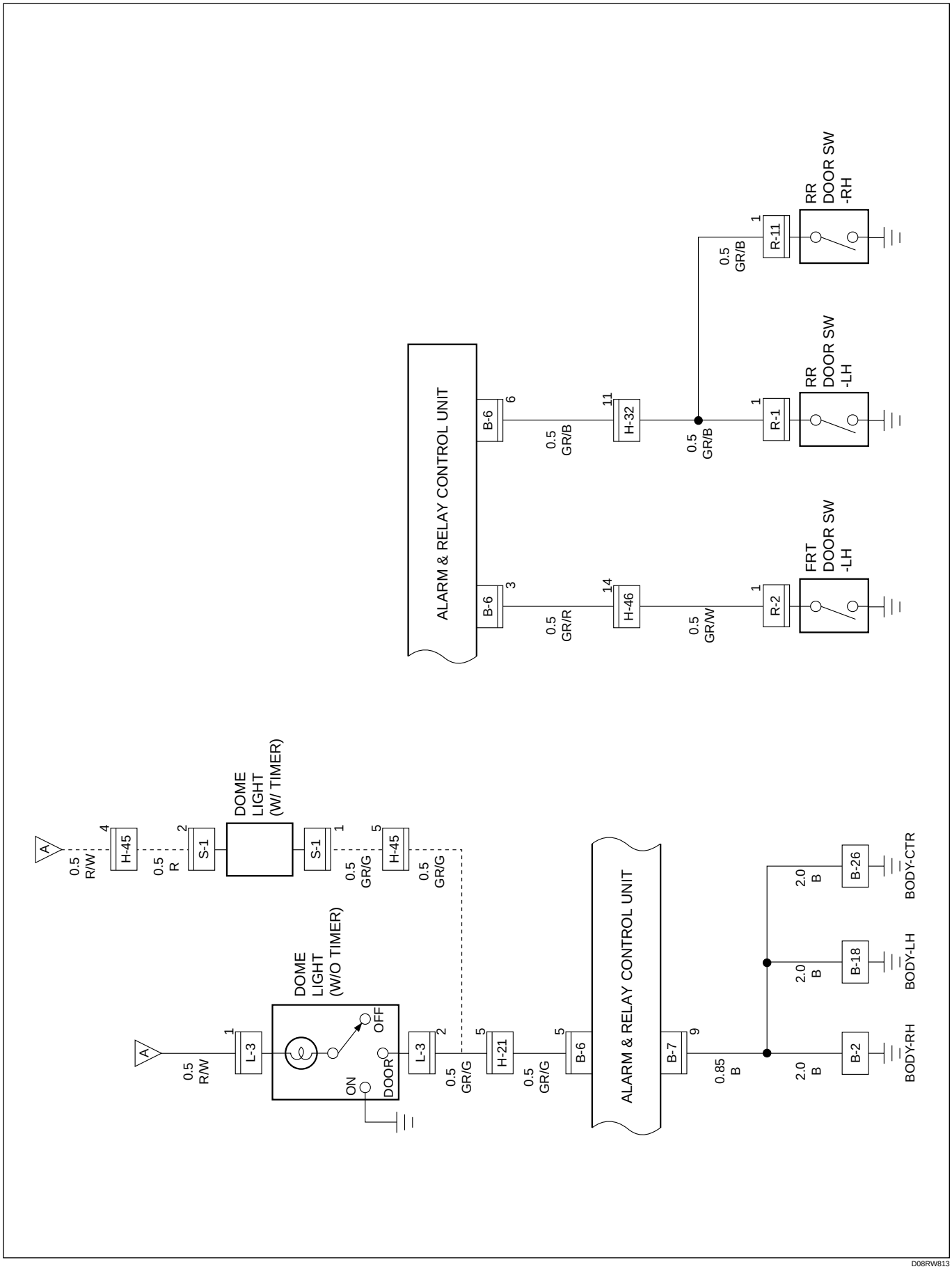

D08RW813

Parts Location (LHD)

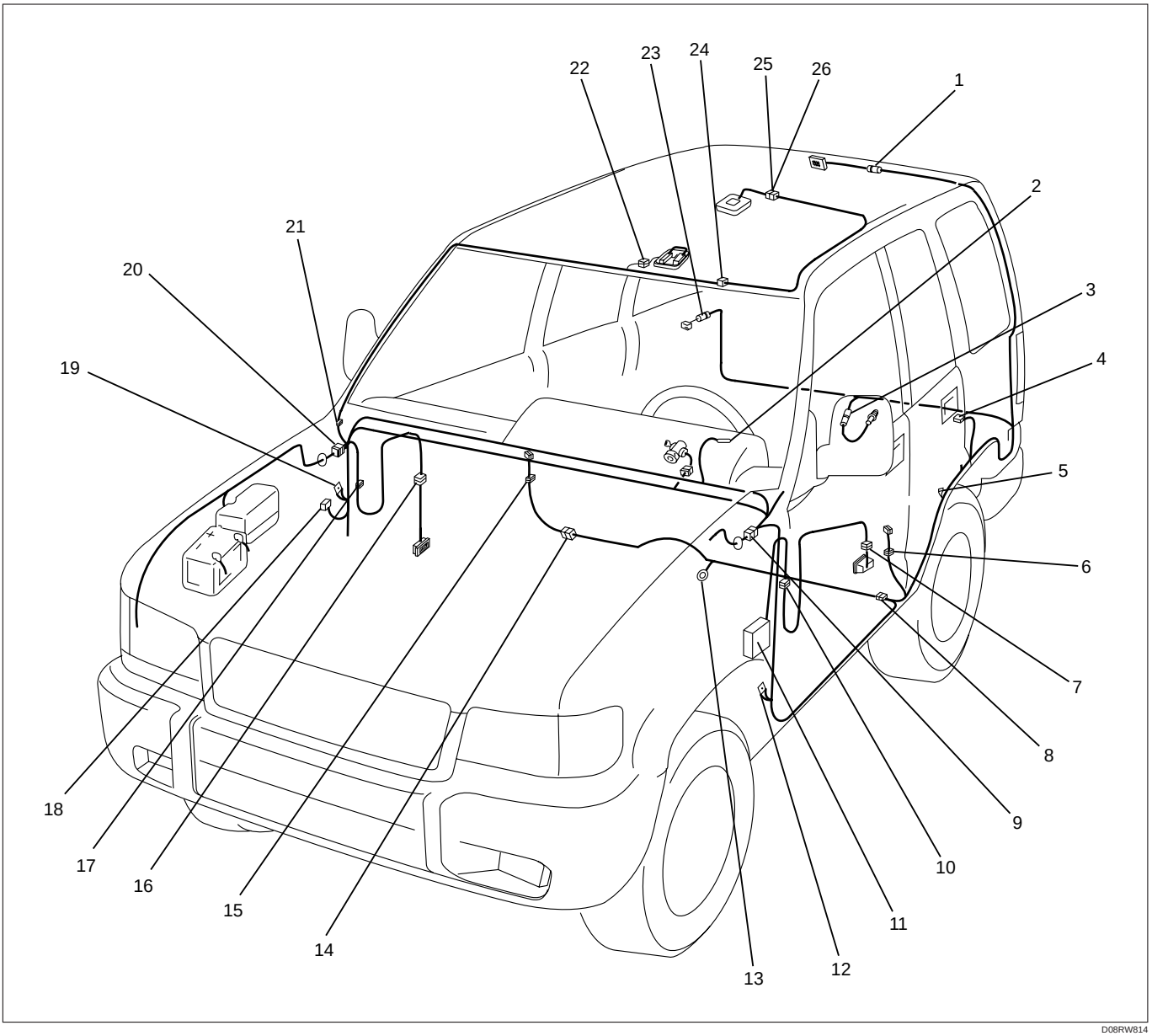

Legend

(1) I-9
(2) C-66
(3) H-87, H-9
(4) C-16
(5) Glow Plug × 4
(6) H-4, H-5
(7) E-37
(8) E-41
(9) C-60
(10) B-19
(11) Dropping Resistor
(12) C-59
(13) H-41, H-42
(14) H-3
(15) Relay and Fuse Box (X-17)
(16) Glow Relay-1 (C-51, C-52)
(17) Glow Relay-2 (C-53, C-54, C-55)
(18) C-39
(19) H-15, H-26
(20) Fuse Box

Power Door Lock

General Description

The circuit consists of door lock (& power window) switch, door lock actuator for front and rear door, tailgate lock actuator and door lock key switch.
Front door lock switch–LH is always provided with battery voltage. The key or the inside lock button on the both driver's and front passenger's door can activate the lock mechanism of all the door (including tailgate).
When driver's door lock switch or front passenger's door lock switch is turned on, current flows for about one second to door lock actuator of each door connected in parallel with front door lock (& power window) switch–LH to activate actuator to lock and unlock doors.

Circuit Diagram (RHD)-1

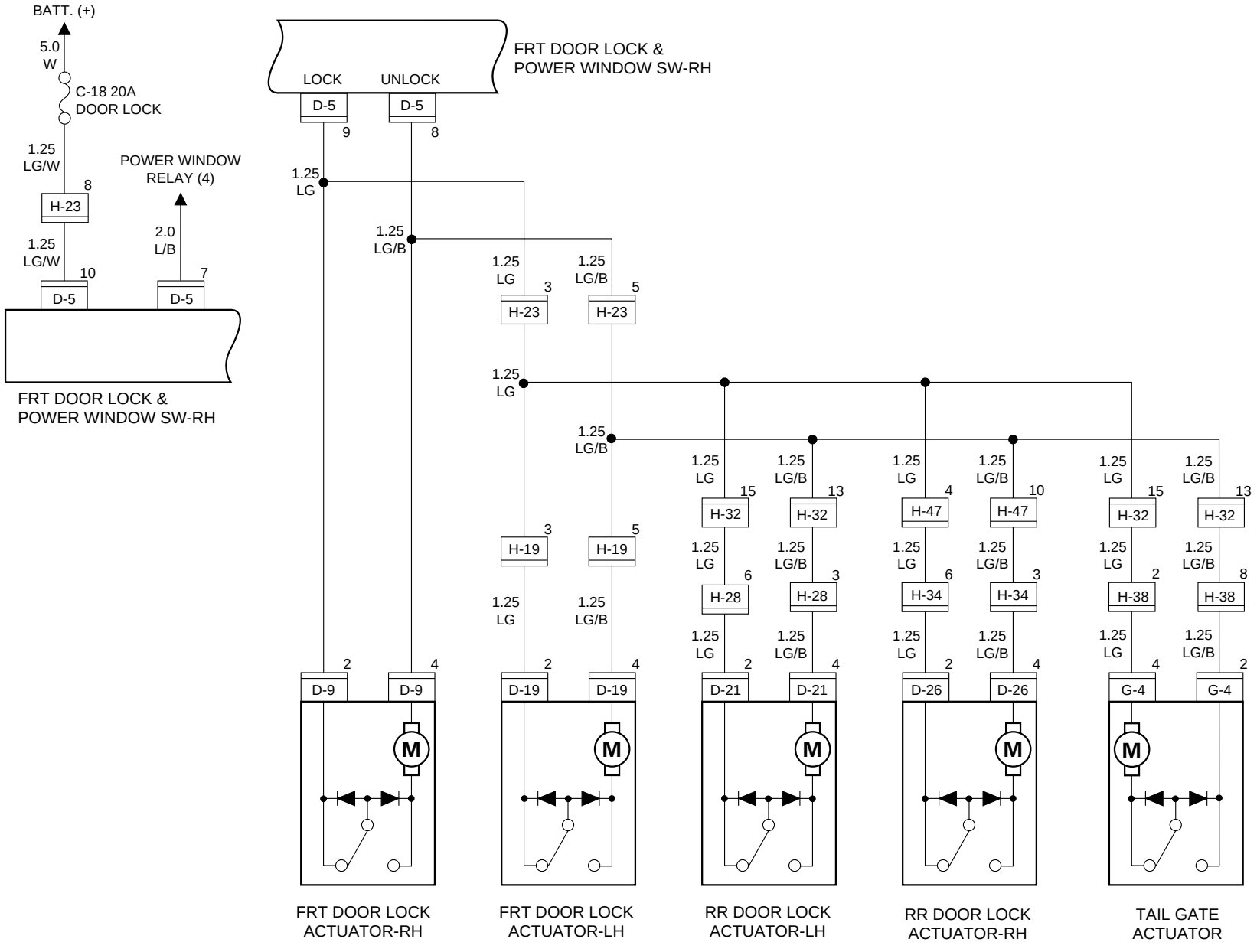

D08RW759

Circuit Diagram (RHD)-2

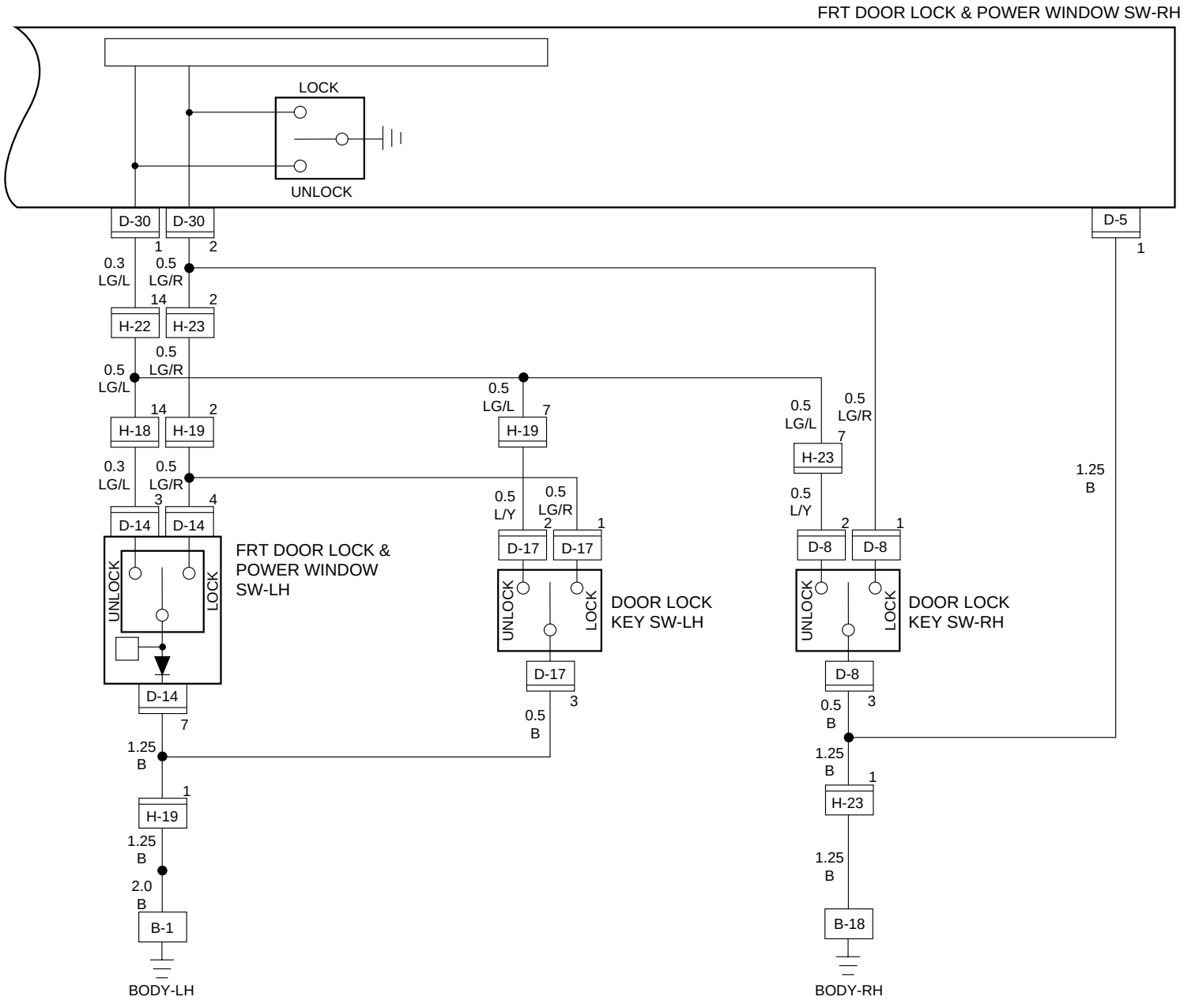

D08RW769

Circuit Diagram (RHD W/Keyless Entry)-1

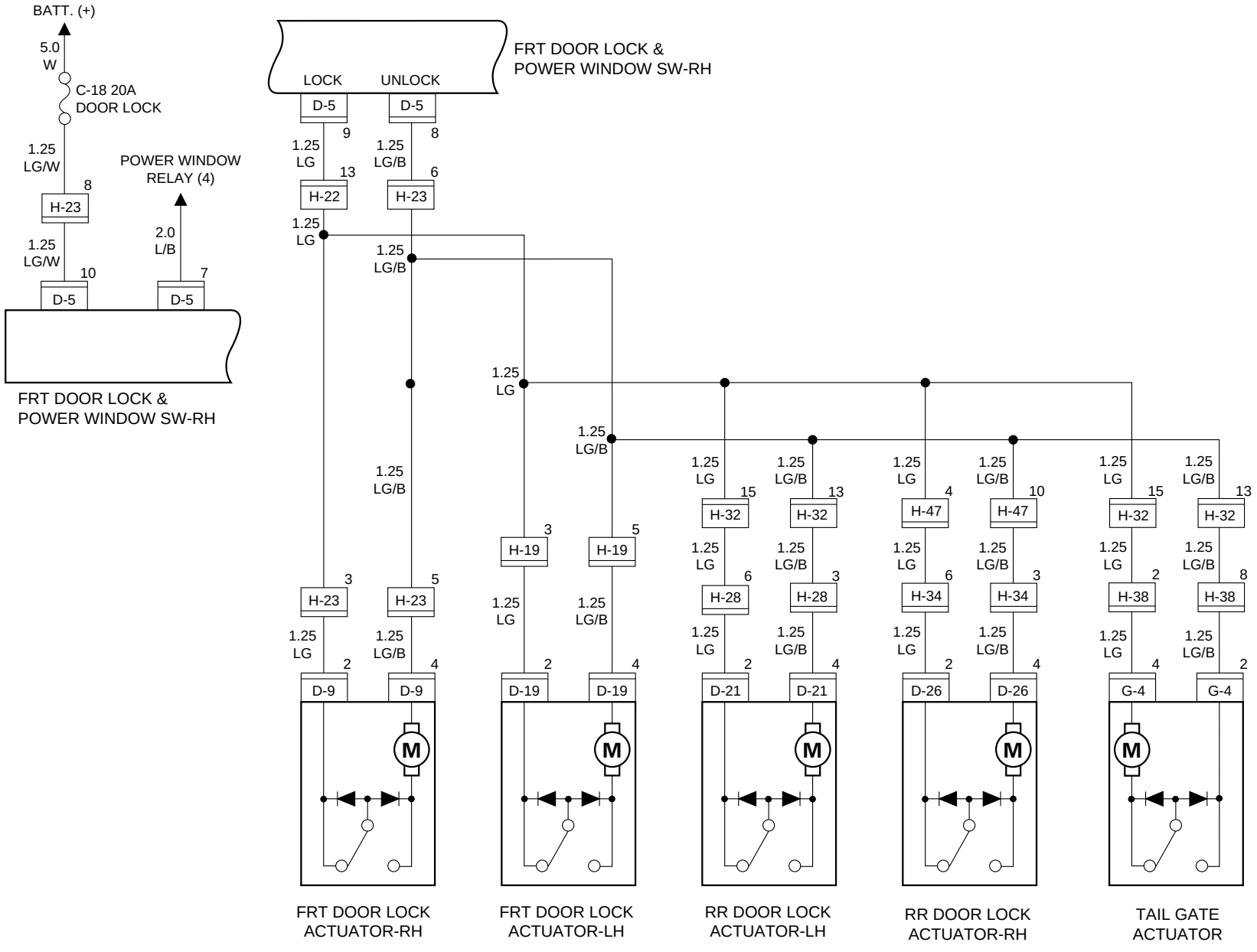

D08RW761

Circuit Diagram (RHD W/Keyless Entry)-2

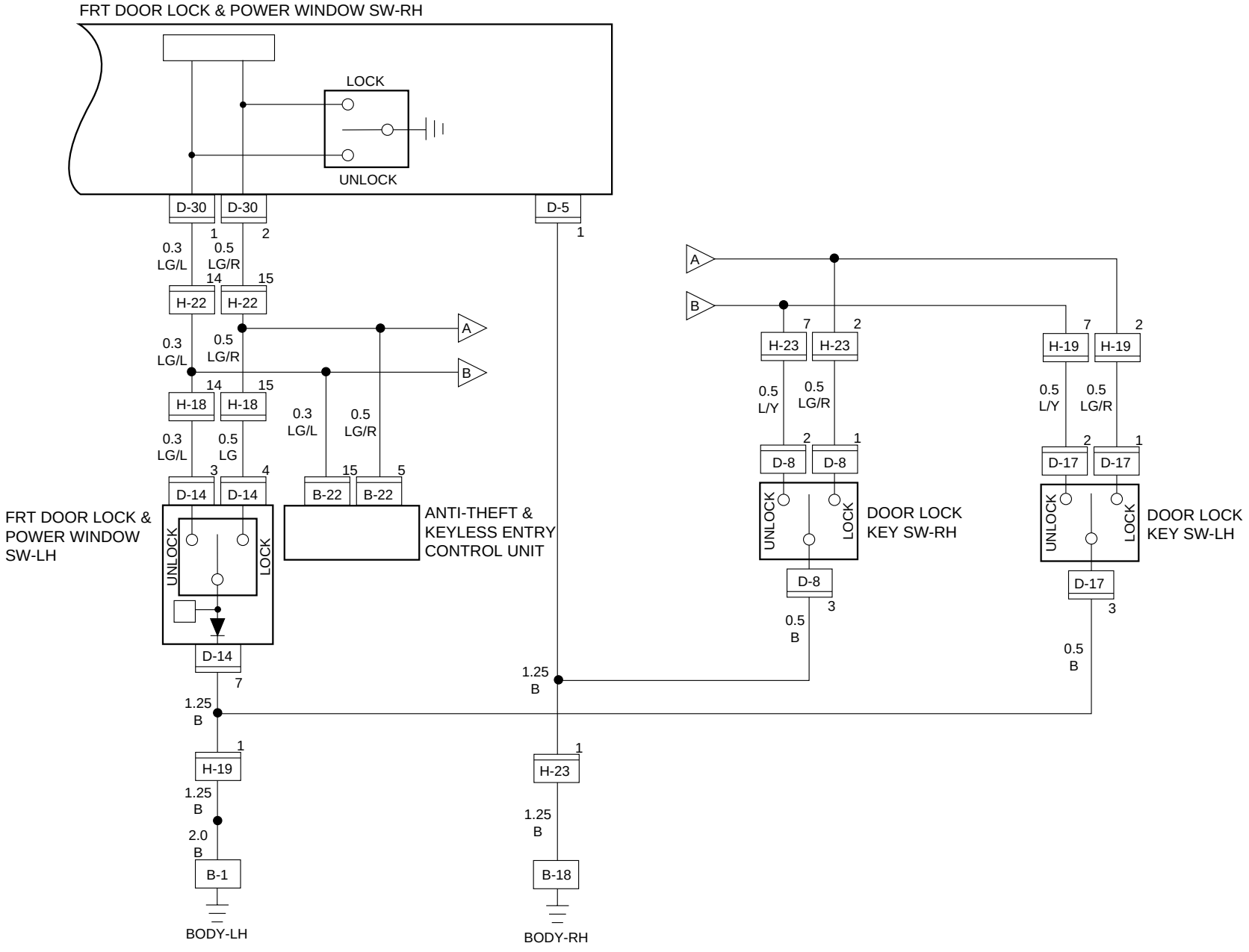

D08RW762

Circuit Diagram (South Africa W/Keyless Entry)-2

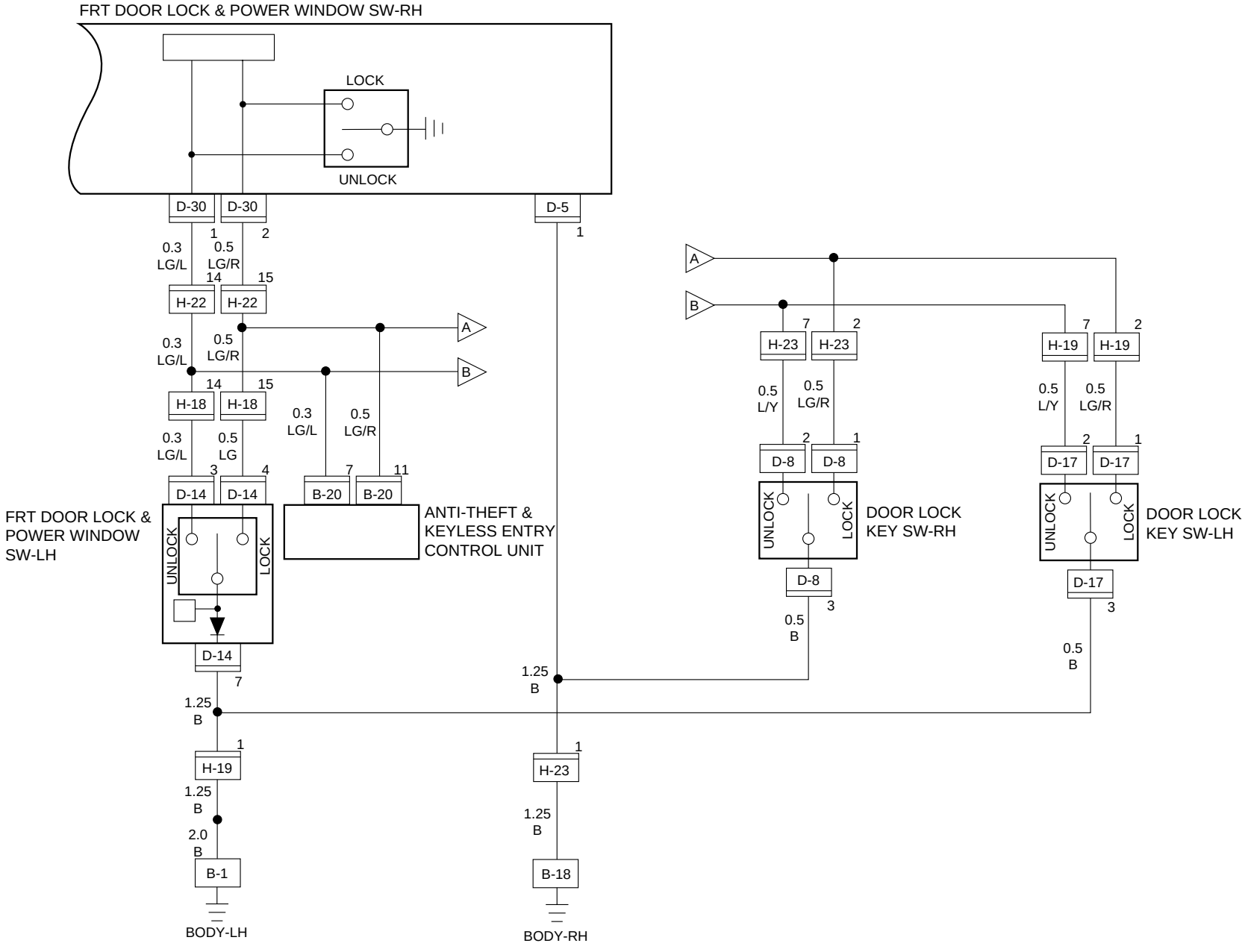

D08RW763

Parts Location (RHD)

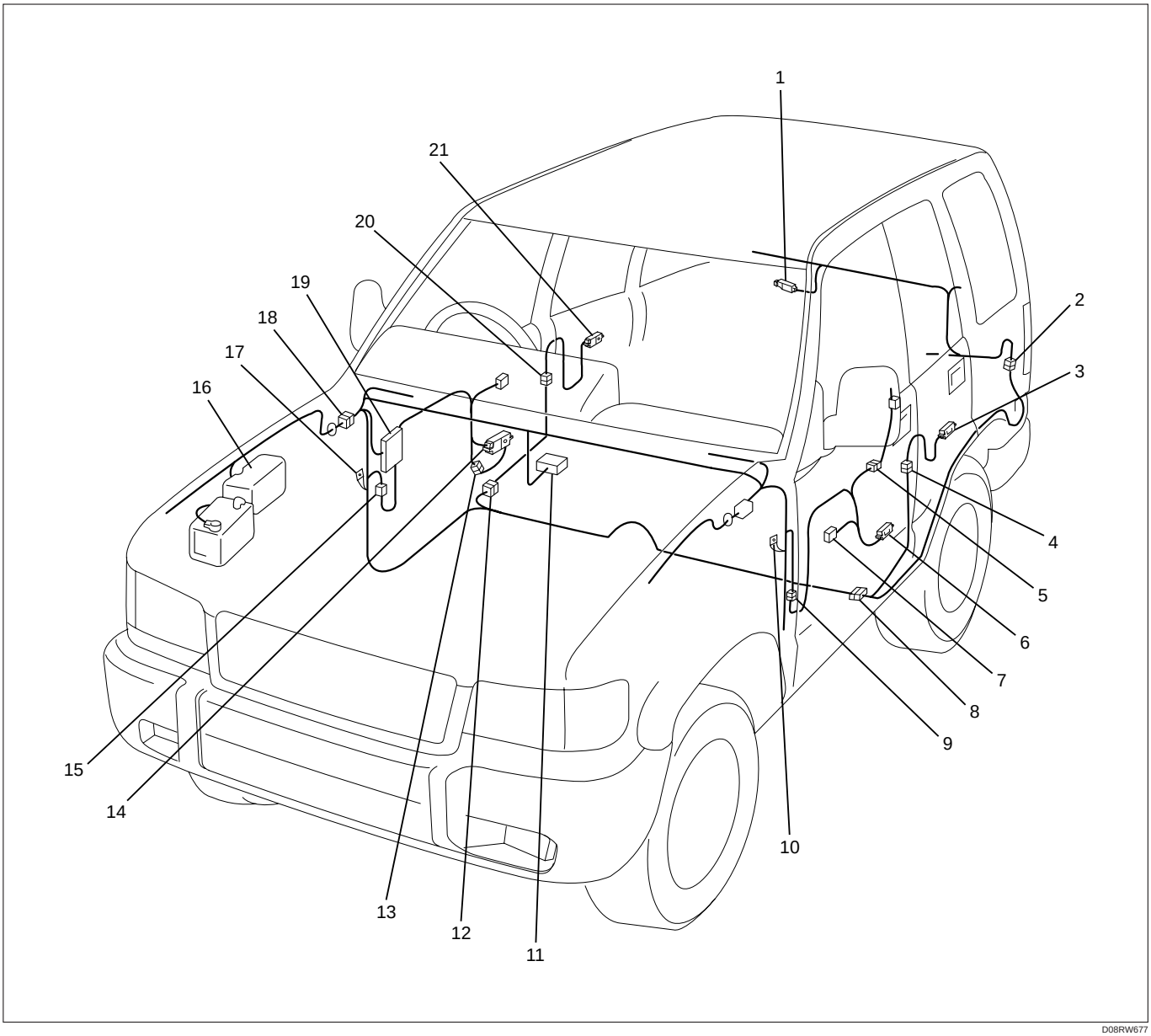

Legend

(1) G-4
(2) H-38
(3) D-21
(4) H-28
(5) D-17
(6) D-19
(7) D-14
(8) H-32
(9) H-18, H-19
(10) B-1
(11) B-22 (B-20, South Africa)
(12) H-47
(13) D-8
(14) D-9
(15) H-22, H-23
(16) Relay and Fuse Box
(17) B-18
(18) H-14
(19) Fuse Box
(20) H-34
(21) D-26

Circuit Diagram (LHD)-1

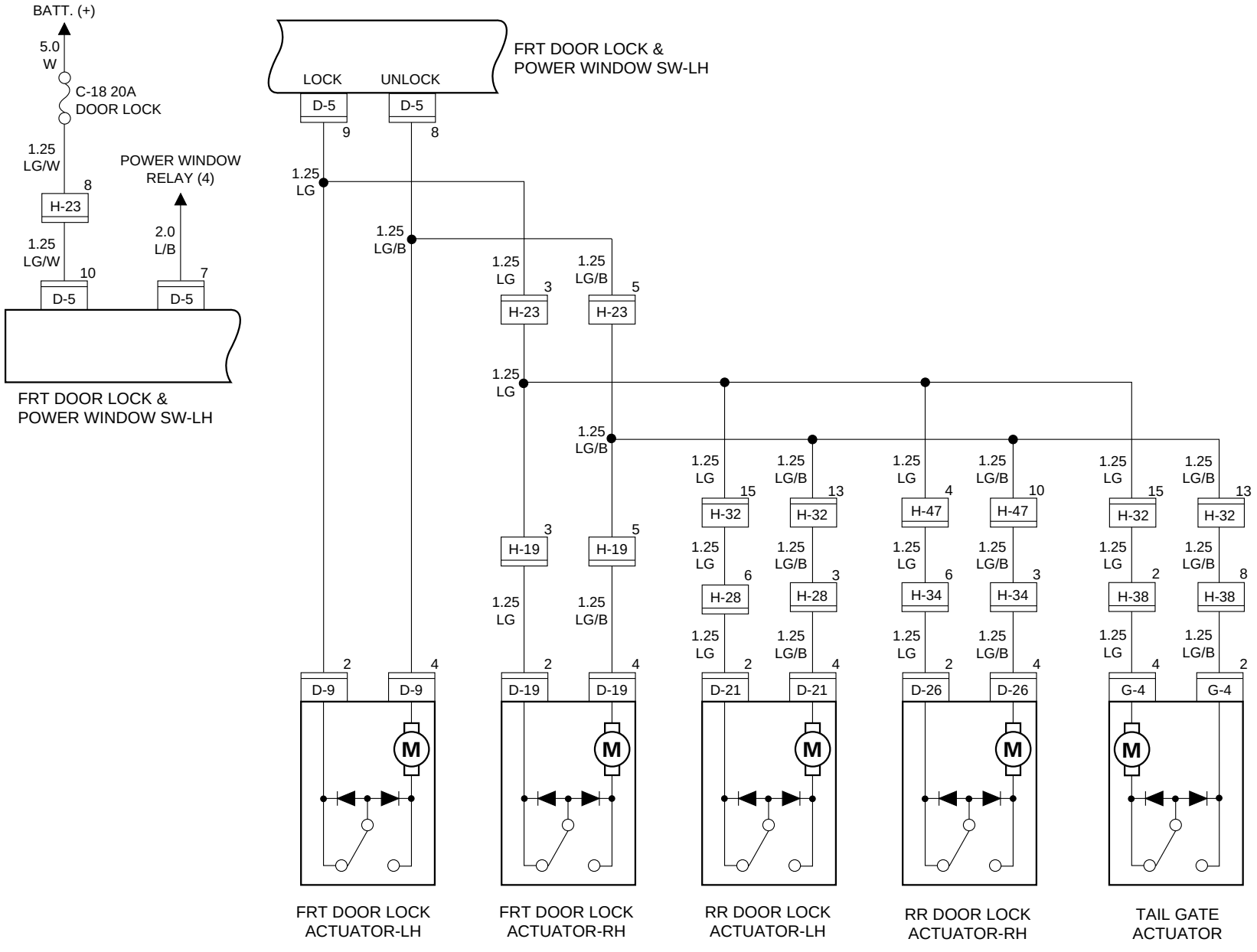

D08RW884

Circuit Diagram (LHD)-2

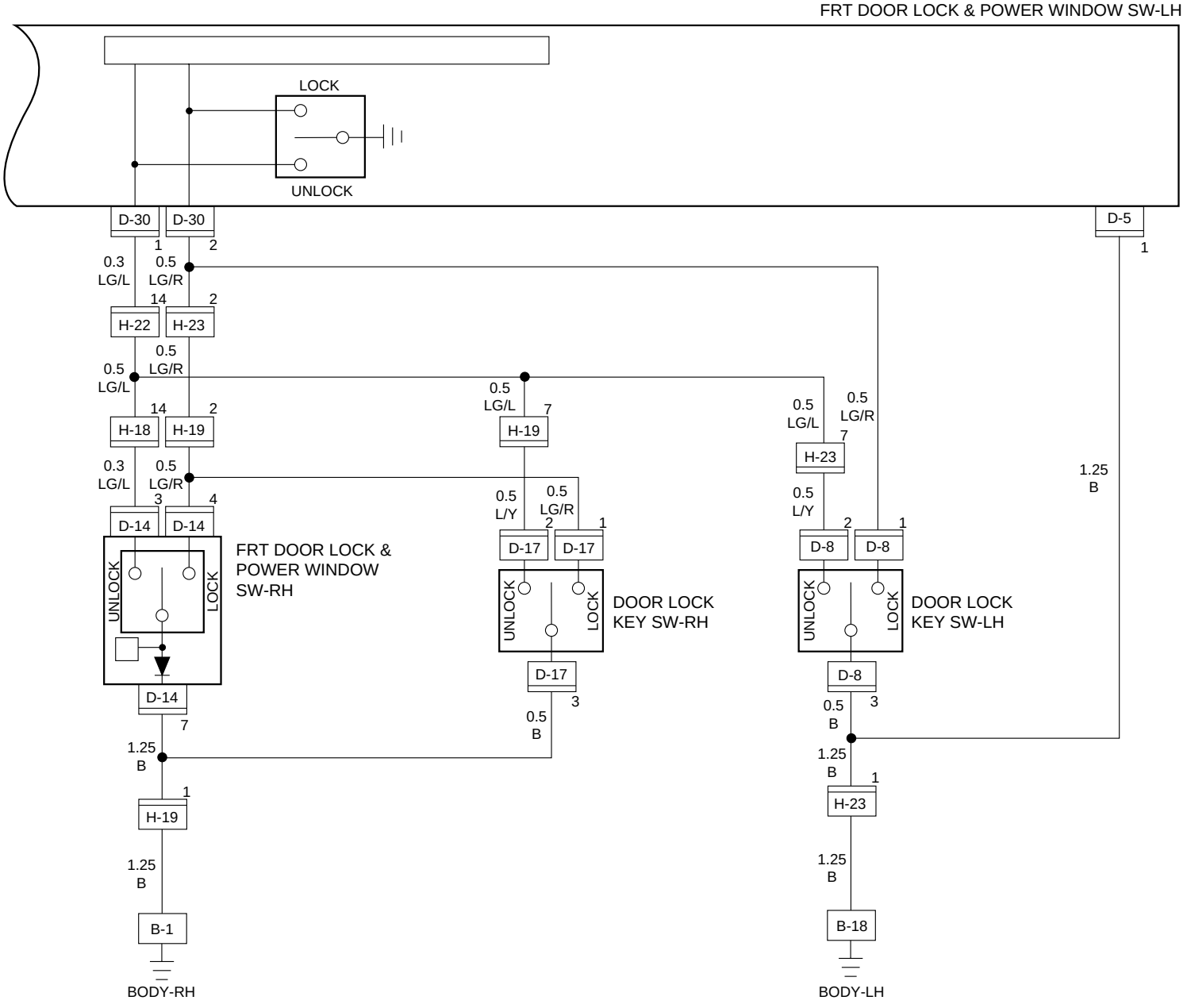

Circuit Diagram (LHD W/Keyless Entry)-1

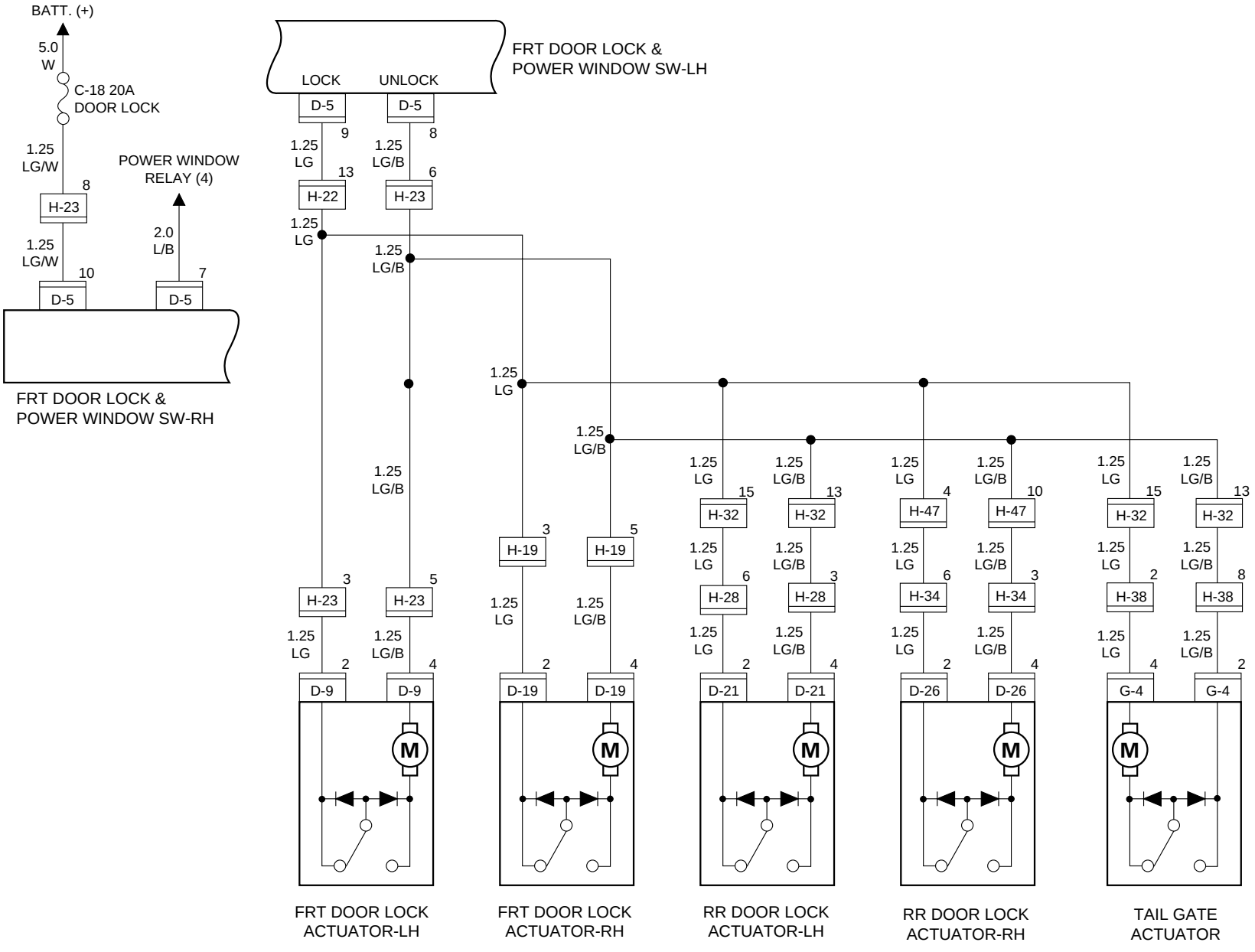

D08RW886

Circuit Diagram (LHD W/Keyless Entry)-2

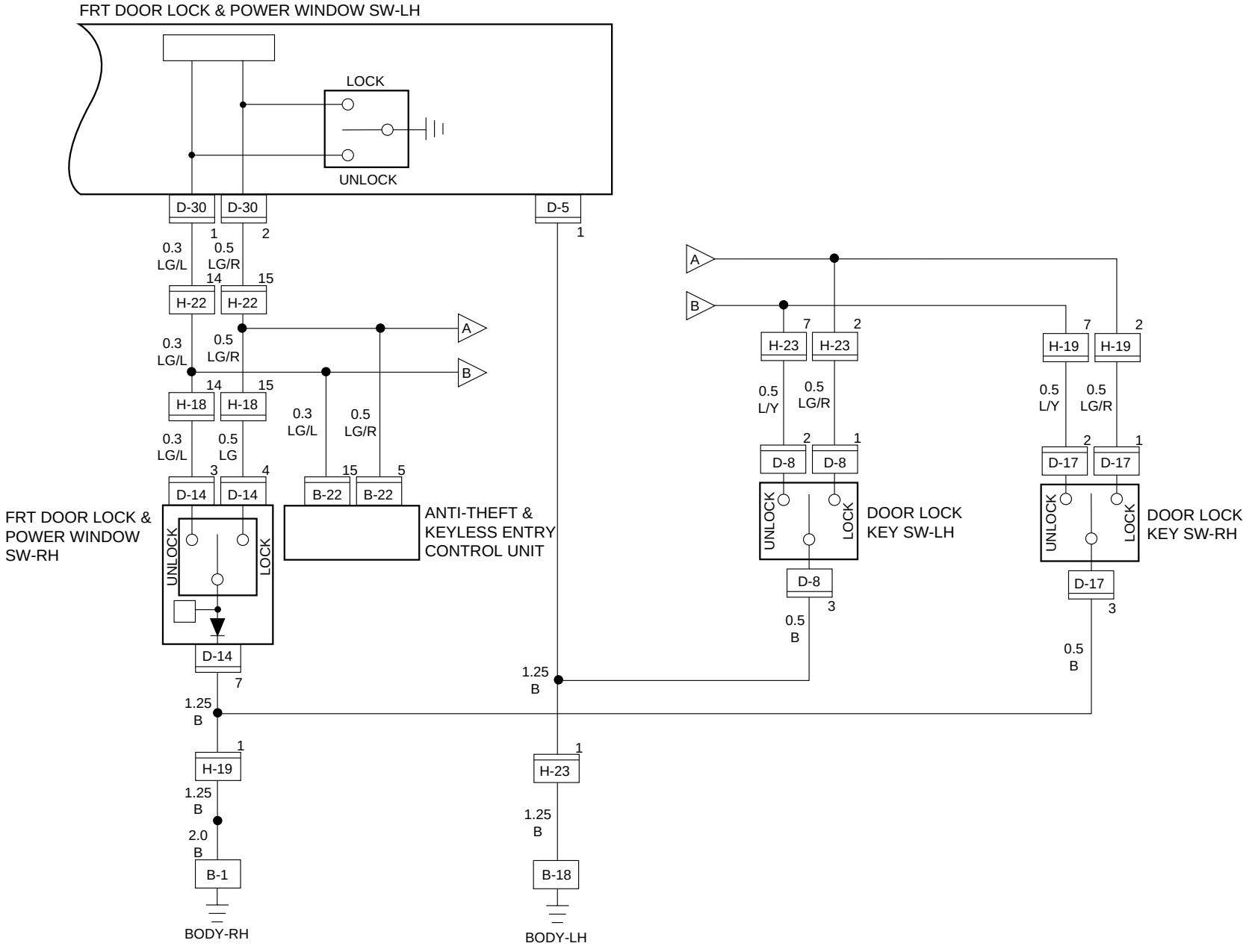

Parts Location (LHD)

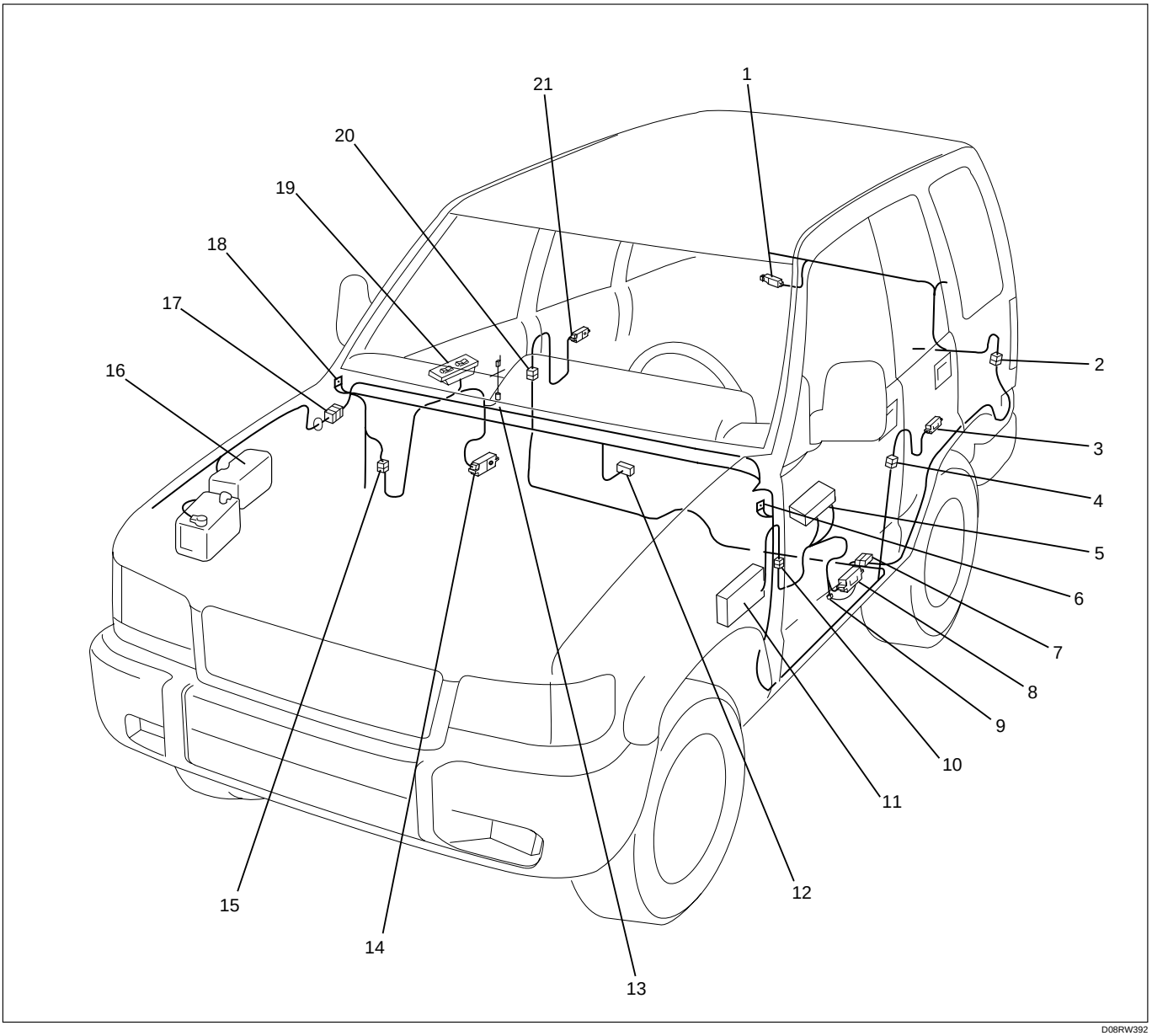

D08RW392

Legend

(1) G-4
(2) H-38
(3) D-21
(4) D-28
(5) D-5, D-30
(6) B-18
(7) H-32
(8) D-9
(9) D-8
(10) H-22, H-23
(11) Fuse Box
(12) B-22
(13) D-17
(14) D-19
(15) H-18, H-19
(16) Relay and Fuse Box
(17) H-14
(18) B-2
(19) D-14
(20) H-34
(21) D-26

Diagnosis

Quick Chart for Check Points

Check point / Trouble mode	Fuse (C-18 20A)	FRT Door lock (& power window) SW-Driver's side	FRT Door lock (& power window) SW-Passen-ger's side	Door lock switch FRT–Driver's side	Door lock switch FRT–Passen-ger's side	Door lock actuator					
						FRT–LH	FRT–RH	RR–LH	RR–RH	Tailgate	Cable harness
1. All the doors do not lock and unlock by door lock SW-Driver's side	○	○									○
2. All the doors do not get locked (or unlocked) by door lock SW-Passenger's side		○	○								○
3. FRT door–LH does not get locked (or unlocked)						○					○
4. FRT door–RH does not get locked (or unlocked)							○				○
5. RR door–LH does not get locked (or unlocked)								○			○
6. RR door–RH does not get locked (or unlocked)									○		○
7. Tailgate does not get locked (or unlocked)										○	○
8. Door lock does not operate when operated from the door lock key SW-Driver's side		○		○							○
9. Door lock does not operate when operated from the door lock key SW-Passenger's side		○			○						○

1. All The Doors Do Not Lock And Unlock By Door Lock SW-Driver's Side

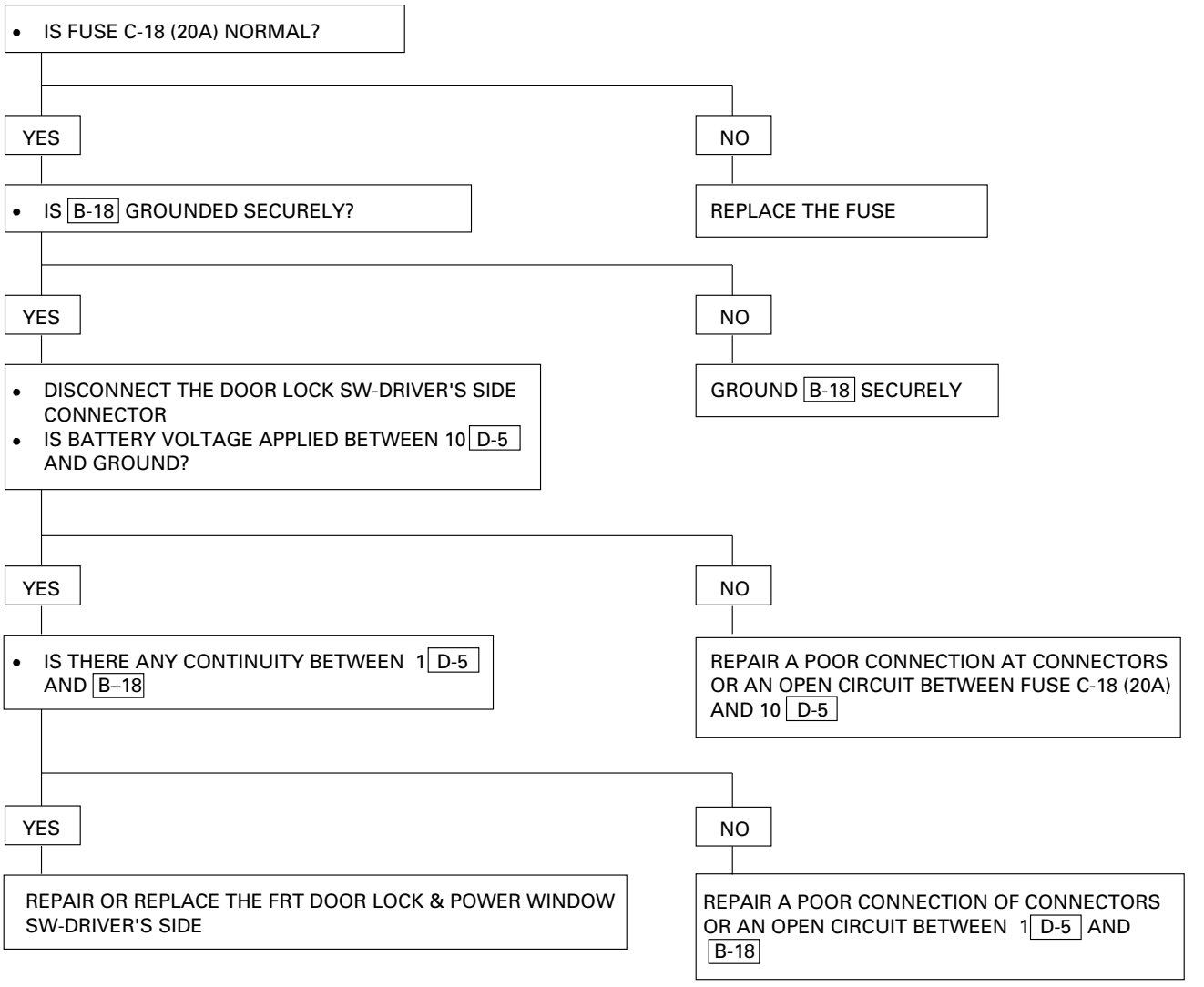

2. All The Doors Do Not Get Locked (Or Unlocked) By FRT Door Lock SW-Passenger's Side

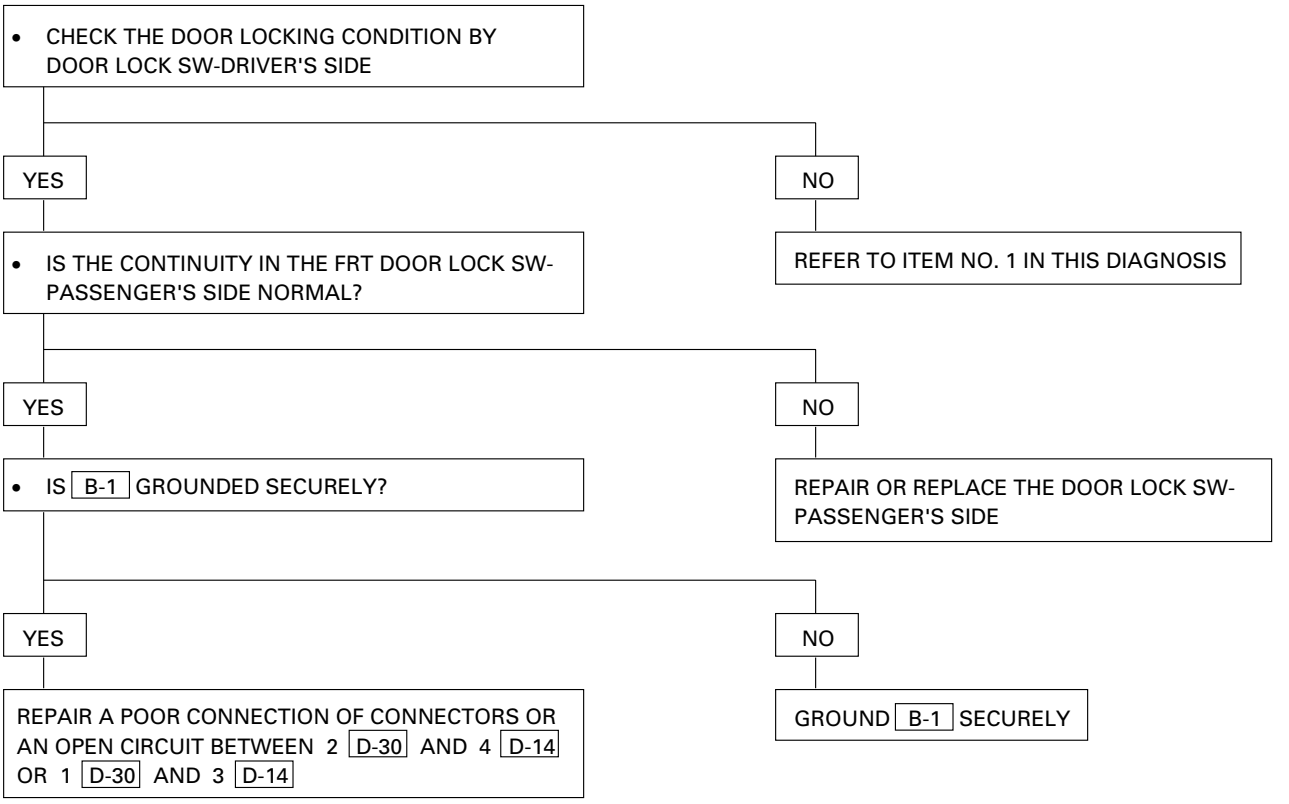

3. FRT Door–LH Does Not Get Locked (Or Unlocked)

4. FRT Door–RH Does Not Get Locked (Or Unlocked)

5. RR Door–LH Does Not Get Locked (Or Unlocked)

6. RR Door–RH Does Not Get Locked (Or Unlocked)

7. Tailgate Does Not Get Locked (Or Unlocked)

REPLACE THE DOOR LOCK ACTUATOR

8. Door Lock Does Not Operate When Operated From The Door Lock Key SW-Driver's Side

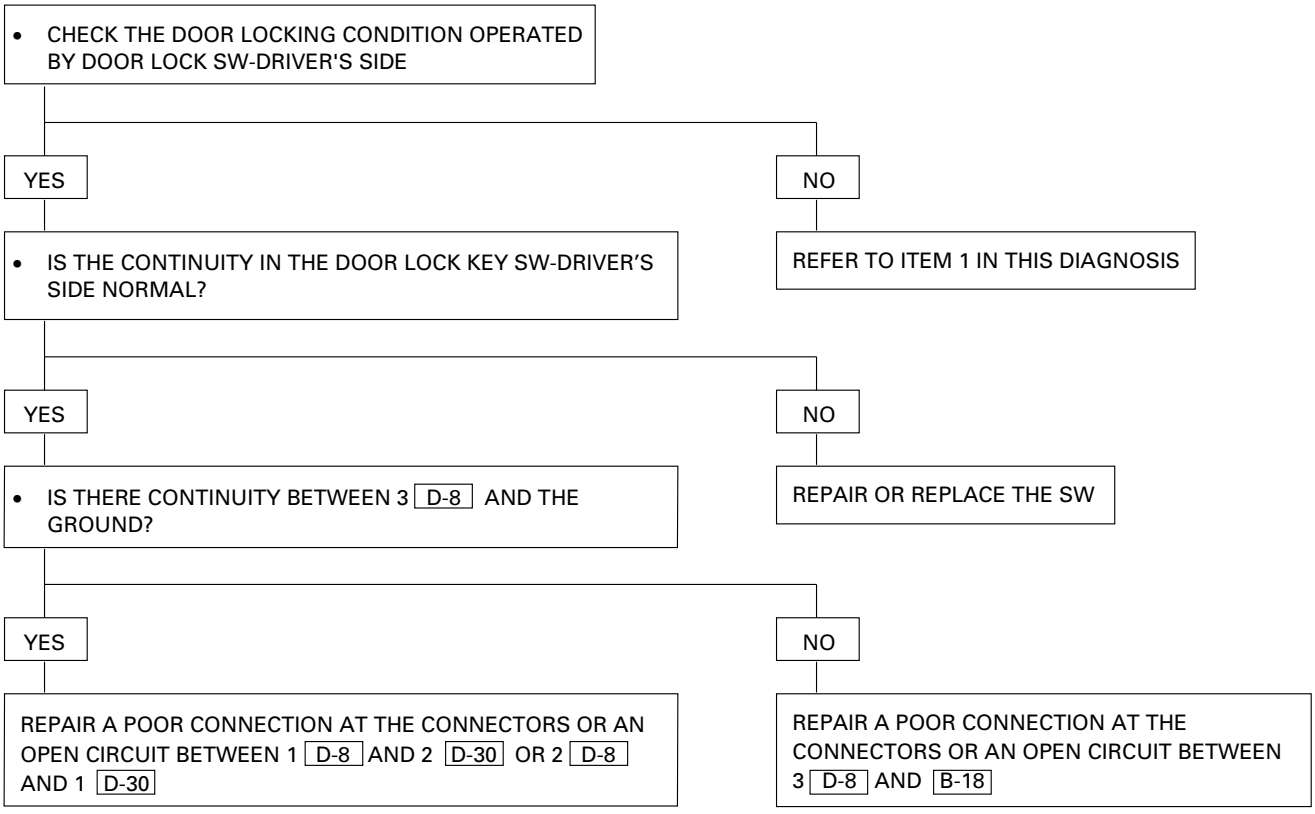

9. Door Lock Does Not Operate When Operated From The Door Lock Key SW-Passenger's Side

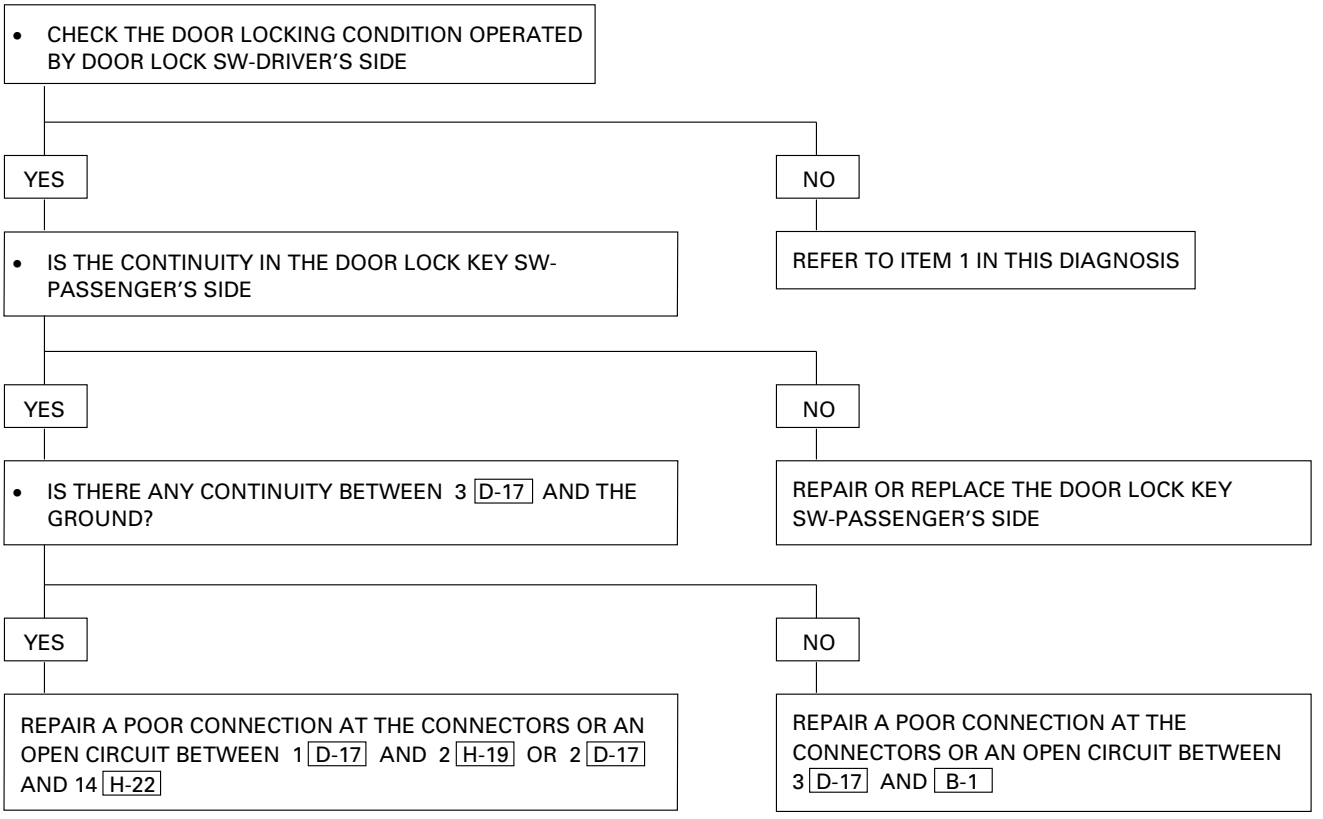

Power Window

General Description

The circuit consists of (door lock &) power window switch for each of front windows, power window switch for rear doors and power window motors.
When starter switch is turned on, battery voltage is applied to each of power window switches through circuit breaker and power window relay on the circuit.
Driver's power window switch has "ONE TOUCH" function for driver's side window.
This function opens driver's side window fully by just setting the switch to "AUTO" position.
When lock switch on driver's side power window switch is depressed, battery voltage to passenger's power window switches are shut off. So, even if these switches are operated, power window motor does not operate.

Circuit Diagram (RHD)

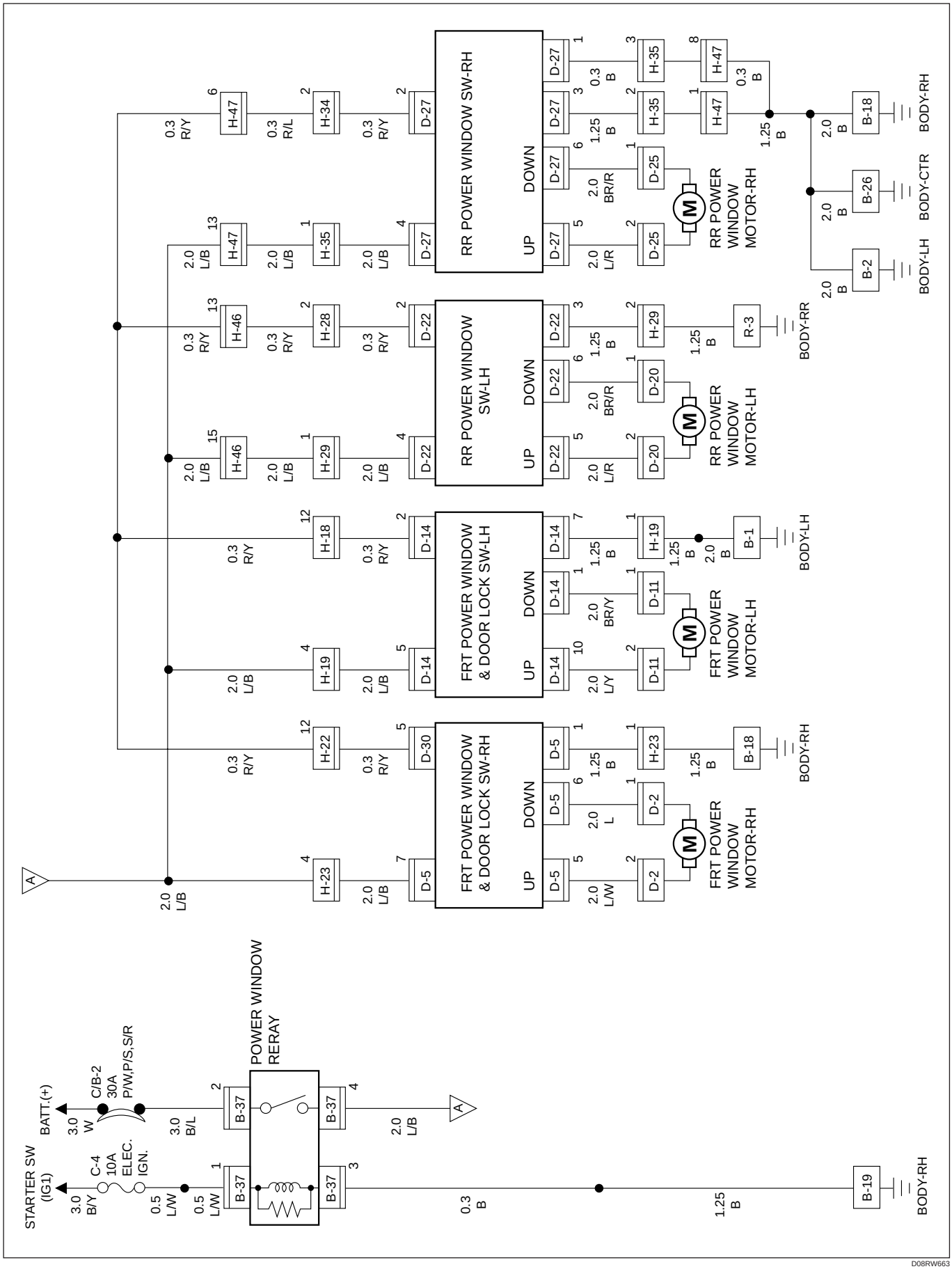

D08RW663

Parts Location (RHD)

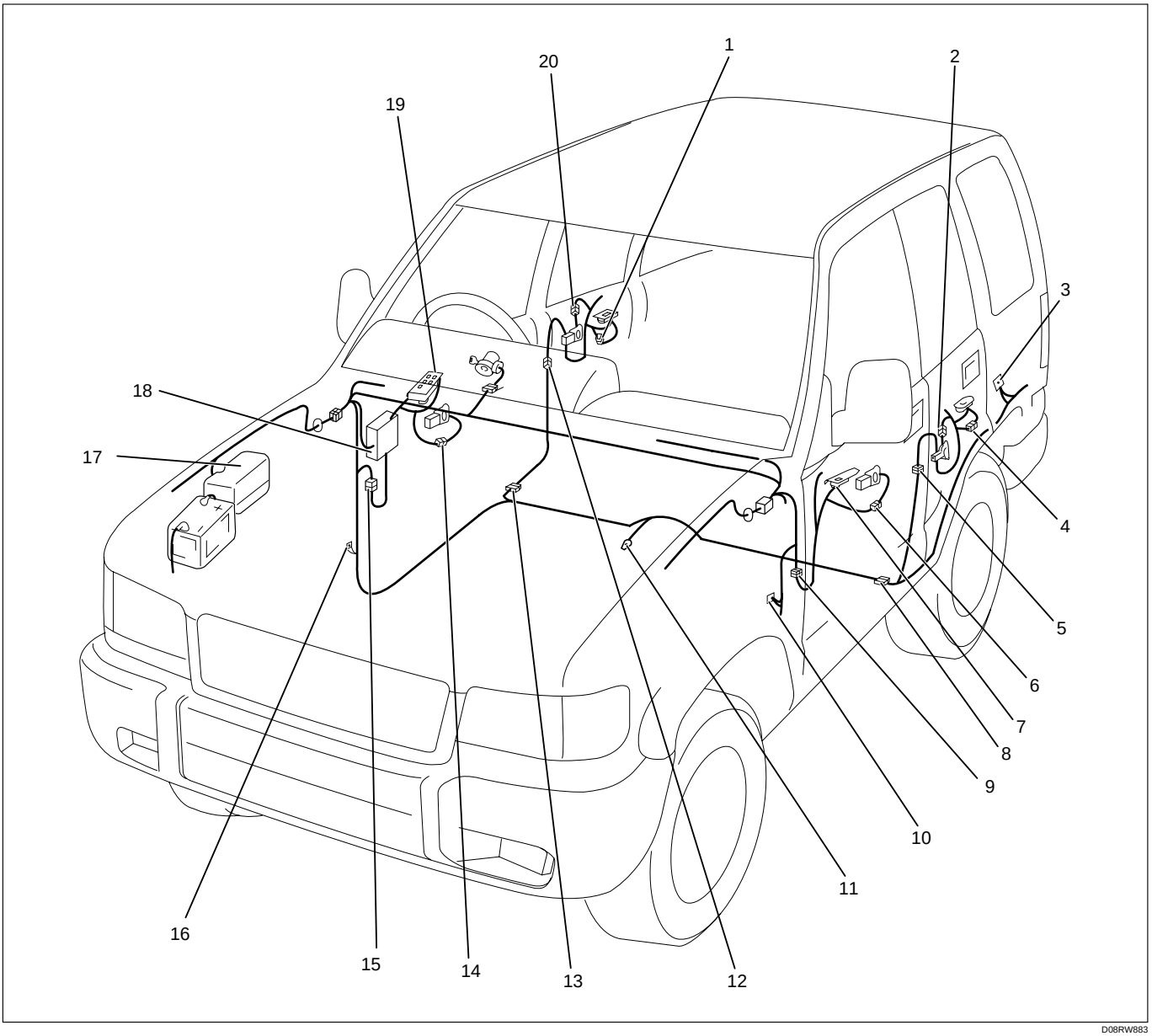

D08RW883

Legend

(1) D-27
(2) D-20
(3) R-3
(4) D-22
(5) H-28, H-29
(6) D-11
(7) D-14
(8) H-46
(9) H-18, H-19
(10) B-1, B-2
(11) B-26
(12) H-34, H-35
(13) H-47
(14) D-2
(15) H-22, H-23
(16) B-18, B-19
(17) Relay and Fuse Box
(18) Fuse Box (B-37)
(19) D-5, D-30
(20) D-25

Circuit Diagram (LHD)

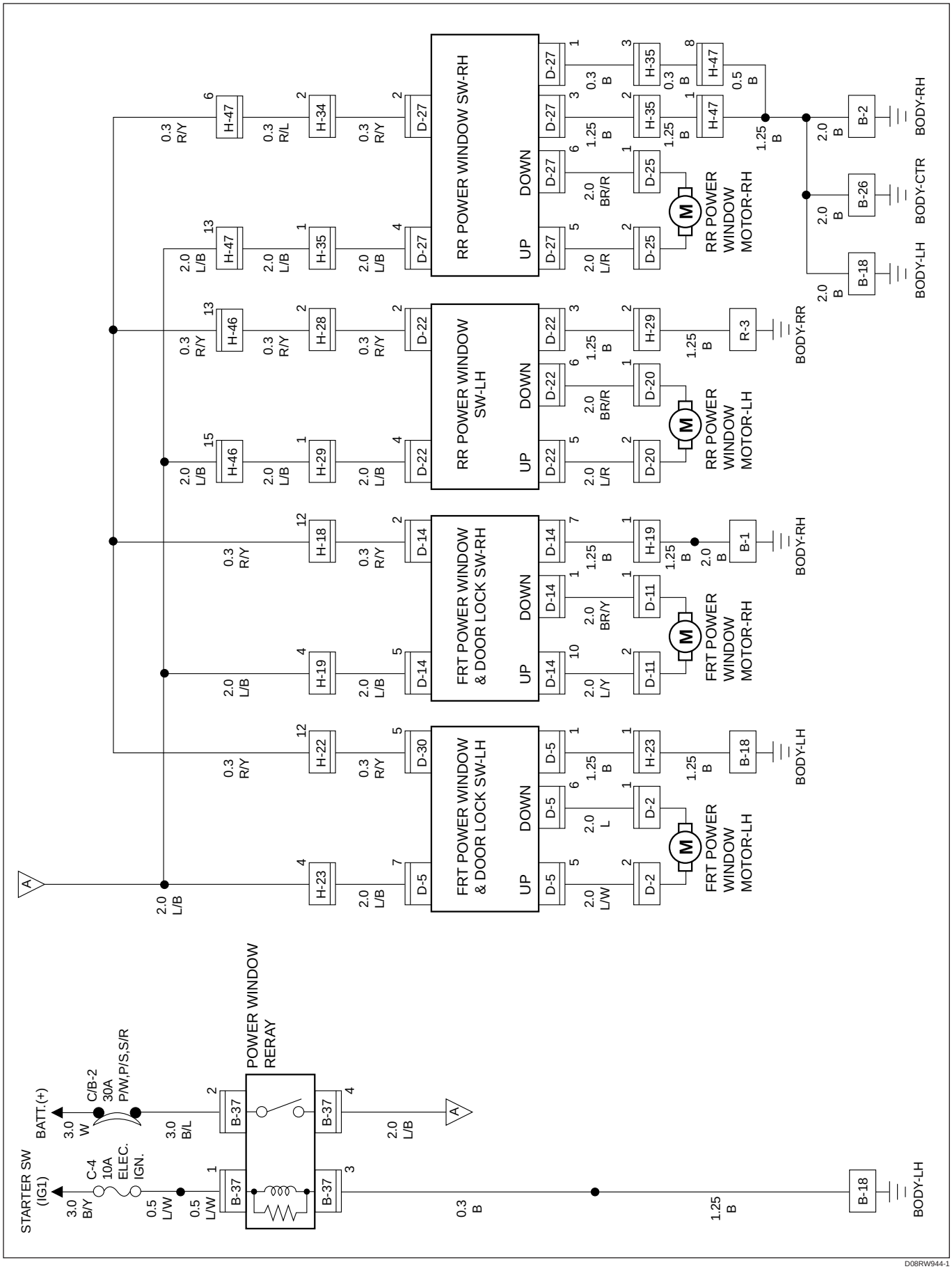

D08RW944-1

Parts Location (LHD)

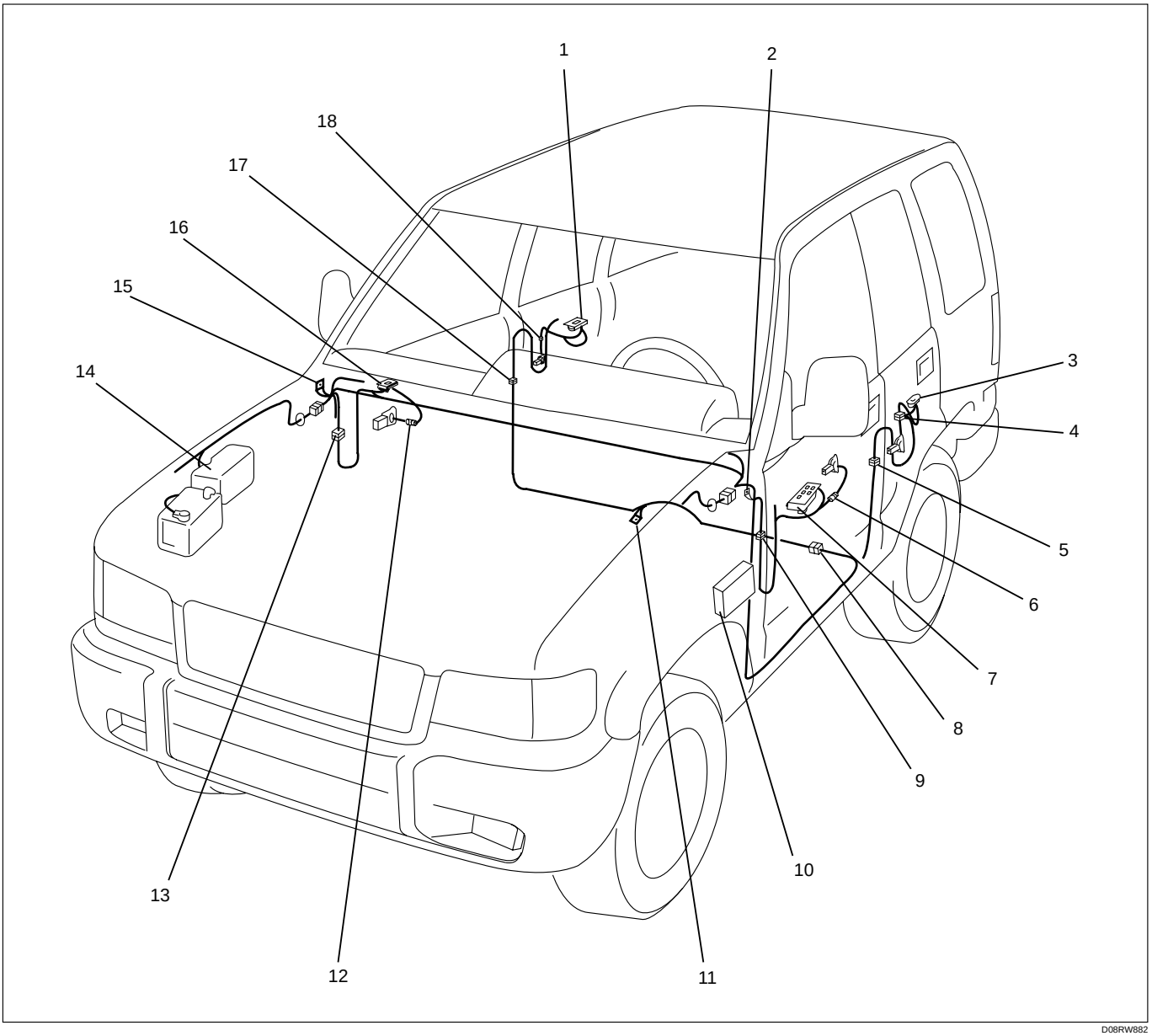

D08RW882

Legend

(1) D-27
(2) B-18, B-19
(3) D-22
(4) D-20
(5) H-28, H-29
(6) D-2
(7) D-5, D-30
(8) H-46
(9) H-22, H-23
(10) Fuse Box (B-37)
(11) B-26
(12) D-11
(13) H-18, H-19
(14) Relay and Fuse Box
(15) B-2
(16) D-14
(17) H-34, H-35
(18) D-25

Diagnosis

All Windows Do Not Operate

STEP	ACTION	VALUE(S)	YES	NO
1	Is the fuse C–4 normal?	–	Go to step 2	Replace the fuse
2	Is the circuit breaker C/B–2 normal?	–	Go to step 3	Replace the circuit breaker
3	Is B–19 grounded securely?	–	Go to step 4	Ground it securely
4	Disconnect the power window relay connector B–37. Is the battery voltage applied between harness side connector B–37 terminal 2 and the ground?	Approx. 12V	Go to step 6	Go to step 5
5	Repair an open circuit between the circuit breaker C/B–2 and connector B–37 terminal 2. Is the action complete?	–	Go to step 4	–
6	Turn the starter switch on Is the battery voltage applied between harness side connector B–37 terminal 1 and the ground?	Approx. 12V	Go to step 8	Go to step 7
7	Repair an open circuit between the fuse C–4 and connector B–37 terminal 1. Is the action complete?	–	Go to step 6	–
8	Is there continuity between harness side connector B–37 terminal 3 and the ground B–19?	–	Replace the relay	Go to step 9
9	Repair an open circuit between connector B–37 terminal 3 and the ground B–19. Is the action complete?	–	Verify repair	–

Window On The Driver's Side Does Not Operate

STEP	ACTION	VALUE(S)	YES	NO
1	Is B–18 grounded securely?	–	Go to step 2	Ground it securely
2	Is there continuity between harness side connector D–5 terminal 1 and the ground B–18?	–	Go to step 4	Go to step 3
3	Repair an open circuit between connector D–5 terminal 1 and the ground B–18. Is the action complete?	–	Go to step 2	–
4	Turn the starter switch on. Is the battery voltage applied between harness side connector D–5 terminal 7 and the ground?	Approx. 12V	Go to step 6	Go to step 5
5	Repair an open circuit between connector B–37 terminal 4 and connector D–5 terminal 7. Is the action complete?	–	Go to step 4	–
6	Connect the battery positive terminal with harness side connector D–5 terminal 5 or 6, and the negative terminal with harness side connector D–5 terminal 6 or 5. Does the motor operate?	–	Replace the front power window & door lock switch–RH	Go to step 7
7	1. Disconnect the front power window motor–RH connector D–2. 2. Connect the battery positive terminal with the motor side connector D–2 terminal 1 or 2, and connect the battery negative terminal with the motor side connector D–2 terminal 2 or 1. Does the motor operate?	–	Go to step 8	Replace the motor
8	Repair an open circuit between the front power window & door lock switch–RH and the front power window motor–RH. Is the action complete?	–	Verify repair	–

Window On The Front Passenger's Side Does Not Operate

STEP	ACTION	VALUE(S)	YES	NO
1	Is B–1 grounded securely?	–	Go to step 2	Ground it securely
2	Disconnect the front power window & door lock switch–LH connector D–14. Is there continuity between harness side connector D–14 terminal 7 and the ground B–1?	–	Go to step 4	Go to step 3
3	Repair an open circuit between connector D–14 terminal 7 and the ground B–1. Is the action complete?	–	Go to step 2	–
4	Turn the starter switch on. Is the battery voltage applied between harness side connector D–14 terminal 5 and the ground?	Approx. 12V	Go to step 6	Go to step 5
5	Repair an open circuit between connector B–37 terminal 4 and connector D–14 terminal 5. Is the action complete?	–	Go to step 4	–
6	Connect the battery positive terminal with harness side connector D–14 terminal 10 or 1, and connect the battery negative terminal with harness side connector D–14 terminal 1 or 10. Does the motor operate?	–	Replace the front power window & door lock switch–LH	Go to step 7
7	1. Disconnect the front power window motor–LH connector D–11. 2. Connect the battery positive terminal with the motor side connector D–11 terminal 1 or 2, and connect the battery negative terminal with the motor side connector D–11 terminal 2 or 1. Does the motor operate?	–	Go to step 8	Replace the motor
8	Repair an open circuit between the front power window & door lock switch–LH and the front power window motor–LH. Is the action complete?	–	Verify repair	–

Rear Window On The Left (or Right) Side Does Not Operate

STEP	ACTION	VALUE(S)	YES	NO
1	1. Disconnect the rear power window switch–LH connector D–22 or the rear power window & door lock switch–RH connector D–27. 2. Turn the starter switch on. Is the battery voltage applied between harness side connector D–22 terminal 4 and the ground, or harness side connector D–27 terminal 4 and the ground?	Approx. 12V	Go to step 3	Go to step 2
2	Repair an open circuit between connector B–37 terminal 4 and connector D–22 terminal 4 or connector D–27 terminal 4. Is the action complete?	–	Go to step 1	–
3	Is there continuity between harness side connector D–22 terminal 3 and the ground, or harness side connector D–27 terminal 3 and the ground?	–	Go to step 5	Go to step 4
4	Repair an open circuit between connector D–22 terminal 3 or connector D–27 terminal 3 and the ground. Is the action complete?	–	Go to step 3	–
5	Connect the battery positive terminal with harness side connector D–22 terminals 5 or harness side connector D–27 terminal 5, and connect the battery negative terminal with harness side connector D–22 terminal 6 or harness side connector D–27 terminal 6. Does the motor operate?	–	Replace the rear power window switch–LH or –RH	Go to step 6
6	1. Disconnect the rear power window motor connector D–20 or D–25. 2. Connect the battery positive terminal with motor side connector D–20 or D–25 terminal 1 or 2, and connect the battery negative terminal with the motor side connector D–20 or D–25 terminal 2 or 1. Does the motor operate?	–	Go to step 7	Replace the motor
7	Repair an open circuit between the rear power window switch and the rear power window motor. Is the action complete?	–	Verify repair	–

Window on the Front Passenger's Side Does Not Operate by the Front Power Window & Door Lock Switch – RH

STEP	ACTION	VALUE(S)	YES	NO
1	Disconnect the front power window & door lock switch–RH connector D–30 and the front power window & door lock switch–RH connector D–14. Is there continuity between harness side connector D–30 terminal 5 and harness side connector D–14 terminal 2?	–	Replace the front power window & door lock switch–RH	Go to step 2
2	Repair an open circuit between connector D–30 terminal 5 and connector D–14 terminal 2. Is the action complete?	–	Verify repair	–

Lock SW Does Not Function

STEP	ACTION	VALUE(S)	YES	NO
1	Repair or replace the front power window & door lock switch–RH. Is the action complete?	–	Verify repair	–

Cruise Control

General Description

The circuit consists of cruise control unit, cruise main switch, combination switch, clutch switch (M/T), mode switch (A/T), brake switch, actuator and indicator lights.
Cruise control system keeps the vehicle running at a fixed speed until a signal canceling this fixed speed is received.
When the cruise main switch is turned on with the vehicle in the running mode, the battery voltage is applied to the control unit.
When a signal from the combination switch is input to the control unit while vehicle is in this state, the actuator is activated to operate the system. Also, while the system is operating, the cruise indicator light in the meter panel lights up.

Set Function

When the cruise main switch turned on and the set switch is depressed with the vehicle speed within the set limit and cancel operation is refused, the vehicle speed when the set switch is released is stored in the control unit as the set speed. But in case of the vehicle speed is over maximum limit speed of cruise control, maximum limit speed in the control unit is stored as the set speed.

Resume Function

Unless the vehicle speed falls below the minimum speed limit after canceling the set speed by the cancel switch, pushing the resume switch causes the vehicle to resume the speed before cancellation.

Acceleration Function

During cruise control driving, pushing the acceleration switch (on time is more than 0.6 sec.) causes an increase in cruise speed and vehicle accelerates at a controlled rate untill acceleration switch released.
Vehicle speed at the acceleration switch released plus 1.0 km/h is stored in the control unit as the set speed.

Tap up Function

During cruise control driving, pushing the coast switch (on time is more than 0.6 sec.) causes a decrease in cruise speed and the vehicle decelerate at a controlled rate until coast switch released.
Vehicle speed at the coast switch released minus approx. 1.0 km/h is stored in the control unit as the set speed.

Tap down Function

During cruise control driving, the set speed can be lowered approx. 1.0 km/h each time by operating the coast switch quickly within 0.6 sec.

Cancel Function

During cruise control driving, the cruise control is released if the control unit receives a signal from the cancel switch, mode switch, clutch switch or brake switch. The set speed is still stored.

Down Cancel Function

The cruise control is canceled when the vehicle speed becomes the set speed minus 20 km/h during the cruise control working and the set speed is erased.

Over Drive (OD) Cancel Function

OD cancel function is required when the vehicle speed becomes the set speed minus 3 km/h during the cruise control working.
OD cancel function is enabled when the acceleration function and/or resume function are working except the vehicle speed is in more than 120 km/h.

Circuit Diagram (RHD)-1

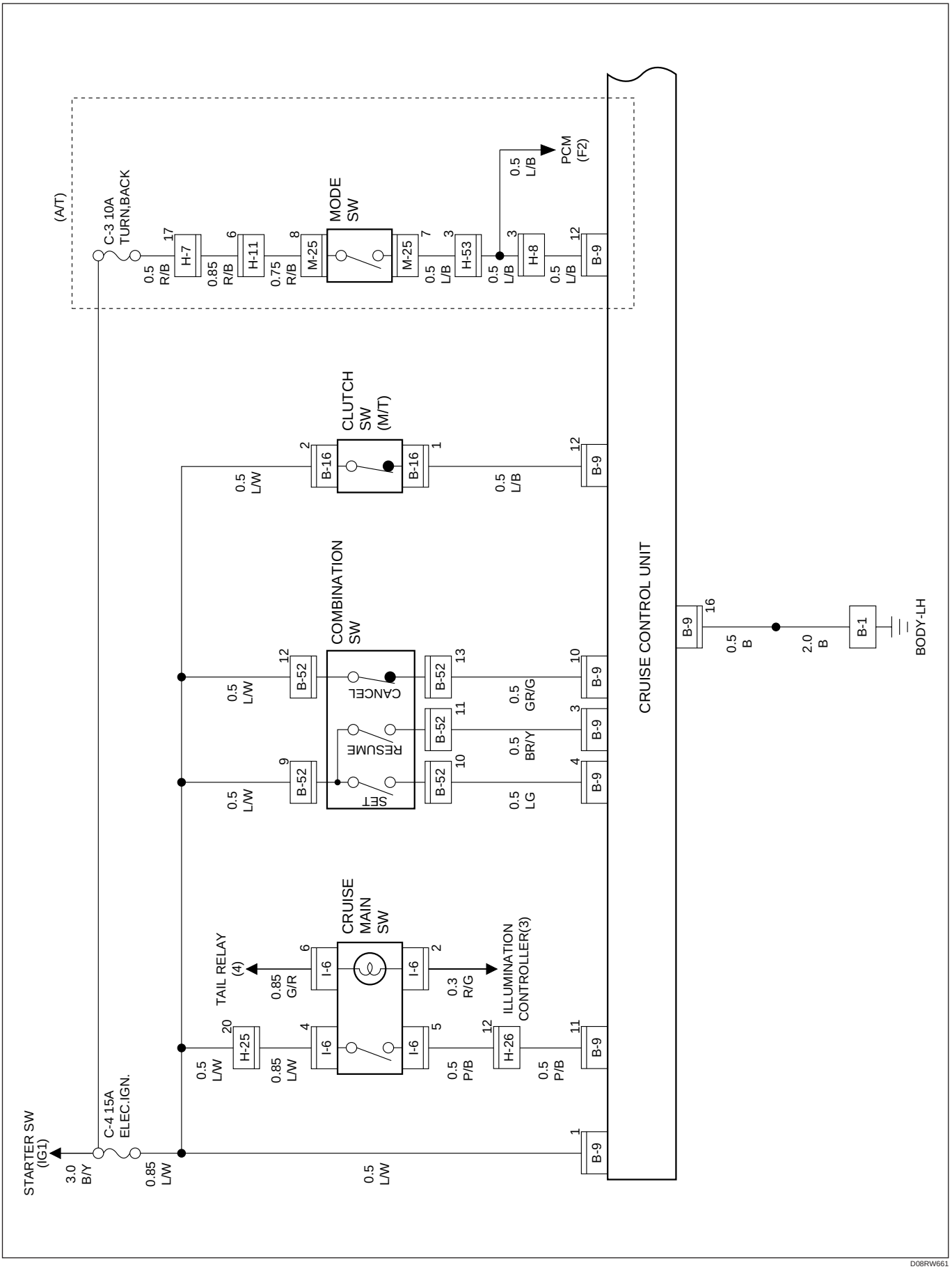

D08RW661

Circuit Diagram (RHD)-2

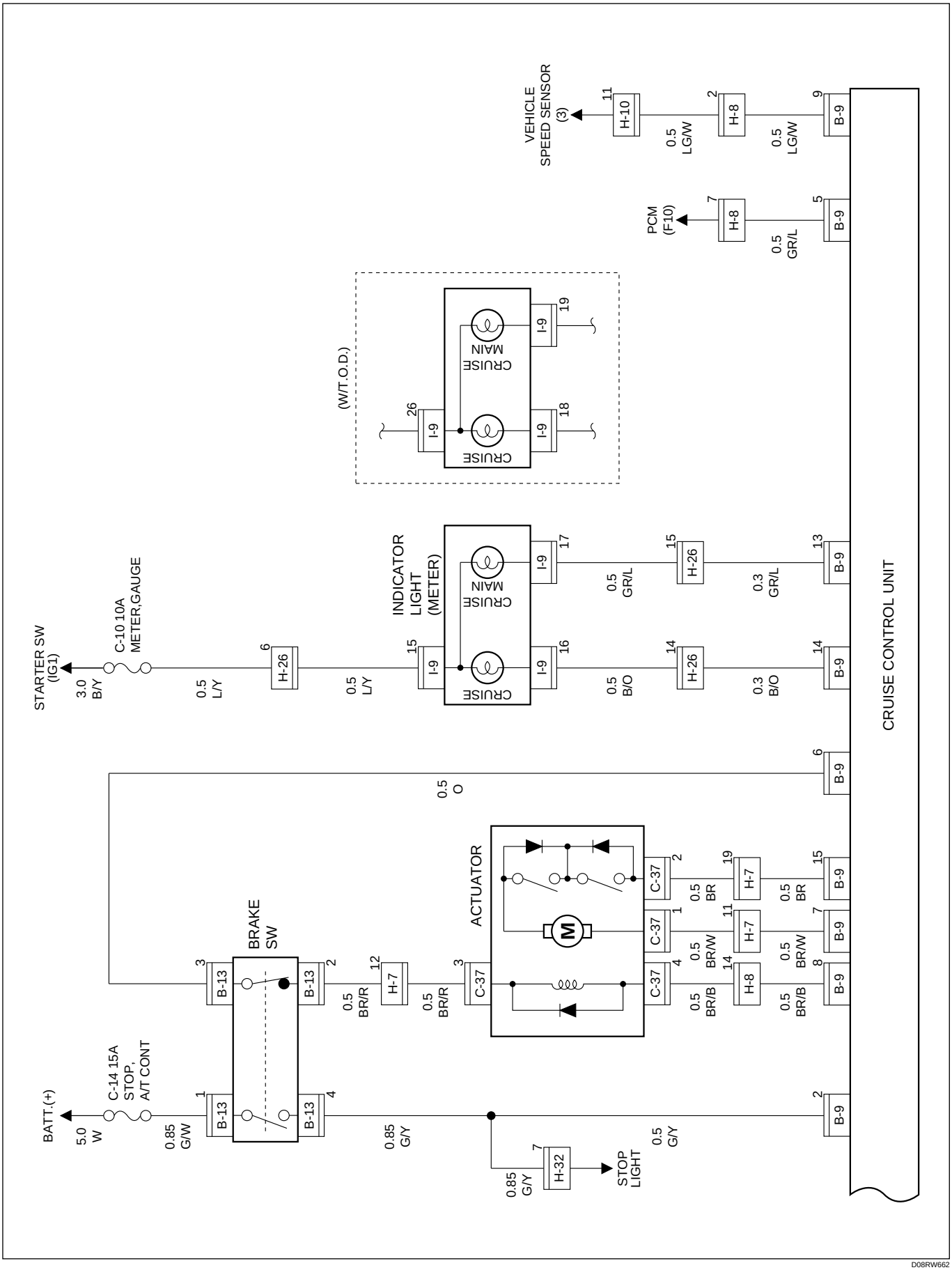

D08RW662

Parts Location (RHD)

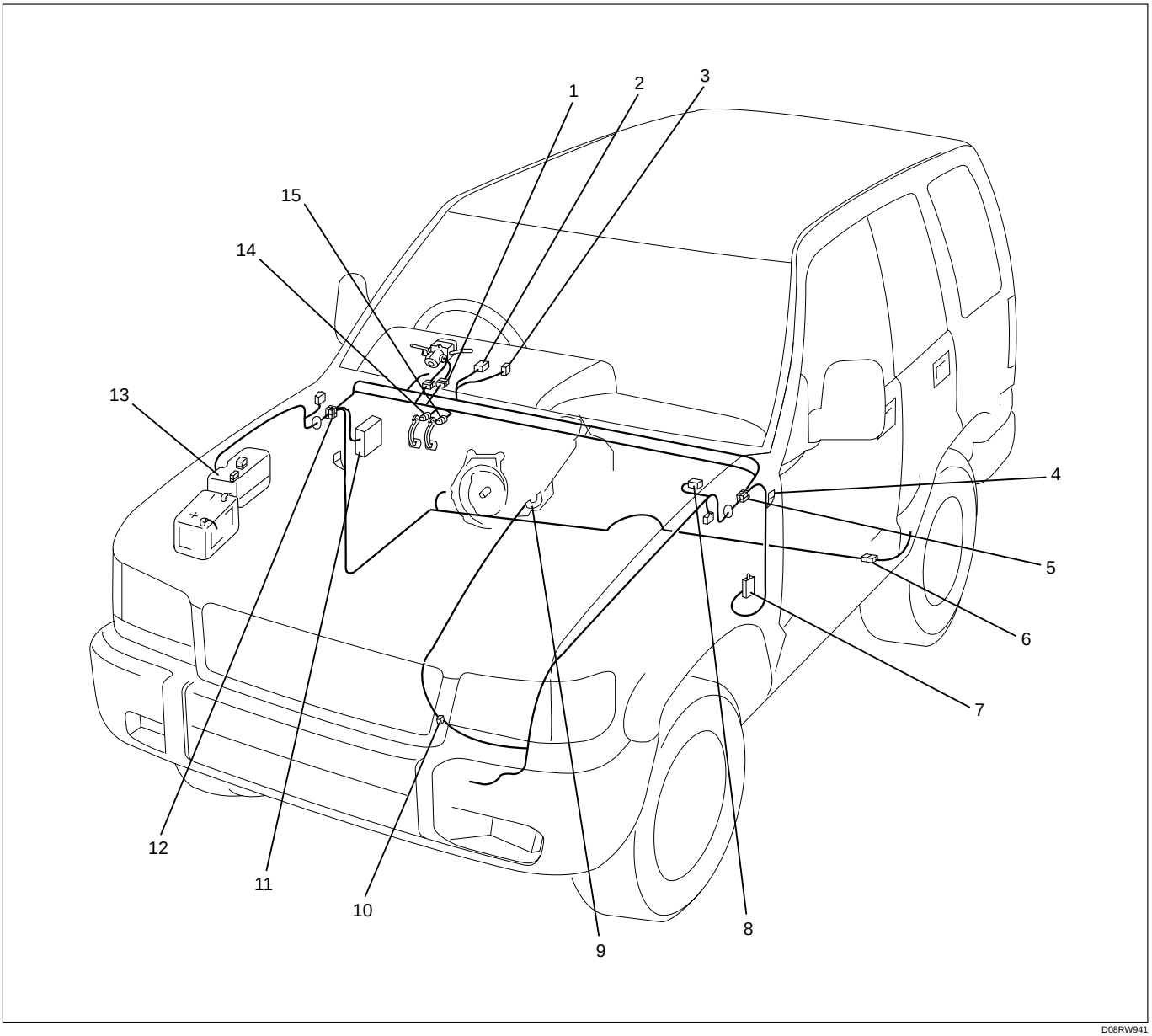

D08RW941

Legend

(1) B-52
(2) I-9
(3) I-6
(4) B-1
(5) H-7, H-8
(6) H-32
(7) Cruis Control Unit (B-9)
(8) C-37
(9) Mode Switch A/T (M-25)
(10) H-10, H-11, H-53
(11) Fuse Box
(12) H-25, H-26
(13) Relay and Fuse Box
(14) B-13
(15) B-16

Circuit Diagram (LHD)-1

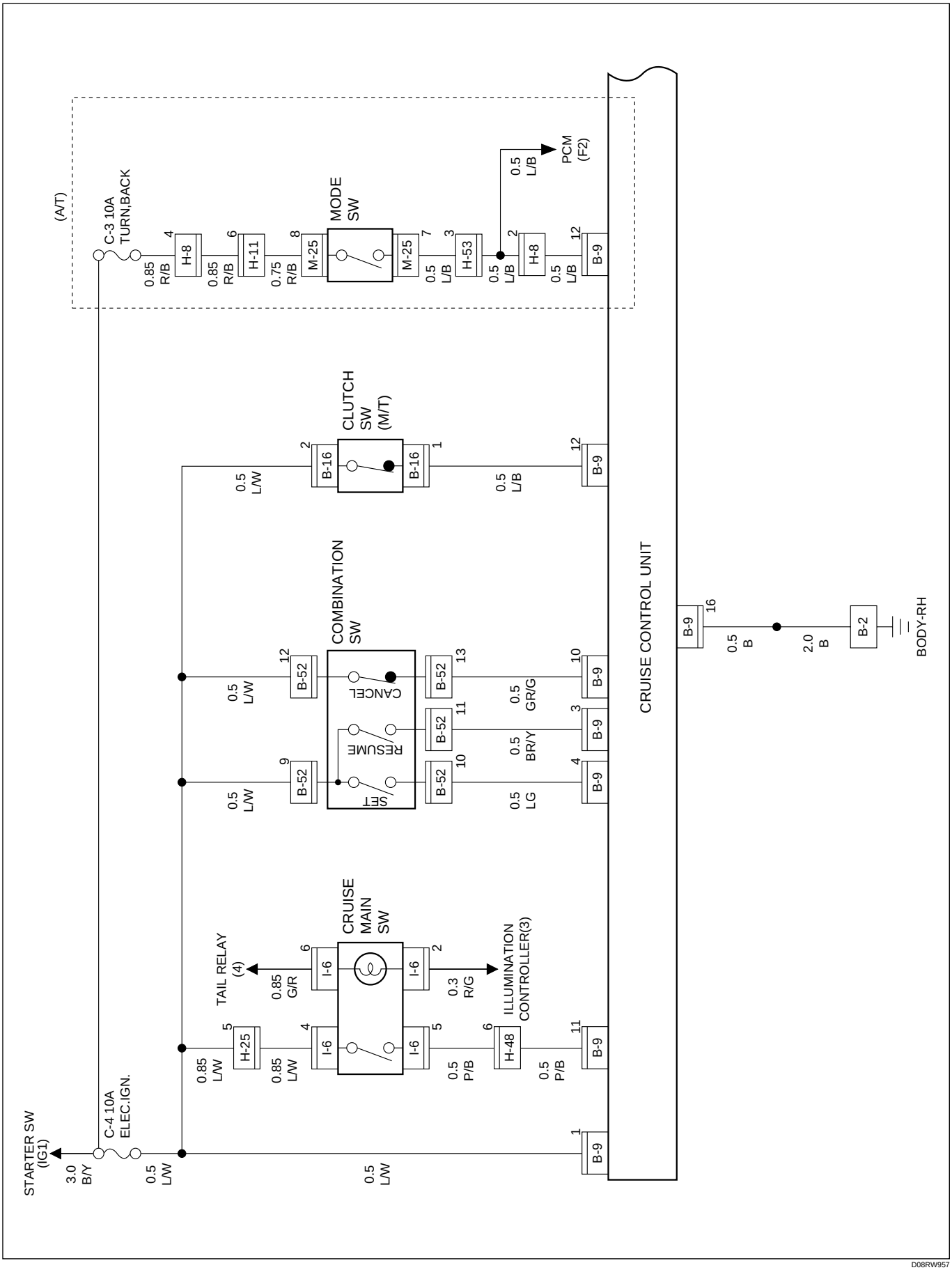

Circuit Diagram (LHD)-2

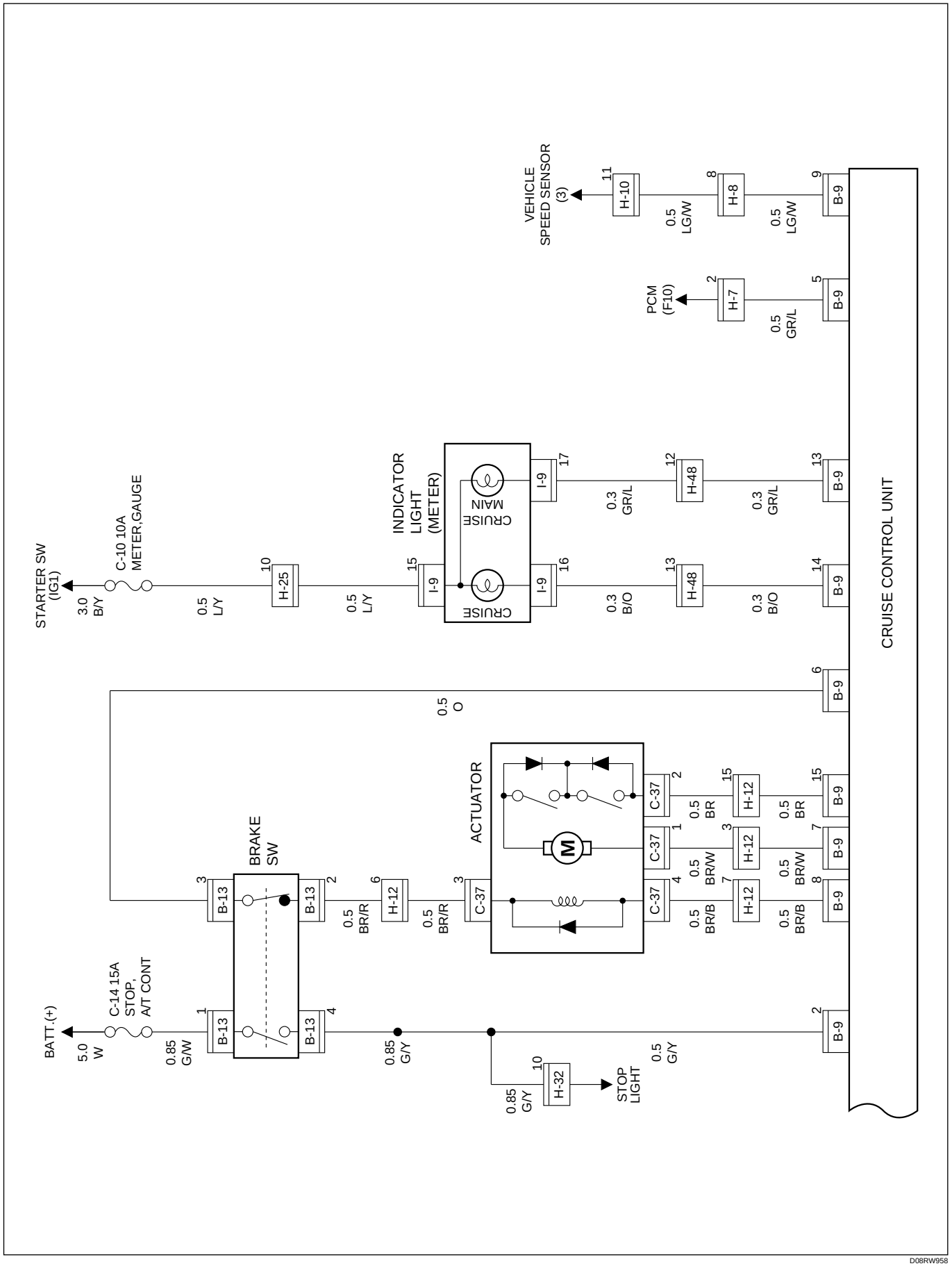

D08RW958

Parts Location (LHD)

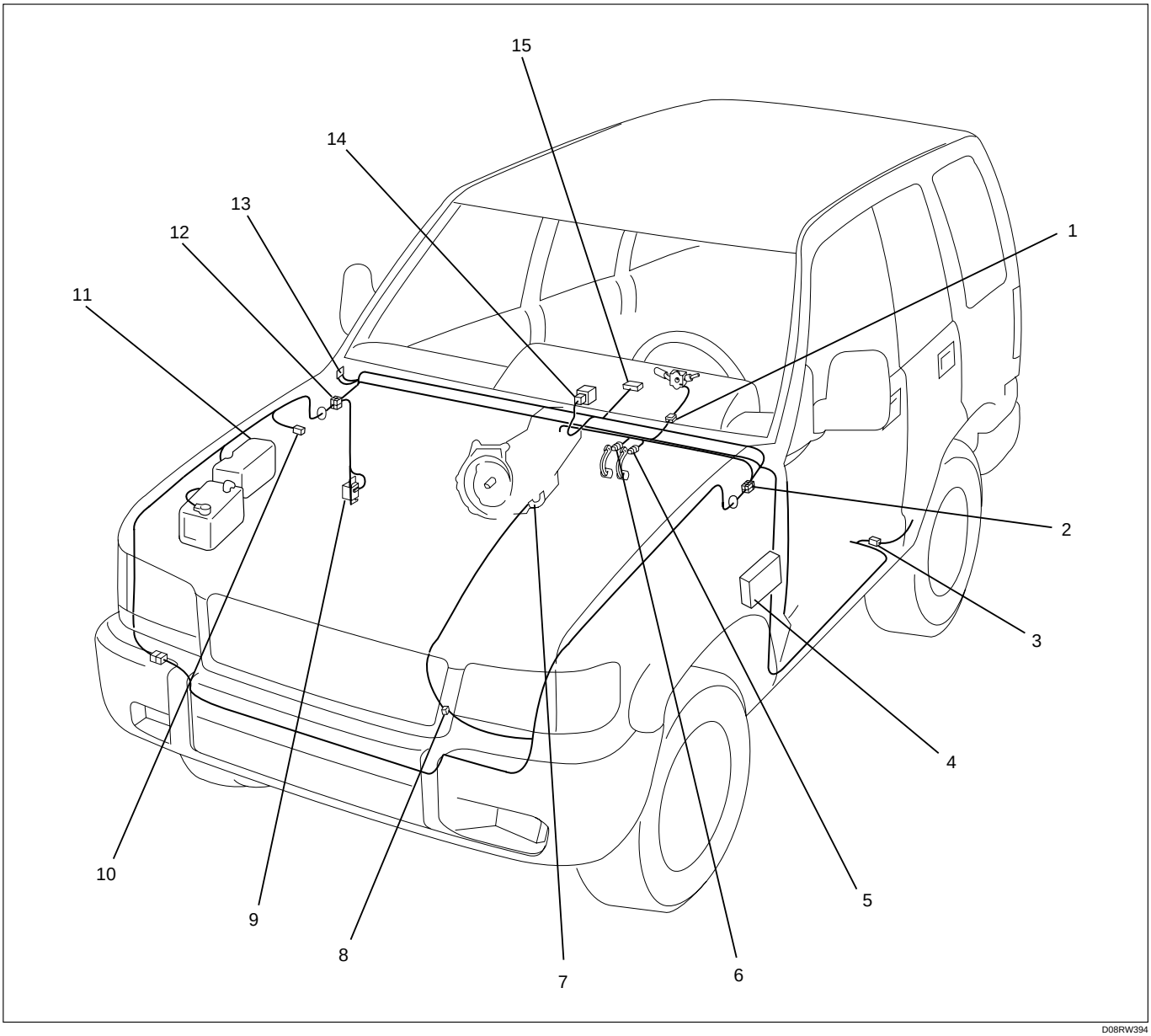

D08RW394

Legend

(1) B-52
(2) H-7, H-8, H-25
(3) H-32
(4) Fuse Box
(5) B-16
(6) B-13
(7) Mode Switch (M-25)
(8) H-10, H-11, H-53
(9) Cruise Control Unit (B-9)
(10) C-37
(11) Relay and Fuse Box
(12) H-12, H-48
(13) B-2
(14) I-6
(15) I-9

Diagnosis

The cruise control unit uses the cruise main indicator light and diagnoses the failure, when the control unit detects abnormality on the table below.

PART	POSIBLE CAUSE	DETECTION PERIOD	DTC
Actuator	Motor system short circuit	Energizing motor	1–1
	Clutch system short circuit	Energizing clutch	1–2
	Clutch system open circuit	Energizing clutch	1–2
	Mechanical defect	Cruise controlling	1–3
	Close side of motor system open circuit	Cruise controlling	1–1
Cruise control unit	Open side of motor system continuously energizing	While starter sw on	1–4
	Clutch output abnormality	While starter sw on	1–4
Vehicle speed sensor	Signal of vehicle speed disconnection	Cruise controlling	2–1
	Signal of vehicle speed abnormality	Cruise controlling	2–1
Switch	Turning on switch at all times	While starter sw on	3–1
	Turning on switch at the same time.	While starter sw on	3–1

DTC: Diagnostic Trouble Code

DTC Display Condition

1. While starter switch on and vehicle speed is 0 km/h, the DTC output begins in top priority by cancel switch turn on and off being repeated three times for 2 sec. while cruise main switch pushing on, and stops the DTC output whether vehicle speed is more than 10 km/h or the resume switch is turned on.
2. The cruise control unit outputs the DTC(s) in order from small figure of the code.
3. The header of display of DTC(s) is assumed 4 sec., and it is 2 sec. between different kind of codes.
4. The DTC(s) are erased with the starter switch turned off.

DTC Display Format

1. When no DTCs are detected. (The unit : sec.)

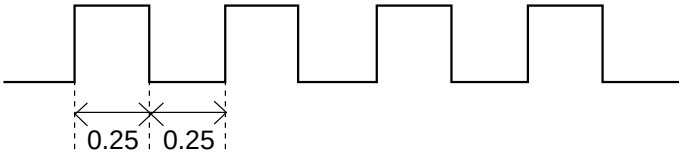

2. When two or more DTCs are detected. (The unit ; sec.)

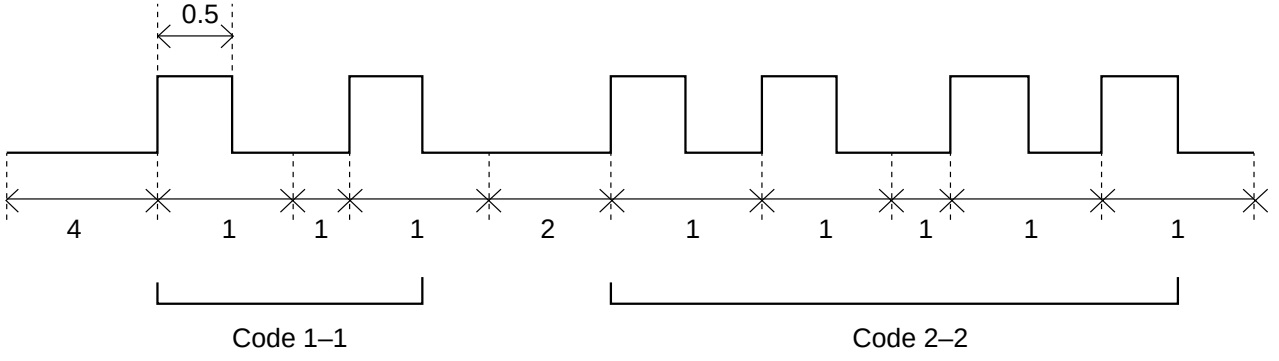

DTC 1–1 Motor System Short Circuit

STEP	ACTION	VALUE(S)	YES	NO
1	1. Turn the starter switch off. 2. Disconnect the actuator connector C–37. 3. Measure resistance between actuator side connector terminal 1 and 2. **NOTE: If control plate position is fully opened or fully closed, resistance can not be measured.** Is the resistance within range specified in the value(s) column?	More than 4.2Ω	Go to step 2	Replace the actuator
2	Measure continuity between harness side connector C–37 terminal 1 and the ground, terminal 2 and the ground, and terminal 1 and 2. Are the results same as specified in the value(s) columns?	No continuity	Replace the control unit	Repair or replace the harness

DTC 1–2 Clutch System Open or Short Circuit

STEP	ACTION	VALUE(S)	YES	NO
1	1. Turn the starter switch off. 2. Disconnect the actuator connector C–37. 3. Measure resistance between actuator side connector terminal 3 and 4. Is the resistance within range specified in the value(s) column?	34.7 – 42.4Ω	Go to step 2	Replace the actuator
2	1. Disconnect the brake switch connector B–13. 2. Check continuity between switch side connector terminal 2 and 3. Is there continuity between terminals?	–	Go to step 3	Adjust the switch or replace it
3	1. Reconnect the brake switch connector B–13. 2. Check continuity between harness side connector B–9 terminal 6 and connector C–37 terminal 3, connector C–37 terminal 4 and connector B–9 terminal 8. Is there continuity between terminals?	–	Go to step 4	Repair open circuit
4	Is there continuity between harness side connector C–37 terminal 3 and the ground, connector C–37 terminal 4 and the ground, connector B–9 terminal 6 and the ground? Are the results same as specified in the value(s) column?	No continuity	Replace the control unit	Repair short circuit

DTC 1–3 Mechanical Defect

STEP	ACTION	VALUE(S)	YES	NO
1	1. Turn the starter switch off. 2. Disconnect the actuator connector C–37. 3. Connect the battery positive terminal with the actuator side connector terminal 3 and the battery negative terminal with terminal 4. Does the control plate move by hand?	–	Replace the actuator	Go to step 2
2	Connect the battery positive terminal with the actuator side connector terminal 1 and 3, and the battery negative terminal with terminal 2 and 4. Does the control plate move to full open side?	–	Go to step 3	Replace the actuator
3	Connect the battery positive terminal with the actuator side connector terminal 2 and 3, and the battery negative terminal with terminal 1 and 4. Does the control plate move to full close side?	–	Go to step 4	Replace the actuator
4	Is there continuity between harness side connector C–37 terminal 1 and connector B–9 terminal 7, connector C–37 terminal 2 and connector B–9 terminal 15?	–	Replace the control unit	Repair or replace harness

DTC 1–4 Open Side of Motor System Continuously Energizing

STEP	ACTION	VALUE(S)	YES	NO
1	1. Turn the starter switch off. 2. Disconnect the actuator connector C–37. 3. Measure resistance between actuator side connector terminal 1 and 2. **NOTE: If control plate position is fully opened or fully closed, resistance can not be measured.** Is there resistance within range specified in the value(s) column?	More than 4.2Ω	Go to step 2	Replace the actuator
2	Is there continuity between harness side connector C–37 terminal 1 and connector B–9 terminal 7, harness side connector C–37 terminal 2 and connector B–9 terminal 15?	–	Replace the control unit	Repair or replace harness

Anti-lock Brake System (ABS)

General Description

The circuit consists of EHCU (Electronic Hydraulic Control Unit), wheel speed sensor, G–sensor, stoplight switch or brake switch (w/cruise control), backup light switch, transmission switch–1, 2, indicator light and data link connector.
EHCU controls brake fluid pressure applied to front and rear wheels to prevent wheels from locking by using speed sensor and G–sensor signals.
Based on wheel speed signals from speed sensor, EHCU activates solenoid valves incorporated into the control unit to increase, maintain or decrease brake fluid pressure.
Refer to Anti–lock Brake System in Brakes section.

Circuit Diagram (RHD)-1

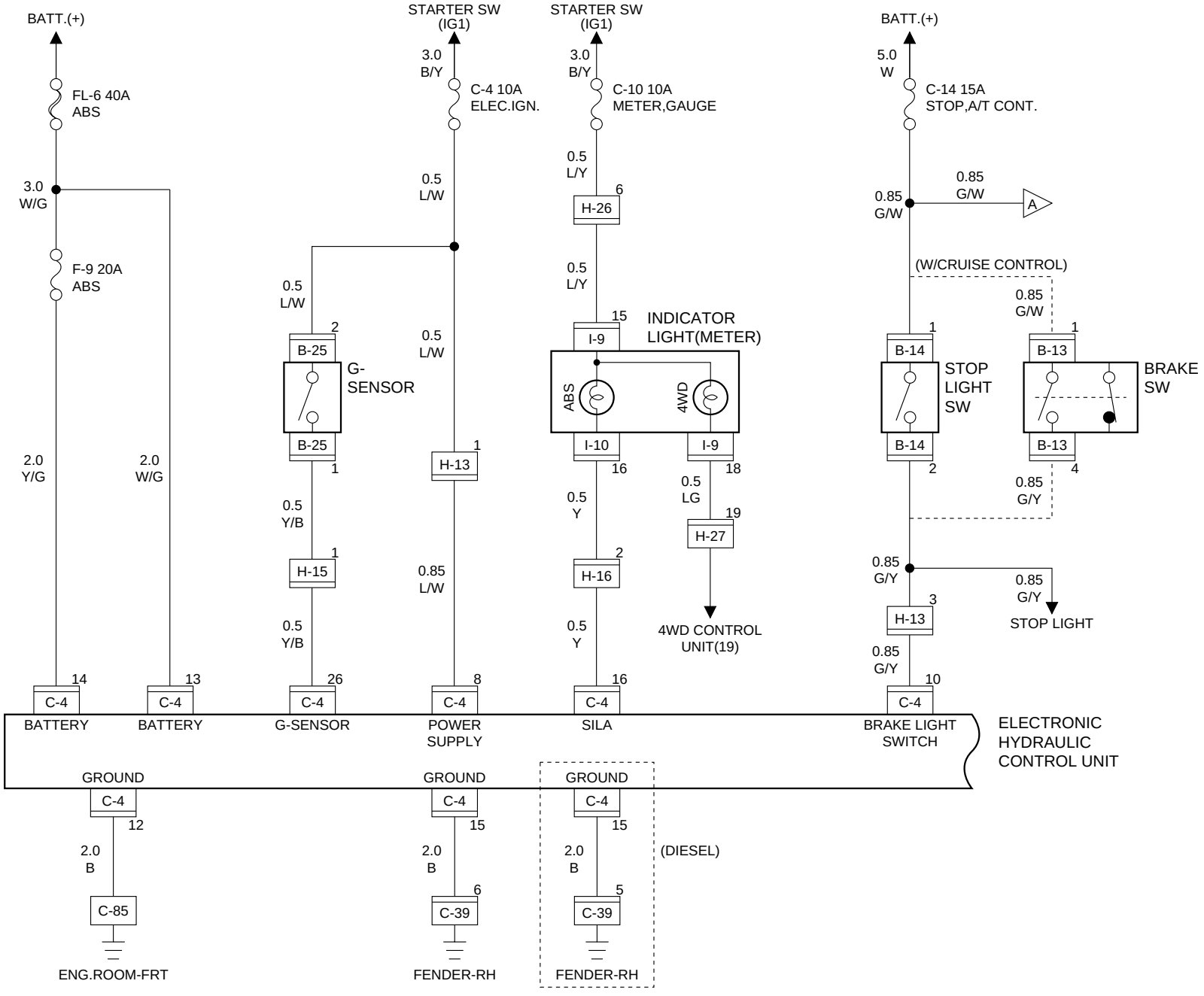

D08RW601

Circuit Diagram (RHD 6V*1)-2

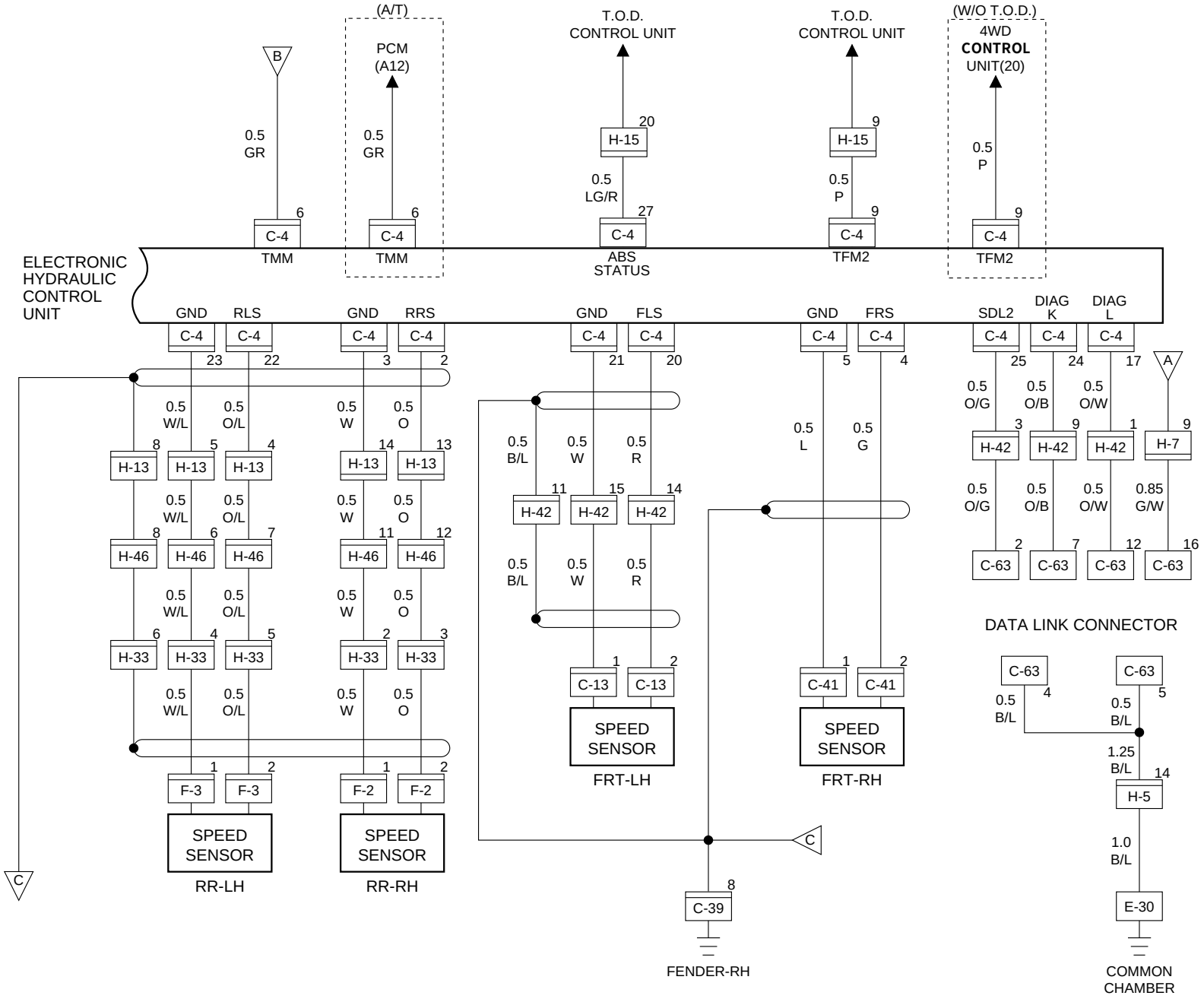

D08RW786

Circuit Diagram (RHD 4J**)-2

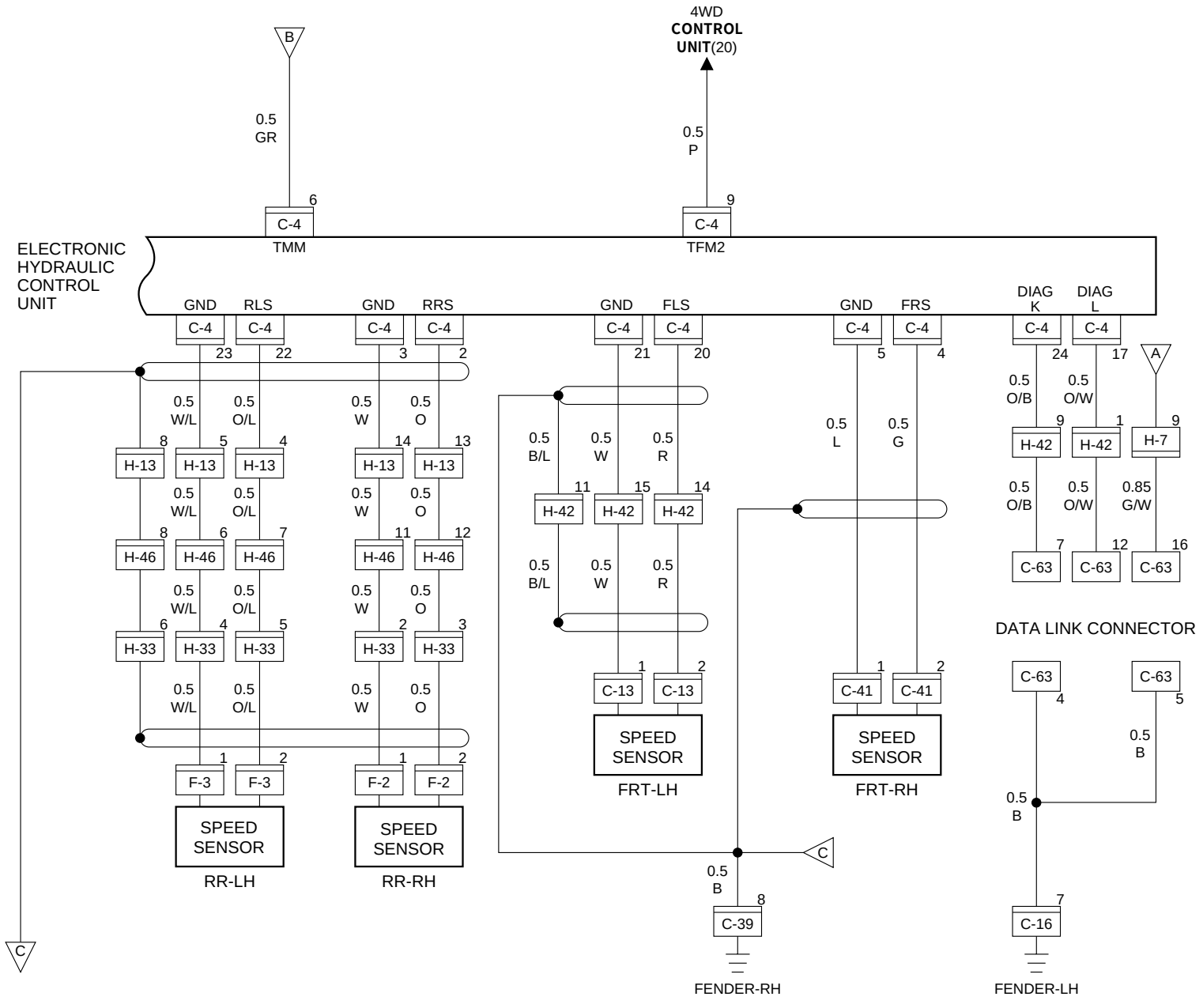

D08RW788

Circuit Diagram (RHD 6VD1)-3

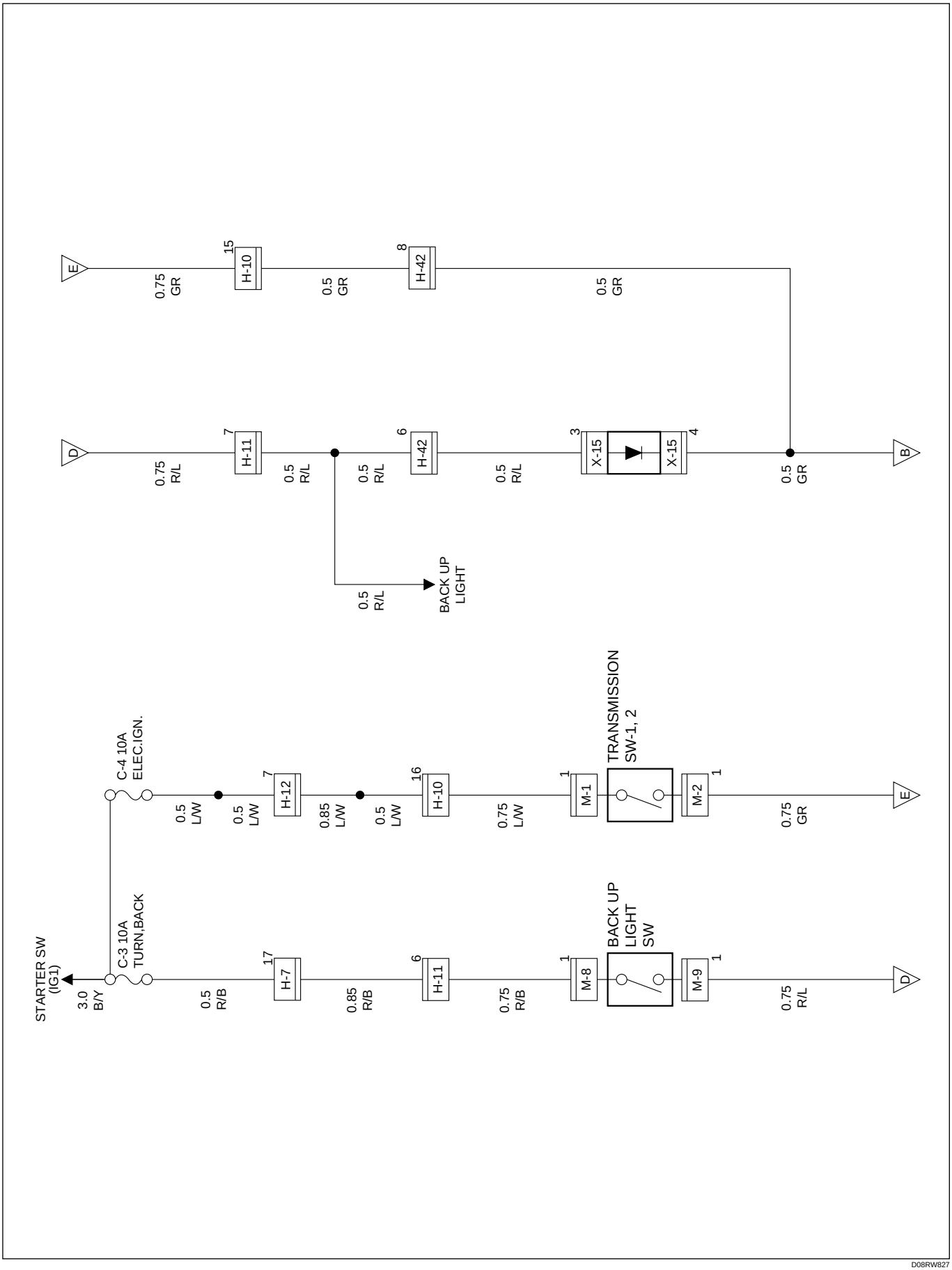

D08RW827

Circuit Diagram (RHD 6VE1)-3

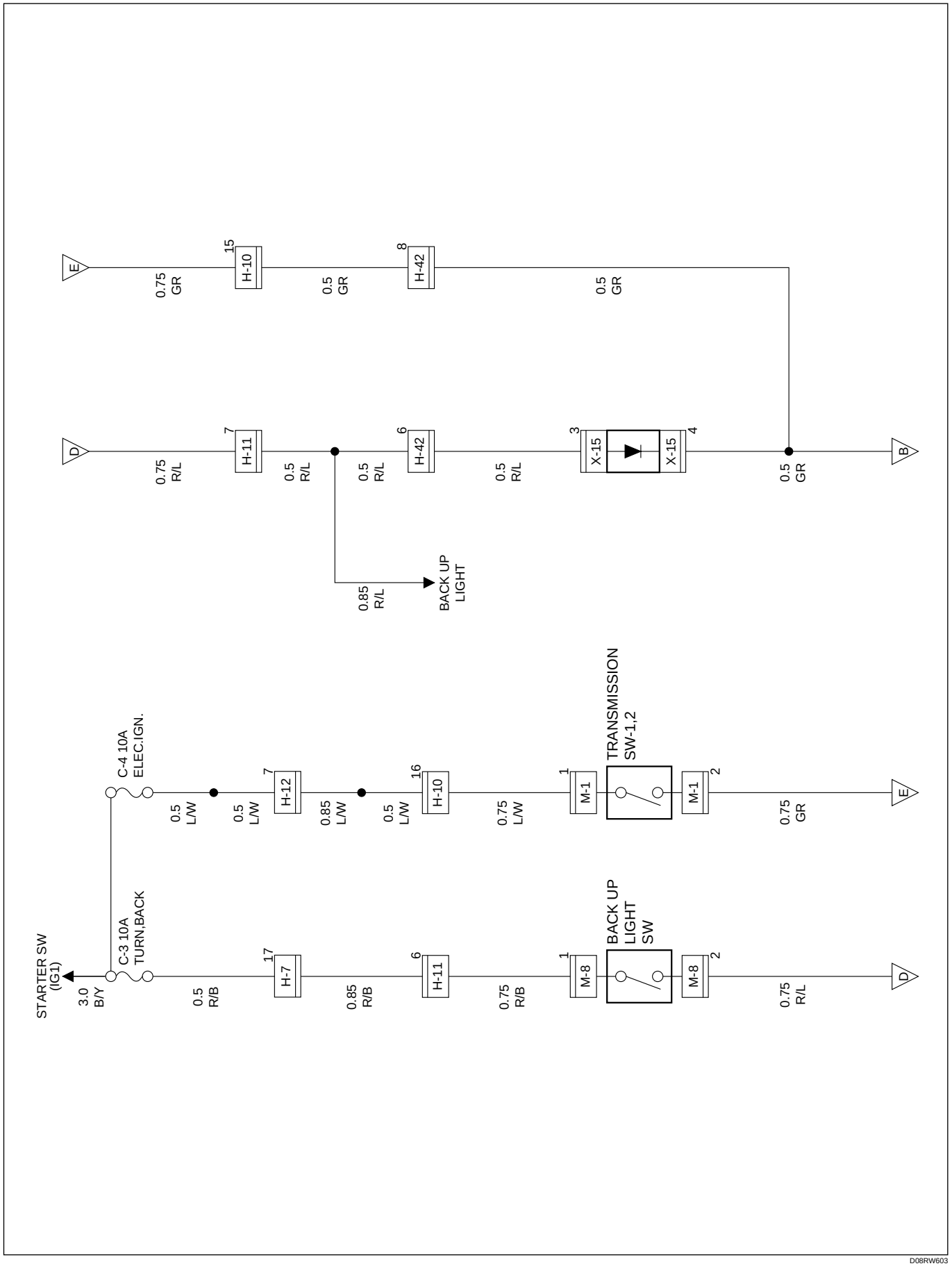

D08RW603

Circuit Diagram (RHD 4J**)-3

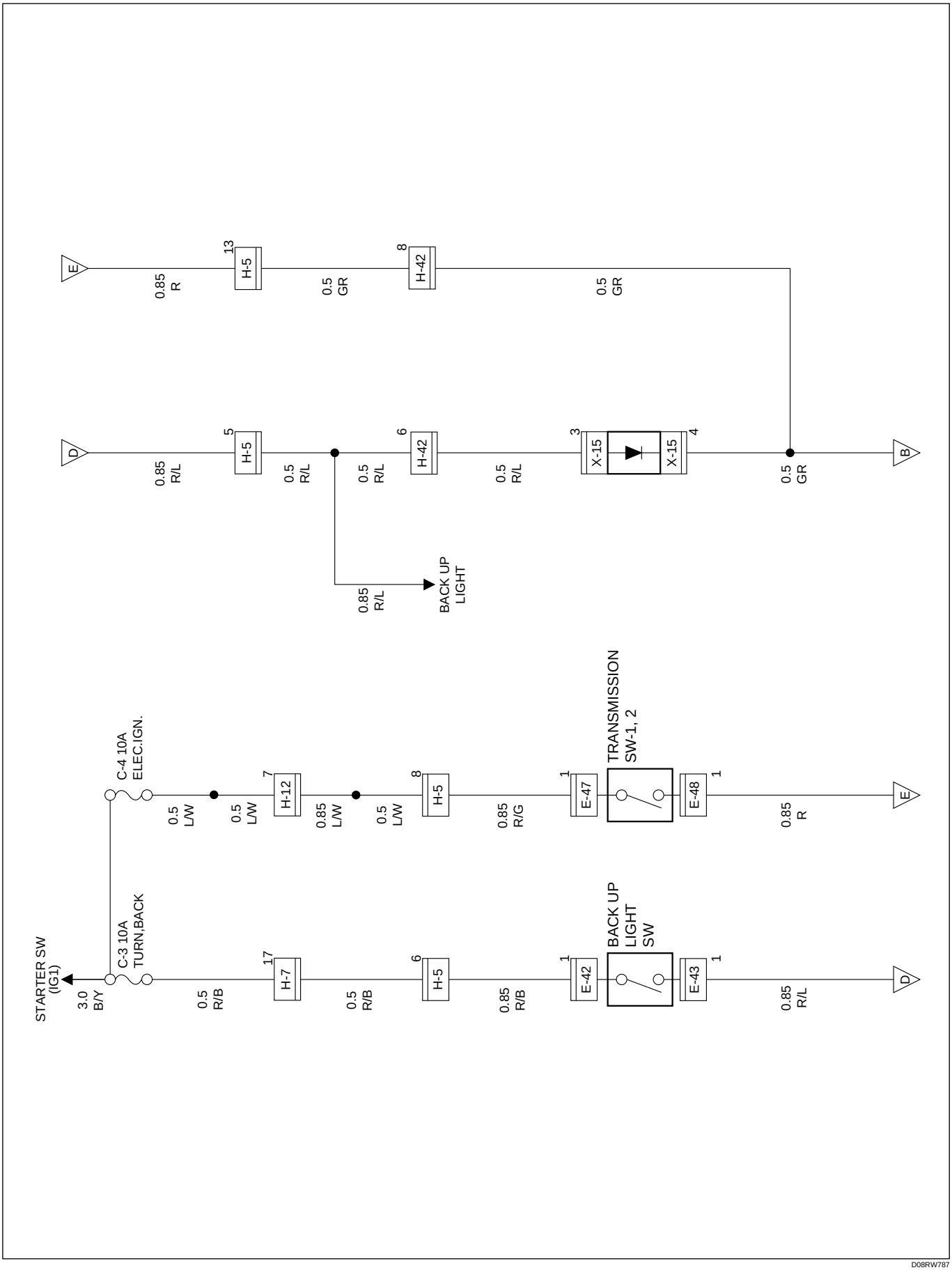

D08RW787

Parts Location (RHD)

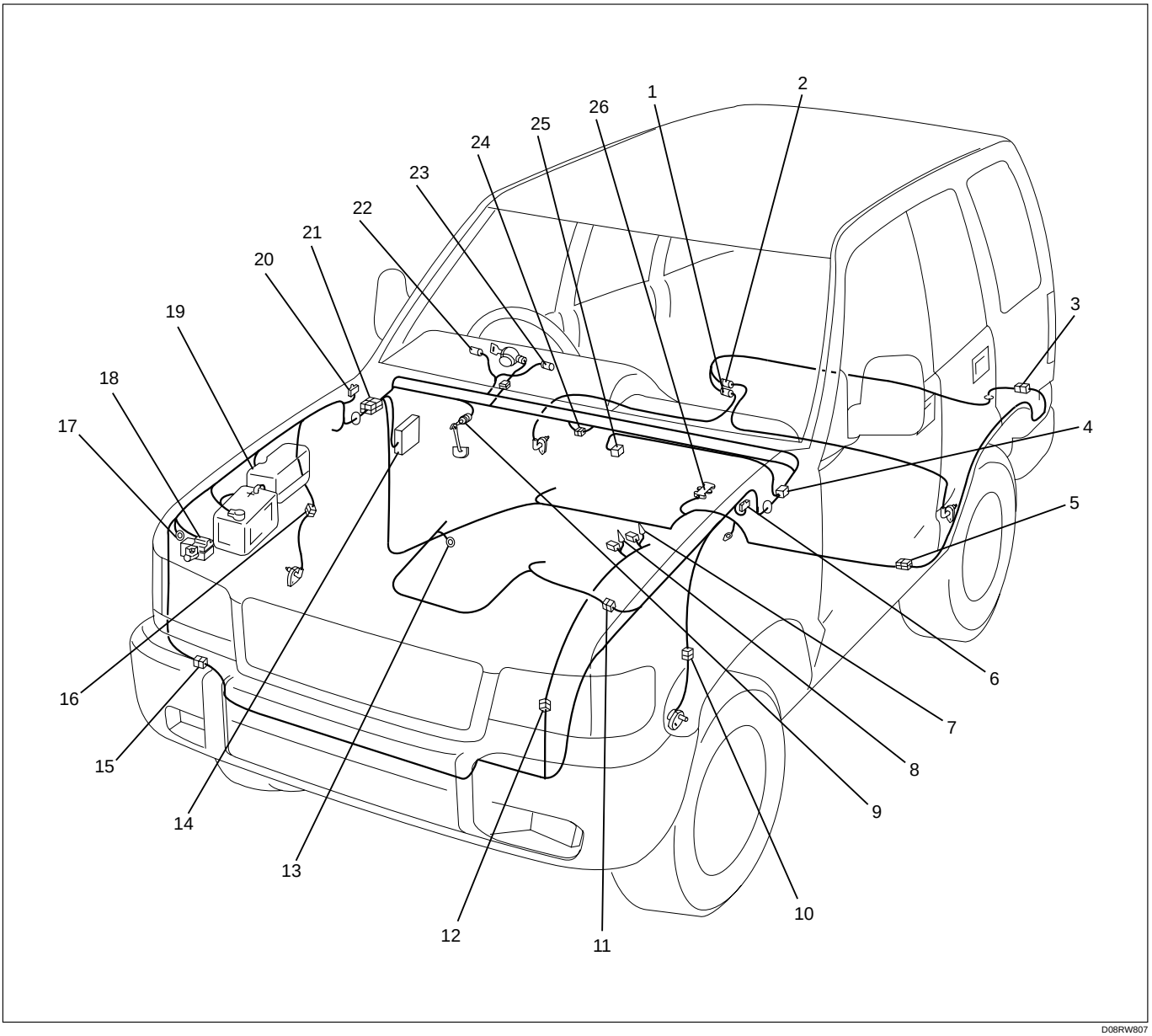

D08RW807

Legend

(1) F-2
(2) F-3
(3) H-33
(4) H-7
(5) H-46
(6) C-16
(7) E-42, E-43, M-8
(8) E-47, E-48, M-1
(9) B-13 or B-14
(10) C-13
(11) H-4, H-5, H-6
(12) H-10, H-11
(13) E-30
(14) Fuse Box
(15) H-42
(16) C-41
(17) C-85
(18) C-4 (EHCU)
(19) Relay and Fuse Box
(20) C-39
(21) H-13, H-15, H-16, H-26, H-27
(22) I-10
(23) I-9
(24) H-12
(25) C-63
(26) B-25

Circuit Diagram (LHD)-1

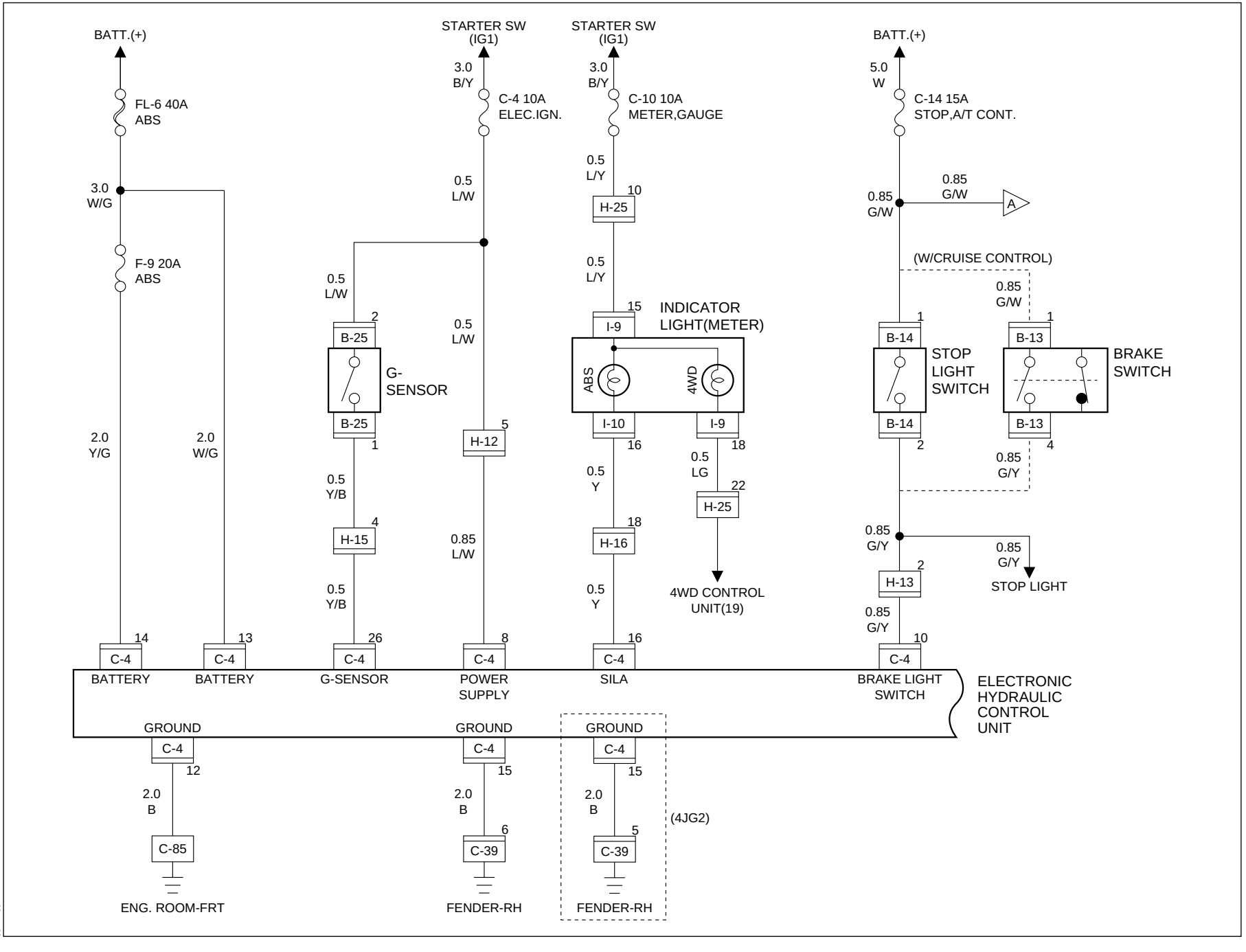

D08RW793

Circuit Diagram (LHD 6VD1)-2

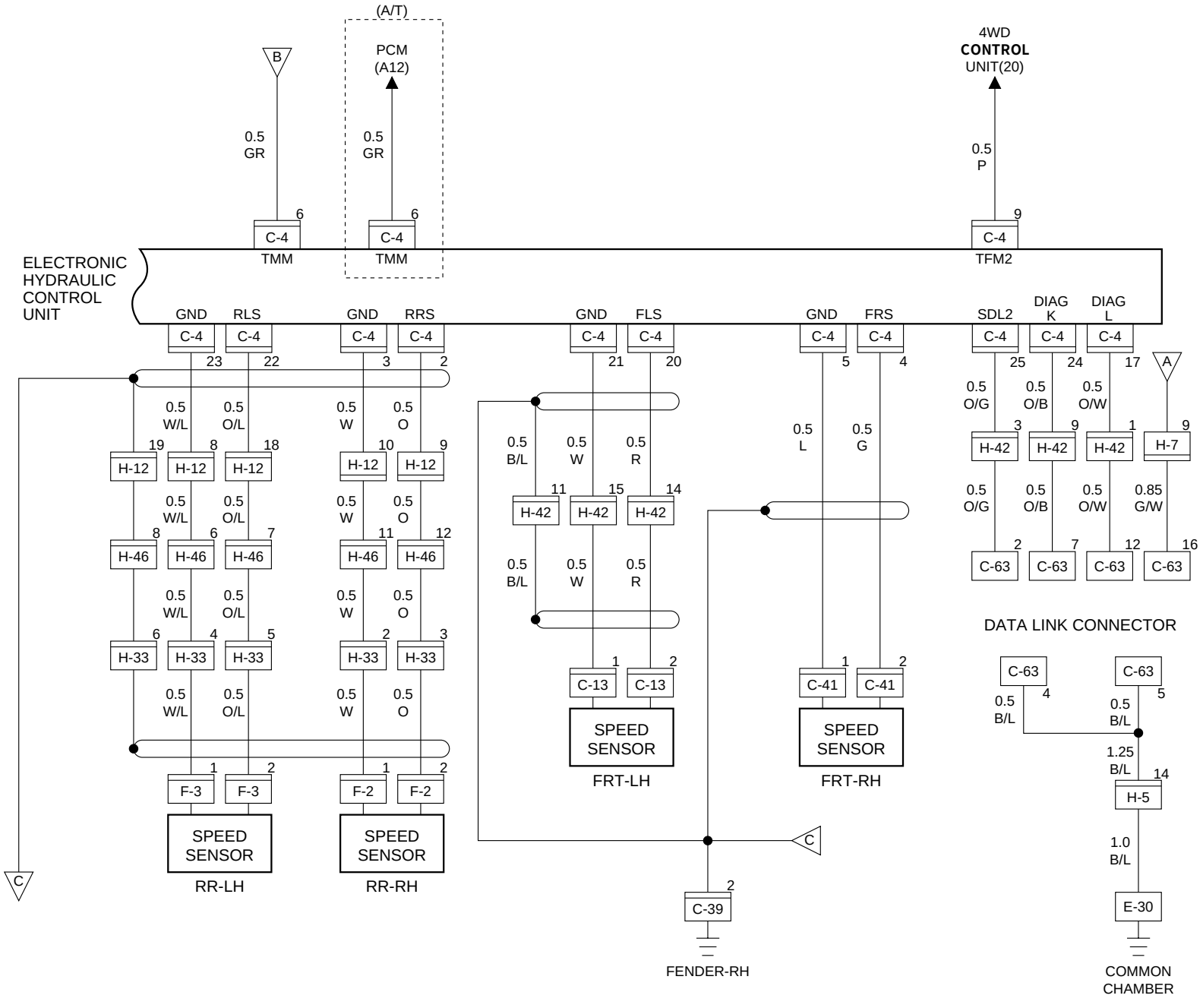

D08RW790

Circuit Diagram (LHD 4JG2)-2

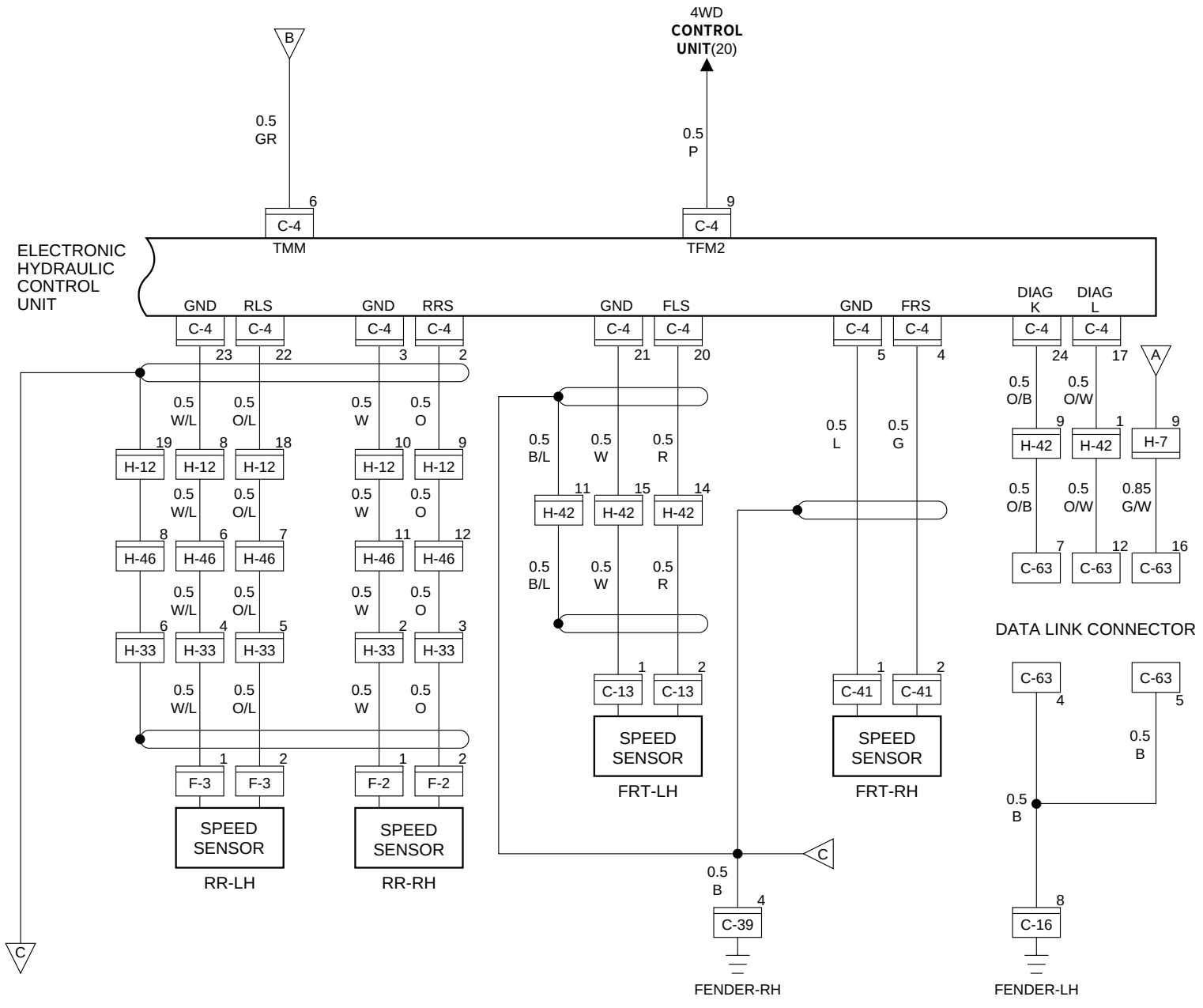

Circuit Diagram (LHD 6VD1)-3

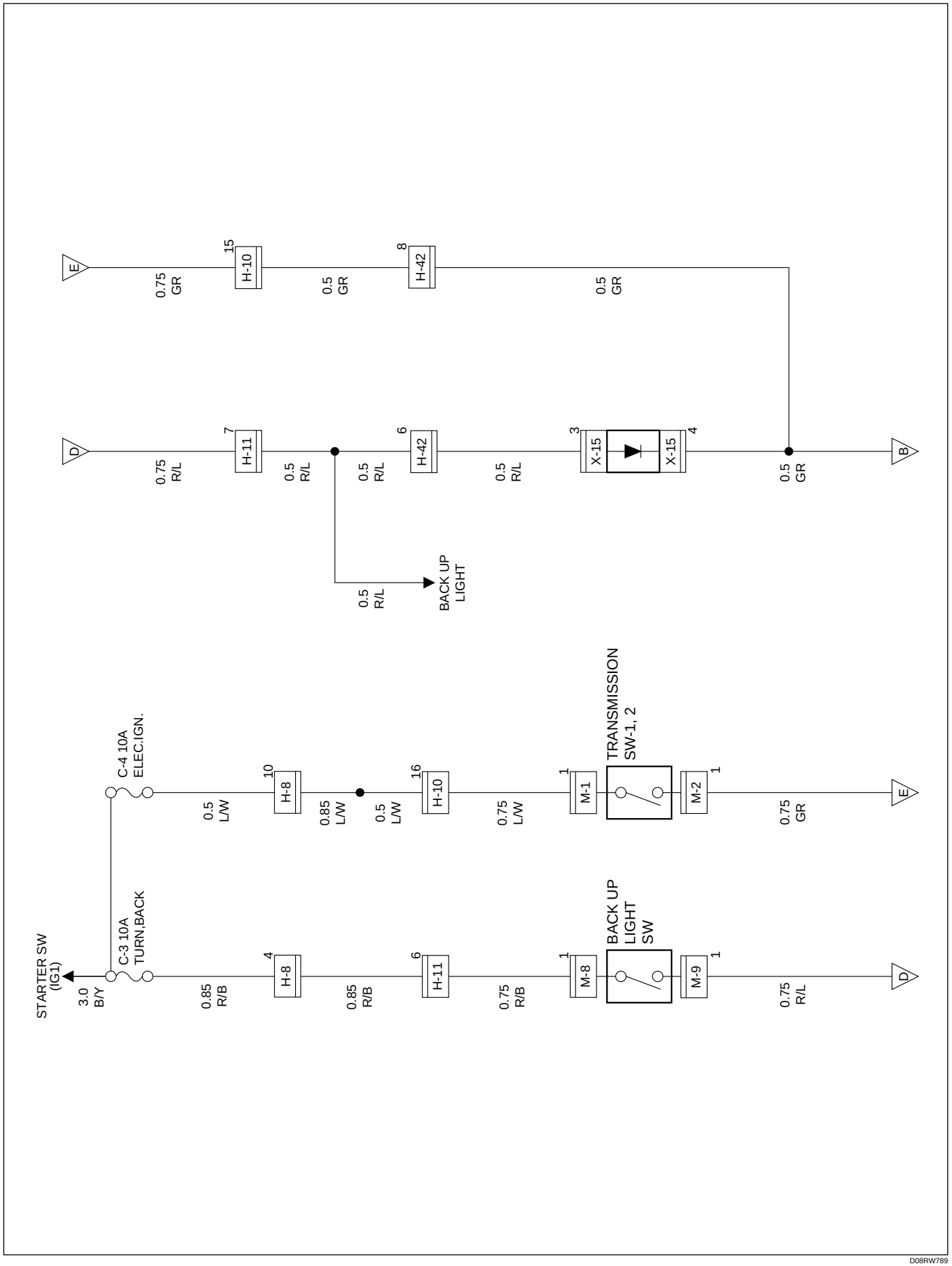

D08RW789

Circuit Diagram (LHD 4JG2)-3

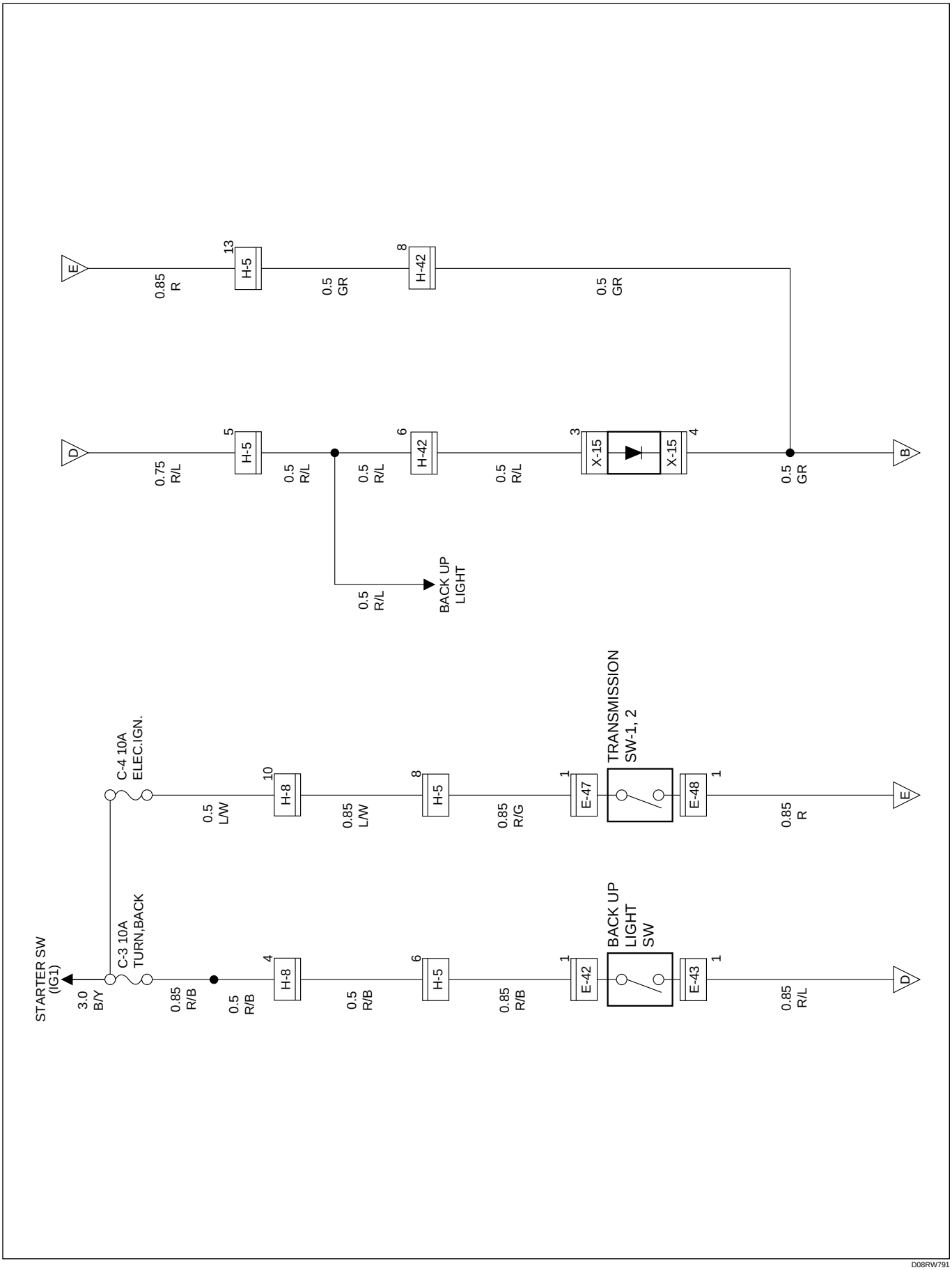

D08RW791

Parts Location (LHD)

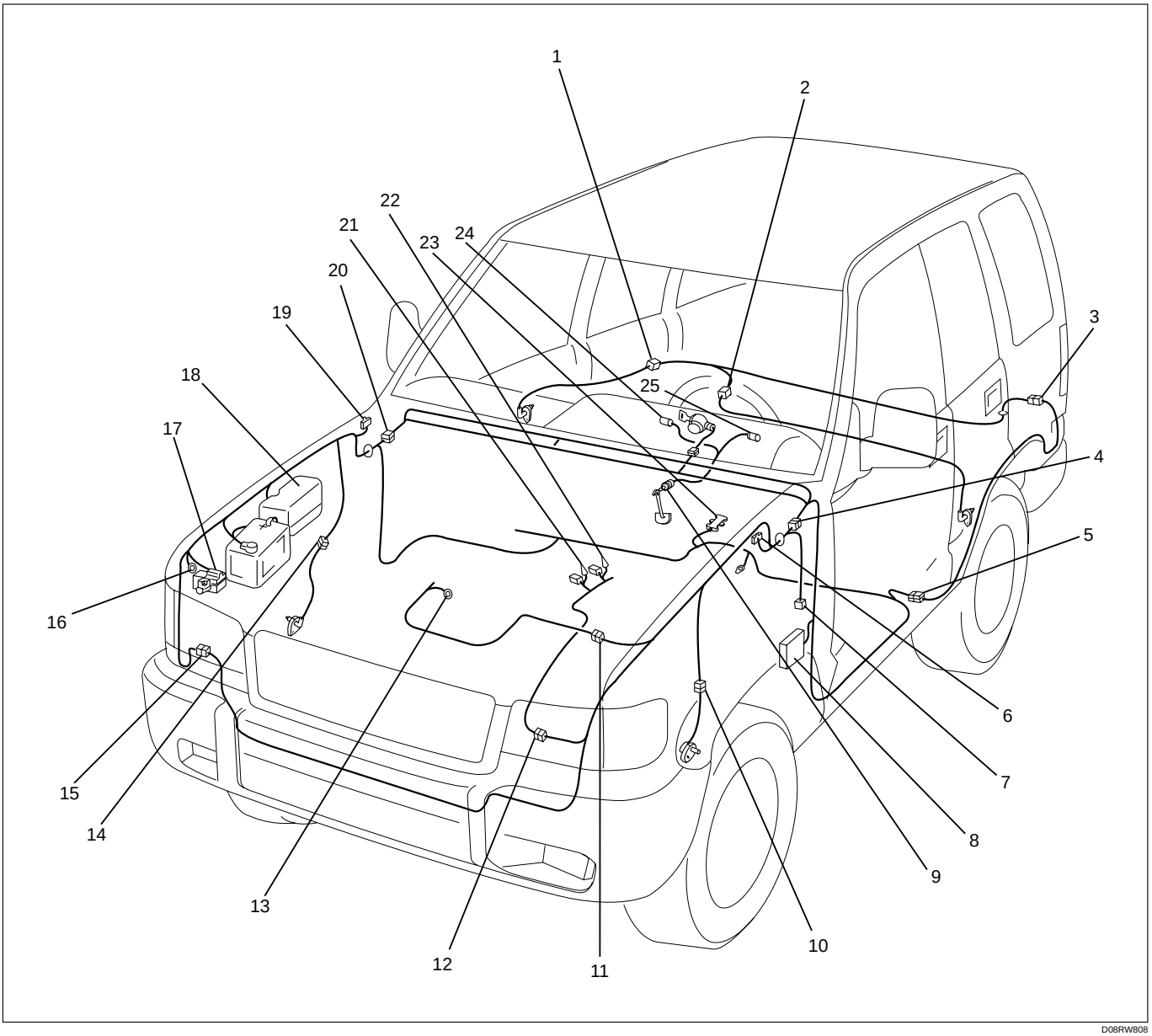

D08RW808

Legend

(1) F-2
(2) F-3
(3) H-33
(4) H-7, H-8, H-25
(5) H-46
(6) C-16
(7) C-63
(8) Fuse Box
(9) B-13 or B-14
(10) C-13
(11) H-5
(12) H-10, H-11
(13) E-30
(14) C-41
(15) H-42
(16) C-85
(17) C-4 (EHCU)
(18) Relay and Fuse Box
(19) C-39
(20) H-12, H-13, H-15, H-16
(21) E-47, E-48, M-1
(22) E-42, E-43, M-8
(23) B-25
(24) I-10
(25) I-9

A/T Shift Lock

General Description

The circuit consists of stoplight switch or brake switch and shift lock controller.
This system is designed not to allow shift lever to be shifted from “P” position to any other position without depressing brake pedal while starter switch is turned on.
The solenoid pin at the lower portion of shift lever retracts when brake pedal is not depressed, thus causing shift lever cam to be locked by link lever.

Circuit Diagram (RHD)

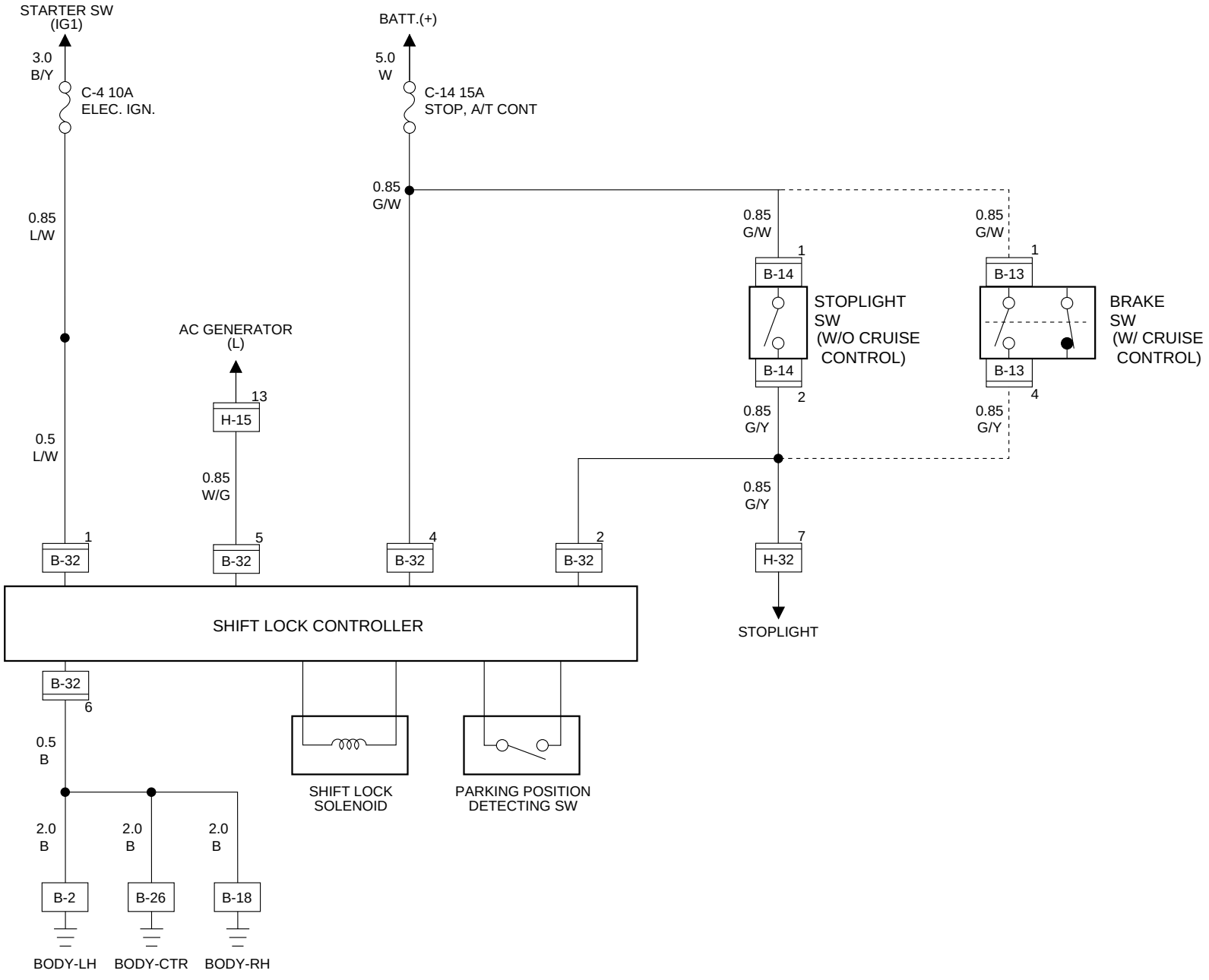

D08RW659

Parts Location (RHD)

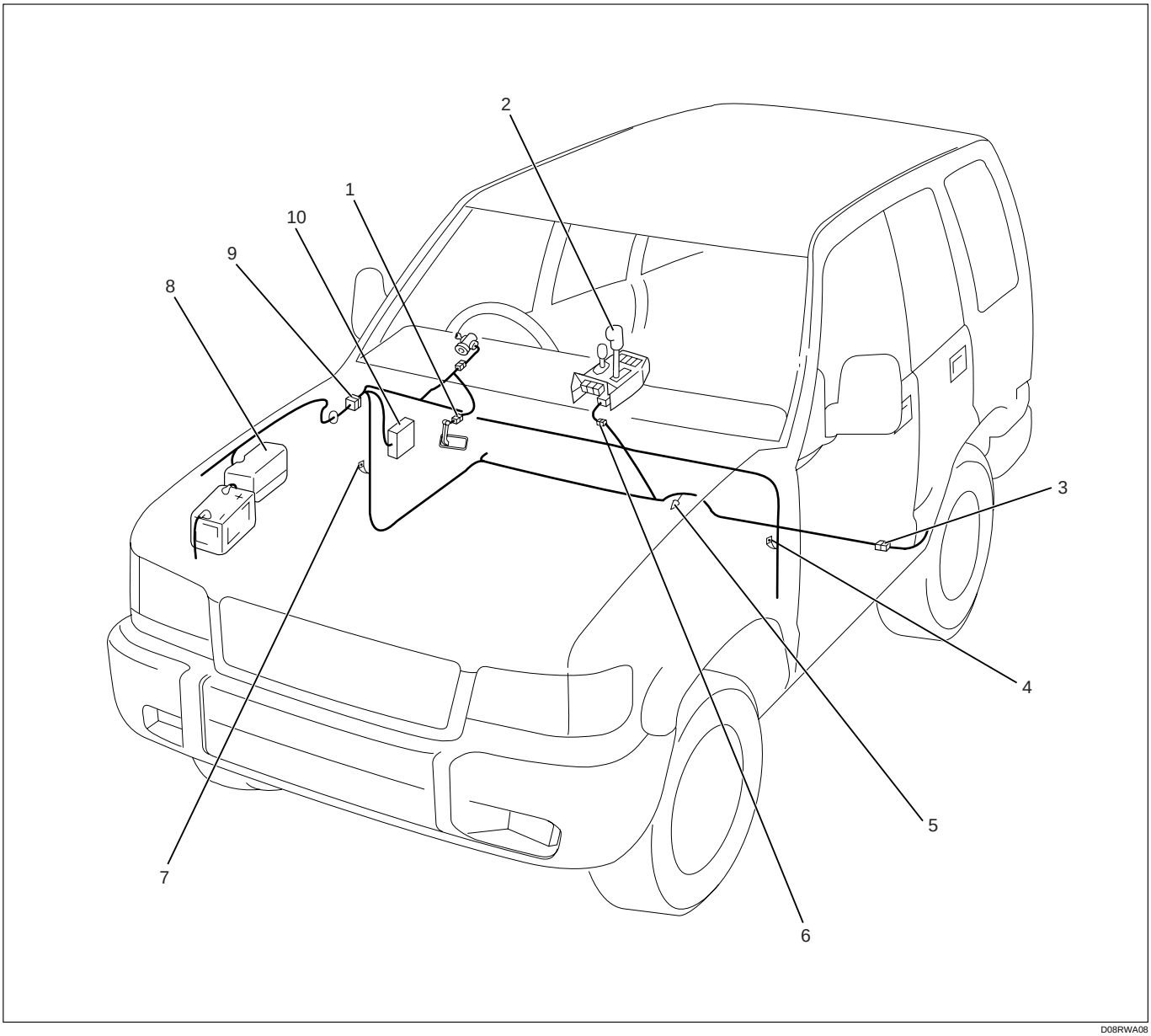

D08RWA08

Legend

(1) B-13 or B-14
(2) Shift Lever
(3) H-32
(4) B-2
(5) B-26
(6) Shift Lock Controller (B-32)
(7) B-18
(8) Relay and Fuse Box
(9) H-15
(10) Fuse Box

Circuit Diagram (LHD)

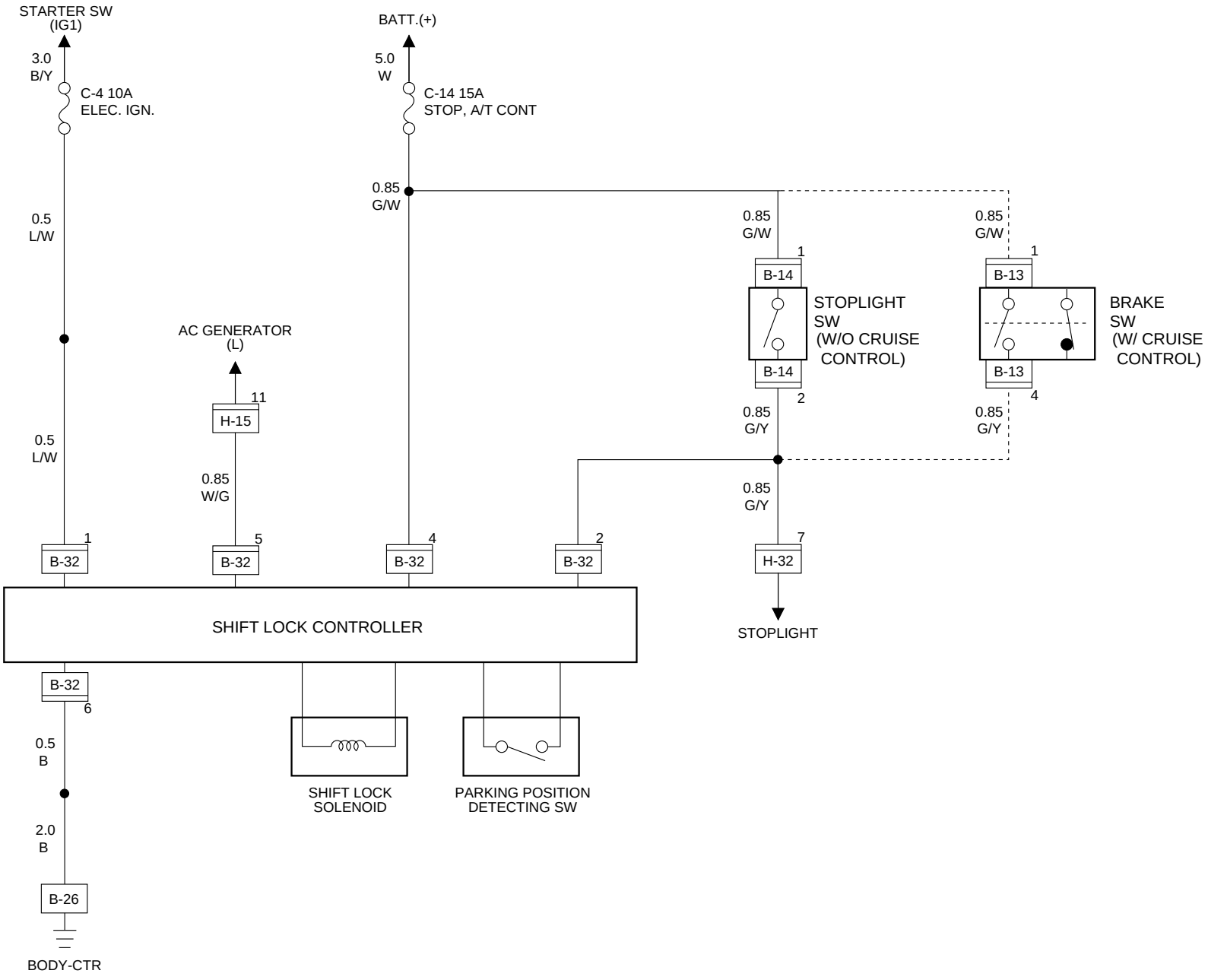

D08RW956

Parts Location (LHD)

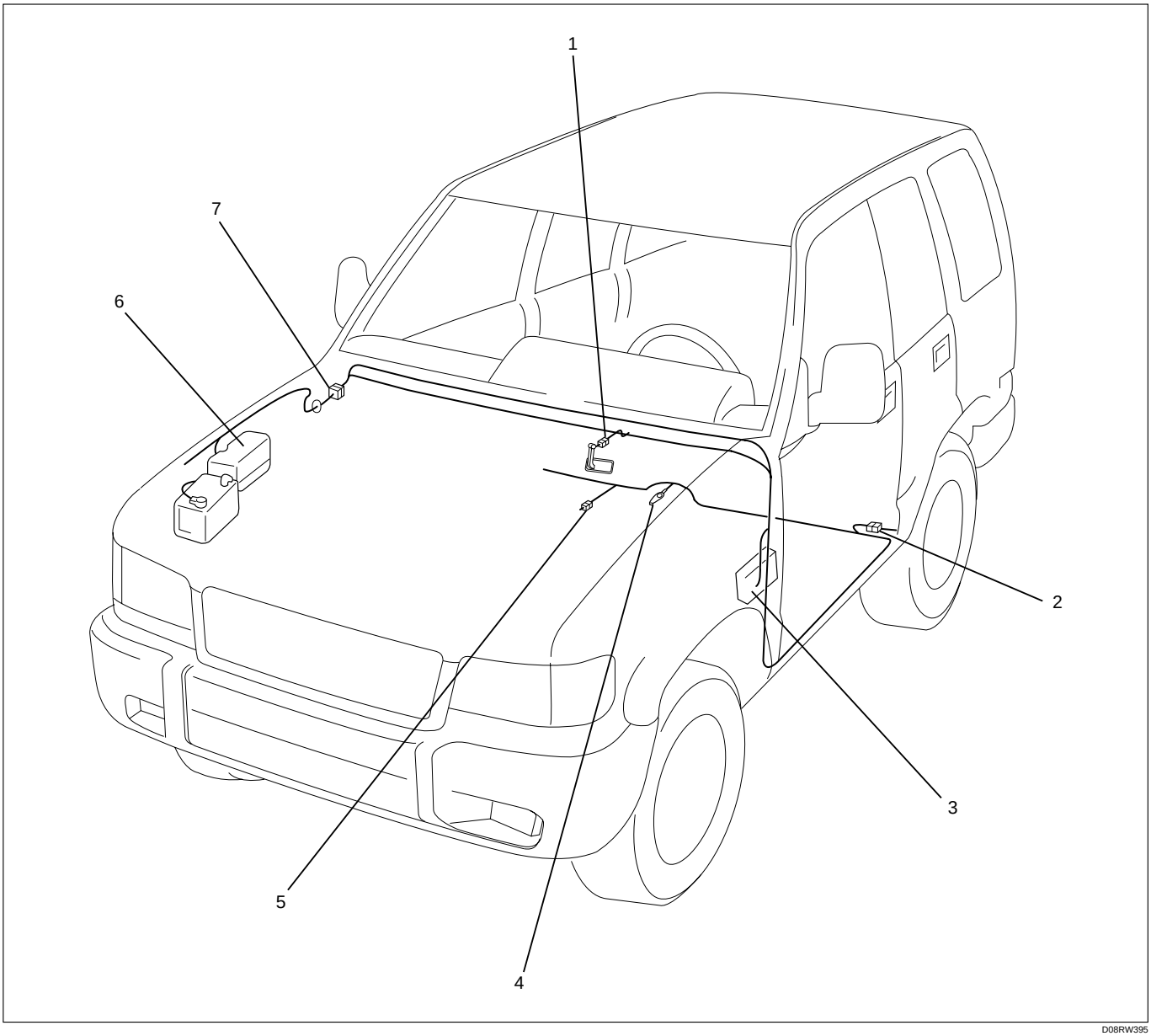

D08RW395

Legend

(1) B-13 or B-14
(2) H-32
(3) Fuse Box
(4) B-26
(5) B-32
(6) Relay and Fuse Box
(7) H-15

Windshield Wiper/Washer

General Description

The circuit consists of windshield wiper/washer switch, windshield wiper motor, windshield washer motor and alarm & relay control unit.
When windshield wiper/washer switch is turned on with starter switch on, battery voltage is applied to windshield wiper motor to activate wipers.
When windshield washer switch is turned on with starter switch on, battery voltage is applied to windshield washer motor.
Windshield washer motor squirts glass cleaning fluid while windshield washer switch is pushed and at the same time, alarm & relay control unit activates windshield wiper motor to wipe glass cleaning fluid at low speed.

Circuit Diagram (RHD)

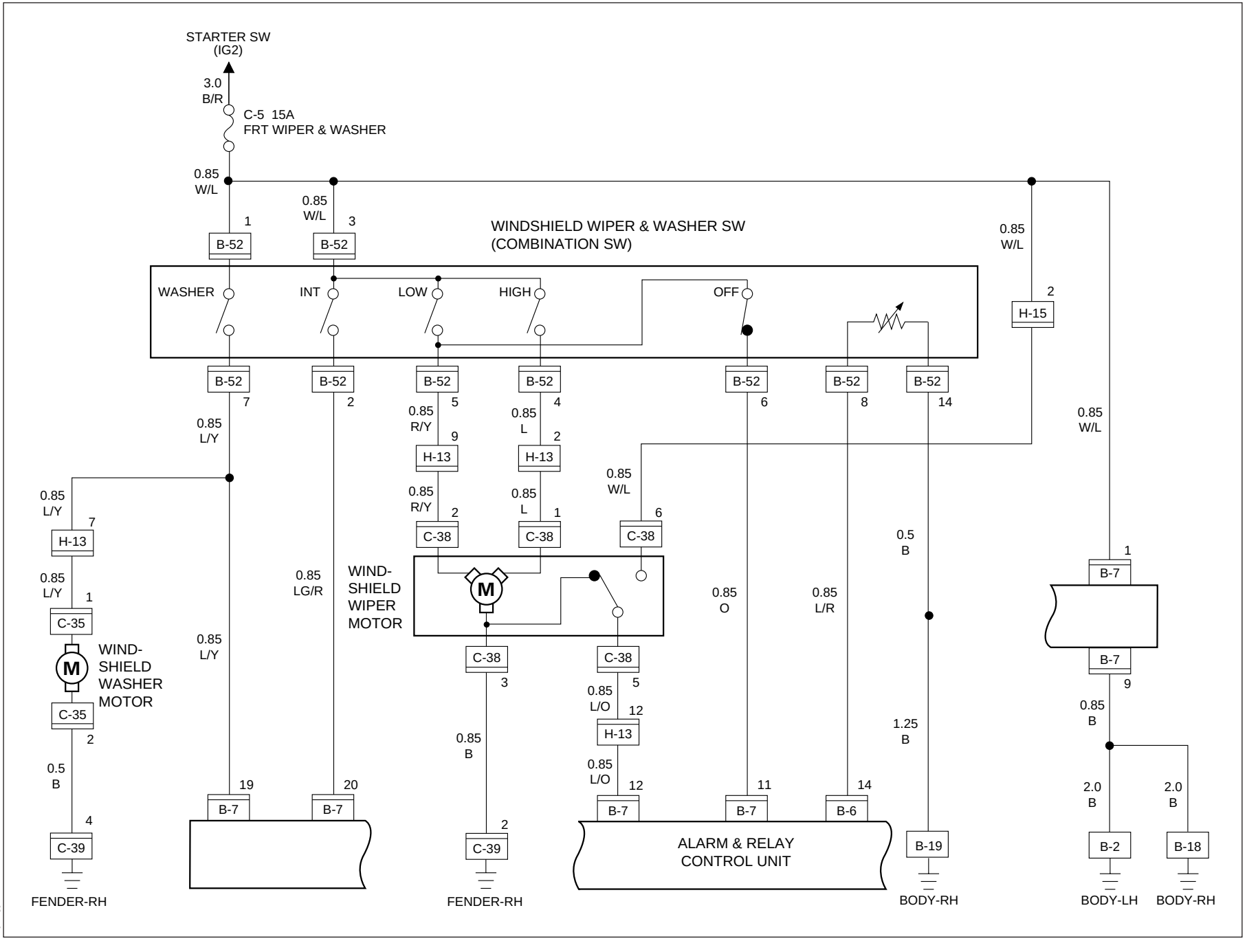

D08RW644

Parts Location (RHD)

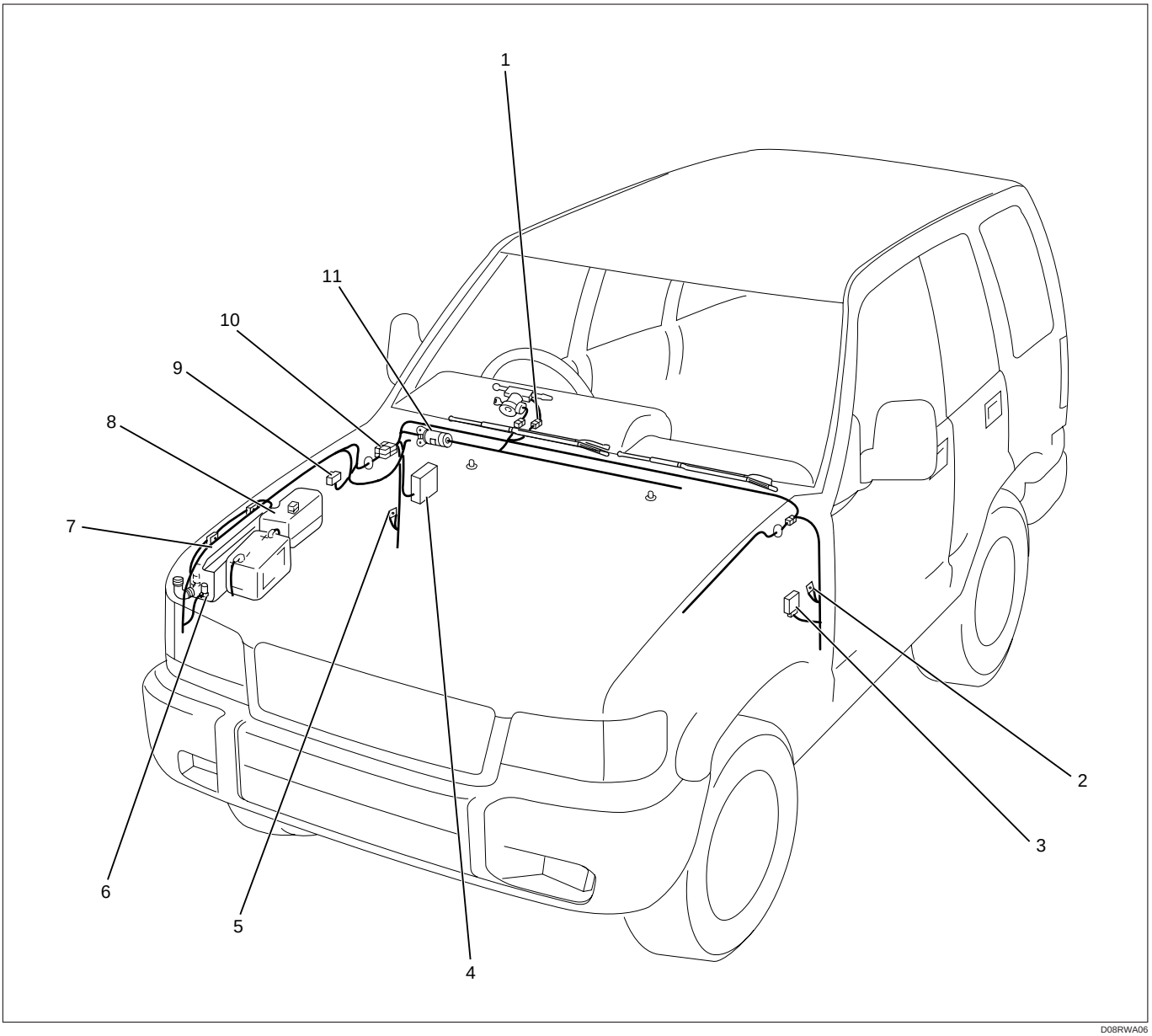

D08RWA06

Legend

(1) B-52
(2) B-2
(3) Alarm and Relay Control Unit (B-6, B-7)
(4) Fuse Box
(5) B-18, B-19
(6) FRT Wind Shild Washer Motor (C-35)
(7) Wind Shield Washer Tank
(8) Relay and Fuse Box
(9) C-39
(10) H-13, H-15
(11) Wind Shild Wiper Motor (C-38)

Circuit Diagram (LHD)

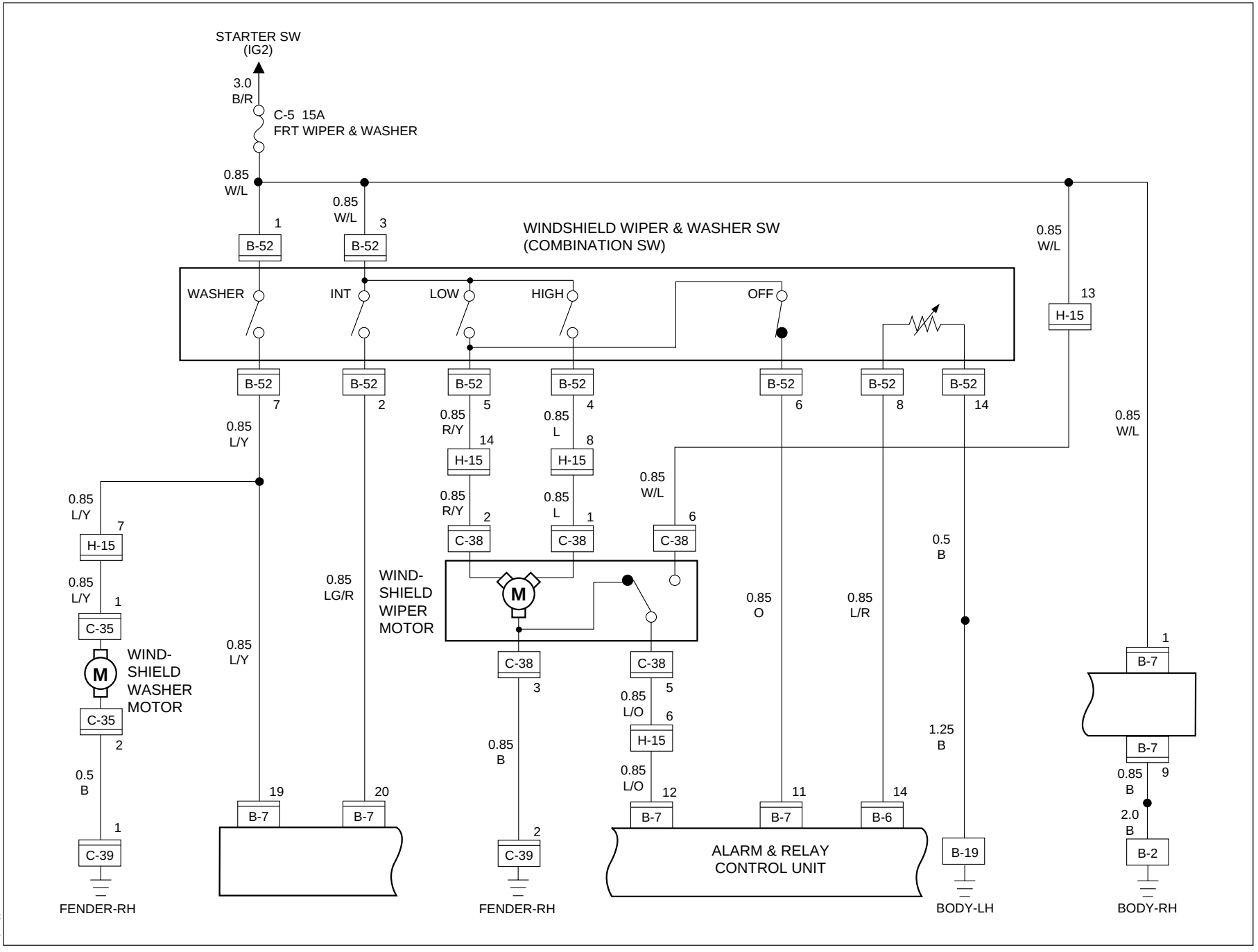

Parts Location (LHD)

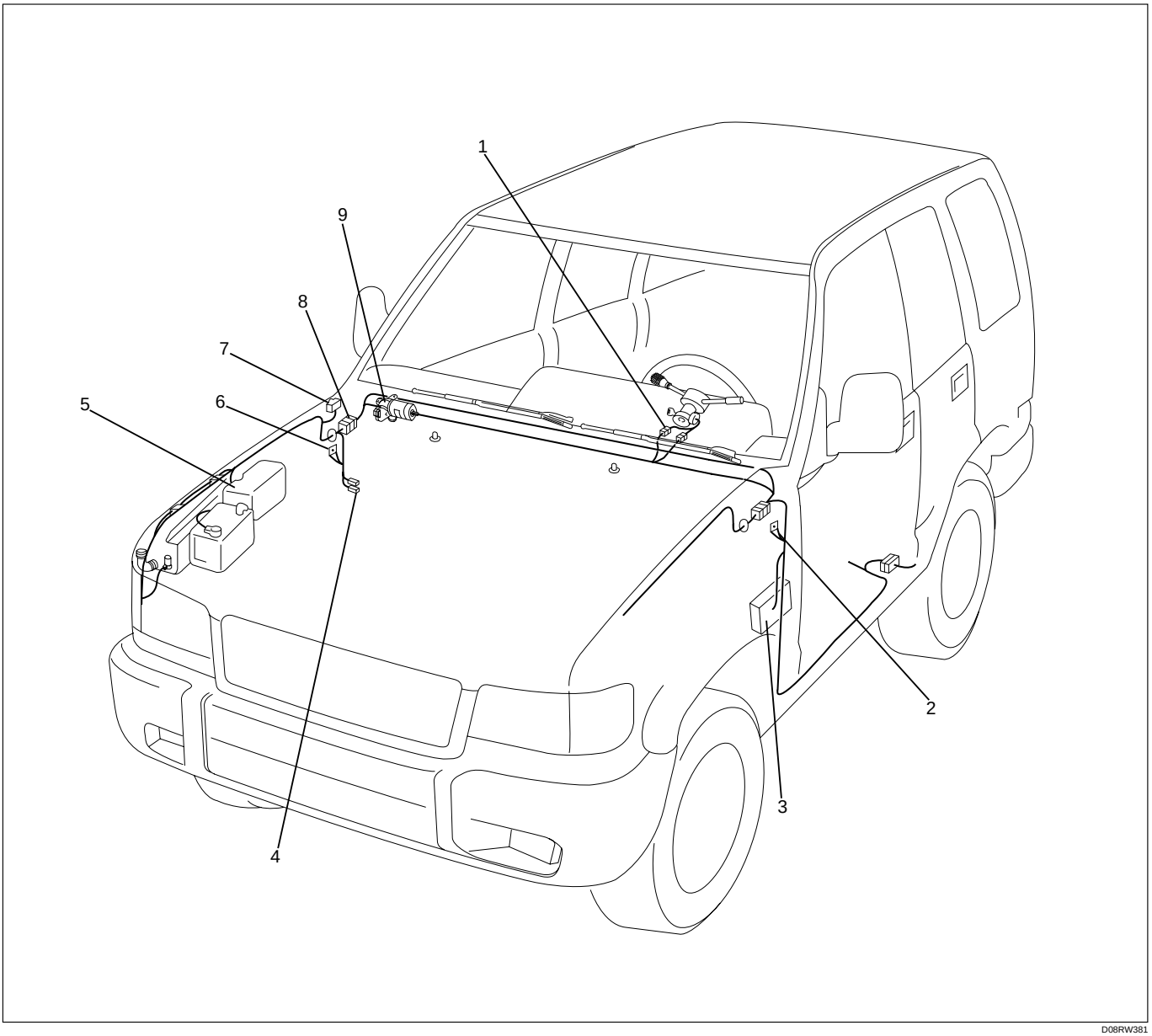

D08RW381

Legend

(1) B-52
(2) B-19
(3) Fuse Box
(4) B-6, B-7
(5) Relay and Fuse Box
(6) B-2
(7) C-39
(8) H-15
(9) C-38

Diagnosis

Quick Chart for Check Points

Trouble mode \ Check point	Fuse C-5 (15A)	Wiper & washer SW	Alarm & relay control unit	Wiper motor	Washer motor	Cable harness
1 Windshield wiper does not operate at any position	○	○		○		○
2 Windshield wiper does not operate at “INT” position		○	○			○
3 Intermittent interval does not change		○	○			○
4 Windshield wiper does not operate at “LO” position		○		○		○
5 Windshield wiper does not operate at “HI” position		○		○		○
6 Auto-stop function of the windshield wiper motor does not operate		○	○	○		○
7 Rotation of the front wiper motor does not stop		○		○		
8 Windshield washer motor does not operate	○	○			○	○

1 Windshield Wiper Does Not Operate At Any Switch Position

- IS FUSE C-5 (15A) NORMAL?

YES

- DISCONNECT THE CONNECTOR OF THE WINDSHIELD WIPER & WASHER SWITCH
- TURN THE STARTER SWITCH ON
- IS THERE ANY BATTERY VOLTAGE APPLIED BETWEEN THE SWITCH HARNESS SIDE CONNECTOR 3 B-52 AND THE GROUND?

NO

REPLACE THE FUSE

YES

- IS THE CONTINUITY IN THE WINDSHIELD WIPER & WASHER SWITCH NORMAL?

NO

REPAIR A POOR CONNECTION AT THE CONNECTORS OR AN OPEN CIRCUIT BETWEEN THE FUSE C-5 (15A) AND 3 B-52

YES

- IS 2 C-39 GROUNDED SECURELY?

NO

REPAIR OR REPLACE THE SWITCH

YES

- DISCONNECT THE CONNECTOR OF THE WINDSHIELD WIPER MOTOR
- WITH THE MOTOR CONNECTOR 2 C-38 CONNECTED TO THE BATTERY (+) TERMINAL, AND THE CONNECTOR 3 C-38 TO THE (–) TERMINAL, DOES THE MOTOR ROTATE AT A LOW SPEED?
- AND WITH THE CONNECTOR 1 C-38 CONNECTED TO THE (+) TERMINAL, DOES THE MOTOR ROTATE AT A HIGH SPEED?

NO

GROUND IT SECURELY

YES

REPAIR A POOR CONNECTION AT THE CONNECTORS OR AN OPEN CIRCUIT BETWEEN 3 C-38 AND THE GROUND

NO

REPAIR OR REPLACE THE WINDSHIELD WIPER MOTOR

2 Windshield Wiper Does Not Operate At “INT” Position

- DISCONNECT THE CONNECTORS OF THE WINDSHIELD WIPER & WASHER SWITCH
- SET THE SWITCH AT THE “INT” POSITION
- IS THERE CONTINUITY BETWEEN THE SWITCH CONNECTOR TERMINALS 3 B-52 AND 2 B-52 ?

YES

- IS B-19 GROUNDED SECURELY?

NO

REPAIR OR REPLACE THE WINDSHIELD WIPER & WASHER SWITCH

YES

- IS THERE CONTINUITY BETWEEN THE WINDSHIELD WIPER & WASHER SWITCH HARNESS SIDE CONNECTOR TERMINALS 14 B-52 AND THE GROUND?

NO

GROUND IT SECURELY

YES

- DISCONNECT THE CONNECTOR OF THE ALARM & RELAY CONTROL UNIT
- SET THE WINDSHIELD WIPER & WASHER SWITCH AT THE "INT" POSITION AND TURN THE STARTER SWITCH ON
- IS THE BATTERY VOLTAGE APPLIED BETWEEN 20 B-7 AND THE GROUND?

NO

REPAIR A POOR CONNECTION AT THE CONNECTORS OR AN OPEN CIRCUIT BETWEEN 14 B-52 AND B-19

YES

- IS THERE CONTINUITY BETWEEN 14 B-6 AND 8 B-52 ?

NO

REPAIR A POOR CONNECTION AT THE CONNECTORS OR AN OPEN CIRCUIT BETWEEN 2 B-52 AND 20 B-7

YES

REPLACE THE ALARM & RELAY CONTROL UNIT

NO

REPAIR A POOR CONNECTION AT THE CONNECTORS OR AN OPEN CIRCUIT BETWEEN 14 B-6 AND 8 B-52

3 Intermittent Interval Does Not Change

- DISCONNECT THE CONNECTOR OF THE WINDSHIELD WIPER & WASHER SWITCH
- WHEN THE INTERMITTENT KNOB IS TURNED, DOES THE RESISTANCE VALUE BETWEEN THE SWITCH CONNECTOR TERMINALS 8 B-52 AND 14 B-52 VARY BETWEEN 0Ω - 2KΩ?

YES

- IS THERE SHORT CIRCUIT BETWEEN 14 B-6 AND 8 B-52 ?

YES

REPAIR A SHORT CIRCUIT

NO

REPLACE THE ALARM & RELAY CONTROL UNIT

NO

REPAIR OR REPLACE THE SWITCH

4 Windshield Wiper Does Not Operate At “LO” Position

- DISCONNECT THE CONNECTORS OF THE WINDSHIELD WIPER & WASHER SWITCH
- TURN THE STARTER SWITCH ON
- SHORT CIRCUIT THE WINDSHIELD WIPER & WASHER SWITCH HARNESS SIDE CONNECTOR TERMINALS 3 B-52 - 5 B-52 AND CHECK TO SEE IF THE WINDSHIELD WIPER MOTOR ROTATES AT A LOW SPEED.

REPAIR OR REPLACE THE WIPER & WASHER SWITCH

5 Windshield Wiper Does Not Operate At “HI” Position

- DISCONNECT THE CONNECTOR OF THE WINDSHIELD WIPER & WASHER SWITCH
- WITH THE SWITCH SET AT “HI” POSITION, IS THERE CONTINUITY BETWEEN THE SWITCH CONNECTOR TERMINALS 3 B-52 AND 4 B-52 ?

YES

- DISCONNECT THE CONNECTOR OF THE WINDSHIELD WIPER MOTOR
- CONNECT THE MOTOR CONNECTOR 1 C-38 TO THE BATTERY (+) TERMINAL, AND 3 C-38 TO THE BATTERY (–) TERMINAL
- DOES THE MOTOR ROTATE AT A HIGH SPEED?

YES

REPAIR A POOR CONNECTION AT THE CONNECTORS OR AN OPEN CIRCUIT BETWEEN 4 B-52 AND 1 C-38

NO

REPAIR OR REPLACE THE WINDSHIELD WIPER MOTOR

NO

REPAIR OR REPLACE THE WINDSHIELD WIPER & WASHER SWITCH

6 Auto-Stop Function of The Windshield Wiper Motor Does Not Operate

- DISCONNECT THE CONNECTOR OF THE WINDSHIELD WIPER & WASHER SWITCH
- WITH THE SWITCH SET AT "OFF" POSITION, IS THERE CONTINUITY BETWEEN THE SWITCH CONNECTOR TERMINALS 5 B-52 AND 6 B-52 ?

YES

- DISCONNECT THE CONNECTOR OF THE WINDSHIELD WIPER MOTOR
- CONNECT THE MOTOR CONNECTOR 2 C-38 TO THE BATTERY (+) TERMINAL AND 3 C-38 TO THE (–) TERMINAL, AND THEN CHANGE THE CONNECTION OF THE BATTERY (+) TERMINAL TO THE CONNECTOR 6 C-38 WHILE THE MOTOR ROTATING AT A LOW SPEED
- WHEN CONNECTING THE CONNECTOR TERMINALS 2 C-38 AND 5 C-38 IN THIS CONDITION, DOES THE MOTOR STOP AT AUTO-STOP POSITION?

NO

REPAIR OR REPLACE THE WINDSHIELD WIPER & WASHER SWITCH

YES

- TURN THE STARTER SWITCH ON
- IS THERE ANY BATTERY VOLTAGE APPLIED BETWEEN THE WINDSHIELD WIPER MOTOR HARNESS SIDE CONNECTOR TERMINAL 6 C-38 AND GROUND?

NO

REPAIR OR REPLACE THE WINDSHIELD WIPER MOTOR

YES

- DISCONNECT THE CONNECTOR OF THE ALARM & RELAY CONTROL UNIT
- IS THERE CONTINUITY BETWEEN THE HARNESS SIDE CONNECTOR 12 B-7 AND THE WINDSHIELD WIPER MOTOR HARNESS SIDE CONNECTOR 5 C-38 ?

NO

REPAIR A POOR CONNECTION AT THE CONNECTORS OR AN OPEN CIRCUIT BETWEEN THE FUSE C-5 (15A) AND 6 C-38

YES

REPLACE THE ALARM & RELAY CONTROL UNIT

NO

REPAIR A POOR CONNECTION AT THE CONNECTORS OR AN OPEN CIRCUIT BETWEEN 5 C-38 AND 12 B-7

7 Rotation of The Windshield Wiper Motor Does Not Stop

- IS THE CONTINUITY IN THE WINDSHIELD WIPER & WASHER SWITCH NORMAL?

YES

REPAIR OR REPLACE THE WINDSHIELD WIPER MOTOR

NO

REPAIR OR REPLACE THE WINDSHIELD WIPER & WASHER SWITCH

8 Windshield Washer Motor Does Not Operate

- IS FUSE C-5 (15A) NORMAL?

YES

- DISCONNECT THE CONNECTOR OF THE WINDSHIELD WIPER & WASHER SWITCH
- WITH THE WASHER BUTTON DEPRESSED, IS THERE CONTINUITY BETWEEN THE SWITCH SIDE CONNECTOR TERMINALS 1 B-52 AND 7 B-52 ?

YES

- TURN THE STARTER SWITCH ON
- IS THE BATTERY VOLTAGE APPLIED BETWEEN THE WINDSHIELD WIPER & WASHER SWITCH HARNESS SIDE CONNECTOR TERMINAL 1 B-52 AND THE GROUND?

YES

- DISCONNECT THE CONNECTOR OF THE WINDSHIELD WIPER WASHER MOTOR
- TURN THE STARTER SWITCH ON
- WITH THE WASHER BUTTON OF THE WINDSHIELD WIPER & WASHER SWITCH DEPRESSED, IS THE BATTERY VOLTAGE APPLIED BETWEEN THE WASHER MOTOR HARNESS SIDE CONNECTOR TERMINAL 1 C-35 AND THE GROUND?

YES

- IS 4 I-39 GROUNDED SECURELY?

YES

- CONNECT THE MOTOR SIDE CONNECTOR 1 C-35 OF THE WINDSHIELD WASHER MOTOR TO THE BATTERY (+) TERMINAL, AND THE CONNECTOR 2 C-35 TO THE (–) TERMINAL
- DOES THE MOTOR ROTATE?

YES

REPAIR A POOR CONNECTION AT THE CONNECTORS OR AN OPEN CIRCUIT BETWEEN 2 C-35 AND THE GROUND

NO

REPLACE THE WINDSHIELD WASHER MOTOR

NO

GROUND IT SECURELY

NO

REPAIR A POOR CONNECTION AT THE CONNECTORS OR AN OPEN CIRCUIT BETWEEN 7 B-52 AND 1 C-35

NO

REPAIR A POOR CONNECTION AT THE CONNECTORS OR AN OPEN CIRCUIT BETWEEN FUSE C-5 (15A) AND 1 B-52

NO

REPAIR OR REPLACE THE WINDSHIELD WIPER & WASHER SWITCH

NO

REPLACE FUSE C-5 (15A)

Rear Wiper/Washer

General Description

The circuit consists of rear wiper/washer switch, alarm & relay control unit, rear wiper motor and rear washer motor.

When rear wiper switch on rear wiper/washer switch is depressed, battery voltage is applied to rear wiper motor through alarm & relay control unit and activates rear wiper motor.

When rear washer switch on rear wiper/washer switch is depressed, battery voltage is applied to rear washer motor and activates rear washer motor.

At the same time, the current as an input signal for activating rear wiper motor flows to alarm & relay control unit, then alarm & relay control unit activates rear wiper motor to wipe glass cleaning fluid.

Circuit Diagram (RHD)-1

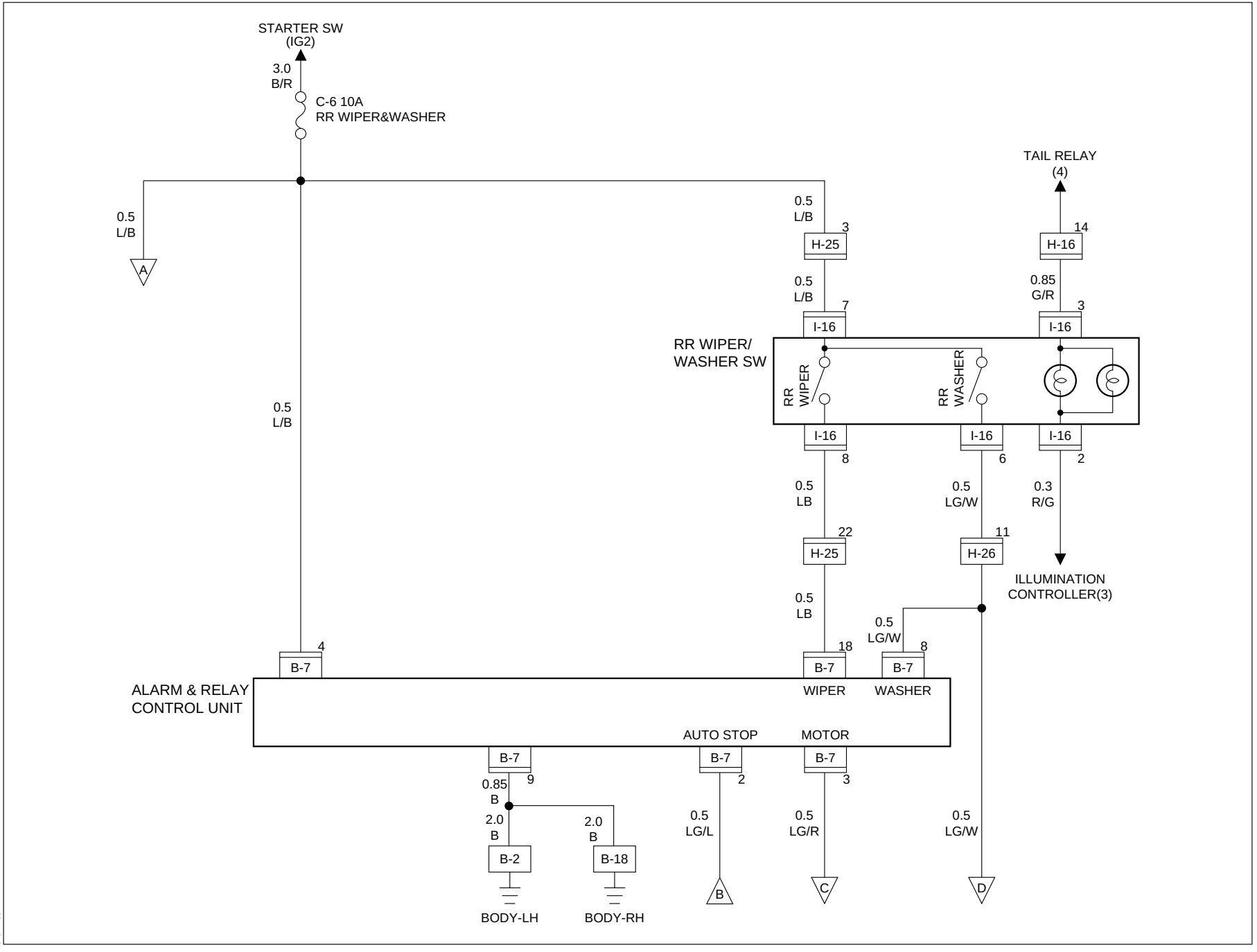

Circuit Diagram (RHD)-2

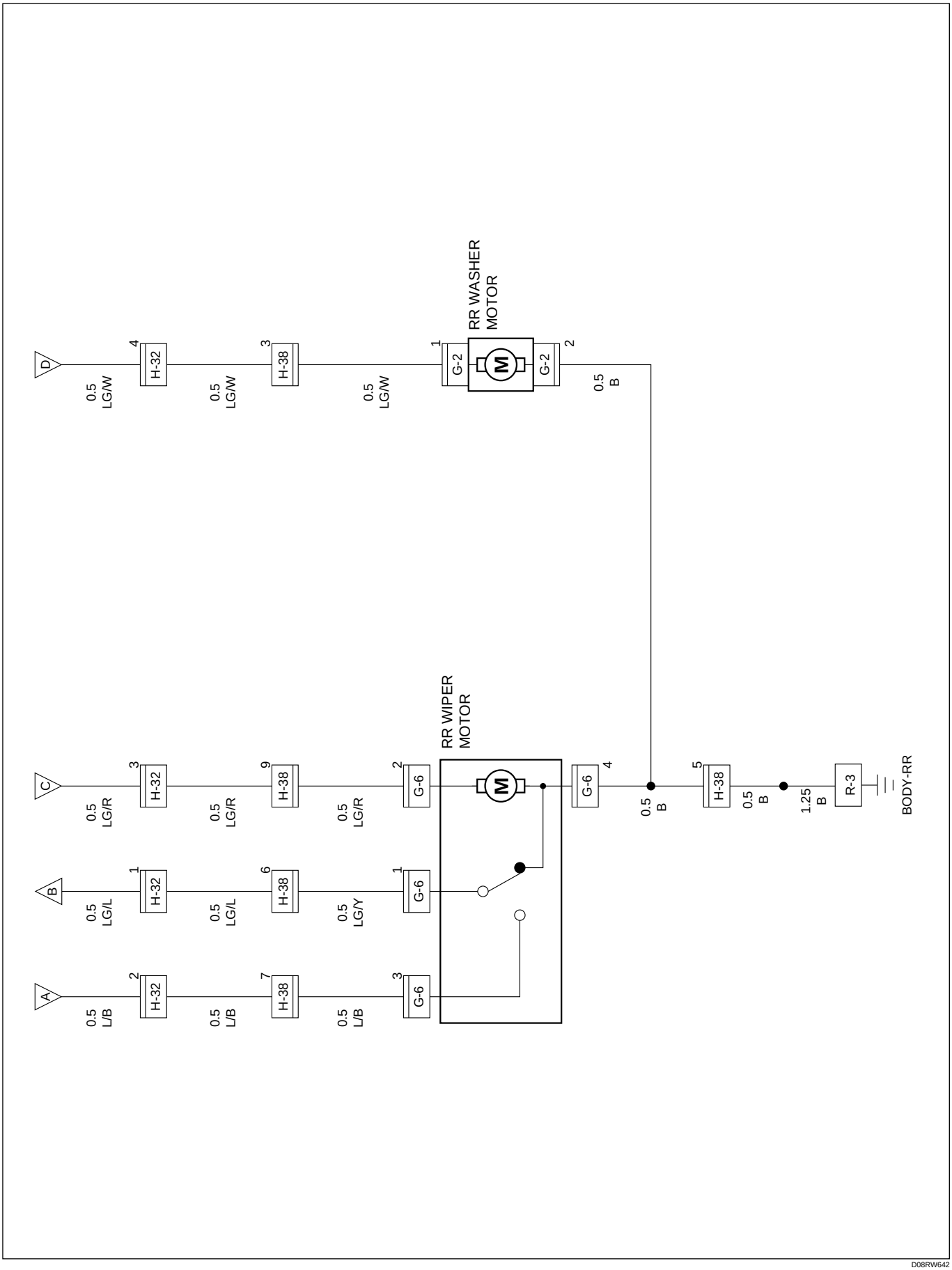

D08RW642

Parts Location (RHD)

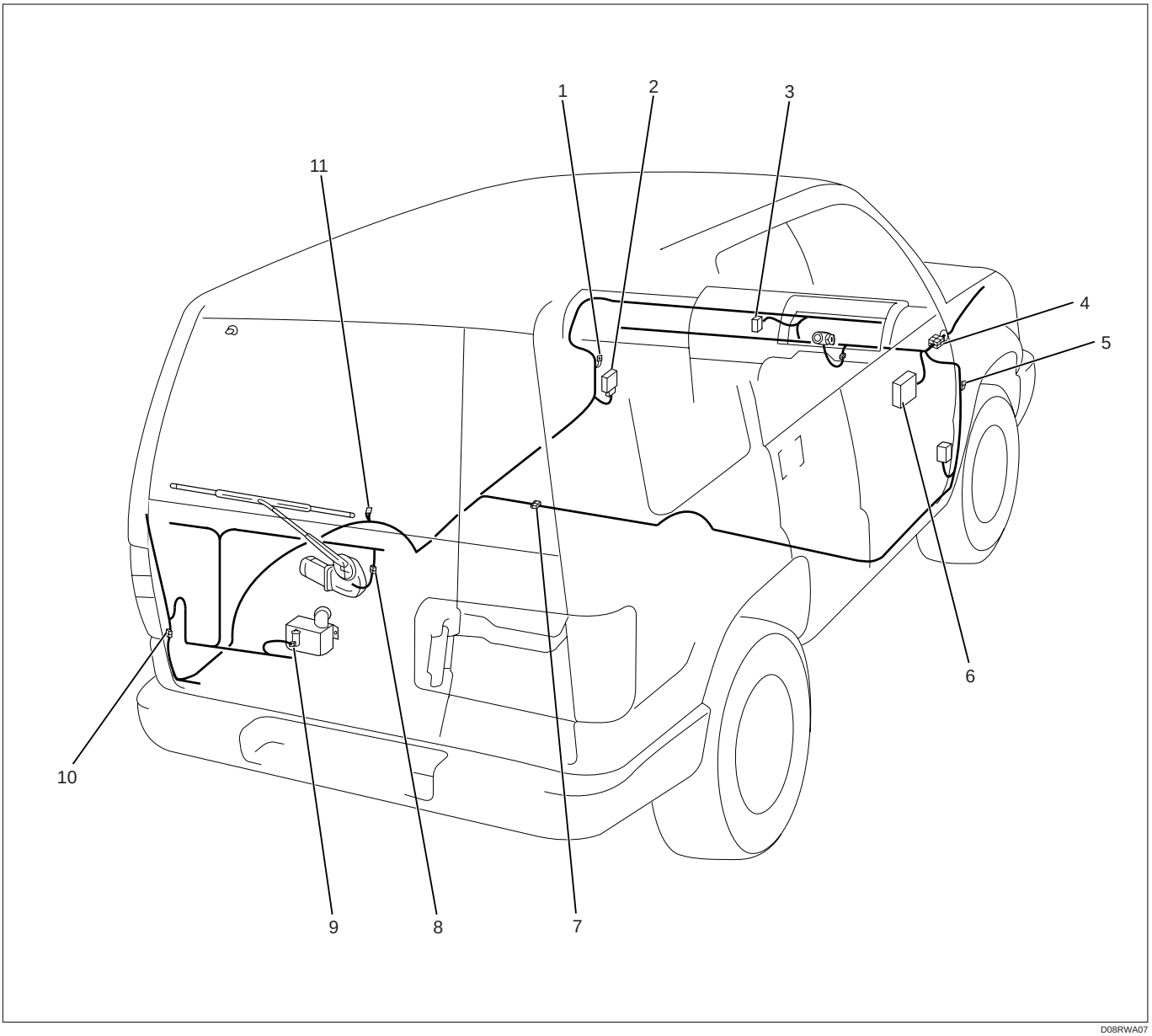

D08RWA07

Legend

(1) B-2
(2) Alarm and Relay Control Unit (B-7)
(3) I-16
(4) H-16, H-25, H-26
(5) B-18
(6) Fuse Box
(7) H-32
(8) RR Wiper Motor (G-6)
(9) RR Washer Motor (G-2)
(10) H-38
(11) R-3

Circuit Diagram (LHD)-1

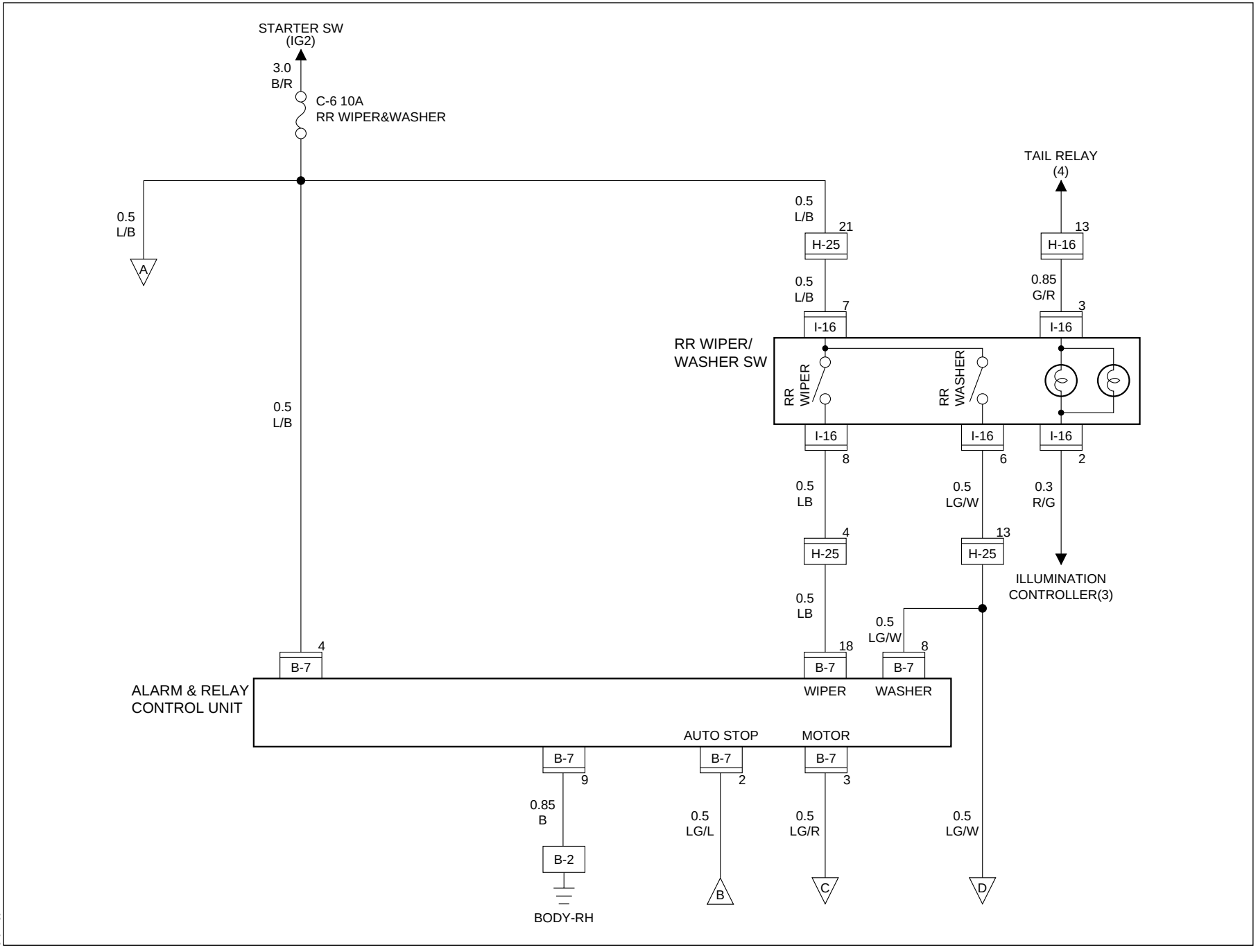

D08RW072

Circuit Diagram (LHD)-2

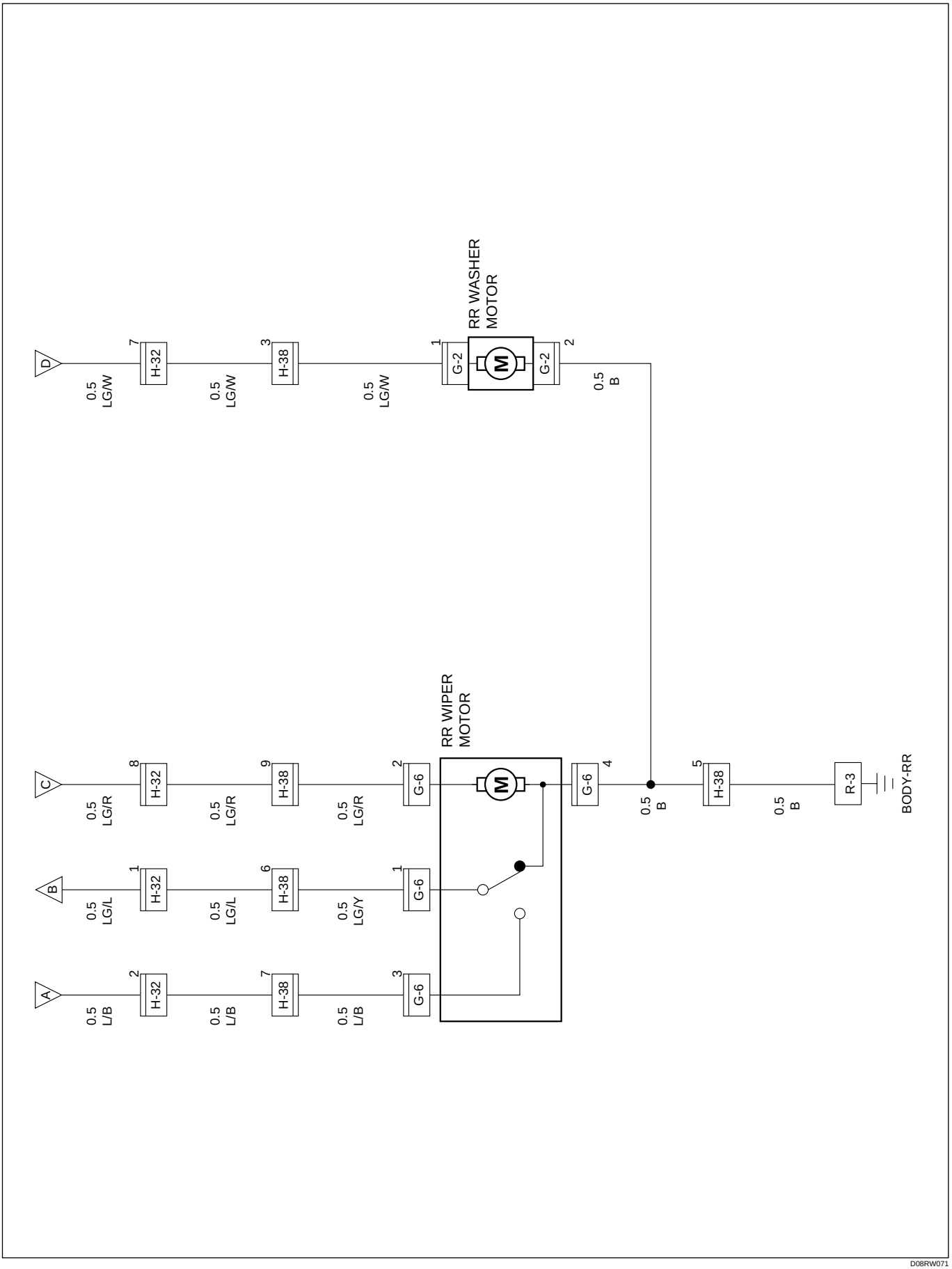

D08RW071

Parts Location (LHD)

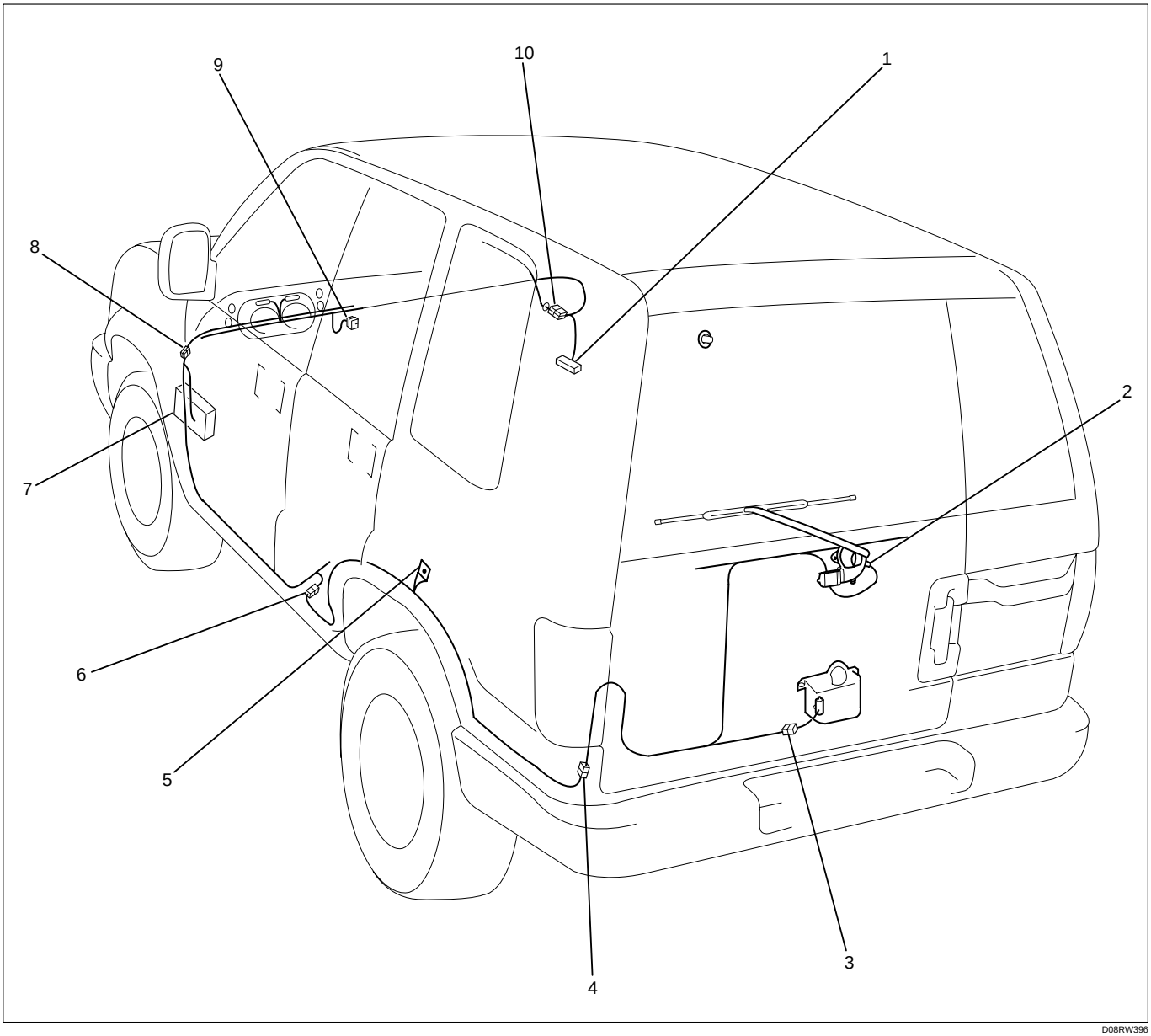

D08RW396

Legend

(1) B-7
(2) G-6
(3) G-2
(4) H-38
(5) R-3
(6) H-32
(7) Fuse Box
(8) H-25
(9) I-16
(10) H-16

Diagnosis

Quick Chart for Check Points

Trouble mode \ Check point	Fuse C-6 (10A)	Wiper & washer SW	Rear wiper motor	Washer motor	Alarm & relay control unit	Cable harness
1 Rear wiper motor does not operate	○	○	○		○	○
2 Auto-stop function of the rear wiper motor does not operate			○		○	○
3 Rear wiper motor does not operate at “WIPER” position		○			○	○
4 Rear wiper motor does not operate at “WIPER & WASHER” position		○			○	○
5 Rotation of the rear wiper motor does not stop		○	○			
6 Rear washer motor does not operate		○	○	○		○

1 Rear Wiper Motor Does Not Operate

- IS FUSE C-6 (10A) NORMAL?

YES

- DISCONNECT THE CONNECTOR OF THE REAR WIPER & WASHER SWITCH
- IS THE CONTINUITY IN THE REAR WIPER & WASHER SWITCH NORMAL?

NO

REPLACE FUSE C-6 (10A)

YES

- TURN THE STARTER SW ON
- IS THE BATTERY VOLTAGE APPLIED BETWEEN THE REAR WIPER & WASHER SWITCH HARNESS SIDE CONNECTOR TERMINAL 7 I-16 AND GROUND?

NO

REPAIR OR REPLACE THE REAR WIPER & WASHER SWITCH

YES

- DISCONNECT THE CONNECTORS OF THE REAR WIPER MOTOR
- WITH THE MOTOR SIDE CONNECTOR 2 G-6 CONNECTED TO THE BATTERY (+) TERMINAL AND THE CONNECTOR 4 G-6 TO THE (–) TERMINAL, DOES THE MOTOR ROTATE?

NO

REPAIR A POOR CONNECTION AT THE CONNECTORS OR AN OPEN CIRCUIT BETWEEN FUSE C-6 (10A) AND 7 I-16

YES

IS R-3 GROUNDED SECURELY?

NO

REPAIR OR REPLACE THE REAR WIPER MOTOR

YES

- DISCONNECT THE CONNECTORS OF THE ALARM & RELAY CONTROL UNIT
- TURN THE STARTER SWITCH ON
- WITH THE REAR WIPER & WASHER SWITCH AT WIPER POSITION, IS THE BATTERY VOLTAGE APPLIED BETWEEN 18 B-7 AND THE GROUND?

NO

GROUND IT SECURELY

YES

- IS THERE CONTINUITY BETWEEN HARNESS SIDE CONNECTOR 3 B-7 AND 2 G-6 ?

NO

REPAIR A POOR CONNECTION AT THE CONNECTORS OR AN OPEN CIRCUIT BETWEEN 8 I-16 AND 18 B-7

YES

REPLACE THE ALARM & RELAY CONTROL UNIT

NO

REPAIR A POOR CONNECTION AT THE CONNECTORS OR AN OPEN CIRCUIT BETWEEN 3 B-7 AND 2 G-6

2 Auto-Stop Function of The Rear Wiper Motor Does Not Operate

- DISCONNECT THE CONNECTOR OF THE REAR WIPER MOTOR
- CONNECT THE MOTOR SIDE CONNECTOR 2 G-6 TO THE BATTERY (+) TERMINAL AND THE TERMINAL 4 G-6 TO THE (–) TERMINAL
- WHILE ROTATING THE MOTOR, CHANGE THE CONNECTION OF THE BATTERY (+) TERMINAL TO THE CONNECTOR 3 G-6 , AND THEN CONNECT THE CONNECTOR 1 G-6 AND 2 G-6
- DOES THE REAR WIPER STOP AT THE AUTO-STOP POSITION IN THIS CONDITION?

YES

- TURN THE START SWITCH ON
- IS THE BATTERY VOLTAGE APPLIED BETWEEN THE REAR WIPER MOTOR HARNESS SIDE CONNECTOR 3 G-6 AND THE GROUND?

YES

- DISCONNECT THE CONNECTOR OF THE ALARM & RELAY CONTROL UNIT
- IS THERE CONTINUITY BETWEEN THE RELAY HARNESS SIDE CONNECTOR 2 B-7 AND THE WIPER MOTOR HARNESS SIDE CONNECTOR 1 G-6 ?

YES

REPLACE THE ALARM & RELAY CONTROL UNIT

NO

REPAIR A POOR CONNECTION AT THE CONNECTORS OR AN OPEN CIRCUIT BETWEEN 2 B-7 AND 1 G-6

NO

REPAIR A POOR CONNECTION AT THE CONNECTORS OR AN OPEN CIRCUIT BETWEEN THE FUSE C-6 (10A) AND 3 G-6

NO

REPAIR OR REPLACE THE REAR WIPER MOTOR

3 Rear Wiper Motor Does Not Operate at “Wiper” Position

- IS THE CONTINUITY IN THE REAR WIPER & WASHER SWITCH NORMAL?

YES

- DISCONNECT THE CONNECTOR OF THE ALARM & RELAY CONTROL UNIT
- TURN THE STARTER SWITCH ON
- WITH THE REAR WIPER & WASHER SWITCH SET AT “WIPER” POSITION, IS THE BATTERY VOLTAGE APPLIED BETWEEN THE CONTROL UNIT HARNESS SIDE CONNECTOR 18 B-7 AND GROUND?

YES

REPLACE THE ALARM & RELAY CONTROL UNIT

NO

REPAIR A POOR CONNECTION AT THE CONNECTORS OR AN OPEN CIRCUIT BETWEEN 18 B-7 AND 8 I-16

NO

REPAIR OR REPLACE THE REAR WIPER & WASHER SWITCH

4 Rear Wiper Motor Does Not Operate at “Washer” Position

- IS THE CONTINUITY IN THE REAR WIPER & WASHER SWITCH NORMAL?

YES

- DISCONNECT THE CONNECTOR OF THE ALARM & RELAY CONTROL UNIT
- TURN THE STARTER SWITCH ON
- WITH THE REAR WIPER & WASHER SWITCH SET AT “WASH” POSITION, IS THE BATTERY VOLTAGE APPLIED BETWEEN THE CONTROL UNIT HARNESS SIDE CONNECTOR 8 B-7 AND THE GROUND?

YES

REPLACE THE ALARM & RELAY CONTROL UNIT

NO

REPAIR A POOR CONNECTION AT THE CONNECTORS OR AN OPEN CIRCUIT BETWEEN 6 I-16 AND 8 B-7

NO

REPAIR OR REPLACE THE REAR WIPER & WASHER SWITCH

5 Rotation of The Rear Wiper Motor Does Not Stop

- IS THE CONTINUITY IN THE REAR WIPER & WASHER SWITCH NORMAL?

YES

- DISCONNECT THE ALARM & RELAY CONTROL UNIT CONNECTORS
  TURN THE STARTER SW ON
  IS THE BATTERY VOLTAGE APPLIED BETWEEN HARNESS SIDE CONNECTOR 2 B-7 AND THE GROUND?

YES

REPAIR OR REPLACE THE RR WIPER MOTOR

NO

REPLACE THE ALARM & RELAY CONTROL UNIT

NO

REPAIR OR REPLACE THE REAR WIPER & WASHER SWITCH

6 Rear Washer Motor Does Not Operate

- IS FUSE C-6 (10A) NORMAL?

YES

- DISCONNECT THE CONNECTOR OF THE REAR WIPER & WASHER SWITCH
- WITH THE SWITCH SET AT “WASH” POSITION, IS THERE CONTINUITY BETWEEN THE SWITCH CONNECTOR TERMINALS 7 [I-16] AND 6 [I-16] ?

YES

- TURN THE STARTER SWITCH ON
- IS THE BATTERY VOLTAGE APPLIED BETWEEN THE REAR WIPER & WASHER SWITCH HARNESS SIDE CONNECTOR 7 [I-16] AND GROUND?

YES

- DISCONNECT THE CONNECTOR OF THE REAR WASHER MOTOR
- TURN THE STARTER SWITCH ON
- WITH THE REAR WIPER & WASHER SWITCH SET AT “WASH” POSITION, IS THE BATTERY VOLTAGE APPLIED BETWEEN THE REAR WASHER MOTOR HARNESS SIDE CONNECTOR 1 [G-2] AND GROUND?

YES

- CONNECT THE MOTOR SIDE CONNECTOR TERMINAL 1 [G-2] TO THE BATTERY (+) TERMINAL AND 2 [G-2] TO THE (–) TERMINAL
- DOES THE MOTOR OPERATE?

YES

- IS [R-3] GROUNDED SECURELY?

YES

REPAIR A POOR CONNECTION AT THE CONNECTORS OR AN OPEN CIRCUIT BETWEEN 2 [G-2] AND [R-3]

NO

GROUND IT SECURELY

NO

REPLACE THE REAR WASHER MOTOR

NO

REPAIR A POOR CONNECTION AT THE CONNECTORS OR AN OPEN CIRCUIT BETWEEN 1 [G-2] AND 6 [I-16]

NO

REPAIR A POOR CONNECTION AT THE CONNECTORS OR AN OPEN CIRCUIT BETWEEN THE FUSE C-6 (10A) AND 7 [I-16]

NO

REPAIR OR REPLACE THE SWITCH

NO

REPLACE THE FUSE

Headlight Wiper/Washer

General Description

The circuit consists of the starter switch, headlight wiper switch, headlight wiper motor and washer motor. By pushing the headlight wiper/washer switch with the starter switch on, the wiper will make 5 strokes with washer solution applied between each of the first 4 strokes, regardless of the length of time the switch is held down.

The washer nozzle is installed to the wiper blade, and the tank to which the washer motor is installed shared between the headlight washer and the windshield washer.

Circuit Diagram (RHD) – 1

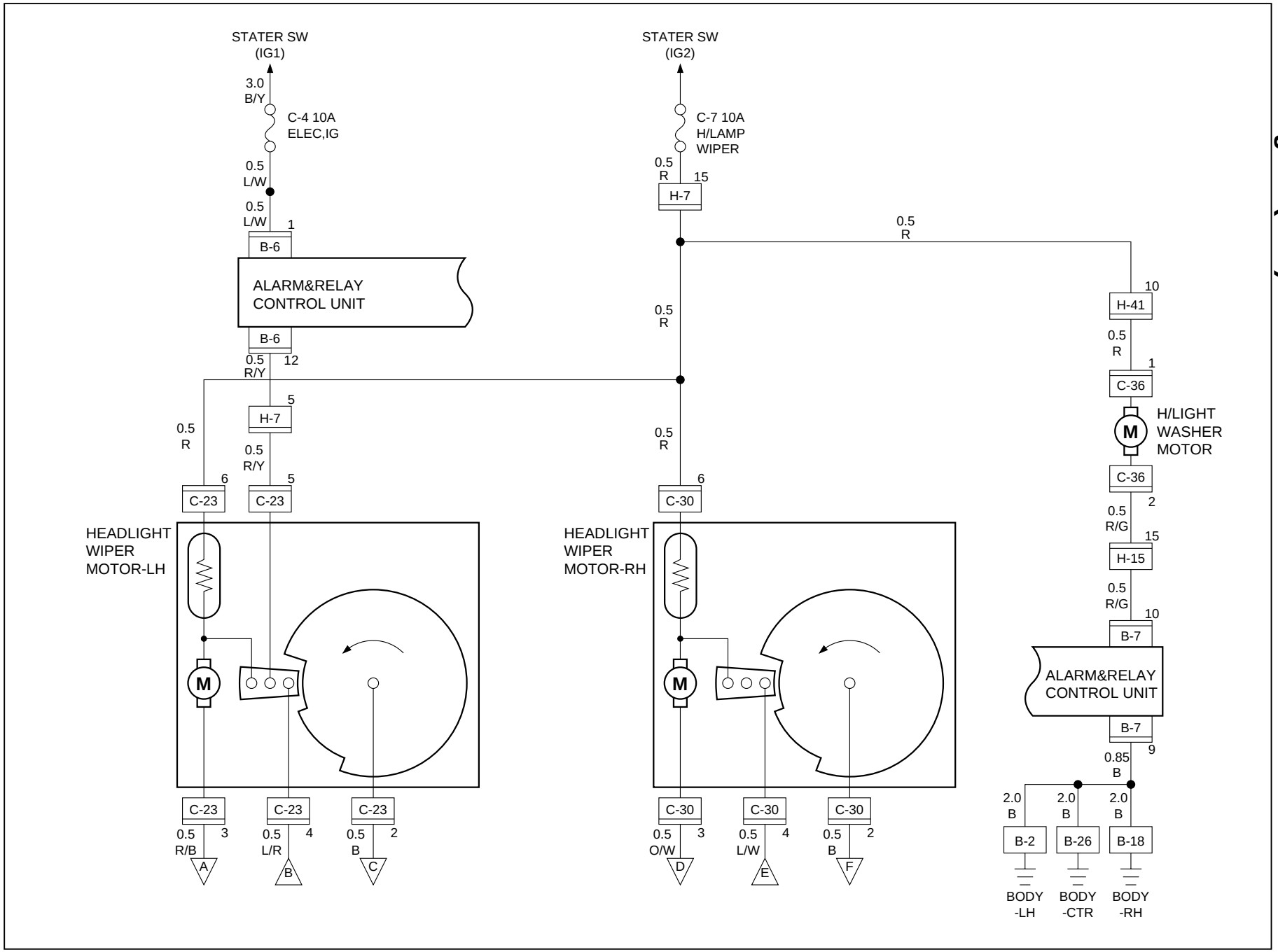

D08RW931

Circuit Diagram (RHD) – 2

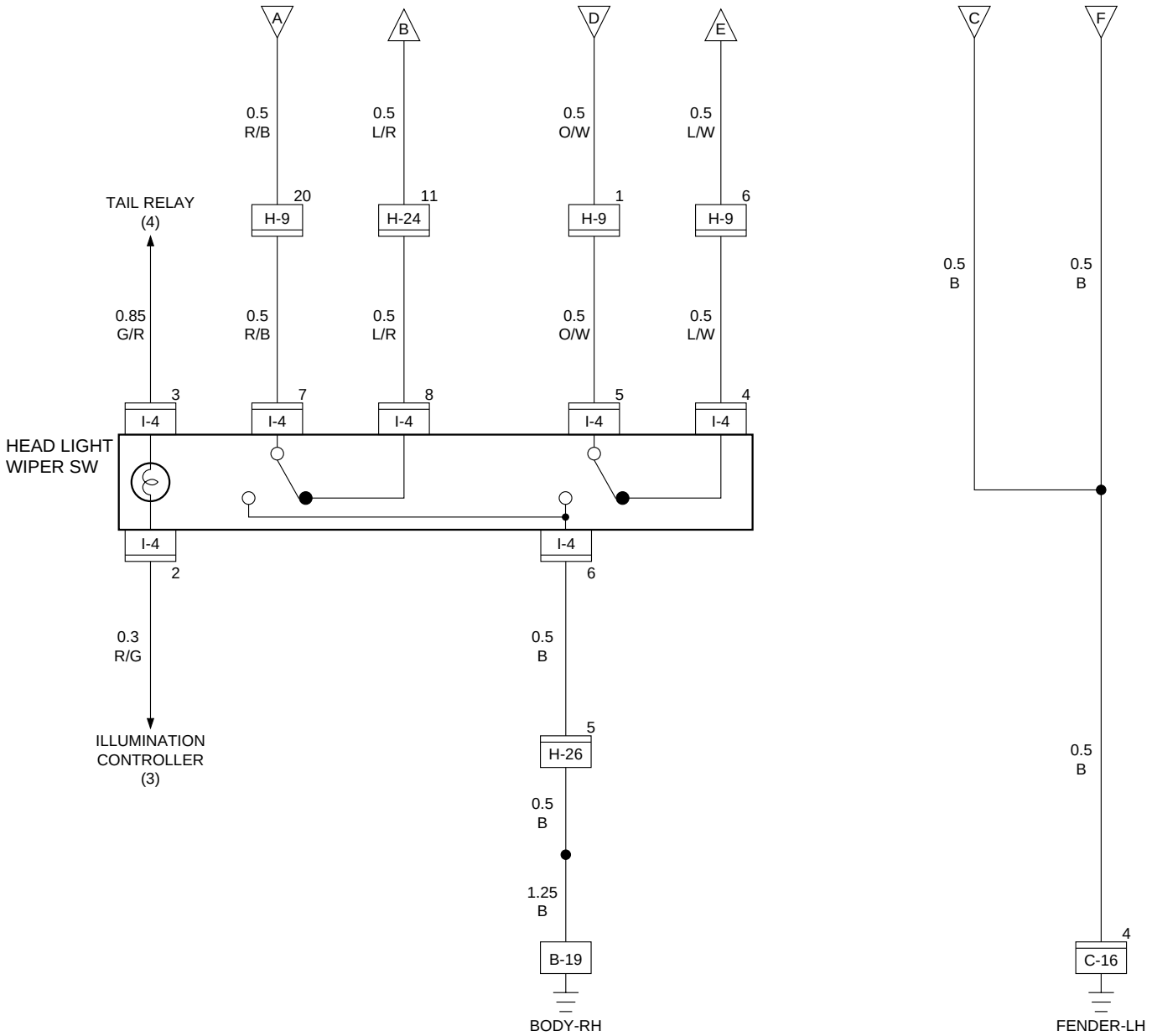

Parts Location (RHD)

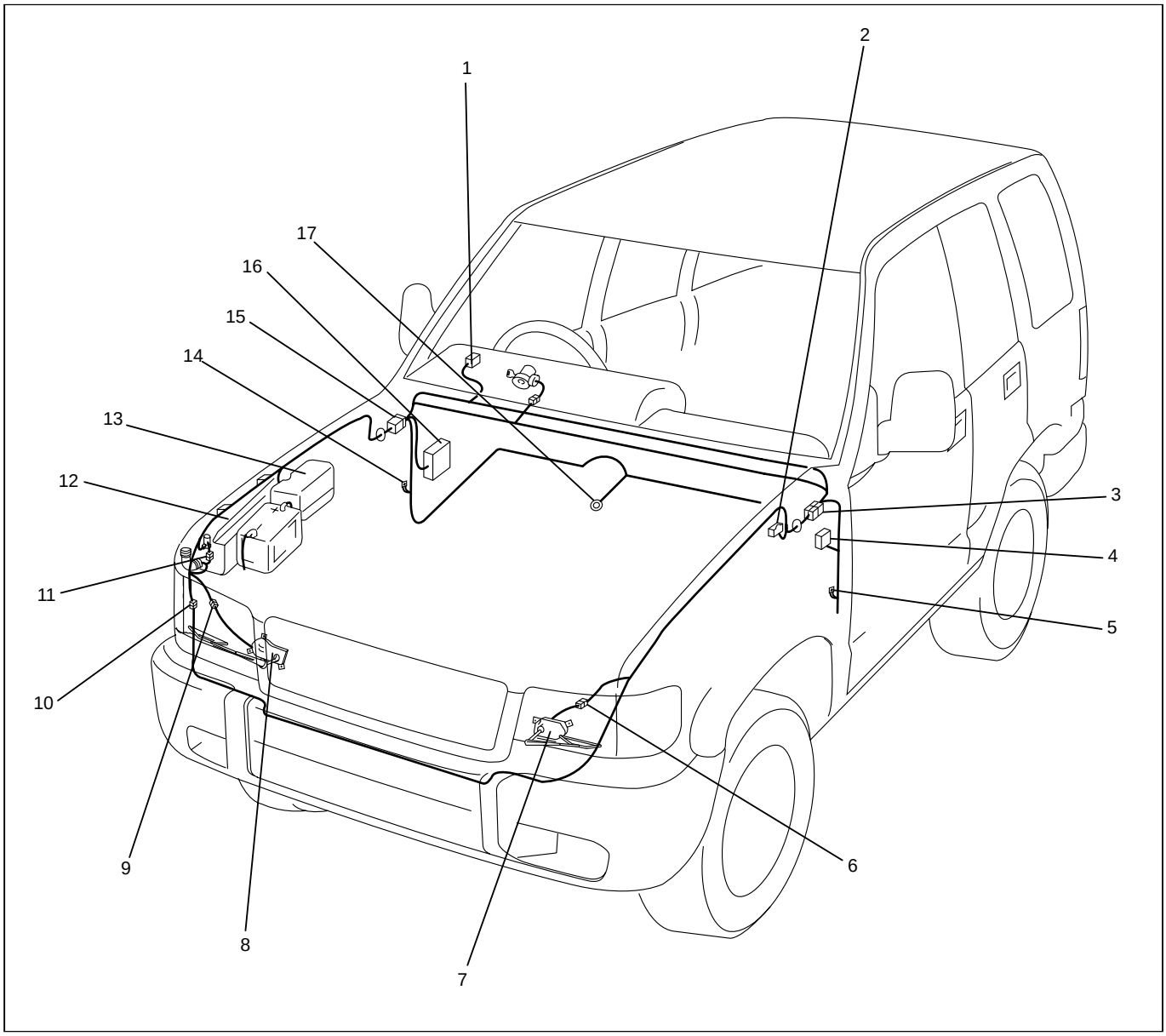

D08RW938

Legend

(1) I-4
(2) C-16
(3) H-7, H-9, H-24
(4) B-6, B-7
(5) B-2
(6) C-23
(7) Headlight Wiper Motor-LH
(8) Headlight Wiper Motor-RH
(9) C-30
(10) H-41
(11) C-36
(12) Washer Tank
(13) Relay and Fuse Box
(14) B-18, B-19
(15) H-15, H-26
(16) Fuse Box
(17) B-26

Circuit Diagram (LHD) – 1

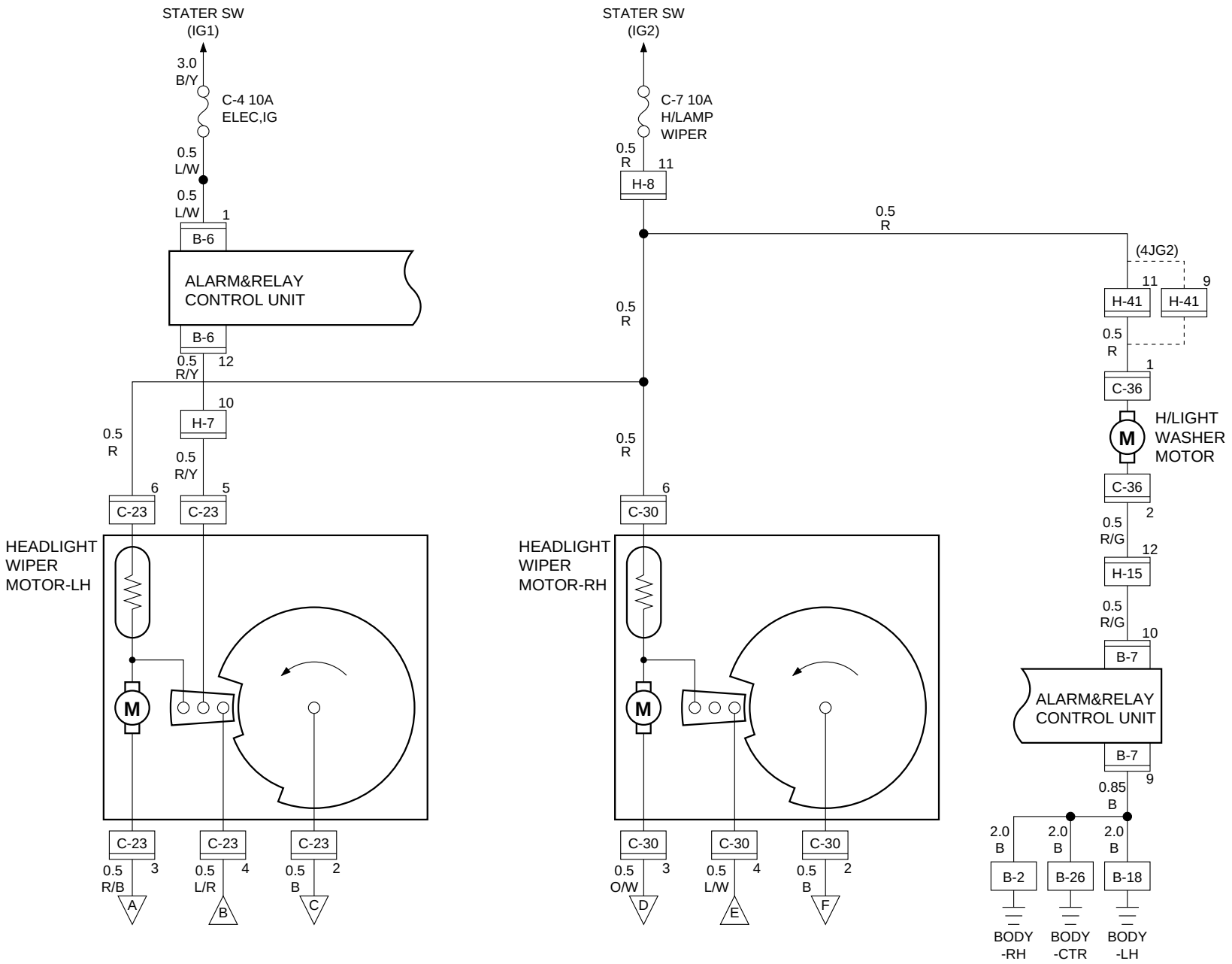

Circuit Diagram (LHD)-2

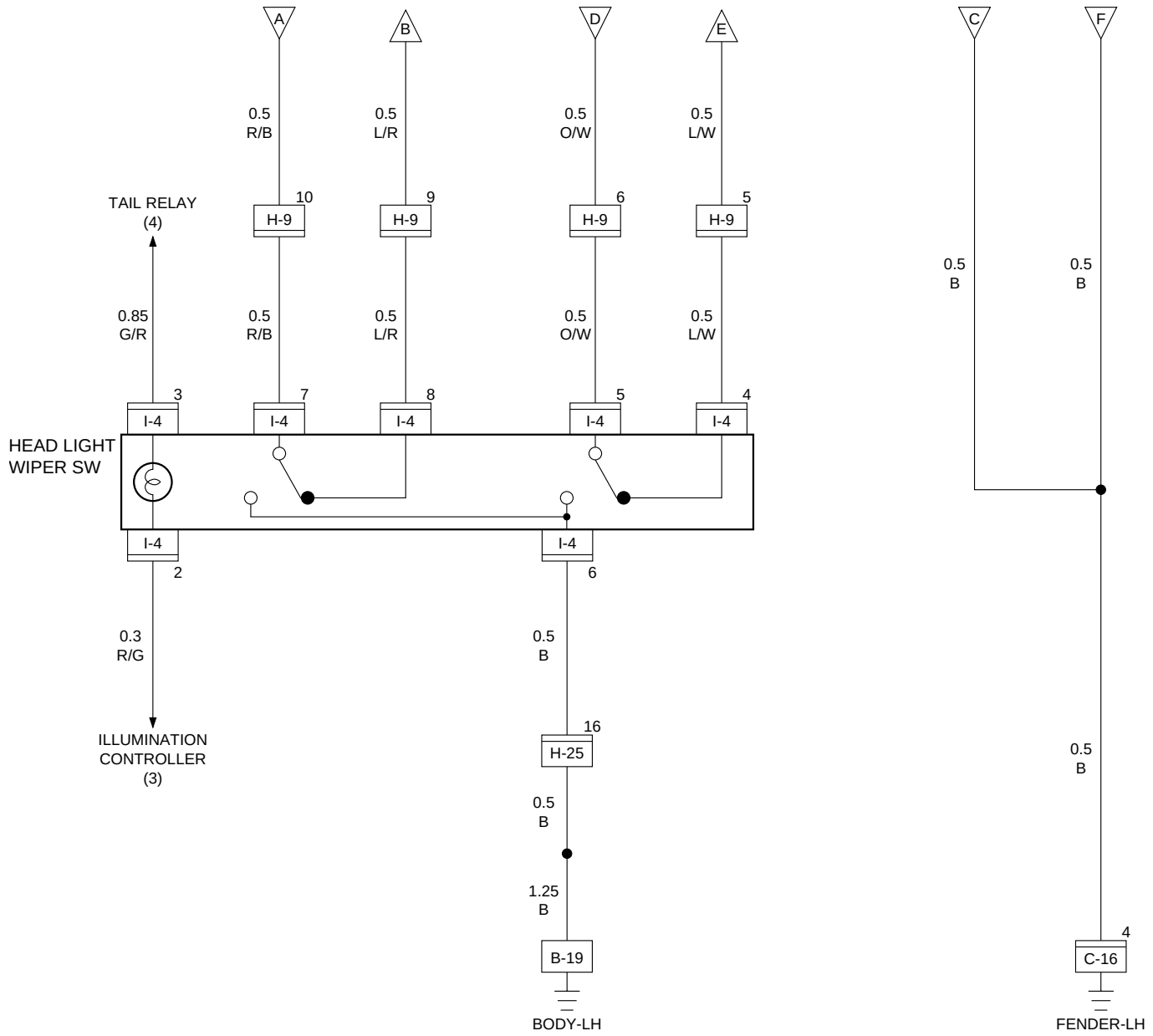

Parts Location (LHD)

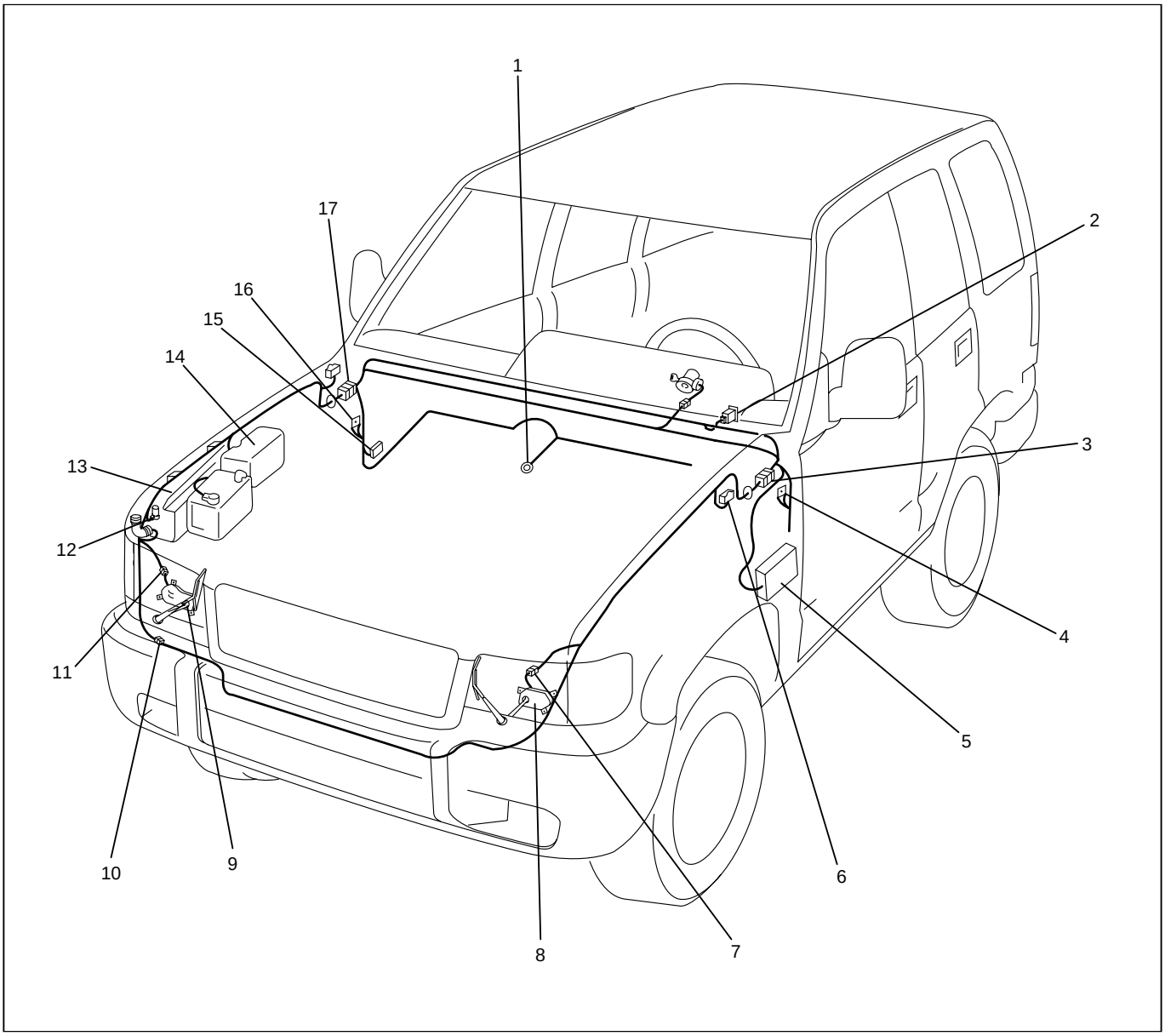

D08RW937

Legend

(1) B-26
(2) I-4
(3) H-7, H-8, H-9, H-25
(4) B-18, B-19
(5) Fuse Box
(6) C-16
(7) C-23
(8) Headlight Wiper Motor-LH
(9) Headlight Wiper Motor-RH
(10) H-41
(11) C-30
(12) C-36
(13) Washer Tank
(14) Relay and Fuse Box
(15) B-6, B-7
(16) B-2
(17) H-15

Diagnosis

Quick Chart for Check Points

Check point / Trouble mode	Fuse		Headlight wiper SW	Headlight wiper motor	Headlight washer motor	Alarm & relay control unit	Cable harness
	C-7	C-4					
1. Headlight wipers and washer do not operate on either side	○		○				○
2. Wiper on the left (or right) side does not operate			○	○			○
3. Auto-stop function of the wiper on the left (or right) side does not operate			○	○			○
4. Wiper on the left (or right) side does not stop			○	○			○
5. Washer motor does not operate		○			○	○	○

1. Headlight Wipers And Washer Do Not Operate On Either Side

- IS FUSE C-7 (10A) NORMAL?

YES

- TURN THE STARTER SWITCH ON
- IS THE BATTERY VOLTAGE APPLIED BETWEEN FUSE C-7 AND HEADLIGHT WIPER MOTOR CONNECTOR TERMINAL 6 AND THE GROUND?

NO

REPLACE THE FUSE C-7 (10A)

YES

- IS B-19 GROUNDED SECURELY?

NO

REPAIR A POOR CONNECTION AT THE CONNECTORS OR AN OPEN CIRCUIT BETWEEN FUSE C-7 AND HEADLIGHT WIPER MOTOR

YES

- DISCONNECT THE HEADLIGHT WIPER SWITCH CONNECTOR
- IS THE CONTINUITY IN THE SWITCH NORMAL?

NO

GROUND IT SECURELY

YES

REPAIR A POOR CONNECTION AT THE CONNECTORS OR AN OPEN CIRCUIT BETWEEN 6 I-4 AND B-19

NO

REPAIR OR REPLACE THE HEADLIGHT WIPER SW

2. Wiper On The Left (Or Right) Side Does Not Operate

- DISCONNECT THE HEADLIGHT WIPER SWITCH CONNECTOR
- WITH THE SWITCH ON, IS THERE CONTINUITY BETWEEN SWITCH CONNECTOR TERMINALS 7 I-4 AND 6 I-4 (5 I-4 AND 6 I-4)?

YES

- DISCONNECT THE WIPER MOTOR CONNECTOR THAT DOES NOT OPERATE
- TURN THE STARTER SWITCH ON
- IS THERE BATTERY VOLTAGE APPLIED BETWEEN THE HEADLIGHT WIPER MOTOR HARNESS SIDE CONNECTOR 6 C-23 (6 C-30) AND GROUND?

YES

- CONNECT THE MOTOR SIDE CONNECTOR 6 C-23 (6 C-30)OF THE HEADLIGHT WIPER MOTOR TO THE BATTERY (+) TERMINAL AND 3 C-23 (3 C-30) TO THE (–) TERMINAL
- DOES THE MOTOR ROTATE?

YES

REPAIR A POOR CONNECTION AT THE CONNECTORS OR AN OPEN CIRCUIT BETWEEN 3 C-23 AND 7 I-4 (3 C-30 AND 5 I-4)

NO

REPAIR OR REPLACE THE WIPER MOTOR

NO

REPAIR A POOR CONNECTION AT THE CONNECTORS OR AN OPEN CIRCUIT BETWEEN
(RHD)
6 C-23 (6 C-30) AND 15 H-7
(LHD)
6 C-23 (6 C-30) AND 11 H-8

NO

REPAIR OR REPLACE THE HEADLIGHT WIPER SWITCH

3. Auto-stop Function Of The Wiper On The Left (Or Right) Side Does Not Operate

- DISCONNECT THE HEADLIGHT WIPER SWITCH CONNECTOR
- WITH THE SWITCH SET AT "OFF" POSITION, IS THERE CONTINUITY BETWEEN THE SWITCH CONNECTOR TERMINALS 7 I-4 AND 8 I-4 (4 I-4 AND 5 I-4)?

YES

- RECONNECT THE HEADLIGHT WIPER SW CONNECTOR AND DISCONNECT THE HEADLIGHT WIPER MOTOR CONNECTOR
- IS THERE CONTINUITY BETWEEN HARNESS SIDE CONNECTORS 3 C-23 AND 4 C-23 (3 C-30 AND 4 C-30)?

NO

REPAIR OR REPLACE THE SWITCH

YES

- WITH THE WIPER MOTOR CONNECTOR 6 C-23 (6 C-30) CONNECTED TO THE BATTERY (+) TERMINAL, AND 3 C-23 (3 C-30) TO THE (–) TERMINAL, ROTATE THE MOTOR.
- WHILE ROTATING THE MOTOR, CHANGE THE CONNECTION OF THE (–) TERMINAL TO 2 C-23 (2 C-30) AND CONNECT 3 C-23 (3 C-30) TO 4 C-23 (4 C-30)
- DOES THE MOTOR STOP AT THE AUTO-STOP POSITION?

NO

REPAIR A POOR CONNECTION AT THE CONNECTORS OR AN OPEN CIRCUIT BETWEEN 4 C-23 AND 8 I-4 (4 C-30 AND 4 I-4)

YES

REPAIR A POOR CONNECTION AT THE CONNECTORS OR AN OPEN CIRCUIT
[LHD]
BETWEEN 2 C-23 (2 C-30) AND 4 C-16
[RHD]
BETWEEN 2 C-23 (2 C-30) AND 4 C-16

NO

REPAIR OR REPLACE THE HEADLIGHT WIPER MOTOR

NOTE: If headlight wiper motor auto-stop on both sides does not function, it may be attributable either to headlight wiper switch trouble or to poor grounding of connector C-16 .

4. Wiper On The Left (Or Right) Side Does Not Stop

- STOP THE WIPER MOTOR AT THE AUTO-STOP POSITION
- DISCONNECT THE HEADLIGHT WIPER SWITCH CONNECTOR
- TURN THE STARTER SWITCH ON
- DOES THE WIPER MOTOR REMAIN STOPPED?

YES

- IS THE CONTINUITY IN THE HEADLIGHT WIPER SWITCH NORMAL?

NO

REPAIR A SHORT CIRCUIT BETWEEN 3 C-23 AND 7 I-4 (3 C-30 AND 5 I-4)

YES

- DISCONNECT THE WIPER MOTOR CONNECTOR
- IS THERE CONTINUITY BETWEEN THE MOTOR SIDE CONNECTOR TERMINALS 4 C-23 AND 2 C-23 (4 C-30 AND 2 C-30)?

NO

REPAIR OR REPLACE THE SWITCH

YES

REPAIR THE WIPER MOTOR AUTO-STOP MECHANISM, OR REPLACE THE MOTOR

NO

REPAIR A SHORT CIRCUIT BETWEEN 4 C-23 AND 8 I-4 (4 C-30 AND 4 I-4)

5. Washer Motor Does Not Operate

- IS FUSE C-4 (10A) NORMAL?

YES

- DISCONNECT THE HEADLIGHT WASHER MOTOR CONNECTOR
- TURN THE STARTER SWITCH ON
- IS THERE BATTERY VOLTAGE APPLIED BETWEEN THE WASHER MOTOR HARNESS SIDE CONNECTOR 1 C-36 AND THE GROUND?

YES

- CONNECT THE MOTOR SIDE CONNECTOR TERMINAL 1 C-36 TO THE BATTERY (+) TERMINAL, AND 2 C-36 TO THE (–) TERMINAL
- DOES THE MOTOR ROTATE?

YES

- DISCONNET THE ALARM & RELAY CONTROL UNIT CONNECTOR B-6
- TURN THE STARTER SWITCH ON
- IS THERE BATTERY VOLTAGE APPLIED BETWEEN THE CONTROL UNIT HARNESS SIDE CONNECTOR 1 B-6 AND THE GROUND?

YES

- RECONNECT THE HEADLIGHT WASHER MOTOR CONNECTOR
- IS THERE BATTERY VOLTAGE APPLIED BETWEEN THE HARNESS SIDE CONNECTOR 10 B-7 AND THE GROUND?

YES

- IS THERE CONTINUITY BETWEEN THE HARNESS SIDE CONNECTORS 12 B-6 AND 5 C-23

YES

REPLACE THE ALARM & RELAY CONTROL UNIT

NO

REPAIR A POOR CONNECTION AT THE CONNECTORS OR AN OPEN CIRCUIT IN THE CIRCUIT

NO

REPAIR A POOR CONNECTION AT THE CONNECTORS OR AN OPEN CIRCUIT BETWEEN 2 C-36 AND 10 B-7

NO

REPAIR A POOR CONNECTION AT THE CONNECTORS OR AN OPEN CIRCUIT BETWEEN FUSE C-4 (10A) AND 1 B-6

NO

REPAIR OR REPLACE THE MOTOR

NO

REPAIR A POOR CONNECTION AT THE CONNECTORS OR AN OPEN CIRCUIT BETWEEN 1 C-36 AND FUSE C-7 (10A)

NO

REPLACE THE FUSE

Rear Defogger

General Description

When rear defogger switch is turned on with starter switch on, battery voltage is applied to rear defogger through rear defogger relay to operate rear defogger. Alarm & relay control unit is provided with a timer. When the operation time of the timer elapses which has been set in advance at manufacture, the switch is automatically turned off. (The timer operating time is normally about 30 minutes).

Circuit Diagram (RHD)

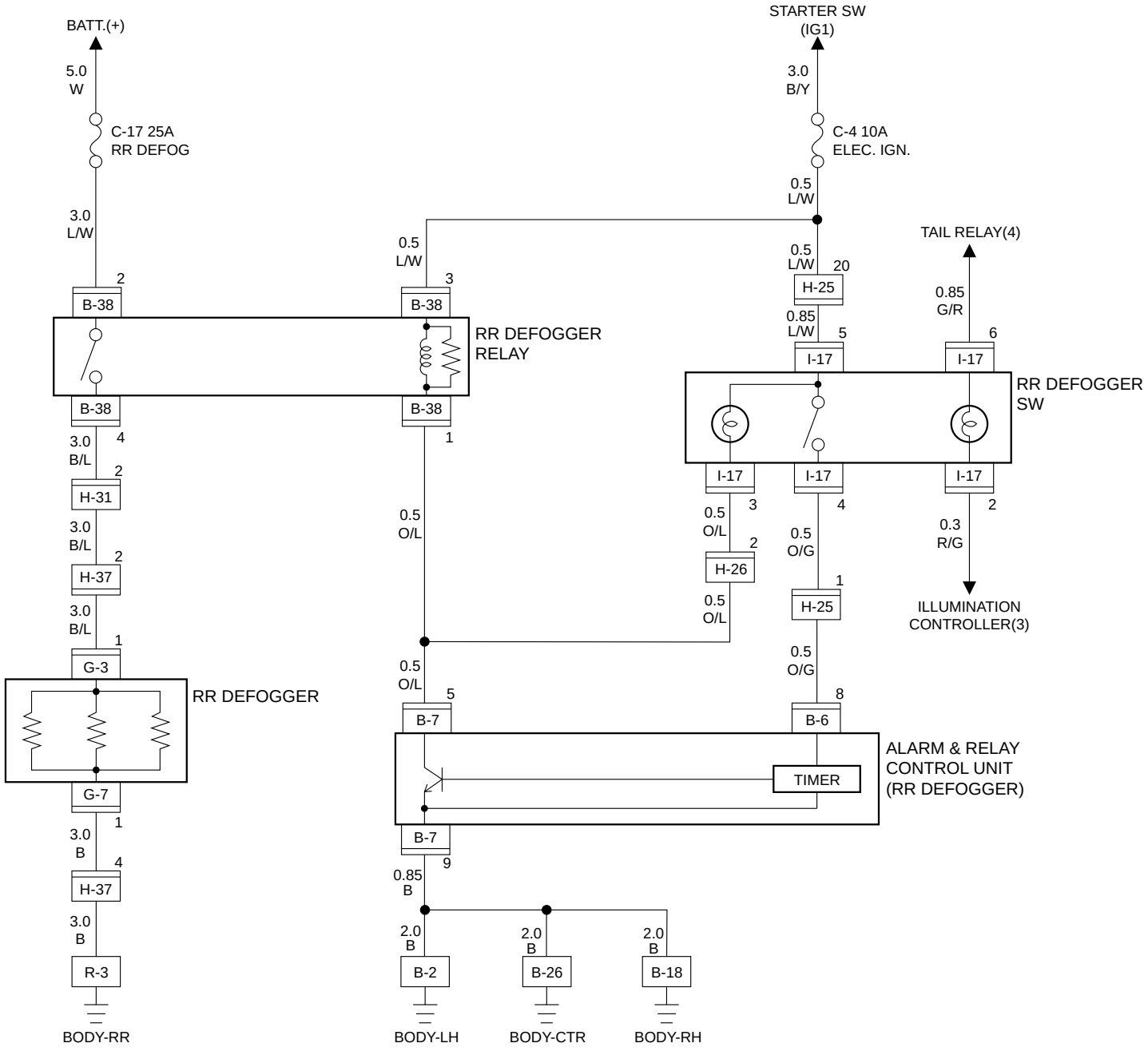

Parts Location (RHD)

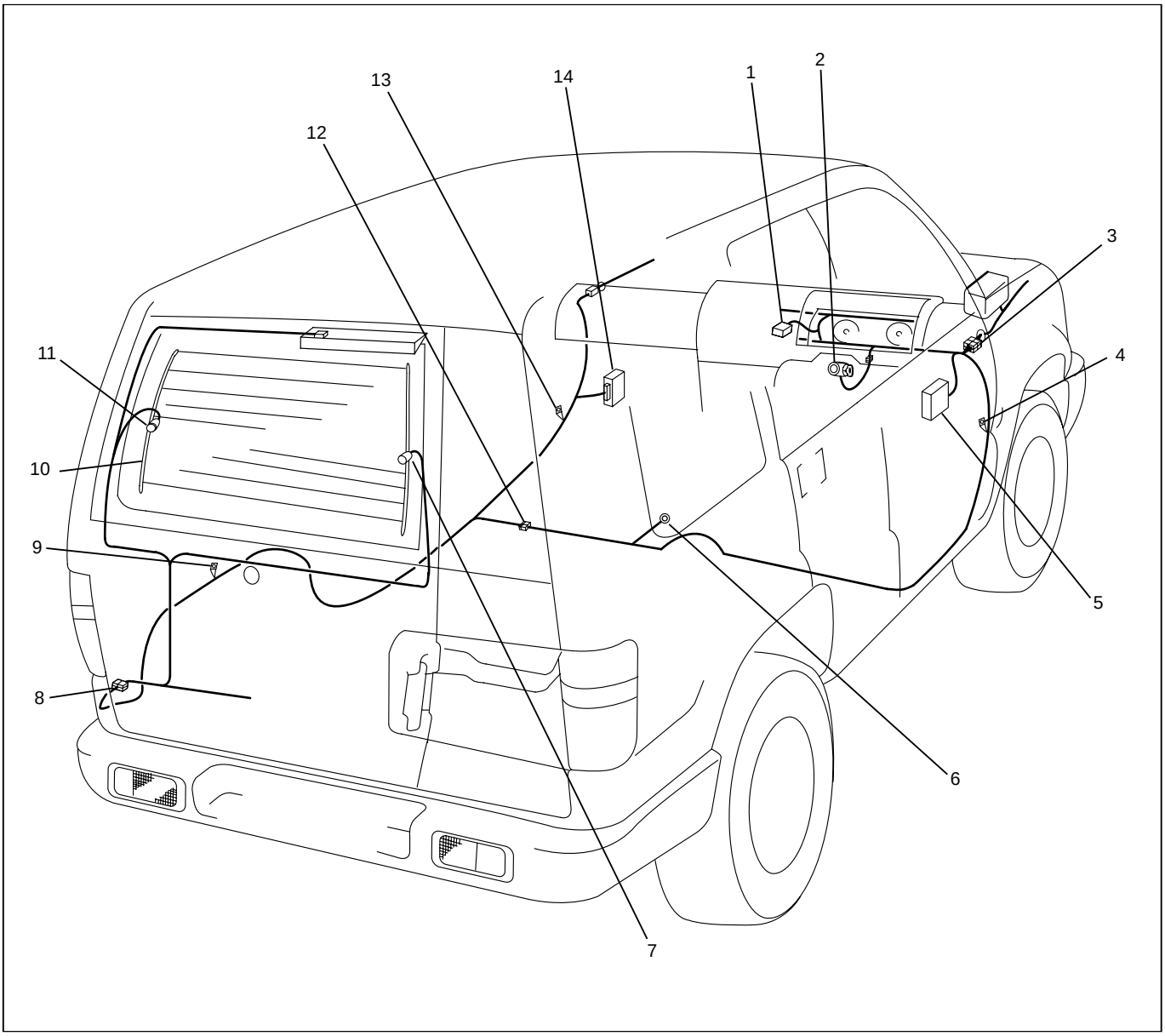

D08RW811

Legend

(1) I-17 (Rear Defogger Switch)
(2) Starter Switch
(3) H-25, H-26
(4) B-19
(5) Fuse Box (B-38)
(6) B-26
(7) G-7
(8) H-37
(9) R-3
(10) Rear Defogger
(11) G-3
(12) H-31
(13) B-2
(14) B-6, B-7 (Alarm and Relay Control Unit)

Circuit Diagram (LHD)

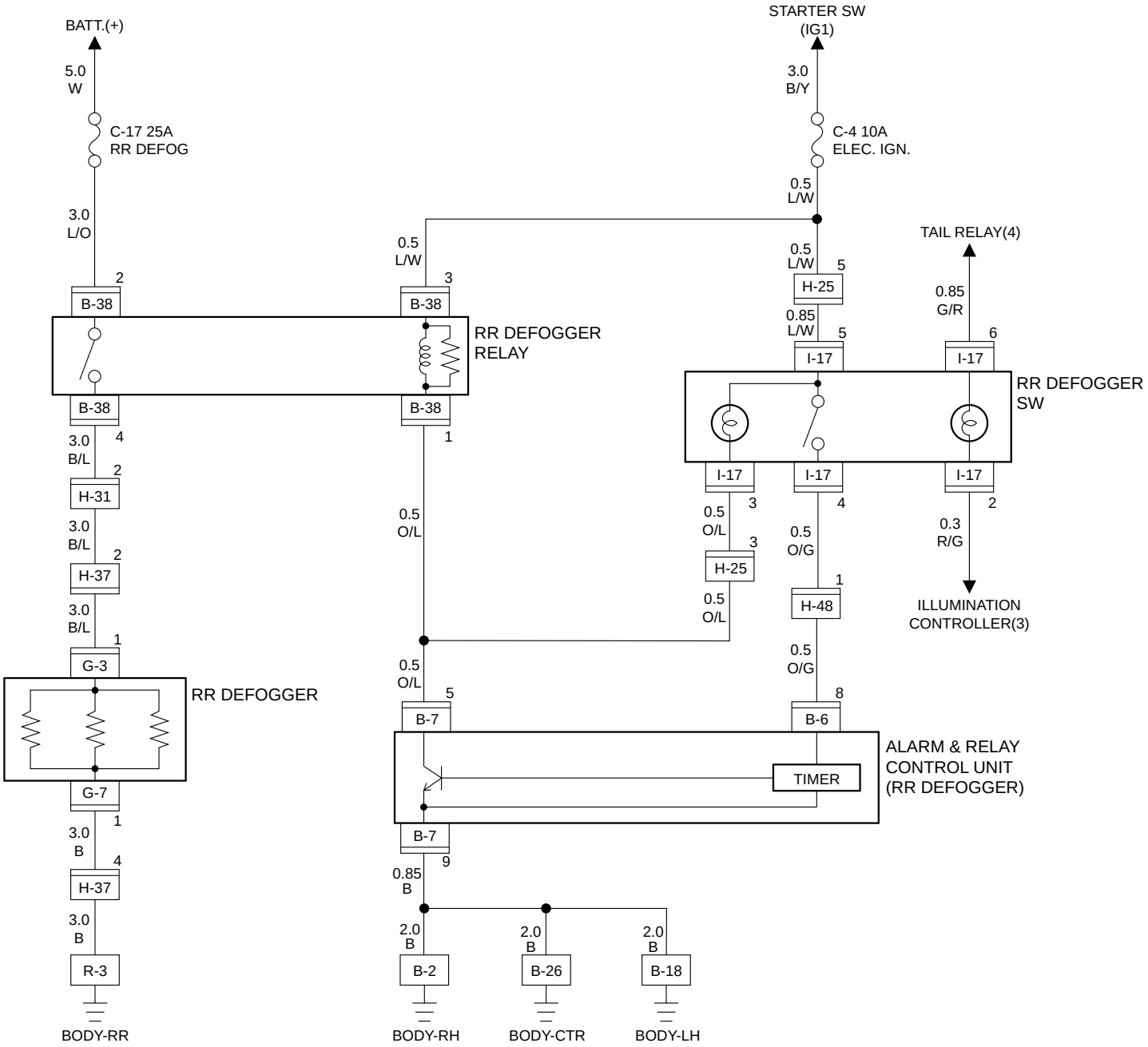

Parts Location (RHD)

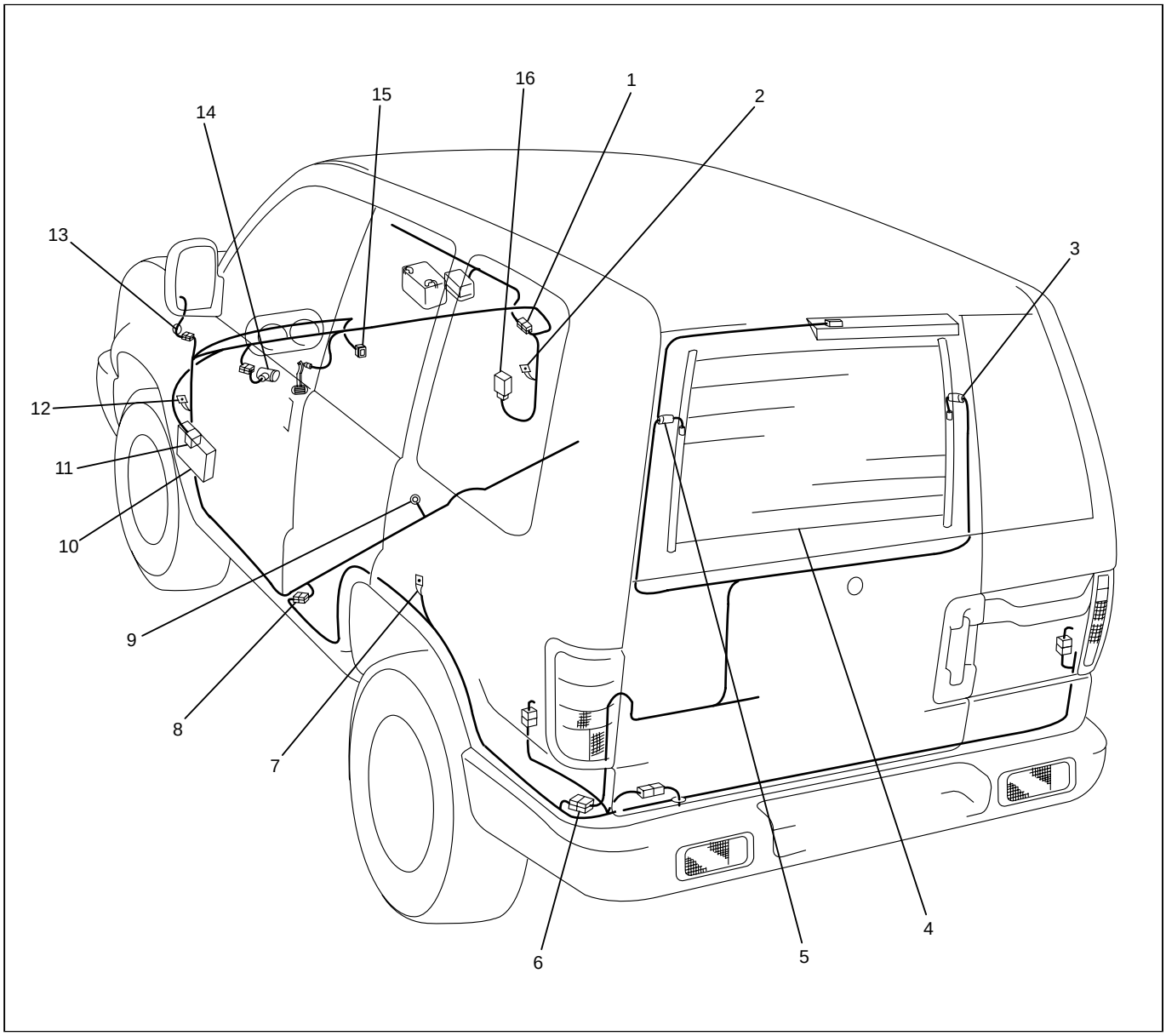

D08RW810

Legend

(1) H-48
(2) B-2
(3) G-7
(4) Rear Defogger
(5) G-3
(6) H-37
(7) R-3
(8) H-31
(9) B-26
(10) Fuse Box
(11) B-38
(12) B-18
(13) H-25
(14) Starter Switch
(15) I-17 (Rear Defogger Switch)
(16) B-6, B-7 (Alarm and Relay Control Unit)

Diagnosis

Quick Chart for Check Points

Trouble mode \ Check point	Fuse		Rear defogger SW	Rear defogger relay	Alarm & relay control unit	Cable harness
	C-4 (10A)	C-17 (25A)				
1 Rear defogger does not operate	○	○	○	○	○	○
2 Rear defogger timer does not function					○	

1 Rear Defogger Does Not Operate

- ARE THE FUSES C-4 (10A) AND C-17 (25A) NORMAL?

YES

- IS THE REAR DEFOGGER RELAY NORMAL?

NO

REPLACE THE FUSE

YES

- IS THE REAR DEFOGGER SWITCH NORMAL?

NO

REPLACE THE RELAY

YES

- IS R-3 GROUNDED SECURELY?

NO

REPAIR OR REPLACE THE SWITCH

YES

- TURN ON THE STARTER SWITCH AND THE REAR DEFOGGER SWITCH
- IS THERE A BATTERY VOLTAGE APPLIED BETWEEN THE REAR DEFOGGER CONNECTOR 1 G-3 AND THE GROUND?

NO

GROUND IT SECURELY

YES

- IS THERE CONTINUITY BETWEEN 1 G-7 AND THE GROUND?

NO

REPAIR A POOR CONNECTION AT THE CONNECTORS OR AN OPEN CIRCUIT IN EACH OF THE FOLLOWING CONNECTIONS: FUSE C-17 (25A) AND 2 B-38 , FUSE C-4 (10A) AND 3 B-38 , 4 B-38 AND 1 G-3 , 4 I-17 AND 8 B-6 , 5 I-17 AND FUSE C-4 (10A)

YES

REPLACE THE ALARM & RELAY CONTROL UNIT

NO

REPAIR A POOR CONNECTION AT THE CONNECTORS OR AN OPEN CIRCUIT BETWEEN 1 G-7 AND R-3

2 Rear Defogger Timer Does Not Function

REPLACE THE ALARM & RELAY CONTROL UNIT

Audio

General Description

The audio circuit is designed for the current to flow through the receiver circuit when the radio switch is turned on with the starter switch in“ACC” or “ON”. Current runs through the memory circuit of the audio regardless of the position of the starter switch.
The radio antenna operates in connection to the radio switch. The antenna rod goes up when the switch is ON and goes down to be stored in the fender with the switch OFF. The antenna rod also goes down when the starter switch is turned off with radio on.

Circuit Diagram (RHD)-1

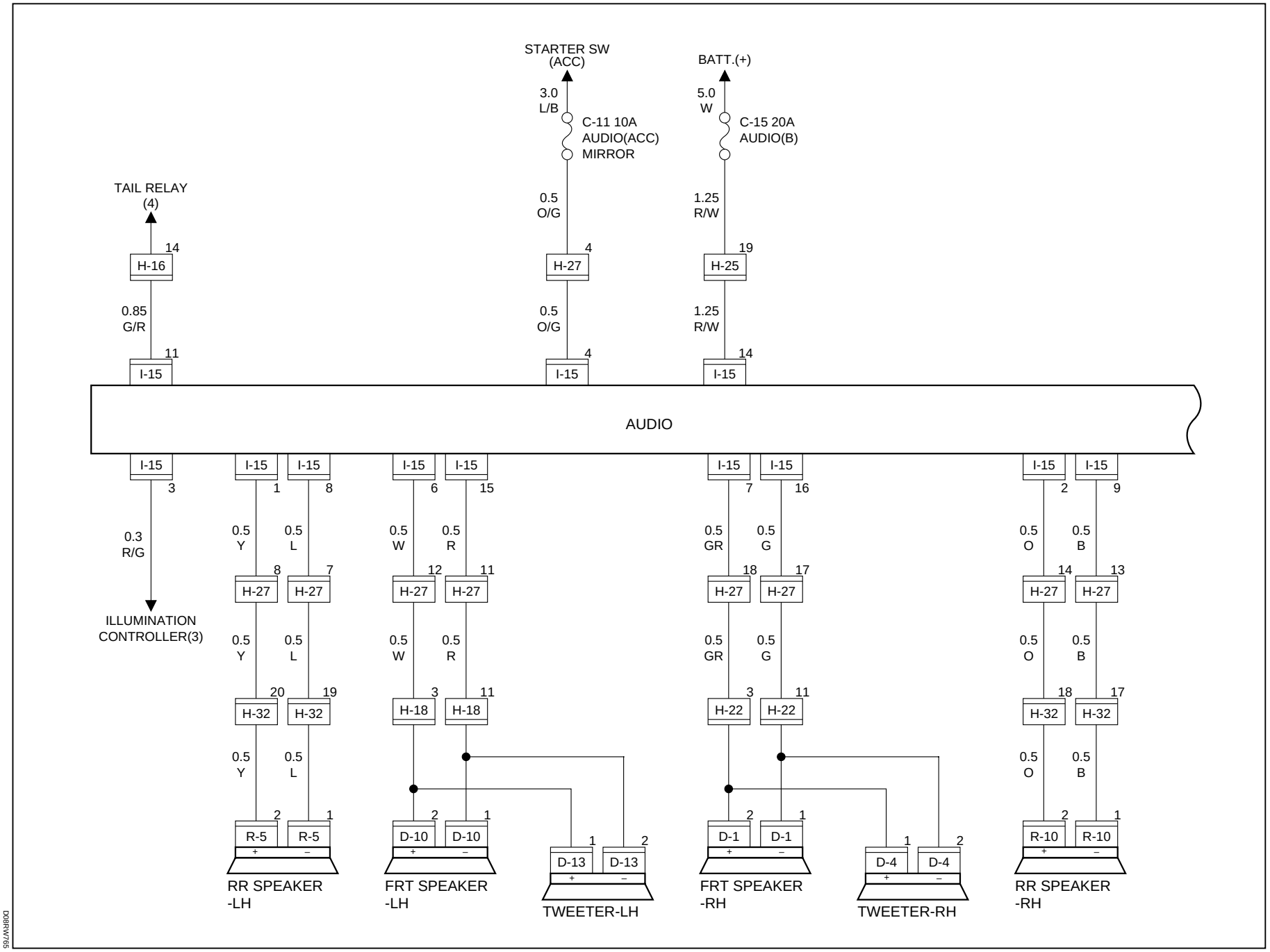

D08RW765

Circuit Diagram (RHD)-2

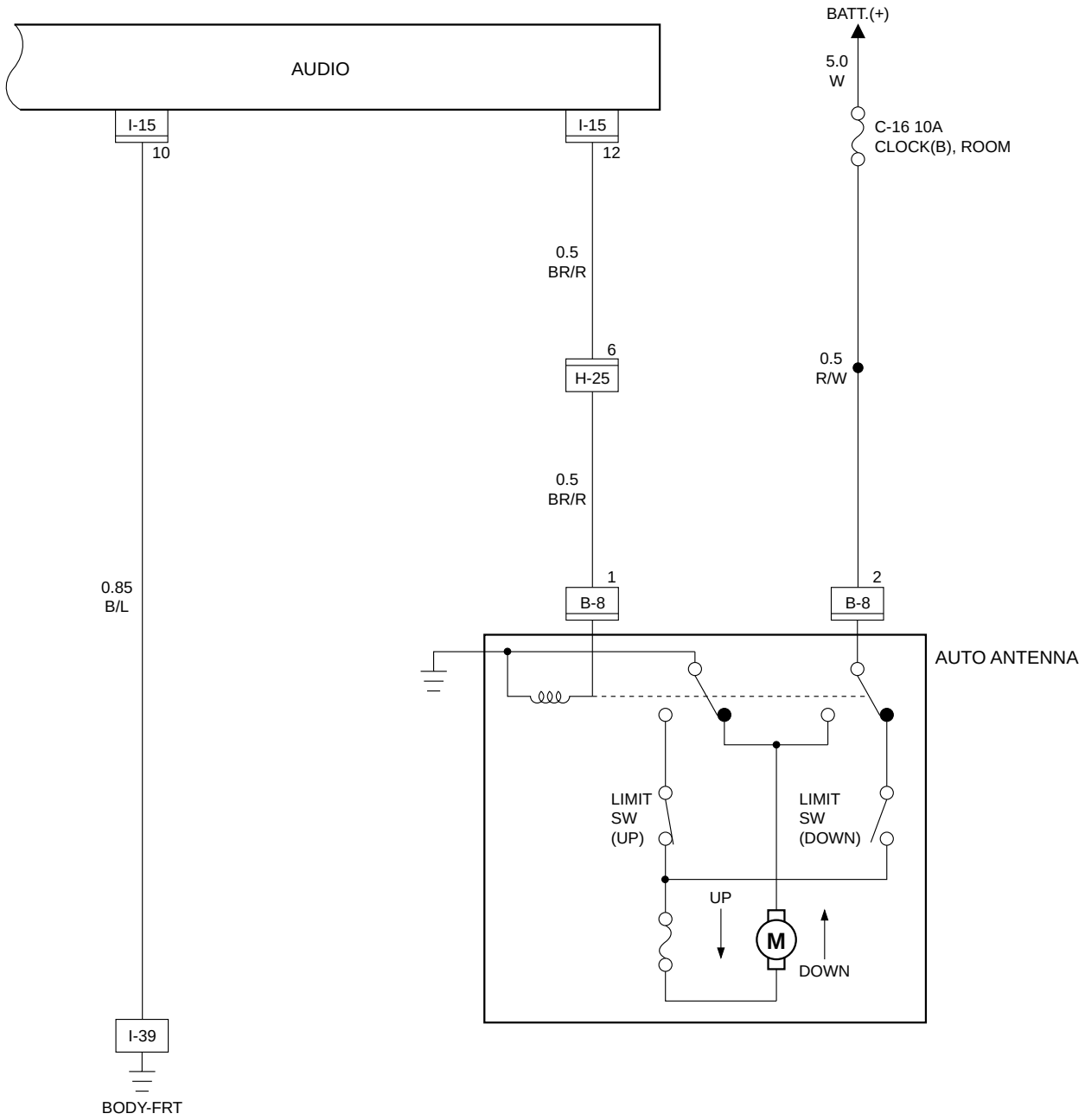

Circuit Diagram (South Africa)-1

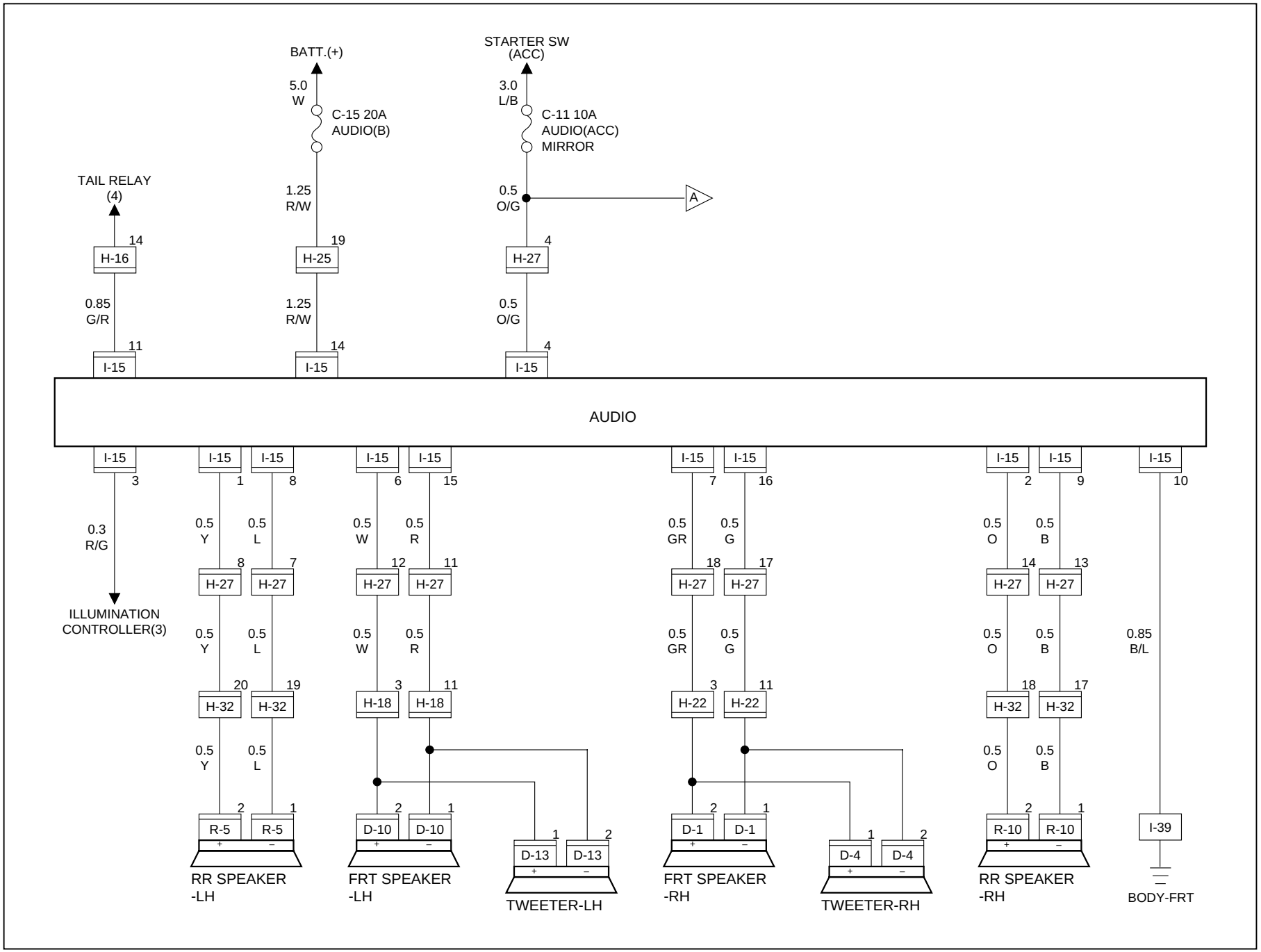

D08RW390

Circuit Diagram (South Africa)-2

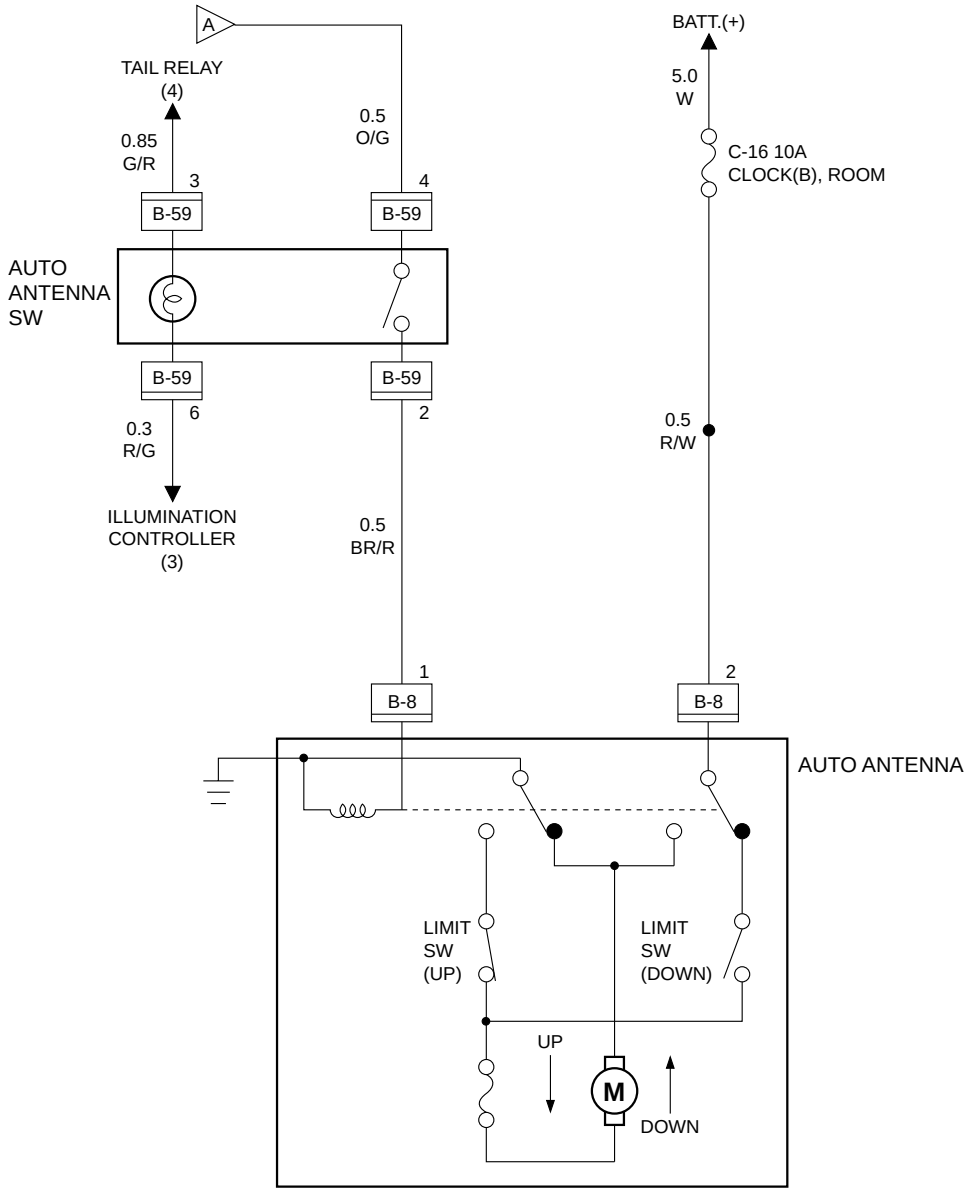

Parts Location (RHD)

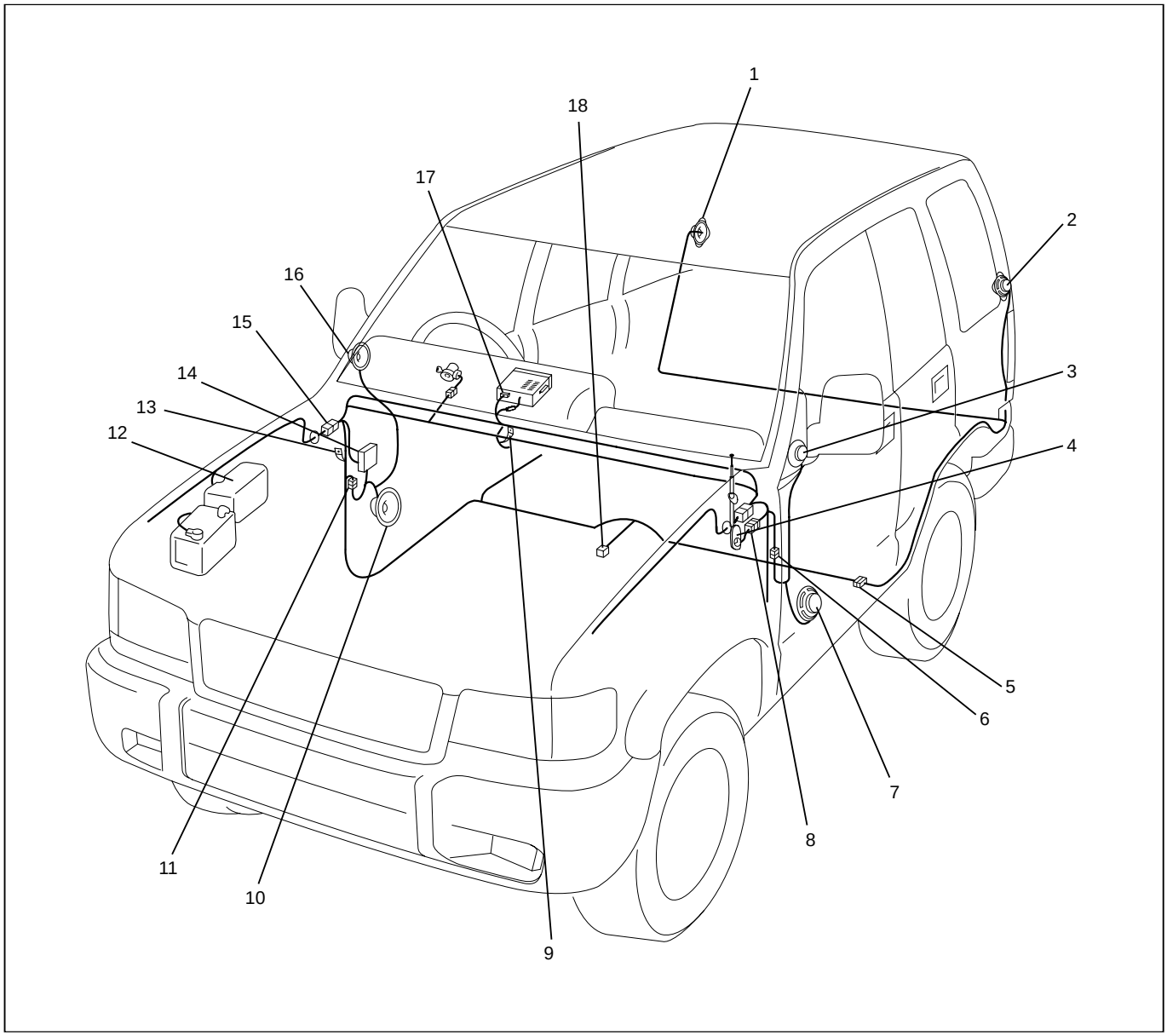

D08RWB91

Legend

(1) R-10
(2) R-5
(3) D-13
(4) Auto Antenna
(5) H-32
(6) H-18
(7) D-10
(8) B-8
(9) I-39
(10) D-1
(11) H-22
(12) Relay and Fuse Box
(13) B-19
(14) Fuse Box
(15) H-25, H-26, H-27
(16) D-4
(17) I-15
(18) B-59

Circuit Diagram (LHD)-1

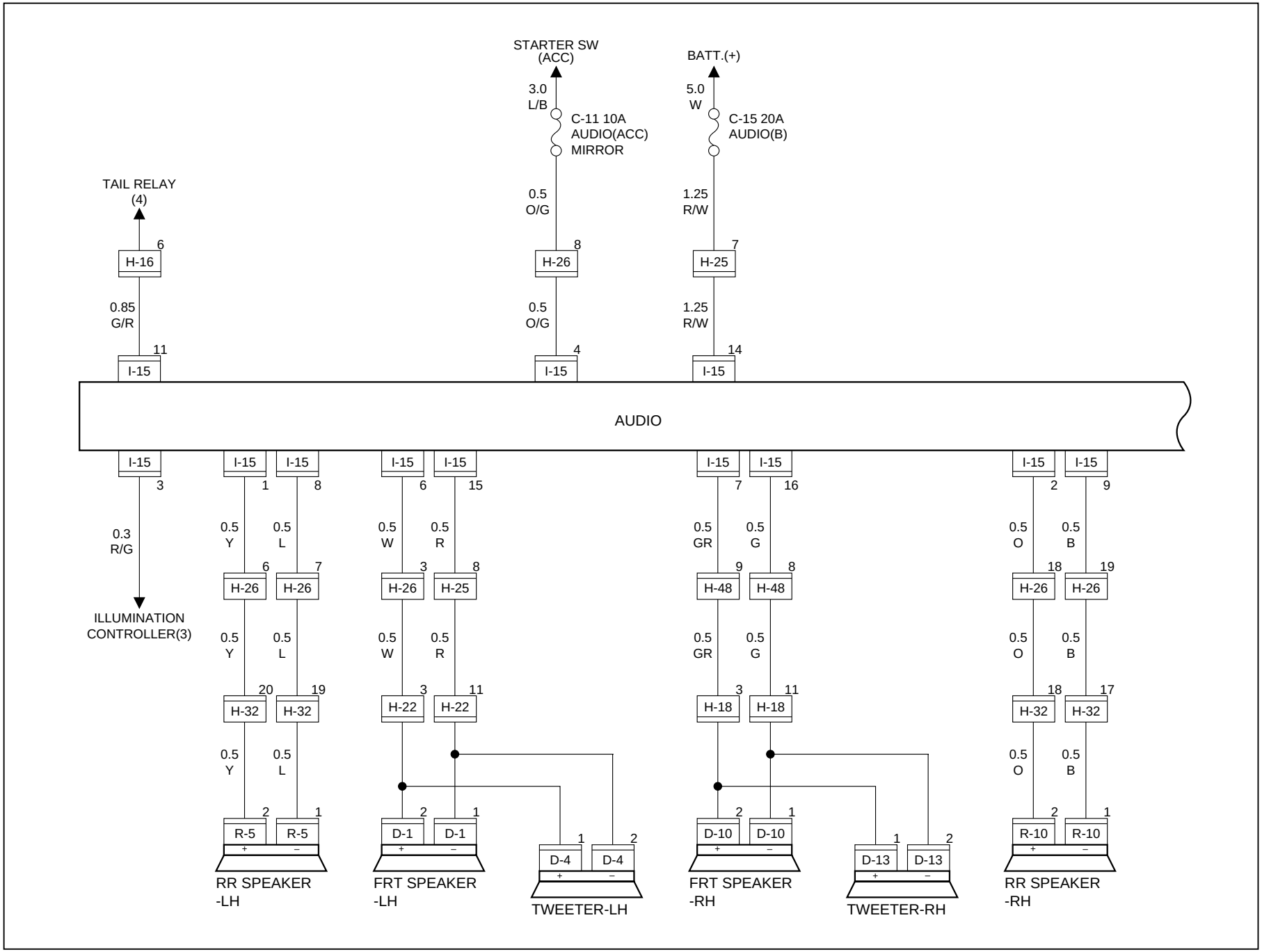

Circuit Diagram (LHD)-2

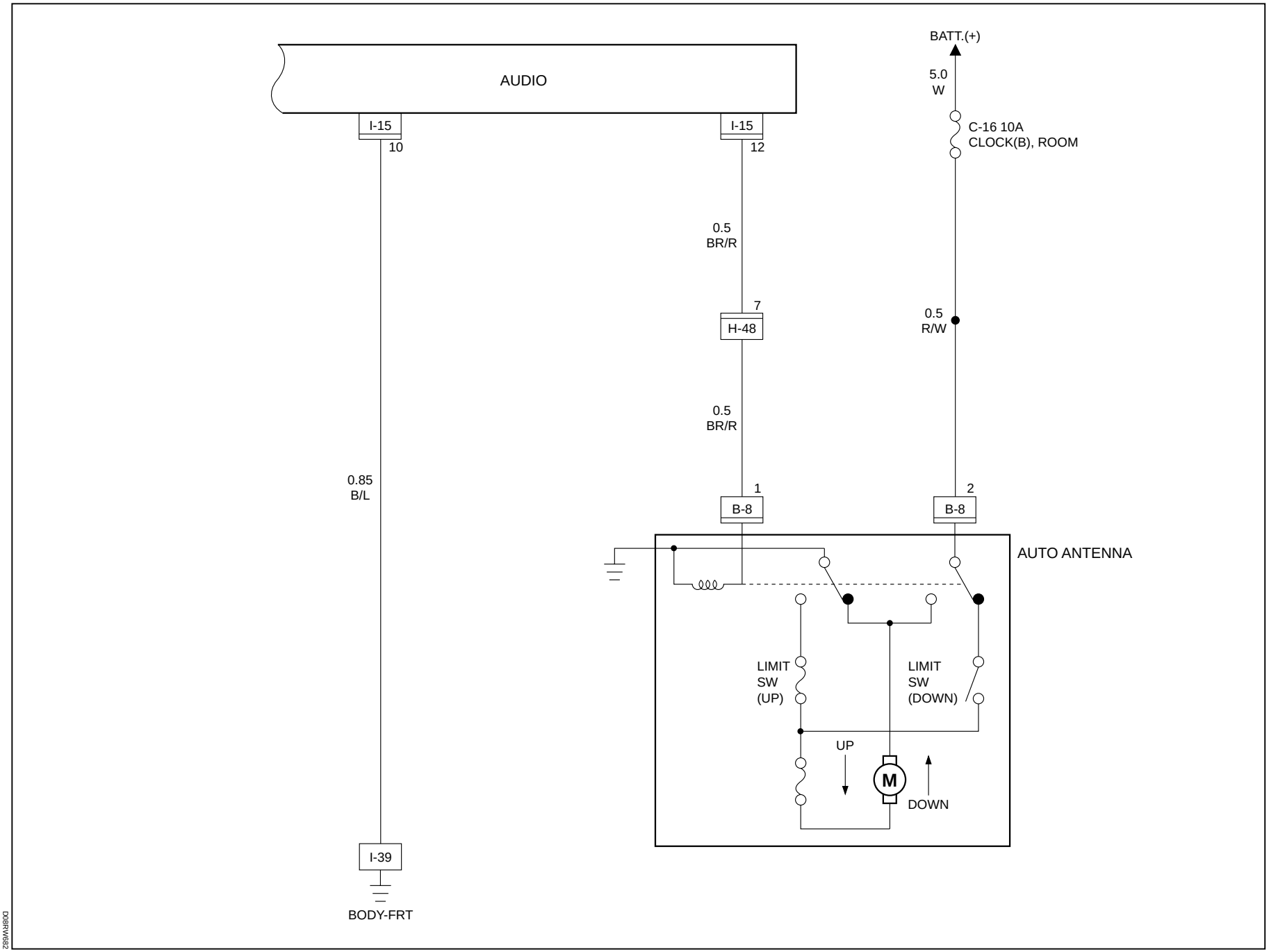

D08RM482

Parts Location (LHD)

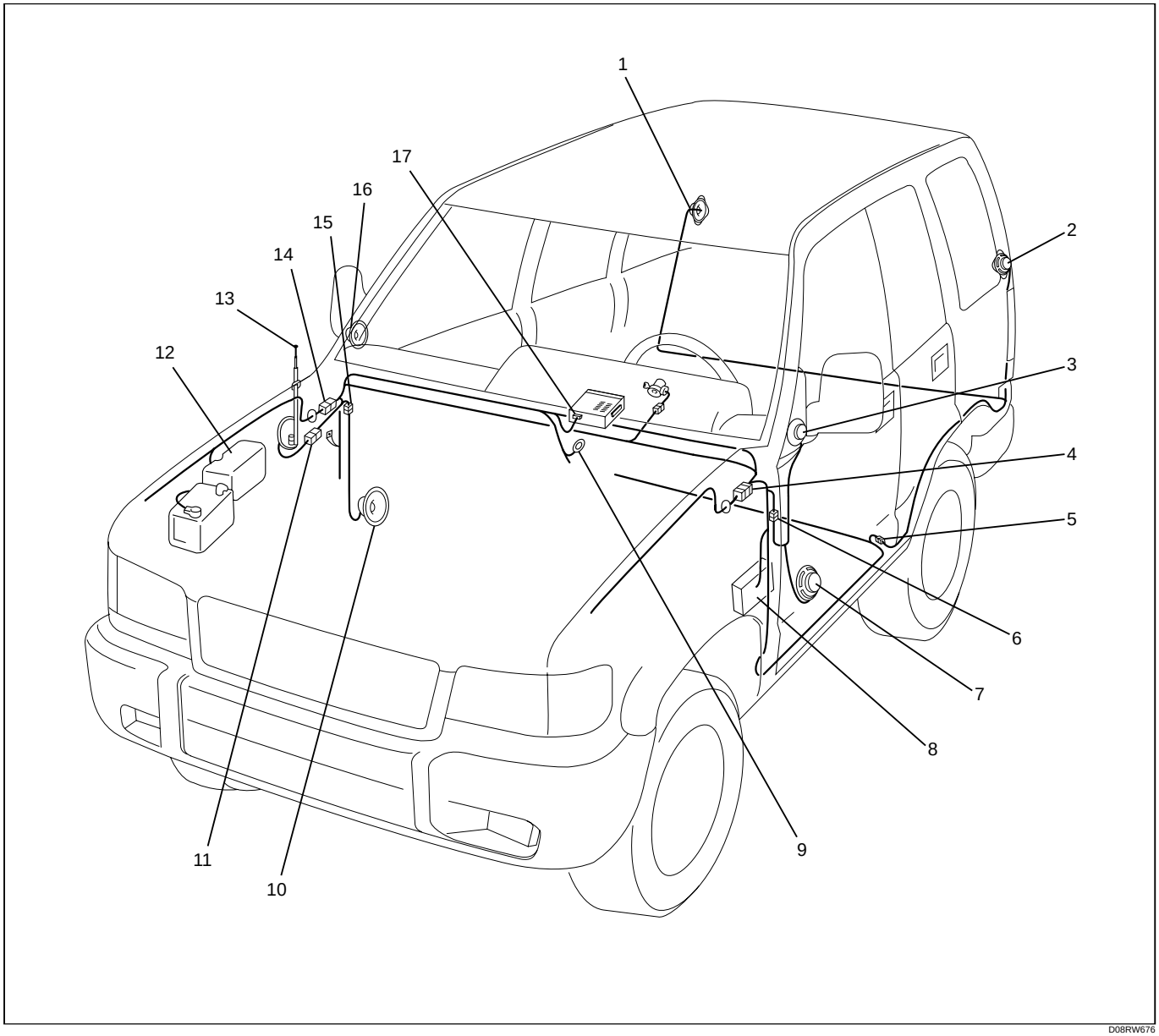

Legend

(1) R-10
(2) R-5
(3) D-4
(4) H-25, H-26
(5) H-32
(6) H-22
(7) D-1
(8) Fuse Box
(9) I-39
(10) D-10
(11) B-8
(12) Relay and Fuse Box
(13) Auto Antenna
(14) H-48
(15) H-18
(16) D-13
(17) I-15

Cigarette Lighter and Digital Clock

General Description

When cigarette lighter is pushed in with starter switch at either “ACC” or “ON” position, a circuit is formed in cigarette lighter case to heat lighter coil. Cigarette lighter springs back to its original position after lighter coil is heated.

Circuit Diagram (RHD)

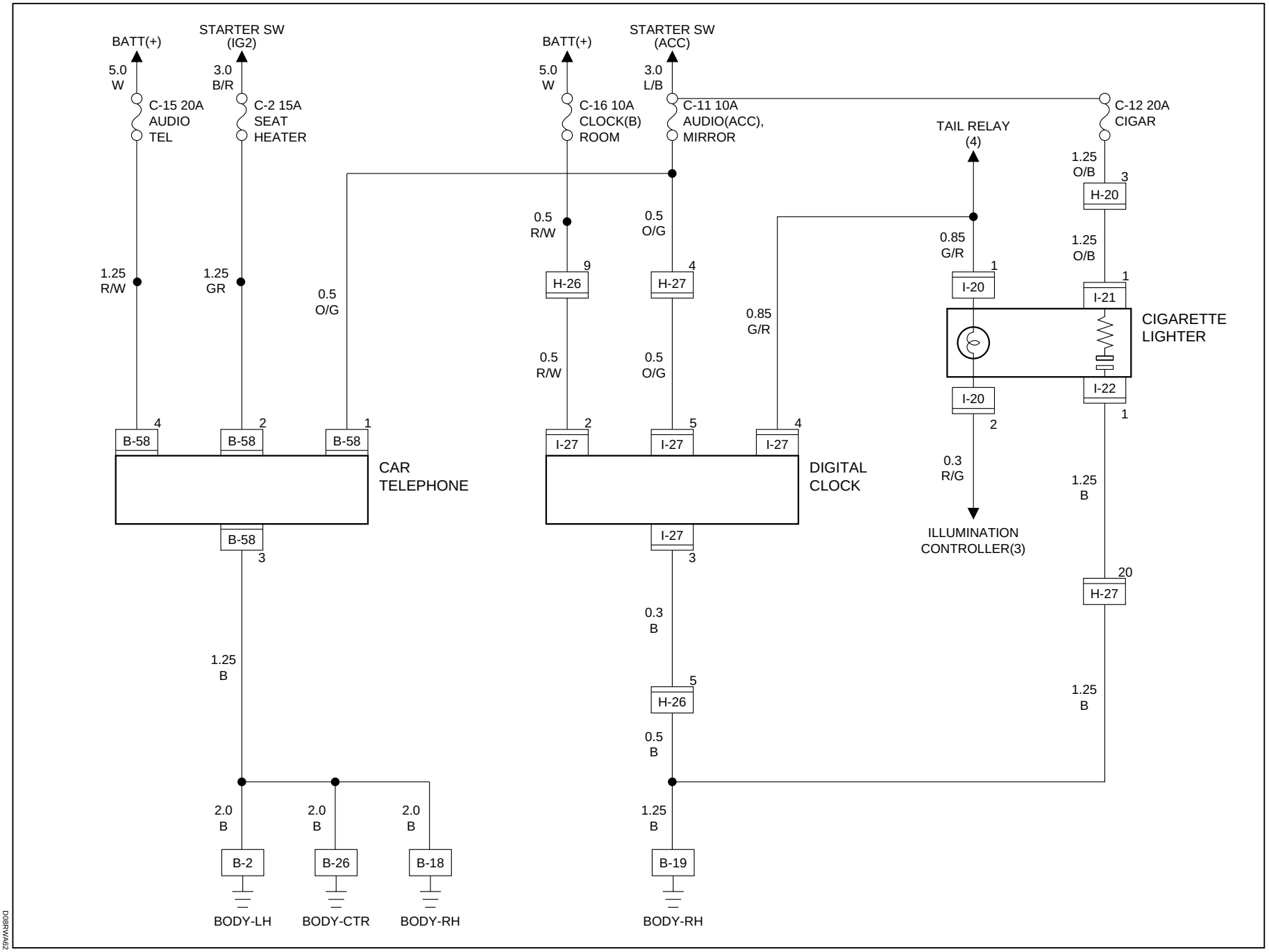

D08RWA62

Parts Location (RHD)

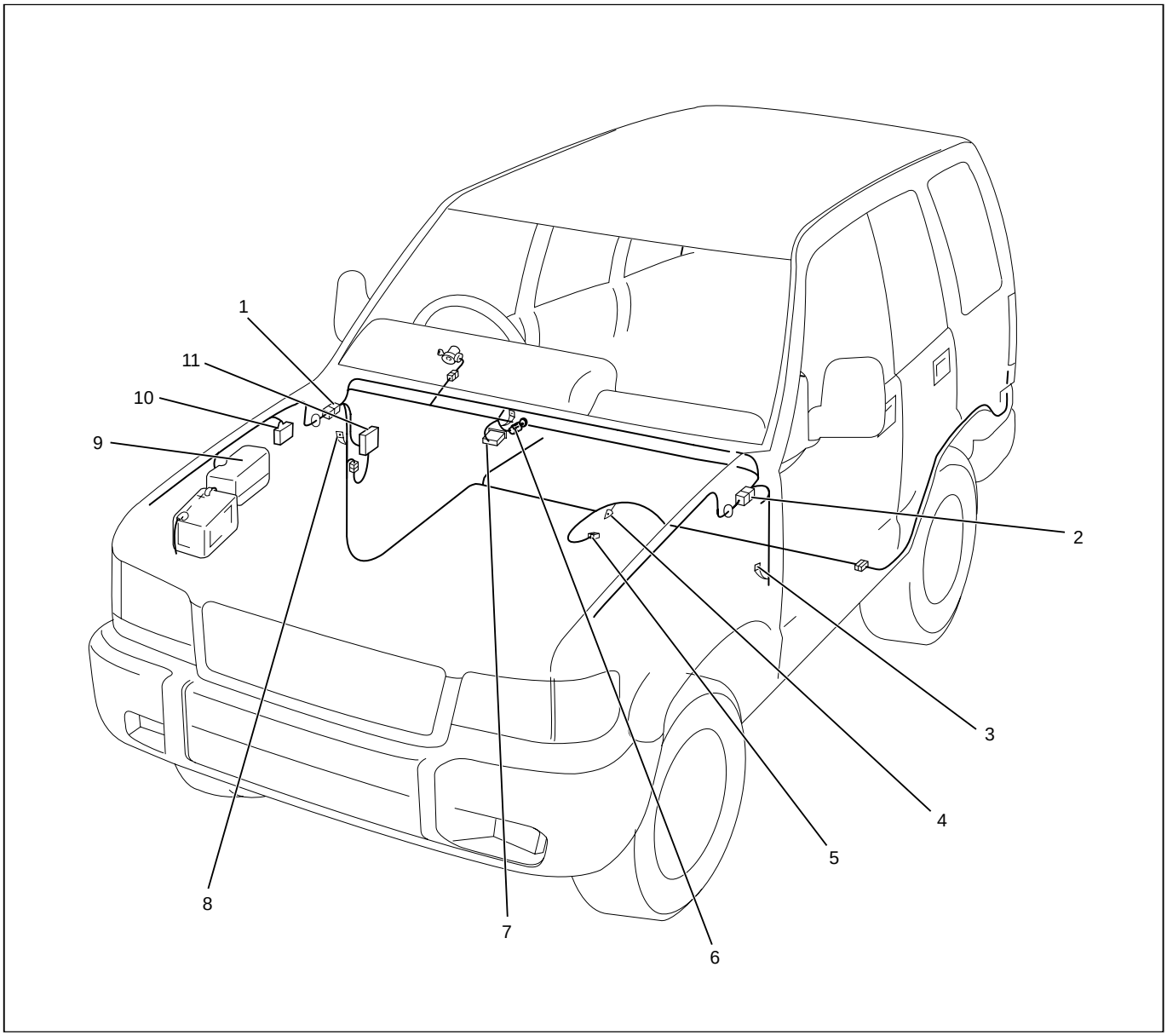

D08RWA52

Legend

(1) H-26, H-27
(2) H-20
(3) B-2
(4) B-26
(5) B-58
(6) I-20, I-21, I-22
(7) I-27
(8) B-18, B-19
(9) Relay and Fuse Box
(10) C-39
(11) Fuse Box

Circuit Diagram (LHD)

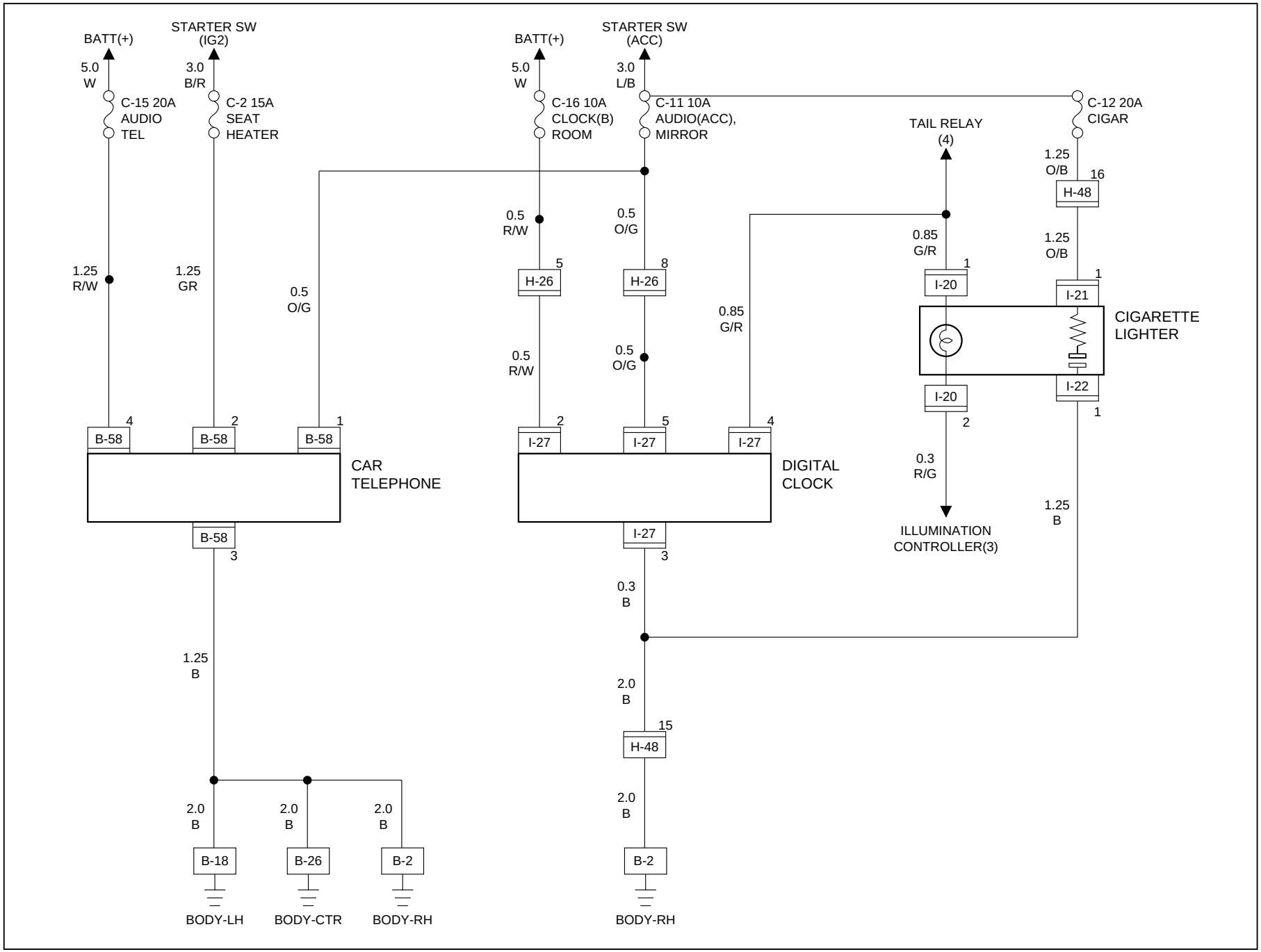

D08RWA63

Parts Location (LHD)

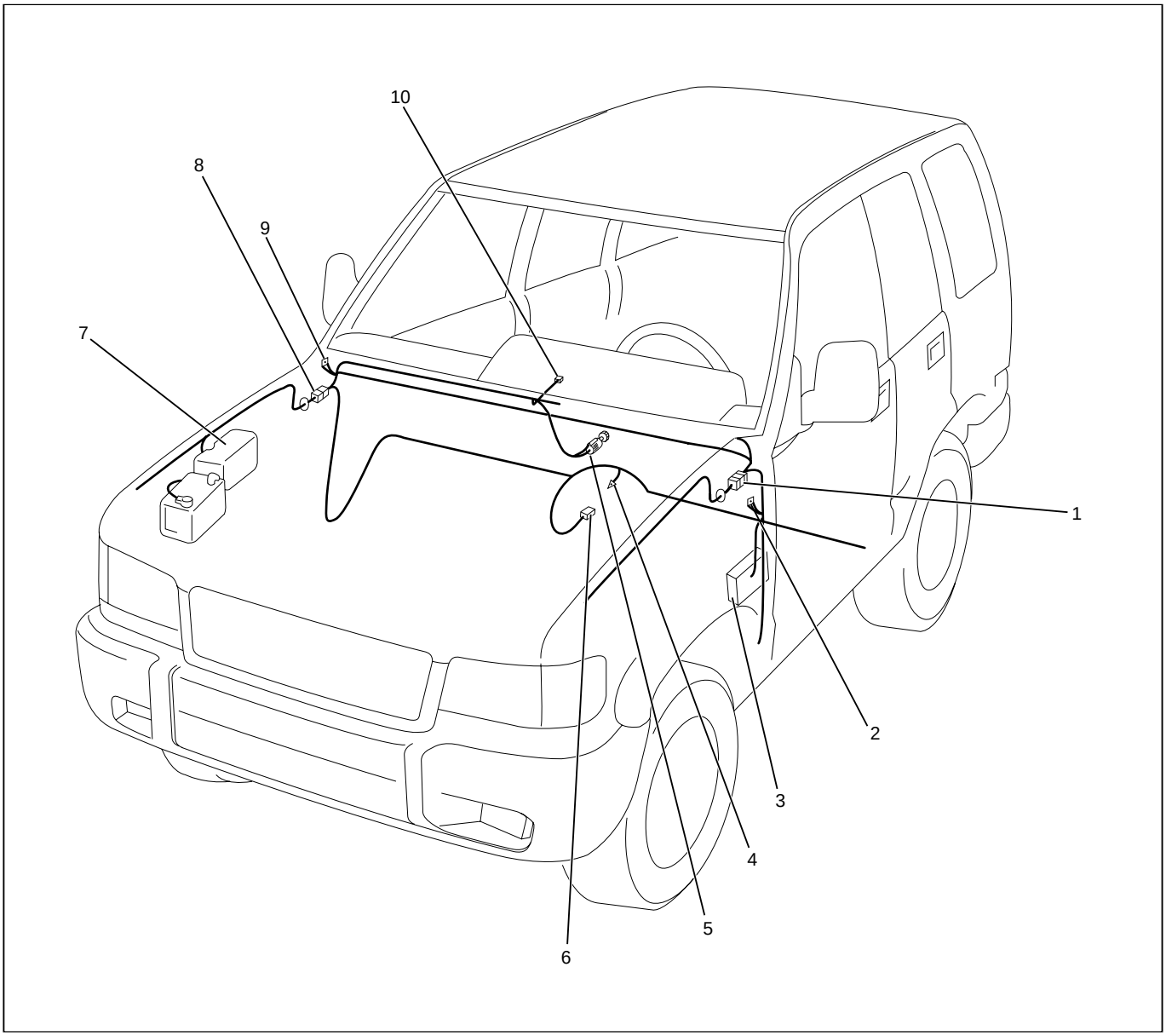

D08RWA50

Legend

(1) H-26
(2) B-18
(3) Fuse Box
(4) B-26
(5) I-20, I-21, I-22
(6) B-58
(7) Relay and Fuse Box
(8) H-48
(9) B-2
(10) I-27

Power Door Mirror

General Description

The circuit consists of door mirror control switch, folding switch, defogger switch and door mirrors on both sides.

When control switch is operated with starter switch at either “ACC” or “ON” position, motors incorporated in door mirrors on both sides rotates to allow the horizontal and vertical adjustment of mirror angle.

Folding switch can be used to fold mirror and return it to its original position.

When turning on door mirror defogger switch with starter switch at “ON” position, built–in heater in mirror is activated to perform defogger function.

Circuit Diagram (RHD)-1

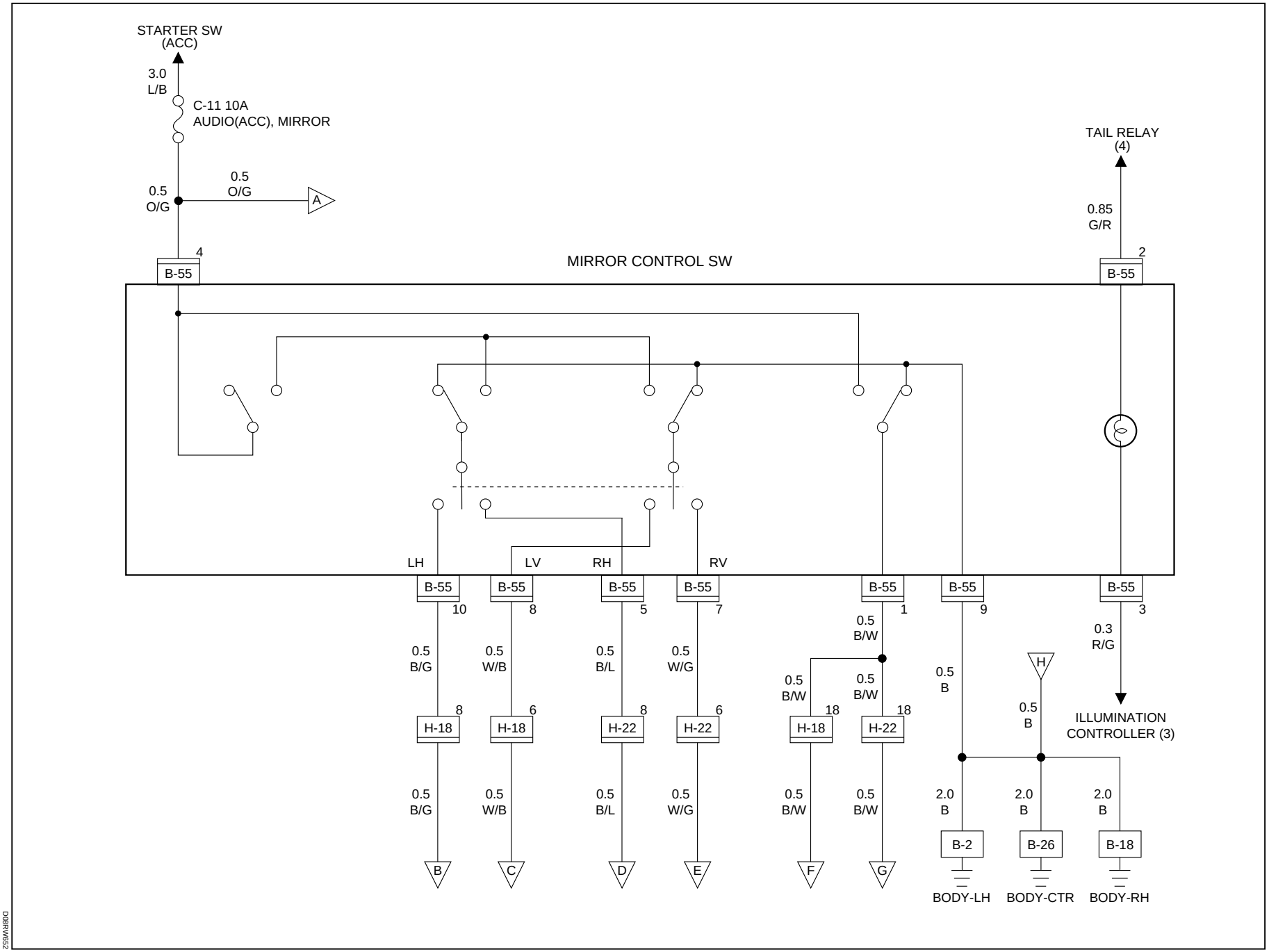

D08RW652

Circuit Diagram (RHD)-2

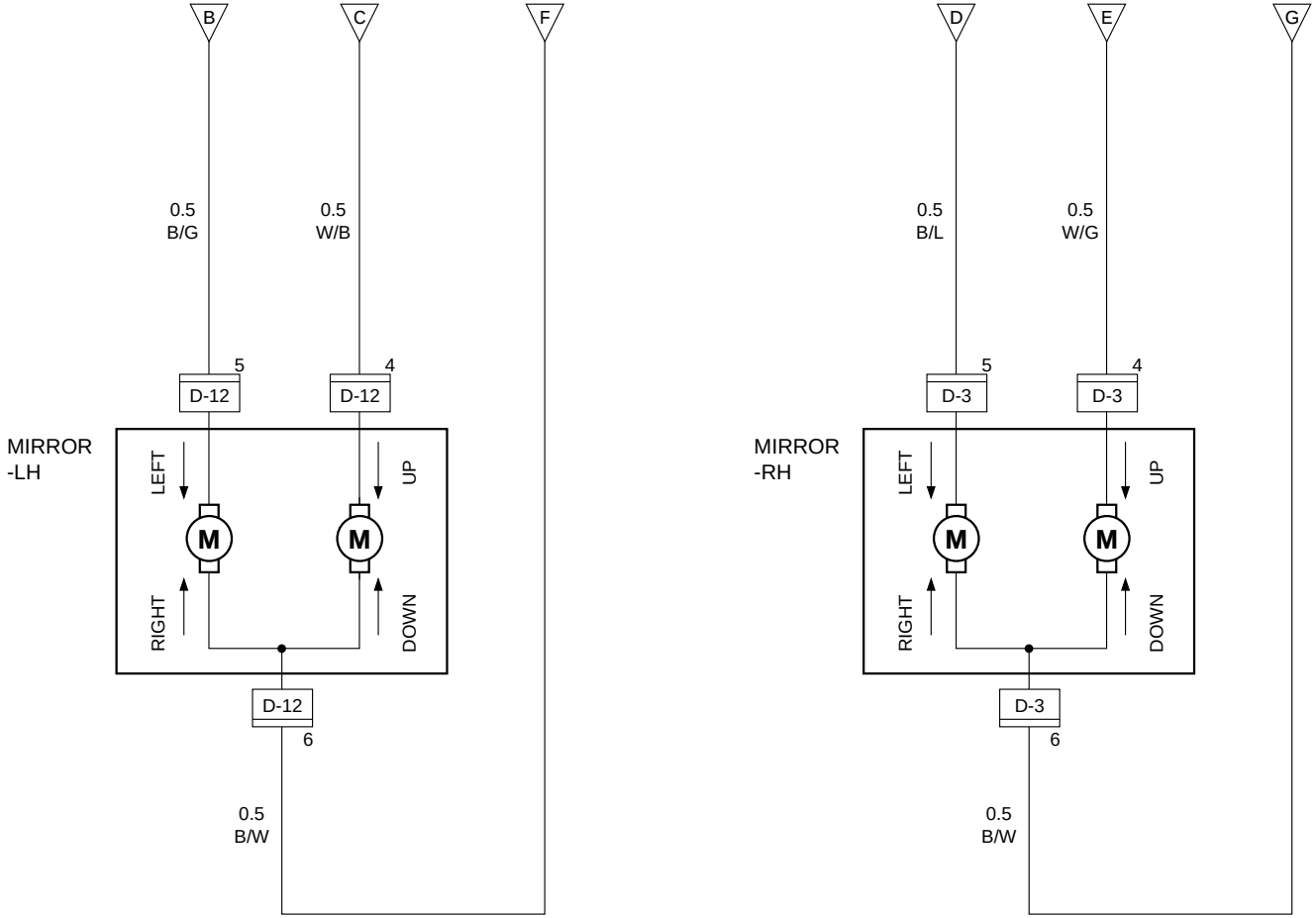

Circuit Diagram (RHD)-3

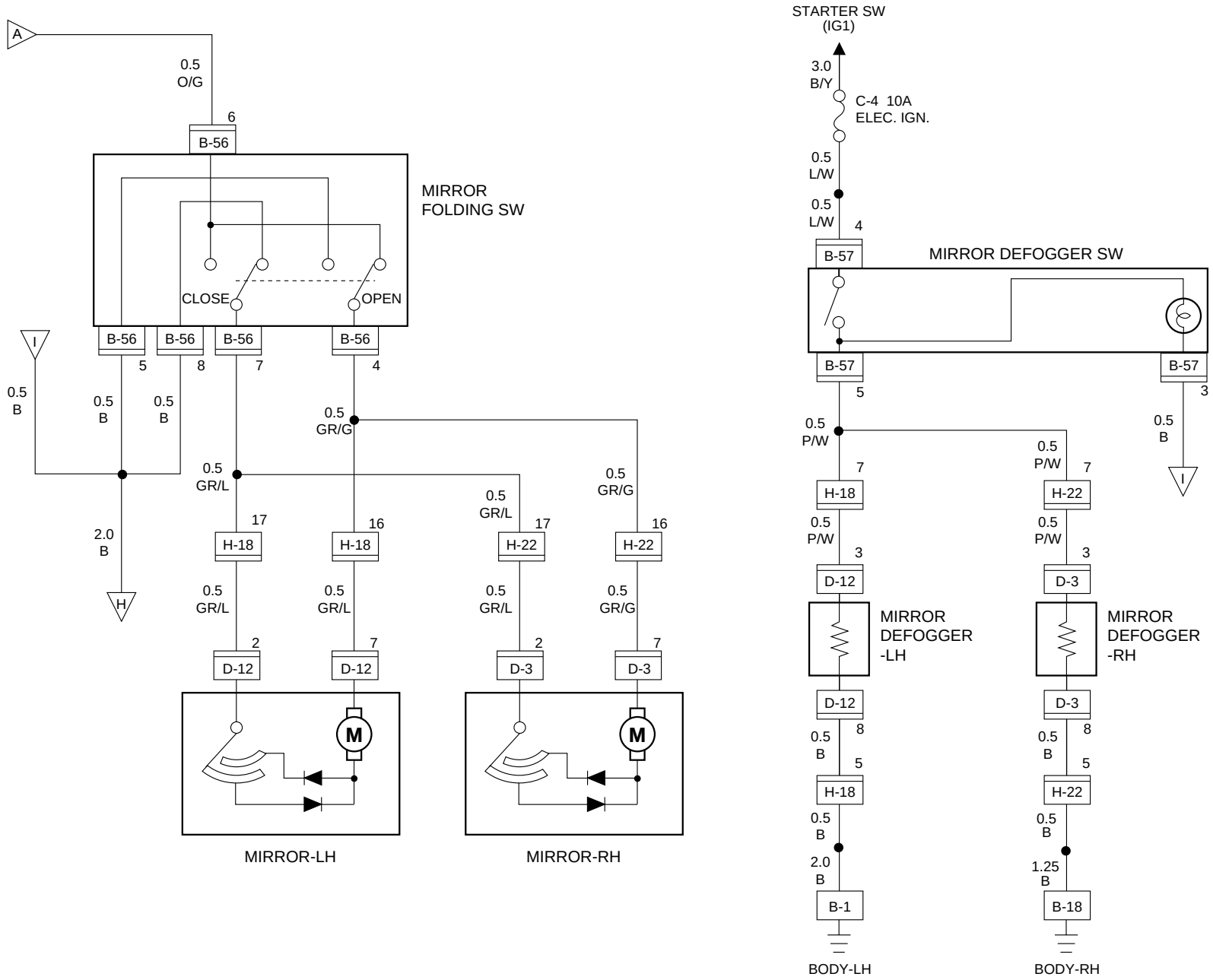

D08RW645

Parts Location (RHD)

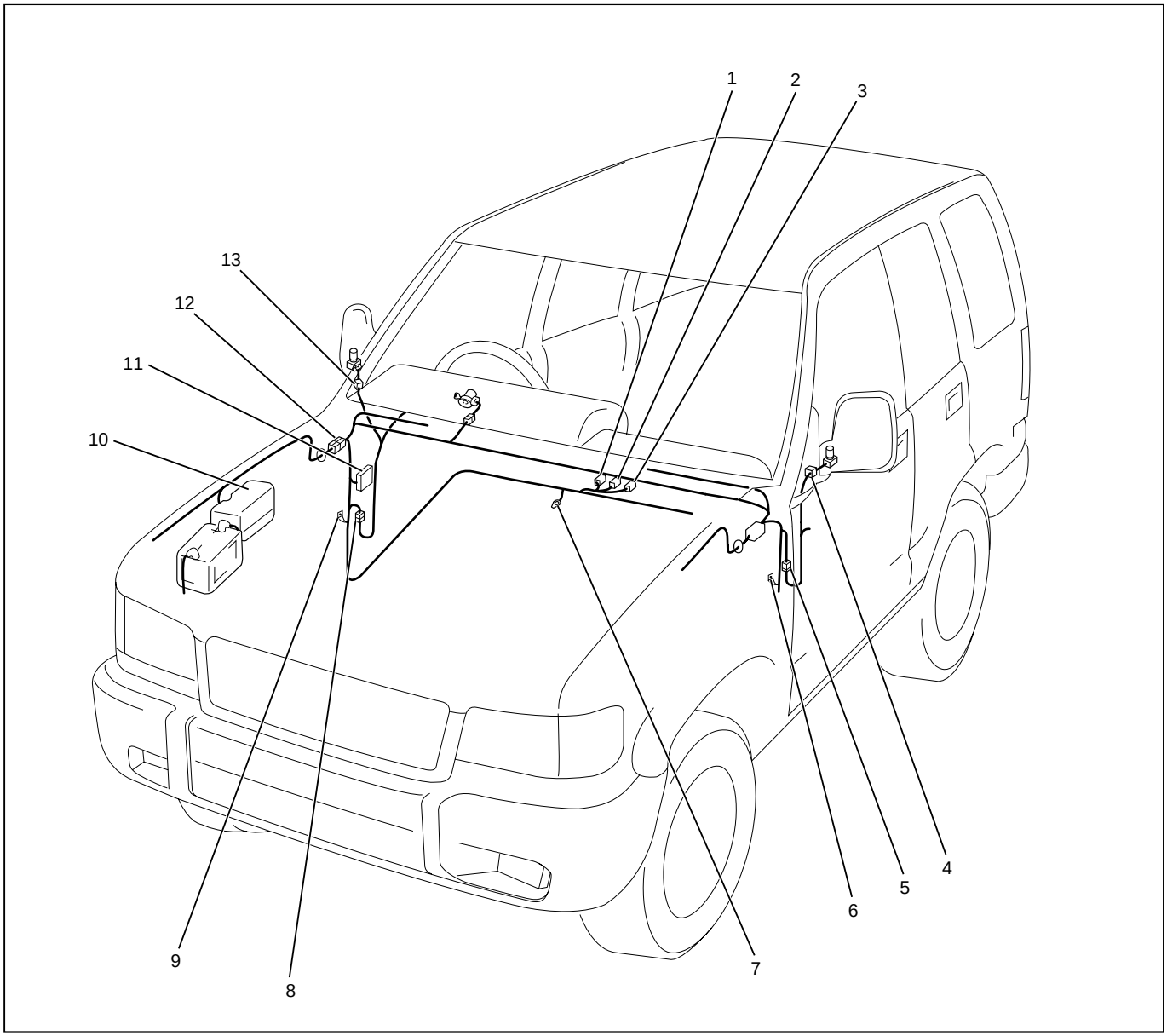

D08RWA05

Legend

(1) B-56 (Center Console)
(2) B-57 (Center Console)
(3) B-55 (Center Console)
(4) D-12
(5) H-18
(6) B-1, B-2
(7) B-26
(8) H-22
(9) B-18
(10) Relay & Fuse Box
(11) Fuse Box
(12) H-14
(13) D-3

Circuit Diagram (LHD)-1

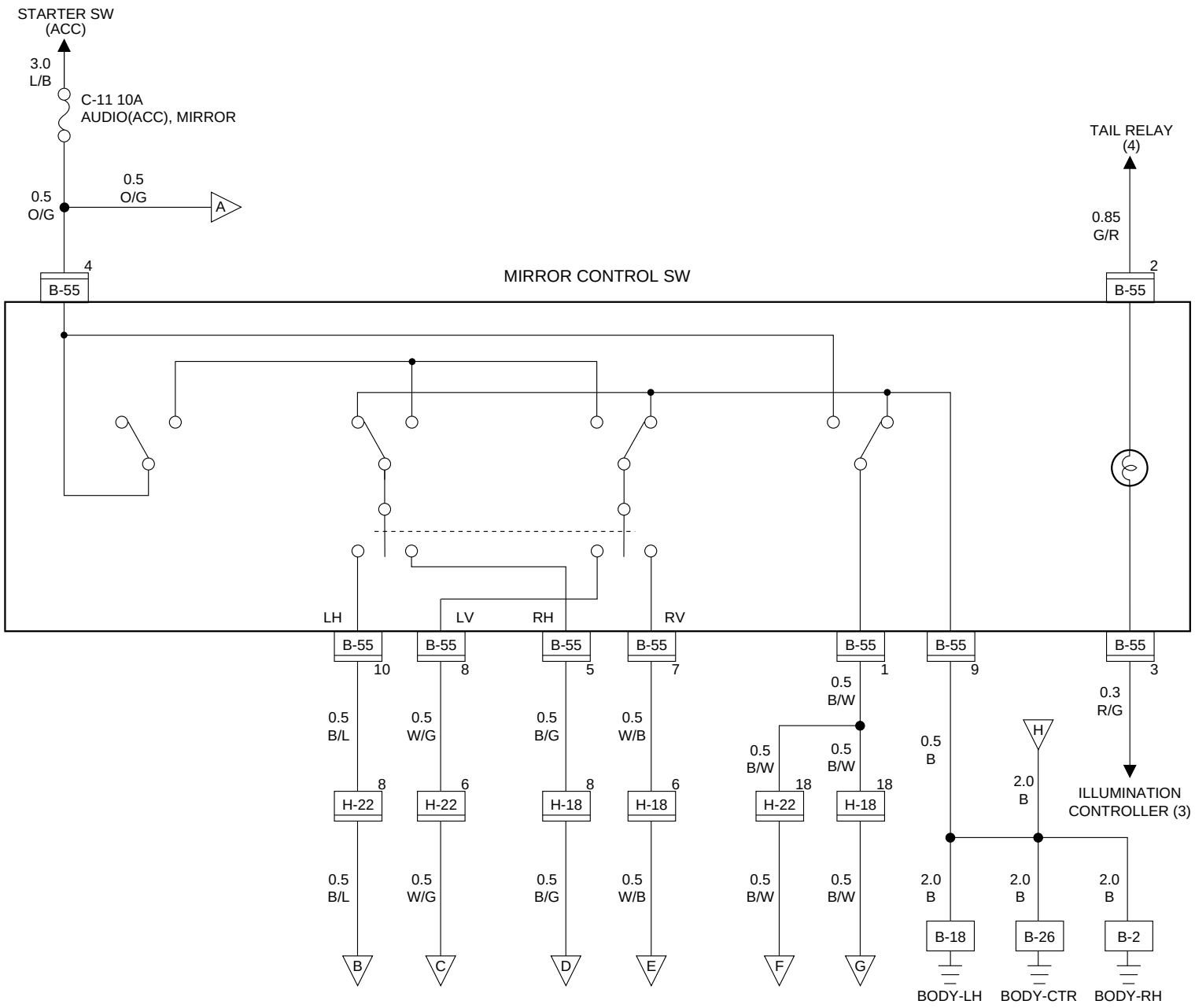

D08RW945

Circuit Diagram (LHD)-2

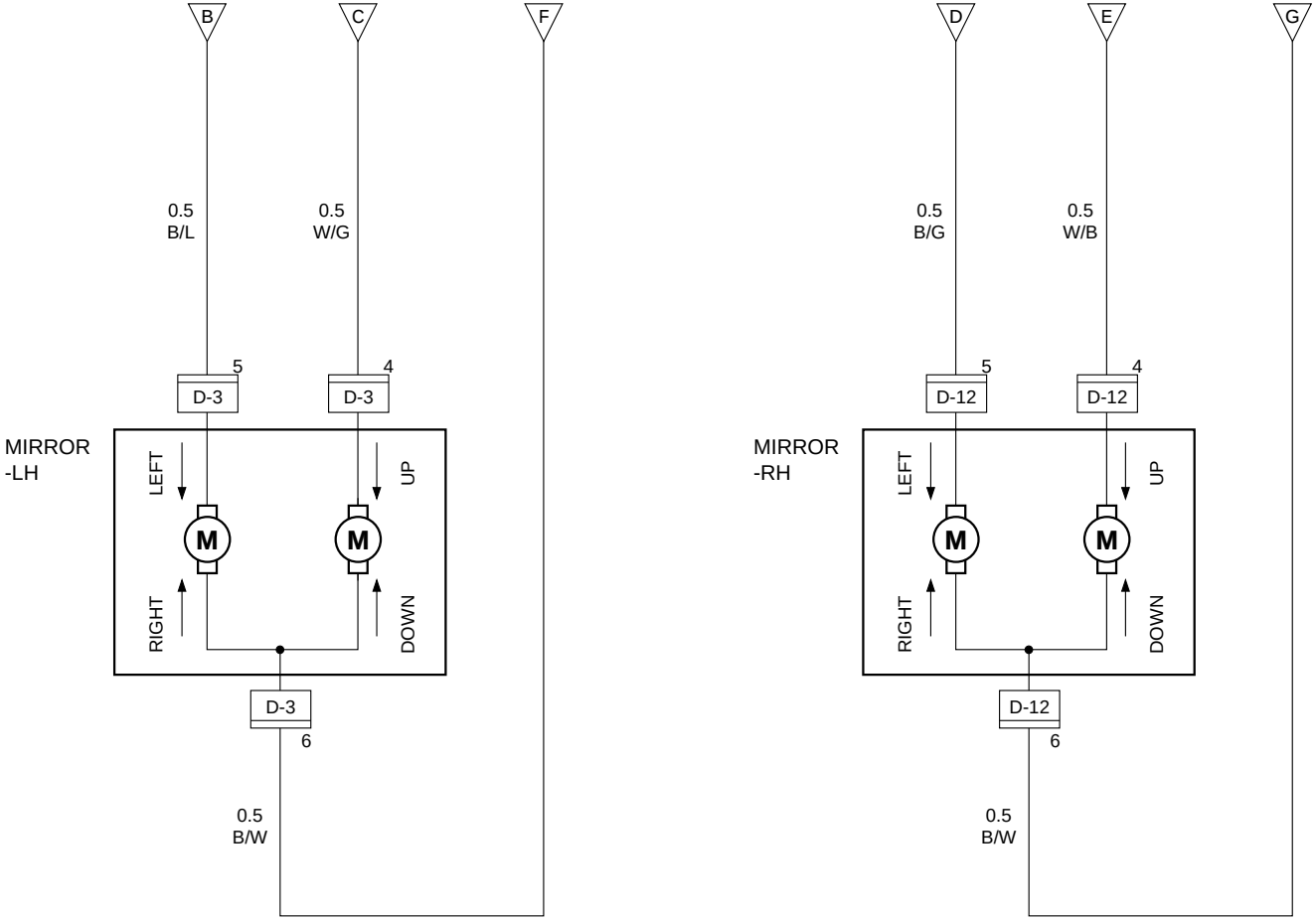

Circuit Diagram (LHD)-3

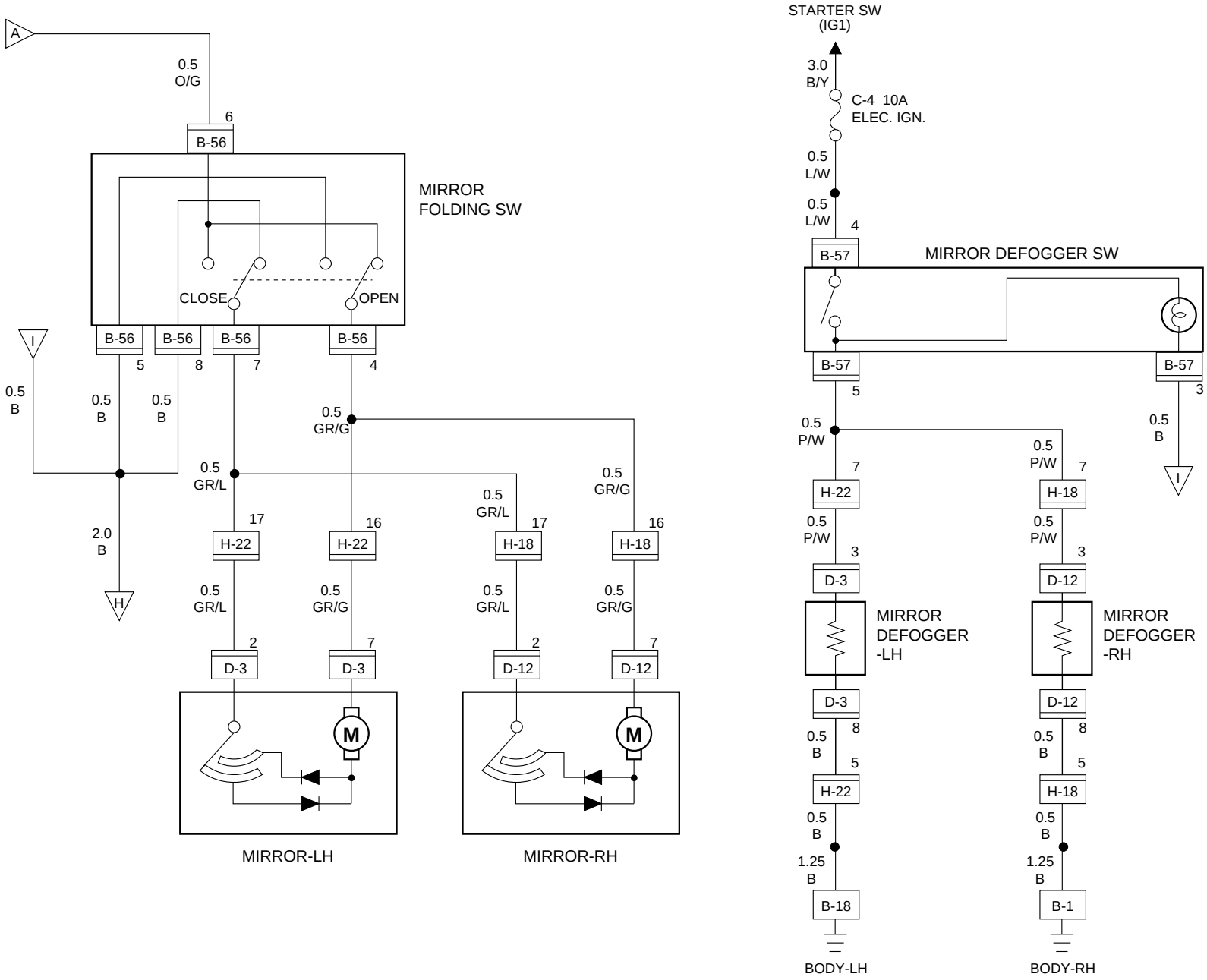

D08RW046

Parts Location (LHD)

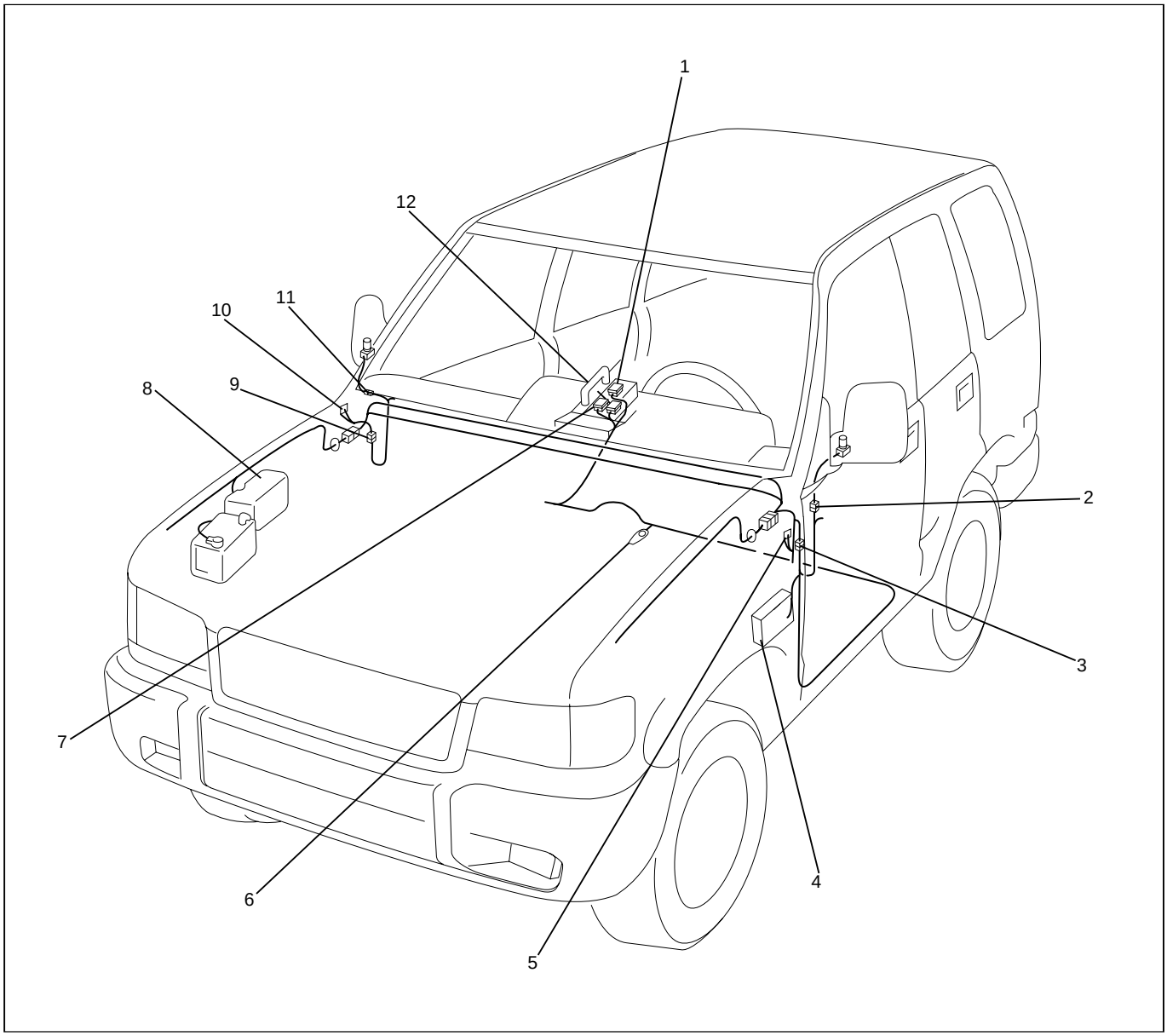

D08RW380

Legend

(1) B-55
(2) D-3
(3) H-22
(4) Fuse Box
(5) B-18
(6) B-26
(7) B-57
(8) Relay and Fuse Box
(9) H-18
(10) B-1, B-2
(11) D-12
(12) B-56

Diagnosis

Quick Chart for Check Points

SW	Trouble mode \ Check point	Fuse		Door mirror SW			Door mirror		Cable harness
		C-4 (10A)	C-11 (10A)	Control	Folding	Defogger	LH	RH	
Control switch	1. Mirrors on both sides do not operate		○	○					○
	2. Mirror on the left (or right) side does not operate			○			○	○	○
	3. Mirrors on both sides operate only in the vertical (or horizontal) direction			○					
	4. Mirror on the left side operates only in the vertical (or horizontal) direction			○			○		○
	5. Mirror on the right side operates only in the vertical (or horizontal) direction			○				○	○
Folding switch	6. Folding mechanism of the both mirrors does not operate		○		○				○
	7. Folding mechanism of the mirror on the left (or right) side does not operate				○		○	○	○
Defogger switch	8. Mirror defoggers on both sides do not operate	○				○			○
	9. Mirror defogger on the left (or right) side does not operate						○	○	○

1. Mirrors On Both Sides Do Not Operate

- IS THE FUSE C-11 (10A) NORMAL?

YES

- REMOVE THE CONNECTORS OF THE DOOR MIRROR CONTROL SW
- SET THE STARTER SW TO “ACC” POSITION
- IS THE BATTERY VOLTAGE APPLIED BETWEEN THE HARNESS SIDE CONNECTOR 4 B-55 AND THE GROUND?

NO

REPLACE THE FUSE

YES

- IS THERE ANY CONTINUITY BETWEEN THE HARNESS SIDE CONNECTORS 9 B-55 AND THE GROUND?

NO

REPAIR A POOR CONNECTION AT THE CONNECTORS OR AN OPEN CIRCUIT BETWEEN THE FUSE C-11 (10A) AND 4 B-55 (CONTROL SW)

YES

- IS THE CONTINUITY IN THE DOOR MIRROR CONTROL SWITCH NORMAL?

NO

REPAIR A POOR CONNECTION AT THE CONNECTORS OR AN OPEN CIRCUIT IN THE CIRCUIT

YES

REPAIR A POOR CONNECTION AT THE CONNECTORS OR AN OPEN CIRCUIT BETWEEN 1 B-55 AND 18 H-18 OR 18 H-22

NO

REPAIR THE DOOR MIRROR CONTROL SW

2. Mirror on The Left (Or Right) Side Does Not Operate

- IS THE DOOR MIRROR CONTROL SW NORMAL?

YES

- IS THE DOOR MIRROR ON THE LEFT (OR RIGHT) SIDE NORMAL?

YES

REPAIR A POOR CONNECTION OF CONNECTORS OR AN OPEN CIRCUIT BETWEEN 1 B-55 AND 6 D-12 (OR 6 D-3) OR 1 B-55 AND 6 D-3 (OR 6 D-12)

NO

REPAIR OR REPLACE THE DOOR MIRROR

NO

REPAIR OR TRPLACE THE DOOR MIRROR CONTROL SW

3. Mirrors On Both Sides Operate Only In The Vertical (Or Horizontal) Direction

REPAIR OR REPLACE THE DOOR MIRROR CONTROL SW

4. Mirror On The Left Side Operates Only In The Vertical (Or Horizontal) Direction

- IS THE CONTINUITY IN THE DOOR MIRROR CONTROL SWITCH NORMAL?

YES

- IS THE DOOR MIRROR NORMAL?

YES

REPAIR A POOR CONNECTION OF CONNECTORS OR AN OPEN CIRCUIT BETWEEN 8 B-55 AND 4 D-12 (OR 10 B-55 AND 5 D-12 , OR 8 B-55 AND 4 D-3 (OR 10 B-55 AND 5 D-3)

NO

REPAIR OR REPLACE THE DOOR MIRROR

NO

REPAIR OR REPLACE THE DOOR MIRROR CONTROL SW

NOTE: Connectors shown in the parenthesis "( )" indicate a check point of the mirror that does not operate in the horizontal direction.

5. Mirror On The Right Side Operates Only In The Vertical (Or Horizontal) Direction

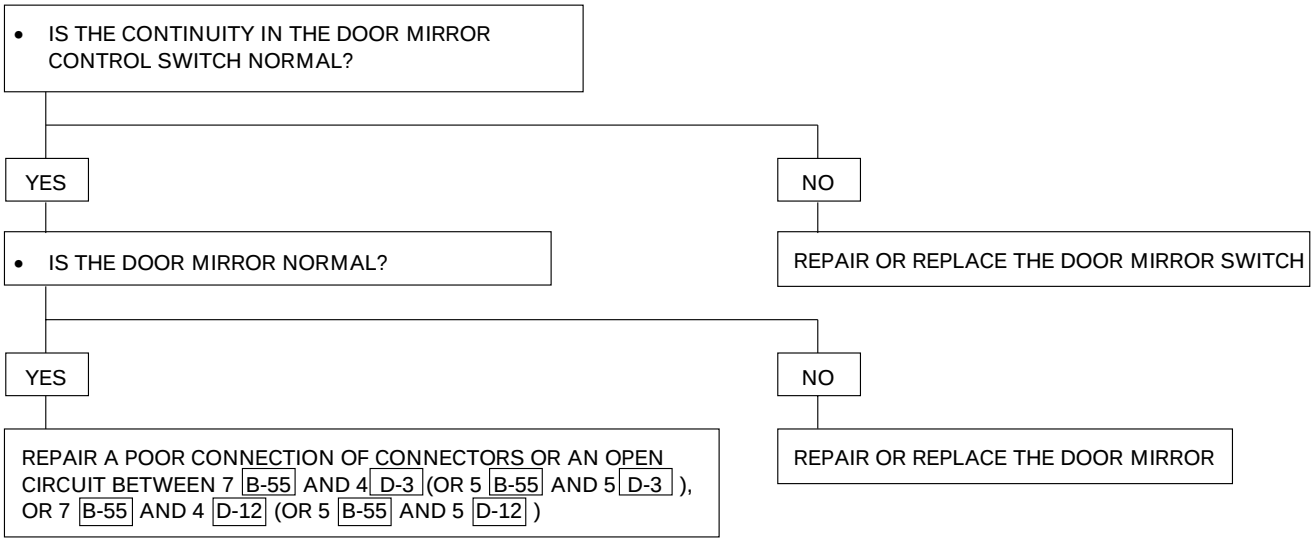

NOTE: Connectors shown in the parenthesis "( )" indicate a check point of the mirror that does not operate in the horizontal direction.

6. Folding Mechanism Of The Both Mirrors Does Not Operate

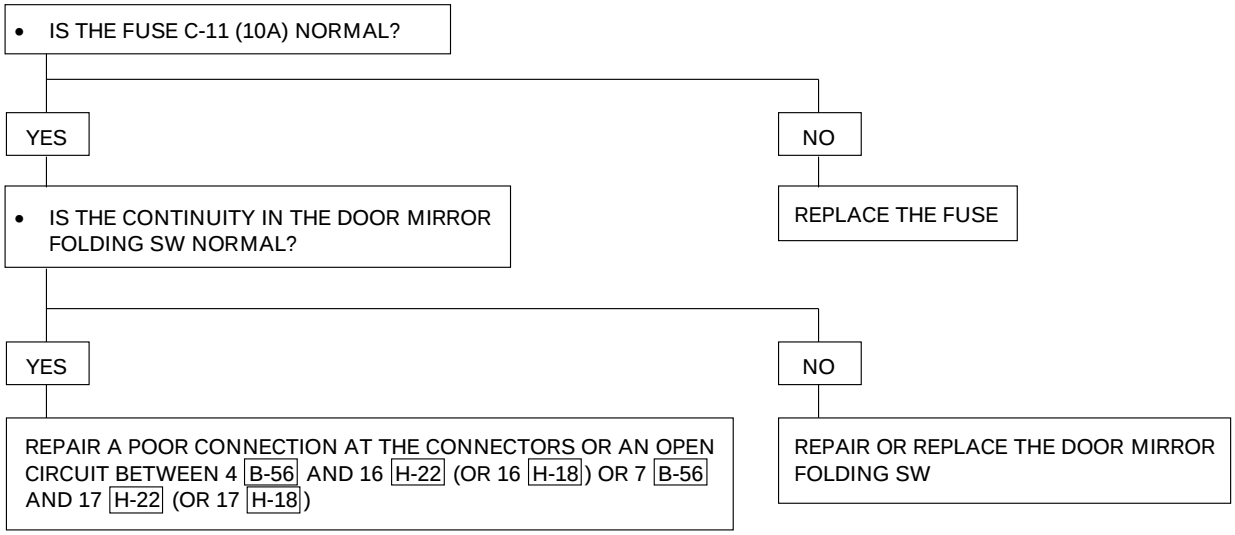

7. Folding Mechanism Of The Mirror On The Left (Or Right) Side Does Not Operate

- DISCONNECT THE CONNECTOR OF THE DOOR MIRROR
- CONNECT THE DOOR MIRROR CONNECTOR 2 D-12 (OR 2 D-3) OR 2 D-3 (OR 2 D-12) TO THE BATTERY (+) TERMINAL AND 7 D-12 (OR 7 D-3) OR 7 D-3 (OR 7 D-12) TO THE BATTERY (–) TERMINAL. DOES THE MIRROR OPERATE TO THE FOLDING DIRECTION?

  (CONNECT THE DOOR MIRROR CONNECTOR 7 D-12 (OR 7 D-3) OR 7 D-3 (OR 7 D-12) TO THE BATTERY (+) TERMINAL AND 2 D-12 (OR 2 D-3) OR 2 D-3 (OR 2 D-12) TO THE BATTERY (–) TERMINAL. DOES THE MIRROR OPERATE TO THE DRIVING POSITION?)

YES

- IS THE FOLDING SW NORMAL?

YES

REPAIR A POOR CONNECTION OF THE CONNECTORS OR AN OPEN CIRCUIT BETWEEN 7 B-56 AND 2 D-12 (OR 2 D-3) OR 4 B-56 AND 7 D-12 (OR 7 D-3), OR 7 B-56 AND 2 D-3 (OR 2 D-12) OR 4 B-56 AND 7 D-3 (OR 7 D-12)

NO

REPAIR OR REPLACE THE FOLDING SW

NO

REPAIR OR REPLACE THE DOOR MIRROR

8. Mirror Defogger On Both Sides Do Not Operate

- IS FUSE C-4 (10A) NORMAL?

YES

- IS THE DOOR MIRROR DEFOGGER SW NORMAL?

NO

REPAIR THE FUSE

YES

- REMOVE THE CONNECTORS OF THE DOOR MIRROR DEFOGGER SW
- TURN ON THE STARTER SW
- IS BATTERY VOLTAGE APPLIED BETWEEN THE HARNESS SIDE CONNECTOR 4 B-57 AND THE GROUND?

NO

REPAIR OR REPLACE THE DOOR MIRROR DEFOGGER SW

YES

REPAIR A POOR CONNECTION OF CONNECTORS OR AN OPEN CIRCUIT BETWEEN 5 B-57 AND 7 H-22 OR 5 B-57 AND 7 H-18

NO

REPAIR A POOR CONNECTION OF CONNECTORS OR AN OPEN CIRCUIT BETWEEN THE FUSE C-4 (10A) AND 4 B-57

9. Mirror Defogger On The Left (Or Right) Side Does Not Operate

- DISCONNECT THE MIRROR CONNECTOR ON THE LEFT (OR RIGHT) SIDE.
- TURN THE STARTER SWITCH AND THE DEFOGGER SWITCH ON
- IS THERE A BATTERY VOLTAGE APPLIED BETWEEN 3 D-12 (OR 3 D-3) AND GROUND, OR 3 D-3 (OR 3 D-12) AND GROUND?

YES

- IS THE CONTINUITY IN THE MIRROR NORMAL?

NO

REPAIR A POOR CONNECTION OF THE CONNECTORS OR AN OPEN CIRUICT BETWEEN 5 B-57 AND 3 D-12 (OR 3 D-3) OR 5 B-57 AND 3 D-3 (OR 3 D-12)

YES

- IS B-18 (B-1) GROUNDED SECURELY?

NO

REPAIR OR REPLACE THE MIRROR

YES

REPAIR A POOR CONNECTION OF CONNECTORS OR AN OPEN CIRCUIT BETWEEN 8 D-12 AND B-1 (OR 8 D-3 AND B-18), OR 8 D-3 AND B-18 (OR 8 D-12 AND B-1)

NO

GROUND IT SECURELY

Anti-Theft System with Keyless Entry

Circuit Diagram (RHD 6V*1)-1

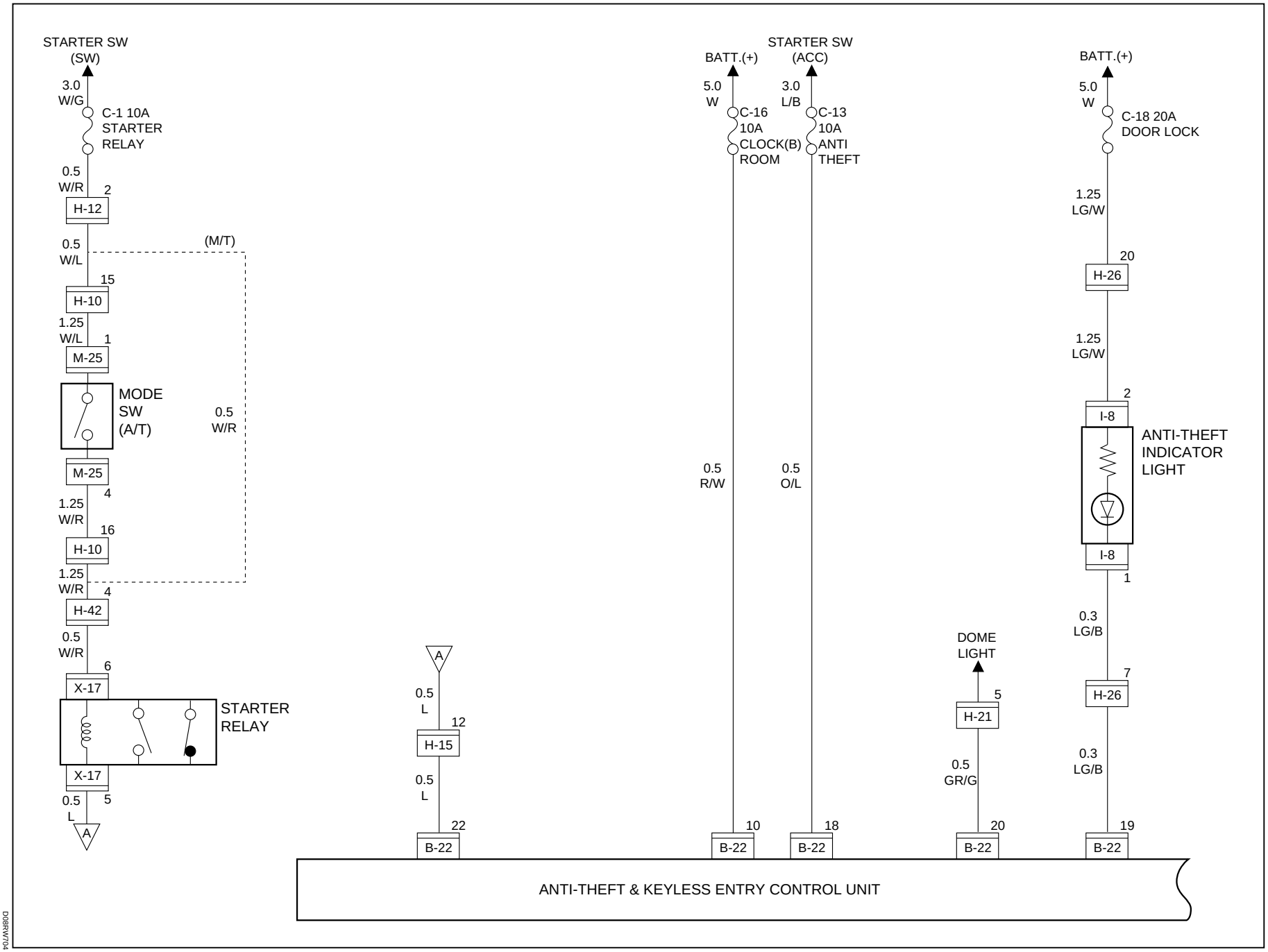

Circuit Diagram (RHD 4J**)-1

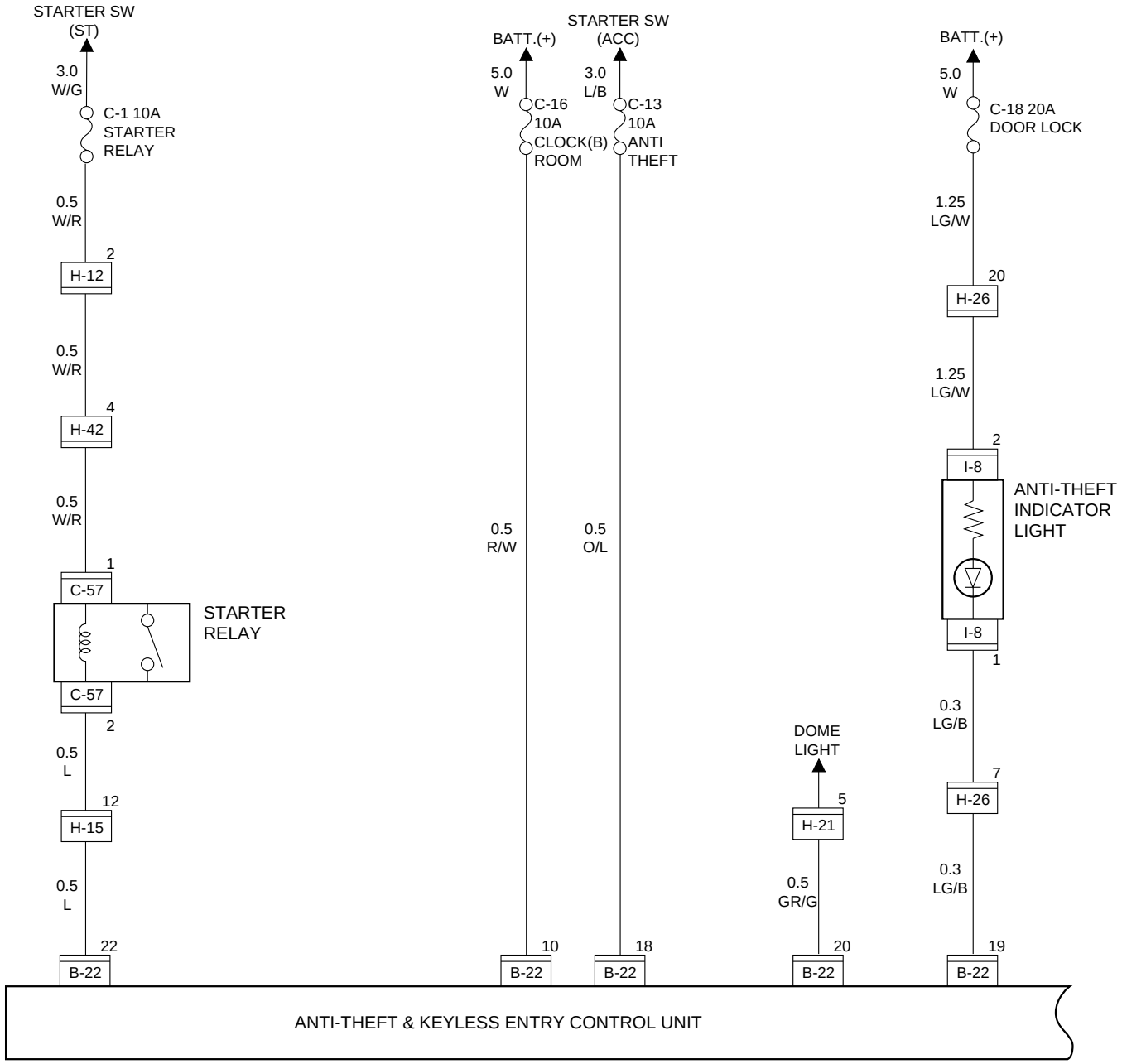

D08RW703

Circuit Diagram (RHD)-2

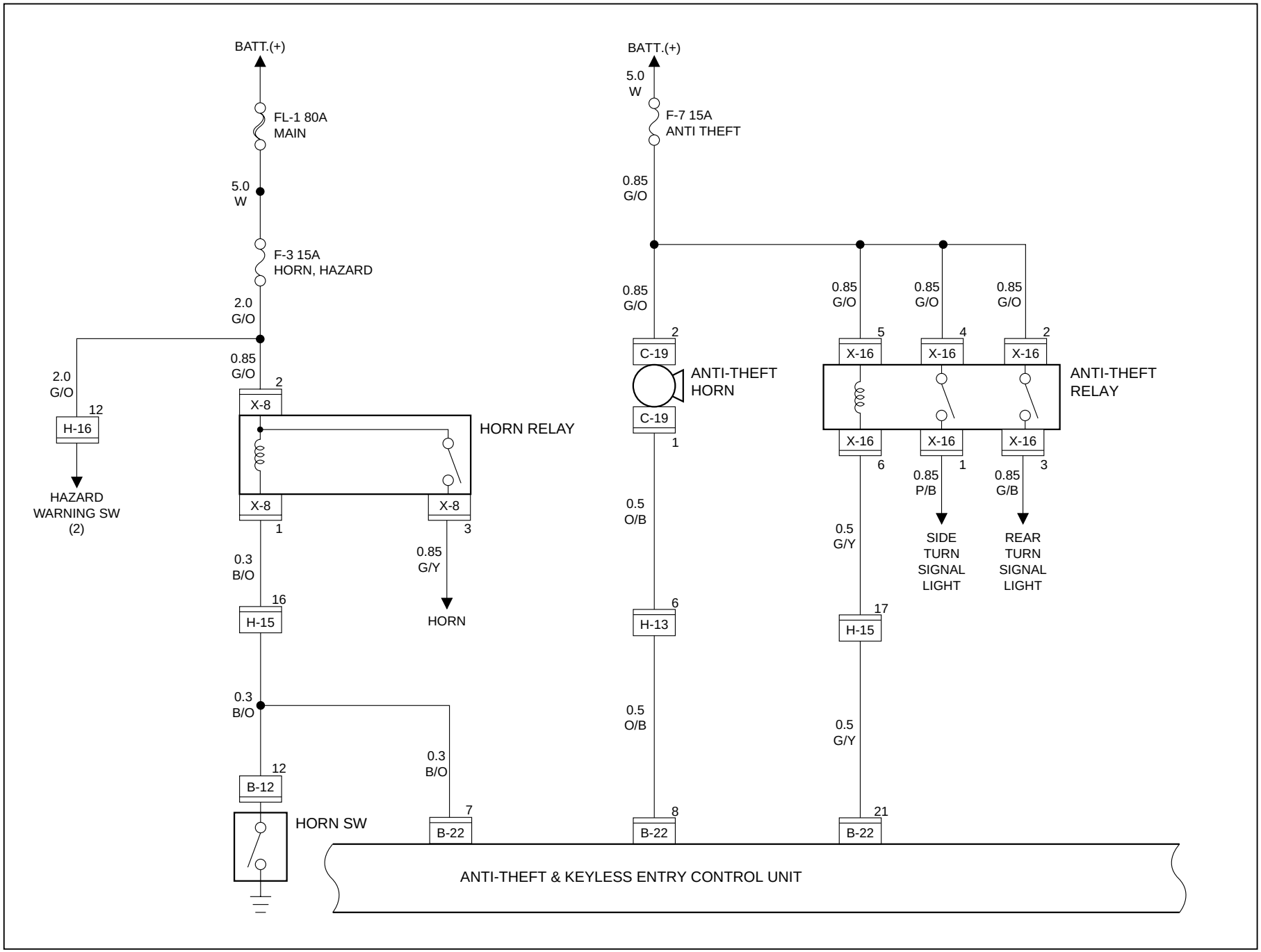

Circuit Diagram (RHD)-3

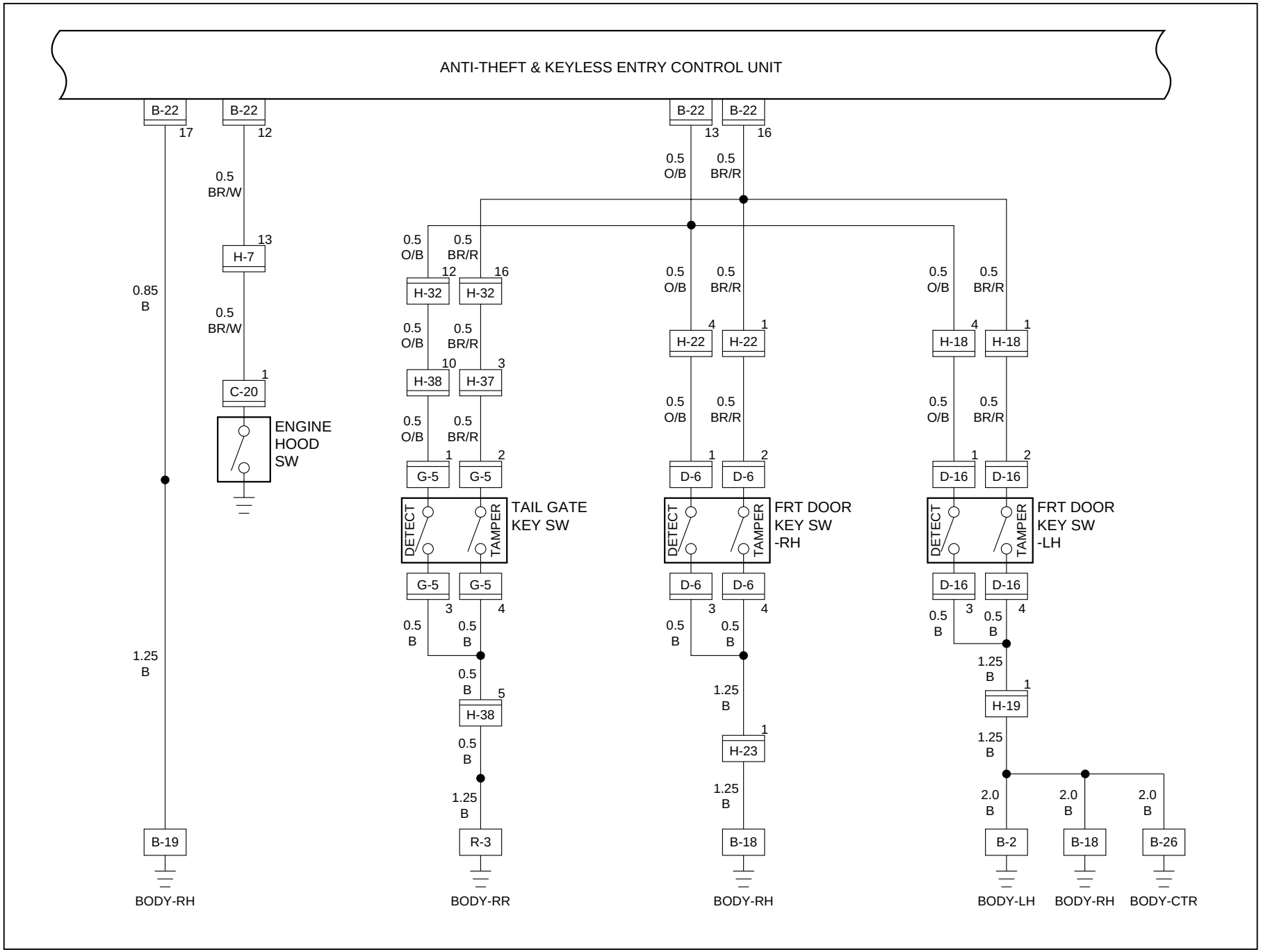

Circuit Diagram (RHD)-4

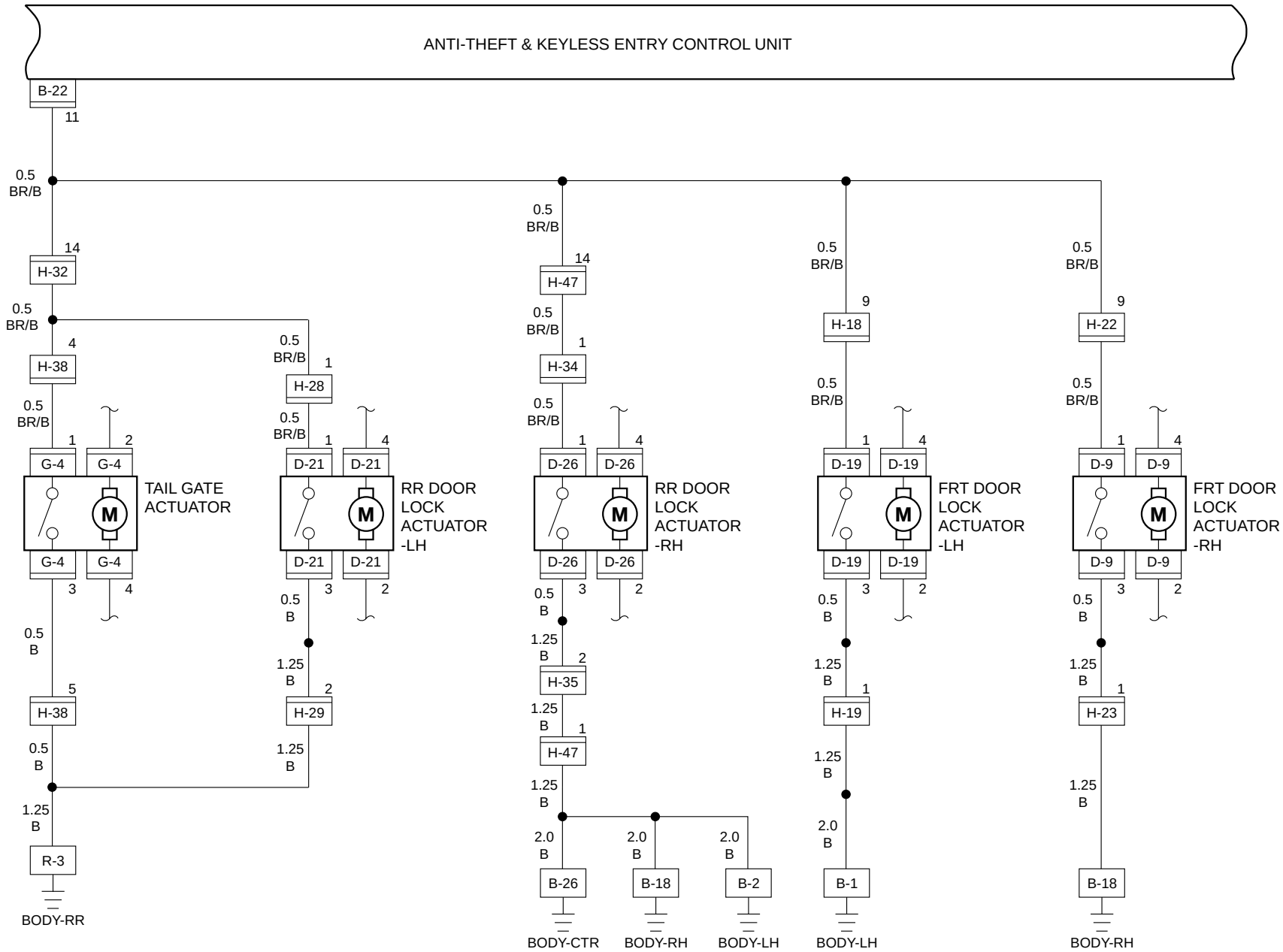

D08RW707

Circuit Diagram (RHD)-5

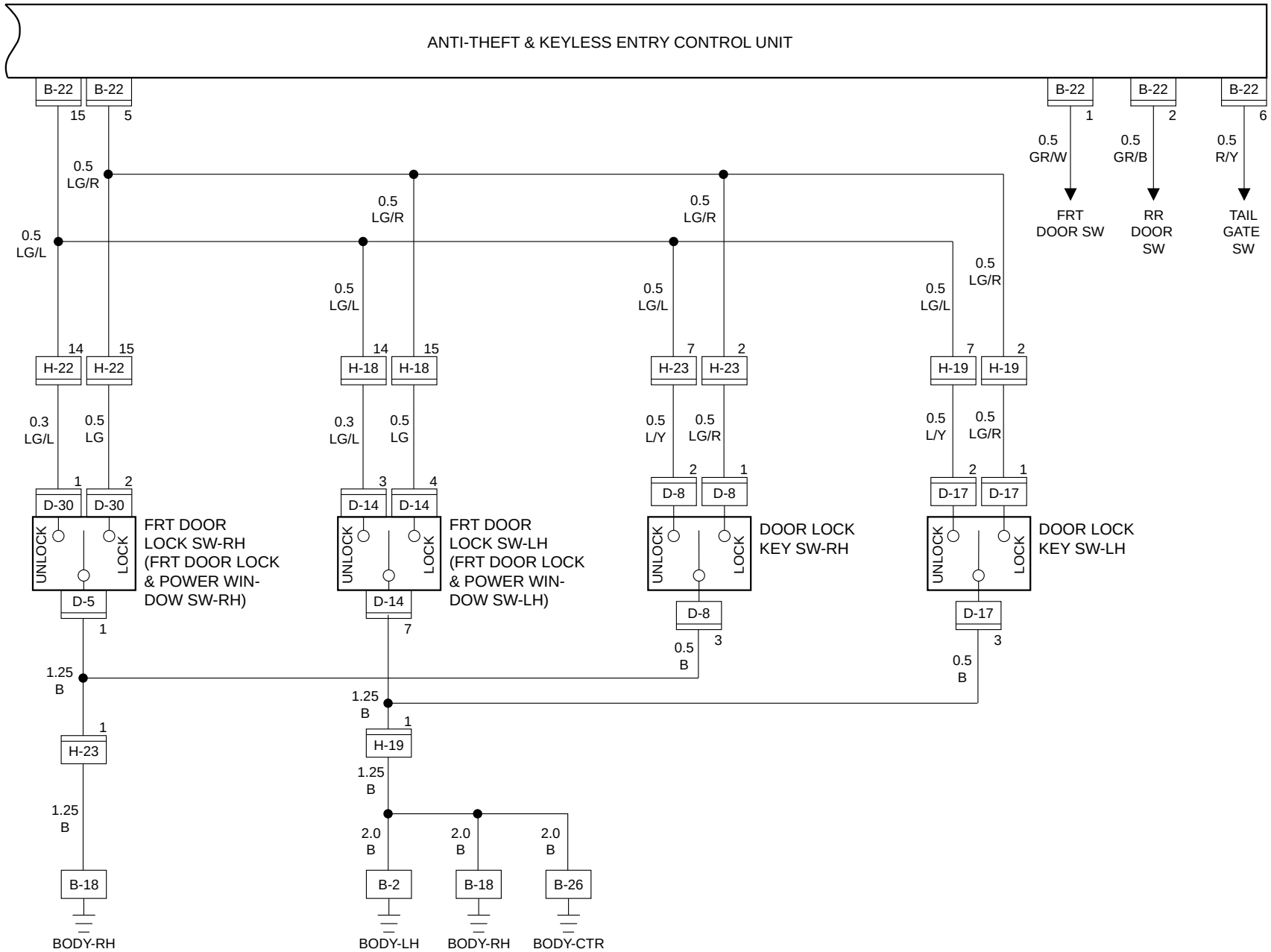

D08RM708

Circuit Diagram (South Africa)-1

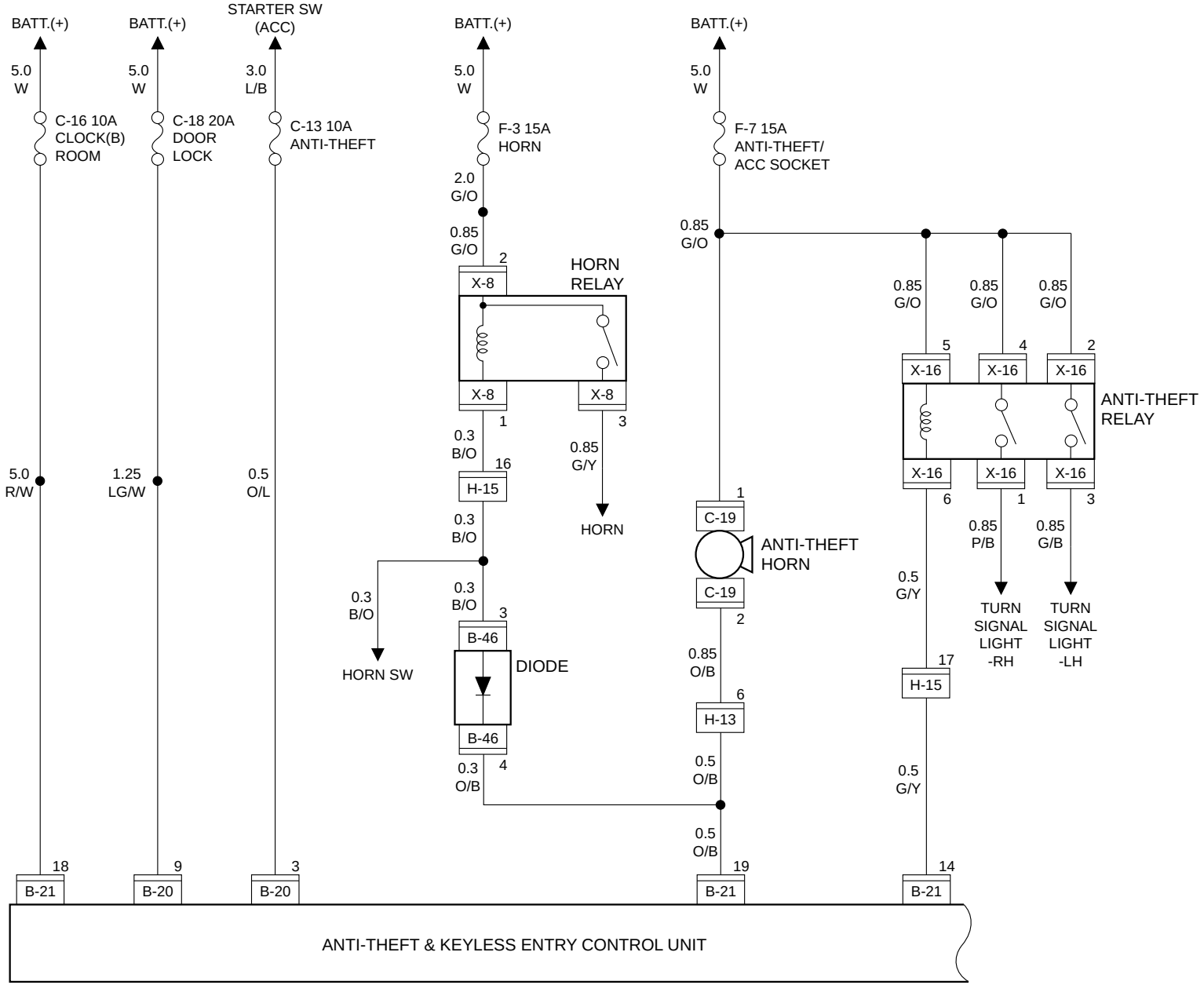

D08RW686

Circuit Diagram (South Africa)-2

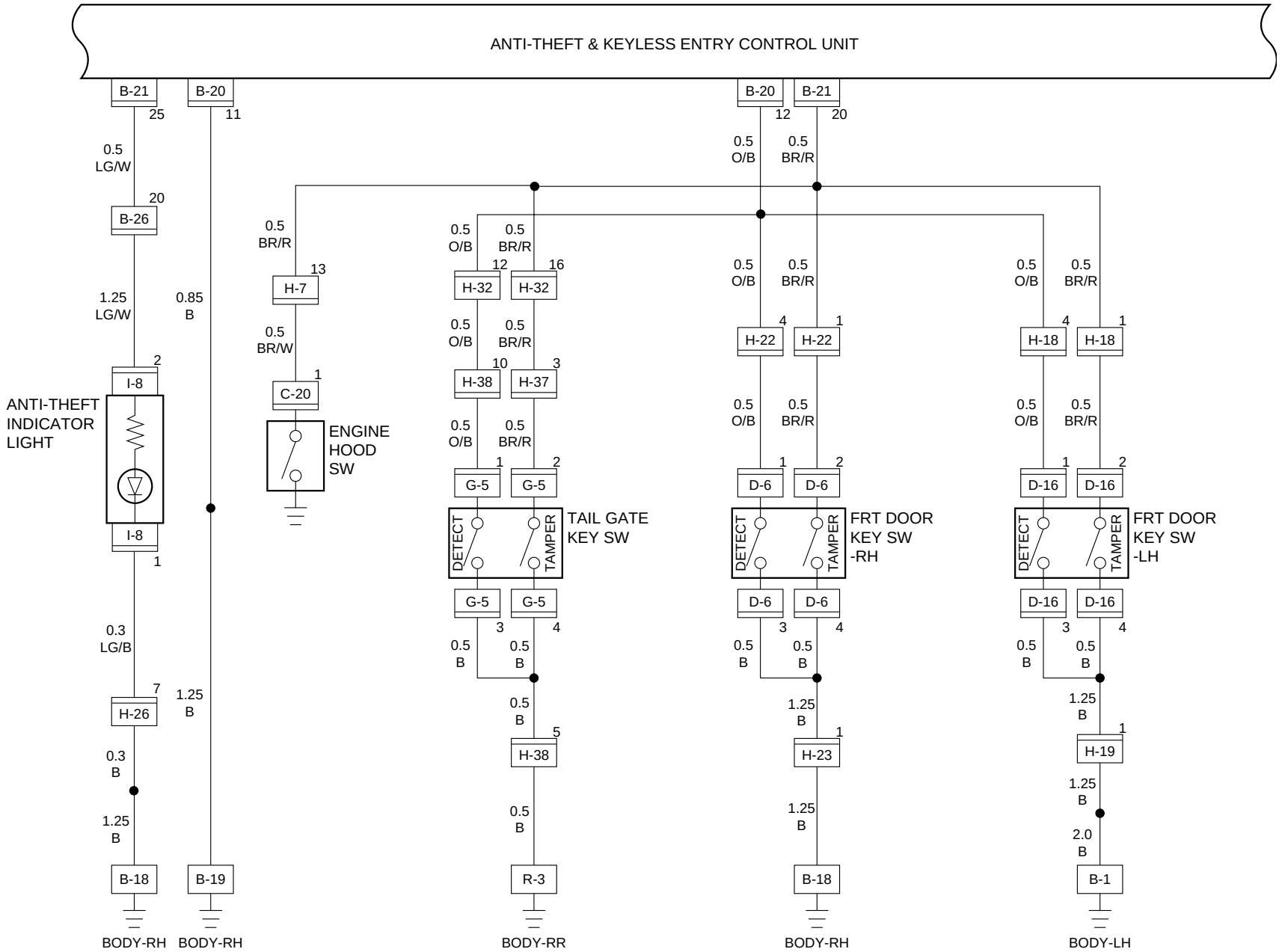

D08RW687

Circuit Diagram (South Africa)-3

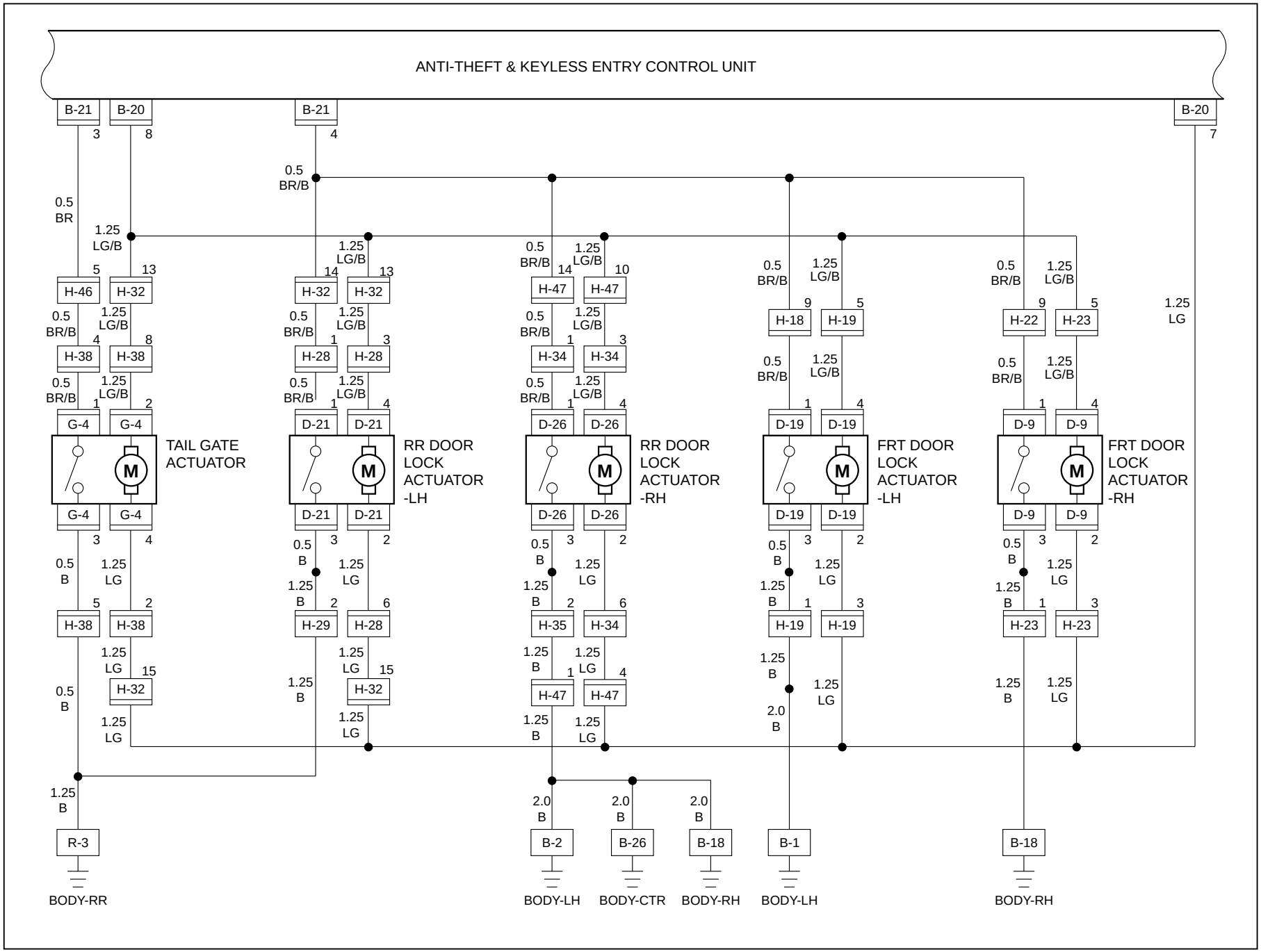

D08RW888

Circuit Diagram (South Africa)-4

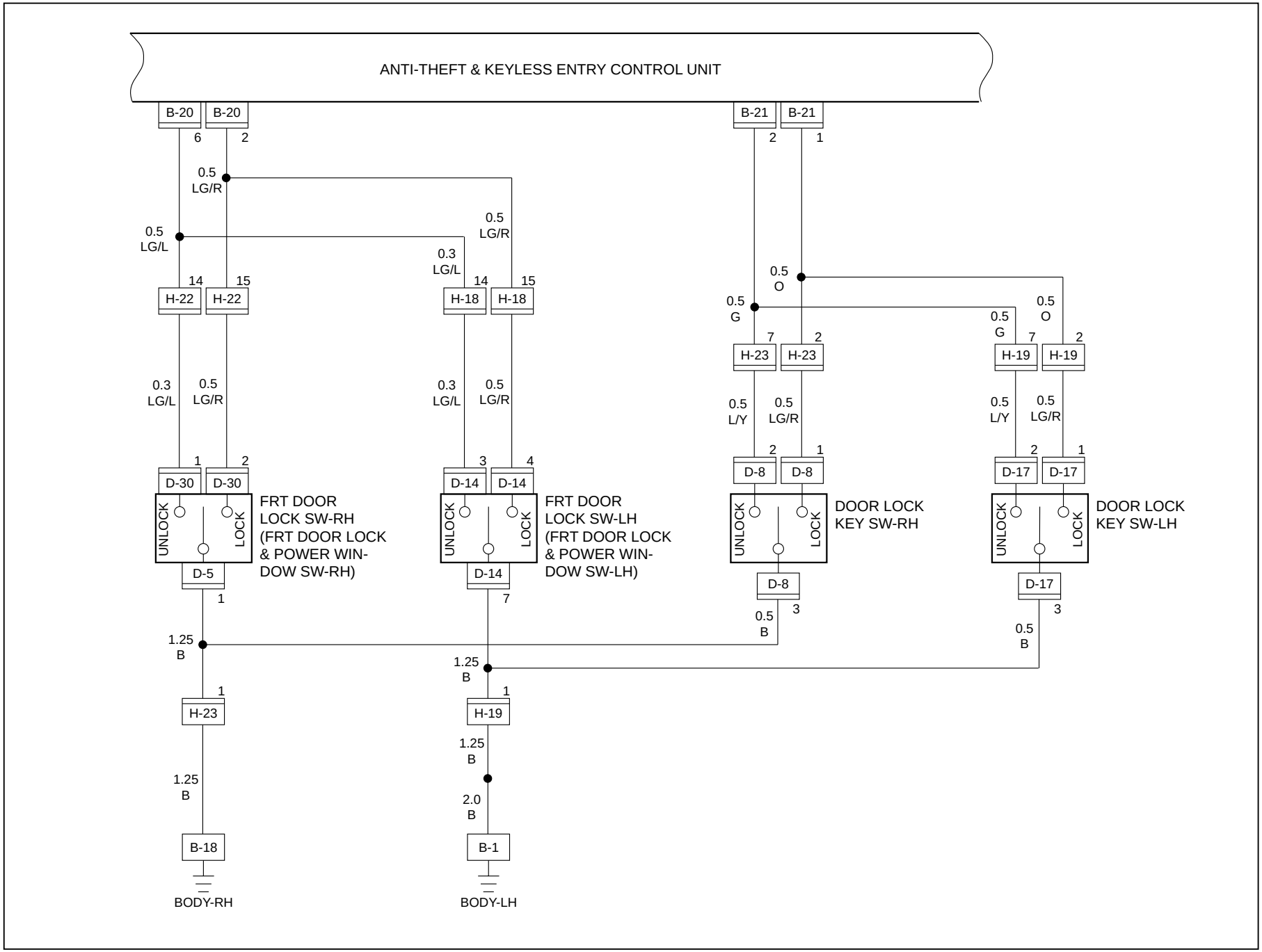

D8BW8689

Circuit Diagram (South Africa)-5

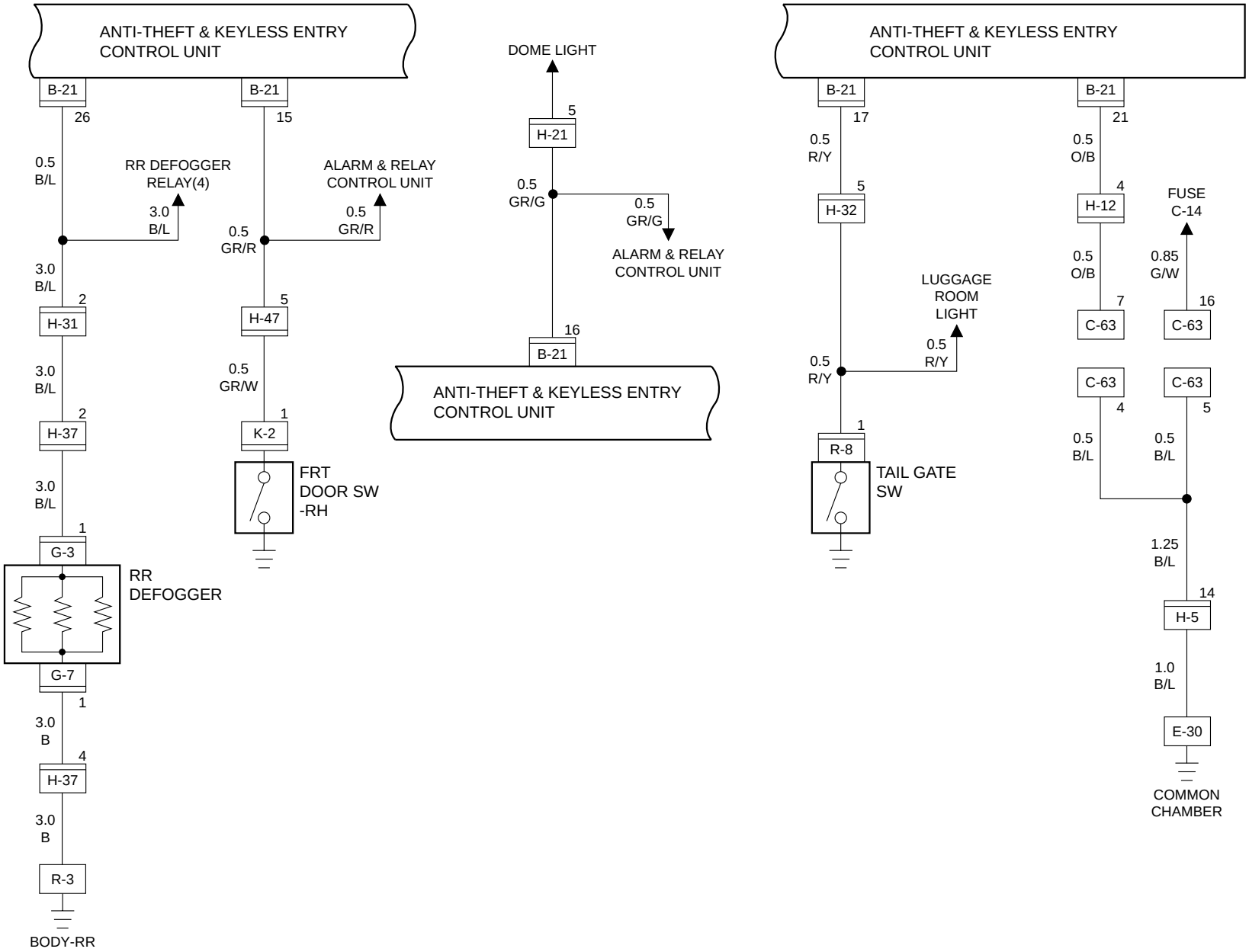

D08RM691

Parts Location (RHD)

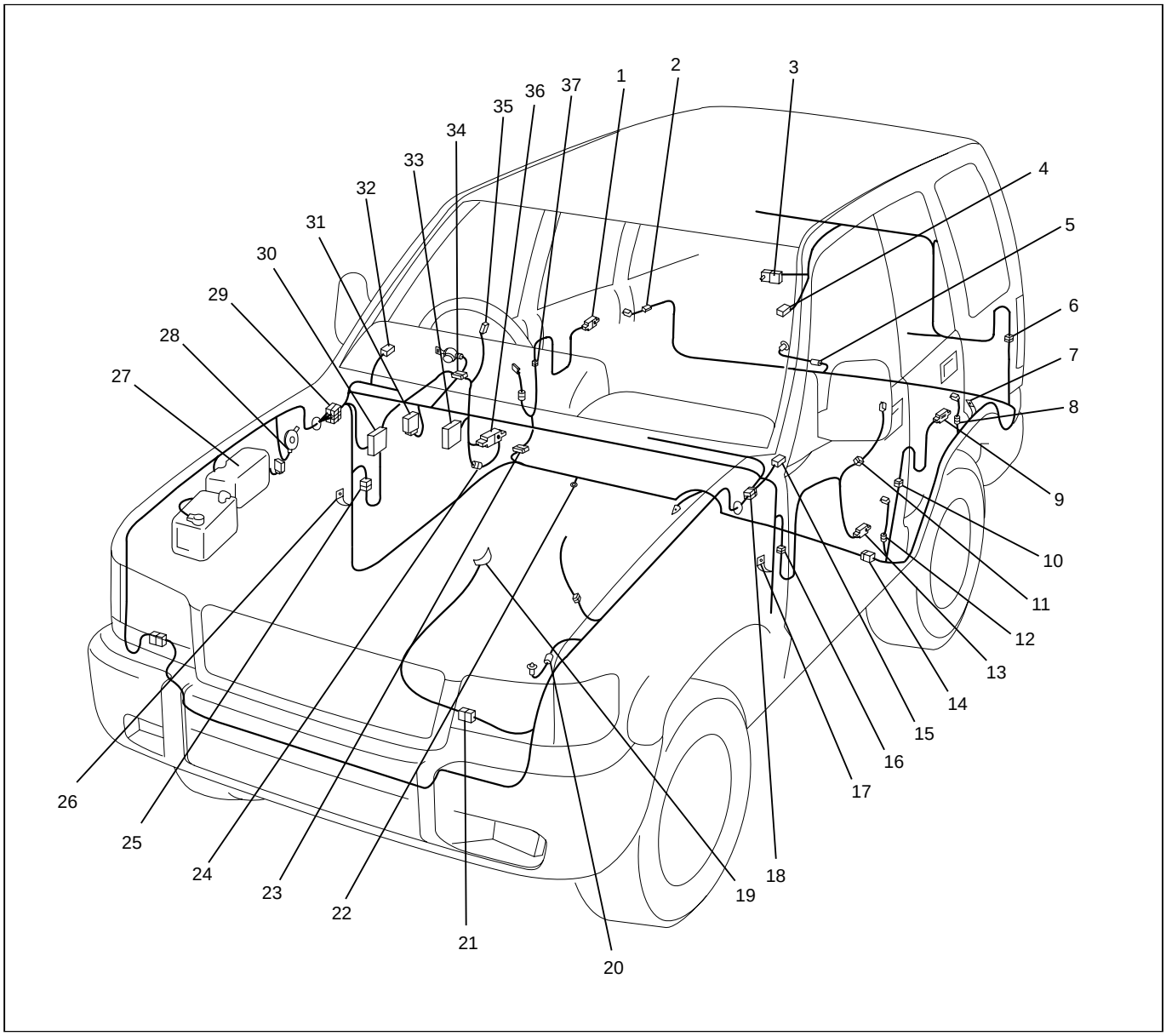

D08RW680

Legend

(1) D-26
(2) R-11
(3) G-4
(4) G-5
(5) R-8
(6) H-37, H-38
(7) R-3
(8) R-1
(9) D-21
(10) H-28, H-29
(11) D-17
(12) R-2
(13) D-19
(14) H-32
(15) H-21
(16) H-18, H-19
(17) B-1, B-2
(18) H-7, H-8
(19) M-25
(20) C-20
(21) H-10
(22) B-26
(23) H-47
(24) D-8
(25) H-22, H-23
(26) B-18, B-19
(27) Relay and Fuse Box
(28) C-19
(29) H-13, H-14, H-15, H-16, H-26
(30) Fuse Box
(31) B-22 (B-20, B-21 for South Africa)
(32) I-8
(33) D-5, D-30
(34) B-12
(35) D-6
(36) D-9
(37) D-26

Circuit Diagram (LHD 6VD1)-1

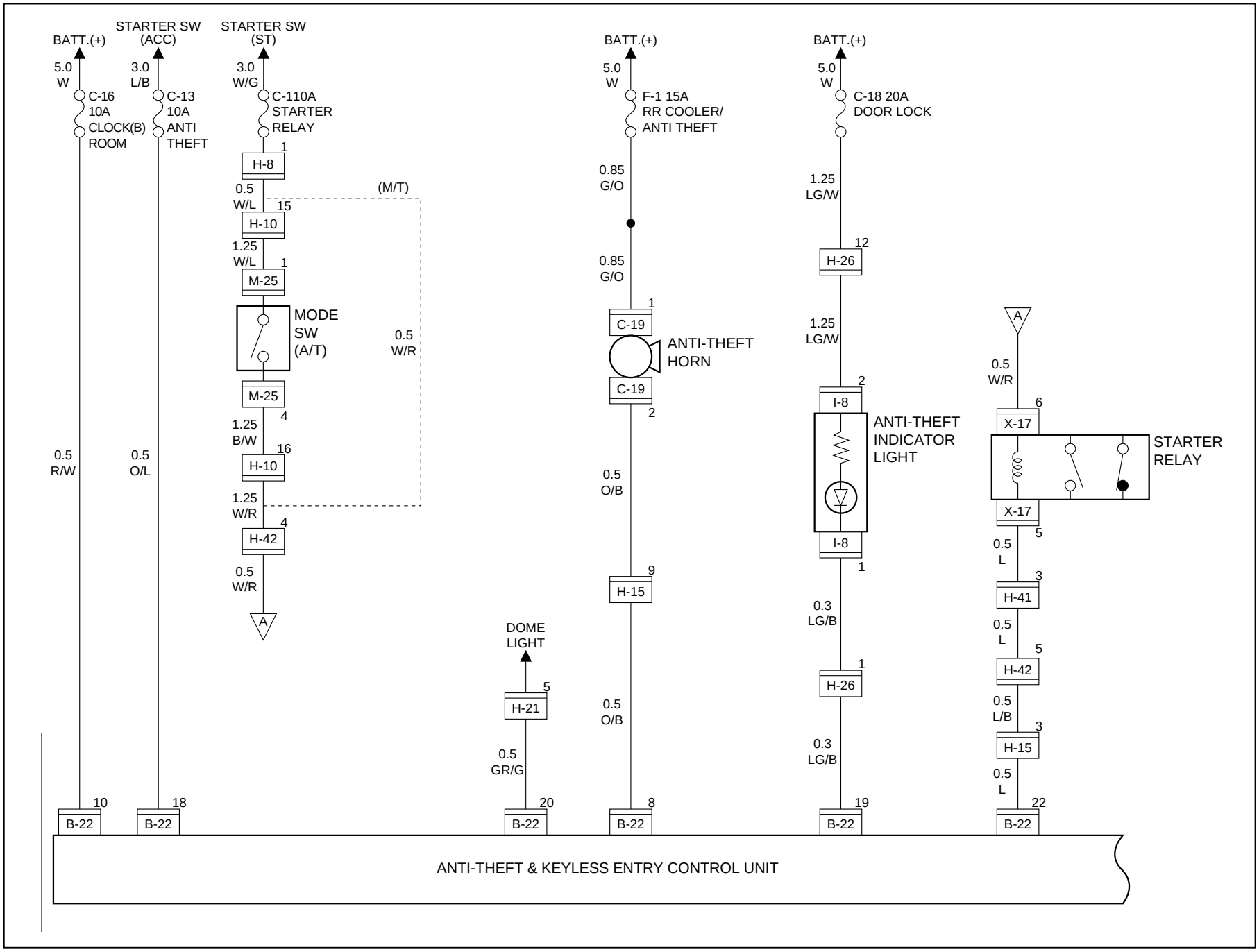

D08RW920

Circuit Diagram (LHD 4JG2)-1

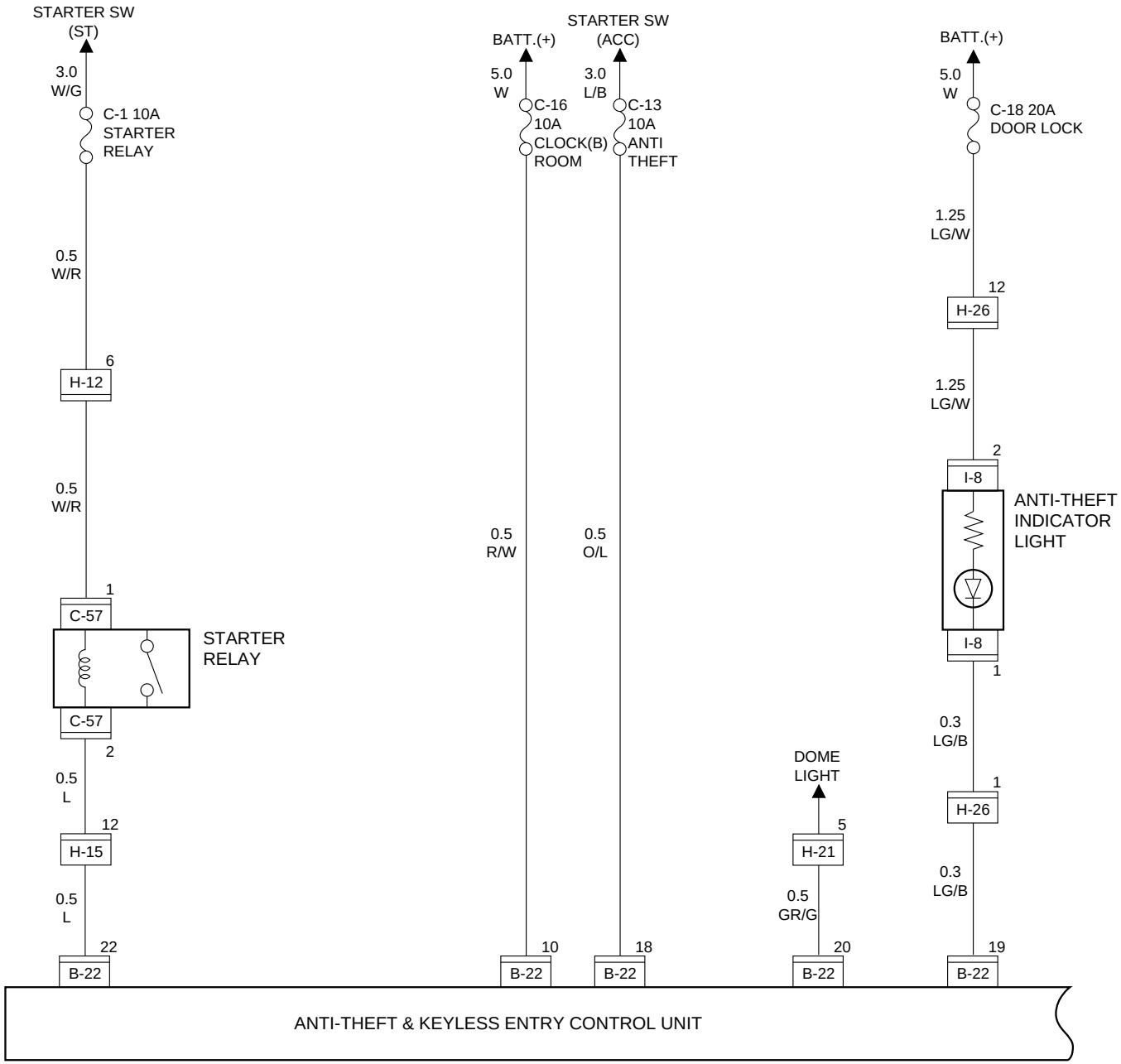

Circuit Diagram (LHD)-2

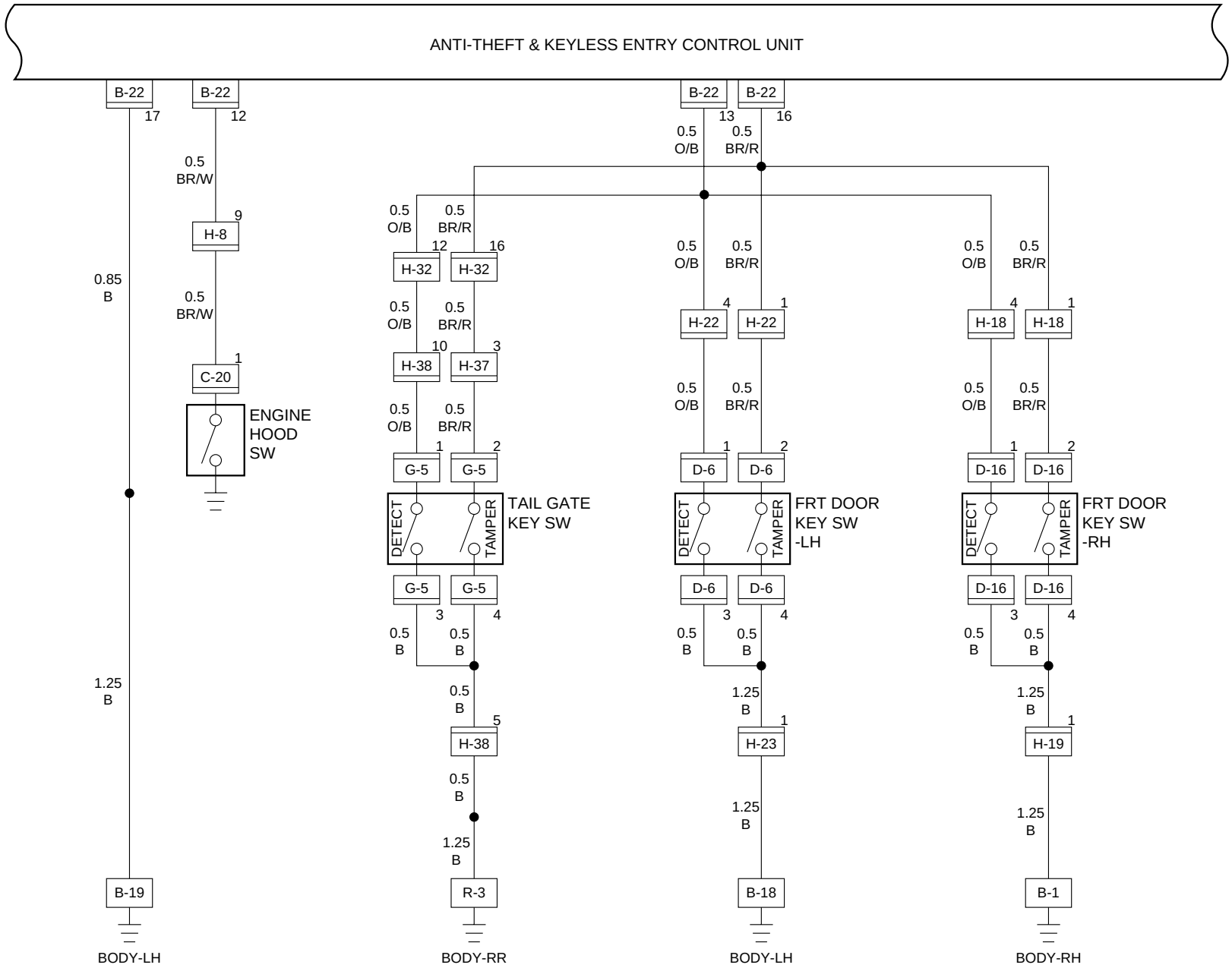

D08RM921

Circuit Diagram (LHD)-3

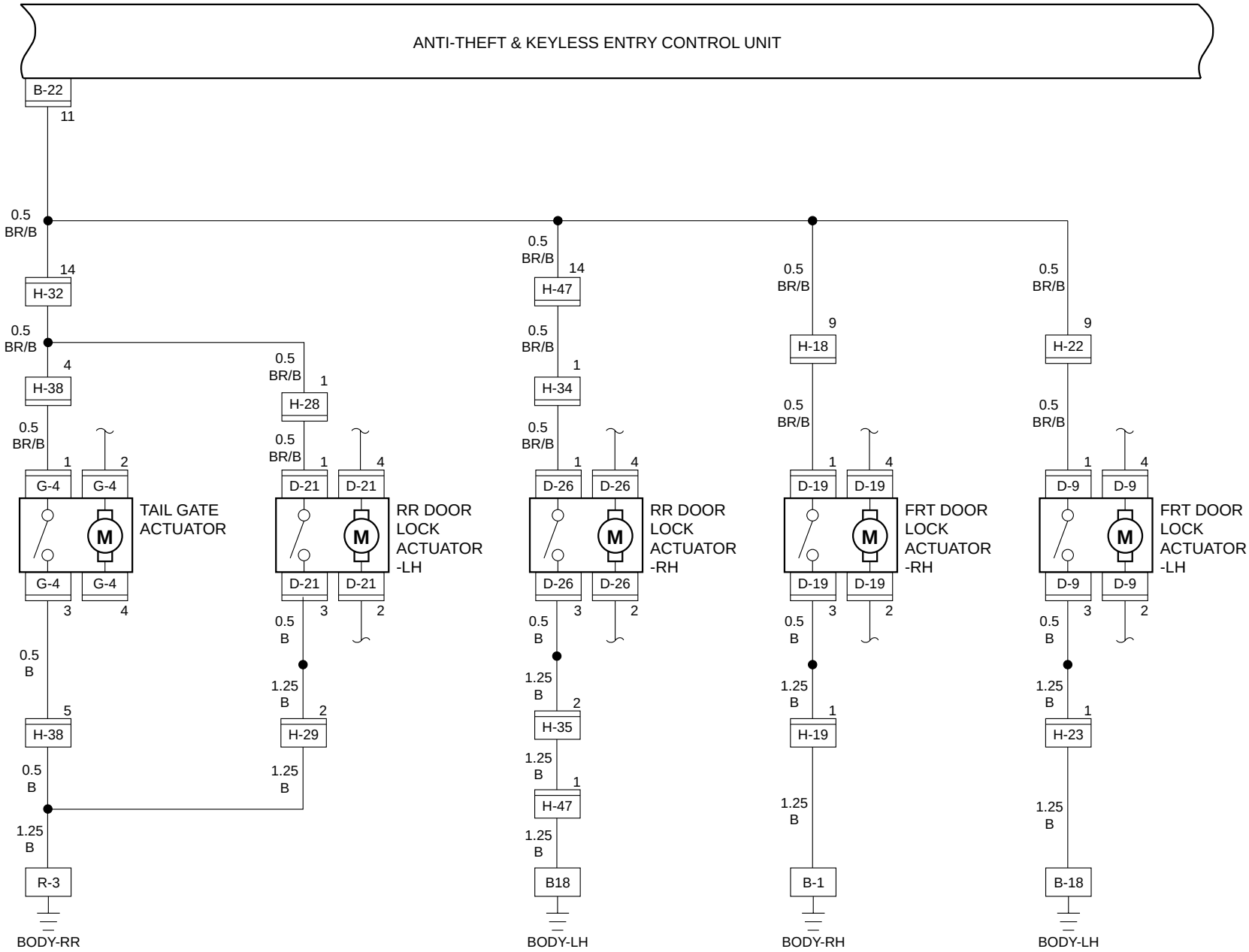

D08RW022

Circuit Diagram (LHD)-4

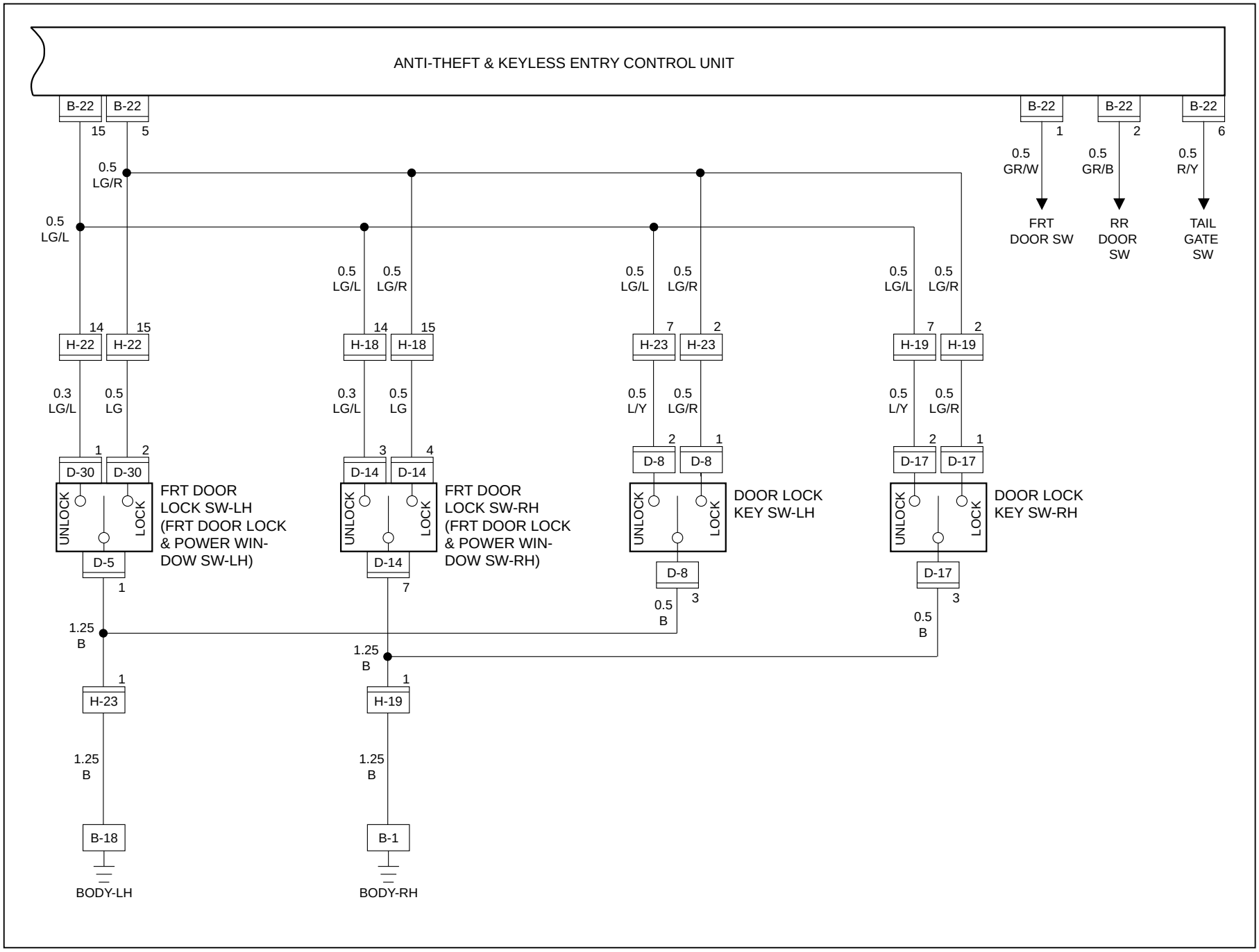

D08RW923

Parts Location (LHD)

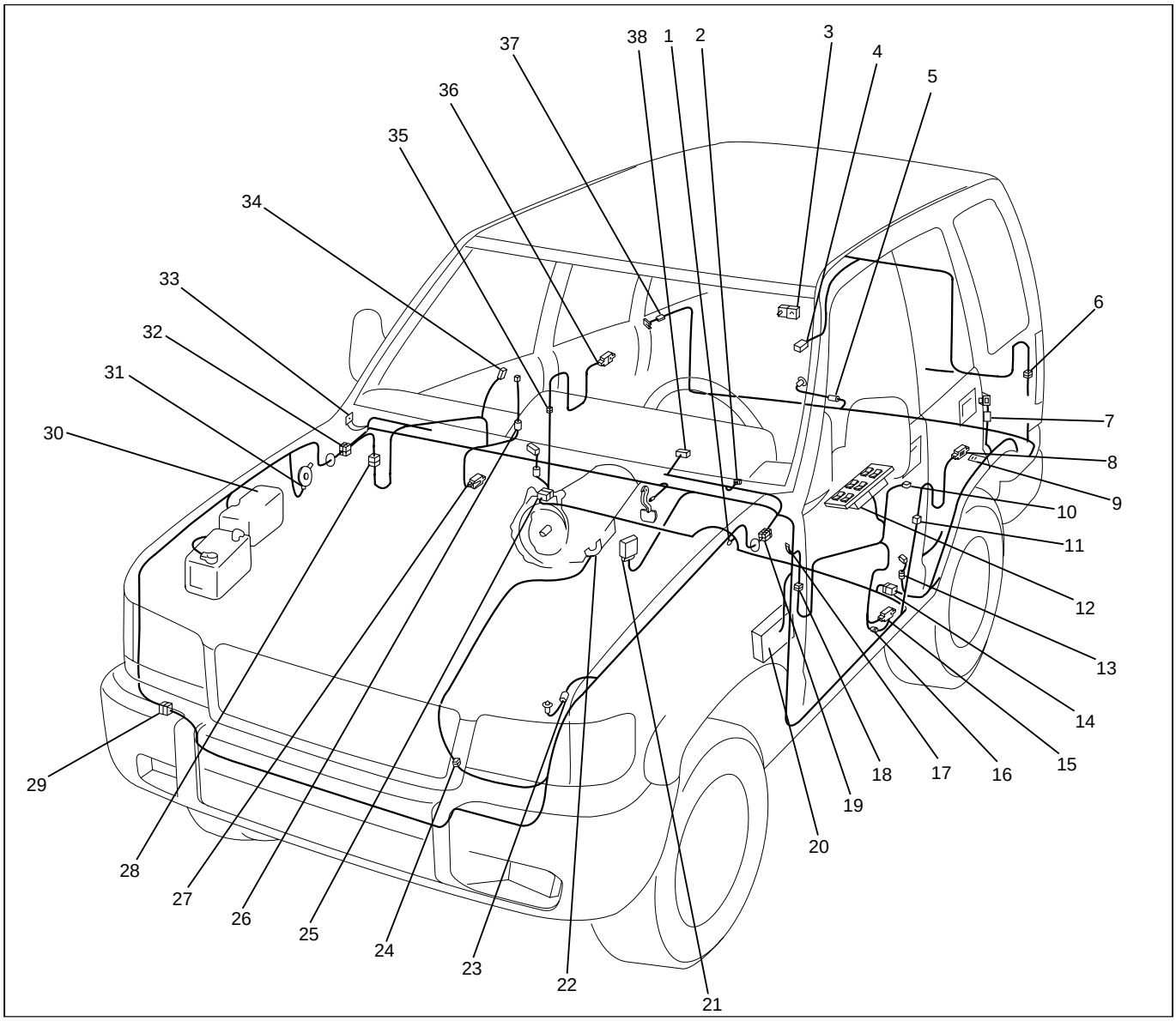

D08RW679

Legend

(1) B-26
(2) I-8
(3) G-4
(4) G-5
(5) R-8
(6) H-37, H-38
(7) R-1
(8) D-21
(9) R-3
(10) D-6
(11) H-28, H-29
(12) D-5, D-30
(13) B-22
(14) H-32
(15) D-9
(16) D-8
(17) B-18, B-19
(18) H-22, H-23
(19) H-8, H-26
(20) Fuse Box
(21) B-22
(22) M-25
(23) C-20
(24) H-10
(25) H-47
(26) D-17
(27) D-19
(28) H-18, H-19
(29) H-41, H-42
(30) Relay and Fuse Box (X-17)
(31) C-19
(32) H-12, H-15, H-21
(33) B-1
(34) D-16
(35) H-34, H-35
(36) D-26
(37) R-11
(38) B-12

Diagnosis

Diagnosis Procedure

1. Check to see if the battery voltage is normal.
2. Check to see if the fuse is normal.
3. Replace the anti–theft & keyless entry control unit with one reserved for test. If a trouble recurs even after replacing the control unit, find out the cause of the trouble by referring to “System check procedure” and the following list.

ITEM	MALFUNCTION	POSSIBLE CAUSE	DETECTING METHOD	REMARKS
A	ANTI–THEFT indicator light does not flash	Defective contact of door switch, or open circuit in door switch wiring.	With door open, dome light and courtesy light do not come on.	Burnt out indicator light bulb possible.
		Short circuit in the detect switch.	Check the control unit connector.	Refer to “Connector check table” in this system.
B	Indicator light does not change to fully ON condition, or does not come on at all.	Engine hood, doors and tailgate are not fully closed and locked.	Check to see if doors are closed and locked.	
		Defective door switch, or short circuit in switch wiring.	Dome light and courtesy light remain lit on after closing doors.	
		Defective tamper switch, or short circuit in wiring.	Check the control unit connector.	Refer to “Connector check table” in this system.
		Defective lock switch, or short circuit in wiring.	Check the control unit connector.	Refer to “Connector check table” in this system.
		Defective engine hood switch, or short circuit in wiring.	Check the control unit connector.	Refer to “Connector check table” in this system.
		Defective tailgate switch, or short circuit in wiring.	Luggage room light remains lit after closing tailgate.	
C	ANTI–THEFT indicator light does not turn off. (Steadily on)	Defective control unit.		
D	When door is opened by pulling up locking knob, alarm does not operate	Poor contact of lock switch, or open circuit in wiring.	Check alarm operation (See No. 46 of “System check procedure”), possible cause is a poor contact of lock switch of an open circuit in wiring.	
		Broken wire in wiring to headlight and horn, or a blown fuse.	Check to see if headlights go out. Check the control unit connector.	Refer to “Connector check table” in this system.
E	Alarm does not stop.	Defective contact of detect switch, or damaged switch wiring.	Check the control unit connector.	Refer to “Connector check table” in this system.

ITEM	MALFUNCTION	POSSIBLE CAUSE	DETECTING METHOD	REMARKS
F	Even when door unlocked with key, alarm operates.	Defective contact of detect switch, or damaged switch wiring.	Check the control unit connector.	Refer to “Connector check table” in this system.
		Door detect switch is assembled to wrong door.	When key is turned to lock position, alarm stops.	
G	Alarm does not operate even with tailgate open.	Defective contact of tailgate switch, or defective wiring.	When luggage room light switch is turned on with tailgate open, luggage room light does not come on.	
H	Even when tailgate is opened with key, alarm does not stop.	Defective contact of tailgate detect switch, or damage wiring.	Check the control unit connector.	Refer to “Connector check table” in this system.
I	Even when engine hood is opened with remote release, alarm does not operate	Damaged engine hood switch or wiring.		
J	Even when starter switch is turned, alarm does not stop	Defective contact of starter switch.	With starter switch turned to “ACC” position, audio, cigarette lighter and door mirrors (on “ACC” circuit) do not operate.	
K	Indicator light continues flashing	Damaged door switch, or a short circuit in wiring.	After closing door, dome light and courtesy light remain on.	
		Damaged tamper switch, or a short circuit in wiring.	Check the control unit connector.	Refer to “Connector check table” in this system.

System Check Procedure

STEP	OPERATION	ITEM TO BE CHECKED	ITEM OF MALFUNCTION	REMARKS
1	Turn starter key to “ON” position.	Check to see if engine hood, tailgate and doors are closed and locked.		
2	Open windows fully.			
3	Pull out starter key after turning it back to “OFF” position.	Check to see if indicator light remains lit off.	K	
4	Unlock left front door with locking knob.			
5	Open left front door. (And get out of the vehicle.)	Check to see if indicator light flashes.	A	
		Check to see if dome light and courtesy light illuminate.		
6	Close left front door.			Be sure to lock door with locking knob.
7	Lock left front door.	Check to see if indicator light changes from flashing to steadily on.	B	
8	Wait about 10 seconds	Check to see if indicator light turns off in about 10 seconds.	C	Activate alarm device.
9	Unlock left front door with locking knob.	Check to see if alarm operates (with headlight flashing, and horn blaring intermittently.)	D	All doors are unlocked.
10	Insert key into key cylinder of left front door and turn it in unlock direction.	Check to see if alarm stops.	E	With key set at unlock position, check to see if alarm stops.
11	Lock left front door.	Check to see if indicator light turns on.	B	All doors are locked.
12	Wait for about 10 seconds.	Check to see if indicator light goes off after about 10 seconds.	C	Activate alarm device.
13	Unlock left front door with key.	Check to see if alarm does not operate.	F	
14	Lock left front door with key.	Check to see if indicator light turns on.	B	
15	Wait for about 10 seconds.	Check to see if indicator light goes off after about 10 seconds.	C	Activate alarm device.
16	Unlock left rear door with locking knob.	Check to see if alarm starts.	D	Only left rear door is unlocked.

STEP	OPERATION	ITEM TO BE CHECKED	ITEM OF MALFUNCTION	REMARKS
17	Insert key into key cylinder of left front door and turn it to unlock direction.	Check to see if alarm stops.	E	With key set at unlock position, check to see if alarm stops. (All doors are unlocked.)
18	Open left rear door.	Check to see if indicator light flashes.	A	
		Check to see if dome light and courtesy light come on.		
19	With one person in vehicle, close left rear door.			
20	Lock left front door with locking knob.	Check to see if indicator light is steadily on.	B	All doors are locked.
21	Wait about 10 seconds.	Check to see if indicator light turns off in about 10 seconds.	C	Activate alarm device.
22	Unlock tailgate from inside with locking knob.	Check to see if alarm operates.	D	Only tailgate is unlocked.
23	Open tailgate, insert key into key cylinder of tailgate and turn it in lock direction.	Check to see if alarm stops.	H	With key set at unlock position, check to see if alarm stops.
24	Leave tailgate open.	Check to see if indicator light flashes.	A	
		Check to see if luggage room light on.	G	
25	Close tailgate			
26	Insert key into tailgate key cylinder and turn it in lock direction.	Check to see if indicator light changes over from flashing into lighting condition.	B	
27	Wait about 10 seconds.	Check to see if indicator light goes off after about 10 seconds.	C	Activate alarm device.
28	Unlock tailgate with key.	Check to see if alarm does not operate.	F	
29	Lock tailgate with key.	Check to see if indicator light come on.	B	
30	Wait about 10 seconds.	Check to see if indicator light goes off after about 10 seconds.	C	Activate alarm device.

STEP	OPERATION	ITEM TO BE CHECKED	ITEM OF MALFUNCTION	REMARKS
31	Unlock right rear door with locking knob.	Check to see if alarm operates.	D	Only right rear door is unlocked.
32	Insert key into key cylinder of right front door and turn it in unlock direction.	Check to see if alarm stops.	E	With key at unlock position, check to see if alarm stops. (With all doors unlocked.)
33	Open right rear door.	Check to see if indicator light flashes.	A	
		Check to see if dome light and courtesy light come on.		
34	Close right rear door.			
35	Insert key into key cylinder of right front door and turn it in lock direction.	Check to see if indicator light stays on steadily.	B	
36	Wait about 10 seconds.	Check to see if indicator light goes off after about 10 seconds.	C	Activate alarm device.
37	Unlock right front door with locking knob.	Check to see if alarm operates.	D	Only right front door is unlocked.
38	Insert key into key cylinder of right front door and turn it in unlock direction.	Check to see if alarm stops.	E	With key at unlock position, check to see if alarm stops. (With all doors unlocked.)
39	Open right front door.	Check to see if indicator light flashes.	A	
		Check to see if dome light and courtesy light come on.		
40	Close right front door.			
41	Lock right front door with key.	Check to see if indicator light stays on steadily.	B	
42	Wait about 10 seconds.	Check to see if indicator light goes off after about 10 seconds.	C	Activate alarm device.
43	Unlock right front door with key.	Check to see if alarm does not operate.	F	
44	Lock right front door with key.	Check to see if indicator light stays on steadily.	B	

STEP	OPERATION	ITEM TO BE CHECKED	ITEM OF MALFUNCTION	REMARKS
45	Wait about 10 seconds.	Check to see if indicator light goes off after about 10 seconds.	C	Activate alarm device.
46	Open engine hood with engine hood release handle.	Check to see if alarm operates.	I	
47	Insert key into starter switch and turn it to “ACC” position.	Check to see if alarm stops.	J	

NOTE: When the connector of the anti–theft & keyless entry control unit is disconnected, the starter is inoperative.
In the checking of short wheel base model, Step Nos. 16 through 21 and Step Nos. 31 through 36 are omitted.

Connector Check Table

Check the anti–theft & keyless entry control unit harness side connector B–20 by using a circuit tester.

TERMINAL NO.	CONNECTION	CHECK ITEM	OPERATION	CIRCUIT CONDITION
1	FRT door switch–LH, RH	Continuity	Open door	Continuity
			Close door	No continuity
2	RR door switch–LH, RH	Continuity	Open door	Continuity
			Close door	No continuity
3	—	—	–	–
4	Door lock key switch–LH, RH	Continuity	Lock with key	Continuity
5	FRT door lock switch–LH, RH	Continuity	Lock	Continuity
6	Tailgate switch	Continuity	Open tailgate	Continuity
			Close tailgate	No continuity
8	Anti–theft horn	Voltage	–	Approx. 12V
10	Battery	Voltage	–	Approx. 12V
11	Door switch	Continuity	Unlock with locking knob	Continuity
			Lock with locking knob	No continuity
12	Engine hood switch	Continuity	Open engine hood	Continuity
			Close engine hood	No continuity
13	Detect switch	Continuity	Unlock with key	Continuity
			Lock with key	No continuity
14	Door lock key switch	Continuity	Unlock	Continuity
15	FRT door lock switch–LH, RH	Continuity	Unlock	Continuity
16	Tamper switch	Continuity	–	No continuity
17	Ground	Continuity	–	Continuity
18	Starter switch	Voltage	Starter switch “ACC”	Approx. 12V
19	Indicator light	Voltage	–	Approx. 12V
20	Dome light	Voltage	Dome light “DOOR” position	Approx. 12V
21	Anti-theft relay	Voltage	–	Approx. 12V
22	Starter relay	Voltage	Mode switch “P” or “N”	Approx. 12V
			Clutch pedal depressed	Approx. 12V

ID Code Registration

There are four kinds of ID codes which can be registered, for which these three modes, ID code new registration, ID code additional registration and ID code check, are available.

ID Code New Registration

This procedure erases all registered ID codes and registers a new received ID code instead.

Step	Action	Yes	No
1	1. Open the driver's side door. 2. Turn the starter switch off. Is the action complete?	Go to Step 2	—
2	Turn the starter switch to ACC position and then off three times within five seconds after step 1. Is the action complete within five seconds?	Go to Step 3	Finished
3	Close the door and then open it two times within ten seconds after step 2. Is the action complete within ten seconds?	Go to Step 4	Finished
4	1. Turn the starter switch to ACC position and then off five times. 2. Close the door and then open it. NOTE: This step must be performed within ten seconds after step 3. Is the action complete?	Go to Step 5	Finished
5	The control unit makes lock/unlock response once with interval of one second. Is the response complete?	Go to Step 6	—
6	Operate the lock or unlock button of transmitter within twenty seconds after step 5. Is the action complete?	Go to Step 7	Finished
7	The control unit makes lock/unlock response once with interval of one second as ID temporary registration. Is the response complete?	Go to Step 8	—
8	Operate the lock or unlock button of transmitter within twenty seconds after step 7. Is the action complete?	Go to Step 9	Finished
9	The control unit compares temporary registered ID code with receiving ID code. Is temporary registered ID code the same as receiving ID code?	Go to Step 11	Go to Step 11
10	The control unit makes lock/unlock response three times with interval of one second. Is the response complete?	Finished	—
11	The control unit erases all registered ID codes and registers new ID code. Is the registration complete?	Go to Step 12	Go to Step 13

Step	Action	Yes	No
12	The control unit makes lock/unlock response once with interval of one second. Is the response complete?	Finished	—
13	The control unit makes lock/unlock response three times with interval of one second. Is the response complete?	Finished	—

ID Code Additional Registration

This procedure additionally registers a new received ID code with holding registered ID codes. When total number of registered ID codes and newly registered ID code exceeds four, they are erased in order of older one.

Step	Action	Yes	No
1	1. Open the driver's side door. 2. Turn the starter switch off. Is the action complete?	Go to Step 2	—
2	Turn the starter switch to ACC position and then off three times within five seconds after step 1. Is the action complete within five seconds?	Go to Step 3	Finished
3	Close the door and then open it two times within ten seconds after step 2. Is the action complete within ten seconds?	Go to Step 4	Finished
4	1. Turn the starter switch to ACC position and then off three times. 2. Close the door and then open it. NOTE: This step must be performed within ten seconds after step 3. Is the action complete?	Go to Step 5	Finished
5	The control unit makes lock/unlock response two times with interval of one second. Is the response complete?	Go to Step 6	—
6	Operate the lock or unlock button of transmitter within twenty seconds after step 5. Is the action complete?	Go to Step 7	Finished
7	The control unit makes lock/unlock response two times with interval of one second as ID temporary registration. Is the response complete?	Go to Step 8	—
8	Operate the lock or unlock transmitter within twenty seconds after step 7. Is the action complete?	Go to Step 9	Finished
9	The control unit compares temporary registered ID code with receiving ID code. Is temporary registered ID code the same as receiving ID code?	Go to Step 11	Go to Step 10
10	The control unit makes lock/unlock response three times with interval of one second. Is the response complete?	Finished	—
11	The control unit registers new ID code. Is the registration complete?	Go to Step 12	Go to Step 13

Step	Action	Yes	No
12	The control unit makes lock/unlock response once with interval of one second. Is the response complete?	Finished	—
13	The control unit makes lock/unlock response three times with interval of one second. Is the response complete?	Finished	—

ID Code Check

This procedure checks how many kinds of ID code are registered.

Step	Action	Yes	No
1	1. Open the driver's side door. 2. Turn the starter switch off. Is the action complete?	Go to Step 2	—
2	Turn the starter switch to ACC position and then off three times within five seconds after step 1. Is the action complete within five seconds?	Go to Step 3	Finished
3	Close the door and then open it two times within ten seconds after step 2. Is the action complete within ten seconds?	Go to Step 4	Finished
4	1. Turn the starter switch to ACC position and then off. 2. Close the door and then open it. NOTE: This step must be performed within ten seconds after step 3. Is the action complete?	Go to Step 5	Finished
5	The control unit makes lock/unlock response twice as many the number of registered ID code with interval of two seconds. (In case of no registered code, the response is made ten times.) Is the response complete?	Finished	—

Answer Back (Anti–theft Horn Operation) Change Mode

Anti–theft horn, as an answer back function for the transmitter operation, changes from available into unavailing or from unavailing into available by this procedure.

Step	Action	Yes	No
1	Open the driver's side door. Is the action complete?	Go to Step 2	—
2	Lock the door and then unlock it three times within ten seconds after step 1. Is the action complete within five seconds?	Go to Step 3	Finished
3	Close the door and then open it two times within ten seconds after step 2. Is the action complete within ten seconds?	Go to Step 4	Finished

Step	Action	Yes	No
4	1. Lock the door and unlock it three times. 2. Close the door and then open it. NOTE: This step must be performed within ten seconds after step 3. Is the action complete?	Go to Step 5	Finished
5	Answer back mode changes. Is this step complete?	Go to Step 6	Go to Step 7
6	The control unit makes lock/unlock response once with interval of one second. Is the response complete?	Finished	—
7	The control unit makes lock/unlock response three times with interval of one second. Is the response complete?	Finished	—

Anti–theft & Keyless Entry Control Unit/Transmitter Replacement

Anti–theft & Keyless Entry Control Unit Replacement

1. Remove and install the control unit.
   - Refer to Anti–theft & Keyless Entry Control Unit Removal and Installation in this section.
2. Register ID code.
   - Refer to ID Code Registration in this section.
3. Check that the keyless entry system works normally.

Transmitter Replacement

1. Prepare a new transmitter.
2. Register ID code.
   - Refer to ID Code Registration in this section.
3. Check that the keyless entry system works normally.

Transmitter Battery Replacement

1. Remove a screw to remove the cover.
2. Remove the batteries.
3. Set the new batteries into the transmitter.
4. Install the cover to the transmitter.
5. Check that the keyless entry system works normally.

Meter and Warning/Indicator Light

General Description

The circuit consists of meter assembly vehicle speed sensor, engine coolant temperature sensor, seat belt switch, oil pressure switch, brake fluid switch, parking brake switch and other some switches and sensors.

Meter assembly contains speedometer, tachometer, voltmeter, engine coolant temperature gauge, oil pressure gauge, fuel gauge, warning/indicator light and illumination light.

Circuit Diagram (RHD 6V*1 W/O T.O.D)-1

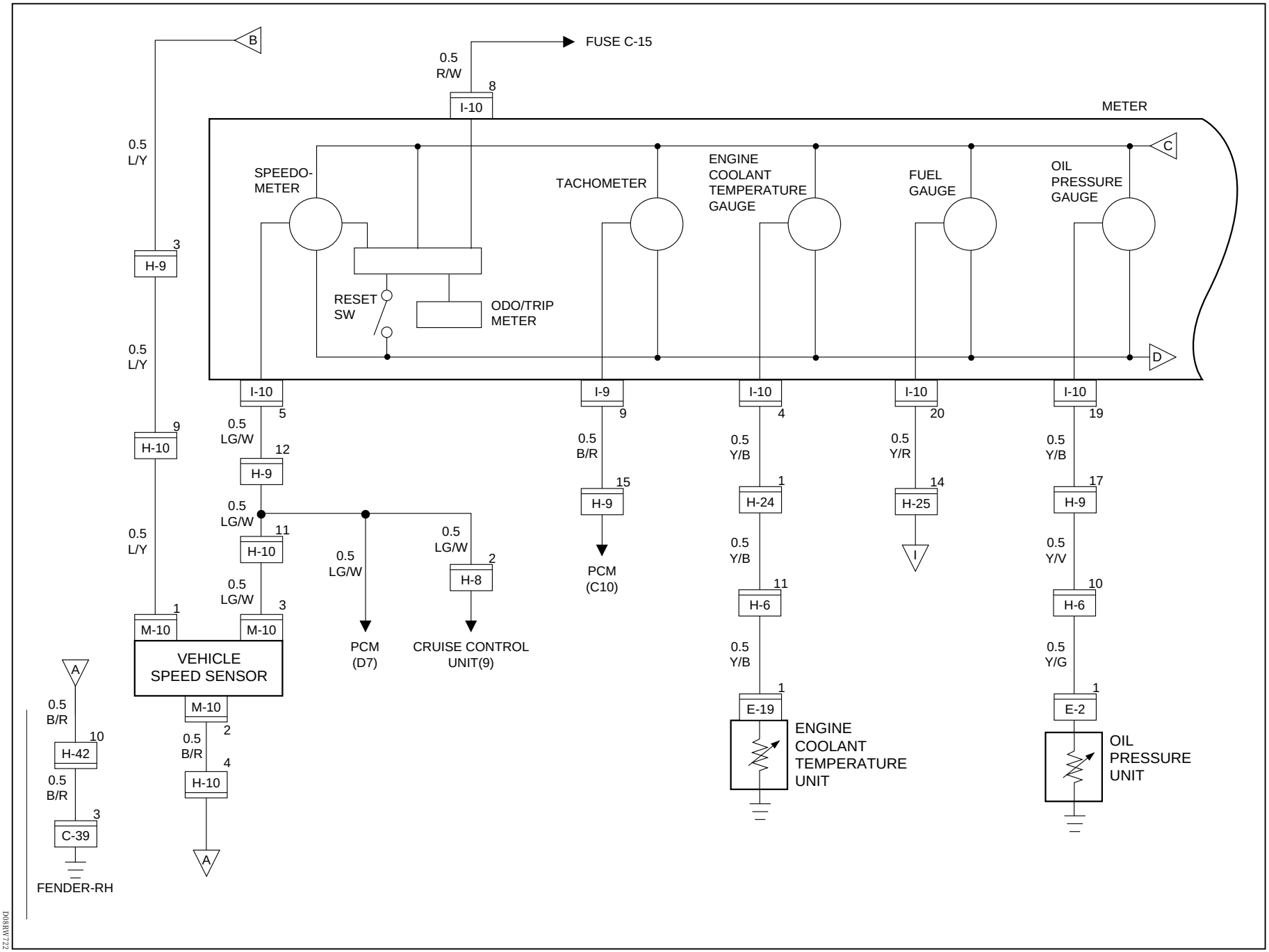

Circuit Diagram (RHD 6V*1 W/O T.O.D)-2

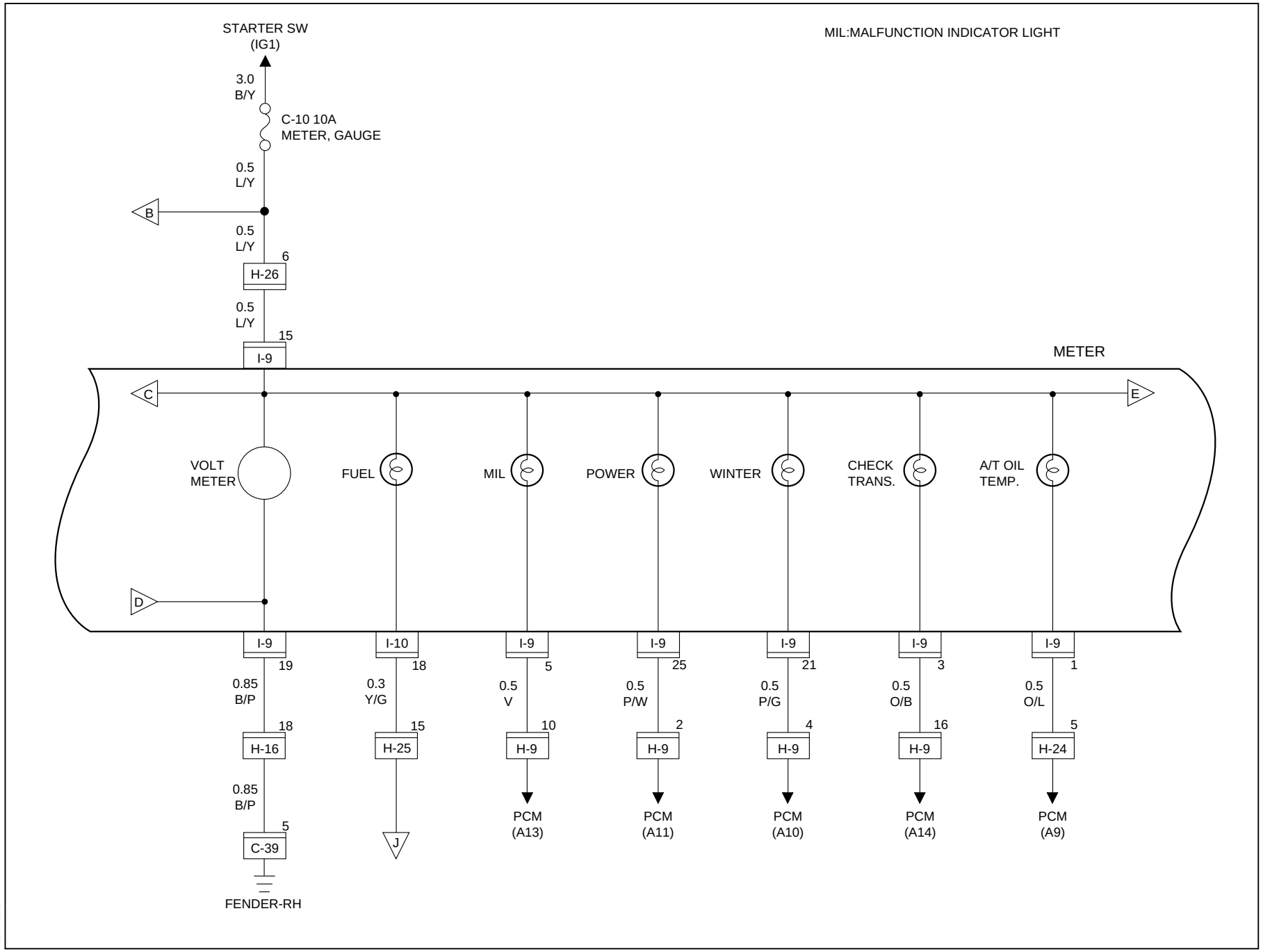

Circuit Diagram (RHD 6V*1 W/O T.O.D)-3

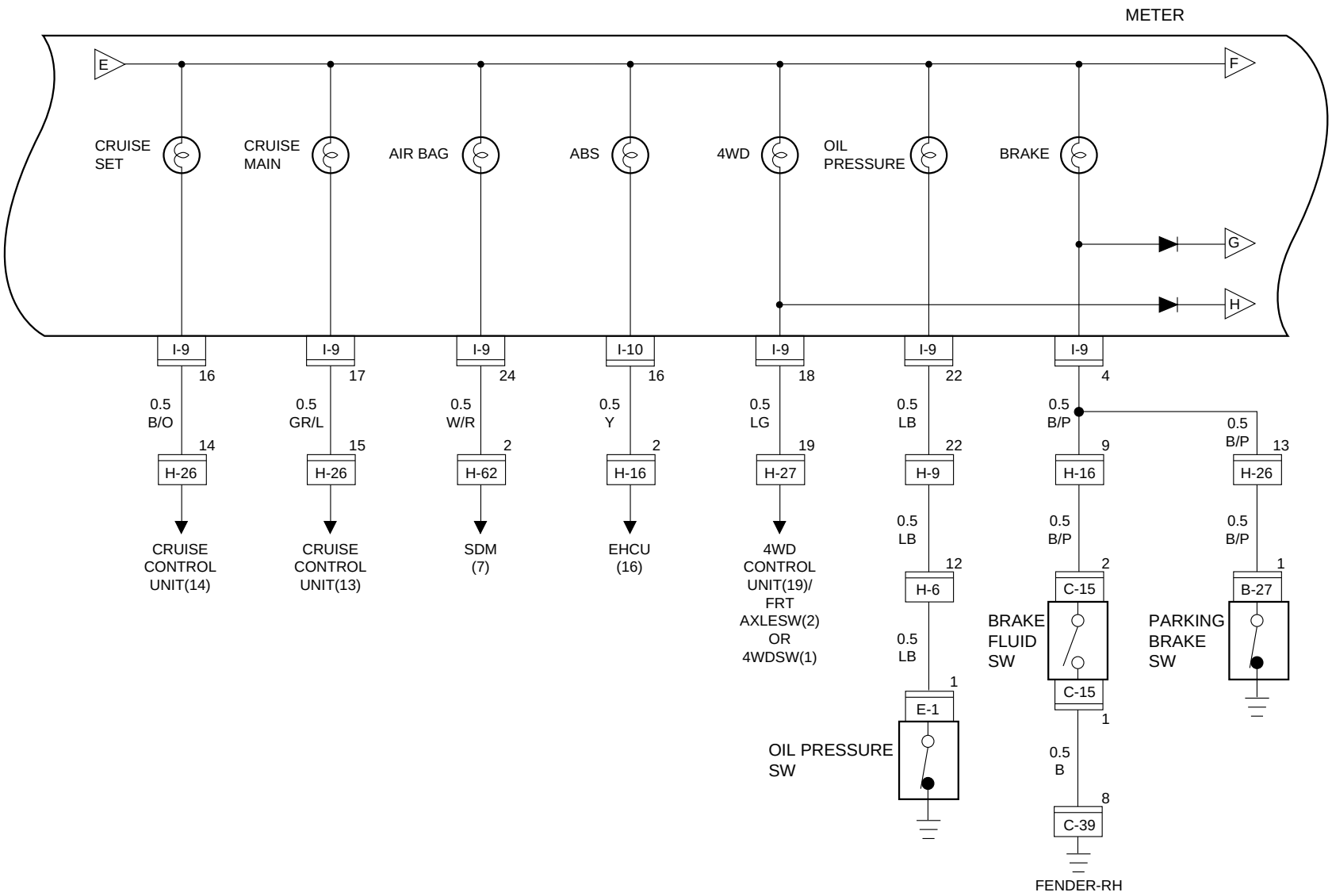

Circuit Diagram (RHD 6VD1 W/O T.O.D)-4

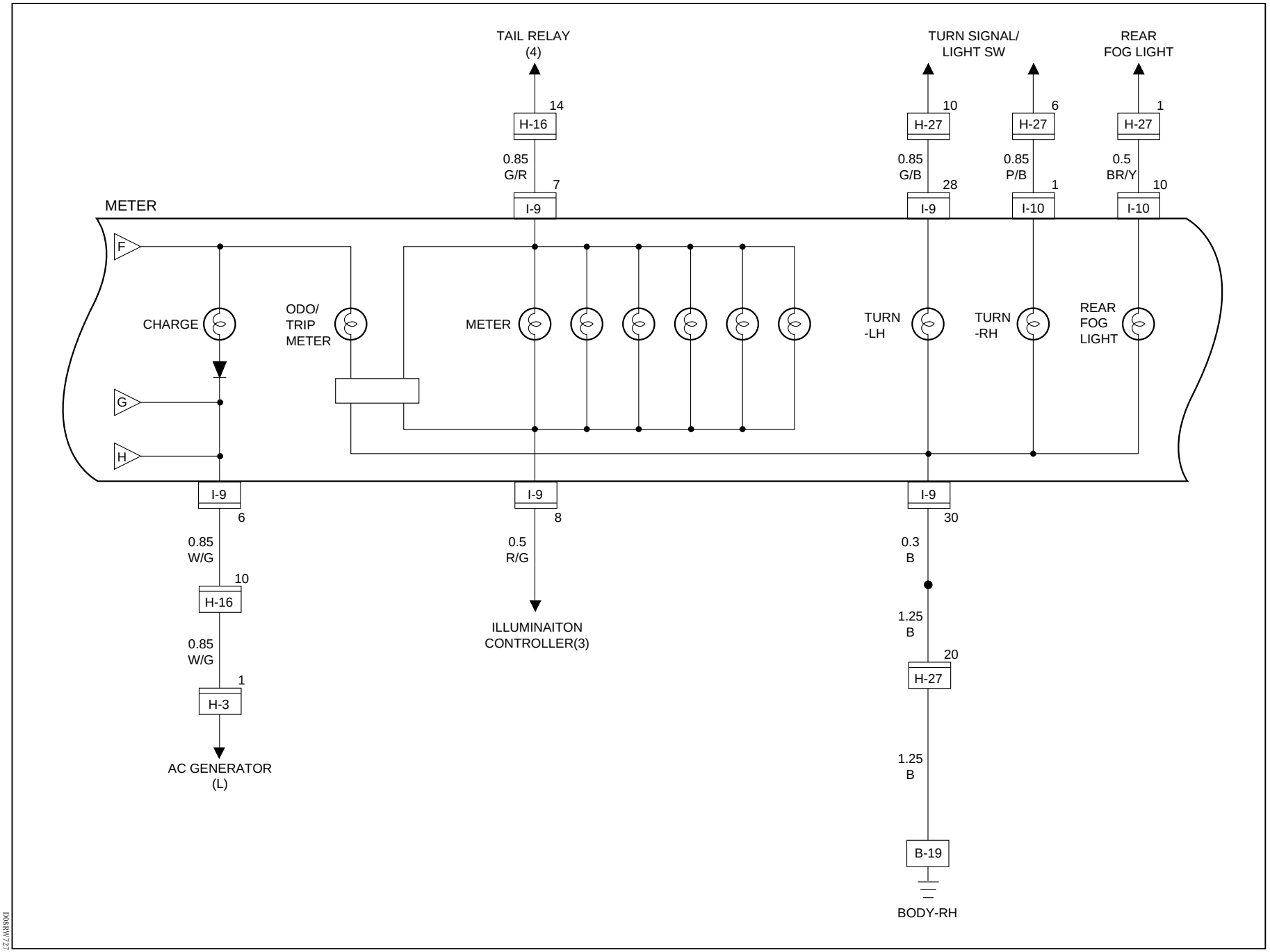

D08RW22

Circuit Diagram (RHD 6VD1 W/O T.O.D)-5

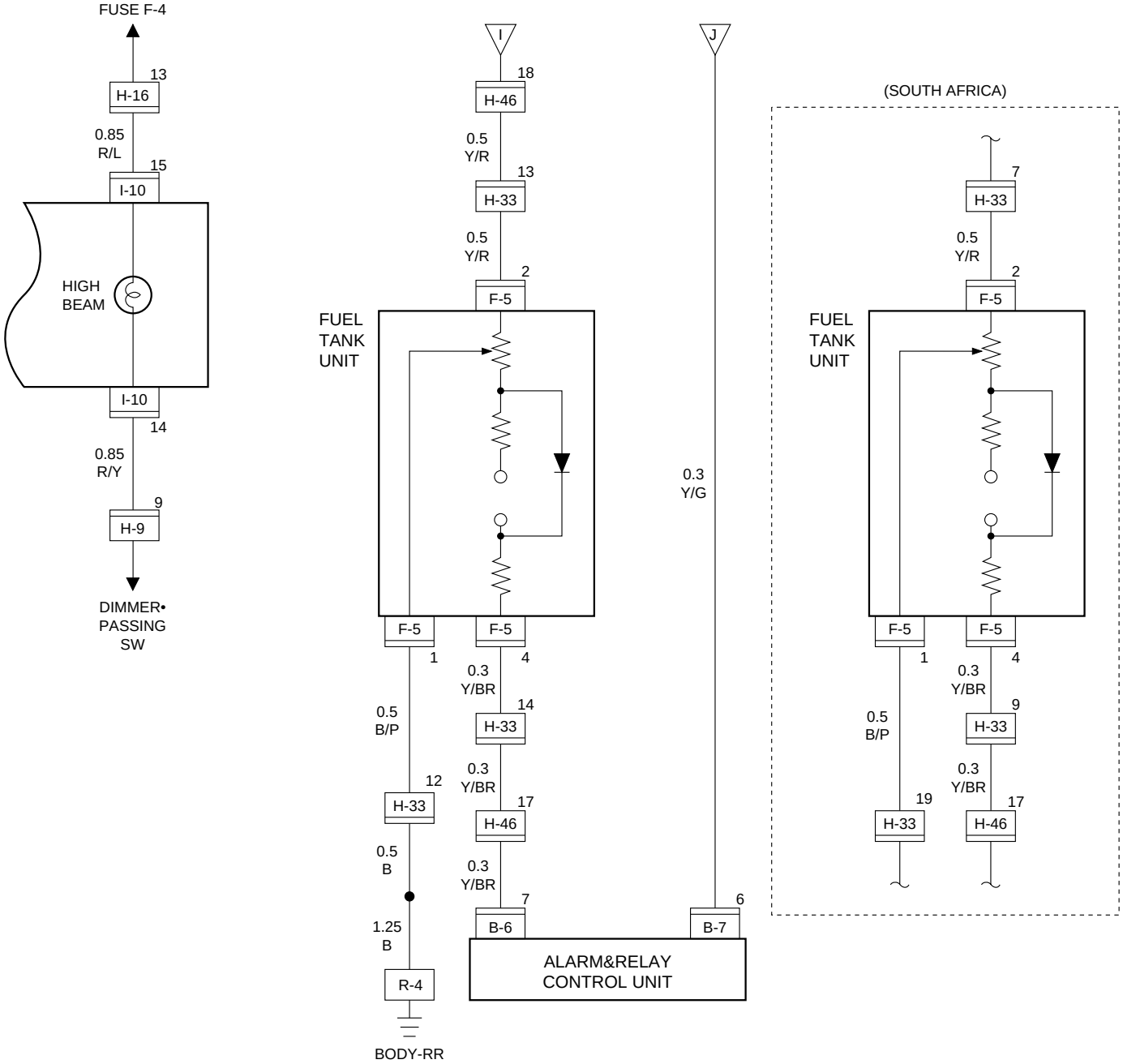

Circuit Diagram (RHD 6V*1 W/O T.O.D)-6

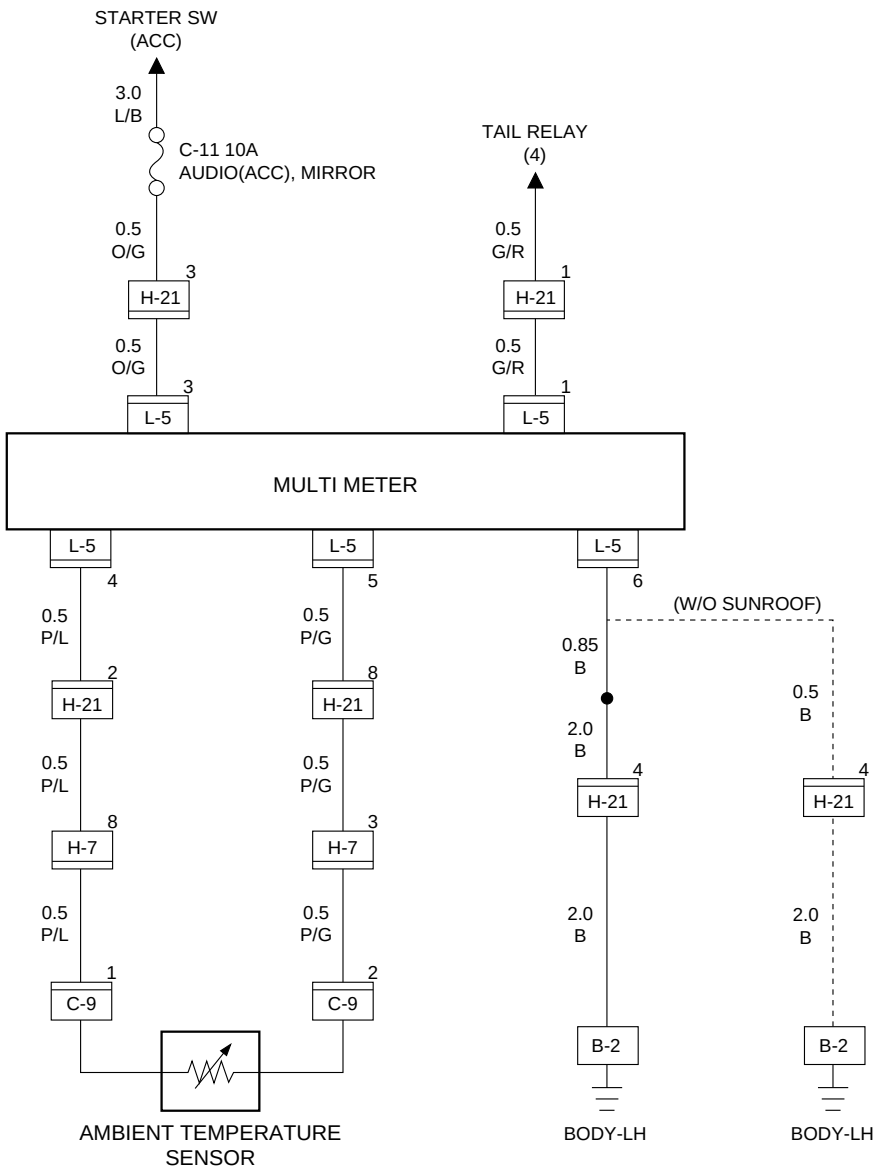

Circuit Diagram (RHD 6V*1 W/T.O.D)-1

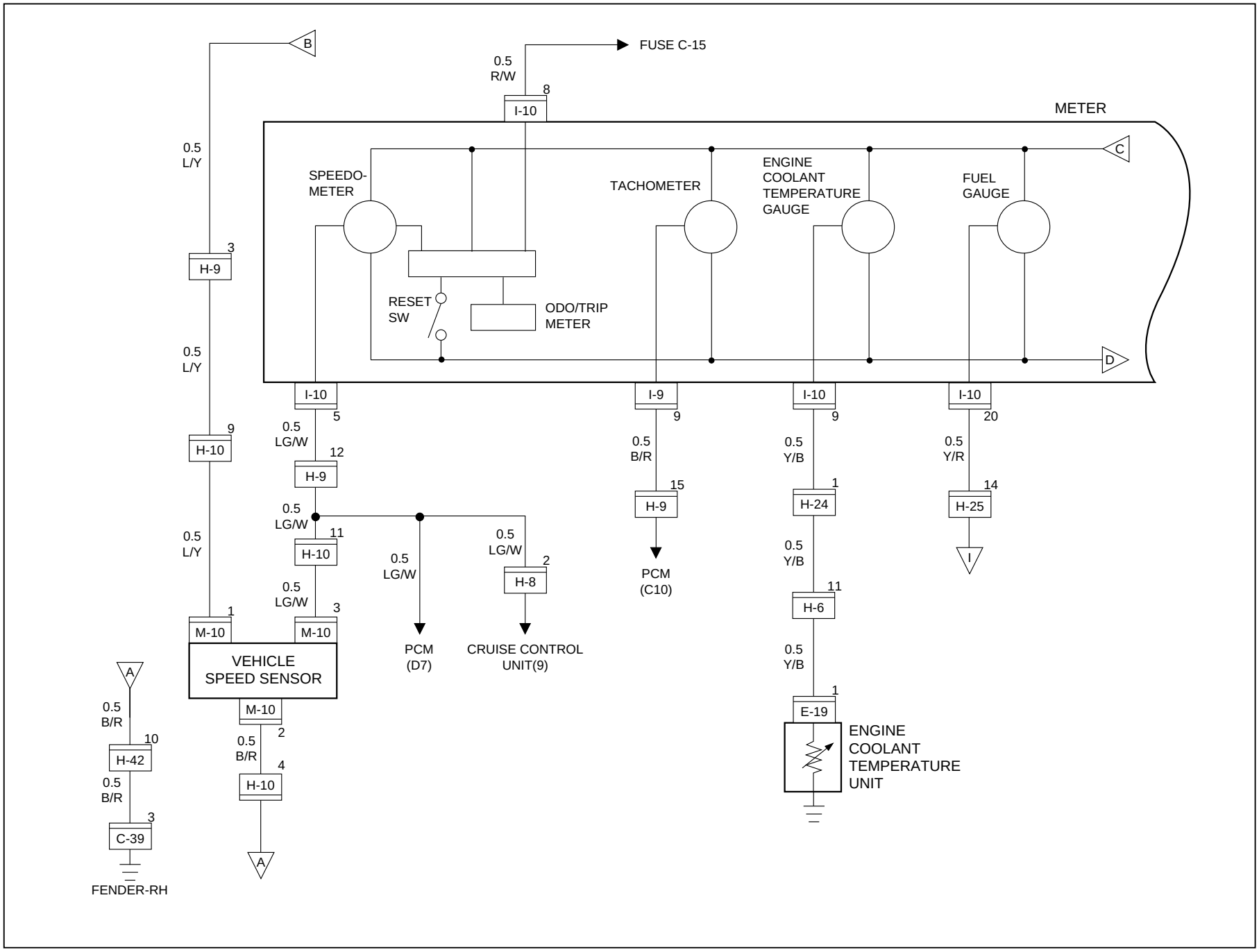

Circuit Diagram (RHD 6V*1 W/T.O.D)-2

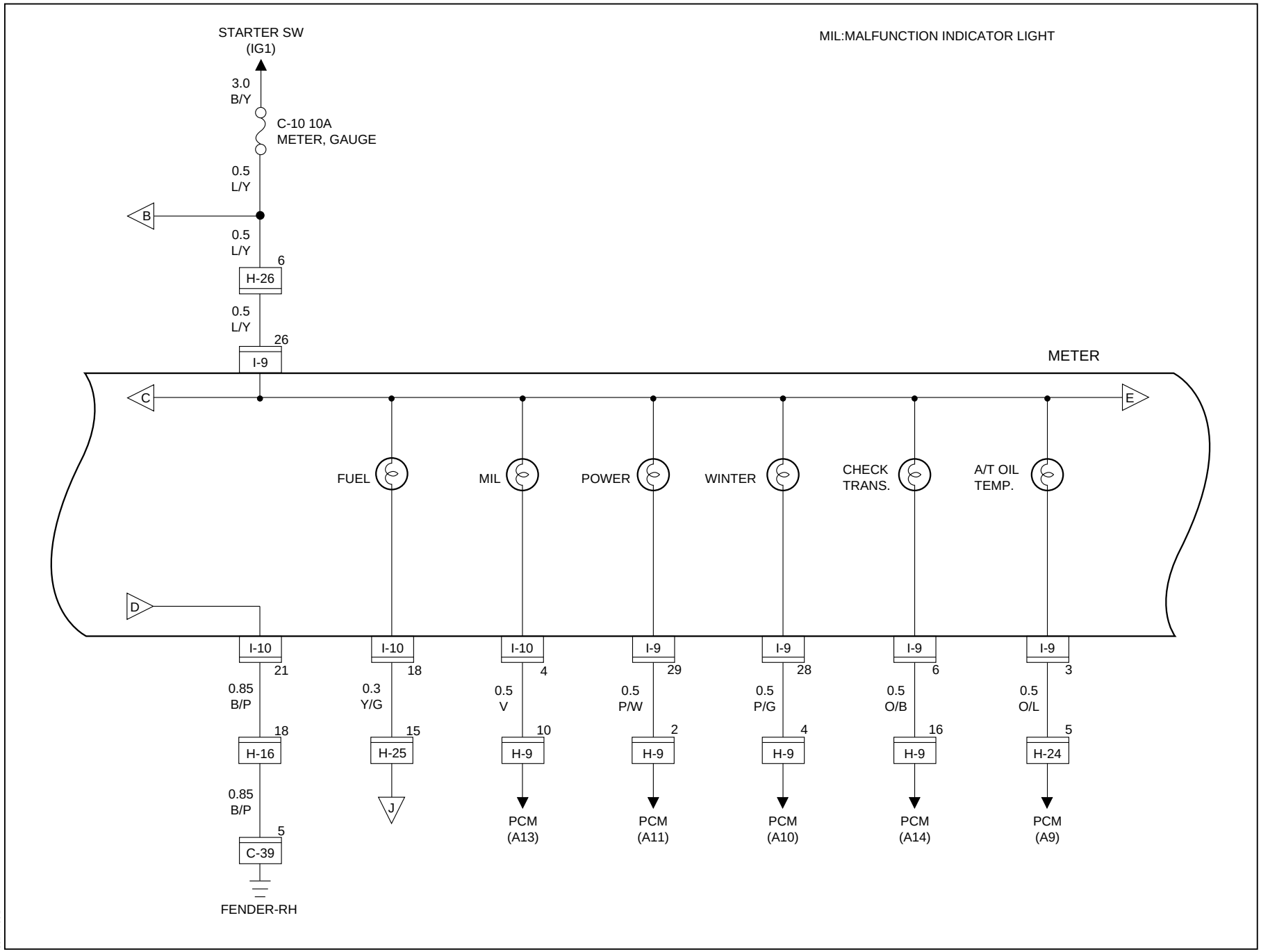

Circuit Diagram (RHD 6V*1 W/T.O.D)-3

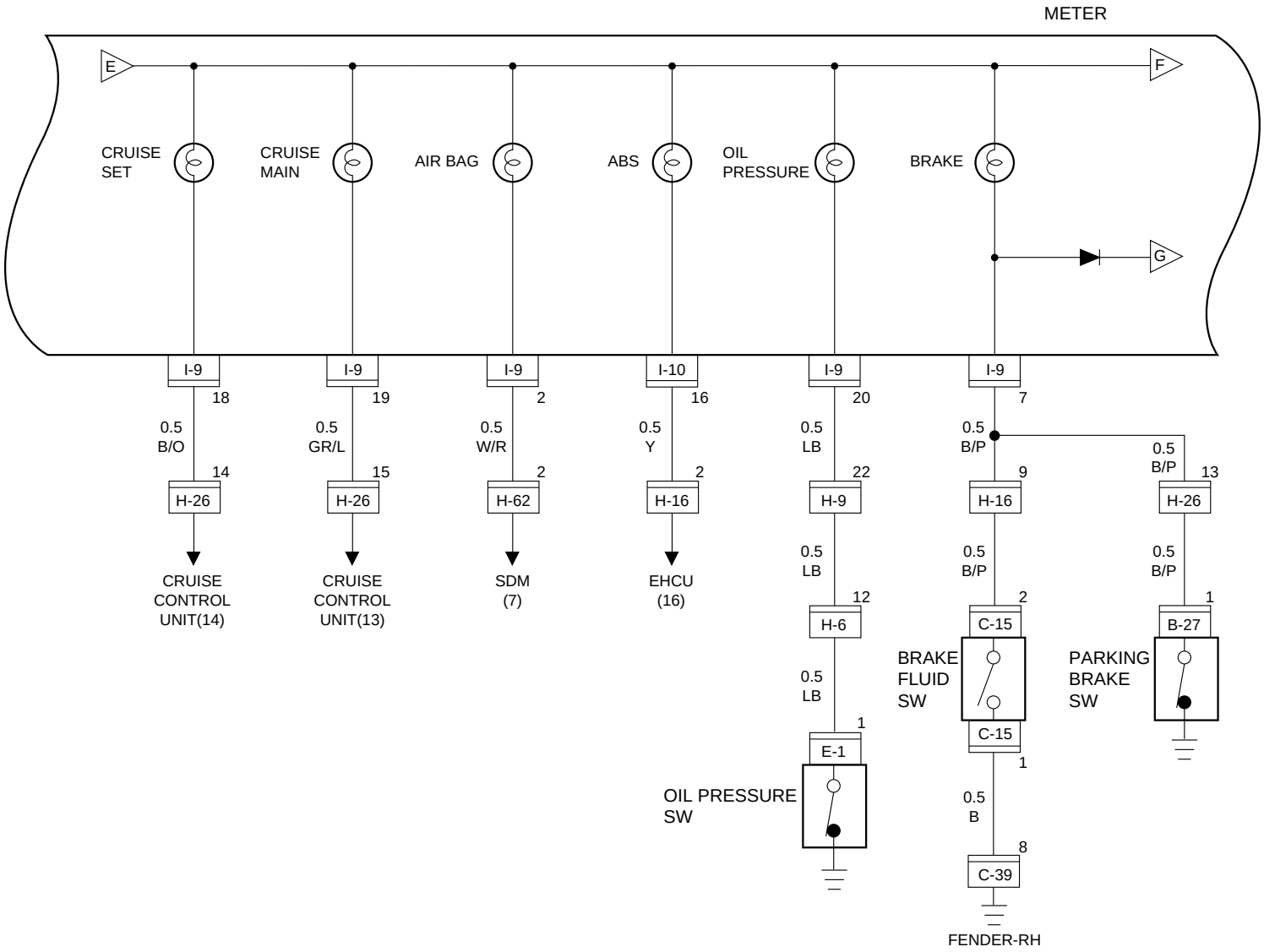

Circuit Diagram (RHD 6V*1 W/T.O.D)-4

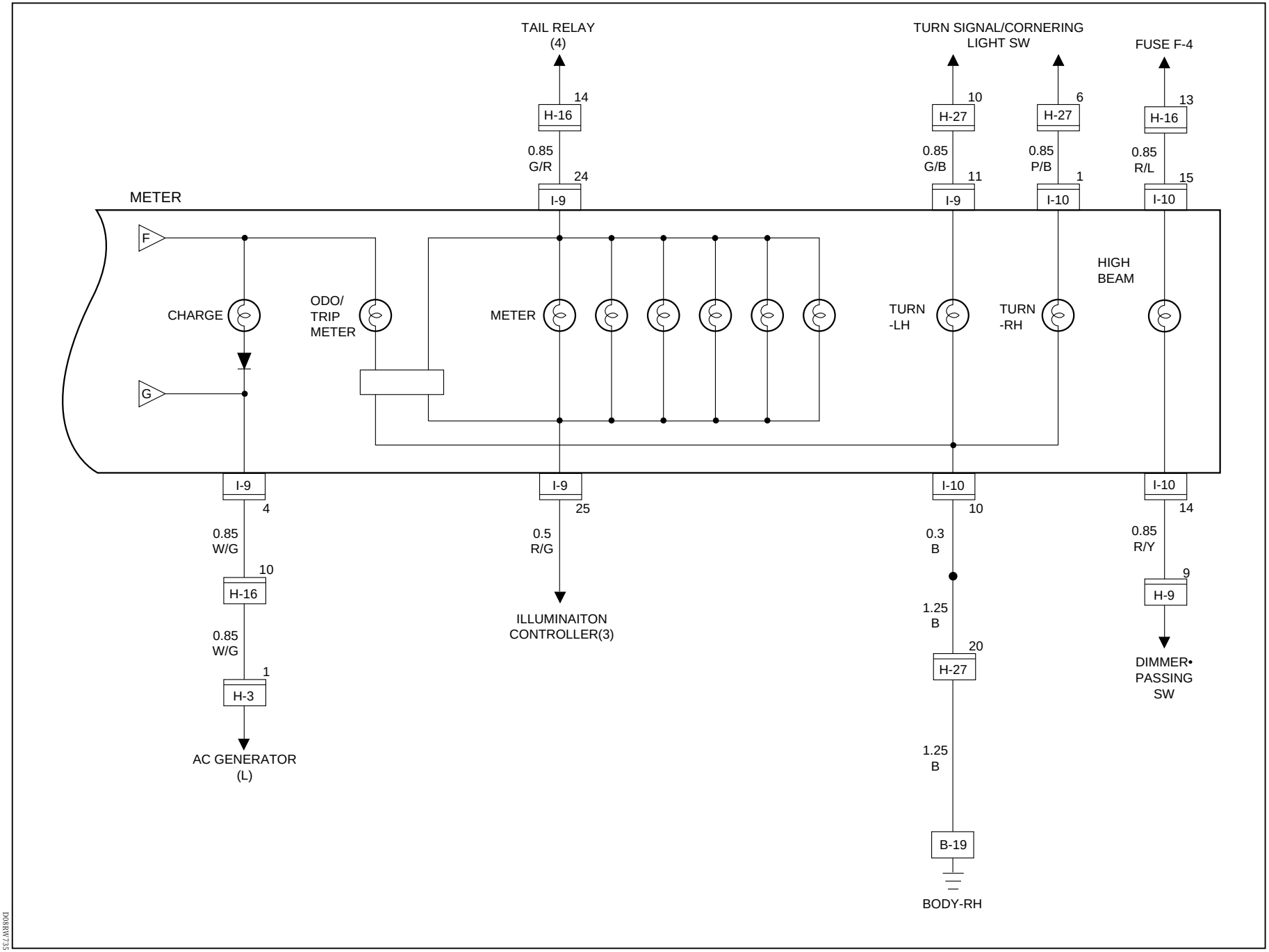

D08RW735

Circuit Diagram (RHD 6V*1 W/T.O.D)-5

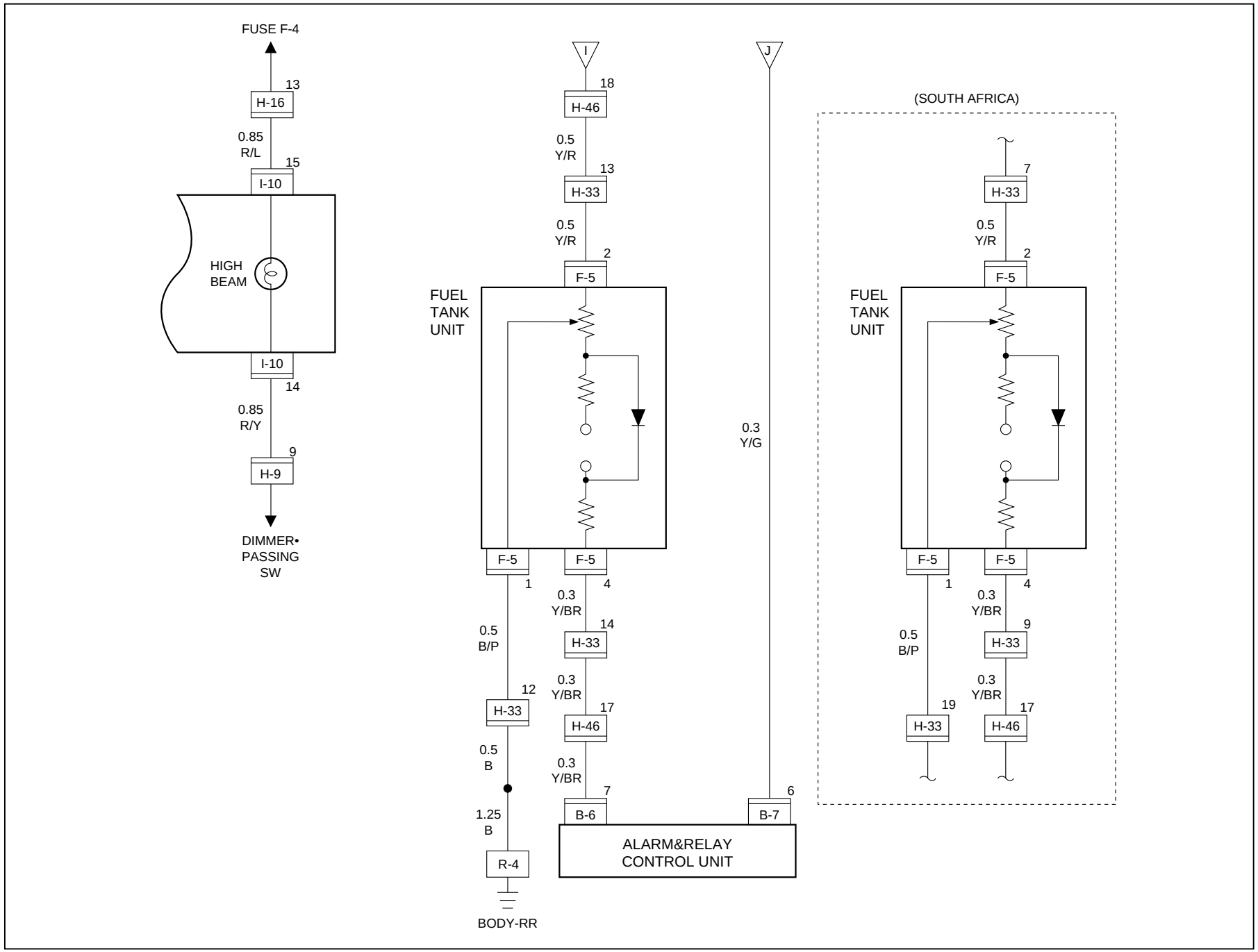

Circuit Diagram (RHD 6V*1 W/T.O.D)-6

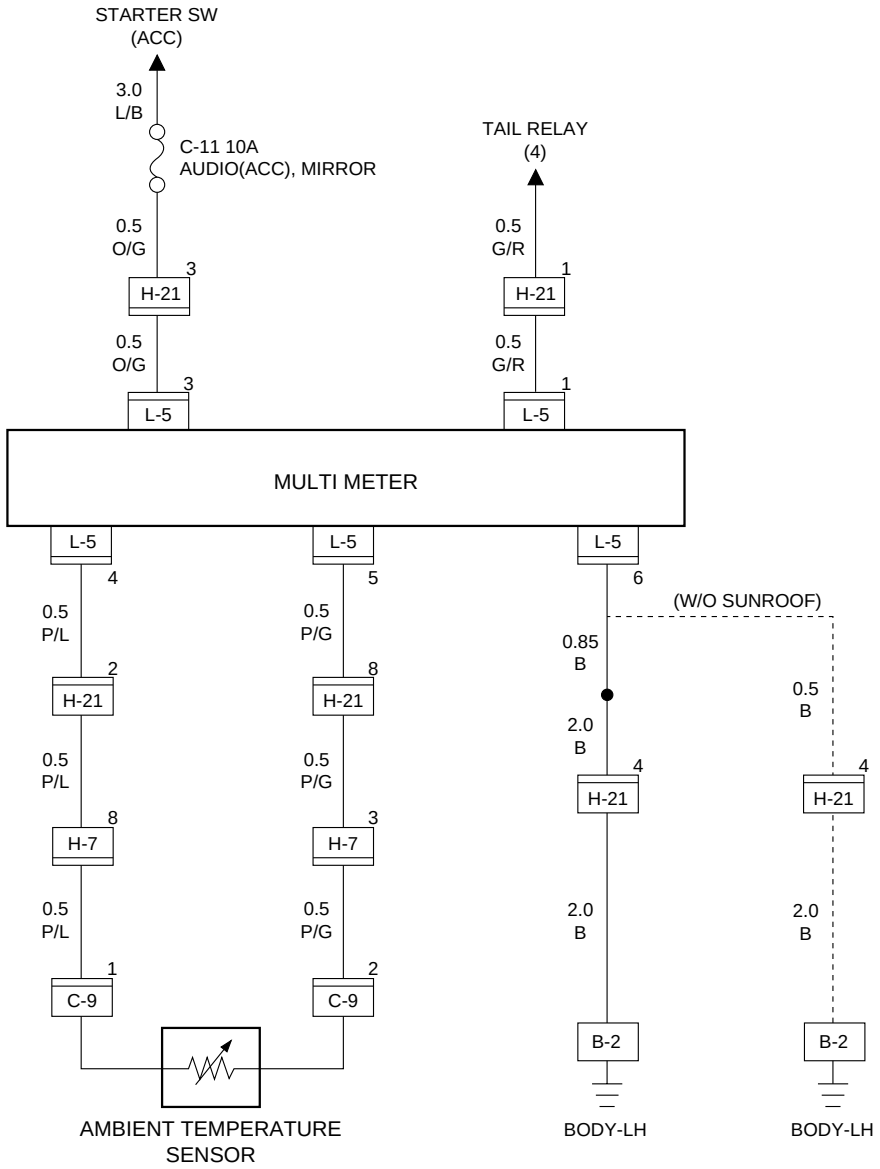

Circuit Diagram (RHD 4JG2)-1

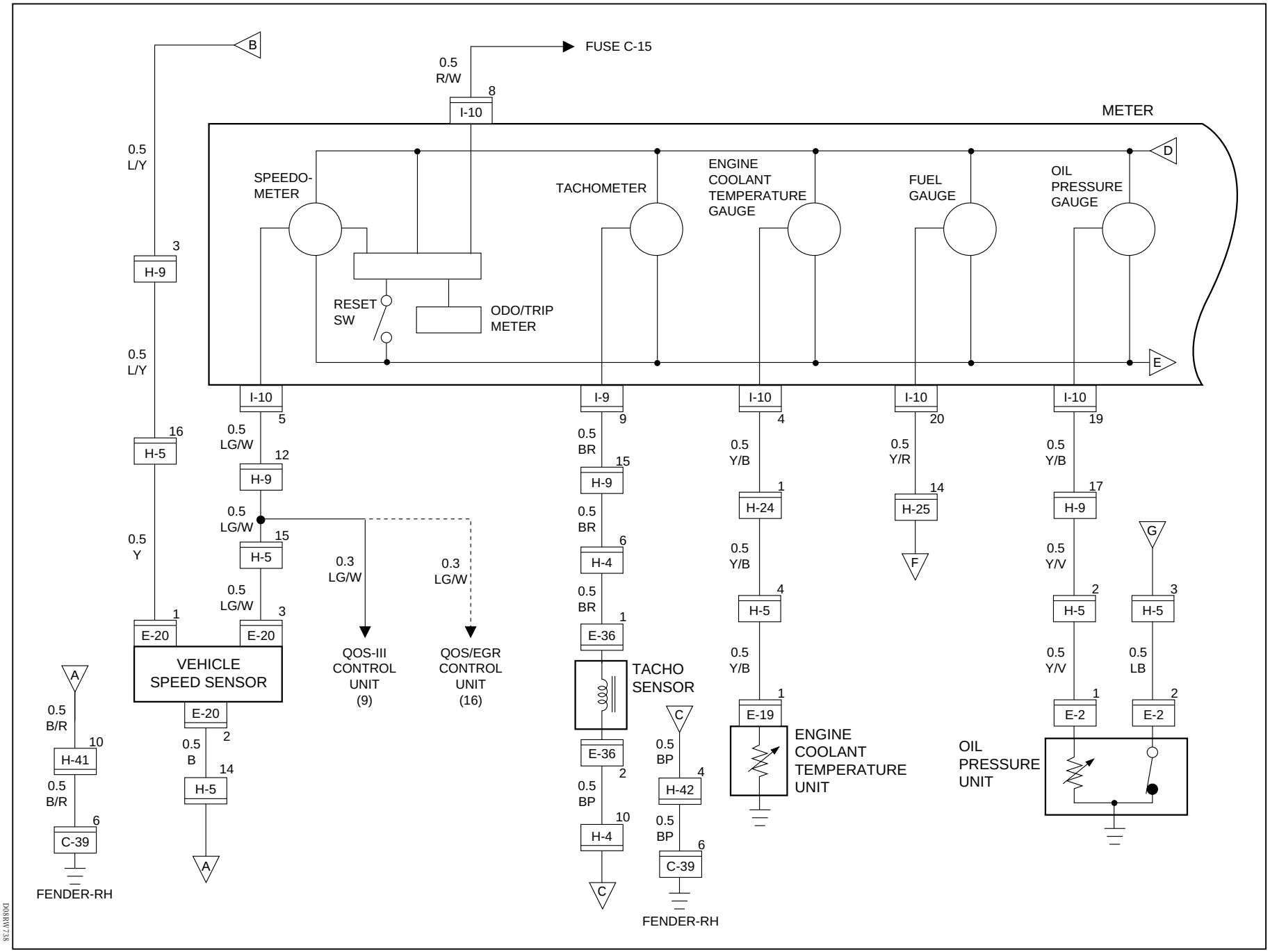

Circuit Diagram (RHD 4JG2)-2

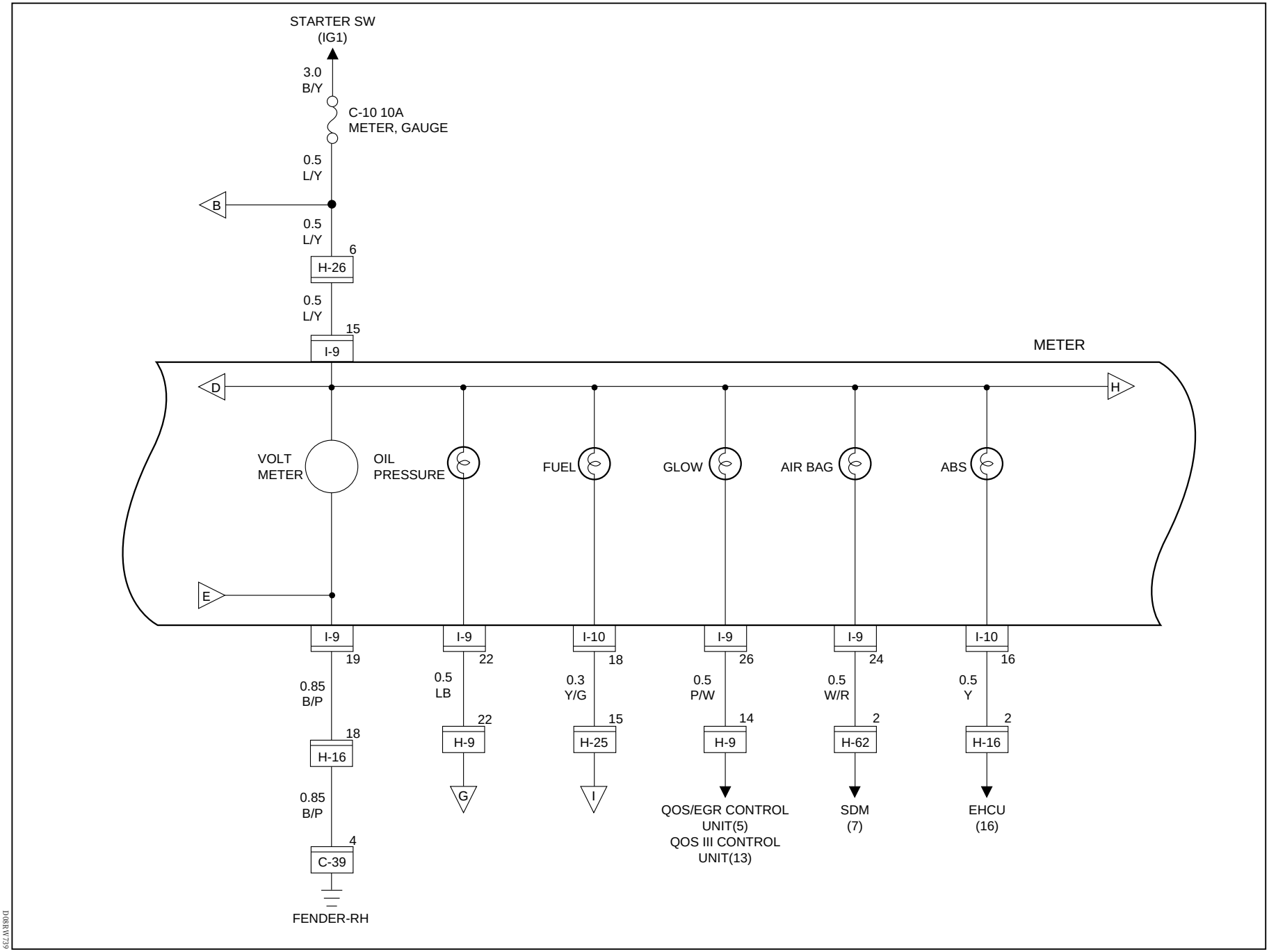

D08RW739

Circuit Diagram (RHD 4JG2)-3

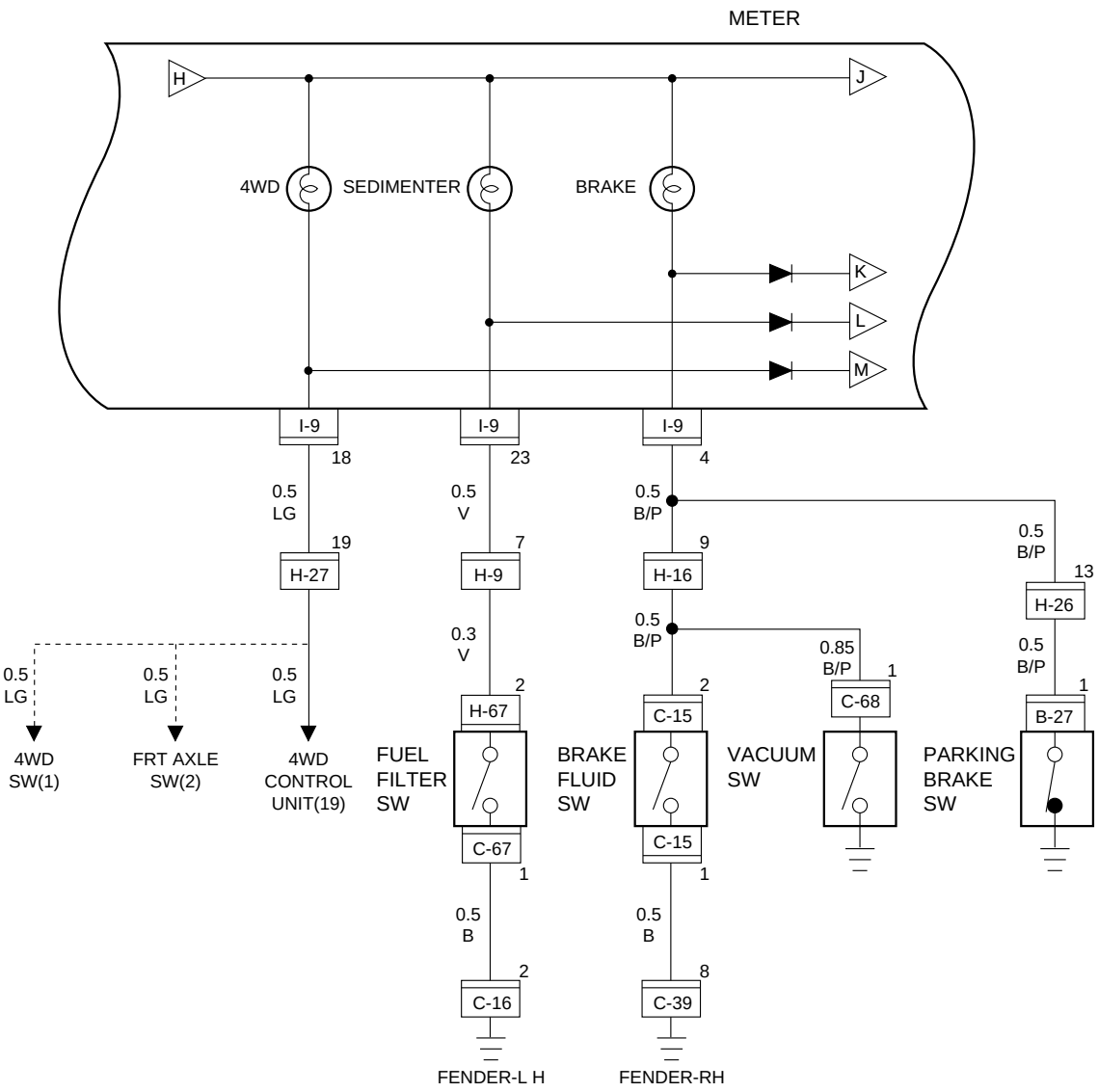

Circuit Diagram (RHD 4JG2)-4

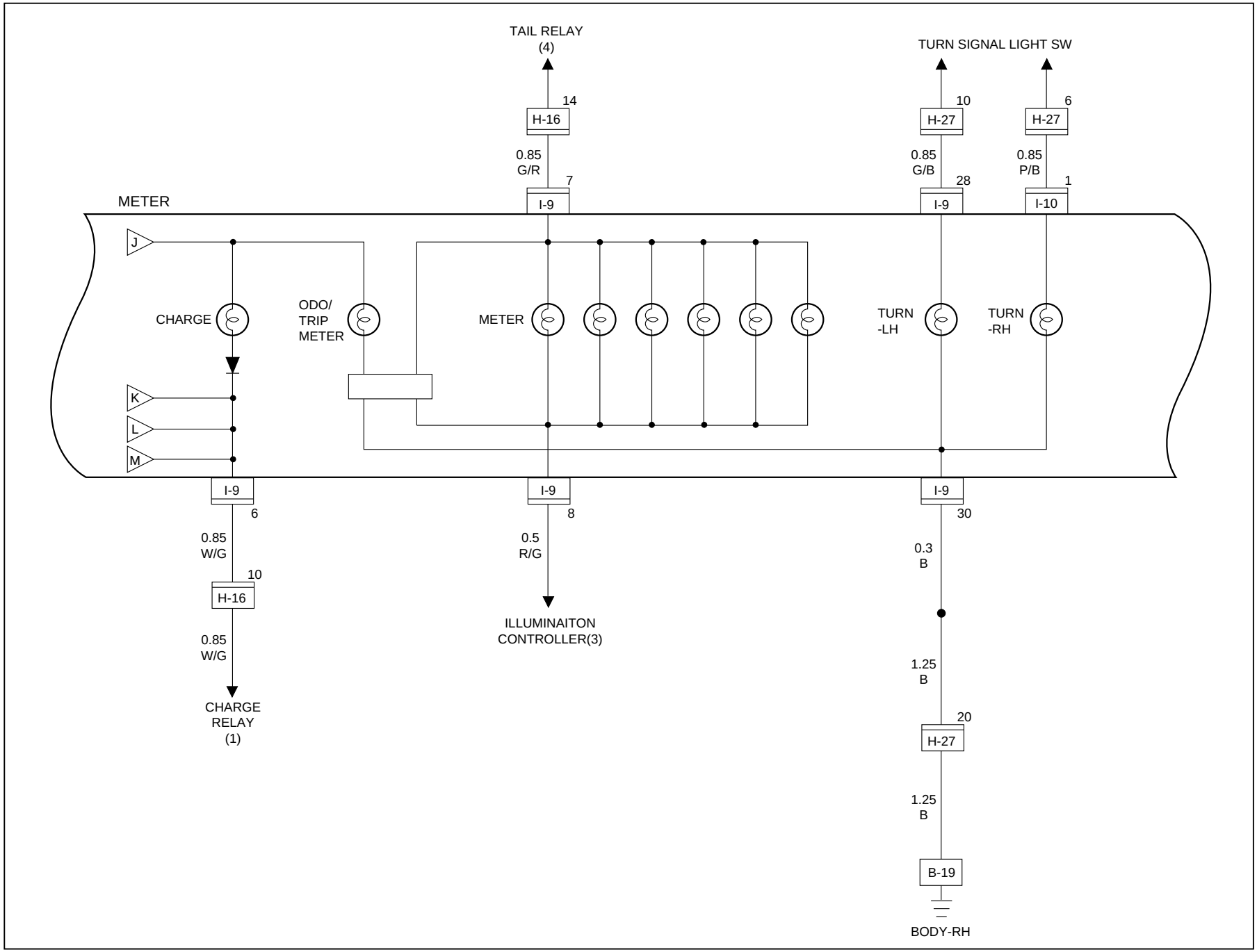

D08RW740

Circuit Diagram (RHD 4JG2)-5

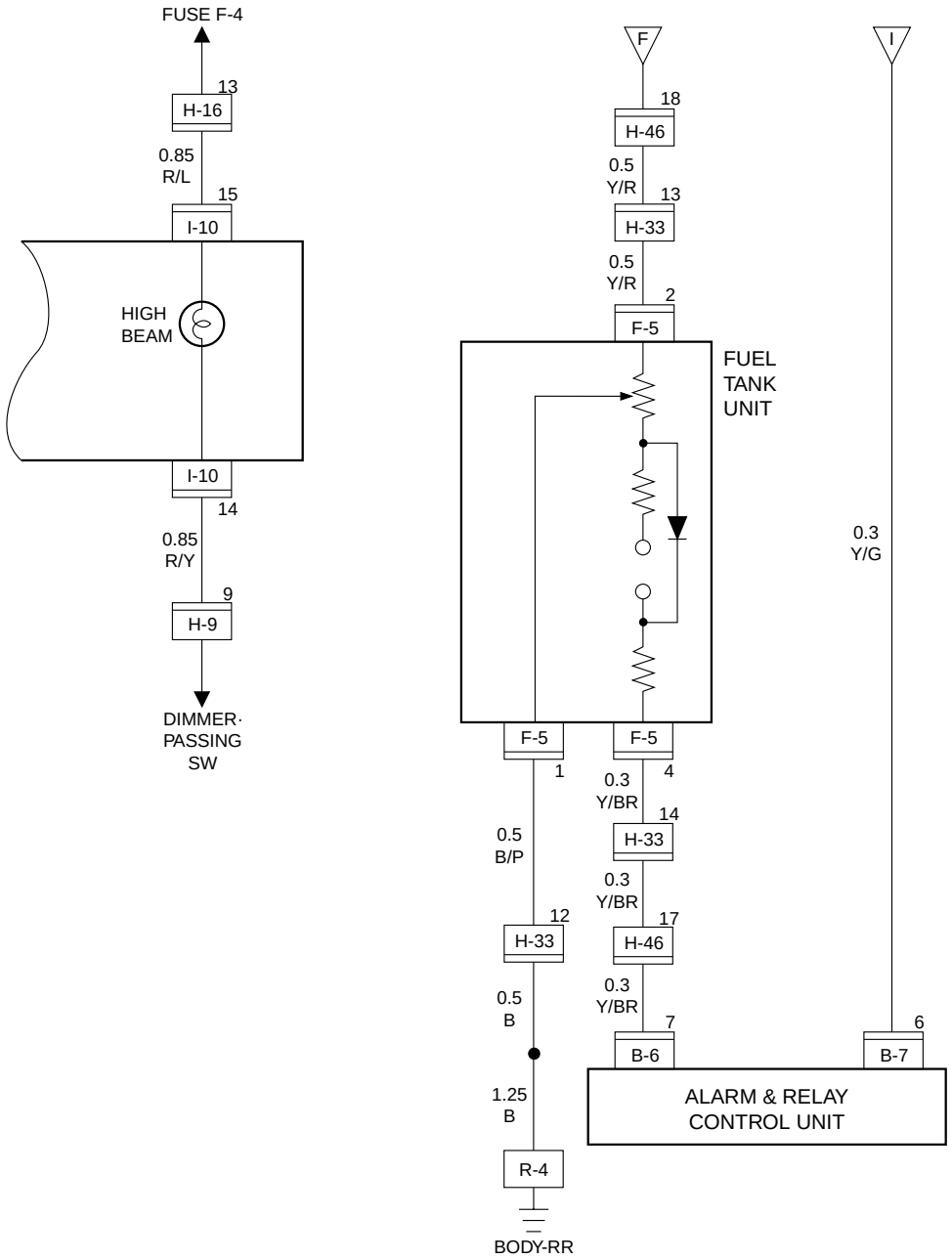

Circuit Diagram (RHD 4JG2)-6

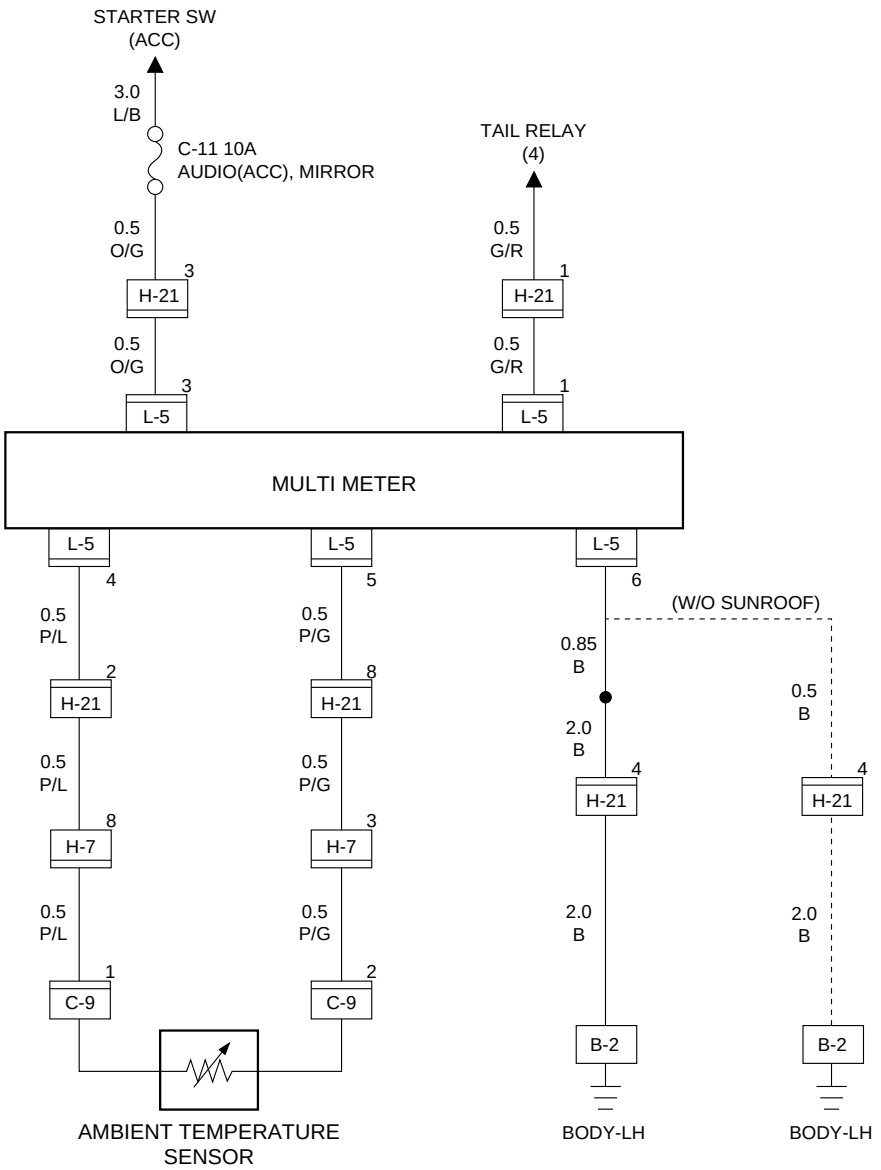

D08RW730

Parts Location (RHD 6V*1)

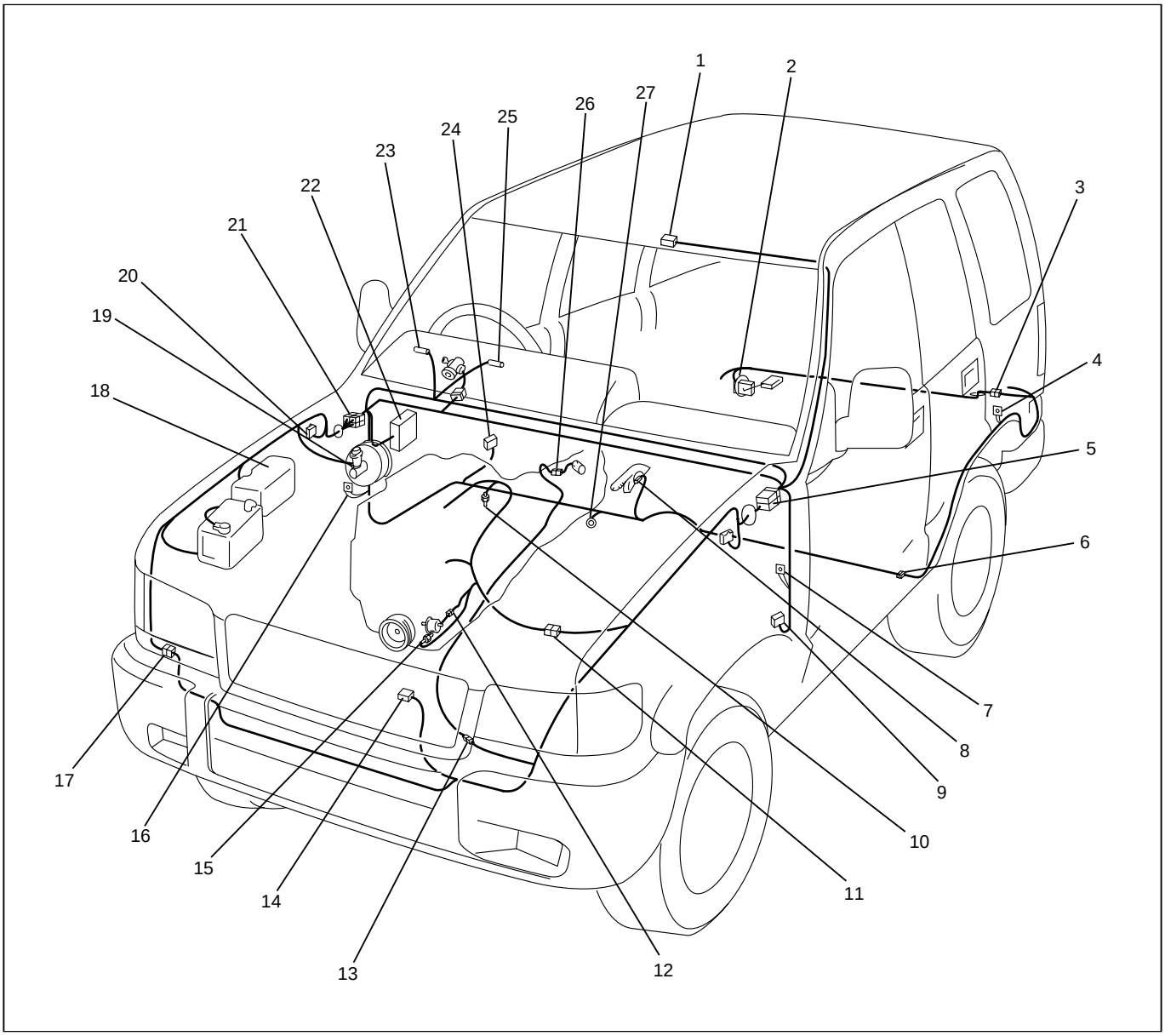

D08RW747

Legend

(1) L-5
(2) F-5
(3) H-33
(4) R-4
(5) H-7, H-8, H-9, H-21, H-24
(6) H-46
(7) B-1, B-2
(8) B-27
(9) B-6, B-7 (Alarm and Relay Control Unit)
(10) E-19
(11) H-6
(12) E-2
(13) H-10
(14) C-9
(15) E-1
(16) B-19
(17) H-41
(18) Relay and Fuse Box
(19) C-15
(20) C-39
(21) H-13, H-14, H-15, H-25, H-26, H-27, H-62
(22) Fuse Box
(23) I-10
(24) B-24
(25) I-9
(26) M-10
(27) B-26

Parts Location (RHD 4JG2)

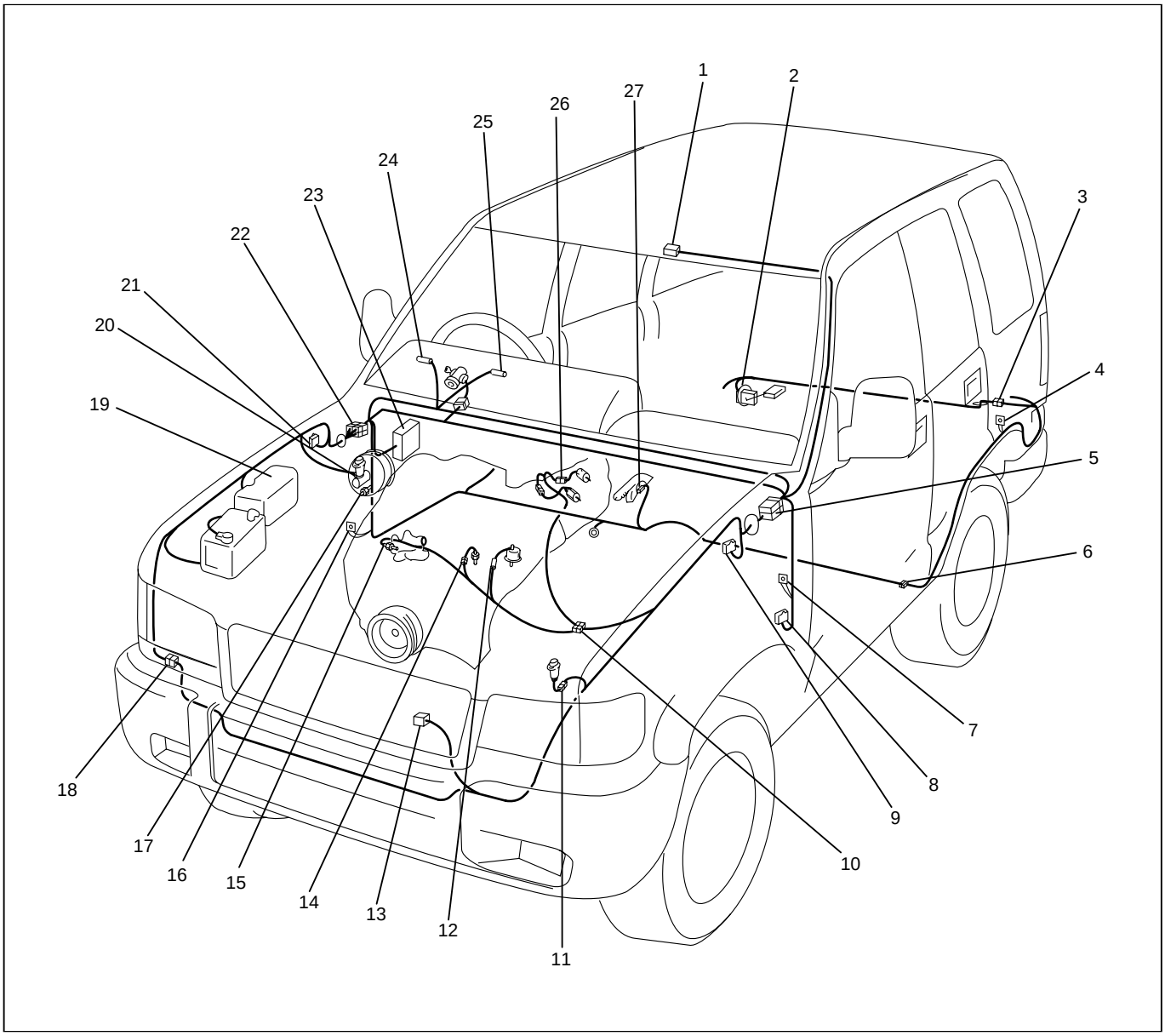

D08RW748

Legend

(1) L-5
(2) F-5
(3) H-33
(4) R-4
(5) H-7, H-9, H-21, H-24
(6) H-46
(7) B-1
(8) B-6, B-7 (Alarm and Relay Control Unit)
(9) C-16
(10) H-4, H-5
(11) C-67
(12) E-2
(13) C-9
(14) E-36
(15) E-19
(16) B-19
(17) C-68
(18) H-41, H-42
(19) Relay and Fuse Box
(20) C-15
(21) C-39
(22) H-13, H-15, H-16, H-25, H-26, H-27, H-62
(23) Fuse Box
(24) I-10
(25) I-9
(26) E-44
(27) B-27

Circuit Diagram (LHD 6V*1 W/O T.O.D)-1

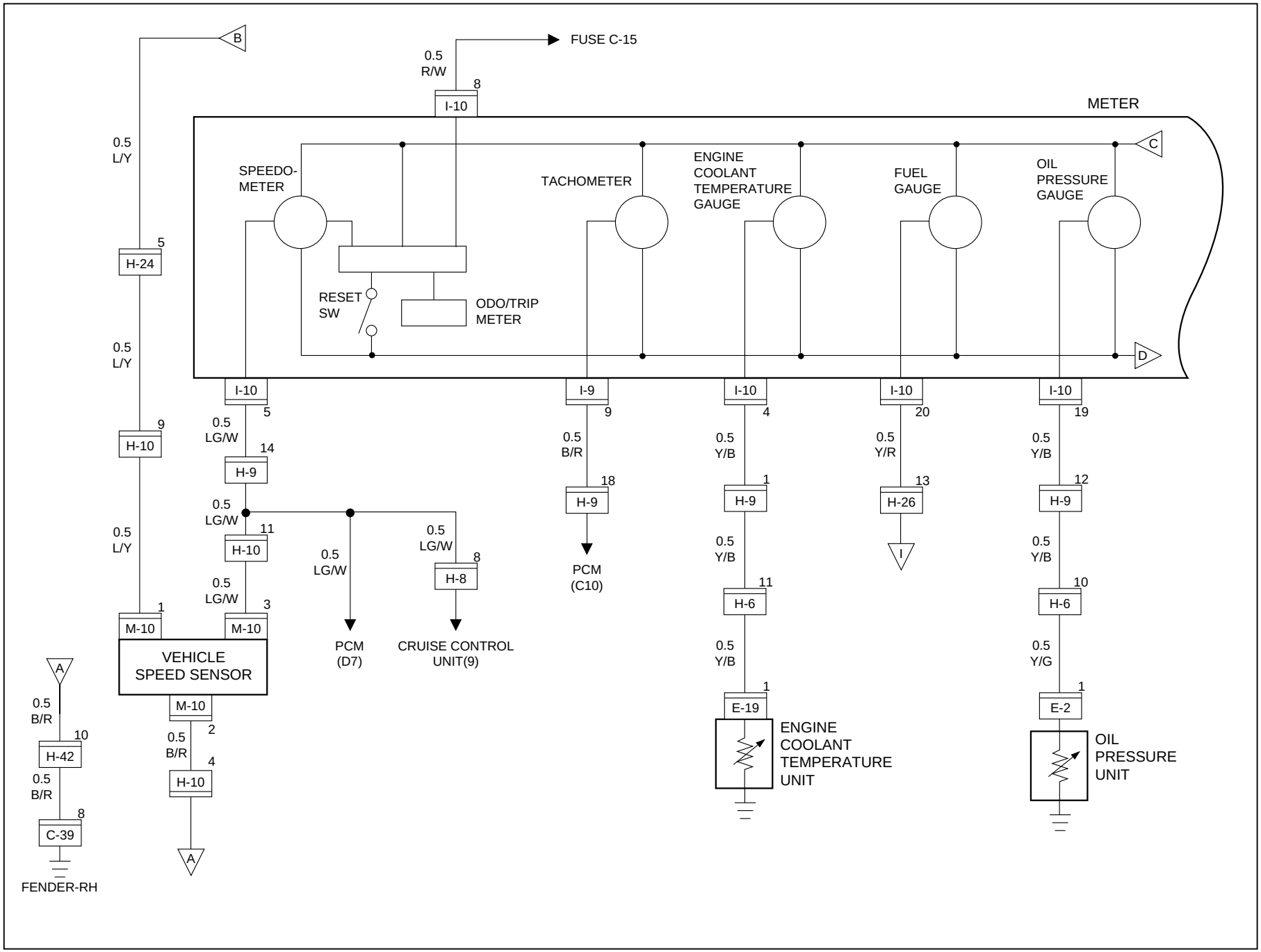

D08RW924

Circuit Diagram (LHD 6V*1 W/O T.O.D)-2

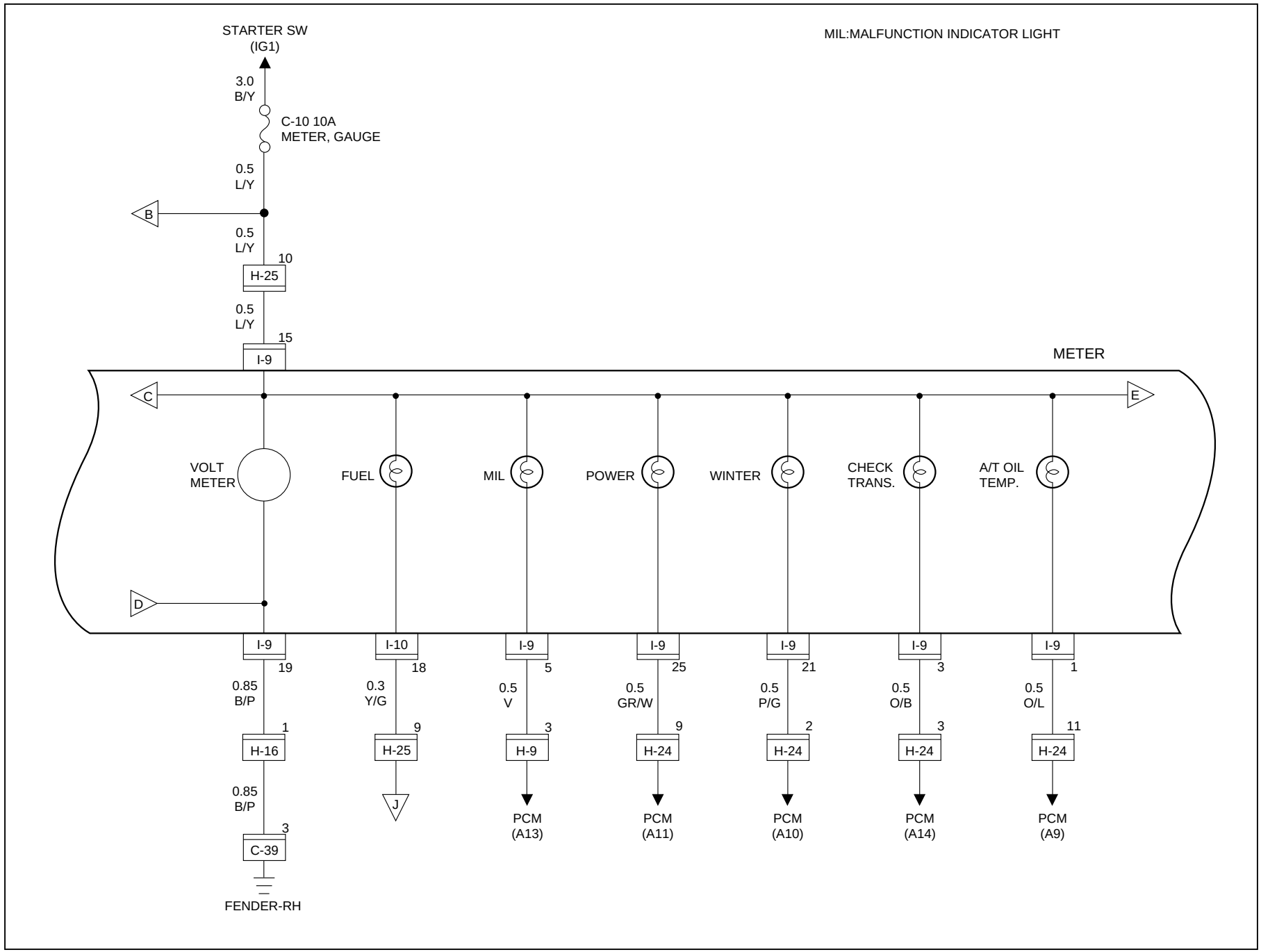

D08RW925

Circuit Diagram (LHD 6V*1 W/O T.O.D)-3

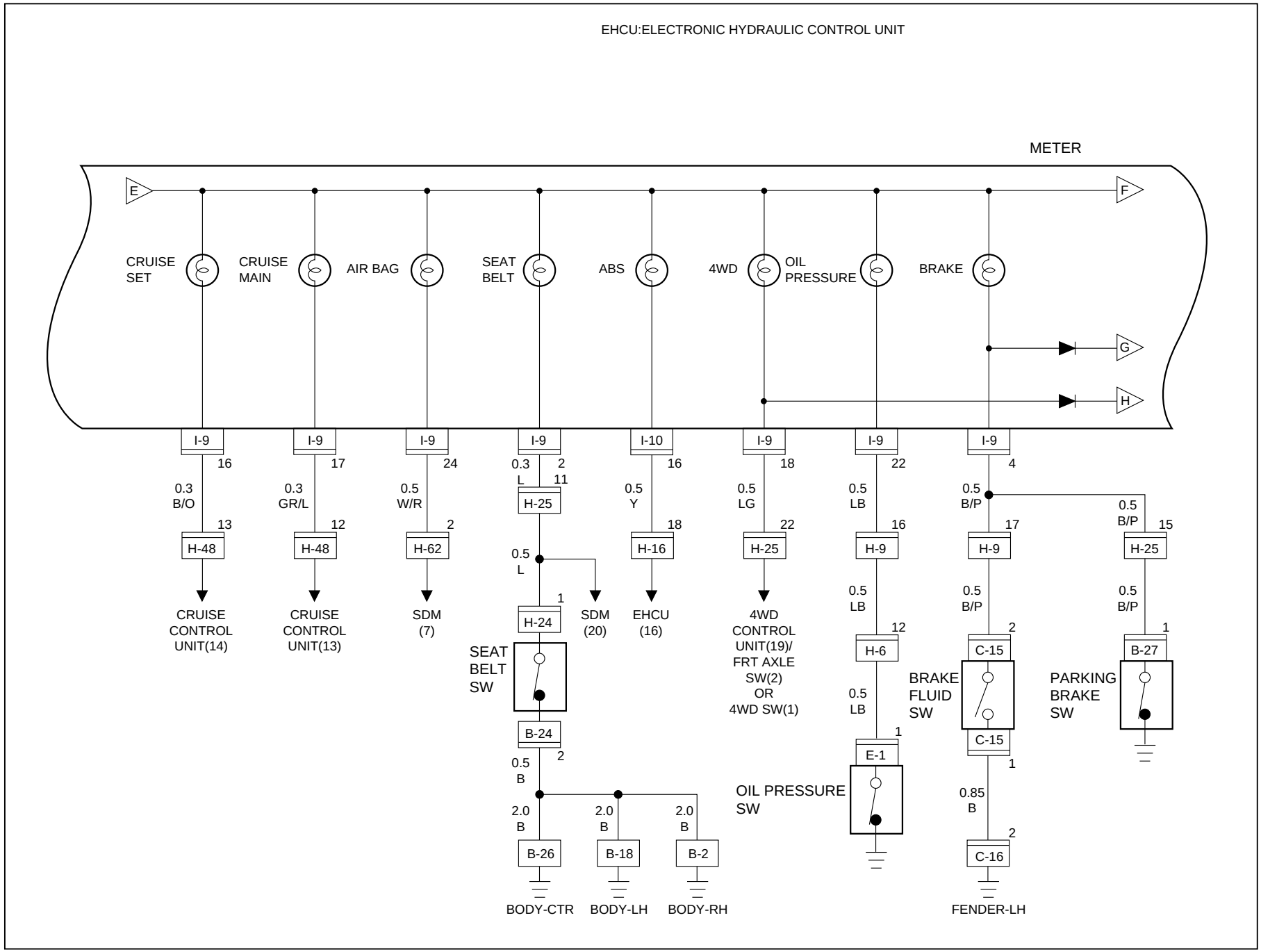

D08RW926

Circuit Diagram (LHD 6V*1 W/O T.O.D)-4

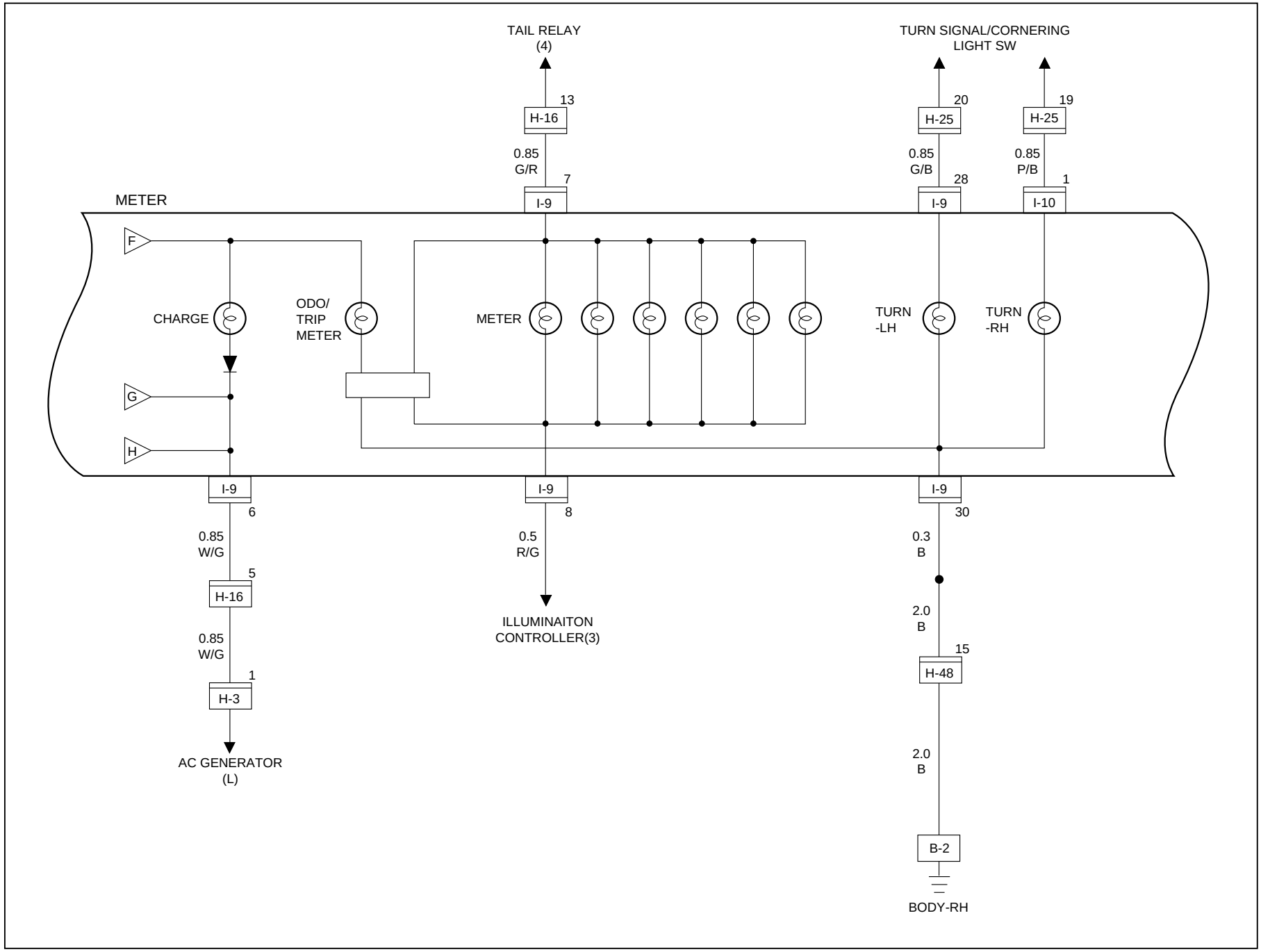

D08RM927

Circuit Diagram (LHD 6V*1 W/O T.O.D)-5

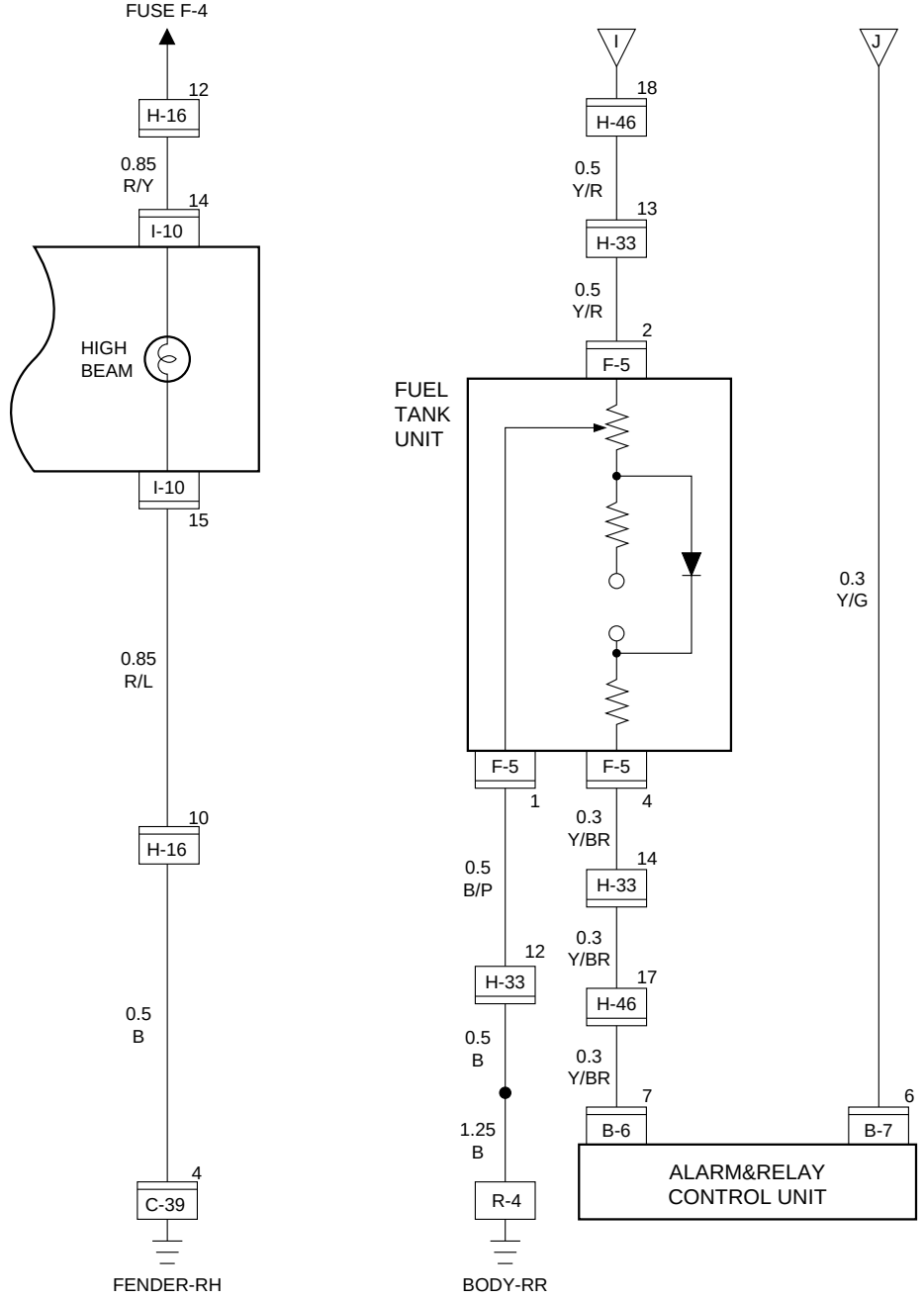

Circuit Diagram (LHD 6V*1 W/O T.O.D)-6

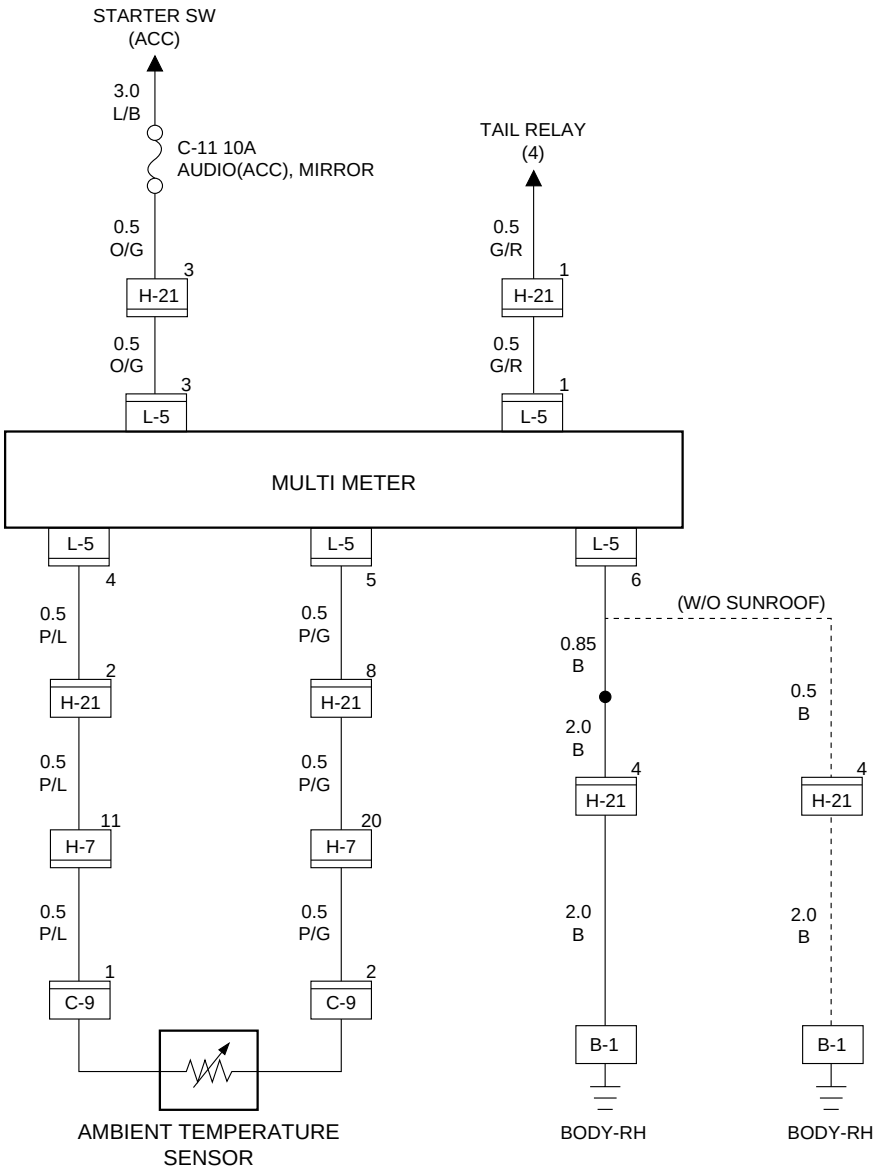

D08RW329

Circuit Diagram (LHD 4JG2)-1

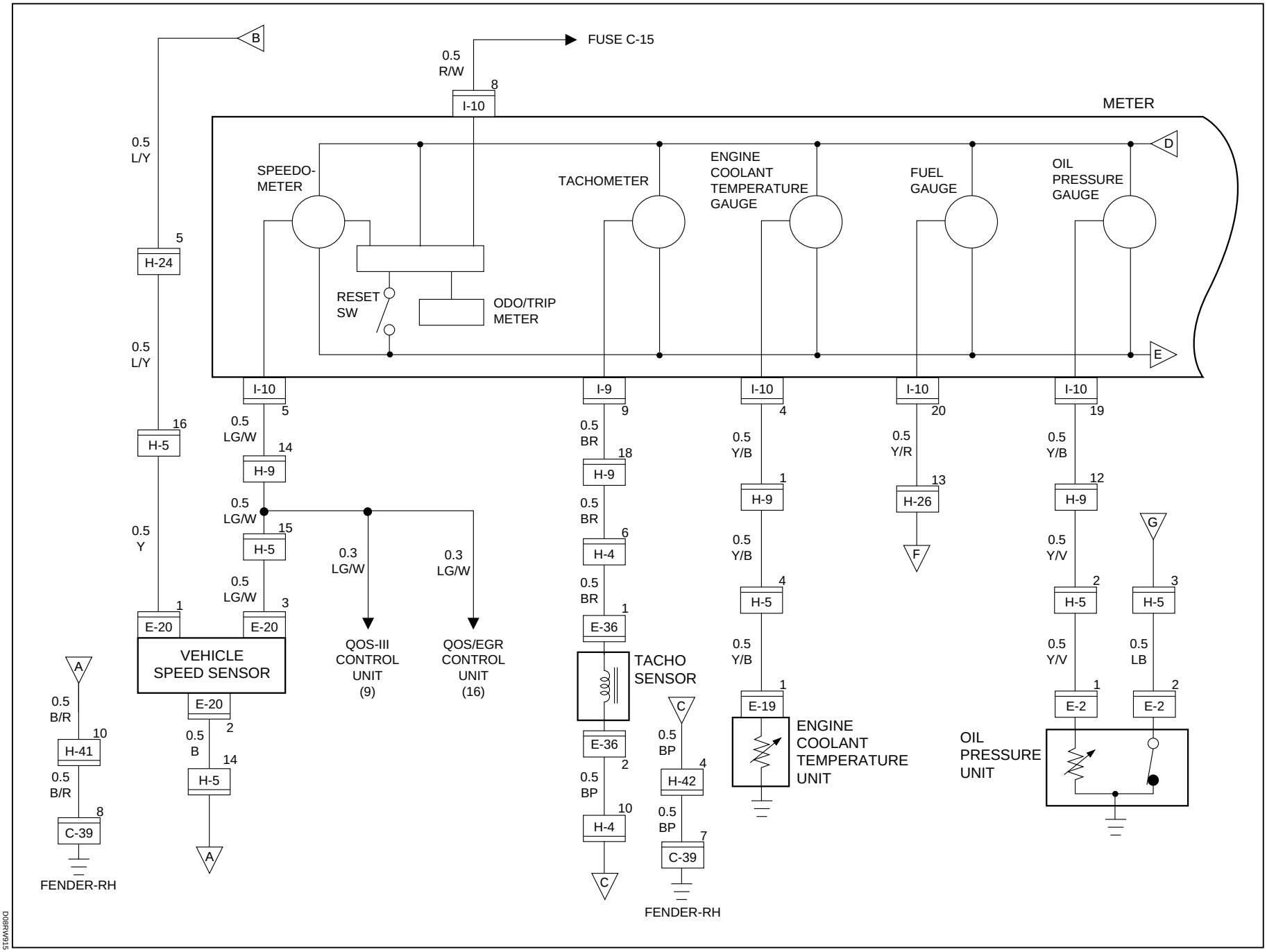

D08RW915

Circuit Diagram (LHD 4JG2)-2

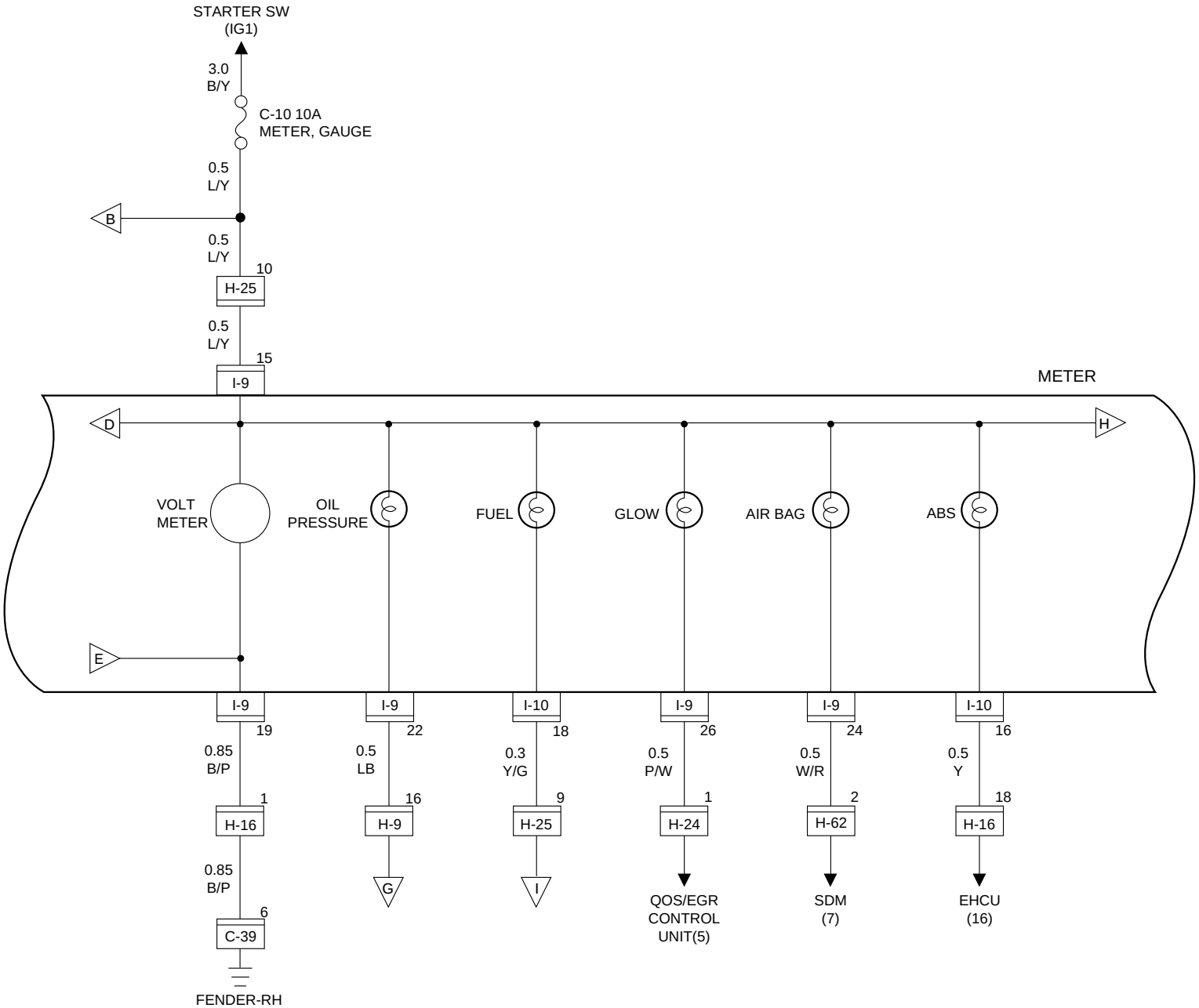

D08RW916

Circuit Diagram (LHD 4JG2)-3

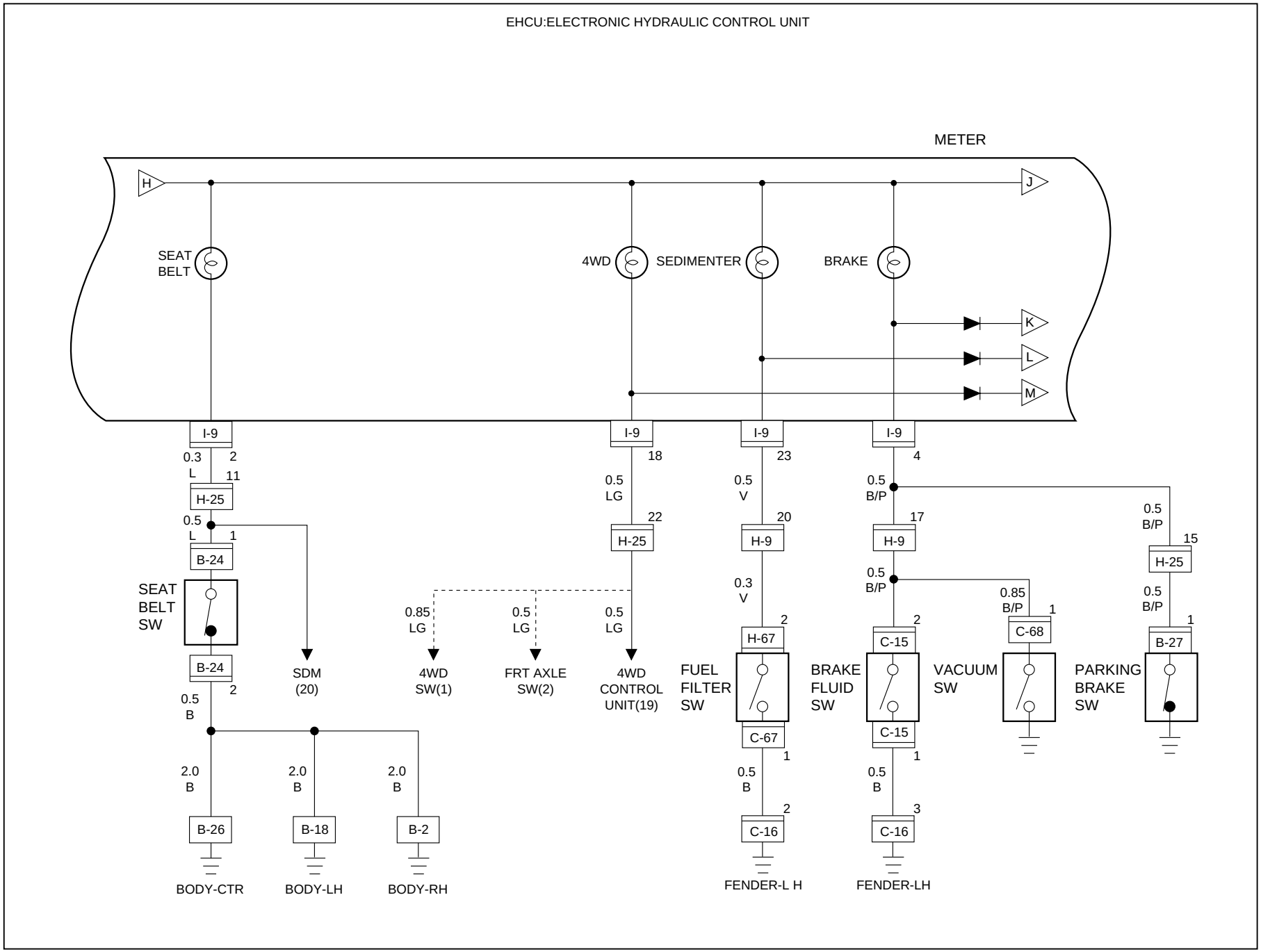

D08RW914

Circuit Diagram (LHD 4JG2)-4

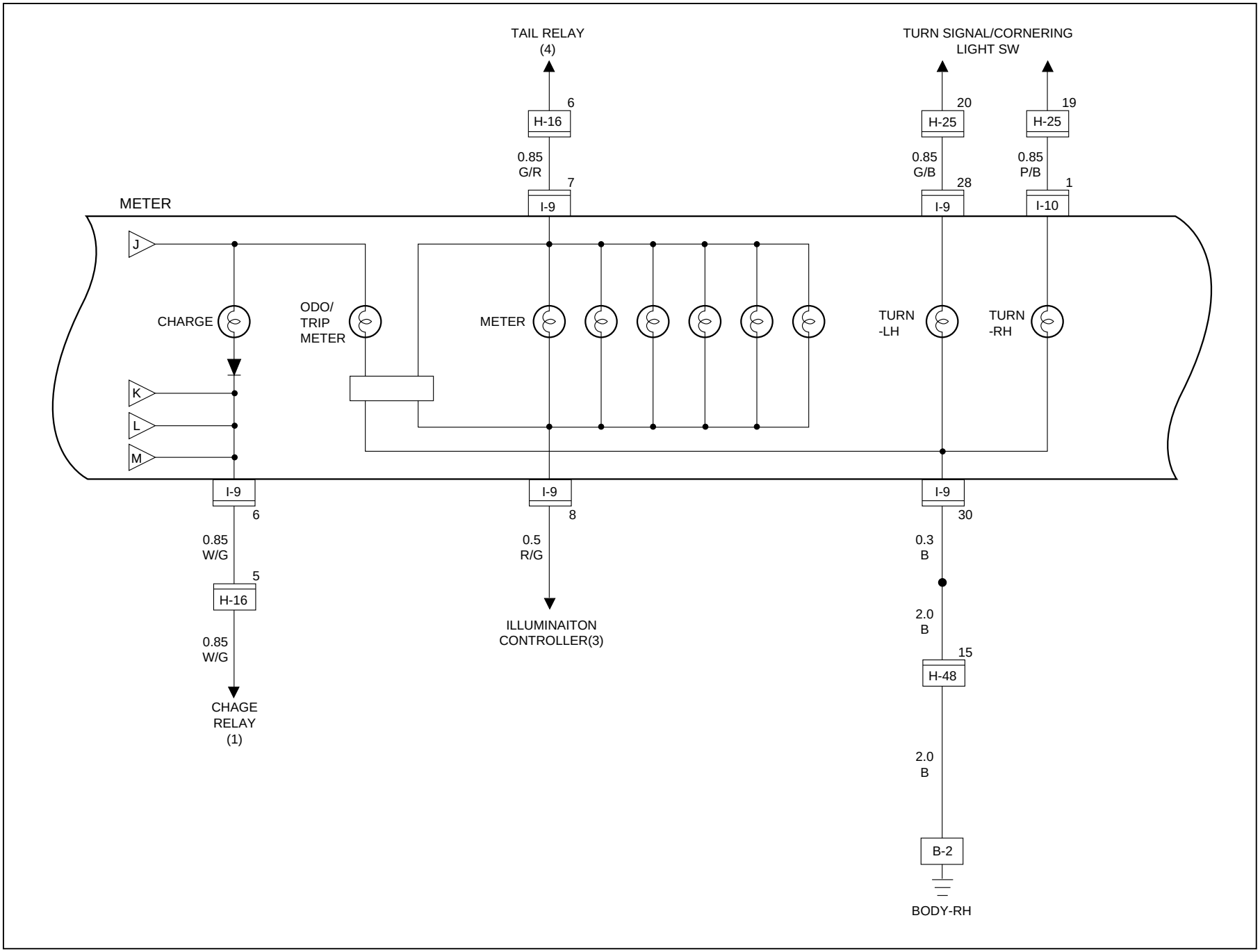

D08RW917

Circuit Diagram (LHD 4JG2)-5

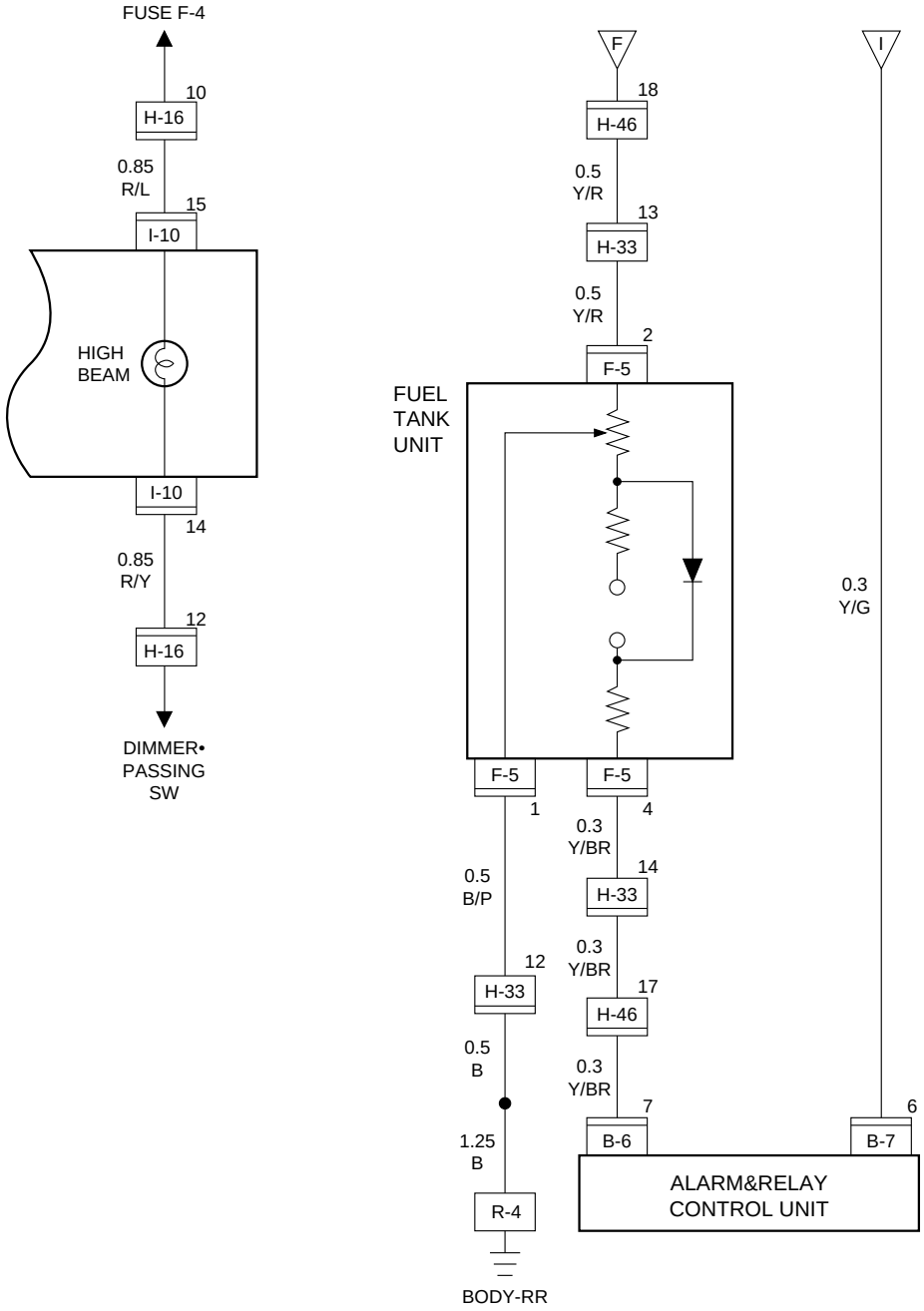

Circuit Diagram (LHD 4JG2)-6

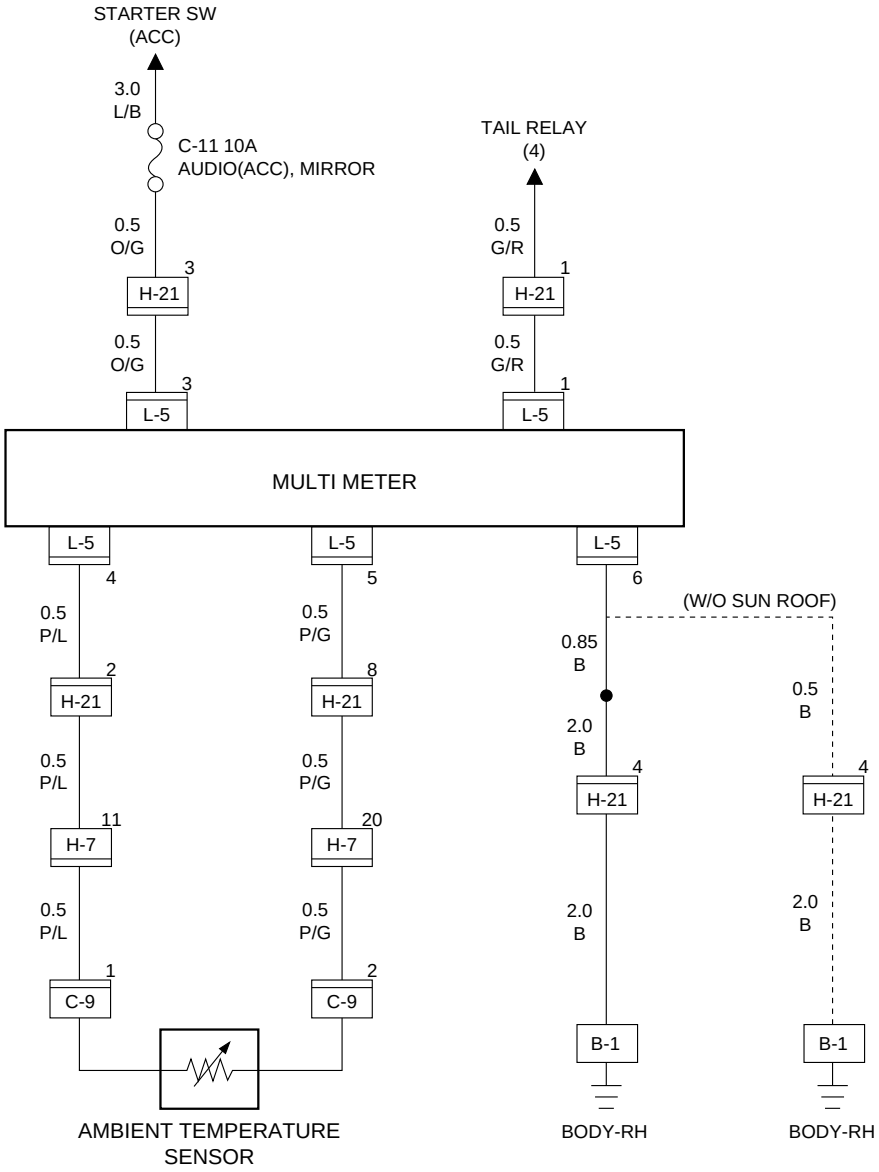

D08RW919

Parts Location (LHD W/O T.O.D 6V*1)

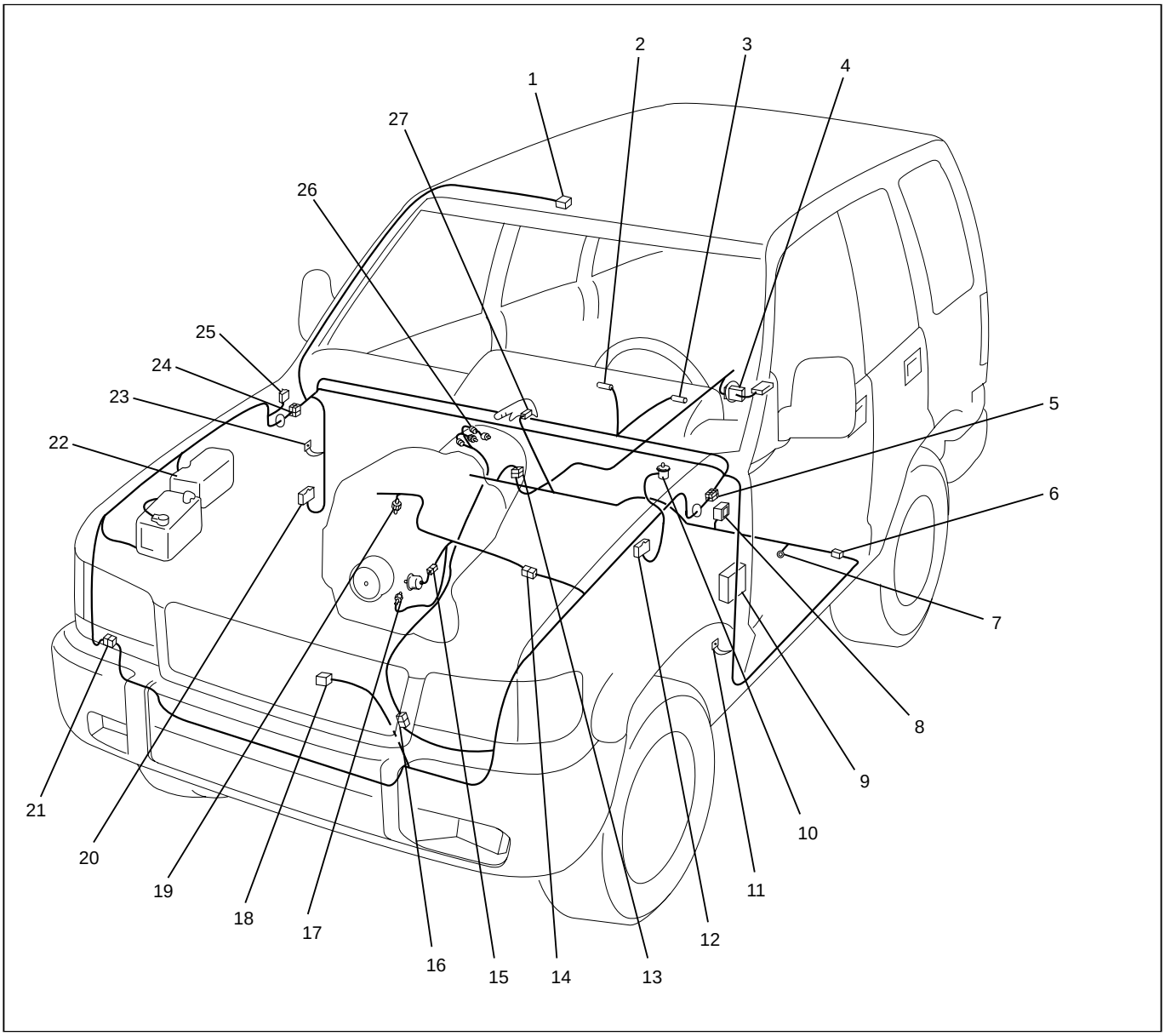

D08RW930

Legend

(1) L-5
(2) I-10
(3) I-9
(4) F-5
(5) H-7, H-8, H-9, H-24, H-25, H-26, H-62
(6) H-46
(7) B-26
(8) B-62
(9) Fuse Box
(10) C-15
(11) B-18
(12) C-16
(13) H-33
(14) H-6
(15) E-2
(16) H-10
(17) E-1
(18) C-9
(19) E-19
(20) B-6, B-7 (Alarm and Relay Control Unit)
(21) H-42
(22) Relay and Fuse Box
(23) B-1, B-2
(24) H-16, H-21, H-48
(25) C-39
(26) M-10
(27) B-27

Parts Location (LHD 4JG2)

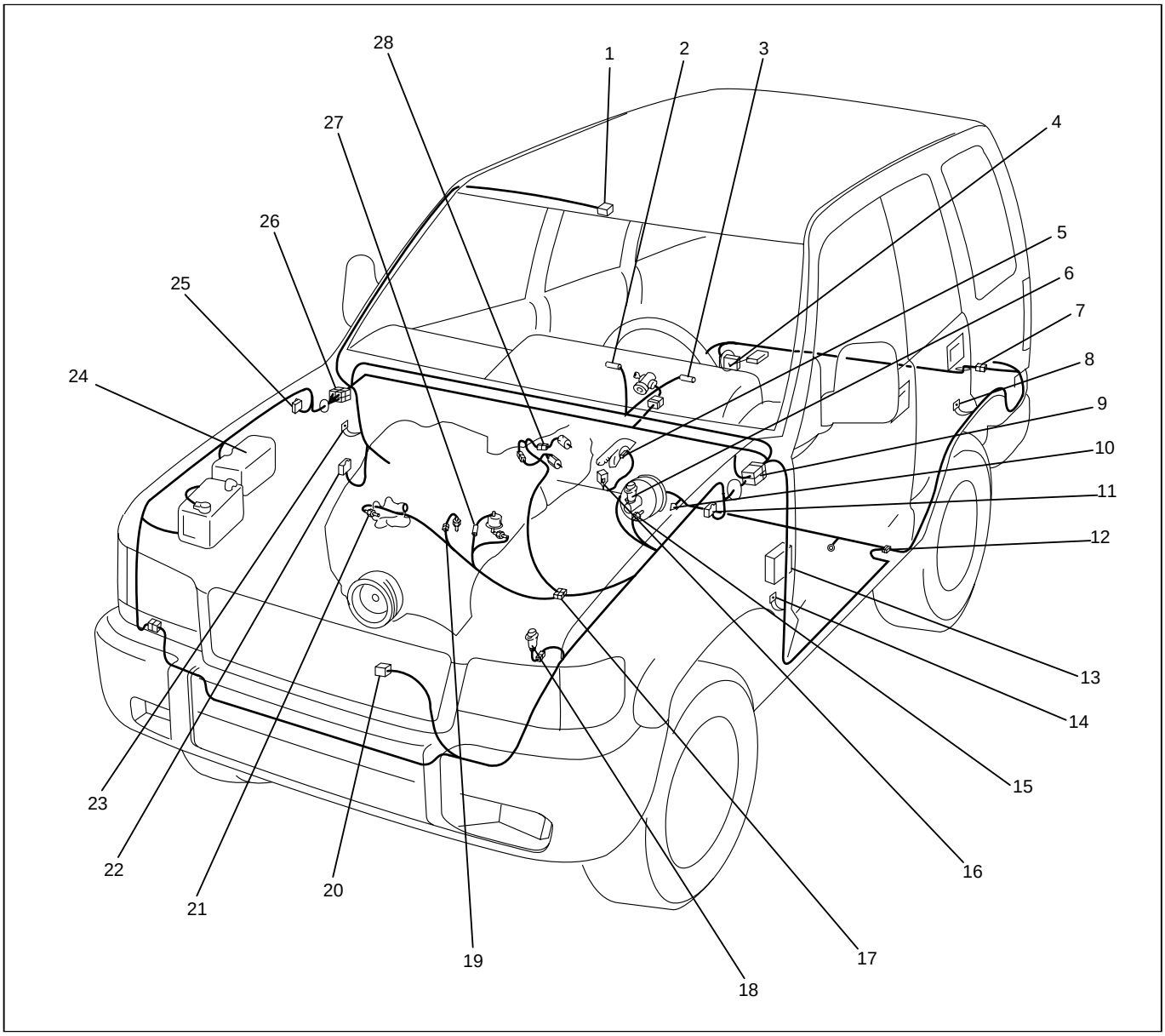

D08RW897

Legend

(1) L-5
(2) I-10
(3) I-9
(4) F-5
(5) B-27
(6) C-15
(7) H-33
(8) R-4
(9) H-7, H-9, H-24, H-25, H-62
(10) B-26
(11) C-16
(12) H-46
(13) Fuse Box
(14) B-18
(15) C-68
(16) B-62
(17) H-4, H-5
(18) C-67
(19) E-36
(20) C-9
(21) E-19
(22) B-6, B-7 (Alarm and Relay Control Unit)
(23) B-1, B-2
(24) Relay and Fuse Box
(25) C-39
(26) H-12, H-14, H-16, H-21, H-48
(27) E-2
(28) E-20

Diagnosis

1. Speedometer

1-1. Speedometer and Odometer Do Not Function

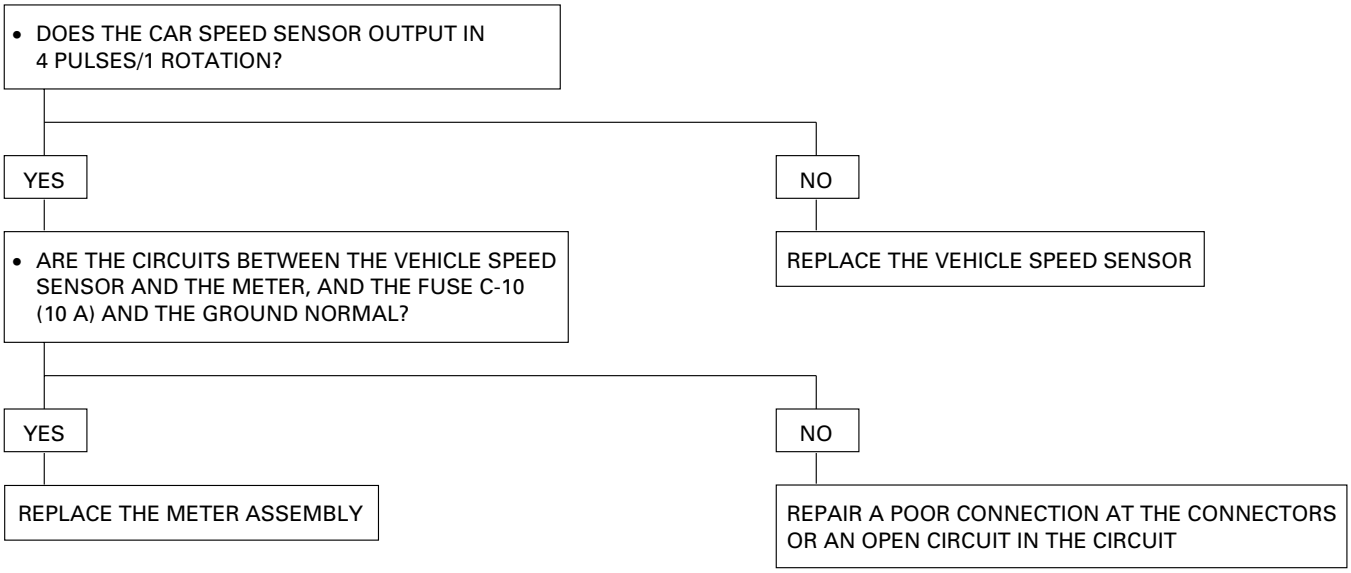

1-2. Speedometer Does Not Function (Odometer is Normal)

REPLACE THE METER ASSEMBLY

1-3. Odometer Does Not Function (Speedometer is Normal)

REPLACE THE METER ASSEMBLY

1-4. Speedometer Needle Fluctuations (May Be Wide Fluctuation)

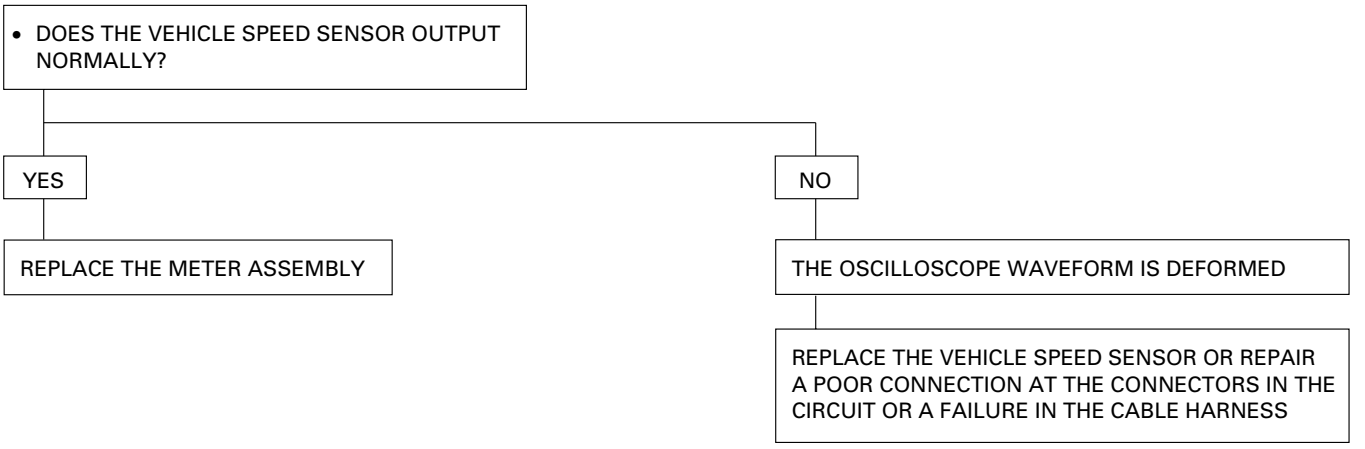

1-5. Speedometer Needle Jumps Erratically

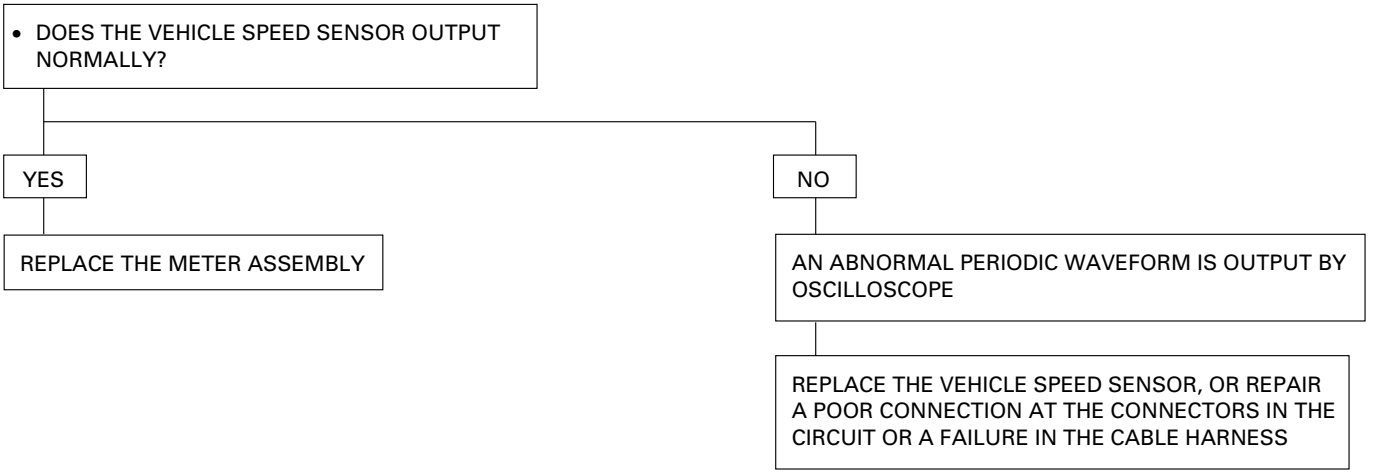

Inspection of a waveform by oscilloscope

1. Connect a resistance of 1.3 to 5k ohm (1.4W or more) between the harness side connectors 15 I-9 and 5 I-10 (w/o TOD) or 26 I-9 and 5 I-10

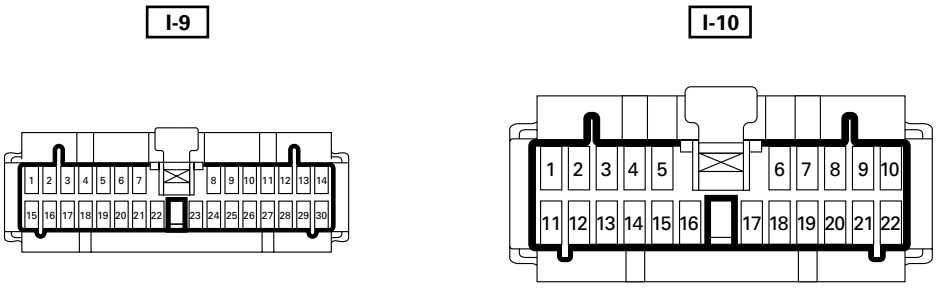

2. Install a speedometer tester.
3. Turn on the starter SW.
4. Check the waveform at the time when the car speed is at 60 km/h.

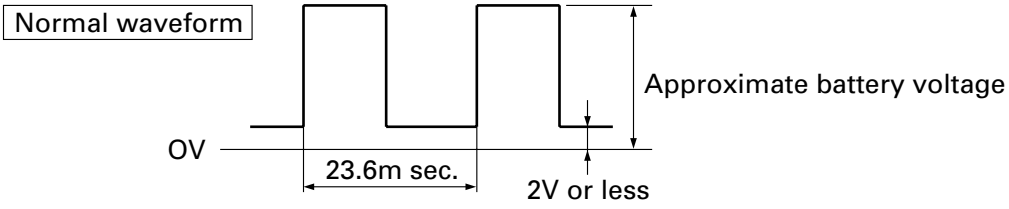

2. Tachometer

2-1. Tachometer Does Not Function

- IS THE PULSE INPUT NORMAL?

YES → REPLACE THE METER ASSEMBLY

NO → REPLACE THE PCM, ECM OR REPAIR A POOR CONNECTION AT THE CONNECTORS IN THE CIRCUIT OR A FAILURE IN THE CABLE HARNESS

2-2. Tachometer Needle Fluctuates (May Be Wide Fluctuation)

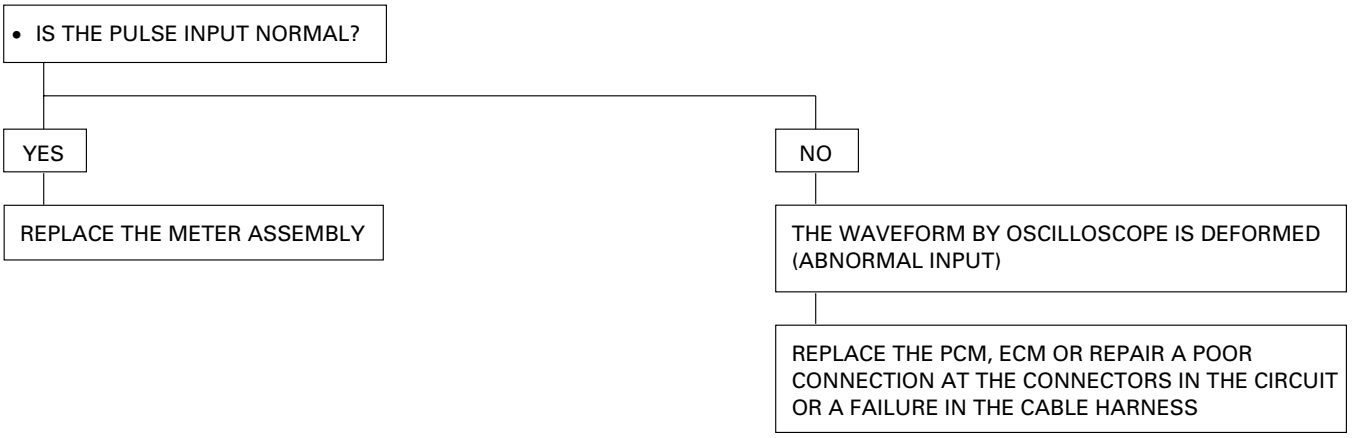

2-3. Tachometer Needle Jumps Erratically

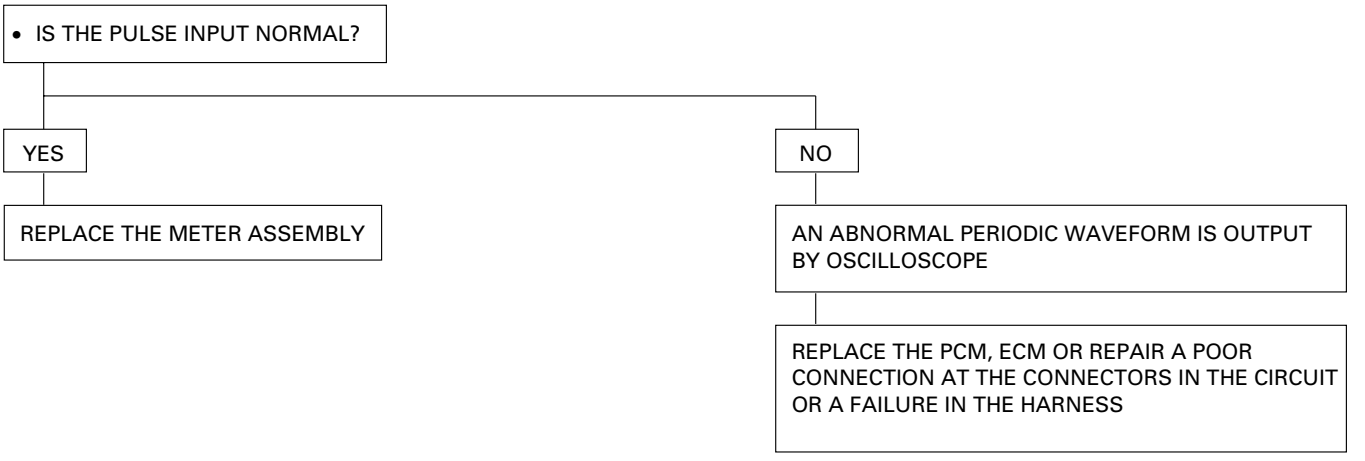

Inspection of a waveform by oscilloscope

1. Check the waveform of the meter assembly connector 9 I-9 (Tachometer pulse).

I-9

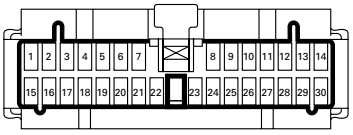

Normal waveform

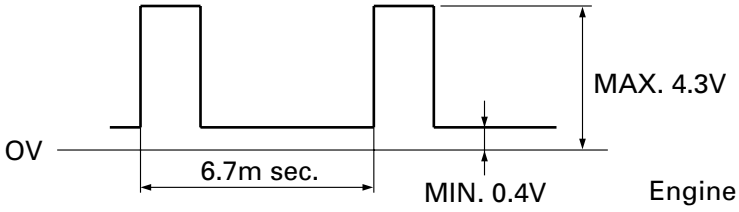

Engine revolution : 3000 rpm

3. Voltmeter

3-1. Voltmeter Needle Does Not Move

3-2. Voltage Reading Is Too Low (Or High)

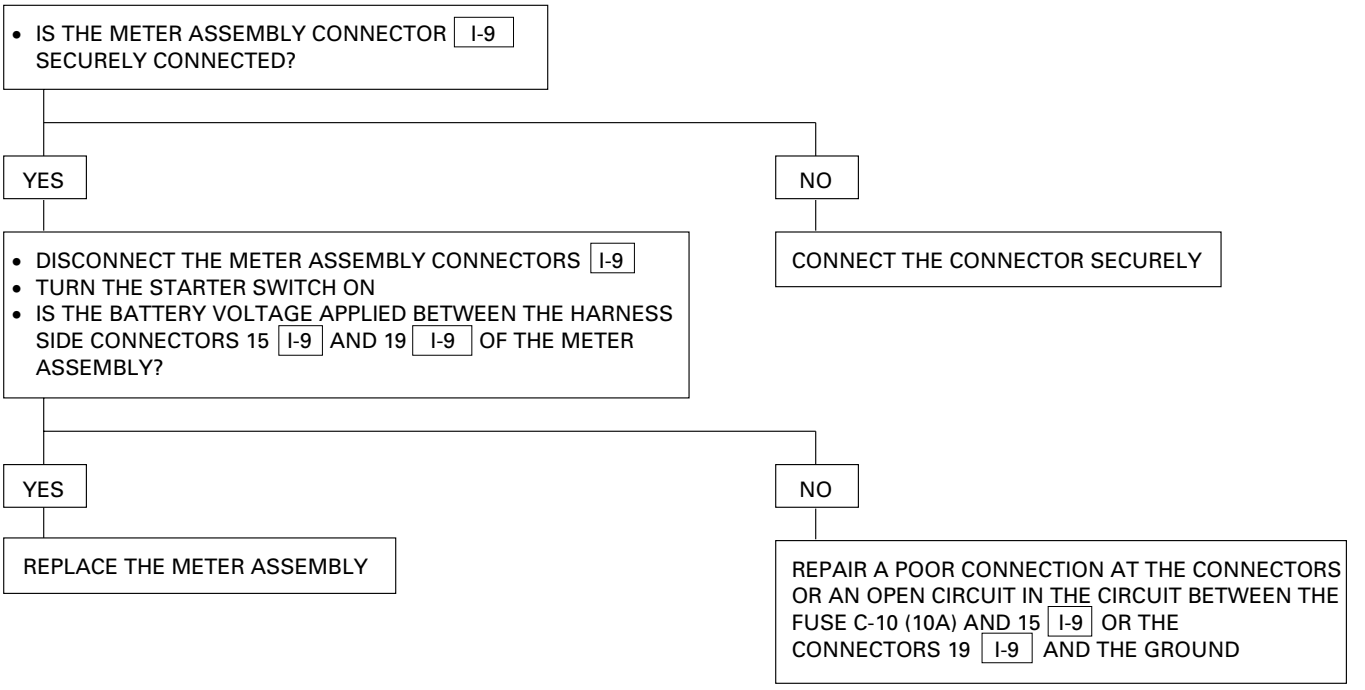

4. Engine Coolant Temperature (ECT) Gauge

4-1 Gauge Needle Does Not Move

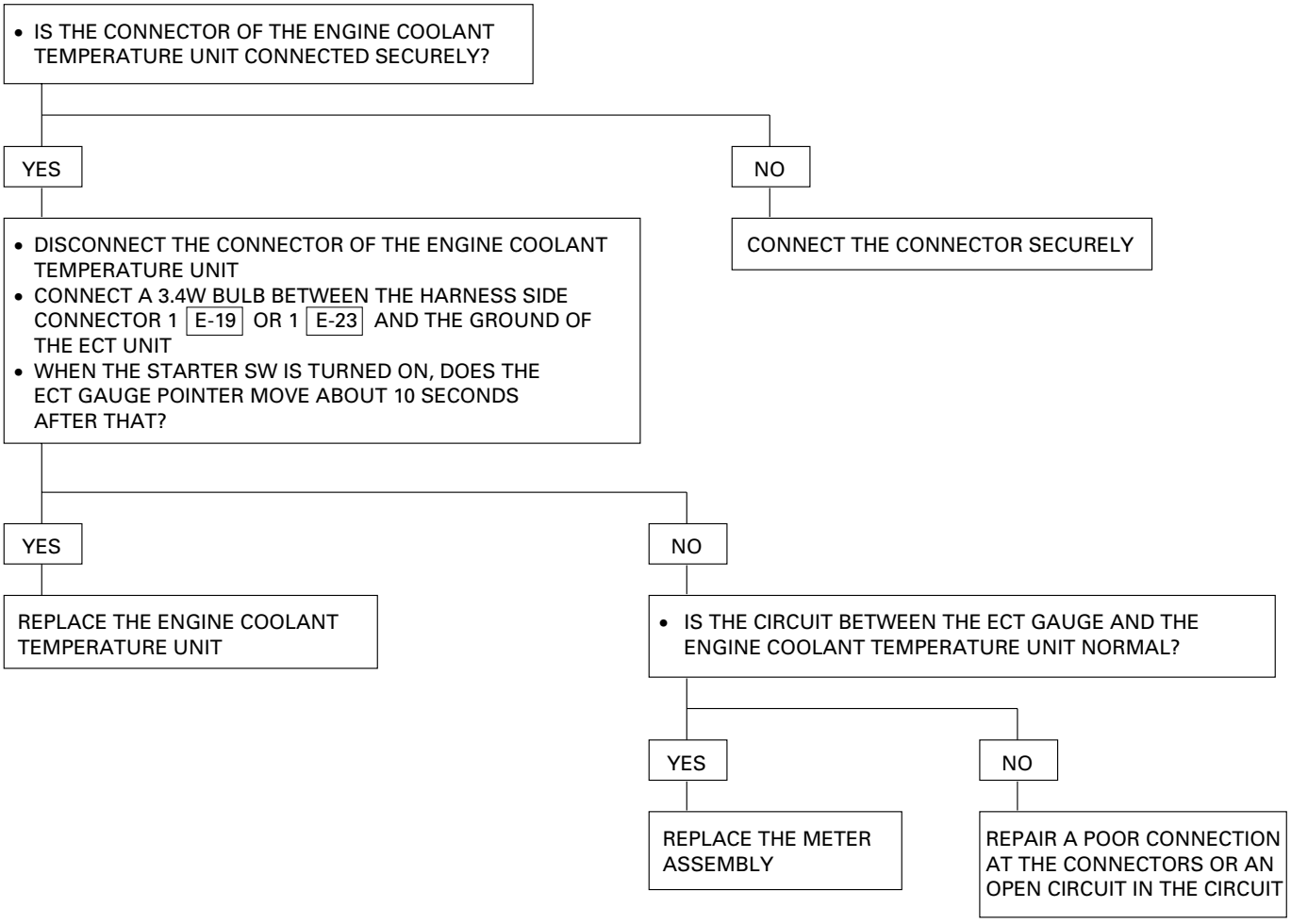

4-2 Gauge Reading Is Too Low (Or High)

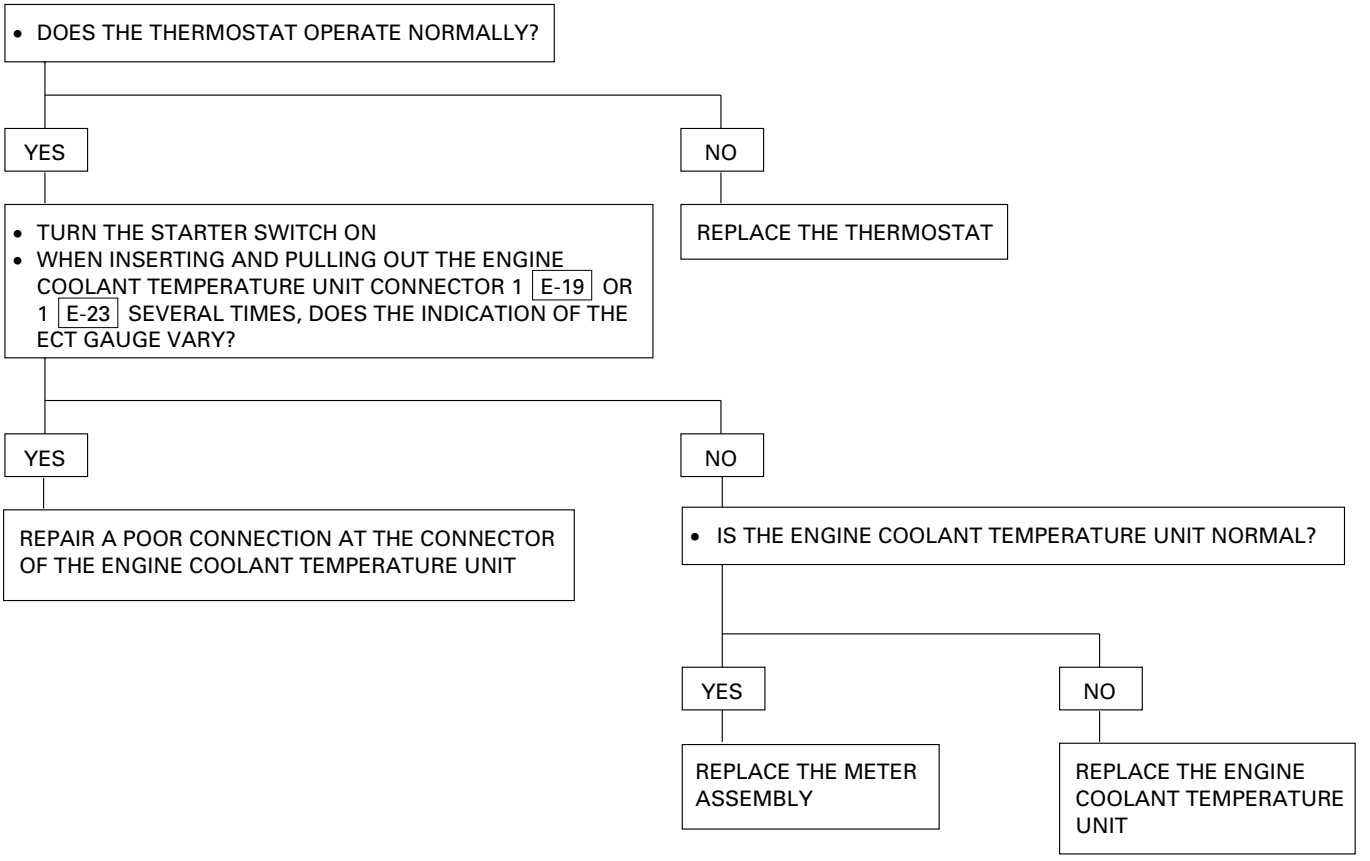

4-3 Needle Overshoots (Goes Up To The “H” Range)

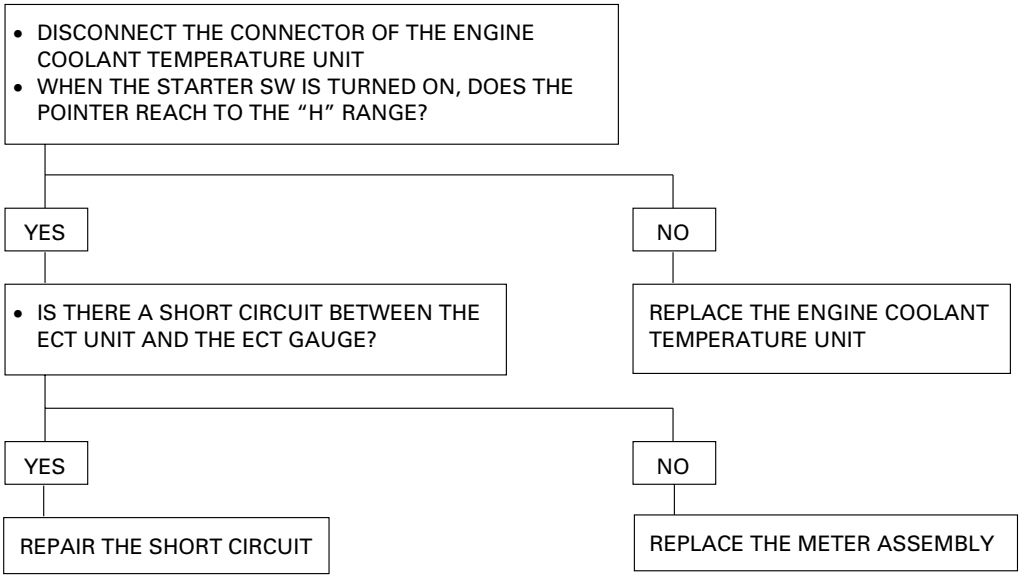

5. Oil Pressure Gauge

5-1 Needle Does Not Move

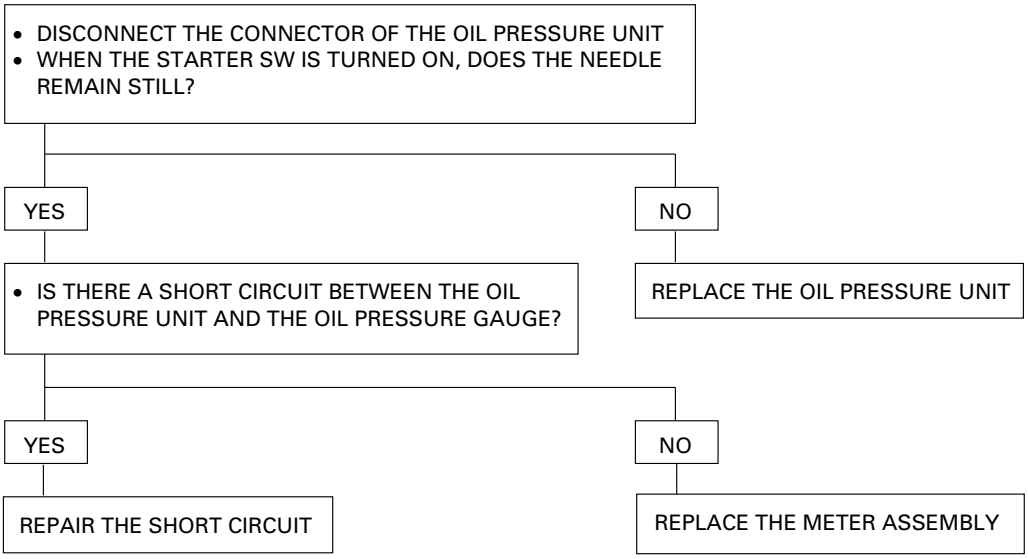

5-2 Oil Pressure Gauge Reading Is Too Low (Or High)

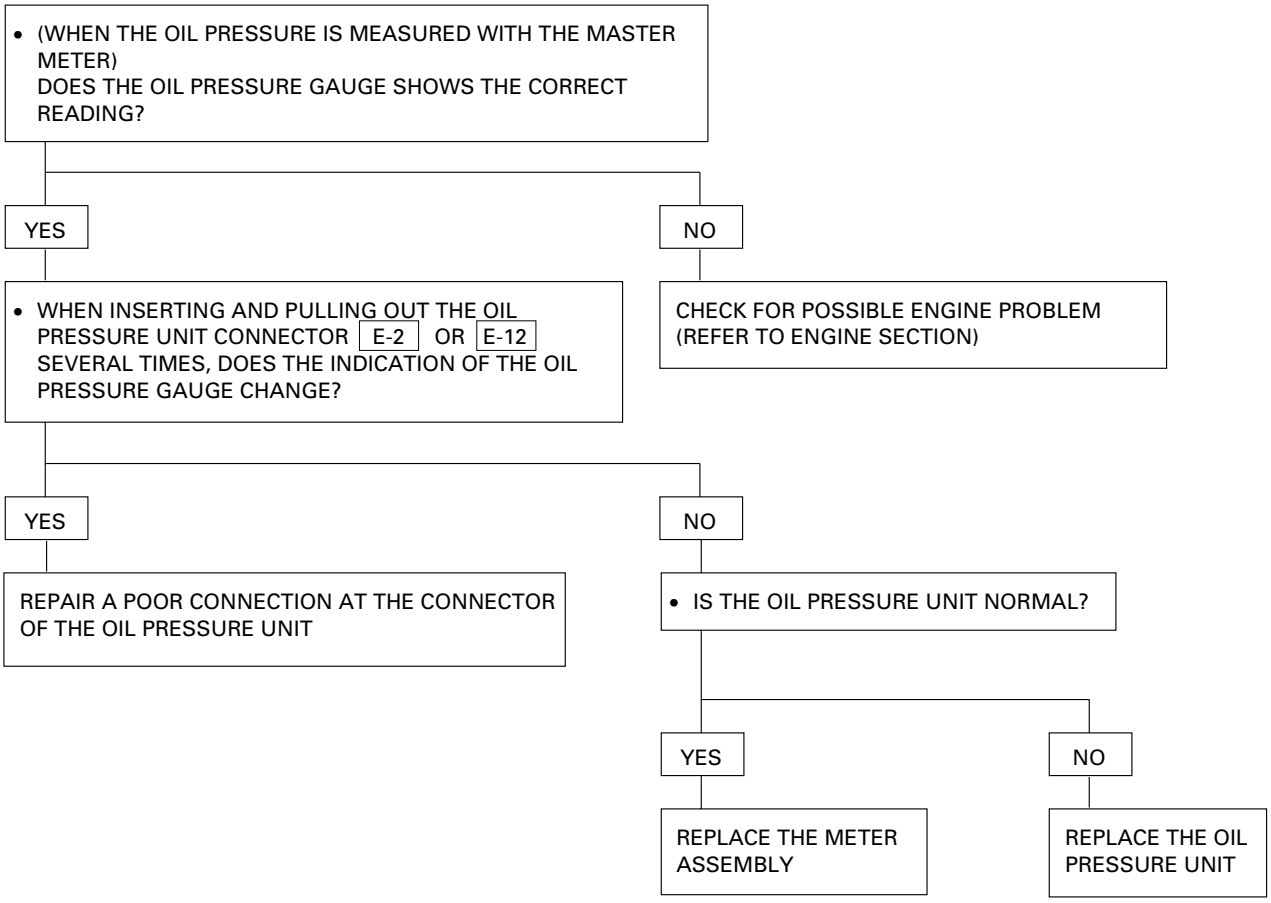

5-3 Needle Overshoots (Goes Up To 15 (x100 kPa))

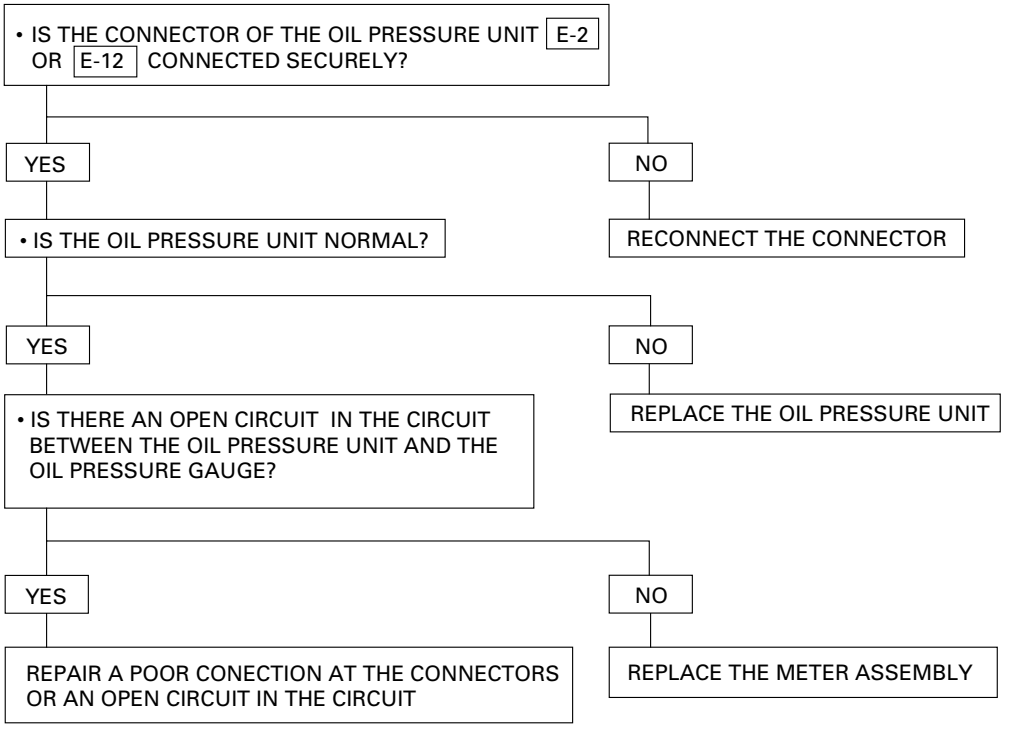

6. Fuel Gauge

6-1 Fuel Gauge Needle Does Not Move

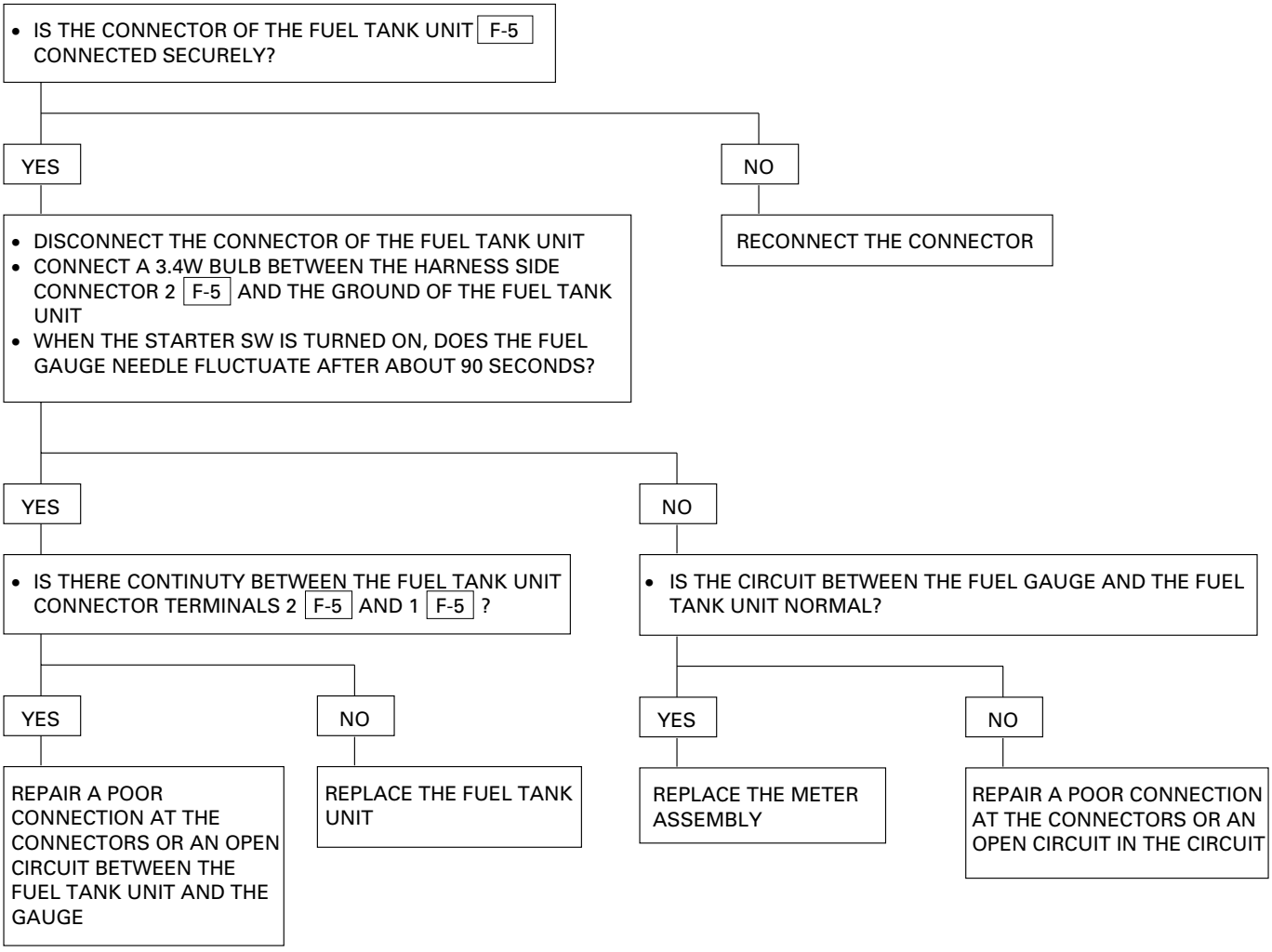

6-2 Even When The Tank Is Filled Up With Fuel, The Needle Does Not Reach “F”

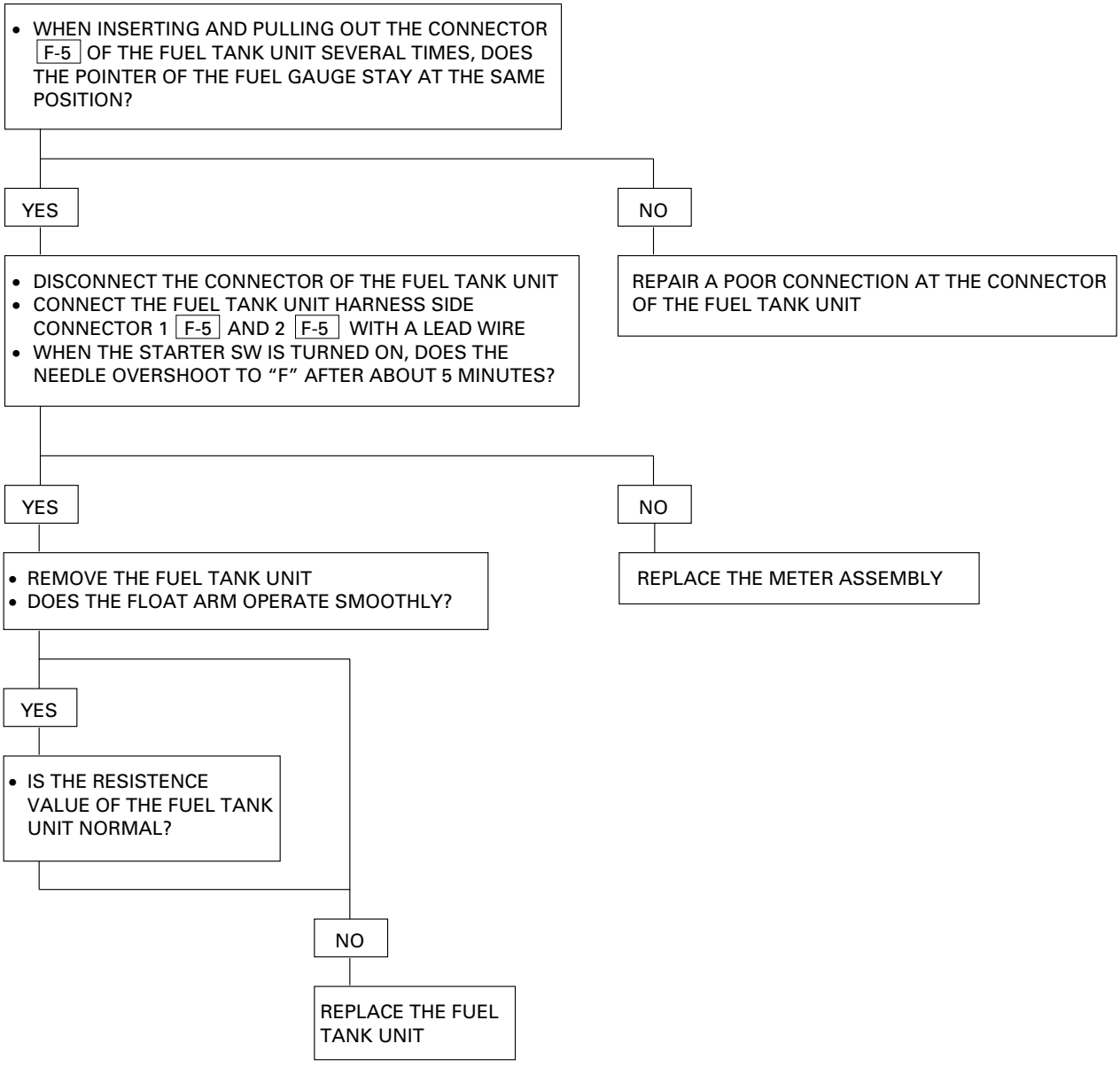

6-3 Even When The Tank Is Not Full of Fuel, The Needle Overshoots (Or Goes Up To “F”)

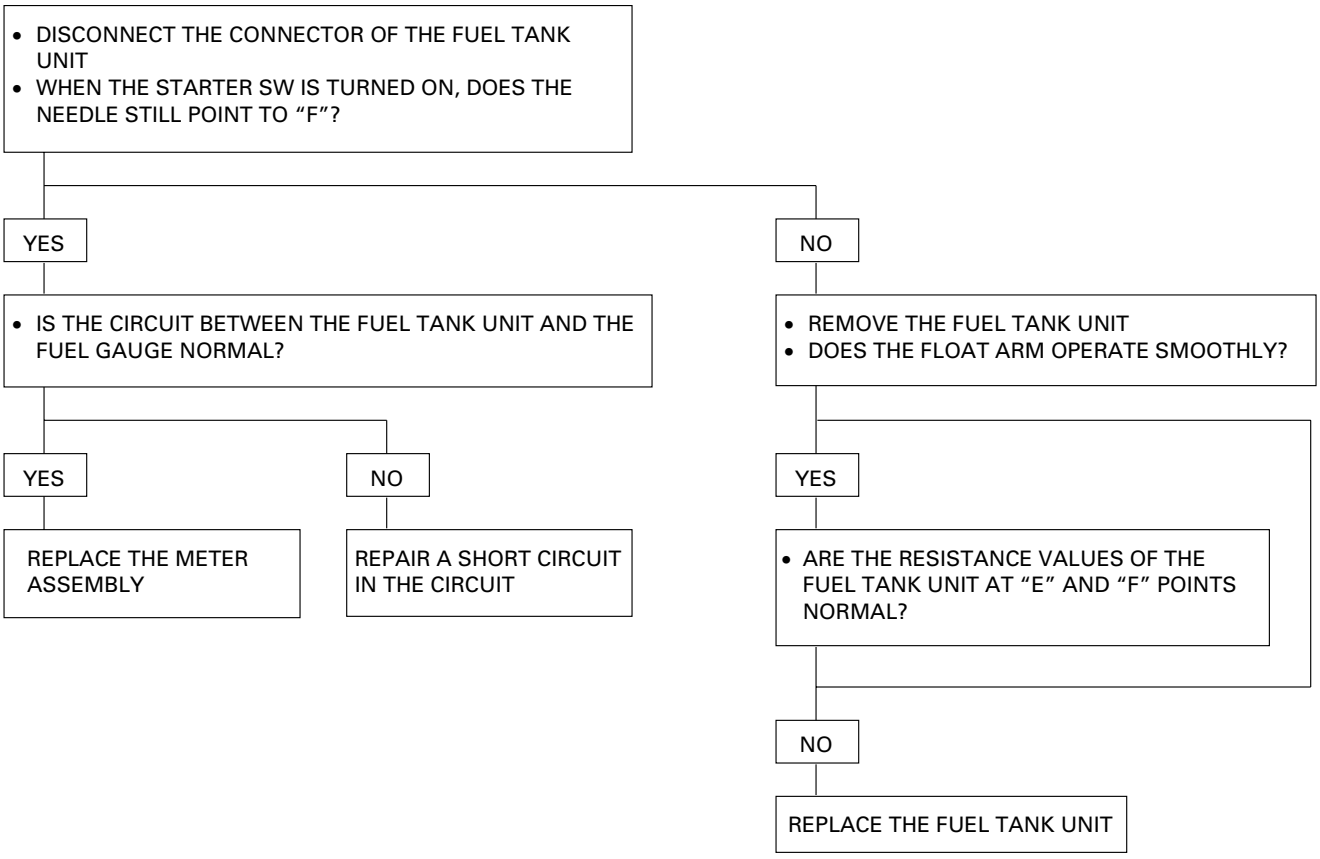

7. Warning/Indicator Light

7-1 When The Parkng Brake Lever Is Pulled, The Indicator Light Does Not Light Up

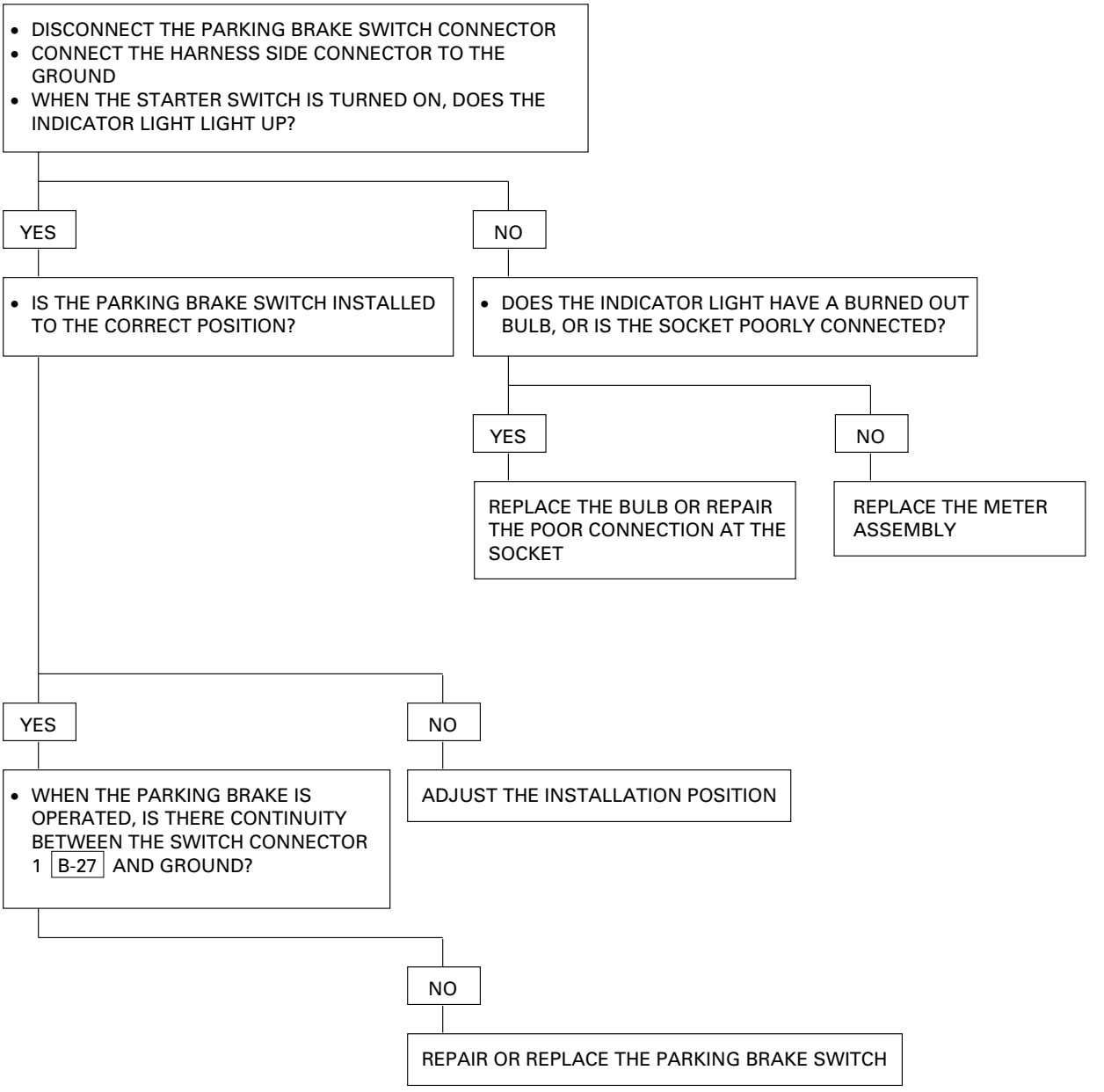

7-2 Even When The Parking Brake Lever Is Released, The Indicator Light Does Not Go Off

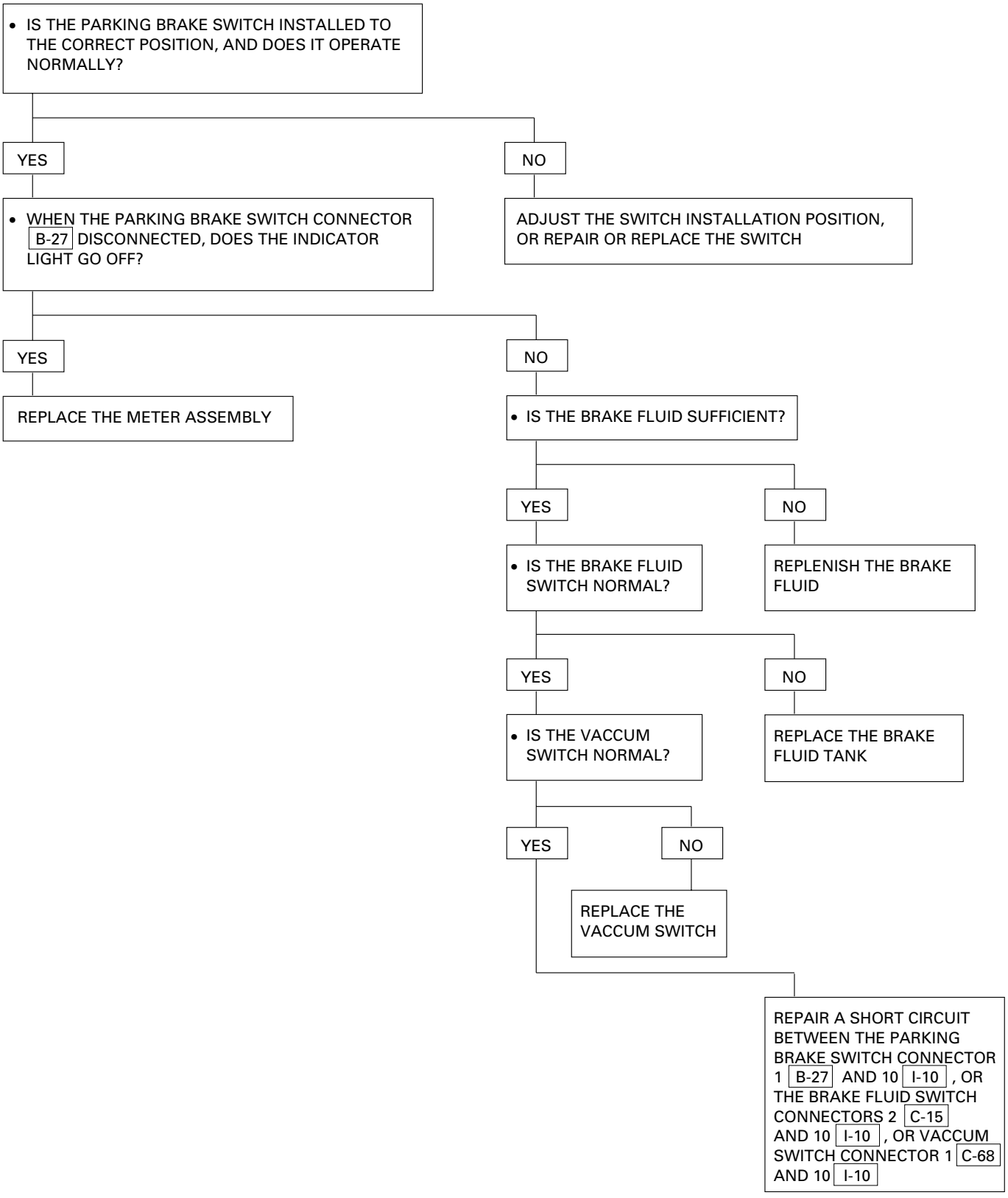

7-3 While The Engine Is Operating, The Oil Pressure Warning Light Does Not Go Off

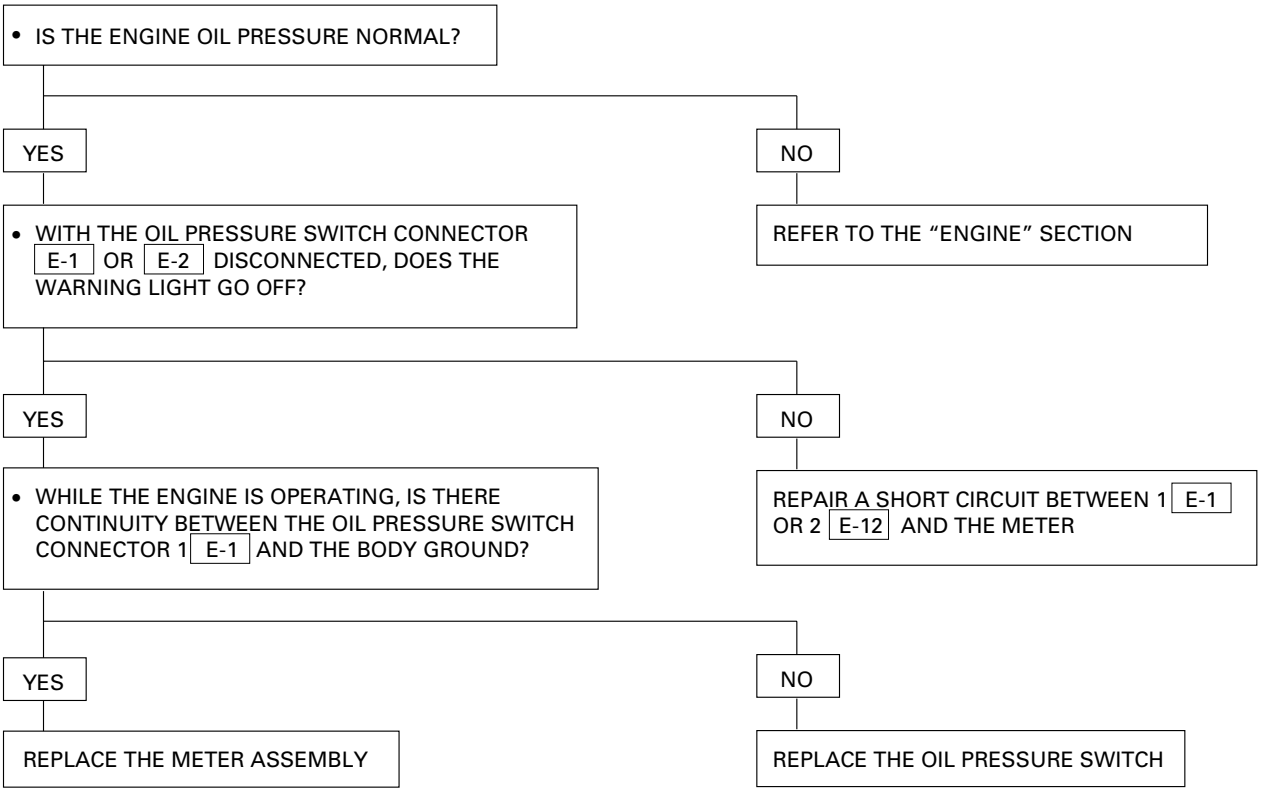

7-4 Even When The Fuel Tank Is Full With Fuel, The Low Fuel Warning Light Lights Up

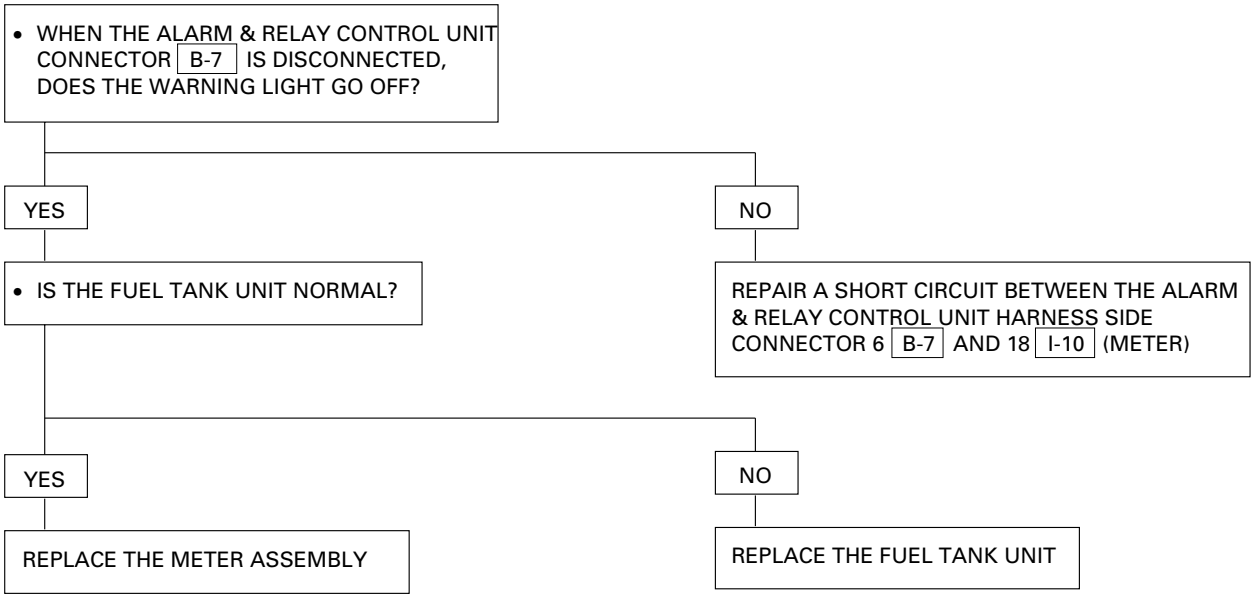

7-5 Even When The Fuel Tank Is Empty, The Low Fuel Warning Light Does Not Light Up

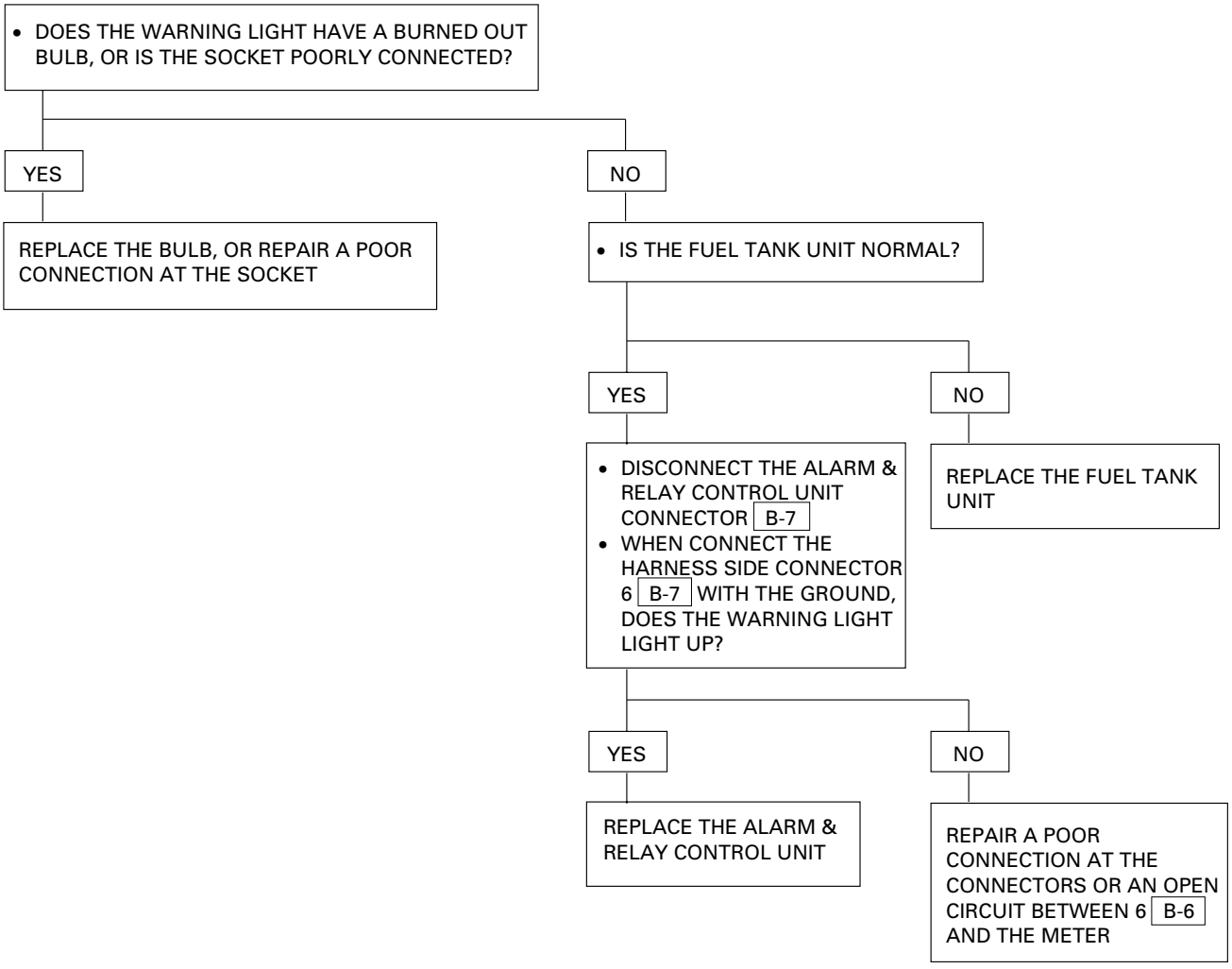

A/T Shift Indicator

General Description

The circuit consists of mode switch, A/T shift indicator control unit and A/T shift indicator (meter).
A/T shift indicator control unit controls to illuminate A/T shift indicator light according to signals from mode switch.

Circuit Diagram (RHD)-1

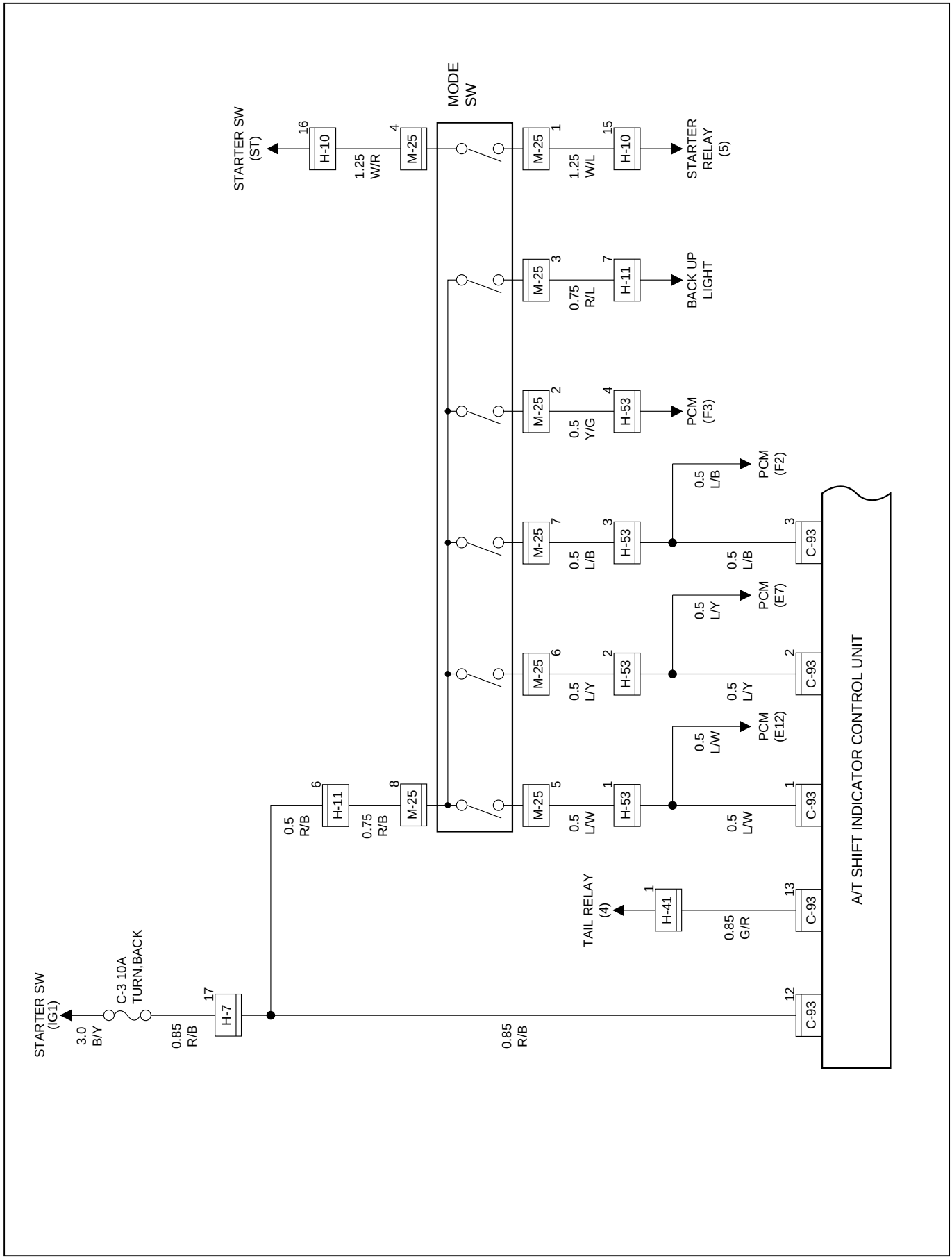

D08RW639

Circuit Diagram (RHD)-2

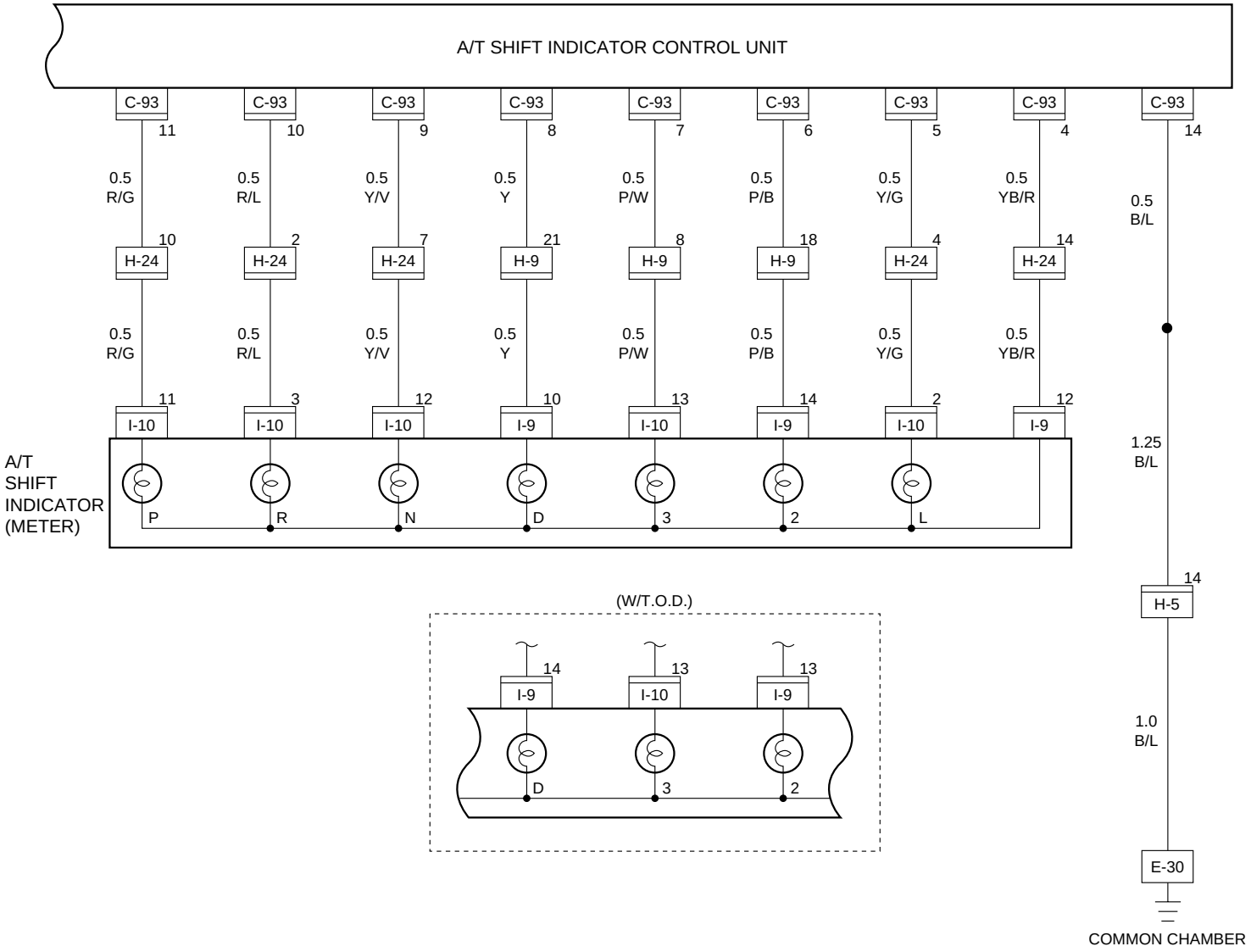

Parts Location (RHD)

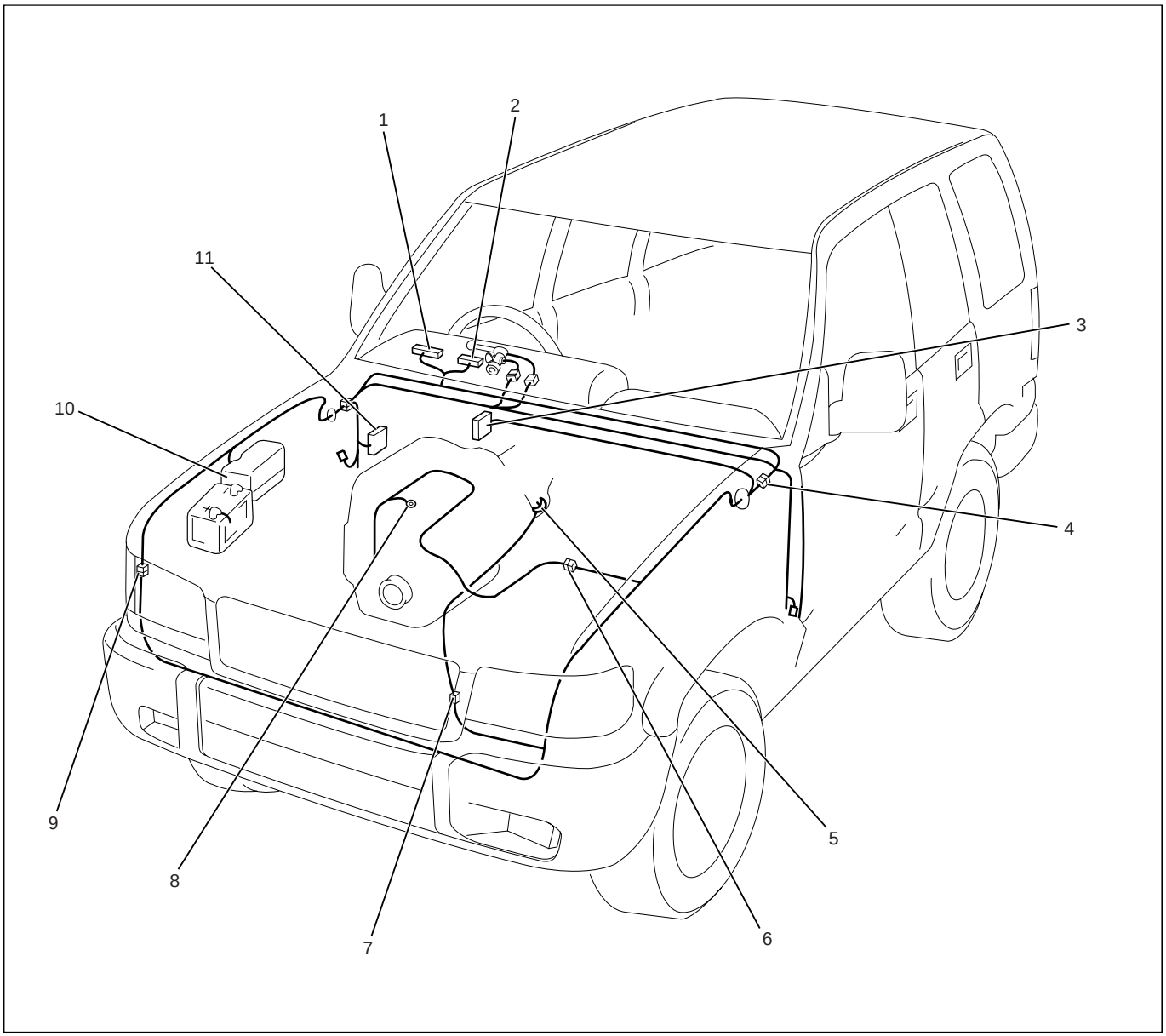

D08RWA10

Legend

(1) I-10
(2) I-9
(3) C-93
(4) H-7, H-8, H-9, H-24
(5) Mode Switch
(6) H-5
(7) H-10, H-11, H-53
(8) E-30
(9) H-41
(10) Relay and Fuse Box
(11) Fuse Box

Circuit Diagram (LHD)-1

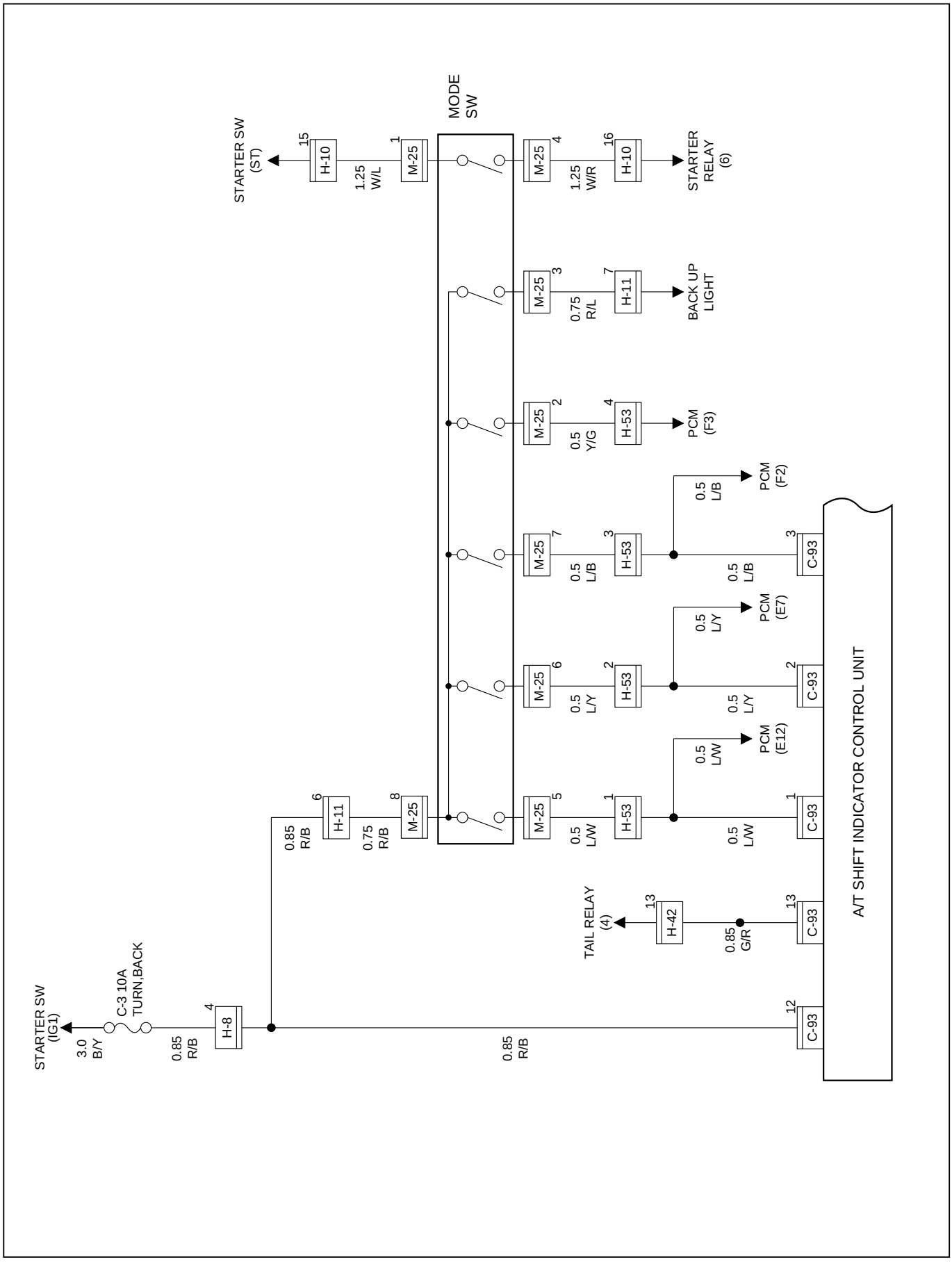

D08RW949

Circuit Diagram (LHD)-2

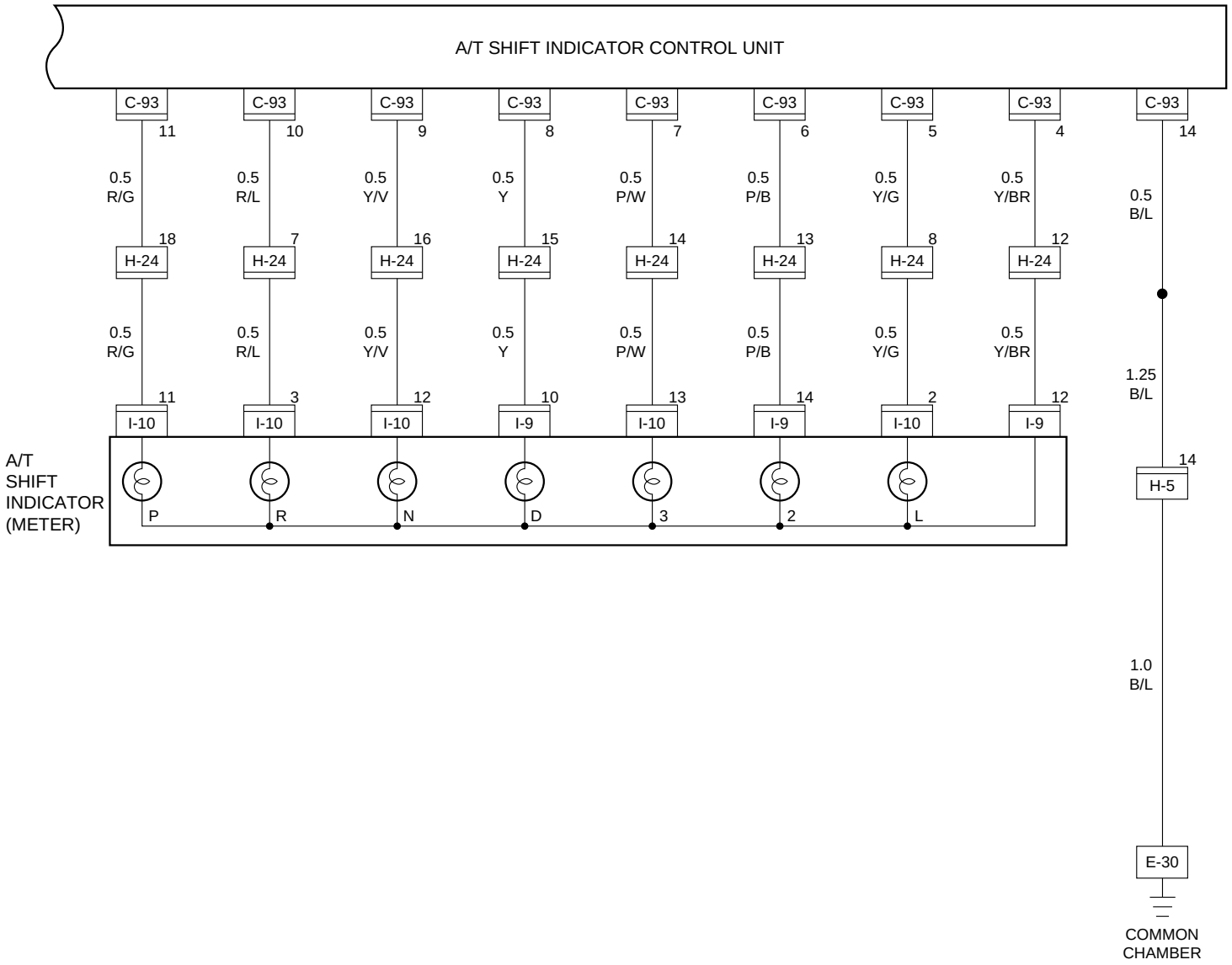

Parts Location (LHD)

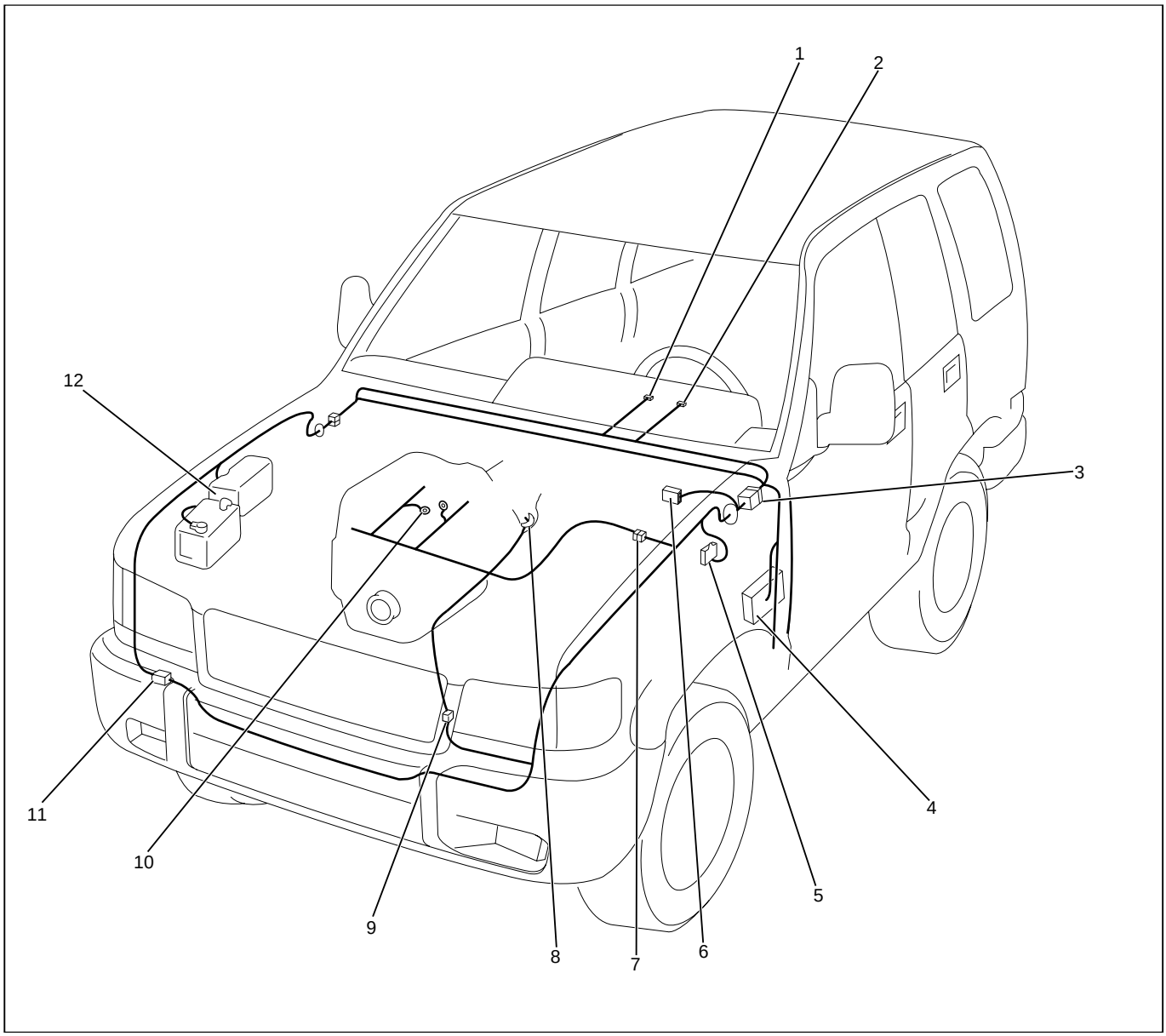

D08RWA09

Legend

(1) I-10
(2) I-9
(3) H-8, H-9, H-24
(4) Fuse Box
(5) C-16
(6) C-93
(7) H-5
(8) M-25
(9) H-10, H-11, H-53
(10) E-30
(11) H-42
(12) Relay and Fuse Box

Heater and Air Conditioning

General Description

The circuit consists of pressure switch, A/C switch, electronic thermostat, blower motor, fan switch, magnetic clutch of A/C compressor, blower resistor and relay.

The operation of A/C system is controlled by turning A/C switch on and off. Electronic thermostat and PCM can stop operation of A/C temporarily by disconnecting magnetic clutch under the predetermined conditions to adjust room temperature, preventing abnormal rise of engine coolant and reduce engine load while A/C is in operation.

Refer to Heating, Ventilation and Air Conditioning in HVAC section.

Circuit Diagram (RHD 6VD1)-1

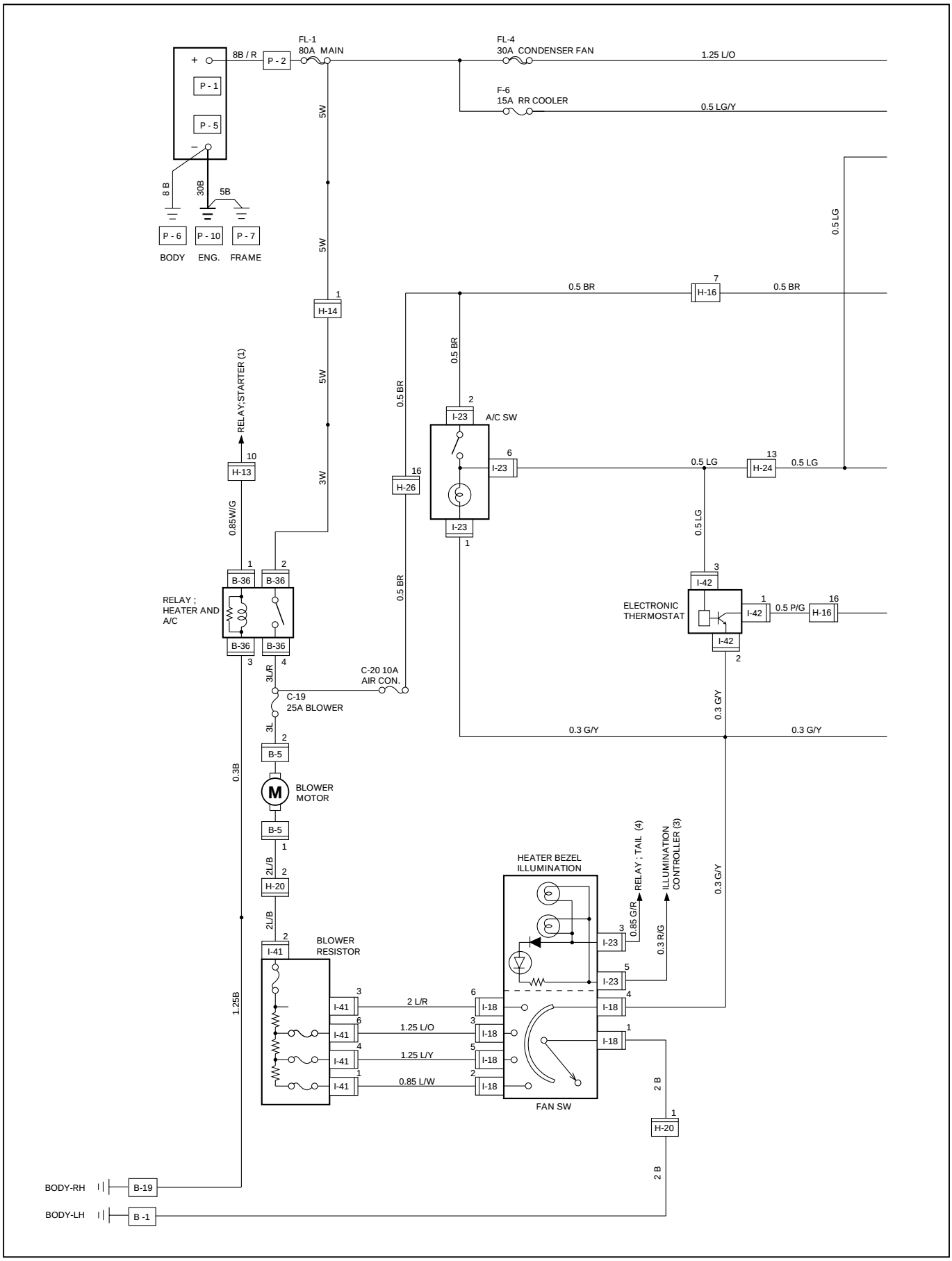

D08RW770

Circuit Diagram (RHD 6VD1)-2

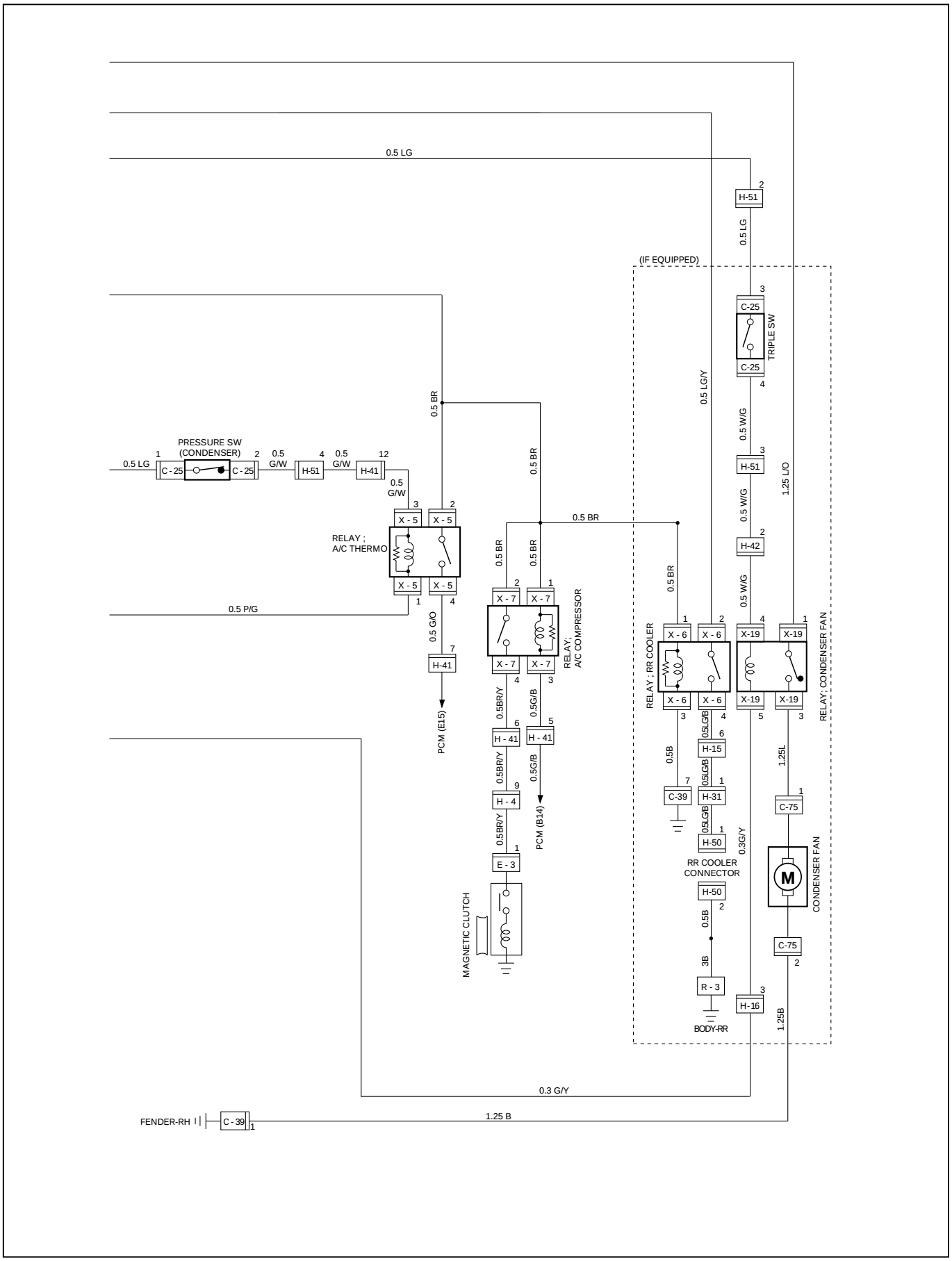

D08RW771

Parts Location (RHD 6VD1)

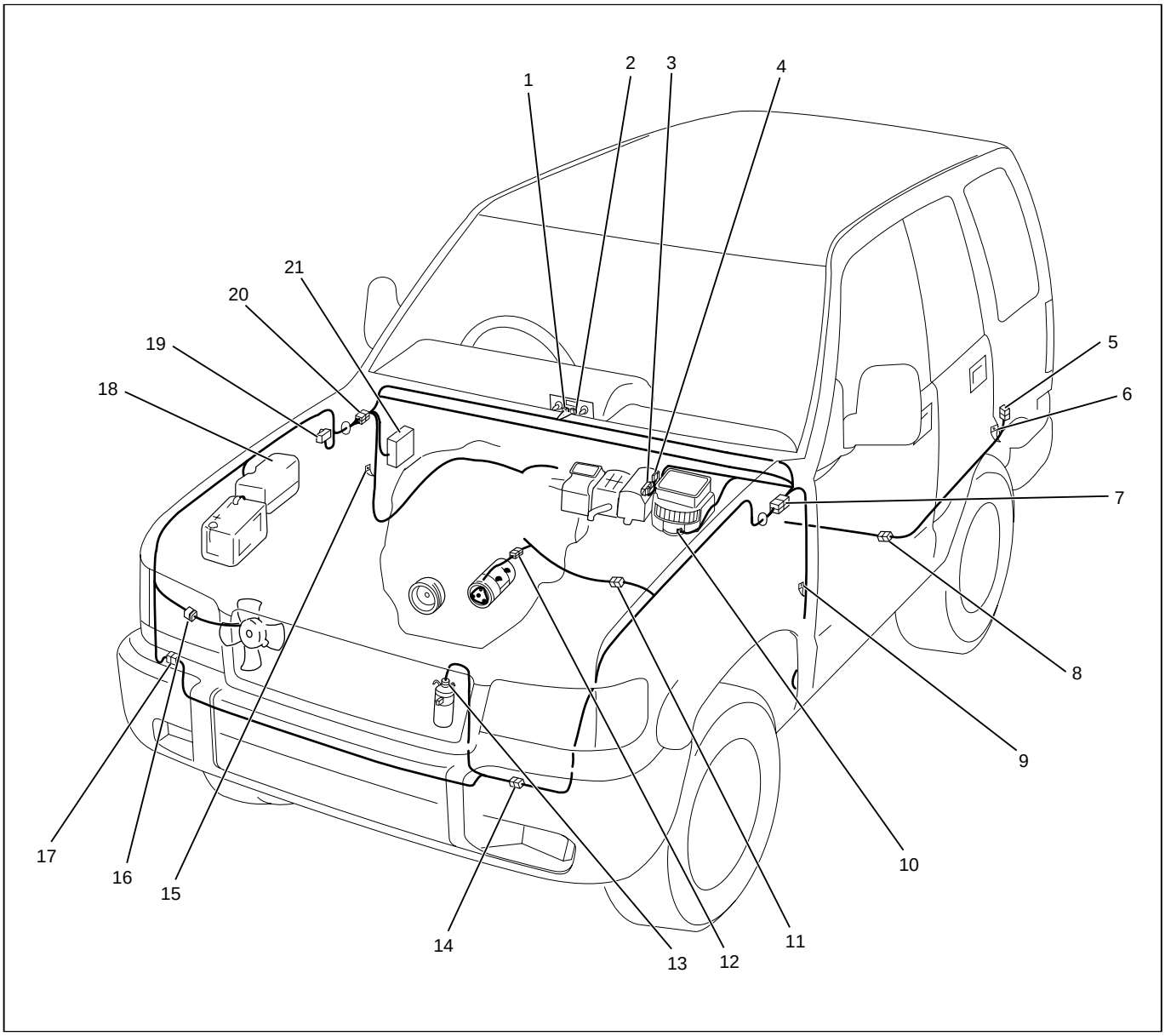

D08RWA15

Legend

(1) I-23
(2) I-18
(3) Blower Resistor (I-41)
(4) Electronic Thermostat (I-42)
(5) H-50
(6) R-3
(7) H-7, H-20, H-24
(8) H-31
(9) B-1
(10) Blower Motor (B-5)
(11) X-4
(12) E-3
(13) C-25
(14) H-51
(15) B-19
(16) C-75
(17) H-41, H-42
(18) Relay and Fuse Box (X-5, X-6, X-7, X-19)
(19) C-39
(20) H-13, H-14, H-15, H-16, H-24
(21) Fuse Box (B-36)

Circuit Diagram (LHD 6VD1)-1

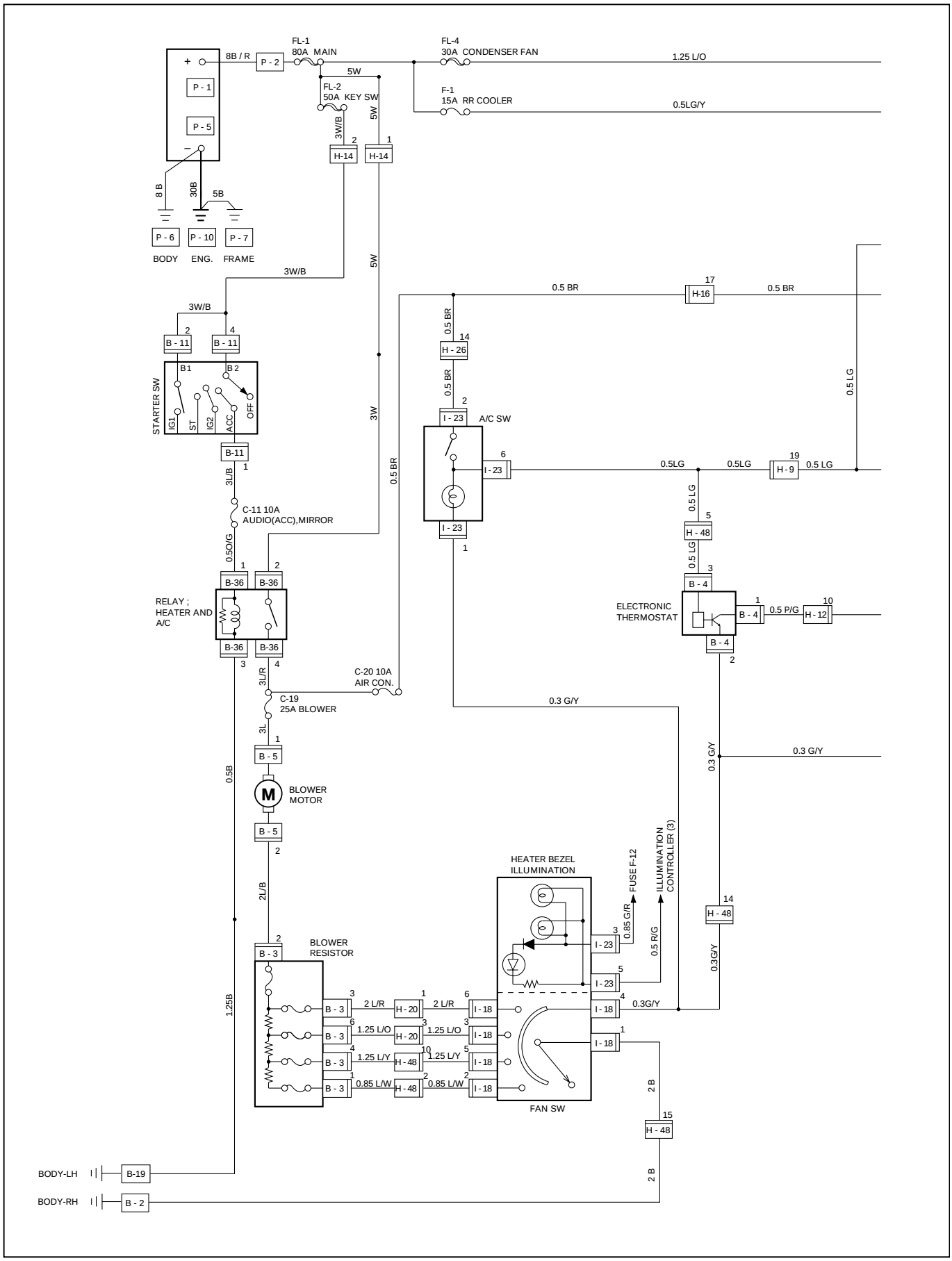

D08RW698

Circuit Diagram (LHD 6VD1)-2

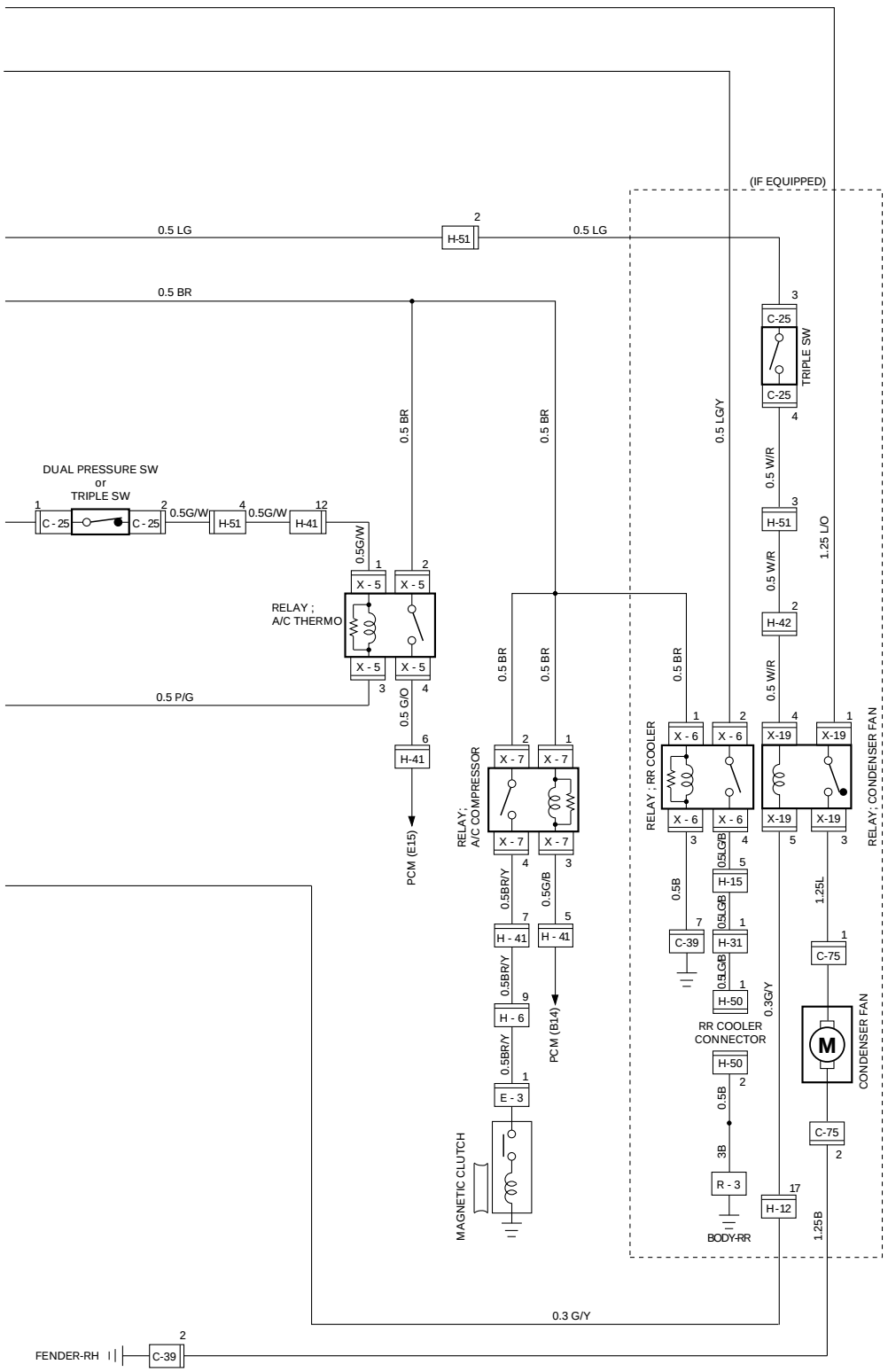

D08RW699

Parts Location (LHD 6VD1)

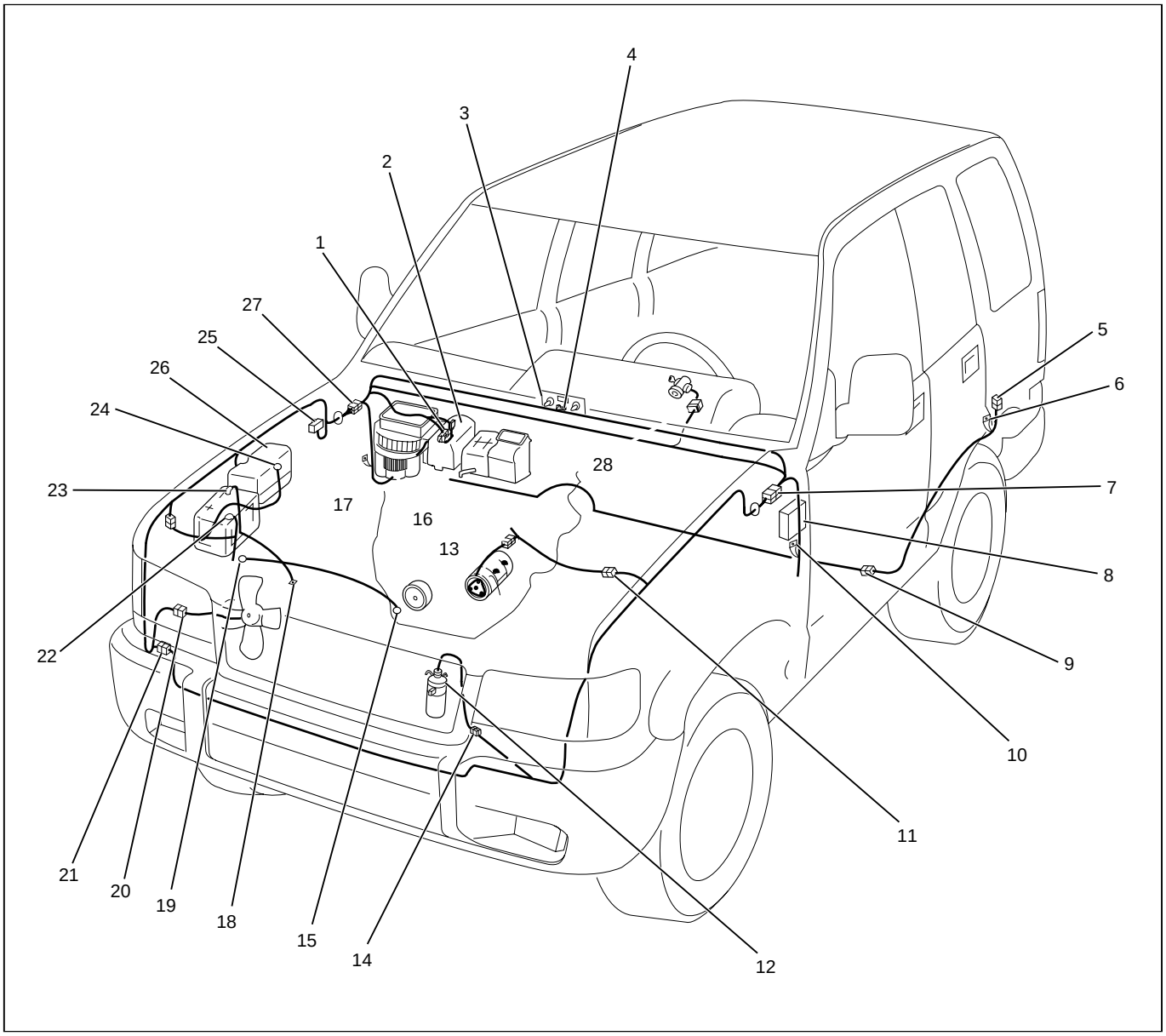

D08RWA14

Legend

(1) Blower Resistor (B-3)
(2) Electronic Thermostat (B-4)
(3) I-23
(4) I-18
(5) H-50
(6) R-3
(7) H-9, H-24
(8) Fuse Box (B-36)
(9) H-31
(10) B-19
(11) H-6
(12) C-25
(13) E-3
(14) H-51
(15) P-10
(16) Blower Motor (B-5)
(17) B-2
(18) P-7
(19) P-6
(20) C-75
(21) H-41, H-42
(22) P-5
(23) P-1
(24) P-2
(25) C-39
(26) Relay and Fuse Box (X-5, X-6, X-7, X-19)
(27) H-12, H-14, H-16, H-20, H-26, H-48
(28) B-11

Circuit Diagram (RHD 4JG2)-1

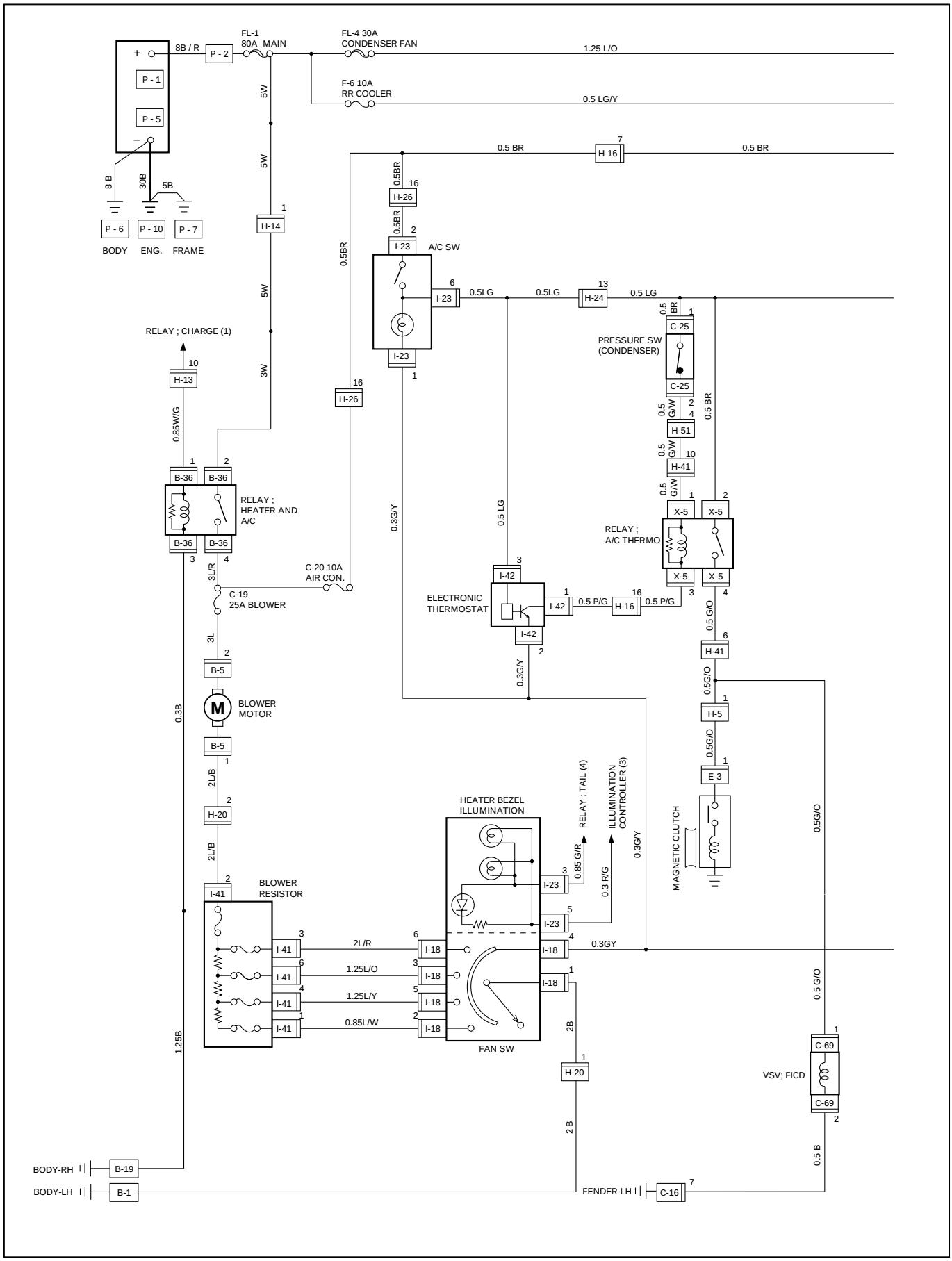

D08RW803

Circuit Diagram (RHD 4JG2)-2

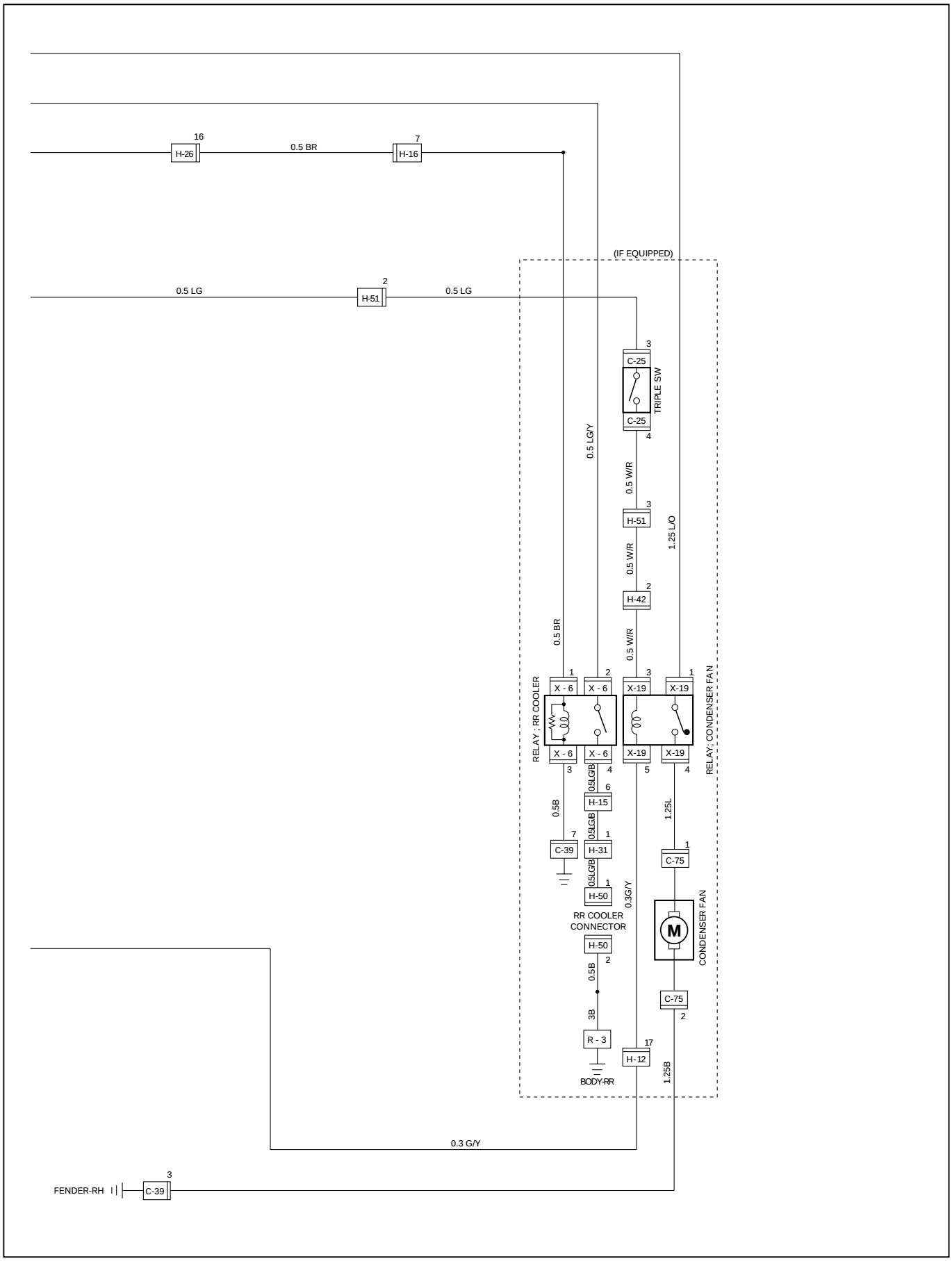

D08RW802

Parts Location (RHD 4JG2)

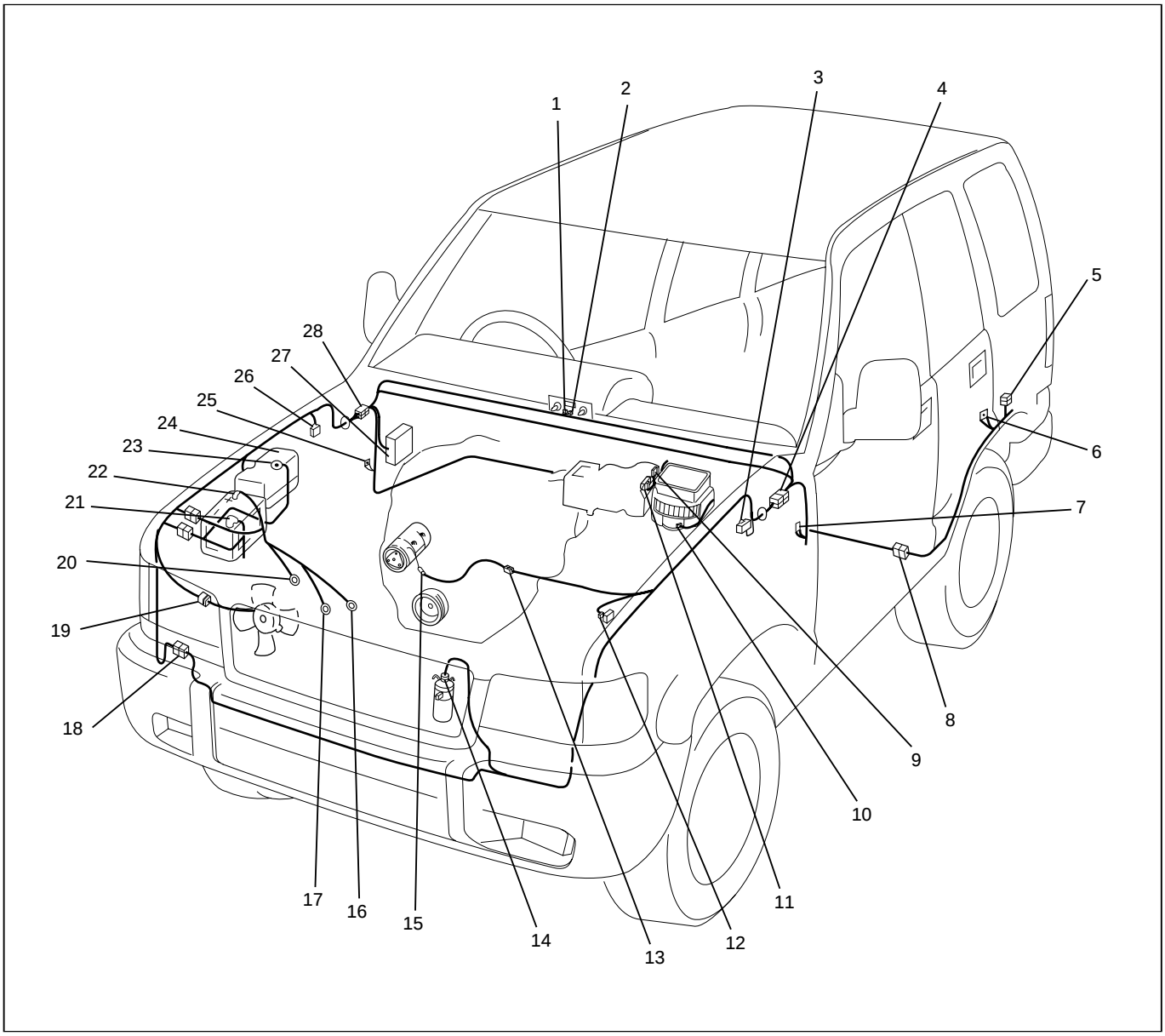

D08RWA29

Legend

(1) I-18
(2) I-23
(3) C-16
(4) H-7, H-20, H-24
(5) H-50
(6) R-3
(7) B-1
(8) H-31
(9) Electronic Thermostat (I-42)
(10) Blower Motor (B-5)
(11) Blower Resistor (I-41)
(12) C-69
(13) H-5
(14) C-25
(15) E-3
(16) P-10
(17) P-7
(18) H-41, H-42
(19) C-75
(20) P-6
(21) P-1
(22) P-5
(23) P-2
(24) Relay and Fuse Box (X-5, X-6, X-19)
(25) B-19
(26) C-39
(27) Fuse Box (B-36)
(28) H-12, H-13, H-14, H-16, H-26

Circuit Diagram (LHD 4JG2)-1

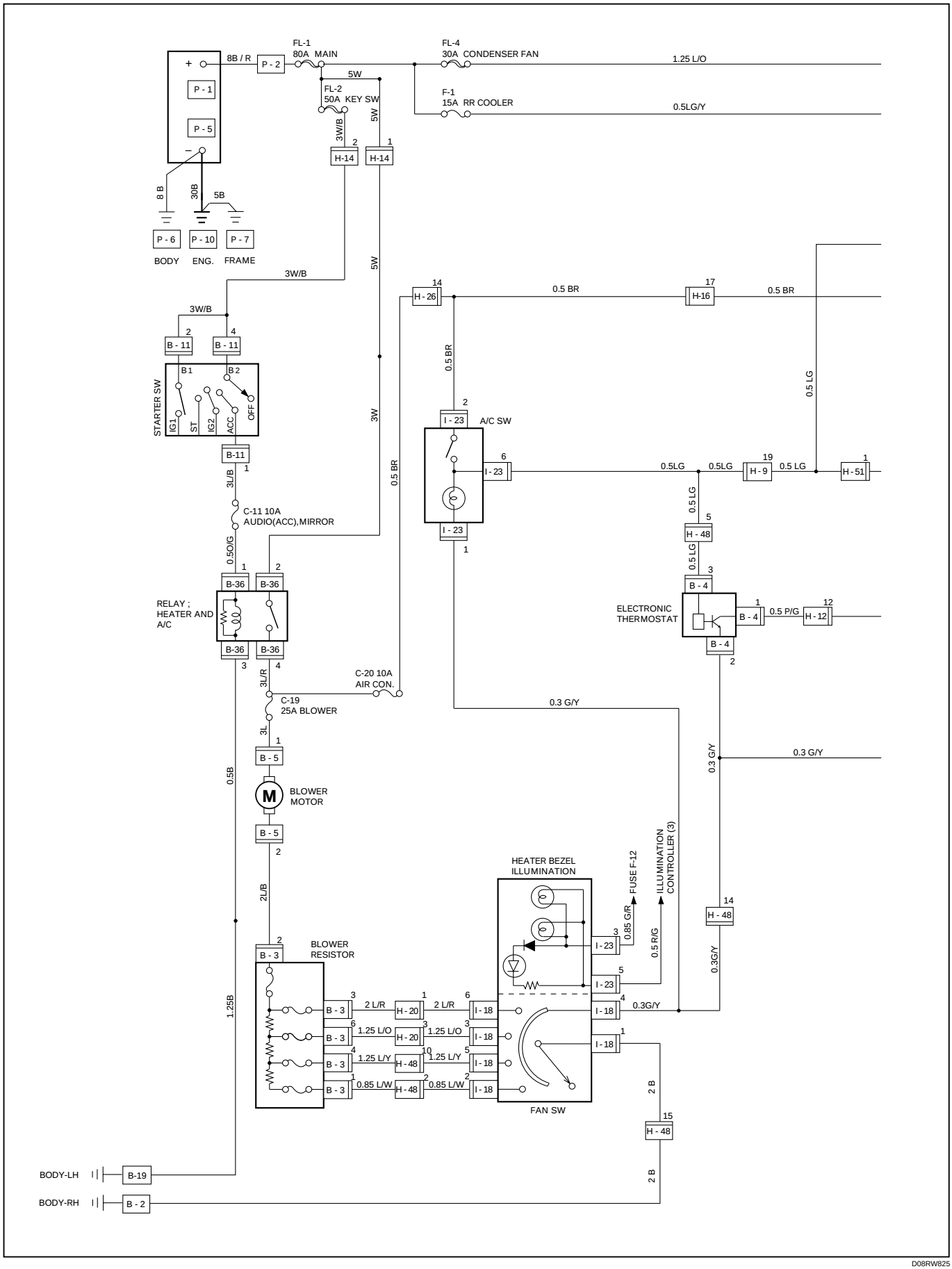

D08RW825

Circuit Diagram (LHD 4JG2)-2

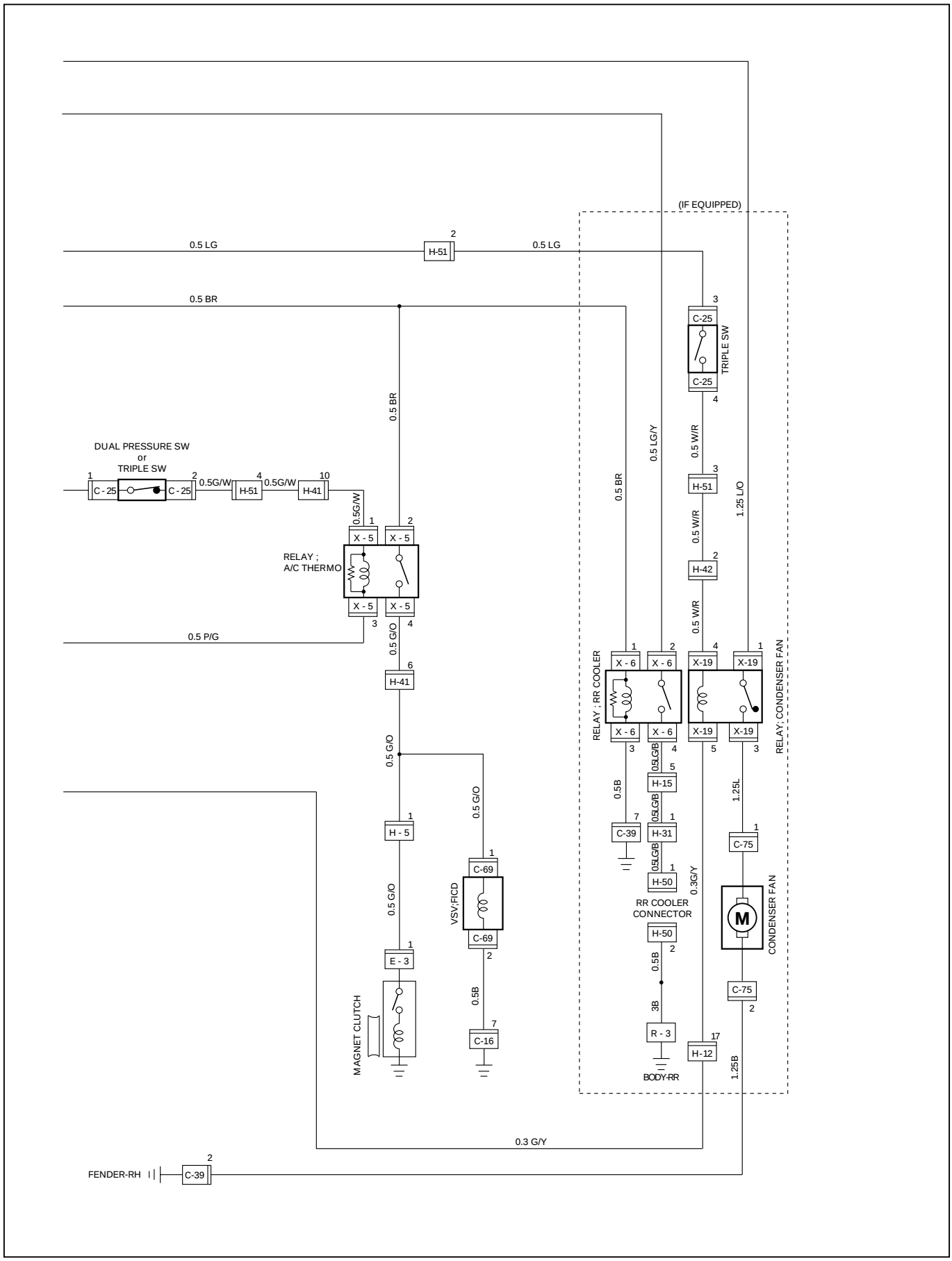

D08RW826

Parts Location (LHD 4JG2)

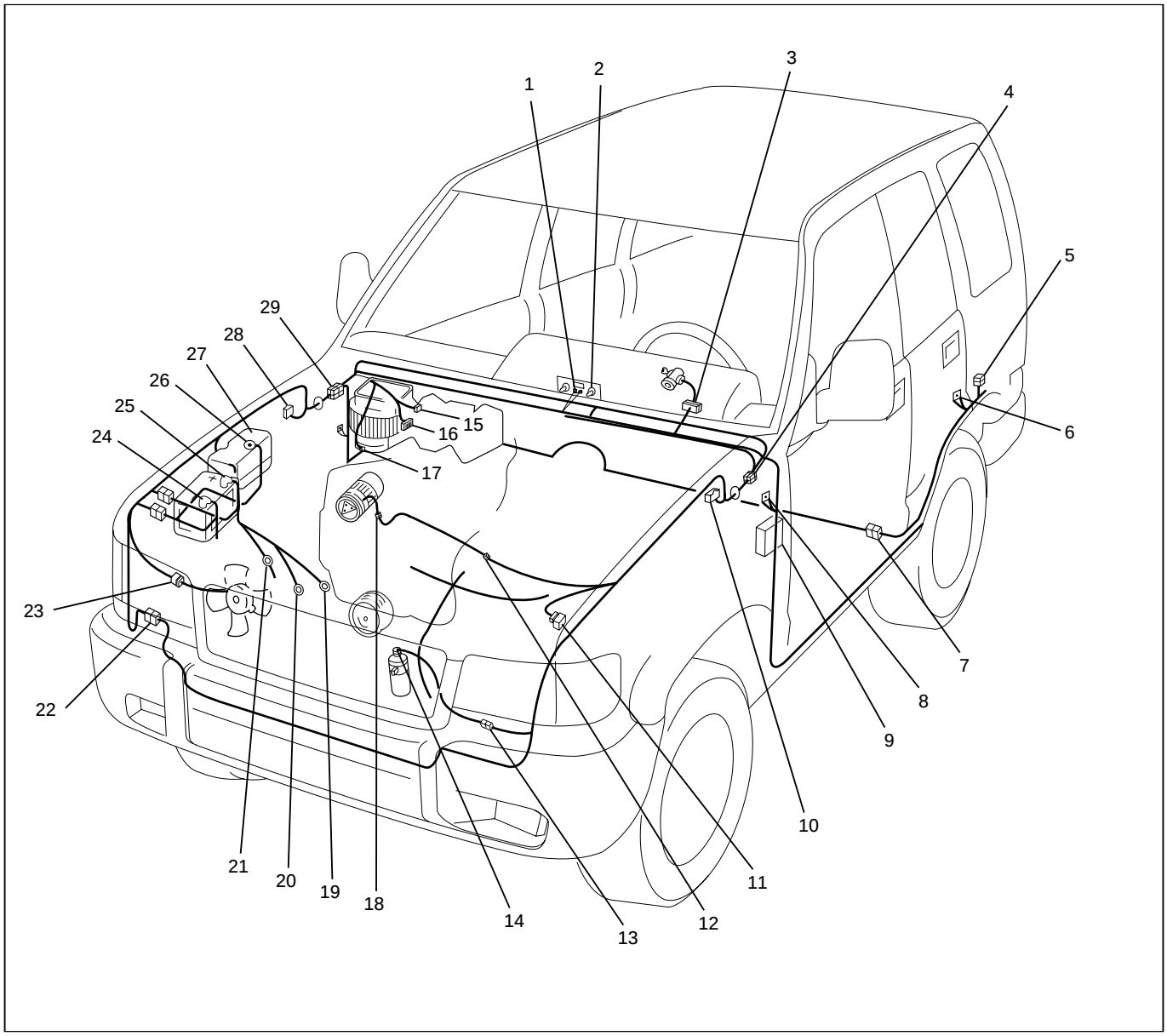

D08RWA28

Legend

(1) I-18
(2) I-23
(3) B-11
(4) H-7, H-9, H-26
(5) H-50
(6) R-3
(7) H-31
(8) B-19
(9) Fuse Box (B-36)
(10) C-16
(11) C-69
(12) H-5
(13) H-51
(14) C-25
(15) Electronic Thermostat (B-4)
(16) Blower Resistor (B-3)
(17) Blower Motor (B-5)
(18) E-3
(19) P-10
(20) P-7
(21) P-6
(22) H-41, H-42
(23) C-75
(24) P-1
(25) P-5
(26) P-2
(27) Relay and Fuse Box (X-5, X-6, X-19)
(28) C-39
(29) H-12, H-14, H-16, H-20, H-48

Sun Roof

General Description

The circuit consists of sun roof switch, sun roof control unit, safety stop switch, limit switch and sun roof motor.

When sun roof switch is turned on, battery voltage is applied to sun roof control unit through circuit breaker and power window relay.

Accordingly, when sun roof switch is set to “Open” or “Close” position, open or close relay incorporated into the control unit is activated to change rotational direction of sun roof motor to open or close sun roof.

Also, operational process (full close → limit stop → full open → safety stop → full close) of sun roof is controlled by the control unit in accordance with signals received from safety stop switch and limit switch.

Circuit Diagram (RHD)

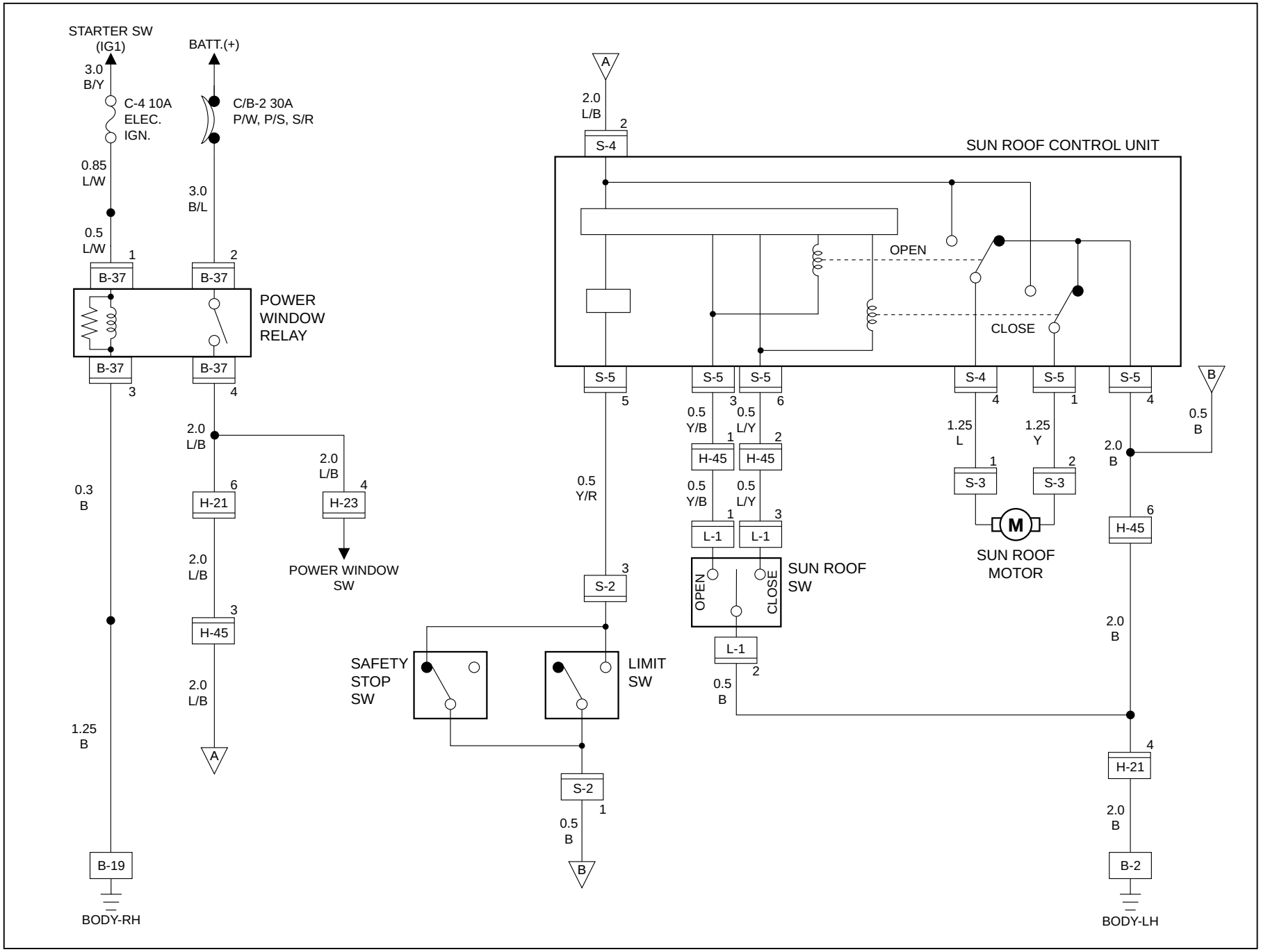

D08RW649

Parts Location (RHD)

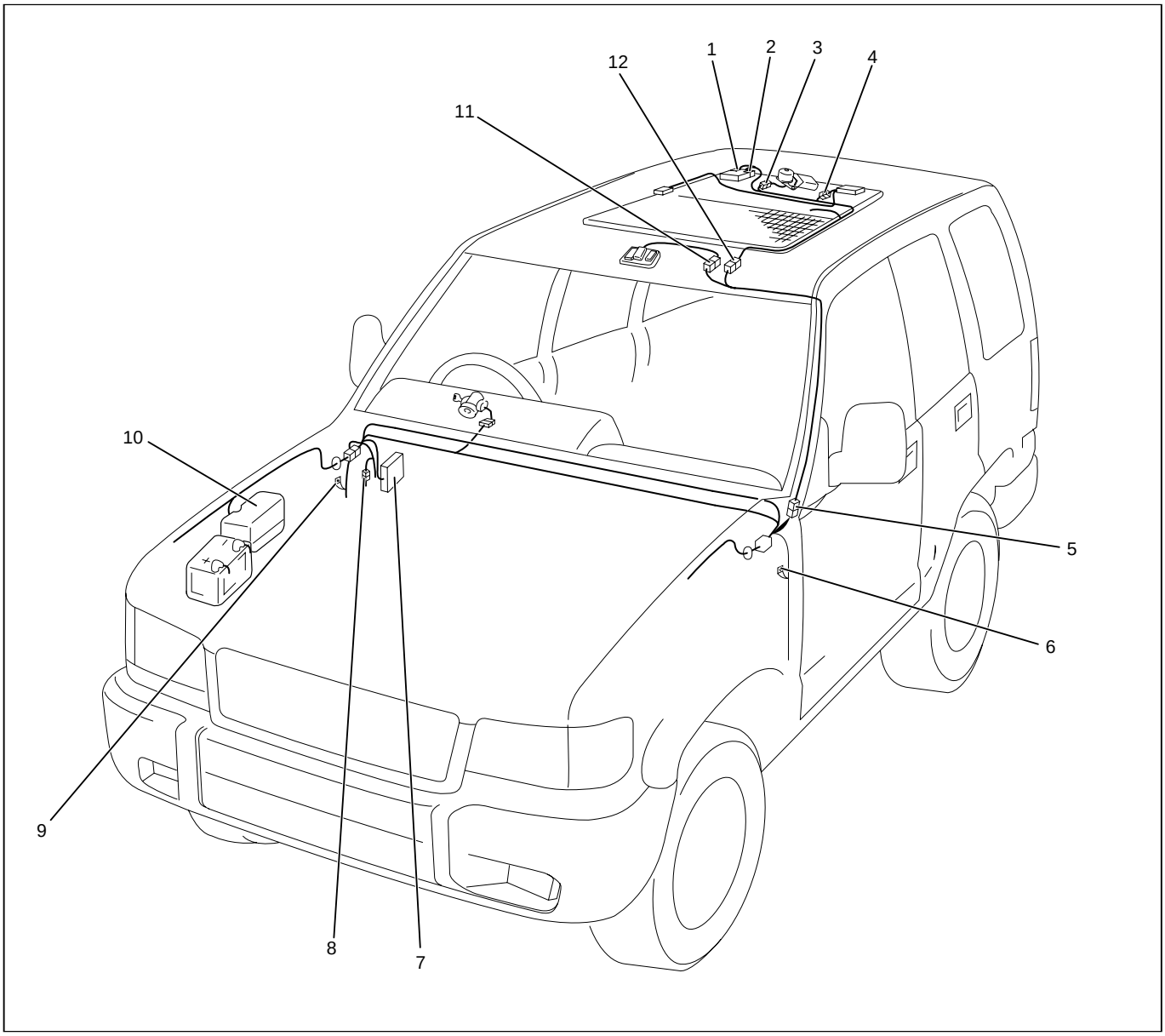

D08RW995

Legend

(1) S-5
(2) S-4
(3) S-3
(4) S-2
(5) H-21
(6) B-2
(7) Fuse Box (B-37)
(8) H-23
(9) B-19
(10) Relay and Fuse Box
(11) L-1
(12) H-45

Circuit Diagram (LHD)

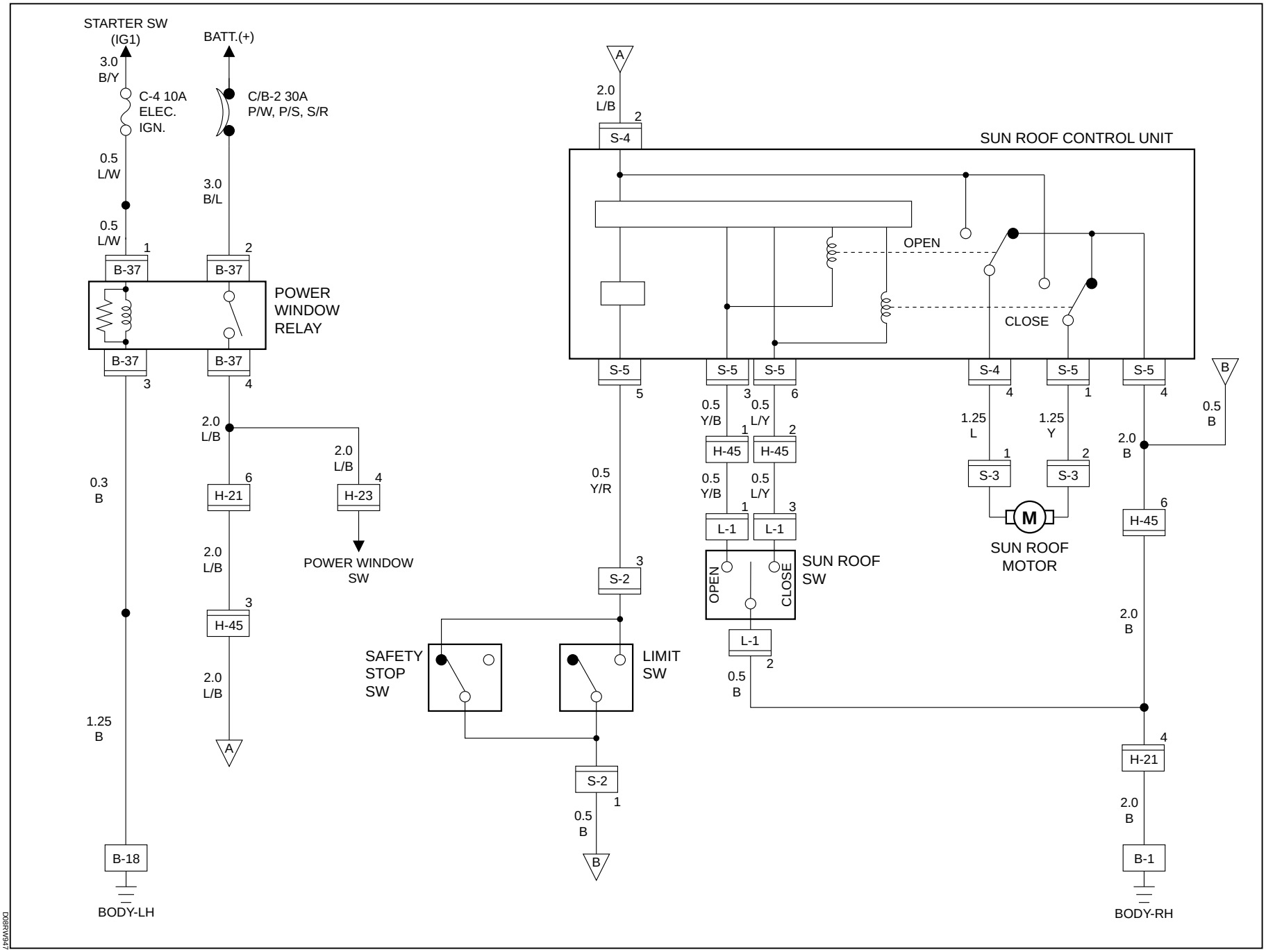

D08RW947

Parts Location (LHD)

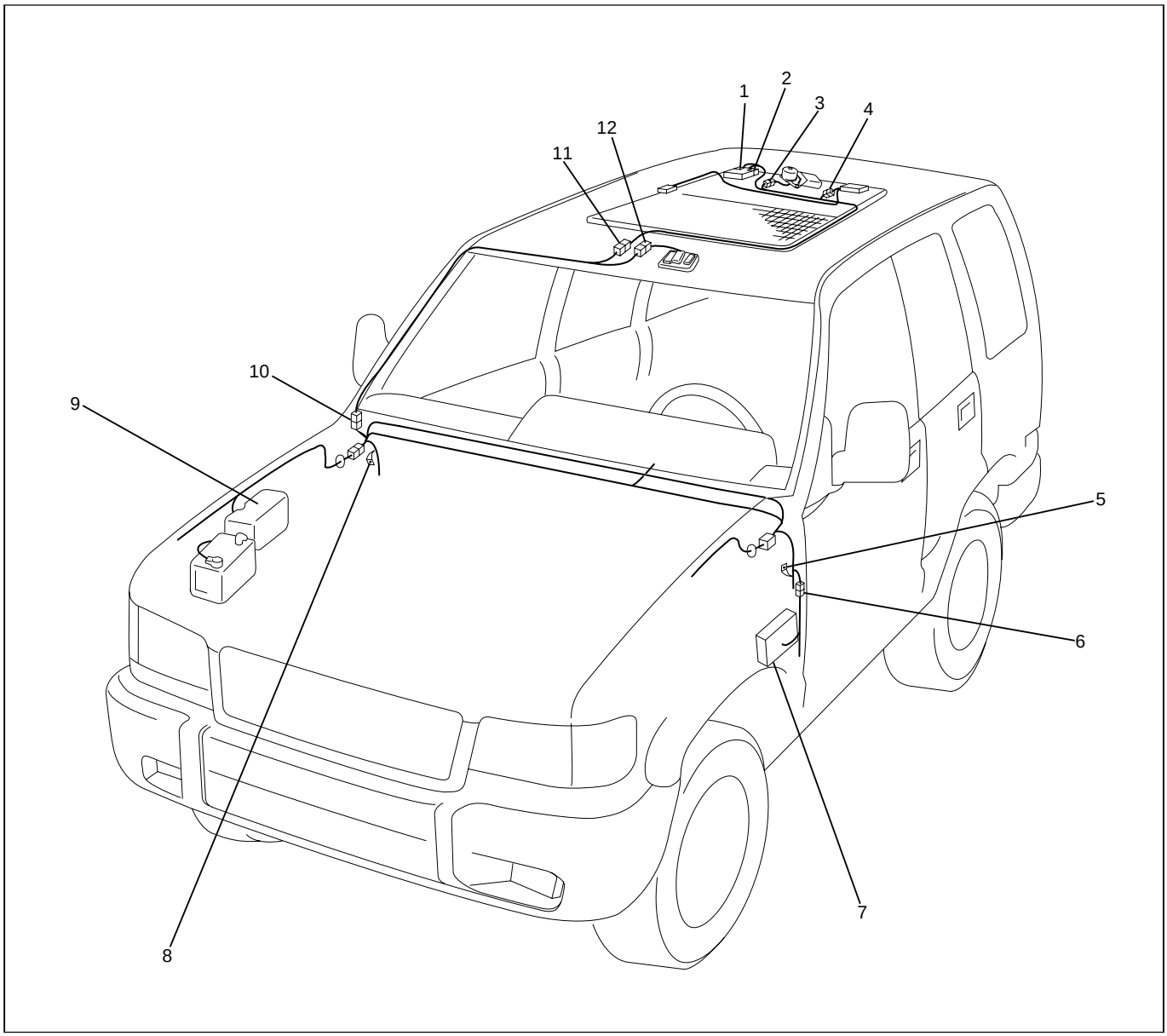

D08RW388

Legend

(1) S-5
(2) S-4
(3) S-3
(4) S-2
(5) B-18
(6) H-23
(7) Fuse Box (B-37)
(8) B-1
(9) Relay and Fuse Box
(10) H-21
(11) H-45
(12) L-1

Diagnosis

Quick Chart for Check Points

Check point / Trouble mode	C/B-2 (30A)	Fuse C-4 (10A)	Power win-dow relay	Sun roof switch	Sun roof control unit	Sun roof motor	Safety stop switch	Limit switch	Cable har-ness
1. Sun roof does not open				○	○	○			○
2. Sun roof does not close				○	○	○			○
3. Safety stop mechanism does not operate before sun roof closes completely					○		○		○
4. Limit switch mechanism does not operate before sun roof open completely					○			○	○
5. Power source circuit diagnosis	○	○	○						○

1. Sun Roof Does Not Open
2. Sun Roof Does Not Close

- TURN THE STARTER SWITCH ON
- IS BATTERY VOLTAGE APPLIED BETWEEN 2 [S-4] AND THE GROUND?

YES

- IS [B-2] (OR [B-1]) GROUNDED SECURELY?

NO

REFER TO ITEM No. 5 “POWER SOURCE CIRCUIT DIAGNOSIS” IN THIS DIAGNOSIS

YES

- IS THE SUN ROOF SWITCH NORMAL?

NO

GROUND IT SECURELY

YES

- IS THERE ANY CONTINUITY BETWEEN 3 [S-5] - 1 [L-1] (6 [S-5] - 3 [L-1])?

NO

REPAIR OR REPLACE THE SWITCH

YES

- IS THERE ANY CONTINUITY BETWEEN 2 [L-1] - [B-2] (OR [B-1])?

NO

REPAIR A POOR CONNECTION OF THE CONNECTORS OR AN OPEN CIRCUIT IN THE CIRCUIT

YES

- CONNECT THE BATTERY (+) TERMINAL TO THE SUN ROOF MOTOR SIDE CONNECTOR TERMINAL 1 [S-3] (2 [S-3]) AND THE (–) TERMINAL TO 2 [S-3] (1 [S-3])
- DOES THE MOTOR ROTATE?

NO

REPAIR A POOR CONNECTION OF THE CONNECTORS OR AN OPEN CIRCUIT IN THE CIRCUIT

YES

- IS THERE ANY CONTINUITY BETWEEN THE HARNESS SIDE CONNECTOR TERMINALS 1 [S-3] - 2 [S-3] ?

NO

REPAIR OR REPLACE THE MOTOR

YES

- IS THERE ANY CONTINUITY BETWEEN 4 [S-5] - [B-2] (OR [B-1])?

NO

REPAIR A POOR CONNECTION OF THE CONNECTORS OR AN OPEN CIRCUIT IN THE CIRCUIT

(A)

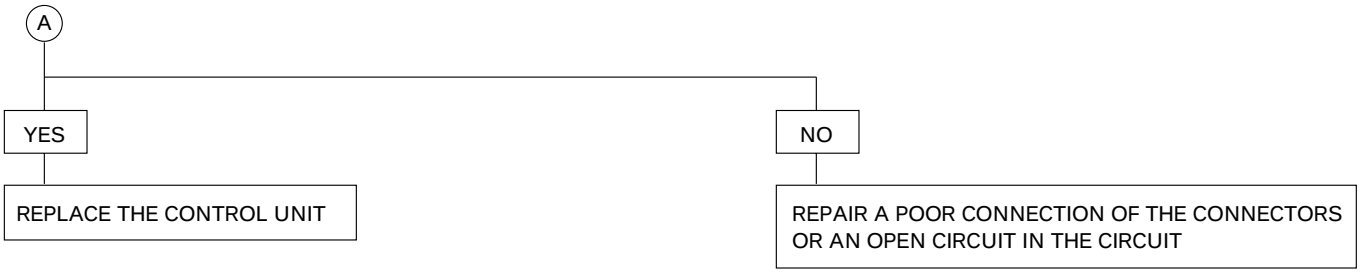

3. Safety Stop Mechanism Does Not Operate Before Sun Roof Closes Completely

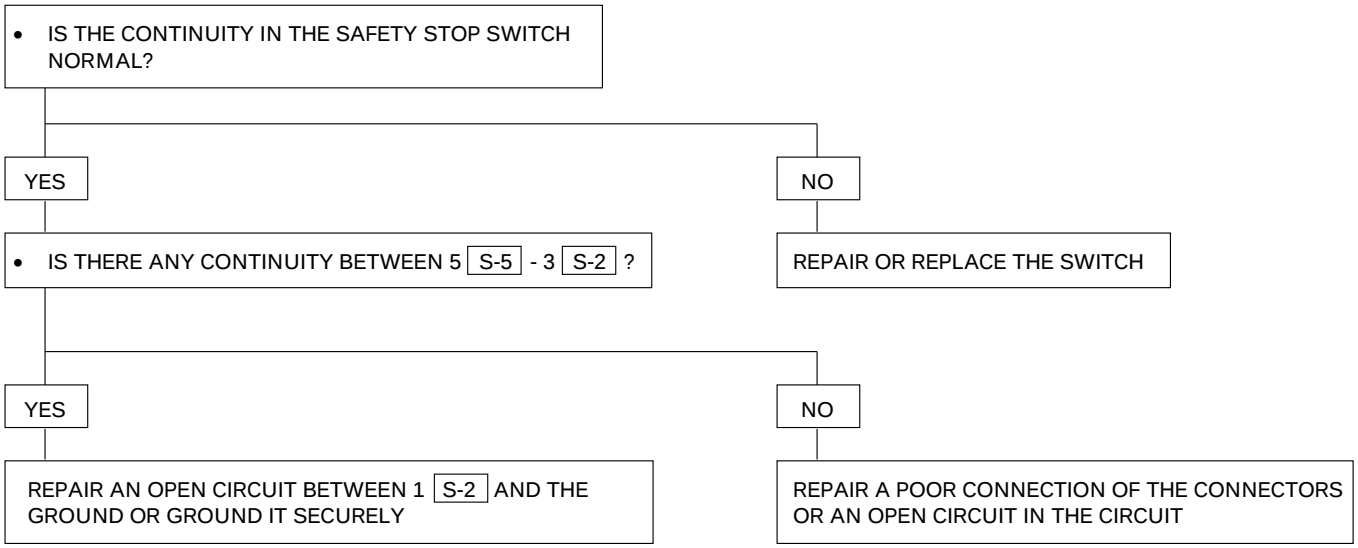

4. Limit Switch Mechanism Does Not Operate Before Sun Roof Open Completely

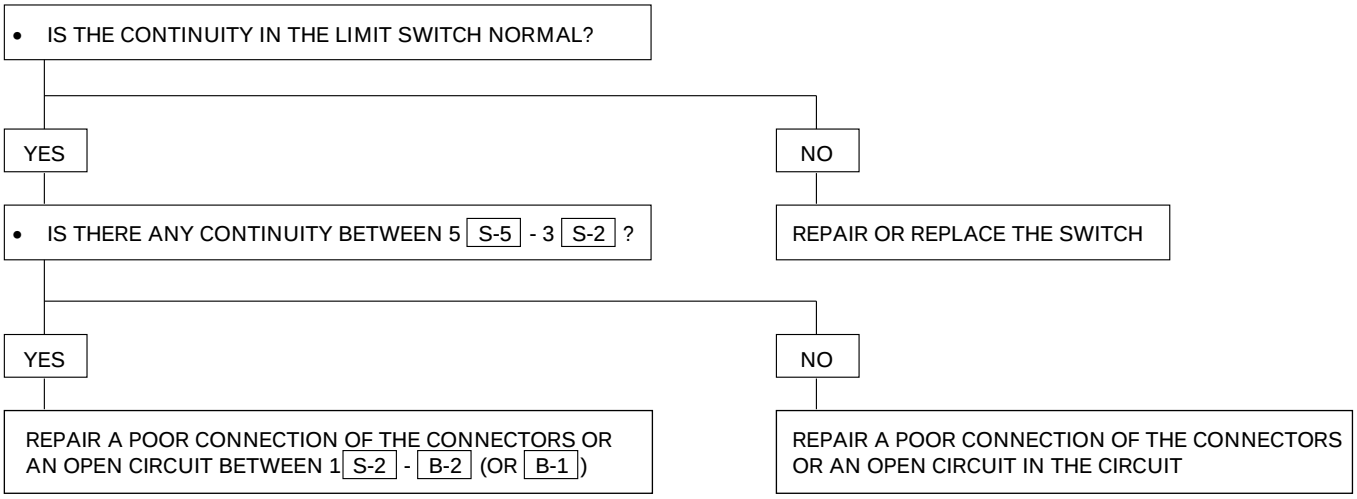

5. Power Source Circuit Diagnosis

- IS THERE ANY CONTINUITY BETWEEN THE TERMINALS OF C/B-2 (30A)?

YES

- IS FUSE C-4 (10A) NORMAL?

NO

PUSH IN THE RESET BUTTON OF CIRCUIT BREAKER AND CHECK THE CONTINUITY AGAIN
IF THERE IS NO CONTINUITY AFTER PUSHING RESET BUTTON, REPLACE IT WITH NEW ONE

YES

- IS THE POWER WINDOW RELAY NORMAL?

NO

REPLACE THE FUSE

YES

- TURN THE STARTER SWITCH ON
- IS THE BATTERY VOLTAGE APPLIED BETWEEN 1 B-37 AND THE GROUND OR 2 B-37 AND THE GROUND?

NO

REPLACE THE RELAY

YES

- IS B-19 (OR B-18) GROUNDED SECURELY?

NO

REPAIR A POOR CONNECTION OF THE CONNECTORS OR AN OPEN CIRCUIT BETWEEN FUSE C-4 (10A) AND 1 B-37 OR 1 H-14 AND 2 B-37

YES

REPAIR A POOR CONNECTION OF THE CONNECTORS OR AN OPEN CIRCUIT BETWEEN 3 B-37 AND B-19 (OR B-18)

NO

GROUND IT SECURELY

Seat Heater

General Description

The circuit consists of seat heater switch and seat heater unit.
Seat heater unit is incorporated into front seats.
To prevent from being overheated, seat heater unit has thermostat.

Circuit Diagram (RHD)

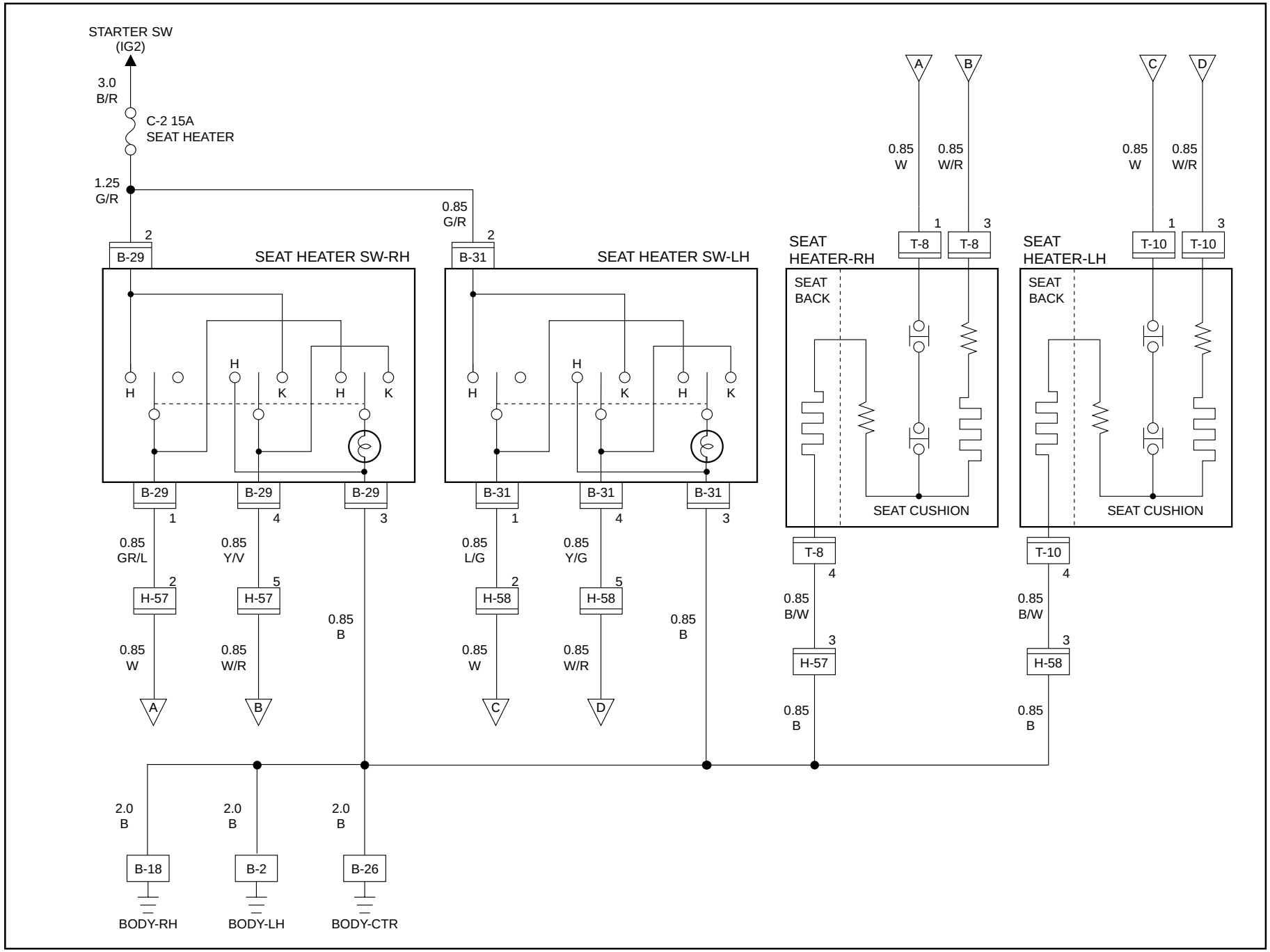

D08RW648

Parts Location (RHD)

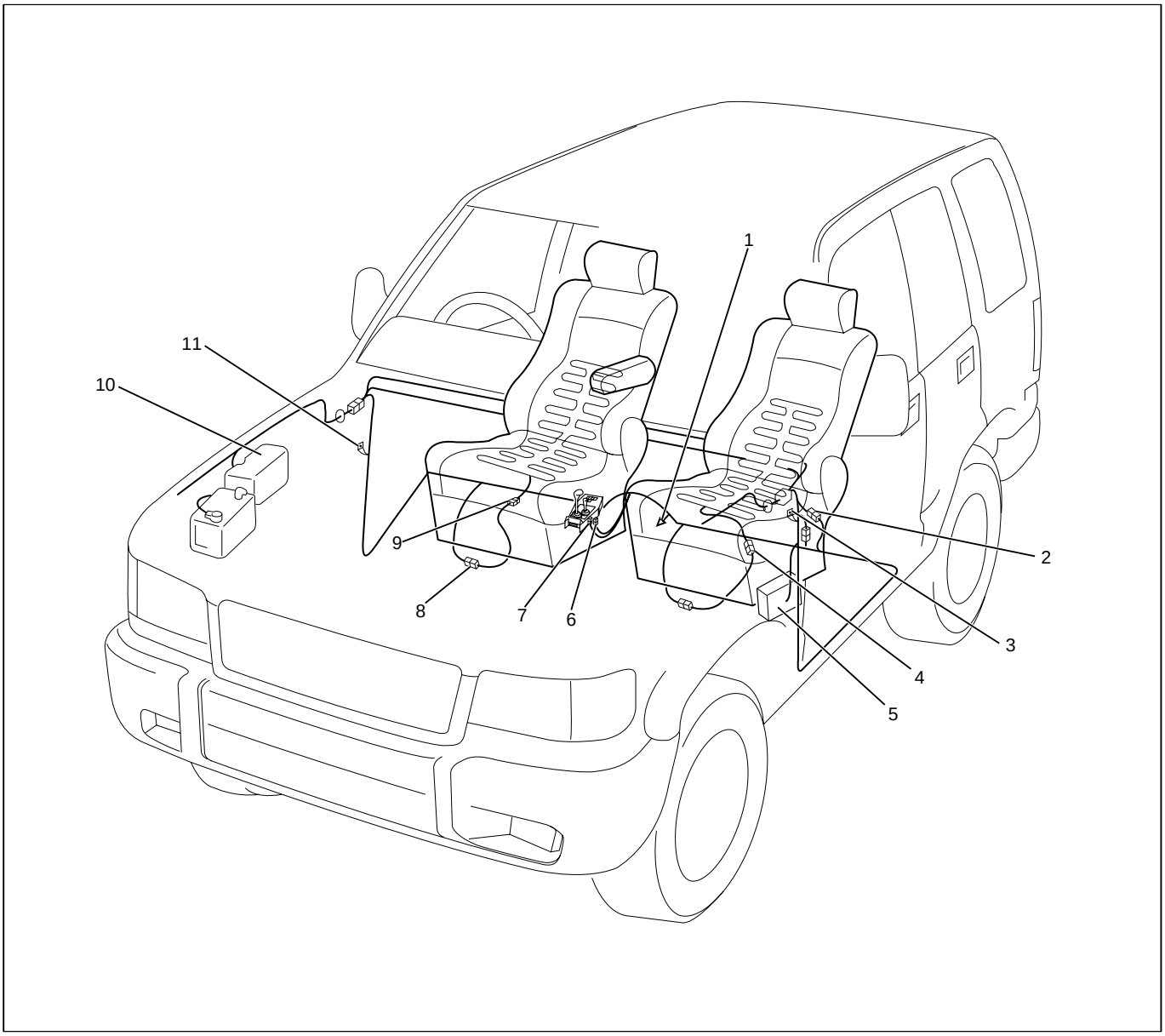

D08RW993

Legend

(1) B-26
(2) H-58
(3) B-2
(4) T-10
(5) Fuse Box
(6) B-31
(7) B-29
(8) H-57
(9) T-8
(10) Relay and Fuse Box
(11) B-18

Circuit Diagram (LHD)

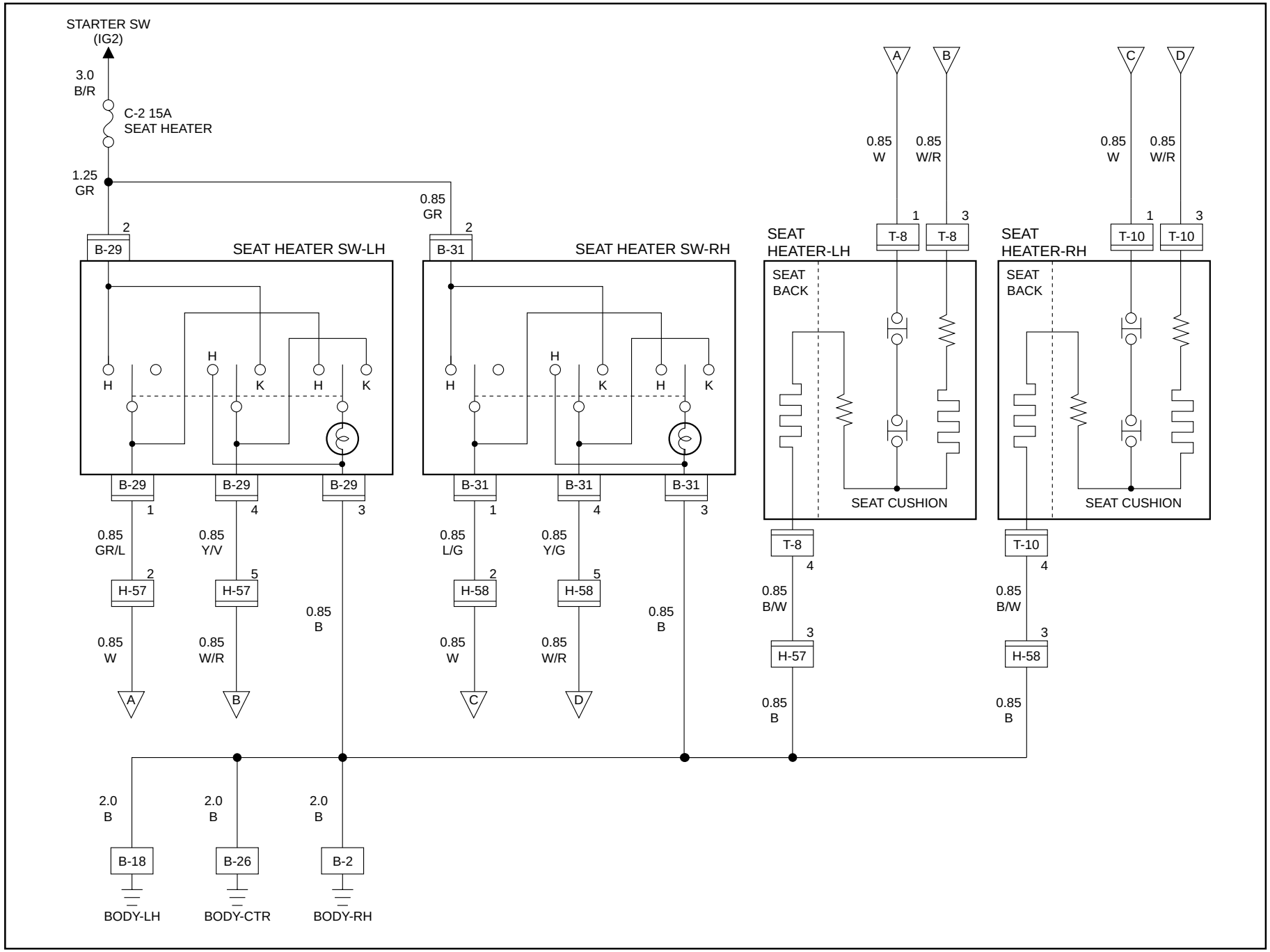

D08RW948

Parts Location (LHD)

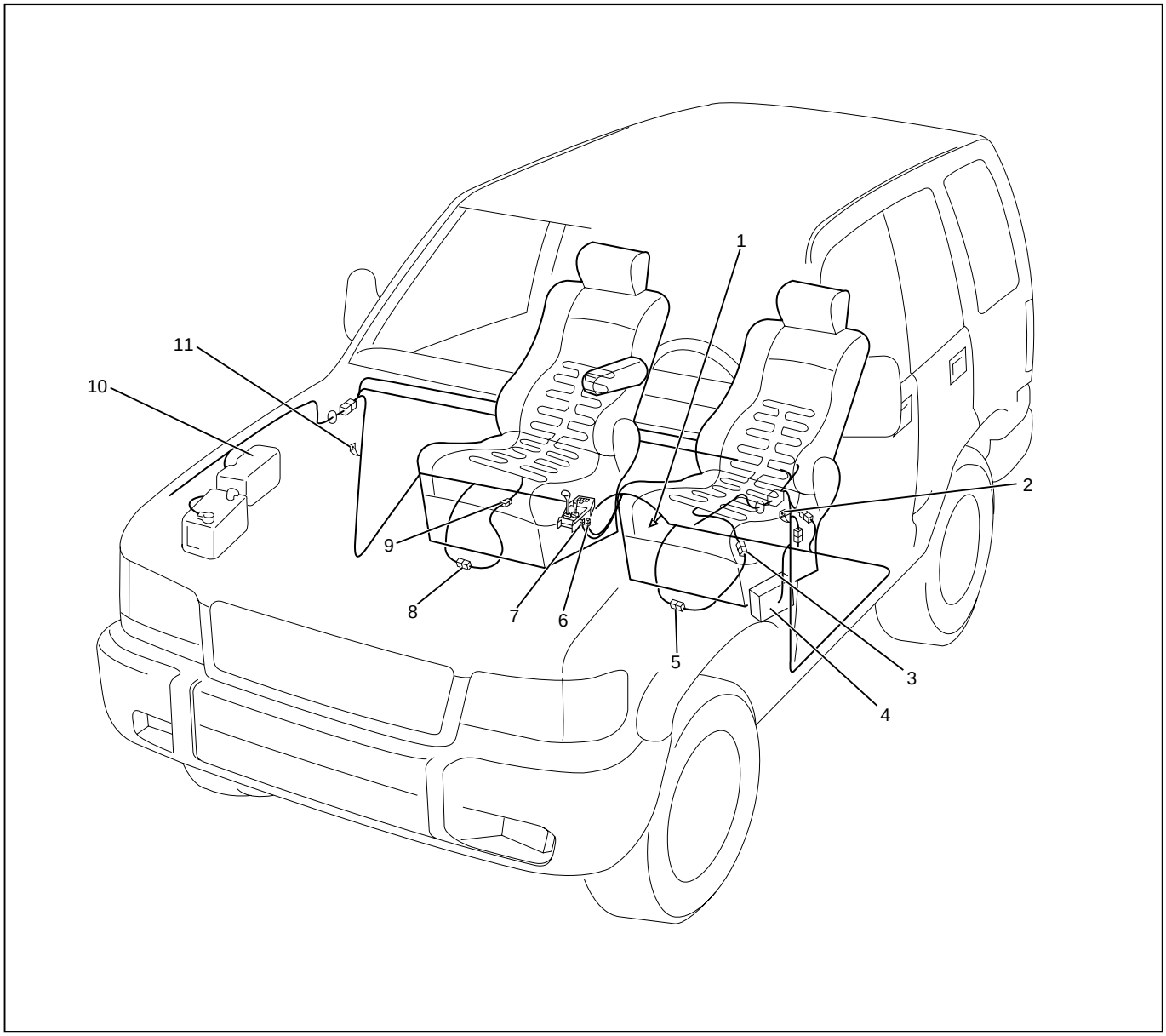

D08RW992

Legend

(1) B-26
(2) B-18
(3) T-8
(4) Fuse Box
(5) H-57
(6) B-31
(7) B-29
(8) H-58
(9) T-10
(10) Relay and Fuse Box
(11) B-2

Diagnosis

Quick Chart for Check Points

Trouble mode \ Check point	Fuse C-2 (15A)	Seat heater SW		Heat unit		Cable harness
		Driver side	Passenger side	Driver side	Passenger side	
1. Seat heater on both sides does not heat up	○					○
2. Seat heater on the driver (or passenger) side does not heat up		○	○	○	○	○
3. Heat (or keep) position does not heat up		○	○	○	○	

1. Seat Heater on Both Sides Does Not Heat Up

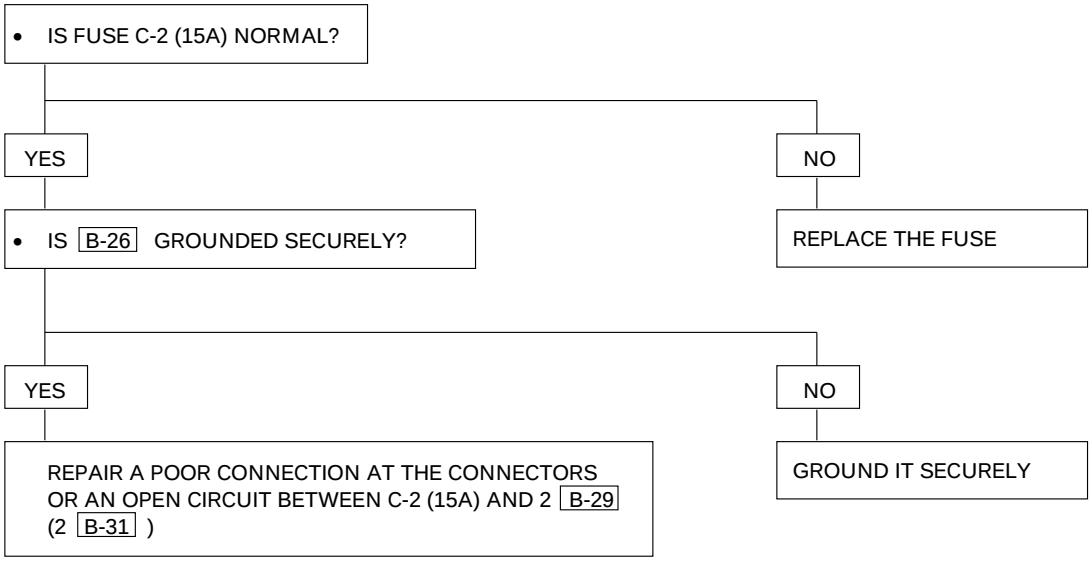

2. Seat Heater on The Driver (Or Passenger) Side Does Not Heat Up

- DISCONNECT THE SEAT HEATER SWITCH CONNECTOR
- TURN THE STARTER SWITCH "ON"
- IS THE BATTERY VOLTAGE APPLIED BETWEEN THE SEAT HEATER SW HARNESS SIDE CONNECTOR 2 B-29 (OR 2 B-31) AND THE GROUND?

YES

- IS THE SEAT HEATER SW FUNCTION NORMAL?

NO

REPAIR A POOR CONNECTION AT THE CONNECTORS OR AN OPEN CIRCUIT IN THE CIRCUIT

YES

- DISCONNECT THE HEAT UNIT CONNECTOR
- IS THERE ANY CONTINUITY BETWEEN THE HEAT UNIT CONNECTOR 1 T-8 , 3 T-8 AND 4 T-8 (OR 1 T-10 , 3 T-10 AND 4 T-10)

NO

REPLACE THE SEAT HEATER SW

YES

REPAIR A POOR CONNECTION AT THE CONNECTORS OR AN OPEN CIRCUIT BETWEEN 1 B-29 AND 1 T-8 , 4 B-29 AND 3 T-8 , 4 T-8 AND GROUND (OR 1 B-31 AND 1 T-10 , 4 B-31 AND 3 T-10 , 4 T-10 AND GROUND)

NO

REPLACE THE HEAT UNIT

3. Heat (Or Keep) Position Does Not Heat Up

- IS THE SEAT HEATER SW FUNCTION NORMAL?

YES

REPLACE THE HEAT UNIT

NO

REPLACE THE SEAT HEATER SW

Power Seat

General Description

The circuit consists of power seat switch, front tilt motor (driver's seat only), rear tilt motor (driver's seat only), slide motor and recliner motor.

Power seat switch has a tilt and slide switch and a recliner switch. The motor built in the seat can be actuated by operating these switches to move the seat to desired position, independent of position of starter switch.

Circuit Diagram (RHD)-1

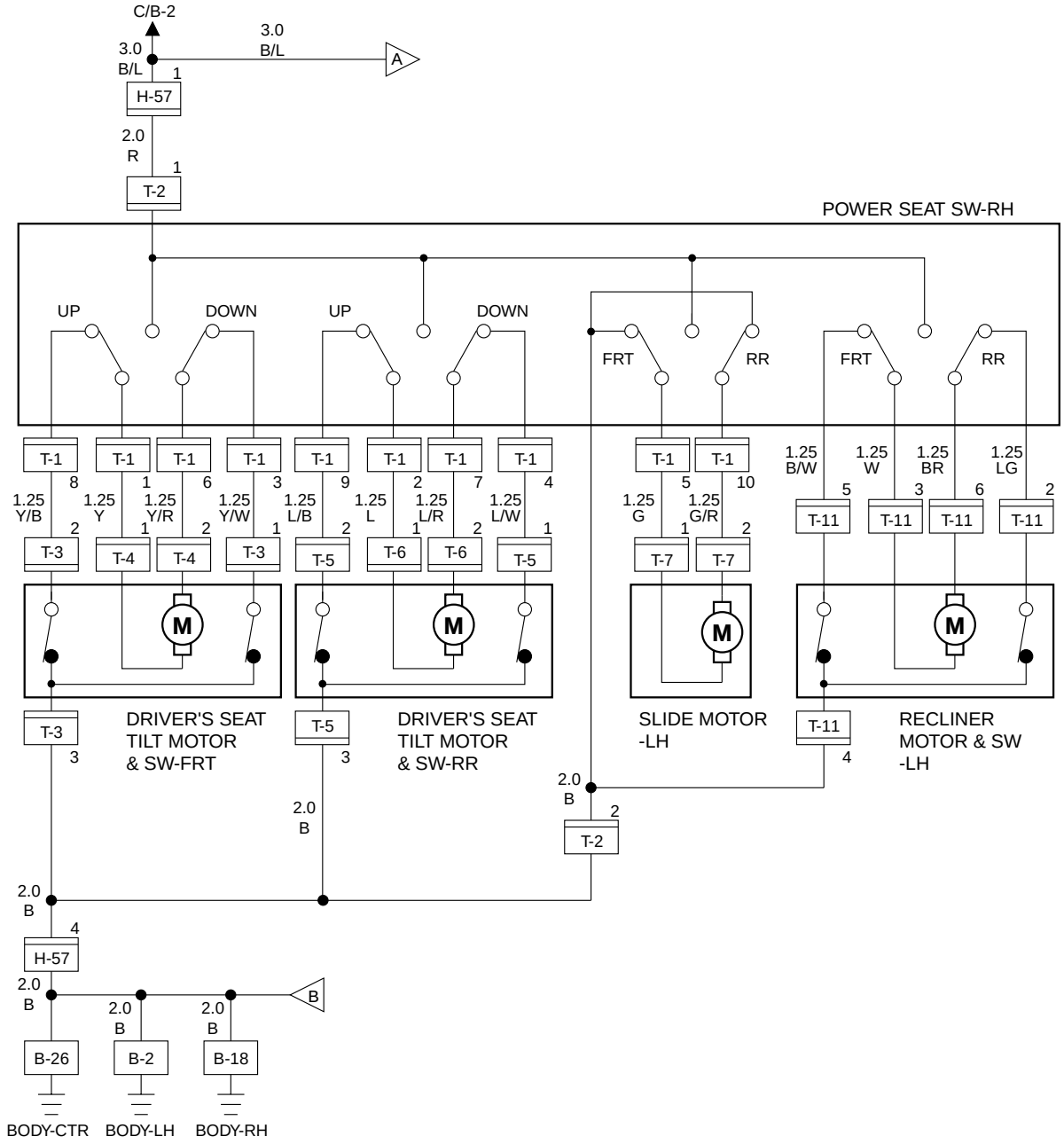

Circuit Diagram (RHD)-2

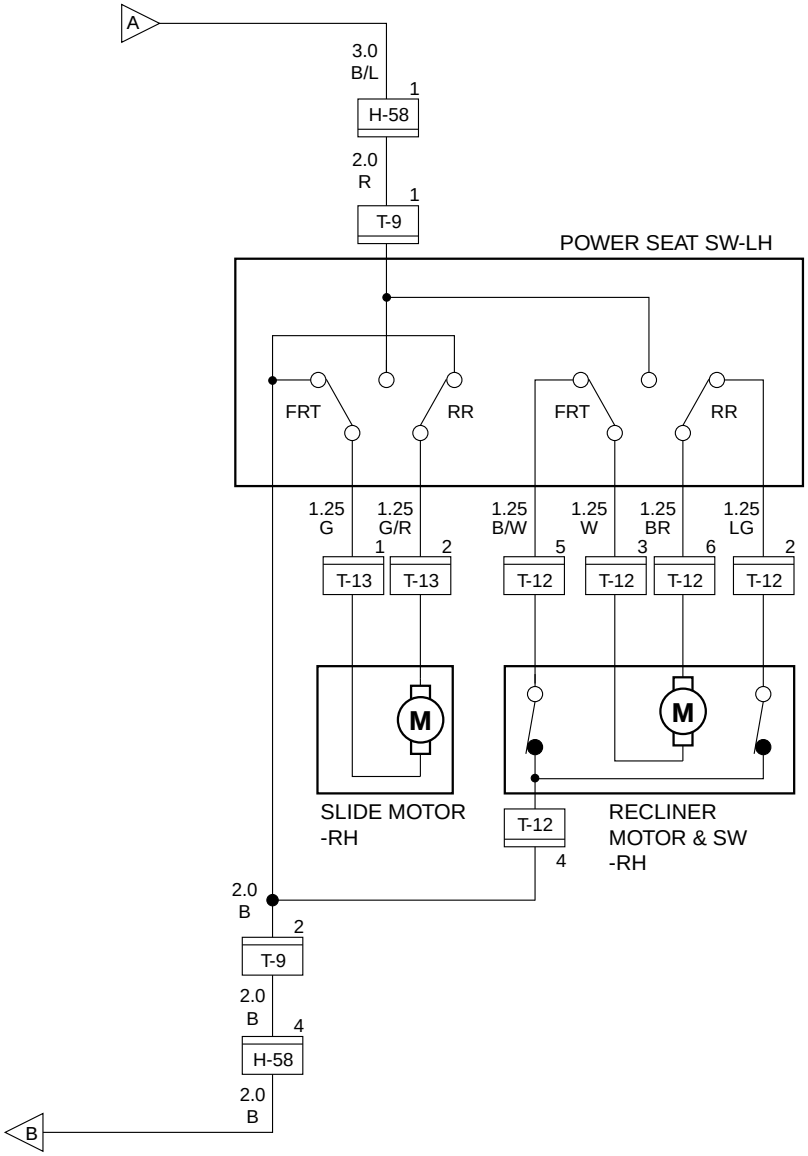

Parts Location (RHD)

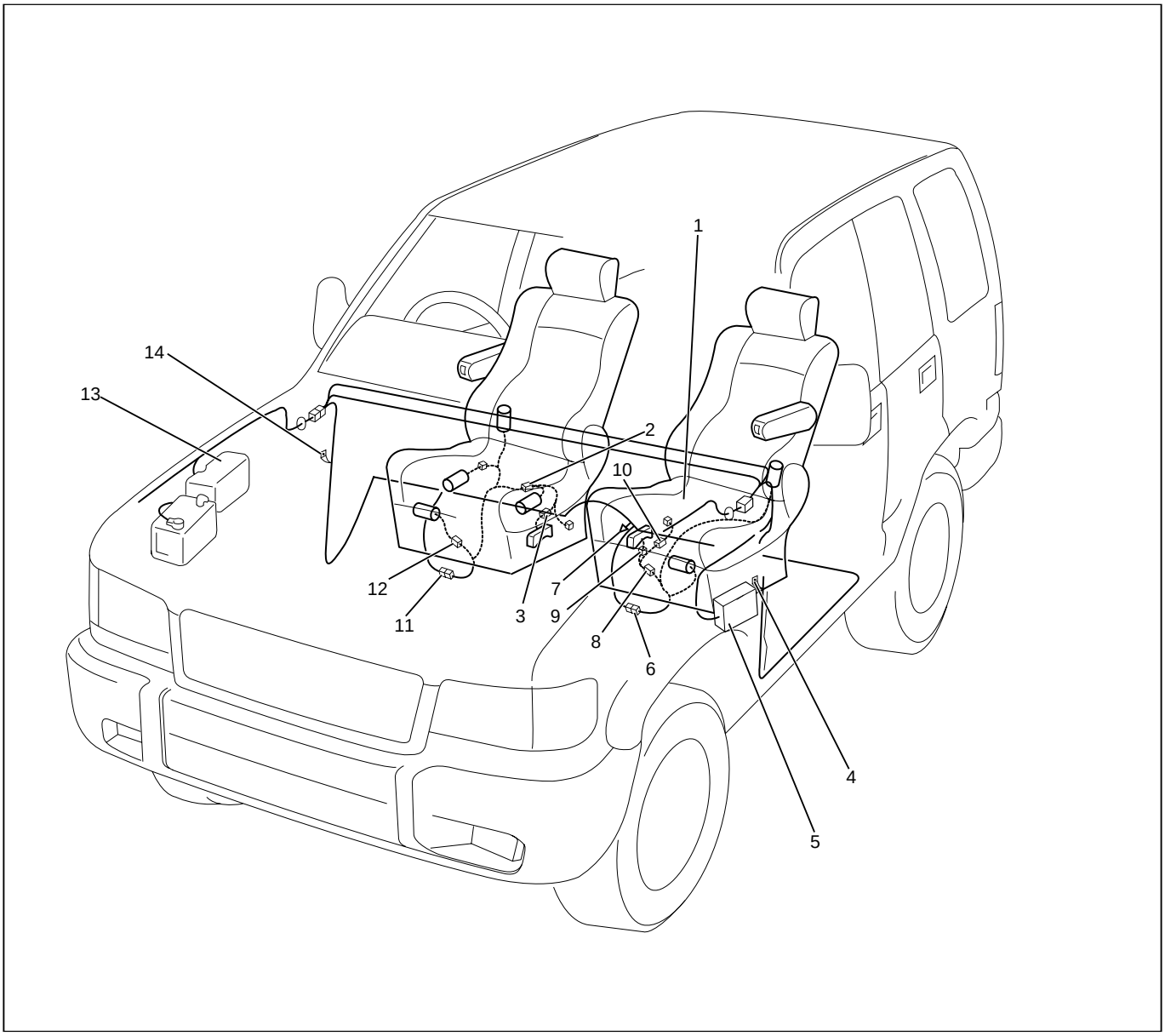

D08RW996

Legend

(1) T-6
(2) T-4
(3) T-1
(4) B-2
(5) Fuse Box
(6) H-58
(7) B-26
(8) T-9
(9) T-13
(10) T-12
(11) H-57
(12) T-7
(13) Relay and Fuse Box
(14) B-18

Circuit Diagram (LHD)-1

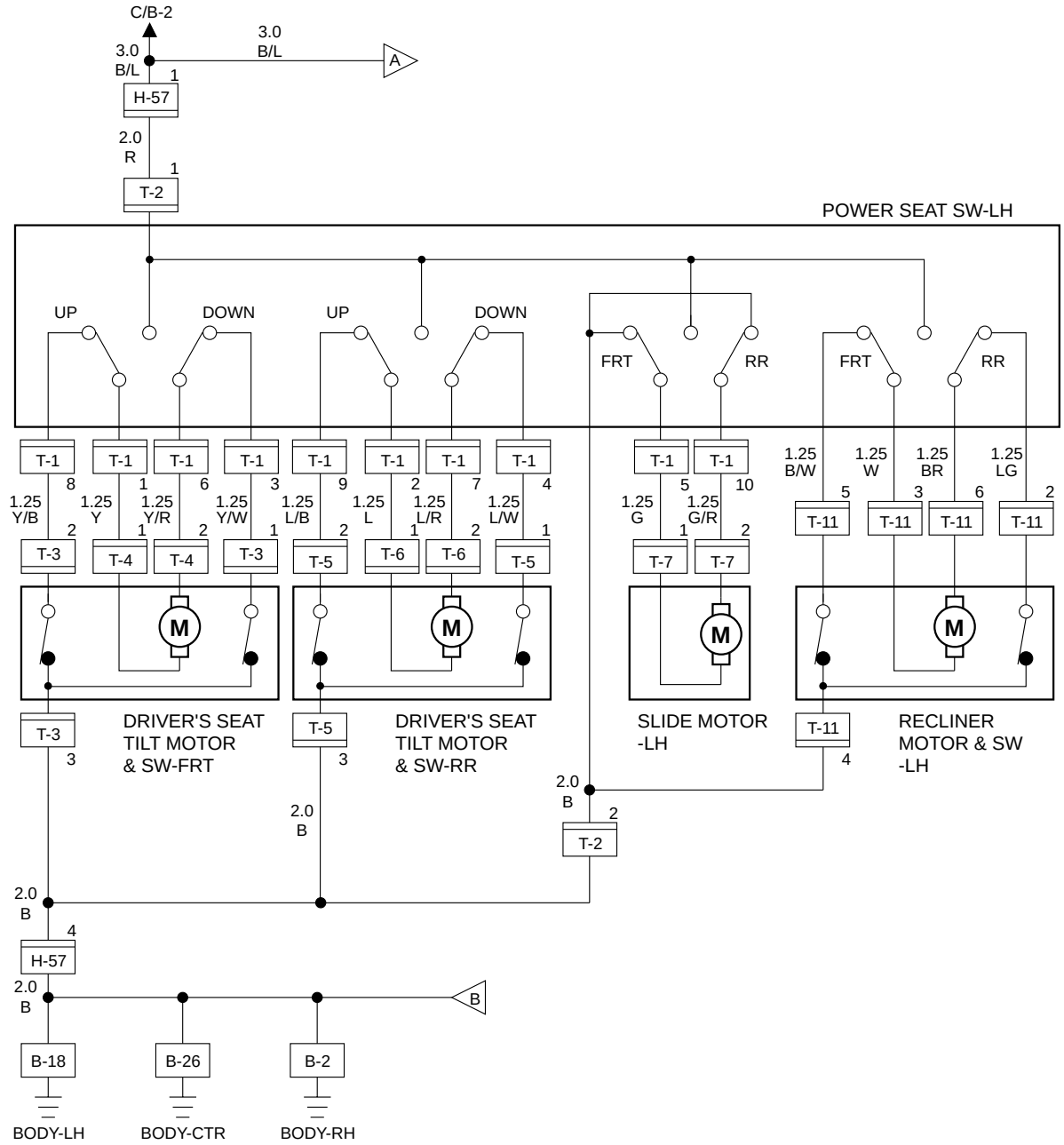

D08RW951

Circuit Diagram (LHD)-2

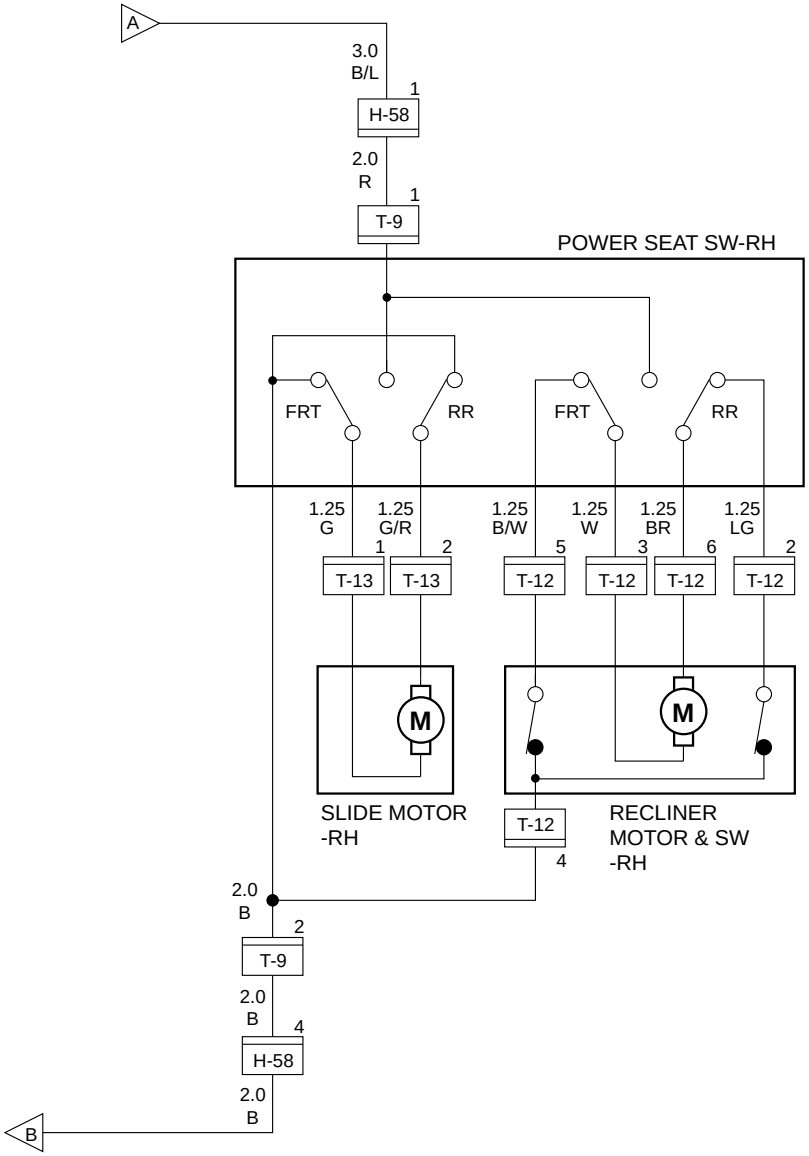

Parts Location (LHD)

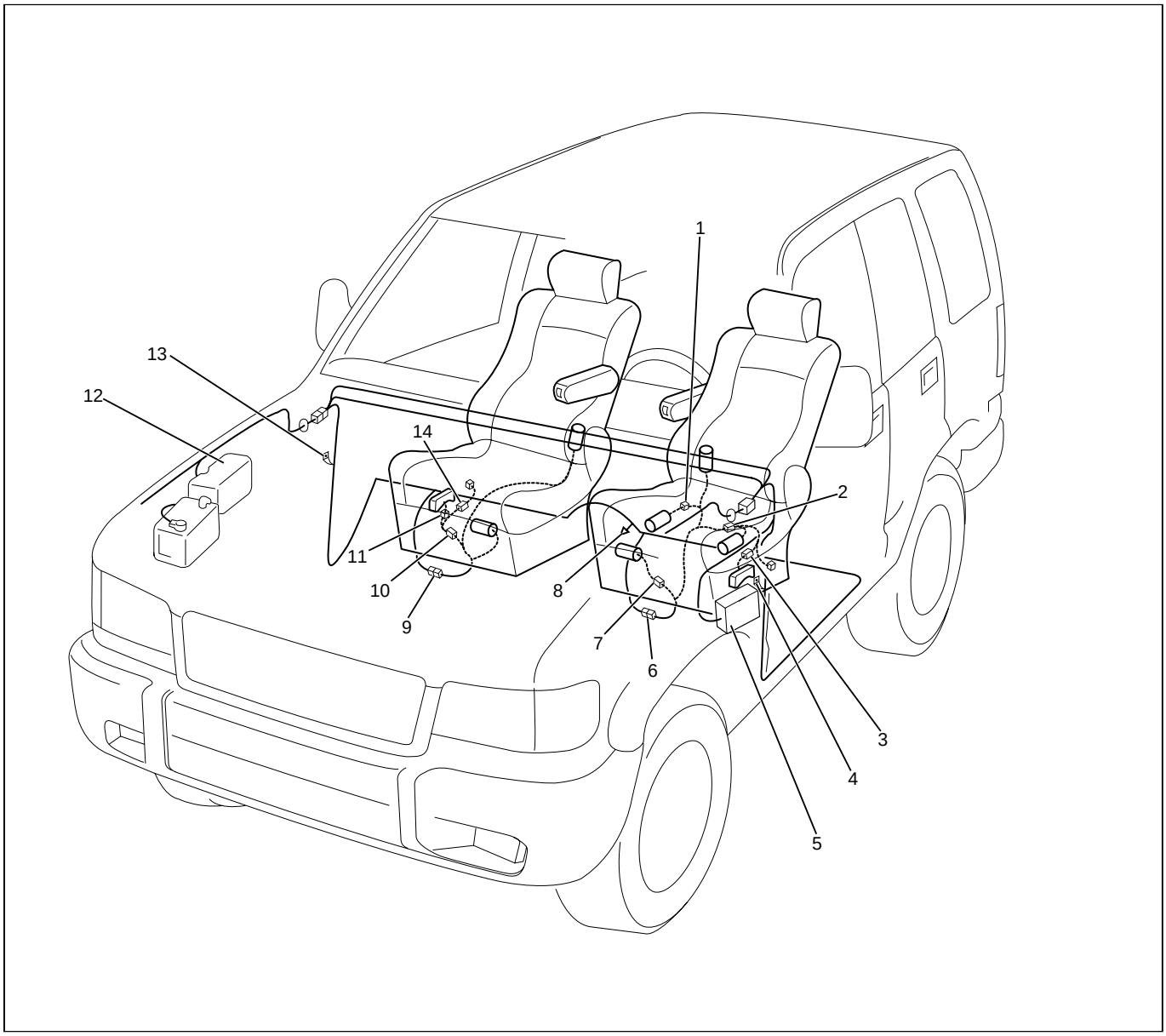

D08RW994

Legend

(1) T-6
(2) T-4
(3) T-1
(4) B-18
(5) Fuse Box
(6) H-57
(7) T-7
(8) B-26
(9) H-58
(10) T-9
(11) T-13
(12) Relay and Fuse Box
(13) B-2
(14) T-12

Diagnosis

Quick Chart for Check Points

Trouble mode \ Check point		Circuit breaker (30A)	Tilt & slide SW			Tilt & slide motor			Reclining SW	Reclining motor	Cable harness
			FRT tilt	RR tilt	Slide	FRT tilt	RR tilt	Slide			
Driver seat	1. Power seat does not operate at any direction	○									○
	2. Front tilt mechanism does not operate		○			○					○
	3. Rear tilt mechanism does not operate			○			○				○
	4. Sliding mechanism does not operate				○			○			○
	5. Reclining mechanism does not operate								○	○	○
Passenger seat	1. Power seat does not operate at any direction	○									○
	2. Sliding mechanism does not operate				○			○			○
	3. Reclining mechanism does not operate								○	○	○

Driver Seat

1. Power Seat Does Not Operate At Any Direction

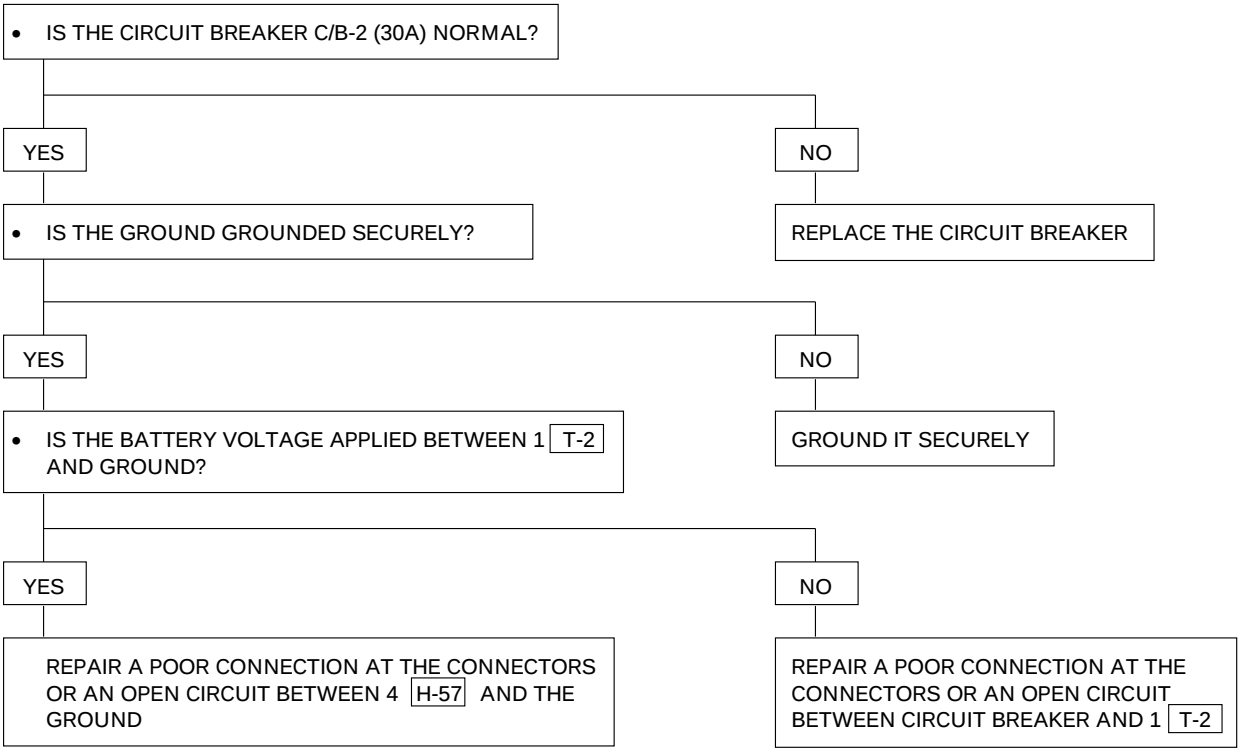

2. Front Tilt Mechanism Does Not Operate

- IS TILT & SLIDE SWITCH NORMAL?

YES

- IS FRONT TILT MOTOR NORMAL?

YES

REPAIR A POOR CONNECTION AT THE CONNECTORS OR AN OPEN CIRCUIT BETWEEN 1 [T-1] AND 1 [T-4] , 6 [T-1] AND 2 [T-4] , 3 [T-1] AND 1 [T-3] , 8 [T-1] AND 2 [T-3] OR 3 [T-3]

NO

REPAIR OR REPLACE THE FRONT TILT MOTOR

NO

REPAIR OR REPLACE THE TILT & SLIDE SWITCH

3. Rear Tilt Mechanism Does Not Operate

- IS TILT & SLIDE SWITCH NORMAL?

YES

- IS REAR TILT MOTOR NORMAL?

YES

REPAIR A POOR CONNECTION AT THE CONNECTORS OR AN OPEN CIRCUIT BETWEEN 2 [T-1] AND 1 [T-6] , 7 [T-1] AND 2 [T-6] , 4 [T-1] AND 1 [T-5] , 9 [T-1] AND 2 [T-5] OR 3 [T-5]

NO

REPAIR OR REPLACE THE REAR TILT MOTOR

NO

REPAIR OR REPLACE THE TILT & SLIDE SWITCH

4. Sliding Mechanism Does Not Operate

- IS TILT & SLIDE SWITCH NORMAL?

YES

- IS SLIDE MOTOR NORMAL?

YES

REPAIR A POOR CONNECTION AT THE CONNECTORS OR AN OPEN CIRCUIT BETWEEN 5 T-1 AND 1 T-7 , 10 T-1 AND 2 T-7 OR 2 T-2

NO

REPAIR OR REPLACE THE SLIDE MOTOR

NO

REPAIR OR REPLACE THE TILT & SLIDE SWITCH

5. Reclining Mechanism Does Not Operate

- IS RECLINER SWITCH NORMAL?

YES

- IS RECLINER MOTOR NORMAL?

YES

REPAIR A POOR CONNECTION AT THE CONNECTORS 3 T-11 , 6 T-11 , 2 T-11 , 5 T-11 AND 4 T-11

NO

REPAIR OR REPLACE THE RECLINER MOTOR

NO

REPAIR OR REPLACE THE RECLINER SWITCH

Passenger Seat

1. Power Seat Does Not Operate At Any Direction

- IS THE CIRCUIT BREAKER C/B-2 (30A) NORMAL?

YES

- IS THE GROUND SECURELY GROUNDED?

YES

- IS THE BATTERY VOLTAGE APPLIED BETWEEN 1 T-9 AND GROUND?

YES

REPAIR A POOR CONNECTION AT THE CONNECTORS OR AN OPEN CIRCUIT 2 T-9 AND THE GROUND

NO

REPAIR A POOR CONNECTION AT THE CONNECTORS OR AN OPEN CIRCUIT BETWEEN CIRCUIT BREAKER AND 1 T-9

NO

GROUND IT SECURELY

NO

REPLACE THE CIRCUIT BREAKER

2. Sliding Mechanism Does Not Operate

- IS SLIDE SWITCH NORMAL?
  - YES
    - IS SLIDE MOTOR NORMAL?
      - YES
        - REPAIR A POOR CONNECTION AT THE CONNECTORS 1 T-13 AND 2 T-13
      - NO
        - REPAIR OR REPLACE THE SLIDE MOTOR
  - NO
    - REPAIR OR REPLACE THE SLIDE SWITCH

3. Reclining Mechanism Does Not Operate

- IS RECLINER SWITCH NORMAL?
  - YES
    - IS RECLINER MOTOR NORMAL?
      - YES
        - REPAIR A POOR CONNECTION AT THE CONNECTORS 5 T-12 , 3 T-12 , 6 T-12 , 2 T-12 AND 4 T-12
      - NO
        - REPAIR OR REPLACE THE RECLINER MOTOR
  - NO
    - REPAIR OR REPLACE THE RECLINER SWITCH

Shift On The Fly System

Circuit Diagram (RHD 6V*1 Lever Type)-1

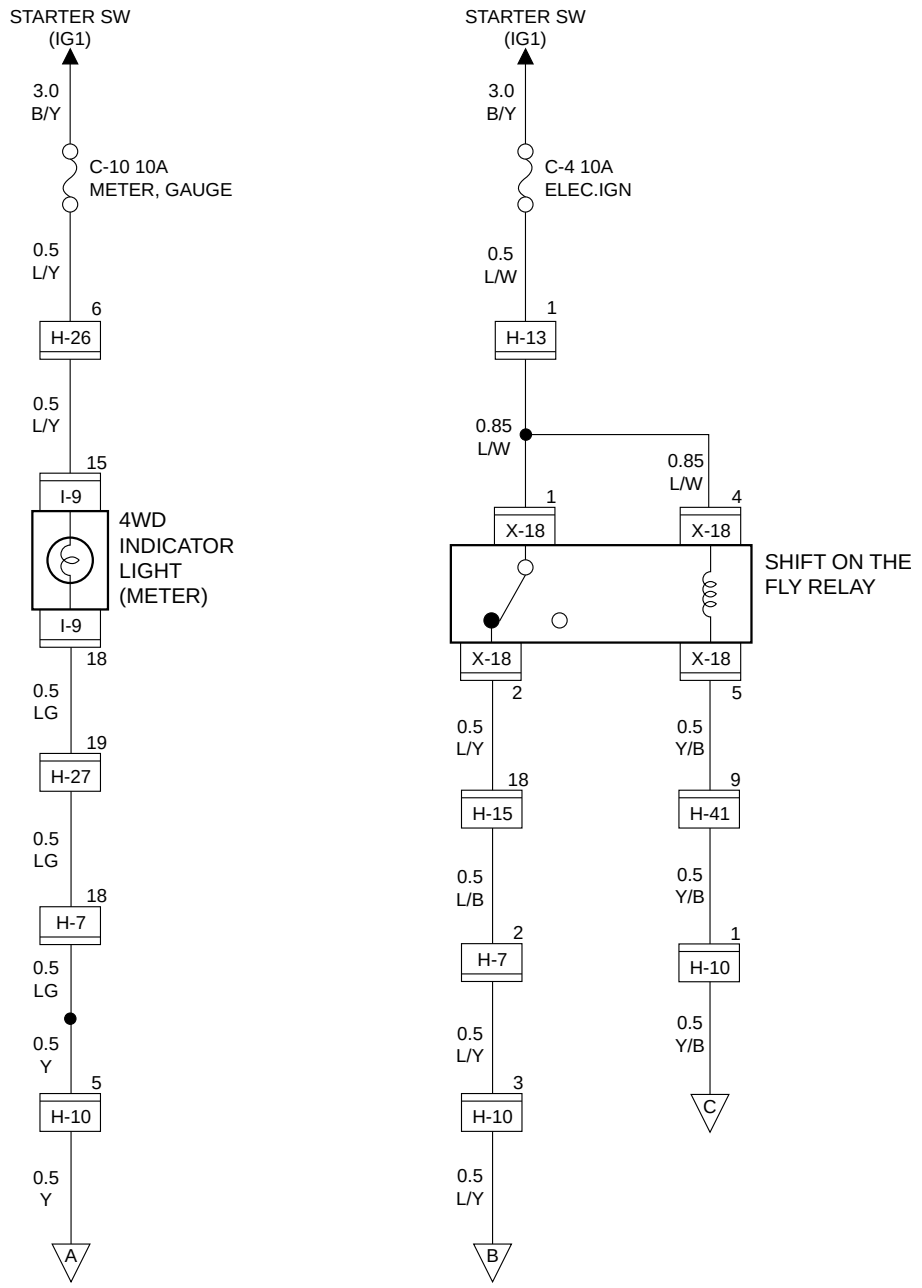

D08MW715

Circuit Diagram (RHD 6V*1 Lever Type)-2

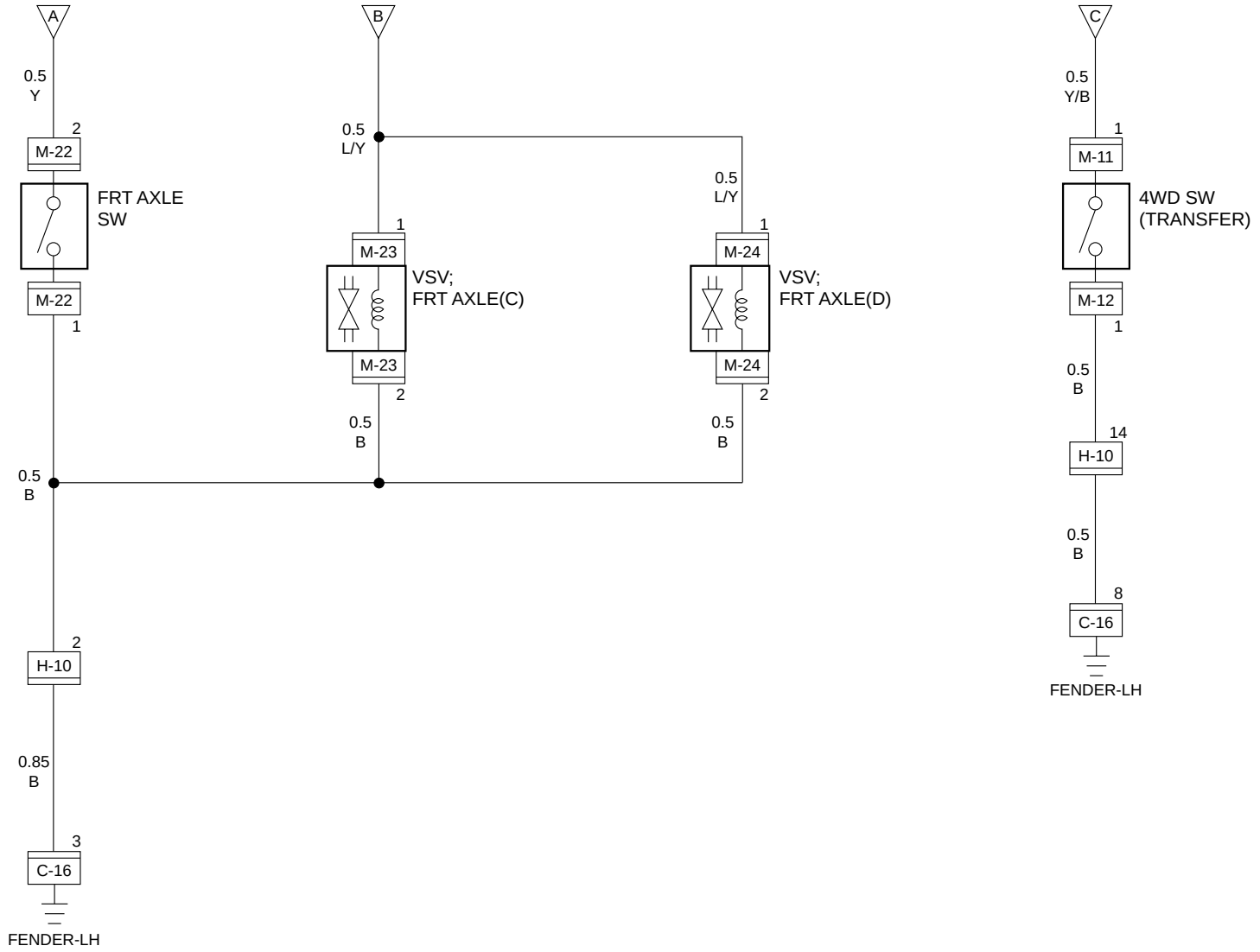

Parts Location (RHD 6V*1 Lever Type)

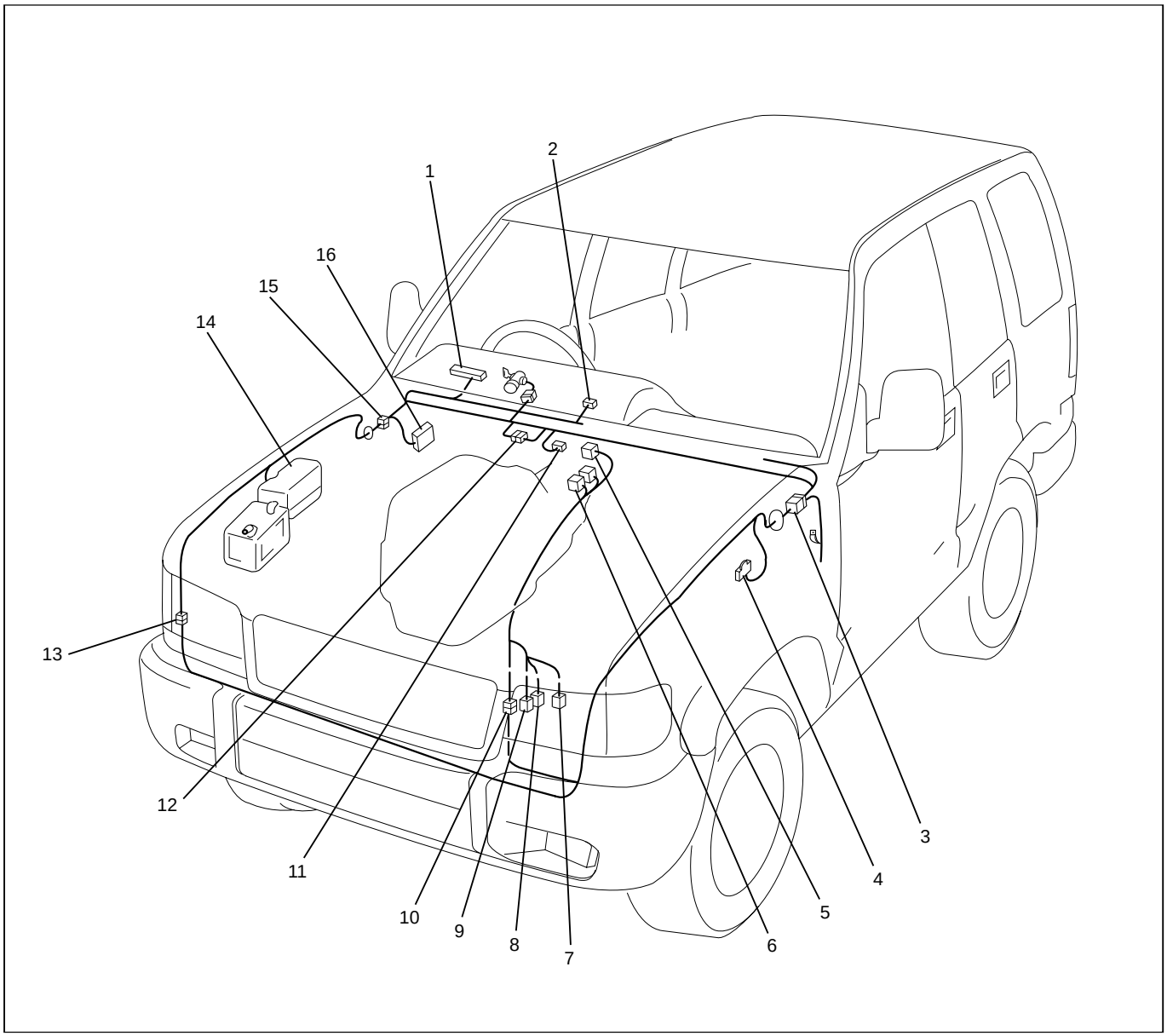

D08RW624

Legend

(1) I-9
(2) I-12
(3) H-7, H-9
(4) C-16
(5) M-26
(6) M-11, M-12
(7) M-22
(8) M-23
(9) M-24
(10) H-10
(11) C-94
(12) H-12
(13) H-41
(14) Relay and Fuse Box
(15) H-15, H-25
(16) Fuse Box

Circuit Diagram (RHD 4JG2 Lever Type)-1

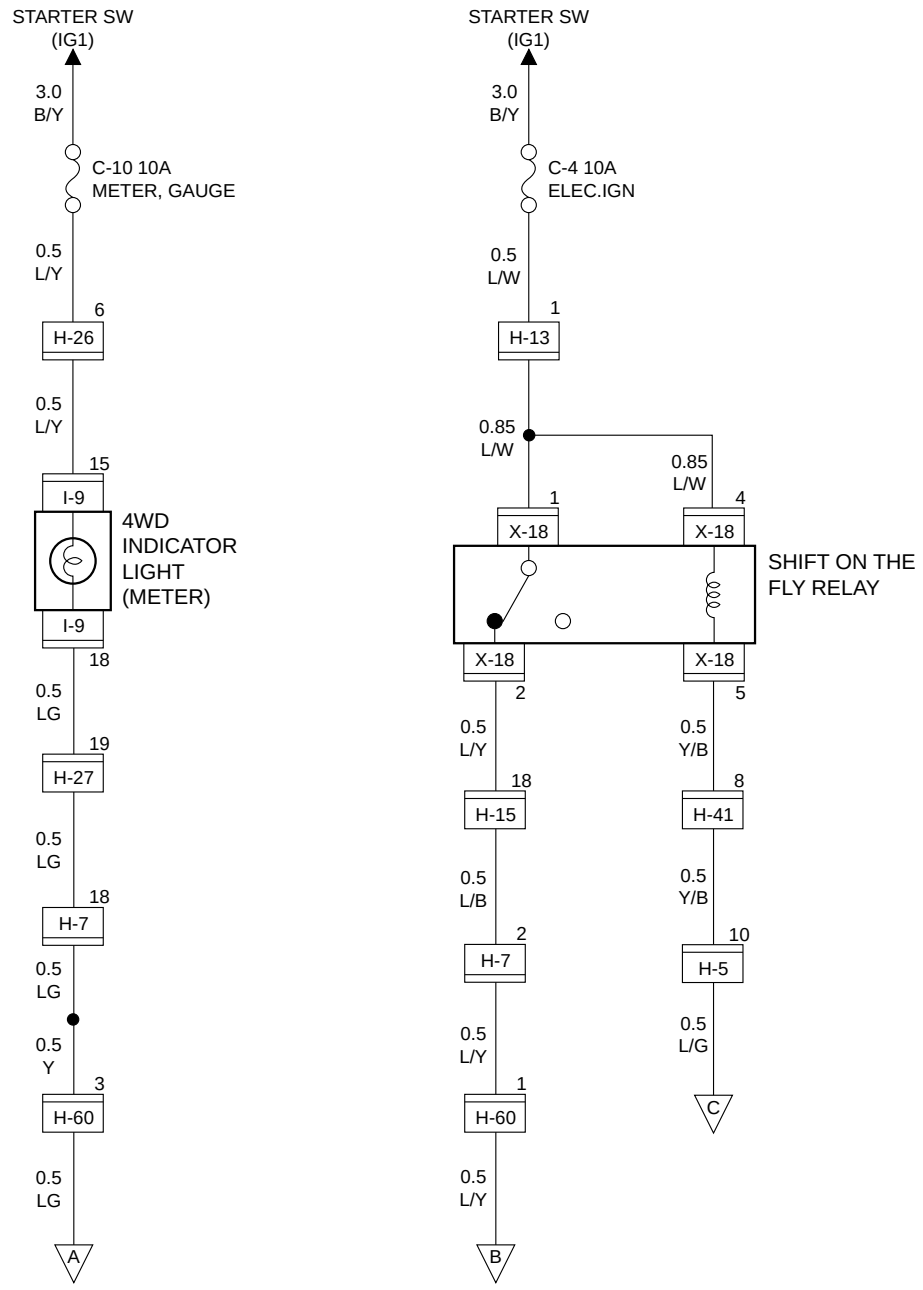

D8RW718

Circuit Diagram (RHD 4JG2 Lever Type)-2

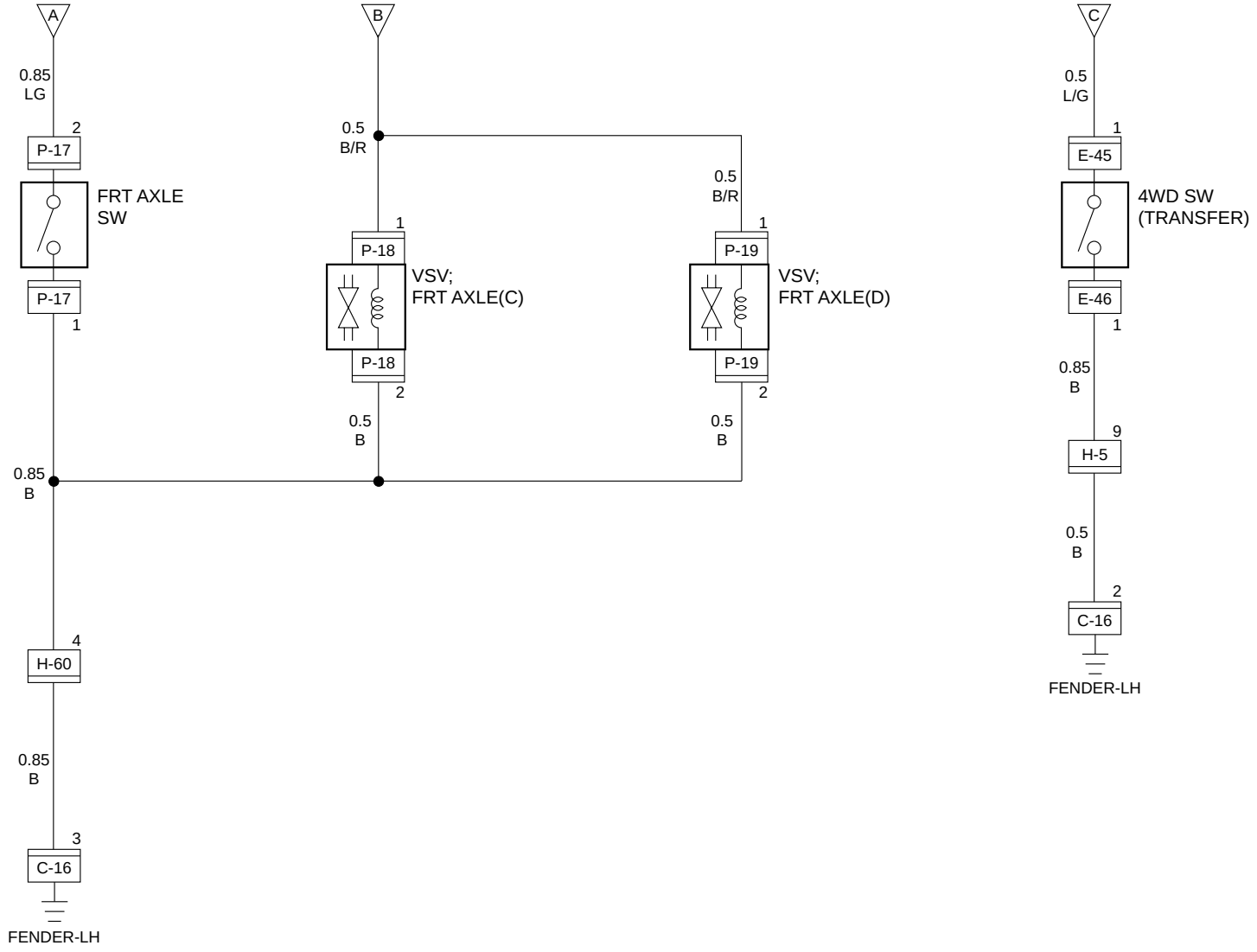

Parts Location (RHD 4JG2 Lever Type)

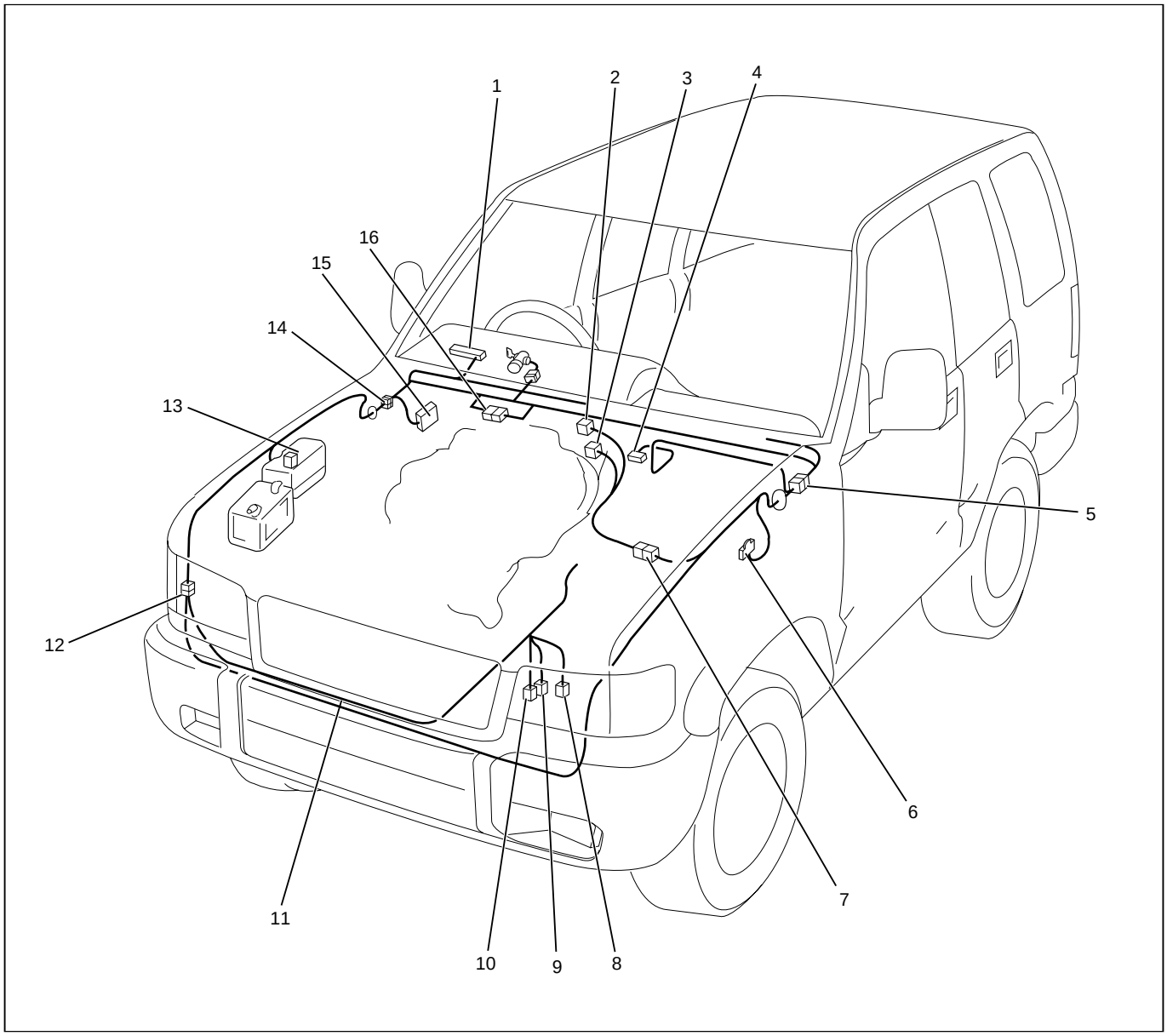

D08RW830

Legend

(1) I-9
(2) E-45
(3) E-46
(4) H-7
(5) C-16
(6) H-5
(7) P-17
(8) P-18
(9) P-19
(10) Battery (+) Cable
(11) H-41, H-60
(12) Relay and Fuse Box (X-18)
(13) H-13, H-15, H-26, H-27
(14) Fuse Box

Circuit Diagram (LHD 6VD1 LeverType)-1

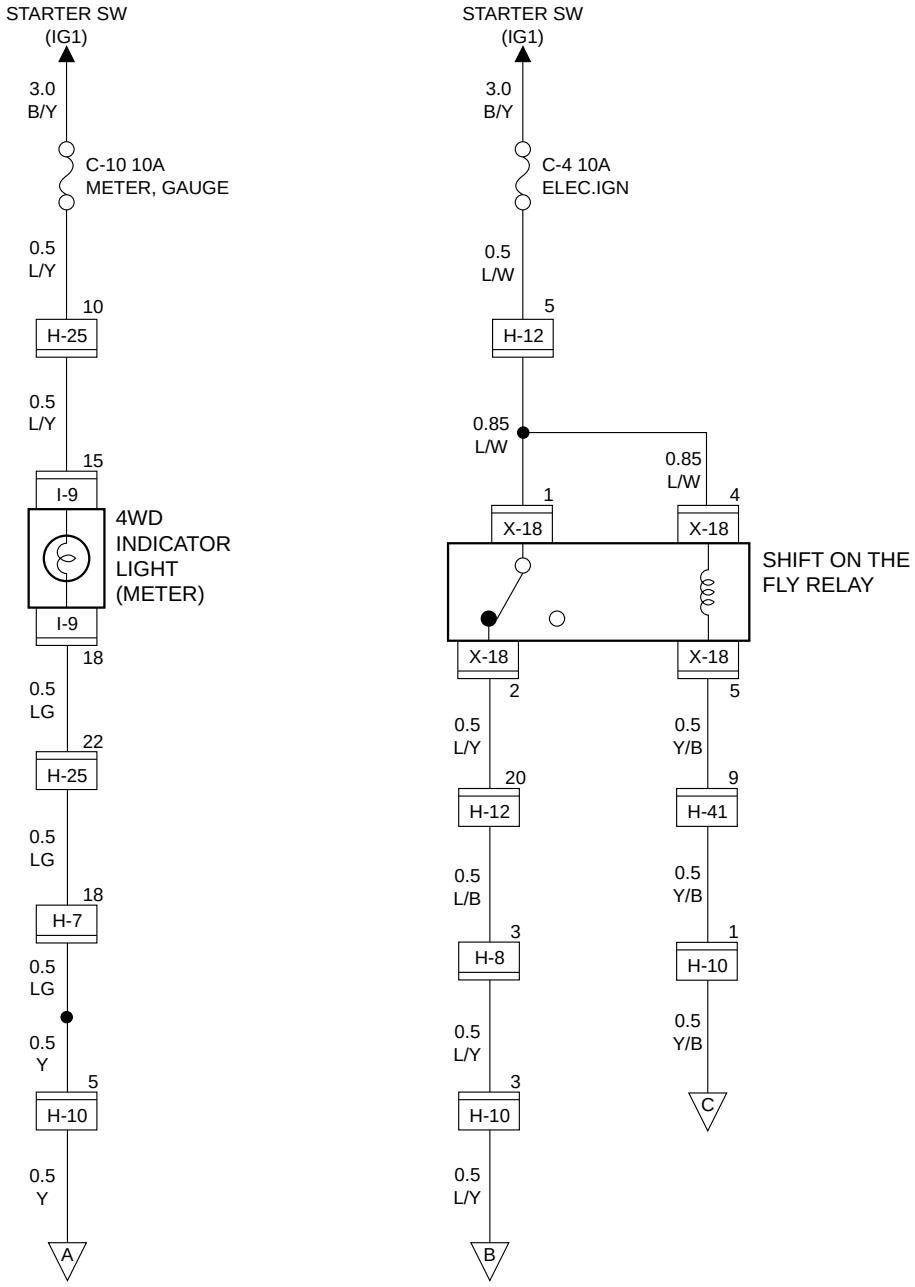

Circuit Diagram (LHD 6VD1 Lever Type)-2

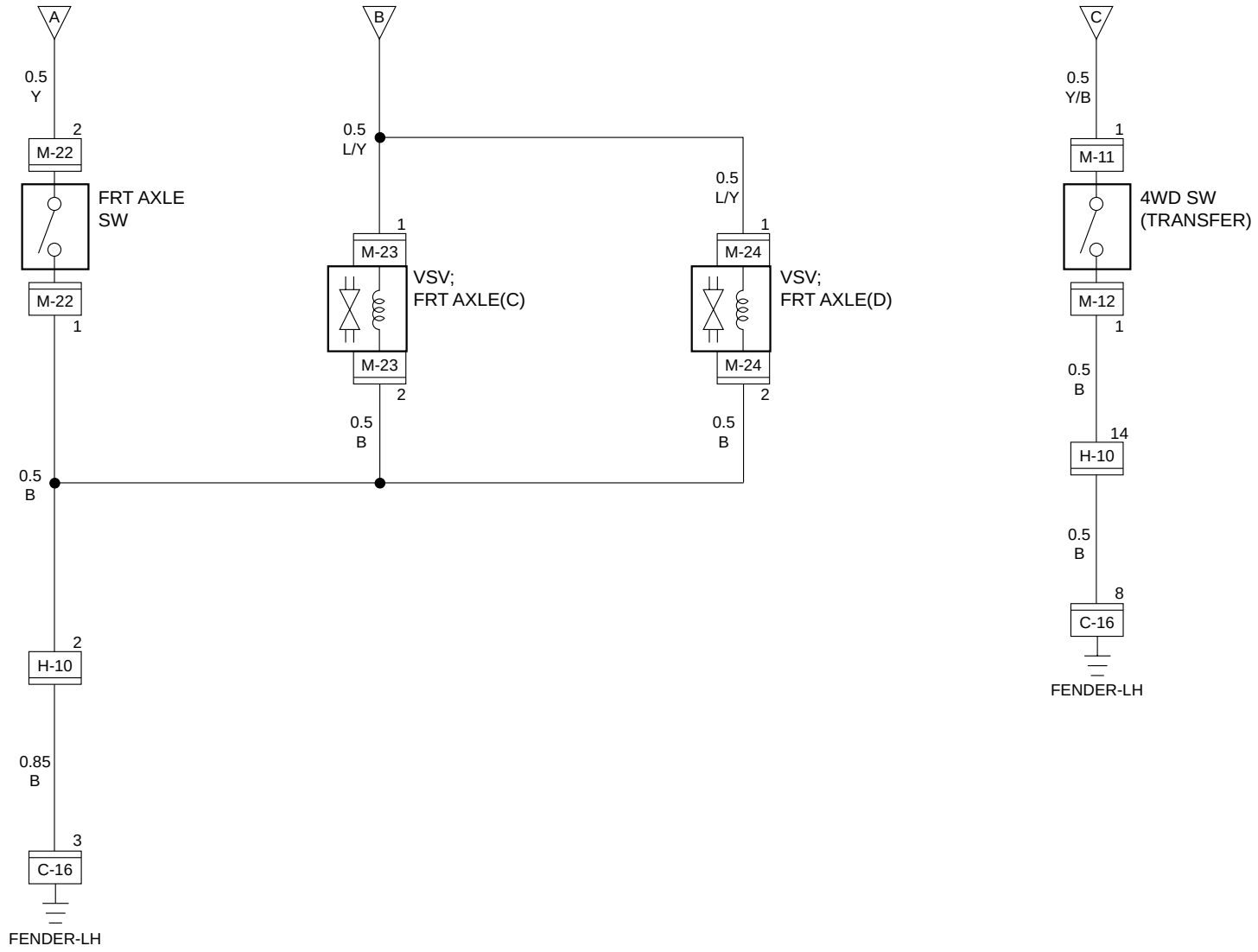

Parts Location (LHD 6VD1 Lever Type)

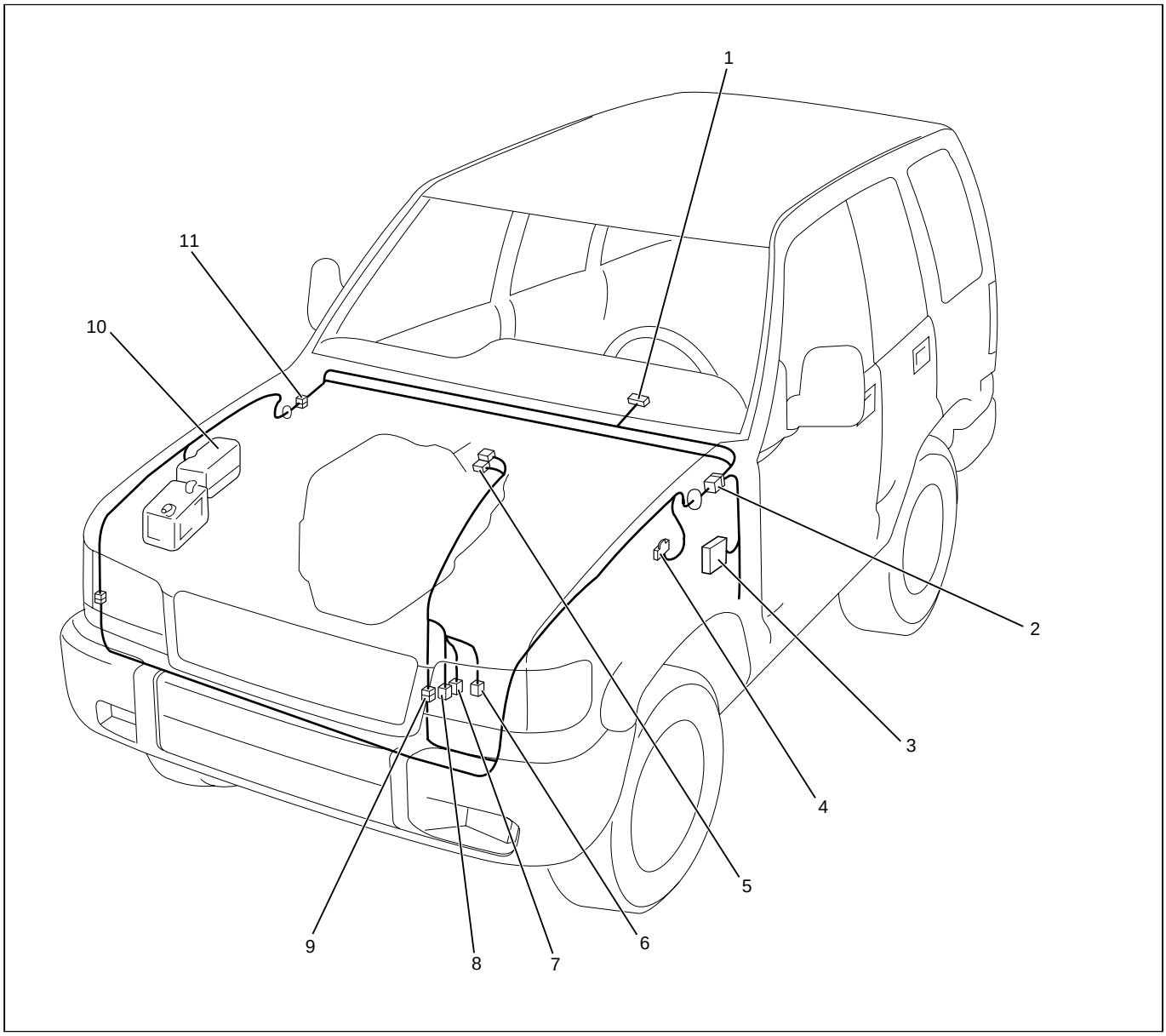

D08RW833

Legend

(1) I-9
(2) H-7, H-8, H-25
(3) Fuse Box
(4) C-16
(5) M-11, M-12
(6) M-22
(7) M-23
(8) M-24
(9) H-10
(10) Relay and Fuse Box (X-18)
(11) H-12

Circuit Diagram (LHD 4JG2 Lever Type)-1

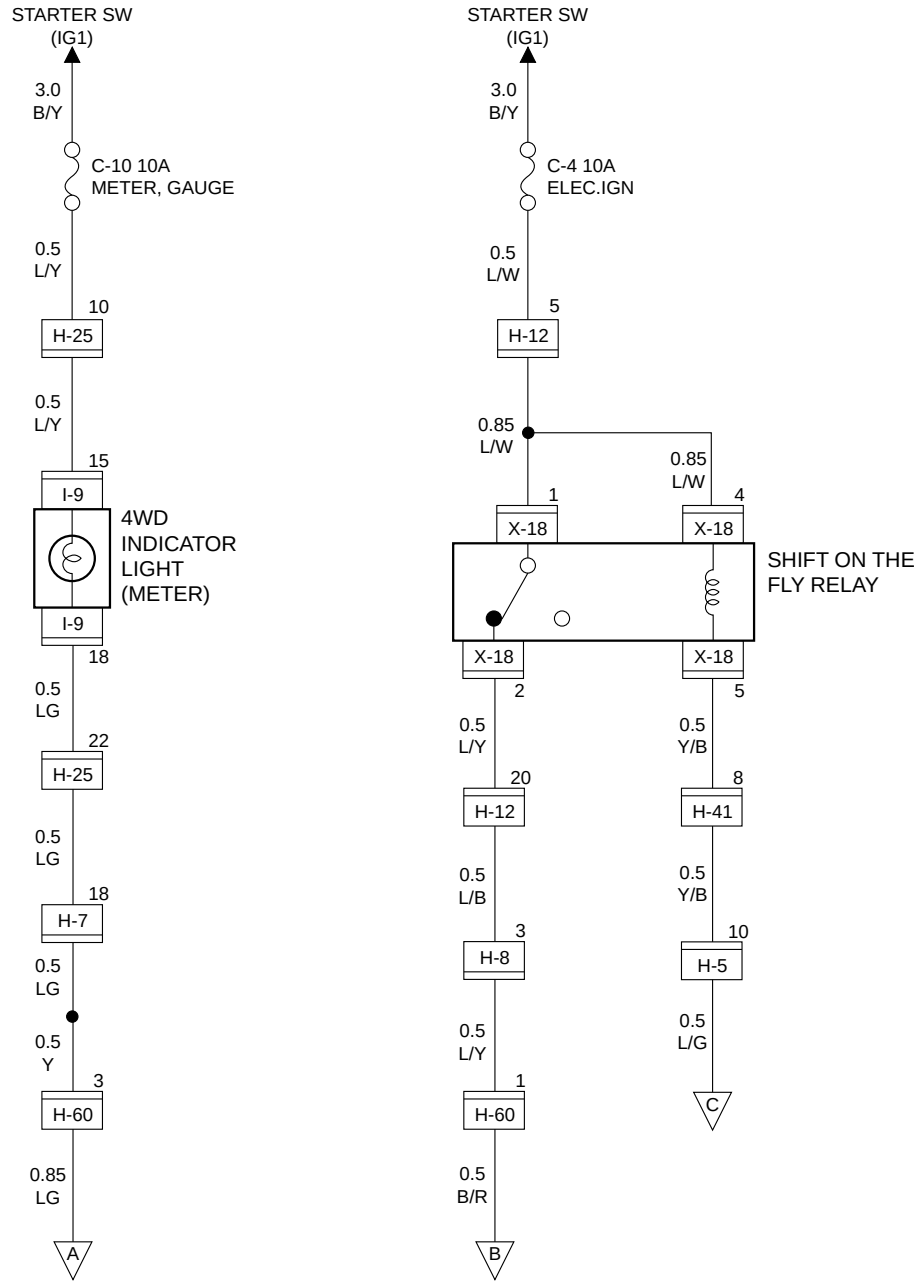

Circuit Diagram (LHD 4JG2 Lever Type)-2

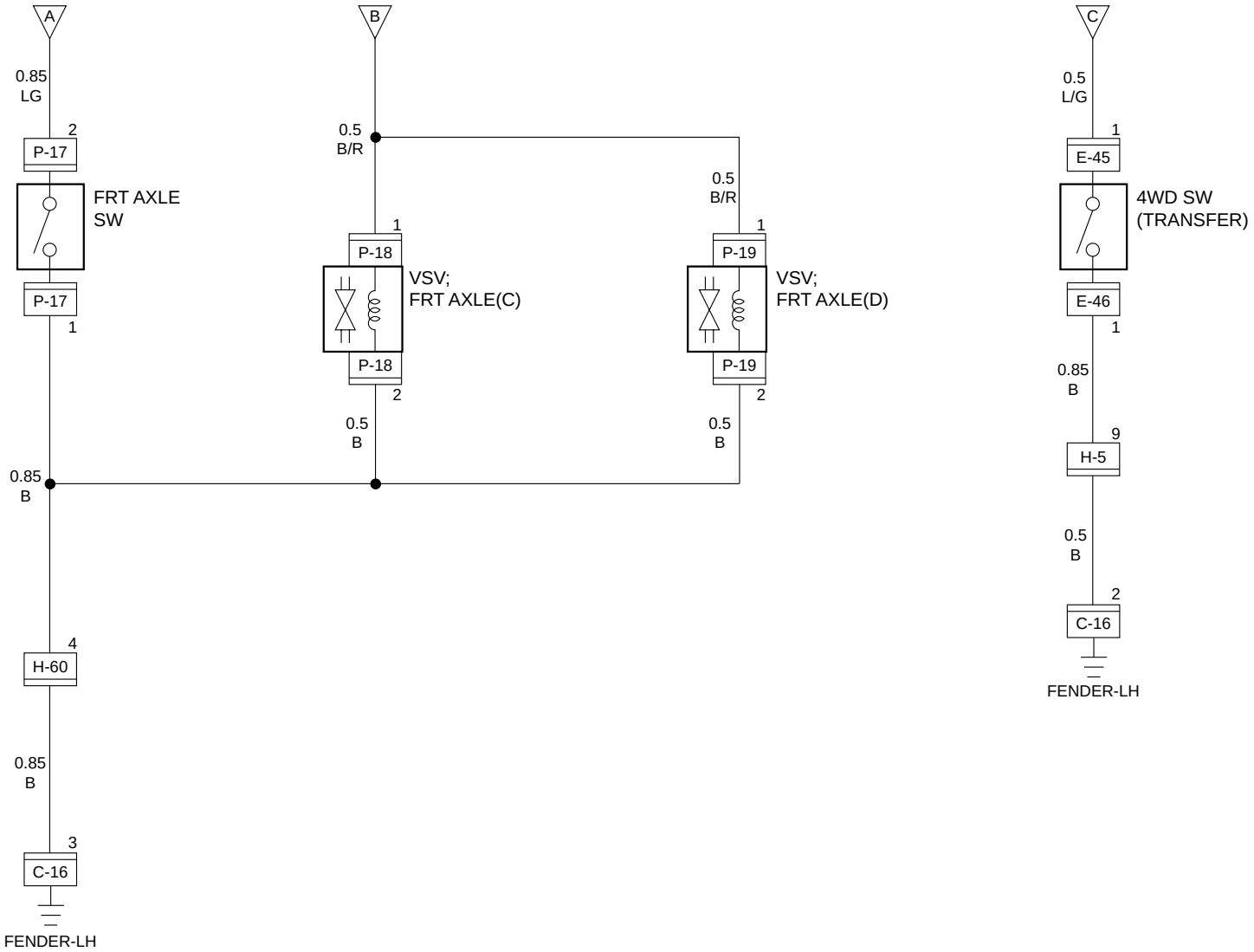

Parts Location (LHD 4JG2 Lever Type)

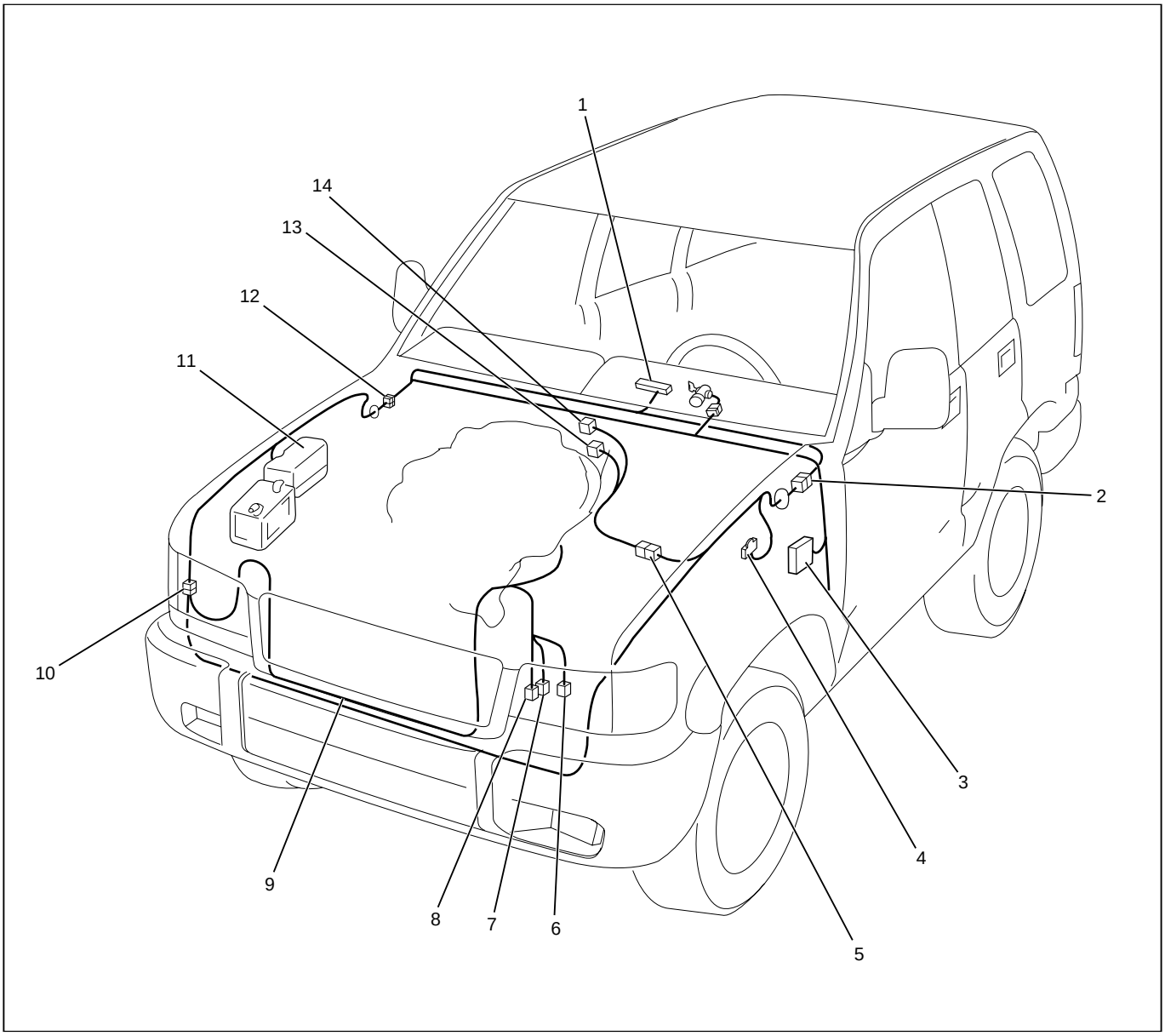

D08RW829

Legend

(1) I-9
(2) H-7, H-8, H-25
(3) Fuse Box
(4) C-16
(5) H-5
(6) P-17
(7) P-18
(8) P-19
(9) Battery (+) Cable
(10) H-42, H-60
(11) Relay and Fuse Box (X-18)
(12) H-12
(13) E-46
(14) E-45

Circuit Diagram (RHD 6V*1 Push Button Type)-1

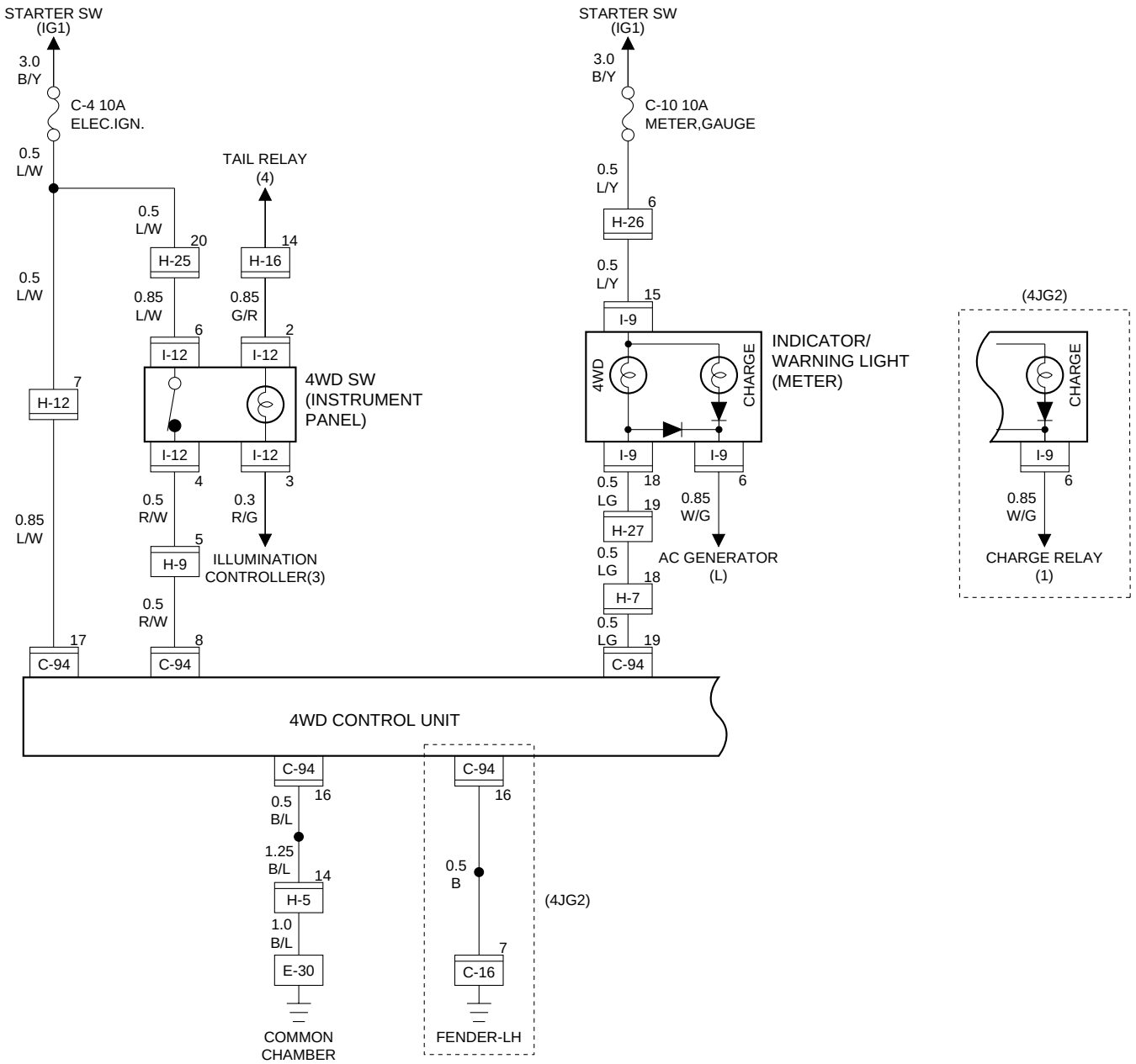

D08RW44

Circuit Diagram (RHD 6V*1 Push Button Type)-2

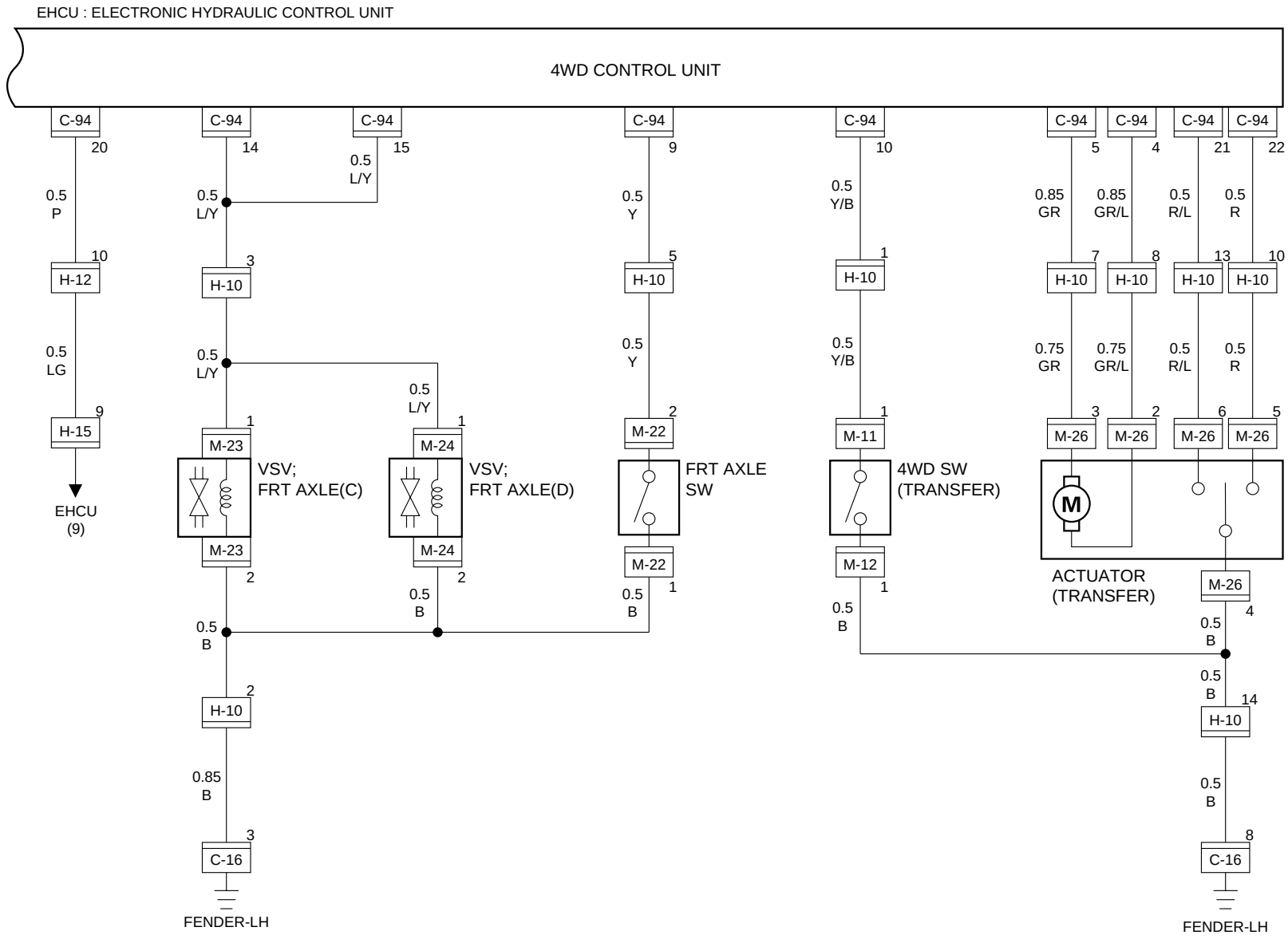

D8RW638

Parts Location (RHD 6V*1 Push Bitton Type)

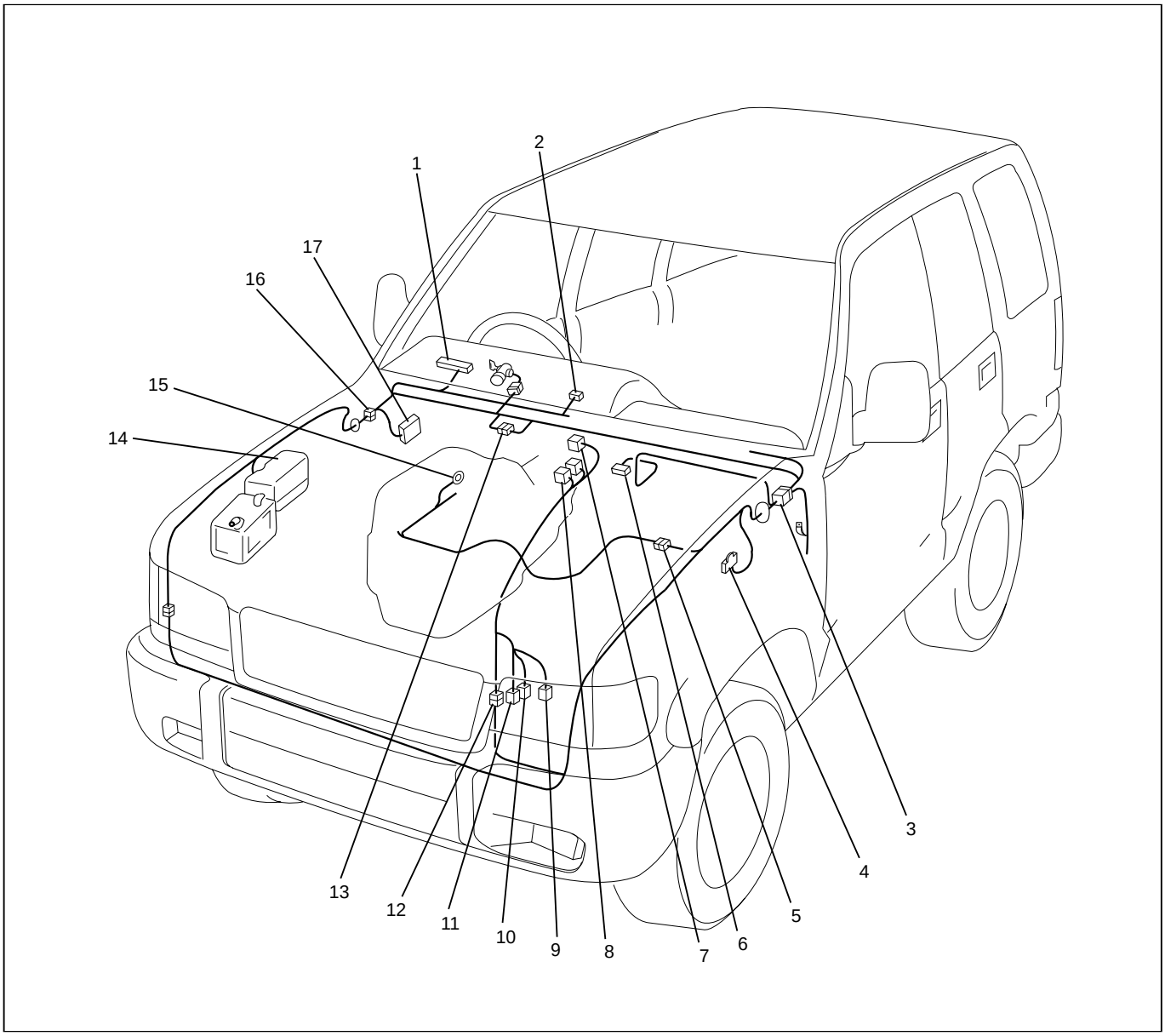

D08RW853

Legend

(1) I-9
(2) I-12
(3) I-12
(4) H-7, H-9
(5) C-16
(6) C-94
(7) M-26
(8) M-11, M-12
(9) M-22
(10) M-23
(11) M-24
(12) H-10
(13) H-12
(14) Relay and Fuse Box
(15) E-30
(16) H-15, H-16, H-25, H-26, H-27
(17) Fuse Box

Circuit Diagram (RHD 4JG2 Push Button Type)-1

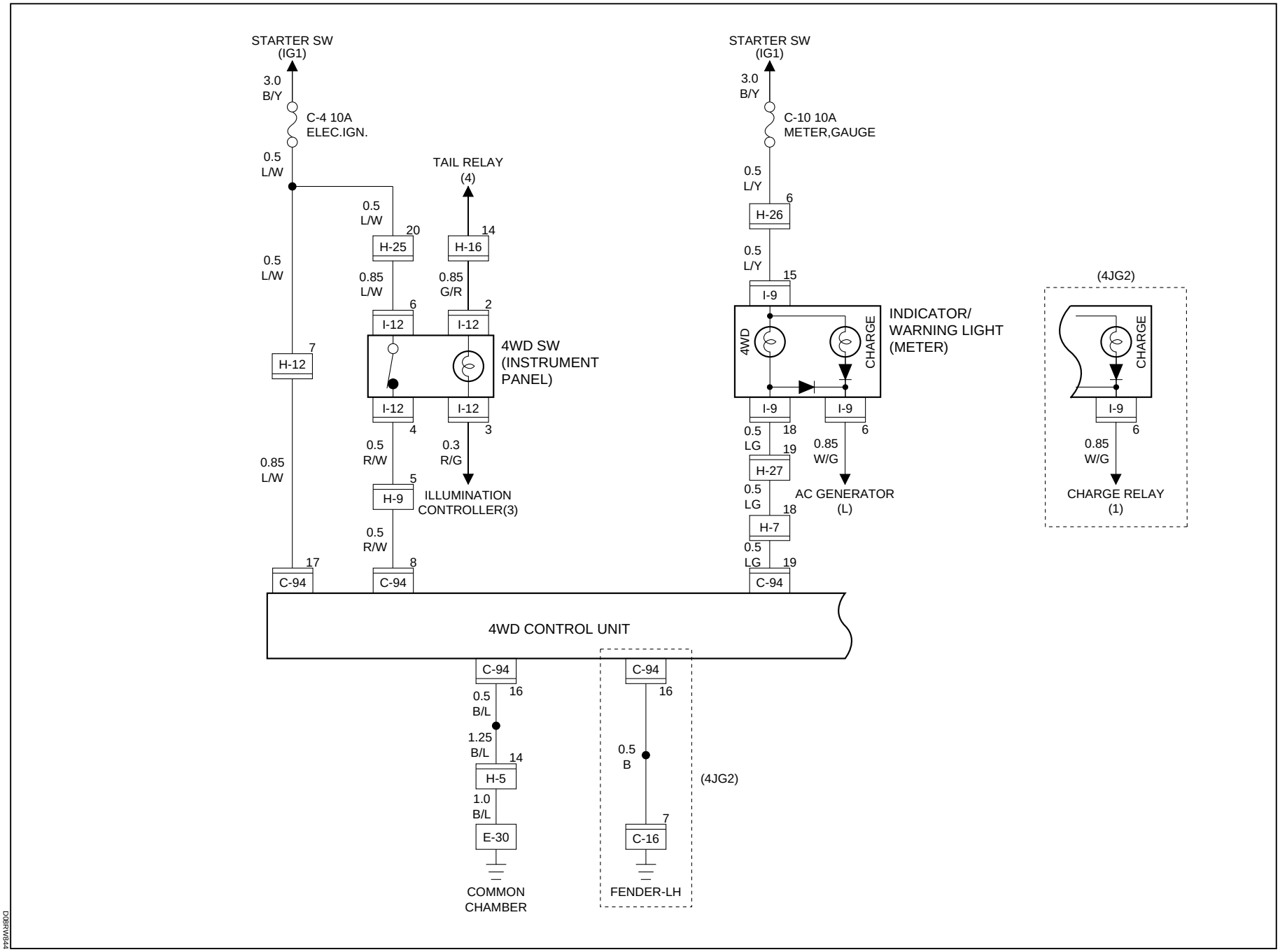

D08RW844

Circuit Diagram (RHD 4JG2 Push Button Type)-2

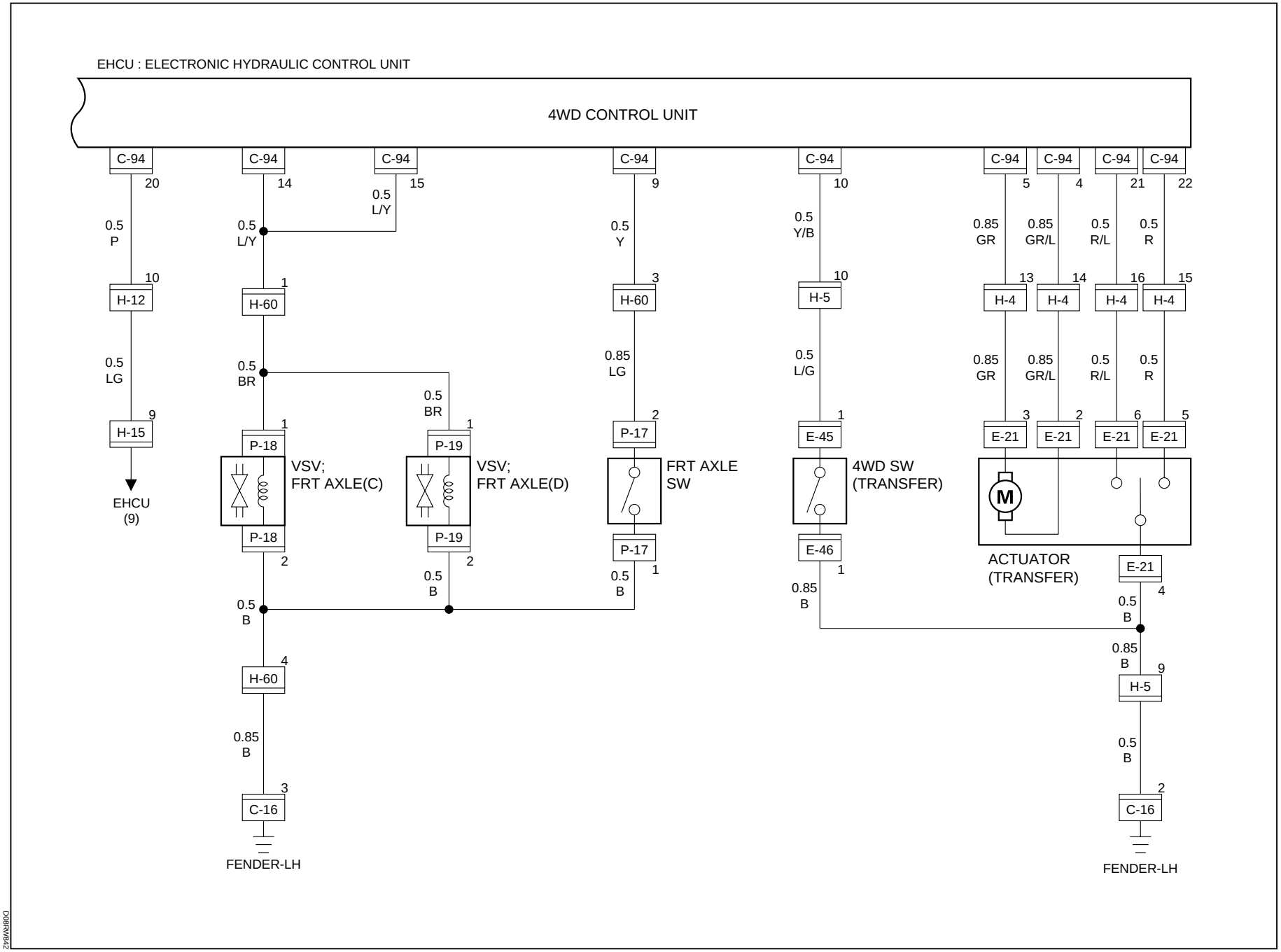

Parts Location (RHD 4JG2 Push Button Type)

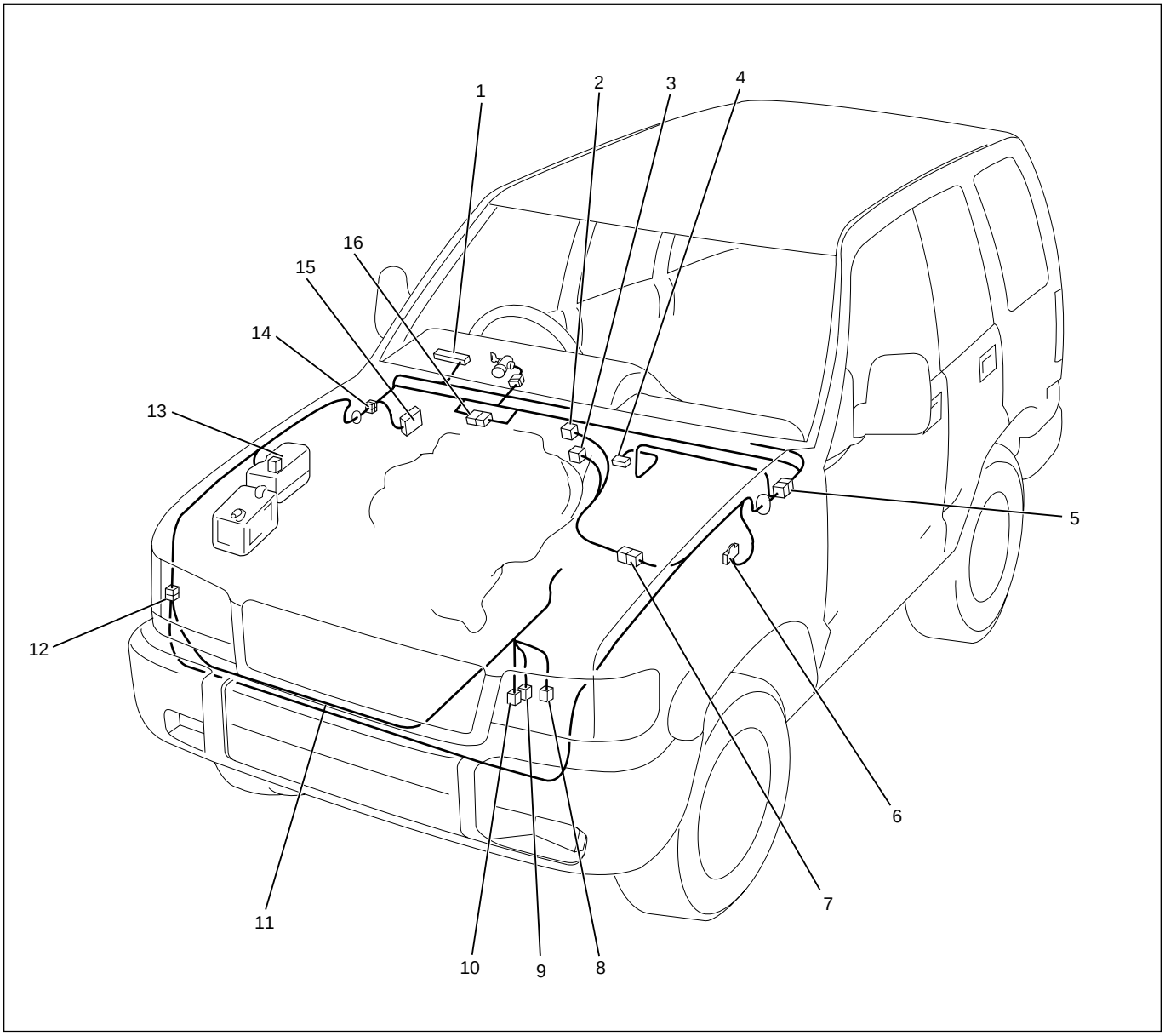

D08RW830

Legend

(1) I-9
(2) E-21
(3) E-45, E-46
(4) C-94
(5) H-7, H-9
(6) C-16
(7) H-4, H-5
(8) P-17
(9) P-18
(10) P-19
(11) Battery Positive Cable
(12) H-60
(13) Relay and Fuse Box
(14) H-15, H-16, H-25, H-26, H-27
(15) Fuse Box
(16) H-12

Circuit Diagram (LHD 6VD1 Push Button Type)-1

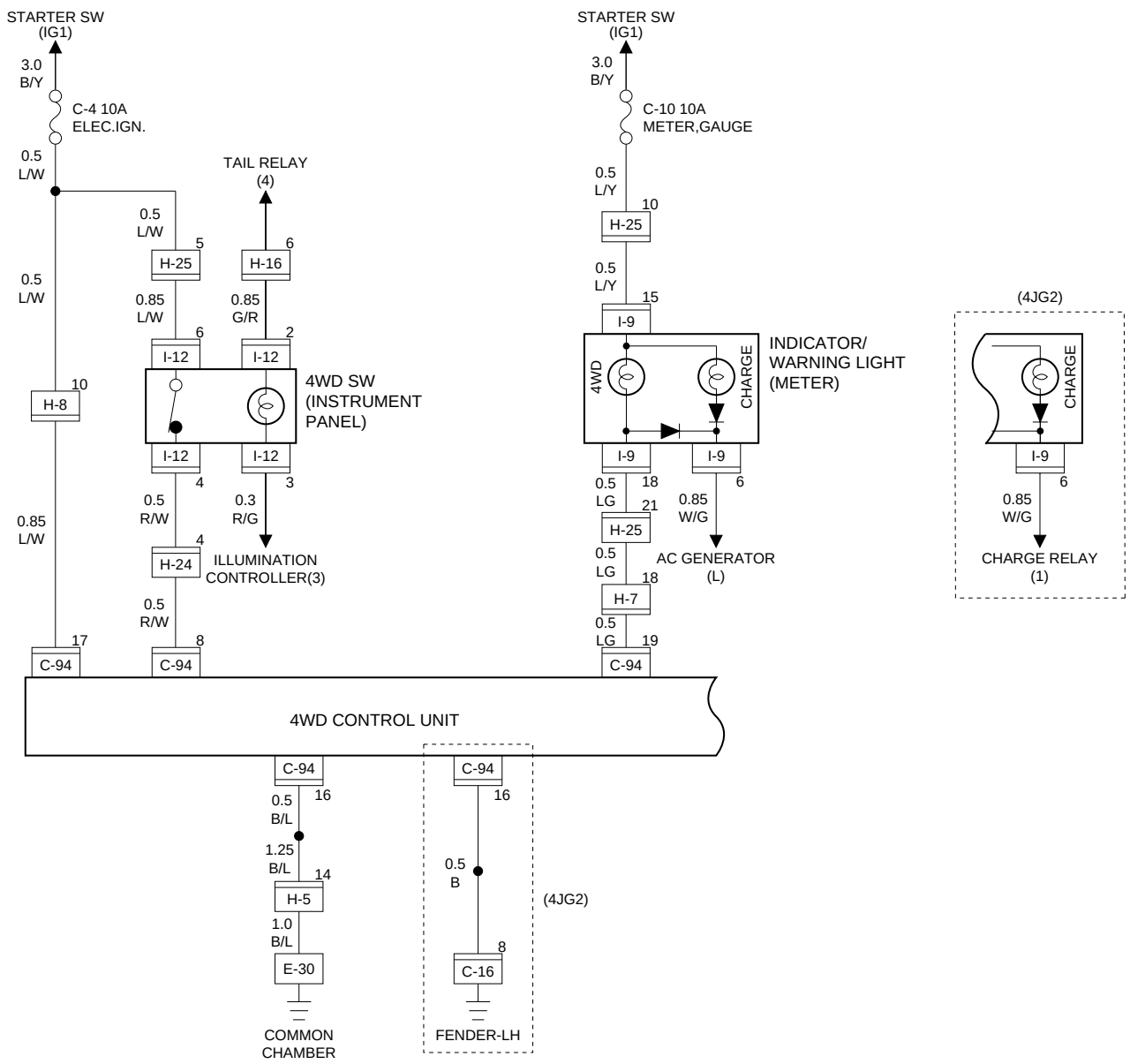

D08RW845

Circuit Diagram (LHD 6VD1 Push Button Type)-2

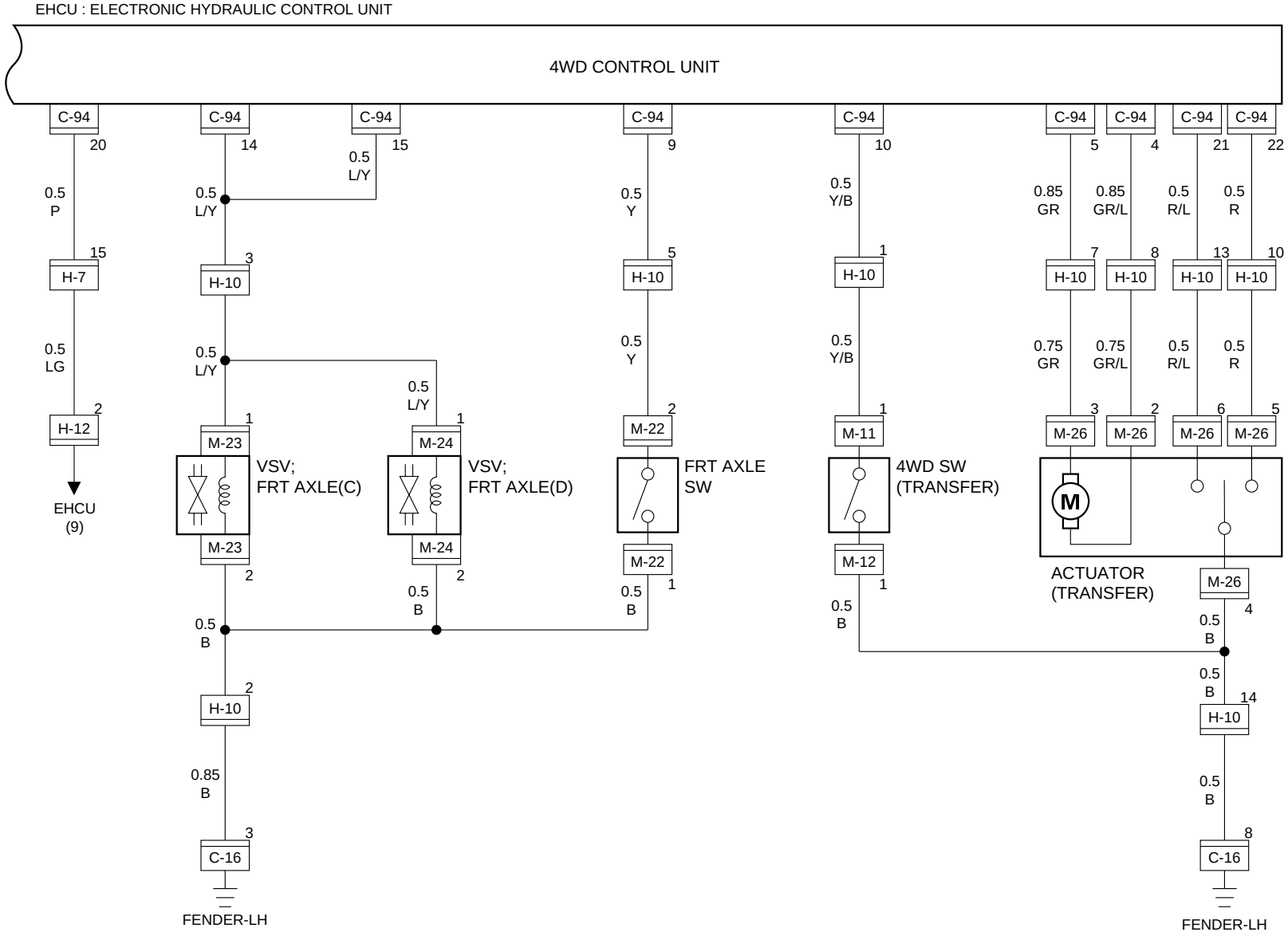

Parts Location (LHD 6VD1 Push Button Type)

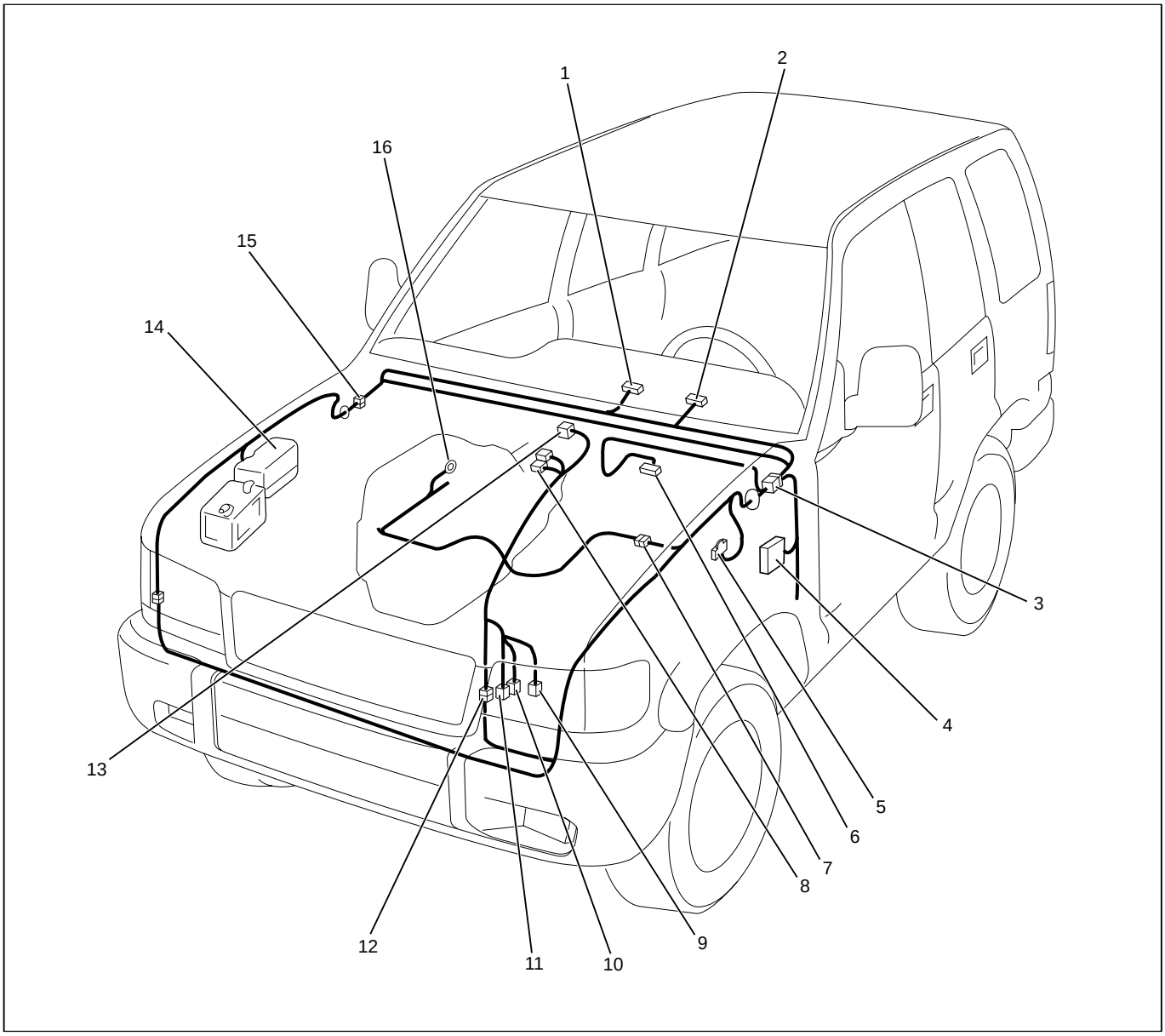

D08RW854

Legend

(1) I-12
(2) I-9
(3) H-7, H-8, H-24, H-25
(4) Fuse Box
(5) C-16
(6) C-94
(7) H-5
(8) M-11, M-12
(9) M-22
(10) M-23
(11) M-24
(12) H-10
(13) M-26
(14) Relay and Fuse Box
(15) H-12, H-16
(16) E-30

Circuit Diagram (LHD 4JG2 Push Button Type)-1

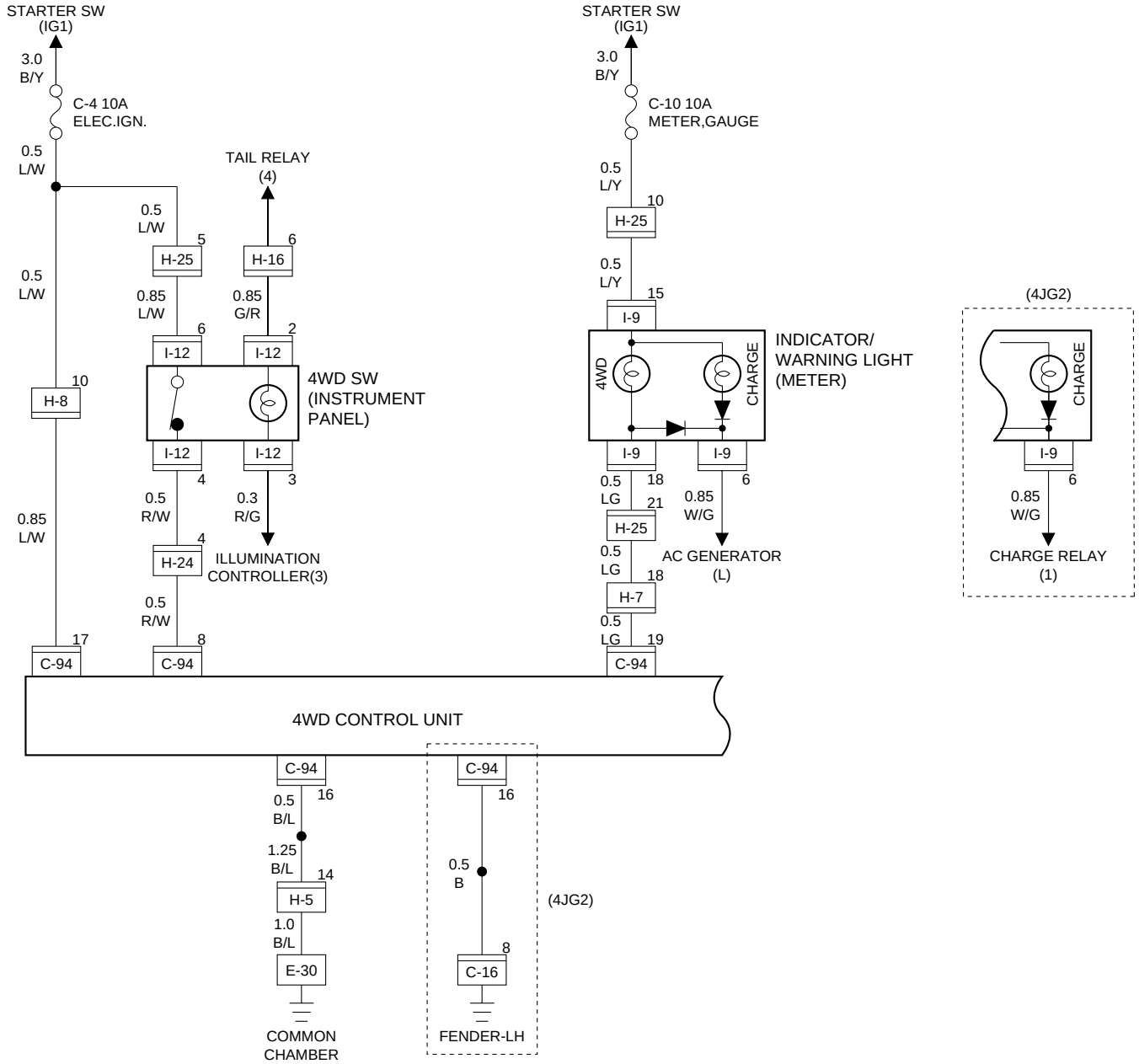

D08RW845

Circuit Diagram (LHD 4JG2 Push Button Type)-2

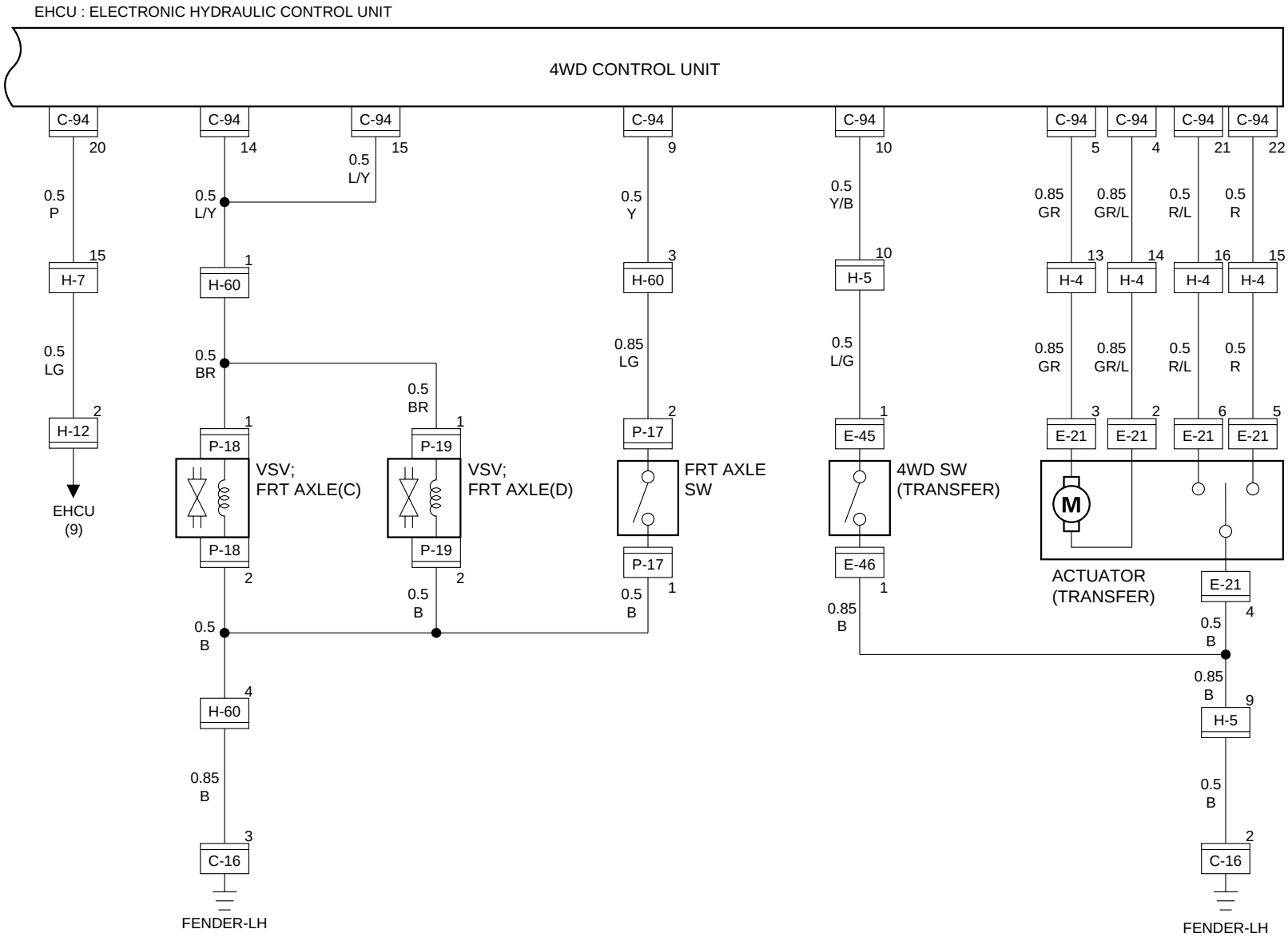

D08RW4A1

Parts Location (LHD 4JG2 Push Button Type)

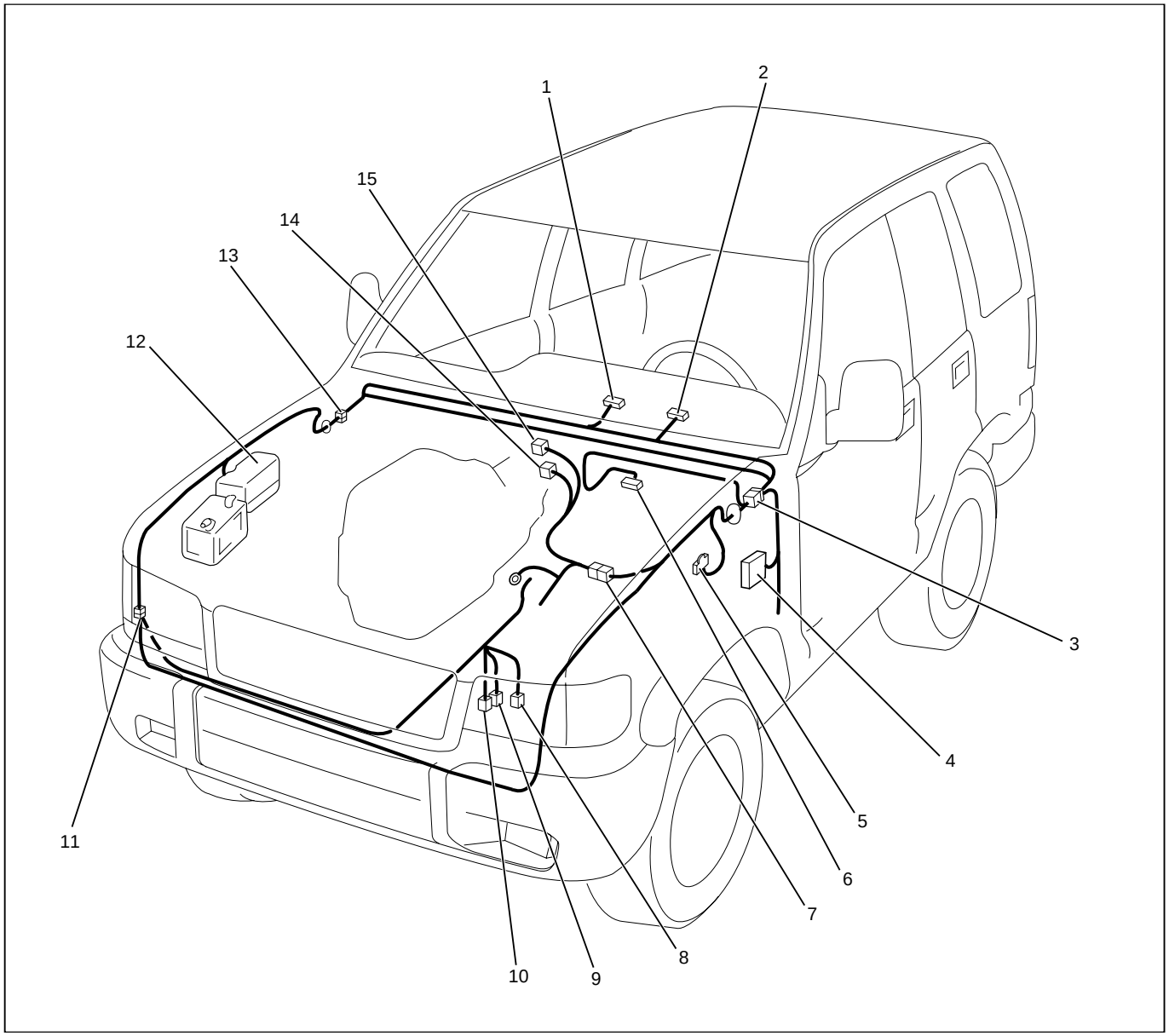

D08RW852

Legend

(1) I-12
(2) I-9
(3) H-7 H-8, H-24, H-25
(4) Fuse Box
(5) C-16
(6) C-94
(7) H-4, H-5
(8) P-17
(9) P-18
(10) P-19
(11) H-60
(12) Relay and Fuse Box
(13) H-12, H-16
(14) E-45, E-46
(15) E-21

Torque on Demand (T.O.D.)

Circuit Diagram (RHD 6VE1)-1

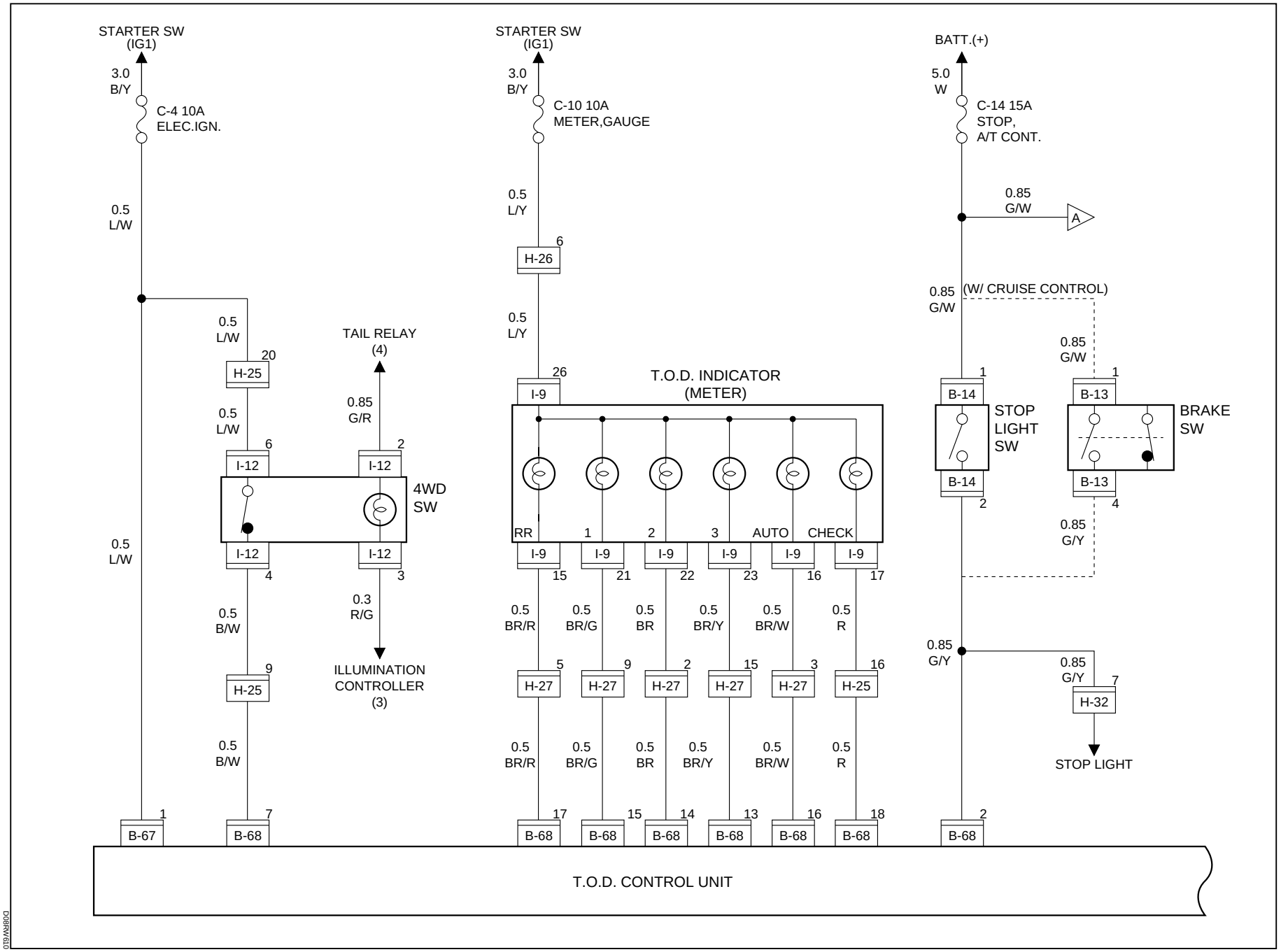

D08RW610

Circuit Diagram (RHD 6VE1)-2

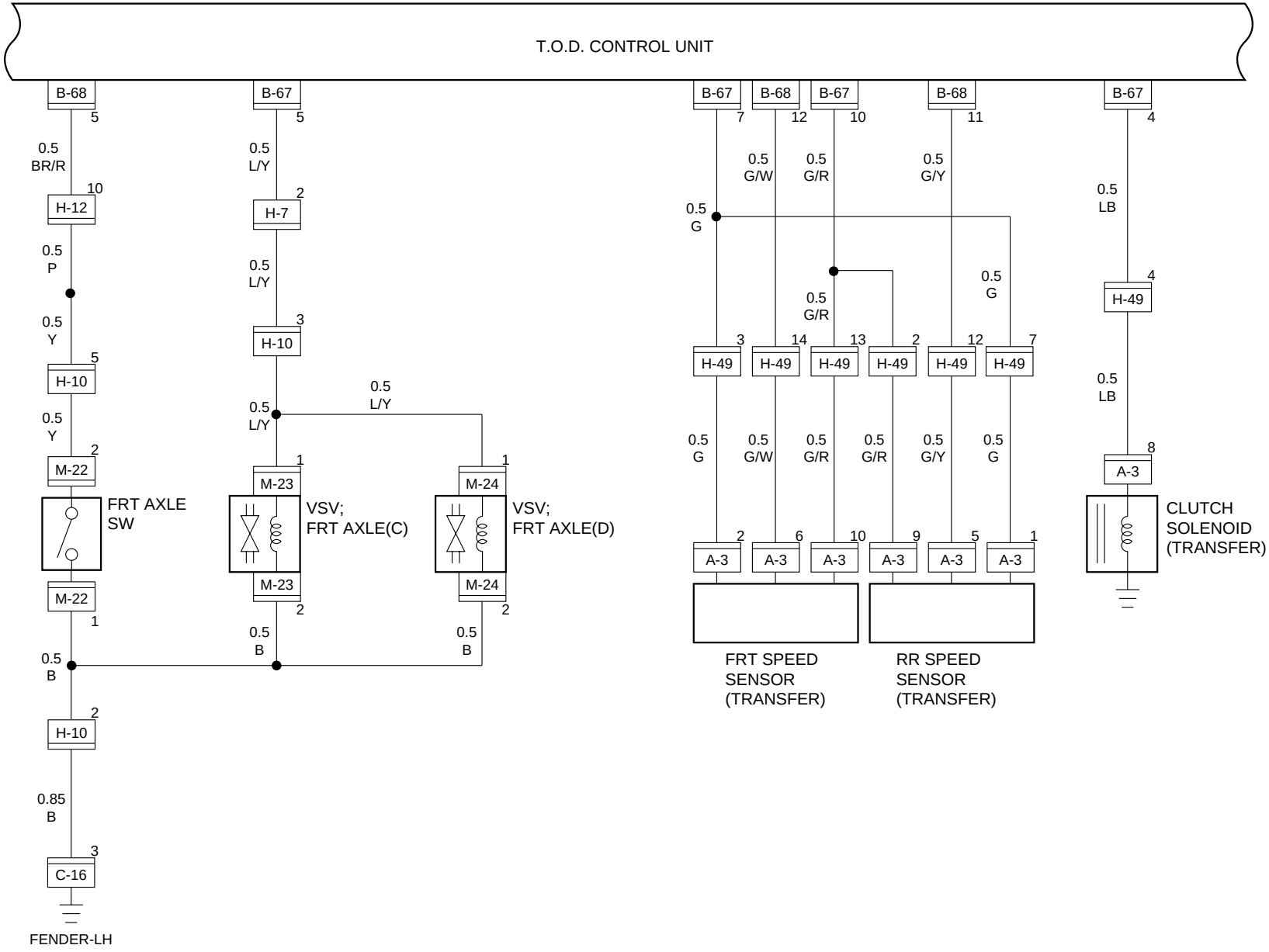

D08RW61I

Circuit Diagram (RHD 6VE1)-3

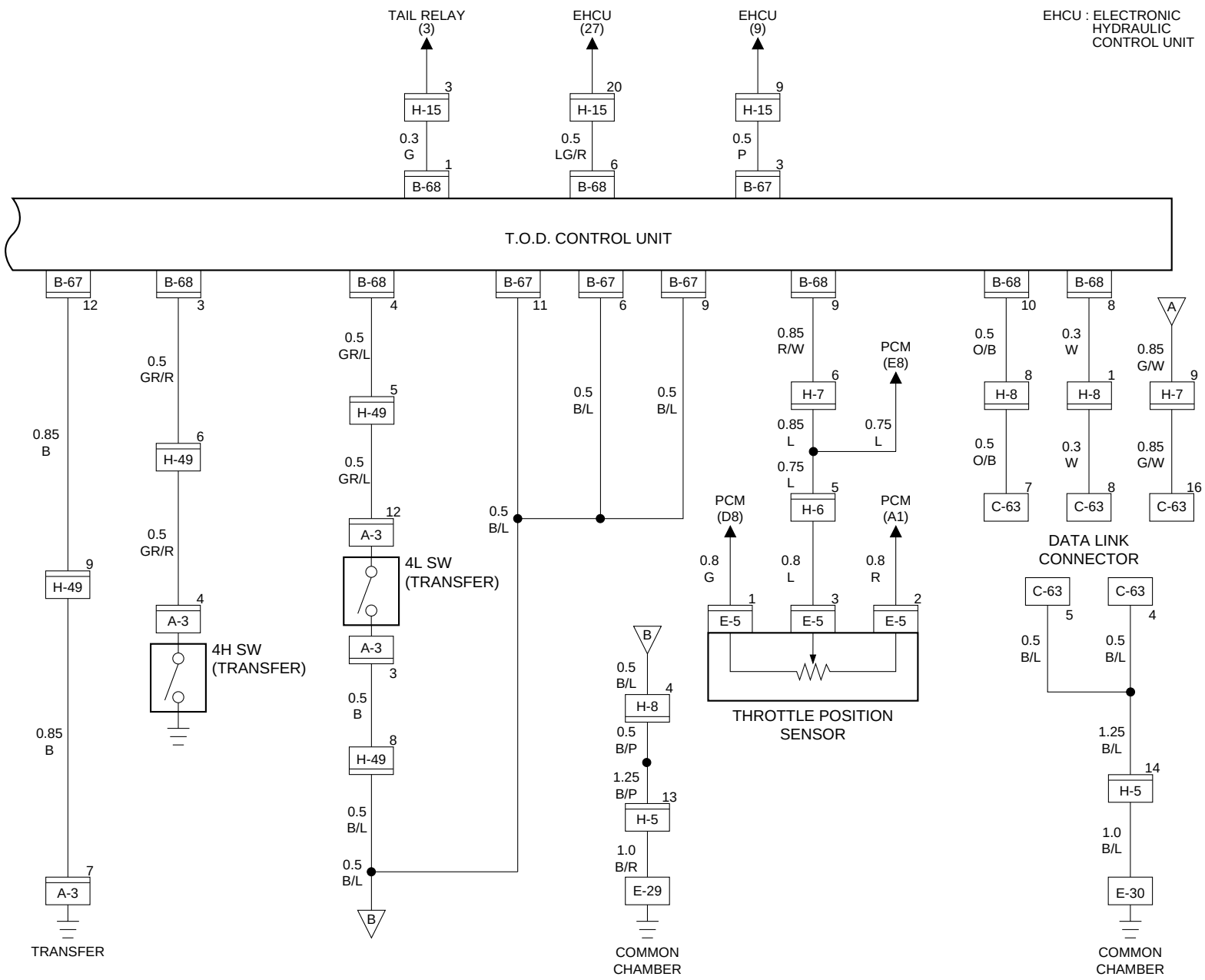

D08RW912

Parts Location

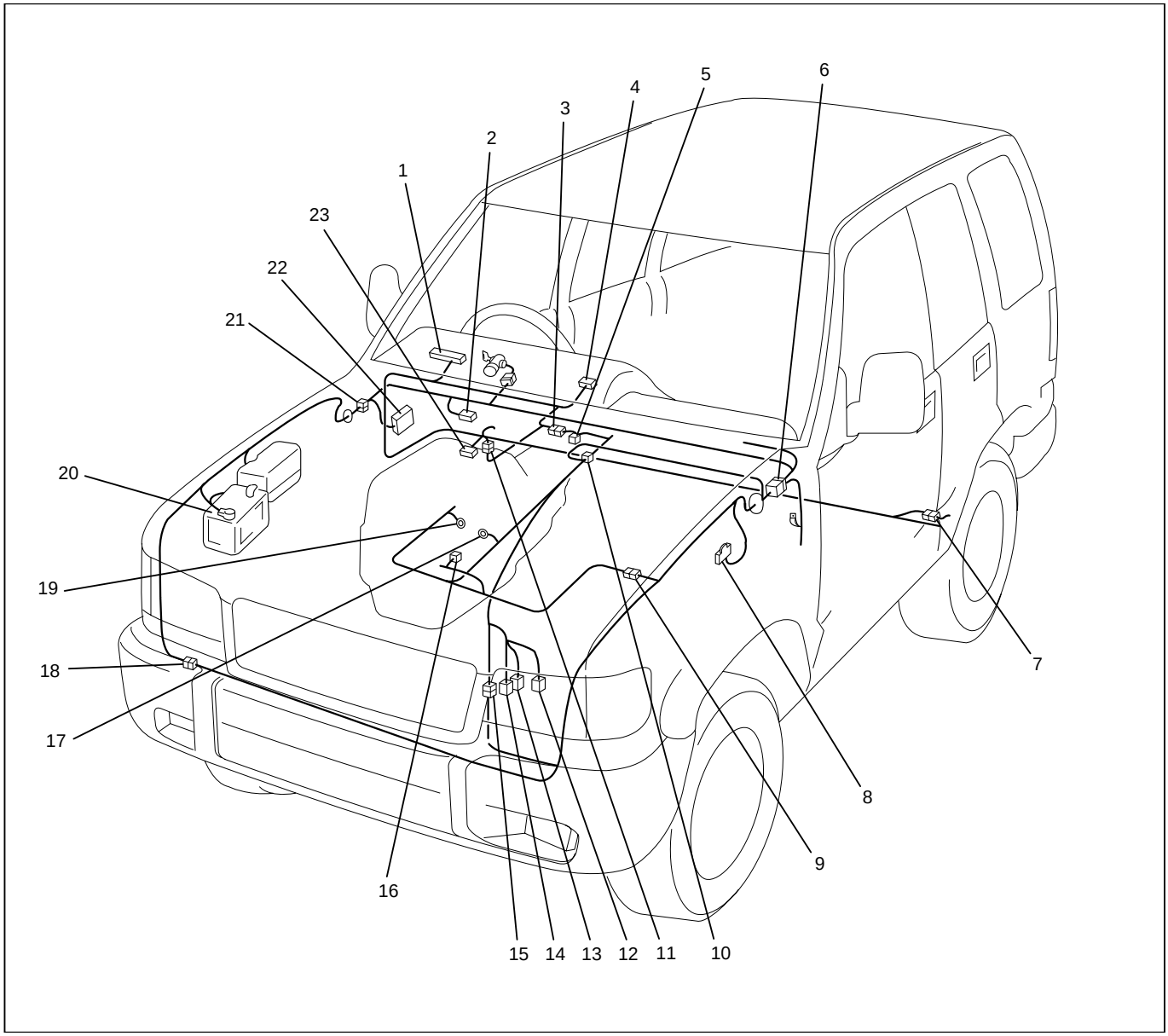

D08RW621

Legend

(1) I-9
(2) B-13 or B-14
(3) H-12
(4) I-12
(5) A-3
(6) H-7, H-8
(7) H-32
(8) C-16
(9) H-5, H-6
(10) C-63
(11) H-49
(12) M-22
(13) M-23
(14) M-24
(15) H-10
(16) E-5
(17) E-29
(18) H-42
(19) E-30
(20) Battery
(21) H-13, H-15, H-26
(22) Fuse Box
(23) B-67, B-68

Supplemental Restraint System (SRS) – Air Bag

General Description

The circuit consists of Sensing and Diagnostic Module (SDM), driver's air bag assembly, SRS coil assembly, passenger's air bag assembly, and "AIR BAG" warning light. SDM, SRS coil assembly (driver side only), driver air bag assembly, passenger air bag assembly and connector wire make up the deployment loops. The function of the deployment loops is to supply current through air bag assembly, which will cause deployment of the air bags in the event of a frontal crash of sufficient force, up to 30 degrees off the center line of the vehicle. The air bag assemblies are only supplied enough current to deploy when the SDM detects vehicle velocity changes severe enough to warrant deployment.

The SDM contains a sensing device which converts vehicle velocity changes to an electrical signal.

The electrical signal generated is processed by the SDM and then compared to a value stored in memory. When the generated signal exceeds the stored value, the SDM will cause current to flow through the air bag assembly deploying the air bags.

Refer to Supplemental Restraint System in Restraints section.

Circuit Diagram (6VD1)

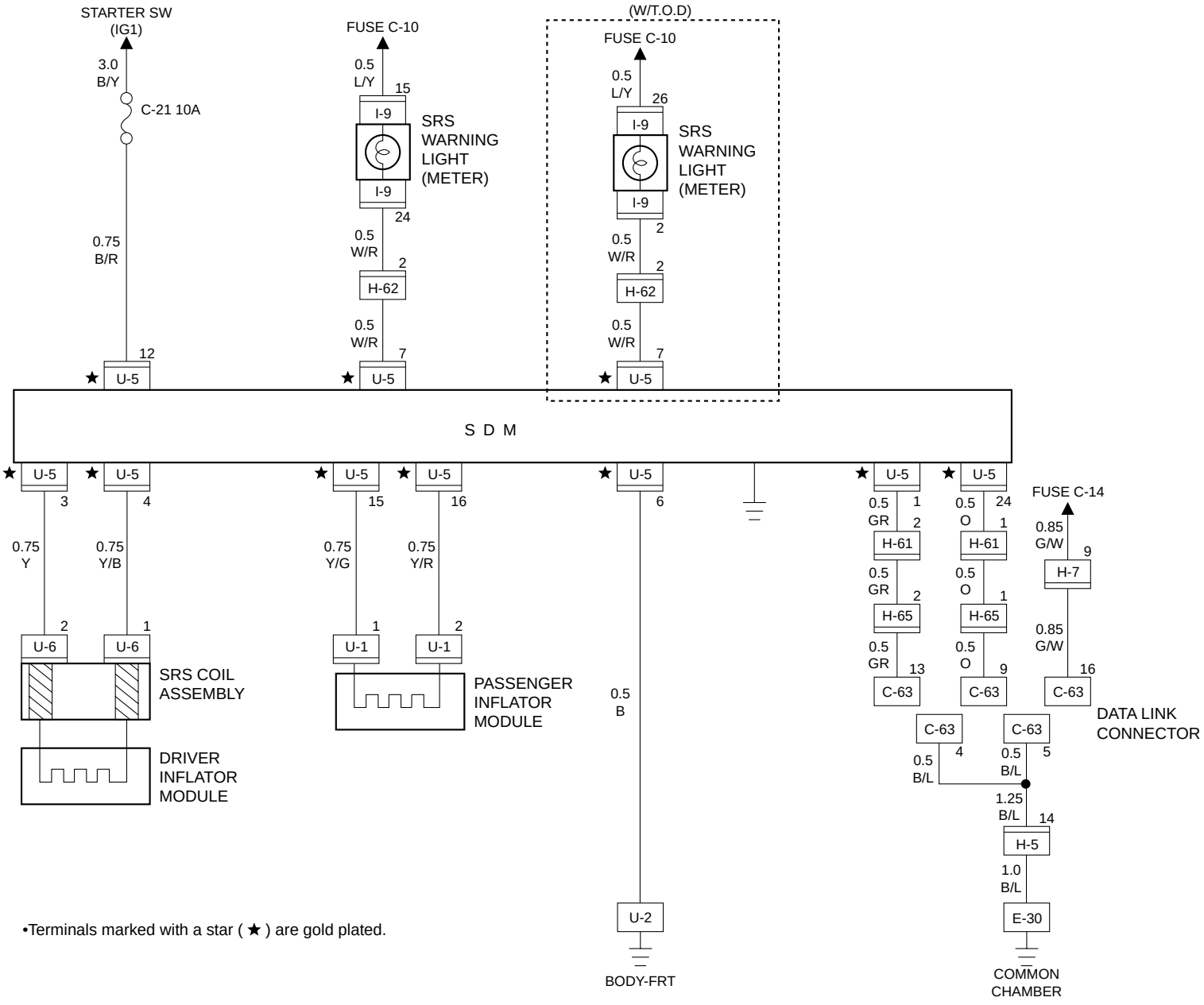

•Terminals marked with a star (★) are gold plated.

D08RW605

Circuit Diagram (4JG2)

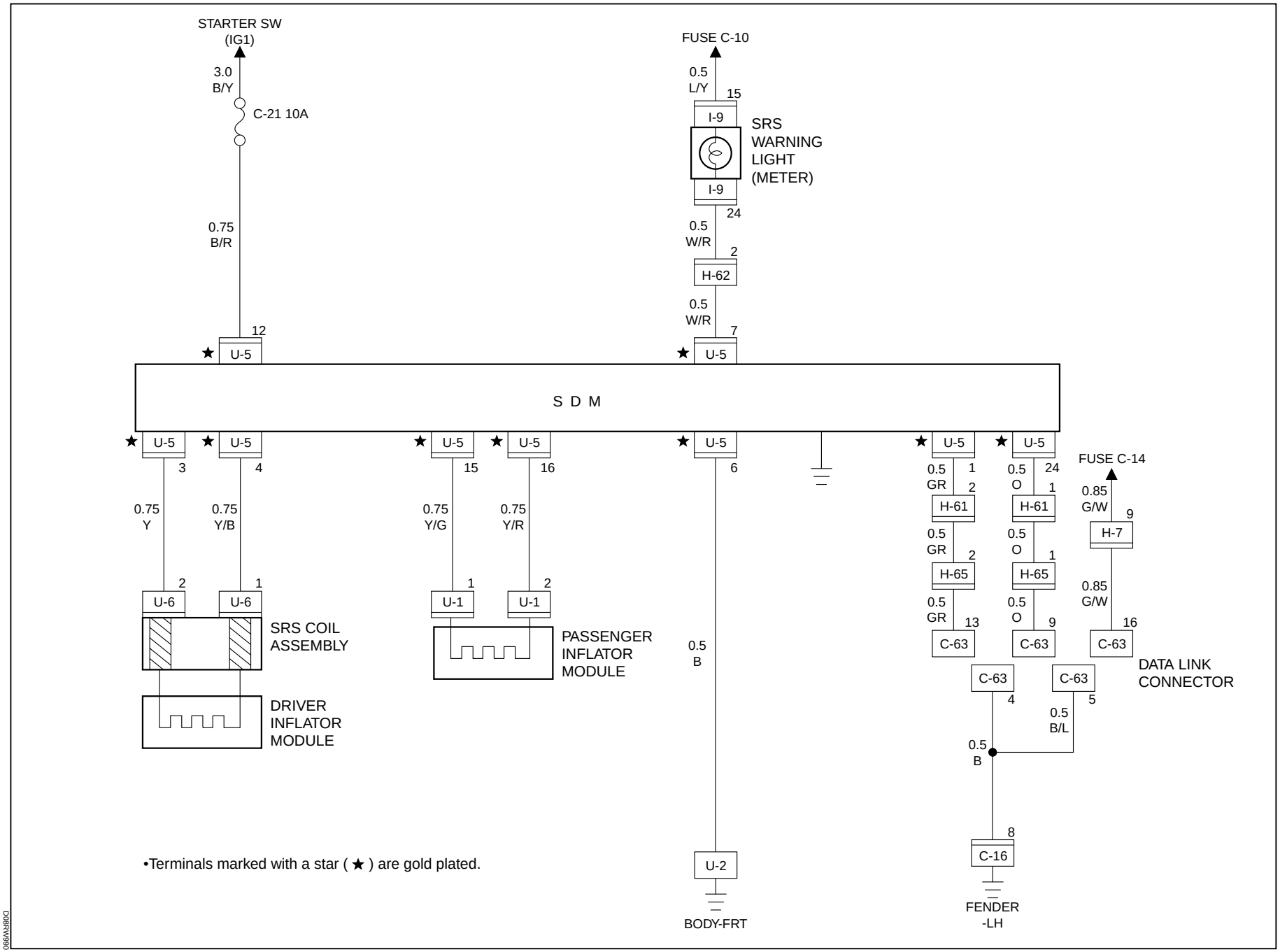

•Terminals marked with a star (★) are gold plated.

D08RW990

Circuit Diagram (6VE1 South Africa)-1

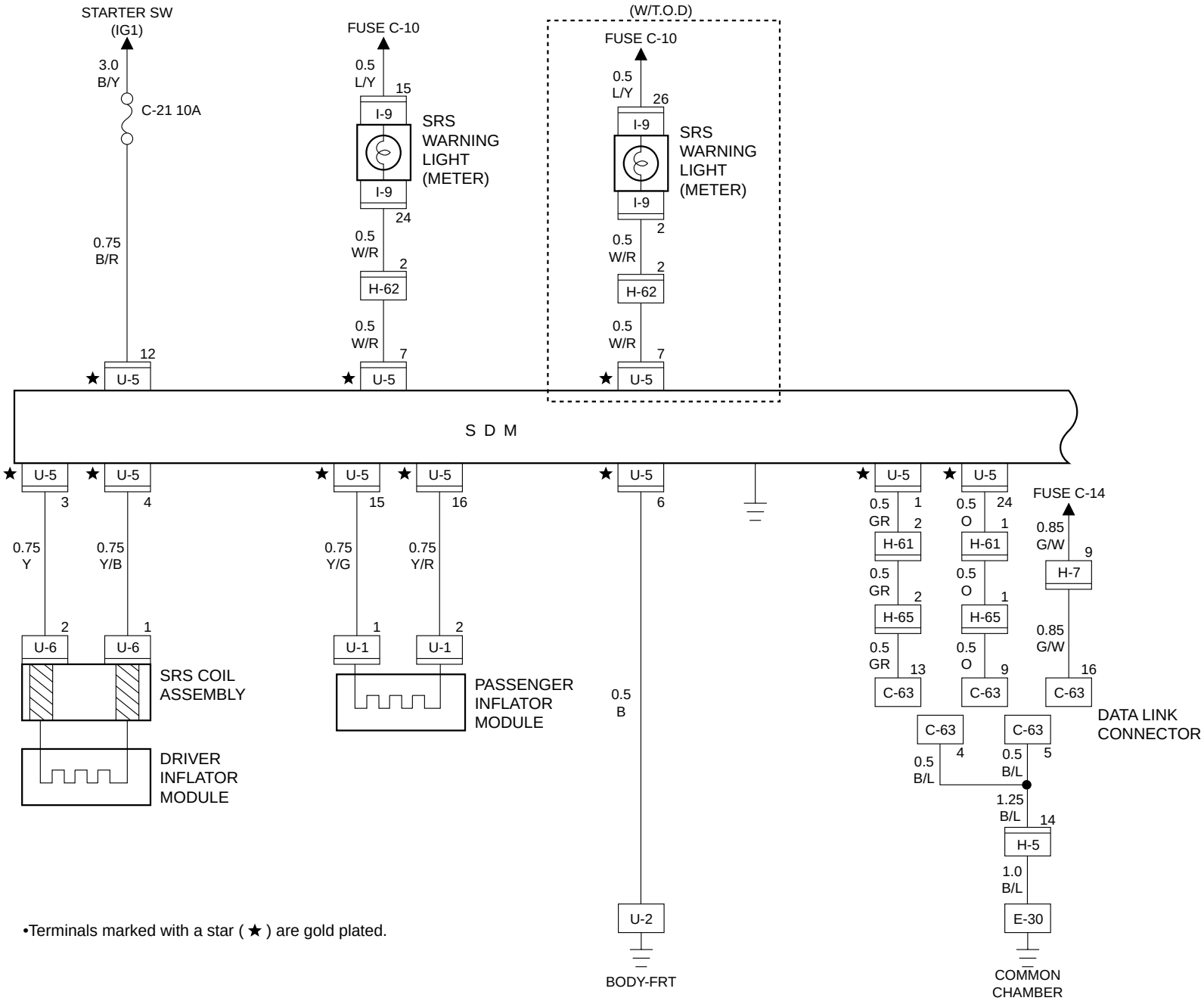

D08RWB41

Circuit Diagram (6VE1 South Africa)-2

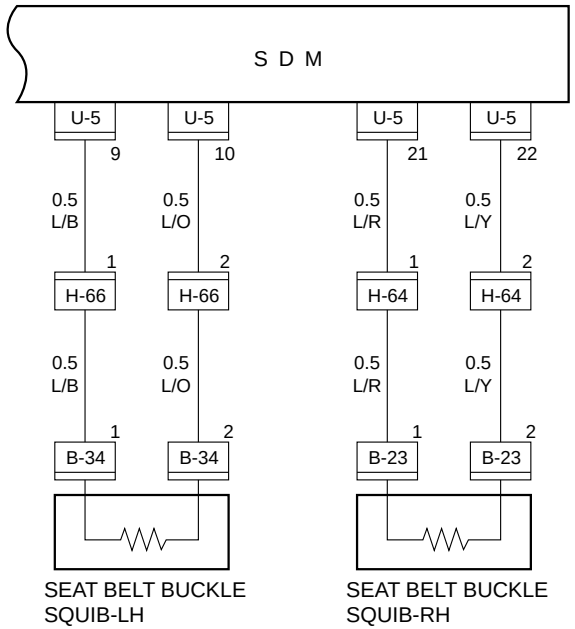

Parts Location (RHD)

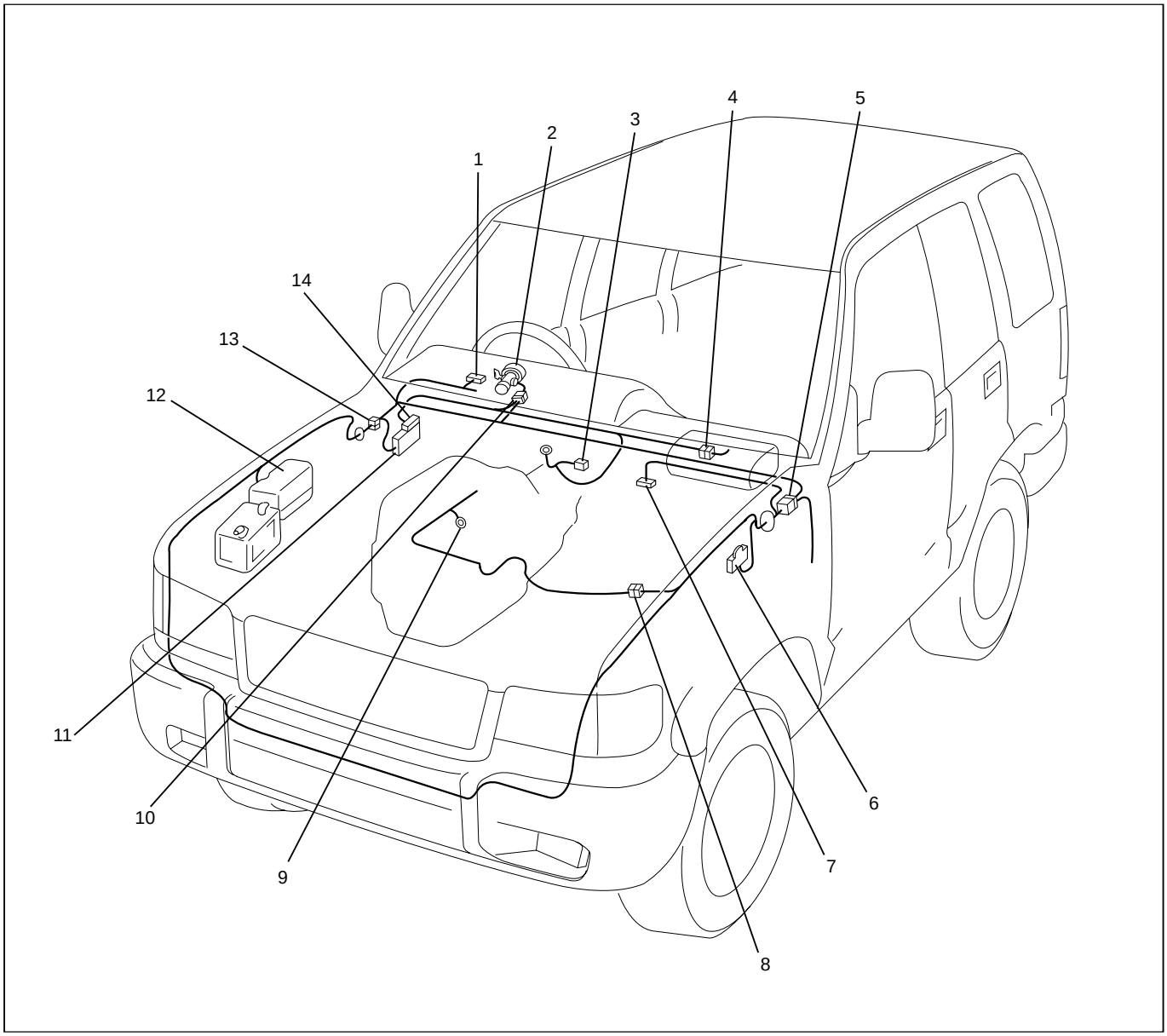

D08RW622

Legend

(1) I-9
(2) SRS Coil Assembly
(3) U-5
(4) U-1
(5) H-7, H-65
(6) C-16
(7) C-63
(8) H-5
(9) E-30
(10) U-2
(11) Fuse Box
(12) Relay and Fuse Box
(13) H-61, H-62
(14) Fuse Box (C-21)

Parts Location (LHD)

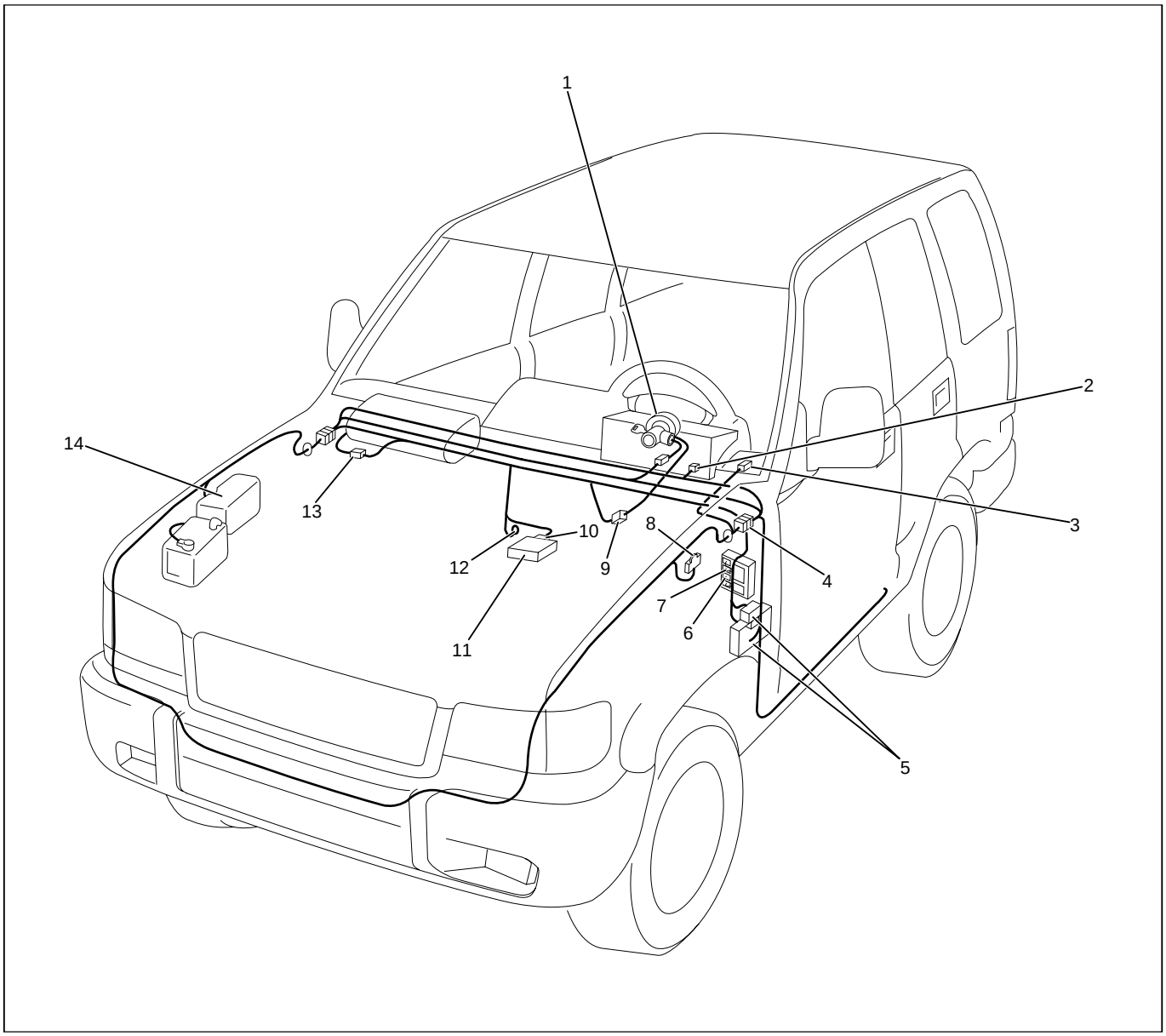

D08RW997

Legend

(1) SRS Coil Assembly
(2) I-37
(3) C-63
(4) H-7
(5) Fuse Box (H-49)
(6) H-52
(7) H-51
(8) C-16
(9) U-6
(10) U-5
(11) SDM
(12) U-2
(13) U-1
(14) Relay and Fuse Box

Connector List

No.	Connector face	No.	Connector face
A-1	NOT USED		
A-2	NOT USED		
A-3			

No.	Connector face	No.	Connector face
B-1	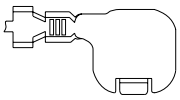	B-11	
B-2	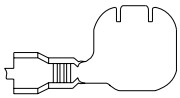	B-12	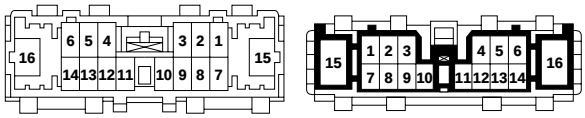
B-3	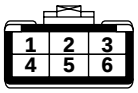	B-13	
B-4	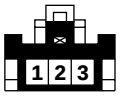	B-14	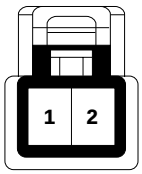
B-5		B-15	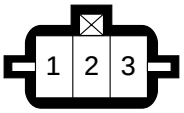
B-6	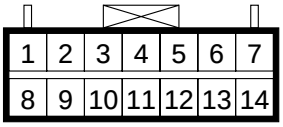	B-16	
B-7	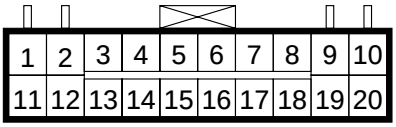	B-17	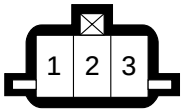
B-8		B-18	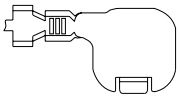
B-9	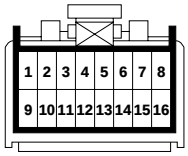	B-19	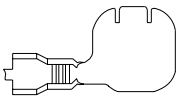
B-10		B-20	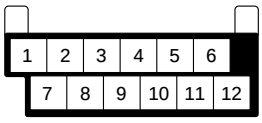

No.	Connector face	No.	Connector face
B-21	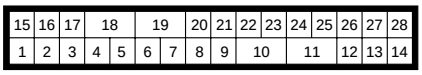	B-31	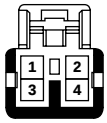
B-22	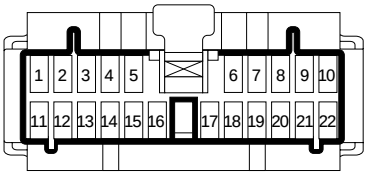	B-32	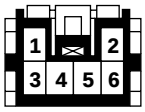
B-23	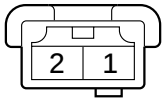	B-33	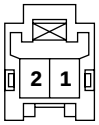
B-24	**NOT USED**	B-34	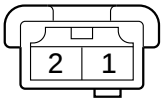 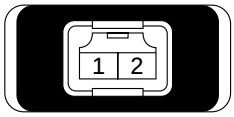
B-25		B-35	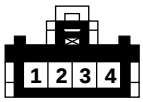 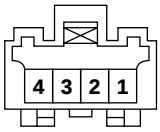
B-26	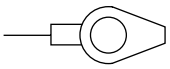	B-36	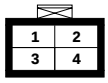
B-27		B-37	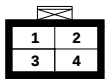
B-28	**NOT USED**	B-38	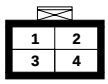
B-29	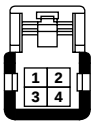	B-39	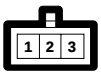
B-30		B-40	**NOT USED**

No.	Connector face	No.	Connector face
B-41	NOT USED	B-51	NOT USED
B-42	—	B-52	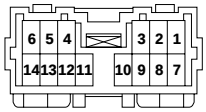 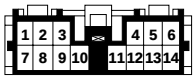
B-43	NOT USED	B-53	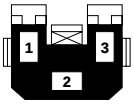
B-44	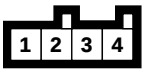	B-54	NOT USED
B-45	NOT USED	B-55	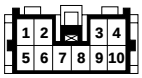 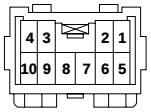
B-46	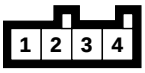	B-56	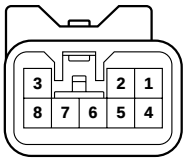
B-47	NOT USED	B-57	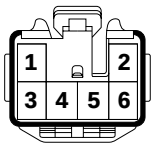
B-48	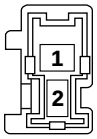 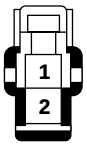	B-58	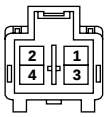
B-49	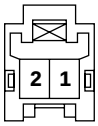	B-59	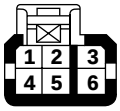
B-50	NOT USED	B-60	NOT USED

No.	Connector face	No.	Connector face
B-61	**NOT USED**		
B-62	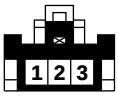 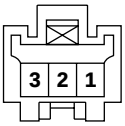		
B-63	**NOT USED**		
B-64	**NOT USED**		
B-65	**NOT USED**		
B-66	**NOT USED**		
B-67	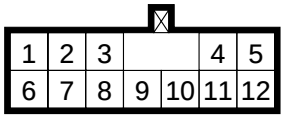		
B-68	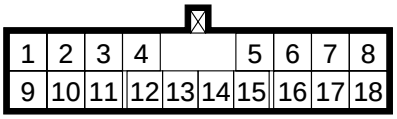		
B-69	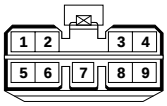		

No.	Connector face	No.	Connector face
C-1	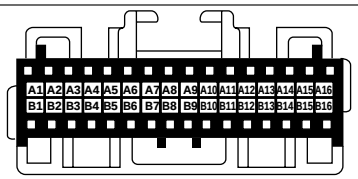	C-11	NOT USED
C-2	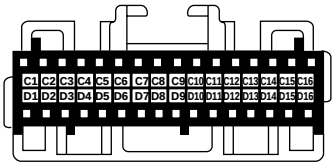	C-12	NOT USED
C-3	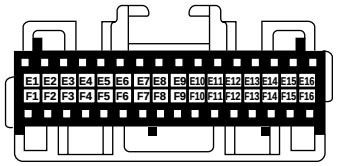	C-13	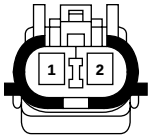 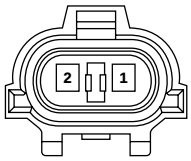
C-4	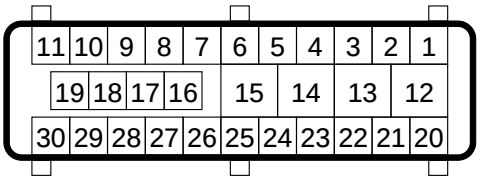	C-14	NOT USED
C-5	NOT USED	C-15	
C-6	NOT USED	C-16	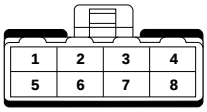 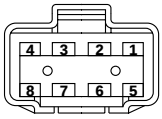
C-7	NOT USED	C-17	NOT USED
C-8	NOT USED	C-18	NOT USED
C-9		C-19	
C-10	NOT USED	C-20	

No.	Connector face	No.	Connector face
C-21	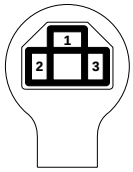	C-31	
C-22		C-32	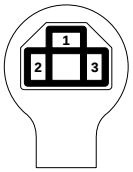
C-23		C-33	NOT USED
C-24		C-34	NOT USED
C-25		C-35	
C-26	NOT USED	C-36	
C-27	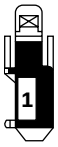	C-37	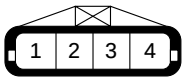
C-28	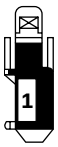	C-38	
C-29		C-39	
C-30		C-40	NOT USED

No.	Connector face	No.	Connector face
C-41		C-55	
C-42	NOT USED	C-56	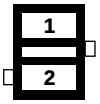
C-43	NOT USED	C-57	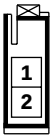
C-44		C-58	NOT USED
C-45		C-59	NOT USED
C-46 ~ C-50	NOT USED	C-60	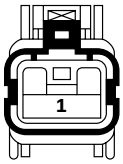
C-51	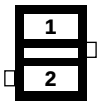	C-61	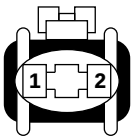
C-52	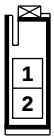	C-62	NOT USED
C-53		C-63	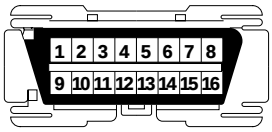
C-54		C-64	NOT USED

No.	Connector face	No.	Connector face
C-65	NOT USED	C-74	
C-66 (QOS/ EGR)	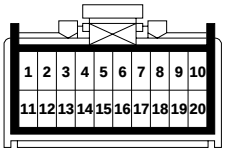	C-75	
C-66 (QOS-III)	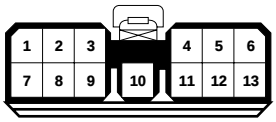	C-76	
C-67		C-77	
C-68	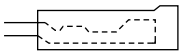	C-85	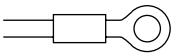
C-69		C-86	
C-70	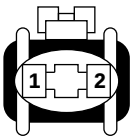	C-87	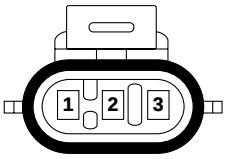
C-71	NOT USED	C-88	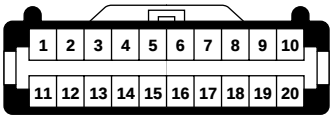
C-72		C-89 ~ C-92	NOT USED
C-73		C-93	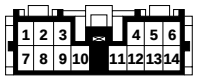

No.	Connector face	No.	Connector face
C-94	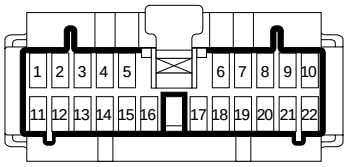		

No.	Connector face	No.	Connector face
D-1	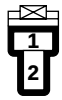	D-11	
D-2		D-12	
D-3		D-13	
D-4		D-14	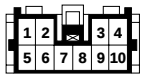
D-5	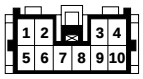	D-15	**NOT USED**
D-6		D-16	
D-7		D-17	
D-8		D-18	
D-9	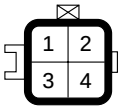	D-19	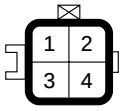
D-10	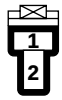	D-20	

No.	Connector face	No.	Connector face
D-21	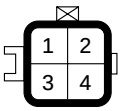		
D-22	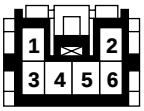		
D-23	**NOT USED**		
D-24	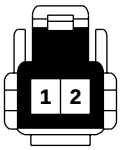		
D-25	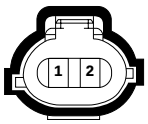 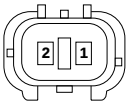		
D-26	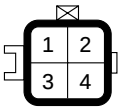		
D-27	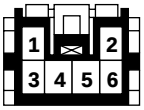		
D-28	**NOT USED**		
D-29	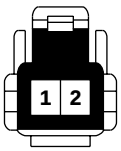		
D-30	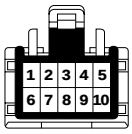		

No.	Connector face	No.	Connector face
E-1	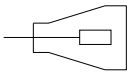	E-11	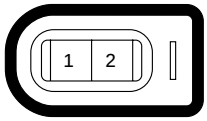
E-2		E-12	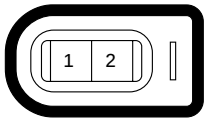
E-3	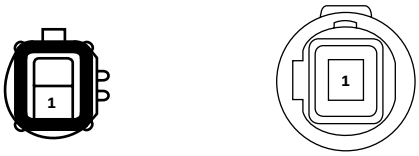	E-13	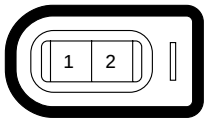
E-4		E-14	
E-5	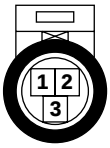	E-15	
E-6	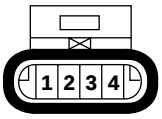	E-16	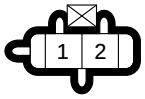
E-7	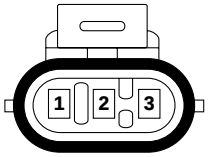	E-17	
E-8	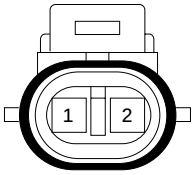	E-18	
E-9	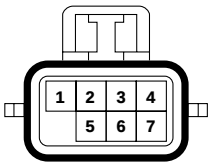 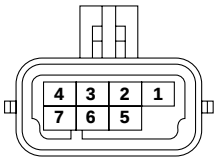	E-19	
E-10	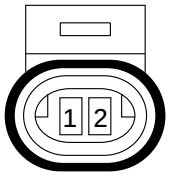	E-20	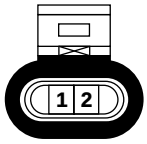

No.	Connector face	No.	Connector face
E-21		E-31	
E-22	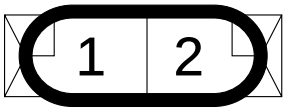	E-32	
E-23		E-33	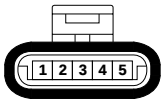
E-24	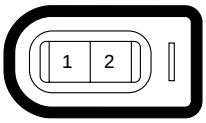	E-34	**NOT USED**
E-25	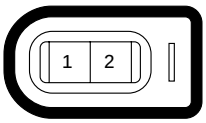	E-35	**NOT USED**
E-26	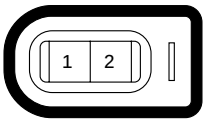	E-36	**NOT USED**
E-27	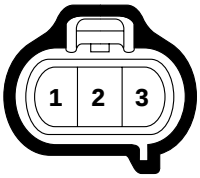	E-37	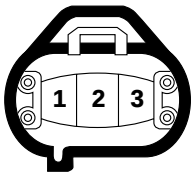
E-28	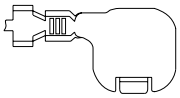	E-38	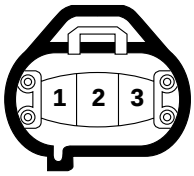
E-29	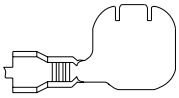	E-39	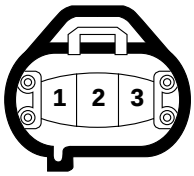
E-30	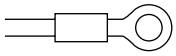	E-40	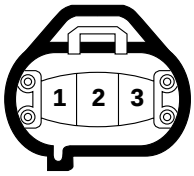

No.	Connector face	No.	Connector face
E-41	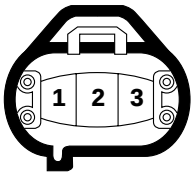		
E-42	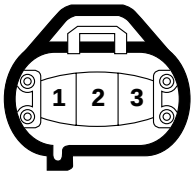		
E-43	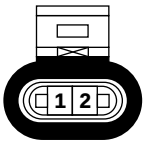		
E-44	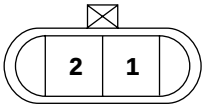		
E-45	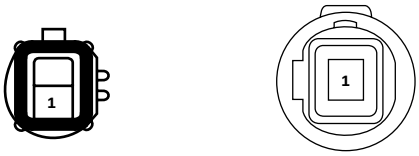		

No.	Connector face	No.	Connector face
F-1	NOT USED		
F-2			
F-3			
F-4			
F-5	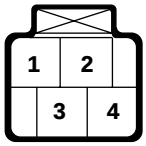		
F-6	NOT USED		
F-7			
F-8			
F-9	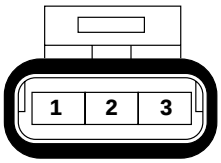		

No.	Connector face	No.	Connector face
G-1	NOT USED		
G-2			
G-3			
G-4	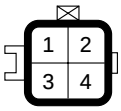		
G-5	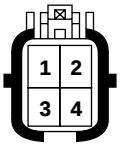 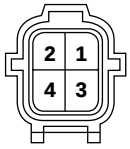		
G-6	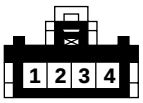		
G-7			
G-8	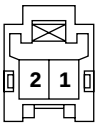		
G-9	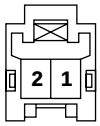		

No.	Connector face	No.	Connector face
H-1	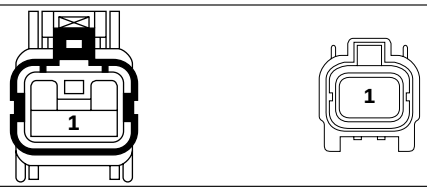	H-8 (LHD)	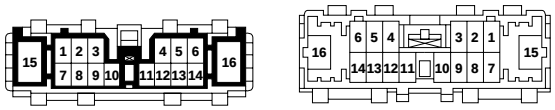
H-2		H-9 (RHD)	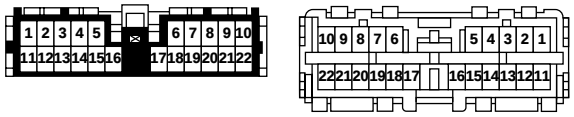
H-3 (6V*1)		H-9 (LHD)	
H-3 (4JG2)		H-10	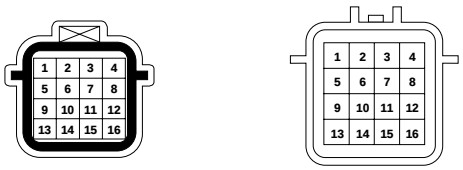
H-4	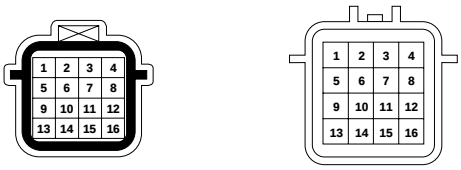	H-11	
H-5	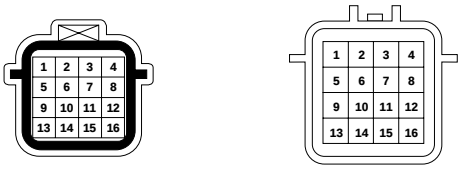	H-12 (RHD)	
H-6 (6V*1)	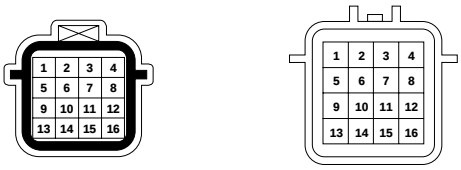	H-12 (LHD)	
H-6 (4JG2)		H-13 (RHD)	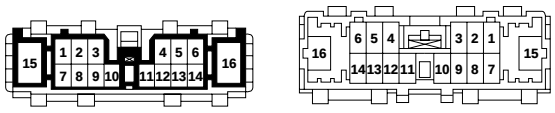
H-7		H-13 (LHD)	
H-8 (RHD)	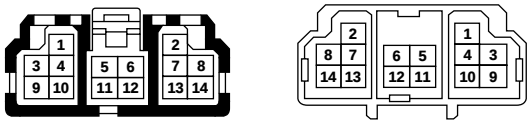	H-14	

No.	Connector face	No.	Connector face
H-15 (RHD)		H-23	
H-15 (LHD)	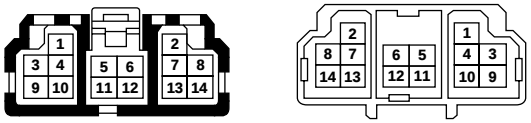	H-24 (RHD)	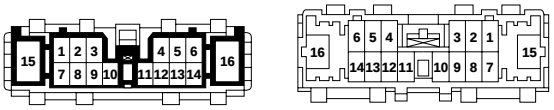
H-16 (RHD)	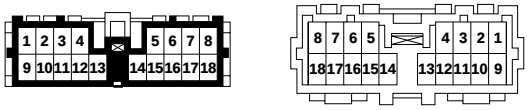	H-24 (LHD)	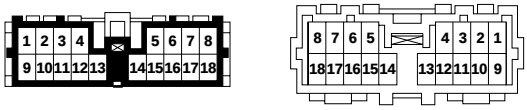
H-16 (LHD)	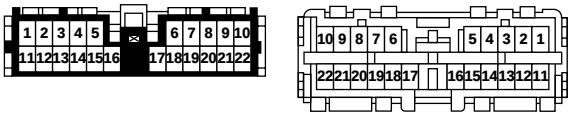	H-25	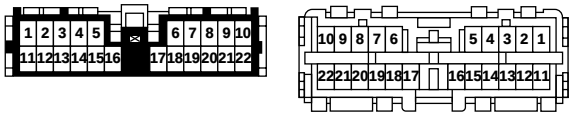
H-17	NOT USED	H-26	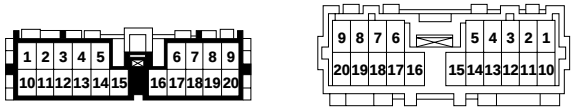
H-18	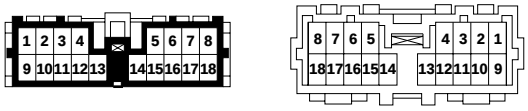	H-27	
H-19		H-28	
H-20		H-29	
H-21		H-30	NOT USED
H-22	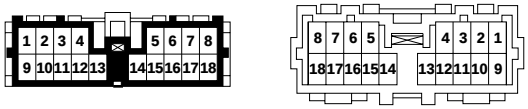	H-31	

No.	Connector face	No.	Connector face
H-32	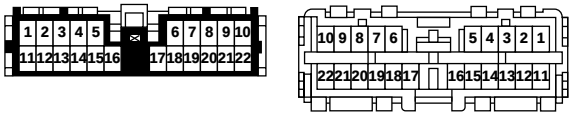	H-41 (4JG2)	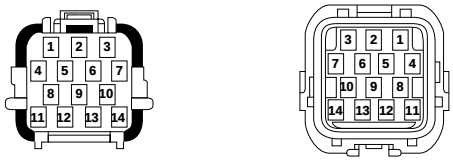
H-33		H-43	
H-34		H-44	
H-35		H-45	
H-36	NOT USED	H-46	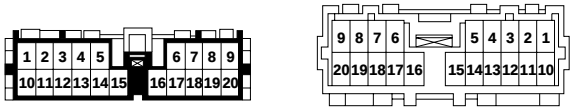
H-37		H-47	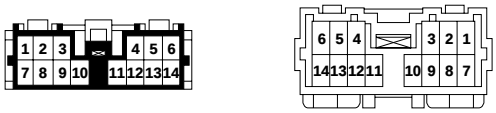
H-38		H-48	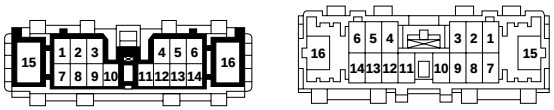
H-39		H-49 (W/ TOD)	
H-40	NOT USED	H-49 (W/O TOD)	
H-41 (6V*1)	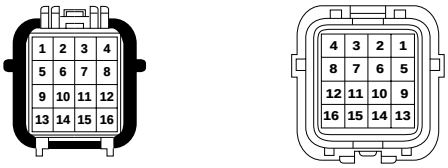	H-50	NOT USED

No.	Connector face	No.	Connector face
H-51		H-61	
H-52	**NOT USED**	H-62	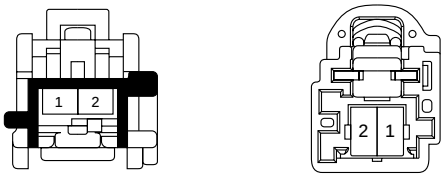
H-53	**NOT USED**	H-63	
H-54	**NOT USED**	H-64	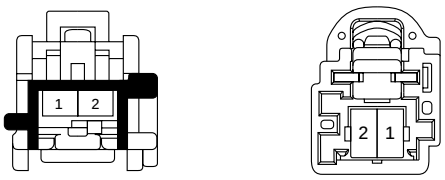
H-55	**NOT USED**	H-65	
H-56	**NOT USED**		
H-57			
H-58			
H-59			
H-60			

No.	Connector face	No.	Connector face
I-1	NOT USED	I-11	
I-2	NOT USED	I-12	
I-3	NOT USED	I-13	NOT USED
I-4		I-14	NOT USED
I-5	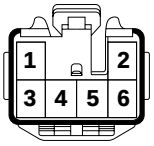	I-15	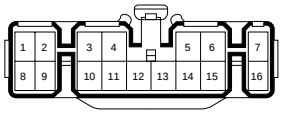 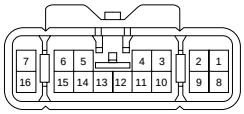
I-6	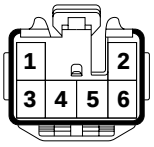	I-16	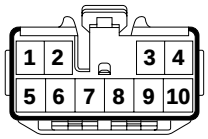
I-7	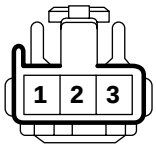	I-17	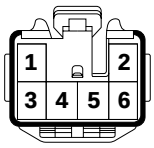
I-8		I-18	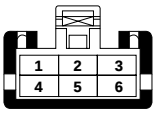
I-9	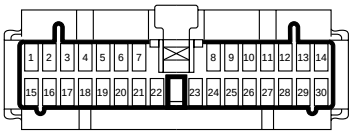	I-19	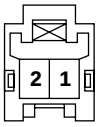
I-10	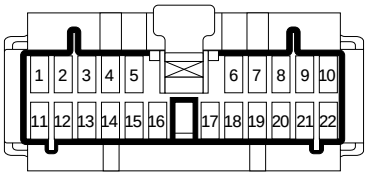	I-20	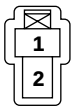

No.	Connector face	No.	Connector face
I-21		I-30 ~ I-38	NOT USED
I-22		I-39	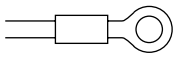
I-23	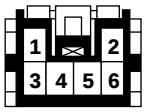	I-40	NOT USED
I-24	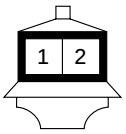	I-41	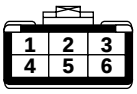
I-25	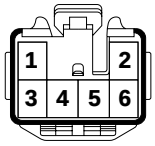	I-42	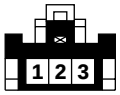
I-26	NOT USED		
I-27	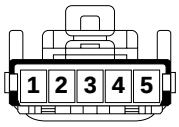		
I-28	NOT USED		
I-29	NOT USED		
I-30	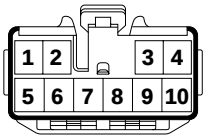		

No.	Connector face	No.	Connector face
K-1	NOT USED		
K-2			

No.	Connector face	No.	Connector face
L-1			
L-2			
L-3			
L-4	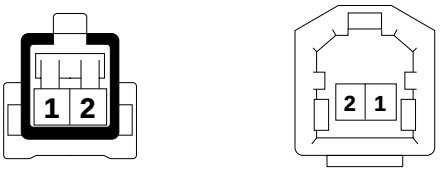		
L-5	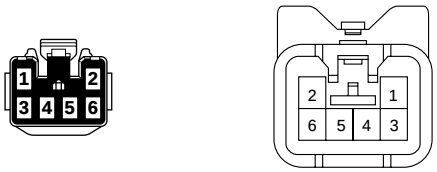		
L-6	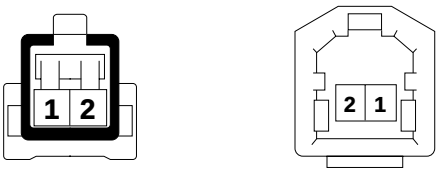		

No.	Connector face	No.	Connector face
M-1	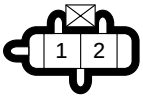	M-11	
M-2	NOT USED	M-12	
M-3	NOT USED	M-13	NOT USED
M-4	NOT USED	M-14	NOT USED
M-5	NOT USED	M-15	
M-6	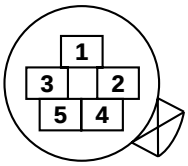	M-16	NOT USED
M-7	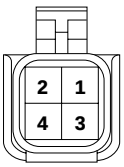	M-17	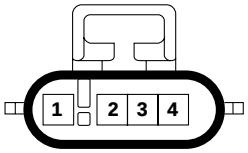 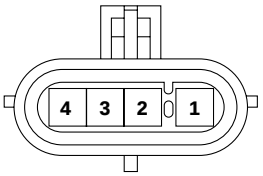
M-8		M-18	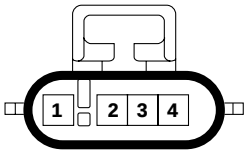 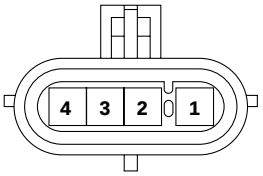
M-9	NOT USED	M-19	NOT USED
M-10	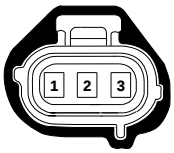	M-20	NOT USED

No.	Connector face	No.	Connector face
M-21	NOT USED		
M-22			
M-23			
M-24			
M-25	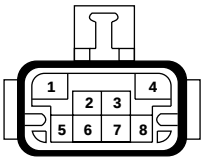 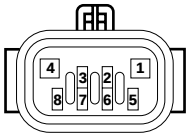		
M-26			

No.	Connector face	No.	Connector face
P-1	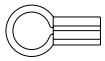	P-10	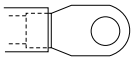
P-2	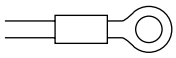	P-11	NOT USED
P-3		P-12	NOT USED
P-4	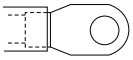	P-13	NOT USED
P-5	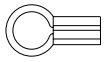	P-14	NOT USED
P-6	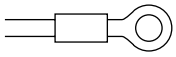	P-15	NOT USED
P-7	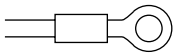	P-16	NOT USED
P-8 (6V*1)	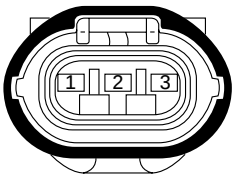	P-17	
P-8 (4JG2)	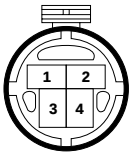	P-18	
P-9	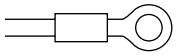	P-19	

No.	Connector face	No.	Connector face
R-1		R-11	
R-2		R-12	
R-3	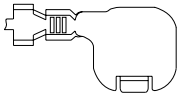	R-12	 (South Africa, China)
R-4	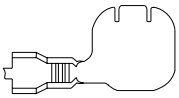	R-13	
R-5		R-13	 (South Africa, China)
R-6		R-14	NOT USED
R-7	NOT USED	R-15	NOT USED
R-8		R-16	
R-9	NOT USED		
R-10			

No.	Connector face	No.	Connector face
S-1	NOT USED		
S-2			
S-3			
S-4			
S-5	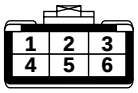		

No.	Connector face	No.	Connector face
T-1	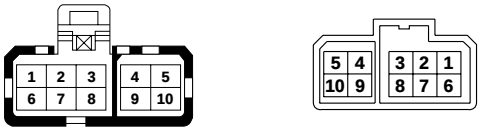	T-11	
T-2		T-12	
T-3		T-13	
T-4			
T-5			
T-6			
T-7			
T-8			
T-9			
T-10			

No.	Connector face	No.	Connector face
U-1			
U-2	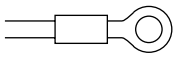		
U-3	**NOT USED**		
U-4	**NOT USED**		
U-5	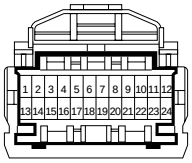		
U-6			

No.	Connector face	No.	Connector face
X-1	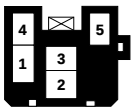	X-11	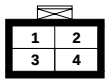
X-2	NOT USED	X-12	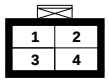
X-3	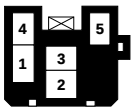	X-13	NOT USED
X-4	NOT USED	X-14	NOT USED
X-5	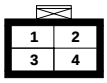	X-15	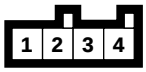
X-6	NOT USED	X-16	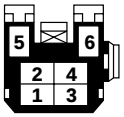
X-7	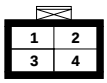	X-17 (6V*1)	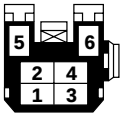
X-8	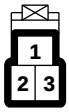	X-17 (4JG2)	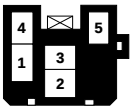
X-9	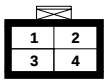	X-18	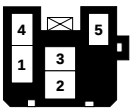
X-10	NOT USED	X-19	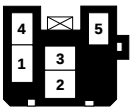

No.	Connector face	No.	Connector face
X-20	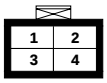		
X-21	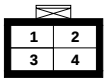		
X-22	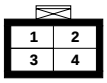		
X-23	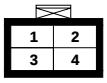		

MEMO

METER AND GAUGE

CONTENTS

Service Precaution 8E–1
General Description 8E–1
Meter Assembly 8E–2
General Description 8E–2
Layout for Meters/Gauges, Warning Lights, Indicator Lights and Illumination Lights . . . 8E–2
Table for Meter/Gauge Connector Terminal Connections 8E–8
Removal 8E–14
Installation 8E–14
Warning Light Bulb, Indicator Light Bulb, Illumination Light Bulb, A/T Indicator Light Bulb 8E–14
Removal 8E–14
Installation 8E–14
Vehicle Speed Sensor 8E–15
Removal 8E–15
Installation 8E–15
Fuel Tank Unit 8E–15
Removal 8E–15
Installation 8E–15
Multi Meter 8E–16
Removal 8E–16
Installation 8E–16
Ambient Sensor 8E–16
Removal 8E–16
Installation 8E–16
Main Data and Specifications 8E–17

Service Precaution

WARNING: IF SO EQUIPPED WITH A SUPPLEMENTAL RESTRAINT SYSTEM (SRS), REFER TO THE SRS COMPONENT AND WIRING LOCATION VIEW IN ORDER TO DETERMINE WHETHER YOU ARE PERFORMING SERVICE ON OR NEAR THE SRS COMPONENTS OR THE SRS WIRING. WHEN YOU ARE PERFORMING SERVICE ON OR NEAR THE SRS COMPONENTS OR THE SRS WIRING, REFER TO THE SRS SERVICE INFORMATION. FAILURE TO FOLLOW WARNINGS COULD RESULT IN POSSIBLE AIR BAG DEPLOYMENT, PERSONAL INJURY, OR OTHERWISE UNNEEDED SRS SYSTEM REPAIRS.

CAUTION: Always use the correct fastener in the proper location. When you replace a fastener, use ONLY the exact part number for that application. ISUZU will call out those fasteners that require a replacement after removal. ISUZU will also call out the fasteners that require thread lockers or thread sealant. UNLESS OTHERWISE SPECIFIED, do not use supplemental coatings (Paints, greases, or other corrosion inhibitors) on threaded fasteners or fastener joint interfaces. Generally, such coatings adversely affect the fastener torque and the joint clamping force, and may damage the fastener. When you install fasteners, use the correct tightening sequence and specifications. Following these instructions can help you avoid damage to parts and systems.

General Description

The circuit consists of the starter switch, meter assembly, vehicle speed sensor, transmission switch, lighting switch, turn signal switch, thermo unit, oil pressure unit, Powertrain Control Module (PCM), fuel tank unit, 4WD switch, oil pressure switch, parking brake switch, brake fluid switch, seat belt switch, illumination controller, multi meter and ambient sensor.

Meter Assembly

General Description

The meter assembly has the speedometer, tachometer, engine coolant temperature gauge, fuel gauge and warning/indicator lights. In addition, the meter assembly containing TOD (Torque on Demand) has the TOD indicator light, or the meter assembly not containing TOD has the voltmeter and oil pressure gauge instead of the TOD indicator.

Layout for Meters/Gauges, Warning Lights, Indicator Lights and Illumination Lights

Meter Assembly–Gasoline W/O TOD (Front View)

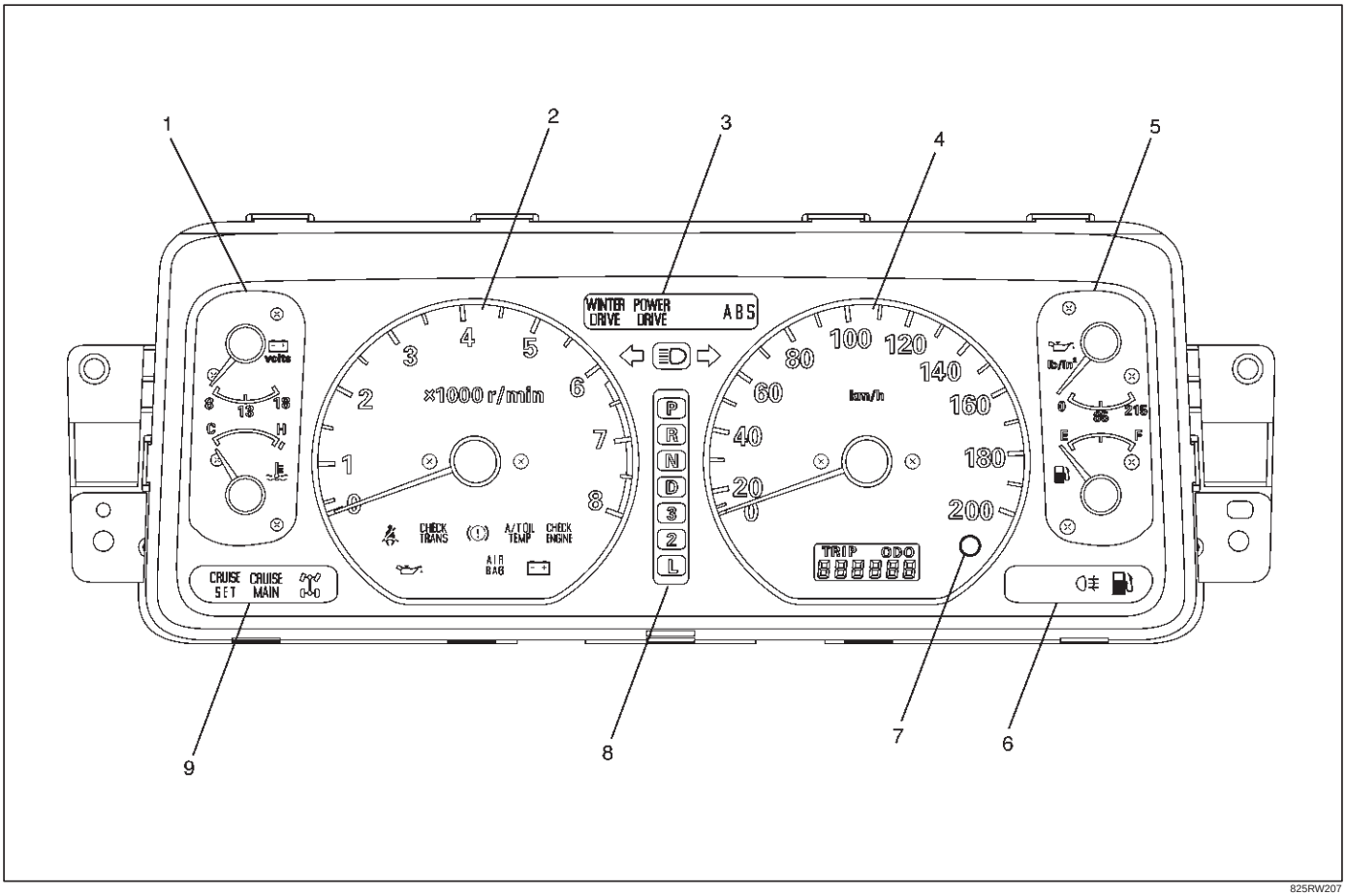

825RW207

Legend

(1) Voltmeter & Engine Coolant Temperature Gauge
(2) Tachometer
(3) Warning Light Lens
(4) Speedometer
(5) Oil Pressure Gauge & Fuel Gauge
(6) Warning Light Lens
(7) Reset Knob
(8) A/T Shift Indicator
(9) Warning Light Lens

Meter Assembly–Gasoline W/O TOD (Rear View)

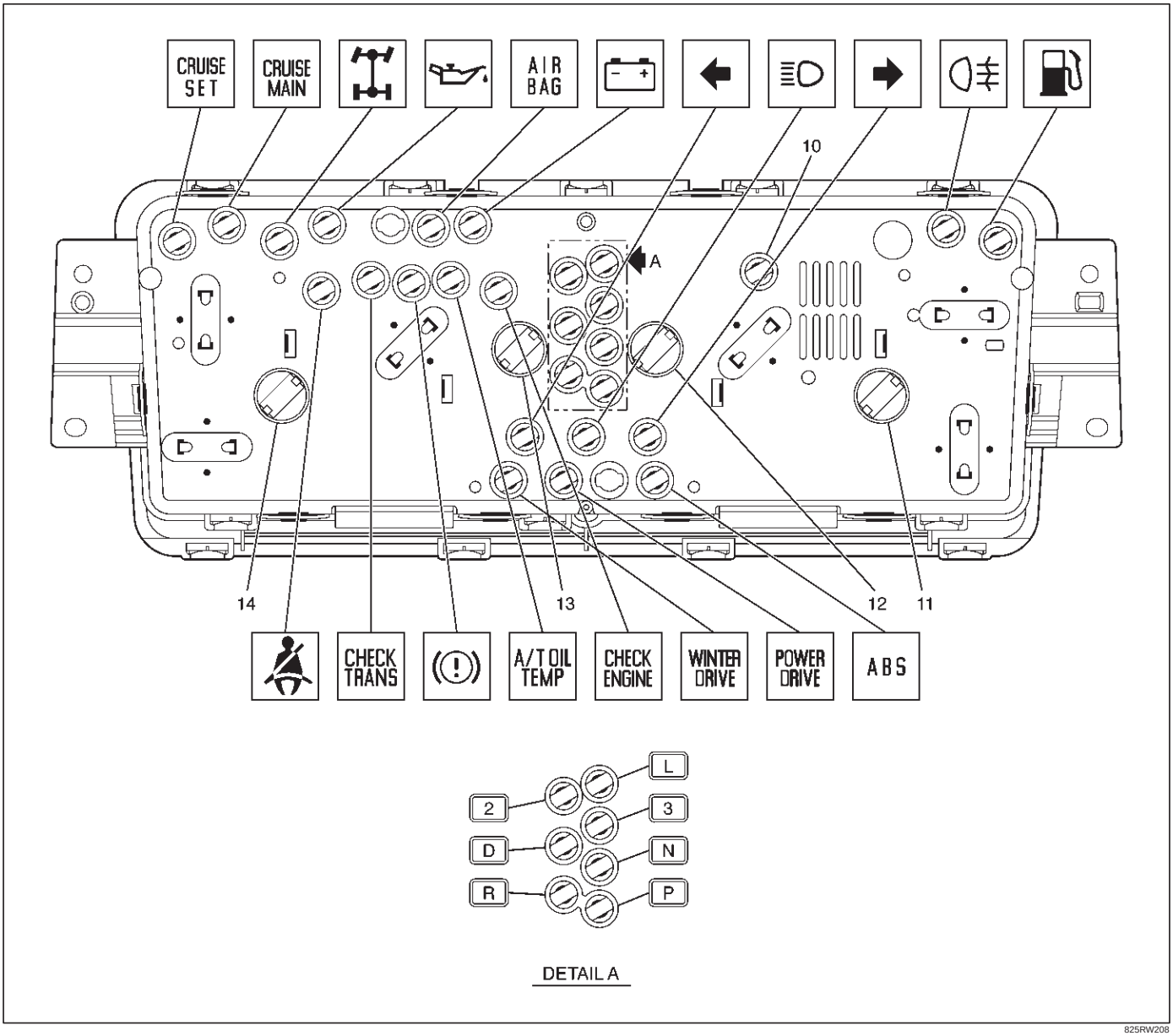

825RW208

Legend

(10) LCD Light
(11) Illumination Light
(12) Illumination Light
(13) Illumination Light
(14) Illumination Light

Meter Assembly–Gasoline W/TOD (Front View)

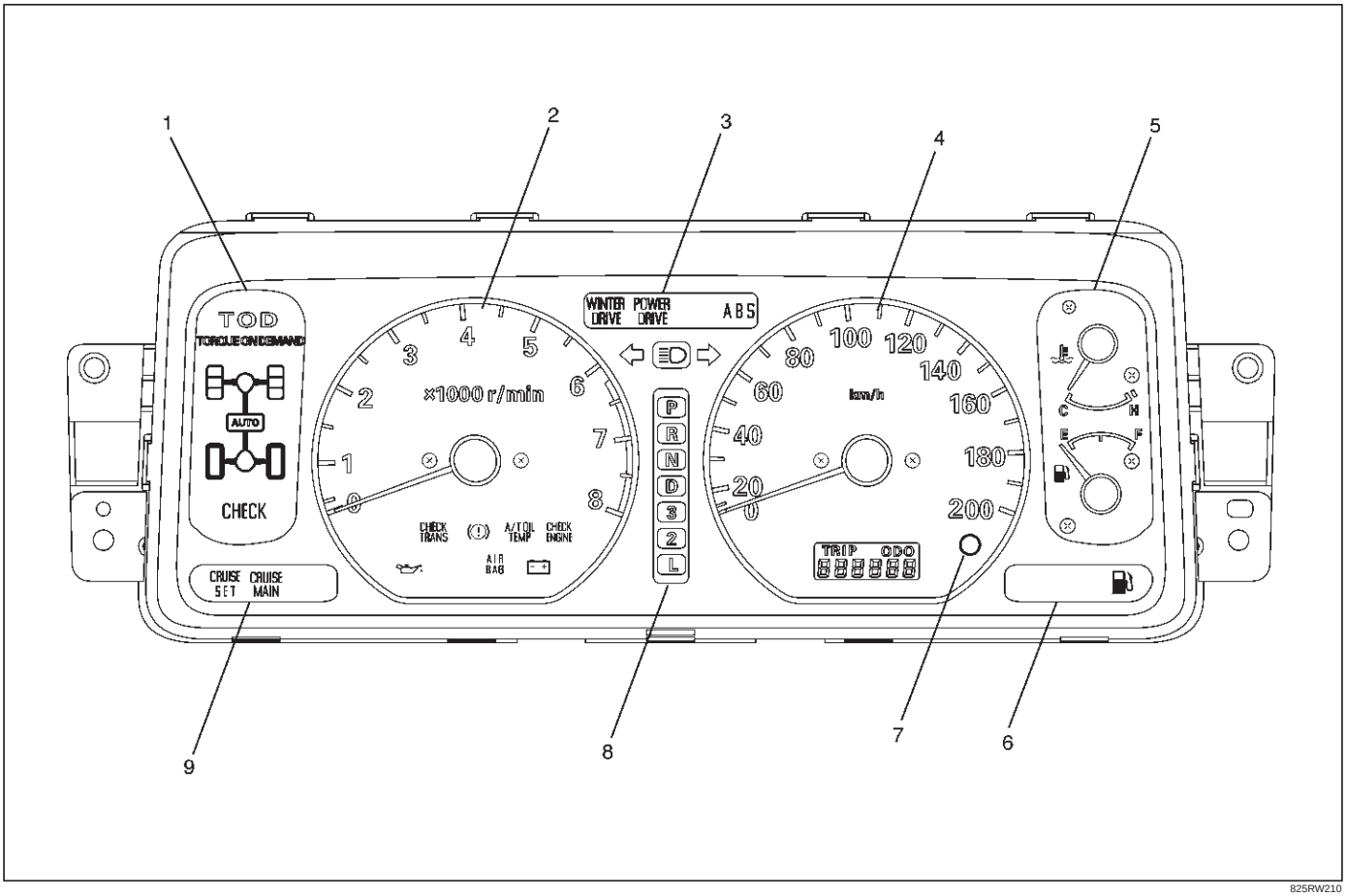

825RW210

Legend

(1) TOD Indicator
(2) Tachometer
(3) Warning Light Lens
(4) Speedometer
(5) Coolant Temperature Gauge & Fuel Gauge
(6) Warning Light Lens
(7) Reset Knob
(8) A/T Shift Indicator
(9) Warning Light Lens

Meter Assembly–Gasoline W/TOD (Rear View)

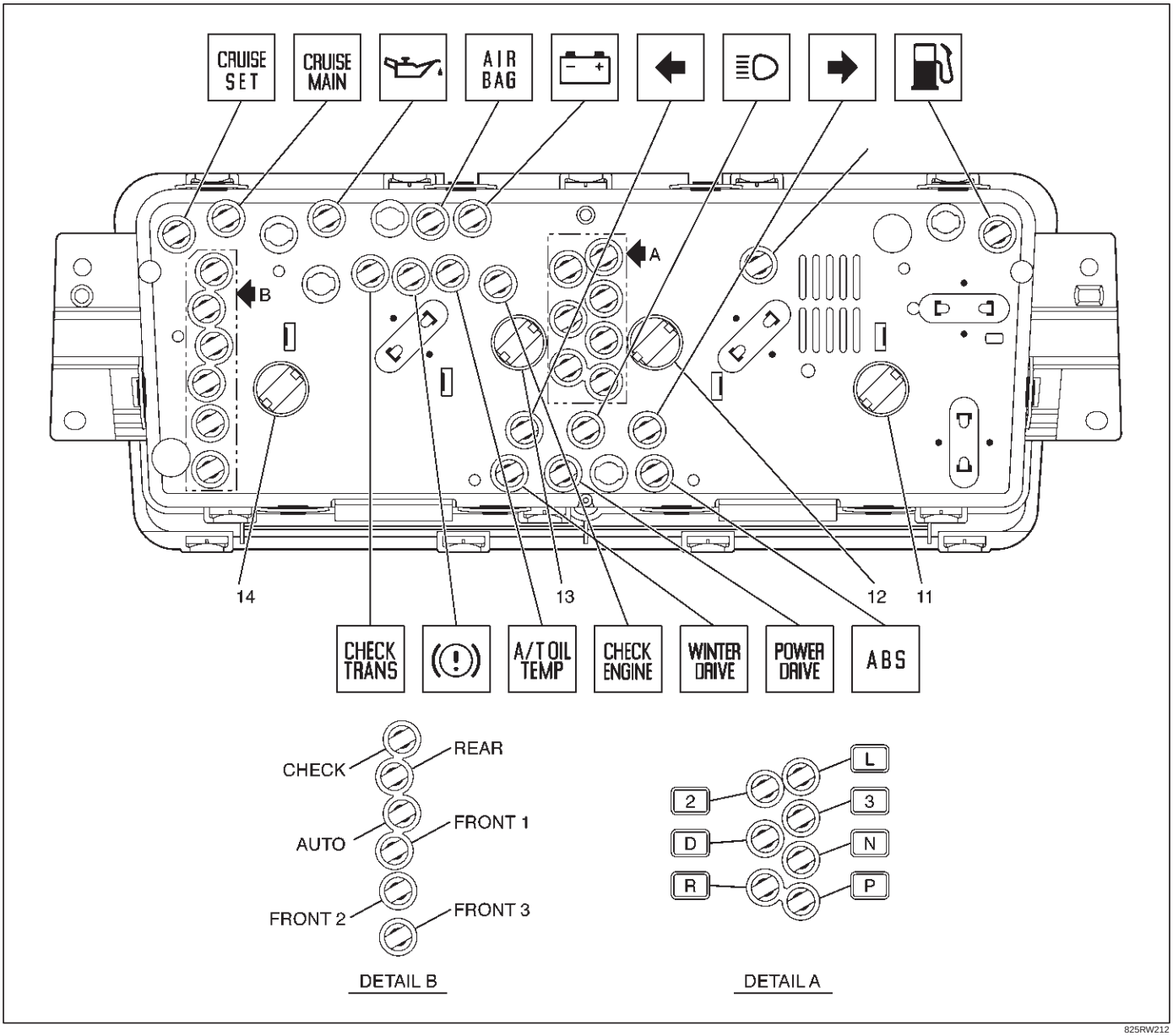

825RW212

Legend

(10) LCD Light
(11) Illumination Light
(12) Illumination Light
(13) Illumination Light
(14) Illumination Light

Meter Assembly–Diesel (Front View)

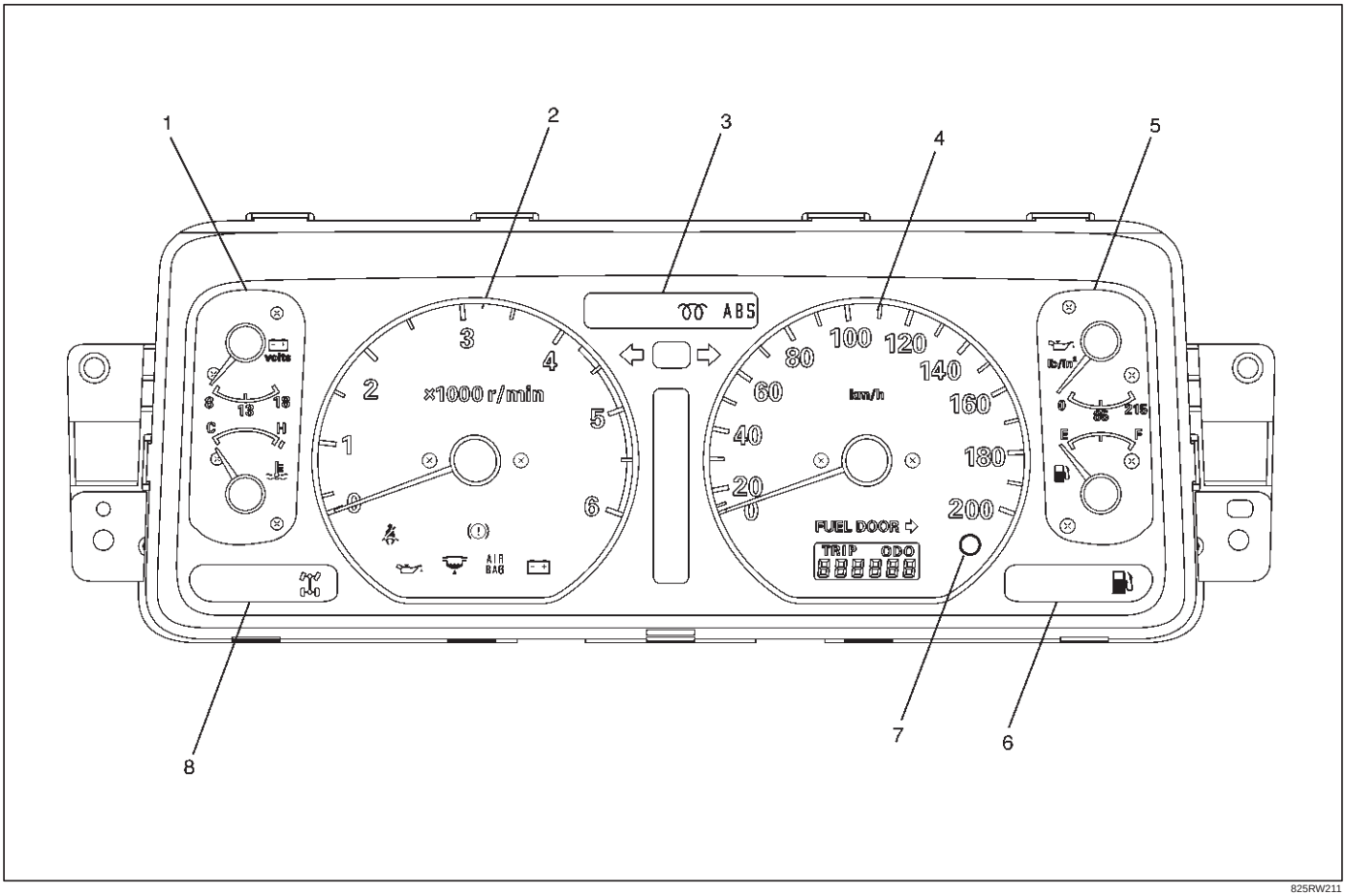

825RW211

Legend

(1) TOD Indicator
(2) Tachometer
(3) Warning Light Lens
(4) Speedometer
(5) Coolant Temperature Gauge & Fuel Gauge
(6) Warning Light Lens
(7) Reset Knob
(8) Warning Light Lens

Meter Assembly–Diesel (Rear View)

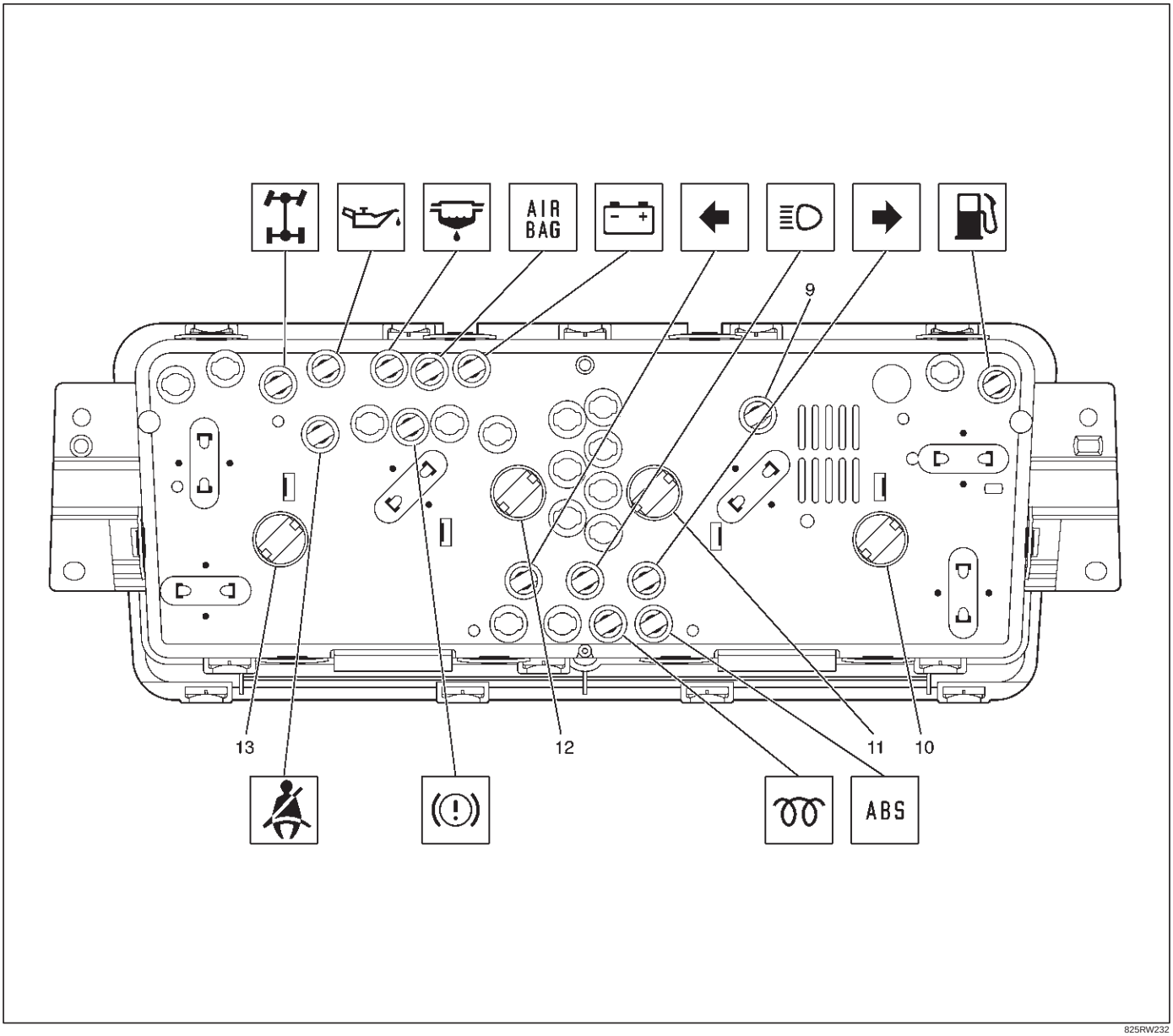

825RW232

Legend

(9) LCD Light
(10) Illumination Light
(11) Illumination Light
(12) Illumination Light
(13) Illumination Light

Table for Meter/Gauge Connector Terminal Connections

Meter Assembly–Gasoline W/O TOD–1

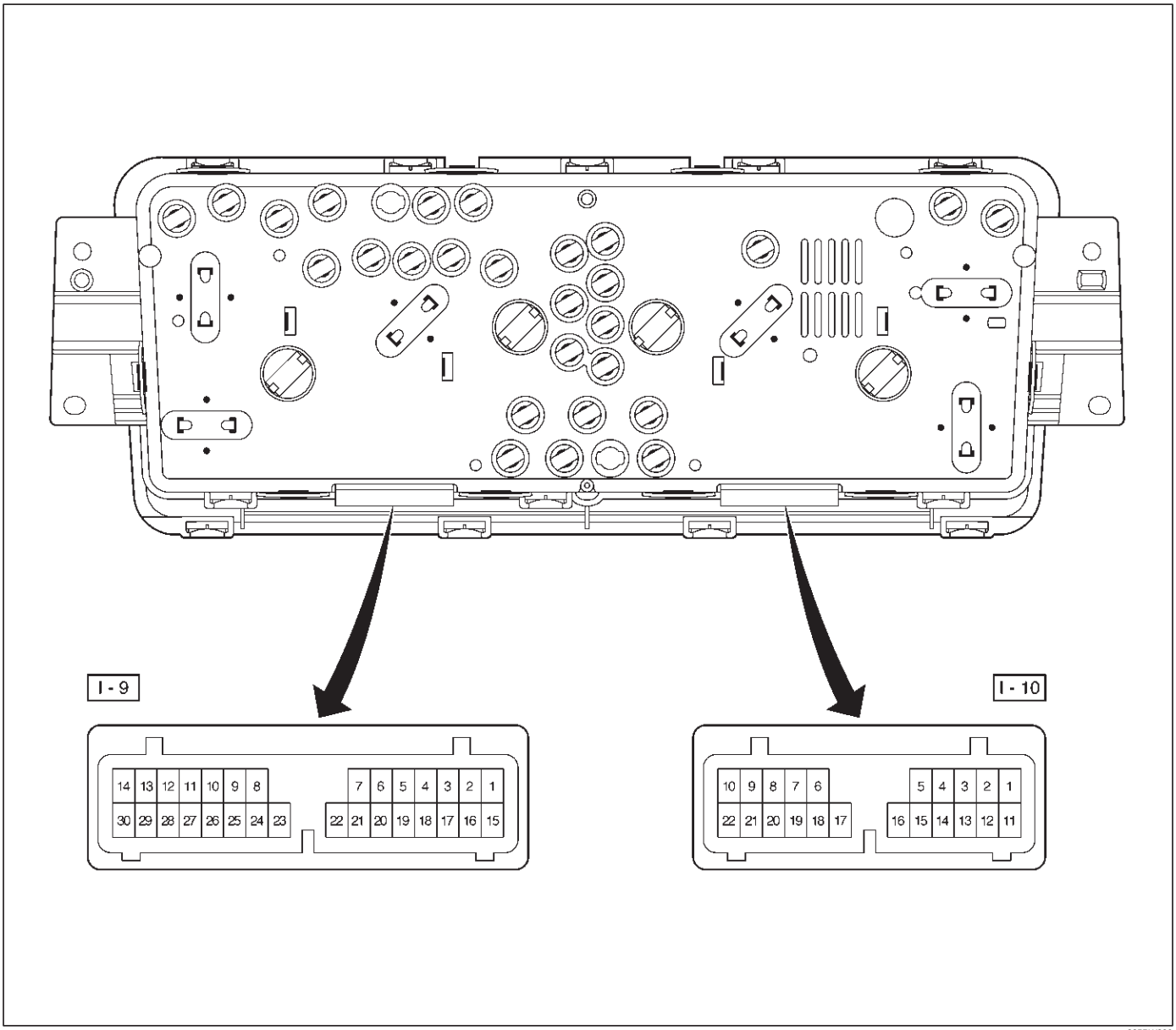

825RW206

Meter Assembly–Gasoline W/O TOD–2

Connector No. I–9	
Terminal	**Function**
1	A/T oil temp warning light
2	Seat belt warning light
3	Check trans warning light
4	Brake warning light
5	Check engine warning light
6	Charge warning light
7	Cigarette lighter illumination light
8	Illumination controller
9	Tachometer
10	D position (A/T)
11	—
12	A/T shift indicator control unit
13	—
14	2 position (A/T)
15	Starter switch
16	Cruise set indicator light
17	Cruise main indicator light
18	4WD indicator light
19	Ground (Gauge)
20	—
21	Winter drive indicator light
22	Oil pressure warning light
23	—
24	Air bag warning light
25	Power drive indicator light
26	—
27	—
28	Turn signal indicator light (Left)
29	—
30	Ground

Connector No. I–10	
Terminal	**Function**
1	Turn signal indicator light (Right)
2	L position (A/T)
3	R position (A/T)
4	Engine coolant temperature gauge
5	Speedometer
6	—
7	—
8	Battery (+)
9	—
10	Rear fog light
11	P position (A/T)
12	N position (A/T)
13	3 position (A/T)
14	High-beam indicator light (–)
15	High-beam indicator light (+)
16	ABS indicator light
17	—
18	Fuel warning light
19	Oil pressure gauge
20	Fuel gauge
21	—
22	—

Meter Assembly–Gasoline W/TOD–1

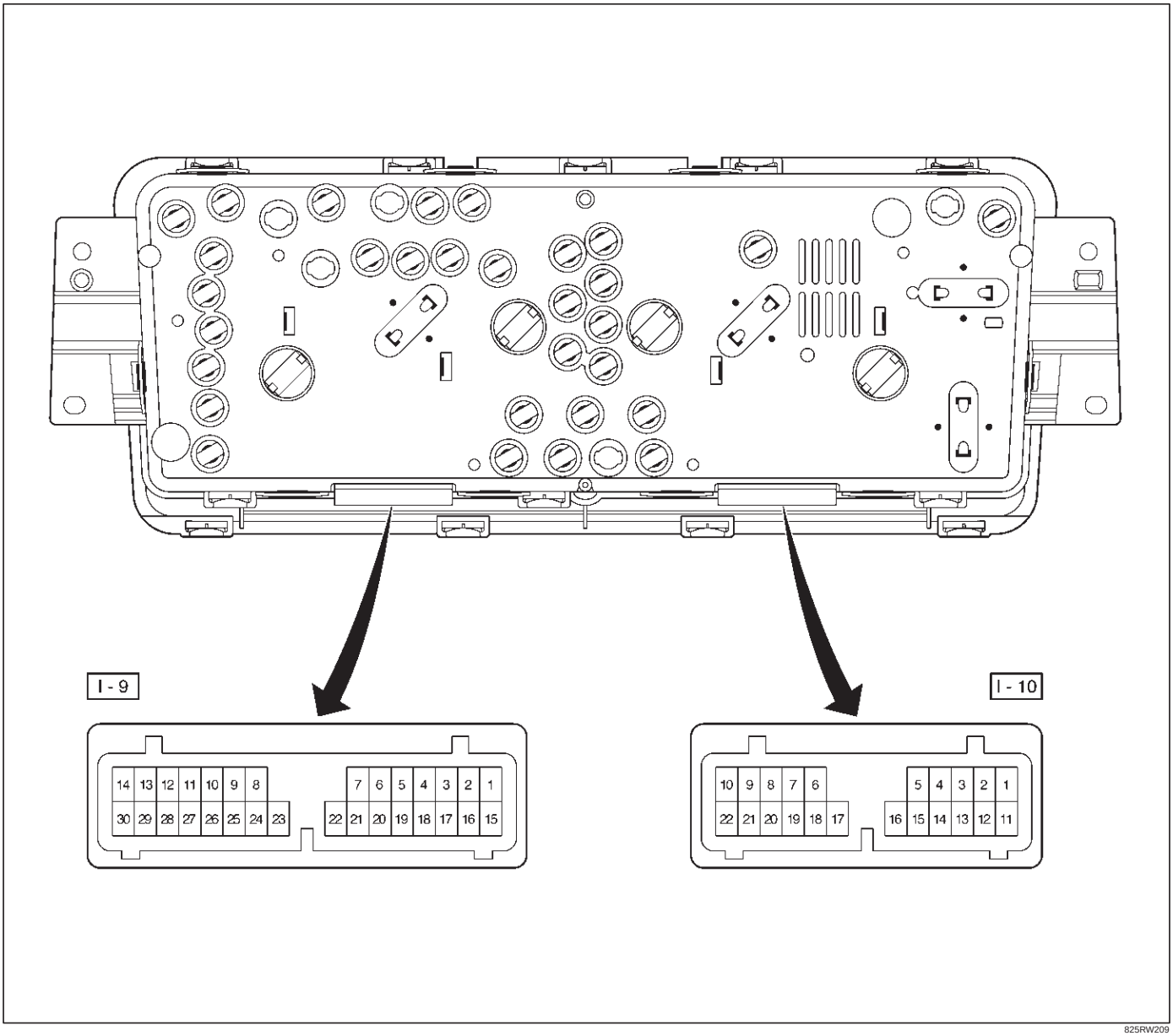

825RW209

Meter Assembly–Gasoline W/TOD–2

Connector No. I–9	
Terminal	**Function**
1	—
2	Air bag warning light
3	A/T oil temp warning light
4	Charge warning light
5	Check engine warning light
6	Check trans warning light
7	Brake warning light
8	—
9	Tachometer
10	—
11	Turn signal indicator light (Left)
12	A/T shift indicator control unit
13	2 position (A/T)
14	D position (A/T)
15	Rear (TOD)
16	Auto (TOD)
17	Check (TOD)
18	Cruise set indicator light
19	Cruise main indicator light
20	Oil pressure warning light
21	Front “1” (TOD)
22	Front “2” (TOD)
23	Front “3” (TOD)
24	Cigarette lighter illumination light
25	Illumination controller
26	Starter switch
27	—
28	Winter drive indicator light
29	Power drive indicator light
30	—

Connector No. I–10	
Terminal	**Function**
1	Turn signal indicator light (Right)
2	L position (A/T)
3	R position (A/T)
4	Check engine warning light
5	Speedometer
6	—
7	—
8	Battery (+)
9	Engine coolant temperature gauge
10	Ground
11	P position (A/T)
12	N position (A/T)
13	3 position (A/T)
14	High beam indicator light (–)
15	High beam indicator light (+)
16	ABS indicator light
17	—
18	Fuel warning light
19	—
20	Fuel gauge
21	Ground (Gauge)
22	—

Meter Assembly–Diesel–1

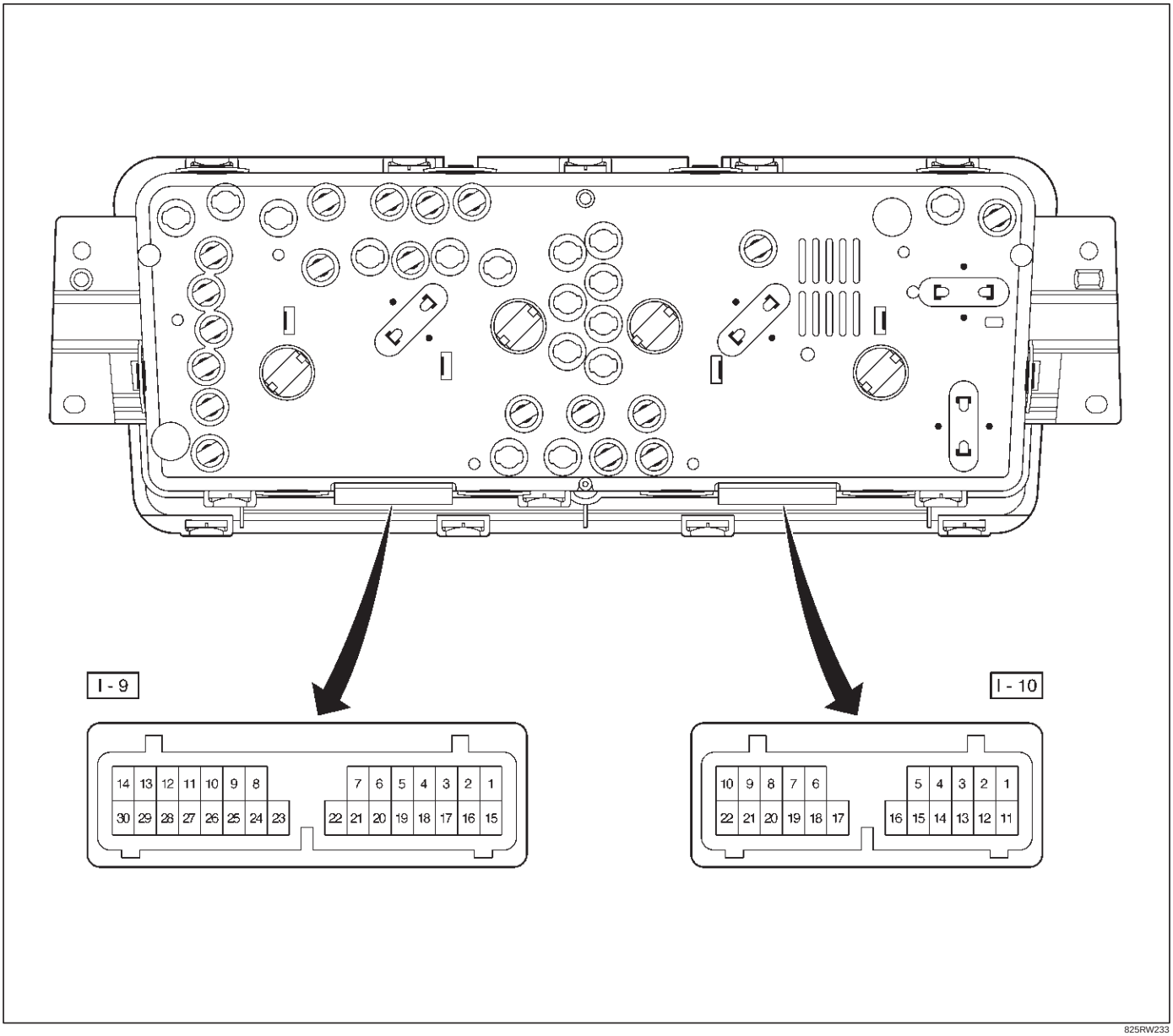

825RW233

Meter Assembly–Diesel–2

Connector No. I–9	
Terminal	**Function**
1	—
2	Seat belt warning light
3	—
4	Brake warning light
5	—
6	Charge warning light
7	Cigarette lighter illumination light
8	Illumination controller
9	Tachometer
10	—
11	—
12	—
13	—
14	—
15	Starter switch
16	—
17	—
18	4WD indicator light
19	Ground (Gauge)
20	—
21	—
22	Oil pressure warning light
23	Water sedimenter
24	Air bag warning light
25	—
26	Glow indicator light
27	—
28	Turn signal indicator light (Left)
29	—
30	Ground

Connector No. I–10	
Terminal	**Function**
1	Turn signal indicator light (Right)
2	—
3	—
4	Engine coolant temperature gauge
5	Speedometer
6	—
7	—
8	Battery (+)
9	—
10	—
11	—
12	—
13	—
14	High-beam indicator light (–)
15	High-beam indicator light (+)
16	ABS indicator light
17	—
18	Fuel warning light
19	Oil pressure gauge
20	Fuel gauge
21	—
22	—

Removal

1. Disconnect the battery ground cable.
2. Remove the front console assembly(1).
   Refer to the Instrument Panel Assembly in Body Structure section.
3. Remove the lower cluster assembly(2).
   Refer to the Instrument Panel Assembly in Body Structure section.
4. Remove the instrument panel driver lower cover(3).
   Refer to the Instrument Panel Assembly in Body Structure section.

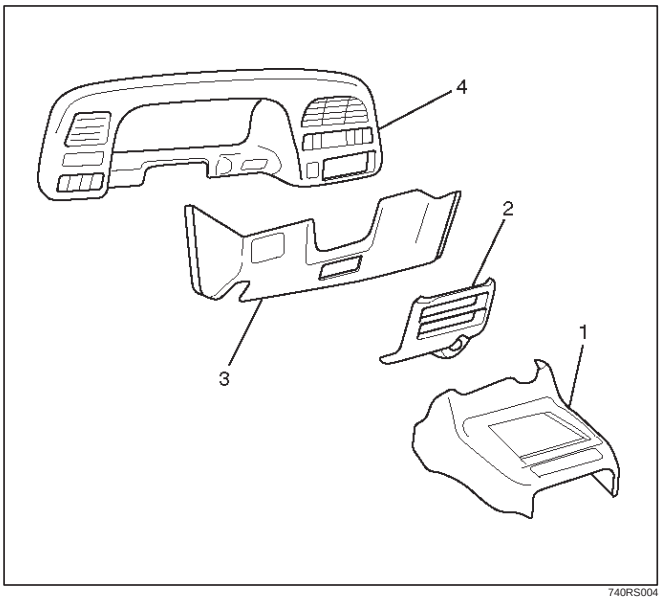

740RS004

5. Remove four fixing screws and disconnect the meter connectors to remove the meter assembly(5).

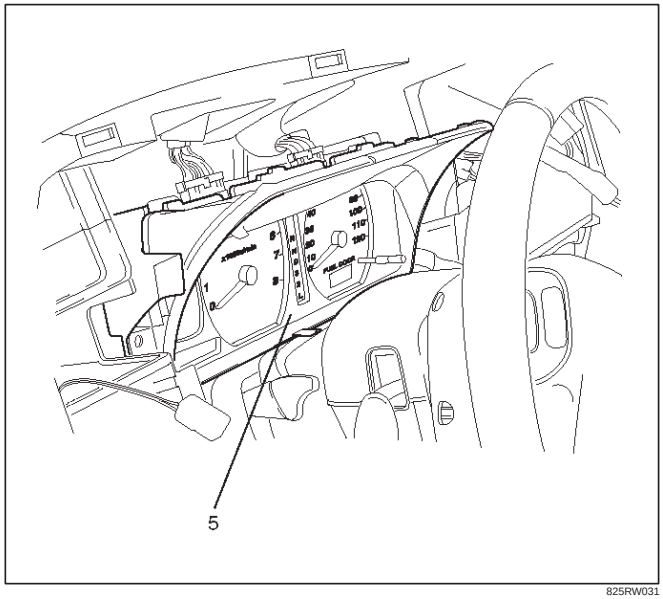

825RW031

CAUTION: The removed meter assembly should be placed upright or with its face side up.

Installation

To install, follow the removal steps in the reverse order.

Warning Light Bulb, Indicator Light Bulb, Illumination Light Bulb, A/T Indicator Light Bulb

Removal

1. Disconnect the battery ground cable.
2. Remove the meter assembly(1).
   Refer to the Meter Assembly removal steps in this section.
3. Hold the bulb socket by hand and rotate it counterclockwise to remove the socket & bulb(2) from the meter body.

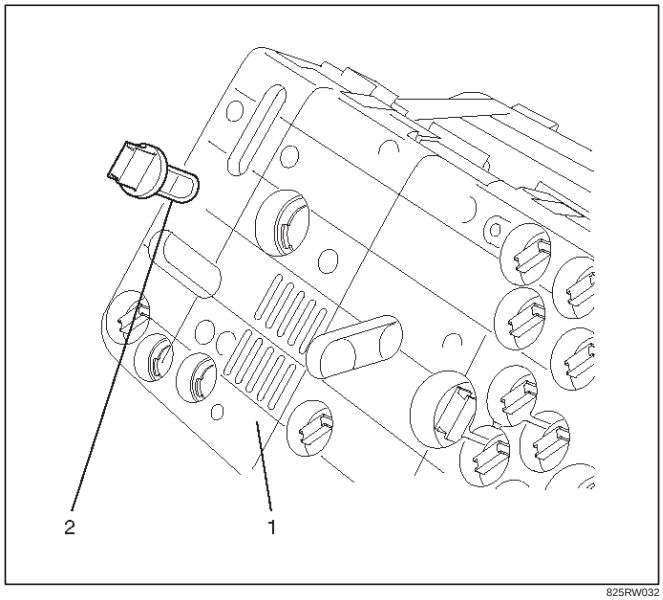

825RW032

Installation

To install, follow the removal steps in the reverse order.

Vehicle Speed Sensor

Removal

1. Disconnect the battery ground cable.
2. Disconnect the connector, remove the vehicle speed sensor body by rotating it and then remove the vehicle speed sensor(1).

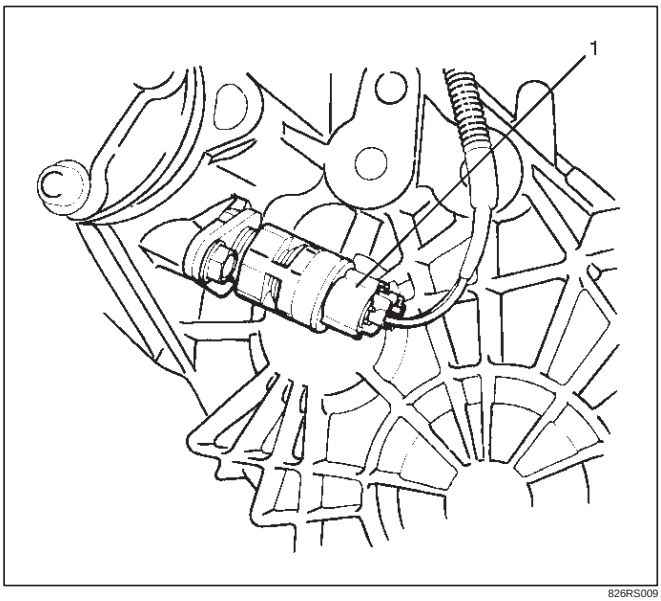

826RS009

Installation

To install, follow the removal steps in the reverse order, noting the following point.

1. Tighten the vehicle speed sensor to the specified torque.

Torque: 27 N·m (2.8 kg·m/20 lb ft)

Fuel Tank Unit

Removal

1. Disconnect the battery ground cable.
2. Remove the fuel tank(1).
   Refer to the Fuel Tank removal steps in Engine section
3. Disconnect the connectors, remove five screws and then remove the fuel tank unit(2).

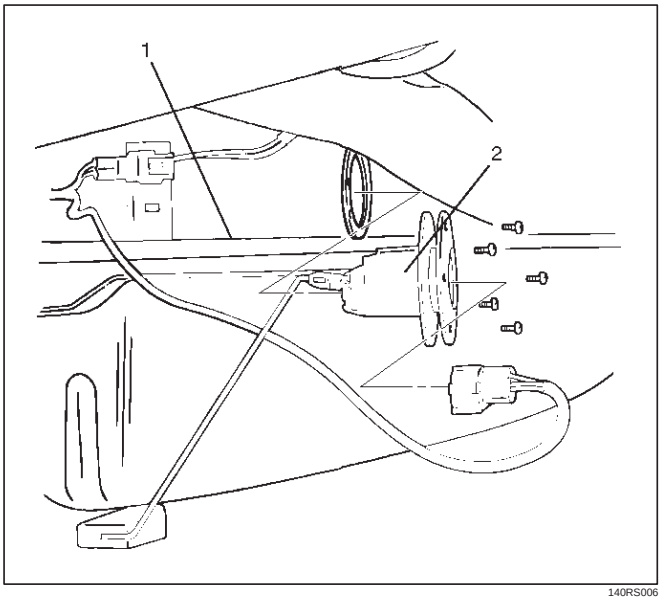

140RS006

Installation

To install, follow the removal steps in the reverse order.

Multi Meter

Removal

1. Disconnect the battery ground cable.
2. Remove two caps, two screws and disconnect the connector to remove the multi meter(1).

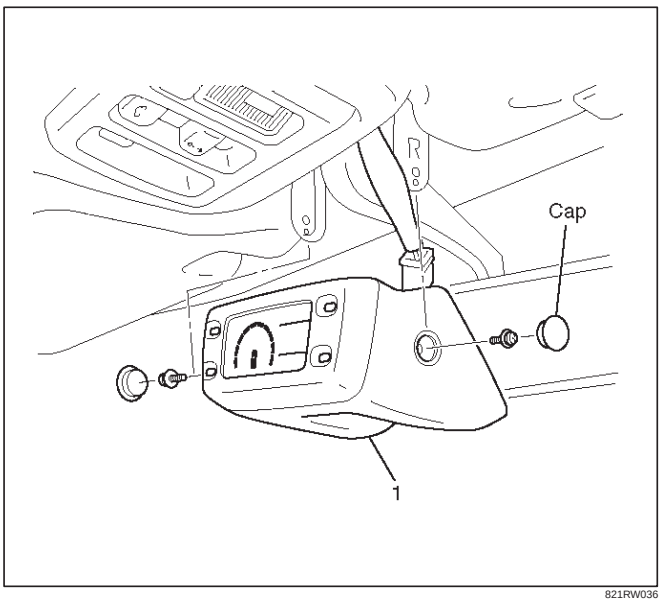

821RW036

Installation

To install, follow the removal steps in the reverse order.

Ambient Sensor

Removal

1. Disconnect the battery ground cable.
2. Disconnect the connector and remove the nut to remove the ambient sensor(1).

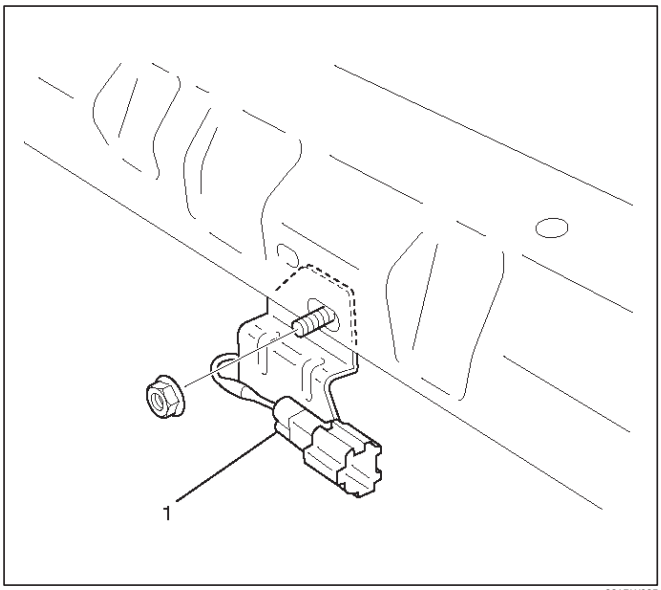

821RW035

Installation

To install, follow the removal steps in the reverse order.

Main Data and Specifications

Torque Specifications

Application	N·m	kg·m	Lb Ft	Lb In
Vehicle Speed Sensor Fixing	27	2.8	20	—

MEMO

BODY AND ACCESSORIES

BODY STRUCTURE

CONTENTS

Service Precaution 8F–3
Frame 8F–3
General Description 8F–3
Frame Dimensions (L W B) 8F–4
Frame Dimensions (S W B) 8F–5
General Description 8F–6
Front Bumper 8F–6
Parts Location 8F–6
Removal 8F–7
Installation 8F–7
Front Bumper Slider Bracket 8F–7
Removal 8F–7
Installation 8F–7
Rear Bumper 8F–8
Parts Location 8F–8
Removal 8F–8
Installation 8F–9
Parts Location (W/Rear Combination Light and License Light) 8F–10
Removal 8F–10
Installation 8F–11
Parts Location (W/Rear Combination Light) 8F–12
Removal 8F–12
Installation 8F–13
Rear Bumper Slider 8F–14
Removal 8F–14
Installation 8F–14
General Description 8F–15
Cowl Cover 8F–15
Parts Location 8F–15
Removal 8F–15
Installation 8F–16
Engine Hood 8F–16
Removal 8F–16
Installation 8F–16
Air Bulge 8F–17
Parts Location 8F–17
Removal 8F–17
Installation 8F–17
Engine Hood Hinge 8F–18
Parts Location 8F–18
Removal 8F–18
Installation 8F–18
Engine Hood Lock 8F–19
Parts Location 8F–19
Removal 8F–19
Installation 8F–20
Radiator Grille And Front End Lower Panel . 8F–20
Parts Location 8F–20
Removal 8F–20
Installation 8F–21
Front Fender Panel 8F–22
Parts Location 8F–22
Removal 8F–22
Installation 8F–23
Body Mounting 8F–24
Parts Location 8F–24
Removal (No.1 – No. 2) 8F–24
Removal (No. 3 — No. 6) 8F–25
Installation 8F–26
General Description 8F–27
Body Dimension 8F–28
Instrument Panel Assembly 8F–48
Parts Location 8F–48
Removal 8F–49
Installation 8F–53
Cross Beam Assembly 8F–54
Parts Location 8F–54
Removal 8F–54
Installation 8F–55
Front Door Assembly 8F–56
Parts Location 8F–56
Removal 8F–56
Installation 8F–56
Rear Door Assembly 8F–57
Parts Location 8F–57
Removal 8F–57
Installation 8F–58
Door Strikers 8F–58
Adjustment 8F–58
Door Check Arm Assembly (Front & Rear) . . 8F–59
Parts Location 8F–59
Removal 8F–59
Installation 8F–60
Front Window Regulator, Glass And Glass Run 8F–60
Parts Location 8F–60
Removal 8F–60

Installation 8F–62
Rear Window Regulator And Glass 8F–63
Parts Location 8F–63
Removal 8F–63
Installation 8F–64
Rear Door Fixed Glass And Glass Run 8F–65
Parts Location 8F–65
Removal 8F–65
Installation 8F–66
Front Door Sash Moulding 8F–67
Parts Location 8F–67
Removal 8F–67
Installation 8F–67
Rear Door Moulding 8F–68
Parts Location 8F–68
Removal 8F–68
Installation 8F–68
Front Door Waist Seal 8F–69
Parts Location 8F–69
Removal 8F–69
Installation 8F–69
Rear Door Waist Seal 8F–70
Parts Location 8F–70
Removal and Installation 8F–70
Front Door Weatherstrip 8F–71
Parts Location 8F–71
Removal 8F–71
Installation 8F–72
Rear Door Weatherstrip 8F–73
Parts Location 8F–73
Removal and Installation 8F–73
Front Door Seal Finisher 8F–74
Parts Location 8F–74
Removal 8F–74
Installation 8F–74
Rear Door Seal Finisher 8F–75
Parts Location 8F–75
Removal 8F–75
Installation 8F–75
Tailgate Assembly (LH) 8F–76
Parts Location 8F–76
Removal 8F–76
Installation 8F–77
Tailgate Assembly (RH) 8F–78
Parts Location 8F–78
Removal 8F–78
Installation 8F–79
Tailgate Strikers 8F–80
Adjustment 8F–80
Tailgate Stopper Assembly 8F–80
Parts Location 8F–80
Removal 8F–80
Installation 8F–80
Tailgate Dove-Tail 8F–81
Parts Location 8F–81
Removal 8F–81
Installation 8F–81
Tailgate Dove-Tail Striker 8F–82
Adjustment 8F–82
Tailgate Frame Cover (LH) 8F–83
Parts Location 8F–83
Removal 8F–83
Installation 8F–83
Tailgate Frame Cover (RH) 8F–84
Removal 8F–84
Installation 8F–84
Tailgate Sash Trim Cover 8F–85
Parts Location 8F–85
Removal 8F–85
Installation 8F–85
Tailgate Outer Weatherstrip 8F–86
Parts Location 8F–86
Removal 8F–86
Installation 8F–86
Tailgate Center Weatherstrip 8F–87
Parts Location 8F–87
Removal 8F–87
Installation 8F–87
Tailgate Main Weatherstrip 8F–88
Parts Location 8F–88
Removal 8F–88
Installation 8F–88
Spare Tire Carrier 8F–89
Parts Location 8F–89
Removal 8F–89
Installation 8F–89
Headlining 8F–90
Parts Location 8F–90
Removal 8F–90
Installation 8F–91
Rear Air Deflector 8F–92
Parts Location 8F–92
Removal 8F–92
Installation 8F–92
Roof Moulding 8F–94
Parts Location 8F–94
Removal 8F–94
Installation 8F–95
Windshield 8F–96
Parts Location 8F–96
Removal 8F–96
Installation 8F–97
Rear Quarter Side Glass 8F–101
Parts Location 8F–101

Removal 8F–101
Installation 8F–102
Tailgate Glass 8F–104
Parts Location 8F–104
Removal 8F–104
Installation 8F–105
Main Data and Specifications 8F–106
Special Tools 8F–117

Service Precaution

WARNING: THIS VEHICLE HAS A SUPPLEMENTAL RESTRAINT SYSTEM (SRS). REFER TO THE SRS COMPONENT AND WIRING LOCATION VIEW IN ORDER TO DETERMINE WHETHER YOU ARE PERFORMING SERVICE ON OR NEAR THE SRS COMPONENTS OR THE SRS WIRING. WHEN YOU ARE PERFORMING SERVICE ON OR NEAR THE SRS COMPONENTS OR THE SRS WIRING, REFER TO THE SRS SERVICE INFORMATION. FAILURE TO FOLLOW WARNINGS COULD RESULT IN POSSIBLE AIR BAG DEPLOYMENT, PERSONAL INJURY, OR OTHERWISE UNNEEDED SRS SYSTEM REPAIRS.

CAUTION: Always use the correct fastener in the proper location. When you replace a fastener, use ONLY the exact part number for that application. ISUZU will call out those fasteners that require a replacement after removal. ISUZU will also call out the fasteners that require thread lockers or thread sealant. UNLESS OTHERWISE SPECIFIED, do not use supplemental coatings (Paints, greases, or other corrosion inhibitors) on threaded fasteners or fastener joint interfaces. Generally, such coatings adversely affect the fastener torque and the joint clamping force, and may damage the fastener. When you install fasteners, use the correct tightening sequence and specifications. Following these instructions can help you avoid damage to parts and systems.

Frame

General Description

Proper frame alignment is important to assure normal vehicle life and performance of many other parts of the vehicle. If the vehicle has been involved in a fire, collision or has been overloaded, it is necessary to check the frame alignment.

Frame Dimensions (L W B)

This illustration is based on the gasoline engine and A/T model.

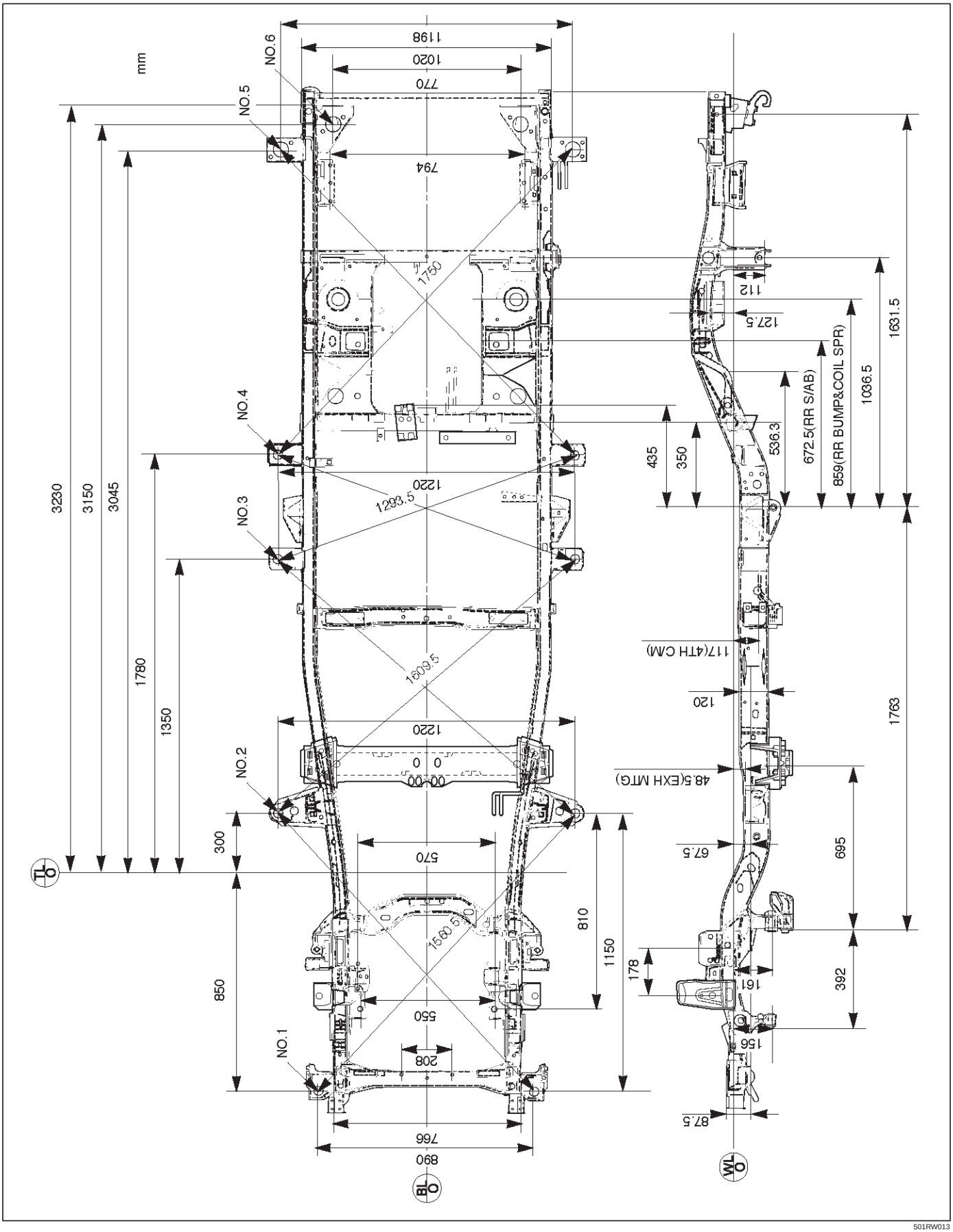

501RW013

Frame Dimensions (S W B)

This illustration is based on the gasoline engine and A/T model.

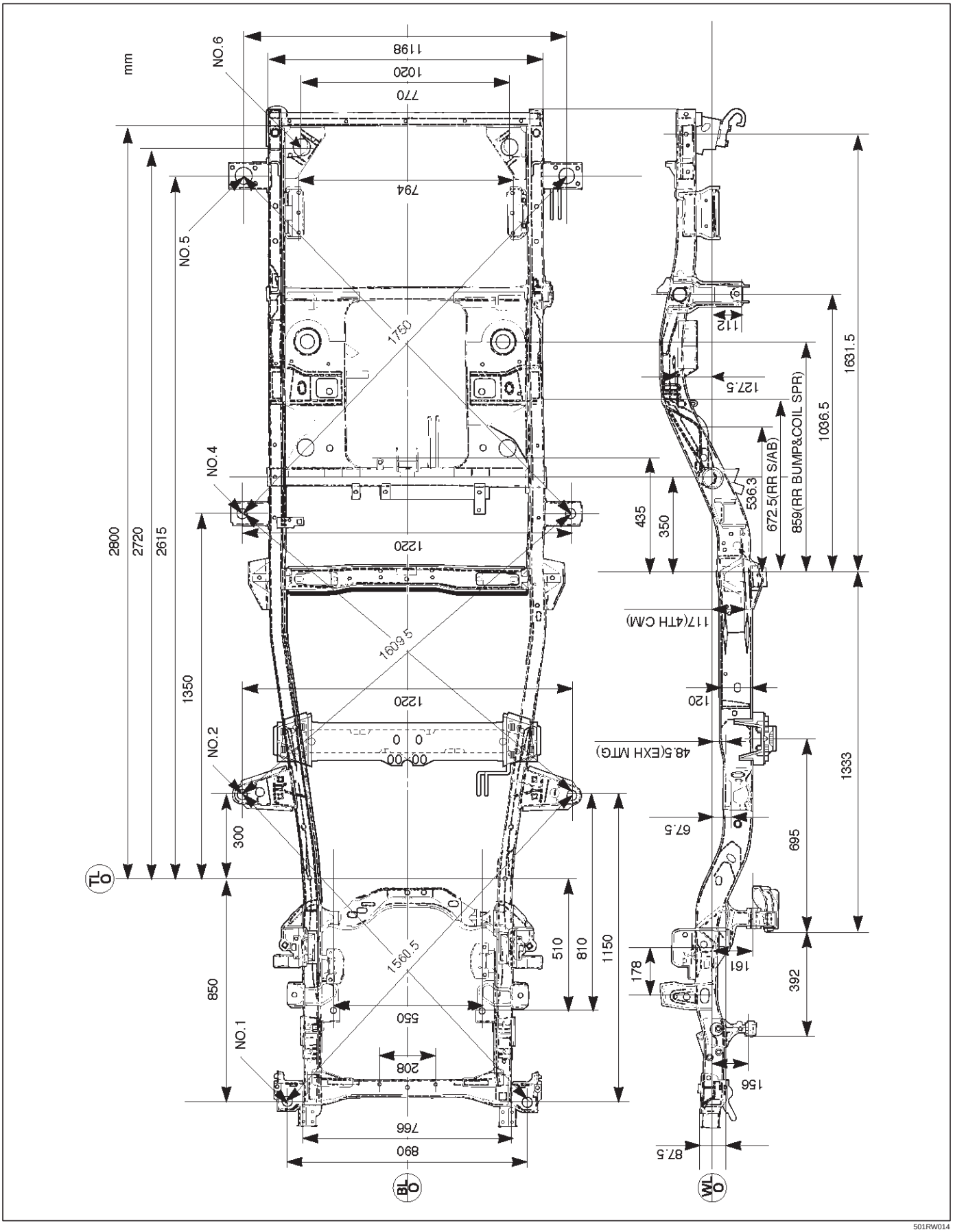

501RW014

General Description

This section describes how to remove and install front and rear bumpers. Each bumper is installed with two fixing bolts used on either side to fasten the backbar to the frame, a slider is used to fasten the bumper fascia to the fender panel. The bumpers can be removed by taking them out forward or backward after removing the two fixing bolts on either side.

Front Bumper

Parts Location

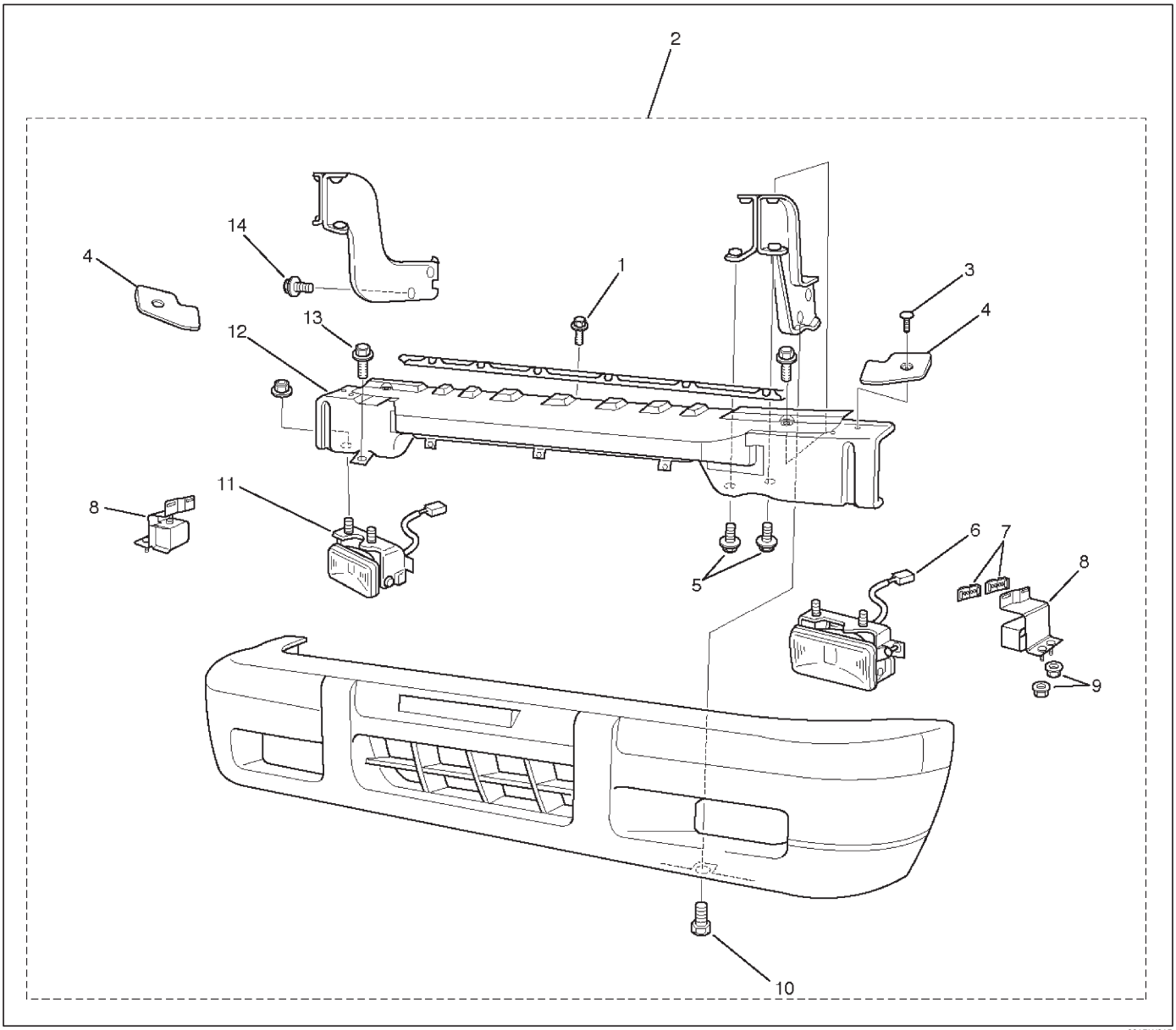

601RW015

Legend

(1) Front Bumper Retainer Bolt
(2) Front Bumper Assembly
(3) Support Fixing Clip
(4) Bumper Spacer Support
(5) Back Bar Fixing Bolt
(6) Front Fog Light Connector
(7) Front Bumper Slider Fixing Clip
(8) Front Bumper Slider
(9) Front Bumper Slider Fixing Nut
(10) Bumper Fascia Lower Bolt
(11) Front Fog Light Assembly
(12) Reinforce Assembly
(13) Reinforce Lower Bolt
(14) Front Bumper Fixing Bolt

Removal

1. Disconnect battery ground cable.
2. Remove front fog light connector.
3. Remove front bumper assembly fixing bolt.
   - Remove the two bolts from both sides of the front bumper.

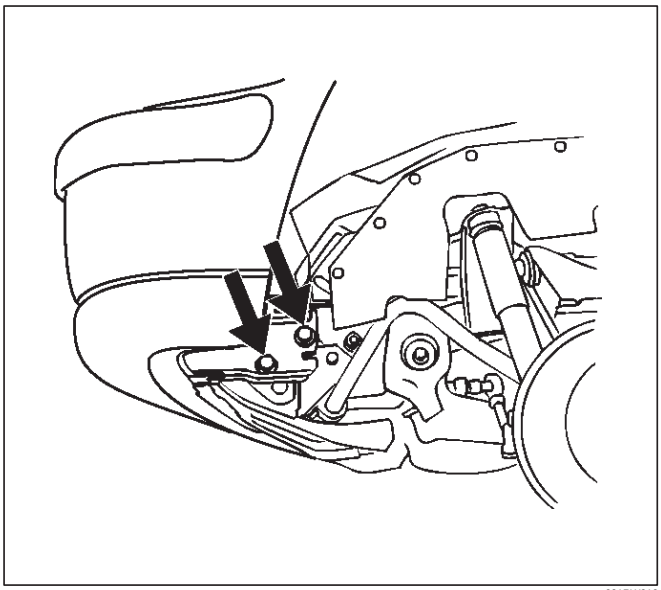

601RW010

4. Remove front bumper assembly.
5. Remove bumper fascia lower bolts.
6. Remove front bumper retainer.
7. Remove reinforce lower bolts.
   - Loosen the five bolts and release claws.
8. Remove reinforce assembly.
9. Remove backbar fixing bolts.
   - Remove the four bolts at each backbar.
10. Remove front fog light assembly.
11. Remove the front bumper slider(1).
    - Remove the two clips(4) and the two nuts(3), and release the claw from the washer(2).

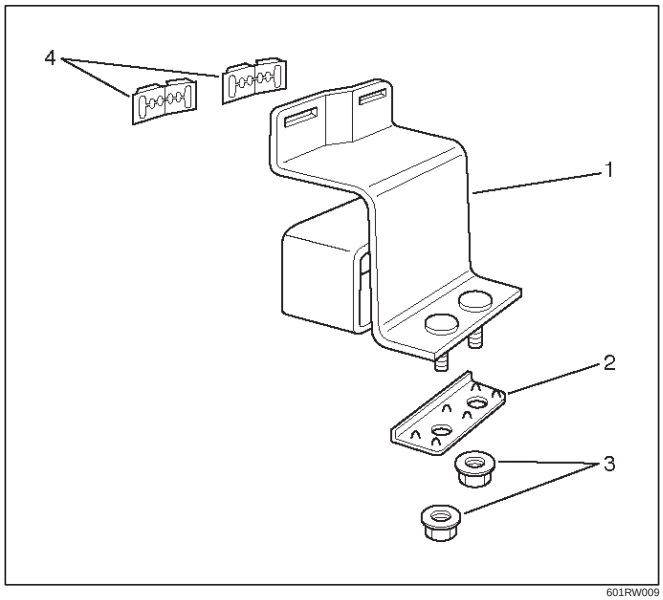

601RW009

Installation

To install, follow the removal steps in reverse order noting the following points:

1. Tighten the front bumper assembly fixing bolts to the specified torque.

   Torque: 132 N•m (13.5kg·m/98 lb ft)

Front Bumper Slider Bracket

Removal

1. Disconnect battery ground cable.
2. Remove the Front bumper.
   - Refer to Front Bumper in this section.
3. Remove the three nuts(1) and draw out the slider bracket(2).

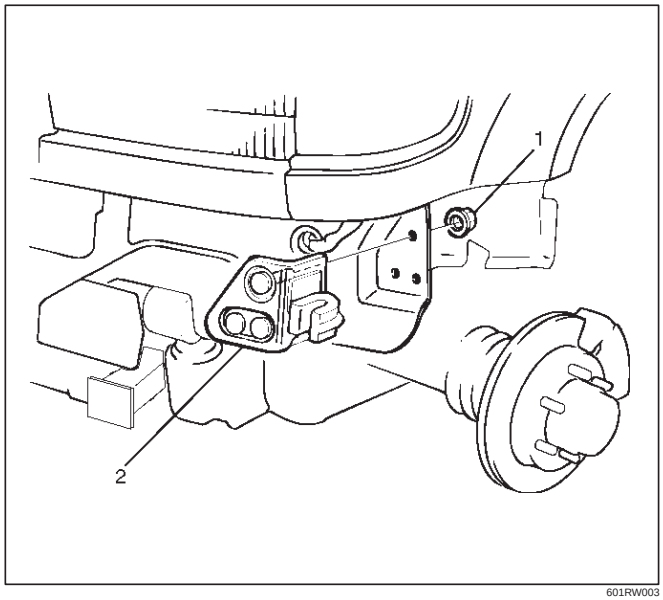

601RW003

Installation

To install, follow the removal steps in reverse order.

Rear Bumper

Parts Location

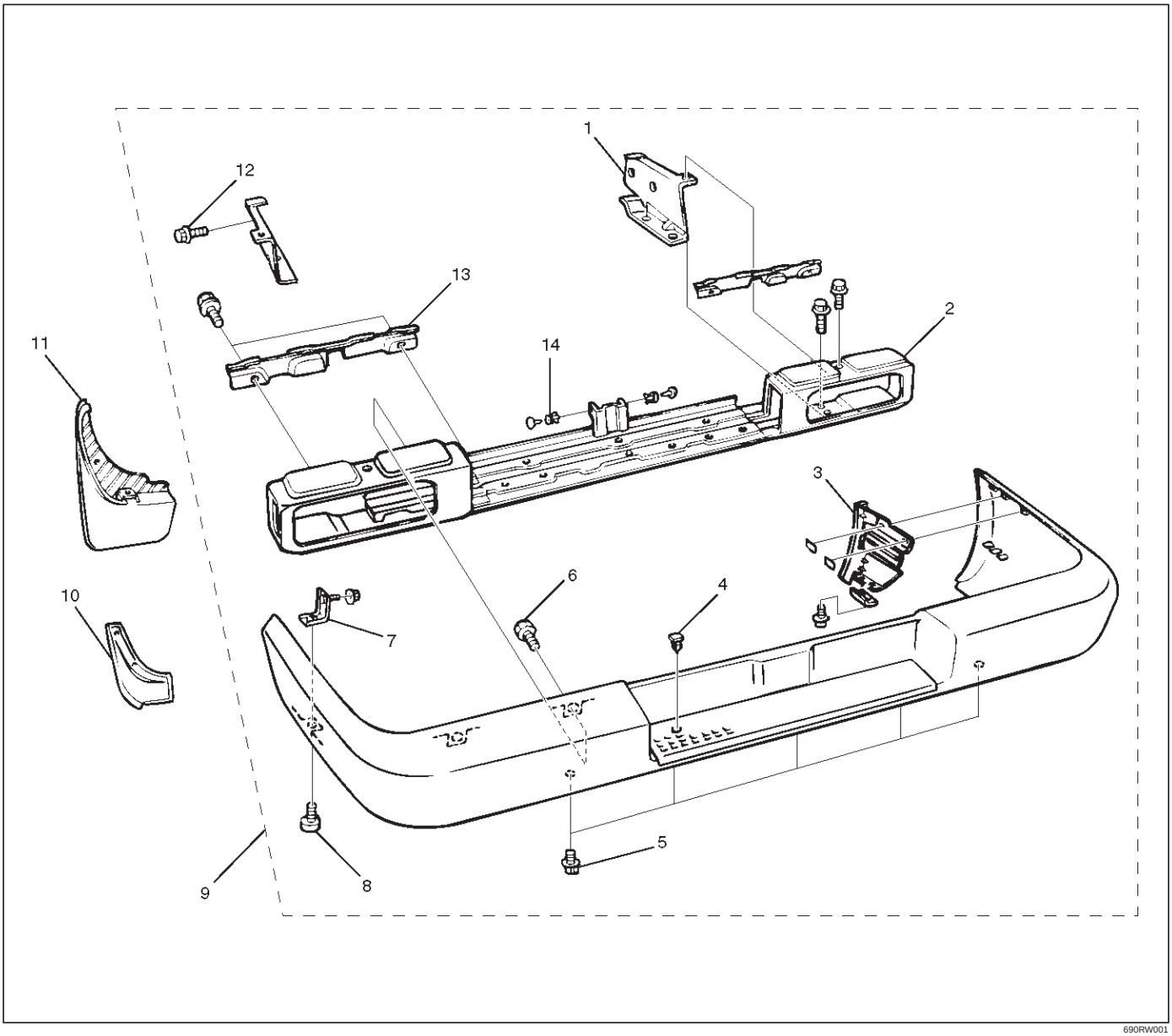

690RW001

Legend

(1) Back Bars
(2) Reinforce Assembly
(3) Rear Bumper Slider Brackets
(4) Rear Step Clips
(5) Reinforce Lower Screws
(6) Reinforce Upper Bolts
(7) Rear Bumper Fascia Brackets
(8) Rear Bumper Fascia Bracket Screws
(9) Rear Bumper Assembly
(10) Rear Bumper Side Covers
(11) Mud Flaps
(12) Rear Bumper Assembly Fixing Bolts
(13) Rear Bumper Retainers
(14) Clips

Removal

1. Remove rear bumper side covers.
2. Remove mud flaps.
   - Remove three screws.
3. Remove bumper fascia bracket screws.

4. Remove rear bumper assembly fixing bolts.
   - Remove two bolts from each side.

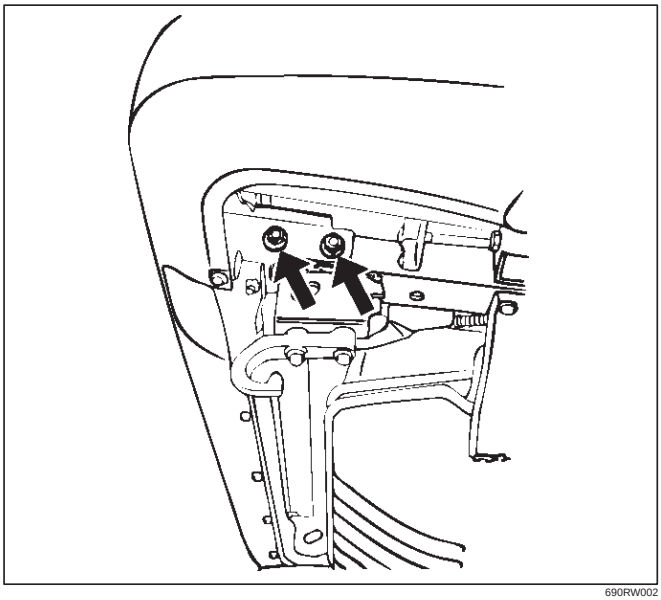

690RW002

5. Remove rear bumper assembly.
6. Remove rear bumper retainers.
7. Remove reinforce upper bolts.
   - Remove the rear bumper retainer from each side, and then remove two upper bolts.
8. Remove reinforce lower screws.
9. Remove clips.
10. Remove rear step clips.
11. Remove reinforce assembly.
    - Pull out both ends of the bumper fascia and take out the reinforce assembly.
12. Remove backbars.
    - Remove the three bolts from each backbar.
13. Remove rear bumper slider brackets(4).
    - Remove the two clips(1) and two screws(3), and then remove claw caught in the washer(2).

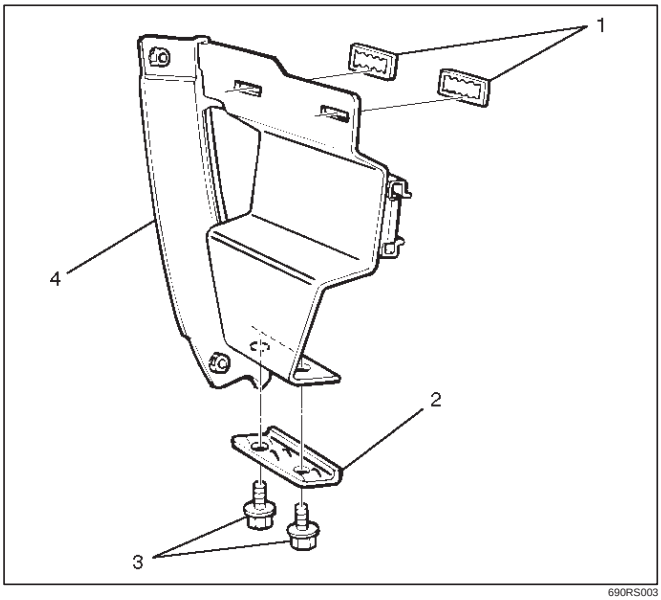

690RS003

14. Remove bumper fascia brackets.
    - Remove the fixing nut on the back side of the fender panel.

Installation

To install, follow the removal steps in reverse order noting the following points:

1. Tighten the rear bumper assembly fixing bolts to the specified torque.

   Torque: 132 N•m (13.5kg·m/98 lb ft)

2. Apply chassis grease to the slider and the slider bracket moving surface.

Parts Location (W/Rear Combination Light and License Light)

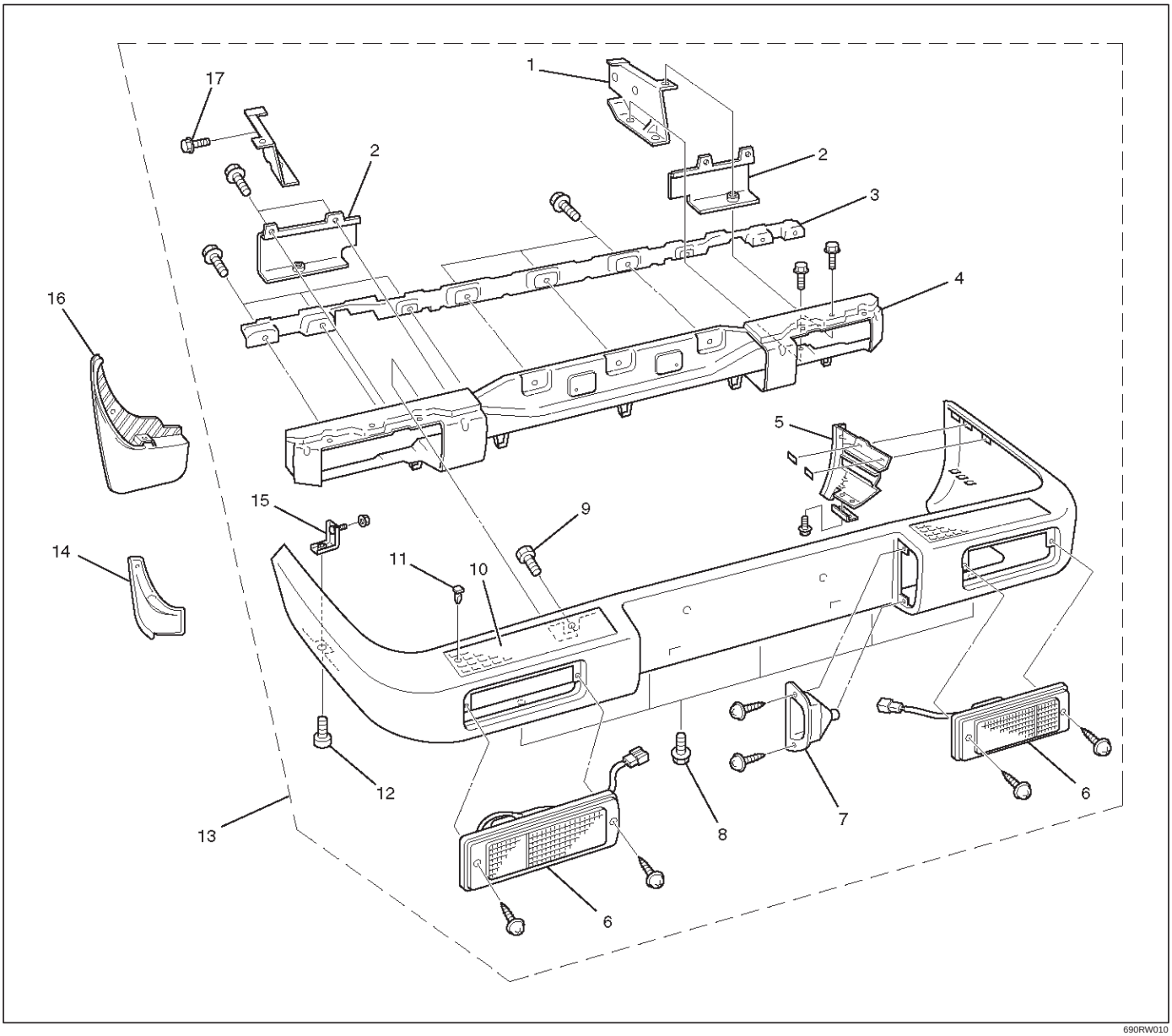

690RW010

Legend

(1) Back Bar
(2) Rear Combination Light Back Plate
(3) Rear Bumper Retainer
(4) Reinforce Assembly
(5) Rear Bumper Slider Brackets
(6) Rear Combination Light Assembly
(7) License Light
(8) Reinforce Lower Screws
(9) Reinforce Upper Bolts
(10) Rear Step
(11) Rear Step Clips
(12) Rear Bumper Fascia Bracket Screws
(13) Rear Bumper Assembly
(14) Rear Bumper Side Covers
(15) Rear Bumper Fascia Brackets
(16) Mud Flaps
(17) Rear Bumper Assembly Fixing Bolts

Removal

1. Disconnect battery ground cable.
2. Remove rear bumper side covers.
3. Remove mud flaps.
   - Remove three screws.
4. Remove rear bumper fascia bracket screws.

5. Remove rear bumper assembly fixing bolts.
   - Remove two bolts from each side.

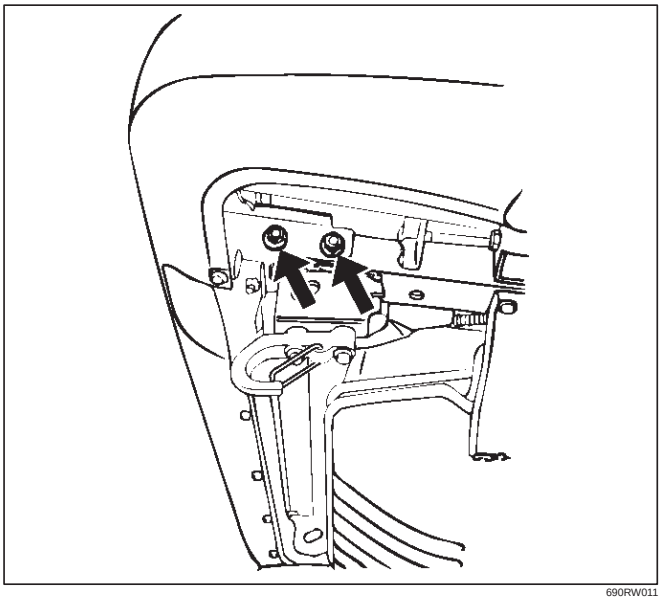

690RW011

6. Remove rear bumper assembly.
7. Remove rear bumper retainers.
8. Remove rear combination light back plate.
9. Remove reinforce upper bolts.
   - Remove the rear bumper retainer from each side, and then remove two upper bolts.
10. Remove reinforce lower screws.
11. Remove rear step clips.
12. Remove rear step.
13. Remove reinforce assembly.
    - Pull out both ends of the bumper fascia and take out the reinforce assembly.
14. Remove backbars.
    - Remove the three bolts from each backbar.
15. Remove rear bumper slider brackets(4).
    - Remove the two clips(1) and two screws(3), and then remove claw caught in the washer(2).

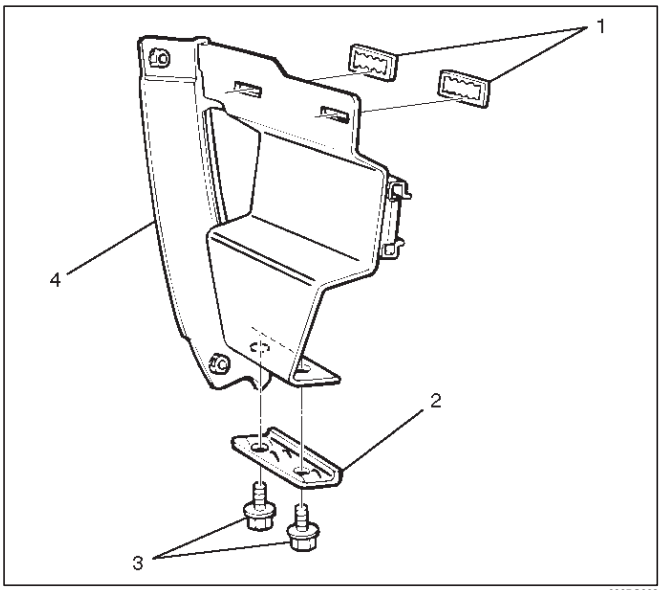

690RS003

16. Remove bumper fascia brackets.
    - Remove the fixing nut on the back side of the fender panel.
17. Remove rear combination light assembly.
18. Remove license light.

Installation

To install, follow the removal steps in reverse order noting the following points:

1. Tighten the rear bumper assembly fixing bolts to the specified torque.

   Torque: 132 N•m (13.5kg·m/98 lb ft)

2. Apply chassis grease to the slider and the slider bracket moving surface.

Parts Location (W/Rear Combination Light)

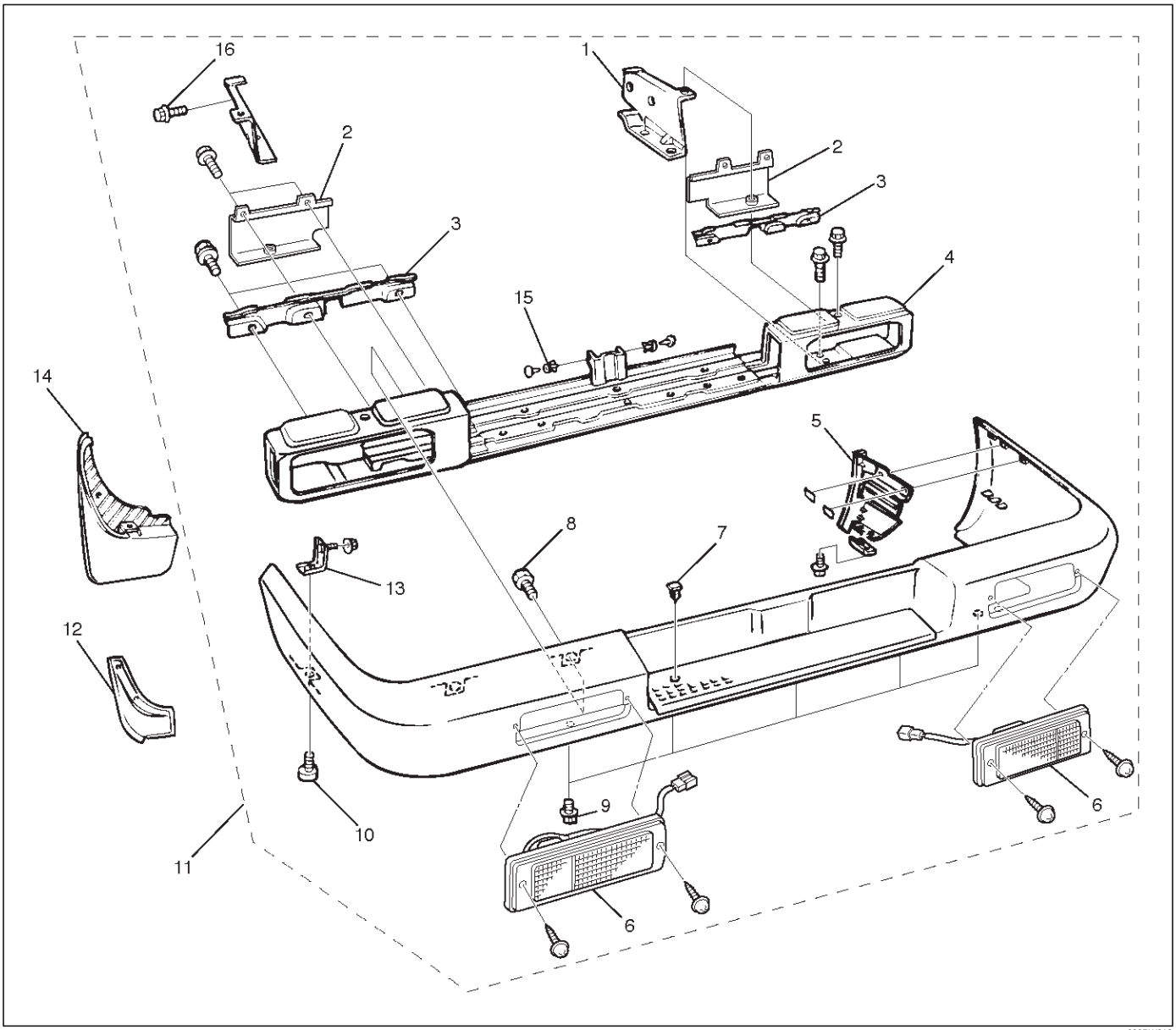

690RW012

Legend

(1) Back Bar
(2) Rear Combination Light Back Plate
(3) Rear Bumper Retainer
(4) Reinforce Assembly
(5) Rear Bumper Slider Brackets
(6) Rear Combination Light Assembly
(7) Rear Step Clips
(8) Reinforce Upper Bolts
(9) Reinforce Lower Screws
(10) Rear Bumper Fascia Bracket Screws
(11) Rear Bumper Assembly
(12) Rear Bumper Side Covers
(13) Rear Bumper Fascia Brackets
(14) Mud Flaps
(15) Clips
(16) Rear Bumper Assembly Fixing Bolts

Removal

1. Disconnect battery ground cable.
2. Remove rear bumper side covers.
3. Remove mud flaps.
   - Remove three screws.
4. Remove rear bumper fascia bracket screws.

5. Remove rear bumper assembly fixing bolts.
   - Remove two bolts from each side.

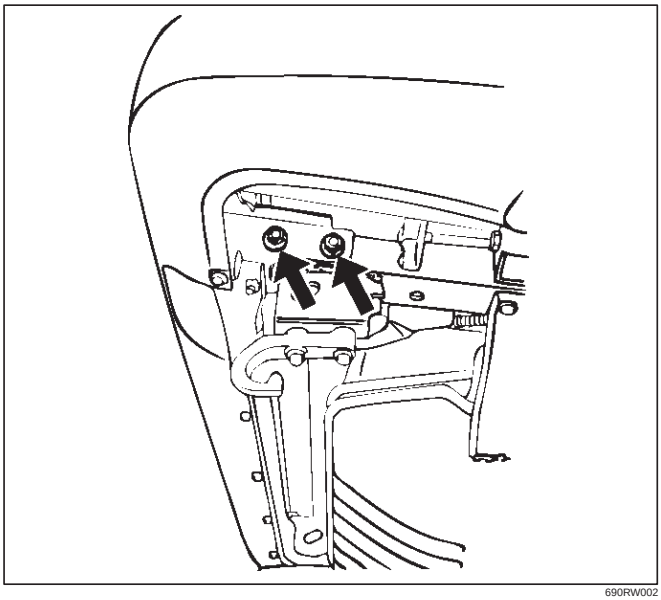

690RW002

6. Remove rear bumper assembly.
7. Remove rear bumper retainers.
8. Remove rear combination light back plate.
9. Remove reinforce upper bolts.
   - Remove the rear bumper retainer from each side, and then remove two upper bolts.
10. Remove reinforce lower screws.
11. Remove clips.
12. Remove rear step clips.
13. Remove reinforce assembly.
    - Pull out both ends of the bumper fascia and take out the reinforce assembly.
14. Remove backbars.
    - Remove the three bolts from each backbar.
15. Remove rear bumper slider brackets(4).
    - Remove the two clips(1) and two screws(3), and then remove claw caught in the washer(2).

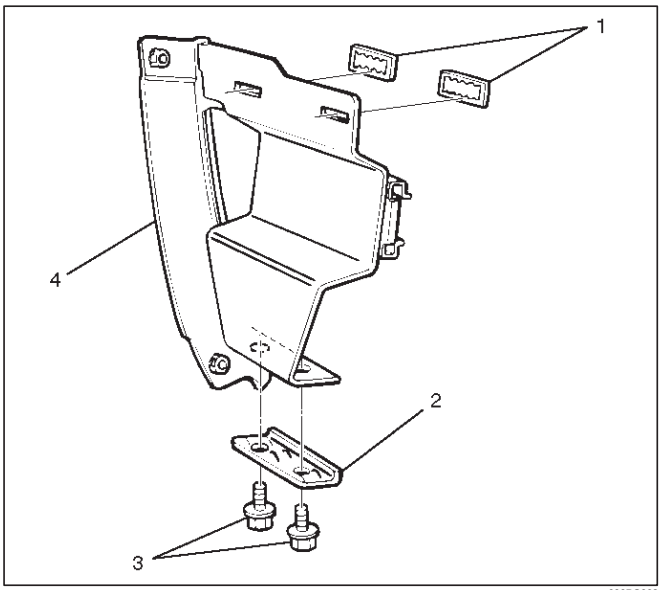

690RS003

16. Remove bumper fascia brackets.
    - Remove the fixing nut on the back side of the fender panel.
17. Remove rear combination light assembly.

Installation

To install, follow the removal steps in reverse order noting the following points:

1. Tighten the rear bumper assembly fixing bolts to the specified torque.

   Torque: 132 N•m (13.5kg·m/98 lb ft)

2. Apply chassis grease to the slider and the slider bracket moving surface.

Rear Bumper Slider

Removal

1. Remove the rear bumper.
   - Refer to Rear Bumper removal in this section.
2. Remove the three bolts (2).
3. Remove rear bumper slider (1).

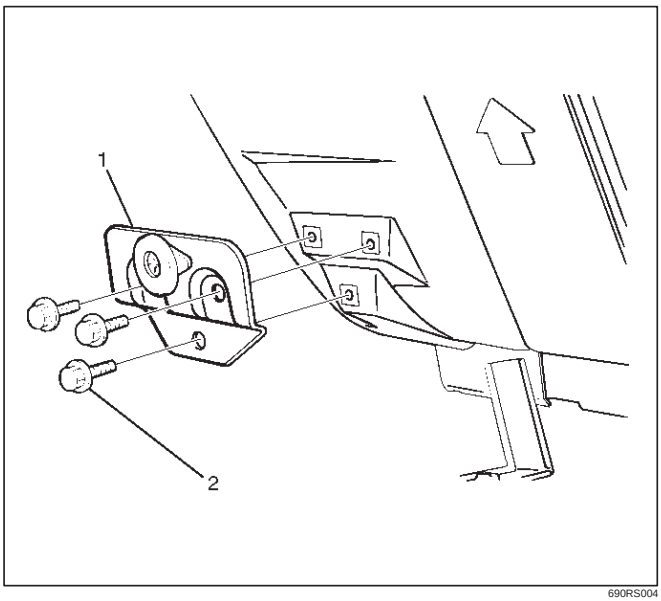

690RS004

Installation

To install, follow the removal steps in reverse order noting the following points:

1. Apply chassis grease to the slider and the slider bracket moving surface.

General Description

This section includes items of front end sheet metal that are attached by bolts, screws or clips and related accessory components.

Anti-corrosion materials have been applied to the interior surfaces of some metal panels to provide rust resistance. When servicing these panels, areas on which this material has been disturbed should be properly recoated with service-type anti-corrosion material.

Cowl Cover

Parts Location

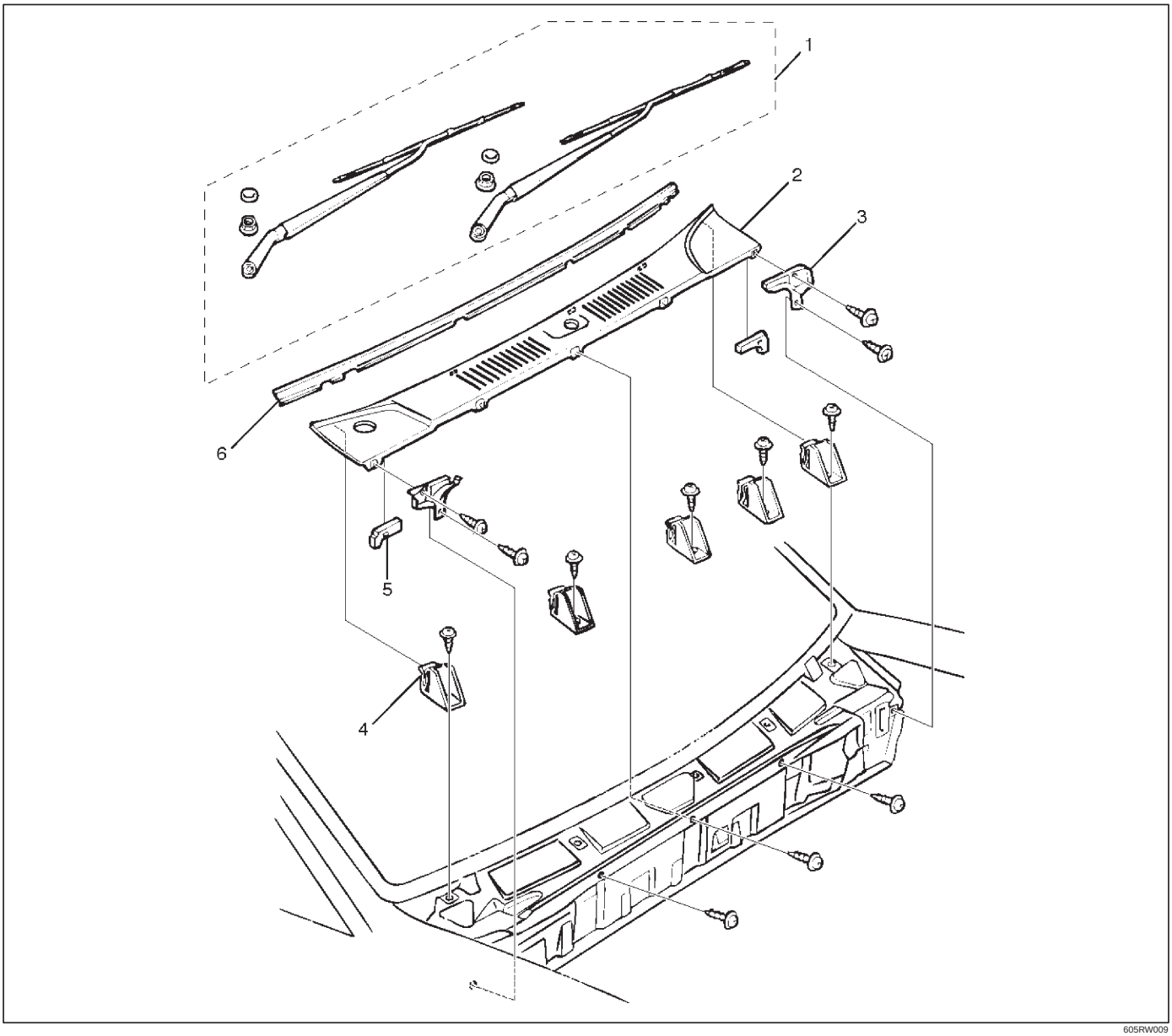

605RW009

Legend

(1) Front Wiper Arms
(2) Cowl Cover
(3) Cowl Cover Brackets
(4) Cowl Cover Stoppers
(5) Cower Cover Seals
(6) Front Window Lower Molding

Removal

1. Open the hood.
2. Support the hood.
3. Remove front wiper arms.
   - Refer to Wiper/Washer System in this section.
4. Remove cowl cover brackets.
   - Disconnect two screws each side.

5. Remove cowl cover.
   - Disconnect three screws.
6. Remove cowl cover seals.
7. Remove front window lower molding.
8. Remove cowl cover stoppers.

Installation

To install, follow the removal steps in reverse order.

Engine Hood

Removal

1. Open the hood.
2. Support the hood.
3. Remove windowshield washer nozzle tube.

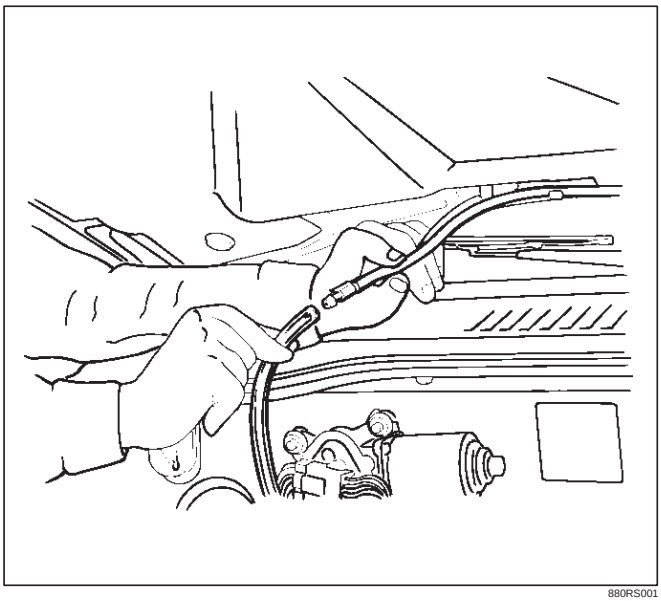

880RS001

4. Remove hood hinge bolts (3).
   - Before removing the hinges from the Engine hood (1), scribe a mark (2) showing location of the hinges to facilitate installation in the original position.

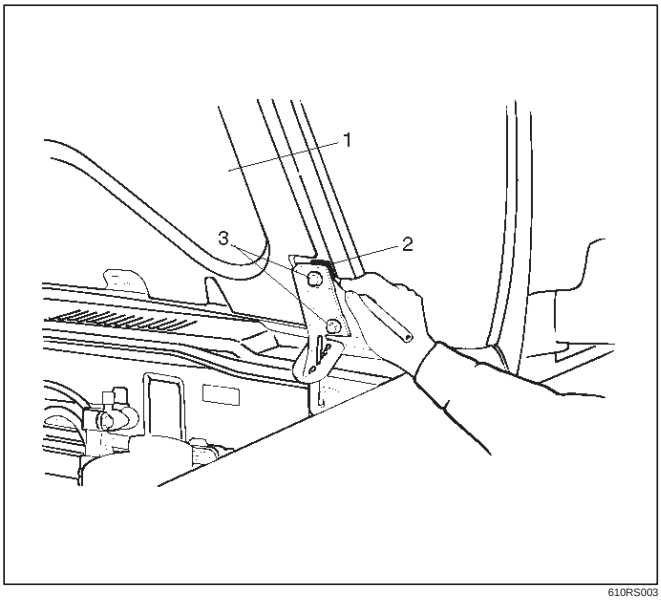

610RS003

5. Remove engine hood.

Installation

To install, follow the removal steps in the reverse order noting the following points:

1. Tighten the engine hood fixing bolts to the specified torque.

   Torque: 13 N•m (1.3kg·m/113 lb in)

2. Adjust the engine hood mounting gap with reference to Body Dimension in this section.
3. Check and see if the engine hood lock operates normally.

Air Bulge

Parts Location

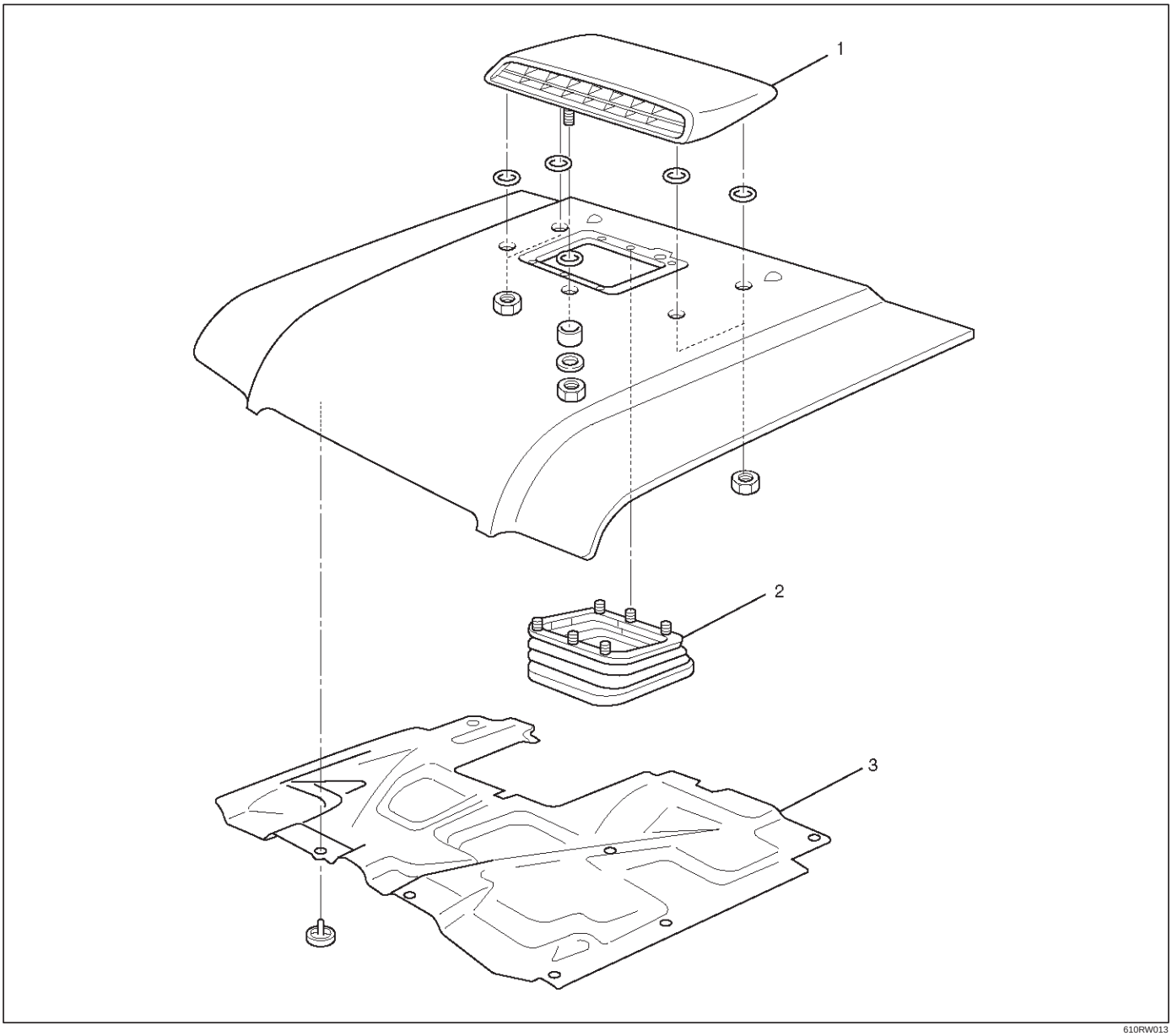

Legend

(1) Air Bulge
(2) Intercooler Seal
(3) Engine Hood Insulator

Removal

1. Remove engine food insulator.
   - Remove the sixteen clips.
2. Remove Intercooler seal.
   - Remove the six clips.
3. Remove air bulge.
   - Remove the six nuts.

Installation

To install, follow the removal steps in the reverse order noting the following points:

1. Tighten the air bulge fixing nuts to the specified torgue.

   Torque 8 N•m (0.8kg·m/ 69 lb in)

Engine Hood Hinge

Parts Location

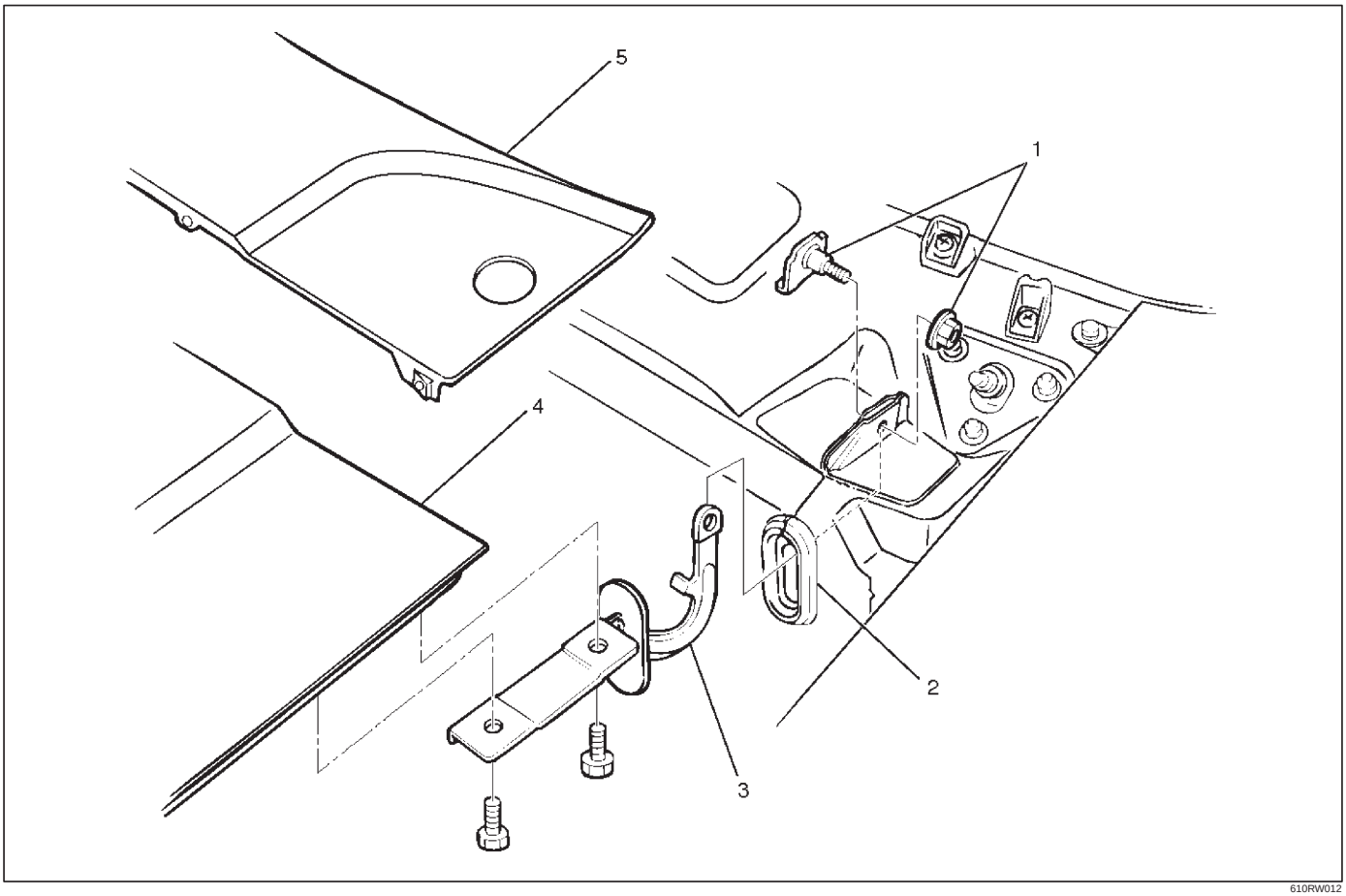

610RW012

Legend

(1) Hinge Fixing Bolts And Nuts
(2) Hood End Seal
(3) Engine Hood Hinge
(4) Engine Hood
(5) Cowl Cover

Removal

1. Remove cowl cover.
   - Refer to Cowl Cover in this section.
2. Remove engine hood.
   - Refer to Engine Hood in this section.
3. Remove hinge fixing bolt and nut.
4. Remove engine hood hinge.
5. Remove hood end seal.

Installation

To install, follow the removal steps in reverse order noting the following points:

1. Tighten the hood hinge fixing bolt and nut to the specified torque.

   Torque 13 N•m (1.3kg·m/113 lb in)

Engine Hood Lock

Parts Location

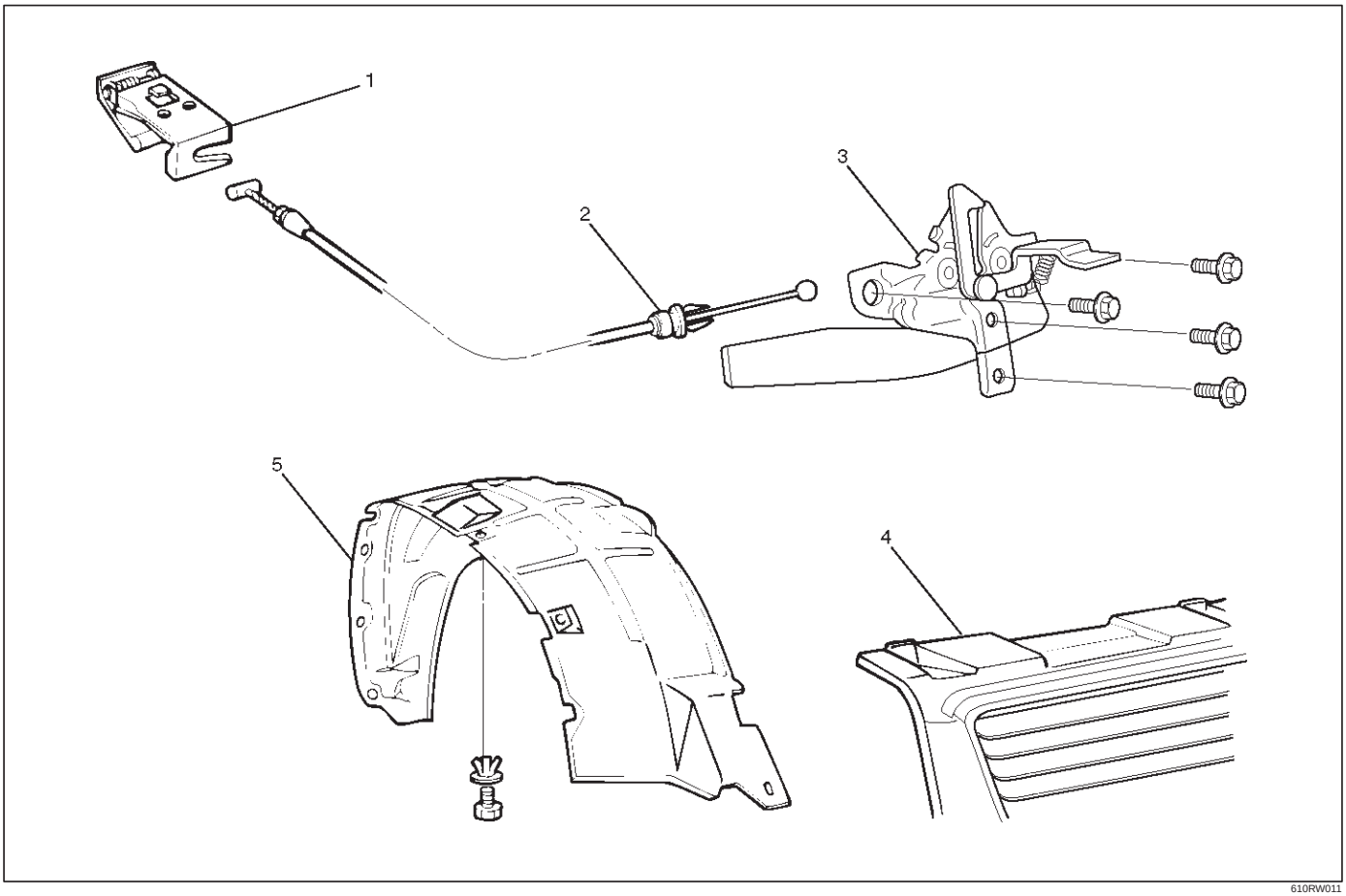

610RW011

Legend

(1) Hood Lock Control Lever
(2) Control Cable
(3) Engine Hood Lock Assembly
(4) Radiator Grille
(5) Inner Liner

Removal

1. Remove hood lock control lever.
2. Remove inner liner.
3. Remove control cable.
   - Remove the cable fixing clips from the body panel.
4. Remove radiator grille.
   - Refer to Radiator Grille And Front End Lower Panel in this section.
5. Remove engine hood lock assembly.
   - Apply setting marks (1) to the hood lock assembly and the body prior to removal.

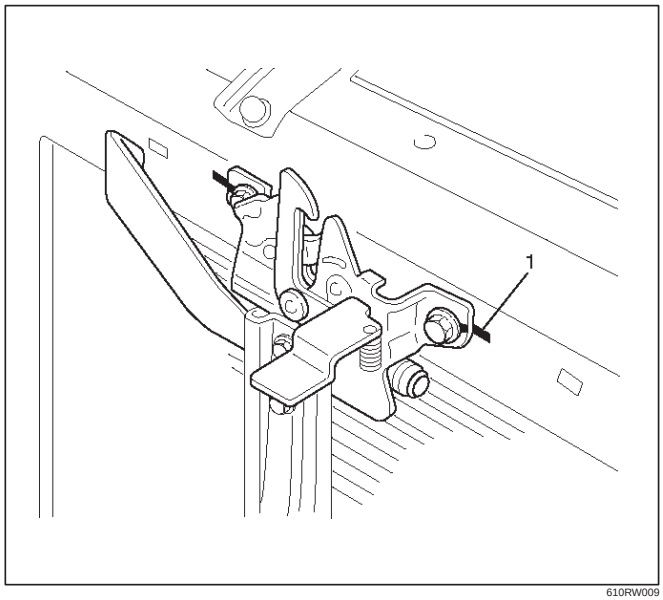

610RW009

Installation

To install, follow the removal steps in reverse order noting the following points:

1. Reroute the control cable to its original position, and check and see if the lock assembly and control lever work normally.
2. Tighten the hood lock assembly fixing bolts to the specified torque.

Torque : 10 N•m (1.0kg·m/87 lb in)

Radiator Grille And Front End Lower Panel

Parts Location

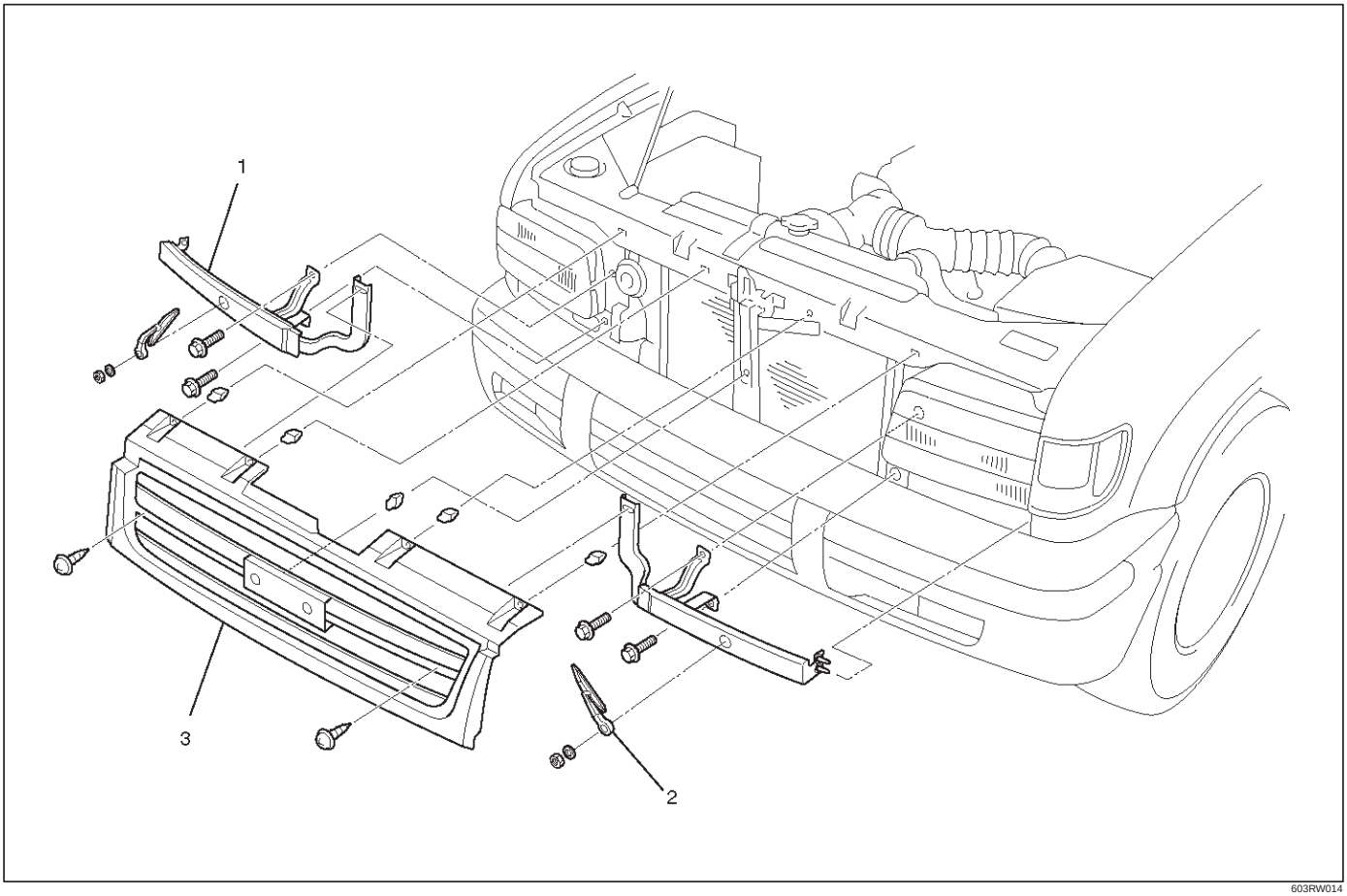

603RW014

Legend

(1) Front End Lower Panel
(2) Head light Wiper
(3) Radiator Grille

Removal

1. Open the hood.
2. Support the hood.
3. Remove headlight wiper.
   - Refer to Wiper/Washer System in this section.

4. Remove radiator grille.
   - Raise the clips (1) on the radiator grille and remove two screws.

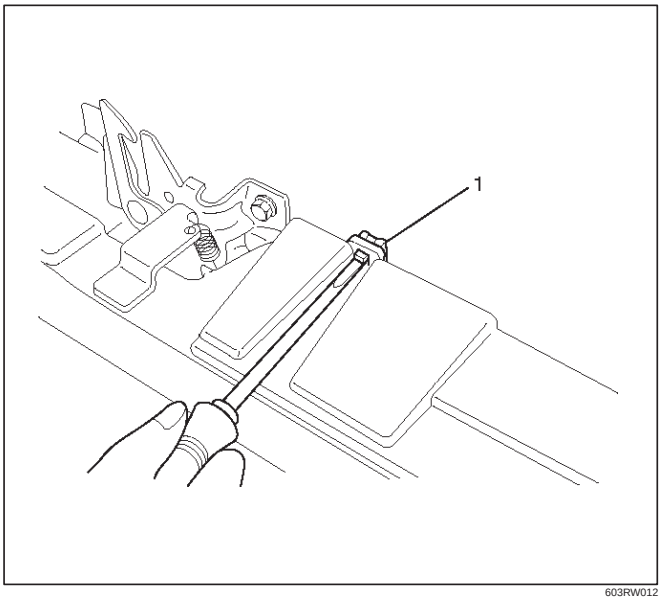

603RW012

5. Remove front end lower panel.
   - Remove two fixing bolts and remove the panel from the fender.

Installation

To install, follow the removal steps in reverse order, noting the following point.

1. Install the radiator grille clips remaining on the body side in the radiator grille, and then install the radiator grille on the body.

Front Fender Panel

Parts Location

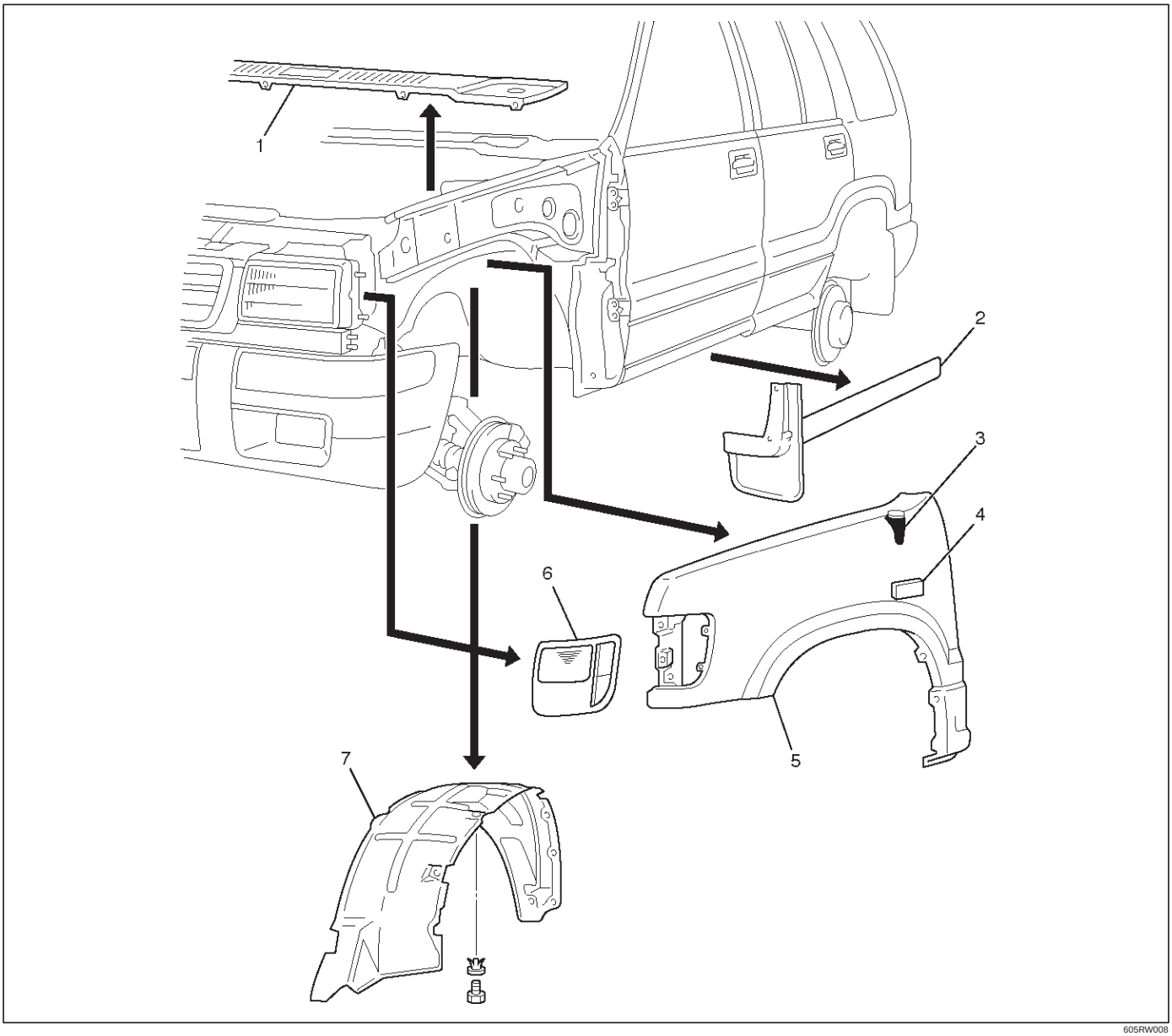

605RW008

Legend

(1) Cowl Cover
(2) Front Mud Flap
(3) Antenna Bezel
(4) Side Flasher Light
(5) Front Fender Panel
(6) Front Combination Lamp Assembly
(7) Inner Liner

Removal

1. Open the hood.
2. Support the hood.
3. Disconnect the battery ground cable.
4. Remove cowl cover.
   - Refer to Cowl Cover in this section.
5. Remove front combination lamp assembly.
   - Disconnect fixing screw and connector.
6. Remove front mud flap.
   - Disconnect three fixing screws and four clips.
7. Remove inner liner.
8. Remove antenna bezel.
   - Refer to Entertainment in this section.
9. Remove side flasher light.
   - Refer to Lighting System in this section.

10. Remove front fender panel.
    - Disconnect ten fixing bolts and two nuts.

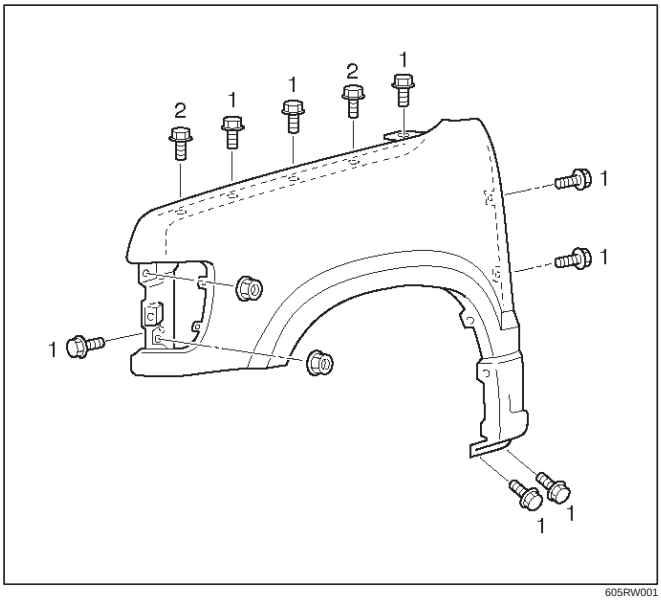

605RW001

Installation

To install, follow the removal steps in the reverse order noting the following points:

1. Tighten the front fender panel fixing bolts to the specified torque.

   (1) Torque : 9 N•m (0.9kg·m/78 lb in)

   (2) Torque : 7 N•m (0.7kg·m/61 lb in)

Body Mounting

Parts Location

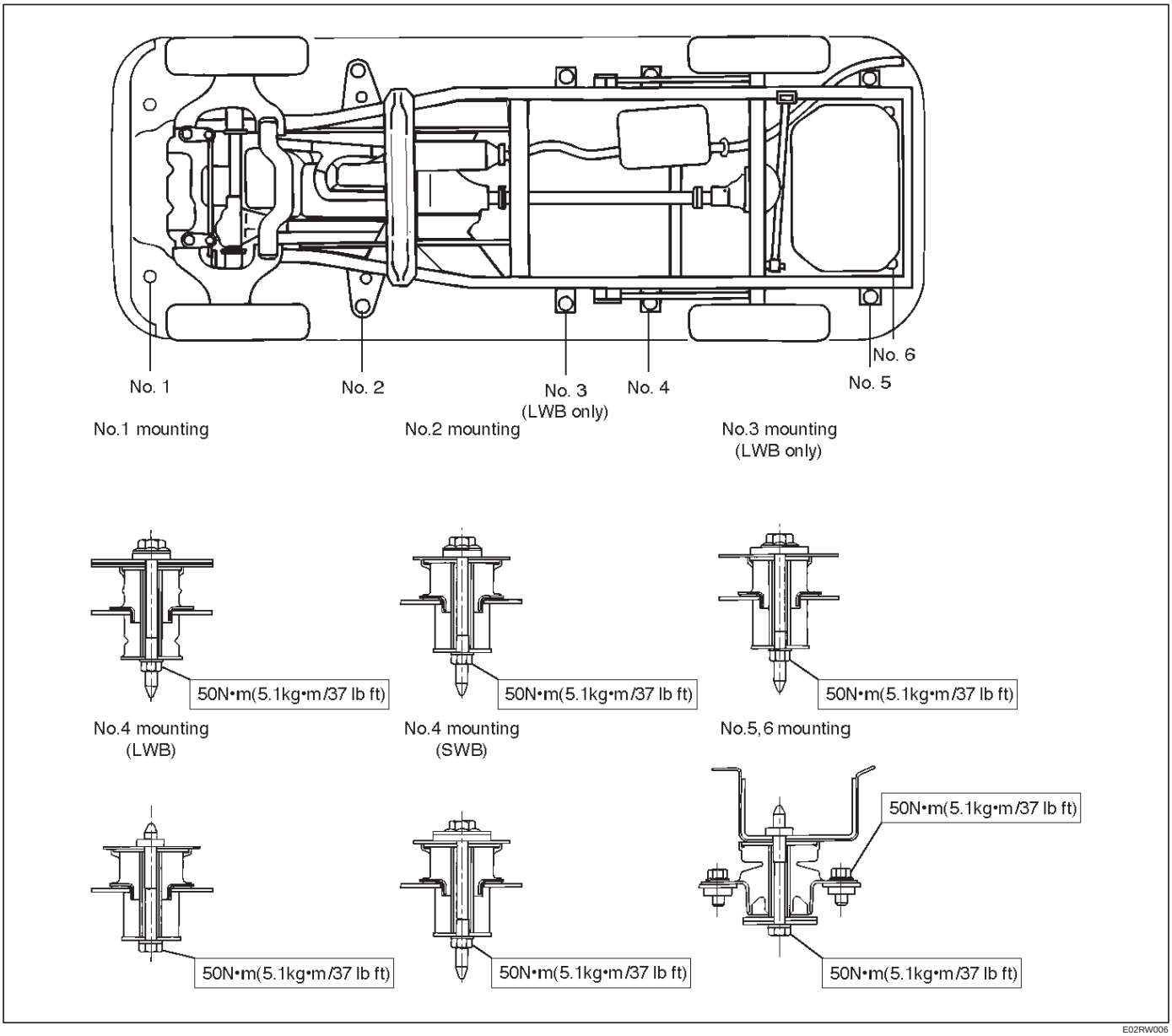

Removal (No.1 – No. 2)

1. Remove the front bumper.
2. Jack up the vehicle by the frame.
3. Support the front side sill and rear axle with stands.
   Further, support the front jack up point with a jack.

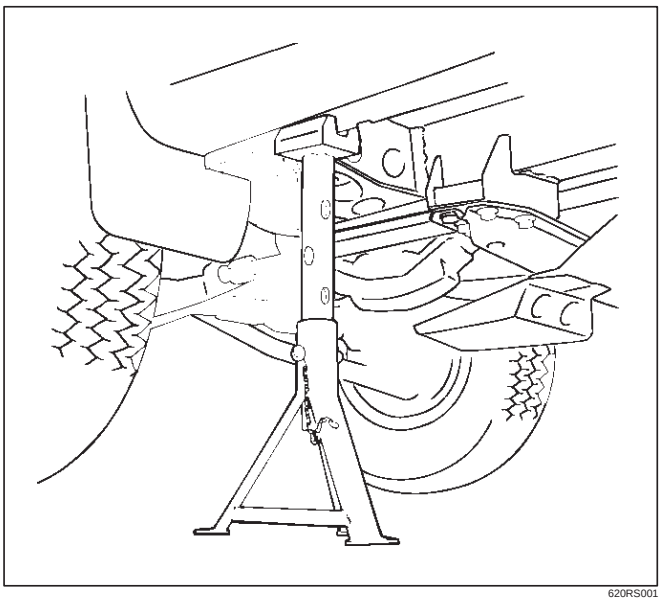

620RS001

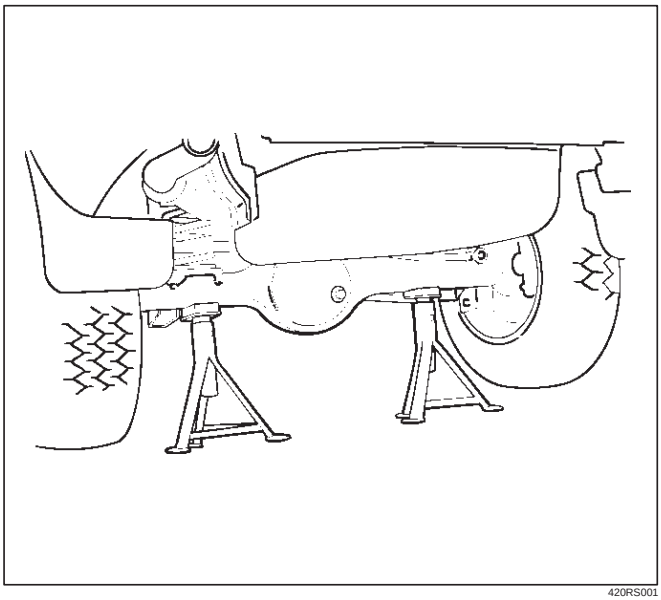

420RS001

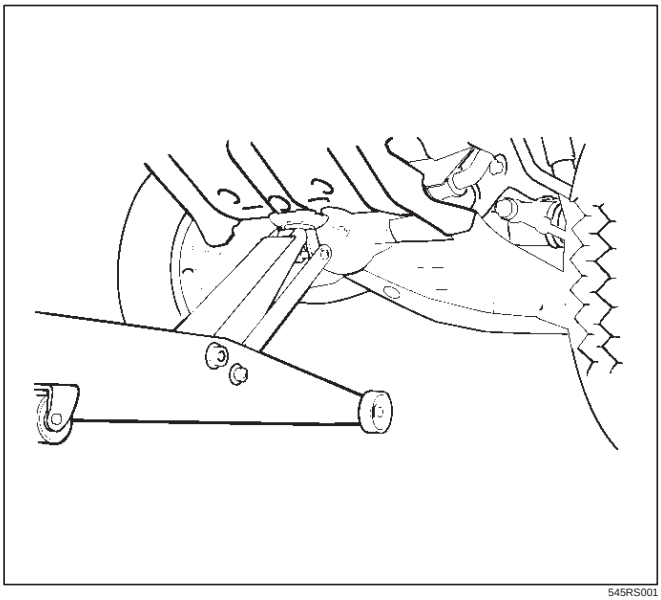

545RS001

4. Remove the mounting bolts (No. 1-4) on either side.
   - No. 1 – Hold in check not to turn from the inside of the front fender.
   - No. 2 – Remove the front door sill plate and dash side trim panel, turn over the floor carpet and hold the bolt in check not to turn.
   - No. 3 (LWB only)– Remove the rear door sill plate and center pillar lower trim cover, turn over the floor carpet and hold the bolt in check not to turn.
   - No. 4 (SWB)– Remove the luggage side trim cover, turn over the floor carpet and hold the bolt in chek not to turn.
   - No. 4 (LWB)– Remove the bolt from under the frame.
5. Loosen the mounting bolts (No. 5-6) on either side.
6. Remove the frame side mounting and washer.
7. Gently lower the jack supporting the front axle until the cab side mounting can be removed.
8. Remove the cab side mounting.
   - Be sure to use a splice bar around the mounting to be removed.

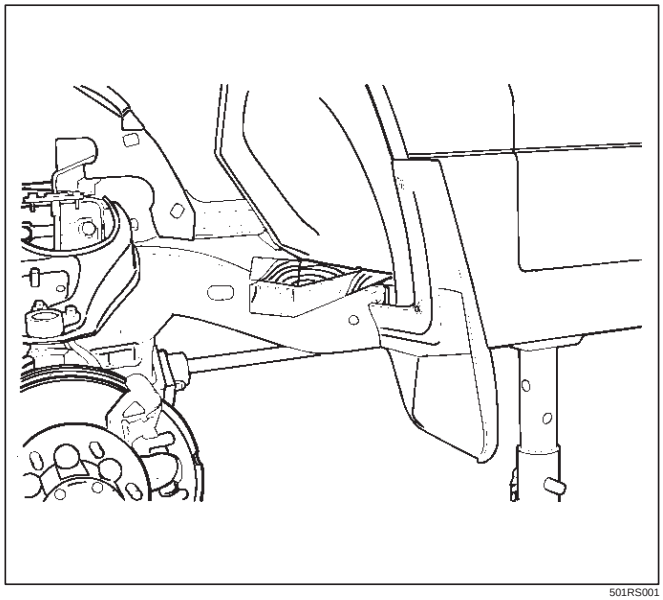

501RS001

Removal (No. 3 — No. 6)

1. Remove the rear bumper.
2. Jack up the vehicle by the frame.

3. Support the rear side sill and frame stands, and support the rear axle with a jack.

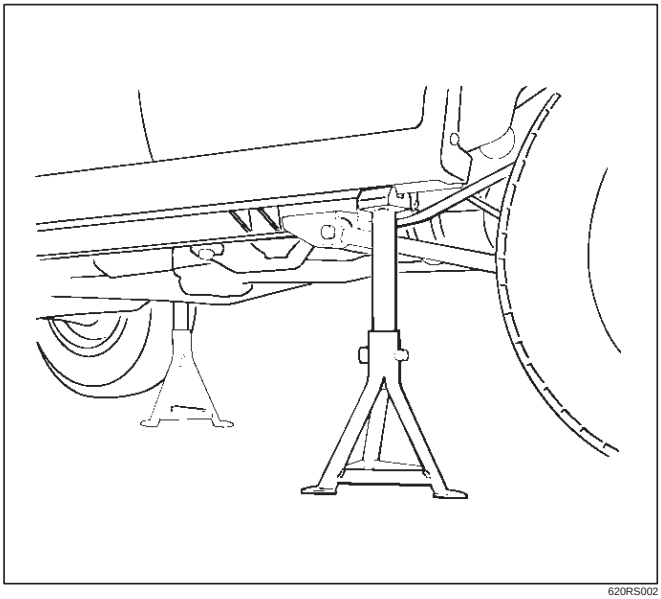

620RS002

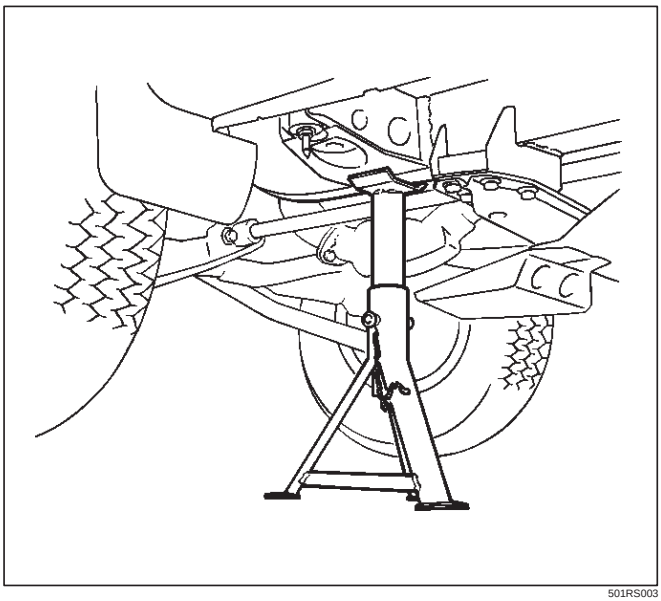

501RS003

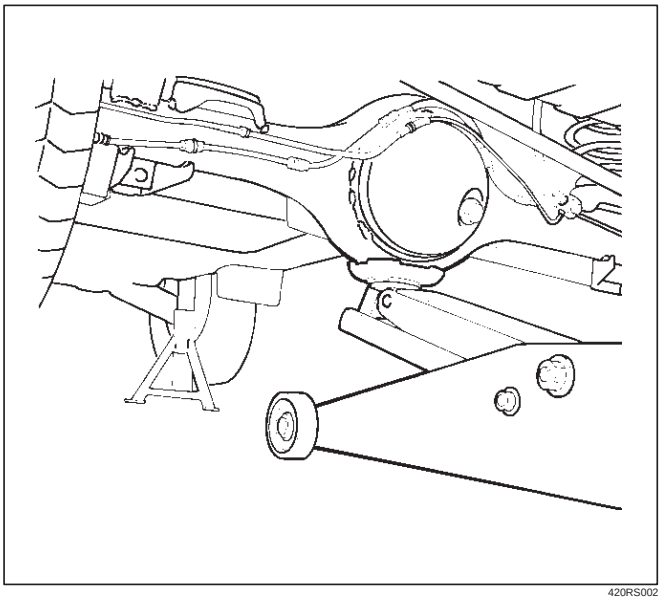

420RS002

4. Remove the mounting bolts (No. 3-6) on either side.
   - No. 3 (LWB only) — Remove the rear door sill plate and center pillar lower-trim cover, turn over the floor carpet and hold the bolt in check not to turn.
   - No. 4 (SWB) — Remove the luggage side trim cover, turn over the floor carpet and hold the bolt in check not to turn.
   - No. 4 (LWB) and No. 5 – 6
5. Remove the frame side mounting and washer.
6. Gently lower the jack supporting the rear axle until the cab side mounting can be removed.
7. Remove the cab side mounting.
   - Be sure to use a splice bar around the mounting to be removed.
   - As for No. 5 and 6, remove the frame side bracket fixing bolts after lowering the frame gently.

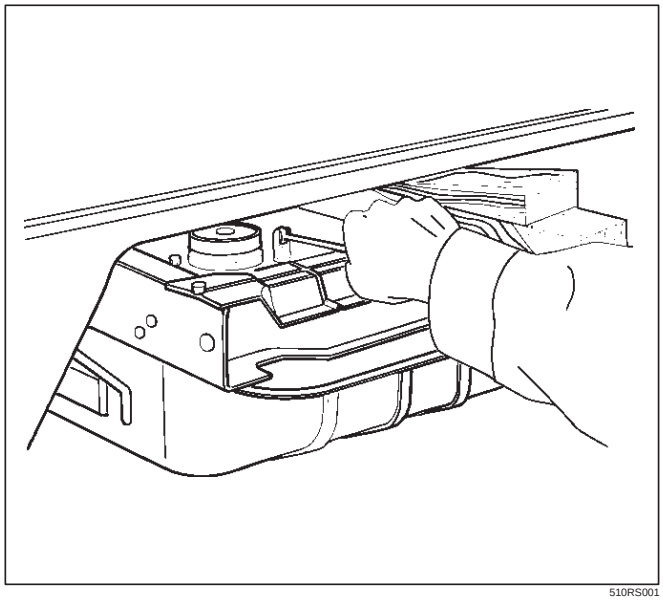

510RS001

Installation

To install, follow the removal steps in the reverse order, noting the following point:

1. Tighten each mounting bolt to the specified torque.

   Torque : 50 N•m (5.1kg·m/37 lb ft)

General Description

This section describes major items of the removal, installation and servicing procedures pertaining to the TROOPER body. Each servicing instruction is applicable to all models of the TROOPER, unless otherwise specifically mentioned. For those differing by specific models from the common procedures, they are detailed for each model.

Body Dimension

Upper Body

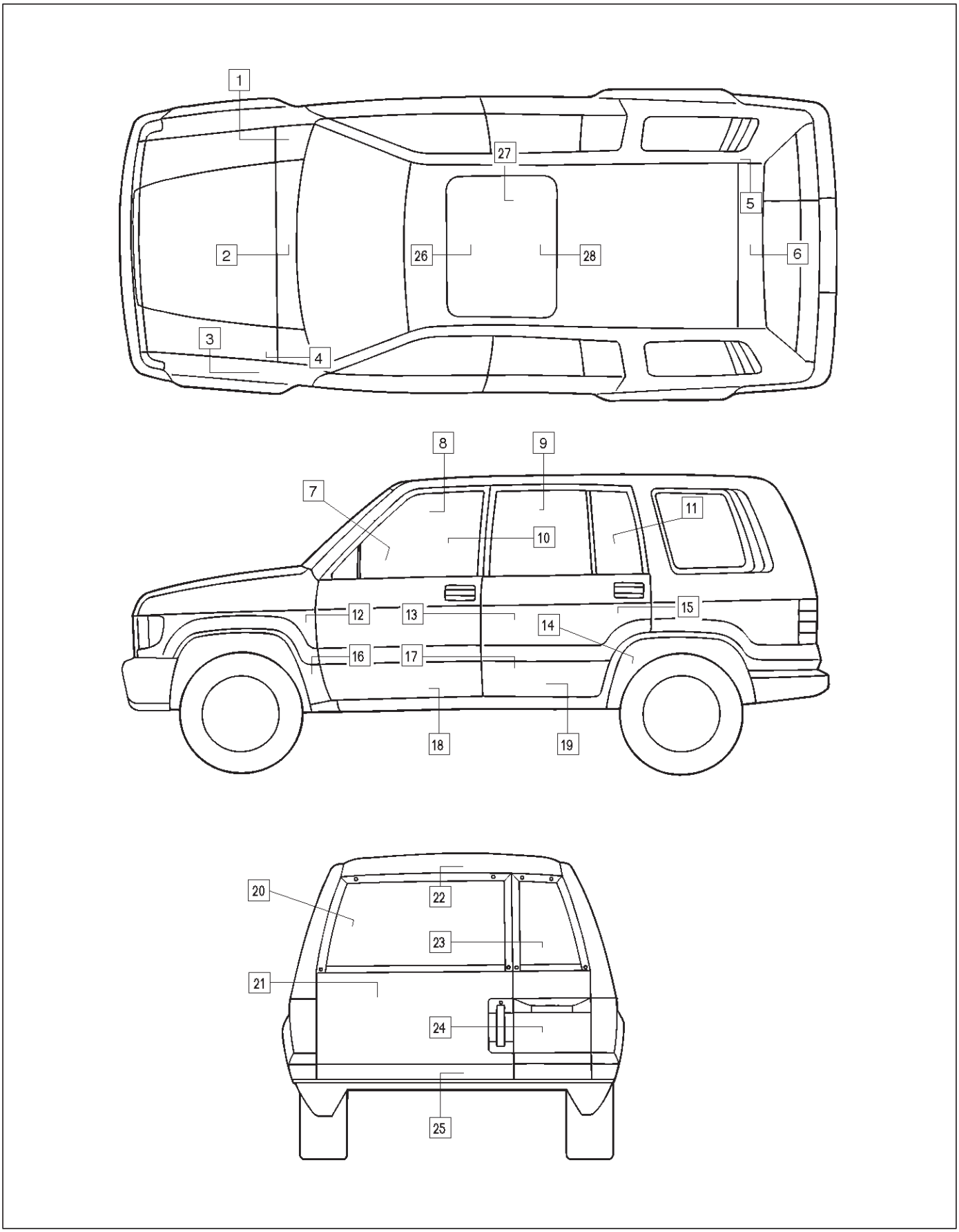

A10RW001

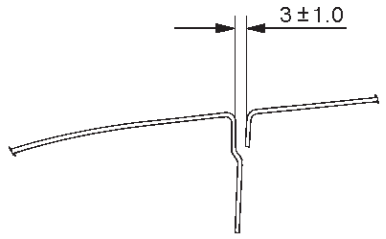

SECTION 1

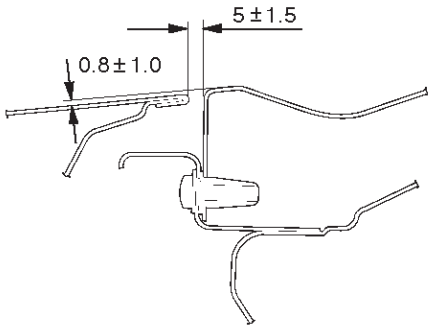

SECTION 2

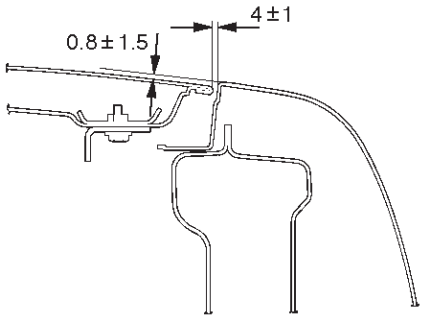

SECTION 3

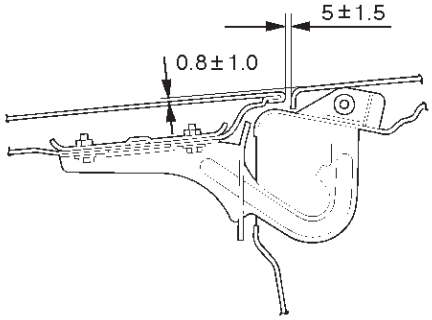

SECTION 4

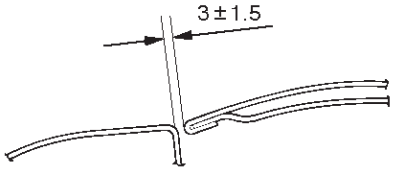

SECTION 5

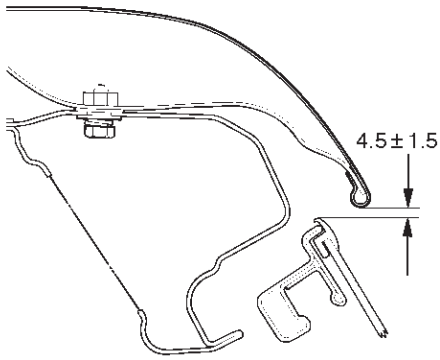

SECTION 6

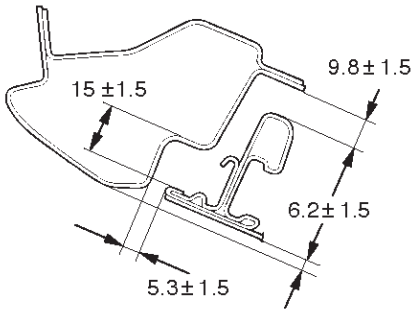

SECTION 7

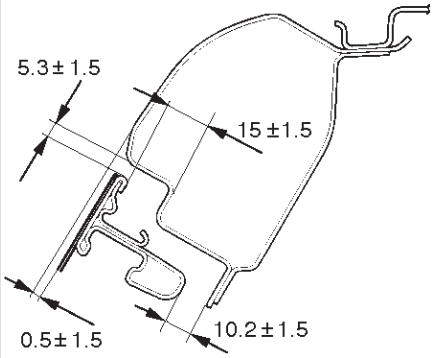

SECTION 8、9

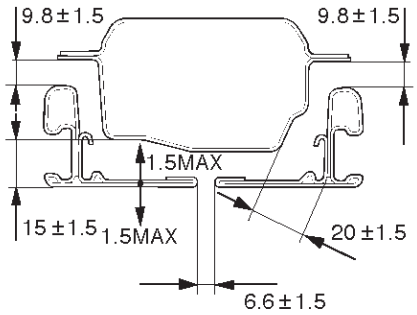

SECTION 10

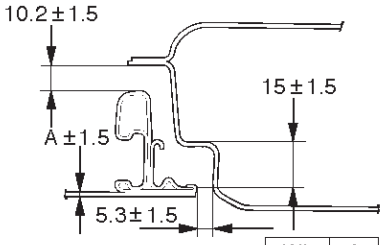

WL	A
1100	0.5
800	1.3

SECTION 11

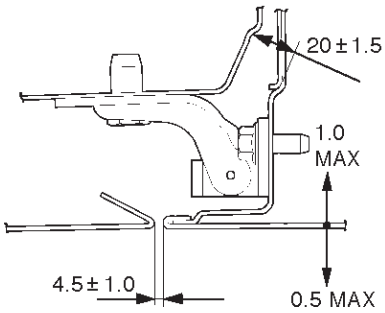

SECTION 12

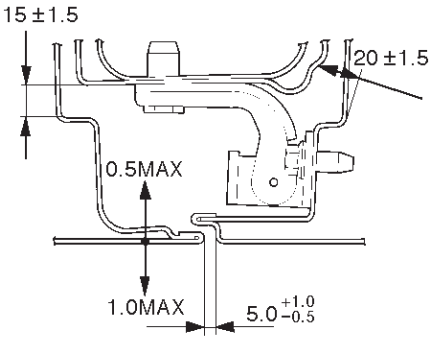

SECTION 13

A10RW002

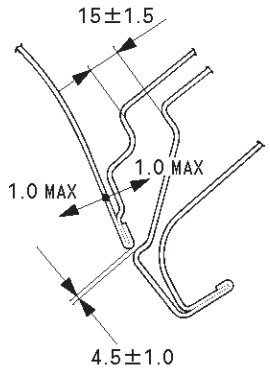

SECTION 14

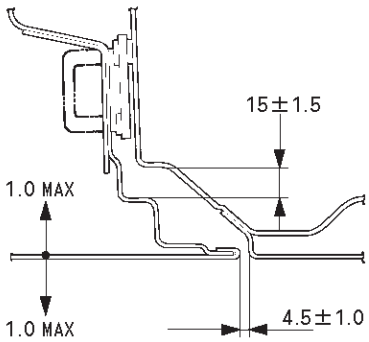

SECTION 15

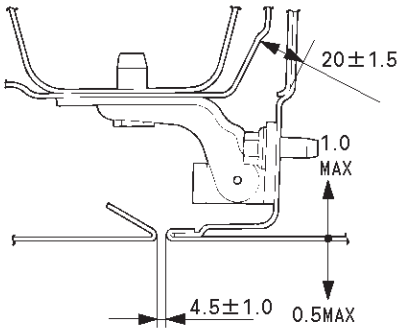

SECTION 16

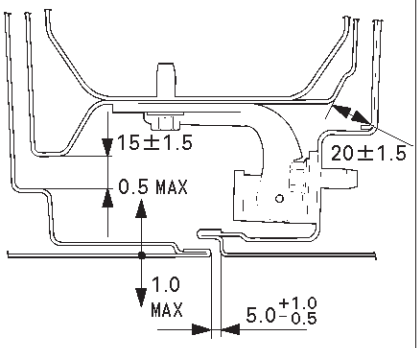

SECTION 17

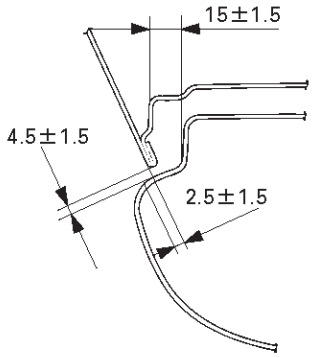

SECTION 18、19

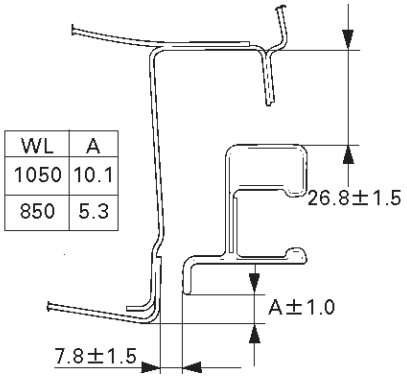

WL	A
1050	10.1
850	5.3

SECTION 20

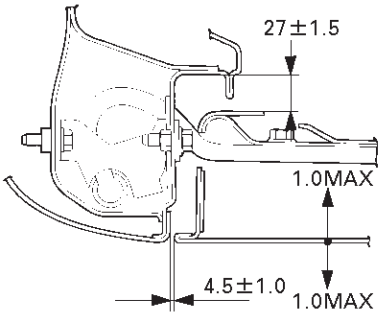

SECTION 21

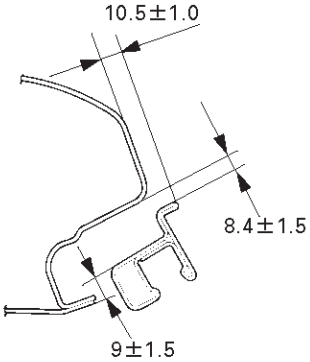

SECTION 22

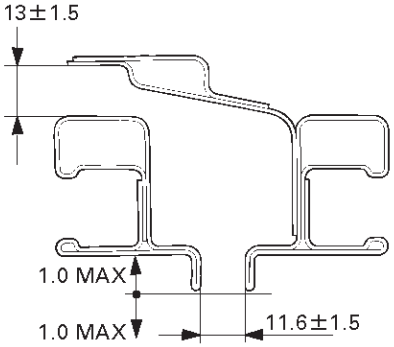

SECTION 23

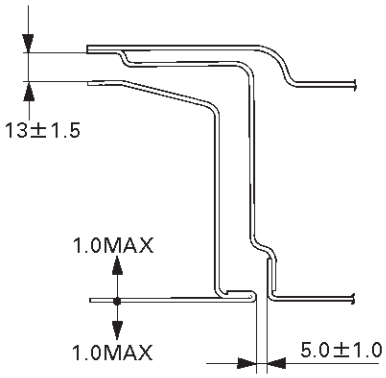

SECTION 24

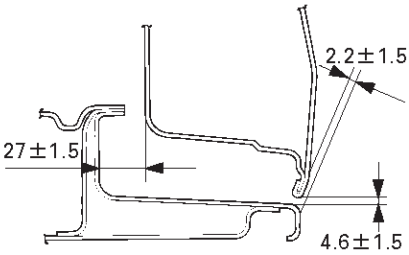

SECTION 25

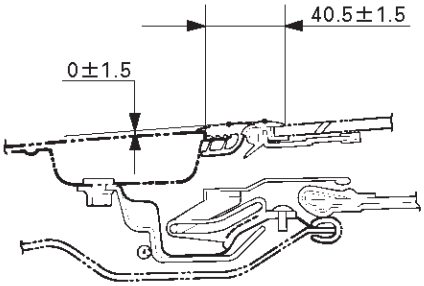

SECTION 26

A10RW014

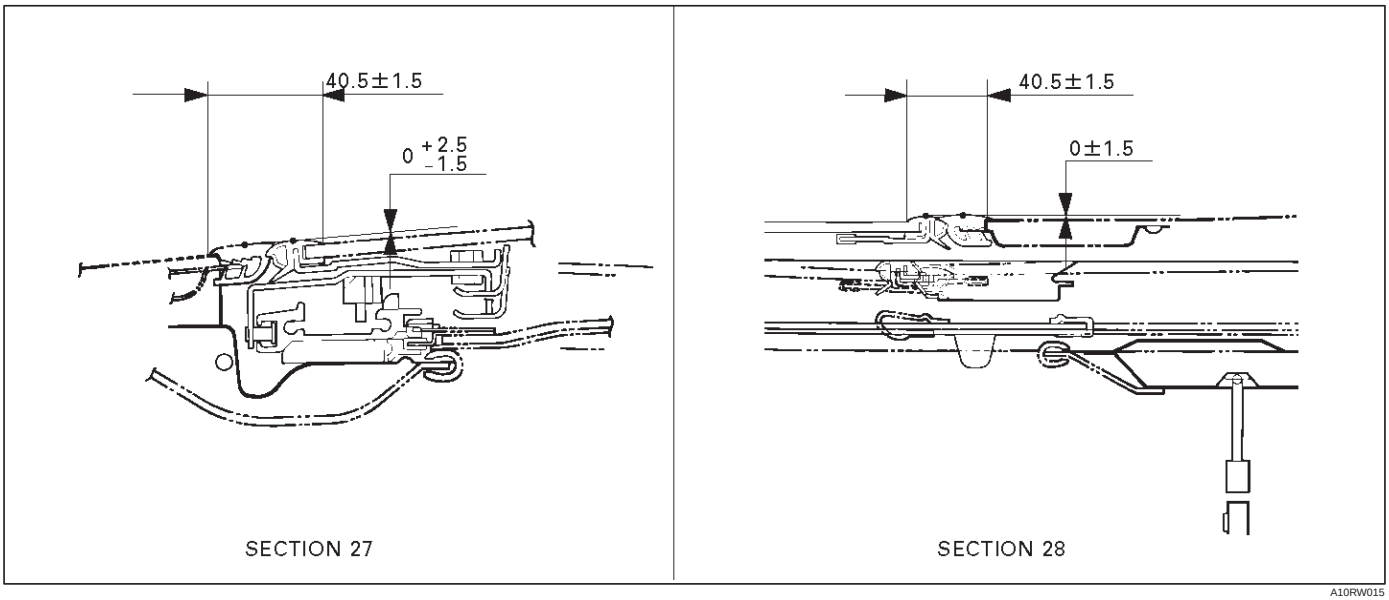

A10RW015

Front Section

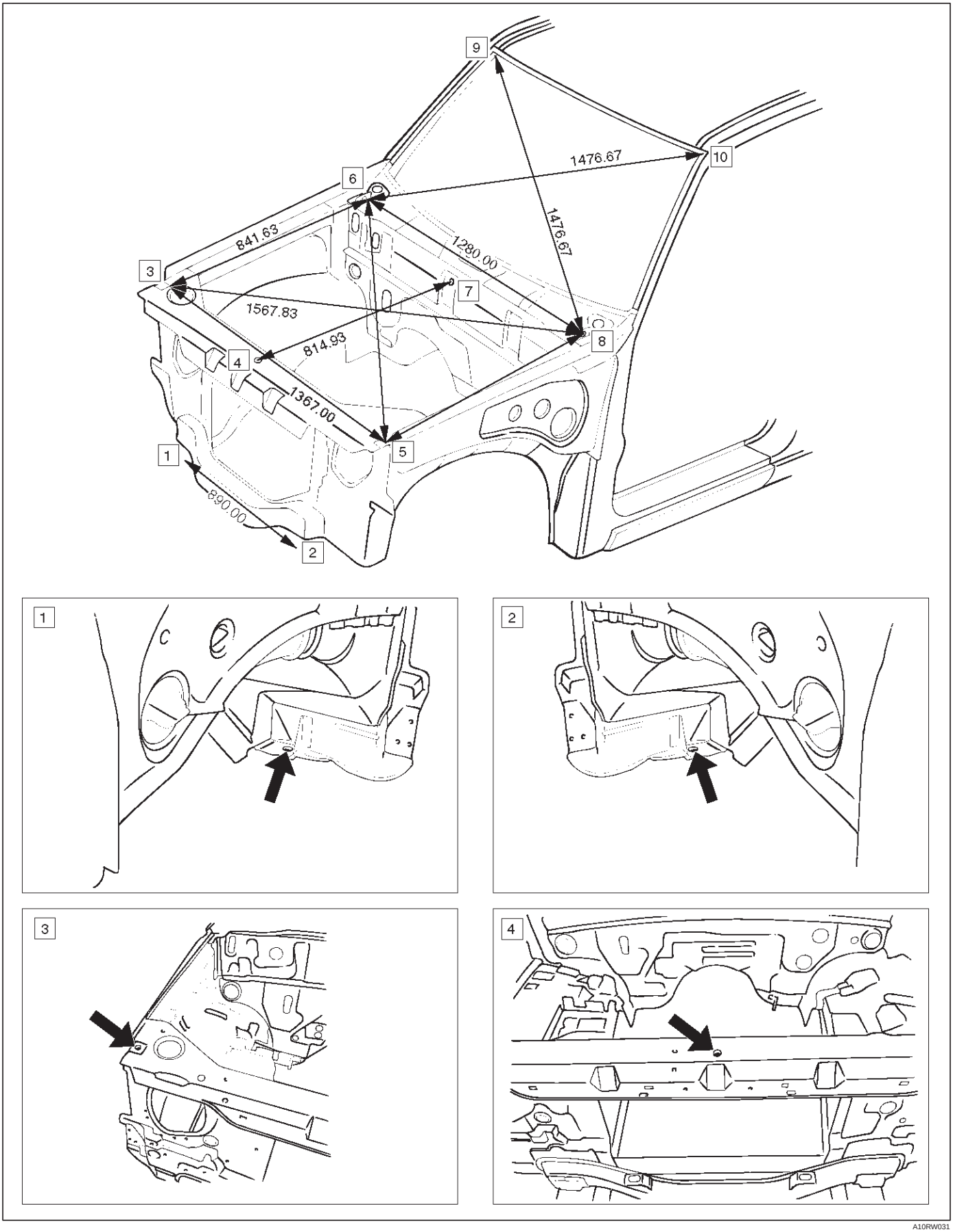

A10RW031

5

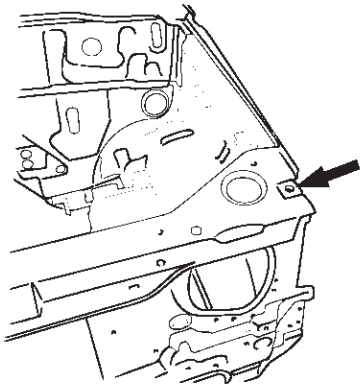

6

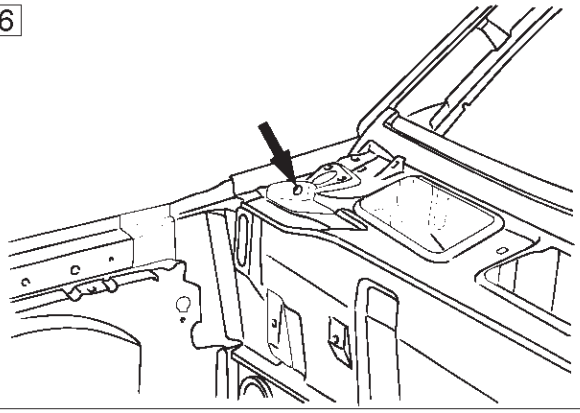

7

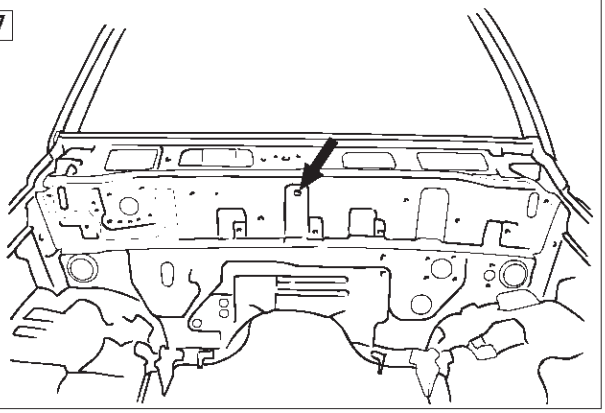

8

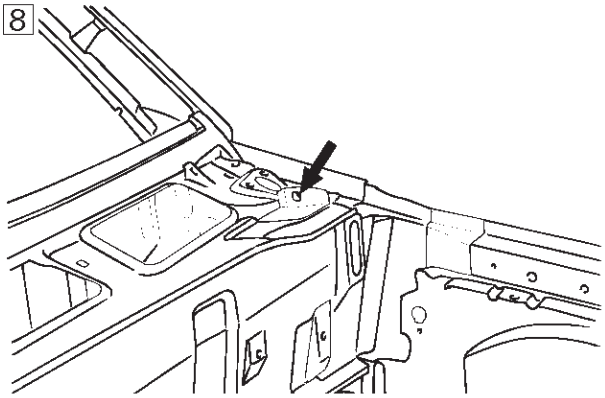

9

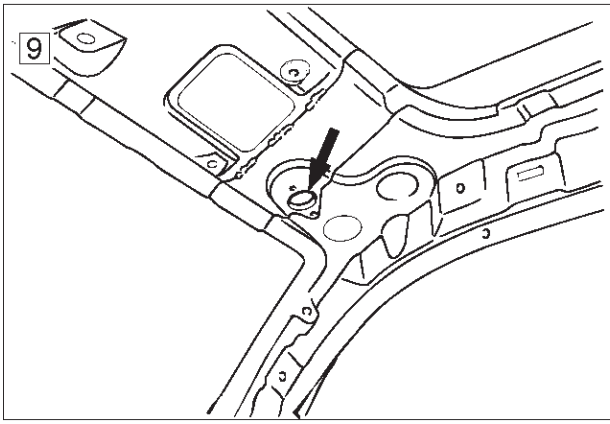

10

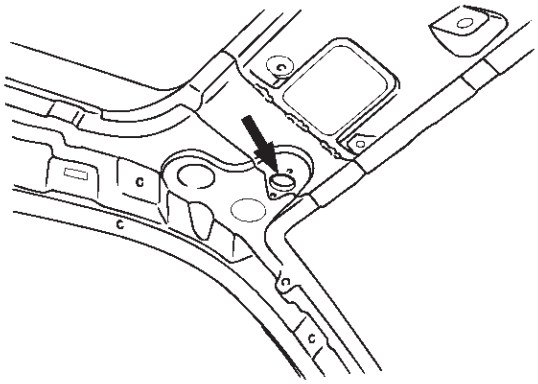

A10RW004

Room Section (LWB)

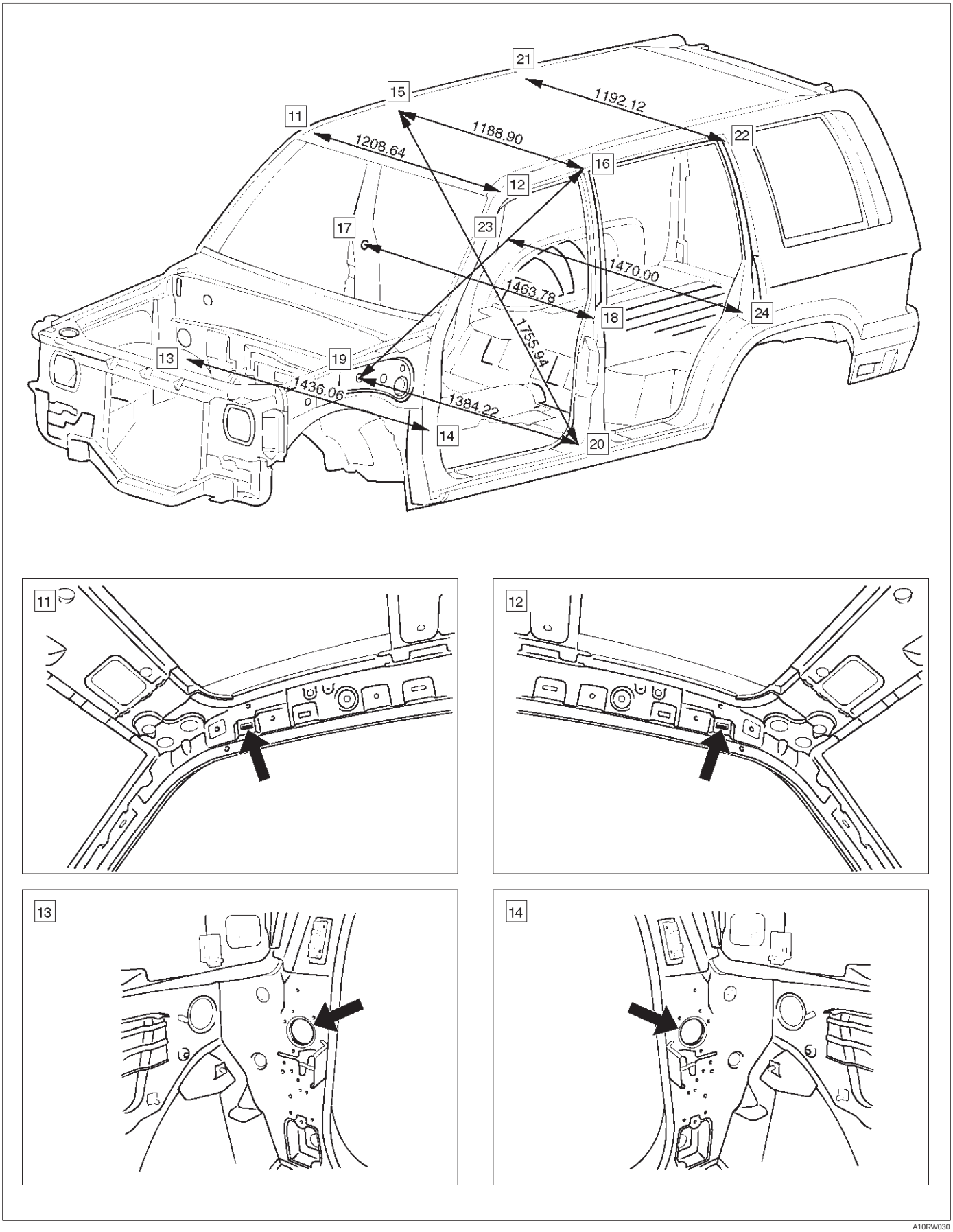

A10RW030

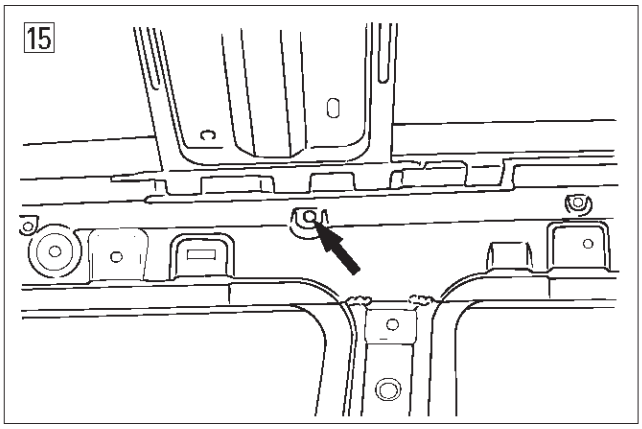

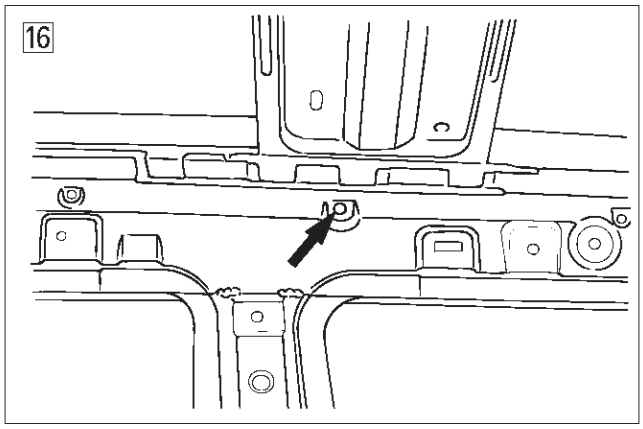

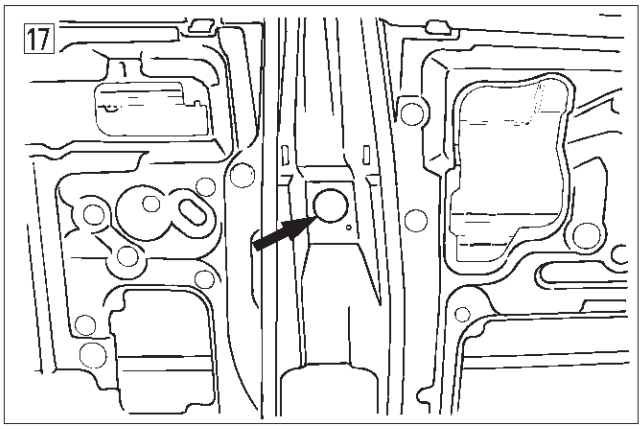

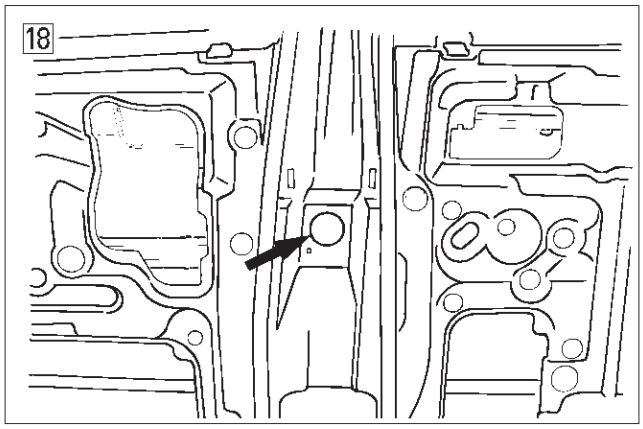

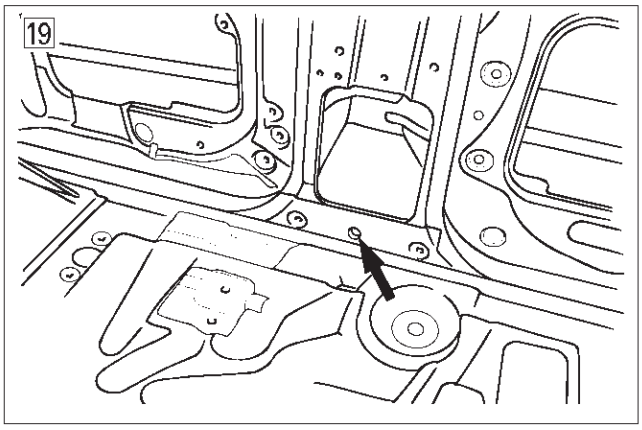

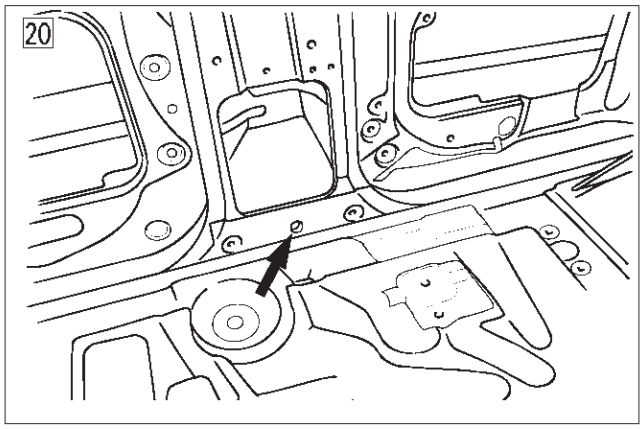

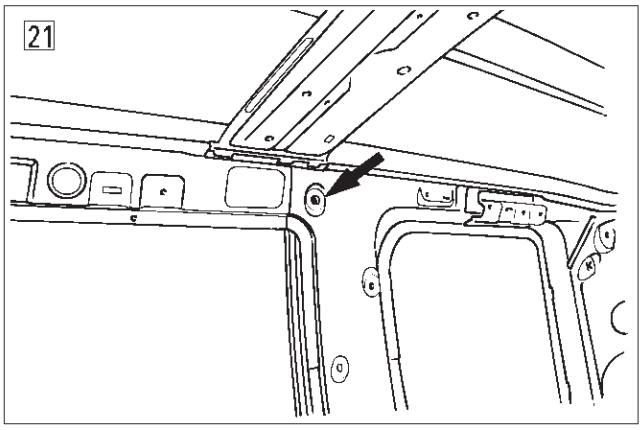

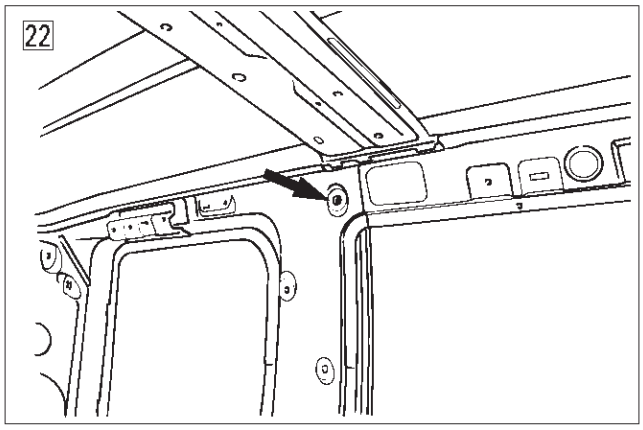

A10RW005

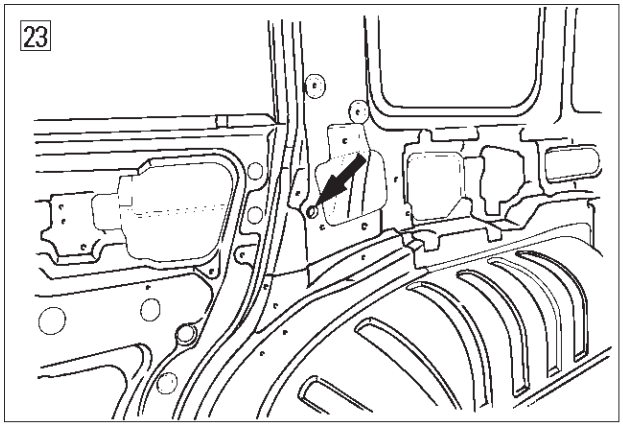

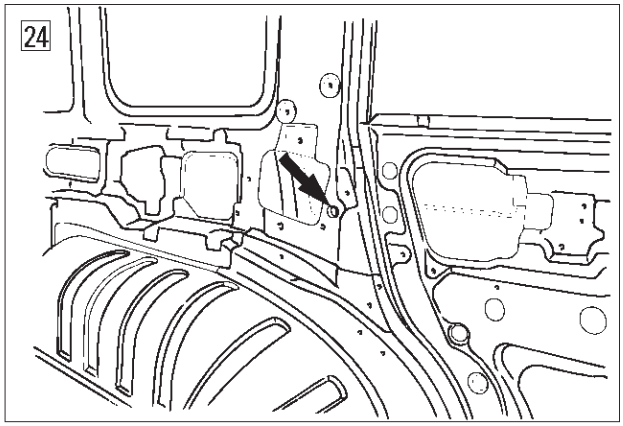

A10RW006

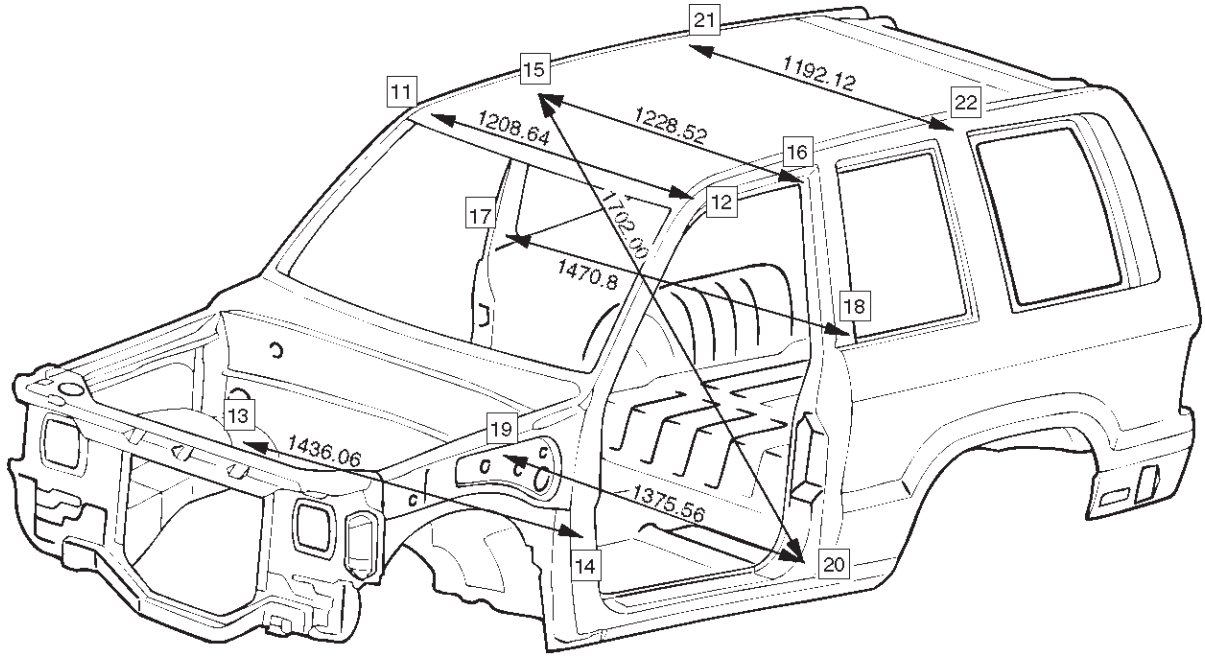
21
15
11
1192.12
22
1208.64
1228.52
16
12
17
1702.00
1470.8
18
13
19
1436.06
1375.56
14
20

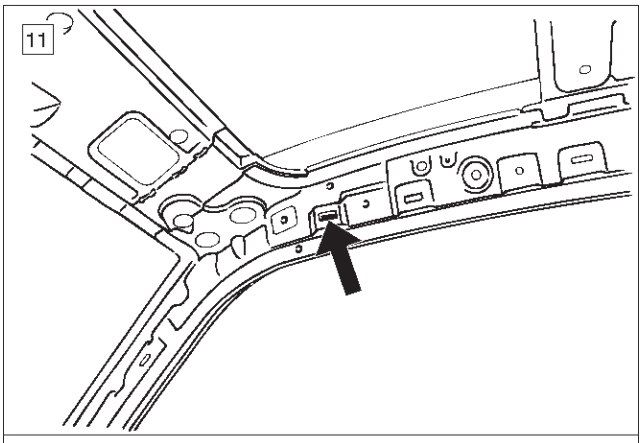
11

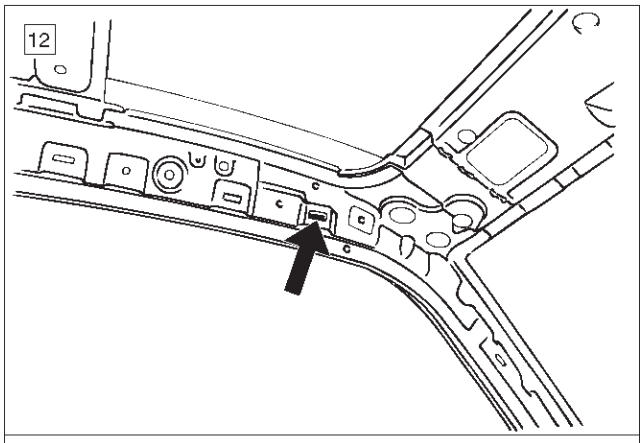
12

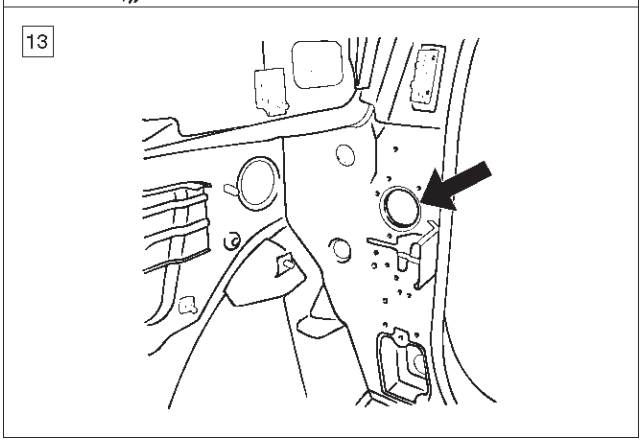
13

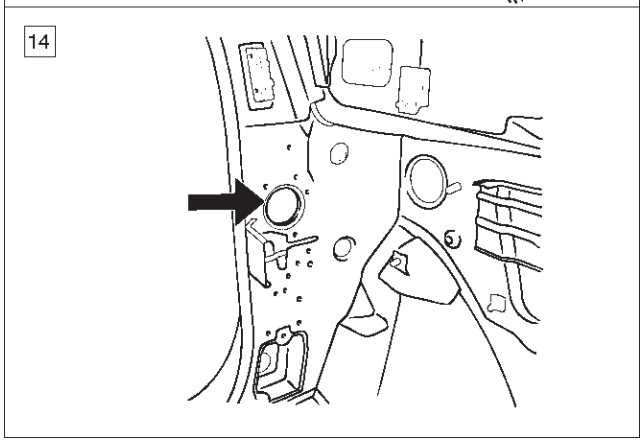
14

A10RW024

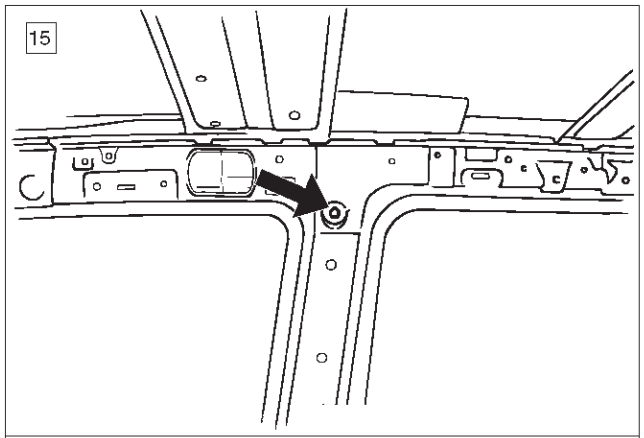

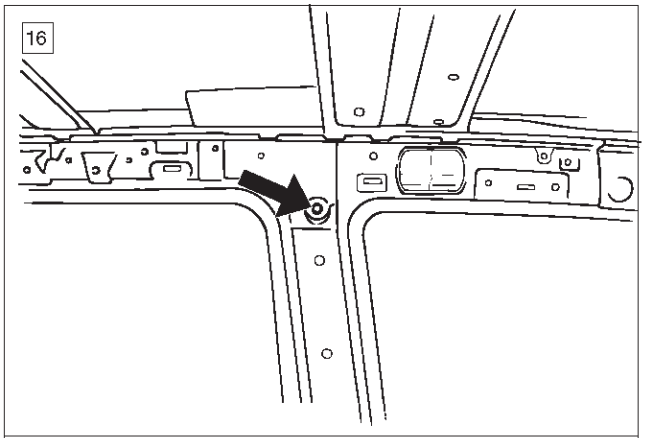

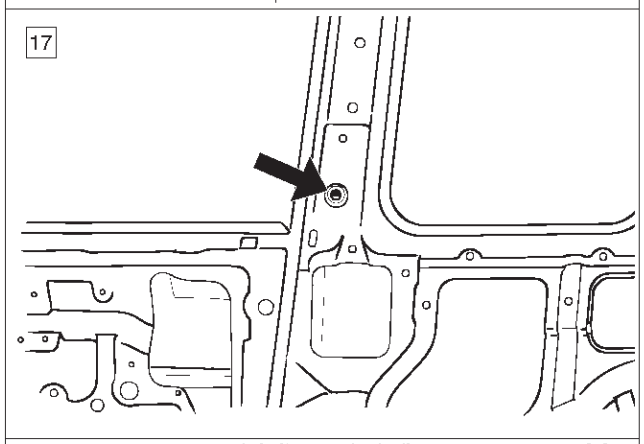

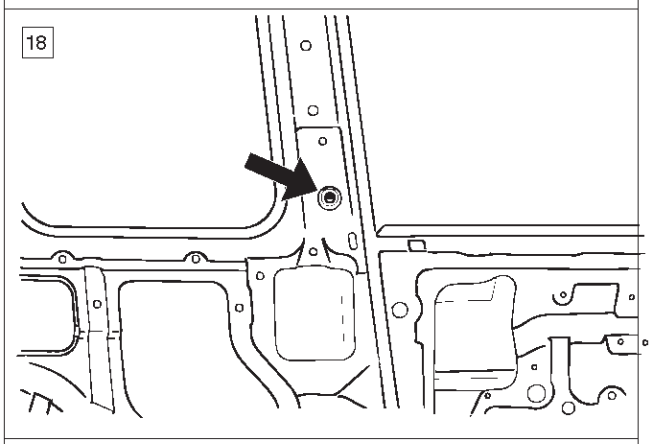

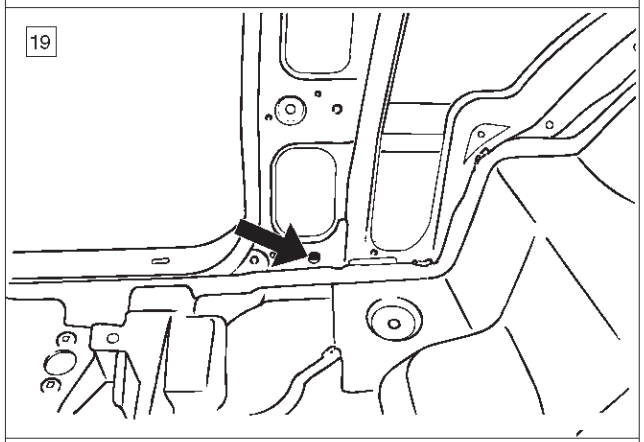

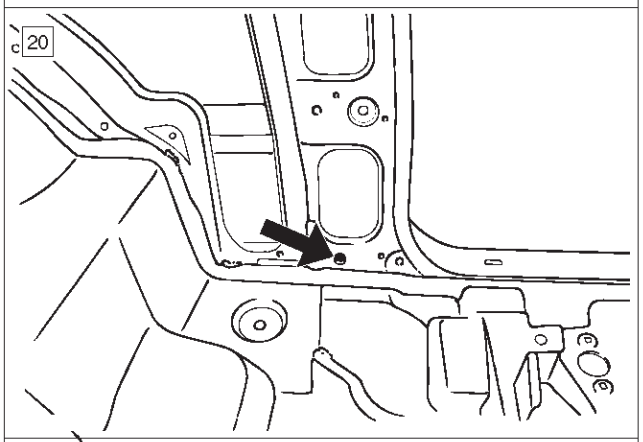

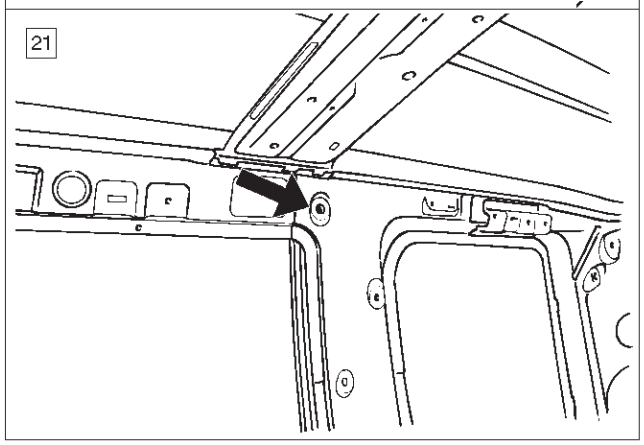

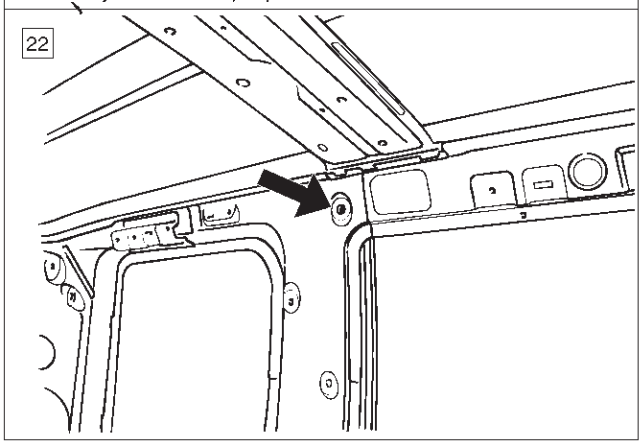

A10RW025

Rear Section

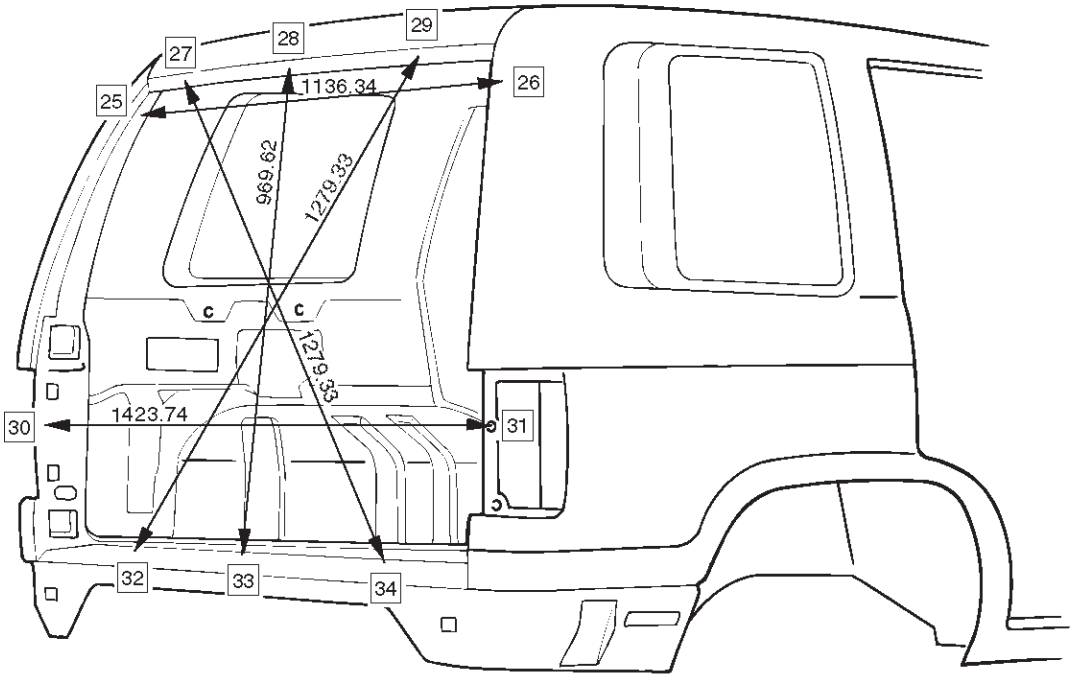

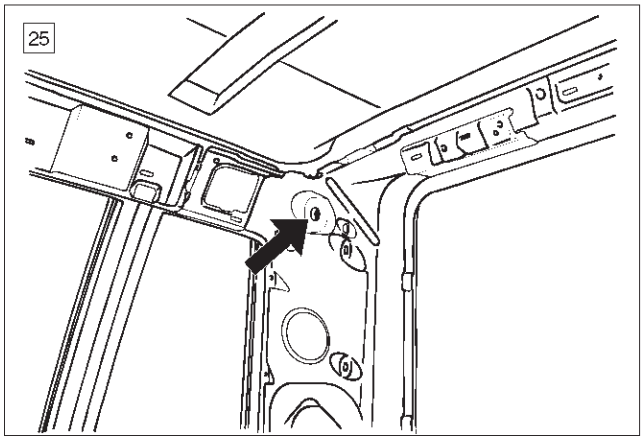

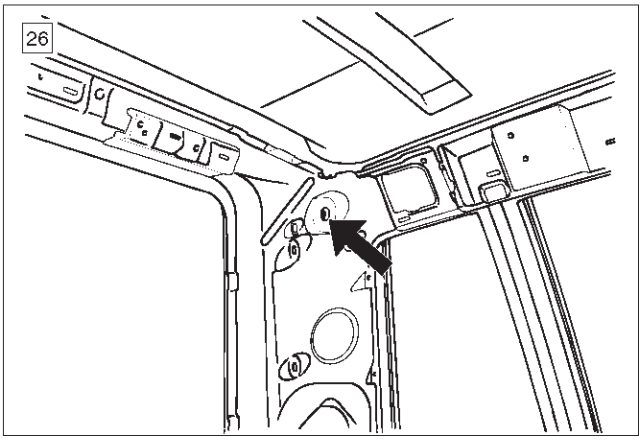

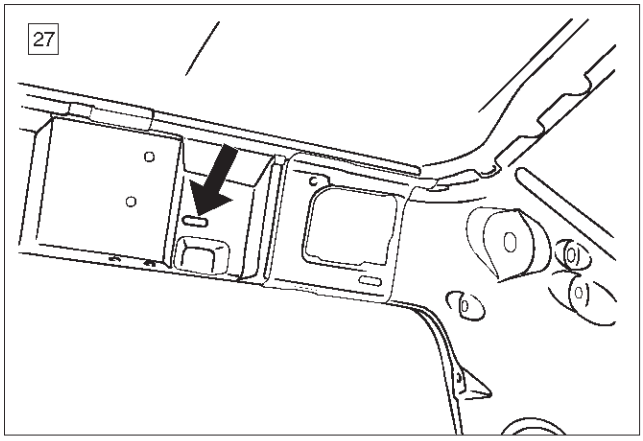

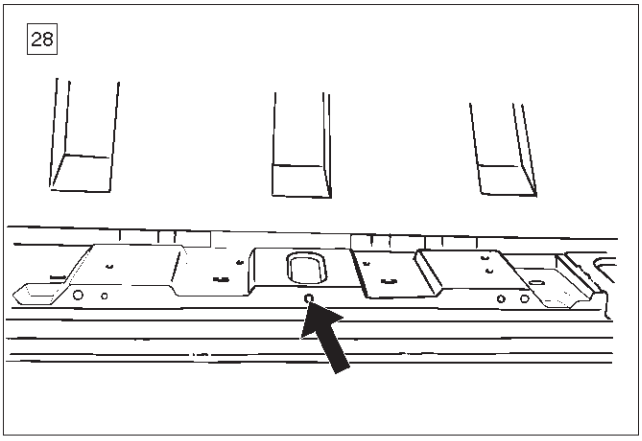

A10RW032

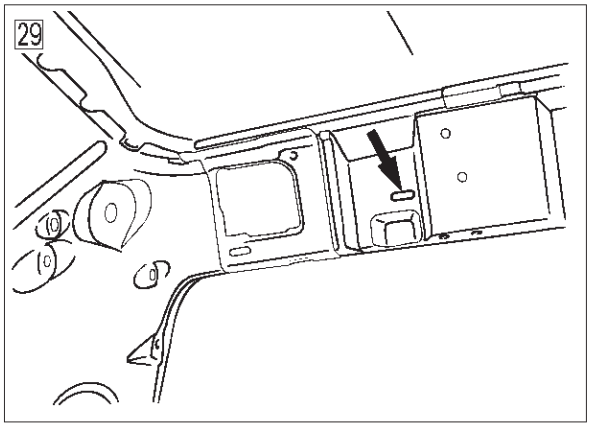

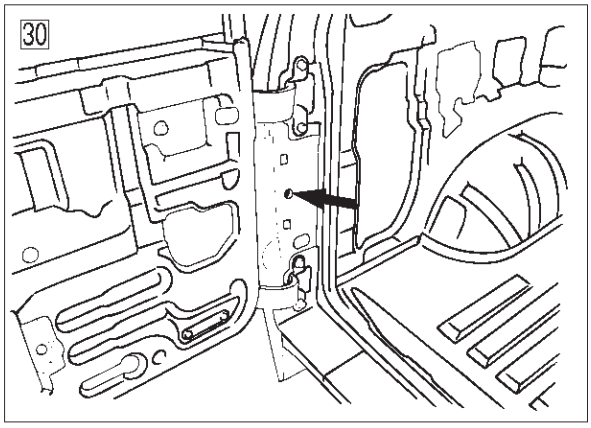

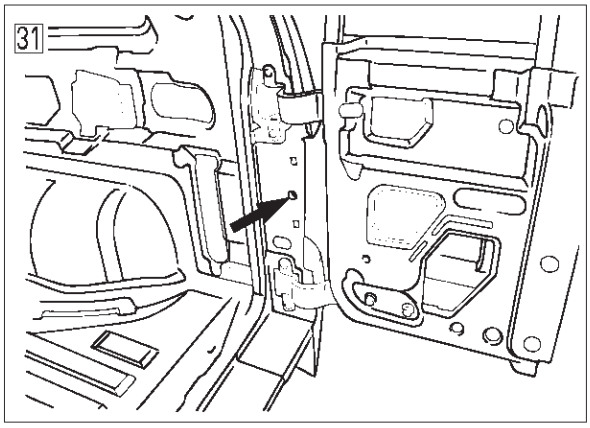

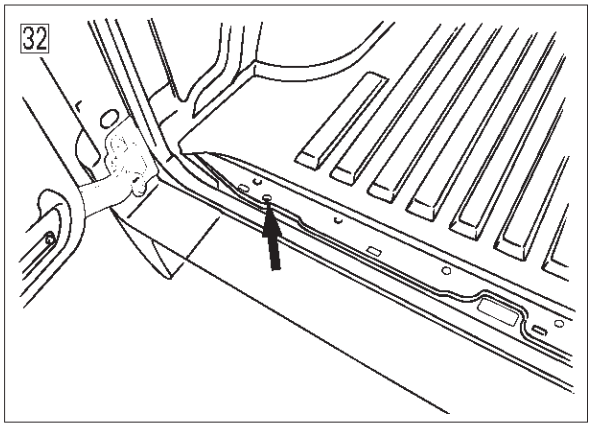

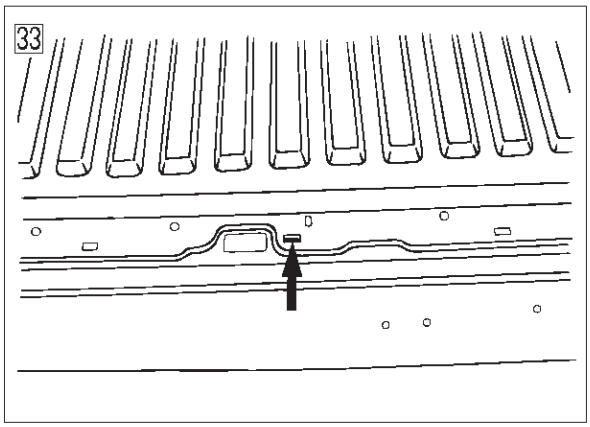

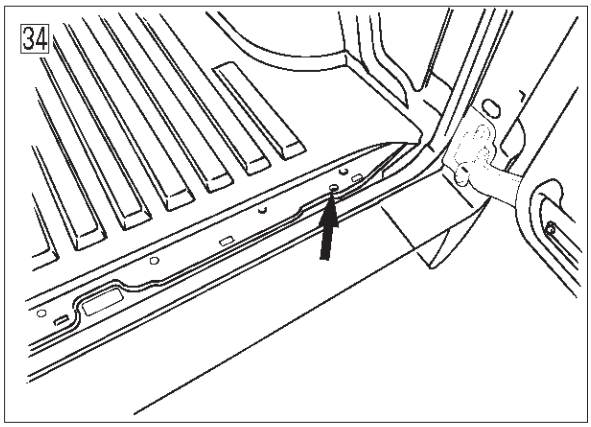

A10RW008

Side Body

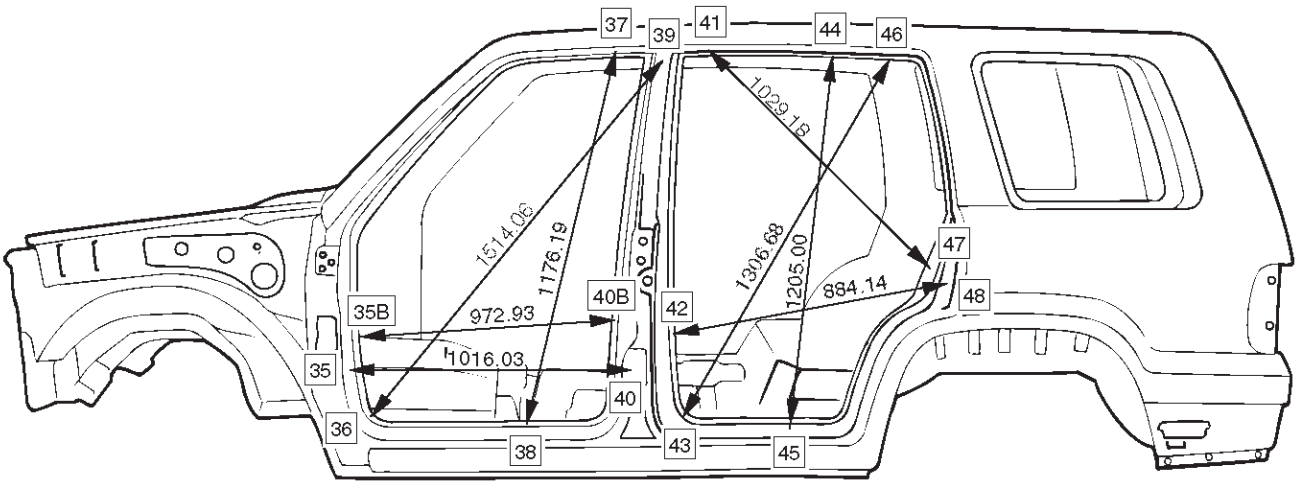

* 35B ~ 40B : Short Wheel Base Only

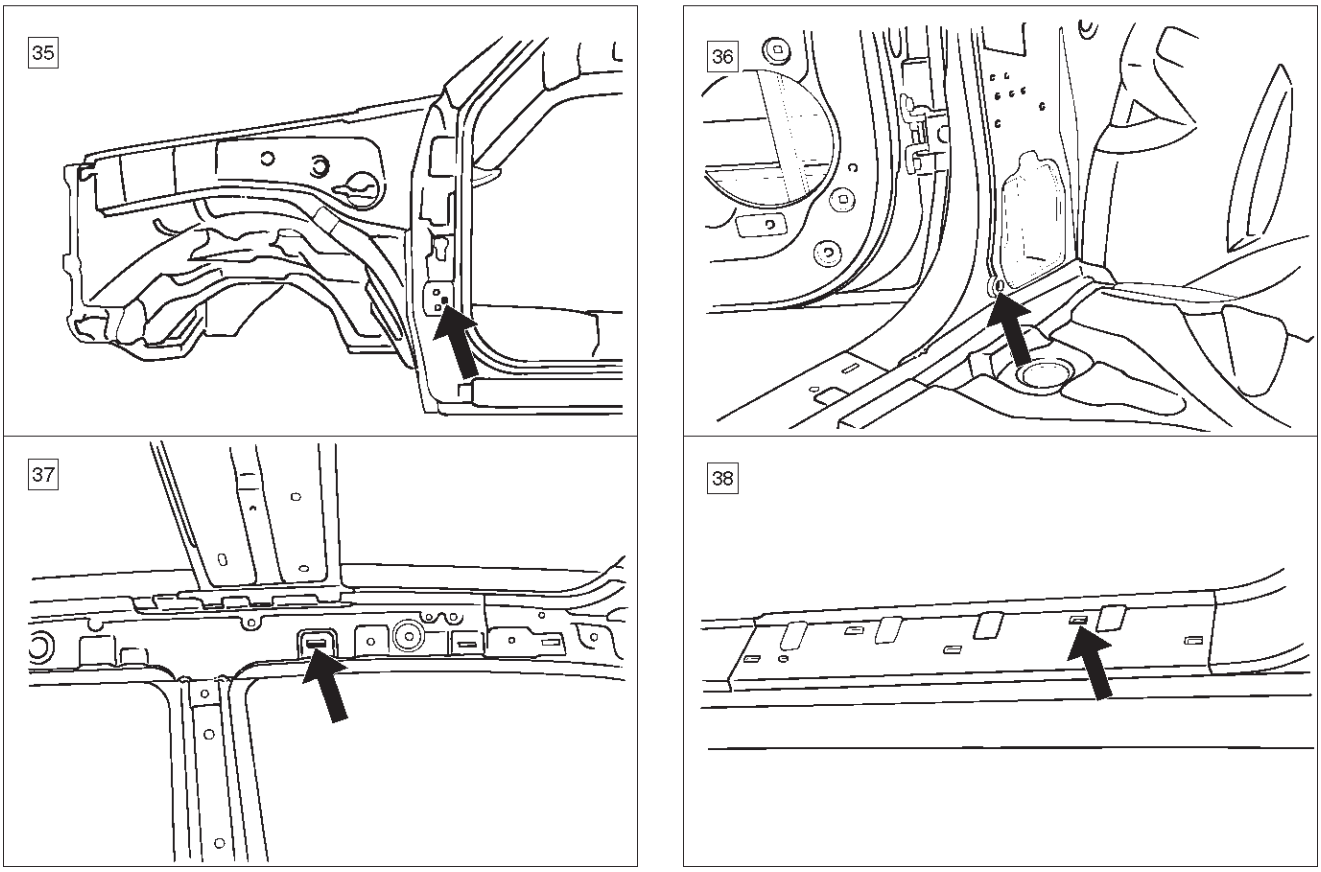

A10RW026

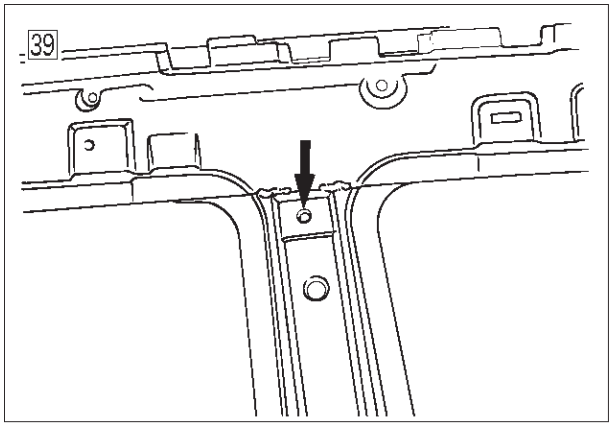

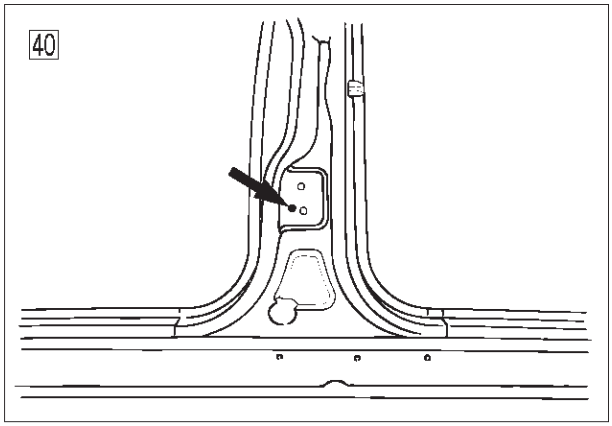

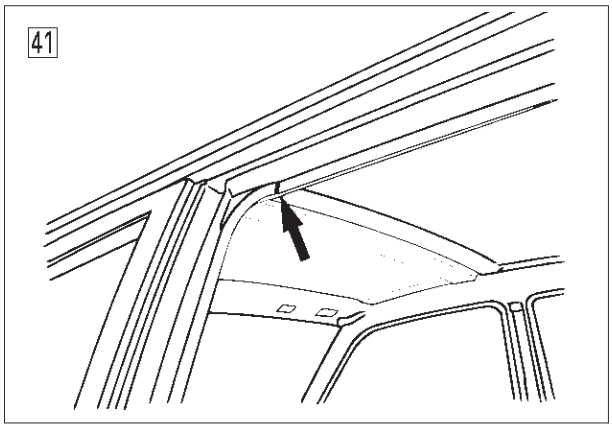

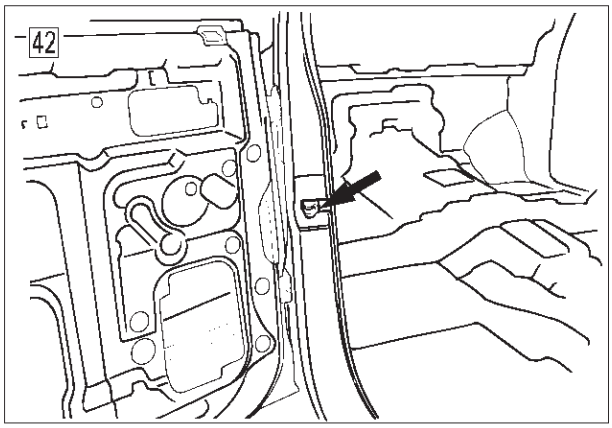

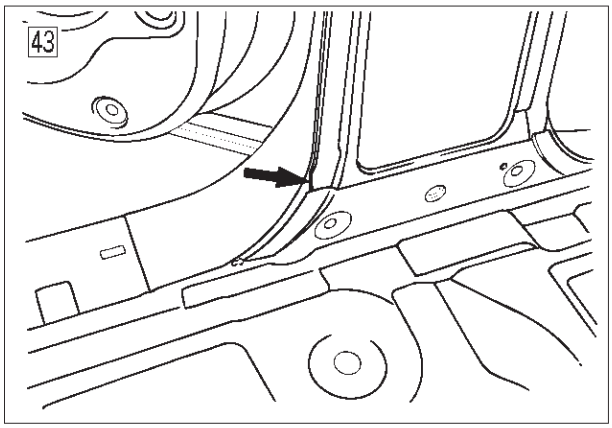

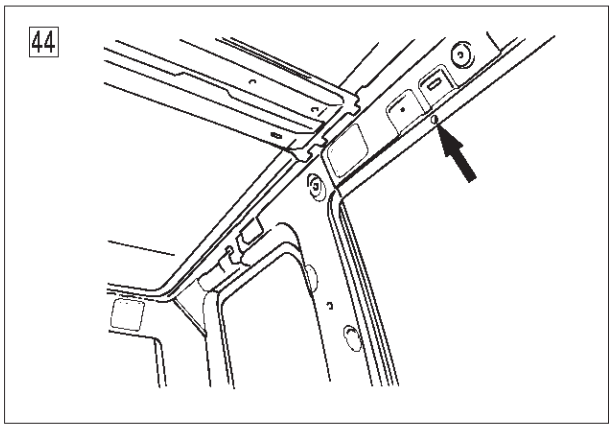

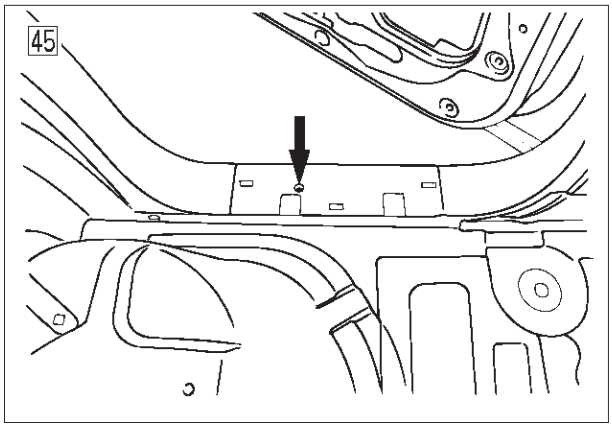

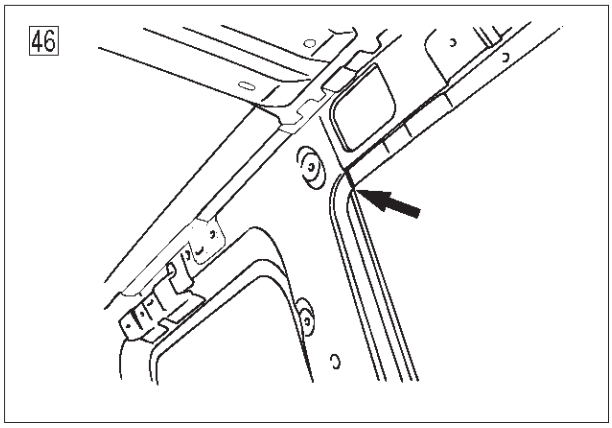

A10RW009

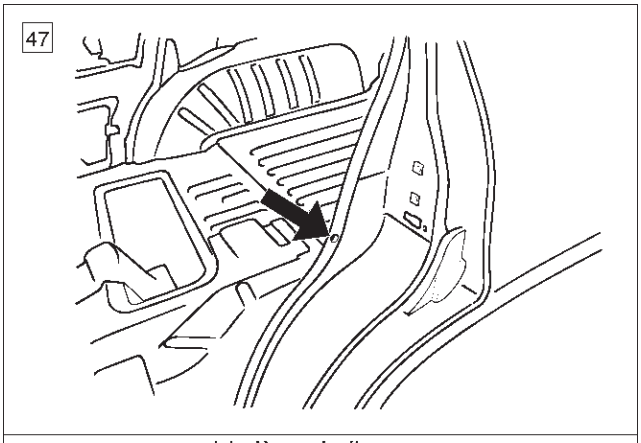

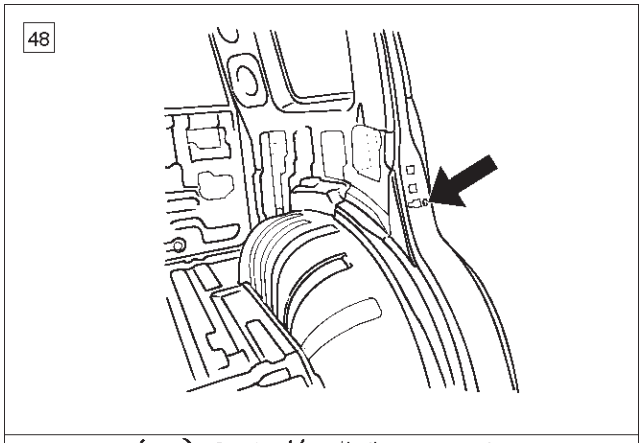

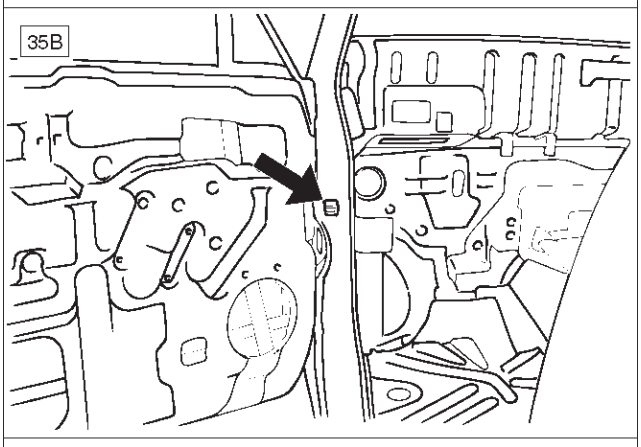

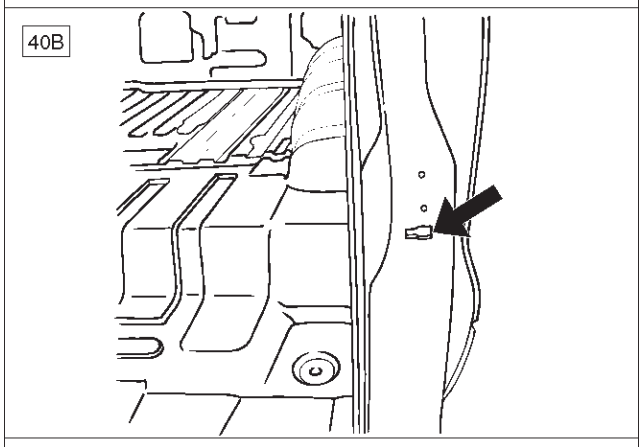

A10RW027

Window Glass

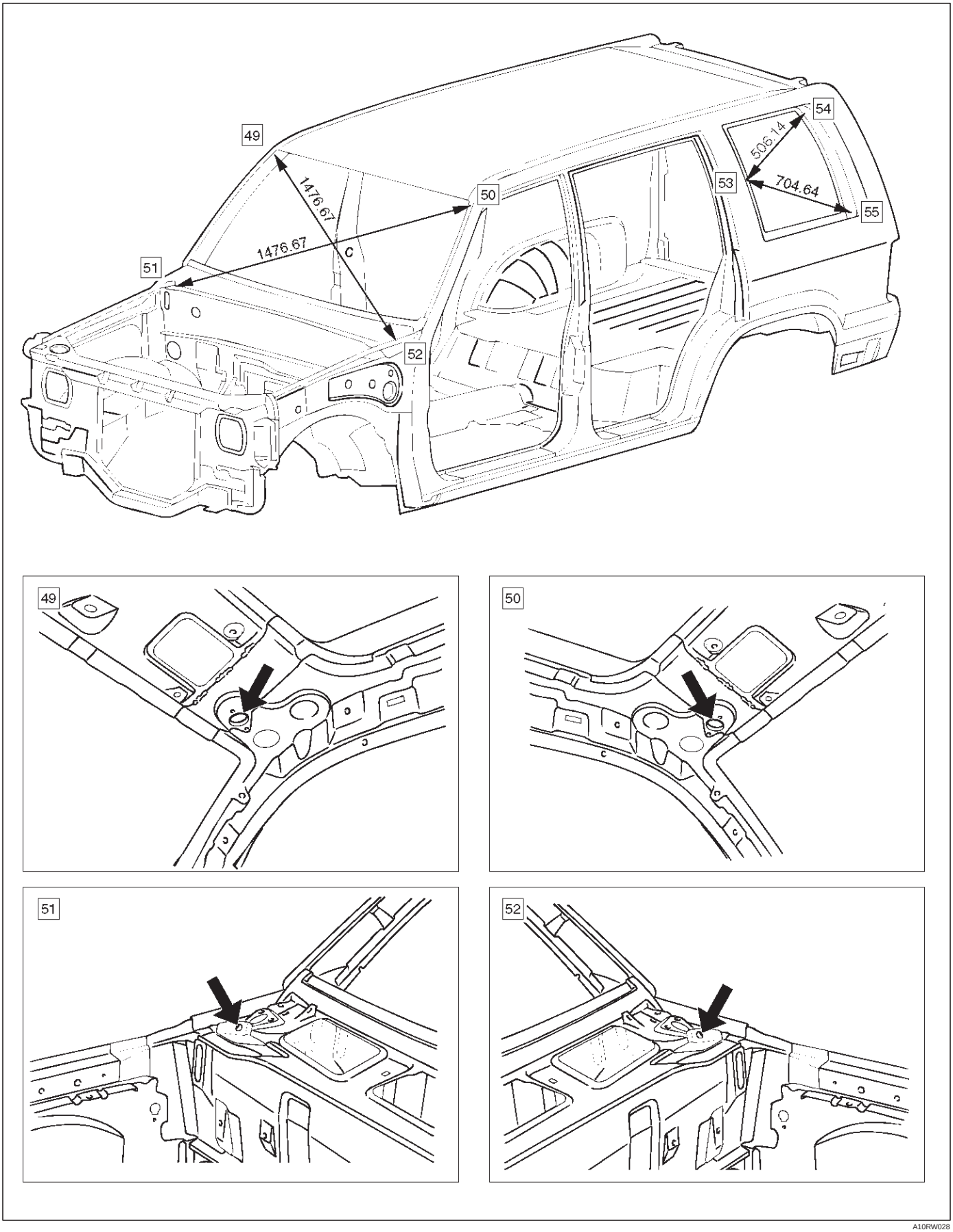

A10RW028

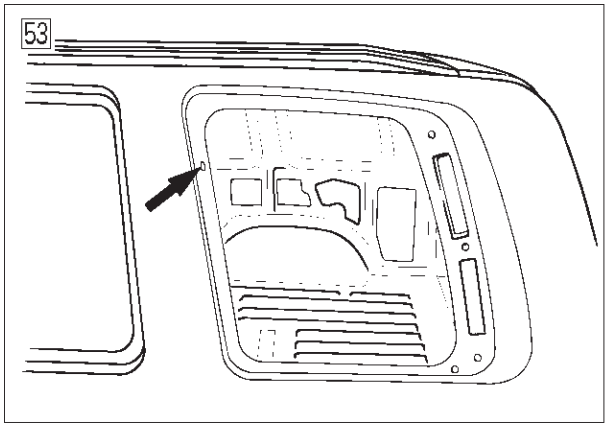

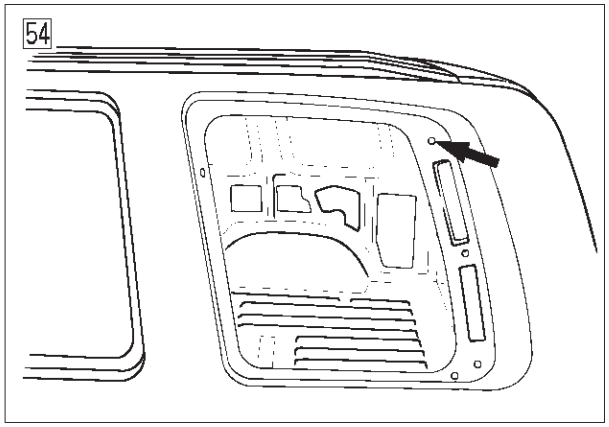

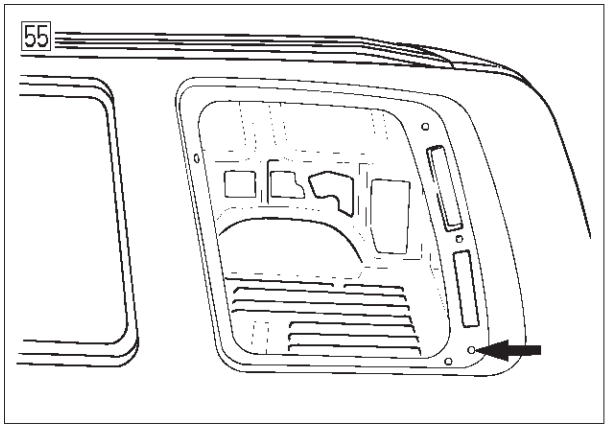

A10RW011

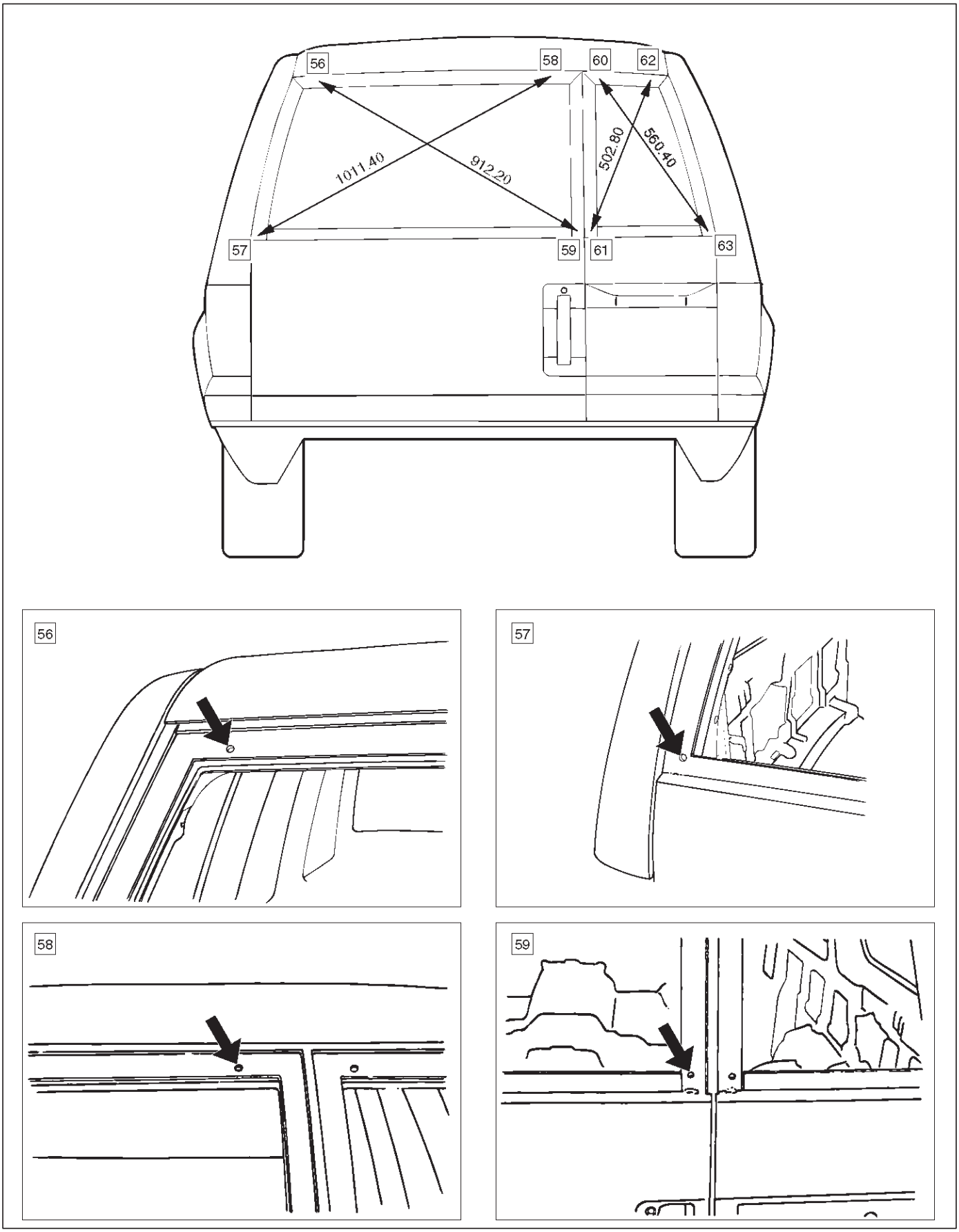

A10RW029

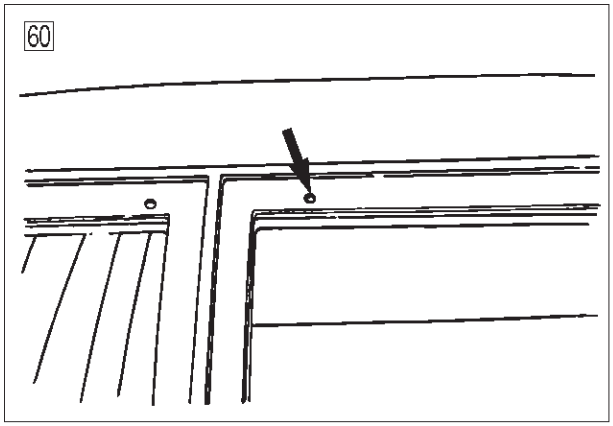

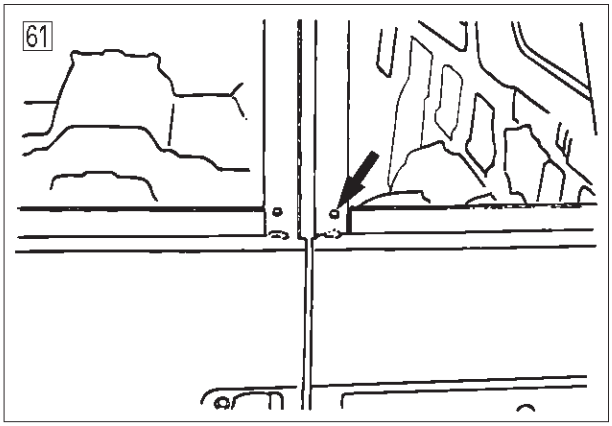

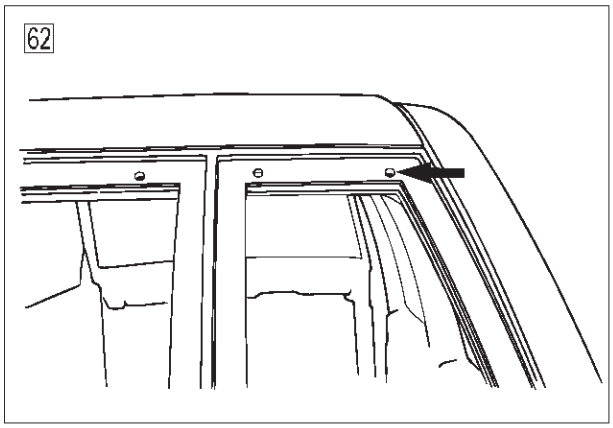

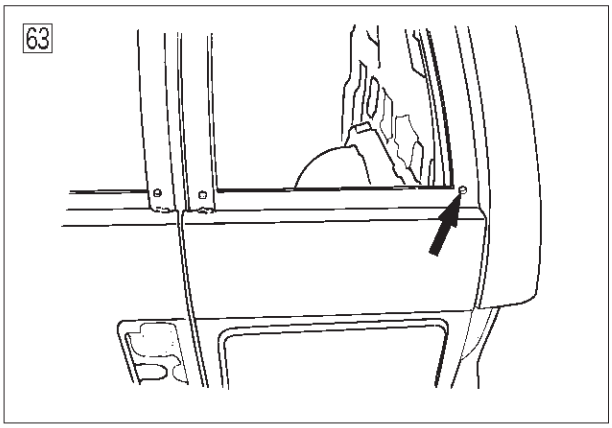

A10RW013

Instrument Panel Assembly

Parts Location

This illustration is based on RHD and W/SRS.

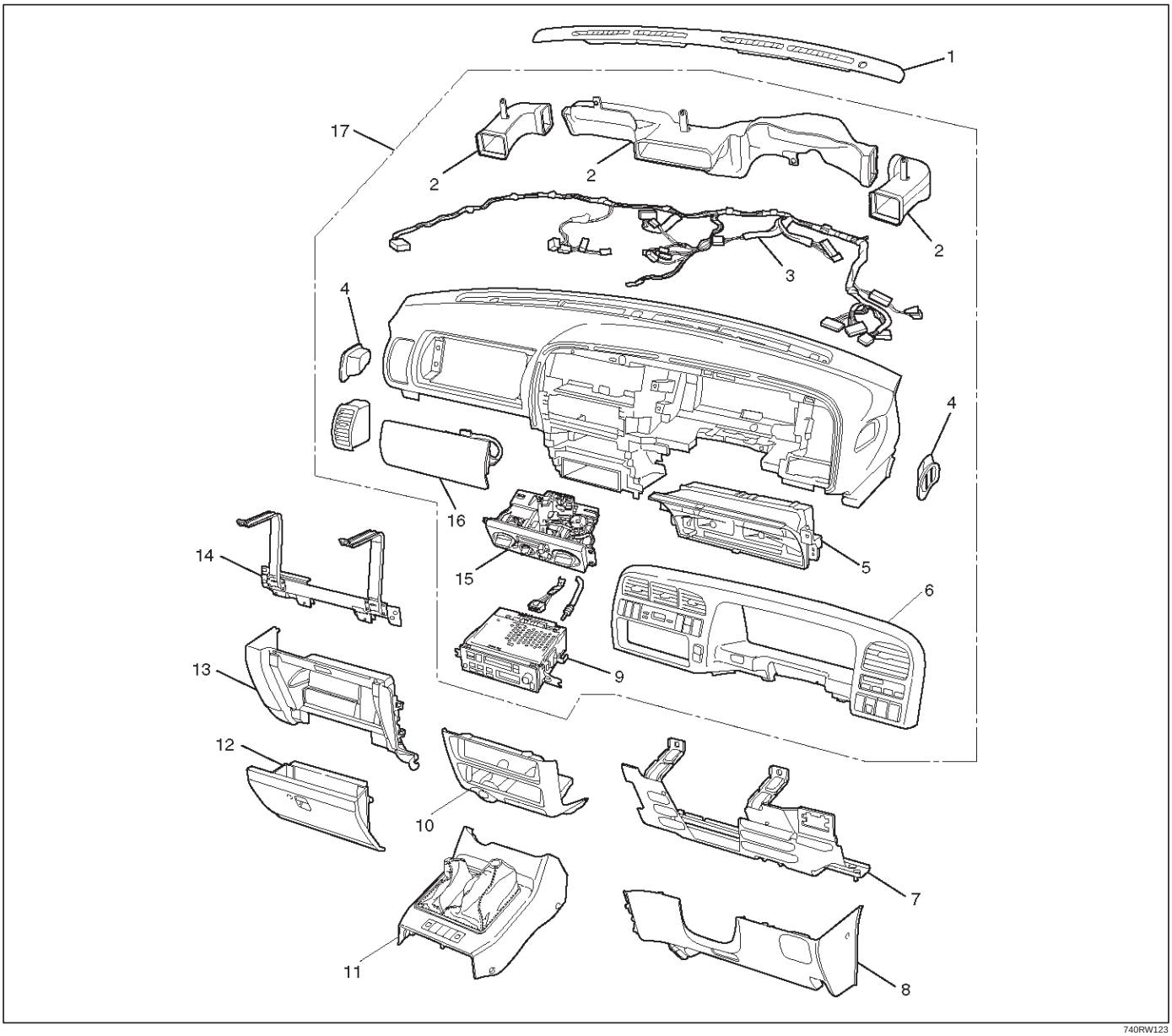

740RW123

Legend

(1) Front Defroster Grille
(2) Vent Duct Assembly
(3) Instrument Harness Assembly
(4) Side Defroster Grille
(5) Meter Assembly
(6) Instrument Panel Cluster Assembly
(7) Driver Knee Bolster Assembly (W/SRS)
(8) Instrument Panel Driver Lower Cover Assembly
(9) Radio Assembly
(10) Lower Cluster Assembly
(11) Front Console Assembly
(12) Glove Box
(13) Instrument Panel Passenger Lower Cover Assembly
(14) Passenger Knee Bolster Reinforcement Assembly
(15) Control Lever Assembly
(16) Passenger Inflator Module (W/SRS)
(17) Instrument Panel Assembly

Removal

CAUTION: For precautions on installation or removal of SRS—air bag system, refer to Supplemental Restraint System (SRS) — AIR BAG in Restraint section.

1. Disconnect the battery ground cable.
2. Remove front console assembly.
   - Remove the 4 fixing screws and disconnect the switch connectors.
3. Remove lower cluster assembly.
   - Remove the 3 fixing screws (1) in order to disconnect the cigarette lighter (3) and the illumination (2) connectors.

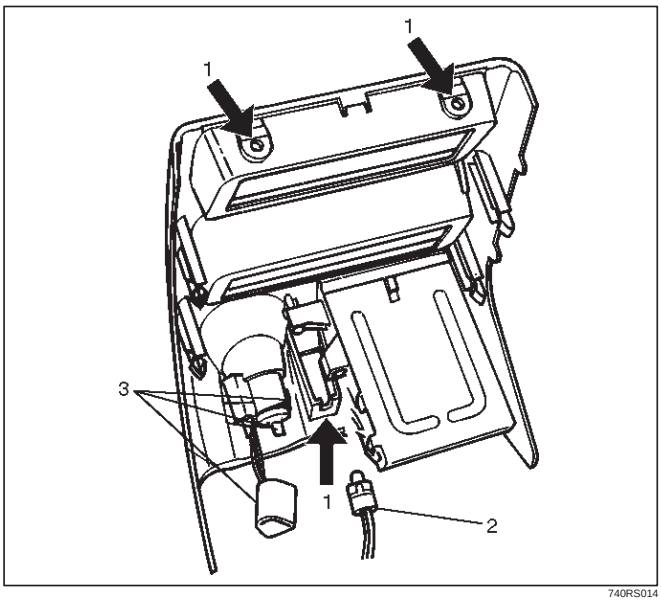

740RS014

4. Remove glove box.
   - Remove the 2 fixing screws.

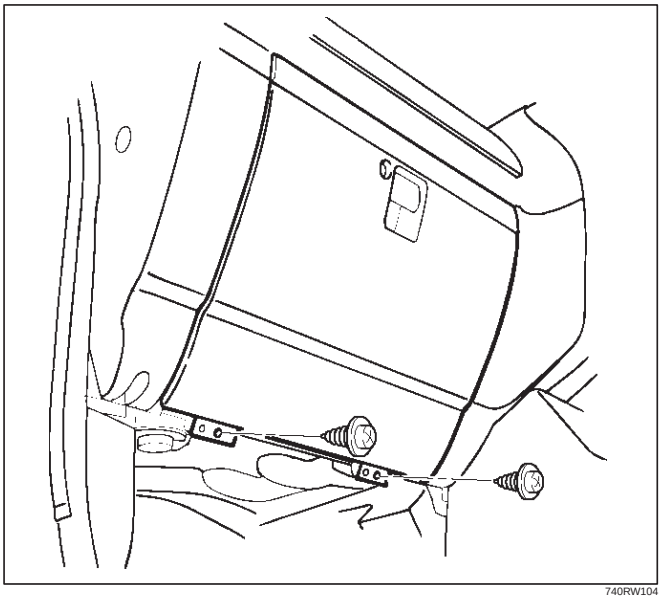

740RW104

5. Remove instrument panel passenger lower cover assembly.
   - Remove the 7 fixing screws (1) and 1 clip (2).

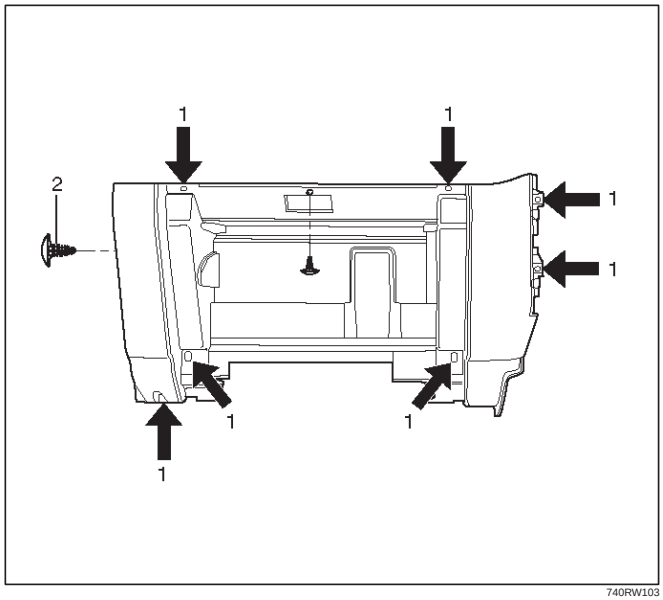

740RW103

6. Remove passenger knee bolster reinforcement assembly.
   - Remove the 4 fixing bolts (2) and 4 nuts (1).

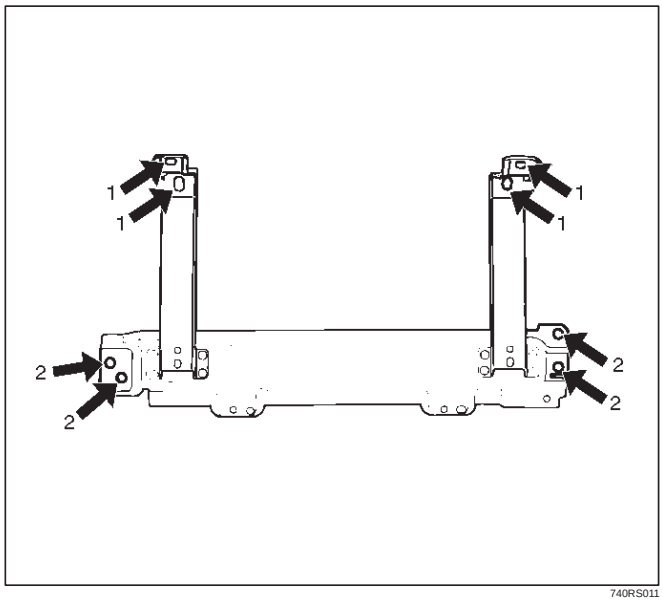

740RS011

7. Remove instrument panel driver lower cover assembly.
   - Remove the engine hood opener fixing screws.
   - Remove the 2 fixing screws (2), 1 fixing bolt (3), and 1 clip (4). Pull out the fasteners at the 4 positions (1).

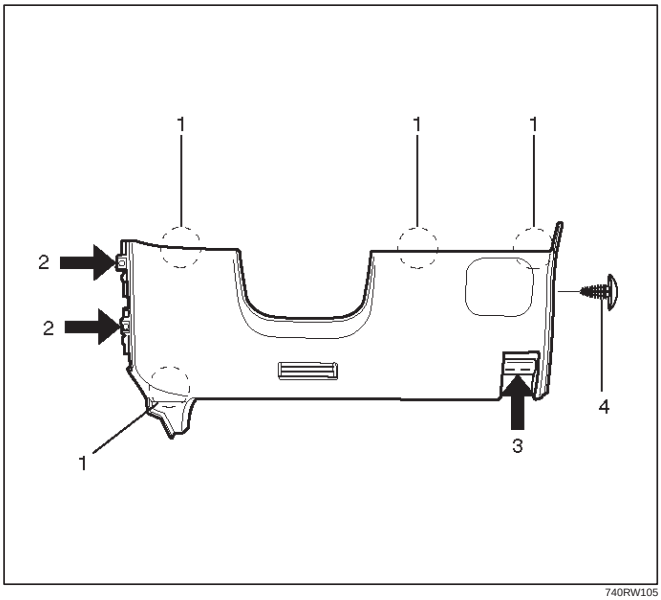

740RW105

8. Remove driver knee bolster assembly (W/SRS).
   - Remove the 6 fixing nuts.

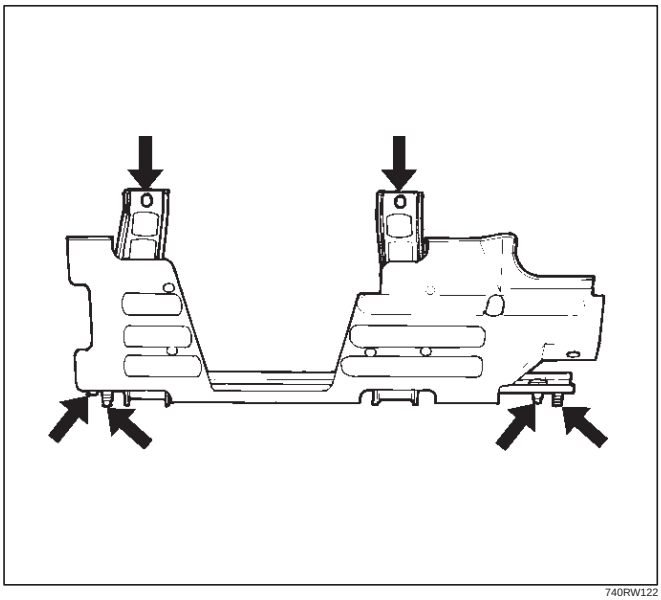

740RW122

9. Remove front defroster grille.
   - Pry 8 claws on the front side toward you side (room side) and raise the grille upward.
10. Remove instrument panel assembly.
   - Remove the 2 fixing bolts on the SRS adjust bracket and the cross beam under the passenger inflator module (W/SRS).

CAUTION: For precautions on installation or removal of SRS — air bag system, refer to Supplemental RestraintSystem (SRS) — AIR BAG in Restraint section.

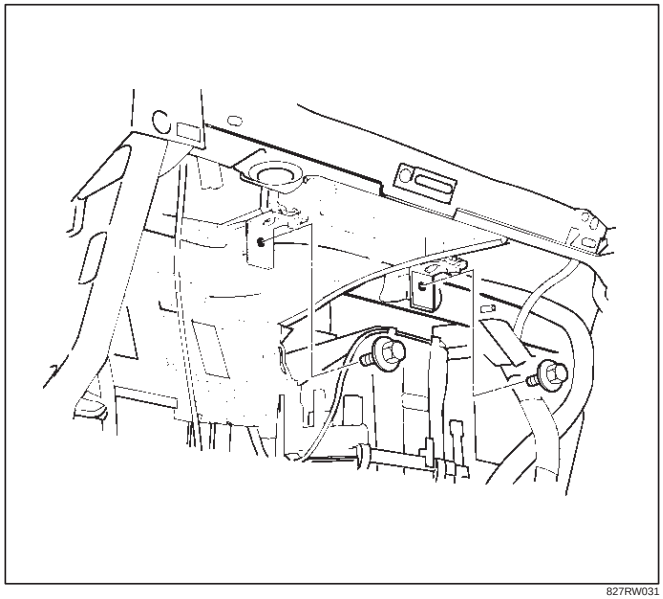

827RW031

- Disconnect the 3 air conditioner control cables on the unit side.
- Remove the instrument harness connectors (5 connectors on the drivers side and 3 connectors on the passenger side), the passenger inflator module connector, the radio antenna cable plug, and the ground cable fixing bolt on the center bracket.
- Remove the 4 bolts (4) and the 2 nuts (3) under the instrument panel assembly, and the upper left and the upper right bolts (2) and the center nut (1).

740RW106

11. Remove passenger inflator module (W/SRS).
    - From the back of the instrument panel, remove the 4 fixing nuts (2) on the passenger inflator module (3) and the 2 fixing nuts (1) and washers on the support bracket (4), then disengage the 2 clips in order to remove the passenger inflator module.

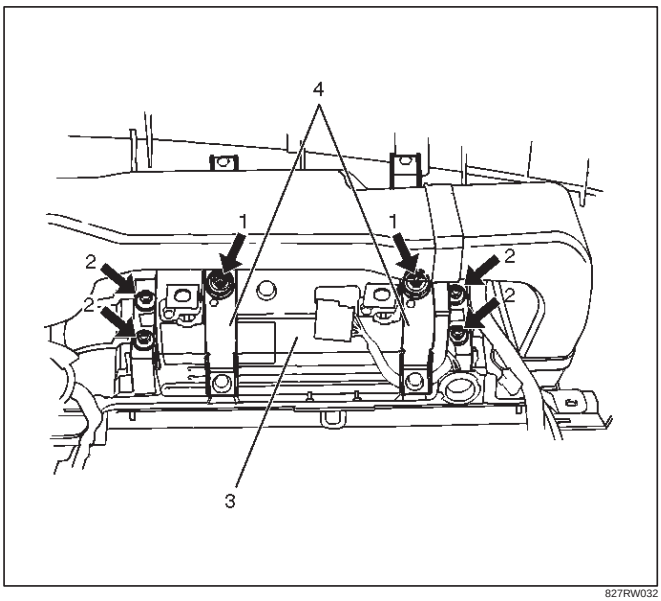

827RW032

12. Remove instrument panel cluster assembly.
    - Remove the 5 fixing screws (2) and pull the main unit toward you and remove the clips at the 4 positions (1). Disconnect the switch connectors.

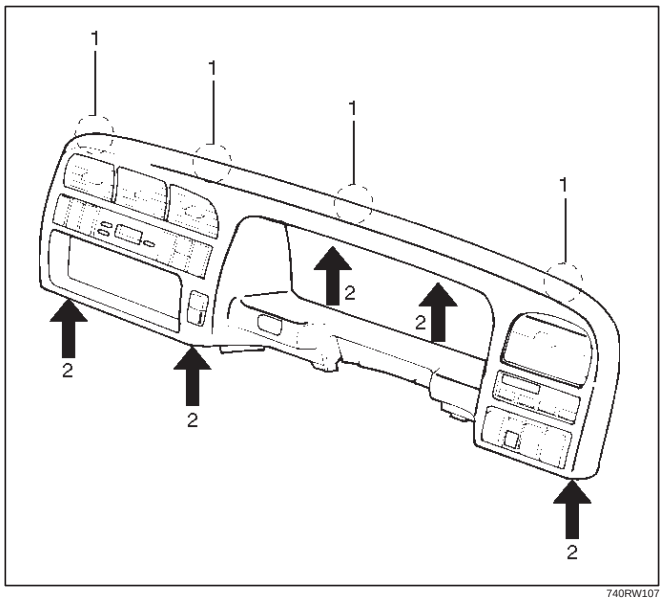

740RW107

13. Remove meter assembly.
    - Remove the 4 meter assembly fixing screws and disconnect the meter harness connectors.

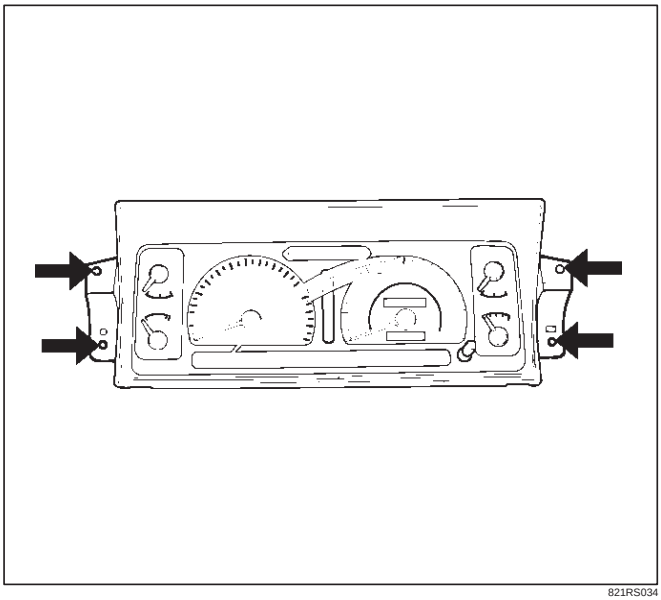

821RS034

14. Remove control lever assembly.
    - Refer to HVAC System in HVAC section.
15. Remove radio assembly.
    - Remove 2 fixing screws.
16. Remove vent duct assembly.
    - Remove 5 fixing screws.
17. Remove instrument harness assembly.
    - Remove the 4 fixing screws, fasteners at the 4 positions and the clips at the 7 positions.
18. Remove side defroster grille.

NOTE: For the order of removal steps in which each items contained in the instrument panel assembly are removed individually, refer to the chart.

Installation

To install, follow the removal steps in the reverse order.

Order Of Removal/Installation Steps For Each Item

Removal Item	Removal Procedure	Removal Step
Front console assembly	Shift knob (M/T), Power & Winter SW (A/T), Transfer knob, Seat heater/Miller SW conn. and 4 screws	1, 2
Lower cluster assembly	3 screws, Ciger lighter conn. and Ashtray illumination conn.	1~3
Glove box	2 screws	4
Instrument panel passenger lower cover	7 screws and 1 clip	1~5
Passenger knee bolster reinforcement	4 nuts and 4 bolts	1~6
Instrument panel driver lower cover	Engine hood opening fixing screw, 2 screws, 1 bolt, 1 clip and fasteners at 4 positions	1~3, 7
Driver knee bolster	6 nuts	1~3, 7, 8
Front defroster grille	Claws at 8 positions	9
Instrument panel assembly	2 bolts (SRS adjust bracket~ cross beam), A/C control cable (Unit side at 3 position), Instrument harness connector (Driver side 5 position, assist side 3 position), SRS module conn., Radio antenna jack, Earth cable, 9 bolts and 3 nuts	1~10
Passenger inflator module	4 nuts (SRS module~Instrument panel), 2 nuts 0 and 2 washers (SRS module~support bracket) and 2 clips	1~6, 11
Instrument panel cluster	5 Screws, fastener at 4 position and each SW conn.	1~3, 7, 12
Meter assembly	4 screws and connectors	1~3, 7, 12, 13
A/C control panel assembly	4 screws and connectors	1~3, 7, 12, 14
Radio assembly	2 screws	1~3, 15
Vent duct assembly	5 screws	1~10, 16
Instrument harness assembly	4 screws, fasteners at 4 position, and clips at 7 position	1~10, 17
Side defroster grille		18

M/T = Manual Transmission
A/T = Automatic Transmission
SRS = Supplemental Restraint System
A/C = Air Conditioning

Cross Beam Assembly

Parts Location

This illustration es based on RHD and W/SRS

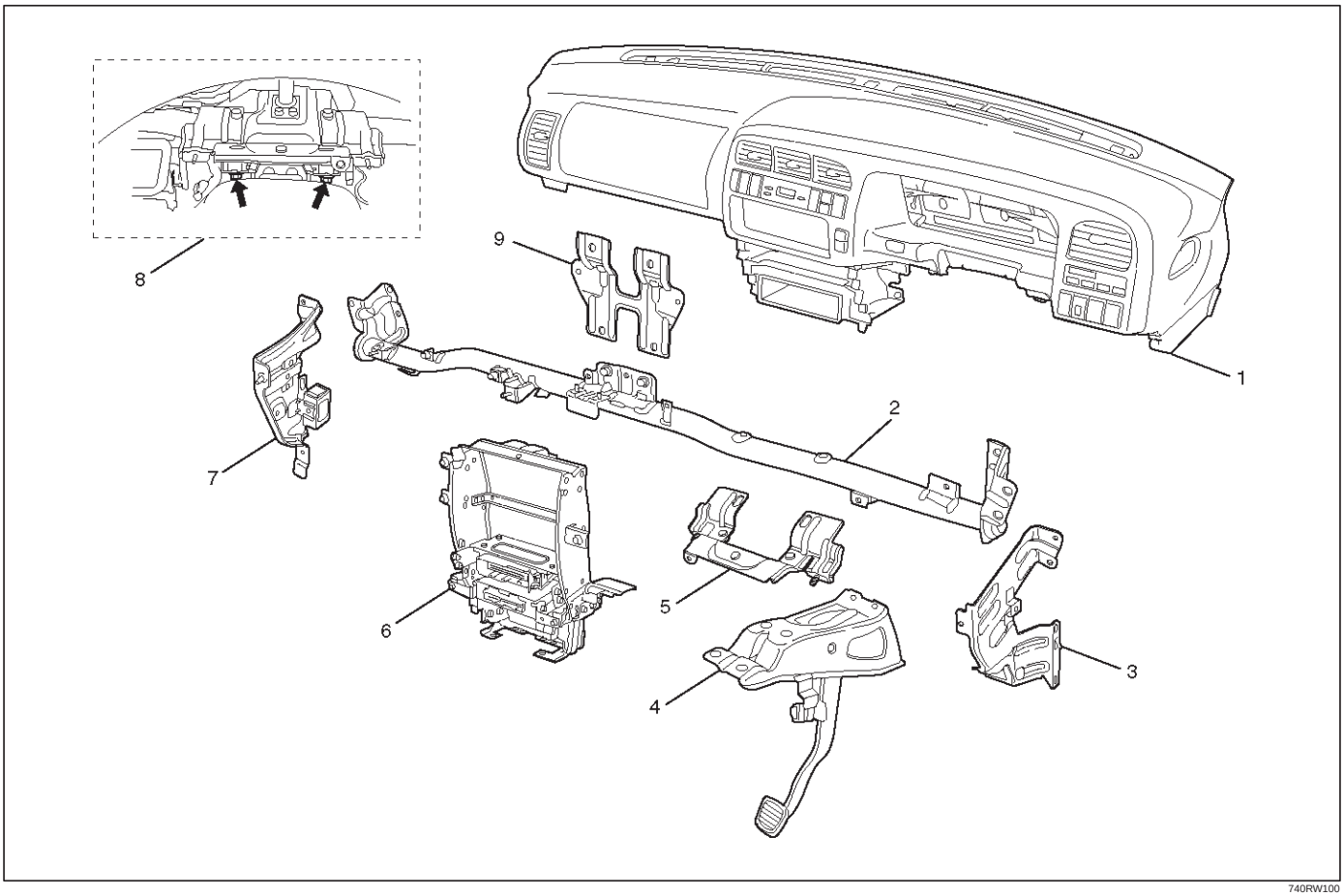

740RW100

Legend

(1) Instrument Panel Assembly
(2) Cross Beam Assembly
(3) Side Support Bracket Assembly (RH)
(4) Brake Pedal Mounting Bracket Assembly
(5) Steering Support Bracket Assembly
(6) Instrument Panel Center Bracket
(7) Side Support Bracket Assembly (LH)
(8) Steering Column Fixing Bolts
(9) Cross Beam Center Bracket

Removal

1. Disconnect battery ground cable.
2. Remove instrument panel assembly.
   - Refer to Instrument Panel Assembly in this section.
3. Remove side support bracket assembly (LH/RH).
   - Remove the 4 fixing bolts on both sides.
4. Remove cross beam center bracket
   - Remove 2 fixing nuts.
5. Remove instrument panel center bracket.
   - Disconnect the PCM and EBCM connector.
   - Remove the DERM (SRS) with 3 fixing nuts.

CAUTION: For precautions on installation or removal of SRS — air bag system, refer to Supplemental Restraint System (SRS) — AIR BAG in Restraint section.

- Remove the 2 fixing nuts (upper) and the 4 fixing bolts (lower).

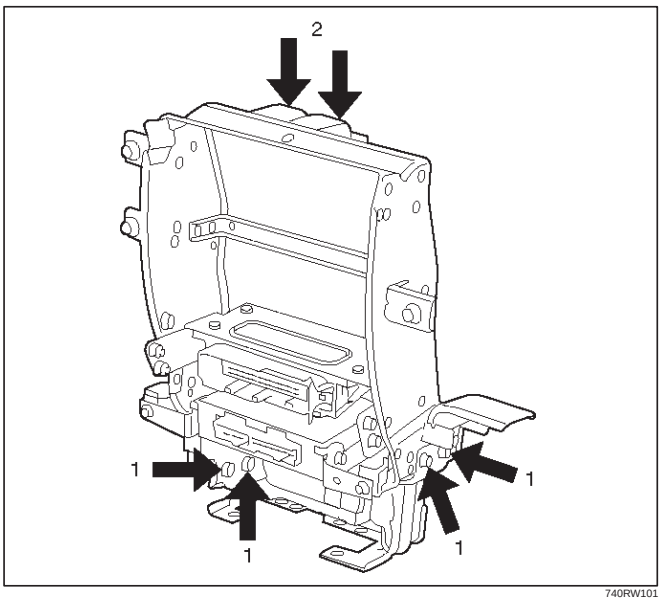

740RW101

6. Remove steering column fixing bolts.
   - Remove 2 fixing bolts.

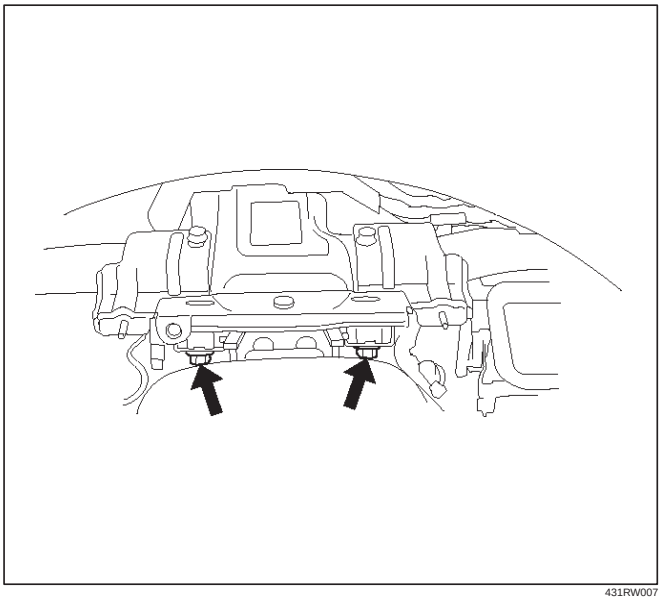

431RW007

7. Remove brake pedal mounting bracket assembly.
   - Disconnect the 2 brake pedal mounting bracket assembly fixing nuts, and remove the antitheft controller.
   - Disconnect the brake pedal link and the brake switch, and remove the 4 fixing bolts and the nuts on the bracket.

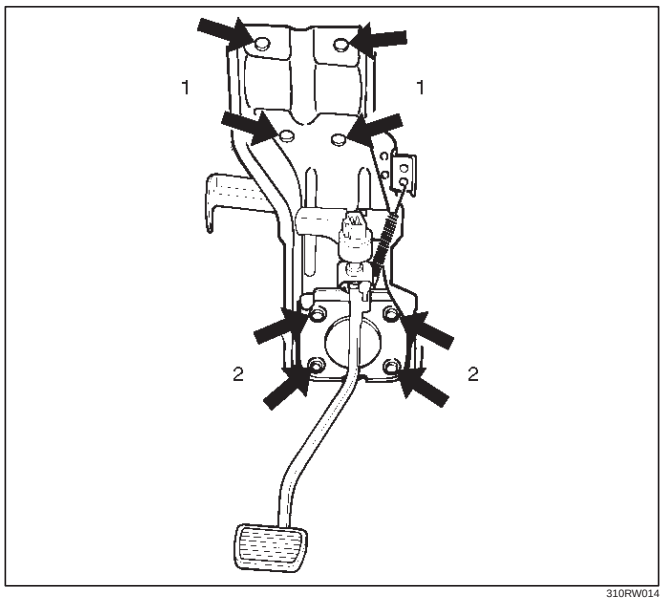

310RW014

8. Remove steering support bracket assembly.
   - Remove the 2 fixing bolts (upper side) (1) and the 3 fixing nuts (lower side) (2).

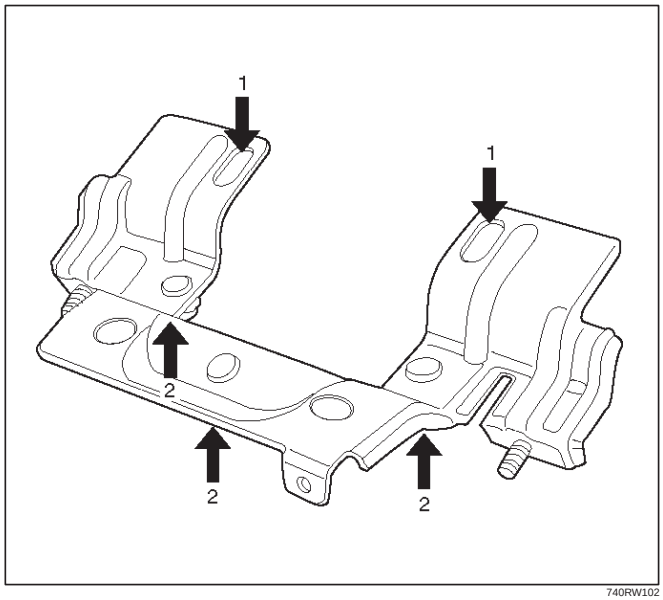

740RW102

9. Remove cross beam assembly.
   - Disconnect the harness clips from the crossbeam assembly, and remove 2 fixing bolts on both sides and 2 fixing nuts in the center.

Installation

To install, follow the removal steps in the reverse order.

Front Door Assembly

Parts Location

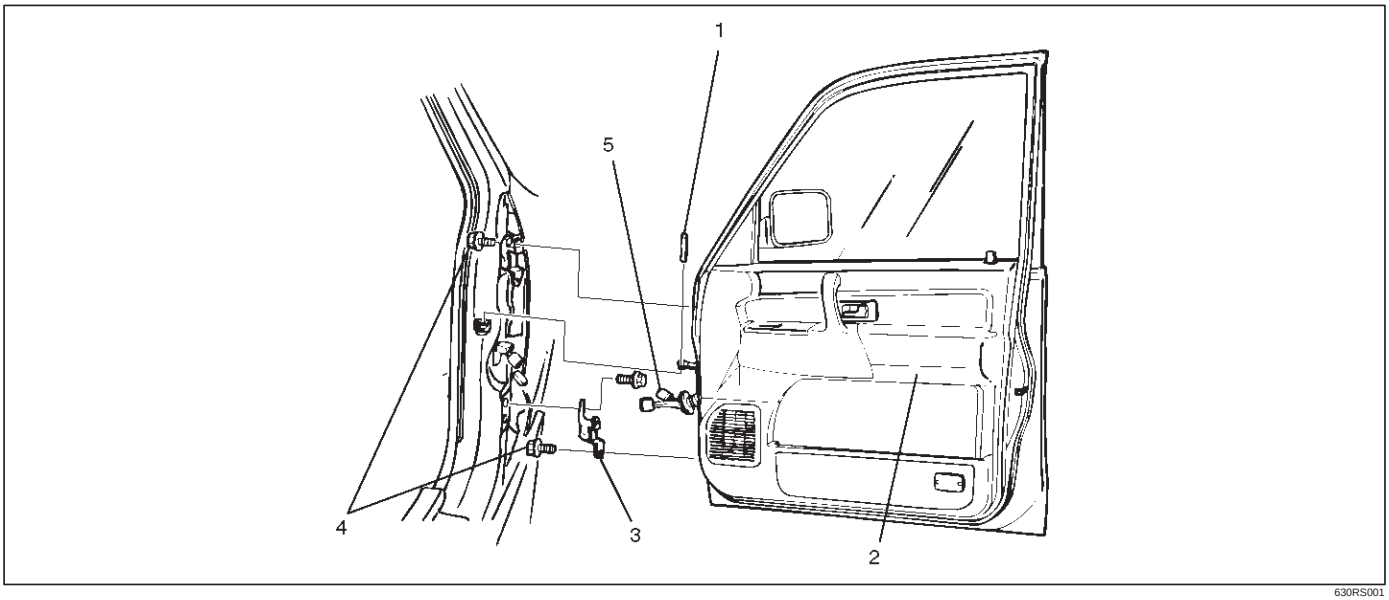

630RS001

Legend

(1) Door Check Arm Pin
(2) Front Door Assembly
(3) Door Hinge Assembly
(4) Hinge Bolt
(5) Door Harness Connection

Removal

1. Disconnect the battery ground cable.
2. Remove door check arm pin (1).

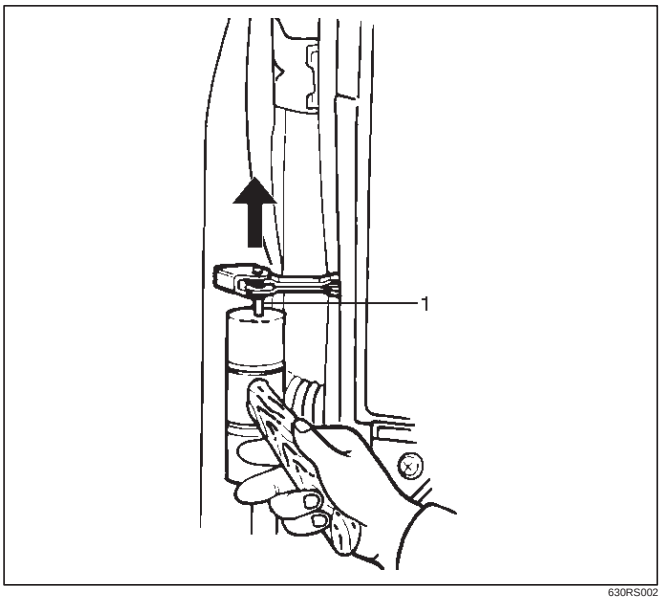

630RS002

3. Remove hinge bolt.
   - Align the hinge bolt to the door side hinge and put a marker on it.
4. Remove door harness connection (2).
   - Pull the door harness grommet out in order to disconnect the harness connection.

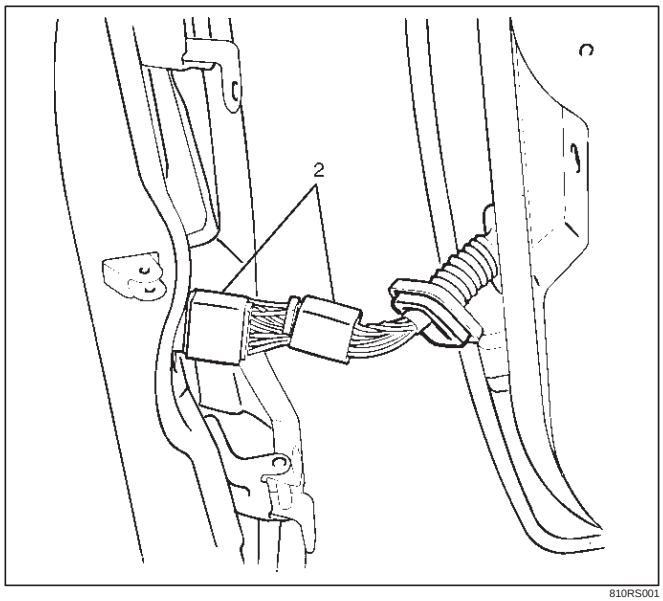

810RS001

5. Remove front door assembly.

Installation

To install, follow the removal steps in the reverse order, noting the following points:

1. Align the door fitting to the body by referring to Body Dimensions in this section.
2. Tighten the door hinge bolts to the specified torque.

   Torque : 34 N•m (3.5kg·m/25 lb ft)
3. Apply chassis grease to the door check arm pin and the door hinge moving surface.

Rear Door Assembly

Parts Location

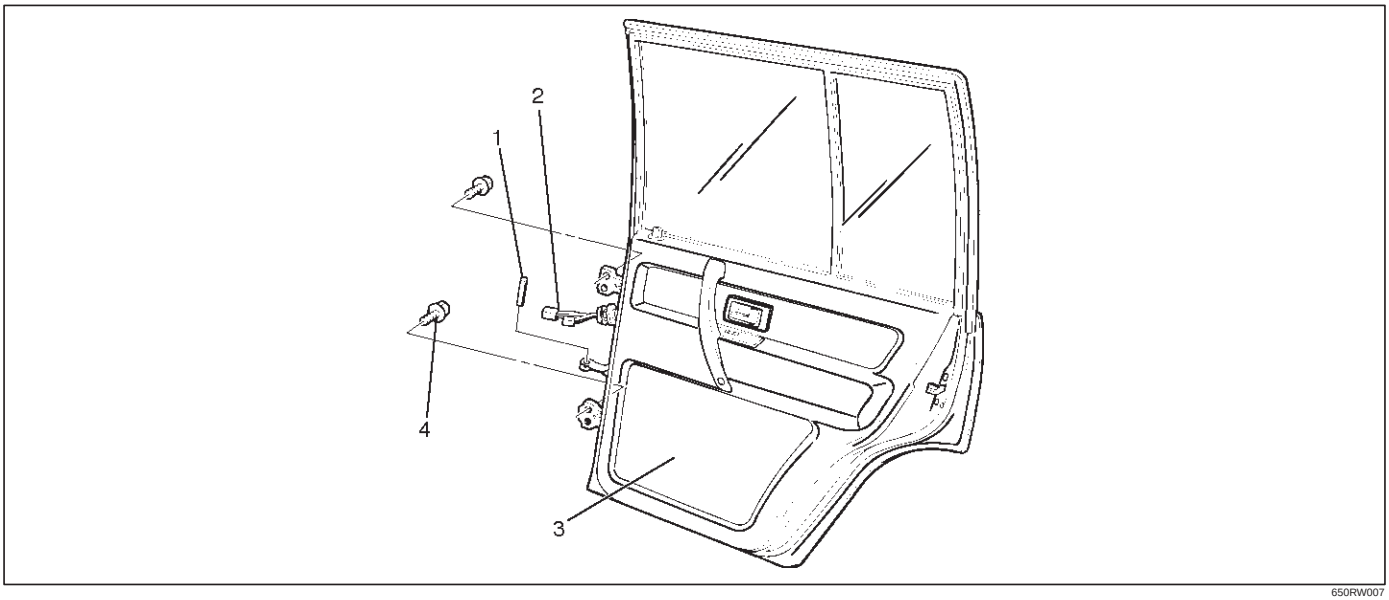

650RW007

Legend

(1) Door Check Arm Pin
(2) Door Harness Connection
(3) Rear Door Assembly
(4) Hinge Bolt

Removal

1. Disconnect the battery ground cable.
2. Apply a setting mark on the body side hinge.
3. Remove door check arm pin (1).

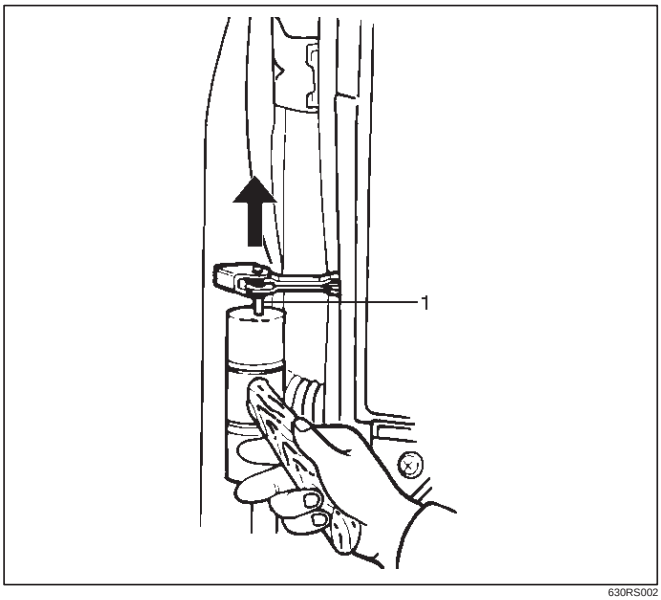

630RS002

4. Remove hinge bolt.
   - Open the front door and remove the body side hinge bolts (2).

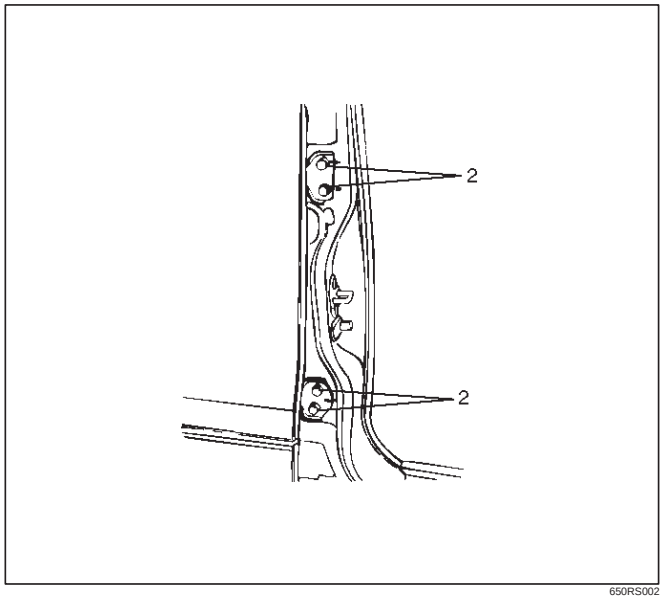

650RS002

5. Remove door harness connection (3).
   - Pull the door harness grommet out in order to disconnect the door harness connection.

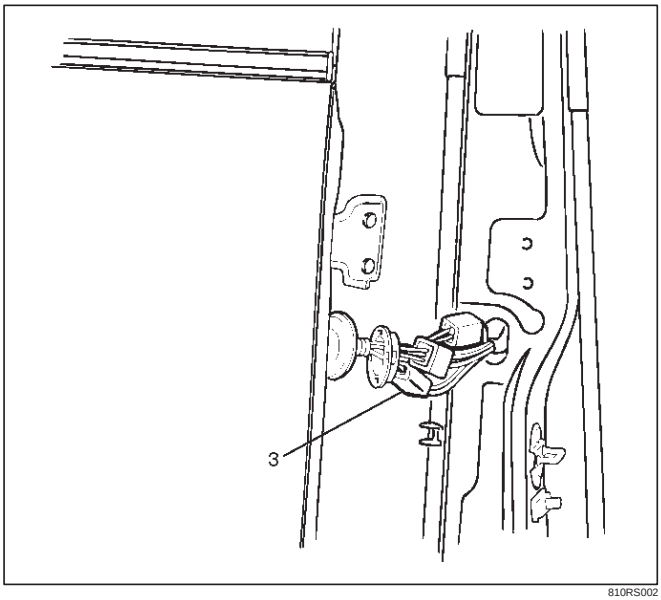

810RS002

6. Remove door assembly

Installation

To install, follow the removal steps in the reverse order, noting the following points.

1. Align the door fitting to the body by refer to Body Dimensions in this section.
2. Tighten the door hinge bolts to the specified torque.

   Torque : 34 N•m (3.5kg·m/25 lb ft)
3. Apply chassis grease to the check arm pin and the door hinge moving surface.

Door Strikers

Adjustment

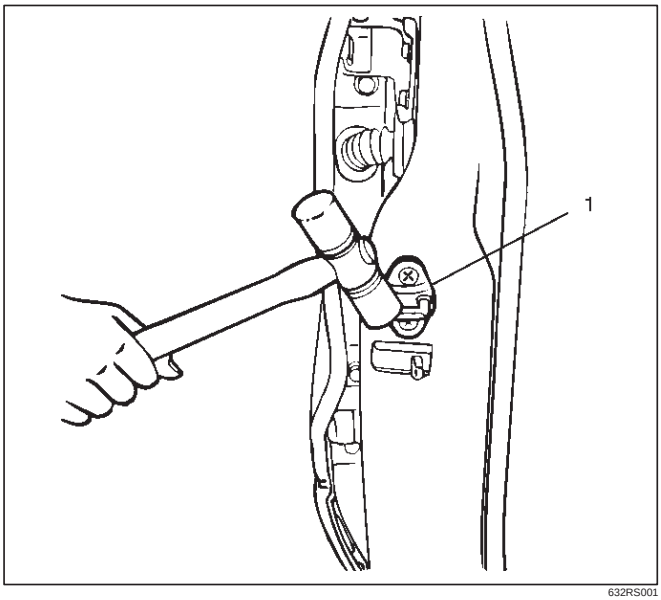

632RS001

1. Loosen the striker (1) screws.
2. Tap with a plastic hammer to align.
3. Tighten the striker screws.

   Torque : 15 N•m (1.5kg·m/11 lb ft)

Door Check Arm Assembly (Front & Rear)

Parts Location

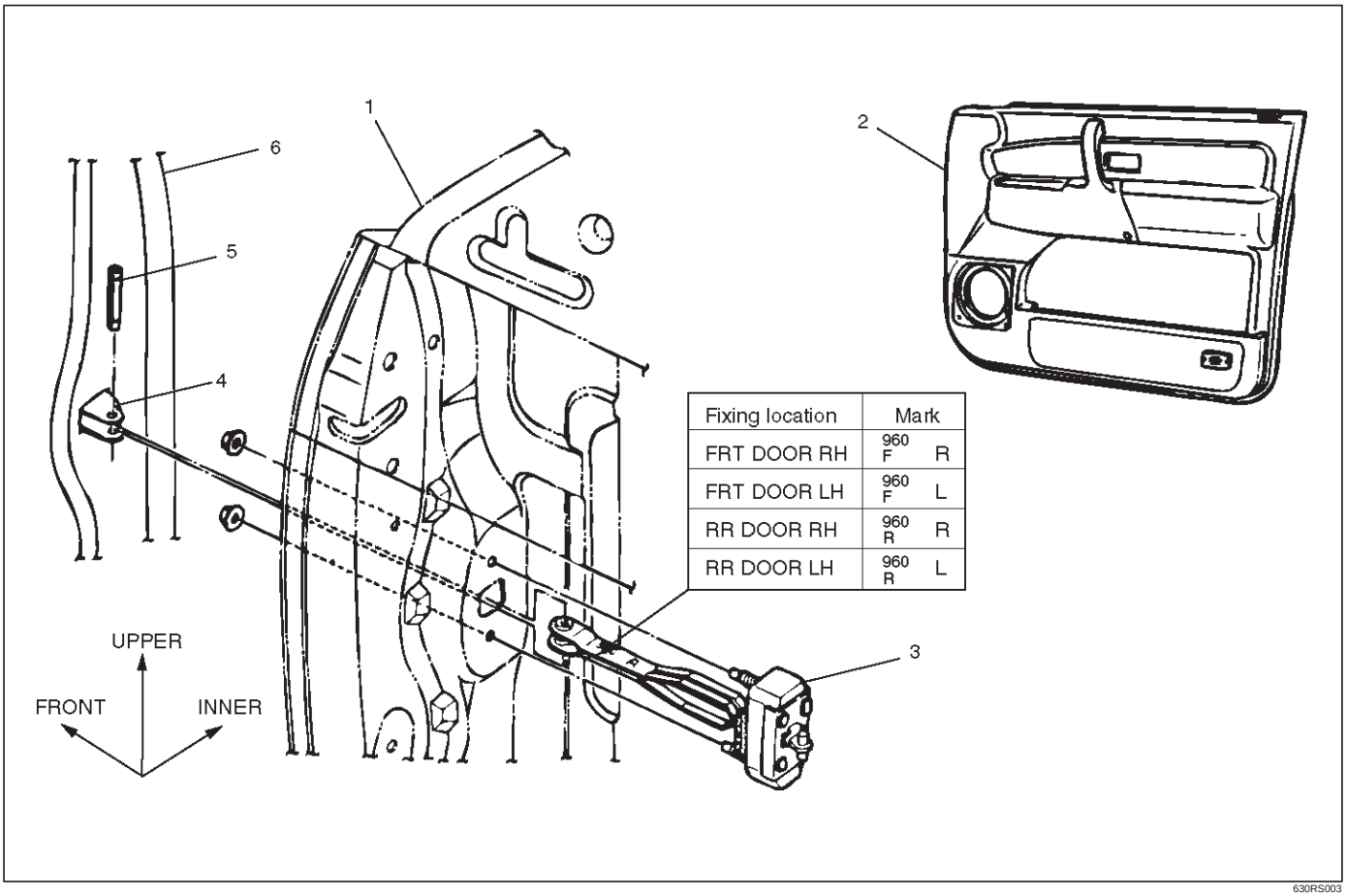

630RS003

Legend

(1) Front or Rear Door
(2) Door Trim Panel
(3) Check Arm Assembly
(4) Check Arm Pin Bracket
(5) Check Arm Pin
(6) Front or Center Pillar

Removal

1. Disconnect the battery ground cable.
2. Remove door trim panel.
   - Refer to Exterior / Interrior Trim in this section.
3. Remove check arm pin (1).

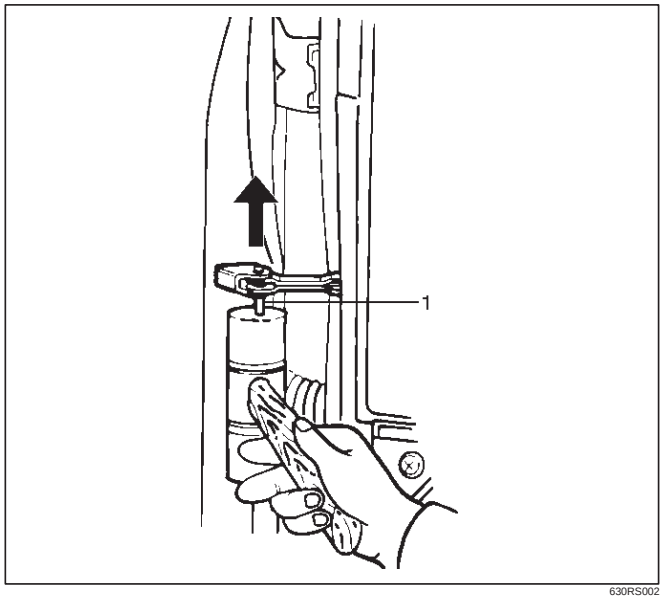

630RS002

4. Remove check arm assembly.
   - Carefully peel off the water proof sheet as much as necessary, for check arm removal.

Installation

To install, follow the removal steps in the reverse order, noting the following point.

1. When installing the check arm assembly, note its marking to ensure using the appropriate part.
2. Tighten the check arm fixing nuts to the specified torque.

   Torque : 13 N•m (1.3kg·m/113 lb in)
3. Apply chassis grease to the check arm pin moving surface.

Front Window Regulator, Glass And Glass Run

Parts Location

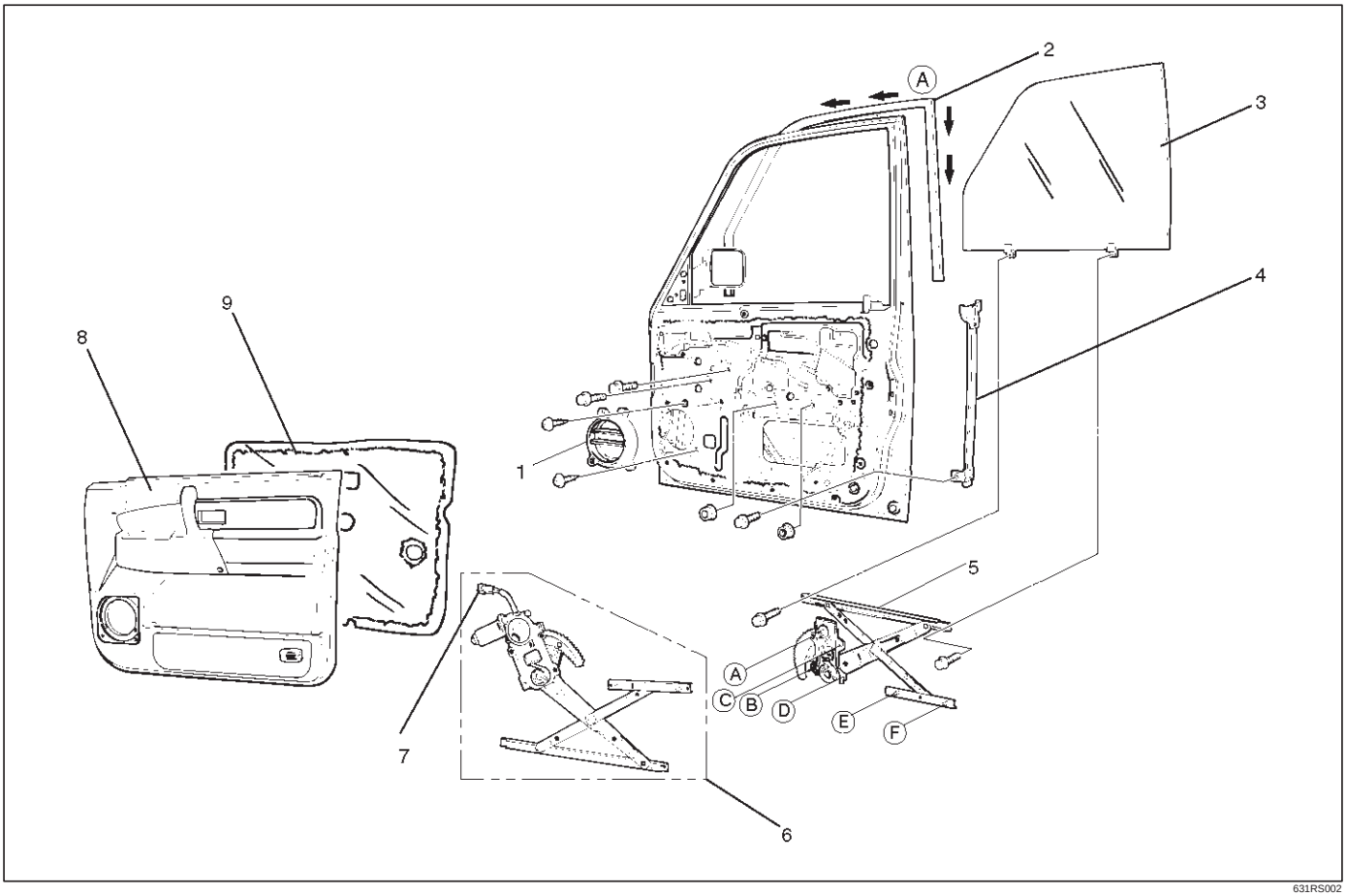

631RS002

Legend

(1) Speaker Box
(2) Glass Run
(3) Glass
(4) Rear Guide Rail
(5) Window Regulator
(6) Window Regulator with Power Window
(7) Window Regulator Motor Connector
(8) Door Trim Panel
(9) Waterproof Sheet

Removal

1. Disconnect the battery ground cable.
2. Remove door trim panel.
   - Refer to Exterior / Interrior Trim in this section.
3. Remove speaker box.

4. Remove waterproof sheet.
   - Take notice of the door harness and the grommet, peel the waterproof sheet off the door panel carefully.

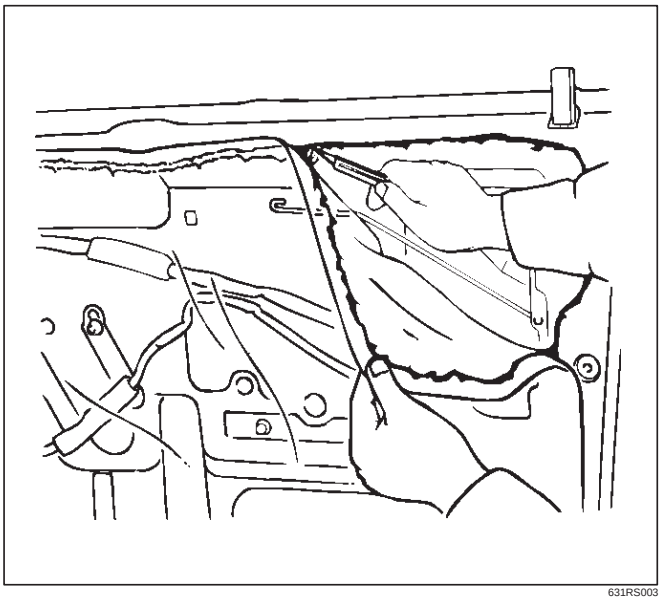

631RS003

5. Remove glass.
   - Bring the glass (1) down to the position where the fixing bolts can be seen.
   - Remove the glass fixing bolts from the window regulator (2) and lower the front side of the glass.

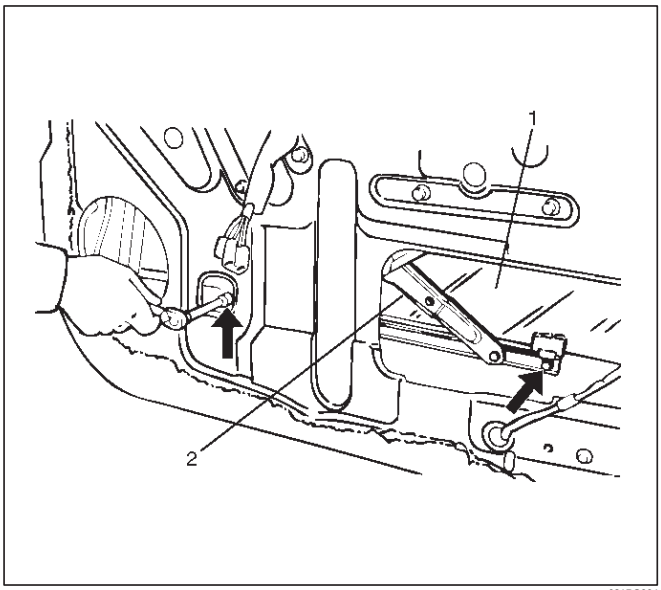

631RS004

   - When the front side of the glass comes off the glass run (3), turn the glass inside out and pull it up from its rear side.

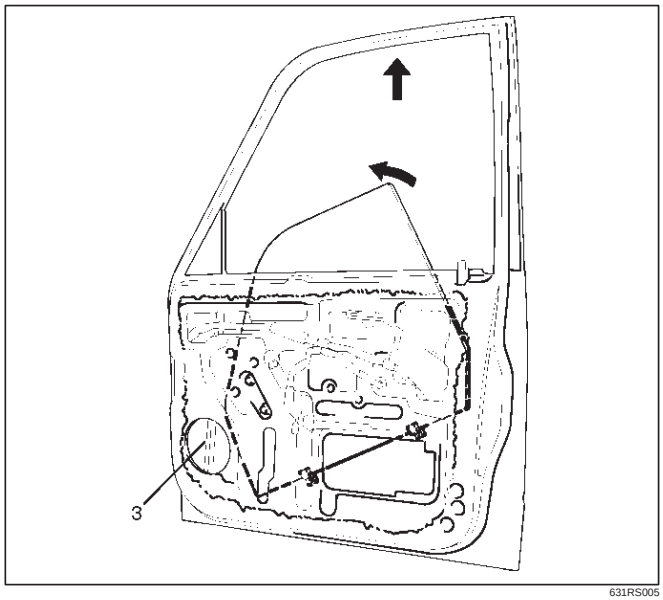

631RS005

6. Remove window regulator.
   - Remove the window regulator fixing bolts (4) and the rear guide rail fixing bolt (5).
   - Disconnect the window regulator motor harness connector, if equipped with power windows.

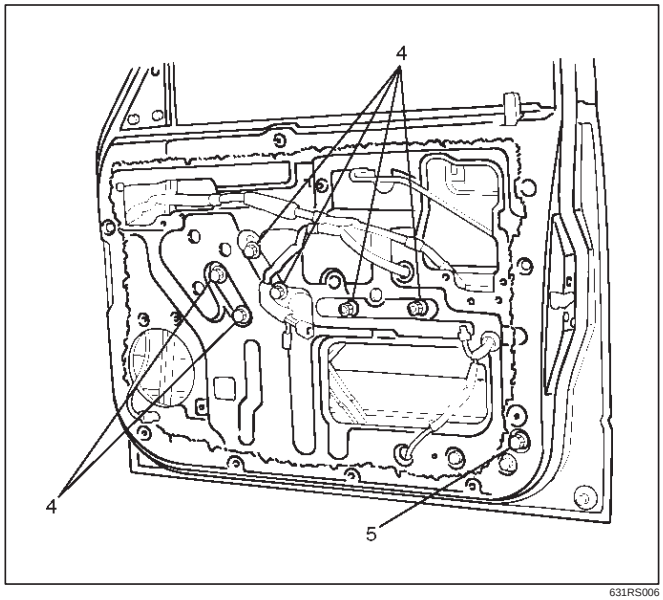

631RS006

7. Remove glass run.
   - Pull the glass run (6) out from the door frame groove.

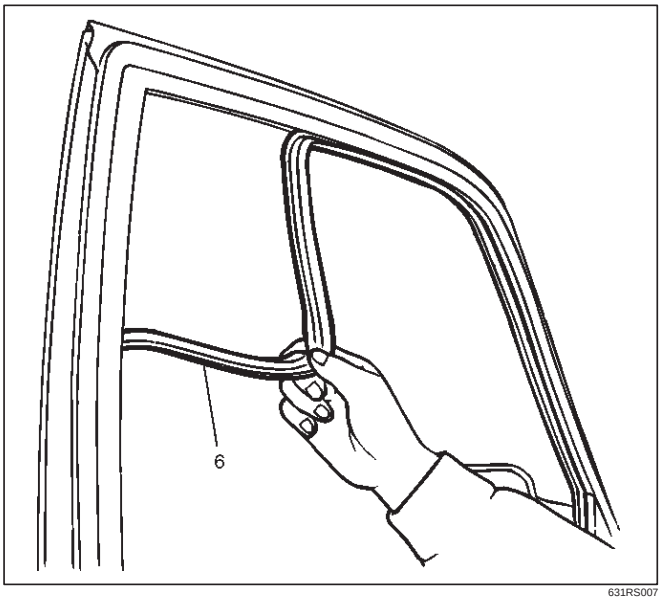

631RS007

8. Remove rear guide rail.

Installation

To install, follow the removal steps in the reverse order, noting the following points.

1. Apply soap and water to the door frame groove. Insert the glass run (1) to the door frame from the A corner in the arrow–marked directions.
   Install the glass run with its wider end pointed to the inside of the vehicle.

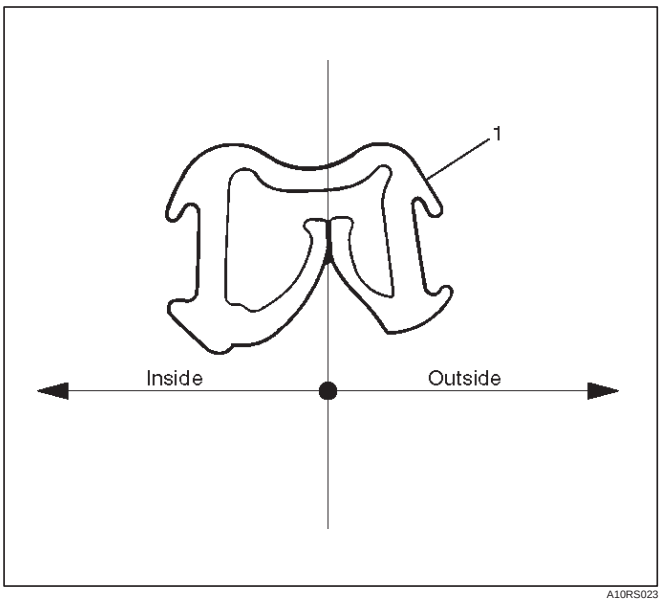

A10RS023

2. Set the glass into the door panel with the front side of the glass lowered and insert the rear side of the glass into the glass run (1). Then insert the front side of the glass into the glass run in order to install the glass to the glass run while raising it up along the glass run.
3. Tighten the window regulator and the glass fixing bolts and nuts to the specified torque.

   Torque : 8 N•m (0.8kg·m/69 lb in)

4. Check to see of the window regulator operates smoothly and the glass opens and closes properly. Install the waterproof sheet with no clearance between the door panel and the waterproof sheet.

Rear Window Regulator And Glass

Parts Location

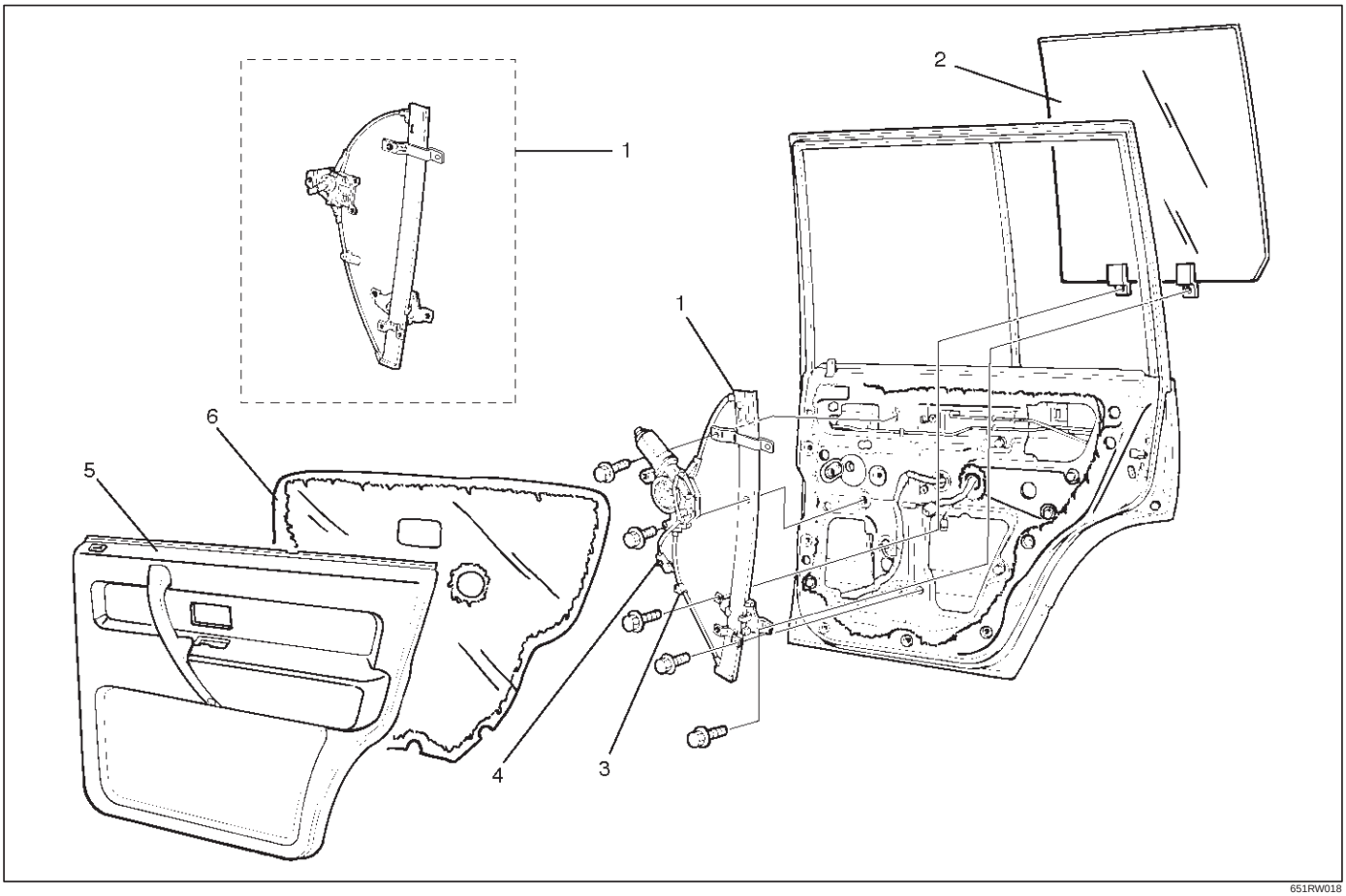

651RW018

Legend

(1) Window Regulator
(2) Glass
(3) Cable Fixing Clip
(4) Window Regulator Motor Connector
(5) Door Trim Panel
(6) Waterproof Sheet

Removal

1. Disconnect the battery ground cable.
2. Remove door trim panel.
   - Refer to Door Trim Panel (Rear) removal procedure in this section.
3. Remove waterproof sheet (1).
   - Taking notice of the door harness, peel the waterproof sheet off the door panel carefully.

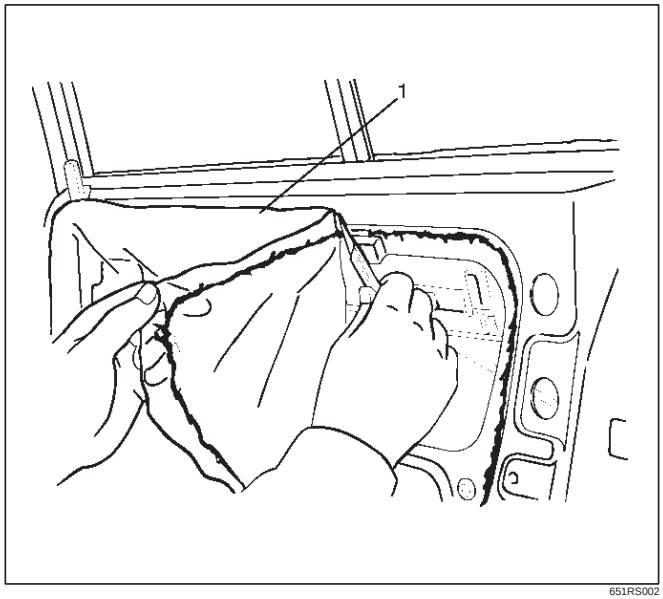

651RS002

4. Remove glass.
   - Bring the glass down to the position where the bolt can be seen.
   - Remove the sash division 2 fixing bolts (1) and then remove the glass fixing bolt to remove the glass upwards.

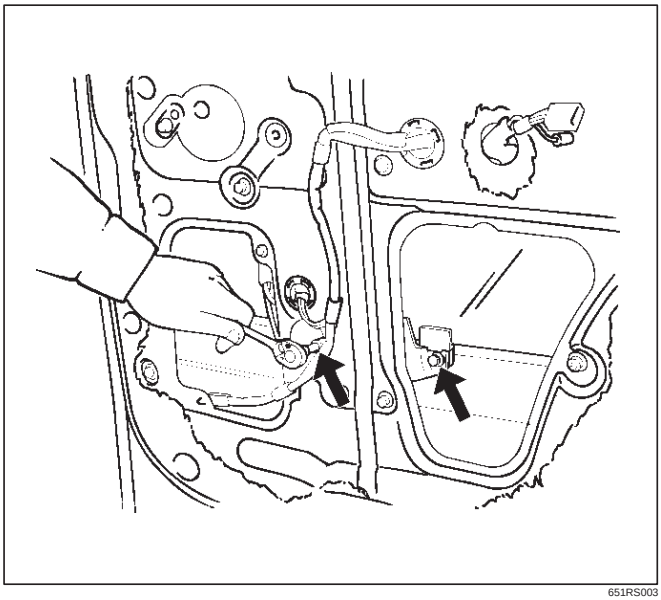

651RS003

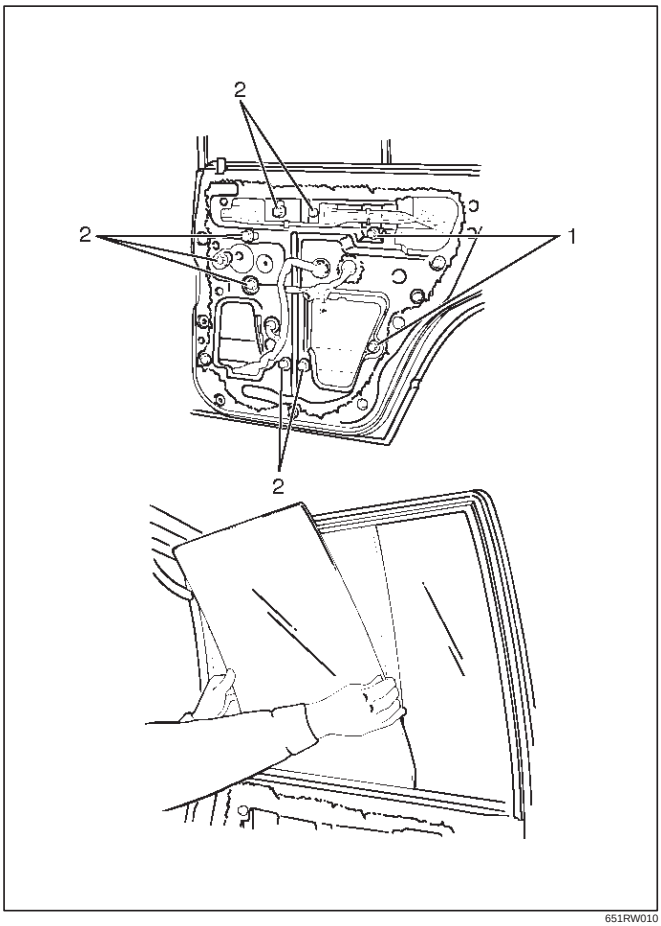

651RW010

5. Remove window regulator.
   - Disconnect the regulator motor connector (4) and remove the window regulator cable fixing clip (3) from the door panel, if model is equipped with power windows.
   - Remove the window regulator 7 fixing bolts (2) and pull the regulator out from the lower hole of the door panel.

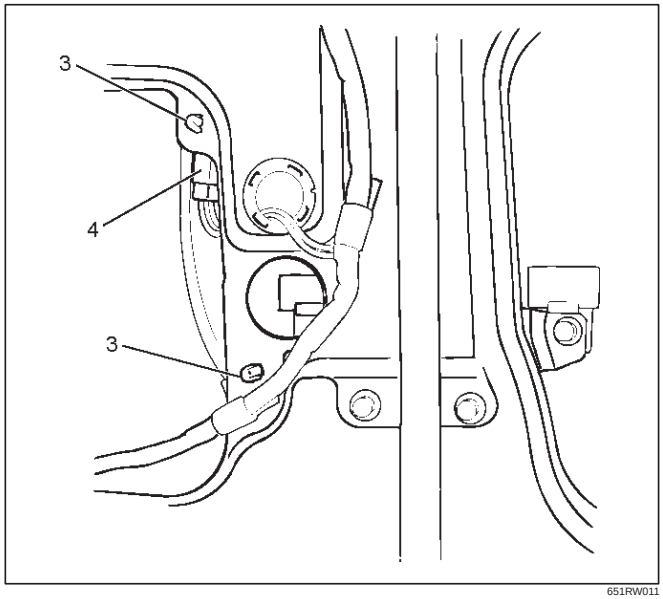

651RW011

Installation

To install, follow the removal steps in the reverse order, noting the following points.

1. Tighten the window regulator and the glass fixing bolts to the specified torque.

   Torque : 8 N•m (0.8kg·m/69 lb in)

2. Install the waterproof sheet with no clearance between the door panel and the waterproof sheet.

Rear Door Fixed Glass And Glass Run

Parts Location

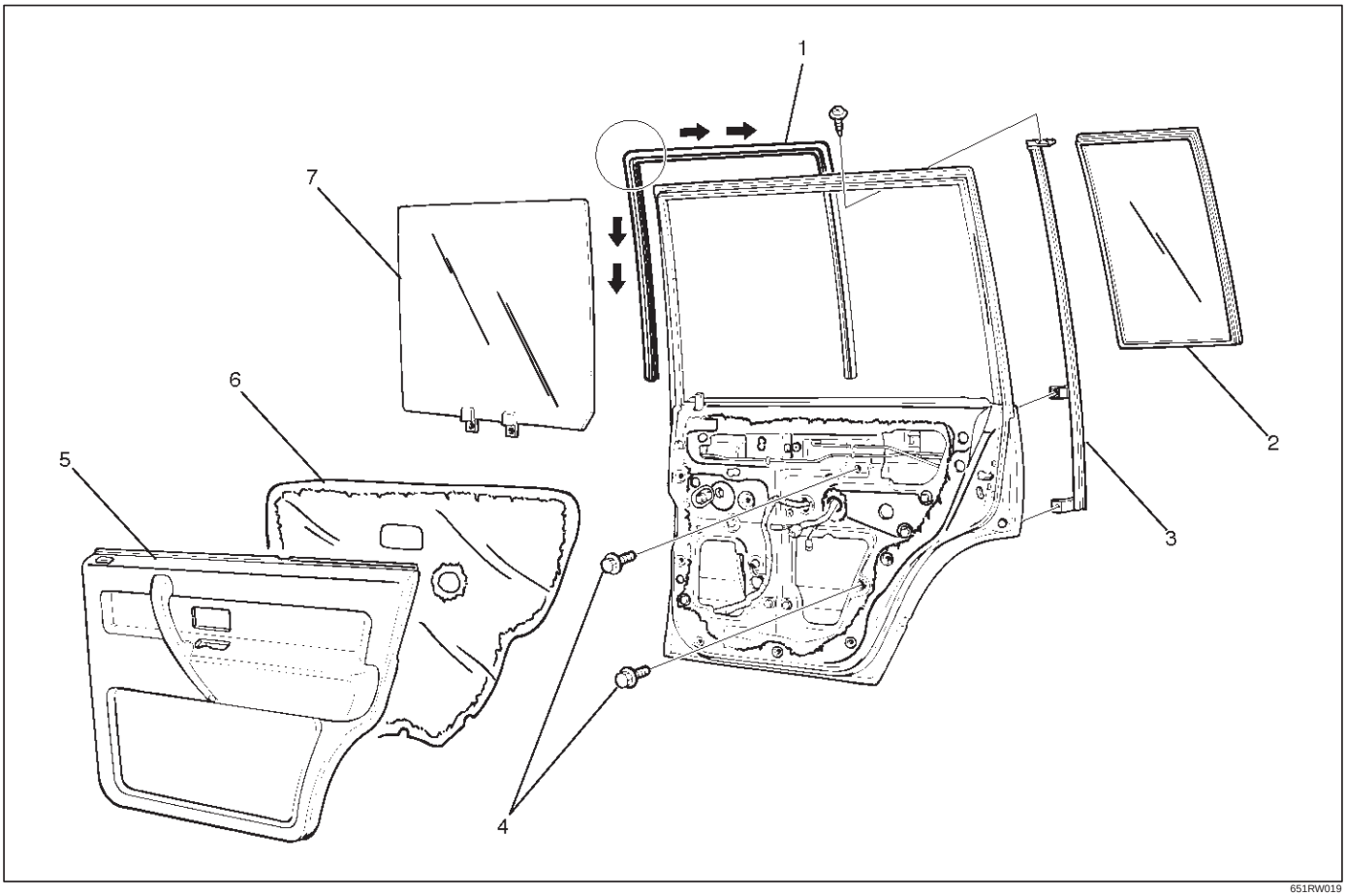

651RW019

Legend

(1) Glass Run
(2) Rear Fixed Glass
(3) Sash Division
(4) Sash Division Fixing Bolts
(5) Door Trim Panel
(6) Waterproof Sheet
(7) Glass

Removal

1. Disconnect the battery ground cable.
2. Remove door trim panel.
3. Remove waterproof sheet.
4. Remove glass.
   - Refer to Window Regulator and Glass removal procedure in this section.
5. Remove glass run.
   - Pull the glass run (1) out from the door frame.

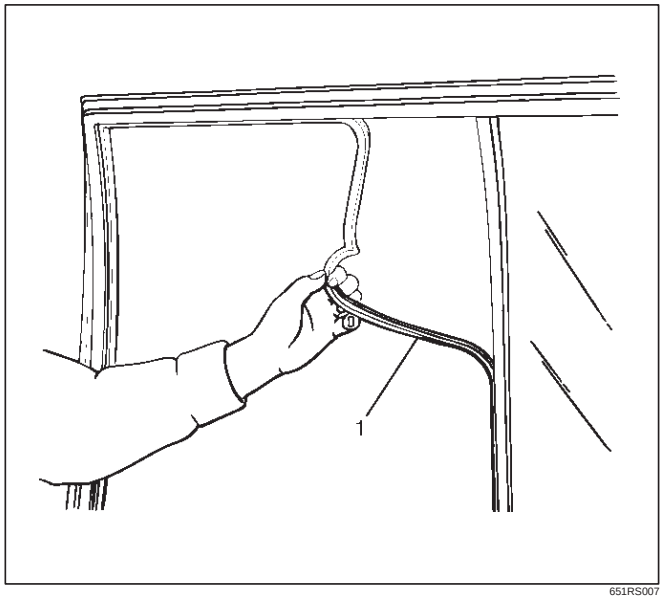

651RS007

6. Remove sash division (2).

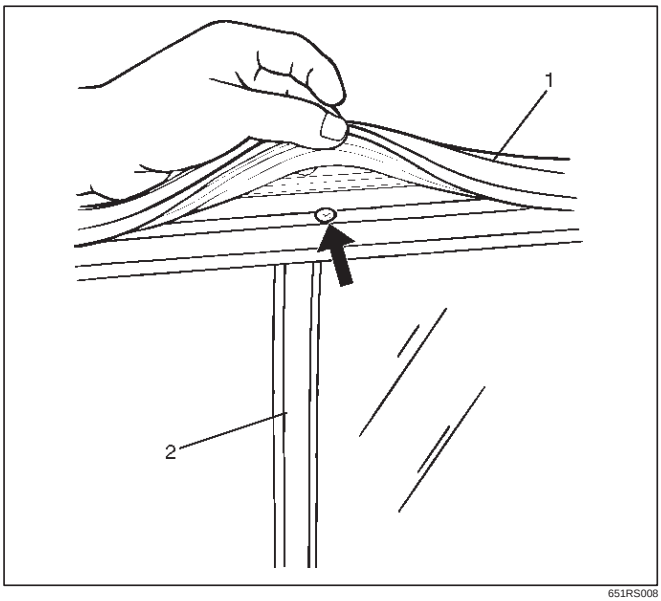

651RS008

7. Remove door fixed glass.

Installation

To install, follow the removal steps in the reverse order, noting the following points.

1. Apply soap and water to the fixed glass.
2. Apply soap and water to the door groove and insert the glass run (3) to the frame from the corner in the arrow-marked directions.
3. Be sure to install the glass run with its end pointed to the inside of the vehicle.

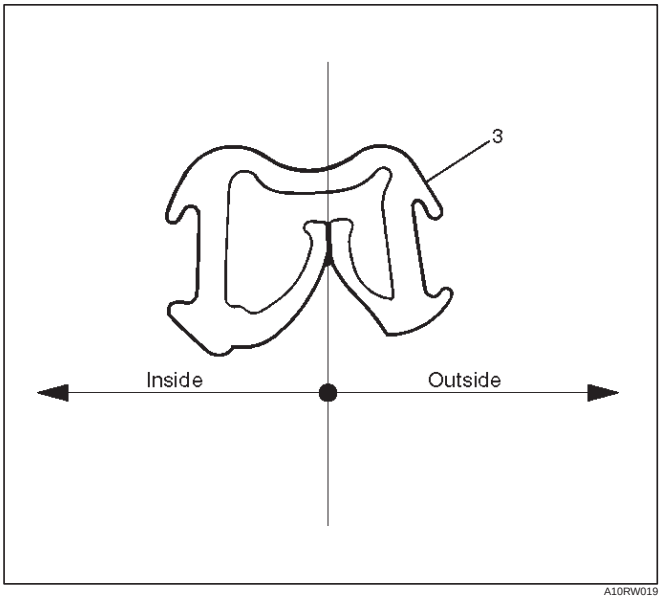

A10RW019

Front Door Sash Moulding

Parts Location

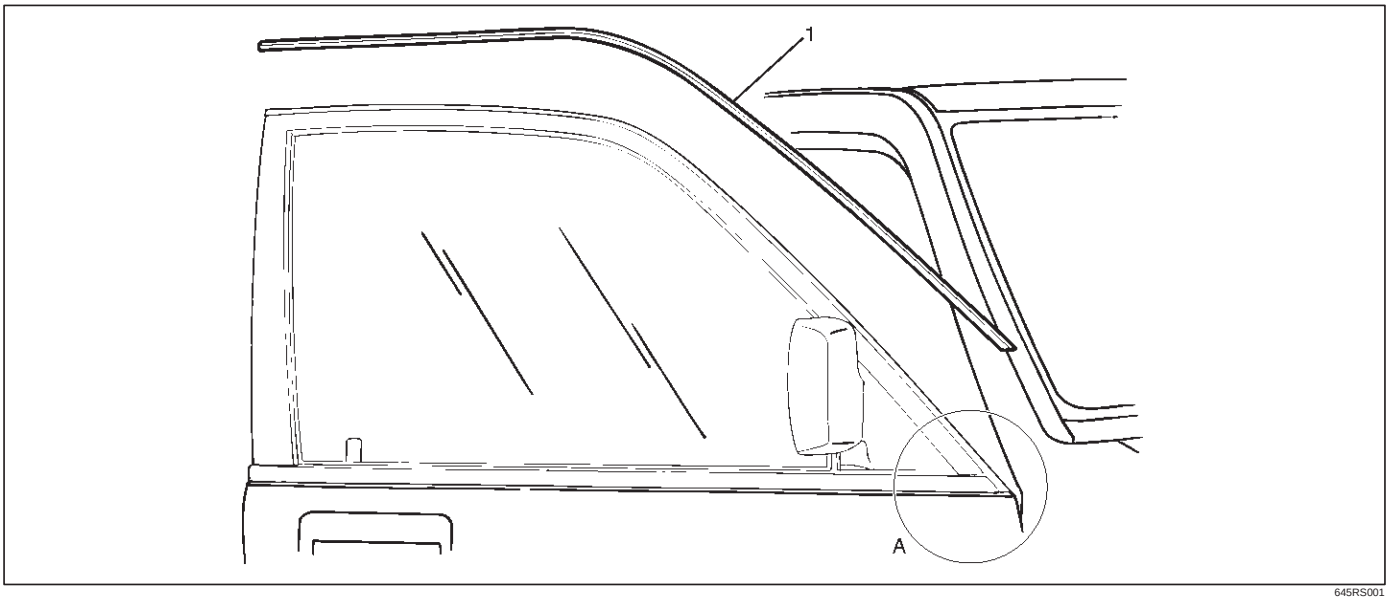

645RS001

Legend

(1) Front Door Sash Moulding

Removal

1. Remove front door slash moulding.
   - To avoid the weatherstrip (1) and pry the door sash moulding (2) out from the door panel.

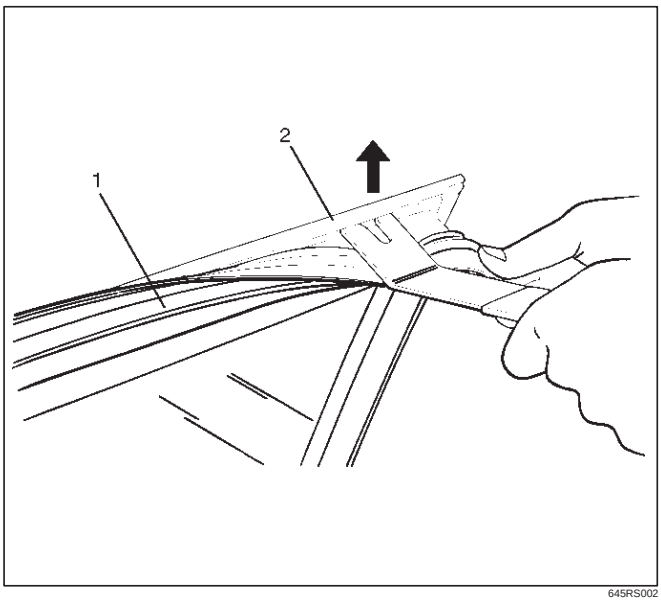

645RS002

Installation

1. Install the front door sash moulding.
   - Assemble the edge portion (A portion) of the moulding so that the clearance between the moulding and the waist seal becomes 1 mm (0.04 in).

Rear Door Moulding

Parts Location

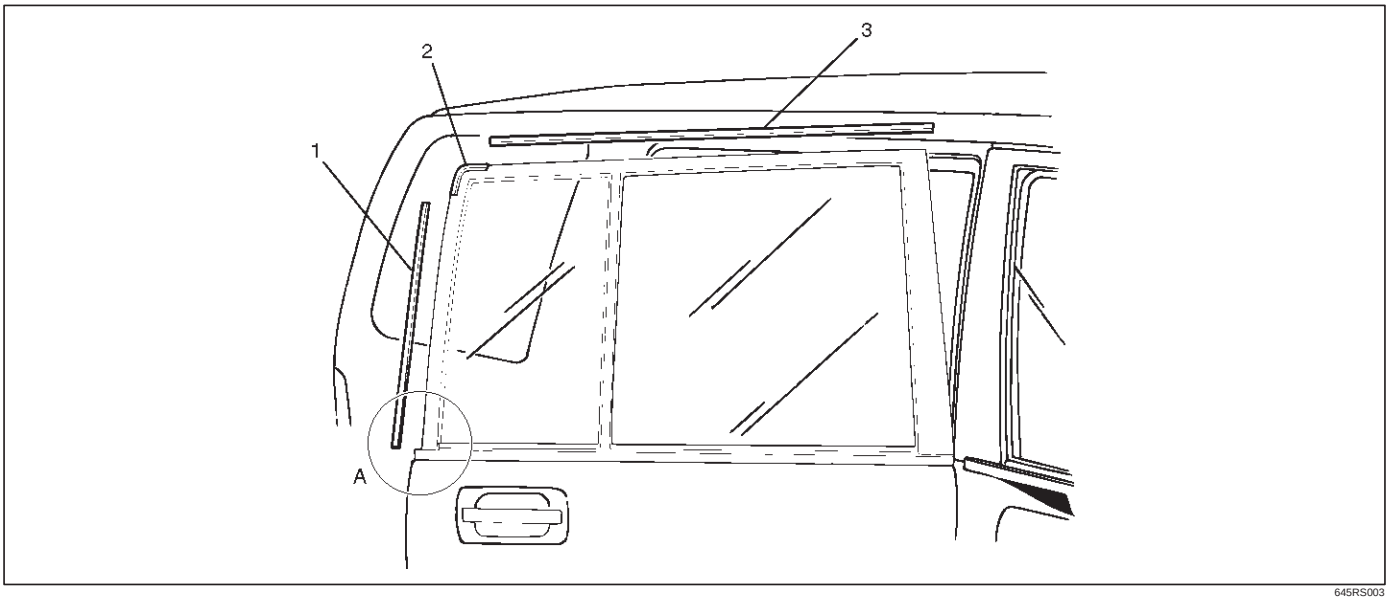

645RS003

Legend

(1) Rear Door Side Moulding
(2) Rear Door Corner Moulding
(3) Rear Door Upper Moulding

Removal

1. Disconnect the battery ground cable.
2. Remove rear door side moulding.
3. Remove rear door upper moulding.
4. Remove rear door corner moulding.
   - Avoiding the weatherstrip (3), pry the moulding (2) out from the door frame (1).

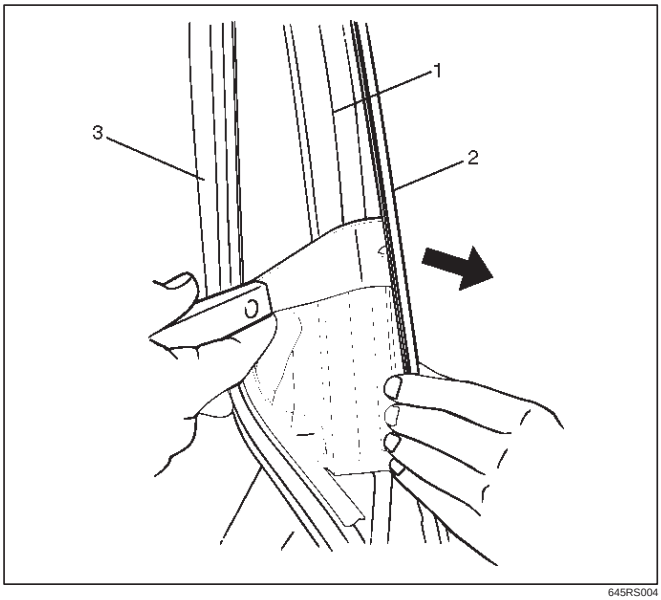

645RS004

Installation

To install, follow the removal steps in the reverse order, noting the following points.

1. Install each moulding with no clearance between each piece of moulding.
2. Assemble the edge portion (A portion) of the moulding so that the clearance between the rear side moulding and the waist seal is 1 mm (0.04 in).

Front Door Waist Seal

Parts Location

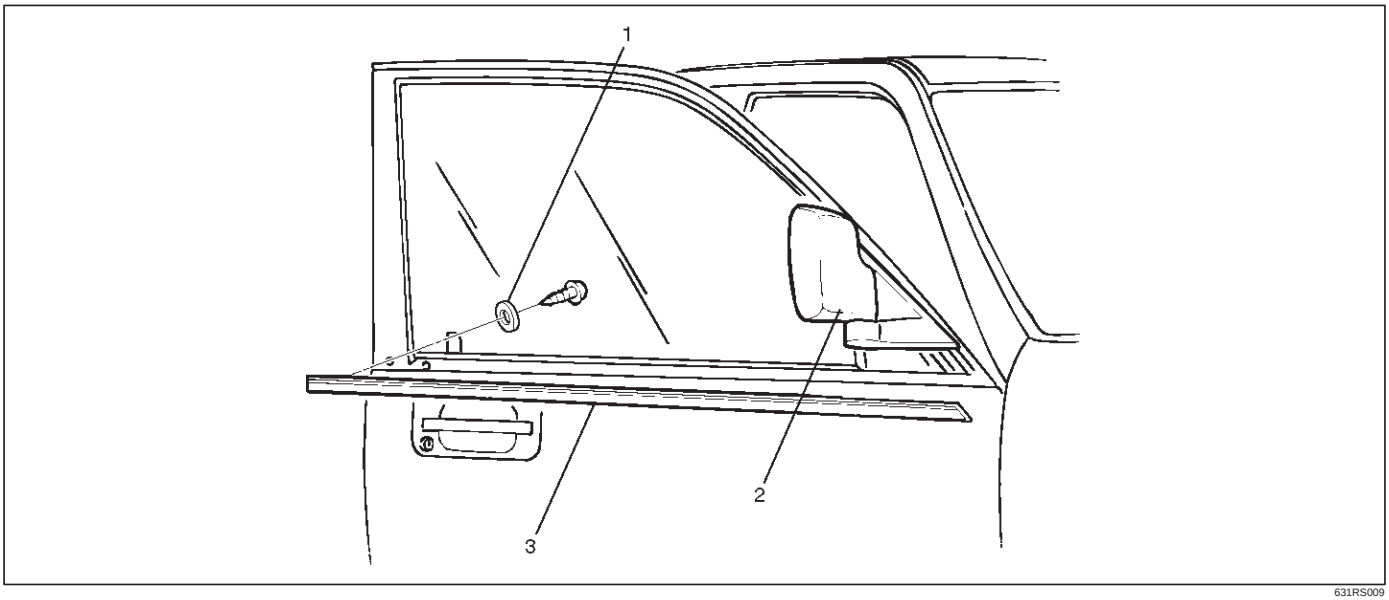

631RS009

Legend

(1) Nylon Washer
(2) Door Mirror
(3) Front Door Waist Seal

Removal

1. Disconnect the battery ground cable.
2. Remove door mirror.
   - Refer to Exterior / Interrior Trim in this section.
3. Remove front door waist seal.
   - Remove the fixing screw and pull out the waist seal (1) from the door frame while prying it up.

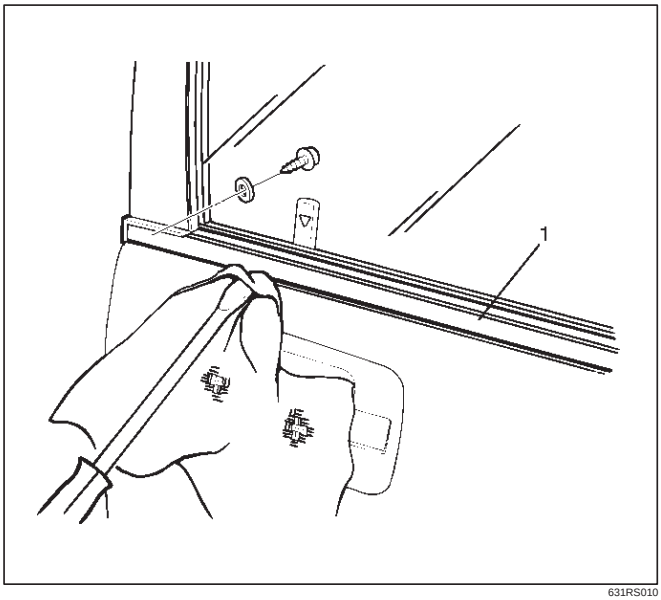

631RS010

Installation

1. Install the front door waist seal.
   - Apply soap and water to the inside of the waist seal and align the screw hole of the waist seal to the door panel hole, and gently tap the seal with a rubber hammer.

     Be sure not to tap the seal hard. This may result in deforming the seal.
2. Install the door mirror.

Rear Door Waist Seal

Parts Location

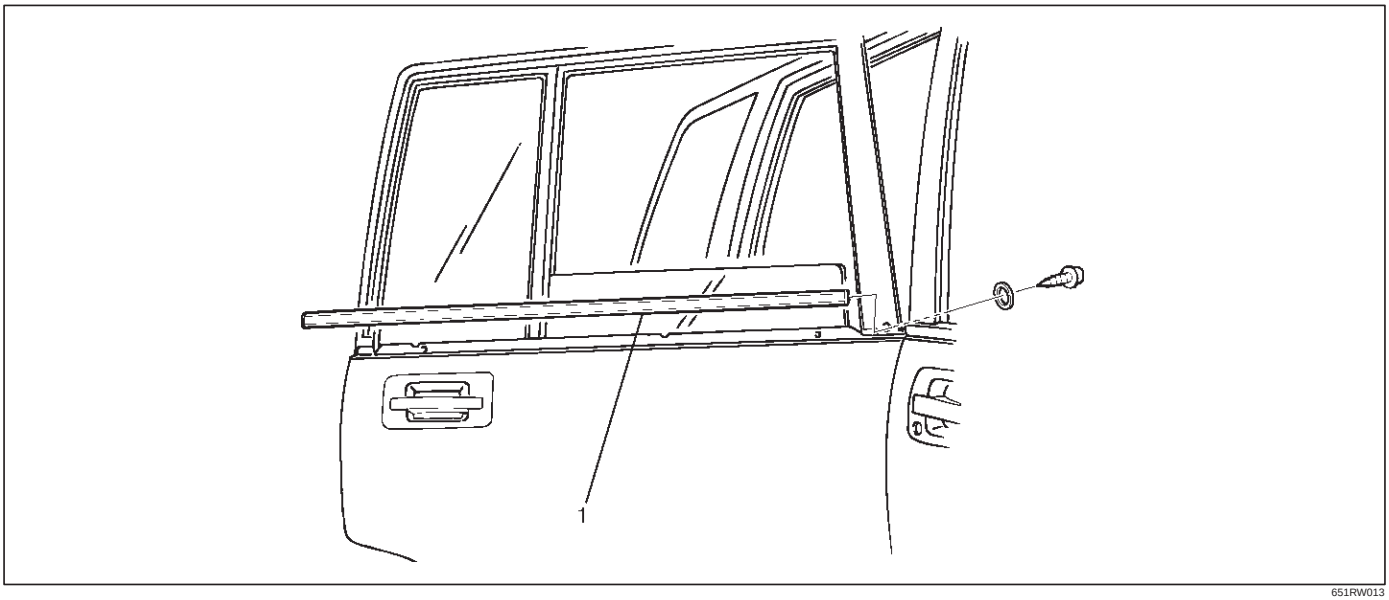

651RW013

Legend

(1) Rear Door Waist Seal

Removal and Installation

Refer to Front Door Waist Seal in this section.

Front Door Weatherstrip

Parts Location

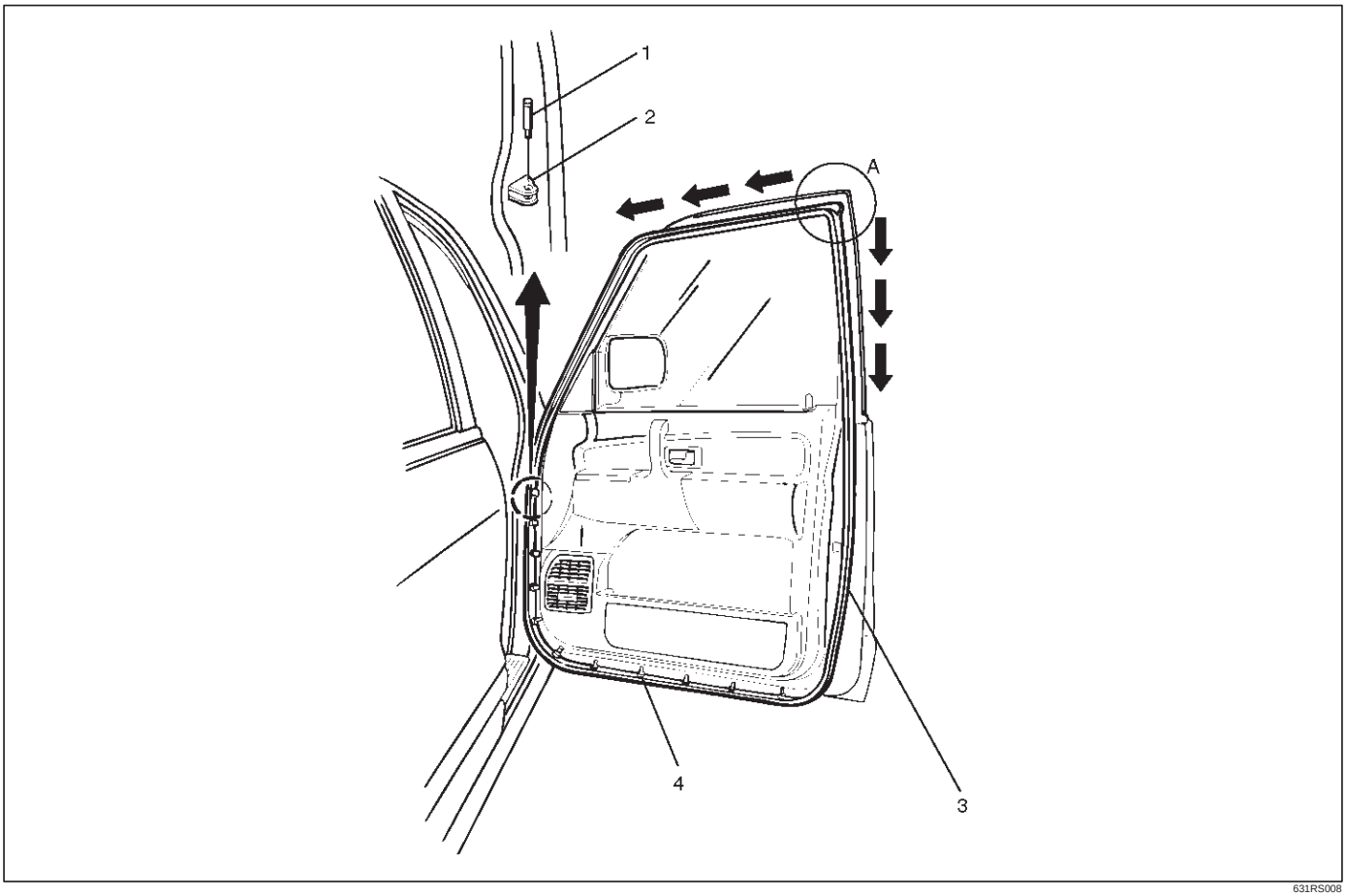

631RS008

Legend

(1) Check Arm Pin
(2) Bracket
(3) Weather Strip
(4) Clip

Removal

1. Remove check arm pin.
2. Remove front door weatherstrip.
   - Pull the weatherstrip (1) out from the door frame.

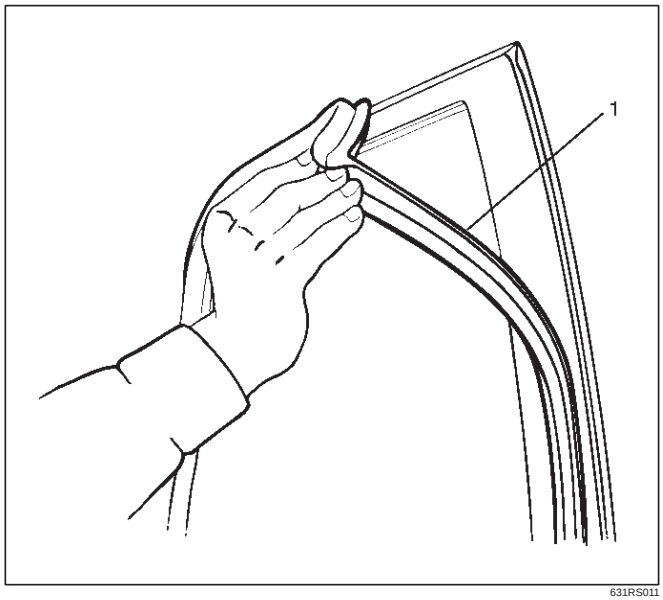

631RS011

- Carefully remove the weatherstrip (2) from the door panel.

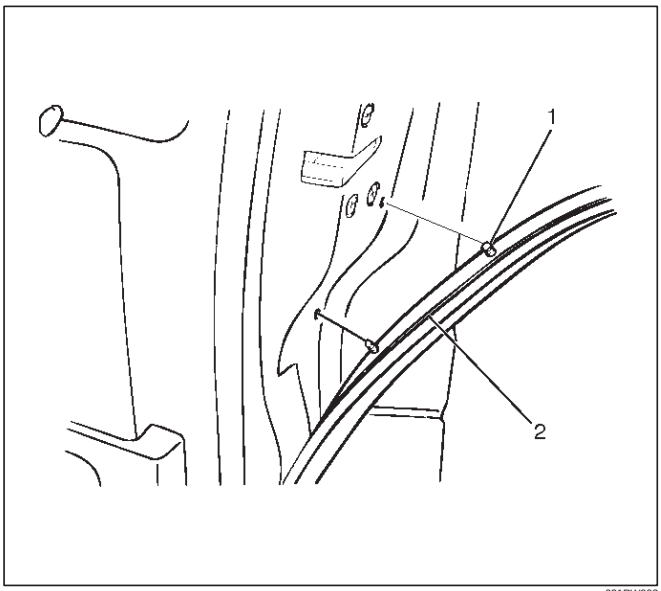

631RW003

Installation

1. Install the front door weatherstrip.
   - Apply soapy water to the door frame groove.
   - Apply the sealing adhesive (3) to the upper A portion of the door frame (1) and press it for installation after assembling the weatherstrip (2).

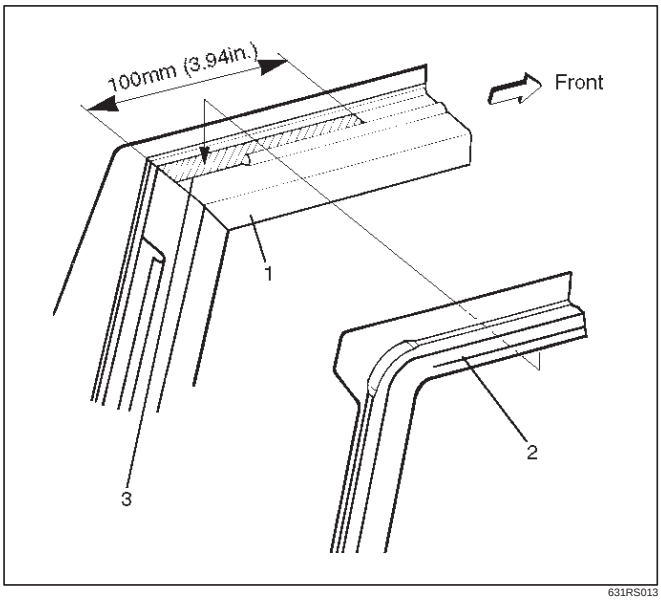

631RS013

- After positioning the weatherstrip (4) corner, insert the weatherstrip into the door frame groove from A point in the arrow–marked direction.

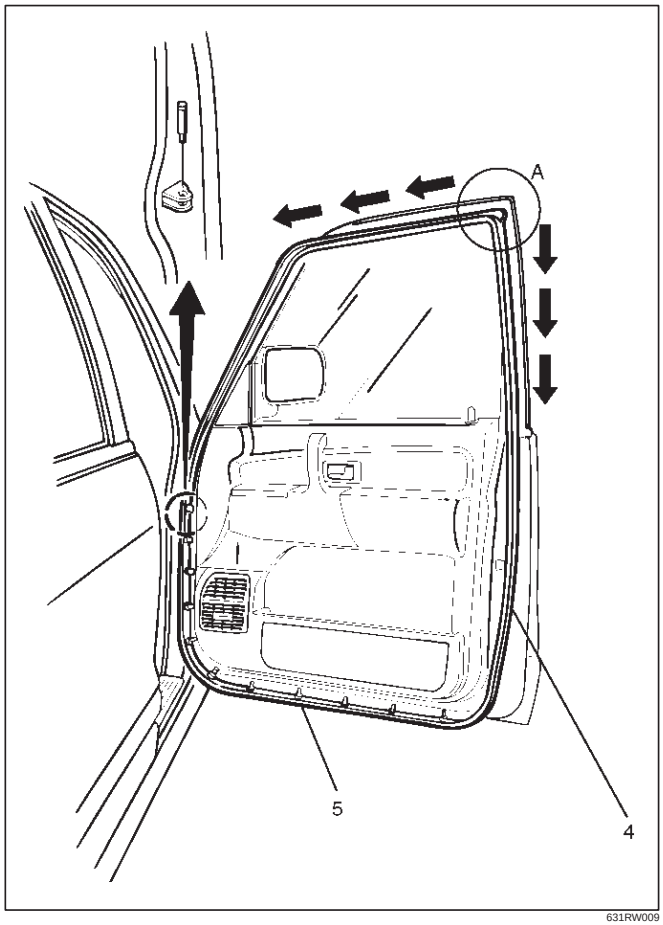

631RW009

- Insert the weatherstrip clip (5) into the door panel up to its base.

2. Install the check arm pin.

Rear Door Weatherstrip

Parts Location

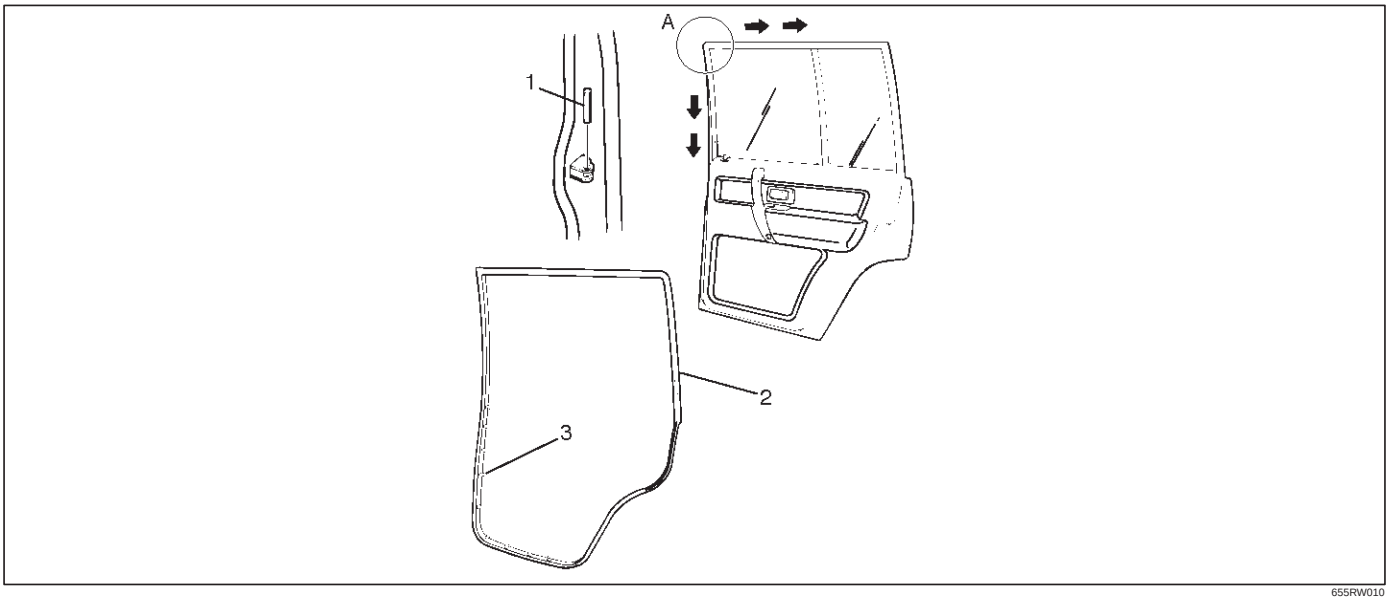

655RW010

Legend

(1) Check Arm Pin
(2) Rear Door Weather Strip
(3) Clip

Removal and Installation

Refer to Front Door Weatherstrip in this section.

Front Door Seal Finisher

Parts Location

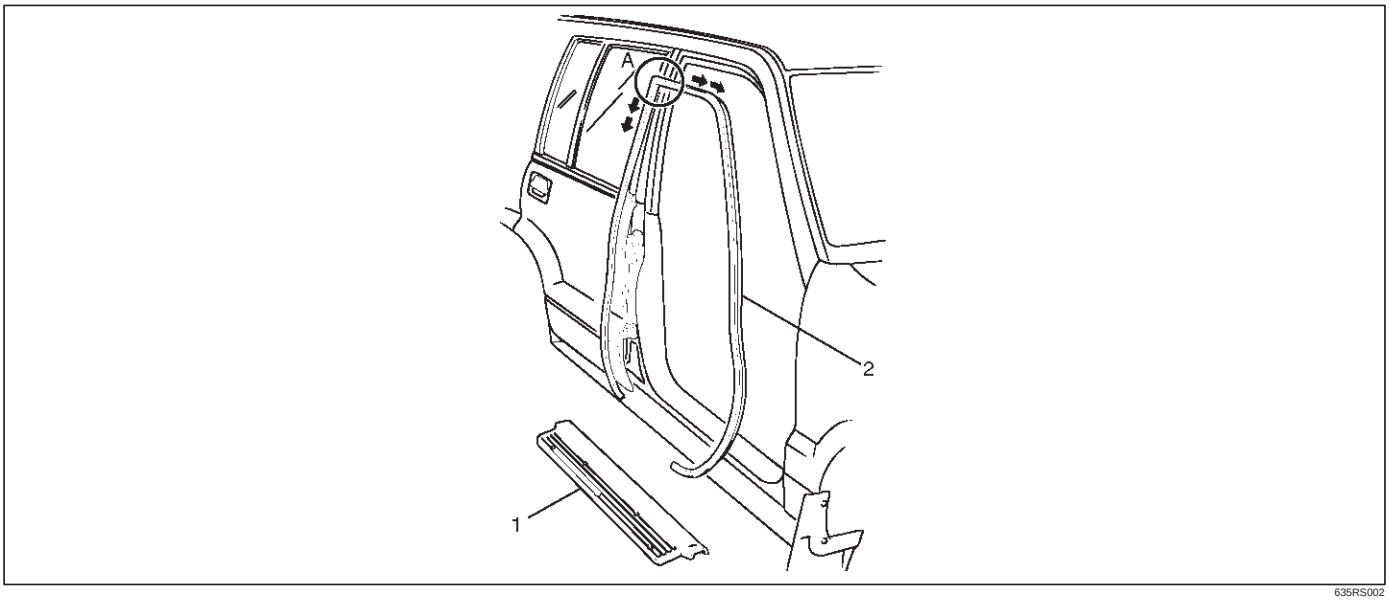

635RS002

Legend

(1) Front Door Sill Plate
(2) Front Door Seal Finisher

Removal

1. Disconnect the battery ground cable.
2. Remove front door sill plate.
3. Remove front door seal finisher (1).
   - Pull the finisher out from the body panel.

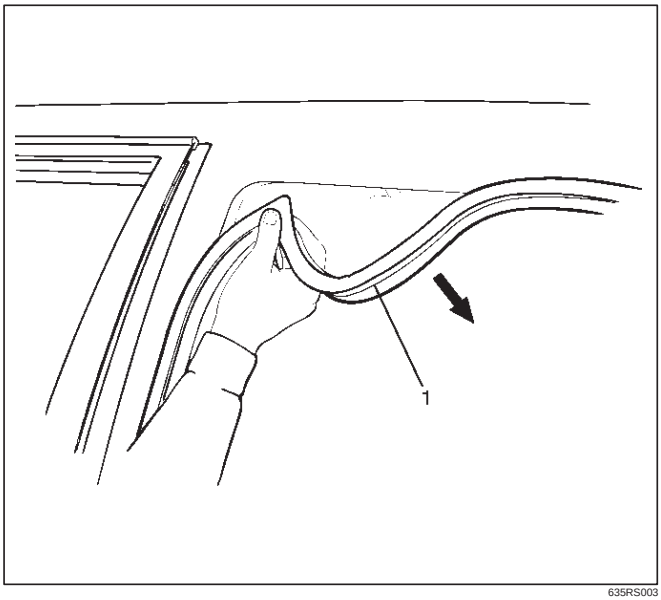

635RS003

Installation

1. Install the front door seal finisher (2).
   - Insert the finisher into the A corner and install the finisher in the arrow–marked directions.

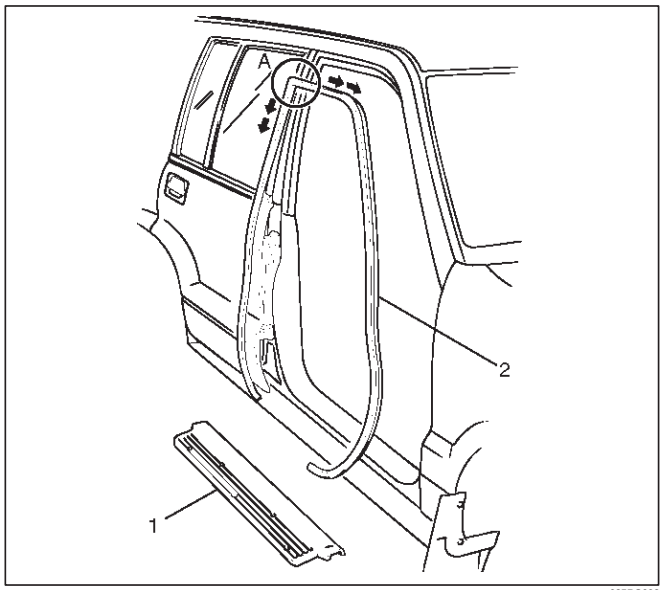

635RS002

2. Install the front door sill plate (1).
   - Take care not to allow the sill plate to distort or twist the finisher.

Rear Door Seal Finisher

Parts Location

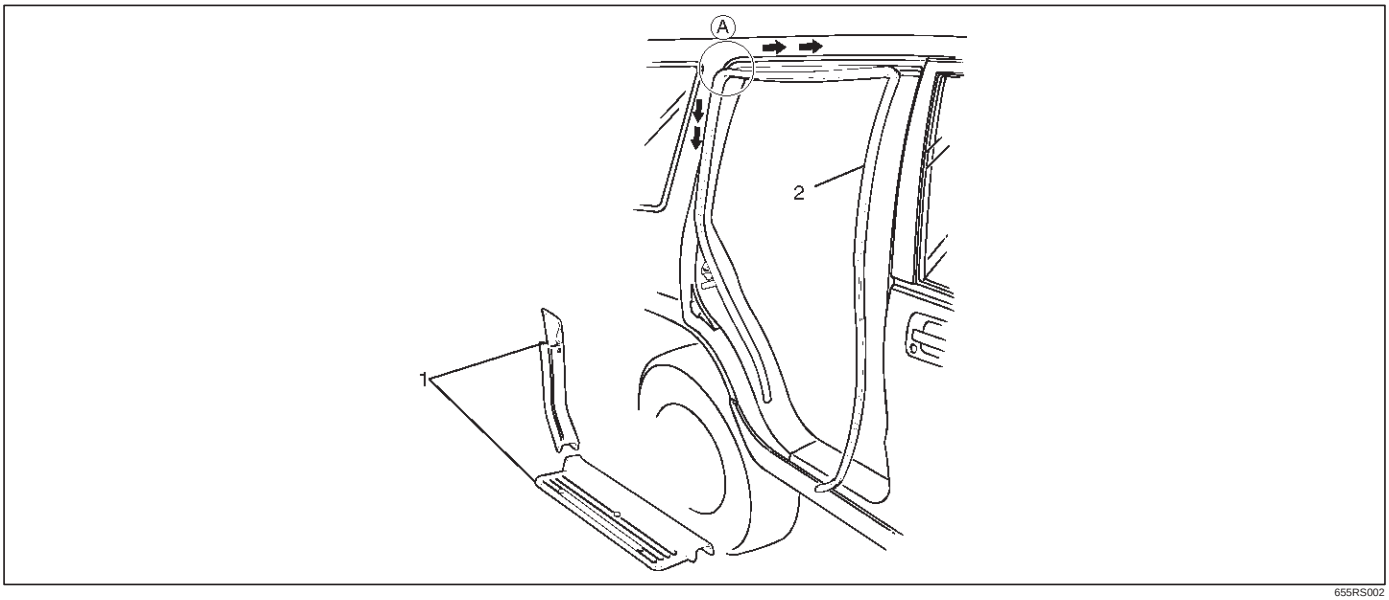

655RS002

Legend

(1) Rear Door Sill Plate and Luggage Side Lower Cover
(2) Rear Door Seal Finisher

Removal

1. Disconnect the battery ground cable.
2. Remove rear door sill plate and the luggage side lower cover.
3. Remove rear door seal finisher (1).
   - Pull the rear door seal finisher (1) out from the body panel.

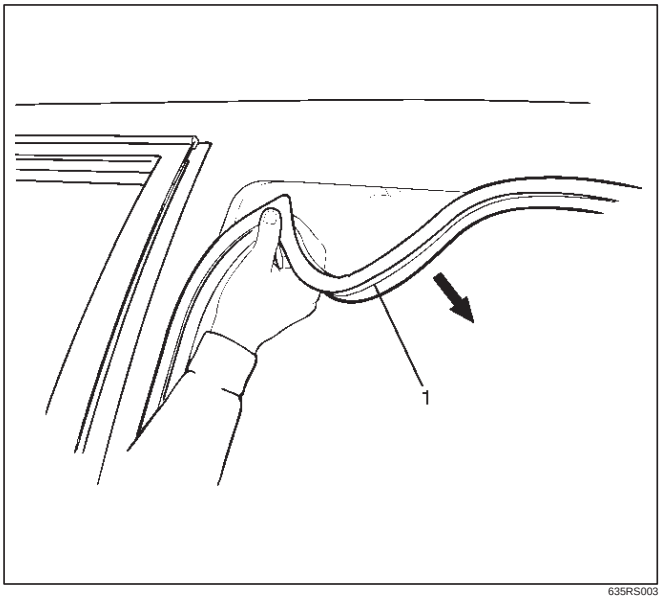

635RS003

Installation

1. Install the rear door seal finisher (2).
   - Insert the rear door seal finisher (2) into the A corner and install the finisher in the arrow-marked directions.

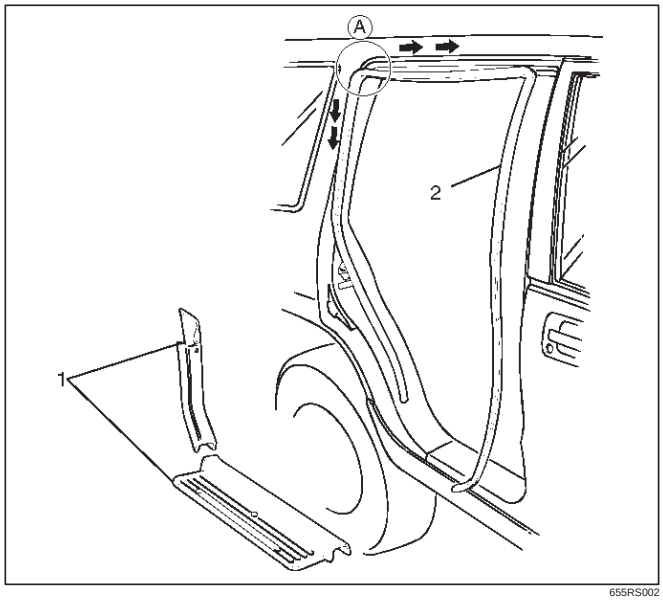

655RS002

2. Install the rear door sill plate and luggage side lower cover.
   - Be careful not to allow the sill plate and the cover to distort or twist the finisher.

Tailgate Assembly (LH)

Parts Location

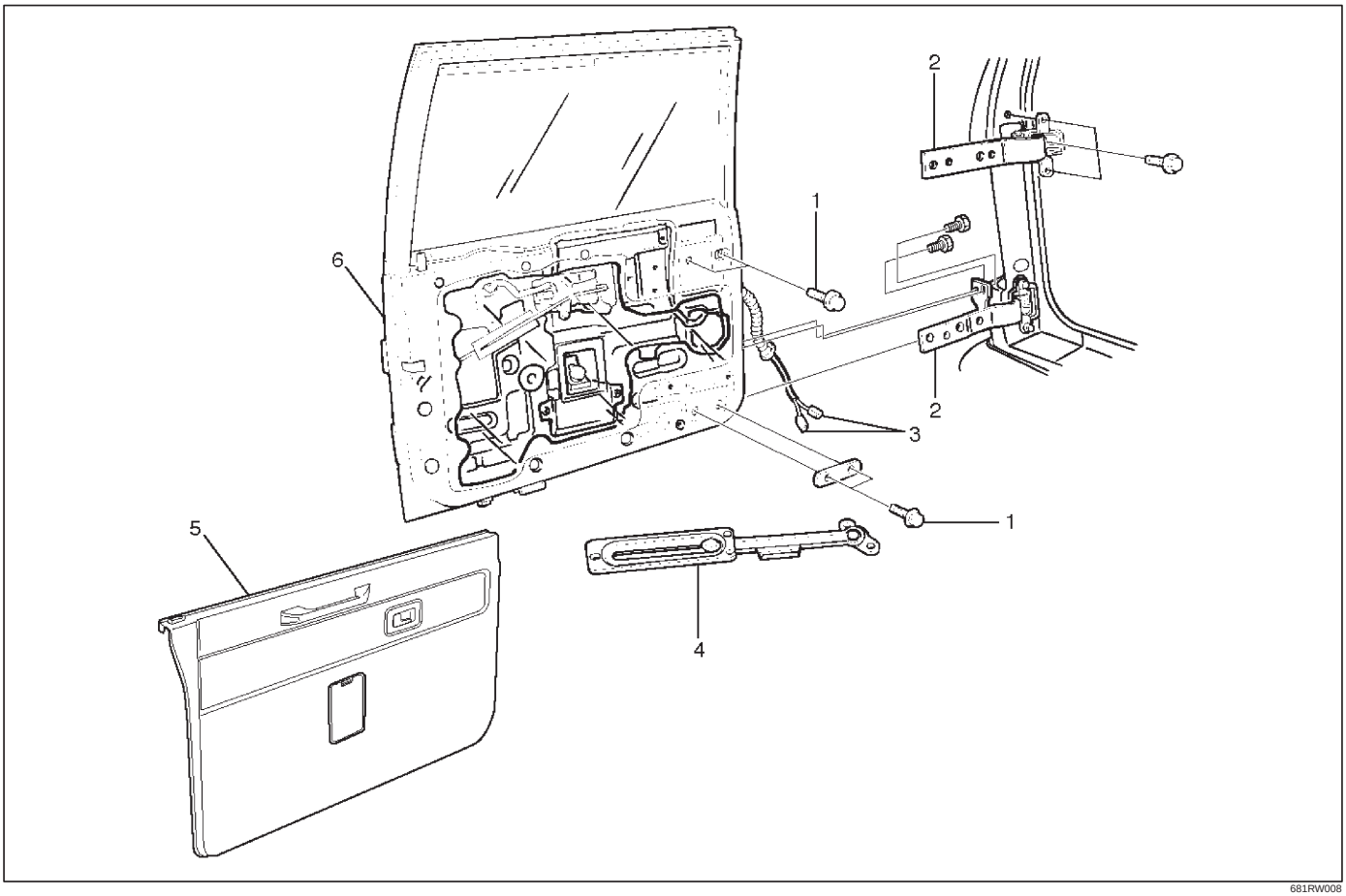

681RW008

Legend

(1) Tailgate Fixing Bolt
(2) Tailgate Hinge
(3) Tailgate Harness Connection
(4) Tailgate Stopper Assembly
(5) Tailgate Trim Panel (LH)
(6) Tailgate Assembly (LH)

Removal

1. Disconnect the battery ground cable.
2. Remove tailgate time panel (LH).
   - Refer to Exterior / Interrior Trim in this section.
3. Remove tailgate stopper assembly
4. Remove tailgate harness connection.
   - Open the luggage trim panel lid and disconnect the tailgate harness connection.

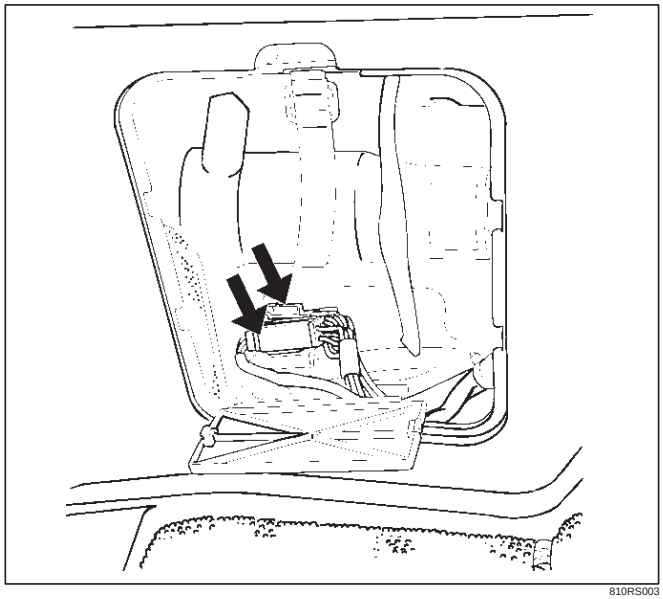

810RS003

5. Remove tailgate fixing bolts.

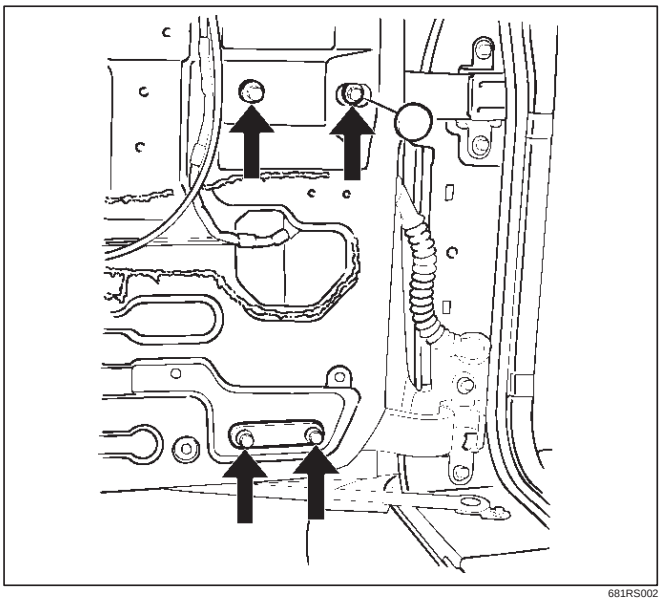

681RS002

6. Remove tailgate assembly (LH).
7. Remove tailgate hinge.
   - Apply a setting mark (1) on the body side hinge and remove the hinge fixing bolts.

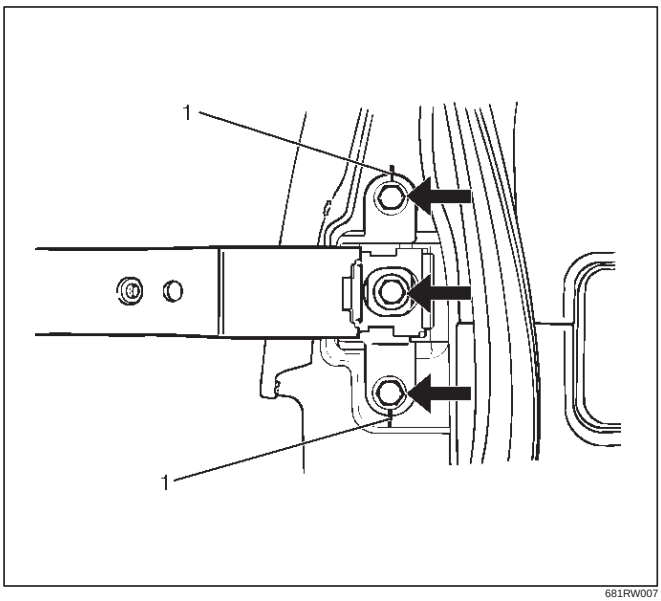

681RW007

Installation

To install, follow the removal steps in the reverse order, noting the following points.

1. Apply chassis grease to the tailgate hinge and the tailgate stopper moving surface.
2. Align the tailgate fitting to the body by referring to Body Dimension in this section.
3. Tighten the hinge bolts to the specified torque.

   Torque : 34 N•m (3.5kg·m/25 lb ft)

Tailgate Assembly (RH)

Parts Location

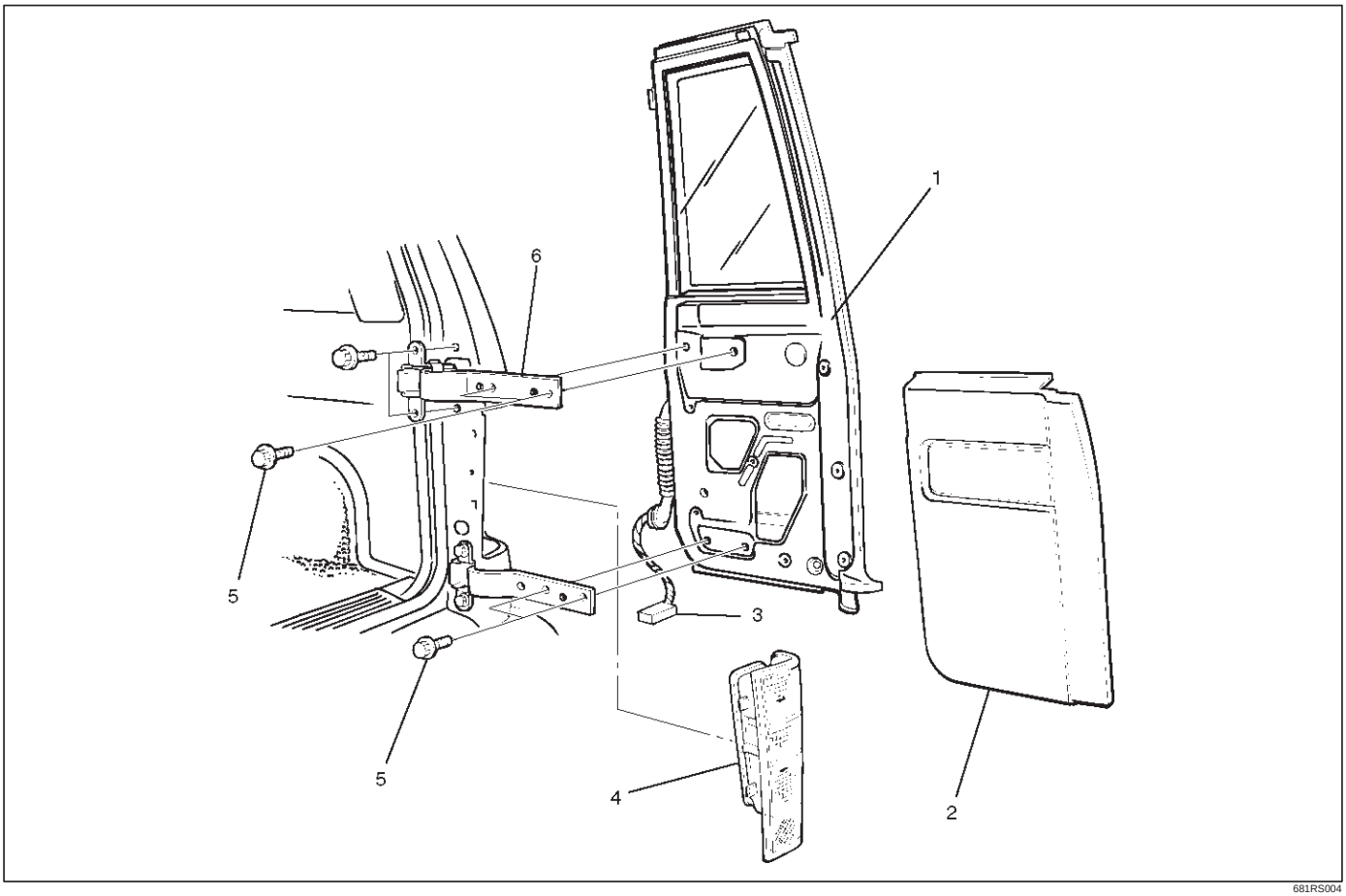

681RS004

Legend

(1) Tailgate Assembly (RH)
(2) Tailgate Trim Panel (RH)
(3) Tailgate Harness Connection
(4) Rear Combination Light (RH)
(5) Tailgate Fixing Bolt
(6) Tailgate Hinge

Removal

1. Disconnect the battery ground cable.
2. Remove rear combination light (RH).
3. Remove tailgate trim panel (RH).
   - Refer to Exterior / Interrior Trim in this section.
4. Remove tailgate harness connection.
   - Disconnect the tailgate harness connection.

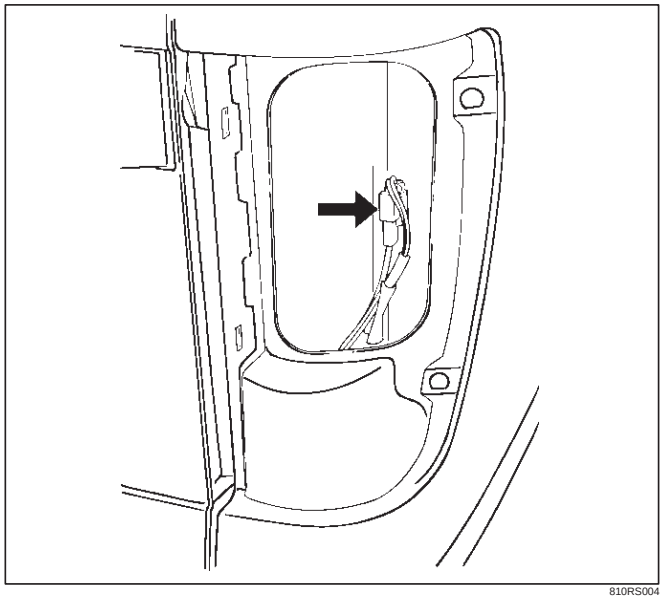

810RS004

5. Remove tailgate fixing bolt.

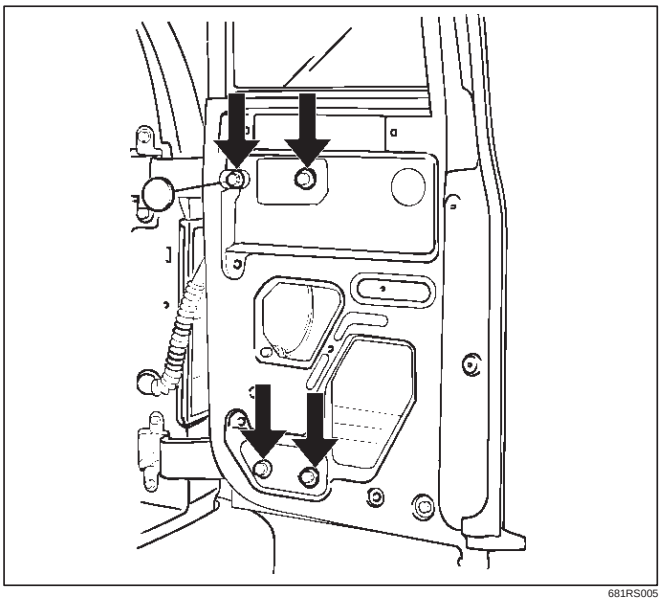

681RS005

6. Remove tailgate assembly (RH).
7. Remove tailgate hinge.
   - Apply a setting mark (1) on the body side hinge and remove the hinge fixing bolts.

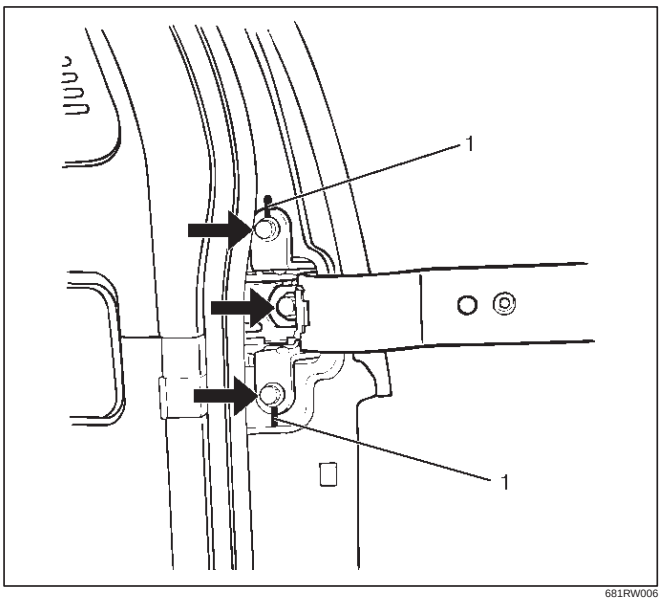

681RW006

Installation

To install, follow the removal steps in the reverse order, noting the following point.

1. Apply chassis grease to the tailgate hinge moving surface.
2. Align the tailgate fitting to the body. Refer to Body Dimension in this section.
3. Tighten the hinge bolts to the specified torque.

Torque : 34 N•m (3.5kg·m/25 lb ft)

Tailgate Strikers

Adjustment

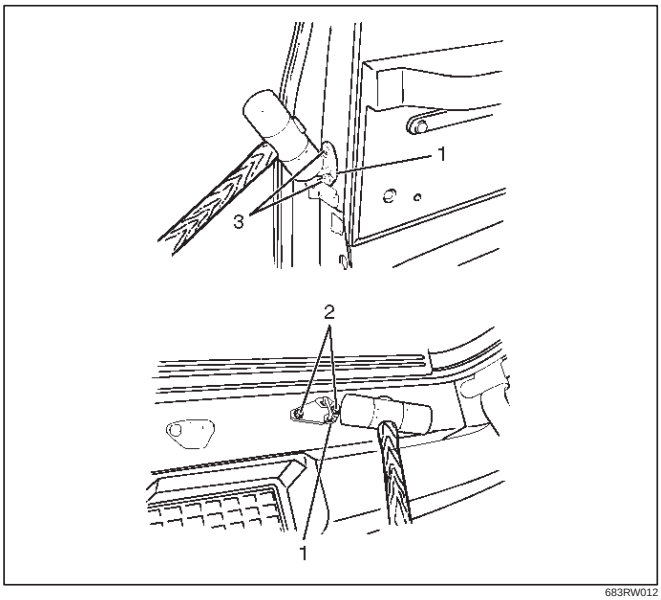

683RW012

1. Loosen the striker screws (3) (or bolts (2)).
2. Tap the striker (1) with a plastic hammer to align.
3. Tighten the striker screws (3) (or bolts (2)).

Screw Torque : 15 N•m (1.5kg·m/11 lb ft)

Bolt Torque : 12 N•m (1.2kg·m/104 lb in)

Tailgate Stopper Assembly

Parts Location

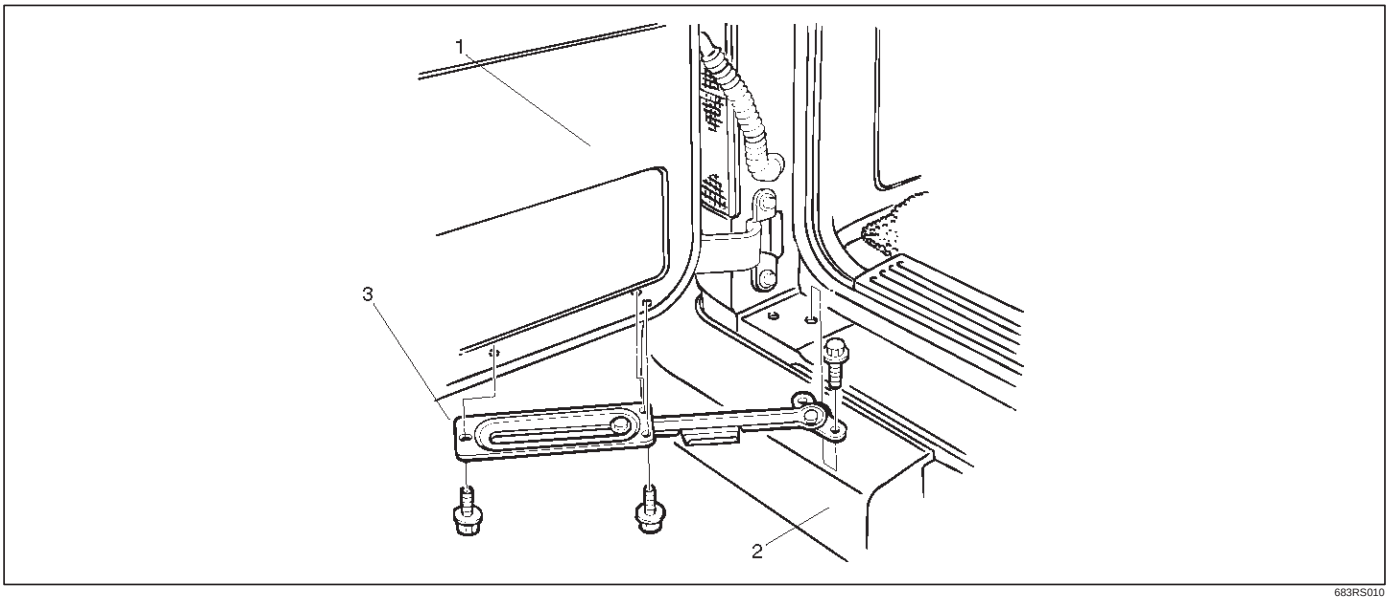

683RS010

Legend

(1) Tailgate
(2) Rear Bumper
(3) Tailgate Stopper Assembly

Removal

1. Remove tailgate stopper assembly.
2. Apply chassis grease to the stopper moving surface.

Installation

1. Install the tailgate stopper assembly.
   - Tighten the fixing bolts to the specified torque.

Torque : 12 N•m (1.2kg·m/104 lb in)

Tailgate Dove-Tail

Parts Location

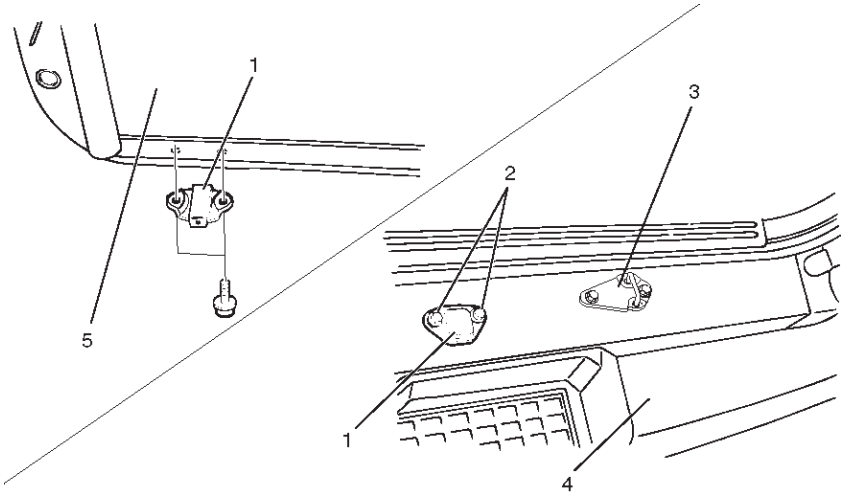

683RW011

Legend

(1) Dove-Tail
(2) Fixing Bolt
(3) Tailgate Striker
(4) Rear Bumper
(5) Tailgate (LH)

Removal

1. Remove tailgate dove-tail.

Installation

1. Install the tailgate dove–tail
   - Apply chassis grease to the dove–tail (A) moving surface.
   - Tighten the fixing bolts to the specified torque.

   Torque : 12 N•m (1.2kg·m/104 lb in)

Tailgate Dove-Tail Striker

Adjustment

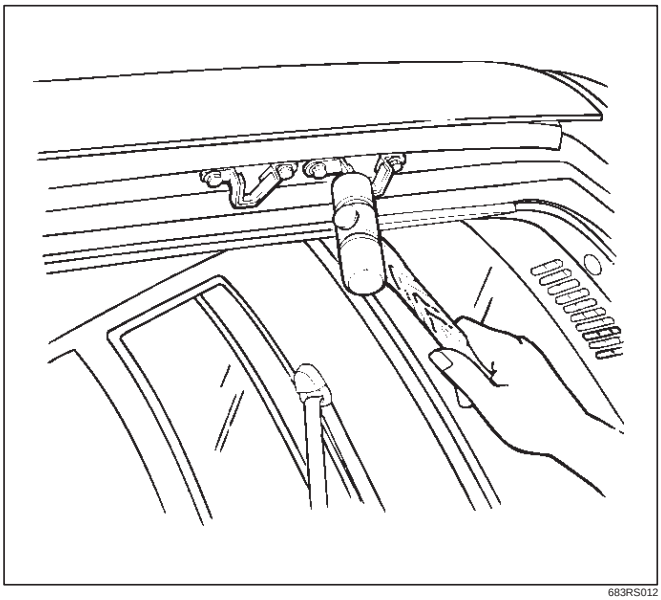

683RS012

1. Loosen the striker bolts.
2. Tap with a plastic hammer to align.
   - Gaps between Dove–Tail Striker (2) and bracket (1) are 0 mm (No clearance).

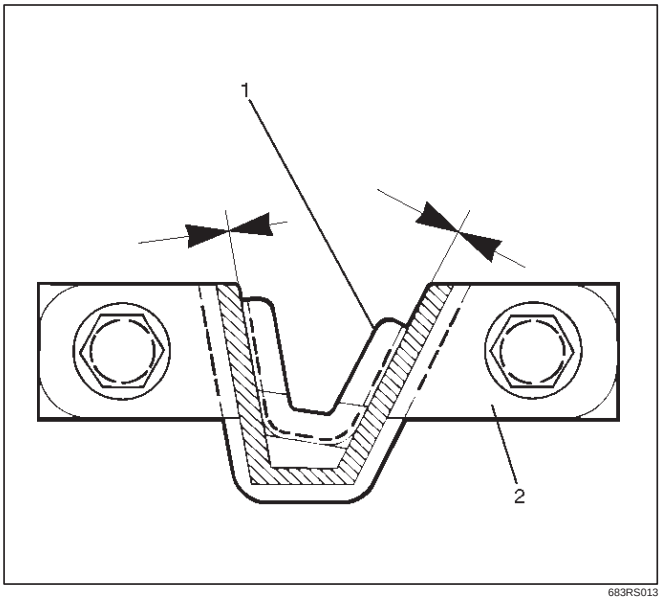

683RS013

3. Tighten striker bolts.

   Torque : 12 N•m (1.2kg·m/104 lb in)

Tailgate Frame Cover (LH)

Parts Location

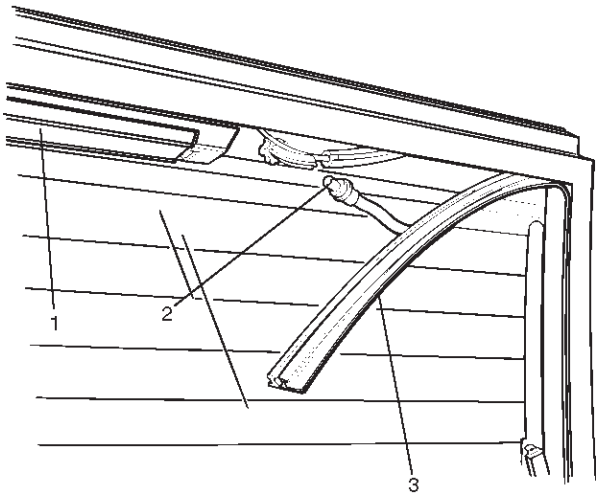

684RW001

Legend

(1) High Mount Stop Light
(2) Washer Tube
(3) Tailgate Frame Cover

Removal

1. Disconnect the battery ground cable.
2. Remove tailgate frame cover.
   - Pull the tailgate frame cover (2) out.
   - Disconnect the washer tube (1) at the nozzle and pull the washer tube out from the frame cover (2).
   - Disconnect the rear defogger and pull the harness from the cover.

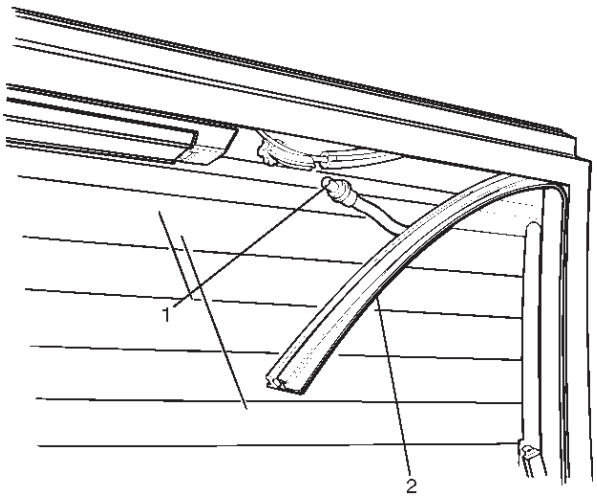

684RW002

Installation

1. Install the tailgate frame cover (1).
   - Hit the lower A edge portion of the cover to the tailgate flange.
   - Clearance between the frame cover and the tailgate panel (B portion) is 1 mm (0.04 in).

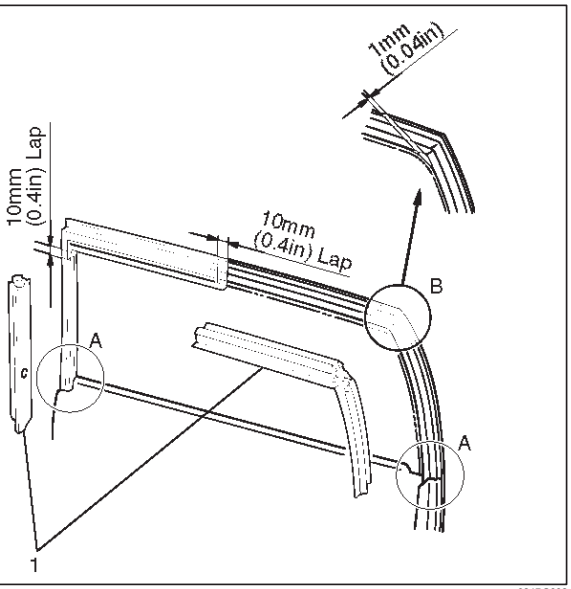

684RS008

Tailgate Frame Cover (RH)

Removal

1. Remove tailgate frame cover (RH).
   - Pull the frame cover out from the tailgate frame.

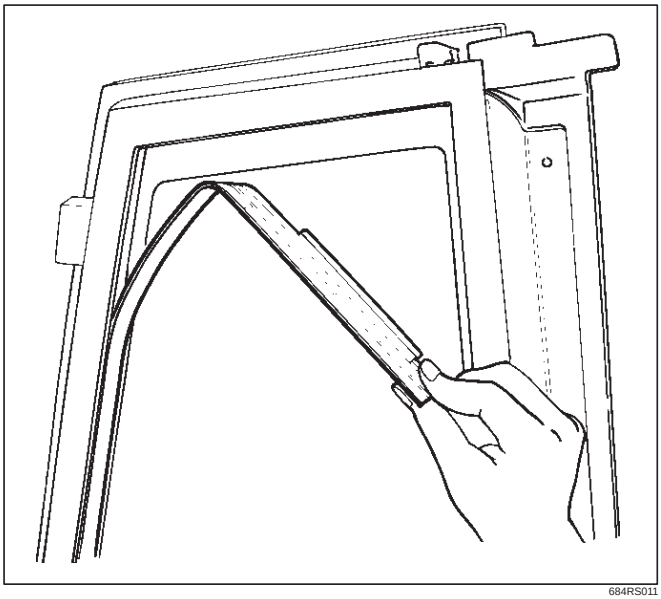

684RS011

Installation

1. Install the tailgate frame cover.
   - Hit the lower A edge portion (2) of the tailgate frame cover (1).

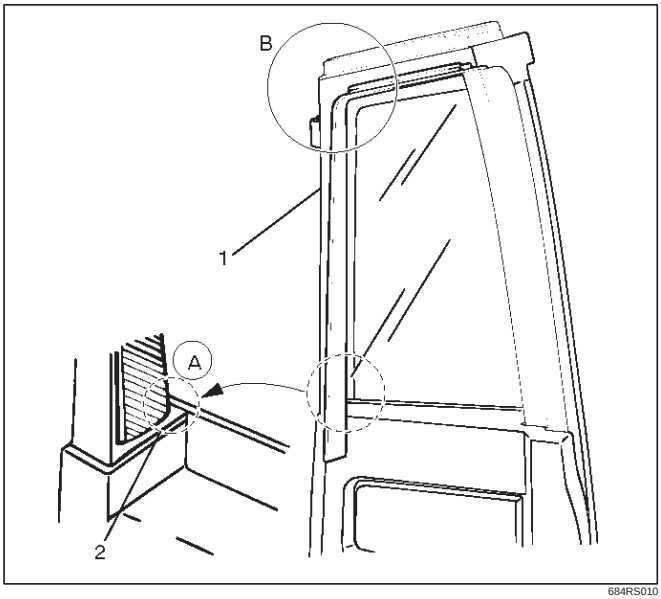

684RS010

   - Clearance between the frame cover and the tailgate panel (B portion) is 1 mm (0.04 in).

Tailgate Sash Trim Cover

Parts Location

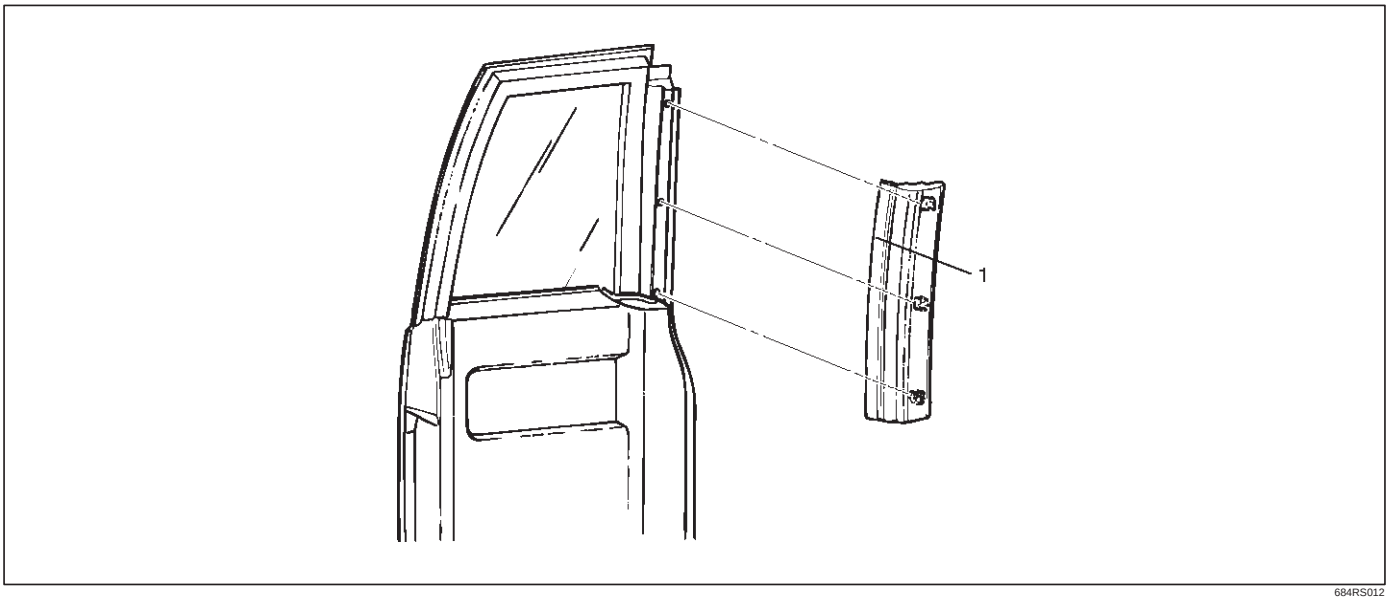

684RS012

Legend

(1) Tailgate Sash Trim Cover

Removal

1. Remove tailgate sash trim cover (1).
   - Pry the tailgate trim cover retainers free from the tailgate panel.

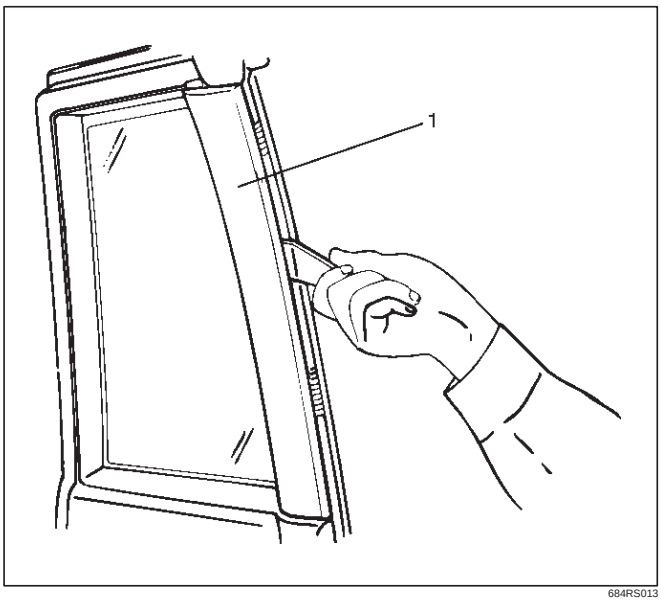

684RS013

Installation

1. Install the tailgate sash trim cover (1).
   - Insert the trim cover retainers into the tailgate hole securely so that there are no gaps between them.

Tailgate Outer Weatherstrip

Parts Location

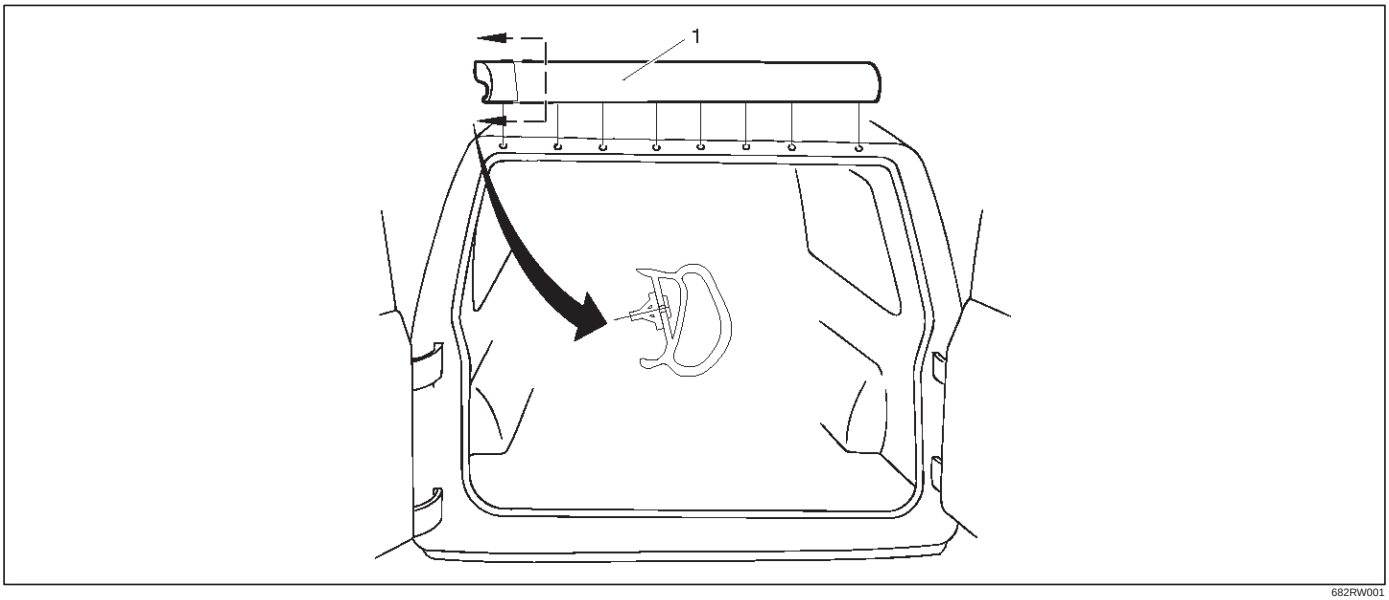

682RW001

Legend

(1) Tailgate Outer Weatherstrip

Removal

1. Disconnect the battery ground cable.
2. Remove tailgate outer weatherstrip (1).
   - Pry the tailgate outer weatherstrip clips (2) free from the body panel.

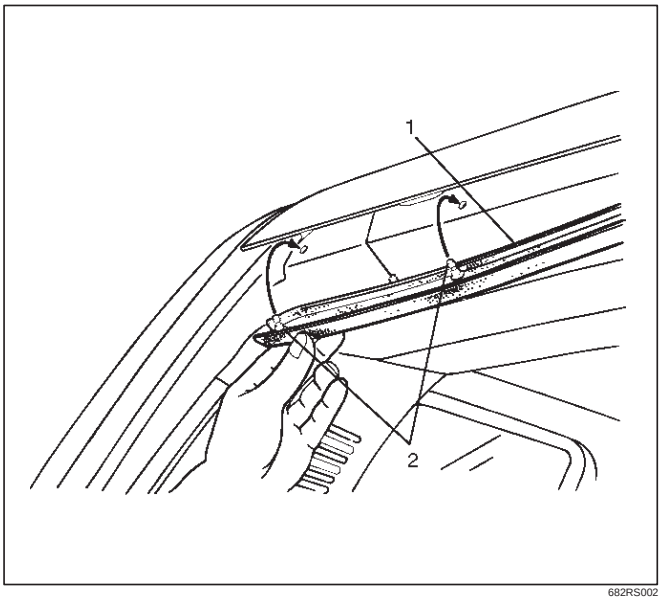

682RS002

Installation

1. Install the tailgate weatherstrip.
   - Insert the tailgate outer weatherstrip clip into the body panel hole securely in order to install the tailgate outer weatherstrip with the gap between the body panel and the weatherstrip.

Tailgate Center Weatherstrip

Parts Location

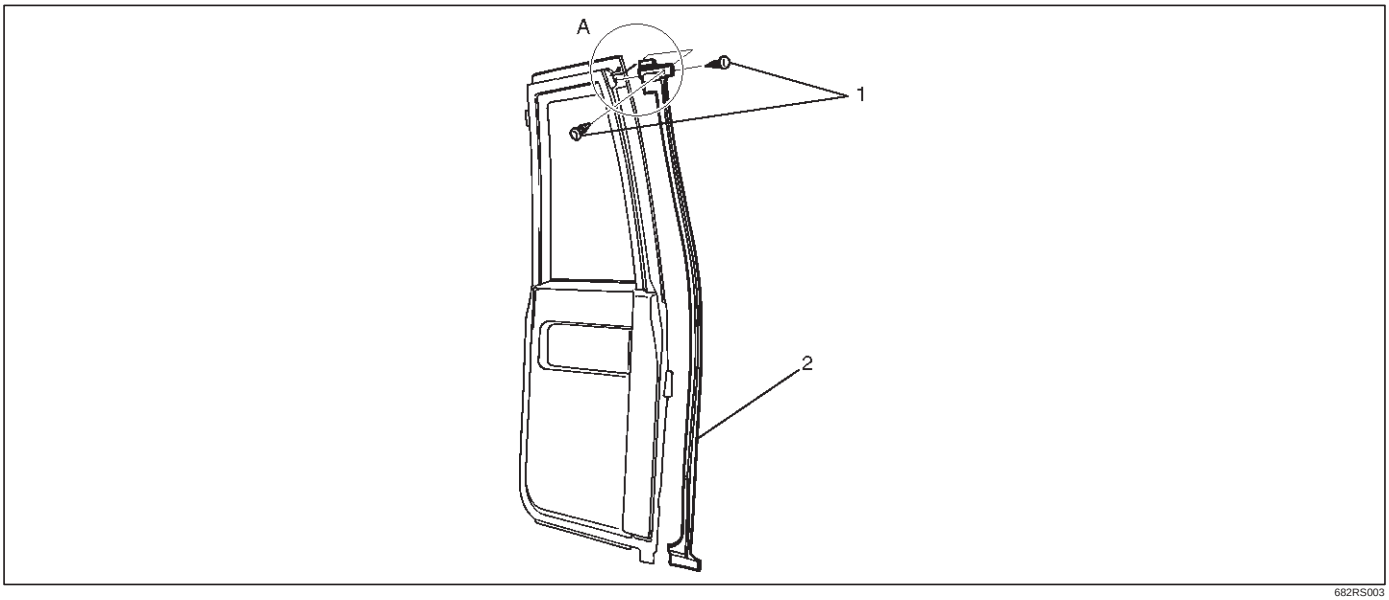

682RS003

Legend

(1) Clip
(2) Tailgate Center Weatherstrip

Removal

1. Remove tailgate center weatherstrip.
   - Remove the fixing clips in order to pull the tailgate center weatherstrip out from the tailgate panel.

Installation

1. Install the tailgate center weatherstrip (1).
   - Start assembling at the A portion.

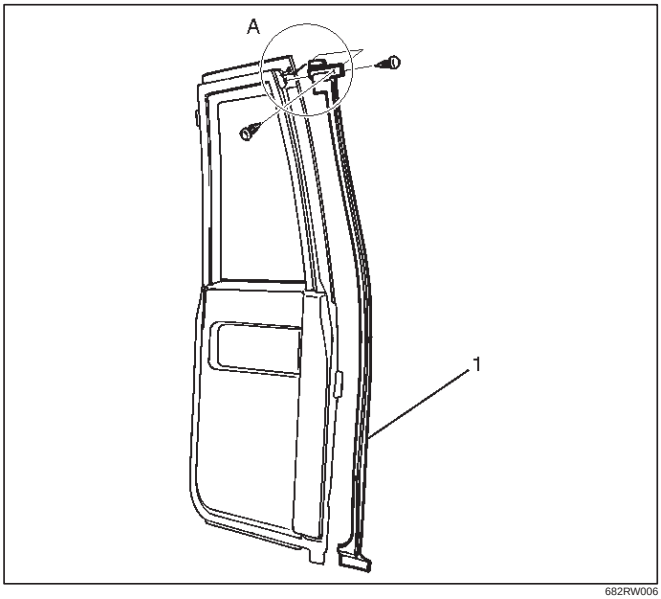

682RW006

- Clean the tailgate center weatherstrip (4) adhesive tape (2) and the butyl seal (3) fitting position of the tailgate panel.
- Affix new adhesive tape and the butyl seal to the weatherstrip (lower side) in order to install the tailgate center weatherstrip to the tailgate panel with no gap between them.

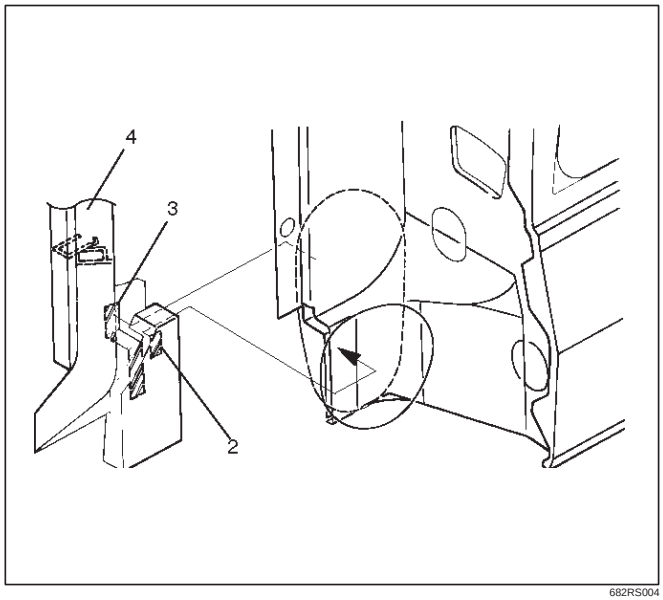

682RS004

Tailgate Main Weatherstrip

Parts Location

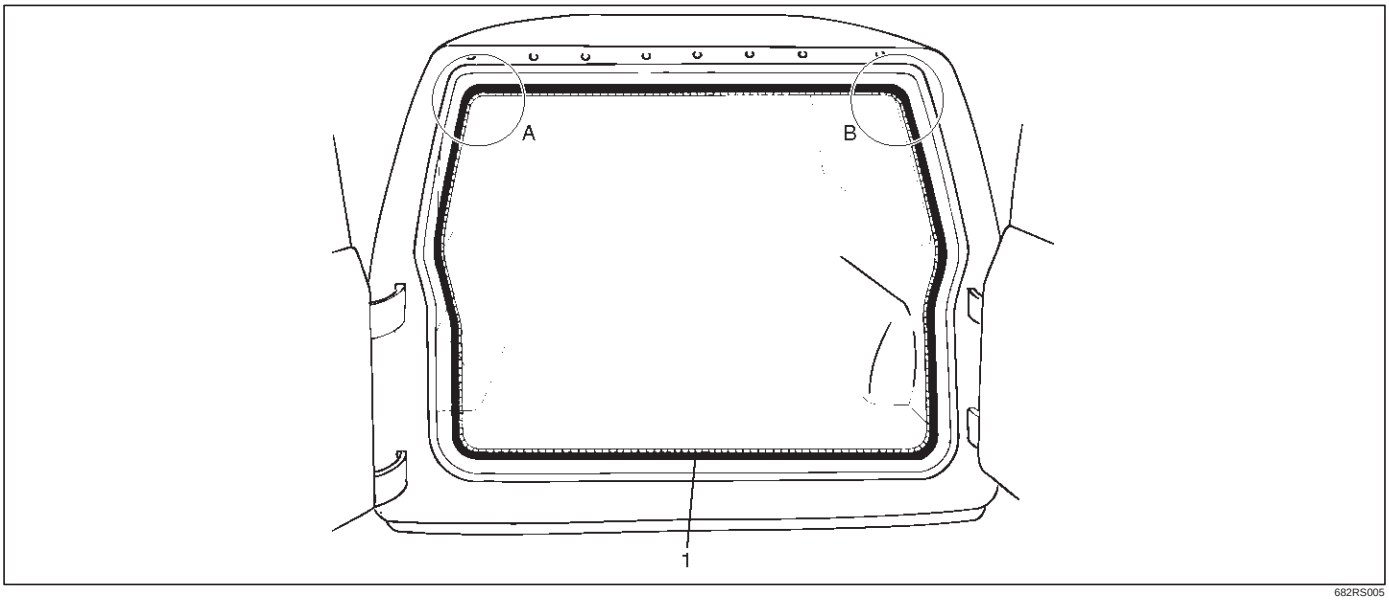

682RS005

Legend

(1) Tailgate Main Weatherstrip

Removal

1. Remove tailgate main weatherstrip.
   - Pull the tailgate main weatherstrip out from the body panel.

Installation

1. Install the tailgate main weatherstrip.
   - Align the A and B positions to the corners of the body panel. Install the tailgate main weatherstrip to the body panel by gently tapping with a plastic hammer. There should be not clearance between the body panel the tailgate main weatherstrip.

Spare Tire Carrier

Parts Location

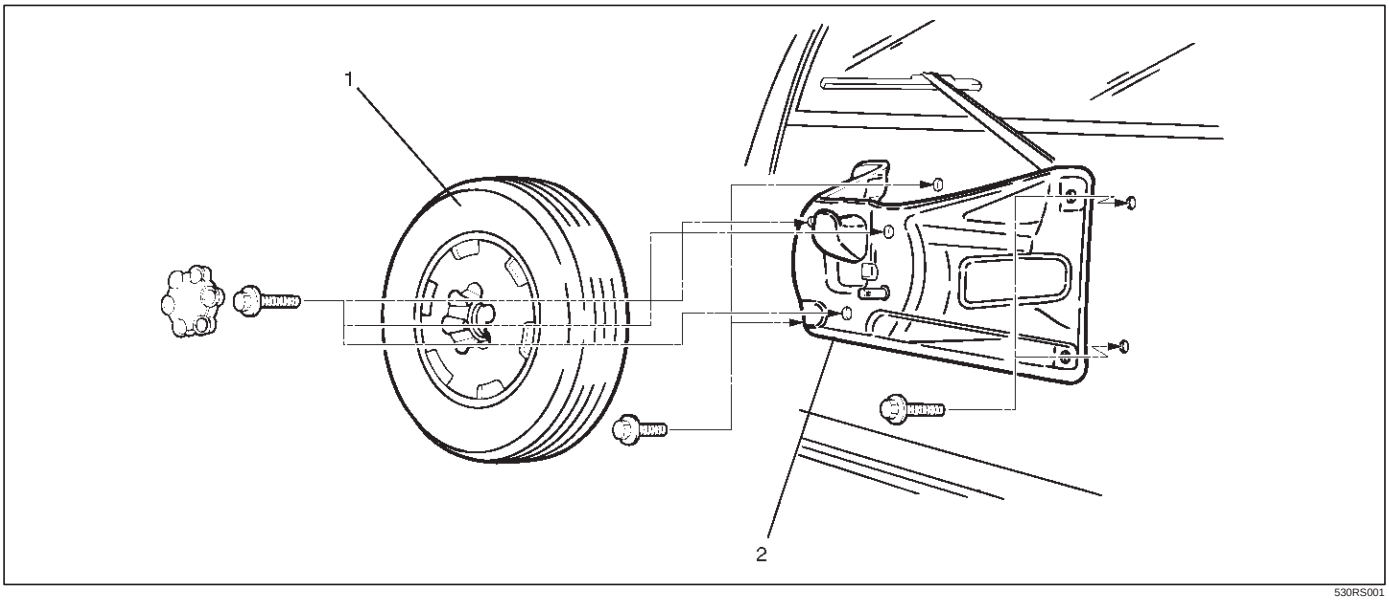

530RS001

Legend

(1) Spare Tire
(2) Spare Tire Carrier

Removal

1. Remove spare tire.
2. Remove spare tire carrier.
   - Remove the special bolts by using special tool (If so equipped).
   - Spare tire carrier bolt wrench 5–8840–2095–0 (J–34355).

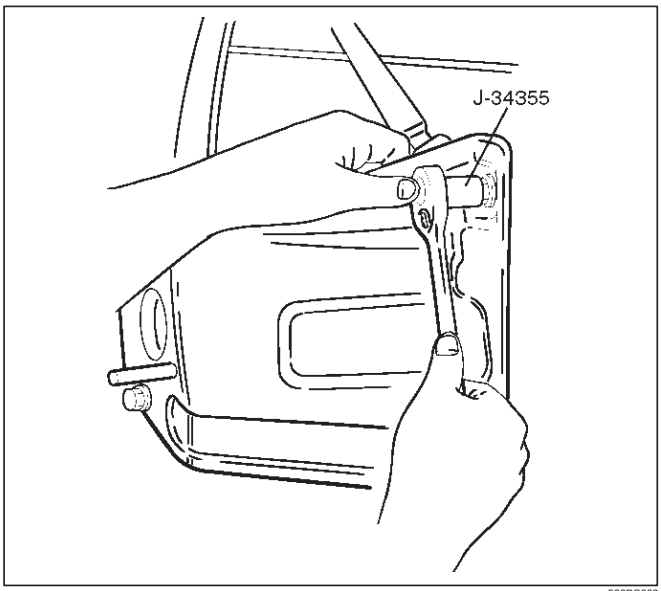

530RS002

Installation

1. Install the spare tire carrier.
   - Tighten the carrier fixing bolts to the specified torque.

   Torque : 31 N•m (3.2kg·m/23 lb ft)
2. Install the spare tire.
   - Tighten the spare tire fixing bolts to the specified torque.

   Torque : 118 N•m (12.0kg·m/87 lb ft)

Headlining

Parts Location

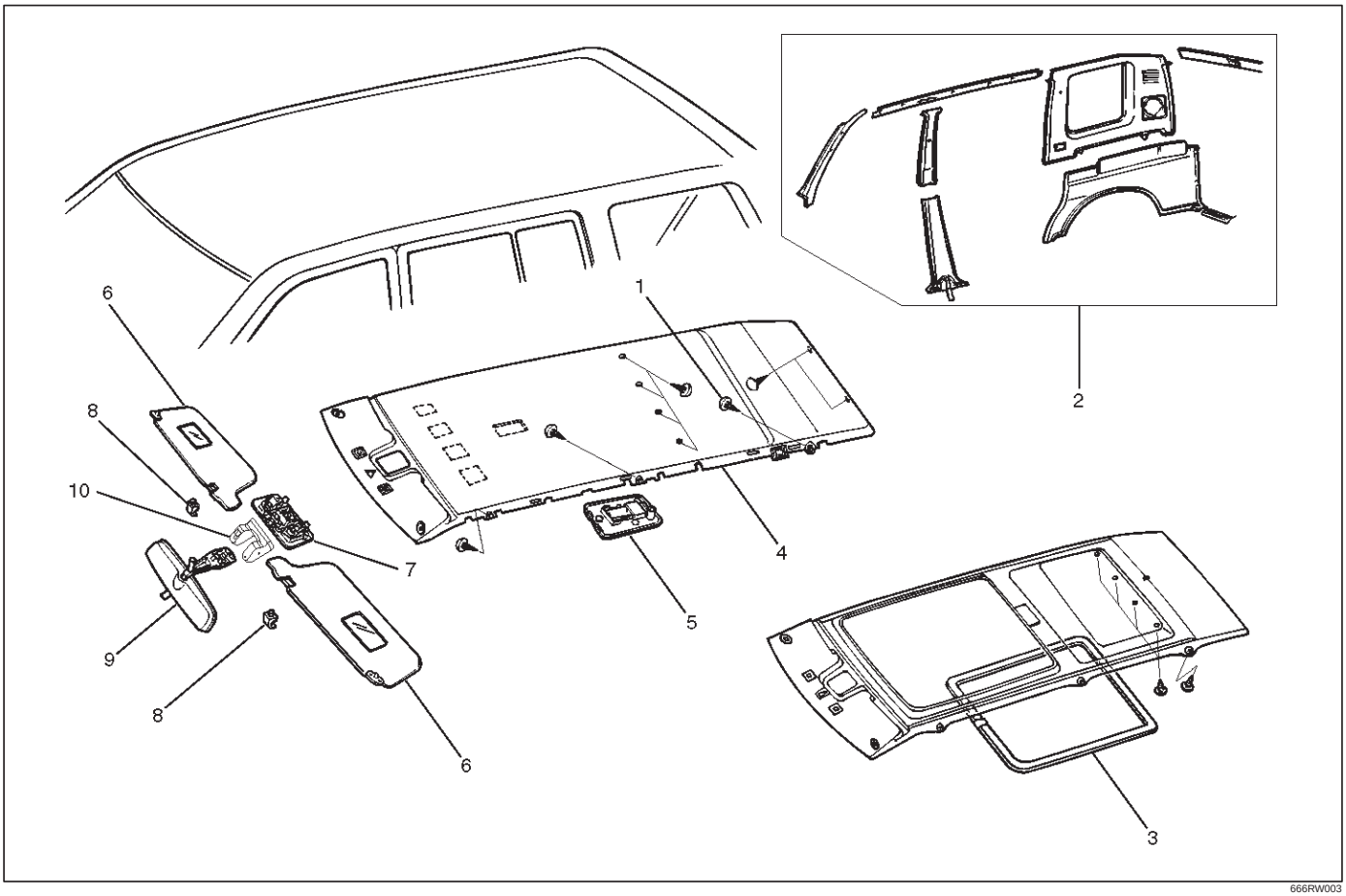

666RW003

Legend

(1) Clip
(2) Interior Trim Panels
(3) Sun Roof Finisher (W/Sun Roof)
(4) Headlining
(5) Dome Light
(6) Sunvisors
(7) Map Light
(8) Sunvisor Holder
(9) Rear View Mirror
(10) Multi Meter

Removal

1. Disconnect the battery ground cable.
2. Remove interior trim panels.
   - Refer to Exterior / Interrior Trim in this section.
3. Remove dome light.
   - Remove the dome light lens and the fixing screws.
   - Disconnect the dome light connectors.
4. Remove multi meter (4) (If so eguipped).
   - Remove two caps (2), two screws (3) and disconnect the connector (1).

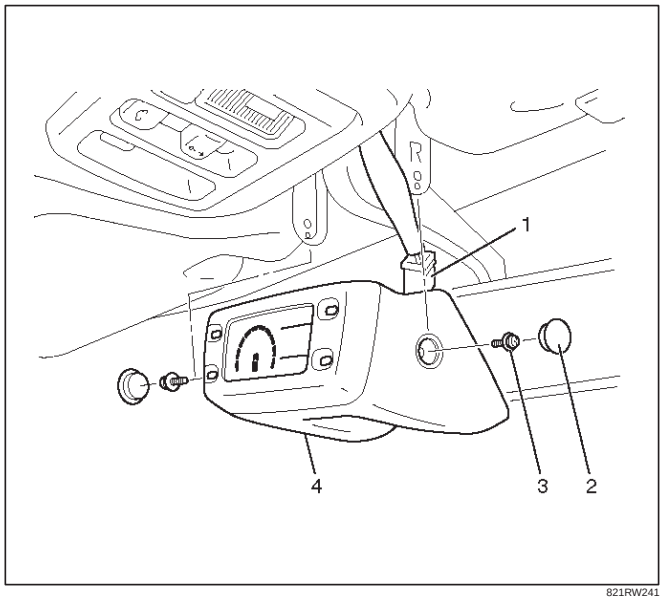

821RW241

5. Remove rear view mirror.
   - Remove the rubber stopper (1).
   - Pry off the mirror stay cover (2) and remove 3 screws.

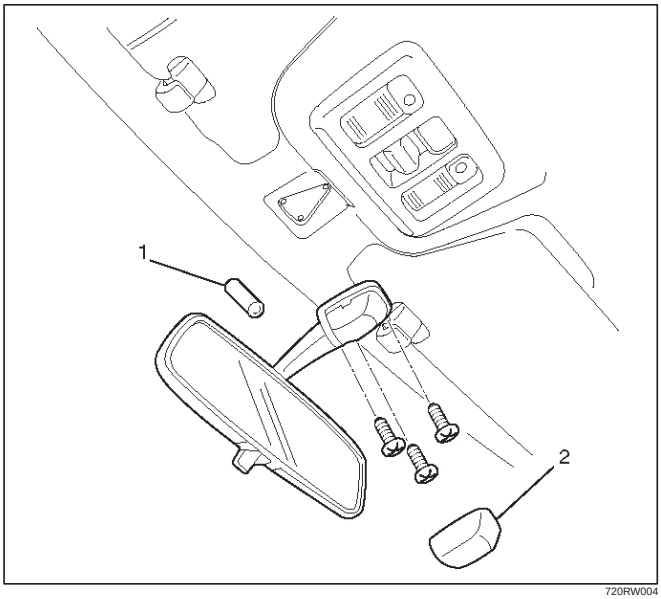

720RW004

6. Remove map light/sun roof switch.
   - Pry the map light clip free from the map light/sun roof switch bracket and disconnect the connector.

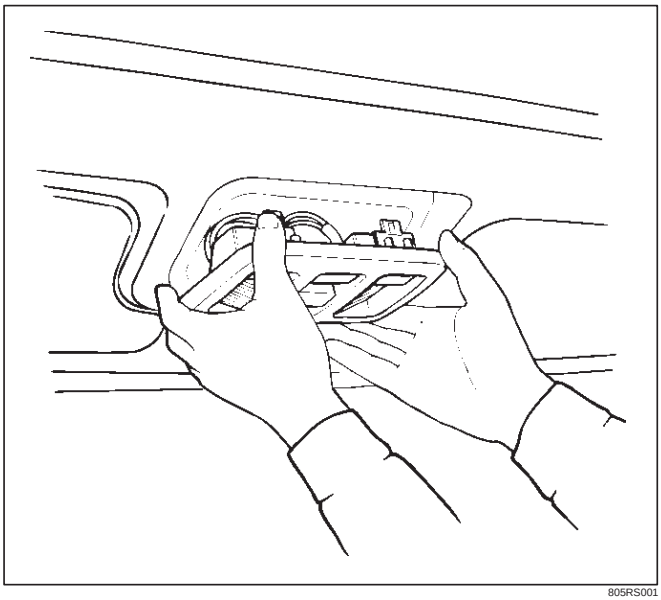

805RS001

7. Remove sunvisors.
   - Remove the fixing screw and turn the sunvisor holder (1) to remove it.
   - Disconnect the vanity mirror illumination connector.

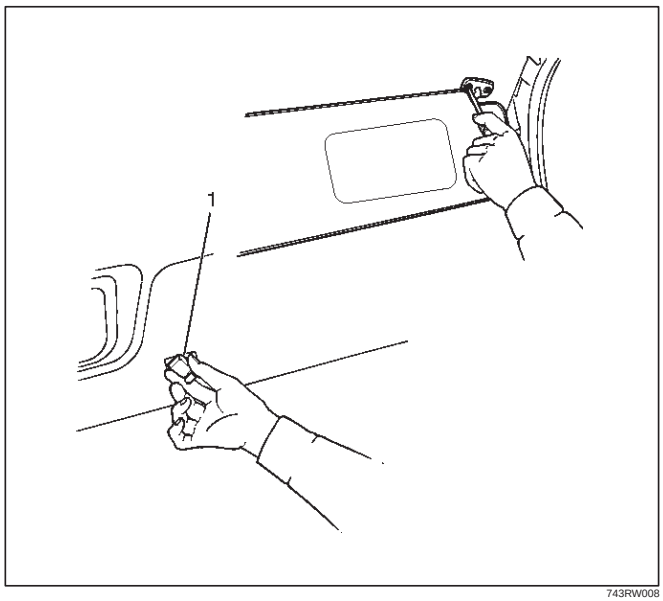

743RW008

8. Remove sun roof finisher (W/Sun roof).
9. Remove headlining.
   - Remove the headlining fixing clips.

Installation

To install, follow the removal steps in the reverse order, noting the following points.

1. Install the headlining so that the fixing clips will not come off.
2. To install the sun roof finisher (3), first fit in at one place with the head lining (2) close to the sun roof frame complete (1), then install the entire finisher tightly by hitting it with a plastic hammer, not allowing it to move up.

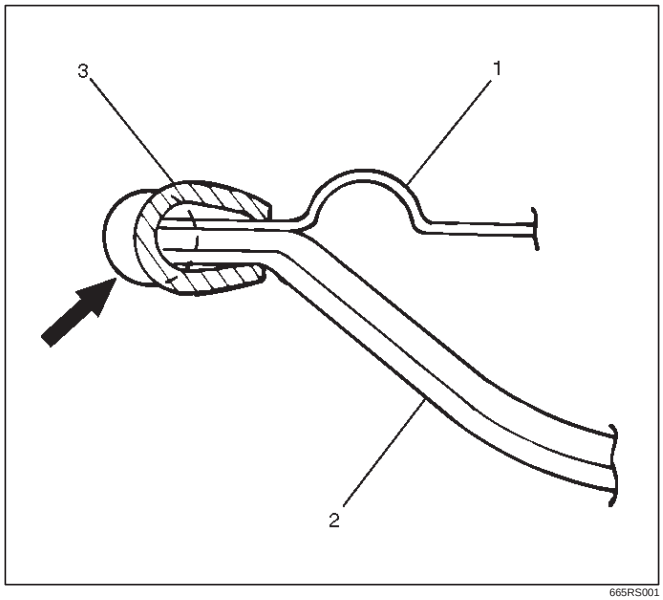

665RS001

Rear Air Deflector

Parts Location

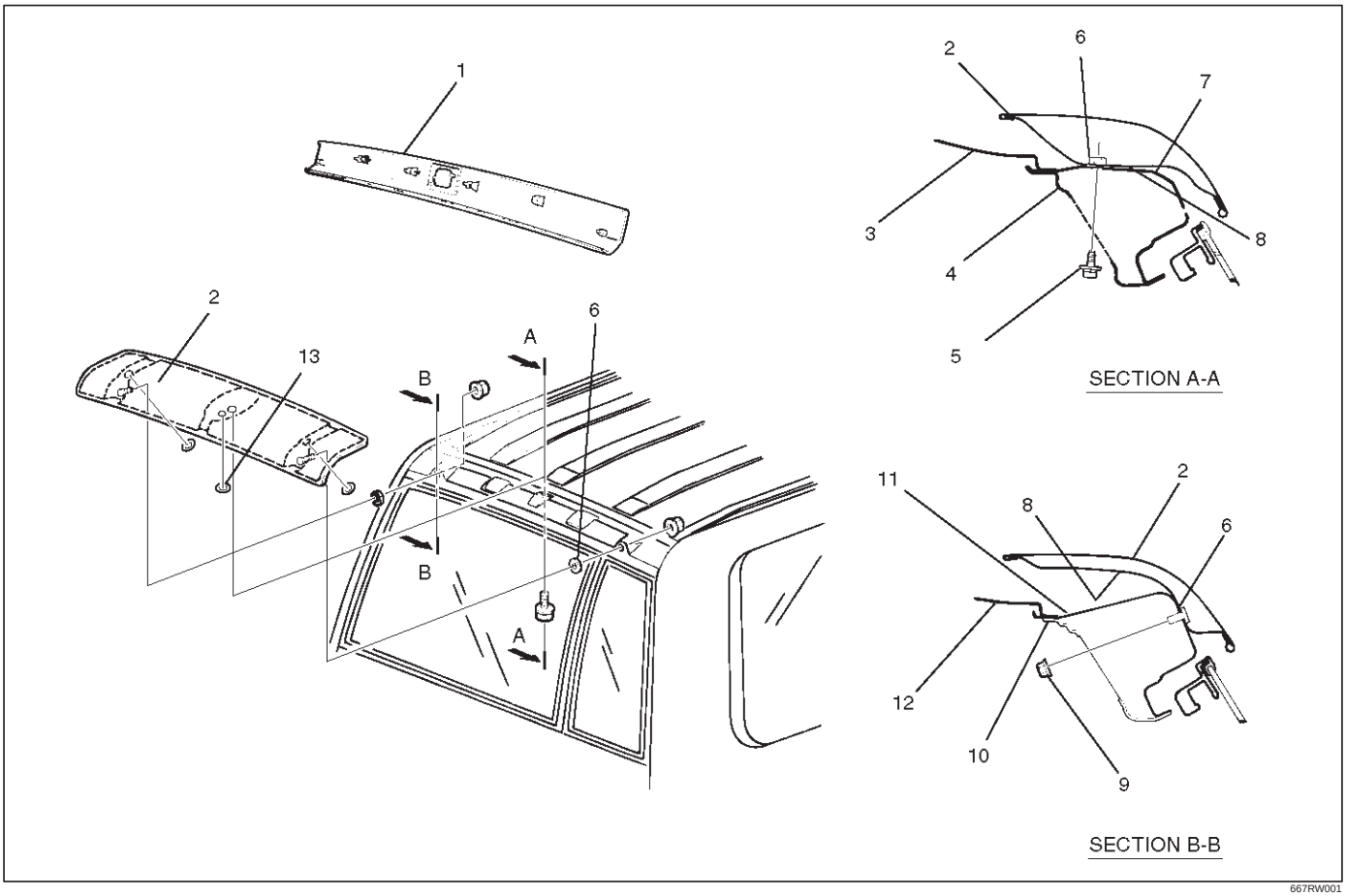

Legend

(1) Rear Roof Trim Cover
(2) Rear Air Deflector
(3) Roof Rail
(4) Rear Inner Roof Rail
(5) Fixing Bolt
(6) Nylon Washer
(7) Rear Outer Roof Panel
(8) Grommet
(9) Fixing Nut
(10) Rear Pillar Upper Reinforcement
(11) Rear Outer Roof Rail
(12) Roof Panel
(13) Grommet

Removal

1. Disconnect the battery ground cable
2. Remove rear roof trim cover.
   - Refer to Exterior / Interrior Trim in this section.
3. Remove rear air deflector.
   - Take notice of the grommet and the nylon washer.

Installation

To install, follow the removal steps in the reverse order, noting the following points.

1. Install the grommet (1) to the air deflector (2) drain hole.

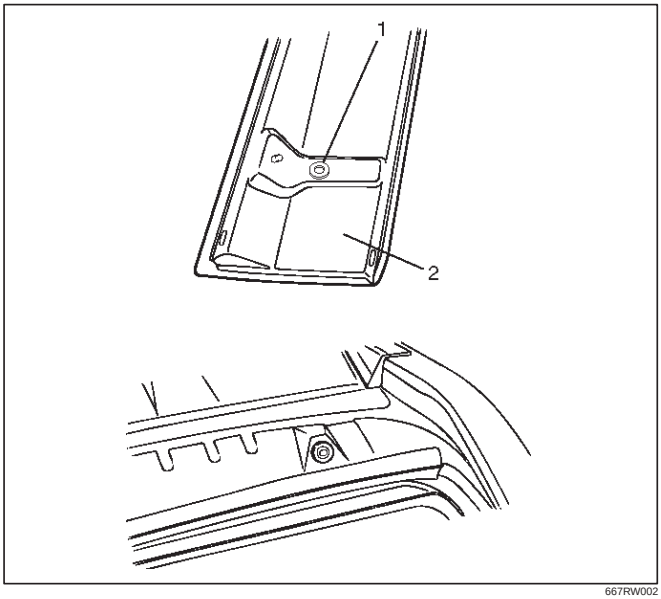

667RW002

2. Use a new nylon washer (4). Peel off the adhesive tape of the washer to install the nylon washer to the air deflector (3).

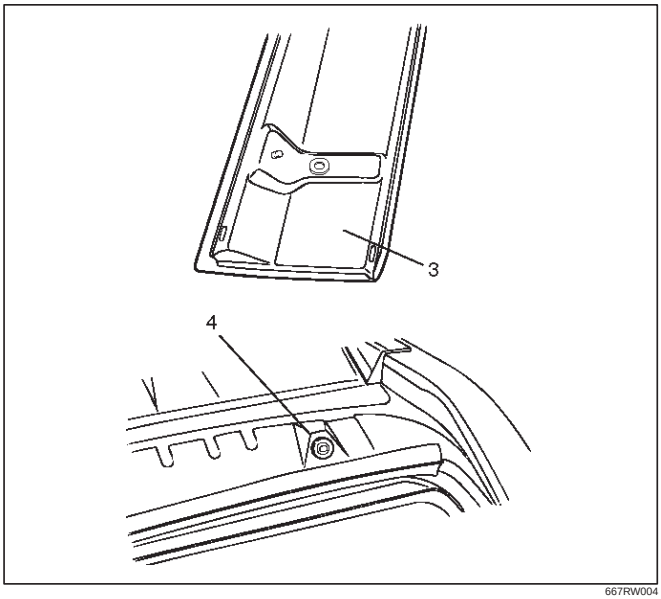

667RW004

3. Install the air deflector (5) to the roof by referring to the specified values shown in the illustration.

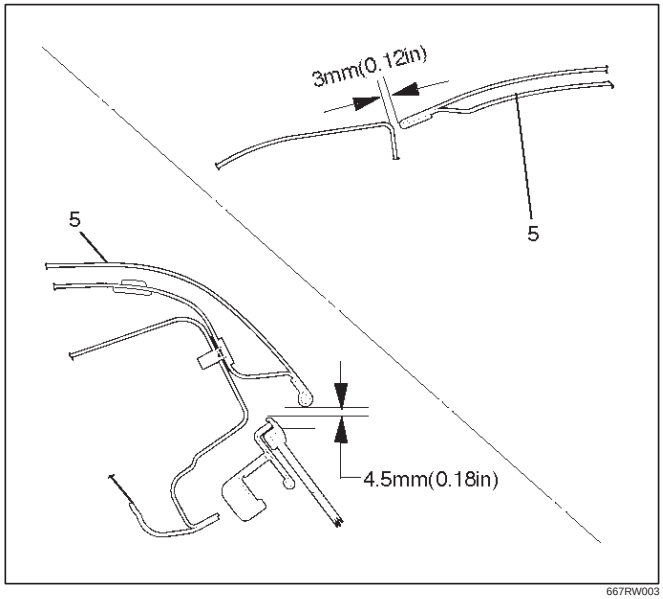

667RW003

4. Tighten the deflector fixing to the specified torque.

Bolt Torque : 6 N•m (0.6kg·m/52 lb in)

Nut Torque : 8 N•m (0.8kg·m/69 lb in)

Roof Moulding

Parts Location

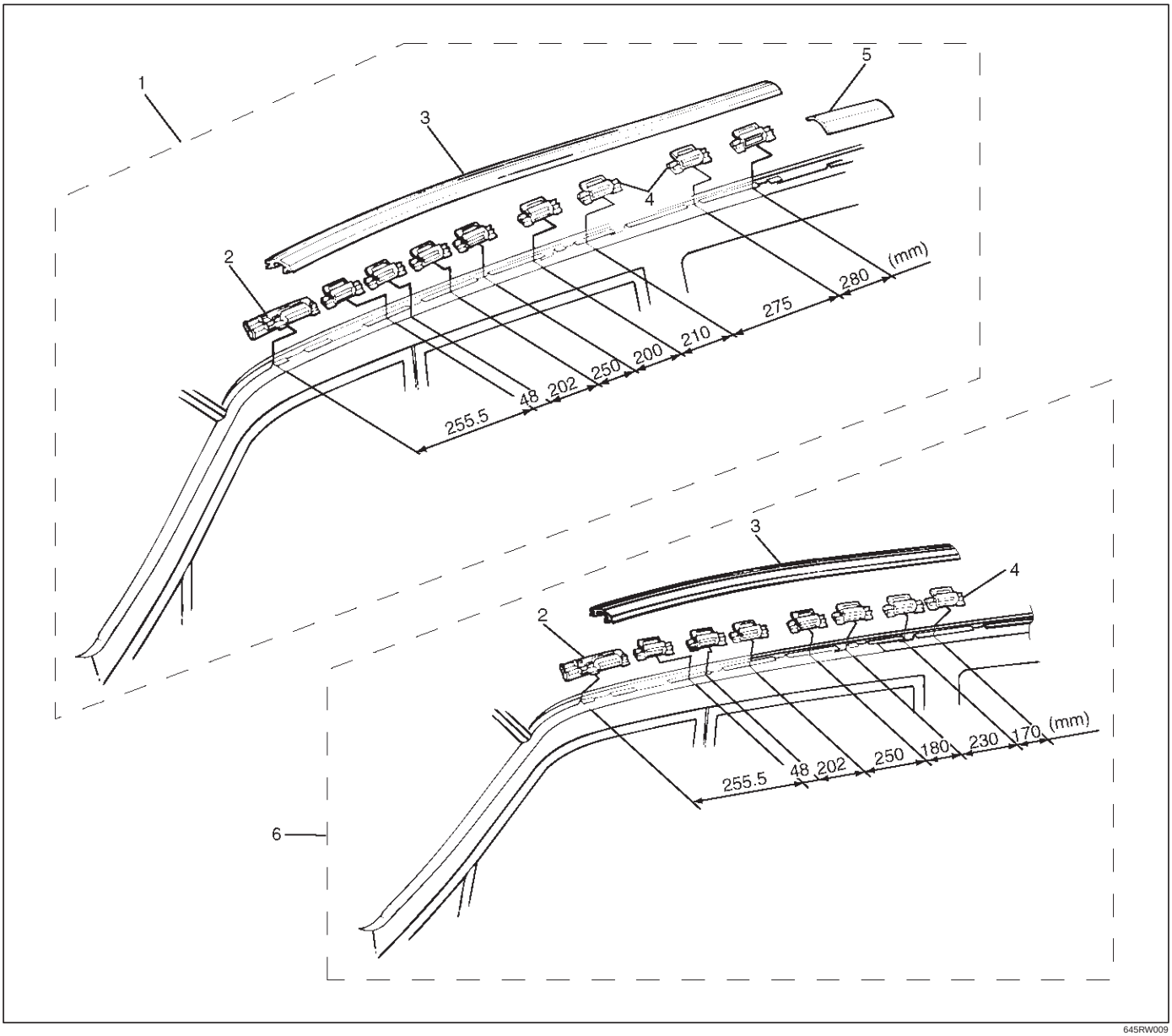

645RW009

Legend

(1) L·W·B
(2) Windshield Side Moulding Upper Clip
(3) Roof Mounting
(4) Moulding Roof Clip
(5) Roof End Moulding
(6) S·W·B

Removal

1. Disconnect the battery ground cable.
2. Remove roof moulding.
3. Remove roof end moulding.
   - Remove the sealing adhesive and the adhesive tape of the roof end moulding from the panel using a knife or scraper while you peel them off.
4. Remove moulding roof clips.

Installation

1. Install the moulding roof clips (1).
   - Install the clips on roof panel flange (2) to refer the illustration.

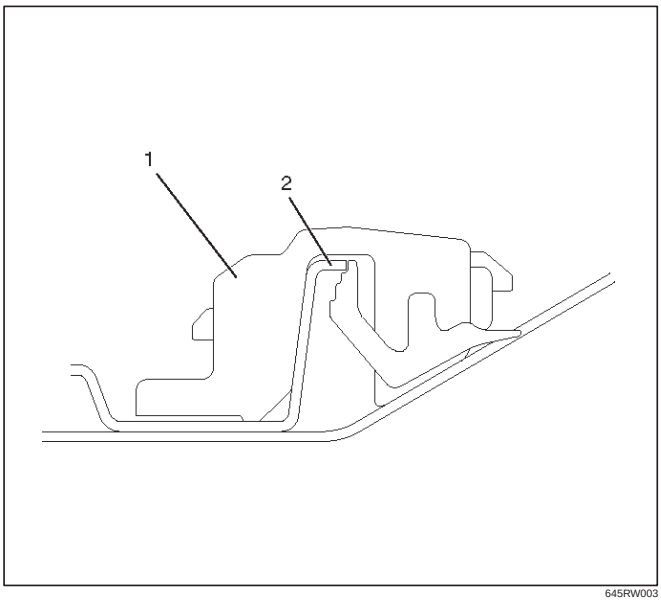

645RW003

2. Install the roof end moulding (3).
   - Clean the body panel where the roof end moulding is installed.
   - Install the roof end moulding and the rear air deflector (2) so that the installation clearance between them is within the specified values. Securely fix it with the adhesive tape (4) and sealing adhesive (5).

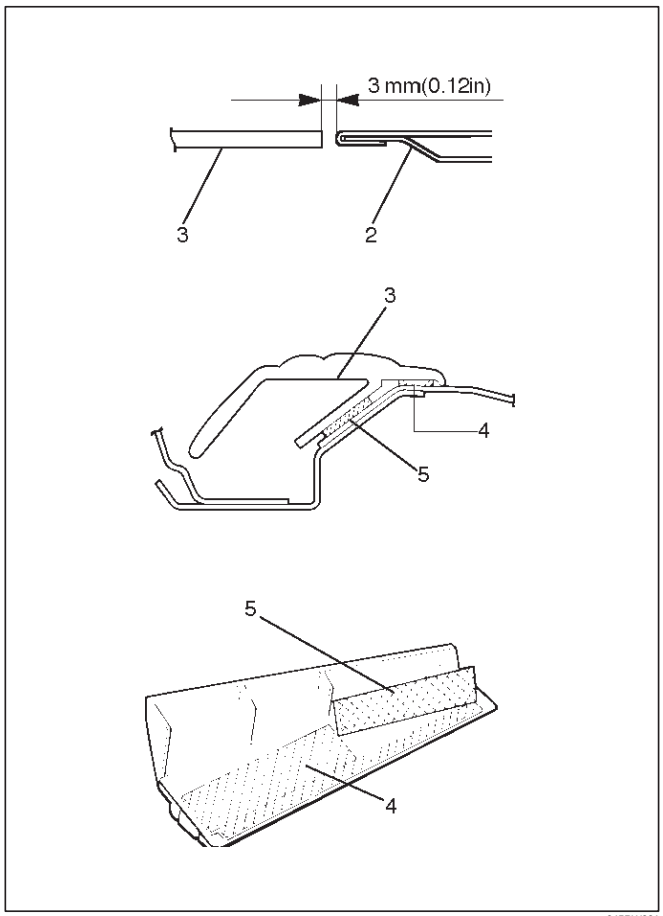

645RW001

3. Install the roof moulding (9).
   - Assemble the windshield side moulding upper clip (8) to the roof panel with the clip positioning rib (6) (oblique lines portion) attached to the roof panel flange (7). Assemble the roof moulding (9) while you attach the front edge portion of the roof molding to the windshield side moulding (10).

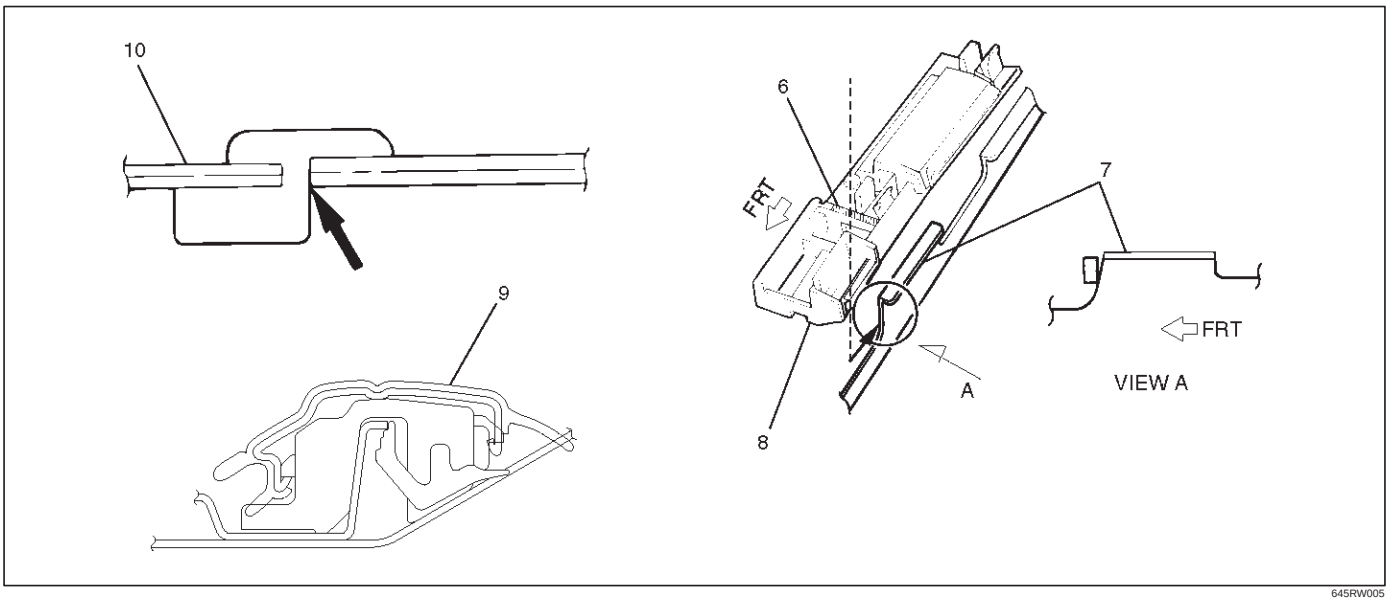

645RW005

Windshield

Parts Location

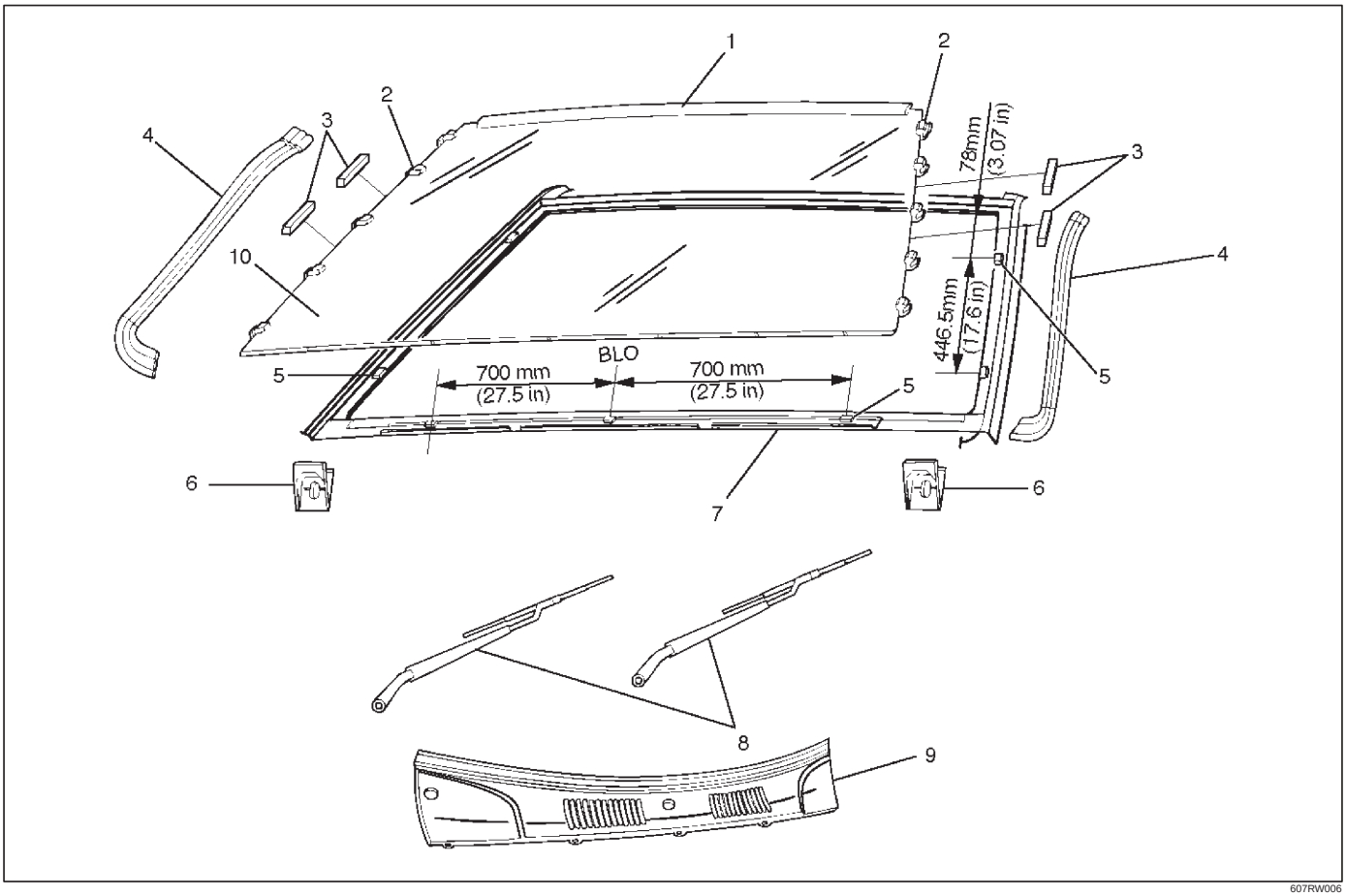

607RW006

Legend

(1) Windshield Upper Moulding
(2) Moulding Clip
(3) Windshield Side Seal
(4) Windshield Side Moulding
(5) Spacer
(6) Windshield Support
(7) Cowl Upper Rail Flange
(8) Windshield Wiper
(9) Front Cowl Cover
(10) Windshield

Removal

1. Disconnect the battery ground cable.
2. Remove windshield wiper.
   - Refer to Wiper/Washer System section.
3. Remove front cowl cover.
   - Refer to Cowl Cover removal steps in this section.
4. Remove windshield side moulding.
   - Pull the moulding out from the windshield side moulding clip.
5. Remove windshield support.
6. Remove windshield side seal.
7. Remove windshield (2).

- Use a knife to cut through part of the adhesive caulking material.
- Secure one end of a piece of steel piano wire (1) (0.02 inches in diameter) to a piece of wood that can serve as a handle.

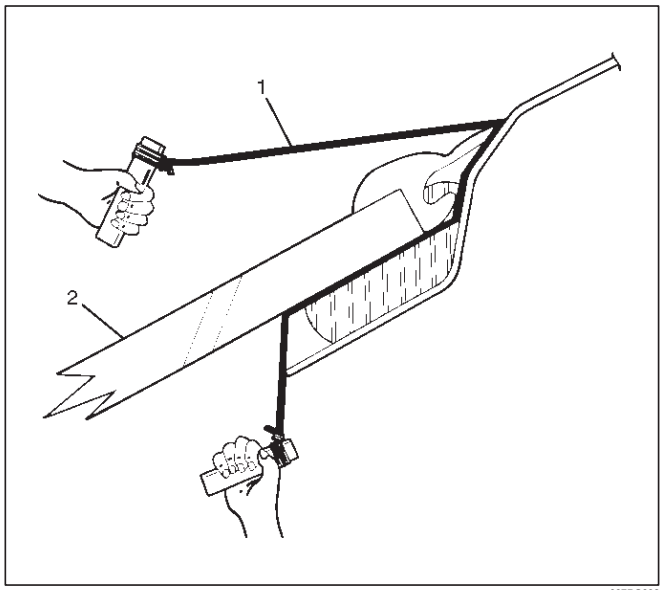

607RS002

- Use a pair of needle nose pliers to insert the other end of the piano wire through the adhesive caulking material at the edge of the windshield glass.
- Secure the other end of the piano wire to another piece of wood.
- With the aid of an assistant, carefully move the piano wire with a sawing motion to cut through the adhesive caulking material around the entire circumference of the windshield glass.
- Clean the remaining adhesive caulking material from the area of the body which holds the windshield.

8. Remove windshield upper moulding.
   - Taking notice of the adhesive tape, and peel the moulding off the windshield upper portion.
9. Remove moulding clip.
10. Remove spacer.

Installation

1. Install the spacer (1).
   - Clean the bonding surfaces of both the windshield and the body panel.
   - When installing the spacers, align the lower side spacer to the R stop of the body panel and the side spacer to the end of the body panel. Be sure to always use a new spacer.

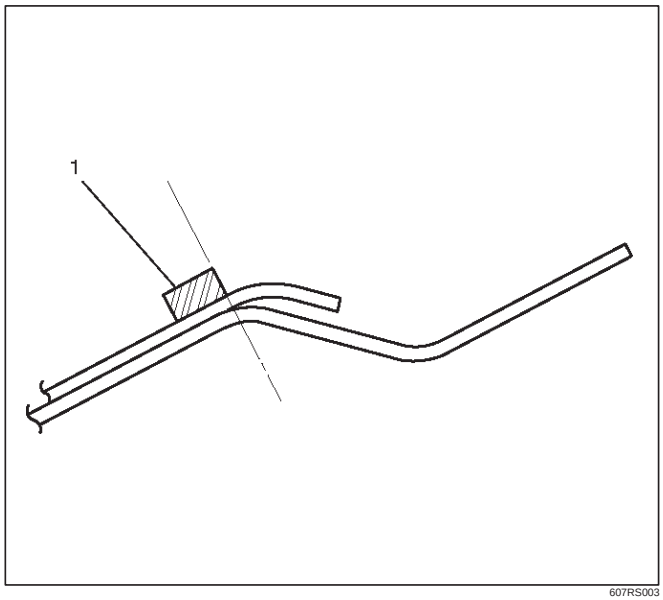

607RS003

- Be absolutely sure to apply glass primer and body primer to the body panel as shown in the illustration.

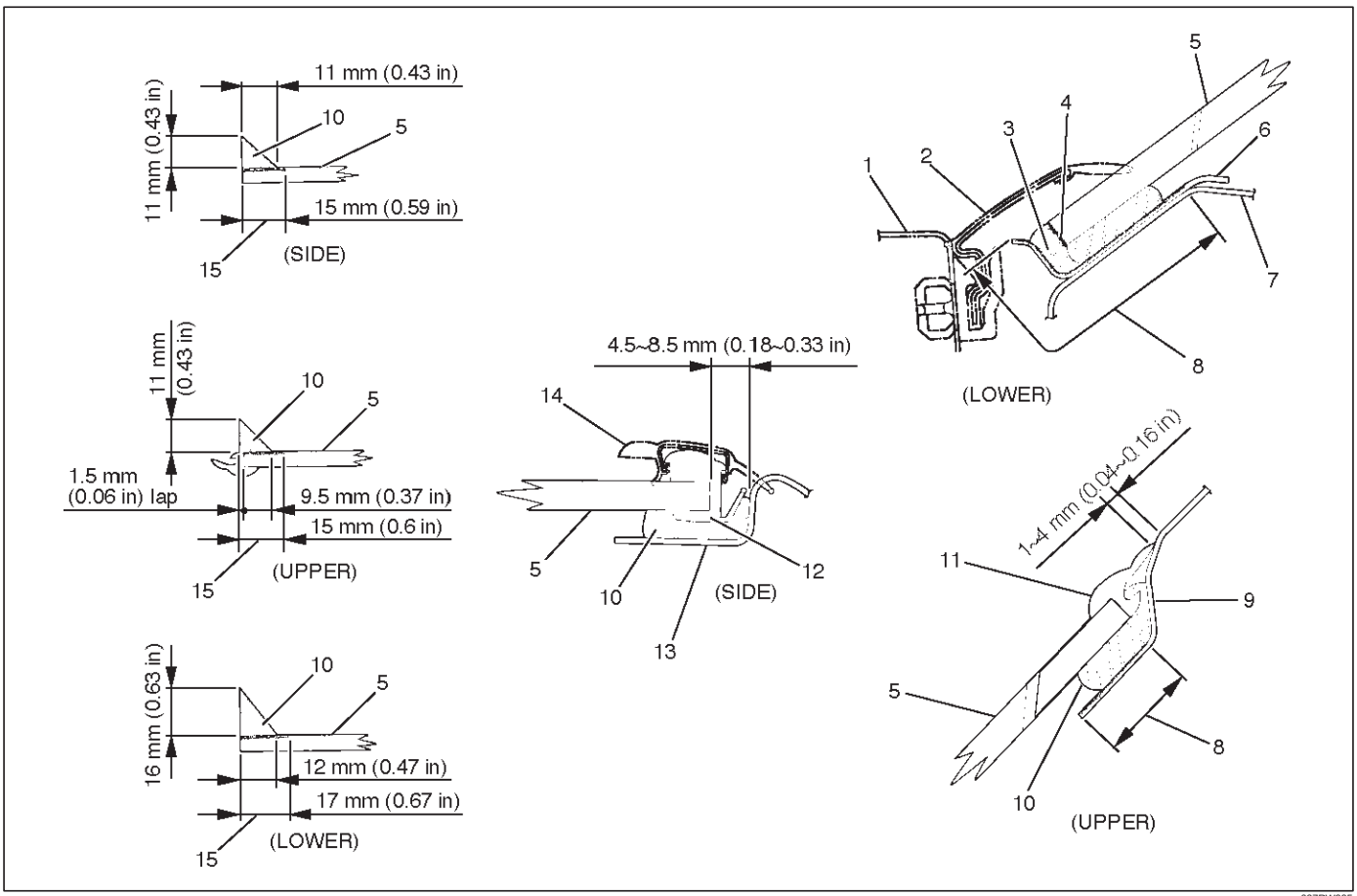

607RW005

Legend

(1) Front Cowl Cover
(2) Windshield Lower Moulding
(3) The portion of the cowl upper rail flange where sealing adhesive is additionally filled
(4) Apply primer to the glass and portion where sealing adhesive is additionally filled
(5) Windshield
(6) Cowl Upper Rail
(7) Cowl Upper Panel
(8) Body Primer
(9) Roof Panel
(10) Sealing Adhesive
(11) Windshield Upper Moulding
(12) Moulding Clip
(13) Front Pillar Outer Panel
(14) Windshield Side Moulding
(15) Sealing Adhesive

2. Install the moulding clip (2).
   - Install new moulding clips to the fixed position of the windshield (3).
   - Always use new moulding clips (4).

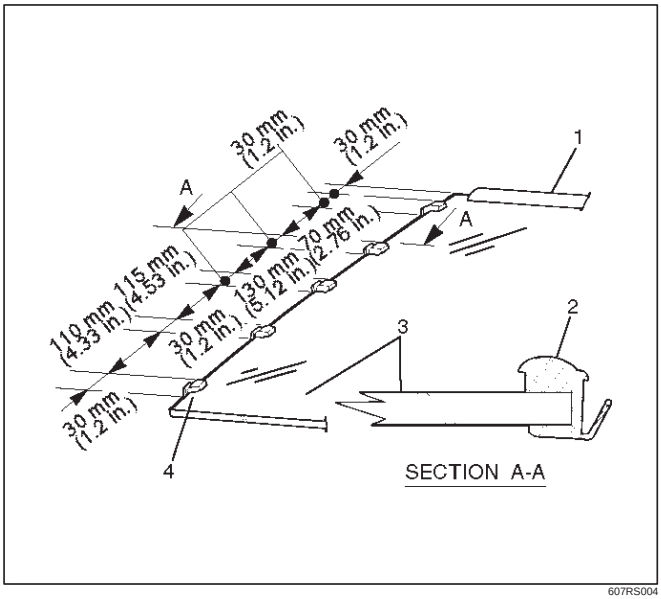

607RS004

3. Install the windshield upper moulding (1).
   - Peel off the adhesive tape (2) and install the moulding to the fixed position of the windshield (3).
   - Always use new upper moulding (1).

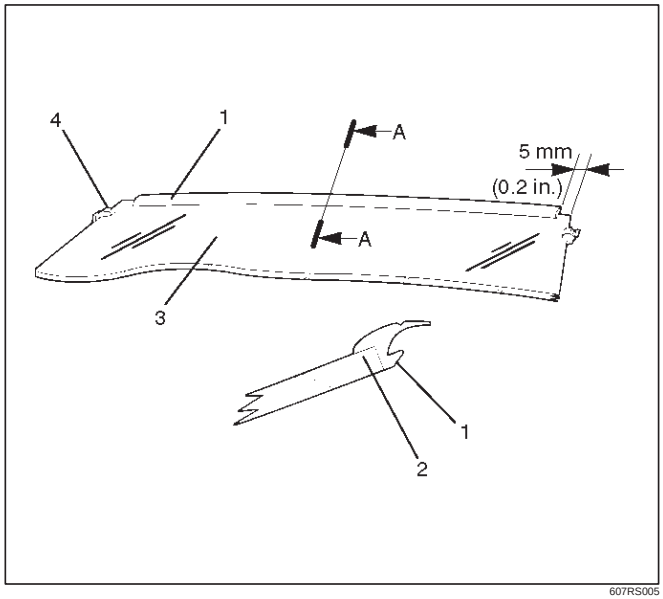

607RS005

4. Install the windshield.

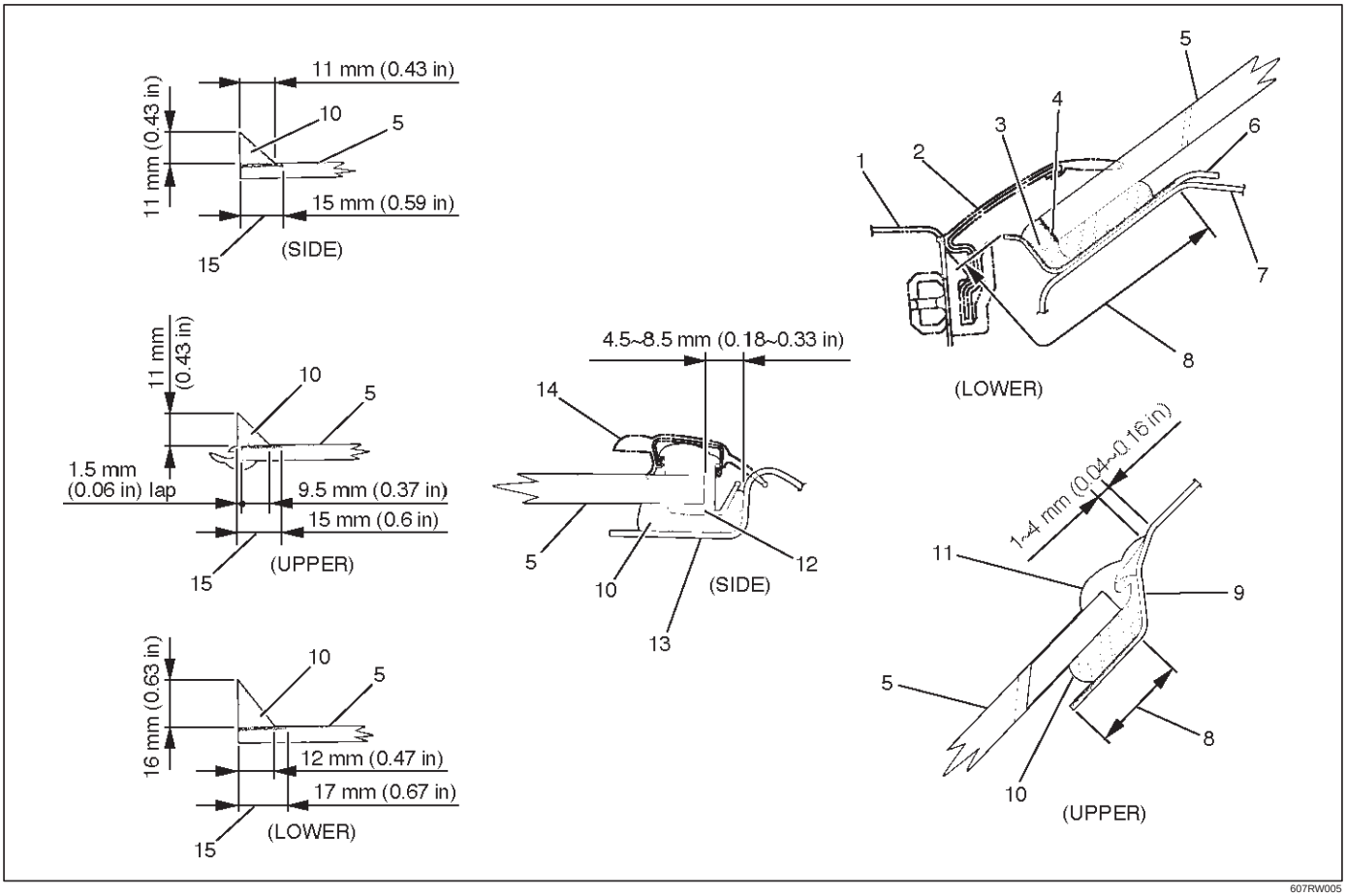

607RW005

Legend

(1) Front Cowl Cover
(2) Windshield Lower Moulding
(3) The portion of the cowl upper rail flange where sealing adhesive is additionally filled
(4) Apply primer to the glass and portion where sealing adhesive is additionally filled
(5) Windshield
(6) Cowl Upper Rail
(7) Cowl Upper Panel
(8) Body Primer
(9) Roof Panel
(10) Sealing Adhesive
(11) Windshield Upper Moulding
(12) Moulding Clip
(13) Front Pillar Outer Panel
(14) Windshield Side Moulding
(15) Sealing Adhesive

5. Install the windshield side seal.

6. Install the windshield support (2).

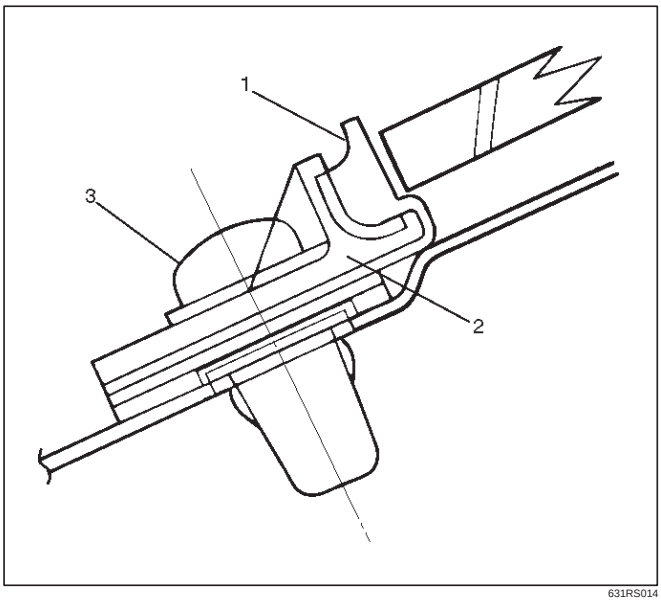

631RS014

- Apply a sealing adhesive to the circumference of the windshield.
- Apply the sealing adhesive to the frange portion of the cowl upper rail.
- Adjust the gap clearance of the windshield.
- Install the windshield to the body panel by applying pressure to the windshield.
- Cure the adhesive at a temperature of 20~30˚C (68~86˚F) for 24 hours.
- Check that the windshield does not leak water.

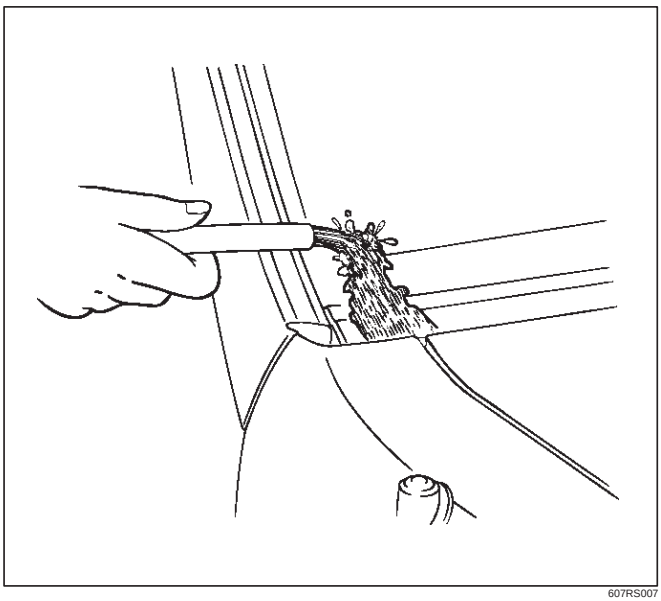

607RS007

7. Install the windshield side moulding.
   - Insert the windshield (5) side moulding (1) into the moulding clip (2).

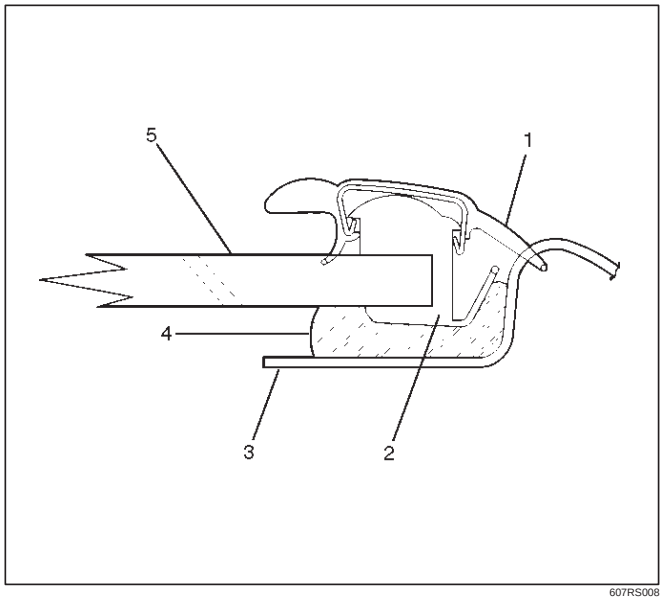

607RS008

   - Take care not to damage the side moulding when you install it.
8. Install the front cowl cover.
9. Install the windshield wiper.

Rear Quarter Side Glass

Parts Location

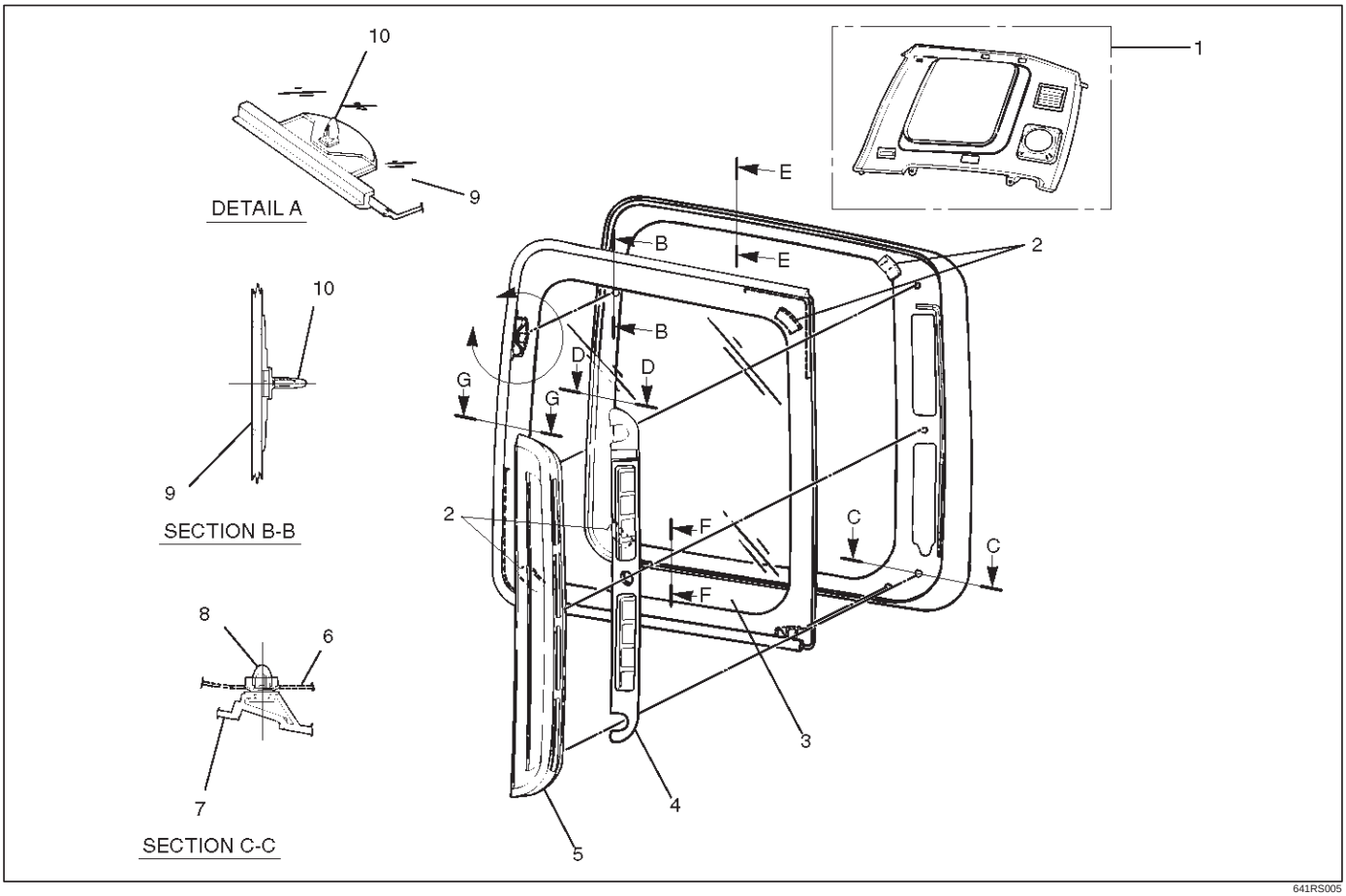

641RS005

Legend

(1) Rear Quarter Upper Trim Panel
(2) Fastener
(3) Rear Quarter Side Glass
(4) Valve Assembly
(5) Ventilation Assembly
(6) Side Outer Panel
(7) Ventilation Assembly
(8) Ventilation Fixing Clip
(9) Rear Quarter Side
(10) Glass Fixing Clip

Removal

1. Disconnect the battery ground cable.
2. Remove rear quarter upper trim panel.
   - Refer to Exterior / Interrior Trim in this section.
3. Remove ventilation assembly.
4. Remove valve assembly.
   - Refer to Exterior / Interrior Trim in this section.
5. Remove rear quarter side glass.
   - Refer to Windshield removal procedure in this section.

Installation

1. Install the rear quarter side glass.

- Clean the bonding surfaces of both the glass and the body panel.
- Install the fasteners (1) to the fixed positions of the glass and the body panel.
- Always use new fasteners.
- Be absolutely sure to apply glass primer (2) to the side glass.
- Apply a sealing adhesive (1) to the glass circumference.

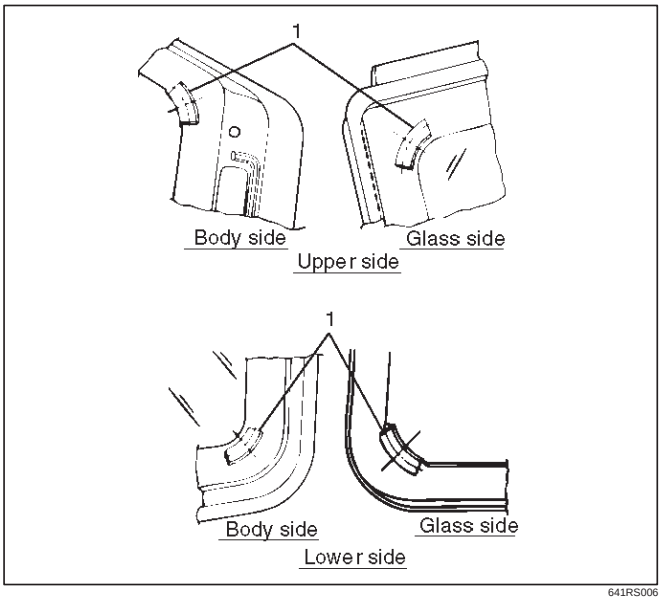

641RS006

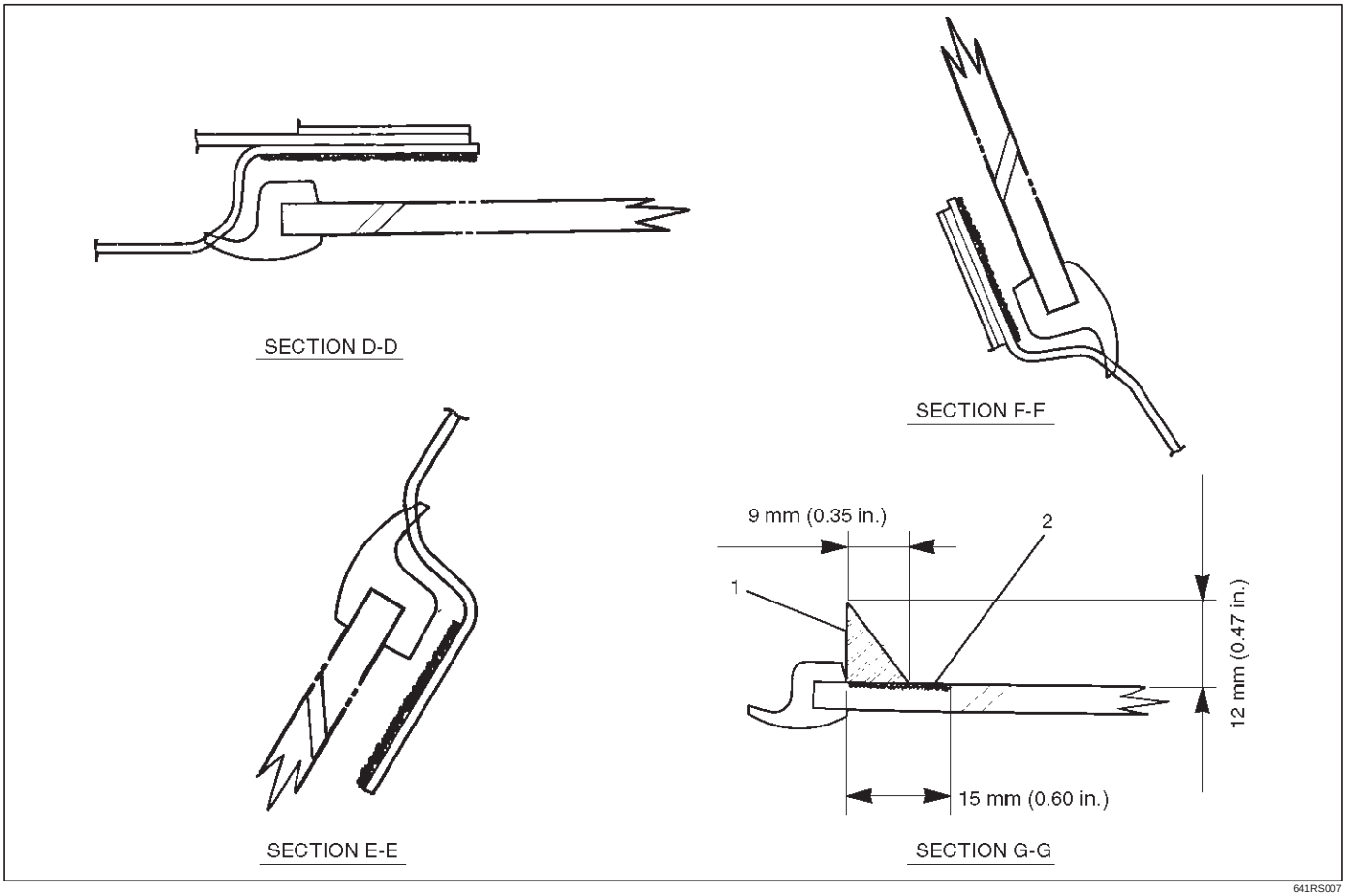

641RS007

- Apply PVC primer (4) to the A clip portion.

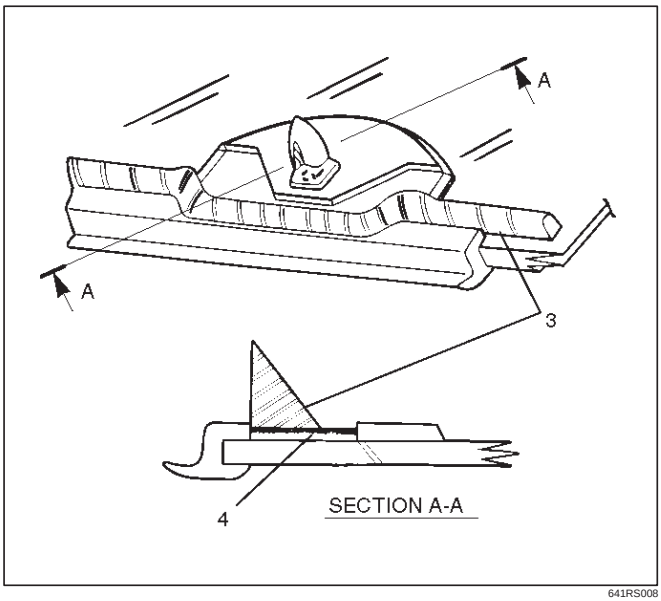

641RS008

- Insert the fixing clip on the side glass into the body panel.
- Push the side glass against the body panel and bond them.
- Cure the adhesive at a temperature of 20~30˚C (68~86˚F) for 24 hours.
- Check that the rear quarter side glass does not leak water.

2. Install the valve assembly.
3. Install the ventilation assembly.
4. Install the rear quarter upper trim panel.

Tailgate Glass

Parts Location

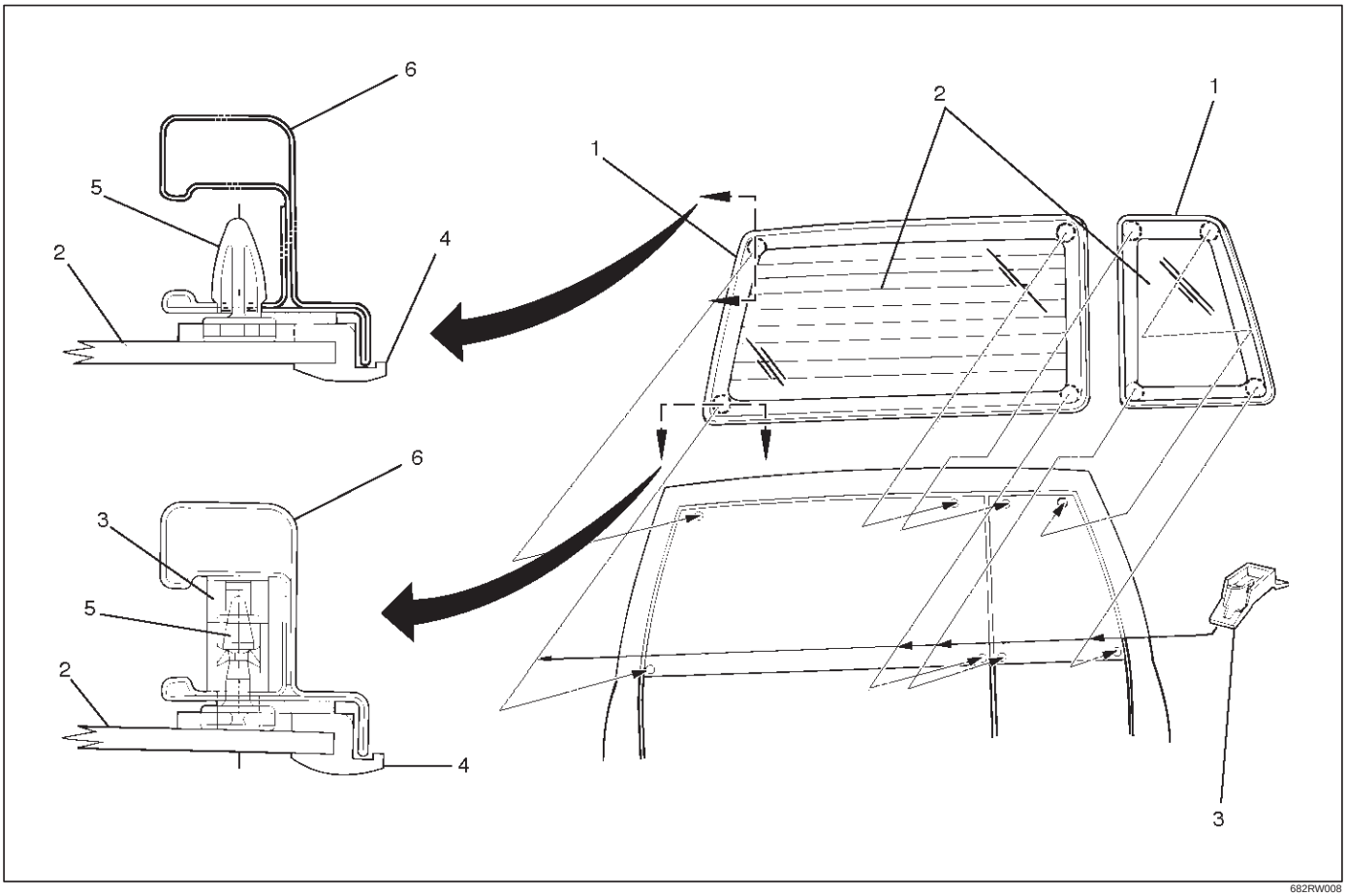

682RW008

Legend

(1) Tailgate Glass Moulding
(2) Tailgate Glass
(3) Tailgate Glass Clip
(4) Glass Moulding
(5) Clip
(6) Body Panel

Removal

1. Remove battery ground cable.
2. Remove tailgate trim panel.
3. Remove tailgate sash trim cover (RH only).
   - Remove the tailgate frame cover. Refer to Exterior / Interrior Trim in this section
4. Remove tailgate glass.

- Refer to Windshield removal procedure in this section.

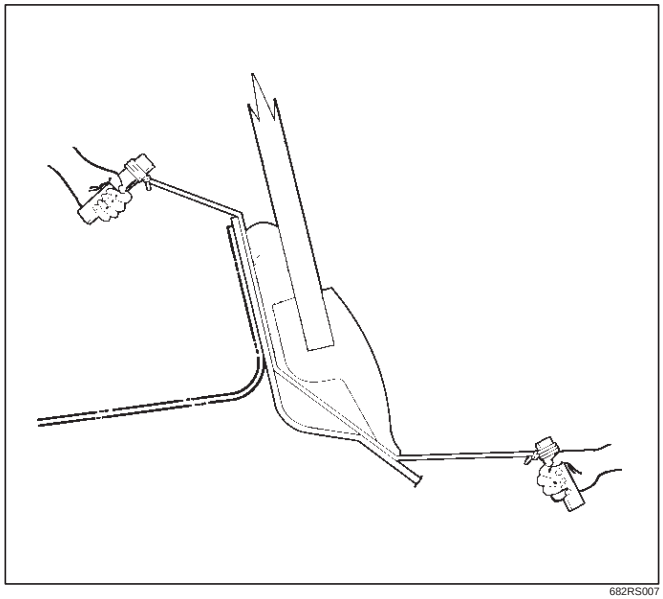

682RS007

5. Remove tailgate glass clip.

Installation

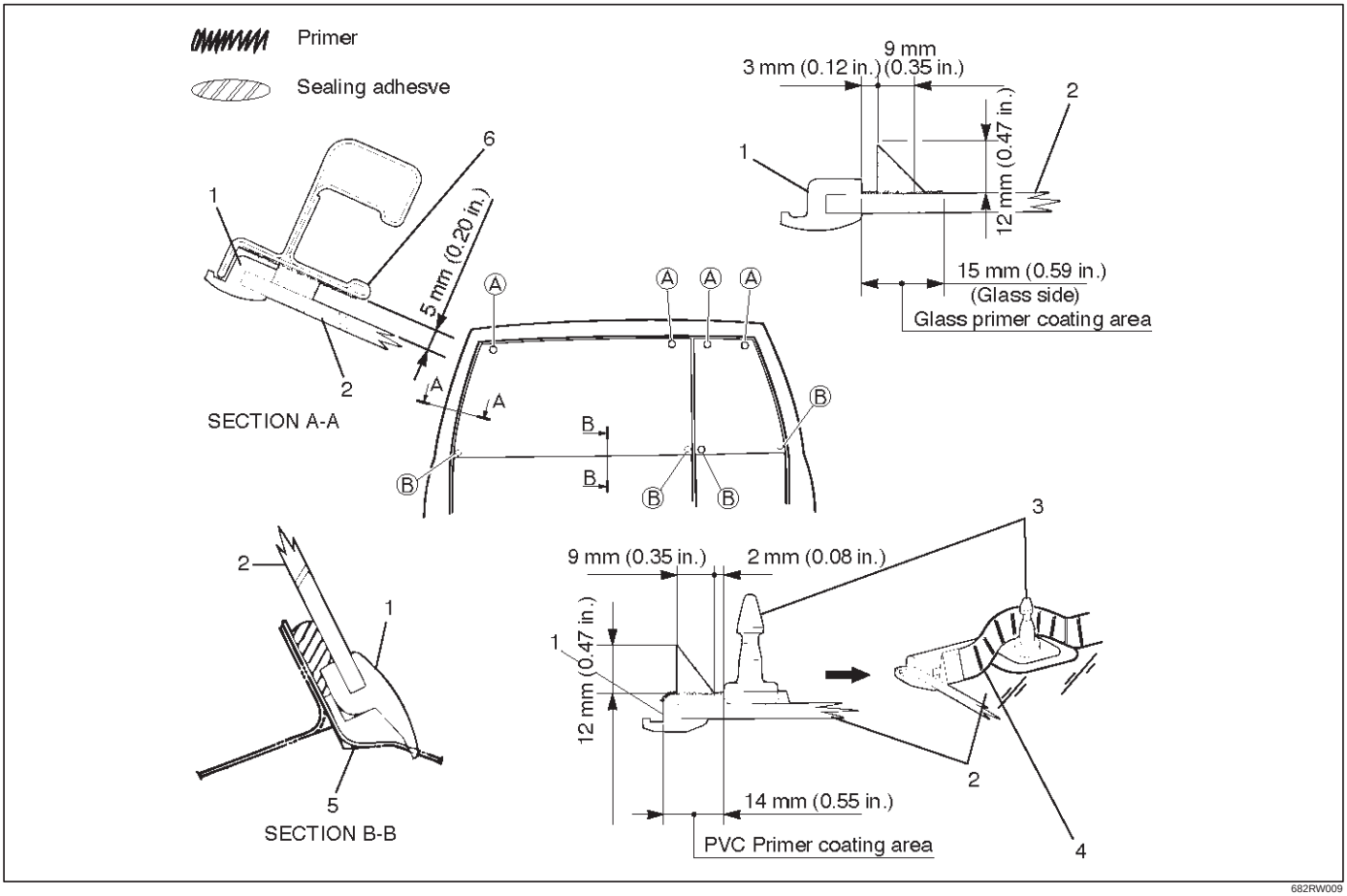

Legend

(1) Glass Moulding
(2) Tailgate Glass
(3) Clip
(4) Sealing Adhesive
(5) Body Panel
(6) Tailgate Frame

1. Install the tailgate glass clip.

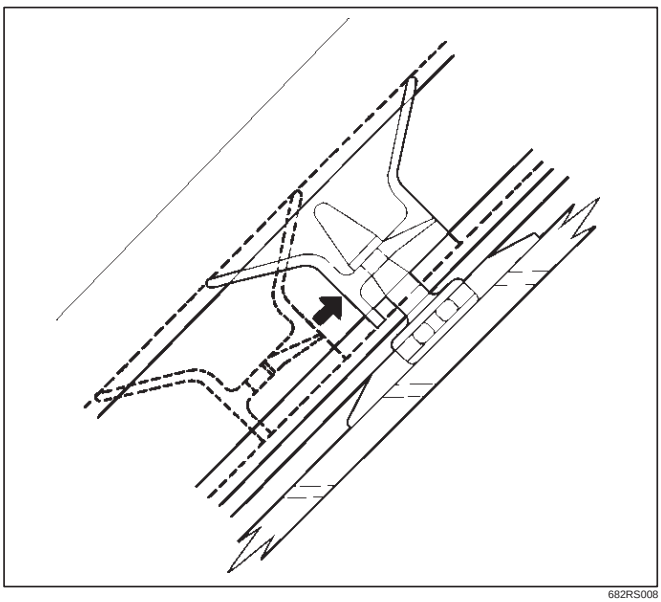

2. Install the tailgate glass (2).
   - Clean the bonding surfaces of both the tailgate glass and the tailgate panel.
   - Be absolutely sure to apply glass primer to the tailgate glass and PCV primer to the glass moulding (1).
   - Apply a sealing adhesive to the circumference of the tailgate glass as shown.
   - Insert the clip of the tailgate glass A portion into the tailgate panel hole to position the glass.
   - Install the new tailgate glass clip to the clip of the tailgate glass B portion while sliding it, and bond the glass to the tailgate panel by applying pressure.

     Always use new tailgate glass clips.
   - Cure the bonding at a temperature of 20~30˚C (68~86˚F) for 24 hours.
   - Check that the tailgate glass does not leak water.

Main Data and Specifications

Torque Specifications

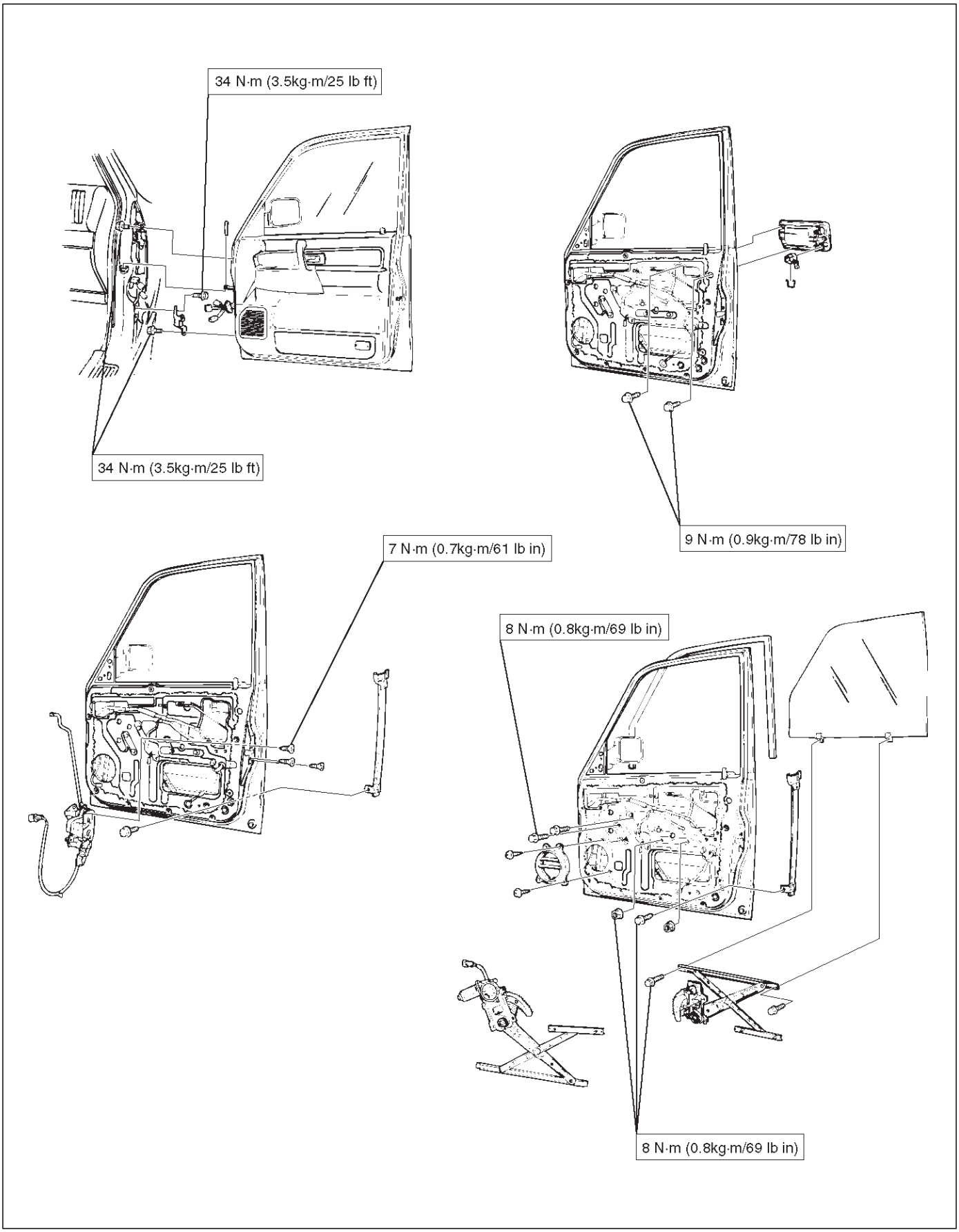

E10RW020

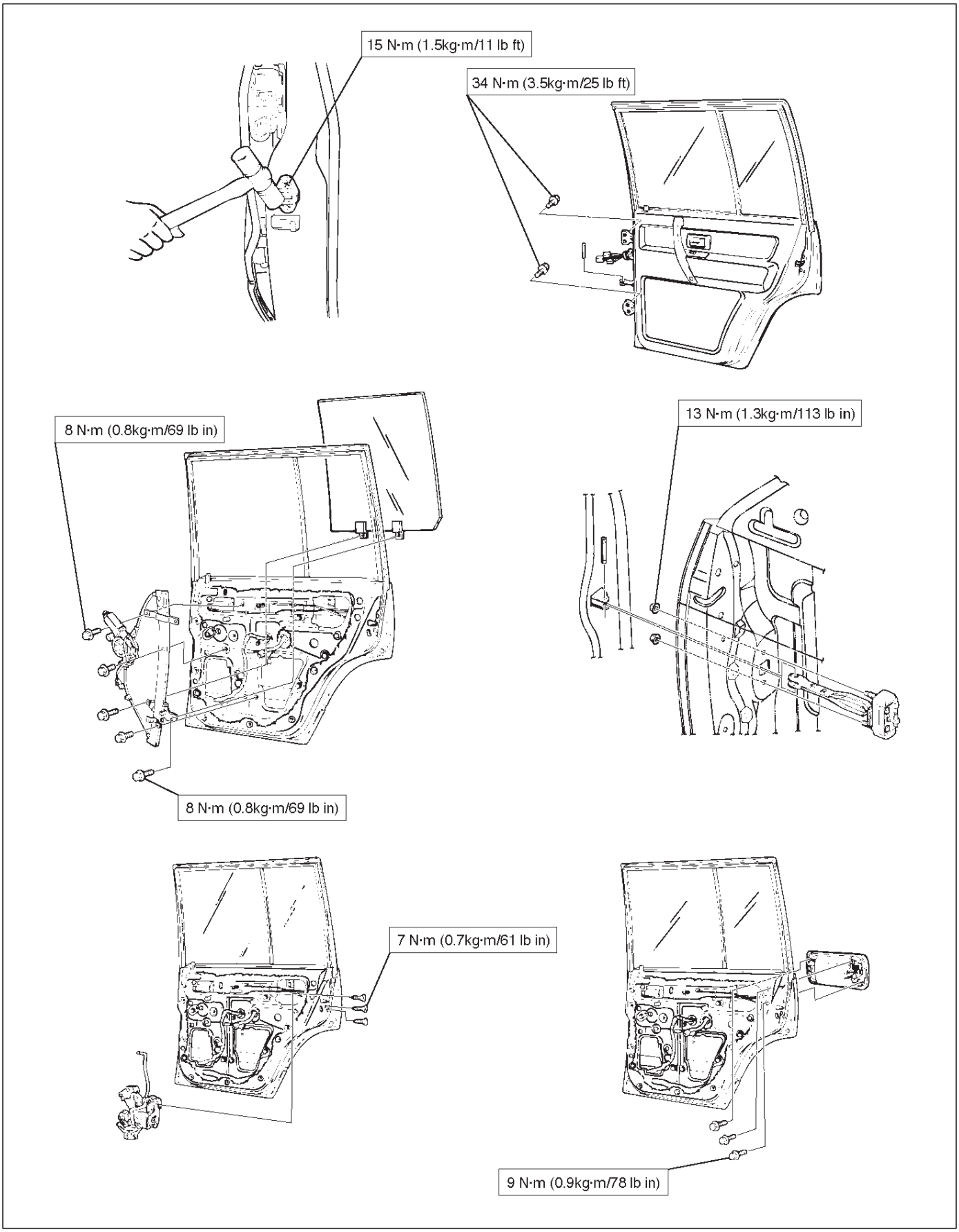
15 N·m (1.5kg·m/11 lb ft)
34 N·m (3.5kg·m/25 lb ft)
8 N·m (0.8kg·m/69 lb in)
13 N·m (1.3kg·m/113 lb in)
8 N·m (0.8kg·m/69 lb in)
7 N·m (0.7kg·m/61 lb in)
9 N·m (0.9kg·m/78 lb in)

E10RW019

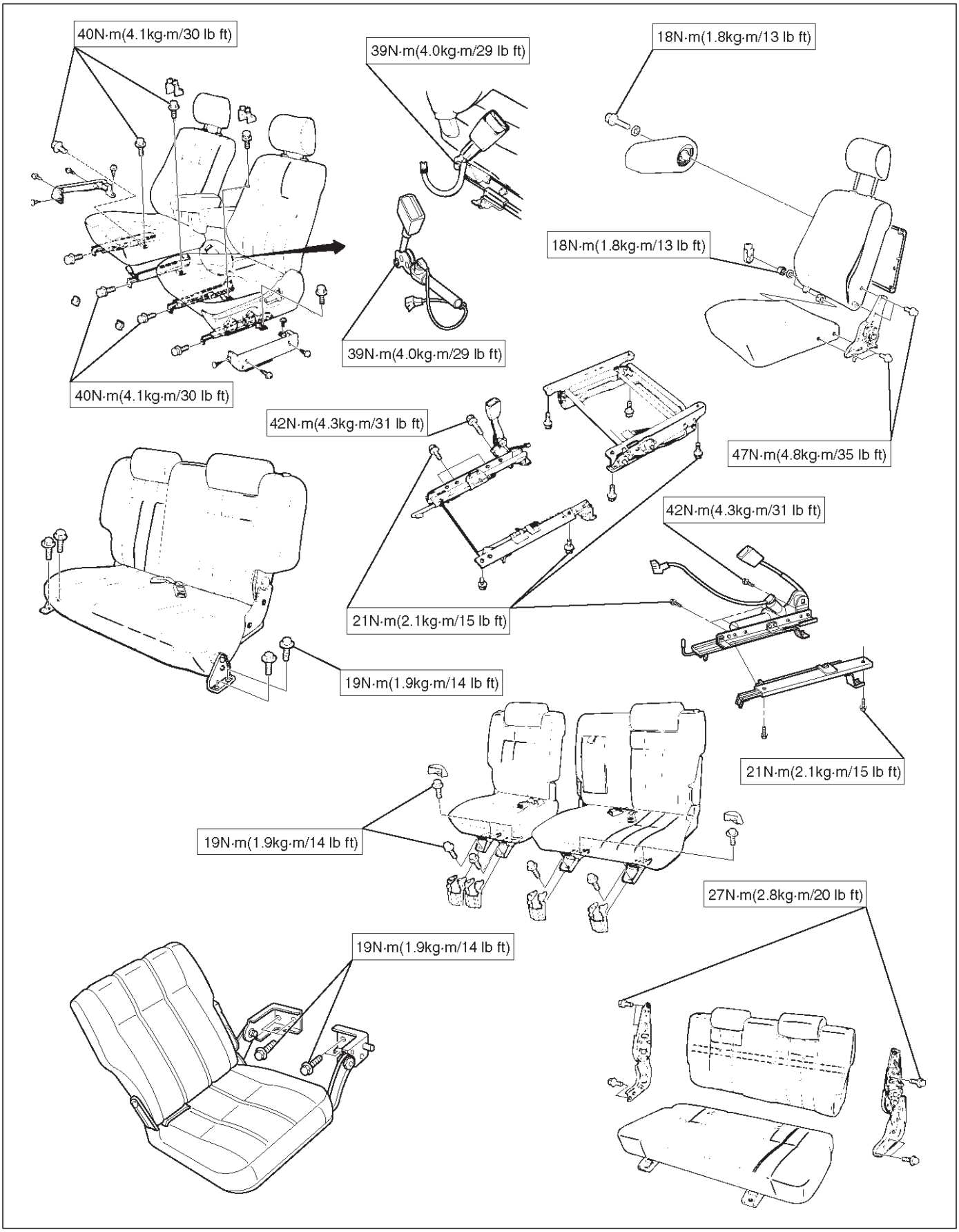
40N·m(4.1kg·m/30 lb ft)
39N·m(4.0kg·m/29 lb ft)
18N·m(1.8kg·m/13 lb ft)
18N·m(1.8kg·m/13 lb ft)
39N·m(4.0kg·m/29 lb ft)
40N·m(4.1kg·m/30 lb ft)
42N·m(4.3kg·m/31 lb ft)
47N·m(4.8kg·m/35 lb ft)
42N·m(4.3kg·m/31 lb ft)
21N·m(2.1kg·m/15 lb ft)
19N·m(1.9kg·m/14 lb ft)
21N·m(2.1kg·m/15 lb ft)
19N·m(1.9kg·m/14 lb ft)
27N·m(2.8kg·m/20 lb ft)
19N·m(1.9kg·m/14 lb ft)

E10RX007

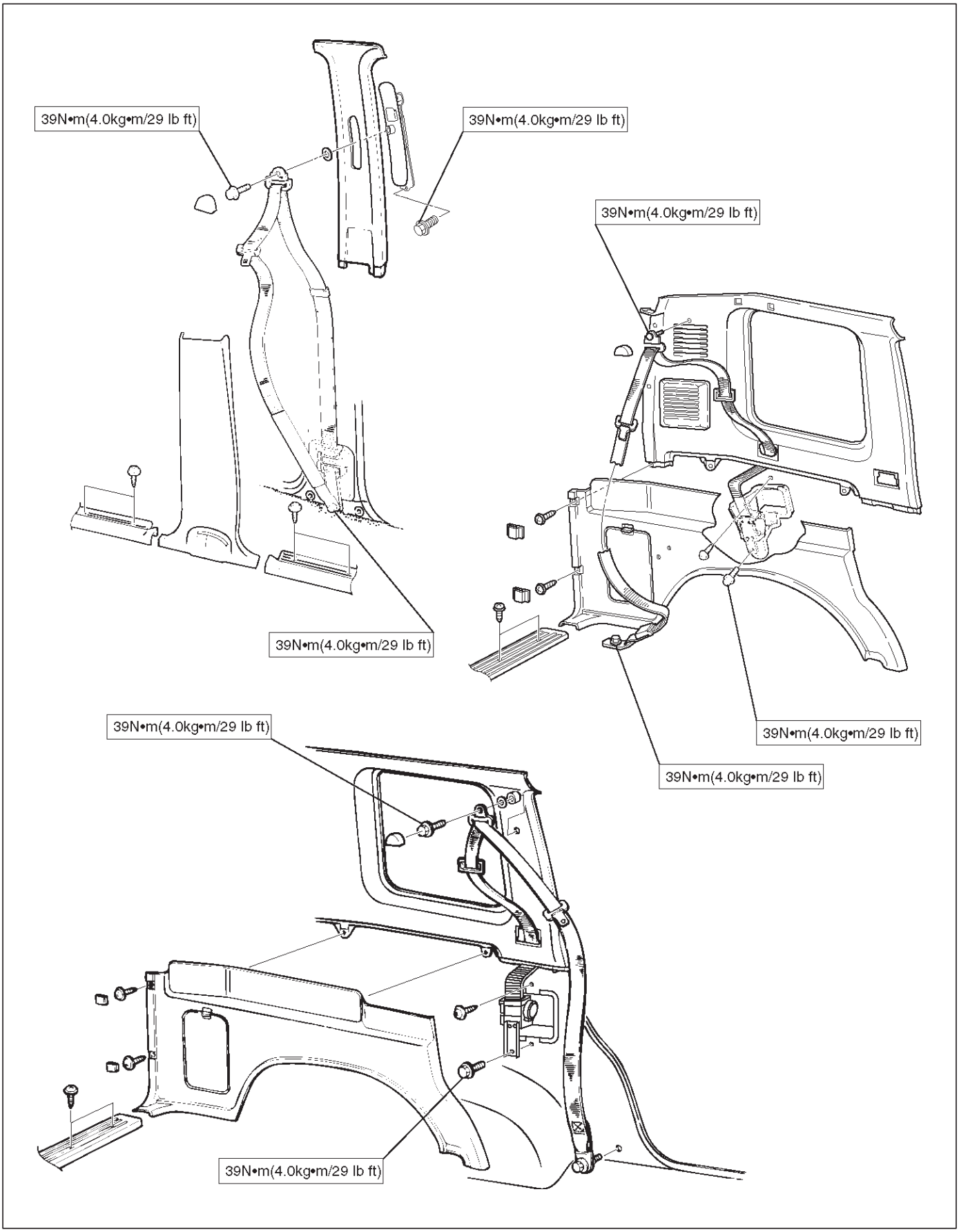
39N•m(4.0kg•m/29 lb ft)
39N•m(4.0kg•m/29 lb ft)
39N•m(4.0kg•m/29 lb ft)
39N•m(4.0kg•m/29 lb ft)
39N•m(4.0kg•m/29 lb ft)
39N•m(4.0kg•m/29 lb ft)
39N•m(4.0kg•m/29 lb ft)
39N•m(4.0kg•m/29 lb ft)

E10RW021

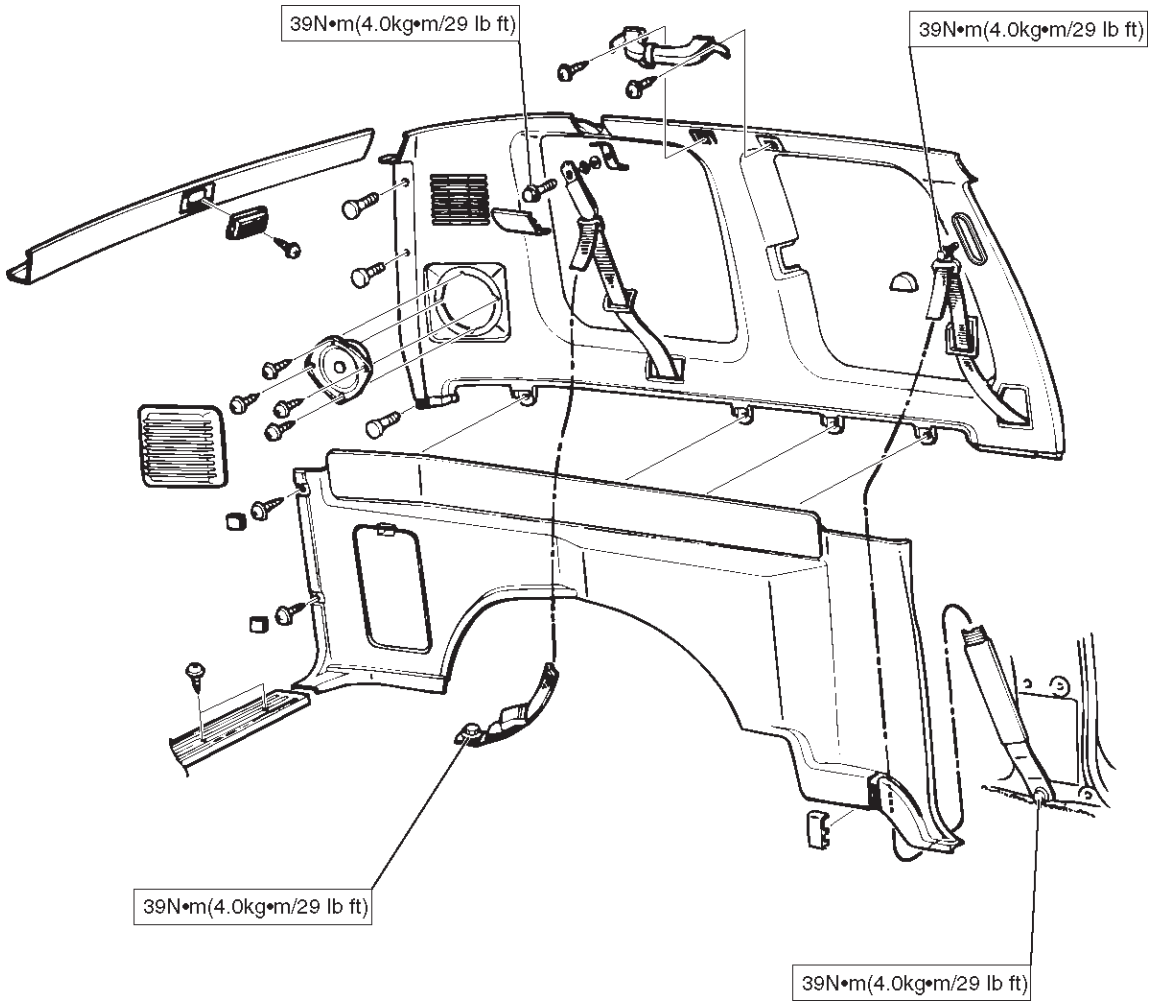
39N•m(4.0kg•m/29 lb ft)
39N•m(4.0kg•m/29 lb ft)
39N•m(4.0kg•m/29 lb ft)
39N•m(4.0kg•m/29 lb ft)

E10RW028

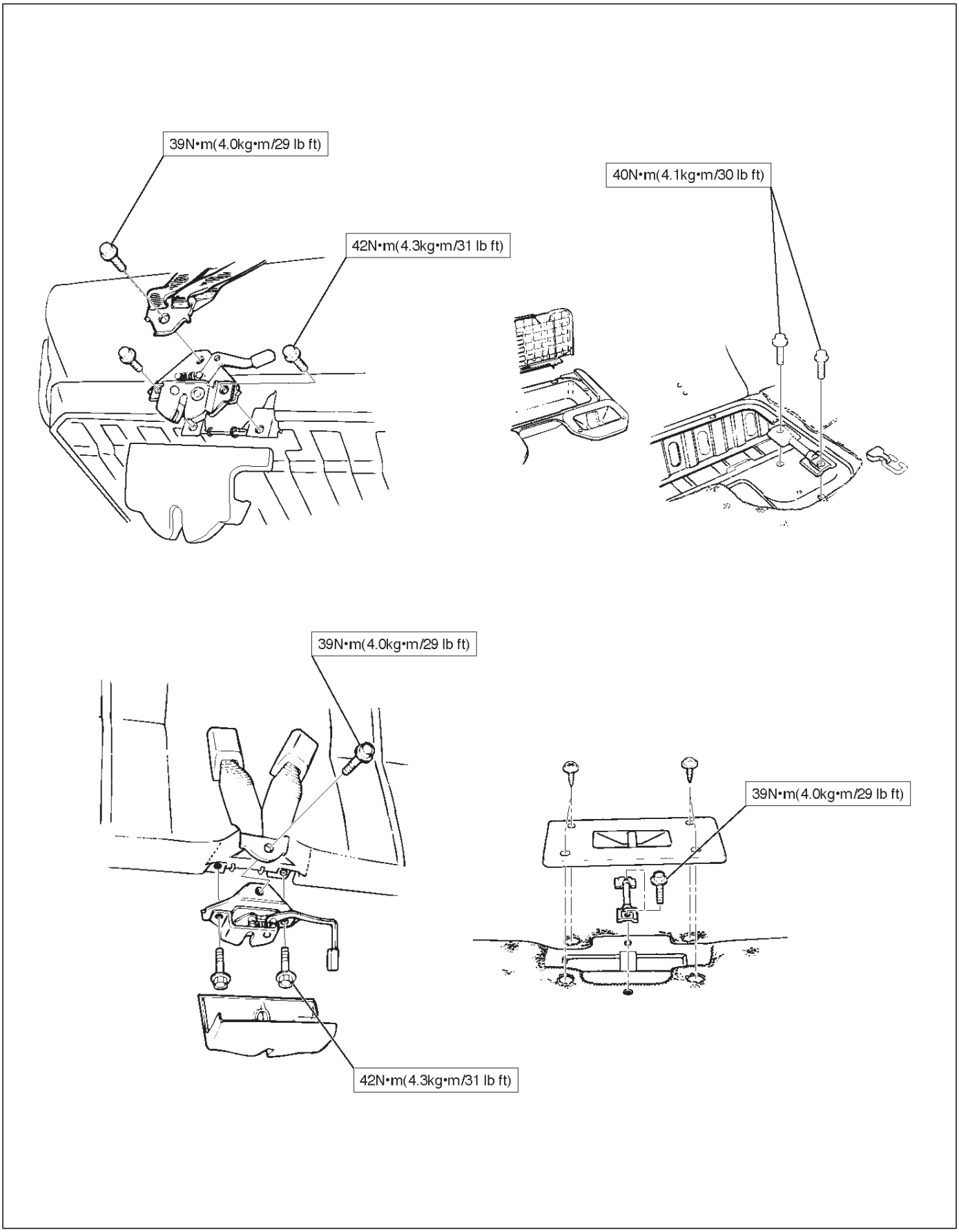
39N•m(4.0kg•m/29 lb ft)
42N•m(4.3kg•m/31 lb ft)
40N•m(4.1kg•m/30 lb ft)
39N•m(4.0kg•m/29 lb ft)
39N•m(4.0kg•m/29 lb ft)
42N•m(4.3kg•m/31 lb ft)

E10RW029

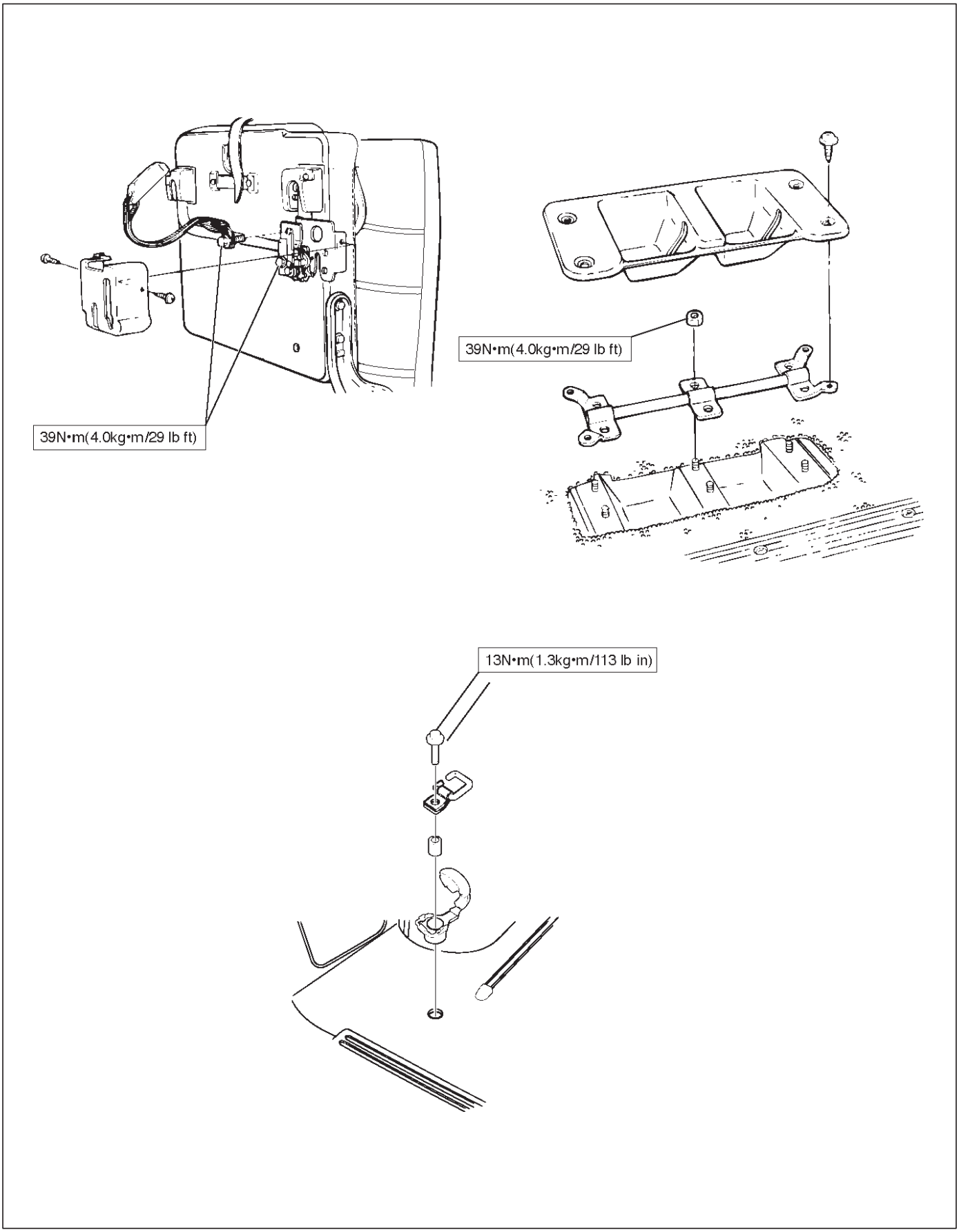

E10RW027

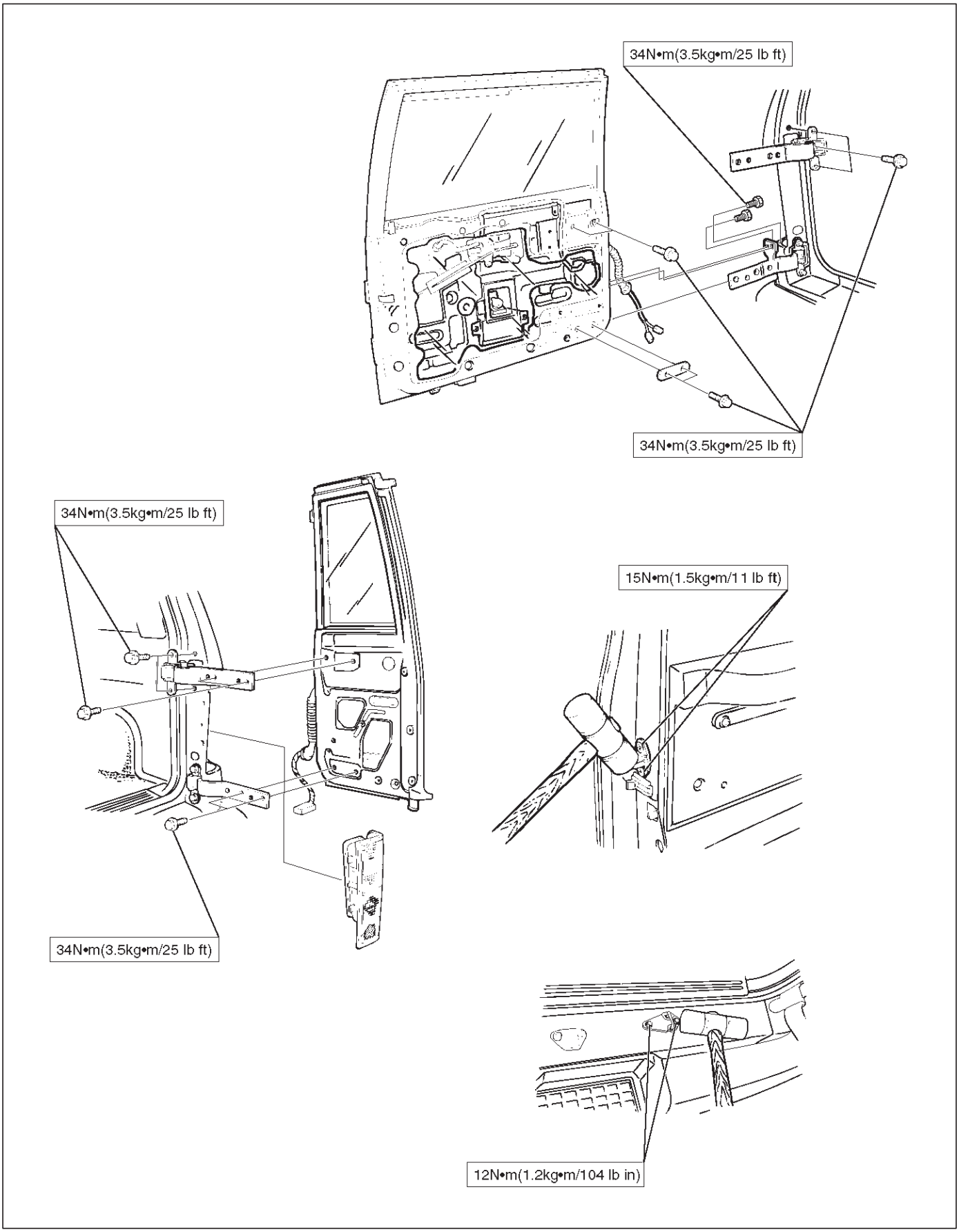
34N•m(3.5kg•m/25 lb ft)
34N•m(3.5kg•m/25 lb ft)
34N•m(3.5kg•m/25 lb ft)
15N•m(1.5kg•m/11 lb ft)
34N•m(3.5kg•m/25 lb ft)
12N•m(1.2kg•m/104 lb in)

E10RW024

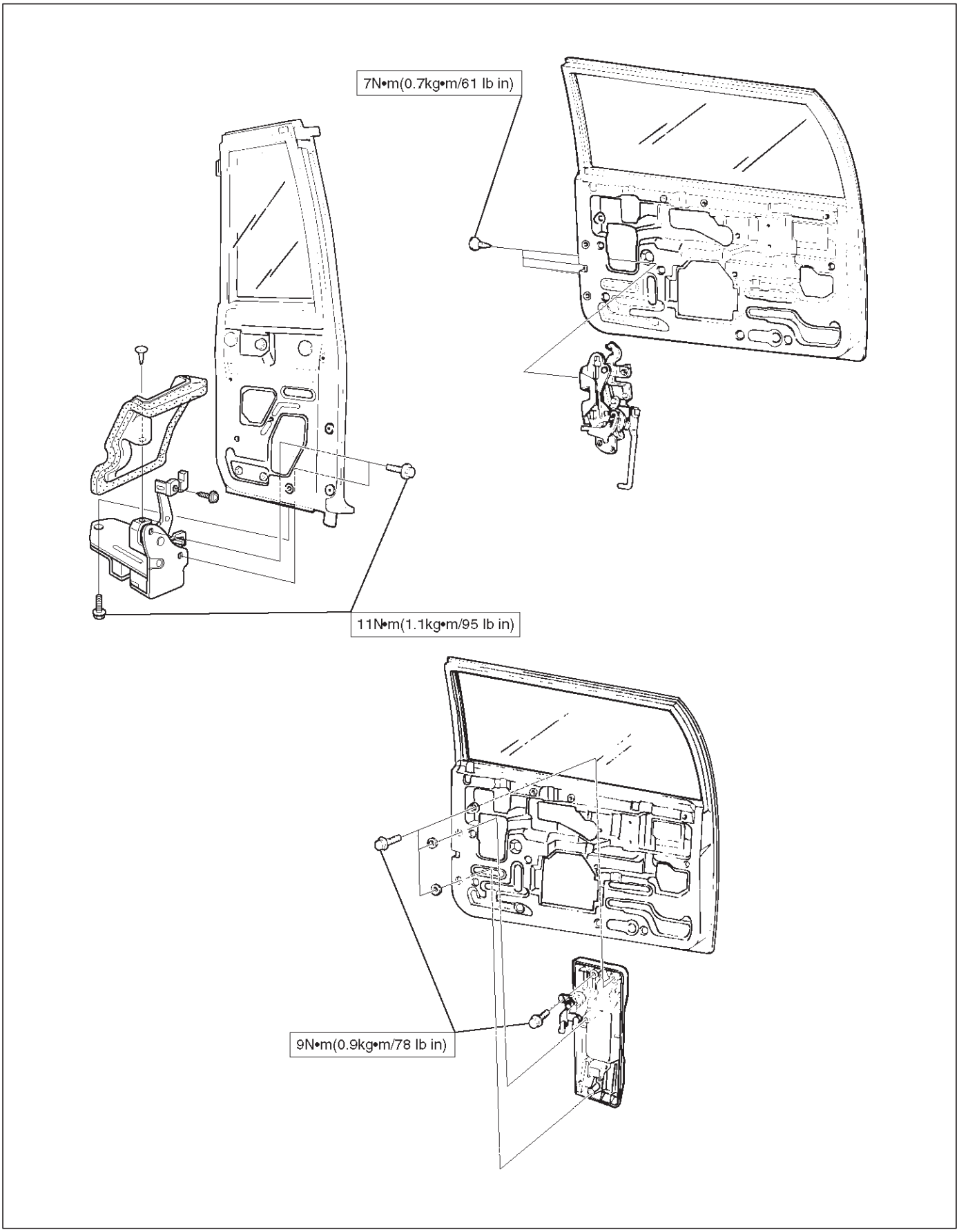

E10RW025

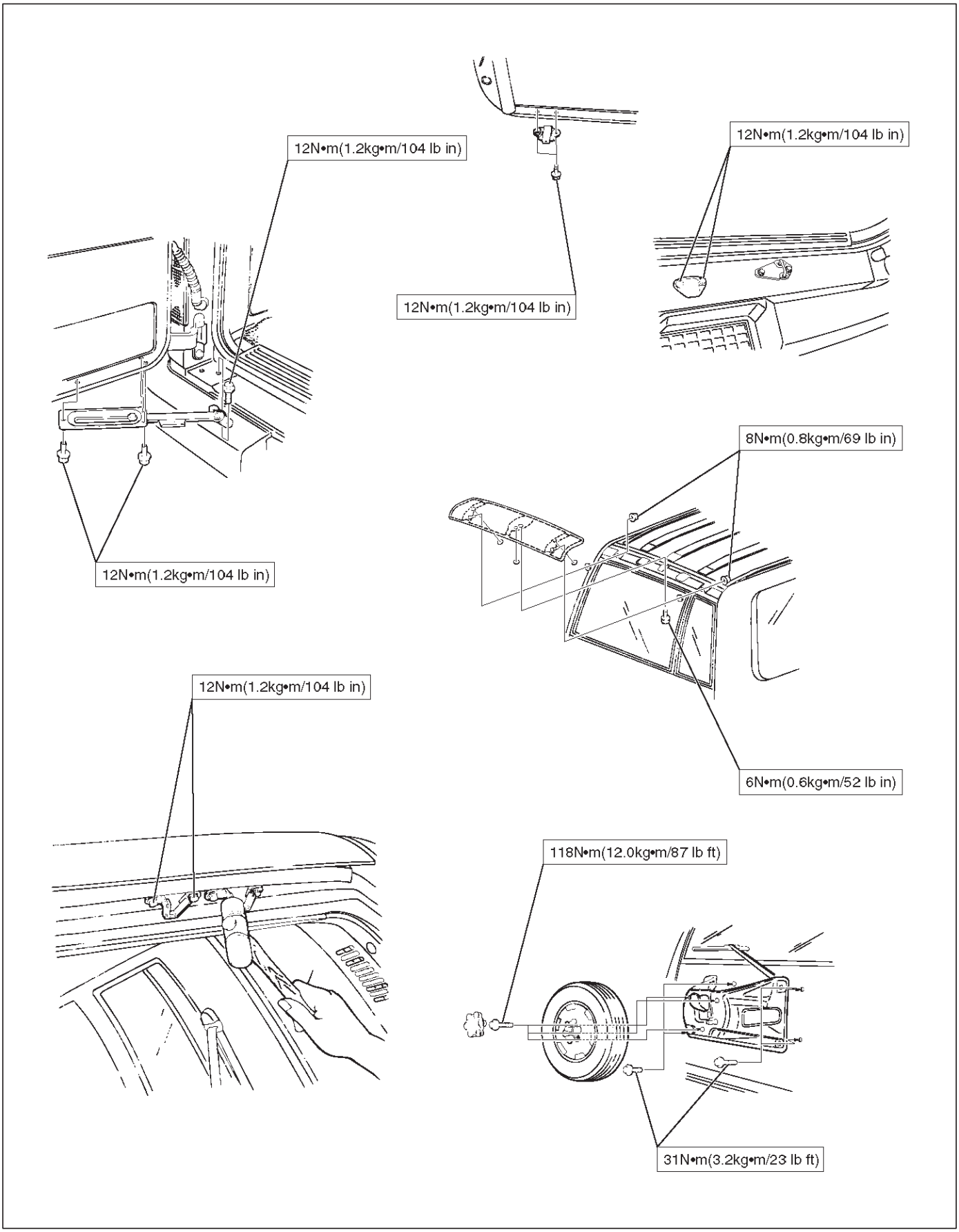
12N•m(1.2kg•m/104 lb in)
12N•m(1.2kg•m/104 lb in)
12N•m(1.2kg•m/104 lb in)
12N•m(1.2kg•m/104 lb in)
8N•m(0.8kg•m/69 lb in)
6N•m(0.6kg•m/52 lb in)
12N•m(1.2kg•m/104 lb in)
118N•m(12.0kg•m/87 lb ft)
31N•m(3.2kg•m/23 lb ft)

E10RW026

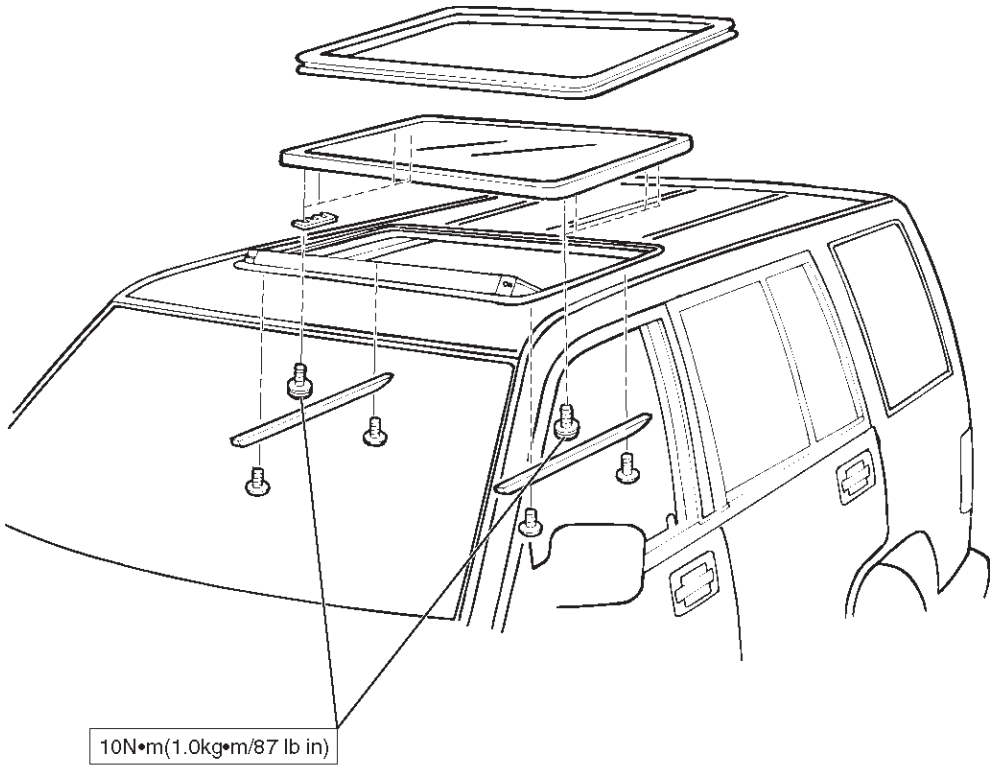

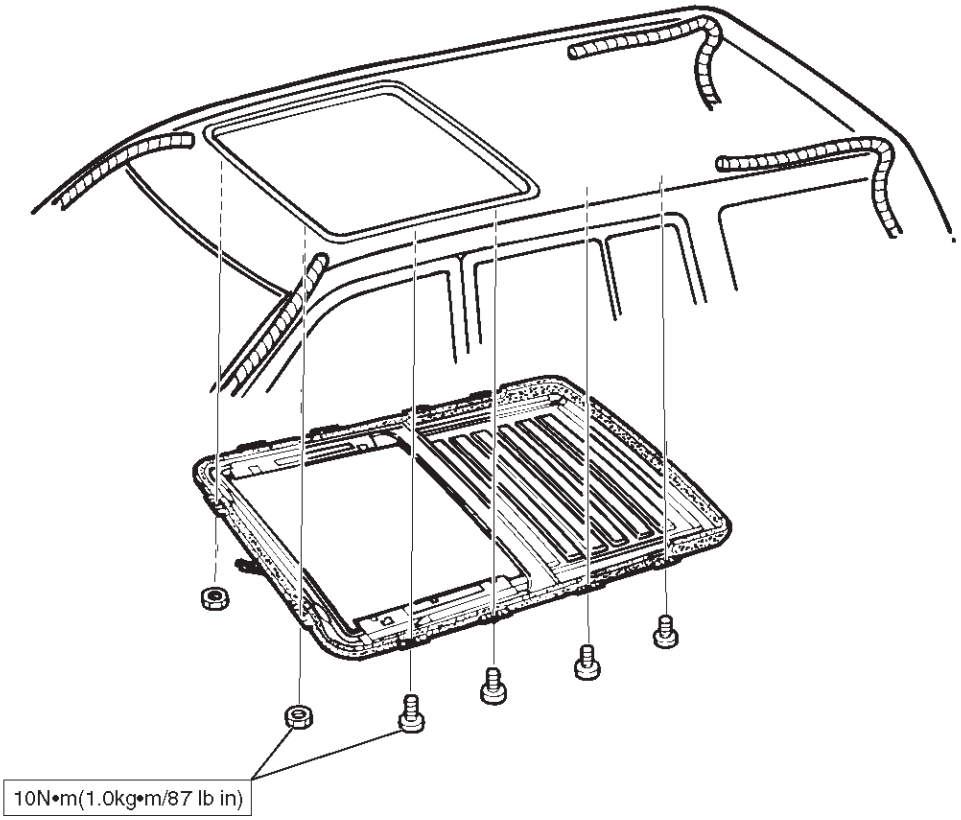

E10RW022

Special Tools

ILLUSTRATION	**TOOL NO.** TOOL NAME
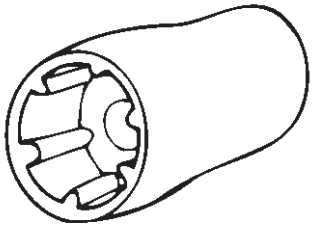	5–8840–2095–0 **(J–34355)** Spare Tire Carrior Bolt Wrench

BODY AND ACCESSORIES

SEATS

CONTENTS

Service Precaution 8G–1
Front Seat Assembly 8G–2
Front Seat Assembly and Associated Parts 8G–2
Removal 8G–2
Installation 8G–3
Disassembled View (Long Wheel Base) . . 8G–3
Disassembly 8G–4
Reassembly 8G–5
Disassembled View (Short Wheel Base) . . 8G–6
Disassembly 8G–6
Reassembly 8G–8
Power Seat Assembly 8G–9
General Description 8G–9
Disassembled View 8G–9
Disassembly 8G–10
Reassembly 8G–12
Power Seat Switch 8G–12
Removal 8G–12
Installation 8G–12
Front Tilt Motor / Rear Tilt Motor / Slide Motor / Recliner Motor 8G–13
Parts Location 8G–13
Removal and Installation 8G–13
Seat Heater System 8G–14
General Description 8G–14
Seat Heater Switch Removal and Installation 8G–14
Heat Unit Parts Location 8G–14
Heat Unit Removal and Installation 8G–14
Rear Seat Assembly 8G–15
Rear Seat Assembly and Associated Parts 8G–15
Removal 8G–15
Installation 8G–15
Disassembled View (Split Type) 8G–16
Disassembly (Split Type) 8G–17
Reassembly (Split Type) 8G–18
Disassembled View (Short Wheel Base) . . 8G–19
Disassembly 8G–19
Reassembly 8G–20
Disassembled View (Bench Type) 8G–21
Disassembly (Bench Type) 8G–22
Reassembly (Bench Type) 8G–23
Third Seat Assembly 8G–23
Parts Location 8G–23
Removal 8G–23
Installation 8G–24
Disassembled View 8G–24
Disassembly 8G–25
Reassembly 8G–25
Rear Seat Foot Rest 8G–25
Rear Seat Foot Rest and Associated Parts 8G–25
Removal 8G–26
Installation 8G–26
Main Data and Specifications 8G–26

Service Precaution

WARNING: IF SO EQUIPPED WITH A SUPPLEMENTAL RESTRAINT SYSTEM (SRS), REFER TO THE SRS COMPONENT AND WIRING LOCATION VIEW IN ORDER TO DETERMINE WHETHER YOU ARE PERFORMING SERVICE ON OR NEAR THE SRS COMPONENTS OR THE SRS WIRING. WHEN YOU ARE PERFORMING SERVICE ON OR NEAR THE SRS COMPONENTS OR THE SRS WIRING, REFER TO THE SRS SERVICE INFORMATION. FAILURE TO FOLLOW WARNINGS COULD RESULT IN POSSIBLE AIR BAG DEPLOYMENT, PERSONAL INJURY, OR OTHERWISE UNNEEDED SRS SYSTEM REPAIRS.

CAUTION: Always use the correct fastener in the proper location. When you replace a fastener, use ONLY the exact part number for that application. ISUZU will call out those fasteners that require a replacement after removal. ISUZU will also call out the fasteners that require thread lockers or thread sealant. UNLESS OTHERWISE SPECIFIED, do not use supplemental coatings (Paints, greases, or other corrosion inhibitors) on threaded fasteners or fastener joint interfaces. Generally, such coatings adversely affect the fastener torque and the joint clamping force, and may damage the fastener. When you install fasteners, use the correct tightening sequence and specifications. Following these instructions can help you avoid damage to parts and systems.

Front Seat Assembly

Front Seat Assembly and Associated Parts

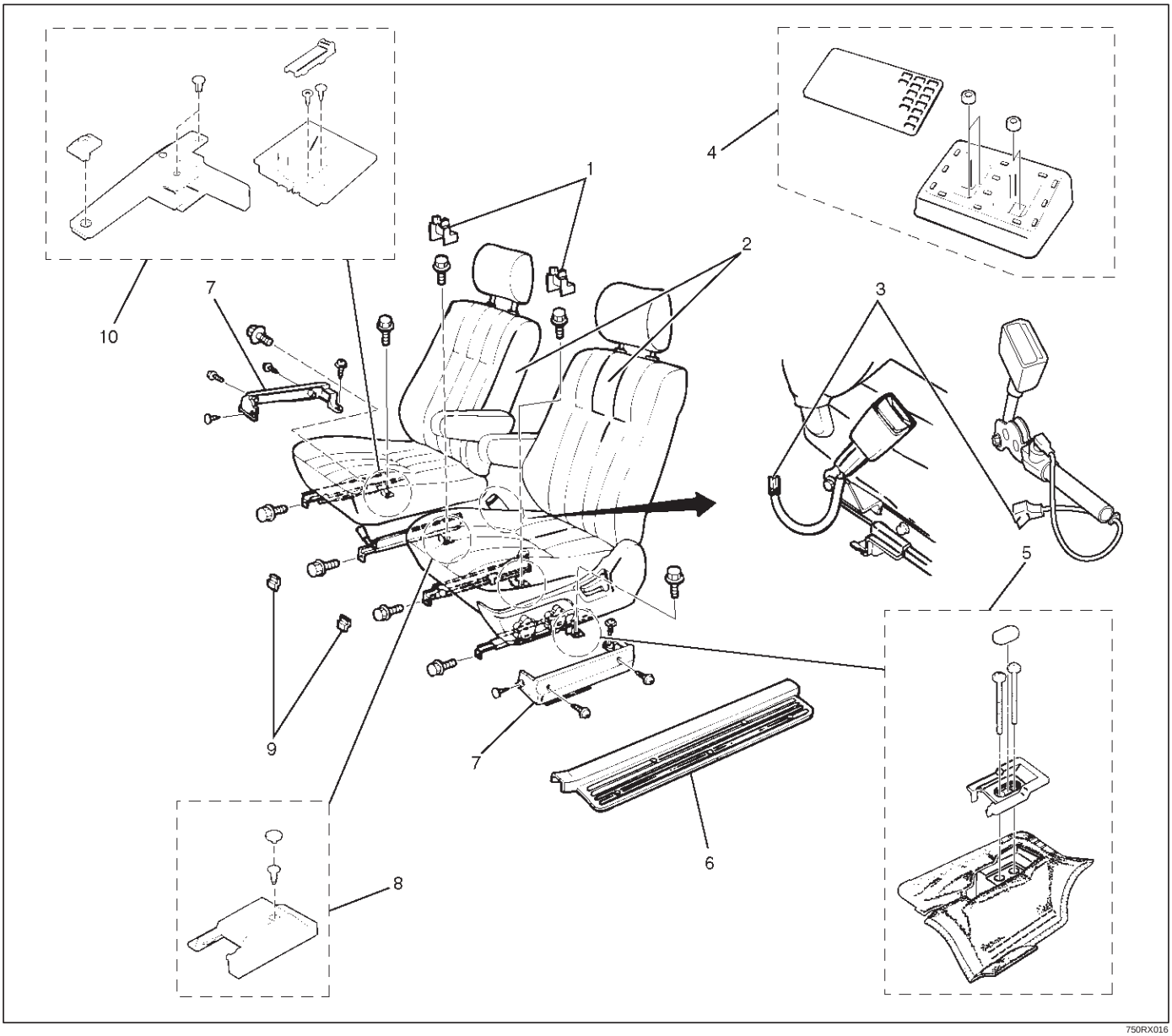

750RX016

Legend

(1) Rear Cover
(2) Front Seat Assembly
(3) Seat Belt Warning Connector/Pretensioner Harness Connector
(4) Rear Seat Foot Rest (L·W·B)
(5) Seat Rail Cover (S·W·B)
(6) Door Sill Plate
(7) Riser Cover (L·W·B)
(8) Seat Slide Cover (S·W·B)
(9) Front Cover
(10) Seat Rail Cover and Hole Cover (S·W·B)

Removal

1. Disconnect the battery ground cable.
2. Remove the front cover.
3. Remove the rear cover.
   - Remove the cover fixing screw from the rear inner cover, if this model is equipped with the power seats.
4. Remove the door sill plate.
5. Remove the rear seat foot rest.
   - Refer to the Rear Seat Foot Rest in this section.
6. Remove the riser cover.
7. Remove the seat belt warning connector (Driver's side only) or pretensioner harness connector.
8. Remove the front seat assembly.
   - Disconnect the power seat connector, if this model is equipped with the power seats.

Installation

To install, follow the removal steps in the reverse order, noting the following points:

1. Tighten the front seat assembly fixing bolts to the specified torque.

   Torque: 40 N·m (4.1 kg·m/30 lb ft)

2. Install the longest bolt to the rear inner side fixing location, if this model is equipped with power seats.

Disassembled View (Long Wheel Base)

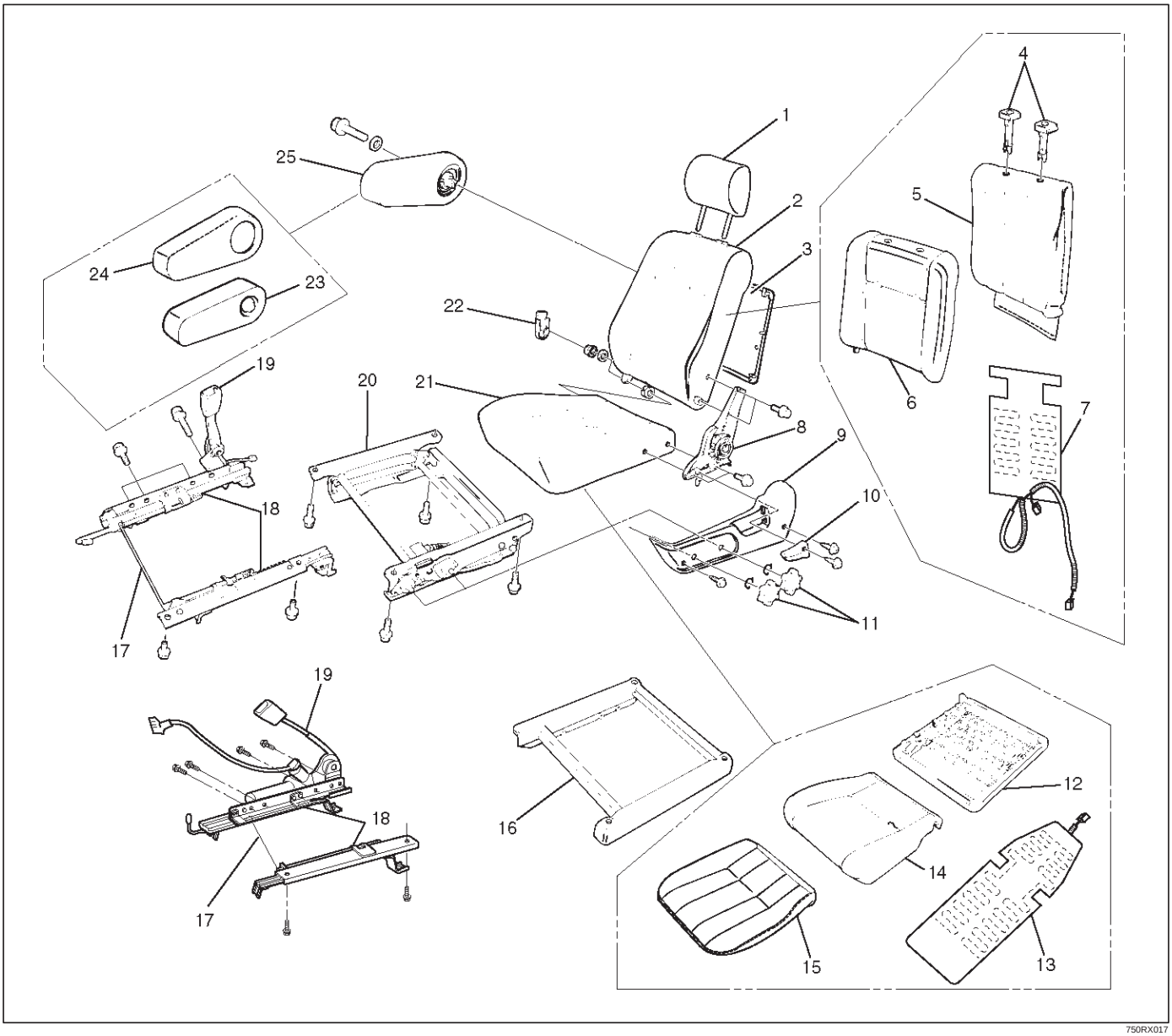

Legend

(1) Head Rest
(2) Seat Back Assembly
(3) Back Board Assembly
(4) Guide Holder
(5) Trim Cover
(6) Pad & Frame Assembly
(7) Seat Heater Assembly
(8) Reclining Device
(9) Slide Cover
(10) Reclining Knob
(11) Dial (W/Height Adjuster)
(12) Frame Assembly
(13) Seat Heater Assembly
(14) Pad Assembly
(15) Trim Cover
(16) Spacer (W/O Height Adjuster)
(17) Release Wire
(18) Seat Adjuster/Seat Adjuster (W/Pretensioner)
(19) Seat Belt Buckle Assembly
(20) Height Adjuster
(21) Seat Cushion Assembly
(22) Hinge Cover
(23) Pad & Frame Assembly
(24) Trim Cover
(25) Armrest Assembly

Disassembly

1. Remove the head rest.
2. Remove the reclining knob.
3. Remove the dial(1) (W/height adjuster).
   - Remove the side cover fixing screws and the dial lock spring(2).

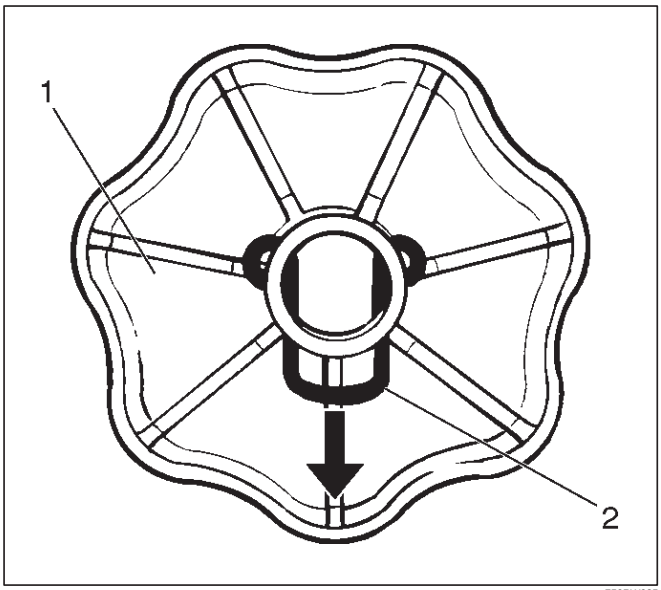

750RW025

4. Remove the side cover.
5. Remove the armrest assembly.
   - Open the armrest fastener and remove the armrest fixing bolt.

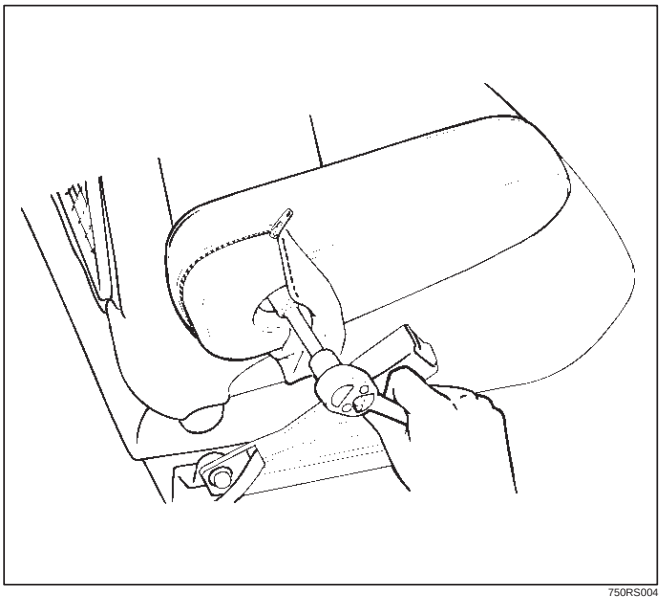

750RS004

6. Remove the trim cover.
7. Remove the pad and frame assembly.
8. Remove the hinge cover.
9. Remove the back board assembly(3).
   - Pull out the back board while prying the clip (4) of the back board free from the seat back assembly.

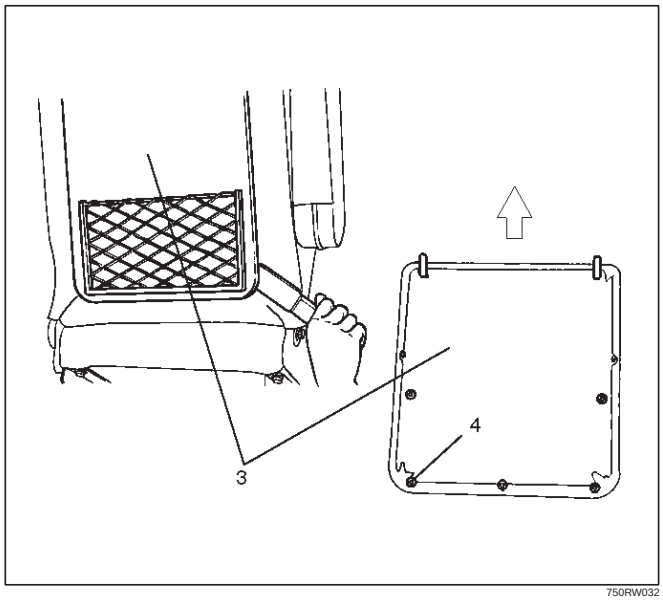

750RW032

10. Remove the reclining device.
    - Turn up the seat back trim cover in order to remove the reclining device fixing bolts.

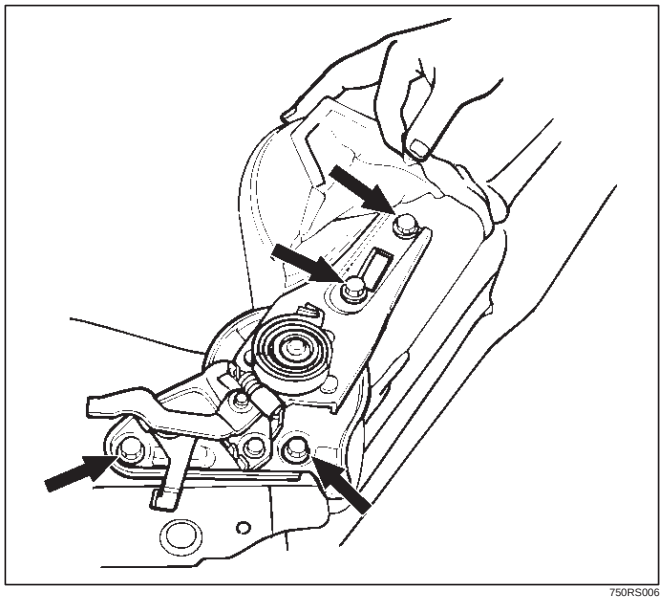

750RS006

11. Remove the seat back assembly.
    - Remove the clips (2) from the seat heater harness (1), and separate the seat heater connector (3) (models with the seat heater).

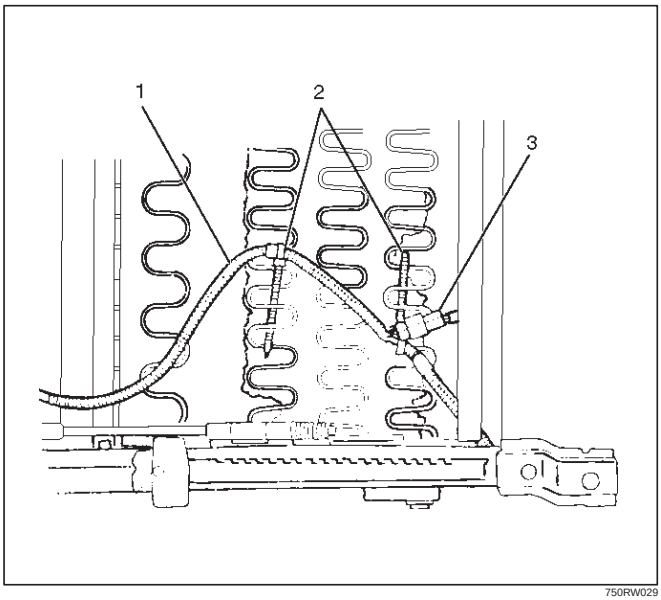

750RW029

    - Remove the seat back assembly fixing nut on the opposite side of the reclining device.

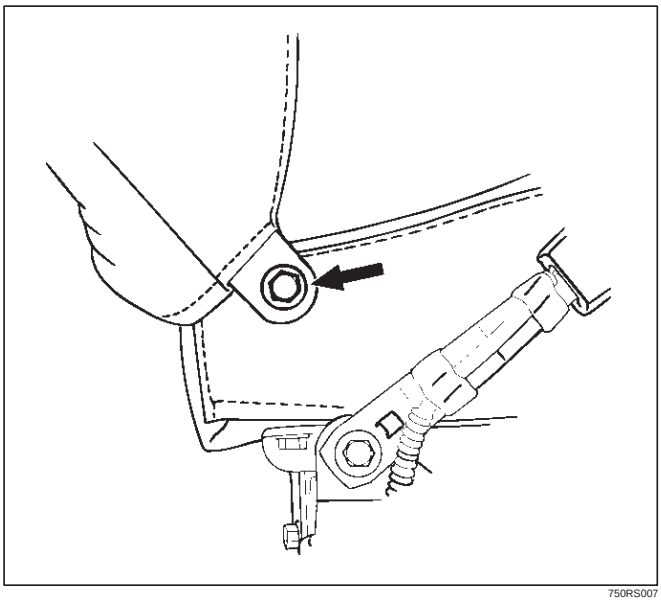

750RS007

12. Remove the guide holder.
    - Pull the guide holder out by holding the bottom end of it from the seat back assembly.
13. Remove the trim cover.
    - Remove the trim cover hog rings from the back side of the seat back.
    - With close attention paid to the hog rings and the wire which connect the trim cover and the pad and frame assembly, remove the trim cover while turning it up.
14. Remove the pad and frame assembly.
15. Remove the seat heater assembly.
16. Remove the seat adjuster.
    - Disconnect the release wire(4) and remove the fixing bolts.

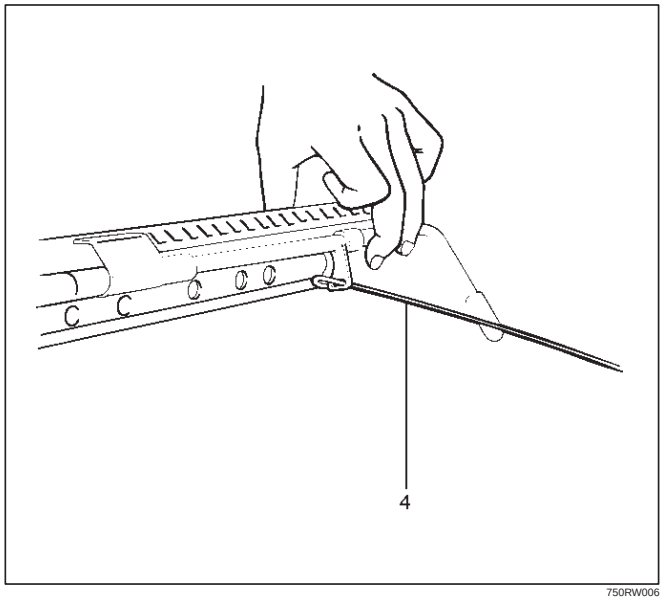

750RW006

    - Remove the seat belt buckle assembly.
17. Remove the height adjuster.
18. Remove the spacer (W/O height adjuster).
19. Remove the seat cushion assembly.
20. Remove the trim cover.
    - Remove the trim cover hog rings from the back side of the seat cushion assembly.
    - With close attention paid to the hog rings and the wire which connect the trim cover and the pad and frame assembly, remove the trim cover while turning it up.
21. Remove the frame assembly.
22. Remove the pad assembly.
23. Remove the seat heater assembly.

Reassembly

To reassembly, follow the disassembly steps in the reverse order, noting the following point.

1. Tighten the armrest assembly fixing bolts to the specified torque.

   Torque: 18 N·m (1.8 kg·m/13 lb ft)

2. Tighten the reclining device fixing bolts to the specified torque.

   Torque: 47 N·m (4.8kg·m/35 lb ft)

Disassembled View (Short Wheel Base)

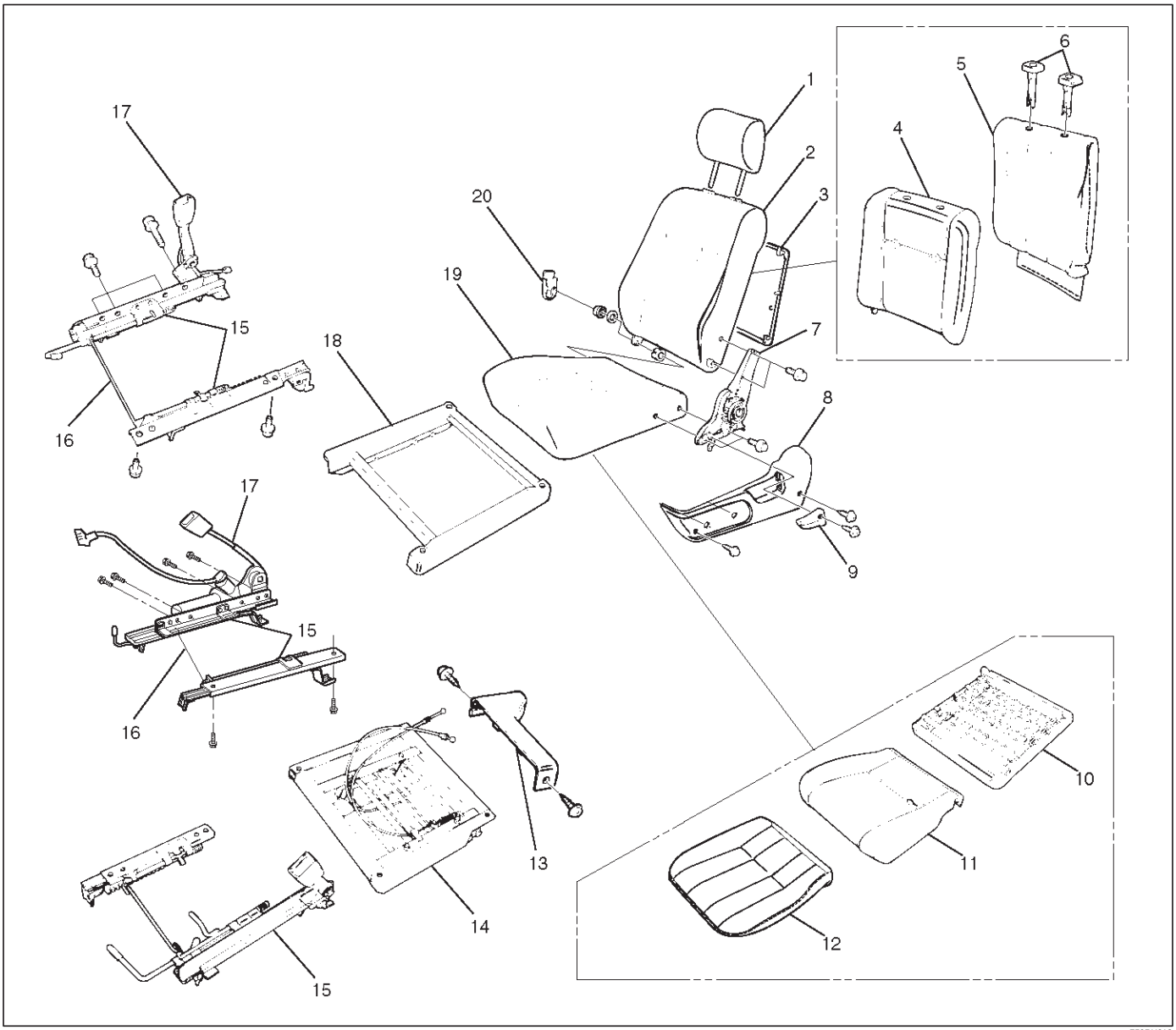

Legend

(1) Head Rest
(2) Seat Back Assembly
(3) Back Board Assembly
(4) Pad & Frame Assembly
(5) Trim Cover
(6) Guide Holder
(7) Reclining Device
(8) Slide Cover
(9) Reclining Knob
(10) Frame Assembly
(11) Pad Assembly
(12) Trim Cover
(13) Walk–in Cover
(14) Walk–in Assembly
(15) Seat Adjuster/Seat Adjuster (W/Pretensioner)
(16) Release Wire
(17) Seat Belt Buckle Assembly
(18) Spacer
(19) Seat Cushion Assembly
(20) Hinge Cover

Disassembly

1. Remove the head rest.
2. Remove the reclining knob.
3. Remove the side cover.
4. Remove the hinge cover.
5. Remove the back board assembly.
   - Pull out the back board while prying the clip of the back board free from the seat back assembly.

6. Remove the reclining device.
   - Trun up the seat back trim cover in order to remove the reclining device fixing bolts.

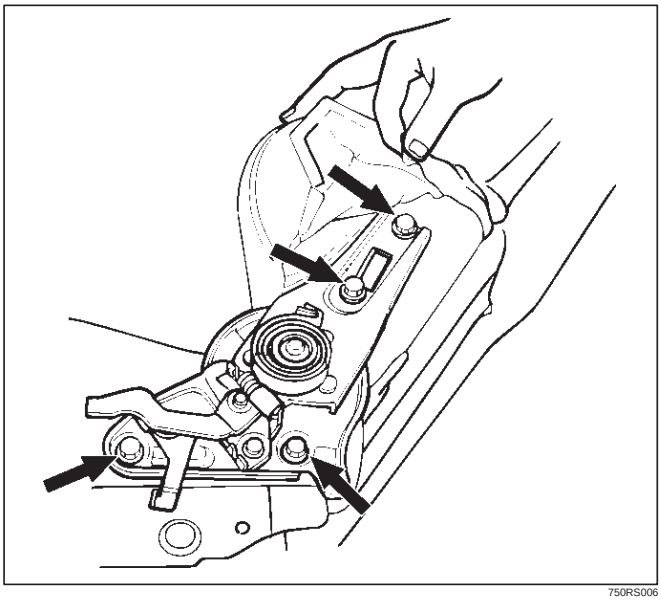

750RS006

   - Remove the push nut (2) and disconnect walk-in cable (3) from reclining device (1).

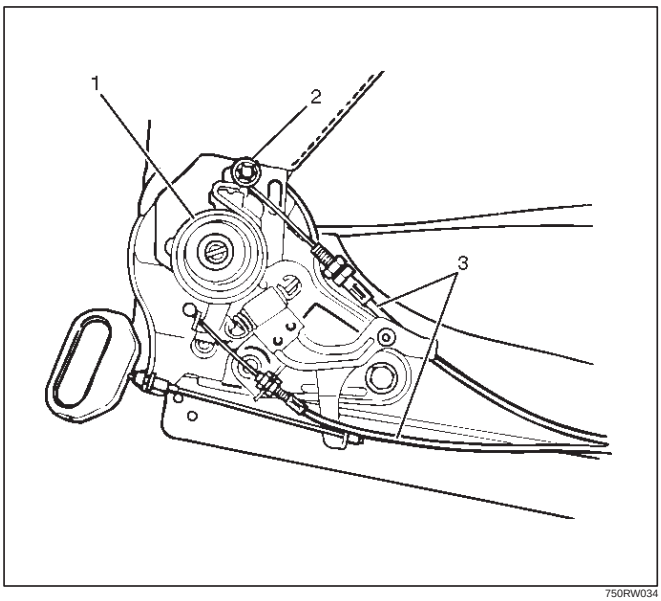

750RW034

7. Remove the seat back assembly.
   - Remove the seat back assembly fixing nut on the opposite side of the reclining device.

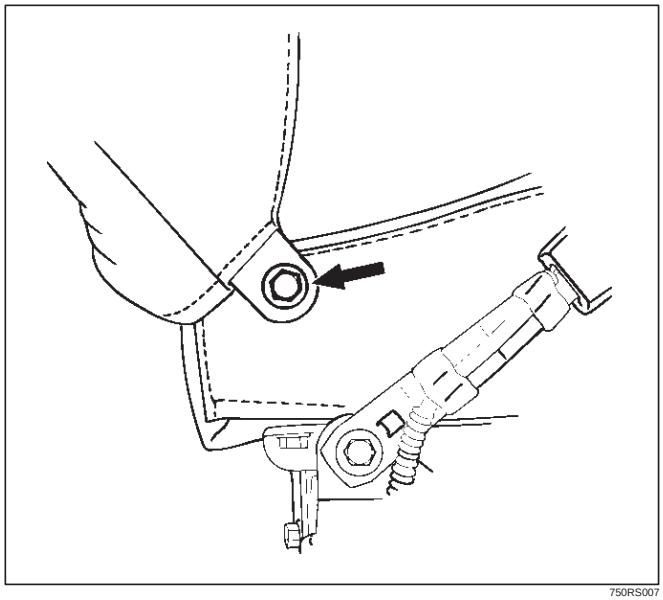

750RS007

8. Remove the guide holder.
   - Pull the guide holder out by holding the bottom end of it from the seat back assembly.
9. Remove the trim cover.
   - Remove the trim cover hog rings from the back side of the seat back.
   - With close attention paid to the hog rings and the wire which connect the trim cover and the pad and frame assembly, remove the trim cover while turning it up.
10. Remove the pad and frame assembly.
11. Remove the walk-in cover.
12. Remove the seat adjuster.
    - Disconnect the release wire (4) and remove the fixing bolts.

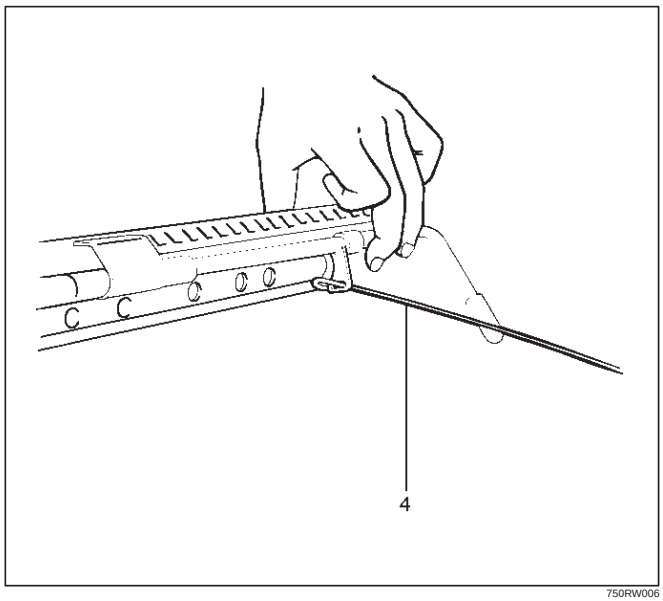

750RW006

    - Remove the seat belt buckle assembly.

13. Remove the walk-in assembly (passenger side).
14. Remove the spacer (driver side).
15. Remove the seat cushion assembly.
16. Remove the trim cover.
    - Remove the trim cover hog rings from the back side of the seat cushion assembly.
    - With close attention paid to the hog rings and the wire which connect the trim cover and the pad and frame assembly, remove the trim cover while turning it up.
17. Remove the frame assembly.
18. Remove the pad assembly.

Reassembly

To reassembly, follow the disassembly steps in the reverse order, noting the following point.

1. Tighten the armrest assembly fixing bolts to the specified torque.

   Torque: 18 N·m (1.8 kg·m/13 lb ft)

2. Tighten the reclining device fixing bolts to the specified torque.

   Torque: 47 N·m (4.8kg·m/35 lb ft)

Power Seat Assembly

General Description

The circuit consists of the power seat switch, front tilt motor (driver's seat only), rear tilt motor (driver's seat only), slide motor and the recliner motor.

The power seat switch has a tilt & slide switch and a recliner switch.
The motor built in the seat can be actuated by operating these switches to move the seat to desired position, independent of the position of the starter switch.

Disassembled View

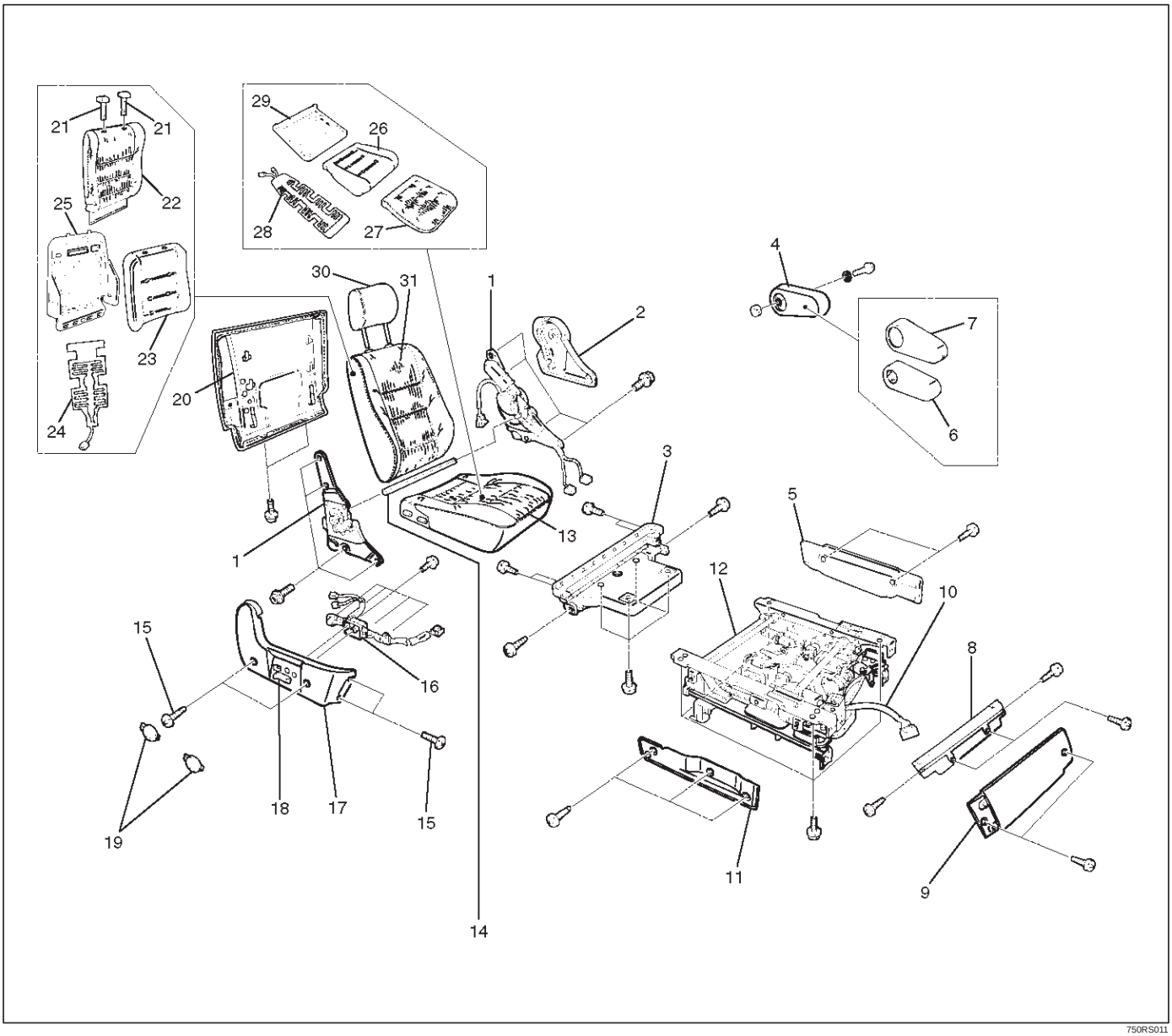

Legend

(1) Reclining Device
(2) Inner Cover
(3) Rear Cover
(4) Armrest Assembly
(5) Inner Lower Cover
(6) Pad & Frame Assembly
(7) Trim Cover
(8) Front Lower Cover
(9) Front Cover
(10) Power Seat Harness
(11) Outer Lower Cover
(12) Adjuster Assembly
(13) Seat Cushion Assembly
(14) Connecting Shaft
(15) Outer Cover Fixing Screws
(16) Switch Assembly
(17) Outer Cover
(18) Switch Knob
(19) Outer Cover Cap
(20) Back Board Assembly
(21) Guide Holder
(22) Trim Cover
(23) Pad Assembly

(24) Seat Heater
(25) Frame Assembly
(26) Pad Assembly
(27) Trim Cover
(28) Seat Heater
(29) Frame Assembly
(30) Head Rest
(31) Seat Back Assembly

Disassembly

1. Disconnect the battery ground cable.
2. Remove the head rest.
3. Remove the switch knob.
   - Pull the switch knob out.
4. Remove the outer cover cap.
5. Remove the outer cover fixing screws.
   - Pull up the outer cover(1) to remove the cover from the reclining device(2).

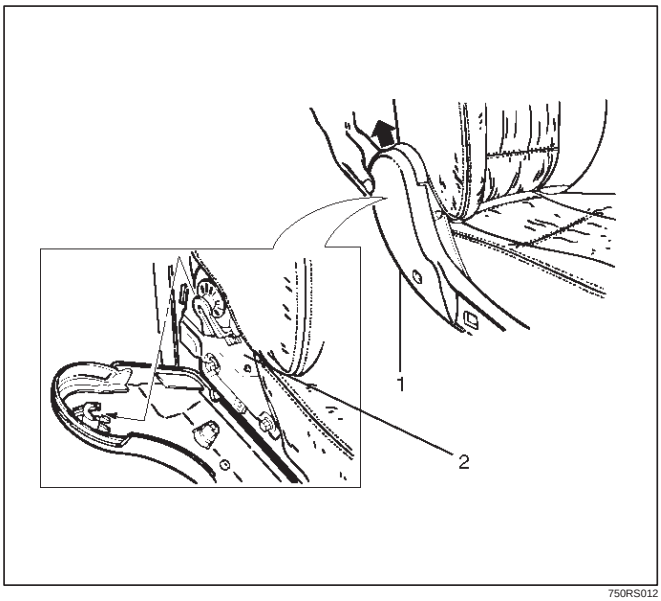

750RS012

6. Remove the front cover.
7. Remove the front lower cover.
8. Remove the rear cover.
9. Remove the outer cover.
   - Disconnect the switch connectors and remove the harness fixing clips.
10. Remove the switch assembly.
    - Remove the switch fixing screws from the outer cover.
11. Remove the armrest assembly.
    - Open the armrest fastener and remove the fixing bolt.

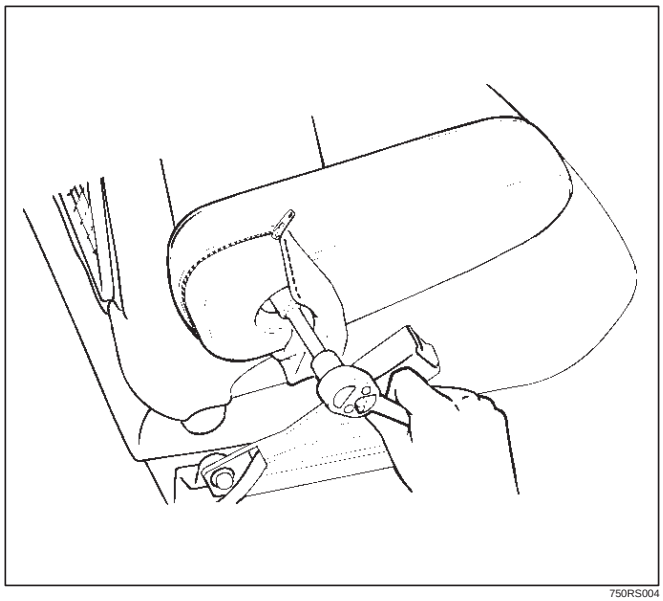

750RS004

12. Remove the trim cover.
13. Remove the pad & frame assembly.
14. Remove the inner cover
    - Remove the cover fixing screw.
    - Pull up the inner cover to remove the cover from the reclining device(3).

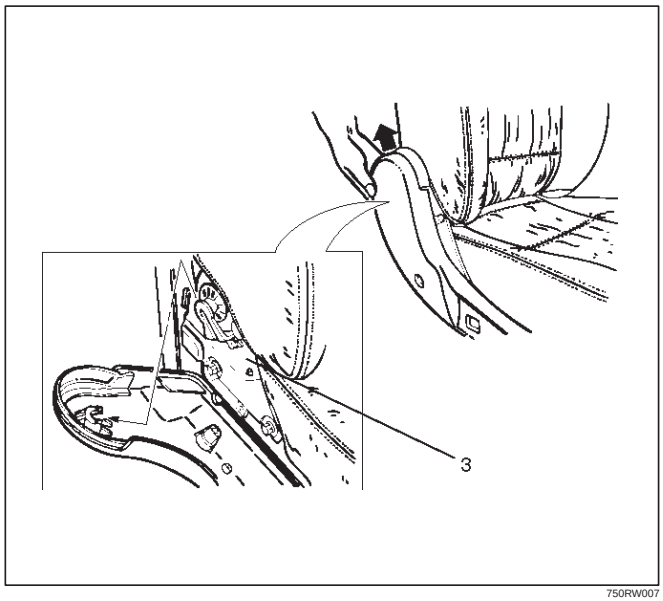

750RW007

15. Remove the back board assembly(4).
    - Remove the board fixing screws.
    - Pull the back board downward and remove the board from the seat back frame(5).

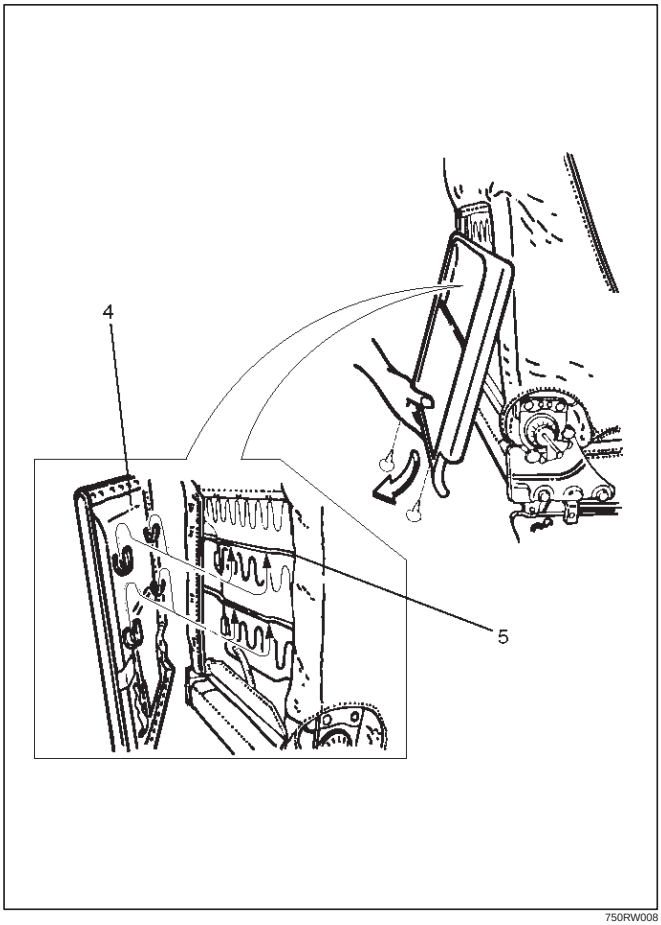

750RW008

16. Remove the reclining device(7).
    - Remove the device lower side fixing bolt in order to separate the seat back from the seat cushion.
    - Disconnect the seat heater connector.
    - Remove the trim cover(6) hog rings from the backside of the seat back assembly.
    - Turn up the seat back trim cover to remove the reclining device upper side fixing bolt.
    - Disconnect the connecting shaft and the reclining device connectors.

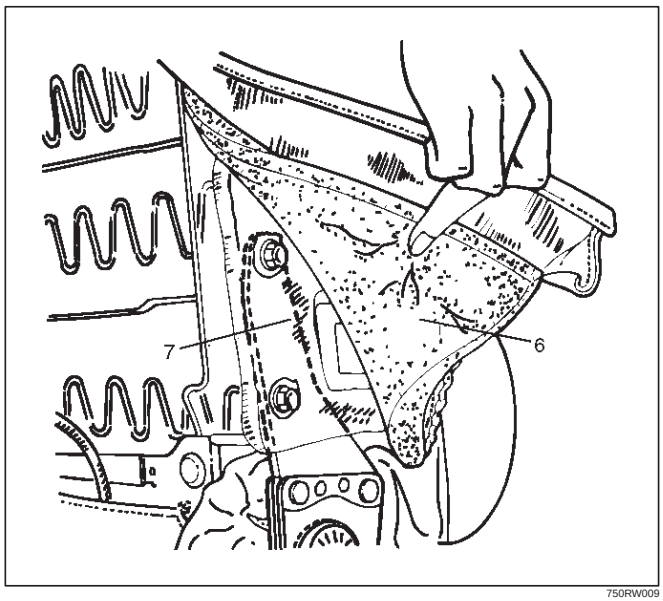

750RW009

17. Remove the seat back assembly.
18. Remove the guide holder(8).
    - Remove the trim cover fixing hog rings(9) from the backside of the seat back assembly.
    - Hold the tip end of the guide holder and pull the holder out from the seat back assembly.

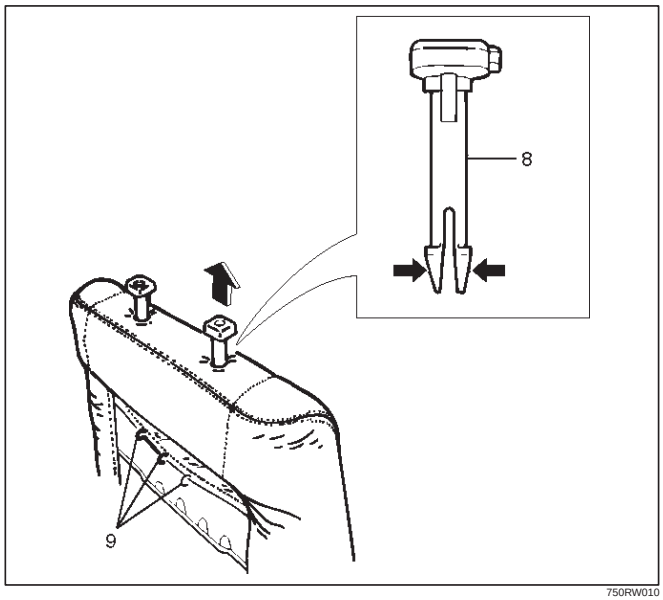

750RW010

19. Remove the trim cover.
    - Remove the trim cover hog rings from the backside of the seat back.
    - With close attention paid to the hog rings and the wire which connect the trim cover and pad & frame assembly, remove the trim cover while turning it up.
20. Remove the seat heater.
21. Remove the pad assembly.
22. Remove the frame assembly.
23. Remove the outer lower cover.
24. Remove the inner lower cover.
25. Remove the adjuster assembly.
    - Disconnect the connectors and remove the fixing bolts.

- Remove the power seat harness from the adjuster assembly.

26. Remove the seat cushion assembly.
27. Remove the trim cover.
    - Remove the trim cover hog rings from the backside of the seat cushion assembly.
    - With close attention paid to the hog rings and the wire which connect the trim cover and the pad & frame assembly, remove the trim cover while turning it up.
28. Remove the seat heater.
29. Remove the frame assembly.
30. Remove the pad assembly.

Reassembly

To reassemble, follow the disassembly steps in the reverse order, noting the following point.

1. Tighten the fixing bolts to the specified torque.
    - Refer to the Torque Specifications in this section.

Power Seat Switch

Removal

1. Remove the side cover(3).
    - Refer to the Power Seat Assembly disassembly steps in this section.
2. Remove the tilt & slide switch lever(4).
    - Hold the switch lever with your fingers and pull it toward you.
3. Remove the tilt & slide switch(2).
    - Remove two screws.
4. Remove the recliner switch(1).
    - Remove two screws.

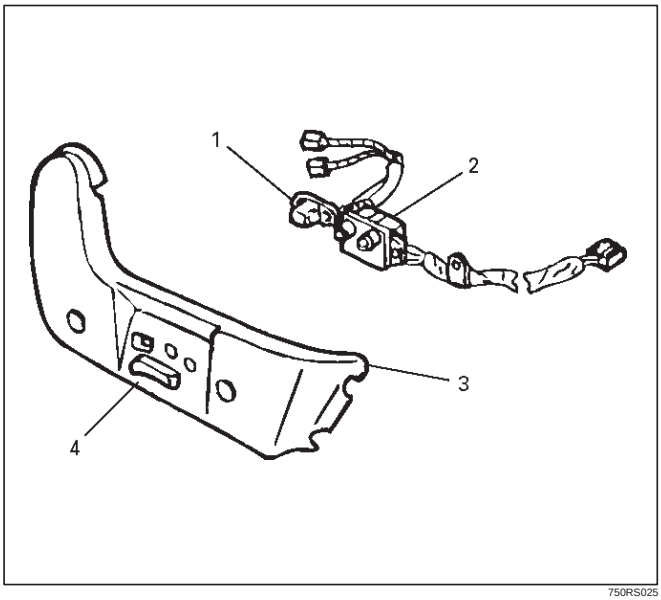

750RS025

Installation

To install, follow the removal steps in the reverse order.

Front Tilt Motor / Rear Tilt Motor / Slide Motor / Recliner Motor

Parts Location

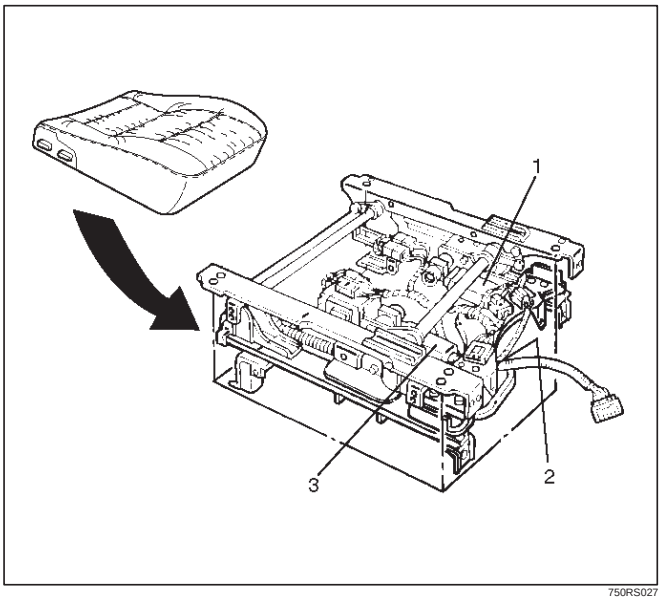

750RS027

Legend

(1) Tilt Motor
(2) Slide Motor
(3) Tilt Motor

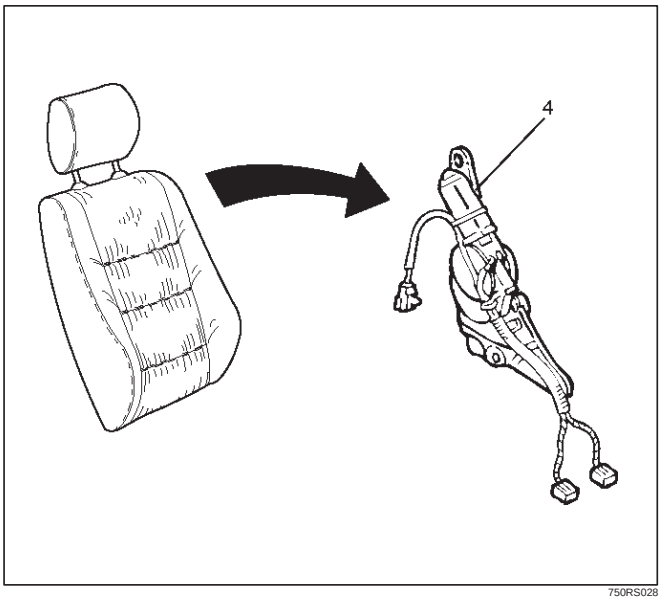

750RS028

Legend

(4) Recliner Motor

Removal and Installation

Refer to the Power Seat Assembly disassembly and reassembly steps in this section.

Seat Heater System

General Description

The circuit consists of the starter switch, seat heater switch and the heat unit.
The seat heater is provided in driver's and front passenger seats (as option).
When the seat heater switch is ON, the seat heat built in the seat back and cushion is switched on to warm the seats.
To prevent the seats from being overheated, the circuit is fitted with a thermostat.

Seat Heater Switch Removal and Installation

Refer to the Seat Heater Switch removal and installation steps in Lighting System section.

Heat Unit Parts Location

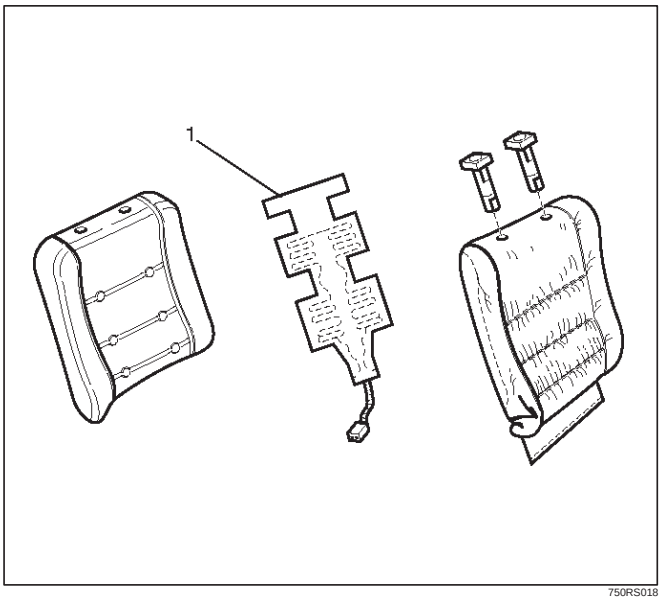

750RS018

Legend
(1) Heat Unit (Seat Back Side)

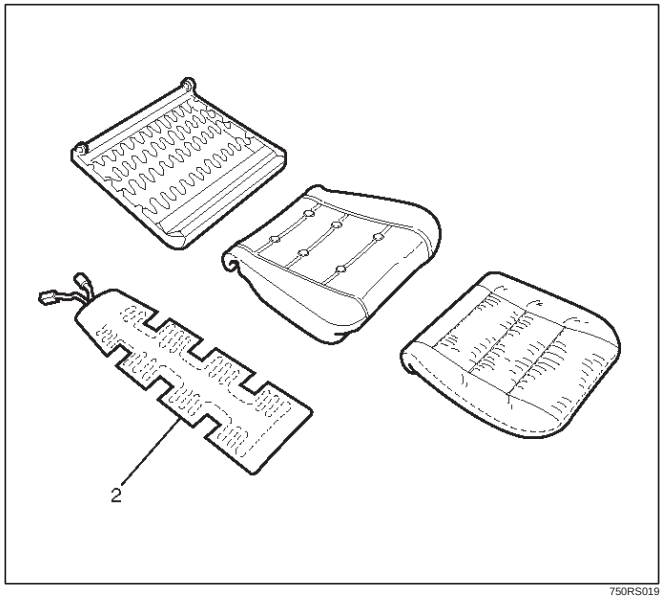

750RS019

Legend
(2) Heat Unit (Seat Cushion Side)

Heat Unit Removal and Installation

Refer to the Power Seat Assembly disassembly and reassembly steps in this section.

Rear Seat Assembly

Rear Seat Assembly and Associated Parts

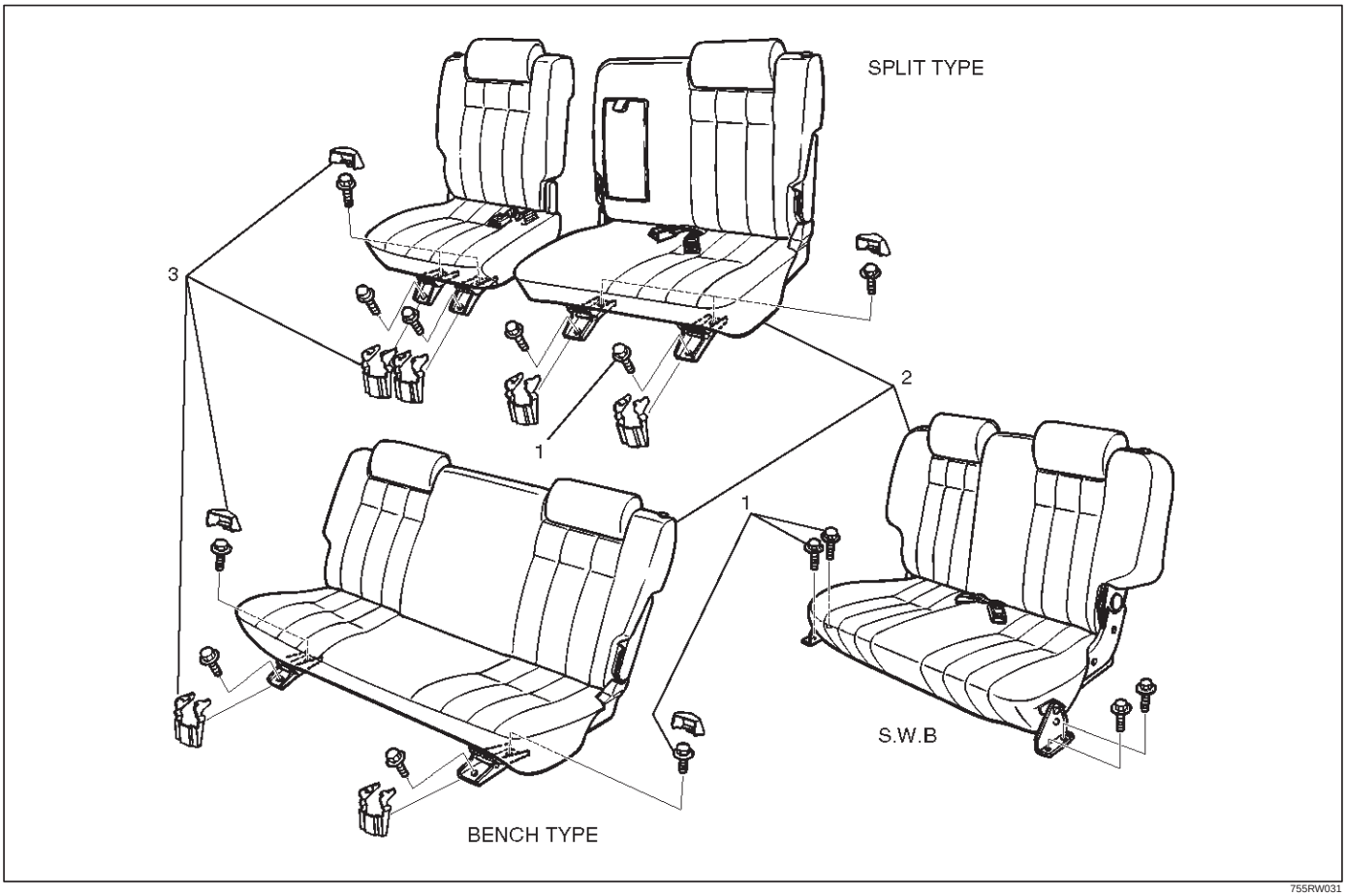

755RW031

Legend

(1) Fixing Bolts
(2) Rear Seat Assembly
(3) Mounting Bracket Cover

Removal

1. Unlock the rear seat(1) lock to remove it.
2. Remove the mounting bracket cover.
3. Remove the fixing bolts.

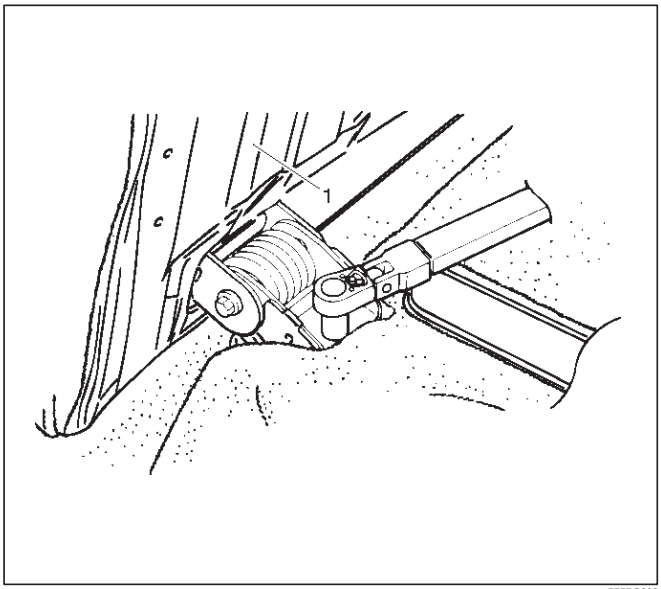

755RS002

4. Remove the rear seat assembly.

Installation

To install, follow the removal steps in the reverse order, noting the following point.

1. Tighten the rear seat fixing bolts to the specified torque.

   Torque: 19 N·m (1.9kg·m/14 lb ft)

Disassembled View (Split Type)

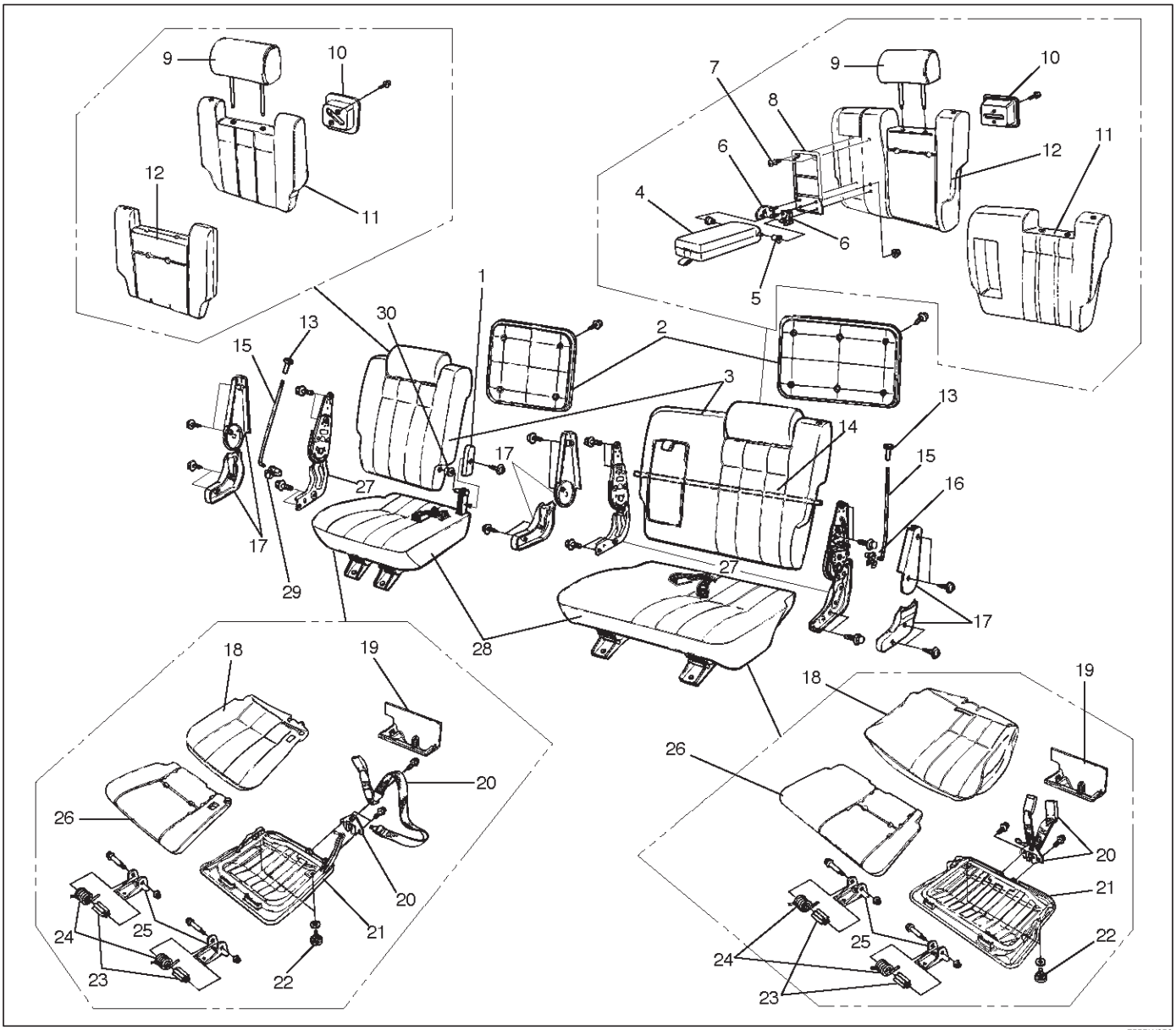

755RW056

Legend

(1) Free Hinge Cover
(2) Back Board
(3) Seat Back Assembly
(4) Armrest Assembly
(5) Bush
(6) Armrest Set Bracket
(7) Clip
(8) Armrest Board
(9) Pillow Assembly
(10) Band Hook Cover
(11) Trim Cover
(12) Pad & Frame Assembly
(13) Release Knob
(14) Connecting Shaft
(15) Release Rod
(16) Linkage Bush
(17) Device Cover
(18) Trim Cover
(19) Seat Lock Cover
(20) Rear Seat Belt Buckle and Lock Assembly
(21) Frame Assembly
(22) Stopper Rubber
(23) Spring Collar
(24) Return Spring
(25) Mounting Bracket
(26) Pad Assembly
(27) Reclining Device
(28) Seat Cushion Assembly
(29) Linkage Bush
(30) Bush

Disassembly (Split Type)

1. Remove the back board.
   - Remove the clips and the back board.
2. Remove the device cover.
3. Remove the release knob.
   - Turn the knob counterclockwise to remove it.
4. Remove the release rod.
   - Disconnect the rod from the linkage bush.
5. Remove the reclining device.

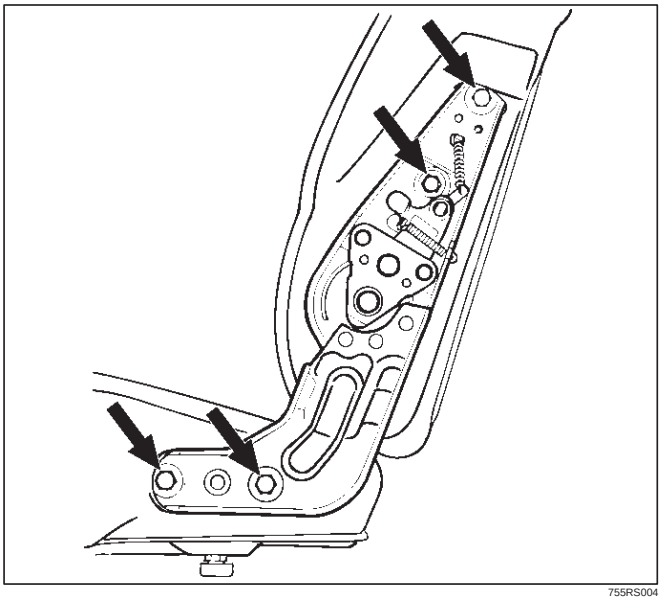

755RS004

6. Remove the connecting shaft.
7. Remove the seat back assembly.
8. Remove the pillow assembly.
   - Turn up the seat back trim cover and slit the pad from the back around to the place where the lock spring(2) of the guide bush(1) is.

   Then insert a finger through the slit and pull out the pillow while you are pressing down on the lock spring.

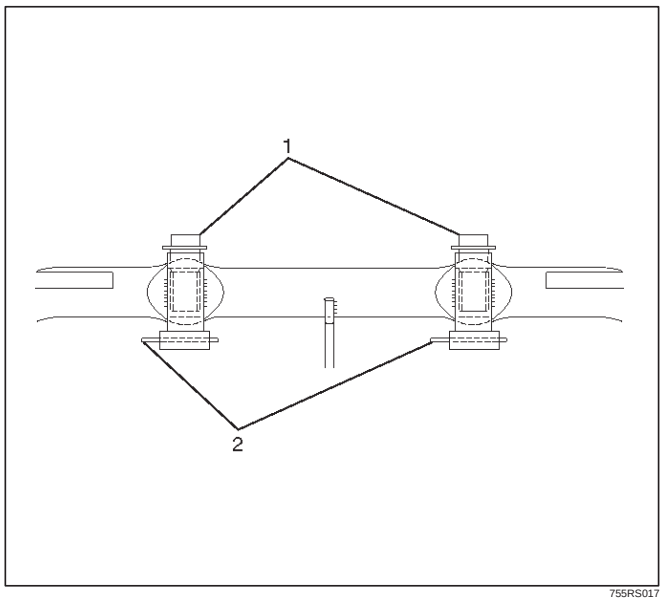

755RS017

9. Remove the band hook cover.
10. Remove the armrest assembly.
    - Turn up the seat back trim cover and remove the fixing nuts.
11. Remove the armrest set bracket.
12. Remove the armrest board.
13. Remove the trim cover.
    - Remove the trim cover fixing hog rings from the backside of the seat back.
    - With close attention paid to the hog rings and the wire which connect the trim cover and the pad and frame assembly, remove the trim cover while turning it up.
14. Remove the pad & frame assembly.
15. Remove the seat cushion assembly.
16. Remove the seat lock cover.
17. Remove the rear seat belt buckle and lock assembly.
18. Remove the mounting bracket.
19. Remove the return spring.
20. Remove the spring collar.
21. Remove the trim cover.
    - Remove the hog rings and pull the trim cover out from the frame assembly groove.
    - With close attention paid to the hog rings and the wire which connect the trim cover and the pad & frame assembly, remove the trim cover while turning it up.
22. Remove the frame assembly.
23. Remove the pad assembly.
24. Remove the stopper rubber.

Reassembly (Split Type)

To reassemble, follow the disassembly steps in the reverse order, noting the following point.

1. Tighten the reclining device fixing bolts to the specified torque.

   Torque: 27 N·m (2.8kg·m/20 lb ft)

2. Loosen the rubber stopper lock nut(1). Adjust the stopper(3) so there is no clearance between the bottom of the stopper and the carpet(2) while you make sure the rear seat is firmly locked.

   Then tighten the lock nut securely.

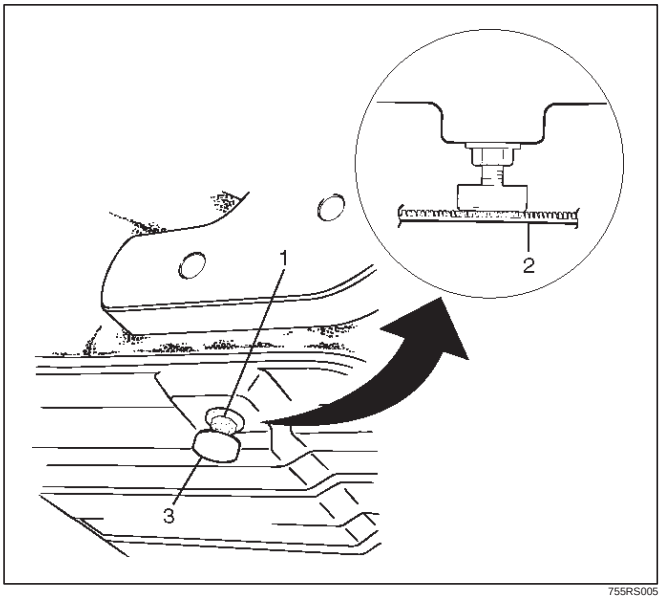

755RS005

Disassembled View (Short Wheel Base)

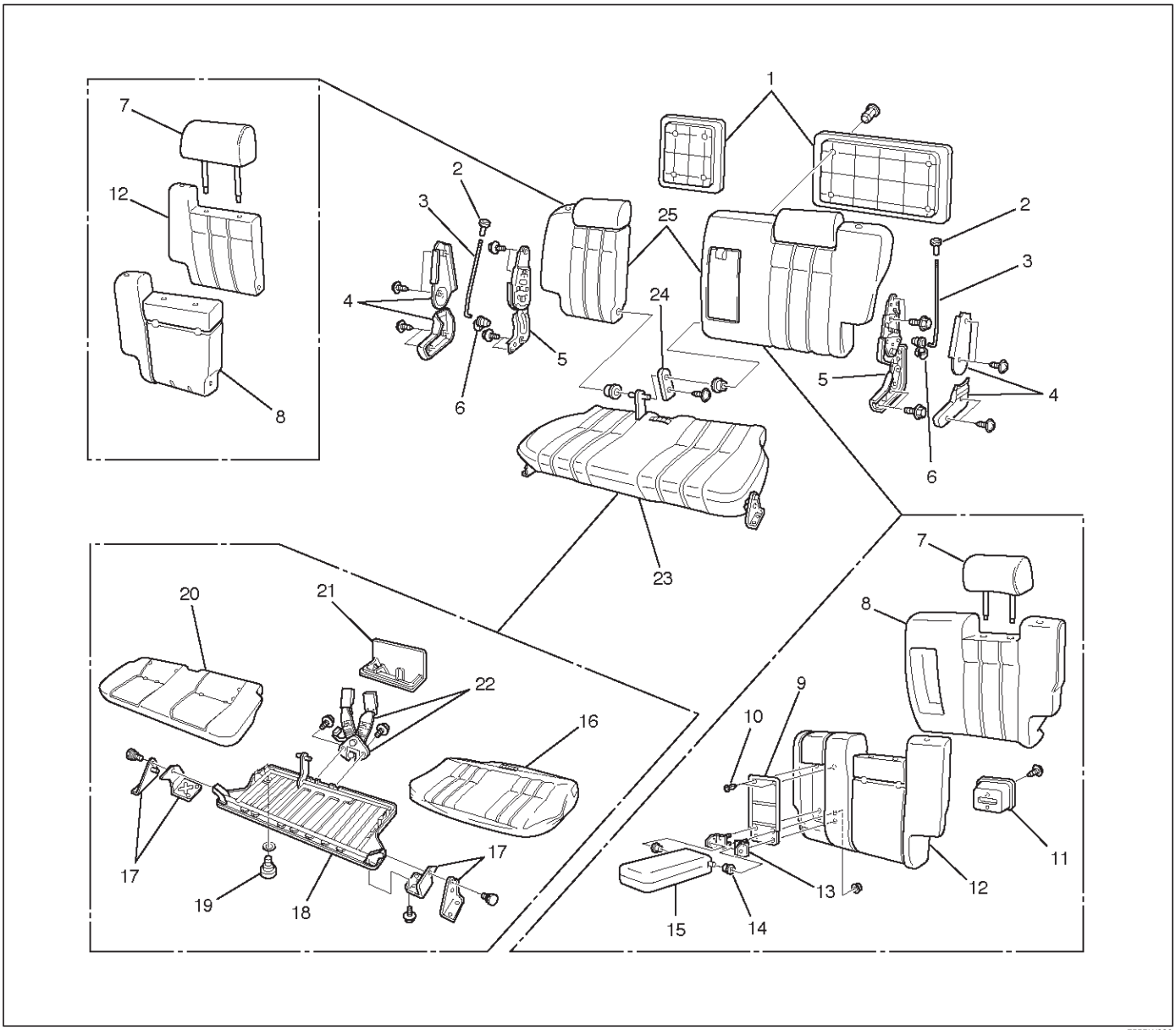

Legend

(1) Back Board
(2) Release Knob
(3) Release Rod
(4) Device Cover
(5) Reclining Device
(6) Linkage Bush
(7) Pillow Assembly
(8) Pad & Frame Assembly
(9) Armrest Board
(10) Clip
(11) Band Hook Cover
(12) Trim Cover
(13) Armrest Set Bracket
(14) Bush
(15) Armrest Assembly
(16) Trim Cover
(17) Mounting Bracket
(18) Frame Assembly
(19) Stopper Rubber
(20) Pad Assembly
(21) Seat Lock Cover
(22) Rear seat Belt Bukle and Lock Assembly
(23) Seat Cushion Assembly
(24) Free Hinge Cover
(25) Seat Back Assembly

Disassembly

1. Remove the back board.
   - Remove the clips and the back board.
2. Remove the device cover.
3. Remove the release knob.
   - Turn the knob counterclockwise to remove it.

4. Remove the release rod.
   - Disconnect the rod from the linkage bush.
5. Remove the reclining device.

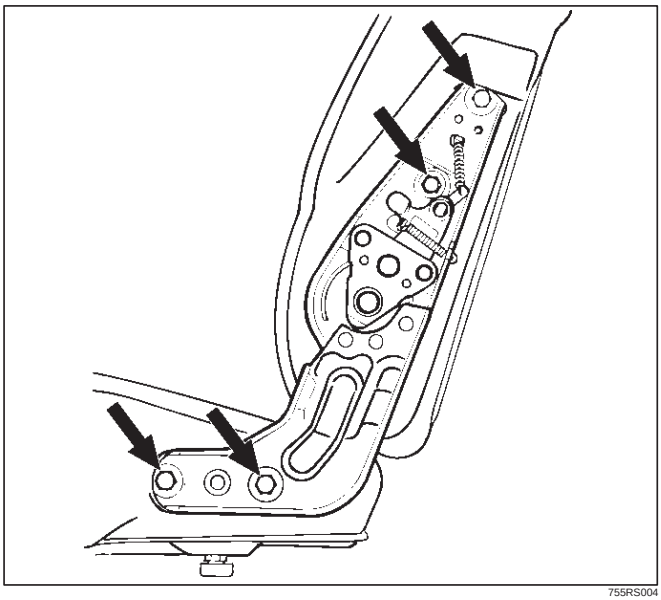

755RS004

6. Remove the seat back assembly.
7. Remove the pillow assembly.
   - Turn up the seat back trim cover and slit the pad from the back around to the place where the lock spring(2) of the guide bush(1) is.

   Then insert a finger through the slit and pull out the pillow while you are pressing down on the lock spring.

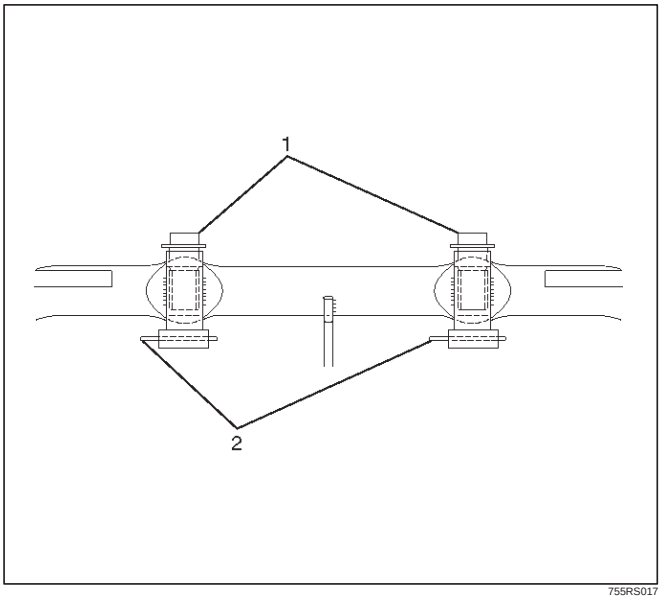

755RS017

8. Remove the band hook cover.
9. Remove the armrest assembly.
   - Turn up the seat back trim cover and remove the fixing nuts.
10. Remove the armrest set bracket.
11. Remove the armrest board.
12. Remove the trim cover.
    - Remove the trim cover fixing hog rings from the backside of the seat back.
    - With close attention paid to the hog rings and the wire which connect the trim cover and the pad and frame assembly, remove the trim cover while turning it up.
13. Remove the pad & frame assembly.
14. Remove the free hinge cover.
15. Remove the seat cushion assembly.
16. Remove the seat lock cover.
17. Remove the rear seat belt buckle and lock assembly.
18. Remove the mounting bracket.
19. Remove the trim cover.
    - Remove the hog rings and pull the trim cover out from the frame assembly groove.
    - With close attention paid to the hog rings and the wire which connect the trim cover and the pad & frame assembly, remove the trim cover while turning it up.
20. Remove the frame assembly.
21. Remove the pad assembly.
22. Remove the stopper rubber.

Reassembly

To reassemble, follow the disassembly steps in the reverse order, noting the following point.

1. Tighten the reclining device fixing bolts to the specified torque.

   Torque: 27 N·m (2.8kg·m/20 lb ft)
2. Loosen the rubber stopper lock nut(1). Adjust the stopper(3) so there is no clearance between the bottom of the stopper and the carpet(2) while you make sure the rear seat is firmly locked.

   Then tighten the lock nut securely.

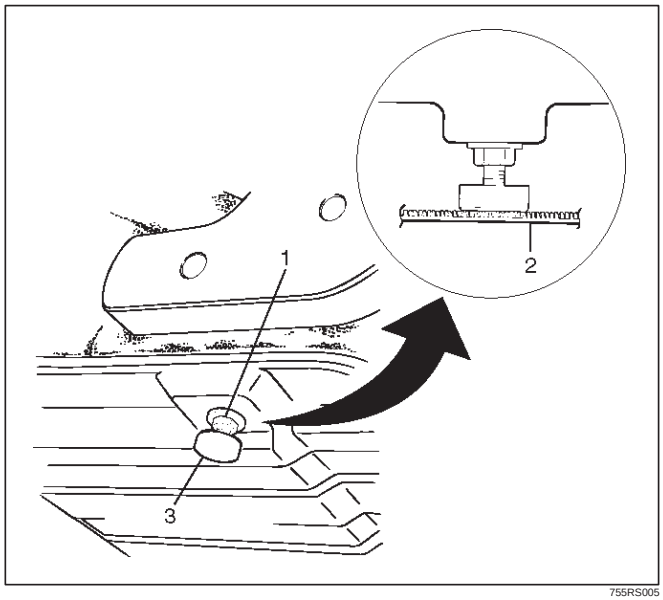

755RS005

Disassembled View (Bench Type)

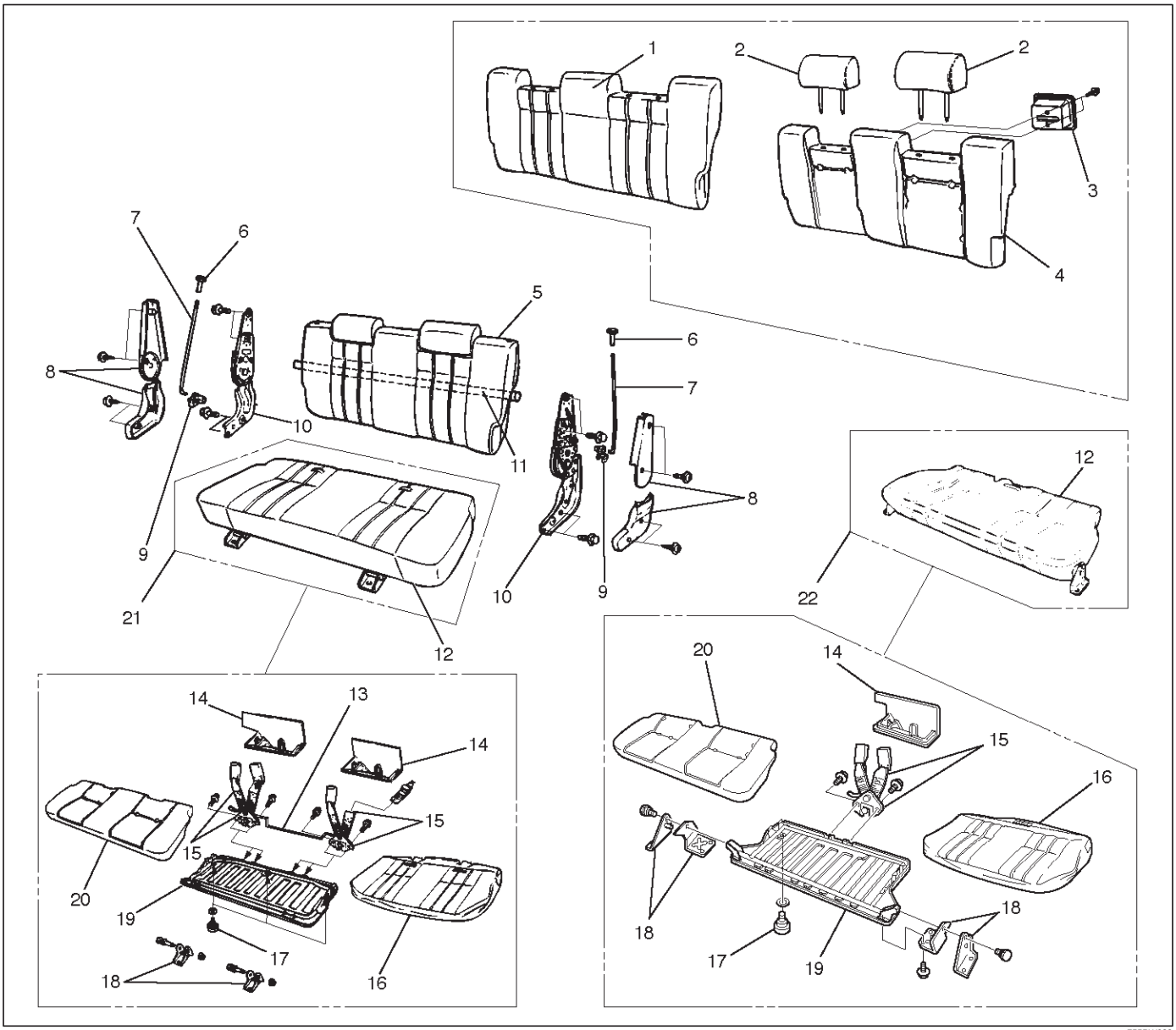

755RW033

Legend

(1) Trim Cover
(2) Pillow Assembly
(3) Band Hook Cover
(4) Pad & Frame Assembly
(5) Seat Back Assembly
(6) Release Knob
(7) Release Rod
(8) Device Cover
(9) Linkage Bush
(10) Reclining Device
(11) Connecting Shaft
(12) Seat Cushion Assembly
(13) Connecting Link
(14) Seat Lock Cover
(15) Rear Seat Belt Buckle and Lock Assembly
(16) Trim Cover
(17) Stopper Rubber
(18) Mounting Bracket
(19) Frame Assembly
(20) Pad Assembly
(21) L·W·B
(22) S·W·B

Disassembly (Bench Type)

1. Remove the device cover.
2. Remove the release knob.
   - Turn the knob to the counterclockwise to remove it.
3. Remove the release rod.
   - Disconnect the rod from the linkage bush.
4. Remove the reclining device.

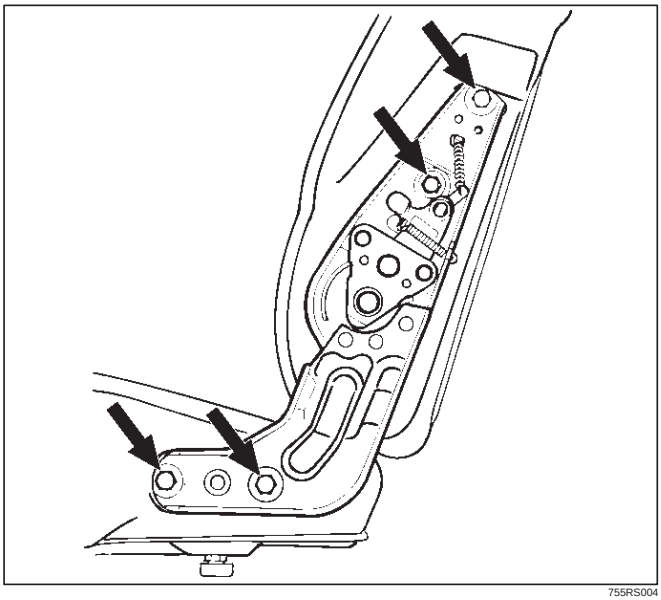

755RS004

5. Remove the connecting shaft.
6. Remove the seat back assembly.
7. Remove the band hook cover.
8. Remove the pillow assembly.
   - Refer to the Disassembly (Split Type) in this section.

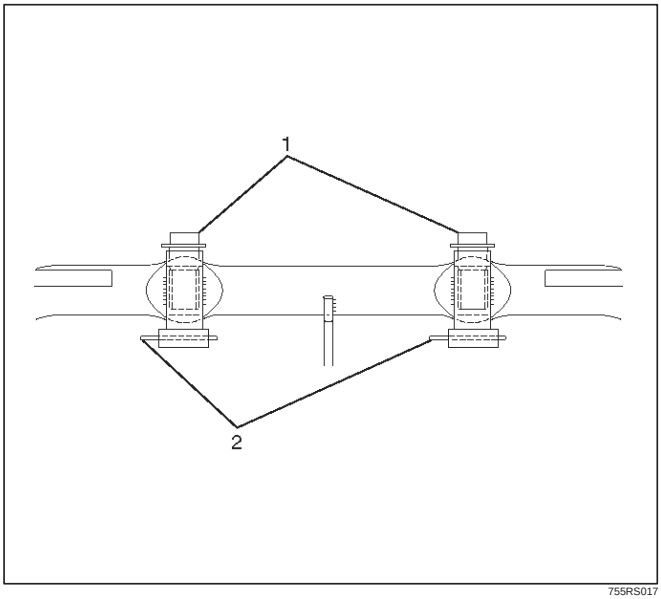

755RS017

9. Remove the trim cover.
   - Open the fastener(3), and with close attention paid to the hog rings and wire which connect the trim cover and the pad and frame assembly, remove the trim cover as you turn it up.

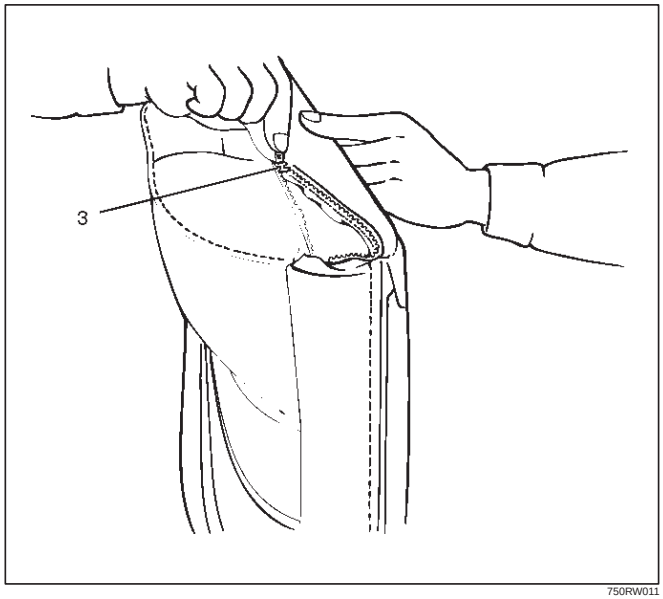

750RW011

10. Remove the pad & frame assembly.
11. Remove the seat cushion assembly.
12. Remove the seat lock cover.
13. Remove the rear seat belt buckle and lock assembly.
14. Remove the mounting bracket.
15. Remove the trim cover.
    - Remove the hog rings and pull the trim cover out from the frame assembly groove.
    - With close attention paid to the hog rings and the wire which connect the trim cover and the pad and frame assembly, remove the trim cover while turning it up.
16. Remove the frame assembly.
17. Remove the pad assembly.
18. Remove the stopper rubber.

Reassembly (Bench Type)

To reassemble, follow the disassembly steps in the reverse order, noting the following point.

1. Tighten the reclining device fixing bolts to the specified torque.

   Torque: 27 N·m (2.8kg·m/20 lb ft)

2. Loosen the rubber stopper lock nut(1) and adjust the stopper rubber(3) so there is no clearance between the bottom of the stopper and the carpet(2), while ensuring the rear seat is firmly locked.
   Tighten the lock nut securely.

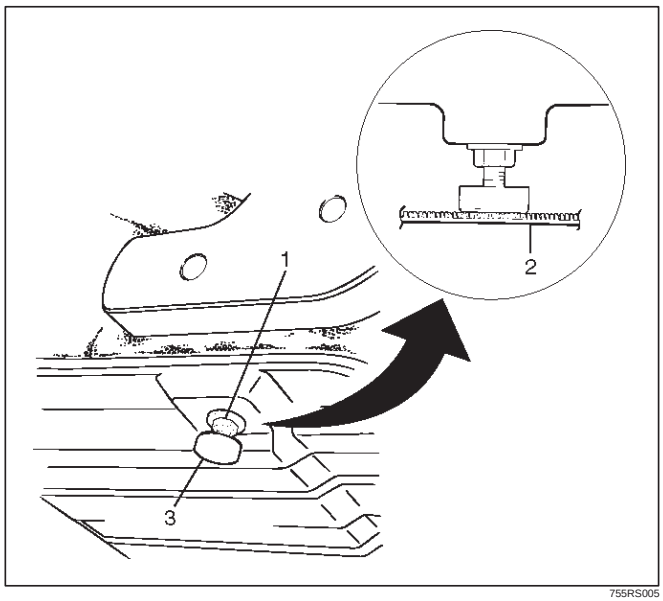

755RS005

Third Seat Assembly

Parts Location

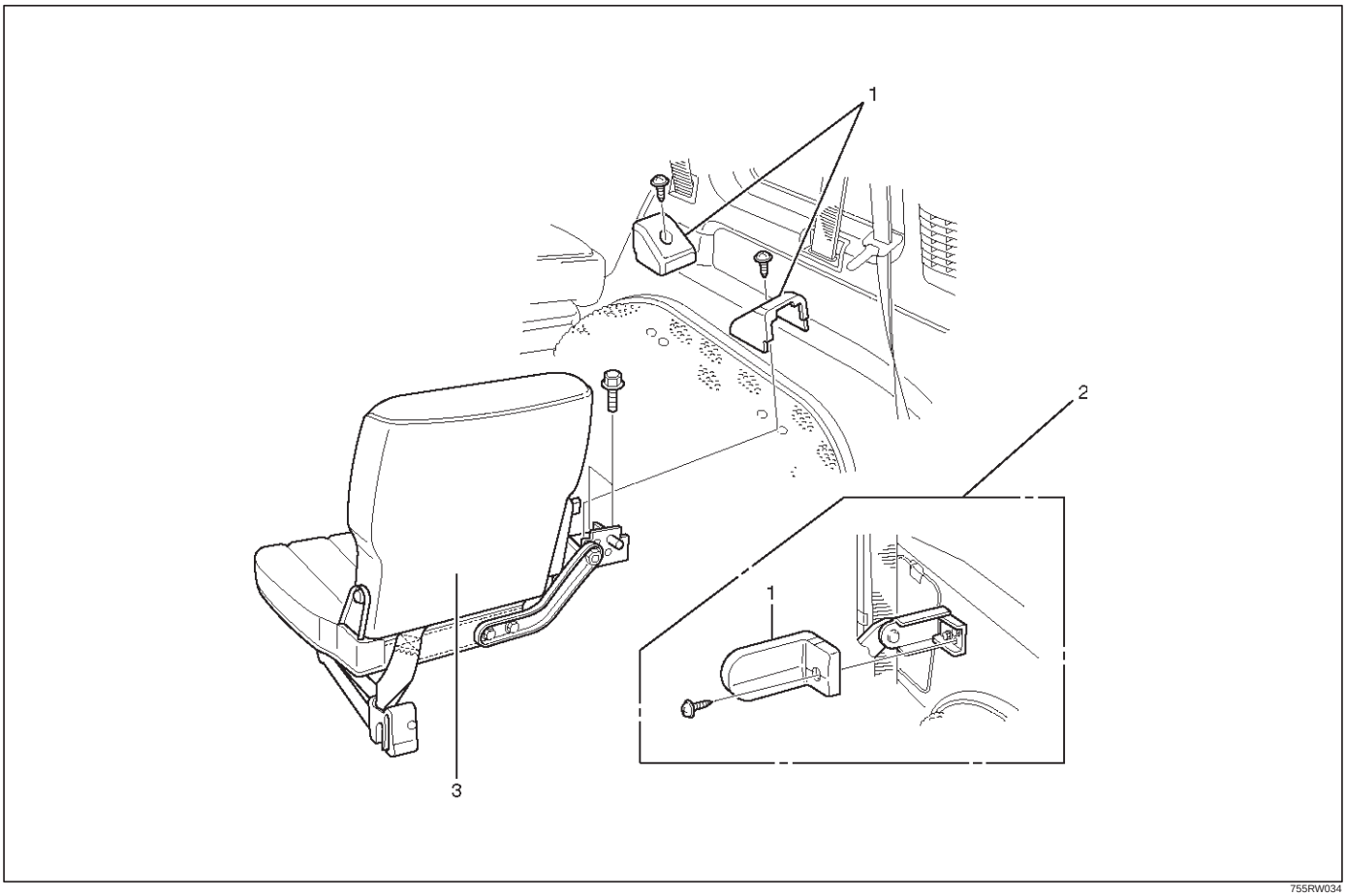

755RW034

Legend

(1) Cover
(2) Rear Side of LH
(3) Third Seat Assembly

Removal

1. Disconnect the battery ground cable.
2. Remove the cover.
3. Remove the third seat assembly.

Installation

To reassemble, follow the disassembly steps in the reverse order, noting the following point.

1. Tighten the reclining device fixing bolts to the specified torque.

Torque: 19 N·m (1.9kg·m/14 lb ft)

Disassembled View

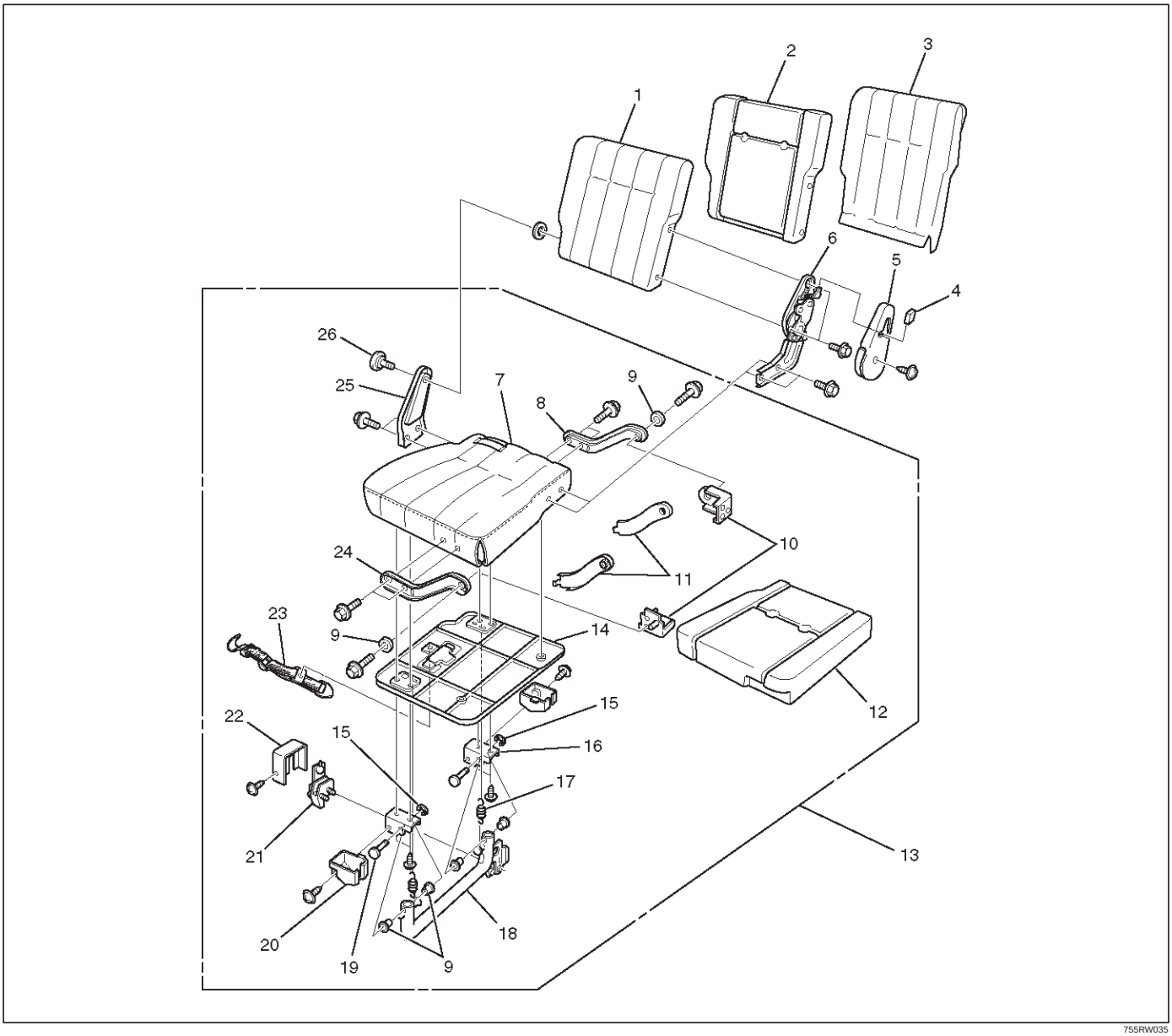

Legend

(1) Seat Back Assembly
(2) Pad & Frame Assembly
(3) Trim Cover
(4) Hinge Knob
(5) Hinge Cover
(6) Hinge Assembly
(7) Trim Cover
(8) Arm Bracket
(9) Bush
(10) Bracket
(11) Arm Bracket Cover
(12) Pad & Frame Assembly
(13) Seat Cushion Assembly
(14) Board Assembly
(15) E–Ring
(16) Cam Bracket
(17) Tension Spring
(18) Leg Pipe Assembly
(19) Hing Pin
(20) Lock Cover
(21) Floor Lock Assembly
(22) Lock Cover
(23) Band Assembly
(24) Arm Bracket
(25) Free Hinge
(26) Free Hinge Bolt

Disassembly

1. Remove the hinge knob.
   - Pull the knob out from hinge assembly.
2. Remove the hinge cover.
3. Remove the hinge assembly.
4. Remove the free hinge bolt.
5. Remove the seat back assembly.
6. Remove the trim cover.
   - Trun up the trim cover from under the seat back while taking notice of the hog ring and wire.

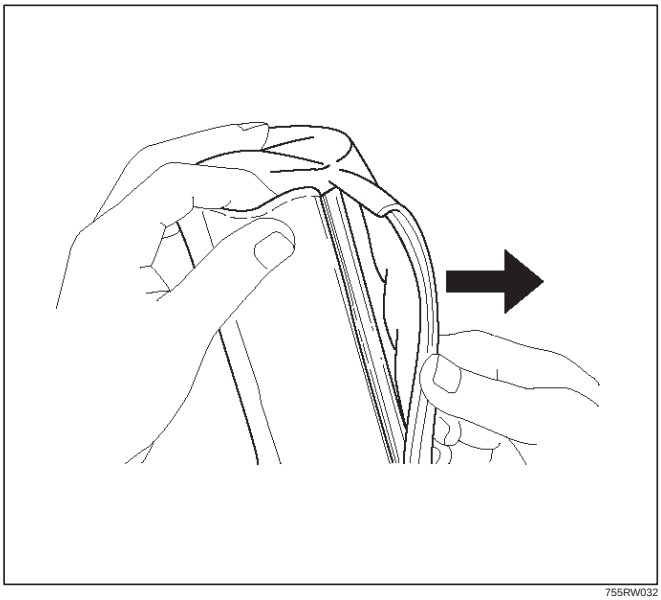

755RW032

7. Remove the pad & frame assembly.
8. Remove the seat cushion assembly.
9. Remove the free hinge.
10. Remove the lock cover.
11. Remove the floor lock assembly.
12. Remove the leg cover.
13. Remove the leg pipe assembly.
    - Remove the E-ring and pull the hinge pin from cam bracket.
14. Remove the cam bracket.
15. Remove the tension spring.
16. Remove the band assembly.
17. Remove the board assembly.
18. Remove trim cover.
    - Remove the hog ring from back side seat cushion.
    - Turn up the trim cover from under the seat back while taking notice of the hog ring.
19. Remove the arm bracket.
20. Remove the arm bracket cover.
21. Remove the pad & frame assembly.

Reassembly

To reassemble, follow the disassembly steps in the reverse order.

Rear Seat Foot Rest

Rear Seat Foot Rest and Associated Parts

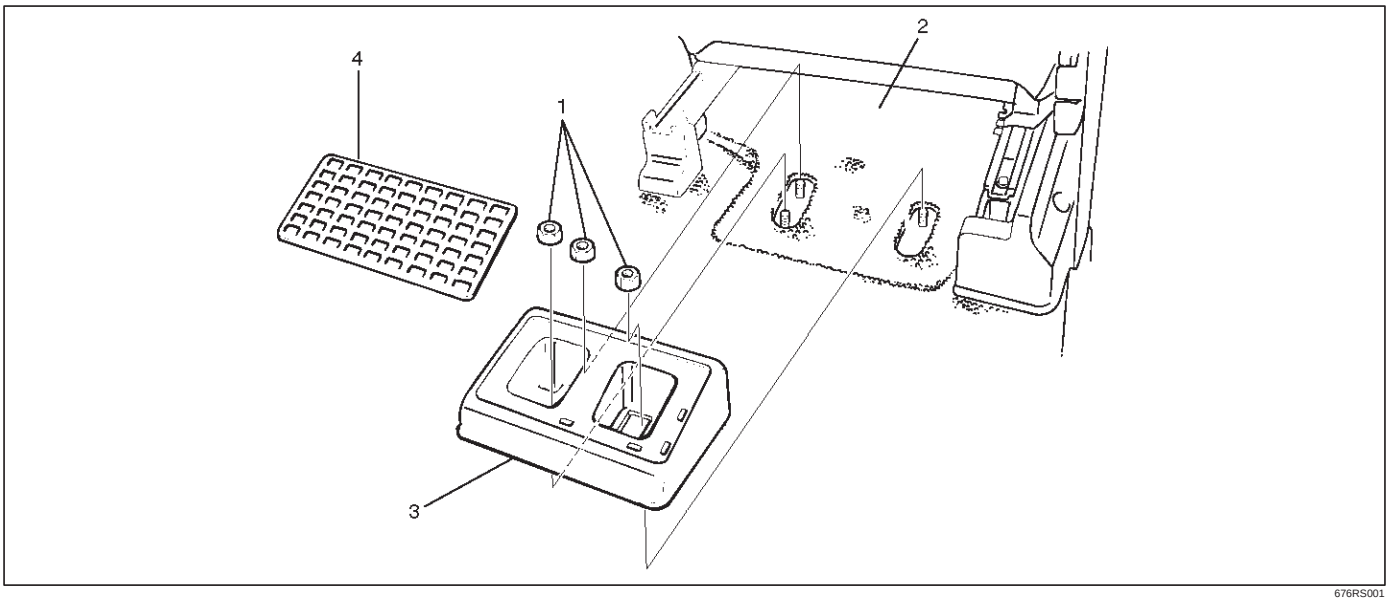

676RS001

Legend

(1) Fixing Nut
(2) Front Seat
(3) Rear Seat Foot Rest
(4) Foot Rest Pad

Removal

1. Remove the foot rest pad.

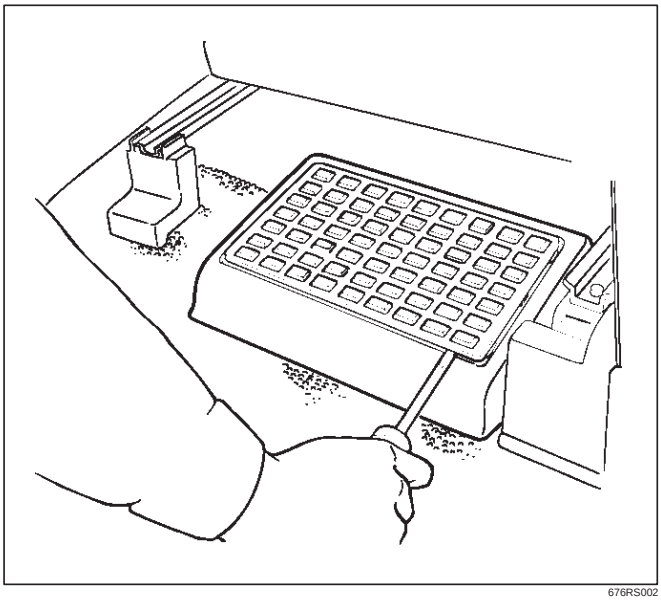

676RS002

2. Remove the fixing nuts.
3. Remove the rear seat foot rest.

Installation

To install, follow the removal steps in the reverse order.

Main Data and Specifications

Torque Specifications

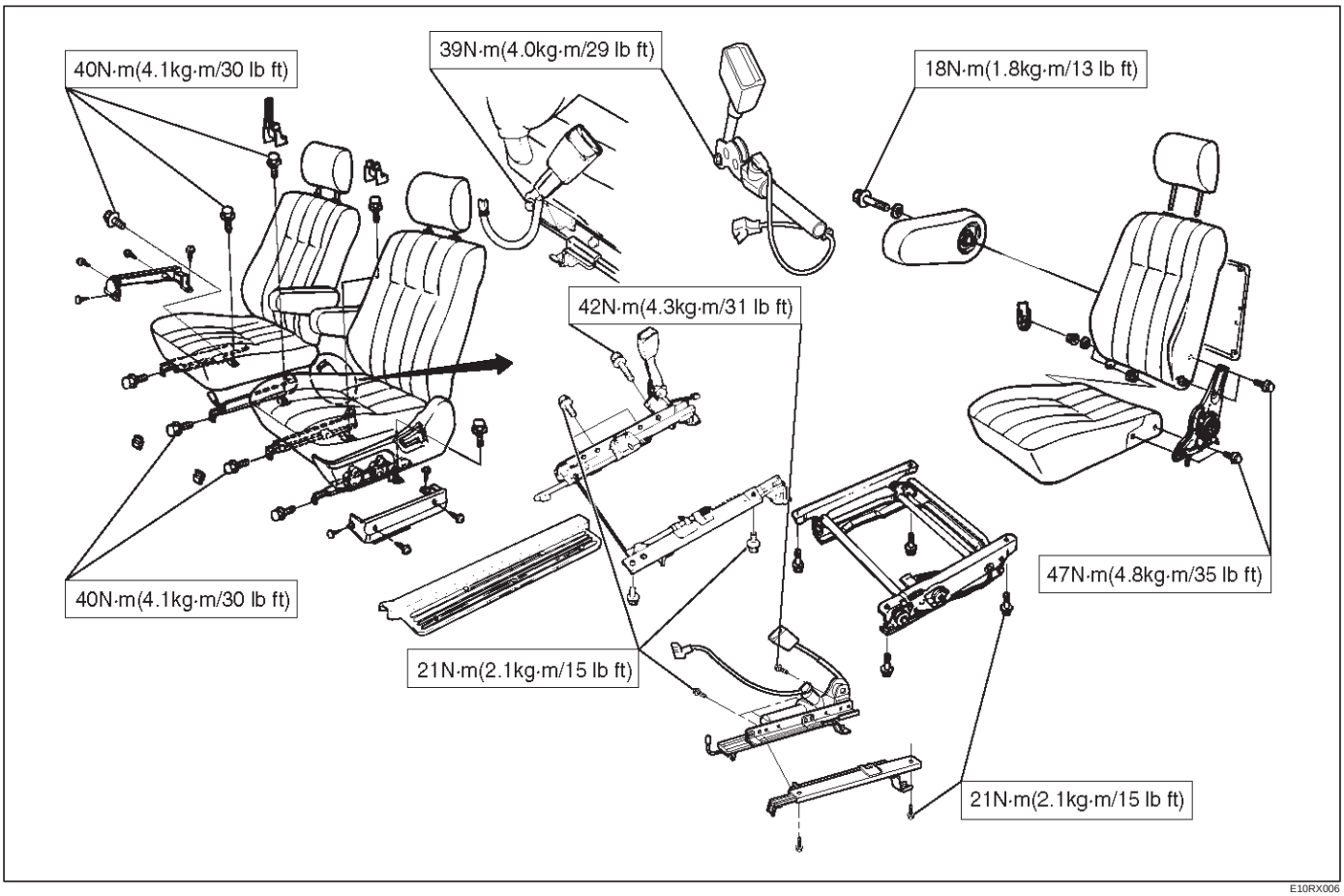

E10RX006

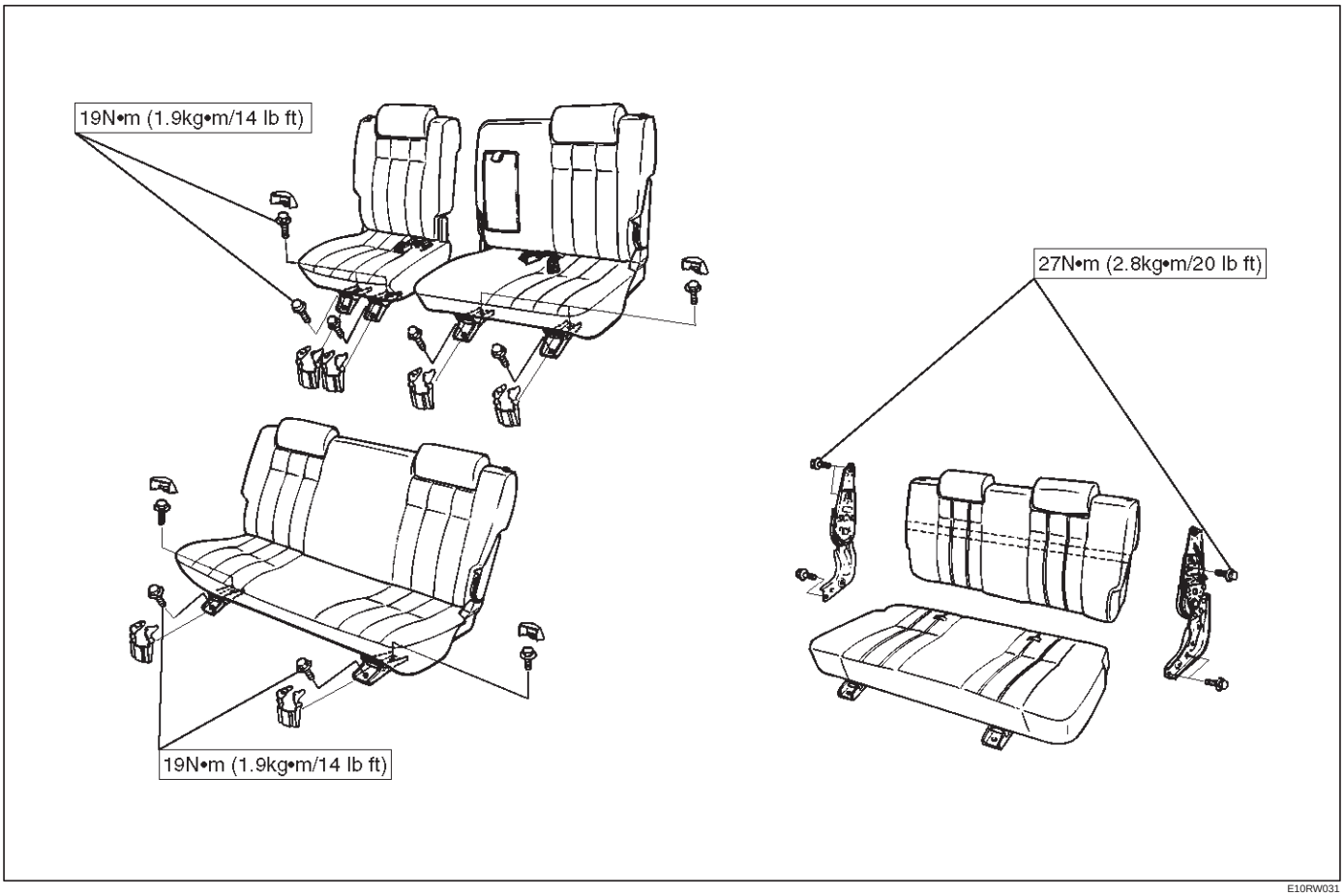

E10RW031

BODY AND ACCESSORIES

SECURITY AND LOCKS

CONTENTS

Service Precaution 8H–2
Front Door Lock Assembly 8H–2
Front Door Lock Assembly and Associated Parts 8H–2
Removal 8H–2
Installation 8H–3
Front Outside Handle and Door Lock Cylinder 8H–4
Front Outside Handle, Door Lock Cylinder and Associated Parts 8H–4
Removal 8H–4
Installation 8H–5
Rear Door Lock Assembly 8H–7
Rear Door Lock Assembly and Associated Parts 8H–7
Removal 8H–7
Installation 8H–8
Rear Outside Handle 8H–9
Rear Outside Handle and Associated Parts 8H–9
Removal 8H–9
Installation 8H–10
Rear Door Inside Lock Knob Link 8H–10
Removal 8H–10
Installation 8H–10
Door Inside Lock Knob 8H–11
Removal 8H–11
Installation 8H–11
Door Inside Handle 8H–11
Removal and Installation 8H–11
Tailgate Lock Assembly (LH) 8H–12
Tailgate Lock Assembly (LH) and Associated Parts 8H–12
Removal 8H–12
Installation 8H–13
Tailgate Lock Assembly (RH) 8H–14
Tailgate Lock Assembly (RH) and Associated Parts 8H–14
Removal 8H–14
Installation 8H–15
Tailgate Inside Lock Knob 8H–15
Removal 8H–15
Installation 8H–15
Tailgate Inside Handle 8H–16
Parts Location 8H–16
Removal and Installation 8H–16
Tailgate Outside Handle and/or Tailgate Lock Cylinder 8H–17
Tailgate Outside Handle and/or Tailgate Lock Cylinder and Associated Parts 8H–17
Removal 8H–17
Installation 8H–18
Key 8H–19
Key Coding 8H–19
Key Styles 8H–19
Power Door Lock System 8H–20
General Description 8H–20
Front Door Lock Actuator Removal 8H–20
Front Door Lock Actuator Installation 8H–20
Rear Door Lock Actuator Removal 8H–20
Rear Door Lock Actuator Installation 8H–21
Tailgate Lock Actuator Removal 8H–21
Tailgate Lock Actuator Installation 8H–21
Anti-theft System 8H–22
General Description 8H–22
Anti-theft & Keyless Entry Control Unit Removal 8H–22
Anti-theft & Keyless Entry Control Unit Installation 8H–22
Anti-theft Indicator Removal 8H–22
Anti-theft Indicator Installation 8H–23
Anti-theft Horn Removal 8H–23
Anti-Theft Horn Installation 8H–23
Engine Hood Switch Removal 8H–23
Engine Hood Switch Installation 8H–23
Keyless Entry System 8H–24
ID Code Registration 8H–24
Answer Back (Anti–theft Horn Operation) Change Mode 8H–26
Anti–theft & Keyless Entry Control Unit/Transmitter Replacement 8H–27
Main Data and Specifications 8H–28

Service Precaution

WARNING: IF SO EQUIPPED WITH A SUPPLEMENTAL RESTRAINT SYSTEM (SRS), REFER TO THE SRS COMPONENT AND WIRING LOCATION VIEW IN ORDER TO DETERMINE WHETHER YOU ARE PERFORMING SERVICE ON OR NEAR THE SRS COMPONENTS OR THE SRS WIRING. WHEN YOU ARE PERFORMING SERVICE ON OR NEAR THE SRS COMPONENTS OR THE SRS WIRING, REFER TO THE SRS SERVICE INFORMATION. FAILURE TO FOLLOW WARNINGS COULD RESULT IN POSSIBLE AIR BAG DEPLOYMENT, PERSONAL INJURY, OR OTHERWISE UNNEEDED SRS SYSTEM REPAIRS.

CAUTION: Always use the correct fastener in the proper location. When you replace a fastener, use ONLY the exact part number for that application. ISUZU will call out those fasteners that require a replacement after removal. ISUZU will also call out the fasteners that require thread lockers or thread sealant. UNLESS OTHERWISE SPECIFIED, do not use supplemental coatings (Paints, greases, or other corrosion inhibitors) on threaded fasteners or fastener joint interfaces. Generally, such coatings adversely affect the fastener torque and the joint clamping force, and may damage the fastener. When you install fasteners, use the correct tightening sequence and specifications. Following these instructions can help you avoid damage to parts and systems.

Front Door Lock Assembly

Front Door Lock Assembly and Associated Parts

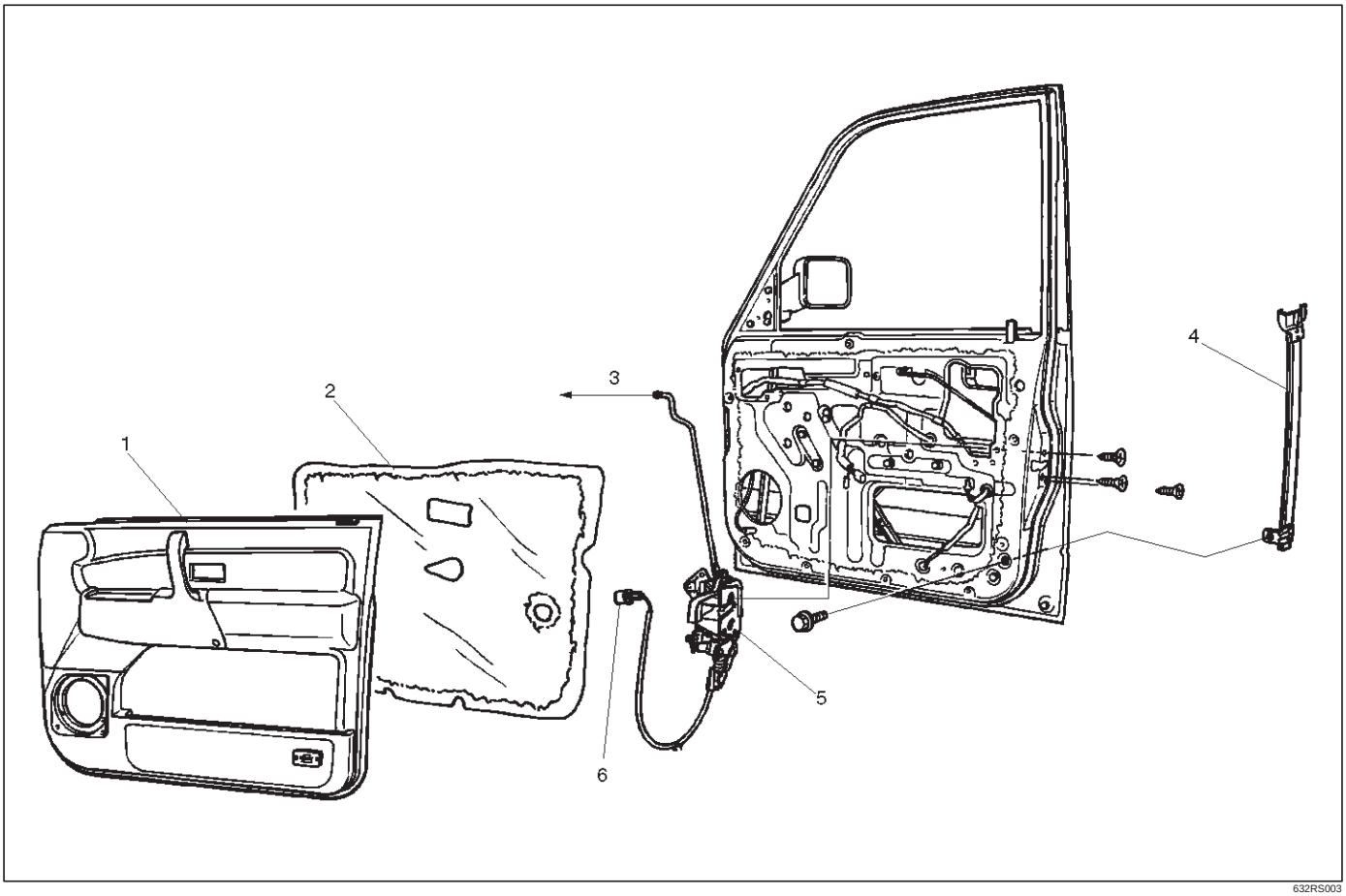

632RS003

Legend

(1) Door Trim Panel
(2) Waterproof Sheet
(3) To Outside Handle
(4) Rear Guide Rail
(5) Door Lock Assembly
(6) Door Lock Switch Connector (W/Power Door Lock)

Removal

1. Disconnect the battery ground cable.
2. Remove the door trim panel.
3. Remove the waterproof sheet.
   Refer to the Window Regulator removal procedure in Body Structure section.

4. Raise the glass up to the uppermost position, and then remove the rear guide rail.
5. Disconnect the door lock switch connector (w/power door lock) and locking links (arrow marks positions), then remove the door lock assembly fixing screws and door lock assembly.

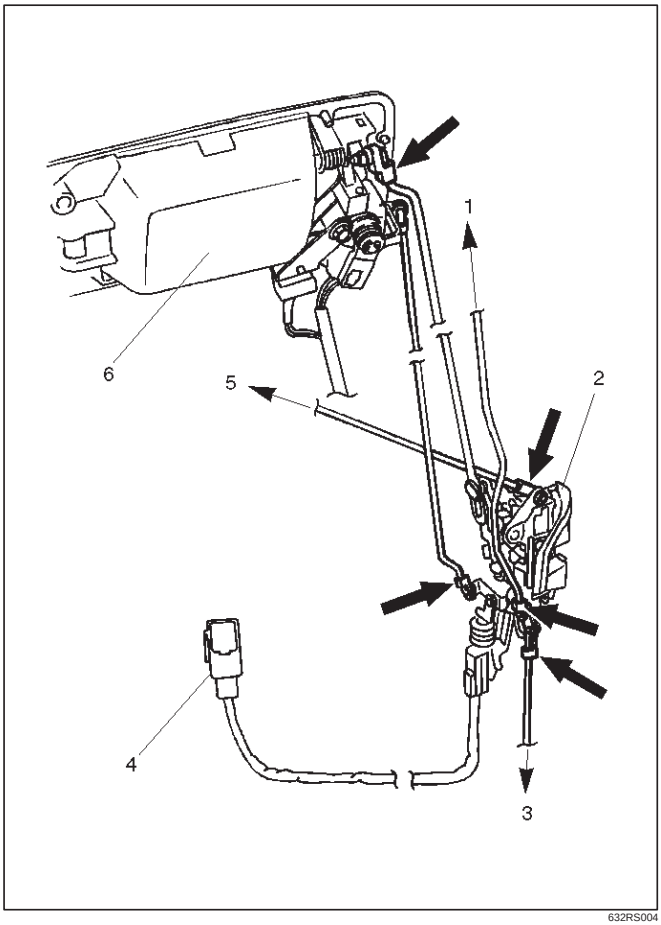

Legend

(1) To Inside Lock Knob
(2) Door Lock Assembly
(3) To Actuator
(4) Door Lock Switch Connector
(5) To Inside Handle
(6) Outside Handle

Installation

To install, follow the removal steps in the reverse order, noting the following points.

1. Apply chassis grease to the lock assembly and striker moving surface.
2. Tighten the door lock assembly fixing screws to the specified torque.

   Torque: 7 N·m (0.7kg·m/61 lb in)
3. Check that the door lock operates smoothly.

Front Outside Handle and Door Lock Cylinder

Front Outside Handle, Door Lock Cylinder and Associated Parts

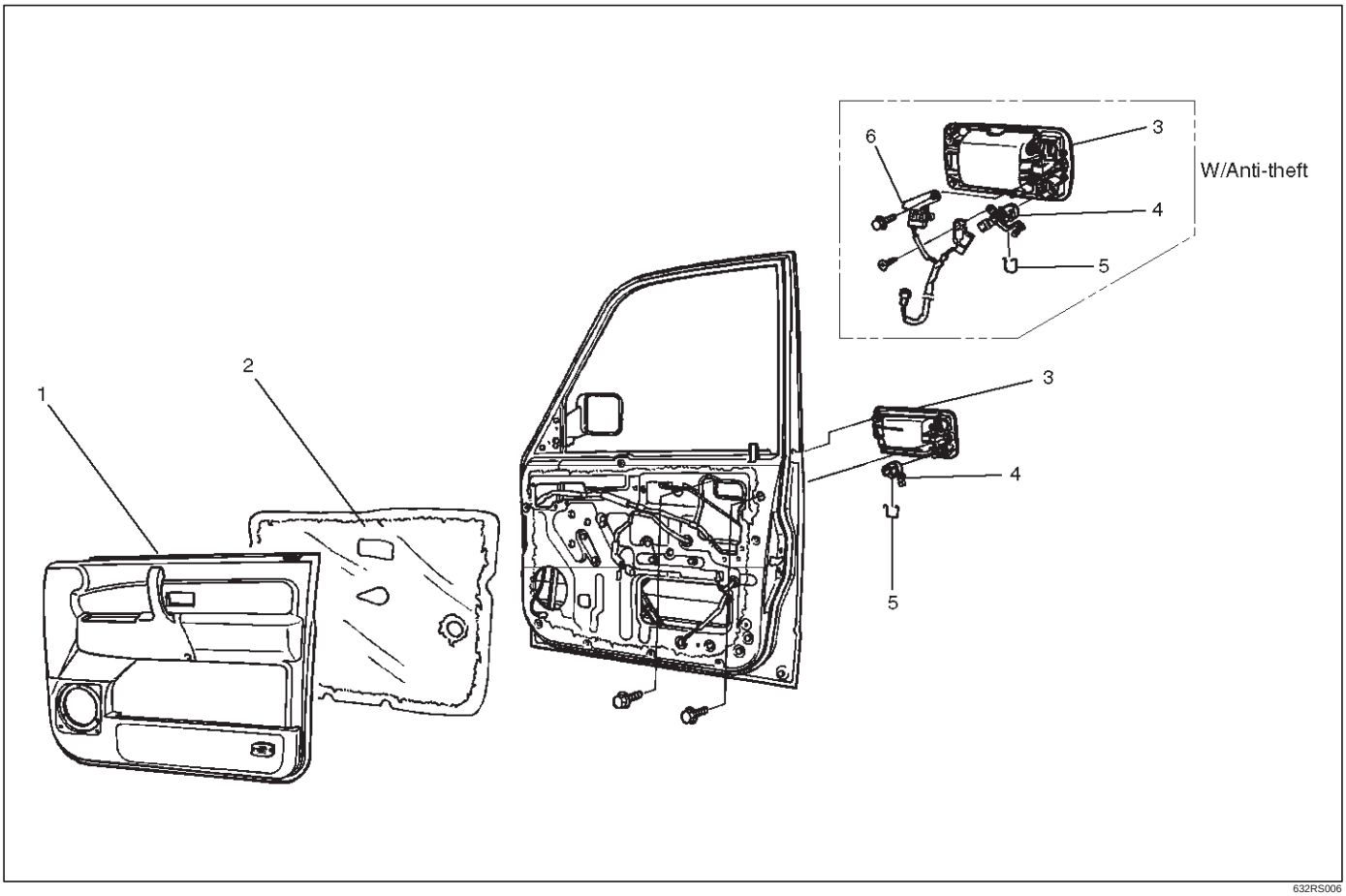

Legend

(1) Door Trim Panel
(2) Waterproof Sheet
(3) Outside Handle
(4) Door Lock Cylinder
(5) Clip
(6) Key Switch (W/Anti-Theft)

Removal

1. Disconnect the battery ground cable.
2. Remove the door trim panel.
3. Remove the waterproof sheet.
   Refer to the Window Regulator removal procedure in Body Structure section.

4. Disconnect the locking links (arrow marks positions) and key switch connector (w/anti-theft) to remove the outside handle.

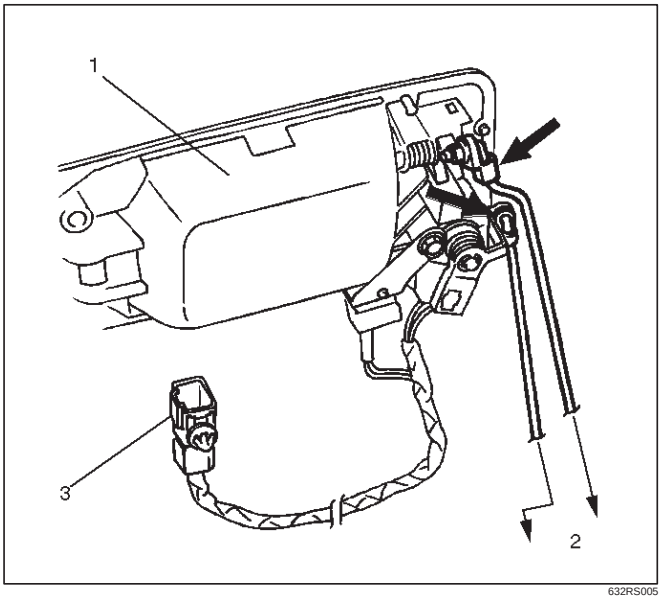

632RS005

Legend

(1) Outside Handle
(2) To Door Lock Assembly
(3) Key Switch Connector (W/Anti–Theft)

5. Remove the key Switch.

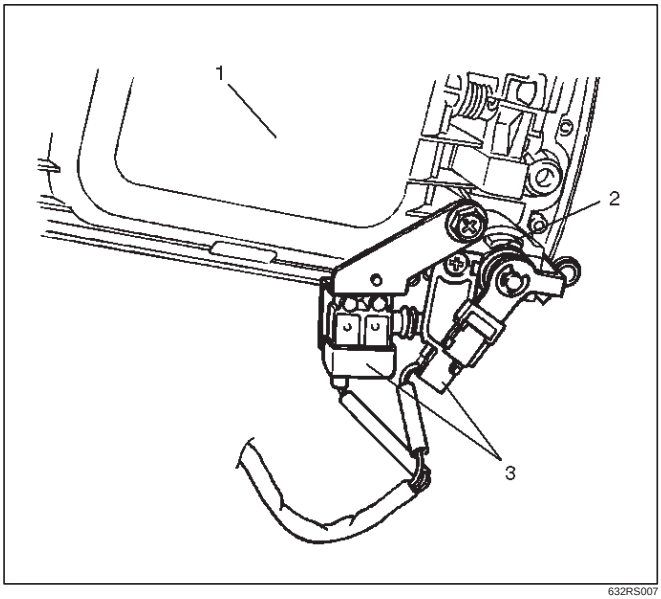

632RS007

Legend

(1) Outside Handle
(2) Lock Cylinder
(3) Key Switch

6. Remove the fixing clip(1) to remove the door lock cylinder(2).

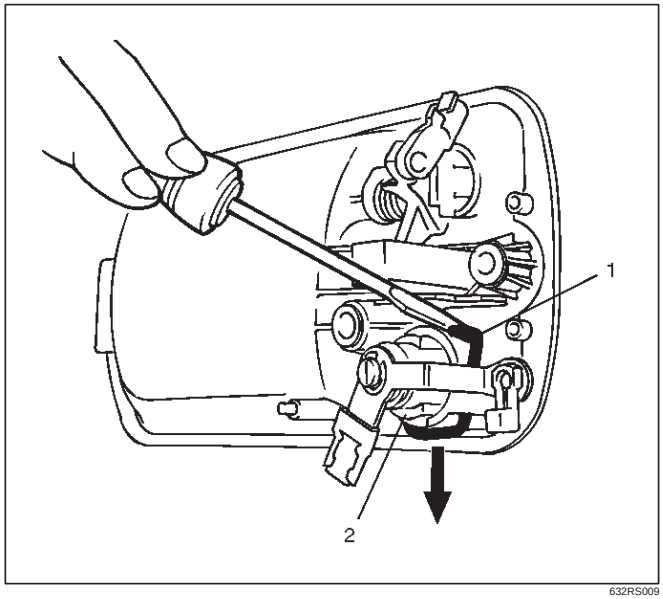

632RS009

Installation

To install, follow the removal steps in the reverse order, noting the following points.

1. Be sure to install the door lock cylinder(2) at a right angle to the outside handle(1).

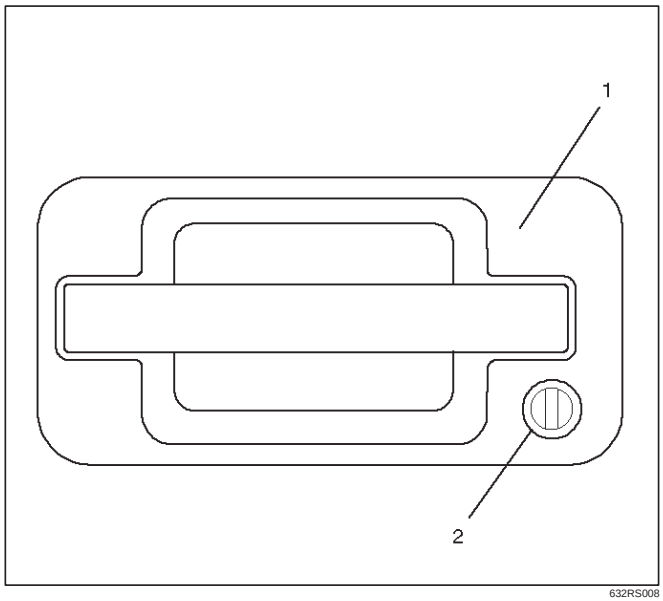

632RS008

2. For the anti-theft system, be sure to install the push rod(3) of key switch while pressing it to the door lock cylinder(5) so that there is no continuity between the key switch(4) side connector terminal No. D6–2 and D6–4 (No. D16–2 and D16–4: passenger side).

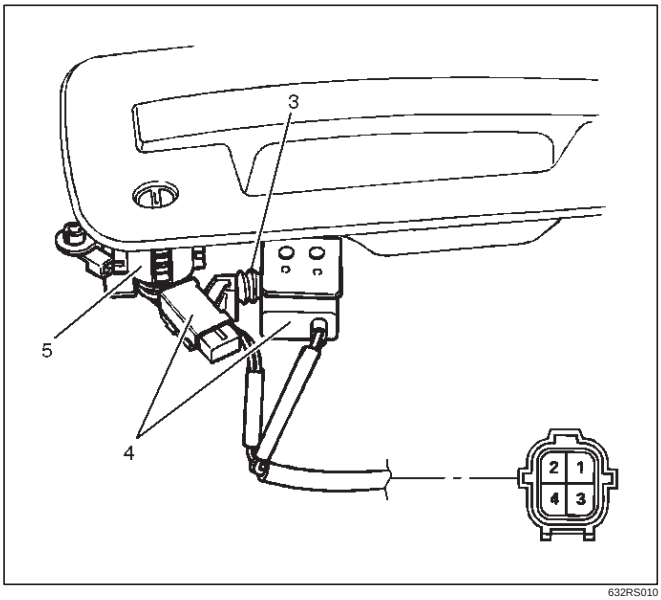

632RS010

3. Tighten the outside handle and key switch fixing bolts to the specified torque.

Torque: 9 N·m (0.9kg·m/78 lb in)

4. Check for smooth outside handle and lock cylinder operation.

Rear Door Lock Assembly

Rear Door Lock Assembly and Associated Parts

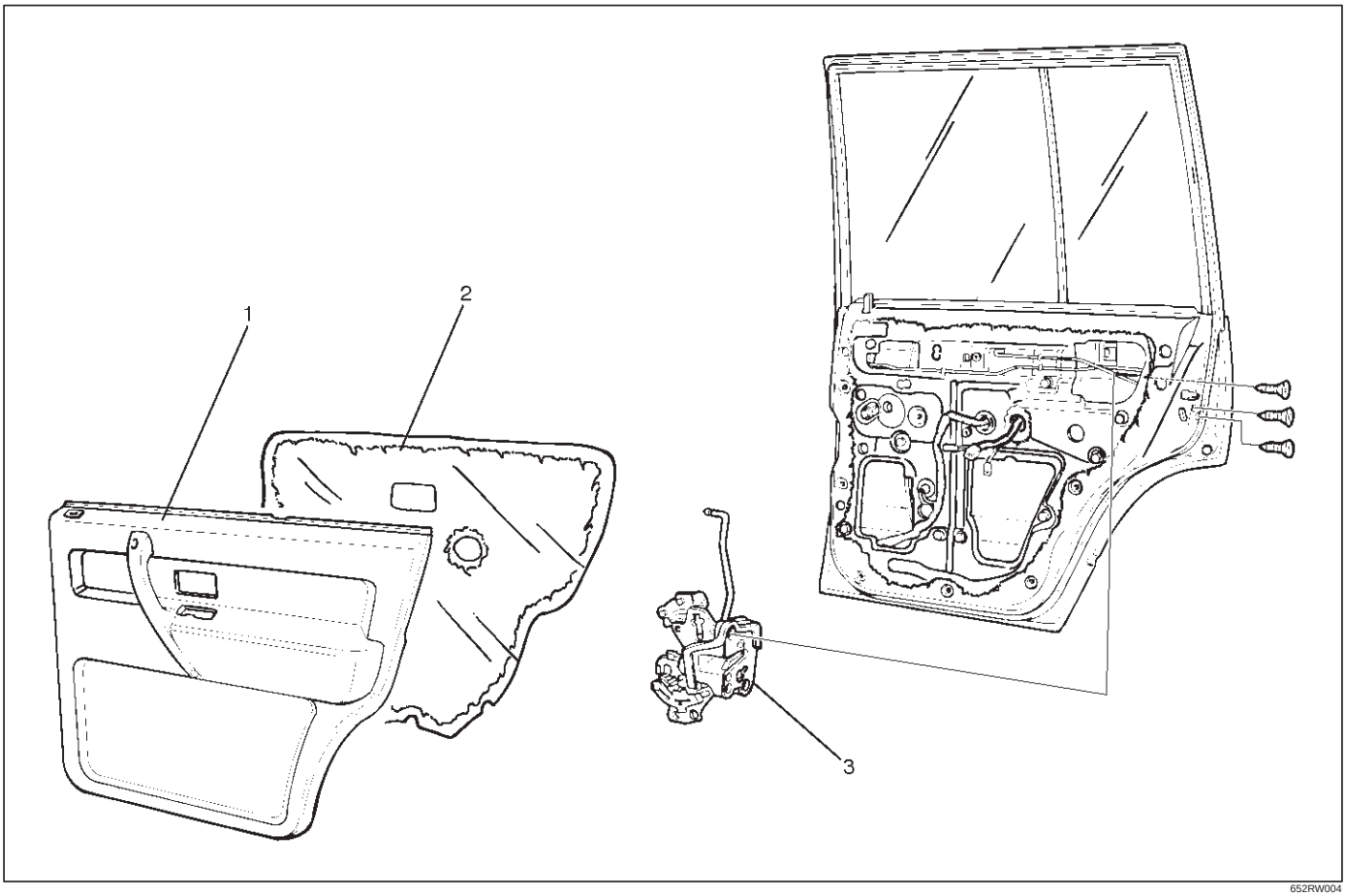

652RW004

Legend

(1) Door Trim Panel
(2) Waterproof Sheet
(3) Door Lock Assembly

Removal

1. Disconnect the battery ground cable.
2. Remove the door trim panel.
3. Remove the waterproof sheet.
   Refer to the Window Regulator removal procedure in Body Structure section.

4. Disconnect the locking links (arrow marks positions) and remove the fixing screws to remove the door lock assembly.

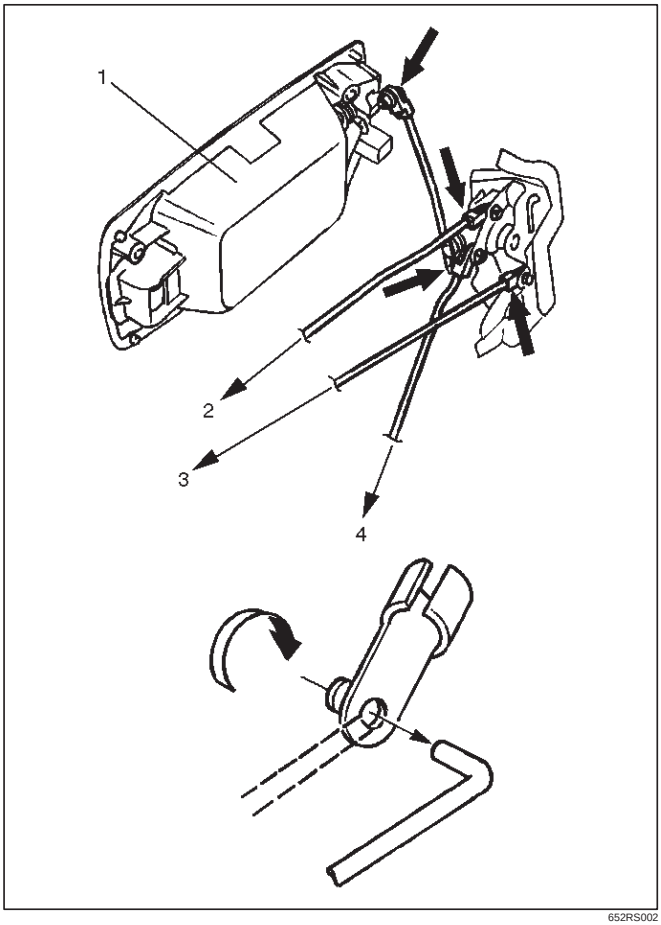

652RS002

Legend

(1) Outside Handle
(2) To Inside Lock Knob
(3) To Inside Handle
(4) To Actuator

Installation

To install, follow the removal steps in the reverse order, noting the following points.

1. Apply chassis grease to the lock assembly and striker moving surface.
2. Tighten the door lock assembly fixing screws to the specified torque.

   Torque: 7 N·m (0.7kg·m/61 lb in)

3. Check that the door lock operates smoothly.

Rear Outside Handle

Rear Outside Handle and Associated Parts

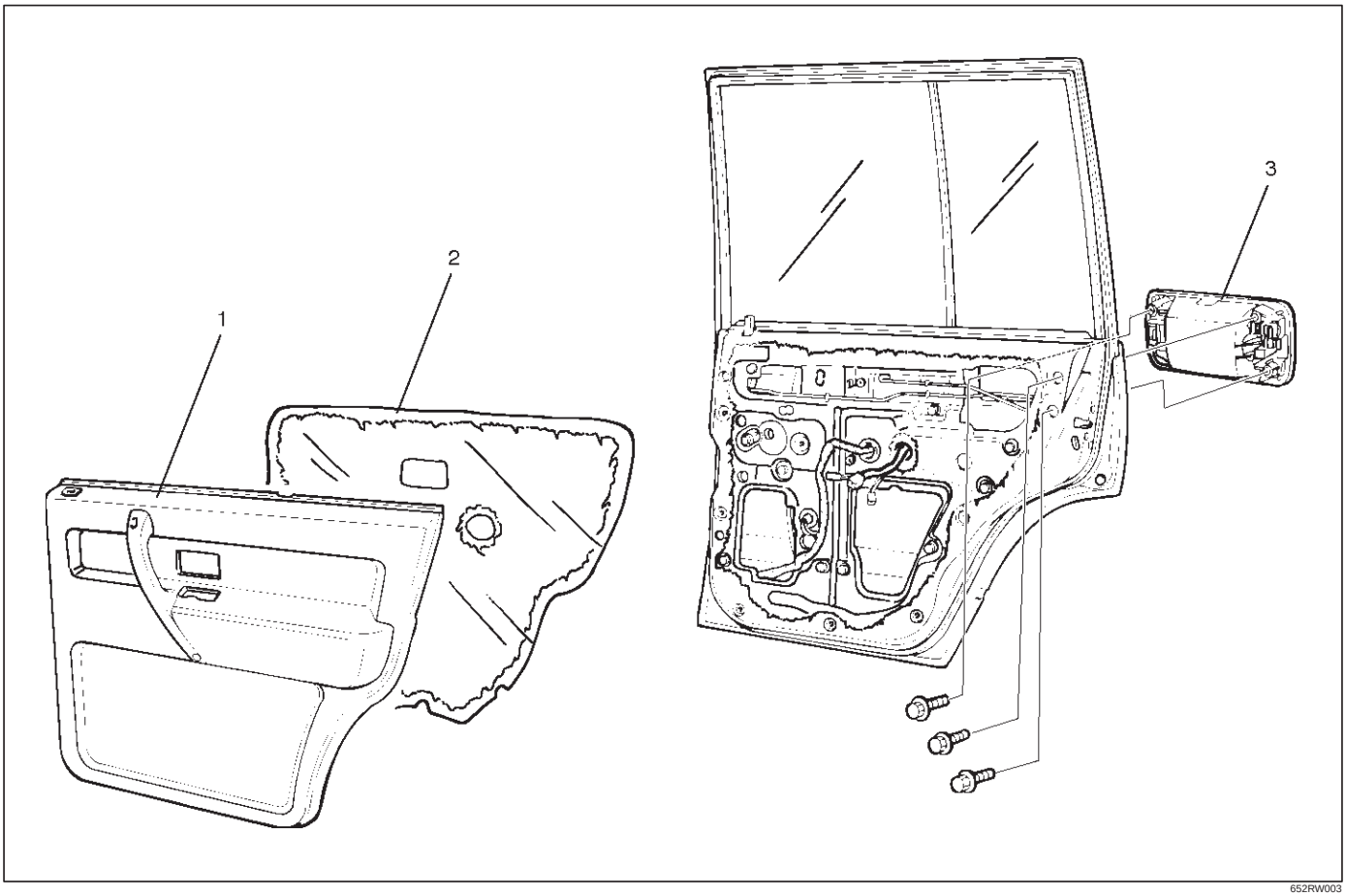

652RW003

Legend

(1) Door Trim Panel
(2) Waterproof Sheet
(3) Outside Handle

Removal

1. Disconnect the battery ground cable.
2. Remove the door trim panel.
3. Remove the waterproof sheet.
   Refer to the Window Regulator removal procedure in Body Structure section.
4. Disconnect the locking link (arrow mark position) and remove three fixing bolts to remove the outside handle.

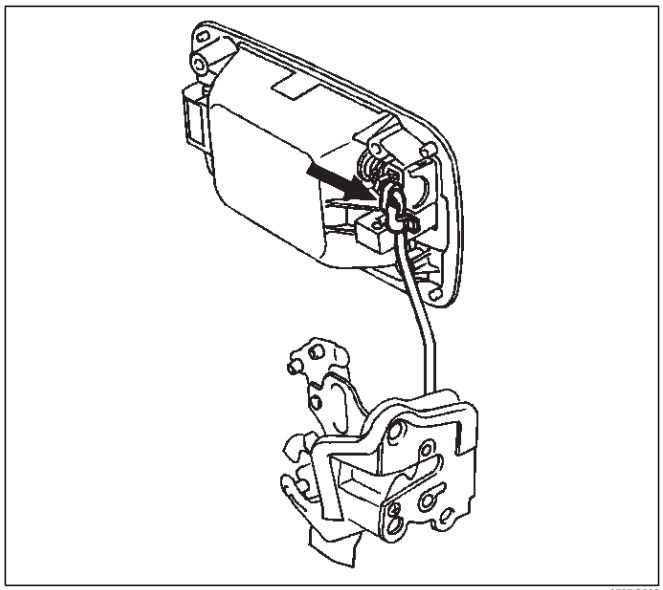

652RS003

Installation

To install, follow the removal steps in the reverse order, noting the following points.

1. Tighten the outside handle fixing bolts to the specified torque.

   Torque: 9 N·m (0.9kg·m/78 lb in)

2. Check that the outside handle operates smoothly.

Rear Door Inside Lock Knob Link

Removal

1. Disconnect the battery ground cable.
2. Remove the door trim panel(3).
3. Remove the waterproof sheet(2).
   Refer to the Window Regulator removal procedure in Body Structure section.
4. Remove the fixing screw(4) and disconnect the locking link at the door lock assembly to remove the rear door inside lock knob link(1).

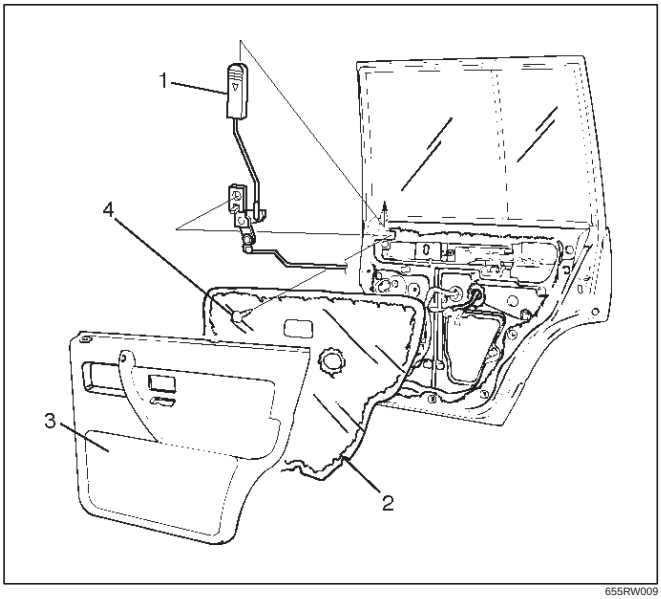

655RW009

Installation

To install, follow the removal steps in the reverse order.

Door Inside Lock Knob

Removal

1. Disconnect the battery ground cable.
2. Remove the door trim panel(1).
   Refer to the Door Trim Panel removal procedure in Exterior/Interior Trim section.
3. Turn the door inside lock knob counterclockwise and then remove the door inside lock knob (2).

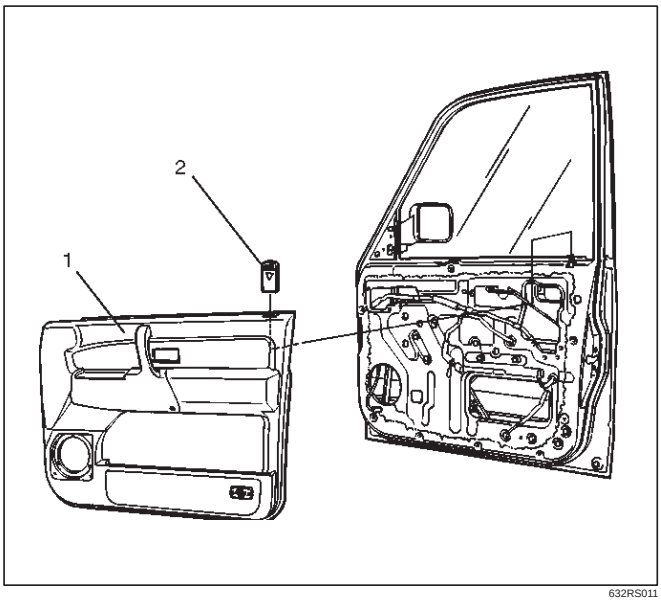

632RS011

Installation

To install, follow the removal steps in the reverse order.

Door Inside Handle

Removal and Installation

Refer to the Door Trim Panel removal and installation procedures in Exterior/Interior Trim section.

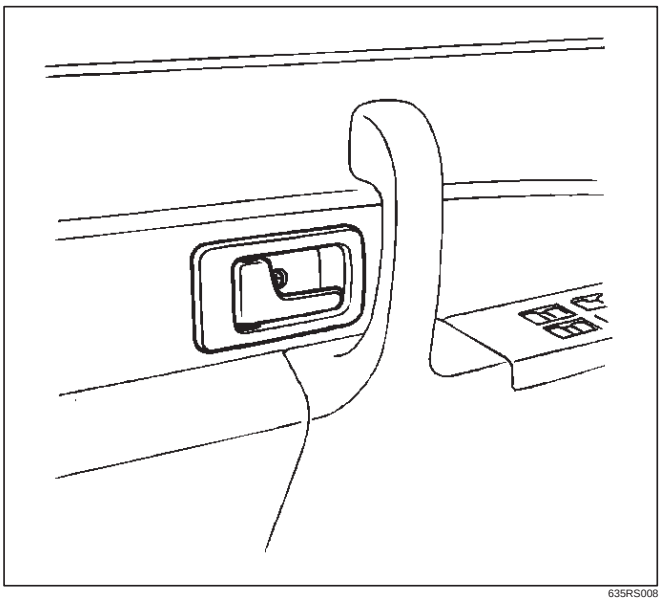

635RS008

Tailgate Lock Assembly (LH)

Tailgate Lock Assembly (LH) and Associated Parts

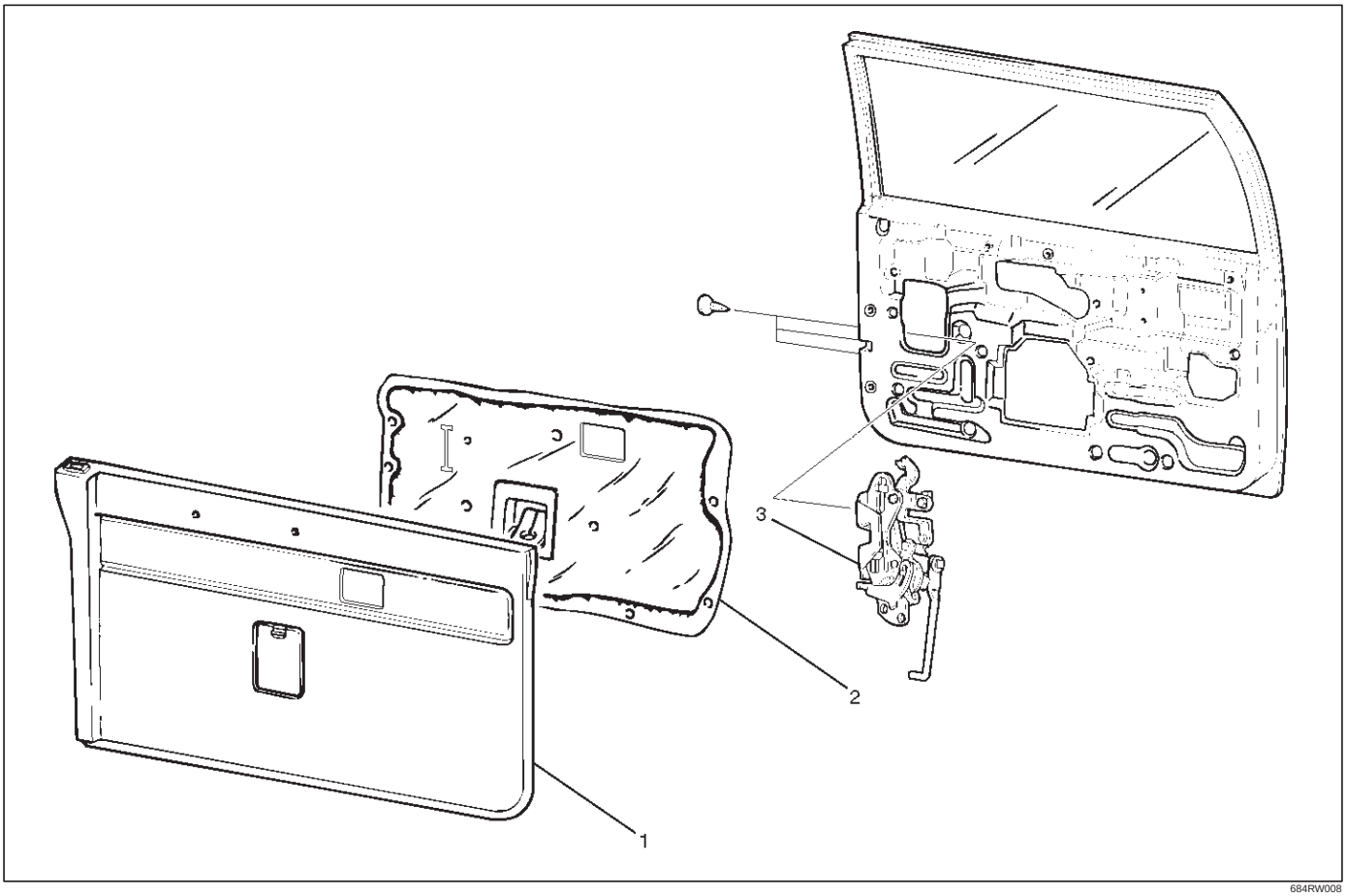

684RW008

Legend

(1) Tailgate Trim Panel(LH)
(2) Waterproof Sheet
(3) Tailgate Lock Assembly

Removal

1. Disconnect the battery ground cable.
2. Remove the tailgate trim panel (LH).
   Refer to the Tailgate Trim Panel (LH) removal procedure in Exterior/Interior Trim section.
3. Taking notice of the tailgate harness, peel the waterproof sheet off the tailgate panel carefully and then remove the waterproof sheet.

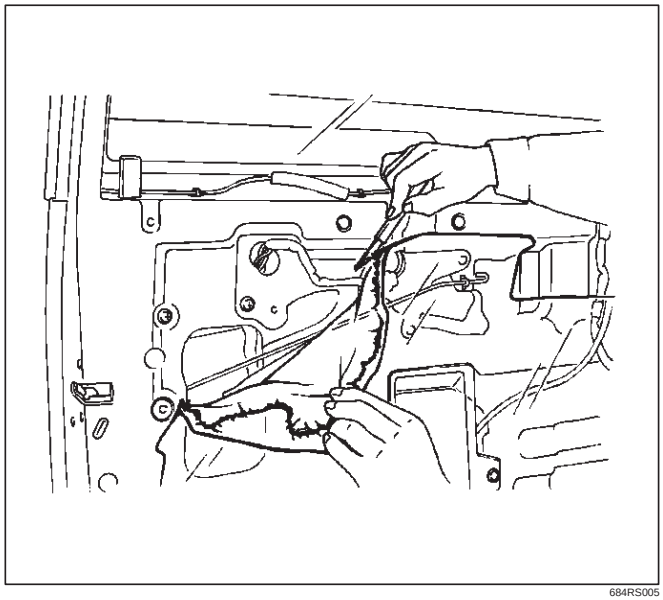

684RS005

4. Disconnect the locking links (arrow marks positions), remove three fixing screws and then remove the tailgate lock assembly (LH).

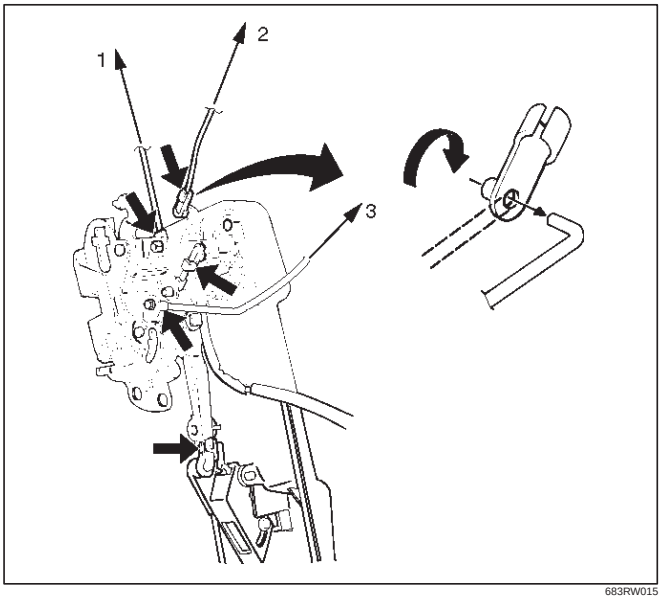

683RW015

Legend

(1) To Inside Lock Knob
(2) To Actuator
(3) To Inside Handle

Installation

To install, follow the removal steps in the reverse order, noting the following points.

1. Apply chassis grease to the lock assembly and striker moving surface.
2. Tighten the tailgate lock assembly fixing screws to the specified torque.

   Torque: 7 N·m (0.7kg·m/61 lb in)

3. Check that the tailgate lock operates correctly after installing it.

Tailgate Lock Assembly (RH)

Tailgate Lock Assembly (RH) and Associated Parts

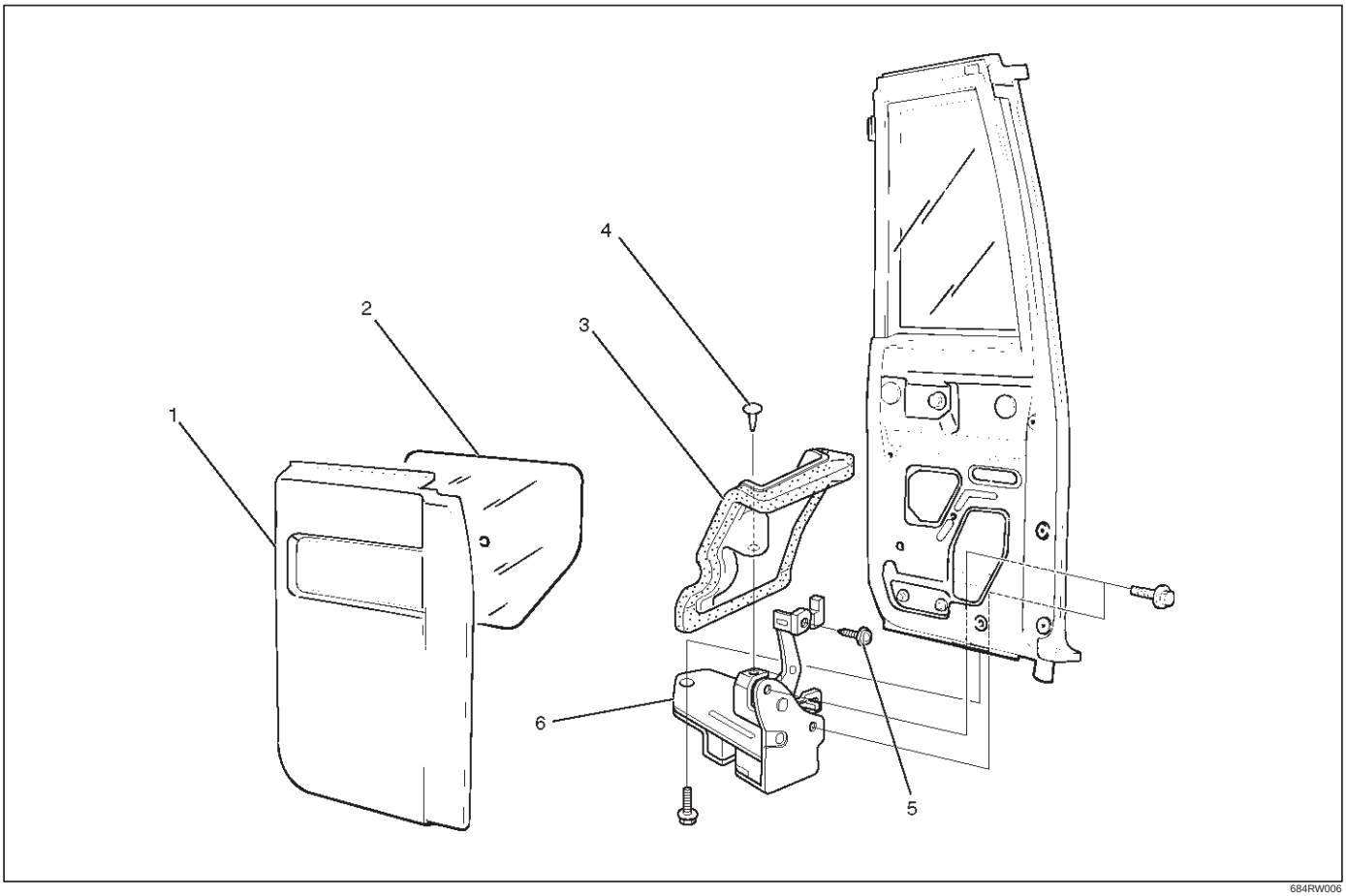

684RW006

Legend

(1) Tailgate Trim Panel (RH)
(2) Waterproof Sheet
(3) Tailgate Lock Seal
(4) Clip
(5) Screw
(6) Tailgate Lock Assembly (RH)

Removal

1. Disconnect the battery ground cable.
2. Remove the tailgate trim panel (RH).
   Refer to the Tailgate Trim Panel (RH) removal procedure in Exterior/Interior Trim section.
3. Peel the waterproof sheet off the tailgate panel carefully and then remove the waterproof sheet.
4. Remove three fixing bolts and then remove the tailgate lock assembly (RH).

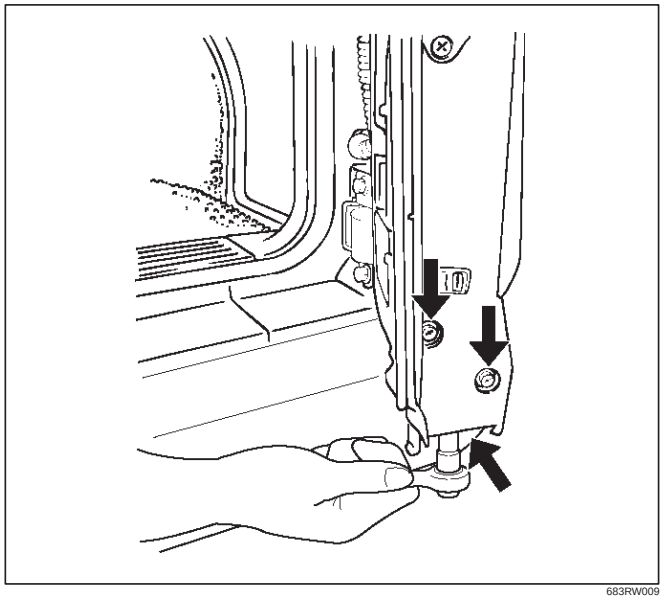

683RW009

5. Remove the tailgate lock seal fixing clip(1) and then remove the tailgate lock seal(2).

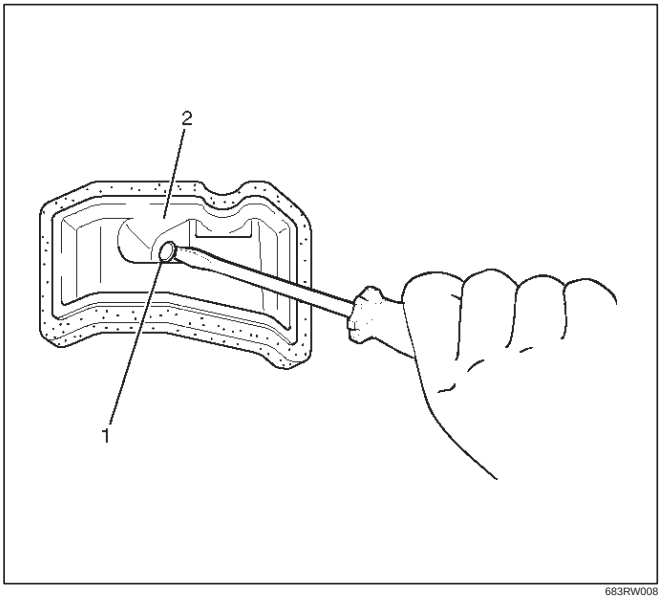

683RW008

Installation

To install, follow the removal steps in the reverse order, noting the following points.

1. Apply chassis grease to the lock assembly and striker moving surface.
2. Tighten the tailgate lock assembly fixing bolts to the specified torque.

   Torque: 11 N·m (1.1kg·m/95 lb in)
3. Check that the tailgate lock operates correctly after installing it.

Tailgate Inside Lock Knob

Removal

1. Disconnect the battery ground cable.
2. Remove the tailgate trim panel (LH)(2).
   Refer to the Tailgate Trim Panel (LH) removal procedure in Exterior/Interior Trim section.
3. Take care of cushion to turn the lock knob counterclockwise and then remove the tailgate inside lock knob(1).

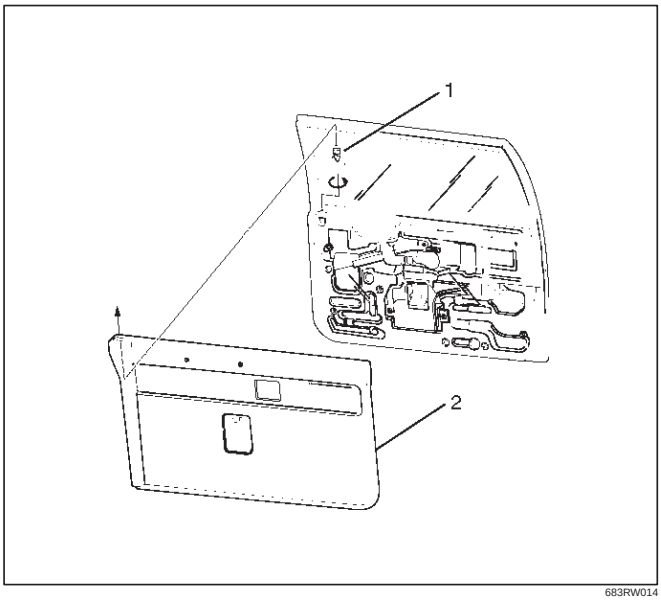

683RW014

Installation

To install, follow the removal steps in the reverse order.

Tailgate Inside Handle

Parts Location

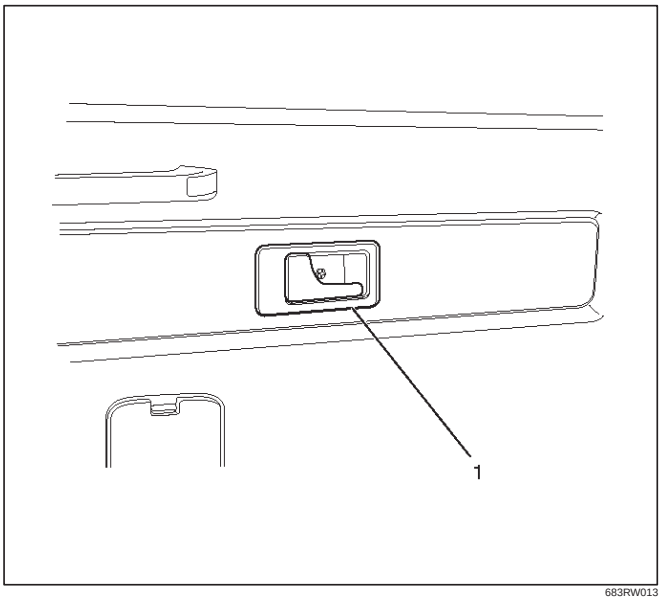

683RW013

Legend

(1) Tailgate Inside Handle

Removal and Installation

- Refer to the Tailgate Trim Panel (LH) removal procedure in Exterior/Interior Trim section.

Tailgate Outside Handle and/or Tailgate Lock Cylinder

Tailgate Outside Handle and/or Tailgate Lock Cylinder and Associated Parts

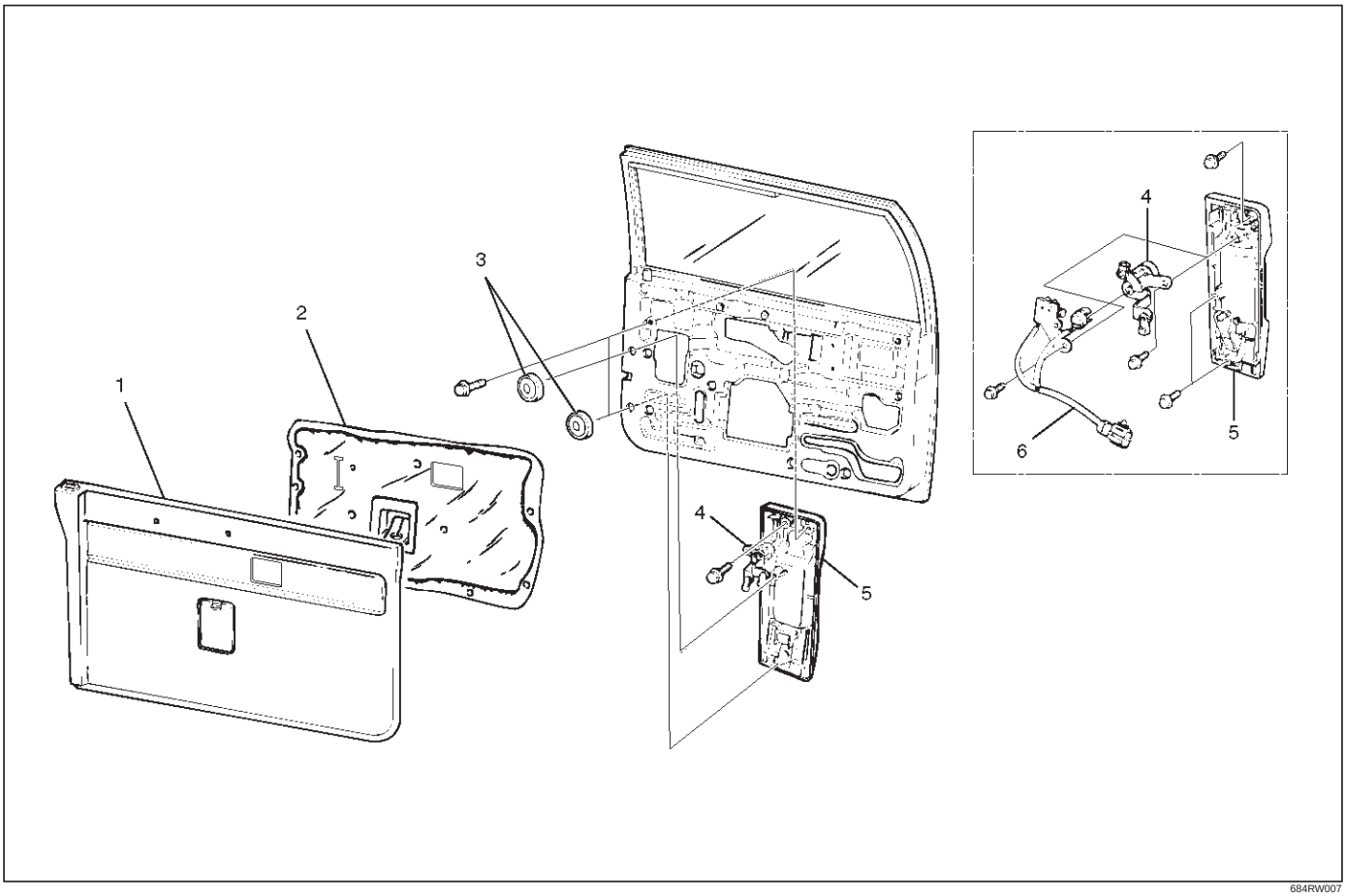

Legend

(1) Tailgate Trim Panel (LH)
(2) Waterproof Sheet
(3) Grommet
(4) Tailgate Lock Cylinder
(5) Tailgate Outside Handle
(6) Key Switch (W/Anti–Theft)

Removal

1. Disconnect the battery ground cable.
2. Remove the tailgate trim panel.
3. Remove the waterproof sheet.
   Refer to the Tailgate Lock Assembly (LH) in this section.
4. Remove the grommet.

5. Disconnect the locking links (arrow marks positions), key switch connector (w/anti-theft) and remove three fixing bolts to remove the tailgate outside handle.

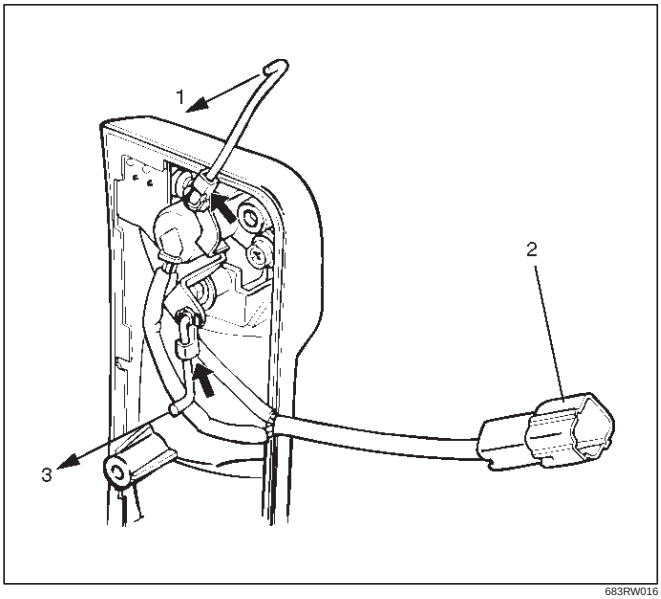

683RW016

Legend

(1) To Actuator
(2) Key Switch Connector (W/Anti–Theft)
(3) To Lock Assembly

6. Remove the key switch fixing bolt(3) to remove the key switch (w/anti-theft) (4) from the tailgate lock cylinder (1).
   And remove the tailgate lock cylinder fixing bolt(2) to remove the tailgate lock cylinder.

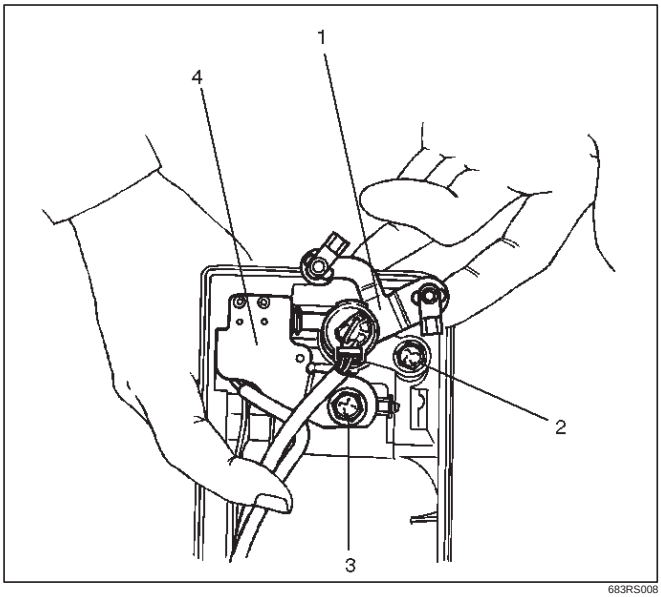

683RS008

Installation

To install, follow the removal steps in the reverse order, noting the following points.

1. For the anti-theft system, install the push rod(1) of the key switch(3) to the key cylinder(2) while pressing it so that there is not continuity between the key switch side connector terminals No. G5–2 and G5–4 as shown in the figure.

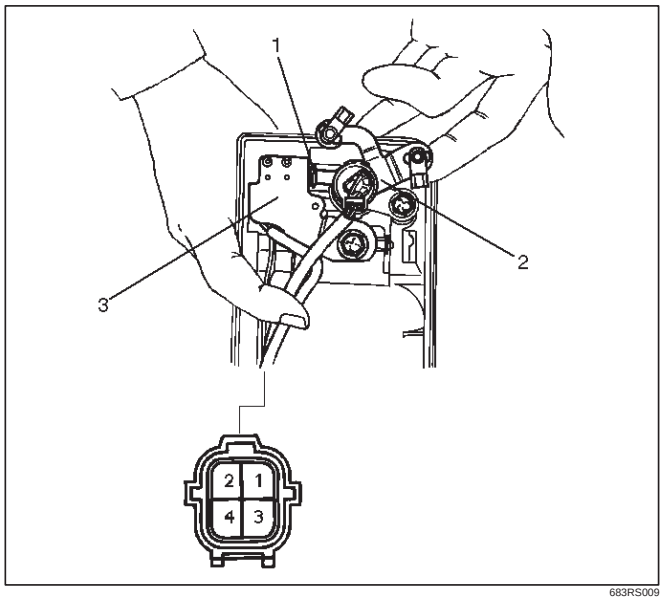

683RS009

2. Tighten the outside handle and key cylinder fixing bolts to the specified torque.

   Torque: 9 N·m (0.9kg·m/78 lb in)

3. Check that the outside handle and key cylinder operate correctly after installing them.

Key

Key Coding

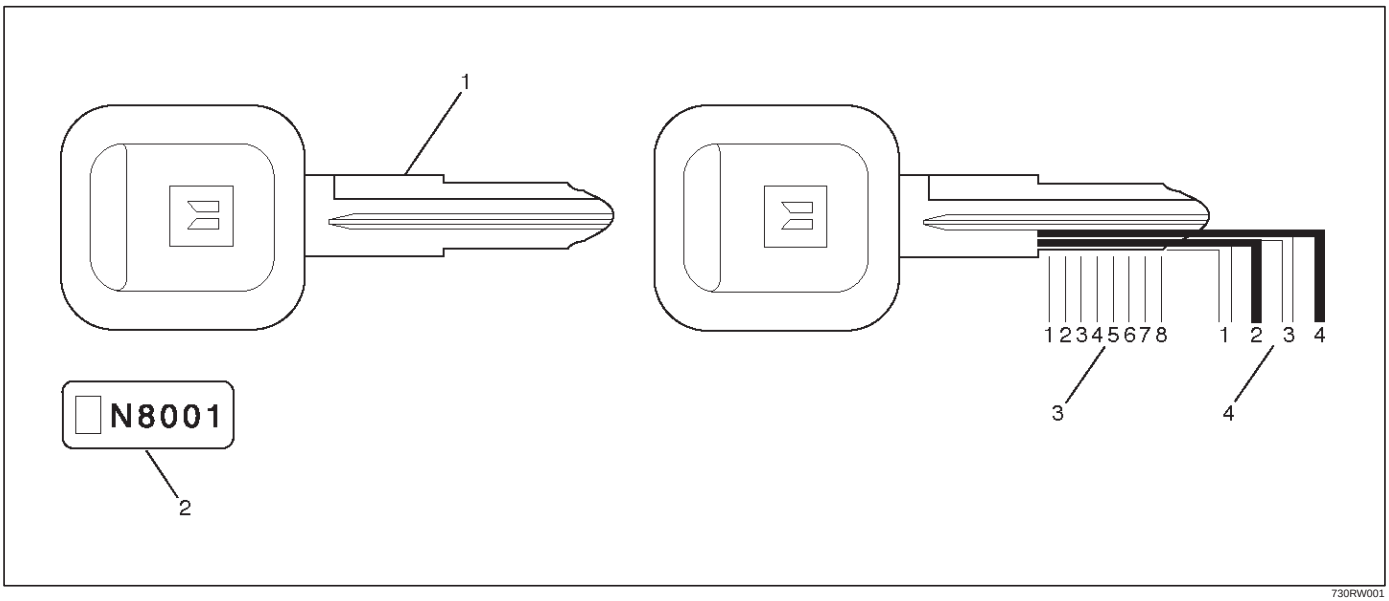

730RW001

Legend
(1) Key(Actual Size)
(2) Key Code Tag
(3) Position
(4) Level

One key is used for the ignition, door, and tailgate lock cylinders. The keys are cut on both edges to make them reversible.
Key identification is obtained from the five character key code stamped on the key code tag. From this key code, the key code cutting combination can be determined from a code list (available to owners of key cutting equipment from suppliers).
If key codes are not available from records or tags, the key code can be obtained from the right hand door lock cylinder (if lock has not been replaced). Lock cylinders supplied by the factory as service parts are unmarked.
If the original key is available, the key code cutting combination can be determined by laying the key on the diagram shown in the figure.

Key Styles

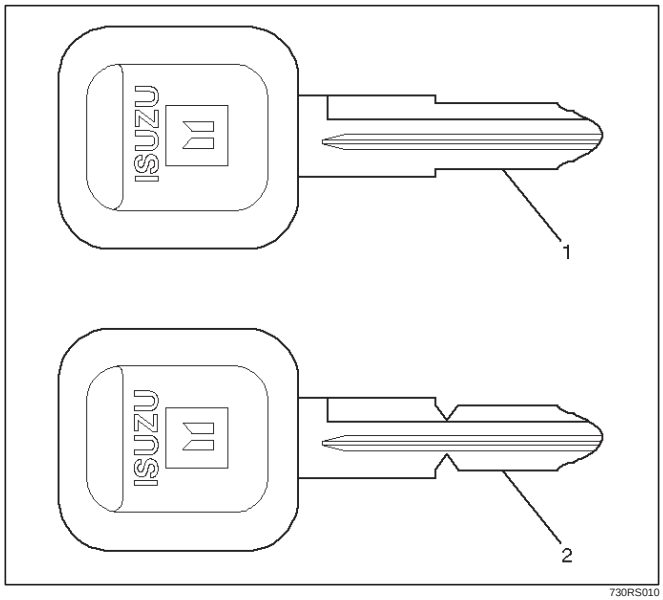

730RS010

Legend
(1) Blank Key Style “A”
(2) Blank Key Style “B”

The keys come in styles A or B depending on the key code cutting combination. When the first position in the combination is a 1, 2 or 3, Style A is used. When the first position is a 4, Style B (factory pre-cut key) is used.

Power Door Lock System

General Description

The circuit consists of the door lock (& power window) switch, door lock actuator for the front and rear door, tailgate lock actuator and the door lock key switch. The front door lock switch –LH is always provided with battery voltage.
The key or the inside lock button on the both driver's and the front passenger's door can activate the lock mechanism of all the doors (including the tailgate).
When the driver's door lock switch or the front passenger's door lock switch is turned on, current flows for about one second to the door lock actuator of each door connected in parallel with the front door lock (& power window) switch –LH to activate the actuator to lock and unlock the doors.

Front Door Lock Actuator Removal

1. Refer to the Front Door Lock Assembly removal procedure in this section.
2. Remove the door lock actuator(1).

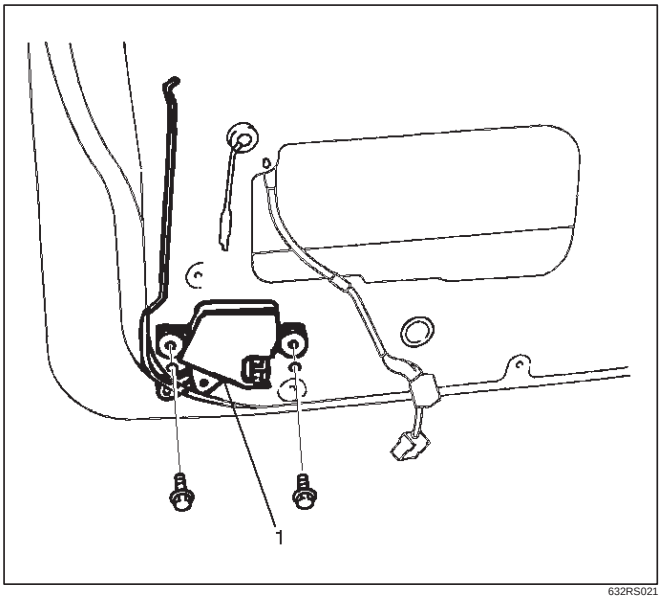

632RS021

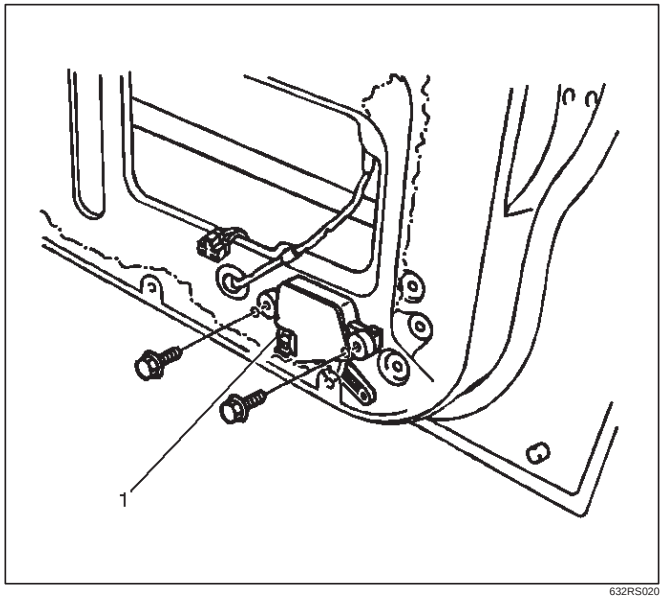

632RS020

Front Door Lock Actuator Installation

To install, follow the removal steps in the reverse order.

Rear Door Lock Actuator Removal

1. Refer to the Rear Door Lock Assembly removal procedure in this section.
2. Removal the door lock actuator(1).

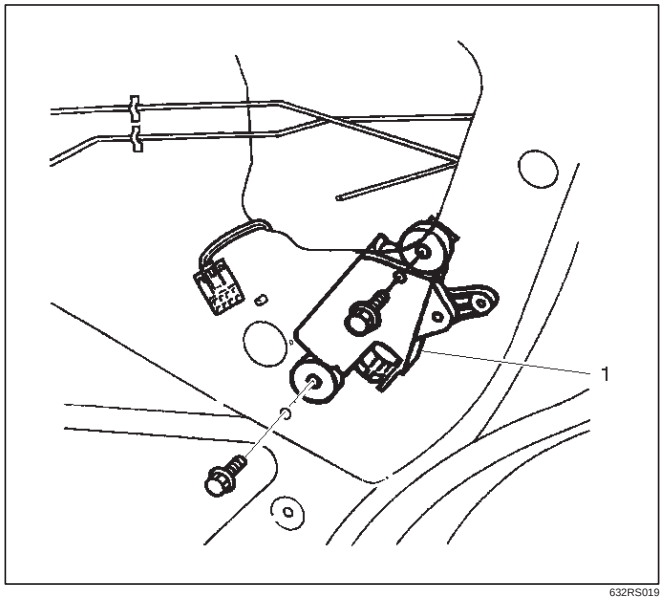

632RS019

Rear Door Lock Actuator Installation

To install, follow the removal steps in the reverse order.

Tailgate Lock Actuator Removal

1. Refer to the Tailgate Lock Assembly removal procedure in this section.
2. Remove the tailgate lock actuator(1).

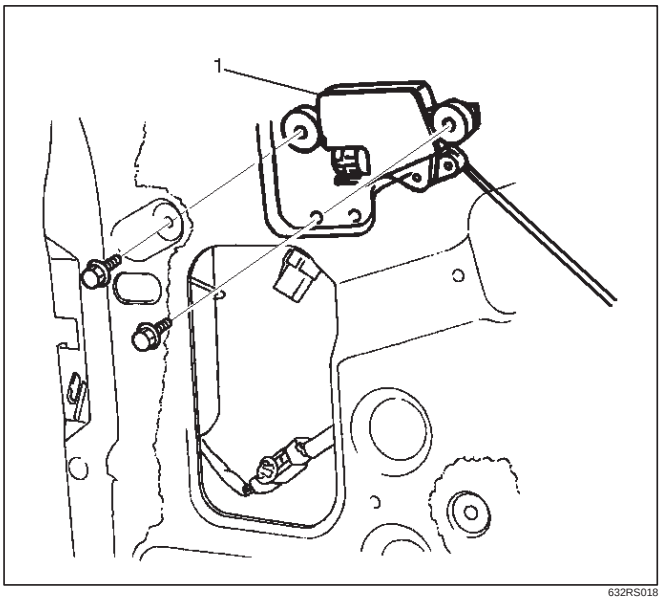

632RS018

Tailgate Lock Actuator Installation

To install, follow the removal steps in the reverse order.

Anti-theft System

General Description

The circuit consists of the starter switch, anti-theft & keyless entry control unit, anti-theft horn, front door and tailgate key switch (detect and tamper switch), door lock (& power window) switch, door lock actuator for each door, engine hood switch, clutch start switch (M/T), ANTI-THEFT indicator light and mode switch (A/T).
The system operates as follows: After locking the starter switch and removing the starter key (this sets the alarm), if the door is unlocked in any way other than with the proper key, the headlights start flashing, the horn sounds, and the starter circuit is disabled. (However, the engine hood and all the doors must be locked and closed.)
Once the system has been placed in the warning or alarm condition, it can be released only when the starter switch is shifted from “OFF” to “ACC” by the starter key, or when the lock of the front door or the tailgate is released (to activate the detect switch) by the starter key.

Anti-theft & Keyless Entry Control Unit Removal

1. Disconnect the battery ground cable.
2. Remove the front console assembly.
   - Refer to the Instrument Panel Assembly in Body Structure section.
3. Remove the lower cluster assembly.
   - Refer to the Instrument Panel Assembly in Body Structure section.
4. Disconnect the connector(2).
5. Remove four screws to remove the anti-theft & keyless entry control unit with bracket(1).

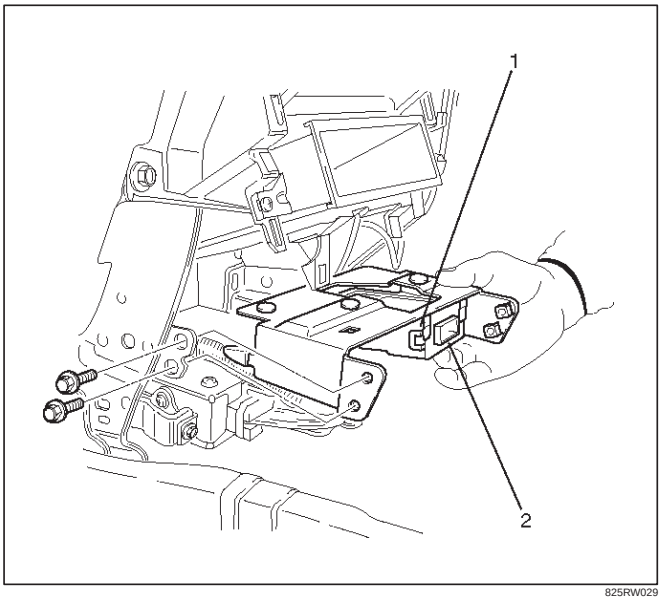

825RW029

6. Remove two nuts from the anti-theft & keyless entry control unit with bracket(3) to remove the anti-theft & keyless entry controller(4).

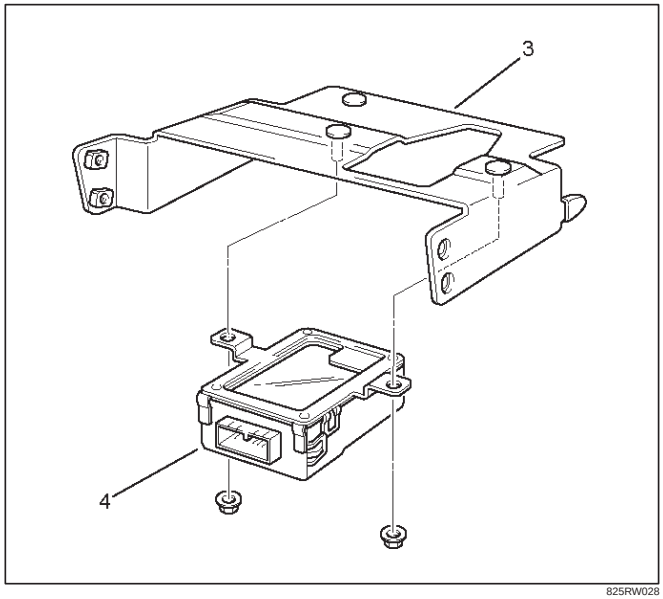

825RW028

Anti-theft & Keyless Entry Control Unit Installation

To install, follow the removal steps in the reverse order.

Anti-theft Indicator Removal

1. Disconnect the battery ground cable.
2. Remove the front console assembly(1).
   Refer to the Instrument Panel Assembly in Body Structure section.
3. Remove the lower cluster assembly(2).
   Refer to the Instrument Panel Assembly in Body Structure section.
4. Remove the instrument panel driver lower cover assembly(3).
   Refer to the Instrument Panel Assembly in Body Structure section.

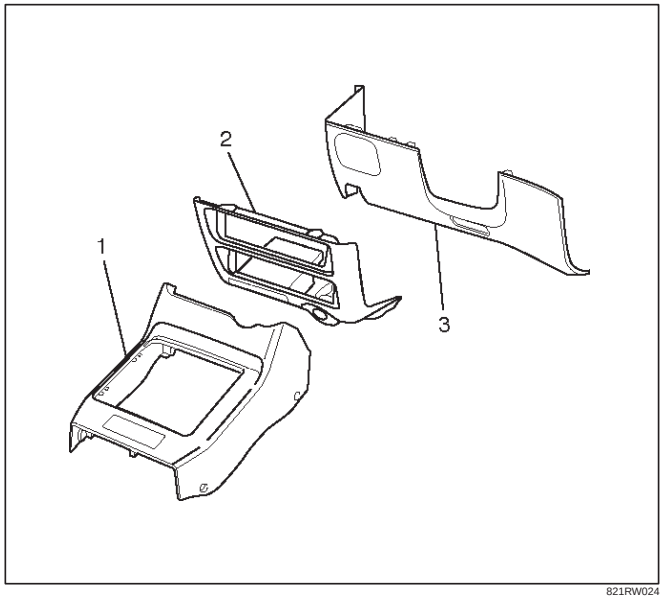

821RW024

5. Remove the instrument panel cluster assembly(4). Refer to the Instrument Panel Assembly in Body Structure section.
6. Remove two screws and then remove the anti-theft indicator(5).

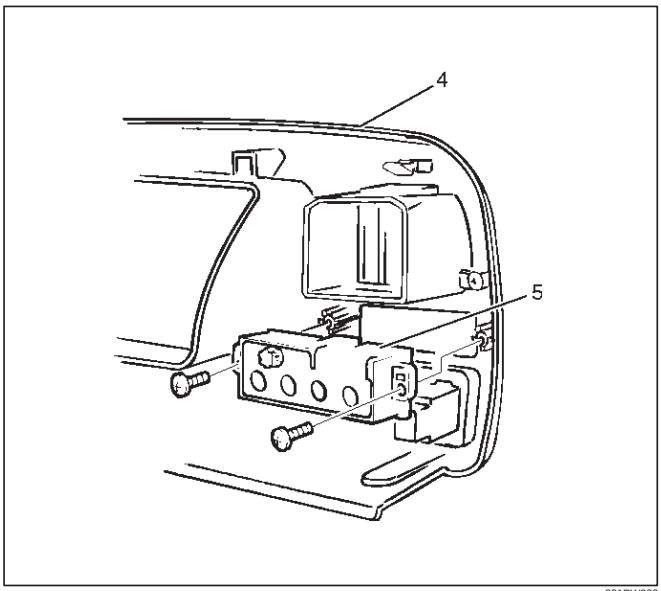

821RW032

Anti-theft Indicator Installation

To install, follow the removal steps in the reverse order.

Anti-theft Horn Removal

1. Disconnect the battery ground cable.
2. Disconnect the connector and remove the fixing bolt to remove the anti-theft horn(1).

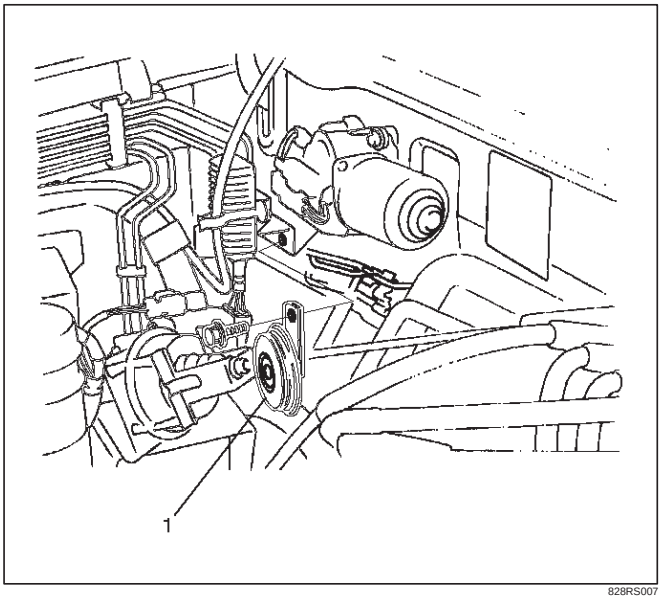

828RS007

Anti-Theft Horn Installation

To install, follow the removal steps in the reverse order.

Engine Hood Switch Removal

1. Disconnect the battery ground cable.
2. Remove the cap(1).
3. Remove the lock nut(2).
4. Disconnect the connector(4).
5. Remove the engine hood switch(3).

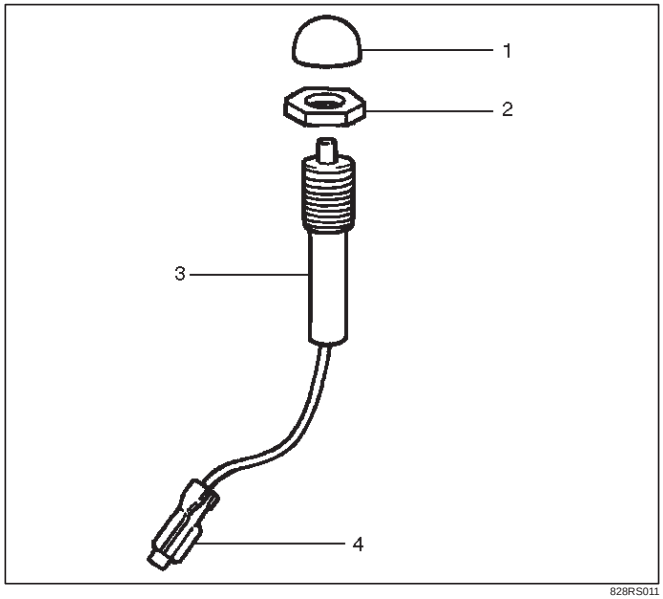

828RS011

Engine Hood Switch Installation

To install, follow the removal steps in the reverse order.

Keyless Entry System

ID Code Registration

There are four kinds of ID codes which can be registered, for which these three modes, ID code new registration, ID code additional registration and ID code check, are available.

ID Code New Registration

This procedure erases all registered ID codes and registers a new received ID code instead.

Step	Action	Yes	No
1	1. Open the driver's side door. 2. Turn the starter switch off. Is the action complete?	Go to Step 2	—
2	Turn the starter switch to ACC position and then off three times within five seconds after step 1. Is the action complete within five seconds?	Go to Step 3	Finished
3	Close the door and then open it two times within ten seconds after step 2. Is the action complete within ten seconds?	Go to Step 4	Finished
4	1. Turn the starter switch to ACC position and then off five times. 2. Close the door and then open it. NOTE: This step must be performed within ten seconds after step 3. Is the action complete?	Go to Step 5	Finished
5	The control unit makes lock/unlock response once with interval of one second. Is the response complete?	Go to Step 6	—
6	Operate the lock or unlock button of transmitter within twenty senconds afer step 5. Is the action complete?	Go to Step 7	Finished
7	The control unit makes lock/unlock response once with in terval of one second as ID temprary registration. Is the response complete?	Go to Step 8	—
8	Operate the lock or unlock button of transmitter within twenty seconds after step 7. Is the action complete?	Go to Step 9	Finished
9	The control unit compares temporary registered ID code with receiving ID code Is temporary registered ID code the same as receiving ID code?	Go to Step 10	Go to Step 11
10	The control unit makes lock/unlock response three times with interval of one second. Is the response complete?	Finished	—
11	The control unit erases all registered ID codes and registers new ID code. Is the registration complete?	Go to Step 12	Go to Step 13

Step	Action	Yes	No
12	The control unit makes lock/unlock response once with interval of one second. Is the response complete?	Finished	—
13	The control unit makes lock/unlock response three times with interval of one second. Is the response complete?	Finished	—

ID Code Additional Registration

This procedure additionally registers a new received ID code with holding registered ID codes. When total number of registered ID codes and newly registered ID code exceeds four, they are erased in order of older one.

Step	Action	Yes	No
1	1. Open the driver's side door. 2. Turn the starter switch off. Is the action complete?	Go to Step 2	—
2	Turn the starter switch to ACC position and then off three times within five seconds after step 1. Is the action complete within five seconds?	Go to Step 3	Finished
3	Close the door and then open it two times within ten seconds after step 2. Is the action complete within ten seconds?	Go to Step 4	Finished
4	1. Turn the starter switch to ACC position and then off three times. 2. Close the door and then open it. NOTE: This step must be performed within ten seconds after step 3. Is the action complete?	Go to Step 5	Finished
5	The control unit makes lock/unlock response two times with interval of one second. Is the response complete?	Go to Step 6	—
6	Operate the lock or unlock button of transmitter within twenty seconds afer step 5. Is the action complete?	Go to Step 7	Finished
7	The control unit makes lock/unlock response two times with interval of one second as ID temprary registration. Is the response complete?	Go to Step 8	—
8	Operate the lock or unlock transmitter within twenty seconds after step 7. Is the action complete?	Go to Step 9	Finished
9	The control unit compares temporary registered ID code with receiving ID code Is temporary registered ID code the same as receiving ID code?	Go to Step 10	Go to Step 11
10	The control unit makes lock/unlock response with interval of one second. Is the response complete?	Finished	—
11	The control unit registers new ID code. Is the registration complete?	Go to Step 12	Go to Step 13

Step	Action	Yes	No
12	The control unit makes lock/unlock response once with interval of one second. Is the response complete?	Finished	—
13	The control unit makes lock/unlock response three times with interval of one second. Is the response complete?	Finished	—

ID Code Check

This procedure checks how many kinds of ID code are registered.

Step	Action	Yes	No
1	1. Open the driver's side door. 2. Turn the starter switch off. Is the action complete?	Go to Step 2	—
2	Turn the starter switch to ACC position and then off three times within five seconds after step 1. Is the action complete within five seconds?	Go to Step 3	Finished
3	Close the door and then open it two times within ten seconds after step 2. Is the action complete within ten seconds?	Go to Step 4	Finished
4	1. Turn the starter switch to ACC position and then off. 2. Close the door and then open it. NOTE: This step must be performed within ten seconds after step 3. Is the action complete?	Go to Step 5	Finished
5	The control unit makes lock/unlock response twice as many the number of registered ID code with interval of two seconds. (In case of no registered code, the response is made ten times.) Is the response complete?	Finished	—

Answer Back (Anti–theft Horn Operation) Change Mode

Anti–theft horn, as an answer back function for the transmitter operation, chages from available into unavailing or from unavailing into available by this procedure.

Step	Action	Yes	No
1	Open the driver's side door. Is the action complete?	Go to Step 2	—
2	Lock the door and then unlock it three times within ten seconds after step 1. Is the action complete within five seconds?	Go to Step 3	Finished
3	Close the door and then open it two times within ten seconds after step 2. Is the action complete within ten seconds?	Go to Step 4	Finished

Step	Action	Yes	No
4	1. Lock the door and unlock it three times. 2. Close the door and then open it. NOTE: This step must be performed within ten seconds after step 3. Is the action complete?	Go to Step 5	Finished
5	Answer back mode changes. Is this step complete?	Go to Step 6	Go to Step 7
6	The control unit makes lock/unlock response once with interval of one second. Is the response complete?	Finished	—
7	The control unit makes lock/unlock response three times with interval of one second. Is the response complete?	Finished	—

Anti–theft & Keyless Entry Control Unit/Transmitter Replacement

Anti–theft & Keyless Entry Control Unit Replacement

1. Remove and install the control unit.
   - Refer to Anti–theft & Keyless Entry Control Unit Removal and Installation in this section.
2. Register ID code.
   - Refer to ID Code Registration in this section.
3. Check that the keyless entry system works normally.

Transmitter Replacement

1. Prepare a new transmitter.
2. Regiter ID code.
   - Refer to ID Code Registration in this section.
3. Check that the keyless entry system works normally.

Transmitter Battery Replacement

1. Remove a screw to remove the cover.
2. Remove the batteries.
3. Set the new batteries into the transmitter.
4. Install the cover to the transmitter.
5. Check that the keyless entry system works normally.

Main Data and Specifications

Torque Specifications

Application	N·m	Kg·m	Lb Ft	Lb In
Front Door Lock Assembly Fixing Screws	7	0.7	—	61
Front Outside Handle and Key Switch Fixing Bolts	9	0.9	—	78
Rear Door Lock Assembly Fixing Screws	7	0.7	—	61
Rear Outside Handle Fixing Bolts	9	0.9	—	78
Tailgate Lock Assembly (LH) Fixing Screws	7	0.7	—	61
Tailgate Lock Assembly (RH) Fixing Bolts	11	1.1	—	95
Tailgate Outside Handle and Key Cylinder Fixing Bolts	9	0.9	—	78

BODY AND ACCESSORIES

SUN ROOF/CONVERTIBLE TOP

CONTENTS

Service Precaution 8I–1
Sun Roof Glass 8I–2
Sun Roof Glass and Associated Parts 8I–2
Removal 8I–2
Installation 8I–3
Sun Roof Deflector 8I–4
Removal 8I–4
Installation 8I–4
Sunshade 8I–4
Disassembled View 8I–4
Removal 8I–5
Installation 8I–5
Sun Roof Frame Complete Assembly 8I–6
Sun Roof Frame Complete Assembly and Associated Parts 8I–6
Removal 8I–6
Installation 8I–7
Disassembled View 8I–7
Disassembly 8I–7
Reassembly 8I–8
Sun Roof Drain Hose (Front Side) 8I–9
Sun Roof Drain Hose (Front Side) and Associated Parts 8I–9
Removal 8I–9
Installation 8I–9
Sun Roof Drain Hose (Rear Side) 8I–10
Sun Roof Drain Hose (Rear Side) and Associated Parts 8I–10
Removal 8I–10
Installation 8I–10
Sun Roof Switch 8I–11
General Description 8I–11
Removal 8I–11
Installation 8I–11
Sun Roof Motor 8I–12
Removal 8I–12
Installation 8I–12
Main Data and Specifications 8I–12

Service Precaution

WARNING: IF SO EQUIPPED WITH A SUPPLEMENTAL RESTRAINT SYSTEM (SRS), REFER TO THE SRS COMPONENT AND WIRING LOCATION VIEW IN ORDER TO DETERMINE WHETHER YOU ARE PERFORMING SERVICE ON OR NEAR THE SRS COMPONENTS OR THE SRS WIRING. WHEN YOU ARE PERFORMING SERVICE ON OR NEAR THE SRS COMPONENTS OR THE SRS WIRING, REFER TO THE SRS SERVICE INFORMATION. FAILURE TO FOLLOW WARNINGS COULD RESULT IN POSSIBLE AIR BAG DEPLOYMENT, PERSONAL INJURY, OR OTHERWISE UNNEEDED SRS SYSTEM REPAIRS.

CAUTION: Always use the correct fastener in the proper location. When you replace a fastener, use ONLY the exact part number for that application. ISUZU will call out those fasteners that require a replacement after removal. ISUZU will also call out the fasteners that require thread lockers or thread sealant. UNLESS OTHERWISE SPECIFIED, do not use supplemental coatings (Paints, greases, or other corrosion inhibitors) on threaded fasteners or fastener joint interfaces. Generally, such coatings adversely affect the fastener torque and the joint clamping force, and may damage the fastener. When you install fasteners, use the correct tightening sequence and specifications. Following these instructions can help you avoid damage to parts and systems.

Sun Roof Glass

Sun Roof Glass and Associated Parts

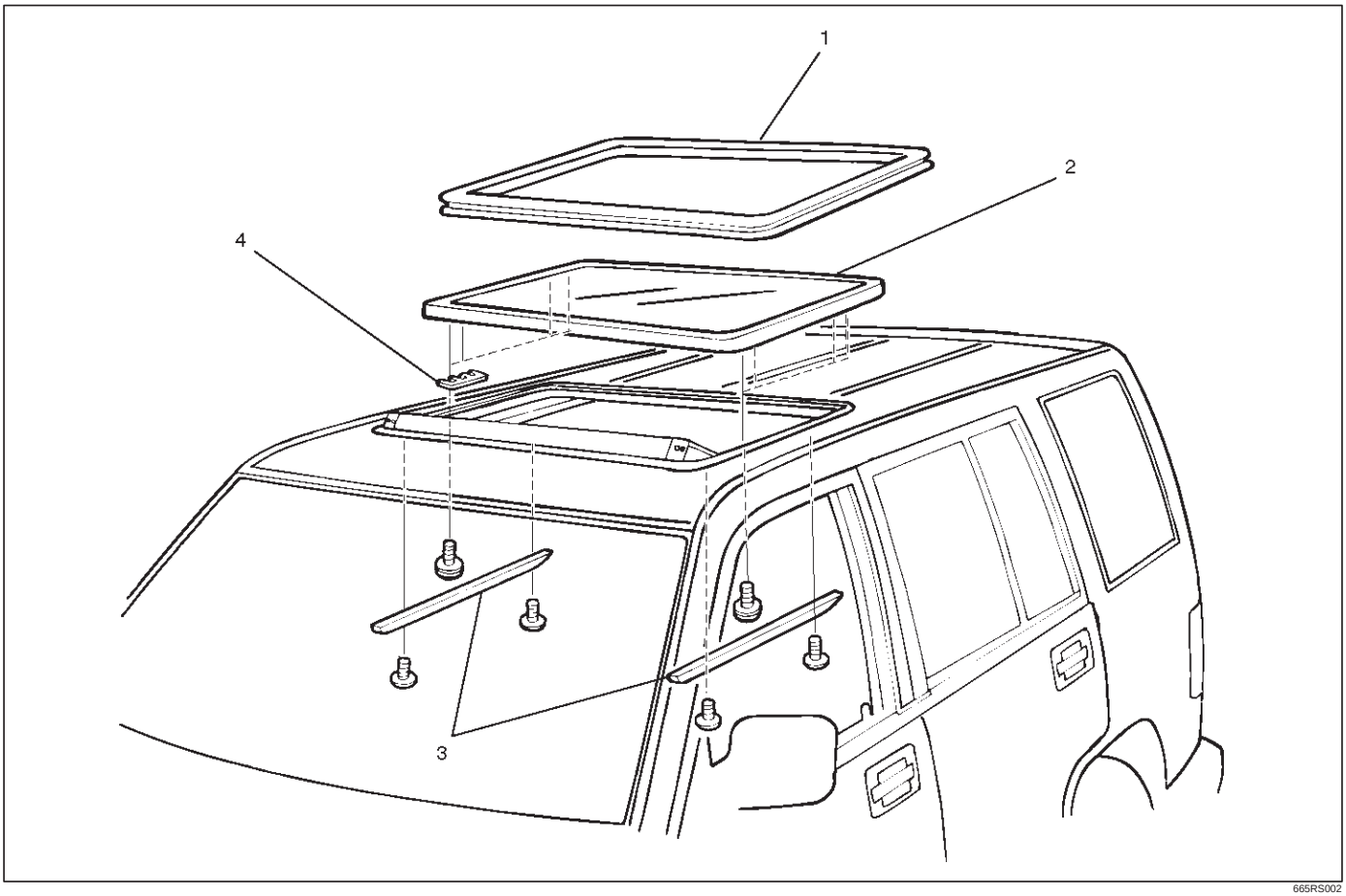

665RS002

Legend

(1) Sun Roof Weatherstrip
(2) Sun Roof Glass
(3) Decoration Cover
(4) Sun Roof Shim

Removal

1. Open the sun roof and pull the sun roof weatherstrip out from the roof panel.
2. Disconnect the battery ground cable.
3. Close the sun roof and open the sunshade(1). Then, remove the decoration cover fixing screws and decoration cover(2).

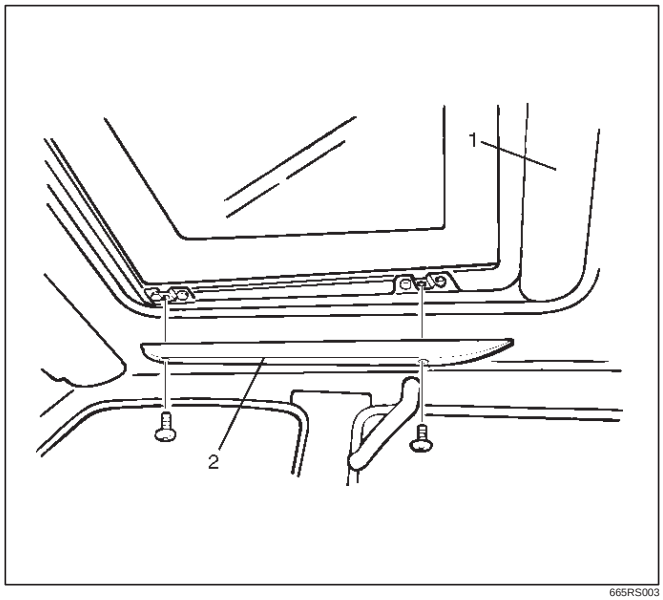

665RS003

4. Remove eight sun roof glass fixing screws to remove the sun roof glass(3).

NOTE: If shims are used between the sun roof set plate and the glass, note the number of shims used.

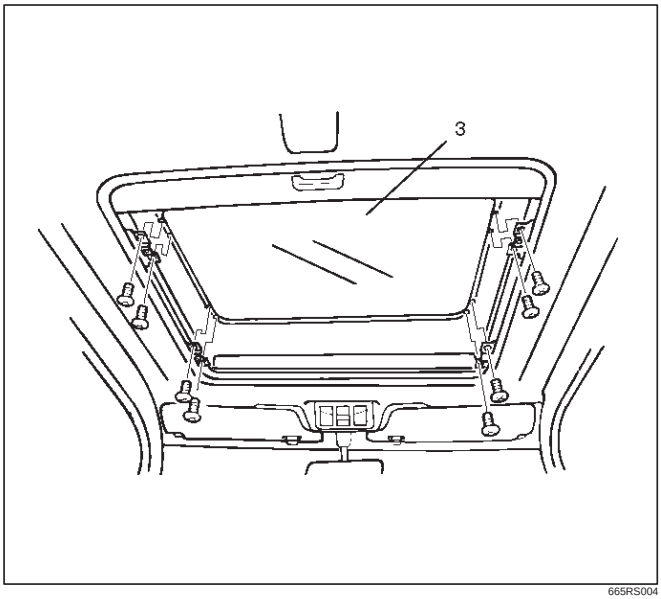

665RS004

Installation

1. Clean the body panel of the weatherstrip fixing portion.
2. If the protective film(1) of the body panel is peel, it cannot be reused.
   Install the new protective film around the body panel(2).
3. Install the new weatherstrip(3).
   Always replace with a new one.
4. Be sure to install the sun roof weatherstrip so that the white marking location(4) of the weatherstrip is on the front side of the vehicle.

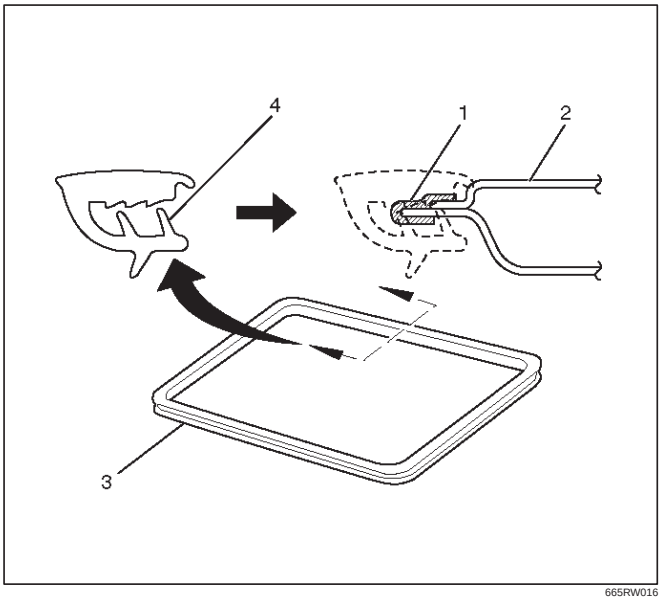

665RW016

5. Temporary install the glass to the sun roof frame.
6. Open and shut the sun roof four to five times to position correctly the sun roof weatherstrip and the glass in the longitudinal and latitudinal setting positions.
7. Insert the original shims between the sun roof set plate and the glass.
8. Tighten the sun roof glass fixing screws to the specified torque.

   Torque: 10 N·m (1.0 kg·m/87 lb in)
9. After the sun roof glass is installed, check the roof panel and sun roof glass for vertical install position.
   If out of standard, adjust with shim.
   For the installation standard, refer to the Body Dimension in Body Structure section.
10. Install the decoration cover.

Sun Roof Deflector

Removal

1. Open the sun roof.
2. Remove the fixing screws(2) to remove the sun roof deflector(1).

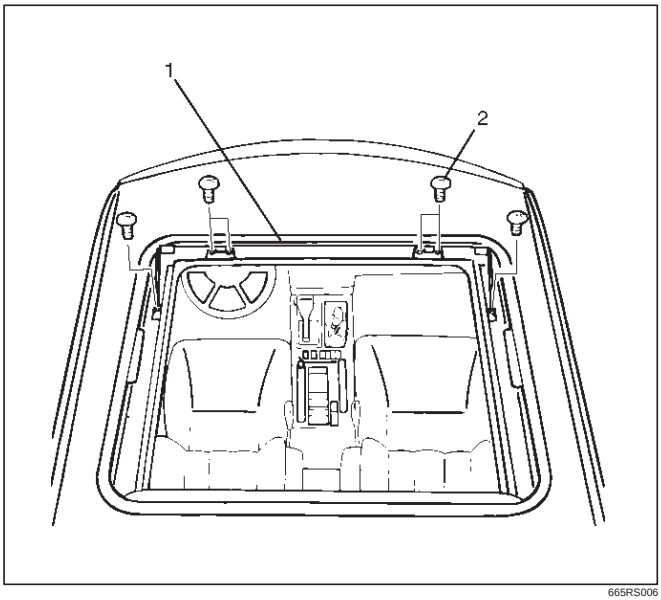

665RS006

Installation

To install, follow the removal steps in the reverse order.

Sunshade

Disassembled View

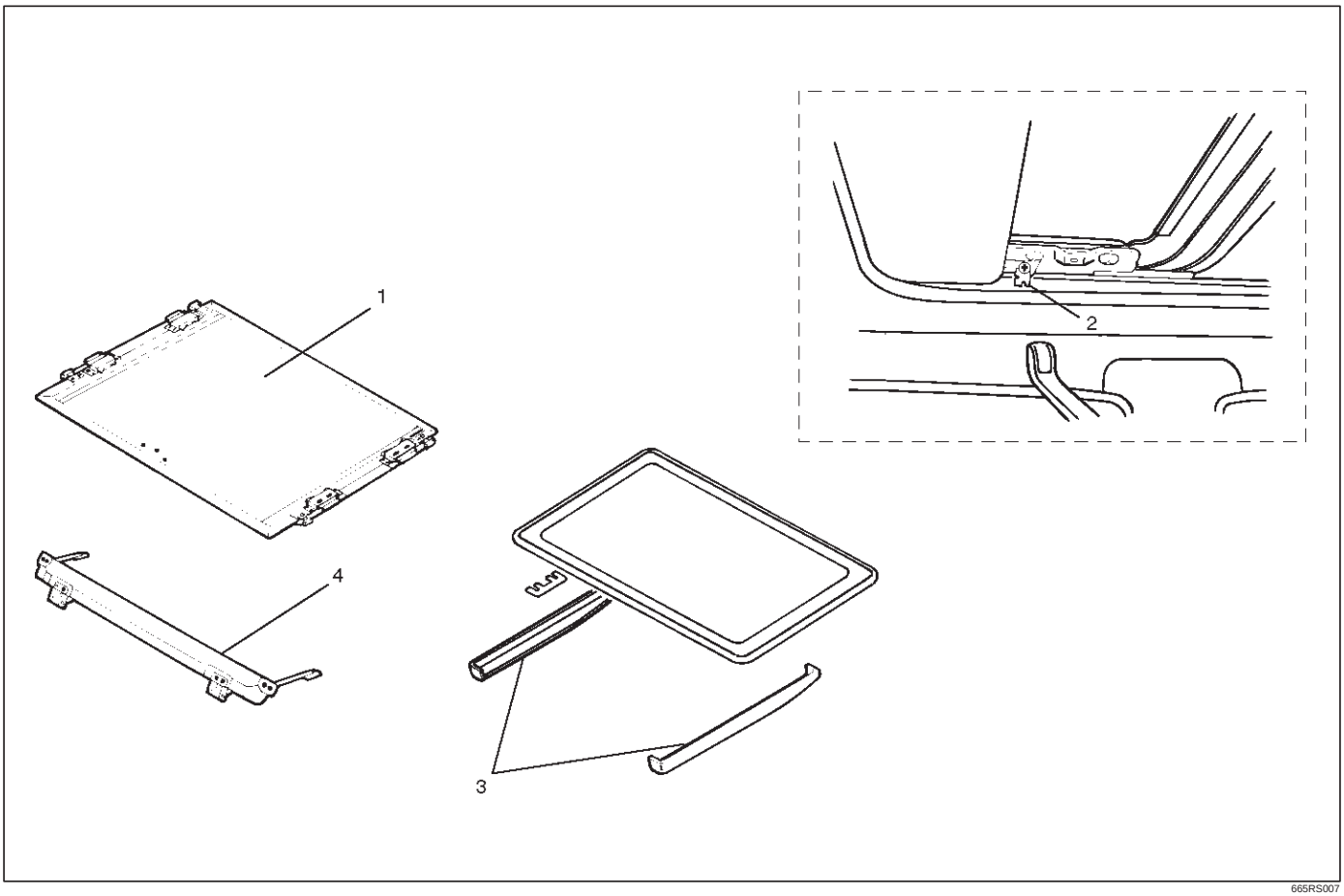

665RS007

Legend

(1) Sunshade
(2) Sunshade Stopper
(3) Decoration Cover
(4) Sun Roof Deflector

Removal

1. Remove the decoration cover.
2. Open the sun roof half position, remove the sunshade stopper screw and pull out the sunshade(6) until its front side protrudes a little from the sun roof glass(2) to remove the sunshade stopper.
3. Remove the sun roof deflector.
   - Refer to the Sun Roof Deflector in this section.
4. Open the sun roof completely.
5. Remove the sunshade guide rail stopper(5), and pull out the sunshade up to the rail edge.
6. Remove the guide pin(4) in the sunshade through the notch(7) of guide rail(1) and then draw the sunshade out of the roof by pushing inward the retaining clips(3) on both sides.

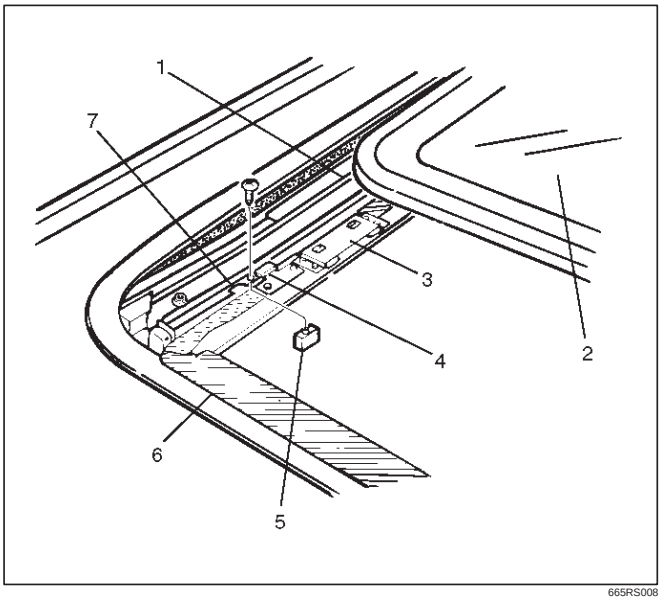

665RS008

Installation

To install, follow the removal steps in the reverse order.

Sun Roof Frame Complete Assembly

Sun Roof Frame Complete Assembly and Associated Parts

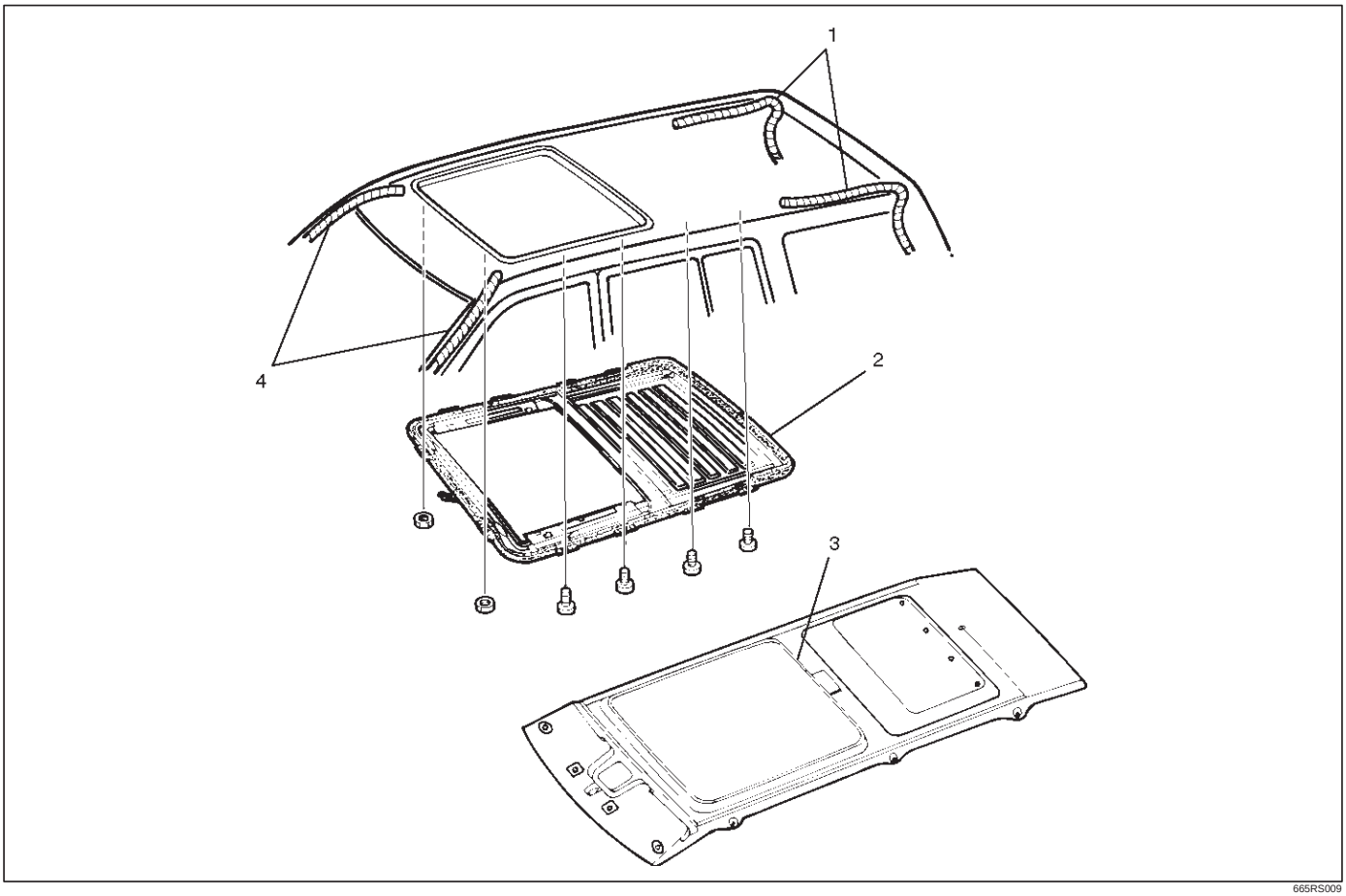

665RS009

Legend

(1) Sun Roof Drain Hose
(2) Sun Roof Frame Complete Assembly
(3) Headlining
(4) Sun Roof Drain Hose

Removal

1. Disconnect the battery ground cable.
2. Remove the headlining.
   - Refer to the Headlining removal steps in Body Structure section.
3. Disconnect the sun roof drain hose at the sun roof frame side as shown in the figure.

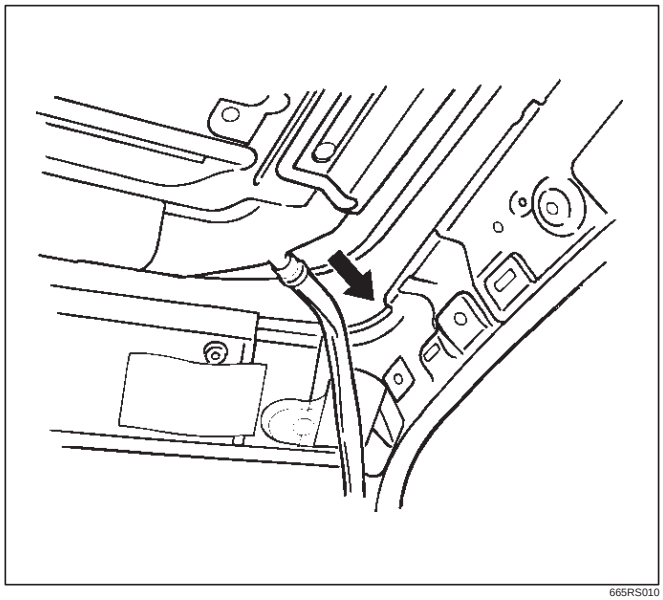

665RS010

4. Disconnect the sun roof harness connection.

5. Remove two sun roof frame complete assembly fixing nuts (front side) and four fixing bolts (each side) from the frame complete, and then remove the sun roof frame complete assembly.

NOTE: Be sure to remove the frame complete while supporting it.

Installation

1. Tighten the sun roof frame complete assembly fixing bolts and nuts to the specified torque.

   Torque: 10 N·m(1.0 kg·m/87 lb in)

2. After installing the frame complete, loosen the sun roof glass fixing nuts and adjust the sun roof glass setting position.
   - Refer to the Sun Roof Glass installation steps in this section.
3. Install the sun roof drain hose.
4. Install the headlining.

Disassembled View

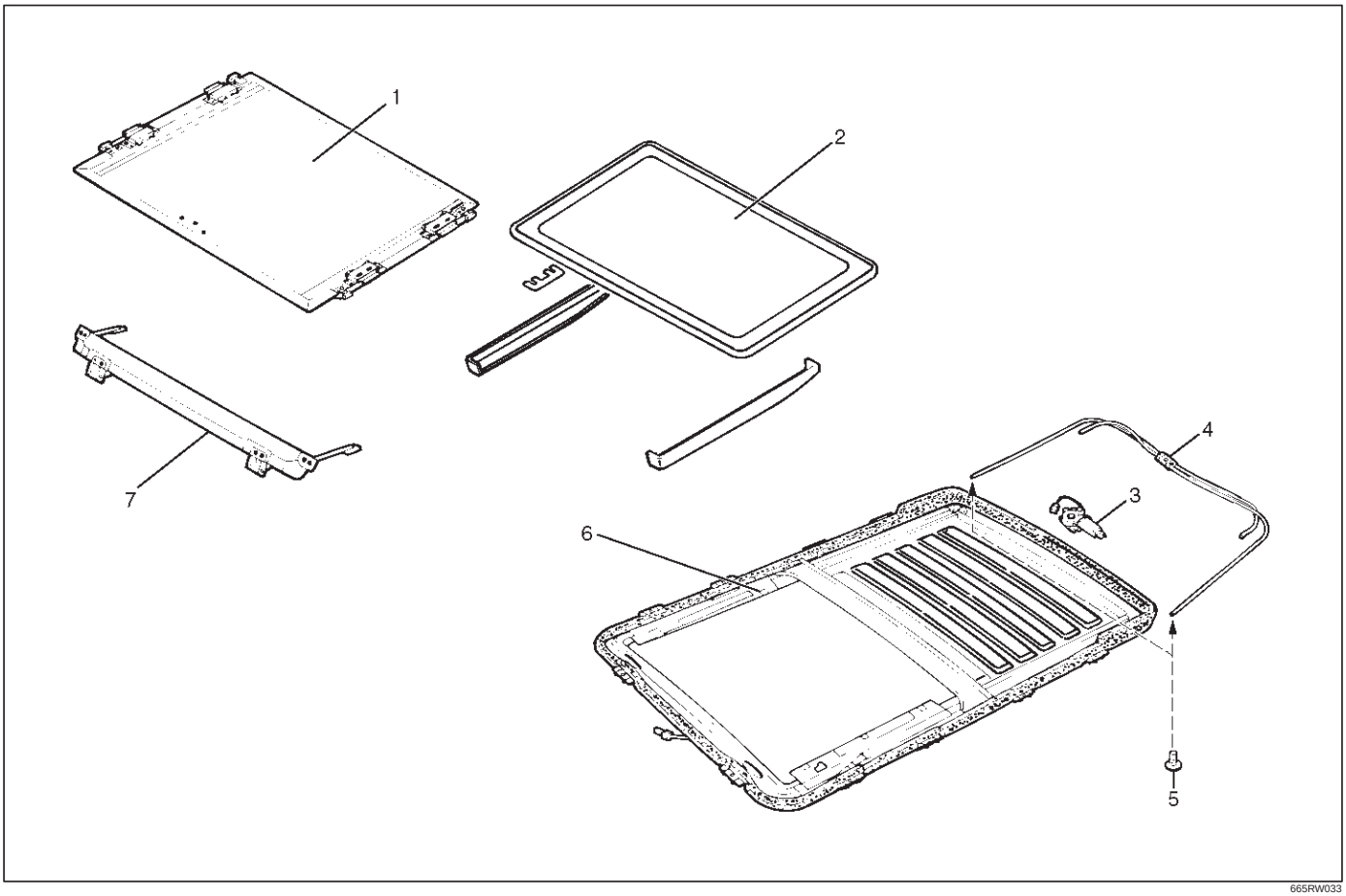

665RW033

Legend

(1) Sunshade
(2) Sun Roof Glass
(3) Sun Roof Motor
(4) Sun Roof Drive Unit Assembly
(5) Outer Tube Fixing Screw
(6) Sun Roof Frame Assembly
(7) Sun Roof Deflector

Disassembly

1. Open the sun roof.
2. Remove the sun roof deflector fixing screws and then remove the sun roof deflector.
3. Remove the sunshade.
   - Refer to the Sunshade in this section.
4. Close the sun roof, remove the decoration cover and the fixing screws and then remove the sun roof glass.
5. If the shims are used between the sun roof set plate and the glass, note the number of the shims.
6. Disconnect the sun roof motor connector, remove the sun roof fixing nuts and screws, and then remove the sun roof motor.

7. Remove the cable outer tube(2) fixing screws.
8. Remove the cable outer tube fixing clamps(1) and guide rail fixing nuts(5).
9. Prying the guide rail a little with a screwdriver, draw the outer tube out of the grommet(3).
   - At this time, the inner cable(4) remains on the frame assembly.
10. Remove the sun roof frame assembly.

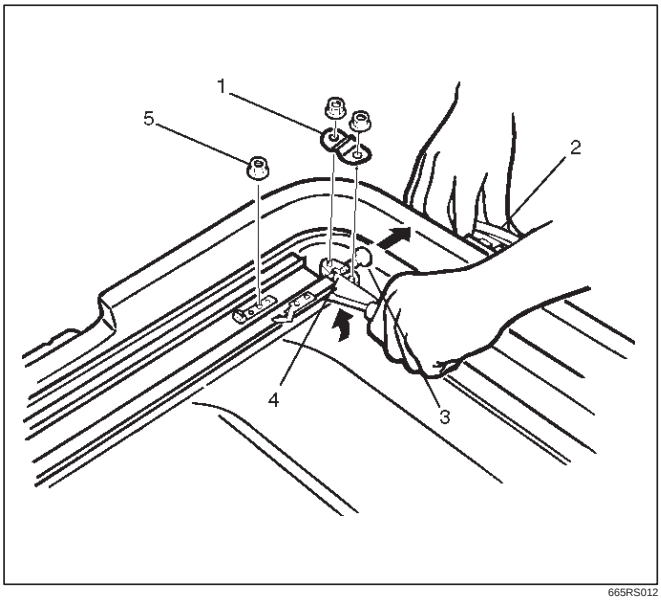

665RS012

Reassembly

To reassembly, follow the disassembly steps in the reverse order, noting the following points.

1. When installing the motor or drive unit, set the sun roof set plate in the full closed position by pushing the link(3) portion using the screwdriver(2).
2. When installing the sun roof glass(1) to the sun roof set plate, insert the original shims in the same position before removing the sun roof glass.

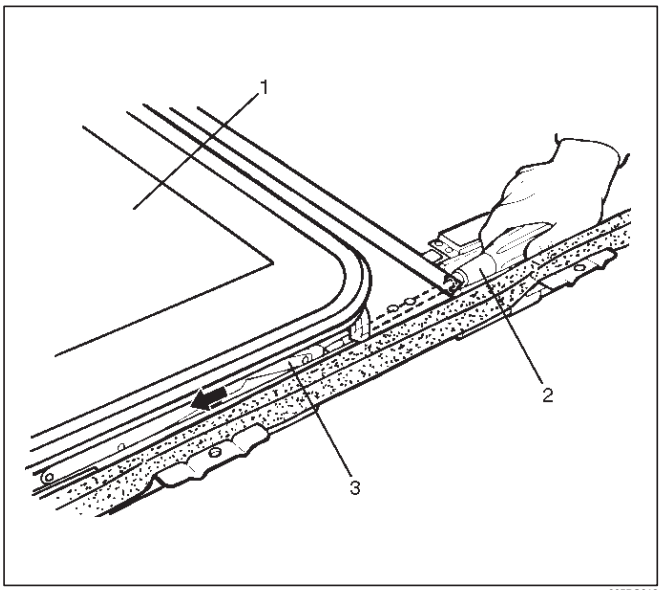

665RS013

Sun Roof Drain Hose (Front Side)

Sun Roof Drain Hose (Front Side) and Associated Parts

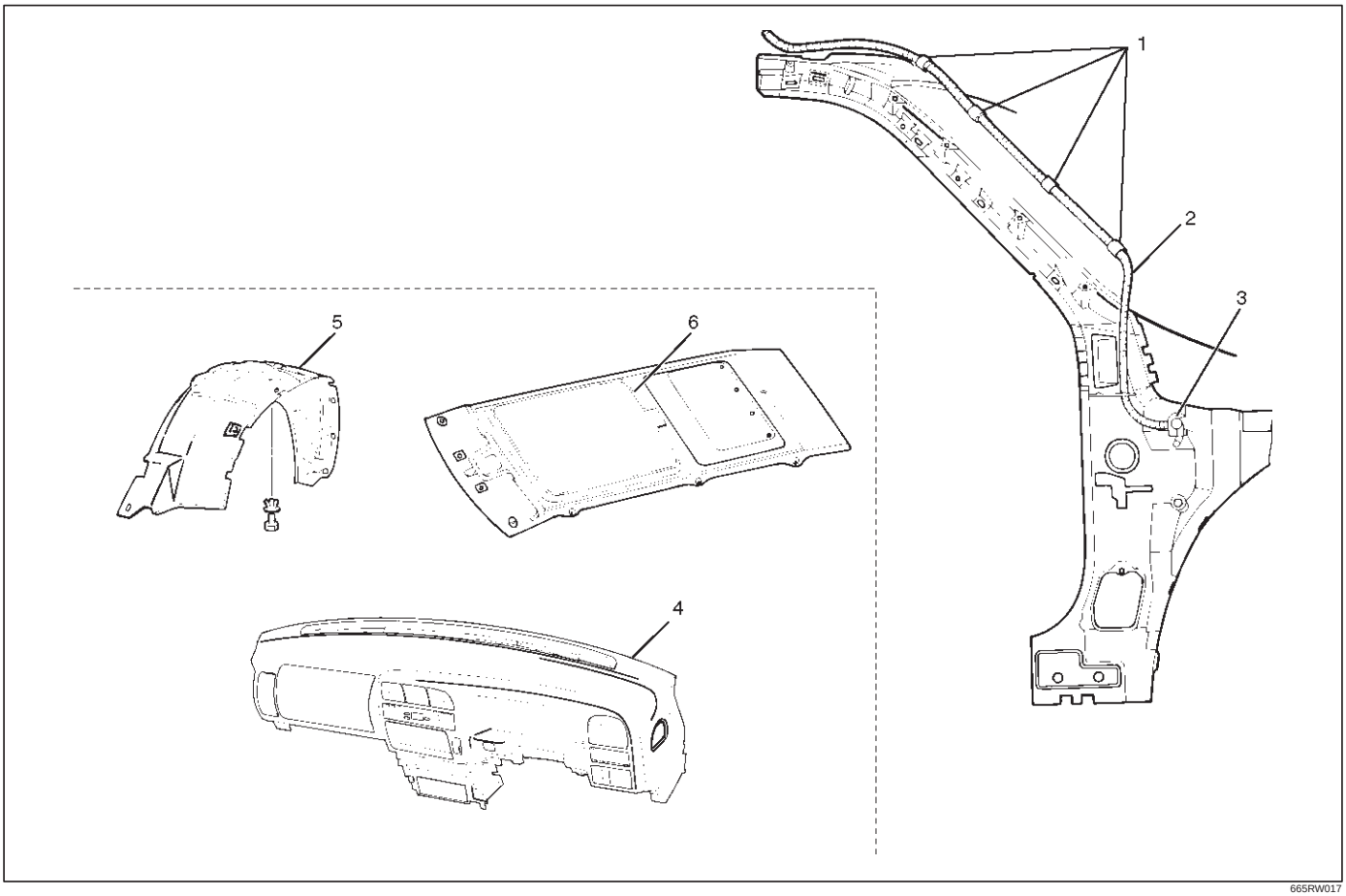

665RW017

Legend

(1) Clip
(2) Sun Roof Drain Hose
(3) Grommet
(4) Instrument Panel Assembly
(5) Front Inner Liner
(6) Headlining

Removal

1. Disconnect the battery ground cable.
2. Remove the front inner liner.
3. Remove the headlining.
   - Refer to the Headlining removal steps in Body Structure section.
4. Remove the instrument panel assembly.
   - Refer to the Instrument Panel Assembly removal steps in Body Structure section.
5. Disconnect the drain hose at the frame complete side.
6. Apply the soap and water to the body panel grommet.
7. Pass the string from the sun roof frame side through the drain port side, and remove the drain hose from the hose fixing clips. Taking care not to allow the body panel grommet to be removed together with the hose, pull the drain hose only to the inside of the vehicle. (The string should be kept as it is.)

Installation

To install, follow the removal steps in the reverse order, noting the following points.

1. Apply the soap and water to the body panel grommet.
2. Install the drain hose from inside of the vehicle by utilizing, as a guide, the string passed during removal step.
3. The body panel grommet must not be twisted or caught in during installation.
4. Complete routing, avoiding extreme bends or curves.
5. After routing, install the trim with care not to allow the drain hose to be caught in.
6. Test the drain condition.
7. The protrusion of drain hose from the body panel must be within 50 mm (2.0 in). If it exceeds 50 mm (2.0 in) after correct routing, cut the leading edge so that the protrusion is within 50 mm (2.0 in).

Sun Roof Drain Hose (Rear Side)

Sun Roof Drain Hose (Rear Side) and Associated Parts

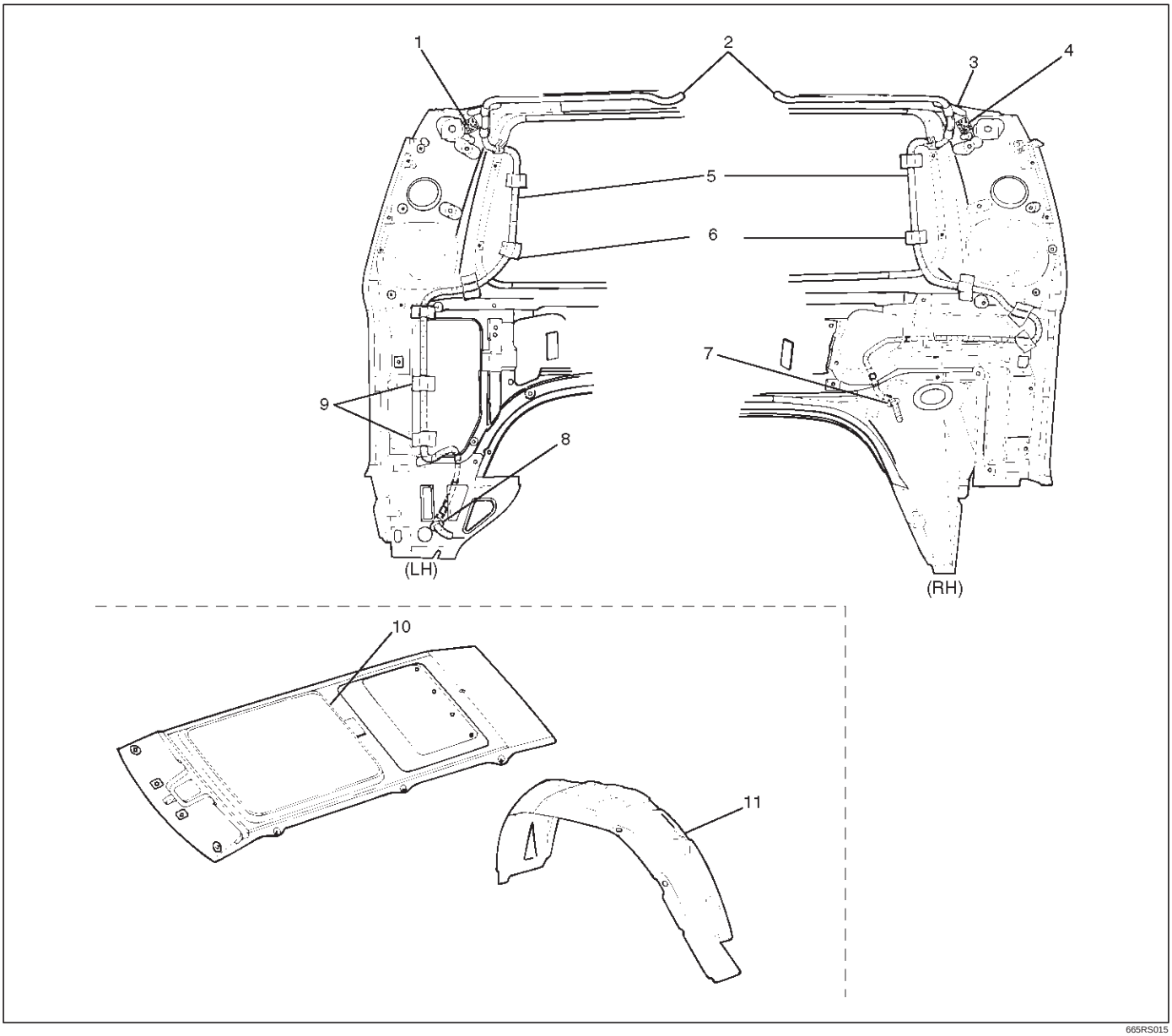

665RS015

Legend

(1) Soft Tape
(2) Pipe
(3) Clip
(4) Soft Tape
(5) Sun Roof Drain Hose
(6) Tape
(7) Grommet
(8) Grommet
(9) Clip
(10) Headlining
(11) Rear Fender Inner Liner

Removal

1. Disconnect the battery ground cable.
2. Remove the rear fender inner liner.
3. Remove the headlining.
   - Refer to the Headlining removal steps in Body Structure section.
4. Disconnect the drain hose at the frame complete side.
5. Apply the soap and water to the body panel grommet.
6. Remove the hose fixing tapes and clips.
7. Pull the drain hose to the inside of the vehicle.

Installation

To install, follow the removal steps in the reverse order, noting the following points.

1. Apply the soap and water to the body panel grommet.

2. Insert the drain hose from inside of vehicle, restore routing, and fix with new soft tape and clip.
   If the grommet is removed during removal of drain hose, insert the grommet into drain hose from outside of the vehicle, and install on the body panel, avoiding any twisting.
3. After installing the drain hose, install the trim while taking care not to crush the drain hose.
   Also, care should be taken not to allow the drain hose connected to the pipe to be caught in.
4. Test the drain condition.
5. The protrusion of the drain hose from the body panel must be within 50 mm (2.0 in). If it exceeds 50 mm (2.0 in) after correct routing, cut the leading edge so that the protrusion is within 50 mm (2.0 in).

Sun Roof Switch

General Description

Sun roof operation can be controlled by pushing continuously the sun roof switch to activate the sun roof control unit and sun roof motor.
While the switch is being pushed to the “OPEN” side, the sun roof stops about 165 mm (6.5 in) before fully open position. Push the switch again to the “OPEN” side to open it fully. When the switch is being continuously pushed to the “CLOSE” side, the sun roof stops about 180 mm (7.1 in) short of the fully closed position and remains in this state. Push the switch again to the “CLOSE” side to close it completely.

Removal

1. Disconnect the battery ground cable.
2. Pull down the switch housing(2) and disconnect the sun roof switch and map light connectors to remove the sun roof switch(1).

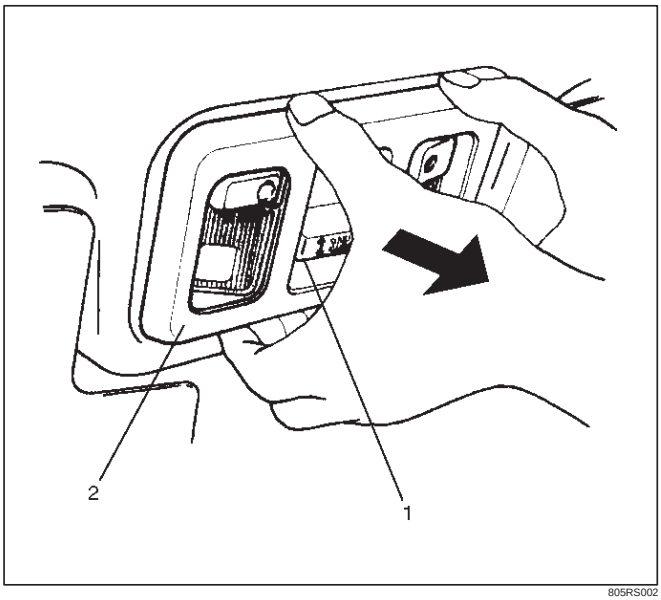

805RS002

Installation

To install, follow the removal steps in the reverse order.

Sun Roof Motor

Removal

1. Disconnect the battery ground cable.
2. Remove the headlining(2).
   - Refer to the Headlining removal steps in Body Structure section.
3. Disconnect the connector, and remove three nuts and two screws to remove the sun roof motor(1).

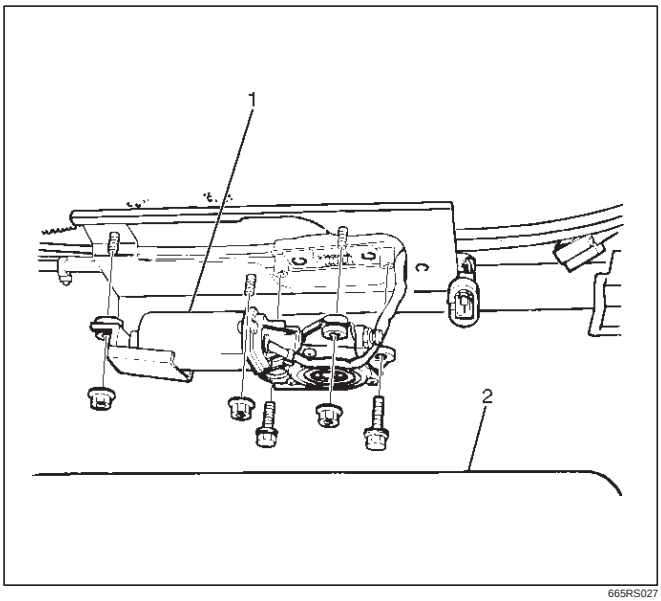

665RS027

Installation

To install, follow the removal steps in the reverse order.

Main Data and Specifications

Torque Specifications

Application	N·m	kg·m	lb ft	lb in
Sun Roof Frame Complete Assembly Fixing Bolts	10	1.0	—	87
Sun Roof Glass Fixing Screws	10	1.0	—	87

BODY AND ACCESSORIES

EXTERIOR / INTERIOR TRIM

CONTENTS

Service Precaution 8J–2
Dash Side Trim Panel 8J–3
Removal 8J–3
Installation 8J–3
Assist Grip 8J–3
Parts Location 8J–3
Removal and Installation 8J–3
Consoles 8J–4
Consoles and Associated Parts 8J–4
Removal 8J–4
Installation 8J–5
Front Door Trim Panel 8J–6
Front Door Trim Panel and Associated Parts 8J–6
Removal 8J–6
Installation 8J–9
Rear Door Trim Panel 8J–10
Rear Door Trim Panel and Associated Parts 8J–10
Removal 8J–10
Installation 8J–11
Door Mirror 8J–13
Door Mirror and Associated Parts 8J–13
Removal 8J–13
Installation 8J–13
Luggage Side and Quarter Upper Trim Cover (Long Wheel Base) 8J–14
Luggage Side, Quarter Upper Trim Cover and Associated Parts 8J–14
Removal 8J–14
Installation 8J–16
Luggage Side and Quarter Upper Trim Cover (Short Wheel Base) 8J–17
Luggage Side, Quarter Upper Trim Cover and Associated Parts 8J–17
Removal 8J–17
Installation 8J–19
Center Pillar and Roof Side Trim Cover (Long Wheel Base) 8J–20
Center Pillar, Roof Side Trim Cover and Associated Parts 8J–20
Removal 8J–20
Installation 8J–21
Roof Side Trim Cover (Short Wheel Base) . . 8J–22
Roof Side Trim Cover and Associated Parts 8J–22
Removal 8J–22
Installation 8J–22
Front Pillar Trim Cover 8J–23
Front Pillar Trim Cover and Associated Parts 8J–23
Removal 8J–23
Installation 8J–23
Center Pillar Assist Grip 8J–24
Parts Location 8J–24
Removal and Installation 8J–24
Assist Grip 8J–24
Parts Location 8J–24
Removal and Installation 8J–24
Fuel Filler Lid Opener Cable 8J–25
Fuel Filler Lid Opener Cable and Associated Parts 8J–25
Removal 8J–25
Installation 8J–26
Fuel Filler Door 8J–26
Parts Location 8J–26
Removal 8J–26
Installation 8J–26
Rocker Protector (Without Wheel Opening Extension) 8J–27
Rocker Protector (Without Wheel Opening Extension) and Associated Parts 8J–27
Removal 8J–27
Installation 8J–27
Wheel Opening Extension and Rocker Protector Assembly 8J–28
Wheel Opening Extension, Rocker Protector Assembly and Associated Parts 8J–28
Removal 8J–28
Installation 8J–29
Mud Flaps (With Wheel Opening Extension) 8J–31
Mud Flaps (With Wheel Opening Extension) and Associated Parts 8J–31
Removal 8J–31
Installation 8J–31
Ventilation Assembly 8J–32
Ventilation Assembly and Associated Parts 8J–32
Removal 8J–32
Installation 8J–32

Quarter Flipper Glass Assembly (S·W·B) . . . 8J–33
Quarter Flipper Glass Assembly and Associated Parts 8J–33
Removal 8J–33
Installation 8J–33
Tailgate Trim Panel (LH) 8J–34
Tailgate Trim Panel (LH) and Associated Parts 8J–34
Removal 8J–34
Installation 8J–35
Tailgate Trim Panel (RH) 8J–36
Parts Location 8J–36
Removal 8J–36
Installation 8J–36
Luggage Floor Box 8J–37
Luggage Floor Box and Associated Parts . 8J–37
Remove 8J–37
Installation 8J–37
Rope Hook Set 8J–37
Rope Hook Set and Associated Parts 8J–37
Removal 8J–37
Installation 8J–37
Power Door Mirror System 8J–38
General Description 8J–38
Door Mirror Switch Assembly (Control Switch, Folding Switch and Defogger Switch) Removal 8J–38
Installation 8J–38
Power Door Mirror 8J–38
General Description 8J–38
Removal and Installation 8J–38
Power Window System 8J–39
General Description 8J–39
Power Window Switch Removal and Installation 8J–39
Power Window Motor Removal and Installation 8J–40
Main Data and Specifications 8J–41

Service Precaution

WARNING: IF SO EQUIPPED WITH A SUPPLEMENTAL RESTRAINT SYSTEM (SRS), REFER TO THE SRS COMPONENT AND WIRING LOCATION VIEW IN ORDER TO DETERMINE WHETHER YOU ARE PERFORMING SERVICE ON OR NEAR THE SRS COMPONENTS OR THE SRS WIRING. WHEN YOU ARE PERFORMING SERVICE ON OR NEAR THE SRS COMPONENTS OR THE SRS WIRING, REFER TO THE SRS SERVICE INFORMATION. FAILURE TO FOLLOW WARNINGS COULD RESULT IN POSSIBLE AIR BAG DEPLOYMENT, PERSONAL INJURY, OR OTHERWISE UNNEEDED SRS SYSTEM REPAIRS.

CAUTION: Always use the correct fastener in the proper location. When you replace a fastener, use ONLY the exact part number for that application. ISUZU will call out those fasteners that require a replacement after removal. ISUZU will also call out the fasteners that require thread lockers or thread sealant. UNLESS OTHERWISE SPECIFIED, do not use supplemental coatings (Paints, greases, or other corrosion inhibitors) on threaded fasteners or fastener joint interfaces. Generally, such coatings adversely affect the fastener torque and the joint clamping force, and may damage the fastener. When you install fasteners, use the correct tightening sequence and specifications. Following these instructions can help you avoid damage to parts and systems.

Dash Side Trim Panel

Removal

1. Disconnect the battery ground cable.
2. Remove the Front door sill plate(2).
3. Remove the Dash side trim panel(3).
   - Turn up the door inner seal(1) of the body panel to remove the clips of the trim panel.
   - Take care not to damage the harness and the controller on the back of the trim panel.

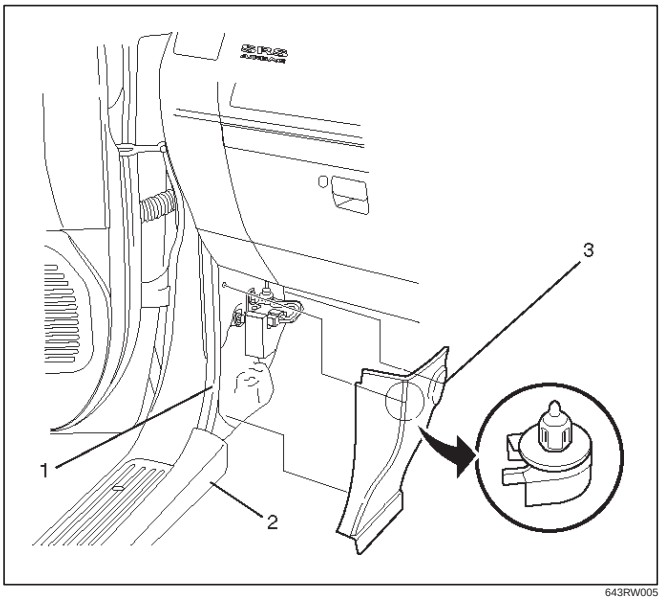

643RW005

Installation

To install, follow the removal steps in the reverse order, noting the following point.

1. Lap the door inner seal over the trim panel to install them securely to the body panel.

Assist Grip

Parts Location

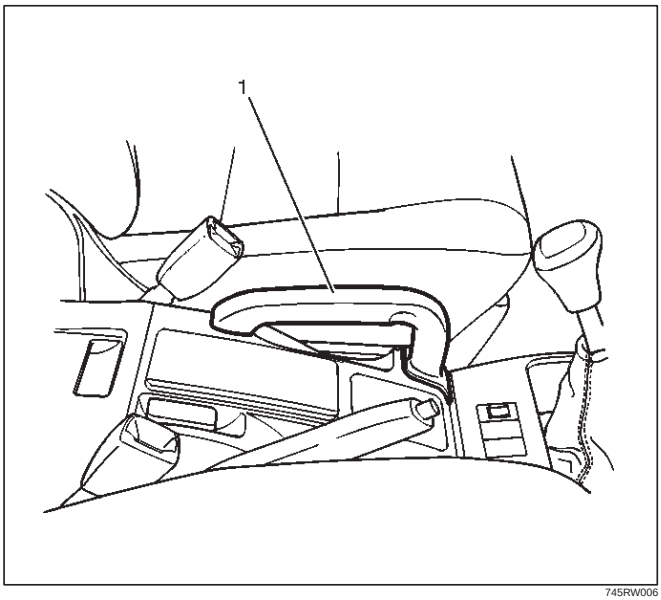

745RW006

Legend

(1) Assist Grip

Removal and Installation

- Refer to the Consoles removal and installation steps in this section.

Consoles

Consoles and Associated Parts

This illustration is based on RHD

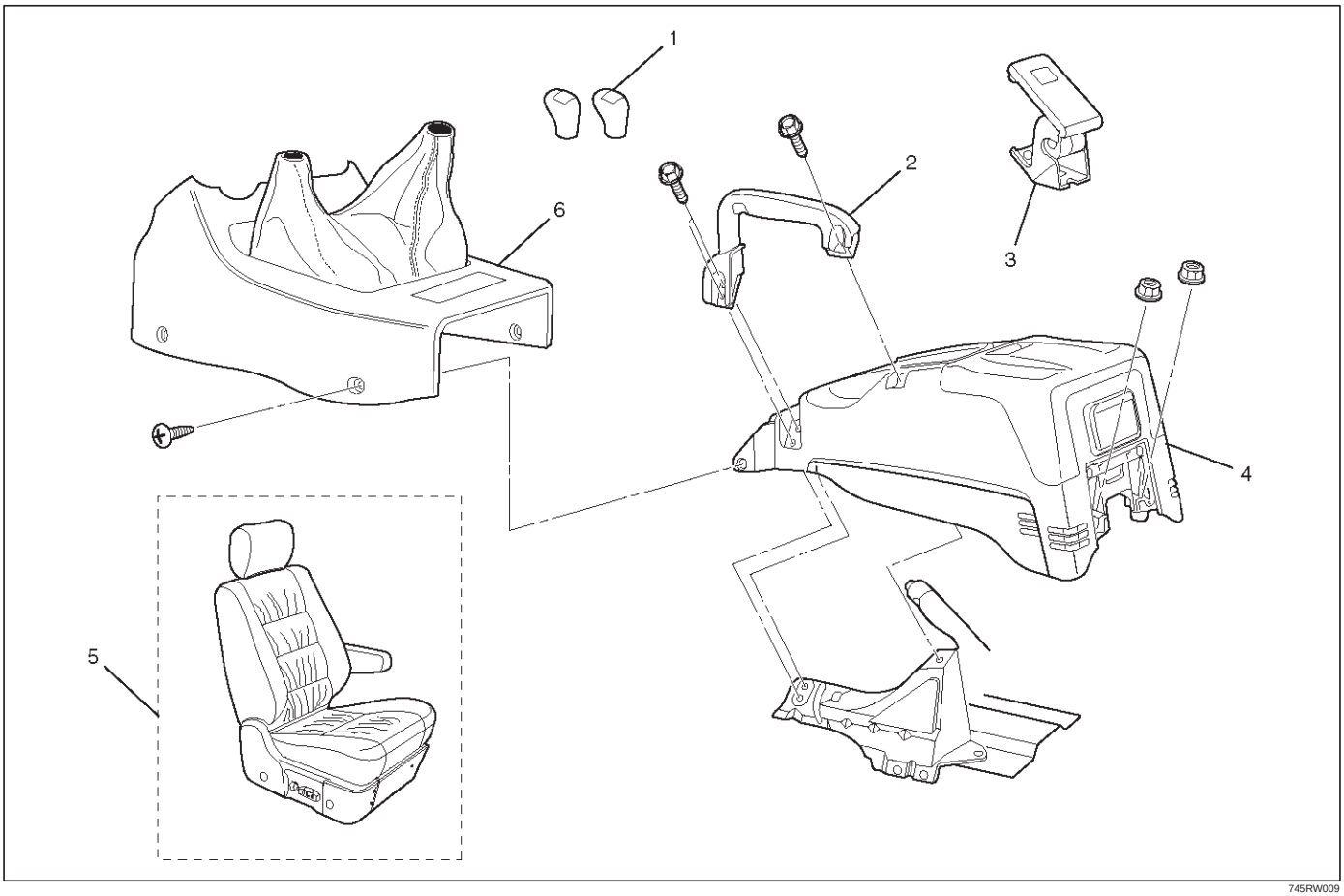

745RW009

Legend

(1) Shift Knob (M/T) / Transfer Knob (A/T)
(2) Assist Grip
(3) Fuel Filler Lid Opener
(4) Center Console Assembly
(5) Front Seat Assembly (RH)
(6) Front Console Assembly

Removal

1. Disconnect the battery ground cable.
2. Remove the shift knob (M/T) / transfer knob (A/T).
3. Remove the front console assembly.
   - Remove four fixing screws and disconnect the switch connectors.
4. Remove the front seat assembly(RH).
   - Refer to the Front Seat Assembly removal steps in Seats section.
5. Remove the assist grip.
   - Remove three bolts.
6. Remove the fuel filler lid opener.
   - Remove the fuel filter lid opener(1) and disconnect the cable(2).

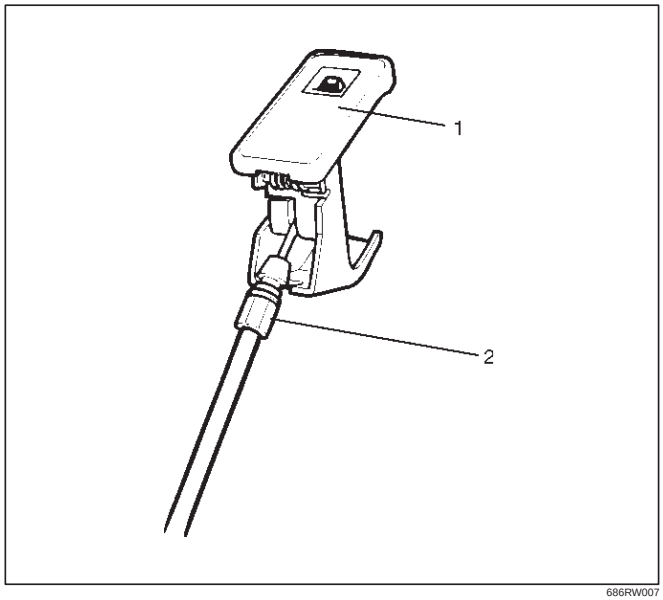

686RW007

7. Remove the center console assembly(2).
   - Remove two fixing screws on the front side.
     Open the rear cover, remove two nuts, then the center console assembly.
   - Remove the rear heater duct(1) from the center console.

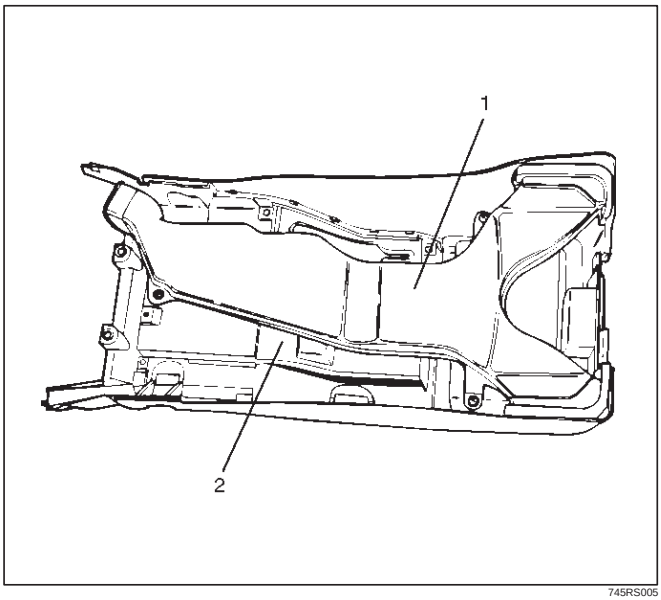

745RS005

Installation

To install, follow the removal steps in the reverse order.

Front Door Trim Panel

Front Door Trim Panel and Associated Parts

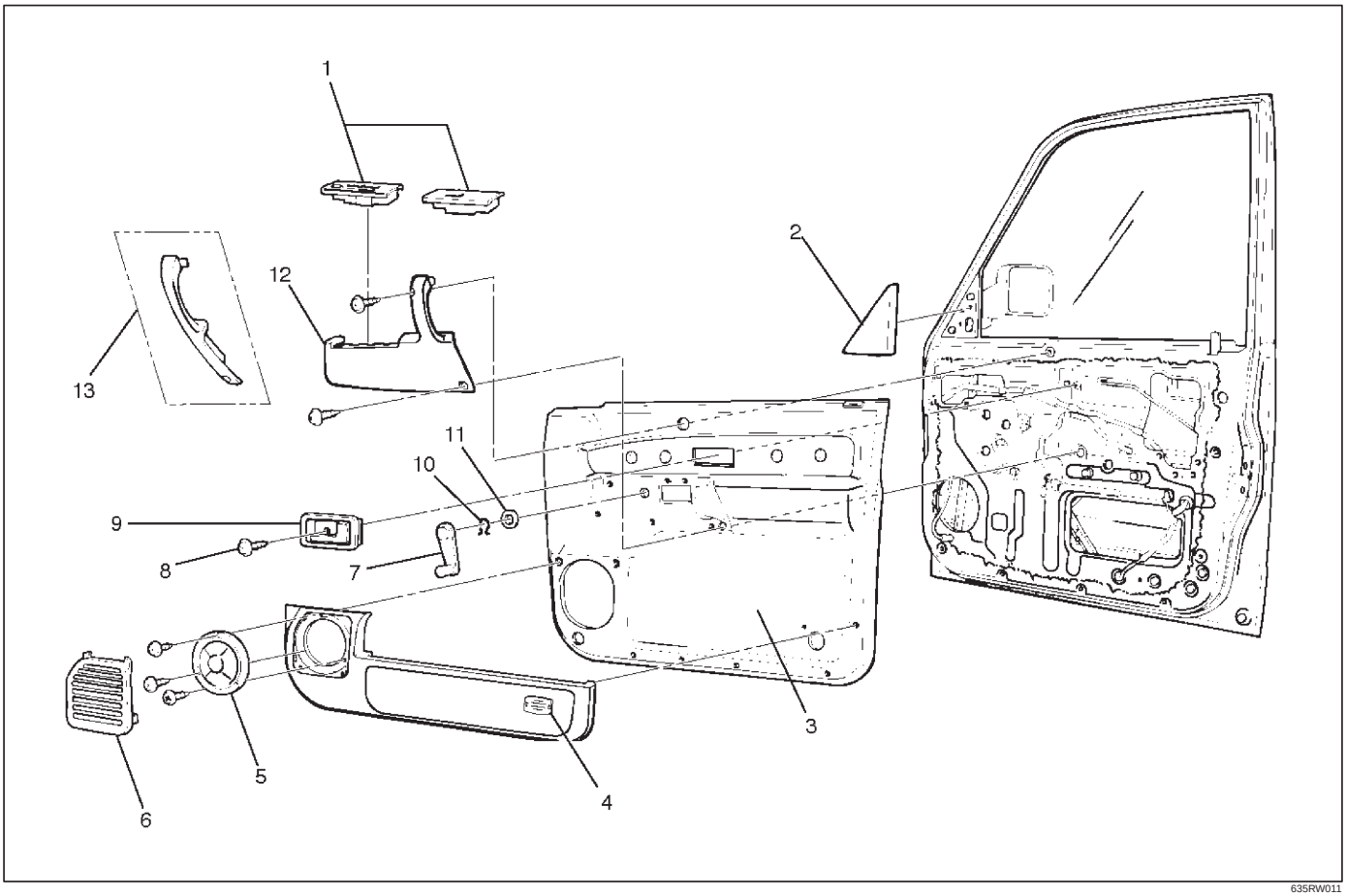

635RW011

Legend

(1) Power Window Switch
(2) Door Mirror Cover
(3) Door Trim Panel
(4) Courtesy Light
(5) Front Speaker
(6) Speaker Cover
(7) Regulator Handle
(8) Inside Handle Fixing Screw
(9) Inside Handle
(10) Hook
(11) Washer
(12) Inside Pull Handle
(13) Inside Pull Handle (W/O Power Window)

Removal

1. Disconnect the battery ground cable.

2. Remove the door mirror cover (1).

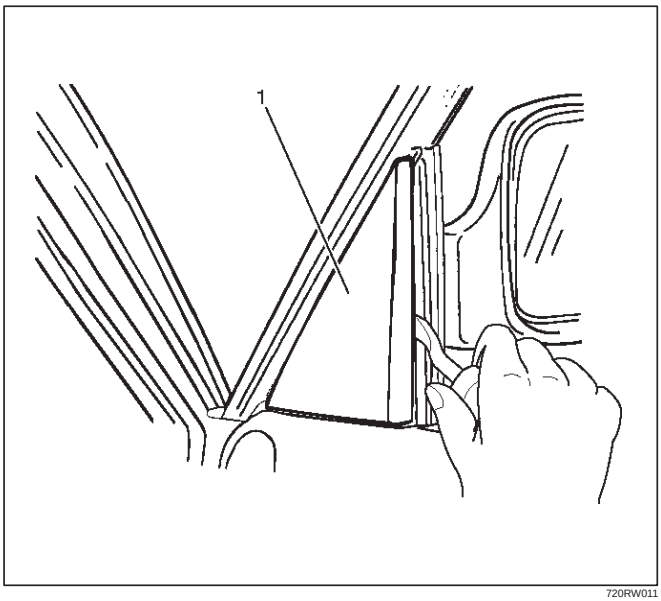

720RW011

3. Remove the regulator handle(3).
   - Pull the hook(4) out and remove the regulator handle.

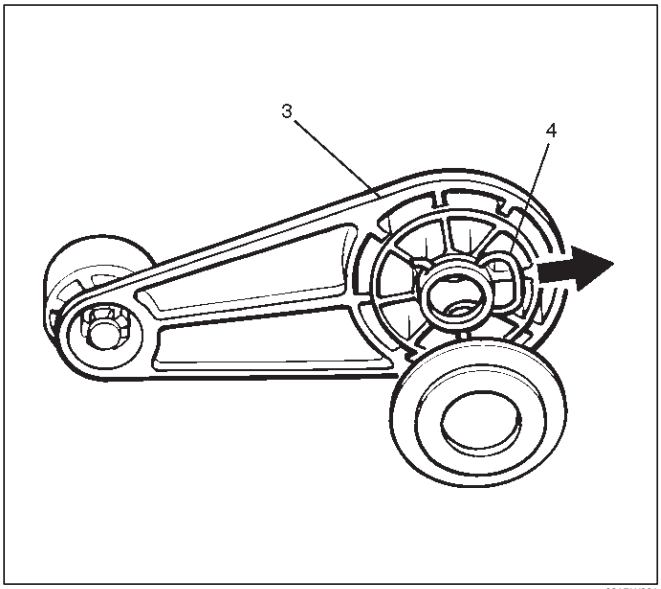

631RW001

4. Remove the power window switch(1).
   - Pry the power window switch out and disconnect the switch connector.

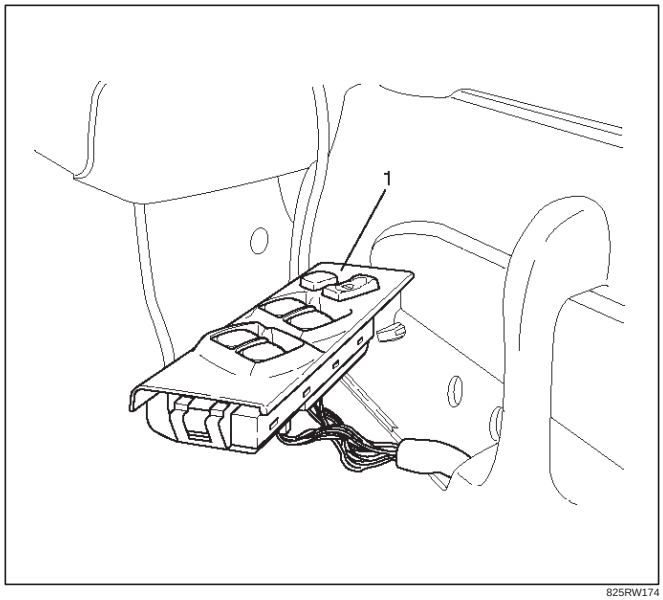

825RW174

5. Remove the speaker cover.
6. Remove the front speaker.
   - Remove the front speaker fixing screws in order to disconnect the speaker connector.
7. Remove the inside handle fixing screw.
   - Remove the screw that fixes the inside handle(7), slide the inside handle to the position illustrated, and leave it there for the moment.

CAUTION: Take care not to impose excessive force on the inside handle link(6), lest this link is elongated, which could make it impossible to operate the door with the inside handle.

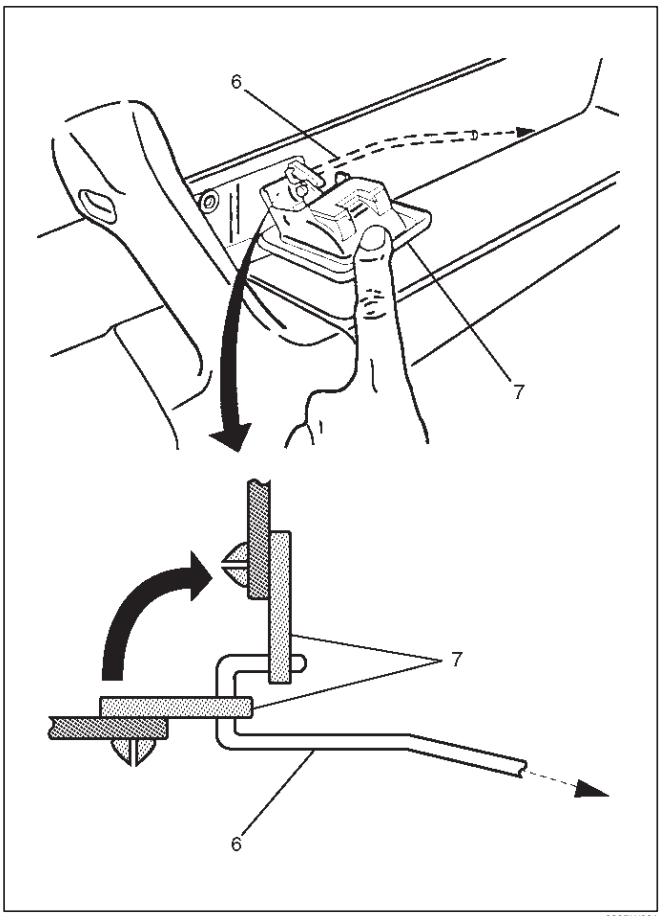

632RW001

8. Remove the door trim panel(9).
   - Remove two fixing screws(8) in order to take off seven clips(10) from the door panel.

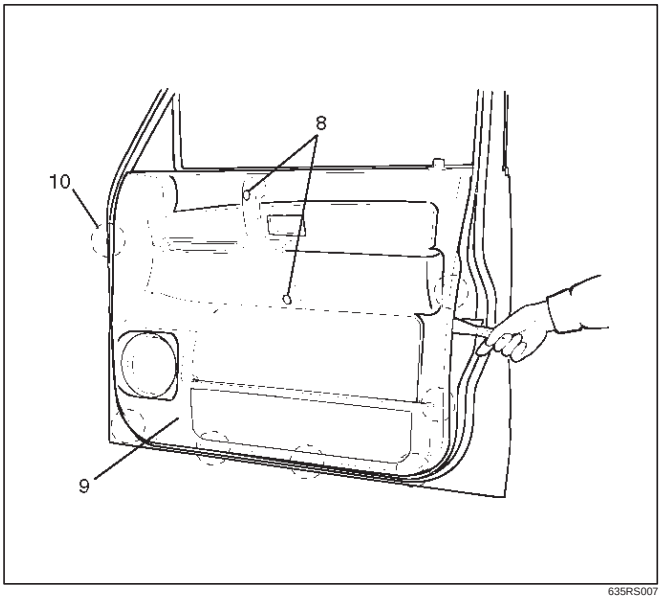

635RS007

- Disconnect the courtesy light connector(13) to lift the door trim panel(14) and unlock the engagement of the waist seal(12) section. Then, pass the inside handle(11) through the mounting hole of the trim panel, and detach the trim panel.

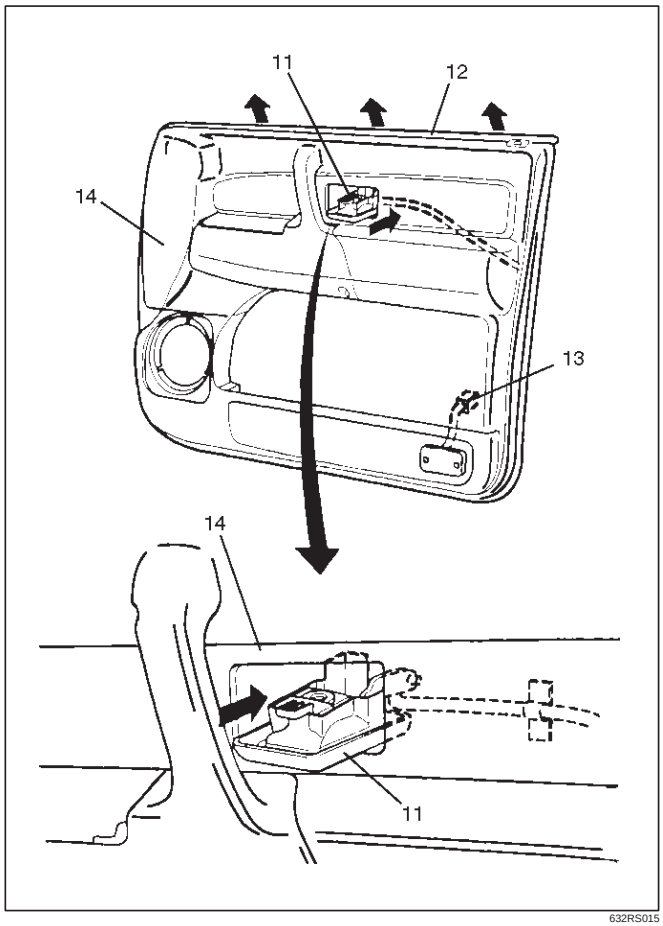

632RS015

9. Remove the inside handle.

Installation

To install, follow the removal steps in the reverse order, noting the following point.

1. When installing the inside handle(2), assemble it temporarily to the inside handle link(1).

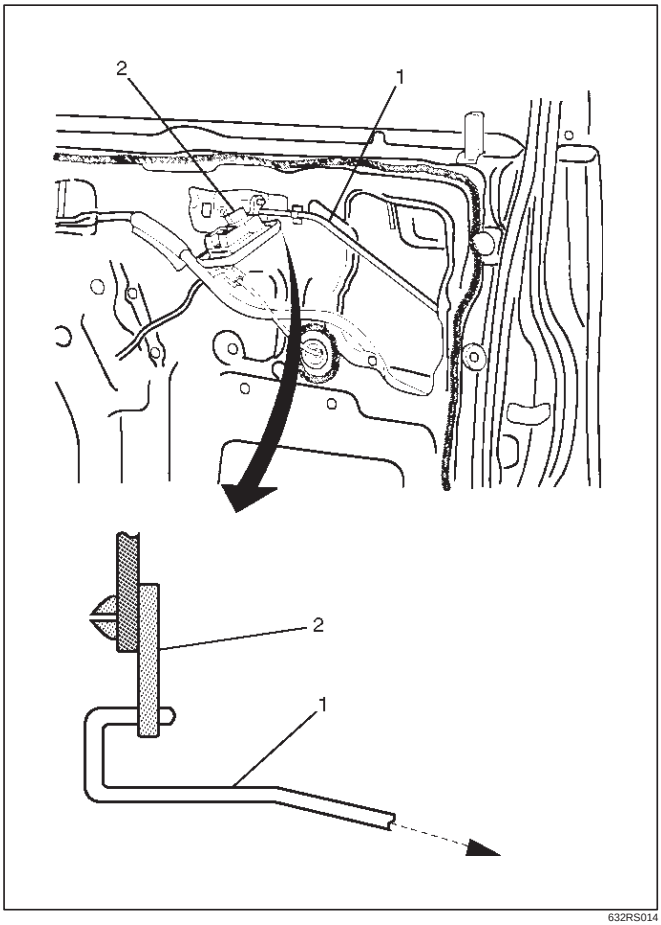

632RS014

2. Pass the inside handle(4) through the mounting hole of the trim panel and assemble the trim panel.

   Engage seven clips(8) into the door panel. Also, connect the courtesy light connector(5) and leave the connectors of the speaker(7), tweeter(9) and power window(3) drawn out to their prescribed positions, so that they will not be caught.

   Then, put the inside handle(4) to the normal position of the inside handle link(6).

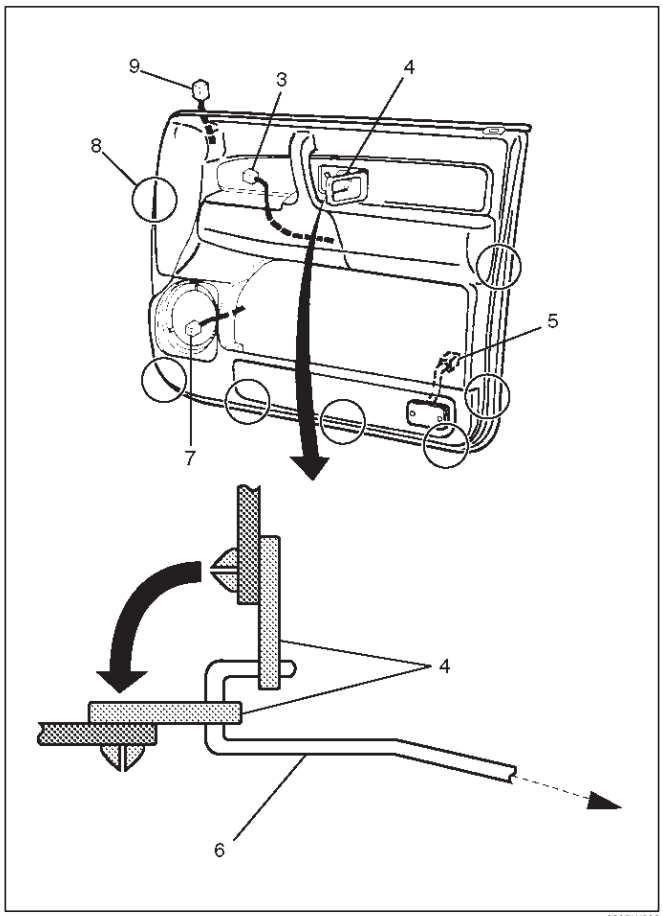

632RW006

3. Fit the claw(10) of the inside handle(11) securely into the hole of the door panel and fix the inside handle with the screw.

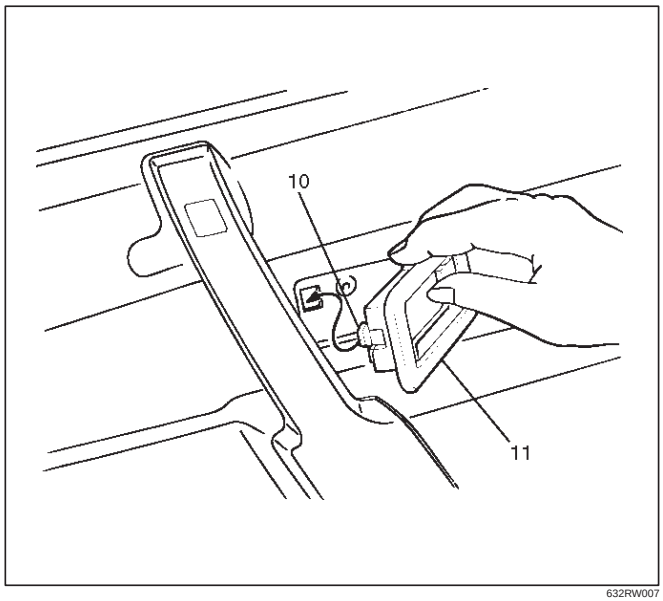

632RW007

Rear Door Trim Panel

Rear Door Trim Panel and Associated Parts

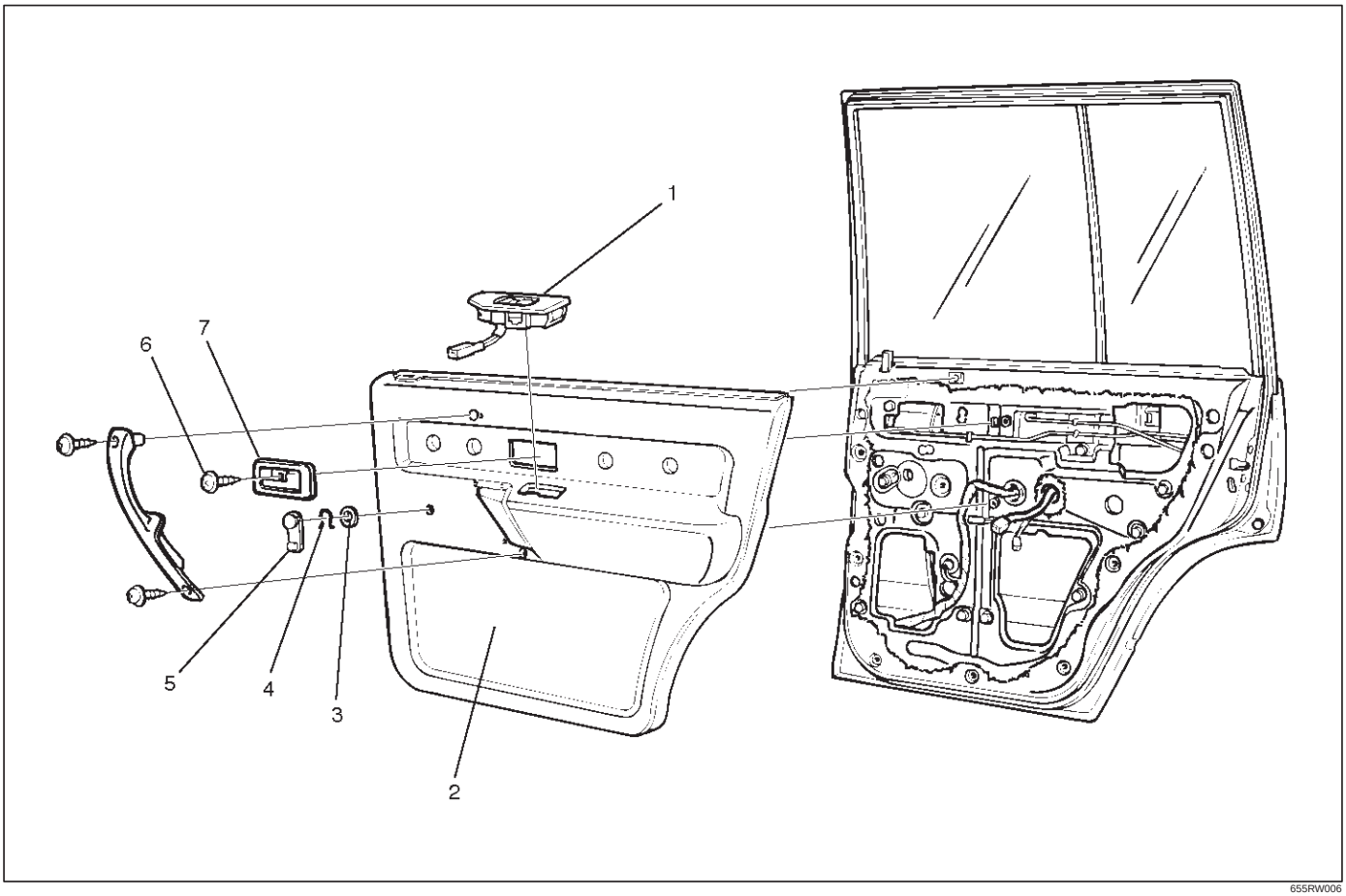

655RW006

Legend

(1) Power Window Switch
(2) Door Trim Panel
(3) Washer
(4) Clip
(5) Regulator Handle
(6) Inside Handle Fixing Screw
(7) Inside Handle

Removal

1. Disconnect the battery ground cable.
2. Remove the regulator handle(1).
   - Pull the hook(2) out and remove the regulator handle.

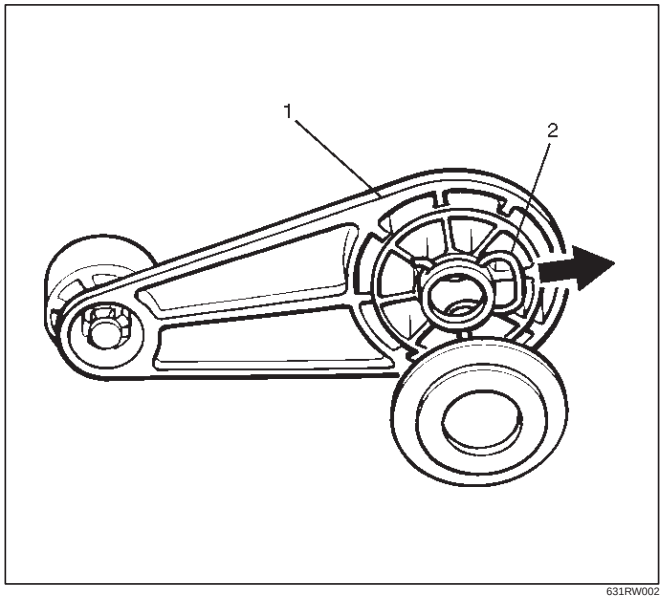

631RW002

3. Remove the power window switch(3).
   - Pry the power window switch out and disconnect the switch connector.

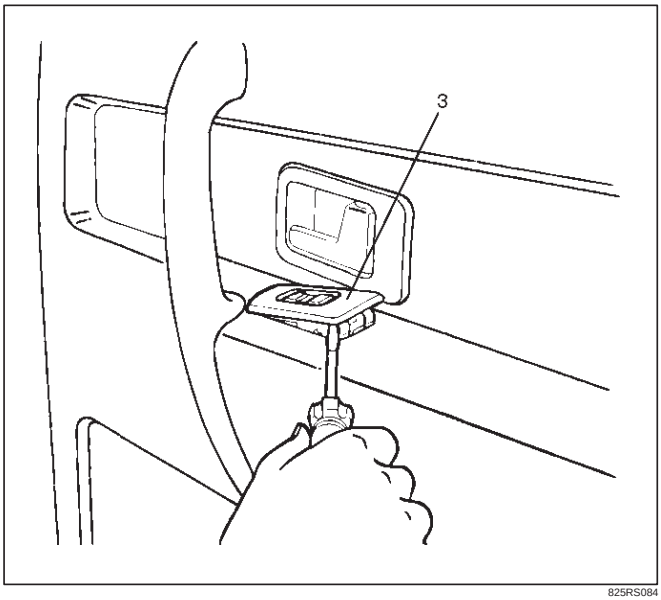

825RS084

4. Remove the inside handle fixing screw.
   - Remove the screw that fixes the inside handle(5), slide the inside handle to the position illustrated, and leave it there for the moment.

CAUTION: Take care not to impose excessive force on the inside handle link(4), lest this link be elongated, which could make it impossible to operate the door with the inside handle.

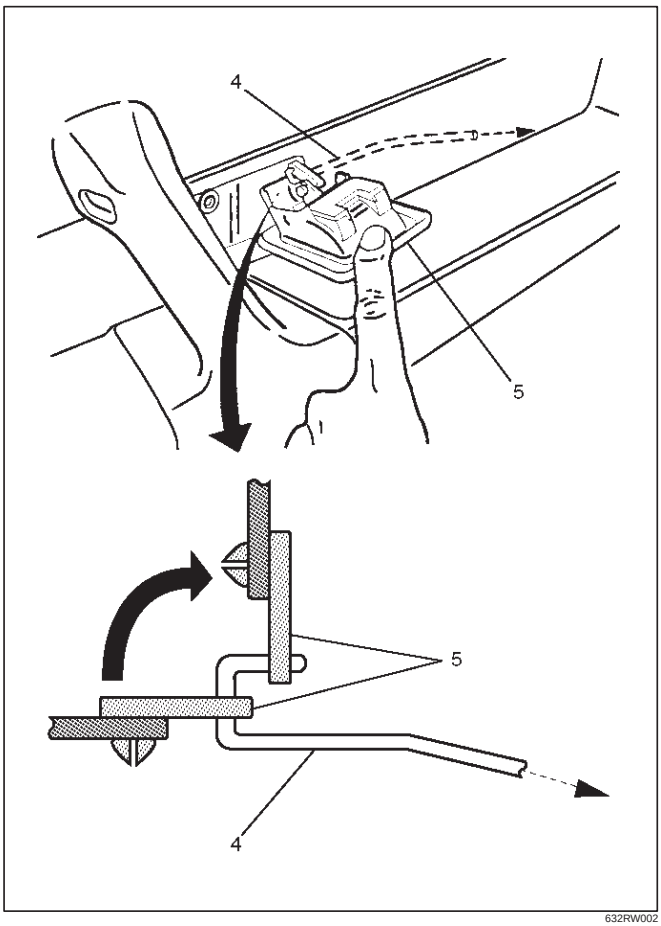

632RW002

5. Remove the door trim panel(6).
   - Remove two fixing screws(8) to take off seven clips(7) from the door panel.

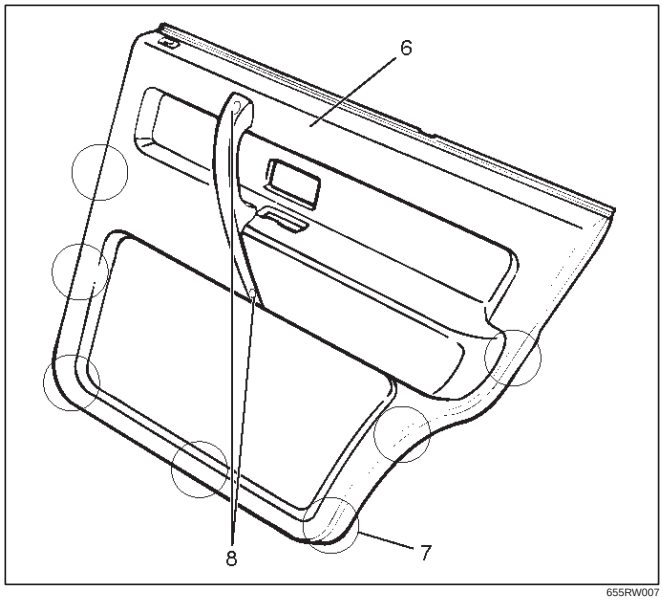

655RW007

   - Lift the trim panel and unlock the engagement of the waist seal section. Then, pass the inside lever through the mounting hole of the trim panel, and detach the trim panel.

6. Remove the inside handle.

Installation

To install, follow the removal steps in the reverse order, noting the following point.

1. When installing the inside handle(1), assemble temporarily to the inside handle link(2).

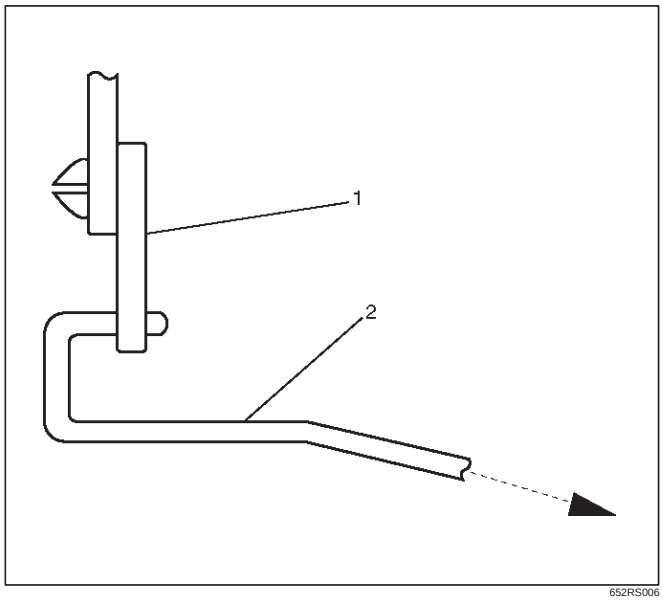

652RS006

2. Pass the inside handle through the mounting hole of the trim panel. Assemble the trim panel. Engage securely seven clips into the door panel. Also, leave the connector of the power window drawn out to its prescribed position, so that it will not caught.
3. Put back the inside handle(3) to the original position of the link(5). Fit the claw(4) of the inside handle securely into the hole of the door panel. Fix the handle with the screw.

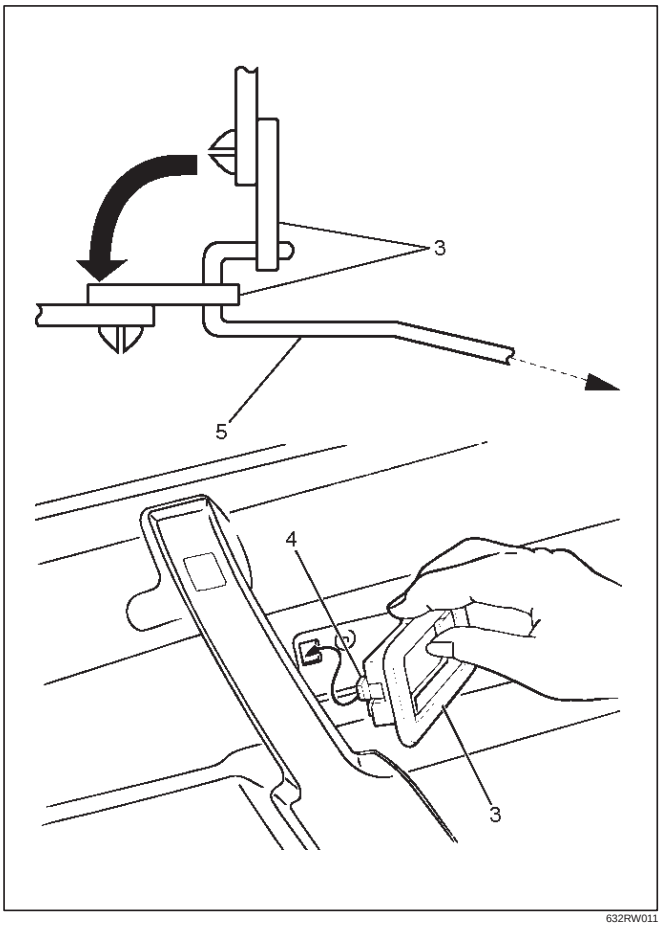

632RW011

Door Mirror

Door Mirror and Associated Parts

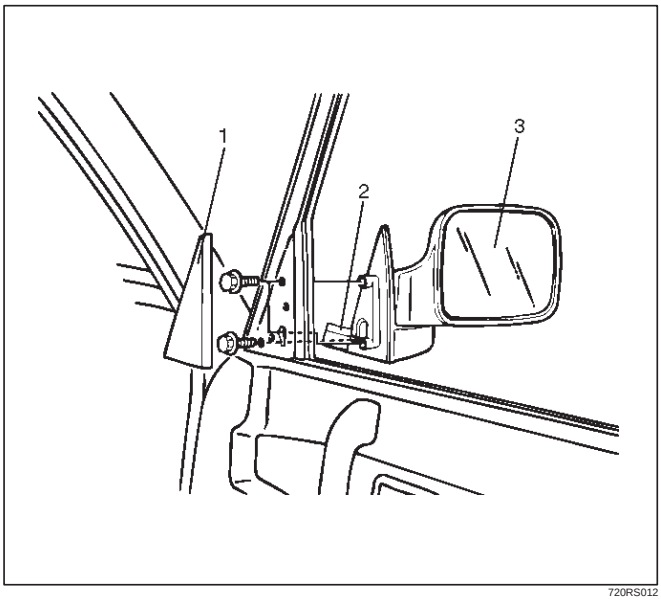

720RS012

Legend

(1) Door Mirror Cover
(2) Door Mirror Connector
(3) Door Mirror

Removal

1. Disconnect the battery ground cable.
2. Remove the door mirror cover(1).

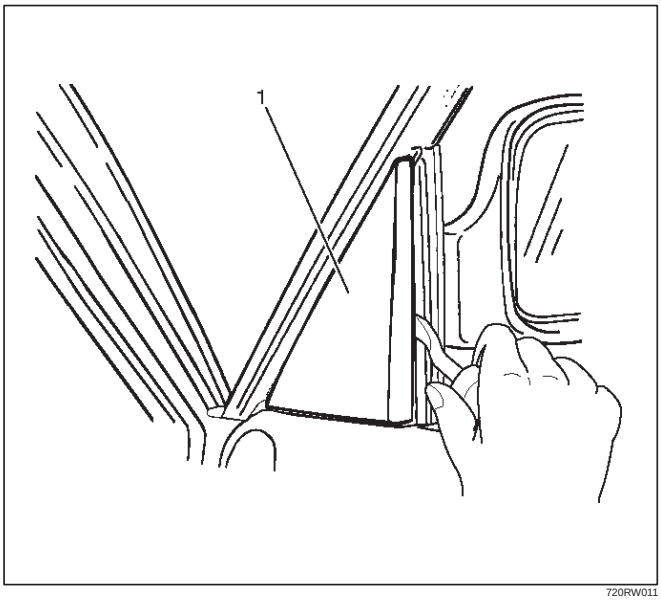

720RW011

3. Remove the door mirror connector.
4. Remove the door mirror.

Installation

To install, follow the removal steps in the reverse order, noting the following points.

1. When you install the door mirror, install the bolt(1) to the mirror temporarily, hook the bolt to the door side hole and tighten the bolt from the inside.

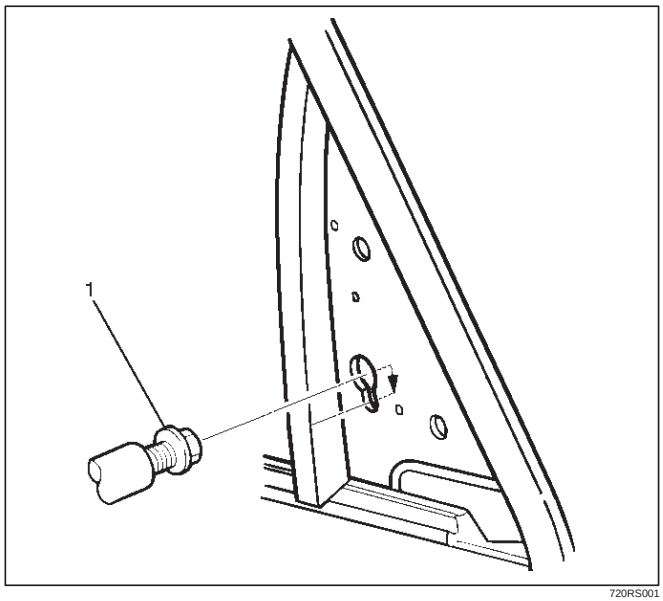

720RS001

2. When installing the door mirror, hold the glass run lip(2) between the door mirror base(3) and the center sash(4).

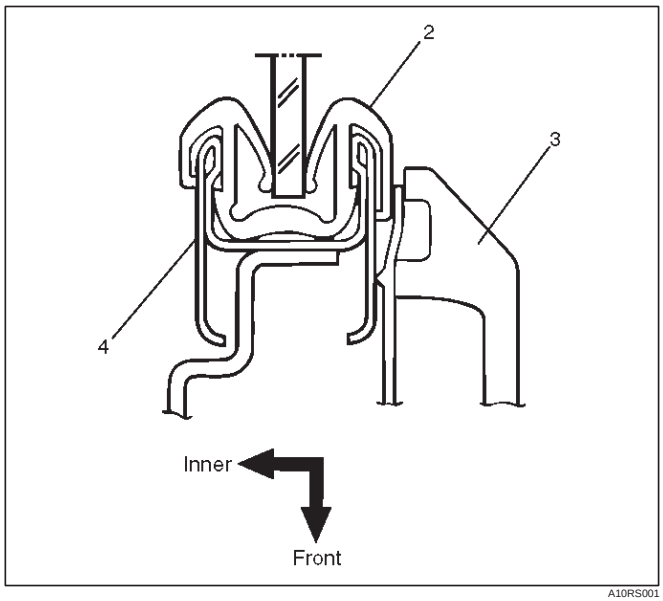

A10RS001

3. Tighten the door mirror fixing bolts to the specified torque.

Torque: 8 N·m (0.8kg·m/69 lb in)

Luggage Side and Quarter Upper Trim Cover (Long Wheel Base)

Luggage Side, Quarter Upper Trim Cover and Associated Parts

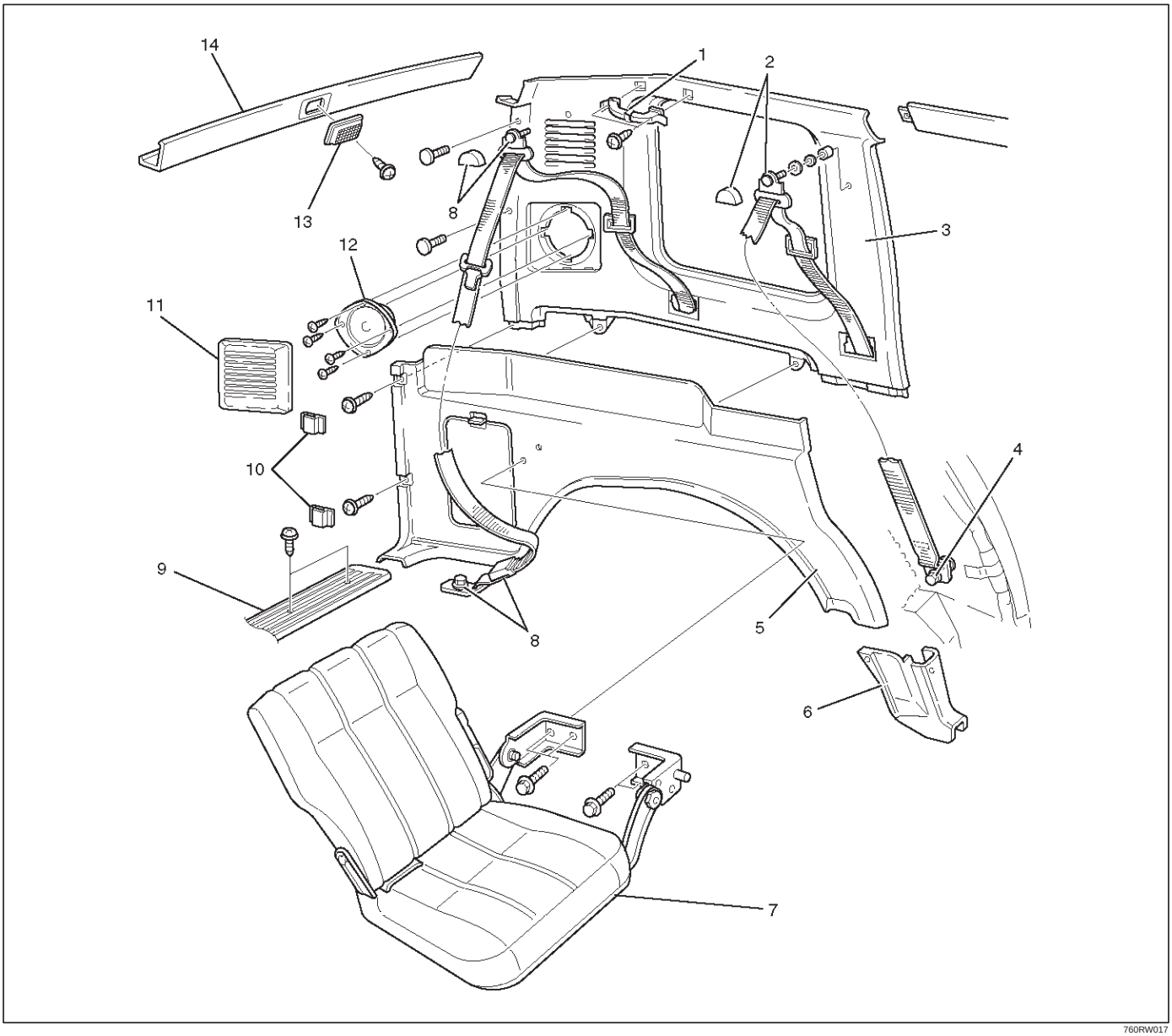

760RW017

Legend

(1) Assist Grip
(2) Rear Seat Belt Anchor Bolt Cover and Anchor Bolt
(3) Quarter Upper Trim Cover
(4) Anchor Bolt
(5) Luggage Side Trim Cover
(6) Luggage Side Lower Cover
(7) Third Seat Assembly and seat Bracket
(8) Third Seat Belt Anchor Bolt Cover and Anchor Bolt
(9) Rear End Floor Trim Cover
(10) Luggage Side Cap
(11) Speaker Grille
(12) Rear Speaker
(13) Luggage Room Light
(14) Rear Roof Trim Cover

Removal

1. Disconnect the battery ground cable.
2. Remove the third seat assembly and seat bracket.
3. Remove the rear end floor trim cover.
4. Remove the luggage side cap.

5. Remove the luggage side lower cover.
6. Remove the luggage side trim cover (1).
   - Remove the rear side fixing screws and pry the trim cover retainers free from the body panel and the upper trim cover.

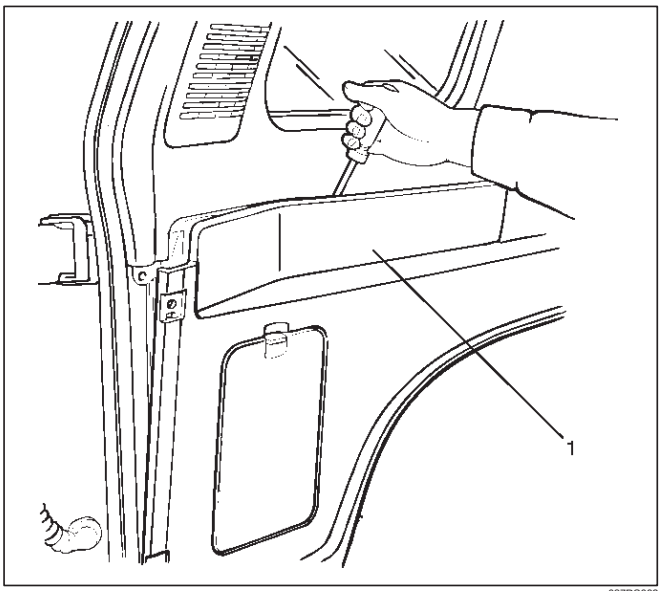

687RS002

7. Remove the luggage room light.
   - Remove the luggage room light lens and the fixing screws.
   - Disconnect the luggage room light connector.
8. Remove the rear roof trim cover.
   - Pry the trim cover retainers free from the body panel.

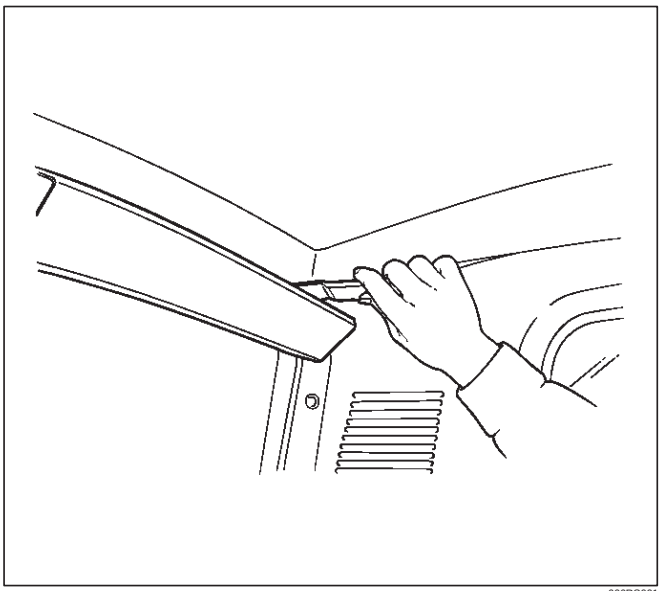

666RS001

9. Remove the speaker grille.

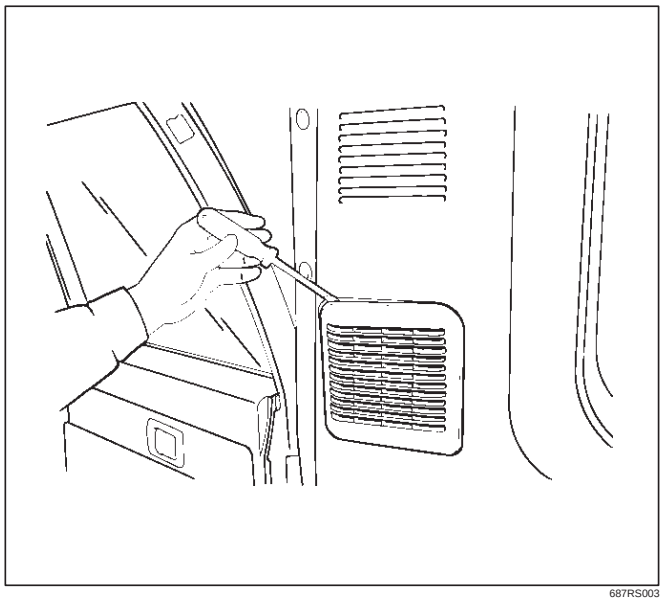

687RS003

10. Remove the rear speaker.
    - Remove the rear speaker fixing screws and disconnect the connector.
11. Remove the rear seat belt anchor bolt cover (2) and the anchor bolt (3).

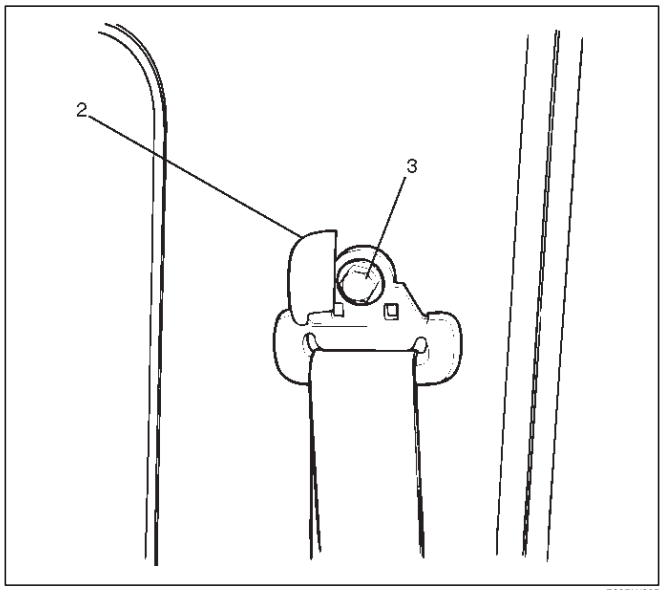

760RW005

12. Remove the third seat belt anchor bolt cover and anchor bolt.
    - Refer to the Third Seat Belt removal procedure in Seat Belt System section.
13. Remove the assist grip.

14. Remove the quarter upper trim cover.
    - Remove the rear side clips of the trim cover and pry the quarter upper trim cover retainers free from the body panel.

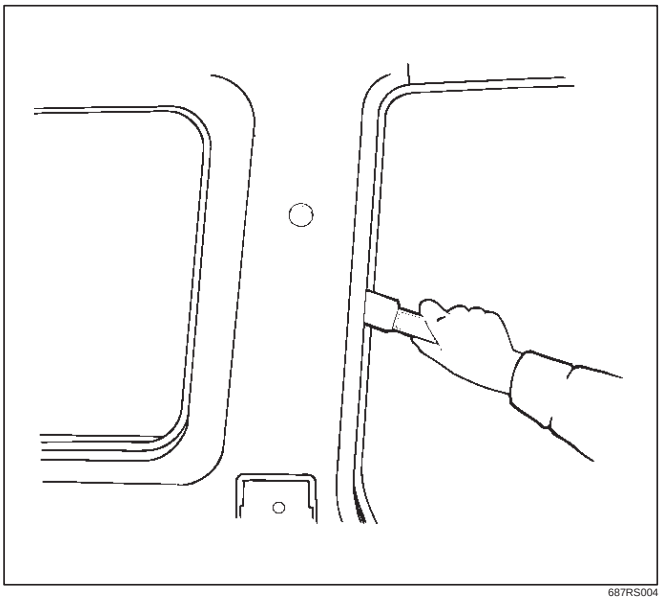

687RS004

Installation

To install, follow the removal steps in the reverse order, noting the following point.

1. Tighten the seat belt anchor bolt to the specified torque.

   Torque: 39 N·m (4.0kg·m/29 lb ft)

Luggage Side and Quarter Upper Trim Cover (Short Wheel Base)

Luggage Side, Quarter Upper Trim Cover and Associated Parts

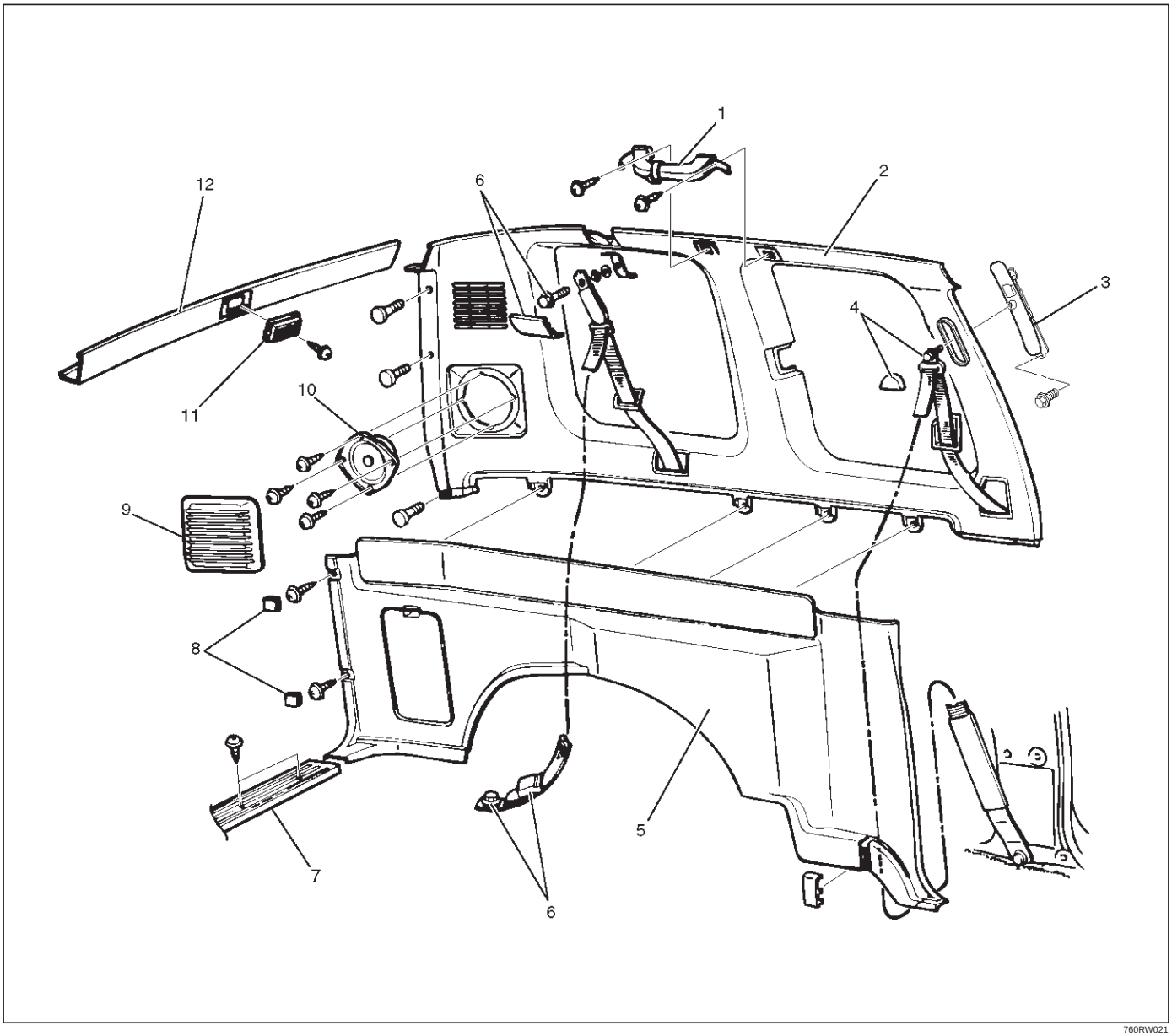

Legend

(1) Rear Assist Grip
(2) Quater Upper Trim Cover
(3) Seat belt adjust Shoulder Anchor Plate
(4) Front Seat Belt Anchor Bolt Cover and Anchor Bolt
(5) Luggage Side Trim Cover
(6) Rear Seat Belt Anchor Bolt Cover and Anchor Bolt
(7) Rear End Floor Trim Cover
(8) Luggage Side Cap
(9) Speaker Grill
(10) Rear Speaker
(11) Luggage Room Light
(12) Rear Roof Trim Cover

Removal

1. Disconnect the battery ground cable.
2. Remove the rear end floor trim cover.
3. Remove the luggage side cap.

4. Remove the luggage side trim cover (1).
   - Remove the rear side fixing screws and pry the trim cover retainers free from the body panel and the upper trim cover.
   - Remove the cover by pulling the front seat belt out of the slit on the lower side of the trim cover.

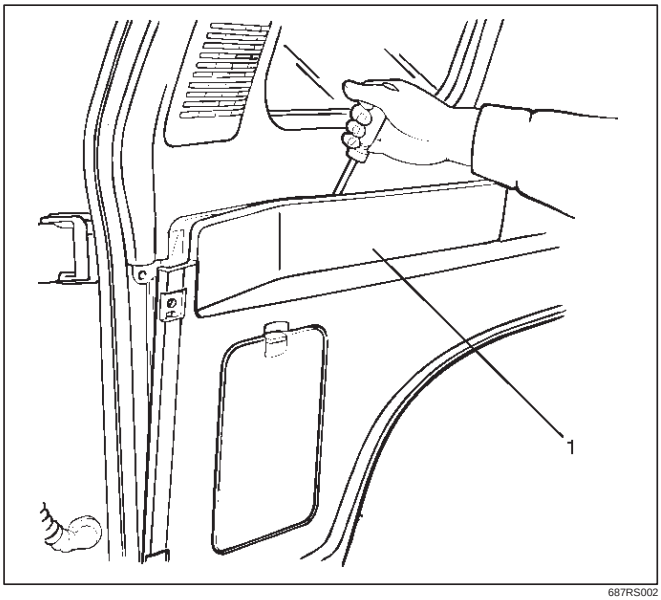

687RS002

5. Remove the luggage room light.
   - Remove the luggage room light lens and the fixing screws.
   - Disconnect the luggage room light connector.
6. Remove the rear roof trim cover.
   - Pry the trim cover retainers free from the body panel.

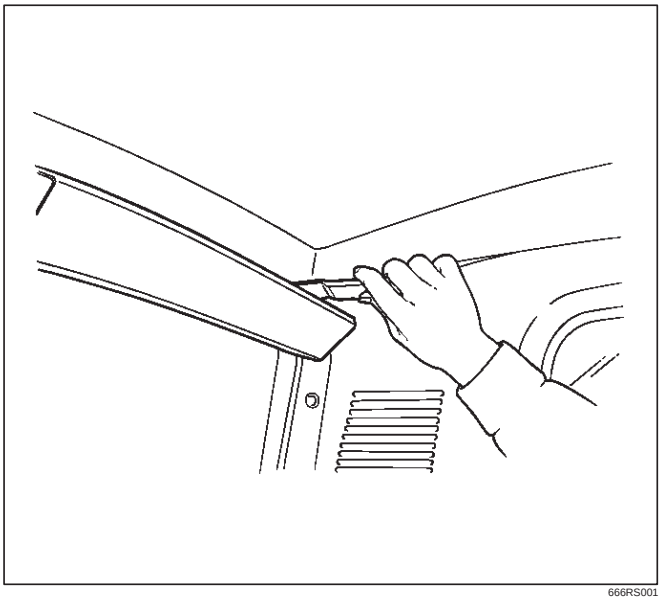

666RS001

7. Remove the speaker grille.

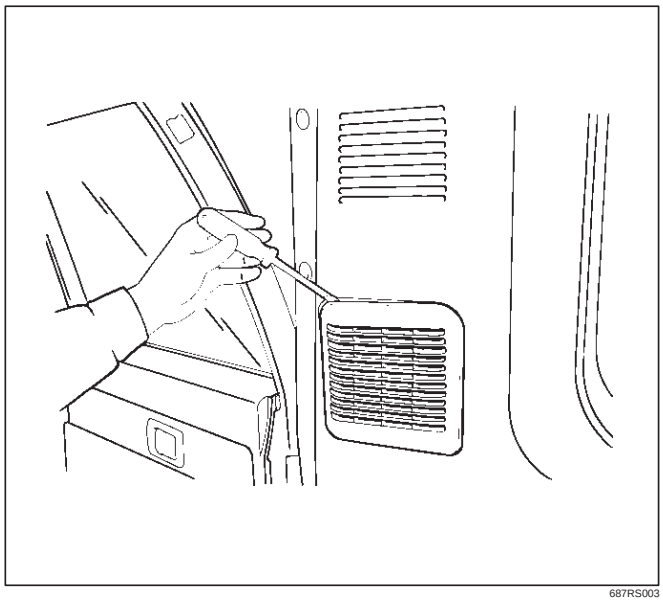

687RS003

8. Remove the rear speaker.
   - Remove the rear speaker fixing screws and disconnect the connector.
9. Remove the rear assist grip (7).
   - Open the both side of the assist grip cover (8) and remove two fixing screws.

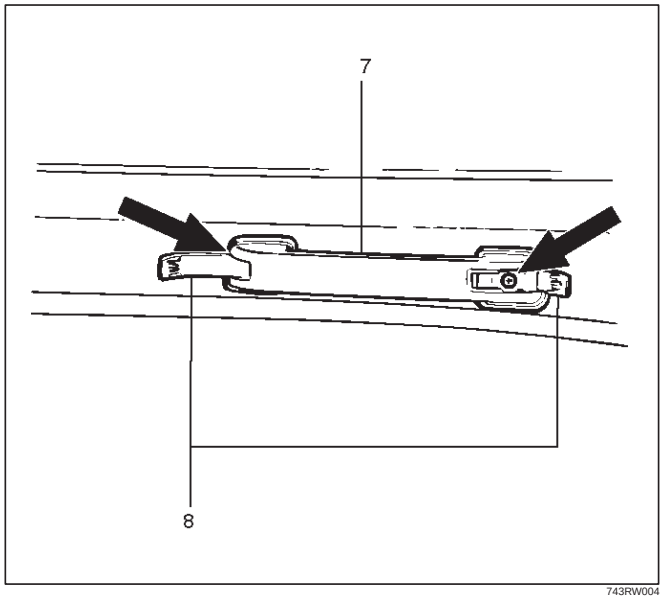

743RW004

10. Remove the rear seat belt anchor bolt cover (1) and the anchor bolt (2).

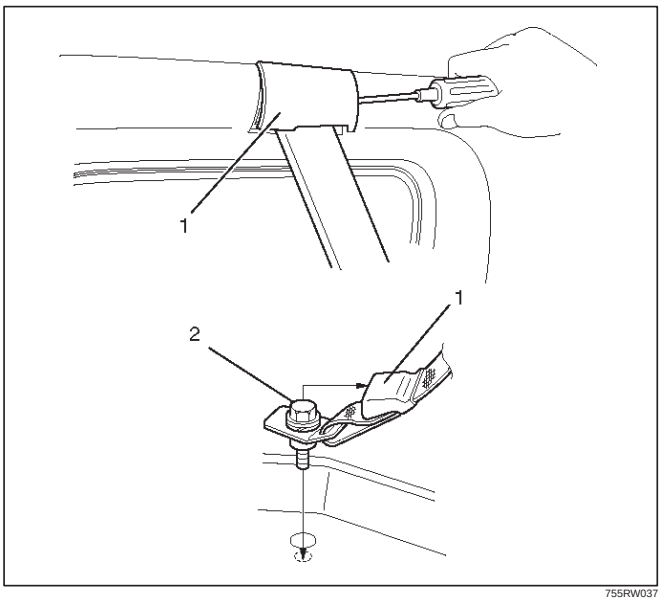

755RW037

11. Remove the front seat belt anchor bolt cover (3) and the anchor bolt (4).

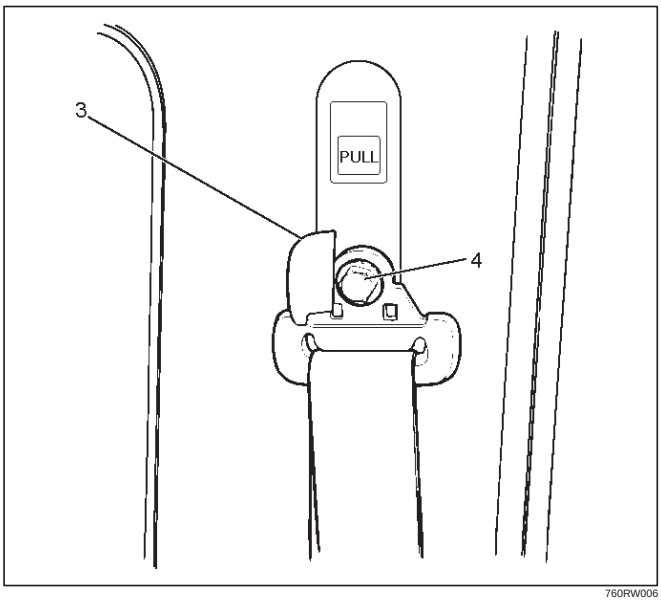

760RW006

12. Remove the quarter upper trim cover.
    - Remove the rear side clips of the trim cover and pry the quarter upper trim cover retainers free from the body panel.

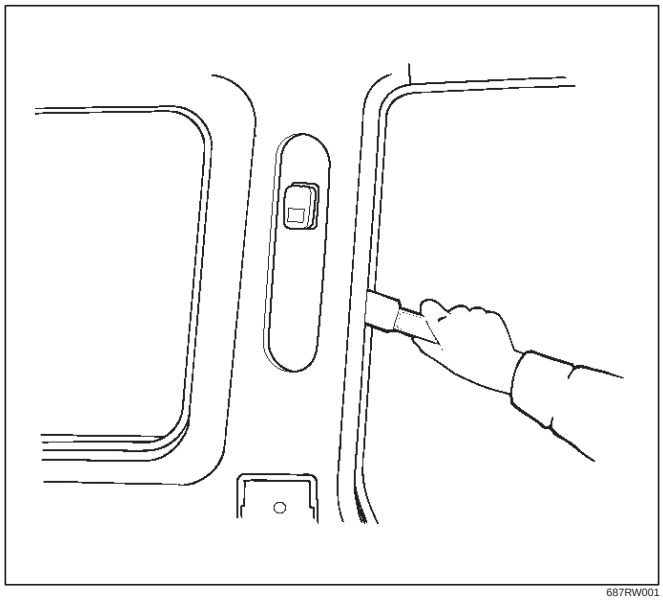

687RW001

13. Remove the seat belt adjust shoulder anchor plate.

Installation

To install, follow the removal steps in the reverse order, noting the following point.

1. Tighten the seat belt anchor bolts to the specified torque.

   Torque: 39 N·m (4.0kg·m/29 lb ft)

Center Pillar and Roof Side Trim Cover (Long Wheel Base)

Center Pillar, Roof Side Trim Cover and Associated Parts

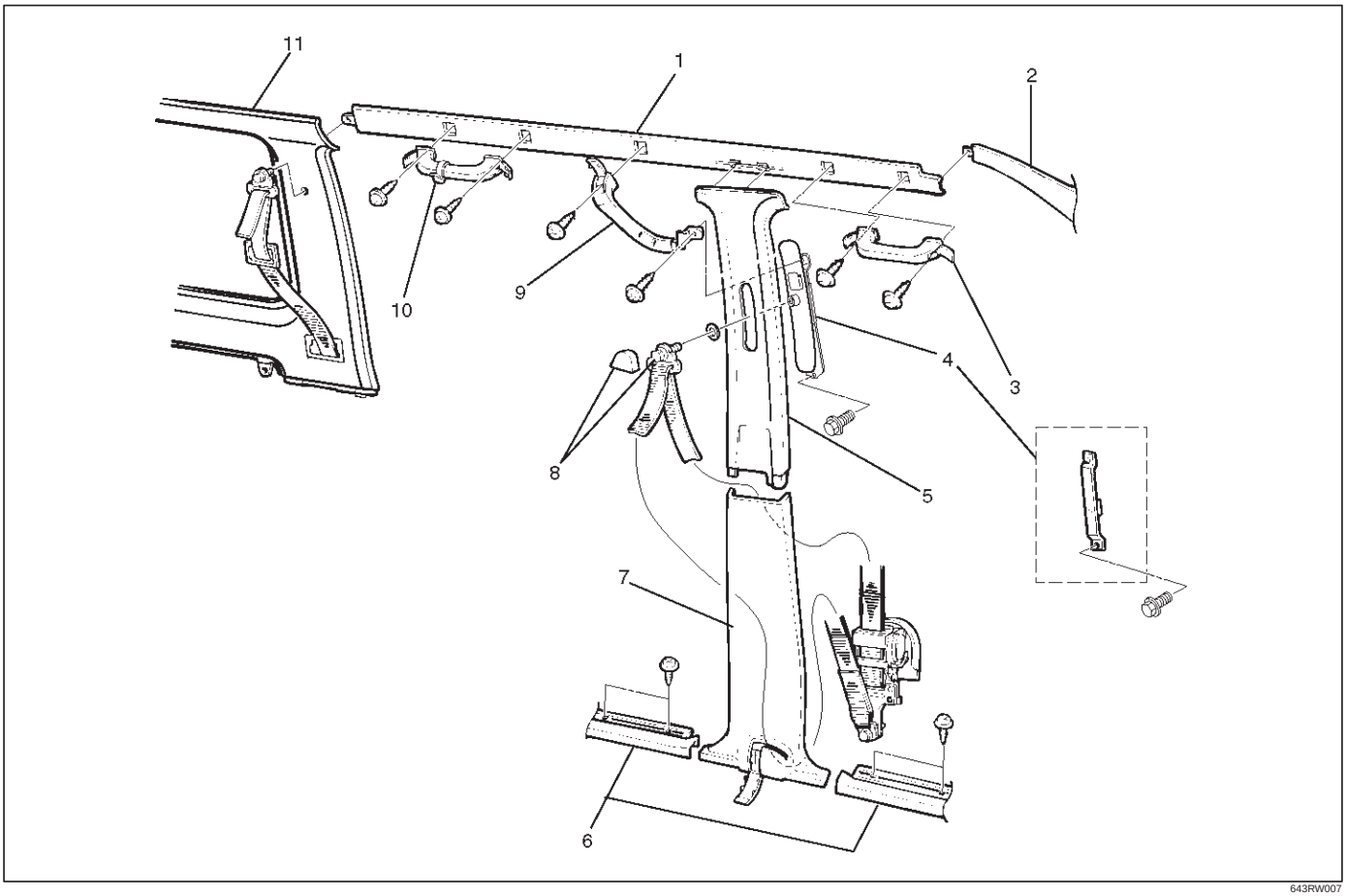

643RW007

Legend

(1) Roof Side Trim Cover
(2) Front Pillar Trim Cover
(3) Assist Grip (Passenger Seat Side)
(4) Adjust Shoulder Anchor Assembly/Seat Belt Anchor Plate
(5) Center Pillar Upper Trim Plate
(6) Door Sill Plate (Front and Rear)
(7) Center Pillar Lower Trim Cover
(8) Front Seat Anchor Bolt Cover and Anchor Bolt
(9) Center Pillar Assist Grip
(10) Assist Grip
(11) Rear Quarter Upper Trim Cover

Removal

1. Disconnect the battery ground cable.
2. Remove the door sill plate (front and rear).
3. Remove the center pillar lower trim cover (2).
   - Turn up the finisher (1) and pry the trim cover retainers free from the body panel, then slide the trim cover downward.

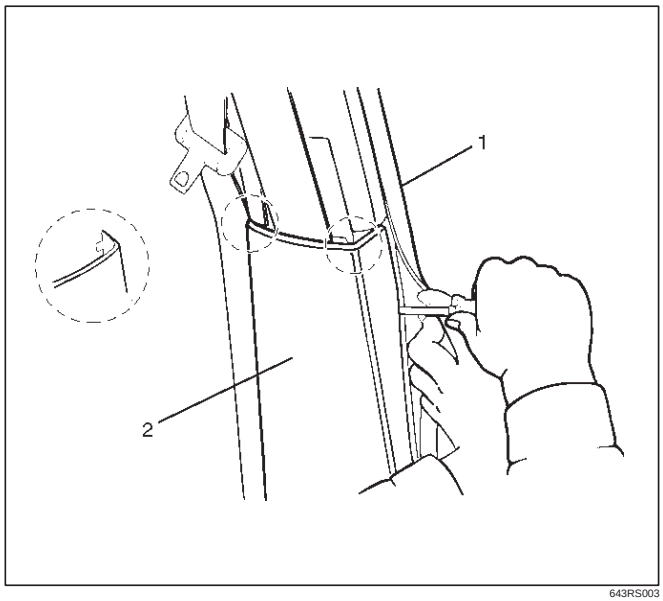

643RS003

4. Remove the front seat belt anchor bolt cover (3) and the anchor bolt (4).

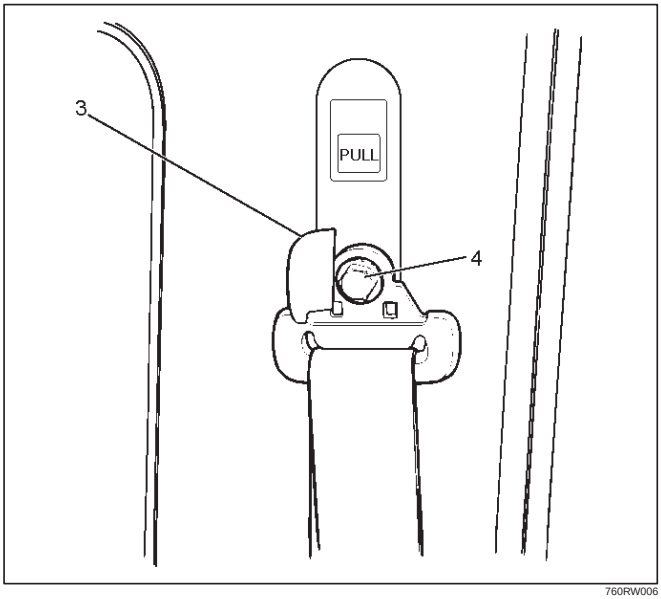

760RW006

5. Remove the center pillar upper trim cover (6).
   - Turn up the finisher (5) and pry the trim cover retainers free from the body panel.

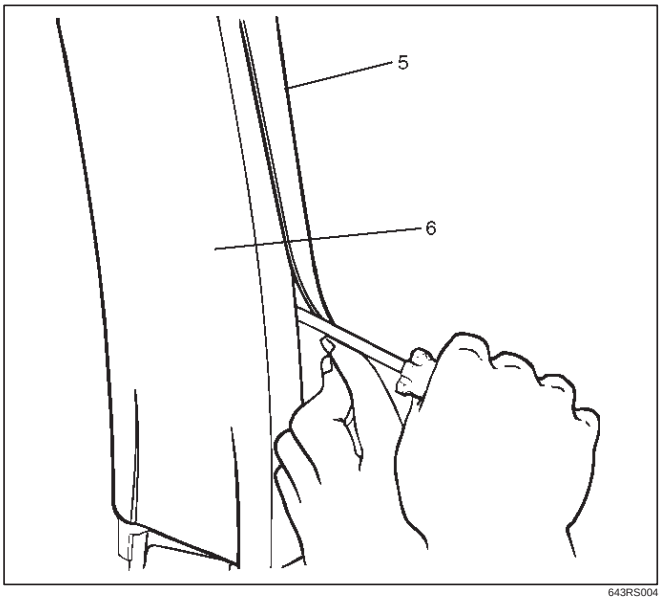

643RS004

6. Remove the center pillar assist grip.
7. Remove the seat belt anchor plate/adjusut shoulder anchor assembly.
8. Remove the assist grip (7).
   - Open the both side of the assist grip cover (8) and remove two fixing screws.

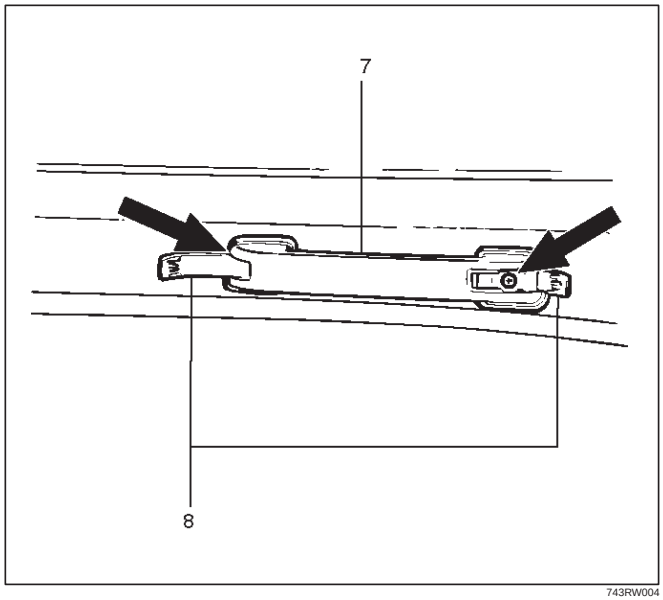

743RW004

9. Remove the roof side trim cover (9).
   - Turn up the finisher (10) and pry the trim cover retainers free from the body panel.

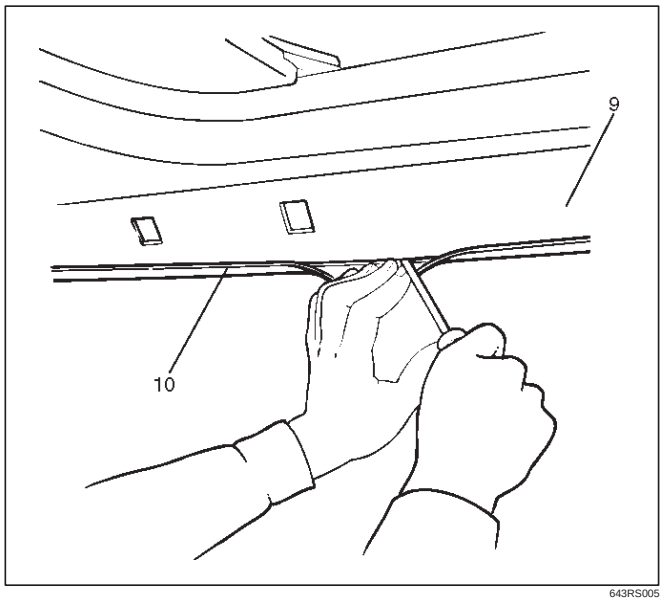

643RS005

Installation

To install, follow the removal steps in the reverse order, noting the following point.

1. Install the seat belt anchor bolts to the specified torque.

   Torque: 39 N·m (4.0kg·m/29 lb ft)

Roof Side Trim Cover (Short Wheel Base)

Roof Side Trim Cover and Associated Parts

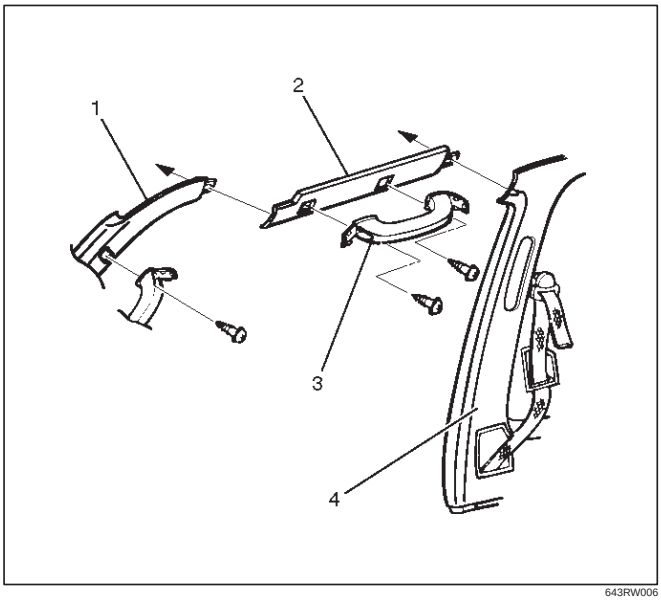

643RW006

Legend

(1) Front Pillar Trim Cover
(2) Roof Side Trim Cover
(3) Assist Grip (Passenger Seat Side)
(4) Rear Quarter Upper Trim Cover

Removal

1. Remove the assist grip.
2. Remove the roof side trim cover (9).
   - Turn up the finisher (10) and pry the trim cover retainers free from the body panel.

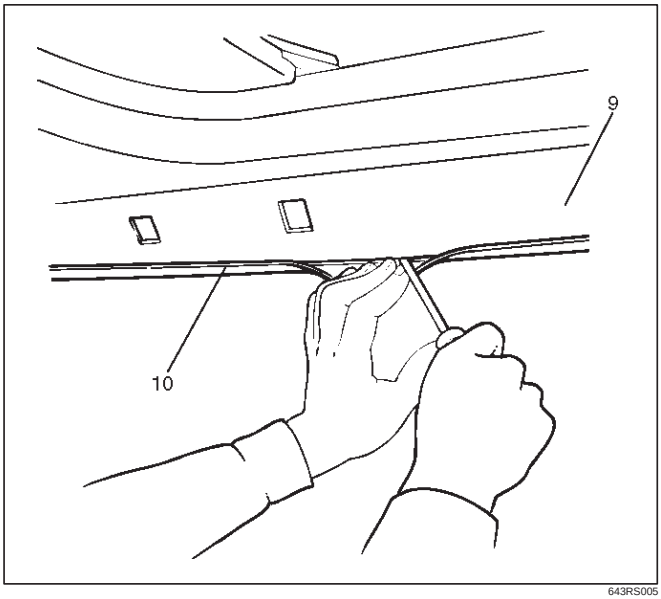

643RS005

Installation

To install, follow the removal steps in the reverse order.

Front Pillar Trim Cover

Front Pillar Trim Cover and Associated Parts

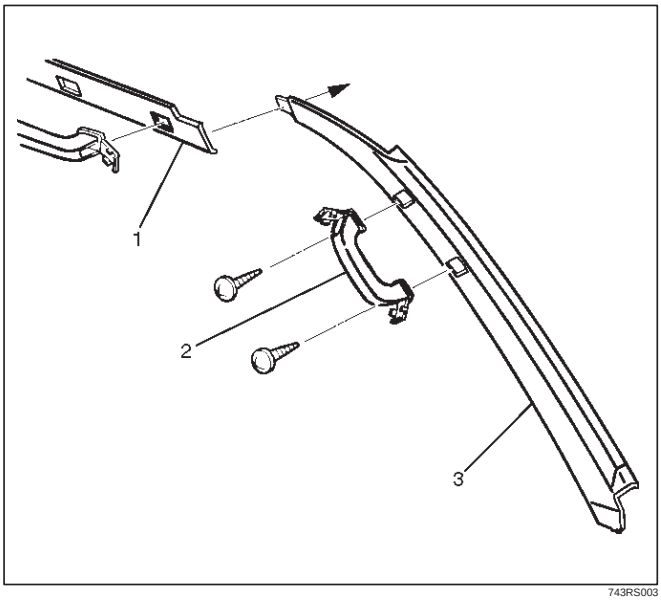

743RS003

Legend

(1) Roof Side Trim Panel
(2) Assist Grip
(3) Front Pillar Trim Panel

Removal

1. Remove the front pillar assist grip(1).
   - Open the both sides of the assist grip cover (2) and remove the fixing screws and the front pillar assist grip.

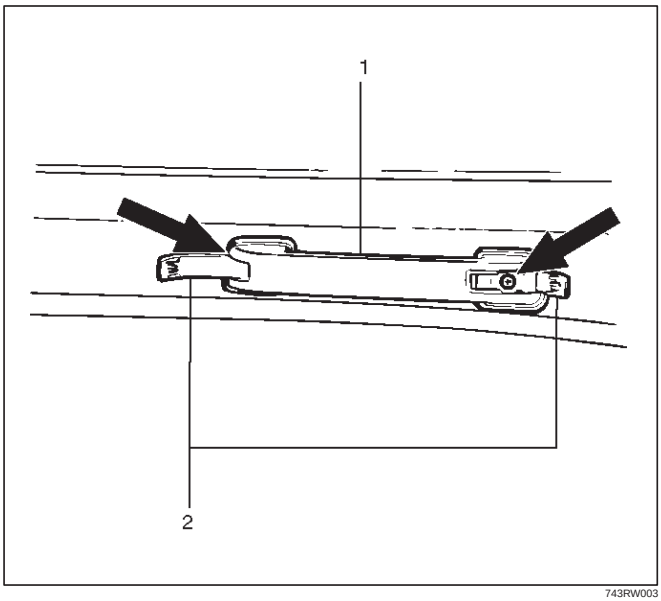

743RW003

2. Remove the front pillar trim cover (3).
   - Turn up the finisher (4) and pry the trim cover retainers free from the body panel.

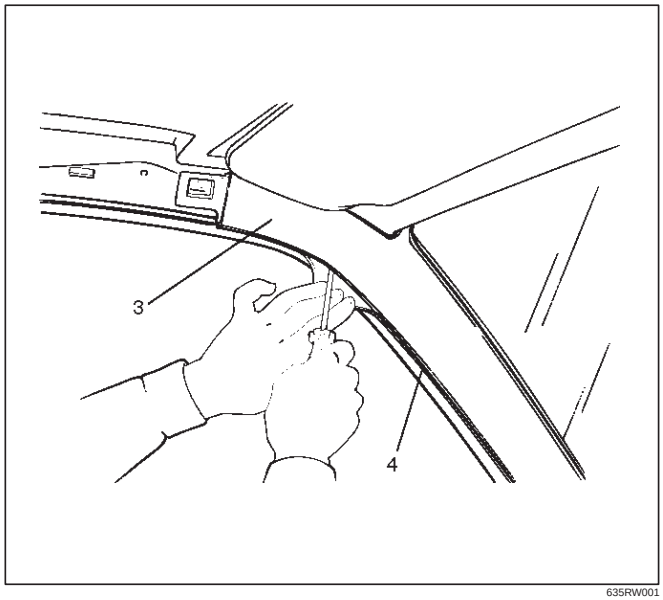

635RW001

Installation

To install, follow the removal steps in the reverse order.

Center Pillar Assist Grip

Parts Location

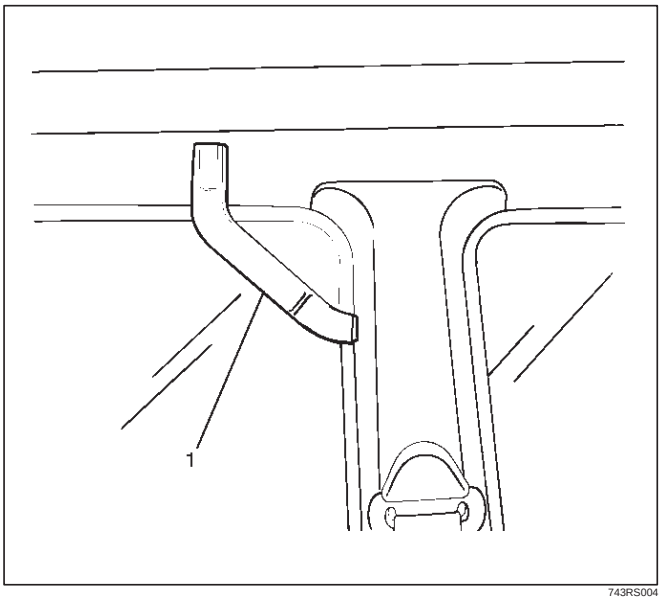

Legend
(1) Center Pillar Assist Grip

Removal and Installation

Refer to the Center Pillar and Roof Side Trim Cover in this section.

Assist Grip

Parts Location

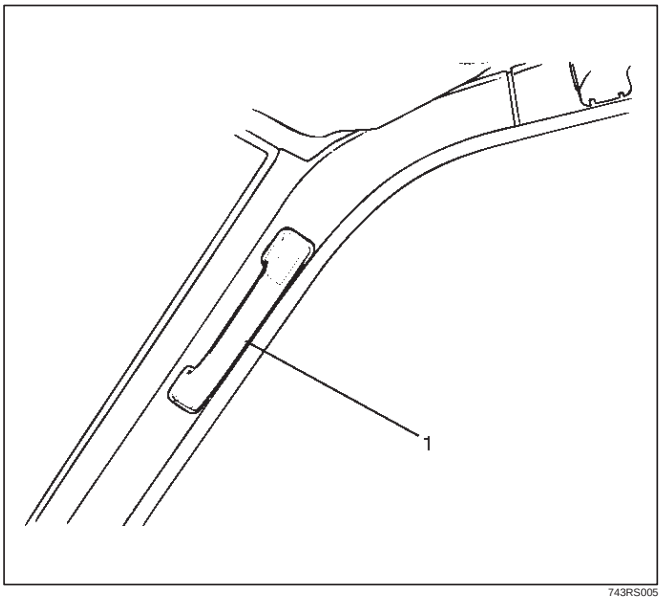

Legend
(1) Assist Grip

Removal and Installation

Refer to the Front Pillar Trim Cover in this section.

Fuel Filler Lid Opener Cable

Fuel Filler Lid Opener Cable and Associated Parts

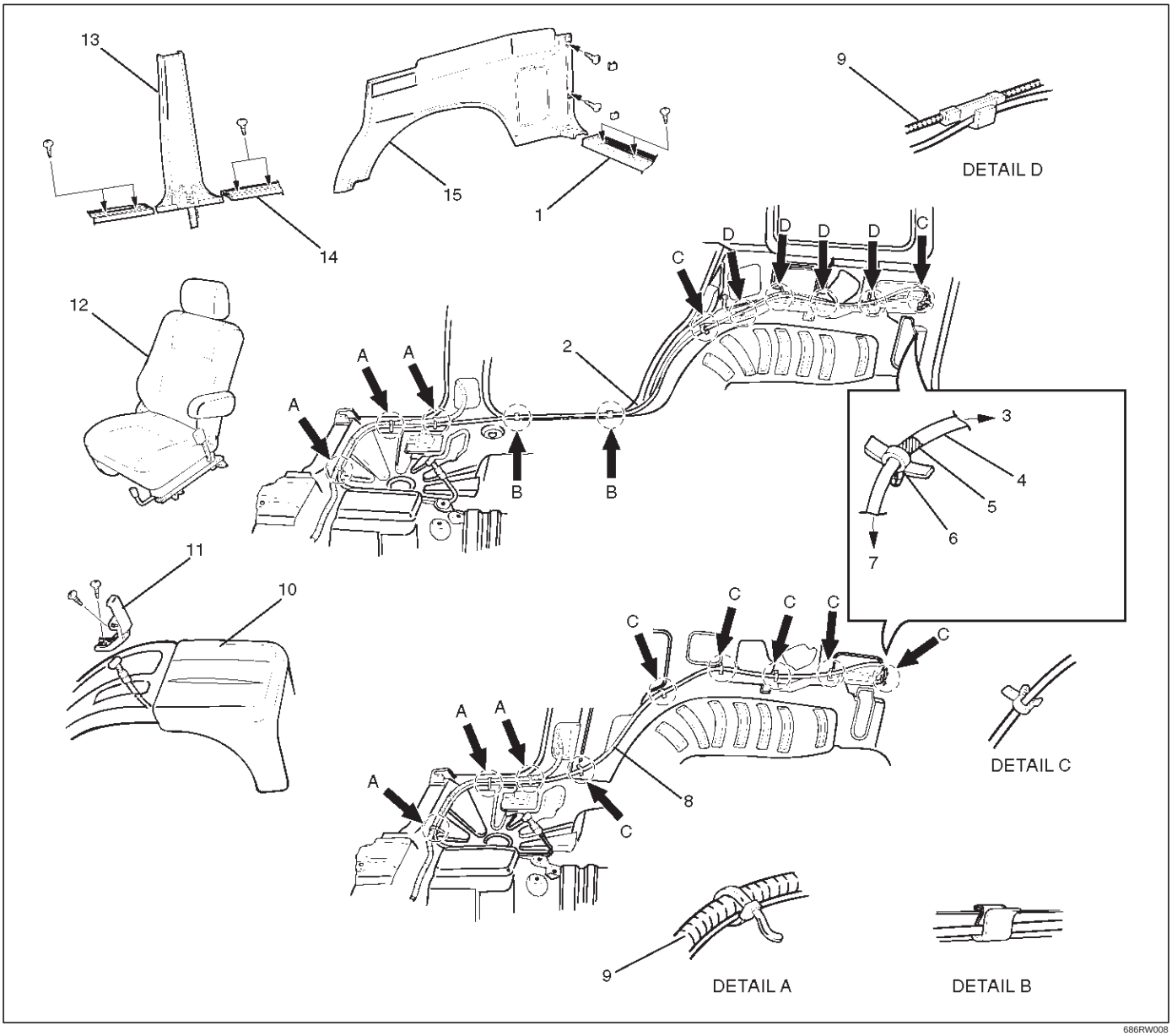

Legend

(1) Rear End Floor Trim Cover
(2) Fuel Filler Lid Opener Cable (L·W·B)
(3) To Lever
(4) Cable
(5) Marking
(6) Clip
(7) To Door
(8) Fuel Filler Lid Opener Cable (S·W·B)
(9) Chassis Harness
(10) Center Console Assembly
(11) Fuel Filler Lid Opener
(12) Front Seat (RH)
(13) Center Pillar Lower Trim Cover
(14) Rear Door Sill Plate (RH)
(15) Luggage Side Trim Panel (RH)

Removal

1. Disconnect the battery ground cable.
2. Remove the front seat (RH).
3. Remove the rear door sill plate (RH).
4. Remove the center pillar lower trim cover.
5. Remove the rear end floor trim panel.
6. Remove the luggage side trim panel (RH).
   - Refer to the Interior Trim Panels in this section.

7. Remove the fuel filler lid opener(1).
   - Remove two opener fixing screws and disconnect the cable(2).

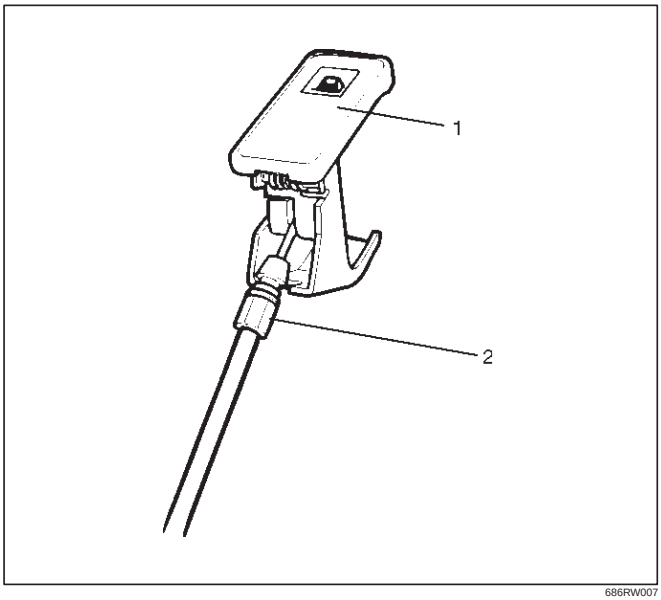

686RW007

8. Remove the center console assembly.
9. Remove the fuel filler lid opener cable.
   - Roll up the floor carpet and remove the clips of the chassis harness and body panel to pull out the cable toward the fuel filler lid.

Installation

To install, follow the removal steps in the reverse order, noting the following points.

1. Insert the opener cable(2) into the body panel(1) securely.

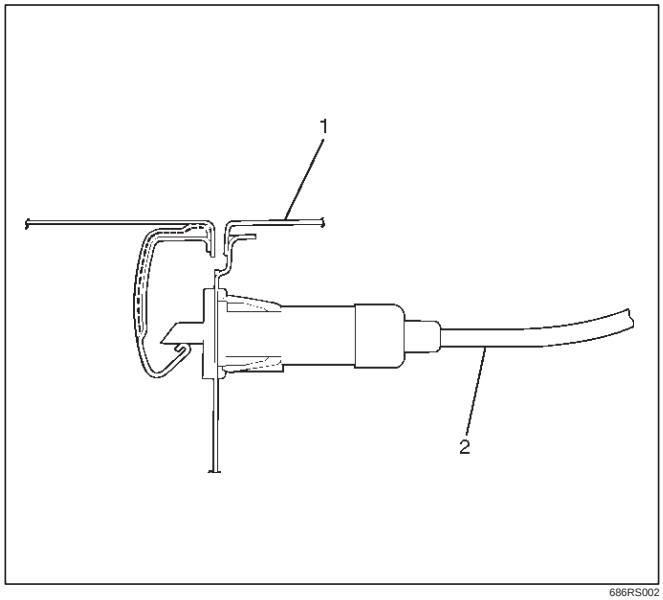

686RS002

2. Install the cable and clips to its original position to the chassis harness and the body panel.
3. Check that the opener operates smoothly.

Fuel Filler Door

Parts Location

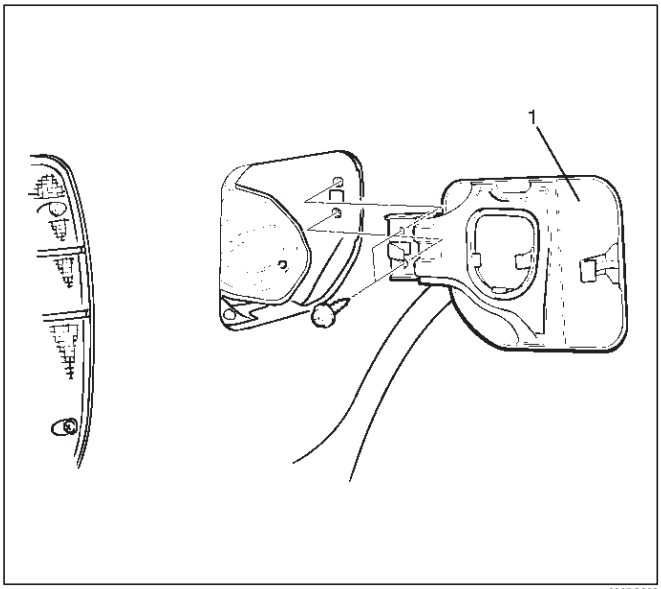

686RS003

Legend

(1) Fuel Filler Door

Removal

1. Remove the fuel filler door.

Installation

1. Install the fuel filler door.

Rocker Protector (Without Wheel Opening Extension)

Rocker Protector (Without Wheel Opening Extension) and Associated Parts

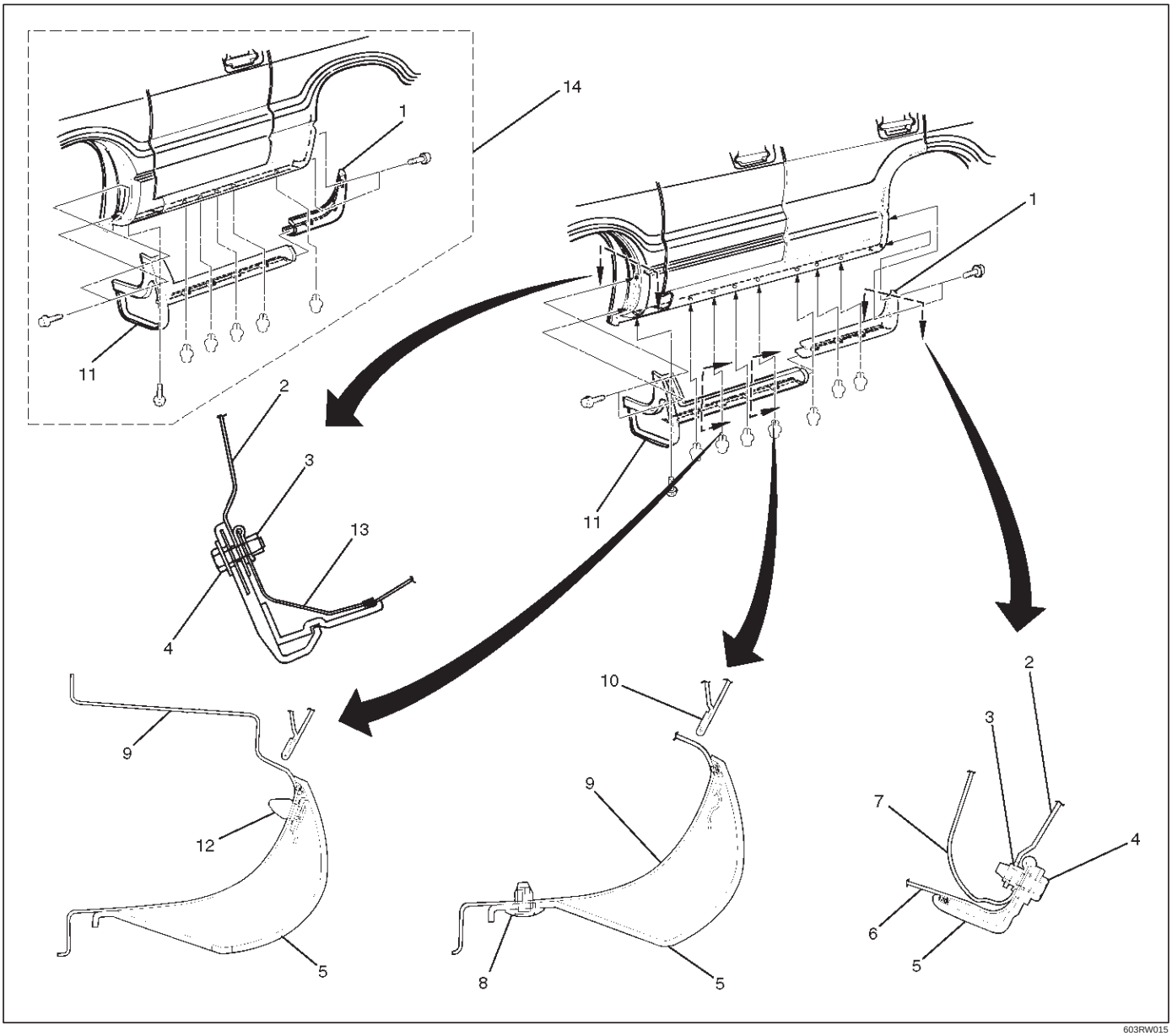

603RW015

Legend

(1) Rear Rocker Protector
(2) Inner Liner
(3) Spare Nut
(4) Fixing Screw
(5) Rocker Protector
(6) Outer Side Panel
(7) Outer Wheel House Panel
(8) Fixing Clip
(9) Outer Rocker Panel
(10) Door Panel
(11) Front Rocker Protector
(12) Clip (W/Rocker Protector)
(13) Fender Panel
(14) Short Wheel Base

Removal

1. Remove the rear rocker protector.
2. Remove the front rocker protector.

Installation

To install, follow the remove steps in the reverse order.

Wheel Opening Extension and Rocker Protector Assembly

Wheel Opening Extension, Rocker Protector Assembly and Associated Parts

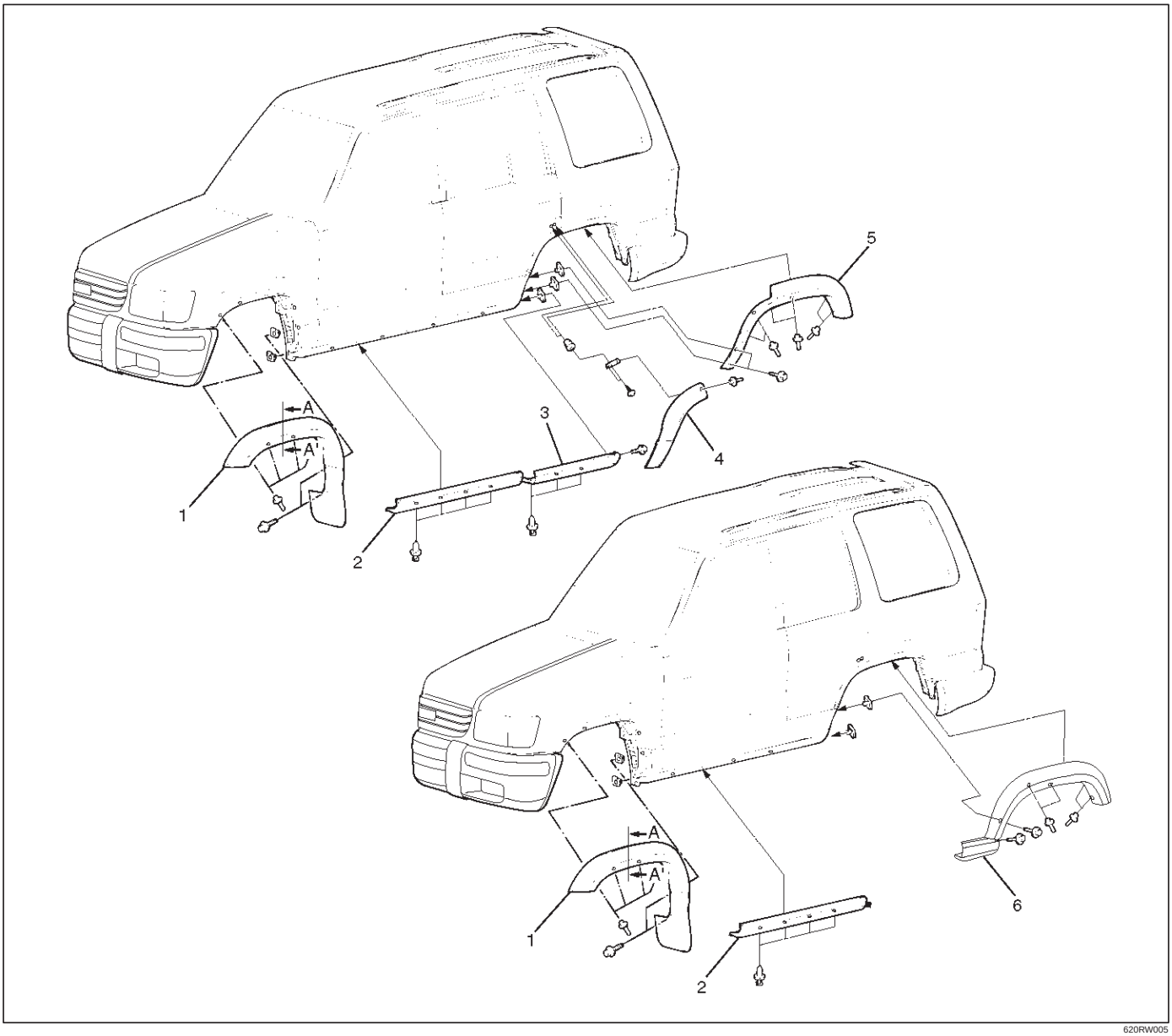

620RW005

Legend

(1) Front Wheel Opening Extension Assembly
(2) Front Rocker Protector Assembly
(3) Rear Rocker Protector Assembly (Only LWB)
(4) Rear Door Wheel Opening Extension Assembly (Only LWB)
(5) Rear Quarter Wheel Opening Extension Assembly (Only LWB)
(6) Rear Wheel Opening Extension Assembly (Only SWB)

Removal

1. Remove the front wheel opening extension(2).
   - Let a 5mm drill(3) go through four blind rivets(5) to disengaged riveted portions.
     Remove two screws and disengage five clips (6), then remove the front wheel opening extension assembly.

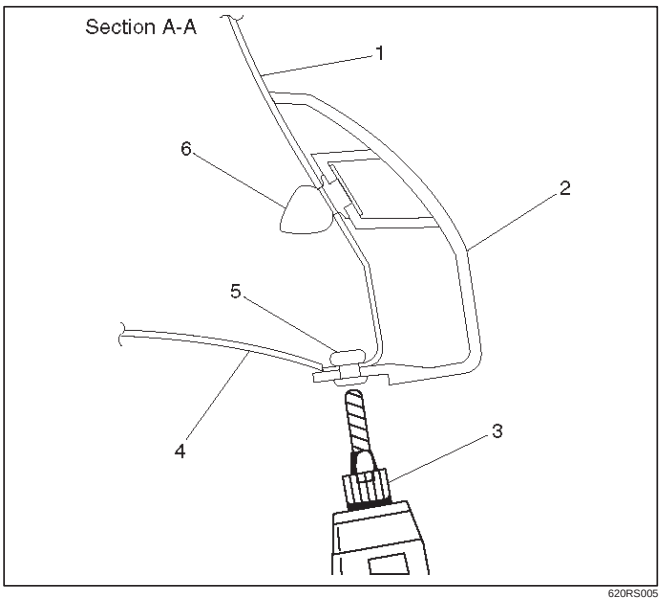

620RS005

2. Remove the rear quarter wheel opening extension assembly (Only LWB).
   - Let a 5mm drill go through six blind rivets to disengage riveted portions.

     Disengage four clips, remove two screws, and remove the rear quarter wheel opening extension assembly.
3. Remove the rear wheel opening extension assembly (Only SWB).
   - Let a 5mm drill go through four blind rivets to disengage riveted portions. Remove two screws, disengage eight clips, and remove the rear wheel opening extension assembly.
   - Remove two fixing nuts (upper) and four fixing bolts (lower).
4. Remove the rear door wheel opening extension assembly (Only LWB).
   - Let a 5mm drill go through a blind rivet to disengage riveted portions.

     Disengage three clips, peel off the bonded portions with two double surface adhesive tape and the rear door wheel opening extension assembly.
5. Remove the rear rocker protector assembly (Only LWB).
   - Loosen and pull three clips, remove a rear screw, and remove the rear rocker protector assembly.
6. Remove the front rocker protector assembly.
   - Loosen and pull four clips, and remove the front rocker protector assembly.

Installation

To install, follow the removal steps in the reverse order, noting the following points.

1. Use a new 2–sided adhesive tape whenever installing each wheel opening extension assembly and rocker protector assembly. Using a white gasoline, clean the places in advance where a 2–sided adhesive tape is affixed. Also, install the clips, screws and blind rivets in the order specified as shown in the figure.

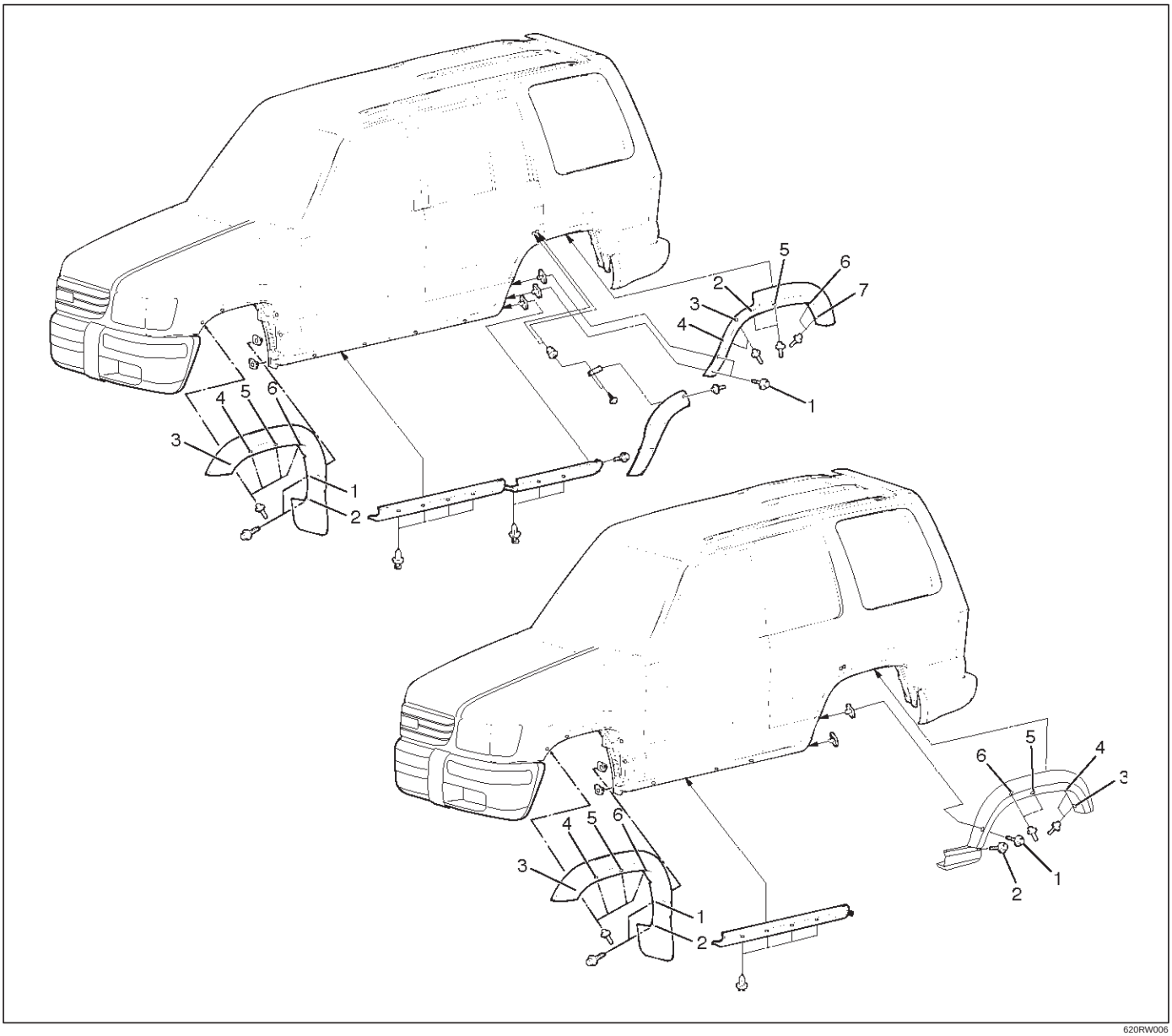

620RW006

Mud Flaps (With Wheel Opening Extension)

Mud Flaps (With Wheel Opening Extension) and Associated Parts

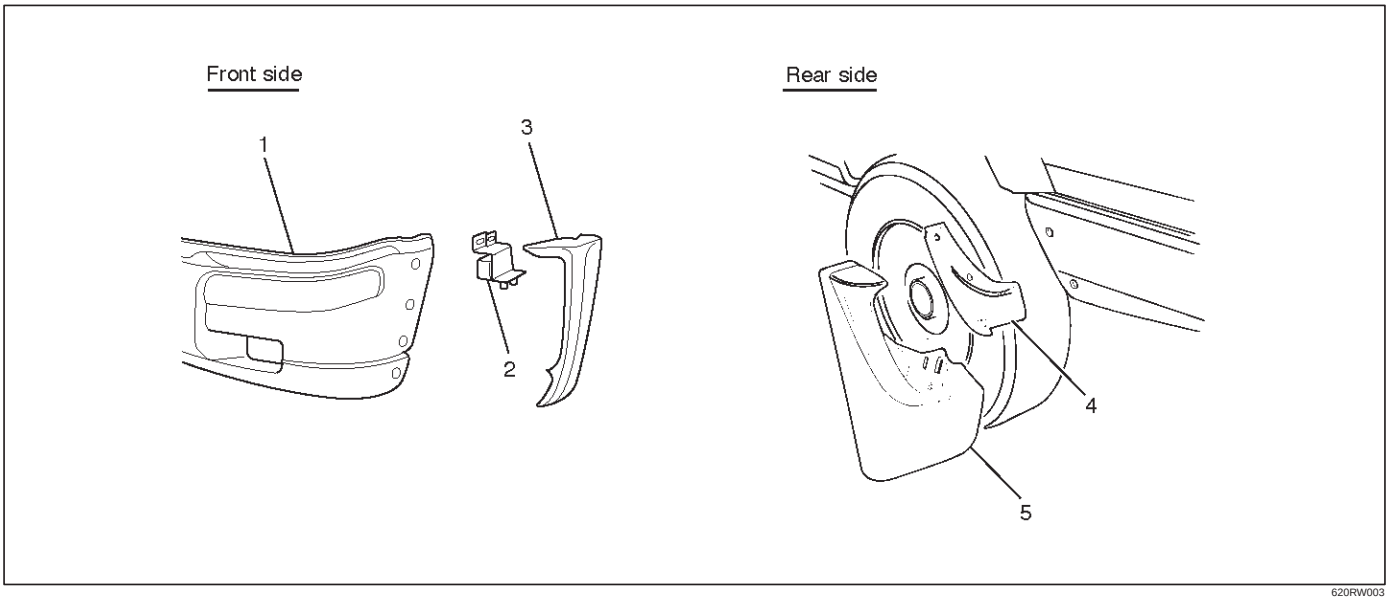

620RW003

Legend

(1) Front Bumper Assembly
(2) Front Bumper Slider
(3) Front Mud Flap
(4) Bumper Side Cover
(5) Rear Mud Flap

Removal

Front Side

1. Remove the front bumper assembly.
   - Disconnect the front fog light connector and remove two bolts from both sides of the front bumper.
2. Remove the front bumper slider(1).
   - Remove two clips(4) and two nuts(3), release the claw from the washer(2).

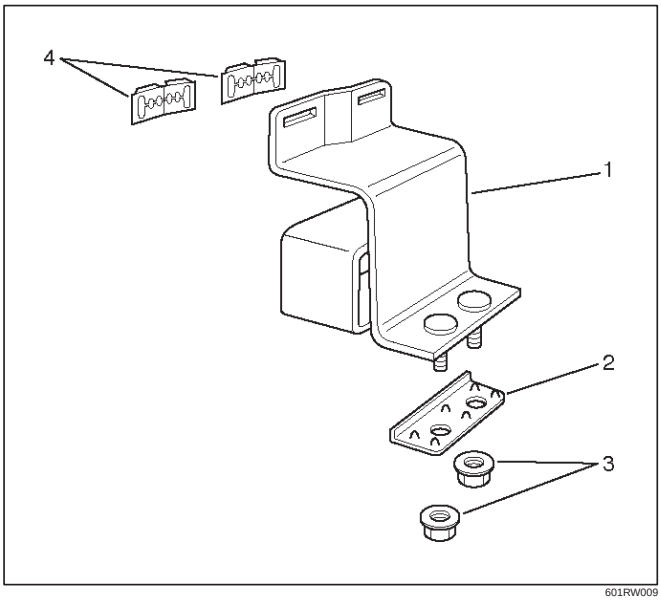

601RW009

3. Remove the front mud flap.
   - Remove four nuts and a clip.

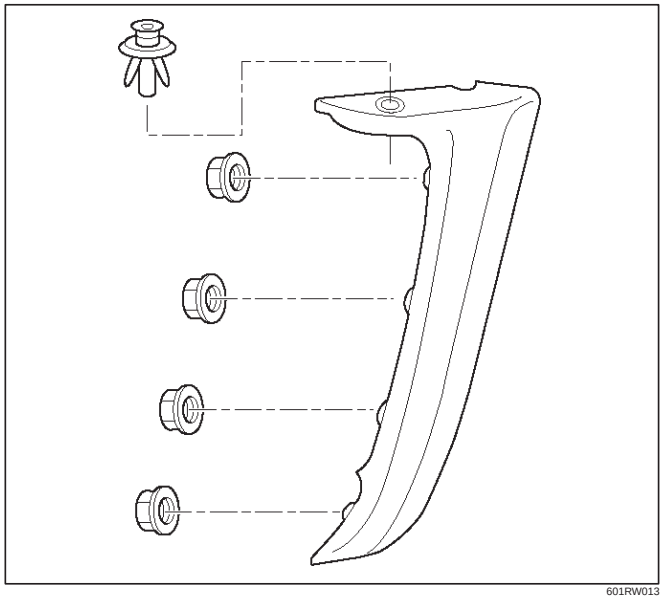

601RW013

Rear Side

1. Remove the bumper side cover.
2. Remove the rear mud flap.
   - Remove four bolts and two nuts.

Installation

To install, follow the removal steps in the reverse order.

Ventilation Assembly

Ventilation Assembly and Associated Parts

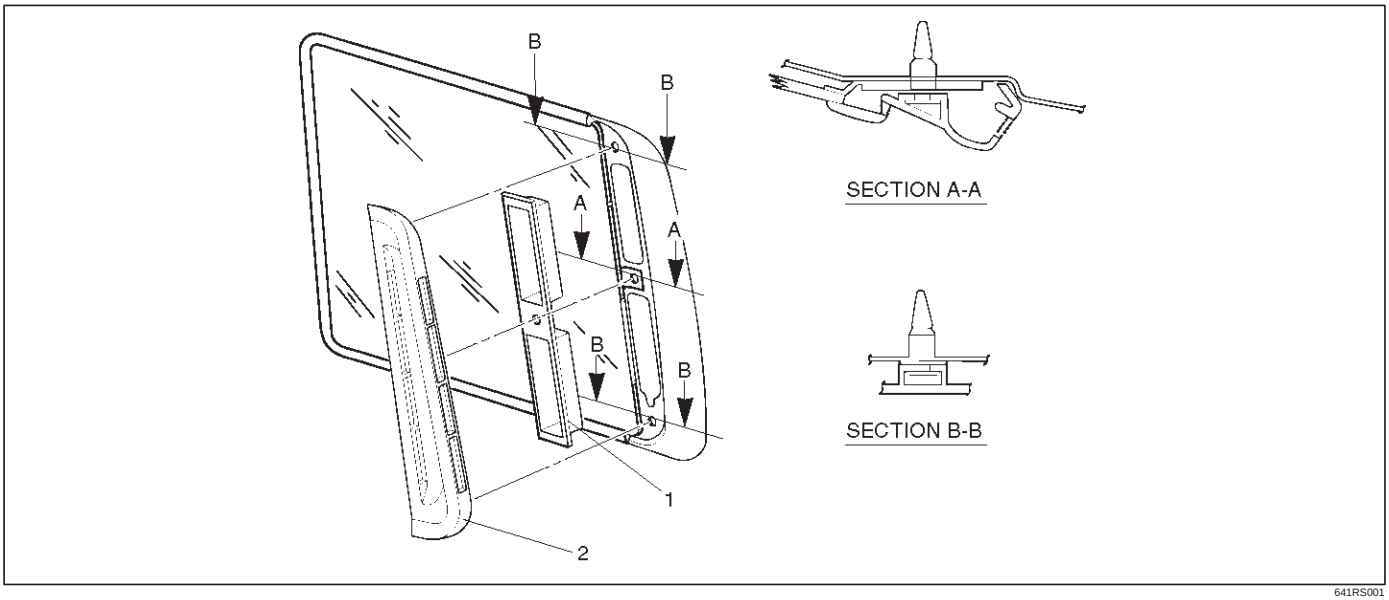

641RS001

Legend

(1) Outlet Valve Assembly
(2) Ventilation Assembly

Removal

1. Remove the ventilation assembly(1).
   - Pry the ventilation assembly retainers free from the body panel.

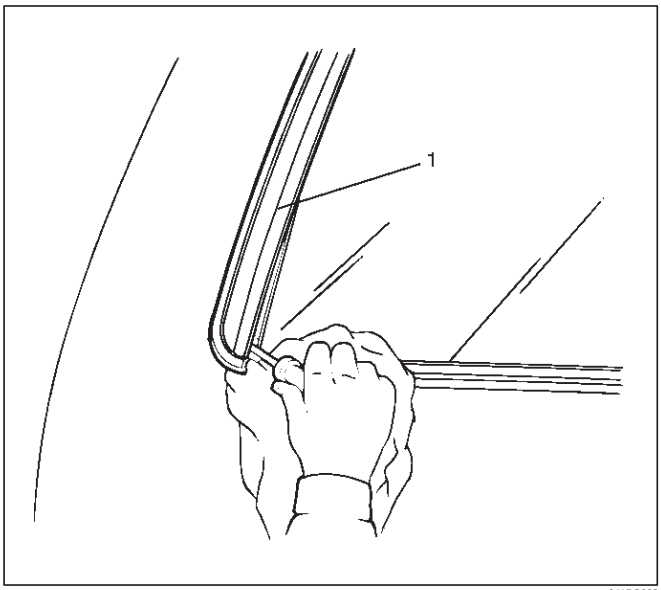

641RS002

2. Remove the outlet valve assembly.

Installation

1. Install the outlet valve assembly.
   - Insert the upper and lower catches of the outlet valve into the body panel flange and fix them securely.
2. Install the ventilation assembly.
   - Fix the clips to the body panel securely so that the ventilation assembly will not come off the body panel.

Quarter Flipper Glass Assembly (S·W·B)

Quarter Flipper Glass Assembly and Associated Parts

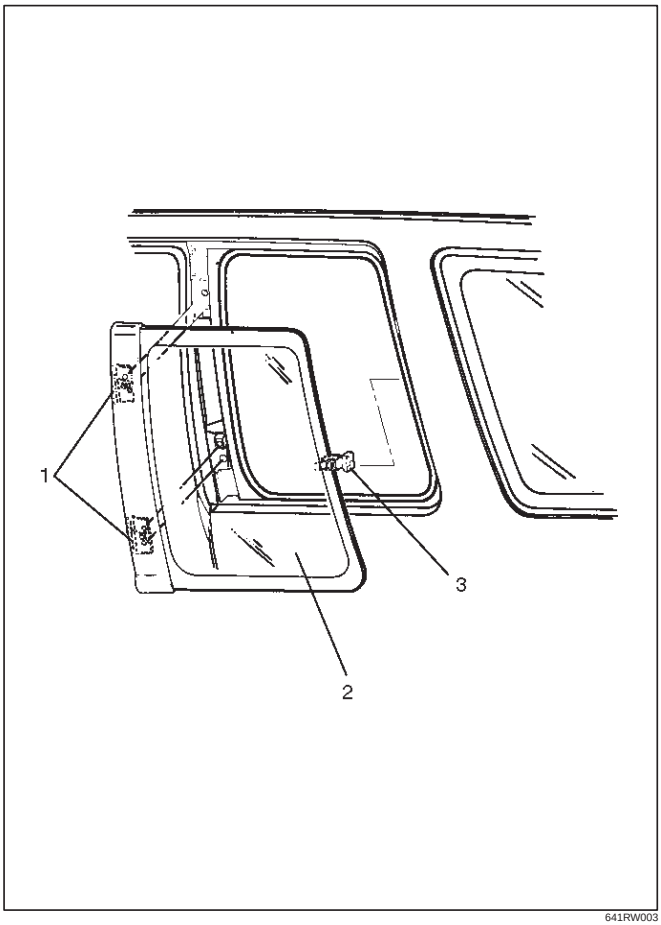

641RW003

Legend

(1) Hinge Assembly
(2) Quater Flipper Glass Assembly
(3) Fastener

Removal

1. Remove the guater flipper glass assembly (3).
   - Remove the fixing screws (2) and rivet (5).
2. Remove the fastener (1).
3. Remove the hinge assembly (4).

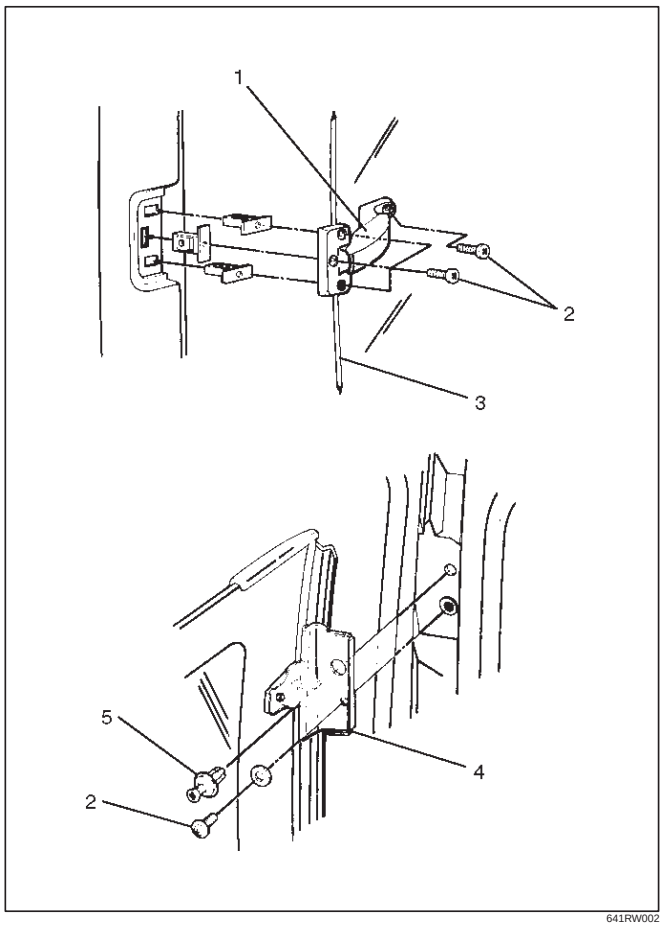

641RW002

Installation

To install, follow the removal steps in the reverse order.

Tailgate Trim Panel (LH)

Tailgate Trim Panel (LH) and Associated Parts

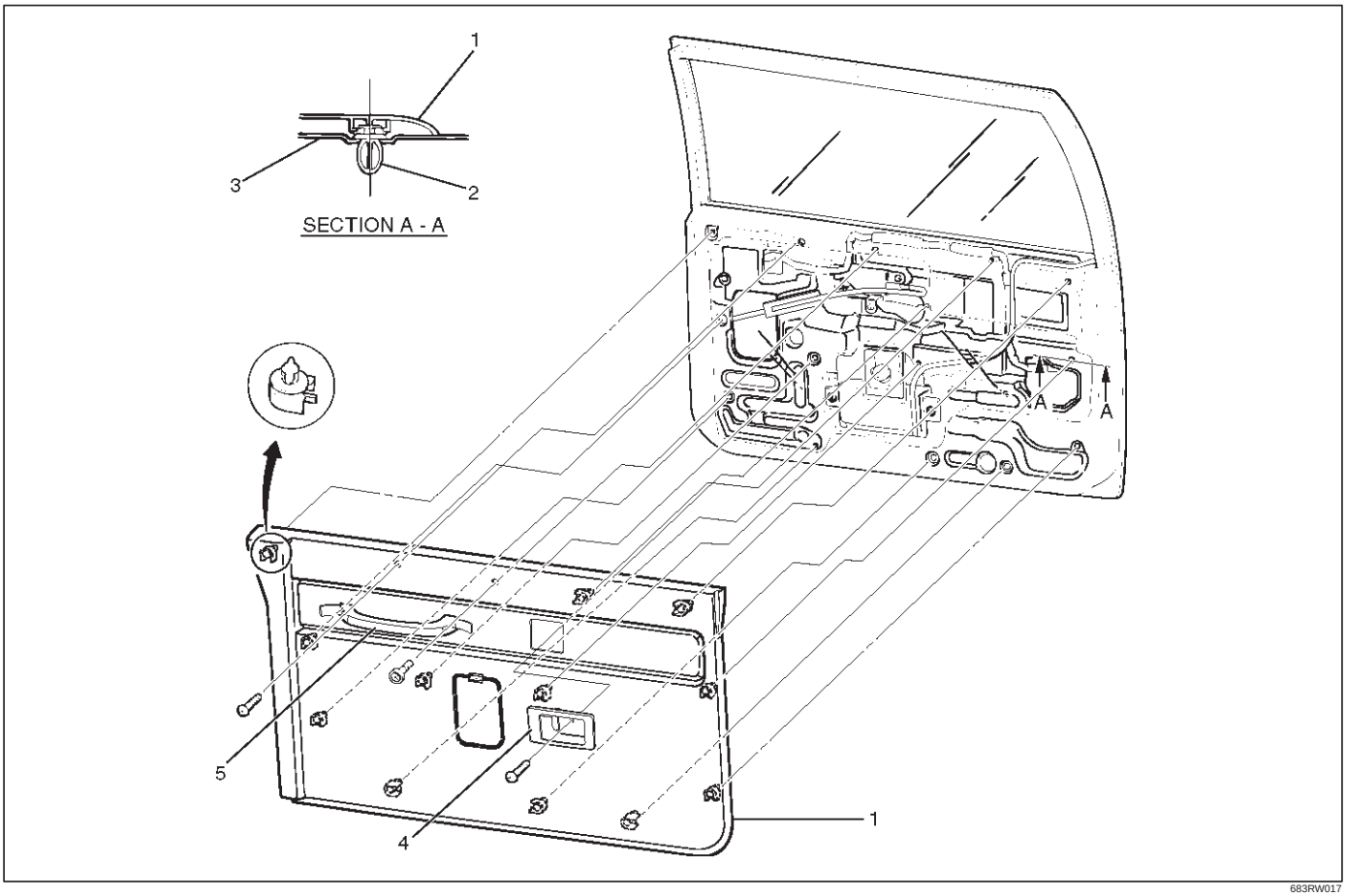

683RW017

Legend

(1) Tailgate Trim Panel (LH)
(2) Clip
(3) Tailgate Panel
(4) Inside Handle
(5) Tailgate Assist Grip

Removal

1. Disconnect the battery ground cable.
2. Remove the tailgate assist grip.
   - Open the assist covers (1) and remove two fixing screws.

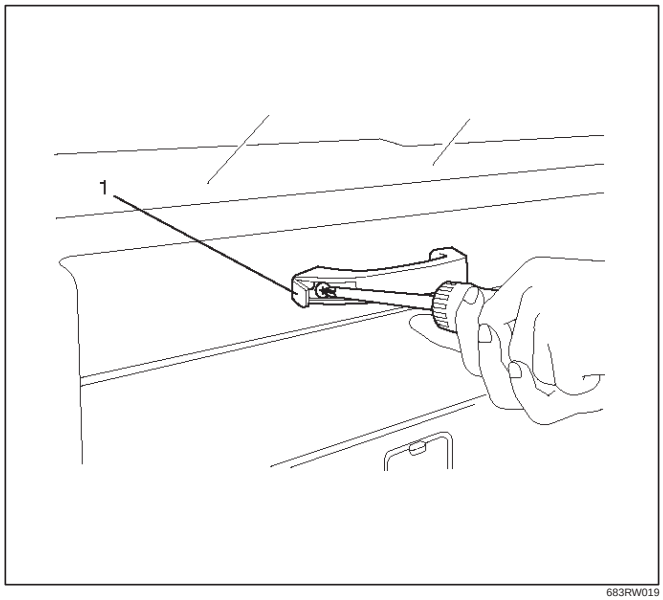

683RW019

3. Remove the inside handle (2).
   - Remove the fixing screw and disconnect the locking link (1).

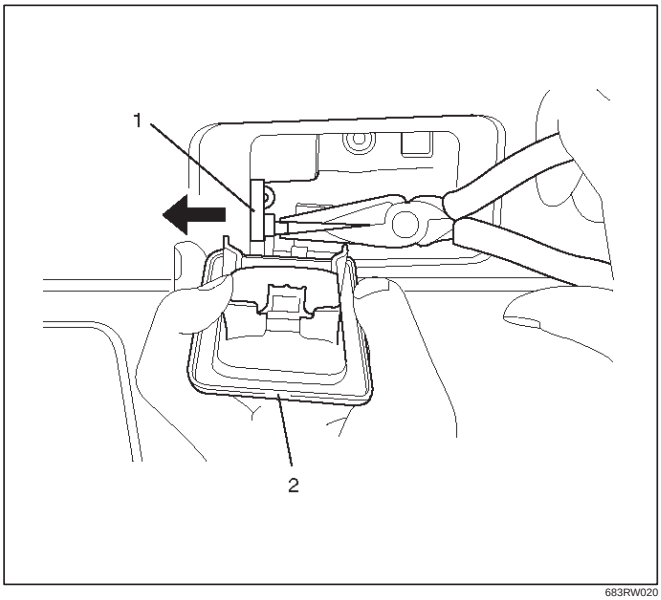

683RW020

4. Remove the tailgate trim panel (LH).
   - Pry the trim panel retainers free from the tailgate panel.

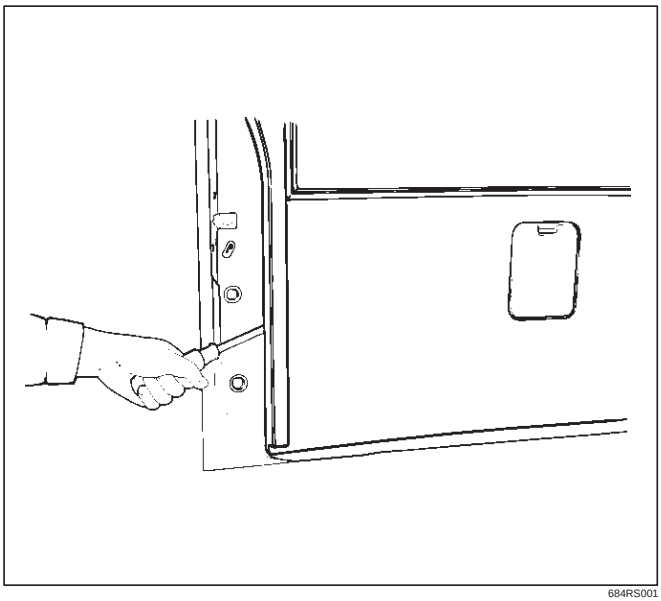

684RS001

Installation

To install, follow the removal steps in the reverse order, noting the following point.

1. Install the inside handle (1), connect the link to the handle, insert the catch portion of the handle into the tailgate side hole securely and fix it with a screw.

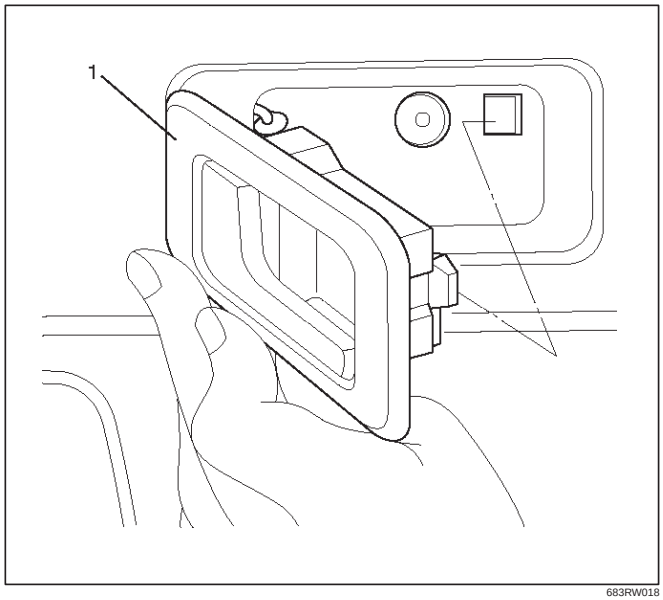

683RW018

Tailgate Trim Panel (RH)

Parts Location

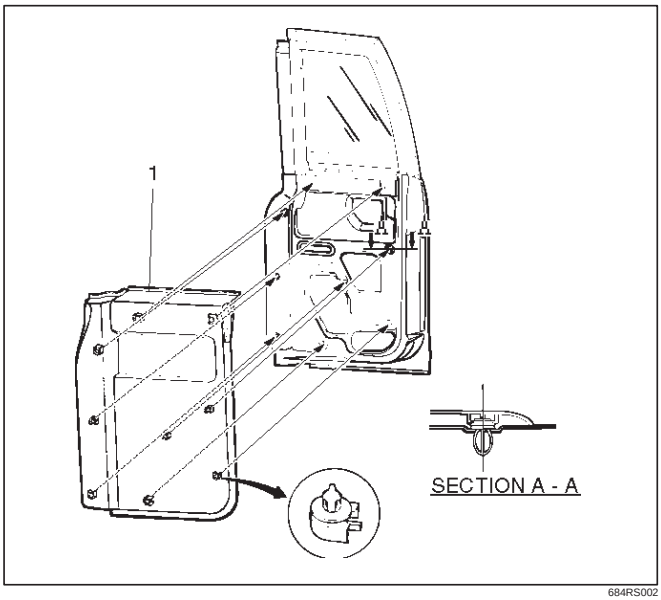

684RS002

Legend

(1) Tailgate Trim Panel

Removal

1. Disconnect the battery ground cable.
2. Remove the tailgate trim panel (RH).
   - Pry trim panel retainer free from the tailgate panel.

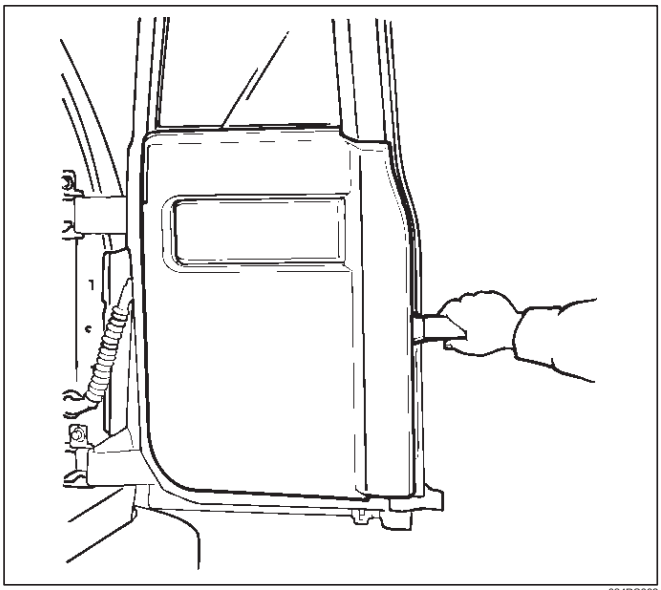

684RS003

Installation

1. Install the trim panel (RH).
   - Insert the retainer of the trim panel into the tailgate panel and fix it securely.

Luggage Floor Box

Luggage Floor Box and Associated Parts

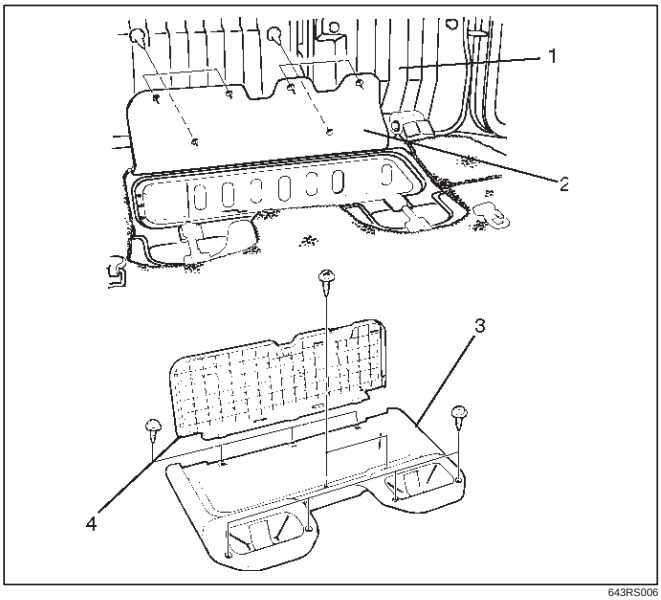

643RS006

Legend

(1) Rear Seat
(2) Floor Carpet
(3) Luggage Floor Box
(4) Luggage Floor Box Cover

Remove

1. Fold the rear seat assembly to the front direction.
2. Remove the luggage floor box cover.
   - Remove the clips which connect the floor carpet and the luggage floor box cover.
3. Remove the luggage floor box.

Installation

1. Install the luggage floor box.
2. Install the luggage floor box cover.

Rope Hook Set

Rope Hook Set and Associated Parts

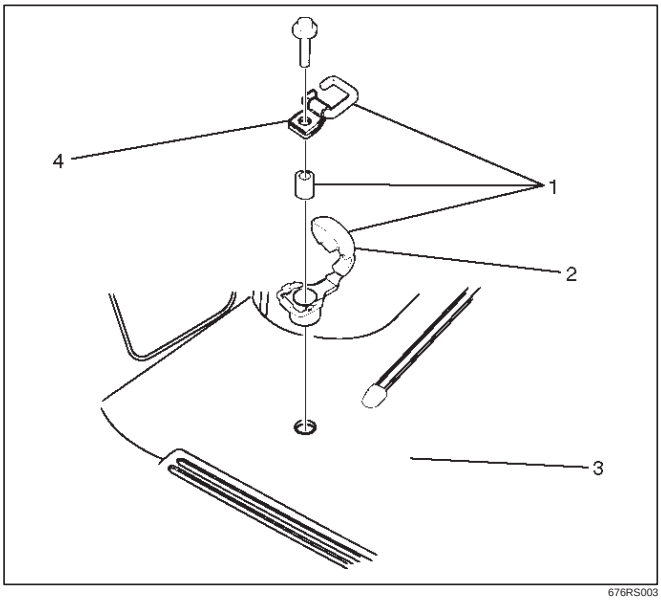

676RS003

Legend

(1) Rope Hook Set
(2) Cover
(3) Luggage Floor Carpet
(4) Hook

Removal

1. Remove the rope hook set.
   - Open the hook cover and hook fixing bolt.

Installation

1. Install the rope hook set.
   - Tighten the hook fixing bolt to the specified torque.

   Torque: 13 N·m (1.3kg·m/113 lb in)

Power Door Mirror System

General Description

The circuit consists of the starter switch, door mirror control switch, folding switch, defogger switch and door mirrors on both sides.
The door mirror switch consists of the control switch, folding switch and defogger switch.
When the control switch is operated with the starter switch at either “ACC” or “ON” position, the motors incorporated in the door mirrors on both sides rotates to allow the horizontal and vertical adjustment of mirror angles.
The folding switch can be used to fold the mirror and return it to its original position.
When turning on the door mirror defogger switch with the starter switch at “ON” position, built-in heater in the mirror is activated to perform the defogger function.

Door Mirror Switch Assembly (Control Switch, Folding Switch and Defogger Switch) Removal

1. Disconnect the battery ground cable.
2. Remove the front console assembly(2).
   - Remove four screws.
   - Remove the transmission shift lever knob.
   - Remove the transfer shift lever knob.
   - Disconnect the seat heater switch connectors (if so equipped).
   - Disconnect the door mirror switch connectors.
   - Disconnect the power & winter switch connectors. (A/T only)
3. Remove the door mirror switch assembly(1).
   - Push the lock from the back side of the front console.

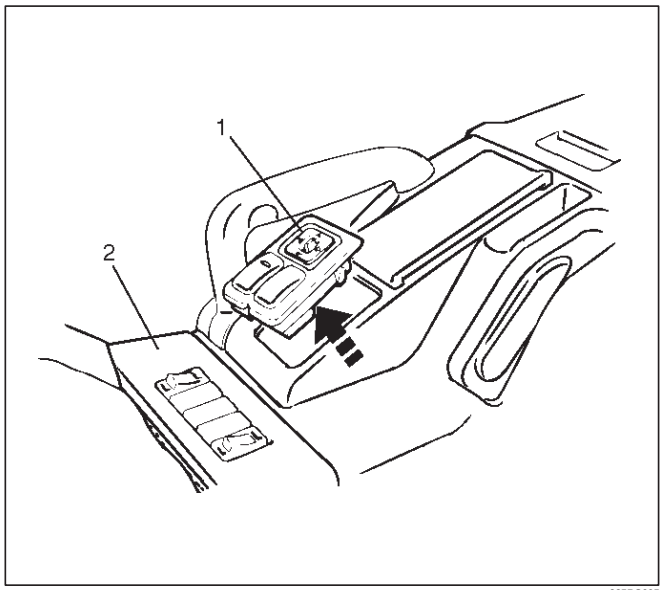

825RS005

Installation

To install, follow the removal steps in the reverse order, noting the following point.

1. Depress the switch with your fingers until it locks securely.

Power Door Mirror

General Description

Mirrors contain two driving motors for the horizontal and vertical movement of the mirror and one motor for folding the mirror.
The movement of the mirror is controlled by the direction of current running through these motors.
The housing portion of the mirror is provided with the auto-stop mechanism which is interlocked with the motor for folding the mirror. When the mirror moves to the stop position (with the mirror folded or returned to its original position), the current to the motor is shut off.
When the mirror cannot operate due to some obstacle and the motor stops its rotation, the resistor prevents current overflow.

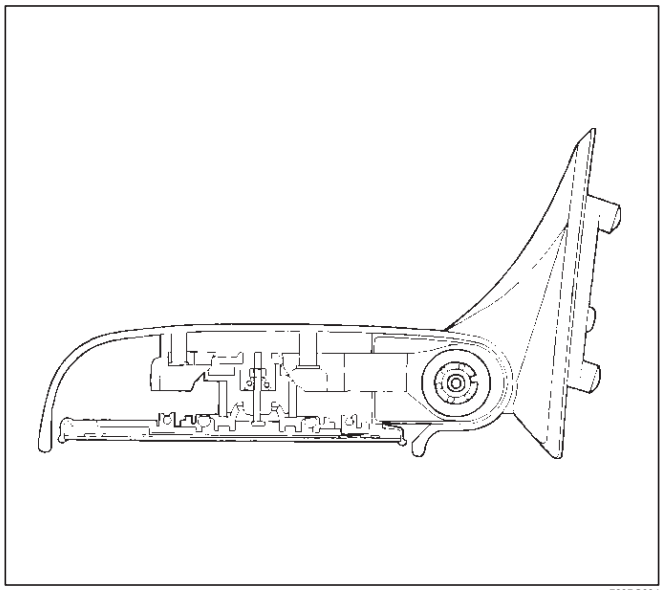
720RS004

Removal and Installation

Refer to the Door Mirror removal and installation steps in this section.

Power Window System

General Description

The circuit consists of the starter switch, (door lock &) power window switch for each of the front windows, power window switch for rear windows and power window motors.
When the starter switch is turned on, the battery voltage is applied to each of the power window switches through the circuit breaker and the power window relay on the circuit.
The “Down” switch of the driver’s power window switch has a built-in function which can be operated by just touching it.
Accordingly, the window will roll down automatically by just setting the switch to the “AUTO” position.
When the driver’s power lock switch at the driver side is depressed, the power source to the passenger’s power window switches are shut off. So, even if these switches are operated, the power window motor will not operate.

Power Window Switch Removal and Installation

Driver Seat Side

Removal

1. Disconnect the battery ground cable.
2. Remove the switch(1).
   - Pull out the switch by pushing the spring with the tip of a screwdriver.
   - Disconnect two connectors.

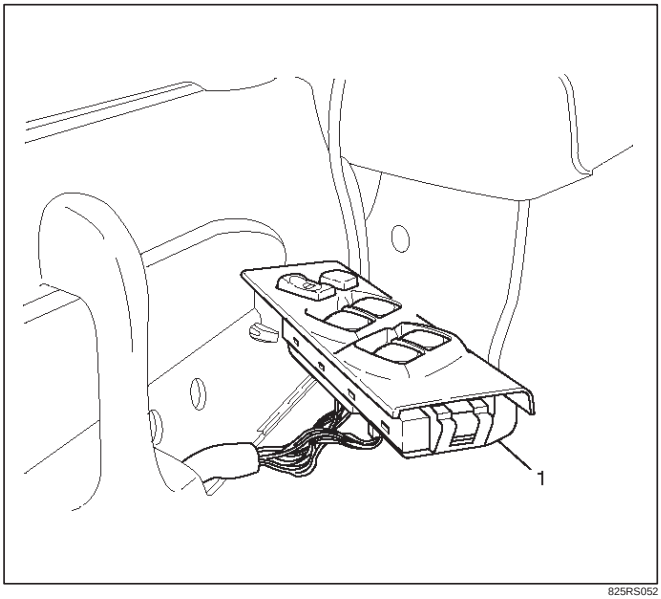

825RS052

Installation

To install, follow the removal steps in the reverse order.

Front Passenger Seat Side

Removal

1. Disconnect the battery ground cable.
2. Remove the switch(1).
   - Pull out the switch by pushing the spring with the tip of a screwdriver.
   - Disconnect the connector.

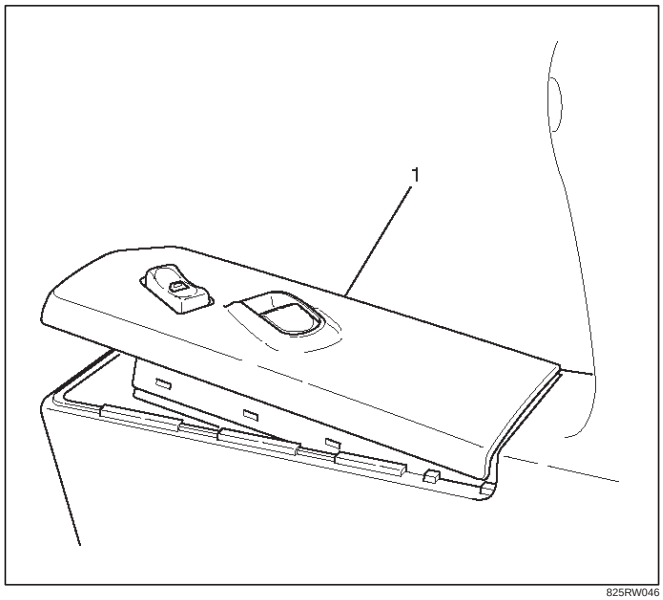

825RW046

Installation

To install, follow the removal steps in the reverse order.

Rear-Left and Right Sides

Removal

1. Disconnect the battery ground cable.
2. Remove the switch(1).
   - Pull out the switch by pushing the spring with the tip of a screwdriver.
   - Disconnect the connector.

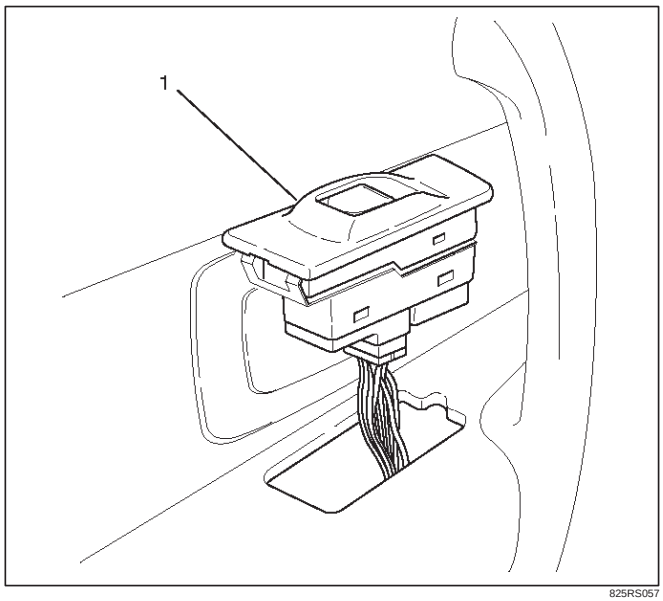

825RS057

Installation

To install, follow the removal steps in the reverse order.

Power Window Motor Removal and Installation

Driver Seat Side

Removal

1. Disconnect the battery ground cable.
2. Remove the window regulator assembly (1).
   - Refer to the Window Regulator and Glass removal steps in Body Structure section.
3. Remove the power window motor(2).
   - Remove three screws.

CAUTION: When removing the motor from the regulator(1), be careful not to get injured by the strong repellent force of the regulator spring.

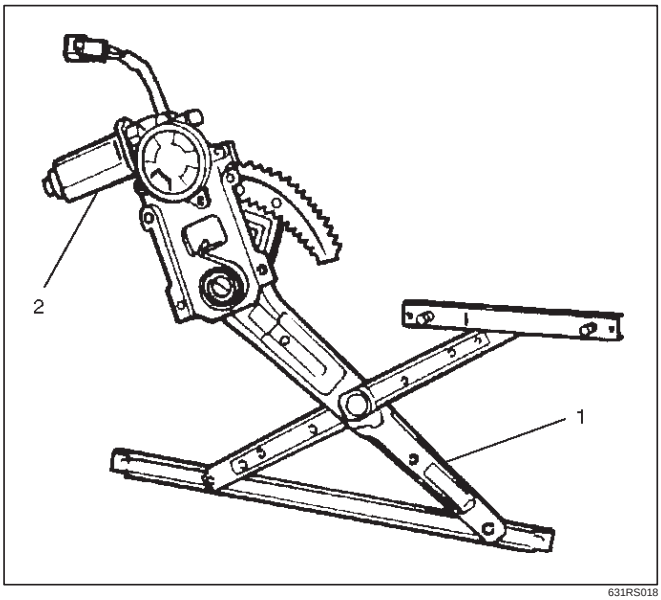

631RS018

Installation

To install, follow the removal steps in the reverse order.

Front Passenger Seat Side

Removal

1. Disconnect the battery ground cable.
2. Remove the window regulator assembly (1).
   - Refer to the Window Regulator and Glass removal steps in Body Structure section.
3. Remove the power window motor(2).
   - Remove three screws.

CAUTION: When removing the motor from the regulator(1), be careful not to get injured by the strong repellent force of the regulator spring.

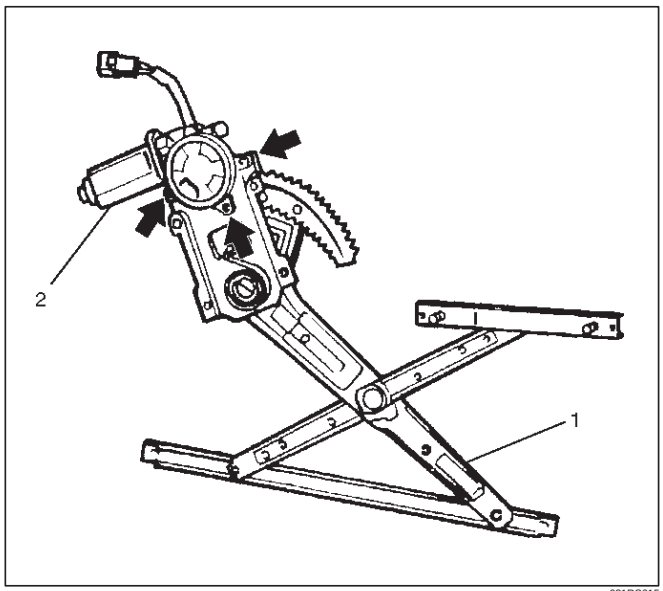

631RS015

Installation

To install, follow the removal steps in the reverse order.

Rear-Left Side

Removal

1. Disconnect the battery ground cable.
2. Remove the rear window regulator assembly.
   - Refer to the Rear Window Regulator and Glass removal steps in Body Structure section.
3. Remove the power window motor(1).
   - Remove four screws.

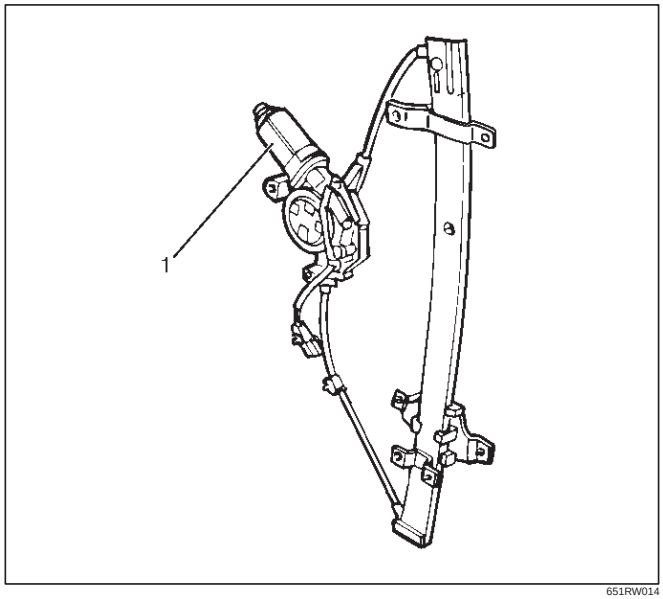

651RW014

Installation

To install, follow the removal steps in the reverse order.

Rear-Right Side

Removal and Installation

Refer to the Rear Power Window Motor-Left Side removal and installation steps in this section.

Main Data and Specifications

Torque Specifications

Application	N·m	kg·m	lb ft	lb in
Door Mirror Fixing Bolts	8	0.8	—	69
Seat Belt Anchor Bolts	39	4.0	29	—
Hook Fixing Bolt	13	1.3	—	113

RESTRAINTS

CONTENTS

Seat Belt System 9A–1
Supplemental Restraint System (SRS) 9J–1
Restraint Control System 9J1–1

SEAT BELT SYSTEM

CONTENTS

Service Precaution 9A–1
Seat Belt 9A–2
Front Seat Belt and Associated Parts (Long Wheel Base) 9A–2
Removal 9A–2
Inspection 9A–2
Installation 9A–3
Front Seat Belt and Associated Parts (Short Wheel Base) 9A–4
Removal 9A–4
Inspection 9A–4
Installation 9A–5
Rear Seat Belt and Associated Parts (Long Wheel Base) 9A–6
Removal 9A–6
Inspection 9A–6
Installation 9A–7
Rear Seat Belt and Associated Parts (Short Wheel Base) 9A–8
Removal 9A–8
Inspection 9A–9
Installation 9A–9
Third Seat Belt and Associated Parts (Long Wheel Base) 9A–10
Removal 9A–10
Inspection 9A–11
Installation 9A–11
Front Seat Buckle Assembly 9A–12
Removal 9A–12
Installation 9A–12
Front Seat Buckle Assembly (W/Pretensioner) 9A–12
Removal 9A–12
Installation 9A–12
Rear Center Seat Belt Buckle Assembly . . . 9A–13
Rear Center Seat Belt Buckle Assembly and Associated Parts 9A–13
Removal 9A–13
Installation 9A–13
Third Seat Belt Buckle and Lock Assembly . 9A–14
Third Seat Belt Buckle and Lock Assembly and Associated Parts 9A–14
Removal 9A–14
Installation 9A–14
Rear Seat Lock Assembly 9A–15
Removal 9A–15
Installation 9A–15
Rear Seat Lock Assembly (Bench Type) . . . 9A–15
Removal 9A–15
Installation 9A–15
Rear Seat Strikers 9A–16
Removal 9A–16
Installation 9A–16
Third Seat Striker 9A–16
Removal 9A–16
Installation 9A–16
Main Data and Specifications 9A–17

Service Precaution

WARNING: THIS VEHICLE HAS A SUPPLEMENTAL RESTRAINT SYSTEM (SRS). REFER TO THE SRS COMPONENT AND WIRING LOCATION VIEW IN ORDER TO DETERMINE WHETHER YOU ARE PERFORMING SERVICE ON OR NEAR THE SRS COMPONENTS OR THE SRS WIRING. WHEN YOU ARE PERFORMING SERVICE ON OR NEAR THE SRS COMPONENTS OR THE SRS WIRING, REFER TO THE SRS SERVICE INFORMATION. FAILURE TO FOLLOW WARNINGS COULD RESULT IN POSSIBLE AIR BAG DEPLOYMENT, PERSONAL INJURY, OR OTHERWISE UNNEEDED SRS SYSTEM REPAIRS.

CAUTION: Always use the correct fastener in the proper location. When you replace a fastener, use ONLY the exact part number for that application. ISUZU will call out those fasteners that require a replacement after removal. ISUZU will also call out the fasteners that require thread lockers or thread sealant. UNLESS OTHERWISE SPECIFIED, do not use supplemental coatings (Paints, greases, or other corrosion inhibitors) on threaded fasteners or fasteners joint interfaces. Generally, such coatings adversely affect the fastener torque and the joint clamping force, and may damage the fasteners. When you install fasteners, use the correct tightening sequence and specifications. Following these instructions can help you avoid damage to parts and systems.

Seat Belt

Front Seat Belt and Associated Parts (Long Wheel Base)

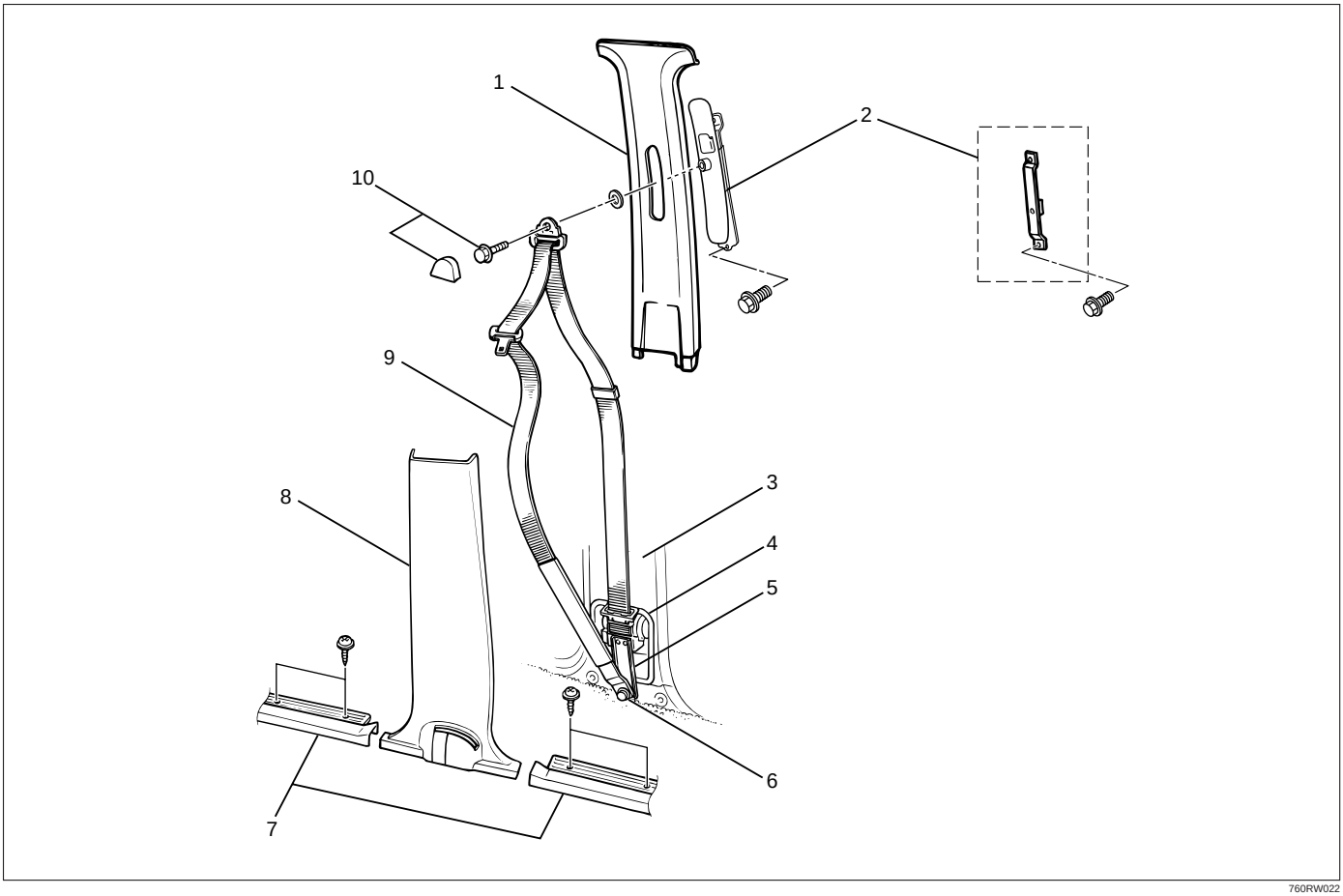

Legend

(1) Center Pillar Upper Trim Cover
(2) Adjust Shoulder Anchor Assembly/Seat Belt Anchor Plate
(3) Center Pillar
(4) Dust Cover
(5) Retractor
(6) Anchor Bolt (Lower)
(7) Door Sill Plate (Front & Rear)
(8) Center Pillar Lower Trim Cover
(9) Front Seat Belt Assembly
(10) Front Seat Belt Anchor Bolt Cover and Anchor Bolt

Removal

1. Disconnect the battery ground cable.
2. Remove the door sill plate (Front & Rear).
3. Remove the center pillar lower trim cover.
4. Remove the front seat belt anchor bolt cover and anchor bolt (Upper Side).
   - Refer to Center Pillar and Roof Side Trim Cover in Exterior/Interior Trim section.
5. Remove the seat belt lower anchor bolt and screw, and then remove the front seat belt.
6. Remove the adjust shoulder anchor assembly/seat belt anchor plate.
   - Refer to Center Pillar and Roof Side Trim Cover in Exterior/Interior Trim section.

Inspection

If any of the following abnormalities is found, replace on an assembly basis;

- Deform and malfunction of adjustable shoulder anchor/seat belt anchor plate.
- No smooth move of upper/lower anchors in the circumferential direction.
- Damaged and/or deformed through ring.
- Damaged and/or deformed tongue.
- Damaged and/or frayed of webbing.
- Deformed retractor bracket.
- Seat belt not rewound up.
- Resistance or abnormal sound when seat belt is wound out and rewound.
- Retractor abnormality.

Inspection of retractor

1. ELR (Emergency Locking Retractor) lock inclining angle check.
   - When the retractor is moved gently from its installing position, make sure it is not locked within 15° in any directions, and it remains locked at 45° or larger.
2. ELR lock check.
   - When the seat belt is drawn slowly with the retractor installed, make sure it is not locked. And when it is drawn quickly, make sure it is locked.
3. ALR (Automatic Locking Retractor)/ELR check (Except for driver's seat).
   - When rewound after winding out the seat belt, make sure the seat belt cannot be taken out. After rewinding, make sure it has returned to its normal operation.

CAUTION: Do not disassemble the retractor.

Installation

To install, follow the removal steps in the reverse order, noting the following points;

1. Pass the seat belt through the lower trim cover hole, and tighten the seat belt anchor bolts to the specified torque.

   Torque: 39 N·m (4.0 kg·m/29 lb ft)
2. After installing the trim cover to the body panel securely, close the lower trim cover.

Front Seat Belt and Associated Parts (Short Wheel Base)

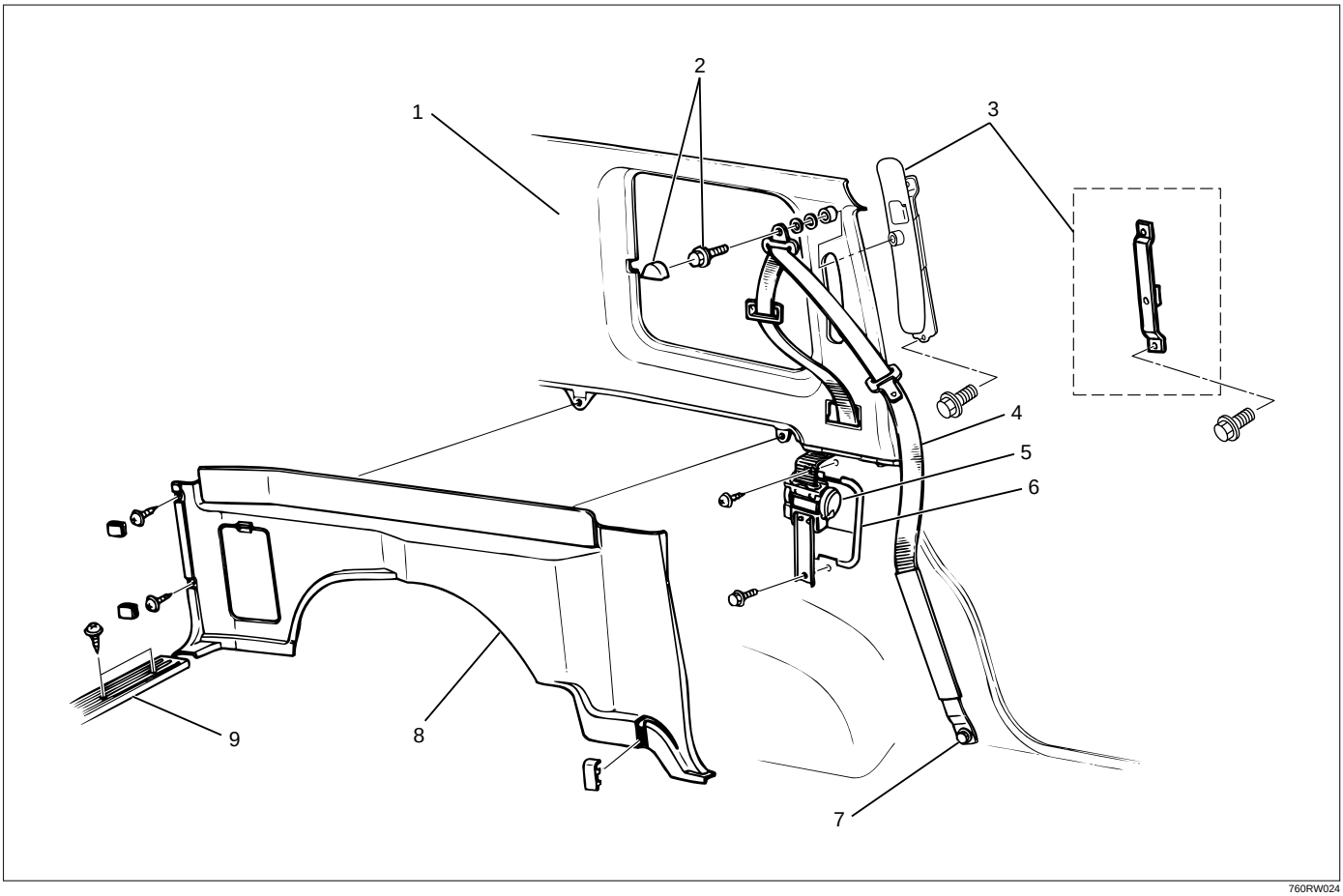

Legend

(1) Quarter Upper Trim Cover
(2) Front Seat Belt Anchor Bolt Cover and Anchor Bolt (Upper Side)
(3) Adjust Shoulder Anchor Assembly/Seat Belt Anchor Plate
(4) Front Seat Belt Assembly
(5) Retractor
(6) Dust Cover
(7) Anchor Bolt (Lower)
(8) Luggage Side Trim Cover
(9) Rear End Floor Trim Cover

Removal

1. Disconnect the battery ground cable.
2. Remove the rear end floor trim cover.
3. Remove the luggage side trim cover.
   - Refer to Luggage Side and Quarter Upper Trim Panel removal steps in Exterior/Interior Trim section.
4. Remove the front seat belt anchor bolt cover and anchor bolt (Upper Side).
5. Remove the seat belt lower anchor bolt and the retractor and then remove the front seat belt.
6. Remove the adjust shoulder anchor assembly/seat belt anchor plate.
   - Refer to Luggage Side and Quarter Upper Trim Cover remove steps in Exterior/Interior Trim section.

Inspection

If any of the following abnormalities is found, replace on an assembly basis;

- Deform and malfunction of adjustable shoulder anchor/seat belt anchor plate.
- No smooth move of upper/lower anchors in the circumferential direction.
- Damaged and/or deformed through ring.
- Damaged and/or deformed tongue.
- Damaged and/or frayed of webbing.
- Deformed retractor bracket.
- Seat belt not rewound up.
- Resistance or abnormal sound when seat belt is wound out and rewound.
- Retractor abnormality.

Inspection of retractor

1. ELR (Emergency Locking Retractor) lock inclining angle check.
   - When the retractor is moved gently from its installing position, make sure it is not locked within 15° in any directions, and it remains locked at 45° or larger.
2. ELR lock check.
   - When the seat belt is drawn slowly with the retractor installed, make sure it is not locked. And when it is drawn quickly, make sure it is locked.
3. ALR (Automatic Locking Retractor)/ELR check (Except for driver's seat).
   - When rewound after winding out the seat belt, make sure the seat belt cannot be taken out. After rewinding, make sure it has returned to its normal operation.

CAUTION: Do not disassemble the retractor.

Installation

To install, follow the removal steps in the reverse order, noting the following points;

1. Pass the seat belt through the lower trim cover hole, and tighten the seat belt anchor bolts to the specified torque.

   Torque: 39 N·m (4.0 kg·m/29 lb ft)
2. After installing the trim cover to the body panel securely, close the lower trim cover.

Rear Seat Belt and Associated Parts (Long Wheel Base)

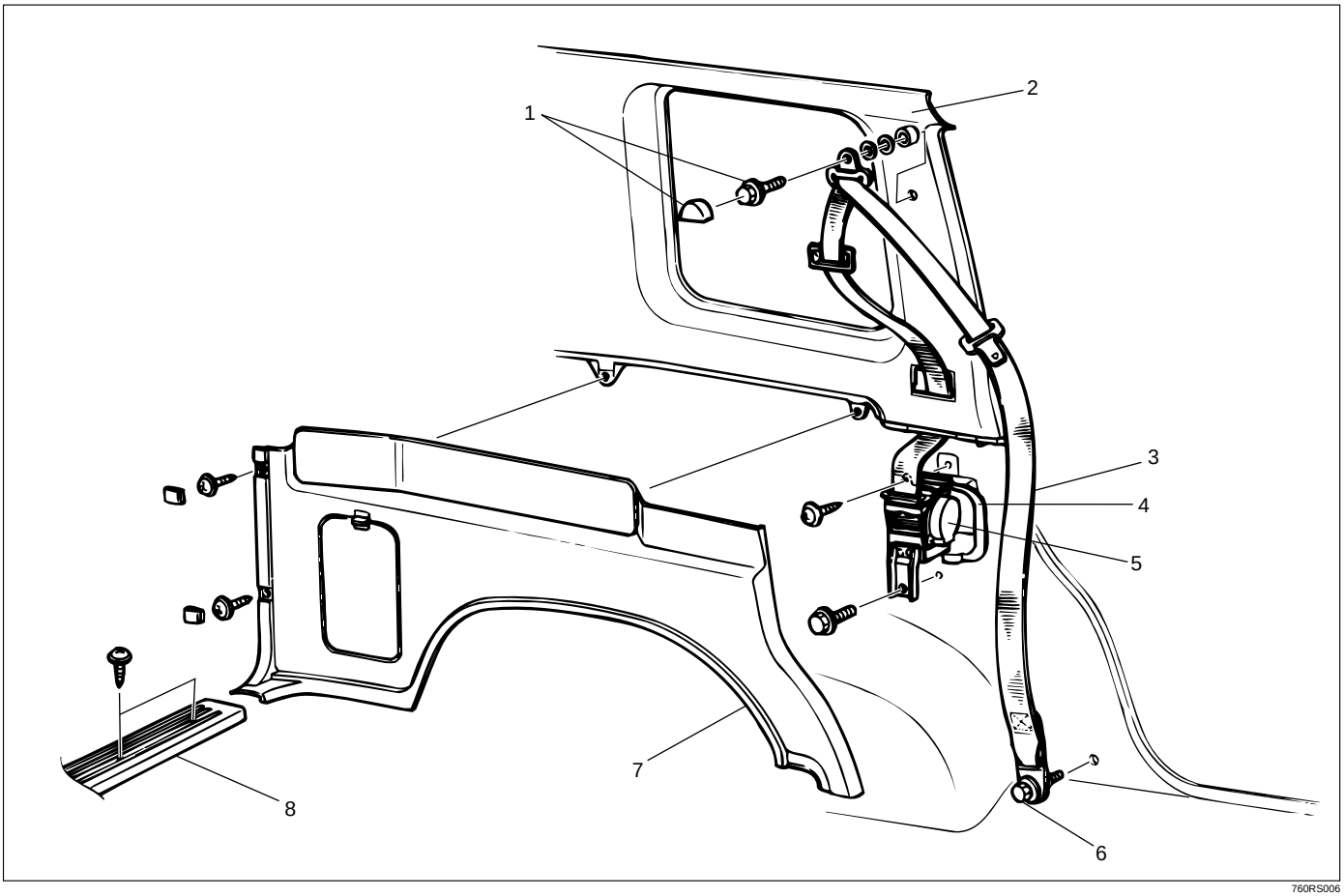

Legend

(1) Rear Seat Belt Anchor Bolt Cover and Anchor Bolt (Upper Side)
(2) Quarter Upper Trim Cover
(3) Rear Seat Belt Assembly
(4) Dust Cover
(5) Retractor
(6) Anchor Bolt (Lower Side)
(7) Luggage Side Trim Cover
(8) Rear End Floor Trim Cover

Removal

1. Disconnect the battery ground cable.
2. Remove the rear end floor trim cover.
3. Remove the luggage side trim cover.
   - Refer to Luggage Side and Quarter Upper Trim Panel removal steps in Exterior/Interior Trim section.
4. Remove the rear seat belt anchor bolt cover and anchor bolt (Upper Side).
5. Remove the seat belt lower anchor bolt and remove the retractor from dust cover slit to remove the rear seat belt.

Inspection

If any of the following abnormalities is found, replace on an assembly basis;

- No smooth move of upper/lower anchors in the circumferential direction.
- Damaged and/or deformed through ring.
- Damaged and/or deformed tongue.
- Damaged and/or frayed of webbing.
- Deformed retractor bracket.
- Seat belt not rewound up.
- Resistance or abnormal sound when seat belt is wound out and rewound.
- Retractor abnormality.

Inspection of retractor

1. ELR (Emergency Locking Retractor) lock inclining angle check.
   - When the retractor is moved gently from its installing position, make sure it is not locked within 15° in any directions, and it remains locked at 45° or larger.
2. ELR lock check.
   - When the seat belt is drawn slowly with the retractor installed, make sure it is not locked. And when it is drawn quickly, make sure it is locked.
3. ALR (Automatic Locking Retractor)/ELR check (Except for driver's seat).
   - When rewound after winding out the seat belt, make sure the seat belt cannot be taken out. After rewinding, make sure it has returned to its normal operation.

CAUTION: Do not disassemble the retractor.

Installation

To install, follow the removal steps in the reverse order, noting the following point.

1. Tighten the seat belt anchor bolts to the specified torque.

   Torque: 39 N·m (4.0 kg·m/29 lb ft)

Rear Seat Belt and Associated Parts (Short Wheel Base)

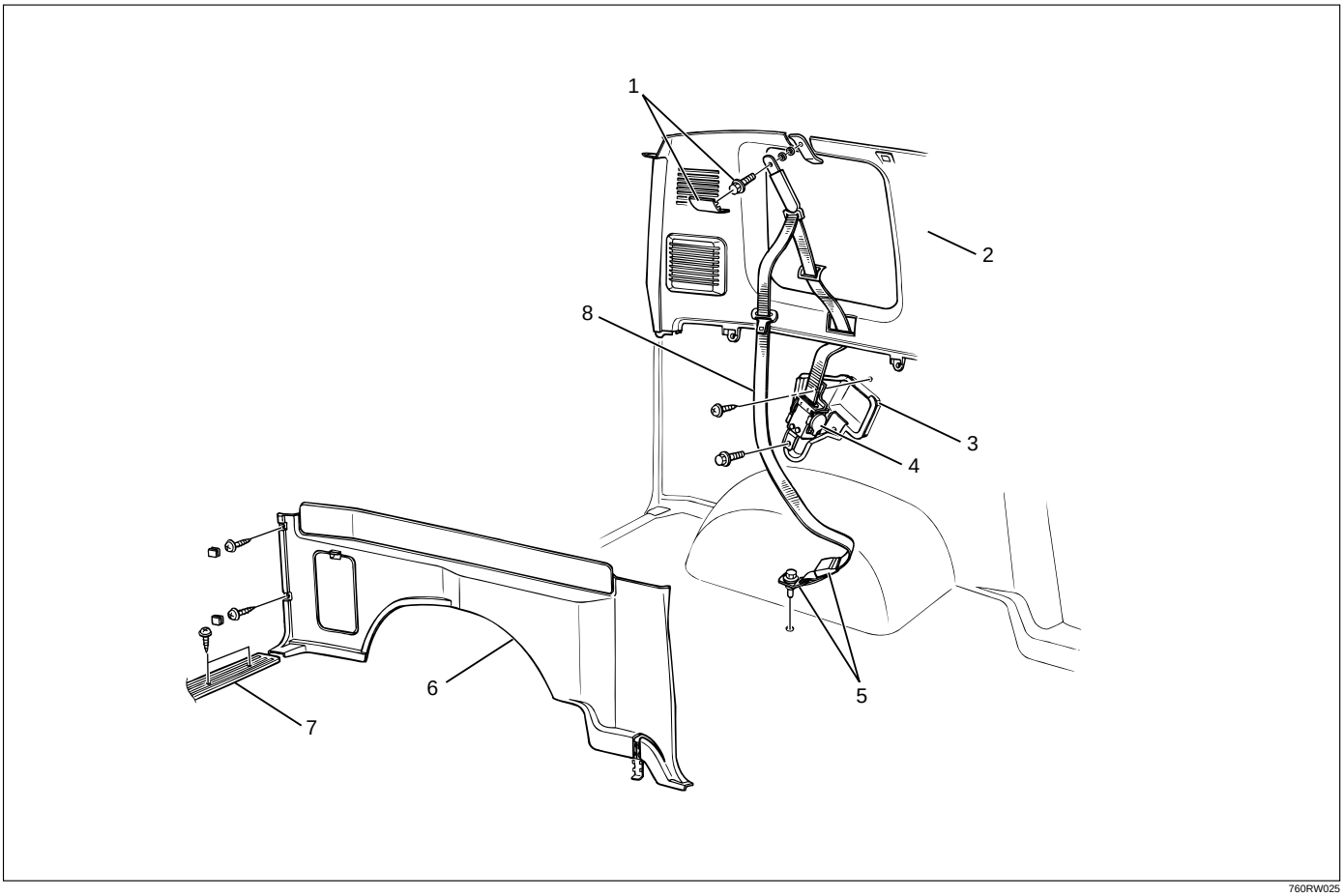

760RW025

Legend

(1) Rear Seat Belt Upper Anchor Bolt Cover and Anchor Bolt
(2) Quarter Upper Trim Cover
(3) Dust Cover
(4) Retractor
(5) Rear Seat Belt Lower Anchor Bolt Cover and Anchor Bolt
(6) Luggage Side Trim Cover
(7) Rear End Floor Trim Cover
(8) Rear Seat Belt Assembly

Removal

1. Disconnect the battery ground cable.
2. Remove the rear seat belt lower anchor bolt cover (1) and anchor bolt (2).

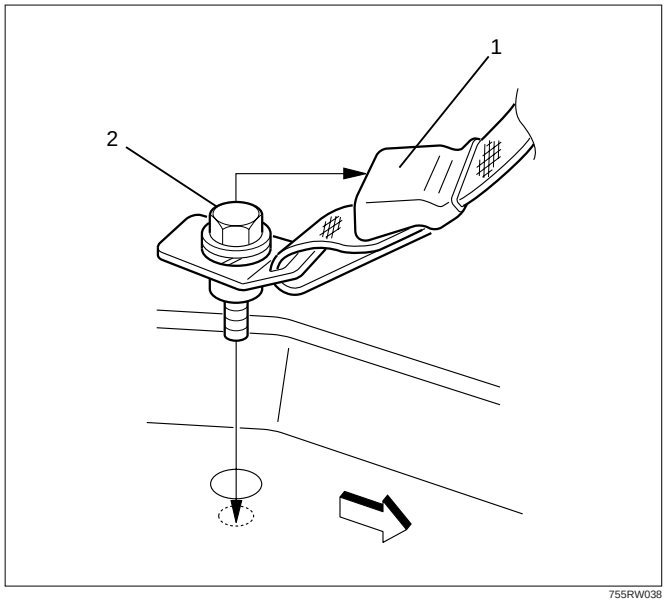

755RW038

3. Remove the rear end floor trim cover.
4. Remove the luggage side trim cover.
   - Refer to Luggage Side and Quarter Upper Trim Panel removal steps in Exterior/Interior Trim section.
5. Remove the rear seat belt upper anchor bolt cover (1) and anchor bolt.

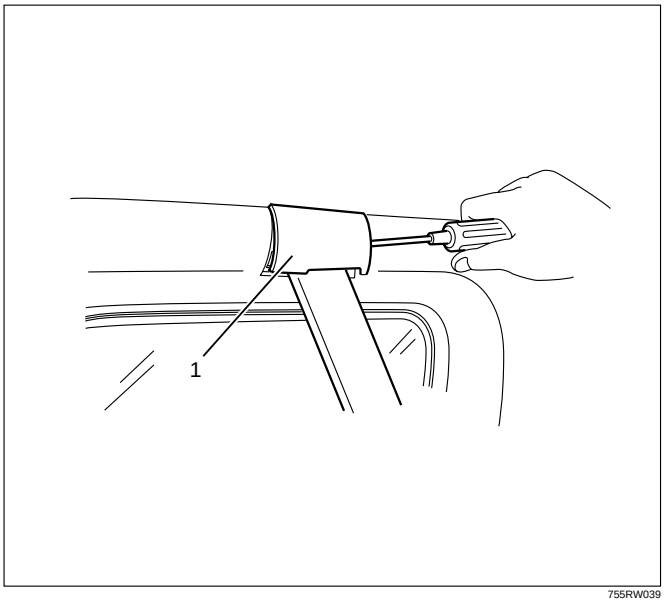

755RW039

6. Remove the rear seat belt assembly.
   - Remove the seat belt lower anchor bolt and screw.
   - Remove the retractor from the dust cover slit.

Inspection

If any of the following abnormalities is found, replace on an assembly basis;

- No smooth move of upper/lower anchors in the circumferential direction.
- Damaged and/or deformed through ring.
- Damaged and/or deformed tongue.
- Damaged and/or frayed of webbing.
- Deformed retractor bracket.
- Seat belt not rewound up.
- Resistance or abnormal sound when seat belt is wound out and rewound.
- Retractor abnormality.

Inspection of retractor

1. ELR (Emergency Locking Retractor) lock inclining angle check.
   - When the retractor is moved gently from its installing position, make sure it is not locked within 15° in any directions, and it remains locked at 45° or larger.
2. ELR lock check.
   - When the seat belt is drawn slowly with the retractor installed, make sure it is not locked. And when it is drawn quickly, make sure it is locked.
3. ALR (Automatic Locking Retractor)/ELR check (Except for driver's seat).
   - When rewound after winding out the seat belt, make sure the seat belt cannot be taken out. After rewinding, make sure it has returned to its normal operation.

CAUTION: Do not disassemble the retractor.

Installation

To install, follow the removal steps in the reverse order, noting the following point.

1. Be sure to install the lower side anchor plate straight horizontally, with mounting hole of the plate at the center.
2. Tighten the seat belt anchor bolts to the specified torque.

   Torque: 39 N·m (4.0 kg·m/29 lb ft)

Third Seat Belt and Associated Parts (Long Wheel Base)

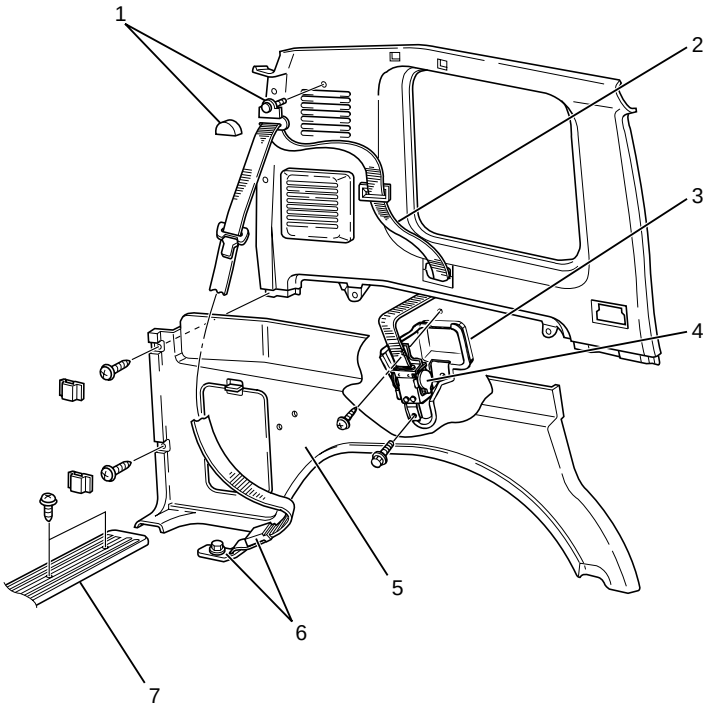

760RW027

Legend

(1) Third Seat Belt Upper Anchor Bolt Cover and Anchor Bolt
(2) Third Seat Belt Assembly
(3) Dust Cover
(4) Retractor
(5) Luggage Side Trim Cover
(6) Third Seat Belt Lower Anchor Bolt Cover and Anchor Bolt
(7) Rear End Floor Trim Cover

Removal

1. Disconnect the battery ground cable.
2. Remove the rear end floor trim cover.
3. Remove the luggage side trim cover.
   - Refer to Luggage Side and Quarter Upper Trim Panel removal steps in Exterior/Interior Trim section.
4. Remove the third seat belt anchor bolt cover and anchor bolt (Upper Side).
5. Remove the seat belt lower anchor bolt and remove the retractor from dust cover slit to remove the third seat belt.

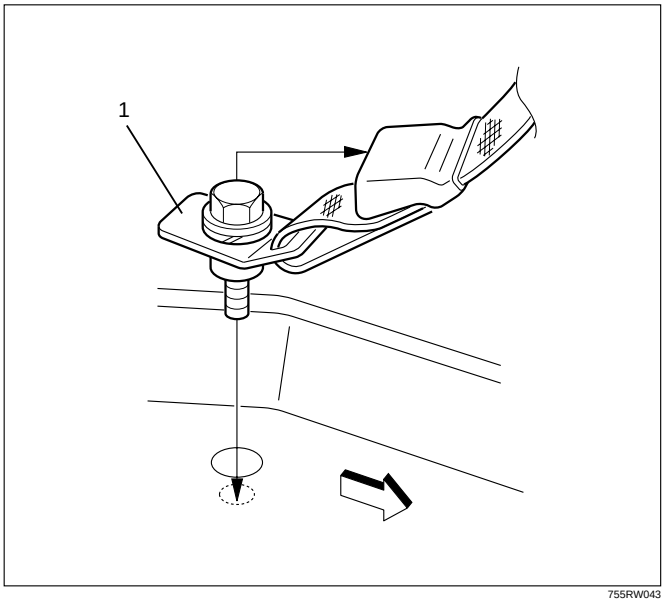

755RW043

Inspection

If any of the following abnormalities is found, replace on an assembly basis;

- No smooth move of upper/lower anchors in the circumferential direction.
- Damaged and/or deformed through ring.
- Damaged and/or deformed tongue.
- Damaged and/or frayed of webbing.
- Deformed retractor bracket.
- Seat belt not rewound up.
- Resistance or abnormal sound when seat belt is wound out and rewound.
- Retractor abnormality.

Inspection of retractor

1. ELR (Emergency Locking Retractor) lock inclining angle check.
   - When the retractor is moved gently from its installing position, make sure it is not locked within 15° in any directions, and it remains locked at 45° or larger.
2. ELR lock check.
   - When the seat belt is drawn slowly with the retractor installed, make sure it is not locked. And when it is drawn quickly, make sure it is locked.

CAUTION: Do not disassemble the retractor.

Installation

To install, follow the removal steps in the reverse order, noting the following point.

1. Be sure to install the lower side anchor plate (1) straight against the longitudinal direction of the vehicle with mounting hole of the plate at the center.
2. Tighten the seat belt anchor bolts to the specified torque.

   Torque: 39 N·m (4.0 kg·m/29 lb ft)

Front Seat Buckle Assembly

Removal

1. Disconnect the battery ground cable.
2. Disconnect the seat belt warning connector (If so equipped).
3. Remove the front seat buckle assembly(1).

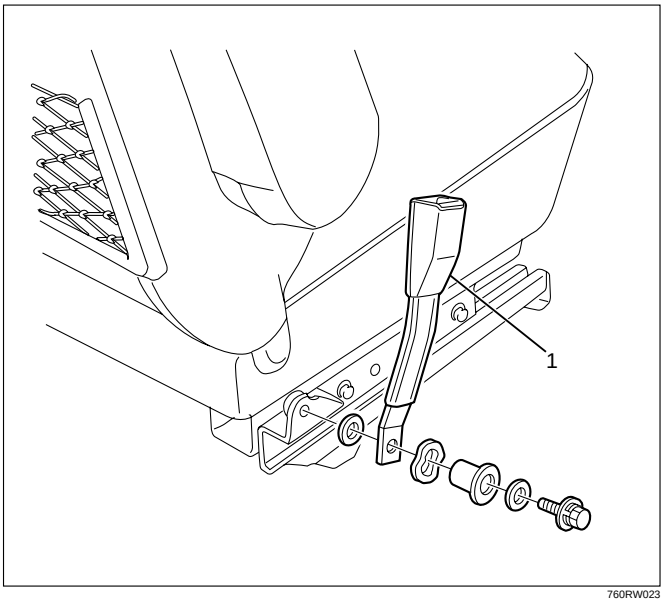

760RW023

Installation

To install, follow the removal steps in the reverse order, noting the following points.

1. Fix the buckle to the rotation – stop position(2) securely to install the front seat buckle assembly(1).

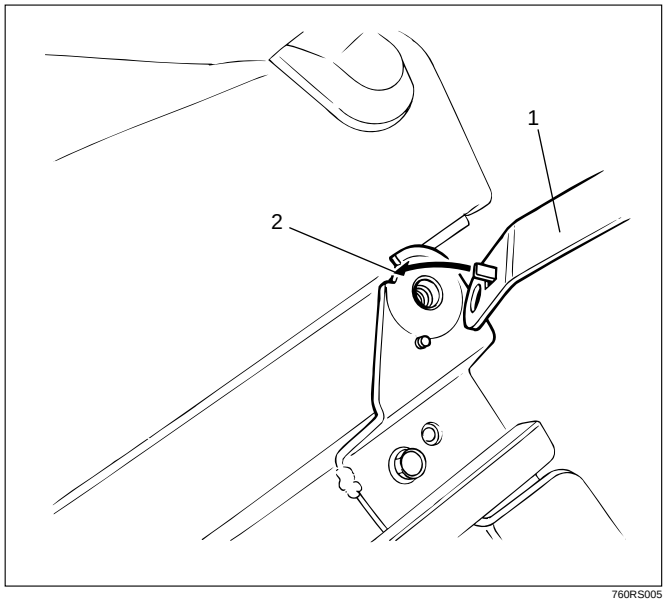

760RS005

2. Tighten the buckle anchor bolt to the specified torque.
   Torque: 39 N·m (4.0 kg·m/29 lb ft)

Front Seat Buckle Assembly (W/Pretensioner)

Removal

1. Disconnect the battery ground cable.
2. Disconnect the pretensioner harness connector(3).
3. Remove the pretensioner cover(1).
4. Remove the front seat buckle assembly(2).

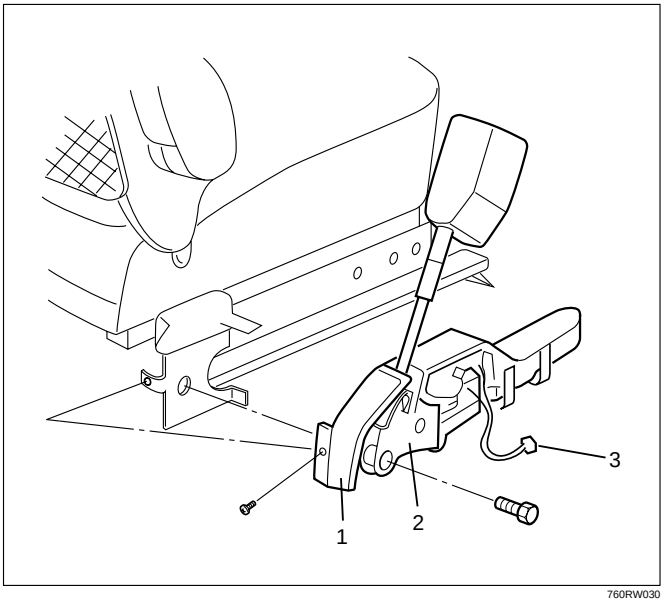

760RW030

Installation

To install, follow the removal steps in the reverse order, noting the following points.

1. Fix the buckle to the rotation – stop position securely to install the front seat buckle assembly.
2. Connect the pretensioner harness connector.

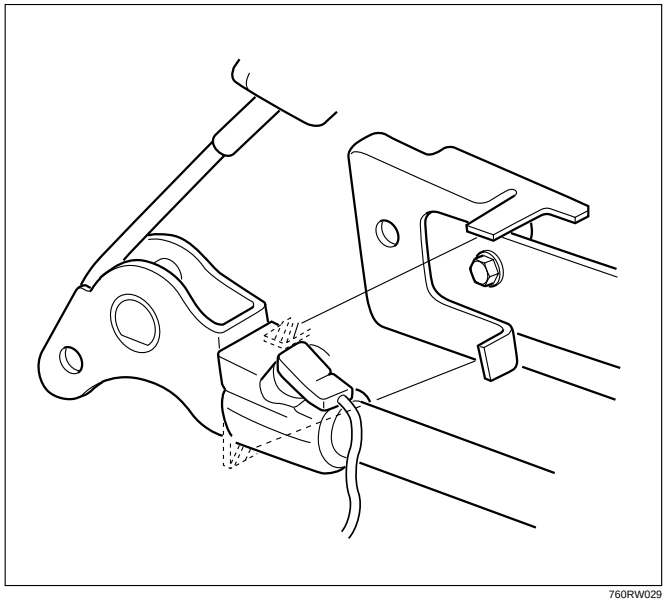

760RW029

3. Tighten the buckle anchor bolt to the specified torque.
   Torque: 39 N·m (4.0 kg·m/29 lb ft)

Rear Center Seat Belt Buckle Assembly

Rear Center Seat Belt Buckle Assembly and Associated Parts

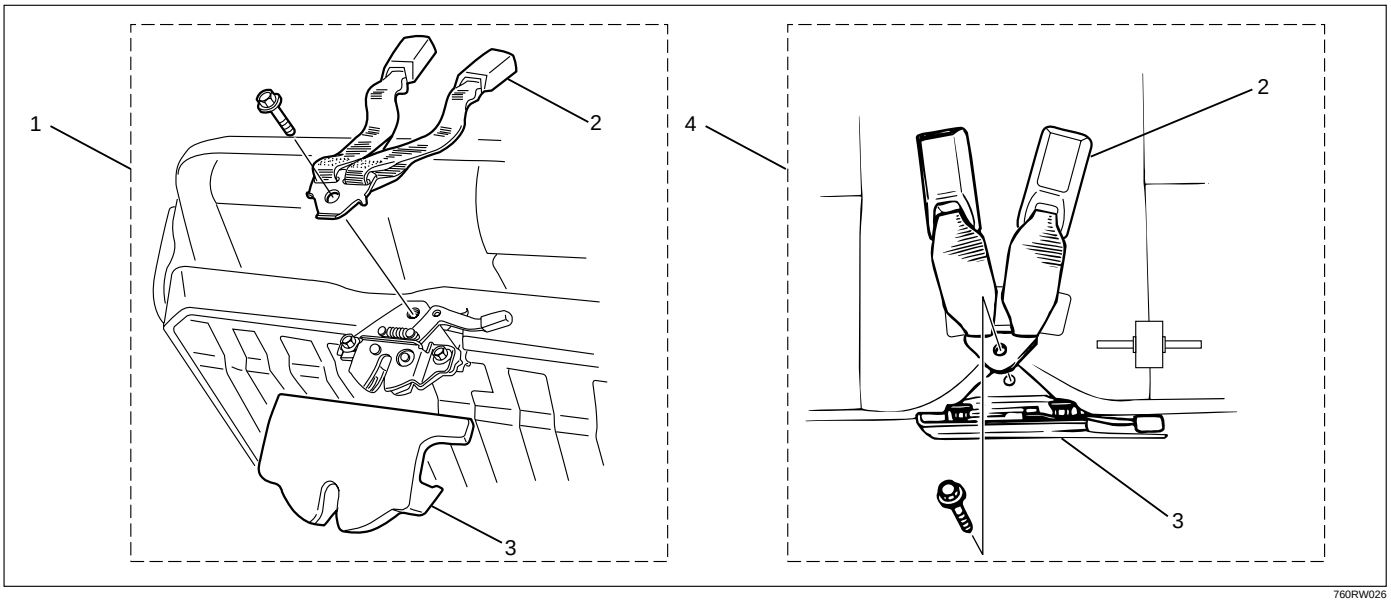

760RW026

Legend
(1) Long Wheel Base
(2) Rear Seat Belt Buckle Assembly
(3) Seat Lock Cover
(4) Short Wheel Base

Removal

1. Remove the catch portions(2) & (3) of the seat lock assembly(4) from the cover, and then remove the seat lock cover(1).

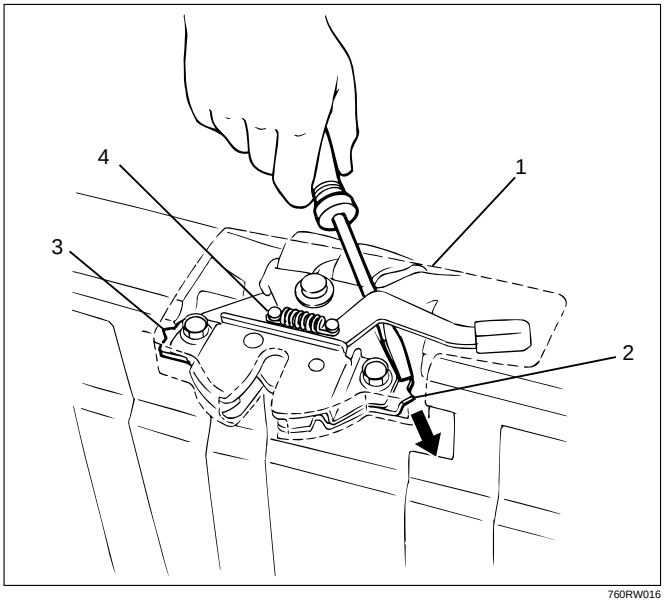

760RW016

2. Remove the rear seat buckle assembly.

Installation

1. Fix the rear seat belt buckle assembly(1) to the rotation stopper and tighten the anchor bolt to the specified torque.

Torque: 39 N·m (4.0 kg·m/29 lb ft)

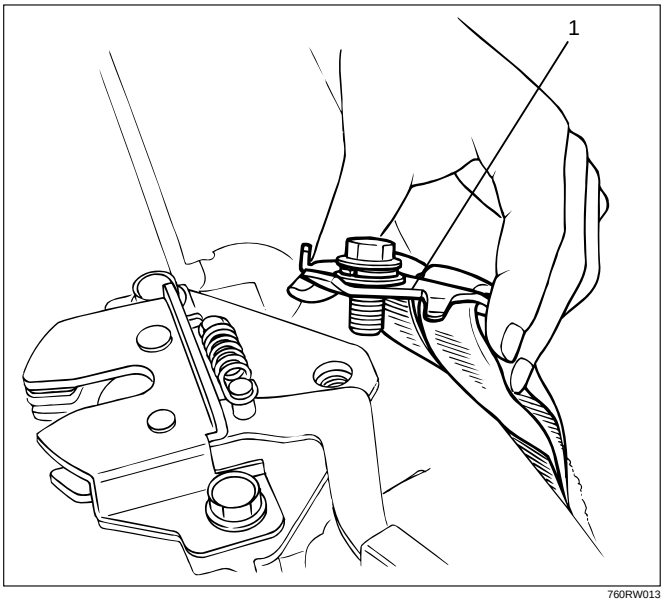

760RW013

2. Install the seat lock cover.

Third Seat Belt Buckle and Lock Assembly

Third Seat Belt Buckle and Lock Assembly and Associated Parts

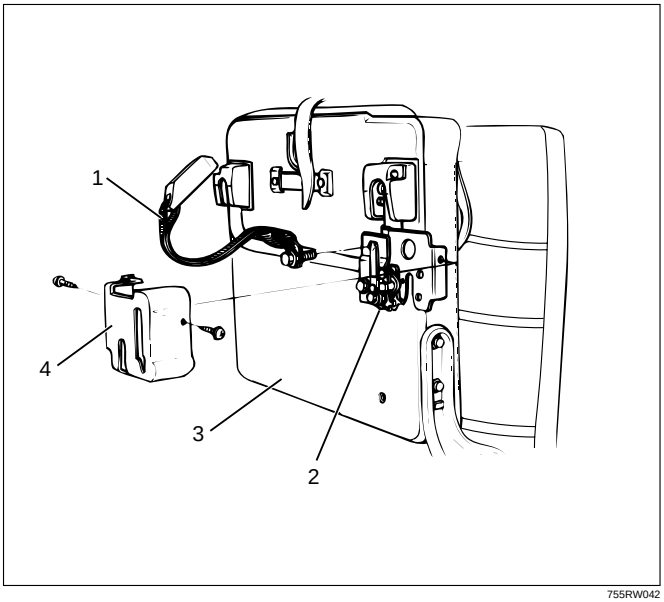

755RW042

Legend

(1) Third Seat Belt Buckle Assembly
(2) Third Seat Lock Assembly
(3) Third Seat
(4) Seat Lock Cover

Removal

1. Disconnect the battery ground cable.
2. Remove seat lock cover.
3. Remove third seat belt buckle assembly.
4. Remove third seat lock assembly.

Installation

To install, follow the removal steps in the reverse order, noting the following point.

1. Tighten the lock assembly fixing bolts to the specified torque.

   Torque: 39 N·m (4.0 kg·m/29 lb ft)

2. Tighten the buckle assembly fixing bolt to the specified torque.

   Torque: 39 N·m (4.0 kg·m/29 lb ft)

Rear Seat Lock Assembly

Removal

1. Remove the seat lock cover(3).
2. Remove the rear seat belt buckle assembly(1).
3. Remove the rear seat lock assembly(2).

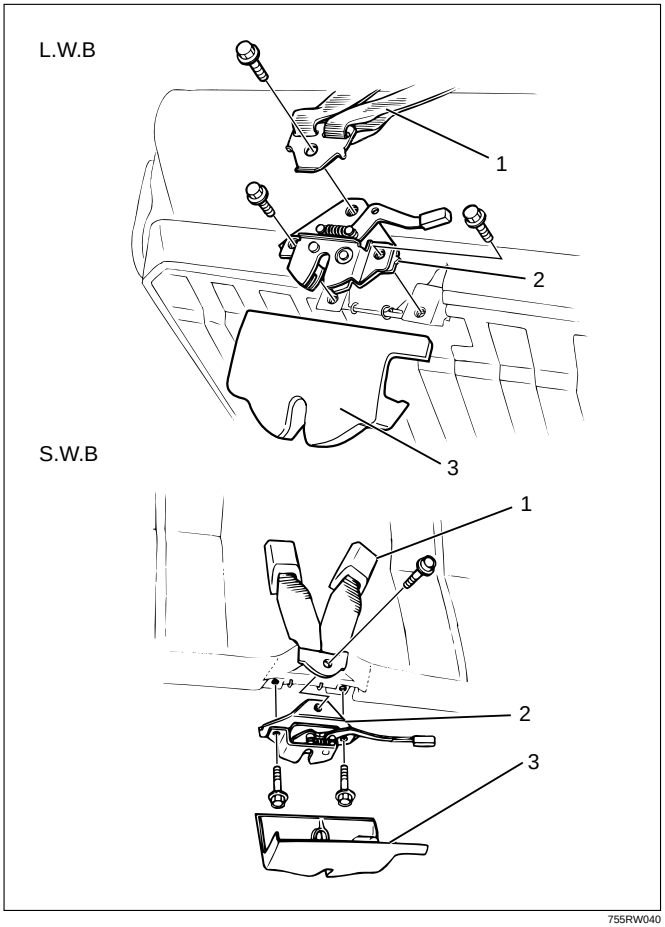

755RW040

Installation

To install, follow the removal steps in the reverse order, noting the following point.

1. Tighten the seat lock fixing bolts to the specified torque.

   Torque: 42 N·m (4.3 kg·m/31 lb ft)

Rear Seat Lock Assembly (Bench Type)

Removal

1. Remove the seat lock cover(3).
2. Remove the rear seat belt/buckle assembly(1).
3. Disconnect the link connecting the lock assemblies on the both sides, and then remove the rear seat lock assembly(2).

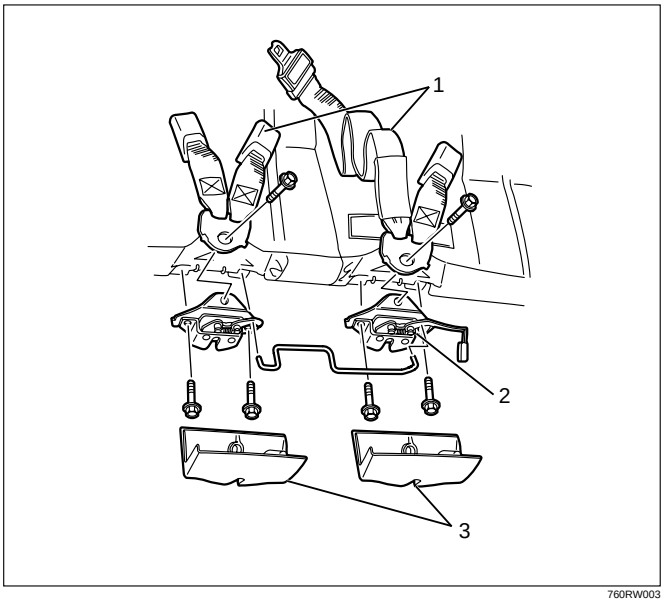

760RW003

Installation

To install, follow the removal steps in the reverse order, noting the following point.

1. Tighten the seat lock fixing bolts to the specified torque.

   Torque: 42 N·m (4.3 kg·m/31 lb ft)

Rear Seat Strikers

Removal

1. Fold the rear seat assembly to the front direction.
2. Remove the luggage floor box(1) (L·W·B).
   Remove the striker cover(3) (S·W·B).
3. Remove the rear seat striker(2).

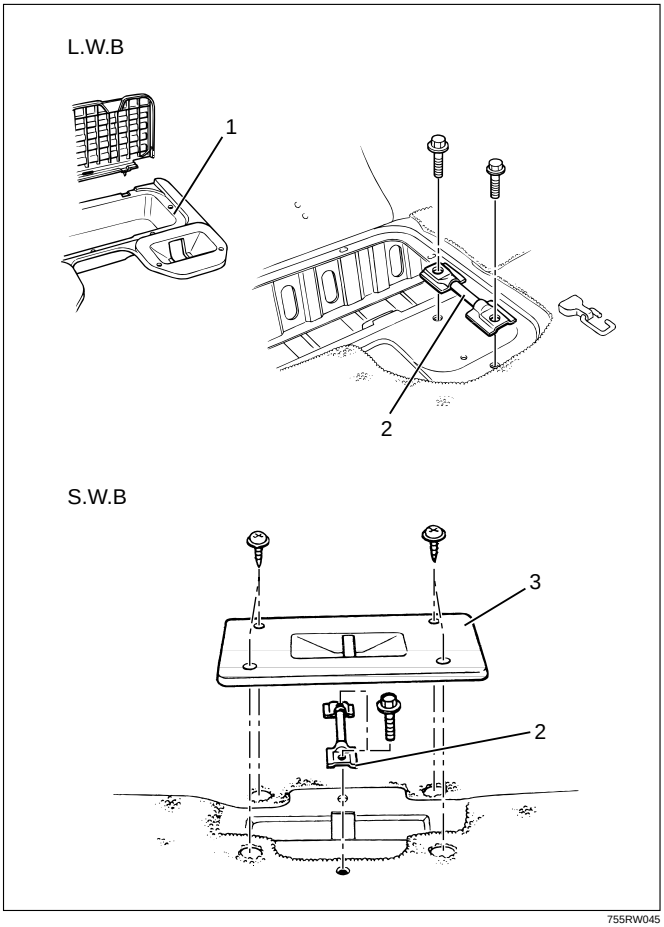

755RW045

Installation

To install, follow the removal steps in the reverse order, noting the following point.

1. Tighten the striker fixing bolts to the specified torque.
   Torque: 40 N·m (4.1 kg·m/30 lb ft)

Third Seat Striker

Removal

1. Disconnect the battery ground cable.
2. Remove the striker cover (1).
3. Remove the third seat striker (2).

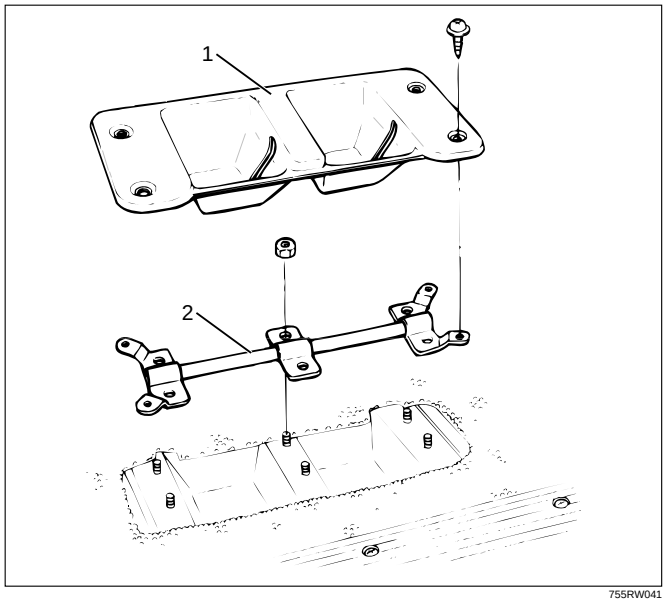

755RW041

Installation

To install, follow the removal steps in the reverse order, noting the following point.

1. Tighten the striker fixing nuts to the specified torque.
   Torque: 39 N·m (4.0 kg·m/29 lb ft)

Main Data and Specifications

Torque Specifications

Application	N·m	kg·m	Lb Ft
Front Seat Belt Anchor Bolts	39	4.0	29
Rear Seat Belt Anchor Bolts	39	4.0	29
Front Seat Buckle Anchor Bolt	39	4.0	29
Rear Seat Buckle Anchor Bolt	39	4.0	29
Rear Seat Lock Fixing Bolts	42	4.3	31
Third Seat Belt Anchor Bolts	39	4.0	29
Third Seat Lock Fixing Bolts	39	4.0	29
Third Seat Buckle Anchor Bolt	39	4.0	29
Third Seat Striker Fixing Nuts	39	4.0	29
Rear Seat Striker Fixing Bolts	40	4.1	30

RESTRAINTS

SUPPLEMENTAL RESTRAINT SYSTEM (SRS)

CONTENTS

Service Precaution 9J–1
General Description 9J–2
SRS Component And Wiring Location View . 9J–4
Component Description 9J–4
Definitions 9J–7
Diagnosis 9J–8
SRS Connector Body Face Views 9J–9
Repairs And Inspections Required After An Accident 9J–9
On–Vehicle Service 9J–10
Air Bag Assembly Handling / Shipping / Scrapping 9J–11
Pretensioner Seat Belt Handling / Shipping / Scrapping. 9J–11
Special Tools 9J–26
Service Precautions for SRS Component Service 9J–30
SRS Connectors 9J–31
Sensing And Diagnostic Module (SDM) 9J–33
Service Precautions 9J–33
Removal 9J–33
Installation 9J–33
Driver Air Bag Assembly 9J–35
Service Precautions 9J–35
Removal 9J–35
Installation 9J–36
Steering Wheel 9J–37
Service Precautions 9J–37
Removal 9J–37
Installation 9J–38
SRS Coil Assembly 9J–39
Service Precautions 9J–39
Removal 9J–39
Installation 9J–41
SRS Coil Replacement Procedure 9J–42
Removal 9J–42
How to Disconnect the horn terminal 9J–43
How to Connect Horn Terminal 9J–43
Installation 9J–44
Steering Column 9J–44
Service Precautions 9J–44
Removal 9J–44
Installation 9J–46
Passenger Air Bag Assembly 9J–48
Service Precautions 9J–48
Removal 9J–48
Installation 9J–48
Pretensioner Seat Belt (If so equipped) 9J–49
Service Precaution 9J–49
Parts Location 9J–49
Removal 9J–49
Installation 9J–49
Main Data and Specifications 9J–50

Service Precaution

WARNING: IF SO EQUIPPED WITH A SUPPLEMENTAL RESTRAINT SYSTEM (SRS), REFER TO THE SRS COMPONENT AND WIRING LOCATION VIEW IN ORDER TO DETERMINE WHETHER YOU ARE PERFORMING SERVICE ON OR NEAR THE SRS COMPONENTS OR THE SRS WIRING. WHEN YOU ARE PERFORMING SERVICE ON OR NEAR THE SRS COMPONENTS OR THE SRS WIRING, REFER TO THE SRS SERVICE INFORMATION. FAILURE TO FOLLOW WARNINGS COULD RESULT IN POSSIBLE AIR BAG DEPLOYMENT, PERSONAL INJURY, OR OTHERWISE UNNEEDED SRS SYSTEM REPAIRS.

CAUTION: Always use the correct fastener in the proper location. When you replace a fastener, use ONLY the exact part number for that application. ISUZU will call out those fasteners that require a replacement after removal. ISUZU will also call out the fasteners that require thread lockers or thread sealant. UNLESS OTHERWISE SPECIFIED, do not use supplemental coatings (Paints, greases, or other corrosion inhibitors) on threaded fasteners or fastener joint interfaces. Generally, such coatings adversely affect the fastener torque and the joint clamping force, and may damage the fastener. When you install fasteners, use the correct tightening sequence and specifications. Following these instructions can help you avoid damage to parts and systems.

General Description

CAUTION: When fasteners are removed, always reinstall them at the same location from which they were removed. If a fastener needs to be replaced, use the correct part number fastener for that application. If the correct part number fastener is not available, a fastener of equal size and strength (or stronger) may be used. Fasteners that are not reused, and those requiring thread locking compound will be called out. The correct torque value must be used when installing fasteners that require it. If the above conditions are not followed, parts or system damage could result.

Restraint Devices

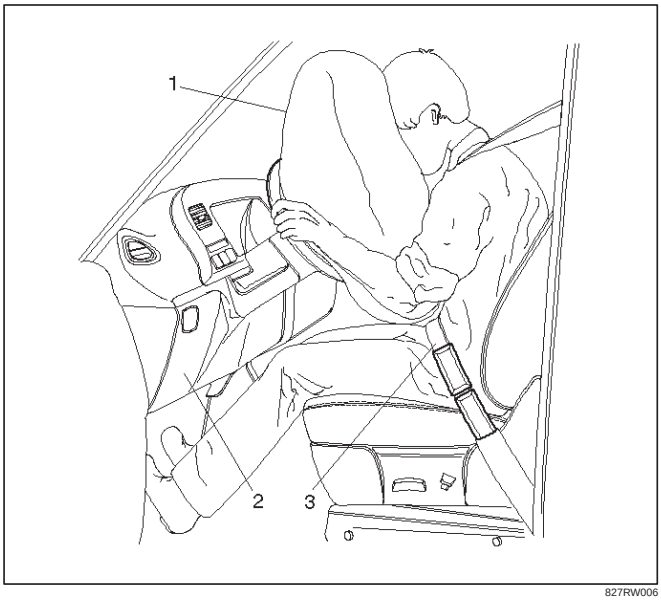

827RW006

Legend

(1) Deployed Air Bag
(2) Knee Bolster
(3) Seat Belt

The Supplemental Restraint System (SRS) helps supplement the protection offered by the driver and front passenger seat belts by deploying an air bag from the center of the steering wheel and from the top of the right side of the instrument panel.

The air bag deploys when the vehicle is involved in a frontal crash of sufficient force up to 30 degrees off the centerline of the vehicle. To further absorb the crash energy there is a knee bolster located beneath the instrument panel for both the driver and passenger, and the steering column is collapsible.

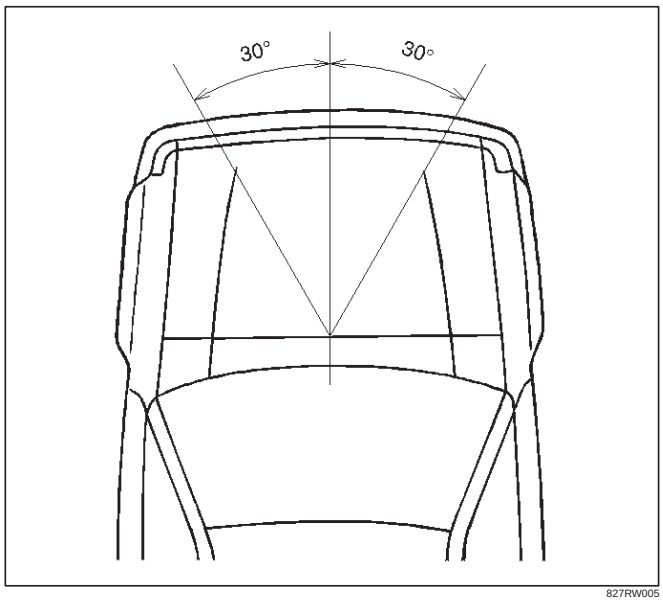

827RW005

System Description

The SRS consists of the Sensing and Diagnostic Module (SDM), the driver air bag assembly, the SRS coil assembly, the passenger air bag assembly and the “AIR BAG” warning lamp in the instrument cluster. The SDM, SRS coil assembly (driver side only), driver air bag assembly, passenger air bag assembly and connector wire make up the deployment loops. The function of the deployment loops is to supply current through air bag assembly, which will cause deployment of the air bags in the event of a frontal crash of sufficient force, up to 30 degrees off the centerline of the vehicle. The air bag assemblies are only supplied enough current to deploy when the SDM detects vehicle velocity changes severe enough to warrant deployment.

The SDM contains a sensing device which converts vehicle velocity change to an electrical signal. The electrical signal generated is processed by the SDM and then compared to a value stored in memory. When the generated signal exceeds the stored value, the SDM will cause current to flow through the air bag assembly deploying the air bags.

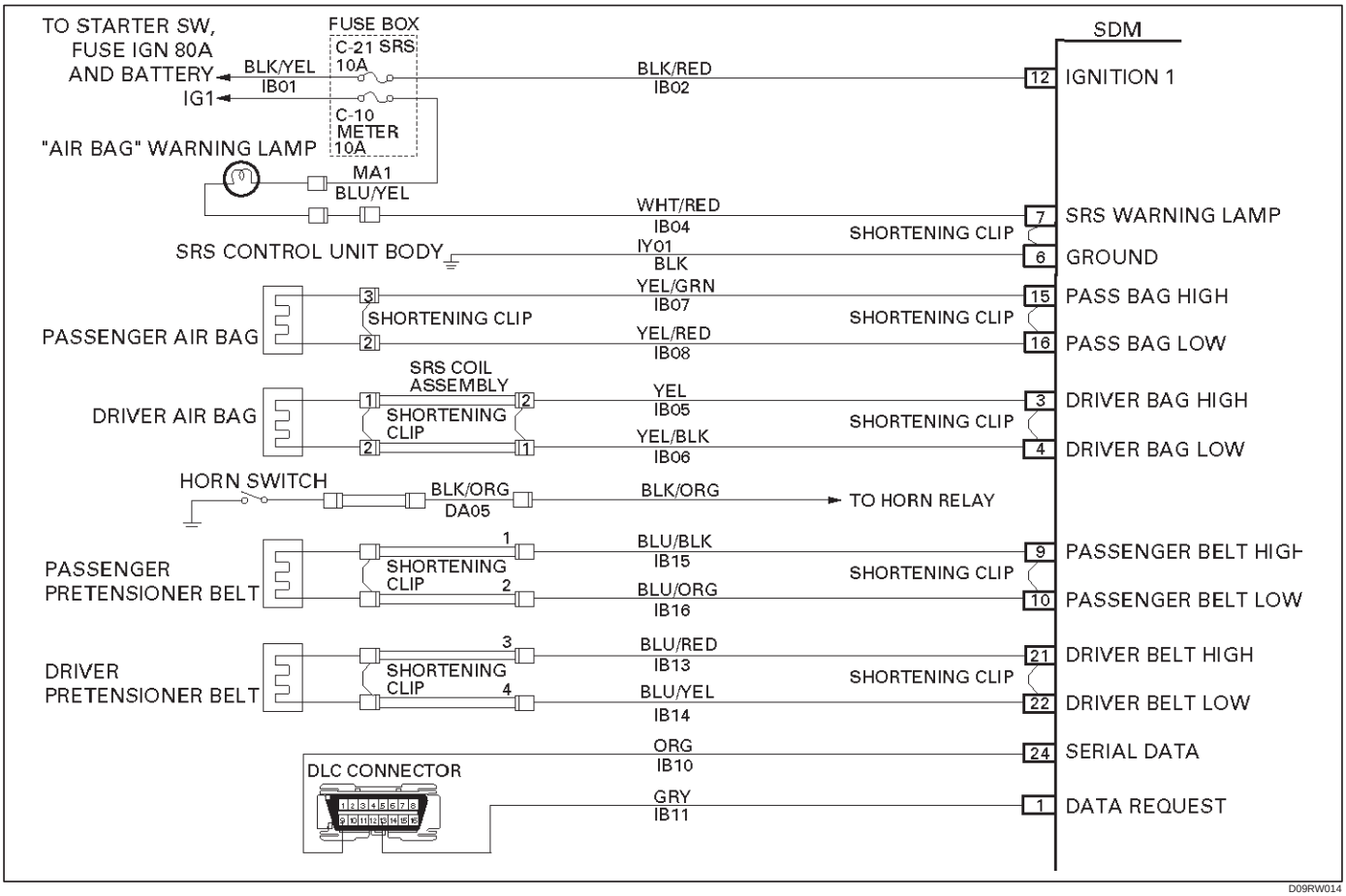

SRS Component And Wiring Location View

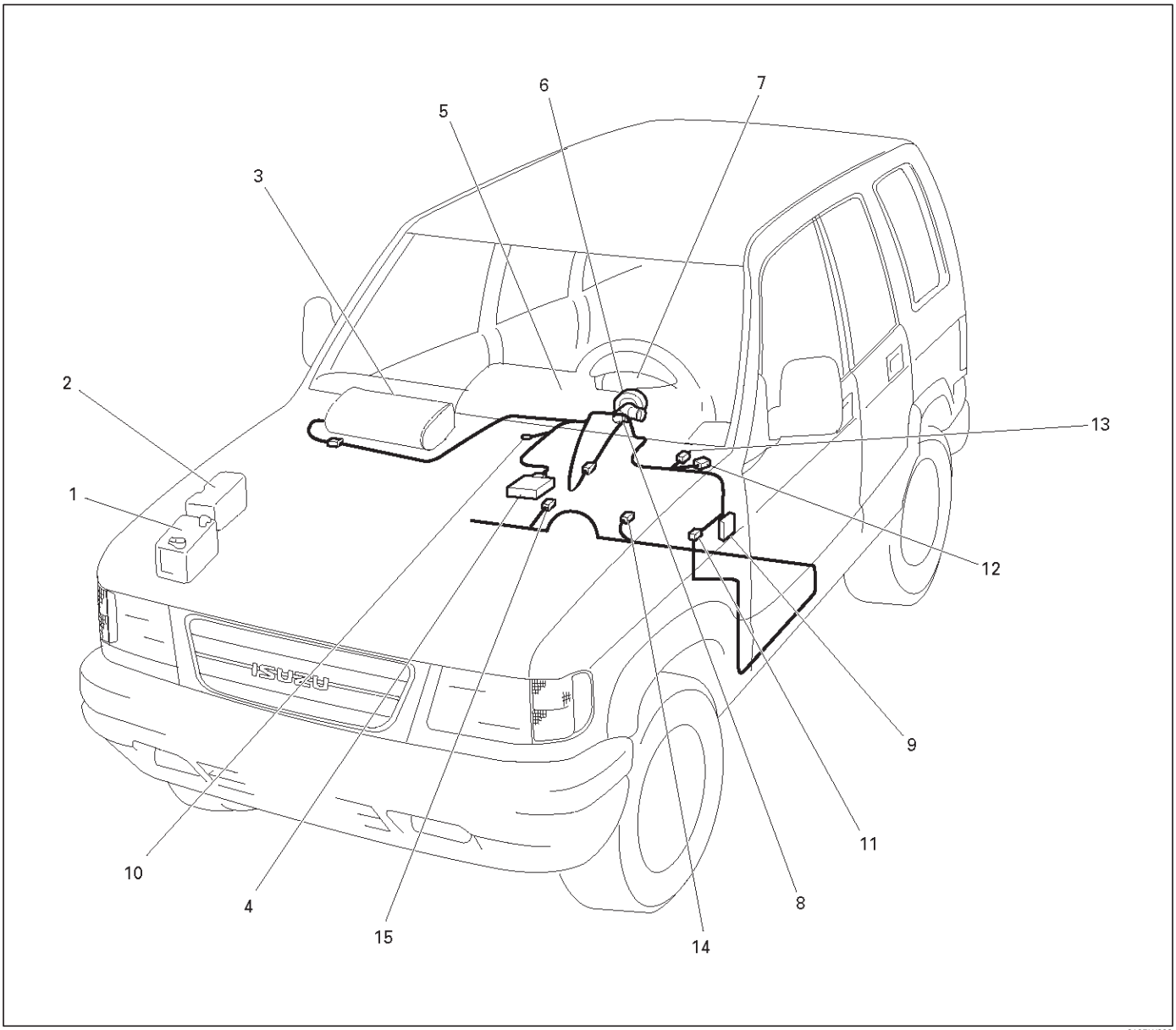

810RW298

Legend

(1) Battery
(2) Relay & Fuse Box
(3) Passenger Air Bag Assembly
(4) SDM
(5) Meter Assembly
(6) SRS Coil Assembly
(7) Driver Air Bag Assembly
(8) Starter Switch
(9) Fuse Box, C–21
(10) SRS Body Earth
(11) Body Harness Connector
(12) Instrument Harness Connector
(13) Engine Haness Connector
(14) Pretensioner, LH (If so equipped)
(15) Pretensioner, RH (If so equipped)

Component Description

SDM (Sensing and Diagnostic Module)

WARNING: DURING SERVICE PROCEDURES, BE VERY CAREFUL WHEN HANDLING A SENSING AND DIAGNOSTIC MODULE (SDM). NEVER STRIKE OR JAR THE SDM. NEVER POWER UP THE SRS WHEN THE SDM IS NOT RIGIDLY ATTACHED TO THE VEHICLE. ALL SDM AND MOUNTING BRACKET FASTENERS MUST BE CAREFULLY TORQUED AND THE ARROW MUST BE POINTED TOWARD THE FRONT OF THE VEHICLE TO ENSURE PROPER OPERATION OF THE SRS. THE SDM COULD BE ACTIVATED WHEN POWERED WHILE NOT RIGIDLY ATTACHED TO THE VEHICLE WHICH COULD CAUSE DEPLOYMENT AND RESULT IN PERSONAL INJURY.

The Sensing and Diagnostic Module (SDM) is designed to perform the following functions in the SRS:

1. Energy Reserve — The SDM maintains 24–Volt Loop Reserve (24VLR) energy supply to provide deployment energy when ignition voltage is lost in a frontal crash.
2. Frontal Crash Detection — The SDM monitors vehicle velocity changes to detect frontal crashes which are severe enough to warrant deployment.
3. Air Bag Deployment — When a frontal crash of sufficient force is detected, the SDM will cause enough current to flow through the air bag assembly to deploy the air bag.
4. Malfunction Detection — The SDM performs diagnostic monitoring of SRS electrical components and sets a diagnostic trouble code when a malfunction is detected.
5. Frontal Crash Recording — The SDM records information regarding SRS status during frontal crash.
6. Malfunction Diagnosis — The SDM displays SRS diagnostic trouble codes and system status information through the use of a scan tool.
7. Driver Notification — The SDM warns the vehicle driver of SRS malfunctions by controlling the “Air Bag” warning lamp.

The SDM is connected to the SRS wiring harness by a 24–pin connector. This harness connector uses a shorting clip across certain terminals in the contact area. This shorting clip connects the “AIR BAG” warning lamp to ground when the SDM harness connector is disconnected or CPA (Connector Position Assurance) is not inserted even if completely connected. This will cause the “AIR BAG” warning lamp to come “ON” steady whenever the ignition switch is at the ON or START positions with the SDM disconnected.

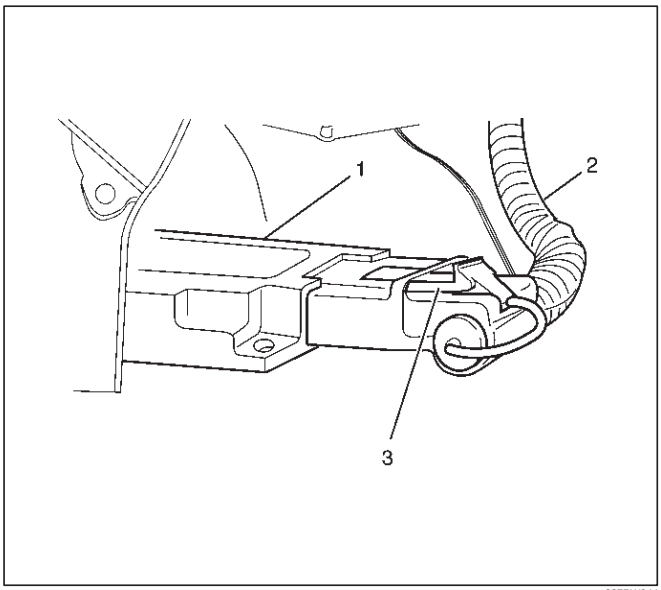

827RW044

Legend

(1) SDM
(2) SRS Harness
(3) Connector Position Assurance

“Air Bag” Warning Lamp

Ignition voltage is applied to the “AIR BAG” warning lamp when the ignition switch is at the ON or START positions. The SDM controls the lamp by providing ground with a lamp driver. The “AIR BAG” warning lamp is used in the SRS to do the following:

1. Verify lamp and SDM operation by turn on 3.5 seconds and then turns “OFF” when the ignition switch is first turned “ON”.
2. Warn the vehicle driver of SRS electrical system malfunctions which could potentially affect the operation of the SRS. These malfunctions could result in nondeployment in case of a frontal crash or deployment for conditions less severe than intended.

The “AIR BAG ” warning lamp is the key to driver notification of SRS malfunctions. For proper lamp operation, refer to the “SRS Diagnostic System Check” in this section.

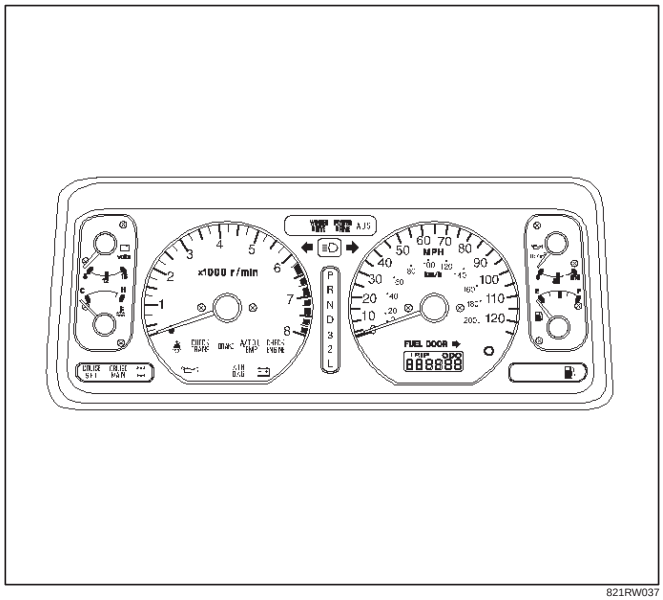

821RW037

SRS Coil Assembly

The SRS coil assembly consists of two current carrying coils. This is attached to the steering column and allow rotation of the steering wheel while maintaining continuous contact of the driver deployment loop to the driver air bag assembly.

There is a shorting clip on the yellow 2–pin connector near the base of steering column which connects the SRS coil to the SRS wiring harness.

The shorting clip shorts to the SRS coil and driver air bag assembly when the yellow 2–pin connector is disconnected. The circuit to the driver air bag assembly is shorted in this way to help prevent unwanted deployment of the air bag when servicing the steering column or other SRS components.

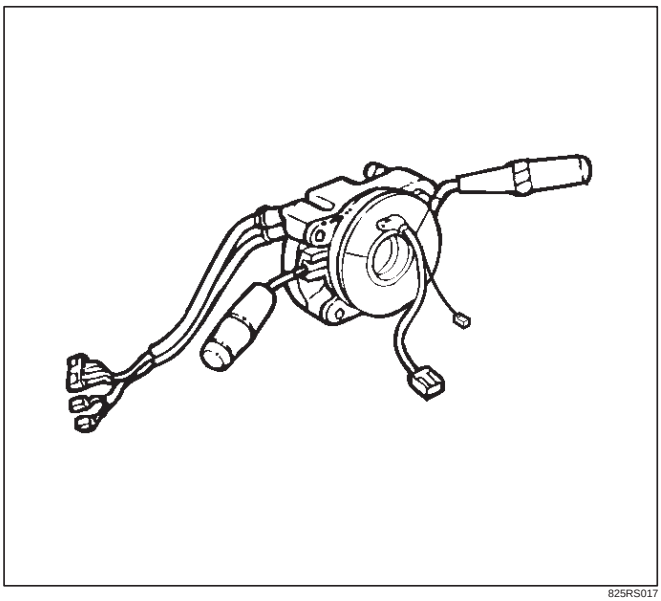

825RS017

Air Bag Assemblies

The air bag assembly consist of an inflatable air bag assembly and an inflator (a canister of gas–generating material and an initiating device). When the vehicle is in a frontal crash of sufficient force.

The SDM causes current flow through the deployment loops. Current passing through the inflator ignites the material in the air bag assembly. The gas produced from this reaction rapidly inflates the air bag assembly.

There is a shorting clip on the driver air bag assembly connector which connects the SRS coil assembly. The shorting clip shorts across the driver air bag assembly circuits when driver air bag assembly connector is disconnected.

The circuit to the driver air bag assembly is shorted in this way to help prevent unwanted deployment of the air bag when servicing the driver air bag assembly, the steering column or other SRS components.

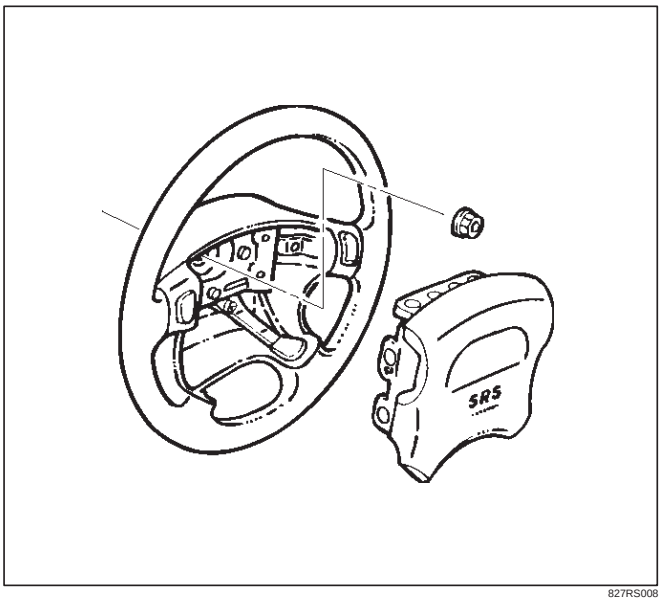

827RS008

There is a shorting clip on the passenger air bag assembly connector which connects to the SRS harness.

The shorting clip shorts across the passenger air bag assembly circuit when the passenger air bag assembly connector is disconnected. The circuit to the passenger air bag assembly is shorted in this way to help prevent unwanted deployment of the air bag when servicing the passenger air bag assembly, the instrument panel or other SRS components.

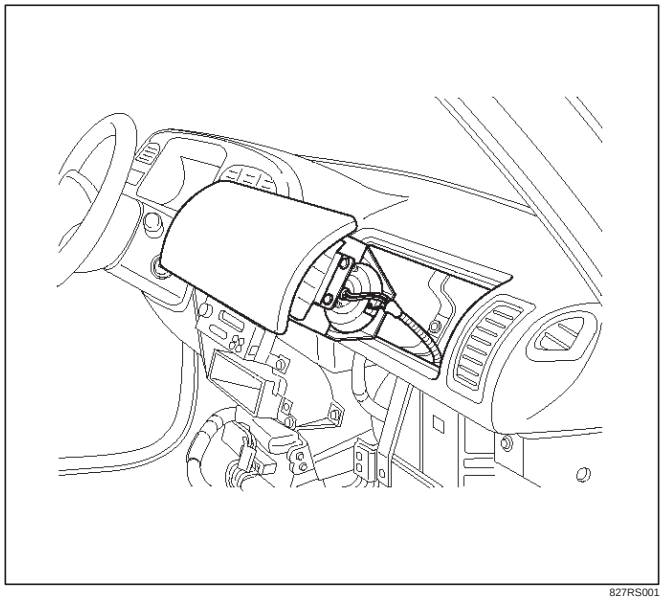

827RS001

Seat Belt with Pretensioner (If so equipped)

The seat belt comprises a seat belt and a cylinder (a cylinder filled with powder and an ignition device). In cases of frontal collision which cause a shock exceeding a specified level, the controller lets current flow to the inflation circuit. The current ignites the cylinder of the seat belt, producing gas. The gas helps tighten the seat belt to restrain firmly the driver's upper half in his seat.

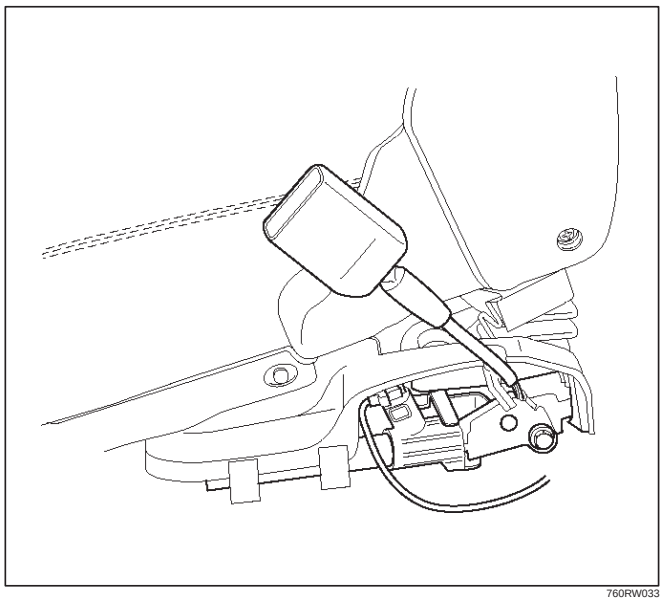

760RW033

Steering Column

The steering column absorbs energy and is designed to compress in a frontal crash to decrease the chance of injury to the driver.

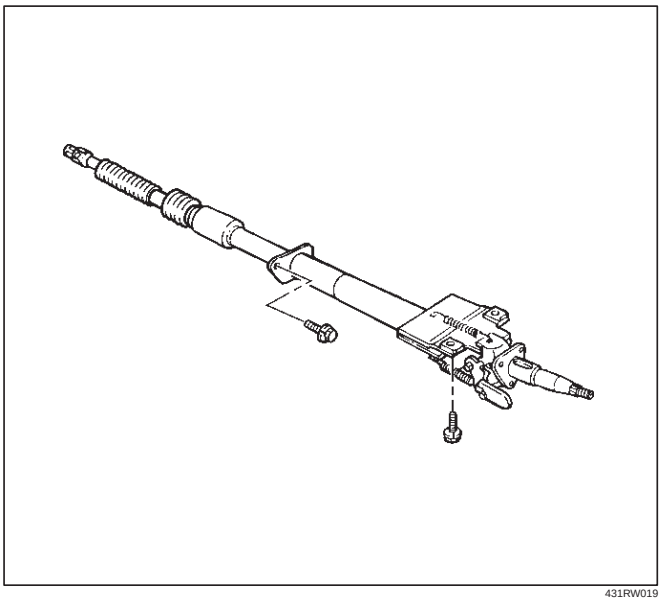

431RW019

Knee Bolster

The knee bolsters are used to absorb energy to protect knees and control the forward movement of the vehicle's front seat occupants during a frontal crash, by limiting leg movement.

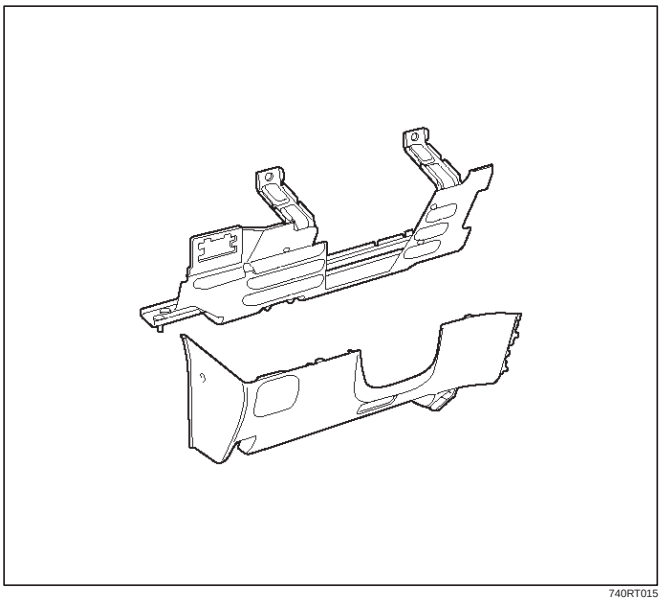

740RT015

Definitions

Air Bag
An inflatable cloth cushion designed to deploy in certain frontal crashes. It supplements the protection offered by the seat belts by distributing the impact load more evenly over the vehicle occupant's head and torso.

Asynchronous
Performed in a nonperiodic fashion, (i.e., no defined time or interval).

B+
Battery voltage, (B+) The voltage available at the battery at the time of the indicated measurement. With the key "ON" and the engine not running, the system voltage will likely be between 12 and 12.5 volts. At idle, the voltage may be 14 to 16 volts. The voltage could be as low as 10 volts during engine cranking.

Bulb Check
The SDM will cause the "AIR BAG" warning lamp to turn on 3.5 seconds and then go "OFF" whenever the ignition switch transitions to the ON position from any other ignition switch position and no malfunctions are detected.

"Continuous Monitoring"
Tests performed by the SDM on the SRS every 100 milliseconds while "Ignition 1" voltage is in the normal operating voltage range at the SDM.

Data Link Connector (DLC)
Formerly "DLC" a connector which allows communication with an external computer, such as a scan tool.

Datum Line
A base line parallel to the plane of the underbody or frame from which all vertical measurements originate.

Deploy
To inflate the air bag.

Deployment Loops
The circuits which supply current to the air bag assemblies to deploy the air bag.

Diagnostic Trouble Code (DTC)
Formerly "Code", a numerical designator used by the SDM to indicate specific SRS malfunctions.

Driver Current Source
An output of the SDM which applies current into the driver air bag assembly circuit during the "Initiator Assembly Resistance Test".

Driver Air Bag Assembly
An assembly located in the steering wheel hub consisting of an inflatable bag, an inflator and an initiator.

EEPROM
Electrically Erasable Programmable Read Only Memory. Memory which retains its contents when power is removed from the SDM.

Ignition Cycle
The voltage at the SDM "Ignition 1" inputs, with ignition switch "ON", is within the normal operating voltage range for at least ten seconds before turning ignition switch "OFF".

Ignition 1
A battery voltage (B+) circuit which is only powered with the ignition switch in the ON, or START positions.

Initiator
The electrical component inside the air bag assembly which, when sufficient current flows, sets off the chemical reaction that inflates the air bag.

"Initiator Assembly Resistance Test"
Tests performed once each ignition cycle when no malfunctions are detected during "Turn–ON" or "Continuous Monitoring". This test checks for the correct SDM configuration for the vehicle, shorts to "Ignition 1" in

the deployment loops, high resistance or opens in the "Driver Side High", "Driver Side Low", "Passenger Side High" and "Passenger Side Low" circuits and measures the resistance of the inflator assembly consisting of 1) Initiators, 2) SRS coil assembly (driver side only), 3) Connectors and associated wiring.

Normal Operating Voltage Range
The voltage measured between the SDM "Ignition 1" terminals and "Ground" terminals is between 9 and 16 volts.

Passenger Current Source
An output of the SDM which applies current into the passenger air bag assembly circuit during the "Initiator Assembly Resistance Test".

Passenger Air Bag Assembly
An assembly located in the right side of the instrument panel consisting of an inflatable bag, an inflator and an initiator.

Scan Tool
An external computer used to read diagnostic information from on–board computers via the data link connector.

SDM
Sensing and Diagnostic Module which provides reserve energy to the deployment loops, deploys the air bags when required and performs diagnostic monitoring of all SRS components.

Serial Data
Information representing the status of the SRS.

SRS
Supplemental Restraint System.

SRS Coil Assembly
An assembly of two current–carrying coils in the driver deployment loop that allows the rotation of the steering wheel while maintaining the continuous contact of the driver deployment loop to the driver air bag assembly.

SRS Wiring Harness
The wires and connectors that electrically connect the components in the SRS.

"Turn–ON"
Test which the SDM performs on the SRS once during each ignition cycle immediately after "Ignition 1" voltage is applied to the SDM and before "Continuous Monitoring".

Diagnosis

WARNING: TO AVOID DEPLOYMENT WHEN TROUBLESHOOTING THE SRS, DO NOT USE ELECTRICAL TEST EQUIPMENT SUCH AS A BATTERY–POWERED OR AC–POWERED VOLTMETER, OHMMETER, ETC., OR ANY TYPE OF ELECTRICAL EQUIPMENT OTHER THAN THAT SPECIFIED IN THIS MANUAL. DO NOT USE A NONPOWERED PROBE–TYPE TESTER. INSTRUCTIONS IN THIS MANUAL MUST BE FOLLOWED CAREFULLY, OTHERWISE PERSONAL INJURY MAY RESULT.

Diagnostic Trouble Codes

The "SRS Diagnostic System Check" must always be the starting point of any SRS diagnosis. The "SRS Diagnostic System Check" checks for proper "AIR BAG" warning lamp operation and checks for SRS diagnostic trouble codes using the scan tool.

1. Current diagnostic trouble codes – Malfunctions that are presently being detected. Current diagnostic trouble codes are stored in RAM (Random Access Memory).
2. History diagnostic trouble codes – All malfunctions detected since the last time the history memory was cleared. History diagnostic trouble codes are stored in EEPROM.

Scan Tool Diagnostics

A scan tool is used to read current and history diagnostic trouble codes and to clear all diagnostic trouble codes after a repair is completed. The scan tool must be updated to communicate with the SRS through a replaceable cartridge before it can be used for SRS diagnostics. To use the scan tool, connect it to the data link connector and turn the ignition switch "ON". The scan tool reads serial data from the SDM "Serial Data" line terminal "24" to the data link connector terminal "9".

Use Of Special Tools

WARNING: TO AVOID DEPLOYMENT WHEN TROUBLESHOOTING THE SRS, DO NOT USE ELECTRICAL TEST EQUIPMENT SUCH AS A BATTERY–POWERED OR AC–POWERED VOLTMETER, OHMMETER, ETC, OR ANY TYPE OF ELECTRICAL EQUIPMENT OTHER THAN THAT SPECIFIED IN THIS MANUAL. DO NOT USE A NON POWERED PROBE–TYPE TESTER. INSTRUCTIONS IN THIS MANUAL MUST BE FOLLOWED CAREFULLY, OTHERWISE PERSONAL INJURY MAY RESULT. YOU SHOULD BE FAMILIAR WITH THE TOOLS LISTED IN THIS SECTION UNDER THE HANDLING SRS SPECIAL TOOLS.

You should be able to measure voltage and resistance. You should be familiar with proper use of a scan tool such as the Tech 2 Diagnostic Computer, SRS Driver/Passenger Load Tool 5–8840–2421–0, Connector Test Adapter Kit 5–8840–0385–0, and the DVM (Digital Multimeter) 5–8840–0285–0.

SRS Connector Body Face Views

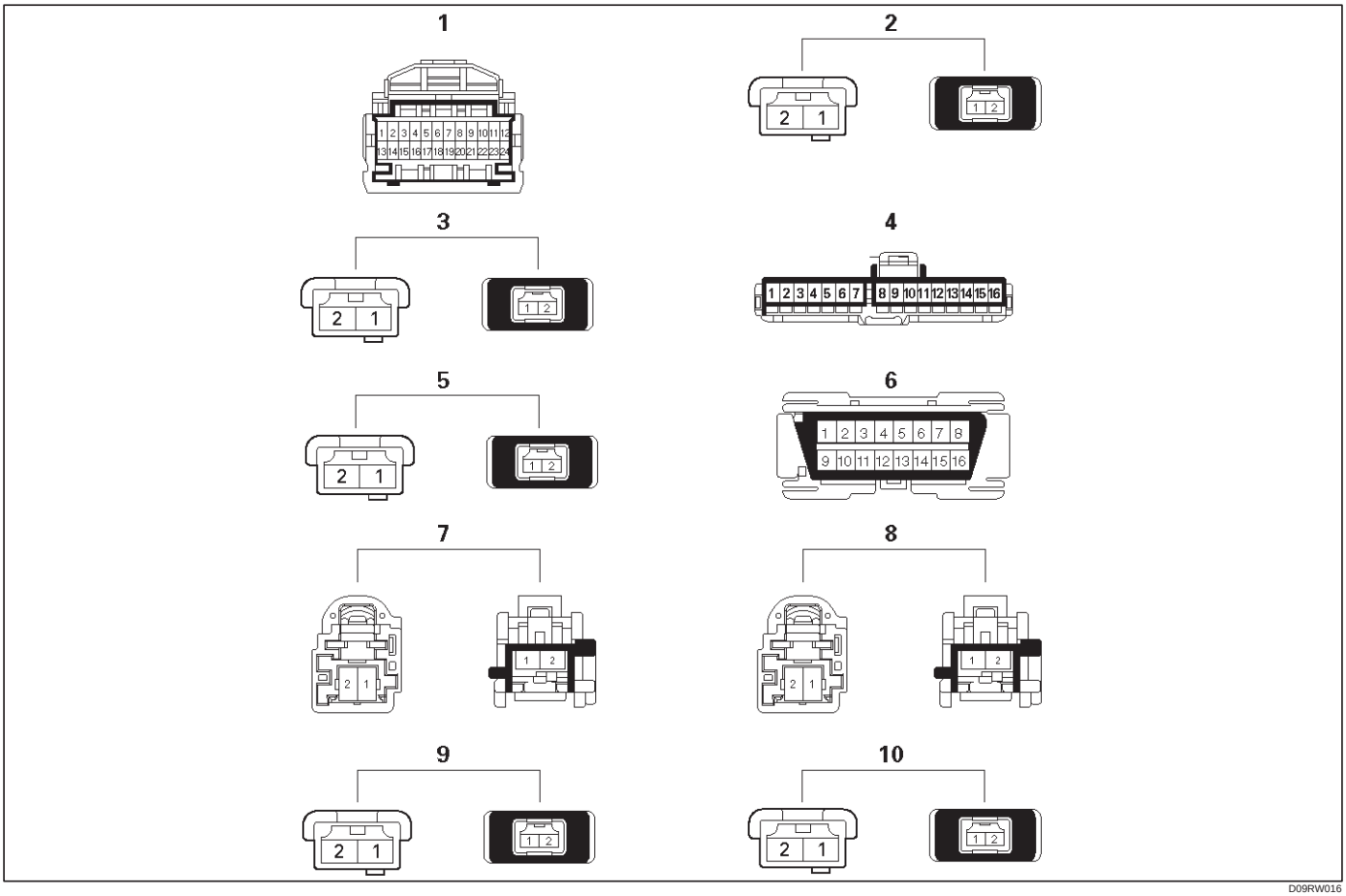

Legend

(1) SDM
(2) Driver Air Bag Assembly
(3) Passenger Air Bag Assembly
(4) “Air Bag” Warning Lamp
(5) SRS Coil Assembly
(6) DLC
(7) Connector between Chassis Harness and Pretensioner Harness for Driver Seat Belt (If so equipped)
(8) Connector between Chassis Harness and Pretensioner Harness for Passenger Seat Belt (If so equipped)
(9) Connector between Pretensioner Harness and driver side Pretensioner Seat Belt (If so equipped)
(10) Connector between Pretensioner Harness and passenger side Pretensioner Seat Belt (If so equipped)

Repairs And Inspections Required After An Accident

NOTE: If any SRS components are damaged, they must be replaced. If SRS component mounting points are damaged, they must be replaced.

- Never use SRS parts from another vehicle. This does not include remanufactured parts purchased from an authorized dealer; they may be used for SRS repairs.
- Do not attempt to service the SDM, the SRS coil assembly, or the air bag assembly. Service of these items is by replacement only.
- Verify the part number of replacement air bag assembly.

CAUTION: Never use the air bag assembly from another vehicle. Use only the air bag assembly for Trooper.

CAUTION: Proper operation of the sensors and supplemental restraint system (SRS) requires that any repairs to the vehicle structure return it to the original production configuration. Deployment requires, at a minimum, replacement of the SDM, air bag assembly and dimensional inspection of the steering column. Any visible damage to the SDM mounting bracket (s) requires replacement, and the steering column must be dimensionally inspected, whether deployment occurred or not.

Accident With Deployment – Component Replacement And Inspections

Certain SRS components must be replaced or inspected for damage after a frontal crash involving air bag deployment. Those components are:

- Air bag assembly
- SDM

CAUTION: Refer to "SDM Replacement Guidelines" below for important information on SDM replacement in both deployment and non deployment crashes.

- SRS coil assembly — Inspect wiring and connector for any signs of scorching, melting, or damage due to excessive heat. Replace if damaged. Refer to section "SRS Coil Assembly" in this manual.

Accident With or Without Deployment – Component Inspection

Certain SRS system components and rotation parts must be inspected after any crash, whether the air bag deployed or not. Those components are:

- Steering column — Refer to Inspection Required "After an Accident" in this manual.
- Knee bolsters and mounting points — Inspect for any distortion, bending, cracking, or other damage.
- I/P steering column reinforcement plate — Inspect for any distortion, bending, cracking, or other damage.
- I/P braces — Inspect for any distortion, bending, cracking, or other damage.
- Seat belts and mounting points — Refer to "Seat Belts" in Section "Seat Belt" of this workshop manual.

SDM Replacement Guidelines

SDM replacement policy requires replacement of SDM, after crash involving air bag deployment when "SRS Warning Lamp" turn "ON", "SRS Diagnosis" should be done according to Section "Restraint Control System."
If accident without deployment air bag, it is not necessary replacement of SDM when do not indicate to replace the SDM by scan tool after SRS system check.

Wiring Damage

If any SRS wire harness is damaged, it should be replaced. Don't repair SRS harness. It is replace only.

SRS Connector (Plastic Body And Terminal Metal Pin) Damage

If any connector or terminal in the SRS wire harness (except pigtails) is damaged, it should be replaced.

SRS Wire Pigtail Damage

If the wiring pigtail (a wire or wires attached directly to the device, not by a connector) is damaged, the entire component (with pigtail) must be replaced. Examples of "pigtail" components are the driver air bag assembly, the passenger air bag assembly, and the SRS coil assembly.

On–Vehicle Service

Service Precaution

WARNING: WHEN PERFORMING SERVICE ON OR AROUND SRS COMPONENTS OR SRS WIRING, FOLLOW THE PROCEDURES LISTED BELOW TO TEMPORARILY DISABLE THE SRS. FAILURE TO FOLLOW PROCEDURES COULD RESULT IN POSSIBLE AIR BAG DEPLOYMENT, PERSONAL INJURY OR OTHERWISE UNNEEDED SRS REPAIRS.

The SDM in Driver–Passenger SRS can maintain sufficient voltage to cause a deployment for up to 15 seconds after the ignition switch is turned "OFF," the battery is disconnected, or the fuse powering the SDM is removed.
Many of the service procedures require removal of the "C–21" fuse, and disconnection of the air bag assembly from the deployment loop to avoid an accidental deployment. If the air bag assembly is disconnected from the deployment loop as noted in the "Disabling the SRS" procedure that follows, service can begin immediately without waiting for the 15 second time period to expire.

Disabling The SRS

Removal

Turn the ignition switch to "LOCK" and remove key.

1. Remove SRS fuse C–21, from left dash side lower fuse block or disconnect battery.
2. Disconnect yellow 2–pin connector at the base of steering column.
3. Remove glove box assembly, refer to "Passenger Air Bag Assembly Replacement" in this manual.
4. Disconnect yellow 2–pin connector behind the glove box assembly.

CAUTION: With the "C–21" fuse removed and ignition switch "ON", the "AIR BAG" warning lamp will be "ON". This is normal operation and does not indicate an SRS malfunction.

Enabling The SRS

Installation

CAUTION: Never use the air bag assembly from another vehicle. Use only the air bag assembly for Trooper.

Turn ignition switch to "LOCK" and remove key.

1. Connect yellow 2–pin connector passenger air bag assembly.
2. Install glove box assembly. Refer to "Passenger air bag assembly replacement" in this manual.
3. Connect yellow 2–pin connector at the base of steering column.
4. Install "AIR BAG" fuse C–21 to left dash side lower fuse block or connect battery.

Turn ignition switch to "ON" and verify that the "AIR BAG" warning lamp turn on 3.5 seconds and then turns "OFF." If it does not operate as described, perform the "SRS Diagnostic System Check" in this manual.

Handling / Installation / Diagnosis

1. Air bag assembly should not be subjected to temperatures above 93˚C (200˚F).
2. Air bag assembly, and SDM should not be used if they have been dropped from a height of 100 centimeters (3.28 feet) or more.
3. When a SDM is replaced, it must be oriented with the arrow on the sensor pointing toward the front of the vehicle. It is very important for the SDM to be located flat on the mounting surface, parallel to the vehicle datum line. It is important that the SDM mounting surface is free of any dirt or other foreign material.
4. Do not apply power to the SRS unless all components are connected or a diagnostic chart requests it, as this will set a diagnostic trouble code.
5. The “SRS Diagnostic System Check” must be the starting point of any SRS diagnostics. The “SRS Diagnostic System Check” will verify proper “AIR BAG” warning lamp operation and will lead you to the correct chart to diagnose any SRS malfunctions. Bypassing these procedures may result in extended diagnostic time, incorrect diagnosis, and incorrect parts replacement.

Air Bag Assembly Handling / Shipping / Scrapping

Live (Undeployed) Air Bag Assembly

Special care is necessary when handling and storing a live (undeployed) air bag assembly. The rapid gas generation produced during deployment of the air bag could cause the air bag assembly, or an object in front of the air bag assembly, to be thrown through the air in the unlikely event of an accidental deployment.

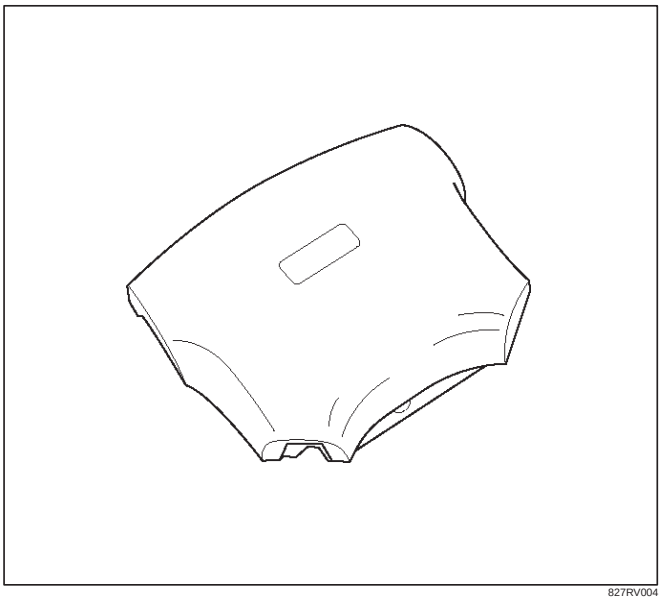

827RV004

WARNING: WHEN CARRYING A LIVE AIR BAG ASSEMBLY, MAKE SURE THE BAG OPENING IS POINTED AWAY FROM YOU. IN CASE OF AN ACCIDENTAL DEPLOYMENT, THE BAG WILL THEN DEPLOY WITH MINIMAL CHANCE OF INJURY. NEVER CARRY THE AIR BAG ASSEMBLY BY THE WIRES OR CONNECTOR ON THE UNDERSIDE OF THE MODULE.

Pretensioner Seat Belt Handling / Shipping / Scrapping.

Live (undeployed) pretensioner seat belt.

Special care is necessary when handling and storing a live (undeployed) pretensioner seat belt.
The rapid gas generation produced during deployment of the pretensioner seat belt (could cause the pretensioner seat belt), or an object around of pretensioner seat belt, to be thrown through the air in the unlikely event of an accidental deployment.

WARNING: WHEN CARRYING A LIVE PRETENSIONER SEAT BELT, MAKE SURE THE PRETENSIONER SEAT BELT CYLINDER IS POINTED AWAY FROM YOU. IN CASE OF AN ACCIDENTAL DEPLOYMENT, THE PRETENSIONER SEAT BELT WILL THEN DEPLOY WITH MINIMAL CHANCE OF INJURY. NEVER CARRY THE PRETENSIONER SEAT BELT BY THE CYLINDER OR WIRES ON THE UNDERSIDE OF THE MODULE.

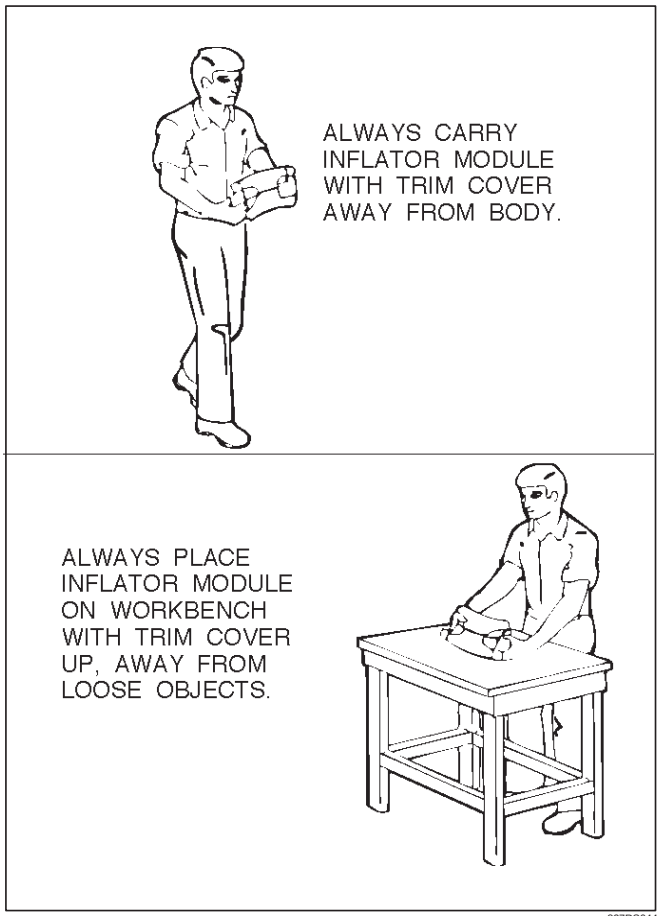

827RS044

Air Bag Assembly and/or Pretensioner Seat Belt Shipping Procedure For Live(Undeployed) Them.

Service personnel should refer to the Service Bulletins for proper SRS composition parts shipping procedures.

Deployed Air Bag Assembly (Driver Side)

"You should wear gloves and glasses. After the air bag assembly has been deployed, the surface of the air bag may contain solid particulate. This solid particulate consists primarily of by products of the chemical reaction, Potassium Chloride and copper metal dust. Compounds of Potassium Borate, Strontium Chloride, Copper Chloride, and Ammonium Chloride may be found in amounts of about 1% (each) of the total particulate."

Deployed Pretensioner Seat Belt.

You should wear gloves and safety glasses. After the pretensioner seat belt has been deployed, the surface of the pretensioner seat belt cylinder may heating up.

Air Bag Assembly and/or Pretensioner Seat Belt Scrapping Procedure.

During the cause of vehicle's useful life, certain situations may arise which will necessitate the disposal of a live air bag and/or pretensioner seat belt. (This information covers proper procedures for disposing of a live air bag assembly and/or pretensioner seat belt.)
Before a live air bag assembly can be dispose off, it must be deployed.
A live air bag assembly and/or pretensioner seat belt must not be disposed of though normal refuse channels.

WARNING: FAILURE TO FOLLOW PROPER SUPPLEMENTAL RESTRAINT SYSTEM (SRS) AIR BAG ASSEMBLY DISPOSAL PROCEDURES CAN RESULT IN AIR BAG DEPLOYMENT WHICH MAY CAUSE PERSONAL INJURY. AN UNDPLOYED AIR BAG ASSEMBLY MUST NOT BE DISPOSED OF THROUGH NORMAL REFUSE CHANNELS. THE UNDEPLOYED AIR BAG ASSEMBLY CONTAINS SUBSTANCES THAT CAN CAUSE SEVERE ILLNESS OR PERSONAL INJURY IF THE SEALED CONTAINER IS DAMAGED DURING DISPOSAL. DISPOSAL IN ANY MANNER INCONSISTENT WITH PROPER PROCEDURES MAY BE A VIOLATION OF LOCAL LAW.

In situations which require deployment of a live air bag assembly, deployment may be accomplished inside or outside the vehicle. The method employed depends upon the final disposition of the particular vehicle, as noted in "Deployment Outside Vehicle" and "Deployment Inside Vehicle" in this section.

Cautions About Air Bag Deployment And Disposal

Failure to follow proper procedures could result in erroneous air bag deployment which may cause personal injury be sure to follow proper procedures.

1. Turn off (Lock) the ignition switch and disconnect the minus terminal of the battery, then start the work 15 or more sec later. (Air bag is designed to work by the back-up power source even if the battery power source is cut off at vehicle collision).
2. Be sure not to disassemble the air bag.
3. Do not give an impact to the air bag and bring the air bag close to magnet. (The air bag could deploy unexpectedly).
4. Place the air bag with its trim cover up.
5. Do not let the air bag deploy directly on the floor. (The air bag may be blown off 2 ~ 3 m (6.5 or 10 feet)).
6. Be sure to install the air bag firmly to a deployment tool (fixing tool).
7. Set a battery 10 m (33 feet) or more away from the air bag.
8. Before disconnecting air bag harness, ground the worker by touching the vehicle outer panel with bare hand.
9. When connecting or disconnecting the harness, do not work just in front of the air bag.
10. As deployment gives rise to big sound, warn the people around against it. Further, try to reduce the sound by covering the steering wheel or tires, and shut the vehicle windows in case of deployment inside the vehicle.
11. As deployment generates smoke, select a well ventilated place. (In case of deployment indoors, avoid deployment just under a fire alarm, smoke sensor, and fluorescent lamps).
12. Be careful not to inhale the smoke after deployment.
13. If part of the vehicle glass is damaged, cover the vehicle with a car cover to prevent the glass from braking at the time of deployment.
14. Do not touch the air bag immediately after deployment, since it remains hot for 30 minutes.
15. Do not water the air bag immediately after deployment.
16. Wear safety glasses and gloves throughout the work and wash the glasses and gloves after the work.
17. Do not reuse the removed air bag for another vehicle. (Deployment characteristic is different with vehicle types).

Deployment Outside Vehicle (Driver Air Bag Assembly)

Deployment outside the vehicle is proper when the vehicle is to be returned to service. This includes, for example, situations in which the vehicle will be returned to useful service after a functionally or cosmetically deficient air bag assembly is replaced. Deployment and disposal of a malfunctioning air bag assembly is, of course, subject to any required retention period.
For deployment of a live (undeployed) air bag assembly outside the vehicle, the deployment procedure must be followed exactly. Always wear safety glasses during this deployment procedure until a deployed air bag assembly is scrapped or until an undeployed air bag assembly is shipped. Before performing the procedures you should be familiar with servicing the SRS and with proper handling of the air bag assembly. Procedures should be read fully before they are performed.
The following procedure requires use of 5–8840–2468–0 SRS deployment harness with appropriate pigtail adapter. Do not attempt procedure without 5–8840–2468–0 adapter.

WARNING: FAILURE TO FOLLOW PROCEDURES IN THE ORDER LISTED MAY RESULT IN PERSONAL INJURY. NEVER CONNECT DEPLOYMENT

HARNESS TO ANY POWER SOURCE BEFORE CONNECTING DEPLOYMENT HARNESS TO THE DRIVER AIR BAG ASSEMBLY. DEPLOYMENT HARNESS SHALL REMAIN SHORTED AND NOT BE CONNECTED TO A POWER SOURCE UNTIL THE AIR BAG IS TO BE DEPLOYED. THE AIR BAG ASSEMBLY WILL IMMEDIATELY DEPLOY THE AIR BAG WHEN A POWER SOURCE IS CONNECTED TO IT. WEAR SAFETY GLASSES THROUGHOUT THIS ENTIRE DEPLOYMENT AND DISPOSAL PROCEDURE.

NOTE: This information applies only to driver air bag assembly . Refer to “Deployment Outside Vehicle (Passenger Air Bag assembly)” in this section for information on passenger air bag assembly scrapping.

1. Turn ignition switch to “LOCK”, remove key.
2. Inspect 5–8840–2468–0 SRS Deployment Harness and appropriate pigtail adapter for damage. If harness or pigtail adapter is damaged, discard and obtain a replacement.
3. Short the two SRS deployment harness leads together by fully seating one banana plug into the other. SRS deployment harness shall remain shorted and not be connected to a power source until the air bag is to be deployed.

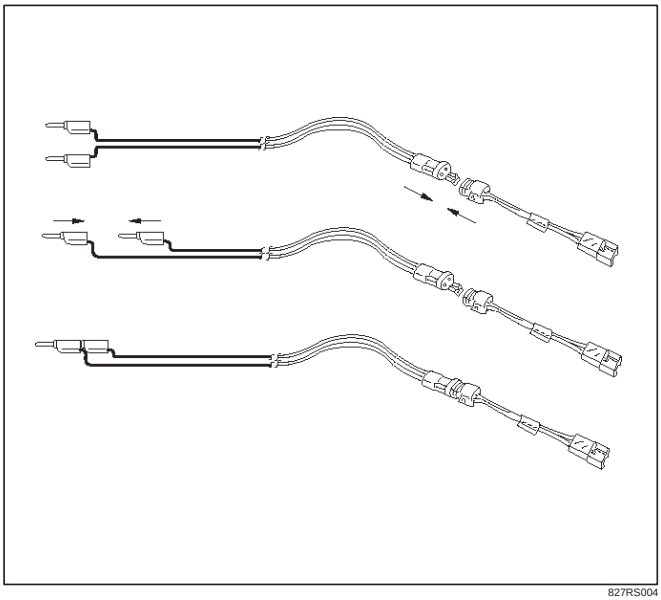

827RS004

4. Connect the appropriate pigtail adapter to the SRS deployment harness.
5. Remove the driver air bag assembly from vehicle. Refer to “Inflator Module Removal” in this manual.

WARNING: WHEN STORING A LIVE AIR BAG ASSEMBLY OR WHEN LEAVING A LIVE AIR BAG ASSEMBLY UNATTENDED ON A BENCH OR OTHER SURFACE, ALWAYS FACE THE AIR BAG AND TRIM COVER UP AND AWAY FROM THE SURFACE. THIS IS NECESSARY SO THAT A FREE SPACE IS PROVIDED TO ALLOW THE AIR BAG TO EXPAND IN THE UNLIKELY EVENT OF ACCIDENTAL DEPLOYMENT. FAILURE TO FOLLOW PROCEDURES MAY RESULT IN PERSONAL INJURY.

6. Place the driver air bag assembly on a work bench or other surface away from all loose or flammable objects with its trim cover facing up, away from the surface.

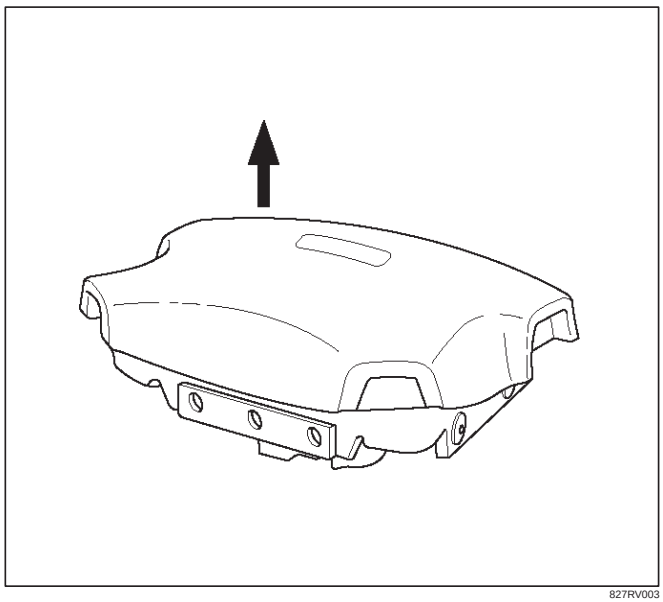

827RV003

7. Clear a space on the ground about 183 cm (six feet) in clearance where the driver air bag assembly is to be deployed. A paved, outdoor location where there is no activity is preferred. If an outdoor location is not available, a space on the shop floor where there is no activity and sufficient ventilation is recommended. Ensure no loose or flammable objects are within the deployment area.

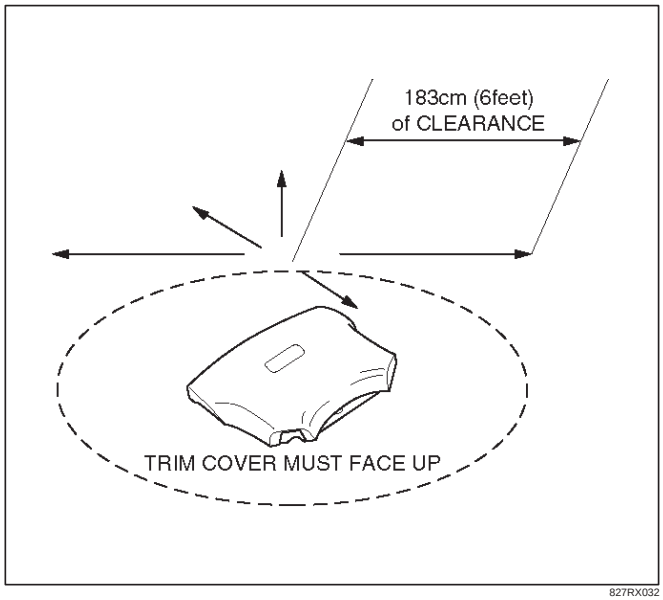

827RX032

8. Place the driver air bag assembly, with its trim cover facing up, on the ground in the space just cleared.
9. Stretch the SRS deployment harness and pigtail adapter from the driver air bag assembly to its full length.

10. Place a power source near the shorted end of the SRS deployment harness. Recommended application: 12 volts minimum, 2 amps minimum. A vehicle battery is suggested.
11. Connect the driver air bag assembly to the pigtail adapter on the SRS deployment harness. Deployment harness shall remain shorted and not be connected to a power source until the air bag is to be deployed. The driver air bag assembly will immediately deploy the air bag when a power source is connected to it.

NOTE: Ensure that the pigtail adapter is firmly seated into the driver air bag assembly connector. Failure to fully seat the connectors may leave the shorting bar located in the driver air bag assembly connector functioning (shorted) and may result in nondeployment of the driver air bag assembly.

12. Verify that the area around the driver air bag assembly is clear of all people and loose or flammable objects.
13. Verify that the driver air bag assembly is resting with its trim cover facing up.
14. Notify all people in the immediate area that you intend to deploy the driver air bag. The deployment will be accompanied by a substantial noise which may startle the uninformed.
15. Separate the two banana plugs on the SRS deployment harness.

NOTE: When the air bag deploys, the driver air bag assembly may jump about 3 m (ten feet) vertically. This is a normal reaction of the driver air bag to the force of the rapid gas expansion inside the air bag.

NOTE: When the air bag deploys, the rapid gas expansion will create a substantial noise. Notify all people in the immediate area that you intend to deploy the driver air bag.

WARNING: DEPLOYMENT HARNESS SHALL REMAIN SHORTED AND NOT BE CONNECTED TO A POWER SOURCE UNTIL THE AIR BAG IS TO BE DEPLOYED. THE AIR BAG ASSEMBLY WILL IMMEDIATELY DEPLOY THE AIR BAG WHEN A POWER SOURCE IS CONNECTED TO IT. CONNECTING THE DEPLOYMENT HARNESS TO THE POWER SOURCE SHOULD ALWAYS BE THE LAST STEP IN THE AIR BAG ASSEMBLY DEPLOYMENT PROCEDURE. FAILURE TO FOLLOW PROCEDURES IN THE ORDER LISTED MAY RESULT IN PERSONAL INJURY.

16. Connect the SRS deployment harness wires to the power source to immediately deploy the driver air bag. Recommended application: 12 volts minimum, 2 amps minimum. A vehicle battery is suggested.
17. Disconnect the SRS deployment harness from the power source.
18. Short the two SRS deployment harness leads together by fully seating one banana plug into the other.
19. In the unlikely event that the driver air bag assembly did not deploy after following these procedures, proceed immediately with Steps 24 through 26. If the driver air bag assembly did deploy, proceed with Steps 20 through 23.
20. Put on a pair of shop gloves and safety glasses to protect your hands and eyes from possible irritation and heat when handling the deployed driver air bag assembly. After the air bag assembly has been deployed, the surface of the air bag may contain a powdery residue. This solid particulate consists primarily of by products of the chemical reaction, Potassium Chloride and copper metal dust. Compounds of Potassium Borate, Strontium Chloride, Copper Chloride, and Ammonium Chloride may be found in amounts of about 1 % (each) of the total particulate.

WARNING: SAFETY PRECAUTIONS MUST BE OBSERVED WHEN HANDING A DEPLOYED AIR BAG ASSEMBLY. AFTER DEPLOYMENT, THE METAL SURFACES OF THE AIR BAG ASSEMBLY WILL BE VERY HOT. ALLOW THE INFLATOR MODULE TO COOL BEFORE HANDLING ANY METAL PORTION OF IT. DO NOT PLACE THE DEPLOYED AIR BAG ASSEMBLY NEAR ANY FLAMMABLE OBJECTS. FAILURE TO FOLLOW PROCEDURES MAY RESULT IN FIRE OR PERSONAL INJURY.

AFTER A DRIVER AIR BAG ASSEMBLY HAS BEEN DEPLOYED, THE METAL CANISTER AND SURROUNDING AREAS OF THE DRIVER AIR BAG ASSEMBLY WILL BE VERY HOT. DO NOT TOUCH THE METAL AREAS OF THE DRIVER AIR BAG ASSEMBLY FOR ABOUT TEN MINUTES AFTER DEPLOYMENT. IF THE DEPLOYED DRIVER AIR BAG ASSEMBLY MUST BE MOVED BEFORE IT IS COOL, WEAR GLOVES AND HANDLE BY THE AIR BAG OR TRIM COVER.

21. Disconnect the pigtail adapter from the driver air bag assembly as soon after deployment as possible. This will prevent damage to the pigtail adapter or SRS deployment harness due to possible contact with the hot driver air bag assembly canister. The pigtail adapter can be reused. They should, however, be inspected for damage after each deployment and replaced if necessary.
22. Dispose of the deployed driver air bag assembly through normal refuse channels after it has cooled for at least 30 minutes.
23. Wash your hands with mild soap and water afterward.

NOTE: The remaining steps are to be followed in the unlikely event that the driver air bag assembly did not deploy after following these procedures.

24. Ensure that the SRS deployment harness has been disconnected from the power source and that its two banana plugs have been shorted together by fully seating one banana plug into the other.
25. Disconnect the pigtail adapter from the driver air bag assembly.

WARNING: WHEN STORING A LIVE AIR BAG ASSEMBLY OR WHEN LEAVING A LIVE INFLATOR MODULE UNATTENDED ON A BENCH OR OTHER

SURFACE, ALWAYS FACE THE BAG AND TRIM COVER UP AND AWAY FROM THE SURFACE. THIS IS NECESSARY SO THAT A FREE SPACE IS PROVIDED TO ALLOW THE AIR BAG TO EXPAND IN THE UNLIKELY EVENT OF ACCIDENTAL DEPLOYMENT. FAILURE TO FOLLOW PROCEDURES MAY RESULT IN PERSONAL INJURY.

26. Temporarily store the driver air bag assembly with its trim cover facing up, away from the surface upon which it rests.

Deployment Outside Vehicle (Passenger Air Bag Assembly)

WARNING: FAILURE TO FOLLOW PROPER SRS AIR BAG ASSEMBLY DISPOSAL PROCEDURES CAN RESULT IN AIR BAG DEPLOYMENT WHICH MAY CAUSE PERSONAL INJURY. UNDEPLOYED AIR BAG ASSEMBLIES MUST NOT BE DISPOSED OF THROUGH NORMAL REFUSE CHANNELS. THE UNDEPLOYED AIR BAG ASSEMBLY CONTAINS SUBSTANCES THAT CAN CAUSE SEVERE ILLNESS OR PERSONAL INJURY IF THE SEALED CONTAINER IS DAMAGED DURING DISPOSAL. DISPOSAL IN ANY MANNER INCONSISTENT WITH PROPER PROCEDURES MAY BE A VIOLATION OF FEDERAL, STATE AND/OR LOCAL LAWS.

Deployment out of the vehicle is proper when the vehicle is to be returned to service. This includes, for example, situations in which a functionally or cosmetically deficient air bag assembly is replaced. Deployment and disposal of an air bag assembly is, of course, subject to any required retention period.

For deployment of a live air bag assembly out of the vehicle, the deployment procedure must be followed exactly. Always wear safety glasses during this deployment procedure until the deployed air bag assembly is scrapped. Before performing the procedures, you should be familiar with servicing the SRS system and with proper handling of the air bag assembly. Procedures should be read fully before they are performed.

The following procedure requires use of 5–8840–2468–0 SRS Deployment Harness with the appropriate pigtail adapter. The procedure also requires the use of 5–8840–2420–0 Passenger Side SRS Module Deployment Fixture. Do not attempt this procedure without 5–8840–2468–0 and adapter, and 5–8840–2420–0.

WARNING: FAILURE TO FOLLOW PROCEDURES IN THE ORDER LISTED MAY RESULT IN PERSONAL INJURY. NEVER CONNECT DEPLOYMENT HARNESS TO ANY POWER SOURCE BEFORE CONNECTING DEPLOYMENT HARNESS TO THE AIR BAG ASSEMBLY. DEPLOYMENT HARNESS SHALL REMAIN SHORTED AND NOT BE CONNECTED TO A POWER SOURCE UNTIL THE AIR BAG IS TO BE DEPLOYED. THE AIR BAG ASSEMBLY WILL IMMEDIATELY DEPLOY THE AIR BAG WHEN A POWER SOURCE IS CONNECTED TO IT. WEAR SAFETY GLASSES THROUGHOUT THIS ENTIRE DEPLOYMENT AND DISPOSAL PROCEDURE.

NOTE: This information applies only to passenger air bag assembly. Information for disposing of a live driver air bag assembly can be found in “Deployment Outside Vehicle” (Driver Air Bag Assembly) in this section.

1. Turn ignition switch to “LOCK” remove key, and put on safety glasses.
2. Inspect 5–8840–2468–0 SRS Deployment Harness and appropriate pigtail adapter for damage. If harness or pigtail is damaged, discard and obtain a replacement.
3. Short the two SRS Deployment Harness leads together by fully seating one banana plug into the other. The SRS Deployment Harness shall remain shorted and not be connected to a power source until the air bag is to be deployed.

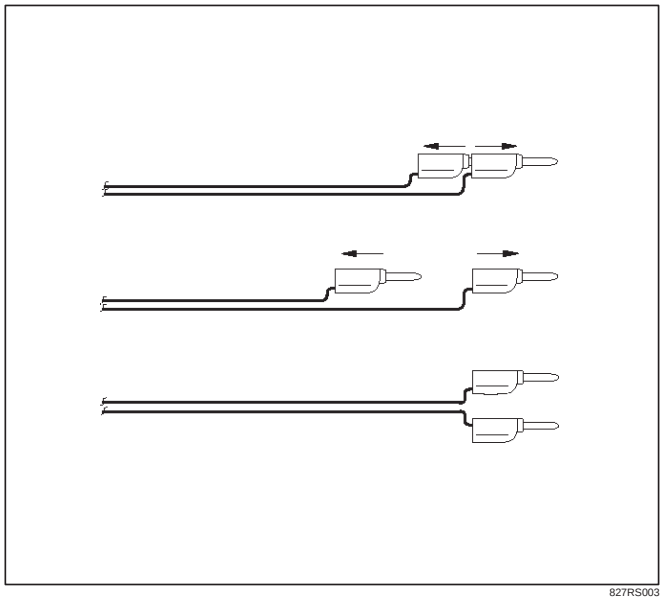

827RS003

4. Connect the appropriate pigtail adapter to the SRS Deployment Harness

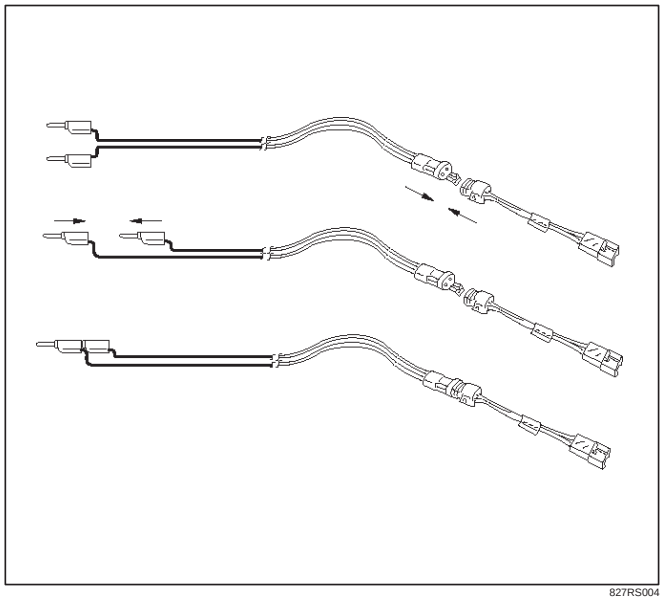

827RS004

5. Remove passenger air bag assembly from vehicle. Refer to “Passenger Air Bag Assembly Removal ” in this Section 9J–3.
6. Clear a space on the ground approximately 183 cm (six feet) in clearance where the fixture with attached air bag assembly is to be placed for deployment. A paved outdoor location where there is no activity is preferred. If an outdoor location is not available, a space on the shop floor where is no activity and sufficient ventilation is recommended. Ensure that no loose or flammable objects are within the deployment area.
7. Place the 5–8840–2420–0 on the bench vice. This is necessary to provide sufficient stabilization of the fixture during deployment.
8. Attach the passenger air bag assembly in the 5–8840–2420–0. An air bag assembly must be mounted such that the bag will deploy upward. SECURELY HAND–TIGHTEN ALL FASTENERS PRIOR TO DEPLOYMENT.

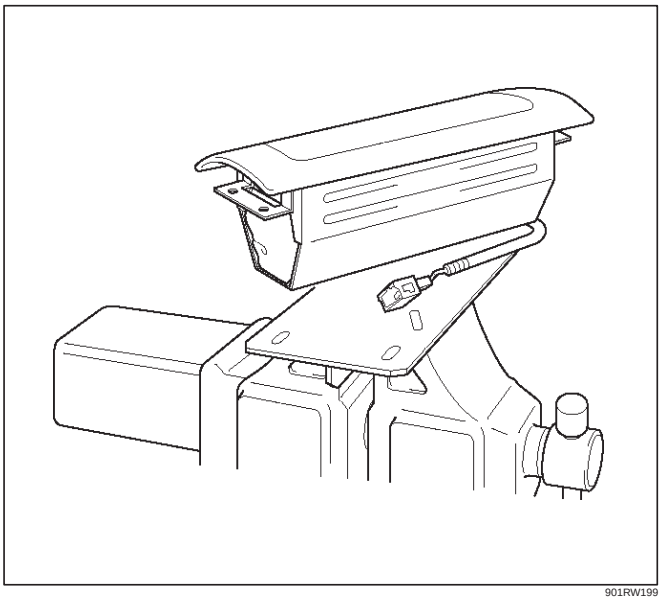

901RW199

9. Stretch the SRS Deployment Harness and pigtail adapter from the air bag assembly to its full length.
10. Place a power source near the shorted end of the SRS deployment harness. (Recommended application: 12 volts minimum, 2 amps minimum. A vehicle battery is suggested.)
11. Connect the air bag assembly to the pigtail adapter on the SRS deployment harness. The SRS Deployment Harness shall remain shorted and not be connected to a power source until the air bag is to be deployed. The air bag assembly will immediately deploy the air bag when a power source is connected to it.

NOTE: Ensure that the pigtail adapter is firmly seated into the air bag assembly connector. Failure to fully seat the connectors may leave the shorting bar located in the air bag assembly connector functioning (shorting the deployment circuit) and may result in nondeployment of the air bag assembly.

12. Verify that the area around the passenger air bag assembly is clear of all people and loose or flammable objects.
13. Verify that the passenger air bag assembly is firmly and properly in 5–8840–2420–0.
14. Notify all people in the immediate area of your intention to deploy the passenger air bag assembly. The deployment will be accompanied by a substantial noise which may startle the uninformed.
15. Separate the two banana plugs on the SRS deployment harness.

NOTE: When air bag deploys, the rapid gas expansion will create a substantial noise. Notify all people in the immediate area that you intend to deploy the air bag assembly.

WARNING: DEPLOYMENT HARNESS SHALL REMAIN SHORTED AND NOT BE CONNECTED TO A POWER SOURCE UNTIL THE AIR BAG IS TO BE DEPLOYED. THE AIR BAG ASSEMBLY WILL IMMEDIATELY DEPLOY THE AIR BAG WHEN A POWER SOURCE IS CONNECTED TO IT. CONNECTING THE DEPLOYMENT HARNESS TO THE POWER SOURCE SHOULD ALWAYS BE THE LAST STEP IN THE AIR BAG ASSEMBLY DEPLOYMENT PROCEDURE. FAILURE TO FOLLOW PROCEDURES IN THE ORDER LISTED MAY RESULT IN PERSONAL INJURY.

16. Connect the SRS deployment harness wires to the power source to immediately deploy the air bag assembly. Recommended application : 12 volts minimum, 2 amps minimum. A vehicle battery is suggested.
17. Disconnect the SRS deployment harness from the power source.
18. Short the two SRS deployment harness leads together by fully seating one banana plug into the other.
19. In the unlikely event that the passenger air bag assembly did not deploy after following these procedures, proceed immediately with Steps 24 through 26. If the passenger air bag assembly deployed as intended, proceed with Steps 20 through 23.
20. Put on a pair of shop gloves and safety glasses to protect your hands and eyes from possible irritation and heat when handling the deployed air bag assembly.

    After the air bag assembly has been deployed, the surface of the air bag may contain a powdery residue. This powder consists primarily of cornstarch (used to lubricate the bag as it inflates) and by products of the chemical reaction. Sodium hydroxide dust (similar to lye soap) is produced as a by product of the deployment reaction. The sodium hydroxide then quickly reacts with atmospheric moisture and is converted to sodium carbonate and sodium bicarbonate (baking soda). Therefore, it is unlikely that sodium hydroxide will be present after deployment.

WARNING: SAFETY PRECAUTIONS MUST BE OBSERVED WHEN HANDLING A DEPLOYED AIR BAG ASSEMBLY. AFTER DEPLOYMENT, THE METAL SURFACES OF THE AIR BAG ASSEMBLY WILL BE HOT. ALLOW THE AIR BAG ASSEMBLY TO

COOL BEFORE HANDLING ANY METAL PORTION OF IT. DO NOT PLACE THE DEPLOYED INFLATOR MODULE NEAR ANY FLAMMABLE OBJECTS. FAILURE TO FOLLOW PROCEDURES MAY RESULT IN FIRE OR PERSONAL INJURY. AFTER AN AIR BAG ASSEMBLY HAS BEEN DEPLOYED, THE METAL CANISTER AND SURROUNDING AREAS OF THE AIR BAG ASSEMBLY WILL BE HOT. DO NOT TOUCH THE METAL AREAS OF THE AIR BAG ASSEMBLY FOR ABOUT THIRTY MINUTES AFTER DEPLOYMENT. IF THE DEPLOYED AIR BAG ASSEMBLY MUST BE MOVED BEFORE IT IS COOL, WEAR GLOVES AND HANDLE BY THE AIR BAG ITSELF.

21. Disconnect the pigtail adapter from the air bag assembly as soon after deployment as possible to avoid damage to the pigtail adapter or SRS deployment harness from contacting the hot air bag assembly canister. The pigtail adapter and SRS deployment harness are designed to be reused. They should, however, be inspected for damage after each deployment and replaced if necessary.
22. Dispose of the deployed air bag assembly through normal refuse channels after it has cooled for at least 30 minutes.
23. Wash your hands with mild soap and water afterward.

NOTE: The remaining steps are to be followed in the unlikely event that the air bag assembly did not deploy after following the above procedures.

24. Ensure that the SRS deployment harness has been disconnected from the power source and that its two banana plugs have been shorted together by fully seating one banana plug into the other.
25. Disconnect the pigtail adapter from the air bag assembly.

WARNING: WHEN STORING A LIVE AIR BAG ASSEMBLY OR WHEN LEAVING A LIVE AIR BAG ASSEMBLY UNATTENDED ON A BENCH OR OTHER SURFACE, ALWAYS FACE THE BAG UP AND AWAY FROM THE SURFACE. THIS IS NECESSARY SO THAT A FREE SPACE IS PROVIDED TO ALLOW THE AIR BAG TO EXPAND IN THE UNLIKELY EVENT OF ACCIDENTAL DEPLOYMENT. FAILURE TO FOLLOW PROCEDURES MAY RESULT IN PERSONAL INJURY.

26. Temporarily store the air bag assembly with the bag facing up, away from the surface upon which it rests.

Deployment Outside Vehicle (Fixing Air Bag on Tire)

Read and understand the items of “CAUTIONS ABOUT AIR BAG DEPLOYMENT AND DISPOSAL PROCEDURES” and “Usage of Deployment Tool” for safe deployment of air bag.

1. Remove air bag assembly from vehicle. Refer to air bag assembly Removal “in this section”.
2. Inspect J–41434 Supplemental Restraint System (SRS) Deployment Harness and appropriate pigtail adapter for damage. If harness or pigtail is damaged, discard and obtain a replacement.
3. Extend double pole extension cord to a position far away 10 m (33 feet) from the air bag assembly.
4. Place a power source near the extended end of SRS air bag deployment harness. (Use of 12V battery is recommended).

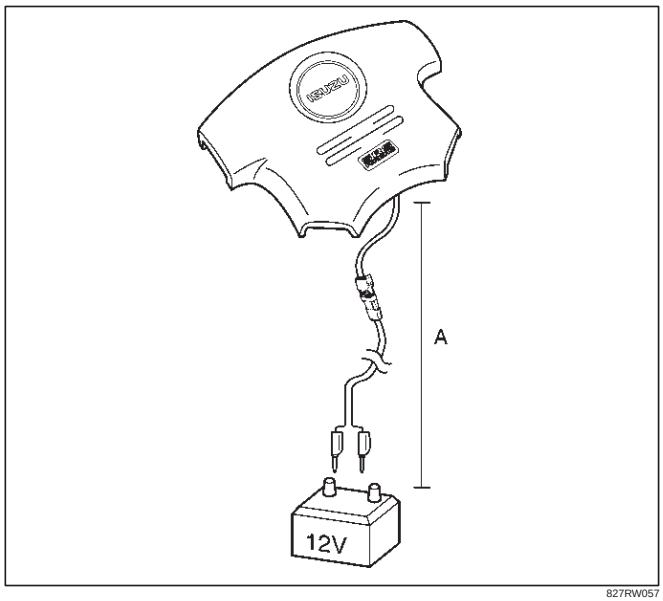

827RW057

Legend

(A) 10 m (33 feet) or more

5. Insert one of the banana plugs into the other banana plug to short the two SRS air bag deployment harness. Do not the harness to a power source until deployment.

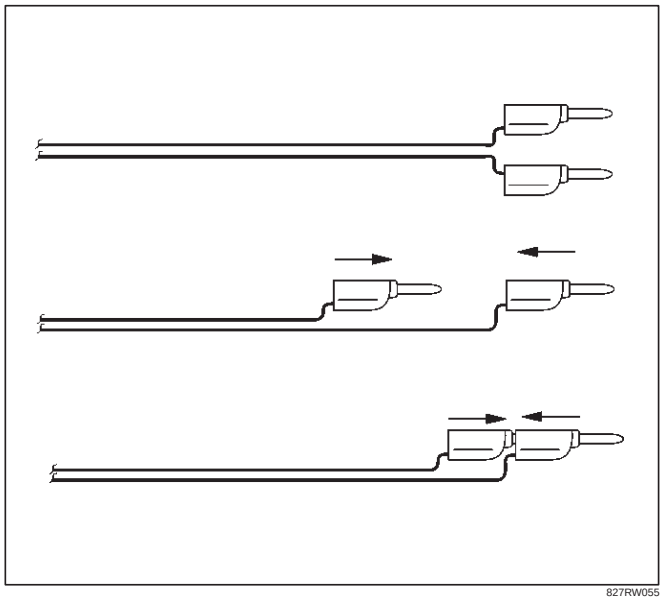

827RW055

6. Prepare four 15 inch or larger tires without wheel and two same size tires with wheels.

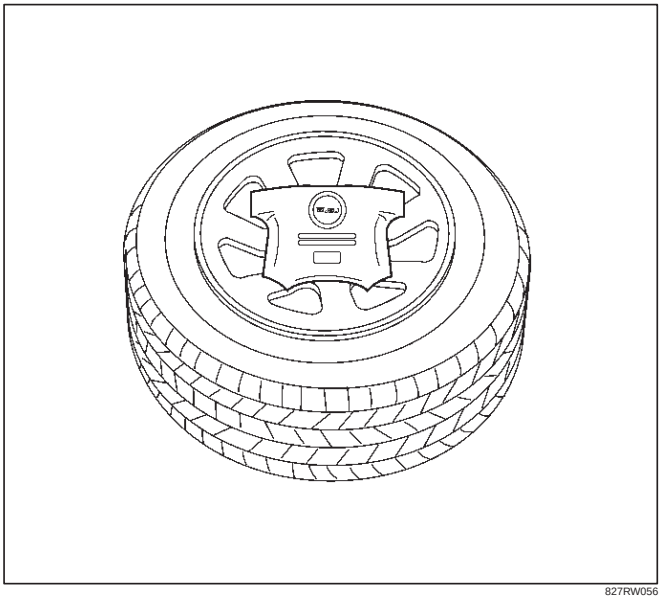

827RW056

7. How to fix Driver air bag.
   1. Fix the air bag with its trim cover up on a tire with a wheel using an automobile use wire harness, (core size: 0.05 inch) or a wire trebly at two or more points.
   2. Connect SRS air bag assembly to the double pole extension cord of the air bag deployment harness.

      Do not connect the deployment harness to a power source until air bag deployment.
      (If connected the SRS air bag assembly deploys immediately)

NOTE: Ensure that the pigtail adapter is firmly seated into the air bag assembly connector. Failure to fully seat the connectors may leave the shorting bar located in the air bag assembly connector functioning (shorting the deployment circuit) and may result in non deployment of the air bag assembly.

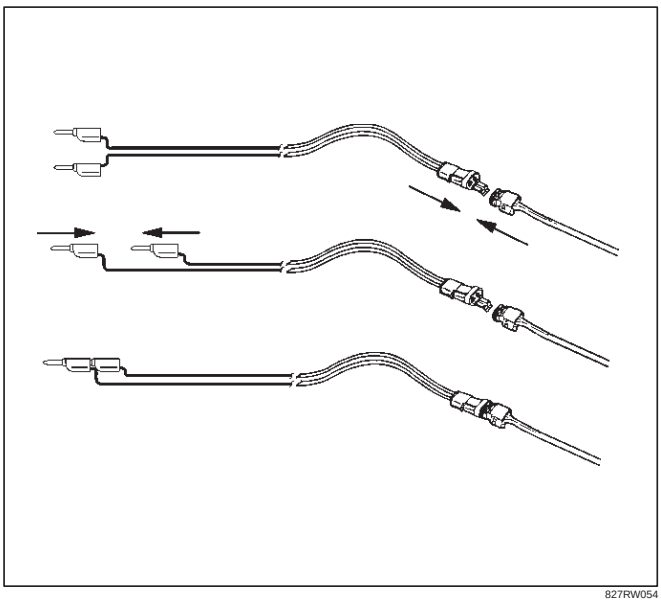

827RW054

3. Place three tires without wheel on the tire on which air bag is fixed and a tire with a wheel on top.

   Bind the five tires with a rope so that the tires may not collapse.

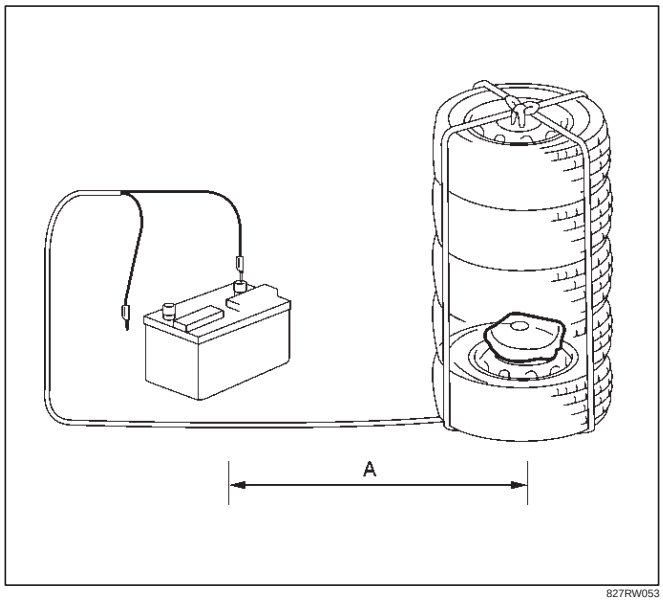

827RW053

Legend

(A) 10 m (33 feet) or more

8. How to fix Passenger air bag.
   1. Fix the air bag with its trim cover side fixing the center of a tire without a wheel using an automobile use wire harness, (core size: 0.05 inch) or a wire trebly at two or more points.

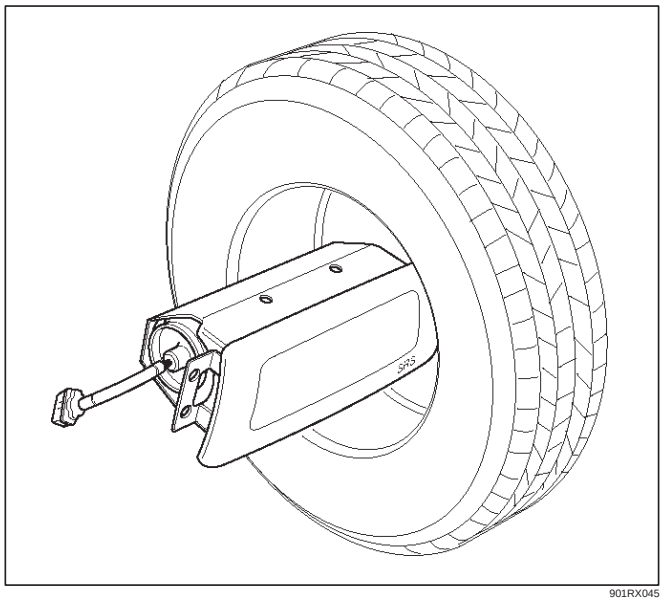

901RX045

   2. Connect Supplemental Restraint System (SRS) air bag assembly to the deployment harness double pole extension cord end. Be sure not to connect the deployment harness to a power source. (If connected the SRS air bag assembly deploys immediately).

NOTE: Ensure that the pigtail adapter is firmly seated into the air bag assembly connector. Failure to fully seat the connectors may leave the shorting bar located in the air bag assembly connector functioning (shorting the deployment circuit) and may result in non deployment of the air bag assembly.

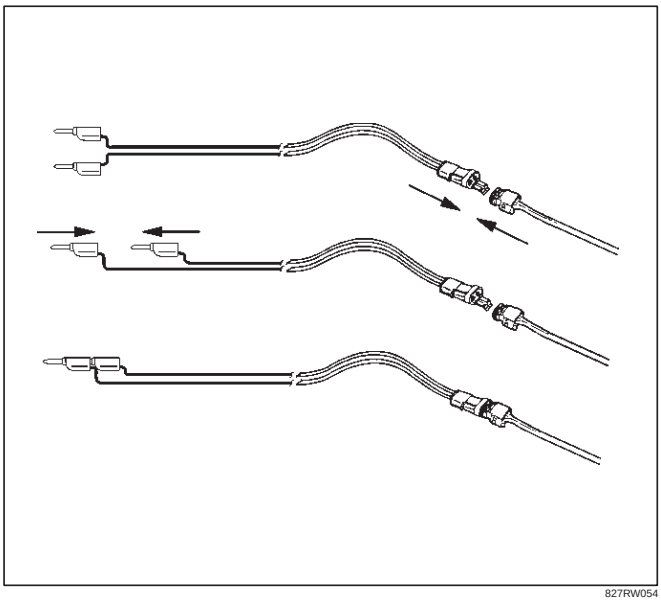

827RW054

3. Put a tire without wheel on another, put the tire on which the air bag is fixing, put a tire without a wheel, and finally put a tire with a wheel on top.

   Bind the tires with a rope so that the tires pile may not collapse.

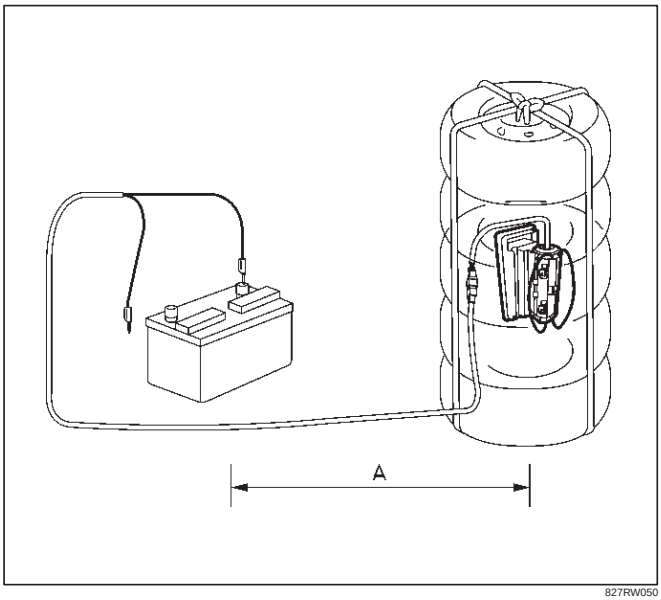

827RW050

Legend

(A) 10 m (33 feet) or more

9. Notify all people in the immediate area of your intention to deploy the passenger air bag assembly. The deployment will be accompanied by a substantial noise which may startle the uninformed.

WARNING: DEPLOYED HARNESS SHALL REMAIN SHORTED AND NOT BE CONNECTED TO A POWER SOURCE UNTIL THE AIR BAG IS TO BE DEPLOYED. THE AIR BAG ASSEMBLY WILL IMMEDIATELY DEPLOY THE AIR BAG WHEN A CONNECTING THE DEPLOYMENT HARNESS TO THE POWER SOURCE SHOULD ALWAYS BE THE LAST STEP IN THE AIR BAG ASSEMBLY DEPLOYMENT PROCEDURE. FAILURE TO FOLLOW PROCEDURES IN THE ORDER LISTED MAY RESULT IN PERSONAL INJURY.

10. Connect the Supplemental Restraint System (SRS) deployment harness wires to the power source to immediately deploy the air bag assembly. Recommended application : 12 volts minimum, 2 amps minimum. A vehicle battery is suggested.

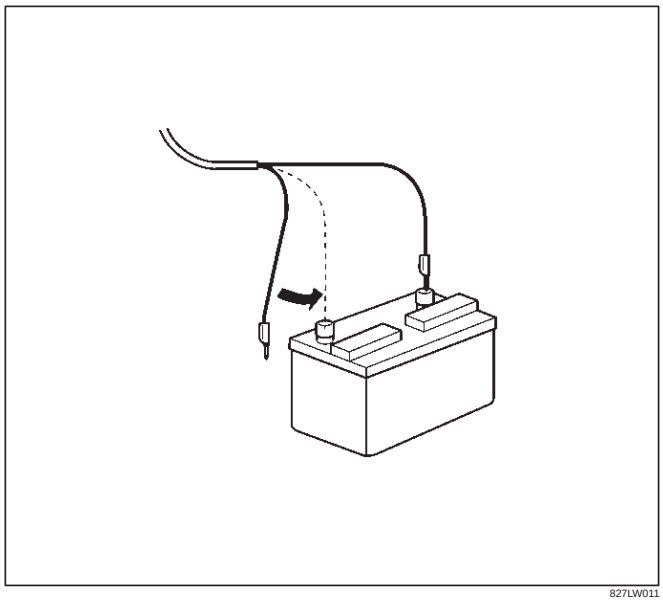

827LW011

WARNING: SAFETY PRECAUTIONS MUST BE OBSERVED WHEN HANDING A DEPLOYED AIR BAG ASSEMBLY. AFTER DEPLOYMENT, THE METAL SURFACES OF THE AIR BAG ASSEMBLY WILL BE VERY HOT. ALLOW THE AIR BAG ASSEMBLY TO COOL BEFORE HANDLING ANY METAL PORTION OF IT. DO NOT PLACE THE DEPLOYED INFLATOR MODULE NEAR ANY FLAMMABLE OBJECTS. FAILURE TO FOLLOW PROCEDURES MAY RESULT IN FIRE OR PERSONAL INJURY. AFTER AN AIR BAG ASSEMBLY HAS BEEN DEPLOYED, THE METAL CANISTER AND SURROUNDING AREAS OF THE AIR BAG ASSEMBLY WILL BE HOT. DO NOT TOUCH THE METAL AREAS OF THE AIR BAG ASSEMBLY FOR ABOUT THIRTY MINUTES AFTER DEPLOYMENT. IF THE DEPLOYED AIR BAG ASSEMBLY MUST BE MOVED BEFORE IT IS COOL, WEAR GLOVES AND HANDLE BY THE AIR BAG IT SELF.

11. Disconnect the pigtail adapter from the air bag assembly as soon after deployment as possible to avoid damage to the pigtail adapter or SRS deployment harness from contacting the hot air bag assembly canister. The pigtail adapter and SRS deployment harness are designed to be reused. They should, however, be inspected for damage after each deployment and replaced if necessary.
12. Dispose of the deployed air bag assembly through normal refuse channels after it has cooled for at least 30 minutes.

13. Wash your hands with mild soap and water afterward.

NOTE: The remaining steps are to be followed in the unlikely event that the air bag assembly did not deploy after following the above procedures.

14. Ensure that the SRS deployment harness has been disconnected from the power source and that its two banana plugs have been shorted together by fully seating one banana plug into the other.

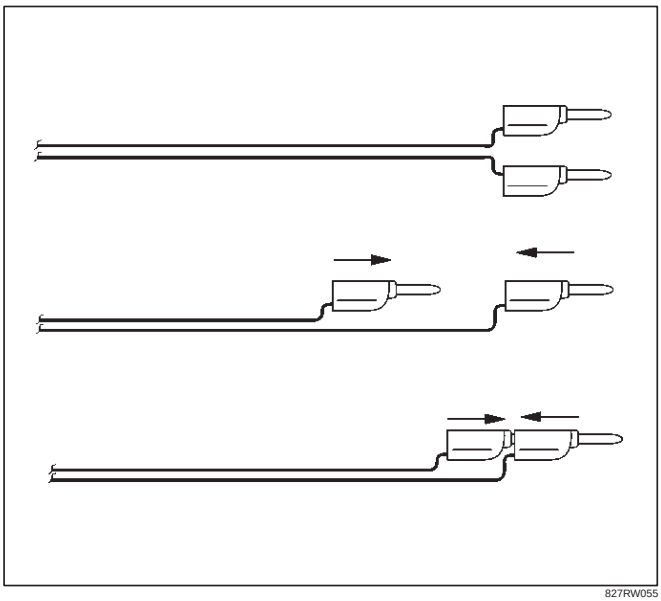

827RW055

15. Disconnect the pigtail adapter from the air bag assembly.

WARNING: WHEN STORING A LIVE AIR BAG ASSEMBLY OR WHEN LEAVING A LIVE AIR BAG ASSEMBLY UNATTENDED ON A BENCH OR OTHER SURFACE, ALWAYS FACE THE BAG UP AND AWAY FROM THE SURFACE. THIS IS NECESSARY SO THAT A FREE SPACE IS PROVIDED TO ALLOW THE AIR BAG TO EXPAND IN THE UNLIKELY EVENT OF ACCIDENTAL DEPLOYMENT. FAILURE TO FOLLOW PROCEDURES MAY RESULT IN PERSONAL INJURY.

16. Temporarily store the air bag assembly with the bag facing up, away from the surface upon which it rests.

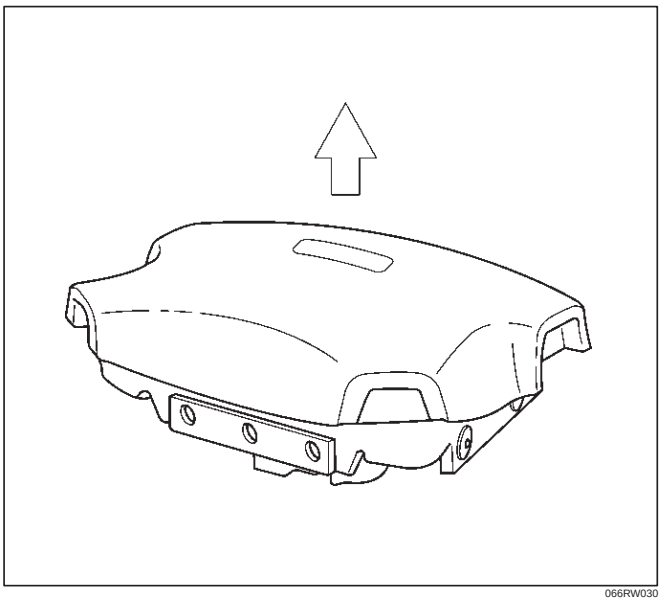

066RW030

Deployment Inside Vehicle (Vehicle Scrapping Procedure)

Deployment inside vehicle is proper when the vehicle is to be destroyed or salvaged for component parts. This includes, but is not limited to, the following situations:

1. The vehicle has completed its useful life.
2. The vehicle has been damaged beyond repair in a nondeployment type accident.
3. The vehicle has been stripped or damaged beyond repair in a theft.
4. The vehicle will be salvaged for component parts to be used on a vehicle with a different Vehicle Identification Number (VIN) as opposed to being rebuilt as same VIN. Never use SRS components from another vehicle.

WARNING: FAILURE TO FOLLOW PROPER SRS AIR BAG ASSEMBLY DISPOSAL PROCEDURES CAN RESULT IN AIR BAG DEPLOYMENT WHICH MAY CAUSE PERSONAL INJURY. UNDEPLOYED AIR BAG ASSEMBLIES MUST NOT BE DISPOSED OF THROUGH NORMAL REFUSE CHANNELS. THE UNDEPLOYED AIR BAG ASSEMBLY CONTAINS SUBSTANCES THAT CAN CAUSE SEVERE ILLNESS OR PERSONAL INJURY IF THE SEALED CONTAINER IS DAMAGED DURING DISPOSAL. DISPOSAL IN ANY MANNER INCONSISTENT WITH PROPER PROCEDURES MAY BE A VIOLATION OF FEDERAL, STATE AND/OR LOCAL LAWS.

1. Turn ignition switch to “LOCK,” remove key and put on safety glasses.
2. Remove all loose objects from front seats.
3. Disconnect driver air bag assembly, yellow 2–pin connector located at the base of the steering column.
4. Cut the driver air bag assembly yellow 2–pin harness connector from the vehicle leaving at least 15 cm (six inches) of wire at the connector.
5. Strip 13 mm (1/2 inch) of insulation from yellow – green and yellow – black wire lead of the connector.
6. Cut two 900 cm (30 feet) deployment wires from 0.8 mm^2 (18 gauge) or thicker multi–strand wire. These wires will be used to fabricate the driver deployment harness.
7. Strip 13 mm (1/2 inch) of insulation from both ends of the wires cut in the previous step.
8. Short the wires by twisting together one end from each. Deployment wires shall remain shorted and not be connected to a power source until the air bag is to be deployed.

WARNING: FAILURE TO FOLLOW PROCEDURES IN THE ORDER LISTED COULD RESULT IN PERSONAL INJURY. NEVER CONNECT DEPLOYMENT WIRES TO ANY POWER SOURCE BEFORE CONNECTING DEPLOYMENT WIRES TO THE AIR BAG ASSEMBLY LEADS. DEPLOYMENT WIRES SHALL REMAIN SHORTED AND BE NOT CONNECTED TO A POWER SOURCE UNTIL THE AIR BAG IS TO BE DEPLOYED. THE AIR BAG ASSEMBLY WILL IMMEDIATELY DEPLOY THE AIR BAG WHEN A POWER SOURCE IS CONNECTED TO IT. WEAR SAFETY GLASSES

THROUGHOUT THIS ENTIRE DEPLOYMENT AND DISPOSAL PROCEDURE.

9. Twist together one connector wire lead to one deployment wire. The connection should be mechanically secure.
10. Bend twisted connection made in the previous step flat and wrap tightly with electrical tape to insulate and secure.
11. Twist together, bend and tape the remaining connector wire lead to the remaining deployment wire.
12. Connect the deployment harness to the driver air bag assembly, yellow 2–pin connector at the base of the steering column. Route deployment harness out the driver side of the vehicle.

WARNING: DEPLOYMENT WIRES SHALL REMAIN SHORTED AND NOT BE CONNECTED TO A POWER SOURCE UNTIL THE AIR BAG IS TO BE DEPLOYED.

THE AIR BAG ASSEMBLY WILL IMMEDIATELY DEPLOY THE AIR BAG WHEN A POWER SOURCE IS CONNECTED TO IT.

CONNECTING THE DEPLOYMENT WIRES TO THE POWER SOURCE SHOULD ALWAYS BE THE FINAL STEP IN THE AIR BAG ASSEMBLY DEPLOYMENT PROCEDURE.

FAILURE TO FOLLOW PROCEDURES IN THE ORDER LISTED COULD RESULT IN PERSONAL INJURY.

13. Disconnect passenger air bag assembly, yellow 2–pin connector located behind glove box assembly.
14. Cut the passenger air bag assembly harness connector from the vehicle leaving at least 15 cm (six inches) of wire at the connector.
15. Strip 13 mm (1/2 inch) of insulation from blue–white and pink–blue wire lead of the connector.
16. Cut two 900 cm (30 feet) deployment wires from 0.8 mm^2 (18 gauge) or thicker multi–strand wire. These wires will be used to fabricate the passenger deployment harness.
17. Strip 13 mm (1/2 inch) of insulation from both ends of the wires cut in the previous step.
18. Short the wires by twisting together one end from each. Deployment wires shall remain shorted and not be connected to a power source until the air bag is to be deployed.

WARNING: FAILURE TO FOLLOW PROCEDURES IN THE ORDER LISTED COULD RESULT IN PERSONAL INJURY. NEVER CONNECT DEPLOYMENT WIRES TO ANY POWER SOURCE BEFORE CONNECTING DEPLOYMENT WIRES TO THE AIR BAG ASSEMBLY LEADS. DEPLOYMENT WIRES SHALL REMAIN SHORTED AND NOT BE CONNECTED TO A POWER SOURCE UNTIL THE AIR BAG IS TO BE DEPLOYED. THE AIR BAG ASSEMBLY WILL IMMEDIATELY DEPLOY THE AIR BAG WHEN A POWER SOURCE IS CONNECTED TO IT. WEAR SAFETY GLASSES THROUGHOUT THIS ENTIRE DEPLOYMENT AND DISPOSAL PROCEDURE.

19. Twist together one connector wire lead to one deployment wire. The connection should be mechanically secure.
20. Bend twisted connection made in the previous step flat and wrap tightly with electrical tape to insulate and secure.
21. Twist together, bend and tape the remaining connector wire lead to the remaining deployment wire.
22. Connect the deployment harness to the passenger air bag assembly, yellow 2–pin connector located behind the glove box assembly. Route deployment harness out the passenger side of the vehicle.

WARNING: DEPLOYMENT WIRES SHALL REMAIN SHORTED AND NOT BE CONNECTED TO A POWER SOURCE UNTIL THE AIR BAG IS TO BE DEPLOYED. THE AIR BAG ASSEMBLY WILL IMMEDIATELY DEPLOY THE AIR BAG WHEN A POWER SOURCE IS CONNECTED TO IT. CONNECTING THE DEPLOYMENT WIRES SHOULD ALWAYS BE THE FINAL STEP IN THE AIR BAG ASSEMBLY DEPLOYMENT PROCEDURE. FAILURE TO FOLLOW PROCEDURES IN THE ORDER LISTED COULD RESULT IN PERSONAL INJURY.

23. Verify that the inside of the vehicle and the area surrounding the vehicle are clear of all people and loose or flammable objects.
24. Stretch the driver and passenger deployment harness to their full length.
25. Completely cover windshield area and front door window openings with a drop cloth, blanket or similar item. This reduces the possibility of injury due to possible fragmentation of the vehicle's glass or interior.
26. Notify all people in the immediate area that you intend to deploy the air bags. The deployment will be accompanied by a substantial noise which may startle the uninformed.
27. Separate the two ends of the driver deployment harness wires.

WARNING: DEPLOYMENT WIRES SHALL REMAIN SHORTED AND NOT BE CONNECTED TO A POWER SOURCE UNTIL THE AIR BAG IS TO A POWER SOURCE UNTIL THE AIR BAG IS TO BE DEPLOYED. THE AIR BAG ASSEMBLY WILL IMMEDIATELY DEPLOY THE AIR BAG WHEN A POWER SOURCE IS CONNECTED TO IT. CONNECTING THE DEPLOYMENT WIRES TO THE POWER SOURCE SHOULD ALWAYS BE THE FINAL STEP IN THE AIR BAG ASSEMBLY DEPLOYMENT PROCEDURE. FAILURE TO FOLLOW PROCEDURES IN THE ORDER LISTED COULD RESULT IN PERSONAL INJURY.

NOTE: When the air bag deploys, the rapid gas expansion will create a substantial noise. Notify all people in the immediate area that you intend to deploy the air bags.

28. Connect the driver deployment harness wires to a power source to immediately deploy the driver air bag assembly. Recommended application: 12 volts minimum, 2 amps minimum. A vehicle battery is suggested.
29. Separate the two ends of the passenger deployment harness wires.

WARNING: DEPLOYMENT WIRES SHALL REMAIN SHORTED AND NOT BE CONNECTED TO A POWER SOURCE UNTIL THE AIR BAG IS TO A POWER SOURCE UNTIL THE AIR BAG IS TO BE DEPLOYED. THE AIR BAG ASSEMBLY WILL IMMEDIATELY DEPLOY THE AIR BAG WHEN A POWER SOURCE IS CONNECTED TO IT. CONNECTING THE DEPLOYMENT WIRES TO THE POWER SOURCE SHOULD ALWAYS BE THE FINAL STEP IN THE AIR BAG ASSEMBLY DEPLOYMENT PROCEDURE. FAILURE TO FOLLOW PROCEDURES IN THE ORDER LISTED COULD RESULT IN PERSONAL INJURY.

30. Connect the passenger deployment harness wires to a power source to immediately deploy the passenger air bag assembly. Recommended application: 12 volts minimum, 2 amps minimum. A vehicle battery is suggested.(Driver air bag assembly) Put on a pair of shop gloves and safety glasses to protect your hands and eyes from possible irritation and heat when handling the deployed air bag assembly. After the air bag assembly has been deployed, the surface of the air bag may contain solid particulate. This solid particulate consists primarily of by products of the chemical reaction, Potassium Chloride and copper metal dust. Compounds of Potassium Borate, Strontium Chloride, Copper Chloride, and Ammonium Chloride may be found in amounts of about 1 % (each) of the total particulate.

    (Passenger air bag assembly)

    Put on a pair of shop gloves and safety glasses to protect your hands and eyes from possible irritation and heat when handling the deployed air bag assembly.

    After the air bag assembly has been deployed, the surface of the air bag may contain a powdery residue. This powder consists primarily of cornstarch (used to lubricate the bag as it inflates) and by products of the chemical reaction. Sodium hydroxide dust (similar to lye soap) is produced as a by product of the deployment reaction. The sodium hydroxide then quickly reacts with atmospheric moisture and is converted to sodium carbonate and sodium bicarbonate (baking soda). Therefore, it is unlikely that sodium hydroxide will be present after deployment.

WARNING: SAFETY PRECAUTIONS MUST BE OBSERVED WHEN HANDLING A DEPLOYED AIR BAG ASSEMBLY. AFTER DEPLOYMENT, THE METAL SURFACES OF THE AIR BAG ASSEMBLY WILL BE VERY HOT. ALLOW THE AIR BAG ASSEMBLY TO COOL BEFORE HANDLING ANY METAL PORTION OF IT. DO NOT PLACE THE HOT DEPLOYED AIR BAG ASSEMBLY NEAR ANY FLAMMABLE OBJECTS. FAILURE TO FOLLOW PROCEDURES COULD RESULT IN FIRE OR PERSONAL INJURY.

After an air bag assembly has been deployed, the metal canister and surrounding areas of the air bag assembly will be very hot. Do not touch the metal areas of the air bag assembly for about 30 minutes after deployment. If the deployed air bag assembly must be moved before it is cool, wear gloves and handle by the air bag or trim cover.

31. Short the driver deployment harness wires by twisting together one end from each. Repeat this procedure for the passenger deployment harness.
32. Carefully remove drop cloth from vehicle and clean off any fragments or discard drop cloth entirely.
33. Disconnect driver deployment harness and passenger deployment harness from vehicle and discard.
34. In the unlikely event that either or both of the air bag assemblies did not deploy after following these procedures, proceed immediately with Steps 36 through 37. If the air bag assembly deployed, proceed to step 35.
35. With both air bags deployed, the vehicle may be scrapped in the same manner as a non–SRS equipped vehicle.

NOTE: The remaining steps are to be followed in the unlikely event that the air bag assembly did not deploy after following these procedures.

36. Remove the undeployed air bag assembly (s) from the vehicle. For driver air bag assembly refer to in the “Passenger Air Bag Assembly Removal” in this manual.

WARNING: WHEN STORING A LIVE AIR BAG ASSEMBLY OR WHEN LEAVING A LIVE AIR BAG ASSEMBLY UNATTENDED ON A BENCH OR OTHER SURFACE, ALWAYS FACE THE BAG AND TRIM COVER UP, AWAY FROM THE SURFACE. THIS IS NECESSARY SO THAT A FREE SPACE IS PROVIDED TO ALLOW THE AIR BAG TO EXPAND IN THE UNLIKELY EVENT OF ACCIDENTAL DEPLOYMENT. FAILURE TO FOLLOW PROCEDURES COULD RESULT IN PERSONAL INJURY.

37. Temporarily store the air bag assembly with the air bag opening facing up, away from the surface upon which it rests.

Deployed Air Bag Assembly Handling

Put on a pair of shop gloves and safety glasses to protect your hands and eyes from possible irritation and heat when handling the deployed air bag assembly.
After the air bag assembly has been deployed, the surface of the air bag may contain a powdery residue.
(Passenger air bag assembly)
After the air bag assembly has been deployed, the surface of the air bag may contain a powdery residue. This powder consists primarily of cornstarch (used to lubricate the bag as it inflates) and by products of the chemical reaction. Sodium hydroxide dust (similar to lye soap) is produced as a by product of the deployment reaction. The sodium hydroxide then quickly reacts with atmospheric moisture and is converted to sodium

carbonate and sodium bicarbonate (baking soda). Therefore, it is unlikely that sodium hydroxide will be present after deployment.
(Driver air bag assembly)
After the air bag assembly has been deployed, the surface of the air bag may contain solid particulate. This solid particulate consists primarily of by products of the chemical reaction, Potassium Chloride and copper metal dust. Compounds of Potassium Borate, Strontium Chloride, Copper Chloride, and Ammonium Chloride may be found in amounts of about 1 % (each) of the total particulate.

Deployment Outside Vehicle (Pretensioner Seat Belt Assembly)

Deployment outside the vehicle is proper when the vehicle is to be returned to service. This includes, for example, situations in which the vehicle will be returned to useful service after a functionally or cosmetically deficient pretensioner seat belt assembly is replaced. Deployment and disposal of a malfunctioning pretensioner seat belt assembly is, of course, subject to any required retention period.
For deployment of a live (undeployed) pretensioner seat belt assembly outside the vehicle, the deployment procedure must be followed exactly. Always wear gloves and safety glasses during this deployment procedure until a deployed pretensioner seat belt assembly is scrapped or until an undeployed pretensioner seat belt assembly is shipped. Before performing the procedures you should be familiar with servicing the system and with proper handling of the pretensioner seat belt assembly. Procedures should be read fully before they are performed.
The following procedure requires use of SRS deployment harness with appropriate pigtail adapter. Do not attempt procedure without adapter.

WARNING: FAILURE TO FOLLOW PROCEDURES IN THE ORDER LISTED MAY RESULT IN PERSONAL INJURY. NEVER CONNECT DEPLOYMENT HARNESS TO ANY POWER SOURCE BEFORE CONNECTING DEPLOYMENT HARNESS TO THE PRETENSIONER SEAT BELT ASSEMBLY. DEPLOYMENT HARNESS SHALL REMAIN SHORTED AND NOT BE CONNECTED TO A POWER SOURCE UNTIL THE PRETENSIONER SEAT BELT IS TO BE DEPLOYED. THE PRETENSIONER SEAT BELT ASSEMBLY WILL IMMEDIATELY DEPLOY THE PRETENSIONER SEAT BELT WHEN A POWER SOURCE IS CONNECTED TO IT. WEAR GLOVES AND SAFETY GLASSES THROUGHOUT THIS ENTIRE DEPLOYMENT AND DISPOSAL PROCEDURE.

1. Turn ignition switch to “LOCK”, remove key.
2. Remove the pretensioner seat belt assembly from vehicle. Refer to “Pretensioner Seat Belt Removal” in this manual.
3. Prepare SRS deployment harness.

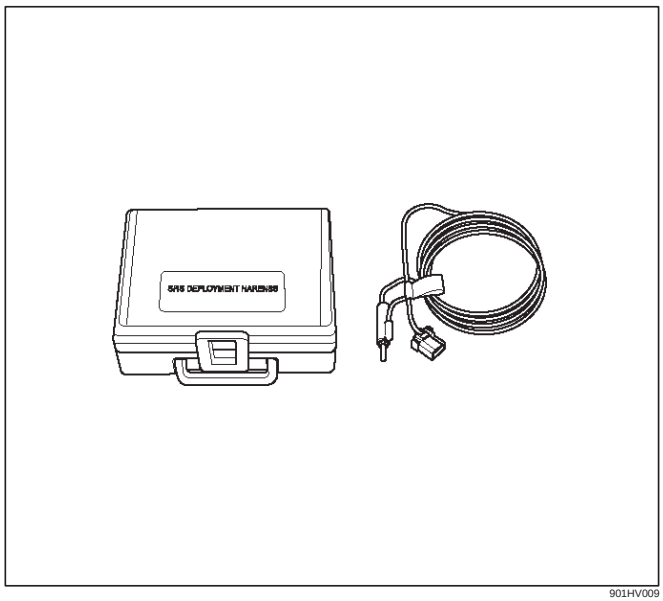

901HV009

4. Short the two SRS deployment harness leads together by fully seating one banana plug into the other. SRS deployment harness shall remain shorted and not be connected to a power source until the pretensioner seat belt is to be deployed.
5. Place the pretensioner seat belt assembly on a work bench or other surface away from all loose or flammable objects.

WARNING: WHEN FIXING THE DEPLOYMENT DEVICE OF PRETENSIONER SEAT BELT, THE DEPLOYMENT DEVICE SHOULD BE FIXED AWAY FROM OTHER PERSON

6. Clear a space on the ground about 183 cm (six feet) in diameter where the pretensioner seat belt assembly is to be deployed. A paved, outdoor location where there is no activity is preferred. If an outdoor location is not available, a space on the shop floor where there is no activity and sufficient ventilation is recommended. Ensure no loose or flammable objects are within the deployment area.
7. Stretch the SRS deployment harness and pigtail adapter from the pretensioner seat belt assembly to its full length.
8. Place a power source near the shorted end of the SRS deployment harness. Recommended application: 12 volts minimum, 2 amps minimum. A vehicle battery is suggested.
9. Deployment harness shall remain shorted and not be connected to a power source until the pretensioner seat belt is to be deployed. The pretensioner seat belt assembly will immediately deploy the pretensioner seat belt when a power source is connected to it.
10. Verify that the area around the pretensioner seat belt assembly is clear of all people and loose or flammable objects.
11. Notify all people in the immediate area that you intend to deploy the driver air bag. The deployment will be accompanied by a substantial noise which may startle the uninformed.
12. Connect the pretensioner seat belt to the pigtail adapter on the SRS deployment harness.

NOTE: Ensure that the pigtail adapter is firmly seated into the pretensioner seat belt assembly connector. Failure to fully seat the connectors may leave the shorting bar located in the pretensioner seat belt assembly connector functioning (shorted) and may result in nondeployment of the pretensioner seat belt assembly.

13. Separate the two banana plugs on the SRS deployment harness.

NOTE: When the pretensioner seat belt deploys, the rapid gas expansion will create a substantial noise. Notify all people in the immediate area that you intend to deploy the pretensioner seat belt.

WARNING: DEPLOYMENT HARNESS SHALL REMAIN SHORTED AND NOT BE CONNECTED TO A POWER SOURCE UNTIL THE PRETENSIONER SEAT BELT IS TO BE DEPLOYED. THE PRETENSIONER SEAT BELT ASSEMBLY WILL IMMEDIATELY DEPLOY THE PRETENSIONER SEAT BELT WHEN A POWER SOURCE IS CONNECTED TO IT. CONNECTING THE DEPLOYMENT HARNESS TO THE POWER SOURCE SHOULD ALWAYS BE THE LAST STEP IN THE PRETENSIONER SEAT BELT ASSEMBLY DEPLOYMENT PROCEDURE. FAILURE TO FOLLOW PROCEDURES IN THE ORDER LISTED MAY RESULT IN PERSONAL INJURY.

14. Connect the SRS deployment harness wires to the power source to immediately deploy the pretensioner seat belt. Recommended application: 12 volts minimum, 2 amps minimum. A vehicle battery is suggested.
15. Disconnect the SRS deployment harness from the power source.
16. Short the two SRS deployment harness leads together by fully seating one banana plug into the other.
17. In the unlikely event that the pretensioner seat belt assembly did not deploy after following these procedures, proceed immediately with Steps 21 through 24. If the pretensioner seat belt assembly did deploy, proceed with Steps 15 through 20.
18.

WARNING: SAFETY PRECAUTIONS MUST BE OBSERVED WHEN HANDING A DEPLOYED PRETENSIONER SEAT BELT ASSEMBLY. AFTER DEPLOYMENT, THE METAL SURFACES OF THE PRETENSIONER SEAT BELT ASSEMBLY WILL BE VERY HOT. ALLOW THE INFLATOR MODULE TO COOL BEFORE HANDLING ANY METAL PORTION OF IT. DO NOT PLACE THE DEPLOYED PRETENSIONER SEAT BELT ASSEMBLY NEAR ANY FLAMMABLE OBJECTS. FAILURE TO FOLLOW PROCEDURES MAY RESULT IN FIRE OR PERSONAL INJURY.

AFTER A DRIVER PRETENSIONER SEAT BELT ASSEMBLY HAS BEEN DEPLOYED, THE METAL CANISTER AND SURROUNDING AREAS OF THE DRIVER PRETENSIONER SEAT BELT ASSEMBLY WILL BE VERY HOT. DO NOT TOUCH THE METAL AREAS OF THE PRETENSIONER SEAT BELT ASSEMBLY FOR ABOUT TEN MINUTES AFTER DEPLOYMENT. IF THE DEPLOYED PRETENSIONER SEAT BELT ASSEMBLY MUST BE MOVED BEFORE IT IS COOL, WEAR GLOVES AND HANDLE BY THE PRETENSIONER SEAT BELT OR TRIM COVER.

19. Disconnect the pigtail adapter from the pretensioner seat belt assembly as soon after deployment as possible. This will prevent damage to the pigtail adapter or SRS deployment harness due to possible contact with the hot pretensioner seat belt assembly canister. The pigtail adapter can be reused. They should, however, be inspected for damage after each deployment and replaced if necessary.
20. Dispose of the deployed pretensioner seat belt assembly through normal refuse channels after it has cooled for at least 30 minutes.
21. Wash your hands with mild soap and water afterward.

NOTE: The remaining steps are to be followed in the unlikely event that the pretensioner seat belt assembly did not deploy after following these procedures.

22. Ensure that the SRS deployment harness has been disconnected from the power source and that its two banana plugs have been shorted together by fully seating one banana plug into the other.
23. Disconnect the pigtail adapter from the pretensioner seat belt assembly.
24. Remove the undeployed pretensioner seat belt from the special tool.

WARNING: WHEN STORING A LIVE PRETENSIONER SEAT BELT ASSEMBLY OR WHEN LEAVING A LIVE INFLATOR MODULE UNATTENDED ON A BENCH OR OTHER SURFACE, ALWAYS PUT THE PRETENSIONER SEAT BELT HORIZONTAL PLACE. THIS IS NECESSARY SO THAT A FREE SPACE IS PROVIDED TO ALLOW THE PRETENSIONER SEAT BELT TO SHRINK IN THE UNLIKELY EVENT OF ACCIDENTAL DEPLOYMENT. FAILURE TO FOLLOW PROCEDURES MAY RESULT IN PERSONAL INJURY.

25. Temporarily store the pretensioner seat belt assembly with its deployment device facing up, away from the surface upon which it rests.

Deployment Inside Vehicle (Pretensioner Seat Belt Vehicle Scrapping Procedure)

Deployment inside vehicle is proper when the vehicle is to be destroyed. This includes, but is not limited to, the following situations:

1. The vehicle has completed its useful life.
2. The vehicle has been damaged beyond repair in a nondeployment type accident.
3. The vehicle has been stripped or damaged beyond repair in a theft.

NOTE: The vehicle will be salvaged for component parts to be used on a vehicle with a different Vehicle Identification Number (VIN) as opposed to being rebuilt as same VIN. Never use pretensioner seat belt components from another vehicle.

WARNING: FAILURE TO FOLLOW PROCEDURES IN THE ORDER LISTED COULD RESULT IN PERSONAL INJURY. NEVER CONNECT DEPLOYMENT WIRES

TO ANY POWER SOURCE BEFORE CONNECTING DEPLOYMENT WIRES TO THE PRETENSIONER SEAT BELT ASSEMBLY LEADS. DEPLOYMENT WIRES SHALL REMAIN SHORTED AND NOT BE CONNECTED TO A POWER SOURCE UNTIL THE PRETENSIONER SEAT BELT IS TO BE DEPLOYED. THE PRETENSIONER SEAT BELT ASSEMBLY WILL IMMEDIATELY DEPLOY THE PRETENSIONER SEAT BELT WHEN A POWER SOURCE IS CONNECTED TO IT. WEAR SAFETY GLASSES THROUGHOUT THIS ENTIRE DEPLOYMENT AND DISPOSAL PROCEDURE.

1. Turn ignition switch to “LOCK,” remove key and put on safety glasses.
2. Remove all loose objects from front seats.
3. Disconnect pretensioner seat belt assembly, yellow 2–pin connector located at the base of the seat.
4. Prepare SRS deployment harness.
5. Short the two SRS deployment harness leads together by fully seating one banana plug into the other.
6. Deployment harness shall remain shorted and not be connected to a power source until the pretensioner seat belt is to be deployed.
7. Route deployment harness out the driver side of the vehicle.
8. Verify that the inside of the vehicle and the area surrounding the vehicle are clear of all people and loose or flammable objects.
9. Stretch the SRS deployment harness to their full length.
10. Connect the deployment harness to the pretensioner seat belt assembly, yellow 2-pin connector at the base of the seat.

WARNING: DEPLOYMENT WIRES SHALL REMAIN SHORTED AND NOT BE CONNECTED TO A POWER SOURCE UNTIL THE PRETENSIONER SEAT BELT IS TO BE DEPLOYED. THE PRETENSIONER SEAT BELT ASSEMBLY WILL IMMEDIATELY DEPLOY THE PRETENSIONER SEAT BELT WHEN A POWER SOURCE IS CONNECTED TO IT. CONNECTING THE DEPLOYMENT WIRES TO THE POWER SOURCE SHOULD ALWAYS BE THE FINAL STEP IN THE PRETENSIONER SEAT BELT ASSEMBLY DEPLOYMENT PROCEDURE. FAILURE TO FOLLOW PROCEDURES IN THE ORDER LISTED COULD RESULT IN PERSONAL INJURY.

11. Notify all people in the immediate area that you intend to deploy the pretensioner seat belt. The deployment will be accompanied by a substantial noise which may startle the uninformed.
12. Separate the two banana plugs on the SRS deployment harness.

NOTE: When the pretensioner seat belt deploys, the rapid gas expansion will create a substantial noise. Notify all people in the immediate area that you intend to deploy the pretensioner seat belt.

13. Connect the SRS deployment harness wires to a power source to immediately deploy the pretensioner seat belt assembly. Recommended application: 12 volts minimum, 2 amps minimum. A vehicle battery is suggested.

WARNING: DEPLOYMENT WIRES SHALL REMAIN SHORTED AND NOT BE CONNECTED TO A POWER SOURCE UNTIL THE PRETENSIONER SEAT BELT IS TO IS TO BE DEPLOYED. THE PRETENSIONER SEAT BELT ASSEMBLY WILL IMMEDIATELY DEPLOY THE PRETENSIONER SEAT BELT WHEN A POWER SOURCE IS CONNECTED TO IT. CONNECTING THE DEPLOYMENT WIRES SHOULD ALWAYS BE THE FINAL STEP IN THE PRETENSIONER SEAT BELT ASSEMBLY DEPLOYMENT PROCEDURE. FAILURE TO FOLLOW PROCEDURES IN THE ORDER LISTED COULD RESULT IN PERSONAL INJURY.

14. Short the two SRS deployment harness leads together by fully seating one banana plug into the other.
15. Disconnect the deployment harness to the pretensioner seat belt assembly, yellow 2-pin connector at the base of the seat.
16. In the unlikely event that the pretensioner seat belt assembly did not deploy after following these procedures, proceed immediately with Steps 18 through 19. If the pretensioner seat belt assembly deployed as intended, proceed with Steps 14 through 17.
17. With both air bags and pretensioner seat belt deployed, the vehicle may be scrapped in the same manner as a non–SRS equipped vehicle.

NOTE: The remaining steps are to be followed in the unlikely event that the pretensioner seat belt assembly did not deploy after following these procedures.

18. Remove the undeployed pretensioner seat belt assembly (s) from the vehicle. For pretensioner seat belt assembly refer to in the “Pretensioner Seat Belt Assembly Removal” in this manual.
19. Temporarily store the pretensioner seat belt assembly with the deployment device facing up, away from the surface upon which it rests.

Special Tools

WARNING: TO AVOID DEPLOYMENT WHEN TROUBLESHOOTING THE SRS, DO NOT USE ELECTRICAL TEST EQUIPMENT SUCH AS A BATTERY–POWERED OR AC–POWERED VOLTMETER, OHMMETER, ETC., OR ANY TYPE OF ELECTRICAL EQUIPMENT OTHER THAN THAT SPECIFIED IN THIS MANUAL. DO NOT USE A NONPOWERED PROBE–TYPE TESTER. INSTRUCTIONS IN THIS MANUAL MUST BE FOLLOWED CAREFULLY, OTHERWISE PERSONAL INJURY MAY RESULT.

5–8840–2421–0 SRS Driver/Passenger Load Tool

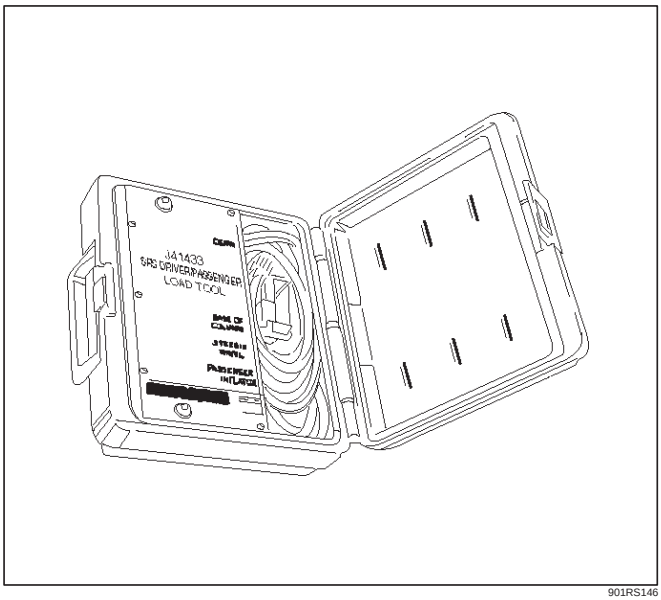

901RS146

The SRS Driver/Passenger Load Tool 5–8840–2421–0 is used only when called for in this section. It is used as a diagnostic aid and safety device to prevent inadvertent air bag assembly deployment.

The load tool has three yellow connectors attached to its case.

The three small connectors are electrically functional and serve as resistive load substitutions.

No more than two connectors are used at any time. One of the small connectors is used to substitute for the load of the driver air bag assembly when it is connected at the top of the column to the SRS coil assembly. Another small connector is used to substitute for the load of the driver air bag assembly and the SRS coil assembly when it is connected at the base of the column to the SRS wiring harness. The third small connector is used to substitute for the load of the passenger air bag assembly and pretensioner seat belt assembly when connected to the passenger air bag assembly and pretensioner seat belt assembly harness connector.

By substituting the resistance of the load tool when called for, a determination can be made as to whether an inflator circuit component is causing system malfunction and which component is causing the malfunction. The load tool should be used only when specifically called for in the diagnostic procedures.

NOTE: If comand to use 5–8840–2421–0 load tool when repair the pretensioner seat belt, connect load tool connector to use for driver air bag and/or passenger air bag connector.

5–8840–0285–0 DVM

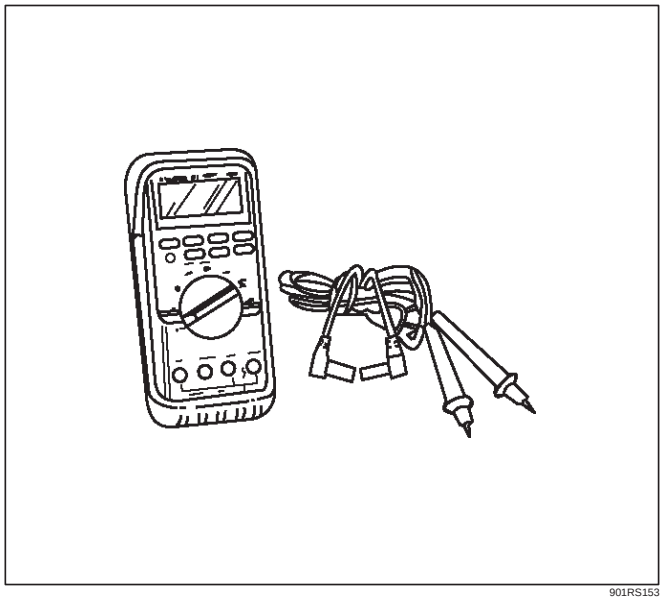

901RS153

The 5–8840–0285–0 DVM is the preferred DVM for use in SRS diagnosis and repair. However, 5–8840–0366–0 may be used if 5–8840–0285–0 is not available. No other DVMs are approved for SRS diagnosis and repair.

Scan Tool

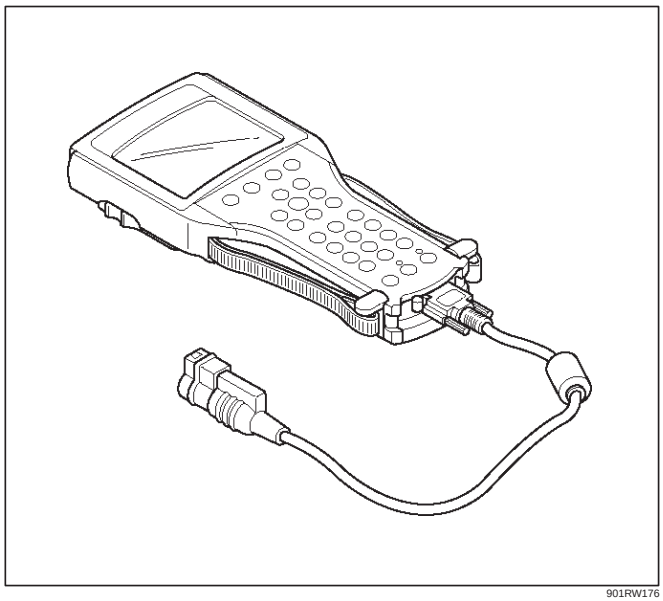

901RW176

The Tech 2 is used to read and clear SRS Diagnostic Trouble Codes (DTCs). Refer to the Tech 2 Operators, Manual for specific information on how to use the Tech 2.

5–8840–0385–0 Connector Test Adapter Kit

901RS151

The 5–8840–0385–0 Connector Test Adapter Kit must be used whenever a diagnostic procedure requests checking or probing a terminal. Using the appropriate adapter will ensure that no damage to the terminal will occur from the DVM prove, such as spreading or bending. The adapter will also give an idea of whether contact tension is sufficient, helping to find an open or intermittent open due to poor terminal contact.

5–8840–2468–0 SRS Deployment Tool

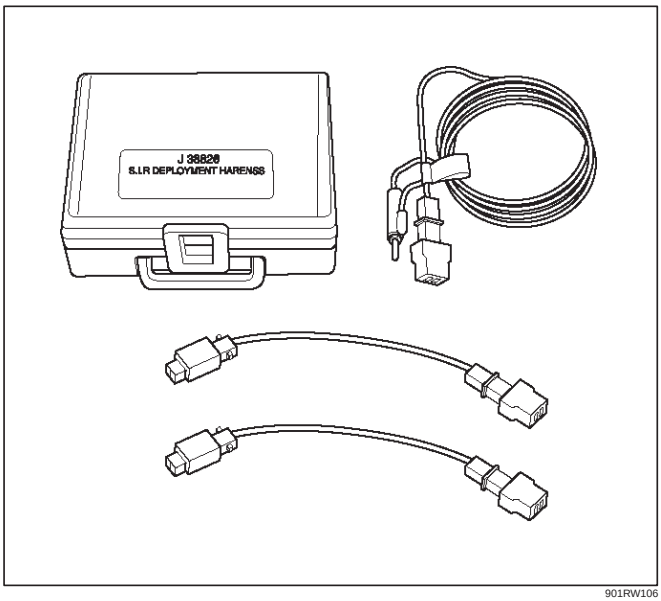

901RW106

The 5–8840–2468–0 SRS Deployment Tool must be used for deployment of the undeployed air bag, and/or pretensioner seat belt.

5–8840–2420–0 SRS Deployment Fixture

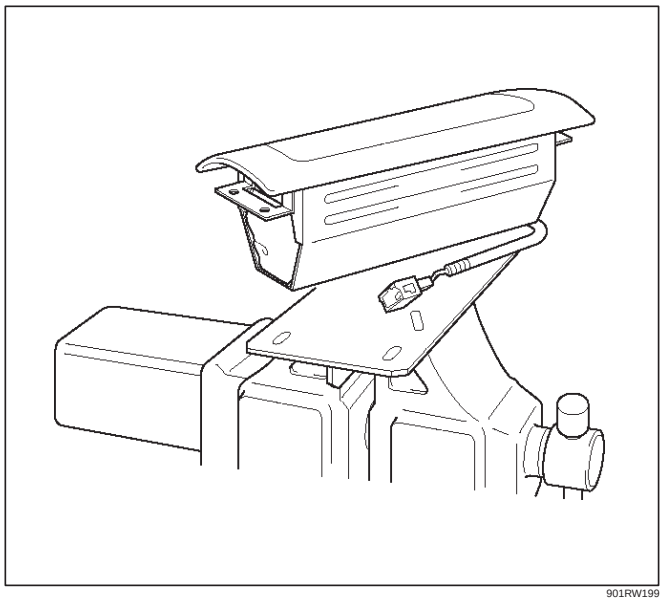

901RW199

The 5–8840–2420–0 SRS Deployment Fixture must be used for deployment of the undeployed passenger side air bag.

5–8840–2469–0 SRS Adapter for Load Tool.

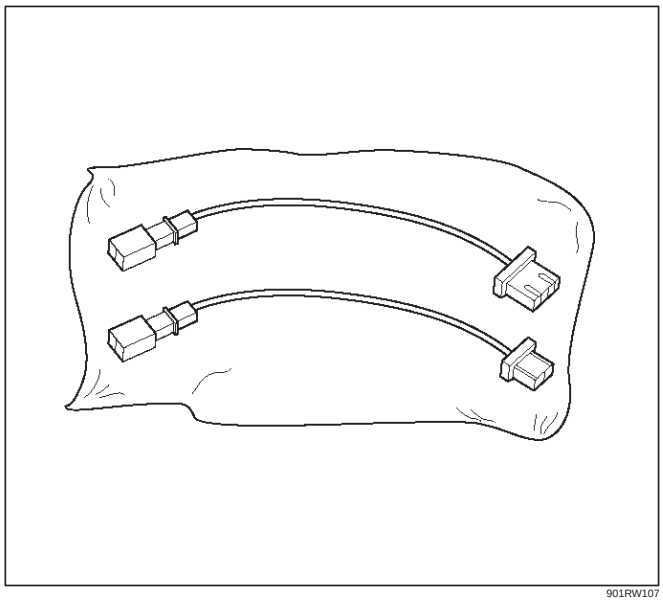

901RW107

The 5–8840–2469–0 SRS Adapter for Load Tool must be used with 5–8840–2421–0 SRS Driver/Passenger Load Tool.

Tech 2 Scan Tool

From 98 MY, Isuzu dealer service departments are recommended to use Tech 2. Please refer to Tech 2 scan tool user guide.

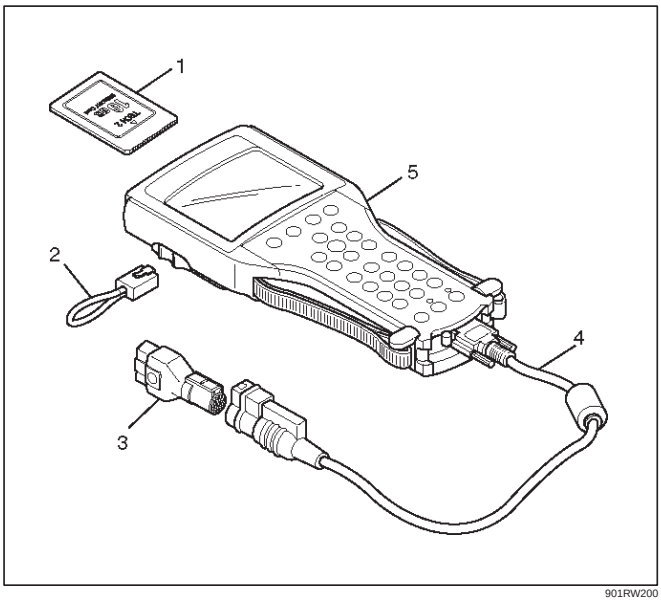

901RW200

Legend

(1) PCMCIA Card
(2) RS 232 Loop Back Connector
(3) SAE 16/19 Adaptor
(4) DLC Cable
(5) Tech–2

Getting Started

- Before operating the Isuzu PCMCIA card with the Tech 2, the following steps must be performed:

1. Insert the Isuzu 98 System PCMCIA card (1) into the Tech 2 (5).
2. Connect the SAE 16/19 adapter (3) to the DLC cable (4).
3. Connect the DLC cable to the Tech 2 (5)
4. Make sure of the vehicle ignition is off.
5. Connect the Tech 2 SAE 16/19 adapter to the vehicle ALDL/DLC connector.

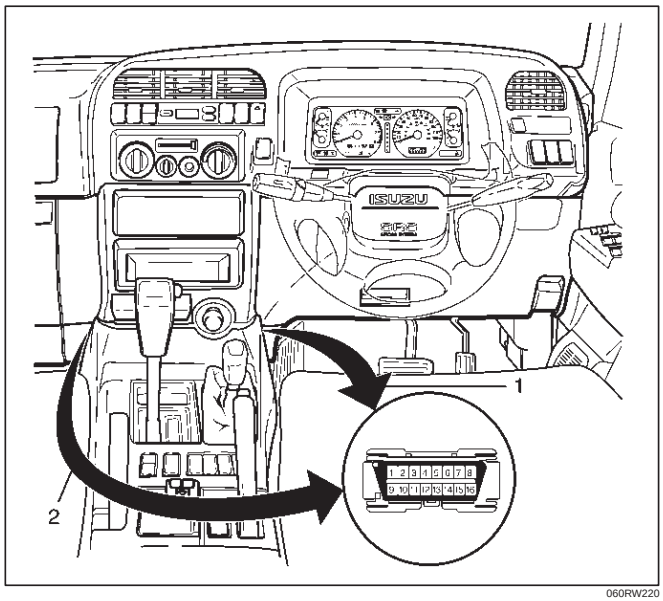

060RW220

Legend

(1) For RHD model
(2) For LHD model

6. Turn on the vehicle ignition switch.
7. Verify the Tech 2 power up display.

060RW009

NOTE: The RS232 Loop back connector is only used to diagnosis Tech 2. Refer to user guide of the Tech 2.

Operating Procedure

The power up screen is displayed when you power up the tester with the Isuzu systems PCMCIA card. Follow the operating procedure below.

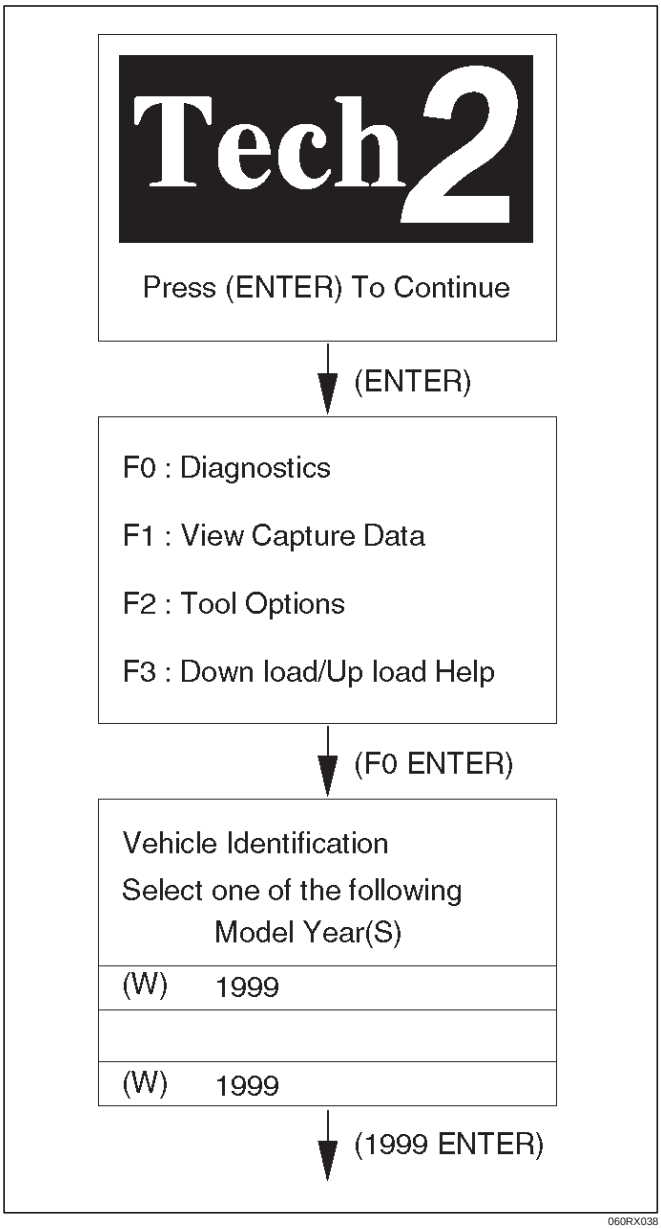

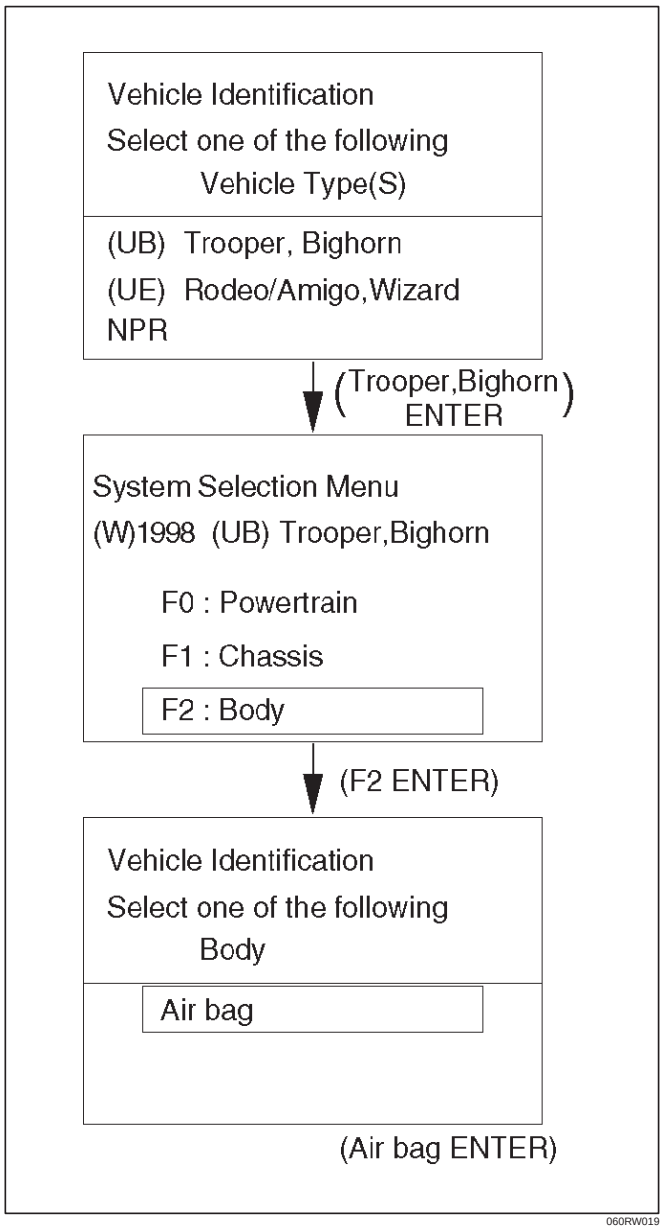

Service Precautions for SRS Component Service

CAUTION: When fasteners are removed, always reinstall them at the same location from which they were removed. If a fastener needs to be replaced, use the correct part number fastener for that application. If the correct part number fastener is not available, a fastener of equal size and strength (or stronger) may be used. fasteners that are not reused, and those requiring thread locking compound will be called out. The correct torque value must be used when installing fasteners that require it. If the above conditions are not followed, parts or system damage could result.

WARNING: WHEN PERFORMING SERVICE ON OR AROUND SRS COMPONENTS OR SRS WIRING, FOLLOW THE PROCEDURES LISTED BELOW TO TEMPORARILY DISABLE THE SRS. FAILURE TO FOLLOW PROCEDURES COULD RESULT IN POSSIBLE AIR BAG DEPLOYMENT, PERSONAL INJURY OR OTHERWISE UNNEEDED SRS REPAIRS.

The SDM in Driver–Passenger SRS can maintain sufficient voltage to cause a deployment for up to 15 seconds after the ignition switch is turned “OFF,” the battery is disconnected, or the fuse powering the SDM is removed.

Many of the service procedures require removal of the “C–21” fuse, and disconnection of the air bag assembly from the deployment loop to avoid an accidental deployment. If the air bag assembly is disconnected from the deployment loop as noted in the “Disabling the SRS” procedure that follows, service can begin immediately without waiting for the 15 second time period to expire.

Disabling The SRS

Removal

Turn the ignition switch to “OFF” and turn the steering wheel so that the vehicle’s wheels are pointing straight ahead.

1. Remove SRS fuse “C–21” from left dash side lower fuse block or disconnect battery.
2. Disconnect yellow 2–pin connector at the base of steering column.
3. Remove glove box assembly; Refer to “Passenger air bag assembly replacement” in this section.
4. Disconnect passenger air bag assembly yellow 2–pin connector behind the glove box assembly.

CAUTION: With the “C–21” fuse removed and ignition switch “ON,” the “AIR BAG” warning lamp will be “ON.” This is normal operation and does not indicate an SRS malfunction.

Enabling The SRS

Installation

Turn ignition switch to “LOCK” and remove key.

1. Connect yellow 2–pin connector passenger air bag assembly.
2. Install glove box assembly. Refer to “Passenger Air Bag Assembly Replacement” in this section.
3. Connect yellow 2–pin connector at the base of the steering column.
4. Install “AIR BAG” fuse “C–21” to left dash side lower fuse block or connect battery.

Turn ignition switch to “ON” and verify that the “AIR BAG” warning lamp turn on 3.5 seconds and then turns “OFF.” If it does not operate as described, perform the “SRS Diagnostic System Check” in this section.

Handling / Installation / Diagnosis

1. Air bag assembly should not be subjected to temperatures above 93˚C (200˚F).
2. Air bag assembly, and SDM should not be used if they have been dropped from a height of 100 centimeters (3.28 feet) or more.
3. When a SDM is replaced, it must be oriented with the arrow on the SDM pointing toward the front of the vehicle. It is very important for the SDM to be located flat on the mounting surface, parallel to the vehicle datum line. It is important that the SDM mounting surface is free of any dirt or other foreign material.
4. Do not apply power to the SRS unless all components are connected or a diagnostic chart requests it, as this will set a diagnostic trouble code.
5. The “SRS Diagnostic System Check” must be the starting point of any SRS diagnostics. The “SRS Diagnostic System Check” will verify proper “AIR BAG” warning lamp operation and will lead you to the correct chart to diagnose any SRS malfunctions. Bypassing these procedures may result in extended diagnostic time, incorrect diagnosis, and incorrect parts replacements.

Inspections Required After An Accident

CAUTION: Certain SRS components must be replaced after a frontal crash involving air bag deployment.

In all types of accidents regardless of “Air Bag” deployment, visually inspect all of the following components and replace as required:

— Driver air bag assembly
— Passenger air bag assembly
— Driver pretensioner assembly
— Passenger pretensioner assembly
— Steering wheel
— SRS coil assembly
— Steering column
— Knee bolster and instrument panel mounting attachments
— Driver seat and belt
— Passenger seat and belt
— SDM

SDM always should be checked according to “SDM Replacement Guidelines.”

CAUTION: Refer to "SDM Replacement Guidelines" below for important information on SDM replacement in both deployment and non–deployment crashes.

Inspect SRS coil assembly wiring and steering wheel for any sign of scorching, melting, or damage due to excessive heat. If coil assembly wire or steering wheel is damaged, replace them. The steering column and wheel must be dimensionally checked to determine if they are damaged. Refer to steering wheel of in this manual.

Never use SRS parts from another vehicle. This does not include remanufactured parts purchased from an authorized Isuzu Retailer; they may be used for SRS repairs.

Do not attempt to repair the SDM, the SRS harness, the SRS coil assembly, the air bag assembly, the steering wheel, or the steering column. Service of these items is replacement only. Verify replacement part numbers.

CAUTION: Proper operation of the SDM and supplemental restraint system (SRS) requires that any repairs to the vehicle structure return it to its original production configuration.

SRS Connectors

CAUTION: The special yellow color connectors are used for supplemental restraint system air bag circuit. When removing the oable harnese, do not pull the cables otherwile, cable disconnection may occur. When connect the SRS connector, insert the connector completely. Imperfect locking may cause malfunction of SRS circuit.

Removal

To remove the connector, hold the cover insulator (1) and pull it. The cover insulator slides and lock will be released. Do not hold the socket insulator (2).

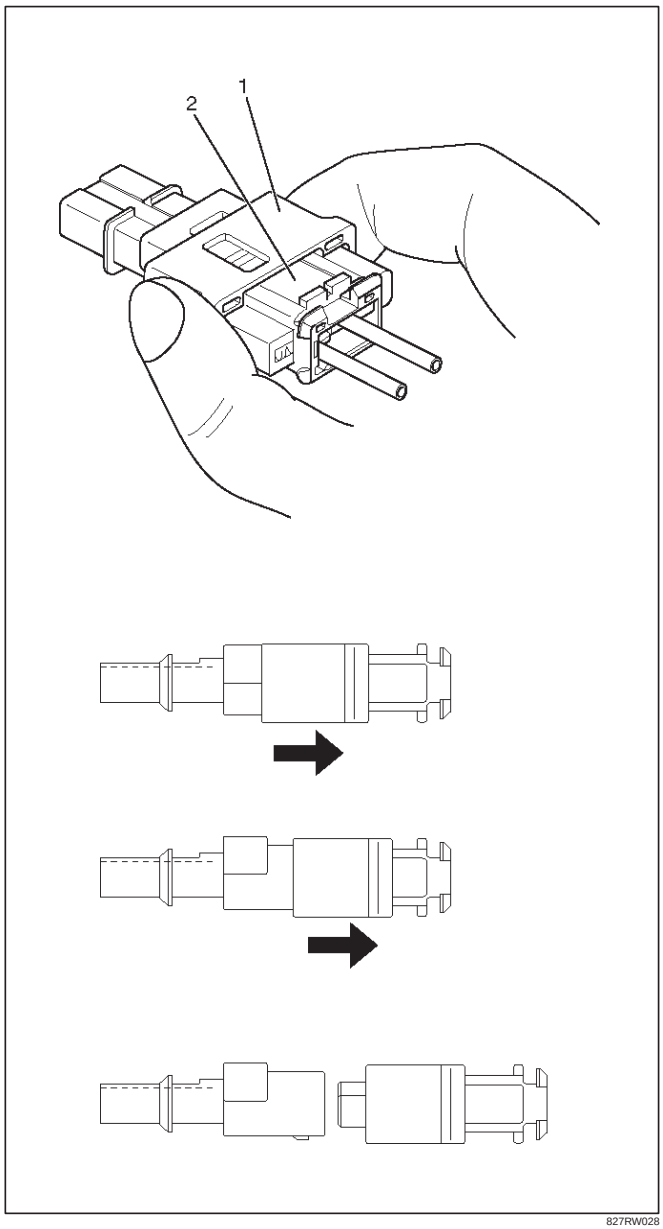

827RW028

Installation

To install the connector, hold the socket insulator (1) and insert it. The cover insulator slides and connector will be locked. Do not hold the cover insulator (2).

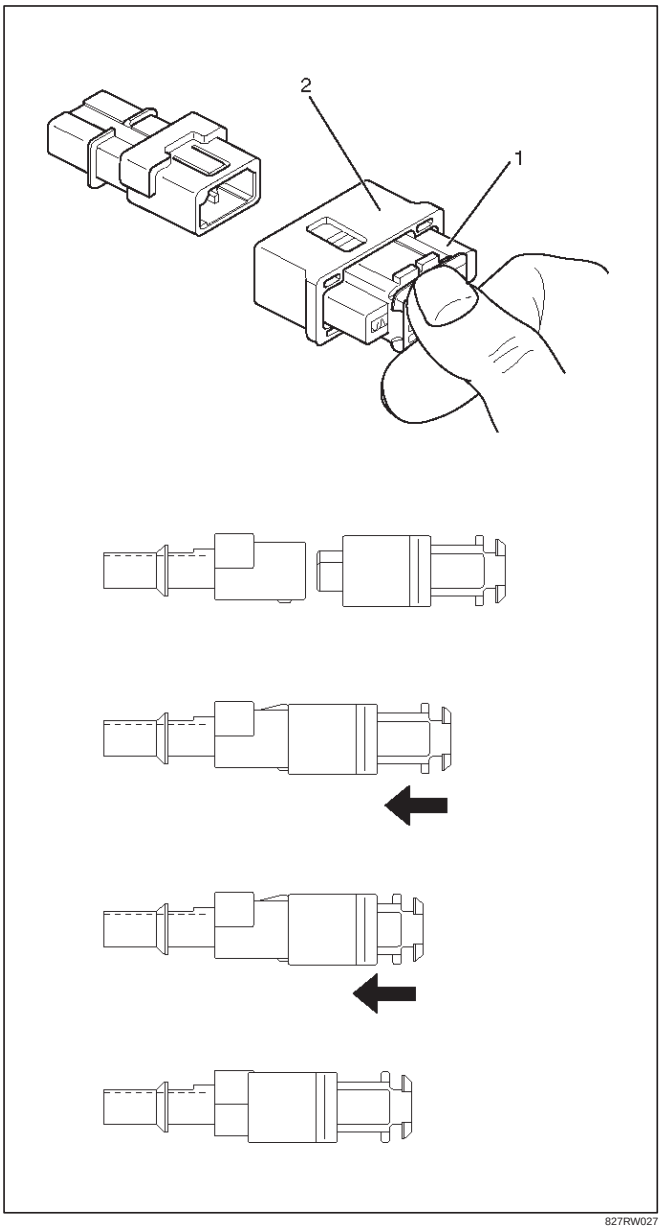

827RW027

Sensing And Diagnostic Module (SDM)

Service Precautions

WARNING: DURING SERVICE PROCEDURES, BE VERY CAREFUL WHEN HANDLING SDM. NEVER STRIKE OR JAR SDM. UNDER SOME CIRCUMSTANCES, IT COULD CAUSE DEPLOYMENT AND RESULT IN PERSONAL INJURY OR IMPROPER OPERATION OF THE SUPPLEMENTAL RESTRAINT SYSTEM (SRS) . SDM MOUNTING BRACKET BOLTS MUST BE CAREFULLY TORQUED TO ASSURE PROPER OPERATION. NEVER POWER UP THE SRS WHEN SDM IS NOT RIGIDLY ATTACHED TO THE VEHICLE. THE SDM COULD BE ACTIVATED WHEN POWERED WHILE NOT RIGIDLY ATTACHED TO THE VEHICLE WHICH COULD CAUSE DEPLOYMENT AND RESULT IN PERSONAL INJURY.

WARNING: PROPER OPERATION OF THE SENSING AND DIAGNOSTIC MODULE (SDM) REQUIRES THE SDM TO BE RIGIDLY ATTACHED TO THE VEHICLE STRUCTURE AND THAT THE ARROW ON THE SENSOR BE POINTING TOWARD THE FRONT OF THE VEHICLE.

SDM is specifically calibrated and is keyed to the SDM location SRS wiring harness. Caution should be used to ensure proper location of the SDM. The keying of the SDM to its location and wiring harness connectors should never be modified in the field.

Removal

1. Disable the SRS (Refer to “Disabling the SRS” in this section).
2. Remove the transmission knob (for M/T) and transfer lever knob.
3. Remove the front console assembly and disconnect wiring harness connector.
4. Pull CPA (Connector Position Assurance) out and push connector lock down to disconnect the SDM harness connector.
5. Remove the three SDM fixing bolts and remove SDM.

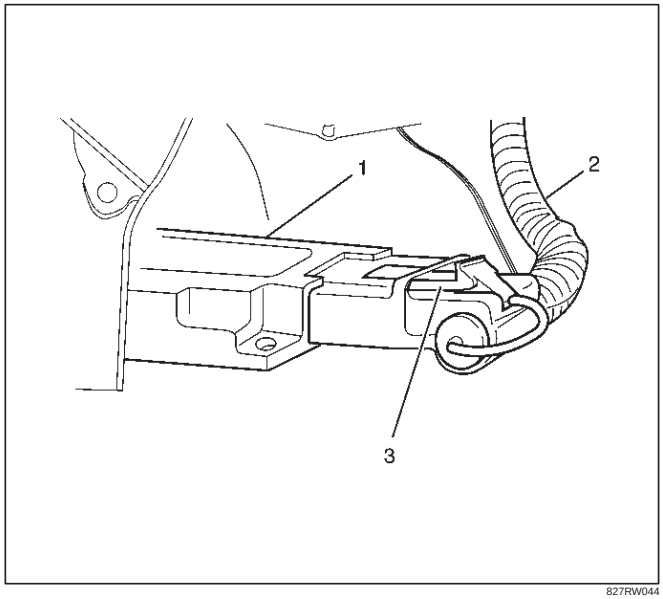

827RW044

Legend

(1) SDM
(2) SRS Harness
(3) Connector Position Assurance

Installation

1. Install the SDM on bracket and fixing bolts and tighten the fixing bolts to the specified torque.

   Torque: 10 N·m (1.0 Kg·m/87 lb in)
2. Connect the SDM harness connector and after that, put CPA into connector.
3. Install the front console.
4. Install the transmission knob (for M/T) and transfer lever knob.

5. Enable the SRS (Refer to “Enabling the SRS” in this section).

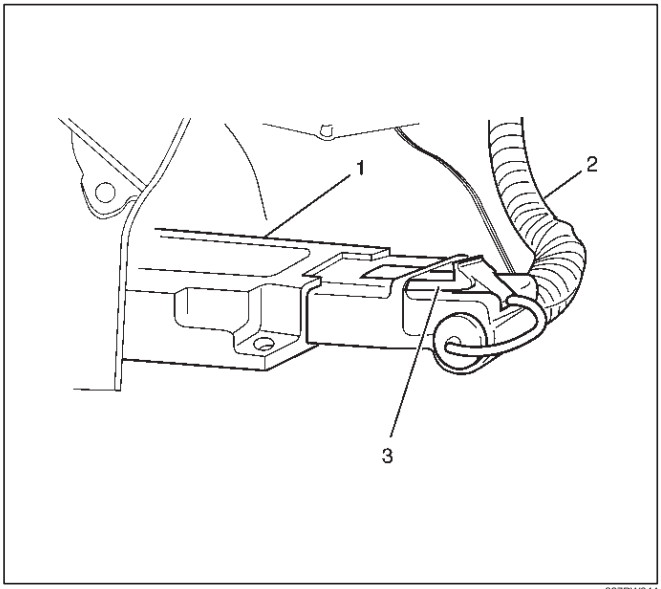

827RW044

Legend

(1) SDM
(2) SRS Harness
(3) Connector Position Assurance

Driver Air Bag Assembly

Service Precautions

WARNING: SAFETY PRECAUTIONS MUST BE FOLLOWED WHEN HANDLING A DEPLOYED AIR BAG ASSEMBLY. AFTER DEPLOYMENT, THE AIR BAG ASSEMBLY SURFACE MAY CONTAIN A SMALL AMOUNT OF SODIUM HYDROXIDE, A BY–PRODUCT OF THE DEPLOYMENT REACTION, THAT IS IRRITATING TO THE SKIN AND EYES. MOST OF THE POWER ON THE AIR BAG ASSEMBLY IS HARMLESS. AS A PRECAUTION, WEAR GLOVES AND SAFETY GLASSES WHEN HANDLING A DEPLOYED AIR BAG ASSEMBLY, AND WASH YOUR HANDS WITH MILD SOAP AND WATER AFTERWARDS.

WARNING: WHEN CARRYING A LIVE AIR BAG ASSEMBLY, MAKE SURE THE BAG AND TRIM COVER ARE POINTED AWAY FROM YOU. NEVER CARRY AIR BAG ASSEMBLY BY THE WIRES OR CONNECTOR ON THE UNDERSIDE OF MODULE. IN THE CASE OF AN ACCIDENTAL DEPLOYMENT, THE BAG WILL THEN DEPLOY WITH MINIMAL CHANCE OF INJURY. WHEN PLACING ALIVE AIR BAG ASSEMBLY ON A BENCH OR OTHER SURFACE, ALWAYS FACE BAG AND TRIM COVER UP, AWAY FROM THE SURFACE. NEVER REST A STEERING COLUMN ASSEMBLY ON THE STEERING WHEEL WITH THE AIR BAG ASSEMBLY FACE DOWN AND COLUMN VERTICAL. THIS IS NECESSARY SO THAT A FREE SPACE IS PROVIDED TO ALLOW THE AIR BAG ASSEMBLY TO EXPAND IN THE UNLIKELY EVENT OF ACCIDENTAL DEPLOYMENT. OTHERWISE, PERSONAL INJURY COULD RESULT.

NOTE: In the event deployment has occurred, inspect coil assembly wire for any signs of scorching, melting or any other damage due to excessive heat. If the coil has been damaged, replace it.

Removal

1. Disable the SRS (Refer to “Disabling the SRS” in this section).
2. Loosen the air bag assembly fixing bolts from behind the steering wheel assembly using a TORX® driver or equivalent until the air bag assembly can be released from steering wheel.

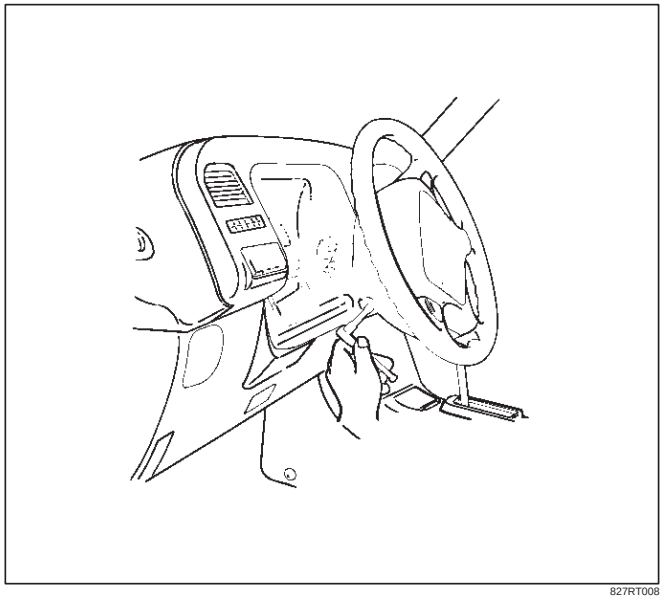

827RT008

3. Disconnect the yellow 2–pin connector located behind the air bag assembly and remove air bag assembly. Refer to “SRS Connectors” in this section for removal and installation.

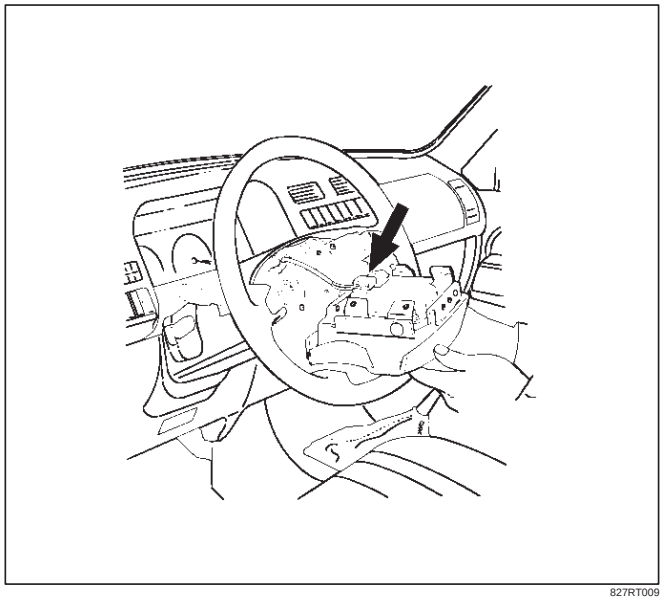

827RT009

Installation

1. Connect air bag to wiring harness connector.

NOTE: Pass the lead wire through the tabs on the plastic cover (wire protector) of air bag to prevent lead wire from being pinched.

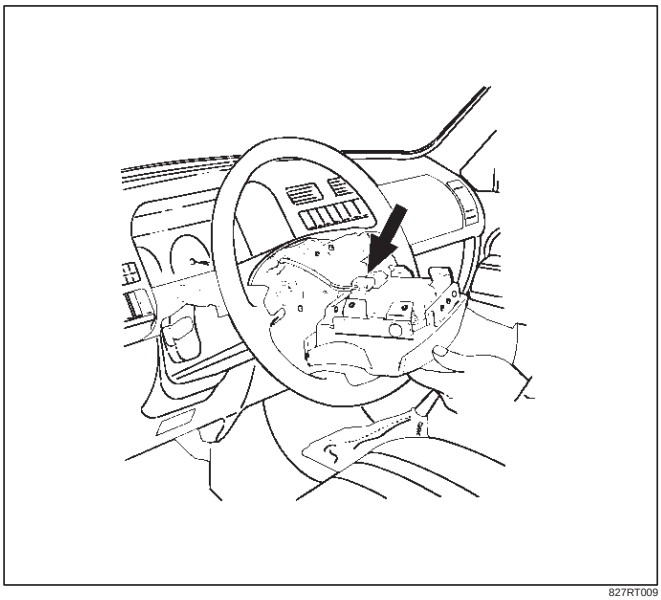

827RT009

2. Install air bag into steering wheel and tighten bolts to specified sequence as shown in figure.

Torque: 8.8 N·m (0.9 Kg·m/78 lb in)

CAUTION: Never use the air bag assembly from another vehicle. Use only new air bag assembly proper to the Trooper which is being repaired.

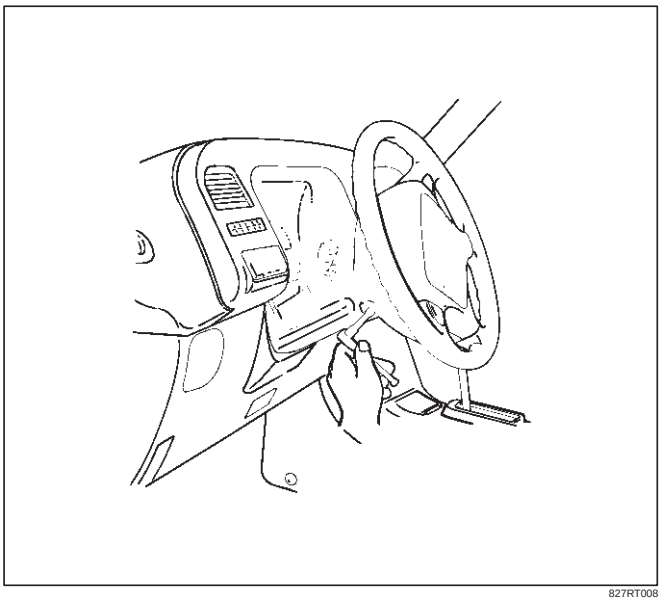

827RT008

3. Enable the SRS (Refer to “Enabling the SRS” in this section).

Steering Wheel

Service Precautions

WARNING: SAFETY PRECAUTIONS MUST BE FOLLOWED WHEN HANDLING A DEPLOYED AIR BAG ASSEMBLY. AFTER DEPLOYMENT, THE AIR BAG ASSEMBLY SURFACE MAY CONTAIN A SMALL AMOUNT OF SODIUM HYDROXIDE, A BY–PRODUCT OF THE DEPLOYMENT REACTION, THAT IS IRRITATING TO THE SKIN AND EYES. MOST OF THE POWER ON THE AIR BAG ASSEMBLY IS HARMLESS. AS A PRECAUTION, WEAR GLOVES AND SAFETY GLASSES WHEN HANDLING A DEPLOYED AIR BAG ASSEMBLY, AND WASH YOUR HANDS WITH MILD SOAP AND WATER AFTERWARDS.

WARNING: WHEN CARRYING A LIVE AIR BAG ASSEMBLY, MAKE SURE THE BAG AND TRIM COVER ARE POINTED AWAY FROM YOU. NEVER CARRY AIR BAG ASSEMBLY BY THE WIRES OR CONNECTOR ON THE UNDERSIDE OF MODULE. IN THE CASE OF AN ACCIDENTAL DEPLOYMENT, THE BAG WILL THEN DEPLOY WITH MINIMAL CHANCE OF INJURY. WHEN PLACING ALIVE AIR BAG ASSEMBLY ON A BENCH OR OTHER SURFACE, ALWAYS FACE BAG AND RIM COVER UP, AWAY FROM THE SURFACE. NEVER REST A STEERING COLUMN ASSEMBLY ON THE STEERING WHEEL WITH THE AIR BAG ASSEMBLY FACE DOWN AND COLUMN VERTICAL. THIS IS NECESSARY SO THAT A FREE SPACE IS PROVIDED TO ALLOW THE AIR BAG ASSEMBLY TO EXPAND IN THE UNLIKELY EVENT OF ACCIDENTAL DEPLOYMENT. OTHERWISE, PERSONAL INJURY COULD RESULT.

NOTE: In the event deployment has occurred, inspect coil assembly wire for any signs of scorching, melting or any other damage due to excessive heat. If the coil has been damaged, replace it.

Removal

1. Disable the SRS (Refer to “Disabling the SRS” in this section).
2. Loosen the air bag assembly fixing bolts from behind the steering wheel assembly using a TORX® driver or equivalent until the air bag assembly can be released from steering wheel.

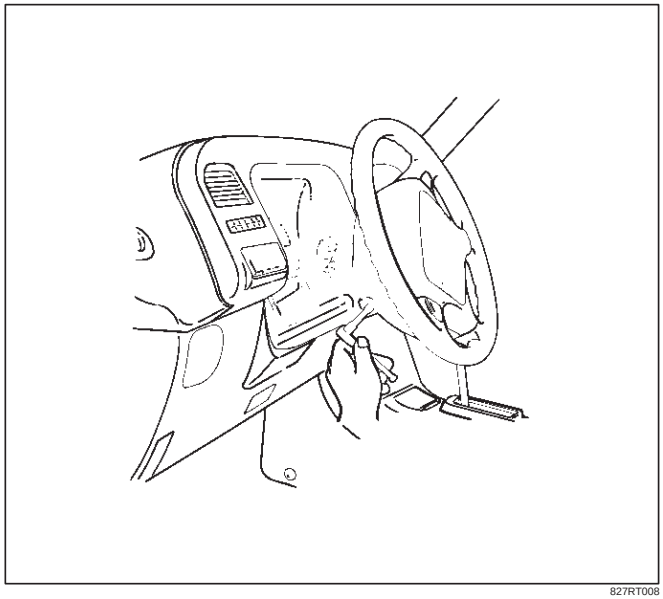

827RT008

3. Disconnect the yellow 2–pin connector located behind the air bag assembly and remove air bag assembly.Refer to “SRS Connectors” in this section for removal and installation.
4. Disconnect horn lead.

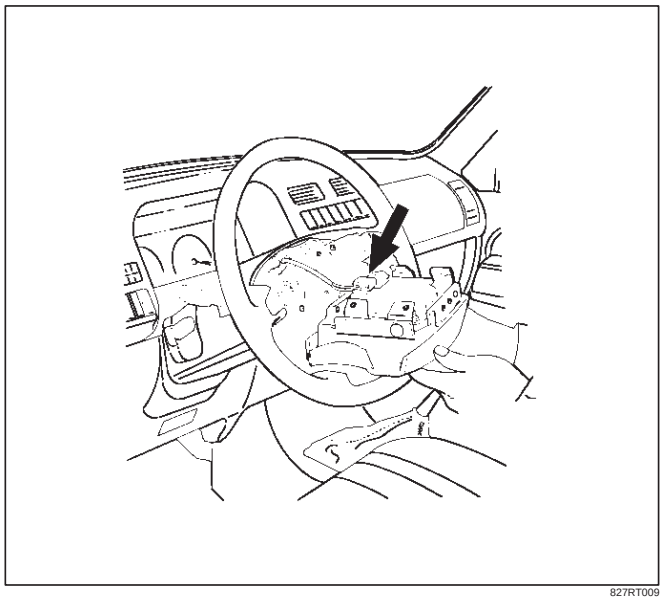

827RT009

5. Remove steering wheel attachment nut.

6. Apply a setting mark across the steering wheel and shaft so parts can be reassembled in their original position.

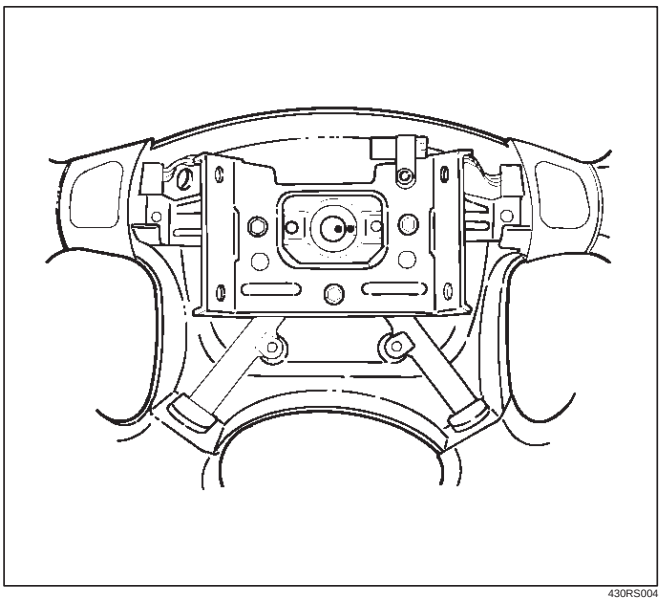

430RS004

7. Move the tires to the straight ahead position before removing the steering wheel. Install steering wheel puller onto steering wheel and remove steering wheel with 5–8521–0016–0.

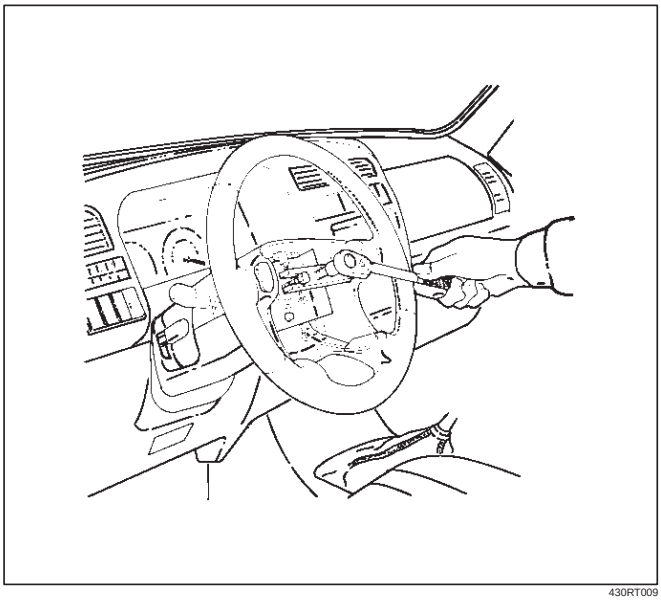

430RT009

8. Feed wiring through the wheel and remove wheel.

CAUTION: Never apply force to the steering wheel in direction of the shaft by using a hammer or other impact tools in an attempt to remove the steering wheel. The steering shaft is designed as an energy absorbing unit.

Installation

1. Install the steering wheel and align the setting marks.

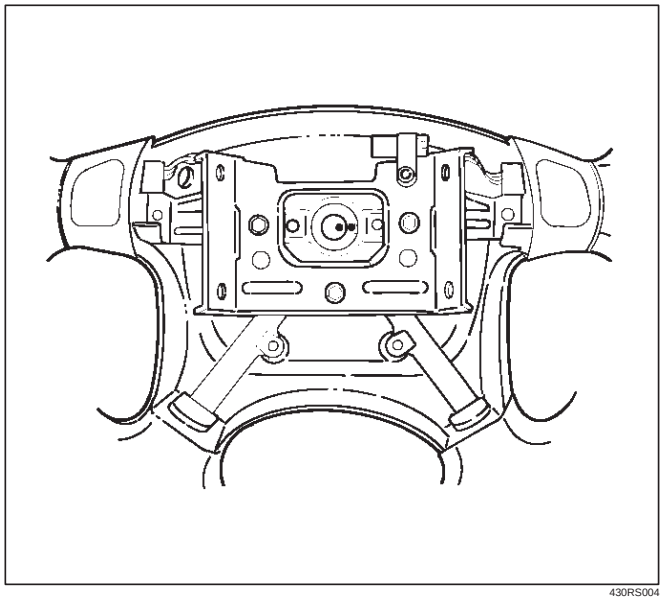

430RS004

2. Tighten the steering wheel fixing nut to the specified torque.

Torque : 34 N·m (3.5 Kg·m/25 lb ft)

3. Connect horn lead.
4. Connect air bag to wiring harness connector.

NOTE: Pass the lead wire through the tabs on the plastic cover (wire protector) of air bag to prevent lead wire from being pinched.

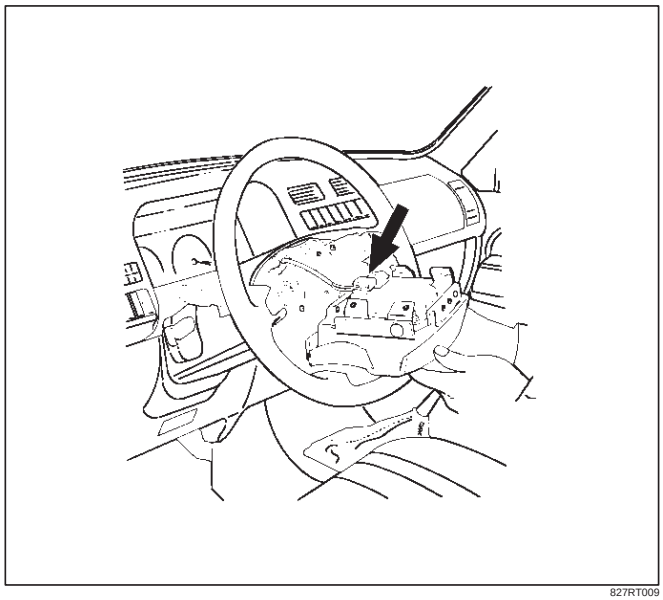

827RT009

5. Install air bag into steering wheel and tighten bolts to specified sequence as show in figure.

Torque: 8.8 N·m (0.9 Kg·m/78 lb in)

CAUTION: Never use the air bag assembly from another vehicle. Use only new air bag assembly proper to the Trooper which is being repaired.

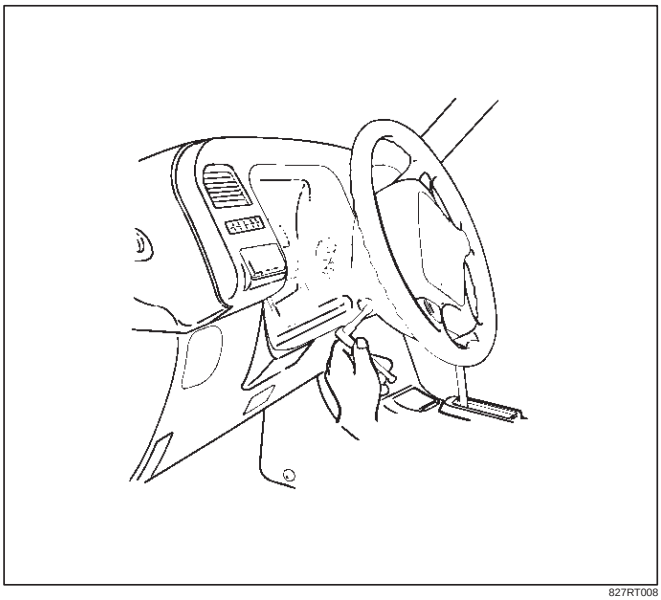

827RT008

6. Enable the SRS (Refer to “Enabling the SRS” in this section).

SRS Coil Assembly

Service Precautions

WARNING: SAFETY PRECAUTIONS MUST BE FOLLOWED WHEN HANDLING A DEPLOYED AIR BAG ASSEMBLY. AFTER DEPLOYMENT, THE AIR BAG ASSEMBLY SURFACE MAY CONTAIN A SMALL AMOUNT OF SODIUM HYDROXIDE, A BY–PRODUCT OF THE DEPLOYMENT REACTION, THAT IS IRRITATING TO THE SKIN AND EYES. MOST OF THE POWER ON THE AIR BAG ASSEMBLY IS HARMLESS. AS A PRECAUTION, WEAR GLOVES AND SAFETY GLASSES WHEN HANDLING A DEPLOYED AIR BAG ASSEMBLY, AND WASH YOUR HANDS WITH MILD SOAP AND WATER AFTERWARDS.

WARNING: WHEN CARRYING A LIVE AIR BAG ASSEMBLY, MAKE SURE THE BAG AND TRIM COVER ARE POINTED AWAY FROM YOU. NEVER CARRY AIR BAG ASSEMBLY BY THE WIRES OR CONNECTOR ON THE UNDERSIDE OF MODULE. IN THE CASE OF AN ACCIDENTAL DEPLOYMENT, THE BAG WILL THEN DEPLOY WITH MINIMAL CHANCE OF INJURY. WHEN PLACING ALIVE AIR BAG ASSEMBLY ON A BENCH OR OTHER SURFACE, ALWAYS FACE BAG AND RIM COVER UP, AWAY FROM THE SURFACE. NEVER REST A STEERING COLUMN ASSEMBLY ON THE STEERING WHEEL WITH THE AIR BAG ASSEMBLY FACE DOWN AND COLUMN VERTICAL. THIS IS NECESSARY SO THAT A FREE SPACE IS PROVIDED TO ALLOW THE AIR BAG ASSEMBLY TO EXPAND IN THE UNLIKELY EVENT OF ACCIDENTAL DEPLOYMENT. OTHERWISE, PERSONAL INJURY COULD RESULT.

NOTE: In the event deployment has occurred, inspect coil assembly wire for any signs of scorching, melting or any other damage due to excessive heat. If the coil has been damaged, replace it.

Removal

1. Disable the SRS (Refer to “Disabling the SRS” in this section).
2. Loosen the air bag assembly fixing bolts from behind the steering wheel assembly using a TORX® driver or equivalent until the air bag assembly can be released from steering wheel.

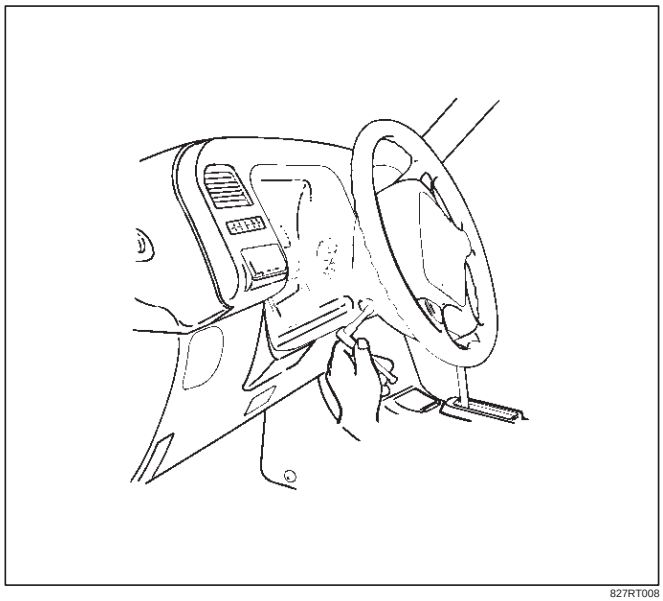

827RT008

3. Disconnect the yellow 2–pin connector located behind the air bag assembly and remove air bag assembly.Refer to “SRS Connectors” in this section for removal and installation.
4. Disconnect horn lead connector.

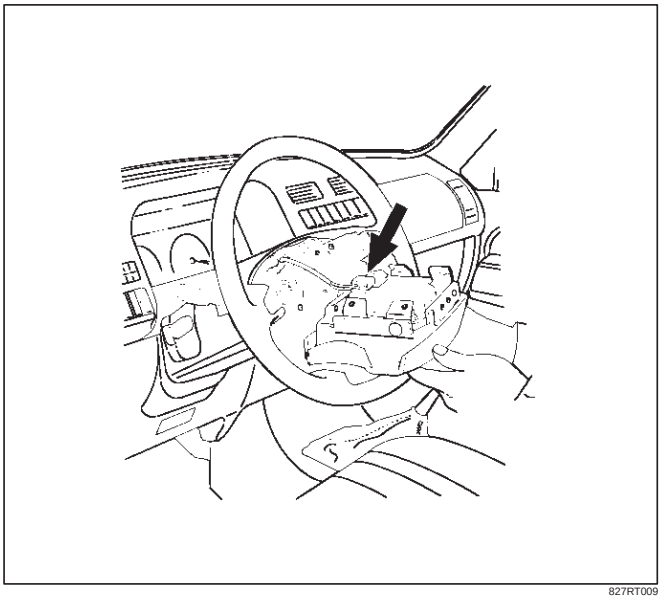

827RT009

5. Remove the steering wheel attachment nut.
6. Apply a setting mark across the steering wheel and shaft so parts can be reassembled in their original position.

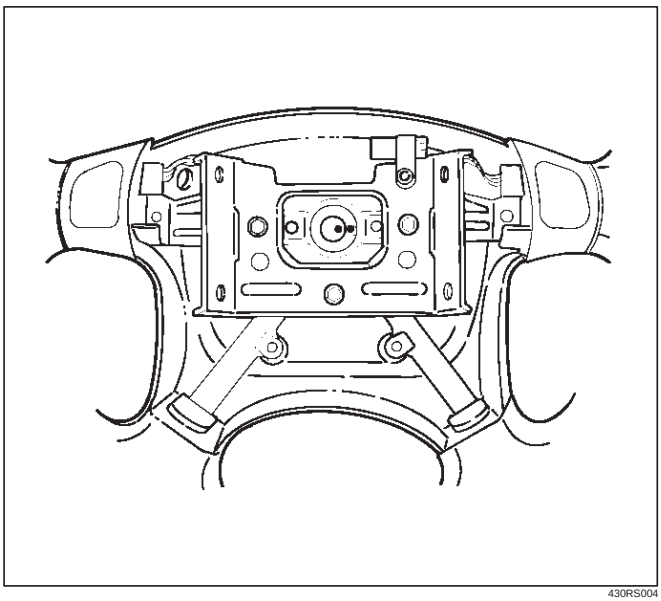

430RS004

7. Move the tires to the straight ahead position before removing the steering wheel and remove wheel with 5–8521–0016–0.

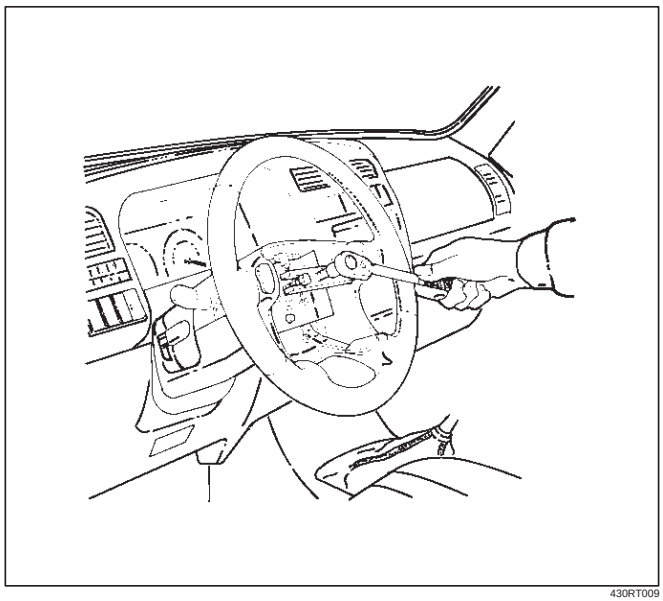

430RT009

8. Feed wiring though the wheel and remove wheel.
9. Remove the steering lower cover and engine hood opening lever.
10. Remove the driver knee bolster assembly.
11. Remove the steering column cover.
12. Remove air conditioning lower duct.
13. Disconnect the 12–pin wiring harness connectors located at the base of steering column.

CAUTION: Never apply force to the steering wheel in the direction of the shaft by using a hammer or other impact tools in an attempt to remove the steering wheel. The steering shaft is designed as an energy absorbing unit.

14. Remove the combination switch assembly with SRS coil.

Installation

1. Install the combination switch assembly with SRS coil.
2. Turn the SRS coil counterclockwise to full, return about 3 turns and align the neutral mark (1).

CAUTION: When turning the SRS coil counterclockwise to full, stop turning if resistance is felt. Forced further turning may damage the cable in the SRS coil.

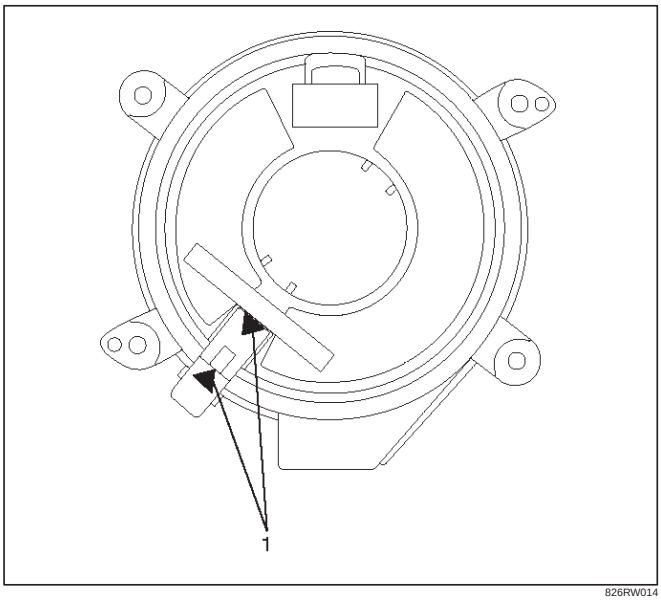

826RW014

3. Connect the wiring harness connectors located at the base of steering column.
4. Install the air conditioning lower duct.
5. Install the steering column cover.

CAUTION: When installing the steering column cover, be sure to wire (through each harness) as illustrated so that the harness starter switch, combination switch and SRS coil may not catch wiring.

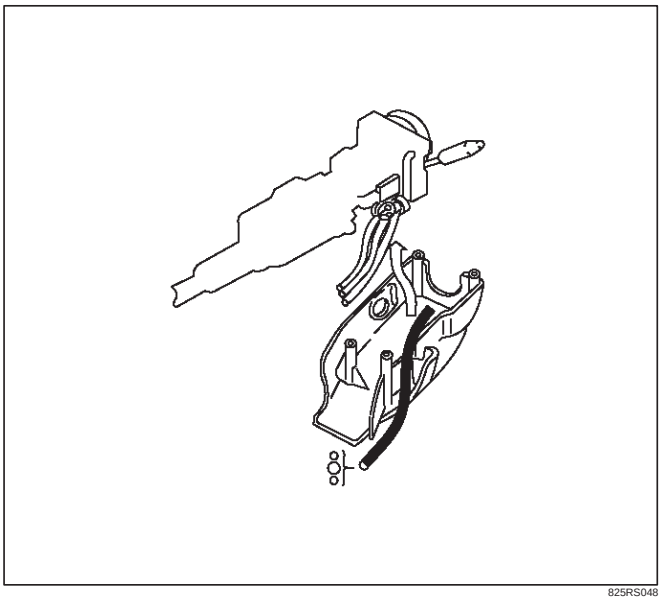

825RS048

6. Install the driver knee bolster assembly.
7. Install the steering lower cover and engine hood opening lever.
8. Install the steering wheel and align the setting marks.

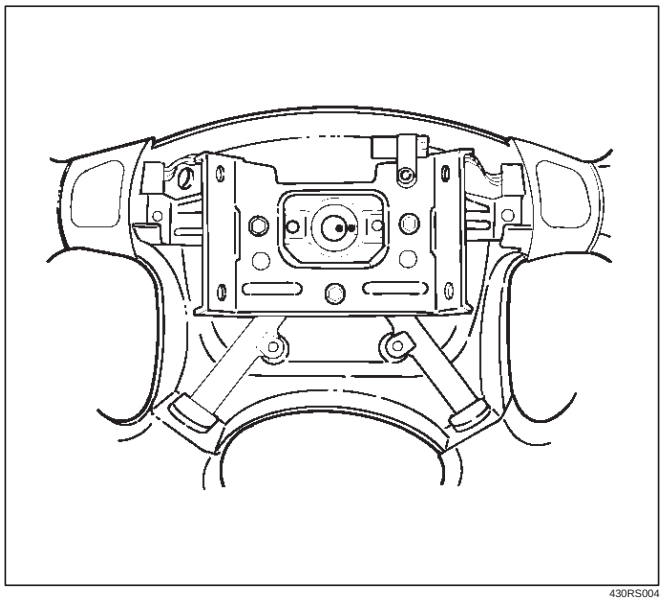

430RS004

9. Tighten the steering wheel fixing nut to the specified torque.

   Torque: 34 N·m (3.5 Kg·m/25 lb ft)

10. Connect horn lead.
11. Connect air bag to wiring harness connector.

NOTE: Pass the lead wire through the tabs on the plastic cover (wire protector) of air to prevent lead wire from being pinches.

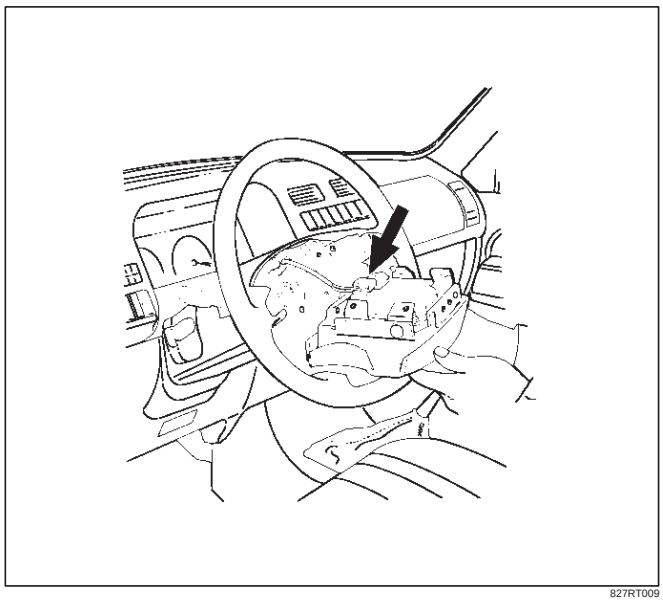

827RT009

12. Install air bag into steering wheel and tighten bolts to specified sequence as shown in figure.

    Torque: 8.8 N·m (0.9 Kg·m/78 lb in)

CAUTION: Never use the air bag assembly from another vehicle. Use only new air bag assembly proper to the Trooper which is being repaired.

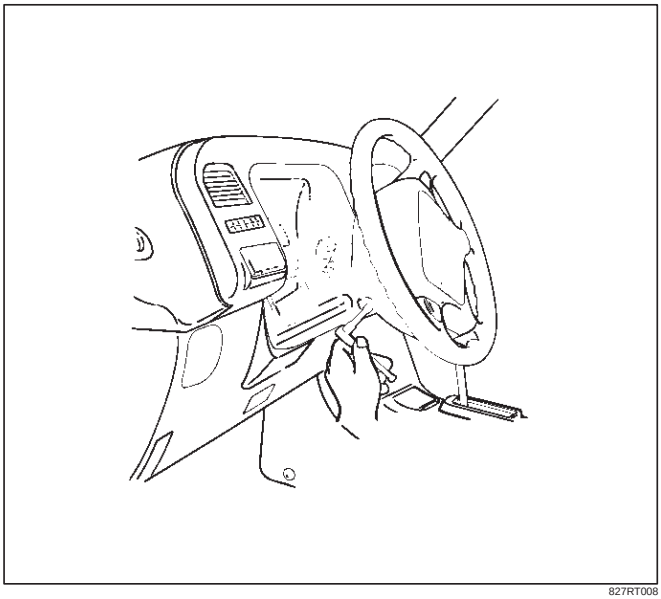

827RT008

13. Enable the SRS (Refer to “Enabling the SRS” in this section).

SRS Coil Replacement Procedure

Removal

1. Same removal steps until step 13 of SRS Coil Assembly Removal.
2. Disconnect the horn terminal NO.12 from connector and remove the tape binding harness. (Refer to How to Disconnect the horn terminal in this section.)

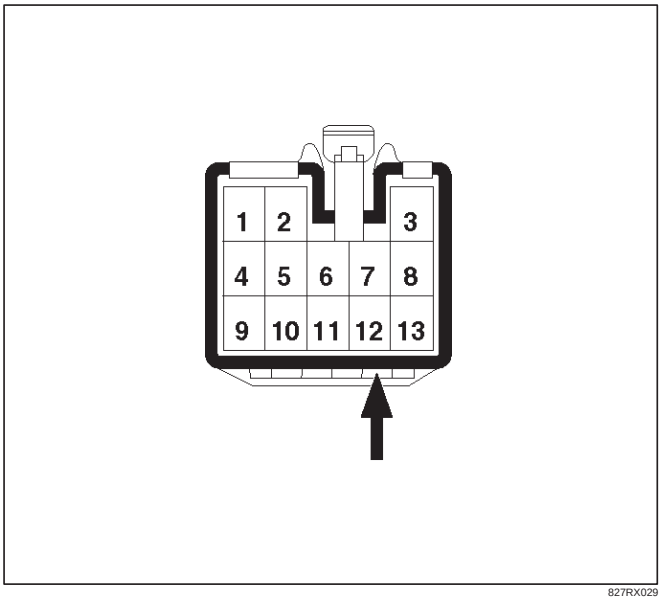

827RX029

3. Remove four bolts of SRS coil assembly and remove the SRS coil assembly from the combination switch.

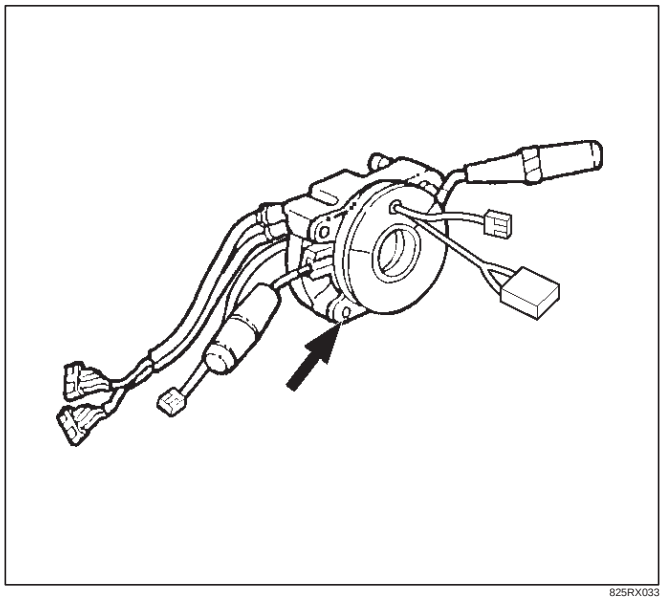

825RX033

How to Disconnect the horn terminal

1. Lift the terminal lock plate from upper portion of connector with a minitenes screw driver (-) and release connector terminal lock.

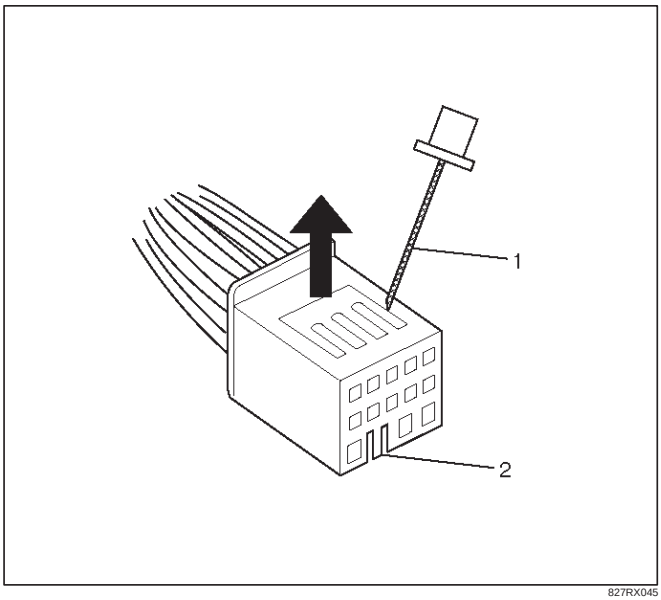

827RX045

Legend

(1) Minitenes screw driver (-)
(2) Connector lock knob

2. Pull out the terminal of lead wire coming to connector NO.12 while lifting the lock part with a minitenes screw driver (-).

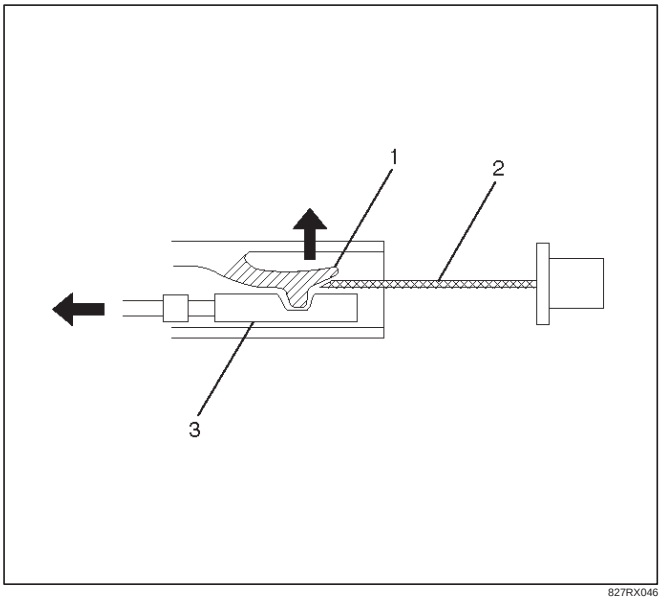

827RX046

Legend

(1) Lock
(2) Minitenes screw driver (-)
(3) Terminal

How to Connect Horn Terminal

1. Insert horn terminal from behind black connector NO.12 until connector lock works.

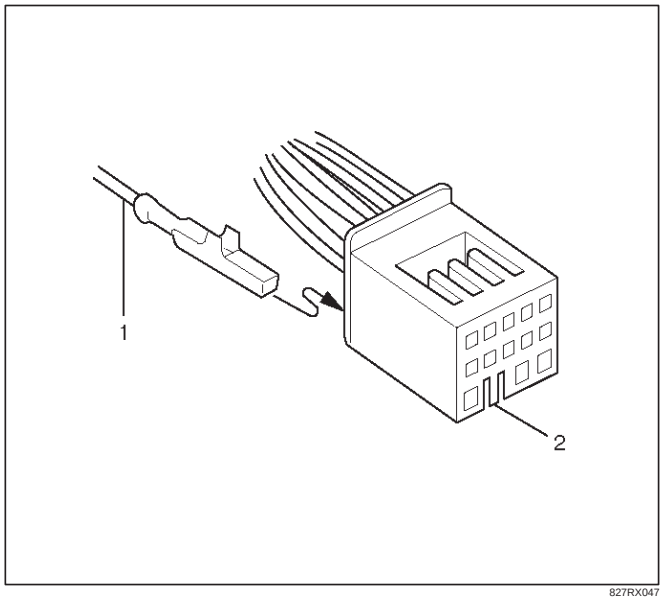

827RX047

Legend

(1) Terminal
(2) Connector lock knob

2. Push terminal lock plate into the connector for a duble lock.

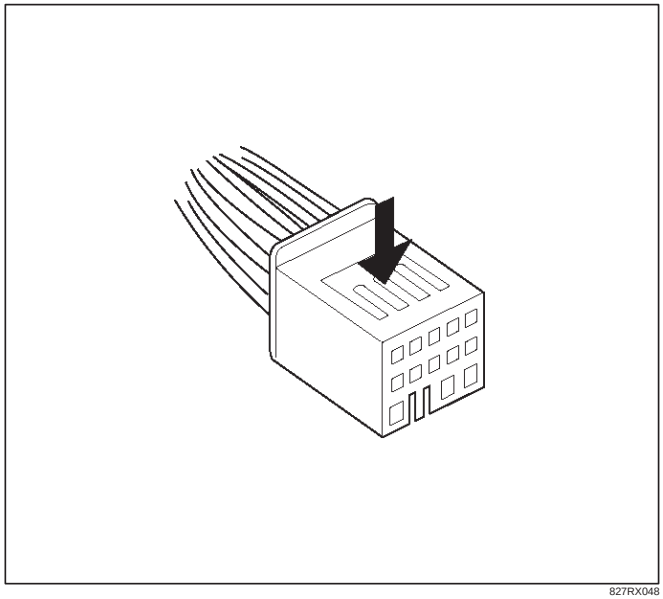

827RX048

Installation

1. Set cancel cam and SRS coil in position and install the SRS coil to combination switch by tightening the four bolts to a specified tightening torque with four bolts.

   Torque: 0.5 N·m (0.05 kg·m/4 lb ft)

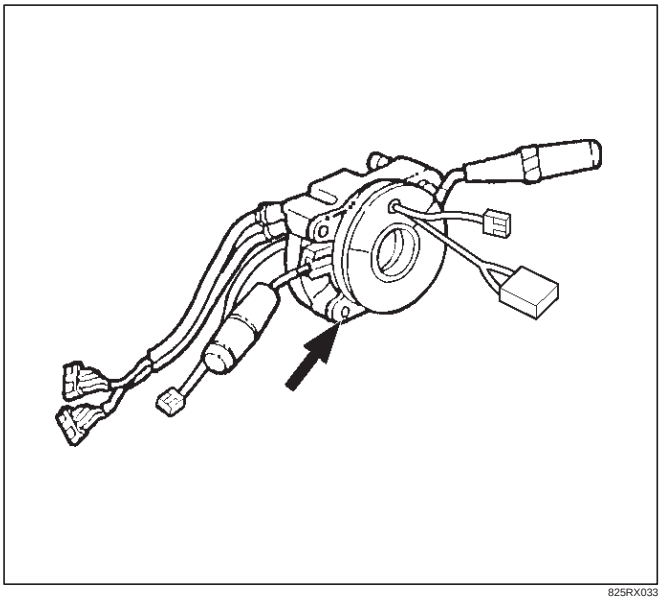

825RX033

2. Insert the horn terminal into the connector NO.12 and bind the combination switch harness and SRS coil harness with a tape. (Refer to How to Connect the Horn Terminal in this section.)
3. After installation steps above, same steps as SRS Coil Assembly installation step 2 to step 13.

Steering Column

Service Precautions

WARNING: SAFETY PRECAUTIONS MUST BE FOLLOWED WHEN HANDLING A DEPLOYED AIR BAG ASSEMBLY. AFTER DEPLOYMENT, THE AIR BAG ASSEMBLY SURFACE MAY CONTAIN A SMALL AMOUNT OF SODIUM HYDROXIDE, A BY–PRODUCT OF THE DEPLOYMENT REACTION, THAT IS IRRITATING TO THE SKIN AND EYES. MOST OF THE POWER ON THE AIR BAG ASSEMBLY IS HARMLESS. AS A PRECAUTION, WEAR GLOVES AND SAFETY GLASSES WHEN HANDLING A DEPLOYED AIR BAG ASSEMBLY, AND WASH YOUR HANDS WITH MILD SOAP AND WATER AFTERWARDS.

WARNING: WHEN CARRYING A LIVE AIR BAG ASSEMBLY, MAKE SURE THE BAG AND TRIM COVER ARE POINTED AWAY FROM YOU. NEVER CARRY AIR BAG ASSEMBLY BY THE WIRES OR CONNECTOR ON THE UNDERSIDE OF MODULE. IN THE CASE OF AN ACCIDENTAL DEPLOYMENT, THE BAG WILL THEN DEPLOY WITH MINIMAL CHANCE OF INJURY. WHEN PLACING ALIVE AIR BAG ASSEMBLY ON A BENCH OR OTHER SURFACE, ALWAYS FACE BAG AND RIM COVER UP, AWAY FROM THE SURFACE. NEVER REST A STEERING COLUMN ASSEMBLY ON THE STEERING WHEEL WITH THE AIR BAG ASSEMBLY FACE DOWN AND COLUMN VERTICAL. THIS IS NECESSARY SO THAT A FREE SPACE IS PROVIDED TO ALLOW THE AIR BAG ASSEMBLY TO EXPAND IN THE UNLIKELY EVENT OF ACCIDENTAL DEPLOYMENT. OTHERWISE, PERSONAL INJURY COULD RESULT.

NOTE: In the event deployment has occurred, inspect coil assembly wire for any signs of scorching, melting or any other damage due to excessive heat. If the coil has been damaged, replace it.

Removal

1. Disable the SRS (Refer to “Disabling the SRS ” in this section).
2. Loosen the air bag assembly fixing bolts from behind the steering wheel assembly using a TORX® driver or equivalent until the air bag assembly can be released from steering wheel.

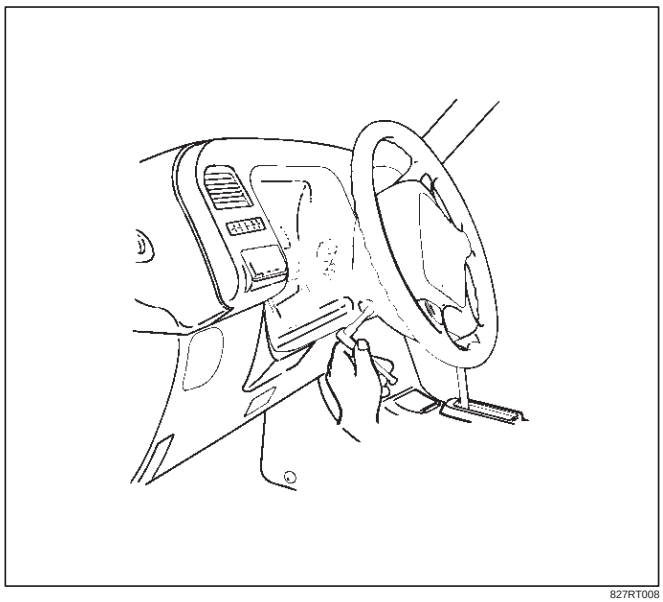

827RT008

3. Disconnect the yellow 2–pin connector located behind the air bag assembly and remove air bag assembly.Refer to “SRS Connectors” in this section for removal and installation.

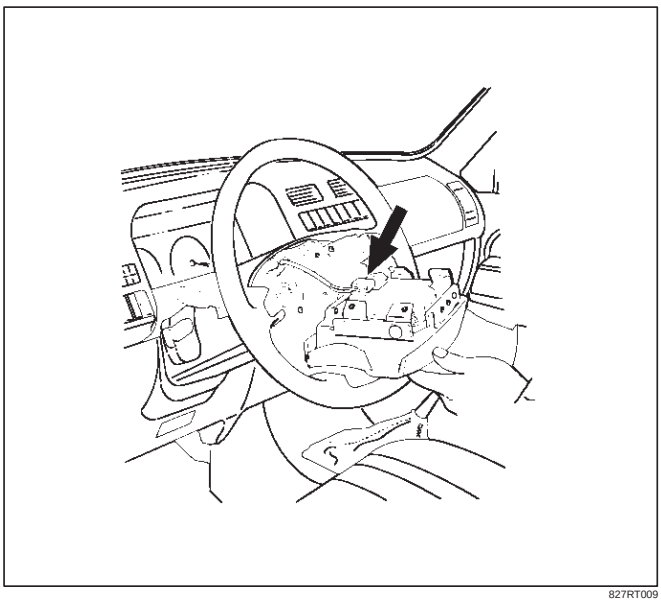

827RT009

4. Disconnect horn lead connector.
5. Remove the steering wheel attachment nut.
6. Apply a setting mark across the steering wheel and shaft so parts can be reassembled in their original position.

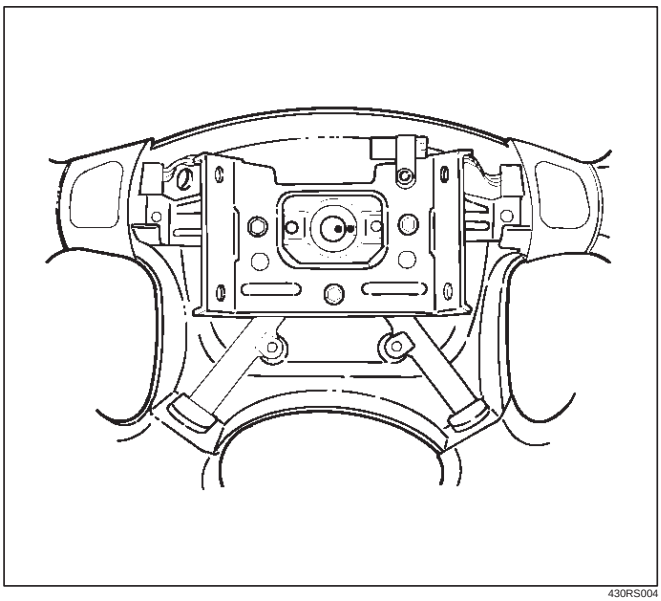

430RS004

7. Move the tires to the straight ahead position before removing the steering wheel and removing wheel with 5–8521–0016–0.

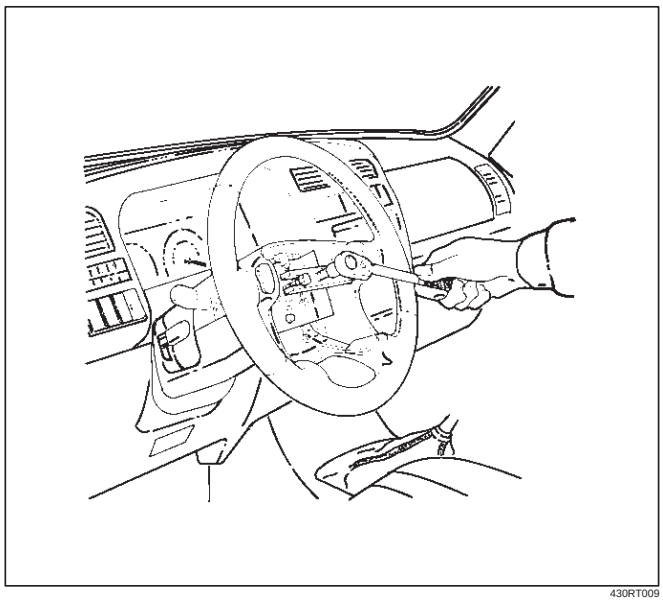

430RT009

8. Feed wiring though the wheel and remove wheel.
9. Remove the steering lower cover and engine hood opening lever.
10. Remove the driver knee bolster assembly.

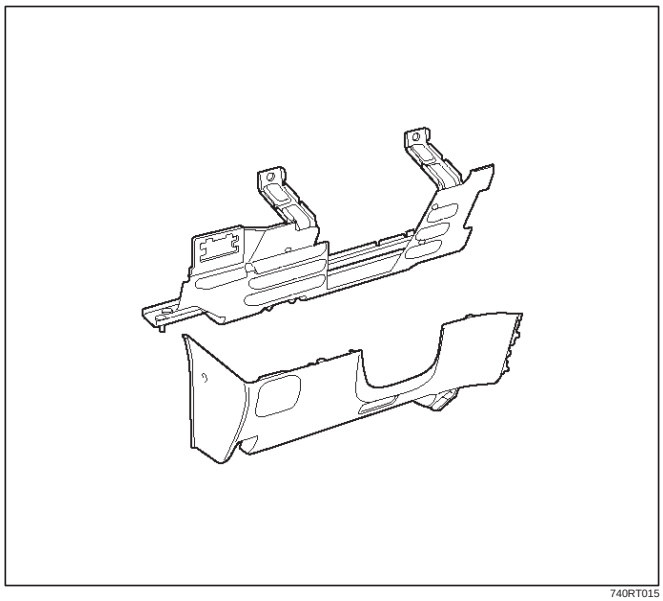

740RT015

11. Remove the steering column cover.
12. Remove air conditioning lower duct.
13. Disconnect the wiring harness connectors located at the base of steering column.

CAUTION: Never apply force to the steering wheel in direction of the shaft by using a hammer or other impact tools in an attempt to remove the steering wheel. The steering shaft is designed as an energy absorbing unit.

14. Remove the combination switch assembly with SRS coil.

NOTE: SRS coil is a part of combination switch assembly, which cannot be replaced separately. Therefore, be sure not to remove the SRS coil from the combination switch assembly.

15. Remove the snap ring.
16. Remove the cushion rubber.
17. Disconnect shift lock cable (A/T only).
18. Disconnect the starter switch harness connector located base of steering column.
19. Remove steering lock cylinder assembly.
20. Apply a setting mark across the universal joint and steering shaft to reassemble the parts in their original position.

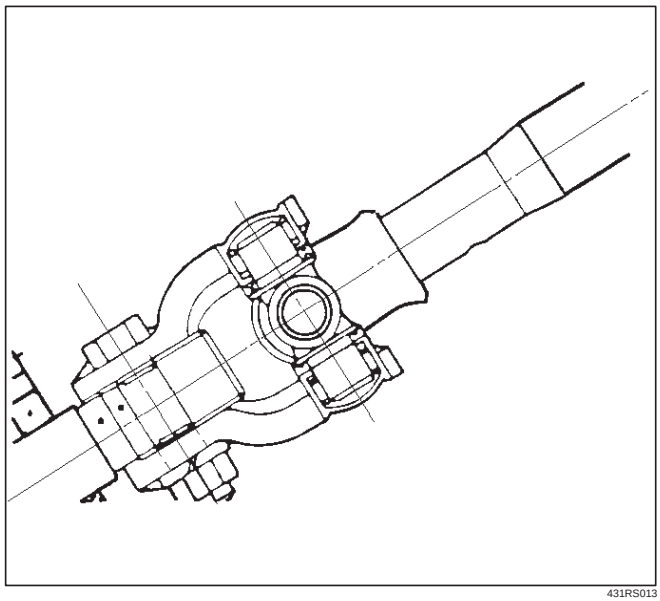

431RS013

21. Remove steering column assembly.

Installation

1. Install the steering column assembly and align the setting marks on the universal joint and steering shaft made during removal.

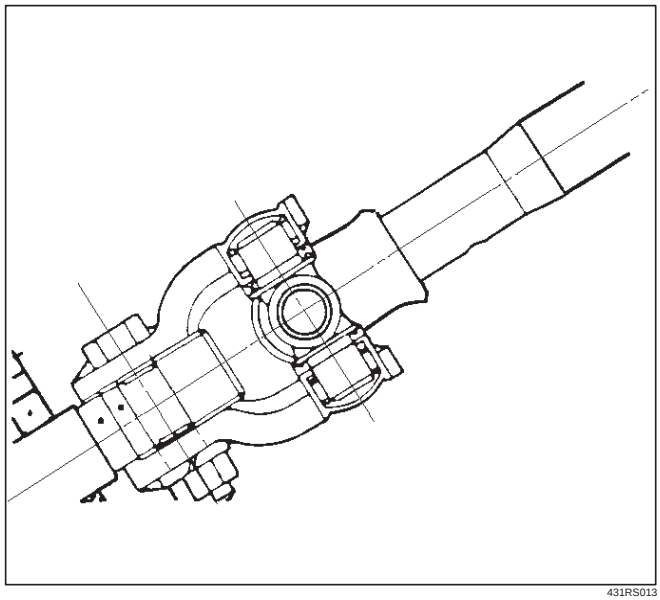

431RS013

2. Tighten the steering column fixing bolts (dash panel side) to the specified torque.

   Torque: 19 N·m (1.9 Kg·m/14 lb ft)

3. Tighten the steering column fixing bolts (Pedal bracket) to the specified torque.

   Torque: 17 N·m (1.7 Kg·m/13 lb ft)

4. Tighten the universal joint to the specified torque.

   Torque: 25 N·m (2.6 Kg·m/18 lb ft)

5. Install steering lock cylinder assembly.
6. Connect shift lock cable (For A/T)
7. Install cushion rubber.
8. Install snap ring.
9. Install the combination switch assembly with SRS coil.
10. Connect the wiring harness connector located on the base of steering column.
11. Turn the SRS coil counterclockwise to full, return about 3 turns and align the neutral mark (1).

CAUTION: When turning the SRS coil counterclockwise to full, stop turning if resistance is felt. Forced further turning may damage to the cable in the SRS coil.

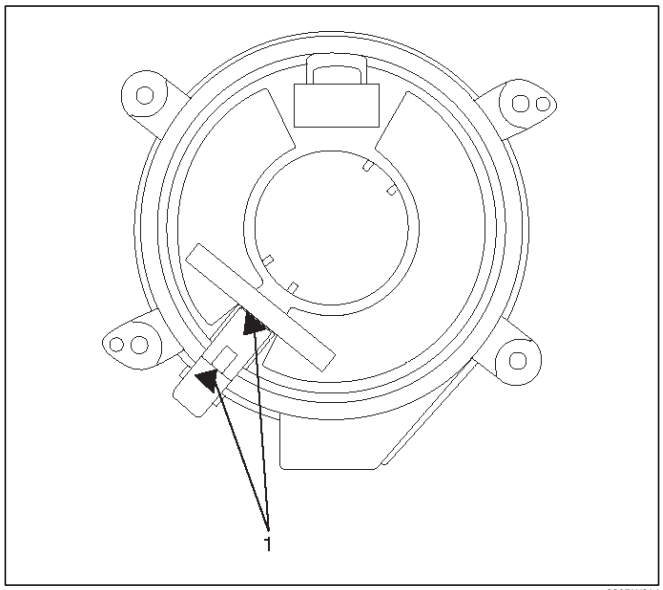

826RW014

12. Install steering column cover.

CAUTION: When installing the steering column cover, be sure to wire (through each harness) as illustrated so that the harness starter switch, combination switch and SRS coil may not catch wiring.

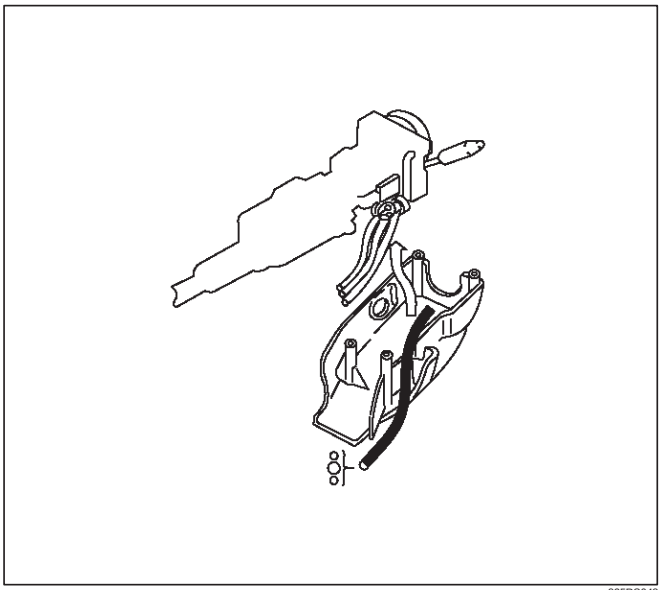

825RS048

13. Install the steering wheel and align the setting marks.

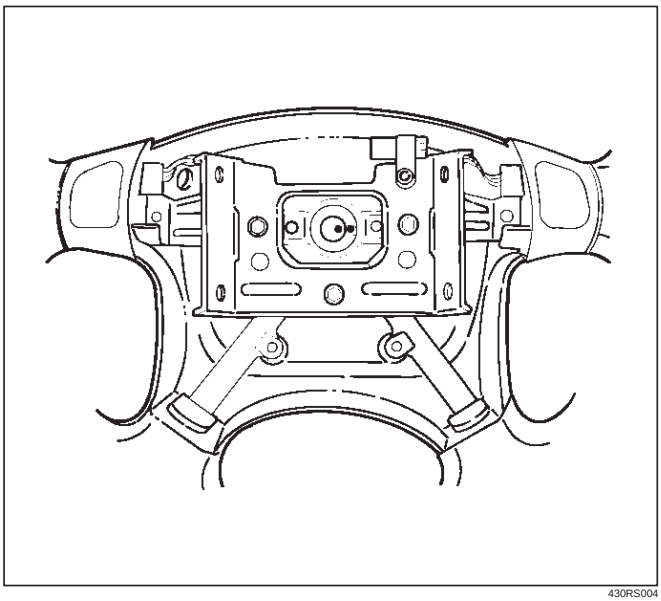

430RS004

14. Tighten the steering wheel fixing nut to the specified torque.

Torque: 34 N·m (3.5 Kg·m/25 lb ft)

15. Connect horn lead.
16. Connect air bag wiring harness connector.

NOTE: Pass the lead wire through the tabs on the plastic cover (wire protector) of air bag to prevent lead wire from being pinched.

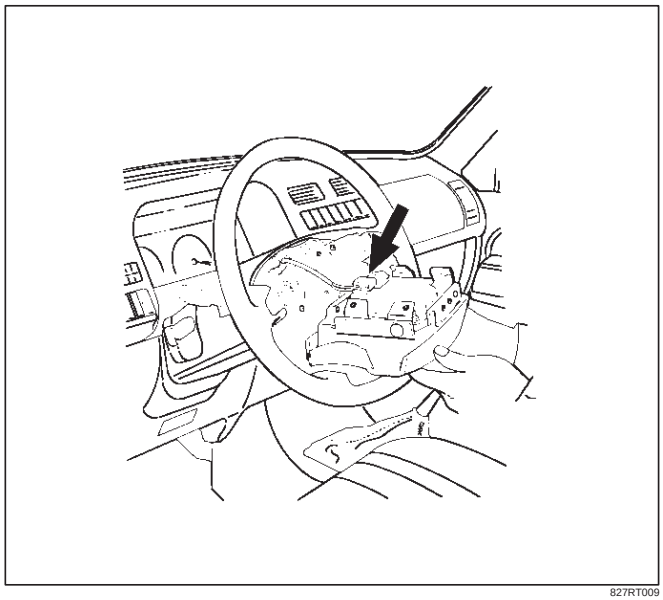

827RT009

17. Install air bag into steering wheel and tighten bolts to specified sequence as shown in figure.

Torque: 8 N·m (0.8 Kg·m/69 lb in)

CAUTION: Never use the air bag assembly from another vehicle. Use only the air bag assembly proper to the Trooper which is being repaired.

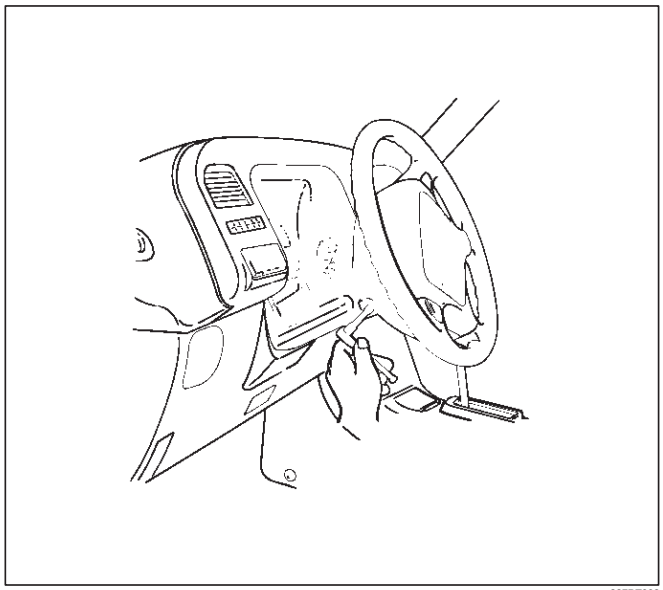

827RT008

18. Enable the SRS (Refer to “Enabling the SRS” in this section).

Passenger Air Bag Assembly

Service Precautions

WARNING: SAFETY PRECAUTIONS MUST BE FOLLOWED WHEN HANDLING A DEPLOYED AIR BAG ASSEMBLY. AFTER DEPLOYMENT, THE AIR BAG ASSEMBLY SURFACE MAY CONTAIN A SMALL AMOUNT OF SODIUM HYDROXIDE, A BY–PRODUCT OF THE DEPLOYMENT REACTION, THAT IS IRRITATING TO THE SKIN AND EYES. MOST OF THE POWER ON THE AIR BAG ASSEMBLY IS HARMLESS. AS A PRECAUTION, WEAR GLOVES AND SAFETY GLASSES WHEN HANDLING A DEPLOYED AIR BAG ASSEMBLY, AND WASH YOUR HANDS WITH MILD SOAP AND WATER AFTERWARDS.

WARNING: WHEN CARRYING A LIVE AIR BAG ASSEMBLY, MAKE SURE THE BAG AND TRIM COVER ARE POINTED AWAY FROM YOU. NEVER CARRY AIR BAG ASSEMBLY BY THE WIRES OR CONNECTOR ON THE UNDERSIDE OF MODULE. IN THE CASE OF AN ACCIDENTAL DEPLOYMENT, THE BAG WILL THEN DEPLOY WITH MINIMAL CHANCE OF INJURY. WHEN PLACING ALIVE AIR BAG ASSEMBLY ON A BENCH OR OTHER SURFACE, ALWAYS FACE BAG AND RIM COVER UP, AWAY FROM THE SURFACE. NEVER REST A STEERING COLUMN ASSEMBLY ON THE STEERING WHEEL WITH THE AIR BAG ASSEMBLY FACE DOWN AND COLUMN VERTICAL. THIS IS NECESSARY SO THAT A FREE SPACE IS PROVIDED TO ALLOW THE AIR BAG ASSEMBLY TO EXPAND IN THE UNLIKELY EVENT OF ACCIDENTAL DEPLOYMENT. OTHERWISE, PERSONAL INJURY COULD RESULT.

NOTE: **IN THE EVENT DEPLOYMENT HAS OCCURRED, INSPECT COIL ASSEMBLY WIRE FOR ANY SIGNS OF SCORCHING, MELTING OR ANY OTHER DAMAGE DUE TO EXCESSIVE HEAT. IF THE COIL HAS BEEN DAMAGED, REPLACE IT.**

Removal

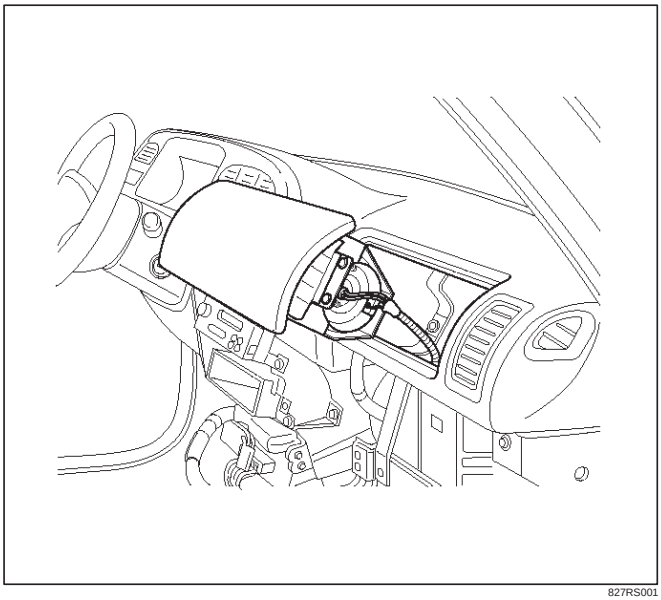

827RS001

1. Disable the SRS (Refer to “Disabling the SRS ” in this section).
2. Remove gear control knob.
3. Remove front console assembly.
4. Remove rear console assembly and disconnect harness connector.
5. Remove ECM and SDM cover.
6. Remove glove box assembly with lid.
7. Remove glove box cover.
8. Remove instrument panel assist side lower cover.
9. Disconnect engine hood opener lever.
10. Remove instrument panel door side lower cover.
11. Remove lower cluster with ashtray.
12. Remove meter cluster assembly and disconnect harness connector.
13. Remove instrument panel lower center cover.
14. Disconnect passenger air bag assembly harness connector.
15. Remove air bag assembly fixing bolts and nuts.
16. Remove passenger air bag assembly.

Installation

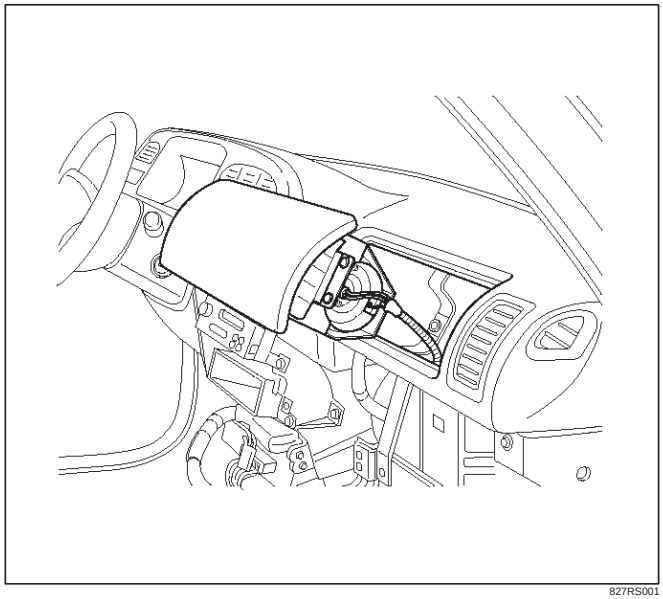

827RS001

1. Install passenger air bag assembly.
2. Install air bag assembly fixing bolts, nuts and tighten to specified torque.

   Torque: 6 N·m (0.6 Kg·m/52 lb in)
3. Connect air bag assembly harness connector.
4. Install instrument panel lower center cover.
5. Install meter cluster assembly and connect harness connector.
6. Install lower cluster with ashtray.
7. Install instrument panel door side lower cover.
8. Connect engine hood opener lever.
9. Install instrument panel assist side lower cover.

10. Install glove box cover.
11. Install glove box assembly with lid.
12. Install ECM and SDM cover.
13. Install rear console assembly and connect harness connector.
14. Install front console assembly.
15. Install gear control knob.
16. Enable the SRS (Refer to “Enabling the SRS” in this section).

Pretensioner Seat Belt (If so equipped)

Service Precaution

WARNING: WHEN PERFORMING SERVICE ON OR AROUND THE PRETENSIONER SEAT BELT OR THE PRETENSIONER SEAT BELT WIRING, FOLLOW THE PROCEDURES LISTED BELOW TO TEMPORARILY DISABLE THE PRETENSIONER SEAT BELT. FAILURE TO FOLLOW PROCEDURES COULD RESULT IN POSSIBLE THE PRETENSIONER SEAT BELT DEPLOYMENT, PERSONAL INJURY OR OTHERWISE UNNEEDED THE PRETENSIONER SEAT BELT REPAIR.

AS A PRECAUTION, WEAR GLOVES AND SAFETY GLASSES WHEN PERFORMING THE PRETENSIONER SEAT BELT. WHEN DEPLOY A LIVE PRETENSIONER SEAT BELT AT OUTSIDE THE VEHICLE, DEPLOYMENT HARNESS SHALL REMAIN SHORTED AND NOT BE CONNECTED TO A POWER SOURCE UNTIL THE PRETENSIONER SEAT BELT IS TO BE DEPLOYED. THE PRETENSIONER SEAT BELT WILL IMMEDIATELY DEPLOY WHEN A POWER SOURCE IS CONNECTED TO IT. CONNECTING THE DEPLOYMENT HARNESS SHOULED ALWAYS BE THE FINAL STEP IN THE PRETENSIONER SEAT BELT DEPLOYMENT PROCEDURE. FAILURE TO FOLLOW PROCEDURES IN THE ORDER LISTED COULD RESULT IN PERSONAL INJURY.

Parts Location

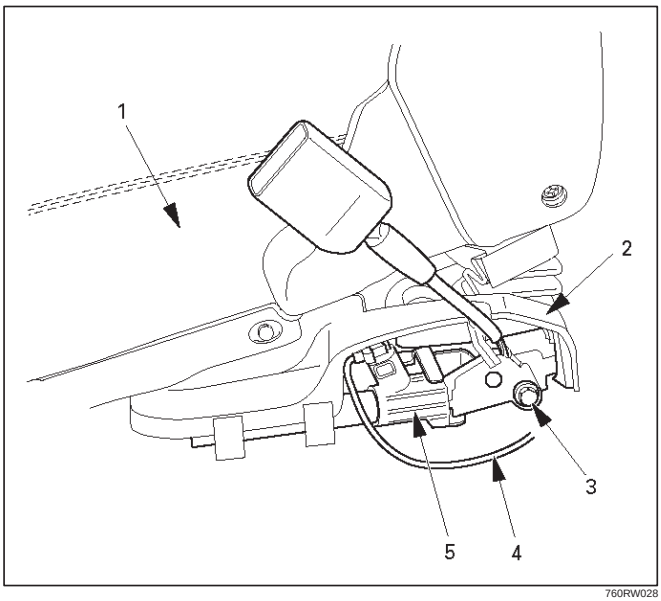

760RW028

Legend

(1) Seat
(2) Pretensioner Cover
(3) Bolt
(4) Pretensioner Harness
(5) Pretensioner

Removal

1. Turn ignition switch to “LOCK”, remove key.
2. Remove the foot rest located behind the seat.
3. Remove the cover on seat slide.
4. Disconnect the 2-pin connector at the base of the seat.
5. Remove four fixing bolts the seat slide and remove seat.
6. Remove the pretensioner seat belt cover.
7. Remove the pretensioner seat belt assembly.

Installation

1. Install the pretensioner seat belt assembly.
2. Install the pretensioner seat belt cover.
3. Install the seat on seat slide and four fixing bolts.
4. Connect the yellow 2-pin connector at the base of the seat.
5. Install the cover on seat slide.
6. Install the foot rest located behind the seat.

Main Data and Specifications

Fastener Tightening Specification

Application	N·m	Kg·m	Lb Ft	Lb In.
SDM	10	1.0	—	87
Driver air bag fixing bolt	8.8	0.9	—	78
Steering wheel fixing bolt	34	3.5	25	—
Steering column (dash panel side fixing bolts)	19	1.9	14	—
Steering column (Pedal bracket fixing bolt)	17	1.7	13	—
Steering column (Universal joint fixing bolt)	25	2.6	18	—
Passenger Air Bag fixing bolts and nuts	6	0.6	—	52

RESTRAINT CONTROL SYSTEM

CONTENTS

Service Precaution 9J1–1
Diagnostic Information 9J1–2
System Schematic 9J1–4
SRS Diagnostic System Check 9J1–4
Chart A SDM Integrity Check 9J1–6
Chart B "AIR BAG" Warning Lamp Comes "ON" Steady 9J1–8
Chart C "AIR BAG" Warning Lamp Does Not Come "ON" Steady 9J1–10
DTC 15 Passenger Deployment Loop Resistance High 9J1–13
DTC 16 Passenger Deployment loop Resistance Low 9J1–15
DTC 17 Passenger Deployment Loop Open 9J1–17
DTC 18 Passenger Deployment Loop Short To Ground 9J1–19
DTC 19 Passenger Deployment Loop Short To B+ 9J1–21
DTC 21 Driver Deployment Loop Resistance High 9J1–23
DTC 22 Driver Deployment Loop Resistance Low 9J1–26
DTC 24 Driver Deployment Loop Short To Ground 9J1–29
DTC 25 Driver Deployment Loop Short To B+ 9J1–31
DTC 26 Driver Deployment Loop Open 9J1–33
DTC 51 Air Bag Deployment Event Commanded 9J1–35
DTC 53 Deployment Commanded With Deployment Loop Fault Or Energy Reserves Out Of Range 9J1–37
DTC 61 Warning Lamp Circuit Failure 9J1–39
DTC 71 Internal SDM Fault 9J1–41
DTC 29 Passenger Pretensioner Loop Short To Ground 9J1–43
DTC 31 Passenger Pretensioner Loop Resistance High 9J1–45
DTC 32 Passenger Pretensioner loop Resistance Low 9J1–47
DTC 33 Passenger Pretensioner Loop Short To Voltage 9J1–49
DTC 34 Passenger Pretensioner Loop Open 9J1–51
DTC 41 Driver Pretensioner Loop Resistance High 9J1–53
DTC 42 Driver Pretensioner Loop Resistance Low 9J1–55
DTC 44 Driver Pretensioner Loop Open 9J1–57
DTC 45 Driver Pretensioner Loop Short To Ground 9J1–59
DTC 46 Driver Pretensioner Loop Short To Voltage 9J1–61
DTC 52 Pretensioner Deployment Event Commanded 9J1–63

Service Precaution

WARNING: IF SO EQUIPPED WITH A SUPPLEMENTAL RESTRAINT SYSTEM (SRS), REFER TO THE SRS COMPONENT AND WIRING LOCATION VIEW IN ORDER TO DETERMINE WHETHER YOU ARE PERFORMING SERVICE ON OR NEAR THE SRS COMPONENTS OR THE SRS WIRING. WHEN YOU ARE PERFORMING SERVICE ON OR NEAR THE SRS COMPONENTS OR THE SRS WIRING, REFER TO THE SRS SERVICE INFORMATION. FAILURE TO FOLLOW WARNINGS COULD RESULT IN POSSIBLE AIR BAG DEPLOYMENT, PERSONAL INJURY, OR OTHERWISE UNNEEDED SRS SYSTEM REPAIRS.

CAUTION: Always use the correct fastener in the proper location. When you replace a fastener, use ONLY the exact part number for that application. ISUZU will call out those fasteners that require a replacement after removal. ISUZU will also call out the fasteners that require thread lockers or thread sealant. UNLESS OTHERWISE SPECIFIED, do not use supplemental coatings (Paints, greases, or other corrosion inhibitors) on threaded fasteners or fastener joint interfaces. Generally, such coatings adversely affect the fastener torque and the joint clamping force, and may damage the fastener. When you install fasteners, use the correct tightening sequence and specifications. Following these instructions can help you avoid damage to parts and systems.

Diagnostic Information

CAUTION: When fasteners are removed, always reinstall them at the same location from which they were removed. if a fastener needs to be replaced, use the correct part number fastener for that application. if the correct part number fastener is not available, a fastener of equal size and strength (or stronger) may be used. fasteners that are not reused, and those requiring thread locking compound will be called out. the correct torque value must be used when installing fasteners that require it. if the above conditions are not followed, parts or system damage could result.

Diagnostic Procedures

WARNING: TO AVOID DEPLOYMENT WHEN TROUBLESHOOTING THE SRS, DO NOT USE ELECTRICAL TEST EQUIPMENT SUCH AS A BATTERY–POWERED OR AC–POWERED VOLTMETER, OHMMETER, ETC., OR ANY TYPE OF ELECTRICAL EQUIPMENT OTHER THAN THAT SPECIFIED IN THIS MANUAL. DO NOT USE A NON POWERED, PROBE–TYPE TESTER. INSTRUCTIONS IN THIS MANUAL MUST BE FOLLOWED CAREFULLY, OTHERWISE PERSONAL INJURY MAY RESULT.

The diagnostic procedures used in this section are designed to aid in finding and repairing SRS problems. Outlined below are the steps to find and repair SRS problems quickly and effectively. Failure to carefully follow these procedures may result in extended diagnostic time, incorrect diagnosis and incorrect parts replacement.

1. **Perform The “SRS Diagnostic System Check”.**
   The “SRS Diagnostic System Check” should always be the starting point of any SRS diagnostics. The “SRS Diagnostic System Check” checks for proper “AIR BAG” warning lamp operation and checks for SRS trouble codes using both “Flash Code” and “Scan Tool” Methods.
2. **Refer To The Proper Diagnostic Chart As Directed By The “SRS Diagnostic System Check”.**
   The “SRS Diagnostic System Check” will lead you to the correct chart to diagnose any SRS problems. Bypassing these procedures may result in extended diagnostic time, incorrect diagnosis and incorrect parts replacement.
3. **Repeat The “SRS Diagnostic System Check” After Any Repair Or Diagnostic Procedures Have Been Performed.**
   Preforming the “SRS Diagnostic System Check” after all repair or diagnostic procedures will assure that the repair has been made correctly and that no other conditions exist.

Diagnostic Codes

The Sensing and Diagnostic Module (SDM) maintains a history record of all diagnostic codes that have been detected since the SRS codes were last cleared during service.

1. Active Codes — Faults that are presently detected this ignition cycle. Active codes are stored in RAM (Random Access Memory).
2. History Codes — All faults detected since the last time the history fault memory was cleared. History codes are stored in EEPROM. (Electronically Erasable Programmable Read only Memory)

How To Read Trouble Codes

All codes (Active and history) can be read (or cleared) by using a scan tool or equivalent.
If a PDT is not available, have the vehicle serviced by ISUZU dealer.

How To Clear Trouble Codes

Trouble codes can only be cleared by using a Scan Tool. If a “scan tool” is not available then inform the owner of the stored codes and suggest that the codes are cleared upon the next visit to an Isuzu dealership.

Scan Tool Diagnostics

A scan tool can be used to read current and history codes and to clear all history codes after a repair is complete. The scan tool must be updated to communicate with the SRS through a memory card or a manufacturer’s update before it can be used for SRS diagnostics. To use the scan tool, connect it to the DLC connector and turn the ignition switch “ON”. Then follow the manufacturer’s directions for communication with the SRS. The scan tool reads serial data from the SDM “Serial Data” output (terminal 24) to the DLC connector (terminal 9).

Basic Knowledge Required

Before using this section of the Service Manual, there is some basic knowledge which will be required. Without this knowledge, you will have trouble using the diagnostic procedures in this section. Use care to prevent harm or unwanted deployment. Read all cautions in the service manual and on warning labels attached to SRS components.

Basic Electrical Circuits

You should understand the basic theory of electricity including series and parallel circuits, and understand the voltage drops across series resistors. You should know the meaning of voltage (volts), current (amps), and resistance (ohms). You should understand what happens in a circuit with an open or a shorted wire. You should be able to read and understand a wiring diagram.

“Flash Code” Diagnostics

Flash code diagnostics can be used to read active codes and to determine if history codes are present but cannot be used to clear codes or read history codes. Flash code diagnostics is enabled by grounding by terminal 4 shorting to terminal 13 of the DLC connector with the ignition switch “ON”. Grounding terminal 4 of the DLC connector pulls the “Diagnostics Request” input (Terminal 1) of the SDM low and signals the SDM to enter the flash code diagnostic display mode.

The SDM displays the trouble codes by flashing the warning lamp. Each code that is displayed will consist of a number of flashes which represents the tens digit, a 1.2 second pause, following by a number of flashes which represents the ones digit of the code. Each code is displayed one time before moving on to the next code. After all of the codes have been displayed, the entire code sequence will continually by repeated until ground is removed from terminal 4 of the DLC connector.

Two special codes exist when reading in the flash code mode (Flash Code 12 and Flash Code 13). “Flash Code 12“ will always be the first code displayed when the flash code mode is enable Code 12 is not an indication of a SRS problem but an indication that the flash code mode has been enabled. If there are no active or history codes present, the SDM will display code 12 until ground is removed from the DLC connector at terminal 4. “flash Code 13” will be displayed if history codes are present. To read the history codes a scan tool must be used.

System Schematic

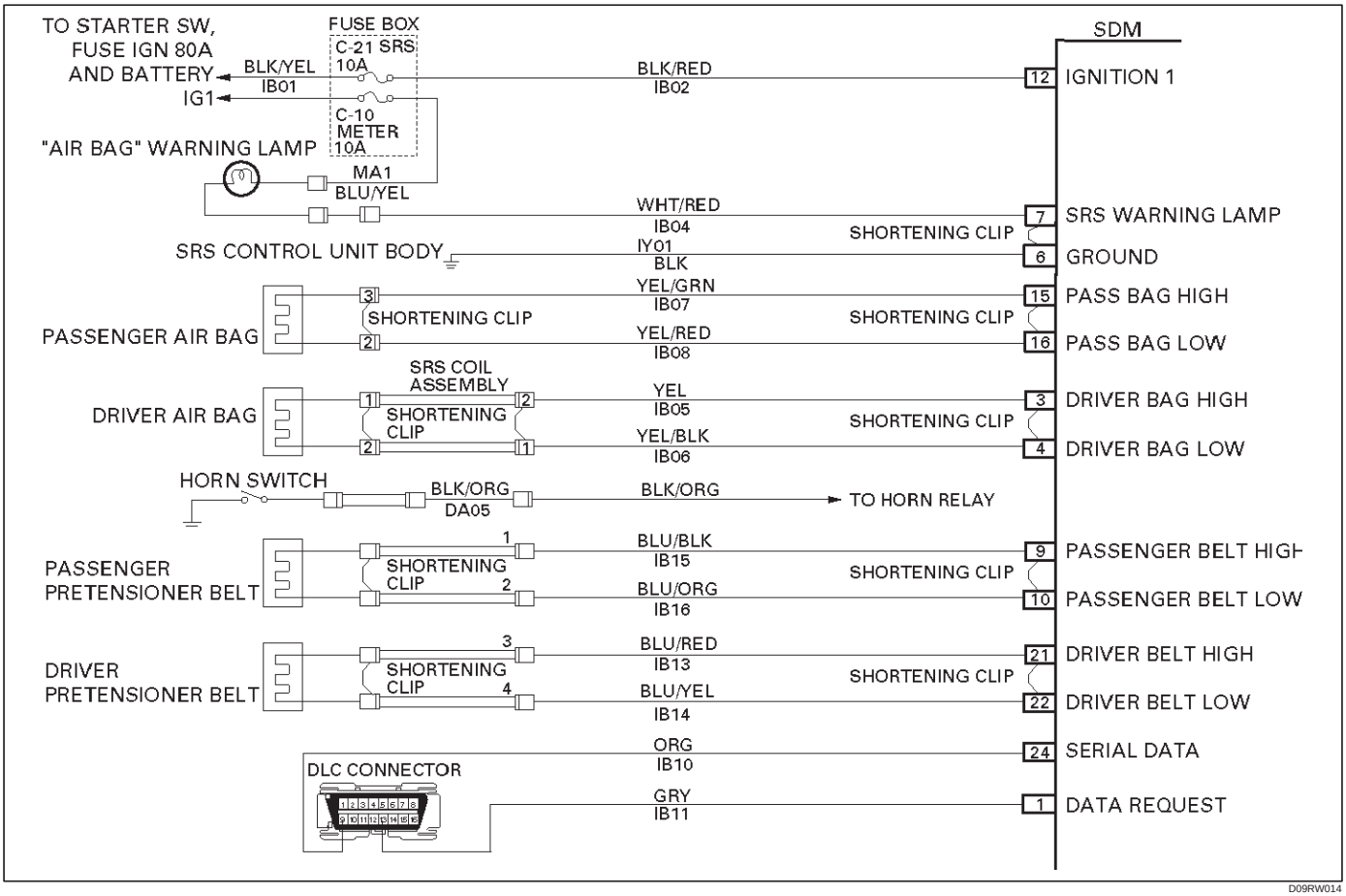

SRS Diagnostic System Check

The diagnostic procedures used in this section are designed to find and repair SRS malfunctions. To get the best results, it is important to use the diagnostic charts and follow the sequence listed below:

A. Perform the “SRS Diagnostic System Check.”
   The “SRS Diagnostic System Check” must be the starting point of any SRS diagnostics. The “SRS Diagnostic System Check” checks for proper “AIR BAG” warning lamp operation, the ability of the SDM to communicate through the “Serial Data” line and whether SRS diagnostic trouble codes exist.

B. Refer to the proper diagnostic chart as directed by the “SRS Diagnostic System Check.”
   The “SRS Diagnostic System Check” will lead you to the correct chart to diagnose any SRS malfunctions. Bypassing these procedures may result in extended diagnostic time, incorrect diagnosis and incorrect parts replacement.

C. Repeat the “SRS Diagnostic System Check” after any repair or diagnostic procedures have been preformed.
   Performing the “SRS Diagnostic System Check” after all repair or diagnostic procedures will ensure that the repair has been made correctly and that no other malfunctions exist

Circuit Description

When the ignition switch is first turned “ON”, “Ignition 1” voltage is applied from the “C–21” fuse to the SDM at the “Ignition 1” input terminals “12”. The SDM responds by flashing the “AIR BAG” warning lamp turn on 3.5 seconds, while performing tests on the SRS.

Notes On System Check Chart:

1. The “AIR BAG” warning lamp should turn on 3.5 seconds after ignition is first turned “ON”.
2. After the “AIR BAG” warning lamp turn on 3.5 seconds, it should turn “OFF”
3. This test checks for the proper operation of the “Serial Data” line. This test will also determine whether history diagnostic trouble codes are stored and, if so, identify them.
4. Improper operation of the “AIR BAG” warning lamp is indicated. This test differentiates a warning lamp stays “ON” condition from a warning lamp does not come “ON” condition.
5. This test checks for proper operation of the “Serial Data” line. This test will also identify the stored diagnostic trouble codes and whether they are current or history.

Diagnostic Aids:

The order in which diagnostic trouble codes are diagnosed is very important. Failure to diagnose the

diagnostic trouble codes in the order specified may result in extended diagnostic time, incorrect diagnosis and incorrect parts replacement.

SRS Diagnostic System Check

Step	Action	Yes	No
1	Note the “Air Bag” warning lamp as ignition switch is turned “ON.” Does the “AIR BAG” warning lamp turn on 3.5 seconds?	Go to Step 2	Go to Step 3
2	Note the “AIR BAG” warning lamp after it turn on 3.5 seconds. Does the “AIR BAG” warning lamp go “OFF”?	Go to Step 4	Go to Step 5
3	Note the “AIR BAG” warning lamp as ignition switch is turned “ON”. Does the “AIR BAG” warning lamp come “ON” steady?	Go to Chart B	Go to Chart C
4	1. Note the “AIR BAG” warning lamp as that ignition switch is turned “ON.” Ignition switch “OFF.” 2. Connect a scan tool to data link connector. 3. Follow direction given in the scan tool instruction manual. Ignition switch “ON.” 4. Request the SRS diagnostic trouble code display, recode all history diagnostic trouble code(s). specify as such, on repair order Is (are) diagnostic trouble code(s) displayed?	Ignition switch “OFF” When DTC 71 is set, go to DTC 71 Chart For all other history codes refer to “Diagnostic Aids” For that specific DTC A history DTC indicates the malfunction has been repaired or is intermittent	SRS is functional and free of malfuncitons, no further diagnosis is required If scan tool indicated “NO DATA RECEIVED,” refer to chassis electrical section8
5	1. Ignition switch “OFF.” 2. Connect a scan tool to data link connector. 3. Follow directions as given in the scan tool instruction manual. 4. Ignition switch “ON.” 5. Request the SRS diagnostic trouble code display, Recode all diagnostic trouble code(s), specifying as current or history on repair order. Is (are) diagnostic trouble code (s) displayed?	Ignition switch “OFF” When DTC 53 is set, go to DTC 53 chart When DTC 51 is set, go to DTC 51 chart When DTC 19 is set, go to DTC 19 chart When DTC 25 is set, go to DTC 25 chart Diagnose remaining current DTCs from lowest to highest When only history DTCs exist, refer to “Diagnostics Aids” for that specific DTC A history DTC indicates the malfunction has been repaired or is intermittent	If scan tool indicates “No Data Received,” refer to chassis electrical section8

Chart A SDM Integrity Check

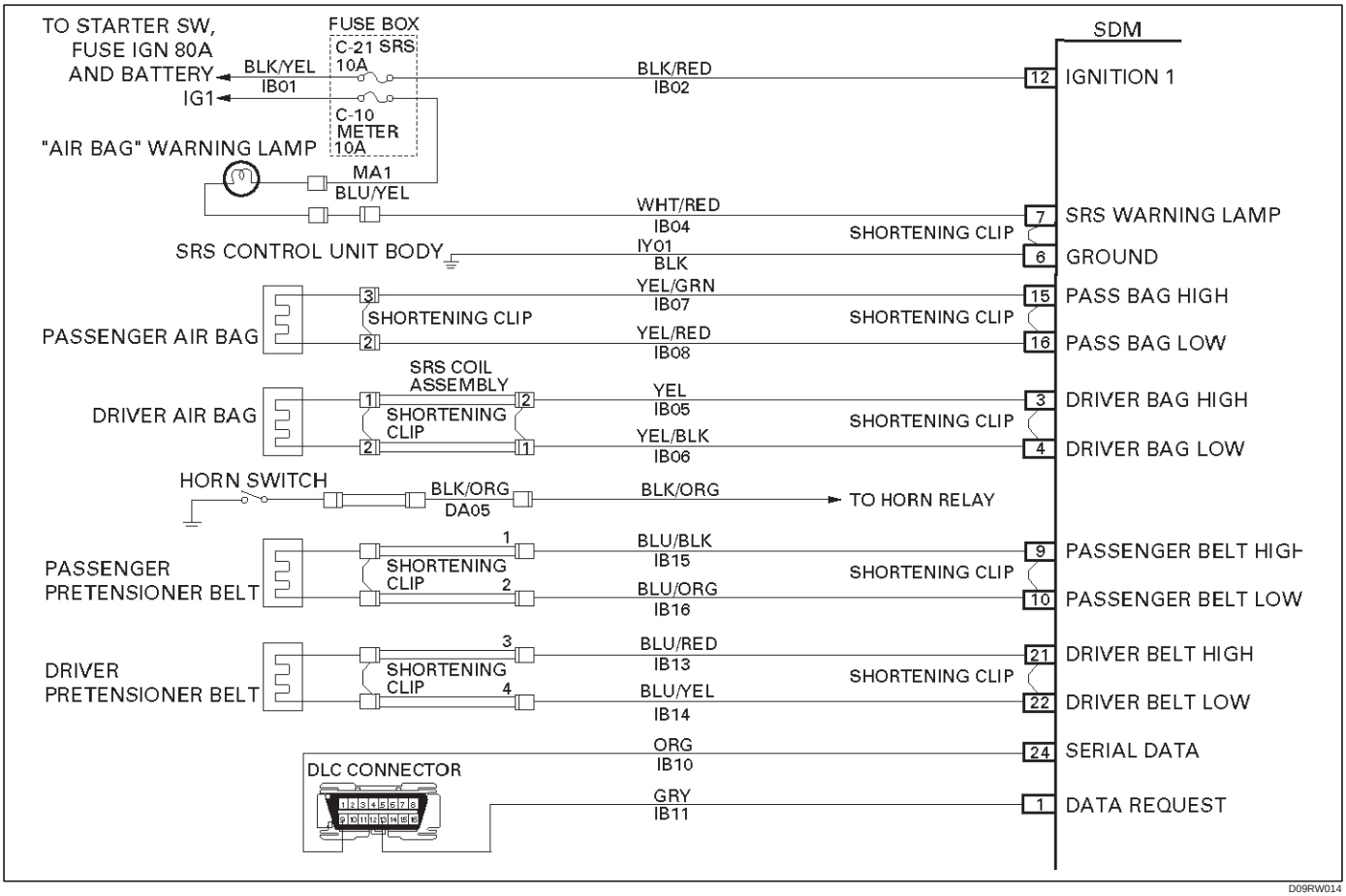

Circuit Description:

When the SDM recognizes “Ignition 1” voltage, applied to terminals “12”, is greater than 9 volts, the “AIR BAG” warning lamp is turned on 3.5 seconds to verify operation. At this time the SDM performs “Turn–ON” tests followed by “Continuous Monitoring” tests. When a malfunction is detected, the SDM sets a current diagnostic trouble code and illuminates the “AIR BAG” warning lamp. The SDM will clear current diagnostic trouble codes and move them to a history file when the malfunction is no longer detected and/or the ignition switch is cycled, except for DTCs 19, 25, 51, 53 and 71. DTC 71 can only be cleared using a scan tool “Clear Codes” command. If DTCs 51, 53 are not indicated then DTC 71 is not existing. DTCs 51, 53 and 71 can not be cleared after a “Clear Codes” command is issued.

Chart Test Description:

Number(s) below refer to step number(s) on the diagnostic chart:

1. This test confirms a current malfunction. If no current malfunction is occurring (history DTC set) the “Diagnostic Aids” for the appropriate diagnostic trouble code should be referenced. The SDM should not be replaced for a history diagnostic trouble code.
2. This test checks for a malfunction introduced into the SRS during the diagnostic process. It is extremely unlikely that a malfunctioning SDM would cause a new malfunction to occur during the diagnostic process.
3. When all circuitry outside the SDM has been found to operate properly, as indicated by the appropriate diagnostic chart, then and only then should the SDM be replaced.

Chart A SDM Integrity Check

WARNING: DURING SERVICE PROCEDURES. BE VERY CAREFUL WHEN HANDLING A SENSING AND DIAGNOSTIC MODULE (SDM). NEVER STRIKE OR JAR THE SDM. NEVER POWER UP THE SRS WHEN THE SDM IS NOT RIGIDLY ATTACHED TO THE VEHICLE. ALL SDM AND MOUNTING BRACKET FASTENERS MUST BE CAREFULLY TORQUED AND THE ARROW MUST BE POINTING TOWARD THE FRONT OF THE VEHICLE TO ENSURE PROPER OPERATION OF THE SRS. THE SDM COULD BE ACTIVATED WHEN POWERED WHILE NOT RIGIDLY ATTACHED TO THE VEHICLE WHICH COULD CAUSE DEPLOYMENT AND RESULT IN PERSONAL INJURY.

Step	Action	Yes	No
1	1. This chart assumes that the “SRS Diagnostic System Check” and either a symptom chart or a diagnostic trouble code chart diagnosis have been performed. When all circuitry outside the SDM has been found to operate properly, as indicated by the appropriate diagnostic chart, and the symptom or DTC remains current, the following 2. Diagnostic procedures must be performed to verify the need for SDM replacement. 3. Ignition switch “OFF”. 4. Reconnect all SRS components, ensure all components are properly mounted. 5. Ensure the ignition switch has been “OFF” for at least 15 seconds. 6. Note “AIR BAG” warning lamp as ignition switch is turned “ON.” Does warning lamp turn on 3.5 seconds then go “OFF”?	The symptom or DTC is no longer occurring Clear SRS diagnostic trouble codes Repeat “SRS Diagnostic System Check”	Go to Step 2
2	Using a scan tool request diagnostic trouble code display Is the same symptom or DTC occurring as was when the “SRS Diagnostic System Check ” was first performed?	Go to Step 3	Ignition switch “OFF” Go to the appropriate chart for the indicated malfunction
3	1. Clear “SRS Diagnostic Trouble Codes”. 2. Ignition switch “OFF” for at least two minutes. 3. Note “AIR BAG” warning lamp as ignition switch is turned “ON.” Does warning lamp turn on 3.5 seconds then go “OFF”?	SRS is functional and free of malfunctions No further diagnosis is required Go to Step 4	Ignition switch “OFF” Replace SDM Go to Step 4
4	Reconnect all SRS components, ensure all components are properly mounted. Was this step finished?	Repeat the “SRS Diagnostic System Check”	Go to Step 4

Chart B "AIR BAG" Warning Lamp Comes "ON" Steady

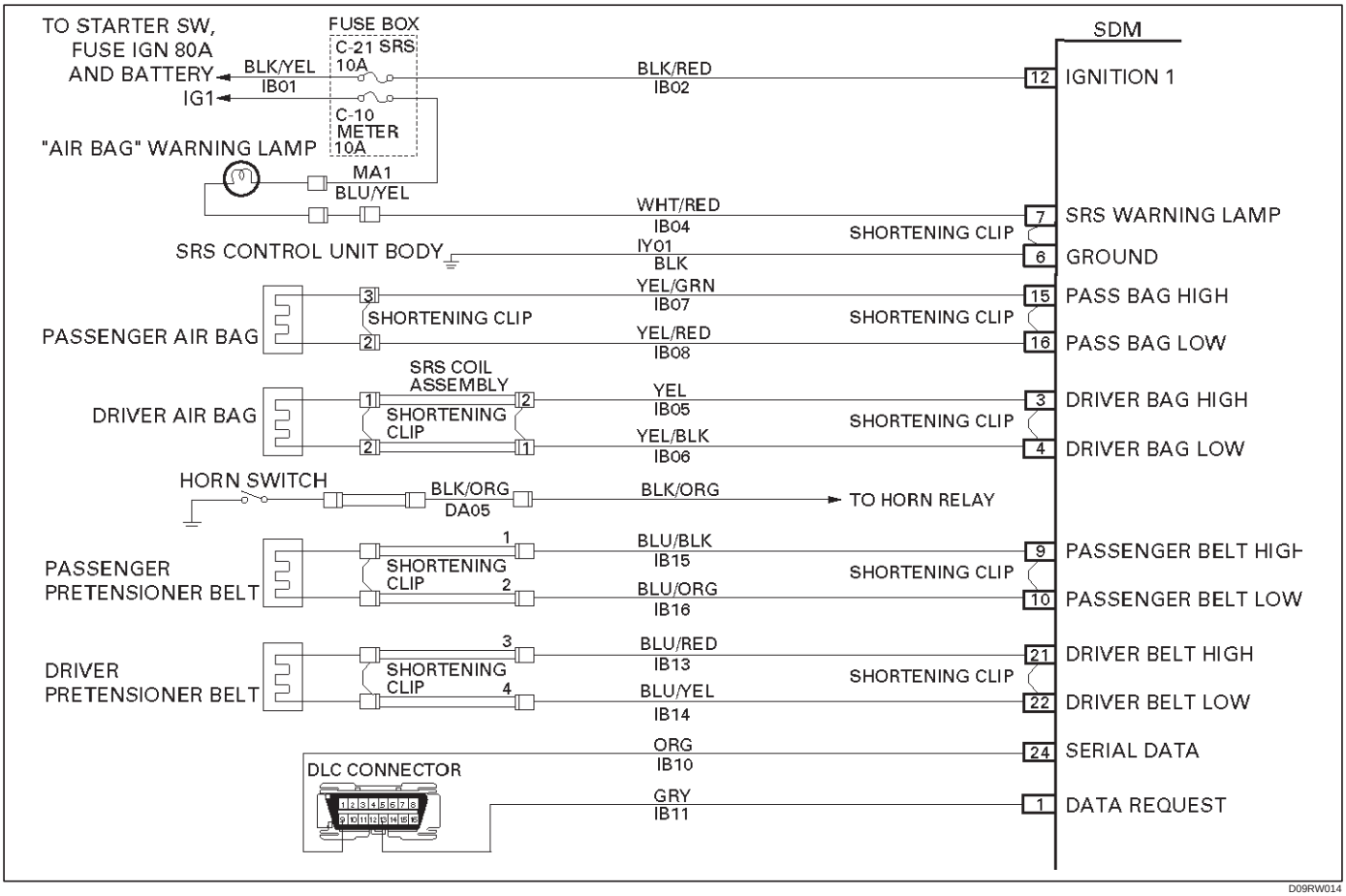

Circuit Description:

When the ignition switch is first turned "ON", "Ignition 1" voltage is applied from the "C–10" fuse to "AIR BAG", warning lamp which is connected to "SRS Warning Lamp", terminal "7". The "C–21" fuses apply system voltage to the "Ignition 1" inputs, terminals "12". The SDM responds by turning on the "AIR BAG" warning lamp 3.5 seconds. If "Ignition 1" is less than 9 volts, the "AIR BAG" warning lamp will come "ON" solid with no DTCs set.

Chart Test Description:

Number(s) below refer to step number(s) on the diagnostic chart.

2. This test checks for an open in the "Ignition 1" circuit to the SDM.
3. This test checks for the voltage of "IGNITION 1".
4. This test determines whether the malfunction is a short to ground in IB04–WHT/RED.

Chart B “AIR BAG” warning lamp comes “ON” Steady

Step	Action	Yes	No
1	1. When measurements are requested in this chart use 5–8840–0285–0 DVM with correct terminal adapter from 5–8840–0385–0. 2. Ignition switch “OFF.” 3. Connect scan tool to data link connector, follow directions as given in the scan tool instruction MANUAL. 4. Ignition switch “ON.” 5. Request SRS diagnostic trouble code display. Dose scan tool indicate “No Data Received”?	Go to Step 2	Go to Step 3
2	1. Ignition switch “OFF”. 2. Inspect SDM harness connector connection to SDM. Is it securely connected to the SDM?	Ignition switch “OFF” Replace SDM Go to Step 5	Connect SDM securely to de–activate shorting clip in SDM harness connector Go to Step 5
3	Using scan tool, request SRS data list. Is “ignition” less than 9 volts?	Go to Step 4	Ignition switch “OFF” Replace SDM Go to Step 5
4	1. Ignition switch “OFF.” 2. Disconnect SRS coil and passenger air bag assemblies. yellow 2–pin connector located at base of steering column and behind the glove box assembly. Disconnect SDM. 3. Disconnect the connector of “SRS Warning Lamp” of instrument cluster. 4. Measure resistance from SDM harness connector terminal “7” to ground “6”. Does 5–8840–0285–0 display “OL” (Infinite)?	Go to Chart A	Replace SRS harness Go to Step 5
5	Reconnect all SRS components, ensure all components are properly mounted. Was this step finished?	Repeat the “SRS Diagnostic System Check”	Go to Step 5

Chart C "AIR BAG" Warning Lamp Does Not Come "ON" Steady

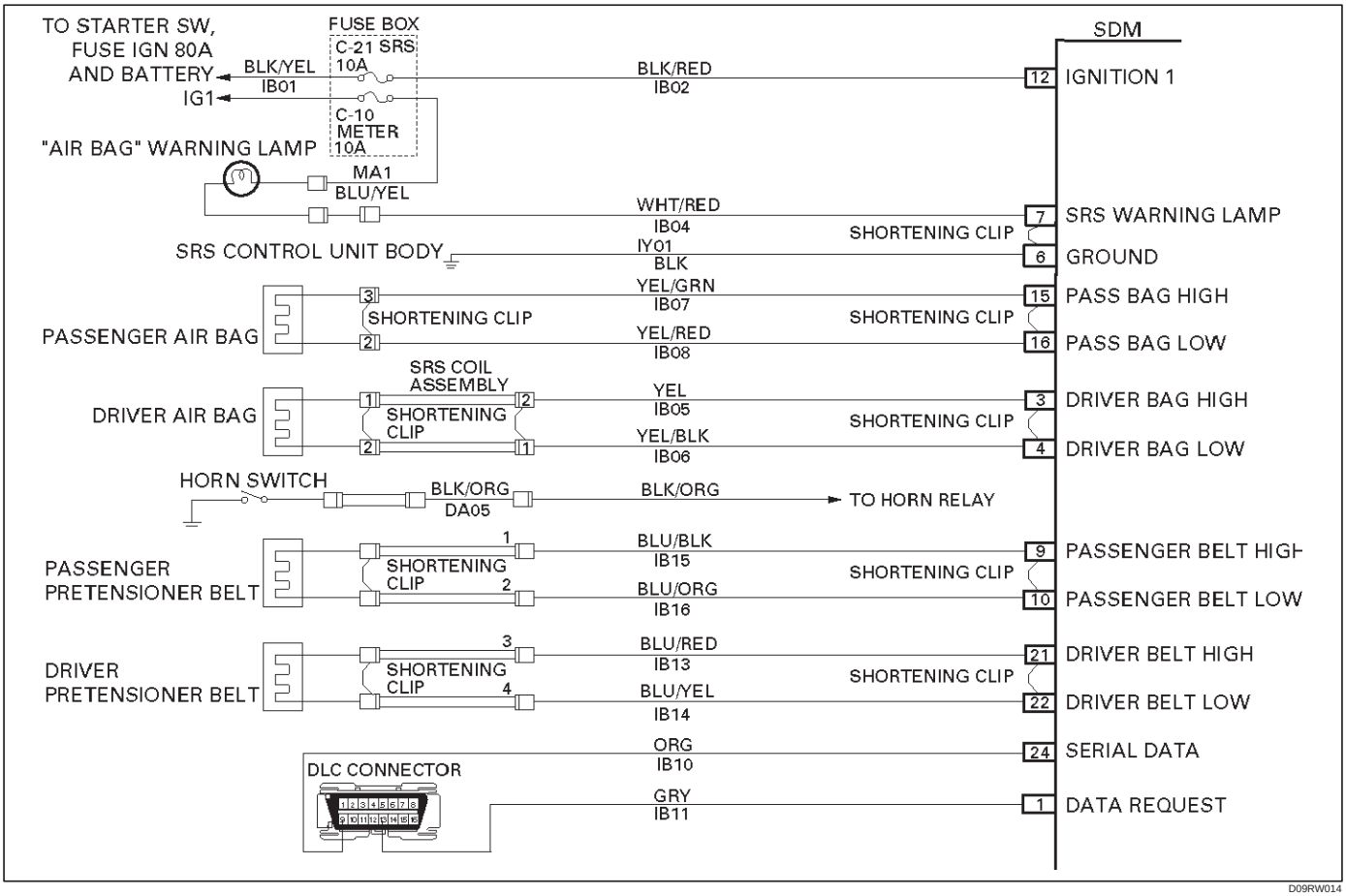

Circuit Description:

When the ignition switch is first turned "ON", "Ignition 1" voltage is applied from the "C–10" fuse to the "AIR BAG" warning lamp which is connected to "SRS Warning Lamp", terminal "7". The "C–21" fuse apply system voltage to the "Ignition 1" inputs, terminals "12". The SDM responds by turning on the "AIR BAG" warning lamp 3.5 seconds. If "Ignition 1" is more than 16 volts, the "AIR BAG" warning lamp will be still "OFF" solid with no DTCs set.

Chart Test description:

Number(s) below refer to step number(s) on the diagnostic chart:

1. This test decides whether power is available to SDM warning lamp power feed circuit.
2. This test determines whether the voltage is present in the warning lamp circuit.
3. This test determines if the malfunction is in the instrument cluster.
4. This test checks for open in the warning lamp circuitry.
5. This test isolates the IB04–WHT/RED circuit and checks for a short in the IB04–WHT/RED circuit to B+.
8. This test checks for a short from the SDM warning lamppower feed circuit to ground.
9. This test determines whether the short to ground is due to a short in the wiring.

Chart C “AIR BAG” Warning Lamp Does Not Come “ON” Steady

Step	Action	Yes	No
1	1. When measurements are requested in this chart,use 5–8840–0285–0 DVM with correct terminal adapter from 5–8840–0385–0. 2. Ignition switch “OFF.” 3. Remove and inspect “C–10” fuse (meter) to the “AIR BAG” warning lamp. Is fuse good?	Go to Step 2	Go to Step 7
2	1. Ignition switch “OFF.” 2. Disconnect SRS coil and passenger air bag assemblies. Yellow 2–pin connector located at base of steering column and behind the glove box assembly. 3. Disconnect SDM. 4. Ignition switch “ON.” 5. Measure voltage on SDM harness connector from terminal “7” to terminal “6” (ground). Is system voltage present on terminal “7”?	Go to Step 4	Go to Step 3
3	1. Ignition switch “OFF.” 2. Remove instrument meter cluster. 3. Check for proper connection to instrument cluster at IB04–WHT/RED terminal. 4. If ok, then remove and inspect “AIR BAG” bulb. Is bulb good?	Go to Step 5	Replace bulb Go to Step 6
4	1. Ignition switch “OFF.” 2. Disconnect instrument meter cluster harness connector. 3. Ignition switch “ON.” 4. Measure voltage on SDM harness connector from terminal “7” to terminal “6” (GROUND). Is voltage 1 volt or less?	Go to Chart A	Replace SRS harness Go to Step 6
5	1. Install bulb. 2. Measure resistance from instrument meter cluster harness connector IB04–WHT/RED terminal to SDM harness connector terminal “7”. Is resistance 5.0 ohms or less?	Service instrument meter cluster Install instrument meter cluster Go to Step 6	Replace SRS harness Go to Step 6
6	Reconnect all SRS components, ensure all components are properly mounted. Was this step finished?	Repeat the “SRS Diagnostic System Check”	Go to Step 6
7	Perform chart C. Was this step finished?	Go to Step 8	Go to Step 1
8	1. Replace “C–10” fuse. 2. Ignition switch “ON” wait 10 Seconds then ignition switch “Off.” 3. Remove and inspect “C–10” fuse. Is fuse good?	Install “C–10” fuse Go to Step 10	Go to Step 9

Chart C “AIR BAG” Warning Lamp Does Not Come “ON” Steady (Cont’d)

Step	Action	Yes	No
9	1. Disconnect SRS coil and passenger air bag assemblies. Yellow 2–pin connectors located at base of steering column and behind the glove box assembly. 2. Disconnect SDM. 3. Replace “C–10” fuse. 4. Ignition switch “ON” wait 10 seconds. 5. Ignition switch “OFF”. 6. Remove and inspection “C–10” fuse. Is fuse good?	Install“C–10” fuse Go to Chart A	Replace SRS harness Replace “C–10” fuse Go to Step 10
10	Reconnect all SRS components, ensure all components are properly mounted. Was this step finished?	Repeat the “SRS Diagnostic System Check”	Go to Step 10

DTC 15 Passenger Deployment Loop Resistance High

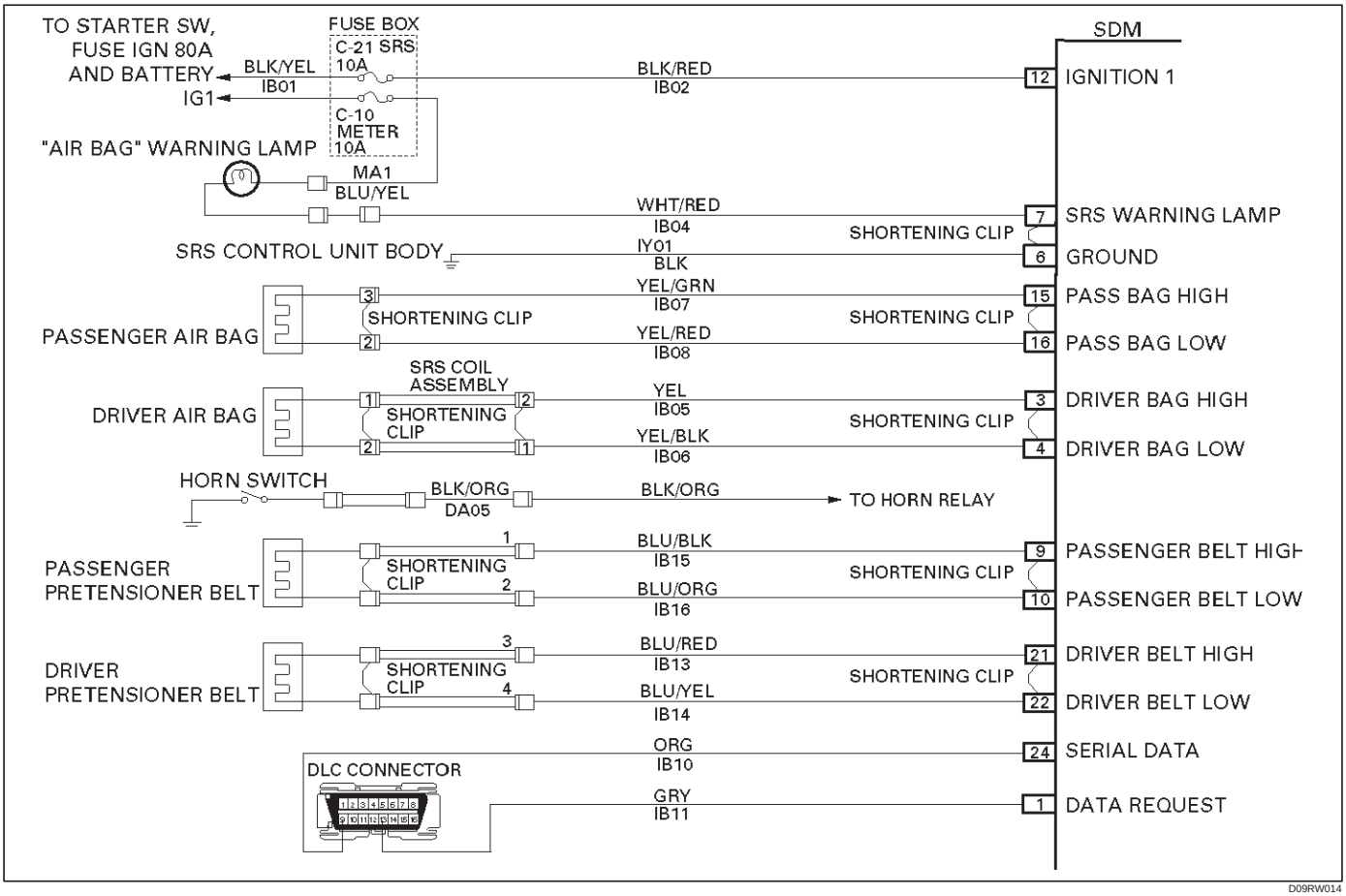

Circuit Description:

When the ignition switch is turned “ON”, the SDM will perform tests to diagnose critical malfunctions within itself. Upon passing these tests “Ignition 1”, and deployment loop voltages are measured to ensure they are within their respective normal voltage ranges. The SDM then proceeds with the “Resistance Measurement Test”. “Passenger Bag Low” terminal “16” is grounded through a resister and the passenger current source connected to “Passenger Bag High” terminal “15” allows a known amount of current to flow. By monitoring the voltage difference between “Passenger Bag High” and “Passenger Bag Low” the SDM calculates the combined resistance of the passenger air bag assembly, harness wiring IB07–YEL/GRN and IB08–YEL/RED connector terminal contact.

DTC Will Set When:

The combined resistance of the passenger air bag assembly, harness wiring IB07–YEL/GRN and IB08–YEL/RED, and connector terminal contact is above a specified value. This test is run once each ignition cycle during the “Resistance Measurement Test” when:

1. No “higher priority faults” are detected during “Turn–ON”,
2. “Ignition 1” voltage is in the specified value.

Action Taken:

SDM turns “ON” the “AIR BAG” warning lamp and sets a diagnostic trouble code.

DTC Will Clear When:

The ignition switch is turned “OFF.”

DTC Chart Test Description:

Number(s) below refer to step number(s) on the diagnostic chart:

2. This test determines whether the malfunction is in the SDM.
3. This test verifies proper connection of the yellow 2–pin connector.
4. This test checks for proper contact and/or corrosion of the yellow 2–pin connector terminals.
5. The test checks for a malfunctioning passenger air bag assembly.
6. This test determines whether the malfunction is due to high resistance in the wiring.

Diagnostic Aids:

An intermittent condition is likely to be caused by a poor connection at the passenger air bag assembly harness connector terminals “1” and “2”, SDM terminal “15” and “16”, or a poor wire to terminal connection in IB07–YEL/GRN and IB08–YEL/RED. This test for this diagnostic trouble code is only run while the “AIR BAG”

warning lamp is performing the bulb check, unless DTC 17 or DTC 26 is detected. When a scan tool “Clear Codes” command is issued and the malfunction is still present, the DTC will not reappear until the next ignition cycle.

DTC 15 Passenger Deployment loop Resistance High

Step	Action	Yes	No
1	Was the “SRS Diagnostic System Check” Performed?	Go to Step 2	Go to The “SRS Diagnostic System Check”
2	1. When measurements are requested in this chart use 5–8840–0285–0 DVM with correct terminal adapter from 5–8840–0385–0. 2. Use scan tool data list function, read and record the passenger deployment loop resistance. Is passenger resist. more than 2.9 ohms?	Go to Step 3	Go to Chart A
3	1. Ignition switch “Off.” 2. Make sure the passenger air bag assembly yellow 2–pin connector located behind the glove box assembly is seated properly. Is the yellow 2–pin connector connected properly?	Go to Step 4	Seat passenger Air Bag assembly yellow 2–pin connector properly Go to Step 7
4	1. Disconnect and inspect the passenger air bag assembly yellow 2–pin connector located behind the glove box assembly. 2. If ok, reconnect the passenger air bag assembly 2–pin connector. 3. Ignition switch “ON.” Is DTC 15 current?	Go to Step 5	Go to Step 7
5	1. Ignition switch “Off.” 2. Disconnect SRS coil and passenger air bag assembly, yellow 2–pin connector located at the base of the steering column and behind the glove box assembly. 3. Connect 5–8840–2421–0 SRS driver / passenger load tool and appropriate adapters to SRS coil and passenger air bag assembly harness connectors. 4. Ignition switch “ON.” Is DTC 15 Current?	Go to Step 6	Ignition switch “Off” Replace the passenger air bag assembly Go to Step 7
6	1. Ignition switch “Off.” 2. There has been an increase in the total circuit resistance of the passenger inflator deployment loop. 3. Use the high resolution ohmmeter mode of the DVM while checking IB07–YEL/GRN and IB08–YEL/RED, and SDM connector terminal “15” and “16” to locate the root cause. Was a fault found?	Replace SRS harness Go to Step 7	Go to Chart A
7	1. Reconnect all components ensure all component are properly mounted. 2. Clear diagnostic trouble codes. Was This step finished?	Repeat the “SRS Diagnostic System Check”	Go to Step 7

DTC 16 Passenger Deployment loop Resistance Low

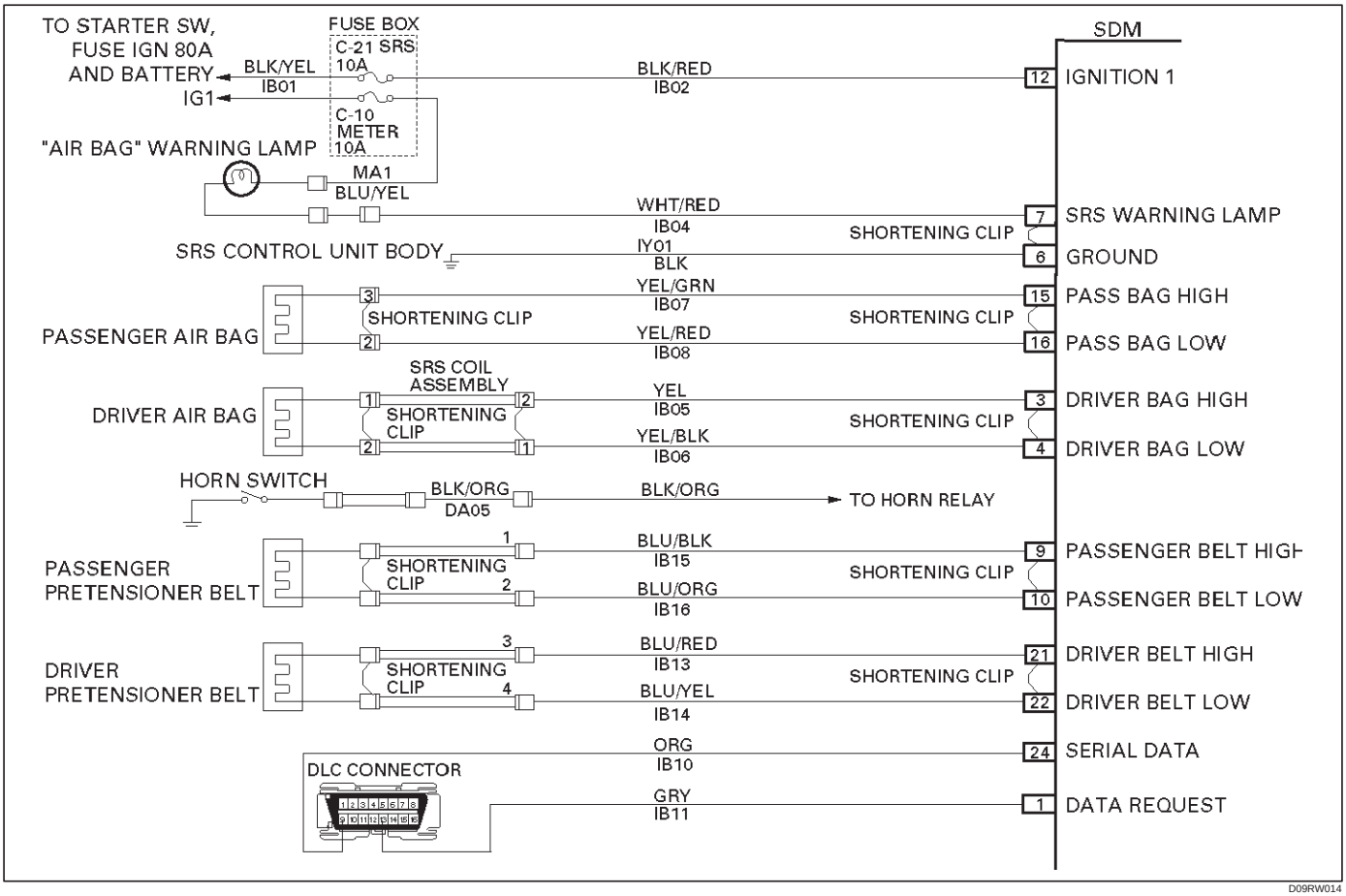

Circuit Description:

When the ignition switch is turned “ON”, the SDM will perform tests to diagnose critical malfunctions within itself. Upon passing these tests “Ignition 1”, and deployment loop voltages are measured to ensure they are within their respective normal voltage ranges. The SDM then proceeds with the “Resistance Measurement Test”. “Passenger Bag Low” terminal “16” is grounded through a resistor and the passenger current source connected to “Passenger Bag High” terminal “15” allows a known amount of current to flow. By monitoring the voltage difference between “Passenger Bag High” and “Passenger Bag Low”, the SDM calculates the combined resistance of the passenger air bag assembly, harness wiring IB07–YEL/GRN and IB08–YEL/RED connector terminal contact.

DTC Will Set When:

The combined resistance of the passenger air bag assembly, harness wiring IB07–YEL/GRN and IB08–YEL/RED, and connector terminal contact is above a specified value. This test is run once each ignition cycle during the “Resistance Measurement Test” when:

1. No “higher priority faults” are detected during “Turn–ON”,
2. “Ignition 1” voltage is in the specified value.

Action Taken:

SDM turns “ON” the “AIR BAG” warning lamp and sets a diagnostic trouble code.

DTC Will Clear When:

The ignition switch is turned “OFF.”

DTC Chart Test Description:

Number(s) below refer to step number(s) on the diagnostic chart:

2. This test determines whether the malfunction is in the SDM.
3. This test verifies connection of the yellow 2–pin connector.
4. This test cheeks for proper operation of the shorting clip in the yellow 2–pin connector.
5. The test checks for a malfunction passenger air bag assembly.
6. This test determines whether the malfunctioning is due to shortening in the wiring.

Diagnostic Aids:

An intermittent condition is likely to be caused by a short between IB07–YEL/GRN and IB08–YEL/RED, or a malfunctioning shorting clip on the passenger air bag assembly which would require replacement of the air bag assembly. The test for this diagnostic trouble code is only run while “AIR BAG” warning lamp is performing the bulb

check, unless DTC 17 or DTC 26 is detected. When a scan tool “Clear Codes” command is issued and the malfunction is still present, the DTC will not reappear until the next ignition cycle.

DTC 16 Passenger Deployment loop Resistance Low

Step	Action	Yes	No
1	Was the “SRS Diagnostic System Check” performed?	Go to Step 2	Repeat the “SRS Diagnostic System Check”
2	1. When measurements are requested in this chart use 5–8840–0285–0 DVM with correct terminal adapter from 5–8840–0385–0. 2. Using scan tool data list function, read and record the passenger deployment loop resistance. Is passenger resist. less than 1.4 ohms?	Go to Step 3	Go to Chart A
3	1. Ignition switch “Off.” 2. Make sure the passenger air bag assembly yellow 2–pin connector located behind the glove box assembly is seated properly. Is the yellow 2–pin connector connected properly?	Go to Step 4	Seat passenger air bag assembly yellow 2–pin connector properly Go to Step 7
4	1. Disconnect and inspect the passenger air bag assembly yellow 2–pin connector located behind the glove box assembly. 2. If ok, reconnect the passenger air bag assembly 2–pin connector. 3. Ignition switch “ON.” Is DTC 16 Current?	Go to Step 5	Go to Step 7
5	1. Ignition switch “Off.” 2. Disconnect SRS coil and passenger air bag assembly, yellow 2–pin connector located at the base of the steering column and behind the glove box assembly. 3. Connect 5–8840–2421–0 SRS driver/passenger load tool and appropriate adapters to SRS coil and passenger air bag assembly harness connectors. 4. Ignition switch “ON.” Is DTC 16 current?	Go to Step 6	Ignition switch “Off” Replace the passenger air bag assembly Go to Step 7
6	1. Ignition switch “Off.” 2. There has been a decrease in the total circuit resistance of the passenger inflator deployment loop. 3. Use the high resolution ohmmeter mode of the DVM while checking IB07–YEL/GRN and IB08–YEL/RED, and SDM connector terminal “15” and “16” to locate the root cause. Was a fault found?	Replace SRS harness Go to Step 7	Go to Chart A
7	1. Reconnect all components, ensure all component are properly mounted. 2. Clear diagnostic trouble codes. Was this step finished?	Repeat the “SRS Diagnostic System Check”	Go to Step 7

DTC 17 Passenger Deployment Loop Open

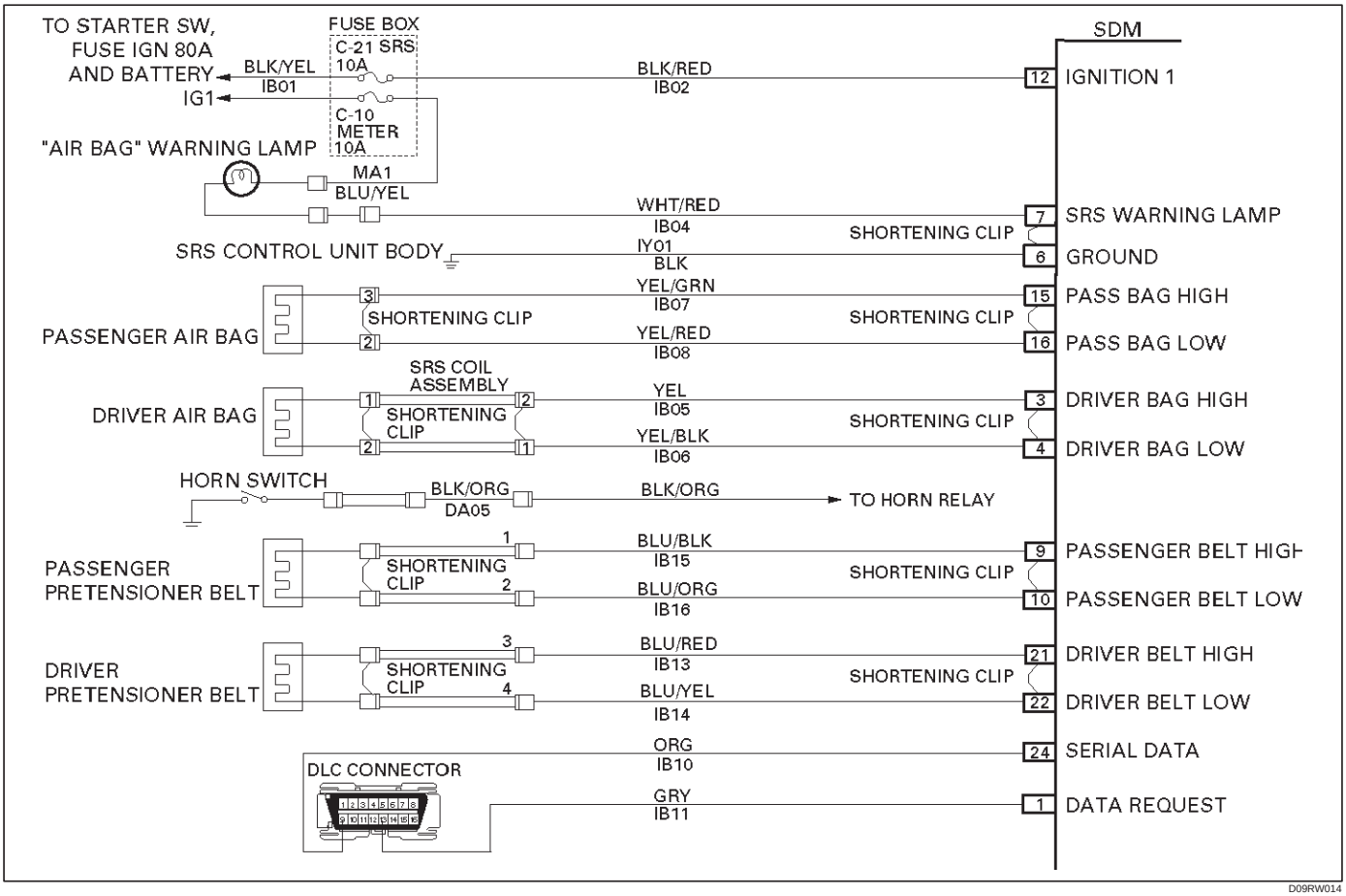

Circuit Description:

When the ignition switch is turned “ON”, the SDM will perform tests to diagnose critical malfunctions within itself. Upon passing these tests, “Ignition 1”, and deployment loop voltages are measured to ensure they are within their respective normal voltage ranges. During “Continuous Monitoring” diagnostics, a fixed amount of current is flowing in the deployment loop. This produces proportional voltage drops in the loop. By monitoring the voltage difference between “Passenger Bag High” and “Passenger Bag Low”, the SDM calculates the combined resistance of the passenger air bag assembly, harness wiring IB07–YEL/GRN AND IB08–YEL/RED, and connector terminal contact.

DTC Will Set When:

The voltage difference between “Passenger Bag High” terminal “15” and “Passenger Bag Low” terminal “16” is above or equal to a specified value for 500 milliseconds during “Continuous Monitoring”.

Action Taken:

SDM turns “ON” the “AIR BAG” warning lamp and sets a diagnostic trouble code.

DTC Will Clear When:

The voltage difference between “Passenger Bag High” terminal “15” and “Passenger Bag Low” terminal “16” is below a specified value for 500 milliseconds during “Continuous Monitoring”.

DTC Chart Test Description:

Number(s) below refer to step number(s) on the diagnostic chart:

2. This test determines whether the malfunction is in the SDM.
3. This test verifies proper connection of the yellow 2–pin connector.
4. This test cheeks for proper contact and/or corrosion of the shorting clip in the yellow 2–pin connector terminals.
5. The test checks for a malfunctioning passenger air bag assembly.
6. This test determines whether the open in the wiring.

Diagnostic Aids:

An intermittent condition is likely to be caused by a poor connection at the passenger air bag assembly harness connector terminals“2” and “3”, SDM terminals “15” and “16”, or an open in IB07–YEL/GRN and IB08–YEL/RED.

DTC 17 Passenger Deployment Loop Open

Step	Action	Yes	No
1	Was the “SRS Diagnostic System Check” performed?	Go to Step 2	Go to the “SRS Diagnostic System Check”
2	1. When measurements are requested in this chart use 5–8840–0285–0 DVM with correct terminal adapter from 5–8840–0385–0. 2. Using scan tool data list function, read and record the passenger differential voltage. Is passenger VDIF 0.425 volts or more?	Go to Step 3	Go to Chart A
3	1. Ignition switch “OFF”. 2. Make sure the passenger air bag assembly yellow 2–pin connector located behind the glove box assembly is seated properly. Is the yellow 2–pin connector connected properly?	Go to Step 4	Seat passenger air bag assembly yellow 2–pin connector properly Go to Step 7
4	1. Disconnect and inspect the passenger air bag assembly yellow 2–pin connector located behind the glove box assembly. 2. If ok, reconnect the passenger air bag assembly 2–pin connector. 3. Ignition switch “ON”. Is DTC 17 current?	Go to Step 5	Go to Step 7
5	1. Ignition switch “Off.” 2. Disconnect SRS coil and passenger air bag assembly, yellow 2–pin connector located at the base of the steering column and behind the glove box assembly. 3. Connect 5–8840–2421–0 SRS driver / passenger load tool and appropriate adapters to SRS coil and passenger air bag assembly harness connectors. 4. Ignition switch “ON.” Is DTC 17 current?	Go to Step 6	Ignition switch “Off” Replace the passenger air bag assembly Go to Step 7
6	1. Ignition switch “Off.” 2. There has been an open circuit resistance in the passenger deployment loop. 3. Use the high resolution ohmmeter mode of the DVM while checking IB07–YEL/GRN and IB08–YEL/RED, and SDM connector terminal “15” and “16” to locate the root cause. Was a fault found?	Replace SRS harness Go to Step 7	Go to Chart A
7	1. Reconnect all components ensure all component are properly mounted. 2. Clear diagnostic trouble codes. Was this step finished?	Go to the “SRS Diagnostic System Check”	Go to Step 7

DTC 18 Passenger Deployment Loop Short To Ground

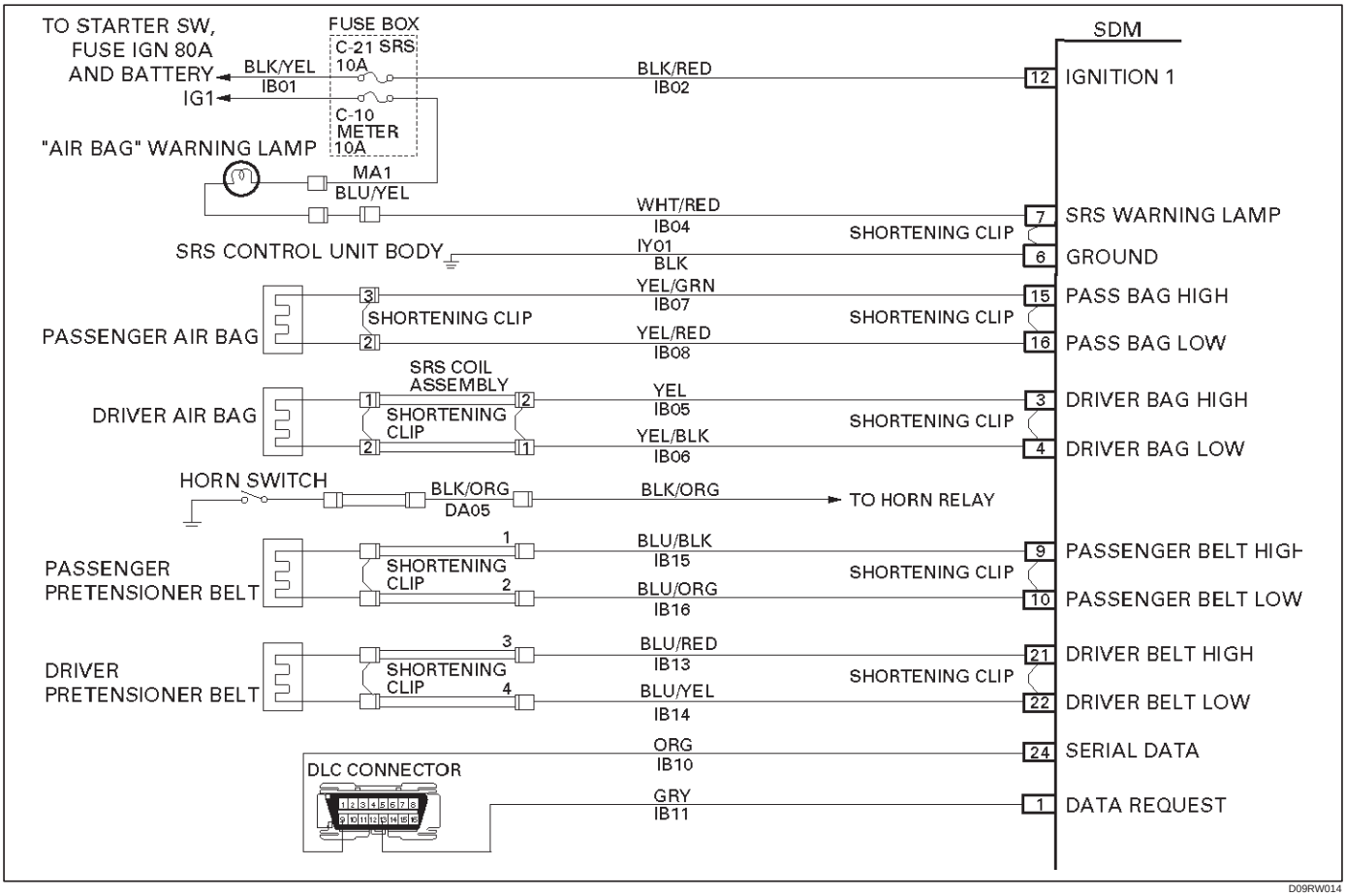

Circuit Description:

When the ignition switch is turned “ON”, the SDM will perform tests to diagnose critical malfunctions within itself. Upon passing these tests, “Ignition 1”, and deployment loop voltages are measured to ensure they are within their respective normal voltage ranges.
The SDM monitors the voltages at “Driver Bag Low” terminal “4” and “Passenger Bag Low” terminal “16” to detect short to ground in the air bag assembly circuits.

DTC Will Set When:

Neither of the two air bag assemblies is open.
“Ignition 1” is within the normal operating voltage range.
Once these conditions are met and the voltage at “Passenger Bag Low” is below a specified value, DTC 18 will set. This test is run once each ignition cycle and “Continuous Monitoring”.

Action Taken:

SDM turns “ON” the “AIR BAG” warning lamp and sets a diagnostic trouble code.

DTC Will Clear When:

This malfunction is no longer occurring and the ignition switch is turned “OFF”.

DTC Chart Test Description:

Number(s) below refer to circled number(s) on the diagnostic chart.

2. This test determines whether the SDM is malfunctioning.
3. This test isolates the malfunction to one side of the passenger air bag assembly yellow 2–pin connector behind glove box assembly.
4. This test determines whether the malfunction is in IB07–YEL/GRN.
5. This test determines whether the malfunction is in IB08–YEL/RED.

Diagnostic Aids:

An intermittent condition is likely to be caused by a short to ground in the passenger air bag assembly circuit. Inspect IB07–YEL/GRN and IB08–YEL/RED carefully for cutting or chafing. If the wiring pigtail of the passenger air bag assembly is damaged, the component must be replaced.

DTC 18 Passenger Deployment Loop Short To Ground

Step	Action	Yes	No
1	Was the “SRS Diagnostic System Check” performed?	Go to Step 2	Go to the “SRS Diagnostic System Check”
2	1. When measurements are requested in this chart use 5–8840–0285–0 DVM with correct terminal adapter from 5–8840–0385–0. 2. Ignition switch “OFF.” 3. Connect scan tool data link connector. follow directions as given in the scan tool operator’s MANUAL. 4. Ignition switch “ON.” 5. Read passenger bag sense LO. Is passenger bag sense LO less than 1.5 volts?	Go to Step 3	Go to Chart A
3	1. Ignition switch “OFF.” 2. Disconnect passenger air bag assembly yellow 2–pin connector behind the glove box assembly. 3. Leave driver air bag assembly connected. 4. Connect SRS driver / passenger load tool 5–8840–2421–0 and appropriate adapter to passenger air bag assembly harness connector. 5. Ignition switch “ON.” Is DTC 18 current?	Go to Step 4	Ignition switch “OFF” Replace passenger air bag assembly Go to Step 6
4	1. Ignition switch “OFF”. 2. Disconnect SRS driver / passenger load tool 3. Measure resistance on SDM harness connector from terminal “15” to terminal “16” (ground). Does 5–8840–0285–0 display “OL” (Infinite)?	Go to Step 5	Replace SRS Harness Go to Step 6
5	Measure resistance on SDM harness connector from terminal “16” to terminal “6” (ground). Does 5–8840–0285–0 display “OL” (Infinite)?	Go to Chart A	Replace SRS Harness. Go to Step 6
6	1. Reconnect all components and ensure all component are properly mounted. 2. Clear diagnostic trouble codes. Was this step finished?	Go to the “SRS Diagnostic system Check”	Go to Step 6

DTC 19 Passenger Deployment Loop Short To B+

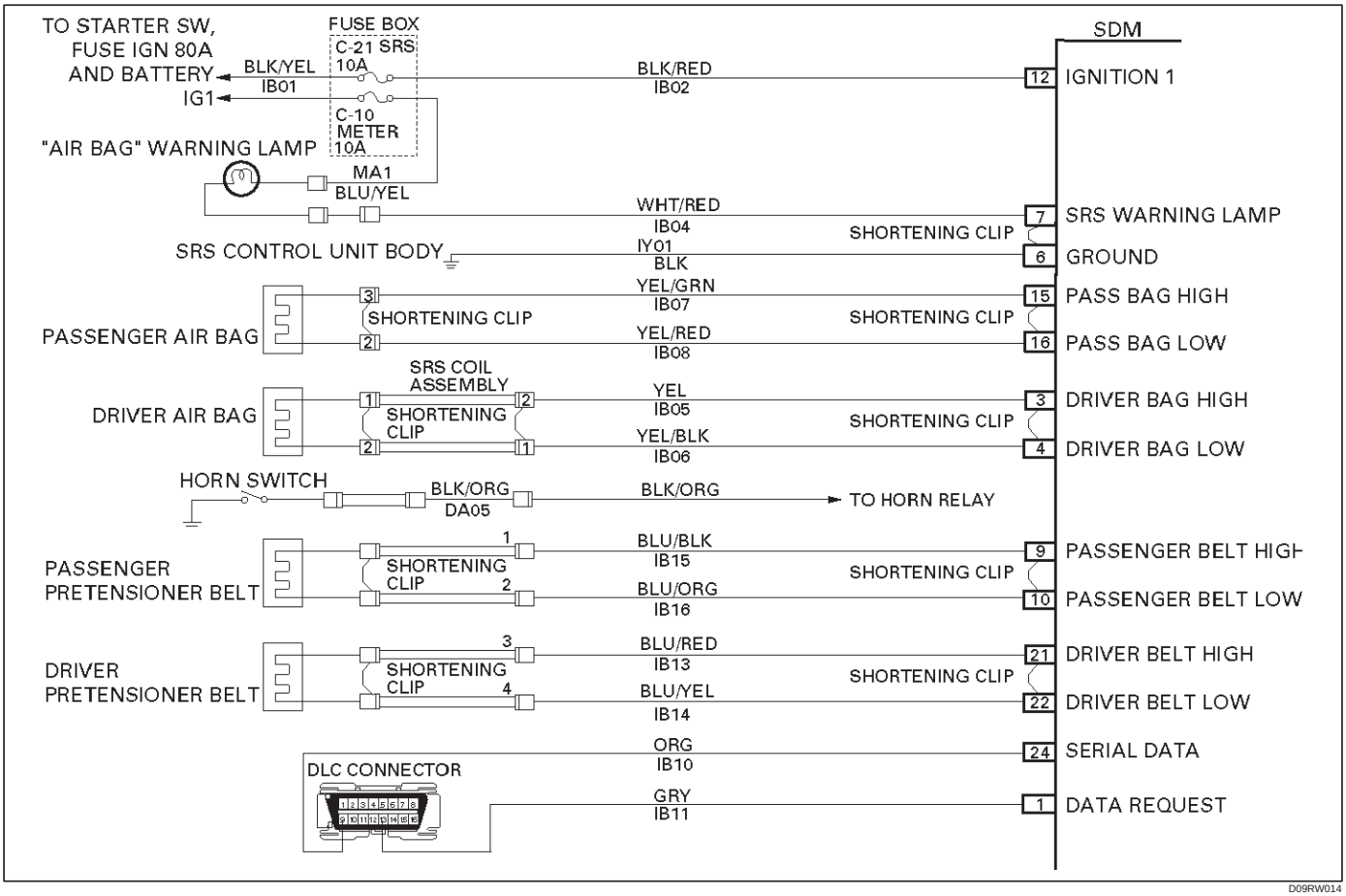

Circuit Description:

When the ignition switch is turned “ON”, the SDM will perform tests to diagnose critical malfunctions within itself. Upon passing these tests, “Ignition 1”, and deployment loop voltages are measured to ensure they are within their respective normal voltage ranges.
The SDM monitors the voltages at “Driver Bag Low” terminal “4” and “Passenger Bag Low” terminal “16” to detect short to B+ in the air bag assembly circuits.

DTC Will Set When:

“Ignition 1” is within the normal operating voltage range. Once these conditions are met and the voltage at “Passenger Bag Low” is above a specified value, DTC 19 will set. This test is run once each ignition cycle and “Continuous Monitoring”.

Action Taken:

SDM turns “ON” the “AIR BAG” warning lamp and sets DTC 19 and also DTC 71.

DTC Will Clear When:

The SDM is replaced.

DTC Chart Test Description:

Number(s) below refer to step number(s) on the diagnostic chart:

2. This test determines whether the malfunction is in the SDM.
3. This test isolates the malfunction to one side of the passenger air bag assembly yellow 2–pin connector behind glove box assembly.
4. This test determines whether the malfunction is in IB07–YEL/GRN.
5. This test determines whether the malfunction is in IB08–YEL/RED.

Diagnostic Aids:

An intermittent condition is likely to be caused by a short to B+ in the passenger air bag assembly circuit. Inspect IB07–YEL/GRN and IB08–YEL/RED carefully for cutting or chafing. If the wiring pigtail of the passenger air bag assembly is damaged, the component must be replaced. A careful inspection of IB07–YEL/GRN and IB08–YEL/RED, including the passenger air bag assembly pigtail is essential to ensure that the replacement SDM will not be damaged.

DTC 19 Passenger Deployment Loop Short To B+

CAUTION: When DTC 19 has been set, it is necessary to replace the SDM. Setting DTC 19 will also cause DTC 71 to set. When a scan tool "CLEAR CODES" command is issued and the malfunction is no longer present, DTC 71 will remain current. Ensure that the short to voltage condition is repaired prior to installing a replacement SDM to avoid damaging the SDM.

Step	Action	Yes	No
1	Perform the "SRS Diagnostic System Check" Was the "SRS Diagnostic System Check" performed?	Go to Step 2	Repeat the "SRS Diagnostic System Check"
2	1. When measurements are requested in this chart use 5–8840–0285–0 DVM With correct terminal adapter from 5–8840–0385–0. 2. Ignition switch "OFF." 3. Connect scan tool data link connector. follow directions as given in the scan tool operator's manual. 4. Ignition switch "ON." 5. Read passenger bag sense LO. Is passenger bag sense LO more than 3.5 volts?	Go to Step 3	Go to Chart A
3	1. Ignition switch "OFF". 2. Disconnect passenger air bag assembly yellow 2–pin connector behind the glove box assembly. 3. Leave driver air bag assembly connected. 4. Connect SRS driver / passenger load tool 5–8840–2421–0 and appropriate adapter to passenger air bag assembly harness connector. 5. Ignition switch "ON." Is passenger bag sense LO more than 3.5 volts?	Go to Step 4	Ignition switch "OFF" Replace passenger air bag assembly Go to Step 6
4	1. Ignition switch "OFF." 2. Disconnect SDM. 3. Disconnect SRS driver / passenger load tool. 4. Measure resistance on SDM harness connector from terminal "15" to terminal "12" (ignition). Does 5–8840–0285–0 display "OL" (infinite)?	Go to Step 5	Replace SRS harness Go to Step 6.
5	Measure resistance on SDM harness connector from terminal "16" and terminal "12" (ignition). Does 5–8840–0285–0 display "OL" (infinite)?	Go to Chart A	replace SRS harness Go to Step 6
6	1. Reconnect all components ensure all component are properly mounted. 2. Ignition switch "ON". Is passenger bag senslo less than 3.5 volts?	Ignition switch "OFF" Replace SDM Go to Step 7	Go to Chart A
7	1. Reconnect all components ensure all component are properly mounted. 2. Clear diagnostic trouble codes. Was this step finished?	Repeat the "SRS Diagnostic System Check"	Go to Step 7

DTC 21 Driver Deployment Loop Resistance High

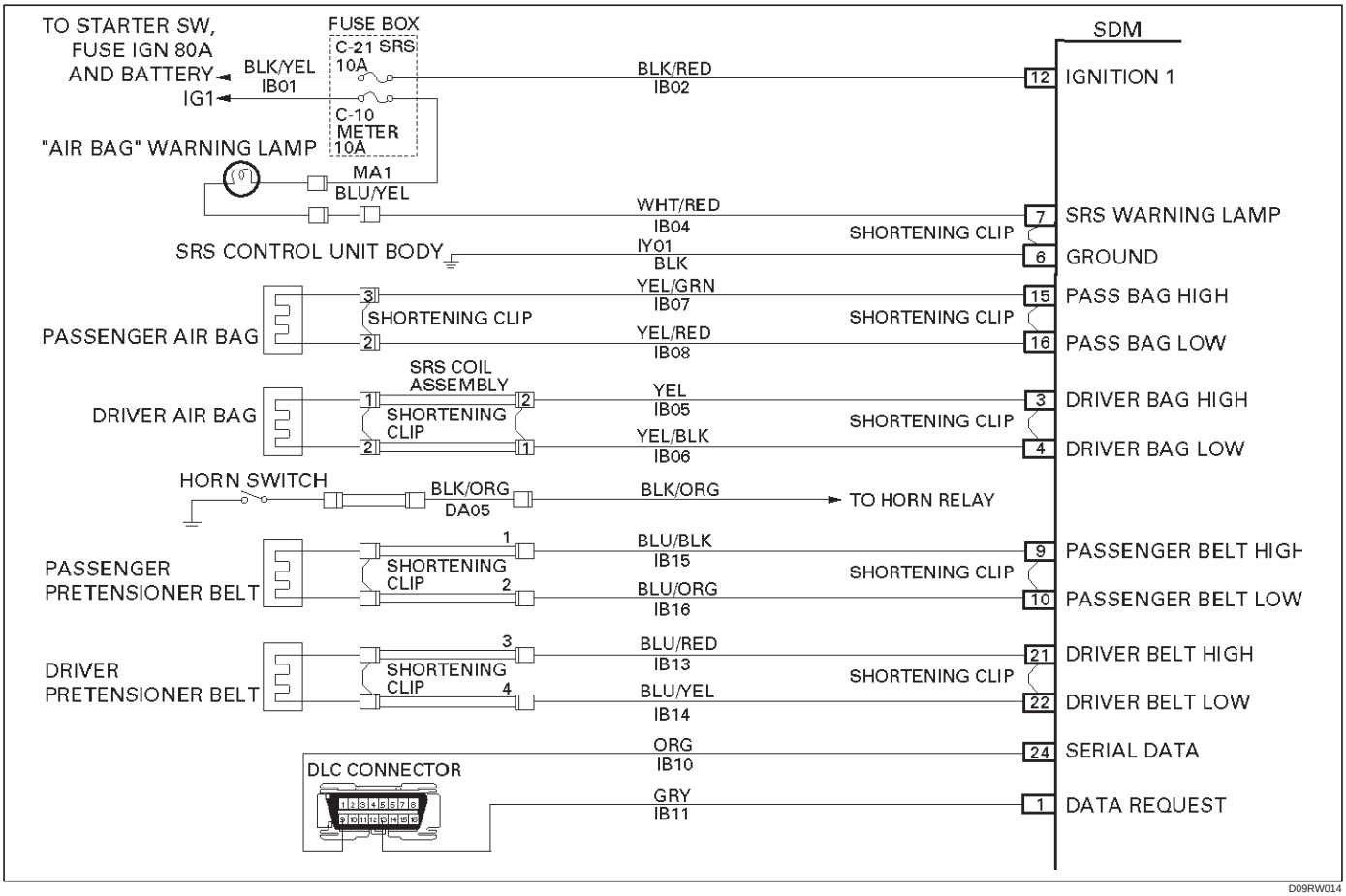

Circuit Description:

When the ignition switch is turned “ON”, the SDM will perform tests to diagnose critical malfunctions within itself. Upon passing these tests, “Ignition 1”, and deployment loop voltages are measured to ensure they are within their respective normal voltage ranges.

The SDM then proceeds with the “Resistance Measurement Test” “Driver Bag Low” terminal “4” is grounded through a current sink and the driver current source connected to “Driver Bag High” terminal “3” allows a known amount of current to flow. By monitoring the voltage difference between “Driver Bag High” and “Driver Bag Low”, the SDM calculates the combined resistance of the driver air bag assembly, SRS coil assembly, harness wiring IB05–YEL and IB06–YEL/BLK, and connector terminal contact.

DTC Will Set When:

The combined resistance of the driver air bag assembly, SRS Coil assembly, harness wiring IB05–YEL and IB06–YEL/BLK, and connector terminal contact is above a specified value. This test run once each ignition cycle during the “Resistance Measurement Test” when:

1. No “higher priority faults” are detected during “Turn–ON”
2. “Ignition 1” voltage is in the specified value.

Action Taken:

SDM turns “ON” the “AIR BAG” warning lamp and sets DTC 21.

DTC Will Clear When:

The ignition switch is turned “OFF”.

DTC Chart Test Description:

Number(s) below refer to step number(s) on the diagnostic chart:

2. This test determines whether the malfunction is in the SDM.
3. This test verifies proper connection of the yellow 2–pin connector at the base of the steering column.
4. This test checks for proper contact and/or corrosion of the 2–pin connector terminals at the base of steering column.
5. This test isolate the malfunction to one side of the SRS coil assembly yellow 2–pin connector located at the base of the steering column.
6. This test determines whether the malfunction is due to high resistance in the wiring.
7. This test determines whether the malfunction is in the SRS coil assembly or the driver air bag assembly.

Diagnostic Aids:

An intermittent condition is likely to be caused by a poor connection at terminals “1” and “2” of the SRS coil 2–pin connector at the base of the steering column, terminal “1” and “2” of the driver air bag assembly 2–pin connector at the top of the steering column, SDM terminals “3” and “4” or a poor wire to terminal connection in IB05–YEL or IB06–YEL/BLK. The test for this diagnostic trouble code is only run while the “AIR BAG” warning lamp is performing the bulb check, unless DTC 17 or DTC 26 is detected. When a scan tool “Clear Codes” command is issued and the malfunction is still present, the DTC will not reappear until the next ignition cycle.

DTC 21 Driver Deployment Loop Resistance High

Step	Action	Yes	No
1	Perform the “SRS Diagnostic System Check”. Was the “SRS Diagnostic System Check” performed?	Go to Step 2	Repeat the “SRS Diagnostic System Check”
2	1. When measurements are requested in this chart use 5–8840–0285–0 DVM with correct terminal adapter from 5–8840–0385–0. 2. Use scan tool data list function, read and record the driver deployment loop resistance. Is driver resistance more than 3.7 ohms?	Go to Step 3	Go to Chart A
3	1. Ignition switch “OFF.” 2. Disconnect SRS coil assembly yellow 2–pin connector located at base of steering column is seated properly. Is the 2–pin connector connected properly?	Go to Step 4	Seat SRS coil assembly 2–pin connector properly Go to Step 8
4	1. Disconnect and inspect the SRS coil assembly yellow 2–Pin connector located base of steering column. 2. If ok, reconnect the SRS coil assembly yellow 2–pin connector. 3. Ignition switch “ON.” Is DTC 21 current?	Go to Step 5	Go to Step 8
5	1. Ignition switch “OFF.” 2. Disconnect SRS coil and passenger air bag assembly, yellow 2–pin connector located at the base of steering column and behind the glove box assembly. 3. Connect SRS driver / passenger load tool 5–8840–2421–0 and appropriate adapter to SRS coil and passenger air bag assembly harness connectors. 4. Ignition switch “ON.” Is DTC 21 current?	Go to Step 6	Go to Step 7
6	1. Ignition switch “Off.” 2. There has been a increase in the total circuit resistance of the driver deployment loop. 3. Use the high resolution ohmmeter mode of the DVM while checking IB05–YEL and IB06–YEL/BLK, and SDM connector terminal “3” and “4” to locate the root cause. Was a fault found?	Replace SRS harness Go to Step 8	Go to Chart A

DTC 21 Driver Deployment Loop Resistance High (Cont'd)

Step	Action	Yes	No
7	1. Ignition switch "OFF." 2. Disconnect SRS driver / passenger load tool from SRS coil assembly harness connector. 3. Connect SRS driver / passenger load tool 5–8840–2421–0 on the top of steering column. 4. Reconnect SRS coil assembly harness connector as the base of steering column. 5. Ignition switch "ON." Is DTC 21 current?	Ignition switch "OFF" Replace SRS coil assembly Go to Step 8	Ignition switch "OFF" Replace driver air bag assembly Go to Step 8
8	1. Reconnect all components ensure all component are properly mounted. 2. Clear diagnostic trouble codes. Was this step finished?	Repeat the "SRS Diagnostic System Check"	Go to Step 8

DTC 22 Driver Deployment Loop Resistance Low

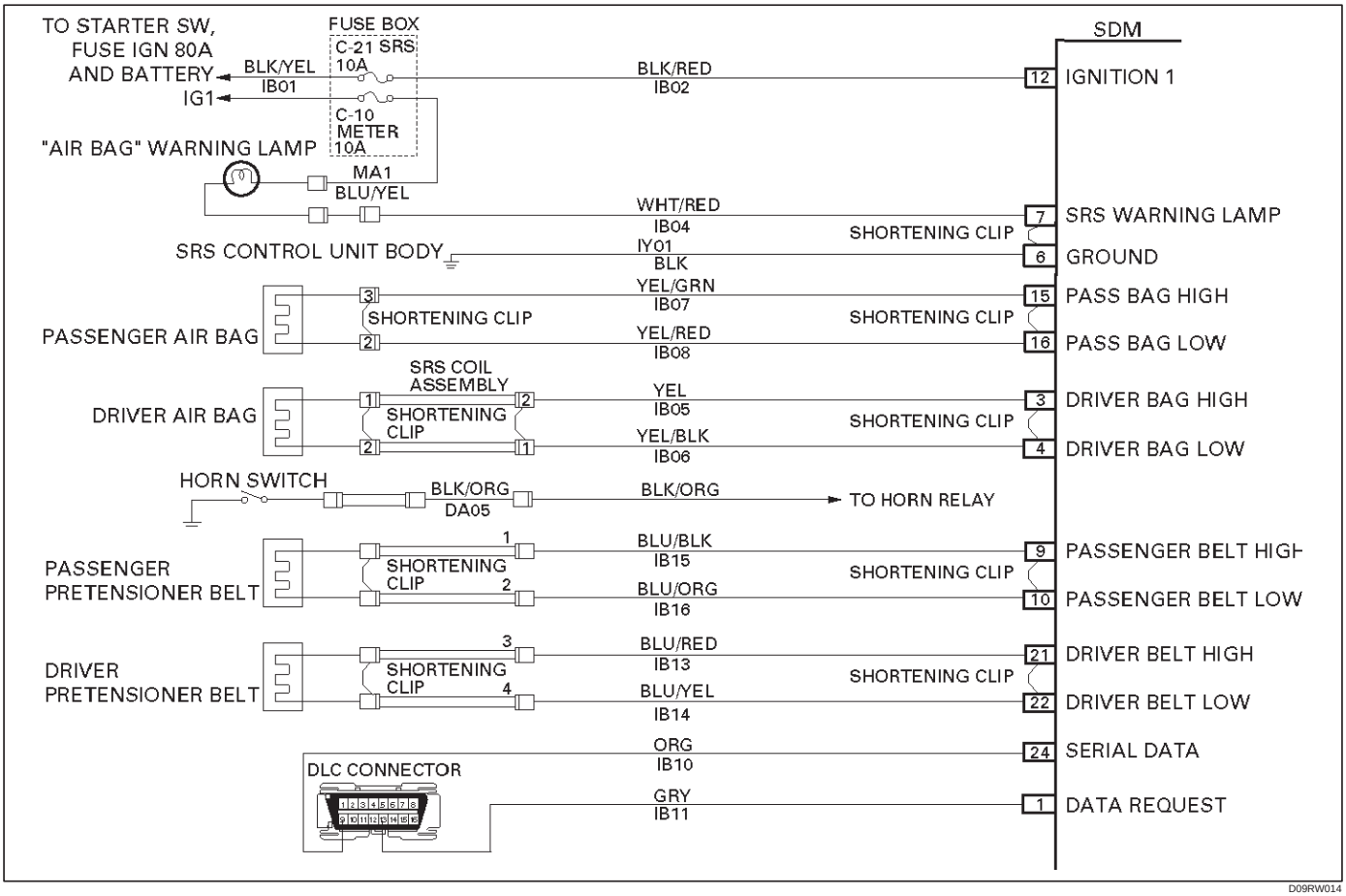

Circuit Description:

When the ignition switch is turned “ON”, the SDM will perform tests to diagnose critical malfunctions within itself. Upon passing these tests “Ignition 1”, and deployment loop voltages are measured to ensure they are within their respective normal voltage ranges.

The SDM then proceeds with the “Resistance Measurement Test” “Driver Bag Low” terminal “4” is grounded through a current sink and the driver current source connected to “Driver Bag High” terminal “3” allows a known amount of current to flow. By monitoring the voltage difference between “Driver Bag High” and “Driver Bag Low” the SDM calculates the combined resistance of the driver air bag assembly, SRS coil assembly, harness wiring IB05–YEL and IB06–YEL/BLK and connector terminal contact.

DTC Will Set When:

The combined resistance of the driver air bag assembly, SRS Coil assembly, harness wiring IB05–YEL and IB06–YEL/BLK and connector terminal contact is above a specified value. This test is run once each ignition cycle during the “Resistance Measurement Test” when:

1. No “higher priority faults” are detected during “Turn–ON”
2. “Ignition 1” voltage is in the specified value.

Action Taken:

SDM turns “ON” the “AIR BAG” warning lamp and sets DTC 22.

DTC Will Clear When:

The ignition switch is turned “OFF.”

DTC Chart Test Description:

Number(s) below refer to circled number(s) on the diagnostic chart:

2. This test determines whether the malfunction is in the SDM.
3. This test verifies proper connection of the yellow 2–pin connector at the base of the steering column.
4. This test checks for proper operation of the shorting clip in the yellow 2–pin connector.
5. This test isolate the malfunction to one side of the SRS coil assembly yellow 2–pin connector located at the base of steering column.
6. This test determines whether the malfunction is due to shortening in the wiring.
7. This test determines whether the malfunction is in the SRS coil assembly or the driver air bag assembly.

Diagnostic Aids:

An intermittent condition is likely to be caused by a short between IB05–YEL or IB06–YEL/BLK or a

malfunctioning shorting clip on the driver air bag assembly or SRS coil assembly which would require replacement of the component. The test for this diagnostic trouble code is only run while the “AIR BAG” warning lamp is performing the bulb check, unless DTC 17 or DTC 26 is detected. When a scan tool “Clear Codes” command is issued and the malfunction is still present, the DTC will not reappear until the next ignition cycle.

DTC 22 Driver Deployment Loop Resistance Low

Step	Action	Yes	No
1	Perform the “SRS Diagnostic System Check.” Was the “SRS Diagnostic System Check” performed?	Go to Step 2	Go to the “SRS Diagnostic System Check”
2	1. When measurements are requested in this chart use 5–8840–0285–0 DVM with correct terminal adapter from 5–8840–0385–0. 2. Use scan tool data list function, read and record the driver deployment loop resistance. Is driver deployment loop resistance less than 1.7 OHMS?	Go to Step 3	Go to Chart A
3	1. Ignition switch “OFF.” 2. Make sure the SRS coil assembly yellow 2–pin connector located at the base of steering column is seated properly. Is the 2–pin connector connected properly?	Go to Step 4	Seat driver air bag assembly 2–pin connector properly Go to Step 8
4	1. Disconnect and inspect the SRS coil assembly yellow 2–pin connector located base of steering column. 2. If ok, reconnect the SRS coil assembly yellow 2–pin connector. 3. Ignition switch “ON.” Is DTC 22 current?	Go to Step 5	Go to Step 8
5	1. Ignition switch “OFF.” 2. Disconnect SRS coil and passenger air bag assembly, yellow 2–pin connector located at the base of steering column and behind the glove box assembly. 3. Connect SRS driver / passenger load tool 5–8840–2421–0 and appropriate adapter to SRS coil and passenger air bag assembly harness connectors. 4. Ignition switch “ON.” Is DTC 22 current?	Go to Step 6	Go to Step 7
6	1. Ignition switch “OFF.” 2. There has been a decrease in the total circuit resistance of the driver deployment loop. 3. Use the high resolution ohmmeter mode of the DVM while checking IB05–YEL and IB06–YEL/BLK, and SDM connector terminal “3” and “4” to locate the root cause. Was a fault found?	Replace SRS harness Go to Step 8	Go to Chart A

DTC 22 Driver Deployment Loop Resistance Low (Cont'd)

Step	Action	Yes	No
7	1. Ignition switch "OFF." 2. Disconnect SRS driver / passenger load tool from driver air bag assembly harness connector. 3. Connect SRS driver / passenger load tool 5–8840–2421–0 to the top of steering column 2–pin connector. 4. Reconnect SRS coil assembly harness connector as the base of steering column. 5. Ignition switch "ON." Is DTC 22 current?	Ignition switch "off" Replace SRS coil assembly Go to Step 8	Ignition switch "OFF" Replace driver air bag assembly Go to Step 8
8	1. Reconnect all components, ensure all component are properly mounted. 2. Clear diagnostic trouble codes. Was this step finished?	Go to the "SRS Diagnostic System Check"	Go to Step 8

DTC 24 Driver Deployment Loop Short To Ground

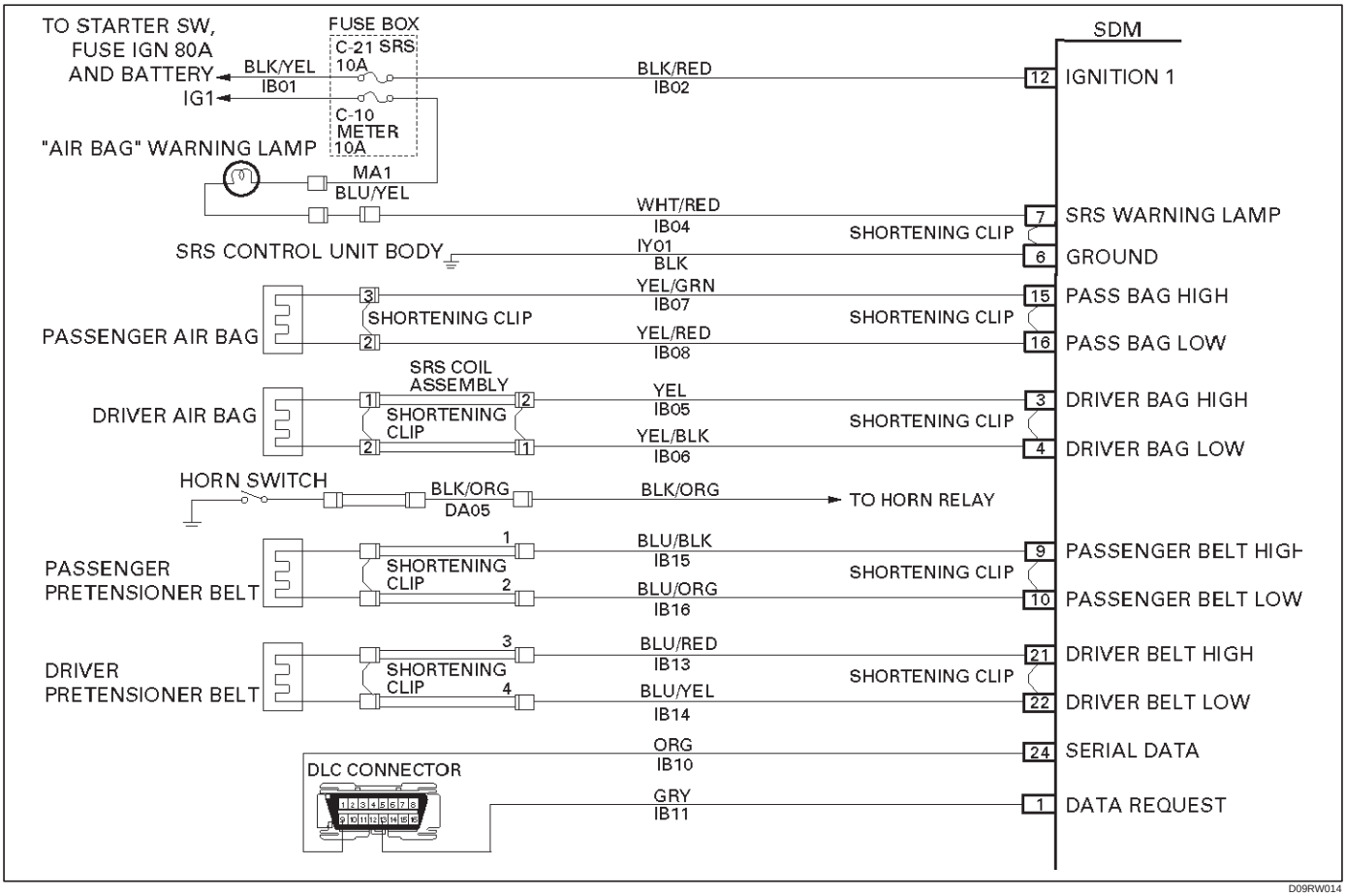

Circuit Description:

When the ignition switch is turned “ON”, the SDM will perform tests to diagnose critical malfunctions within itself. Upon passing these tests, “Ignition 1”, and deployment loop voltages are measured to ensure they are within their respective normal voltage ranges.
The SDM monitors the voltage at “Driver Bag Low” terminal “4” and “passenger Bag Low” terminal “16” to detect shorts to ground in the air bag assembly circuits.

DTC Will Set When:

Neither of the two air bag assemblies is open.
“Ignition 1” is within the normal operating voltage range.
This test is run once each ignition cycle and “Continuous Monitoring”. Once these conditions are met and the voltage at “Driver Bag Low” is below a specified value, DTC 24 will set.

Action Taken:

SDM turns “ON” the “AIR BAG” warning lamp and sets a diagnostic trouble code.

DTC Will Clear When:

The malfunction is no longer occurring and the ignition is turned “OFF”.

DTC Chart Test Description:

Number(s) below refer to step number(s) on the diagnostic chart:

2. This test determines whether the SDM is malfunctioning
3. This test isolates the malfunction to one side of the SRS coil assembly yellow 2–pin connector at the base of the steering column.
4. This test determines whether the malfunction is in IB05–YEL.
5. This test determines whether the malfunction is in IB06–YEL/BLK.
6. This test determines whether the malfunction is in the SRS coil assembly or the driver air bag assembly.

Diagnostic Aids:

An intermittent condition is likely to be caused by a short to ground in the driver air bag assembly circuit. Inspect IB05–YEL and IB06–YEL/BLK carefully for cutting or chafing.

DTC 24 Driver Deployment Loop Short To Ground

Step	Action	Yes	No
1	Was the “SRS Diagnostic System Check” performed?	Go to Step 2	Go to the “SRS Diagnostic System Check”
2	1. When measurements are requested in this chart use 5–8840–0285–0 DVM with correct terminal adapter from 5–8840–0385–0. 2. Ignition switch “OFF.” 3. Connect scan tool data link connector. follow directions as given in the scan tool operator’s manual. 4. Ignition switch “ON.” 5. Read driver bag sense LO. Is driver bag sense LO less than 1.5 volts?	Go to Step 3	Go to Chart A
3	1. Ignition switch “OFF.” 2. Disconnect SRS coil assembly yellow 2–pin connector located at base of the steering column. leave passenger air bag assembly connected. 3. Connect SRS driver / passenger load tool 5–8840–2421–0 and appropriate adapter to SRS coil assembly harness connector. 4. ignition switch “ON.” Is DTC 24 current?	Go to Step 4	Go to Step 6
4	1. Ignition switch “OFF.” 2. Disconnect SDM. 3. Disconnect SRS driver / passenger load tool. 4. Measure resistance on SDM harness connector “3” to terminal “6” (ground). Does 5–8840–0285–0 display “OL” (infinite)?	Go to Step 5	Replace SRS harness Go to Step 7
5	Measure resistance on SDM harness connector from terminal “4” to terminal “6” (ground). Does 5–8840–0285–0 display “OL” (infinite)?	Go to Chart A	Replace SRS harness Go to Step 7
6	1. Ignition switch “OFF.” 2. Disconnect SRS driver / passenger load tool 5–8840–2421–0 from SRS coil assembly harness connector. 3. Connect SRS driver / passenger load tool 5–8840–2421–0 and appropriate adapter 5–8840–0385–0 to driver air bag assembly harness connector. located top of the steering column 2–pin connector. 4. Reconnect SRS coil assembly harness connector as the base of steering column. 5. Ignition switch “ON.” Is DTC 24 current?	Ignition switch “OFF” Replace SRS coil assembly Go to Step 7	Ignition switch “OFF” Replace driver air bag assembly Go to Step 7
7	1. Reconnect all components ensure all component are properly mounted. 2. Clear diagnostic trouble codes. Was this step finished?	Go to the “SRS Diagnostic System Check”	Go to Step 7

DTC 25 Driver Deployment Loop Short To B+

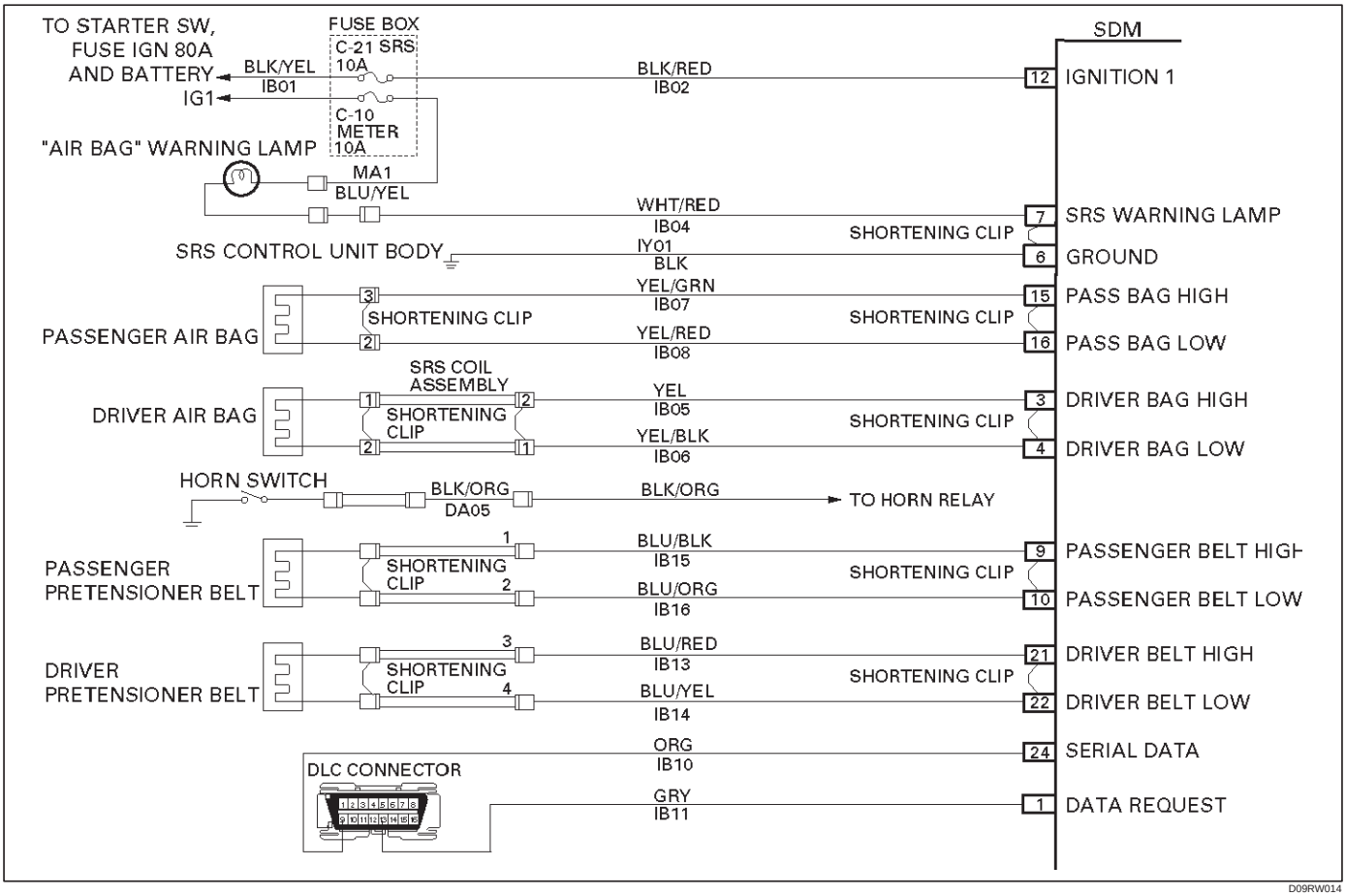

Circuit Description:

When the ignition switch is turned “ON”, the SDM will perform tests to diagnose critical malfunctions within itself. Upon passing these tests, “Ignition 1”, and deployment loop voltages are measured to ensure they are within their respective normal voltage ranges.
The SDM monitors the voltage at “Driver Bag Low” terminal “4” and “Passenger Bag Low” terminal “16” to detect shorts to B+ in the air bag assembly circuits.

DTC Will Set When:

“Ignition 1” is in the normal operating voltage range. This test is run once each ignition cycle and “Continuous monitoring”. Once these conditions are met and the voltage at “Driver Bag Low” is above a specified value, DTC 25 will set.

Action Taken:

SDM turns “ON” the “AIR BAG” warning lamp and sets DTC 25 and also DTC 71

DTC Will Clear When:

The SDM is replaced.

DTC Chart Test Description:

Number(s) below refer to step number(s) on the diagnostic chart:

2. This test determines whether the SDM is malfunctioning.
3. This test isolates the malfunction to one side of the driver air bag assembly yellow 2–pin connector at the base of steering column.
4. This test determines whether the malfunction is in IB05–YEL.
5. This test determines whether the malfunction is in IB06–YEL/BLK.
6. This test determines whether the malfunction is in the SRS coil assembly or the driver air bag assembly.

Diagnostic Aids:

An intermittent condition is likely to be caused by a short to B+ in the driver air bag assembly circuit. Inspect IB05–YEL and IB06–YEL/BLK carefully for cutting or chafing. If the wiring pigtail of the driver air bag assembly and SRS coil assembly is damaged, the components must be replaced. A careful inspection of IB05–YEL and IB06–YEL/BLK, including the SRS coil assembly and driver air bag assembly is essential to ensure that the replacement SDM will not be damaged.

DTC 25 Driver Deployment Loop Short To B+

CAUTION: When DTC 25 has been set, it is necessary to replace the SDM. Setting DTC 25 will also cause DTC 71 to set. When a scan tool "CLEAR CODES" command is issued and the malfunction is no longer present, DTC 71 will remain current. Ensure that the short to B+ condition is repaired prior to installing a replacement SDM to avoid damaging the SDM.

Step	Action	Yes	No
1	Was the "SRS Diagnostic System Check" performed?	Go to Step 2	Go to the "SRS Diagnostic System Check"
2	1. When measurements are requested in this chart use 5–8840–0285–0 DVM with correct terminal adapter from 5–8840–0385–0. 2. Ignition switch "OFF." 3. Connect scan tool data link connector. follow directions as given in the scan tool operator's manual. 4. Ignition switch "ON." 5. Read driver bag sense LO . Is driver bag sense LO more than 3.5 volts?	Go to Step 3	Go to Chart A
3	1. Ignition switch "OFF." 2. Disconnect SRS coil assembly yellow 2–pin connector at the base of the steering column. Leave passenger air bag assembly connected. 3. Connect SRS driver /passenger load tool 5–8840–2421–0 and appropriate adapter to SRS coil assembly harness connector. 4. Ignition switch "ON." Is driver bag sense LO more than 3.5 volts?	Go to Step 4	Go to Step 6
4	1. Ignition switch "OFF." 2. Disconnect SDM. 3. Disconnect SRS driver /passenger load tool. 4. Measure resistance on SDM harness connector "3" to terminal "12" (ignition). Does 5–8840–0285–0 display "OL" (infinite)?	Go to Step 5	Replace SRS harness Go to Step 7
5	Measure resistance on SDM harness connector from terminal "4" to terminal "12" (ignition). Does 5–8840–0285–0 display "OL" (infinite)?	Go to Chart A	Replace SRS harness Go to Step 7
6	1. Ignition switch "OFF" 2. Connect SRS driver / passenger load tool 5–8840–2421–0 and appropriate adapter 5–8840–0385–0 to driver air bag assembly harness 2-pin connector located at top of the steering column. 3. Reconnect SRS coil assembly harness connector as the base of steering column. 4. Ignition switch "ON." Is driver bag sense LO more than 3.5 volts?	Ignition switch "OFF" Replace SRS coil assembly Go to Step 7	Ignition switch "OFF" Replace driver air bag assembly Go to Step 7
7	1. Reconnect all components, ensure all component are properly mounted. 2. Ignition switch "ON." Is driver bag senslo less than 3.5 volts?	Ignition switch "OFF" Replace SDM Go to Step 8	Go to Chart A
8	1. Reconnect all components ensure all component are properly mounted. 2. Clear diagnostic trouble codes. Was this step finished?	Go to the "SRS Diagnostic System Check"	Go to Step 8

DTC 26 Driver Deployment Loop Open

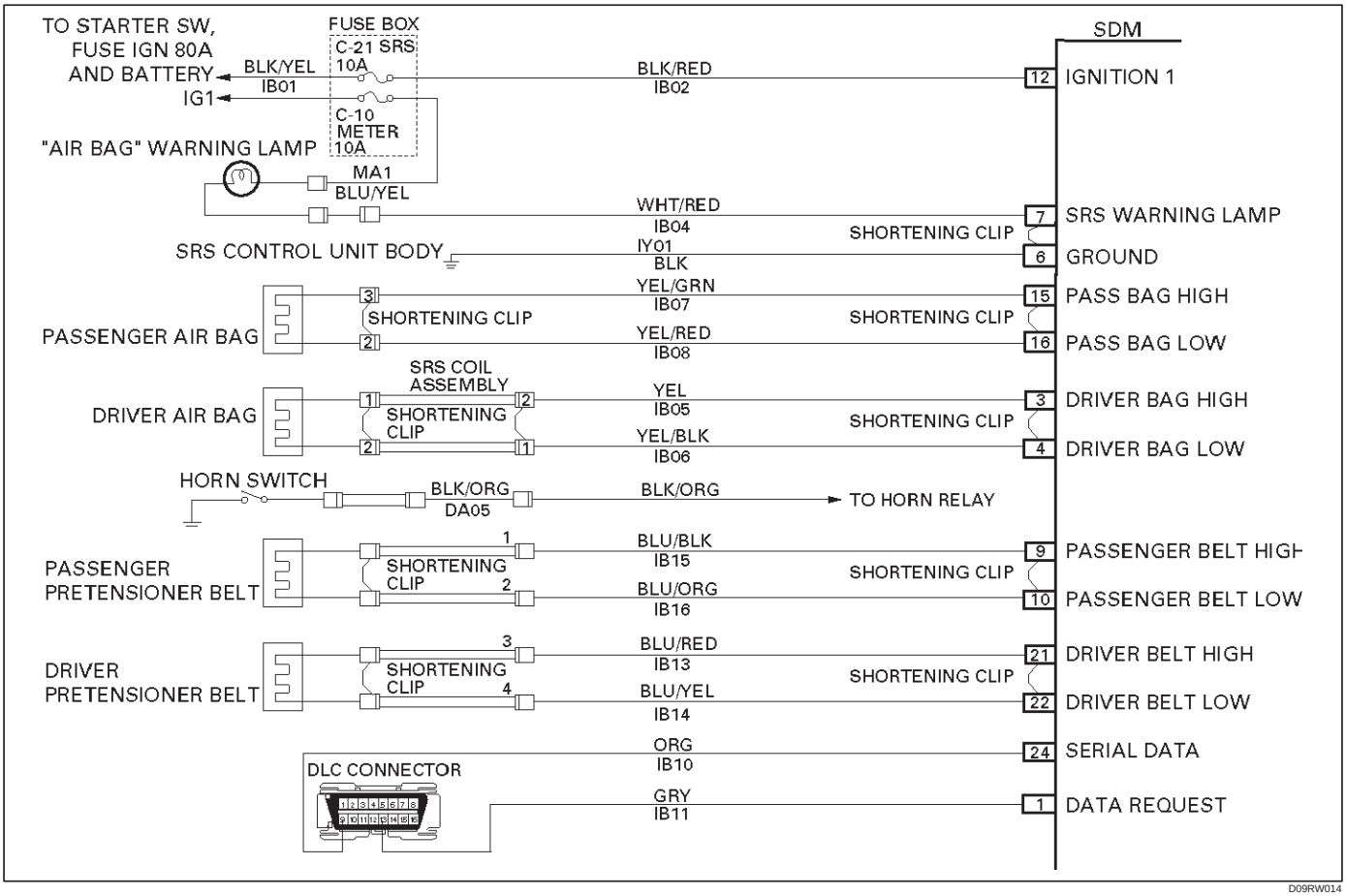

Circuit Description:

When the ignition switch is turned “ON”, the SDM will perform tests to diagnose critical malfunctions within itself. Upon passing these tests, “Ignition 1”, and deployment loop voltages are measured to ensure they are within their respective normal voltage ranges.

During “Continuous Monitoring” diagnostics, a fixed amount of current is following in the deployment loop. This produces proportional voltage drops in the loop. By monitoring the voltage difference between “Driver Bag High” and “Driver Bag Low”, the SDM calculates the combined resistance of the driver air bag assembly, SRS coil assembly, harness wiring IB05–YEL and IB06–YEL/BLK, and connector terminal contact.

DTC Will Set When:

The voltage difference between “Driver Bag High” terminal “3” and “Driver Bag Low” terminal “4” is above or equal to a specified value for 500 milliseconds during “Continuous Monitoring”.

Action Taken:

SDM turns “ON” the “AIR BAG” warning lamp and sets a diagnostic trouble code.

DTC Will Clear When:

The voltage difference between “Driver Bag High” terminal “3” and “Driver Bag Low” terminal “4” is below a specified value for 500 milliseconds during “Continuous Monitoring”.

DTC Chart Test Description:

Number(s) below refer to step number(s) on the diagnostic chart:

2. This test determines whether the malfunction is in the SDM.
3. This test verifies proper connection of the yellow 2–pin connector at the base of the steering column.
4. This test checks for proper contact and/or corrosion of the yellow 2–pin connector at the base of the steering column.
5. This test isolates the malfunction to one side of the SRS coil assembly yellow 2–pin connector located at the base of steering column.
6. This test determines whether the open is in the wiring.
7. This test determines whether the malfunction is in the SRS coil assembly or the driver air bag assembly.

Diagnostic Aids:

An intermittent condition is likely to be caused by a poor connection at the driver air bag assembly harness 2–pin connector terminals “1” and “2” at the top of the steering column, SRS coil assembly harness 2–pin connection terminals “1” and “2”, SDM terminals “3” and “4”, or an open in IB05–YEL and IB06–YEL/BLK.

DTC 26 Driver Deployment Loop Open

Step	Action	Yes	No
1	Was the “SRS Diagnostic System Check” performed?	Go to Step 2	Go to the “SRS Diagnostic System Check”
2	1. When measurements are requested in this chart use 5–8840–0285–0 DVM with correct terminal adapter from 5–8840–0385–0. 2. Use scan tool data list function, read and record the driver differential voltage. Is driver VDIF more than 4.25 volts?	Go to Step 3	Go to Chart A
3	1. Ignition switch “OFF.” 2. Make sure the SRS coil assembly yellow 2–pin connector located at the base of steering column is seated properly. Is the yellow 2–pin connector connected properly?	Go to Step 4	Seat driver air bag assembly 2–pin connector Go to Step 8
4	1. Disconnect and inspect the SRS coil assembly yellow 2–pin connector located base of steering column. 2. If ok, reconnect the SRS coil assembly yellow 2–pin connector. 3. Ignition switch “ON.” Is DTC 26 current?	Go to Step 5	Go to Step 8
5	1. Ignition switch “OFF”. 2. Disconnect SRS coil and passenger air bag assembly, yellow 2–pin connectors located at the base of steering column and behind the glove box assembly. 3. Connect SRS driver/passenger load tool 5–8840–2421–0 and appropriate adapter to SRS coil and passenger air bag assembly harness connectors. 4. Ignition switch “ON.” Is DTC 26 current?	Go to Step 6	Go to Step 7
6	1. Ignition switch “OFF.” 2. There has been an open circuit in the driver inflator deployment loop. 3. Use the high resolution ohmmeter mode of the DVM while checking IB05–YEL and IB06–YEL/BLK, and SDM connector terminal “3” and “4” to locate the root cause. Was a fault found?	Replace SRS harness Go to Step 8	Go to Chart A
7	1. Ignition switch “OFF.” 2. Disconnect SRS driver / passenger load tool from SRS coil assembly harness connector. 3. Connect SRS driver / passenger load tool 5–8840–2421–0 on steering column 2–pin connector. 4. Reconnect SRS coil assembly harness connector at the base of steering column. 5. Ignition switch “ON.” Is DTC 26 current?	Ignition switch “OFF” Replace SRS coil assembly Go to Step 8	Ignition switch “OFF” Replace driver air bag assembly Go to Step 8
8	1. Reconnect all components ensure all component are properly mounted. 2. Clear diagnostic trouble codes. Was this step finished?	Repeat the “SRS Diagnostic System Check”	Go to Step 8

DTC 51 Air Bag Deployment Event Commanded

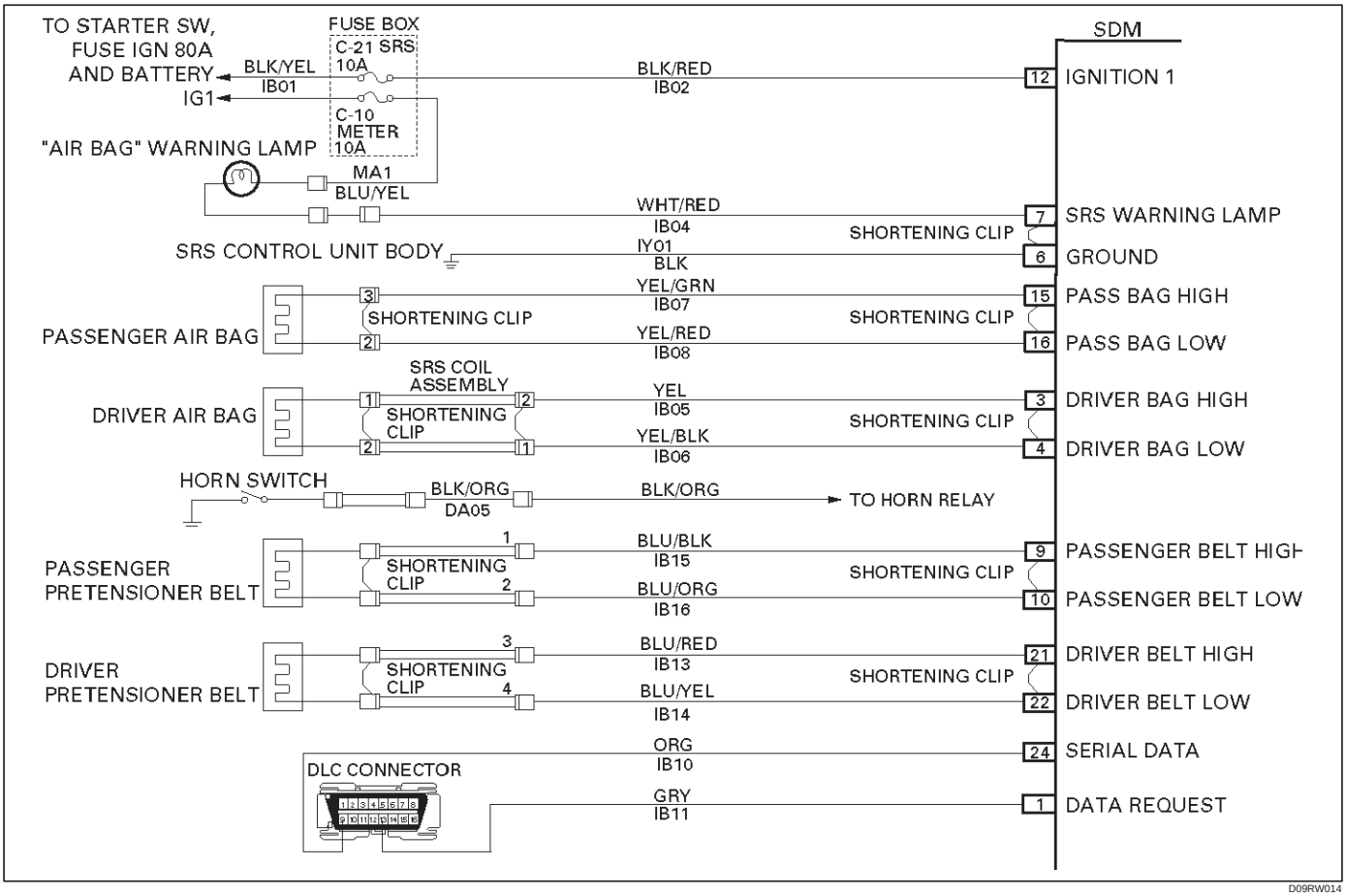

Circuit Description:

The SDM contains a sensing device which converts vehicle velocity changes to an electrical signal. The electrical signal generated is processed by the SDM and then compared to a value stored in memory. When the generated signal exceeds the stored value, the SDM will cause current to flow through the air bag assembly deploying the air bags and causing DTC 51 to set.

DTC Will Set When:

The SDM detects a frontal crash, up to 30 degrees off the centerline of the vehicle, of sufficient force to warrant deployment of the air bags.

Action Taken:

SDM turns “ON” the “AIR BAG” warning lamp records “Crash Data”, and sets a diagnostic trouble code.

DTC Will Clear When:

The SDM is replaced.

DTC Chart Test Description:

Number(s) below refer to step number(s) on the diagnostic chart:

2. If air bag assembly (s) has not deployed, DTC 51 may have falsely set.
3. If DTC 51 has set with no signs of frontal impact, the diagnostic trouble code has falsely set.

DTC 51 Air Bag Deployment Event Commanded

WARNING: DURING SERVICE PROCEDURES. BE VERY CAREFUL WHEN HANDLING A SENSING AND DIAGNOSTIC MODULE (SDM). NEVER STRIKE OR JAR THE SDM. NEVER POWER UP THE SRS WHEN THE SDM IS NOT RIGIDLY ATTACHED TO THE VEHICLE. ALL SDM AND MOUNTING BRACKET FASTENERS MUST BE CAREFULLY TORQUED AND THE ARROW MUST BE POINTING TOWARD THE FRONT OF THE VEHICLE TO ENSURE PROPER OPERATION OF THE SRS. THE SDM COULD BE ACTIVATED WHEN POWERED WHILE NOT RIGIDLY ATTACHED TO THE VEHICLE WHICH COULD CAUSE DEPLOYMENT AND RESULT IN PERSONAL INJURY.

Step	Action	Yes	No
1	Was the “SRS Diagnostic System Check” performed?	Go to Step 2	Go to the “SRS Diagnostic System Check”
2	Ignition switch “OFF.” Have air bag assemblies deployed?	Replace components and perform inspections as directed in “repairs and inspections required after an accident” in this section Clear diagnostic trouble codes Repeat “SRS Diagnostic System Check”	Go to Step 3
3	Inspect front of vehicle and undercarriage for sings of impact. Were signs of impact found?	Replace components and perform inspections as directed in “Repairs and Inspections Required After An Accident” in this section Clear diagnostic trouble codes Repeat “SRS Diagnostic System Check”	Ignition switch “OFF” Replace SDM Reconnect all SRS system components, ensure all components are properly mounted Repeat “SRS Diagnostic System Check”

DTC 53 Deployment Commanded With Deployment Loop Fault Or Energy Reserves Out Of Range

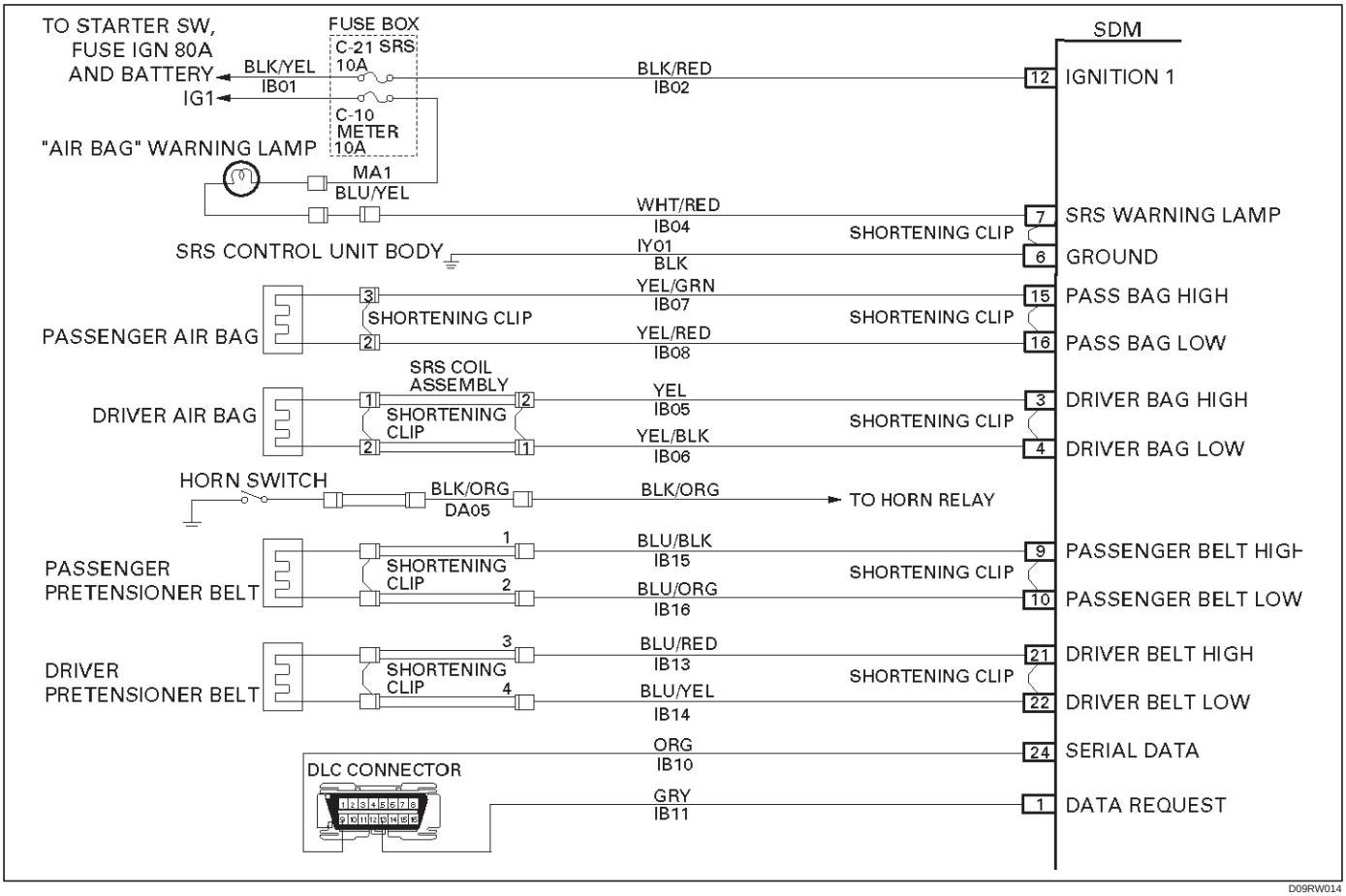

Circuit Description:

The SDM contains a sensing drive which converts vehicle velocity changes to an electrical signal. The electrical signal generated is processed by the SDM and then compared to a value stored in memory. When the generated signal exceeds the stored value, the SDM will cause current to flow through the air bag assembly deploying the air bags. DTC 53 is set accompanying with DTC 51 when a deployment occurs while an air bag assembly circuit fault is present that could possible result in a no deployment situation in one or both air bag assemblies.

DTC Will Set When:

The SDM detects a frontal crash, up to 30 degrees off the centerline of the vehicle, of sufficient force to warrant deployment of the air bags and an inflator circuit fault is present..

Action Taken:

SDM turns “ON” the “AIR BAG” warning lamp records “Crash Data”, and sets a diagnostic trouble code.

DTC Will Clear When:

The SDM is replaced. If DTC 53 is set, one or more DTCs will be set in addition to DTC 53. Malfunction(s) setting DTC(s) (other than DTC 71) must be repaired so that DTC(s) will not be set when a new SDM is installed.

DTC Chart Test Description:

Number(s) below refer to step number(s) on the diagnostic chart:

2. If air bag assembly have not deployed, DTC 53 may have falsely set.
3. If DTC 53 has set with no signs of frontal impact, the diagnostic trouble code has falsely set.

DTC 53 Deployment Commanded WITH Deployment Loop Fault Or Energy Reserves Out Of Range

WARNING: DURING SERVICE PROCEDURES. BE VERY CAREFUL WHEN HANDLING A SENSING AND DIAGNOSTIC MODULE (SDM). NEVER STRIKE OR JAR THE SDM. NEVER POWER UP THE SRS WHEN THE SDM IS NOT RIGIDLY ATTACHED TO THE VEHICLE. ALL SDM AND MOUNTING BRACKET FASTENERS MUST BE CAREFULLY TORQUED AND THE ARROW MUST BE POINTING TOWARD THE FRONT OF THE VEHICLE TO ENSURE PROPER OPERATION OF THE SRS. THE SDM COULD BE ACTIVATED WHEN POWERED WHILE NOT RIGIDLY ATTACHED TO THE VEHICLE WHICH COULD CAUSE DEPLOYMENT AND RESULT IN PERSONAL INJURY.

Step	Action	Yes	No
1	Was the “SRS Diagnostic System Check” performed?	Go to Step 2	Go to the “SRS Diagnostic System Check”
2	Ignition switch “OFF.” Have air bag assembles deployed?	Replace components and perform inspections as directed in “Repairs And Inspections Required After An Accident” in this section Clear diagnostic trouble codes Repeat the “SRS Diagnostic System Check”	Go to Step 3
3	Inspect front of vehicle and undercarriage for signs of impact. Were signs of impact found?	Replace components and perform inspections as directed in “Repairs And Inspections Required After An Accident” in this section Clear diagnostic trouble codes Repeat “SRS Diagnostic System Check”	Ignition switch “OFF” Replace SDM Reconnect all SRS system components, ensure all components are properly mounted Repeat the “SRS Diagnostic System Check”

DTC 61 Warning Lamp Circuit Failure

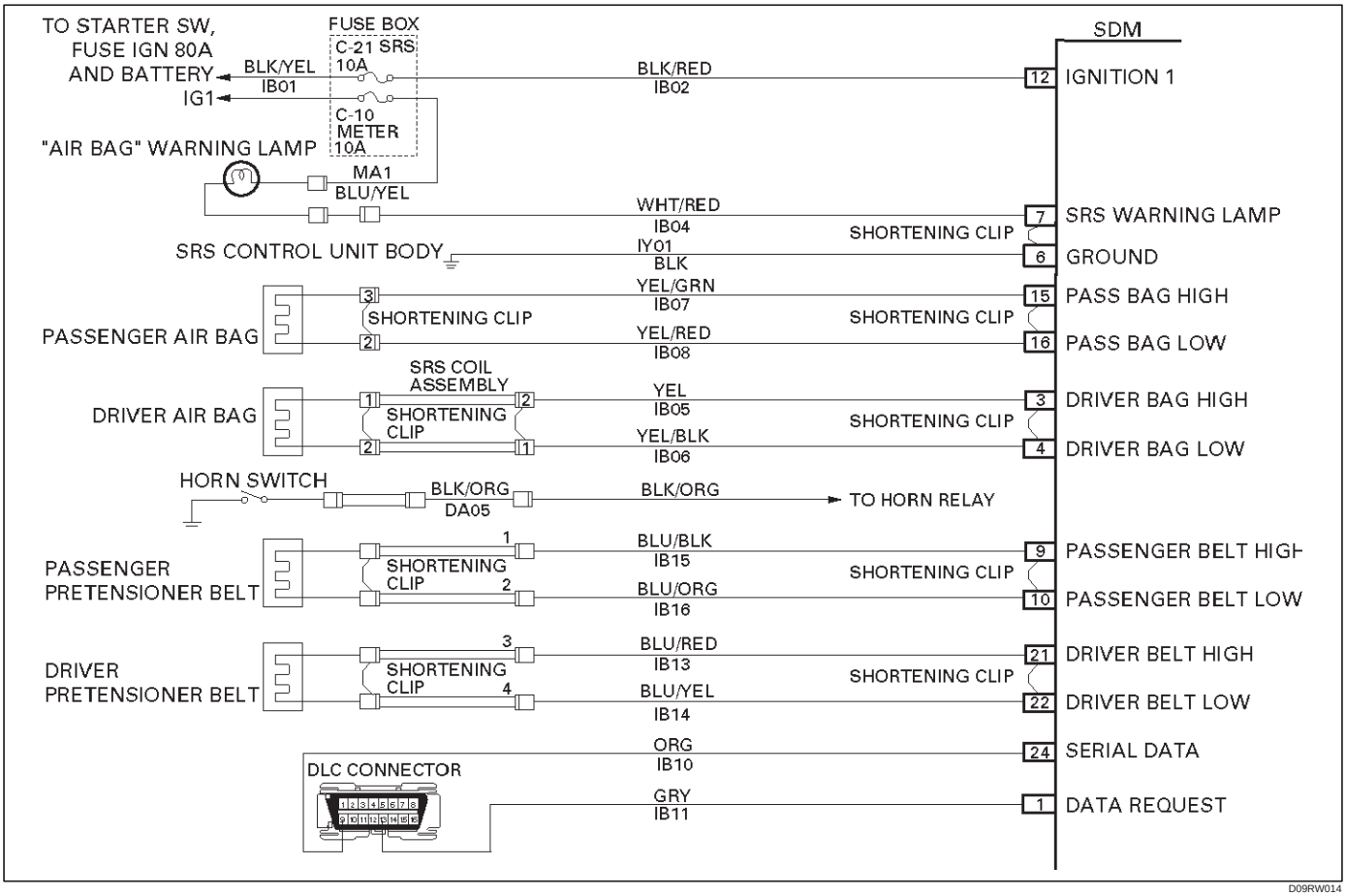

Circuit Description:

When the ignition switch is turned “ON”, battery voltage is applied to the “AIR BAG” warning lamp and to the “Ignition 1” input terminal “12”. The SDM responds by turning on the “AIR BAG” warning lamp 3.5 seconds. The SDM monitors the lamp driver output by comparing the output state at “SRS Warning Lamp” terminal “7” to the microprocessor commanded state. When “Ignition 1” is in the specified value, and the output state does not match the commanded state of the lamp driver for 500 milliseconds, DTC 61 is set.

DTC Will Set When:

“Ignition 1” voltage is in the specified value and the output state at the “SRS Warning Lamp” terminal does not match the commanded state of the lamp driver for 500 milliseconds. This test is run every 100 milliseconds during “Continuous Monitoring” tests and once per each ignition cycle at the beginning.

Action Taken:

SDM attempts to turn “ON” the “AIR BAG” warning lamp and sets a diagnostic trouble code.

DTC Will Clear When:

The ignition switch is turned “OFF.”

Diagnostic Aids:

Refer to Charts B and C to diagnose warning lamp circuit malfunctions.

DTC 61 Warning Lamp Circuit Failure

Step	Action	Yes	No
1	Was the “SRS Diagnostic System Check” performed?	Go to Step 2	Go to the “SRS Diagnostic System Check”
2	1. Malfunctions within the “AIR BAG” warning lamp circuitry will set this diagnostic trouble code. 2. These malfunctions are addressed in the “SRS Diagnostic System Check” via Chart B and Chart C. 3. Failure to properly perform the “SRS Diagnostic System Check” may result in misdiagnosis. 4. Ignition switch “ON.” 5. Clear SRS diagnostic trouble codes. IS DTC 61 set?	Ignition switch “OFF” Go to Chart A	Repeat the “SRS Diagnostic System Check”

DTC 71 Internal SDM Fault

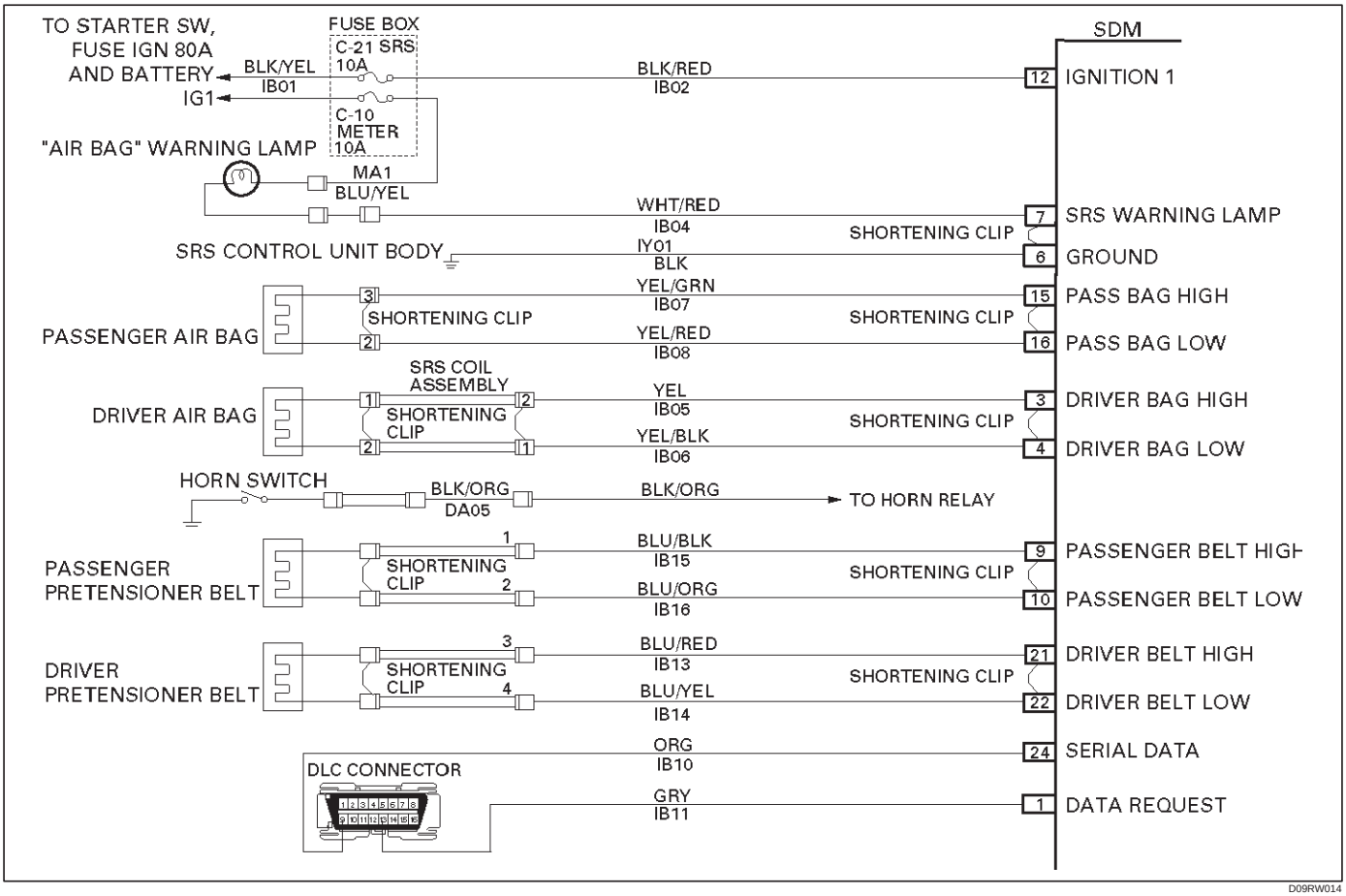

Circuit Description:

DTC 71 is an indication of a potential internal SDM malfunction and will set if any of the following conditions are detected:

1) Deployment or microprocessor energy reserve failure.
2) EEPROM failure.
3) ROM failure.
4) RAM failure.
5) Calibration check sum failure.
6) Deployment switch faults.
7) Accelerometer fault.
8) Arming sensor fault.
9) Diagnostic current faults.
10) DTC 19
11) DTC 25
12) DTC 51
13) DTC 53

DTC Will Set When:

Any of the above indicated malfunctions are detected by the SDM. The malfunctions described above are tested mainly during “Continuous Monitoring” and some ones run each ignition cycle.

Action Taken:

SDM turns “ON” the “AIR BAG” warning lamp and sets a diagnostic trouble code.

DTC Will Clear When:

A scan tool “Clear Codes” commanded is received by the SDM. Some of the indicated malfunctions will only allow the “AIR BAG” warning lamp to go out.
But when DTC 19, 25, 51, 53 are also set, SDM is replaced.

DTC 71 Internal SDM Fault

WARNING: DURING SERVICE PROCEDURES. BE VERY CAREFUL WHEN HANDLING A SENSING AND DIAGNOSTIC MODULE (SDM). NEVER STRIKE OR JAR THE SDM. NEVER POWER UP THE SRS WHEN THE SDM IS NOT RIGIDLY ATTACHED TO THE VEHICLE. ALL SDM AND MOUNTING BRACKET FASTENERS MUST BE CAREFULLY TORQUED AND THE ARROW MUST BE POINTING TOWARD THE FRONT OF THE VEHICLE TO ENSURE PROPER OPERATION OF THE SRS. THE SDM COULD BE ACTIVATED WHEN POWERED WHILE NOT RIGIDLY ATTACHED TO THE VEHICLE WHICH COULD CAUSE DEPLOYMENT AND RESULT IN PERSONAL INJURY.

CAUTION: When DTC 19 or 25 has been set, it is necessary to replace the SDM. Setting DTC 19 and 25 or 51 or 53 will also cause DTC 71 to set. When a scan tool "CLEAR CODES" command is issued and the malfunction is no longer present, DTC 51 or 53 and DTC 71 will remain current. Ensure that the short to voltage condition DTC 19, 25 is repaired prior to installing a replacement SDM to avoid damaging the SDM.

Step	Action	Yes	No
1	Was the "SRS Diagnostic System Check" performed?	Go to Step 2	Go to the "SRS Diagnostic System Check"
2	Note SRS "Diagnostic System Check." IS DTC 19 OR 25 OR 51 OR 53 ALSO SET (CURRENT OR HISTORY)? (REFER TO NOTICE ABOVE.)	Go to DTC 19 if DTC 19 is set Go to DTC 25 if DTC 25 is set Go to DTC 51 if DTC 51 is set Go to DTC 53 if DTC 53 is set	Ignition switch "OFF" Replace SDM Repeat the "SRS Diagnostic System Check"

DTC 29 Passenger Pretensioner Loop Short To Ground

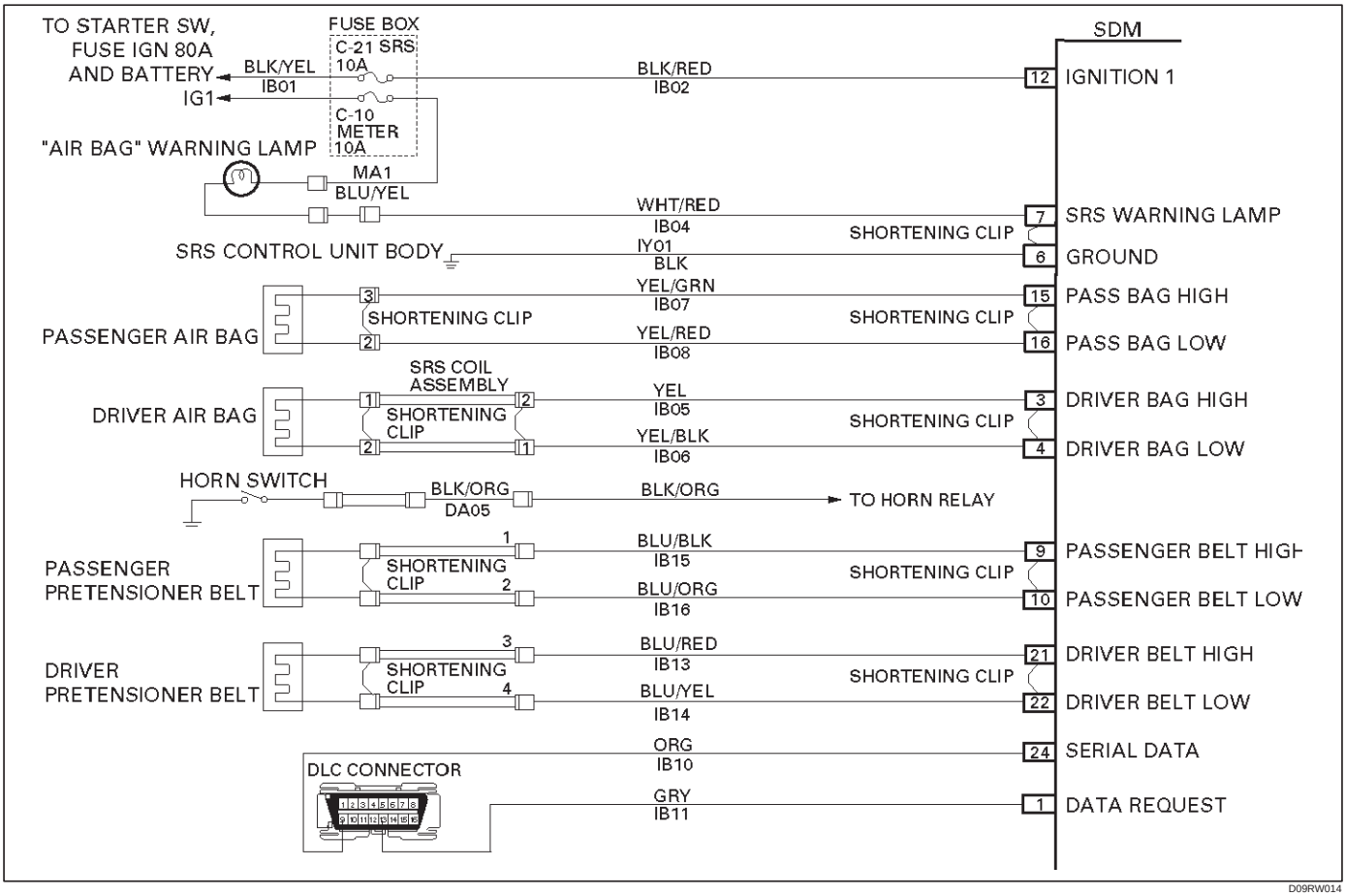

Circuit Description:

When the ignition switch is turned “ON”, the SDM will perform tests to diagnose critical malfunctions within itself. Upon passing these tests, “Ignition 1”, and pretensioner loop voltages are measured to ensure they are within their respective normal voltage ranges.
The SDM monitors the voltages at “Driver Belt Low” terminal “10” and “Passenger Belt Low” terminal “22” to detect short to ground in the pretensioner assembly circuits.

DTC Will Set When:

Neither of the air bag and the pretensioner belt are open. “Ignition 1” is within the normal operating voltage range. Once these conditions are met and the voltage at “Passenger Belt Low” is below a specified value, DTC 29 will set. This test is run once each ignition cycle and “Continuous Monitoring”.

Action Taken:

SDM turns “ON” the “AIR BAG” warning lamp and sets a diagnostic trouble code.

DTC Will Clear When:

This malfunction is no longer occurring and the ignition switch is turned “OFF”.

DTC Chart Test Description:

Number(s) below refer to circled number(s) on the diagnostic chart.

2. This test determines whether the SDM is malfunctioning.
3. This test isolates the malfunction to one side of the passenger pretensioner assembly yellow 2–pin connector at the base of the passenger seat.
4. This test determines whether the malfunction is in IB15–BLU/BLK.
5. This test determines whether the malfunction is in IB16–BLU/ORG.

Diagnostic Aids:

An intermittent condition is likely to be caused by a short to ground in the passenger pretensioner assembly circuit. Inspect IB15–BLU/BLK and IB16–BLU/ORG carefully for cutting or chafing. If the wiring pigtail of the passenger pretensioner assembly is damaged, the component must be replaced.

DTC 29 Passenger Pretensioner Loop Short To Ground

Step	Action	Yes	No
1	Was the “SRS Diagnostic System Check” performed?	Go to Step 2	Go to the “SRS Diagnostic System Check”
2	1. When measurements are requested in this chart use 5–8840–0285–0 DVM with correct terminal adapter from 5–8840–0385–0. 2. Ignition switch “OFF.” 3. Connect scan tool data link connector. follow directions as given in the scan tool operator’s MANUAL. 4. Ignition switch “ON.” 5. Read passenger sense LO. Is passenger sense LO less than 1.5 volts?	Go to Step 3	Go to Chart A
3	1. Ignition switch “OFF.” 2. Disconnect passenger pretensioner assembly yellow 2–pin connector at the base of the passenger seat. 3. Leave driver pretensioner assembly connected. 4. Connect SRS driver / passenger load tool 5–8840–2421–0 and appropriate adapter to passenger pretensioner assembly harness connector. 5. Ignition switch “ON.” Is DTC 29 current?	Go to Step 4	Ignition switch “OFF” Replace passenger pretensioner assembly Go to Step 6
4	1. Ignition switch “OFF”. 2. Disconnect SRS driver / passenger load tool 3. Measure resistance on SDM harness connector from terminal “9” to terminal “6” (ground). Does 5–8840–0285–0 display “OL” (Infinite)?	Go to Step 5	Replace SRS harness or repair chassis harness Go to Step 6
5	Measure resistance on SDM harness connector from terminal “10” to terminal “6” (ground). Does 5–8840–0285–0 display “OL” (Infinite)?	Go to Chart A	Replace SRS harness or repair chassis harness Go to Step 6
6	1. Reconnect all components and ensure all component are properly mounted. 2. Clear diagnostic trouble codes. Was this step finished?	Go to the “SRS Diagnostic system Check”	Go to Step 6

DTC 31 Passenger Pretensioner Loop Resistance High

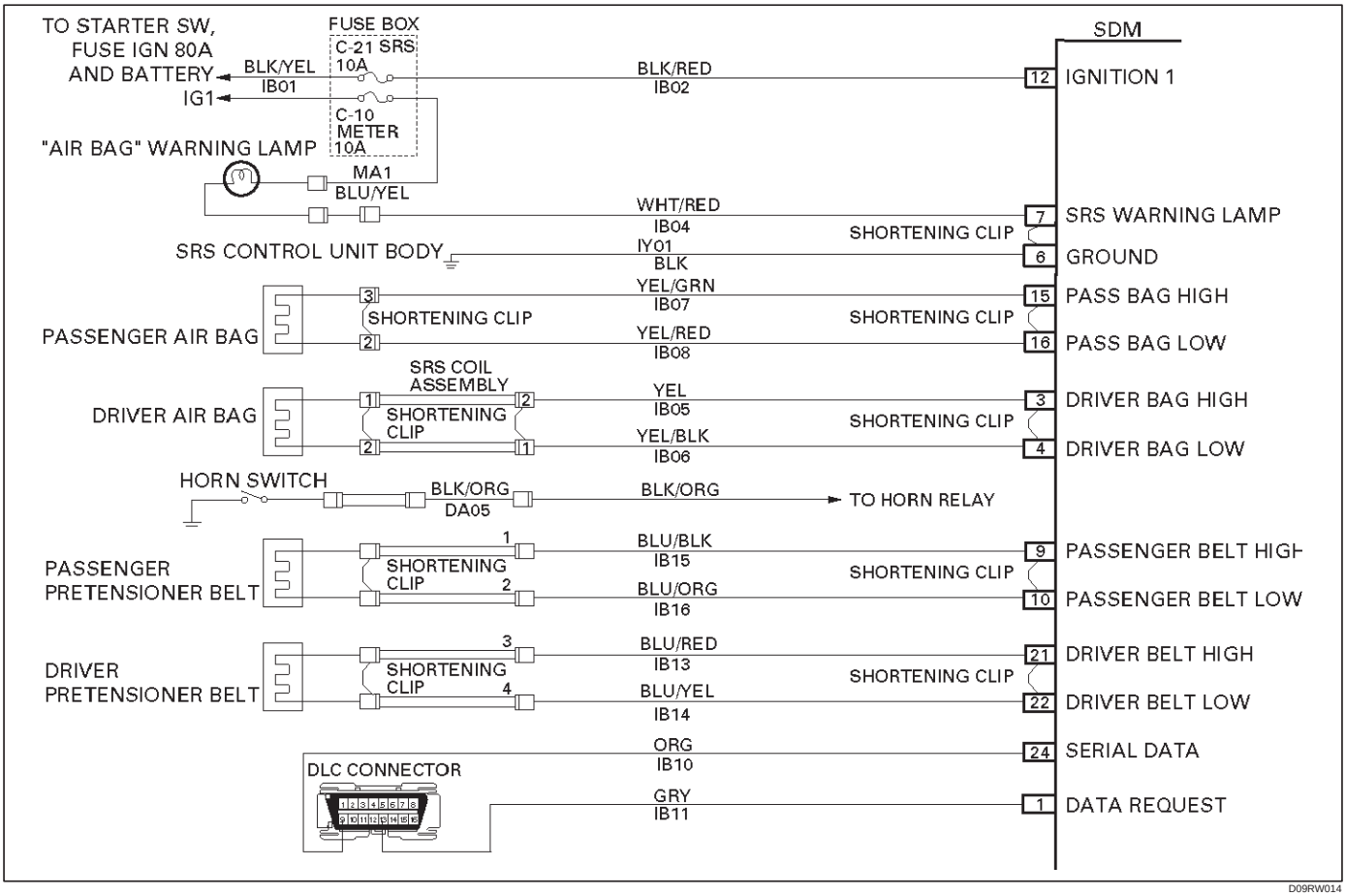

Circuit Description:

When the ignition switch is turned “ON”, the SDM will perform tests to diagnose critical malfunctions within itself. Upon passing these tests “Ignition 1”, and deployment loop voltages are measured to ensure they are within their respective normal voltage ranges. The SDM then proceeds with the “Resistance Measurement Test”. “Passenger Belt Low” terminal “10” is grounded through a resister and the passenger current source connected to “Passenger Belt High” terminal “9” allows a known amount of current to flow. By monitoring the voltage difference between “Passenger Belt High” and “Passenger Belt Low” the SDM calculates the combined resistance of the passenger air bag assembly, harness wiring IB15–BLU/BLK and IB16–BLU/ORG connector terminal contact.

DTC Will Set When:

The combined resistance of the passenger pretensioner assembly, harness wiring IB15–BLU/BLK and IB16–BLU/ORG, and connector terminal contact is above a specified value. This test is run once each ignition cycle during the “Resistance Measurement Test” when:

1. No “higher priority faults” are detected during “Turn–ON”,
2. “Ignition 1” voltage is in the specified value.

Action Taken:

SDM turns “ON” the “AIR BAG” warning lamp and sets a diagnostic trouble code.

DTC Will Clear When:

The ignition switch is turned “OFF.”

DTC Chart Test Description:

Number(s) below refer to step number(s) on the diagnostic chart:

2. This test determines whether the malfunction is in the SDM.
3. This test verifies proper connection of the yellow 2–pin connector.
4. This test checks for proper contact and/or corrosion of the yellow 2–pin connector terminals.
5. The test checks for a malfunctioning passenger pretensioner assembly.
6. This test determines whether the malfunction is due to high resistance in the wiring.

Diagnostic Aids:

An intermittent condition is likely to be caused by a poor connection at the passenger air bag assembly harness connector terminals “1” and “2”, SDM terminal “9” and “10”, or a poor wire to terminal connection in IB15–BLU/BLK and IB16–BLU/ORG. This test for this diagnostic trouble code is only run while the “AIR BAG”

warning lamp is performing the bulb check. When a scan tool "Clear Codes" command is issued and the malfunction is still present, the DTC will not reappear until the next ignition cycle.

DTC 31 Passenger Pretensioner loop Resistance High

Step	Action	Yes	No
1	Was the "SRS Diagnostic System Check" Performed?	Go to Step 2	Go to The "SRS Diagnostic System Check"
2	1. When measurements are requested in this chart use 5–8840–0285–0 DVM with correct terminal adapter from 5–8840–0385–0. 2. Use scan tool data list function, read and record the passenger pretensioner loop resistance. Is passenger resist. more than 3.7 ohms?	Go to Step 3	Go to Chart A
3	1. Ignition switch "Off." 2. Make sure the passenger pretensioner assembly yellow 2–pin connector located at the base of the passenger seat. Is the yellow 2–pin connector connected properly?	Go to Step 4	Seat passenger pretensioner assembly yellow 2–pin connector properly Go to Step 7
4	1. Disconnect and inspect the passenger pretensioner assembly yellow 2–pin connector located at the base of the passenger seat. 2. If ok, reconnect the passenger pretensioner assembly 2–pin connector. 3. Ignition switch "ON." Is DTC 31 current?	Go to Step 5	Go to Step 7
5	1. Ignition switch "Off." 2. Disconnect passenger pretensioner assembly, yellow 2–pin connector located at the base of the passenger seat. 3. Connect 5–8840–2421–0 SRS driver / passenger load tool and appropriate adapters to passenger pretensioner assembly harness connectors. 4. Ignition switch "ON." Is DTC 31 Current?	Go to Step 6	Ignition switch "Off" Replace the passenger pretensioner assembly Go to Step 7
6	1. Ignition switch "Off." 2. There has been an increase in the total circuit resistance of the passenger loop. 3. Use the high resolution ohmmeter mode of the DVM while checking IB15–BLU/BLK and IB16–BLU/ORG, and SDM connector terminal "9" and "10" to locate the root cause. Was a fault found?	Replace SRS harness or repair chassis harness Go to Step 7	Go to Chart A
7	1. Reconnect all components ensure all component are properly mounted. 2. Clear diagnostic trouble codes. Was This step finished?	Repeat the "SRS Diagnostic System Check"	Go to Step 7

DTC 32 Passenger Pretensioner loop Resistance Low

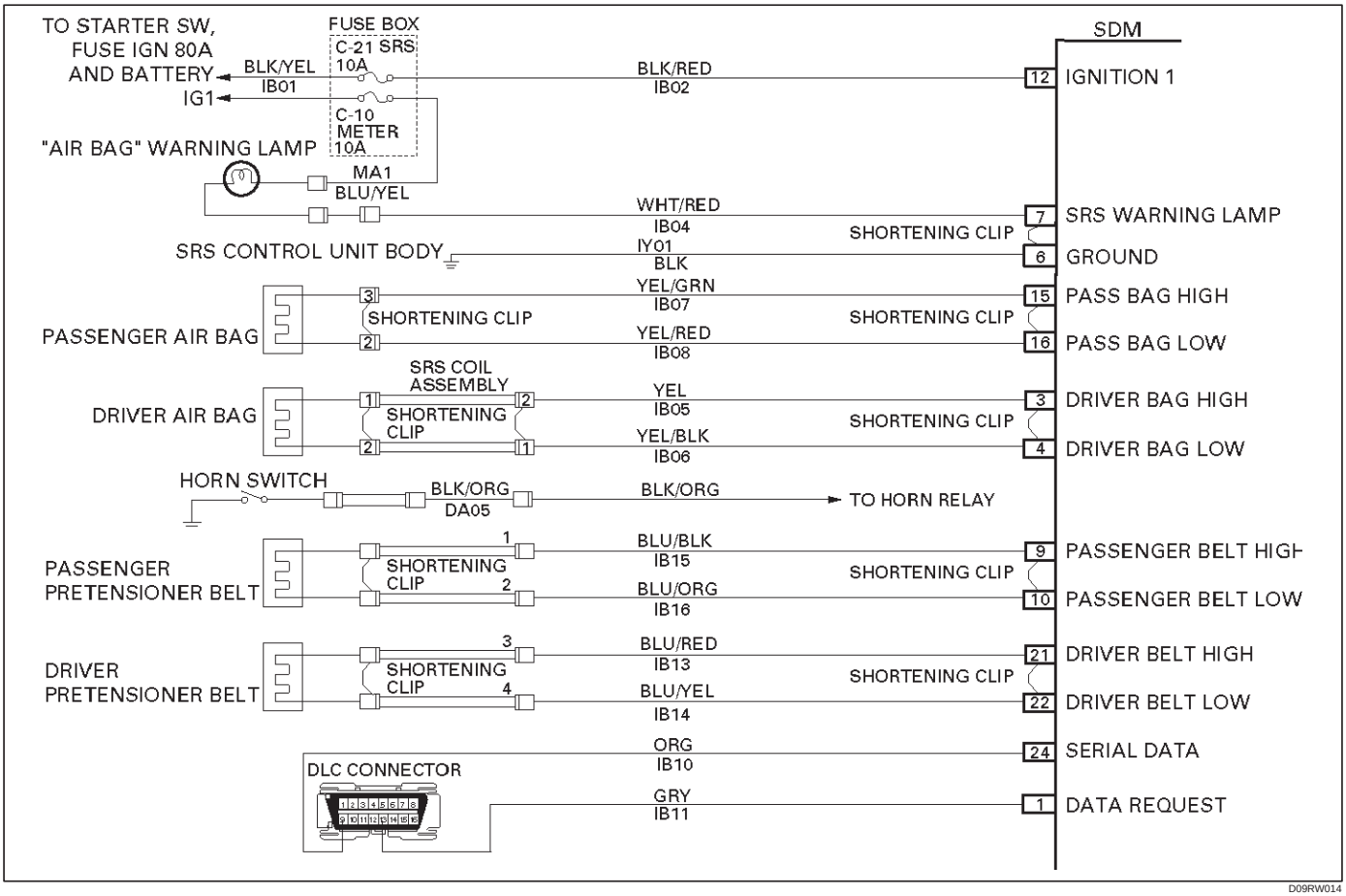

Circuit Description:

When the ignition switch is turned “ON”, the SDM will perform tests to diagnose critical malfunctions within itself. Upon passing these tests “Ignition 1”, and pretensioner loop voltages are measured to ensure they are within their respective normal voltage ranges. The SDM then proceeds with the “Resistance Measurement Test”. “Passenger Belt Low” terminal “10” is grounded through a resistor and the passenger current source connected to “Passenger Belt High” terminal “9” allows a known amount of current to flow. By monitoring the voltage difference between “Passenger Belt High” and “Passenger Belt Low”, the SDM calculates the combined resistance of the passenger air bag assembly, harness wiring IB15–BLU/BLK and IB16–BLU/ORG connector terminal contact.

DTC Will Set When:

The combined resistance of the passenger air bag assembly, harness wiring IB15–BLU/BLK and IB16–BLU/ORG, and connector terminal contact is above a specified value. This test is run once each ignition cycle during the “Resistance Measurement Test” when:

1. No “higher priority faults” are detected during “Turn–ON”,
2. “Ignition 1” voltage is in the specified value.

Action Taken:

SDM turns “ON” the “AIR BAG” warning lamp and sets a diagnostic trouble code.

DTC Will Clear When:

The ignition switch is turned “OFF.”

DTC Chart Test Description:

Number(s) below refer to step number(s) on the diagnostic chart:

2. This test determines whether the malfunction is in the SDM.
3. This test verifies connection of the yellow 2–pin connector.
4. This test cheeks for proper operation of the shorting clip in the yellow 2–pin connector.
5. The test checks for a malfunction passenger pretensioner assembly.
6. This test determines whether the malfunctioning is due to shortening in the wiring.

Diagnostic Aids:

An intermittent condition is likely to be caused by a short between IB15–BLU/BLK and IB16–BLU/ORG, or a malfunctioning shorting clip on the passenger pretensioner assembly which would require replacement of the pretensioner assembly. The test for this diagnostic trouble code is only run while “AIR BAG” warning lamp is

performing the bulb check. When a scan tool “Clear Codes” command is issued and the malfunction is still present, the DTC will not reappear until the next ignition cycle.

DTC 32 Passenger Pretensioner loop Resistance Low

Step	Action	Yes	No
1	Was the “SRS Diagnostic System Check” performed?	Go to Step 2	Repeat the “SRS Diagnostic System Check”
2	1. When measurements are requested in this chart use 5–8840–0285–0 DVM with correct terminal adapter from 5–8840–0385–0. 2. Using scan tool data list function, read and record the passenger pretensioner loop resistance. Is passenger resist. less than 1.4 ohms?	Go to Step 3	Go to Chart A
3	1. Ignition switch “Off.” 2. Make sure the passenger pretensioner assembly yellow 2–pin connector located at the base of the passenger seat. Is the yellow 2–pin connector connected properly?	Go to Step 4	Seat passenger pretensioner assembly yellow 2–pin connector properly Go to Step 7
4	1. Disconnect and inspect the passenger pretensioner assembly yellow 2–pin connector located at the base of the passenger seat. 2. If ok, reconnect the passenger pretensioner assembly 2–pin connector. 3. Ignition switch “ON.” Is DTC 32 Current?	Go to Step 5	Go to Step 7
5	1. Ignition switch “Off.” 2. Disconnect passenger pretensioner assembly, yellow 2–pin connector located at the base of the passenger seat. 3. Connect 5–8840–2421–0 SRS driver/passenger load tool and appropriate adapters to passenger pretensioner assembly harness connectors. 4. Ignition switch “ON.” Is DTC 32 current?	Go to Step 6	Ignition switch “Off” Replace the passenger pretensioner assembly Go to Step 7
6	1. Ignition switch “Off.” 2. There has been a decrease in the total circuit resistance of the passenger pretensioner loop. 3. Use the high resolution ohmmeter mode of the DVM while checking IB15–BLU/BLK and IB16–BLU/ORG, and SDM connector terminal “9” and “10” to locate the root cause. Was a fault found?	Replace SRS harness or repair chassis harness Go to Step 7	Go to Chart A
7	1. Reconnect all components, ensure all component are properly mounted. 2. Clear diagnostic trouble codes. Was this step finished?	Repeat the “SRS Diagnostic System Check”	Go to Step 7

DTC 33 Passenger Pretensioner Loop Short To Voltage

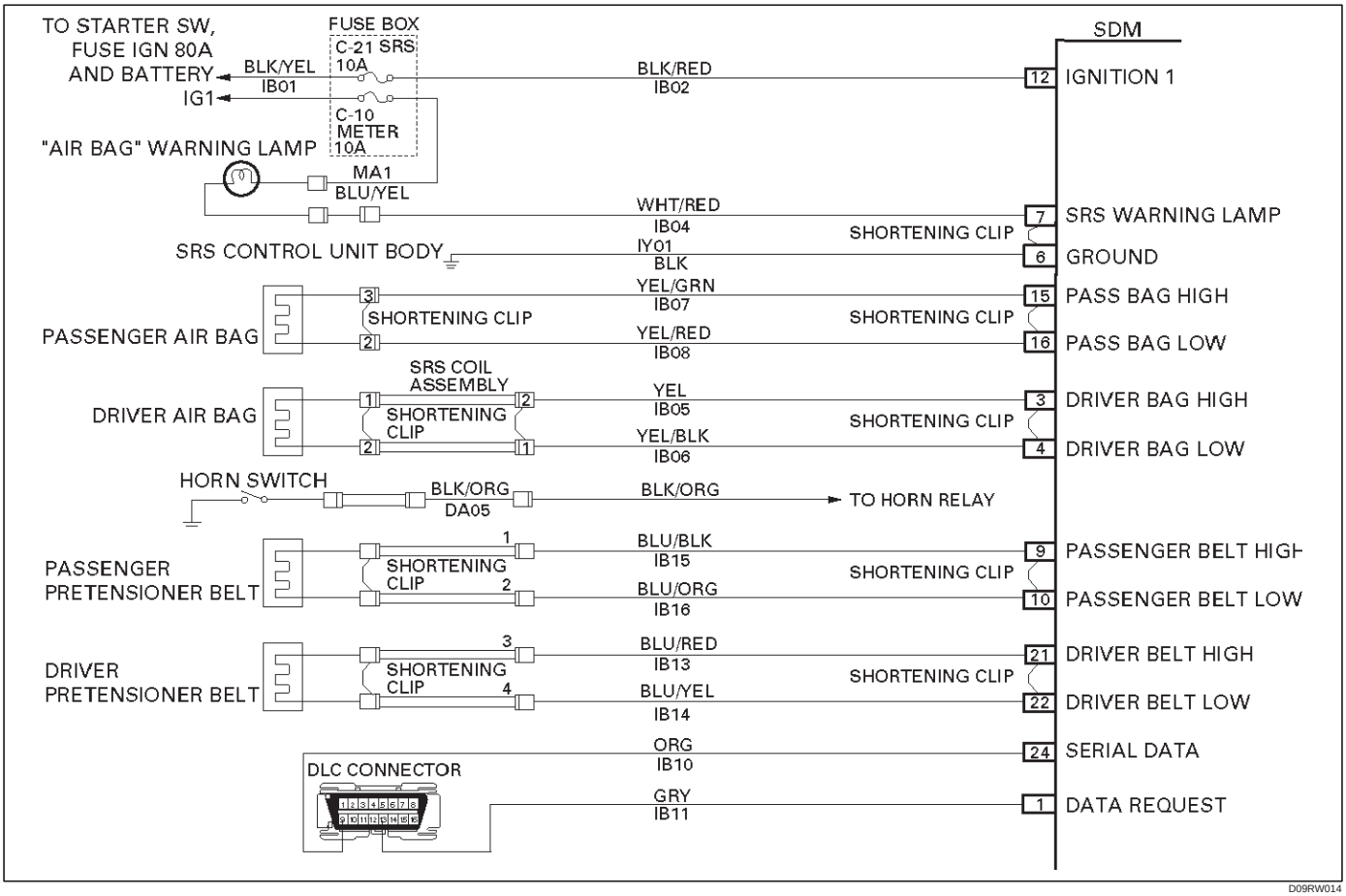

Circuit Description:

When the ignition switch is turned “ON”, the SDM will perform tests to diagnose critical malfunctions within itself. Upon passing these tests, “Ignition 1”, and pretensioner loop voltages are measured to ensure they are within their respective normal voltage ranges.
The SDM monitors the voltages at “Driver Belt Low” terminal “10” and “Passenger Belt Low” terminal “22” to detect short to B+ in the pretensioner assembly circuits.

DTC Will Set When:

“Ignition 1” is within the normal operating voltage range. Once these conditions are met and the voltage at “Passenger pretensioner Low” is above a specified value, DTC 33 will set. This test is run once each ignition cycle and “Continuous Monitoring”.

Action Taken:

SDM turns “ON” the “AIR BAG” warning lamp and sets DTC 33.

DTC Will Clear When:

The malfunction is no longer occurring and the ignition is turned “OFF”.

DTC Chart Test Description:

Number(s) below refer to step number(s) on the diagnostic chart:

2. This test determines whether the malfunction is in the SDM.
3. This test isolates the malfunction to one side of the passenger pretensioner assembly yellow 2–pin connector at the base of the passenger seat.
4. This test determines whether the malfunction is in IB15–BLU/BLK.
5. This test determines whether the malfunction is in IB16–BLU/ORG.

Diagnostic Aids:

An intermittent condition is likely to be caused by a short to B+ in the passenger pretensioner assembly circuit. Inspect IB15–BLU/BLK and IB16–BLU/ORG carefully for cutting or chafing. If the wiring pigtail of the passenger pretensioner assembly is damaged, the component must be replaced. A careful inspection of IB15–BLU/BLK and IB16–BLU/ORG, including the passenger pretensioner assembly pigtail is essential to ensure that the replacement SDM will not be damaged.

DTC 33 Passenger Pretensioner Loop Short To Voltage

Step	Action	Yes	No
1	Perform the “SRS Diagnostic System Check” Was the “SRS Diagnostic System Check” performed?	Go to Step 2	Repeat the “SRS Diagnostic System Check”
2	1. When measurements are requested in this chart use 5–8840–0285–0 DVM With correct terminal adapter from 5–8840–0385–0. 2. Ignition switch “OFF.” 3. Connect scan tool data link connector. follow directions as given in the scan tool operator’s manual. 4. Ignition switch “ON.” 5. Read passenger belt sense LO. Is passenger belt sense LO more than 3.5 volts?	Go to Step 3	Go to Chart A
3	1. Ignition switch “OFF”. 2. Disconnect passenger pretensioner assembly yellow 2–pin connector at the base of the passenger seat. 3. Leave driver pretensioner assembly connected. 4. Connect SRS driver / passenger load tool 5–8840–2421–0 and appropriate adapter to passenger air bag assembly harness connector. 5. Ignition switch “ON.” Is DTC 33 current?	Go to Step 4	Ignition switch “OFF” Replace passenger pretensioner assembly Go to Step 6
4	1. Ignition switch “OFF.” 2. Disconnect SRS driver / passenger load tool. 3. Measure resistance on SDM harness connector from terminal “9” to terminal “12” (ignition). Does 5–8840–0285–0 display “OL” (infinite)?	Go to Step 5	Replace SRS harness Go to Step 6.
5	Measure resistance on SDM harness connector from terminal “10” and terminal “12” (ignition). Does 5–8840–0285–0 display “OL” (infinite)?	Go to Chart A	Replace SRS harness Go to Step 6
6	1. Reconnect all components ensure all component are properly mounted. 2. Clear diagnostic trouble codes. Was this step finished?	Repeat the “SRS Diagnostic System Check”	Go to Step 6

DTC 34 Passenger Pretensioner Loop Open

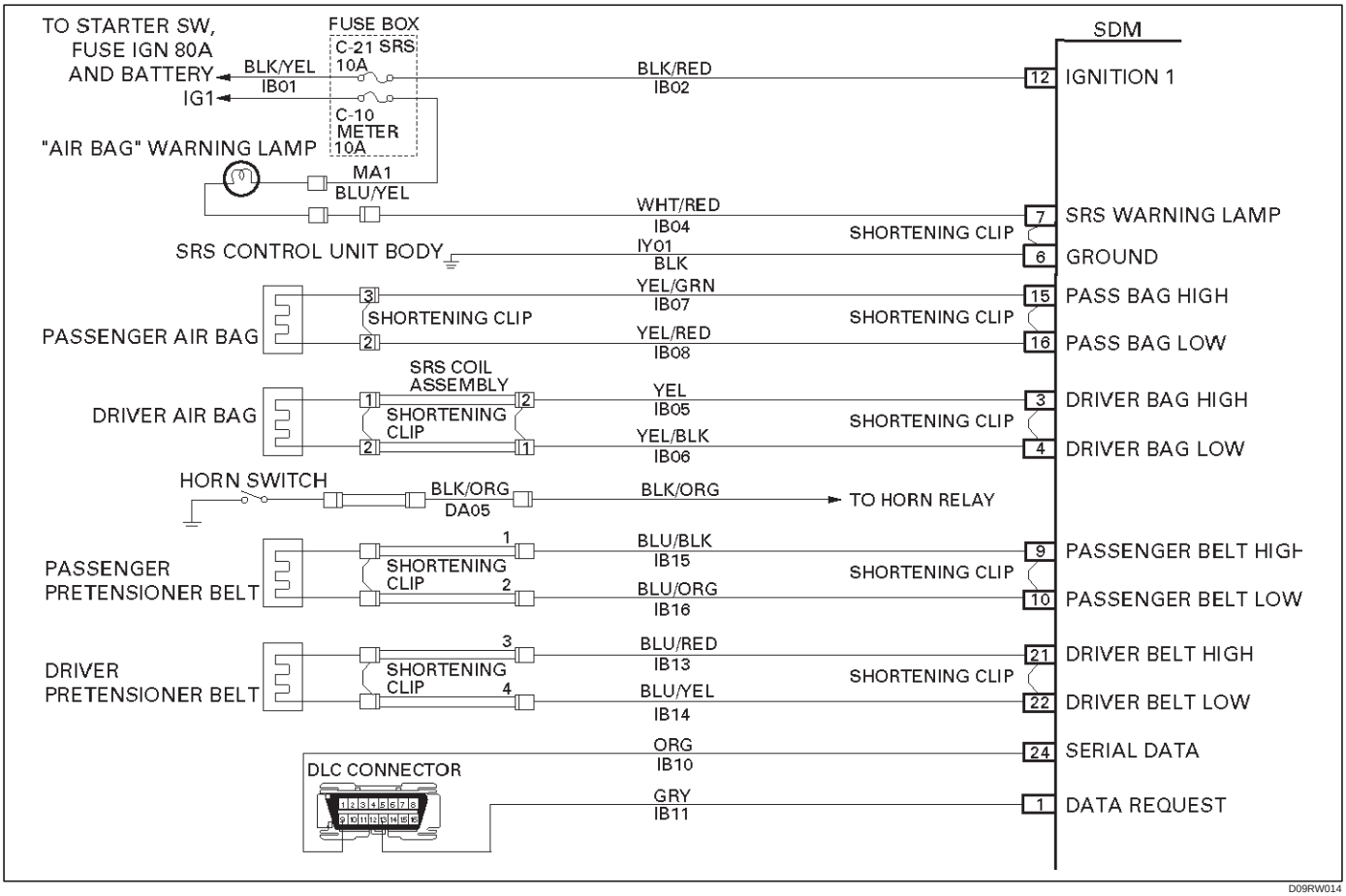

Circuit Description:

When the ignition switch is turned “ON”, the SDM will perform tests to diagnose critical malfunctions within itself. Upon passing these tests, “Ignition 1”, and pretensioner loop voltages are measured to ensure they are within their respective normal voltage ranges. During “Continuous Monitoring” diagnostics, a fixed amount of current is flowing in the deployment loop. This produces proportional voltage drops in the loop. By monitoring the voltage difference between “Passenger Belt High” and “Passenger Belt Low”, the SDM calculates the combined resistance of the passenger pretensioner assembly, harness wiring IB15–BLU/BLK AND IB16–BLU/ORG, and connector terminal contact.

DTC Will Set When:

The voltage difference between “Passenger pretensioner High” terminal “9” and “Passenger pretensioner Low” terminal “10” is above or equal to a specified value for 500 milliseconds during “Continuous Monitoring”.

Action Taken:

SDM turns “ON” the “AIR BAG” warning lamp and sets a diagnostic trouble code.

DTC Will Clear When:

The voltage difference between “Passenger Belt High” terminal “9” and “Passenger Belt Low” terminal “10” is below a specified value for 500 milliseconds during “Continuous Monitoring”.

DTC Chart Test Description:

Number(s) below refer to step number(s) on the diagnostic chart:

2. This test determines whether the malfunction is in the SDM.
3. This test verifies proper connection of the yellow 2–pin connector.
4. This test cheeks for proper contact and/or corrosion of the shorting clip in the yellow 2–pin connector terminals.
5. The test checks for a malfunctioning passenger pretensioner assembly.
6. This test determines whether the open in the wiring.

Diagnostic Aids:

An intermittent condition is likely to be caused by a poor connection at the passenger pretensioner assembly harness connector terminals“1” and “2”, SDM terminals “9” and “10”, or an open in IB15–BLU/BLK and IB16–BLU/ORG.

DTC 34 Passenger Pretensioner Loop Open

Step	Action	Yes	No
1	Was the “SRS Diagnostic System Check” performed?	Go to Step 2	Go to the “SRS Diagnostic System Check”
2	1. When measurements are requested in this chart use 5–8840–0285–0 DVM with correct terminal adapter from 5–8840–0385–0. 2. Using scan tool data list function, read and record the passenger pretensioner differential voltage. Is passenger pretensioner VDIF 0.425 volts or more?	Go to Step 3	Go to Chart A
3	1. Ignition switch “OFF”. 2. Make sure the passenger pretensioner assembly yellow 2–pin connector located at the base of the passenger seat. Is the yellow 2–pin connector connected properly?	Go to Step 4	Seat passenger pretensioner assembly yellow 2–pin connector properly Go to Step 7
4	1. Disconnect and inspect the passenger pretensioner assembly yellow 2–pin connector located at the base of the passenger seat. 2. If ok, reconnect the passenger pretensioner assembly 2–pin connector. 3. Ignition switch “ON”. Is DTC 34 current?	Go to Step 5	Go to Step 7
5	1. Ignition switch “Off.” 2. Disconnect the passenger pretensioner assembly, yellow 2–pin connector located at the base of the passenger seat. 3. Connect 5–8840–2421–0 SRS driver / passenger load tool and appropriate adapters to passenger pretensioner assembly harness connectors. 4. Ignition switch “ON.” Is DTC 34 current?	Go to Step 6	Ignition switch “Off” Replace the passenger pretensioner assembly Go to Step 7
6	1. Ignition switch “Off.” 2. There has been an open circuit resistance in the passenger pretensioner loop. 3. Use the high resolution ohmmeter mode of the DVM while checking IB15–BLU/BLK and IB16–BLU/ORG, and SDM connector terminal “9” and “10” to locate the root cause. Was a fault found?	Replace SRS harness or repair chassis harness Go to Step 7	Go to Chart A
7	1. Reconnect all components ensure all component are properly mounted. 2. Clear diagnostic trouble codes. Was this step finished?	Go to the “SRS Diagnostic System Check”	Go to Step 7

DTC 41 Driver Pretensioner Loop Resistance High

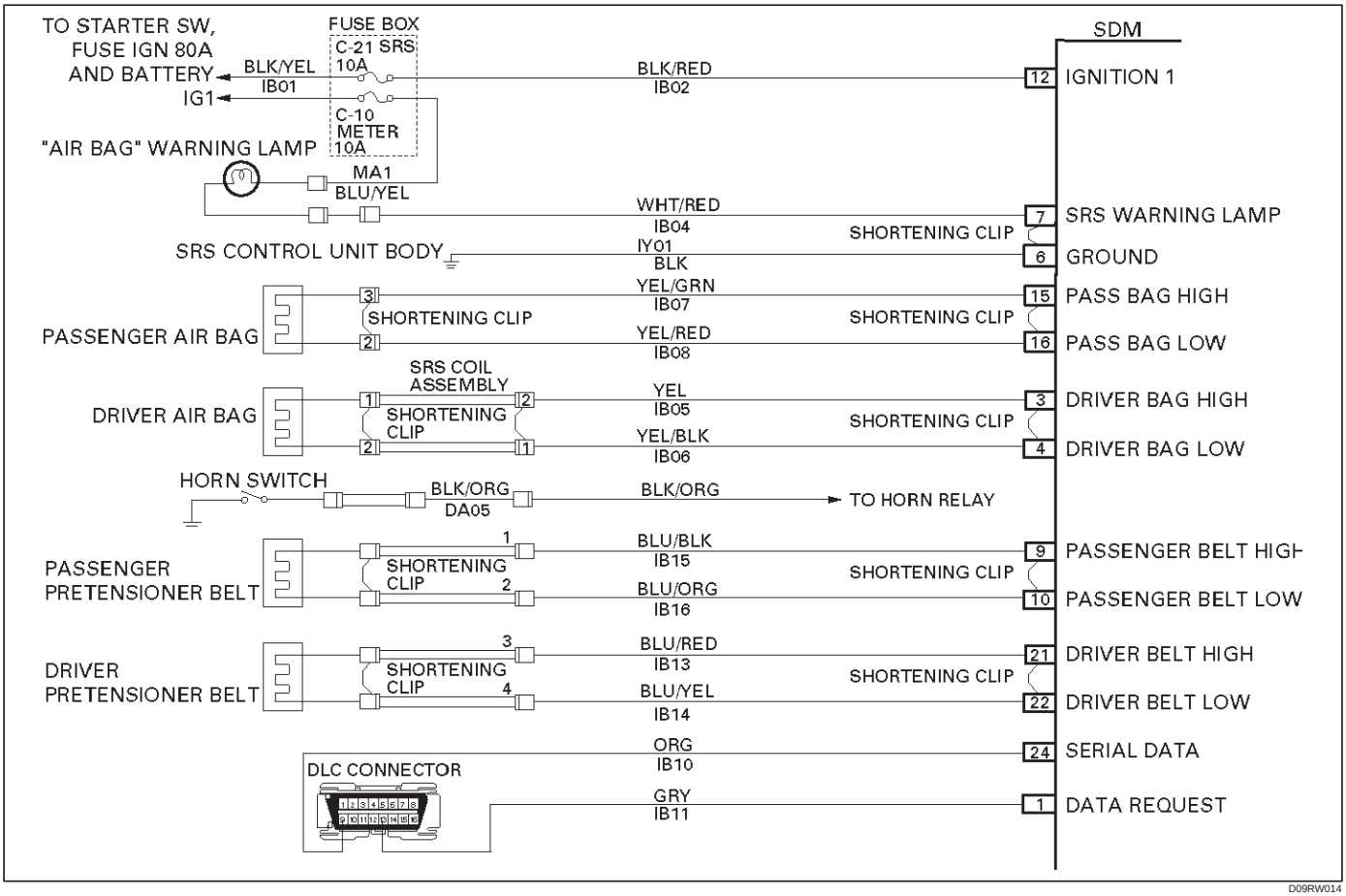

Circuit Description:

When the ignition switch is turned “ON”, the SDM will perform tests to diagnose critical malfunctions within itself. Upon passing these tests, “Ignition 1”, and pretensioner loop voltages are measured to ensure they are within their respective normal voltage ranges.

The SDM then proceeds with the “Resistance Measurement Test” “Driver Belt Low” terminal “22” is grounded through a current sink and the driver current source connected to “Driver Belt High” terminal “21” allows a known amount of current to flow. By monitoring the voltage difference between “Driver Belt High” and “Driver Belt Low”, the SDM calculates the combined resistance of the driver pretensioner assembly, harness wiring IB13–BLU/RED and IB14–BLU/YEL, and connector terminal contact.

DTC Will Set When:

The combined resistance of the driver pretensioner assembly, harness wiring IB13–BLU/RED and IB14–BLU/YEL, and connector terminal contact is above a specified value. This test run once each ignition cycle during the “Resistance Measurement Test” when:

1. No “higher priority faults” are detected during “Turn–ON”
2. “Ignition 1” voltage is in the specified value.

Action Taken:

SDM turns “ON” the “AIR BAG” warning lamp and sets DTC 41.

DTC Will Clear When:

The ignition switch is turned “OFF”.

DTC Chart Test Description:

Number(s) below refer to step number(s) on the diagnostic chart:

2. This test determines whether the malfunction is in the SDM.
3. This test verifies proper connection of the yellow 2–pin connector at the base of the driver seat.
4. This test checks for proper contact and/or corrosion of the 2–pin connector terminals at the base of the driver seat.
5. This test isolate the malfunction to one side of the pretensioner assembly yellow 2–pin connector located at the base of the driver seat.
6. This test determines whether the malfunction is due to high resistance in the wiring.

Diagnostic Aids:

An intermittent condition is likely to be caused by a poor connection at terminals “3” and “4” of the driver pretensioner assembly 2–pin connector at the base of the driver seat. SDM terminals “21” and “22” or a poor wire to terminal connection in IB13–BLU/RED or IB14–BLU/YEL. The test for this diagnostic trouble code is only run while the “AIR BAG” warning lamp is performing the bulb check. When a scan tool “Clear Codes” command is issued and the malfunction is still present, the DTC will not reappear until the next ignition cycle.

DTC 41 Driver Pretensioner Loop Resistance High

Step	Action	Yes	No
1	Perform the “SRS Diagnostic System Check”. Was the “SRS Diagnostic System Check” performed?	Go to Step 2	Repeat the “SRS Diagnostic System Check”
2	1. When measurements are requested in this chart use 5–8840–0285–0 DVM with correct terminal adapter from 5–8840–0385–0. 2. Use scan tool data list function, read and record the driver pretensioner loop resistance. Is driver resistance more than 3.7 ohms?	Go to Step 3	Go to Chart A
3	1. Ignition switch “OFF.” 2. Disconnect driver pretensioner assembly yellow 2–pin connector located at base of the driver seat. Is the 2–pin connector connected properly?	Go to Step 4	Driver pretensioner assembly 2–pin connector properly Go to Step 7
4	1. Disconnect and inspect the driver pretensioner assembly yellow 2–Pin connector located base of the driver seat. 2. If ok, reconnect the driver pretensioner assembly yellow 2–pin connector. 3. Ignition switch “ON.” Is DTC 41 current?	Go to Step 5	Go to Step 7
5	1. Ignition switch “OFF.” 2. Disconnect driver pretensioner assembly, yellow 2–pin connector located at the base of the driver seat. 3. Connect SRS driver / passenger load tool 5–8840–2421–0 and appropriate adapter to driver pretensioner assembly harness connectors. 4. Ignition switch “ON.” Is DTC 41 current?	Go to Step 6	Go to Step 7
6	1. Ignition switch “Off.” 2. There has been a increase in the total circuit resistance of the driver pretensioner loop. 3. Use the high resolution ohmmeter mode of the DVM while checking IB13–BLU/RED and IB14–BLU/YEL, and SDM connector terminal “21” and “22” to locate the root cause. Was a fault found?	Replace SRS harness or repair chassis harness Go to Step 7	Go to Chart A
7	1. Reconnect all components ensure all component are properly mounted. 2. Clear diagnostic trouble codes. Was this step finished?	Repeat the “SRS Diagnostic System Check”	Go to Step 7

DTC 42 Driver Pretensioner Loop Resistance Low

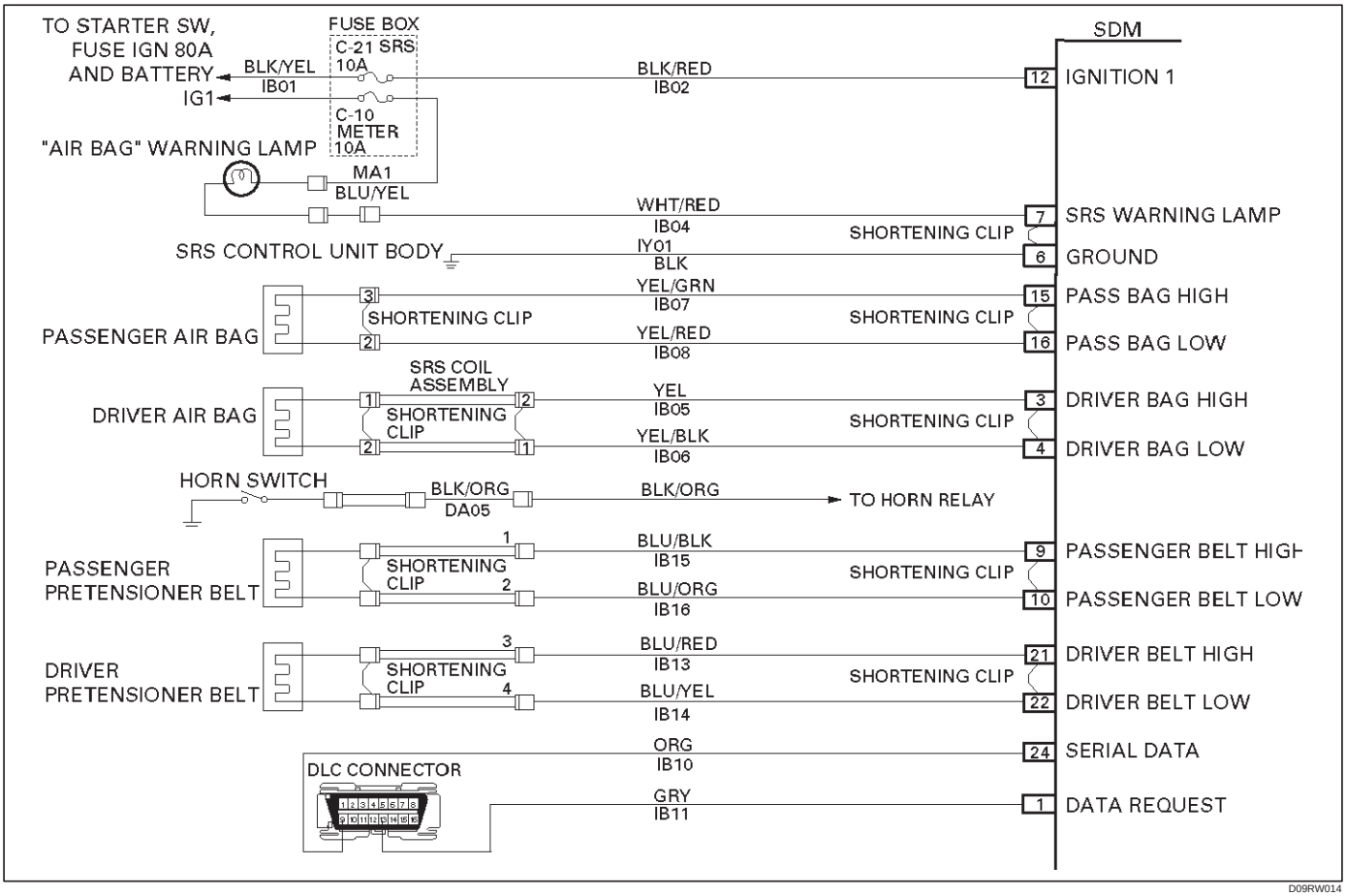

Circuit Description:

When the ignition switch is turned “ON”, the SDM will perform tests to diagnose critical malfunctions within itself. Upon passing these tests “Ignition 1”, and pretensioner loop voltages are measured to ensure they are within their respective normal voltage ranges.

The SDM then proceeds with the “Resistance Measurement Test” “Driver Belt Low” terminal “22” is grounded through a current sink and the driver current source connected to “Driver Belt High” terminal “21” allows a known amount of current to flow. By monitoring the voltage difference between “Driver Belt High” and “Driver Belt Low” the SDM calculates the combined resistance of the driver pretensioner assembly, harness wiring IB13–BLU/RED and IB14–BLU/YEL and connector terminal contact.

DTC Will Set When:

The combined resistance of the driver pretensioner assembly, harness wiring IB13–BLU/RED and IB14–BLU/YEL and connector terminal contact is above a specified value. This test is run once each ignition cycle during the “Resistance Measurement Test” when:

1. No “higher priority faults” are detected during “Turn–ON”
2. “Ignition 1” voltage is in the specified value.

Action Taken:

SDM turns “ON” the “AIR BAG” warning lamp and sets DTC 42.

DTC Will Clear When:

The ignition switch is turned “OFF.”

DTC Chart Test Description:

Number(s) below refer to circled number(s) on the diagnostic chart:

2. This test determines whether the malfunction is in the SDM.
3. This test verifies proper connection of the yellow 2–pin connector at the base of the driver seat.
4. This test checks for proper operation of the shorting clip in the yellow 2–pin connector.
5. This test isolate the malfunction to one side of the pretensioner assembly yellow 2–pin connector located at the base of driver seat.
6. This test determines whether the malfunction is due to shortening in the wiring.

Diagnostic Aids:

An intermittent condition is likely to be caused by a short between IB13–BLU/RED or IB14–BLU/YEL or a malfunctioning shorting clip on the driver pretensioner assembly which would require replacement of the component. The test for this diagnostic trouble code is

only run while the “AIR BAG” warning lamp is performing the bulb check. When a scan tool “Clear Codes” command is issued and the malfunction is still present, the DTC will not reappear until the next ignition cycle.

DTC 42 Driver Pretensioner Loop Resistance Low

Step	Action	Yes	No
1	Perform the “SRS Diagnostic System Check.” WAS THE “SRS Diagnostic System Check” performed?	Go to Step 2	Go to the “SRS Diagnostic System Check”
2	1. When measurements are requested in this chart use 5–8840–0285–0 DVM with correct terminal adapter from 5–8840–0385–0. 2. Use scan tool data list function, read and record the driver pretensioner loop resistance. Is driver pretensioner loop resistance less than 1.4 OHMS?	Go to Step 3	Go to Chart A
3	1. Ignition switch “OFF.” 2. Make sure the driver pretensioner assembly yellow 2–pin connector located at the base of the driver seat is connected properly. Is the 2–pin connector connected properly?	Go to Step 4	Seat driver pretensioner assembly 2–pin connector properly Go to Step 7
4	1. Disconnect and inspect the driver pretensioner assembly yellow 2–pin connector located base of the driver seat. 2. If ok, reconnect the driver pretensioner assembly yellow 2–pin connector. 3. Ignition switch “ON.” Is DTC 42 current?	Go to Step 5	Go to Step 7
5	1. Ignition switch “OFF.” 2. Disconnect driver pretensioner assembly, yellow 2–pin connector located at the base of driver seat. 3. Connect SRS driver / passenger load tool 5–8840–2421–0 and appropriate adapter to driver pretensioner assembly harness connectors. 4. Ignition switch “ON.” Is DTC 42 current?	Go to Step 6	Go to Step 7
6	1. Ignition switch “OFF.” 2. There has been a decrease in the total circuit resistance of the driver pretensioner loop. 3. Use the high resolution ohmmeter mode of the DVM while checking IB13–BLU/RED and IB14–BLU/YEL, and SDM connector terminal “21” and “22” to locate the root cause. Was a fault found?	Replace SRS harness or repair chassis harness Go to Step 7	Go to Chart A
7	1. Reconnect all components, ensure all component are properly mounted. 2. Clear diagnostic trouble codes. Was this step finished?	Go to the “SRS Diagnostic System Check”	Go to Step 7

DTC 44 Driver Pretensioner Loop Open

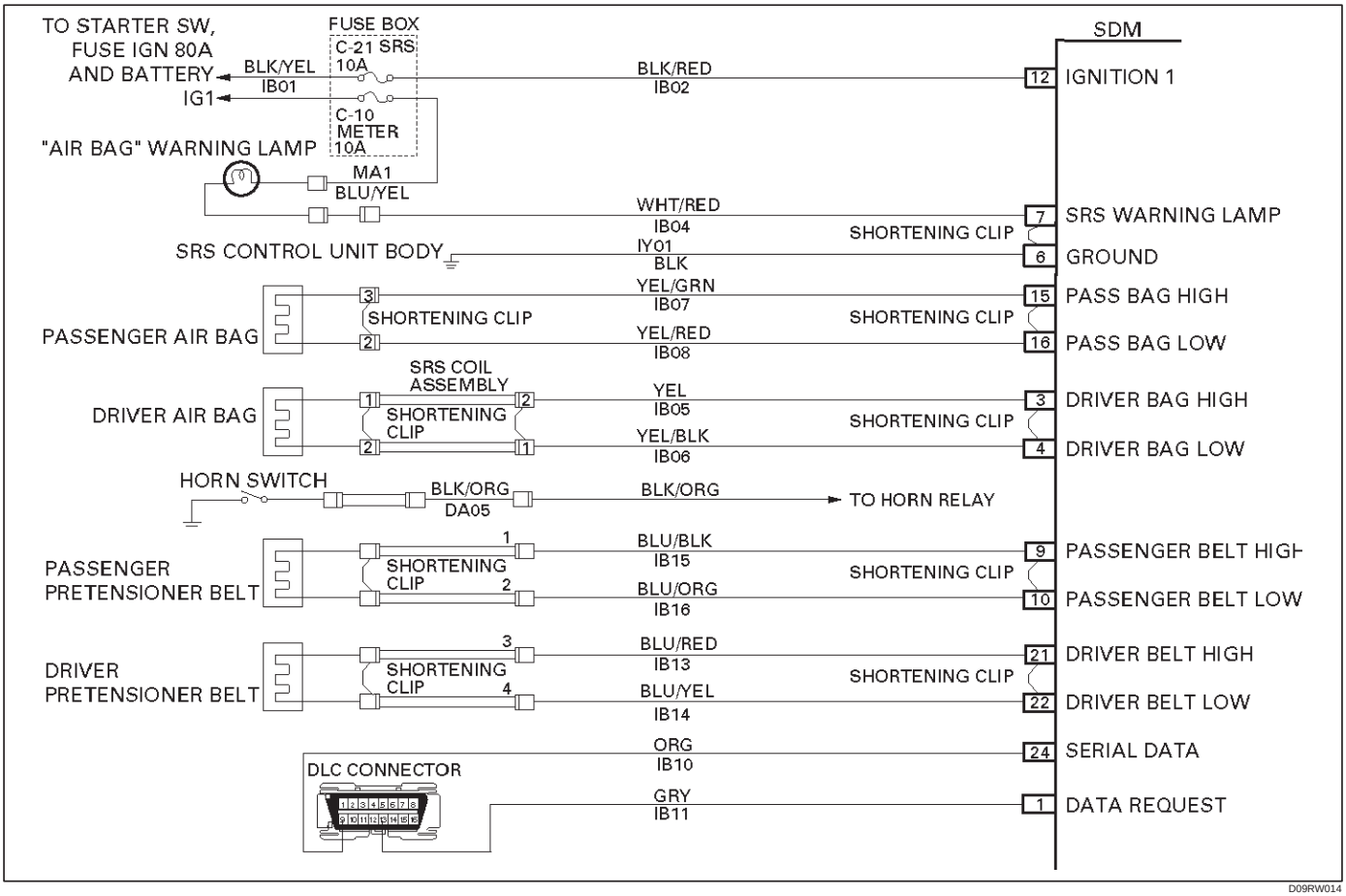

Circuit Description:

When the ignition switch is turned “ON”, the SDM will perform tests to diagnose critical malfunctions within itself. Upon passing these tests, “Ignition 1”, and pretensioner loop voltages are measured to ensure they are within their respective normal voltage ranges.

During “Continuous Monitoring” diagnostics, a fixed amount of current is following in the pretensioner loop. This produces proportional voltage drops in the loop. By monitoring the voltage difference between “Driver Belt High” and “Driver Belt Low”, the SDM calculates the combined resistance of the driver pretensioner assembly, harness wiring IB13–BLU/RED and IB14–BLU/YEL, and connector terminal contact.

DTC Will Set When:

The voltage difference between “Driver Belt High” terminal “21” and “Driver Belt Low” terminal “22” is above or equal to a specified value for 500 milliseconds during “Continuous Monitoring”.

Action Taken:

SDM turns “ON” the “AIR BAG” warning lamp and sets a diagnostic trouble code.

DTC Will Clear When:

The voltage difference between “Driver Belt High” terminal “21” and “Driver Belt Low” terminal “22” is below a specified value for 500 milliseconds during “Continuous Monitoring”.

DTC Chart Test Description:

Number(s) below refer to step number(s) on the diagnostic chart:

2. This test determines whether the malfunction is in the SDM.
3. This test verifies proper connection of the yellow 2–pin connector at the base of the driver seat.
4. This test checks for proper contact and/or corrosion of the yellow 2–pin connector at the base of the driver seat.
5. This test isolates the malfunction to one side of the driver pretensioner assembly yellow 2–pin connector located at the base of driver seat.
6. This test determines whether the open is in the wiring.

Diagnostic Aids:

An intermittent condition is likely to be caused by a poor connection at the driver pretensioner assembly harness 2–pin connector terminals “3” and “4” at the top of the steering column, SDM terminals “21” and “22”, or an open in IB13–BLU/RED and IB14–BLU/YEL.

DTC 44 Driver Pretensioner Loop Open

Step	Action	Yes	No
1	Was the “SRS Diagnostic System Check” performed?	Go to Step 2	Go to the “SRS Diagnostic System Check”
2	1. When measurements are requested in this chart use 5–8840–0285–0 DVM with correct terminal adapter from 5–8840–0385–0. 2. Use scan tool data list function, read and record the driver pretensioner circuit differential voltage. Is driver pretensioner VDIF more than 4.25 volts?	Go to Step 3	Go to Chart A
3	1. Ignition switch “OFF.” 2. Make sure the driver pretensioner assembly yellow 2–pin connector located at the base of the driver seat is seated properly. Is the yellow 2–pin connector connected properly?	Go to Step 4	Seat driver pretensioner assembly 2–pin connector Go to Step 7
4	1. Disconnect and inspect the driver pretensioner assembly yellow 2–pin connector located base of the driver seat. 2. If ok, reconnect the driver pretensioner assembly yellow 2–pin connector. 3. Ignition switch “ON.” Is DTC 44 current?	Go to Step 5	Go to Step 7
5	1. Ignition switch “OFF”. 2. Disconnect driver pretensioner assembly, yellow 2–pin connectors located at the base of the driver seat. 3. Connect SRS driver/passenger load tool 5–8840–2421–0 and appropriate adapter to driver pretensioner assembly harness connectors. 4. Ignition switch “ON.” Is DTC 44 current?	Go to Step 6	Go to Step 7
6	1. Ignition switch “OFF.” 2. There has been an open circuit in the driver pretensioner loop. 3. Use the high resolution ohmmeter mode of the DVM while checking IB13–BLU/RED and IB14–BLU/YEL, and SDM connector terminal “21” and “22” to locate the root cause. Was a fault found?	Replace SRS harness or repair chassis harness Go to Step 7	Go to Chart A
7	1. Reconnect all components ensure all component are properly mounted. 2. Clear diagnostic trouble codes. Was this step finished?	Repeat the “SRS Diagnostic System Check”	Go to Step 7

DTC 45 Driver Pretensioner Loop Short To Ground

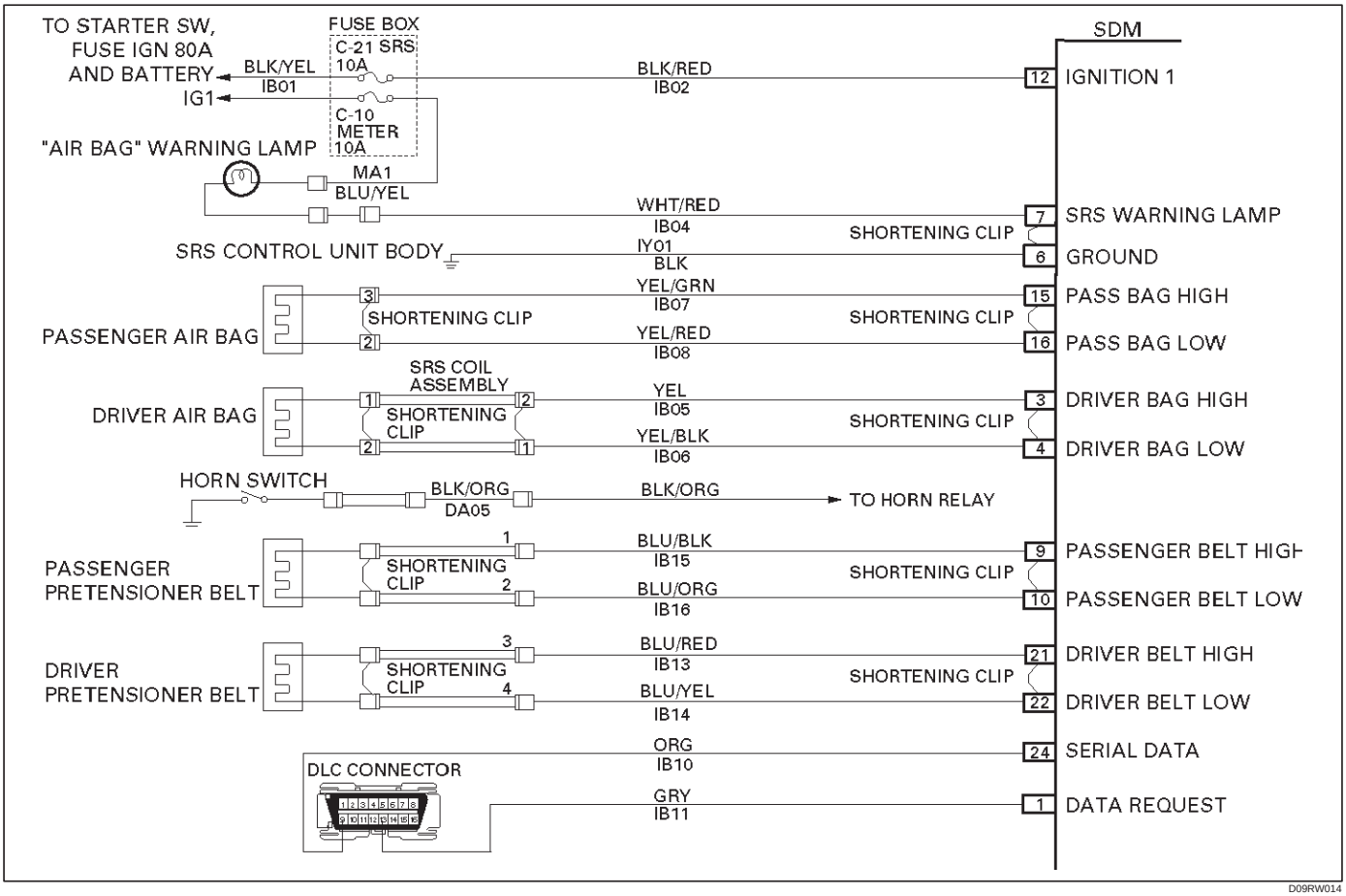

Circuit Description:

When the ignition switch is turned “ON”, the SDM will perform tests to diagnose critical malfunctions within itself. Upon passing these tests, “Ignition 1”, and pretensioner loop voltages are measured to ensure they are within their respective normal voltage ranges.
The SDM monitors the voltage at “Driver Belt Low” terminal “22” and “passenger Belt Low” terminal “10” to detect shorts to ground in the air bag assembly circuits.

DTC Will Set When:

Neither of the air bag and the pretensioner belt are open. “Ignition 1” is within the normal operating voltage range. This test is run once each ignition cycle and “Continuous Monitoring”. Once these conditions are met and the voltage at “Driver Belt Low” is below a specified value, DTC 45 will set.

Action Taken:

SDM turns “ON” the “AIR BAG” warning lamp and sets a diagnostic trouble code.

DTC Will Clear When:

The malfunction is no longer occurring and the ignition is turned “OFF”.

DTC Chart Test Description:

Number(s) below refer to step number(s) on the diagnostic chart:

2. This test determines whether the SDM is malfunctioning
3. This test isolates the malfunction to one side of the driver pretensioner assembly yellow 2–pin connector at the base of the driver seat.
4. This test determines whether the malfunction is in IB13–BLU/RED.
5. This test determines whether the malfunction is in IB14–BLU/YEL.

Diagnostic Aids:

An intermittent condition is likely to be caused by a short to ground in the driver pretensioner assembly circuit. Inspect IB13–BLU/RED and IB14–BLU/YEL carefully for cutting or chafing.

DTC 45 Driver Pretensioner Loop Short To Ground

Step	Action	Yes	No
1	Was the “SRS Diagnostic System Check” performed?	Go to Step 2	Go to the “SRS Diagnostic System Check”
2	1. When measurements are requested in this chart use 5–8840–0285–0 DVM with correct terminal adapter from 5–8840–0385–0. 2. Ignition switch “OFF.” 3. Connect scan tool data link connector. follow directions as given in the scan tool operator’s manual. 4. Ignition switch “ON.” 5. Read driver belt sense LO. Is driver belt sense LO less than 1.5 volts?	Go to Step 3	Go to Chart A
3	1. Ignition switch “OFF.” 2. Disconnect driver pretensioner assembly yellow 2–pin connector located at base of the driver seat, leave passenger pretensioner assembly connected. 3. Connect SRS driver / passenger load tool 5–8840–2421–0 and appropriate adapter to driver pretensioner assembly harness connector. 4. Ignition switch “ON.” Is DTC 45 current?	Go to Step 4	Go to Step 6
4	1. Ignition switch “OFF.” 2. Disconnect SDM. 3. Disconnect SRS driver / passenger load tool. 4. Measure resistance on SDM harness connector “21” to terminal “6” (ground). Does 5–8840–0285–0 display “OL” (infinite)?	Go to Step 5	Replace SRS harness or repair chassis harness Go to Step 6
5	Measure resistance on SDM harness connector from terminal “22” to terminal “6” (ground). Does 5–8840–0285–0 display “OL” (infinite)?	Go to Chart A	Replace SRS harness or repair chassis harness Go to Step 6
6	1. Reconnect all components ensure all component are properly mounted. 2. Clear diagnostic trouble codes. Was this step finished?	Go to the “SRS Diagnostic System Check”	Go to Step 6

DTC 46 Driver Pretensioner Loop Short To Voltage

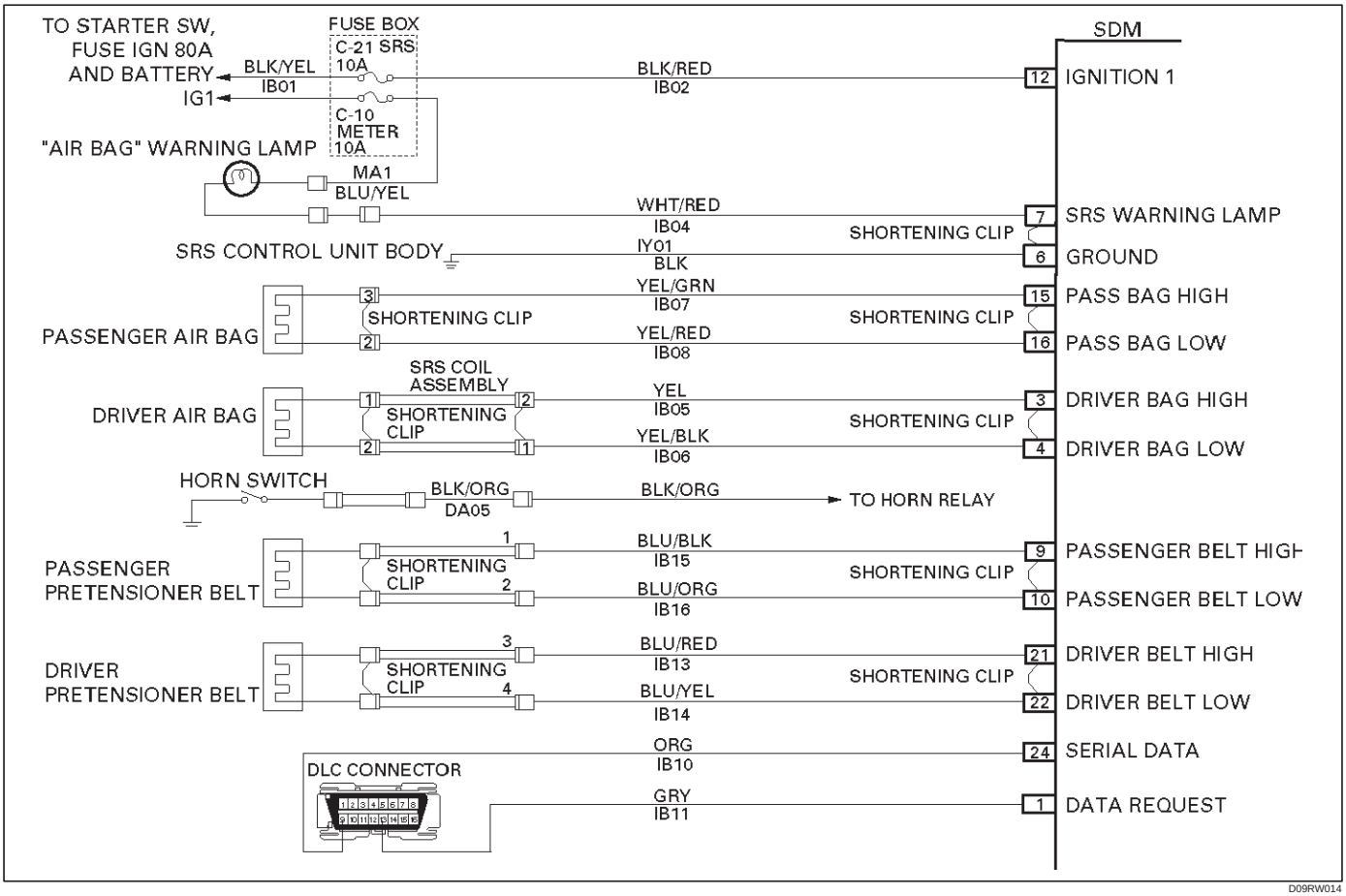

Circuit Description:

When the ignition switch is turned “ON”, the SDM will perform tests to diagnose critical malfunctions within itself. Upon passing these tests, “Ignition 1”, and pretensioner loop voltages are measured to ensure they are within their respective normal voltage ranges.
The SDM monitors the voltage at “Driver Belt Low” terminal “22” and “Passenger Belt Low” terminal “10” to detect shorts to B+ in the pretensioner assembly circuits.

DTC Will Set When:

“Ignition 1” is in the normal operating voltage range. This test is run once each ignition cycle and “Continuous monitoring”. Once these conditions are met and the voltage at “Driver Belt Low” is above a specified value, DTC 46 will set.

Action Taken:

SDM turns “ON” the “AIR BAG” warning lamp and sets DTC 46.

DTC Will Clear When:

The malfunction is no longer occurring and the ignition is turned “OFF”.

DTC Chart Test Description:

Number(s) below refer to step number(s) on the diagnostic chart:

2. This test determines whether the SDM is malfunctioning.
3. This test isolates the malfunction to one side of the driver pretensioner assembly yellow 2–pin connector at the base of the driver seat.
4. This test determines whether the malfunction is in IB13–BLU/RED.
5. This test determines whether the malfunction is in IB14–BLU/YEL.

Diagnostic Aids:

An intermittent condition is likely to be caused by a short to B+ in the driver pretensioner assembly circuit. Inspect IB13–BLU/RED and IB14–BLU/YEL carefully for cutting or chafing. If the wiring pigtail of the driver pretensioner assembly is damaged, the components must be replaced. A careful inspection of IB13–BLU/RED and IB14–BLU/YEL, including the driver pretensioner assembly is essential to ensure that the replacement SDM will not be damaged.

DTC 46 Driver Pretensioner Loop Short To Ignition

Step	Action	Yes	No
1	Was the “SRS Diagnostic System Check” performed?	Go to Step 2	Go to the “SRS Diagnostic System Check”
2	1. When measurements are requested in this chart use 5–8840–0285–0 DVM with correct terminal adapter from 5–8840–0385–0. Ignition switch “OFF.” Connect scan tool data link connector. follow directions as given in the scan tool operator’s manual. 2. Ignition switch “ON.” 3. Read driver belt sense LO . Is driver belt sense LO more than 3.5 volts?	Go to Step 3	Go to Chart A
3	1. Ignition switch “OFF.” 2. Disconnect driver pretensioner assembly yellow 2–pin connector at the base of the driver seat, leave passenger pretensioner assembly connected. 3. Connect SRS driver /passenger load tool 5–8840–2421–0 and appropriate adapter to driver pretensioner assembly harness connector. 4. Ignition switch “ON.” Is DTC 46 current?	Go to Step 4	Ignition switch “OFF” Replace driver pretensioner assembly Go to Step 6
4	1. Ignition switch “OFF.” 2. Disconnect SDM. 3. Disconnect SRS driver /passenger load tool. 4. Measure resistance on SDM harness connector “21” to terminal “12” (ignition). Does 5–8840–0285–0 display “OL” (infinite)?	Go to Step 5	Replace SRS harness or repair chassis harness Go to Step 6
5	Measure resistance on SDM harness connector from terminal “22” to terminal “12” (ignition). Does 5–8840–0285–0 display “OL” (infinite)?	Go to Chart A	Replace SRS harness or repair chassis harness Go to Step 6
6	1. Reconnect all components ensure all component are properly mounted. 2. Clear diagnostic trouble codes. Was this step finished?	Go to the “SRS Diagnostic System Check”	Go to Step 6

DTC 52 Pretensioner Deployment Event Commanded

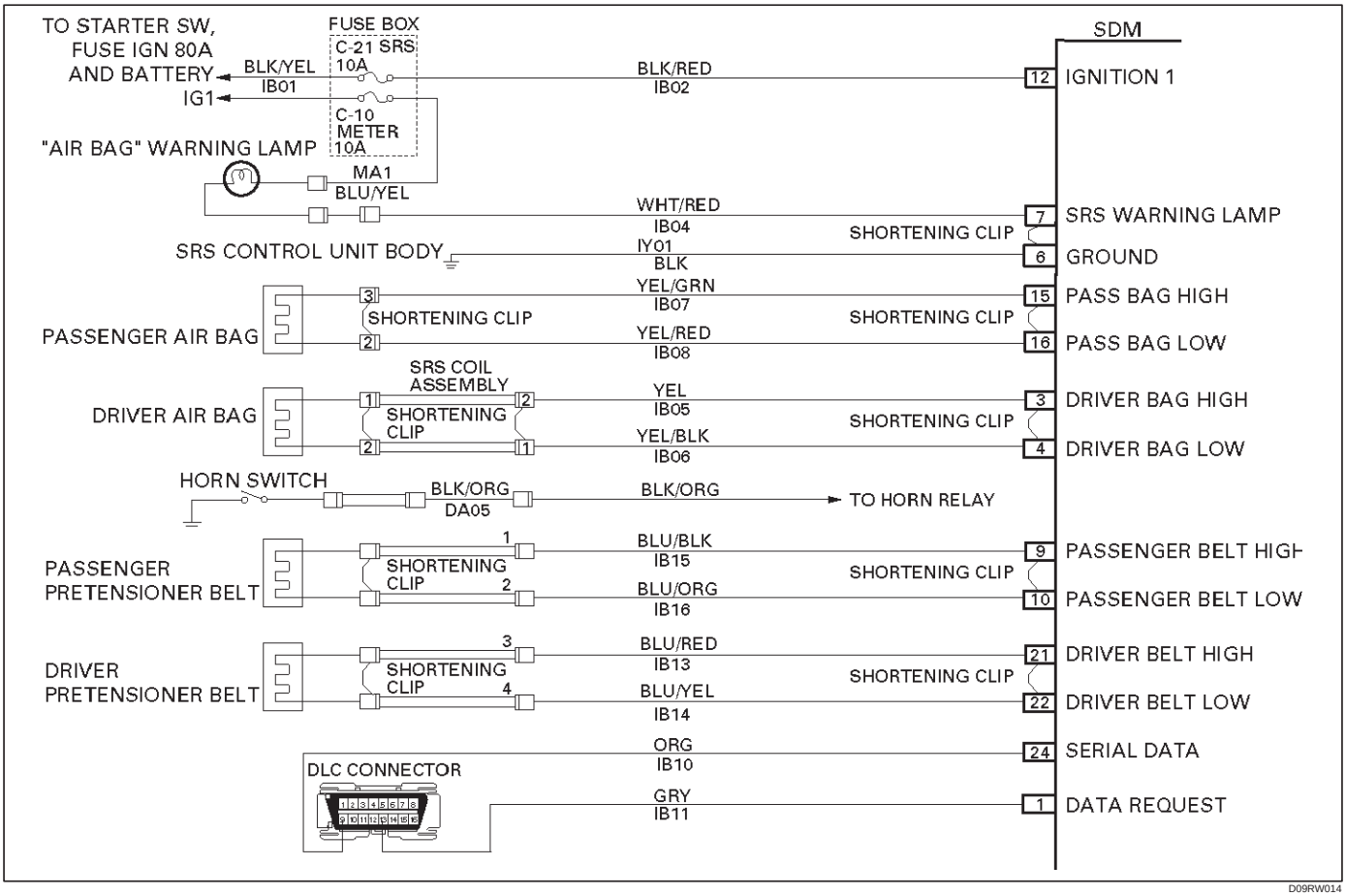

Circuit Description:

The SDM contains a sensing device which converts vehicle velocity changes to an electrical signal. The electrical signal generated is processed by the SDM and then compared to a value stored in memory. When the generated signal exceeds the stored value, the SDM will cause current to flow through the pretensioner assembly deploying the pretensioners and causing DTC 52 to set.

DTC Will Set When:

The SDM detects a frontal crash, up to 30 degrees off the centerline of the vehicle, of sufficient force to warrant deployment of the air bags and pretensioner seat belt.

Action Taken:

SDM turns “ON” the “AIR BAG” warning lamp records “Crash Data”, and sets a diagnostic trouble code.

DTC Will Clear When:

The SDM is replaced.

DTC Chart Test Description:

Number(s) below refer to step number(s) on the diagnostic chart:

2. If pretensioner assembly (s) has not deployed, DTC 52 may have falsely set.
3. If DTC 52 has set with no signs of frontal impact, the diagnostic trouble code has falsely set.

DTC 52 Deployment Event Commanded

WARNING: DURING SERVICE PROCEDURES. BE VERY CAREFUL WHEN HANDLING A SENSING AND DIAGNOSTIC MODULE (SDM). NEVER STRIKE OR JAR THE SDM. NEVER POWER UP THE PRETENSIONER WHEN THE SDM IS NOT RIGIDLY ATTACHED TO THE VEHICLE. ALL SDM AND MOUNTING BRACKET FASTENERS MUST BE CAREFULLY TORQUED AND THE ARROW MUST BE POINTING TOWARD THE FRONT OF THE VEHICLE TO ENSURE PROPER OPERATION OF THE PRETENSIONER. THE SDM COULD BE ACTIVATED WHEN POWERED WHILE NOT RIGIDLY ATTACHED TO THE VEHICLE WHICH COULD CAUSE DEPLOYMENT AND RESULT IN PERSONAL INJURY.

Step	Action	Yes	No
1	Was the “SRS Diagnostic System Check” performed?	Go to Step 2.	Go to the “SRS Diagnostic System Check”
2	Ignition switch “OFF.” Have pretensioner assemblies deployed?	Replace components and perform inspections as directed in “repairs and inspections required after an accident” in this section clear diagnostic trouble codes Repeat “SRS Diagnostic System Check”	Go to Step 3
3	Inspect front of vehicle and undercarriage for sings of impact. Were signs of impact found?	Replace components and perform inspections as directed in “Repairs and Inspections Required After An Accident” in this section Clear diagnostic trouble codes Repeat “SRS Diagnostic System Check”	Ignition switch “OFF” Replace SDM Reconnect all SRS system components, ensure all components are properly mounted Repeat “SRS Diagnostic System Check”

CONTROL SYSTEM

CRUISE CONTROL SYSTEM

CONTENTS

Service Precaution 10A–1
General Description 10A–1
Diagnosis 10A–2
Brake Switch 10A–2
Removal 10A–2
Installation 10A–2
Adjustment 10A–3
Clutch Switch 10A–3
Removal and Installation 10A–3
Adjustment 10A–3
Starter Switch 10A–4
Removal 10A–4
Installation 10A–4
Cruise Control Main Switch 10A–5
Removal 10A–5
Installation 10A–5
Cruise Control Switch (Combination Switch) 10A–5
Removal and Installation 10A–5
Cruise Control Unit 10A–6
Removal 10A–6
Installation 10A–6
Cruise Actuator 10A–7
Actuator Cable Diagram (LHD) 10A–7
Actuator Cable Diagram (RHD) 10A–7
Removal 10A–8
Installation 10A–8
Mode Switch 10A–8
Removal and Installation 10A–8

Service Precaution

WARNING: IF SO EQUIPPED WITH A SUPPLEMENTAL RESTRAINT SYSTEM (SRS), REFER TO THE SRS COMPONENT AND WIRING LOCATION VIEW IN ORDER TO DETERMINE WHETHER YOU ARE PERFORMING SERVICE ON OR NEAR THE SRS COMPONENTS OR THE SRS WIRING. WHEN YOU ARE PERFORMING SERVICE ON OR NEAR THE SRS COMPONENTS OR THE SRS WIRING, REFER TO THE SRS SERVICE INFORMATION. FAILURE TO FOLLOW WARNINGS COULD RESULT IN POSSIBLE AIR BAG DEPLOYMENT, PERSONAL INJURY, OR OTHERWISE UNNEEDED SRS SYSTEM REPAIRS.

CAUTION: Always use the correct fastener in the proper location. When you replace a fastener, use ONLY the exact part number for that application. ISUZU will call out those fasteners that require a replacement after removal. ISUZU will also call out the fasteners that require thread lockers or thread sealant. UNLESS OTHERWISE SPECIFIED, do not use supplemental coatings (Paints, greases, or other corrosion inhibitors) on threaded fasteners or fastener joint interfaces. Generally, such coatings adversely affect the fastener torque and the joint clamping force, and may damage the fastener. When you install fasteners, use the correct tightening sequence and specifications. Following these instructions can help you avoid damage to parts and systems.

General Description

The cruise control keeps the vehicle running at a fixed speed until a signal canceling this fixed speed is received . When the main switch “AUTO CRUISE” is turned on with the vehicle in the running mode, the battery voltage is applied to the control unit. When a signal from the control switch is input to the control unit while the vehicle is in this state, the cruise control actuator is activated to operate the system. Also, while the system is operating, the “AUTO CRUISE” indicator light in the meter assembly lights up.

1. SET/COAST Switch Function

1. **Set Function:** When the SET/COAST switch is pressed and released with the main switch on, the speed at which the vehicle is running at that moment is stored in the memory, and the vehicle automatically runs at the stored speed.
2. **Coast-down Function:** When the SET/COAST switch is kept on while the vehicle in running, the vehicle decelerates during that time. The speed at which vehicle is running when the control switch is turned off is stored in the memory, and the vehicle automatically returns to the stored speed.
3. **Tap-down Function:** When the SET/COAST switch is turned on and off instantaneously while the vehicle is running, the vehicle decelerates a mile for each on/off operation. The vehicle speed at which the vehicle was running when the SET/COAST was turned off last is stored in the memory, and the vehicle automatically returns to this stored speed.

2. RESUME/ACCEL Switch Function

1. **Resume Function:** When the RESUME/ACCEL switch is turned on/off after the system is temporarily deactivated by pressing the brake or clutch pedal while the vehicle is running, the vehicle resumes the speed stored before the system was released, and the vehicle automatically runs at the stored speed .
2. **Accelerate Function:** When the RESUME/ACCEL switch is kept on after the system is released completely, the vehicle accelerates its speed during that time. The vehicle speed at which the vehicle was running when the switch was turned off is stored in the memory, and the vehicle automatically returns to this speed.
3. **Tap-up Function:** When the RESUME/ACCEL switch is turned on and off instantaneously while the vehicle is running, the vehicle decelerates a mile for each on/off operation. The vehicle speed at which the vehicle was running when the switch was turned off last is stored in the memory, and the vehicle automatically returns to this stored speed.

3. CANCEL Function

1. **Temporary Cancellation:**
   - When the brake pedal is pressed.
   - When the clutch pedal is pressed. (M/T)
   - When the select lever is shifted to any position other than “D”, “3”, “2” or “L”. (A/T)
   - When the cancel switch is operated.
   - When the vehicle speed exceeds about 20 km/h over the vehicle speed stored in the memory.
   - Turning the RESUME/ACCEL switch will return the vehicle to the speed stored in the cruise control memory.
2. **Complete Cancellation:**
   - When the starter switch or the main switch is turned off.
   - When the fail-safe function is activated.
   - When the vehicle speed is about 38.5 km/h.

Diagnosis

Refer to the Cruise Control System Diagnosis in Wiring System section.

Brake Switch

Removal

1. Disconnect the battery ground cable.
2. Remove the brake switch (1).
   - Disconnect the connector.
   - Loosen the lock nuts of the switch.
   - Remove the switch by turning it.

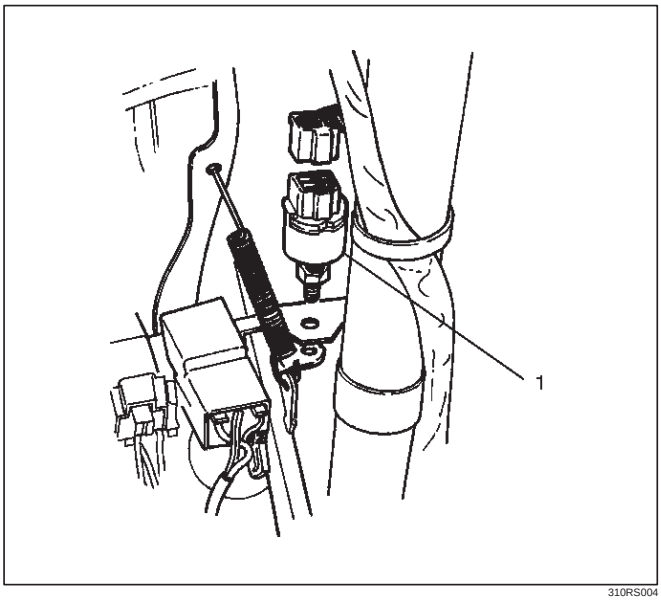

310RS004

Installation

To install, follow the removal steps in the reverse order, noting the following points.

1. Check to see if the brake pedal has been returned by the return spring to the specified position.
2. Turn the switch clockwise until the tip of the threaded portion of the brake switch contacts the pedal arm.
3. Turn the switch counterclockwise until the space between the tip of the threaded portion and the pedal arm is 0.5 to 1.0 mm (0.02-0.04 in.) as shown in the figure.

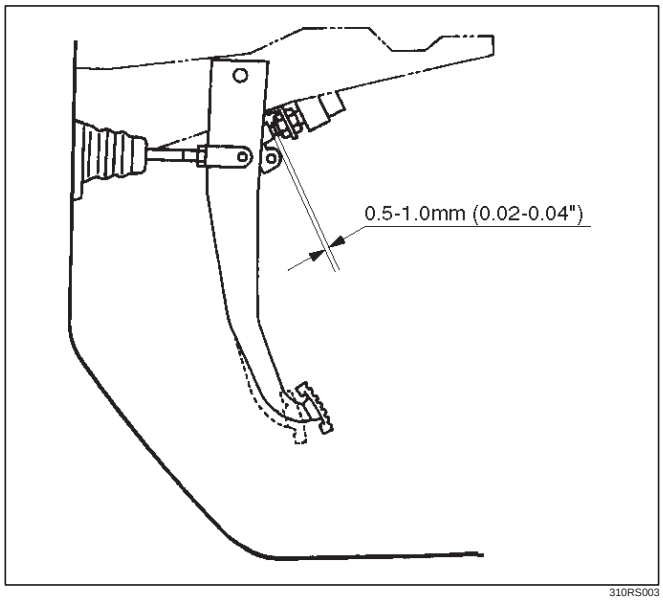

310RS003

Adjustment

1. Check to be sure that the brake pedal (3) has been completely returned by the return spring.
2. Disconnect the switch connector.
3. Loosen the lock nut (1) of the switch (2).
4. Turn the switch clockwise until the tip of screw portion of the brake pedal hits the pedal arm.
5. Turn the switch counterclockwise until the clearance between the tip of the screw portion and the pedal arm becomes 0.5 to 1.0 mm (0.02-0.04 in).
6. Tighten the lock nut.
7. Connect the switch connector.

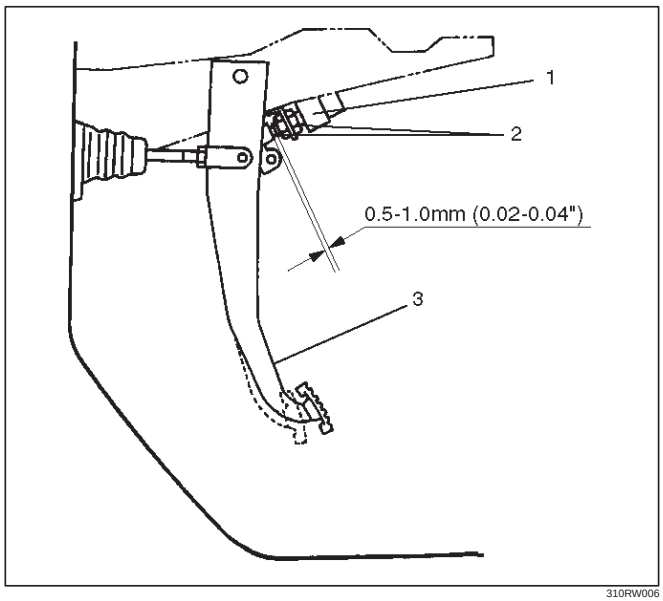

310RW006

Clutch Switch

Removal and Installation

Refer to the Clutch Control removal and installation steps in Clutch section.

Adjustment

1. Check to be sure that the clutch pedal (1) has been completely returned by the return spring.
2. Disconnect the switch connector.
3. Loosen the lock nut (2) of the switch (3).
4. Push the switch by hand until the push rod cannot be seen from the tip portion of the switch.
5. Give the switch one reverse rotation.
6. Tighten the lock nut.
7. Connect the switch connector.

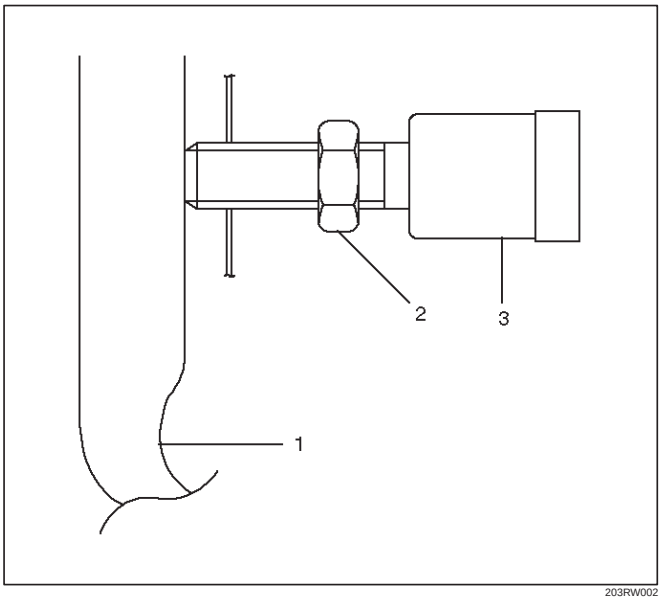

203RW002

Starter Switch

Removal

1. Disconnect the battery ground cable.
2. Remove the front console assembly (1). Refer to the Instrument Panel Assembly in Body Structure section.
3. Remove the lower cluster assembly (2). Refer to the Instrument Panel Assembly in Body Structure section.
4. Remove the instrument panel driver lower cover assembly (3). Refer to the Instrument Panel Assembly in Body Structure section.

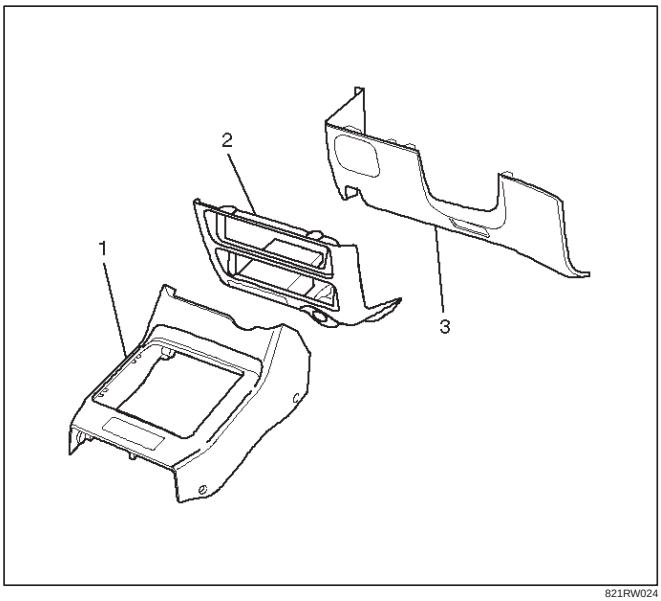

821RW024

5. Remove seven screws to remove the steering cowl (6).
6. Disconnect the connector, remove the screw (4) and then remove the starter switch (5).

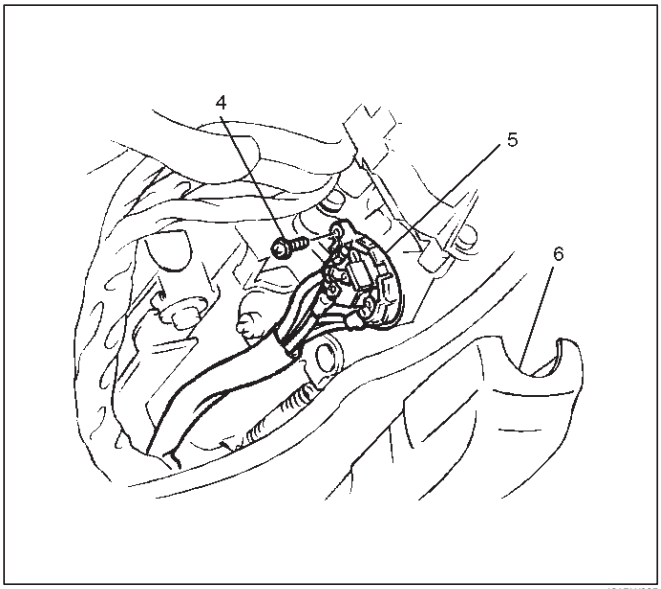

431RW005

Installation

To install, follow the removal steps in the reverse order, noting the following point.

1. When installing the steering cowl (10), be sure to pass the harnesses through the route as shown in the figure so that the starter switch harness (7), the combination switch harness (8) and the inflator module harness (9) will not catch.

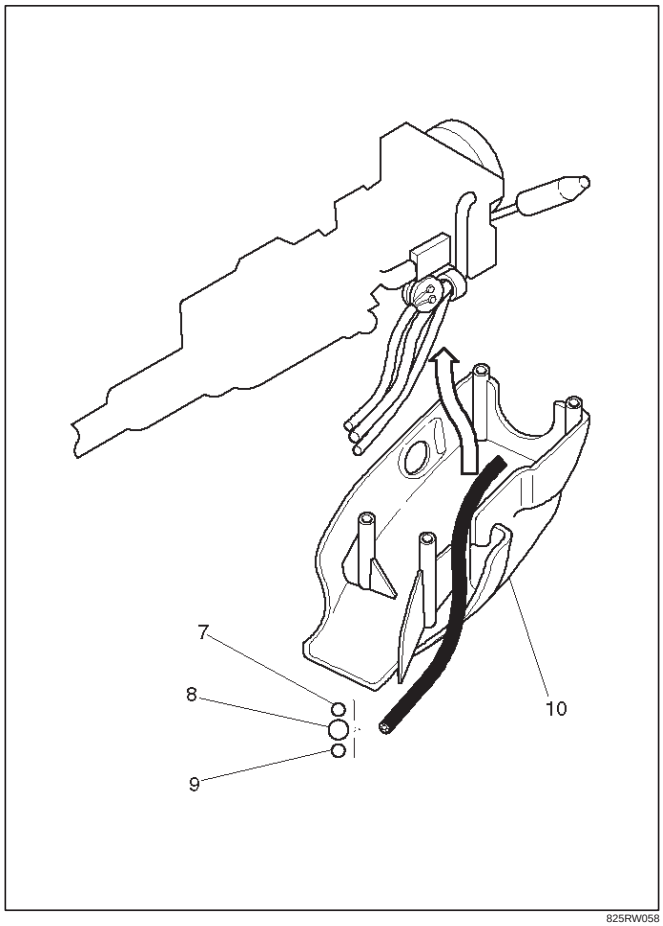

825RW058

Cruise Control Main Switch

Removal

1. Disconnect the battery ground cable.
2. Remove the front console assembly (1). Refer to the Instrument Panel Assembly in Body Structure section.
3. Remove the lower cluster assembly (2). Refer to the Instrument Panel Assembly in Body Structure section.
4. Remove the instrument panel driver lower cover assembly (3). Refer to the Instrument Panel Assembly in Body Structure section.

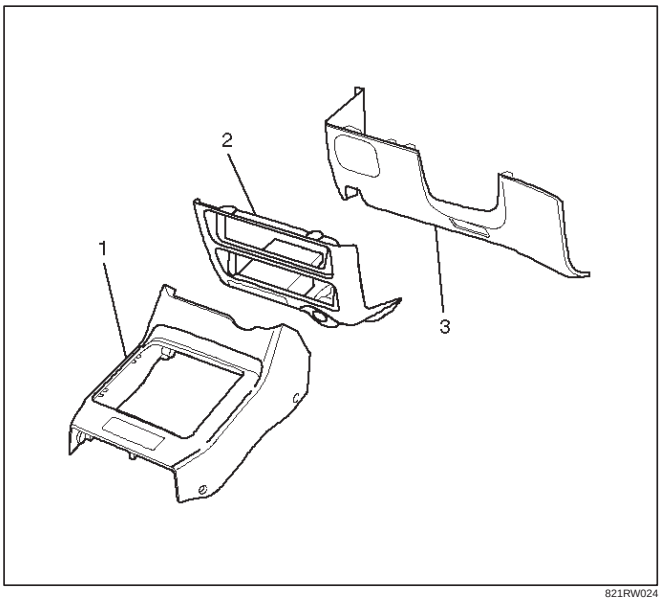

821RW024

5. Remove the instrument panel cluster assembly (5). Refer to the Instrument Panel Assembly in Body Structure section.
6. Disconnect the and push the lock from the side of the instrument panel cluster assembly to remove the cruise control main switch (4).

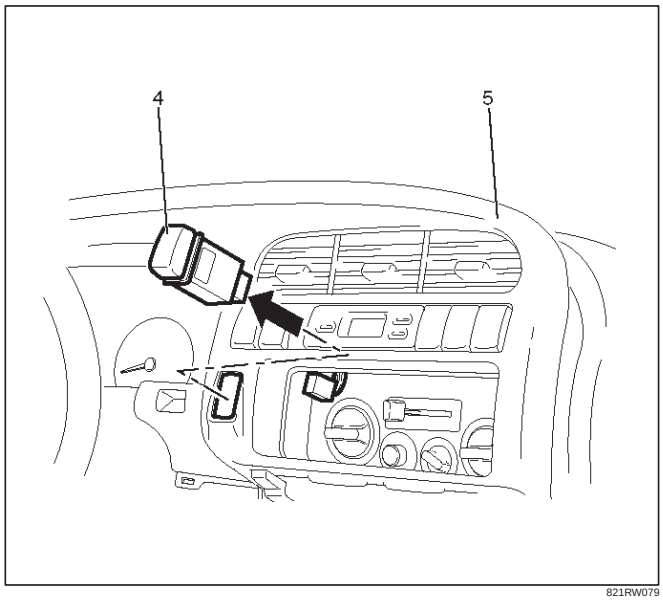

821RW079

Installation

To install, follow the removal steps in the reverse order, noting the following point.

1. Push in the switch with your fingers until the switch is locked securely.

Cruise Control Switch (Combination Switch)

Removal and Installation

Refer to the Lighting Switch (Combination Switch) removal and installation steps of Lighting System in Body and Accessories section.

Cruise Control Unit

Removal

1. Disconnect the battery ground cable.
2. Remove the dash side trim panel (RH)(2).
3. Disconnect the connector.
4. Remove a fixing nut to remove the cruise control unit (1).

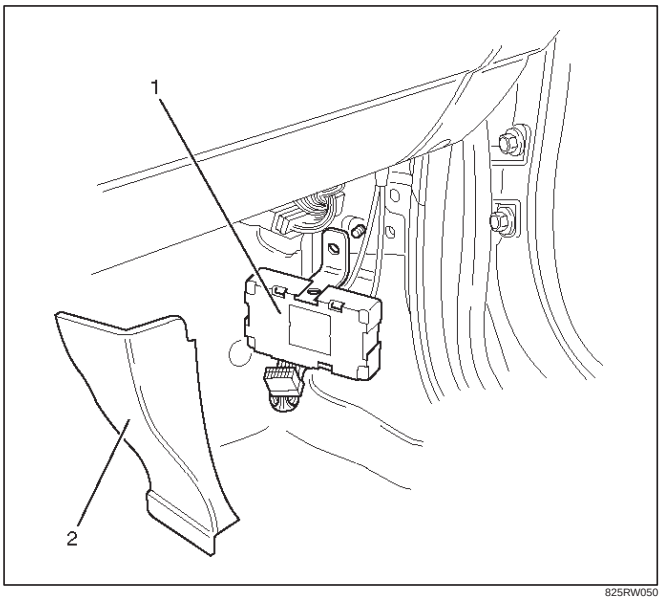

825RW050

Installation

To install, follow the removal steps in the reverse order.

Cruise Actuator

Actuator Cable Diagram (LHD)

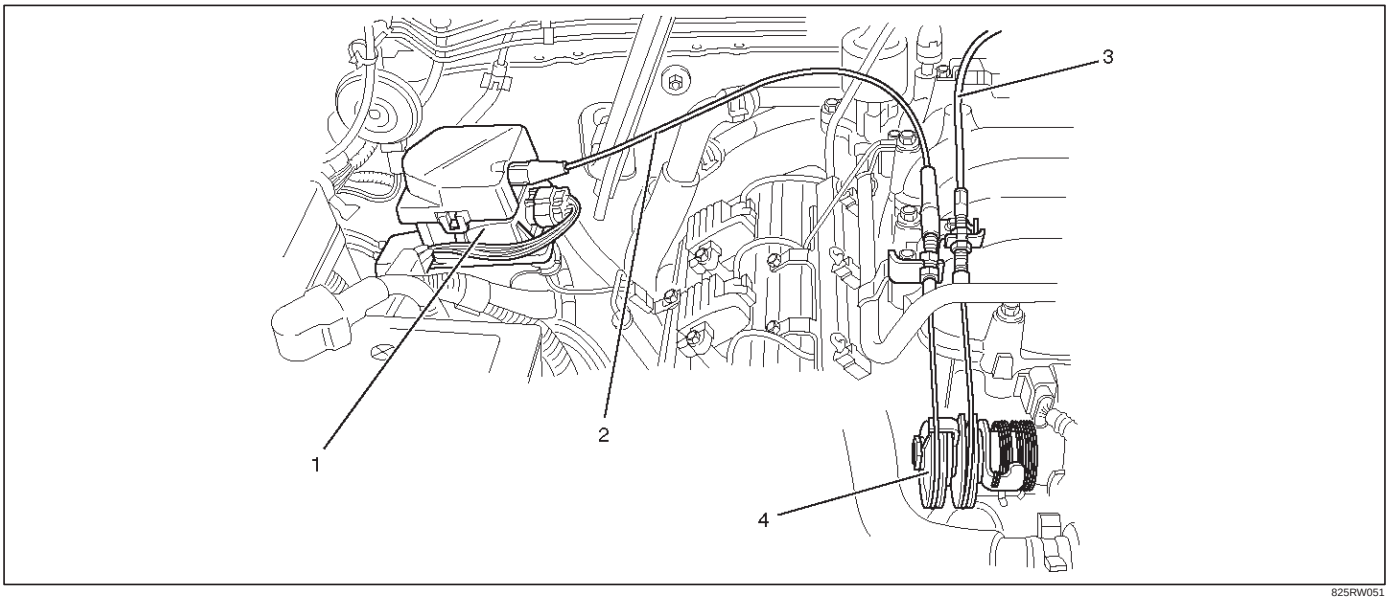

825RW051

Legend

(1) Cruise Actuator Assembly
(2) Cruise Control Cable
(3) Accel Control Cable
(4) Cam Link (Cruise Control Side)

Actuator Cable Diagram (RHD)

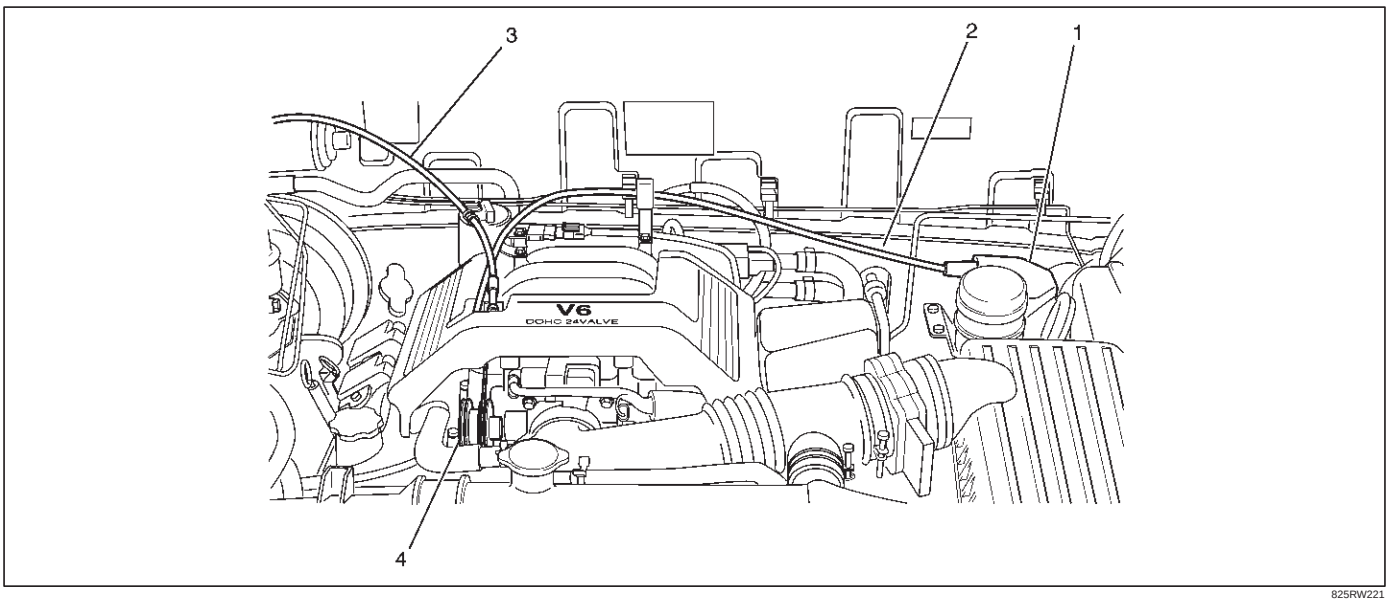

825RW221

Legend

(1) Cruise Actuator Assembly
(2) Cruise Control Cable
(3) Accel Control Cable
(4) Cam Link (Cruise Control Side)

Removal

1. Disconnect the battery ground cable.
2. Remove the cruise actuator Assembly (4).
   - Disconnect the connector (3).
   - Remove the cable end (1) from the cam link (cruise control side).
   - Loosen two fixing nuts (2).
   - Remove three actuator fixing screws.

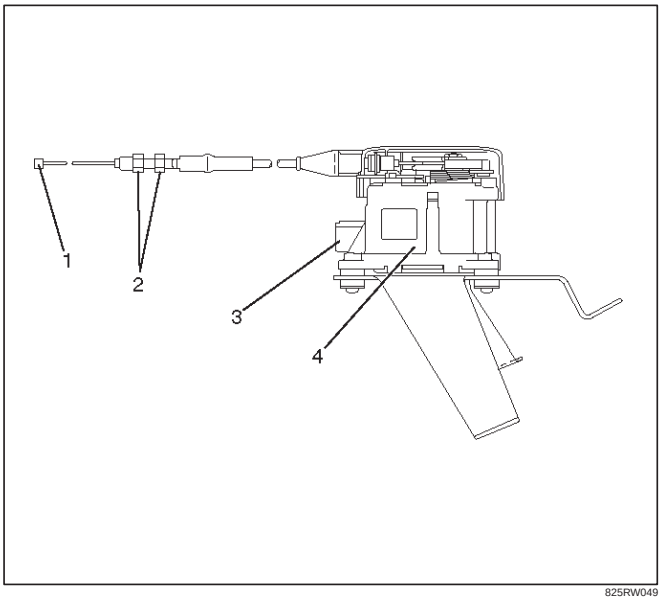

825RW049

Installation

To install, follow the removal steps in the reverse order, noting the following point.

1. Take care not to bend the cable excessively.

Mode Switch

Removal and Installation

Refer to the Mode Switch removal and installation steps in Automatic Transmission section.

PAGE NEXT

THIS MALUAL INCLUDES THE FOLLOWING SECTIONS:

SECTION No.	CONTRNTS
0A	GENERAL INFORMATION
0B	MAINTENANCE AND LUBRICATION

THIS MALUAL INCLUDES THE FOLLOWING SECTIONS:

SECTION No.	CONTRNTS
1A	HEATING AND VENTILATION
1B	AIR CONDITIONING
1D	COMPRESSOR OVERHAUL

THIS MALUAL INCLUDES THE FOLLOWING SECTIONS:

SECTION No.	CONTRNTS
00	SERVICE INFORMATION
2A	FRONT END ALIGNMENT

THIS MALUAL INCLUDES THE FOLLOWING SECTIONS:

SECTION No.	CONTRNTS
3C	FRONT SUSPENSION
3D	REAR SUSPENSION; COIL SPRING
3E	WHEELS AND TIRES

THIS MALUAL INCLUDES THE FOLLOWING SECTIONS:

SECTION No.	CONTRNTS
4A1	DIFFERENTIAL (FRONT)
4A2A	DIFFERENTIAL (Rear 220mm)
4A2B	DIFFERENTIAL (REAR 244mm)
4B1	DRIVELINE CONTROL SYSTEM (SHIFT ON THE FLY)
4B2	DRIVELINE CONTROL SYSTEM (TOD)
4C	DRIVE SHAFT SYSTEM
4D1	TRANSFER CASE (STANDARD TYPE)
4D2	TRANSFER CASE (TOD)

THIS MALUAL INCLUDES THE FOLLOWING SECTIONS:

SECTION No.	CONTRNTS
5A	BRAKE CONTROL SYSTEM
5B	ANTI-LOCK BRAKE SYSTEM
5C	POWER ASSISTED BRAKE SYSTEM
5D	PARKING BRAKES

THIS MALUAL INCLUDES THE FOLLOWING SECTIONS:

6VD1/6VE1

SECTION No.	CONTRNTS
6A	ENGINE MECHANICAL
6B	ENGINE COOLING
6C	ENGINE FUEL
6D1	ENGINE ELECTRICAL
6D2	IGNITION SYSTEM
6D3	STARTING AND CHARGING SYSTEM
6E	ENGINE DRIVEABILITY AND EMISSIONS
6F	ENGINE EXHAUST
6G	ENGINE LUBRICATION
6H	ENGINE SPEED CONTROL SYSTEM
6J	INDUCTION

4JG2

SECTION No.	CONTRNTS
00	SERVICE INFORMATION
6A	ENGINE MECHANICAL
6A2	4JG2-NA / 4JG2-TURBO ENGINE
6B	ENGINE COOLING
6C	FUEL SYSTEM
6D	ENGINE ELECTRICAL
6E	-
6F	EXHAUST
6G	-

4JX1

SECTION No.	CONTRNTS
6A	ENGINE MECHANICAL
6B	ENGINE COOLING
6C	ENGINE FUEL
6D	ENGINE ELECTRICAL
6E	ENGINE DRIVEABILITY AND EMISSIONS
6F	ENGINE EXHAUST
6G	ENGINE LUBRICATION
6H	ENGINE SPEED CONTROL
6J	INDUCTION

THIS MALUAL INCLUDES THE FOLLOWING SECTIONS:

SECTION No.	CONTRNTS
7A	AUTOMATIC TRANSMISSION (4L30-E)
7A	AUTOMATIC TRANSMISSION (AW30-40LE)
7A1	TRANSMISSION CONTROL SYSTEM (4L30-E)
7B	MANUAL TRANSMISSION (AR-5)
7B	MANUAL TRANSMISSION (MUA)
7C	CLUTCH

THIS MALUAL INCLUDES THE FOLLOWING SECTIONS:

SECTION No.	CONTRNTS
8A	LIGHTING SYSTEM
8B	WIPER / WASHER SYSTEM
8C	ENTERTAINMENT
8D	WIRING SYSTEM
8E	METER AND GAUGE
8F	BODY STRUCTURE
8G	SEATS
8H	SECURITY AND LOCKS
8I	SUN ROOF/CONVERTIBLE TOP
8J	EXTERIOR / INTERIOR TRIM

THIS MALUAL INCLUDES THE FOLLOWING SECTIONS:

SECTION No.	CONTRNTS
9A	SEAT BELT SYSTEM
9J	SUPPLEMENTAL RESTRAINT SYSTEM
9J1	RESTRAINT CONTROL SYSTEM

THIS MALUAL INCLUDES THE FOLLOWING SECTIONS:

SECTION No.	CONTRNTS
10A	CRUISE CONTROL SYSTEM

PAGE BACK

THIS MALUAL INCLUDES THE FOLLOWING SECTIONS:

SECTION No.	CONTRNTS
-	IMMOBILIZER SYSTEM

SECTION 0A

GENERAL INFORMATION

CONTENTS

PAGE

General Repair Instructions 0A– 2
How To Use This Manual 0A– 3
Identification 0A– 6
Lifting Instructions 0A– 8
Torque Specifications 0A–10
Recommended Liquid Gasket 0A–11
Recommended Thread Locking Agents 0A–11
Abbreviations Charts 0A–12

Service Precaution

WARNING: THIS VEHICLE HAS A SUPPLEMENTAL RESTRAINT SYSTEM (SRS). REFER TO THE SRS COMPONENT AND WIRING LOCATION VIEW IN ORDER TO DETERMINE WHETHER YOU ARE PERFORMING SERVICE ON OR NEAR THE SRS COMPONENTS OR THE SRS WIRING. WHEN YOU ARE PERFORMING SERVICE ON OR NEAR THE SRS COMPONENTS OR THE SRS WIRING, REFER TO THE SRS SERVICE INFORMATION. FAILURE TO FOLLOW WARNINGS COULD RESULT IN POSSIBLE AIR BAG DEPLOYMENT, PERSONAL INJURY, OR OTHERWISE UNNEEDED SRS SYSTEM REPAIRS.

CAUTION: Always use the correct fastener in the proper location. When you replace a fastener, use ONLY the exact part number for that application. ISUZU will call out those fasteners that require a replacement after removal. ISUZU will also call out the fasteners that require thread lockers or thread sealant. UNLESS OTHERWISE SPECIFIED, do not use supplemental coatings (Paints, greases, or other corrosion inhibitors) on threaded fasteners or fasteners joint interfaces. Generally, such coatings adversely affect the fastener torque and the joint clamping force, and may damage the fastener. When you install fasteners, use the correct tightening sequence and specification. Following these instructions can help you avoid damage to parts and systems.

GENERAL REPAIR INSTRUCTIONS

1. Park the vehicle on level ground and chock the front or rear wheels before lifting the vehicle.
2. Use covers on the vehicle body, seats, and floor to prevent damage and/or contaminations.
3. Disconnect the grounding cable from the battery before performing service operations. This will prevent cable damage or burning due to shortcircuiting.
4. Raise the vehicle with a jack set against the recommended lifting points (see “Lifting instructions” in this section).
5. Support the vehicle on chassis stands.
6. Handle brake fluid and antifreeze solution with great care.
   Spilling these liquids on painted surfaces will damage the paint.
7. The use of the proper tool(s) and special tool(s) where specified is essential to efficient, reliable, and safe service operations.
8. Always use genuine ISUZU replacement parts.
9. Discard used cotter pins, gasket, plastic clips, O-rings, oil seals, lock washers, and self-locking nuts at disassembly.
   Normal function of these parts cannot be guaranteed if they are reused.
10. Keep the disassembled parts neatly in groups. This will facilitate smooth and correct reassembly.
11. Keep fixing nuts and bolts separate.
    Fixing nuts and bolts vary in hardness and design according to installation positions.
12. Clean all parts before inspection or reassembly.
13. Clean the oil ports and other openings with compressed air to make certain that they are free of dirt and obstructions.
14. Lubricate the rotating and sliding faces of all moving parts with oil or grease before installation.
15. Use the recommended liquid gasket to prevent leakage.
16. Carefully observe all nut and bolt torque specifications.
17. When service operation is completed, make a final check to be sure service has been done properly and problem has been corrected.
18. When removing or replacing parts that require refrigerant to be discharged from the air conditioning system, be sure to use the following tools to recover and recycle the Refrigerant-134a (R-134a).

    For 134a:
    Use the R-134a Refrigerant Recovery/Recovery/Recycling/Recharging/System (ACR^4) or its equivalent to prevent the discharge of refrigerant into the air.

HOW TO USE THIS MANUAL

1. Find the applicable section by referring to the table of contents on the introduction page of each manual.
2. In “Service Information”, an opening section of each manual, the troubleshooting, maintenance servicing, service data and/or information on special tools required for the service operations described in the next subsequent sections are arranged and compiled so concisely that you can see at a first glance.
3. Each section except the Service Information section is basically arranged in the following order of headings:
   General description
   On-vehicle service
   Unit repair
4. The service operations are in two groups: one is the “On-vehicle service” where operations can be directly performed on the vehicle, and the other is the “Unit repair” where the operations are done on the work bench after removing the unit from the vehicle.
5. Each service operation section begins with a disassembled view of unit or equipment, which is useful to find relative components, service procedure, availability and contents of repair kits, etc.

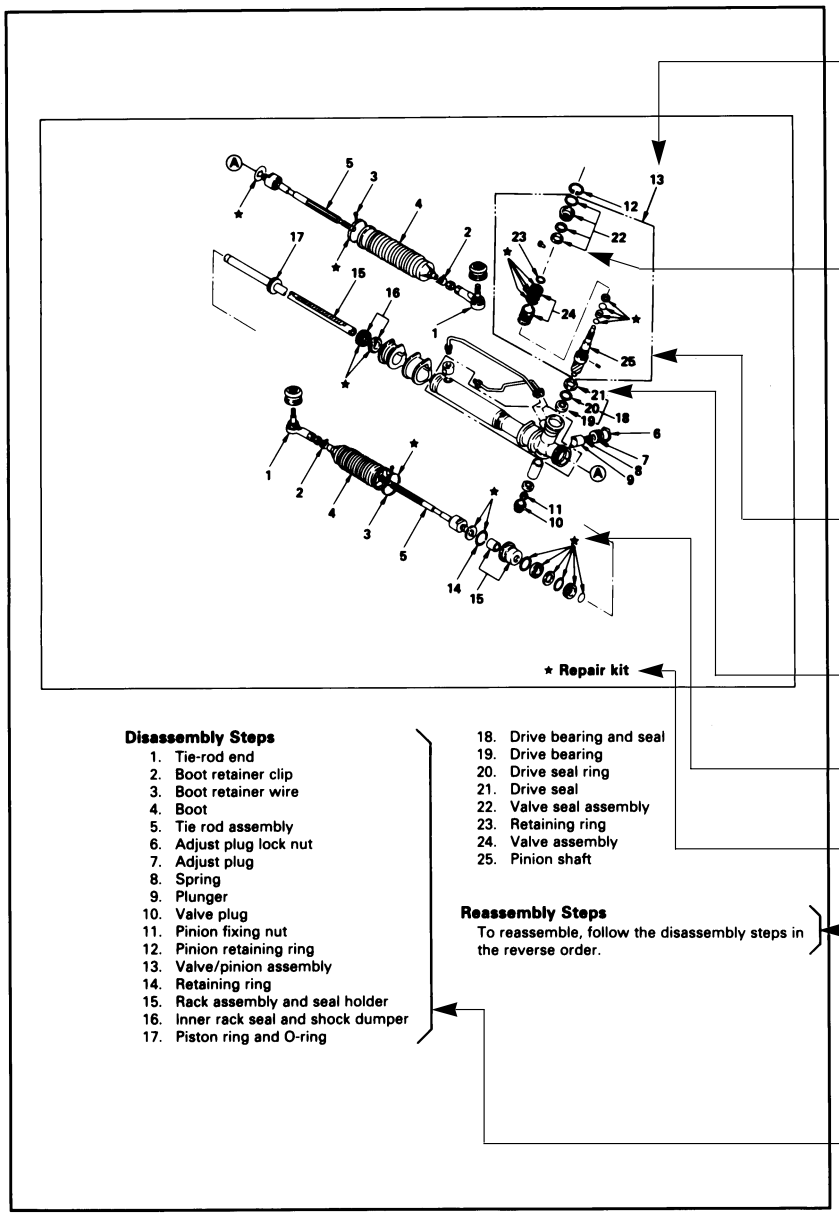

The number represents sequence of removal or disassembly
Removal of unnumbered the parts (excluding bolts, nuts, washers, gaskets, cotter pins, etc.) is unnecessary unless replacement is needed. Where parts replacement requires specific information, instructions are given in “Inspection and Repair”.
This frame is to be removed as a large disassembly with all the parts assembled in the frame. Each one of the parts in the frame is removed as a small disassembly.
Parts to be removed or installed as a unit.
★ Parts contained in repair kit.
★ Indicates repair kit availability.
When the installation (reassembly) procedure is the reverse order of the removal (disassembly) procedure, the sequence of service operation and the parts names will be omitted.
Name of parts listed in sequence of service operation.

For illustrations where there are few items to be performed:

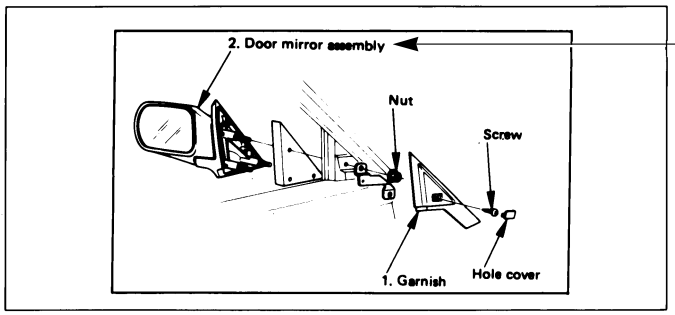

The sequence of removal (disassembly) and the parts names will be given.

6. After the illustration, the details of each operation are shown in the order the operations are carried out in the illustration. Refer to the explanations when checking important information such as the notes in each operation, and places where special tools are to be used and their usage, and the specified service data.

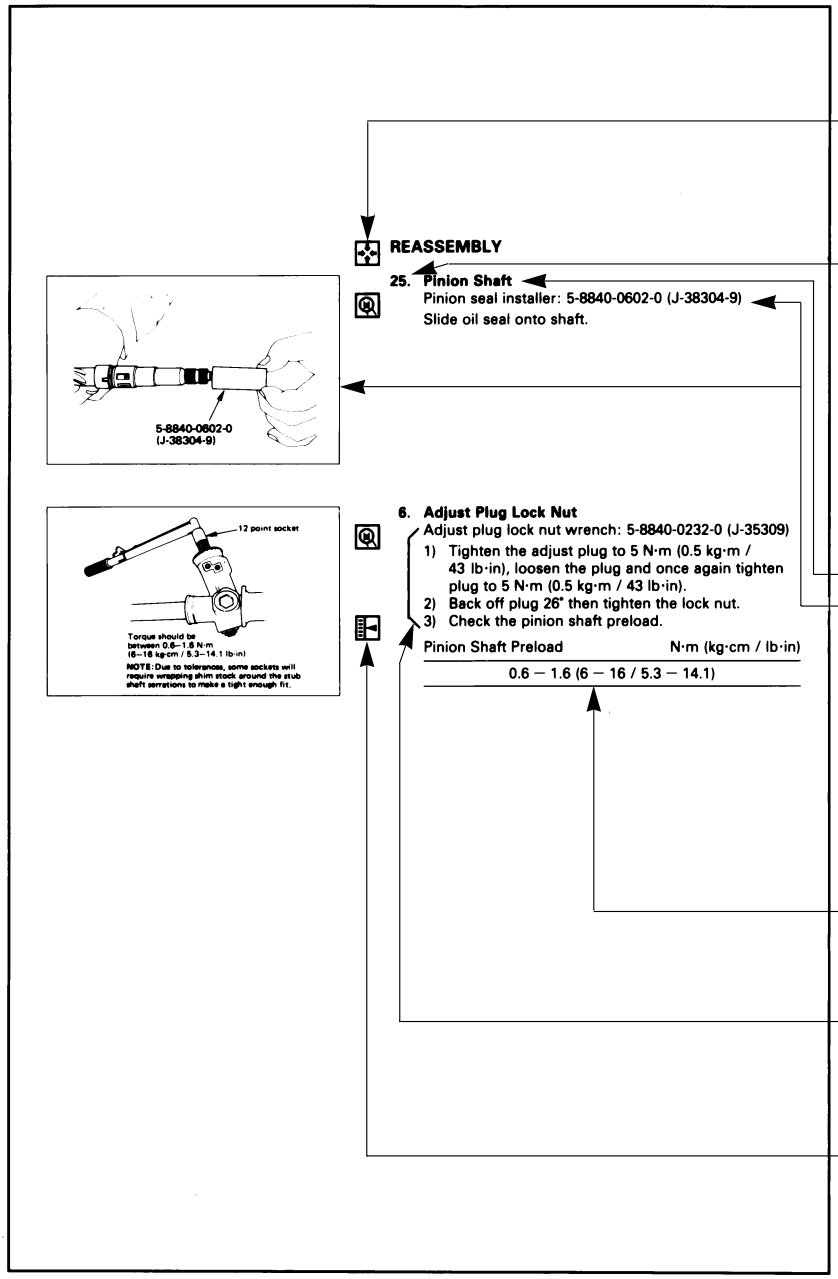

The symbol mark attached to the title indicates the action to be taken in the operations of each title.
Example for this case;
1st step – Reassemble pinion shaft

The numbers given to the installation (assembly) procedure are the same as those given in the removal (disassembly) procedure in the illustration. Therefore, start with the larger number during reassembly.

The titles of operations done in the illustration are given in bold letters. They are described in the order of the procedure of the operations.

Special tools are identified with tool name and/or tool number.
The drawing illustrates how the tool is used.

Service data and specifications are listed in table.

Important note.

The action symbol indicates the step of service to be followed.
Refer to the following paragraph for the meaning of each symbol.

7. In this manual, the following action symbols are used to indicate the type of service operations to be performed.

. . . Remove or disconnect

. . . Install or connect

. . . Disassemble

. . . Reassemble

. . . Align the marks

. . . Correct direction

. . . Inspect

. . . Take measurement

. . . Adjust

. . . Clean

. . . Pay close attention - Important

. . . Tighten to specified torque

. . . Use special tool(s)

. . . Lubricate with oil

. . . Lubricate with grease

. . . Use liquid gasket

8. The service standard is indicated in terms of “Standard” and “Limit”.
   The “Standard” means the assembly standard and standard range within which the parts are considered serviceable.
   “Limit” indicates the limit value (Correction or replacement is necessary when measurement is beyond this limit.)

IDENTIFICATION

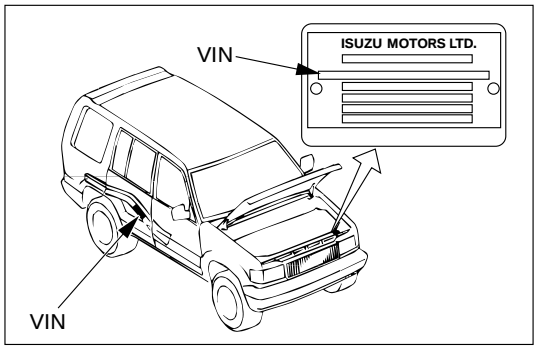

VEHICLE IDENTIFICATION NUMBER (VIN)

This is the legal identification of the vehicle.
It appears on the manufacturer's Plate attached to the left of the engine compartment front end. VIN number is also stamped on the rear right side of the frame.

JAC UBS 25 G Y 7 200001

- 200001 — Sequential Number
- 7 — Plant Code
- Y — Model Year (Y: 2000)
- G — Wheel Base (D: Short, G: Long)
- 25 — Engine Type (25: 6VD1, 26: 6VE1, 69: 4JG2, 73: 4JX1)
- UBS — Vehicle Model
- JAC — World Manufacturer Identifier

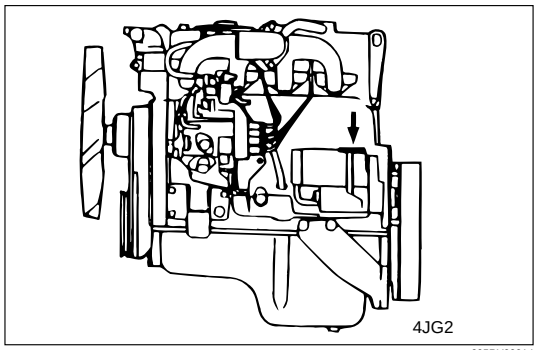

905RY00014

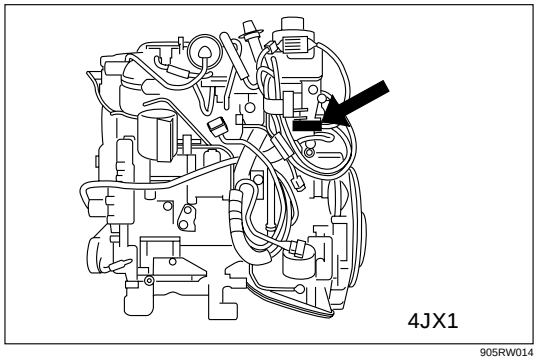

905RW014

ENGINE SERIAL NUMBER

The engine serial number is stamped on the left rear lower area of the cylinder block above the starter.

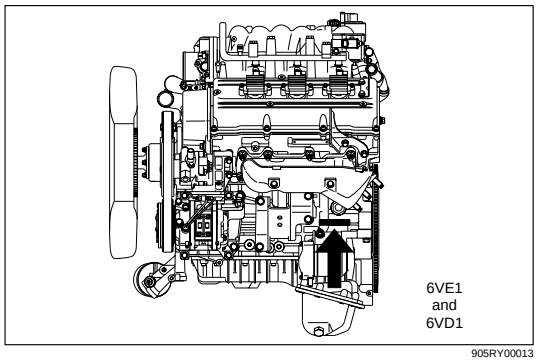

905RY00013

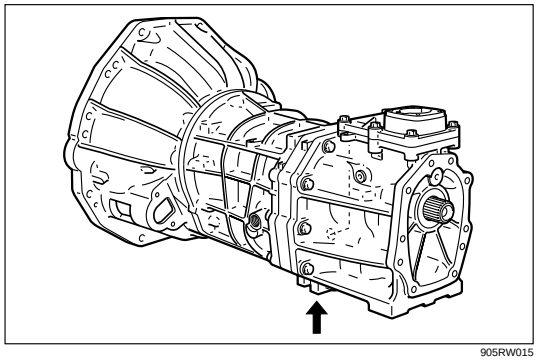

905RW015

TRANSMISSION SERIAL NUMBER

Manual: Stamped on the left side of the transmission intermediate plate.

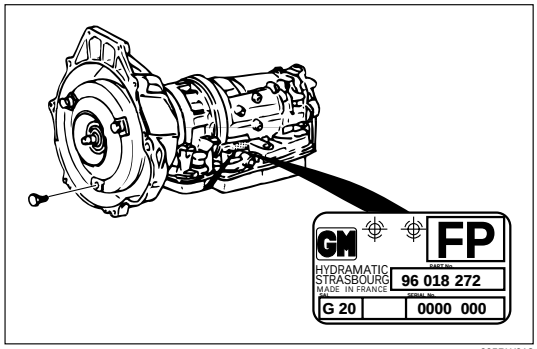

905RW018

Automatic: Stamped on the identification plate, located on the left side of the transmission above the mode switch.

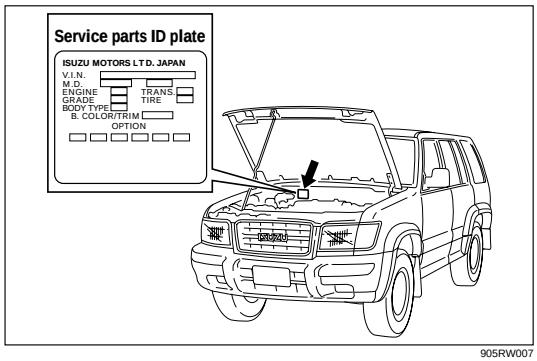

905RW007

SERVICE PARTS IDENTIFICATION PLATE

The Vehicle Information Plate (Service Parts ID plate) is provided on all vehicle models.
It is located on the center dash wall inside the engine compartment. The plate lists the VIN (Vehicle Identification Number), paint information and all production options and special equipment on the vehicle when it was shipped from the factory.

LIFTING INSTRUCTIONS

CAUTION:

- **If a lifting device other than the original jack is used, it is most important that the device be applied only to the correct lifting points. Raising the vehicle from any other point may result in serious damage.**
- **When jacking or lifting a vehicle at the frame side rail or other prescribed lift points, be certain that lift pads do not contact the catalytic converter, brake pipes or cables, or fuel lines. Such contact may result in damage or unsatisfactory vehicle performance.**

LIFTING POINTS AND SUPPORTABLE POINT LOCATIONS

Long wheel Base Model

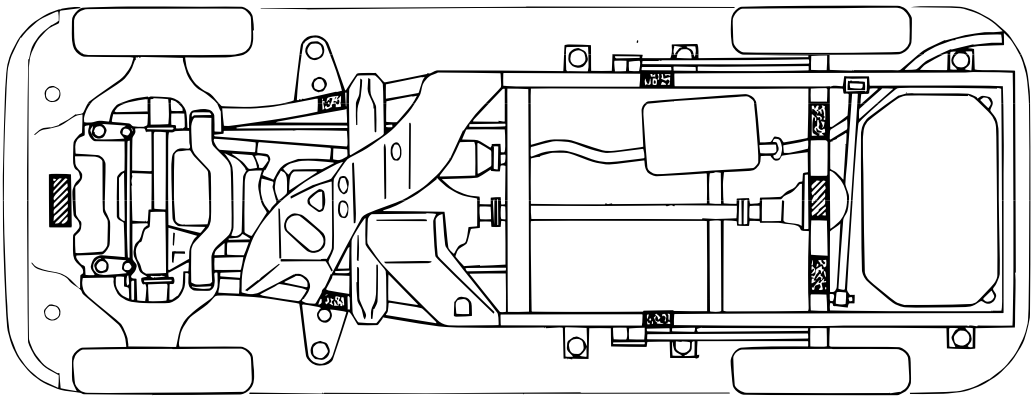

Short Wheel Base Model

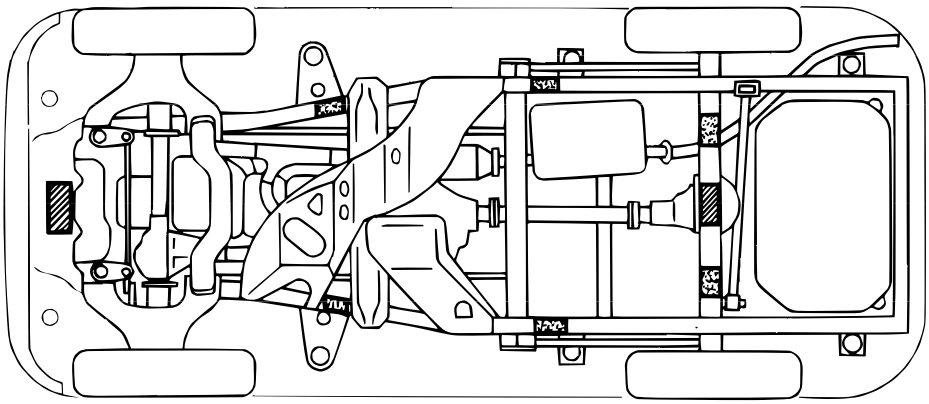

Lifting point

Supportable point

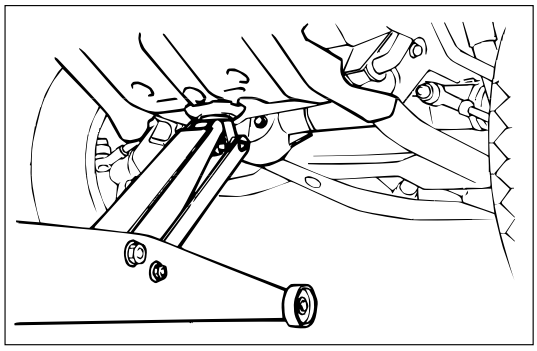

LIFTING POINT; FRONT

When using floor jack, lift on the center of the skid plate.

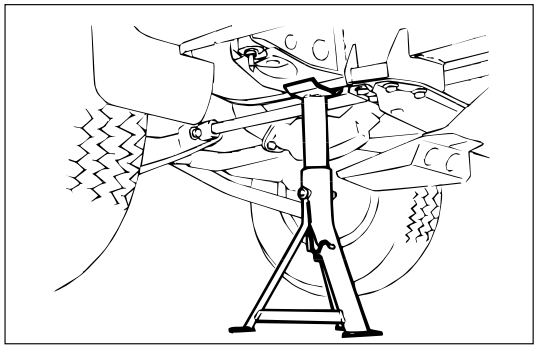

SUPPORTABLE POINT; FRONT

Position the chassis stands at the bottom of the frame sidemember, backward of front wheel.

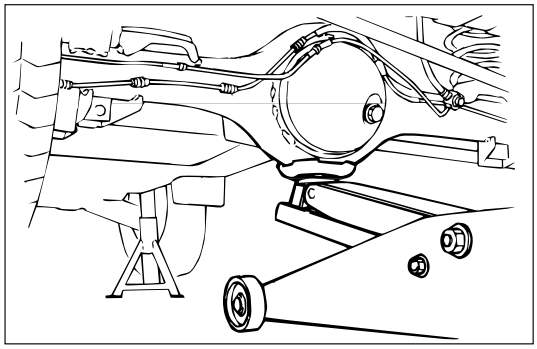

LIFTING POINT; REAR

Position the floor jack at the center of the rear axle case when lifting the vehicle.

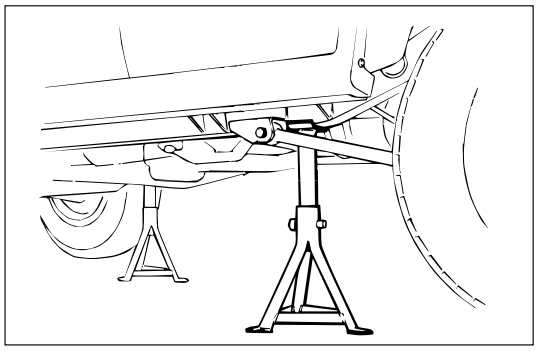

SUPPORTABLE POINT; REAR

Position the chassis stands at the bottom of the frame sidemember, just behind of the trailing link bracket.

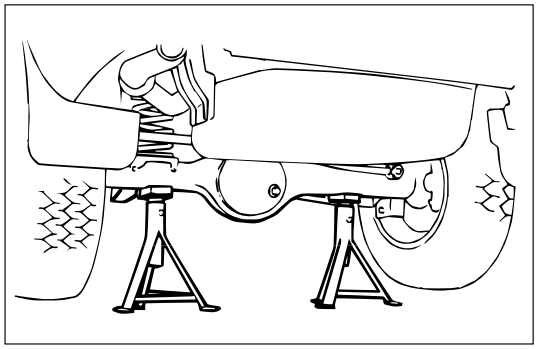

SUPPORTABLE POINT; REAR

Position the chassis stands at the bottom of the rear axle case.

TORQUE SPECIFICATIONS

STANDARD BOLTS

The torque values given in the following table should be applied where a particular torque is not specified.

N·m (kg·m / lb·ft)
N·m kg·cm / lb·in

Strength Class	4.8	8.8		9.8
		Refined	Non-Refined	
Bolt Identification	4	8	.8	9
Bolt Diameter x Pitch (mm)	No mark			
M 6x1.0	6 60 / 52	7 75 / 65		–
M 8x1.25	13 130 / 113	17 175 / 152		24 240 / 208
M10x1.25	27 (2.8 / 20)	37 (3.8 / 27)		50 (5.1 / 37)
M12x1.25	61 (6.3 / 45)	76 (7.8 / 56)		95 (9.7 / 70)
M14x1.5	96 (9.8 / 71)	116 (11.9 / 86)		142 (14.5 / 105)
M16x1.5	130 (13.3 / 96)	170 (17.3 / 125)		200 (20.4 / 148)
M18x1.5	188 (19.2 / 139)	244 (24.9 / 180)		287 (29.3 / 212)
M20x1.5	258 (26.3 / 190)	337 (34.4 / 249)		396 (40.4 / 292)
M22x1.5	332 (33.9 / 245)	453 (46.3 / 335)		530 (54.1 / 391)
M24x2.0	449 (45.8 / 331)	570 (58.2 / 421)		692 (70.6 / 511)
*M10x1.5	26 (2.7 / 20)	36 (3.7 / 27)		48 (4.9 / 35)
*M12x1.5	57 (5.8 / 42)	71 (7.2 / 52)		89 (9.1 / 66)
*M14x2.0	89 (9.1 / 66)	110 (11.2 / 81)		133 (13.6 / 98)
*M16x2.0	124 (12.7 / 92)	162 (16.5 / 119)		191 (19.5 / 141)

The asterisk * indicates that the bolts are used for female-threaded parts that are made of soft materials such as casting, etc.

FLARE NUTS

N·m (kg·m / lb·ft)

Pipe diameter mm (in)	Torque	Pipe diameter mm (in)	Torque
4.76 (0.187)	16 (1.6 / 12)	10.00 (0.394)	54 (5.5 / 40)
6.35 (0.250)	26 (2.7 / 20)	12.00 (0.472)	88 (9.0 / 65)
8.00 (0.315)	44 (4.5 / 33)	15.00 (0.591)	106 (10.8 / 78)

RECOMMENDED LIQUID GASKET

Type	Brand Name	Manufacturer	Remarks
RTV* Silicon Base	Three Bond 1207B Three Bond 1207C Three Bond 1215 Three Bond 1280	Three Bond Three Bond Three Bond Three Bond	For Engine Repairs For Axle Case Repairs. T/M
Water Base	Three Bond 1141E	Three Bond	For Engine Repairs
Solvent	Three Bond 1104 Belco Bond 4 Belco Bond 401 Belco Bond 402	Three Bond Isuzu Isuzu Isuzu	For Engine Repairs
Anaerobic	LOCTITE 515 LOCTITE 518	Loctite Loctite	All

* RTV: Room Temperature Vulcanizer

NOTE:

1. It is very important that the liquid gaskets listed above or their exact equivalent be used on the vehicle.
2. Be careful to use the specified amount of liquid gasket.
   Follow the manufacturer's instructions at all times.
3. Be absolutely sure to remove all lubricants and moisture from the connecting surfaces before applying the liquid gasket.
   The connecting surfaces must be perfectly dry.
4. Do not apply LOCTITE 515 and LOCTITE 518 between two metal surfaces having a clearance of greater than 0.25 mm (0.01 in). Poor adhesion will result.

RECOMMENDED THREAD LOCKING AGENTS

LOCTITE Type	LOCTITE Color	Application Steps
LOCTITE 242	Blue	1. Completely remove all lubricant and moisture from the bolts and the female threaded surfaces of the parts to be joined. The surfaces must be perfectly dry. 2. Apply LOCTITE to the bolts. 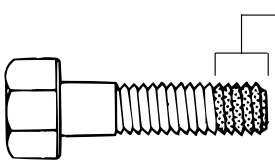 Apply LOCTITE to at least 1/3 of the bolt's threaded area
LOCTITE 262	Red	
LOCTITE 270	Green	
LOCTITE 271	Red	3. Tighten the bolts to the specified torque. After tightening, be sure to keep the bolts free from vibration and torque for at least an hour until LOCTITE hardens.

NOTE: When the application procedures are specified in this manual, follow them.

ABBREVIATIONS CHARTS

LIST OF AUTOMOTIVE ABBREVIATIONS WHICH MAY BE USED IN THIS MANUAL

A – Ampere(s)
ABS – Antilock Brake System
A/C – Air Conditioning
ACCEL – Accelerator
ACC – Accessary
Adj – Adjust
A/F – Air Fuel Ratio
AIR – Air Injection Reaction System
ALDL – Assembly Line Diagnostic Link
Alt – Altitude
AMP – Ampere(s)
ANT – Antenna
APS – Absolute Pressure Sensor
ASM – Assembly
A/T – Automatic Transmission/Transaxle
ATDC – After Top Dead Center
Auth – Authority
Auto – Automatic
BARO – Barometic
Bat – Battery
Bat+ – Battery Positive Terminal
Bbl – Barrel
BCM – Body Control Module
BHP – Brake Horsepower
BP – Back Pressure
BTDC – Before Top Dead Center
°C –Degrees Celsius
Cat. Conv. – Catalytic Converter
cc – Cubic Centimeter
CCC – Computer Command Control
CCOT – Cycling Clutch Orifice Tube
CCP – Controlled Canister Purge
CID – Cubic Inch Displacement
CL – Closed Loop
CLCC – Closed Loop Carburetor Control
CO – Carbon Monoxide
Coax – Coaxial
Conn – Connector
Conv – Converter
CP – Canister Purge
CPS – Central Power Supply
Crank – Crankshaft
CTS – Coolant Temperature Sensor
Cu.In. – Cubic Inch
CV – Constant Velocity
Cyl – Cylinder(s)
C^3I – Computer Controlled Coil Ignition
DBM – Dual Bed Monolith
Diff – Differential
DIS – Direct Ignition System
Dist –Distributor
DOHC – Double Overhead Camshaft
DVM – Digital Voltmeter (10 meg.)
DVOM – Digital Volt Ohmmeter
DVDV – Differential Vacuum Delay Valve
EAC –Electric Air Control
EAS – Electric Air Switching
EBCM – Electronic Brake Control Module
ECC – Electronic Climate Control
ECM – Electronic Control Module
ECU – Electronic Control Unit
– Engine Calibration Unit (PROM)
EECS – Evaporative Emission Control System
EFE – Early Fuel Evaporation
EFI – Electronic Fuel Injection
EGR – Exhaust Gas Recirculation
EGR/TVS – Exhaust Gas Recirculation/Thermostatic Vacuum Switch
ELC – Electronic Level Control
ESC – Electronic Spark Control
EST – Electronic Spark Control
ETR – Electronically Tuned Receiver
EVRV – Electronic Vacuum Regulator Valve (EGR)
Exh – Exhaust
°F – Degrees Fahrenheit
FF – Front Drive Front Engine
FL – Fusible Link
FLW – Fusible Link Wire
FRT –Front
FWD – Front Wheel Drive
4WD – Four Wheel Drive
4x4 – Four Wheel Drive
4 A/T – Four Speed Automatic Transmission/Transaxle
Gal – Gallon
Gen – Generator
Gov – Governor
g – Gram
Harn – Harness
HC – Hydrocarbons
HD –Heavy Duty
HEI – High Energy Ignition
Hg – Mercury
HiAlt – High Altitude
HVAC – Heater-Vent-Air Conditioning
IAC – Idle Air Control
IC – Integrated Circuit
ID – Identification
– Inside Diameter
IDI – Integrated Direct Ignition
IGN – Ignition
ILC – Idle Load Compensator
INJ –Injection
IP – Instrument Panel
IPC – Instrument Panel Cluster
INT – Intake
J/B – Junction Block
km – Kilometers
km/h – Kilometer per Hour
kPa – KiloPascals
KV – Kilovolts (thousands of volts)
KW – Kilowatts

L – Liter
lb·ft – Foot Pounds
lb·in – Inch Pounds
LF – Left Front
LH – Left Hand
LR – Left Rear
LS – Left Side
LWB – Long Wheel Base
L-4 – In-line Four Cylinder Engine
MAF – Mass Air Flow
MAN – Manual
MAP – Manifold Absolute Pressure
MAT – Manifold Air Temperature
MEM-CAL – Memory and Calibration Unit
Max – Maximum
M/C – Mixture Control
Min – Minimum
mm – Millimeter
MPFI – Multi-Port Fuel Injection
MPG – Miles per Gallon
MPH – Miles per Hour
M/T – Manual Transmission/Transaxle
MV – Millivolt
NA – Natural Aspirated
NC – Normally Closed
N·m – Newton Meters
NO – Normally Open
NOx – Nitrogen, Oxides of
OD – Outside Diameter
O/D – Over Drive
OHC – Overhead Camshaft
OL – Open Loop
O_2 – Oxygen
PAIR – Pulse Air Injection Reactor System
P/B – Power Brakes
PCV – Positive Crankcase Ventilation
PFI – Port Fuel Injection
PRESS – Pressure
PROM – Programmable Read Only Memory
P/N – Park/Neutral
P/S – Power Steering
PSI – Pounds per Square Inch
Pt. – Pint
Pri – Primary
PWM – Pulse Width Modulated
Qt – Quart
REF – Reference
RF – Right Front
RFI – Radio Frequency Interference
RH – Right Hand
RPM – Revolutions per Minute
RPO – Regular Production Option
RR – Right Rear
RS – Right Side
RTV – Room Temperature Vulcanizing
RVB – Rear Vacuum Brake
RVR – Response Vacuum Reducer
RWAL – Rear Wheel Antilock Brake
RWD - Rear Wheel Drive
SAE – Society of Automotive Engineers
Sec – Secondary
SFI – Sequential-port Fuel Injection
SI – System International
SIR – Supplemental Inflatable Restraint System
SOHC – Single Overhead Camshaft
Sol – Solenoid
SPEC – Specification
Speedo – Speedometer
SRS – Supplemental Restraint System
ST – Start
Sw – Switch
SWB – Short Wheel Base
SYN – Synchronize
TAC – Thermostatic Air Cleaner
Tach – Tachometer
TBI – Throttle Body Injection
TCC – Transmission/Transaxle Converter Clutch
TCM – Transmission/Transaxle Control Module
TDC – Top Dead Center
Term – Terminal
TEMP – Temperature
TPS – Throttle Position Sensor
TRANS – Transmission/Transaxle
TURBO – Turbocharger
TV – Throttle Valve
TVRS – Television & Radio Suppression
TVS – Thermal Vacuum Switch
3 A/T – Three Speed Automatic Transmission/ Transaxle
2WD – Two Wheel Drive
4x2 – Two wheel Drive
U-joint – Universal Joint
V – Volt(s)
VAC – Vacuum
VIN – Vehicle Identification Number
VRRRE – Vehicle Refrigerant Recovery and Recycling Equipment
V-ref – ECM Reference Voltage
VRV – Vacuum Reducer Valve
VSS – Vehicle Speed Sensor
VSV – Vacuum Switching Valve
V-6 – Six Cylinder “V” Engine
V-8 – Eight Cylinder “V” Engine
W – Watt(s)
w/ – With
w/b – Wheel Base
w/o – Without
WOT – Wide Open Throttle

SECTION 0B

MAINTENANCE AND LUBRICATION

CONTENTS

PAGE

Maintenance Schedule 0B– 2

Recommended Fluids, Lubricants and Fuels 0B– 7

Oil Viscosity Chart. 0B–10

Service Precaution

WARNING: THIS VEHICLE HAS A SUPPLEMENTAL RESTRAINT SYSTEM (SRS). REFER TO THE SRS COMPONENT AND WIRING LOCATION VIEW IN ORDER TO DETERMINE WHETHER YOU ARE PERFORMING SERVICE ON OR NEAR THE SRS COMPONENTS OR THE SRS WIRING. WHEN YOU ARE PERFORMING SERVICE ON OR NEAR THE SRS COMPONENTS OR THE SRS WIRING, REFER TO THE SRS SERVICE INFORMATION. FAILURE TO FOLLOW WARNINGS COULD RESULT IN POSSIBLE AIR BAG DEPLOYMENT, PERSONAL INJURY, OR OTHERWISE UNNEEDED SRS SYSTEM REPAIRS.

CAUTION: Always use the correct fastener in the proper location. When you replace a fastener, use ONLY the exact part number for that application. ISUZU will call out those fasteners that require a replacement after removal. ISUZU will also call out the fasteners that require thread lockers or thread sealant. UNLESS OTHERWISE SPECIFIED, do not use supplemental coatings (Paints, greases, or other corrosion inhibitors) on threaded fasteners or fasteners joint interfaces. Generally, such coatings adversely affect the fastener torque and the joint clamping force, and may damage the fastener. When you install fasteners, use the correct tightening sequence and specification. Following these instructions can help you avoid damage to parts and systems.

MAINTENANCE SCHEDULE

GASOLINE ENGINE MODEL

I: Inspect and correct or replace as necessary A: Adjust
R: Replace or change T: Tighten to specified torque L: Lubricate

SERVICE INTERVAL:	x 1,000 km	5	10	15	20	25	30	35	40	45	50	55	60	65	70	75	80	85	90	95	100
(Use odometer reading	x 1,000 miles	3	6	9	12	15	18	21	24	27	30	33	36	39	42	45	48	51	54	57	60
or months whichever comes first)	or months	6	12	18	24	30	36	42	48	54	60	66	72	78	84	90	96	102	108	114	120
GASOLINE ENGINE																					
* Engine oil		-	-	R	-	-	R	-	-	R	-	-	R	-	-	R	-	-	R	-	-
* Engine oil filter		-	-	R	-	-	R	-	-	R	-	-	R	-	-	R	-	-	R	-	-
Oil leakage and contamination		-	-	I	-	-	I	-	-	I	-	-	I	-	-	I	-	-	I	-	-
* Timing belt		(Replace every 165,000 km or 100,000 miles)																			
Spark plugs (For leaded fuel use)		-	-	-	-	-	-	-	R	-	-	-	-	-	-	-	R	-	-	-	-
Spark plugs (For unleaded fuel use)		(Replace every 165,000 km or 100,000 miles)																			
Exhaust system		-	-	I	-	-	I	-	-	I	-	-	I	-	-	I	-	-	I	-	-
Radiator coolant concentration		-	-	I	-	-	I	-	-	I	-	-	I	-	-	I	-	-	I	-	-
Cooling system for water leakage		-	-	I	-	-	I	-	-	I	-	-	I	-	-	I	-	-	I	-	-
All hoses and pipes in engine compartment for clog or damage		-	-	I	-	-	I	-	-	I	-	-	I	-	-	I	-	-	I	-	-
Fuel filter		-	-	-	-	-	R	-	-	-	-	-	R	-	-	-	-	-	R	-	-
Fuel leakage		-	-	I	-	-	I	-	-	I	-	-	I	-	-	I	-	-	I	-	-
Fuel tank		-	-	I	-	-	I	-	-	I	-	-	I	-	-	I	-	-	I	-	-
* Air cleaner element		-	-	I	-	-	I	-	-	R	-	-	I	-	-	I	-	-	R	-	-
[V] Pre air cleaner		-	-	I	-	-	I	-	-	I	-	-	I	-	-	I	-	-	I	-	-
Engine drive belt		-	-	-	-	-	I	-	-	-	-	-	I	-	-	-	-	-	I	-	-
Valve clearance		(Check and adjust if necessary every 100,000 km or 60,000 miles)																			
[V] O_2 Sensor (For leaded fuel use)		-	-	-	-	-	-	-	-	-	R	-	-	-	-	-	-	-	-	-	R
[V] O_2 Sensor (For unleaded fuel use)		(Replace every 150,000 km or 90,000 miles)																			
CLUTCH																					
Clutch fluid		-	-	I	-	-	I	-	-	I	-	-	I	-	-	I	-	-	I	-	-
Clutch pedal travel and free play		-	-	I	-	-	I	-	-	I	-	-	I	-	-	I	-	-	I	-	-
TRANSMISSION OR TRANSMISSION WITH TRANSFER CASE																					
* Manual transmission with transfer case oil		-	-	R	-	-	I	-	-	R	-	-	I	-	-	R	-	-	I	-	I
* [AT] Automatic transmission fluid leakage		-	-	I	-	-	I	-	-	I	-	-	I	-	-	I	-	-	I	-	-
*(1) [AT] Automatic transmission fluid		-	-	-	-	-	-	-	-	-	-	-	-	-	-	-	-	-	-	-	I
* [AT] Transfer case oil		-	-	R	-	-	I	-	-	R	-	-	I	-	-	R	-	-	I	-	I
PROPELLER SHAFT																					
Loose connections		-	-	I	-	-	I	-	-	I	-	-	I	-	-	I	-	-	I	-	-
* Universal joints and splines for wear		-	-	I	-	-	I	-	-	I	-	-	I	-	-	I	-	-	I	-	-
Universal joints and sliding sleeve (front and rear)		-	-	L	-	-	L	-	-	L	-	-	L	-	-	L	-	-	L	-	-
FRONT AND REAR AXLE																					
* Differential gear oil (Front and rear)		-	-	R	-	-	I	-	-	R	-	-	I	-	-	R	-	-	I	-	I
Shift on the fly system gear oil		-	-	I	-	-	I	-	-	I	-	-	I	-	-	I	-	-	I	-	-
Front axle shaft rubber boot for damage		-	-	I	-	-	I	-	-	I	-	-	I	-	-	I	-	-	I	-	-
Axle case for distortion or damage		-	-	I	-	-	I	-	-	I	-	-	I	-	-	I	-	-	I	-	-
Axle shafts for distortion or damage		-	-	I	-	-	I	-	-	I	-	-	I	-	-	I	-	-	I	-	-
STEERING																					
* Power steering fluid		-	-	I	-	-	I	-	-	R	-	-	I	-	-	I	-	-	R	-	-
Oil leakage		-	-	I	-	-	I	-	-	I	-	-	I	-	-	I	-	-	I	-	-
* Steering system for looseness or damage		-	-	I	-	-	I	-	-	I	-	-	I	-	-	I	-	-	I	-	-
Power steering hose		-	-	I	-	-	I	-	-	I	-	-	I	-	-	R	-	-	I	-	-
Steering wheel play		-	-	I	-	-	I	-	-	I	-	-	I	-	-	I	-	-	I	-	-
Steering function		-	-	I	-	-	I	-	-	I	-	-	I	-	-	I	-	-	I	-	-
Right and left turning radius		-	-	-	-	-	I	-	-	-	-	-	I	-	-	-	-	-	I	-	-
Wheel alignment		-	-	-	-	-	I	-	-	-	-	-	I	-	-	-	-	-	I	-	-
Joint ball for oil leakage or damage		-	-	I	-	-	I	-	-	I	-	-	I	-	-	I	-	-	I	-	-
Joint ball rubber boot for damage		-	-	I	-	-	I	-	-	I	-	-	I	-	-	I	-	-	I	-	-
SERVICE BRAKES																					
Brake fluid		-	-	I	-	-	I	-	-	R	-	-	I	-	-	I	-	-	R	-	-
Brake system for fluid leakage		-	-	I	-	-	I	-	-	I	-	-	I	-	-	I	-	-	I	-	-
Brake function		-	-	I	-	-	I	-	-	I	-	-	I	-	-	I	-	-	I	-	-
* Disc brake pads and discs wear		-	-	I	-	-	I	-	-	I	-	-	I	-	-	I	-	-	I	-	-
Brake pedal travel and free play		-	-	I	-	-	I	-	-	I	-	-	I	-	-	I	-	-	I	-	-
Pipes and hoses for loose connections or damage		-	-	I	-	-	I	-	-	I	-	-	I	-	-	I	-	-	I	-	-

(1): Adjust or change automatic transmission fluid.
*Marks: Under severe driving conditions, additional maintenance is required.
Refer to "Maintenance schedule under severe driving conditions".

GASOLINE ENGINE MODEL

I: Inspect and correct or replace as necessary A: Adjust
R: Replace or change T: Tighten to specified torque L: Lubricate

SERVICE INTERVAL:	x 1,000 km	5	10	15	20	25	30	35	40	45	50	55	60	65	70	75	80	85	90	95	100
(Use odometer reading	x 1,000 miles	3	6	9	12	15	18	21	24	27	30	33	36	39	42	45	48	51	54	57	60
or months whichever comes first)	or months	6	12	18	24	30	36	42	48	54	60	66	72	78	84	90	96	102	108	114	120
PARKING BRAKE																					
Parking brake function		-	-	I	-	-	I	-	-	I	-	-	I	-	-	I	-	-	I	-	-
Parking brake lever travel		-	-	I	-	-	I	-	-	I	-	-	I	-	-	I	-	-	I	-	-
Cables for looseness or damage and guide for damage		-	-	I	-	-	I	-	-	I	-	-	I	-	-	I	-	-	I	-	-
Ratchet for wear or damage		-	-	I	-	-	I	-	-	I	-	-	I	-	-	I	-	-	I	-	-
SUSPENSION																					
Spring leaves for damage		-	-	I	-	-	I	-	-	I	-	-	I	-	-	I	-	-	I	-	-
Mount for looseness or damage		-	-	I	-	-	I	-	-	I	-	-	I	-	-	I	-	-	I	-	-
Shock absorbers for oil leakage		-	-	I	-	-	I	-	-	I	-	-	I	-	-	I	-	-	I	-	-
Shock absorbers mount for looseness		-	-	I	-	-	I	-	-	I	-	-	I	-	-	I	-	-	I	-	-
Rubber bushes of suspension wear or damage		-	-	I	-	-	I	-	-	I	-	-	I	-	-	I	-	-	I	-	-
Spring action for loss of balance due to weakening		-	-	I	-	-	I	-	-	I	-	-	I	-	-	I	-	-	I	-	-
Joint ball rubber boot for damage		-	-	I	-	-	I	-	-	I	-	-	I	-	-	I	-	-	I	-	-
WHEELS																					
Wheel pins		-	-	T	-	-	T	-	-	T	-	-	T	-	-	T	-	-	T	-	-
Wheel disc for damage		-	-	I	-	-	I	-	-	I	-	-	I	-	-	I	-	-	I	-	-
Hub bearing grease		-	-	-	-	-	R	-	-	-	-	-	R	-	-	-	-	-	R	-	-
Front and rear hub bearings for looseness		-	-	I	-	-	I	-	-	I	-	-	I	-	-	I	-	-	I	-	-
Tire pressure and damage		-	-	I	-	-	I	-	-	I	-	-	I	-	-	I	-	-	I	-	-
Tire rotation		(Rotate as required)																			
OTHERS																					
Bolts and nuts on chassis and body		-	-	I	-	-	I	-	-	I	-	-	I	-	-	I	-	-	I	-	-
Lube front free-wheeling hubs		-	-	-	-	-	L	-	-	-	-	-	L	-	-	-	-	-	L	-	-

*Marks: Under severe driving conditions, additional maintenance is required.
Refer to "Maintenance schedule under severe driving conditions".

DIESEL ENGINE MODEL

I: Inspect and correct or replace as necessary A: Adjust
R: Replace or change T: Tighten to specified torque L: Lubricate

SERVICE INTERVAL:	x 1,000 km	5	10	15	20	25	30	35	40	45	50	55	60	65	70	75	80	85	90	95	100
(Use odometer reading	x 1,000 miles	3	6	9	12	15	18	21	24	27	30	33	36	39	42	45	48	51	54	57	60
or months whichever comes first)	or months	6	12	18	24	30	36	42	48	54	60	66	72	78	84	90	96	102	108	114	120
DIESEL ENGINE																					
* D DT Engine oil		R	R	R	R	R	R	R	R	R	R	R	R	R	R	R	R	R	R	R	R
* 4JX Engine oil		-	R	-	R	-	R	-	R	-	R	-	R	-	R	-	R	-	R	-	R
* D DT Engine oil filter		-	R	-	R	-	R	-	R	-	R	-	R	-	R	-	R	-	R	-	R
* 4JX Engine oil filter		-	R	-	R	-	R	-	R	-	R	-	R	-	R	-	R	-	R	-	R
Oil leakage and contamination		-	I	-	I	-	I	-	I	-	I	-	I	-	I	-	I	-	I	-	I
D DT Idling speed and acceleration		-	I	-	I	-	I	-	I	-	I	-	I	-	I	-	I	-	I	-	I
Fan belt tension and damage		-	I	-	I	-	I	-	I	-	I	-	I	-	I	-	I	-	I	-	I
4JX Timing belt		(Replace every 200,000 km or 125,000 miles)																			
Exhaust system		-	I	-	I	-	I	-	I	-	I	-	I	-	I	-	I	-	I	-	I
All hoses and pipes in engine compartment for clog or damage		-	I	-	I	-	I	-	I	-	I	-	I	-	I	-	I	-	I	-	I
Valve clearance		-	-	-	A	-	-	-	A	-	-	-	A	-	-	-	A	-	-	-	A
4JX Valve clearance		-	-	-	A	-	-	-	-	-	A	-	-	-	-	-	A	-	-	-	-
* D DT Air cleaner element		-	I	-	I	-	I	-	R	-	I	-	I	-	I	-	R	-	I	-	I
* 4JX Air cleaner element		-	-	-	-	-	-	-	-	-	-	-	-	-	-	-	R	-	-	-	-
D DT Fuel filter		-	-	-	R	-	-	-	R	-	-	-	R	-	-	-	R	-	-	-	R
4JX Fuel filter		-	-	-	-	-	-	-	-	-	-	-	-	-	-	-	R	-	-	-	-
Radiator coolant concentration		-	I	-	I	-	I	-	I	-	I	-	I	-	I	-	I	-	I	-	I
Cooling system for water leakage		-	I	-	I	-	I	-	I	-	I	-	I	-	I	-	I	-	I	-	I
CLUTCH																					
Clutch fluid		-	I	-	I	-	I	-	I	-	I	-	I	-	I	-	I	-	I	-	I
Clutch pedal travel and free play		-	I	-	I	-	I	-	I	-	I	-	I	-	I	-	I	-	I	-	I
TRANSMISSION OR TRANSMISSION WITH TRANSFER CASE																					
* Manual transmission with transfer case oil		-	R	-	I	-	-	-	R	-	-	-	I	-	-	-	R	-	-	-	I
* AT Automatic transmission fluid		-	-	-	I	-	-	-	I	-	-	-	I	-	-	-	I	-	-	-	I
* AT Transfer case oil		-	R	-	I	-	-	-	R	-	-	-	I	-	-	-	R	-	-	-	I
PROPELLER SHAFT																					
Loose connections		-	I	-	I	-	I	-	I	-	I	-	I	-	I	-	I	-	I	-	I
* Universal joints and splines for wear		-	I	-	I	-	I	-	I	-	I	-	I	-	I	-	I	-	I	-	I
Universal joints and sliding sleeve (front and rear)		-	L	-	L	-	L	-	L	-	L	-	L	-	L	-	L	-	L	-	L
FRONT AND REAR AXLE																					
* Differential gear oil (Front and rear)		-	R	-	I	-	-	-	R	-	-	-	I	-	-	-	R	-	-	-	I
Shift on the fly system gear oil		-	-	-	I	-	-	-	I	-	-	-	I	-	-	-	I	-	-	-	I
Front axle shaft rubber boot for damage		-	-	-	I	-	-	-	I	-	-	-	I	-	-	-	I	-	-	-	I
Axle case for distortion or damage		-	-	-	I	-	-	-	I	-	-	-	I	-	-	-	I	-	-	-	I
Axle shafts for distortion or damage		-	-	-	I	-	-	-	I	-	-	-	I	-	-	-	I	-	-	-	I
STEERING																					
* Power steering fluid		-	I	-	I	-	I	-	R	-	I	-	I	-	I	-	R	-	I	-	I
Oil leakage		-	I	-	I	-	I	-	I	-	I	-	I	-	I	-	I	-	I	-	I
* Steering system for looseness or damage		-	I	-	I	-	I	-	I	-	I	-	I	-	I	-	I	-	I	-	I
Power steering hose		-	I	-	I	-	I	-	I	-	I	-	I	-	R	-	I	-	I	-	I
Steering wheel play		-	I	-	I	-	I	-	I	-	I	-	I	-	I	-	I	-	I	-	I
Steering function		-	I	-	I	-	I	-	I	-	I	-	I	-	I	-	I	-	I	-	I
Right and left turning radius		-	-	-	I	-	-	-	I	-	-	-	I	-	-	-	I	-	-	-	I
Wheel alignment		-	-	-	I	-	-	-	I	-	-	-	I	-	-	-	I	-	-	-	I
Joint ball for oil leakage or damage		-	I	-	I	-	I	-	I	-	I	-	I	-	I	-	I	-	I	-	I
Joint ball rubber boot for damage		-	I	-	I	-	I	-	I	-	I	-	I	-	I	-	I	-	I	-	I
SERVICE BRAKES																					
Brake fluid		-	-	-	I	-	-	-	R	-	-	-	I	-	-	-	R	-	-	-	I
Brake system for fluid leakage		-	I	-	I	-	I	-	I	-	I	-	I	-	I	-	I	-	I	-	I
Brake function		-	I	-	I	-	I	-	I	-	I	-	I	-	I	-	I	-	I	-	I
* Disc brake pads and discs wear		-	I	-	I	-	I	-	I	-	I	-	I	-	I	-	I	-	I	-	I
Brake pedal travel and free play		-	I	-	I	-	I	-	I	-	I	-	I	-	I	-	I	-	I	-	I
Pipes and hoses for loose connections or damage		-	I	-	I	-	I	-	I	-	I	-	I	-	I	-	I	-	I	-	I

NOTE: In the 4JXI-TC diesel engine, there is provided sub (2nd) oil filter for fuel injection at the upper part of crank case on the left side of the engine. This oil filter maintenance-free and does not need a periodic replacement. See reverse side the (back) cover for installation location of the sub (2nd) oil filter.

*Marks: Under severe driving conditions, additional maintenance is required.
Refer to "Maintenance schedule under severe driving conditions".

DIESEL ENGINE MODEL

I: Inspect and correct or replace as necessary A: Adjust
R: Replace or change T: Tighten to specified torque L: Lubricate

SERVICE INTERVAL:	x 1,000 km	5	10	15	20	25	30	35	40	45	50	55	60	65	70	75	80	85	90	95	100
(Use odometer reading	x 1,000 miles	3	6	9	12	15	18	21	24	27	30	33	36	39	42	45	48	51	54	57	60
or months whichever comes first)	or months	6	12	18	24	30	36	42	48	54	60	66	72	78	84	90	96	102	108	114	120
PARKING BRAKE																					
Parking brake function		-	-	-	I	-	-	-	I	-	-	-	I	-	-	-	I	-	-	-	I
Parking brake lever travel		-	-	-	I	-	-	-	I	-	-	-	I	-	-	-	I	-	-	-	I
Cables for looseness or damage and guide for damage		-	-	-	I	-	-	-	I	-	-	-	I	-	-	-	I	-	-	-	I
Ratchet for wear or damage		-	-	-	I	-	-	-	I	-	-	-	I	-	-	-	I	-	-	-	I
SUSPENSION																					
Spring leaves for damage		-	I	-	I	-	I	-	I	-	I	-	I	-	I	-	I	-	I	-	I
Mount for looseness or damage		-	I	-	I	-	I	-	I	-	I	-	I	-	I	-	I	-	I	-	I
Shock absorbers for oil leakage		-	I	-	I	-	I	-	I	-	I	-	I	-	I	-	I	-	I	-	I
Shock absorbers mount for looseness		-	I	-	I	-	I	-	I	-	I	-	I	-	I	-	I	-	I	-	I
Rubber bushes of suspension wear or damage		-	I	-	I	-	I	-	I	-	I	-	I	-	I	-	I	-	I	-	I
Spring action for loss of balance due to weakening		-	-	-	I	-	-	-	I	-	-	-	I	-	-	-	I	-	-	-	I
Joint ball rubber boot for damage		-	I	-	I	-	I	-	I	-	I	-	I	-	I	-	I	-	I	-	I
WHEELS																					
Wheel pins		-	T	-	T	-	T	-	T	-	T	-	T	-	T	-	T	-	T	-	T
Wheel disc for damage		-	I	-	I	-	I	-	I	-	I	-	I	-	I	-	I	-	I	-	I
Hub bearing grease		-	-	-	-	-	R	-	-	-	-	-	R	-	-	-	-	-	R	-	-
Front and rear hub bearings for looseness		-	I	-	I	-	I	-	I	-	I	-	I	-	I	-	I	-	I	-	I
Tire pressure and damage		-	I	-	I	-	I	-	I	-	I	-	I	-	I	-	I	-	I	-	I
Tire rotation		(Rotate as required)																			
OTHERS																					
Bolts and nuts on chassis and body		-	I	-	I	-	I	-	I	-	I	-	I	-	I	-	I	-	I	-	I
Lube front free-wheeling hubs		-	-	-	-	-	L	-	-	-	-	-	L	-	-	-	-	-	L	-	-

*Marks: Under severe driving conditions, additional maintenance is required.
Refer to "Maintenance schedule under severe driving conditions".

MAINTENANCE SCHEDULE UNDER SEVERE DRIVING CONDITIONS

Severe driving conditions
- A: Repeated short trips
- B: Driving on rough roads
- C: Driving on dusty roads
- D: Driving in extremely cold weather and/or salted roads

G6 : 3.2L V6 Gasoline engine
4JX1 : 3.0L L4 Diesel engine
D DT : 3.1L L4 Diesel engine
MT : Manual Transmission
AT : Automatic Transmission
TF : Transfer

Item	Interval		Condition				
			A	B	C	D	A+D
Engine oil	G6 : Change every 5,000 km (3,000 miles) D DT : Change every 2,500 km (1,500 miles) 4JX : Change every 5,000 km (3,000 miles)				●		●
Engine oil filter	G6 : Replace every 10,000 km (6,000 miles) D DT 4JX : Replace every 5,000 km (3,000 miles)				●		●
Air cleaner element	Replace every 20,000 km (12,000 miles) 4JX : Replace every 40,000 km (25,000 miles)				●		
Power steering fluid	Replace every 50,000 km (30,000 miles)			●	●		
Steering system for looseness or damage	Inspect every 5,000 km (3,000 miles)			●			
Universal joints and sleeves	Inspect for wear and lubricate every 5,000 km (3,000 miles)			●	●		
Transmission with transfer case oil	MT	Change every 20,000 km (12,000 miles) After changing at initial 10,000 km (6,000 miles)		●			
	AT	Transmission : Change every 32,000 km (20,000 miles)	●	●	●		●
		Transfer: Change every 20,000 km (12,000 miles) After changing at initial 10,000 km (6,000 miles)		●			
Differential oil	Change every 20,000 km (12,000 miles) After changing at initial 5,000 km (3,000 miles)			●			
Disc brake pads and discs	Inspect every 5,000 km (3,000 miles)		●	●	●		
Timing belt	G6 : Replace every 120,000 km (75,000 miles)				●		●

EXPLANATION OF COMPLETE VEHICLE MAINTENANCE SCHEDULE

Explanations of the services listed in the proceeding Maintenance Scheduled are presented in “Service Information” section of each manual.

Replace all questionable parts and note any necessary repairs as you perform these maintenance procedures.

RECOMMENDED FLUIDS, LUBRICANTS AND FUELS

In order to obtain maximum performance and longest service life from your ISUZU vehicles, it is very important to select and use correctly best lubricants and diesel fuels.

When lubricating, be sure to use ISUZU genuine lubricants or recommended lubricants listed below, according to the maintenance schedule for each vehicle model.

The lubrication intervals in the maintenance schedule and the coverage and period of new vehicle warranty are based on the use of ISUZU genuine lubricants or recommended lubricants as given in the chart which will serve as a guide for selecting lubricants of proper brand name.

LUBRICATION	MAKE	BRAND / TYPE	GRADE	
			API	ACEA
Diesel engine crankcase	**ISUZU GENUINE**	**BESCO MULTI – Z TYPE CE (10W-30)**	**CE**	
	ISUZU GENUINE	**BESCO MULTI – Z (10W-30)**	**CD**	
	ISUZU GENUINE	**BESCO MULTI – Z SUV (5W-30)**	**CD**	
	ISUZU GENUINE	**BESCO S – 3 (10W, 20W, 30, 40)**	**CD**	
	EXXON / ESSO	ESSOLUBE XD-3+ (15W-40)	CG4/CF	E2/B2
	EXXON / ESSO	ESSOLUBE XT 331 (15W-40)	CG-4/CF	E2/B2
	MOBIL	DELVAC HP (15W-40, 20, 30, 40)	CF/CE	
	CALTEX / CHEVRON	DELO CXJ (15W-40, 30, 40)	CF	
	SHELL	RIMURA D (15W-40, 30, 40	CD/CF	
	ELF	PERFORMANCE TROPHY (15W-40)	CE	E3
	TOTAL	RUBIA XT (15W-40)	CF-4	E2
	CASTROL	RX SUPER PLUS (15W-40)	CD/CE/CF	
Gasoline engine crankcase	**ISUZU GENUINE**	**BESCO RACING ACE TYPE SJ (5W-30)**	**SJ**	
	ISUZU GENUINE	**BESCO RACING ACE (7.5W-30)**	**SG**	
	EXXON / ESSO	ESSO SUPERFLO (15W-40, 15W-50, 20W-50)	SJ	A2
	EXXON / ESSO	ESSO UNIFLO (15W-40, 15W-50, 20W-50)	SJ	A2
	MOBIL	MOBIL SUPER XHP (15W-40, 15W-50, 20W-50)	SJ	A3
	CALTEX / TEXACO	HAVOLINE FORMULA-3 (15W-40, 20W-50)	SJ	
	SHELL	HELIX SUPER (10W-30)	SJ	
	ELF	SUPER SPORTI S (15W-40)	SG	
	TOTAL	QUARTZ 5000 (15W-40, 20W-50)	SJ	A2
	CASTROL	GTX-2 (15W-40)	SG/SH	
Manual transmission Transfer case	**ISUZU GENUINE**	**BESCO GEAR OIL TRANSAXLE (5W-30)**	**SG**	
	EXXON / ESSO	ESSOLUBE XD-3+ (15W-40)	CG-4/CF	E2/B2
	EXXON / ESSO	ESSOLUBE XT 331 (15W-40)	CG-4/CF	E2/B2
	MOBIL	MOBIL SUPER (10W-30)	SH	
	CALTEX / TEXACO	HAVOLINE FORMULA-3 (15W-40, 20W-50)	SH	
	SHELL	RIMURA D (15W-40)	CD/CF	
	ELF	SUPER SPORTI S (15W-40)	SG/CD	
	TOTAL	QUARTZ 5000 (15W-40, 20W-50)	SJ/CF	A2/B2
	CASTROL	RX SUPER PLUS (15W-40)	CD/CE/CF	
Differential Shift on the fly system (GL-5 only)	**ISUZU GENUINE**	**BESCO GEAR OIL SH (80W-90, 90, 140)**	**GL-5**	
	ISUZU GENUINE	**BESCO SHIFT ON THE FLY (75W-90)**	**GL-5**	
	EXXON / ESSO	GEAR OIL GX (85W-90)	GL-5	
	MOBIL	MOBILUBE HD (80W-90, 85W-140)	GL-5	
	CALTEX	THURBAN GL-5 EP (80W-90, 85W-140)	GL-5	
	SHELL	SPIRAX HD (90, 140)	GL-5	
	ELF	TRANSELF TYPE B (80W-90, 85W-140)	GL-5	
	TOTAL	TRANSMISSION TM (80W-90, 85W-140)	GL-5	
	CASTROL	EPX 90 (90)	GL-5	
	CASTROL	DYNADRIVE (80W-90)	GL-5	

LUBRICATION	MAKE	BRAND / TYPE	GRADE	
			API	ACEA
Differential (Limited Slip Differential)	**ISUZU GENUINE** EXXON / ESSO MOBIL CALTEX ELF TOTAL CASTROL	**BESCO GEAR OIL LSD (140)** GEAR OIL LSA (90) MOBILUBE HD LS (80W-90) GEAR OIL LSD (90) TRANSELF TYPE BLS (90) TRANSMISSION DA (85W-90) HYPOY LS (90)	**GL-5** GL-5 GL-5 GL-5 GL-5 GL-5 GL-5	
Automatic transmission Power steering	**ISUZU GENUINE** EXXON / ESSO MOBIL CALTEX SHELL ELF TOTAL CASTROL CASTROL	**BESCO ATF II, ATF III** ESSO ATF D (DEXRON® II-D) MOBIL ATF (DEXRON® III) ATF HD (DEXRON® II) SHELL DONAX TA (DEXRON® II-D) ELFMATIC G3 (DEXRON® III) TOTAL FLUID IID (DEXRON® II-D) TQ-D (DEXRON® II) TQ DEXRON III (DEXRON® III)		
Grease fitting (Multi purpose grease)	**ISUZU GENUINE** EXXON / ESSO MOBIL CALTEX / TEXACO SHELL TOTAL CASTROL	**BESCO L-2 GREASE (No.2), L-3 GREASE (No.3)** RONEX MP (No.2) MOBILGREASE HP 222 (No.2) STARPLEX-2 (No.2) RETINAX A (No.2) MULTIS EP2, EP3 (No.2, No.3) LM GREASE (No.2, No.3)		
Propeller shaft sliding yoke Universal joint (Multi purpose grease containing molybdenum disulfide)	**ISUZU GENUINE** EXXON / ESSO EXXON / ESSO CALTEX TOTAL	**ONE LUBER MO GREASE** BEACON Q2 (No.2) MULTIPURPOSE GREASE (Moly) (No.2) MOLYTEX GREASE EP2 (No.2) TOTAL MULTIS MS2 (No.2)		
Engine cooling system	**ISUZU GENUINE** TEXACO / CALTEX	**BESCO LLC SUPER TYPE E** HAVOLINE EXTENDED LIFE ANTIFREEZE COOLANT HAVOLINE XLC EXTENDED LIFE COOLANT 6280		

FLUID	TYPE
Clutch and brake fluid reservoir	**Besco brake fluid (For light duty)** Hydraulic brake fluid SAE J1703 FMVSS 116 DOT.3 grade

NOTE:
When the recommended lubricants are specified in the workshop manual, follow them.

DIESEL FUEL/APPLICABLE STANDARD	
JIS (JAPANESE INDUSTRIAL STANDARD)	Based on K2204 GAS OIL
DIN (DEUTSCHE INDUSTRIE NORMEN)	Based on EN590 : 1997
SAE (SOCIETY OF AUTOMOTIVE ENGINEERS)	Based on SAE J-313C
BS (BRITISH STANDARD)	Based on BS EN590 : 1997

NOTE:
Use the applicable standard or equivalent for diesel fuels.

OIL VISCOSITY CHART

Lubricants should be carefully selected according to the lubrication chart. It is also important to select viscosity of lubricants according to the ambient temperature by referring to the following table.

OIL VISCOSITY CHART FOR GASOLINE ENGINE

APPLY GASOLINE ENGINE OIL

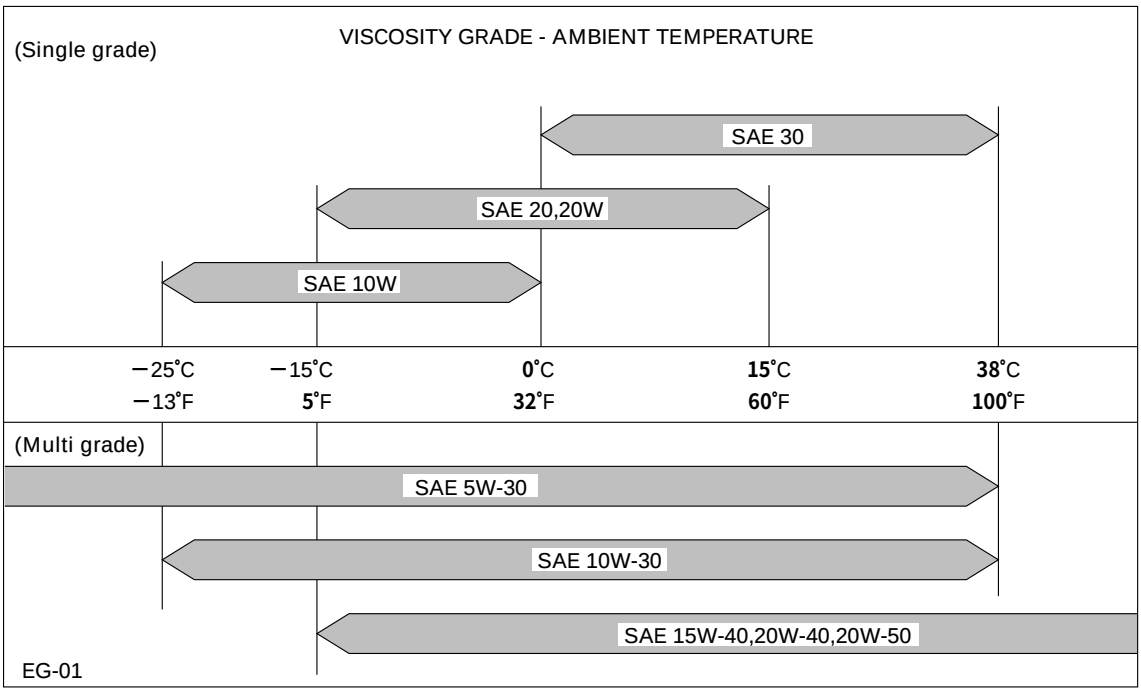

OIL VISCOSITY CHART FOR DIESEL ENGINE

APPLY DIESEL ENGINE OIL

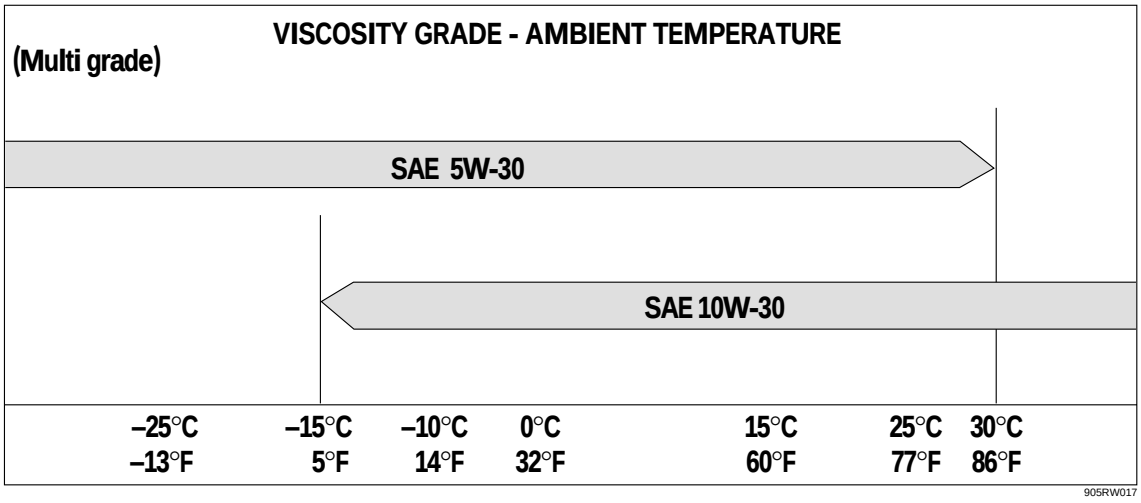

OIL VISCOSITY CHART FOR MANUAL TRANSMISSION AND TRANSFER CASE

APPLY ENGINE OIL

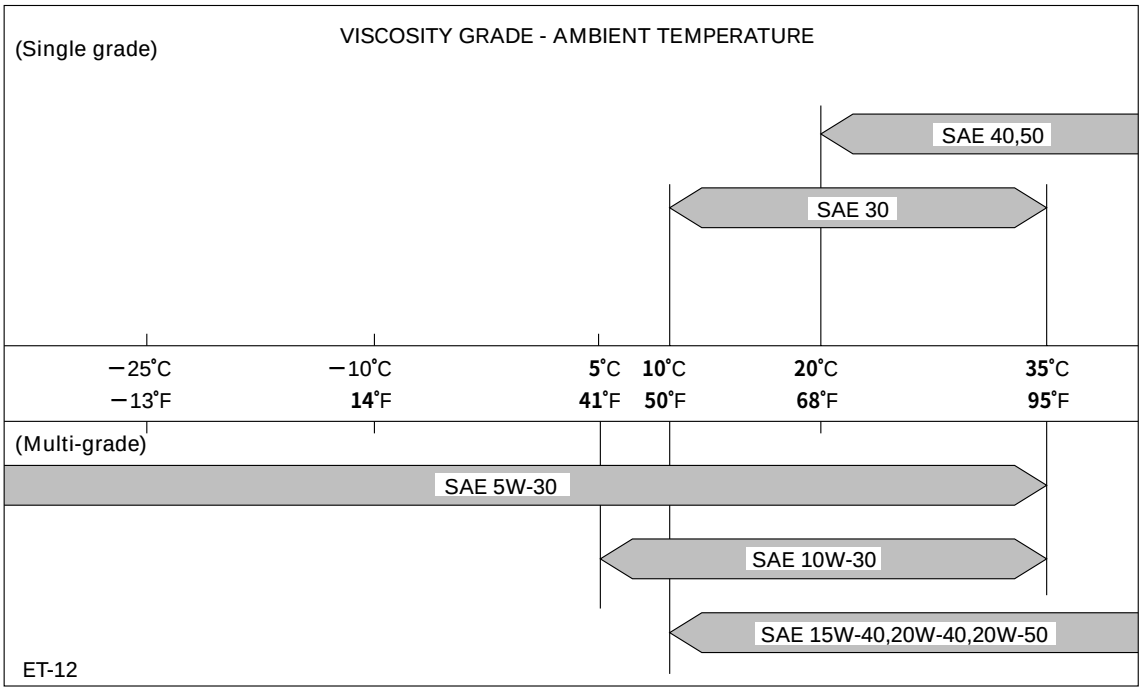

OIL VISCOSITY CHART FOR FRONT AXLE (Manual and Auto locking hub model) AND REAR AXLE

APPLY GEAR OIL

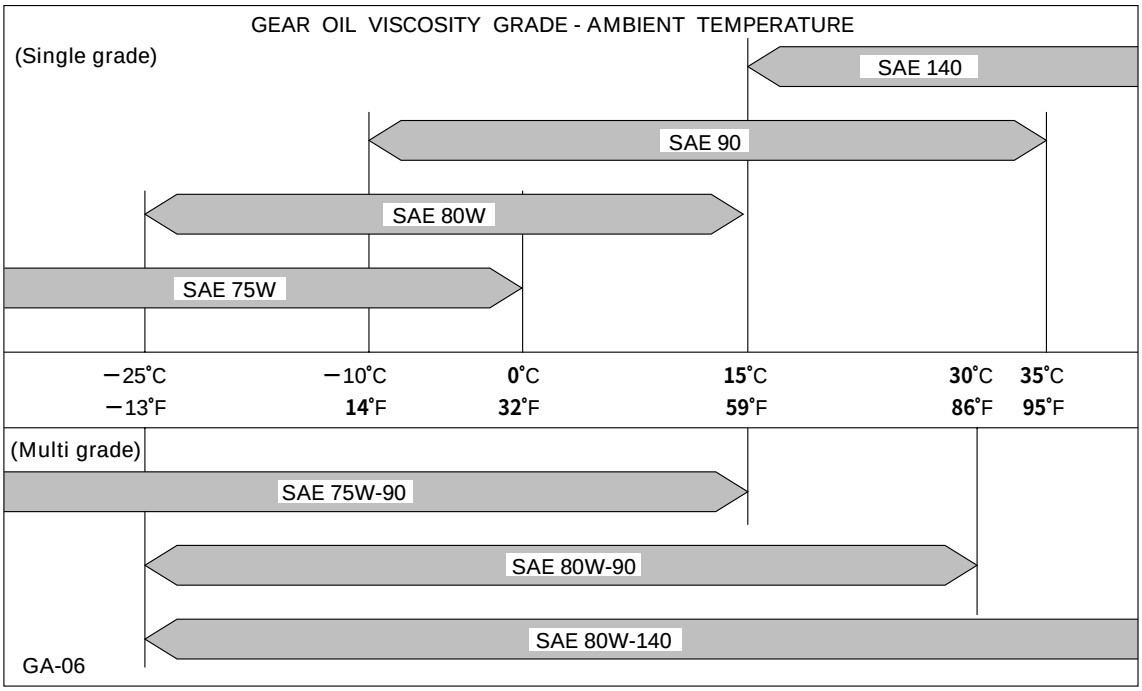

OIL VISCOSITY CHART FOR FRONT AXLE (Shift on the fly model)

APPLY GEAR OIL

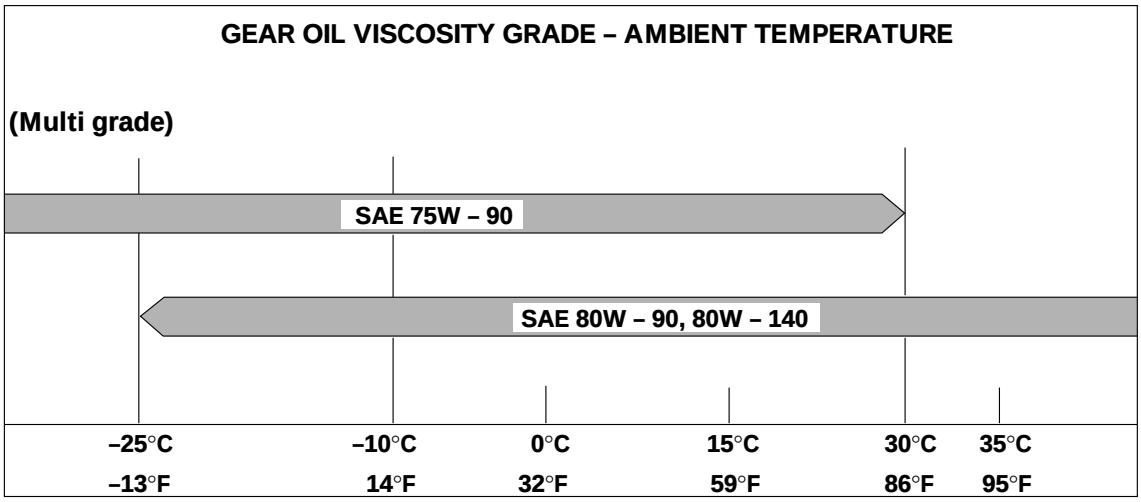

SECTION 1A

HEATING AND VENTILATION

CAUTION
When fasteners are removed, always reinstall them at the same location from which they were removed. If a fastener needs to be replaced, use the correct part number fastener for that application. If the correct part number fastener is not available, a fastener of equal size and strength (or stronger) may be used.

Fasteners that are not reused, and those requiring thread locking compound, will be called out. The correct torque values must be used when installing fasteners that require it. If the above conditions are not followed, parts or system damage could result.

CONTENTS

PAGE

General Description 1A– 2
Heater 1A– 2
Control Lever Assembly 1A– 3
Ventilation 1A– 3
Air Select Knob 1A– 4
Air Source Select Lever 1A– 4
Fan Control Knob 1A– 4
Temperature Control Knob 1A– 4
Ceramic Heater 1A– 5
On-Vehicle Service 1A– 6
Heater Unit 1A– 6
Heater Core and/or Mode Door 1A– 8
Heater Mode Control Link Unit 1A–10
Heater Temperature Control Link Unit 1A–12
Blower Assembly 1A–14
Blower Link Unit and/or Mode Door 1A–16
Blower Motor 1A–18
Rear Heater Duct, Defroster Nozzle and Ventilation Duct 1A–20
Center and/or Side Vent 1A–22
Control Lever Assembly and/or Control Cables 1A–24
Control Panel Illumination Bulb 1A–27
Resistor 1A–28
Ceramic Heater and/or Full Hot Switch 1A–30

GENERAL DESCRIPTION

HEATER

When the engine warming up, the warmed engine coolant is sent out into the heater core. The heater system supplies warm air into the passenger compartment to warm it up.
Outside air is circulated through the heater core of the heater unit and then back into the passenger compartment. By controlling the mixture of outside air and heater core air, the most comfortable passenger compartment temperature can be selected and maintained.
The temperature of warm air sent to the passenger compartment is controlled by the temperature control knob. This knob acts to open and close the air mix door, thus controlling the amount of air passed through the heater core.

The air select knob, with its different modes, also allows you to select and maintain the most comfortable passenger compartment temperature. The air source select lever is used to select either “FRESH” for the introduction of the outside air, or “CIRC” for the circulation of the inside air. When the lever is set to “FRESH”, the outside air is always taken into the passenger compartment. When setting the lever to “CIRC” position, the circulation of air is restricted only to the inside air with no introduction of the outside air and the air in the passenger compartment gets warm quickened. However, the lever is normally set to “FRESH” to prevent the windshield from clouding.

This illustration is based on LHD

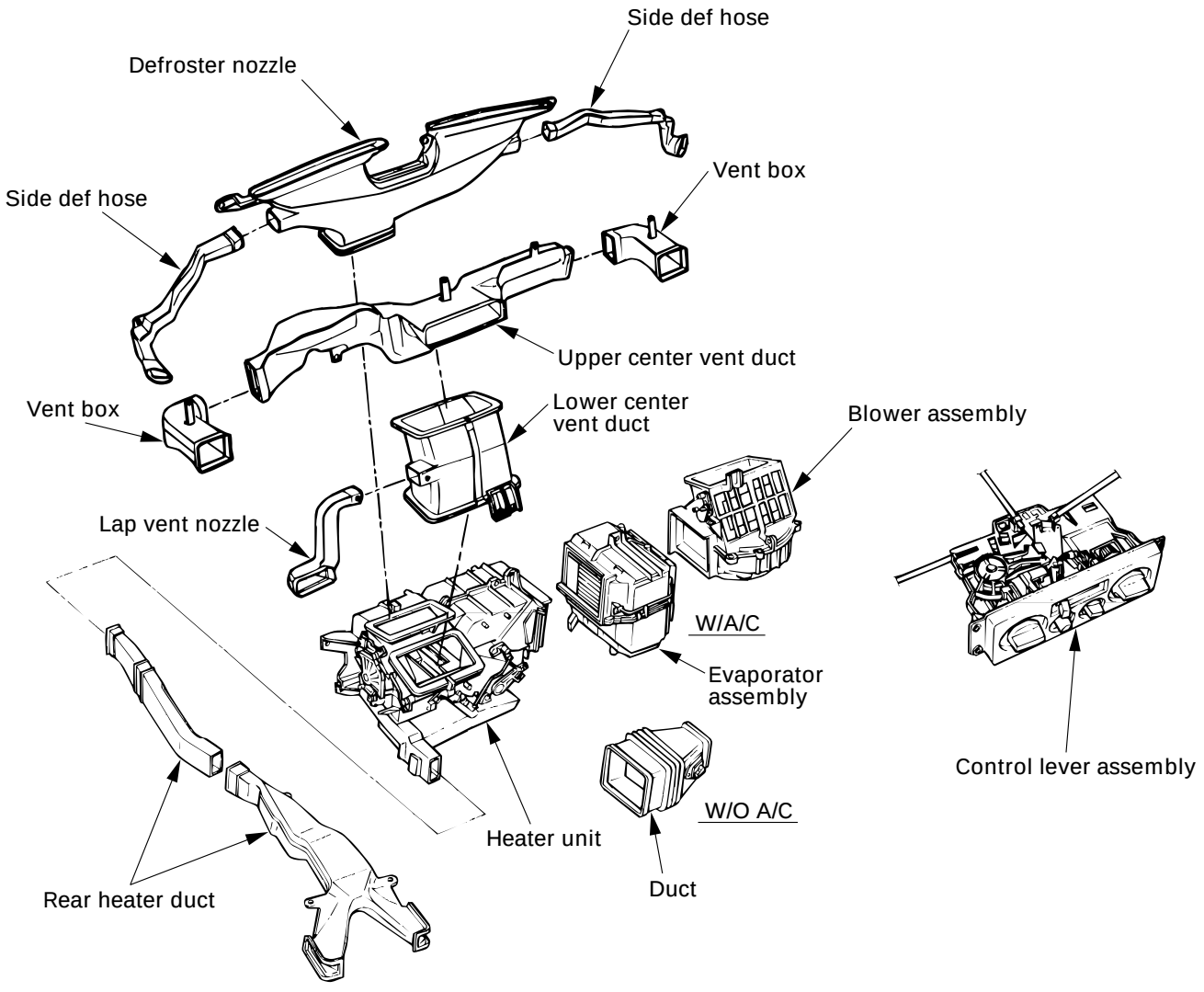

A/C - Air Conditioning

CONTROL LEVER ASSEMBLY

The vehicle has cable-control-type to control by cable the mode and temperature of the heater unit and the mode door for the air source of the blower assembly.

The fan control is used to control the amount of air sent out by the resistor at four levels from “LOW” to “HIGH”.

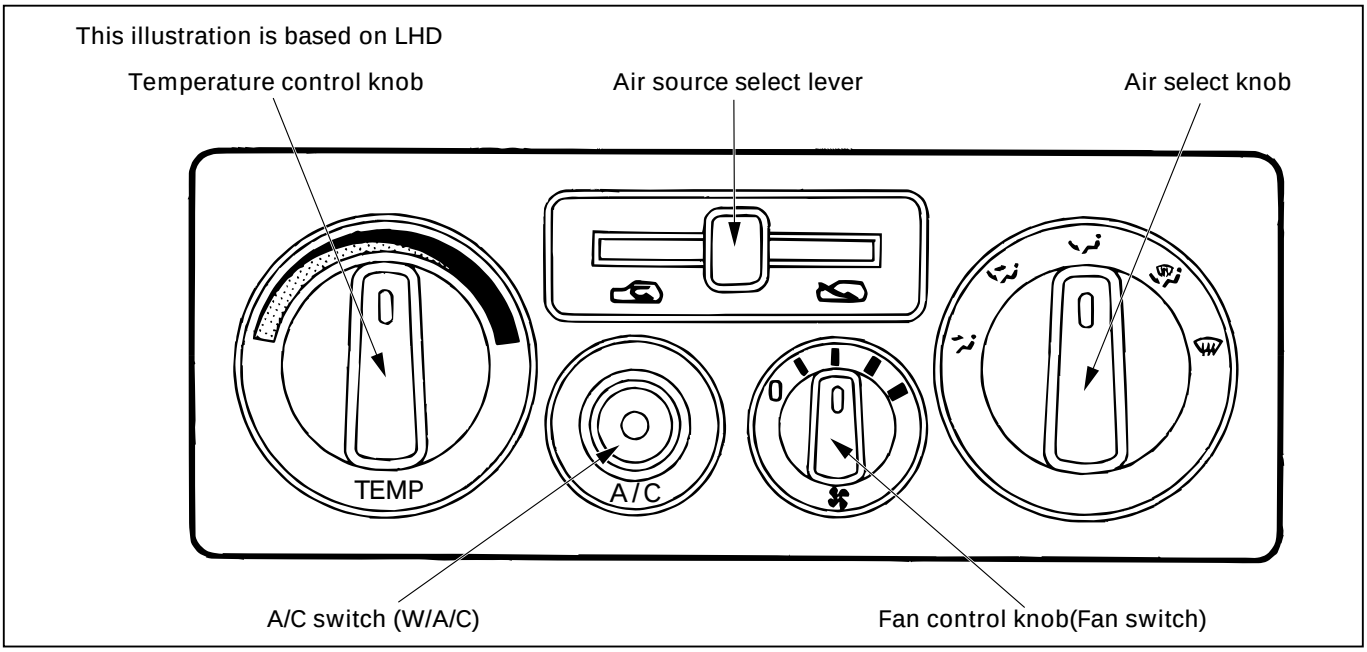

VENTILATION

Set “AIR SOURCE SELECT LEVER” to “FRESH” position and turn on the blower fan. Heating can be done in this lever position, sending in fresh air from outside.

The blower fan also serves to deliver fresh outside air to the vehicle interior to assure adequate ventilation.

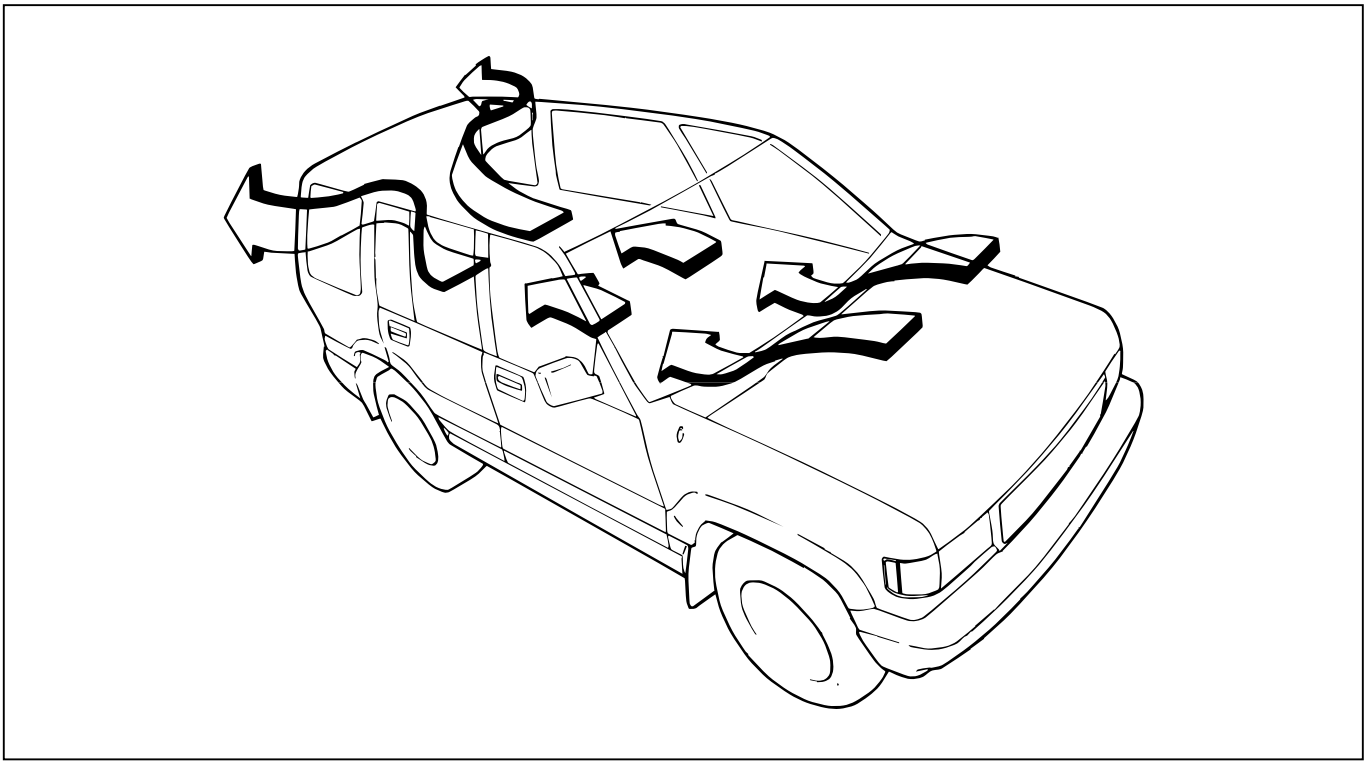

AIR SELECT KNOB

The air selector knob allows you to direct heated air into the passenger compartment through different outlets.

1. **Vent** - In this position, air is discharged from the upper air outlet. Air quantity is controlled by the fan control knob.
2. **Bi-Level** - In this position, air flow is divided between the upper air outlets and the foot air outlets, with warmer air delivered to the floor outlets than the air delivered to the upper air outlets.
3. **Foot** - In this position, air flow is delivered to the foot while sending approx. 30% of total amount of air to the windshield
4. **Def/Foot** - In this position, air flow is delivered to the foot, while sending approx. 40% of total amount of air to the windshield.
5. **Defrost** - In this position, most of the air is delivered to the windshield and a small amount is delivered to the side windows.

Moving the air source select lever to the “CIRC” position provides quickest heat delivery by closing the blower assembly mode door. In this position, outside air is not delivered to the passenger compartment.

AIR SOURCE SELECT LEVER

The intake of outside air and the circulation of inside air are controlled by sliding this lever left or right.

FAN CONTROL KNOB

This knob controls the blower motor speed to regulate the amount of air delivered to the defrost, foot, and ventilation ducts:

1. Low
2. Medium Low
3. Medium High
4. High

TEMPERATURE CONTROL KNOB

When the temperature control knob is in the “COLD” position, the air mix door closes to block the flow of air to the heater core.

When the temperature control knob is in the “HOT” position, the air mix door opens to allow air to pass through the heater core and heat the passenger compartment.

Placing the knob in an intermediate position will cause a lesser or greater amount of air to reach the heater core. In this mode the passenger compartment temperature can be regulated.

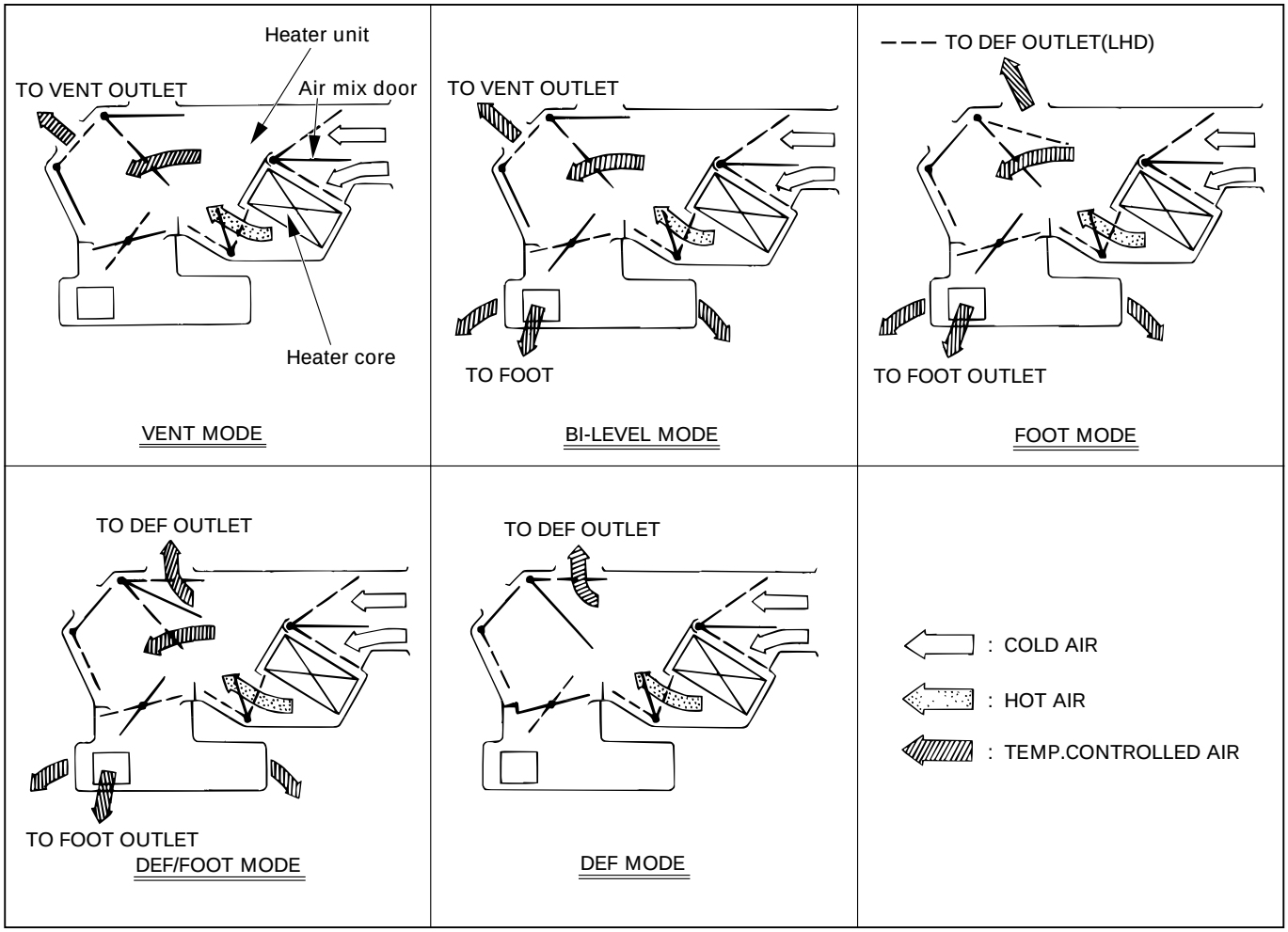

CERAMIC HEATER

When the fan control knob (fan switch) turns on with the temperature control knob set to “FULL HOT” (full hot switch “ON”), the ceramic heater in the heater unit gets hot, thus causing the heater blow temperature of diesel vehicle to get high to improve the heating performance (Since the engine coolant temperature of diesel vehicle is low, its blow temperature is also low.).

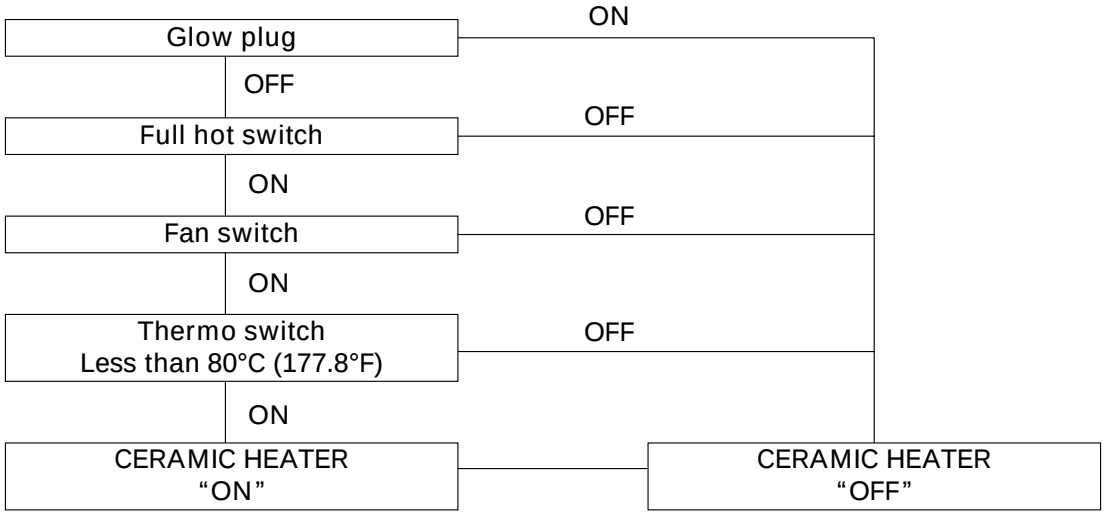

This illustration is based on RHD

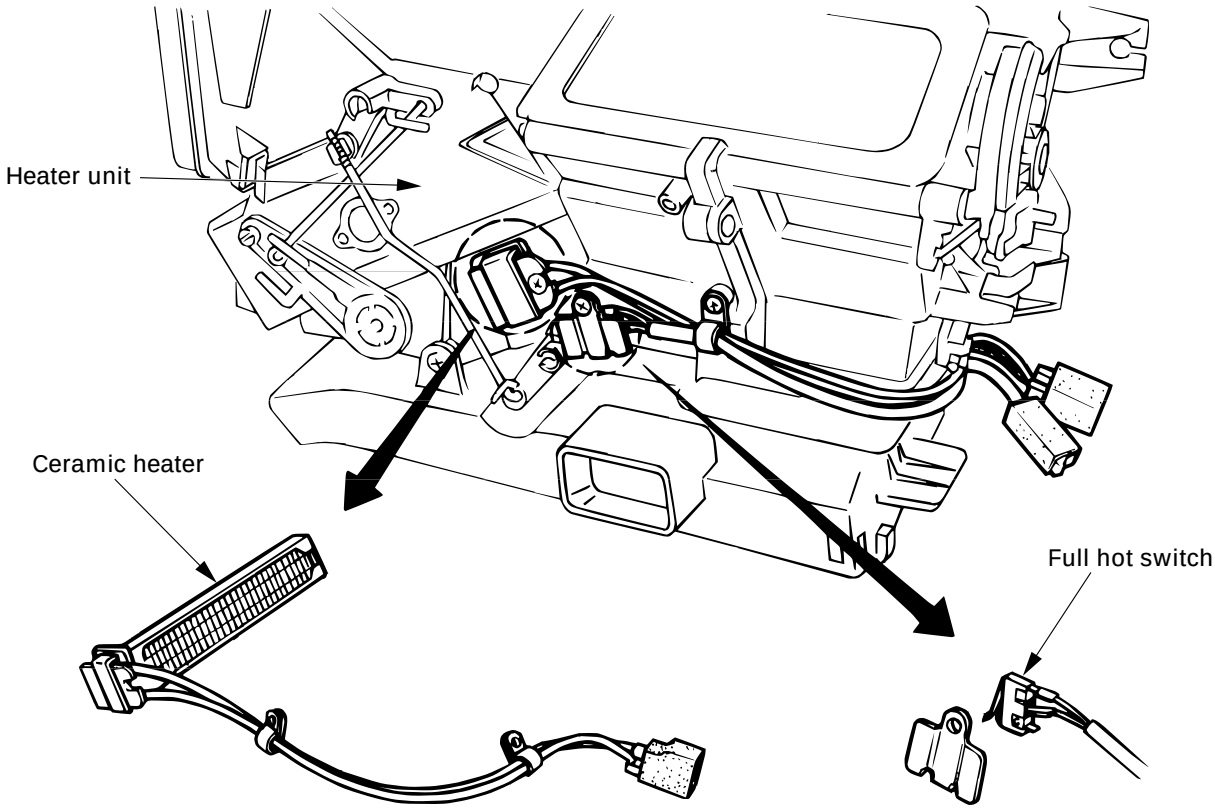

ON-VEHICLE SERVICE

HEATER UNIT

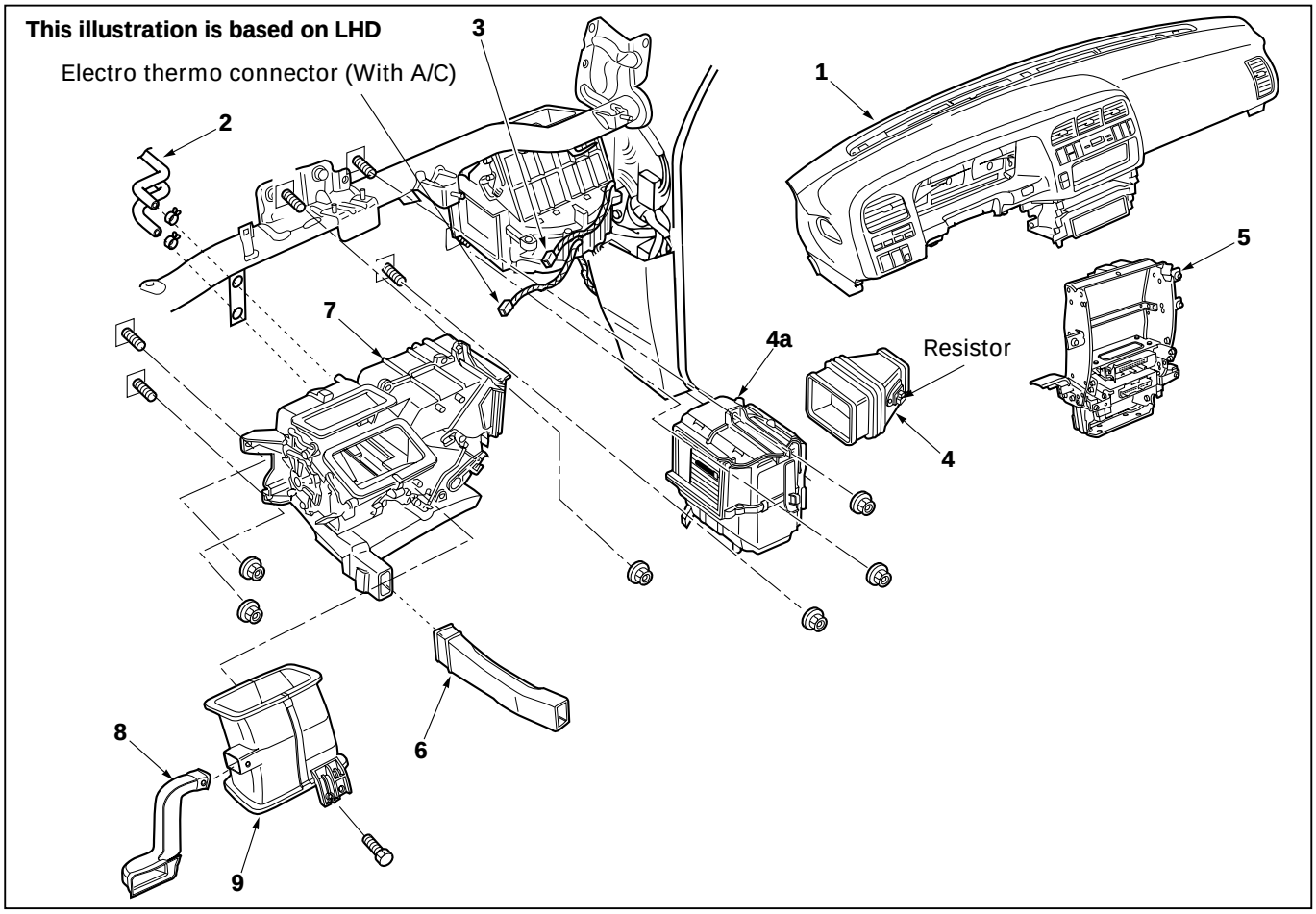

Removal Steps

1. Instrument panel assembly
2. Water hose
3. Resistor connector
4. Duct

4a. Evaporator assembly (A/C only)

5. Instrument panel center bracket
6. Rear heater duct
7. Heater unit
8. Lap vent nozzle
9. Center ventilation lower duct

Installation Steps

To install, follow the removal steps in the reverse order

REMOVAL

Preparation:

- Disconnect the battery ground cable
- Drain engine coolant
- Discharge and recover refrigerant (W/A/C)
  (Refer to Section 1B "REFRIGERANT RECOVERY")

1. **Instrument Panel Assembly**
   Refer to Section 10 "BODY" for INSTRUMENT PANEL ASSEMBLY removal procedure.
2. **Water Hose**
   Disconnect water hoses at heater unit.
3. **Resistor Connector**
4. **Duct**

4a. **Evaporator Assembly**
   Refer to Section 1B "AIR CONDITIONING" for Evaporator Assembly removal procedure.

5. **Instrument panel center bracket**
6. **Rear Heater Duct**
7. **Heater Unit**
8. **Lap vent nozzle**
9. **Center ventilation lower duct**

INSTALLATION

To install, follow the removal steps in the reverse order, noting the following points:

1. When handling the ECM and the control unit, be careful not to make any improper connection of the connectors.
2. Adjust control lever assembly cables.
   Refer to "CONTROL LEVER ASSEMBLY" installation steps in this section.
3. When installing the heater unit, defroster nozzle and center vent duct, be sure that proper seal is made, without any gap between then.

HEATER CORE AND/OR MODE DOOR

This illustration is based on LHD

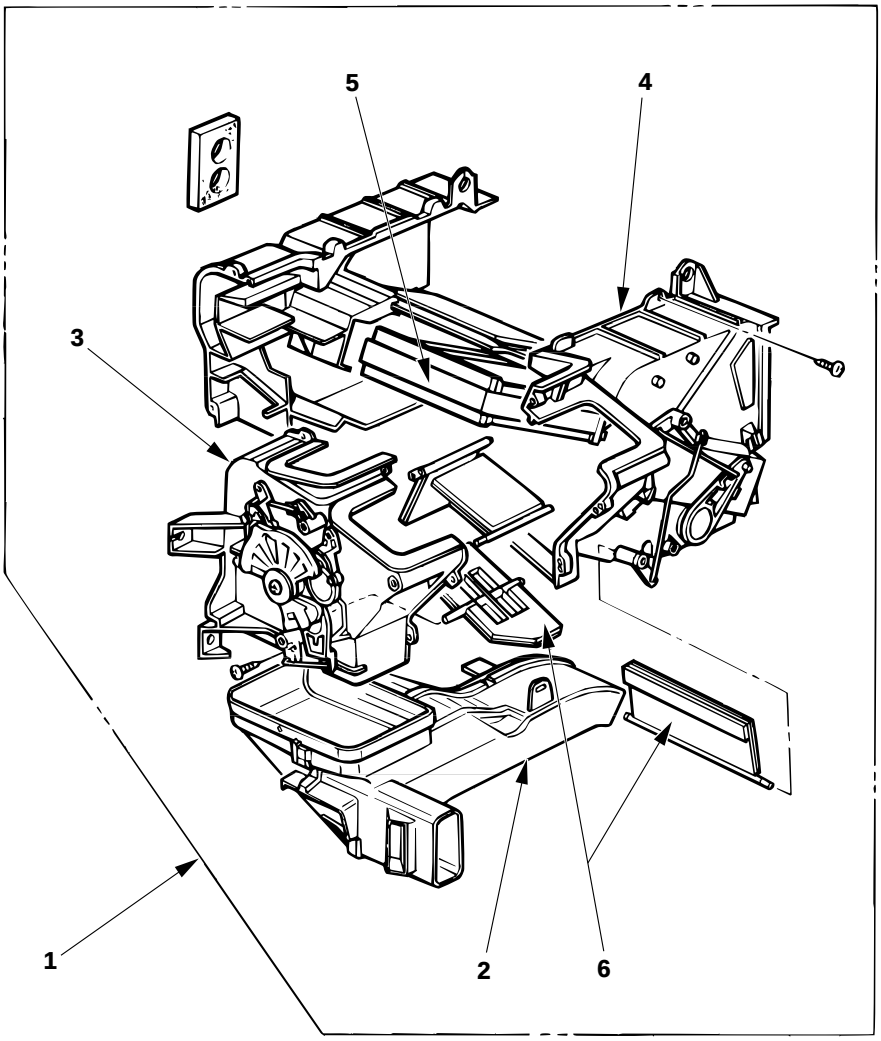

Removal Steps

1. Heater unit
2. Duct
3. Case (Mode control)
4. Case (Temperature control)
5. Heater core
6. Mode door

Installation Steps

To install, follow the removal steps in the reverse order.

REMOVAL

Preparation:

- Disconnect the battery ground cable
- Drain engine coolant

1. **Heater Unit**
   Refer to “HEATER UNIT” removal procedure in this section.
2. **Duct**
3. **Case (Mode Control)**
   Do not remove link unit at this step.
4. **Case (Temperature Control)**
   Separate two halves of core case.

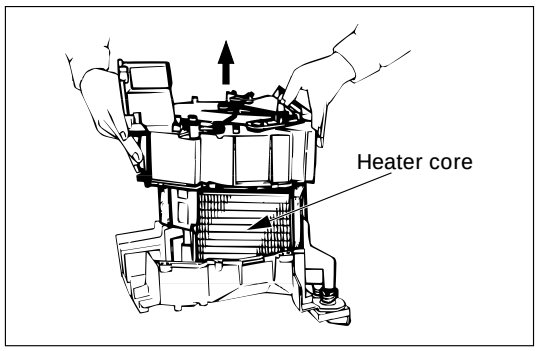

5. **Heater Core**

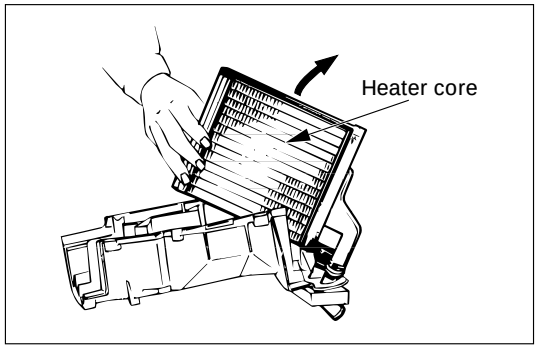

6. **Mode Door**
   Pull out the mode door while raising up the catch of the door lever.

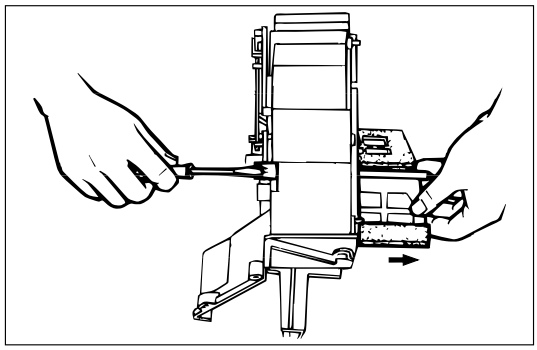

INSTALLATION

To install, follow the removal steps in the reverse order, noting the following point:

1. Check that each mode door operates properly.

HEATER MODE CONTROL LINK UNIT

This illustration is based on LHD

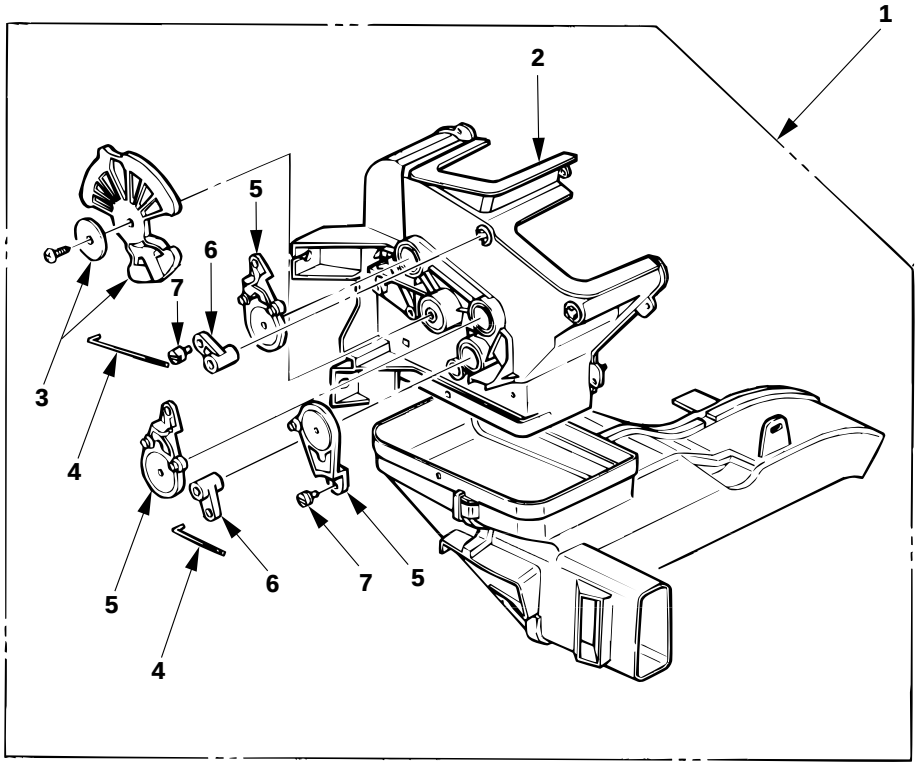

Removal Steps

1. Heater unit
2. Case (Mode control)
3. Washer and mode main lever
4. Rod
5. Mode sub-lever
6. Door lever
7. Clip

Installation Steps

To install, follow the removal steps in the reverse order.

REMOVAL

Preparation:

- Disconnect the battery ground cable
- Drain engine coolant

1. **Heater Unit**
   Refer to “HEATER UNIT” removal procedure in this section.
2. **Case (Mode Control)**
   Remove the case (Mode control) from heater unit.
3. **Washer and Mode Main Lever**
4. **Rod**
5. **Mode Sub-Lever**
   Press the tab of the sub-lever inward, and take out the sub-lever.

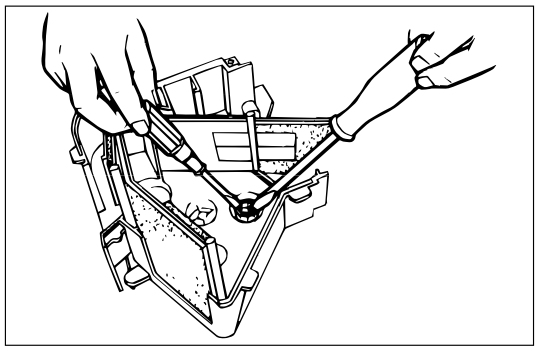

6. **Door Lever**
   Pull out the door lever while raising up the catch of the door lever.

INSTALLATION

To install, follow the removal steps in the reverse order, noting the following points:

1. Apply grease to mode sub-lever and to the abrasive surface of the heater unit.
2. After installing the link unit, check to see if the link unit operates correctly.

HEATER TEMPERATURE CONTROL LINK UNIT

This illustration is based on LHD

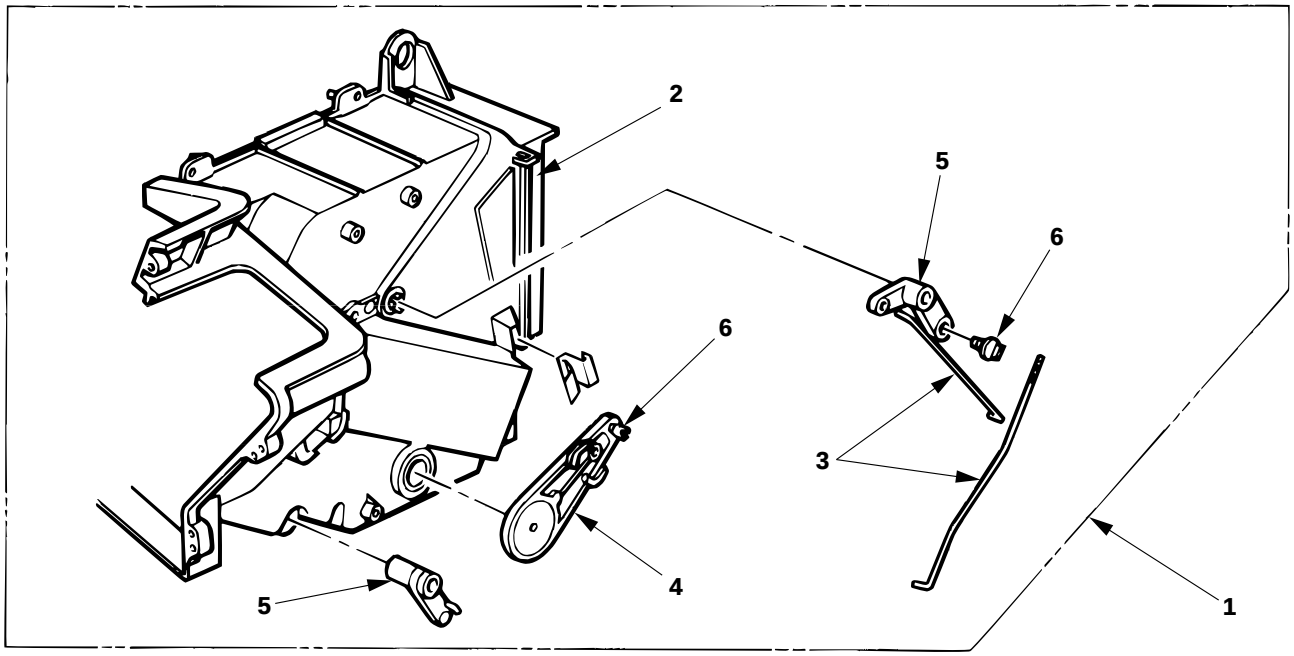

Removal Steps

1. Heater unit
2. Case (Temperature control)
3. Rod
4. Sub-lever
5. Door lever
6. Clip

Installation Steps

To install, follow the removal steps in the reverse order.

REMOVAL

Preparation:

- Disconnect the battery ground cable
- Drain engine coolant

1. **Heater Unit**
   Refer to “HEATER UNIT” removal procedure in this section.
2. **Case (Temperature Control)**
   Remove the case (Temperature control) from the heater unit.
3. **Rod**
4. **Sub-Lever**
5. **Door Lever**
   Pull out the door lever while raising up the catch of the door lever.
6. **Clip**

INSTALLATION

To install, follow the removal steps in the reverse order, noting the following points:

1. Apply grease to sub-lever and to the abrasive surface of the heater unit.
2. After installing the link unit, check to see if the link unit operates correctly.

BLOWER ASSEMBLY

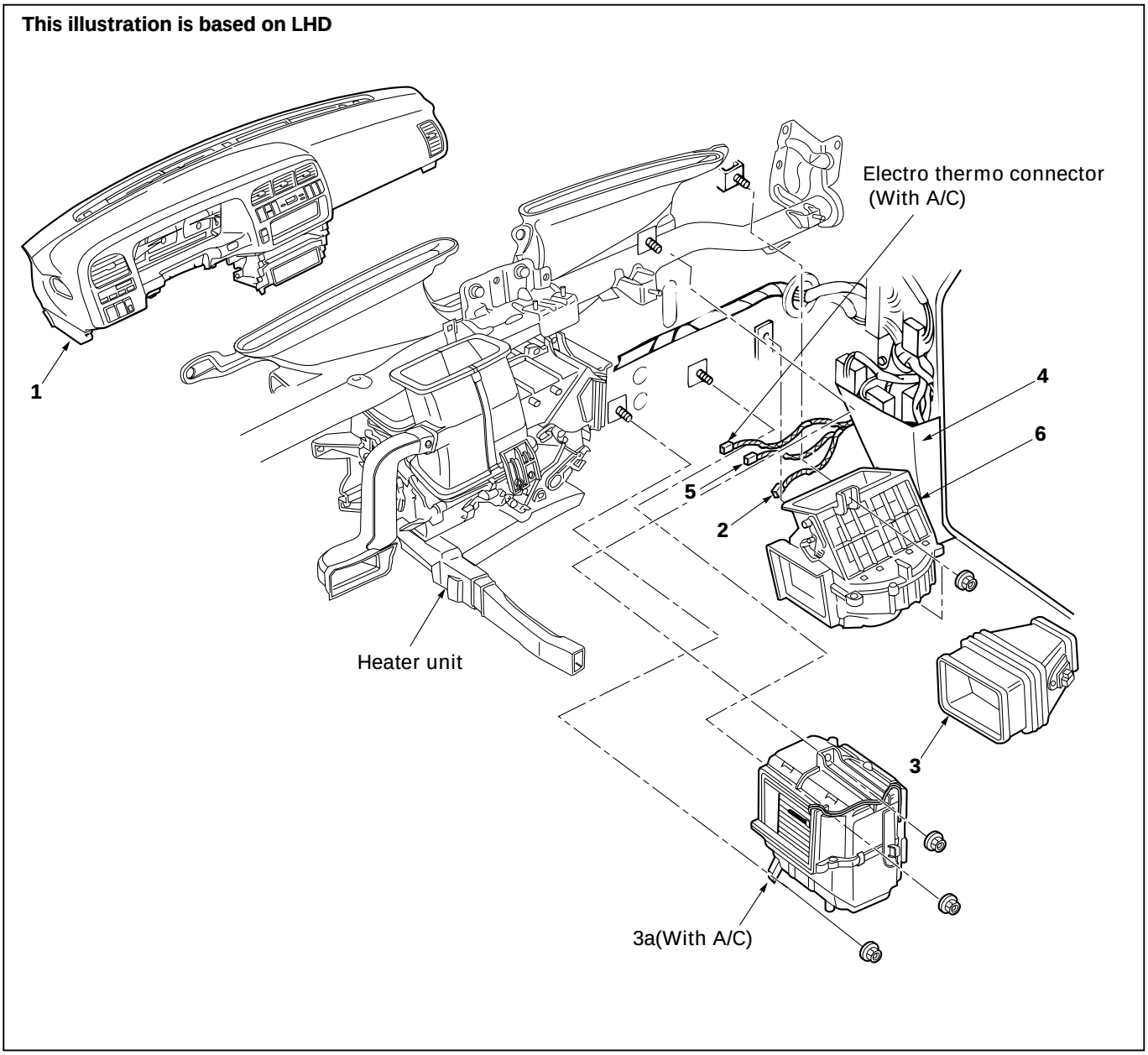

Removal Steps

1. Instrument panel assembly
2. Resistor connector
3. Duct

3a. Evaporator assembly (A/C only)

4. Kick panel
5. Blower motor connector
6. Blower assembly

Installation Steps

To install, follow the removal steps in the reverse order.

REMOVAL

Preparation:

- Disconnect the battery ground cable
- Discharge and recover refrigerant (W/A/C)
  (Refer to Section 1B "REFRIGERANT RECOVERY")

1. **Instrument Panel Assembly**
   Refer to Section 10 "BODY" for INSTRUMENT PANEL ASSEMBLY removal procedure.
2. **Resistor Connector**
3. **Duct**

3a. **Evaporator Assembly (A/C only)**
   Refer to Section 1B "AIR CONDITIONING" for EVAPORATOR ASSEMBLY removal procedure.

4. **Kick panel**
5. **Blower Motor Connector**
6. **Blower Assembly**

INSTALLATION

To install, follow the removal steps in the reverse order, noting the following point:

1. **Adjust Control Lever Assembly Cables**
   Refer to "CONTROL LEVER ASSEMBLY" installation procedure in this section.

BLOWER LINK UNIT AND/OR MODE DOOR

This illustration is based on LHD

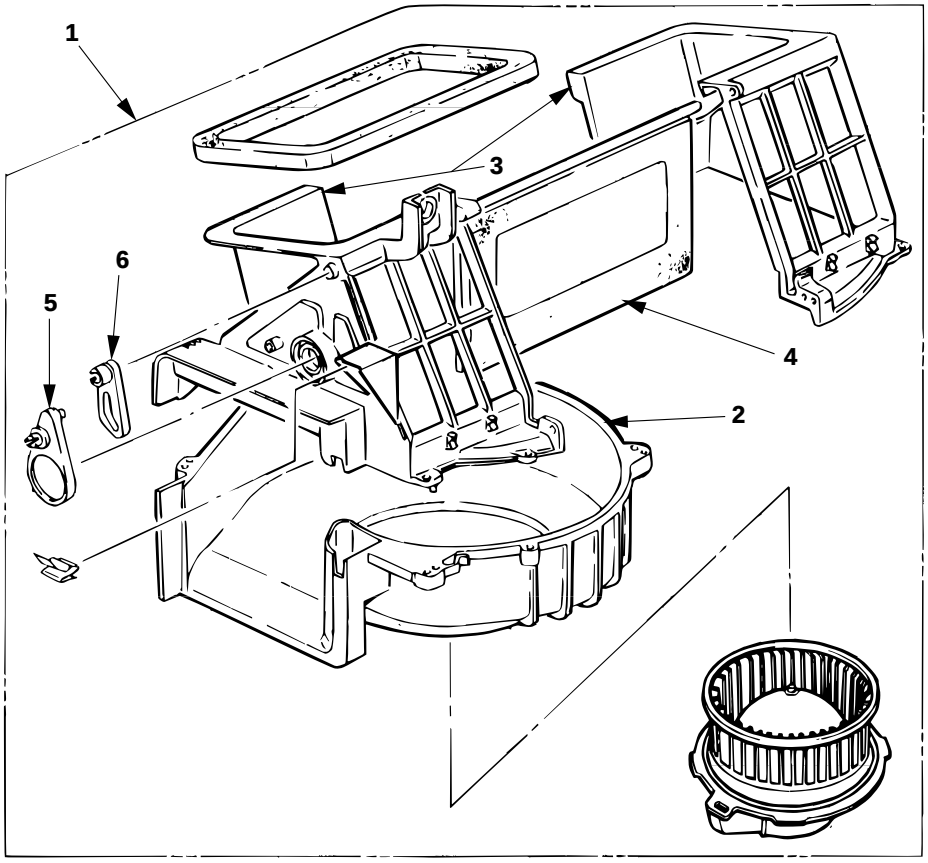

Removal Steps

1. Blower assembly
2. Lower case
3. Upper case
4. Mode door
5. Sub-lever
6. Door lever

Installation Steps

To install, follow the removal steps in the reverse order.

REMOVAL

Preparation:

Disconnect the battery ground cable

1. **Blower Assembly**
   Refer to “BLOWER ASSEMBLY” removal procedure in this section.
2. **Lower Case**
3. **Upper Case**
   Separate upper case and slit the lining parting face with a knife.

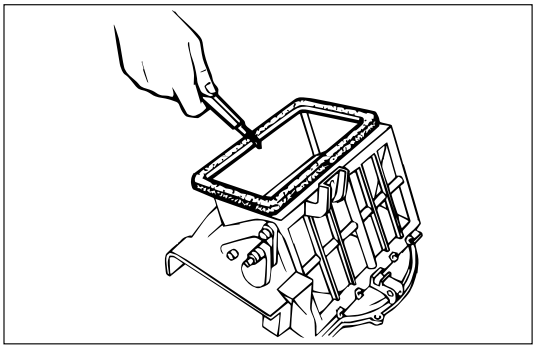

INSTALLATION

To install, follow the removal steps in the reverse order, noting the following points:

1. Apply grease to the door lever and to the abrasive surface of the upper case.
2. Apply an adhesive to parting face of lining when assembling upper case.

BLOWER MOTOR

This illustration is based on LHD

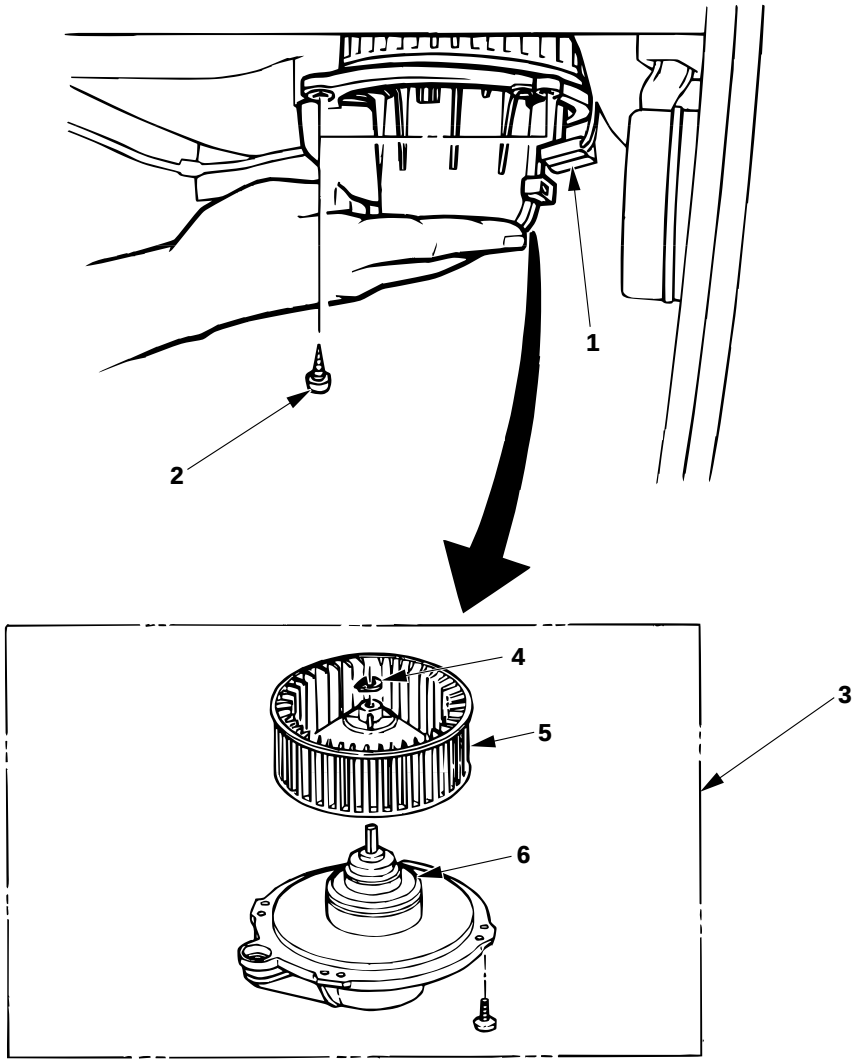

Removal Steps

1. Blower motor connector
2. Attaching screw
3. Blower motor assembly
4. Clip
5. Fan
6. Blower motor

Installation Steps

To install, follow the removal steps in the reverse order.

REMOVAL

Preparation:

Disconnect the battery ground cable

1. **Blower Motor Connector**
2. **Attaching Screw**
3. **Blower Motor Assembly**
4. **Clip**
5. **Fan**
6. **Blower Motor**

INSTALLATION

To install, follow the removal steps in the reverse order.

REAR HEATER DUCT, DEFROSTER NOZZLE AND VENTILATION DUCT

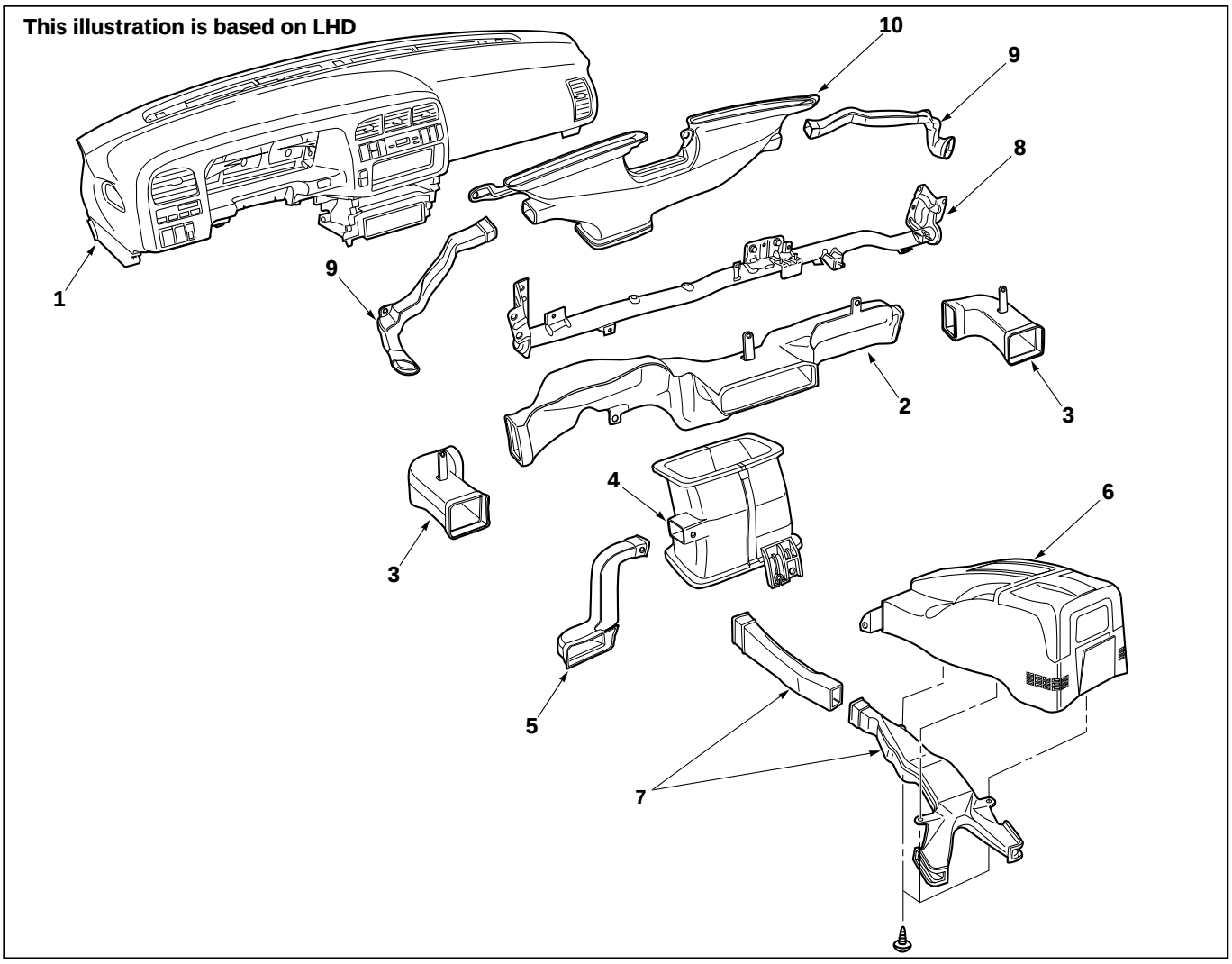

Removal Steps

1. Instrument panel assembly
2. Center ventilation upper duct
3. Side ventilation duct
4. Center ventilation lower duct
5. Driver lap duct
6. Center console
7. Rear heater duct
8. Cross beam assembly
9. Side defroster nozzle
10. Center defroster nozzle

Installation Steps

To install, follow the removal steps in the reverse order.

REMOVAL

Preparation:

Disconnect the battery ground cable

1. **Instrument panel assembly**
   - Refer to Section 10 “BODY” for INSTRUMENT PANEL ASSEMBLY removal procedure.
2. **Center ventilation upper duct**
3. **Side ventilation duct**
4. **Center ventilation lower duct**
5. **Driver lap duct**
6. **Center console**
7. **Rear heater duct**
   - Refer to Section 10 “BODY” for CONSOLES removal procedure.
8. **Cross beam assembly**
   - Refer to Section 10 “BODY” for CROSS BEAM ASSEMBLY removal procedure.
9. **Side defroster nozzle**
10. **Center defroster nozzle**

INSTALLATION

To install, follow the removal steps in the reverse order, noting the following point:

1. Connect each duct and nozzle securely leaving no clearance between them and making no improper matching.

CENTER AND/OR SIDE VENT

This illustration is based on LHD

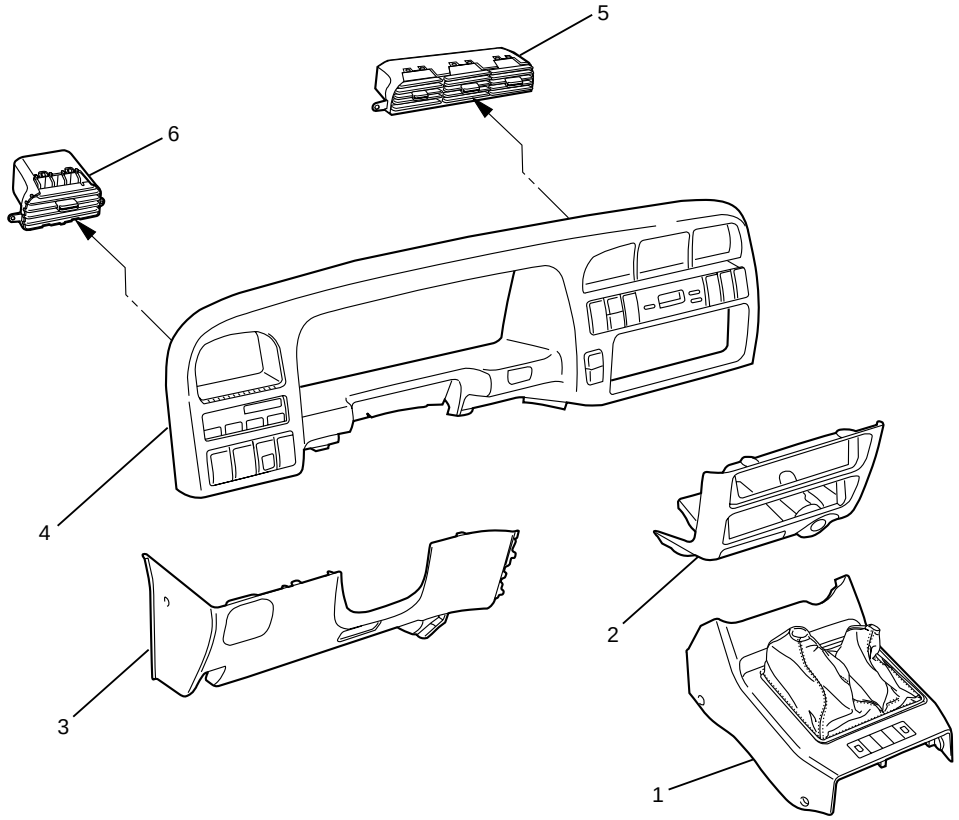

740RW168

Removal Steps

1. Front console assembly
2. Lower cluster assembly
3. Instrument panel driver lower cover assembly
4. Meter cluster assembly
5. Center vent
6. Side vent

Installation Steps

To install, follow the removal steps in the reverse order.

REMOVAL

1. **Front console assembly**
2. **Lower cluster assembly**
3. **Instrument panel driver lower cover assembly**
4. **Meter cluster assembly**
   - Refer to Section 10 “BODY” for INSTRUMENT PANEL ASSEMBLY removal procedure.
5. **Center vent**
   - Remove screws and the center vent from center cluster while prying up the center vent catch portions.
6. **Side vent**
   - Remove screws and the side vent from center cluster while prying up the side vent catch portions.

INSTALLATION

To install, follow the removal steps in the reverse order.

CONTROL LEVER ASSEMBLY AND/OR CONTROL CABLES

This illustration is based on LHD

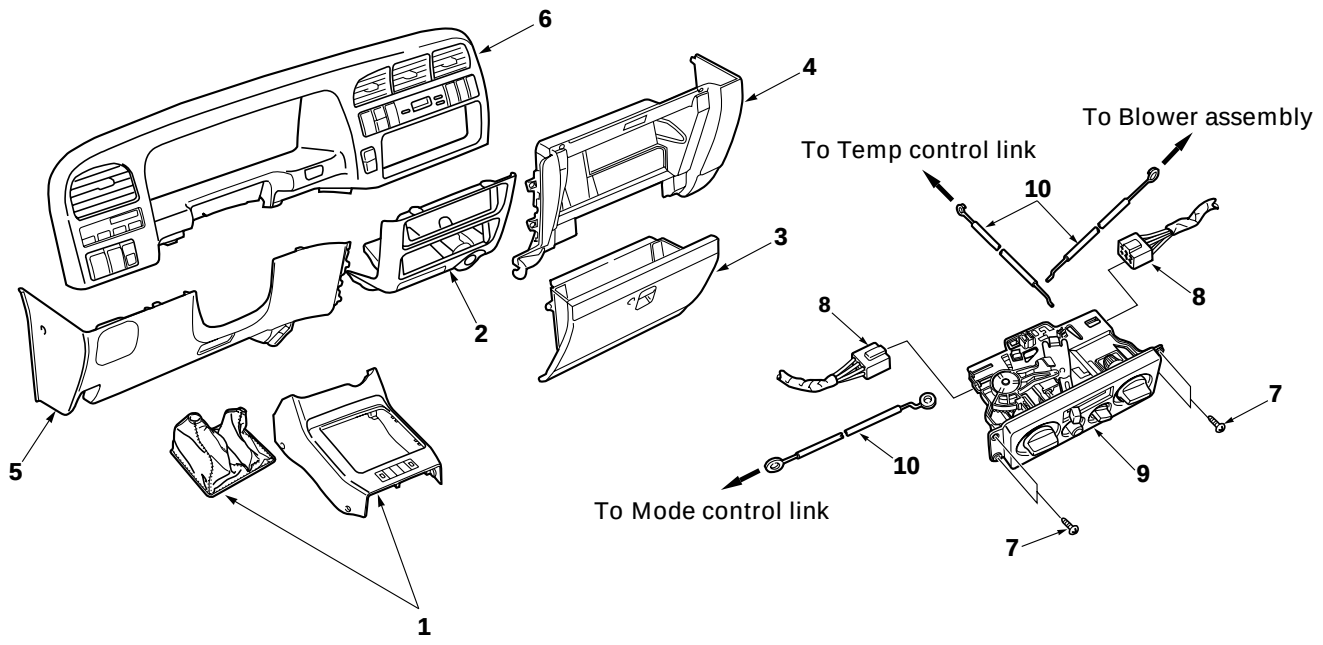

Removal Steps

1. Center console assembly
2. Lower cluster assembly
3. Glove box
4. Instrument panel passenger lower cover assembly
5. Instrument panel driver lower cover assembly
6. Meter cluster assembly
7. Attaching screws
8. Fan switch and air conditioning switch connector
9. Control lever assembly
10. Control cable

Installation Steps

To install, follow the removal steps in the reverse order.

REMOVAL

Preparation:

Disconnect the battery ground cable

1. **Front console assembly**
2. **Lower cluster assembly**
3. **Glove box**
4. **Instrument panel passenger lower cover**
5. **Instrument panel driver lower cover**
6. **Meter cluster assembly**
   Refer to Section 10 “BODY” for INSTRUMENT PANEL ASSEMBLY removal procedure.
7. **Attaching Screws**
   Remove the 4 attaching screws and disconnect the control lever cables at heater unit and blower assembly.

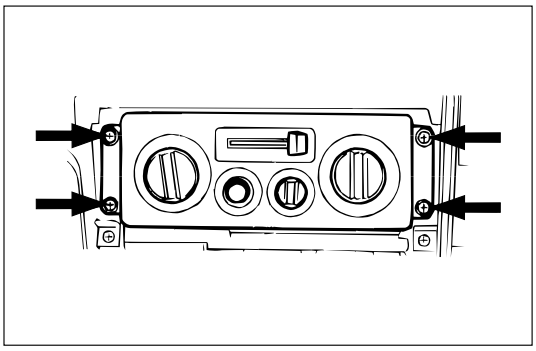

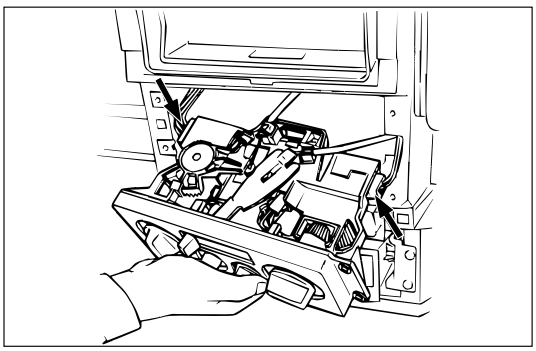

8. **Fan Switch and A/C Switch Connector**
   Pull the control lever assembly out and disconnect the connectors.
9. **Control Lever Assembly**
10. **Control Cable**

INSTALLATION

To install, follow the removal steps in the reverse order, noting the following points:

1. Adjust the control cables
   Air source control cable
   1) Slide the control lever to the left (“CIRC” position).
   2) Connect the control cable at the “CIRC” position of the link unit of blower assembly and fix it with the clip.
   Temperature control cable
   1) Turn the control knob to the left (“MAX COLD” position).
   2) Connect the control cable at the “COLD” position of the temperature control link of the heater unit and fix it with the clip.
   Air select control cable
   1) Turn the control knob to the right (“DEFROST” position).
   2) Connect the control cable at the “DEFROST” position of the mode control link of the heater unit and fix it with the clip.
2. Check control cable operation.

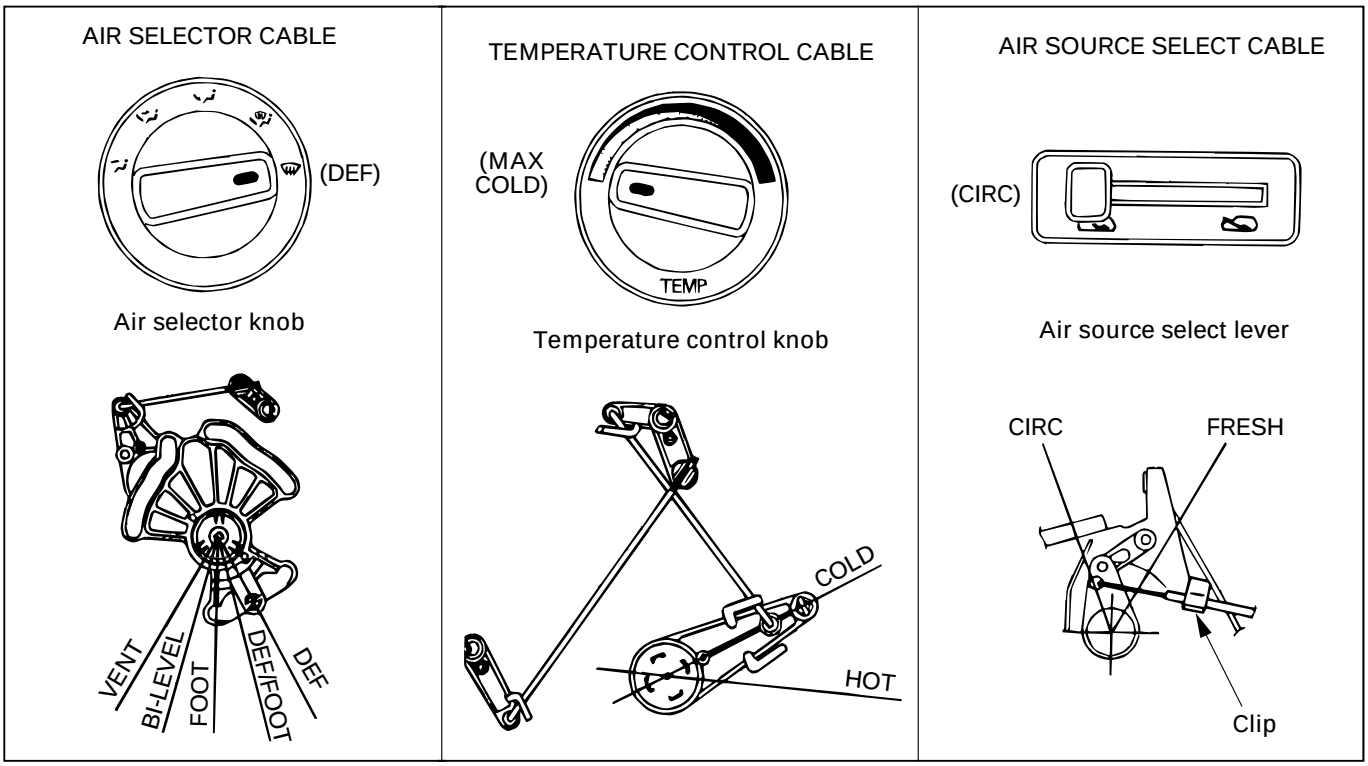

CONTROL PANEL ILLUMINATION BULB

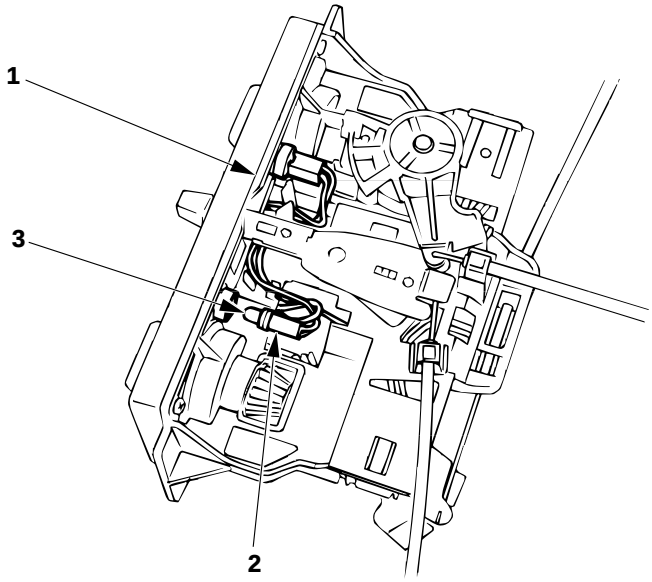

Removal Steps

1. Control lever assembly
2. Bulb socket
3. Illumination bulb

Installation Steps

To install, follow the removal steps in the reverse order.

REMOVAL

Preparation:

Disconnect the battery ground cable

1. **Control Lever Assembly**
   Refer to “CONTROL LEVER ASSEMBLY” removal procedure in this section.
2. **Bulb Socket**
   Pull out the socket from the panel by turning it counterclockwise.
3. **Illumination Bulb**
   Pull the illumination bulb from socket.

INSTALLATION

To install, follow the removal steps in the reverse order.

RESISTOR

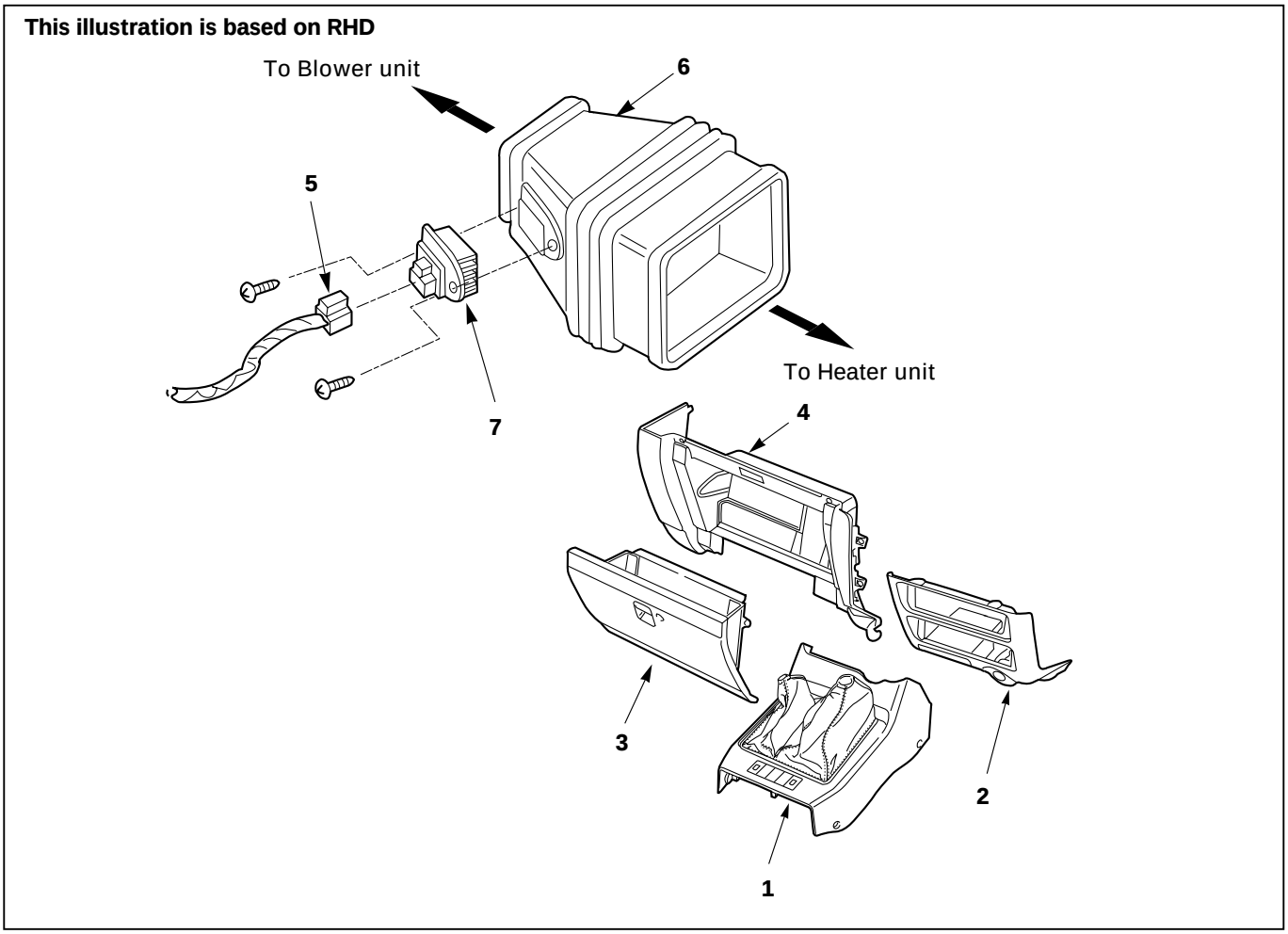

Removal Steps

1. Front console assembly
2. Lower cluster assembly
3. Glove box
4. Instrument panel passenger lower cover
5. Resistor connector
6. Duct (Heater only)
7. Resistor

Installation Steps

To install, follow the removal steps in the reverse order.

REMOVAL

Preparation:

Disconnect the battery ground cable

1. **Front console assembly**
2. **Lower cluster assembly**
3. **Glove box**
4. **Instrument panel passenger lower cover**
   Refer to Section 10 “BODY” for INSTRUMENT PANEL ASSEMBLY removal procedure.
5. **Resistor connector**
6. **Duct (Heater only)**
7. **Resistor**

INSTALLATION

To install, follow the removal steps in the reverse order.

CERAMIC HEATER AND/OR FULL HOT SWITCH

This illustration is based on RHD

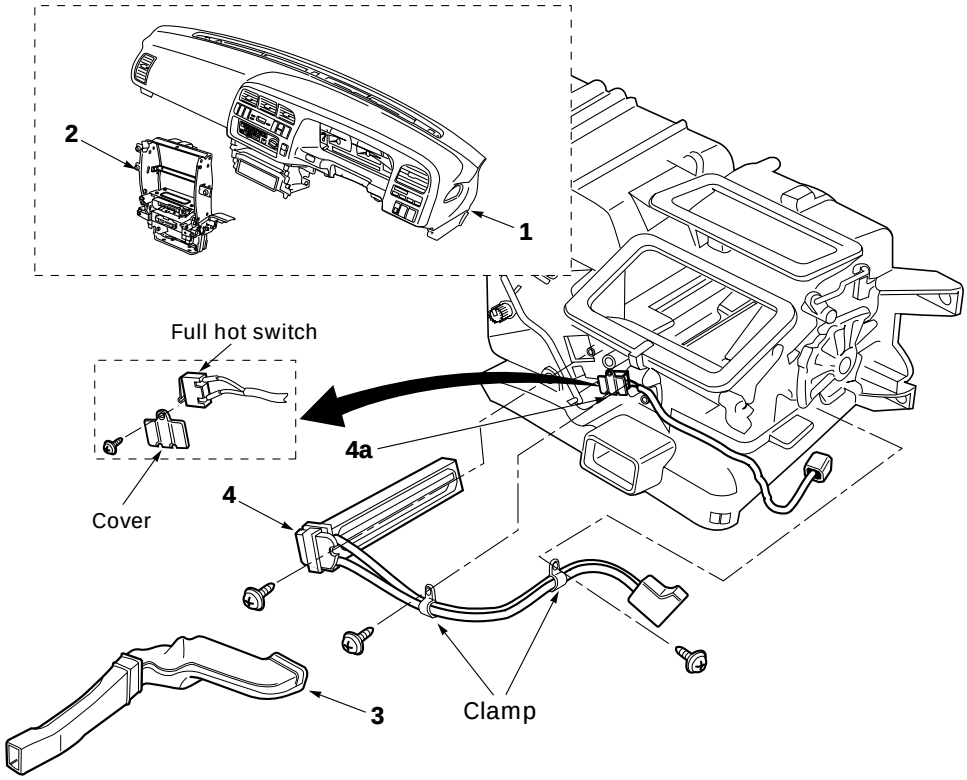

Removal Steps

1. Instrument panel assembly
2. Instrument panel center bracket
3. Rear heater duct
4. Ceramic heater assembly

4a. Full hot switch

Installation Steps

To install, follow the removal steps in the reverse order.

REMOVAL

Preparation:

Disconnect the battery ground cable

1. **Instrument panel assembly**
   Refer to Section 10 “BODY” for “INSTRUMENT PANEL ASSEMBLY” removal procedure.
2. **Instrument panel center bracket**
   Refer to Section 10 “CROSS BEAM ASSEMBLY” removal procedure.
3. **Rear heater duct**
4. **Ceramic heater**
   1) Disconnect the connector and remove the heater fixing screw and heater harness fixing clamps.
   2) Pull the ceramic heater out from heater unit.

4a. **Full hot switch**
   Disconnect the switch connector and remove the switch fixing screw and switch harness fixing clamp.

INSTALLATION

To install, follow the removal steps in the reverse order, noting the following points.

1. The installation should be made with care so that there is continuity between the switch side connector terminals when the knob is set to the “Full Hot” position.
2. Be sure to handle the EGR and the ABS control unit with care to avoid the disengagement of connectors.

MEMO

SECTION 1B

AIR CONDITIONING

CAUTION
When fasteners are removed, always reinstall them at the same location from which they were removed. If a fastener needs to be replaced, use the correct part number fastener for that application. If the correct part number fastener is not available, a fastener of equal size and strength (or stronger) may be used.

Fasteners that are not reused, and those requiring thread locking compound, will be called out. The correct torque values must be used when installing fasteners that require it. If the above conditions are not followed, parts or system damage could result.

CONTENTS

PAGE

General Description 1B– 3
Air Conditioning Refrigerant Cycle Construction 1B– 3
Compressor 1B– 4
Magnetic Clutch 1B– 5
Receiver/Drier 1B– 5
Dual Pressure Switch 1B– 6
Triple Pressure Switch 1B– 6
Expansion Valve 1B– 6
Evaporator 1B– 7
Electronic Thermostat 1B– 7
Refrigerant Line 1B– 7
Service Charge Valve 1B– 7
Air Conditioning Parts 1B– 8
On-Vehicle Service 1B– 13
Precautions For Replacement or Repair of Air Conditioning Parts 1B– 13
Compressor Assembly and Associated Parts 1B– 23
Condenser Assembly (LHD V6 without Condenser Fan) 1B– 33
Condenser Fan Motor 1B– 35
Receiver/Drier 1B– 37
Pressure Switch 1B– 39
Evaporator Assembly 1B– 42
Evaporator Core and/or Expansion Valve 1B– 44
Electronic Thermostat 1B– 47
A/C Switch and Illumination Bulb 1B– 48
Refrigerant Line 1B– 49
Rear Cooler Parts 1B– 51

Full Automatic Air Conditioning System 1B– 60
General Description 1B– 60
Full Automatic Air Conditioner Part Configuration 1B– 60
Circuit Diagram 1B– 62
Function and Features 1B– 74
Full Automatic Air Conditioner Block Diagram 1B– 75
Air Conditioning Parts 1B– 76
Control Panel Layout 1B– 80
Air Control Functions 1B– 81
Operation and Function of Control Panel Switches 1B– 82
Overview of Construction, Movement and Control of Major Parts of Full Automatic Air Conditioner System 1B– 84
Overview of Automatic Control of Full Automatic Air Conditioner 1B– 88
Troubleshooting 1B– 92
Troubleshooting, Its Overview and Procedures 1B– 92
Performance and Movement Checklist for Automatic Air Conditioner Related Parts 1B– 95
Troubleshooting with Self-Diagnosis Function 1B– 97
Inspection by Failed Location 1B–100
Inspection of the Sensors 1B–100
Inspection of the Intake Actuator System 1B–104
Inspection of the Mix Actuator System 1B–107
Inspection of the Mode Actuator System 1B–110
Inspection of the Fan Motor System 1B–113
Inspection of the Magnet Clutch System 1B–118
Inspection of the Air Conditioner Room Temperature Setup System 1B–123
Individual Inspection 1B–124
On-Vehicle Service 1B–126
Power Transistor 1B–126
Automatic Air Conditioner Control Unit 1B–126
In Car Sensor 1B–127
Ambient Sensor 1B–127
Sun Sensor 1B–128
Electronic Thermostat 1B–128
Mode Actuator 1B–129
Mix Actuator 1B–129
Intake Actuator 1B–130

GENERAL DESCRIPTION

AIR CONDITIONING REFRIGERANT CYCLE CONSTRUCTION

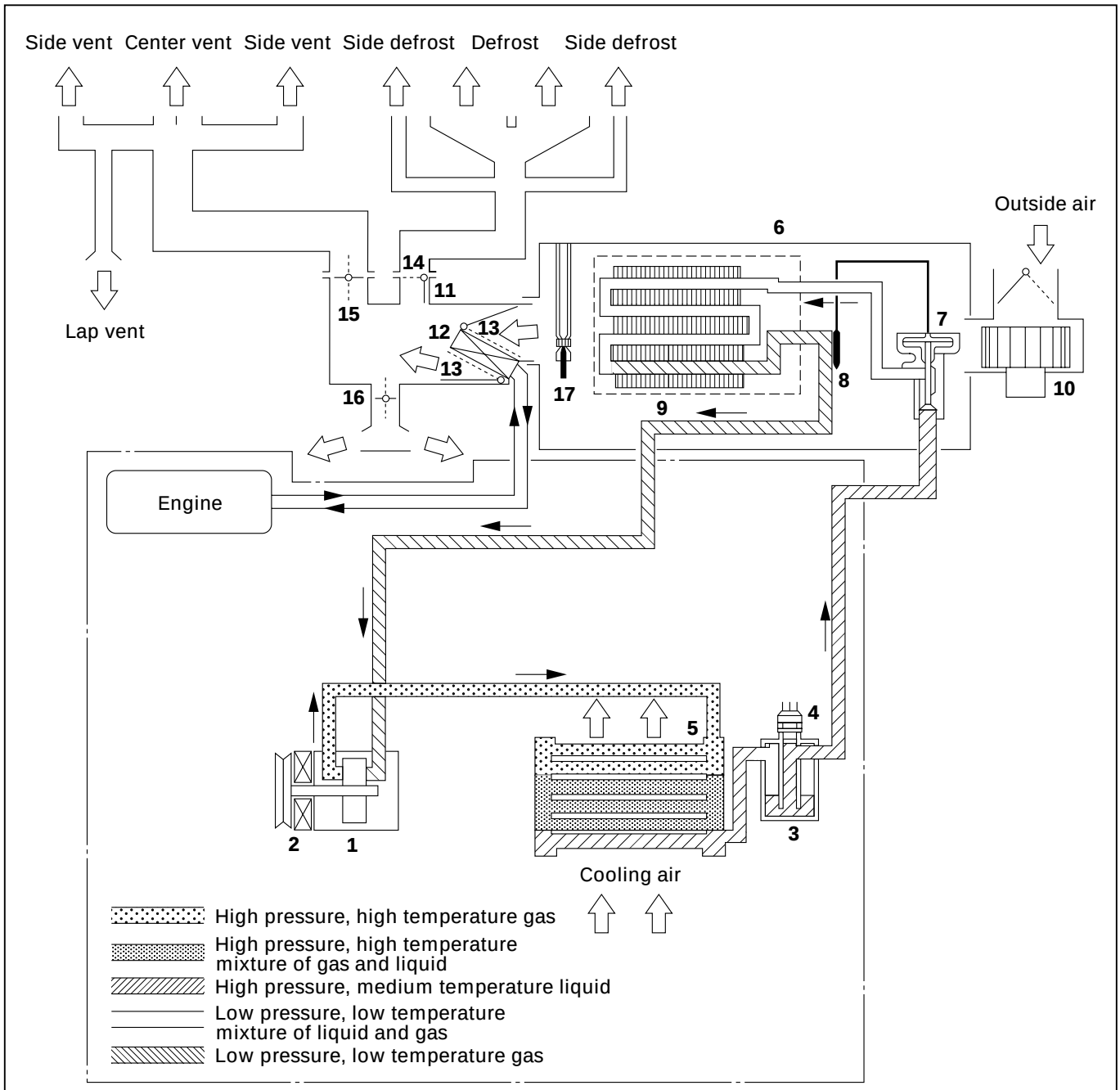

1. Compressor
2. Magnetic clutch
3. Receiver/Drier
4. Dual pressure switch
5. Condenser
6. Evaporator assembly
7. Expansion valve
8. Temperature sensor
9. Evaporator core
10. Blower motor
11. Heater unit
12. Heater core
13. Temp. control door (Air mix door)
14. Mode (DEF) control door
15. Mode (VENT) control door
16. Mode (HEAT) control door
17. Electronic thermostat

The refrigeration cycle includes the following four processes as the refrigerant changes repeatedly from liquid to gas and back to liquid while circulating.

EVAPORATION

The refrigerant is changed from a liquid to a gas inside the evaporator. The refrigerant mist that enters the evaporator vaporizes readily. The liquid refrigerant removes the required quantity of heat (latent heat of vaporization) from the air around the evaporator core cooling fins and rapidly vaporizes. Removing the heat cools the air, which is then radiated from the fins and lowers the temperature of the air inside the vehicle.
The refrigerant liquid sent from the expansion valve and the vaporized refrigerant gas are both present inside the evaporator and the liquid is converted to gas.
With this change from liquid to gas, the pressure inside the evaporator must be kept low enough for vaporization to occur at a lower temperature. Because of that, the vaporized refrigerant is sucked into the compressor.

COMPRESSION

The refrigerant is compressed by the compressor until it is easily liquefied at normal temperature. The vaporized refrigerant in the evaporator is sucked into the compressor. This action maintains the refrigerant inside the evaporator at a low pressure so that it can easily vaporize, even at low temperatures close to 0°C (32°F).
Also, the refrigerant sucked into the compressor is compressed inside the cylinder to increase the pressure and temperature to values such that the refrigerant can easily liquefy at normal ambient temperatures.

CONDENSATION

The refrigerant inside the condenser is cooled by the outside air and changes from gas to liquid. The high temperature, high pressure gas coming from the compressor is cooled and liquefied by the condenser with outside air and accumulated in the receiver/drier. The heat radiated to the outside air by the high temperature, high pressure gas in the compressor is called heat of condensation. This is the total quantity of heat (heat of vaporization) the refrigerant removes from the vehicle interior via the evaporator and the work (calculated as the quantity of heat) performed for compression.

EXPANSION

The expansion valve lowers the pressure of the refrigerant liquid so that it can easily vaporize. The process of lowering the pressure to encourage vaporization before the liquefied refrigerant is sent to the evaporator is called expansion. In addition, the expansion valve controls the flow rate of the refrigerant liquid while decreasing the pressure. That is, the quantity of refrigerant liquid vaporized inside the evaporator is determined by the quantity of heat which must be removed at a prescribed vaporization temperature. It is important that the quantity of refrigerant be controlled to exactly the right value.

COMPRESSOR

The compressor performs two main functions:
It compresses low-pressure and low-temperature refrigerant vapor from the evaporator into high-pressure and high-temperature refrigerant vapor to the condenser. And it pumps refrigerant and refrigerant oil through the A/C system.
6VD1/6VE1 engine on RHD model is equipped with an invariable capacity five-vane rotary compressor (DKV-14D Type).
The compressor sucks and compresses refrigerant by the rotation of the vane installed to the shaft, and always discharges a fixed amount of refrigerant independent of the load of refrigerant.
The thermo sensor is installed to the front head of the compressor to protect it by stopping its operation when the refrigerant gas is insufficient or when the temperature is abnormally high.

- OFF ..... 160 ± 5°C (320.0 ± 41°F)
- ON ..... 135 ± 5°C (275.0 ± 41°F)

Diesel Engine models and 6VD1/6VE1 engine on LHD model are equipped with a swash plate type compressor
Swash plate compressors have a swash (slanted) plate mounted on the shaft. When the shaft turns, the rotation of the swash plate is converted to reciprocating piston motion which sucks in and compresses the refrigerant gas.
Shaft seal (Lip type) is installed between the valve plate and shaft & cylinder head to prevent refrigerant gas leaks. A specified amount of compressor oil is contained in the oil pan.
This oil is supplied to the cylinders, bearings, etc., by an oil pump which is connected to the swash plate shaft.

With some compressors the differential between the intake pressure and discharge pressure generated while the compressor is operating is used for lubrication instead of an oil pump.
The specified amount of the DKV-14D, DKS-15CH and HD6 compressors oil is 150cc (4.2 Imp fl oz). Also, compressor oil to be used varies according to the compressor model. Be sure to avoid mixing two or more different types of oil.
If the wrong oil is used, lubrication will be poor and the compressor will seize or malfunction.
The magnetic clutch connector is a waterproof type.

MAGNETIC CLUTCH

The compressor is driven by the drive belt from the crank pulley of the engine. If the compressor is activated each time the engine is started, this causes too much load to the engine. The magnetic clutch transmits the power from the engine to the compressor and activates it when the air conditioning is “ON”. Also, it cuts off the power from the engine to the compressor when the air conditioning is “OFF”. (Magnetic clutch repair procedure can be found in Section 1D.)

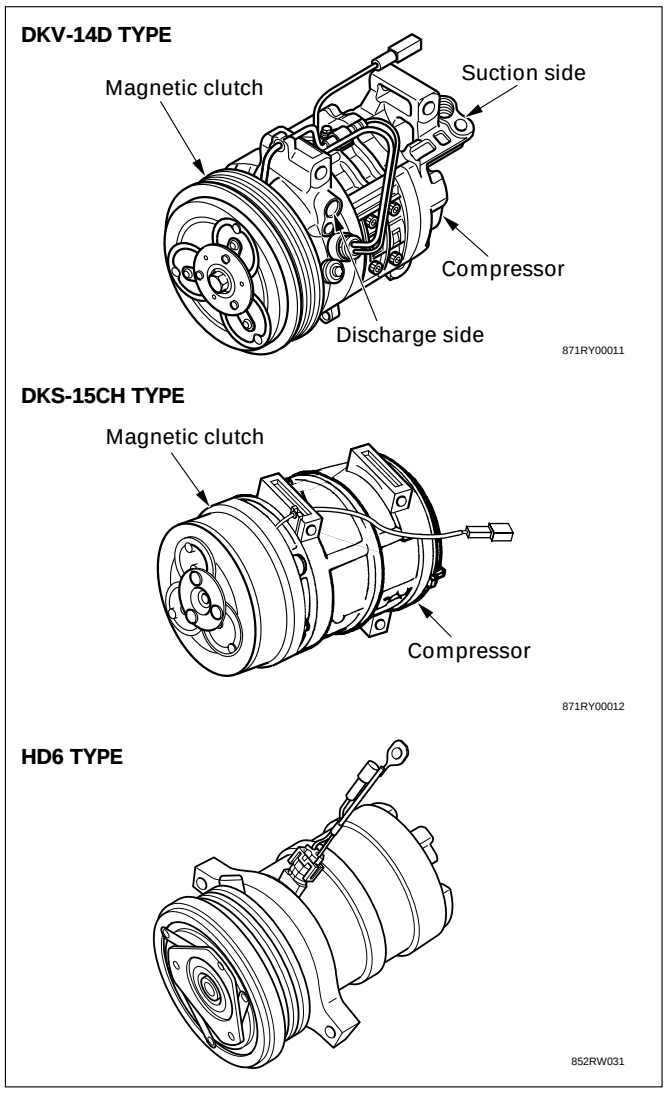

CONDENSER

The condenser assembly in front of the radiator, which carry the refrigerant and cooling fins to provide rapid transfer of heat.
Also, it functions to cool and liquefy the high-pressure and high-temperature vapor sent from the compressor by the radiator fan or outside air.
A condenser may malfunction in two ways: it may leak, or it may be restricted. A condenser restriction will result in excessive compressor discharge pressure. If a partial restriction is present, the refrigerant expands after passing through the restriction.
Thus, ice or frost may from immediately after the restriction. If air flow through the condenser or radiator is blocked, high discharge pressures will result. During normal condenser operation, the refrigerant outlet line will be slightly cooler than the inlet line.
The vehicle is equipped with the condenser of the parallel flow type condenser. A larger thermal transmission area on the inner surface of the tube allows the radiant heat to increase and the ventilation resistance to decrease.
The refrigerant line connection has a bolt at the block joint, for easy servicing.

RECEIVER/DRIER

The receiver/drier performs four functions;

- As the quantity of refrigerant circulated varies depending on the refrigeration cycle conditions, sufficient refrigerant is stored for the refrigeration cycle to operate smoothly in accordance with fluctuations in the quantity circulated.
- The liquefied refrigerant from the condenser is mixed with refrigerant gas containing air bubbles. If refrigerant containing air bubbles is sent to the expansion valve, the cooling capacity will decrease considerably. Therefore, the liquid and air bubbles are separated and only the liquid is sent to the expansion valve.
- The receiver/drier utilizes a filter and dryer to remove the dirt and water mixed in the cycling refrigerant.
- The sight glass, installed atop the receiver/drier, show the state of the refrigerant.

A receiver/drier may fail due to a restriction inside the body of the unit. A restriction at the inlet to the receiver/drier will cause high pressures.
Outlet restrictions will be indicated by low pressure and little or no cooling. An excessively cold receiver/ drier outlet may indicate a restriction.
The receiver/drier of this vehicle is made of aluminum with a smaller tank. It has 300 cc (8.5 Imp fl oz) refrigerant capacity.
The refrigerant line connection has a bolt at the block joint, for easy servicing.

DUAL PRESSURE SWITCH

The dual pressure switch is installed on the upper part of the receiver/drier, to detect excessively high pressure (high pressure switch) and prevent compressor seizure due to the refrigerant leaking (low pressure switch), switching the compressor "ON" or "OFF" as required.
The pressure switch connector is waterproof type.

- Low-pressure control kpa (kg·cm^2 / PSI)
  Compressor
  ON: 205.9 ± 30 (2.1 ± 0.3 / 30 ± 4)
  (Except 6VD1 / 6VE1, LHD model)
  186 ± 30 (1.9 ± 0.3 / 27 ± 4)
  (only for 6VD1 / 6VE1, LHD model)
  OFF: 176 ± 20 (1.8 ± 0.2 / 26 ± 3)
- High-pressure control
  Compressor
  ON: 2354 ± 196 (24.0 ± 2.0 / 341 ± 28)
  OFF: 2942 ± 196 (30.0 ± 2.0 / 427 ± 28)

TRIPLE PRESSURE SWITCH

Triple pressure switch is installed atop the receiver/drier. This switch is constructed with a unitized type of two switches. One of them is a low and high pressure switch (Dual pressure switch) to switch "ON" or "OFF" the magnetic clutch as a result of irregularly high-pressure or low-pressure of the refrigerant. The other one is a medium pressure switch (Cycling switch) to switch "ON" or "OFF" the condenser fan sensing the condenser high side pressure.

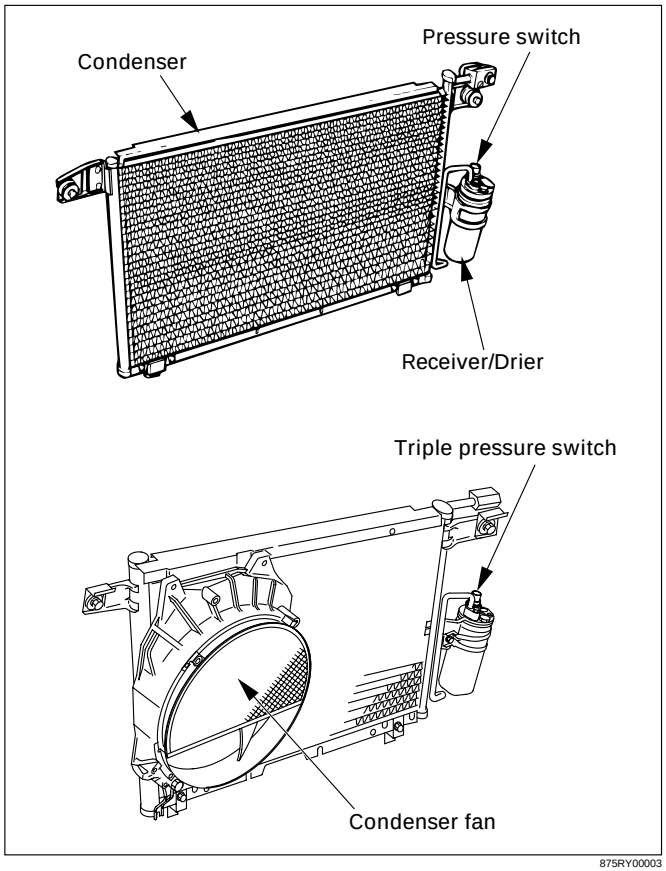

875RY00003

- Low-pressure control kpa (kg·cm^2/PSI)
  Compressor
  ON: 186 ± 30 (1.9 ± 0.3 / 27 ± 4)
  OFF: 176 ± 20 (1.8 ± 0.2 / 26 ± 3)
- Medium-pressure control
  Condenser fan
  ON: 1471 ± 98 (15.0 ± 1.0 / 213 ± 14)
  OFF: 1079 ± 98 (11.0 ± 1.0 / 156 ± 14)
- High-pressure control
  Compressor
  ON: 2354 ± 196 (24.0 ± 2.0 / 341 ± 28)
  OFF: 2942 ± 196 (30.0 ± 2.0 / 427 ± 28)

EXPANSION VALVE

This expansion valve (1) is internal pressure type and it is installed at the evaporator intake port.
The expansion valve converts the high pressure liquid refrigerant sent from the receiver/drier to a low pressure liquid refrigerant by forcing it through a tiny port before sending it to the evaporator (2).
This type of expansion valve consists of a temperature sensor, diaphragm, ball valve, ball seat, spring adjustment screw, etc.
The temperature sensor contacts the evaporator outlet pipe, and converts changes in temperature to pressure. It then transmits these to the top chamber of the diaphragm.
The refrigerant pressure is transmitted to the diaphragms bottom chamber through the external equalizing pressure tube.
The ball valve is connected to the diaphragm. The opening angle of the expansion valve is determined by the force acting on the diaphragm and the spring pressure.
The expansion valve regulates the flow rate of the refrigerant. Accordingly, when a malfunction occurs to this expansion valve, both discharge and suction pressures get low, resulting in insufficient cooling capacity of the evaporator.

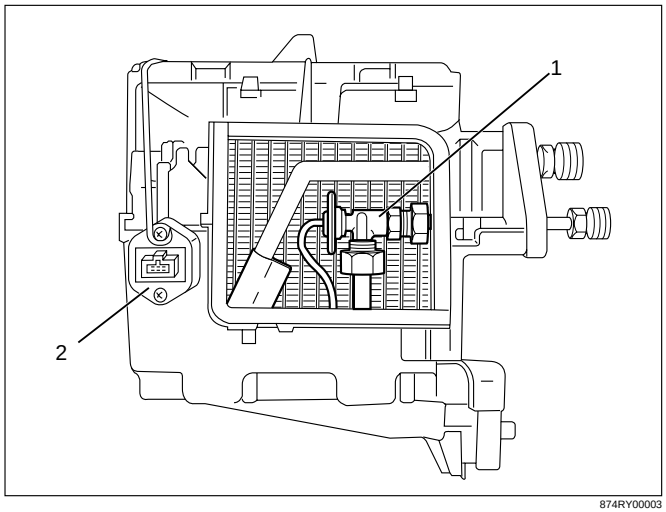

874RY00003

EVAPORATOR

The evaporator cools and dehumidifies the air before the air enters the vehicle. High-pressure liquid refrigerant flows through the expansion valve (1) into the low-pressure area of the evaporator (2). The heat in the air passing through the evaporator core is lost to the cooler surface of the core, thereby cooling the air.
As heat is lost between the air and the evaporator core surface, moisture in the vehicle condenses on the outside surface of the evaporator core and is drained off as water.
When the evaporator malfunctions, the trouble will show up as inadequate supply of cool air. The cause is typically a partially plugged core due to dirt, or a malfunctioning blower motor.
The evaporator core with a laminate louver fin is a single-sided tank type where only one tank is provided under the core.

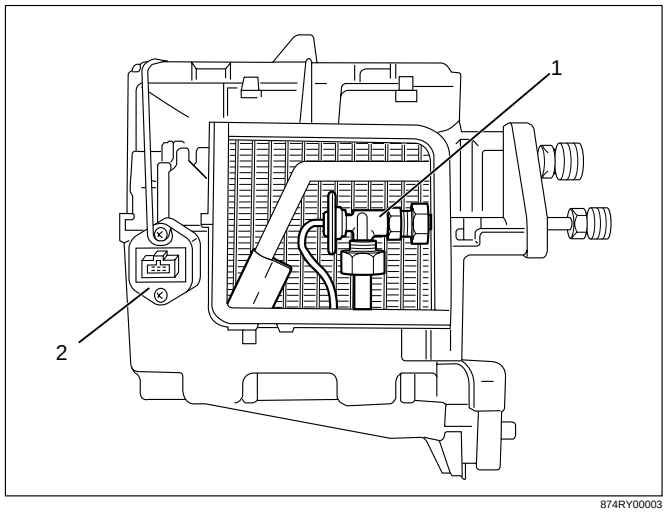

874RY00003

ELECTRONIC THERMOSTAT

The thermostat consists of the thermosensor (1) and thermostat unit (4) which functions electrically to reduce the noises being generated while the system is in operation.
The electronic thermosensor (1) is mounted at the evaporator core (2) outlet and senses the temperature of the cool air from the evaporator (3). Temperature signals are input to the thermostat unit. This information is compared by the thermo unit and the results in output to operate the A/C Thermostat relay and turn the magnetic clutch “ON” or “OFF” to prevent evaporator freeze-up.
A characteristic of the sensor is that the resistance decreases as the temperature increases and the resistance increases as the temperature decreases.

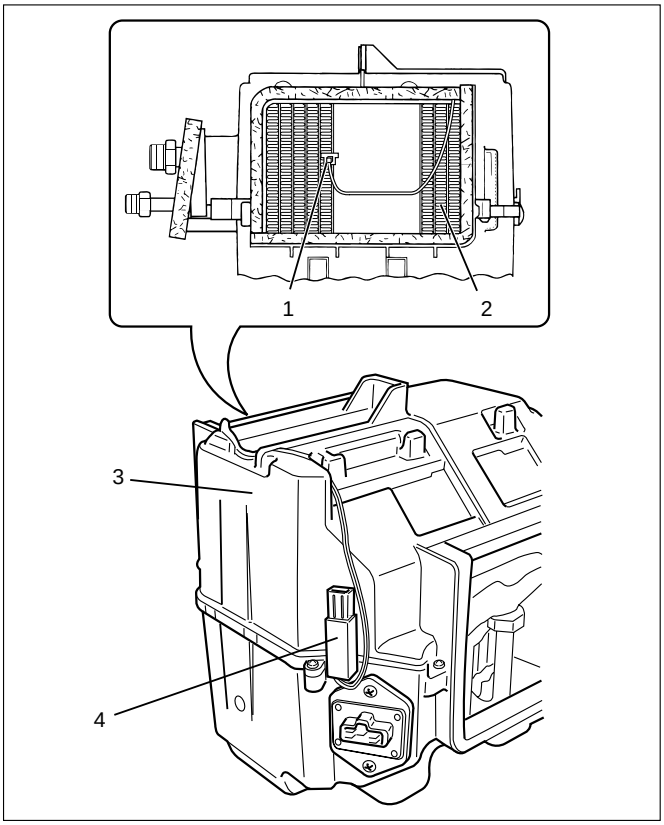

874RX022

REFRIGERANT LINE

Restrictions in the refrigerant line will be indicated by:

1. Suction line; A restricted suction line will cause low suction pressure at the compressor, low discharge pressure and little or not cooling.
2. Discharge line; A restriction in the discharge line generally will cause the discharge line to leak.
3. Liquid line; A liquid line restriction will be evidenced by low discharge and suction pressure and insufficient cooling.

Refrigerant flexible hoses that have a low permeability to refrigerant and moisture are used. These low permeability hoses have a special nylon layer on the inside.

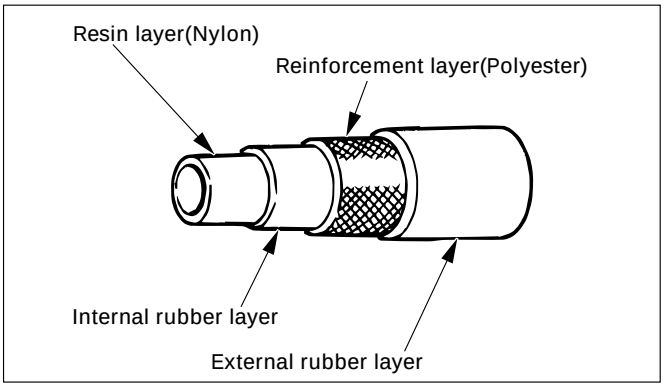

SERVICE CHARGE VALVES

The charging hoses have a quick-joint type fitting, to reduce refrigerant loss during removal and installation.

AIR CONDITIONING PARTS

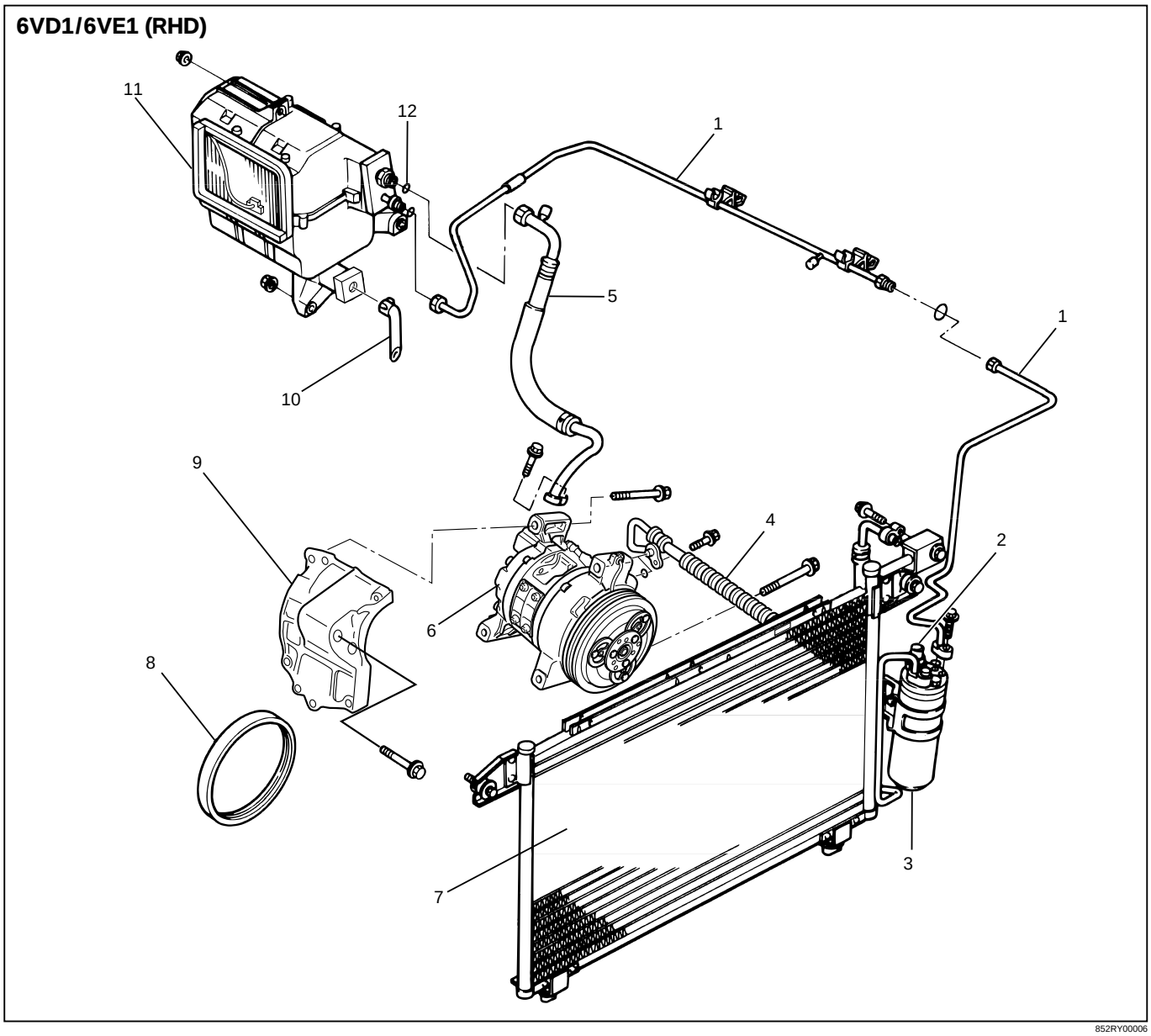

Legend

(1) Liquid Line (High-Pressure Pipe)
(2) Pressure Switch
(3) Receiver Drier
(4) Discharge Line (High-Pressure Hose)
(5) Suction Line (Low-Pressure Hose)
(6) Compressor
(7) Condenser Assembly
(8) Serpentine Belt
(9) Compressor Bracket
(10) Drain Hose
(11) Evaporator Assembly
(12) O-ring

4JG2 (R/LHD)

This illustration is based on RHD

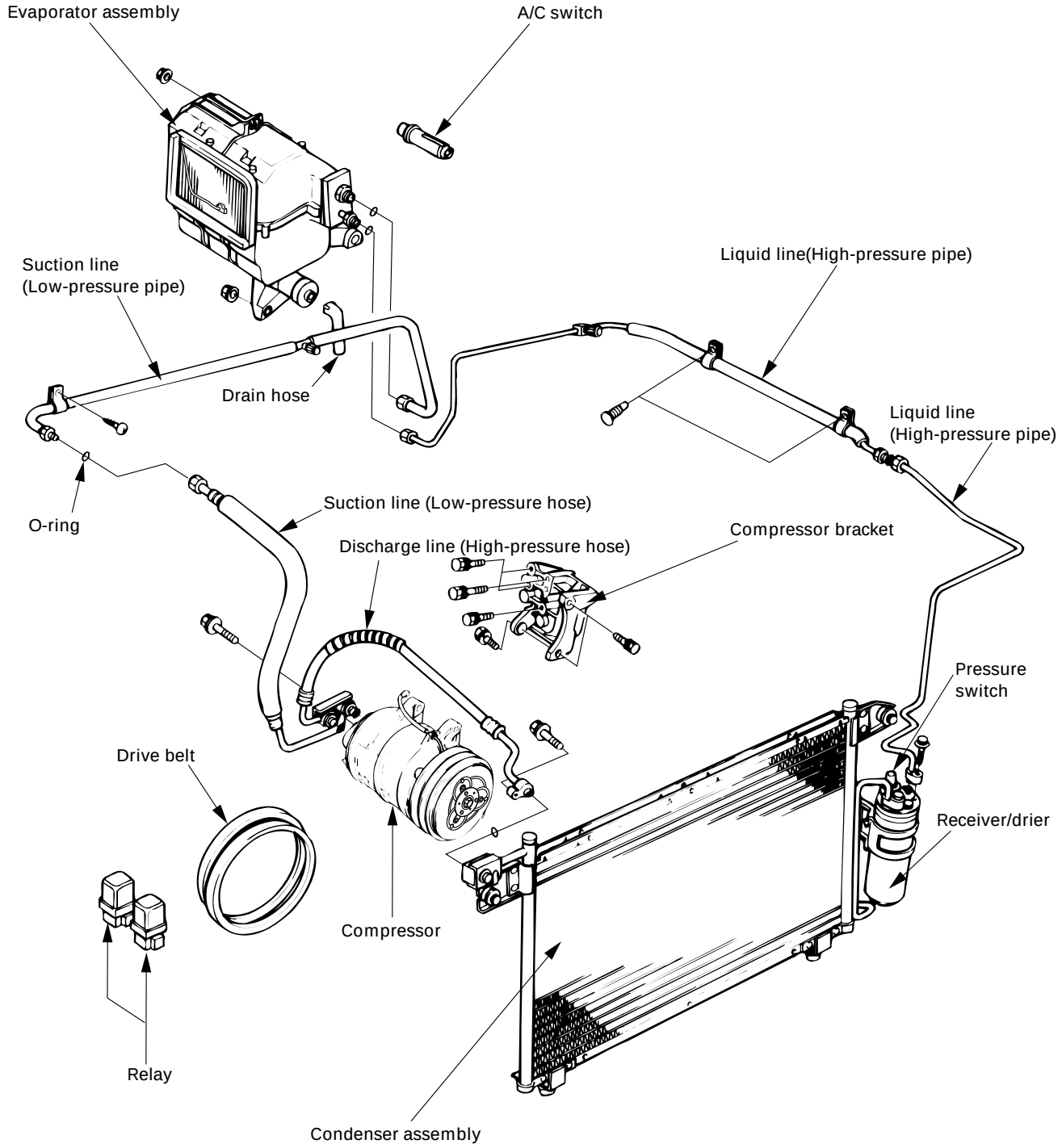

852RY00008

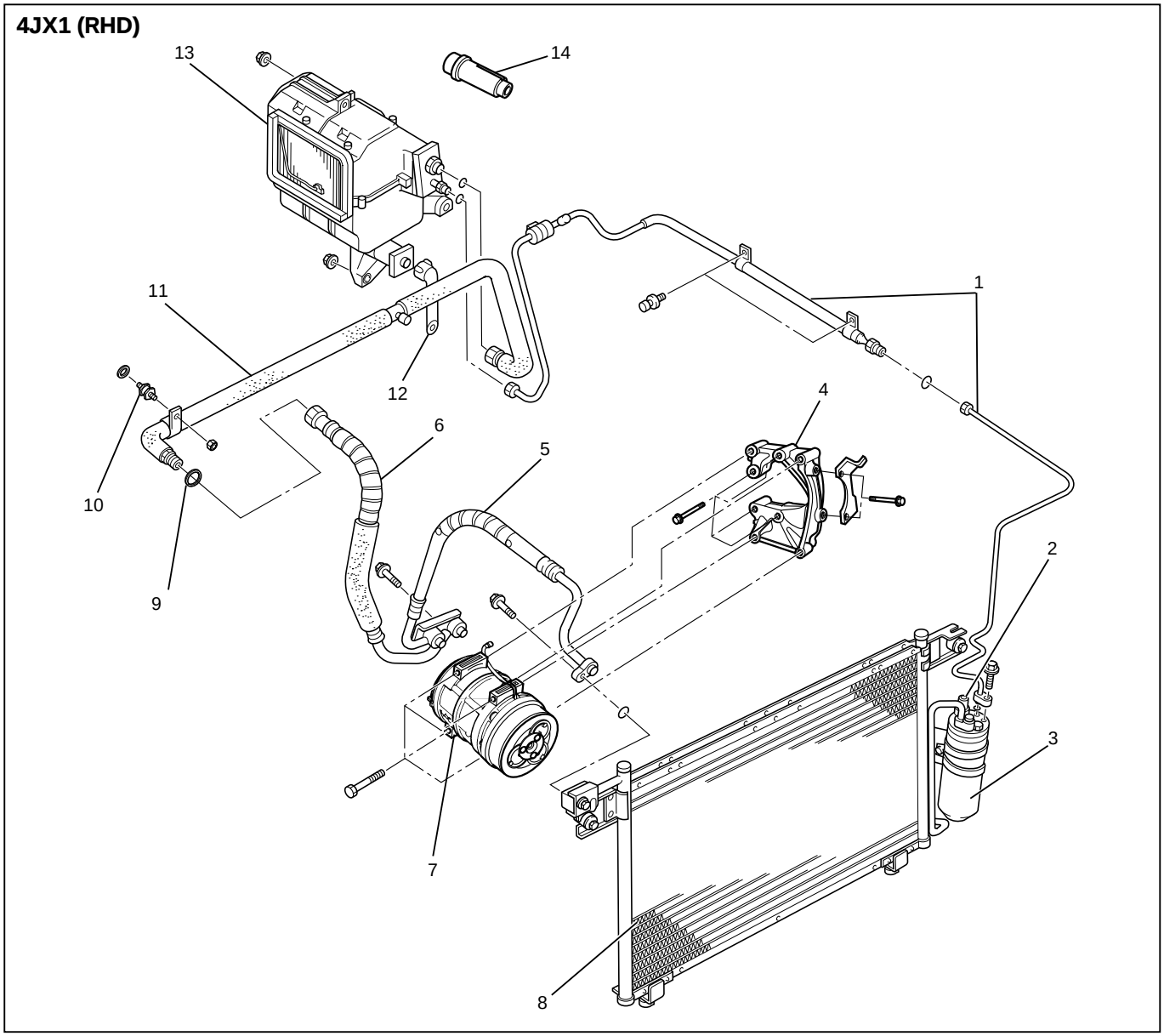

Legend

(1) Liquid Line (High- Pressure Pipe)
(2) Pressure Switch
(3) Receiver Drier
(4) Compressor Bracket
(5) Discharge Line (High-Pressure Hose)
(6) Suction Line (Low-Pressure Hose)
(7) Compressor
(8) Condenser Assembly
(9) O-ring
(10) Insulator Pipe
(11) Suction Line (Low Pressure Pipe)
(12) Drain Hose
(13) Evaporator Assembly
(14) A/C Switch

6VD1/6VE1 (LHD)

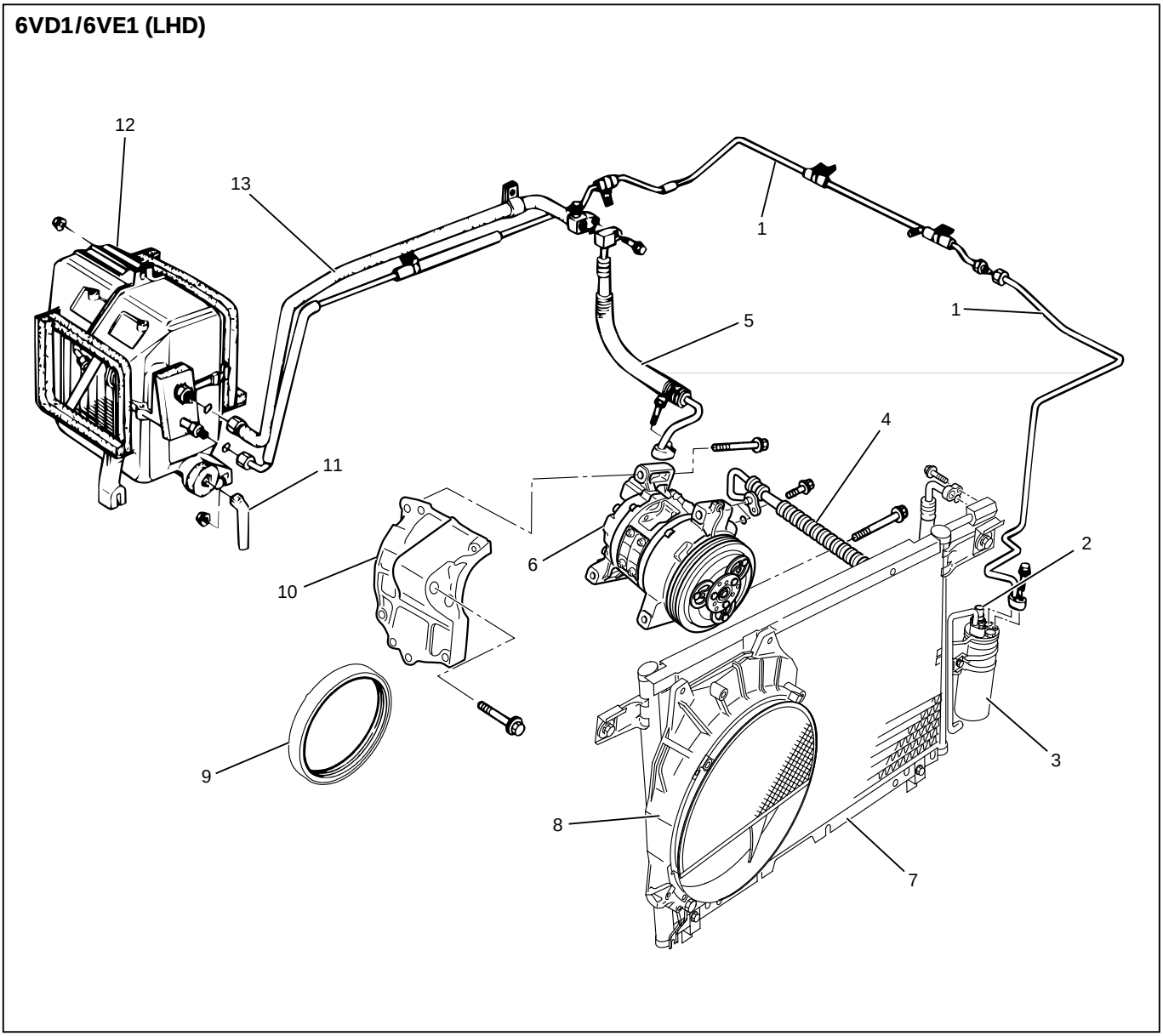

852RY00012

Legend

(1) Liquid Line (High-Pressure Pipe)
(2) Pressure Switch
(3) Receiver Drier
(4) Discharge line (High-Pressure Hose)
(5) Suction Line (Low-Pressure Hose)
(6) Compressor
(7) Condenser Assembly
(8) Condenser Fan
(9) Serpentine Belt
(10) Compressor Bracket
(11) Drain Hose
(12) Evaporator Assembly
(13) Suction Line (Low-Pressure Pipe)

Delphi Harrison (LHD·V6)

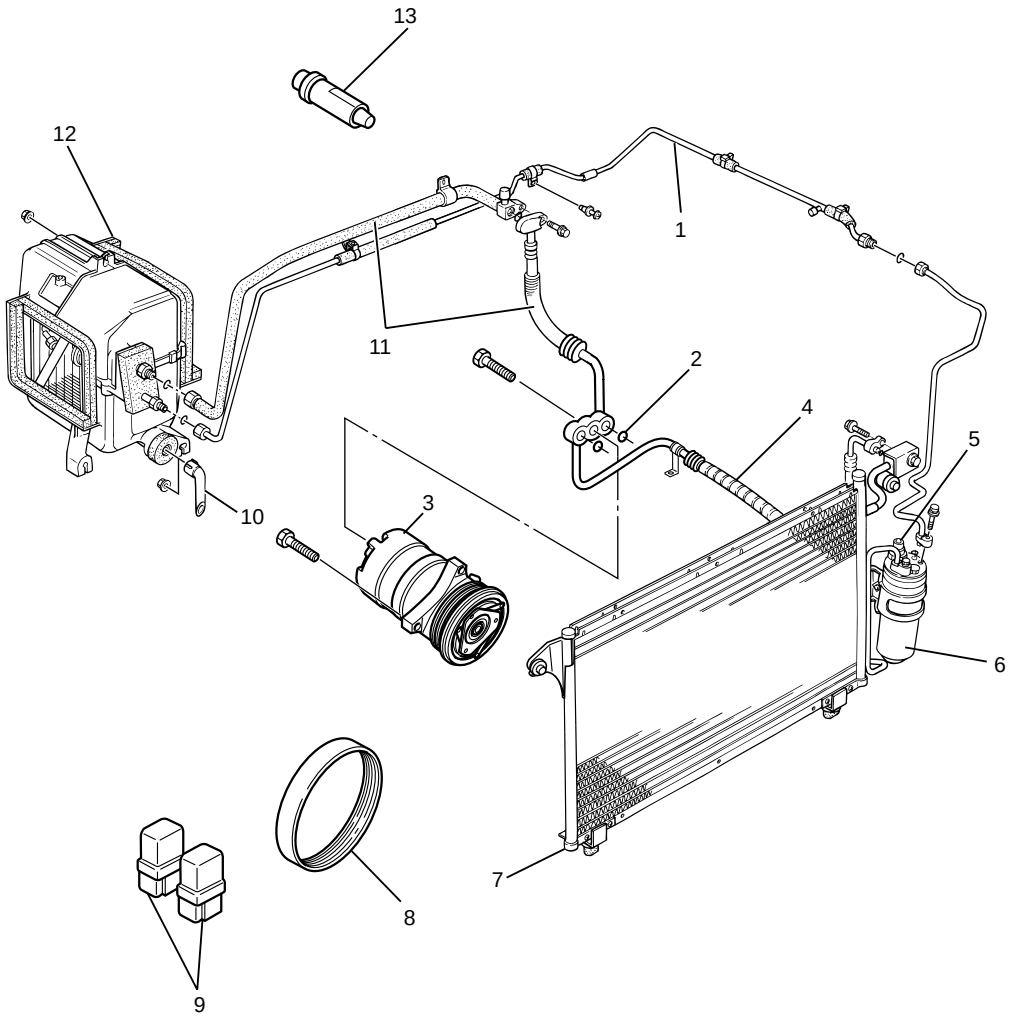

852RW009

Legend

(1) Liquid Line (High-Pressure Pipe)
(2) O-ring
(3) Compressor
(4) Discharge line (High-Pressure Hose)
(5) Pressure Switch
(6) Receiver Drier
(7) Condenser Assembly
(8) Serpentine Belt
(9) Relay
(10) Drain Hose
(11) Suction Line (Low-pressure Hose)
(12) Evaporator Assembly
(13) A/C Switch

ON-VEHICLE SERVICE

PRECAUTIONS FOR REPLACEMENT OR REPAIR OF AIR CONDITIONING PARTS

There are certain procedure, practices and precautions that should be followed when servicing air conditioning systems:

- Keep your work area clean.
- Always wear safety goggle and protective gloves when working on refrigerant systems.
- Beware of the danger of carbon monoxide fumes caused by running the engine.
- Beware of discharged refrigerant in enclosed or improperly ventilated garages.
- Always disconnect the negative battery cable and discharge and recover the refrigerant whenever repairing the air conditioning system.
- When discharging and recovering the refrigerant, do not allow refrigerant to discharge too fast; it will draw compressor oil out of the system.
- Keep moisture and contaminants out of the system. When disconnecting or removing any lines or parts, use plugs or caps to close the fittings immediately. Never remove the caps or plugs until the lines or parts are reconnected or installed.
- When disconnecting or reconnecting the lines, use two wrenches to support the line fitting, to prevent from twisting or other damage.
- Always install new O-rings whenever a connection is disassembled.
- Before connecting any hoses or lines, apply new specified compressor oil to the O-rings.
- When removing and replacing any parts which require discharging the refrigerant circuit, the operations described in this section must be performed in the following sequence:

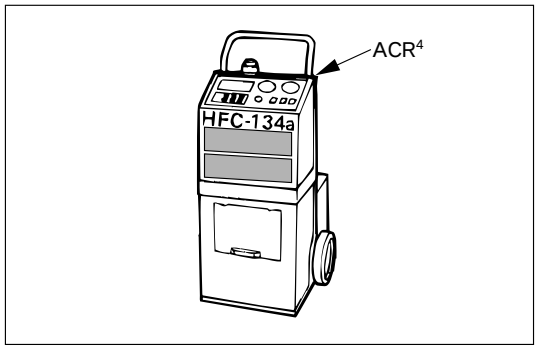

1) Using the ACR^4 (HFC-134a Refrigerant Recovery/ Recycling/ Recharging/ System) or equivalent to thoroughly discharge and recover the refrigerant.

ACR^4 (115V 60Hz) : 5-8840-0629-0 (J-39500-A)
ACR^4 (220-240V 50/60Hz)
: 5-8840-0630-0 (J-39500-220A)
ACR^4 (220-240V 50/60Hz Australian model)
: 5-8840-0631-0 (J-39500-220ANZ)

2) Remove and replace the defective part.

3) After evacuation, charge the air conditioning system and check for leaks.

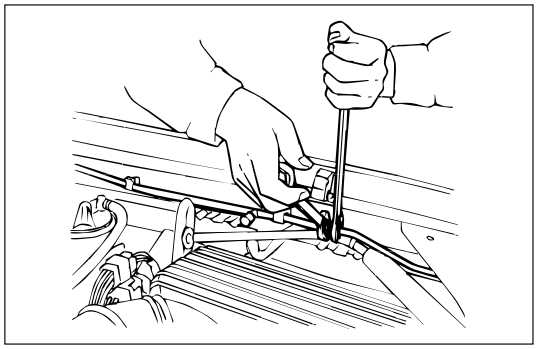

REPAIR OF REFRIGERANT LEAKS

Refrigerant Line Connections
Install new O-rings, if required. When disconnecting or connecting lines, use two wrenches to prevent the connecting portion from twisting or becoming damaged.

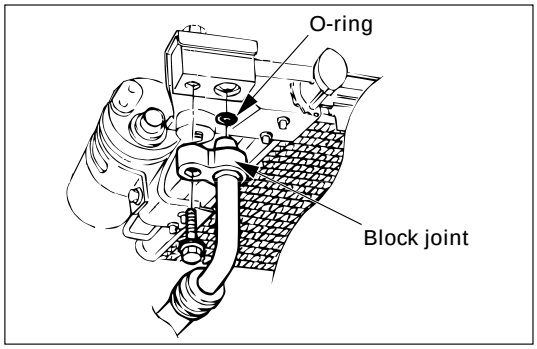

When connecting the refrigerant line at the block joint, securely insert the projecting portion of the joint portion into the connecting hole on the unit side and secure with a bolt.

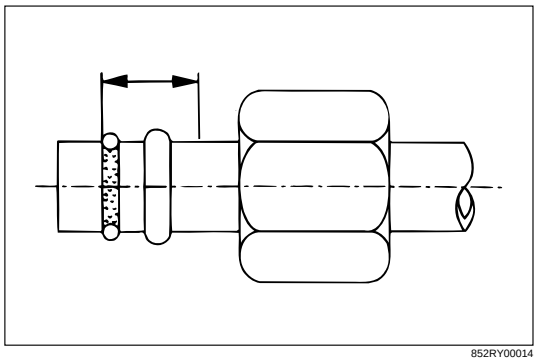

852RY00014

Apply specified compressor oil to the O-rings prior to connecting.

CAUTION:

Compressor (PAG) oil to be used varies according to compressor model. Be sure to apply oil specified for the model of compressor.

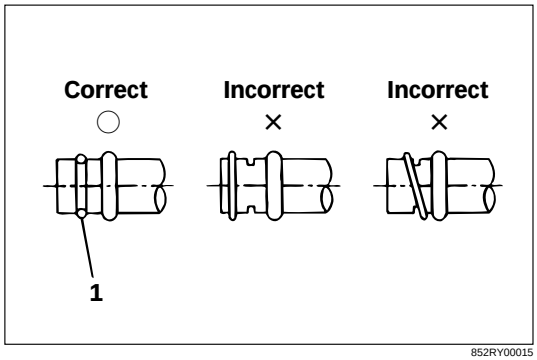

852RY00015

O-rings must be closely aligned with raised portion of refrigerant line.

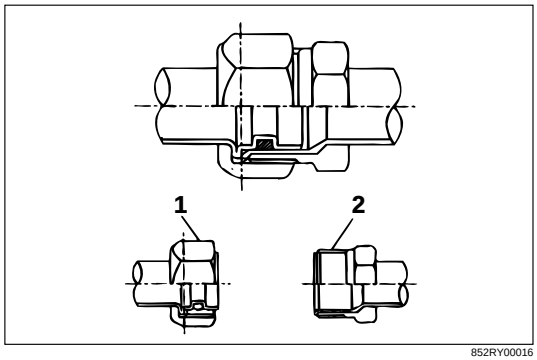

852RY00016

Insert nut into union. First tighten nut by hand as much as possible. Then, tighten nut to specified torque.

(Refer to “SERVICE INFORMATION” for Fixing Torque in section 00)

LEAK AT REFRIGERANT LINE CONNECTIONS

1) Check the torque on the refrigerant line fitting and, if too loose, tighten to the specified torque.
   - Use two wrenches to prevent twisting and damage to the Line.
   - Do not over tighten.
2) Perform a leak test on the refrigerant line fitting.
3) If the leak is still present, discharge and recover the refrigerant from the system.
4) Replace the O-rings.
   - O-rings cannot be reused. Always replace with new ones.
   - Be sure to apply specified compressor oil to the new O-rings.
5) Retighten the refrigerant line fitting to the specified torque.
   - Use two wrenches to prevent twisting and damage to the line.
6) Evacuate, charge and retest the system.

LEAK IN THE HOSE

If the compressor inlet or outlet hose is leaking, the entire hose must be replaced. Refrigerant hose must not be cut or spliced for repair.

1) Locate the leak.
2) Discharge and recover the refrigerant.
3) Remove the hose assembly.
   - Cap the open connections at once.
4) Connect the new hose assembly.
   - Use two wrenches to prevent twisting or damage to the hose fitting.
   - Tighten the hose fitting to the specified torque.
5) Evacuate, charge and test the system.

COMPRESSOR LEAKS

If leaks are located around the compressor shaft seal or shell, replace or repair the compressor.

RECOVERY, RECYCLING, EVACUATION AND CHARGING

Handling Refrigerant-134a (HFC-134a)

Air conditioning systems contain HFC-134a.
This is a chemical mixture which requires special handling procedures to avoid personal injury.

- Always wear safety goggles and protective gloves.
- Always work in a well-ventilated area. Do not weld or steam clean on or near any vehicle-installed air conditioning lines or components.
- If HFC-134a should come in contact with any part of the body, flush the exposed area with cold water and immediately seek medical help.
- If it is necessary to transport or carry any container of HFC-134a in a vehicle, do not carry it in the passenger compartment.
- If it is necessary to fill a small HFC-134a container from a large one, never fill the container completely. Space should always be allowed above the liquid for expansion.
- Keep HFC-134a containers stored below 40 °C (104°F).

WARNING

- **SHOULD HFC-134a CONTACT YOUR EYE(S), CONSULT A DOCTOR IMMEDIATELY.**
- **DO NOT RUB THE AFFECTED EYE(S). INSTEAD, SPLASH QUANTITIES OF FRESH COLD WATER OVER THE AFFECTED AREA TO GRADUALLY RAISE THE TEMPERATURE OF THE REFRIGERANT ABOVE THE FREEZING POINT.**
- **OBTAIN PROPER MEDICAL TREATMENT AS SOON AS POSSIBLE. SHOULD THE HFC-134a TOUCH THE SKIN, THE INJURY MUST BE TREATED THE SAME AS SKIN WHICH HAS BEEN FROSTBITTEN OR FROZEN.**

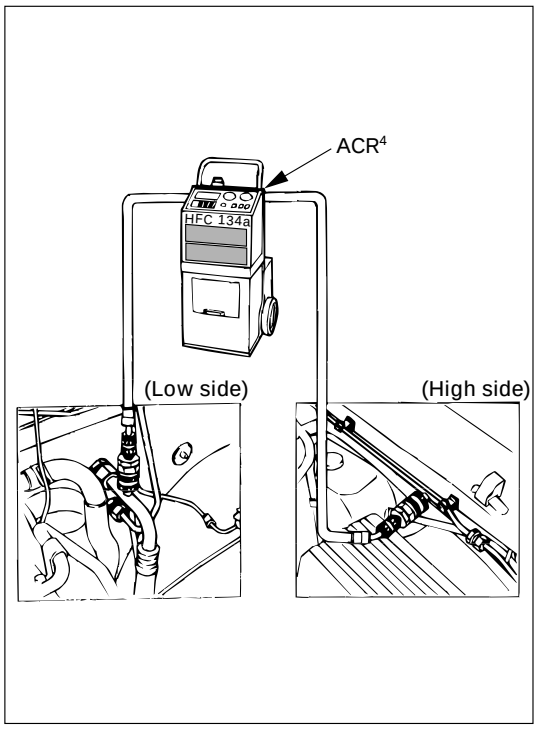

REFRIGERANT RECOVERY

The refrigerant must be discharged and recovered by using ACR4 (HFC-134a Refrigerant Recovery/ Recycling/ Recharging/ System) or equivalent before removing or mounting air conditioning parts.

ACR4 (115V 60Hz) : 5-8840-0629-0 (J-39500-A)
ACR4 (220-240V 50/60Hz)
: 5-8840-0630-0 (J-39500-220A)
ACR4 (220-240V 50/60Hz Australian model)
: 5-8840-0631-0 (J-39500-220ANZ)

1) Connect the high and low charging hoses of the ACR4 (or equivalent) as shown
2) Recover the refrigerant by following the ACR4 Manufacture's Instructions.
3) When a part is removed, put a cap or a plug on the connecting portion so that dust, dirt or moisture cannot get into it.

REFRIGERANT RECYCLING

Recycle the refrigerant recovered by ACR4 or equivalent. For the details of the actual operation, follow the steps in the ACR4 Manufacture's Instructions.

ACR4 (115V 60Hz) : 5-8840-0629-0 (J-39500-A)
ACR4 (220-240V 50/60Hz)
: 5-8840-0630-0 (J-39500-220A)
ACR4 (220-240V 50/60Hz Australian model)
: 5-8840-0631-0 (J-39500-220ANZ)

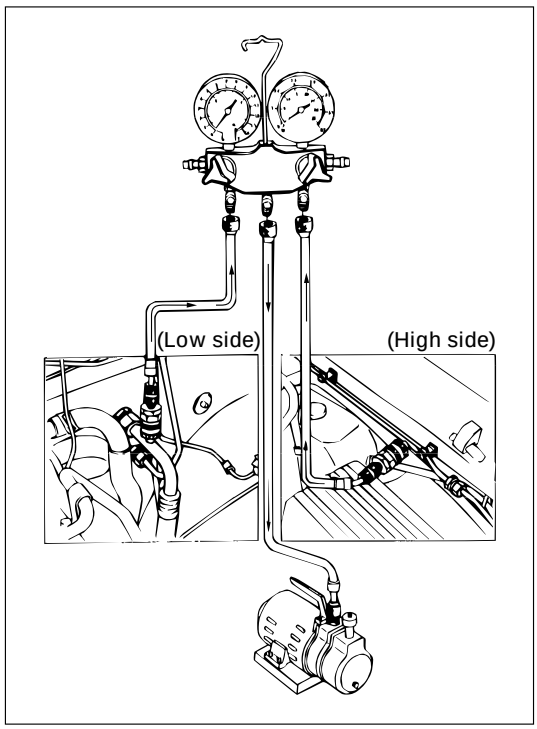

EVACUATION OF THE REFRIGERANT SYSTEM

NOTE:

Explained below is a method using a vacuum pump. Refer to ACR^4 (or equivalent) manufacture's instructions when evacuating the system with ACR^4 (or equivalent)

Air and moisture in the refrigerant will cause problems in the air conditioning system.
Therefore, before charging the refrigerant, be sure to evacuate air and moisture thoroughly from the system.

1) Connect the gauge manifold.
   - High-pressure valve (HI) – Discharge-side
   - Low-pressure valve (LOW) – Suction-side
2) Discharge and recover the refrigerant.
3) Connect the center hose of the gauge manifold set to the vacuum pump inlet.
4) Operate the vacuum pump, open shutoff valve and then open both hand valves.
5) When the low-pressure gauge indicates approx. 750 mmHg (30 inHg), continue the evacuation for 5 minutes or more.
6) Close both hand valves and stop the vacuum pump.
7) Check to ensure that the pressure does not change after 10 minutes or more.
   - If the pressure changes, check the system for leaks.
   - If leaks occur, retighten the refrigerant line connections and repeat the evacuation steps.
8) If no leaks are found, again operate the vacuum pump for 20 minutes or more, After confirming that the gauge manifold pressure is at 750 mmHg(30 inHg), close both hand valves.
9) Close positive shutoff valve.
   Stop the vacuum pump and disconnect the center hose from the vacuum pump.

CHARGING THE REFRIGERANT SYSTEM

There are various methods of charging refrigerant into the air conditioning system.
These include using ACR^4 (HFC-134a Refrigerant Recovery/ Recycling/ Recharging/ System) or equivalent and direct charging with a manifold gauge charging station.

ACR^4 (115V 60Hz) : 5-8840-0629-0 (J-39500-A)
ACR^4 (220-240V 50/60Hz)
: 5-8840-0630-0 (J-39500-220A)
ACR^4 (220-240V 50/60Hz Australian model)
: 5-8840-0631-0 (J-39500-220ANZ)

Charging procedure

- **ACR^4 (or equivalent) method**

For the charging of refrigerant recovery by ACR^4, follow the manufacture's instruction.

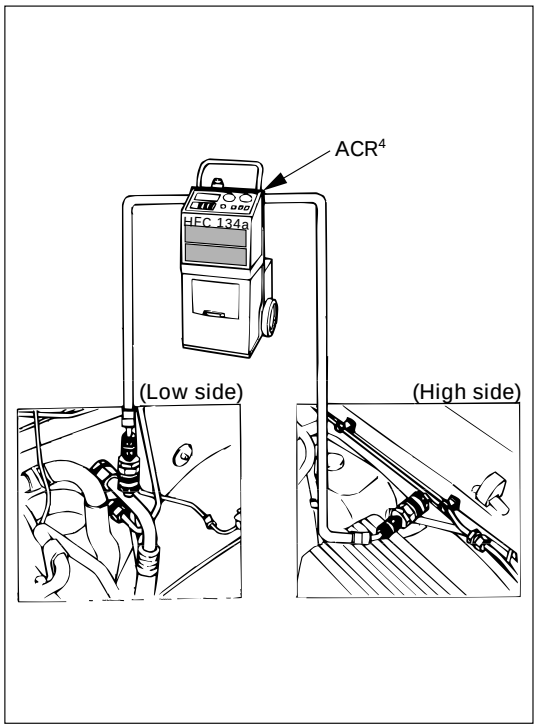

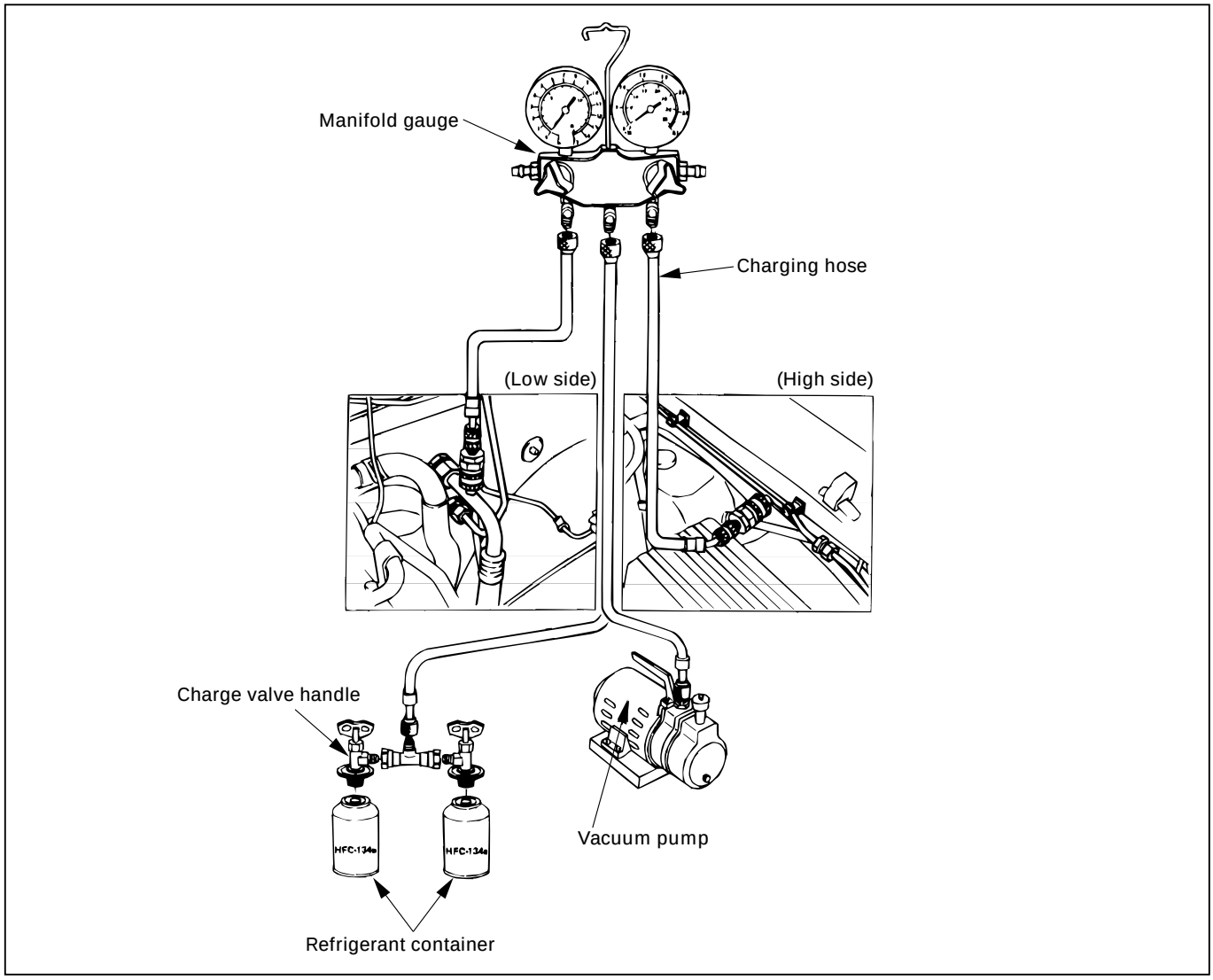

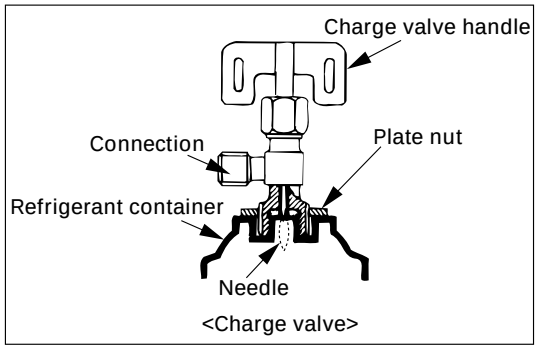

<Charge valve>

- **Direct charging with a manifold gauge charging station method**

Handling the charging valve handle when installing refrigerant container.

1) Before attaching the charge valve to the refrigerant container, turn the charge valve handle counterclockwise until the needle is fully retracted.
2) Turn the plate nut counterclockwise until it reaches its highest position relative to the charge valve.
3) Install the charge valve onto the refrigerant container.
4) Turn the plate nut clockwise and connect the center hose of the manifold gauge to the charge valve.
5) Tighten the plate nut sufficiently by hand. Then turn the charge valve handle clockwise to lower the needle and bore a hole in the refrigerant container.
6) Turn the charge valve handle counterclockwise to raise the needle. The refrigerant in the refrigerant container is charged into the air conditioning system by the operation of the manifold gauge.
   - Be absolutely sure not to reuse the emptied refrigerant container.

1) Make sure the evacuation process is correctly completed.
2) Connect the center-hose of the manifold gauge to the refrigerant container.
   - Turn the charge valve handle counterclockwise to purge the charging line and purge any air existing in the center-hose of the manifold gauge.
3) Open the low-pressure hand valve and charge the refrigerant about 200 g(0.44 lbs.).
   - Make sure the high-pressure hand valve is closed.
   - Avoid charging the refrigerant by turning the refrigerant container upside down.
4) Close the low-pressure hand valve of the manifold gauge.
   - Check to ensure that the degree of pressure does not charge.
5) Check the refrigerant leaks by using a HFC-134a leak detector.
   - If a leak occurs, repair the leak connection, and start all over again from the first step of evacuation.
6) If no leaks are found, open the low-pressure hand valve of the manifold gauge.Then continue charging refrigerant to the system.
   - When charging the system becomes difficult:
     (1) Run the engine at Idling and close the all vehicle doors.
     (2) A/C switch is “ON”.
     (3) Set the fan control knob (fan switch) to its highest position.

WARNING

BE ABSOLUTELY SURE NOT TO OPEN THE HIGH-PRESSURE HAND VALVE. SHOULD THE HIGH-PRESSURE HAND VALVE BE OPENED, THE HIGH-PRESSURE REFRIGERANT GAS WOULD FLOW BACKWARD, AND THIS MAY CAUSE THE REFRIGERANT CONTAINER TO BURST.

7) When the refrigerant container is emptied, use the following procedure to replace it with a new refrigerant container.
   (1) Close the low pressure hand valve.
   (2) Raise the needle upward and remove the charge valve.
   (3) Reinstall the charge valve to the new refrigerant container.
   (4) Purge any air existing in the center hose of the manifold gauge.

8) Charge the system to the specified amount and then close the low-pressure hand valve.

Refrigerant Amount	g(lbs.)
750 (1.65)	

DELPH1HD6/HT6	g(lbs.)
600 (1.32)	

- A fully charged system is indicated by the sight glass on the receiver/driver being free of any bubbles(Refer to “Reading Sight Glass”).
- Check the high and low pressure value of the manifold gauge.
- Check for refrigerant leaks by using a HFC-134a leak detector.

Immediately after charging refrigerant, both high and low pressures are slightly high and to the left of the gauge, but they settle down to the guide pressure valves as shown below:

- Ambient temperature; 25 ~ 30°C (77 ~ 86°F)
- Guide pressure
  High-pressure side;
  Approx. 1373 – 1863 kPa (14 – 19 kg·cm^2 / 199 – 270 PSI)
  Low-pressure side;
  Approx. 147 – 294 kPa (1.4 – 3.0 kg·cm^2 / 21 – 43 PSI)

9) Close the low pressure hand valve and charge valve of the refrigerant container.
10) Stop the air conditioning and the engine.
11) Disconnect the high and low pressure hoses from the manifold gauge fittings.

Reading Sight Glass

High and low pressure pipe temperature	The high pressure pipe is hot and the low pressure pipe is cold. There is a distinct difference in temperature between them.	The high pressure pipe is warm and the low pressure pipe is cool. There is no great difference in temperature between them.	There is little difference in temperature between the high pressure pipe and the low pressure pipe.	The high pressure pipe is hot and the low pressure pipe is slightly warm. There is a difference in temperature between them.
Sight glass condition	Almost transparent. A flow of bubbles can be seen, but they disappear when the throttle is opened. 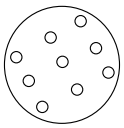	A flow of bubbles always can be seen. It appears sometimes transparent, and sometimes frothy. 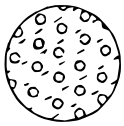	Something like fog faintly can be seen. 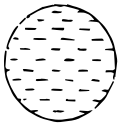	Even at idle with the fan at “HI” (with the window fully open), the bubbles cannot be seen. 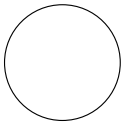
Air conditioner cycle condition	OK	NG (Not enough refrigerant)	NG (Almost no refrigerant)	NG (Too much refrigerant)

The sight glass provides accurate diagnosis only under the following conditions.
If the vehicle can be tested under these conditions, check the sight glass appearance and compare to the chart.

* Engine speed Idling
* A/C switch “ON”
* Blower fan operating at highest speed
* Air source selector lever at “RECIRC”
* Temperature control knob at coldest position
* Ambient temperature below 30°C (86°F) and humidity below 70% (See NOTE 1)
* High side pressure less than 1863 kPa (19 kg·cm^2 / 270 PSI) (See NOTE 2)

NOTE 1

If the vehicle cannot be moved to a testing location that meets these specifications, then the sight glass cannot be used for diagnosis. You must discharge and recover the refrigerant, then recharge the system with the specified amount of refrigerant. Then continue checking the system performance.

NOTE 2

If the high side pressure is greater than stated, the sight glass cannot be used for diagnosis. You must discharge and recover the refrigerant, then recharge the system with the specified amount of refrigerant. Then continue checking system performance.

Compressor Assembly and Associated Parts

6VD1/6VE1 (LHD)

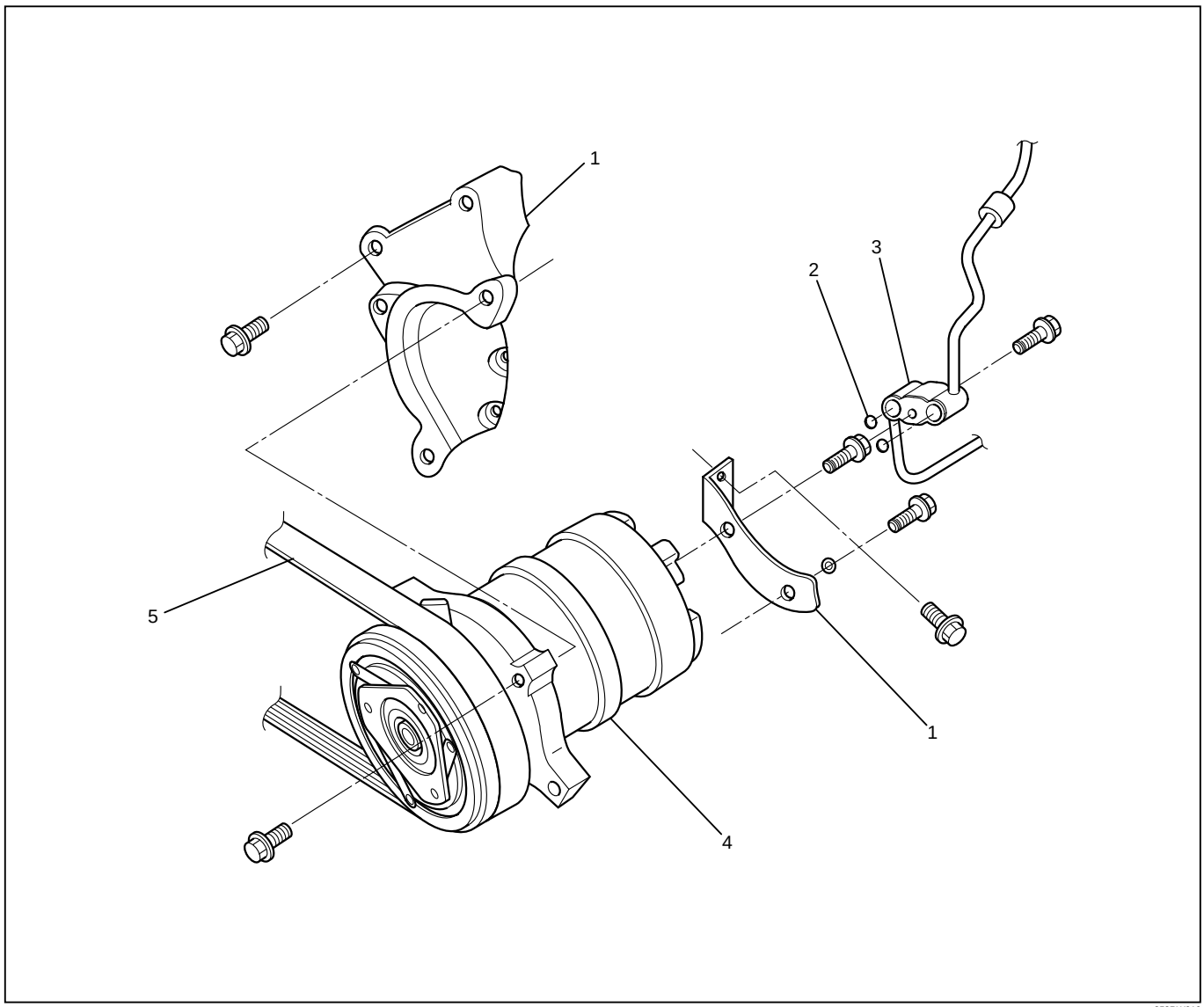

852RW010

Legend

1. Compressor Bracket
2. Seal Washer
3. Refrigerant Line Connector
4. Compressor
5. Serpentine Belt

Removal

1. Disconnect the battery ground cable.
2. Discharge and recover refrigerant
   - Refer to Refrigerant Recovery in this section.
3. Disconnect magnetic clutch harness connector.

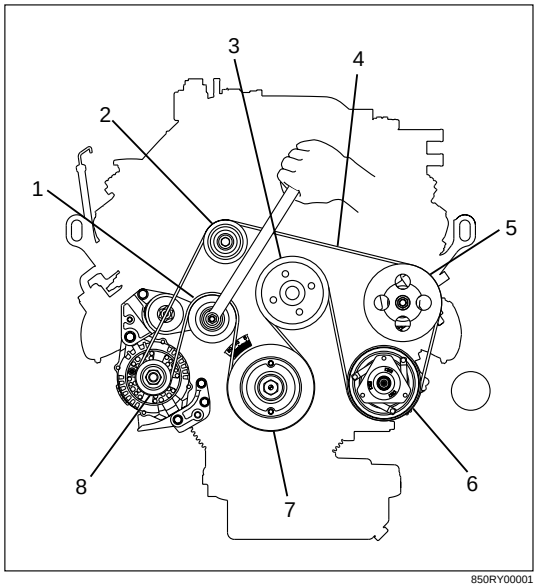

850RY00001

Legend

(1) Tensioner
(2) Idle Pulley
(3) Cooling Fun Pulley
(4) Serpentine Belt
(5) Power Steering Oil Pump
(6) Air Conditioner Compressor
(7) Crankshaft Pulley
(8) Generator

4. Remove serpentine belt.
   - Move serpentine belt tensioner to loose side using wrench then remove serpentine belt.
5. Disconnect refrigerant line connector.
   - When removing the line connector, the connecting part should immediately be plugged or capped to prevent foreign matter from being mixed into the line
6. Remove compressor.

Installation

1) Install compressor.
   - Tighten the compressor fixing bolts to the specified torque.

Compressor Fixing Torque	N·m (kg·m / lb·ft)
19 (1.9 / 14)	

2) Connect refrigerant line connector.
   - Tighten the refrigerant line connector fixing bolts to the specified torque

Refrigerant Line Bolt Torque	N·m (kg·m / lb·ft)
15 (1.5 / 11)	

   - O-rings cannot be reused. Always replace with new ones.
   - Be sure to apply new compressor oil to the O-rings when connecting refrigerant lines.
3) Install serpentine belt.
   - Move serpentine belt tensioner to loose side using wrench, then install serpentine belt to normal position.

COMPRESSOR

6VD1/6VE1 (RHD) & 6VD1 (LHD SAUDI/PHILIPPIN)

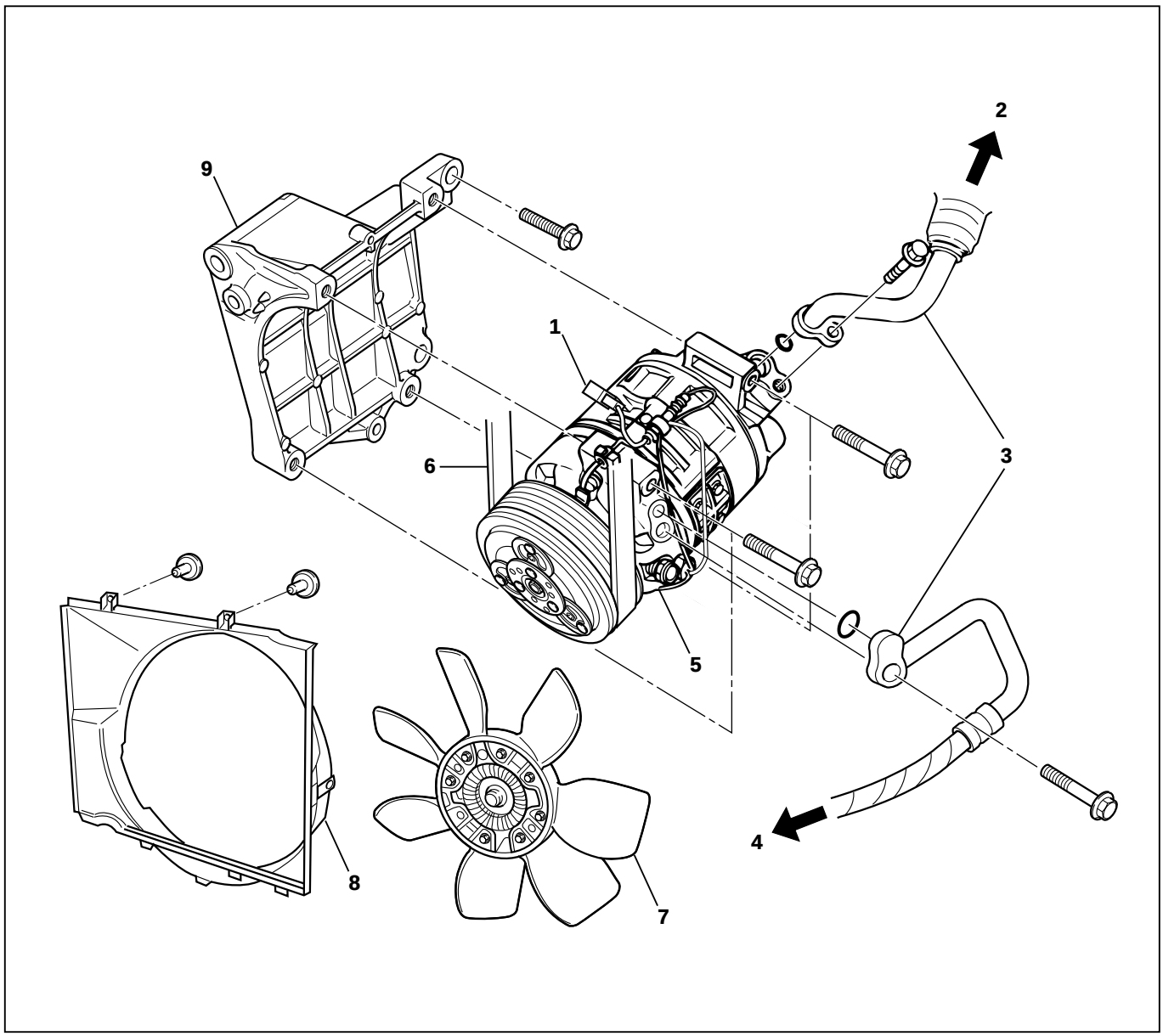

852RY00007

Legend

(1) Magnetic Clutch Harness Connector
(2) To Evaporator
(3) Refrigerant Line Connector
(4) To Condenser
(5) Compressor
(6) Serpentine Belt
(7) Radiator Fan
(8) Radiator Fan Shroud
(9) Compressor Bracket

Removal

1. Disconnect the battery ground cable.
2. Discharge and recover refrigerant.
   - Refer to Refrigerant Recovery in this section.
3. Disconnect magnetic clutch harness connector.
4. Remove radiator fan shroud.
5. Remove radiator fan.
   - When the fan is removed, be sure to tighten the fan fixing nuts temporarily to their original positions.
6. Remove serpentine belt.
   - Move serpentine belt tensioner to loose side using wrench, then remove serpentine belt.

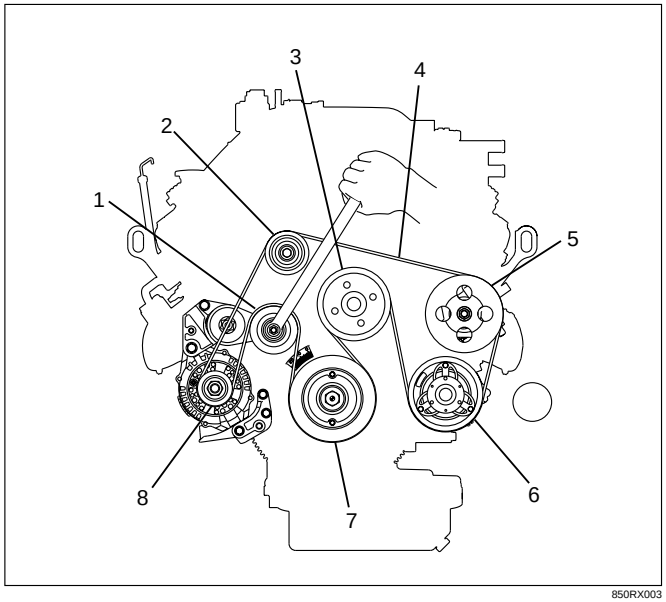

850RX003

Legend

(1) Tensioner
(2) Idle Pulley
(3) Cooling Fan Pulley
(4) Serpentine Belt
(5) Power Steering Oil Pump
(6) Air Conditioner Compressor
(7) Crankshaft Pulley
(8) Generator

7. Disconnect refrigerant line connector.
   - When removing the line connector, the connecting part should immediately be plugged or capped to prevent foreign matter from being mixed into the line.
8. Remove compressor.

Installation

1. Install compressor.
   - Tighten the compressor fixing bolts to the specified torque.

Compressor Fixing Torque	N·m (kg·m / lb·ft)
	19 (1.9 / 14)

2. Connect refrigerant line connector.
   - Tighten the refrigerant line connector fixing bolts to the specified torque.

Refrigerant Line Bolt Torque	N·m (kg·m / lb·ft)
	15 (1.5 / 11)

   - O-rings cannot be reused. Always replace with new ones.
   - Be sure to apply new compressor oil to the O-rings when connecting refrigerant lines.
3. Install serpentine belt.
   - Move serpentine belt tensioner to loose side using wrench, then install serpentine belt to normal position.
4. Install radiator fan.
5. Install radiator fan shroud.
6. Connect magnetic clutch harness connector.

4JG2 ENGINE

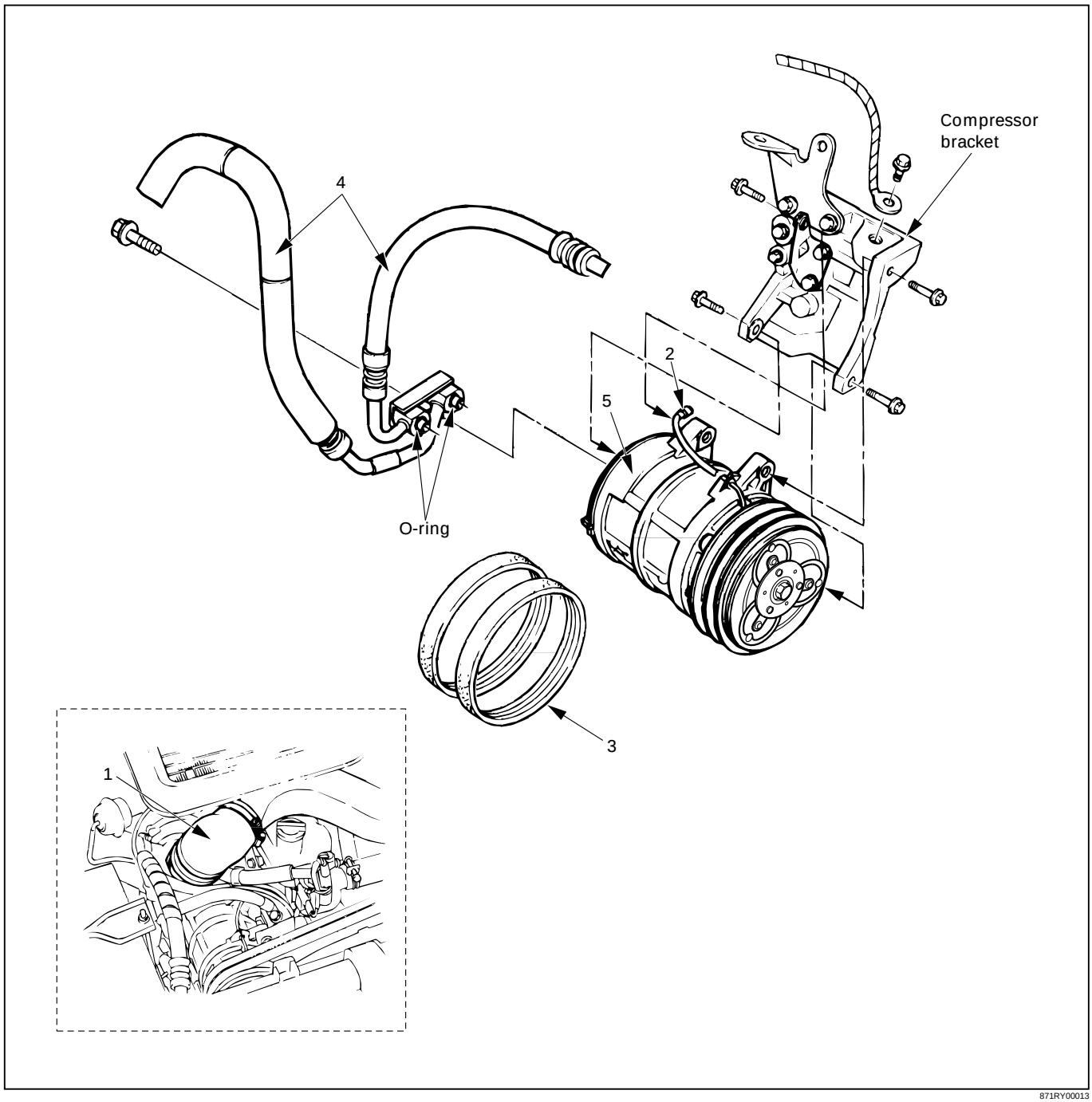

871RY00013

Removal Steps

1. Air duct
2. Magnetic clutch harness connector
3. Drive belt
4. Refrigerant line connector
5. Compressor

Installation Steps

To install, follow the removal steps in the reverse order.

REMOVAL

Preparation:

- Battery ground cable
- Discharge and recover refrigerant (Refer to "REFRIGERANT RECOVERY" in this section)

1. **Air Duct (Turbo to air cleaner)**
   Cover up the air duct connecting portion to prevent foreign materials from getting into the turbo and the air cleaner.
2. **Magnetic Clutch Harness Connector**
3. **Drive Belt**
   Loosen the power steering pump unit fixing bolts, then loosen the drive belt adjustment bolt and remove the drive belt.

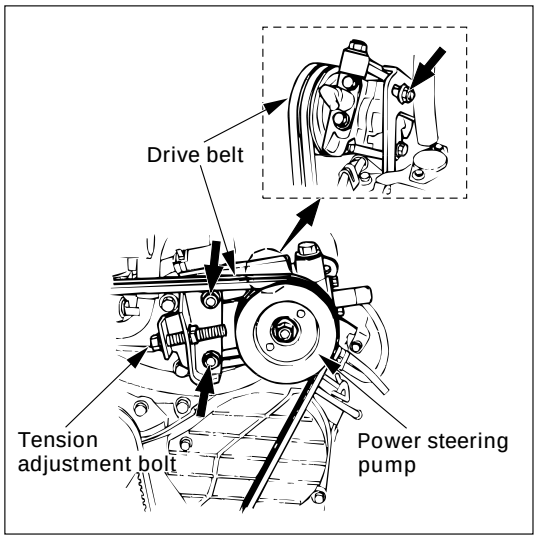

4. **Refrigerant Line Connector**
5. **Compressor**

INSTALLATION

5. **Compressor**
   Tighten the compressor fixing bolts to the specified torque.

Compressor Bolt Torque	N·m (kg·m / lb·ft)
	40 (4.1 / 30)

4. **Refrigerant Line Connector**
   - O-rings cannot be reused. Always replace with new ones.
   - Be sure to apply new compressor oil to the O-rings when connecting refrigerant lines.
   - Tighten the refrigerant line connector to the specified torque.

Refrigerant Line Bolt Torque	N·m (kg·m / lb·ft)
	27 (2.8 / 20)

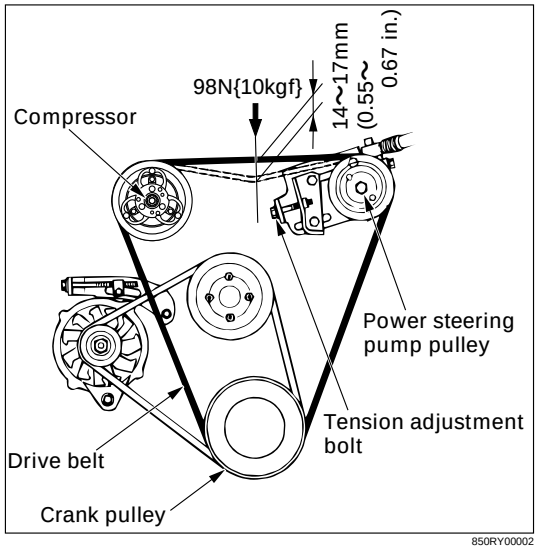

3. Drive Belt

1) Temporary tighten the power steering pump unit fixing bolts.
2) Push the drive belt when the force of 98N {10kgf}., and adjust the drive belt tension by tightening drive belt tension adjustment bolt, till the 14 ~ 17 mm (0.55 ~ 0.67 in) of deflection of the belt is obtained. Then tighten the power steering pump fixing bolts.

2. Magnetic Clutch Harness Connector

1. Air Duct (Turbo to air cleaner)

4JX1 ENGINE

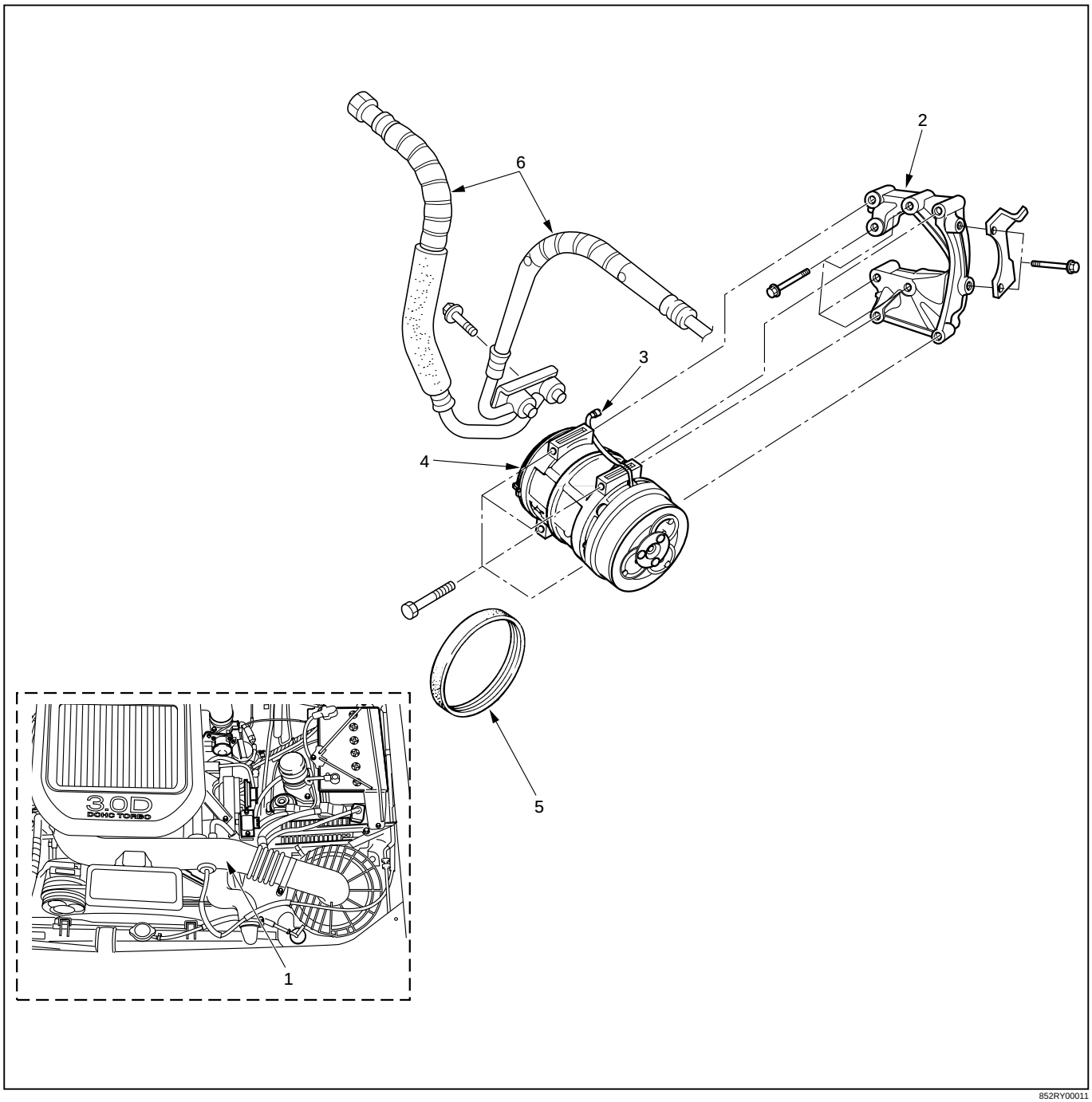

852RY00011

Removal Steps

1. Air duct
2. Compressor bracket
3. Magnetic clutch harness connector
4. Compressor
5. Drive belt
6. Refrigerant line connector

Installation Steps

To install, follow the removal steps in the reverse order.

REMOVAL

Preparation:

- Battery ground cable
- Discharge and recover refrigerant (Refer to "REFRIGERANT RECOVERY" in this section)

1. **Air Duct (Turbo to air cleaner)**
   Cover up the air duct connecting portion to prevent foreign materials from getting into the turbo and the air cleaner.
2. **Magnetic Clutch Harness Connector**
3. **Drive Belt**
   Loosen the power steering pump unit fixing bolts, then loosen the drive belt adjustment bolt and remove the drive belt.

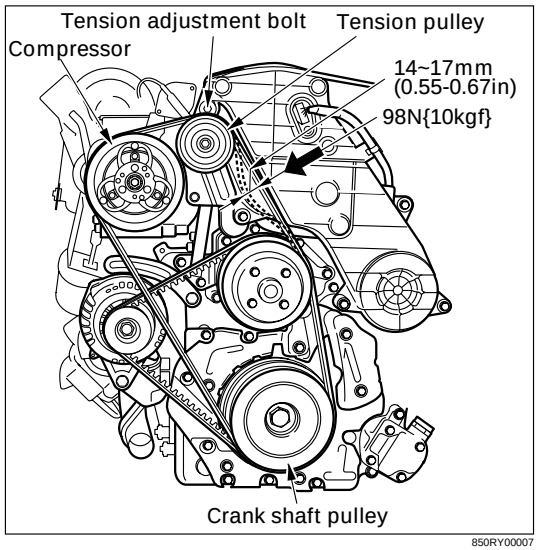

4. **Refrigerant Line Connector**
5. **Compressor**

INSTALLATION

5. **Compressor**
   Tighten the compressor fixing bolts to the specified torque.

Compressor Bolt Torque	N·m (kg·m / lb·ft)
	40 (4.1 / 30)

4. **Refrigerant Line Connector**
   - O-rings cannot be reused. Always replace with new ones.
   - Be sure to apply new compressor oil to the O-rings when connecting refrigerant lines.
   - Tighten the refrigerant line connector to the specified torque.

Refrigerant Line Bolt Torque	N·m (kg·m / lb·ft)
	27 (2.8 / 20)

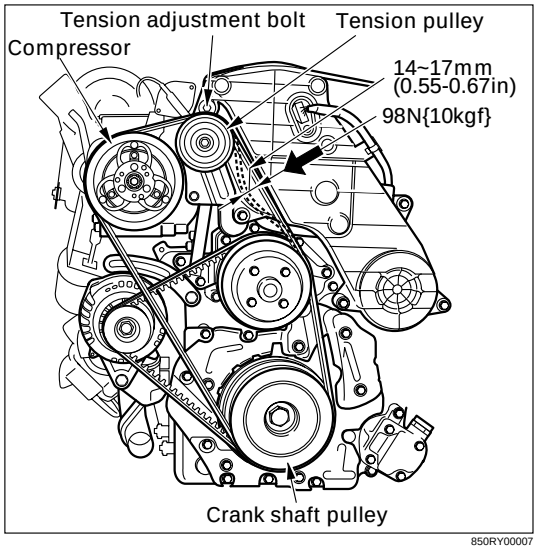

3. Drive Belt

1) Temporary tighten the power steering pump unit fixing bolts.
2) Push the drive belt when the force of 98N {10kgf}., and adjust the drive belt tension by tightening drive belt tension adjustment bolt, till the 14 ~ 17 mm (0.55 ~ 0.67 in) of deflection of the belt is obtained. Then tighten the power steering pump fixing bolts.

2. Magnetic Clutch Harness Connector

1. Air Duct (Turbo to air cleaner)

CONDENSER ASSEMBLY (LHD V6 WITHOUT CONDENSER FAN)

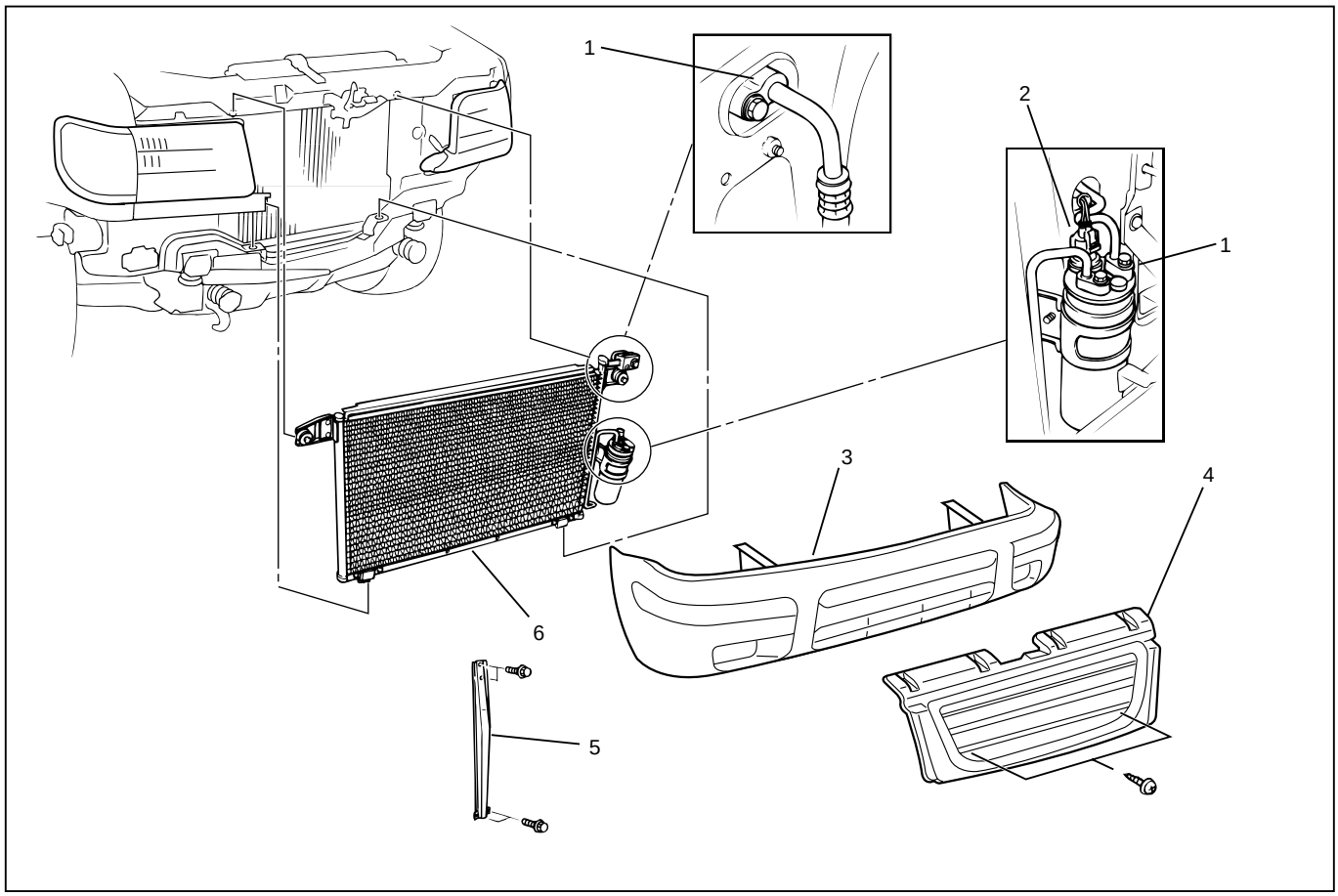

875RW001

Legend

(1) Refrigerant Line
(2) Pressure Switch Connector
(3) Front Bumper Assembly
(4) Radiator Grille
(5) Engine Hood Front End Stay
(6) Condenser Assembly

REMOVAL

1. Disconnect the battery ground cable.
2. Discharge and recover refrigerant.
   - Refer to Refrigerant Recovery in this section.
3. Remove radiator grille.
4. Remove front bumper assembly.
   - Refer to Bumpers in Body and Accessories section.
5. Remove engine hood front end stay.
6. Disconnect pressure switch connector.
7. Disconnect refrigerant line.
   - When removing the line connector, the connecting part should immediately be plugged or capped to prevent foreign matter from being mixed into the line.
8. Remove condenser assembly.
   - Handle with care to prevent damaging the condenser or radiator fin.
   - Be sure to apply new compressor oil to the O-rings when connecting the refrigerant line.

INSTALLATION

1. Install condenser assembly.
   - If installing a new condenser, be sure to add 30cc (1.0 fl. oz.) of new compressor oil to a new one.
   - Tighten the condenser fixing bolts to the specified torque.

Condenser Fixing Torque	N·m (kg·m / lb·in)
6 (0.6 / 52)	

2. Connect refrigerant line.
   - Tighten the inlet line connector fixing bolt to the specified torque.

Inlet Line Torque	N·m (kg·m / lb·ft)
15 (1.5 / 11)	

- Tighten the outlet line connector fixing bolt to the specified torque.

Outlet Line Torque	N·m (kg·m / lb·in)
6 (0.6 / 52)	

- O-rings cannot be reused. Always replace with new ones.
  - Be sure to apply new compressor oil to the O-rings when connecting the refrigerant line..
3. Connect pressure switch connector.
4. Install engine hood front end stay.
5. Install front bumper assembly.
6. Install radiator grille.

CONDENSER FAN MOTOR

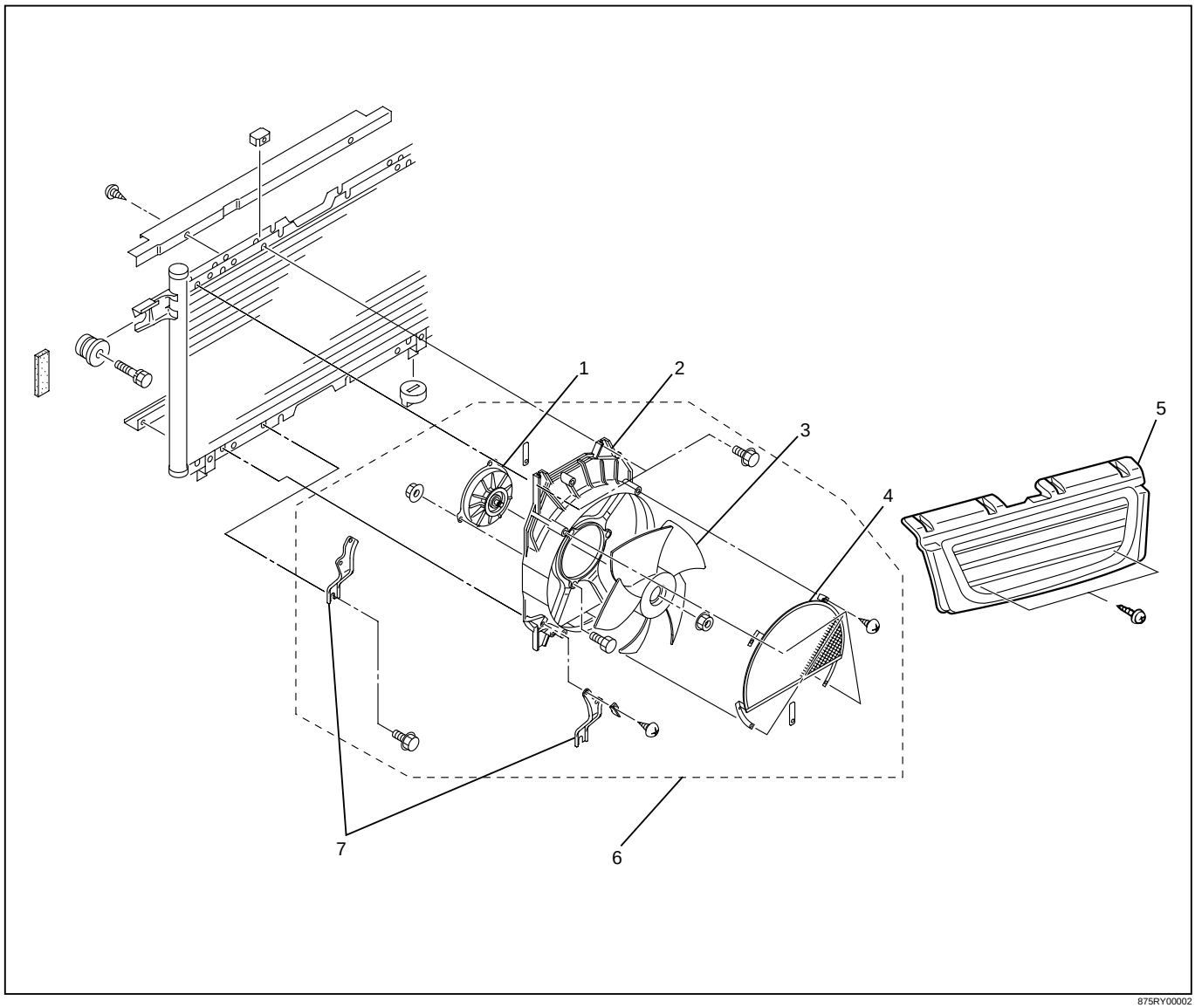

875RY00002

Removal Steps

(1) Condenser Fan Motor
(2) Fan Motor Shroud
(3) Motor Fan
(4) Condenser Unit Net
(5) Radiator Grille
(6) Condenser Fan Assembly
(7) Shroud Bracket

Removal

1. Disconnect the battery ground cable.
2. Discharge and recover refrigerant.
   - Refer to Refrigerant Recovery in this section.
3. Remove radiator grille.
4. Remove condenser fan assembly.
   - Disconnect the fan motor connector and remove the 4 fixing bolts.
5. Remove condenser unit net.
   - Remove the 4 fixing screws.
6. Remove motor fan.
7. Remove condenser fan motor.

Installation

To install, follow the removal steps in the reverse order, noting the following point.

1. Route the fan motor harness in its previous position and fix it securely with clip and bracket.

RECEIVER/DRIER

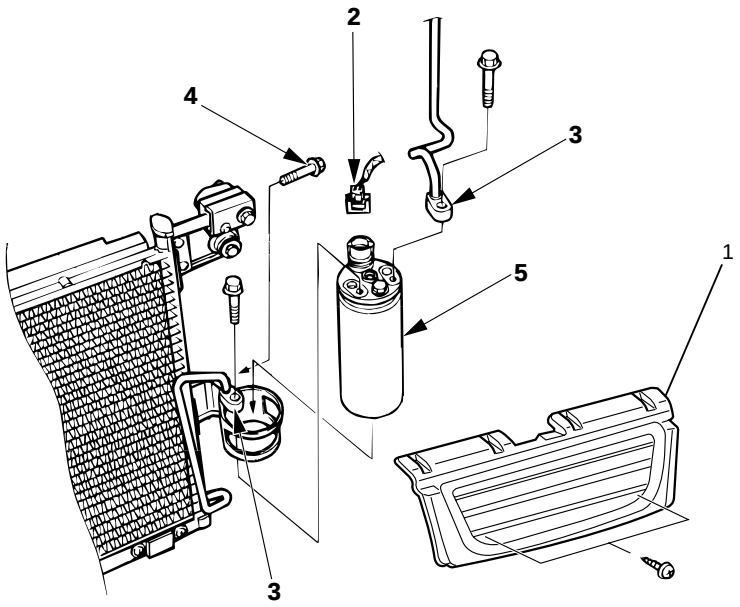

Removal Steps

1. Radiator grille
2. Pressure switch connector
3. Refrigerant line
4. Bracket bolt
5. Receiver/drier

Installation Steps

To install, follow the removal steps in the reverse order.

REMOVAL

Preparation:

- Disconnect the battery ground cable
- Discharge and recover refrigerant (Refer to "REFRIGERANT RECOVERY" in this section.)

1. **Radiator Grille**
2. **Pressure Switch Connector**
3. **Refrigerant Line**
   When removing the line connected part, the connecting part should immediately be plugged or capped to prevent foreign matter from being mixed into the line.
4. **Bracket Bolt**
5. **Receiver/Drier**
   Loosen the bolt, then, using care not to touch or bend the refrigerant line, carefully pull out the receiver/drier.

INSTALLATION

To install, follow the removal steps in the reverse order, noting the following points:

1. If installing a new receiver/drier, be sure to add 30 cc (0.8 Imp fl oz) of new compressor oil to a new one.
2. Put the receiver/drier in the bracket, and connect with the refrigerant line. Check that no excessive force is imposed on the line. Fasten the bracket bolt to the receiver/drier.
3. Tighten the line to the specified torque.

Refrigerant Line Bolt Torque	N·m (kg·m / lb·in)
6 (0.6 / 52)	

4. O-rings cannot be reused. Always replace with new ones.
5. Be sure to apply new compressor oil to the O-rings when connecting refrigerant line.

PRESSURE SWITCH

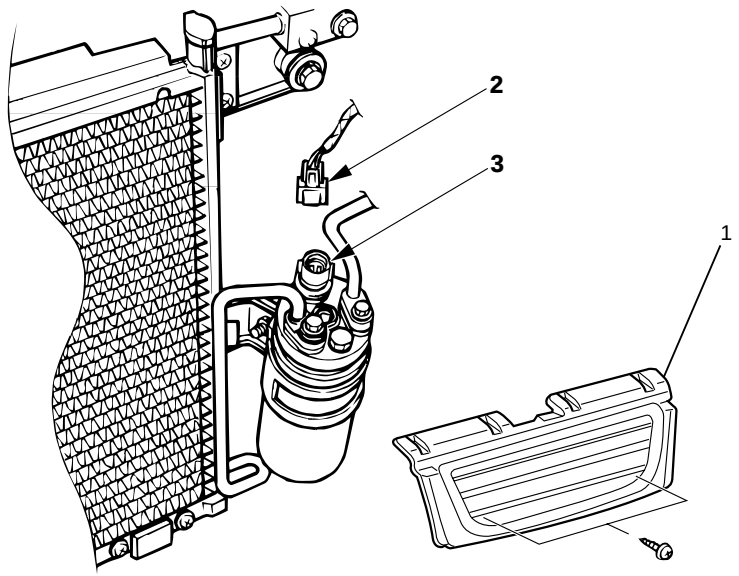

Removal Steps

1. Radiator grille
2. Pressure switch connector
3. Pressure switch

Installation Steps

To install, follow the removal steps in the reverse order.

REMOVAL

Preparation:

- Disconnect the battery ground cable
- Discharge and recover refrigerant (Refer to "REFRIGERANT RECOVERY" in this section.)

1. **Radiator Grille**
2. **Pressure Switch Connector**
3. **Pressure Switch**
   When removing the switch connected part, the connecting part should immediately be plugged or capped to prevent foreign matter from being mixed into the line.

INSTALLATION

To install, follow the removal steps in the reverse order, noting the following points:

1. O-ring cannot be reused. Always replace with a new one.
2. Be sure to apply new compressor oil to the O-ring when connecting pressure switch.
3. Tighten the pressure switch to the specified torque.

Pressure Switch Torque	N·m (kg·m / lb·in)
	13 (1.3 / 113)

Receiver/Drier and Associated Parts (LHD V6 without Condenser Fan)

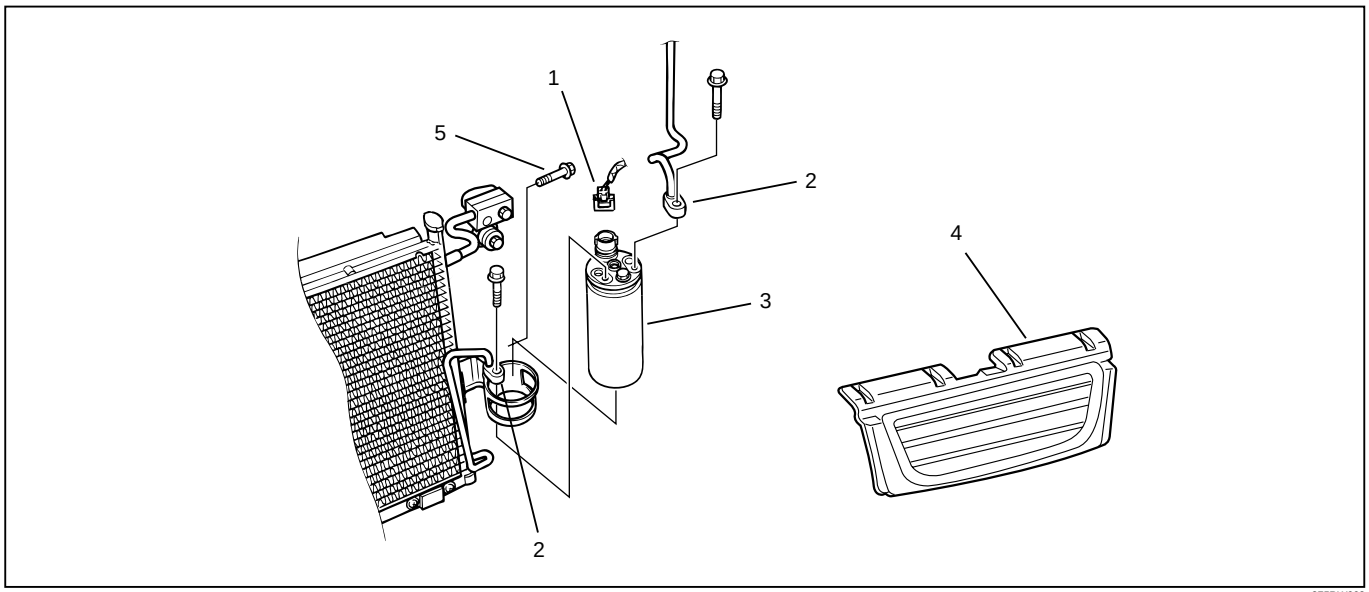

875RW002

Legend

1. Pressure Switch Connector
2. Refrigerant Line
3. Receiver / Drier
4. Radiator Grille
5. Bracket Bolt

REMOVAL

1. Disconnect the battery ground cable
2. Discharge and recover refrigerant
   - Refer to “REFRIGERANT RECOVERY” in this section.
3. Remove radiator grille.
4. Disconnect pressure switch connector.
5. Disconnect refrigerant line.
   - When removing the line connected part, the connecting part should immediately be plugged or capped to prevent foreign matter form being mixed in to line.
6. Remove bracket bolt.
7. Remove receiver/drier.
   - Loosen the bolt, then, using care not to touch or bend the refrigerant line, carefully pull out the receiver/drier.

INSTALLATION

To install, follow the removal steps in the reverse order, noting the following points:

1. If installing a new receiver/drier, be sure to add 30cc(1.0 fl. oz.) of new compressor oil to a new one.
2. Put the receiver/drier in the bracket and connect with the refrigerant line. Check that no excessive force is imposed on the line. Fasten the bracket bolt to the receiver/drier.
3. Tighten the refrigerant line to the specified torque.

Refrigerant Line Blot Torque	N·m (kg·m / lb·in)
6 (0.6 / 52)	

4. O-rings cannot be reused. Always replace with new ones.
5. Be sure to apply new compressor oil to the O-rings when connecting the refrigerant line.

Pressure Switch and Associated Parts

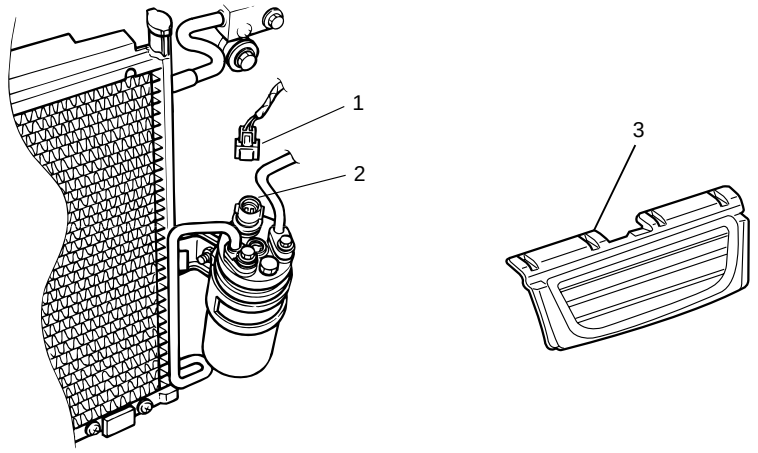

875RW005

Legend

1. Pressure switch connector
2. Pressure switch
3. Radiator Grille

REMOVAL

Preparation:

- Disconnect the battery ground cable
- Discharge and recover refrigerant (Refer to "REFRIGERANT RECOVERY" in this section.)

1. **Radiator Grille**
2. **Pressure Switch Connector**
3. **Pressure Switch**
   When removing the switch connected part, the connecting part should immediately be plugged or capped to prevent foreign matter from being mixed into the line.

INSTALLATION

To install, follow the removal steps in the reverse order, noting the following points:

1. O-ring cannot be reused. Always replace with a new one.
2. Be sure to apply new compressor oil to the O-ring when connecting pressure switch.
3. Tighten the pressure switch to the specified torque.

Pressure Switch Torque	N·m (kg·m / lb·in)
13 (1.3 / 113)	

EVAPORATOR ASSEMBLY

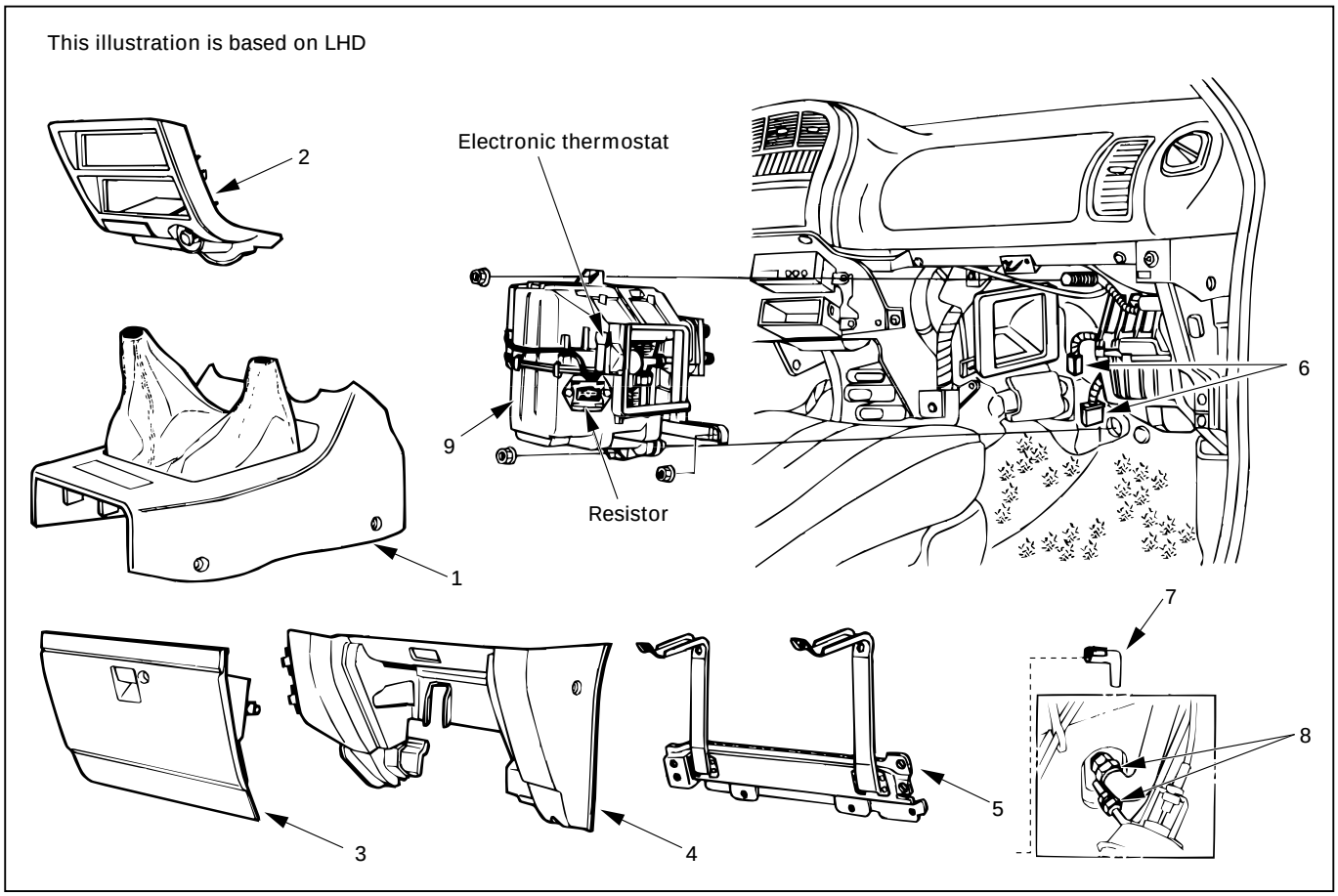

850RW00001

Removal Steps

1. Front console assembly
2. Lower cluster assembly
3. Glove box
4. Instrument panel passenger lower cover assembly
5. Passenger knee bolster reinforcement assembly
6. Resistor and electronic thermostat connector
7. Drain hose
8. Refrigerant line
9. Evaporator assembly

Installation Steps

To install, follow the removal steps in the reverse order.

REMOVAL

Preparation:

- Disconnect the battery ground cable
- Discharge and recover refrigerant (Refer to "REFRIGERANT RECOVERY" in this section.)

1. **Front Console Assembly**
2. **Lower Cluster Assembly**
3. **Glove Box**
4. **Instrument Panel Passenger Lower Cover Assembly**
5. **Passenger Knee Bolster Reinforcement Assembly**
   - Refer to Section 10 "BODY" for INSTRUMENT PANEL ASSEMBLY removal procedure.
6. **Resistor and Electronic Thermostat Connector**

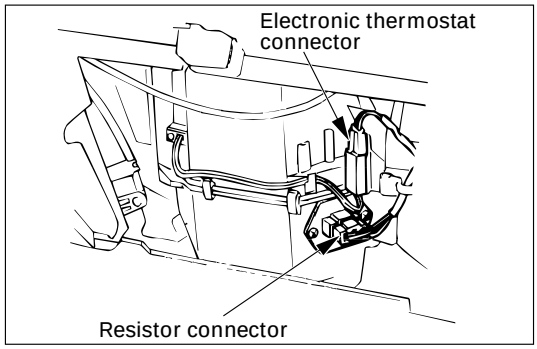

7. **Drain Hose**
8. **Refrigerant Line**
   - Use a back-up wrench when disconnecting and reconnecting the refrigerant lines.
   - When removing the refrigerant line connected part, the connecting part should immediately be plugged or capped to prevent foreign matter from being mixed into the line.
9. **Evaporator Assembly**

INSTALLATION

To install, follow the removal steps in the reverse order, noting the following points:

1. To install a new evaporator assembly, add 50cc (1.4 Imp fl oz) of new compressor oil to a new core.
2. Tighten the refrigerant outlet line to the specified torque.

Outlet Line Torque	N·m (kg·m / lb·ft)
25 (2.5 / 18)	

3. Tighten the refrigerant inlet line to the specified torque.

Inlet Line Torque	N·m (kg·m / lb·ft)
15 (1.5 / 11)	

4. O-rings cannot be reused. Always replace with new ones.
5. Be sure to apply new compressor oil to the O-rings when connecting lines.

EVAPORATOR CORE AND/OR EXPANSION VALVE

This illustration is based on LHD

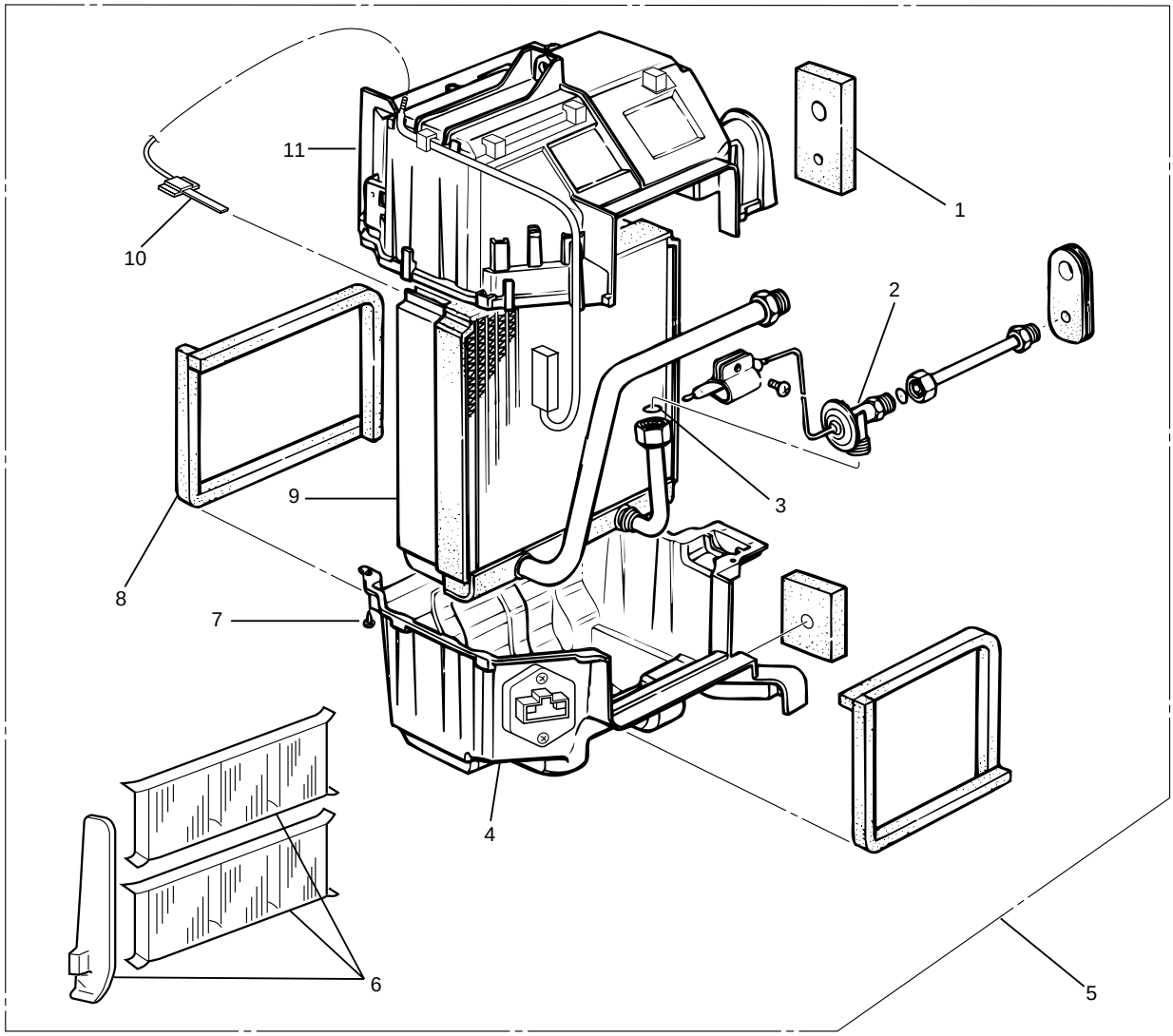

874RY00012

Legend

(1) Lining
(2) Expansion Valve
(3) O-ring
(4) Lower Case
(5) Evaporator Assembly
(6) Pollen Filter
(7) Attaching Screw
(8) Lining
(9) Evaporator Core
(10) Electronic Thermostat
(11) Upper Case

Removal

1. Disconnect the battery ground cable.
2. Discharge and recover refrigerant.
   - Refer to Refrigerant Recovery in this section.
3. Remove evaporator assembly.
   - Refer to Evaporator Assembly in this section.
4. Remove pollen filter.
5. Pull the sensor from the evaporator assembly.
6. Remove attaching screw.
7. Remove upper case.
8. Remove lower case.
   - Slit the case parting face with a knife since the lining is separated when removing the evaporator.

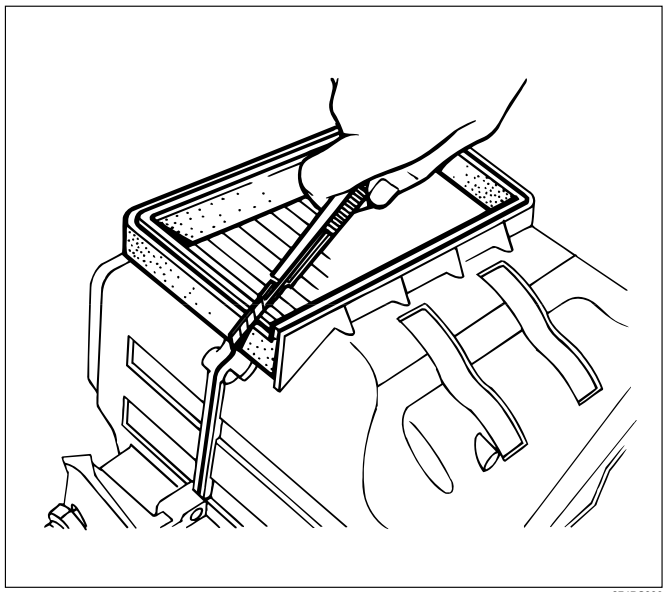

874RS006

- Lift to remove the upper case.

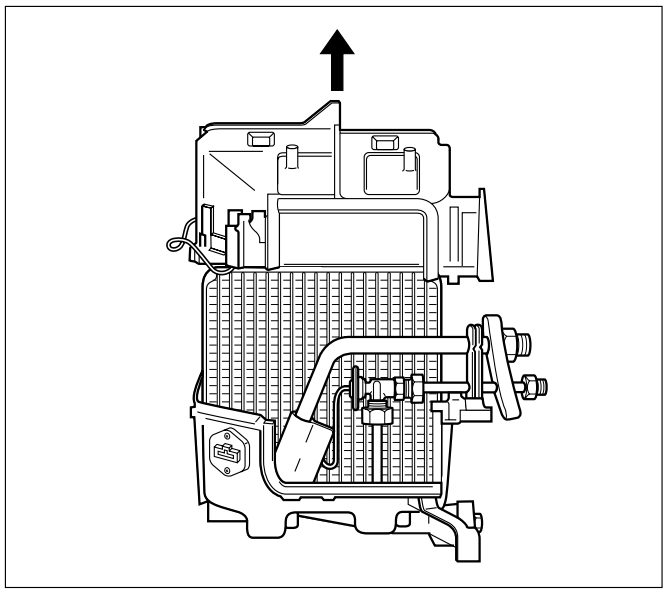

874RY00005

9. Remove evaporator core.

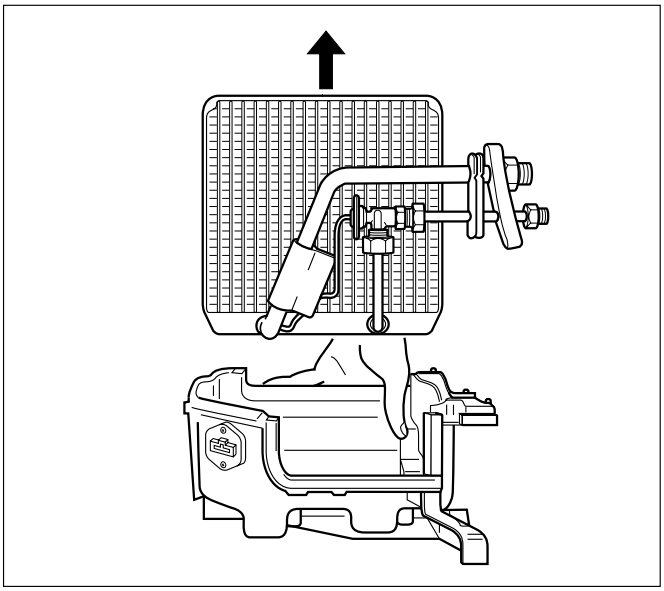

874RY00006

10. Remove expansion valve.
    - Tear off the insulator carefully.
    - Use a back-up wrench when disconnecting all refrigerant pipes.

Installation

To install, follow the removal steps in the reverse order, noting the following points:

1. The sensor is installed on the core with the clip.
2. The sensor must not interfere with the evaporator core.
3. When installing the new evaporator core, install the thermo sensor (2) to the evaporator core (1) specified position with the clip in the illustration.

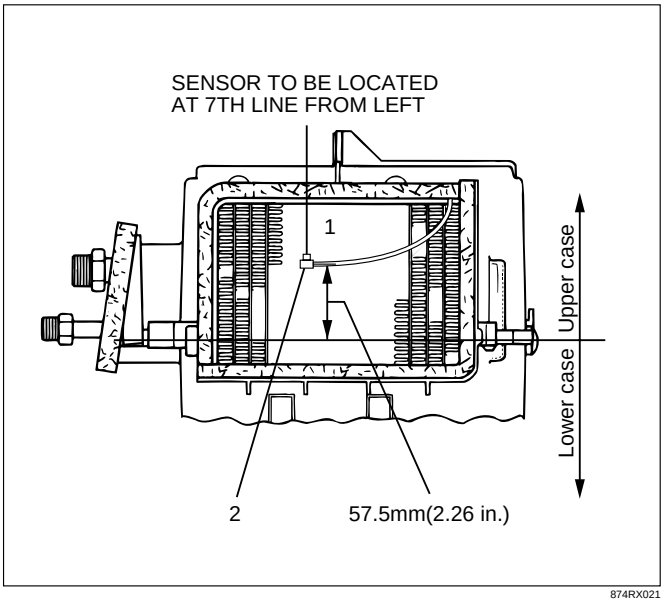

874RX021

4. O-rings cannot be reused, Always replace with new ones.
5. Be sure to apply new compressor oil to the O-rings when connecting lines.
6. Be sure to install the sensor and the insulator on the place where they were before.
7. To install a new evaporator core, add 50cc (1.7 fl. oz.) of new compressor oil to the new core.
8. Tighten the refrigerant lines to the specified torque. Refer to Main Data and Specifications for Torque Specifications in this section.
9. Apply an adhesive to the parting face of the lining when assembling the evaporator assembly.

ELECTRONIC THERMOSTAT

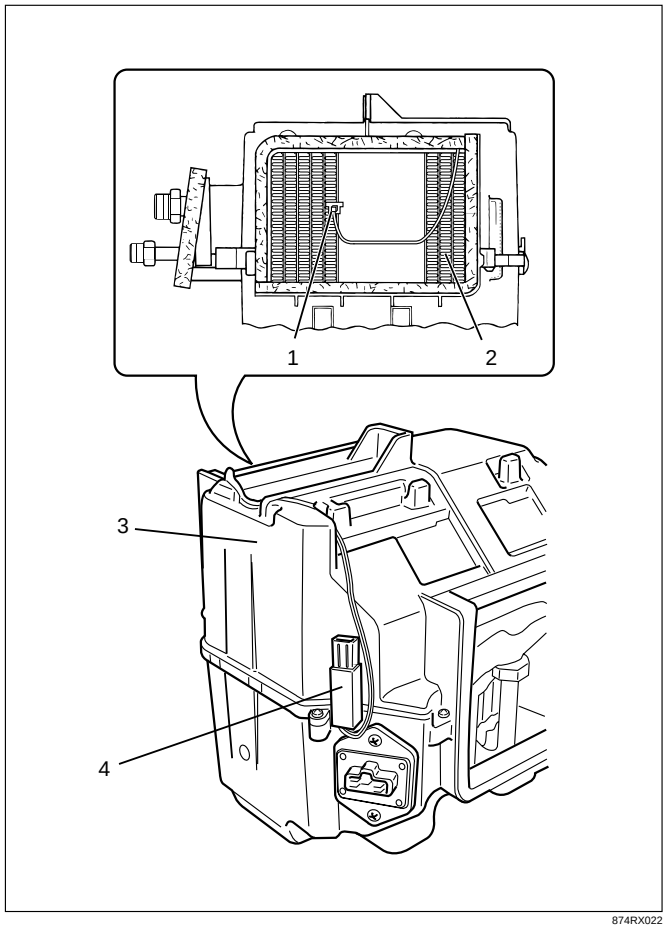

874RX022

Legend

(1) Thermo Sensor
(2) Evaporator Core
(3) Evaporator
(4) Thermostat Unit

Removal

1. Disconnect the battery ground cable.
2. Discharge and recover refrigerant.
   - Refer to Refrigerant Recovery in this section.
3. Remove evaporator assembly.
   - Refer to Evaporator Assembly removal procedure in this section.
4. Remove electronic thermostat.
   - Pull the sensor from the evaporator assembly.

Installation

To install, follow the removal steps in the reverse order, noting the following points.

1. Install the thermostat sensor to the evaporator core specified position with the clip.
2. The sensor is installed on the core with the clip and it must not interfere with the core.

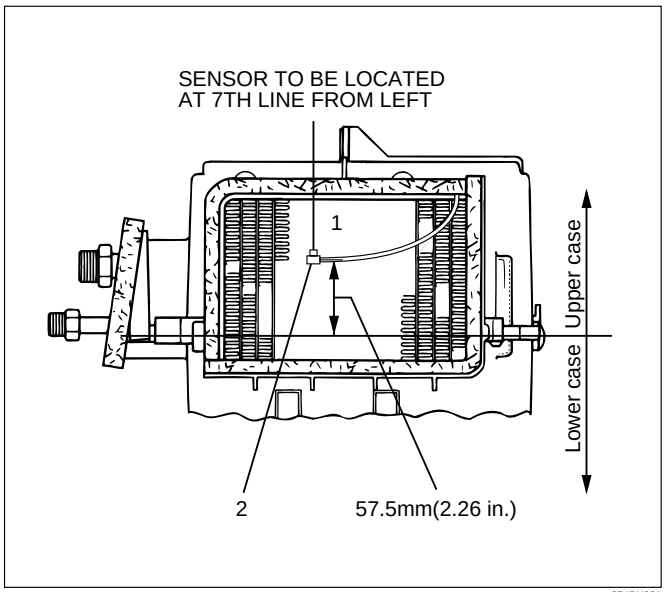

874RX021

A/C SWITCH AND ILLUMINATION BULB

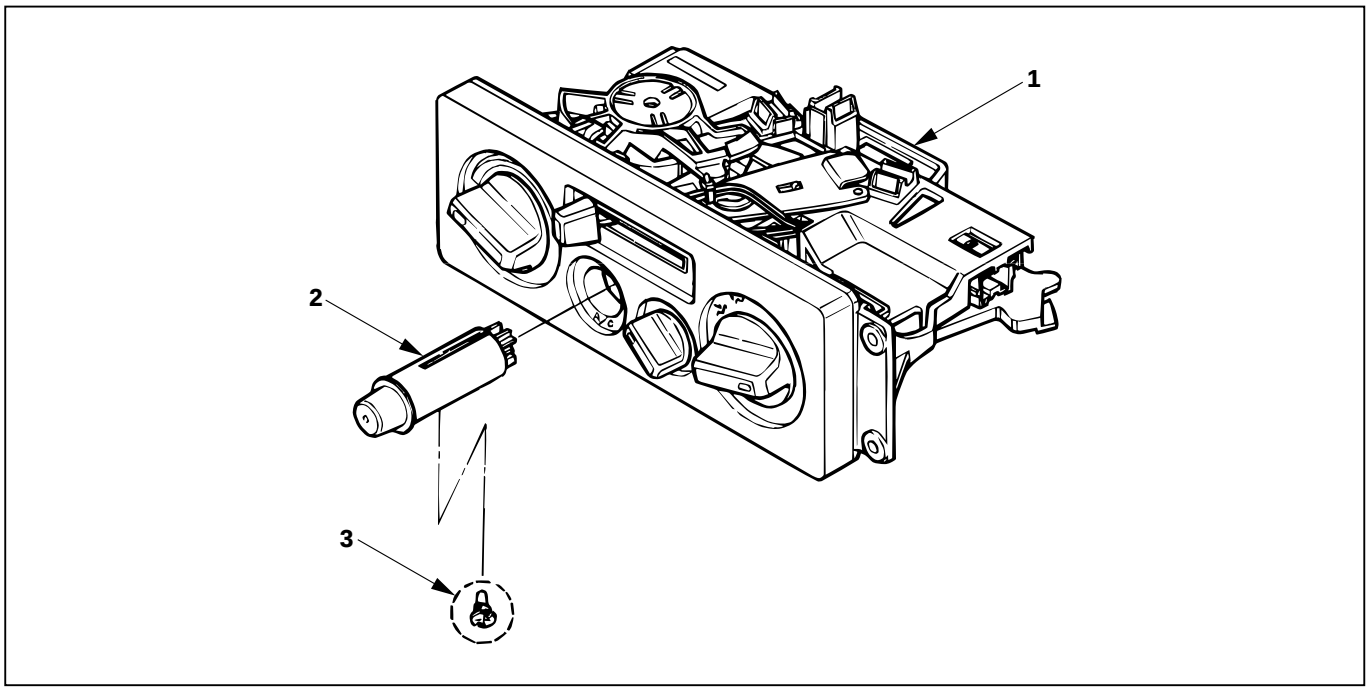

Removal Steps

1. Control lever assembly
2. A/C switch
3. Illumination bulb

Installation Steps

To install, follow the removal steps in the reverse order.

REMOVAL

Preparation:

Disconnect the battery ground cable

1. **Control Lever Assembly**
   Refer to Section 1A "CONTROL LEVER ASSEMBLY" removal procedure.
2. **A/C Switch**
   Raise up the catch portion of the switch and remove the switch while pushing it toward the outside.

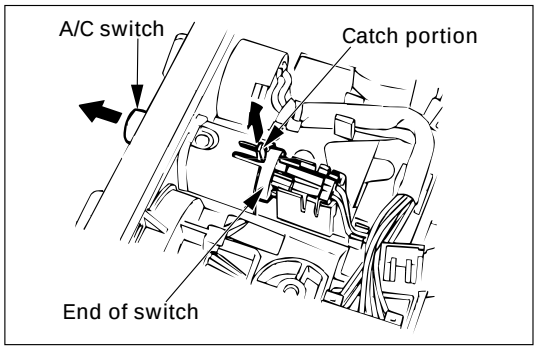

3. **Illumination Bulb**
   Turn the illumination bulb counterclockwise to remove.

INSTALLATION

To install, follow the removal steps in the reverse order.

REFRIGERANT LINE

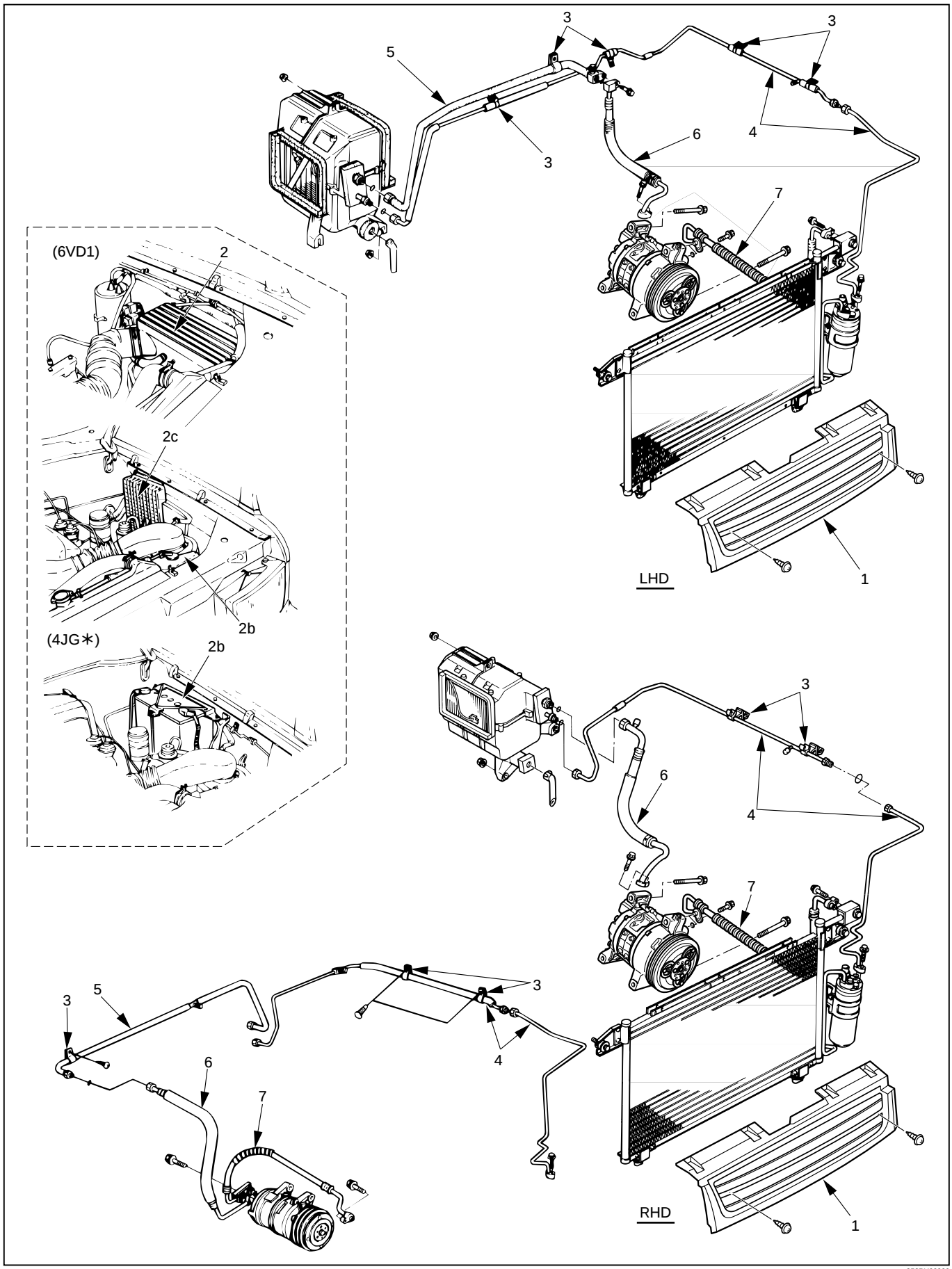

Removal Steps

1. Radiator grille
2. Air cleaner
2a. Dust
2b. Battery and reserver tank
2c. Air cleaner cover
3. Clip and clamp
4. Liquid line (High-pressure pipe)
5. Suction line (Low-pressure pipe)
6. Suction line (Low-pressure hose)
7. Discharge line (High-pressure hose)

Installation Steps

To install, follow the removal steps in the reverse order.

REMOVAL

Preparation:

- Disconnect the battery ground cable
- Discharge and recover refrigerant (Refer to "REFRIGERANT RECOVERY" in this section.)

1. Radiator Grille

2. Air Cleaner

2a. Duct

2b. Battery and Reserver Tank

2c. Air Cleaner Cover

3. Clip and Clamp

4. Liquid Line (High-pressure pipe)

5. Suction Line (Low-pressure pipe)

6. Suction Line (Low-pressure hose)

7. Discharge Line (High-pressure hose)

- Use a back-up wrench when disconnecting and reconnecting the refrigerant lines.
- When removing the refrigerant line connecting part, the connecting part should immediately be plugged or capped to prevent foreign matter from being mixed into the line.

INSTALLATION

To install, follow the removal steps in the reverse order, noting the following points:

1. O-rings cannot be reused. Always replace new ones.
2. Be sure to apply compressor oil to the O-rings when connecting refrigerant lines.
3. Tighten the refrigerant line to the specified torque. (Refer to "SERVICE INFORMATION" for FIXING TORQUE in section 00.)

REAR COOLER PARTS

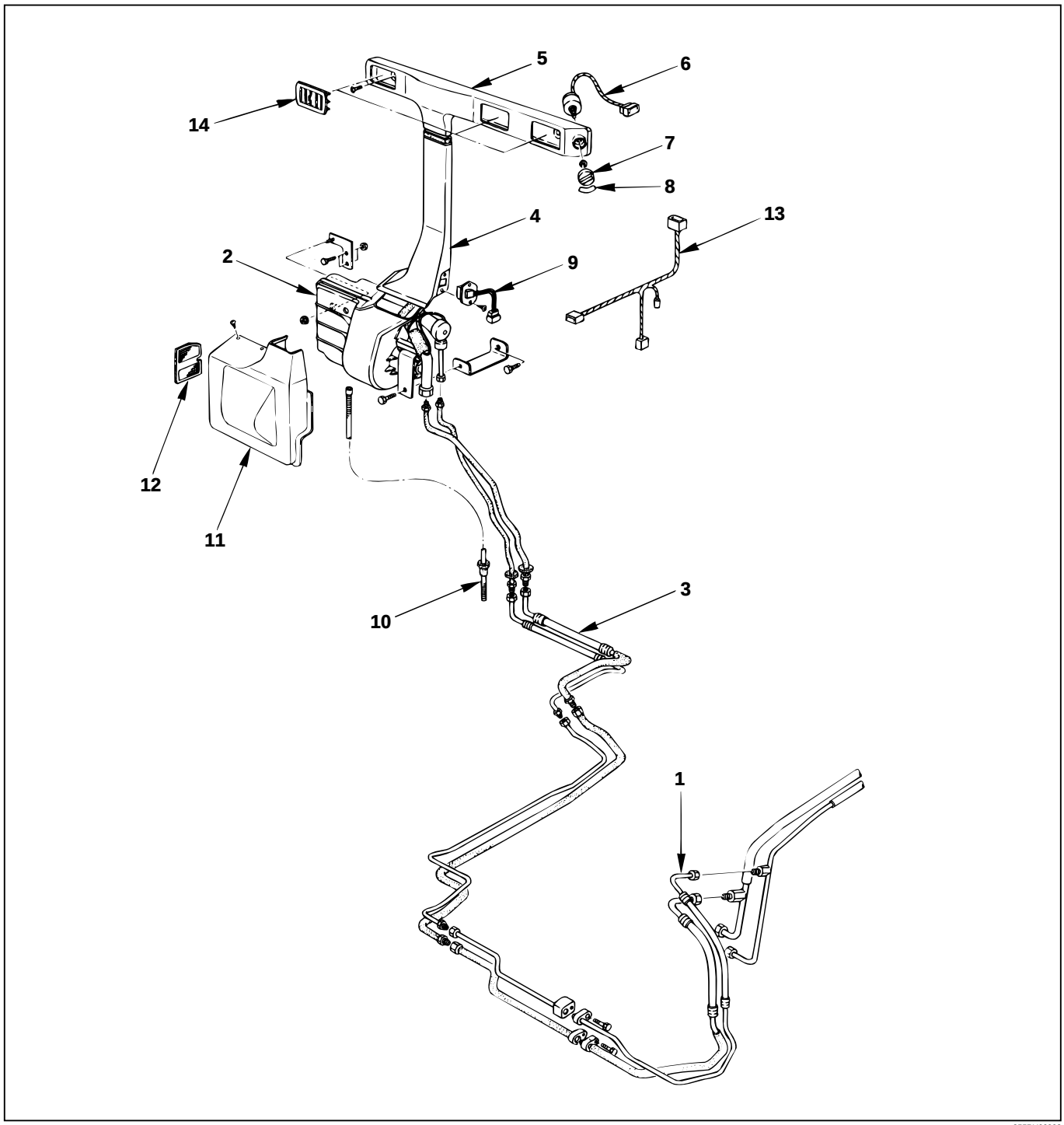

855RY00002

Legend

(1) Liquid Line (high pressure pipe)
(2) Cooling Unit
(3) Suction Line (low pressure pipe)
(4) Duct Assembly
(5) Duct Assembly
(6) Switch
(7) Knob
(8) Panel
(9) Resistor
(10) Drain Hose
(11) Cover Assembly
(12) Filter
(13) Wire Harness
(14) Grille Assembly

REAR COOLER PARTS (ROOF DUCT TYPE)

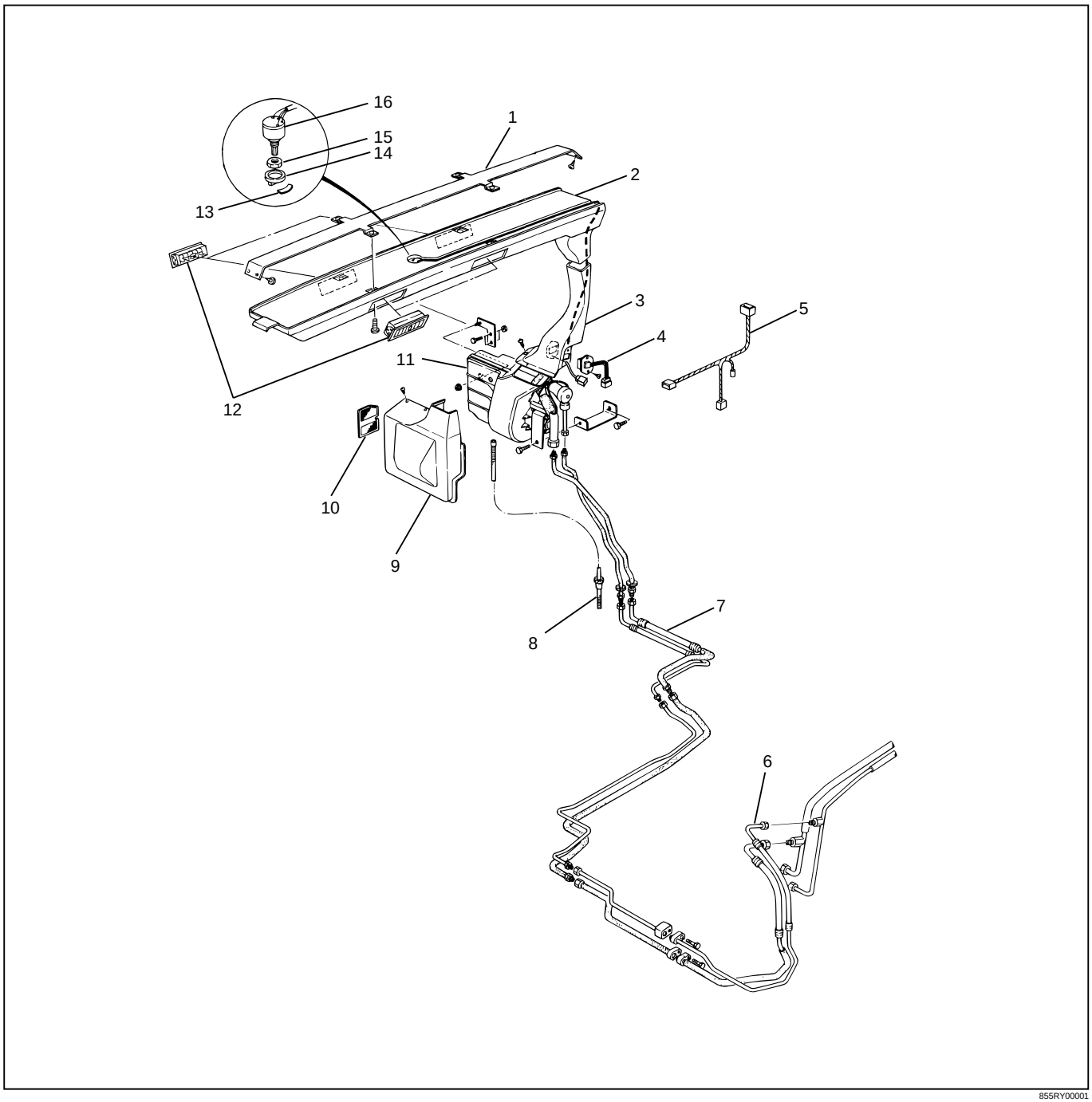

855RY00001

Legend

(1) Roof Duct Bracket
(2) Roof Duct
(3) Lower Duct
(4) Resistor
(5) Wire Harness
(6) Liquid Line (high pressure pipe)
(7) Suction Line (low pressure pipe)
(8) Drain Hose
(9) Cover Assembly
(10) Filter
(11) Cooling Unit
(12) Grille Assembly
(13) Panel
(14) Knob
(15) Nut
(16) Fan Control Switch

WIRING DIAGRAM

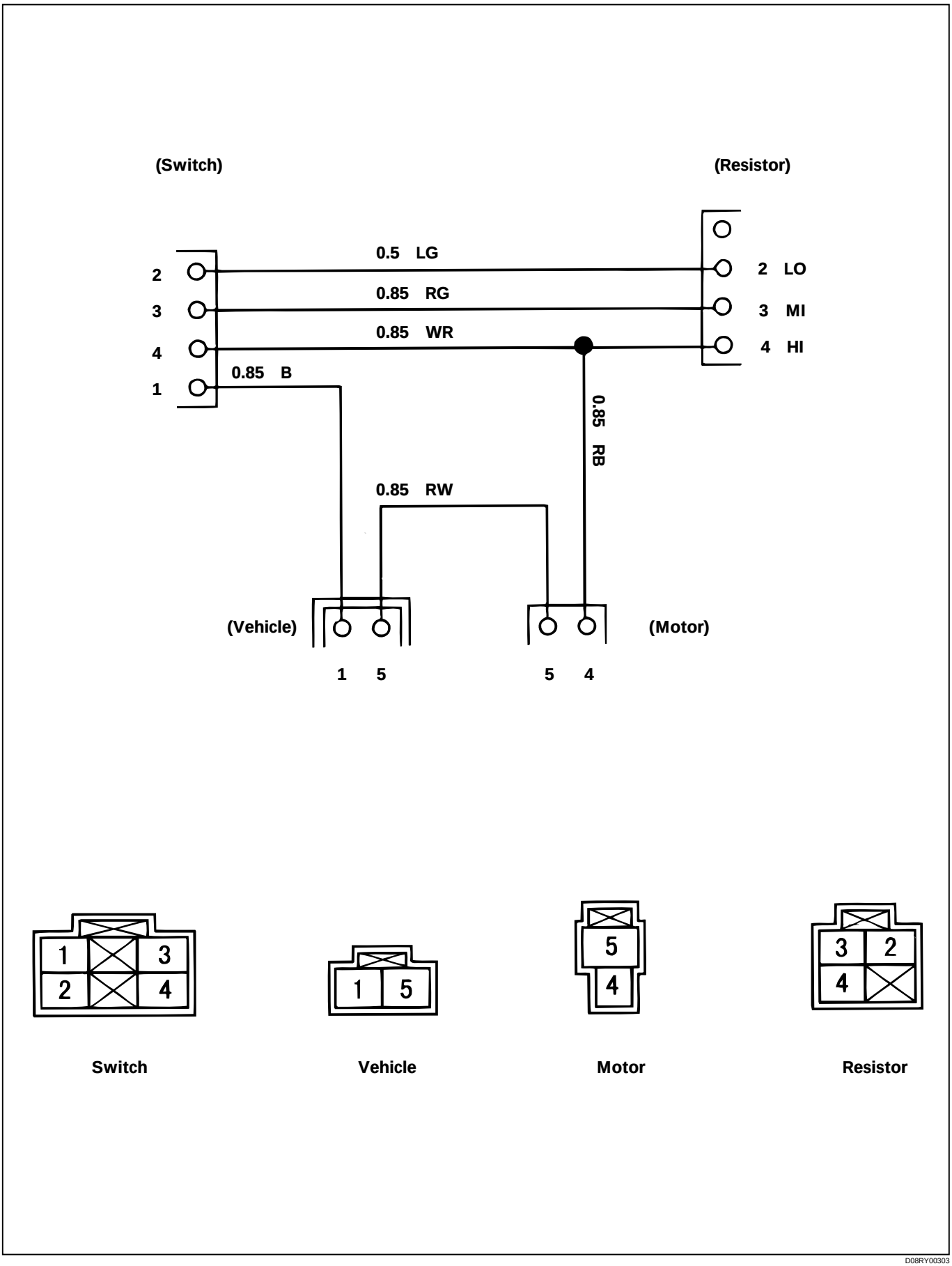

D08RY00303

TORQUE SPECIFICATIONS

N·m (kg·m/ib·ft)

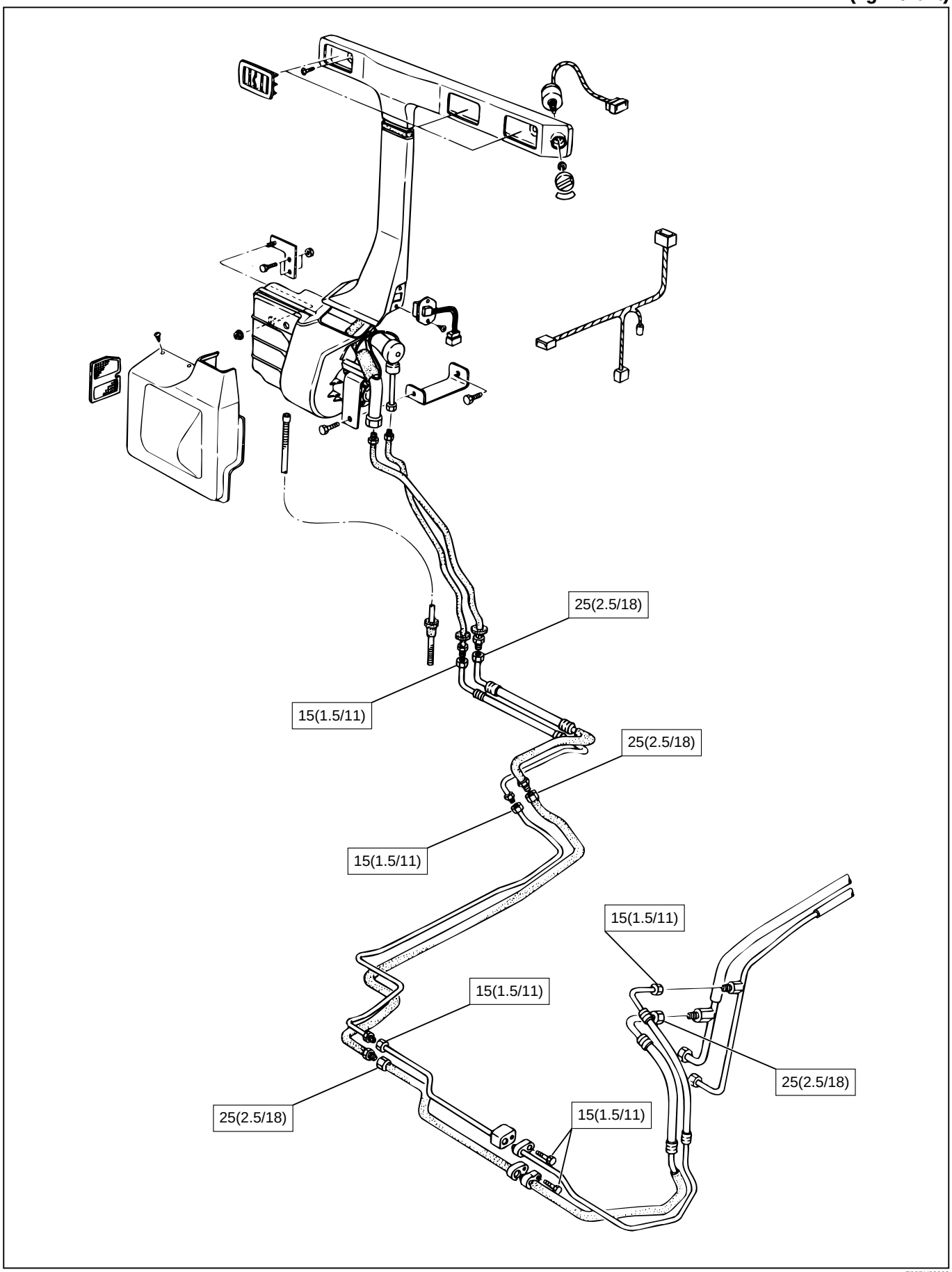

E06RY00003

TORQUE SPECIFICATIONS (ROOF DUCT TYPE)

N·m (kg·m/ib·ft)

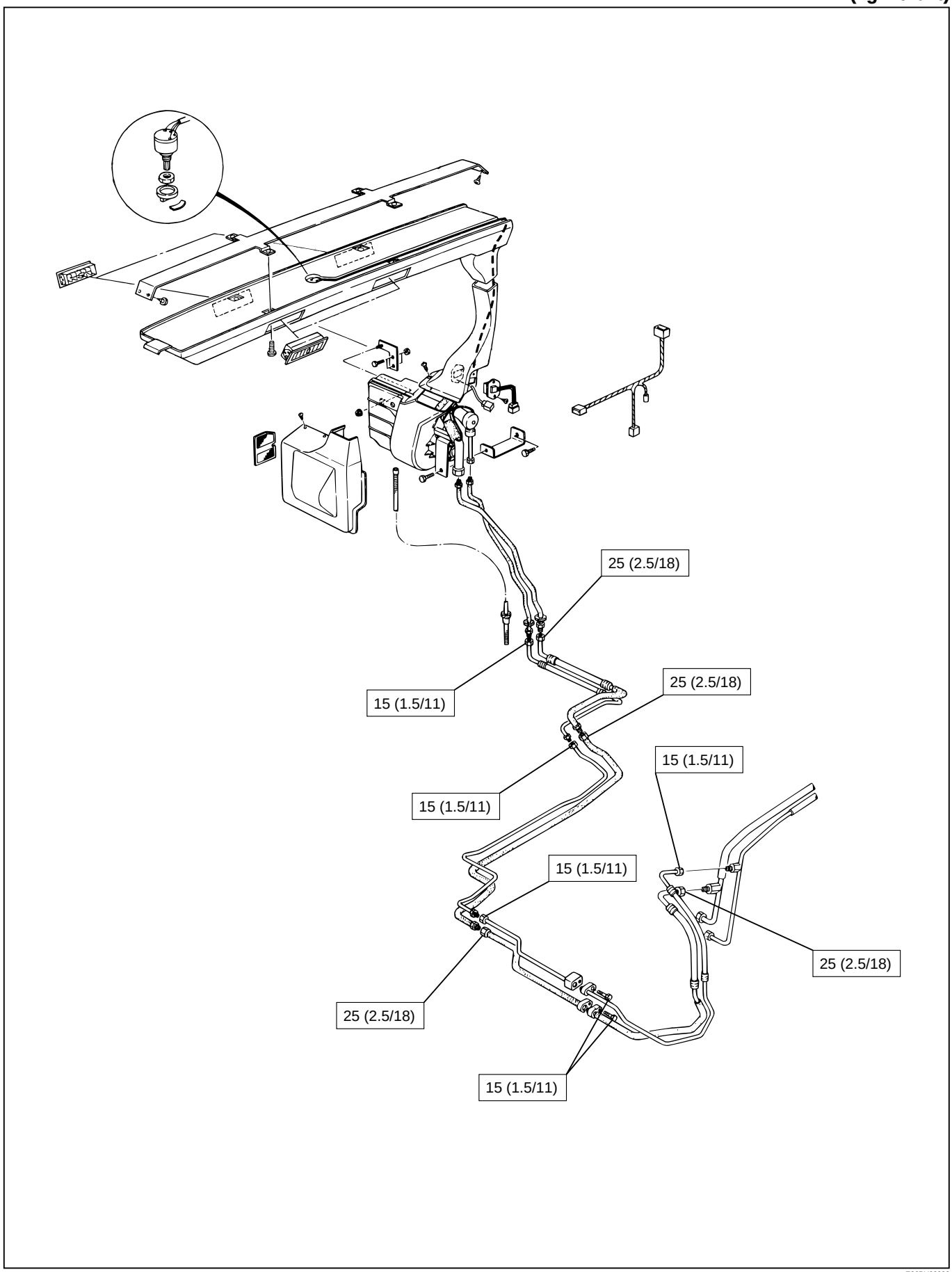

E06RY00002

DIAGNOSIS

Rear Air Conditioning Cycle Diagnosis

Condition	Possible Cause	Correction
No cooling or insufficient cooling	Front air conditioner not switched on.	Switch front A/C switch ON.
	Other	See front air conditioner workshop manual.
Insufficient velocity of cooling air	Clogged filter	Clean or replace cooling unit filter.
	Other	See front air conditioner workshop manual.

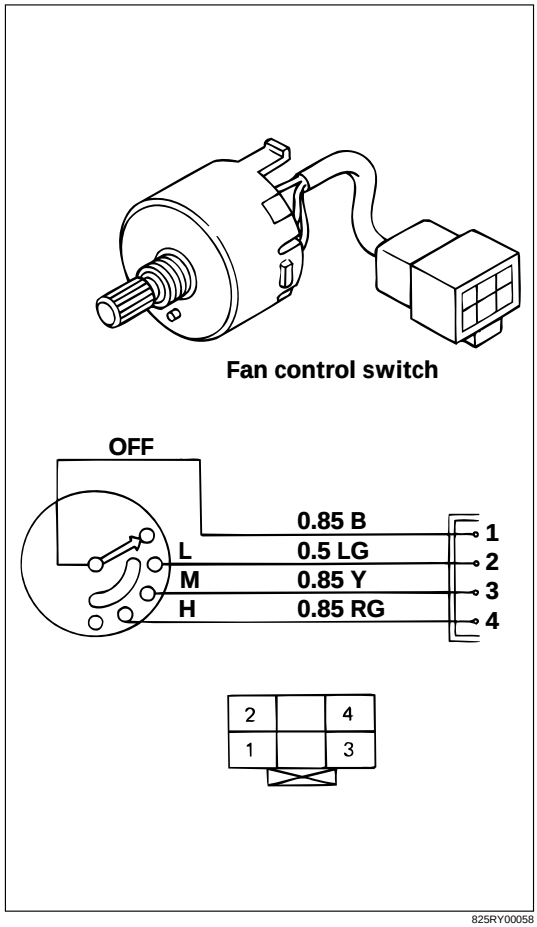

825RY00058

FAN CONTROL SWITCH

Inspection

Using an electric circuit tester, check continuity between terminals.
If not as specified, replace the switch.

	1	2	3	4
OFF				
LOW	○	○		
MEDIUM	○		○	
HIGH	○			○

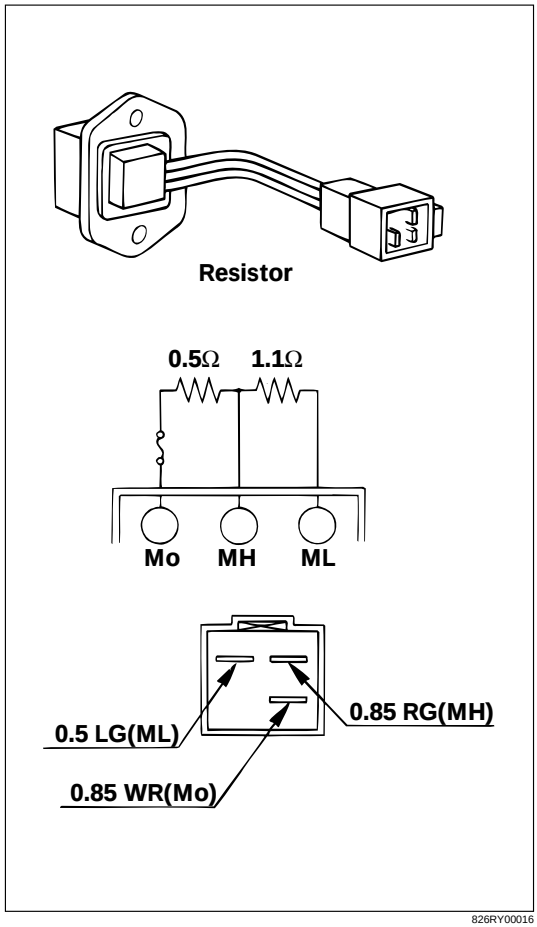

826RY00016

RESISTOR

Inspection

Using an electric circuit tester, check the resistance between the terminals specified below.
If the resistances are not as specified, replace the resistor.

Terminal	Resistance (Ω)
Mo ~ MH	0.5
Mo ~ ML	1.6

COOLING UNIT

Main Components

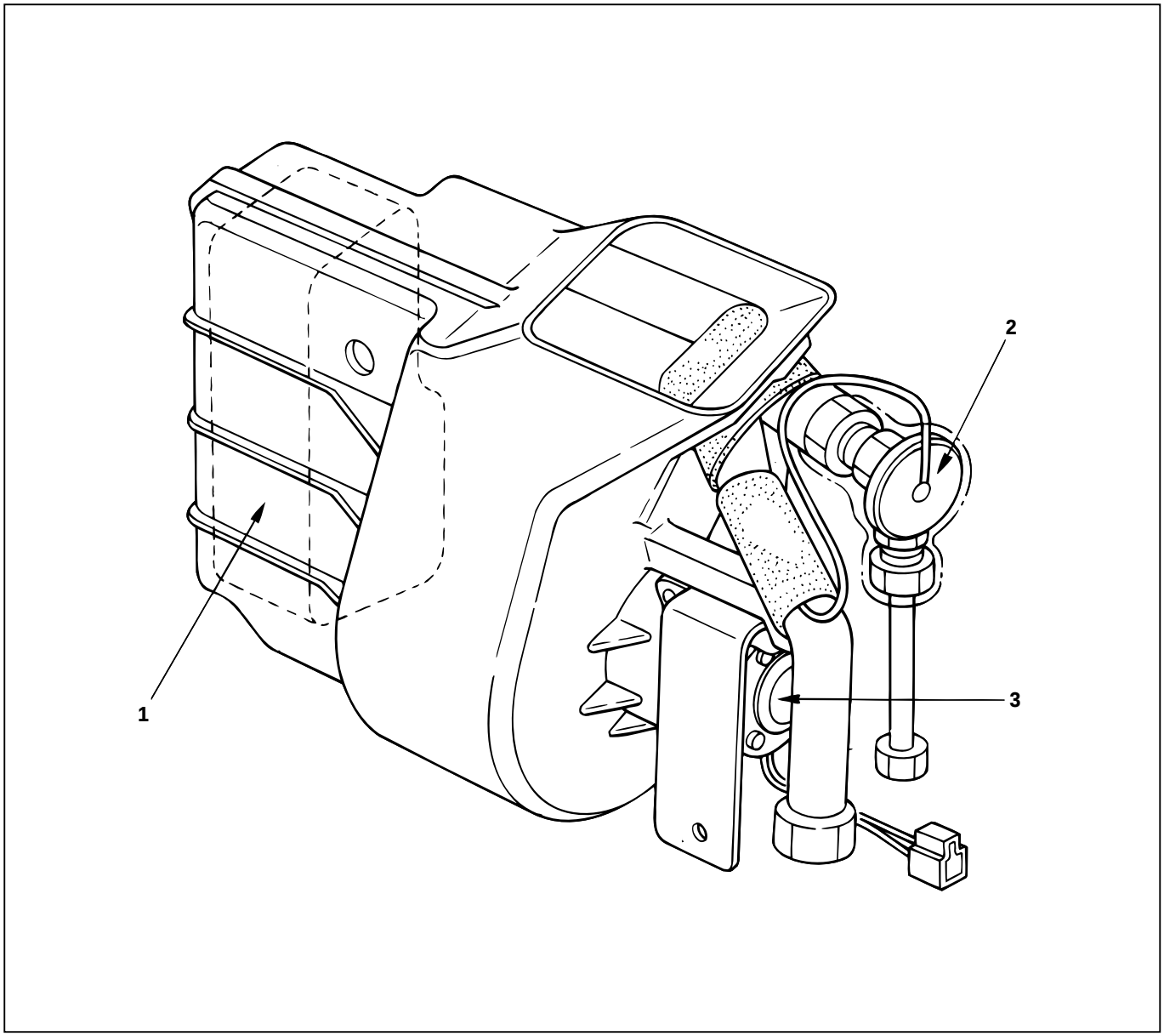

872RY00001

Legend

(1) Evaporator Assembly
(2) Expansion Valve
(3) Fan Motor

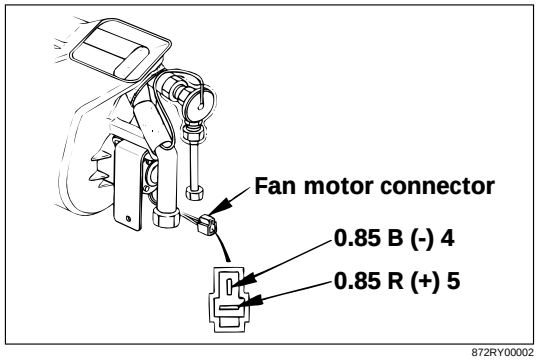

872RY00002

FAN MOTOR

Inspection

1. Disconnect the fan motor connector from the A/C harness.
2. Connect the battery's positive terminal to the No.5 terminal of the fan motor and the negative terminal to the No.4 terminal.
3. Check that the fan motor operates correctly.

FULL AUTOMATIC AIR CONDITIONING SYSTEM

GENERAL DESCRIPTION

Using a variety of sensors, this full automatic heater and air conditioner accurately senses outside air temperature, solar radiation quantity, evaporator's blowing temperature, heater core coolant temperature and interior temperature, then enters these data to the automatic heater/air conditioner control unit (equipped with the built-in micro-computer). The data provided to the control unit enables to automatically control blow temperature and blow air quantity, turn on or off the compressor and switch the blow port as well as switching between the fresh air intake and interior air circulation.
Resetting the automatic function allows you to switch to the manual control mode.
The self-diagnosis function of the automatic heater and air conditioner control unit (with the built-in micro-computer) allows the unit to access and diagnose a failed part easier and quicker.

Full Automatic Air Conditioner Parts Configuration

This illustration is based on RHD

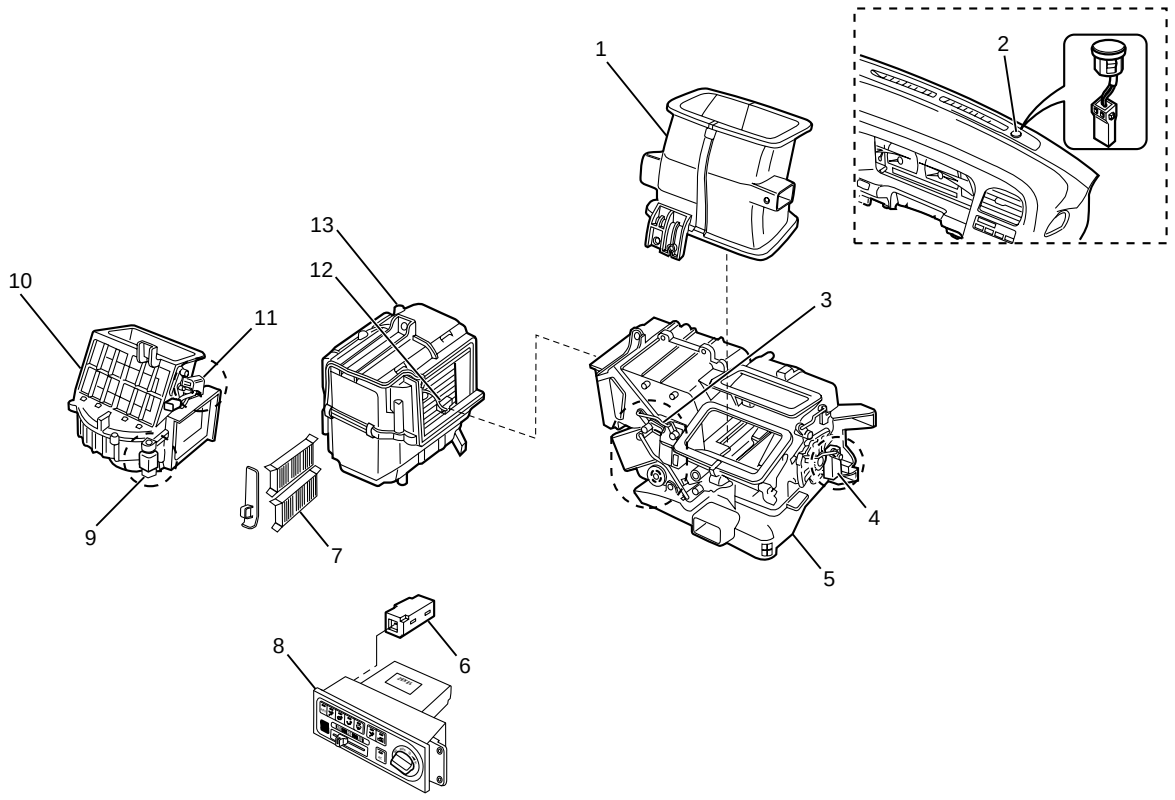

865RY0004

Legend

(1) Lower Center Vent Box
(2) Sun Sensor
(3) Mix Actuator
(4) Mode Actuator
(5) Heater Unit
(6) In Car Sensor
(7) Pollen Filter
(8) Automatic Air Conditioner Control Unit
(9) Max-High Relay
(10) Blower Unit
(11) Intake Actuator
(12) Duct Sensor
(13) Evaporator Assembly

MEMO

CIRCUIT DIAGRAM

6VE1 (RHD)

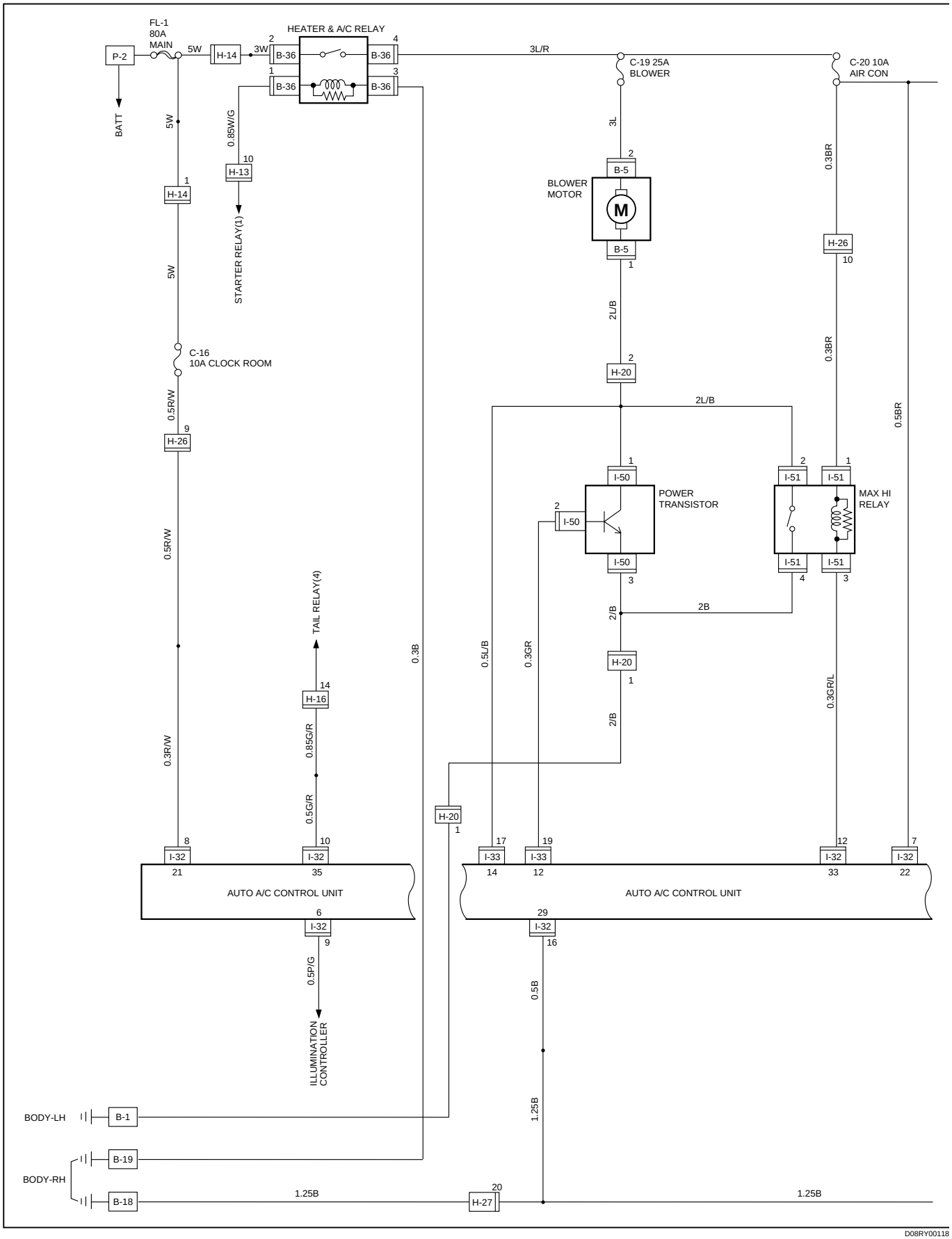

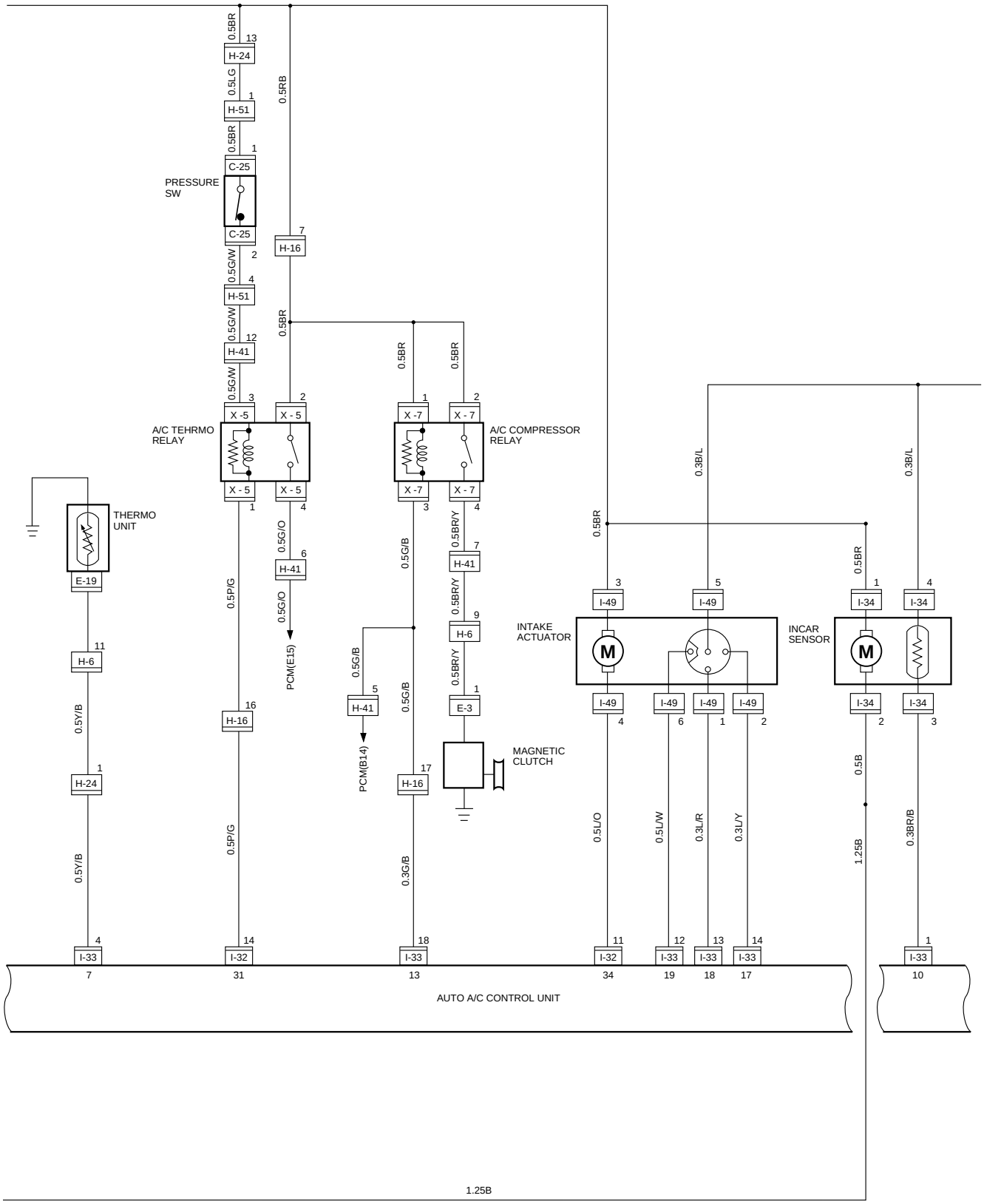
0.5BR
13
H-24
0.5LG
1
H-51
0.5BR
1
C-25
PRESSURE
SW
C-25
0.5G/W
2
4
H-51
0.5G/W
12
H-41
0.5G/W
3
X -5
A/C TEHRMO
RELAY
X - 5
1
4
THERMO
UNIT
E-19
11
H-6
0.5Y/B
1
H-24
0.5Y/B
4
I-33
7
0.5P/G
16
H-16
0.5P/G
14
I-32
31
0.5RB
7
H-16
0.5BR
2
X - 5
0.5G/O
6
H-41
0.5G/O
PCM(E15)
0.5BR
0.5BR
1
X -7
3
0.5G/B
5
H-41
PCM(B14)
0.5G/B
17
H-16
0.5G/B
18
I-33
13
2
X - 7
A/C COMPRESSOR
RELAY
X - 7
4
0.5BR/Y
7
H-41
0.5BR/Y
9
H-6
0.5BR/Y
1
E-3
MAGNETIC
CLUTCH
0.3B/L
0.3B/L
0.5BR
0.5BR
3
I-49
5
I-49
1
I-34
4
I-34
INTAKE
ACTUATOR
M
INCAR
SENSOR
M
I-49
4
I-49
6
I-49
1
I-49
2
I-34
2
I-34
3
0.5B
0.5L/O
0.5L/W
0.3L/R
0.3L/Y
1.25B
0.3BR/B
11
I-32
34
12
I-33
19
13
I-33
18
14
I-33
17
1
I-33
10
AUTO A/C CONTROL UNIT
1.25B

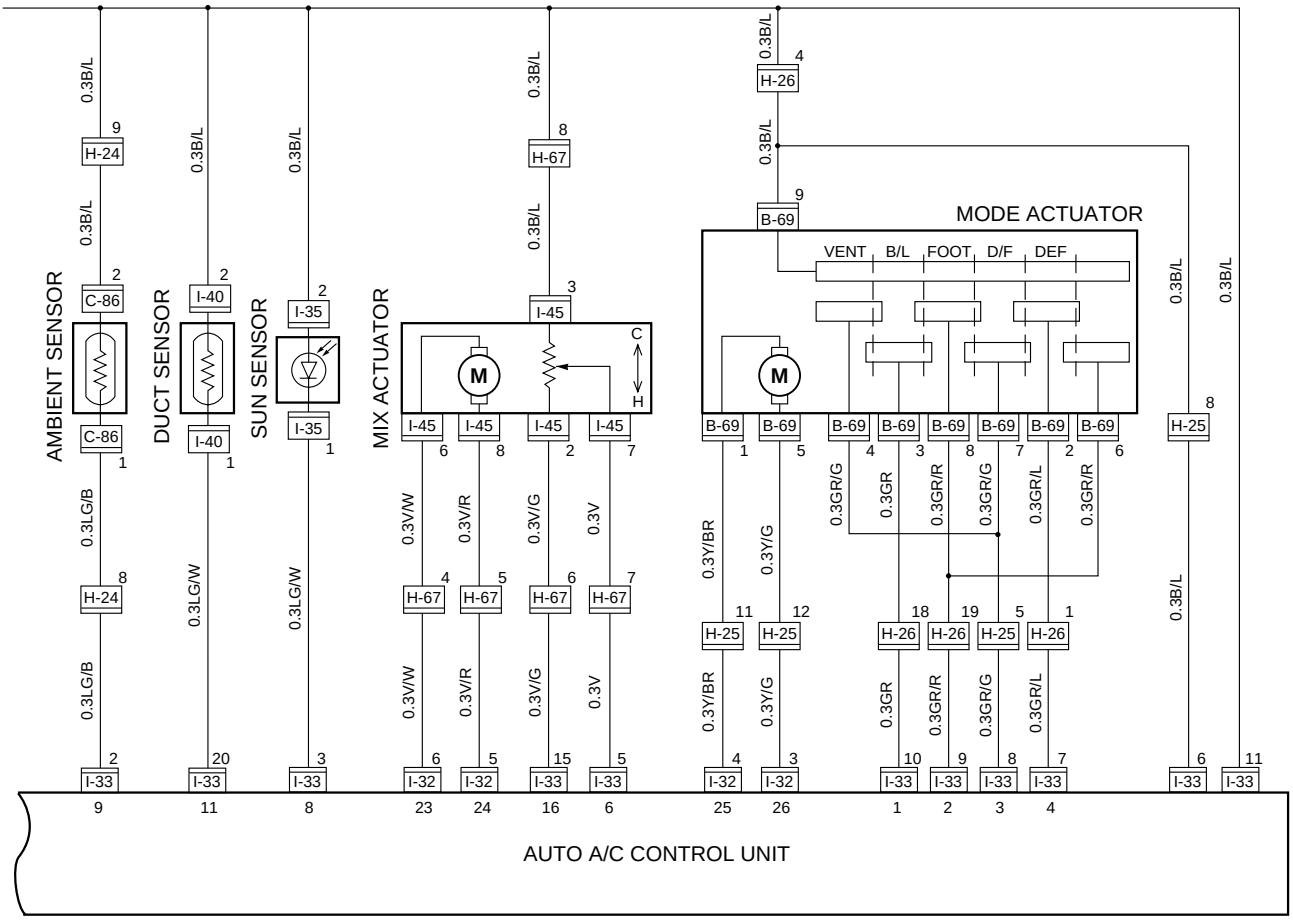
AMBIENT SENSOR
DUCT SENSOR
SUN SENSOR
MIX ACTUATOR
MODE ACTUATOR
VENT
B/L
FOOT
D/F
DEF
M
C
H
0.3B/L
0.3LG/B
0.3LG/W
0.3V/W
0.3V/R
0.3V/G
0.3V
0.3Y/BR
0.3Y/G
0.3GR/G
0.3GR
0.3GR/R
0.3GR/L
C-86
I-40
I-35
I-45
H-67
H-24
H-26
H-25
B-69
I-33
I-32
AUTO A/C CONTROL UNIT

MEMO

6VE1 (LHD)

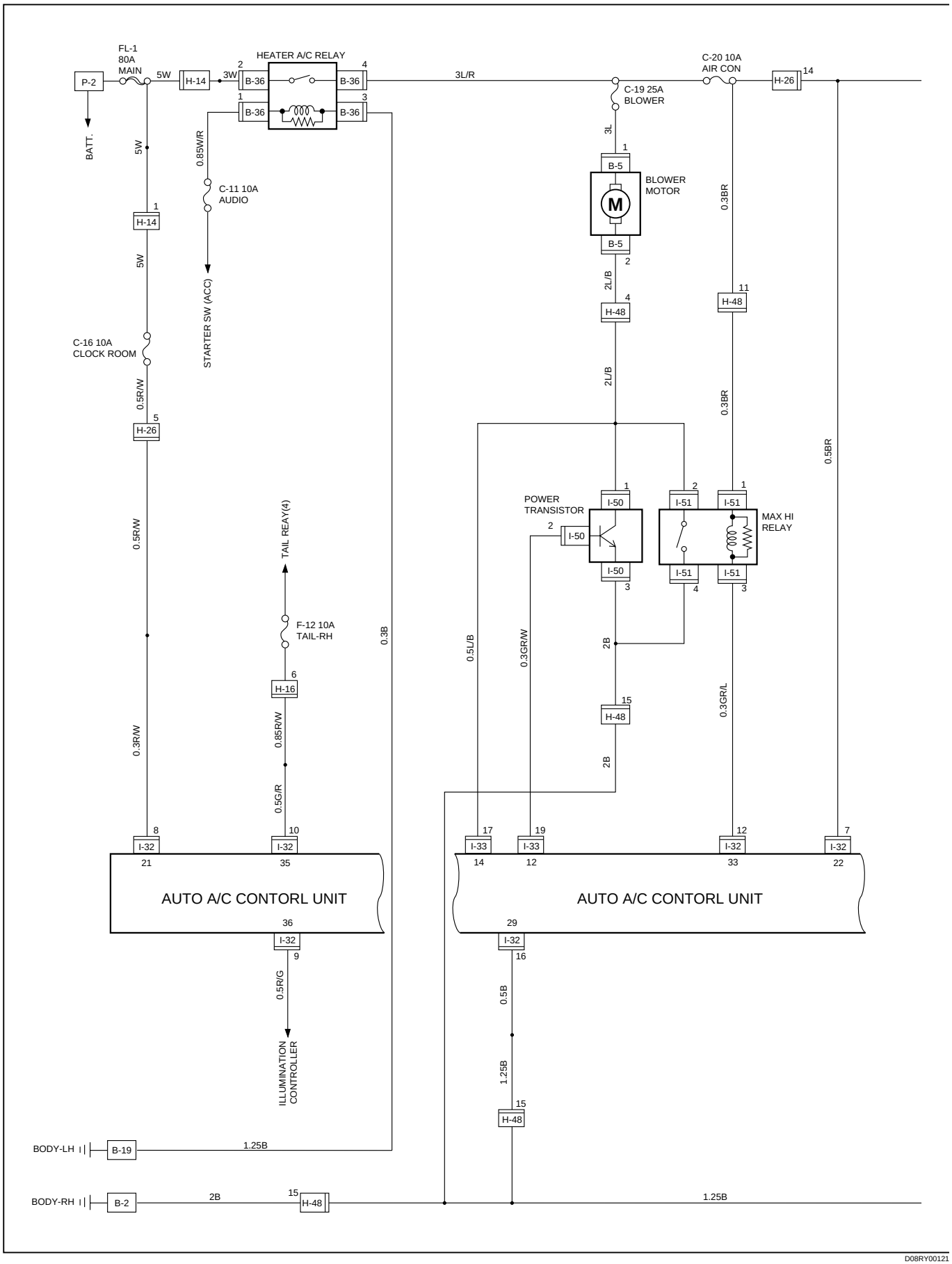
FL-1
80A
MAIN
HEATER A/C RELAY
C-20 10A
AIR CON
C-19 25A
BLOWER
BLOWER
MOTOR
BATT.
C-11 10A
AUDIO
STARTER SW (ACC)
C-16 10A
CLOCK ROOM
POWER
TRANSISTOR
MAX HI
RELAY
TAIL REAY(4)
F-12 10A
TAIL-RH
ILLUMINATION
CONTROLLER
AUTO A/C CONTORL UNIT
AUTO A/C CONTORL UNIT
BODY-LH
BODY-RH
P-2
H-14
B-36
3L/R
H-26
B-5
M
H-48
I-50
I-51
I-32
I-33
H-16
B-19
B-2
5W
3W
0.85W/R
3L
2L/B
0.3BR
0.5BR
0.5R/W
0.3R/W
0.85R/W
0.5G/R
0.3B
0.5U/B
0.3GR/W
2B
0.3GR/L
0.5R/G
0.5B
1.25B
D08RY00121

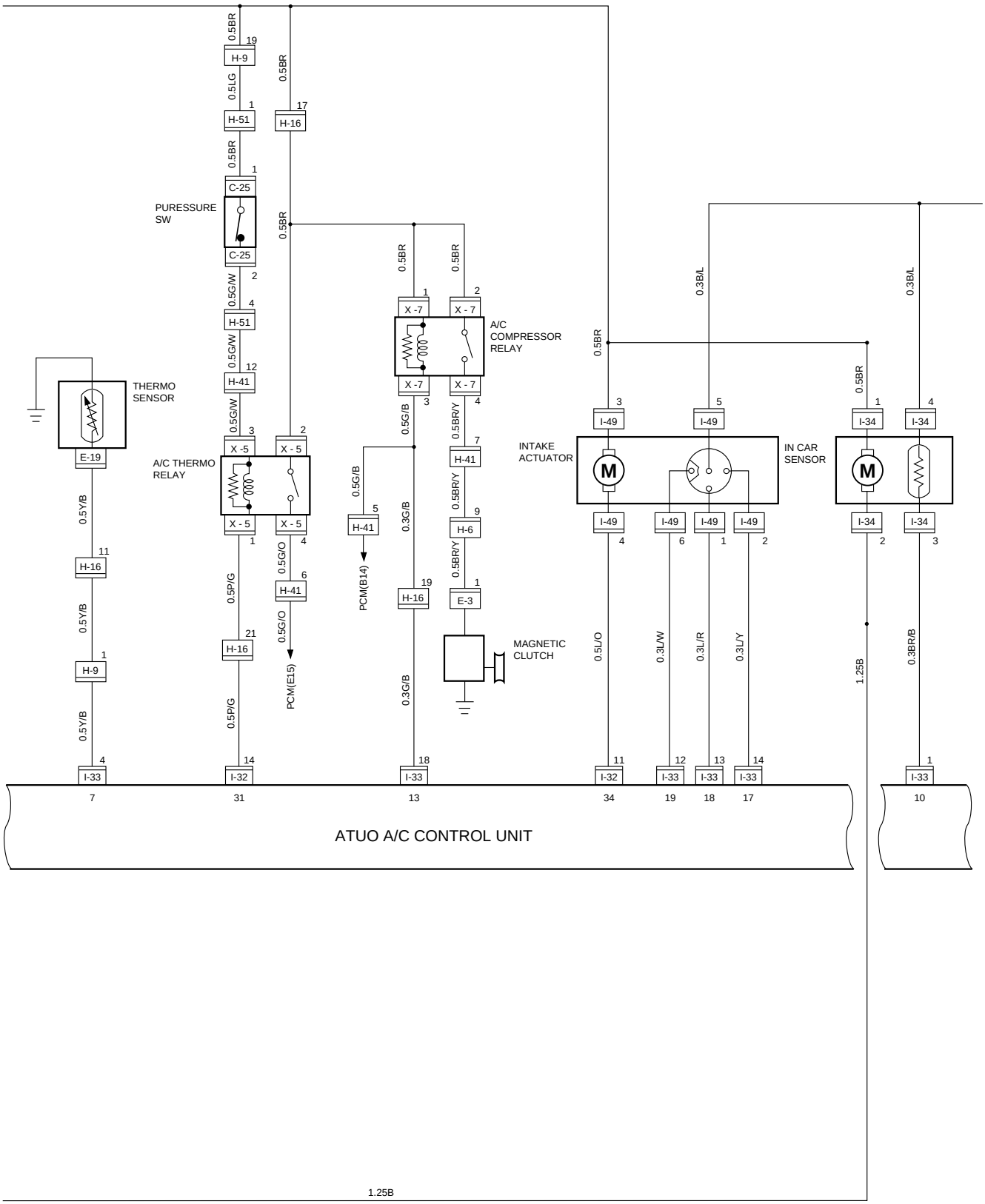
PURESSURE SW
THERMO SENSOR
A/C THERMO RELAY
A/C COMPRESSOR RELAY
INTAKE ACTUATOR
IN CAR SENSOR
MAGNETIC CLUTCH
PCM(E15)
PCM(B14)
ATUO A/C CONTROL UNIT
0.5BR
0.5LG
0.5G/W
0.5Y/B
0.5P/G
0.5G/O
0.5G/B
0.3G/B
0.5BR/Y
0.5L/O
0.3L/W
0.3L/R
0.3L/Y
0.3B/L
0.3BR/B
1.25B
H-9
H-51
H-16
C-25
H-41
X -7
X - 7
X -5
X - 5
E-19
H-6
E-3
I-49
I-34
I-33
I-32
M

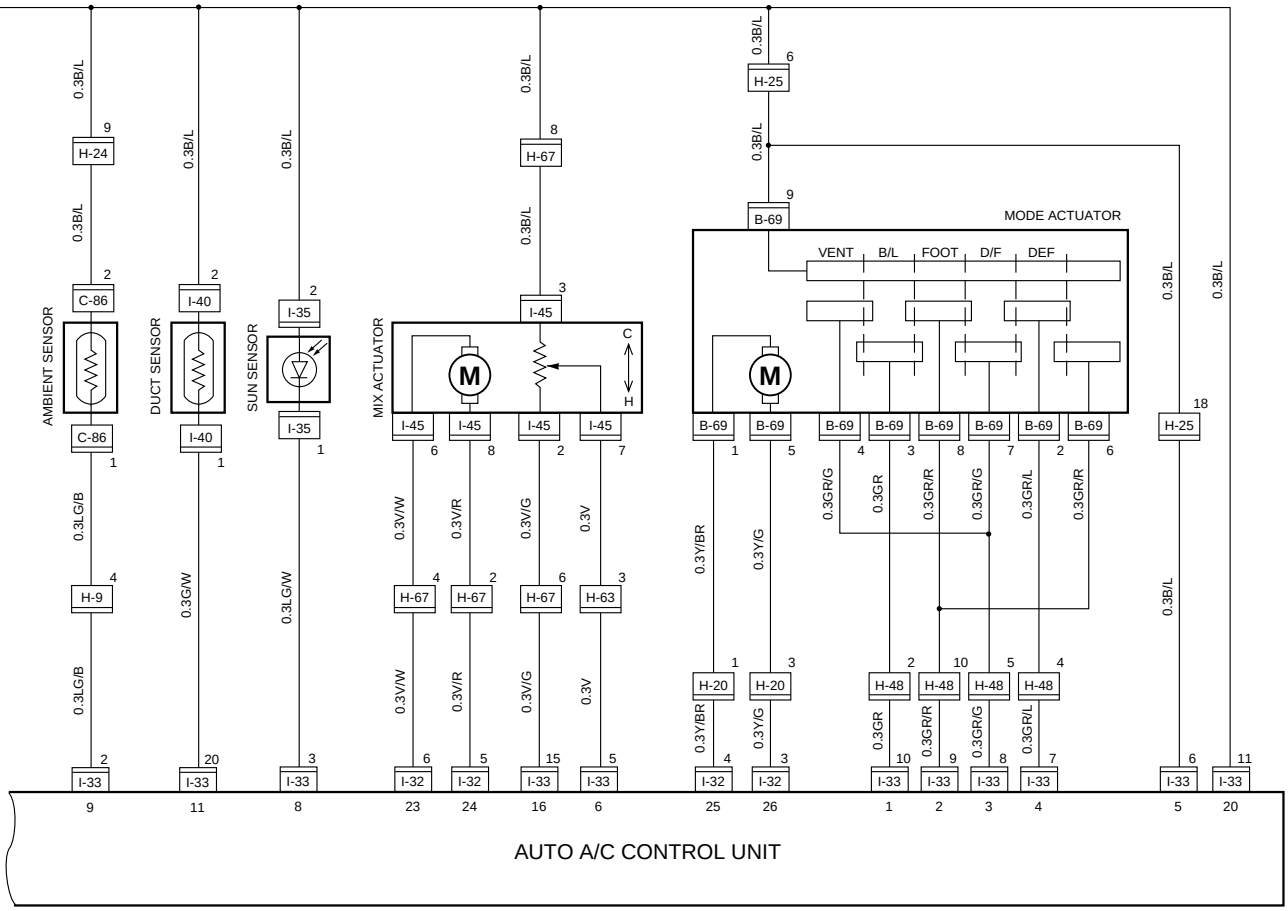
AMBIENT SENSOR
DUCT SENSOR
SUN SENSOR
MIX ACTUATOR
MODE ACTUATOR
VENT
B/L
FOOT
D/F
DEF
C
H
M
AUTO A/C CONTROL UNIT

D08RY00123

MEMO

4JX1 (RHD)

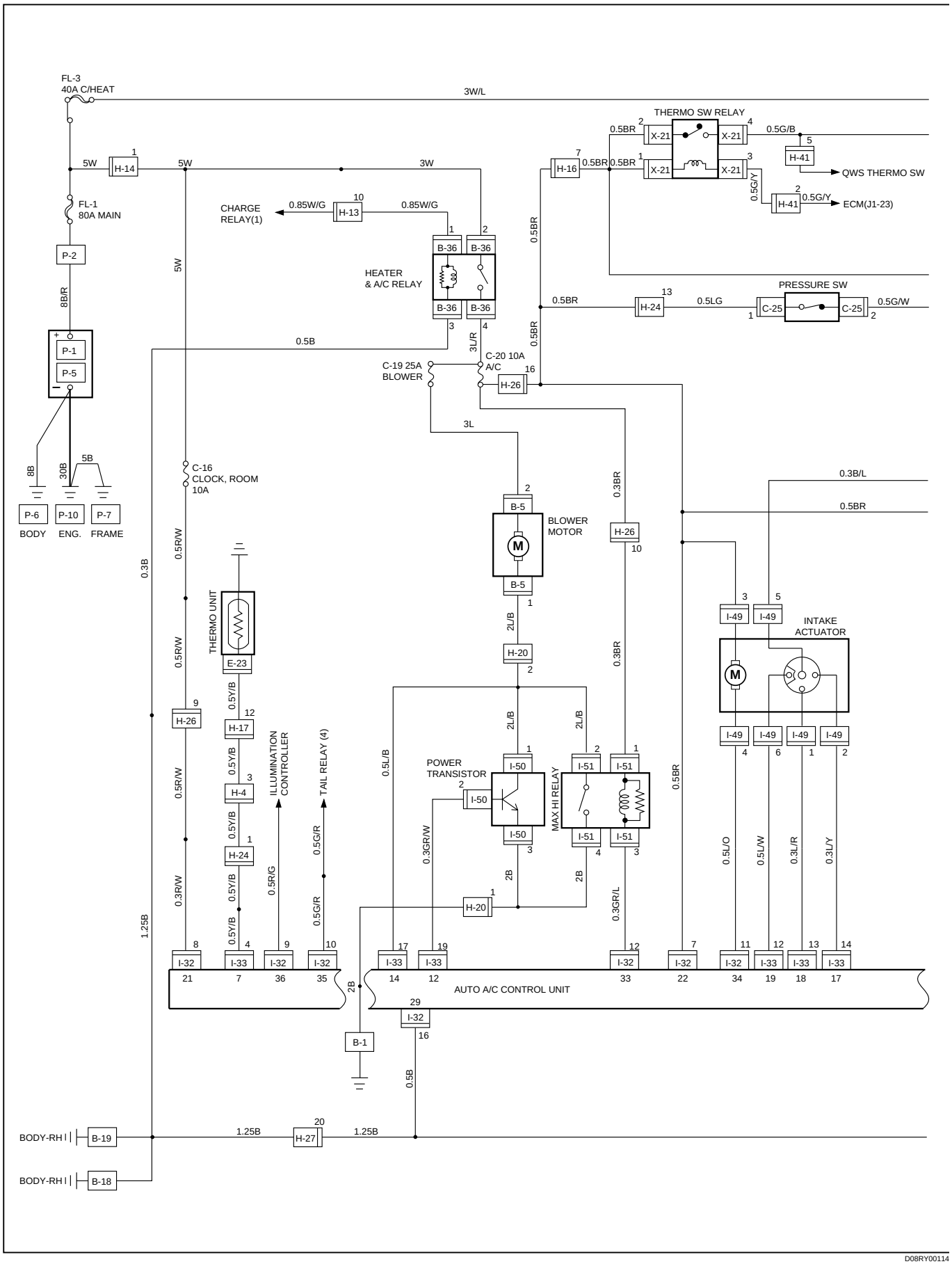

D08RY00114

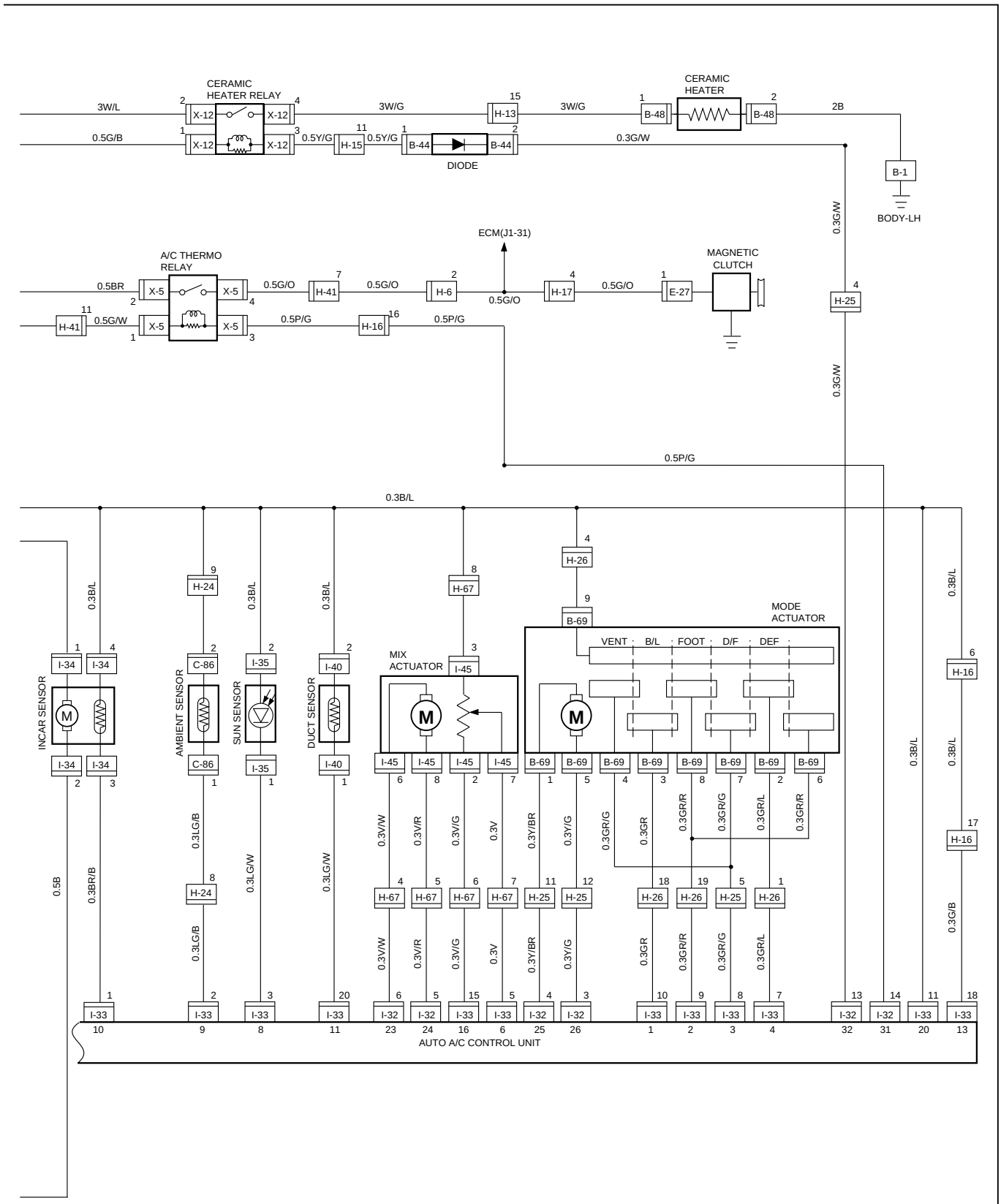
CERAMIC HEATER RELAY
CERAMIC HEATER
DIODE
BODY-LH
ECM(J1-31)
A/C THERMO RELAY
MAGNETIC CLUTCH
MIX ACTUATOR
MODE ACTUATOR
VENT
B/L
FOOT
D/F
DEF
INCAR SENSOR
AMBIENT SENSOR
SUN SENSOR
DUCT SENSOR
AUTO A/C CONTROL UNIT
3W/L
0.5G/B
3W/G
0.5Y/G
0.3G/W
2B
0.5BR
0.5G/W
0.5G/O
0.5P/G
0.3B/L
0.3G/W
0.5B
0.3BR/B
0.3LG/B
0.3LG/W
0.3V/W
0.3V/R
0.3V/G
0.3V
0.3Y/BR
0.3Y/G
0.3GR/G
0.3GR
0.3GR/R
0.3GR/L
0.3G/B

D08RY00115

4JX1 (LHD)

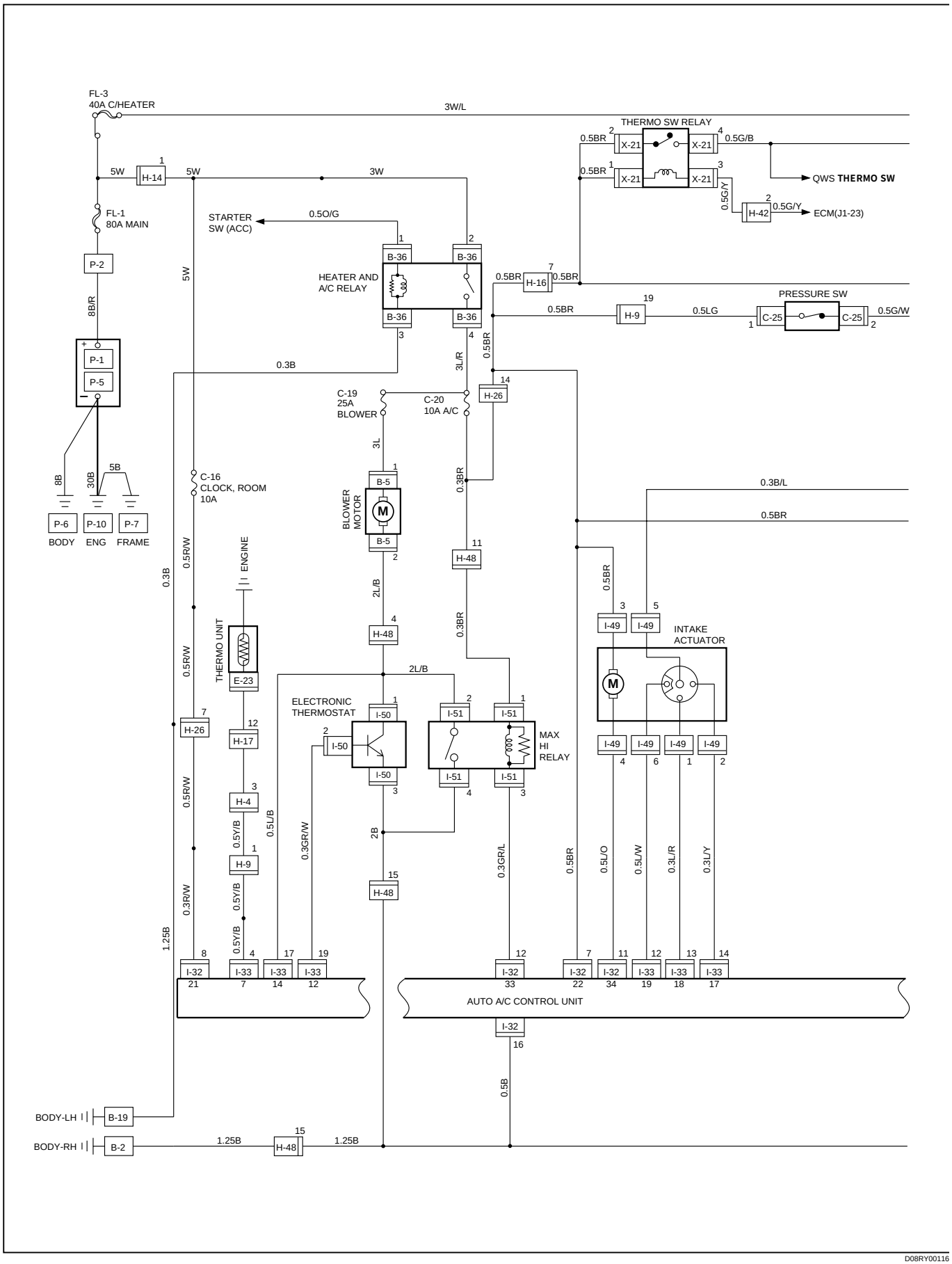

D08RY00116

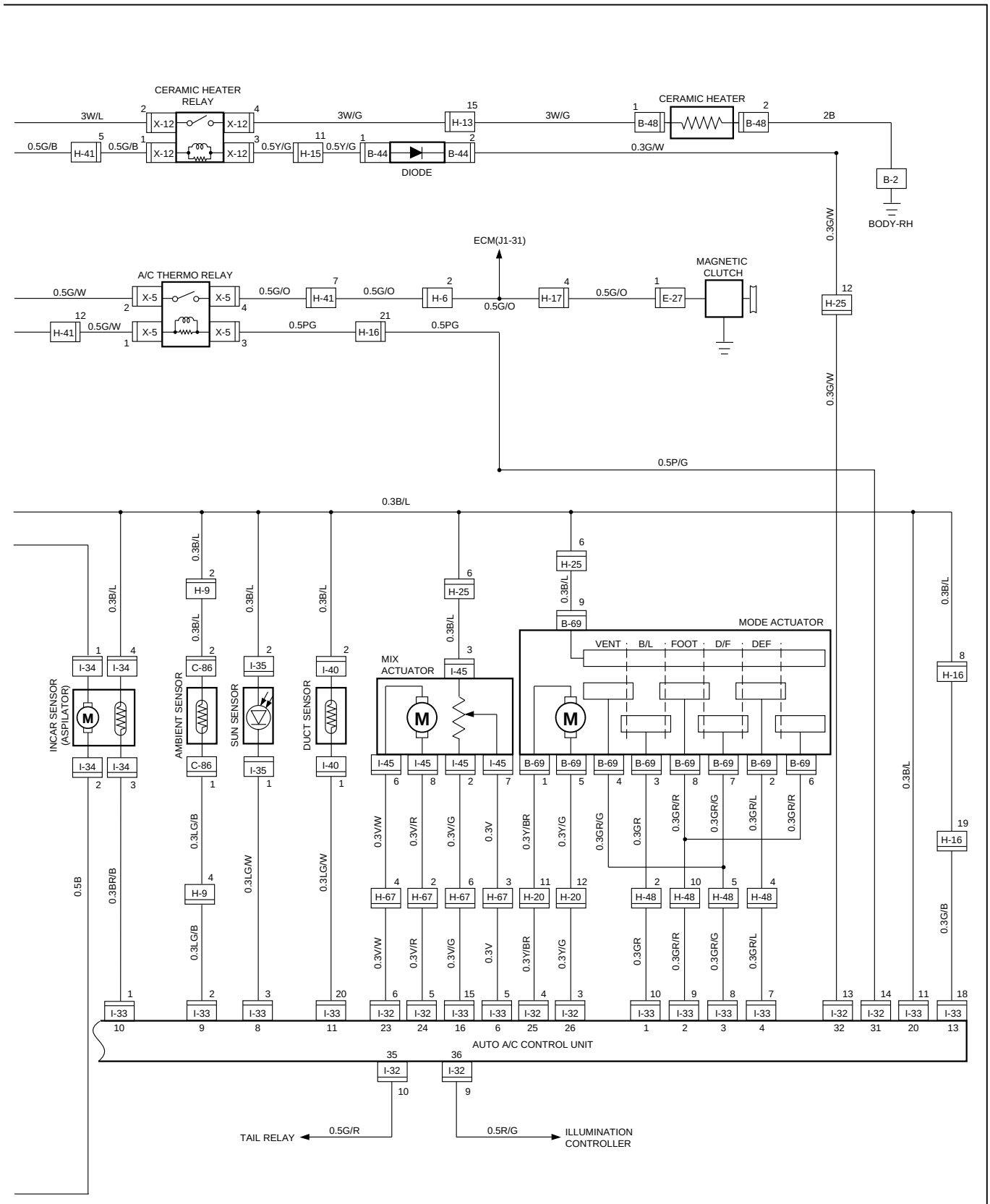
CERAMIC HEATER RELAY
CERAMIC HEATER
DIODE
BODY-RH
ECM(J1-31)
A/C THERMO RELAY
MAGNETIC CLUTCH
MODE ACTUATOR
VENT
B/L
FOOT
D/F
DEF
MIX ACTUATOR
INCAR SENSOR (ASPILATOR)
AMBIENT SENSOR
SUN SENSOR
DUCT SENSOR
AUTO A/C CONTROL UNIT
TAIL RELAY
ILLUMINATION CONTROLLER

D08RY00117

FUNCTIONS AND FEATURES

- Automatic interior temperature control

  This function enables to maintain the interior temperature at the level specified from the temperature control switch despite of changes in factors such as vehicle speeds, outside air temperature and number of passengers.

- Maximum cooling and heating function

  You can select FC (Full cool, namely maximum cooling temperature) or FH (Full heat, maximum heating temperature) from the temperature control lever.

- Automatic air flow control

  Air flow is automatically and consecutively fine tuned according to the specified interior temperature and changes in aperture of the heater unit mix door.

- Mode (blow port) control

  This function automatically selects either one of the VENT, BI-LEVEL, FOOT or DEP mode for the blow port according to changes of temperature on the blow port. Using the mode switch allows you to select a desired blow port manually.

- Intake (switching between the fresh air intake and circulation of interior air) control

  The intake (switching between fresh air intake and circulation of interior air) mode automatically selects either FRESH (fresh air intake), MIX or RECIRC (interior air circulation) according to changes of the blow port temperature. Using the intake switch allows you to select a desired intake port manually (in the manual operation, FRESH and RECIRC modes alone are available). Pressing the DEF (defrost) mode switch selects the FRESH (fresh air intake).

- Cooler start-up timing control

  This function is used for maintaining the air flow at "LOW" level until the evaporator is sufficiently cooled down. It is intended to prevent a large volume of hot air being blowing into inside of a vehicle when the cooler is turned on in hot summer season.

- Heater start-up timing control

  This function is used for maintained the air flow at "LOW" level and also for maintaining the defrost mode until temperature of coolant in the heater core is sufficiently heated. It is intended to prevent a large volume of cool air being blown into inside of a vehicle when the heater is turned on in cold winter season.

- Solar radiation quantity offset control

  The photodiode on the solar radiation sensor determines solar radiation quantity accurately to offset interior temperature quickly.

- Switch position storing function

  This function is used for storing switch positions being selected in the immediately preceding operation, namely the last time the ignition has been turned off. It simplifies the setup procedures when restarting the system.

- Self-diagnosis function

  The self-diagnosis function turned on from the panel switch makes your troubleshooting easier (for detail of this function, refer to the section titled "Self-Diagnosis").

FULL AUTOMATIC AIR CONDITIONER BLOCK DIAGRAM

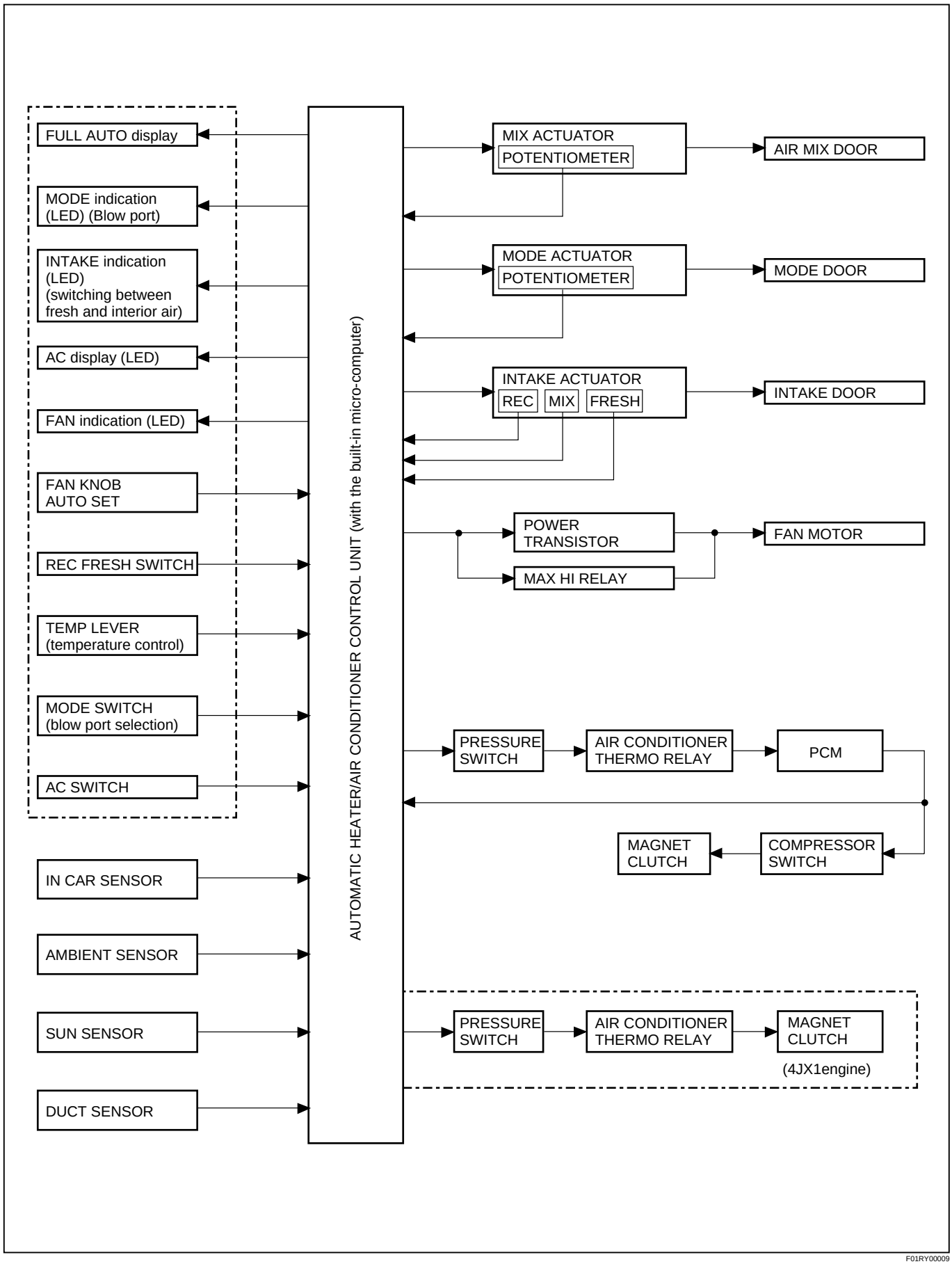

F01RY00009

AIR CONDITIONING PARTS

6VE1 (RHD)

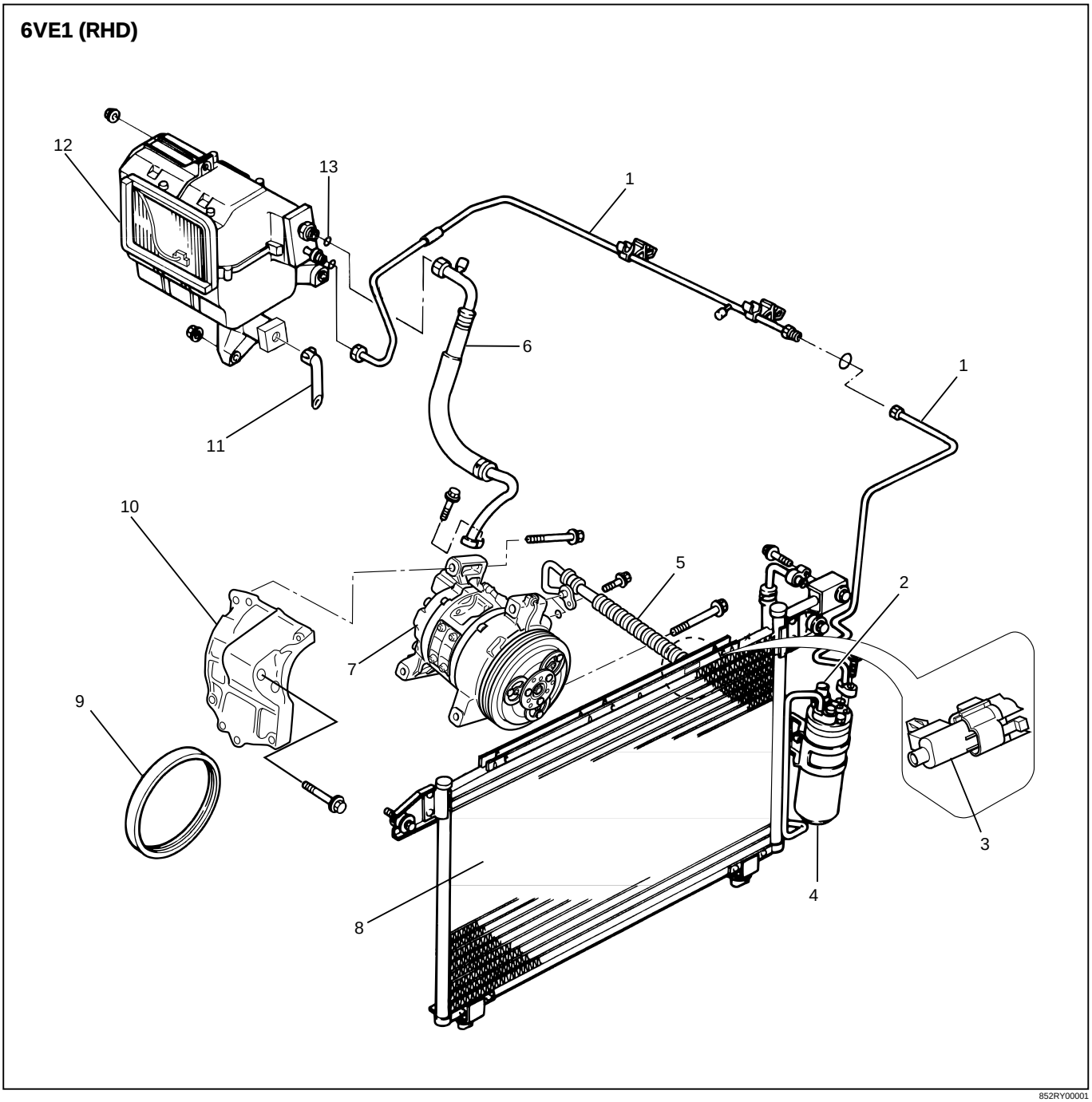

852RY00001

Legend

(1) Liquid Line (High Pressure Pipe)
(2) Pressure Switch
(3) Ambient Sensor
(4) Receiver Drier
(5) Discharge Line (High Pressure Hose)
(6) Suction Line (Low Pressure Hose)
(7) Compressor
(8) Condenser Assembly
(9) Drive Belt
(10) Compressor Bracket
(11) Drain Hose
(12) Evaporator Assembly
(13) O-ring

6VE1 (LHD)

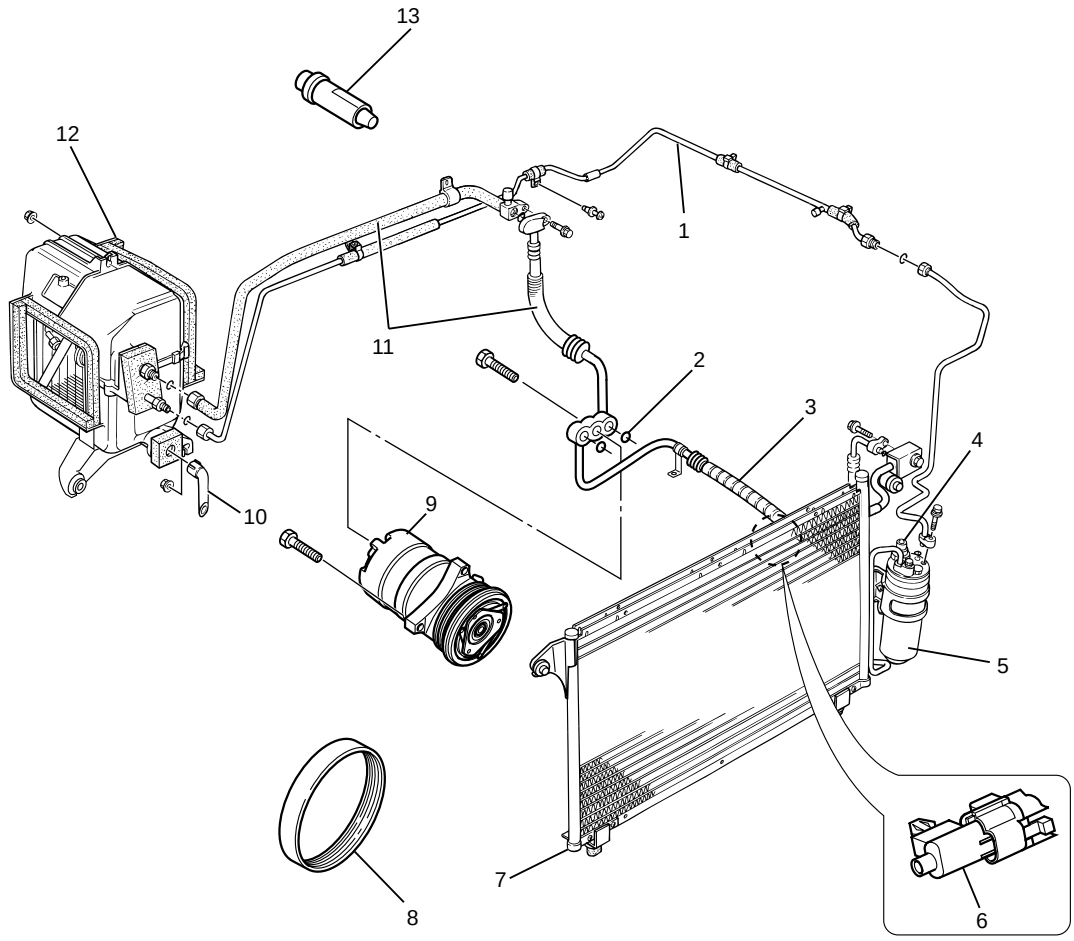

852RY00002

Legend

(1) Liquid Line (High-Pressure Pipe)
(2) O-ring
(3) Discharge Line (High-Pressure Hose)
(4) Pressure Switch
(5) Receiver Drier
(6) Ambient Sensor
(7) Condenser Assembly
(8) Drive Belt
(9) Compressor
(10) Drain Hose
(11) Suction Line (Low-Pressure Hose)
(12) Evaporator Assembly
(13) A/C Switch

4JX1 (RHD)

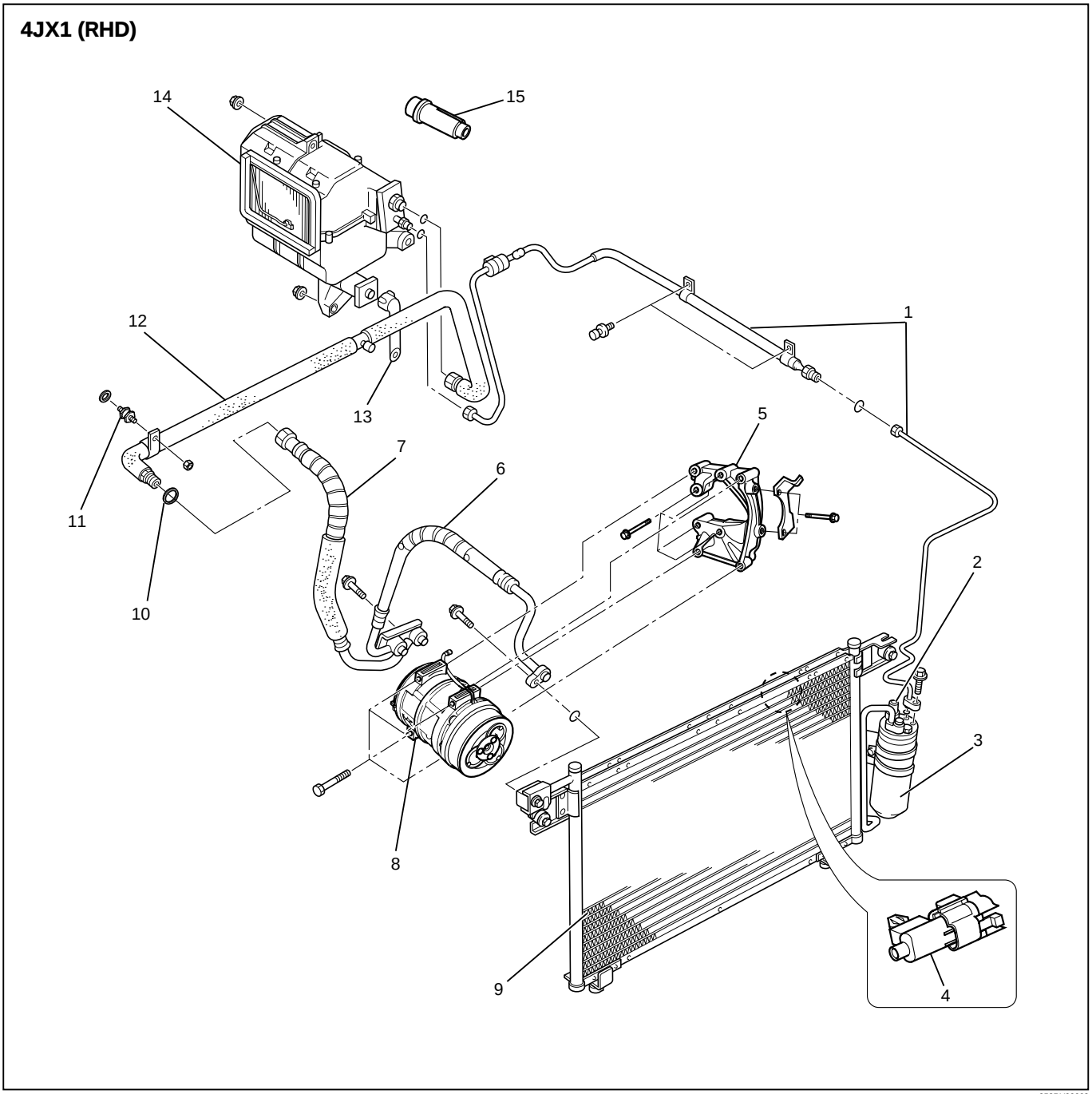

852RY00003

Legend

(1) Liquid Line (High-Pressure Pipe)
(2) Pressure Switch
(3) Receiver Drier
(4) Ambient Sensor
(5) Compressor Bracket
(6) Discharge Line (High-Pressure Hose)
(7) Suction Line (Low-Pressure Hose)
(8) Compressor
(9) Condenser Assembly
(10) O-ring
(11) Insulator Pipe
(12) Suction Line (Low-Pressure Pipe)
(13) Drain Hose
(14) Evaporator Assembly
(15) A/C Switch

4JX1 (LHD)

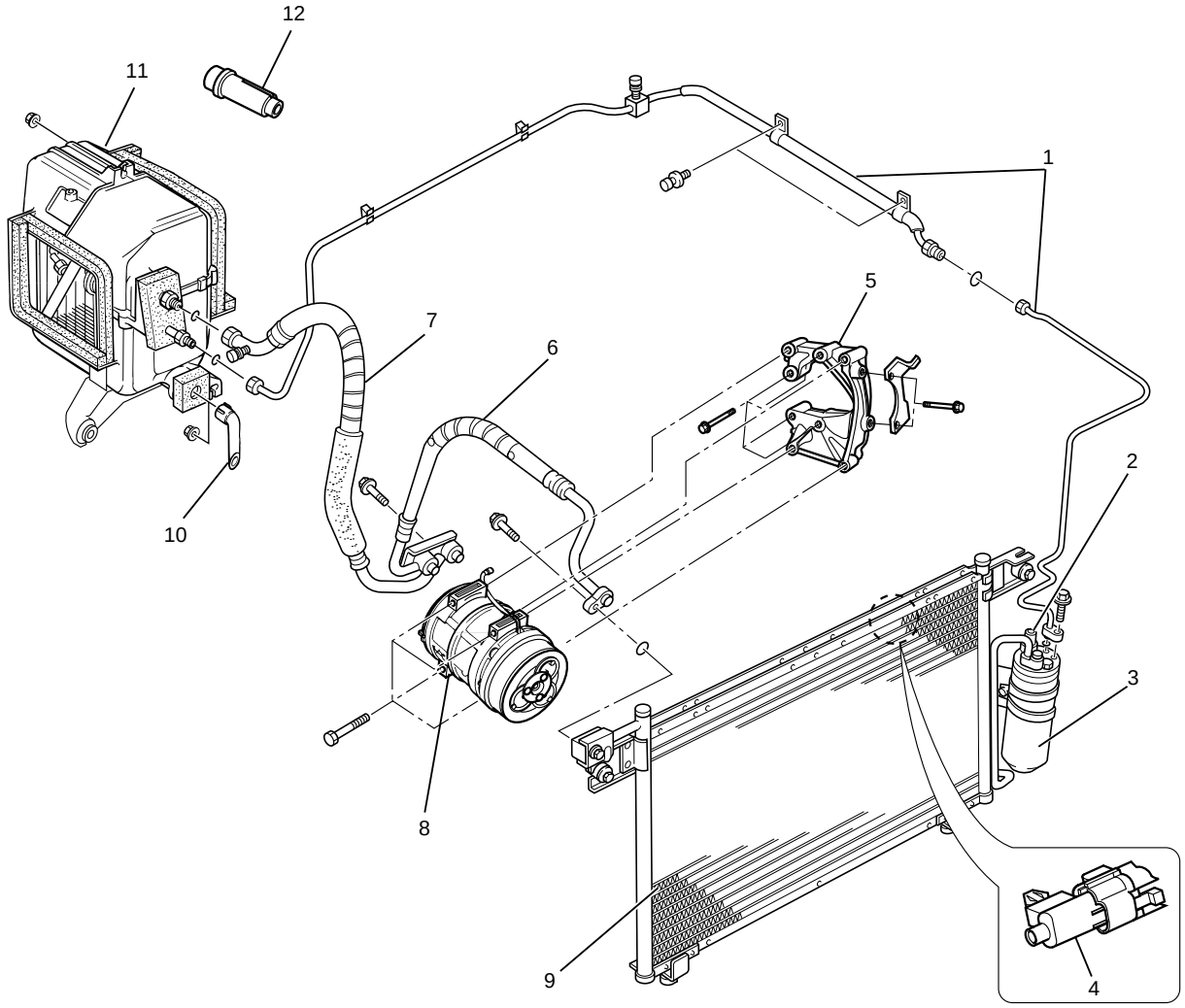

852RY00004

Legend

(1) Liquid Line (High-Pressure Pipe)
(2) Pressure Switch
(3) Receiver Drier
(4) Ambient Sensor
(5) Compressor Bracket
(6) Discharge Line (High-Pressure Hose)
(7) Suction Line (Low-Pressure Hose)
(8) Compressor
(9) Condenser Assembly
(10) Drain Hose
(11) Evaporator Assembly
(12) A/C Switch

Control Panel Layout

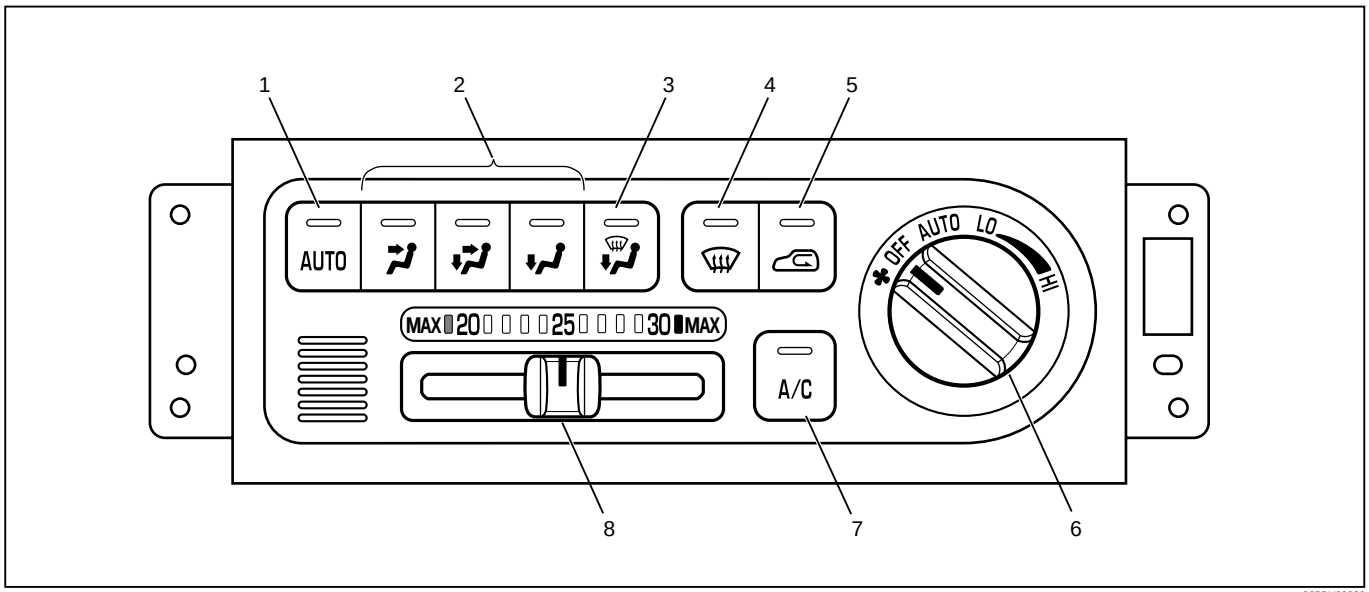

865RY00026

Legend

(1) Auto Switch
(2) Mode Switch
(3) DEF/FOOT Switch
(4) DEF Switch
(5) Intake Switch
(6) Fan Switch
(7) Air Conditioning Switch
(8) Temperature Control Knob

Air Control Functions

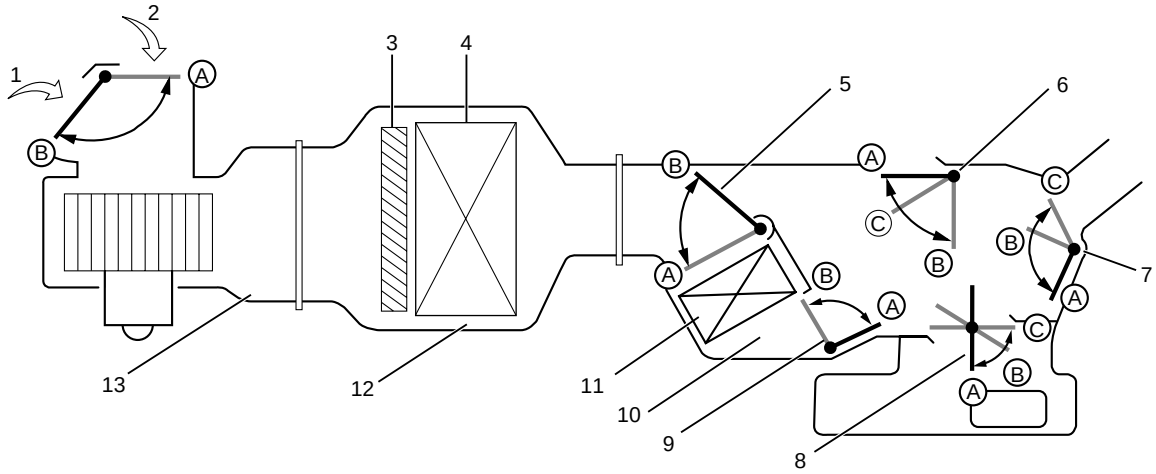

	Mode Position					Display of Intake Status		Set Temperature		
	VENT	BI-LEVEL	FOOT	DEF/FOOT	DEF	ON	OFF	Blue FULL COLD	White 20~30℃	Red FULL HOT
Vent Door	Ⓐ	Ⓑ	Ⓒ	Ⓒ	Ⓒ	—	—	—	—	—
Foot Door	Ⓒ	Ⓑ	Ⓐ	Ⓑ	Ⓒ	—	—	—	—	—
DEF Door	Ⓐ	Ⓐ	Ⓐ	Ⓒ	Ⓑ	—	—	—	—	—
Intake Door	—	—	—	—	—	Ⓐ	Ⓑ	—	—	—
Air Mix Door	—	—	—	—	—	—	—	Ⓐ	Ⓐ～Ⓑ	Ⓑ
Sub Air Mix Door	—	—	—	—	—	—	—	Ⓑ	Ⓑ～Ⓐ	Ⓐ

C01RY00001

Legend

(1) Interior Air Intake
(2) Fresh Air Intake
(3) Pollen Filter
(4) Evaporator Core
(5) Air Mix Door
(6) DEF Door
(7) Vent Door
(8) Foot Door
(9) Sub Air Mix Door
(10) Heater Unit
(11) Heater Core
(12) Evaporator Unit
(13) Blower Unit

OPERATION AND FUNCTIONS OF CONTROL PANEL SWITCHES

1. Auto Switch

(1) Pressing this switch turns on the automatic control mode. It resets all manual switches except that for the fan control. However, when the Manual REC is selected for the intake or the Manual Open is selected for the C/V, these modes are maintained.

(2) It causes the A/C (air conditioner) to the ON mode (this function, however, available only when the fan is turned on and also the compressor is turned on because of the given outside air temperature level).

<Indication>

- The AUTO LED comes on.
- Currently selected mode for the Mode and Intake are respectively indicated.

2. Mode Switch

<Indication>

(1) Pressing the VENT, B/L or FOOT switch selects the corresponding mode.

(2) When the Auto is selected for the Mode and Intake, pressing the mode switch fixes the Intake to the immediately preceding status.

<Indication>

- Turns off the Auto LED.
- Currently selected blow port is indicated.

3. DEF Switch

Press this switch to select the DEF mode.

Blow port	Intake port	A/C	MIX
DEF	Auto FRESH *1	ON mode *2	Auto

<Indication>

*1: When the manual REC is selected for the Intake, the manual REC is maintained.

*2: The ON mode is enabled only when the fun is turned on, and also the compressor is turned on because of the given outside air temperature level.

<Indication>

- The Auto LED is turned off.
- DEF is indicated for the blow port, A/C LED comes on (only when the fan is turned on), and status display is provided for the Intake.

Example 1:

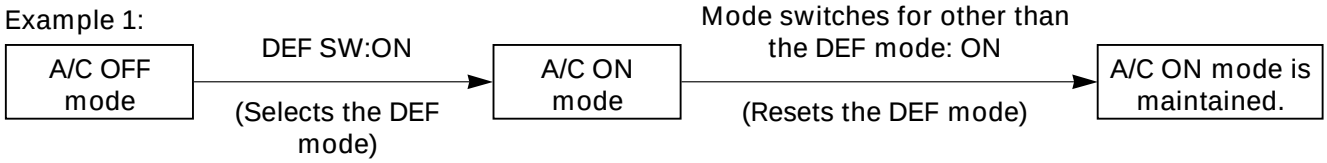

4. Intake Switch

Pressing this switch sequentially selects a different intake port in the following order.

Example 1:

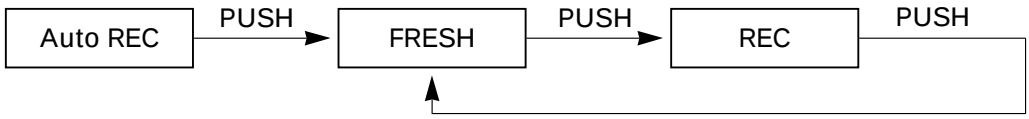

Example 2:

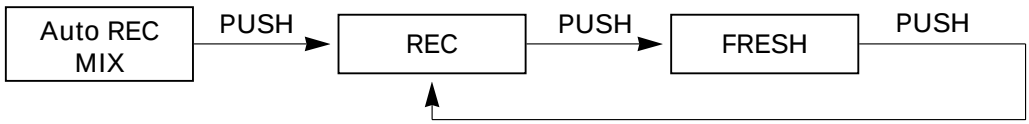

<Indication>

- The Auto LED maintains unaffected.
- Currently selected intake port is indicated.

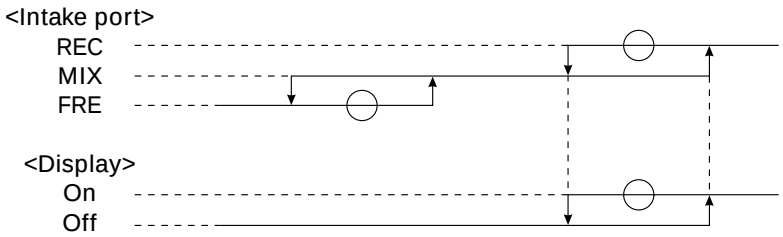

5. Fan Switch

(1) Sets the fan to the specified mode.
(2) Even when the fan switch is turned off, status display for the Model and Intake is maintained.

6. Temperature Control Knob

(1) This knob is operable only when the fan is turned on. It may be used for the MAX control of each block except the fan.
(2) When the manual mode is selected for the fan control, this manual mode is maintained.

<MAX Control>

	Mix	Fan	Mode	Intake	A/C
MAX/COOL	Full cool	MAX/HI	VENT	REC*1	ON mode*2
MAX/HEAT	Full hot	AUTO/HI	FOOT*3	FRESH	Current status is maintained

*1: In the A/C: OFF mode, FRESH shall be selected.
*2: The ON mode is available only when ON is selected for the fan as well as for the cold outside air ON/OFF selection.
*3: When the MAX control is selected from the DEF mode, this DEF mode shall be maintained.

Example 1:

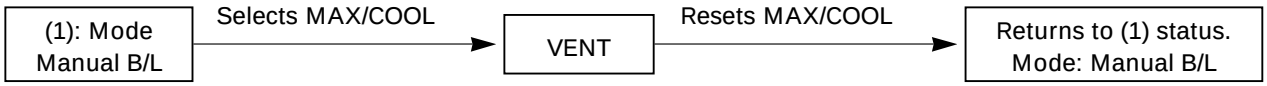

Example 2:

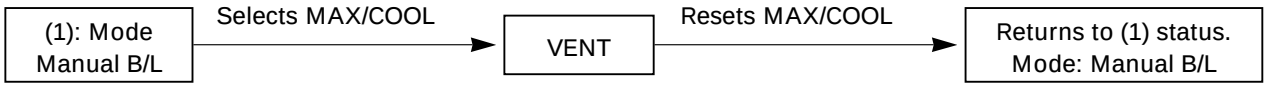

<Indication>

- As long as the MAX control is selected, the immediately preceding indication shall be maintained for the AUTO.
- Status display is provided for others.

7. Air Conditioning Switch

Pressing this switch turns on or off the A/C (air conditioning) control. (The compressor remains turned off if the fan is turned off and also the compressor has been turned off because of the given outside air temperature level.)

<Indication>

(1) The A/C LED remains turned on even if the compressor has been turned off because of the given outside air temperature level. In this case, however, the AUTO or DEF switch must be turned on and the A/C ON mode must also be turned on (by the MAX/C mode).
(2) Pressing the A/C switch from the above state (1) turns off the A/C LED.

OVERVIEW OF CONSTRUCTION, MOVEMENT AND CONTROL OF MAJOR PARTS OF FULL AUTOMATIC AIR CONDITIONER SYSTEM

Automatic Heater/Air Conditioner Control Unit

Equipped with the built-in micro-computer, this control unit operates on signals from sensors and input signals from switches to offer total control of the blower fan, and actuators used for the mode door, intake door and air mix door.
Its self-diagnosis function enables quicker access to a failed part and its more accurate troubleshooting.

In Car Sensor

It is a sensor used for detecting room temperature of a vehicle. This sensor converts a given room temperature into a resistance value before entering the data to the automatic heater/air conditioner control unit.
This in car sensor unites the power driven aspirator and the motor fan so that a small amount of room air may be constantly fed to the sensor.
This sensor is provided on the control panel.

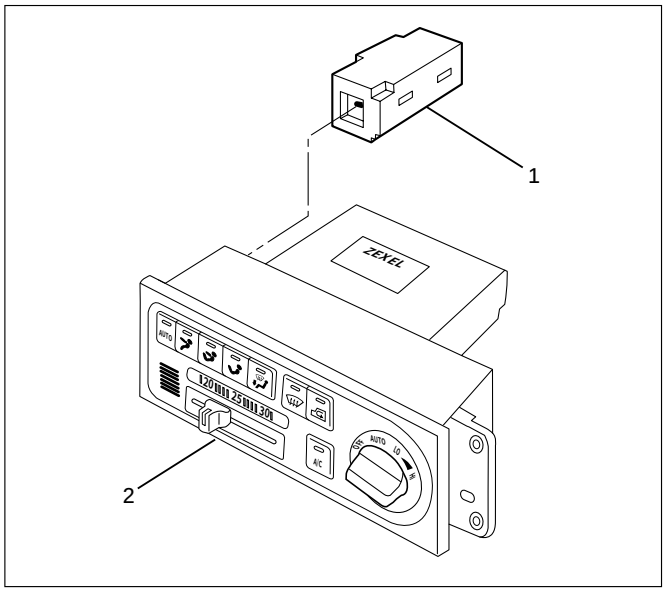

865RY00006

Legend
(1) In Car Sensor
(2) Full Automatic Air Conditioner Control Unit

Ambient Sensor

This sensor is used for detecting temperature outside the vehicle. It converts a given outside air temperature into a resistance value before entering the data to the automatic heater/air conditioner control unit.
Thermal effects from the condenser and radiator during idling after a run can be measured and offset the automatic amplifier.
This sensor is provided on the side plate situated at upper right side of the condenser.

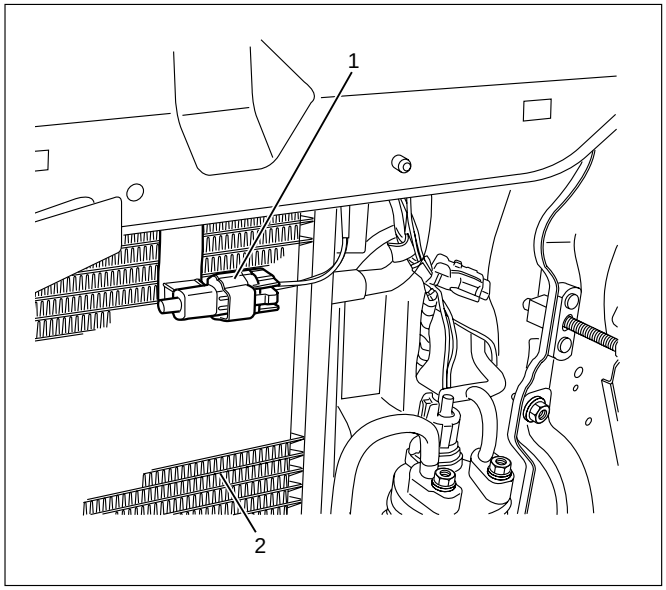

845RY00001

Legend
(1) Ambient Sensor
(2) Condenser Assembly

- **Duct Sensor**
  The sensor is the sensor to detect temperature change of the side of evaporator blower coming by fresh recirculation of intake door or "on" "off" of compressor.
  The temperature is converted to resistant rate.
  And it works as thermostat to control to prevent freezing of evaporator.
  This sensor is installed in the upper case of evaporator.

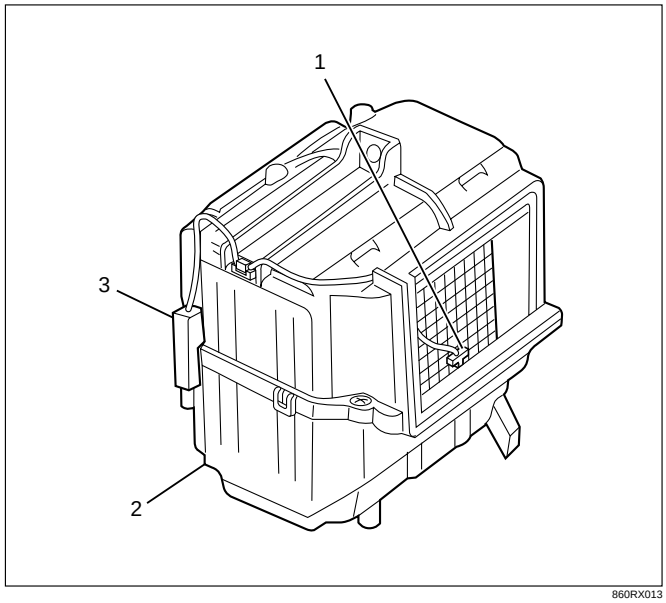

860RX013

Legend
(1) Duct Sensor
(2) Evaporator Assembly
(3) Amplifierblock

In Car Sensor

It is a photodiode used for detecting quantity of solar radiation. This sensor converts the offset signal generated by changes in the interior temperature (which results from fluctuations in solar radiation) into photoelectric current to enter into the automatic heater/air conditioner control unit.
This sensor is provided at top of the defroster grill.

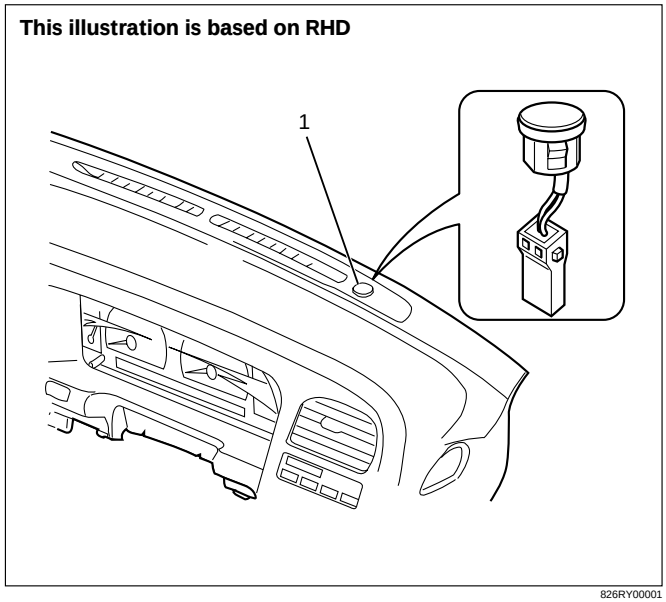

826RY00001

Legend
(1) Sun Sensor

Actuator

The actuators are power driven type containing a small motor. Receiving output current from the automatic heater/air conditioner control unit, actuators drive the heater and blower unit mode doors.
Actuators consist of the mode actuator used for switching the mode (blow port selection), the mix actuator used for changing aperture of the air mix door, the intake actuator used for switching the intake mode(fresh air/interior air).

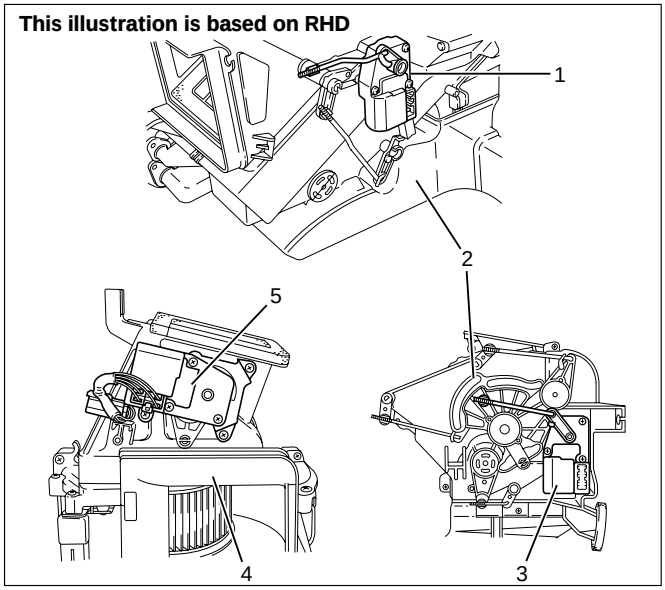

860RX012

Legend
(1) Mix Actuator
(2) Heater Unit
(3) Mode Actuator
(4) Blower Unit
(5) Intake Actuator

The actuator changes the motor speed using the gear and drives each door rotating the output axis united with the sliding contact.

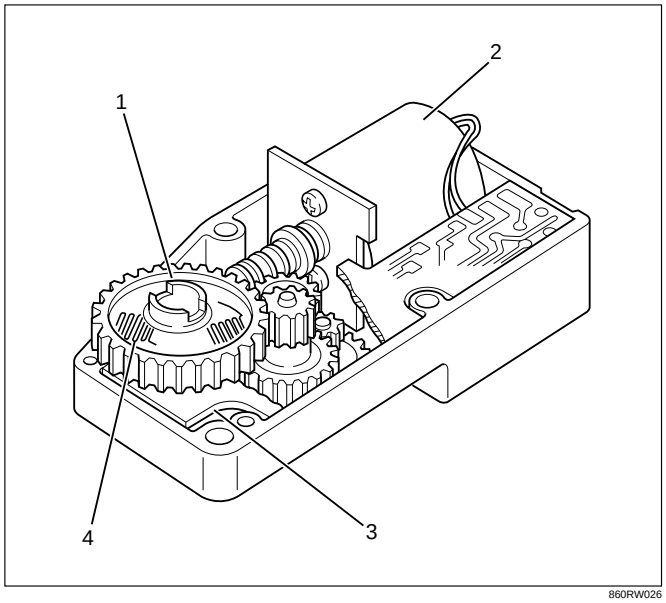

860RW026

Legend

(1) Out put Axis
(2) Motor
(3) Printed Circuit Board
(4) Sliding Contact

The mode and mix actuators are common actuators with the built-in potentiometer. For the intake actuator, the contact switch type is selected.
The potentiometer is a register assembled to the printed circuit board of the mix and mode actuators. It detects the air mix door position specified by rotation of the output axis as a ratio of the variable terminal (VM) voltage against the reference voltage (VDD: 5V), then signals the value to the automatic heater/air conditioner control unit.

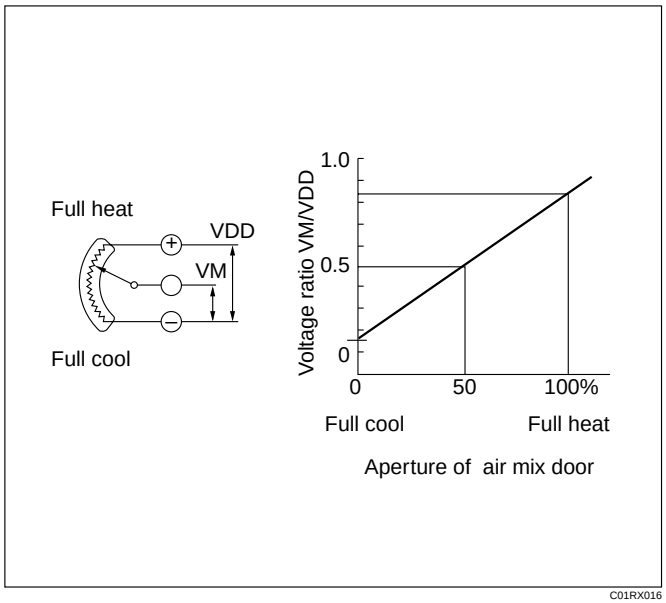

C01RX016

- **Movement of Mix Actuator**

  Position of the air mix door is determined by the controller on the automatic heater/air conditioner control unit.
  As the heat or cool side of the controller is grounded, the transistor on the driver is activated and, thus, the motor rotation is turned on. The sliding contact connected to the motor sends the position detection signal from the potentiometer to the automatic heater/air conditioner control unit. As the set temperature and interior temperature are balanced, the controller returns to the neutral and the motor rotation is stopped.

I-45		Rotation direction	Remarks
(+) side	(–) side		
8	6	Clockwise	Full heat side
6	8	Counter clockwise	Full cool side

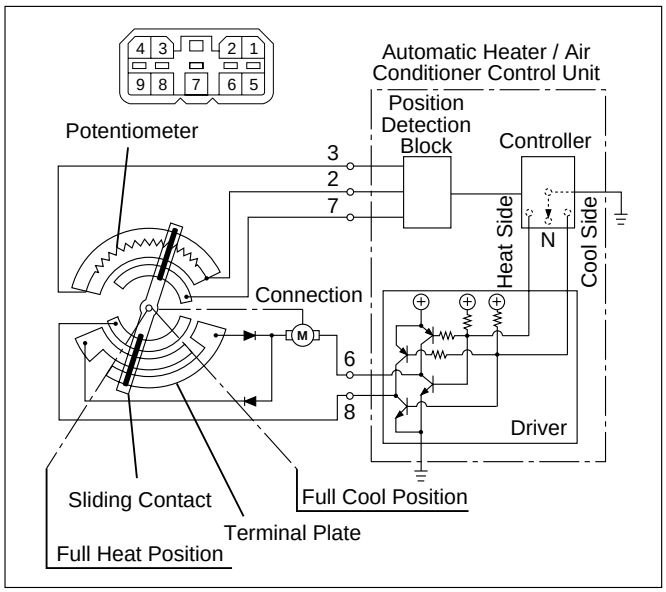

C01RY00016

- **Movement of Mode Actuator**

  As target position of the mode door is decided on the controller of the control unit, the control unit reads the position detection signal from the actuator to select the clockwise or counter clockwise motor rotation direction.
  Grounding the controller VENT or DEF side after the direction selection activates the transistor on the driver, thus turning on the motor rotation. Accompanying the motor rotation, the sliding contact rotates, too. When the target position is reached, the controller on the control unit returns to the neutral and the motor stops.

Conducting pin		Rotation direction	Remarks
(+) side	(–) side		
5	1	Clockwise	VENT to DEF direction
1	5	Counter clockwise	DEF to VENT diction

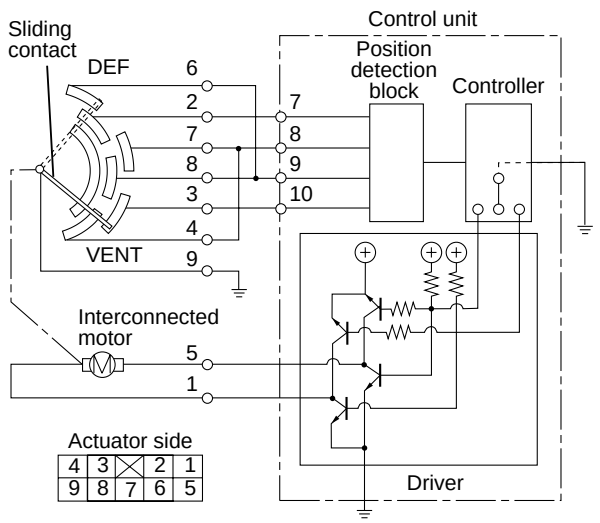

	7	8	9	10
VENT	H	L	H	L
Mid point between VENT - B/L	H	H	H	L
B/L	H	H	L	L
Mid point between B/L - FOOT	H	H	L	H
FOOT	H	L	L	H
Mid point between FOOT - D/F	H	L	H	H
D/F	L	L	H	H
Mid point between D/F - DEF	L	H	H	H
DEF	L	H	L	H

C01RX017

- **Movement of Intake Actuator**

  The controller on the automatic heater/air conditioner control unit selects an intake mode to be used.
  As the Terminal No.5 I-49 is grounded via the sliding contact on the terminal plate, the transistor on the driver is activated, thus turning on the motor rotation. Then, accompanying move of the motor, the sliding contact rotates until grounding of the Terminal No.5 I-49 is removed, thus stopping the motor.

Grounding terminal	Rotation direction	Remarks
No.5 I-49	Clockwise	RE-CIRCULATION→MIX →FRESH

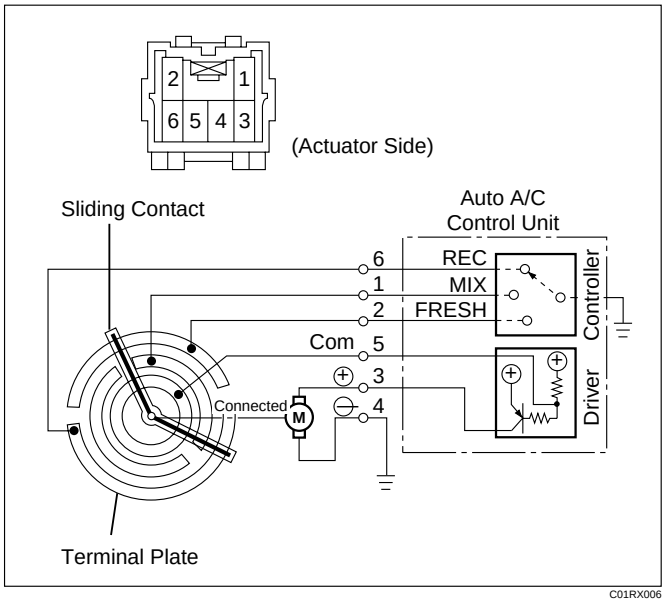

C01RX006

OVERVIEW OF AUTOMATIC CONTROL OF FULL AUTOMATIC AIR CONDITIONER

The full automatic heater and air conditioner on this vehicle has the following features:

- Interior temperature control.
- Air flow control.
- Mode (blow port) control.
- Intake (switching between fresh air and interior air) control.
- Heater start timing control.
- Cooler start timing control.
- Evaporator anti-freeze control.

1. Interior Temperature Control

The automatic heater/air conditioner control unit operates on the setup temperature signal from the temperature control switch and other sensor signals to derive the total signal. Then, the control unit compares this signal against the signal from the potentiometer to determine rotation direction of the mix actuator. The mix actuator moves the air mix door to the aperture specified by the total signal so that the specified interior temperature is achieved.

If the compressor is turned off in the A/C (air conditioning) mode, aperture of the air mix door is offset according to the outside air temperature or the specified interior temperature. This function removes the difference in the blowing temperature in this state and that of when the compressor is turned on.

When FH or FC is selected for the setup temperature, the air mix door is accordingly fixed to the Full Heat or Full Cool mode.

When the VENT mode is selected, aperture of the air mix door is controlled so that excessively heated air may not be blown from the VENT blow port.

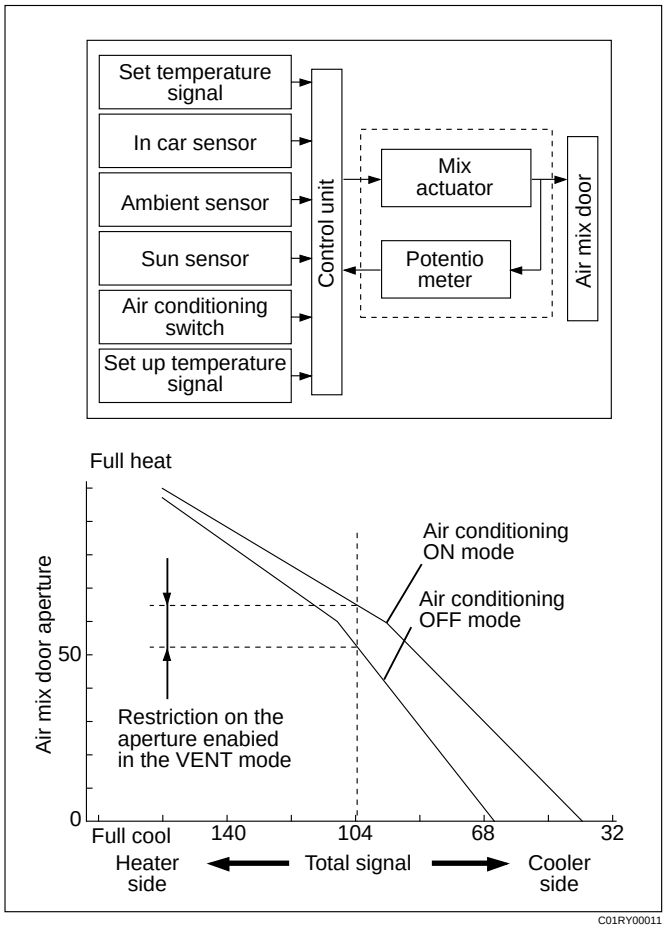

2. Air Flow Control

- In the Auto Mode
  The automatic heater/air conditioner control unit operates on the setup temperature signal and other sensor signals to derive the total signal. Then, the control unit adjusts base potential of the power transistor to match it to the voltage pattern of the target fan so that stage-less fan speed control can be achieved.
  When solar radiation quantity is detected in the VENT or B/L mode, the control unit increases the minimum fan voltage to offset.
  When FH or FC is selected from the temperature control switch, air flow is accordingly fixed to MAX HI or AUTO HI.
- In the Manual Mode
  Air flow specified from the fan switch is entered to the automatic heater/air conditioner control unit as the manual signal. The signal modifies the air flow to the level specified from the fan switch so that the required fan voltage is attained.

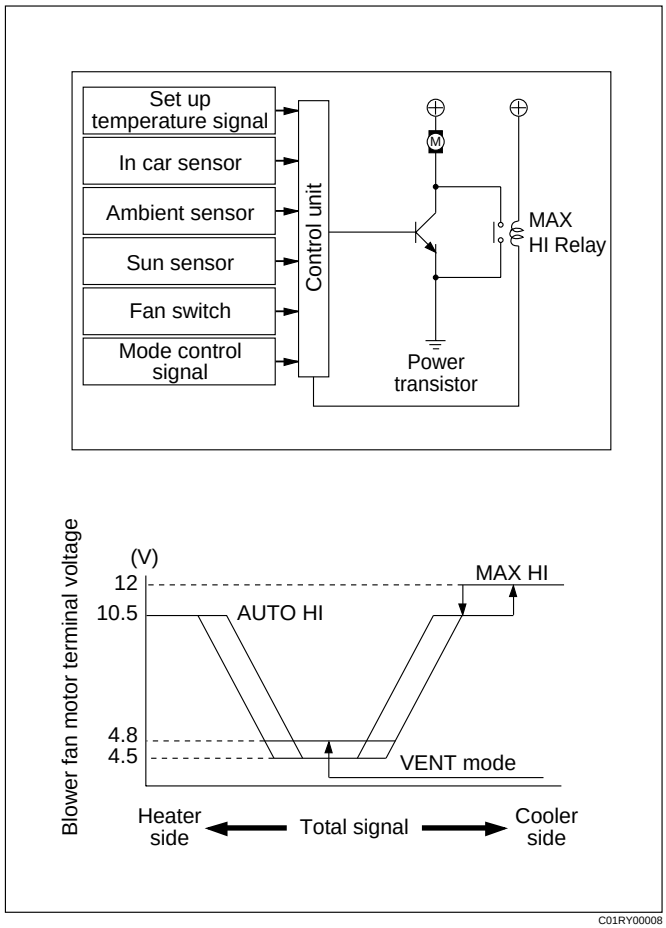

C01RY00008

3. Mode (Blow Port) Control

The automatic heater/air conditioner control unit operates on the setup temperature from the control switch, and temperature and solar radiation quantify from the sensors to determine the total mode control signal. According to the pattern specified by this signal, the control unit selects either one of the VENT, BI-LEVEL, FOOT or DEF/FOOT mode.
The mode actuator determines the rotation direction comparing the target position against the current position being determined by the position detection signal.
When FH or FC is selected for the temperature from the temperature control switch, mode is accordingly fixed to the VENT or FOOT.

- In the manual operation of the mode switch, you can select a desired blow port mode pressing the corresponding mode switch.
- Operating the DEF mode switch selects the DEF for the blow port mode.

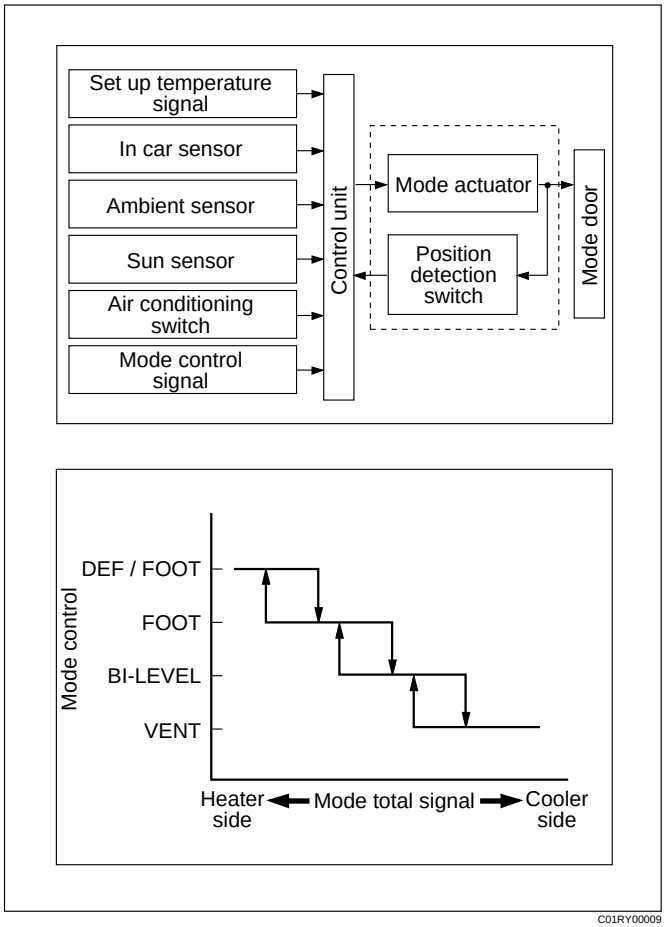

C01RY00009

4. Intake (Fresh air/interior air switching) Control

In the Full Auto mode, the automatic heater/air conditioner control unit operates on the setup temperature signal and other sensor input signals to derive the total signal. According to the pattern specified by this signal, the control unit provides the intake control.

When the fan is turned off or the A/C (air conditioning) is turned off, the intake is fixed to the FRESH mode.

When FC or FH is selected from the control switch, the intake mode is accordingly fixed to the RECIRC or FRESH.

- In the Manual Operation
  Pressing the FRESH (fresh air intake) or the RECIRC (room air circulation) accordingly selects the FRESH or RECIRC mode.
- When the DEF Mode Switch is depressed
  The intake mode is fixed to the FRESH. When the MANU REC is selected, however, the mode is fixed the RECIRC.
- When the Mode Switch is depressed
  If the automatic intake control is selected, the intake is fixed to the currently selected mode.

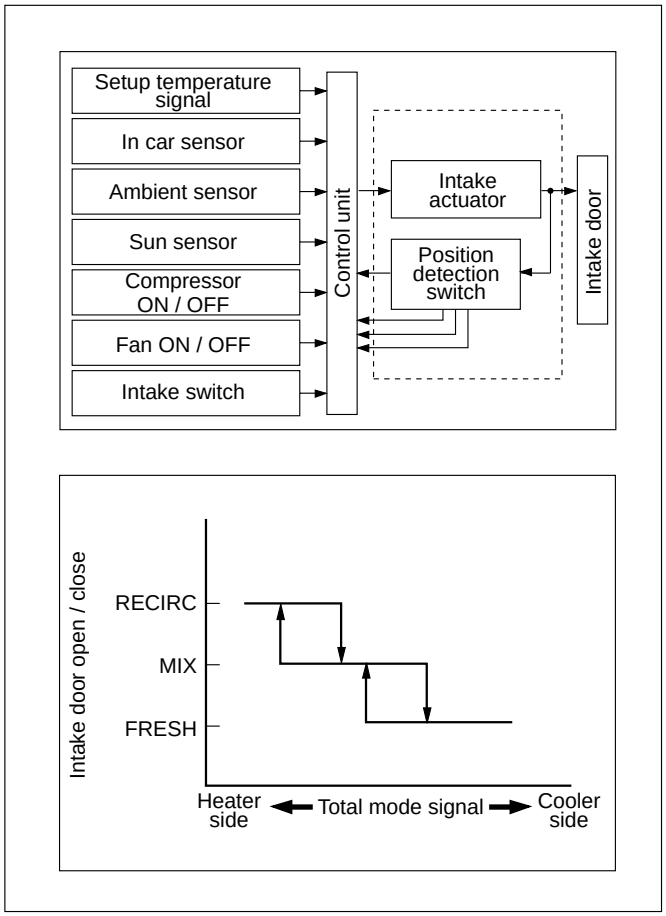

C01RY00012

5. Compressor Control

In the automatic control mode, the automatic heater/air conditioner control unit turns on or off the compressor with the evaporator anti-freeze mechanism using the duct sensor. And, when outside air is detected to be low through the ambient sensor signal, the control unit turns off the compressor using the compressor control function.

- Manual Control
  In the automatic control mode, pressing the A/C (air conditioning) switch turns off the compressor.
- Pressing the DEF mode switch automatically turns on the compressor.

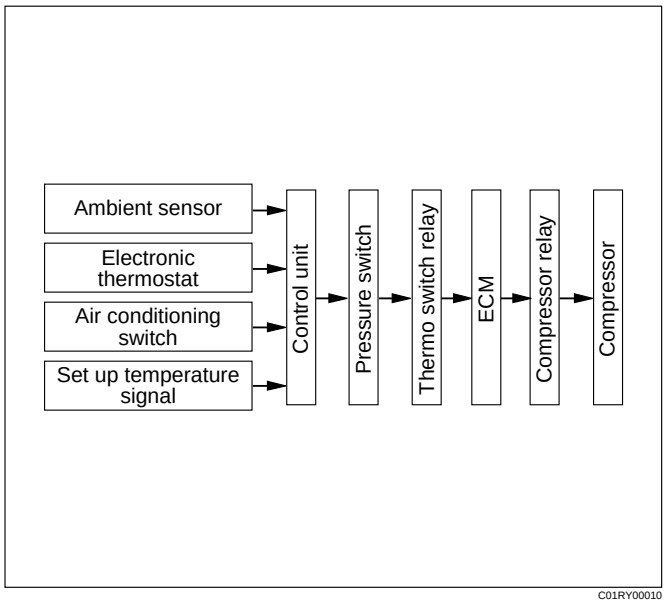

C01RY00010

6. Heating Start Timing Control

When the automatic heater/air conditioner is started, heating is turned on under following conditions.

- The detected temperature of thermo unit is 136°F or less.
- The temperature setting signal and the total signal by each sensor meet the condition of heating.

When the detected temperature by the coolant temperature sensor is 136°F or less the blower fan motor is set to work at low speed and the "DEF" mode is selected.

When the detected temperature by the coolant temperature sensor is 77°F or more, the blow mode changes automatic control. And the blower fan speed is controlled to be lineally up from "LO" to "MAX HI".

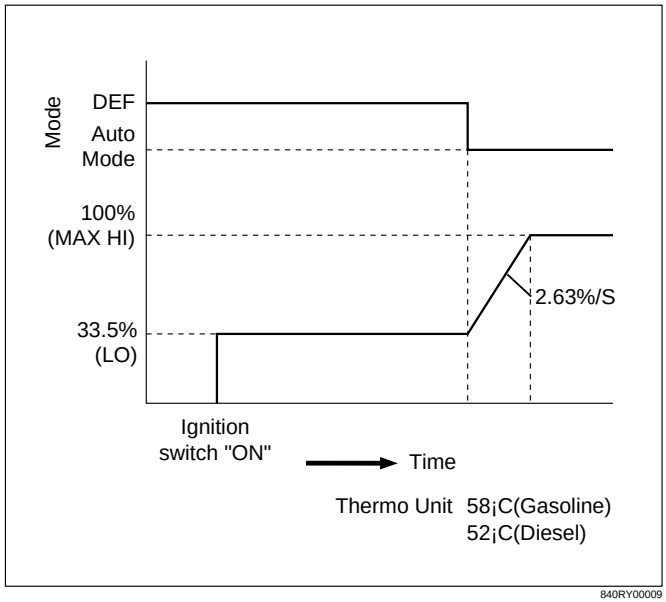

7. Cooling Start Timing Control

When the automatic heater/air conditioner is started, cooling is turned on under following conditions.

- The in car sensor is 86°F or more.
- The temperature setting signal and the signals from each sensor meet the specified condition.

The blower fan speed is set to "LO" for maximum 7 seconds when cooling start conditions meet, and then, is controlled to be lineally up to "MAX HI" by 5.32%/S.

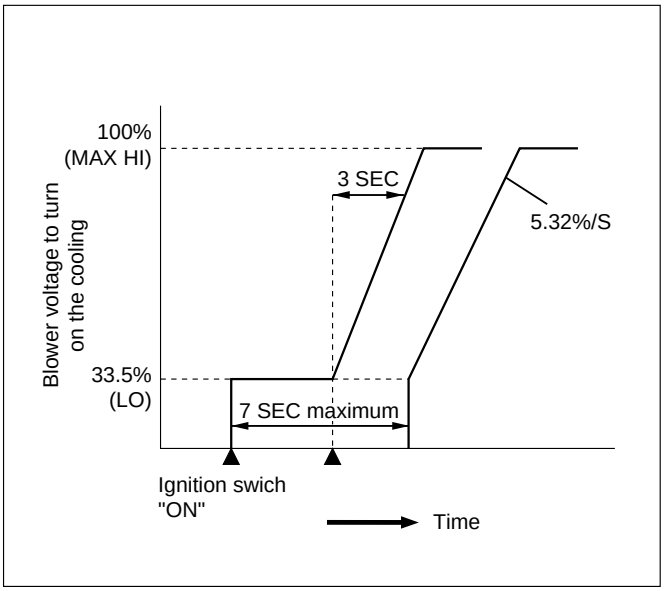

TROUBLESHOOTING

Troubleshooting, Its Overview and Procedures

The full automatic heater and air conditioner equips with the "Self-Diagnosis Function" to check its major components.
This function makes access to the sensors, actuators and blower fan motor system easier when checking them up and, when a failed part is located, this function restores its original performance.
When implementing the troubleshooting, this self-diagnosis function narrows the range to be searched at the first step, then check relevant parts one by one according to the "Checking Procedures by Failed Location" As for a location this function is unappreciable, the system accurately determines characteristics of a given trouble and checks relevant parts according to the "Checking Procedures by Failed Location".
The following illustrates basic troubleshooting flow.

1. Basic Troubleshooting Flow

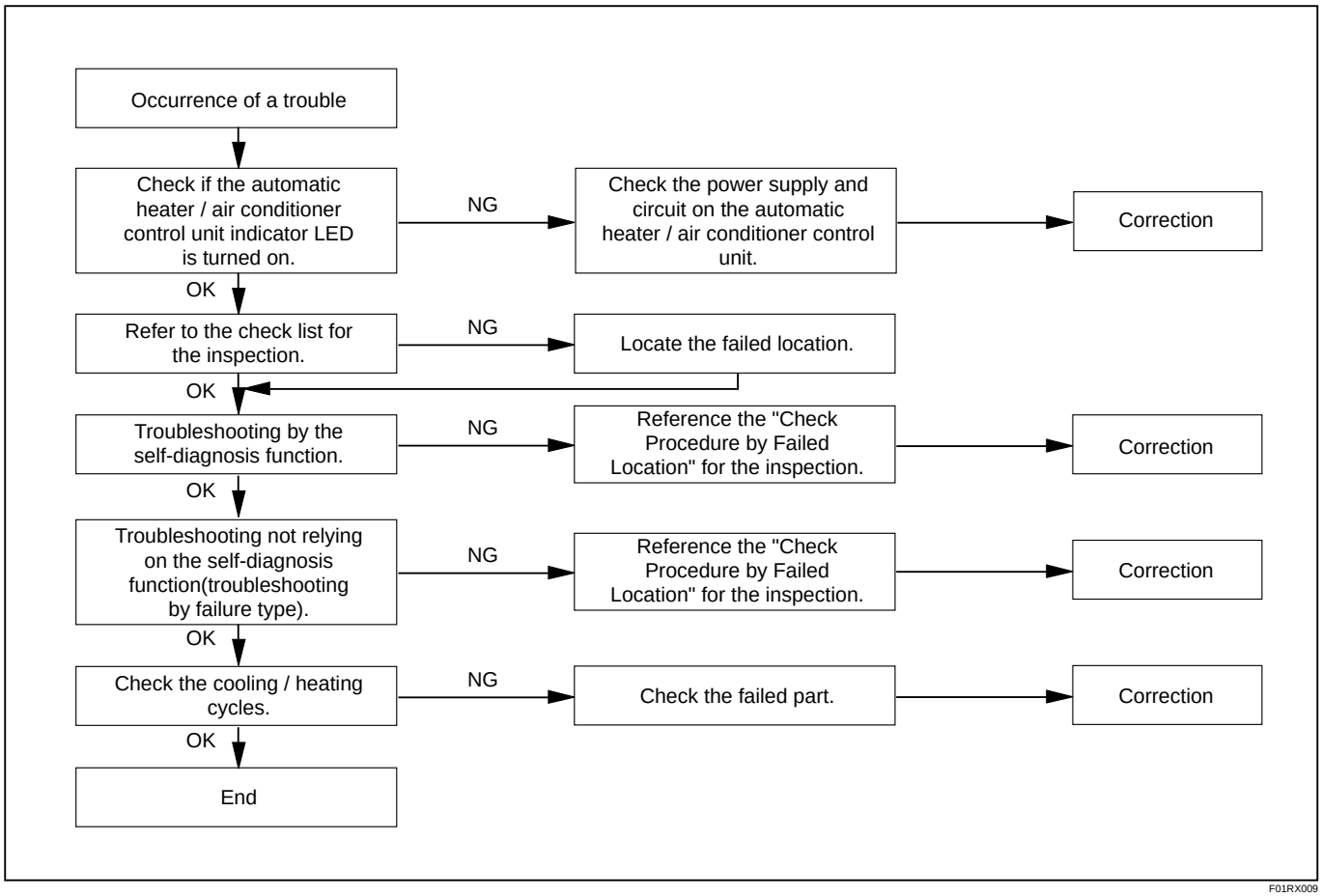

F01RX009

Check of Auto Amplifier (Automatic air conditioner control unit) Power Supply System

- This check is required because a trouble on the auto amplifier (control unit) power supply circuit or grounding circuit prevents accurate troubleshooting.

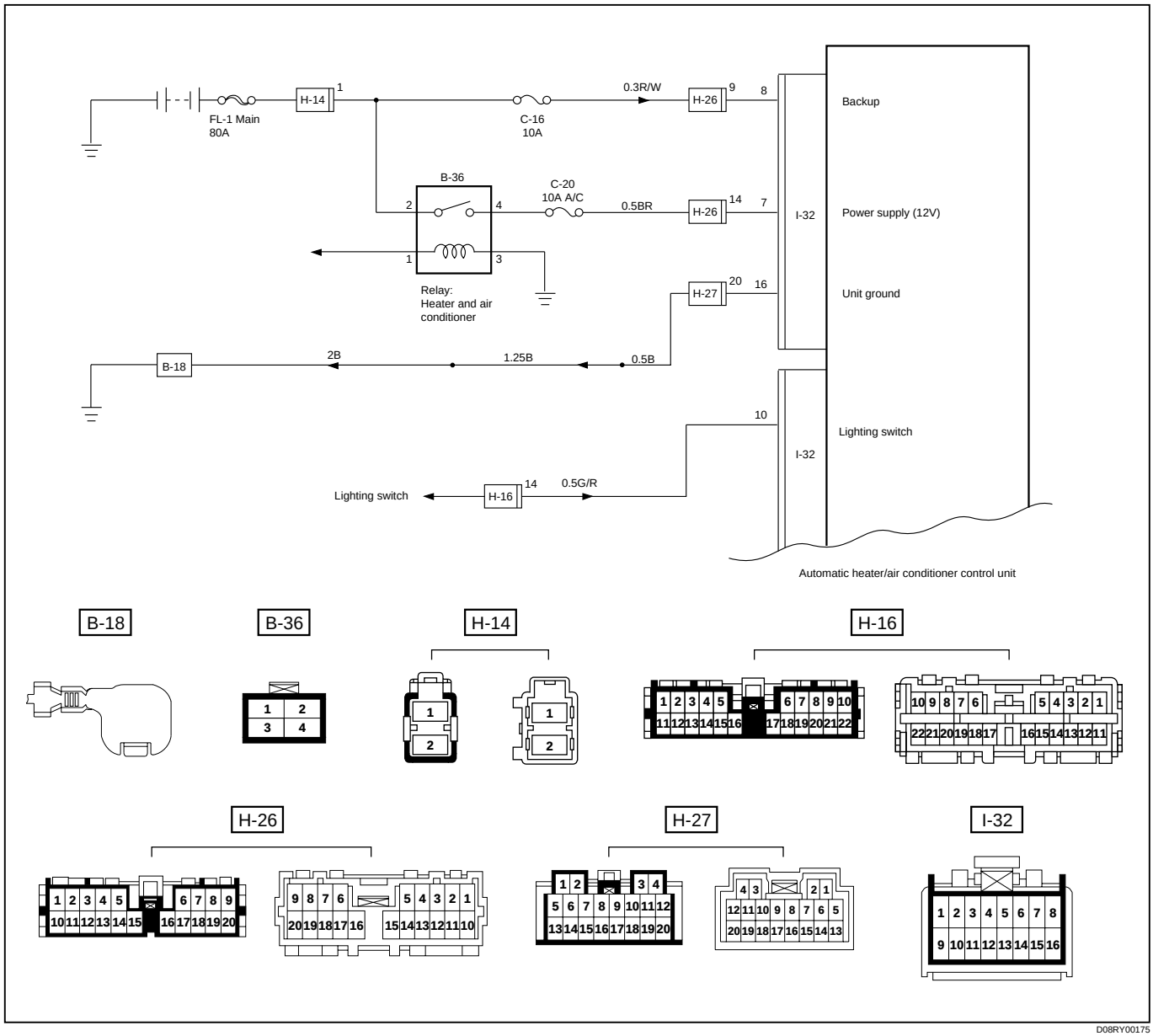

D08RY00175

Check of auto amplifier power supply circuit and grounding circuit.

Chart A

Chart "A" : Check of Auto Amplifier Power Supply System

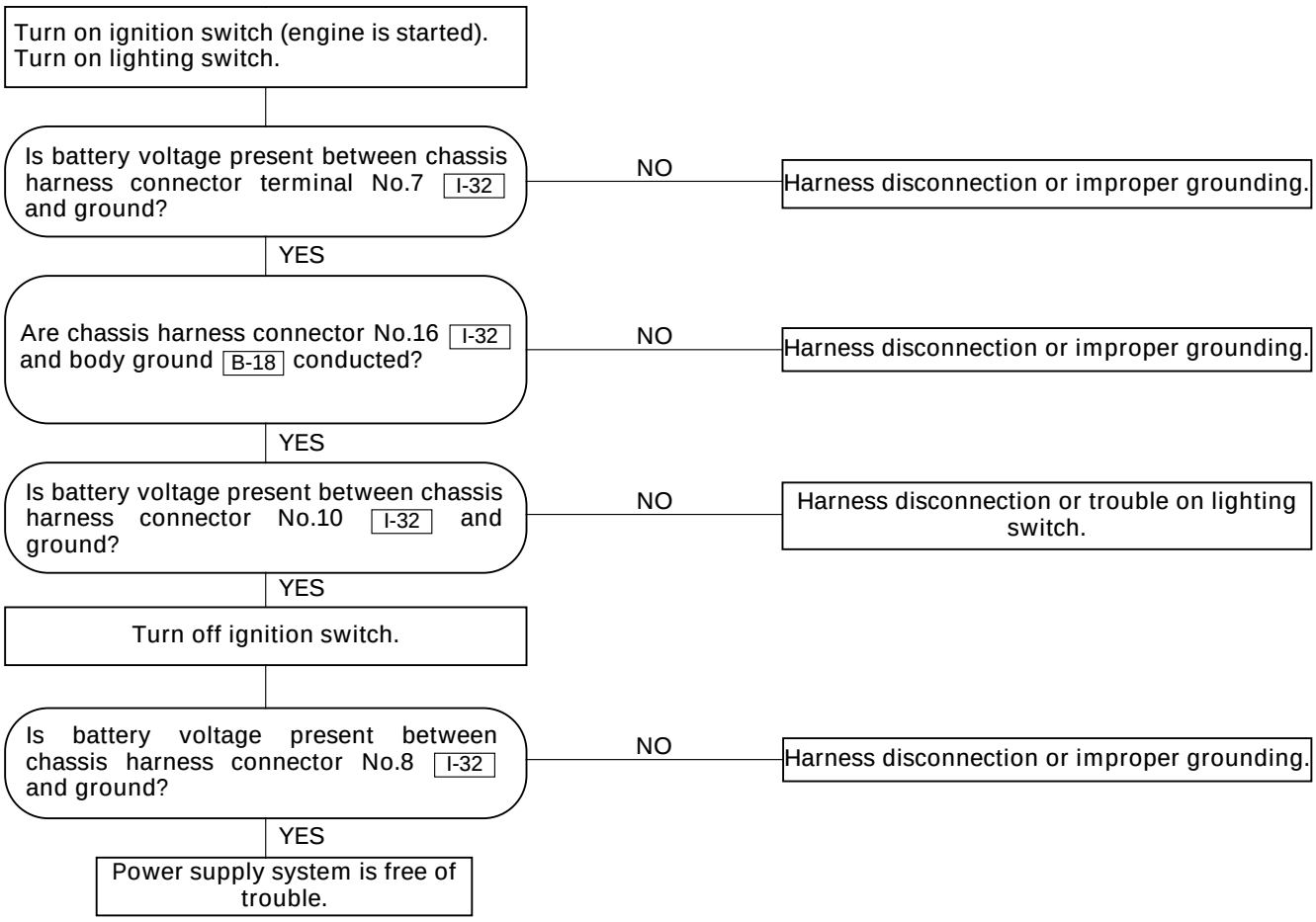

Performance and Movement checklist for Automatic Air Conditioner Related Parts

Start the engine, and when the engine coolant reached 60°C check performance and movement of the related parts according the following checklist.

1. Performance Check Using the Manual Switch

No.	Item	Checking Approach		Acceptance criteria
		Condition	Operation	
1	Blowing temperature (check movement of air mix door)	Auto switch must be turned on (FAN-AUTO MODE-AUTO)	(1) Select FC for the setup temperature. (2) Select FH for the setup temperature. → Then, select the MAX Control.	(1) Cold air shall be blown out. (2) Hot air shall be blown out.
2	Airflow volume (check movement of the mode door)	Set temperature to 25.0°C.	(1) Turn the fan knob off. (2) Turn the fan knob from LOW to HI.	(1) The fan shall be stopped, thus stopping air blow, too. (2) Airflow volume shall change from LOW to HI.
3	Blowing temperature (check movement of the mode door)	Set temperature to 25.0°C. Set the fan knob to HI.	Press the mode switch to change the blow port mode sequentially from the VENT through BI-LEVEL, FOOT up to DEF.	LED corresponding to each mode shall be turned on and the blow port mode shall be switched smoothly.
4	The interior/outside air switching mode (check movement of intake door)	Set temperature to 25.0°C.	Turn the LED off using the interior/outside air switch (this introduces the outside air intake mode). Then, the set fan knob to HI and press the interior/outside switch to turn on the LED.	The LED indication shall be switched from OFF to ON accompanying a change in air blowing sound.
5	Compressor	Set the temperature to FC. (Outside air temperature is 0C or above and interior temperature at ordinary temperature.)	Press the "OFF" switch. (1) Press the Auto switch. (2) Press the Air Conditioner switch.	(1) As the fan knob is set to the Auto position, the A/C switch LED shall come on and the compressor shall be turned on. (2) As the A/C LED comes off, the compressor shall be turned off.

2. Check of Full Auto Function

No.	Item	Checking Approach		Acceptance criteria
		Condition	Operation	
1	Full Auto function	FAN KNOB “AUTO” MODE SW “AUTO”	Select FC for the temperature.	The LED shall come on. Cold air shall be blown out. The following LEDs shall come on: • Blow port mode : F01RX002 • Intake mode • Fan speed : MAX Hi • A/C
			Change the temperature gradually starting with 20°C up to 30°C.	The following phenomena shall be recognized. • Temperature of blown air: Cold air is changed to hot air. • Change in the air flow volume. • The blow port mode LED indication changes in the following sequence: (VENT) (BI-LEVEL) (FOOT) F01RX003
			Select FH for the temperature.	Cold air shall be blown out. The following LEDs shall come on. • Blow port mode : F01RX004 • Fan speed: Max Hi

TROUBLESHOOTING WITH SELF-DIAGNOSIS FUNCTION

1. Overview of Self-Diagnosis Function

The self-diagnosis is implemented in 3 steps for each target. For detail of check procedure contained in each step, refer to the relevant section of "Check Procedure by Failed Location" listed in the Self-Diagnosis Operation Procedure.
For turning on the self-diagnosis function and switching of the check step, refer to the flow chart given below. You can reset the self-diagnosis function by turning the ignition switch off or turning the DEF switch on for 3 seconds.

2. Self-Diagnosis Operation Procedure

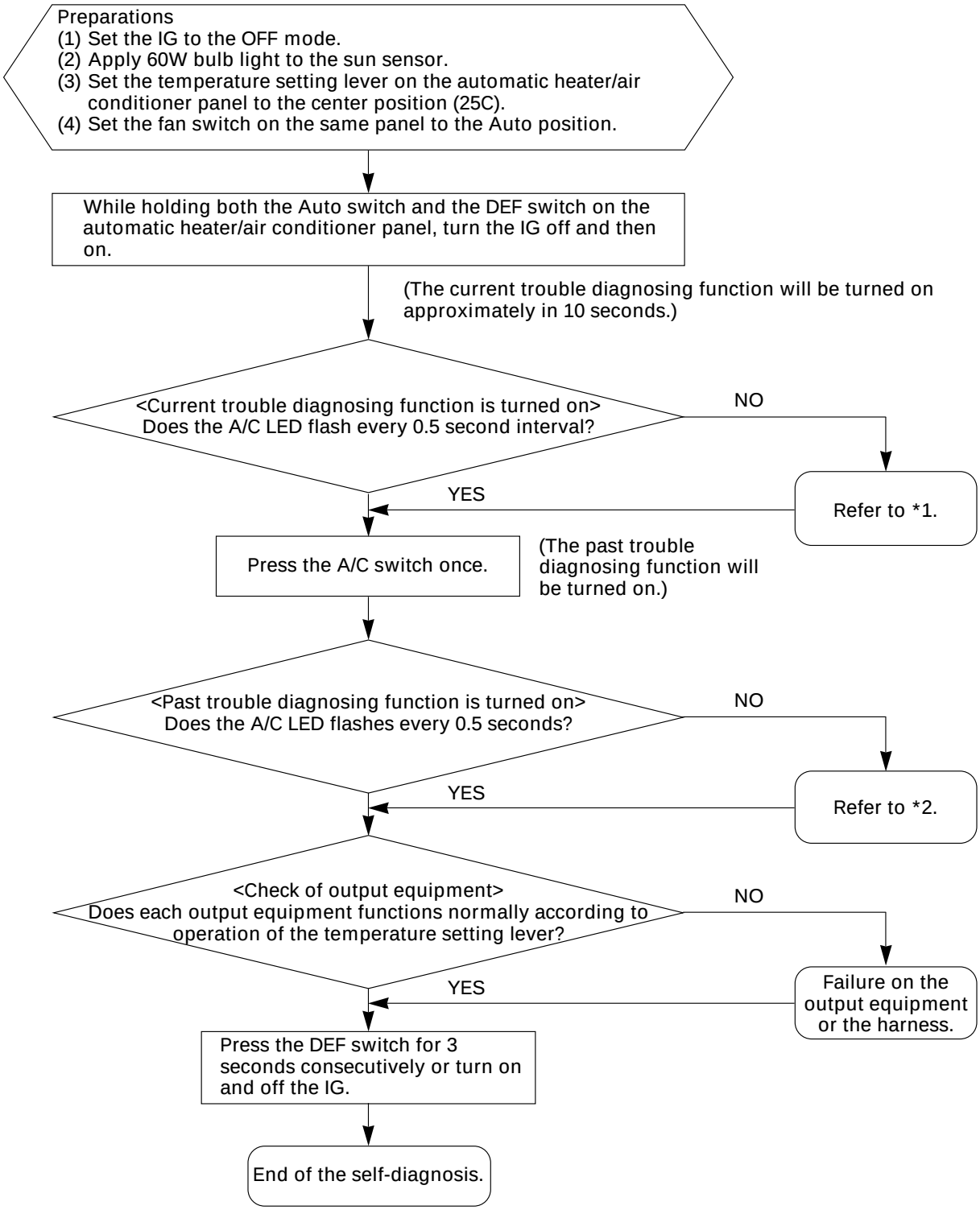

*1. Displaying the Current Trouble Diagnosing Table

Start the engine while holding down both the Auto switch and the DEF switch on the control panel, and the table will appear in approximately 10 seconds to the indicator lamp (LED) of the air conditioning switch. Result of the diagnosis along the following 9 items will be shown one by one in 0.5 second interval irrespective of presence or absence of a trouble for a given item. When the display 9 items is completed, it is repeated with 3 seconds of interval in between. A failed item is indicated by flashing of the LED that is repeated 3 times within 0.5 seconds. If a trouble is indicated, you can locate the failed section by knowing when in the total sequence it has been displayed.

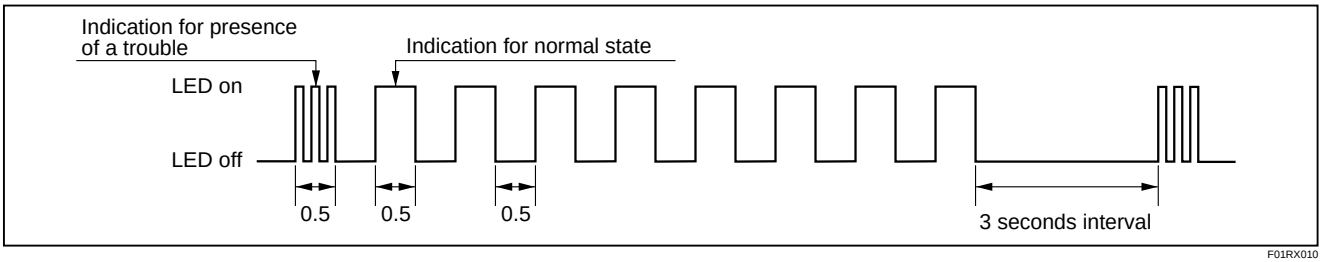

F01RX010

Items for Current Trouble Diagnosis

Display pattern	Failed part
ON / OFF	Normal pattern
	In car sensor
	Ambient sensor
	Sun sensor (Note 1)
	Duct sensor
	Temperature control lever (Note 2)
	Fan switch (Note 3)
	Mix actuator
	Mode (blow port) control
	Intake (fresh air/interior air switching) control

F01RY00008

As shown above, display of result along nine items is repeated with 3-second interval in between.

Note 1: When checking the solar radiation sensor, apply sufficient light using a 60W bulb. Otherwise, it can be diagnosed as failed.

Note 2: If the temperature setting lever is set on both ends (one set to 18°C, blue scale = Full cool and the other to 31°C, red scale = Full hot), they can be diagnosed as failed.

Note 3: Likewise, the fan switch can be diagnosed as failed if set on both ends.

*2. Displaying the Past Trouble Diagnosing Table

The past trouble diagnosis displays only the items on which trouble has recurred 16 times in the past. If you press the air conditioning switch once while the current trouble diagnosis is taking place, display of the past trouble diagnosis will appear on the indicator lamp (LED) of the air conditioning switch. Results of the diagnosis along the following five items are displayed one by one in 0.5 second interval irrespective of presence or absence of a trouble. A failed item is indicated by flashing of the LED that is repeated 3 times within 0.5 seconds. You can locate the failed section by counting in what sequence it has been displayed.

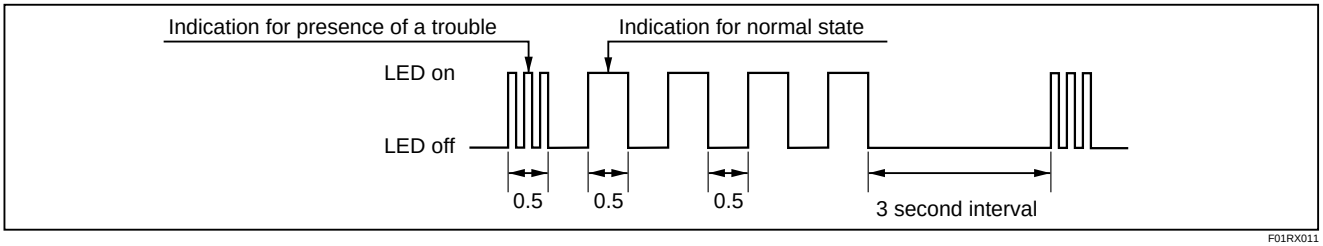

F01RX011

Items for Past Trouble Diagnosis

Display pattern	Failed part
ON / OFF	Normal pattern
	In car sensor
	Ambient sensor
	Sun sensor
	Duct sensor
	Mix actuator

F01RY00007

*3. Check of Output Equipment

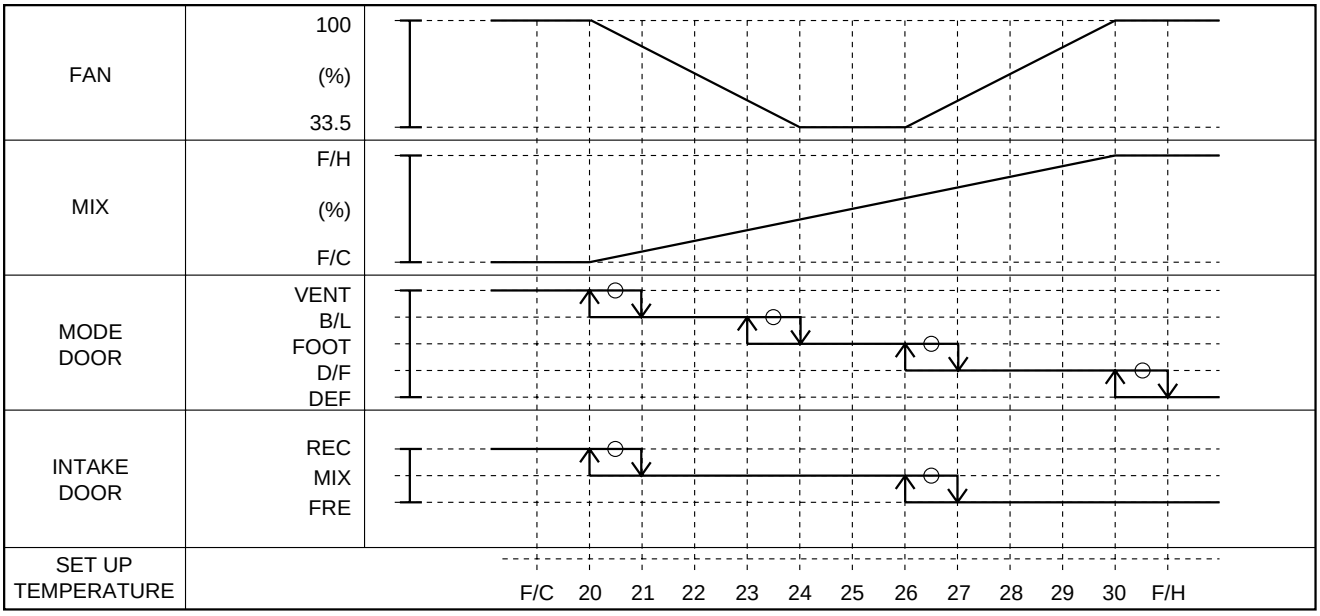

F01RY00001

INSPECTION BY FAILED LOCATION

Inspection of the Sensors

When the self-diagnosis function has determined that trouble is present on the sensors, check them according to the following flow chart.

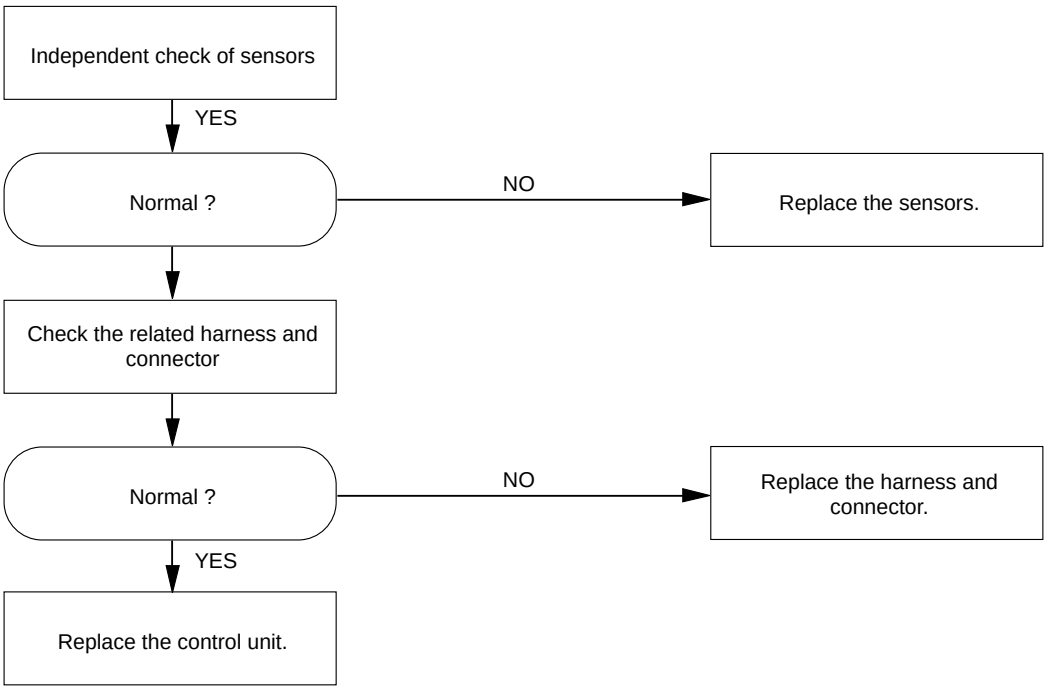

Sensors	Allowable range	Check method
In car sensor	Refer to the sensor resistance curve.	Chart 1
Ambient sensor	Refer to the sensor resistance curve.	Chart 2
Sun sensor	100 ohms maximum in forward and 0.02 mA minimum when exposed to 60W incandescent lamp.	Chart 3

F01RY00005

Chart 1: In Car Sensor

Disconnect the in car sensor connector (I-34).

Is the sensor performance normal? (refer to the later section on "Check Up")

NO → Replace the sensor.

YES

Are conduction provided between the following connector terminals on chassis harness side?:
No.3 I-34 and No.1 I-33.
No.4 I-34 and No.11 I-33.

NO → Disconnection of the harness.

YES

Failure on the automatic heater/air conditioner control unit.

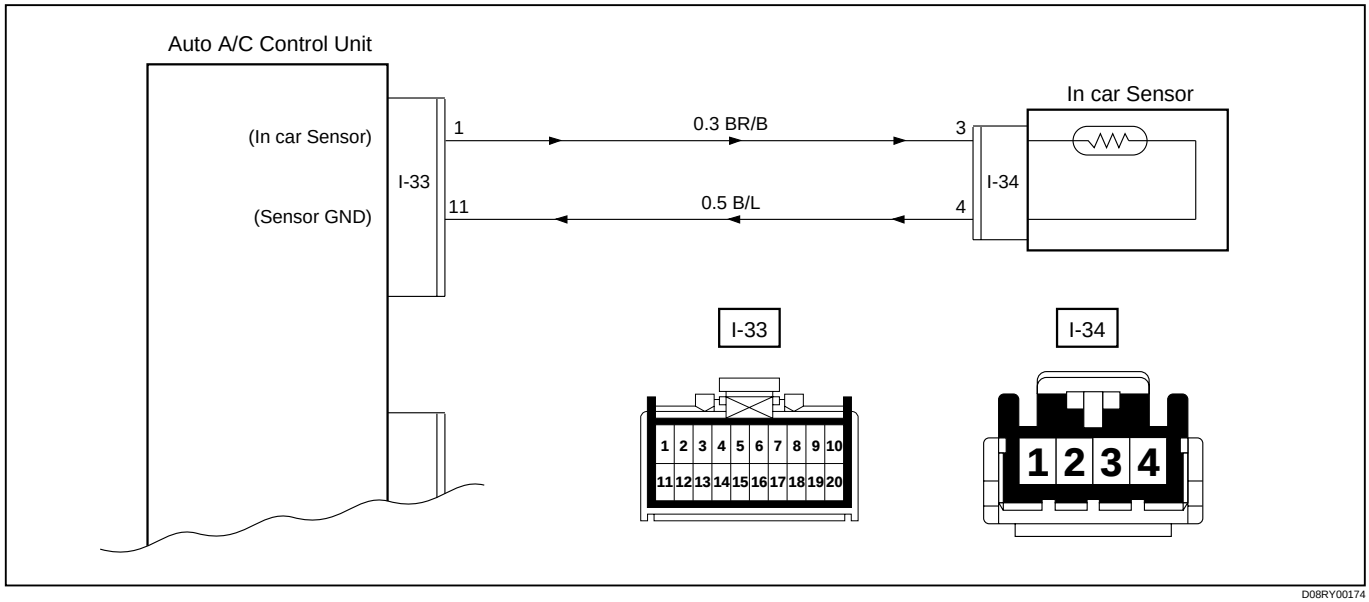

D08RY00174

Chart 2: Ambient Sensor

Disconnect the Ambient sensor connector (C-86).

Is performance of the ambient sensor normal? (Refer to the later section on "Check Up".)

NO → Replace the ambient sensor.

YES

Connect the ambient sensor connector.

Is resistance between the following connectors normal?
No.2 I-33 and No.11 I-33.

NO → Failure on the harness.

YES

Replace the automatic heater/air conditioner control unit.

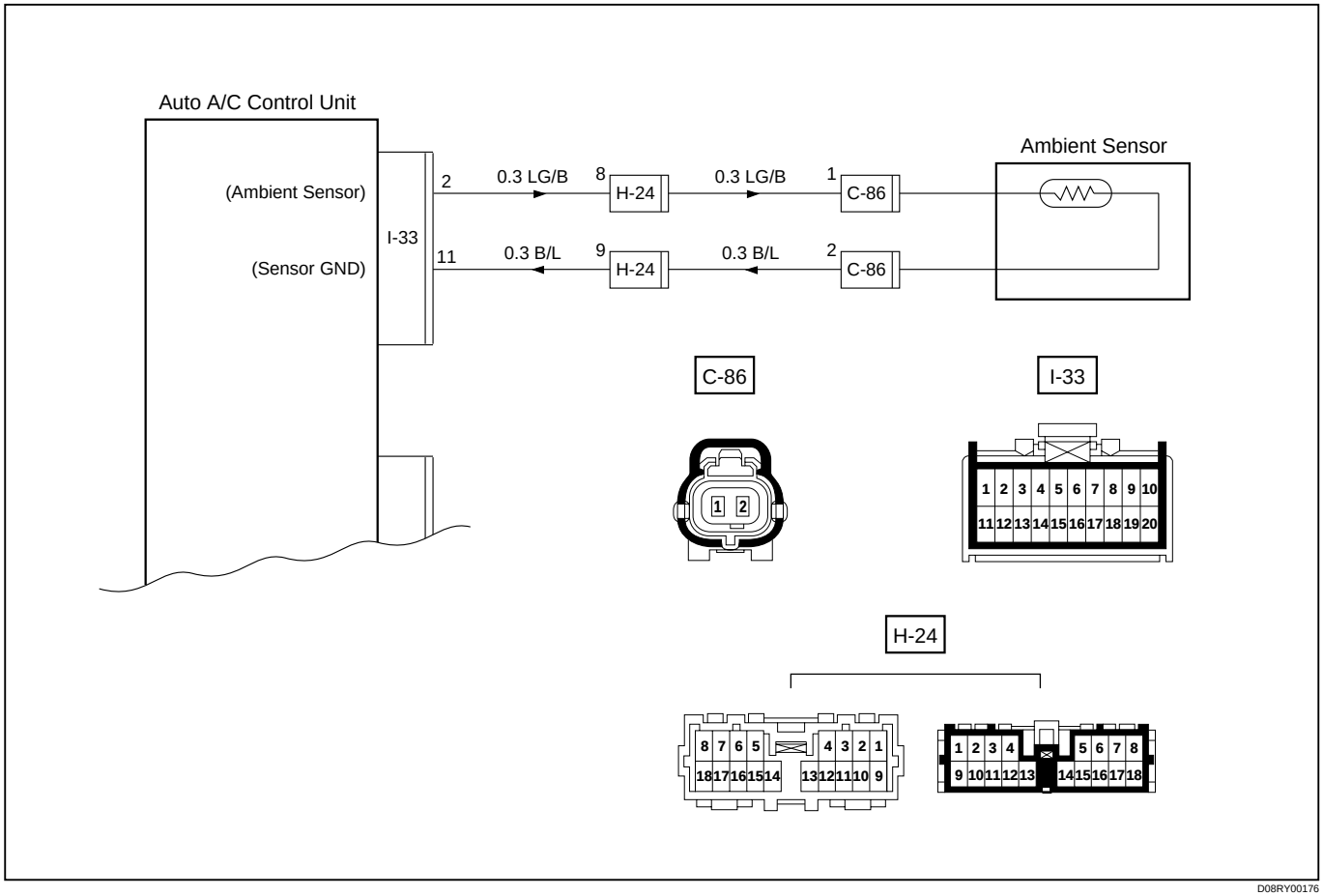

D08RY00176

Chart 3: Sun Sensor

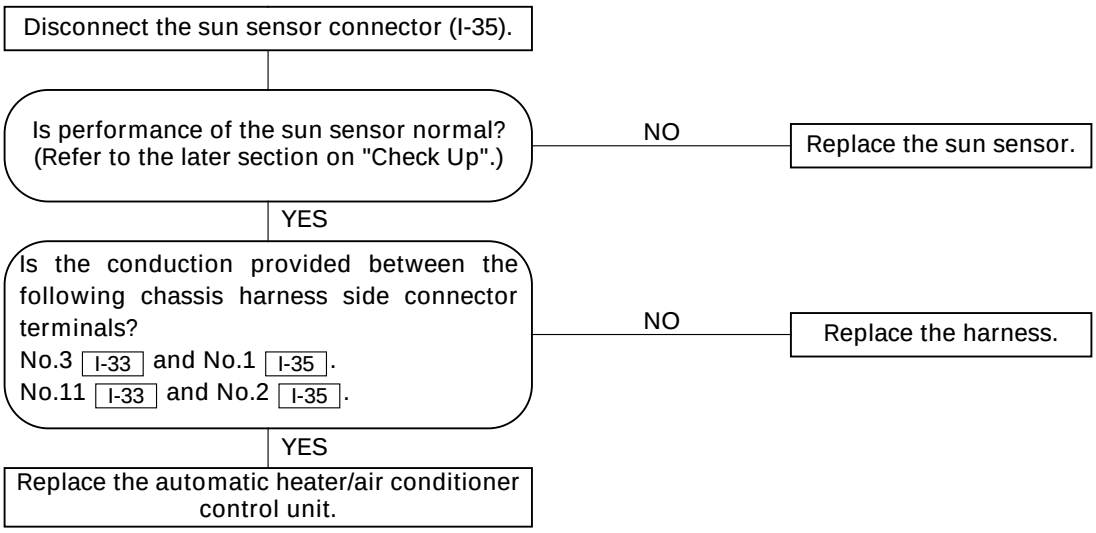

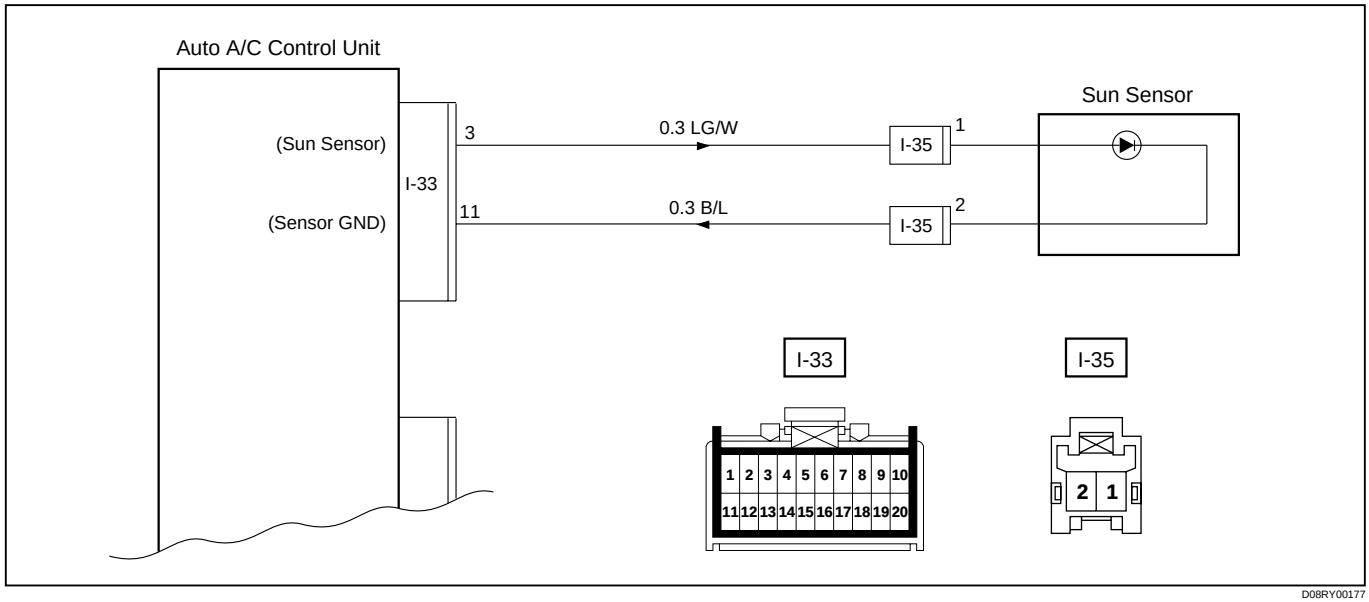

D08RY00177

Inspection of the Intake Actuator System

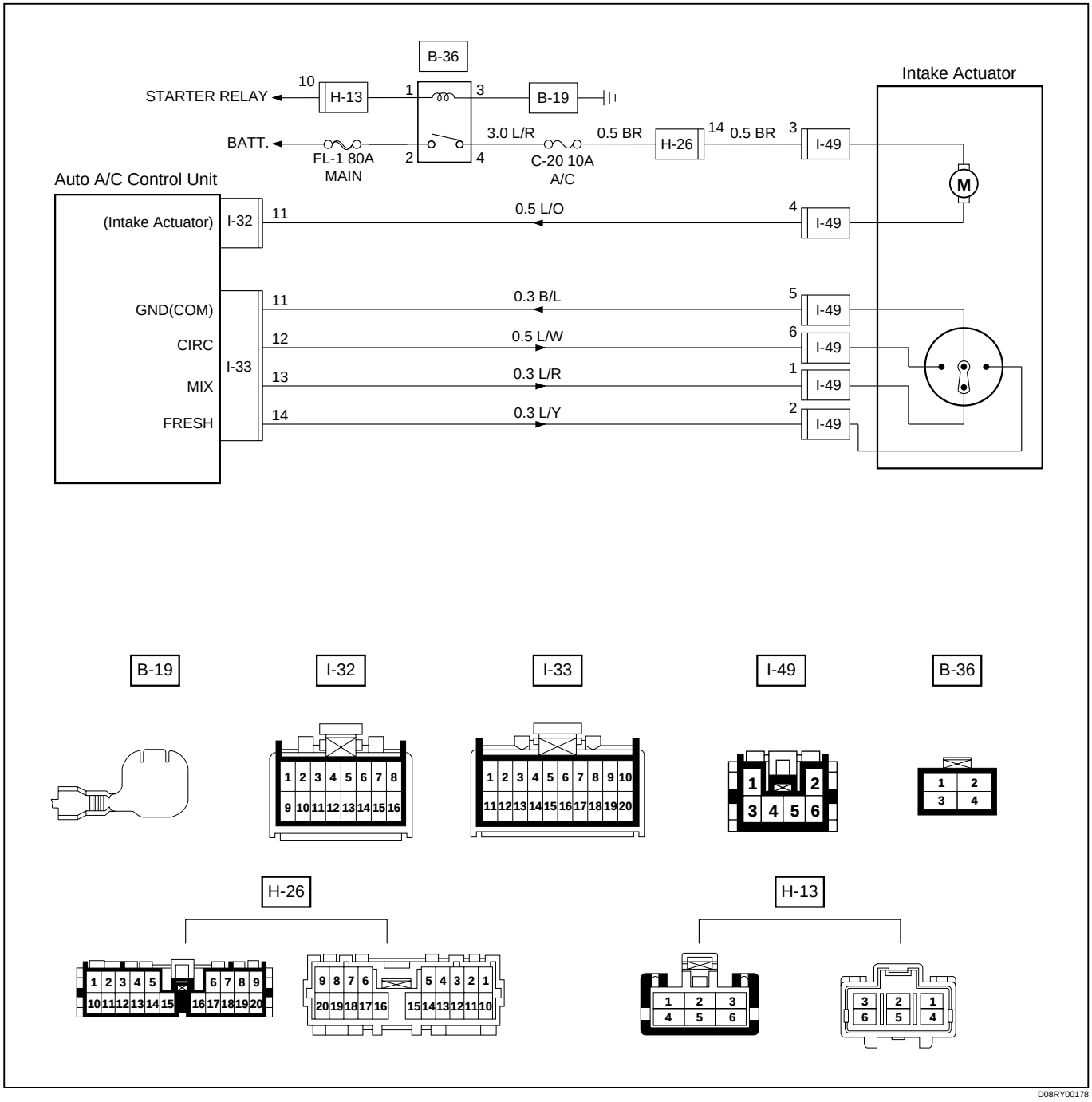

D08RY00178

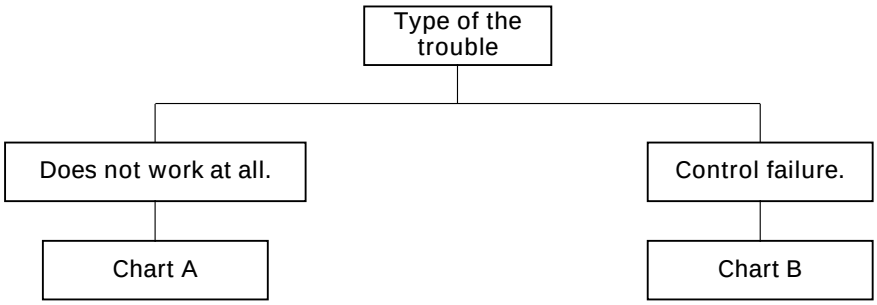

Chart A: Does Not Work At All

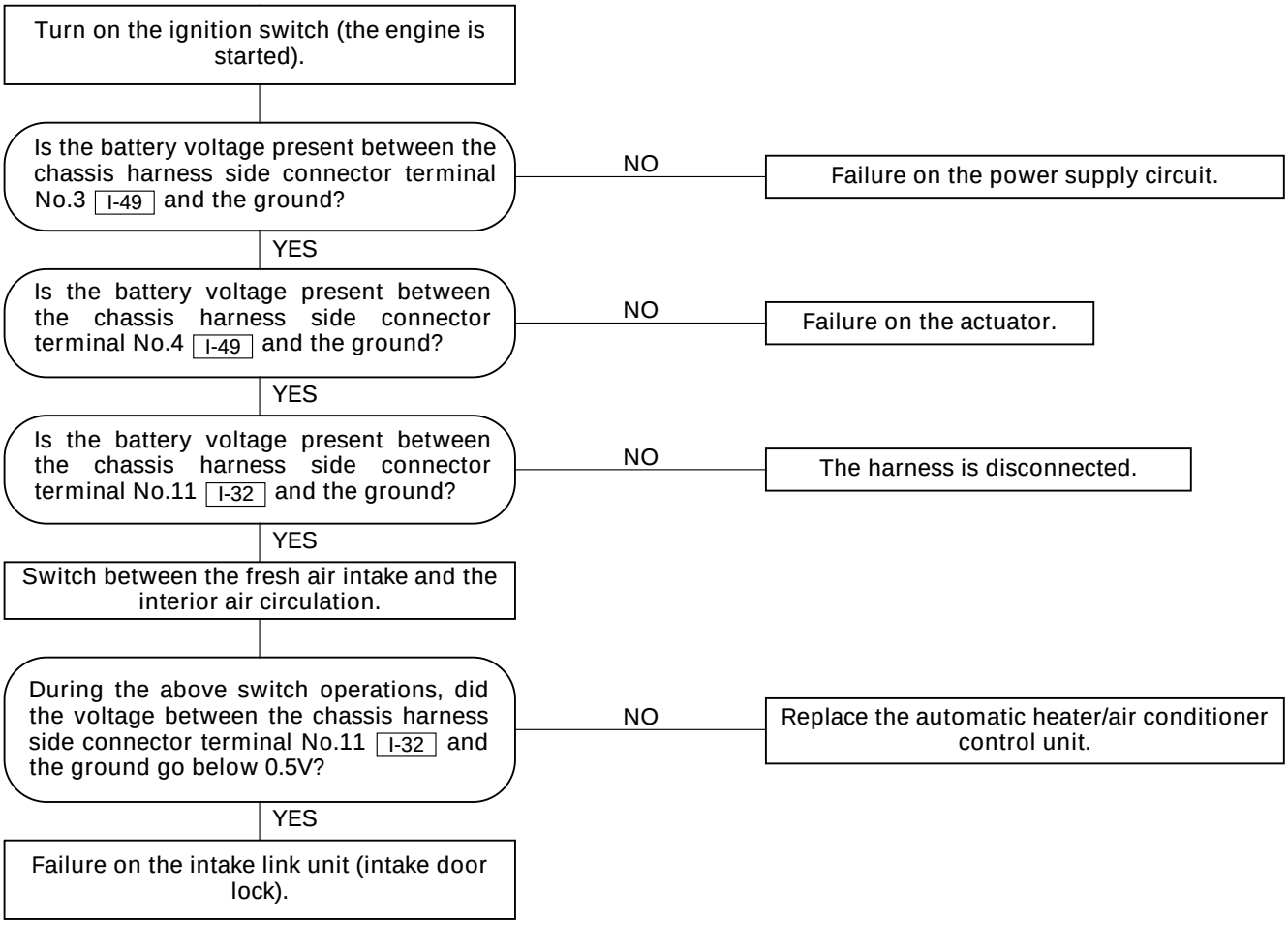

Chart B: Failure on the Intake Control

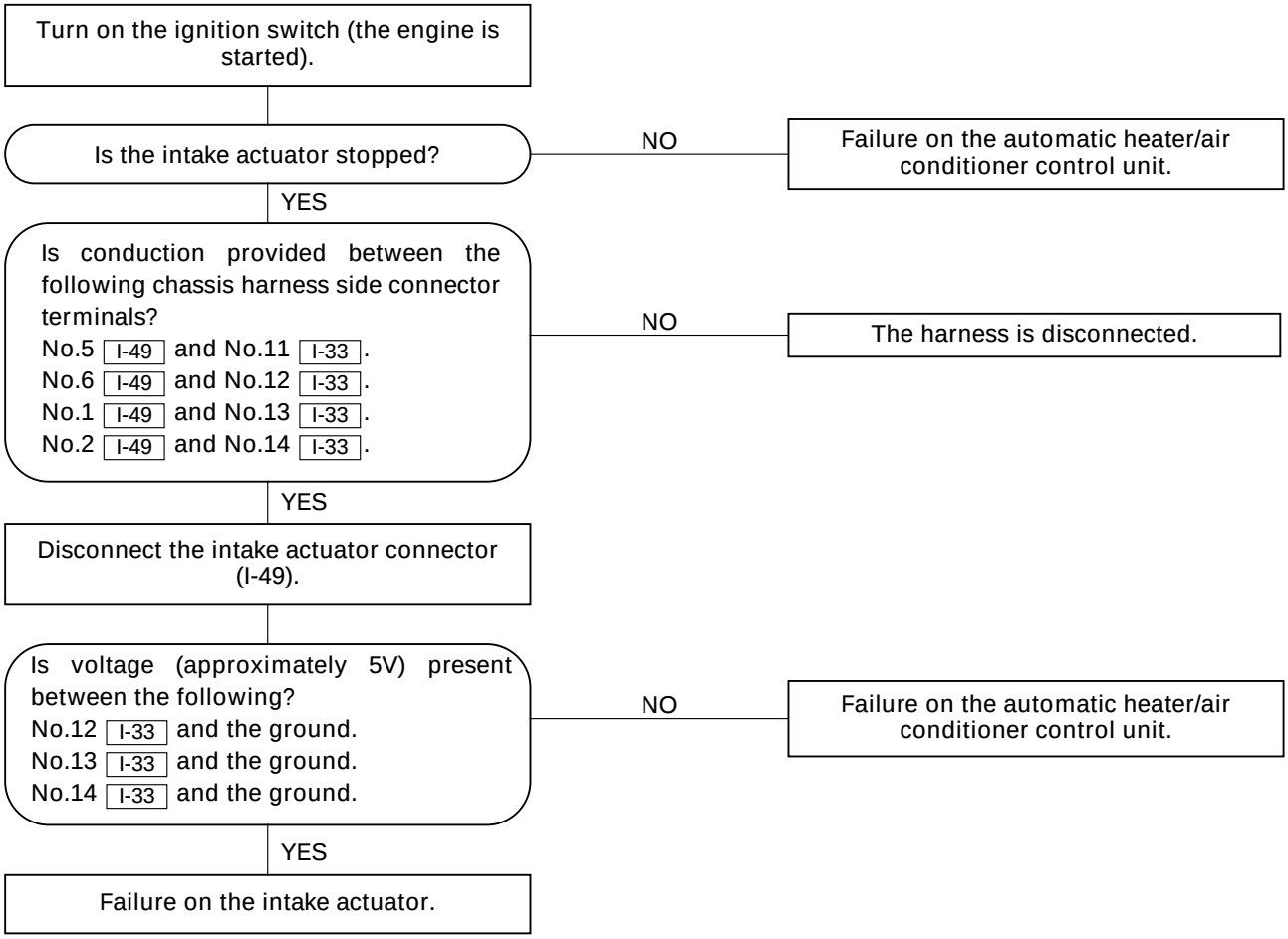

Inspection of the Mix Actuator System

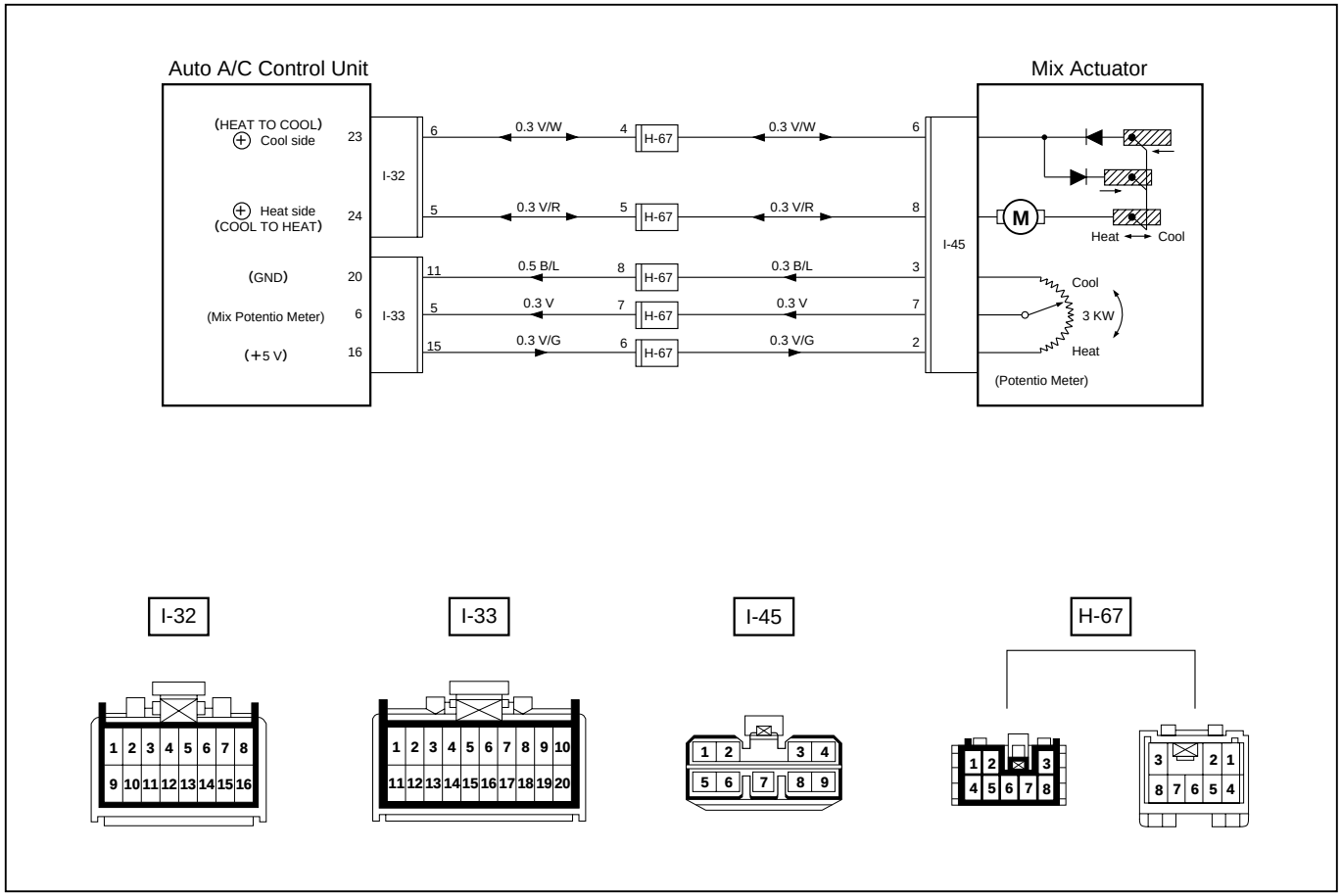

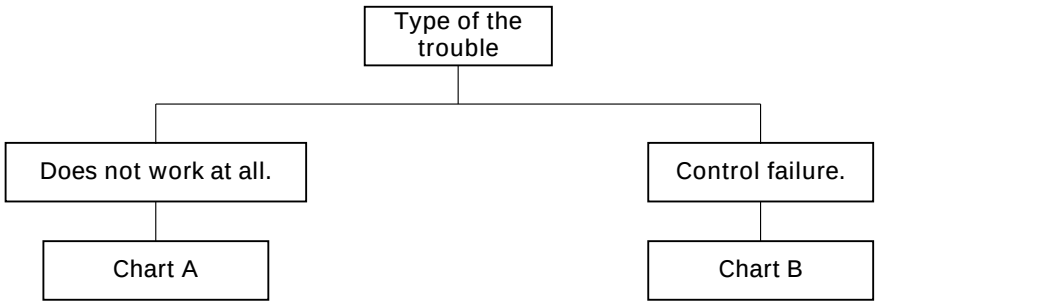

Chart A: Does Not work At All

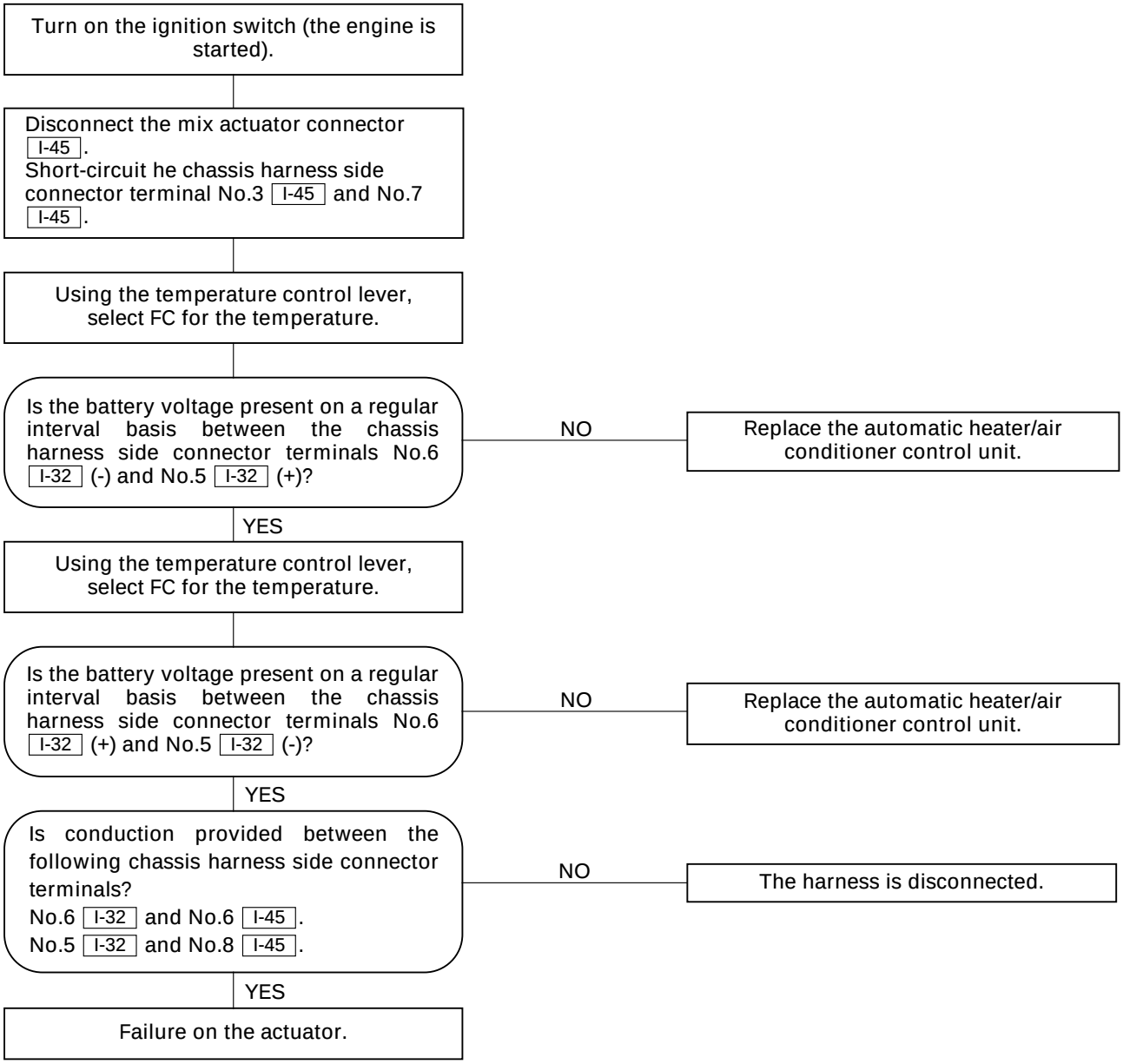

Chart B: Mix Actuator Control Failure

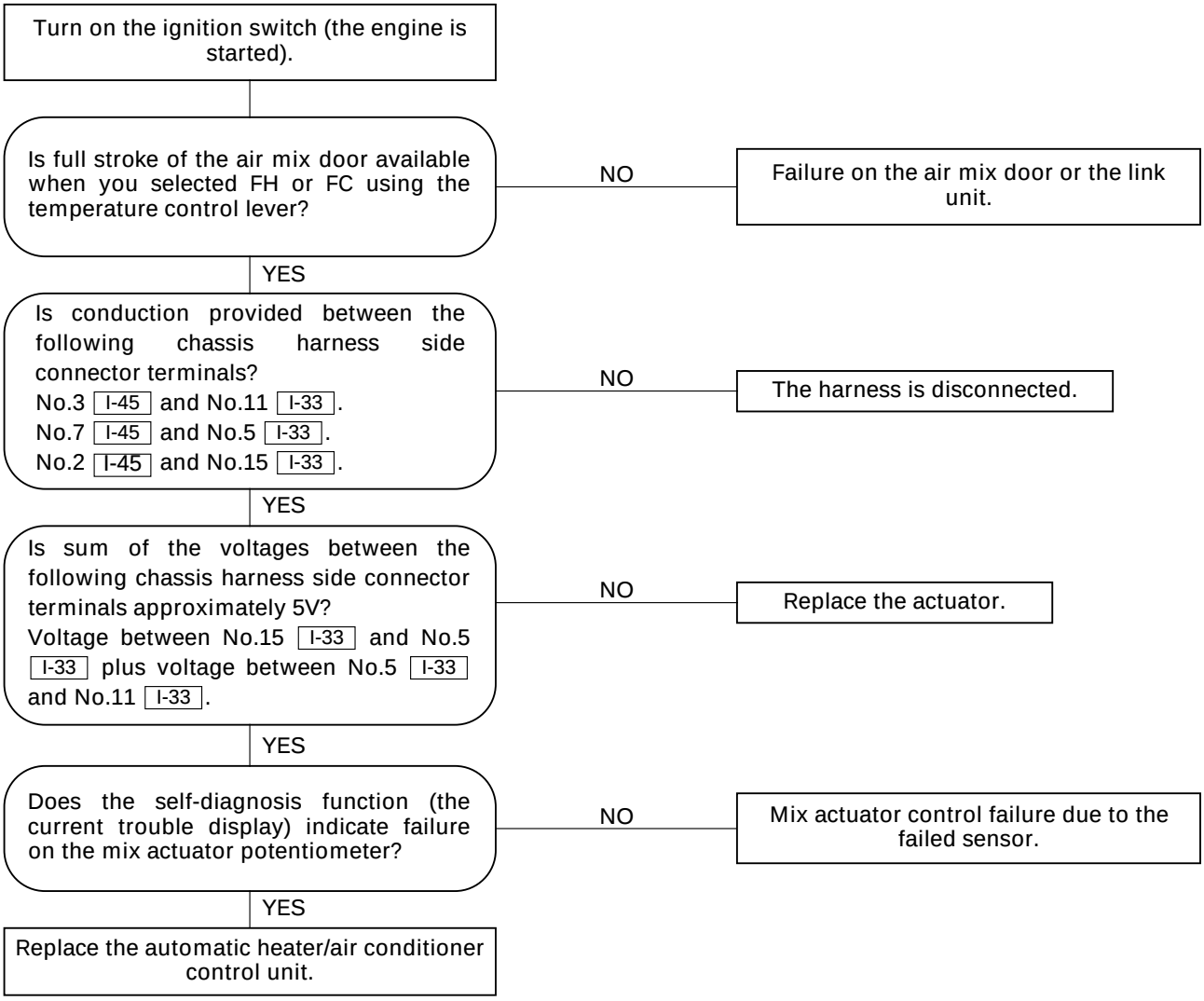

Inspection of the Mode Actuator System

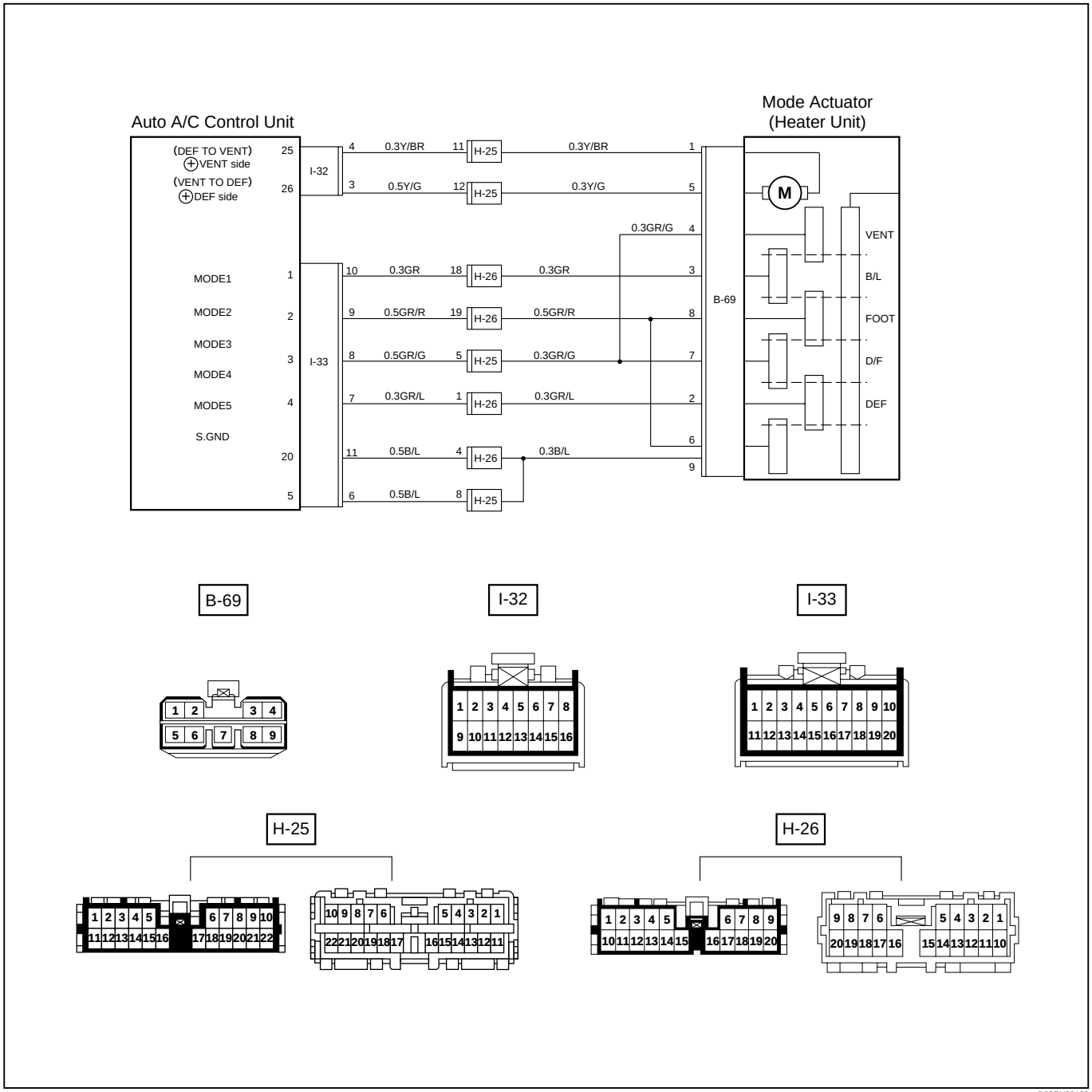

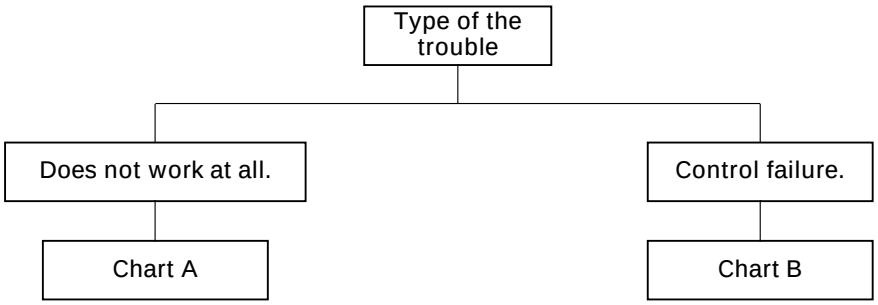

Chart A: Does Not Work At All

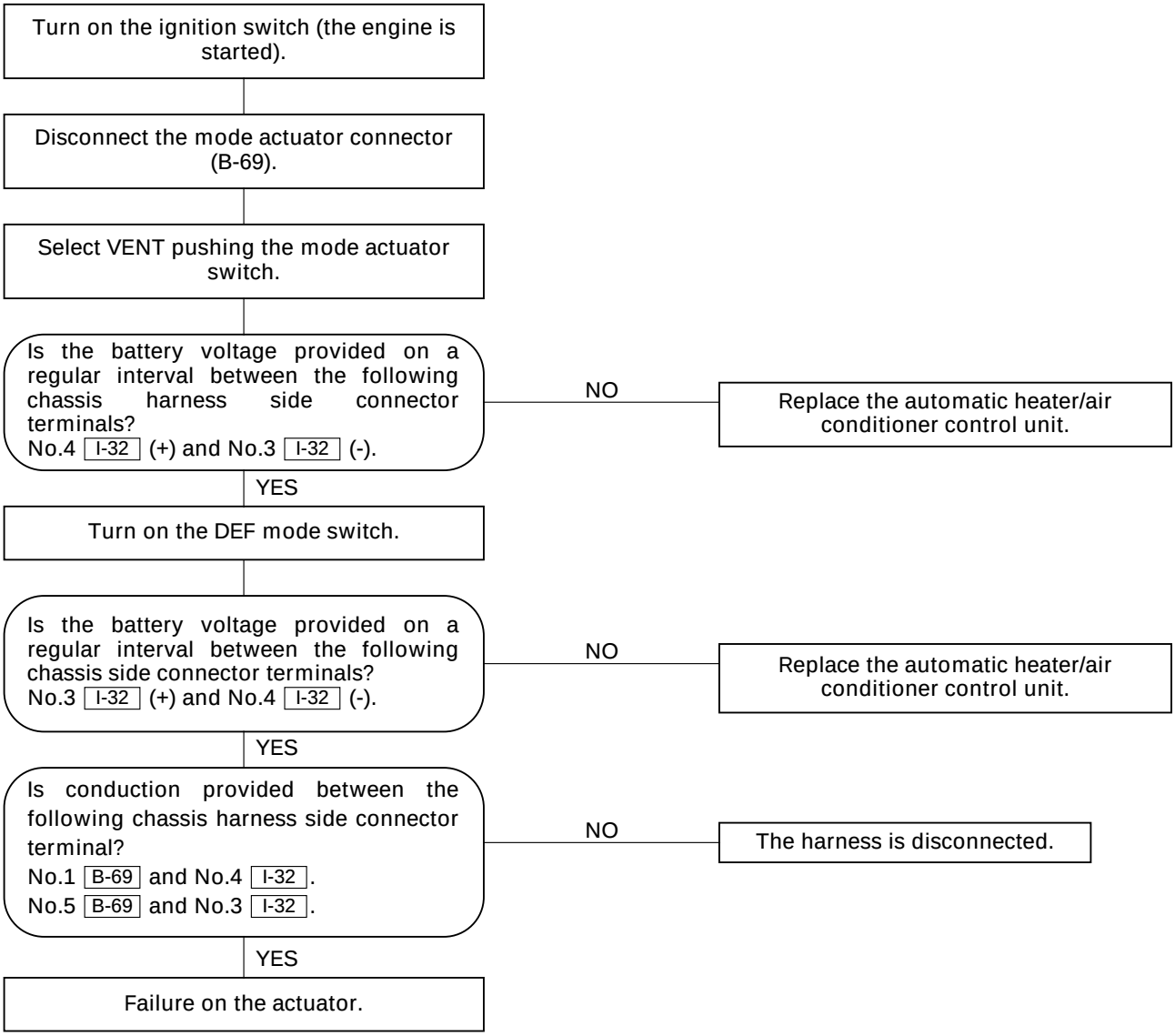

Chart B: Mode Actuator Control Failure

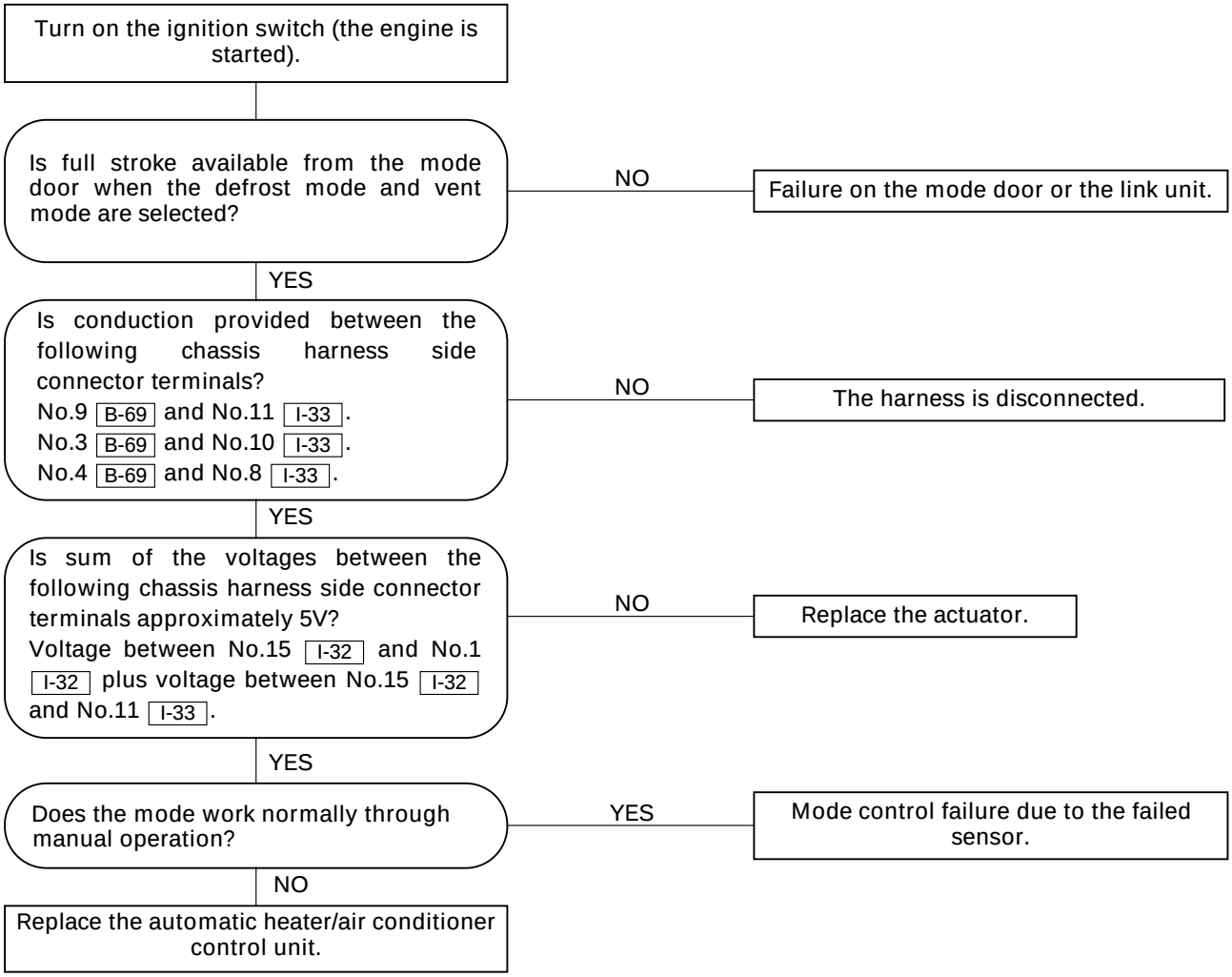

Inspection of the Fan Motor System

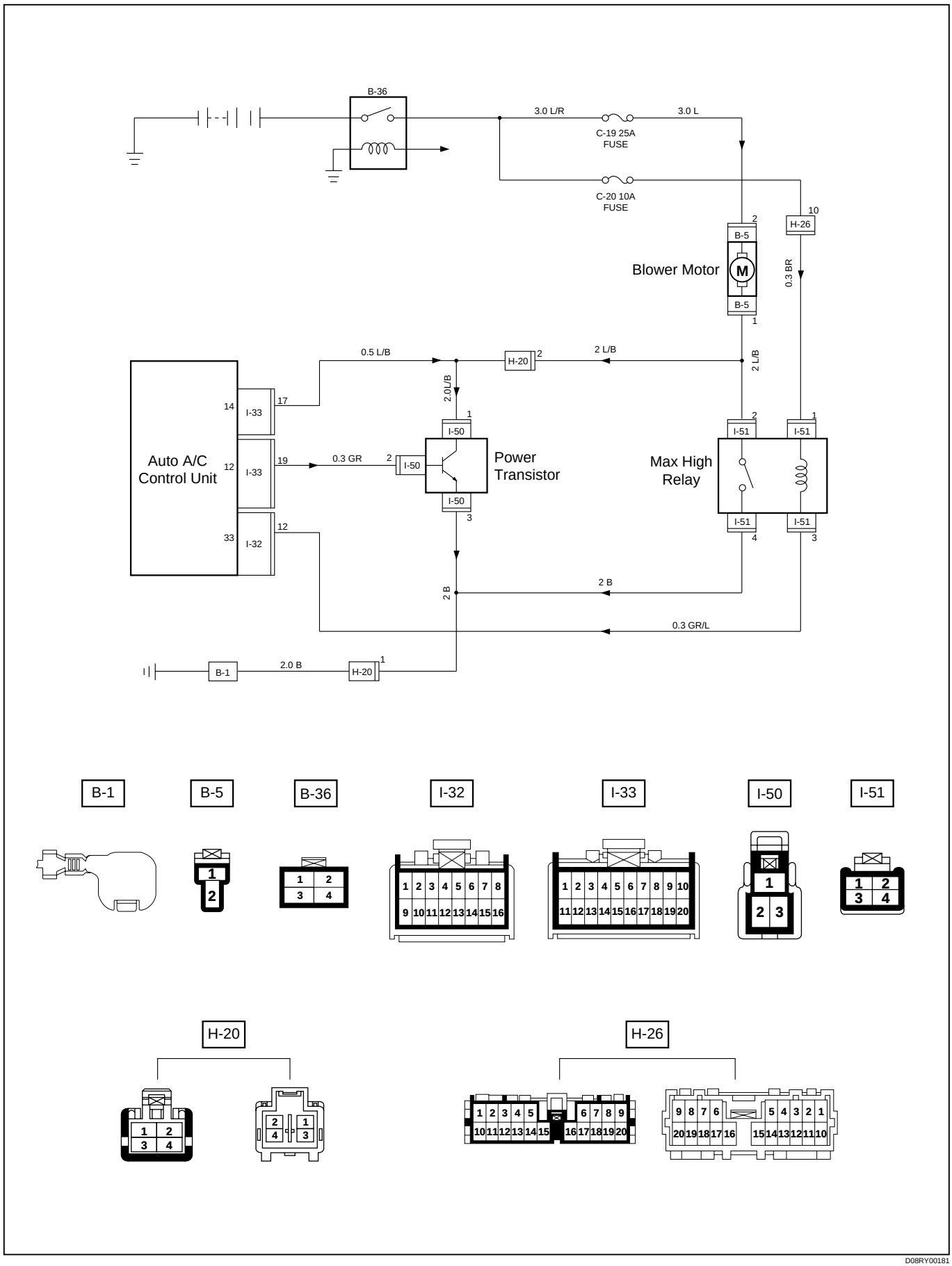

D08RY00181

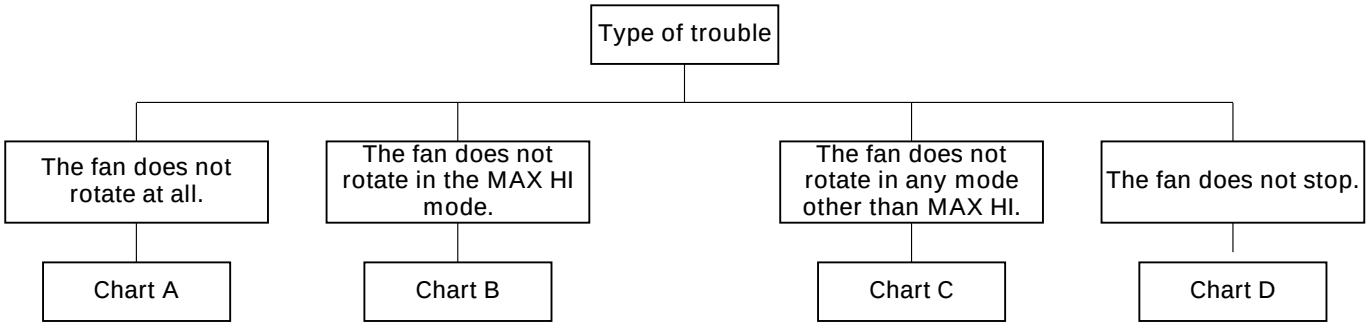

Chart A: Fan Does Not Rotate At All

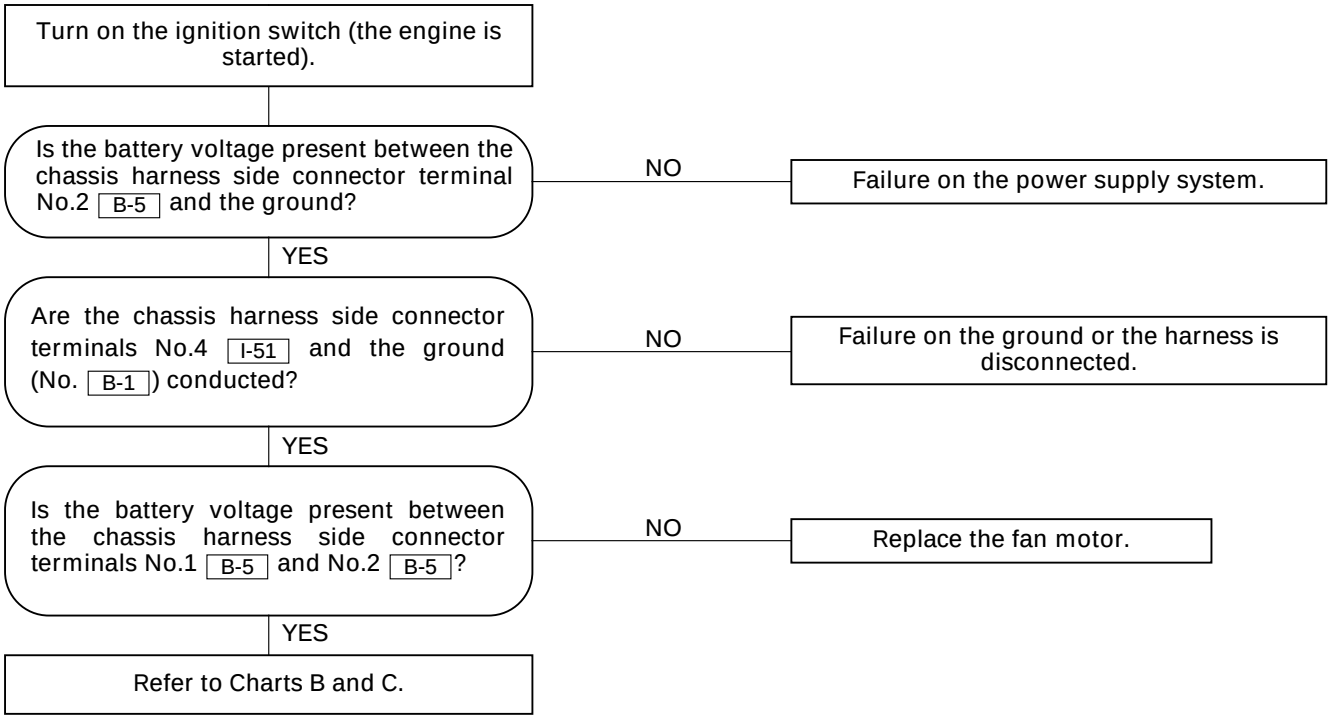

Chart B: Fan Does Not Rotate in MAX HI Mode

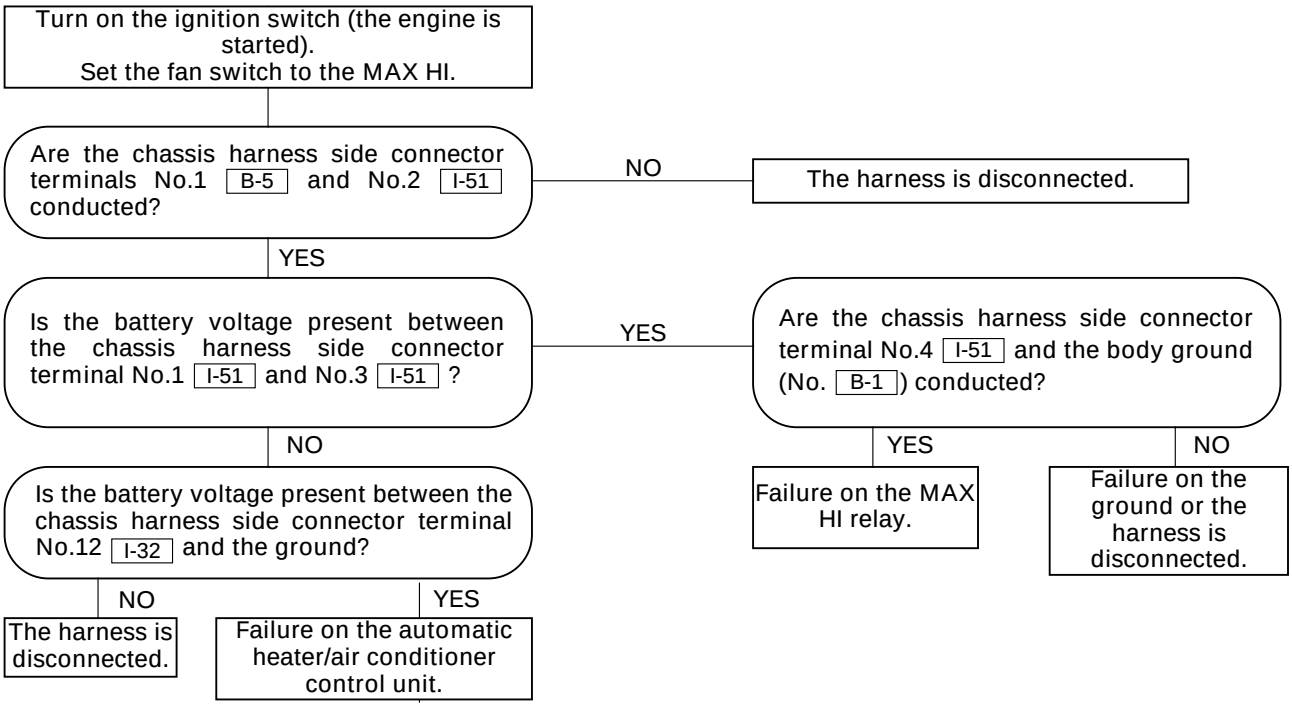

Chart C: Fan Does Not Rotate In Any Mode Other Than MAX HI

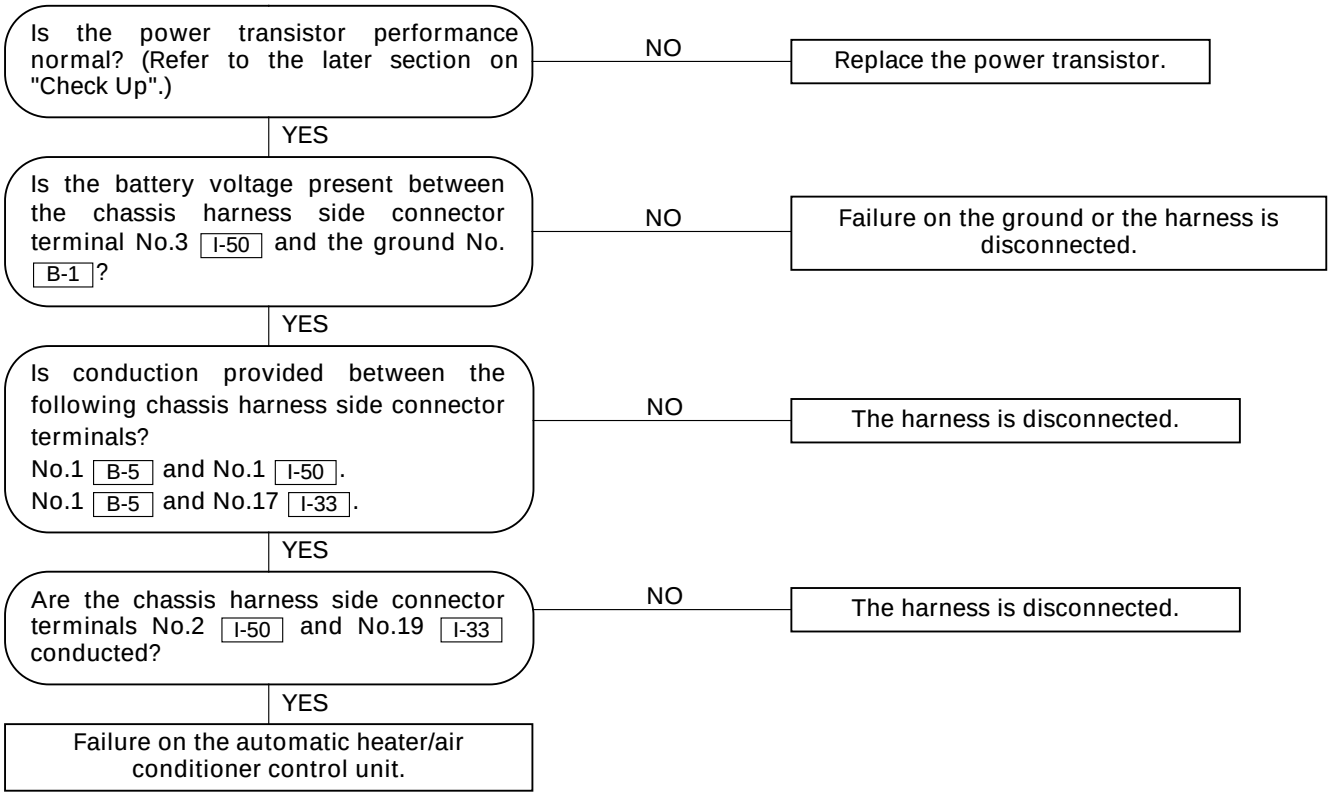

Chart D: Fan Does Not Stop

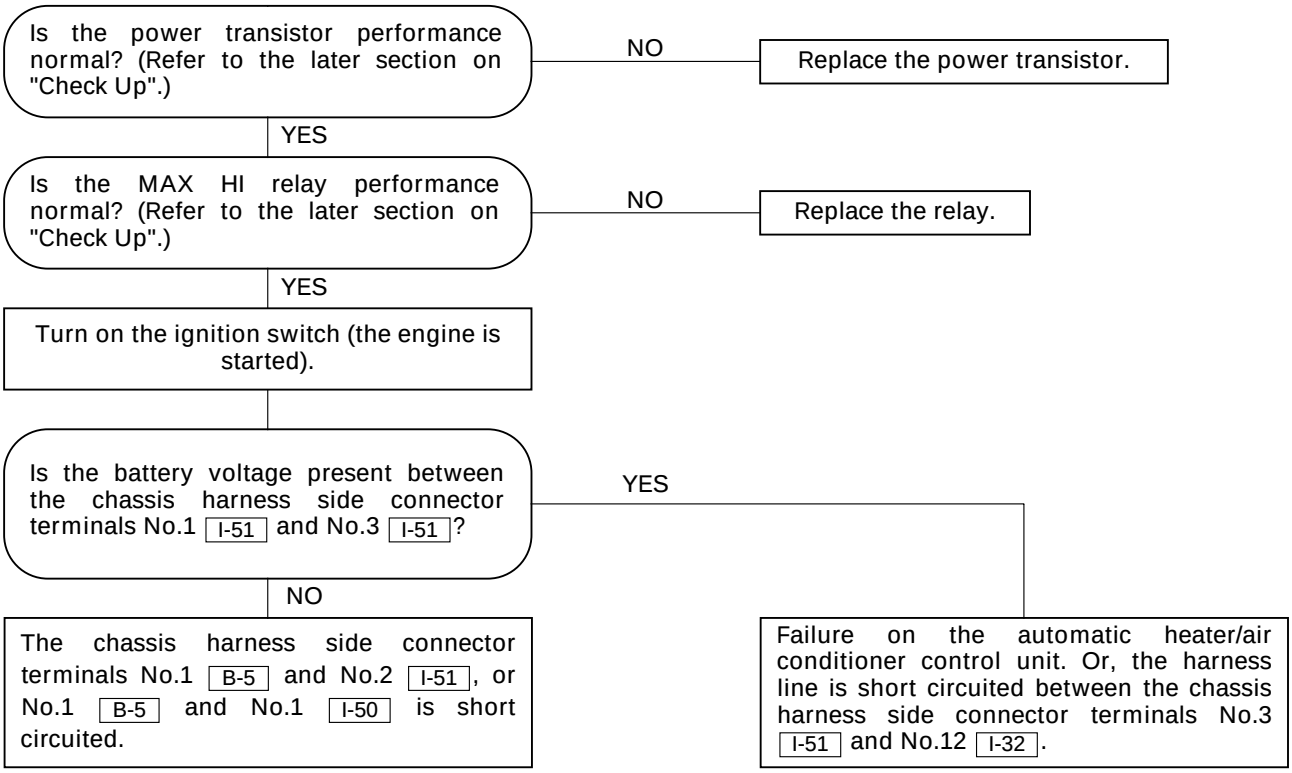

Inspection of the Magnet Clutch System

6VE1 Engine

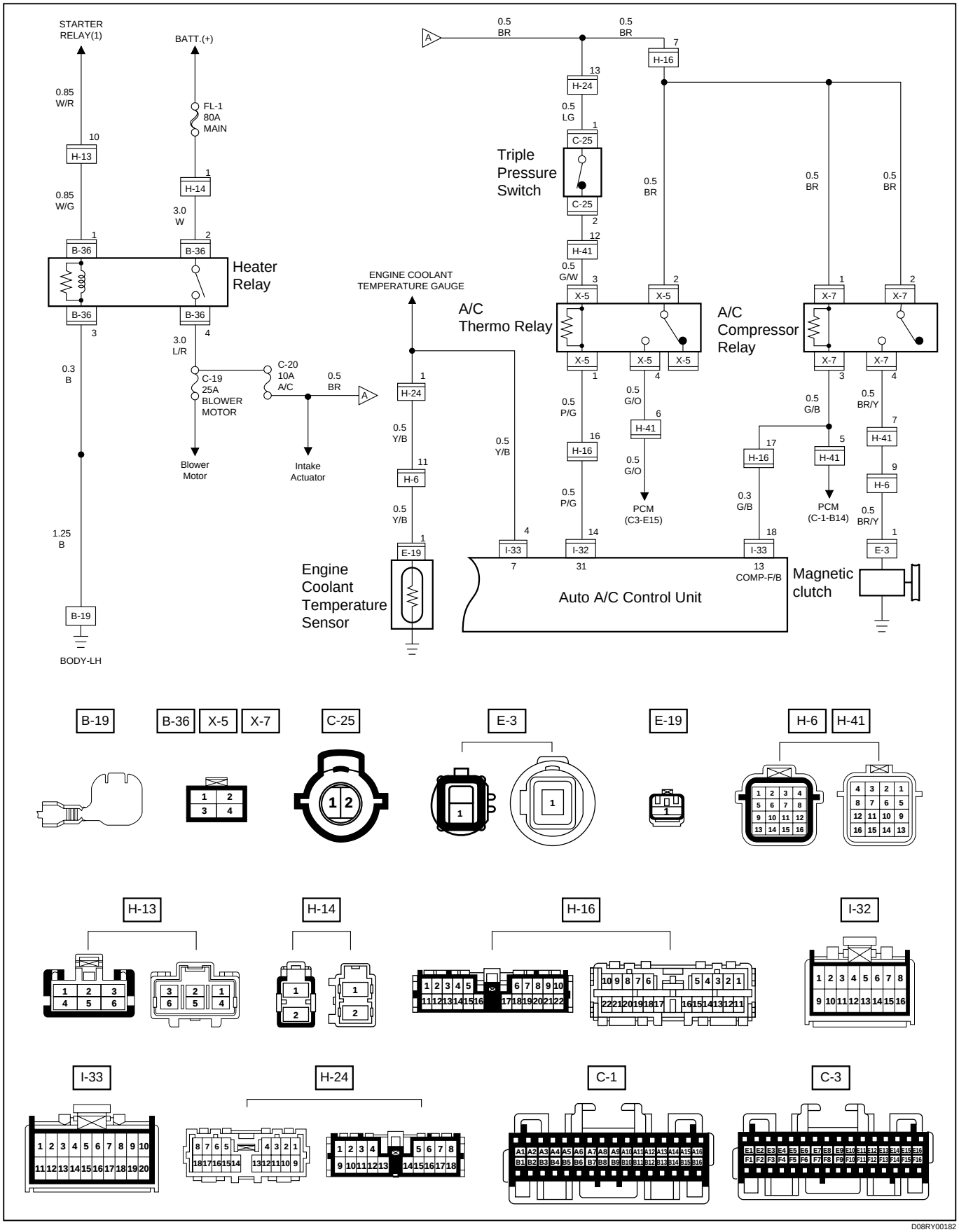

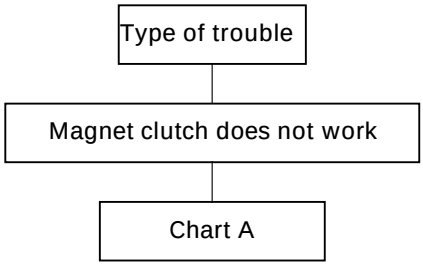

Chart A: Magnet Clutch Does Not work

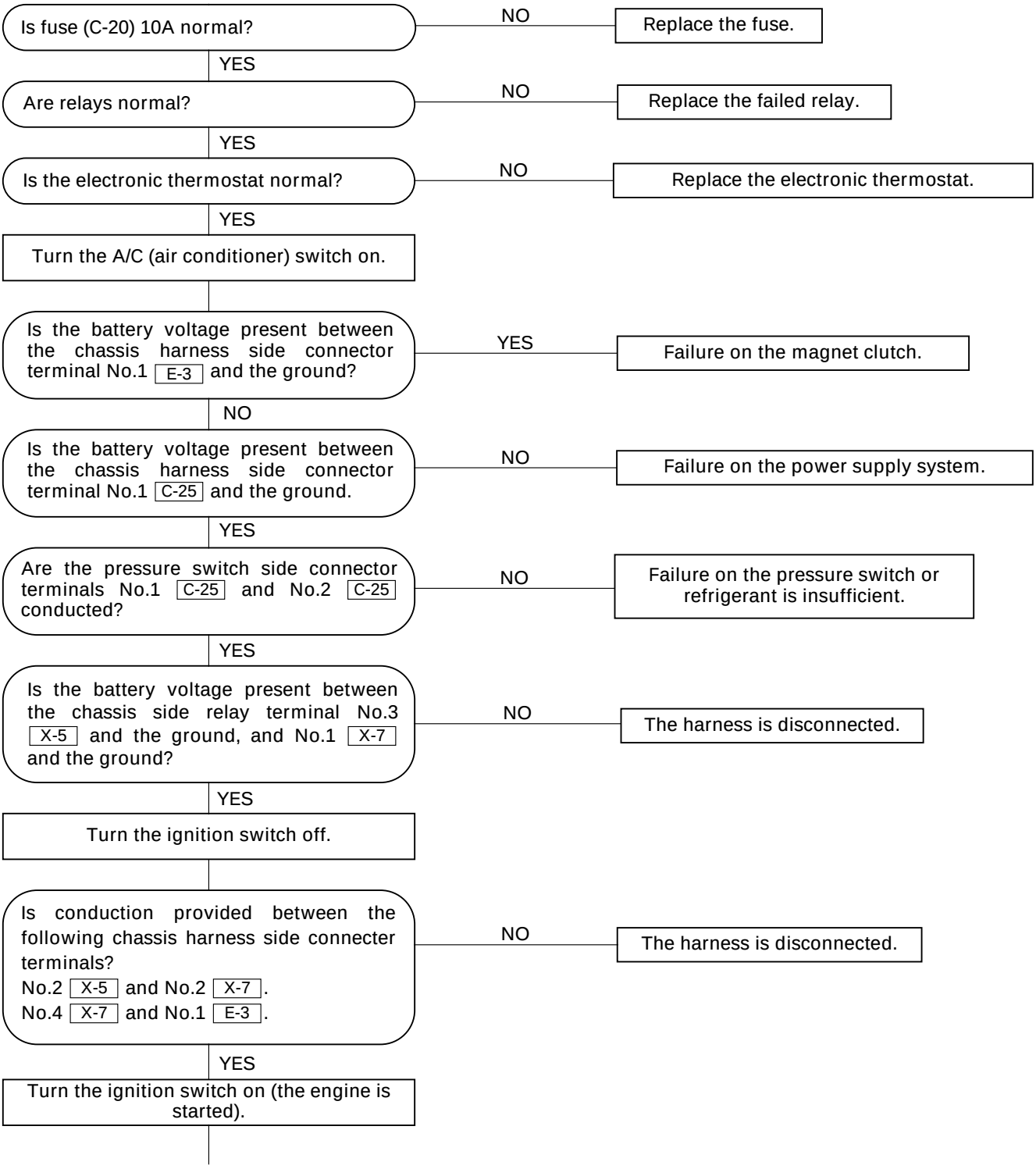

When you turned on the "Auto" switch, does the battery voltage appear between the chassis harness connector terminal No.14 [I-32] and the ground?

- YES → Failure on the automatic heater/air conditioner control unit.
- NO ↓

Disconnect the connector [I-32] on the automatic heater/air conditioner control unit.

Is the battery voltage present between the chassis harness side connector terminal No.14 [I-32] and the ground?

- NO → The harness is disconnected between No.1 [X-5] and No.14 [I-32].
- YES ↓

Is conduction provided between the following chassis harness side connector terminals?
No.B14 [C-1] and No.3 [X-7].
No.E15 [C-3] and No.4 [X-5].

- NO → The harness is disconnected.
- YES ↓

Failure on PCM (see Chapter 6E for A/C control with PCM).

4JX1 Engine

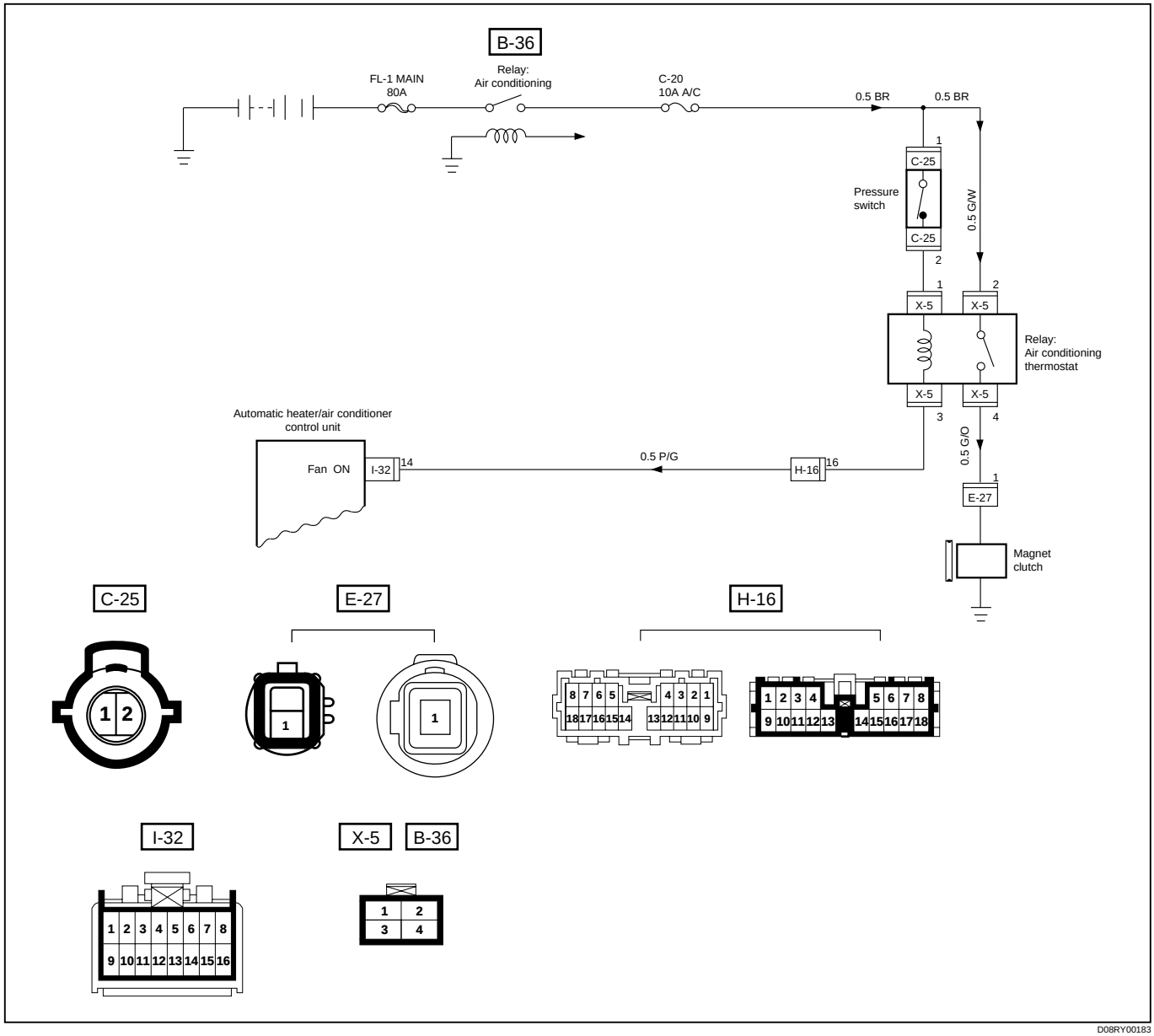

D08RY00183

Type of trouble

Magnet clutch does not work.

Chart A

Chart A: Magnet Clutch Does Not Work

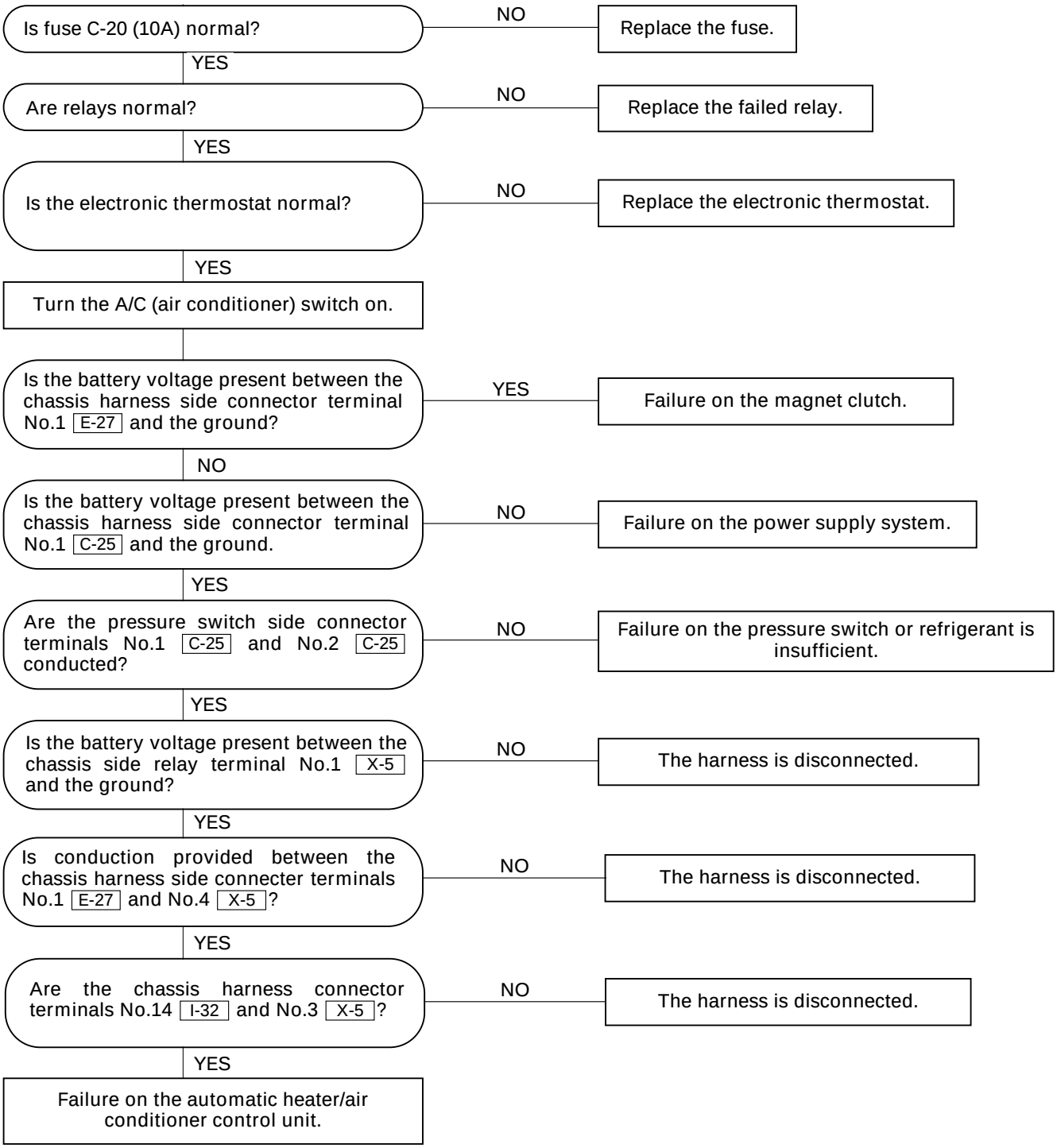

Inspection of the Air Conditioner Room Temperature Setup System

• Conflicts Between the Set Temperature and Actual Room Temperature

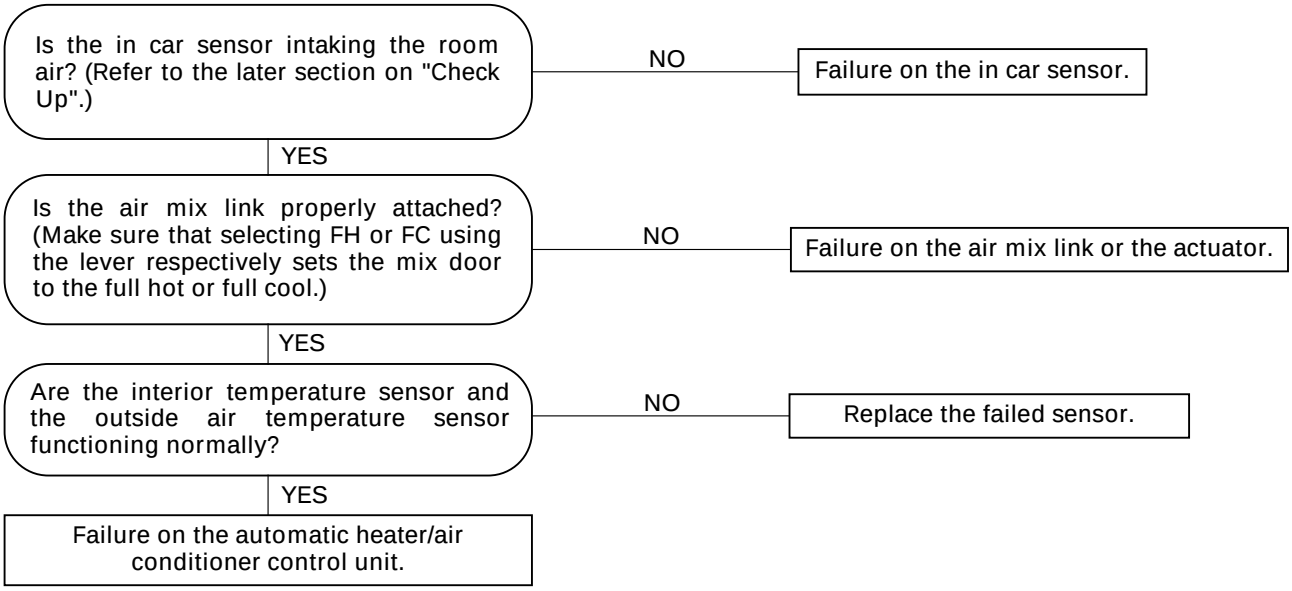

INDIVIDUAL INSPECTION

In Car Sensor

1. Disconnect the in car sensor connector (I-34).
2. Measure resistance between the in car sensor side terminal No.3 I-34 and No.4 I-34.

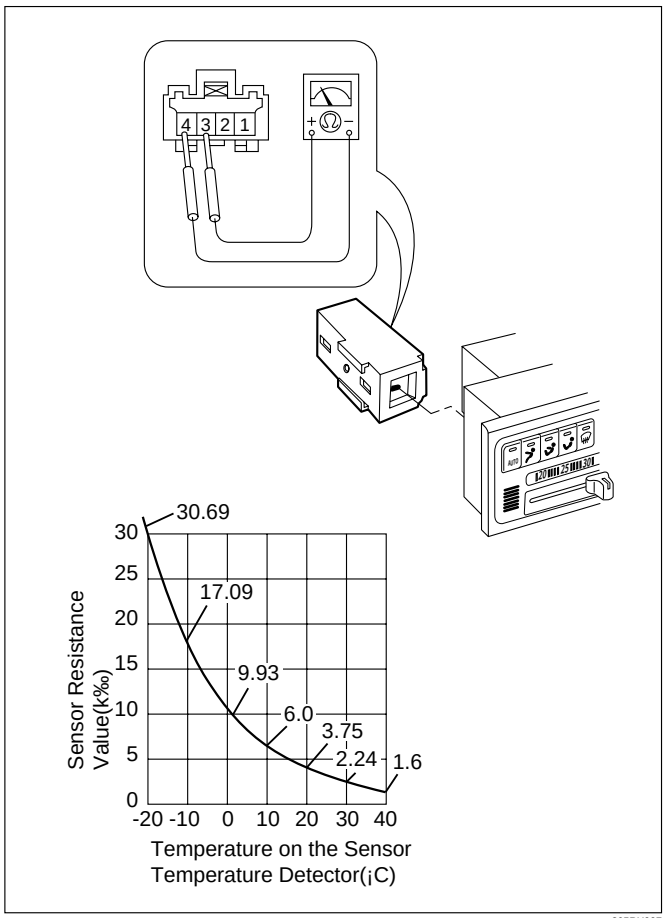

865RX007

Sun Sensor

1. Disconnect the sun sensor connector (I-35).
2. Measure the current value on the sun sensor when placed it approximately 15 cm away from 60W incandescent lamp.

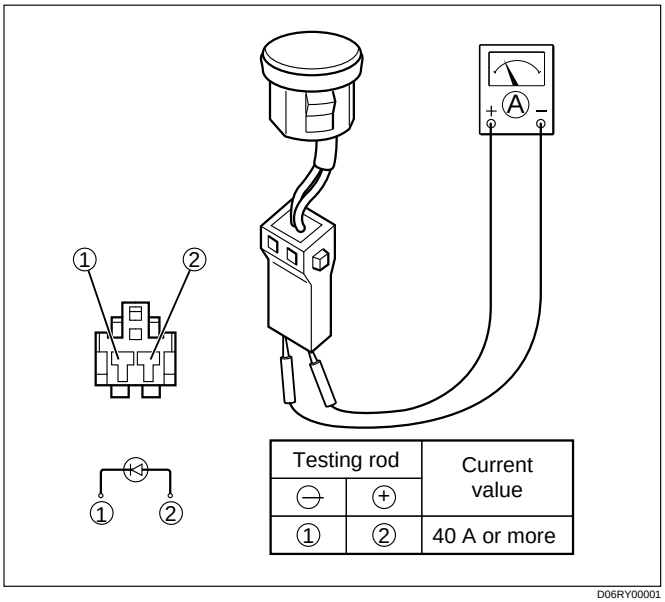

Testing rod		Current value
⊖	⊕	
①	②	40 A or more

D06RY00001

Ambient Sensor

1. Disconnect the connector (C-86) on the ambient sensor.
2. Measure resistance between the ambient sensor side terminals.

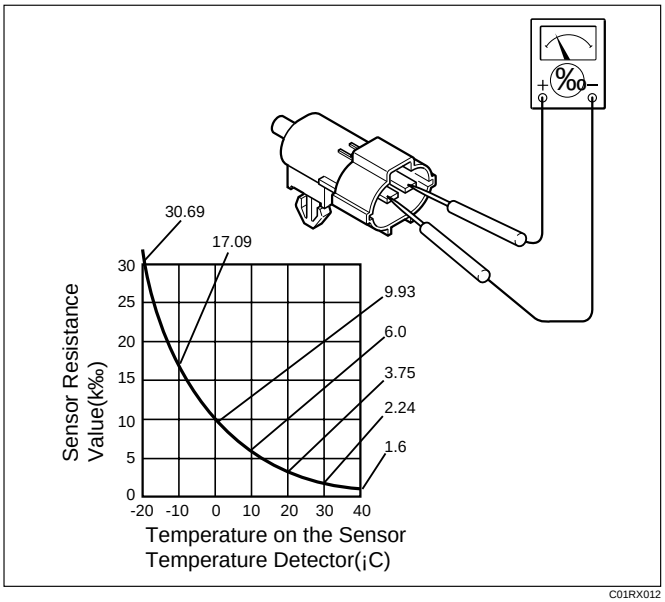

C01RX012

Power Transistor

1. Remove the power transistor connector (I-47) from the evaporator assembly.
2. Check the conduction between the power transistor side terminals.

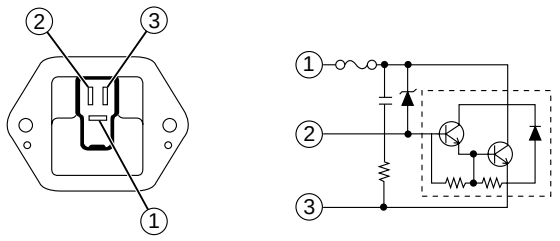

Terminal No.	1	2	3	Conduction
Testing rod	⊖	⊕		Conducted (50‰ maximum)
	⊖		⊕	Conducted (100‰ maximum)
	⊕	⊖		Not conducted
	⊕	⊖		Conducted (220‰ maximum)
		⊖	⊕	Not conducted

C01RY00002

MAX HI Relay

1. Remove the MAX HI relay connector (B-64) from the blower assembly.
2. Check the conduction between the MAX HI relay side terminals.

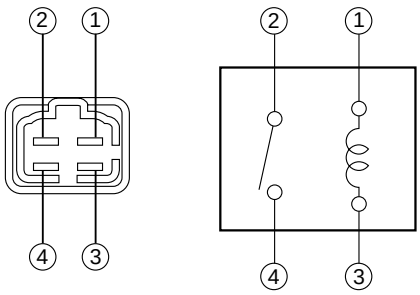

No continuity between terminals (2) and (4).
Continuity between terminal (2) and (4) when battery voltage is applied between (1) and (3).

C01RY00003

In Car Sensor

1. Turn on the ignition switch (the engine is started). Start the air conditioner in "Full Auto".
2. Make sure that the in car sensor suctions cigarette smokes and such.
3. Dismount the in car sensor from the automatic heater/air conditioner control unit. Connect (+) end and (-) end of the battery to the aspirator motor side terminals No.1 I-34 and No.2 I-34, respectively, then check if the motor runs normally.

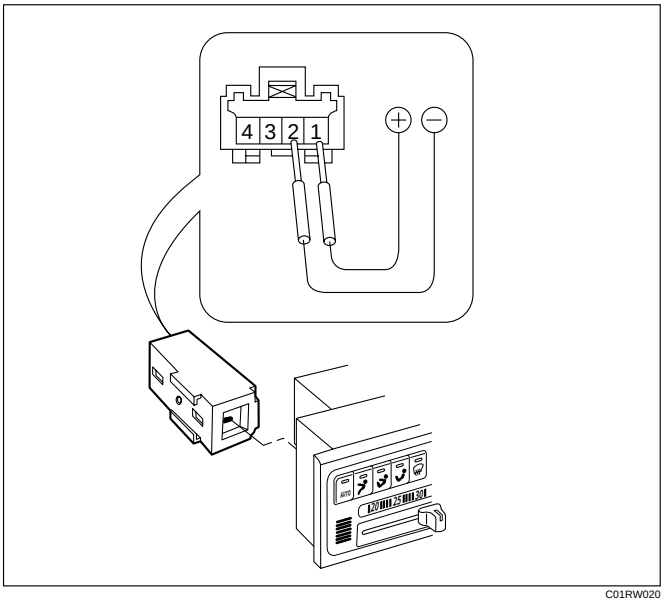

C01RW020

ON-VEHICLE SERVICE

Power Transistor

This illustration is based on RHD

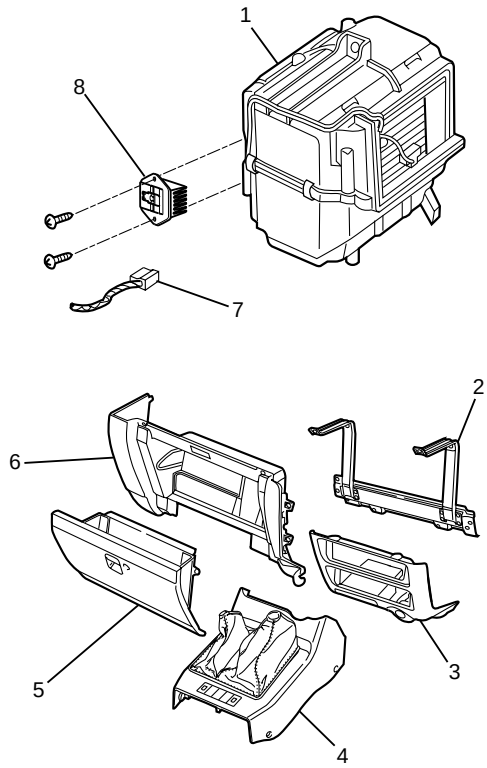

874RY00001

Legend

(1) Evaporator Assembly
(2) Passenger Knee Bolster Reinforcement
(3) Lower Cluster
(4) Front Console
(5) Glove Box
(6) Instrument Panel Passenger Lower Cover
(7) Power Transistor Connector
(8) Power Transistor

Removal

1. Remove front console.
2. Remove lower cluster.
3. Remove glove box.
4. Remove instrument panel passenger lower cover.
5. Remove passenger knee bolster reinforcement.
6. Disconnect the power transistor connector.
7. Remove power transistor.

Installation

To install, follow the removal step in the reverse order.

Automatic Heater/Air Conditioner Control Unit

This illustration is based on RHD

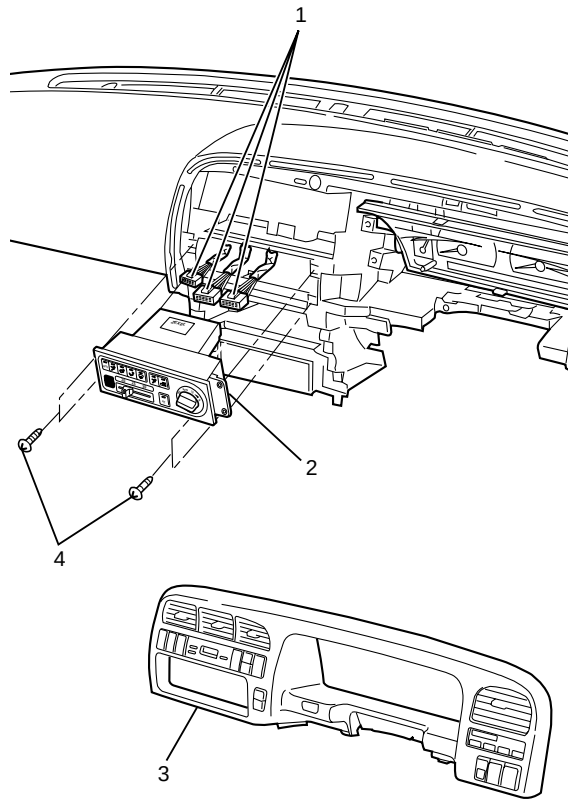

865RY00007

Legend

(1) Connector
(2) Automatic Heater / Air Conditioner Control Unit
(3) Instrument Panel Cluster
(4) Set Screw

Removal

1. Disconnect the battery ground cable.
2. Remove instrument panel cluster.
   - Refer to Instrument Panel Assembly in Body Structure section.
3. Disconnect the automatic heater / air conditioner control unit connector.
4. Remove automatic heater/ air conditioner control unit.

Installation

To install, follow the removal step in the reverse order.

In Car Sensor

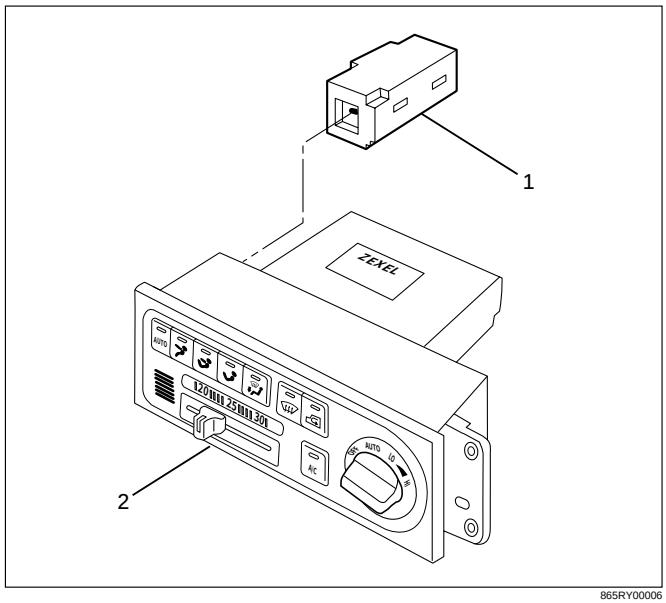

865RY00006

Legend

(1) In Car Sensor
(2) Automatic Heater / Air Conditioner Control Unit

Removal

1. Disconnect the battery ground cable.
2. Remove the automatic heater / air conditioner control unit.
   - Refer to the automatic heater / air conditioner control unit section.
3. Remove in car sensor.

Installation

To install, follow the removal step in the reverse order.

Ambient Sensor

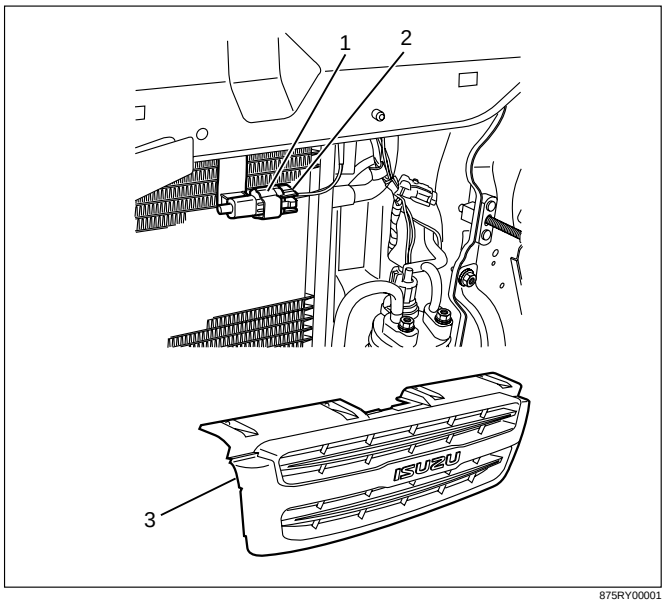

875RY00001

Legend

(1) Ambient Sensor
(2) Sensor Connector
(3) Radiator Grill

Removal

1. Disconnect the battery ground cable.
2. Remove radiator grille.
   - Refer to Radiator Grille in Body Structure section.
3. Disconnect the ambient sensor connector.
4. Remove the ambient sensor.

Installation

To install, follow the removal step in the reverse order.

Sun Sensor

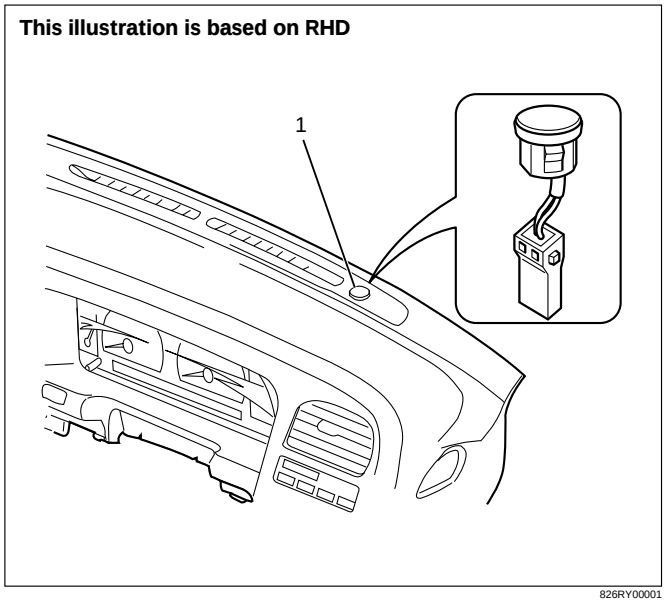

Legend
(1) Sun Sensor

Removal

1. Disconnect the battery ground cable.
2. Remove the sun sensor.
3. Disconnect the sun sensor connector.

Installation

To install, follow the removal step in the reverse order.

Electronic Thermostat

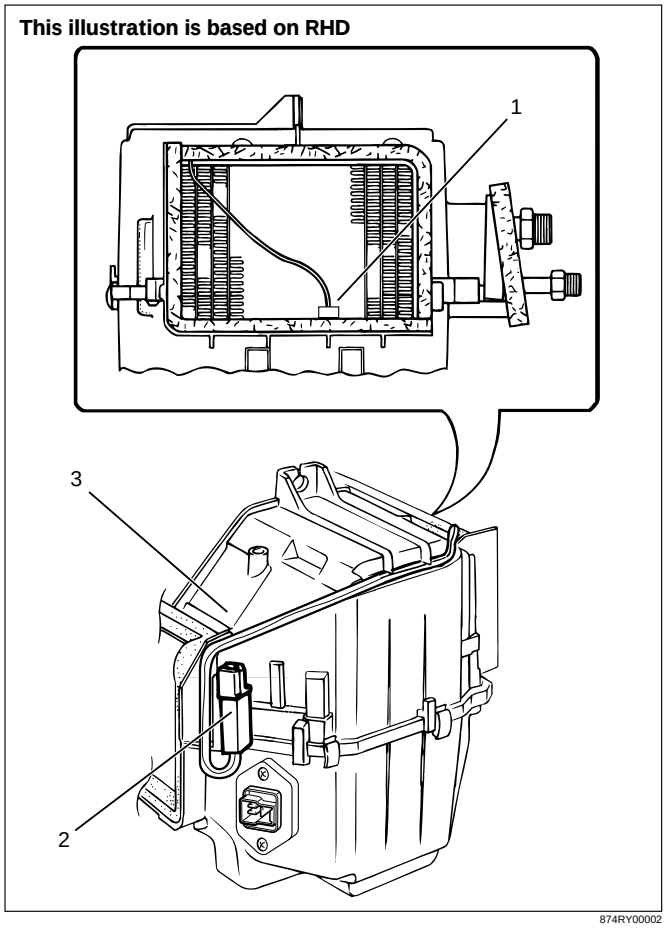

Legend
(1) Duct Sensor
(2) Thermostat Assembly
(3) Evaporator Assembly

Removal

1. Disconnect the battery ground cable.
2. Remove evaporator assembly.
   - Refer to Evaporator Assembly section.
3. Remove electronic thermostat.

Installation

To install, follow the removal step in the reverse order.

Mode Actuator

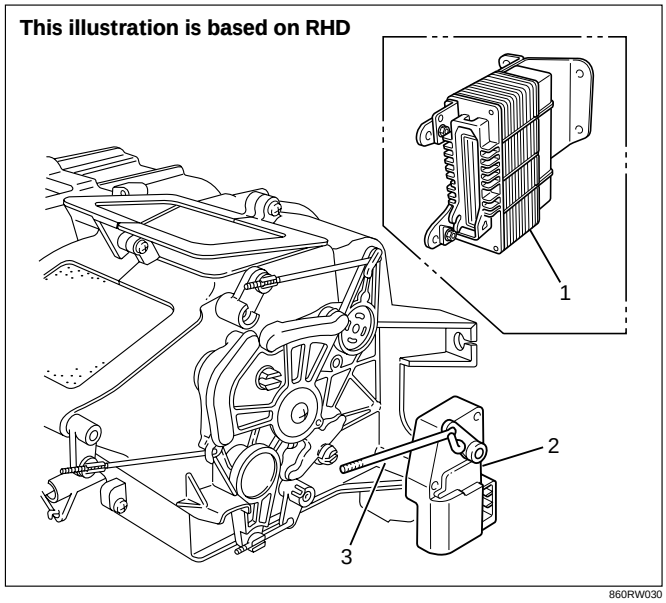

Legend

(1) A/T Control Unit
(2) Mode Actuator
(3) Actuator Rod

Removal

1. Disconnect the battery ground cable.
2. Remove the A/T control unit.
   - The connector shall remain connected.
3. Remove the actuator rod.
4. Remove the mode actuator.

Installation

To install, follow the removal step in the reverse order.

MIX Actuator

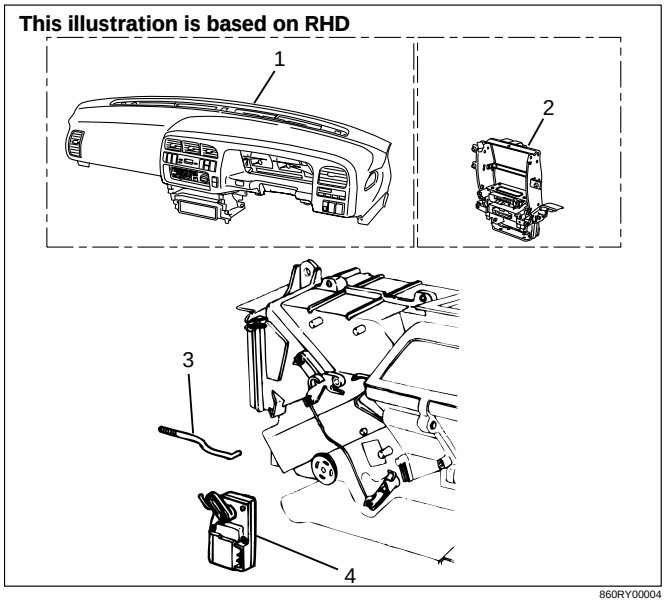

Legend

(1) Instrument Panel Assembly
(2) Instrument Panel Center Bracket
(3) Actuator Rod
(4) Mix Actuator

Removal

1. Disconnect the battery ground cable.
2. Remove the instrument panel assembly.
   - Refer to the Instrument Panel Assembly in Body Structure section.
3. Remove the instrument panel center bracket.
4. Remove the actuator rod.
5. Remove the mix actuator.

Installation

To install, follow the removal step in the reverse order.

Intake Actuator

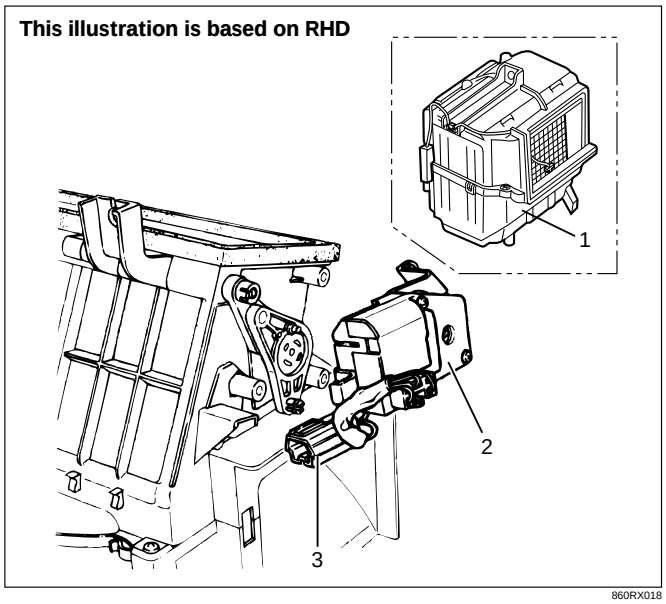

Legend

(1) Evaporator Assembly
(2) Intake Actuator
(3) Intake Actuator Connector

Removal

1. Disconnect the battery ground cable.
2. Discharge and recover refrigerant.
   - Refer to Refrigerant Recovery in this section.
3. Remove the evaporator assembly.
   - Refer to Eevaporator Assembly section.
4. Disconnect the intake actuator connector.
5. Remove the intake actuator.

Installation

To install, follow the removal step in the reverse order.

SECTION 1D

COMPRESSOR OVERHAUL

CAUTION
When fasteners are removed, always reinstall them at the same location from which they were removed. If a fastener needs to be replaced, use the correct part number fastener for that application. If the correct part number fastener is not available, a fastener of equal size and strength (or stronger) may be used.

Fasteners that are not reused, and those requiring thread locking compound, will be called out. The correct torque values must be used when installing fasteners that require it. If the above conditions are not followed, parts or system damage could result.

CONTENTS

PAGE

General Description 1D– 2
General Information 1D– 4
Compressor Oil 1D– 4
Service Procedures 1D– 6
DKV-14D Type Compressor 1D– 6
DKS-15CH Type Compressor 1D–10
HD6 Type Compressor 1D–18

GENERAL DESCRIPTION

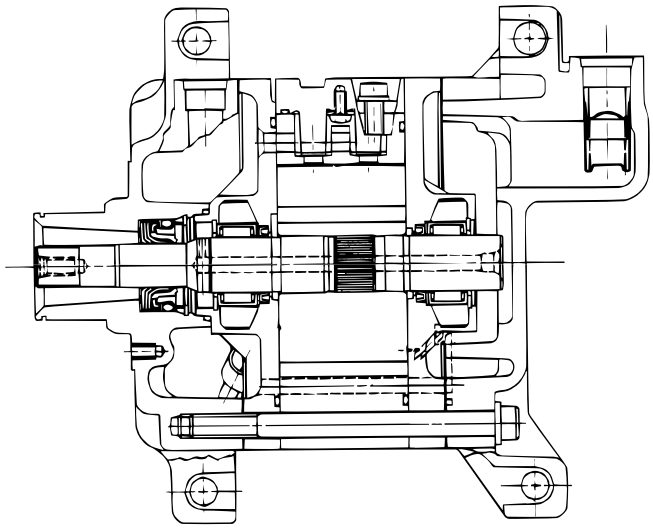

DKV-14D TYPE

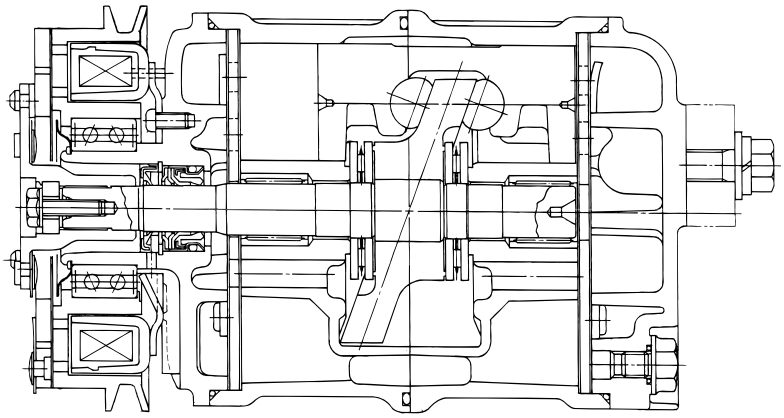

DKS-15CH TYPE

871RY00014

When servicing the compressor, keep dirt or foreign material from getting on or into the compressor parts and system. Clean tools and a clean work area are important for proper service. The compressor connections and the outside of the compressor should be cleaned before any “On-Vehicle” repair, or before removal of the compressor. The parts must be kept clean at all times and any parts to be reassembled should be cleaned with Trichloroethane, naphtha, kerosene, or equivalent

solvent, and dried with dry air. Use only lint free cloths to wipe parts.
The operations described below are based on bench overhaul with compressor removed from the car, except as noted. They have been prepared in order of accessibility of the components. When the compressor is removed from the car for servicing, the oil remaining in the compressor should be discarded and new refrigerant oil added to the compressor.
Magnetic clutch assembly repair procedures require that the system be discharged of refrigerant. (Refer to Section 1B for "REFRIGERANT RECOVERY".)
Compressor malfunction will appear in one of four ways: noise, seizure, leakage or low discharge pressure. Resonant compressor noises are not cause for alarm; however, irregular noise or rattles may indicate broken parts or excessive clearances due to wear. To check seizure, de-energize the magnetic clutch and check to see if the drive plate can be rotated. If rotation is impossible, the compressor is seized. Low discharge pressure may be due to a faulty internal seal of the compressor, or a restriction in the compressor. Low discharge pressure may also be due to an insufficient refrigerant charge or a restriction elsewhere in the system. These possibilities should be checked prior to servicing the compressor. If the compressor is inoperative, but is not seized, check to see if current is being supplied to the magnetic clutch coil terminals.
The compressor has vanes built into a rotor which is mounted on a shaft.
When the shaft rotates, the vanes built into the cylinder block assembly are opened by centrifugal force.
This changes the volume of the space formed by the rotor and cylinder, resulting in the intake and compression of the refrigerant gas. The discharge valve and the valve stopper, which protects the discharge valve, are built into the cylinder block assembly. There is no suction valve but a shaft seal is installed between the shaft and head; a trigger valve, which applies back pressure to the vanes, is installed in the cylinder block and a refrigerant gas temperature sensor is installed in the front head.
The specified quantity of compressor oil is contained in the compressor to lubricate the various parts using the refrigerant gas discharge pressure.
6VD1 engine is equipped with an invariable capacity five-vane rotary compressor (DKV-14D Type).
The compressor sucks and compresses refrigerant by the rotation of the vane installed to the shaft, and always discharges a fixed amount of refrigerant independent of the load of refrigerant.
The thermo sensor is installed to the front head of the compressor to protect it by stopping its operation when the refrigerant gas is insufficient or when the temperature get abnormally high.

- OFF..... 160 ± 5°C (320.0 ± 9.0°F)
- ON ..... 135 ± 5°C (275.0 ± 9.0°F)

4JG2 Engine are provided with a swash plate type compressor (DKS-15CH Type)
Swash plate compressors have a swash (slanted) plate mounted on the shaft. When the shaft turns, the rotation of the swash plate is converted to reciprocating piston motion which sucks in and compresses the refrigerant gas.
Shaft seal (Lip type) is installed between the valve plate and shaft & cylinder head to prevent refrigerant gas leaks. A specified amount of compressor oil is contained in the oil pan.
This oil is supplied to the cylinders, bearings, etc., by an oil pump which is connected to the swash plate shaft.
With some compressors the differential between the intake pressure and discharge pressure generated while the compressor is operating is used for lubrication instead of an oil pump.
Three pistons are arranged at 120g intervals around the center of the swash plate shaft. These pistons are connected to the ends of the swash plate through shoe disks and balls.
The rotation of the swash plate causes reciprocating movement of the piston inside the cylinders, with each piston operating as two cylinders. Because of that, the compressor operates as though it has 6 cylinders.
The specified amount of the compressors oil is 150cc (4.2 Imp fl oz).
Also, compressor oil to be used varies according to the compressor model. Be sure to avoid mixing two or more different types of oil.
If the wrong oil is used, lubrication will be poor and the compressor will seize or malfunction.

GENERAL INFORMATION

COMPRESSOR OIL

OIL SPECIFICATION

- The HFC-134a system requires a synthetic (PAG) compressor oil.
- Compressor (PAG) oil varies according to compressor model. Be sure to use oil specified for the model of compressor.

DKV-14D : ZXL-200PG (ISUZU PART NO. 8-97101-336-0)

DKS-15CH : ZXL-100PG (ISUZU PART NO. 8-97101-338-0)

HANDLING OF OIL

- The oil should be free from moisture, dust, metal powder, etc.
- Do not mix with other oil
- The water content in the oil increases when exposed to the air. After use, seal oil from air immediately.
- The compressor oil must be stored in steel containers, not in plastic containers.

COMPRESSOR OIL CHECK

The oil used to lubricate the compressor is circulating with the refrigerant.
Whenever replacing any component of the system or a large amount of gas leakage occurs, add oil to maintain the original amount of oil.

Oil Capacity

Capacity total in system	150cc (4.2 Imp fl oz)
Compressor (Service parts) charging amount	150cc (4.2 Imp fl oz)

Checking and Adjusting for Used Compressor

1) Perform Oil return operation.
   (Refer to “Oil Return Operation” in this section.)
2) Discharge refrigerant and remove the compressor.
3) Drain the compressor oil and measure the extracted oil with a measuring cylinder.
4) If the amount of oil drained is much less than 90cc (2.5 Imp fl oz), some refrigerant may have leaked out. Conduct leak tests on connections of each system, and if necessary, repair or replace faulty parts.
5) Check the compressor oil for contamination.
   (Refer to “Contamination of Compressor Oil” in this section.)

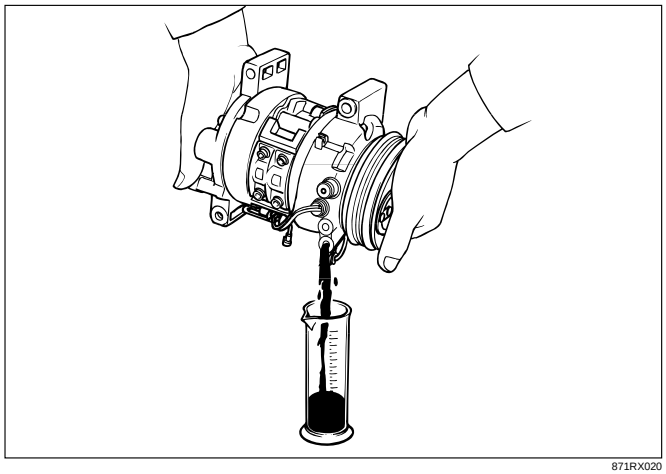

871RX020

6) Adjust oil level following the procedure below.

Collected Amount	Charging Amount
more than 90cc (2.5 Imp fl oz)	same as collected amount
less than 90cc (2.5 Imp fl oz)	90cc (2.5 Imp fl oz)

7) Install the compressor, then evacuate, charge and perform oil return operation.
8) Check system operation.

When it is impossible to perform oil return operation, the compressor oil should be checked in the following order:

1) Discharge refrigerant and remove the compressor.
2) Drain the compressor oil and measure the extracted oil with a measuring cylinder.
3) Check the oil for contamination.
4) If more than 90cc (2.5 Imp fl oz) of oil is extracted from the compressor, supply same amount of oil to the compressor to be installed. If the amount of oil extracted is less than 90cc (2.5 Imp fl oz), recheck the compressor oil in the following order:
5) Supply 90cc (2.5 Imp fl oz) of oil to the compressor and install it onto the vehicle.
6) Perform oil return operation.
7) Remove the compressor and recheck the amount of oil.
8) Adjust the compressor oil, if necessary.

Collected Amount	Charging Amount
more than 90cc (2.5 Imp fl oz)	same as collected amount
less than 90cc (2.5 Imp fl oz)	90cc (2.5 Imp fl oz)

Checking and Adjusting for Compressor Replacement

150cc (4.2 Imp fl oz) of oil is charged in compressor (service parts). So it is necessary to drain the proper amount of oil from the new compressor.

1) Perform oil return operation.
2) Discharge refrigerant and remove the compressor.
3) Drain the compressor oil and measure the extracted oil.
4) Check the compressor oil for contamination.
5) Adjust oil level as required.

Amount of oil drained from used compressor	Draining amount of oil from new compressor
less than 90cc (2.5 Imp fl oz)	Same as drained amount
more than 90cc (2.5 Imp fl oz)	90cc (2.5 Imp fl oz)

6) Evacuate, charge and perform oil return operation.
7) Check system operation.

CONTAMINATION OF COMPRESSOR OIL

Unlike engine oil, no cleaning agent is added to the compressor oil. Even if the compressor runs for a long period of time (approximately 1 season), the oil never becomes contaminated as long as there is nothing wrong with the compressor or its method of use.

Inspect the extracted oil for any of the following conditions:

- The capacity of the oil has increased.
- The oil has changed color to red.
- Foreign substances, metal powder, etc., are present in the oil.

If any of these conditions exists, compressor oil is contaminated. Whenever contaminated compressor oil is discovered, the receiver/drier must be replaced.

OIL RETURN OPERATION

There is close affinity between the oil and the refrigerant. During normal operation, part of the oil recirculates with the refrigerant in the system.

When checking the amount of oil in the system, or replacing any component of the system, the compressor must be run in advance for oil return operation. The procedure is as follows:

1) Open the all doors and engine hood.
2) Start the engine and A/C switch is “ON” and Set the fan control knob at its highest position.
3) Run the compressor for more than 20 minutes between 800 and 1,000 rpm in order to operate the system.
4) Stop the engine.

REPLACEMENT OF COMPONENT PARTS

When replacing system component parts, supply the following amount of oil to the component parts to be installed.

Component parts to be installed	Amount of oil
Evaporator	50cc (1.4 Imp fl oz)
Condenser	30cc (0.8 Imp fl oz)
Receiver/drier	30cc (0.8 Imp fl oz)

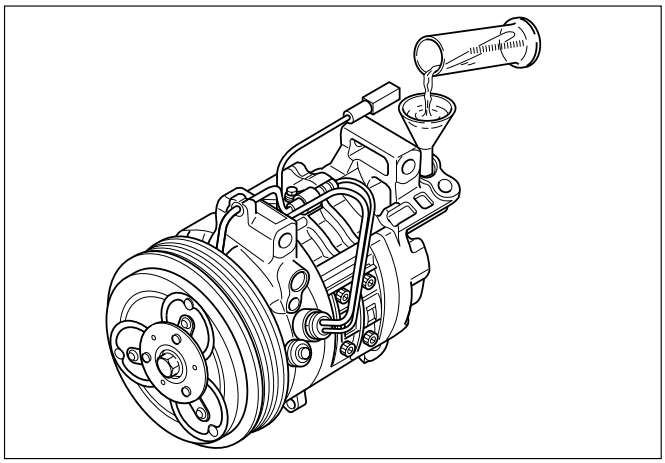

871RX013

SERVICE PROCEDURE

DKV-14D TYPE COMPRESSOR

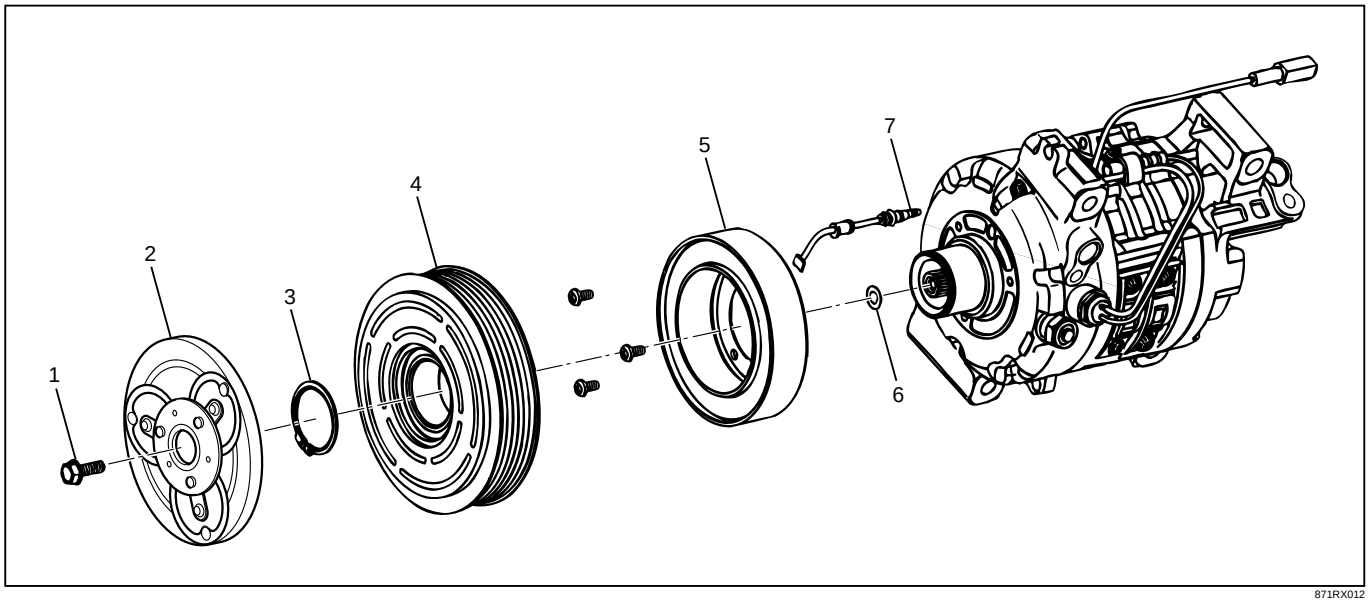

871RX012

Legend

(1) Drive Plate Bolt
(2) Drive Plate
(3) Snap Ring
(4) Pulley Assembly
(5) Field Coil
(6) Shim(s)
(7) Lead Wire

Removal

1. Remove drive plate bolt by using drive plate holder J-7624 (1) to prevent the drive plate from rotating.

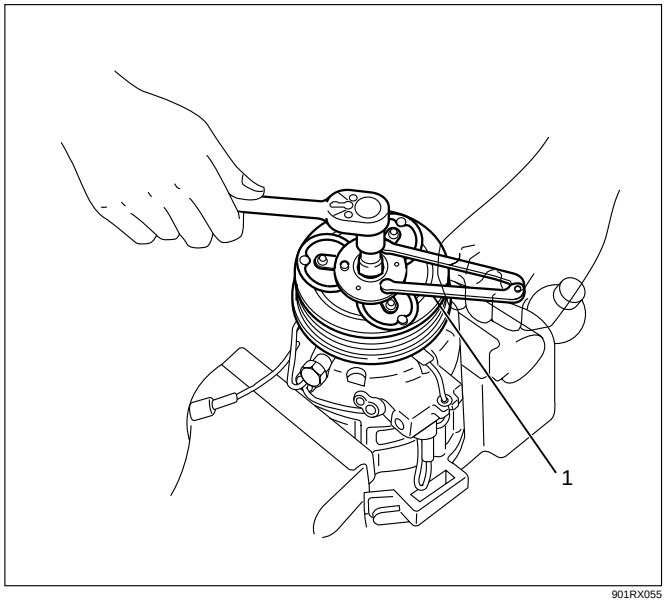

901RX055

2. Remove drive plate by using drive plate puller J-33944-A (2) and forcing screw J-33944-4 (1).

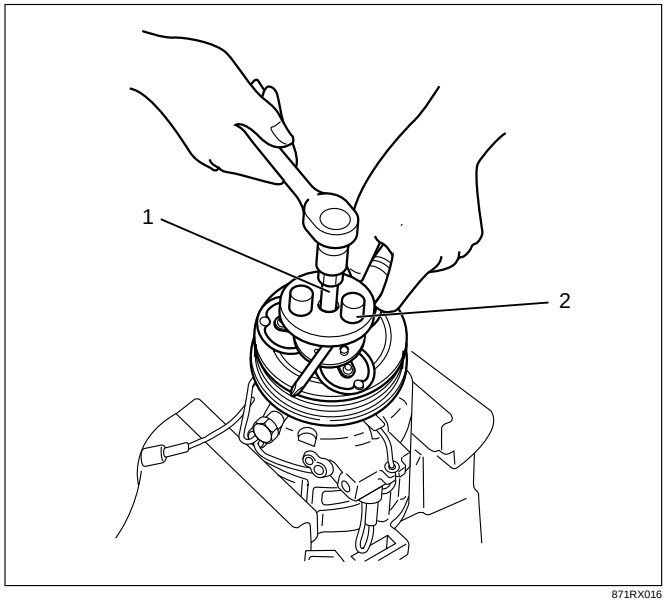

871RX016

3. Remove shim(s).
4. Remove snap ring (1) by using snap ring pliers.

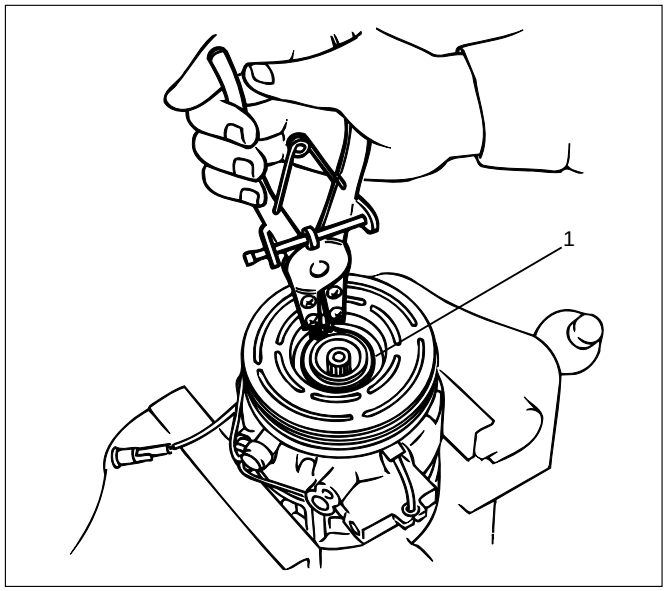

871RW016

5. Remove pulley assembly by using pulley puller pilot J-38424 (2), pulley puller J-8433 (1) and pulley puller leg J-24092-2 (3).

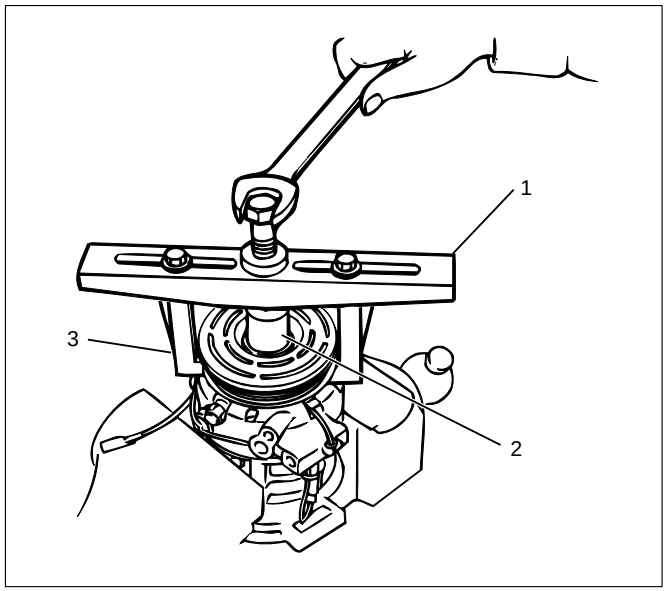

871RX031

6. Loosen screw and disconnect the coil lead wire connector.

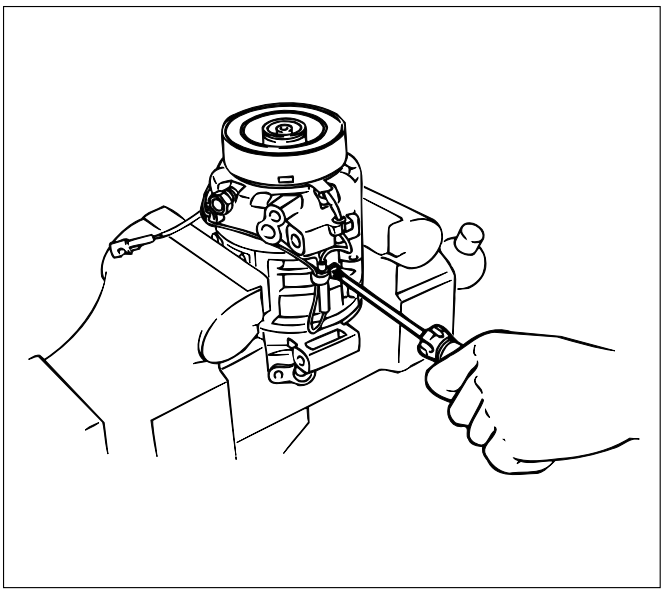

871RS010

7. Loosen three screws and remove the field coil.

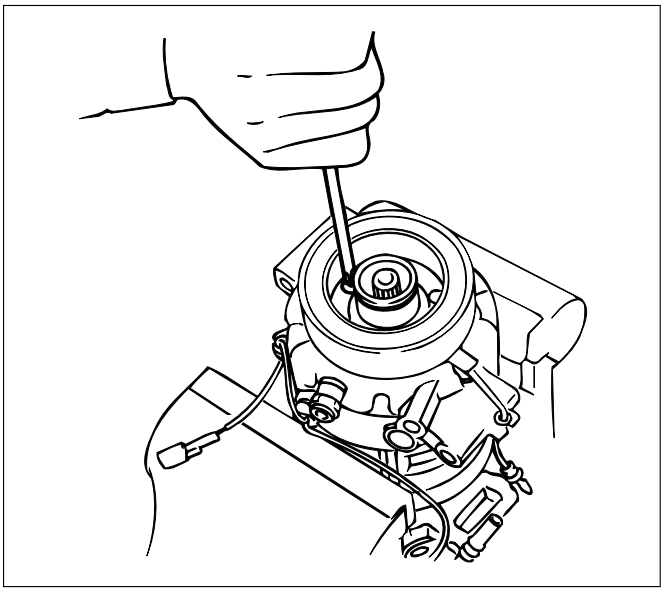

871RS011

Inspection and Repair

Drive Plate

If the frictional surface shows signs of damage due to excessive heat, the drive plate and pulley should be replaced.

Pulley Assembly

Check the appearance of the pulley assembly. If the frictional surface of the pulley shows signs of excessive grooving due to slippage, both the pulley and drive plate should be replaced. The frictional surfaces of the pulley assembly should be cleaned with a suitable solvent before reinstallation.

Coil

Check coil for loose connector or cracked insulation.

Installation

1. Install field coil.
   - Align the located portion (1) of the field coil and compressor.

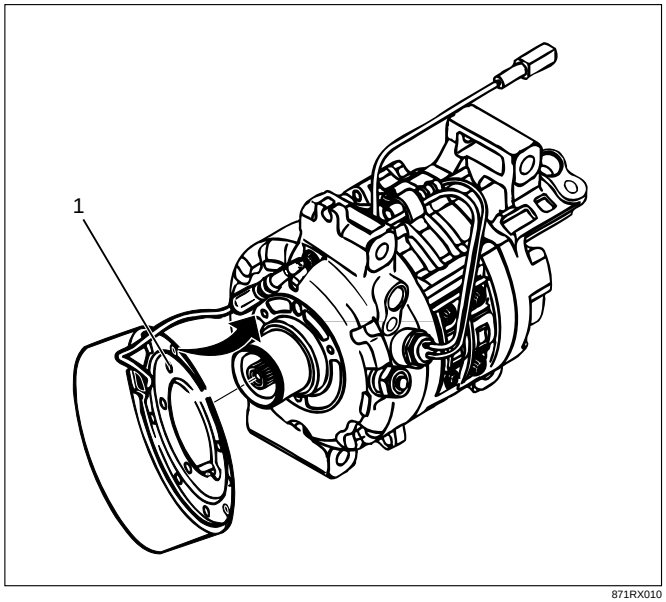

871RX010

   - Tighten the mounting screw to the specified torque.
   Torque: 5N·m (44 lb in)
2. Connect the lead wire connector with the rubber hold and tighten the screw.
3. Install pulley assembly by using pulley installer J-33940-A (2) and drive handle J-8092 (1).

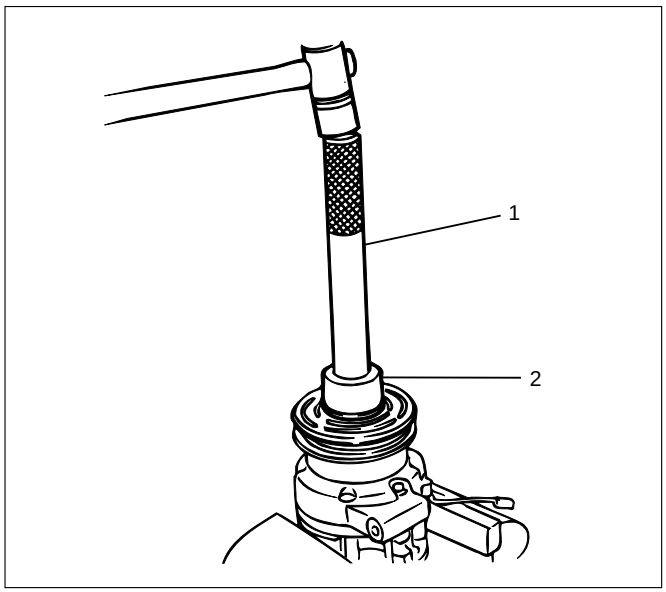

871RX032

4. Install snap ring.
5. Install shim(s).
6. Install the drive plate to the compressor drive shaft together with the original shim(s)(1). Press the drive plate by hand.

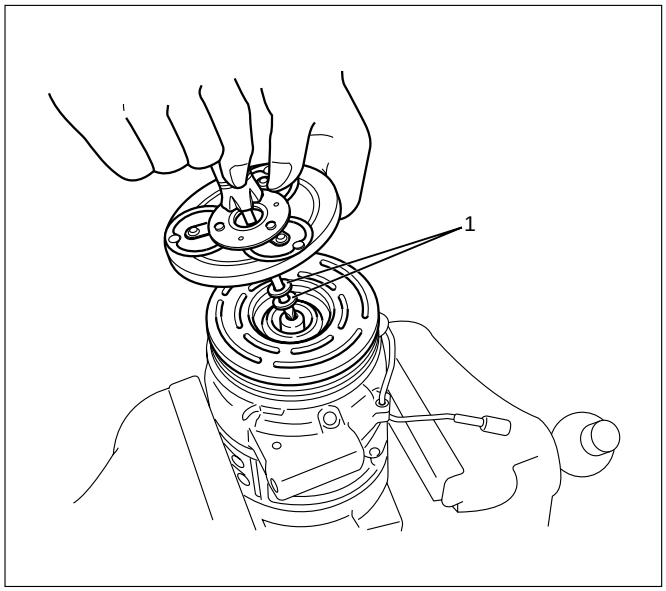

871RX015

7. Install drive plate bolt by using drive plate holder J-7624 (1) to prevent the drive plate from rotating.

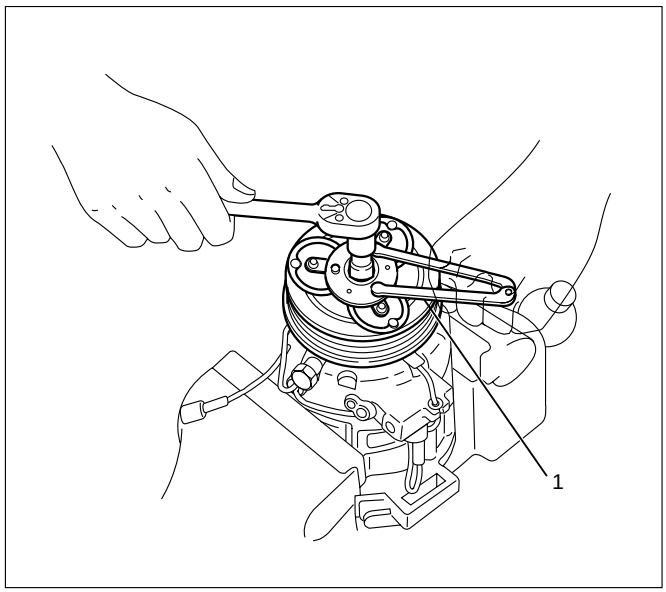

901RX055

- Tighten the drive plate bolt to the specified torque.

Torque: 13 N·m (113 lb in)

- After tightening the drive plate bolt, check to be sure the pulley rotates smoothly.
- Check to be sure that the clutch clearance is between 0.3-0.6 mm (0.01-0.02 in.)

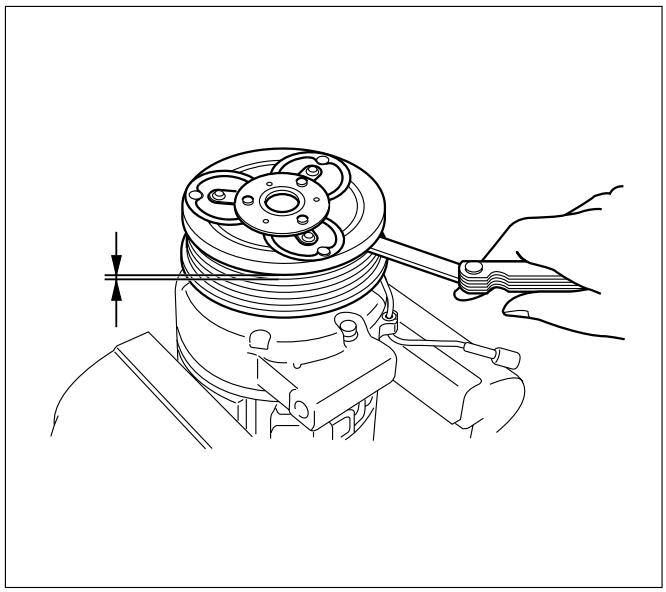

871RX014

- If necessary, install adjusting shim(s).
- Adjusting shims are available in the following thickness.

Thickness

- **0.1 mm (0.0039 in.)**
- **0.3 mm (0.0118 in.)**
- **0.5 mm (0.0197 in.)**

DKS-15CH TYPE COMPRESSOR

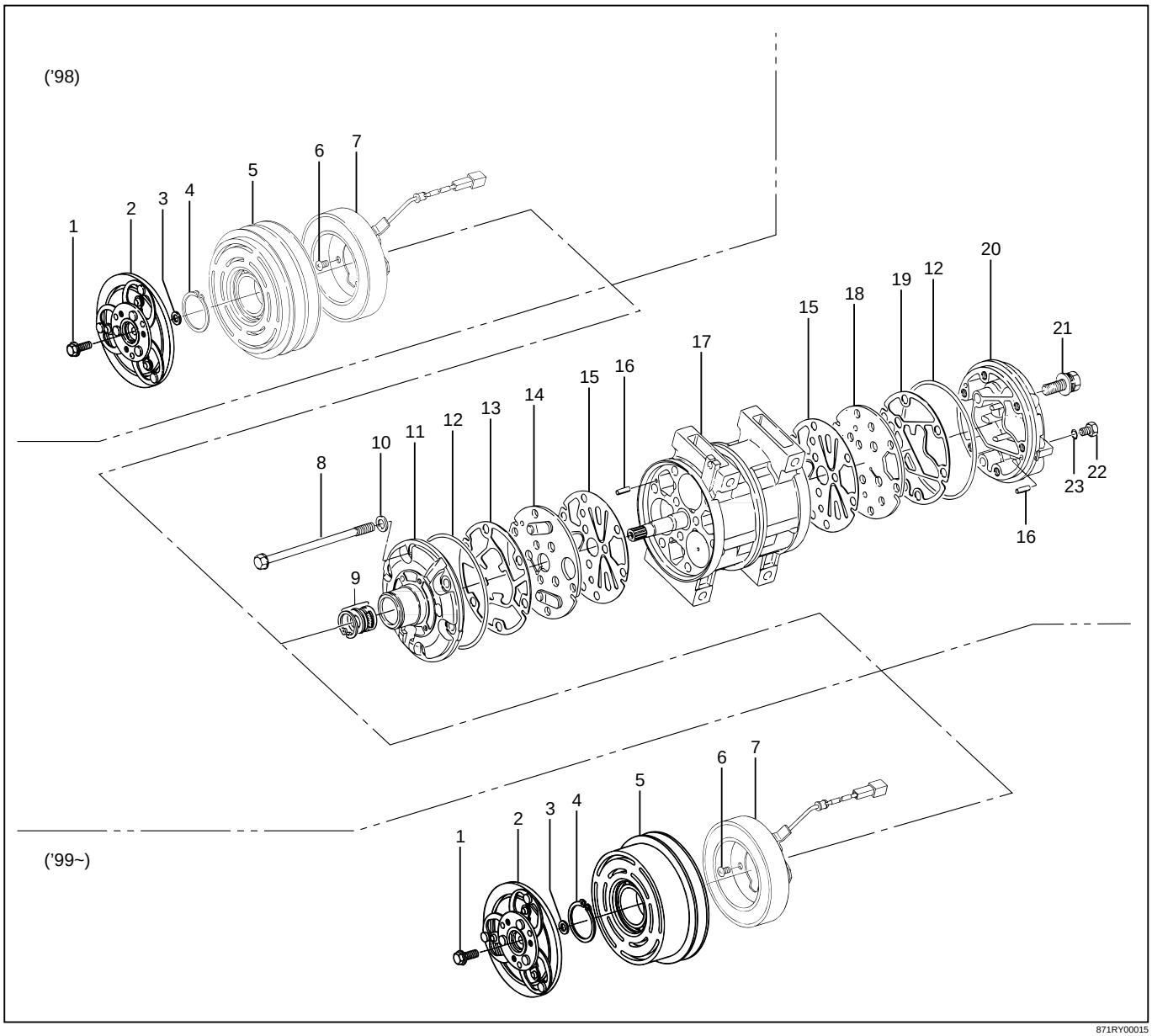

871RY00015

Legend

(1) Drive Plate Bolt
(2) Drive Plate
(3) Shim
(4) Snap Ring
(5) Pulley Assembly
(6) Screw
(7) Field Coil
(8) Through Bolt
(9) Shaft Seal Assembly
(10) Gasket
(11) Front Cylinder Head
(12) O-Ring
(13) Gasket
(14) Front Valve Plate
(15) Front Suction Valve
(16) Pin
(17) Cylinder and Shaft Assembly
(18) Rear Valve Plate
(19) Gasket
(20) Rear Cylinder Head
(21) Bolt
(22) Oil Drain Plug
(23) O-Ring

Removal

1. Remove drive plate bolt by using drive plate holder J-7624 (1) to prevent the drive plate from rotating.

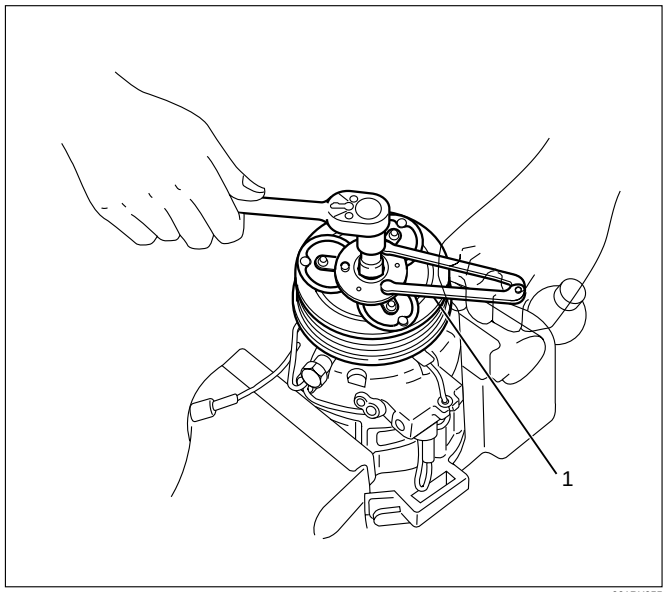

901RX055

2. Remove drive plate by using drive plate puller J-33944-A (2) and forcing screw J-33944-4 (1).

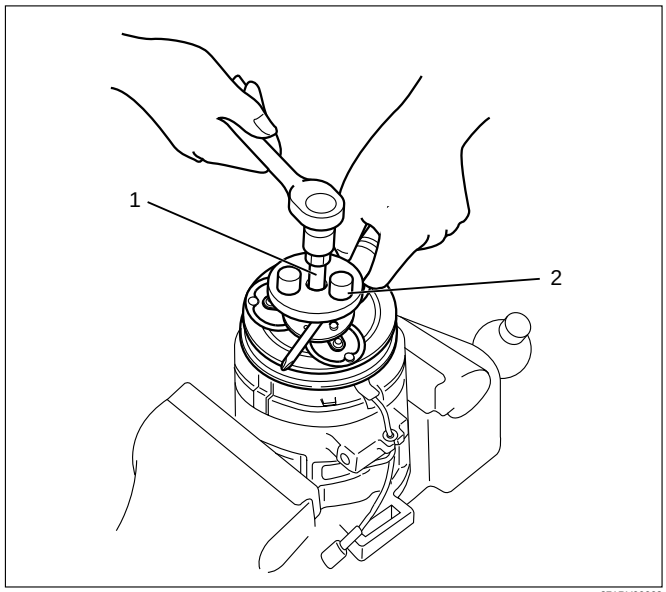

871RY00003

3. Remove shim(s).
4. Remove snap ring (1) by using snap ring pliers.

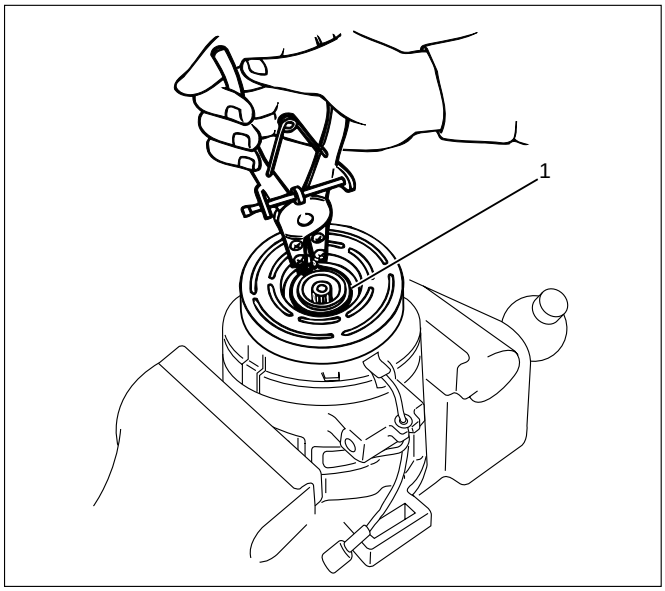

871RY00004

5. Remove pulley assembly by using pulley puller pilot J-38424 (2), pulley puller J-8433 (1) and pulley puller leg J-24092-2 (3).

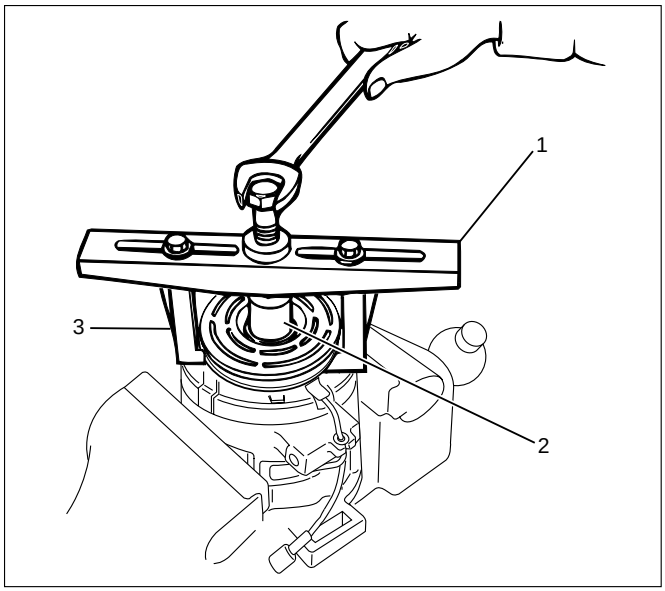

871RY00005

6. Loosen three screws and remove the field coil.

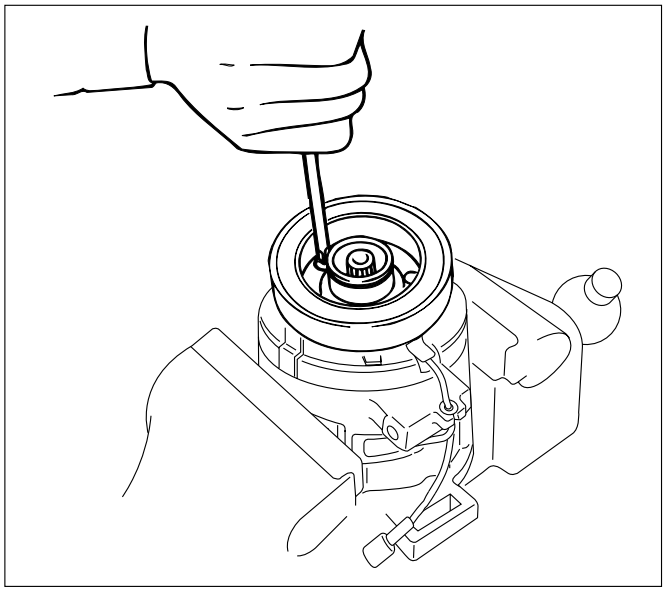

871RY00006

7. Remove snap ring by using snap ring pliers.

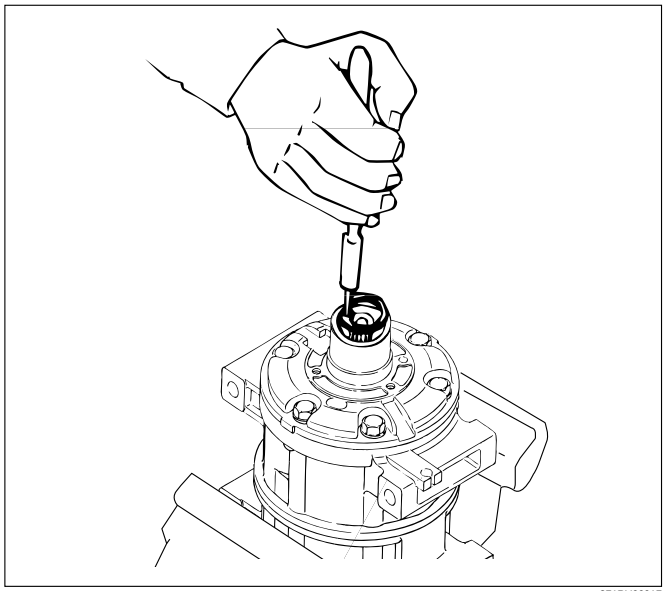

871RY00017

8. Remove shaft seal assembly (2) by using shaft seal remover J-33942 (1).

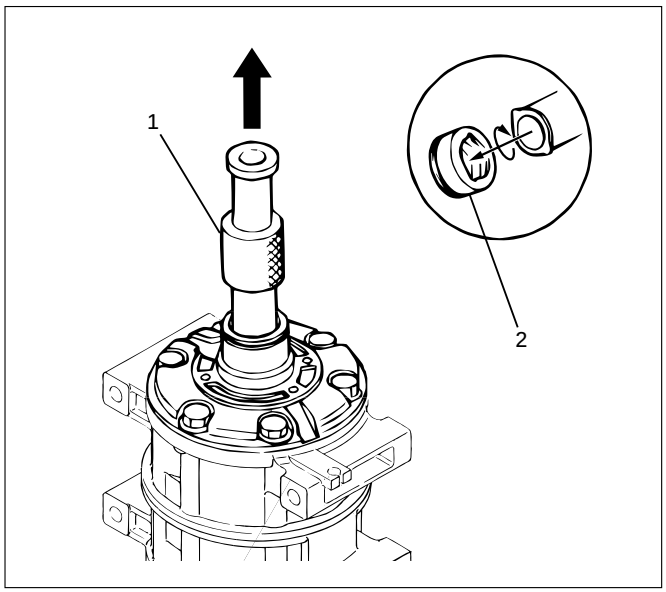

871RY00018

- Engage the remover hook with the shaft seal assembly groove and slowly draw the shaft seal assembly out.

NOTE
The shaft seal is precision-machined and its critical parts are finished to extremely close tolerances. The assembly must be handled with great care, it slips face demanding particularly careful handling.
The shaft seal can not be reused. Install a new shaft seal at reassembly.
Take care not to scratch or otherwise damage the shaft seal face.
Keep the shaft seal free from lint and dirt.

9. Remove through bolt.

10. Remove front cylinder head.

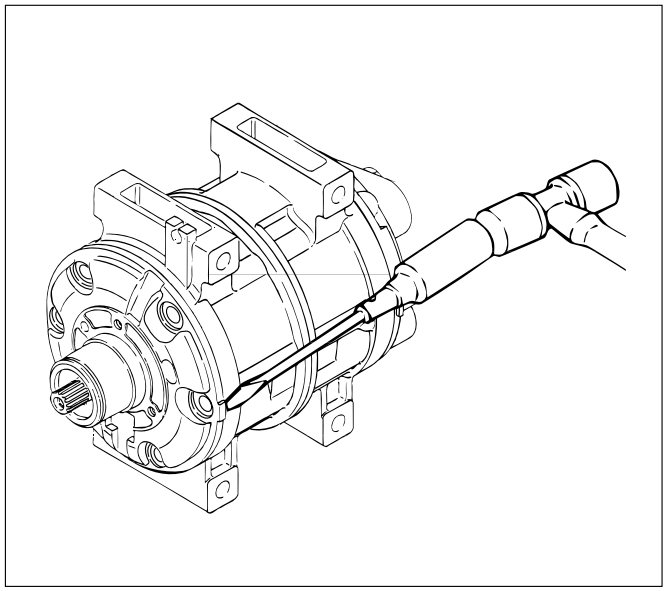

871RY00019

11. Remove o-ring.
    - Alternately tap the projections on the circumference of the front cylinder head with a screwdriver and a plastic hammer to remove the front cylinder head.
12. Remove gasket.
13. Remove front valve plate.
14. Remove front suction valve.

NOTE
Check the front valve plate for scratching and bending.
Check the front valve plate and the front cylinder head for nicks and burrs on the sealing surface.
Buff or replace the valve plate and cylinder head if nicks and burrs are present.
Check that the front valve plate passage is free from obstructions.
Check the front valve plate and the cylinder head for cracks.
Replace the valve plate and cylinder head if cracks are present.

15. Remove rear cylinder head.

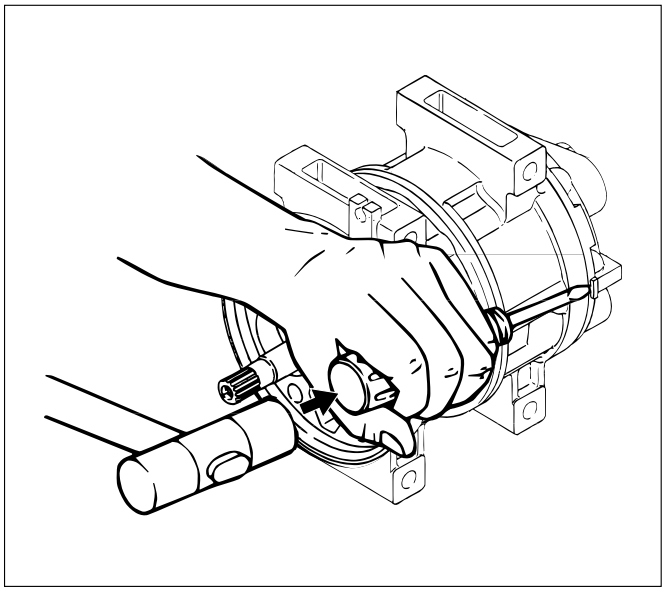

871RY00020

16. Remove o-ring.
    - Alternately tap the projections on the circumference of the rear cylinder head with a screwdriver and a plastic hammer to remove the rear cylinder head.
17. Remove gasket.
18. Remove rear valve plate.
19. Remove rear suction valve.
20. Remove cylinder and shaft assembly.

NOTE
Check the rear valve plate for scratching and bending.
Check the rear valve plate and the rear cylinder head for nicks and burrs on the sealing surface.
Buff or replace the valve plate and cylinder head if nicks and burrs are present.
Check that the rear valve plate passage is free from obstructions.
Check the rear valve plate and the cylinder head for cracks.
Replace the valve plate and cylinder head if cracks are present.

Installation

1. Install cylinder and shaft assembly.
   - Clamp the cylinder shaft assembly in a vise.
     The rear side of the cylinder shaft assembly must be facing up.
2. Install rear suction valve.
   - Apply a coat of new compressor oil to the new suction valve (2).
     Install the suction valve by aligning it with the spring pin and the cylinder valve relief grooves.

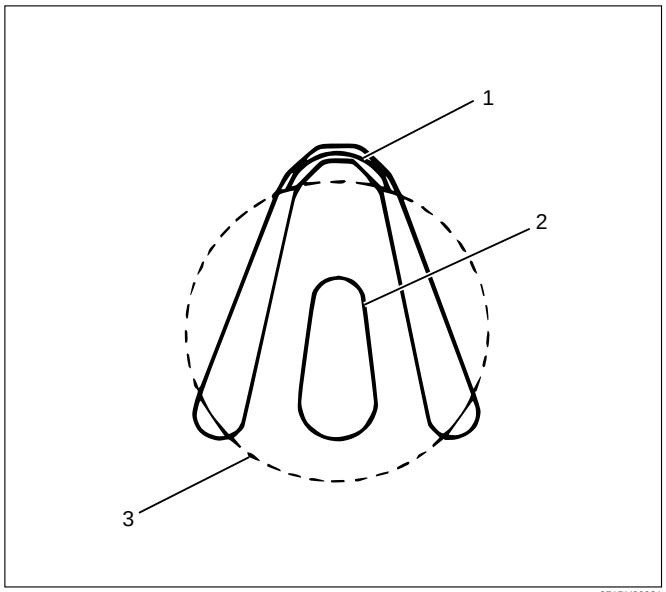

871RY00021

Legend
(1) Escape Groove
(2) Suction Valve
(3) Piston

3. Install rear valve plate.
   - Apply a coat of new compressor oil to the new valve plate.
     Install the valve plate to the suction valve by aligning it with the spring pin.

   NOTE
   Do not mix up the front and rear valve plate.
4. Install gasket.
   - Apply a coat of new compressor oil to the new gasket.
     Install the gasket (3) to the valve plate (4).
5. Install o-ring (2).
6. Install rear cylinder head (1).
   - Apply a coat of new compressor oil to the new o-ring (2).
     Install the o-ring (2) to the rear cylinder head (1).
     Install the rear cylinder head.
     Top the rear cylinder head (1) into place with a plastic hammer.

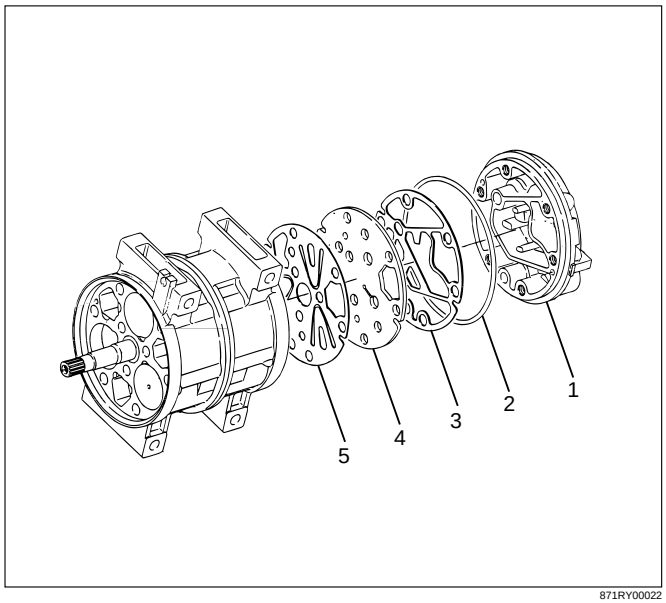

871RY00022

7. Install front suction valve.
   - Set the cylinder shaft assembly with the front side facing up.
     Apply a coat of new compressor oil to the new suction valve (2).
     Install the suction valve (2) by aligning it with the spring pin and the cylinder valve relief grooves.

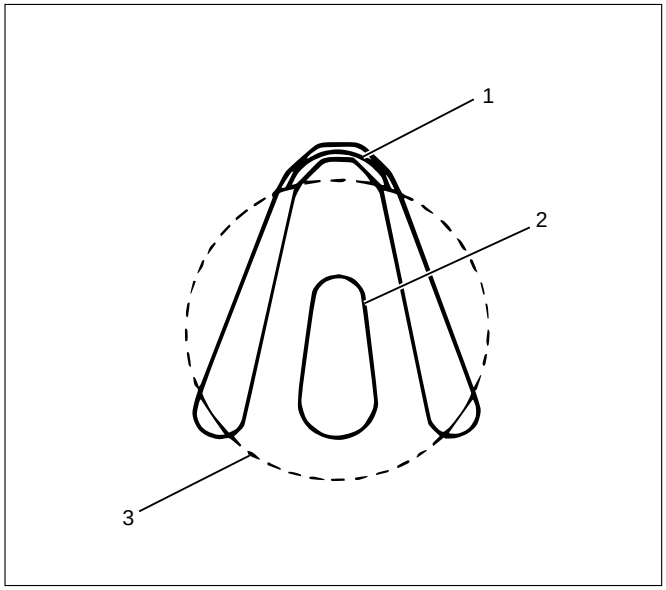

871RY00021

Legend
(1) Escape Groove
(2) Suction Valve
(3) Piston

8. Install front valve plate.
   - Apply a coat of new compressor oil to the new valve plate.
     Install the valve plate to the suction valve by aligning it with the spring pin.

   NOTE
   Do not mix up the front and rear valve plates.
9. Install gasket
   - Apply new compressor oil to the new gasket.
   - Install the gasket to the valve plate by a aligning it with the spring pin.
10. Install o-ring.
11. Install front cylinder head.
   - Apply a coat of new compressor oil to the new O-ring.
     Install the O-ring to the front cylinder head.
     Install the front cylinder head.
     Tap the front cylinder head into place with a plastic hammer.

   NOTE
   When installing the cylinder head, be careful that the end of the drive shaft does not damage the shaft seal assembly surface in the cylinder head.

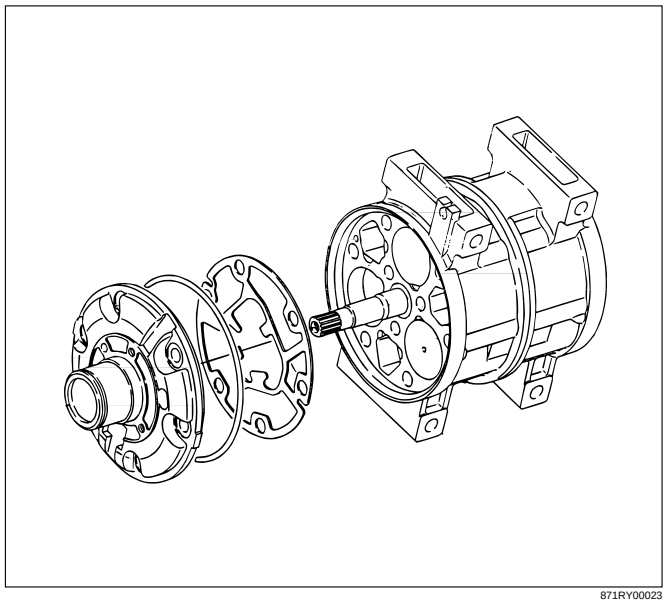

871RY00023

12. Install through bolt.
   - Gaskets cannot reused. Always replace new ones. Tighten the bolts to the specified torque a little at a time in the sequence shown in the illustration.

   Torque: 22N·m (16 lb·ft)

   NOTE
   Rotate the compressor drive shaft two or three times to make sure that it moves smoothly.

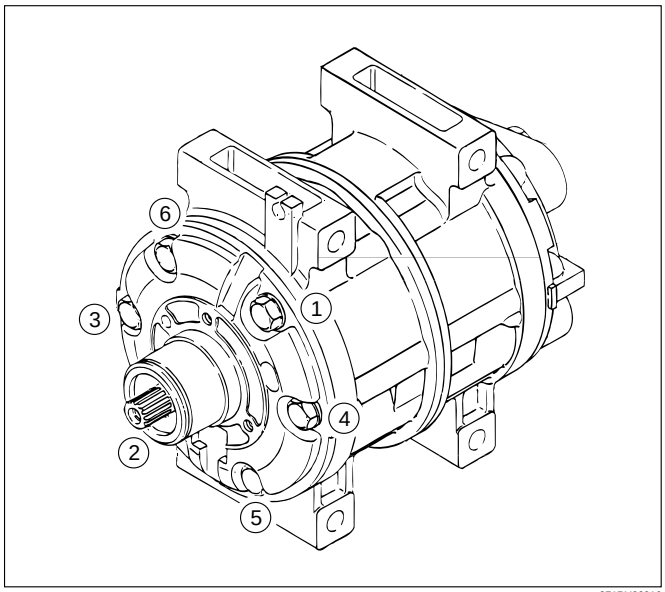

871RY00016

13. Install shaft seal assembly.
    - Clean the sealing portion of the compressor and shaft seal (2).
      Install the shaft seal guide J-34614 (1) onto the end of the drive shaft.
      Apply new compressor oil to the shaft seal guide.
      Install the shaft seal (2) onto the compressor drive shaft head by using shaft seal installer J-33942 (3).

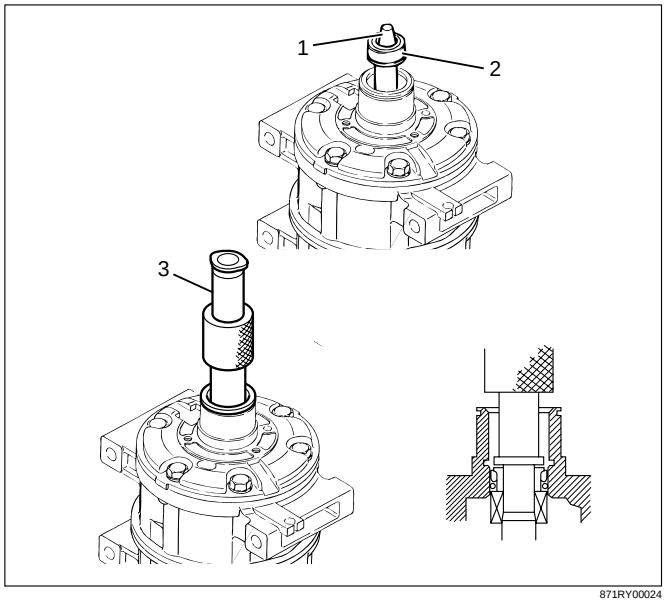

871RY00024

14. Install snap ring.
15. Install field coil.
16. Install lead wire connector.
    - Install the field coil to the compressor.
      Lead wire must be facing up.
      Tighten the field coil fixing screws to the specified torque.

Torque: 5N·m (44 lb·in)

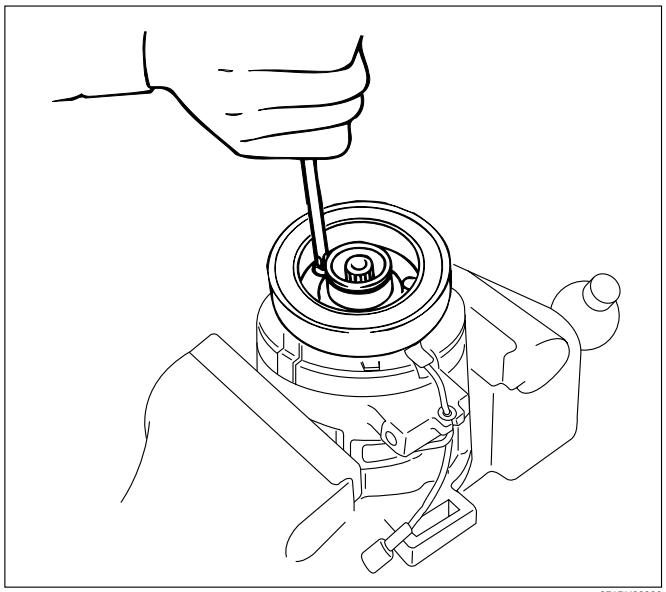
871RY00006

17. Install pulley assembly.
    - Using pulley installer J-33940 (2) and drive handle J-8092 (1) to install the pulley assembly.

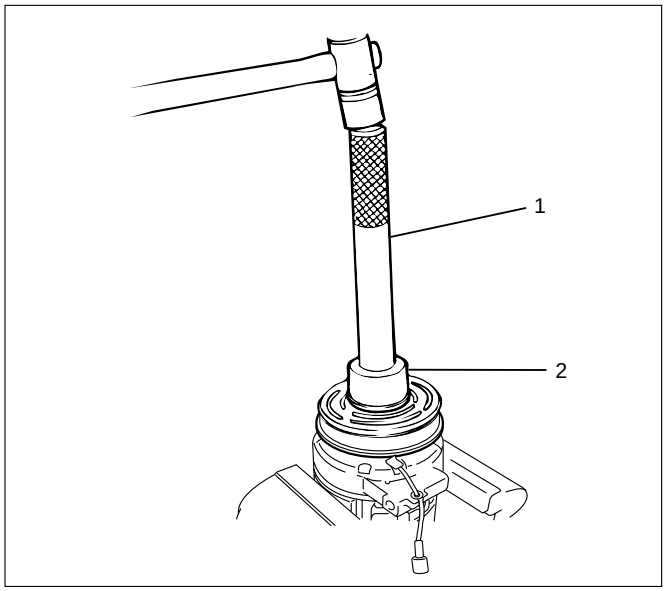

871RY00008

18. Install snap ring.
    - Install the snap ring with the inside indented portion facing out.

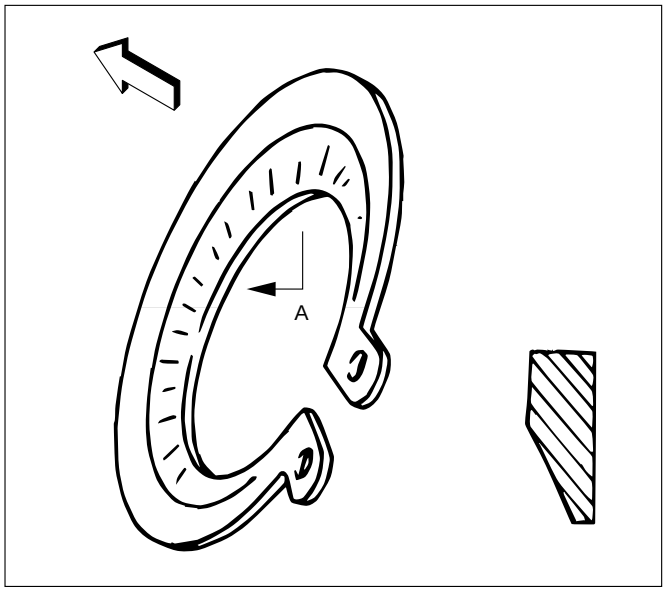

871RY00025

19. Install shim(s).
20. Install drive plate.
    - Install the drive plate to the compressor drive shaft together with the original shim(s)(1) press the drive plate by hand.

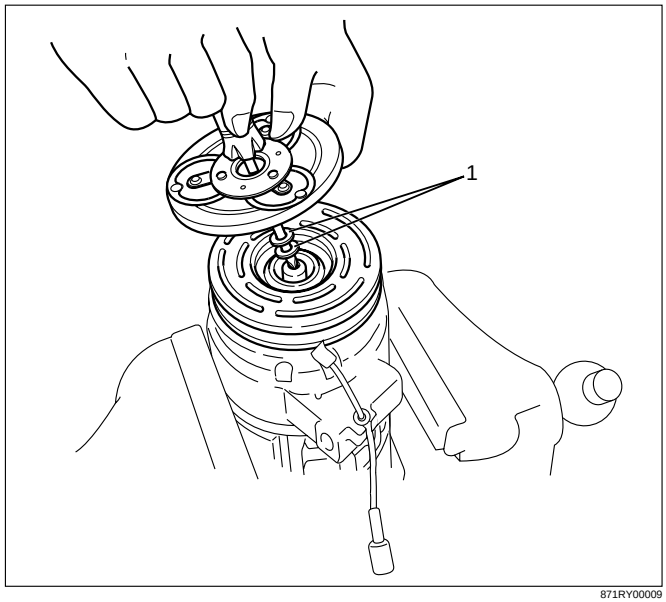

871RY00009

21. Install drive plate bolt by using drive plate holder J-7624 (1) to prevent the drive plate from rotating.
    - Tighten the bolt to the specified torque.

    Torque: 15N·m (11 lb·in)

    NOTE
    After tightening the bolt, check to be sure the pulley rotates smoothly.

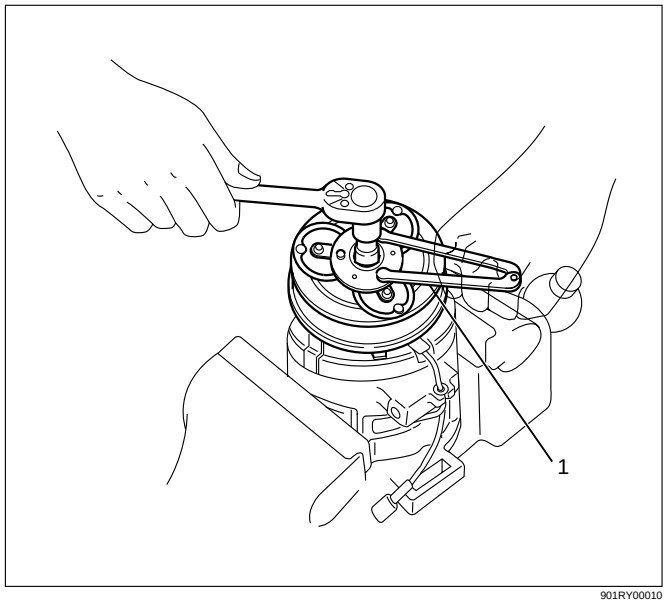

901RY00010

- Check to be sure that the clutch clearance is between 0.3–0.6 mm (0.01–0.02 in.)

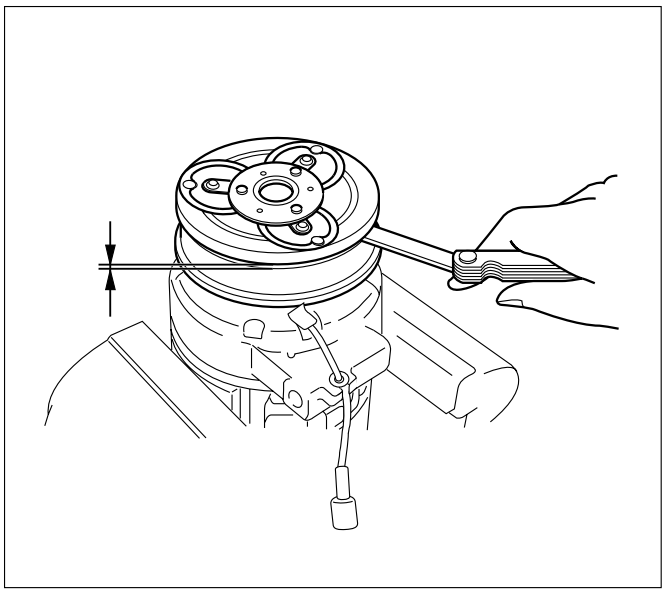

871RY00007

- If necessary, install adjusting shim(s).
- Adjusting shims are available in the following thickness.

Thickness
- **0.1 mm (0.0039 in.)**
- **0.3 mm (0.0118 in.)**
- **0.5 mm (0.0197 in.)**

HD6 TYPE COMPRESSOR

Metric Thread Size Information

Compressor to mounting bracket bolts (Front)
M10 × 1.5 – 6H
Compressor to mounting bracket bolts (Rear)
M8 × 1.25 – 6H
Suction-discharge port screw
M10 × 1.5 – 6H
Compressor shaft
M9 × 1.25 – 6H
Internal hub-clutch drive assembly
M22 × 1.5 – 6H

COMPRESSOR CLUTCH PLATE AND HUB ASSEMBLY

Removal

1. Clamp the holding fixture J-33026 in a vise and attach compressor to holding fixture with thumb screws J-33026-1.
2. With center screw forcing tip in place to thrust against the end of the shaft, thread the Clutch Plate and Hub Assembly Installer-Remover J-33013-B into the hub. Hold the body of the remover with a wrench and turn the center screw into the remover body to remove the clutch plate and hub assembly (1).

CAUTION: Do not drive or pound on the clutch hub or shaft. Internal damage to compressor may result. The forcing tip on J-33013-B remover-installer center screw must be flat or the end of the shaft/axial plate assembly will be damaged.

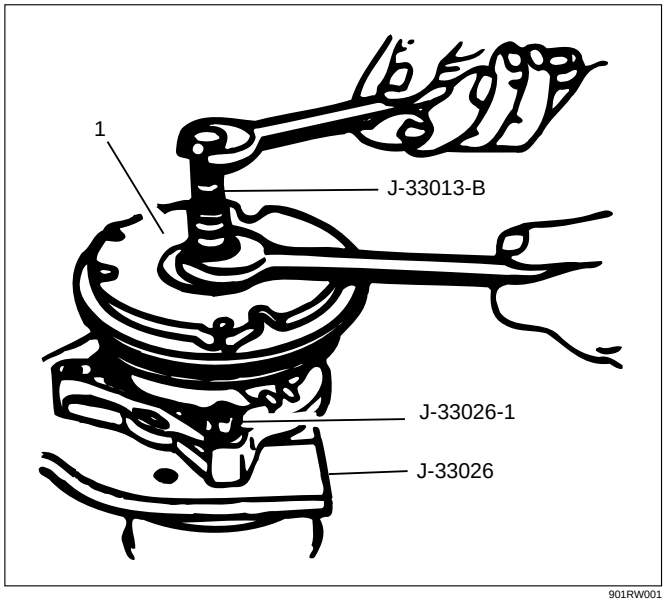

901RW001

3. Remove the shaft key and retain for reassembly.

Installation

1. Install the shaft key into the hub key groove. Allow the key to project approximately 3.2 mm (1/8 in) out of the keyway. The shaft key is curved slightly to provide an interference fit in the hub key groove.
2. Be sure the frictional surface of the clutch plate and the clutch rotor (2) are clean before installing the clutch plate and hub assembly (1).
3. Align the shaft key (4) with the shaft keyway (3) and place the clutch plate and the hub assembly onto the compressor shaft.

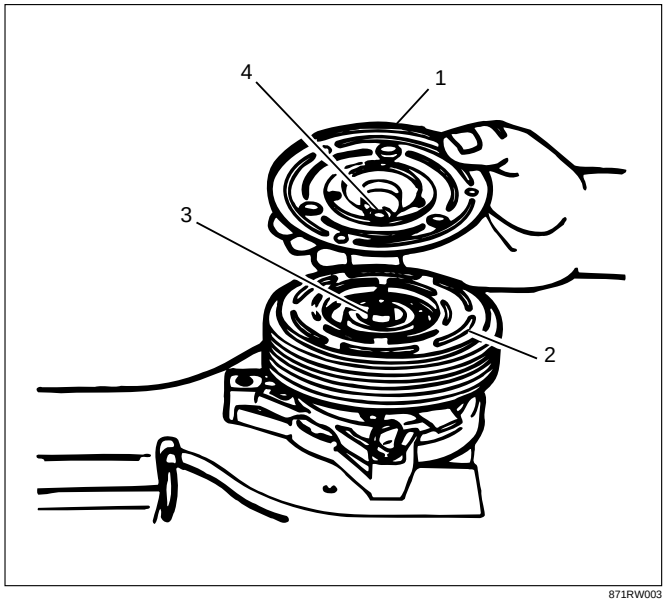

871RW003

4. Remove the forcing tip on J-33013-B clutch plate and hub assembly installer-remover center screw and reverse the body direction on the center screw, as shown in Figure.
5. Install the clutch plate and hub installer-remover J-33013-B with bearing as shown in Figure.
   The body of the J-33013-B installer-remover should be backed off sufficiently to allow the center screw to be threaded onto the end of the compressor shaft.
6. Hold the center screw with a wrench. Tighten the hex portion of the installer-remover J-33013-B body to press the hub onto the shaft. Tighten the body several turns, remove the installer and **check to see that the shaft key is still in place in the keyway before installing the clutch plate and hub assembly to its finial position.** The air gap (2) between frictional surfaces of the clutch plate and clutch rotor should be 0.50–0.76 mm (.020–.030 in).

CAUTION: If the center screw is threaded fully onto the end of the compressor shaft. or if the body of the installer is held and the center screw is rotated, the key will wedge and will break the clutch hub.

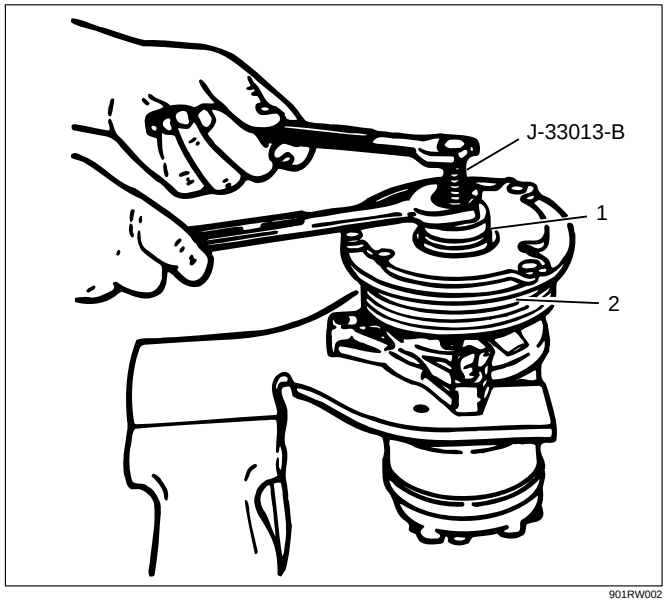

901RW002

COMPRESSOR CLUTCH ROTOR AND/OR BEARING

Removal

1. Remove the clutch plate and hub assembly as described previously.
2. Remove rotor (1) and bearing assembly retaining ring (2), using snap ring pliers.

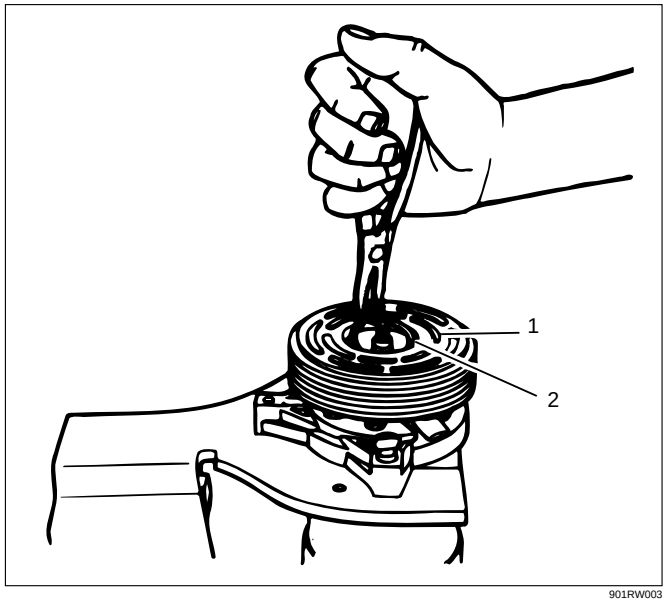

901RW003

3. Install pulley rotor and bearing puller guide J-33023-A to the front head and install J-41552 pulley rotor and bearing puller down into the inner circle of slots (1) in the rotor. Turn the J-41552 puller clockwise in the slots in the rotor.
7. Remove installer J-33013-B, check for proper positioning of the shaft key (even or slightly above the clutch hub).
8. Spin the pulley rotor by hand to see that the rotor is not rubbing the clutch drive plate.
4. Hold the J-41552 puller in place and tighten the puller screw against the puller guide to remove the pulley rotor and bearing assembly.

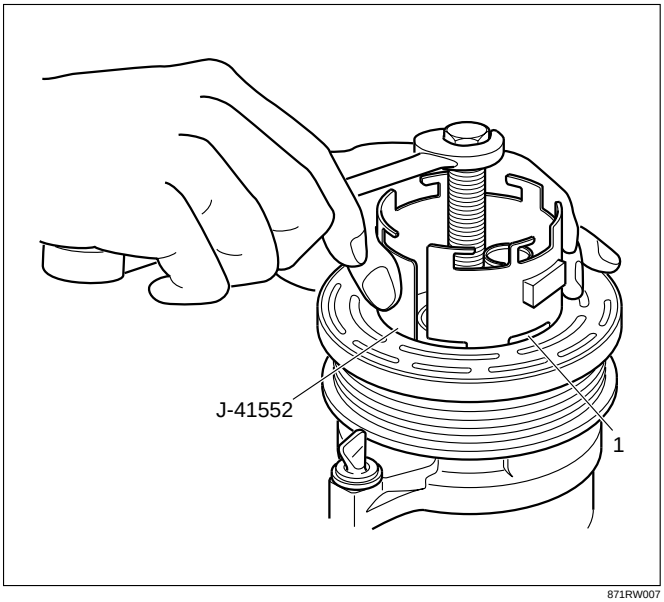

871RW007

Installation

1. With the compressor mounted to the J-34992 holding fixture, position the rotor and bearing assembly on the front head.
2. Position the J-33017 pulley, rotor and bearing installer and J-33023-A puller pilot directly over the inner race of the bearing.

3. Position puller crossbar J-8433-1 on the puller pilot J-33023-A and assemble the two J-33026 through bolts and washers through the puller bar slots and thread them into the J-33026 holding fixture. The thread of the through bolts should engage the full thickness of the holding fixture.
4. Tighten the center screw in the J-8433-1 puller crossbar to force the pulley rotor (1) and bearing assembly onto the compressor front head. Should the J-33017 pulley rotor and bearing installer slip off direct in-line contact with the inner race of the bearing, loosen the J-8433-1 center forcing screw and realign the installer and pilot so that the J-33017 installer will properly clear the front head.

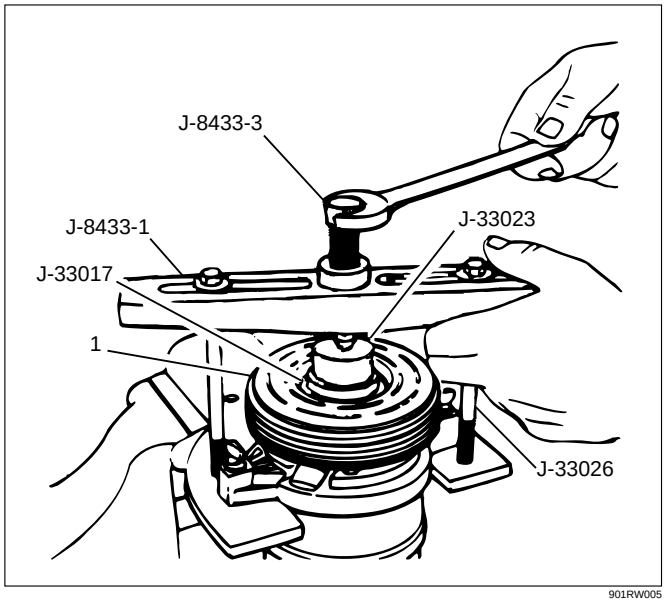

901RW005

5. Install rotor and bearing assembly retainer ring, using snap ring pliers.
6. Reinstall clutch plate and hub assembly as described previously.

COMPRESSOR CLUTCH COIL

Removal

1. Perform Steps 1 through 4 of "Clutch Rotor and/or Bearings" removal procedure. **Mark clutch coil terminal location (1) on compressor front head.**
2. Install J-33023-A puller pilot on front head of compressor. Also install J-8433-1 puller crossbar with J-33025 puller legs as shown in figure.
3. Tighten J-8433-3 forcing screw against the puller pilot to remove the clutch coil (2).

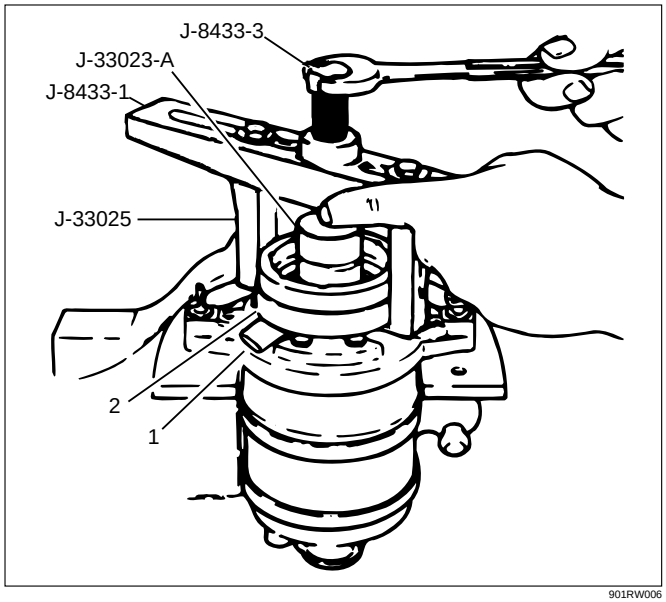

901RW006

Installation

1. Place the clutch coil assembly (1) on the front head with the terminals positioned at the "marked" location.
2. Place the J-33024 clutch coil installer over the internal opening of the clutch coil housing and align installer with the compressor front head.
3. Center the J-8433-1 puller crossbar in the counter-sunk center hole of the J-33024 clutch coil installer. Install the J-33026 through bolts and washers through the crossbar slots and thread them into the holding fixture J-33026 to full fixture thickness.

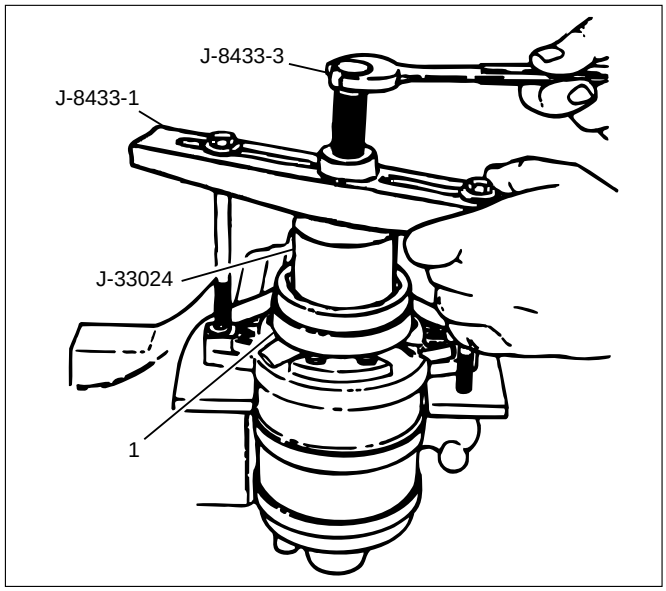

901RW007

4. Turn the center forcing screw of J-8433-1 puller crossbar to force the clutch coil onto the front head. Be sure clutch coil and J-33024 installer stay "in-line" during installation.
5. When coil is fully seated on the front head, use a 1/8 in diameter drift punch (2) and stake the front head at three places 120 degrees apart, to ensure clutch coil (3) remains in position.

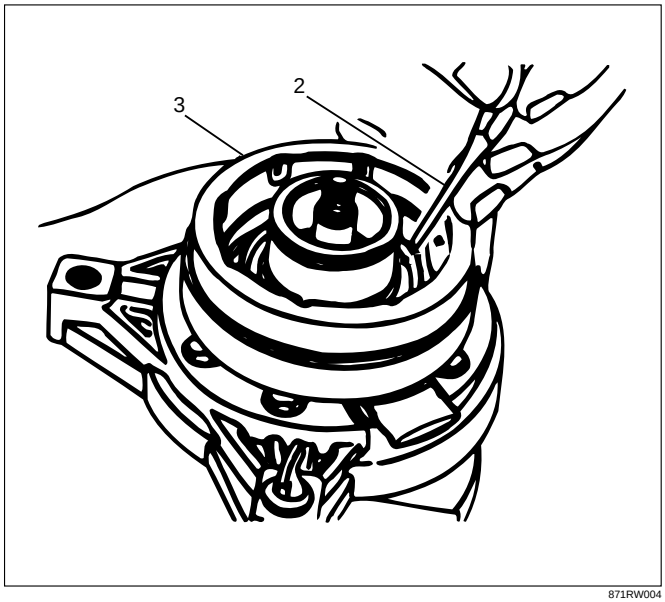

871RW004

- Stake size should be only one-half the area of the punch tip and be only approximately 0.28–0.35 mm (.010–.015 in) deep.

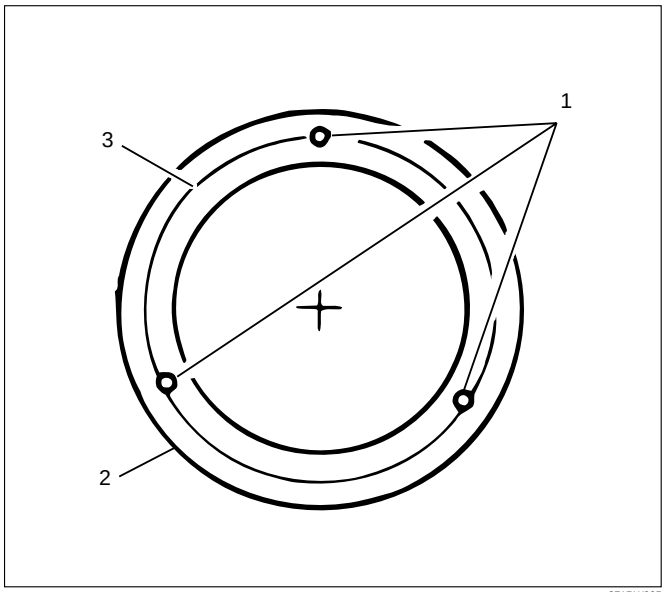

871RW005

Legend

(1) Stake Front Head 0.28–0.35 mm Deep (0.10–015 in)
(2) Clutch Coil Housing
(3) Front Head Surface

6. Install rotor and bearing assembly and the clutch plate and hub assembly as described previously.

COMPRESSOR SHAFT SEAL

Service Precaution

When replacing the shaft seal assembly, pressure relief valve or control switches, it will be necessary to recover the refrigerant. Other than clutch repair procedures, the same holds true for any disassembly of the compressor.

A clean workbench covered with a sheet of clean paper, and a place (clean trays, etc) for all parts being removed and replaced is important, as is the use of proper clean service tools.

CAUTION: Any attempt to use makeshift or inadequate service tools or equipment may result in damage and/or improper compressor operation.

All parts required for servicing the internal compressor are protected by a preservative process and packaged in a manner which will eliminate the necessity of cleaning, washing or flushing of the parts. The parts can be used in the internal assembly just as they are removed from the service package. **Seals and protective packaging should be left intact until just prior to installation.**

If the compressor rear head, front head or cylinder and shaft assembly is to be serviced or replaced, the oil in the compressor must be drained, measured, recorded and replaced.

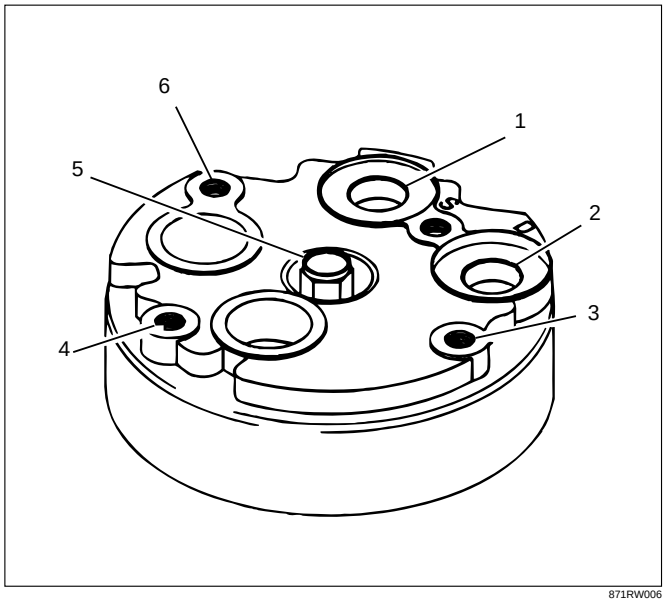

871RW006

Legend

(1) Suction Port
(2) Discharge Port
(3) Mounting Boss
(4) Mounting Boss
(5) Pressure Relief Valve
(6) Mounting Boss

Seal Leak Detection

A shaft seal should not be changed because of small amounts of oil found on an adjacent surface but only after actual refrigerant leakage is found using an approved leak detector.

CAUTION: Handling and care of seal protector is important. If seal protector is nicked or the bottom flared, the new seal may be damaged during installation.

Removal

1. Recover the refrigerant using Refrigerant Recovery System.
2. Loosen and reposition compressor in mounting brackets, if necessary.
3. Remove clutch plate and hub assembly from compressor as described previously.
4. Remove the shaft seal retainer ring, using snap ring pliers.
5. Thoroughly clean inside of compressor neck area surrounding the shaft, the exposed portion of the seal, the retainer ring groove and the shaft itself. Any dirt or foreign material getting into compressor may cause damage.
6. Fully engage the knurled tangs of Seal Remover-Installer J-23128-A into the recessed portion of the Seal (1) by turning the handle clockwise. Remove the Seal from the compressor with a rotary-pulling motion.
   Discard the seal. The handle must be hand-tightened securely. Do not use a wrench or pliers.

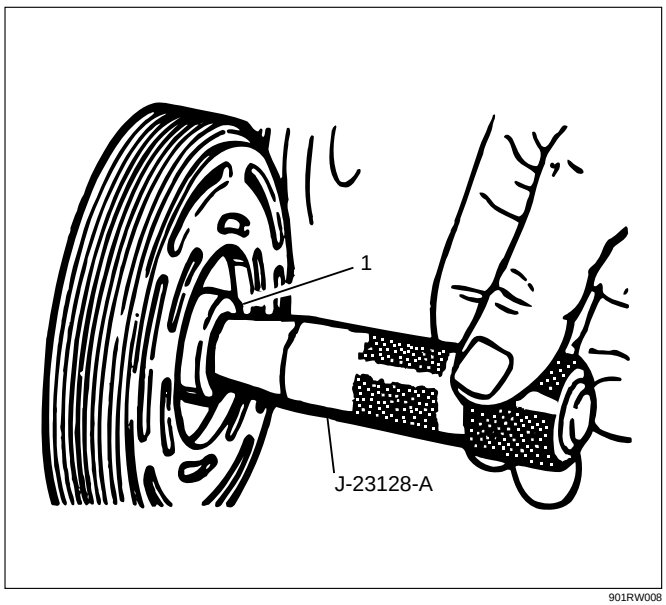

901RW008

7. Remove and discard the seal seat O-ring (2) from the compressor neck using O-ring remover J-9553-01.

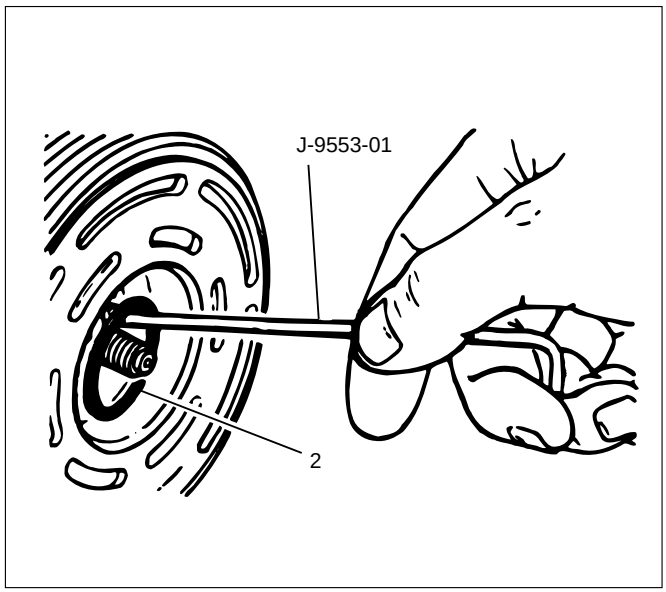

901RW009

8. Recheck the shaft and inside of the compressor neck for dirt or foreign material and be sure these areas are perfectly clean before installing new parts.

Cleaning

Thoroughly clean O-ring seal groove in front head.

CAUTION: Seals should not be re-used. Always use a new specification service seal on rebuild. Be sure that the seal to be installed is not scratched or damaged in anyway. Make sure that the seal seat and seal are free of lint and dirt that could damage the seal surface or prevent sealing.

Installation

1. Dip the new seal seat O-ring (1) in clean 525 viscosity refrigerant oil and assemble onto O-ring installer J-33011.

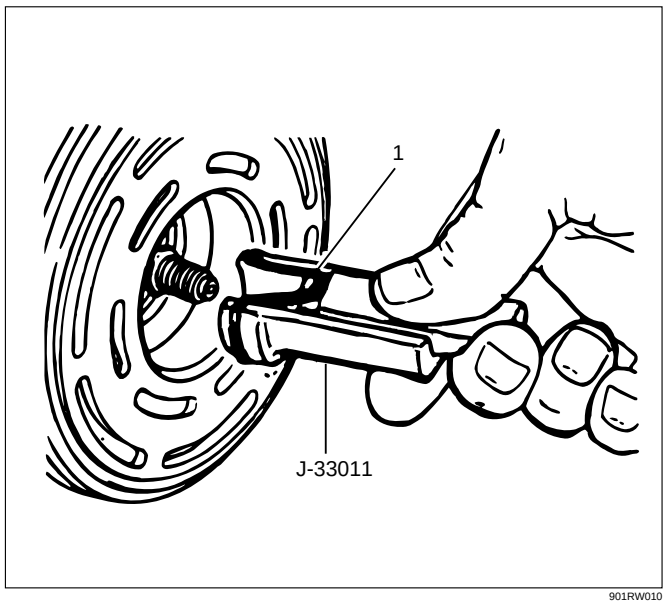

901RW010

2. Insert the O-ring installer J-33011 into the compressor neck until the installer "bottoms". Lower the moveable slide of the O-ring installer to release the O-ring into the seal O-ring lower groove (The compressor neck top groove is for the shaft seal retainer ring.) Rotate the installer to seat the O-ring and remove the installer.
3. Dip the new seal in clean 525 viscosity refrigerant oil and assemble seal to Seal Installer J-23128-A, by turning handle clockwise. The stamped steel case side of the lip seal must be engaged with knurled tangs of installer so that flared-out side of lip seal is facing and installed towards the compressor. Install seal protector J-34614, in the seal lip and place over the compressor shaft, and push the seal in place with a rotary motion or place the seal protector J-34614 over end of compressor shaft, and slide the new seal onto the shaft with a rotary motion until it stops. Take care not to dislodge the O-ring. Be sure the seal (2) makes good contact with the O-ring. Disengage the installer from the seal and remove the installer J-23128-A and the seal protector J-34614.

CAUTION: Handling and care of seal protector is important. If seal protector is nicked or the bottom flared, the new seal may be damaged during installation.

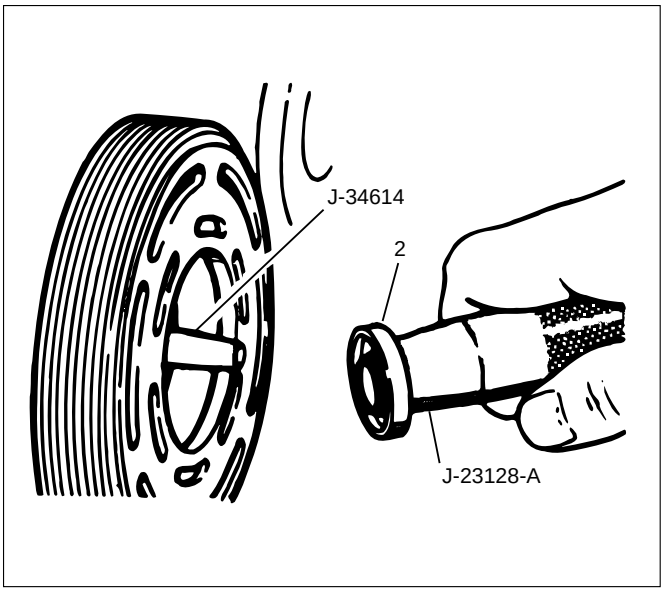

901RW011

4. Install the new seal retainer ring with its flat side against the Seal, using Snap-Ring Pliers. Use the sleeve from O-ring installer J-33011 to press in on the seal retainer ring so that it snaps into its groove.
5. To leak test, install compressor leak test fixture J-39893 on rear head of compressor and connect gage charging lines and Refrigerant Recovery System. Pressurize suction and high-side of compressor with R-134a Refrigerant. Temporarily install (M9 × 1.25 thread on shaft) nut and, with the compressor in horizontal position, rotate the compressor shaft in normal direction of rotation several times by hand. Leak test the seal area and correct and leak found. Recover the refrigerant. Remove shaft nut.

6. Remove any excess oil resulting from installing the new seal parts from the shaft and inside the compressor neck.
7. Install the clutch plate and hub assembly as described previously.
8. Reinstall compressor belt and tighten bracket.
9. Evacuate and charge the refrigerant system.

COMPRESSOR PRESSURE RELIEF VALVE

Removal

1. Recover the refrigerant using Refrigerant Recovery System.
2. Remove old pressure relief valve.

Installation

1. Clean valve seat area on rear head.
2. Lubricate O-ring of new pressure relief valve and O-ring assembly with new 525 viscosity refrigerant oil. Install new valve and torque in place, 9.0 N·m (6.1 ft lbs)
3. Evacuate and recharge the system.
4. Leak test system.

COMPRESSOR OIL

Compressor Oil Check

The oil used to lubricate the compressor is circulating with the refrigerant.
Whenever replacing any component of the system or a large amount of gas leakage occurs, add oil to maintain the original amount of oil.

(Oil Capacity)	
Capacity total in system	150 cc (5.0 fl.oz)
Compressor (Service parts) charging amount	150 cc (5.0 fl.oz)

Checking and Adjusting Oil Quantity for Used Compressor

1. Perform oil return operation. Refer to Oil Return Operation in this section.
2. Discharge and recover refrigerant and remove the compressor.
3. Drain the compressor oil and measure the extracted oil with a measuring cylinder.
4. If the amount of oil drained is much less than 90 cc (3.0 fl. oz.), some refrigerant may have leaked out. Conduct a leak tests on the connections of each system, and if necessary, repair or replace faulty parts.
5. Check the compressor oil contamination. (Refer to Contamination of Compressor Oil in this section.)
6. Adjust the oil level following the next procedure below.

(Collected Amount)	(Charging Amount)
more than 90 cc (3.0 fl.oz)	same as collected amount
less than 90 cc (3.0 fl.oz)	90 cc (3.0 fl.oz)

7. Install the compressor, then evacuate, charge and perform the oil return operation.
8. Check system operation.

When it is impossible to preform oil return operation, the compressor oil should be checked in the following order:

1. Discharge and recover refrigerant and remove the compressor.
2. Drain the compressor oil and measure the extracted oil with a measuring cylinder.
3. Check the oil for contamination.
4. If more than 90 cc (3.0 fl. oz.) of oil is extracted from the compressor, supply the same amount of oil to the compressor to be installed. If the amount of oil extracted is less than 90 cc (3.0 fl. oz.), recheck the compressor oil in the following order:
5. Supply 90 cc (3.0 fl. oz.) of oil to the compressor and install it onto the vehicle.
6. Evacuate and recharge with the proper amount of refrigerant.
7. Perform the oil return operation.
8. Remove the compressor and recheck the amount of oil.
9. Adjust the compressor oil, if necessary.

(Collected Amount)	(Charging Amount)
more than 90 cc (3.0 fl.oz)	same as collected amount
less than 90 cc (3.0 fl.oz)	90 cc (3.0 fl.oz)

Checking and Adjusting for Compressor Replacement

The oil is not charged in compressor (service parts). So it is necessary to charge the proper amount of oil to the new compressor.

1. Perform oil return operation.
2. Discharge and recover the refrigerant and remove the compressor.
3. Drain the compressor oil and measure the extracted oil.
4. Check the compressor oil for contamination.
5. Adjust the oil level as required.

(Amount of oil drained from used compressor)	(Charging amount of oil to new compressor)
more than 90 cc (3.0 fl.oz)	same as drained amount
less than 90 cc (3.0 fl.oz)	90 cc (3.0 fl.oz)

6. Evacuate, charge and perform the oil return operation.
7. Check the system operation.

Contamination of Compressor Oil

Unlike engine oil, no cleaning agent is added to the compressor oil. Even if the compressor runs for a long period of time (approximately one season), the oil never becomes contaminated as long as there is nothing wrong with the compressor or its method of use.

Inspect the extracted oil for any of the following conditions:

- The capacity of the oil has increased.
- The oil has changed to red.
- Foreign substances, metal powder, etc., are present in the oil.

If any of these conditions exists, the compressor oil is contaminated. Whenever contaminated compressor oil is discovered, the receiver/drier must be replaced.

Oil Return Operation

There is close affinity between the oil and the refrigerant. During normal operation, part of the oil recirculates with the refrigerant in the system. When checking the amount of oil in the system, or replacing any component of the system, the compressor must be run in advance for oil return operation. The procedure is as follows:

1. Open all the doors and the engine hood.
2. Start the engine and air conditioning switch to "ON" and set the fan control knob at its highest position.
3. Run the compressor for more than 20 minutes between 800 and 1,000 rpm in order to operate the system.
4. Stop the engine.

Replacement of Component Parts

When replacing the system component parts, supply the following amount of oil to the component parts to be installed.

(Component parts to be installed)	(Amount of Oil)
Evaporator	50 cc (1.7 fl. oz.)
Condenser	30 cc (1.0 fl. oz.)
Receiver/dryer	30 cc (1.0 fl. oz.)
Refrigerant line (one piece)	10 cc (0.3 fl. oz.)

Compressor Leak Testing (External and Internal)

Bench-Check Procedure

1. Install test plate J-39893 on rear head of compressor.
2. Using Refrigerant Recovery System, attach center hose of manifold gage set on charging station to a refrigerant drum standing in an upright drum.
3. Connect charging station high and low pressure lines to corresponding fittings on test plate J-39893. Suction port (low-side) of compressor has large internal opening. Discharge port (high-side) has smaller internal opening into compressor and deeper recess.
4. Open low pressure control, high pressure control and refrigerant control on charging station to allow refrigerant vapor to flow into compressor.
5. Using a leak detector, check for leaks at pressure relief valve, rear head switch location, compressor front and rear head seals, center cylinder seal, through bolt head gaskets and compressor shaft seal. After checking, shut off low pressure control and high-pressure control on charging station.
6. If an external leak is present, perform the necessary corrective measures and recheck for leaks to make certain the leak has been connected.
7. Recover the refrigerant.
8. Disconnect both hoses from the test plate J-39893.
9. Add 90 ml (3 oz.) new PAG lubricant to the compressor assembly. Rotate the complete compressor assembly (not the crankshaft or drive plate hub) slowly several turns to distribute oil to all cylinder and piston areas.
10. Install a M9 × 1.25 threaded nut on the compressor crankshaft if the drive plate and clutch assembly are not installed.
11. Using a box-end wrench or socket and handle, rotate the compressor crankshaft or clutch drive plate on the crankshaft several turns to insure piston assembly to cylinder wall lubrication.
12. Using Refrigerant Recovery System, connect the charging station high-pressure line to the test plate J-39893 high-side connector.
13. Using Refrigerant Recovery System, connect the charging station low-pressure line to the low pressure port of the test plate J-39893. Oil will drain out of the compressor suction port if the compressor is positioned with the suction port downward.

14. Attach the compressor to the J-34992 holding fixture and mount the compressor in a vise so that the compressor will be in a horizontal position and the shaft can be turned with a wrench.
15. Using a wrench, rotate the compressor crankshaft or drive plate hub ten complete revolutions at a speed of approximately one-revolution per second turning the compressor at less than one-revolution per second can result in a lower pump-up pressure and disqualify a good pumping compressor.
16. Observe the reading on high-pressure gauge at the completion of the tenth revolution of the compressor. The pressure reading for a good pumping compressor should be 690 kPa (100 psi) or above. A pressure reading of less than 620 kPa (90 psi) would indicate one or more suction and/or discharge valves leaking an internal leak, or an inoperative valve, and the refrigerant must be recovered and the compressor disassembled and checked for cause of leak. Repair as needed, reassemble and repeat the pump-up test. Externally leak test.
17. When the pressure pump-up test is completed, recover the refrigerant from the high-side and remove the test plate J-39893.
18. Tilt the compressor so that the compressor suction and discharge ports are down. Drain the PAG lubricant from the compressor.
19. Allow the compressor to drain for 10 minutes, then refill with the proper amount of PAG lubricant, per oil balance procedure described previously. The PAG lubricant may be poured into the suction port. If further assembly or processing is required, a shipping plate or test plate J-39893 should be installed to keep out air, dirt and moisture until the compressor is installed.

SECTION 00

SERVICE INFORMATION

CONTENTS

PAGE

Troubleshooting ..... 00 – 3
Main Data and Specifications ..... 00 – 11
Service Standard ..... 00 – 12
Servicing ..... 00 – 13
Fixing Torque ..... 00 – 15
Special Tools ..... 00 – 19

MEMO

TROUBLESHOOTING

CONTENTS

PAGE

General Information ..... 00 – 4
General Troubleshooting ..... 00 – 4
Power Steering System ..... 00 – 7
Power Steering Pump ..... 00 – 8
Steering Column ..... 00 – 9

GENERAL INFORMATION

Since the problems in steering, suspension, wheels and tires involve several systems, they must all be considered when diagnosing a complaint. To identify the symptom, always road test the vehicle first.
Proceed with the following preliminary inspections and correct any defects which are found.

1. Inspect tires for proper pressure and uneven wear.
2. Raise vehicle on a hoist and inspect front and rear suspension and steering linkage for loose or damaged parts.
3. Spin front wheels. Inspect for out-of-round tires, out-of-balance tires, loose and/or rough wheel bearings.

GENERAL TROUBLESHOOTING

Problem	Possible Cause	Correction
Vehicle Pulls	1. Mismatched or uneven tires. 2. Tires not adequately inflated. 3. Broken or sagging springs. 4. Radial tire lateral force. 5. Improper wheel alignment. 6. Brake dragging in one wheel. 7. Loose, bent or broken front or rear suspension parts. 8. Faulty shock absorbers.	Replace tire. Adjust tire pressure. Replace spring. Replace tire. Adjust wheel alignment. Repair brake. Tighten or replace the appropriate suspension part(s). Replace shock absorber.
Abnormal or Excessive Tire Wear	1. Sagging or broken spring. 2. Tire out of balance. 3. Improper wheel alignment. 4. Faulty shock absorber. 5. Hard driving. 6. Overloaded vehicle. 7. Tires not rotated periodically. 8. Worn or loose road wheel bearings. 9. Wobbly wheel or tires. 10. Tires not adequately inflated.	Replace spring. Balance or replace tire. Check front end alignment. Replace shock absorber. Replace tire. Replace tire and reduce load. Replace or rotate tire. Replace wheel bearing. Replace wheel or tire. Adjust the pressure.
Shimmy, Shake or Vibration	1. Tire or wheel out of balance. 2. Loose wheel bearings. 3. Worn steering linkage ball joints. 4. Worn upper or lower end ball joints. 5. Excessively upper wheel runout. 6. Blister or bump on tire. 7. Excessive loaded radial run out of tire/wheel assembly. 8. Improper wheel alignment. 9. Loose or worn steering linkage. 10. Loose steering gear. 11. Tires not adequately inflated. 12. Loose, bent or broken front or rear suspension parts. 13. Faulty shock absorber. 14. Hub bearing preload misadjustment.	Balance wheels or replace tire/or wheel. Replace wheel bearing. Replace ball joints. Replace ball joints. Repair or replace wheel and/or tire. Replace tire. Replace tire or wheel. Check wheel alignment. Tighten or replace steering linkage. Tighten housing bolts. Adjust tire pressure. Tighten or replace the appropriate suspension parts. Replace shock absorber. Adjust preload.

GENERAL TROUBLESHOOTING (CONT.)

Problem	Possible Cause	Correction
Wheel Tramp or Hop	1. Blister or bump on tire. 2. Improper shock absorber operation	Replace tire. Replace shock absorber.
Hard Steering	1. Bind in steering linkage ball studs, upper or lower end ball joint. 2. Improper wheel alignment. 3. Steering gear misadjustment. 4. Tire not adequately inflated. 5. Bind in steering column or shaft. 6. Improper power steering system operation.	Replace ball joints. Check wheel alignment. Check and adjust steering gear preload. Inflate tires to proper pressure. Repair or replace. Repair or replace. Refer to "Power steering system troubleshooting."
Too Much Play In Steering	1. Wheel bearings worn. 2. Loose steering gear or linkage. 3. Steering gear misadjustment. 4. Worn or loose steering shaft universal joint. 5. Worn steering linkage ball joints. 6. Worn upper or lower end ball joints.	Replace wheel bearings. Retighten or repair. Inspect and adjust steering gear preload. Retighten or replace steering shaft. Replace ball joints. Replace ball joints.
Poor Steering Wheel Returnability	1. Bind in steering linkage ball joints. 2. Bind in upper or lower end ball joints. 3. Bind in steering column and shaft. 4. Bind in steering gear. 5. Improper wheel alignment. 6. Tires not adequately inflated. 7. Loose steering wheel nut. 8. Worn wheel bearing.	Replace ball joints. Replace ball joints. Repair or replace. Check and repair steering gear. Adjust wheel alignment. Adjust tire pressure. Retighten. Replace.
Abnormal Noise	1. Worn, sticky or loose upper or lower end ball joint, steering linkage ball joints or drive axle joints. 2. Faulty shock absorbers. 3. Worn upper or lower control arm bushing. 4. Loose stabilizer bar. 5. Loose wheel nuts. 6. Loose suspension bolts or nuts. 7. Broken or otherwise damaged wheel bearings. 8. Broken suspension springs. 9. Loose steering gear. 10. Faulty steering gear.	Replace. Replace or repair. Replace. Retighten bolts. Tighten nuts. Check for elongated wheel nut holes. Replace wheel if required. Retighten suspension bolts or nuts. Replace wheel bearing. Replace spring. Retighten mounting bolt. Check and adjust steering gear.

GENERAL TROUBLESHOOTING (CONT.)

Problem	Possible Cause	Correction
Wandering or Poor Steering Stability	1. Mismatched or unevenly worn tires. 2. Loose steering linkage ball joints. 3. Faulty shock absorbers. 4. Loose stabilizer bar. 5. Broken or sagging springs. 6. Steering gear misadjustment. 7. Improper wheel alignment.	Replace tire or inflate tires to proper pressure. Replace ball joints. Replace shock absorber. Tighten or replace stabilizer bar or bushings. Replace spring (pairs). Check or adjust steering gear. Adjust wheel alignment.
Erratic Steering When Bracking	1. Worn wheel bearings. 2. Broken or sagging springs. 3. Leaking caliper. 4. Warped discs. 5. Badly worn brake pads. 6. Tires are inflated unequally.	Replace wheel bearings. Replace spring (pairs). Repair or replace caliper. Replace brake disc. Replace brake pads. Inflate tires to proper pressure.
Low or Uneven Trim Height	1. Broken or sagging springs. 2. Vehicle overloaded. 3. Incorrect springs.	Replace springs (In pairs) Reduce load. Adjust or replace torsion bar.
Suspension Bottoms	1. Vehicle overloaded. 2. Faulty shock absorber. 3. Incorrect, broken or sagging springs.	Reduce load. Replace shock absorber. Replace springs.
Body Leans	1. Loose stabilizer bar. 2. Faulty shock absorbers, struts or mounting. 3. Broken or sagging springs. 4. Vehicle overloaded.	Tighten stabilizer bar bolts or replace bushings. Replace shock absorber. Replace springs (In pairs) Reduce load.
Cupped Tires	1. Worn wheel bearings. 2. Excessive tire or wheel runout. 3. Worn ball joints. 4. Tire out of balance.	Replace wheel bearings. Replace tire or wheel. Replace ball joints. Adjust tire balance.

POWER STEERING SYSTEM

HISSING NOISE

There is some noise in all power steering systems. One of the most common is a hissing sound when the steering wheel is fully turned and the car is not moving. This noise will be most evident when the wheel is operated while the brakes are applied. There is no relationship between this noise and steering performance. Do not replace the valve unless the "hissing" noise is extremely objectionable. A replacement valve will also have a slight noise, and is not always a cure for the condition.

Problem	Possible Cause	Correction
Rattle or Chucking Noise	1. Pressure hose touching other parts of vehicle. 2. Tie rod ends loose. 3. Loose steering gear mounting. 4. Steering gear misadjustment.	Adjust hose position. Do not bend tubing by hand. Tighten or replace tie rod end. Tighten steering gear mounting. Check and adjust steering gear preload.
Poor Return of Steering Wheel to Center	1. Improper front wheel alignment. 2. Wheel bearing worn. 3. Tie rod end binding. 4. Ball joint binding. 5. Tight or frozen steering shaft bearing. 6. Steering gear misadjustment. 7. Sticky or plugged steering gear valve. 8. Entry of air in the power steering system.	Adjust front wheel alignment. Replace front wheel bearing. Replace tie rod end. Replace ball joint. Replace steering assembly. Adjust the steering gear. Repair or replace steering gear valve. Bleed the system.
Momentary Increase in Effort When Turning Wheel Fast to Right or Left	1. High internal leakage. 2. Power steering fluid level low.	Repair steering gear. Replenish fluid.
Steering Wheel Surges or Jerks When Turning Especially During Parking	1. Insufficient pump pressure. 2. Sticky steering gear valve. 3. Power steering fluid level low.	Repair pump assembly. Repair or replace steering gear. Replenish fluid.
Excessive Wheel Kick Back or Loose Steering	1. Air in system. 2. Tie rod end loose. 3. Wheel bearing worn.	Bleed hydraulic system. Tighten tie rod end. Replace wheel bearing.
Hard Steering or Lack of Power Assist	1. Sticky steering gear valve. 2. Insufficient pump pressure. 3. Excessive internal pump leakage. 4. Excessive internal steering gear leakage. 5. Power steering fluid level low.	Repair or replace steering gear valve. Repair pump assembly. Repair pump assembly. Repair steering gear. Replenish fluid.

POWER STEERING PUMP

Foaming milky power steering fluid, low fluid level, and possible low pressure can be caused by air in the fluid, or loss of fluid due to internal pump leakage. Check for leak and correct. Bleed the system. Extremely cold temperatures will cause air bubbles in the system if the fluid level is low. If the fluid level is correct and pump still foams, remove pump from vehicle and check housing for cracks. If housing is cracked, replace pump housing.

Problem	Possible Cause	Correction
Low Pressure Due to Steering Pump	1. Relief valve sticking or inoperative. 2. Side plate not flat against cam ring. 3. Extreme wear of cam ring. 4. Scored side plate or rotor. 5. Vanes sticking in rotor slots. 6. Cracked or broken side plate. 7. High internal leakage.	Replace relief valve. Replace side plate. Replace cam ring. Replace side plate or rotor. Repair or replace vanes and rotor. Replace side plate. Repair internal leakage.
Low Pressure Due to Steering Gear	1. Scored housing bore. 2. Damaged O-ring or seal ring in the ball nut.	Replace housing. Replace O-ring or seal ring.
Growling Noise in Steering Pump	1. Excessive back pressure in hoses or steering unit caused by restriction. 2. Scored side plate or rotor. 3. Worn cam ring.	Repair steering unit or pump. Replace side plate or rotor. Replace cam ring.
Groaning Noise in Steering Pump	1. Air in the fluid. 2. Low fluid level. 3. Pump mounting loose.	Bleed hydraulic system. Replenish fluid. Tighten mounting bolt.
Rattling Noise in Steering Pump	1. Vanes sticking in rotor slots. 2. Vane improperly installed.	Repair or replace vanes and rotor. Repair rotor and vane.
Swishing Noise in Steering Pump	1. Damaged relief valve.	Replace relief valve.
Whining Noise in Steering Pump	1. Scored side plate and vanes. 2. Damaged relief valve.	Replace side plate and vanes. Replace relief valve.

STEERING COLUMN

LOCK SYSTEM

Problem	Possible Cause	Correction
Will Not Unlock	1. Damaged lock cylinder. 2. Damaged sector. 3. Damaged park lock cable.	Replace lock cylinder. Replace lock cylinder. Replace park lock cable.
Will Not Lock	1. Lock spring broken or worn. 2. Damaged lock cylinder. 3. Ignition switch stuck. 4. Park lock cable damaged.	Replace lock cylinder. Replace lock cylinder. Repair or replace ignition switch. Replace park lock cable.
Key Cannot Be Removed in "OFF-LOCK"	1. Ignition switch is not set correctly. 2. Damaged lock cylinder. 3. Faulty shift lock mechanism.	Correct ignition switch. Replace lock cylinder. Repair or replace the shift lock mechanism.

COLUMN

Problem	Possible Cause	Correction
Noise in Column	1. Universal joint loose. 2. Shaft lock snap ring not seated.	Tighten joint. Place snap ring in proper position.

STEERING COLUMN (CONT.)

TURN SIGNAL SWITCH

This troubleshooting covers mechanical problems only. See Section 8 for turn signal switch electrical diagnosis.

Problem	Possible Cause	Correction
Turn Signal Will Not Stay in Turn Position	1. Foreign material or loose parts preventing movement of yoke. 2. Broken or missing detent or canceling spring.	Repair or replace signal switch. Replace signal switch.
Turn Signal Will Not Cancel	1. Loose switch mounting screws. 2. Switch or anchor bosses broken. 3. Broken, missing or out of position detent, return or canceling spring. 4. Worn canceling cam.	Tighten mounting screws. Replace turn signal switch. Replace turn signal switch. Replace turn signal switch.
Turn Signal Difficult to Operate	1. Turn signal switch arm loose. 2. Yoke broken or distorted. 3. Loose or misplaced springs. 4. Foreign parts and/or material. 5. Loose turn signal switch mounting screws.	Tighten arm screw. Replace turn signal switch. Replace turn signal switch. Repair turn signal switch. Tighten mounting screws.
Turn Signal Will Not Indicate Lane Change	1. Broken lane change pressure pad or spring hanger. 2. Broken, missing or misplaced lane change spring. 3. Base of wire damaged.	Replace turn signal switch. Replace turn signal switch. Replace turn signal switch.
Hezard Switch Cannot Be Turned Off	1. Foreign material between hazard switch to turn signal switch body.	Repair or replace hazard switch.
No Turn Signal Lights	1. Electrical failure in chassis harness. 2. Inoperative turn signal flasher unit. 3. Loose chassis harness connector.	Refer to Section 8 “Electrical Troubleshooting”. Replace flasher unit. Repair loose connector.
Front or Rear Turn Signal Lights Not Flashing	1. Burned-out damaged turn signal bulb. 2. High resistance connection to ground at bulb socket. 3. Loose chassis harness connector.	Replace bulb. Repair bulb socket. Repair loose connector.

MAIN DATA AND SPECIFICATIONS

FRONT END ALIGNMENT

Caster		2° 10' ± 45'
Camber		0° ± 30'
King pin inclination		12° 30' ± 30'
Toe-in	mm (in)	0 ± 2 (0 ± 0.08)
Max. steering angle	(inside)	$34°^{+0°}_{-2°}$
	(outside)	32°

POWER STEERING

Steering gear	
Type	Integral, ball screw
Gear ratio	16.3 : 1
Oil pump	
Type	Vane
Operating fluid	ATF DEXRON® - II E or III

SERVICE STANDARD

Items	Service Standard	Service Limit
POWER STEERING GEAR Sector shaft outside diameter mm (in)	32.0 (1.26)	31.7 (1.25)
POWER STEERING PUMP Fluid pressure (When the engine is normal operating temperature, increase engine speed to 1500rpm.) kpa (kg/cm^2/psi)	9300 – 9800 (95 – 100 / 1350 – 1420) (6VD1 6VE1) 9800 – 10300 (100 – 105 / 1420 – 1490) (4JG2 4JX1)	———
STEERING WHEEL Free play mm (in)	0 – 30 (0 – 1.18)	———

SERVICING

STEERING

INSPECTION

Visual check

Check the following parts:

- Oil leakage.
- Steering system for looseness or damage.
- Steering function
- Joint ball for oil leakage or damage.
- Joint ball rubber boot for damage.

MAINTENANCE

The hydraulic system should be kept clean and fluid level in the reservoir should be checked at regular intervals and fluid added when required. Refer to "MAINTENANCE AND LUBRICATION" in section 0B of the manual for type of fluid to be used and intervals for filling.

If the system contains some dirt, flush it as detailed later in this section. If it is exceptionally dirty, both the pump and the gear must be completely disassembled before further usage.

All tubes, hoses, and fittings should be inspected for leakage at regular intervals. Fittings must be tight. Make sure the clips, clamps and supporting tubes and hoses are in place and properly secured.

Power steering hoses and lines must not be twisted, kinked or tightly bent. Air in the system will cause spongy action and noisy operation. When a hose is disconnected or when fluid is lost, for any reason, the system must be bled after refilling. Refer to "Bleeding the Power Steering System" in this section.

FLUID LEVEL

1. Run the engine until the power steering fluid reaches normal operating temperature, about 55°C (130°F), then shut the engine off.
2. Check the level of fluid in the reservoir.
3. If the fluid level is low, add power steering fluid as specified in "MAINTENANCE AND LUBRICATION" in section 0B to the proper level and install the receiver cap.
4. When checking the fluid level after the steering system has been serviced, air must be bled from the system. Refer to "Bleeding the Power Steering System" in this section.

STEERING WHEEL FREE PLAY ADJUSTMENT

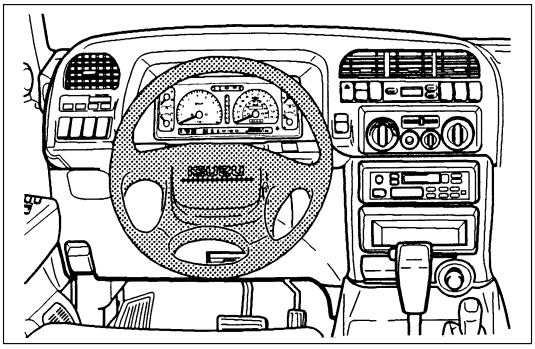

INSPECTION

1. Check the amount of steering wheel play by turning the wheel in both directions until the tires begin to move with the front wheels properly in the straight ahead position.

NOTE:
The wheel free play should be checked with the engine running.

Steering Wheel Free Play	mm (in)
0 – 30 (0 – 1.18)	

2. Also check the steering wheel for play and looseness in mount by moving it back and froth and sideways. While driving, check for hard-steering, steering shimmy and tendency to pull to one side.

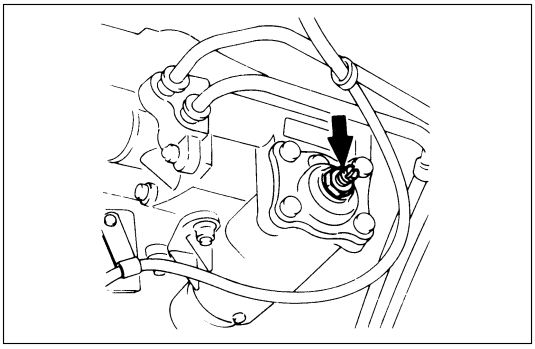

ADJUSTMENT

1. Align the front wheels properly in the straight ahead position.
2. Loosen the lock nut on the adjusting screw of the steering gear.
3. Turn the adjust screw clockwise to decrease free play or counter-clockwise to increase.
4. After check of specified free play, tighten the lock nut to specified torque.

Lock Nut Torque	N·m (kg·m/lb·ft)
41 (4.2 / 30)	

FIXING TORQUE

Power Steering

N·m (kg·m/lb·ft)

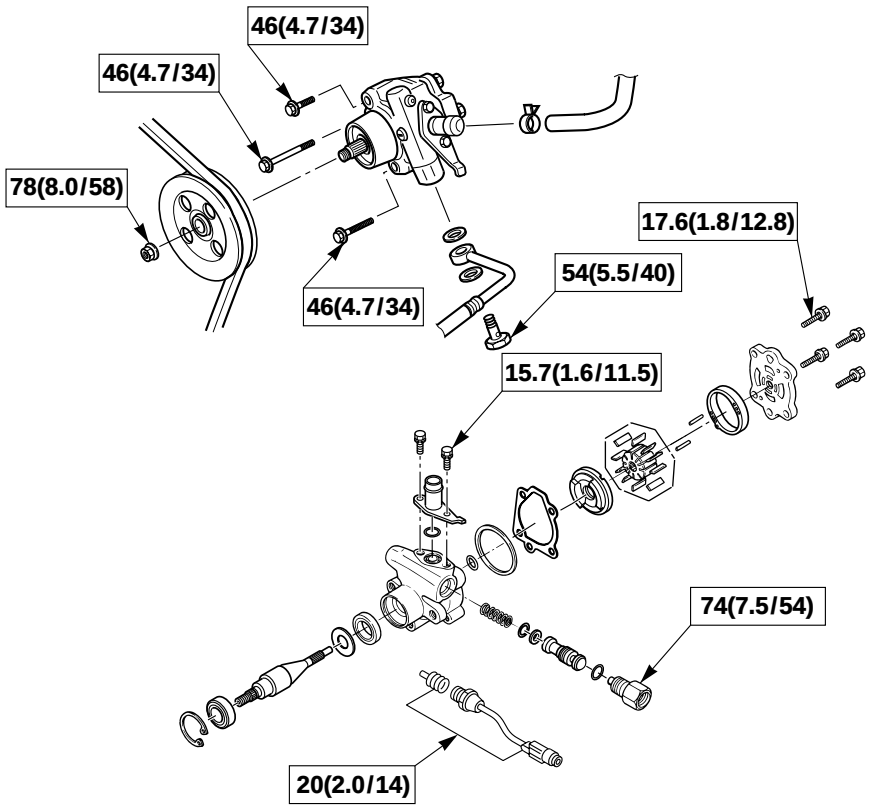

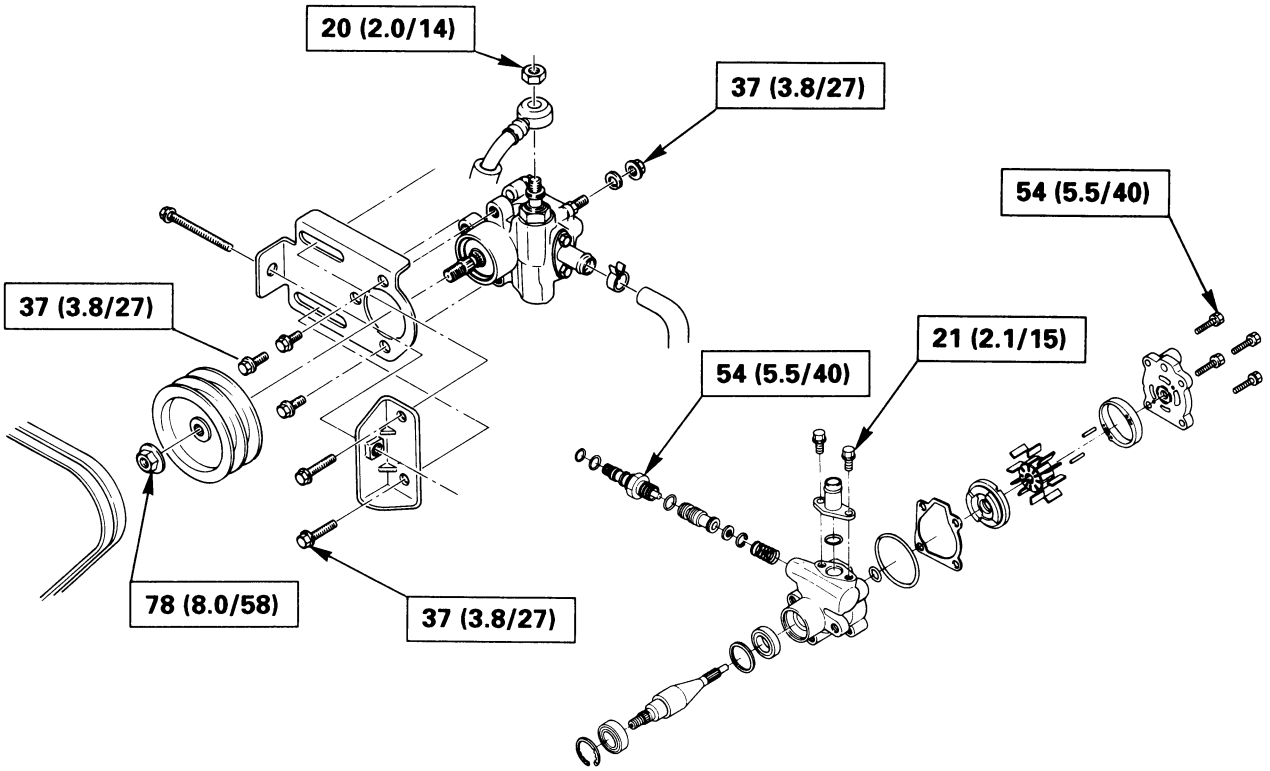

Power Steering (Cont.)

N·m (kg·m/lb·ft)

These illustrations are based on the LHD model.

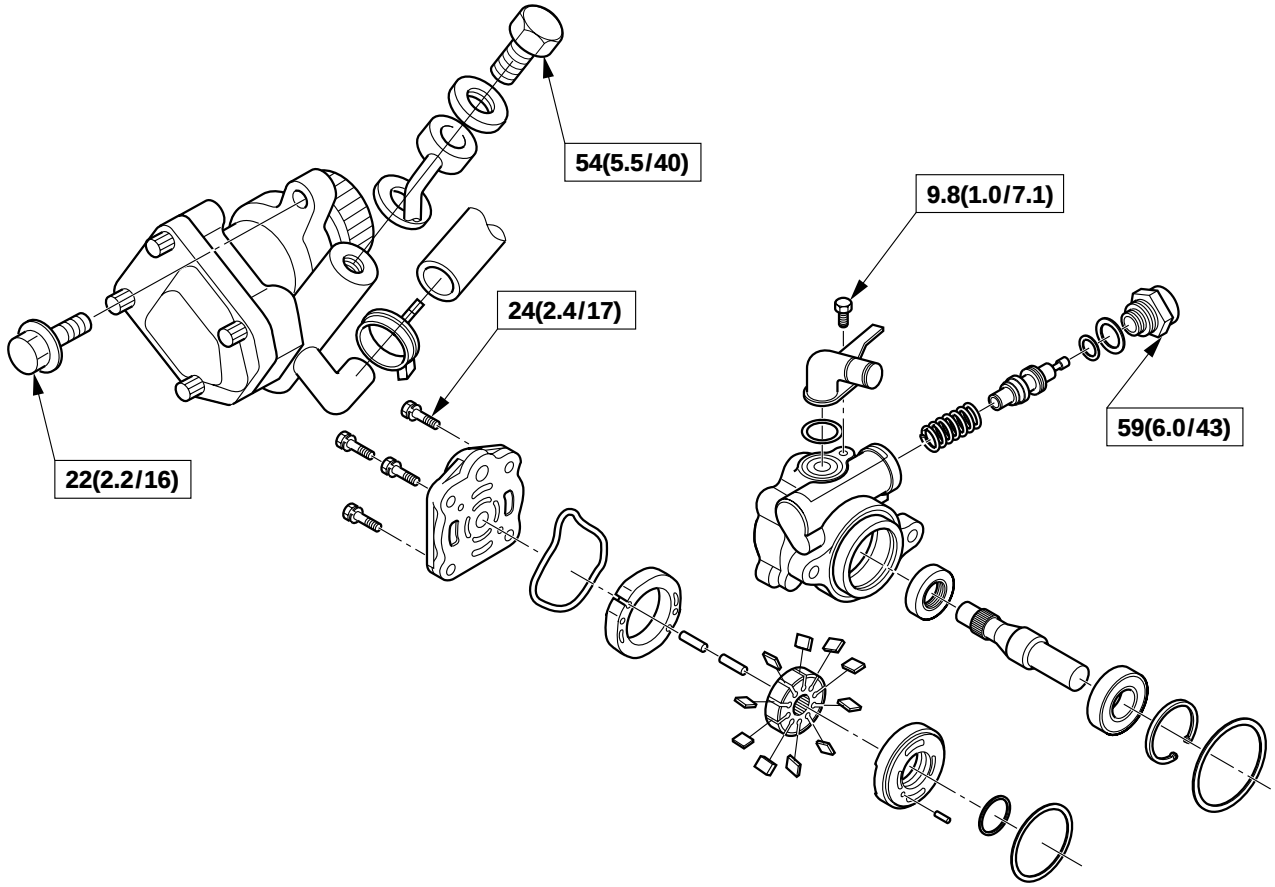

E03RW011

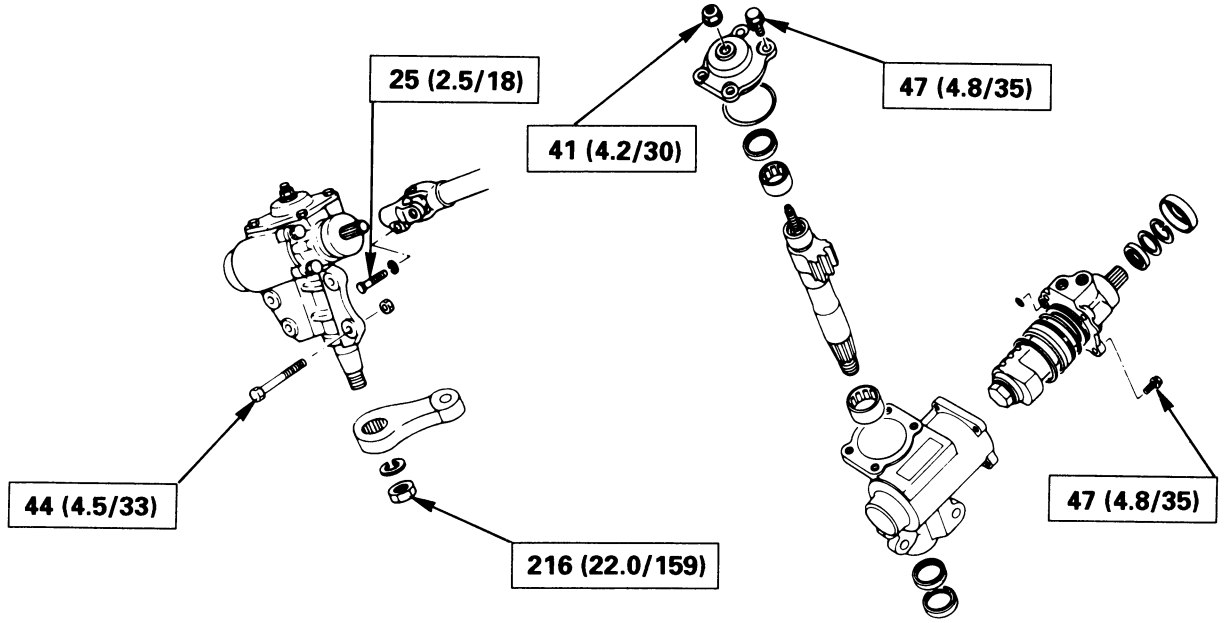

Steering Linkage

N·m (kg·m/lb·ft)

These illustrations are based on the LHD model.

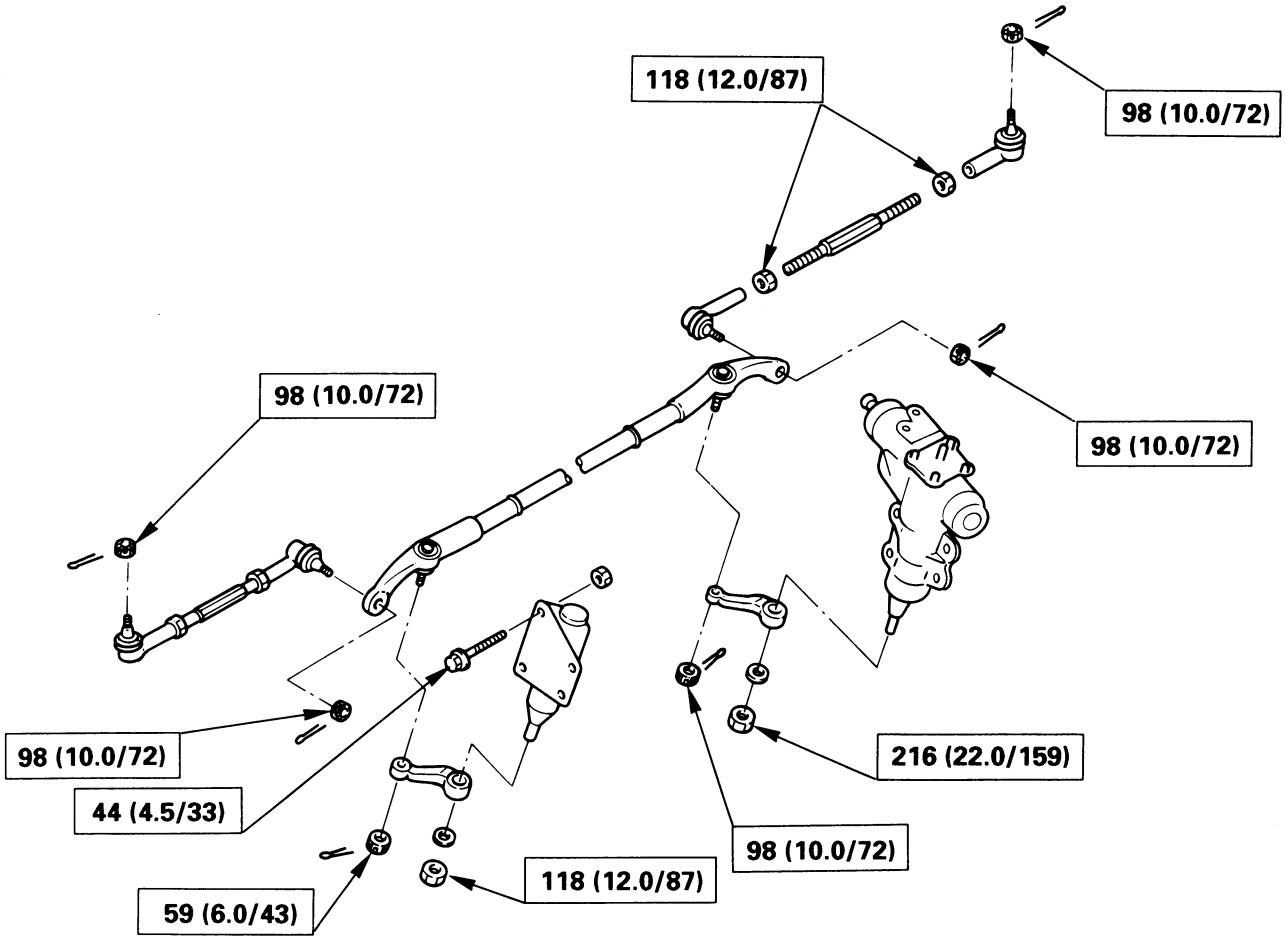

Steering Column

N·m (kg·m/lb·ft)

This illustration is based on the LHD model.

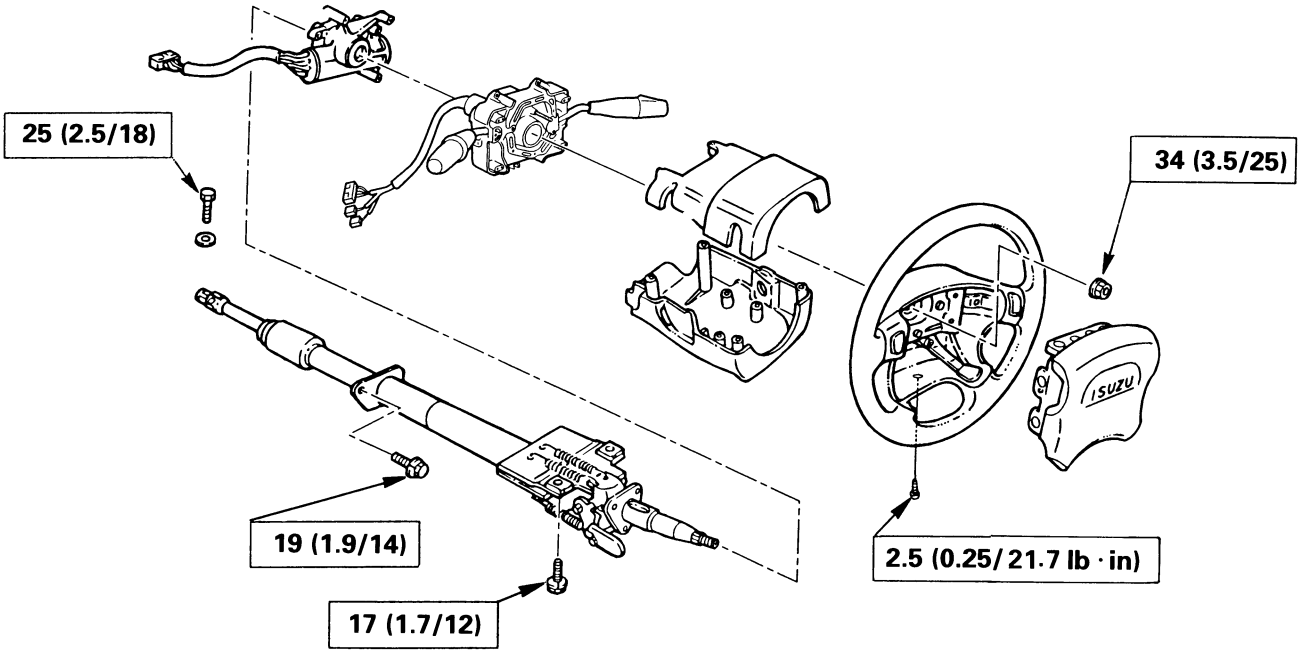

This illustration is based on the LHD model.

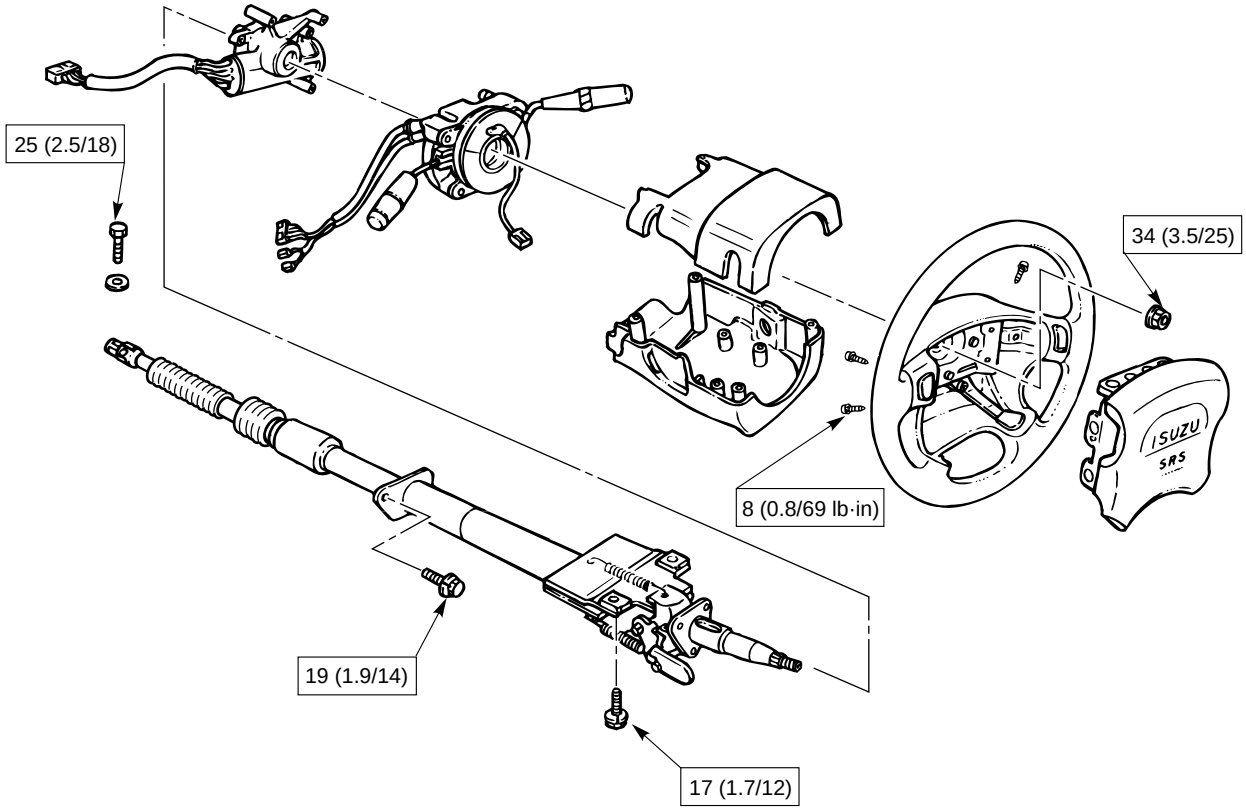

E03RW010

SPECIAL TOOLS

Illustration	Part No.	Part Name
	5–8840–0135–0 (J–29877–A)	Tester: Power steering
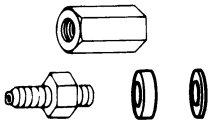	5–8840–2297–0 (J–39213)	Adapter: Power steering tester For 6VD1, 6VE1, 4JX1
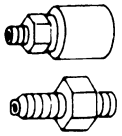	5–8840–0136–0 (J–33996)	Adapter: Power steering tester For 4JG2
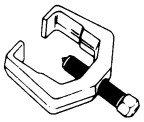	5–8840–2005–0 (J–29107)	Remover: Pitman arm
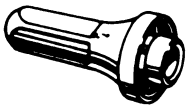	5–8522–0026–0 (J–26508)	Installer: Extension housing oil sael
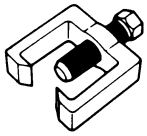	5–8840–2121–0 (J–36831)	Remover: Tie rod end
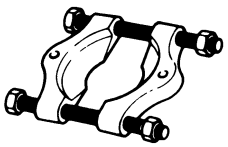	5–8840–0015–0 (J–22912–01)	Remover: Relay lever
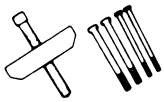	5–8521–0016–0 (J–29752)	Remover: Steering wheel

MEMO

SECTION 2A

FRONT END ALIGNMENT

CONTENTS

PAGE

General Description ..... 2A – 2
Definition of Terms ..... 2A – 2
On-Vehicle Service ..... 2A – 3
Inspection ..... 2A – 3
Trim Height Adjustment ..... 2A – 3
Caster Adjustment ..... 2A – 4
Camber Adjustment ..... 2A – 4
Toe-in Adjustment ..... 2A – 5
Maximum Steering Angle Adjustment ..... 2A – 5

GENERAL DESCRIPTION

"Front End Alignment" refers to the angular relationship between the front wheels, the front suspension attaching parts and the ground.
Proper front end alignment must be maintained in order to insure efficient steering, good directional stability and to prevent abnormal tire wear.
The most important factors of front end alignment are wheel toe-in, wheel camber and axle caster.

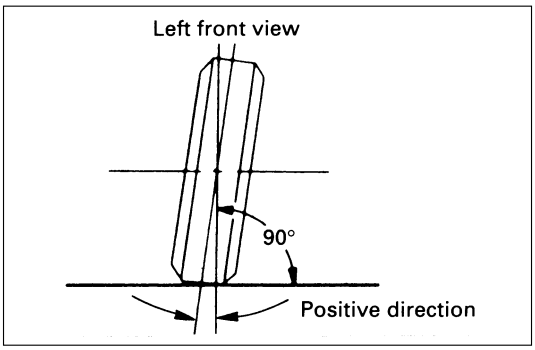

DEFINITION OF TERMS

CAMBER

Camber is the inward or outward tilting of the front wheels from the vertical. When the wheels tilt outward at the top, the camber is positive (+). When the wheels tilt inward at the top, the camber is negative (–). The amount of tilt measured in degrees from the vertical is called the camber angle.
If camber is extreme or unequal between the wheels, improper steering and excessive tire wear will result. Negative camber causes wear on the inside tire, while positive camber causes wear to the outside.

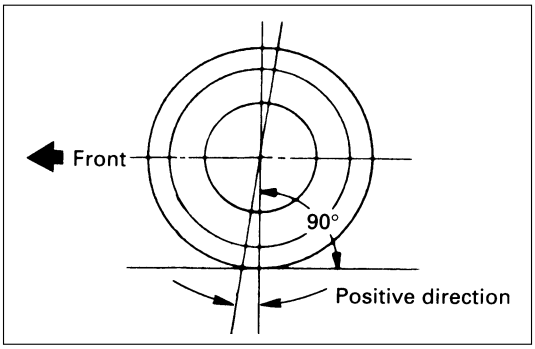

CASTER

Caster is the tilting of the wheel axis either forward or backward from the vertical (when viewed from the side of the vehicle). A backward tilt is positive(+) and a forward tilt is negative(–).
On the short and long arm type suspension you cannot see a caster angle without a special instrument, but if you look straight down from the top of the upper control arm to the ground, the ball joints do not line up (fore and aft) when a caster angle other than 0 degree is present. With a positive angle, the lower ball joint would be slightly ahead (toward the front of the vehicle) of the upper ball joint center line.

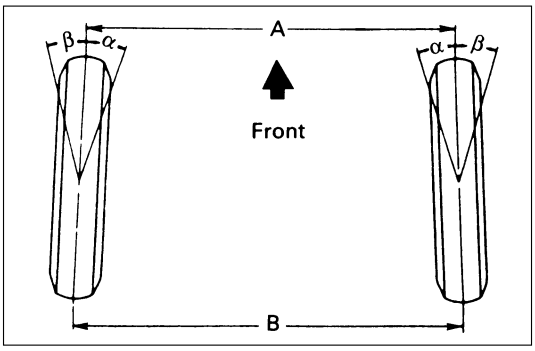

TOE-IN

Toe-in is the turning of the front wheels. The actual amount of toe-in is normally a fraction of a degree. Toe-in is measured from the center of the tire treads or from the inside of the tires. The purpose of toe-in is to insure parallel rolling of the front wheels and to offset any small deflections of the wheel support system which occurs when the vehicle is rolling forward. Incorrect toe-in results in excessive toe-in and unstable steering. Toe-in is the last alignment to be set in the front end alignment procedure.

ON-VEHICLE SERVICE

INSPECTION

Before making any adjustments affecting caster, camber or toe-in, the following front end inspection should be made.

INSPECT

1. Tires for proper inflation pressure. Refer to “Wheels and Tires” in section 3E.
2. Front wheel bearings for proper adjustment. Refer to “Front Wheel Drive” in section 4C.
3. Ball joints, tie rod ends and relay rods. If excessive looseness is noted, correct before adjusting. Refer to “Steering Linkage” in section 2A.
4. Wheel and tires for run-out. Refer to “Wheels and Tires”in section 3E.
5. Trim height. If not within specifications, the correction must be made before adjusting caster.
6. Steering gear for looseness at the frame.
7. Shock absorbers for leaks or any noticeable noise. Refer to “Front Suspension” in section 3C.
8. Control arms or stabilizer bar attachment for looseness. Refer to “Front Suspension“ in section 3C.
9. Alignment equipment. Follow the manufacturer’s instructions.
10. Level of the vehicle. The vehicle must be on a level surface.

TRIM HEIGHT ADJUSTMENT

Adjust the trim height by means of the adjusting bolt on the height control arms.

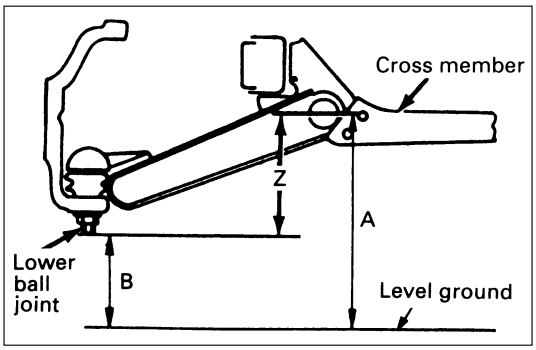

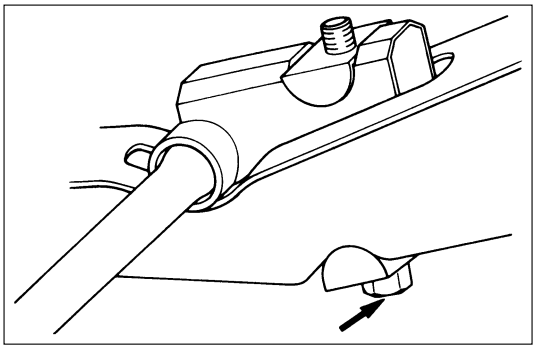

CAUTION:
When adjusting front end alignment, be sure to begin with trim height as trim height adjustment may change other adjusted alignments.

1. Check and adjust the tire inflation pressures.
2. Park the vehicle on a level ground and move the front of the vehicle up and down several times to settle the suspension.
3. Make necessary adjustment with the adjusting bolt on the height control arms.

Trim Height(Z)	mm(in)
139 ± 5 (5.47 ± 0.2)	

CASTER ADJUSTMENT

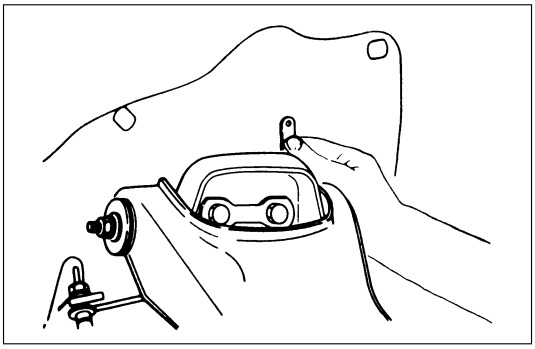

The caster angle can be adjusted by means of the caster shims installed between the chassis frame and fulcrum pins.

Caster Angle
1998 model

2° 10‘ ± 45‘	

2000 model and later

RH	2° 22‘ ± 45‘
LH	2° 10‘ ± 45‘

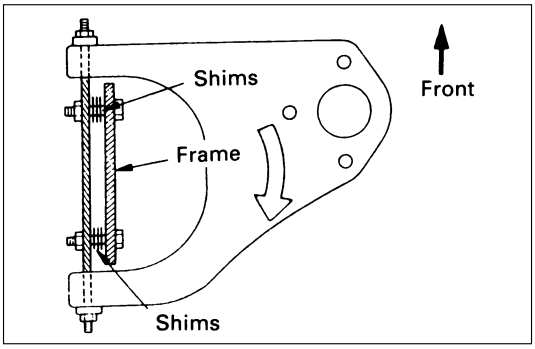

CAUTION:
Left and right side to be equal within 30’

NOTE:
Difference of the caster shim front/rear thickness shall be 3.2 mm (0.126 in) or less. Overall thickness of caster shim and camber shim shall be 10.8 mm (0.425 in) or less.

Tighten the fulcrum pin bolt to the specified torque.

Fulcrum Pin Bolt Torque	N·m (kg·m/lb·ft)
152 (15.5 / 112)	

CAMBER ADJUSTMENT

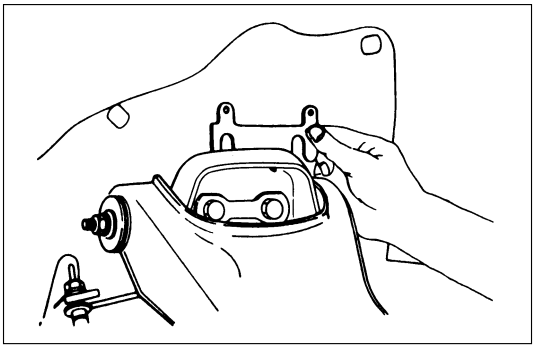

The camber angle can be adjusted by means of the camber shims installed in position between the chassis frame and fulcrum pins.

Wheel Alignment Specification

Camber Angle	0° ± 30‘
King pin inclination	12° 30‘ ± 30‘

CAUTION:
Left and right side to be equal within 30’

NOTE:
Overall thickness of caster shim and camber shim shall be 10.8 mm (0.425 in) or less.

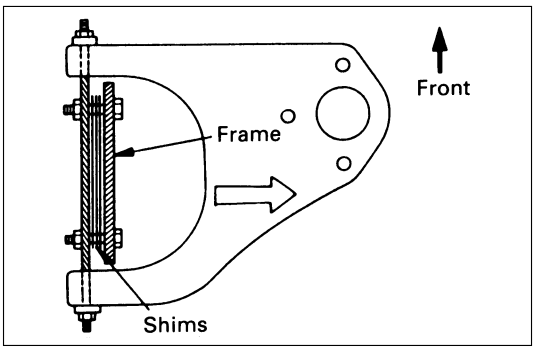

Tighten the fulcrum pin bolt to the specified torque.

Fulcrum Pin Bolt Torque	N·m (kg·m/lb·ft)
152 (15.5 / 112)	

	Position of shim		Camber angle	Caster angle
	Front side	Rear side		
Caster shim	When added	When removed	Decreases	Decreases
	When removed	When added	Increases	Increases
	———	When removed	Unchanged	Decreases
	———	When added	Unchanged	Increases
Camber shim	When added		Decreases	Unchanged
	When removed		Increases	Unchanged

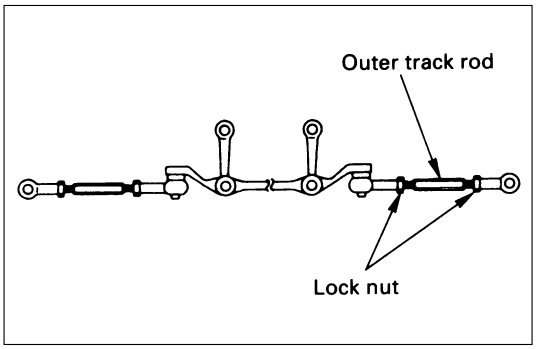

TOE-IN ADJUSTMENT

1. To adjust the toe-in angle, loosen the lock nuts on the outer track rods and turn the outer track rods. Turn both rods the same amount, to keep the steering wheel centered.

Toe-in	mm(in)
0 ± 2 (0 ± 0.08)	

2. Tighten the lock nut to the specified torque.

Lock Nut Torque	N·m (kg·m/lb·ft)
118 (12.0 / 87)	

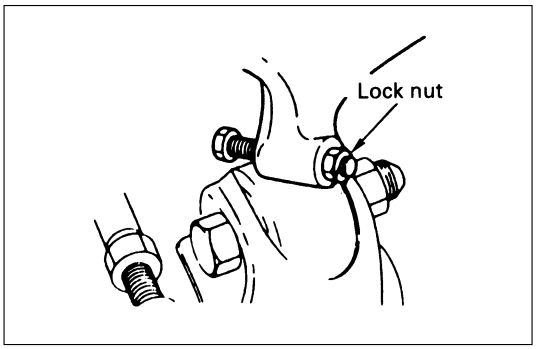

MAXIMUM STEERING ANGLE ADJUSTMENT

The maximum steering angle of the front wheels can be adjusted with the stopper bolts under the frame side members.

1. Position each front wheel on the turning radius gauge in a straight-ahead position.
2. Set the parking brake firmly.
3. Adjust the inside wheel angle of each side with the stopper bolts.

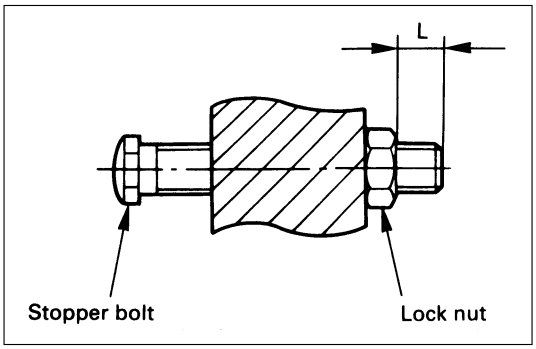

NOTE:
The maximum protruding length (L) of stopper bolt from the lock nut should be 10 mm (0.4 in) or less.

4. Similarly adjust the inside wheel angle of the other side with stopper bolt.

Maximum Steering Angle

Inside wheel	34° $^{+0°}_{-2°}$
Outside wheel	32°

NOTE:
Maximum steering angles should be set after adjusting front wheel alignment.

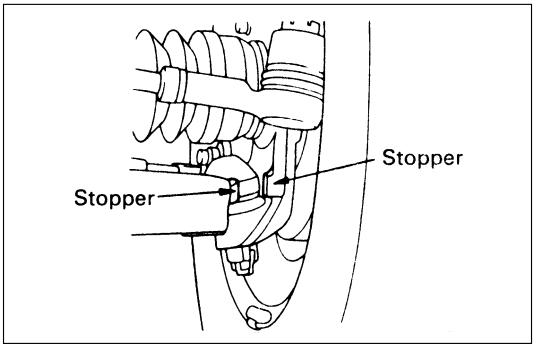

5. If the stop between the lower link end and the knuckle comes ahead of the stopper bolt, adjust the stopper bolt so that inner stopper bolt touches the drop arm (relay lever).

6. Tighten the lock nut to the specified torque.

Lock Nut Torque	N·m (kg·m/lb·ft)
23 (2.3 / 17)	

SECTION 2A
POWER STEERING

CONTENTS

PAGE

General Description ..... 2A – 8
Power Steering Gear ..... 2A – 9
Hydraulic Pump ..... 2A – 9
Pressure Switch (6VD1, 6VE1 Engine) ..... 2A – 9
Power Steering System Test ..... 2A – 10
On-Vehicle Service ..... 2A – 12
Bleeding The Power Steering System ..... 2A – 12
Flushing The Power Steering System ..... 2A – 12
Steering Gear ..... 2A – 13
Power Steering Pump (6VD1, 6VE1 Engine Models) ..... 2A – 16
Power Steering Pump (4JG2 Engine Model) ..... 2A – 18
Power Steering Pump (4JX1 Engine Model) ..... 2A – 20
Unit Repair ..... 2A – 22
Steering Gear ..... 2A – 22
Power Steering Pump (6VD1, 6VE1 Engine Models) ..... 2A – 28
Power Steering Pump (4JG2 Engine Model) ..... 2A – 32
Power Steering Pump (4JX1 Engine Model) ..... 2A – 36

GENERAL DESCRIPTION

This illustration is based on the LHD model.

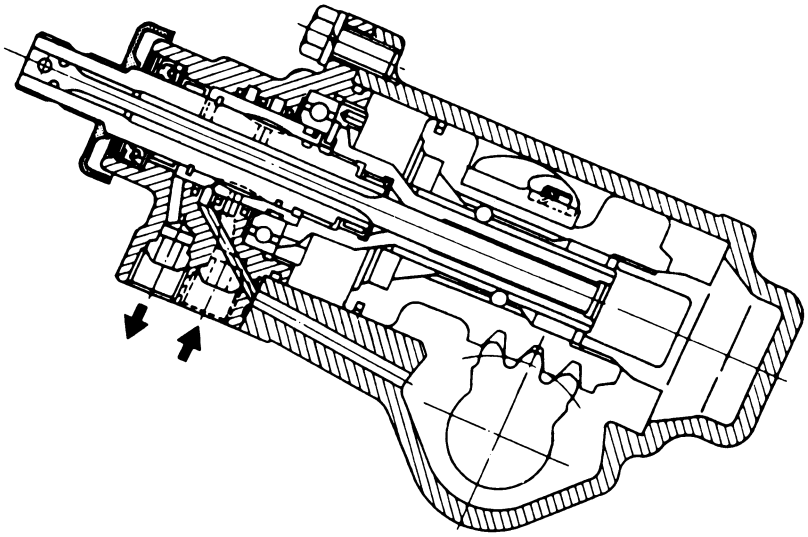

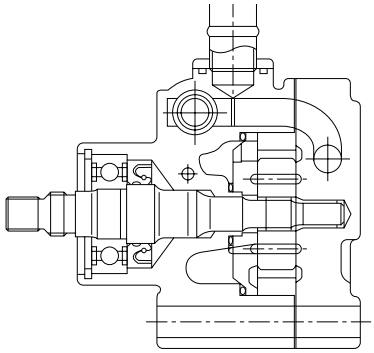

6VD1, 6VE1 Engine Models

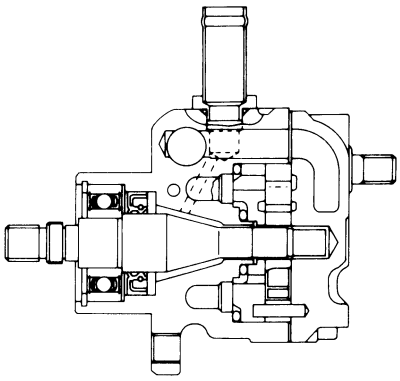

4JG2 Engine Model

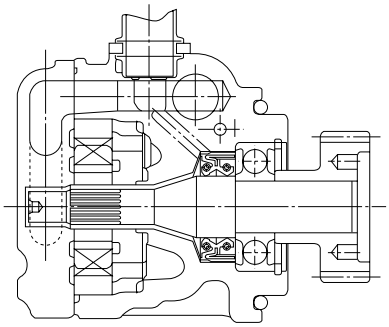

4JX1 Engine Model

The hydraulic power steering system consists of a pump, an oil reservoir, a steering gear, a pressure hose and a return hose.

POWER STEERING GEAR

The power steering gear has a recirculating ball system which acts as a rolling thread between the worm shaft and the rack piston. When the worm shaft is turned right, the rack piston moves up in gear. Turning the worm shaft left moves the rack piston down in gear. The rack piston teeth mesh with the sector, which is part of the sector shaft. Turning the worm shaft turns the sector shaft, which turns the wheels through the steering linkage.

The control valve in the steering gear directs the power steering fluid to either side of the rack piston. The rack piston converts the hydraulic pressure into a mechanical force. If the steering system becomes damaged and loses hydraulic pressure, the vehicle can be controlled manually.

HYDRAULIC PUMP

The hydraulic pump is vane-type design.

There are two bore openings at the rear of the pump housing. The smaller opening contains the pressure line union and flow control valve.

PRESSURE SWITCH (6VD1, 6VE1 Engine)

When hydraulic pressure reaches 3650 ± 350 kPa (530 ± 50 PSI), the pressure switch closes causing ECM to actuate the idle air control valve to prevent the overload-induced engine speed down. The switch opens when hydraulic pressure drops to 3150 ± 350 kPa (460 ± 50PSI).

POWER STEERING SYSTEM TEST

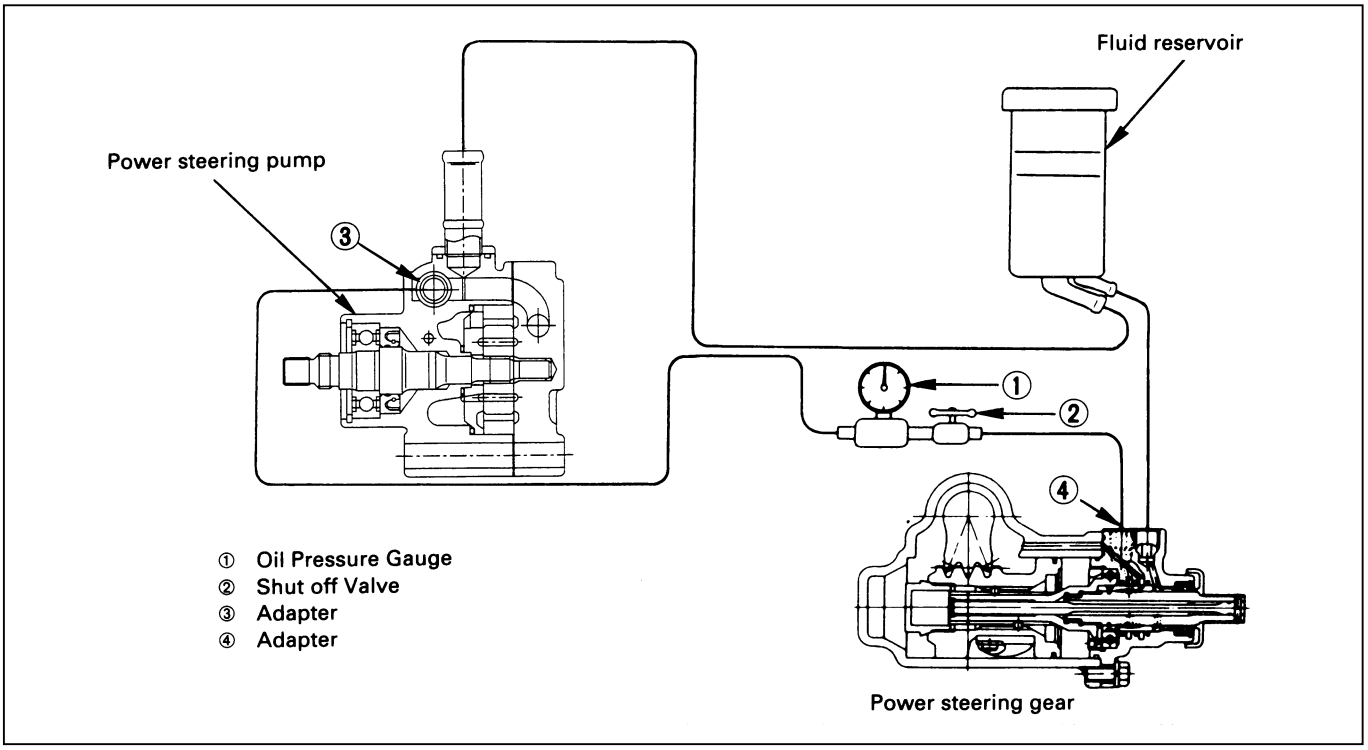

TEST PROCEDURE

Test of fluid pressure in the power steering system is performed to determine whether or not the oil pump and power steering unit are functioning normally.
The power steering system test is method used to identify and isolate hydraulic circuit difficulties.
Prior to performing this test, the following inspections and corrections, if necessary, must be made.

INSPECT

- Pump reservoir for proper fluid level.
- Pump belt for proper tension.
- Pump driver pulley condition.

1. Place a container under the pump to catch the fluid when disconnecting or connecting the hoses.
2. With the engine NOT running , disconnect the pressure hose at the power steering pump and install Power Steering tester.
   The gage must be between the shutoff valve and pump. Open the shutoff valve.

   Tester: 5-8840-0135-0 (J-29877-A)
   Adapter: 5-8840-2297-0 (For 6VD1, 6VE1, 4JX1)
   5-8840-0136-0 (For 4JG2)
3. Check the fluid level. Fill the reservoir with power steering fluid, to the “Full” mark. Start the engine then turn the steering wheel and momentarily hold it against a stop. Turn off and check the connections at tester for leakage.
4. Bleed the system. Refer to “Bleeding the Power Steering System” in this section.
5. Start the engine and check the pump fluid level. Add power steering fluid if required. When the engine is at normal operating temperature, increase engine speed to 1500 rpm.

CAUTION:
Do not leave shutoff valve fully closed for more than 5 seconds, as the pump could become damaged internally.

6. Fully close the shutoff valve. Record the highest pressures.
   - If the pressure recorded is within 9300-9800 kPa (1350-1420 psi) For 6VD1, 6VE1, and 9800-10300 kPa (100-105 kg/cm^2 / 1420-1490 psi) For 4JG2, 4JX1, the pump is functioning within its specifications.
   - If the pressure recorded is higher than 9800 kPa (1420 psi) For 6VD1, 6VE1, and 10300 kPa (105 kg/cm^2 / 1490 psi) For 4JG2, 4JX1, the valve in the pump is defective.

- If the pressure recorded is lower than 9300 kPa (1350 psi) For 6VD1, 6VE1, and 9800 kPa (100 kg/cm^2 / 1420 psi) For 4JG2, 4JX1, the valve or the rotating group in the pump is defective.

7. If the pump pressure are within specifications, leave the valve open and turn (or have someone else turn) the steering wheel fully in both directions. Record the highest pressures and compare with the maximum pump pressure recorded in step 6. If this pressure cannot be built in either (or one) side of the power steering gear, the power steering gear is leaking internally and must be disassembled and repaired.
8. Shut the engine off, remove the testing gage, reconnect the pressure hose, check the fluid level and make the needed repairs.
9. If the problem still exists, the steering and front suspension must be thoroughly examined.

ON-VEHICLE SERVICE

BLEEDING THE POWER STEERING SYSTEM

When a power steering pump or gear has been installed, or an oil line has been disconnected, the air that has entered the system must be bled out before the vehicle is operated. If air is allowed to remain in the power steering fluid system, noisy and unsatisfactory operation of the system may result.

BLEEDING PROCEDURE

When bleeding the system, and any time fluid is added to the power steering system, be sure to use only power steering fluid as specified in "MAINTENANCE AND LUBRICATION" in section 0B.

1. Fill the pump fluid reservoir to the proper level and let the fluid settle for at least two minutes.
2. Start the engine and let it run for a few seconds.
   Do not turn the steering wheel. Then turn the engine off.
3. Add fluid if necessary.
4. Repeat the above procedure until the fluid level remains constant after running the engine.
5. Raise the front end of the vehicle so that the wheels are off the ground.
6. Start the engine. Slowly turn the steering wheel right and left, lightly contacting the wheel stops.
7. Add power steering fluid if necessary.
8. Bring down the vehicle, set the steering wheel at the straight forward position after turning it to its full steer positions 2 or 3 times, and stop the engine.
9. Stop the engine. Check the fluid level and refill as required.
10. If the fluid is extremely foamy, allow the vehicle to stand a few minutes and repeat the above procedure.

INSPECT

- Belt for tightness.
- Pulley for looseness or damage. The pulley should not wobble with the engine running.
- Make sure that hose and pipes are properly fitted.
- Fluid level and fill to the proper level.

FLUSHING THE POWER STEERING SYSTEM

1. Raise the front end of the vehicle off the ground until the wheels are free to turn.
2. Remove the fluid return line at the reservoir inlet connector and plug the connector. Position the line toward a large container to catch the draining fluid.
3. While running the engine at idle, fill the reservoir with new power steering fluid. Turn the steering wheel in both directions. Do not contact wheel stops or hold the wheel in a corner, or fluid will stop and the pump will be in pressure relief mode. A sudden overflow from the reservoir may develop if the wheel is held at a stop.
4. While refilling the reservoir, check the draining fluid for contamination. If foreign material is still evident, replace all lines, disassemble and clean or replace the power steering system components. Do not re-use any drained power steering fluid.
5. Install all the lines and hoses. Fill the system with new power steering fluid and bleed the system as described in "Bleeding The Power Steering System". Operate the engine for about 15 minutes.

STEERING GEAR

These steps are based on the LHD model.

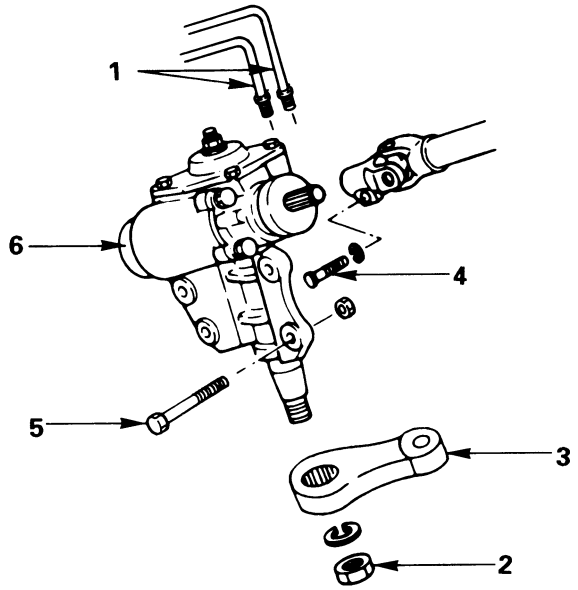

Removal Steps

1. Pipe
2. Nut
3. Pitman arm
4. Universal joint bolt
5. Gear box mounting bolt and nut
6. Gear box

Installation Steps

6. Gear box
5. Gear box mounting bolt and nut
4. Universal joint bolt
3. Pitman arm
2. Nut
1. Pipe

REMOVAL

Preparation:

1) Remove the stone guard.
2) Remove the lower fan shroud. Refer to “Engine cooling” in section 6B1.
3) Disconnect stabilizer bar at the stabilizer links. Loosen stabilizer bracket fixing nuts.

1. Pipe

2. Nut

3. Pitman Arm

Pitman arm remover: 5-8840-2005-0 (J-29107)

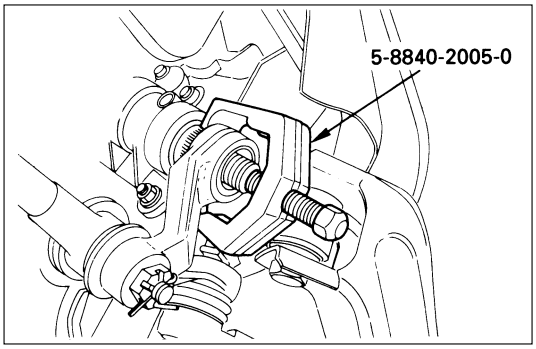

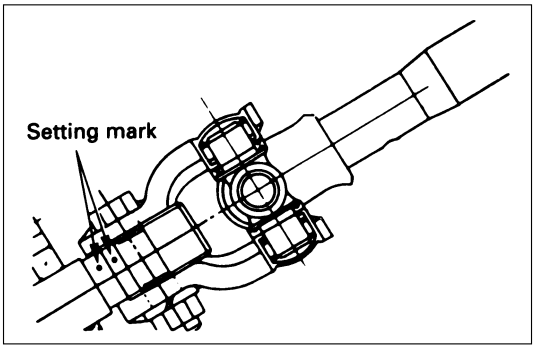

4. Universal Joint Bolt

Make a setting mark across the coupling flange and worm shaft to ensure reassembly of the parts in the original position.

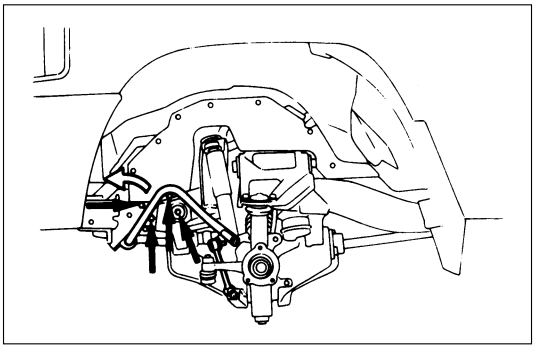

5. Gear Box Mounting Bolt and Nut

Push the stabilizer bar aside and remove the bolts and nuts.

6. Gear Box

INSTALLATION

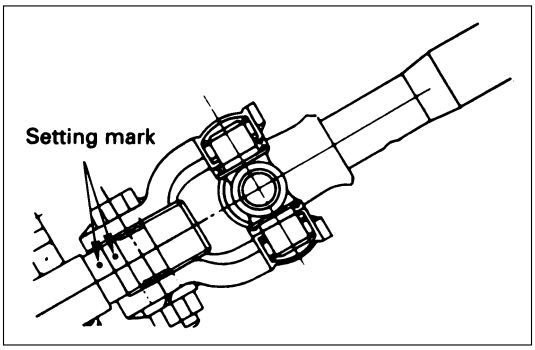

6. Gear Box

Align the setting marks made at removal.

5. Gear Box Mounting Bolt and Nut

Gear Box Mounting

Bolt and Nut Torque	N·m (kg·m/lb·ft)
44 (4.5 / 33)	

4. Universal Joint Bolt

Coupling Clamp Bolt Torque	N·m (kg·m/lb·ft)
25 (2.5 / 18)	

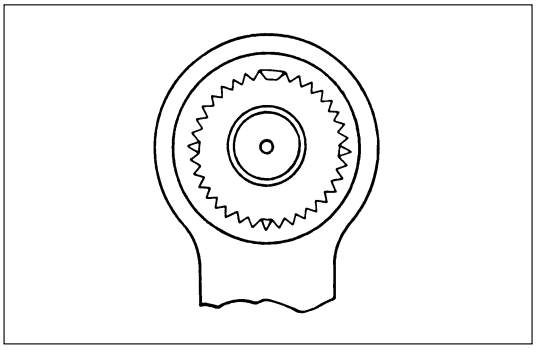

3. Pitman Arm

Align the notched tooth.

2 Nut

Pitman Arm Nut Torque	N·m (kg·m/lb·ft)
216 (22.0 / 159)	

1. Pipe

Pipe Nut Torque	N·m (kg·m/lb·ft)
44 (4.5 / 33)	

POWER STEERING PUMP (6VD1, 6VE1 Engine Models)

436RW006

Removal Steps

1. Drive belt
2. Pulley
3. Hose, suction
4. Hose, flexible
5. Bolt
6. Pump assembly

Installation Steps

6. Pump assembly
5. Bolt
4. Hose, flexible
3. Hose, suction
2. Pulley
1. Drive belt

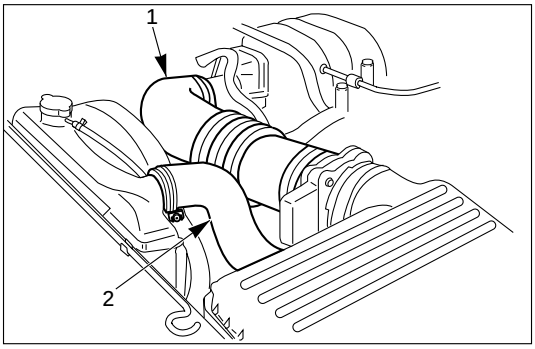

436RW005

REMOVAL

Preparation:

- Drain the engine coolant.
- Place a drain pan below the pump.
- Remove the air cleaner duct (1) and the radiator upper hose (2).

1. **Drive Belt**
2. **Pulley**
3. **Hose, Suction**
4. **Hose, Flexible**
5. **Bolt**
6. **Pump Assembly**

CAUTION:
When removing the pump assembly, be careful not to damage the wiring harness under the pump housing.

INSTALLATION

6. **Pump Assembly**

   Connect the harness under the pump housing.

5. **Bolt**

Pump Bolt Torque	N·m(kg·m/lb·ft)
46 (4.7 / 34)	

4. **Hose, Flexible**

Eye Bolt Torque	N·m (kg·m/lb·ft)
54 (5.5 / 40)	

3. **Hose, Suction**
2. **Pulley**

   Install the pulley onto the power steering pump and tighten the nut to specified torque.

Pulley Nut Torque	N·m (kg·m/lb·ft)
78 (8.0 / 58)	

1. **Drive Belt**
   - Install the air cleaner duct and the radiator upper hose.
   - Refill the engine coolant.
   - Fill and bleed the system. Refer to “Bleeding the Power Steering System” in this section.

POWER STEERING PUMP (4JG2 Engine Model)

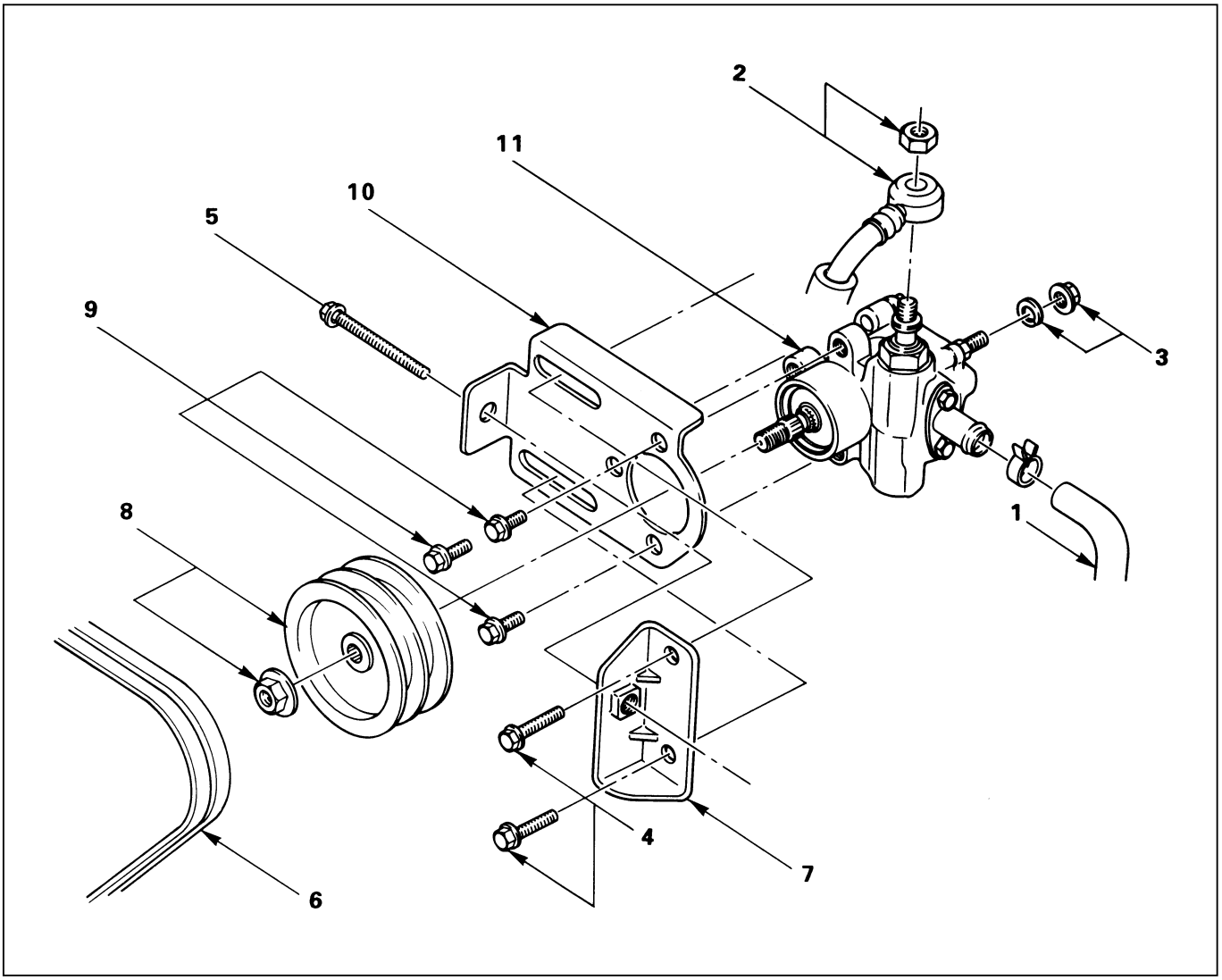

Removal Steps

1. Hose, suction
2. Hose, flexible
3. Adjust nut
4. Bolt
5. Adjust bolt
6. Belt
7. Bracket
8. Pulley
9. Bolt
10. Bracket
11. Pump assembly

Installation Steps

11. Pump assembly
10. Bracket
9. Bolt
8. Pulley
7. Bracket
6. Belt
5. Adjust bolt
4. Bolt
3. Adjust nut
2. Hose, flexible
1. Hose, suction

REMOVAL

Preparation:

- Place a drain pan below the pump.

1. **Hose, Suction**
2. **Hose, Flexible**
3. **Adjust Nut**
4. **Bolt**
5. **Adjust Bolt**
6. **Belt**
7. **Bracket**
8. **Pulley**
9. **Bolt**
10. **Bracket**
11. **Pump Assembly**

INSTALLATION

11. **Pump Assembly**
10. **Bracket**
9. **Bolt**

Pump Bolt Torque	N·m (kg·m/lb·ft)
37 (3.8 / 27)	

8. **Pulley**

Pulley Nut Torque	N·m (kg·m/lb·ft)
78 (8.0 / 58)	

7. **Bracket**
6. **Belt**
5. **Adjust Bolt**
4. **Bolt**
   After adjusting drive belt tension, tighten bolt to specified toque.

Bracket Bolt Torque	N·m (kg·m/lb·ft)
37 (3.8 / 27)	

3. **Adjust Nut**
   After adjusting drive belt tension, tighten bolt to specified toque.

Adjust Nut Torque	N·m (kg·m/lb·ft)
37 (3.8 / 27)	

2. **Hose, Flexible**

Hose Nut Torque	N·m (kg·m/lb·ft)
20 (2.0 / 14)	

1. **Hose, Suction**
   Fill and bleed the system. Refer to “Bleeding the Power Steering System” in this section.

POWER STEERING PUMP (4JX1 Engine Model)

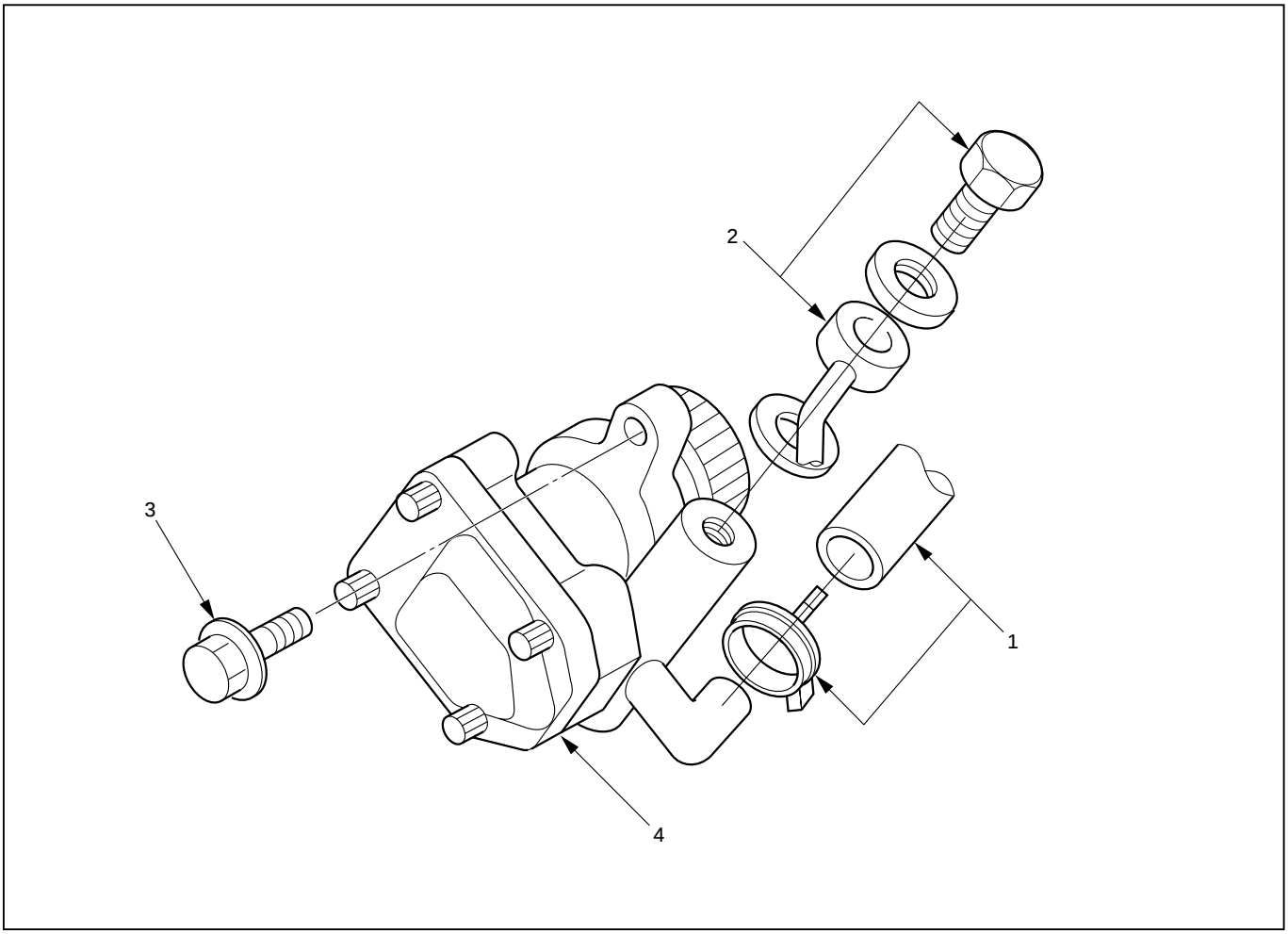

436RW009

Removal Steps

1. Hose, suction
2. Hose, flexible
3. Bolt
4. Pump assembly

Installation Steps

4. Pump assembly
3. Bolt
2. Hose, flexible
1. Hose, suction

REMOVAL

Preparation:

- Place a drain pan below the pump.

1. **Hose, Suction**
2. **Hose, Flexible**
3. **Bolt**
4. **Pump Assembly**

INSTALLATION

4. **Pump Assembly**
3. **Bolt**

Bolt Torque	N·m (kg·m/lb·ft)
22 (2.2 / 16)	

2. **Hose, Flexible**

Hose, Bolt Torque	N·m (kg·m/lb·ft)
54 (5.5 / 40)	

1. **Hose, Suction**
   Fill and bleed the system. Refer to “Bleeding the Power Steering System” in this section.

UNIT REPAIR

STEERING GEAR

These steps are based on the LHD model.

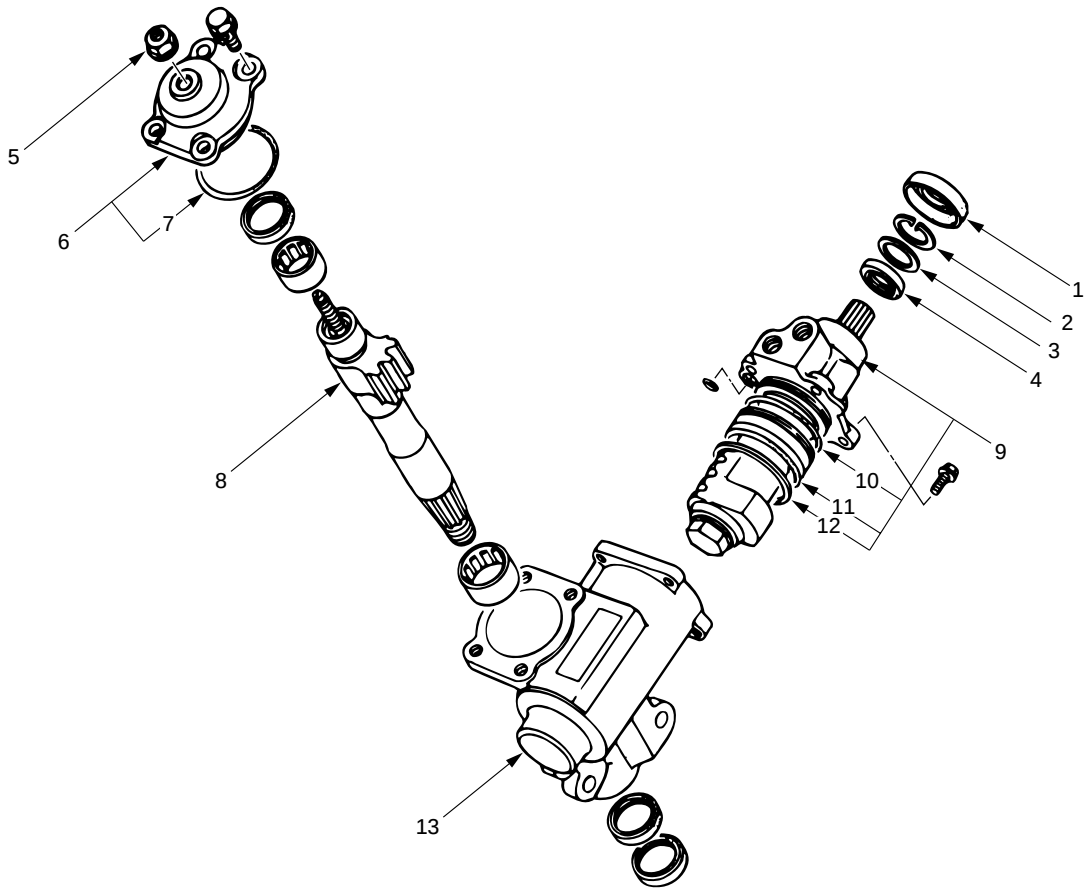

440RW004

Disassembly Steps

1. Dust cover
2. Retaining ring
3. Back up ring
4. Oil seal
5. Lock nut
6. Top cover assembly
7. O-ring
8. Sector shaft
9. Ball-nut and valve housing assembly
10. O-ring
11. Seal ring
12. O-ring
13. Gear box

Reassembly Steps

13. Gear box
12. O-ring
11. Seal ring
10. O-ring
9. Ball-nut and valve housing assembly
8. Sector shaft
7. O-ring
6. Top cover assembly
5. Lock nut
4. Oil seal
3. Back up ring
2. Retaining ring
1. Dust cover

DISASSEMBLY

CAUTION:
Do not clamp the steering gear assembly in a vise by the power cylinder housing.

1. **Dust Cover**
2. **Retaining Ring**
3. **Back up RIng**
4. **Oil Seal**
   1) Clean the faces of the extended stub shaft.
   2) Plug the hose fitting on the inlet side.
   3) Remove the oil seal by blowing compressed air through the hole in the outlet side.

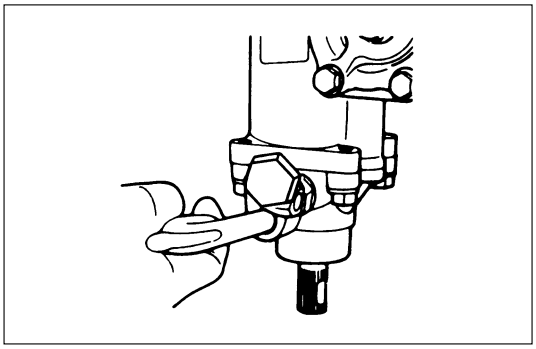

5. **Lock Nut**
   Remove the adjusting screw lock nut and turn the adjusting screw counterclockwise to remove the preload between the sector gear and the rack piston, then remove the top cover bolts.

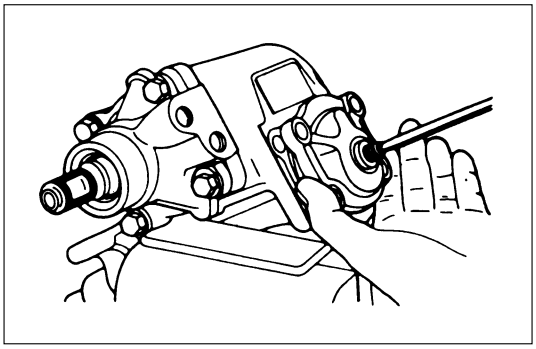

6. **Top Cover Assembly**
   Holding the top cover stationary, turn the adjusting screw clockwise to raise and free to cover, then remove the cover.

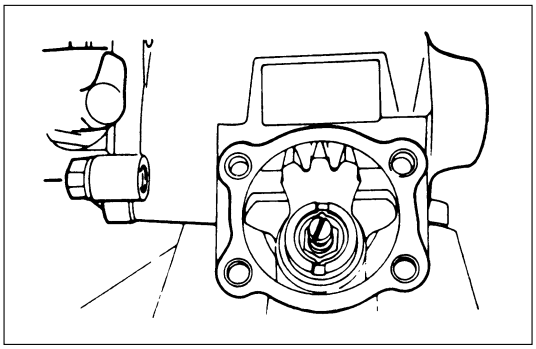

7. **O-ring**
8. **Sector Shaft**
   Bring the stub shaft into straight-ahead position. Do not force the sector shaft off the gear box with a hammer or other impact tools.

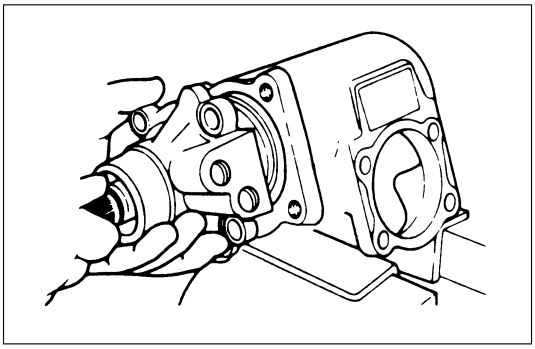

9. Ball-nut and Valve Housing Assembly
It is strongly advisable to always keep the ball nut and valve housing assembly in a horizontal position, or the rack piston will fall off onto the end of the worm, causing the rack piston to slip out of the worm shaft and the balls to fall out.

10. O-ring
11. Seal Ring
12. O-ring
13. Gear Box

INSPECTION AND REPAIR

Inspect the following parts for wear, damage or any other abnormal conditions.

- Bearing
- Ball-nut and valve housing
- Sector shaft
- Top cover
- Gear box
- Needle bearing
- Dust seal
- Seal ring
- Gasket

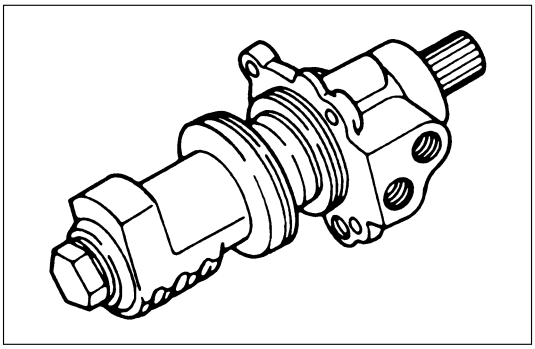

Ball-nut Rotation

Hold the ball nut and valve housing assembly vertically and see if the ball-nut lower by turning smoothly. If the ball-nut does not lower smoothly, check the worm shaft for bending and foreign matter.

NOTE:
When testing the ball nut and valve housing assembly, do not let it travel all the way to the end of worm shaft, or damage to the ball tubes will result.

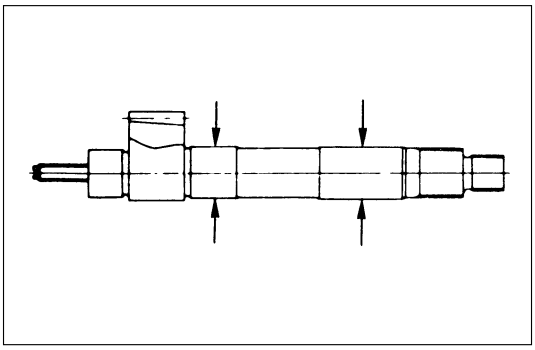

Check sector shaft outside diameter.

Sector Shaft Outside Diameter mm(in)

Standard	Limit
32.0 (1.260)	31.7 (1.248)

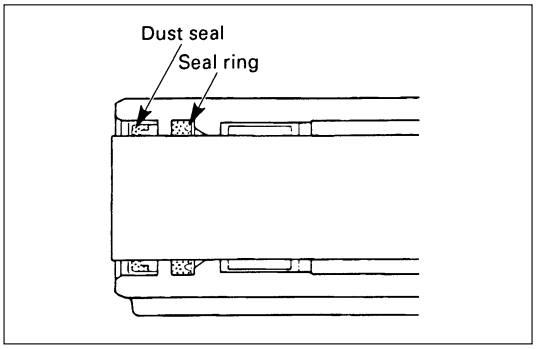

Seal Ring Setting

Note the setting direction. Always install a new part.

Apply a thin coat of power steering fluid to lip of each part.

Dust Seal Setting

Note the setting direction. Always install a new part.

Apply a thin coat of power steering fluid to lip of each part.

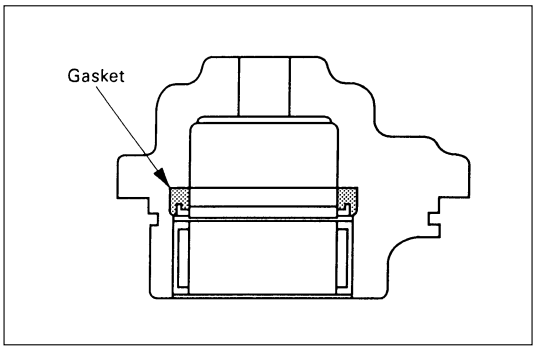

Gasket Setting

Note the setting direction. Always install a new part.

Apply a thin coat of power steering fluid to lip of each part.

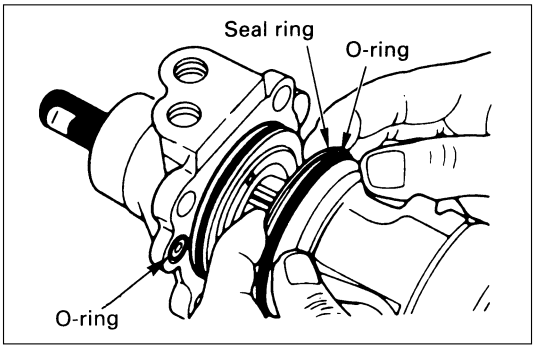

REASSEMBLY

13. Gear Box

12. O-ring
Apply a thin coat of grease.

11. Seal Ring
Apply a thin coat of grease.

10. O-ring
Apply a thin coat of grease.

9. Ball-nut and Valve Housing Assembly

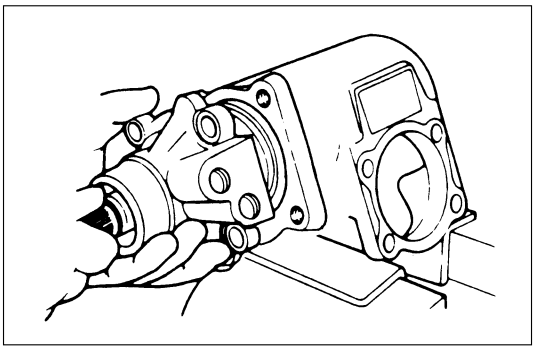

1) It is strongly advisable to always keep the ball screw and valve housing assembly in a horizontal position (avoid holding it vertically), or the rack piston will fall off onto the end of the worm, causing the rack piston to slip out of the worm shaft and ball to fall out.
2) Be careful not to drop the O-ring into the valve housing.
3) Tighten the valve housing bolts to the specified torque.

Valve Housing Bolt Torque	N·m (kg·m/lb·ft)
47 (4.8 / 35)	

8. Sector Shaft

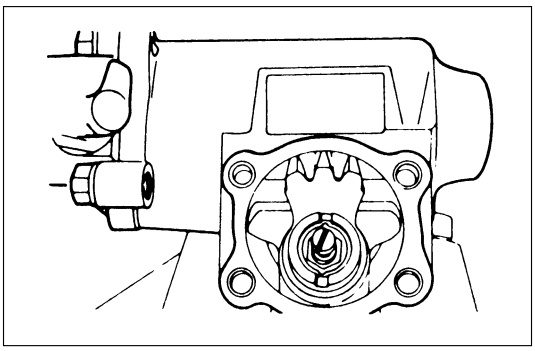

1) Tape the sector shaft serrations to protect the seal ring from damage.
2) Align the center tooth of ball nut with that of the sector shaft.

7. **O-ring**

6. **Top Cover Assembly**

Top Cover Bolt Torque	N·m (kg·m/lb·ft)
47 (4.8 / 35)	

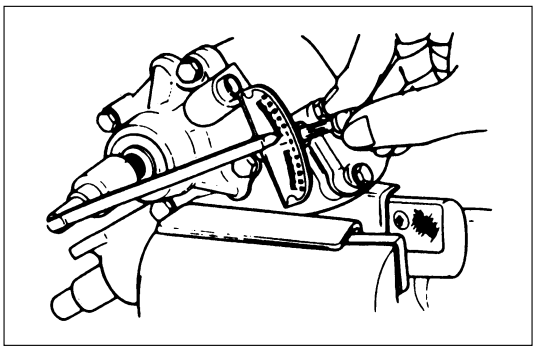

5. **Lock Nut**
Adjust the backlash between the worm gear and the ball nut.

1) With the worm gear rotating, set it to the straight ahead position.
2) Set the worm shaft preload to below 1N·m (10kg·cm / 9 lb·in) with the sector shaft adjusting screw.
3) Measure the worm shaft preload with the worm gear turned 450° both to the right and to the left. The worm gear preload in these positions should be 0.4 - 0.6 N·m (4 - 6 kg·cm / 3.5 - 5.2 lb·in) lower than in the straight ahead position.
4) Lock the sector shaft adjusting screw with the lock nut.

Lock Nut Torque	N·m (kg·m/lb·ft)
41 (4.2 / 30)	

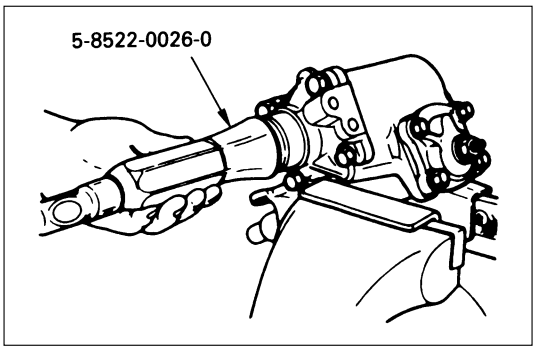

4. **Oil Seal**
Installer: 5-8522-0026-0 (J-26508)

3. **Back up Ring**
Position the chamfered face (outer circumference) towards the oil seal.

2. **Retaining Ring**
position the chamfered face (outer circumference) toward the oil seal.

1. **Dust Cover**

POWER STEERING PUMP (6VD1, 6VE1 Engine Models)

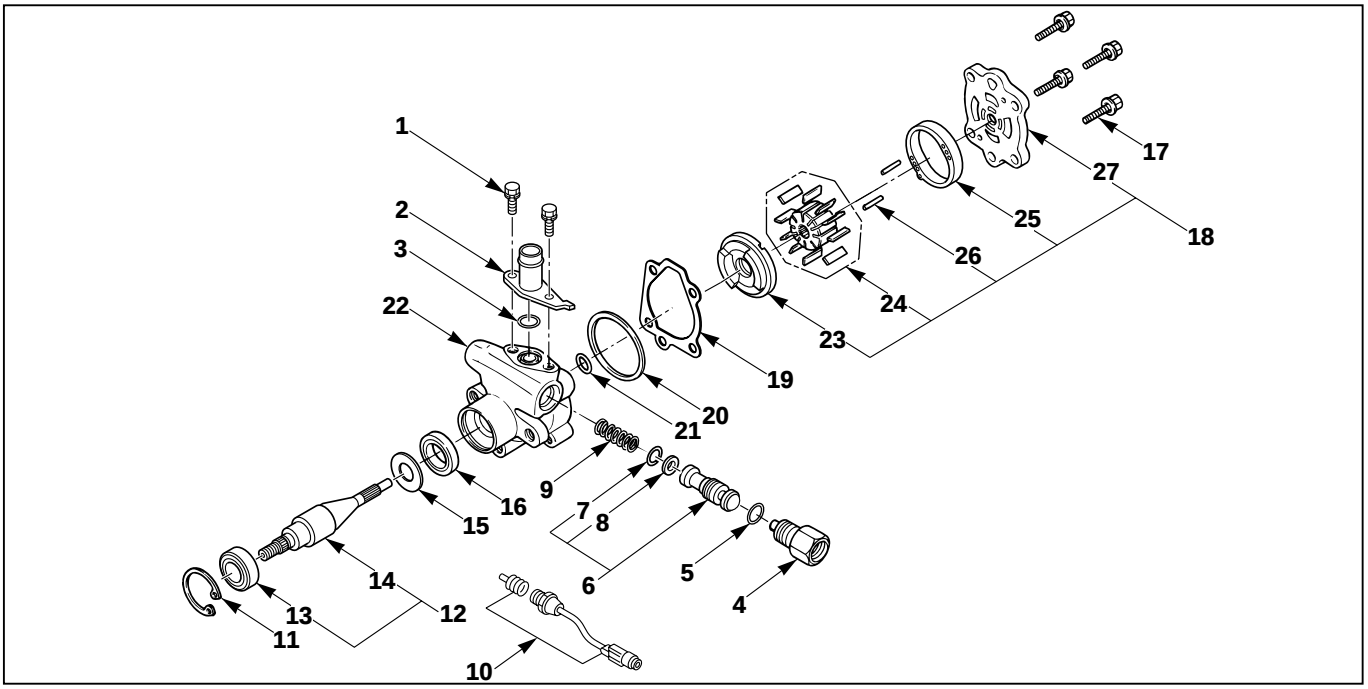

412RW055

Disassembly Steps

1. Bolt
2. Pipe, suction
3. O-ring
4. Connector
5. O-ring
6. Valve
7. Retaining ring
8. Filter
9. Spring
10. Pressure switch
11. Retaining ring
12. Shaft assembly
13. Bearing
14. Shaft
15. Retaining ring
16. Oil seal
17. Bolt
18. Rear housing assembly and pump cartridge
19. Gasket
20. O-ring
21. O-ring
22. Front housing
23. Pressure plate
24. Rotor and vane
25. Cam
26. Pin
27. Rear housing

Reassembly Steps

27. Rear housing
26. Pin
25. Cam
24. Rotor and vane
23. Pressure plate
22. Front housing
21. O-ring
20. O-ring
19. Gasket
18. Rear housing assembly and pump cartridge
17. Bolt
16. Oil seal
15. Retaining ring
14. Shaft
13. Bearing
12. Shaft assembly
11. Retaining ring
10. Pressure switch
9. Spring
8. Filter
7. Retaining ring
6. Valve
5. O-ring
4. Connector
3. O-ring
2. Pipe, suction
1. Bolt

DISASSEMBLY

Preparation:
Clean oil pump with solvent (plug the discharge and suction port, to prevent the entry of solvent). Be careful not to expose the oil seal of shaft assembly to solvent.

1. **Bolt**
2. **Pipe, Suction**
3. **O-ring**
4. **Connector**
5. **O-ring**
6. **Valve Assembly**
7. **Retaining Ring**
8. **Filter**
9. **Spring**
10. **Pressure switch**
11. **Retaining Ring**
12. **Shaft Assembly**
13. **Bearing**
14. **Shaft**
15. **Retaining Ring**
16. **Oil Seal**

CAUTION:
When removing the oil seal, be careful not to damage the housing.

17. **Bolt**
18. **Rear Housing Assembly and Pump Cartridge**
19. **Gasket**
20. **O-ring**
21. **O-ring**
22. **Front Housing**
23. **Pressure Plate**
24. **Rotor and Vane**
25. **Cam**
26. **Pin**
27. **Rear Housing**

INSPECTION AND REPAIR

Make all necessary adjustments, repairs, and part replacements if wear, damage, or other problems are discovered during inspection.

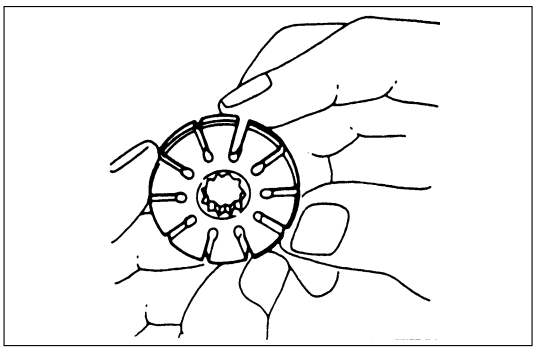

Rotor

Check that the groove in the vane is free from excessive wear and that the vane slides smoothly.
When part replacement becomes necessary, the pump cartridge should be replaced as a subassembly.

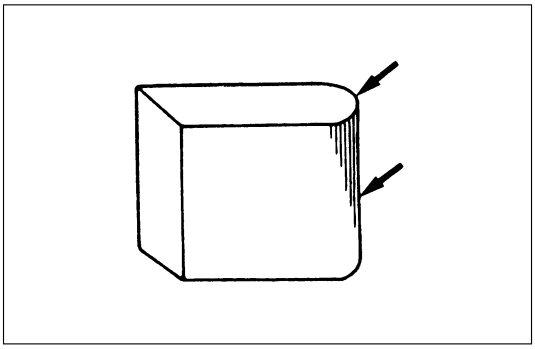

Vane

Sliding faces of the vane should be free from wear. (Particularly the curved face at the tip in contact with the cam should be free from wear and distortion).
When part replacement becomes necessary, the pump cartridge should be replaced as a subassembly.

Cam

The inner face of the arm should have a uniform contact pattern without a sign of step wear.
When part replacement becomes necessary, the pump cartridge should be replaced as a subassembly.

Side plate

The sliding faces of parts must be free from step wear (more than 0.01 mm), which can be felt by the finger nail. The parts with minor scores may be reused after lapping the face.

Valve

The sliding face of the valve must be free from burrs and damage.
The parts with minor scores may be reused after smoothing with emery cloth (#800 or finer).

Shaft

Oil seal sliding faces must be free from a step wear which can be felt by the finger nail.
Bushing face must be free from damage and wear.

O-ring, oil seal, retaining ring

Be sure to discard used parts, and always use new parts for installation. Prior to installation, lubricate all seals and rings with power steering fluid.

REASSEMBLY

27. Rear Housing

26. Pin

25. Cam

24. Rotor and Vane

1. Install the rotor with its punch mark facing the front housing.
2. Install the vanes with curved face in contact with the inner wall of the cam.

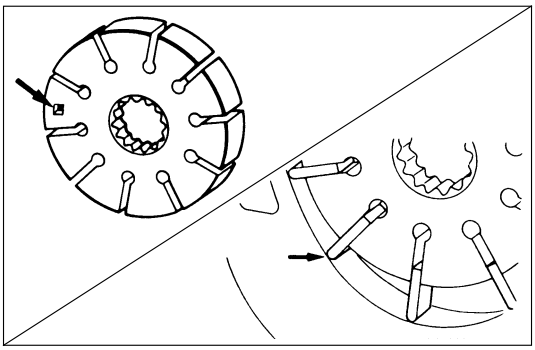

23. Pressure Plate

CAUTION:
When installing side plate, be careful not to damage its inner surface. Damaged side plate may cause poor pump performance, pump seizure or oil leakage.

22. Front Housing
21. O-ring
20. O-ring
Be sure to discard used O-rings, and always use new parts for installation.

19. Gasket
Be sure to discard used parts, and always use new parts for installation.

18. Rear Housing Assembly and Pump Cartridge
17. Bolt

Rear Housing Bolt Torque	N·m (kg·m/lb·ft)
17.6 (1.8 / 12.8)	

16. Oil Seal
Be sure to discard used parts, and always use new parts for installation.

CAUTION:
When installing the oil seal, be careful not to damage the oil seal contacting surface of the housing.

15. Retaining Ring
14. Shaft
13. Bearing
12. Shaft Assembly
11. Retaining Ring
10. Pressure switch

Pressure Switch Torque	N·m (kg·m/lb·ft)
20 (2.0 / 14)	

9. Spring
8. Filter
7. Retaining Ring
6. Valve
5. O-ring
Be sure to discard used parts, and always use new parts for installation.

4. Connector

Connector Torque	N·m (kg·m/lb·ft)
74 (7.5 / 54)	

3. O-ring
Be sure to discard used parts, and always use new parts for installation.

2. Pipe, Suction
1. Bolt

Suction Pipe Bolt Torque	N·m (kg·m/lb·ft)
15.7 (1.6 / 11.5)	

POWER STEERING PUMP (4JG2 Engine Model)

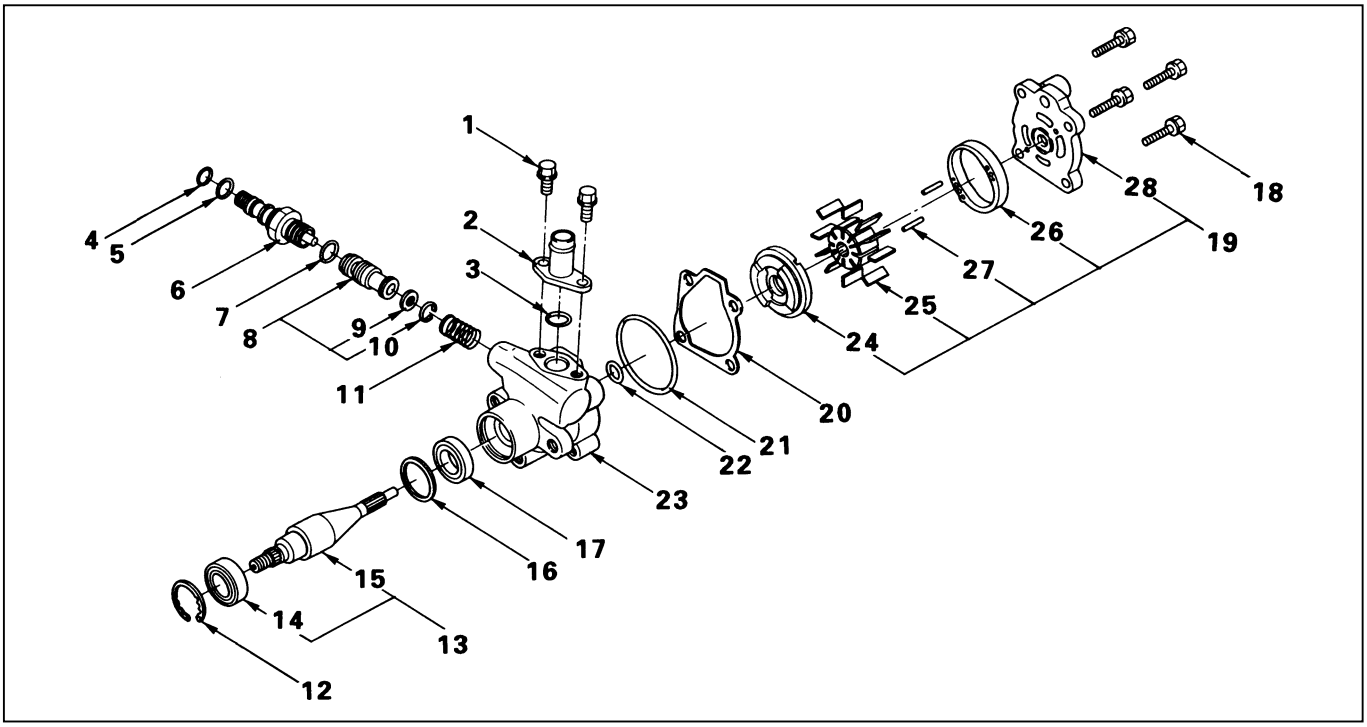

Disassembly Steps

1. Bolt
2. Pipe, suction
3. O-ring
4. O-ring
5. O-ring
6. Connector
7. O-ring
8. Valve
9. Retaining ring
10. Filter
11. Spring
12. Retaining ring
13. Shaft assembly
14. Bearing
15. Shaft
16. Retaining ring
17. Oil seal
18. Bolt
19. Rear housing assembly and pump cartridge
20. Gasket
21. O-ring
22. O-ring
23. Front housing
24. Pressure plate
25. Rotor and vane
26. Cam
27. Pin
28. Rear housing

Reassembly Steps

28. Rear housing
27. Pin
26. Cam
25. Rotor and vane
24. Pressure plate
23. Front housing
22. O-ring
21. O-ring
20. Gasket
19. Rear housing assembly and pump cartridge
18. Bolt
17. Oil seal
16. Retaining ring
15. Shaft
14. Bearing
13. Shaft assembly
12. Retaining ring
11. Spring
10. Filter
9. Retaining ring
8. Valve
7. O-ring
6. Connector
5. O-ring
4. O-ring
3. O-ring
2. Pipe, suction
1. Bolt

DISASSEMBLY

Preparation:
Clean oil pump with solvent (its plug discharge and suction port to prevent the entry of solvent). Be careful not to expose the oil seal of shaft assembly to solvent.

1. **Bolt**
2. **Pipe, Suction**
3. **O-ring**
4. **O-ring**
5. **O-ring**
6. **Connector**
7. **O-ring**
8. **Valve**
9. **Retaining Ring**
10. **Filter**
11. **Spring**
12. **Retaining Ring**
13. **Shaft Assembly**
14. **Bearing**
15. **Shaft**
16. **Retaining Ring**
17. **Oil Seal**

CAUTION:
When removing the oil seal, be careful not to damage the housing.

18. **Bolt**
19. **Rear Housing Assembly and Pump Cartridge**
20. **Gasket**
21. **O-ring**
22. **O-ring**
23. **Front Housing**
24. **Pressure Plate**
25. **Rotor and Vane**
26. **Cam**
27. **Pin**
28. **Rear Housing**

REASSEMBLY

28. Rear Housing

27. Pin

26. Cam

25. Rotor and Vane

Install the rotor with its punch mark facing the front housing.

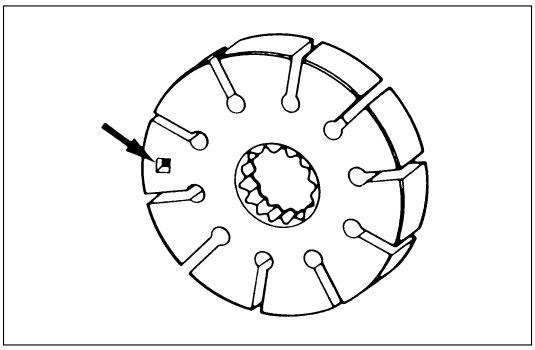

Install the vane with curved face in contact with the inner wall of the cam.

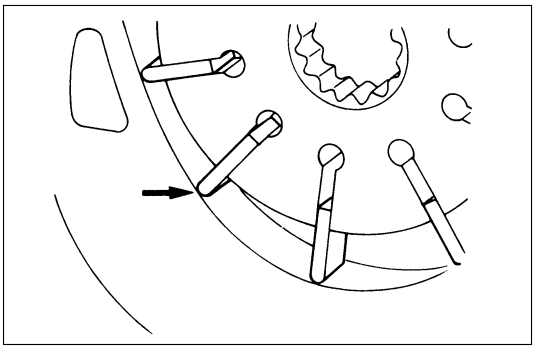

24. Pressure Plate

CAUTION:
When install pressure plate, be careful not to damage its inner surface. Damaged pressure plate may cause poor pump performance, pump seizure or oil leakage.

23. Front Housing

22. O-ring

Be sure to discard used parts, and always used new parts for installation.

21. O-ring

Be sure to discard used parts, and always used new parts for installation.

20. Gasket

Be sure to discard used parts, and always used new parts for installation.

19. Rear Housing Assemble and Pump Cartridge

18. Bolt

Rear Housing Bolt Torque	N·m (kg·m/lb·ft)
54 (5.5 / 40)	

17. O-ring

Be sure to discard used parts, and always used new parts for installation.

CAUTION:
When install pressure plate, be careful not to damage its inner surface. Damaged pressure plate may cause poor pump performance, pump seizure or oil leakage.

16. **Retaining Ring**
15. **Shaft**
14. **Bearing**
13. **Shaft Assembly**
12. **Retaining Ring**
11. **Spring**
10. **Filter**
9. **Retaining Ring**
8. **Valve**
7. **O-ring**
   Be sure to discard used parts, and always used new parts for installation.
6. **Connector**

Connector Torque	N·m (kg·m/lb·ft)
54 (5.5 / 40)	

5. **O-ring**
   Be sure to discard used parts, and always used new parts for installation.
4. **O-ring**
   Be sure to discard used parts, and always used new parts for installation.
3. **O-ring**
   Be sure to discard used parts, and always used new parts for installation.
2. **Pipe, Suction**
1. **Bolt**

Suction Pipe Bolt Torque	N·m (kg·m/lb·ft)
21 (2.1 / 15)	

POWER STEERING PUMP (4JX1 Engine Model)

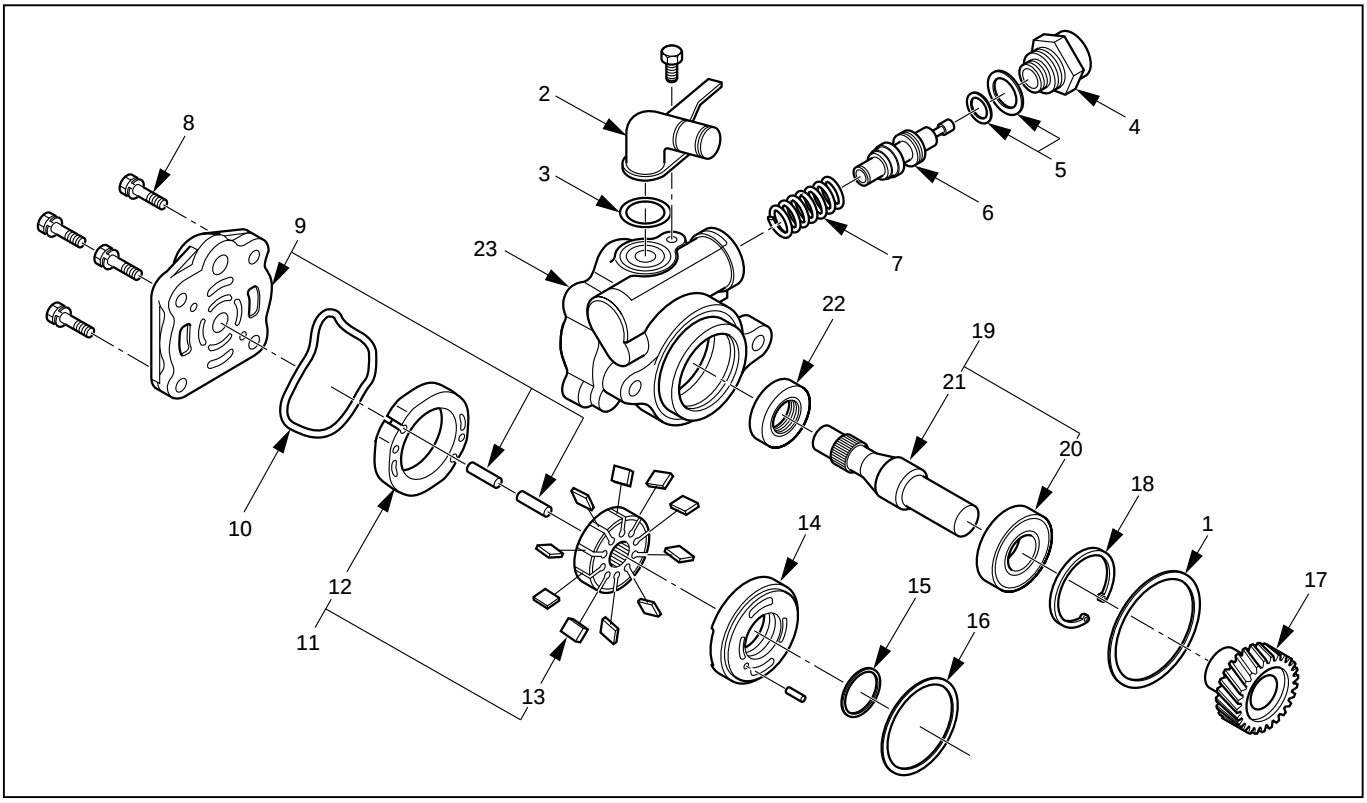

412RW048

Disassembly Steps

1. O-ring
2. Pipe, suction
3. O-ring
4. Connector
5. O-ring
6. Valve
7. Spring
8. Bolt
9. Rear housing assembly
10. O-ring
11. Pump cartridge
12. Cam
13. Rotor and vane
14. Pressure plate
15. O-ring
16. O-ring
17. Gear
18. Retaining ring
19. Shaft assembly
20. Bearing
21. Shaft
22. Oil seal
23. Front housing

Reassembly Steps

23. Front housing
22. Oil seal
21. Shaft
20. Bearing
19. Shaft assembly
18. Retaining ring
17. Gear
16. O-ring
15. O-ring
14. Pressure plate
13. Rotor and vane
12. Cam
11. Pump cartridge
10. O-ring
9. Rear housing assembly
8. Bolt
7. Spring
6. Valve
5. O-ring
4. Connector
3. O-ring
2. Pipe, suction
1. O-ring

DISASSEMBLY

Preparation:
Clean oil pump with solvent (plug the discharge and suction port to prevent the entry of solvent). Be careful not to expose the oil seal of shaft assembly to solvent.

1. **O-ring**
2. **Pipe, Suction**
3. **O-ring**
4. **Connector**
5. **O-ring**
6. **Valve**
7. **Spring**
8. **Bolt**
9. **Rear Housing Assembly**
10. **O-ring**
11. **Pump Cartridge**
12. **Cam**
13. **Rotor and Vane**
14. **Pressure Plate**
15. **O-ring**
16. **O-ring**
17. **Gear**
18. **Retaining Ring**
19. **Shaft Assembly**
20. **Bearing**
21. **Shaft**
22. **Oil seal**

CAUTION:
When removing the oil seal, be careful not to damage the housing.

23. **Front Housing**

REASSEMBLY

23. **Front Housing**
22. **Oil Seal**
    Be sure to discard used parts, and always used new parts for installation.
21. **Shaft**
20. **Bearing**
19. **Shaft Assembly**
18. **Retaining Ring**
17. **Gear**
16. **O-ring**
    Be sure to discard used parts, and always used new parts for installation.
15. **O-ring**
    Be sure to discard used parts, and always used new parts for installation.
14. **Pressure Plate**

CAUTION:
When install pressure plate, be careful not to damage its inner surface. Damaged pressure plate may cause poor pump performance, pump seizure or oil leakage.

13. **Rotor and Vane**
    Install the vane with curved face in contact with the inner wall of the cam.

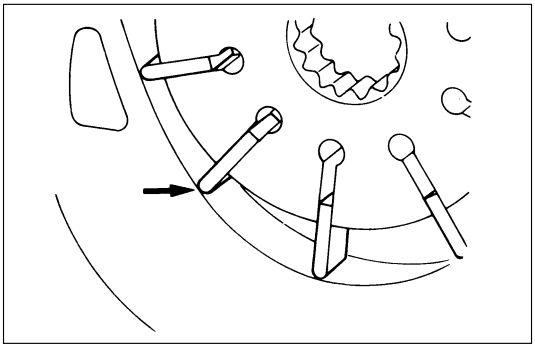

12. **Cam**
11. **Pump Cartridge**
10. **O-ring**
    Be sure to discard used parts, and always used new parts for installation.
9. **Rear Housing Assembly**
8. **Bolt**

Rear Housing Bolt Torque	N·m (kg·m/lb·ft)
24 (2.4 / 17)	

7. **Spring**
6. **Valve**
5. **O-ring**
   Be sure to discard used parts, and always used new parts for installation.
4. **Connector**

Connector Torque	N·m (kg·m/lb·ft)
59 (6.0 / 43)	

3. **O-ring**
   Be sure to discard used parts, and always used new parts for installation.
2. **Pipe, Suction**

Suction Pipe Bolt Torque	N·m (kg·m/lb·ft)
9.8 (1.0 / 7.1)	

1. **O-ring**
   Be sure to discard used parts, and always used new parts for installation.

MEMO

SECTION 2A

STEERING LINKAGE

CONTENTS

PAGE

General Description ..... 2A – 42
On-Vehicle Service ..... 2A – 43
Center Track Rod Assembly ..... 2A – 43
Outer Track Rod Assembly ..... 2A – 46
Relay Lever ..... 2A – 49

GENERAL DESCRIPTION

This illustration is based on the LHD model.

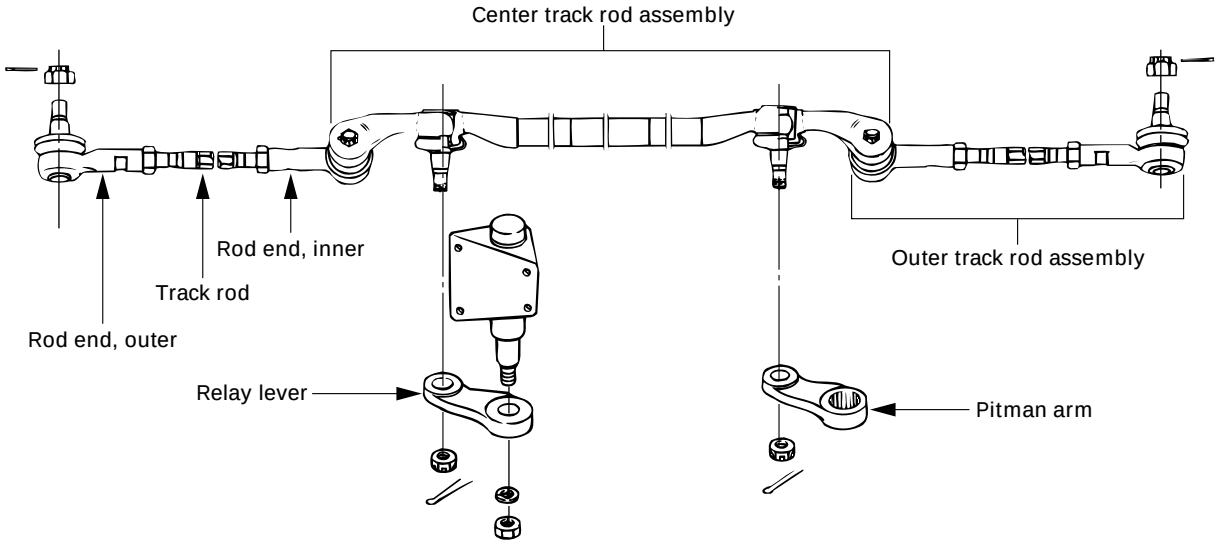

433RW004

The steering linkage consists of a pitman arm, relay lever, center track rod and two adjustable outer track rods.
When the steering wheel is turned, the gear rotates the pitman arm which forces the center track rod to one side. The outer track rods, connected to the center track rod by ball studs, transfer the steering force to the wheels. The outer track rods are adjustable and are used for toe-in adjustments.
The center track rod is supported by the pitman arm and relay lever. The relaylever pivots on a support attached to the frame.

The overall condition of the steering linkage affects steering performance. If parts are bent, damaged, worn or poorly lubricated, improper and possibly dangerous steering action will result.
Whenever any steering linkage components are repaired or replaced, check the steering geometry and front end alignment. Refer to Front End Alignment (Sec. 3A).

ON-VEHICLED SERVICE

CENTER TRACK ROD ASSEMBLY

These steps are based on the LHD model.

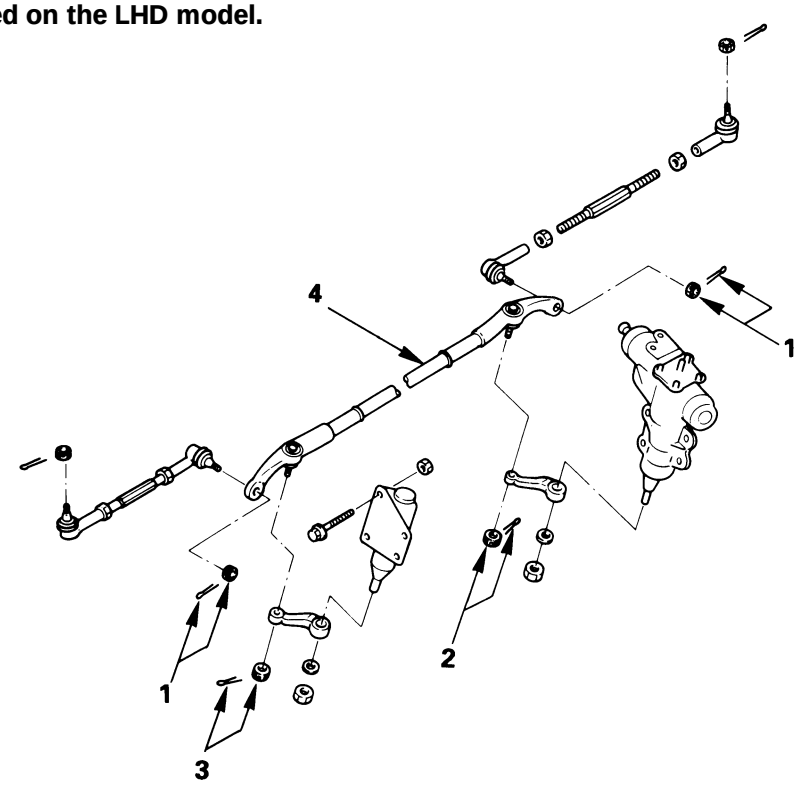

Removal Steps

1. Nut and cotter pin
2. Nut and cotter pin, pitman arm
3. Nut and cotter pin relay lever
4. Center track rod assembly

Installation Steps

4. Center track rod assembly
3. Nut and cotter pin relay lever
2. Nut and cotter pin, pitman arm
1. Nut and cotter pin

REMOVAL

Preparation:
Raise the vehicle and support the frame with suitable safety stands.

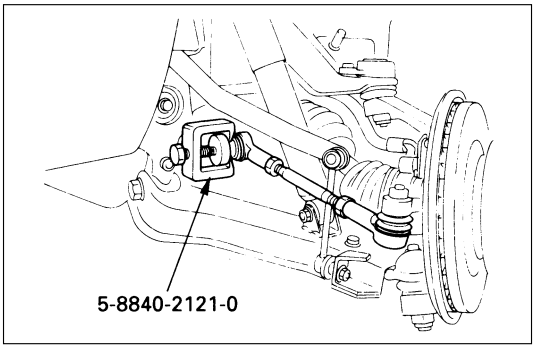

1. **Nut and Cotter Pin**
   Disconnect outer track rod assembly from the center track rod.
   Remover: 5-8840-2121-0 (J-36831)

   CAUTION:
   Be careful not to break the ball joint boot.

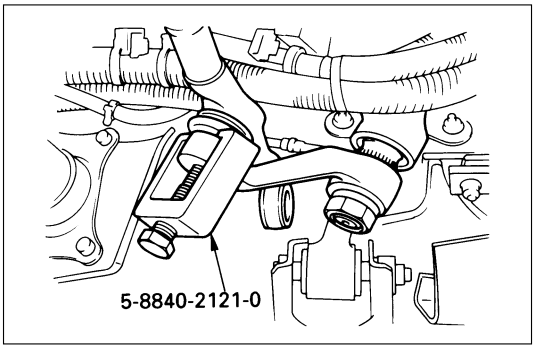

2. **Nut and Cotter Pin, Pitman Arm**
   Remove pitman arm from the center track rod (Fig. 3B3-4)
   Remover: 5-8840-2121-0 (J-36831)

   CAUTION:
   Be careful not to break the ball joint boot.

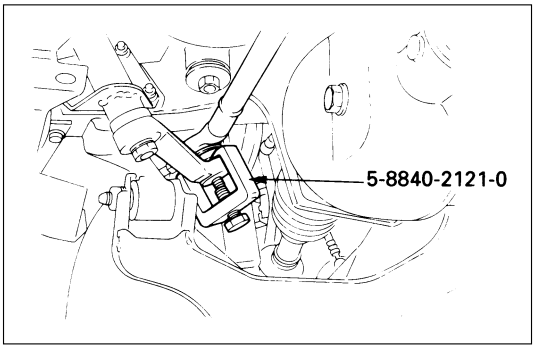

3. **Nut and Cotter Pin, Relay Lever**
   Remove relay lever from the center track rod.
   Remover: 5-8840-2121-0 (J-36831)

   CAUTION:
   Be careful not to break the ball joint boot.

4. **Center Track Rod Assembly**

INSPECTION AND REPAIR

Make necessary correction or parts replacement if wear, damage, corrosion, bending, deteriorations or any other abnormal condition are found through inspection.
Check the following parts.

- Ball joint (Boot, screws and tapered surfaces)

INSTALLATION

4. **Center Track Rod Assembly**

3. **Nut and Cotter Pin, Relay Lever**
Tighten the nut to the specified torque, with just enough additional torque to align cotter pin holes. Install new cotter pin.

Relay Lever Nut Torque	N·m (kg·m/lb·ft)
59 (6.0 / 43)	

2. **Nut and Cotter Pin, Pitman Arm**
Tighten the nut to the specified torque, with just enough additional torque to align cotter pin hole. Install new cotter pin.

Pitman Arm Nut Torque	N·m (kg·m/lb·ft)
98 (10.0 / 72)	

1. **Nut and Cotter Pins**
Tighten the nut to the specified torque, with just enough additional torque to align cotter pin holes. Install new cotter pin.

Center Track Rod Nut Torque	N·m (kg·m/lb·ft)
98 (10.0 / 72)	

OUTER TRACK ROD ASSEMBLY

These steps are based on the LHD model.

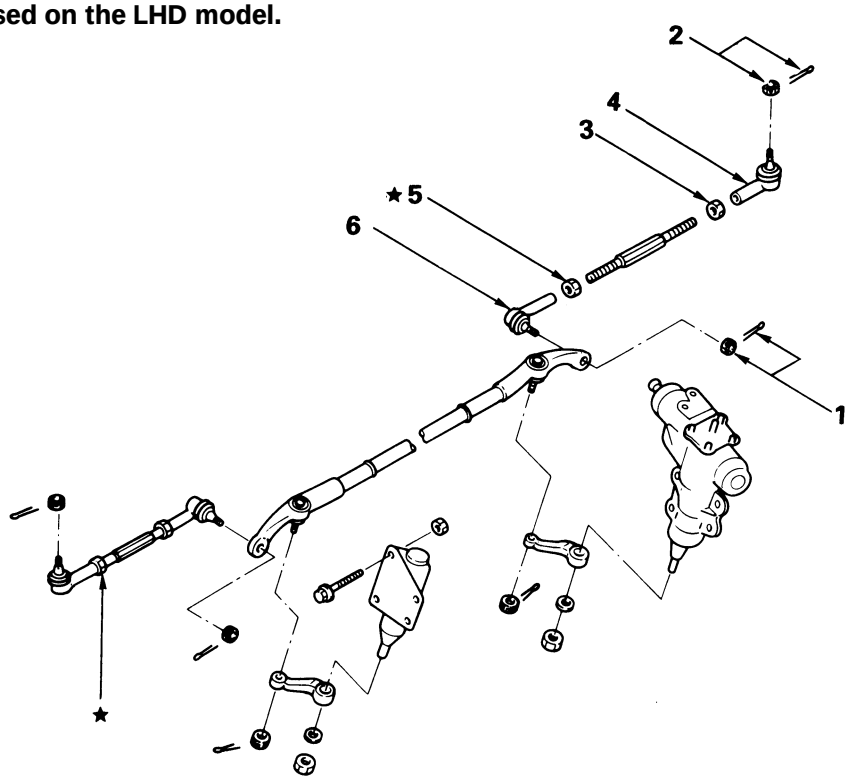

Removal Steps

1. Nut and cotter pin, center track rod
2. Nut and cotter pin, knuckle arm
3. Lock nut, outer
4. Rod end assembly outer
5. Lock nut, inner
6. Rod end assembly, inner

★ The screw is threaded counterclockwise.

Installation Steps

6. Rod end assembly, inner
5. Lock nut, inner
4. Rod end assembly outer
3. Lock nut, outer
2. Nut and cotter pin, knuckle arm
1. Nut and cotter pin, center track rod

REMOVAL

Preparation:
Remove wheel and tire assembly.
Refer to "Wheels and Tires" in section 3E.

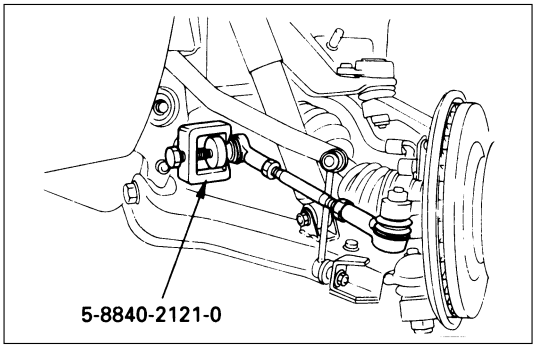

1. **Nut and Cotter Pin, Center Track Rod**
   Disconnect outer track rod assembly at the center track rod.

   Remover: 5-8840-2121-0 (J-36831)

   CAUTION:
   Be careful not to break the ball joint boot.

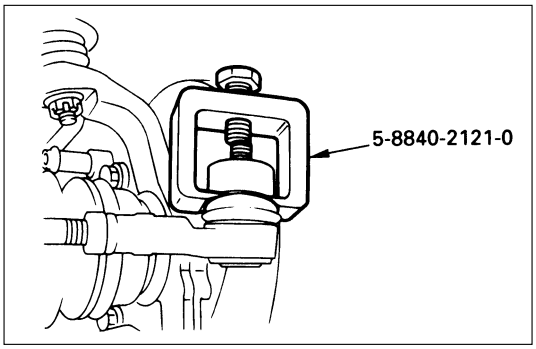

2. **Nut and Cotter Pin, Knuckle Arm**
   Remove outer track rod assembly from the knuckle arm.

   Remover: 5-8840-2121-0 (J-36831)

   CAUTION:
   Be careful not to break the ball joint boot.

3. **Lock Nut, Outer**

   NOTE:
   In either outer rod, the screw on the right side of the vehicle is threaded counterclockwise.

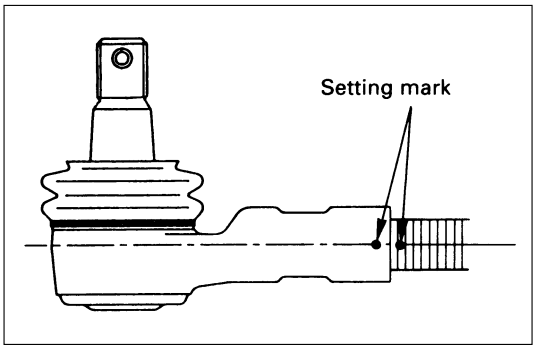

4. **Rod End Assembly, Outer**
   Apply setting marks to ensure reassembly of the parts in their original position.

5. **Lock Nut, Inner**

   NOTE:
   In either outer rod, the screw on the right side of the vehicle is threaded counterclockwise.

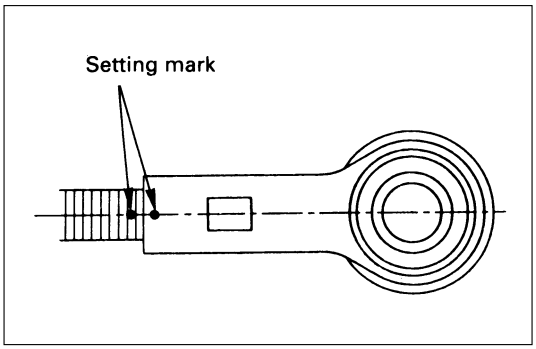

6. **Rod End, Inner**
   Apply setting marks to ensure reassembly of the parts in their original position.

INSPECTION AND REPAIR

Make necessary correction or parts replacement if wear, damage, corrosion, bending, deteriorations or any other abnormal condition are found through inspection.
Check the following parts.

- Rod end assembly
- Ball joint (Boot, screws and tapered surfaces)

INSTALLATION

6. Rod End, Inner
Align the setting marks applied during desassembly.

5. Lock Nut, Inner

Lock Nut Torque	N·m (kg·m/lb·ft)
118 (12.0 / 87)	

NOTE:
In either outer rod, the screw on the right side of the vehicle is threaded counterclockwise.

4. Rod End Assembly, Outer
Align the setting marks applied during disassembly.

3 Lock Nut, Outer

Lock Nut Torque	N·m (kg·m/lb·ft)
118 (12.0 / 87)	

2. Nut and Cotter pin, Knuckle Arm
Tighten the nut to the specified torque, with just enough additional torque to align cotter pin holes. Install new cotter pin.

Knuckle Arm Nut Torque	N·m (kg·m/lb·ft)
98 (10.0 / 72)	

1. Nut and Cotter Pin, Center Track Rod
Tighten the nut to the specified torque, with just enough additional torque to align cotter pin holes. Install new cotter pin.

Track Rod Nut Torque	N·m (kg·m/lb·ft)
98 (10.0 / 72)	

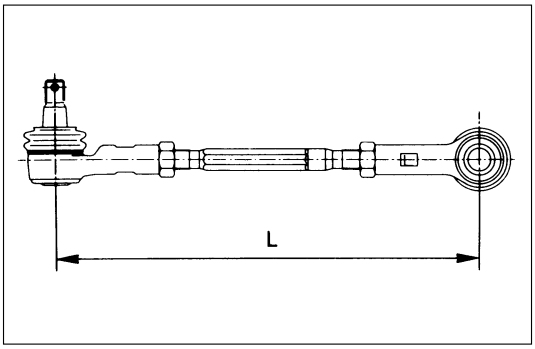

NOTE:
If replacing the track rod, adjust the new track rod length.

Rod Length (L)	mm (in)
328.3 (12.93) : Wide Tread 299 (11.77) : Narrow Tread	

NOTE:
Adjust the toe-in. Refer to “Front End Alignment” in section 3A.

RELAY LEVER

These steps are based on the LHD model.

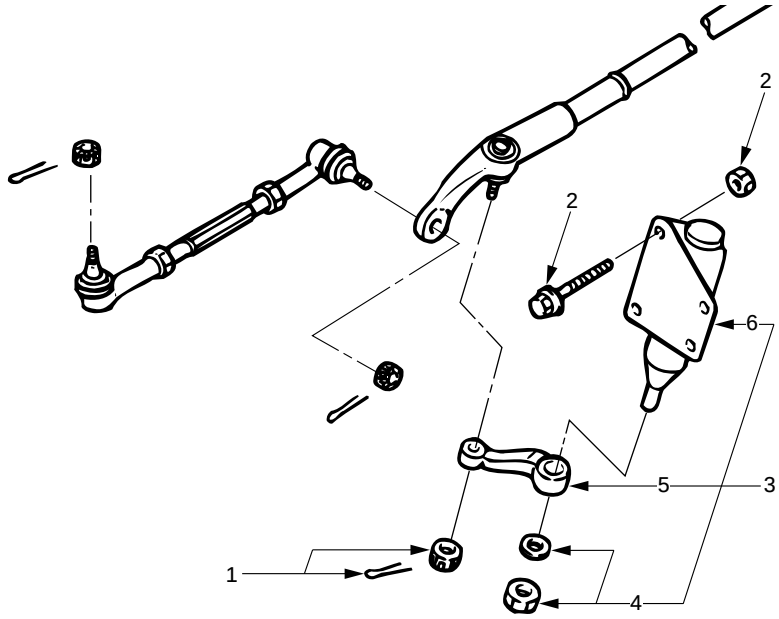

433RW005

Removal Steps

1. Nut and cotter pin
2. Bolt and nut
3. Relay lever and Bracket
4. Nut and washer
5. Relay lever
6. Bracket

Installation Steps

6. Bracket
5. Relay lever
4. Nut and washer
3. Relay lever and bracket
2. Bolt and nut
1. Nut and cotter pin

REMOVAL

Preparation:
Raise the vehicle and support the frame with suitable safety stands.

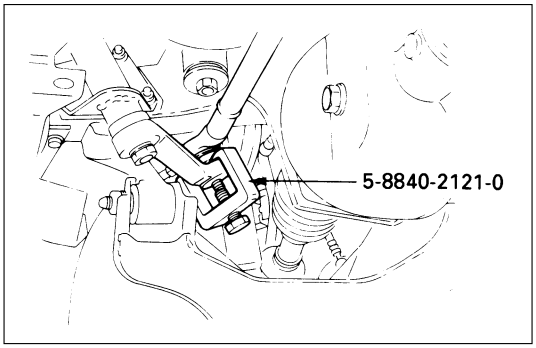

1. **Nut and Cotter pin**
   Disconnect relay lever at the center track rod.
   Remover: 5-8840-2121-0 (J-36831)

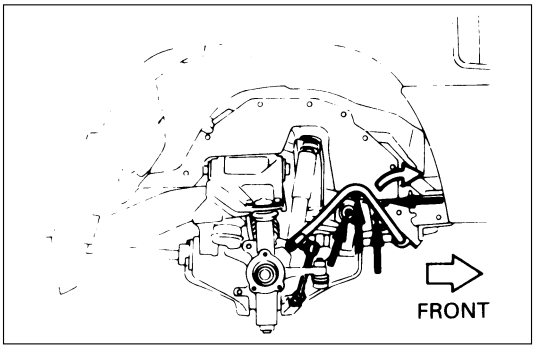

2. **Bolt and Nut**
   Remove stabilizer bar bolts and nuts and push the stabilizer bar aside and remove the bolts and nuts.

3. **Relay Lever and Bracket**
4. **Nut and Washer**
5. **Relay Lever**
   Remove relay lever from the bracket.
   Remover: 5-8840-0015-0 (J-22912-01)

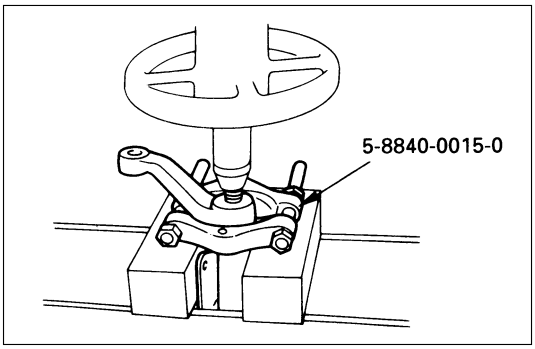

6. **Bracket**

INSTALLATION

6. **Bracket**
5. **Relay Lever**
4. **Nut and Washer**

Relay Lever Nut Torque	N·m (kg·m/lb·ft)
118 (12.0 / 87)	

3. **Relay Lever and Bracket**
2. **Bolt and Nut**

Bracket Nut Torque	N·m (kg·m/lb·ft)
44 (4.5 / 33)	

1. **Nut and Cotter Pin**
   Tighten the nut to the specified torque, with just enough additional torque to align cotter pin holes. Install new cotter pin.

Relay Lever Nut Torque	N·m (kg·m/lb·ft)
59 (6.0 / 43)	

SECTION 2A

SUPPLEMENTAL RESTRAINT SYSTEM STEERING WHEEL & COLUMN

CAUTION:
When fasteners are removed, always reinstall them at the same location from which they were removed. If a fastener needs to be replaced, use the correct part number fastener for that application. If the correct part number fastener is not available, a fastener of equal size and strength (or stronger) may be used. Fasteners that are not reused, and those requiring thread locking compound, will be called out. The correct torque value must be used when installing fasteners that require it. If the above conditions are not followed, parts or system damage could result.

CONTENTS

PAGE

General Description ..... 2A – 52
On-Vehicle Service ..... 2A – 53
SRS Connectors ..... 2A – 53
Inflator Module Replacement ..... 2A – 54
Steering Wheel Replacement ..... 2A – 57
Combination Switch Replacement ..... 2A – 60
Lock Cylinder Replacement ..... 2A – 64
Steering Column Replacement ..... 2A – 69

GENERAL DESCRIPTION

This steering wheel and column repair section covers the Supplemental Restraint System (SRS) steering column. The following repair procedures are specific to SRS Components. When servicing a vehicle equipped with Supplemental Restraint System, pay close attention to all WARNINGS and CAUTIONS.

For detailed explanation about SRS, refer to Section 9J "SUPPLEMENTAL RESTRAINT SYSTEM (SRS)" of manual.

The steering column has three important features in addition to the steering function:

1. The column is energy absorbing, designed to compress in a front-end collision to minimize the possibility of injury to the driver of the vehicle.
2. The ignition switch and lock are mounted conveniently on the column.
3. With the column mounted lock, the ignition and steering operation can be locked to prevent theft of the vehicle.

The column may be disassembled and reassembled. To insure the energy absorbing action, it is important that the specified screws, bolts and nuts be used only as designated and that they are tightened to the specified torque.

When the column is removed from the vehicle, a sharp blow on the end of steering shaft or shift lever, leaning on the column assembly, or dropping the assembly could shear or loosen the fasteners that maintain column rigidity.

WARNING

THIS VEHICLE HAS A SUPPLEMENTAL RESTRAINT SYSTEM (SRS). REFER TO THE SRS COMPONENT AND WIRING LOCATION VIEW IN ORDER TO DETERMINE WHETHER YOU ARE PERFORMING SERVICE ON OR NEAR THE SRS COMPONENTS OR THE SRS WIRING. WHEN YOU ARE PERFORMING SERVICE ON OR NEAR THE SRS COMPONENTS OR THE SRS WIRING, REFER TO THE SRS SERVICE INFORMATION. FAILURE TO FOLLOW WARNINGS COULD RESULT IN POSSIBLE AIR BAG DEPLOYMENT, PERSONAL INJURY, OR OTHERWISE UNNEEDED SRS SYSTEM REPAIRS.

SAFE HANDLING OF INFLATOR MODULES REQUIRES FOLLOWING THE PROCEDURES DESCRIBED BELOW FOR BOTH LIVE AND DEPLOYED MODULES.

SAFETY PRECAUTIONS MUST BE FOLLOWED WHEN HANDLING A DEPLOYED AIR BAG ASSEMBLY (AIR BAG). AFTER DEPLOYMENT, THE AIR BAG ASSEMBLY (AIR BAG) SURFACE MAY CONTAIN A SMALL AMOUNT OF SODIUM HYDROXIDE, A BY-PRODUCT OF THE DEPLOYMENT REACTION, THAT IS IRRITATING TO THE SKIN AND EYES. MOST OF THE POWDER ON THE AIR BAG ASSEMBLY (AIR BAG) IS HARMLESS. AS A PRECAUTION, WEAR GLOVES AND SAFETY GLASSES WHEN HANDLING A DEPLOYED AIR BAG ASSEMBLY, AND WASH YOUR HANDS WITH MILD SOAP AND WATER AFTERWARDS.

WHEN CARRYING A LIVE AIR BAG ASSEMBLY, MAKE SURE THE BAG AND TRIM COVER ARE POINTED AWAY FROM YOU. NEVER CARRY AN AIR BAG ASSEMBLY BY THE WIRES OR CONNECTOR ON THE UNDERSIDE OF MODULE. IN THE CASE OF AN ACCIDENTAL DEPLOYMENT, THE BAG WILL THEN DEPLOY WITH MINIMAL CHANCE OF INJURY. WHEN PLACING A LIVE AIR BAG ASSEMBLY ON A BENCH OR OTHER SURFACE, ALWAYS FACE THE BAG AND TRIM COVER UP, AWAY FROM THE SURFACE. NEVER REST A STEERING COLUMN ASSEMBLY ON THE STEERING WHEEL WITH THE AIR BAG ASSEMBLY FACE DOWN AND COLUMN VERTICAL. THIS IS NECESSARY SO THAT A FREE SPACE IS PROVIDED TO ALLOW THE AIR BAG ASSEMBLY TO EXPAND IN THE UNLIKELY EVENT OF ACCIDENTAL DEPLOYMENT. OTHERWISE, PERSONAL INJURY COULD RESULT.

TO AVOID DEPLOYMENT WHEN TROUBLE SHOOTING THE SRS SYSTEM, DO NOT USE ELECTRICAL TEST EQUIPMENT, SUCH AS BATTERY-POWERED OR A/C-POWERED VOLTMETER, OHMMETER, ETC., OR ANY TYPE OF ELECTRICAL EQUIPMENT OTHER THAN SPECIFIED IN THIS MANUAL. DO NOT USE A NON-POWERED PROBE-TYPE TESTER.

INSTRUCTIONS IN THIS MANUAL MUST BE FOLLOWED CAREFULLY, OTHERWISE PERSONAL INJURY MAY RESULT.

ON-VEHICLE SERVICE

SRS CONNECTORS

CAUTION:
The special yellow color connectors are used for supplemental restraint system-air bag circuit.
When removing the cable harness, do not pull the cables. Otherwise, cable disconnection may occur.
When connect the SRS connector, insert the connector completely. Imperfect locking may cause malfunction of SRS circuit.

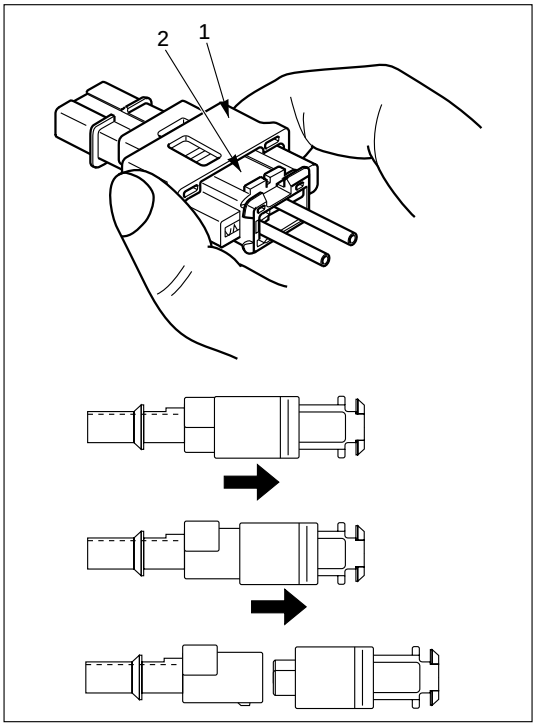

827RW035

REMOVAL

To remove the connector, hold the cover insulator(1) and pull it. The cover insulator slides and lock will be released.

Do not hold the socket insulator(2).

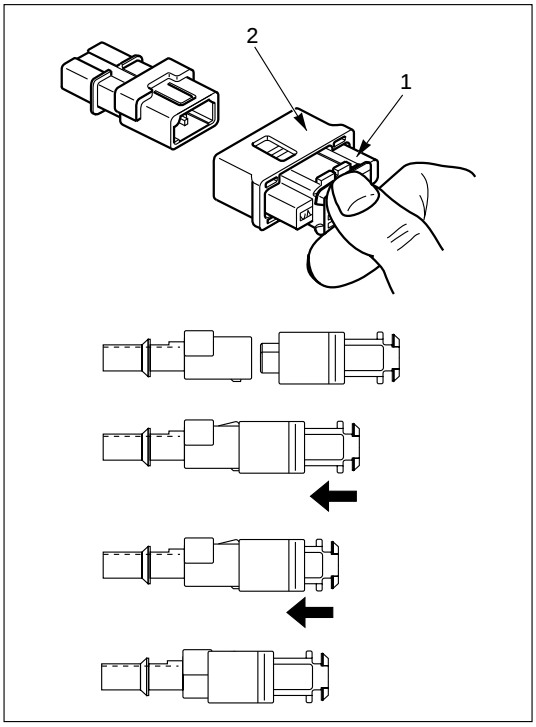

827RW034

INSTALLATION

To install the connector, hold the socket insulator(1) and insert it. The cover insulator slides and connector will be locked.

Do not hold the cover insulator(2).

INFLATOR MODULE REPLACEMENT

These steps are based on the LHD model.

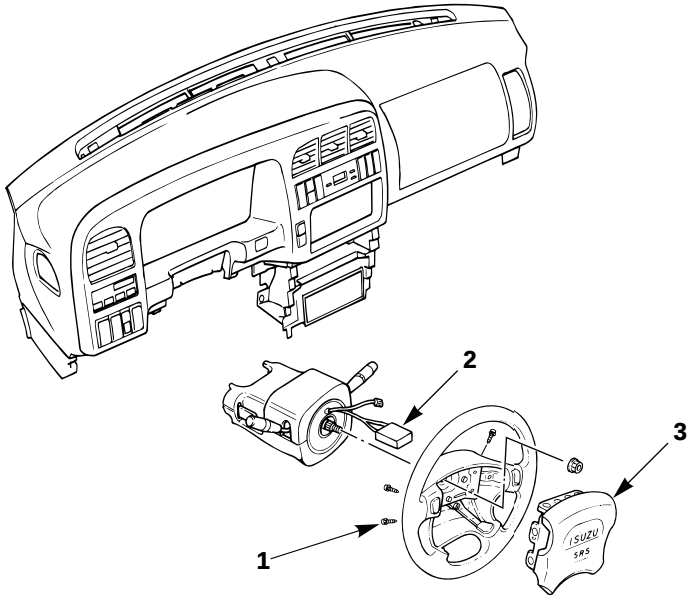

827RS049

Removal Steps

1. Fixing bolt
2. Module connector
3. Inflator module

Installation Steps

3. Inflator module
2. Module connector
1. Fixing bolt

REMOVAL

Preparation:

1) Turn the steering wheel so that the vehicle's wheels are pointing straight ahead.
2) Turn the ignition switch to "LOCK".
3) Disconnect the battery ground cable, and wait at least 5 minutes.
4) Disconnect the yellow 2way SRS connector located under the steering column.

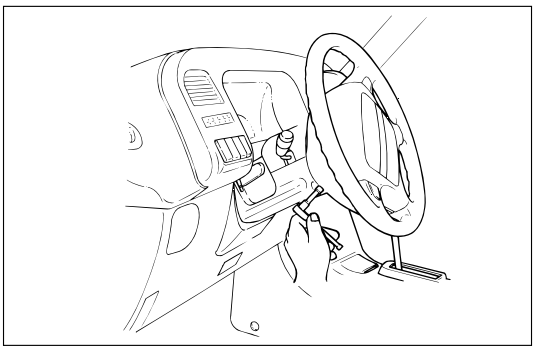

827RS014

1. Fixing Bolt

Loosen the inflator module fixing bolt from behind the steering wheel assembly using a TORX, driver or equivalent until the inflator module can be released from steering assembly.

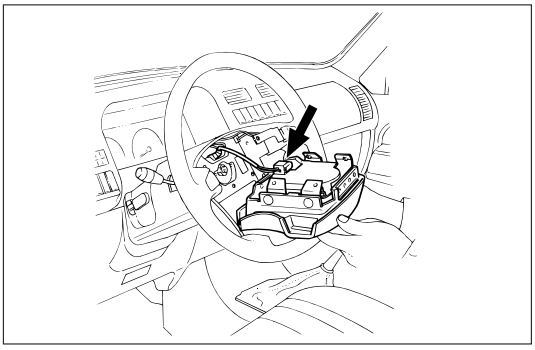

827RS015

2. **Module Connector**

   Disconnect the yellow 2way SRS connector located behind the inflator module.

3. **Inflator Module**

INSPECTION AND REPAIR

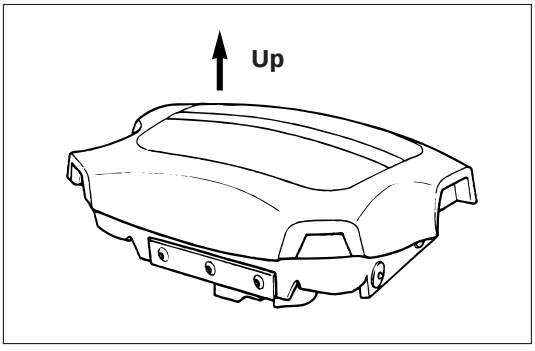

827RS016

WARNING
THE INFLATOR MODULE SHOULD ALWAYS BE CARRIED WITH THE URETHANE COVER AWAY FROM YOUR BODY AND SHOULD ALWAYS BE LAID ON A FLAT SURFACE WITH THE URETHANE SIDE UP. THIS IS NECESSARY BECAUSE A FREE SPACE IS PROVIDED TO ALLOW THE AIR CUSHION TO EXPAND IN THE UNLIKELY EVENT OF ACCIDENTAL DEPLOYMENT. OTHERWISE, PERSONAL INJURY MAY BE RESULT.

The Inflator module consists of a cover, air bag, inflator, and retainer. Inspect the Inflator module mainly for the following:

1) Check for holes, cracks, severe blemishes and deformation on the cover.
2) Check that the retainer is not deformed.
3) Check for defects such as damage and breakage in the lead wire of the squib.

If an abnormality is found as the result of the inspection, replace the Inflator module with a new one.

INSTALLATION

3. **Inflator Module**

CAUTION:
- **Never use the air bag assembly from another vehicle. Use only the air bag assembly for "UBS".**
- **When replace the inflator module, use only same parts number assembly. If different parts number assembly is installed, the air bag system can not function correctly because it has different characteristic.**

2. **Module Connector**

   Support the module and carefully connect the module connector.

   NOTE:
   Pass the lead wire through the tabs on the plastic cover (wire protector) of inflator to prevent lead wire from being pinched.

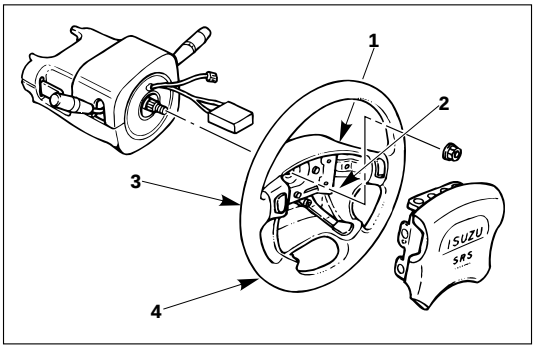

827RS017

1. Fixing Bolt

1) Secure the module with one bolt to relieve weight on the connector wire.
2) Tighten bolts to specified sequence as figure.

N·m (kg·m/lb·in)
8 (0.8 / 69)

3) Connect the yellow 2way SRS connector located under the steering column.
4) Connect the battery ground cable.
5) Set ignition to "ON" while watching warning light. Light should flash 7 times and then go off. If lamp does not operate correctly, refer to Section 9J.

STEERING WHEEL REPLACEMENT

CAUTION:
Once the steering column is removed from the vehicle, the column is extremely suspectible to damage. Dropping the column assembly on its end could collapse the steering shaft or loosen the slide block which maintains column rigidity. Leaning on the column assembly could cause the jacket to bend or deform. Any of the above damage could impair the column's collapsible design. If it is necessary to remove the steering wheel, use only the specified steering wheel puller. Under no conditions should the end of the shaft be hammered upon, as hammering could loosen slide block which maintains column rigidity.

These steps are based on the LHD model.

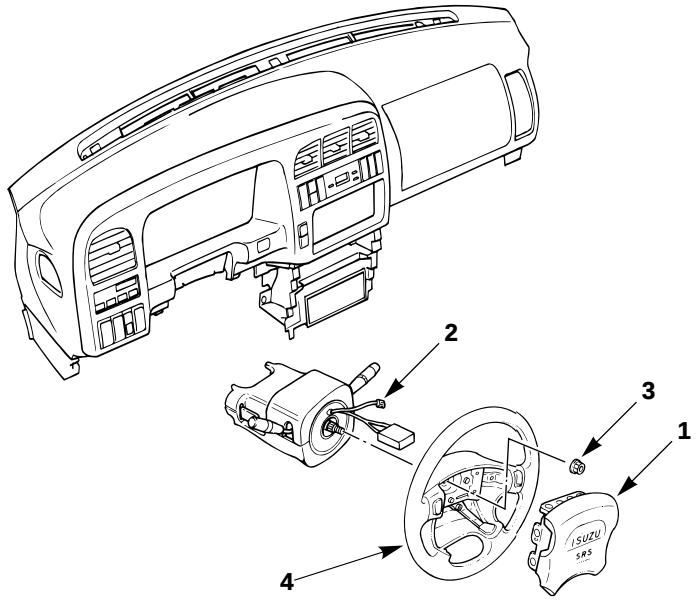

430RS016

Removal Steps

1. Inflator module
2. Horn lead
3. Steering wheel fixing nut
4. Steering wheel

Installation Steps

4. Steering wheel
3. Steering wheel fixing nut
2. Horn lead
1. Inflator module

REMOVAL

Preparation:

1) Turn the steering wheel so that the vehicle's wheels are pointing straight ahead.
2) Turn the ignition switch to "LOCK".
3) Disconnect the battery ground cable, and wait at least 5 minutes.
4) Disconnect the yellow 2way SRS connector located under the steering column.

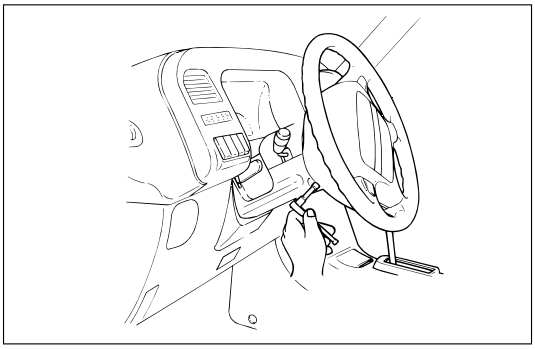

827RS014

1. **Inflator Module**
   1) Loosen the inflator module fixing bolt from behind the steering wheel assembly using a TORX® driver or equivalent until the inflator module can be released from steering assembly.
   2) Disconnect the yellow 2way SRS connector located behind the inflator module.

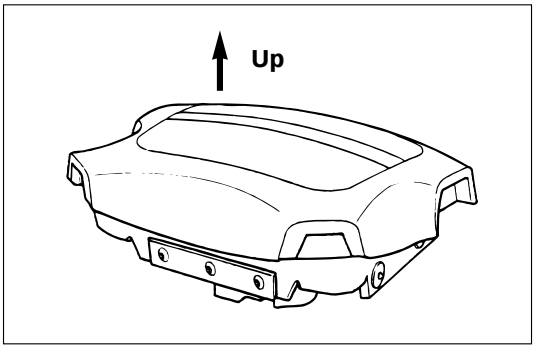

827RS016

WARNING
THE INFLATOR MODULE SHOULD ALWAYS BE CARRIED WITH THE URETHANE COVER AWAY FROM YOUR BODY AND SHOULD ALWAYS BE LAID ON A FLAT SURFACE WITH THE URETHANE SIDE UP. THIS IS NECESSARY BECAUSE A FREE SPACE IS PROVIDED TO ALLOW THE AIR CUSHION TO EXPAND IN THE UNLIKELY EVENT OF ACCIDENTAL DEPLOYMENT. OTHERWISE, PERSONAL INJURY MAY RESULT.

2. **Horn Lead**
3. **Steering Wheel Fixing Nut**
4. **Steering Wheel**
   1) Apply a setting mark across the steering wheel and shaft so parts can be reassembled in their original position.

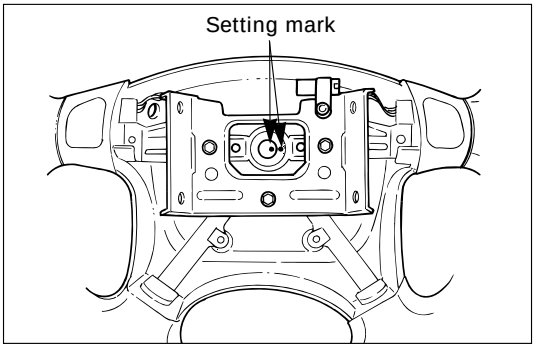

430RS004

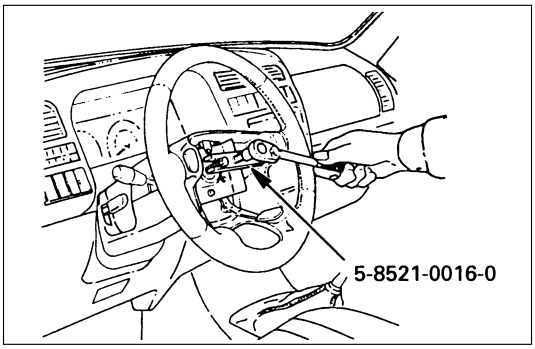

2) Move the front wheels to the straight ahead position and use special tool.

Steering wheel remover: 5-8840-0016-0 (J-29752)

NOTE:
Never apply force to the steering wheel in direction of the shaft by using a hammer or other impact tools in an attempt to remove the steering wheel. The steering shaft is designed as an energy absorbing unit.

INSTALLATION

4. Steering Wheel

Align the setting marks made when removing.

CAUTION:
Never apply force to the setting wheel in direction of the shaft by using a hammer or other impact tools in an attempt to install the steering wheel. The setting shaft is designed as an energy absorbing unit.

3. Steering Wheel Fixing Nut

Steering Wheel Nut Torque	N·m (kg·m/lb·ft)
34 (3.5 / 25)	

2. Horn Lead

1. Inflator Module

1) Support the module and carefully connect the module connector.

CAUTION:
- **Never use the air bag assembly from another vehicle. Use only the air bag assembly for "UBS".**
- **When replace the inflator module, use only same parts number assembly. If different parts number assembly is installed, the air bag system can not function correctly because it has different characteristic.**

NOTE:
Pass the lead wire through the tabs on the plastic cover (wire protector) of inflator to prevent lead wire from being pinches.

2) Secure the module with one bolt to relieve weight on the connector wire.
3) Tighten bolts to specified sequence as figure.

Inflator module Bolt Torque	N·m (kg·m/lb·in)
8 (0.8 / 69)	

4) Connect the yellow 2way SRS connector located under the steering column.
5) Connect the battery ground cable.
6) Set ignition to "ON" while watching warning light. Light should flash 7 times and then go off. If lamp does not operate correctly, refer to Section 9J.

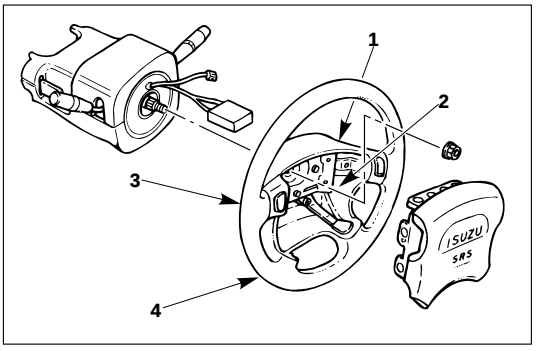

827RS017

COMBINATION SWITCH REPLACEMENT

These steps are based on the LHD model.

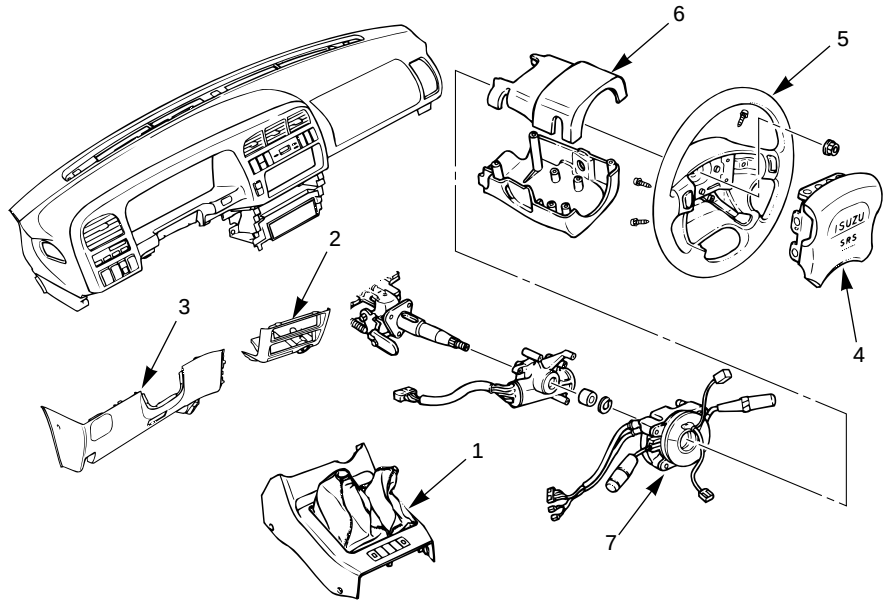

431RT001

Removal Steps

1. Front console assembly
2. Lower cluster assembly
3. Steering lower cover
4. Inflator module
5. Steering wheel
6. Steering column cover
7. Combination switch and SRS coil assembly

Installation Steps

7. Combination switch and SRS coil assembly
6. Steering column cover
5. Steering wheel
4. Inflator module
3. Steering lower cover
2. Lower cluster assembly
1. Front console assembly

REMOVAL

Preparation:

1) Turn the steering wheel so that the vehicle's wheels are pointing straight ahead.
2) Turn the ignition switch to "LOCK".
3) Disconnect the battery ground cable, and wait at least 5 minutes.
4) Disconnect the yellow 2way SRS connector located under the steering column.

CAUTION:
The wheels of the vehicle must be straight ahead and the steering column in the "LOCK" position before disconnecting the steering wheel. Failure to do so will cause the coil assembly to become uncentered which will cause damage to the coil assembly.

1. **Front Console Assembly**
   1) Remove the transmission (for M/T) and transfer control lever knob.
   2) Disconnect the wiring harness connectors.
2. **Lower Cluster Assembly**
3. **Steering Lower Cover**

   Remove the engine hood opening lever.
4. **Inflator Module**
   1) Loosen the inflator module fixing bolt from behind the steering wheel assembly using a TORX® driver or equivalent until the inflator module can be released from steering assembly.

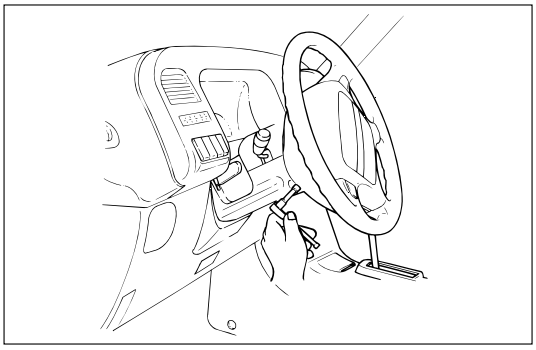

827RS014

   2) Disconnect the yellow 2way SRS connector located behind the inflator module.

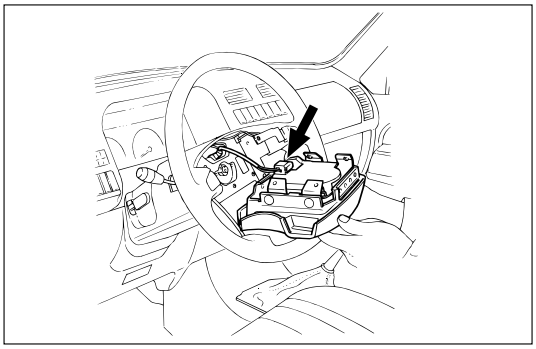

827RS015

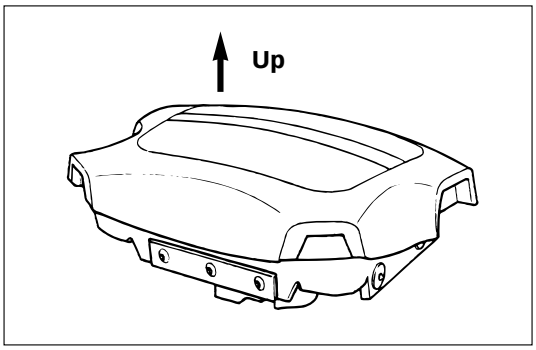

827RS016

WARNING
THE INFLATOR MODULE SHOULD ALWAYS BE CARRIED WITH THE URETHANE COVER AWAY FROM YOUR BODY AND SHOULD ALWAYS BE LAID ON A FLAT SURFACE WITH THE URETHANE SIDE UP. THIS IS NECESSARY BECAUSE A FREE SPACE IS PROVIDED TO ALLOW THE AIR CUSHION TO EXPAND IN THE UNLIKELY EVENT OF A ACCIDENTAL DEPLOYMENT. OTHERWISE, PERSONAL INJURY MAY RESULT.

5. **Steering Wheel**

   Apply a setting mark across the steering wheel and shaft so parts can be reassembled in their original position.

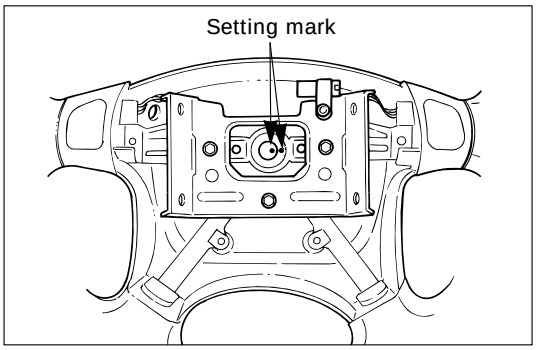

430RS004

Use special tool. Remove the steering wheel. Move the tires to the straight ahead position before removing the steering wheel.

Steering wheel remover: 5-8840-0016-0 (J-29752)

CAUTION:
Never apply force to the steering wheel in direction of the shaft by using a hammer or other impact tools in an attempt to remove the steering wheel. The steering shaft is designed as an energy absorbing unit.

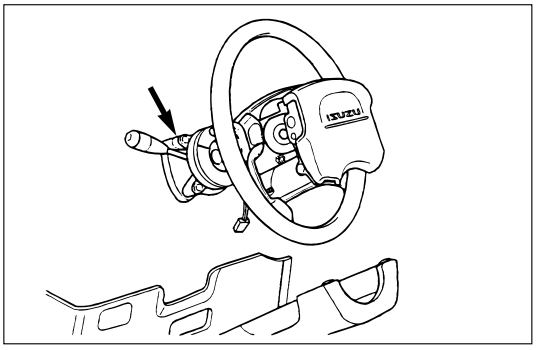

825RS046

6. **Steering Column Cover**
7. **Combination Switch and SRS Coil Assembly**
   1) Disconnect the wiring harness connectors located under the steering column.
   2) Remove the combination switch assembly with SRS coil.

NOTE:
The SRS coil is a part of the combination switch assembly, which can not be replaced separately. Therefore, be sure not to remove the SRS coil from the combination switch assembly.

INSTALLATION

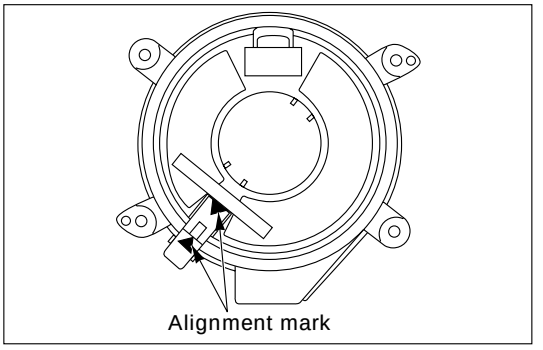

826RW027

7. **Combination Switch and SRS Coil Assembly**
   1) After installation of combination switch assembly, connect the combination switch wiring harness connector and the SRS 2way connector located under the steering column.
   2) Turn the SRS coil counterclockwise to full, return about 3 turns and align the neutral mark.

CAUTION:
When turning the SRS coil counterclockwise to full, stop turning if resistance is felt. Forced further turning may damage to the cable in the SRS coil.

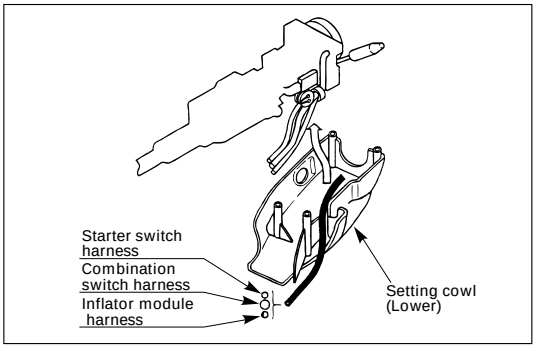

825RS048

6. **Steering Column Cover**

   When installing the steering column cover, be sure to route each wire harness as illustrated so that the harnesses do not catch on any moving parts.

5. Steering Wheel

Align the setting marks made when removing.

CAUTION:
Never apply force to the steering wheel in direction of the shaft by using a hammer or other impact tools in an attempt to remove the steering wheel. The steering shaft is designed as an energy absorbing unit.

Tighten the steering wheel fixing nut to the specified torque.

Steering Wheel Nut Torque	N·m (kg·m/lb·ft)
34 (3.5 / 25)	

4. Inflator Module

1) Support the module and carefully connect the module connector.

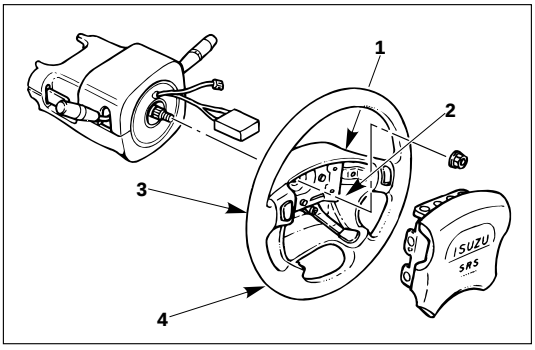

827RS017

CAUTION:
- **Never use the air bag assembly from another vehicle. Use only the air bag assembly for "UBS".**
- **When replace the inflator module, use only same parts number assembly. If different parts number assembly is installed, the air bag system can not function correctly because it has different characteristic.**

NOTE:
Pass the lead wire through the tabs on the plastic cover (wire protector) of inflator to prevent lead wire from being pinched.

2) Secure the module with one bolt to relieve weight on the connector wire.
3) Tighten bolts to specified sequence as figure.

Inflator Module Bolt Torque	N·m (kg·m/lb·in)
8 (0.8 / 69)	

3. Steering Lower Cover

Install the engine hood opening lever.

2. Lower Cluster Assembly

1. Front Console Assembly

1) Install the transmission (for M/T) and transfer control lever knob.
2) Install the wiring harness connectors.

Connect the battery ground cable.

Turn the ignition to "ON" while watching warning light.

Light should flash 7 times and then go off. If lamp does not operate correctly, refer to Section 9J.

LOCK CYLINDER REPLACEMENT

These steps are based on the LHD model.

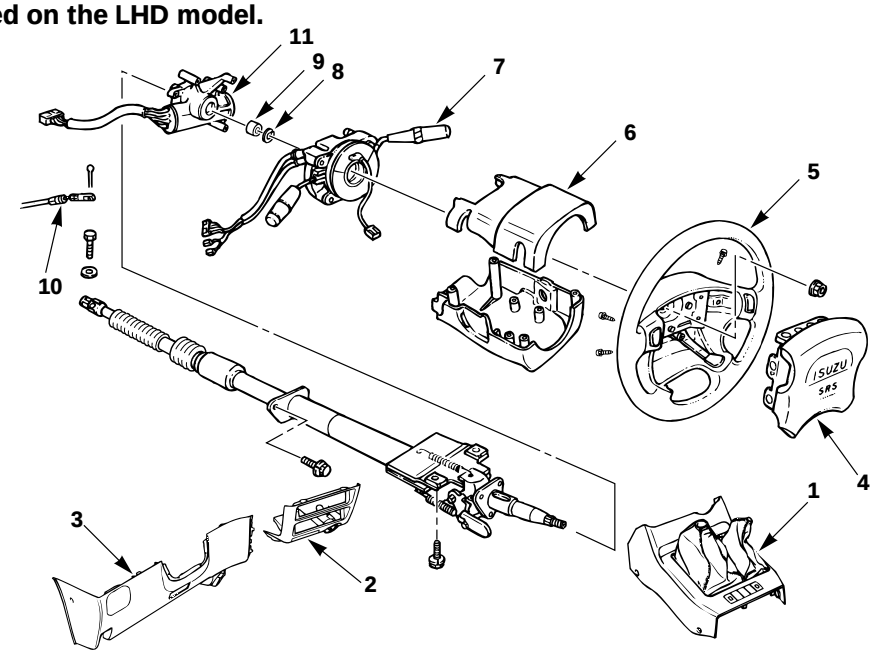

431RT003

Removal Steps

1. Front console assembly
2. Lower cluster assembly
3. Steering lower cover
4. Inflator module
5. Steering wheel
6. Steering column cover
7. Combination switch and SRS coil assembly
8. Snap ring
9. Cushion rubber
10. Shift lock cable (for A/T)
11. Lock cylinder assembly

Installation Steps

11. Lock cylinder assembly
10. Shift lock cable (for A/T)
9. Cushion rubber
8. Snap ring
7. Combination switch and SRS coil assembly
6. Steering column cover
5. Steering wheel
4. Inflator module
3. Steering lower cover
2. Lower cluster assembly
1. Front console assembly

REMOVAL

Preparation:

1) Turn the steering wheel so that the vehicle's wheels are pointing straight ahead.
2) Turn the ignition switch to "LOCK".
3) Disconnect the battery ground cable, and wait at least 5 minutes.
4) Disconnect the yellow 2way SRS connector located under the steering column.

CAUTION:
The wheels of the vehicle must be straight ahead and the steering column in the "LOCK" position before disconnecting the steering wheel. Failure to do so will cause the coil assembly to become uncentered which will cause damage to the coil assembly.

1. **Front Console Assembly**
   1) Remove the transmission (for M/T) and transfer control lever knob.
   2) Disconnect the wiring harness connectors.
2. **Lower Cluster Assembly**
3. **Steering Lower Cover**

   Remove the engine hood opening lever.
4. **Inflator Module**
   1) Loosen the inflator module fixing bolt from behind the steering wheel assembly using a TORX® driver or equivalent until the inflator module can be released from steering assembly.

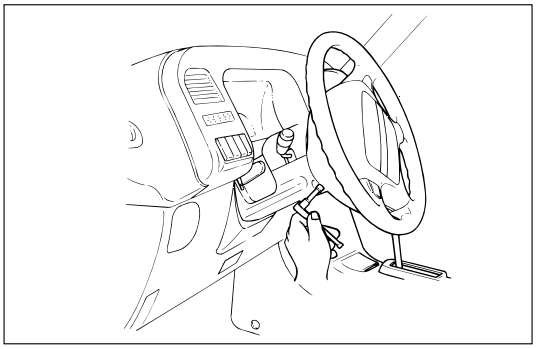

827RS014

   2) Disconnect the yellow 2way SRS connector located behind the inflator module.

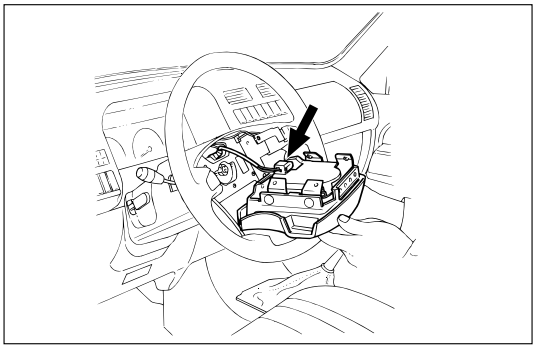

827RS015

WARNING
THE INFLATOR MODULE SHOULD ALWAYS BE CARRIED WITH THE URETHANE COVER AWAY FROM YOUR BODY AND SHOULD ALWAYS BE LAID ON A FLAT SURFACE WITH THE URETHANE SIDE UP. THIS IS NECESSARY BECAUSE A FREE SPACE IS PROVIDED TO ALLOW THE AIR CUSHION TO EXPAND IN THE UNLIKELY EVENT OF A ACCIDENTAL DEPLOYMENT. OTHERWISE, PERSONAL INJURY MAY RESULT.

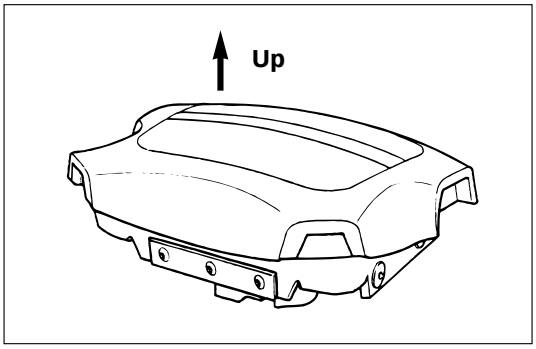

827RS016

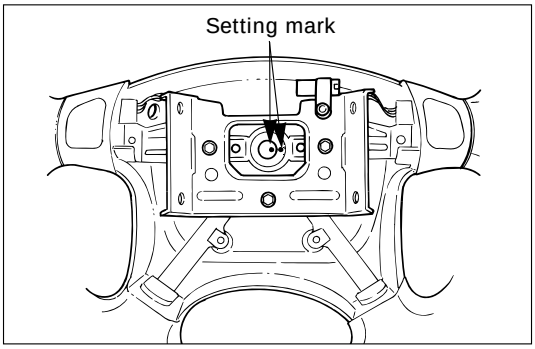

430RS004

5. Steering Wheel

Apply a setting mark across the steering wheel and shaft so parts can be reassembled in their original position.

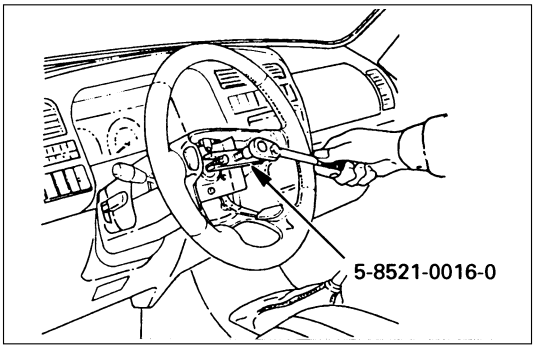

Use special tool. Remove the steering wheel. Move the tires to the straight ahead position before removing the steering wheel.

Steering wheel remover: 5-8840-0016-0 (J-29752)

CAUTION:
Never apply force to the steering wheel in direction of the shaft by using a hammer or other impact tools in an attempt to remove the steering wheel. The steering shaft is designed as an energy absorbing unit.

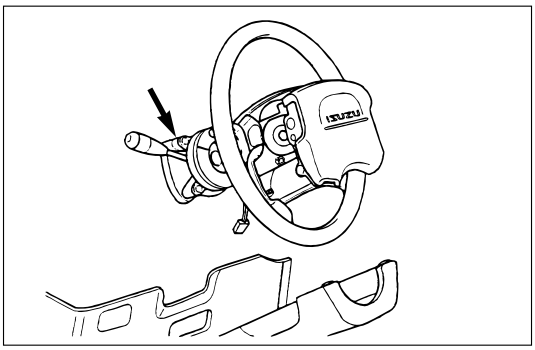

825RS046

6. Steering Column Cover

7. Combination Switch and SRS Coil Assembly

1) Disconnect the wiring harness connectors located under the steering column.
2) Remove the combination switch assembly with SRS coil.

NOTE:
The SRS coil is a part of the combination switch assembly, which can not be replaced separately. Therefore, be sure not to remove the SRS coil from the combination switch assembly.

8. Snap Ring

9. Cushion Rubber

10. Shift Lock Cable (for A/T)

11. Lock Cylinder Assembly

Disconnect the starter switch harness connector located under the steering column.

INSTALLATION

11. **Lock Cylinder Assembly**
10. **Shift Lock Cable (for A/T)**
9. **Cushion rubber**
8. **Snap ring**
7. **Combination Switch and SRS Coil Assembly**
   1) After installation of combination switch assembly, connect the combination switch wiring harness connector and the SRS 2way connector located under the steering column.
   2) Turn the SRS coil counterclockwise to full, return about 3 turns and align the neutral mark.

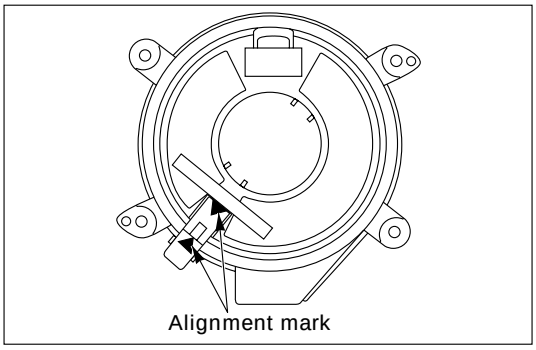

826RW027

CAUTION:
When turning the SRS coil counterclockwise to full, stop turning if resistance is felt. Forced further turning may damage to the cable in the SRS coil.

6. **Steering Column Cover**

   When installing the steering column cover, be sure to route each wire harness as illustrated so that the harnesses do not catch on any moving parts.

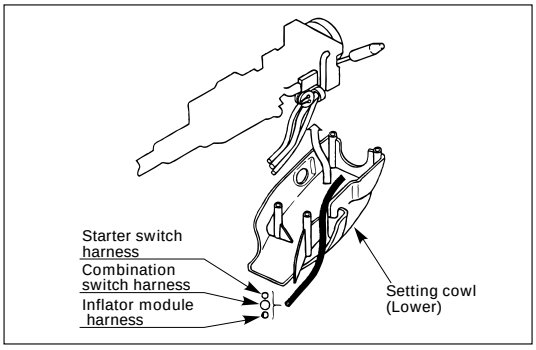

825RS048

5. **Steering Wheel**

   Align the setting marks made when removing.

CAUTION:
Never apply force to the setting wheel in direction of the shaft by using a hammer or other impact tools in an attempt to remove the steering wheel. The steering shaft is designed as an energy absorbing unit.

Tighten the steering wheel fixing nut to the specified torque.

Steering Wheel Nut Torque	N·m (kg·m/lb·ft)
34 (3.5 / 25)	

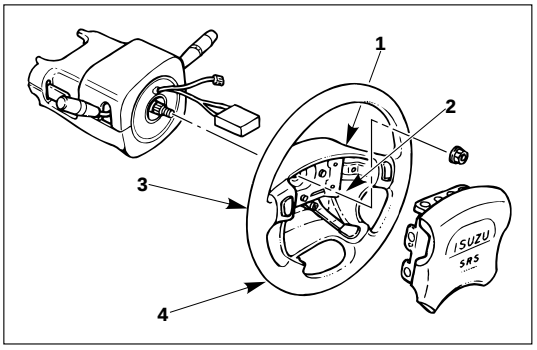

827RS017

4. **Inflator Module**
   1) Support the module and carefully connect the module connector.

CAUTION:
- **Never use the air bag assembly from another vehicle. Use only the air bag assembly for "UBS".**
- **When replace the inflator module, use only same parts number assembly. If different parts number assembly is installed, the air bag system can not function correctly because it has different characteristic.**

NOTE:
Pass the lead wire through the tabs on the plastic cover (wire protector) of inflator to prevent lead wire from being pinched.

   2) Secure the module with one bolt to relieve weight on the connector wire.
   3) Tighten bolts to specified sequence as figure.

Inflator Module Bolt Torque	N·m (kg·m/lb·in)
8 (0.8 / 69)	

3. **Steering Lower Cover**
   Install the engine hood opening lever.
2. **Lower Cluster Assembly**
1. **Front Console Assembly**
   Connect the wiring harness connectors.
   Install the transmission (for M/T) and transfer control lever knob.
   Connect the yellow 2way SRS connector located under the steering column.
   Connect the battery ground cable.

SYSTEM INSPECTION

- Turn the ignition to "ON" while watching warning light.
- Light should flash 7 times and then go off. If lamp does not operate correctly, refer to Section 9J.

STEERING COLUMN REPLACEMENT

These steps are based on the LHD model.

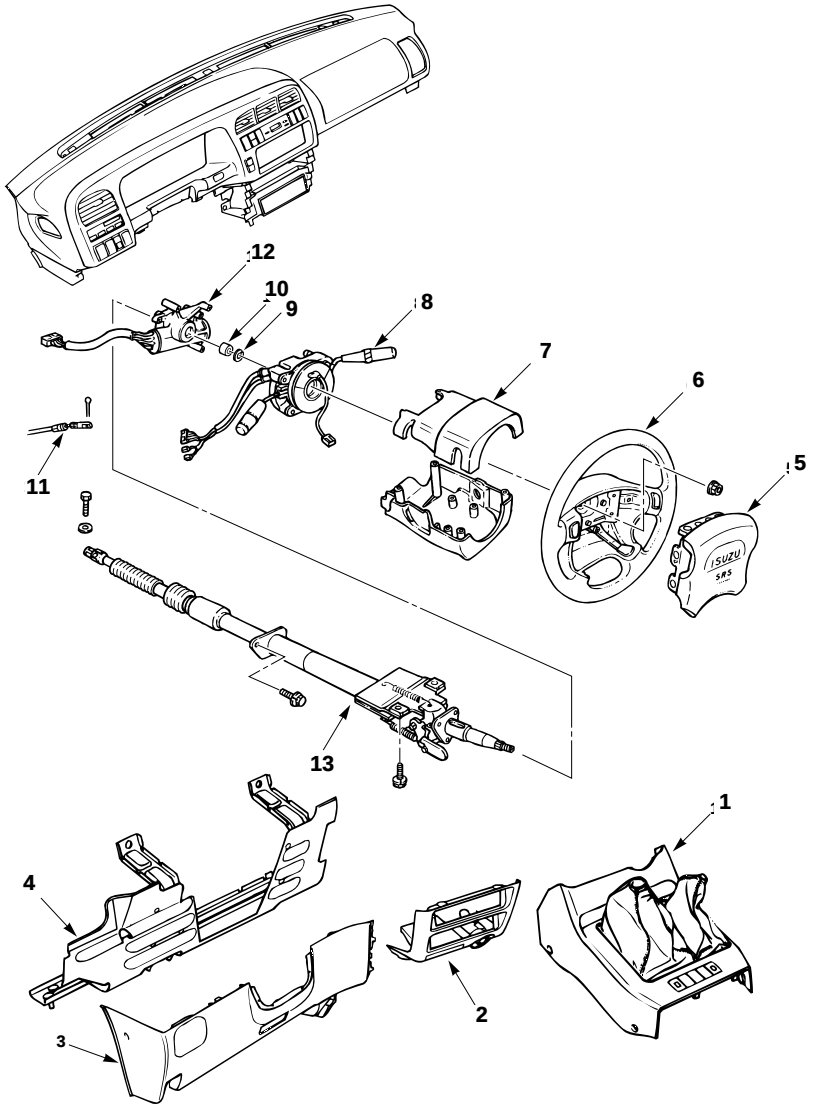

431RT002

Removal Steps

1. Front console assembly
2. Lower cluster assembly
3. Steering lower cover
4. Driver knee bolster (reinforcement)
5. Inflator module
6. Steering wheel
7. Steering column cover
8. Combination switch and SRS coil assembly
9. Snap ring
10. Cushion rubber
11. Shift lock cable (for A/T)
12. Lock cylinder assembly
13. Steering column assembly

Installation Steps

13. Steering column assembly
12. Lock cylinder assembly
11. Shift lock cable (for A/T)
10. Cushion rubber
9. Snap ring
8. Combination switch and SRS coil assembly
7. Steering column cover
6. Steering wheel
5. Inflator module
4. Driver knee bolster (reinforcement)
3. Steering lower cover
2. Lower cluster assembly
1. Front console assembly

REMOVAL

Preparation:

1) Turn the steering wheel so that the vehicle's wheels are pointing straight ahead.
2) Turn the ignition switch to "LOCK".
3) Disconnect the battery ground cable, and wait at least 5 minutes.
4) Disconnect the yellow 2way SRS connector located under the steering column.

CAUTION:
The wheels of the vehicle must be straight ahead and the steering column in the "LOCK" position before disconnecting the steering wheel.
Failure to do so will cause the SRS coil assembly to become uncentered which will cause damage to the SRS coil assembly.

1. **Front Console Assembly**

   Disconnect the transmission (for M/T) and transfer control lever knob.

   Disconnect the wiring harness connectors.
2. **Lower Cluster Assembly**
3. **Steering Lower Cover**

   Remove the engine hood opening lever.
4. **Driver Knee Bolster (Reinforcement)**
5. **Inflator Module**
   1) Loosen the inflator module fixing bolt from behind the steering wheel assembly using a TORX® driver or equivalent until the inflator module can be released from steering assembly.

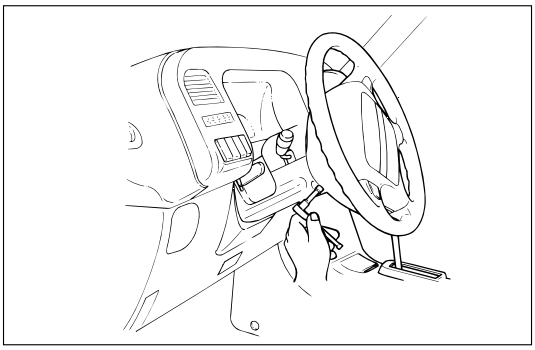

827RS014

   2) Disconnect the yellow 2way SRS connector located behind the inflator module.

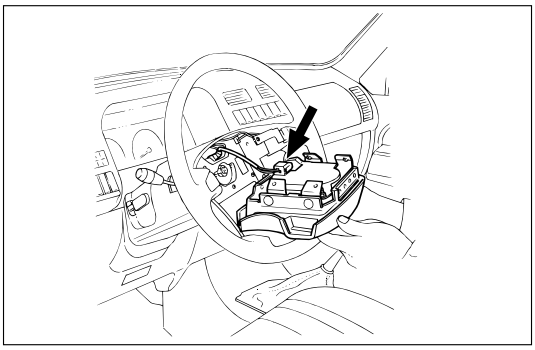

827RS015

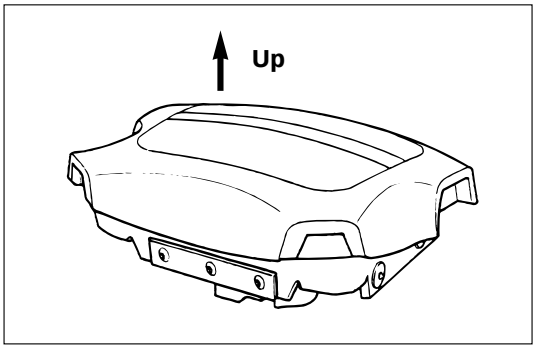

827RS016

WARNING
THE INFLATOR MODULE SHOULD ALWAYS BE CARRIED WITH THE URETHANE COVER AWAY FROM YOUR BODY AND SHOULD ALWAYS BE LAID ON A FLAT SURFACE WITH THE URETHANE SIDE UP. THIS IS NECESSARY BECAUSE A FREE SPACE IS PROVIDED TO ALLOW THE AIR CUSHION TO EXPAND IN THE UNLIKELY EVENT OF A ACCIDENTAL DEPLOYMENT. OTHERWISE, PERSONAL INJURY MAY RESULT.

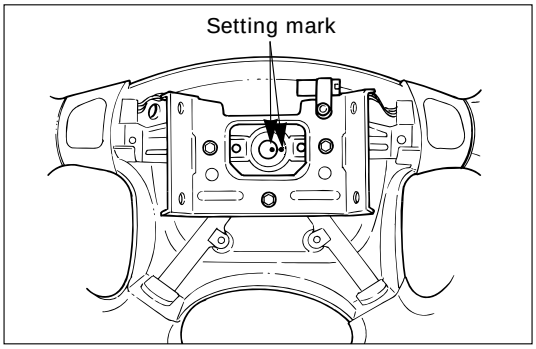

430RS004

6. **Steering Wheel**

   Apply a setting mark across the steering wheel and shaft so parts can be reassembled in their original position.

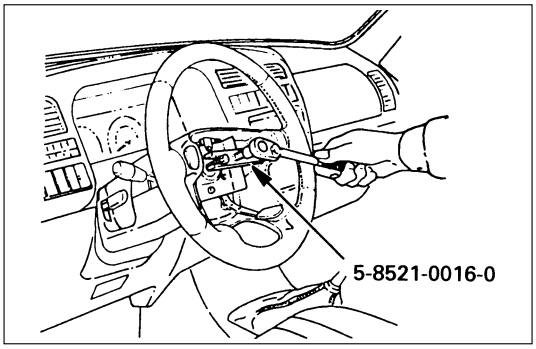

Use special tool. Remove the steering wheel. Move the tires to the straight ahead position before removing the steering wheel.

Steering wheel remover: 5-8840-0016-0 (J-29752)

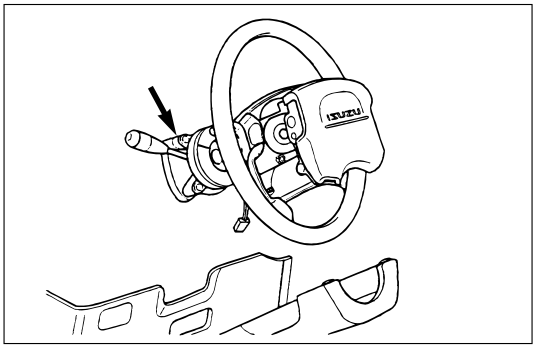

825RS046

7. **Steering Column Cover**
8. **Combination Switch and SRS Coil Assembly**
   1) Disconnect the wiring harness connectors located under the steering column.
   2) Remove the combination switch assembly with SRS coil.

   NOTE:
   The SRS coil is a part of the combination switch assembly, which can not be replaced separately. Therefore, be sure not to remove the SRS coil from the combination switch assembly.

9. **Snap Ring**
10. **Cushion Rubber**
11. **Shift Lock Cable (for A/T)**
12. **Lock Cylinder Assembly**

    Disconnect the starter switch harness connector located under the steering column.

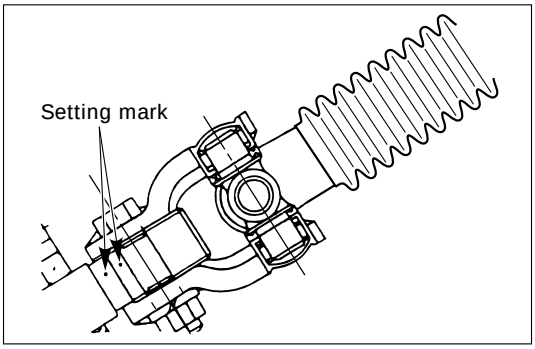

431RV003

13. Steering Column Assembly

Apply a setting mark across the universal joint and steering shaft to reassemble the parts in their original position.

NOTE:
A setting mark can be easily made if the shaft is withdrawn a little by loosening the steering shaft universal joint.

INSTALLATION

13. Steering Column Assembly

Align the setting marks on the universal joint and steering shaft made during removal.

Tighten the steering column fixing bolt (dash panel) to the specified torque.

Steering Column Bolt Torque	N·m (kg·m/lb·ft)
19 (1.9 / 14)	

Tighten the steering column fixing bolt (pedal bracket) to the specified torque.

Steering Column Bolt Torque	N·m (kg·m/lb·ft)
17 (1.7 / 13)	

Tighten the universal joint to the specified torque.

Universal Joint Torque	N·m (kg·m/lb·ft)
25 (2.5 / 18)	

12. Lock Cylinder Assembly

11. Shift Lock Cable (for A/T)

10. Cushion Rubber

9. Snap Ring

8. Combination Switch

1) After installation of combination switch assembly, connect the combination switch wiring harness connector and the SRS 2way connector located under the steering column.
2) Turn the SRS coil counterclockwise to full, return about 3 turns and align the neutral mark.

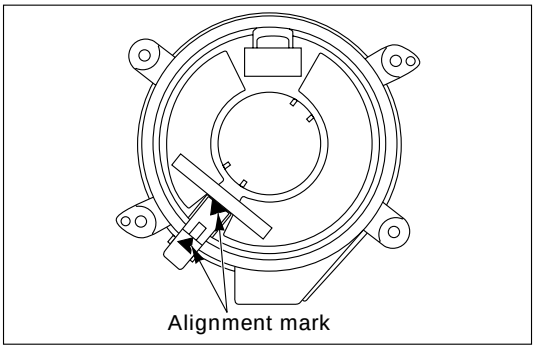

826RW027

CAUTION:
When turning the SRS coil counterclockwise to full, stop turning if resistance is felt. Forced further turning may damage to the cable in the SRS coil.

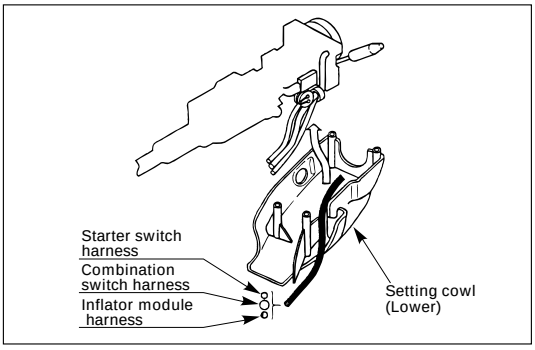

825RS048

7. **Steering Column Cover**

   When installing the steering column cover, be sure to route each wire harness as illustrated so that the harnesses do not catch on any moving parts.

6. **Steering Wheel**

   Align the setting marks made when removing.

CAUTION:
Never apply force to the steering wheel in direction of the shaft by using a hammer or other impact tools in an attempt to remove the steering wheel. The steering shaft if designed as an energy absorbing unit.

Tighten the steering wheel fixing nut to the specified torque.

Steering Wheel Nut Torque	N·m (kg·m/lb·ft)
34 (3.5 / 25)	

5. **Inflator Module**

   1) Support the module and carefully connect the module connector.

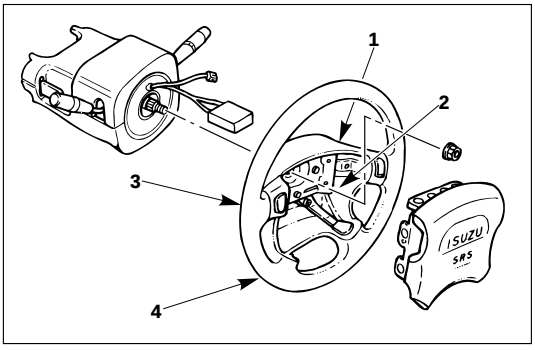

827RS017

CAUTION:
- **Never use the air bag assembly from another vehicle. Use only the air bag assembly for "UBS".**
- **When replace the inflator module, use only same parts number assembly. If different parts number assembly is installed, the air bag system can not function correctly because it has different characteristic.**

NOTE:
Pass the lead wire through the tabs on the plastic cover (wire protector) of inflator to prevent lead wire from being pinched.

   2) Secure the module with one bolt to relieve weight on the connector wire.
   3) Tighten bolts to specified sequence as figure.

Inflator Module Bolt Torque	N·m (kg·m/lb·in)
8 (0.8 / 69)	

4 **Driver Knee Bolster (Reinforcement)**

3. **Steering Lower Cover**

   Install the engine hood opening lever.

2. **Lower Cluster Assembly**

1. **Front Console Assembly**

   Connect the wiring harness connectors.
   Install the transmission (for M/T) and transfer control lever knob.

   Connect the yellow 2way SRS connector located under the steering column.

   Connect the battery ground cable.

SYSTEM INSPECTION

Turn the ignition to "ON" while watching warning light.

Light should flash 7 times and then go off. If lamp does not operate correctly, refer to Section 9J.

SECTION 2A

STEERING COLUMN

CONTENTS

PAGE

General Description ..... 2A – 76
On-Vehicle Service ..... 2A – 77
Steering Wheel Replacement ..... 2A – 77
Combination Switch Replacement ..... 2A – 79
Lock Cylinder Replacement ..... 2A – 81
Steering Column Replacement ..... 2A – 84

GENERAL DESCRIPTION

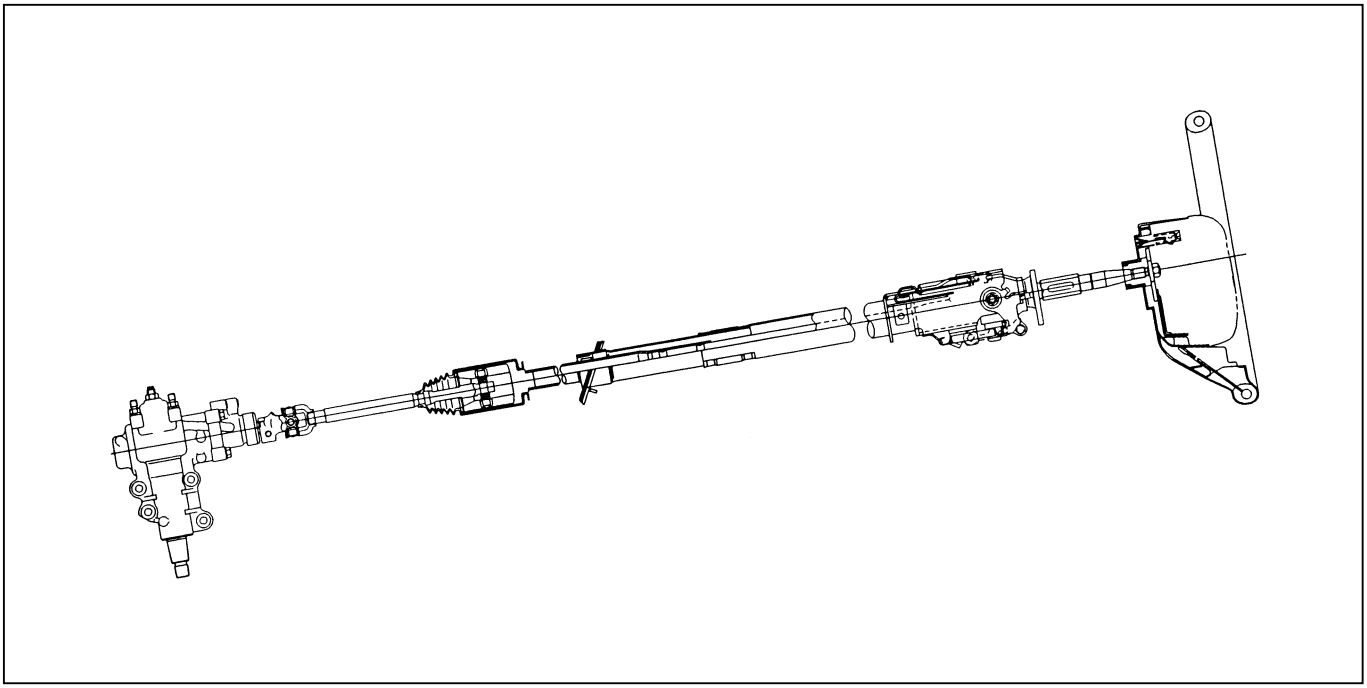

The steering column has three important features in addition to the steering function:

1. The column is energy absorbing, designed to compress in a front-end collision to minimize the possibility of injury to the driver of the vehicle.
2. The ignition switch and lock are mounted conveniently on the column.
3. With the column mounted lock, the ignition and steering operation can be locked to prevent theft of the vehicle.

The column may be disassembled and reassembled. To insure the energy absorbing action, it is important that the specified screws, bolts and nuts be used only as designated and that they are tightened to the specified torque.

When the column is removed from the vehicle, a sharp blow on the end of steering shaft leaning on the column assembly, or dropping the assembly could shear or loosen the fasteners that maintain column rigidity.

ON-VEHICLE SERVICE

STEERING WHEEL REPLACEMENT

These steps are based on the LHD model.

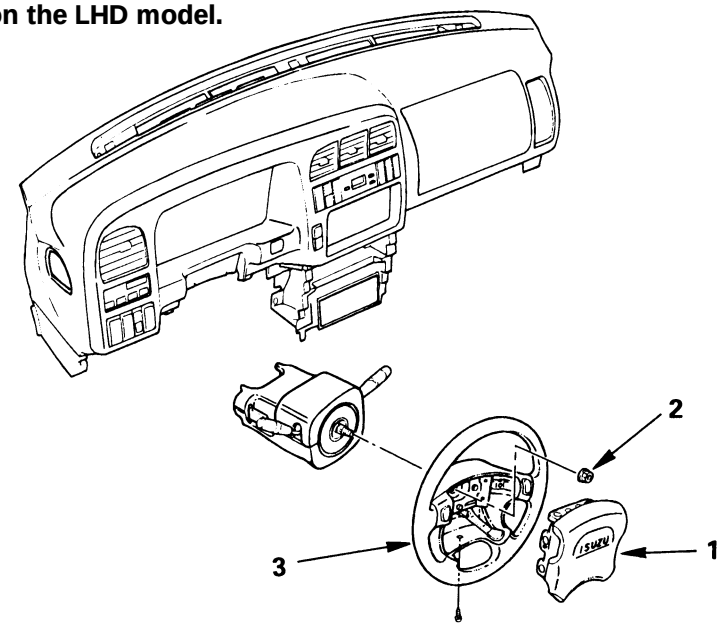

Removal Steps

1. Center pad
2. Nut
3. Steering wheel

Installation Steps

3. Steering wheel
2. Nut
1. Center pad

REMOVAL

1. Center Pad

1) Remove the center pad attaching screw from the steering wheel under side.
2) Disconnect the harness.
3) Remove the center pad from the center of the steering wheel.

2. Nut

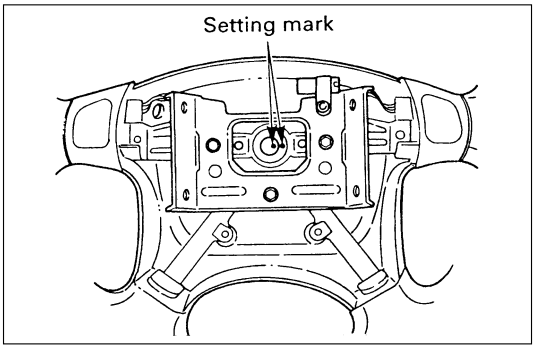

3. Steering Wheel

1) Apply a setting mark across the steering wheel and shaft so parts can be reassembled in their original position.

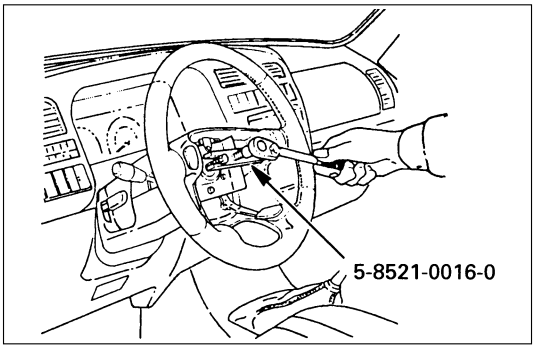

2) Use special tool.

Steering wheel remover:5-8840-0016-0(J-29752)

NOTE:
Never apply force to the steering wheel in direction of the shaft by using a hammer or other impact tools in an attempt to remove the steering wheel. The steering shaft is designed as an energy absorbing unit.

INSTALLATION

3. Steering Wheel

Align the setting marks made when removing.

CAUTION:
Never apply force to the setting wheel in direction of the shaft by using a hammer or other impact tools in an attempt to install the steering wheel. The steering shaft is designed as an energy absorbing unit.

2. Nut

Steering Wheel Nut Torque	N·m (kg·m/lb·ft)
34 (3.5 / 25)	

1. Center pad

Fit four projections of pad in holes on the steering wheel side.
Tighten the screws on the lower side of the pad.

Center Pad Nut Torque	N·m (kg·m/lb·in)
2.5 (0.25 / 21.7)	

COMBINATIONS SWITCH REPLACEMENT

These steps are based on the LHD model.

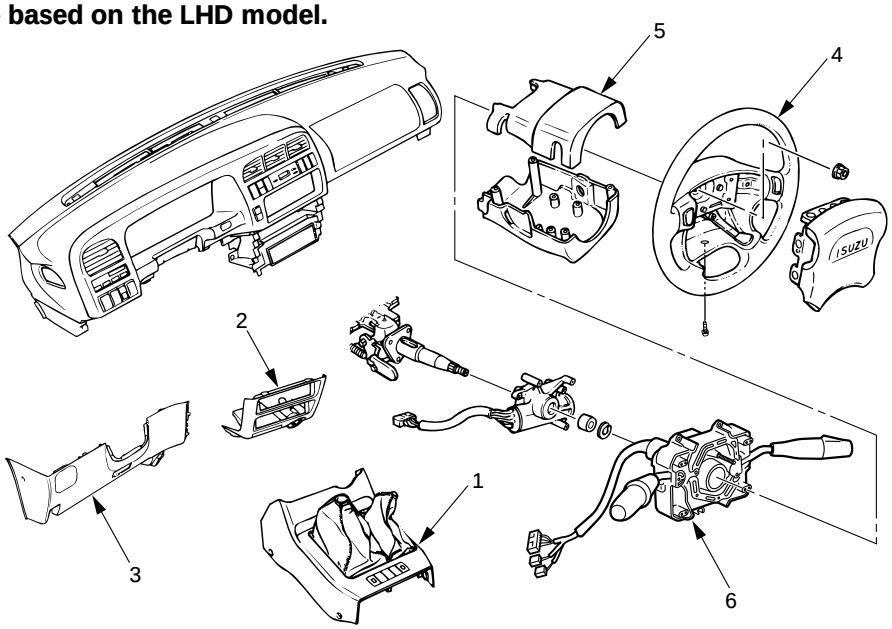

431RW021

Removal Steps

1. Front console assembly
2. Lower cluster assembly
3. Steering lower cover
4. Steering wheel
5. Steering column cover
6. Combination switch

Installation Steps

6. Combination switch
5. Steering column cover
4. Steering wheel
3. Steering lower cover
2. Lower cluster assembly
1. Front console assembly

REMOVAL

1. Front console assembly

1) Remove the transmission (for M/T) and transfer control lever knob.
2) Disconnect the wiring harness connectors.

2. Lower cluster assembly

3. Steering lower cover

Remove the engine hood opening lever.

4. Steering wheel

Apply a setting mark across the steering wheel and shaft so parts can be reassembled in their original position.

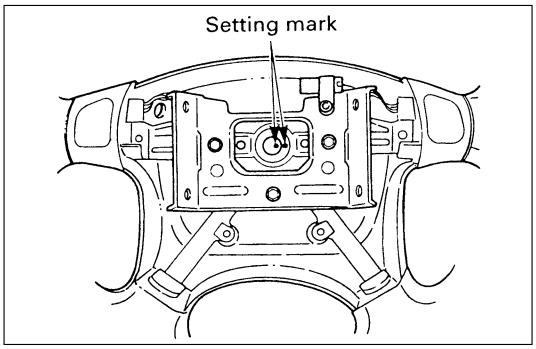

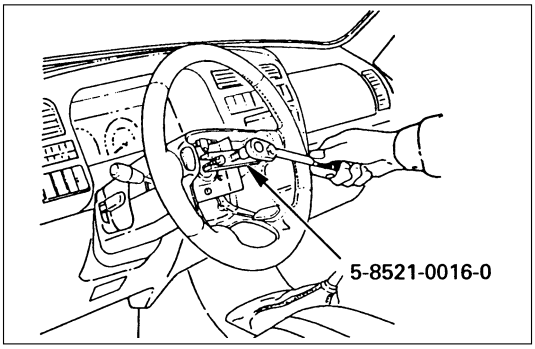

Use special tool. Remove the steering wheel.
Move the tires to the straight ahead positions before removing the steering wheel.

Steering wheel remover:5-8840-0016-0(J-29752)

CAUTION:
Never apply force to the steering wheel in direction of the shaft by using a hammer or other impact tools in an attempt to remove the steering wheel. The steering shaft is designed as an energy absorbing unit.

5. **Steering column cover**
6. **Combination switch**

   Disconnect the wiring harness connector.

INSTALLATION

6. **Combination switch**

   After installations of combinations switch assembly, connect the combination switch wiring harness connector.
5. **Steering column cover**
4. **Steering wheel**

   Align the setting marks made when removing.

CAUTION:
Never apply force to the setting wheel in direction of the shaft by using a hammer or other impact tools in an attempt to remove the steering wheel. The steering shaft is designed as an energy absorbing unit.

Tighten the steering wheel fixing nut to the specified torque.

Steering wheel Nut Torque	N·m (kg·m/lb·ft)
34 (3.5 / 25)	

3. **Steering lower cover**

   Install the engine hood opening lever.
2. **Lower cluster assembly**
1. **Front console assembly**

   Install the transmission (for M/T) and transfer control lever knob.

   Install the wiring harness connectors.

LOCK CYLINDER REPLACEMENT

These steps are based on the LHD model.

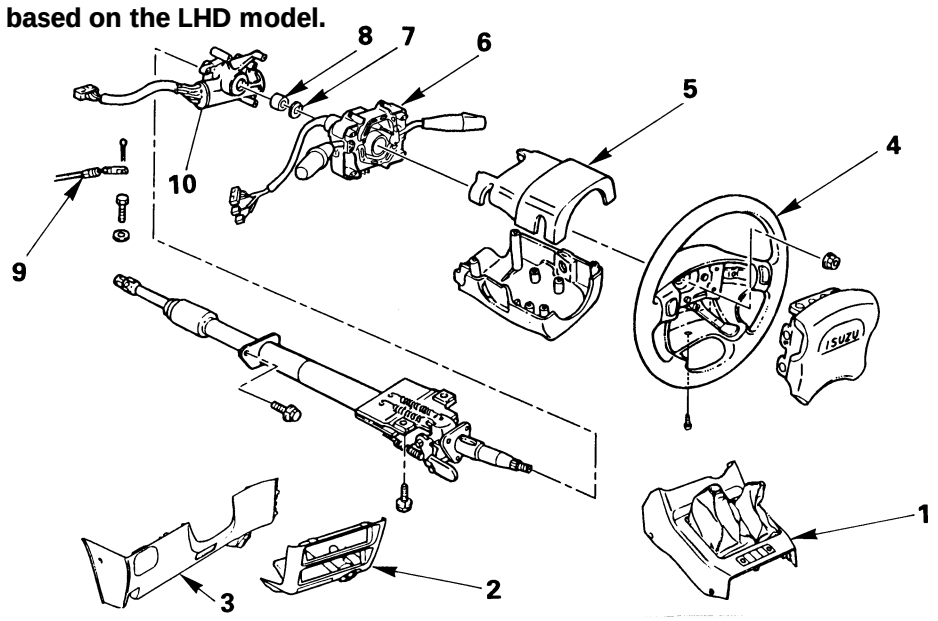

Removal Steps

1. Front console assembly
2. Lower cluster assembly
3. Steering lower cover
4. Steering wheel
5. Steering column cover
6. Combination switch
7. Snap ring
8. Cushion rubber
9. Shift lock cable (for A/T)
10. Lock cylinder assembly

Installation Steps

10. Lock cylinder assembly
9. Shift lock cable (for A/T)
8. Cushion rubber
7. Snap ring
6. Combination switch
5. Steering column cover
4. Steering wheel
3. Steering lower cover
2. Lower cluster assembly
1. Front console assembly

REMOVAL

1. **Front console assembly**
   1) Remove the transmission (for M/T) and transfer control lever knob.
   2) Disconnect the wiring harness connectors.
2. **Lower cluster assembly**
3. **Steering lower cover**

   Remove the engine hood opening lever.

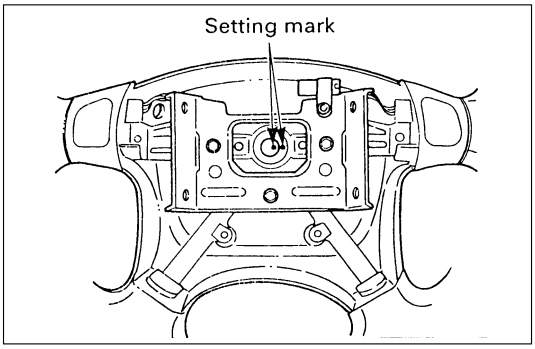

4. **Steering wheel**

   Apply a setting mark across the steering wheel and shaft so parts can be reassembled in their original position.

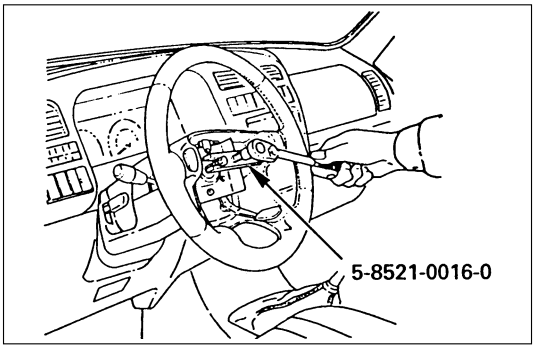

Use special tool. Remove the steering wheel.
Move the tires to the straight ahead positions before removing the steering wheel.

Steering wheel remover:5-8840-0016-0(J-29752)

5. **Steering column cover**
6. **Combination switch**

   Disconnect the wiring harness connectors.
7. **Snap ring**
8. **Cushion rubber**
9. **Shift lock cable (for A/T)**
10. **Lock cylinder assembly**

    Disconnect the starter switch harness connector located under the steering column.

INSTALLATION

10. **Lock cylinder assembly**
9. **Shift lock cable (for A/T)**
8. **Cushion rubber**
7. **Snap ring**
6. **Combination switch**

   After installations of combinations switch assembly, connect the combination switch wiring harness connector.
5. **Steering column cover**
4. **Steering wheel**

   Align the setting marks made when removing.

CAUTION:
Never apply force to the steering wheel in direction of the shaft by using a hammer or other impact tools in an attempt to remove the steering wheel. The steering shaft is designed as an energy absorbing unit.

Tighten the steering wheel fixing nut to the specified torque.

Steering wheel Nut Torque	N·m (kg·m/lb·ft)
34 (3.5 / 25)	

3. **Steering lower cover**

   Install the engine hood opening lever.

2. **Lower cluster assembly**

1. **Front console assembly**

   Connect the wiring harness connectors.

   Install the transmission (for M/T) and transfer control lever knob.

STEERING COLUMN REPLACEMENT

These steps are based on the LHD model.

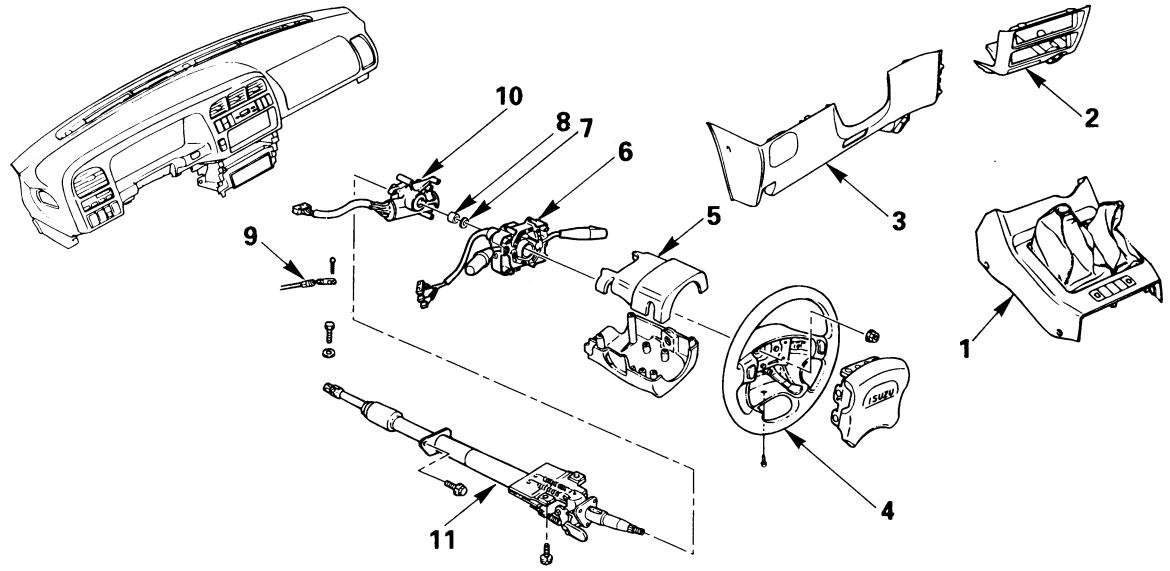

Removal Steps

1. Front console assembly
2. Lower cluster assembly
3. Steering lower cover
4. Steering wheel
5. Steering column cover
6. Combination switch
7. Snap ring
8. Cushion rubber
9. Shift lock cable (for A/T)
10. Lock cylinder assembly
11. Steering column assembly

Installation Steps

11. Steering column assembly
10. Lock cylinder assembly
9. Shift lock cable (for A/T)
8. Cushion rubber
7. Snap ring
6. Combination switch
5. Steering column cover
4. Steering wheel
3. Steering lower cover
2. Lower cluster assembly
1. Front console assembly

REMOVAL

1. **Front console assembly**

   Disconnect the transmission (for M/T) and transfer control lever knob.

   Disconnect the wiring harness connectors.

2. **Lower cluster assembly**

3. **Steering lower cover**

   Remove the engine hood opening lever.

4. **Steering wheel**

   Apply a setting mark across the steering wheel and shaft so parts can be reassembled in their original position.

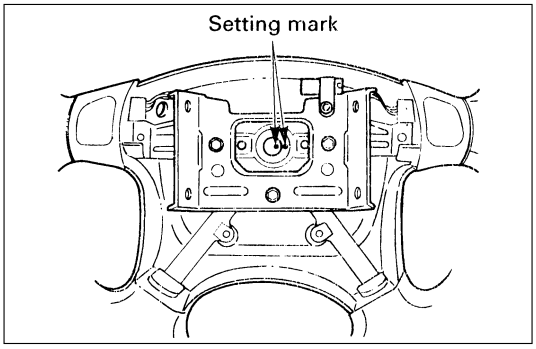

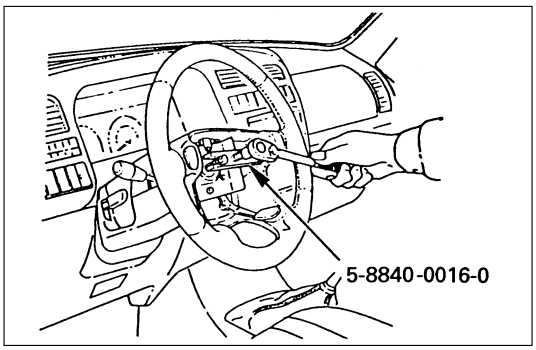

Use special tool. Remove the steering wheel.

Move the tires to the straight ahead positions before removing the steering wheel.

Steering wheel remover:5-8840-0016-0(J-29752)

5. **Steering column cover**
6. **Combination switch**

   Disconnect the wiring harness connectors.

7. **Snap ring**
8. **Cushion rubber**
9. **Shift lock cable (for A/T)**
10. **Lock cylinder assembly**

    Disconnect the starter switch harness connector located under the steering column.

11. **Steering column assembly**

    Apply a setting mark across the universal joint and steering shaft to reassembly the parts in their original position.

    NOTE:
    A setting mark can be easily made if the shaft is withdrawn a little by loosening the steering shaft universal joint.

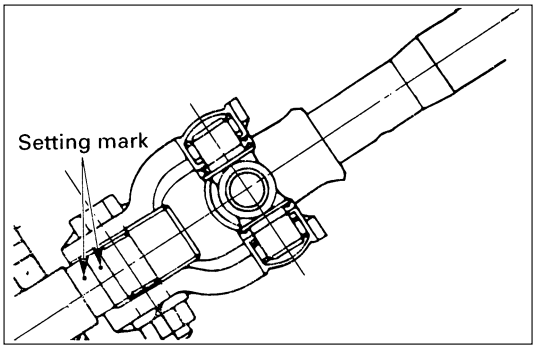

INSTALLATION

11. Steering column assembly

Align the setting marks on the universal joint and steering shaft made during removal.

Tighten the steering column fixing bolt (dash panel) to the specified torque.

Steering Column Bolt Torque	N·m (kg·m/lb·ft)
19 (1.9 / 14)	

Tighten the steering column fixing bolt (pedal bracket) to the specified torque.

Steering Column Bolt Torque	N·m (kg·m/lb·ft)
17 (1.7 / 13)	

Tighten the universal joint to the specified torque.

Universal Joint Torque	N·m (kg·m/lb·ft)
25 (2.5 / 18)	

10. Lock cylinder assembly

9. Shift lock cable (for A/T)

8. Cushion rubber

7. Snap ring

6. Combination switch

After installation of combination switch assembly, connect the combination switch wiring harness connector.

5. Steering column cover

4. Steering wheel

Align the setting marks made when removing.

CAUTION:
Never apply force to the steering wheel in direction of the shaft by using a hammer or other impact tools in an attempt to remove the steering wheel. The steering shaft is designed as an energy absorbing unit.

Tighten the steering wheel fixing nut to the specified torque.

Steering wheel Nut Torque	N·m (kg·m/lb·ft)
34 (3.5 / 25)	

3. Steering lower cover

Install the engine hood opening lever.

2. Lower cluster assembly

1. Front console assembly

Connect the wiring harness connectors.

Install the transmission (for M/T) and transfer control

SECTION 3C
FRONT SUSPENSION

CONTENTS

PAGE
General Description ..... 3C – 2
On-Vehicle Service ..... 3C – 3
Shock Absorber ..... 3C – 3
Stabilizer Bar ..... 3C – 5
Torsion Bar ..... 3C – 7
Knuckle ..... 3C – 10
Upper Control Arm ..... 3C – 14
Lower Control Arm ..... 3C – 18
Upper Ball Joint ..... 3C – 22
Lower Ball Joint ..... 3C – 25

GENERAL DESCRIPTION

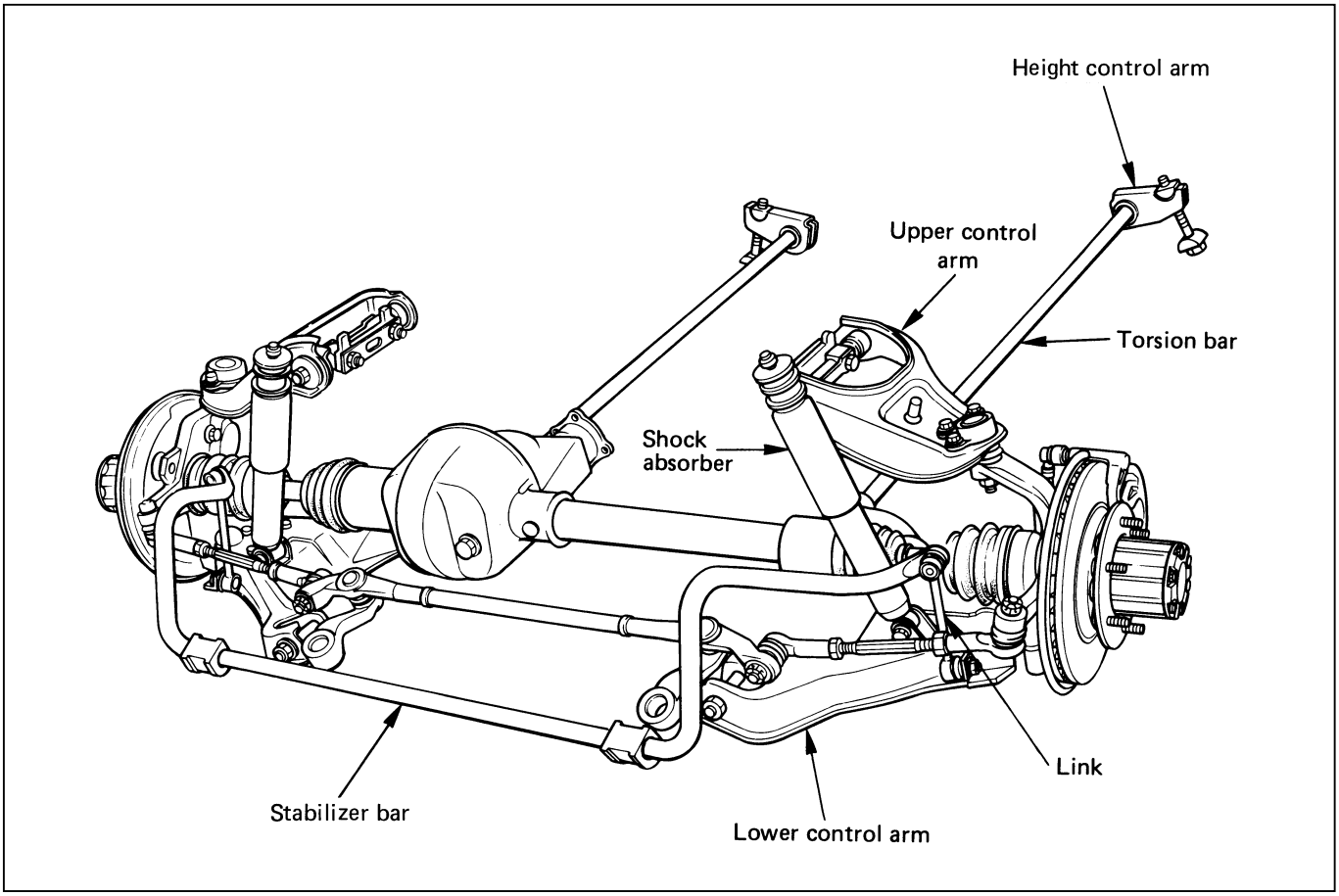

The front suspension is designed to allow each wheel to compensate for changes in the road surface level without greatly affecting the opposite wheel. Each wheel is independently connected to the frame by a steering knuckle, ball joint assemblies, and upper and lower control arms.
The front wheels are held in proper relationship to each other by two outer track rods which are connected to steering arms on the knuckles and to a center track rod.
All models have a front suspension system consisting of control arms, stabilizer bar, shock absorber and a torsion bar. The front end of the torsion bar is attached to the lower control arm.
The rear of the torsion bar is mounted into a height control arm at the crossmember. Vehicle trim height is controlled by adjusting this arm.
Shock absorbers are mounted between the brackets on the frame and the lower control arms.
The lower portion of each shock absorber is attached to the lower control arm by a bolt and nut.
The upper portion of each shock absorber extends through a frame bracket and is secured with two rubber bushings, three retainers and a nut.
Ball joint assemblies are bolted to the outer end of the upper and lower control arm and are attached to the steering knuckle by nuts and cotter pins.
The inner ends of the upper control arm have pressed in bushings. Bolts passing through the bushing, attach the control arm to the frame. The inner ends of the lower control arm are attached to the frame by bolts passing through the bushings, which are pressed in the frame.
Side roll of the front suspension is controlled by a spring steel stabilizer bar. It is mounted in rubber bushings, which are held to the crossmember by brackets. The ends of the stabilizer are connected to the lower control arms by link bolts isolated by rubber bushings.

ON-VEHICLE SERVICE

SHOCK ABSORBER

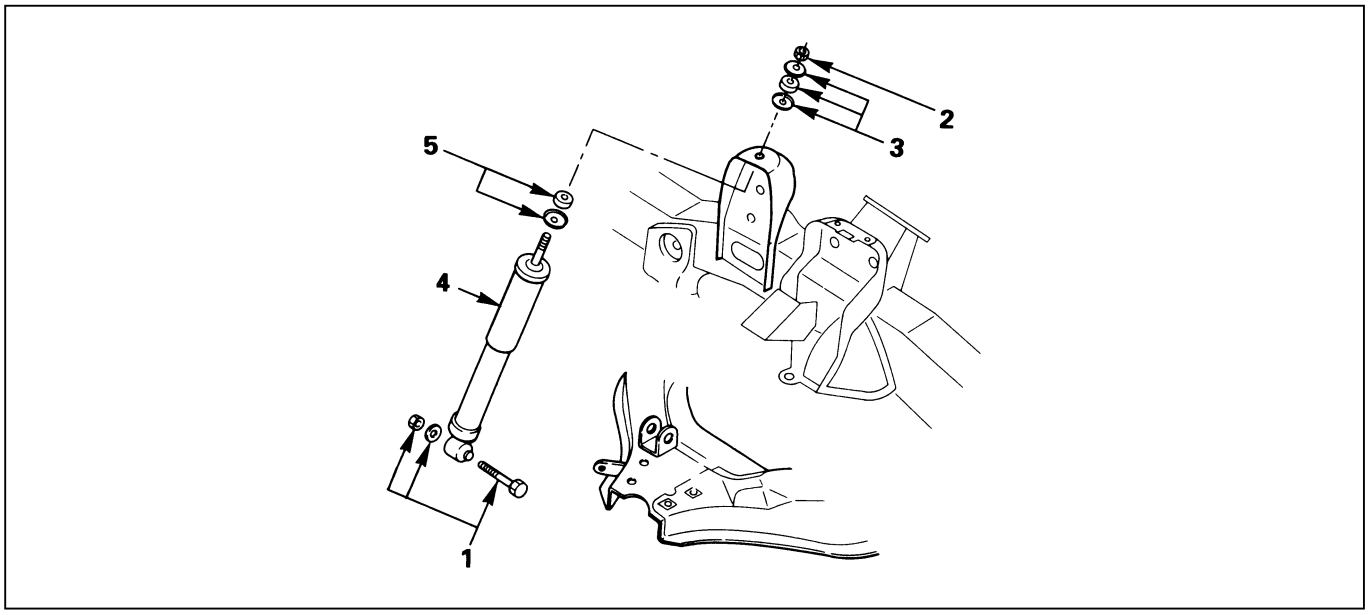

Removal Steps

1. Bolt, nut and washer
2. Nut
3. Rubber bushing and washer
4. Shock absorber
5. Rubber bushing and washer

Installation Steps

5. Rubber bushing and washer
4. Shock absorber
3. Rubber bushing and washer
2. Nut
1. Bolt, nut and washer

REMOVAL

Preparation:

1) Raise the vehicle and support it with suitable safety stands.
2) Remove wheel and tire assembly. Refer to "Wheels and Tires" in section 3E.

1. Bolt, Nut and Washer

2. Nut

3. Rubber Bushing and Washer

4. Shock Absorber

5. Rubber Bushing and Washer

INSPECTION AND REPAIR

Make necessary correction or parts replacement if wear, damage, corrosion or any other abnormal condition are found through inspection.

- Shock absorber
- Rubber bushing

INSTALLATION

5. **Rubber Bushing and Washer**
4. **Shock Absorber**
3. **Rubber Bushing and Washer**
2. **Nut**

Shock Absorber Nut Torque	N·m (kg·m/lb·ft)
20 (2.0 / 14)	

1. **Bolt, Nut and Washer**

Shock Absorber Nut Torque	N·m (kg·m/lb·ft)
82 (8.4 / 61)	

STABILIZER BAR

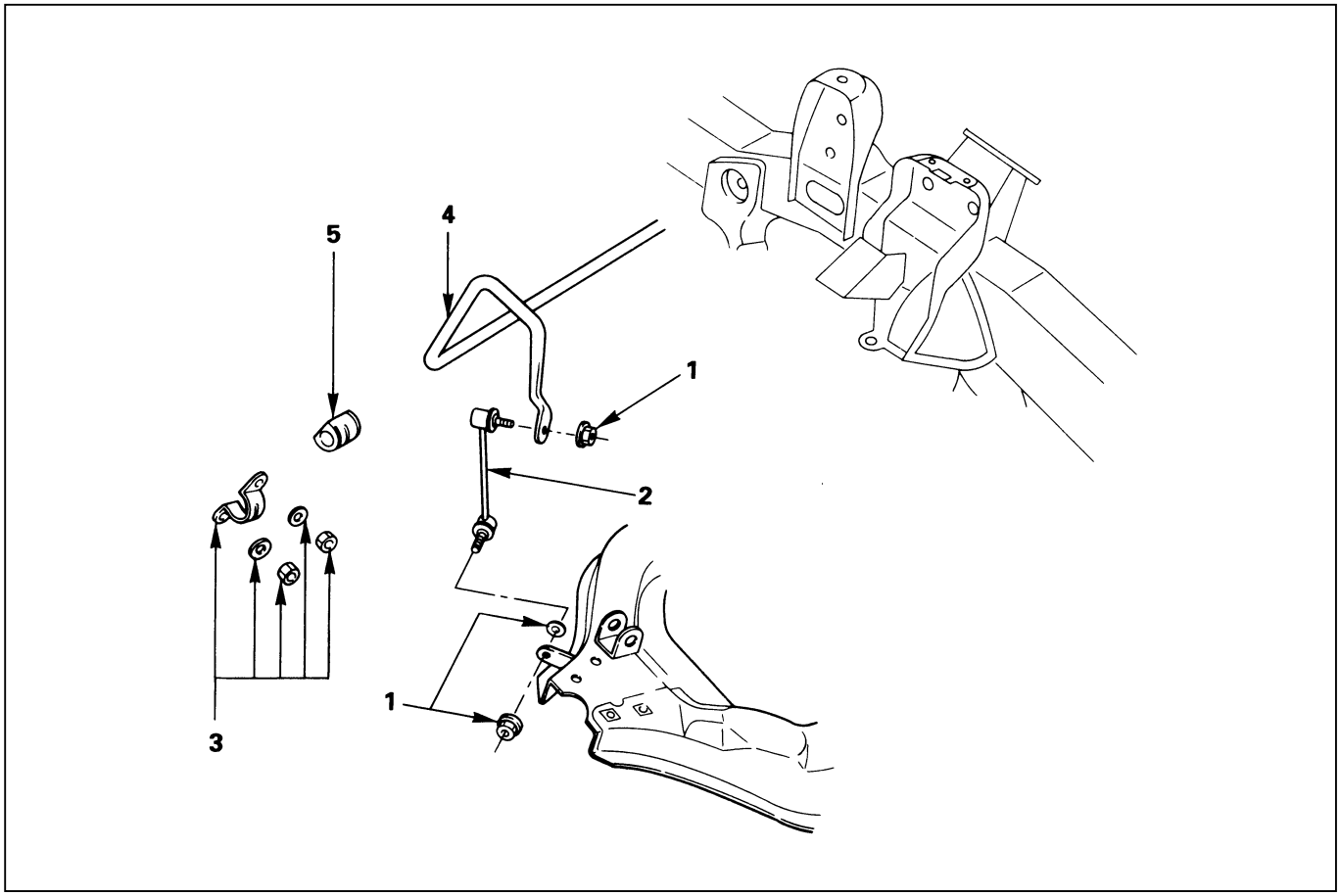

Removal Steps

1. Nut and washer
2. Link
3. Bracket
4. Stabilizer bar
5. Rubber bushing

Installation Steps

5. Rubber bushing
4. Stabilizer bar
3. Bracket
2. Link
1. Nut and washer

REMOVAL

Preparation:

1) Raise the vehicle and support the frame with suitable safety stands.
2) Remove the stone guard.
3) Remove wheel and tire assembly. Refer to “Wheels and Tires” in section 3E.

1. Nut and Washer

CAUTION:
Be careful not to break the ball joint boot.

2. Link

3. Bracket

4. Stabilizer Bar

5. Rubber Bushing

INSPECTION AND REPAIR

Make necessary correction or parts replacement if wear, damage, corrosion or any other abnormal condition are found through inspection.

- Stabilizer bar
- Rubber bushing
- Link ball joint

INSTALLATION

5. **Rubber Bushing**
4. **Stabilizer Bar**
3. **Bracket**

Bracket Nut Torque	N·m (kg·m/lb·ft)
22 (2.2 / 16)	

2. **Link**
1. **Nut and Washer**

Link Nut Torque	N·m (kg·m/lb·ft)
50 (5.1 / 37)	

TORSION BAR

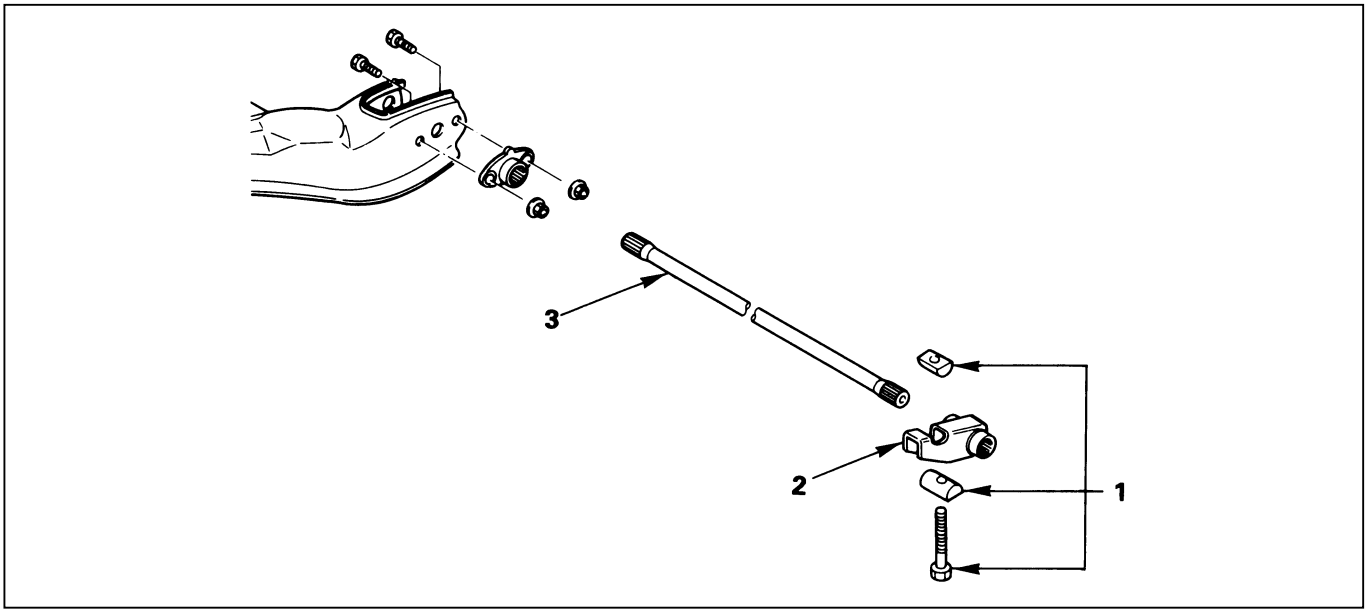

Removal Steps

1. Adjust bolt, end piece and seat
2. Height control arm
3. Torsion bar

Installation Steps

3. Torsion bar
2. Height control arm
1. Adjust bolt, end piece and seat

REMOVAL

Preparation:

Raise the vehicle and support the frame with suitable safety stands.

1. **Adjust Bolt, End Piece and Seat**
   Apply the setting marks to the adjust bolt and end piece.

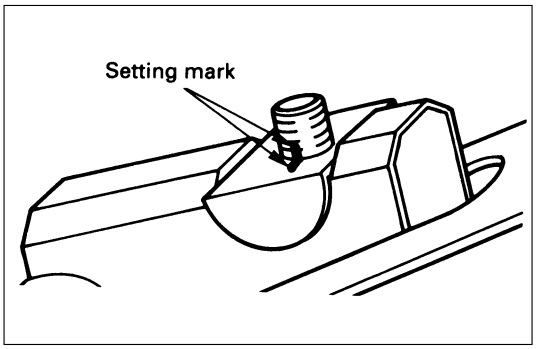

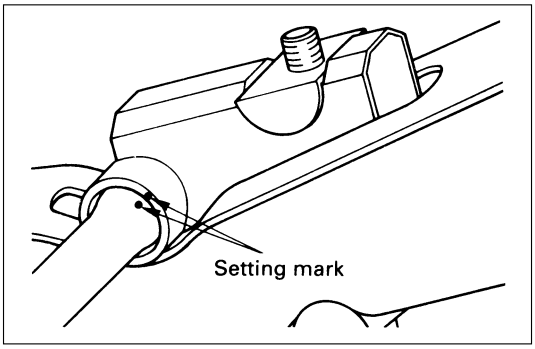

2. Height Control Arm
Apply the setting marks to the height control arm and torsion bar.

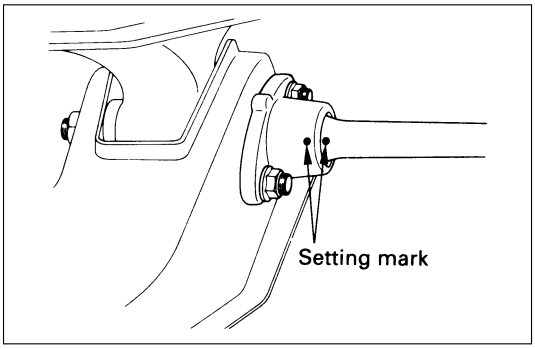

3. Torsion Bar
Apply the setting marks to the torsion bar and lower control arm.

INSPECTION AND REPAIR

Make necessary correction or parts replacement if wear, damage, corrosion or any other abnormal condition are found through inspection.
Check the following parts:

- Torsion bar
- Height control arm
- Adjust bolt
- Rubber seat

INSTALLATION

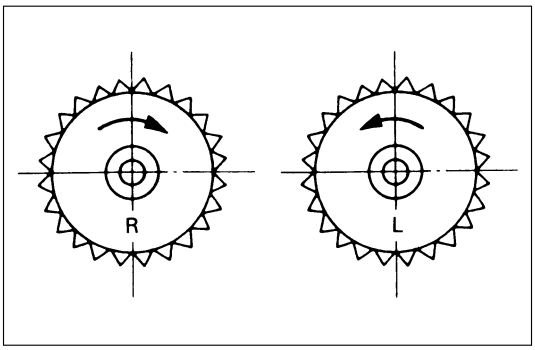

3. Torsion Bar
Make sure the bars are on their correct respective sides.

Apply grease to the serrated portions.

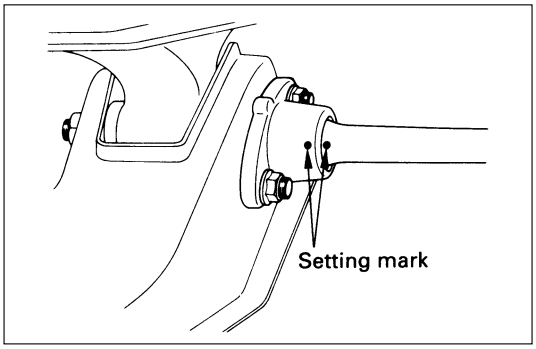

Align the setting marks.

2. Height Control Arm
Apply grease to the portion that fits into the bracket.

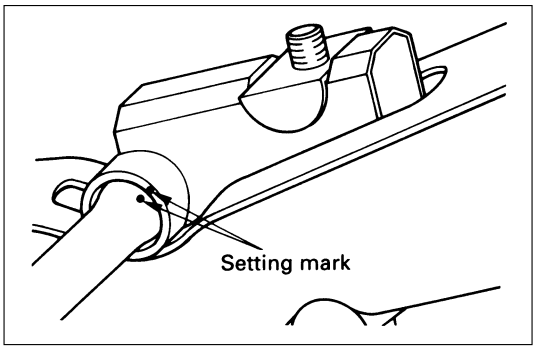

Align the setting marks.

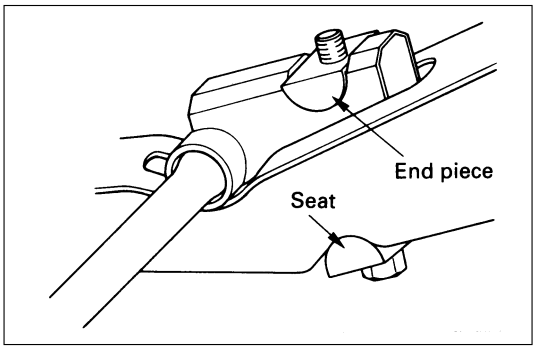

Apply grease to the bolt portion of the end piece.

Apply grease to the portion of the seat that fits into the bracket.

Apply grease to the serrated portions.

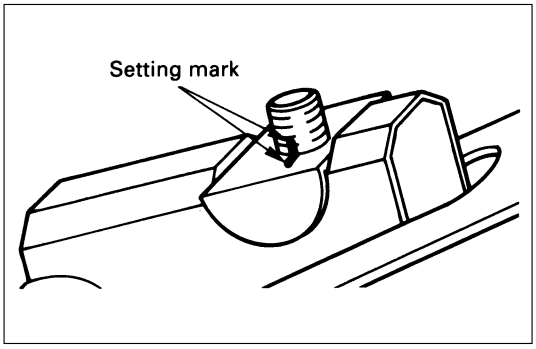

1. Adjust Bolt and Seat
Turn ther adjust bolt to the setting mark applied during disassembly.

NOTE:
Adjust the trim height. Refer to “Front End Alignment” in section 3A.

KNUCKLE

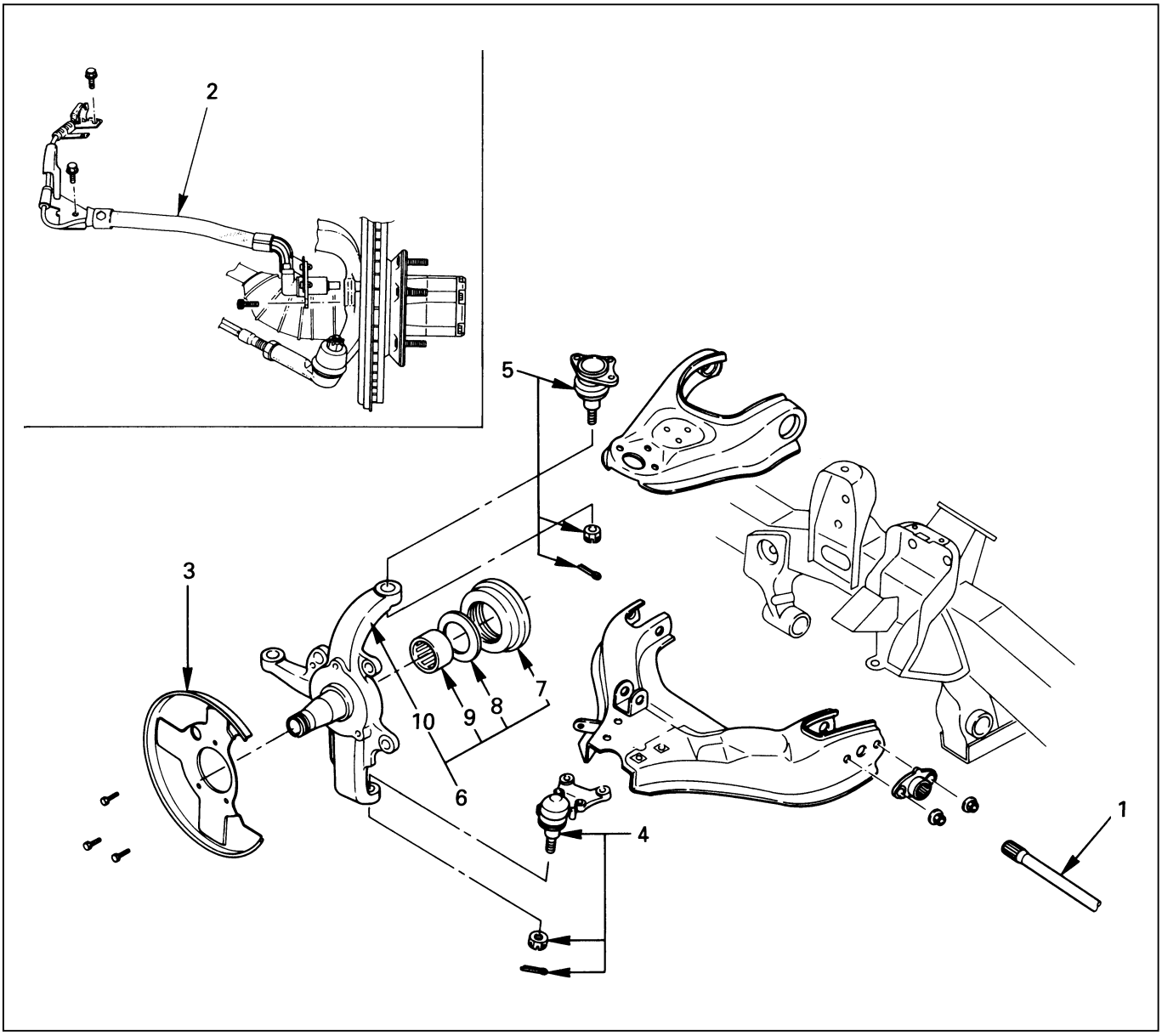

Removal Steps

1. Torsion bar
2. Wheel speed sensor (if equipped with ABS)
3. Back plate
4. Lower ball joint
5. Upper ball joint
6. Knuckle assembly
7. Oil seal
8. Thrust washer
9. Needle bearing
10. Knuckle

Installation Steps

10. Knuckle
9. Needle bearing
8. Thrust washer
7. Oil seal
6. Knuckle assembly
5. Upper ball joint
4. Lower ball joint
3. Back plate
2. Wheel speed sensor (if equipped with ABS)
1. Torsion bar

REMOVAL

Preparation:

1) Raise the vehicle and support the frame with suitable safety stands.
2) Remove wheel and tire assembly. Refer to “Wheels and Tires” in section 3E.
3) Remove the brake caliper. Refer to “Brakes” in section 5.
4) Remove the hub assembly. Refer to “Hub and Disk” in section 4C.
5) Remove outer track rod from the knuckle. Refer to “Steering Linkage” in section 2A.

1. **Torsion Bar**
   Loosen torsion bar by height control arm adjust bolt. Refer to “Torsion bar” in this section.
2. **Wheel speed sensor (if equipped with ABS)**
3. **Back Plate**
4. **Lower Ball Joint**
   Remover: 5-8840-2005-0 (J-29107)

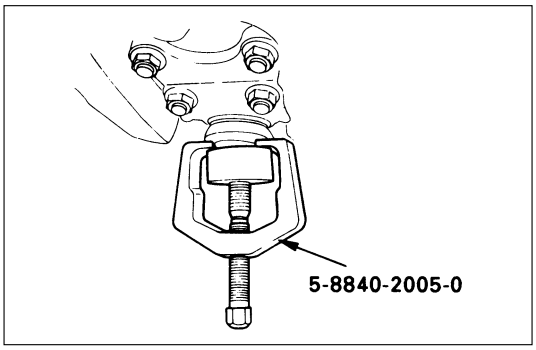

CAUTION:
Be careful not to break the ball joint boot.

5. **Upper Ball Joint**
   Remover: 5-8840-2121-0 (J-36831)

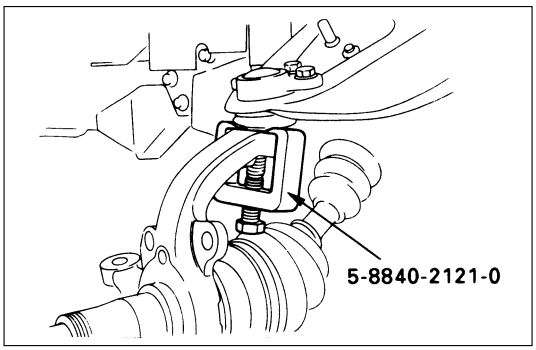

CAUTION:
Be careful not to break the ball joint boot.

6. **Knuckle Assembly**
7. **Oil Seal**
8. **Washer**
9. **Needle Bearing**
   Remover: 5-8840-0019-0 (J-23907)

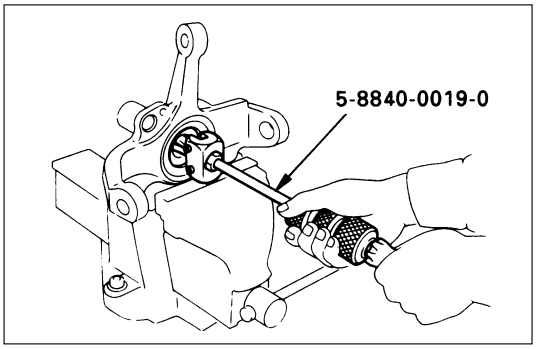

10. Knuckle

INSPECTION AND REPAIR

Make necessary correction or parts replacement if wear, damage, corrosion or any other abnormal condition are found through inspection.
Check the following parts:

- Knuckle
- Needle bearing
- Thrust washer

INSTALLATION

10. Knuckle

9. Needle Bearing

Before installation, apply appropriate amount of multipurpose type grease to the new bearing (Approx. 5 g).
Installer: 5-8840-2128-0 (J-36838) and
5-8840-0007-0 (J-8092)

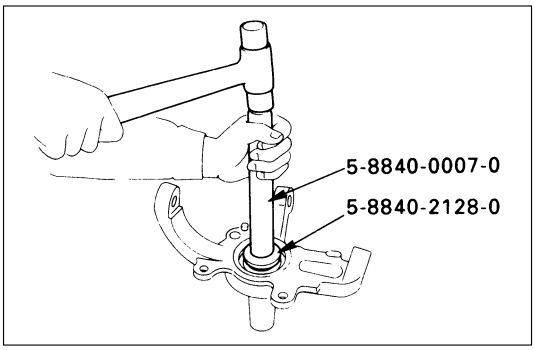

8. Washer

Apply multipurpose type grease to the thrust washer, and install it with chamfered side facing knuckle.

7. Oil Seal

Use a new oil seal, and apply multipurpose type grease to the area surrounded by the lip (approx. 2 g).

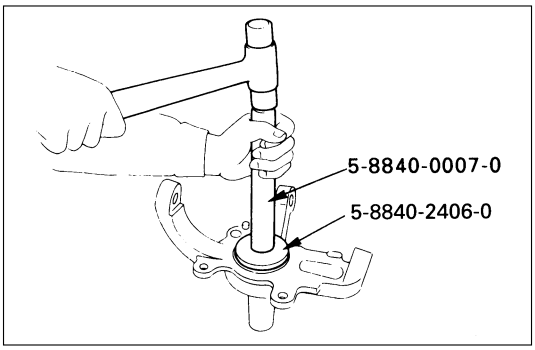

After fitting the oil seal to the installer, drive it to the knuckle using a hammer or bench press until the tool front face contacts with the thrust washer.
Installer: 5-8840-2406-0 (J-41468)and
5-8840-0007-0 (J-8092)

6. Knuckle Assembly

5. Upper Ball Joint

Tighten the nut to the specified torque, with just enough additional torque to align cotter pin holes.
Install new cotter pin.

Upper Ball Joint Nut Torque	N·m (kg·m/lb·ft)
98 (10.0 / 72)	

4. **Lower Ball Joint**
   Tighten the nut to the specified torque, with just enough additional torque to align cotter pin holes. Install new cotter pin.

Lower Ball Joint Nut Torque	N·m (kg·m/lb·ft)
147 (15.0 / 108)	

3. **Back Plate**
2. **Wheel Speed Sensor (if equipped with ABS)**
   Tighten the bolt to the specified torque.

Wheel Speed Sensor Bolt Torque	N·m (kg·m/lb·in)
8 (0.8 / 69)	

1. **Torsion Bar**
   Refer to “Torsion Bar” in this section.

   NOTE:
   Adjust the trim height. Refer to “Front End Alignment” in section 2A.

UPPER CONTROL ARM

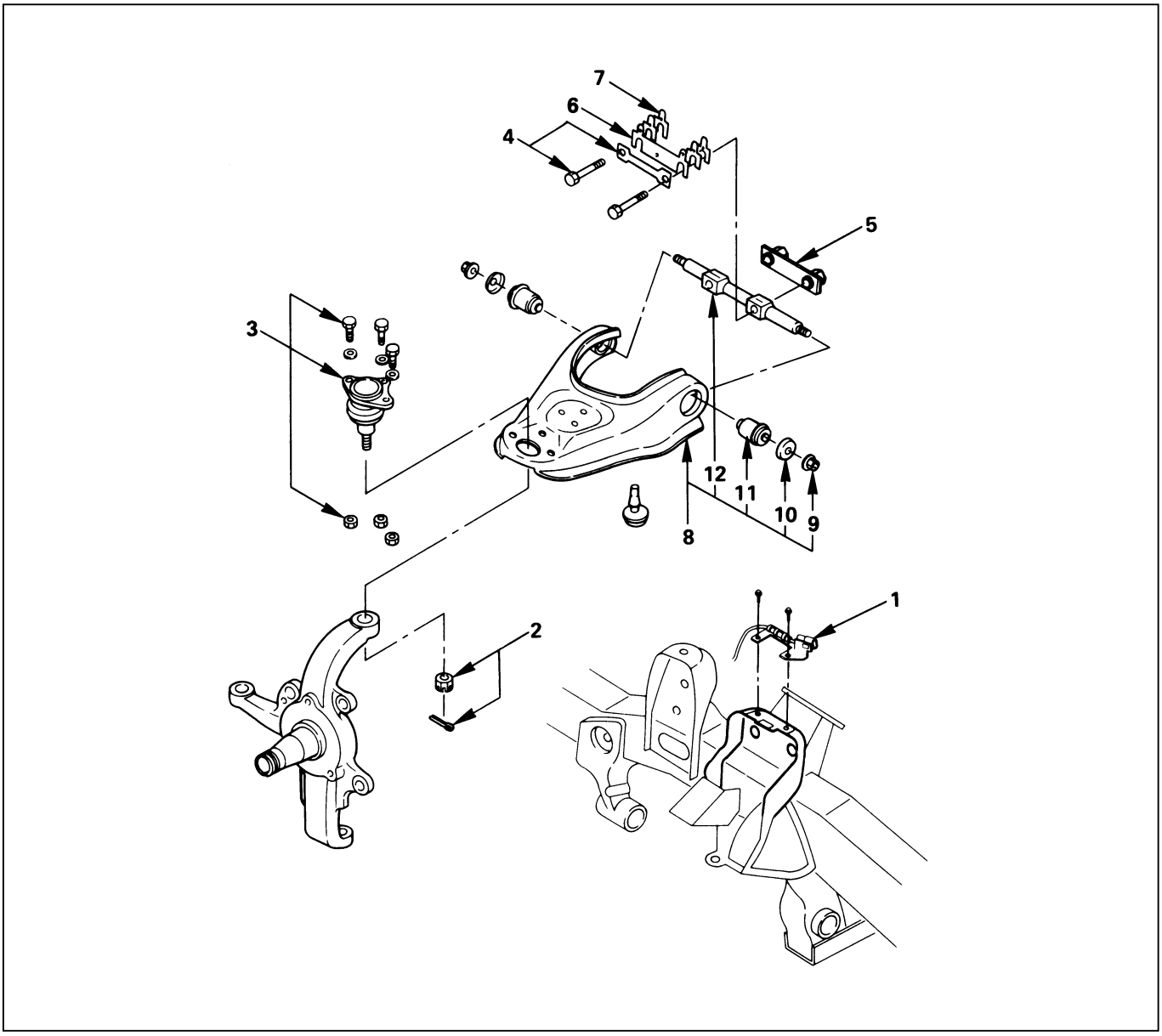

Removal Steps

1. Speed sensor cable (if equipped with ABS)
2. Nut and cotter pin
3. Upper ball joint
4. Bolt and plate
5. Nut assembly
6. Camber shims
7. Caster shims
8. Upper control arm assembly
9. Nut
10. Plate
11. Bushing
12. Fulcrum pin

Installation Steps

12. Fulcrum pin
11. Bushing
10. Plate
9. Nut
8. Upper control arm assembly
7. Caster shims
6. Camber shims
5. Nut assembly
4. Bolt and plate
3. Upper ball joint
2. Nut and cotter pin
1. Speed sensor cable (if equipped with ABS)

REMOVAL

Preparation:

1) Raise the vehicle and support the frame with suitable safety stands.
2) Remove wheel and tire assembly. Refer to “Wheels and Tires” in section 3E.
3) Remove the brake caliper and disconnect flexible hose. Refer to “Brakes” in section 5.
4) Support lower control arm with a jack.

1. **Speed Sensor Cable (if equipped with ABS)**
2. **Nut and Cotter Pin**
   Remove the upper ball joint from the knuckle.
   Remover: 5-8840-2121-0 (J-36831)

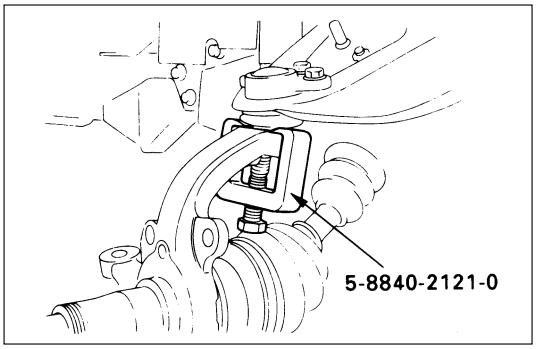

CAUTION:
Be careful not to break the ball joint boot.

3. **Upper Ball Joint**
4. **Bolt and Plate**
5. **Nut Assembly**
6. **Camber Shims**
   Note the positions and number of shims.
7. **Caster Shims**
   Note the positions and number of shims.
8. **Upper Control Arm Assembly**
9. **Nut**
10. **Plate**
11. **Bushing**
    Remover: 5-8840-0256-0 (J-29755)

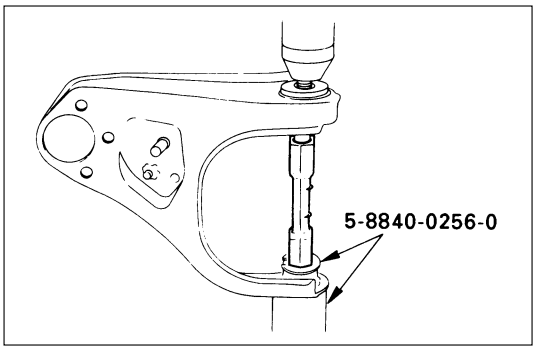

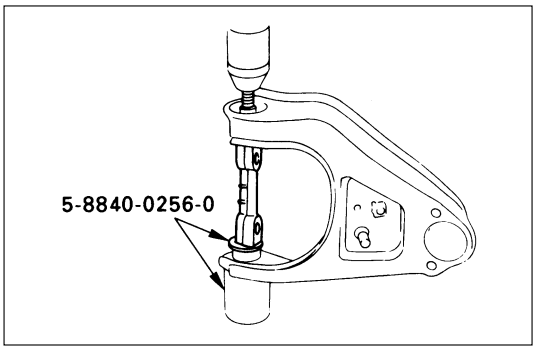

12. **Fulcrum Pin**

INSPECTION AND REPAIR

Make necessary parts replacement if wear, damage, corrosion or any other abnormal conditions are found through inspection.
Check the following parts:

- Upper control arm
- Bushing
- Fulcrum pin

INSTALLATION

12. Fulcrum Pin

11. Bushing

Installer: 5-8840-0256-0 (J-29755) and
5-8840-2307-0 (J-39376)

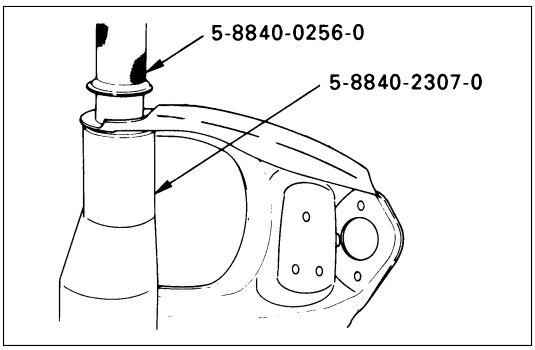

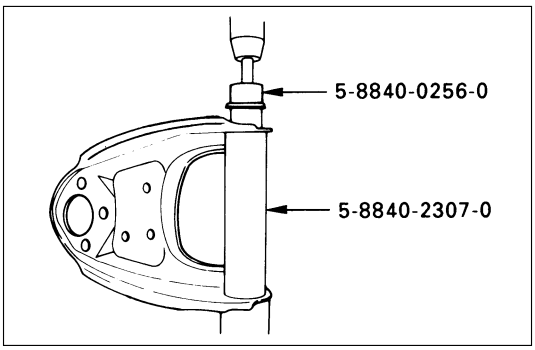

10. Plate

9. Nut

Tighten fulcrum pin nut finger-tight.

NOTE:
Torque fulcrum pin nut after adjusting buffer clearance.

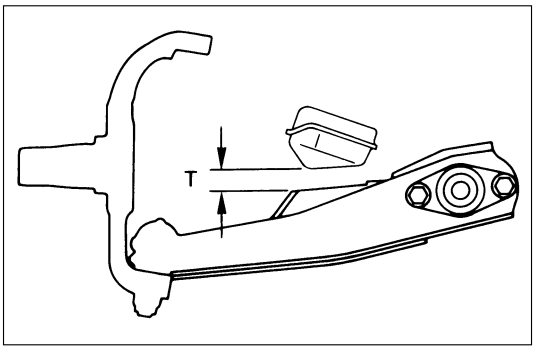

Buffer Clearance (T)	mm (in)
23 (0.91) Wide Tread 24 (0.94) Narrow Tread	

Fulcrum Pin Nut Torque	N·m (kg·m/lb·ft)
108 (11.0 / 80)	

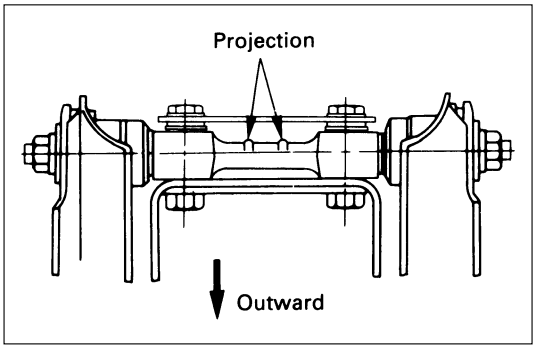

8. Upper Control Arm Assembly
Install upper control arm assembly with the fulcrum pin projections turned inward.

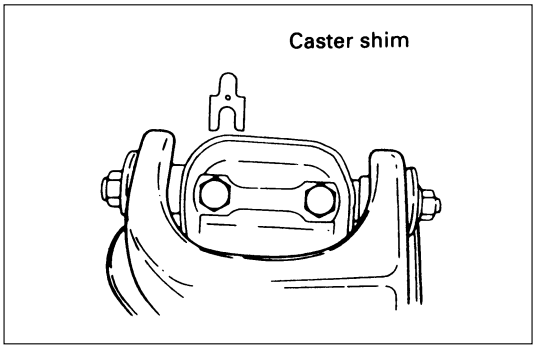

7. Caster Shims
Install the caster shims between the chassis frame and fulcrum pin.

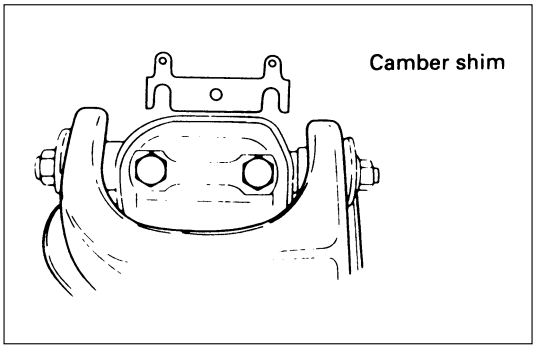

6. Camber Shims
Install the camber shims between the chassis frame and fulcrum pin.

5. Nut Assembly

4. Bolt and Plate

Fulcrum Pin Bolt Torque	N·m (kg·m/lb·ft)
152 (15.2 / 112)	

3. Upper Ball Joint

Upper Ball Joint Nut Torque	N·m (kg·m/lb·ft)
57 (5.8 / 42)	

2. Nut and Cotter Pin
Tighten the nut to the specified torque, with just enough additional torque to align cotter pin holes. Install new cotter pin.

Upper Ball Joint Nut Torque	N·m (kg·m/lb·ft)
98 (10.0 / 72)	

1. Speed Sensor Cable (if equipped with ABS)

LOWER CONTROL ARM

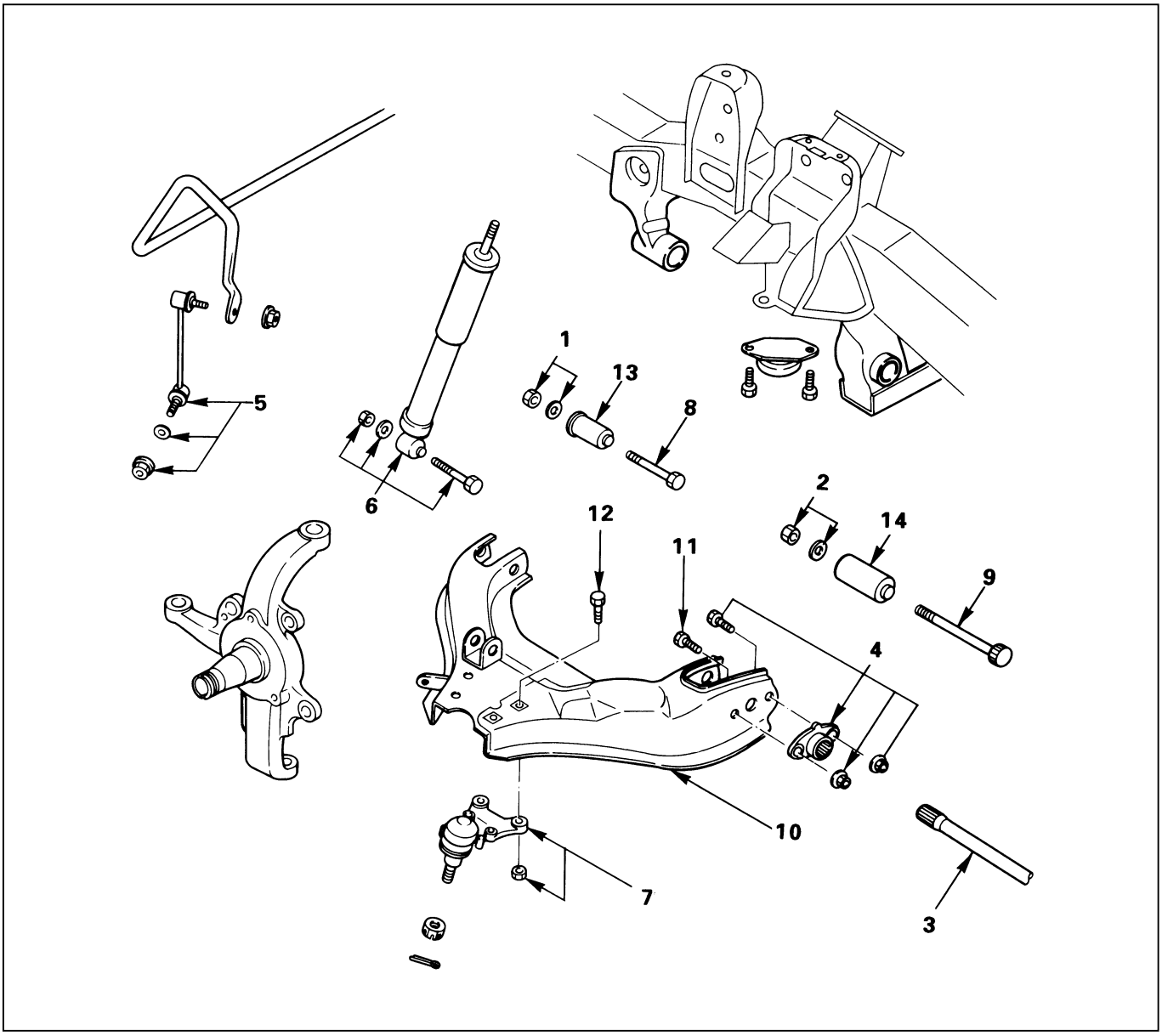

Removal Steps

1. Nut and washer, front
2. Nut and washer, rear
3. Torsion bar
4. Torsion bar arm
5. Stabilizer link
6. Shock absorber
7. Lower ball joint
8. Bolt, front
9. Bolt, rear
10. Lower control arm
11. Bolt, torsion bar arm
12. Bolt, lower ball joint
13. Bushing, front
14. Bushing, rear

Installation Steps

14. Bushing, rear
13. Bushing, front
12. Bolt, lower ball joint
11. Bolt, torsion bar arm
10. Lower control arm
9. Bolt, rear
8. Bolt, front
7. Lower ball joint
6. Shock absorber
5. Stabilizer link
4. Torsion bar arm
3. Torsion bar
2. Nut and washer, rear
1. Nut and washer, front

REMOVAL

Preparation:

1) Raise the vehicle and support the frame with suitable safety stands.
2) Remove wheel and tire assembly. Refer to “Wheels and Tires” in section 3E.
3) Remove the outer track rod from the knuckle. Refer to “Steering Linkage” in section 2A.
4) Remove the retaining ring from the front axle driving shaft to release the shaft from hub. Refer to “Front Axle” in section 4C.
5) Support lower control arm with a jack.

1. **Nut and Washer, Front**
2. **Nut and Washer, Rear**
3. **Torsion Bar**
   Refer to “Torsion Bar” in this section.
4. **Torsion Bar Arm Bracket**
5. **Stabilizer Link**
   Disconnect the link at the lower control arm.
6. **Shock Absorber**
   Remove the shock absorber lower end from the lower control arm.
7. **Lower Ball Joint**
   Remove the lower ball joint from the lower control arm.
8. **Bolt, Front**
9. **Bolt, Rear**
10. **Lower Control Arm**
11. **Bolt, Torsion Bar Arm**
12. **Bolt, Lower Ball Joint**
13. **Bushing, Front**
    Remover: 5-8840-2123-0 (J-36833)

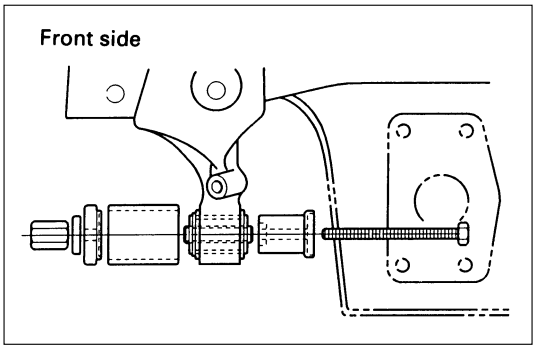

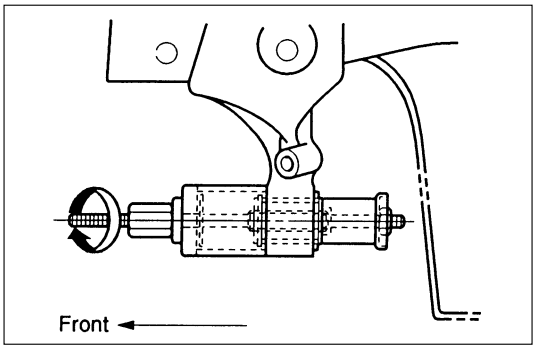

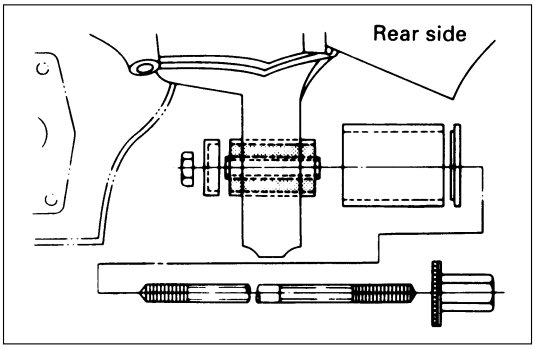

14. Bushing, Rear
Remover: 5-8840-2124-0 (J-36834)

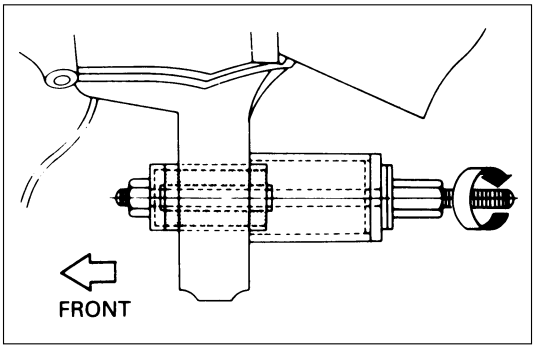

INSPECTION AND REPAIR

Make necessary correction or parts replacement if wear, damage, corrosion or any other abnormal condition are found through inspection.
Check the following parts:

- Lower control arm
- Bushing

INSTALLATION

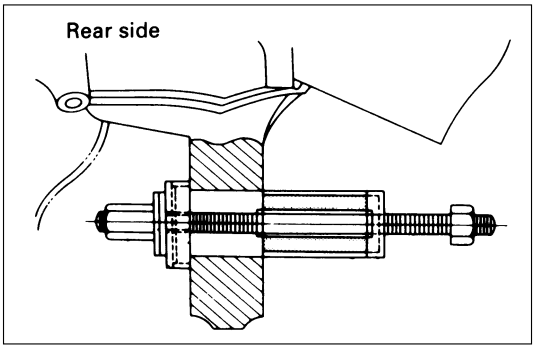

14. Bushing, Rear
Installer: 5-8840-2124-0 (J-36834)

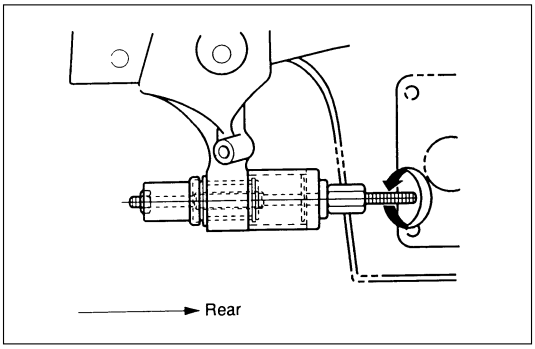

13. Bushing, Front
Installer: 5-8840-2123-0 (J-36833)

12. **Bolt, Lower Ball Joint**
11. **Bolt, Torsion Bar Arm**
10. **Lower Control Arm**
9. **Bolt, Rear**
8. **Bolt, Front**
7. **Lower Ball Joint**

Lower Ball Joint Nut Torque	N·m (kg·m/lb·ft)
103 (10.5 / 76)	

6. **Shock Absorber**

Shock Absorber Nut Torque	N·m (kg·m/lb·ft)
82 (8.4 / 61)	

5. **Stabilizer Link**

Link Nut Torque	N·m (kg·m/lb·ft)
50 (5.1 / 37)	

4. **Torsion Bar Arm Bracket**

Torsion Bar Arm Bracket Nut Torque	N·m (kg·m/lb·ft)
116 (11.8 / 85)	

3. **Torsion Bar**
   Refer to "Torsion Bar" in this section.
2. **Nut and Washer, Rear**
   Tighten lower link nut finger-tight.

NOTE:
Torque lower control arm nut after adjusting buffer clearance.

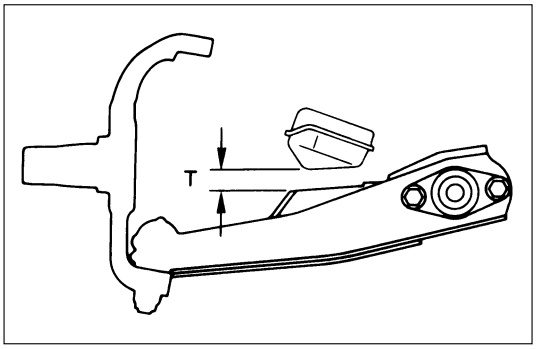

Buffer Clearance (T)	mm (in)
23 (0.91) Wide Tread 24 (0.94) Narrow Tread	

Lower Arm Rear Nut Torque	N·m (kg·m/lb·ft)
196 (20.0 / 145)	

1. **Nut and Washer, Front**
   Tighten lower link nut finger-tight.

NOTE:
Torque lower control arm nut after adjusting buffer clearance.

Buffer Clearance (T)	mm (in)
23 (0.91) Wide Tread 24 (0.94) Narrow Tread	

Lower Arm Front Nut Torque	N·m (kg·m/lb·ft)
157 (16.0 / 116)	

NOTE:
Adjust the trim height. Refer to "Front End Alignment" in section 2A.

UPPER BALL JOINT

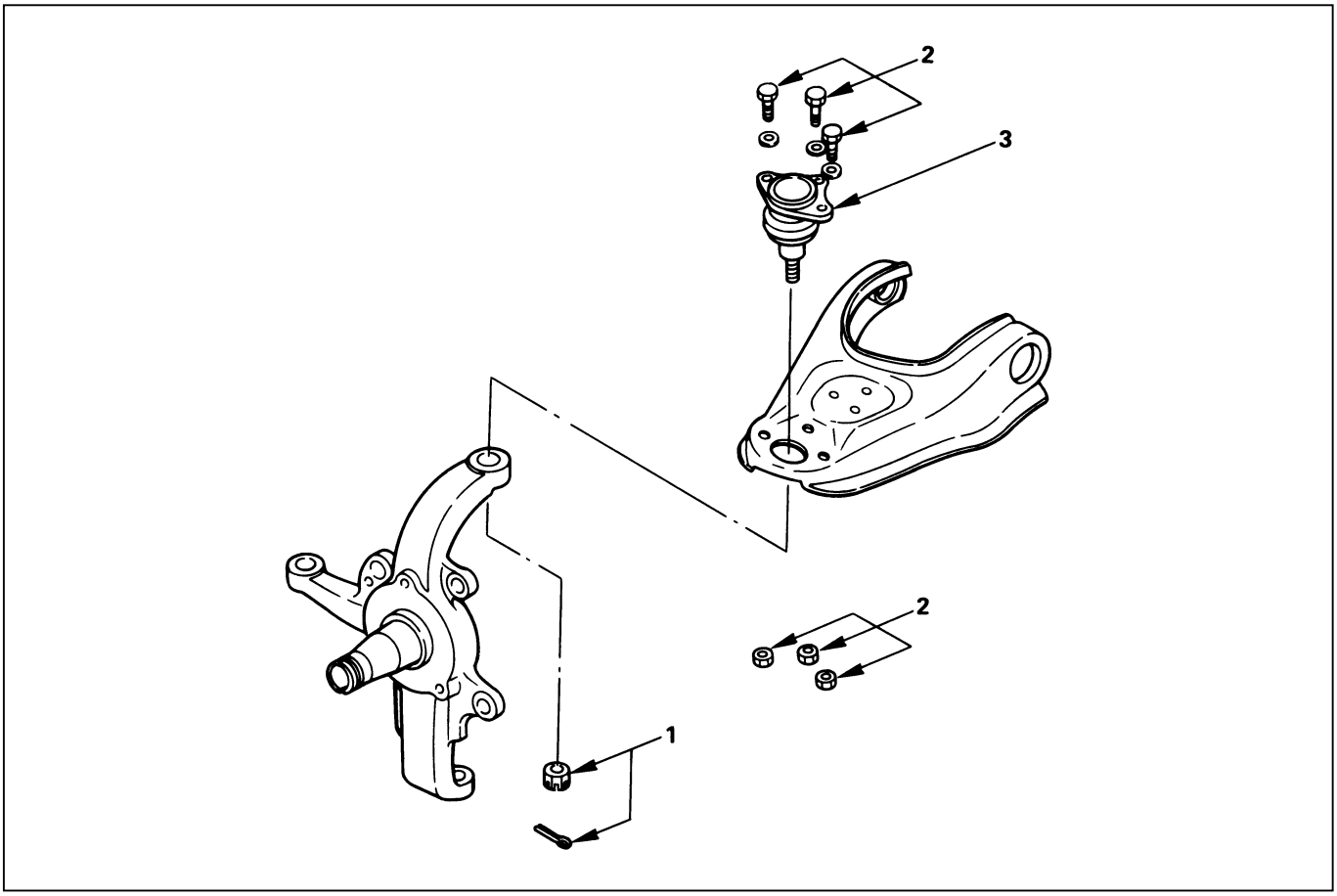

Removal Steps

1. Nut and cotter pin
2. Bolt, nut and washer
3. Upper ball joint

Installation Steps

3. Upper ball joint
2. Bolt, nut and washer
1. Nut and cotter pin

REMOVAL

Preparation:

1) Raise the vehicle and support the frame with suitable safety stands.
2) Remove the speed sensor from the knuckle (If equipped with ABS).

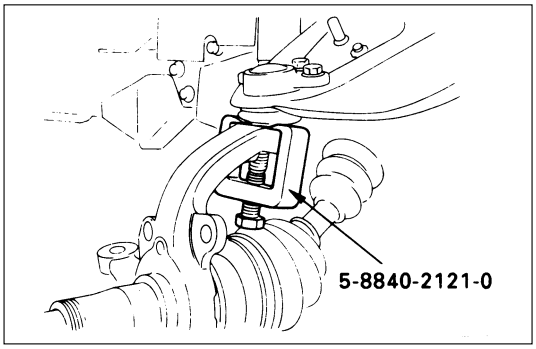

1. **Nut and Cotter Pin**
   Remove the upper ball joint from the knuckle.
   Remover: 5-8840-2121-0 (J-36831)

CAUTION:
Be careful not t o break the ball joint boot.

2. **Bolt, Nut and Washer**
3. **Upper Ball Joint**

INSPECTION AND REPAIR

Make necessary parts replacement if wear, damage, corrosion or any other abnormal conditions are found through inspection.
Inspect the lower end boot for damage or grease leak.
Move the ball joint as shown in the figure to confirm its normal movement.

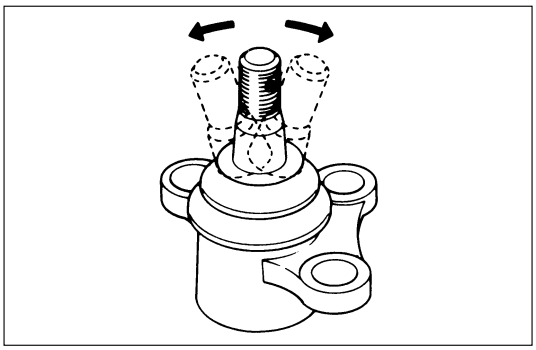

Inspect screw/taper area of ball for flaws.
If any defects are found by the above inspections, replace the ball joint assembly with new one.
After moving the ball joint 4 or 5 times, attach nut then measure the preload.

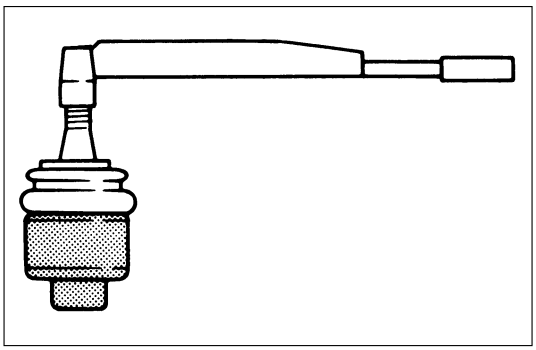

Upper Ball Joint Preload	N·m (kg·m/lb·in)
0.5 – 3.2 (0.05 – 0.33 / 4.3 – 28.6)	

If the above limits specified are exceeded, replace the ball joint assembly.

INSTALLATION

3. **Upper Ball Joint**
2. **Bolt, Nut and Washer**

Upper Ball Joint Bracket Nut Torque	N·m (kg·m/lb·ft)
57 (5.8 / 42)	

1. **Nut and Cotter Pin**
Tighten the nut to the specified torque with just enough additional torque to align cotter pin holes. Install new cotter pin.

Upper Ball Joint Nut Torque	N·m (kg·m/lb·ft)
98 (10.0 / 72)	

LOWER BALL JOINT

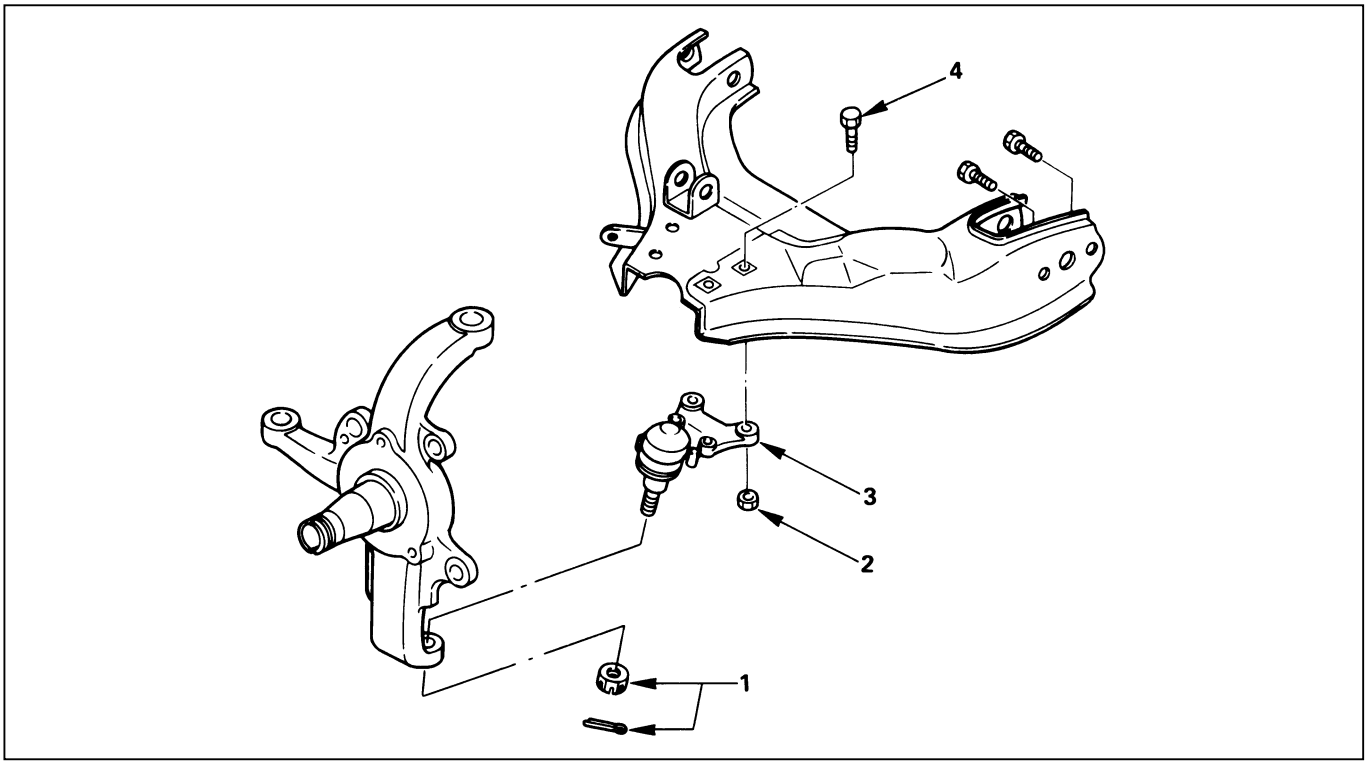

Removal Steps

1. Nut and cotter pin
2. Nut
3. Lower ball joint
4. Bolt

Installation Steps

4. Bolt
3. Lower ball joint
2. Nut
1. Nut and cotter pin

REMOVAL

Preparation:

1) Raise the vehicle and support the frame with suitable safety stands.
2) Remove wheel and tire assembly. Refer to “Wheels and Tires” in section 3E.
3) Remove the outer track rod from the knuckle. Refer to “Steering Linkage” in section 2A.
4) Remove the retaining ring from the front axle driving shaft to release the shaft from hub. Refer to “Front Axle” in section 4C.
5) Support lower control arm with a jack.

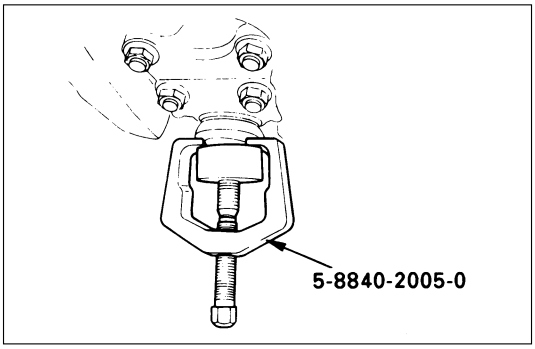

1. **Nut and Cotter Pin**
   Remove the upper ball joint from the knuckle.
   Remover: 5-8840-2005-0 (J-29107)

CAUTION:
Be careful not to break the ball joint boot.

2. **Nut**
3. **Lower Ball Joint**
4. **Bolt**

INSPECTION AND REPAIR

Make necessary parts replacement if wear, damage, corrosion or any other abnormal conditions are found through inspection.
Inspect the lower end boot for damage or grease leak.
Move the ball joint as shown in the figure to confirm its normal movement.

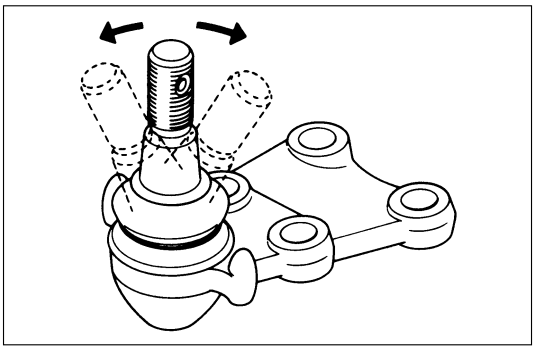

Inspect screw/taper area of ball for flaws.
If any defects are found by the above inspections, replace the ball joint assembly with new one.
After moving the ball joint 4 or 5 times, attach nut then measure the preload.

Lower Ball Joint Preload	N·m (kg·m/lb·in)
0.5 – 6.4 (0.05 – 0.65 / 4.3 – 56.4)	

If the above limits specified are exceeded, replace the ball joint assembly.

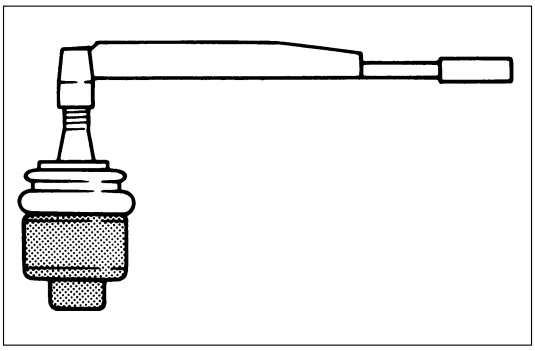

INSTALLATION

4. **Bolt**
3. **Lower Ball Joint**
2. **Nut**

Lower Ball Joint Bracket Nut Torque	N·m (kg·m/lb·ft)
103 (10.5 / 76)	

1. **Nut and Cotter Pin**
   Tighten the nut to the specified torque with just enough additional torque to align cotter pin holes. Install new cotter pin.

Lower Ball Joint Nut Torque	N·m (kg·m/lb·ft)
147 (15.0 / 108)	

SECTION 3D

REAR SUSPENSION; COIL SPRING

CONTENTS

PAGE

General Description ..... 3D – 2
On-Vehicle Service ..... 3D – 3
Coil Spring ..... 3D – 3
Shock Absorber ..... 3D – 6
Trailing Link ..... 3D – 8
Center Link ..... 3D – 10
Lateral Rod ..... 3D – 12
Stabilizer Bar ..... 3D – 15

GENERAL DESCRIPTION

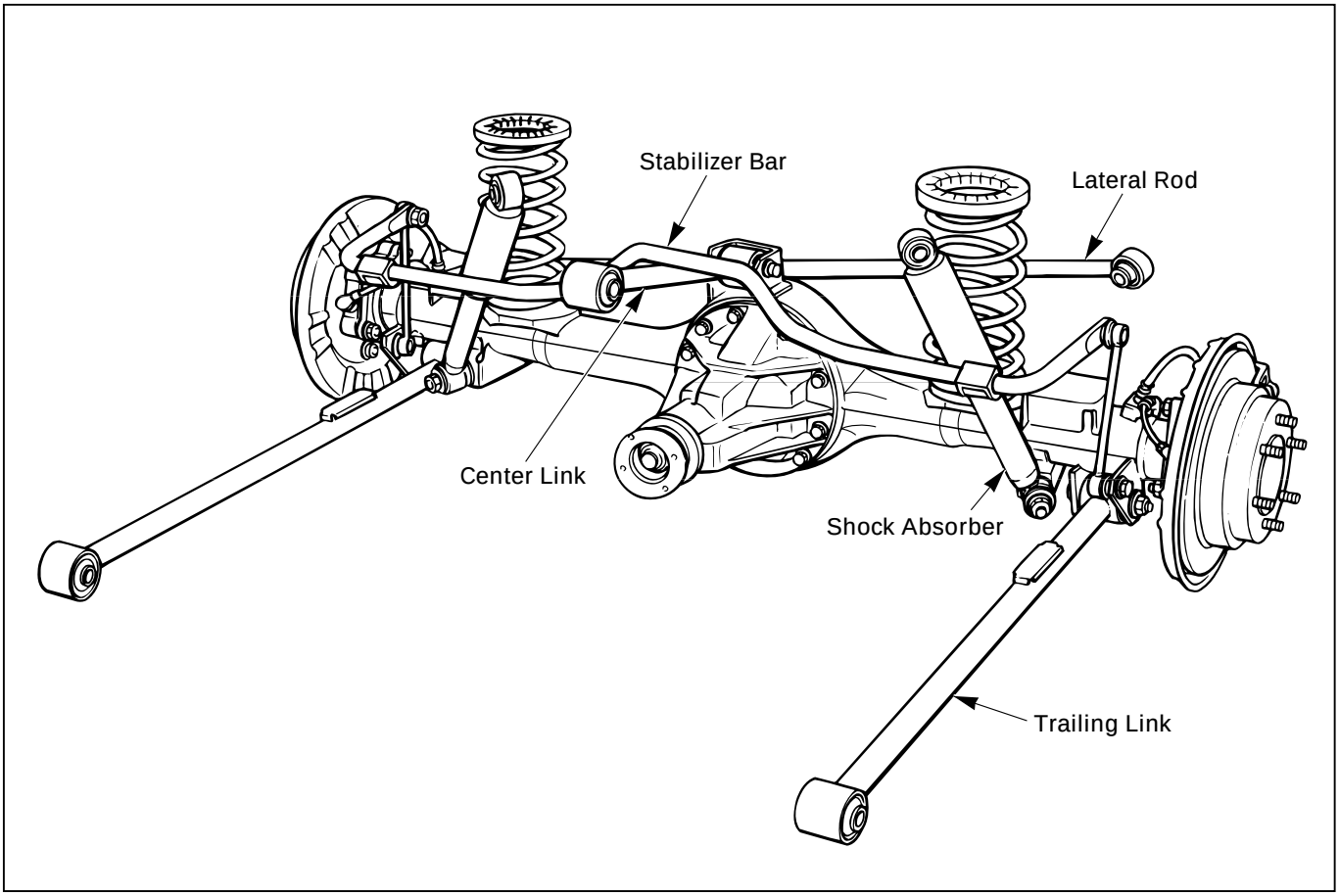

C03RW003

The rear suspension is a 4-link, coil spring type suspension with a stabilizer, consisting of two trailing links, center link, lateral rod, shock absorber, and stabilizer. In this suspension, the links are specially arranged to enable the rear axle to move freely, thereby expanding suspension stroke, reducing friction, and improving lateral rigidity and roll control. All these result in improved stability, riding comfort, and rough road maneuverability.

Each link connects the axle housing with the frame through a rubber bushing. The axle housing is supported by the trailing links and center link longitudinally and by the lateral rod latitudinally.

ON-VEHICLE SERVICE

COIL SPRING

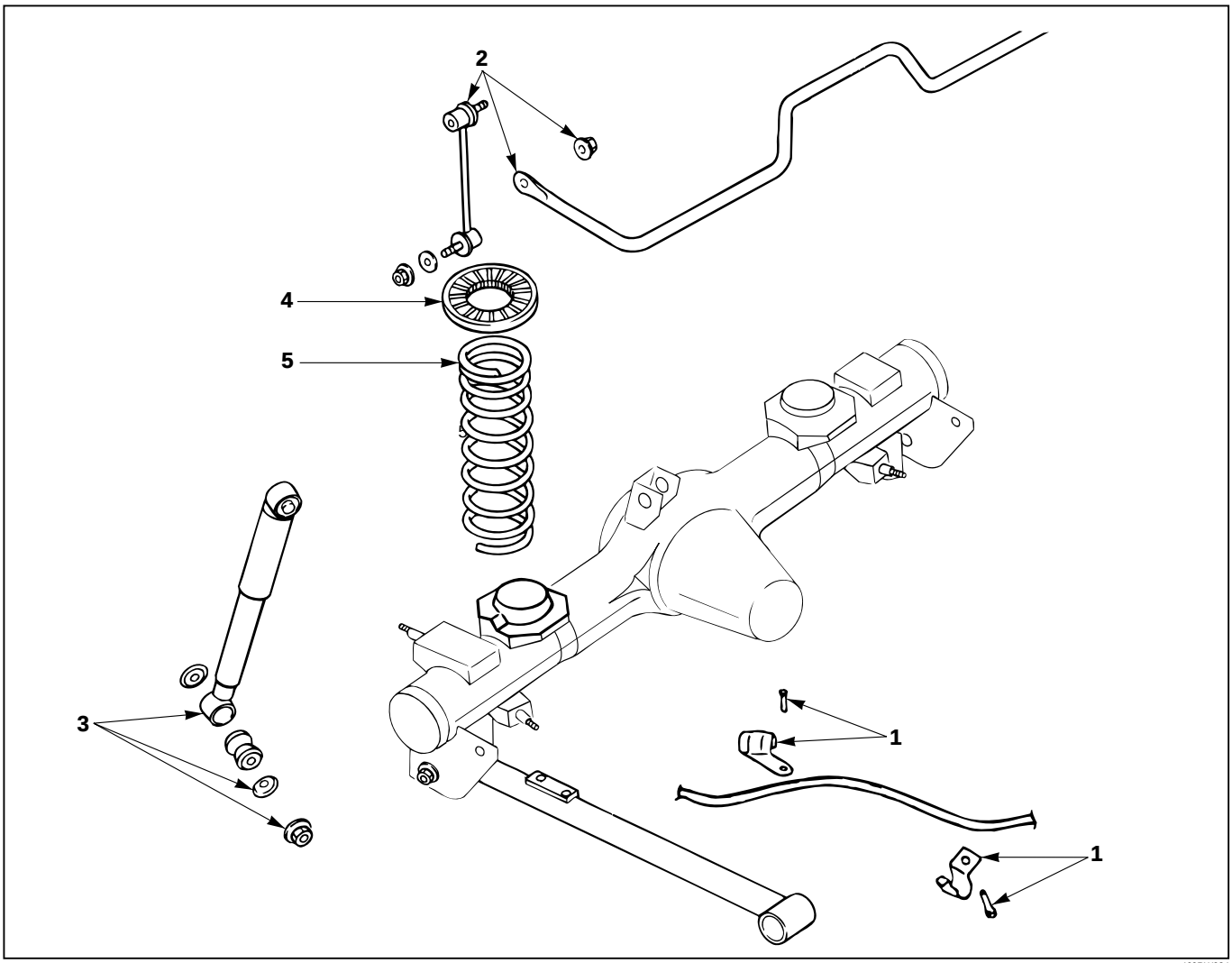

460RW024

Removal Steps

1. Parking brake cable bracket
2. Stabilizer bar
3. Shock absorber
4. Insulator
5. Coil spring

Installation Steps

5. Coil spring
4. Insulator
3. Shock absorber
2. Stabilizer bar
1. Parking brake cable bracket

REMOVAL

Preparation:

1) Raise the vehicle and support the frame with suitable safety stands.
2) Support the rear axle case with a jack.

1. **Parking Brake Cable Bracket**
   Remove the parking brake cable from the trailing link.
2. **Stabilizer Bar**
   Disconnect the stabilizer bar at the stabilizer link.
3. **Shock Absorber**
   Remove the shock absorber from the axle case.
4. **Insulator**
5. **Coil Spring**
   Remove the insulator and coil spring while lowering the rear axle case.

CAUTION:
Be sure not to let the brake hose, parking brake cable, and breather hose extend to their full length.

INSPECTION AND REPAIR

Make necessary correction or parts replacement if wear, damage, corrosion or any other abnormal condition are found through inspection.

- Coil spring
- Insulator

INSTALLATION

5. **Coil Spring**
   Make sure that the coil spring is installed in the proper position.

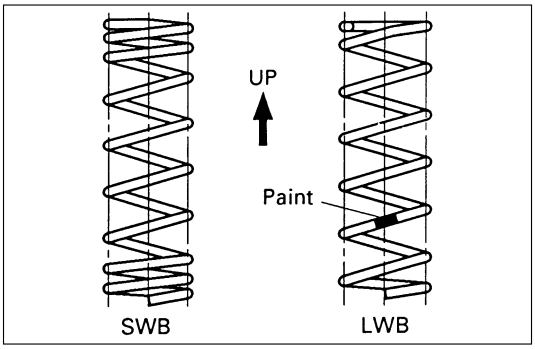

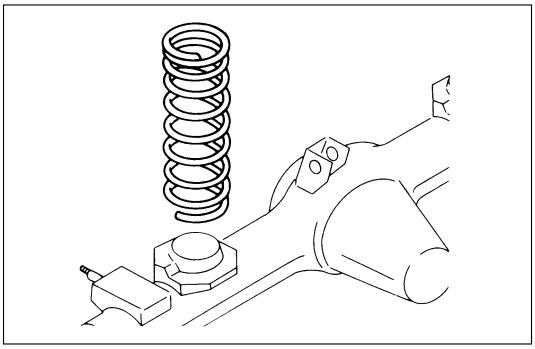

Fit the end of the coil spring to the coil spring seat and mount the coil spring on the rear axle case.

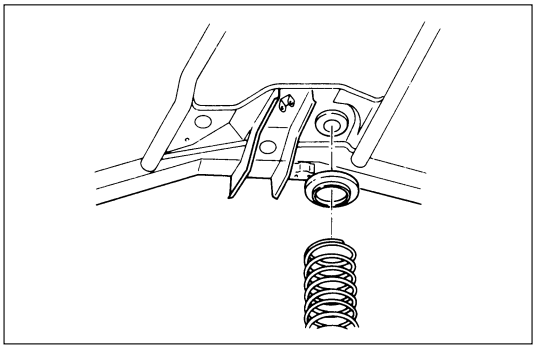

4. Insulator

Install the insulator on the coil spring. Jack up the axle case gently with the top of the coil spring to set the spring seat on the frame side.

3. Shock Absorber

Tighten the nut lightly, and retighten to the specified torque after the vehicle is at curb height.

NOTE:
When mounting shock absorber, be sure not to use grease on bushings or any other nearby part.

Shock Absorber Nut Torque	N·m (kg·m/lb·ft)
78 (8.0 / 58)	

2. Stabilizer Bar

Stabilizer Bar Nut Torque	N·m (kg·m/lb·ft)
50 (5.1 / 37)	

1. Parking Brake Cable Bracket

SHOCK ABSORBER

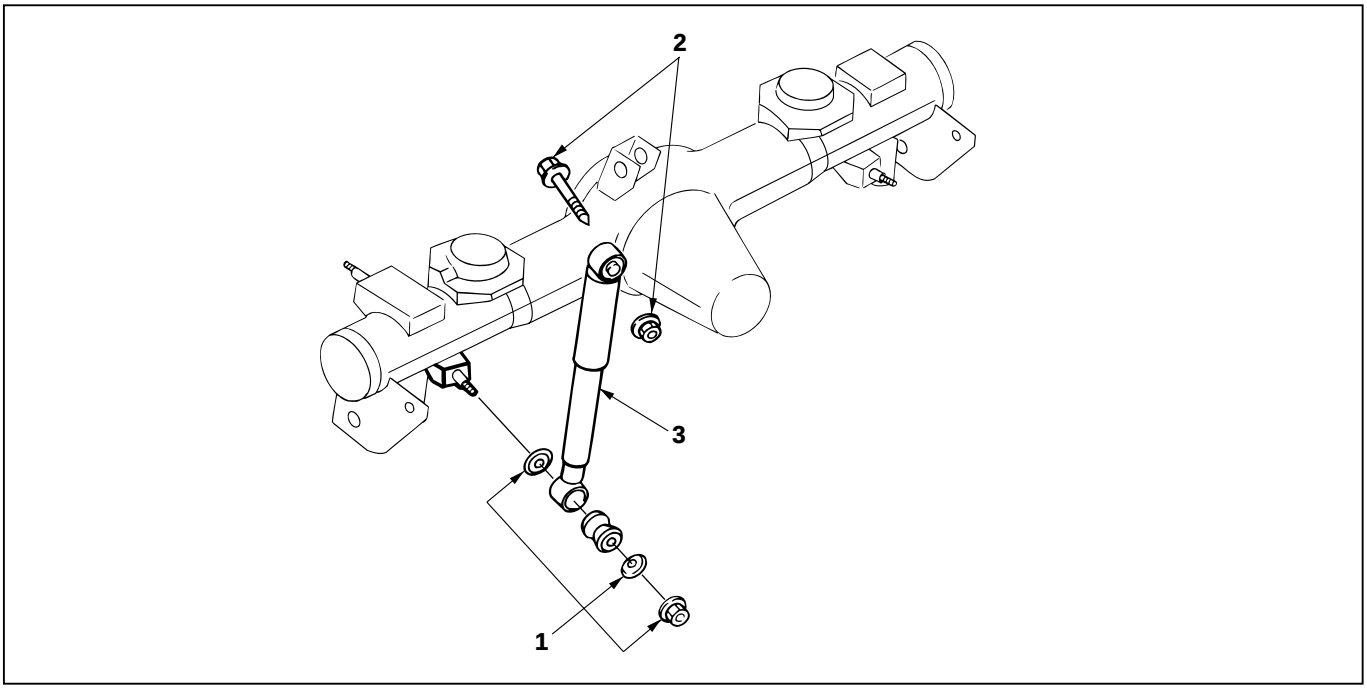

461RW003

Removal Steps

1. Nut and washer
2. Bolt, nut and washer
3. Shock absorber

Installation Steps

3. Shock absorber
2. Bolt, nut and washer
1. Nut and washer

REMOVAL

1. **Nut and Washer**
2. **Bolt, Nut and Washer**
3. **Shock Absorber**

INSPECTION AND REPAIR

Make necessary correction or parts replacement if wear, damage, corrosion or any other abnormal condition are found through inspection.

- Shock absorber
- Rubber bushing (Axle side)

INSTALLATION

3. **Shock Absorber**

   NOTE:
   When mounting rubber bushings, be sure not to use grease on bushings or any other nearby part.

2. **Bolt, Nut and Washer**

   NOTE:
   Tighten the bolt and nut lightly, and retighten to the specified torque after the vehicle is at curb height.

Shock Absorber Nut Torque	N·m (kg·m/lb·ft)
95 (9.7 / 70)	

1. **Nut and Washer**

   NOTE:
   Tighten the bolt and nut lightly, and retighten to the specified torque after the vehicle is at curb height.

Shock Absorber Nut Torque	N·m (kg·m/lb·ft)
78 (8.0 / 58)	

TRAILING LINK

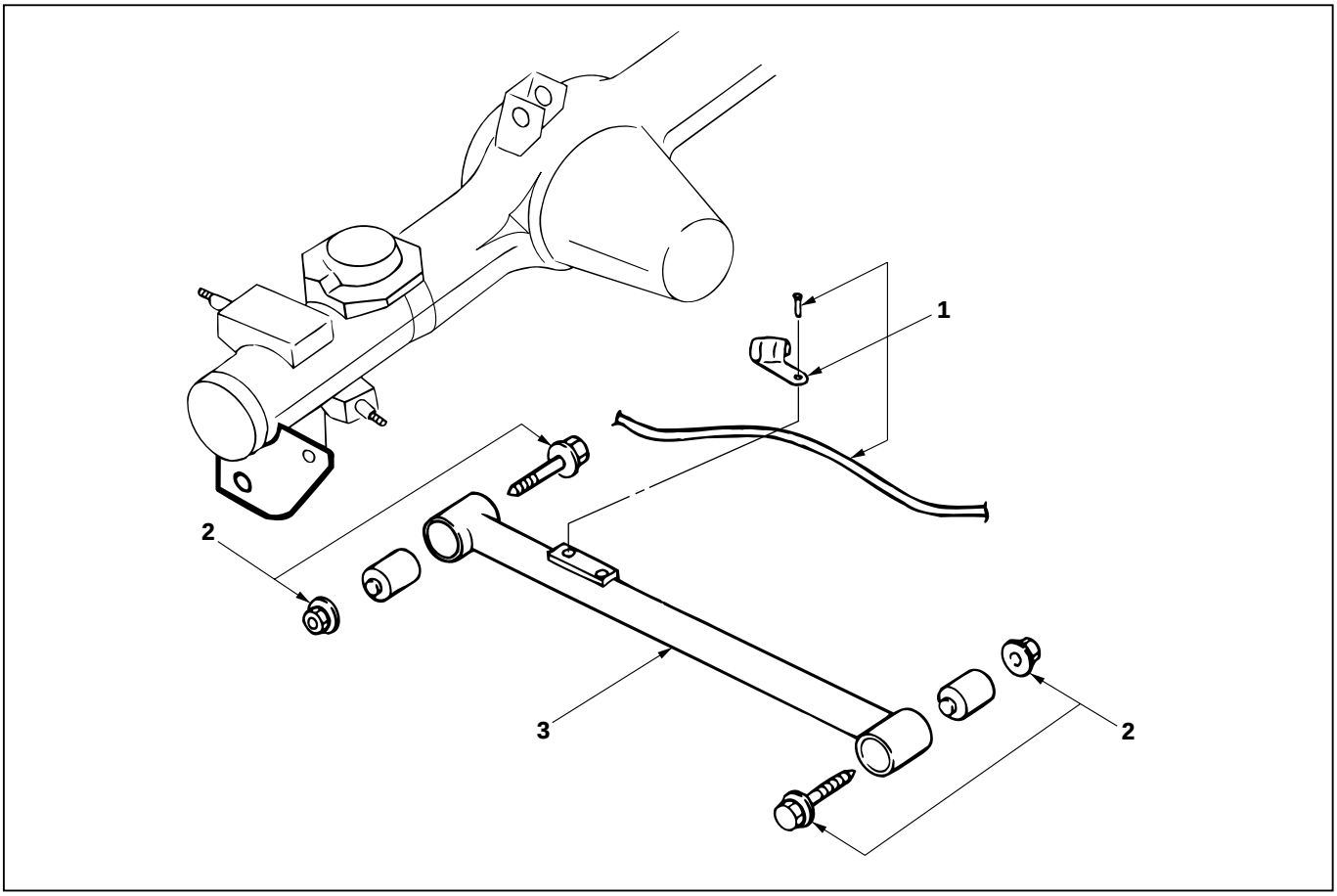

460RW025

Removal Steps

1. Parking brake cable
2. Bolt and nut
3. Trailing link

Installation Steps

3. Trailing link
2. Bolt and nut
1. Parking brake cable

REMOVAL

1. **Parking Brake Cable**
   Remove the parking brake cable from the trailing link.
2. **Bolt and Nut**
3. **Trailing Link**

INSPECTION AND REPAIR

Make necessary correction or parts replacement if wear, damage, corrosion or any other abnormal condition are found through inspection.

1. **Trailing Link**
2. **Rubber Bushing**
   Remove the rubber bushing.
   Remover: 5-8840-2298-0 (J-39214)

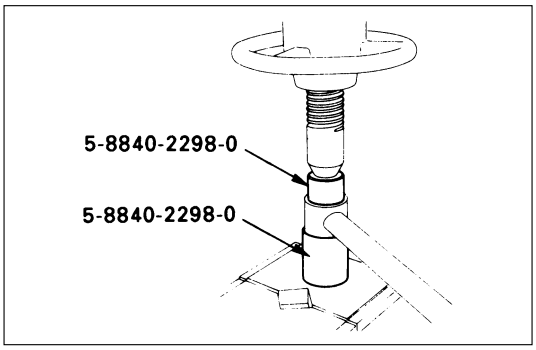

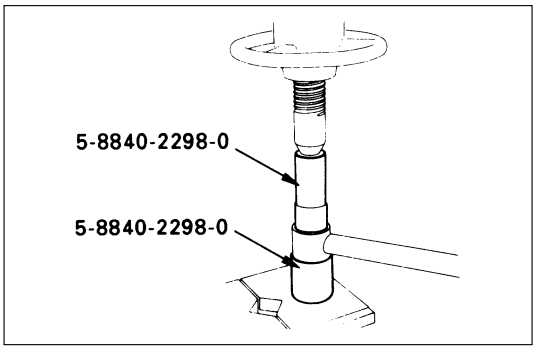

Install the rubber bushing.
Installer: 5-8840-2298-0 (J-39214)

NOTE:
When mounting rubber bushings, be sure not to use grease on bushings or any other nearby part.

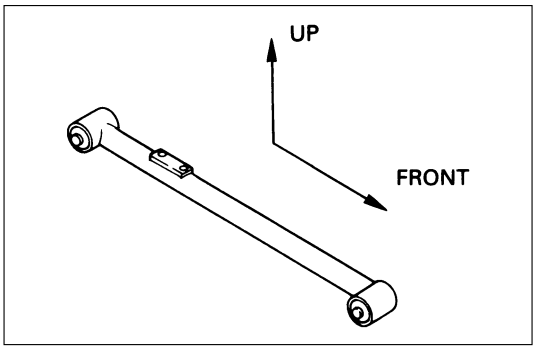

INSTALLATION

3. **Trailing Link**
   Make sure that the trailing link is in its correct position.

   NOTE:
   When mounting trailing link, be sure not to use grease on bushings or any other nearby part.

2. **Bolt and Nut**

   NOTE:
   Tighten the bolts and nuts lightly, and retighten to the specified torque after the vehicle is at curb height.

Trailing Link Nut Torque	N·m (kg·m/lb·ft)
137 (14.0 / 101)	

1. **Parking Brake Cable**

   CAUTION:
   The parking brake cable should not be overstrained or slackened.

CENTER LINK

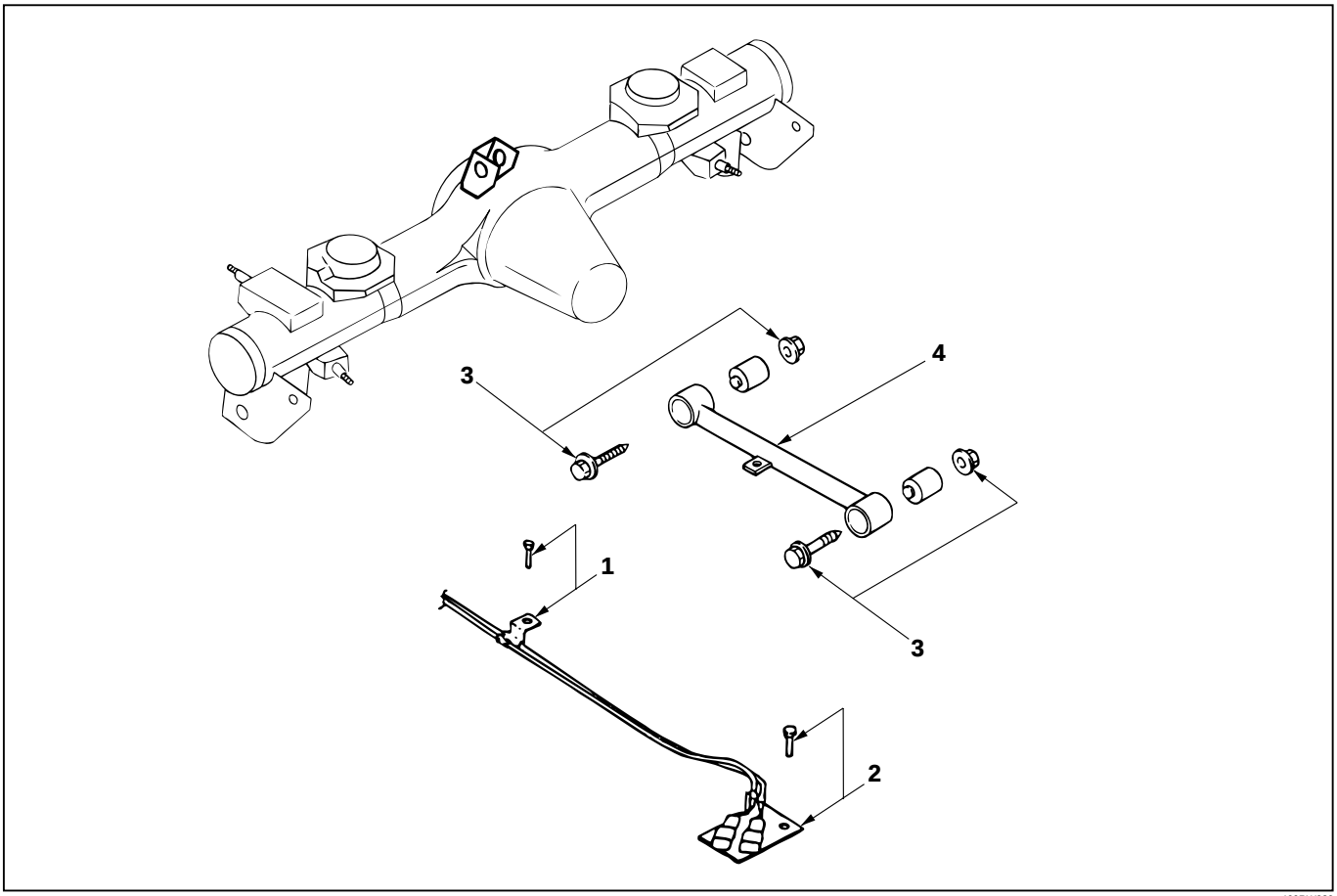

460RW026

Removal Steps

1. Speed sensor cable (If equipped with ABS)
2. Speed sensor cable bracket (If equipped with ABS)
3. Bolt and nut
4. Center link

Installation Steps

4. Center link
3. Bolt and nut
2. Speed sensor cable bracket (If equipped with ABS)
1. Speed sensor cable (If equipped with ABS)

REMOVAL

1. **Speed Sensor Cable (If equipped with ABS)**
   Remove the speed sensor cable from the center link.
2. **Speed Sensor Cable Bracket (If equipped with ABS)**
   Remove the speed sensor cable bracket from the frame.
3. **Bolt and Nut**
4. **Center Link**

INSPECTION AND REPAIR

Make necessary correction or parts replacement if wear, damage, corrosion or any other abnormal condition are found through inspection.

1. **Center Link**
2. **Rubber Bushing**
   Remove the rubber bushing.
   Remover: 5-8840-2298-0 (J-39214)

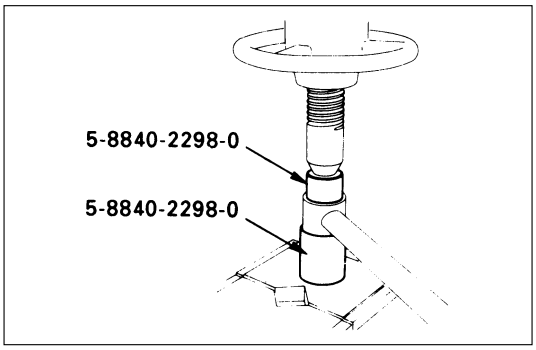

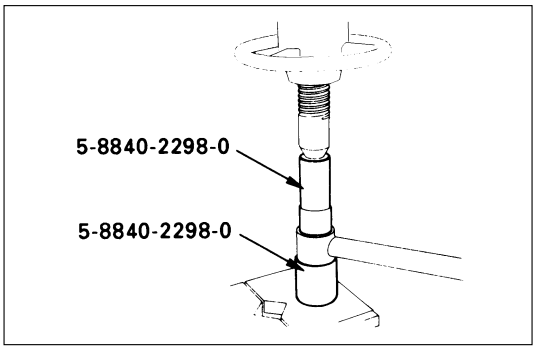

Install the rubber bushing.
Installer: 5-8840-2298-0 (J-39214)

NOTE:
When mounting rubber bushings, be sure not to use grease on bushings or any other nearby part.

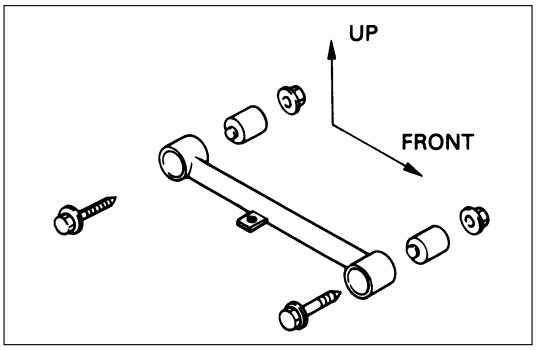

INSTALLATION

4. **Center Link**
   Make sure that the center link is in its correct position.

   NOTE:
   When mounting center link, be sure not to use grease on bushings or any other nearby part.

3. **Bolt and Nut**

   NOTE:
   Tighten the bolts and nuts lightly, and retighten to the specified torque after the vehicle is at curb height.

Center Link Nut Torque	N·m (kg·m/lb·ft)
137 (14.0 / 101)	

2. **Speed Sensor Cable Bracket**
1. **Speed Sensor Cable**

LATERAL ROD

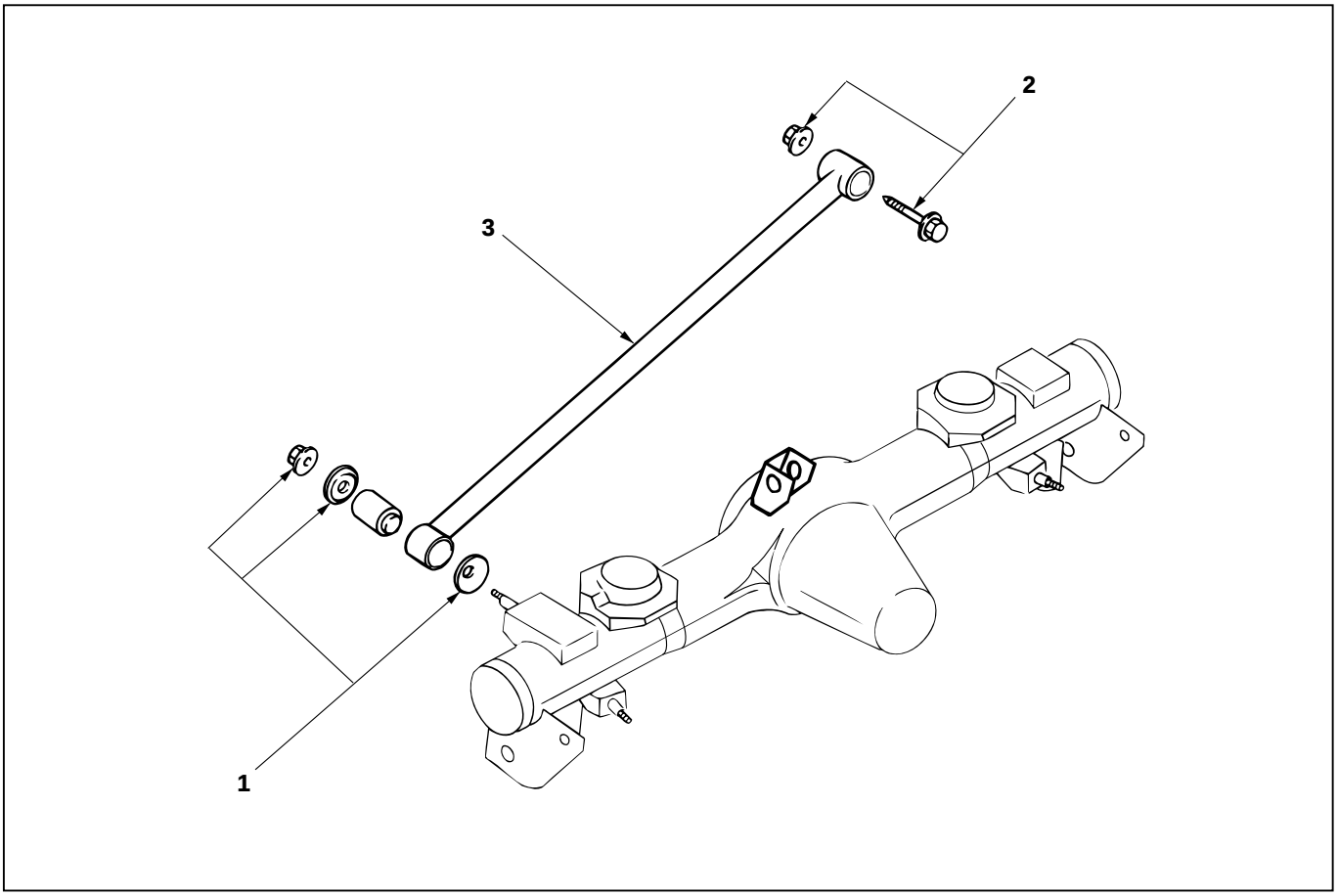

460RW027

Removal Steps

1. Nut and washer
2. Bolt and nut
3. Lateral rod

Installation Steps

3. Lateral rod
2. Bolt and nut
1. Nut and washer

REMOVAL

1. **Nut and Washer**
2. **Bolt and Nut**
3. **Lateral Rod**

INSPECTION AND REPAIR

Make necessary correction or parts replacement if wear, damage, corrosion or any other abnormal condition are found through inspection.

1. **Lateral Rod**

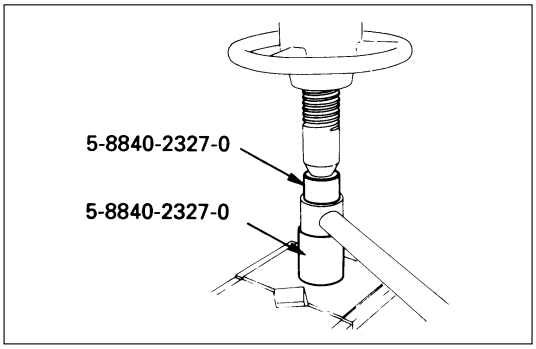

2. Rubber Bushing (Axle side)
Remove the rubber bushing (Axle side).
Remover: 5-8840-2327-0 (J-39792)

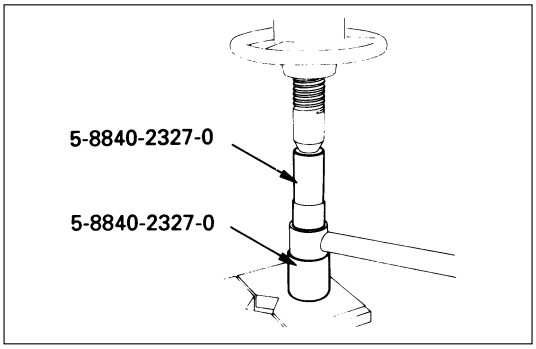

Install the rubber bushing (Axle side).
Installer: 5-8840-2327-0 (J-39792)

NOTE:
When mounting rubber bushings, do not use grease on bushings or any other nearby parts.

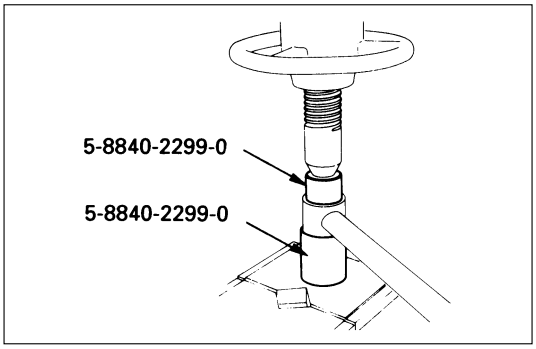

3. Rubber Bushing (Frame side)
Remove the rubber bushing (Frame side).
Remover: 5-8840-2299-0 (J-39215)

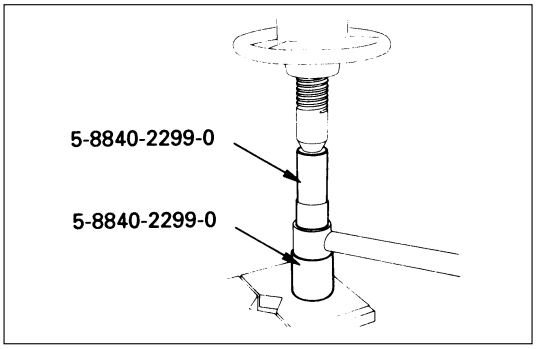

Install the rubber bushing (Frame side).
Installer: 5-8840-2299-0 (J-39215)

NOTE:
When mounting rubber bushings, do not use grease on bushings or any other nearby parts.

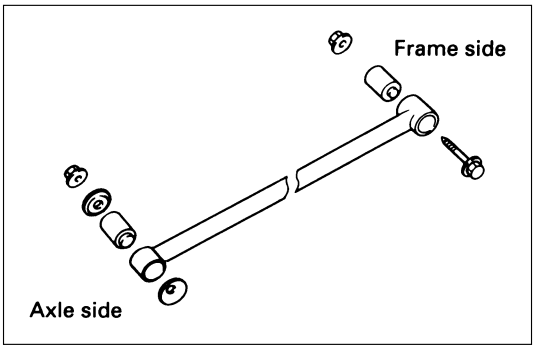

INSTALLATION

3. Lateral Rod

Make sure that the lateral rod is in its correct position.

NOTE:
When mounting lateral rod, be sure not to use grease on bushings or any other nearby part.

2. Bolt and Nut

NOTE:
Tighten the bolt and nut lightly, and retighten to the specified torque after the vehicle is at curb height.

Lateral Rod Nut Torque	N·m (kg·m/lb·ft)
137 (14.0 / 101)	

1. Nut and Washer

NOTE:
Tighten the nut lightly, and retighten to the specified torque after the vehicle is at curb height.

Lateral Rod Nut Torque	N·m (kg·m/lb·ft)
78 (8.0 / 58)	

STABILIZER BAR

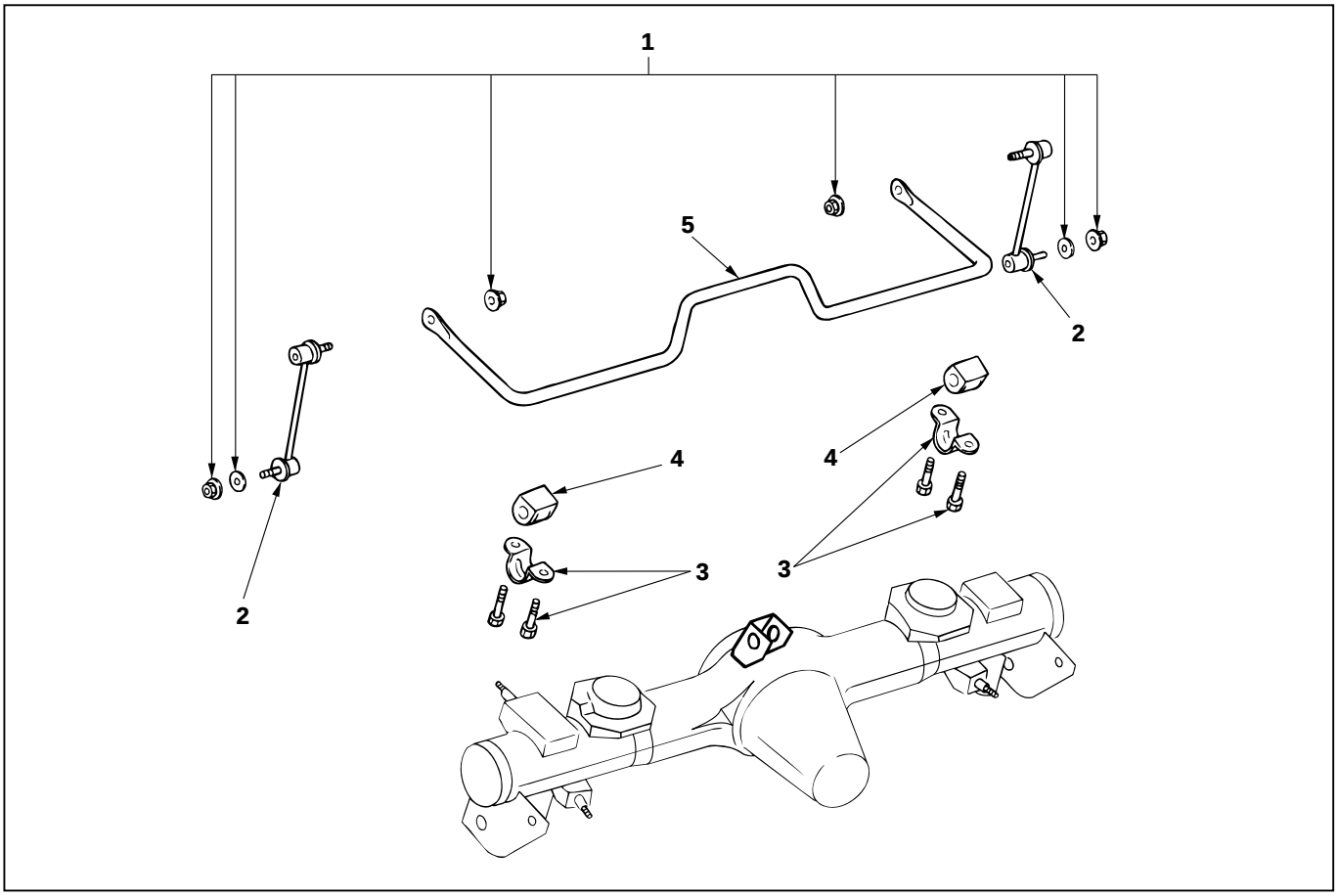

460RW028

Removal Steps

1. Nut and washer
2. Link
3. Bracket
4. Rubber bushing
5. Stabilizer bar

Installation Steps

5. Stabilizer bar
4. Rubber bushing
3. Bracket
2. Link
1. Nut and washer

REMOVAL

Preparation:

1) Raise the vehicle and support the frame with suitable safety stands.
2) Remove wheel and tire assembly.
   Refer to “Wheels and Tires” in section 3E.

1. Nut and Washer

CAUTION:
Be careful not to break the ball joint boot.

2. Link
3. Bracket
4. Rubber Bushing
5. Stabilizer Bar

INSPECTION AND REPAIR

Make necessary correction or parts replacement if wear, damage, corrosion or any other abnormal condition are found through inspection.

- Stabilizer bar
- Rubber bushing
- Link ball joint

INSTALLATION

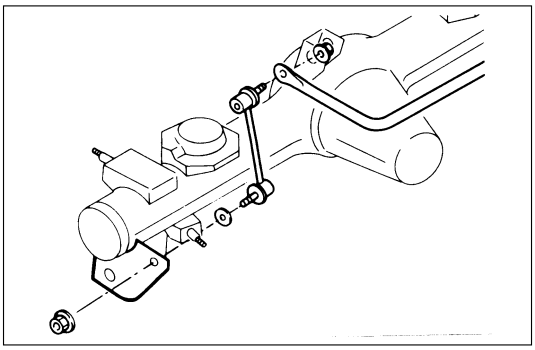

5. Stabilizer Bar

4 Rubber Bushing

3. Bracket

Bracket Bolt Torque	N·m (kg·m/lb·ft)
22 (2.2 / 16)	

2. Link

1. Nut and Washer

Link Nut Torque	N·m (kg·m/lb·ft)
50 (5.1 / 37)	

SECTION 3E

WHEELS AND TIRES

CONTENTS

PAGE

General Description ..... 3E – 2
On-Vehicle Service ..... 3E – 3
Wheels ..... 3E – 3
Unit Repair ..... 3E – 4
Tires ..... 3E – 4
Wheels ..... 3E – 5
General Balance Procedure ..... 3E – 5
Balancing Wheel and Tire ..... 3E – 6

GENERAL DESCRIPTION

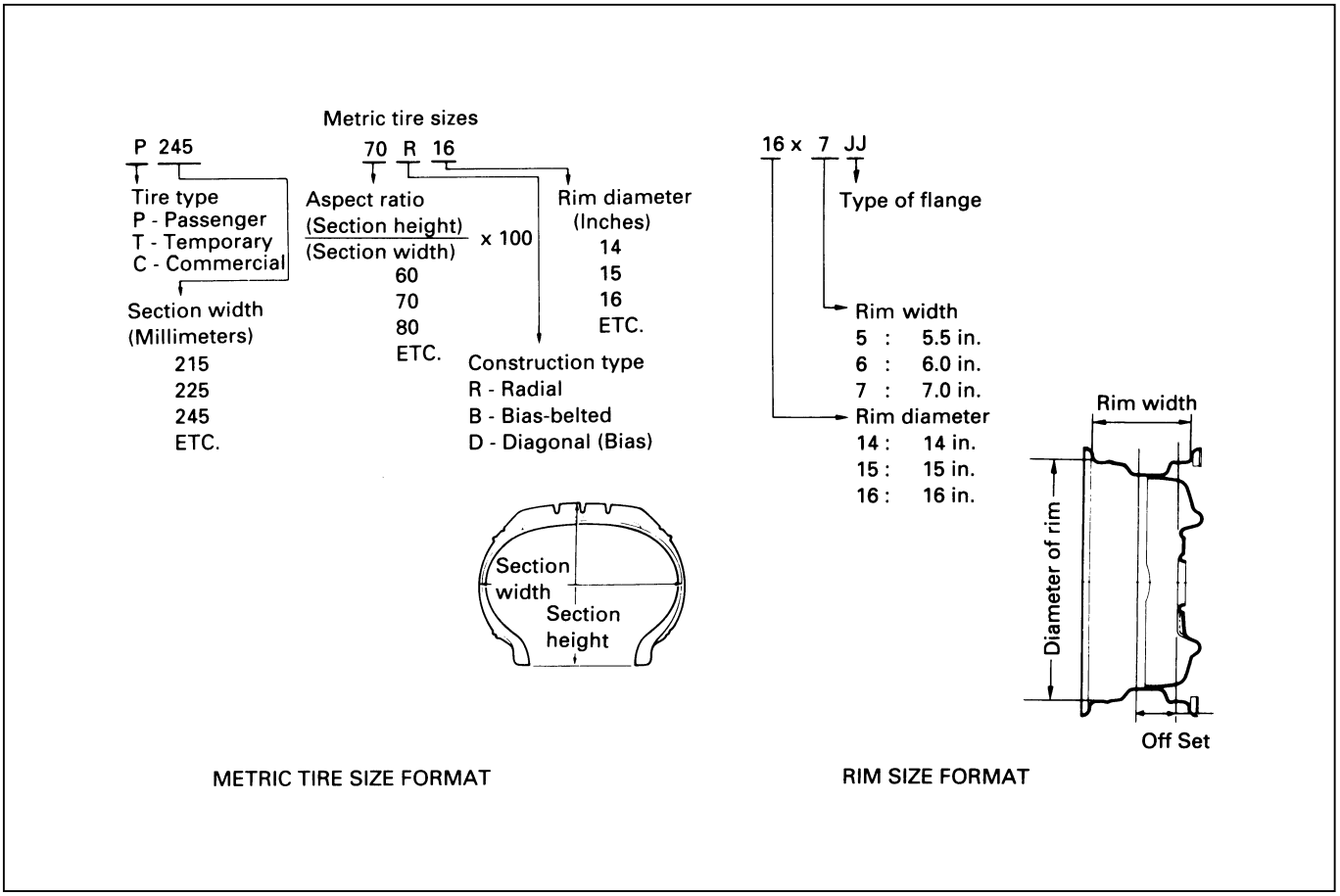

Replacement wheels or tires must be equivalent to the originals in load capacity, specified dimension and mounting configuration. Improper size or type may affect bearing life, brake performance, speedometer/odometer calibration, vehicle ground clearance and tire clearance to the body and chassis.

All models are equipped with metric sized steel belted radial tires. Correct tire pressures and driving habits have an important influence on tire life. Heavy cornering, excessively rapid acceleration and unnecessary sharp braking increase premature and uneven wear.

ON-VEHICLE SERVICE

WHEELS

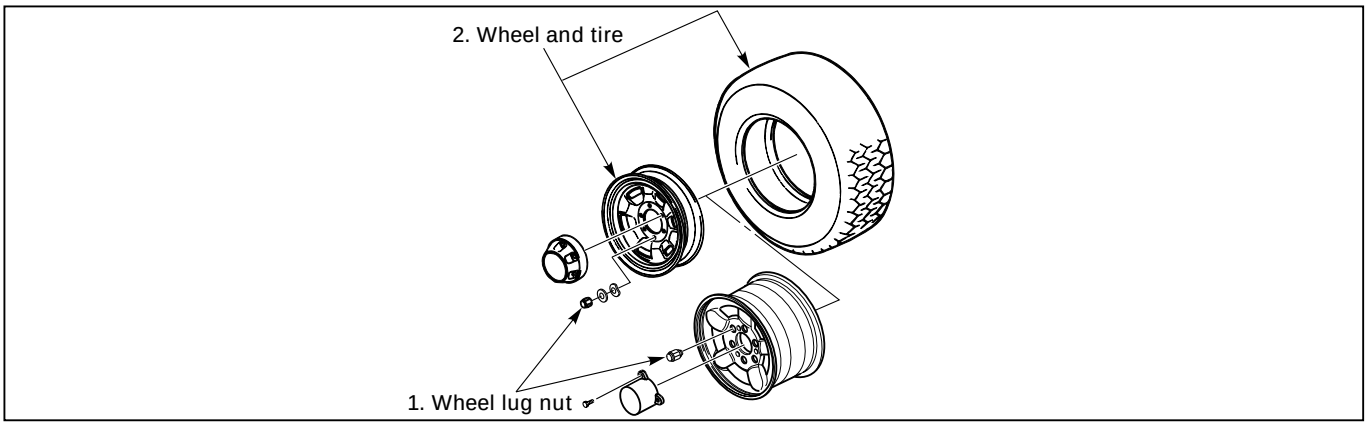

480RV004

Removal Steps

1. Wheel lug nut
2. Wheel and tire

Installation Steps

2. Wheel and tire
1. Wheel lug nut

REMOVAL

1. **Wheel Lug Nut**
   Loosen wheel nut by approximately 180° (half a rotation) and raise the vehicle. Then remove the nuts.
2. **Wheel and Tire**

   NOTE:
   Never use heat to loosen a tight wheel lug nut. The application of heat to the hub can shorten the life of the wheel and may cause damage to wheel bearings.

INSTALLATION

1. **Wheel and Tire**
2. **Wheel Lug Nut**
   Tighten the wheel lug nuts to the specified torque in numerical order.

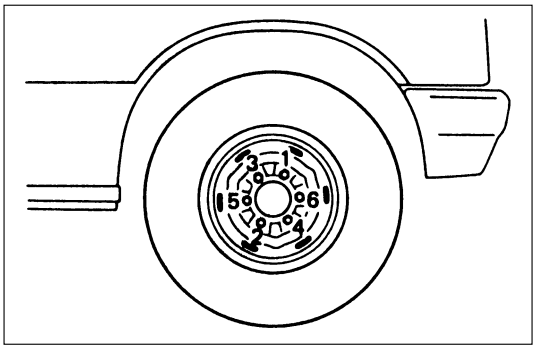

Wheel Lug Nut Torque	N·m (kg·m/lb·ft)
118 (12.0 / 87)	

CAUTION:
Before installing wheels, remove any build-up of corrosion on the wheel mounting surface and brake disc mounting surface by scraping and wire brushing. Installing wheels without good metal-to-metal contact at mounting surfaces can cause wheel nuts to loosen, which can later allow a wheel to come off while the vehicle is moving.

NOTE:
Valve caps should be on the valve stems to keep dust and water out.

UNIT REPAIR

TIRES

REPLACEMENT

When replacement is necessary, the original metric size should be used. Most metric tire sizes do not have exact corresponding alphanumeric tire sizes. It is recommended that new tires be installed in pairs on the same axle. If necessary to replace only one tire, it should be paired with tire having the most tread, to equalize braking traction.

CAUTION:
Do not mix different types of tires such as radial, bias and bias-belted tires except in emergencies, because vehicle handling may be seriously affected and may result in loss of control.

TIRE MOUNTING

Remove valve cap on valve stem and deflate the tire.
Then use a tire changing machine to mount or dismount tires.
Follow the equipment manufacturer's instruction. Do not use hand tools or tire lever alone to change tires as they may damage the tire beads or wheel rim.

TIRE DISMOUNTING

Rim bead seats should be cleaned with a wire brush or coarse steel wool to remove lubricants, and light rust.
Before mounting a tire, the bead area should be well lubricated with an approved tire lubricant.
After mounting, inflate the tire to 196 kPa (28 psi) so that beads are completely seated. Inflate the air to specified pressure and install valve cap to the stem

WARNING:
NEVER STAND OVER TIRE WHEN INFLATING. BEAD MAY BREAK WHEN BEAD SNAPS OVER RIM'S SAFETY HUMP AND CAUSE SERIOUS PERSONAL INJURY.
NEVER EXCEED 240 kPa (35 psi) PRESSURE WHEN INFLATING. IF 240 kPa (35 psi) PRESSURE WILL NOT SEAT BEADS, DEFLATE, RE-LUBRICATE AND RE-INFLATE. OVER INFLATION MAY CAUSE THE BEAD TO BREAK AND CAUSE SERIOUS PERSONAL INJURY.

TIRE REPAIR

There are many different materials on the market used to repair tires.
Manufacturers have published detailed instructions on how and when to repair tires. These instructions can be obtained from the tire manufacturer if they are not included with the repair kit.

WHEELS

REPLACEMENT

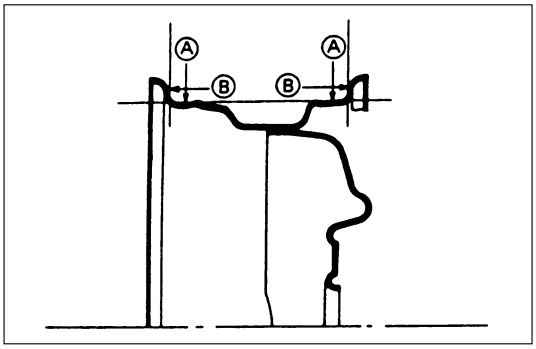

Damaged wheels and wheels with excessive runout must be replaced.
Wheel Runout at Rim (Based on Hub bore.)

	Steel	Aluminum
Ⓐ Vertical play: Less than mm(in)	1.5 (0.059)	0.7 (0.028)
Ⓑ Horizontal play: Less than mm(in)	1.5 (0.059)	0.7 (0.028)

GENERAL BALANCE PROCEDURE

Deposits of mud, etc. must be cleaned from the inside of the rim.
The tire should be inspected for the following: match mount paint marks, bent rims, bulges, irregular tire wear, proper wheel size and inflation pressure. Then balance according to the equipment manufacturer's recommendations.
There are two types of wheel and tire balance.
Static balance is the equal distribution of weight around the wheel.
Assemblies that are statically unbalanced cause a bouncing action called tramp. This condition will eventually cause uneven tire wear.

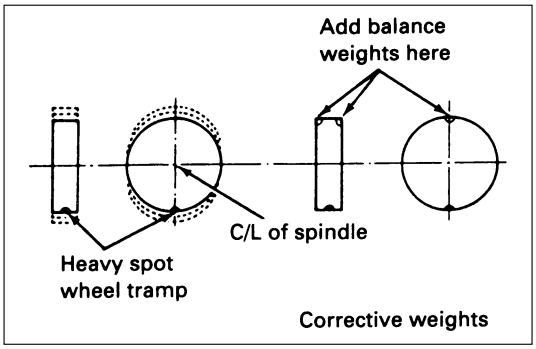

Dynamic balance is the equal distribution of weight on each side of the wheel center-line so that when the tire spins there is not tendency for the assembly to move from side to side. Assemblies that are dynamically unbalanced may cause shimmy.

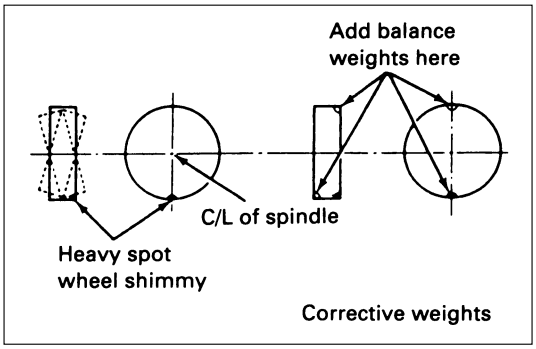

WARNING:
STONES SHOULD BE REMOVED FROM THE TREAD TO AVOID OPERATOR INJURY DURING SPIN BALANCING AND TO OBTAIN A GOOD BALANCE.

BALANCING WHEEL AND TIRE

ON-VEHICLE BALANCING

On-Vehicle balancing methods vary with equipment and tool manufacturers. Be sure to follow each manufacturer's instructions during balancing operation.

OFF-VEHICLE BALANCING

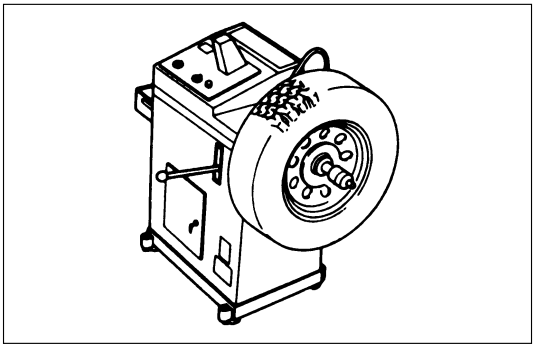

Most electronic off-vehicle balancers are more accurate than the on-vehicle spin balancers. They are easy to use and give a dynamic balance. Although they do not correct for drum or disc unbalance (as on-vehicle spin balancing does), they are very accurate.

DRIVELINE/AXLE

CONTENTS

Differential (Front) 4A1
Differential (Rear/220mm) 4A2A
Differential (Rear/244mm) 4A2B
Driveline Control System (Shift on the Fly) . . 4B1
Driveline Control System (TOD) 4B2
Driveshaft System 4C
Transfer Case (Standard Type) 4D1
Transfer Case (TOD) 4D2

DIFFERENTIAL (FRONT)

CONTENTS

Service Precaution 4A1–1
Front Drive Axle 4A1–2
Diagnosis 4A1–2
Pinion Shaft Oil Seal 4A1–3
Pinion Shaft Oil Seal and Associated Parts 4A1–3
Removal 4A1–3
Inspection and Repair 4A1–4
Installation 4A1–4
Front Drive Axle Assembly 4A1–5
Front Drive Axle Assembly and Associated Parts 4A1–5
Removal 4A1–5
Installation 4A1–7
Differential Assembly 4A1–9
Disassembled View 4A1–9
Disassembly 4A1–10
Reassembly 4A1–12
Differential Cage Assembly 4A1–21
Disassembled View 4A1–21
Disassembly 4A1–21
Inspection and Repair 4A1–22
Reassembly 4A1–23
Main Data and Specifications 4A1–25
Special Tools 4A1–28

Service Precaution

WARNING: IF SO EQUIPPED WITH A SUPPLEMENTAL RESTRAINT SYSTEM (SRS), REFER TO THE SRS COMPONENT AND WIRING LOCATION VIEW IN ORDER TO DETERMINE WHETHER YOU ARE PERFORMING SERVICE ON OR NEAR THE SRS COMPONENTS OR THE SRS WIRING. WHEN YOU ARE REFORMING SERVICE ON OR NEAR THE SRS COMPONENTS OR THE SRS WIRING, REFER TO THE SRS SERVICE INFORMATION. FAILURE TO FOLLOW WARNINGS COULD RESULT IN POSSIBLE AIR BAG DEPLOYMENT, PERSONAL INJURY, OR OTHERWISE UNNEEDED SRS SYSTEM REPAIRS.

CAUTION: Always use the correct fastener in the proper location. When you replace a fastener, use ONLY the exact part number for that application. ISUZU will call out those fasteners that require a replacement after removal. ISUZU will also call out the fasteners that require thread lockers or thread sealant. UNLESS OTHERWISE SPECIFIED , do not use supplemental coatings (Paints, greases, or other corrosion inhibitors) on threaded fasteners or fastener joint interfaces. Generally,such coatings adversely affect the fastener torque and the joint clamping force, and may damage the fastener. When you install fasteners, use the correct tightening sequence and specification. Following these instructions can help you avoid damage to parts and systems.

Front Drive Axle

Diagnosis

Condition	Possible cause	Correction
Oil Leak At Front Axle	Worn or defective oil seal.	Replace the oil seal.
	Front axle housing cracked.	Repair or replace.
Oil Leak At Pinion Shaft	Too much gear oil.	Correct the oil level.
	Oil seal worn or defective.	Replace the oil seal.
	Pinion flange loose or damaged.	Tighten or replace.
Noises In Front Axle Drive Shaft Joint	Broken or worn drive shaft joints and bellows (BJ and DOJ).	Replace the drive shaft joints and bellows.
“Clank” When Accelerating From “Coast”	Loose drive shaft joint to output shaft bolts.	Tighten.
	Damaged inner drive shaft joint.	Replace.
Shudder or Vibration During Acceleration	Excessive drive shaft joint angle.	Repair.
	Worn or damaged drive shaft joints.	Replace.
	Sticking spider assembly (inner drive shaft joint).	Lubricate or replace.
	Sticking joint assembly (outer drive shaft joint).	Lubricate or replace.
Vibration At Highway Speeds	Out of balance or out of round tires.	Balance or replace.
	Front end out of alignment.	Align.
Noises in Front Axle	Insufficient gear oil.	Replenish the gear oil.
	Wrong or poor grade gear oil.	Replace the gear oil.
	Drive pinion to ring gear backlash incorrect.	Adjust the backlash.
	Worn or chipped ring gear, pinion gear or side gear.	Replace the ring gear, pinion gear or side gear.
	Pinion shaft bearing worn.	Replace the pinion shaft bearing.
	Wheel bearing worn.	Replace the wheel bearing.
	Differential bearing loose or worn.	Tighten or replace.
Wanders and Pulls	Wheel bearing preload too tight.	Adjust the wheel bearing preload.
	Incorrect front alignment.	Adjust the front alignment.
	Steering linkage loose or worn.	Tighten or replace.
	Steering gear out of adjustment.	Adjust or replace the steering gear.
	Tire worn or improperly inflated.	Adjust the inflation or replace.
	Front or rear suspension parts loose or broken.	Tighten or replace.
Front Wheel Shimmy	Wheel bearing worn or improperly adjusted.	Adjust or replace.
	Incorrect front alignment.	Adjust the front alignment.
	Worn ball joint or bush.	Replace the ball joint or bush.
	Steering linkage loose or worn.	Tighten or replace.
	Steering gear out of adjustment.	Tighten or replace.
	Tire worn or improperly inflated.	Replace or adjust the inflation.
	Shock absorber worn.	Replace the shock absorber.

Pinion Shaft Oil Seal

Pinion Shaft Oil Seal and Associated Parts

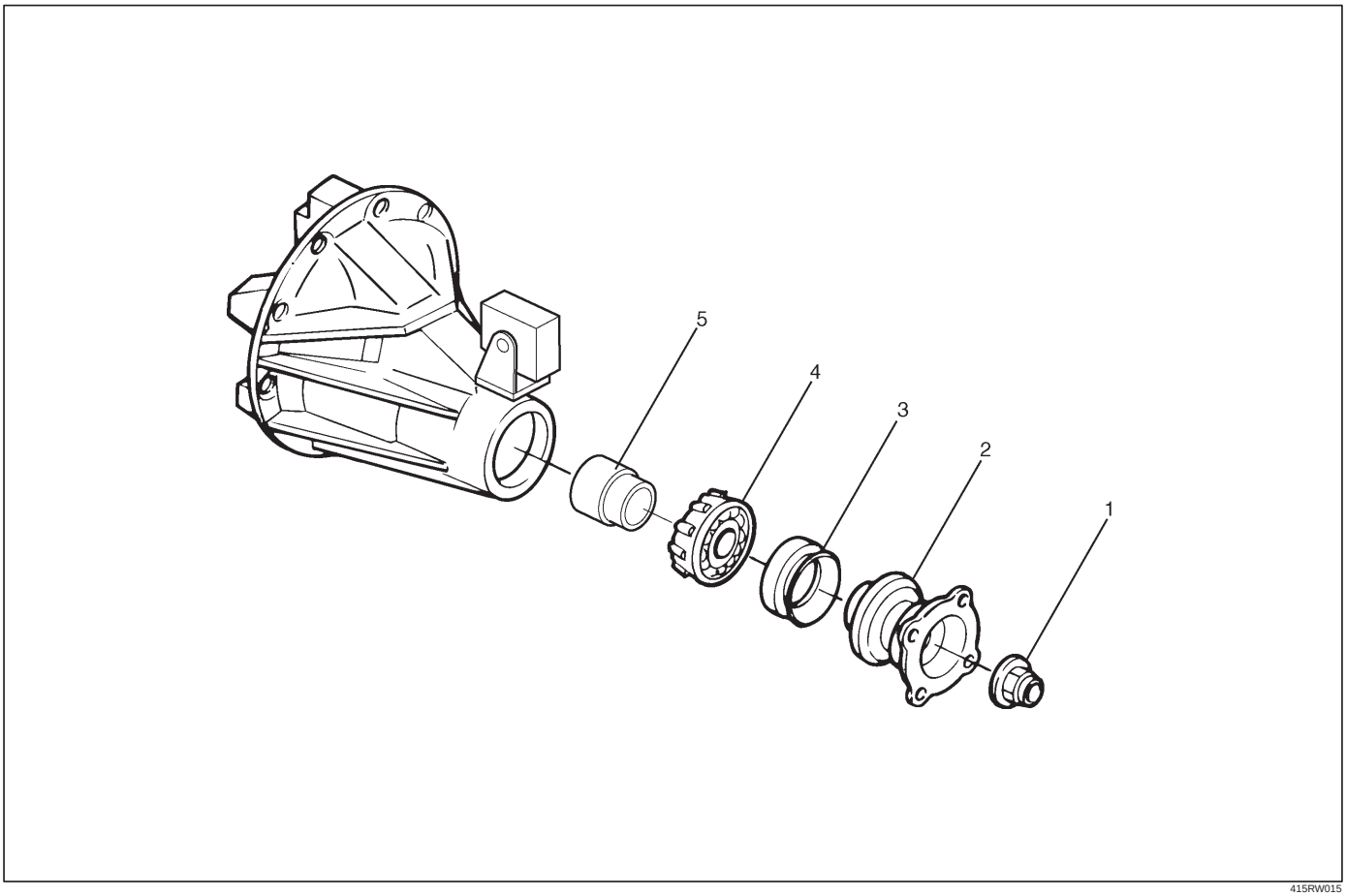

415RW015

Legend

(1) Flange Nut
(2) Flange
(3) Oil Seal
(4) Outer Bearing
(5) Collapsible Spacer

Removal

1. Raise the vehicle and support it at the frame.
   The hoist must remain under the front axle housing.
2. Drain the front axle oil by loosening the drain plug(1).

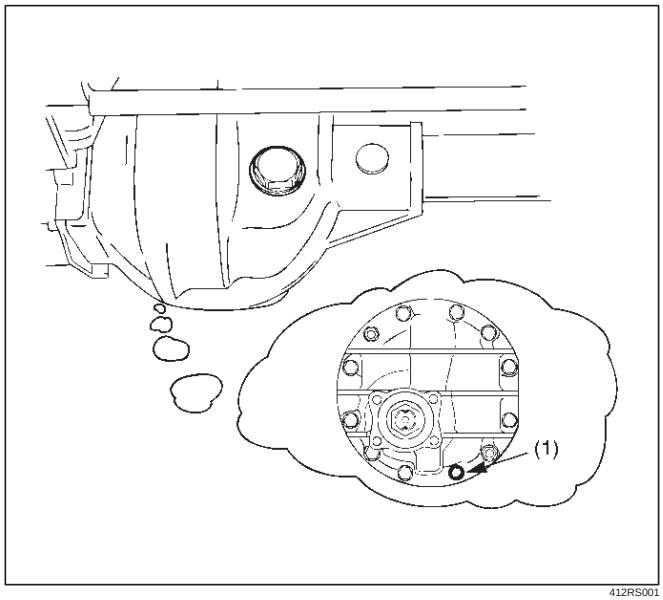

412RS001

3. Remove the front propeller shaft. Refer to Front Propeller Shaft in this section.
4. Remove flange nut by using pinion flange holder 5–8840–2157–0.

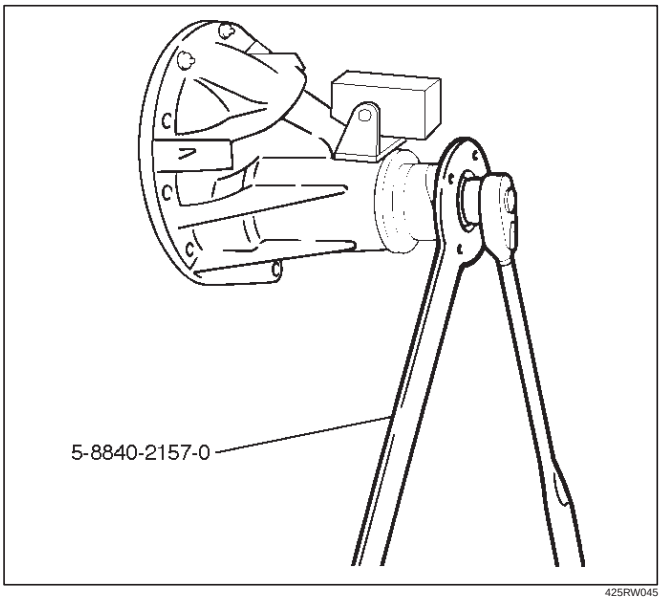

425RW045

5. Remove flange.
6. Remove oil seal.
7. Remove outer bearing by using remover 5–8840–2323–0.

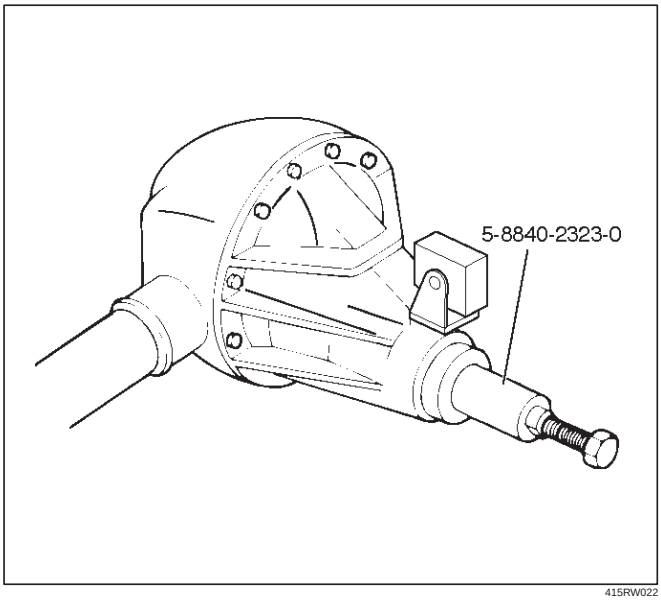

415RW022

8. Remove collapsible spacer.

Inspection and Repair

Make necessary correction or parts replacement if wear, damage, corrosion or any other abnormal conditions are found through inspection.
Check the following parts:

1. Seal surface of the pinion.
2. Cage bore for burns.

Installation

1. Install collapsible spacer. Discard the used collapsible spacer and install a new one.
2. Install outer bearing.

NOTE: Do not drive in, but just temporarily set in the outer bearing by hand, which should be indirectly pressed in finally by tightening the flange nut.

3. Install oil seal, use oil seal installer 9–8522–1275–0 to install a new oil seal that has been soaked in axle lubricant.

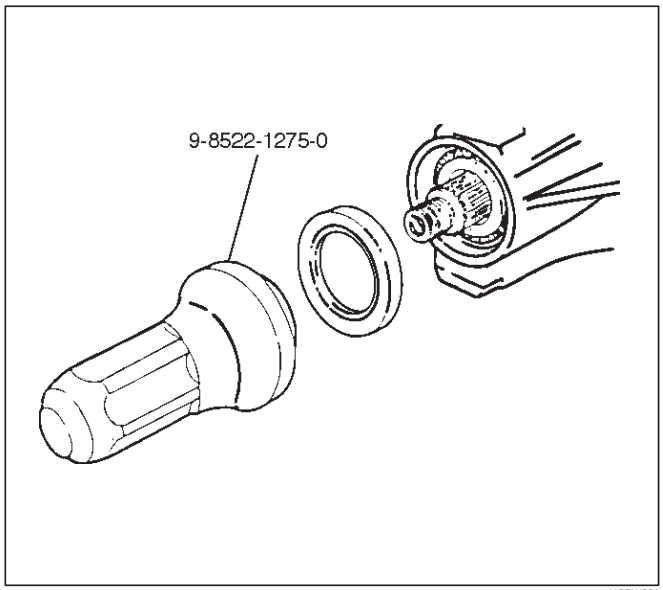

415RW021

4. Install flange.
5. Install flange nut, refer to Differential Assembly for flange nut reassembly in this section.

NOTE: Discard the used nut and install a new one.

Front Drive Axle Assembly

Front Drive Axle Assembly and Associated Parts

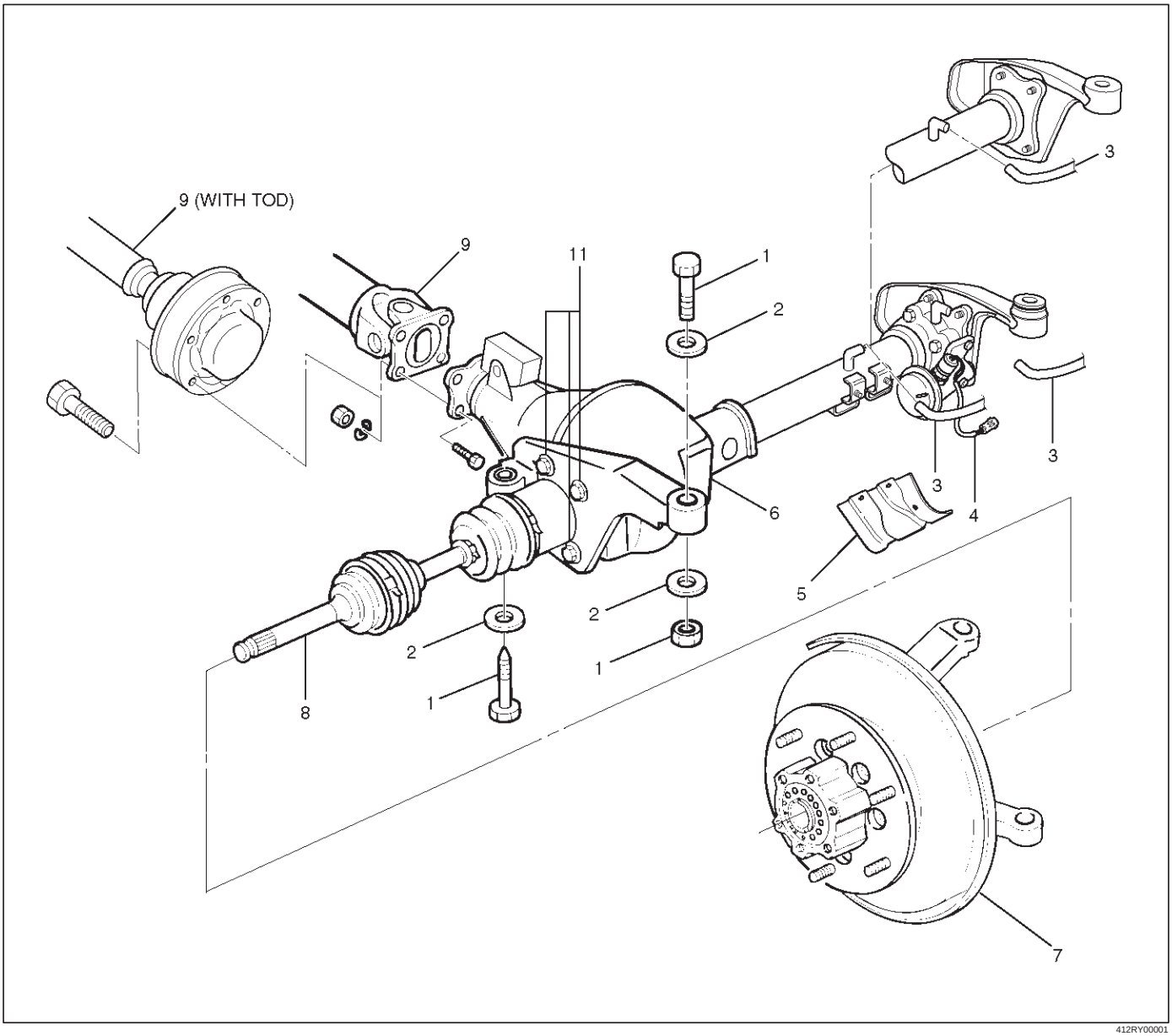

412RY00001

Legend

(1) Mounting Bolt and Nut
(2) Washer and Spacer
(3) Breather Hose
(4) Shift Switch Connector (with Shift on the Fly)
(5) Protector (with Shift on the Fly)
(6) Front Axle Case Assembly and Front Drive Shaft Assembly (LH side)
(7) Hub Assembly (Disc, Back Plate and Knuckle)
(8) Front Drive Shaft Assembly (RH side)
(9) Propeller Shaft
(10) Bolt

Removal

1. Jack up the vehicle and support it using jack stands.
2. Remove the tire and wheel.

3. Remove the drain bolt to drain differential oil.

NOTE:

a. During the work, be sure that the diff case is supported by the jack.

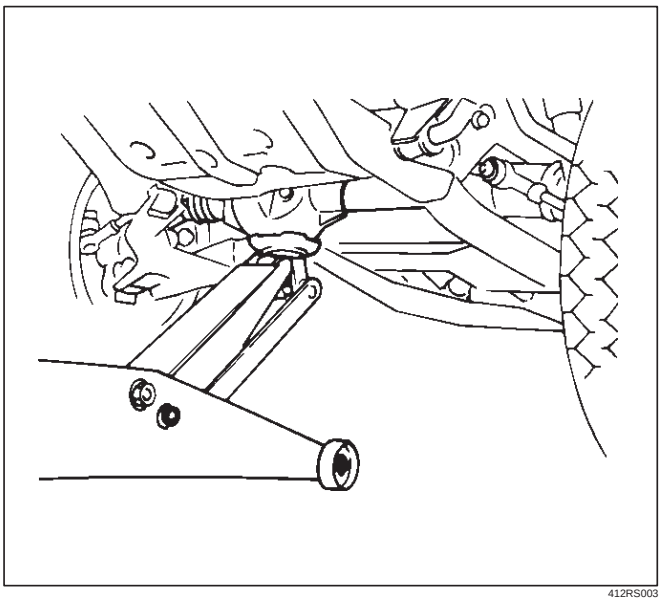

412RS003

b. Remove the brake caliper fixing bolt and hang the caliper. Refer to Front Disc Brake Caliper Assembly in Brake section.

c. Remove the antilock brake system speed sensor (if equipped). Refer to Front Wheel Speed Sensor in Brakes section.

4. Remove the hub assembly (Disc, back plate and knuckle), refer to Front Hub and Disc in this section.
5. Disconnect the knuckle and the suspension arm. Refer to Suspension section.
6. Remove steering link and arm assembly, refer to Steering Linkage in Steering section.
7. Remove suspension crossmember.
8. Remove propeller shaft, refer to Front Propeller Shaft in this section.
9. Remove protector (Shift on the fly model).
10. Remove the hose clip.
11. Disconnect breather hose from front drive axle tube. (and disconnect housing : Shift on the fly model).
12. Disconnect vacuum hose from actuator (Shift on the fly model).
13. Disconnect shift switch connector (Shift on the fly model).

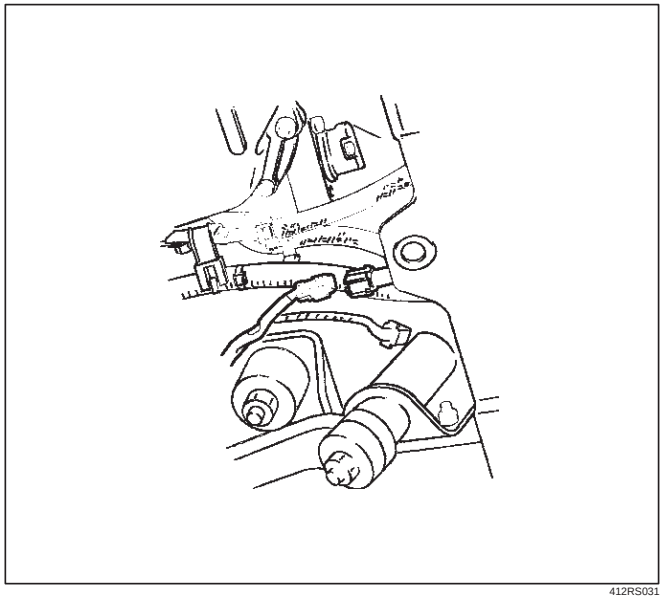

412RS031

14. Remove VSV assembly (1) (Shift on the fly model).

NOTE: Be sure not to remove hose and connector from VSV asm.

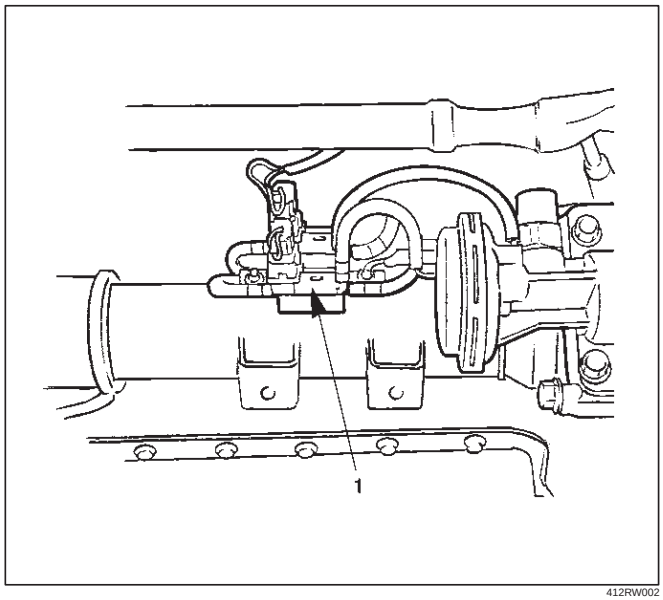

412RW002

15. Remove mounting bolt and nut.

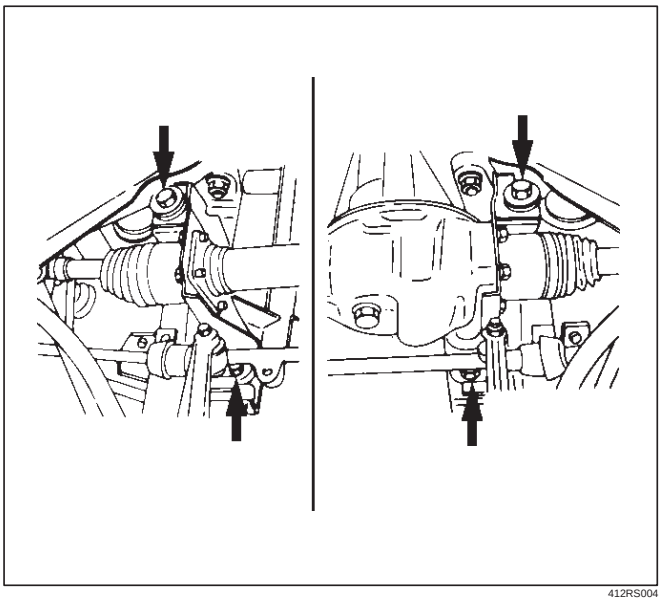

412RS004

16. Remove washer and spacer.
17. Remove the mounting bracket fixing bolt.

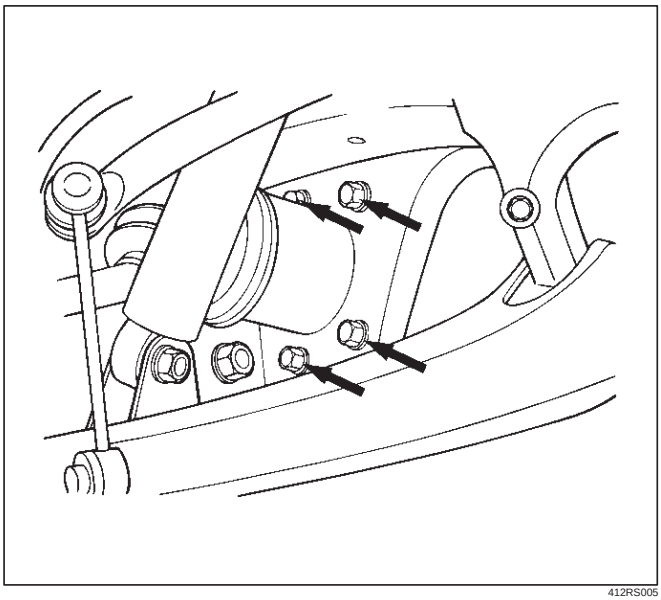

412RS005

18. Lower the vehicle and disconnect the RH front drive shaft assembly, then remove the front axle case assembly and front drive shaft assembly (LH).

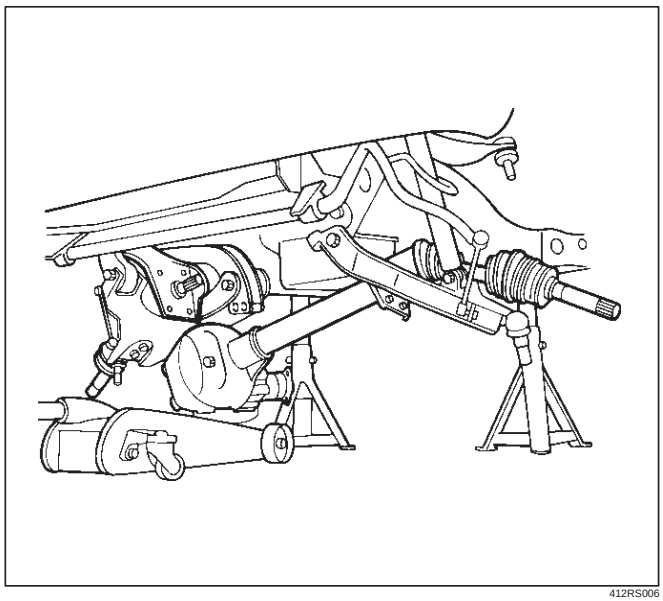

412RS006

19. Remove front drive shaft assembly (RH).

Installation

1. Install front drive shaft assembly (RH) and lay the assembly on the lower arm.
2. Install front axle case assembly and front drive shaft assembly (LH) and place the axle case on the jack, connect to the front drive shaft assembly (RH) before installing to the vehicle.
3. Install bolt and tighten the mounting bracket fixing bolt to the specified torque.

   Torque: 116 N·m (11.8kg·m/85 lb ft)

4. Install washer and spacer.

5. Tighten the mounting bolt and nut to the specified torque.

Torque: 152 N·m (15.5kg·m/112 lb ft)

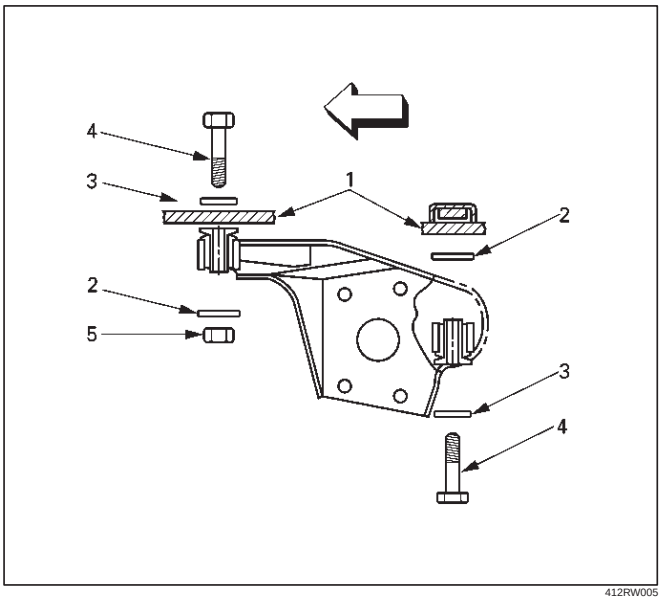

412RW005

Legend

(1) Frame
(2) Spacer
(3) Washer
(4) Bolt
(5) Nut

6. Install VSV assembly and tighten nuts to specified torque (Shift on the fly model).

Torque: 8 N·m (0.8kg·m/69 lb in)

7. Install the shift switch connector (Shift on the fly model).

NOTE: Be careful not to permit the entry of dust into the connector.

8. Install the actuator side of vacuum hose (Shift on the fly model).

NOTE: Be careful not to permit the entry of dust into the hose.

9. Connect breather hose and install the hose clip.
10. Install protector and tighten bolts to specified torque (Shift on the fly model).

Torque: 26 N·m (2.7kg·m/20 lb ft)

11. Install propeller shaft, refer to Front Propeller Shaft in this section.
12. Install suspension crossmember.
13. Steering link and arm assembly, refer to Steering Linkage in Steering section.
14. Install hub assembly (Disc, back plate and knuckle), refer to Front Hub and Disc in this section.

Differential Assembly

Disassembled View

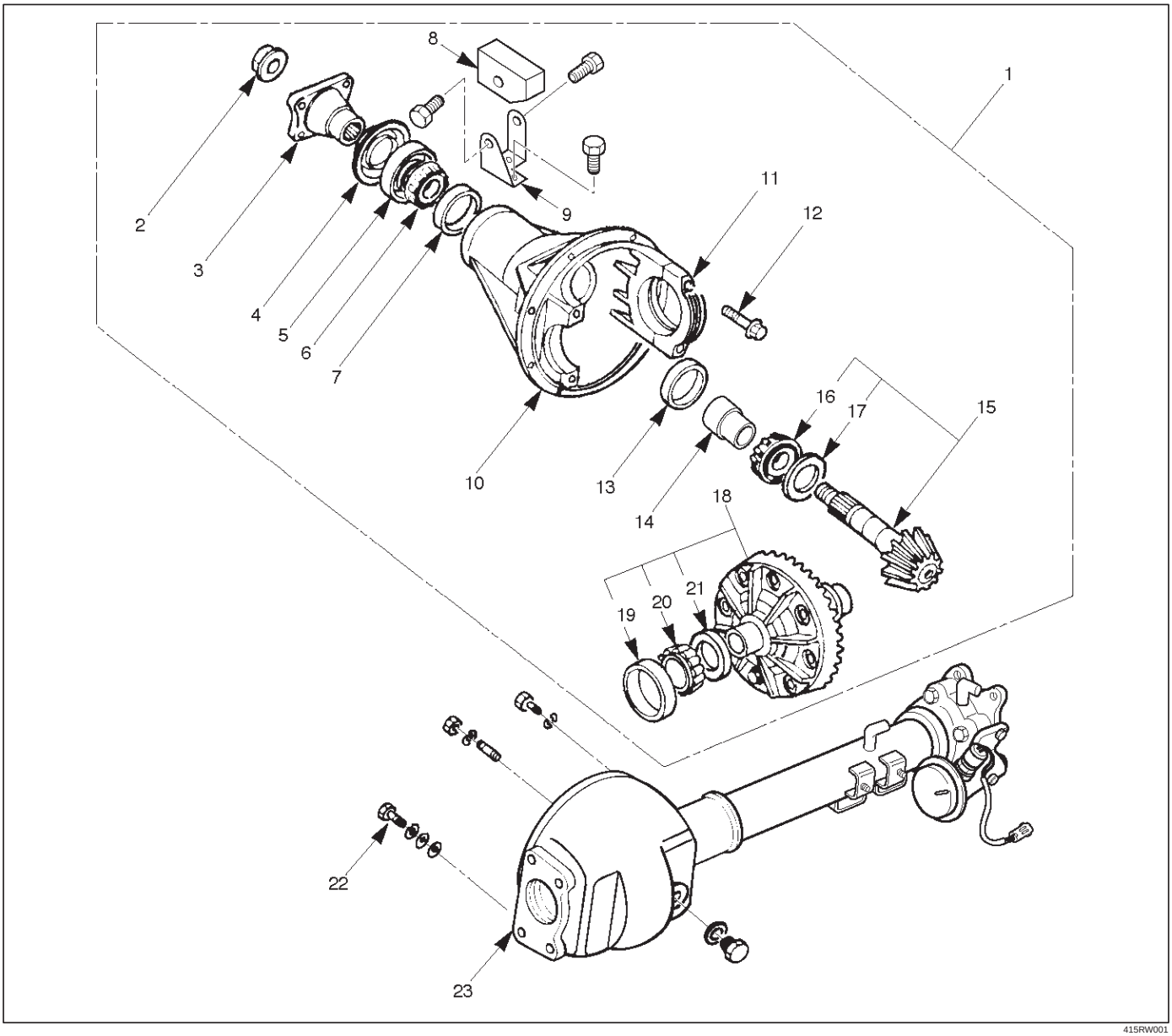

415RW001

Legend

(1) Differential Assembly
(2) Flange Nut
(3) Flange
(4) Dust Cover
(5) Oil Seal
(6) Outer Bearing
(7) Outer Bearing Outer Race
(8) Damper
(9) Bracket
(10) Differential Carrier
(11) Bearing Cap
(12) Bolt
(13) Inner Bearing Outer Race
(14) Collapsible Spacer
(15) Pinion Gear
(16) Inner Bearing
(17) Adjust Shim
(18) Diff Cage Assembly
(19) Side Bearing Outer Race
(20) Side Bearing
(21) Adjust Shim
(22) Bolt
(23) Axle Case

Disassembly

1. Remove differential carrier fixing bolt.
2. Remove differential assembly.
3. Using holding fixture 5–8840–0275–0 and holding fixture base 5–8840–0003–0, fix the differential assembly to the bench.

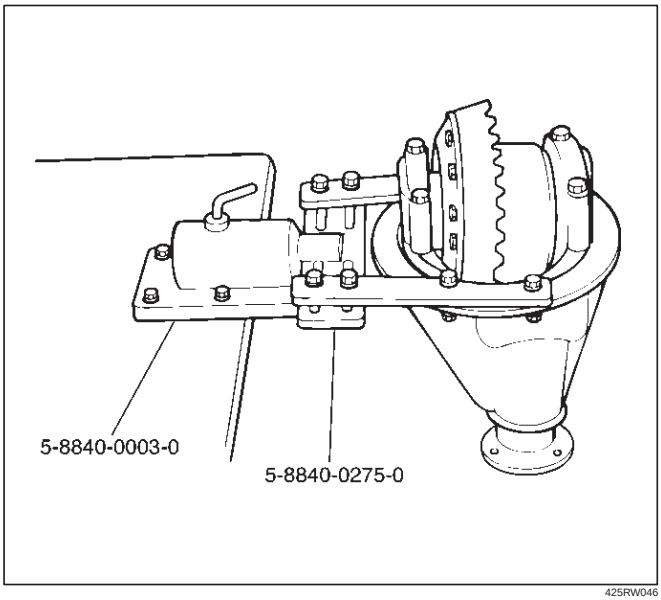

425RW046

4. Remove bearing cap bolt.
5. Apply a setting mark to the side bearing cap and the differential carrier then remove bearing cap.

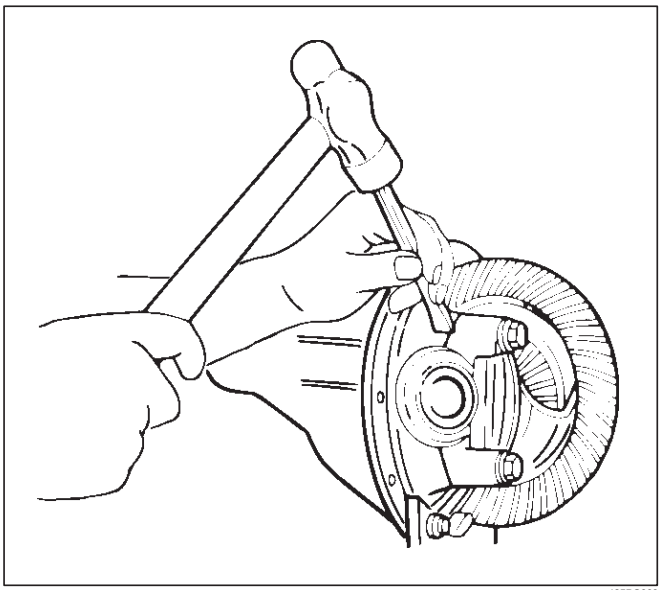

425RS009

6. Remove differential cage assembly.
7. Remove side bearing outer race, after removal, keep the right and left hand side bearing assemblies separate to maintain inner and outer race combinations.
8. Remove side bearing, using remover 5–8840–0013–0, 5–8840–0014–0 and adapter 9–8521–1743–0.

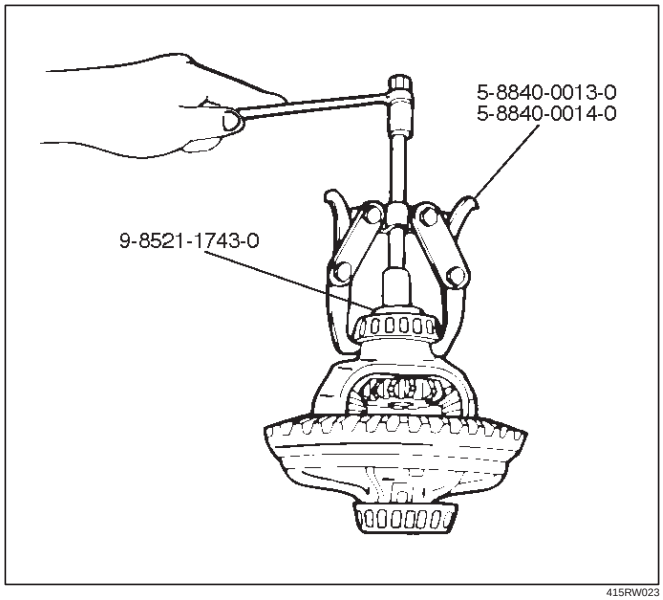

415RW023

9. Remove adjust shim, note the thickness and position of the shims removed.
10. Remove the flange nut using holding wrench 5–8840–2157–0 after raising up its staked parts completely.

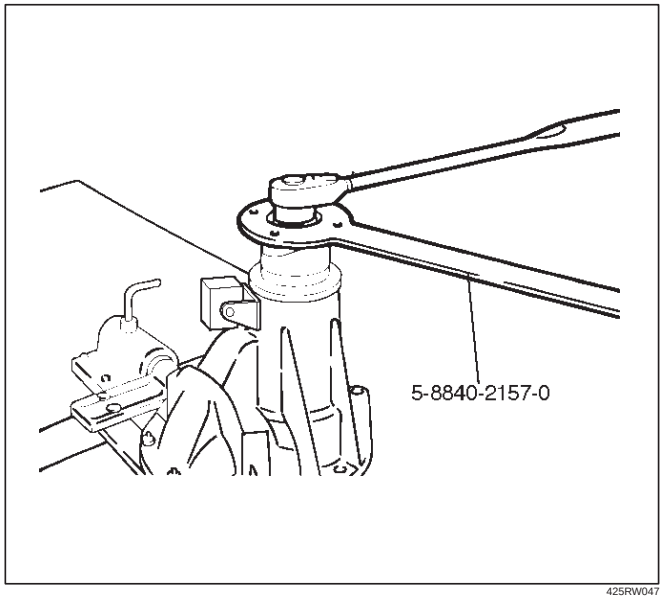

425RW047

11. Remove flange.

12. Remove dust cover.
13. Remove the drive pinion assembly using a soft metal rod and a hammer.

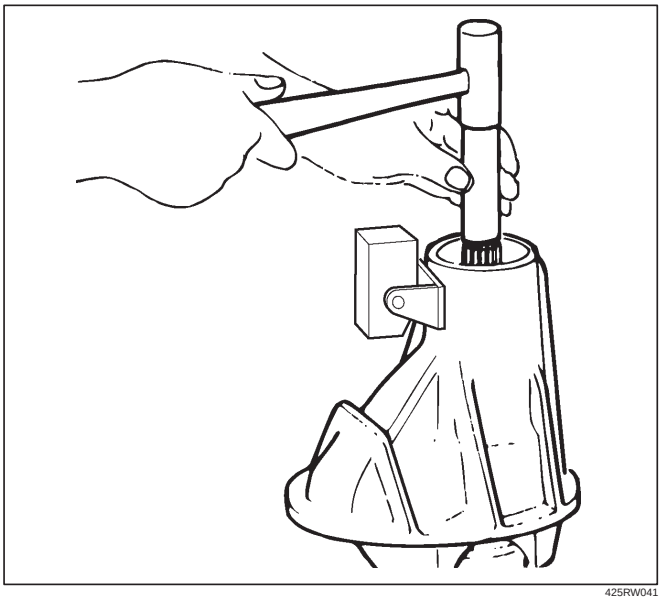

425RW041

14. Remove collapsible spacer.
15. Remove the inner bearing using a separator 5–8840–0015–0 and a press.

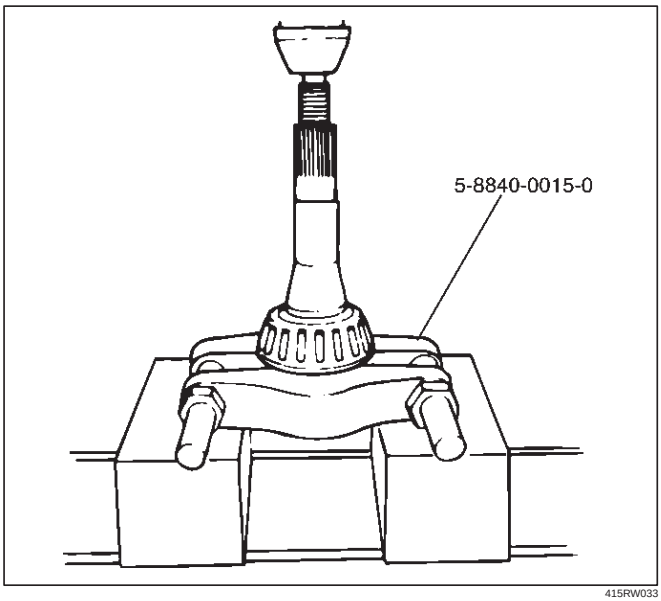

415RW033

16. Remove adjust shim.
17. Remove inner bearing outer race.
18. Remove oil seal.
19. Remove outer bearing.
20. Remove the inner bearing outer race (1) and the outer bearing outer race (2) by using a brass bar and a hammer.

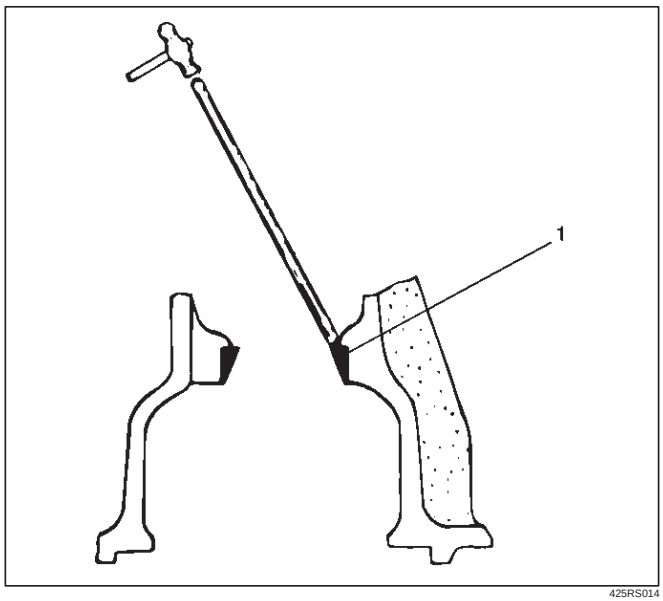

425RS014

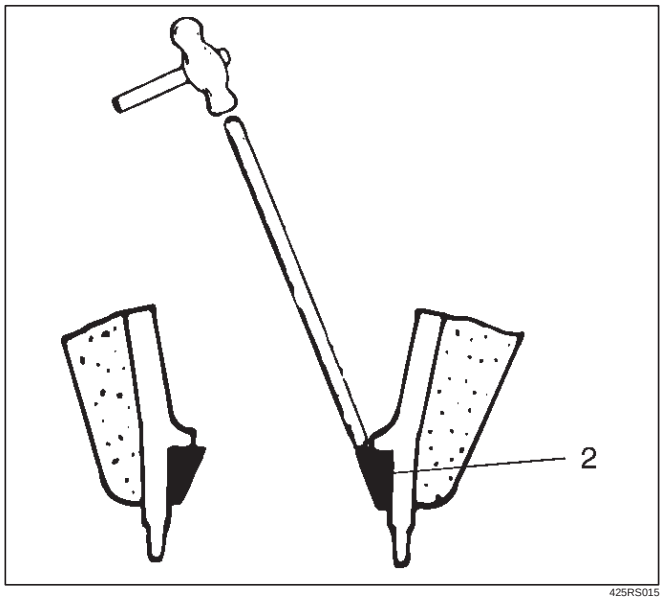

425RS015

21. Remove damper and bracket.

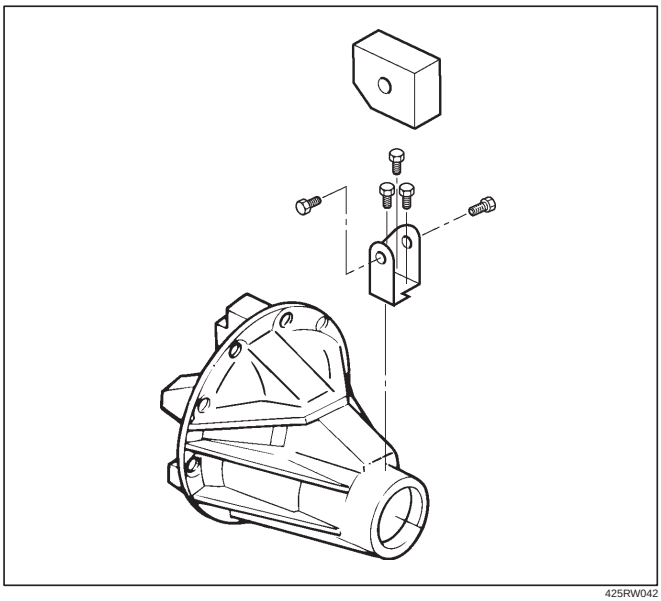

425RW042

Reassembly

1. Using installer 9–8522–1141–0 and grip 5–8840–0007–0, install outer bearing outer race.

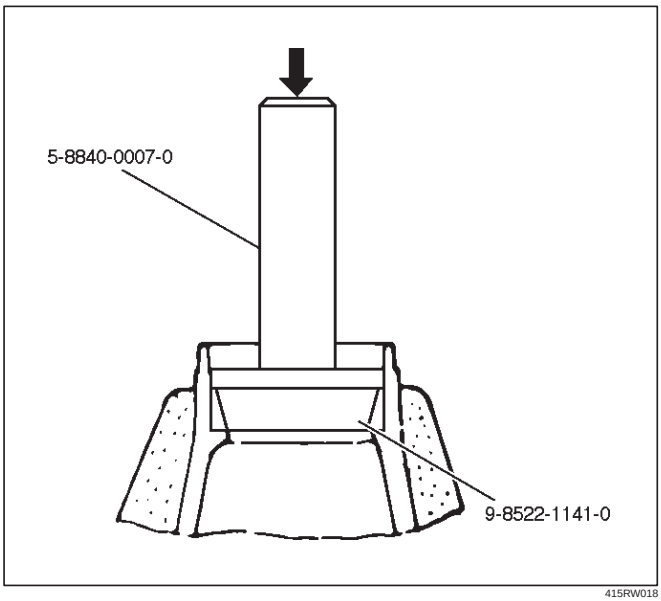

415RW018

2. Using installer 9–8522–1274–0 and grip 5–8840–0007–0, install Inner bearing outer race.

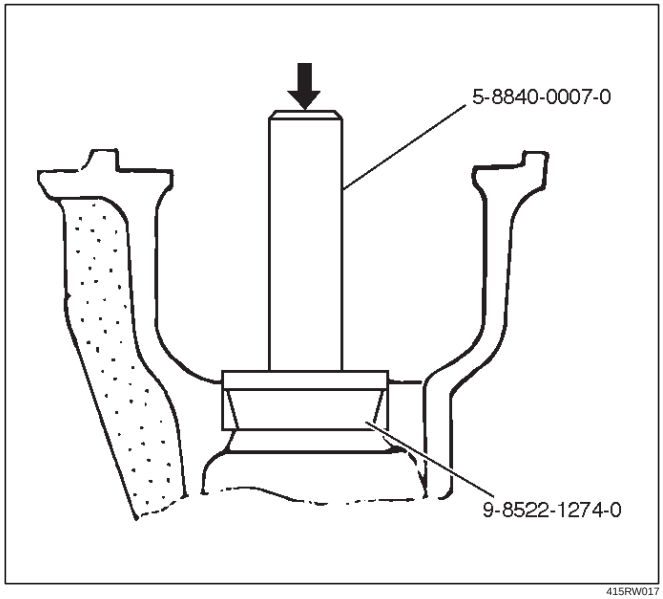

415RW017

3. Install adjust shim and adjust drive pinion mounting distance
   1. Apply gear oil to the inner and outer drive pinion bearing.
      Clean the pinion setting gauge set.
      Then install the gauge set together with the inner and outer bearings.
   2. Tighten the nut to the specified torque.

Torque: 2.3 N·m (0.23kg·m/20 lb in)

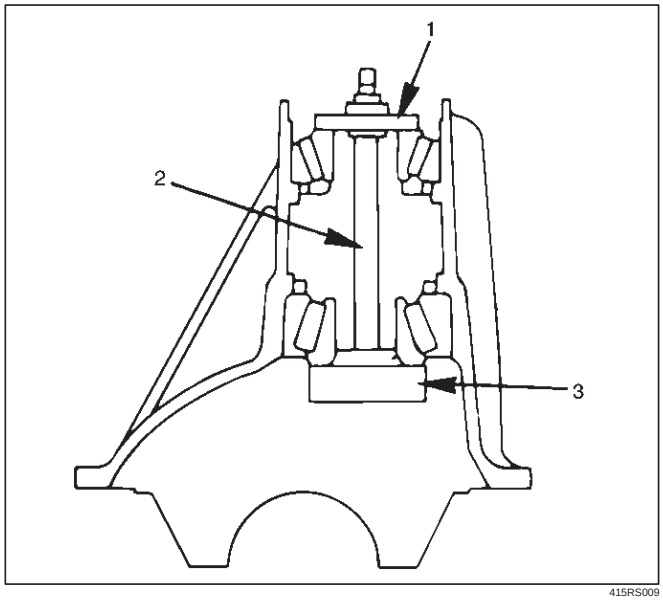

415RS009

Legend

(1) Pilot : 5–8840–2085–0
(2) Nut and Bolt : 5–8840–2089–0
(3) Gauge Plate : 5–8840–2087–0

3. Clean the side bearing bores. Install the dial indicator with the discs and arbor. Install and tighten the bearing caps to the specified torque.

Torque: 98 N·m (10kg·m/72 lb ft)

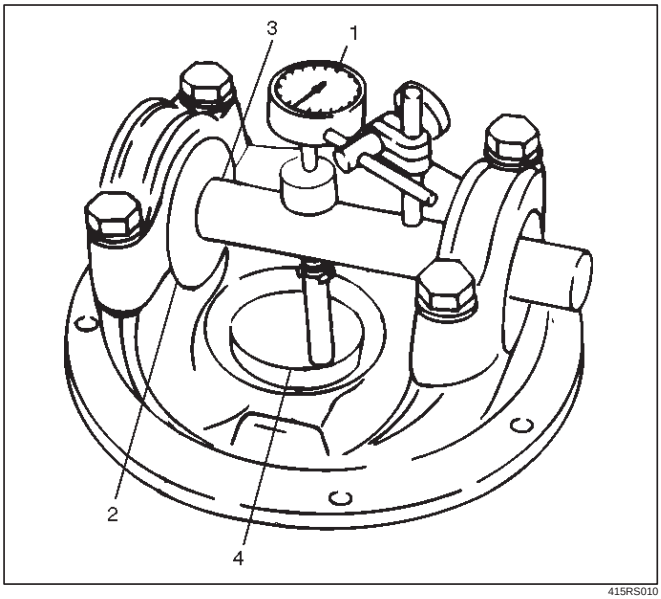

415RS010

Legend

(1) Dial Indicator: 5–8840–0126–0
(2) Disc (2 pcs.): 5-8840-2088-0
(3) Arbor: 5–8840–0128–0
(4) Gauge Plate: 5–8840–2087–0

4. Set the dial indicator to “0”. Place it on the mounting post of the gauging arbor with the contact button touching the indicator pad. Force the dial indicator downward until the needle has made a half turn clockwise. Tighten down the dial indicator in this position.

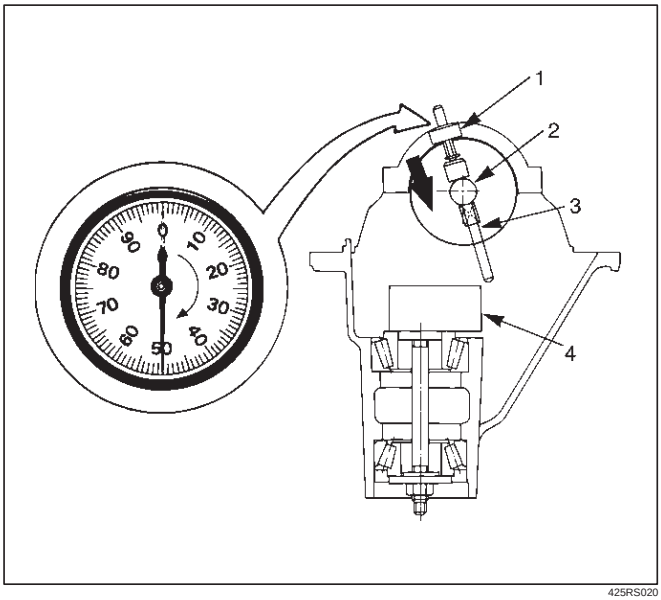

425RS020

Legend

(1) Dial Indicator
(2) Gauging Arbor
(3) Plunger
(4) Gauge Plate

5. Position the plunger on the gauge plate. Move the gauging arbor slowly back and forth and locate the position at which the dial indicator shows the greatest defection. At this point, once again set the dial indicator to “0”.

   Repeat the procedure to verify the “0” setting.

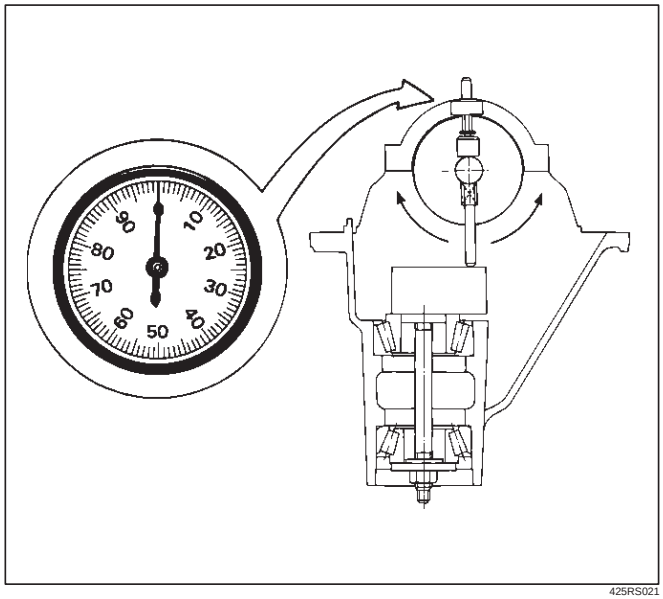

425RS021

6. After the ZERO setting is obtained, rotate the gauging arbor until the dial indicator rod does not touch the gauging plate.

   Record the number the dial indicator needle points to.

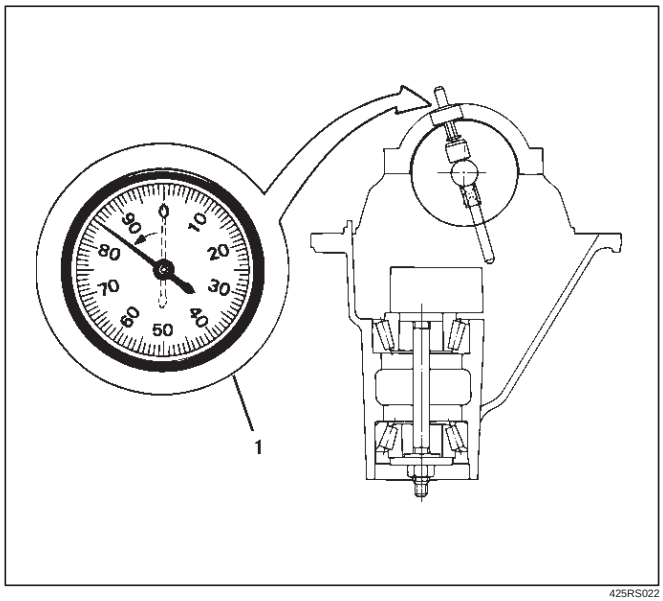

425RS022

Legend

(1) Example=Dial indicator reading of 0.085

7. Record the pinion depth code on the head of the drive pinion.

   The number indicates a necessary change in the pinion mounting distance. A plus number indicates the need for a greater mounting distance (which can be achieved by decreasing the shim thickness). A minus number indicates the need for a smaller mounting distance (which can be achieved by increasing the shim thickness). If examination reveals pinion depth code “0”, the pinion is “nominal”.

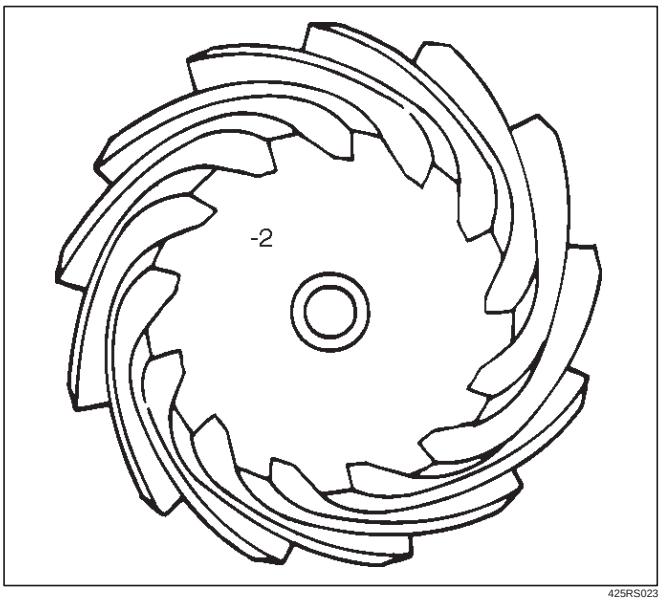

425RS023

8. Select the shim using the chart;

Pinion marking	+10	+8	+6	+4	+2	0	–2	–4	–6	–8	–10
Dial indicator reading (Inches)	mm (Inches)	mm (Inches)	mm (Inches)	mm (Inches)	mm (Inches)	mm (Inches)	mm (Inches)	mm (Inches)	mm (Inches)	mm (Inches)	mm (Inches)
0.081											2.18 (0.0858)
0.082										2.18 (0.0858)	2.20 (0.0866)
0.083									2.18 (0.0858)	2.20 (0.0866)	2.23 (0.0882)
0.084								2.18 (0.0858)	2.20 (0.0866)	2.24 (0.0882)	2.26 (0.0890)
0.085							2.18 (0.0858)	2.20 (0.0866)	2.24 (0.0882)	2.26 (0.0890)	2.28 (0.0898)
0.086						2.18 (0.0858)	2.20 (0.0866)	2.24 (0.0882)	2.26 (0.0890)	2.28 (0.0898)	2.32 (0.0914)
0.087					2.18 (0.0858)	2.20 (0.0866)	2.24 (0.0882)	2.26 (0.0890)	2.28 (0.0898)	2.32 (0.0914)	2.34 (0.0921)
0.088				2.18 (0.0858)	2.20 (0.0866)	2.24 (0.0882)	2.26 (0.0890)	2.28 (0.0898)	2.32 (0.0914)	2.34 (0.0921)	2.36 (0.0929)
0.089			2.18 (0.0858)	2.20 (0.0866)	2.24 (0.0882)	2.26 (0.0890)	2.28 (0.0898)	2.32 (0.0914)	2.34 (0.0921)	2.36 (0.0929)	2.38 (0.0937)
0.090		2.18 (0.0858)	2.20 (0.0866)	2.24 (0.0882)	2.26 (0.0890)	2.28 (0.0898)	2.32 (0.0914)	2.34 (0.0921)	2.36 (0.0929)	2.38 (0.0937)	2.42 (0.0953)
0.091	2.18 (0.0858)	2.20 (0.0866)	2.24 (0.0882)	2.26 (0.0890)	2.28 (0.0898)	2.32 (0.0914)	2.34 (0.0921)	2.36 (0.0929)	2.38 (0.0937)	2.42 (0.0953)	2.44 (0.0961)
0.092	2.20 (0.0866)	2.24 (0.0882)	2.26 (0.0890)	2.28 (0.0898)	2.32 (0.0914)	2.34 (0.0921)	2.36 (0.0929)	2.38 (0.0937)	2.42 (0.0953)	2.44 (0.0961)	2.46 (0.0969)
0.093	2.24 (0.0882)	2.26 (0.0890)	2.28 (0.0898)	2.32 (0.0914)	2.34 (0.0921)	2.36 (0.0929)	2.38 (0.0937)	2.42 (0.0953)	2.44 (0.0961)	2.46 (0.0969)	2.48 (0.0977)
0.094	2.26 (0.0890)	2.28 (0.0898)	2.32 (0.0914)	2.34 (0.0921)	2.36 (0.0929)	2.38 (0.0937)	2.42 (0.0953)	2.44 (0.0961)	2.46 (0.0969)	2.48 (0.0977)	2.52 (0.0992)
0.095	2.28 (0.0898)	2.32 (0.0914)	2.34 (0.0921)	2.36 (0.0929)	2.38 (0.0937)	2.42 (0.0953)	2.44 (0.0961)	2.46 (0.0969)	2.48 (0.0977)	2.52 (0.0992)	2.54 (0.1000)
0.096	2.32 (0.0914)	2.34 (0.0921)	2.36 (0.0929)	2.38 (0.0937)	2.42 (0.0953)	2.44 (0.0961)	2.46 (0.0969)	2.48 (0.0977)	2.52 (0.0992)	2.54 (0.1000)	2.56 (0.1008)
0.097	2.34 (0.0921)	2.36 (0.0929)	2.38 (0.0937)	2.42 (0.0953)	2.44 (0.0961)	2.46 (0.0969)	2.48 (0.0977)	2.52 (0.0992)	2.54 (0.1000)	2.56 (0.1008)	
0.098	2.36 (0.0929)	2.38 (0.0937)	2.42 (0.0953)	2.44 (0.0961)	2.46 (0.0969)	2.48 (0.0977)	2.52 (0.0992)	2.54 (0.1000)	2.56 (0.1008)		
0.099	2.38 (0.0937)	2.42 (0.0953)	2.44 (0.0961)	2.46 (0.0969)	2.48 (0.0977)	2.52 (0.0992)	2.54 (0.1000)	2.56 (0.1008)			
0	2.42 (0.0953)	2.44 (0.0961)	2.46 (0.0969)	2.48 (0.0977)	2.52 (0.0992)	2.54 (0.1000)	2.56 (0.1008)				
0.001	2.44 (0.0961)	2.46 (0.0969)	2.48 (0.0977)	2.52 (0.0992)	2.54 (0.1000)	2.56 (0.1008)					
0.002	2.46 (0.0969)	2.48 (0.0977)	2.52 (0.0992)	2.54 (0.1000)	2.56 (0.1008)						
0.003	2.48 (0.0977)	2.52 (0.0992)	2.54 (0.1000)	2.56 (0.1008)							
0.004	2.52 (0.0992)	2.54 (0.1000)	2.56 (0.1008)								
0.005	2.54 (0.1000)	2.56 (0.1008)									
0.006	2.56 (0.1008)										

NOTE: When ordering shims, find the part number in the parts catalog by using the thickness of shims listed in the above table.

4. Place the shim on the drive pinion, with the chamfered side turned towards the pinion head then install the inner bearing onto the pinion using an installer 9–8522–1165–0 and a press.

NOTE: Do not apply pressure to the roller cage and apply pressure only to the inner race.

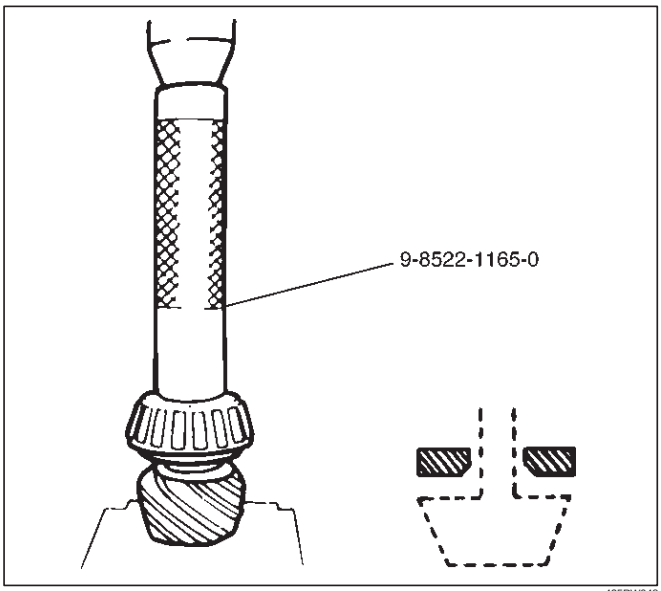

425RW048

5. Discard the used collapsible spacer and install a new one.
6. Install pinion gear.
7. Install outer bearing.
8. Use oil seal installer 9–8522–1275–0 to install a new oil seal that has been soaked in rear axle lubricant.

NOTE: Take care to use a front differential oil seal, NOT the rear differential oil seal.

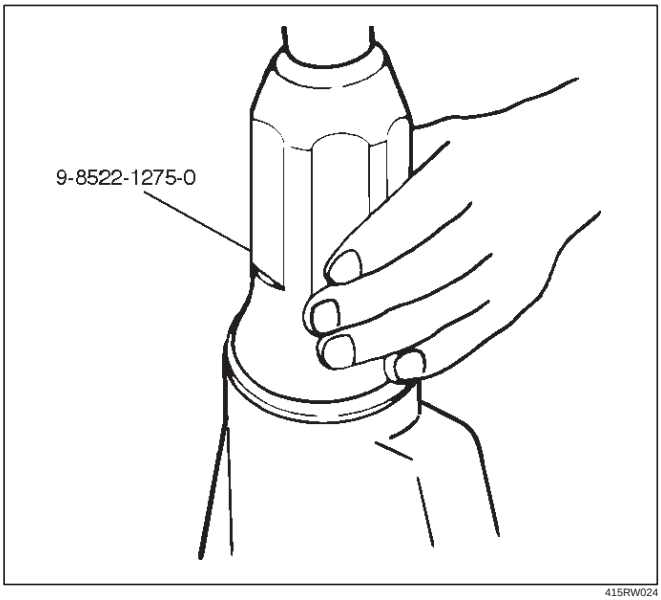

415RW024

9. Install dust cover.
10. Install flange.
11. Install flange nut.
    1. Apply lubricant to the pinion threads.
    2. Tighten the nut to the specified torque using the pinion flange holder 5–8840–2157–0.

Torque: 177–275N·m (18–28kg·m/130–203 lb ft)

NOTE: Discard used flange nut and install new one and do not over tighten the flange nut.

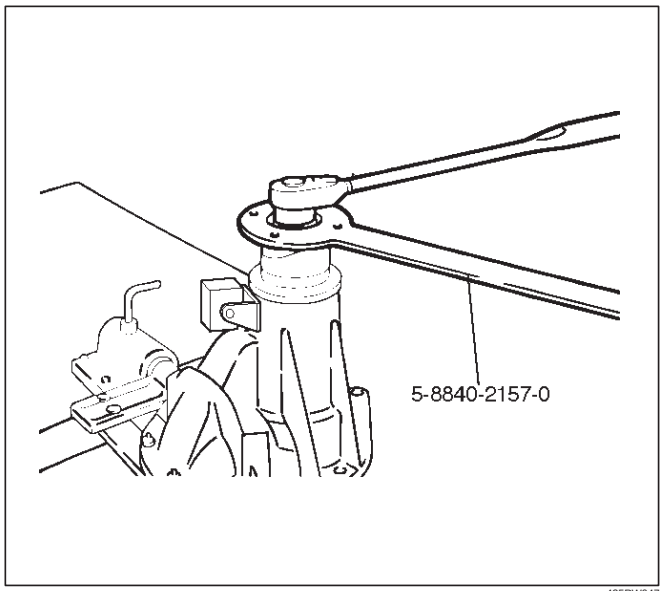

425RW047

3. Adjust pinion bearing preload.
    a. Measure the bearing preload by using a torque meter. Note the scale reading required to rotate the flange.
    b. Continue tightening flange nut until the specified starting torque is obtained.

Starting torque:

New bearing
0.7–1.1 N·m(0.065–0.115kg·m/5.64–9.98 lb in)

Used bearing
0.4–0.5N·m(0.033–0.057kg·m/2.86–4.94 lb in)

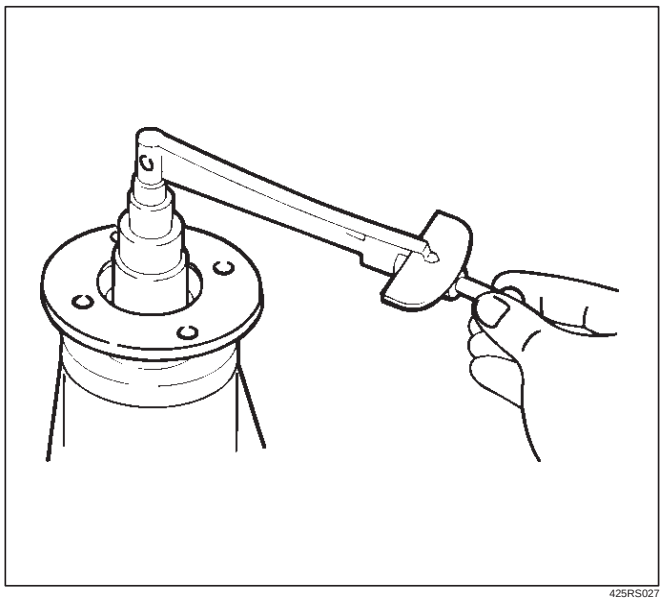

425RS027

4. Using punch 5-8840-2293-0, stake the flange nut at two points.

NOTE: When staking, be sure to turn the nut to insure that there is no change in bearing preload. Make sure of preload again as instructed in 3).

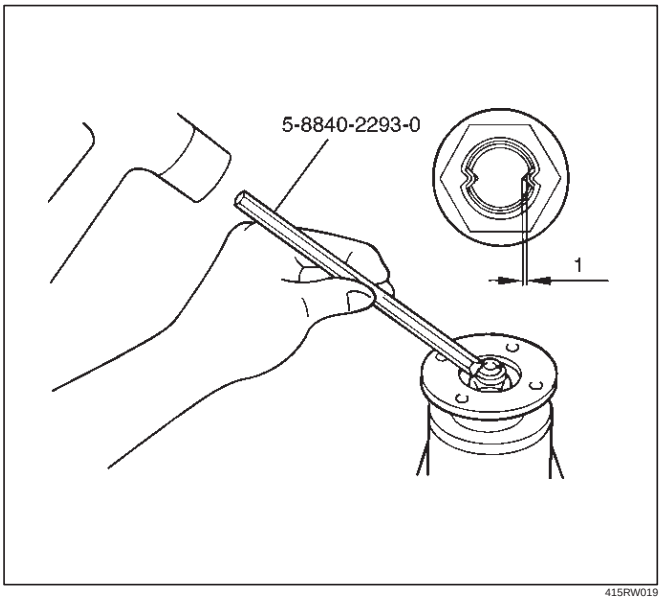

415RW019

Legend

(1) 1.3mm or less

12. Install adjust shim.
    1. Attach the side bearing to the differential assembly without shims. Support the opposite side using a pilot to prevent bearing damage.

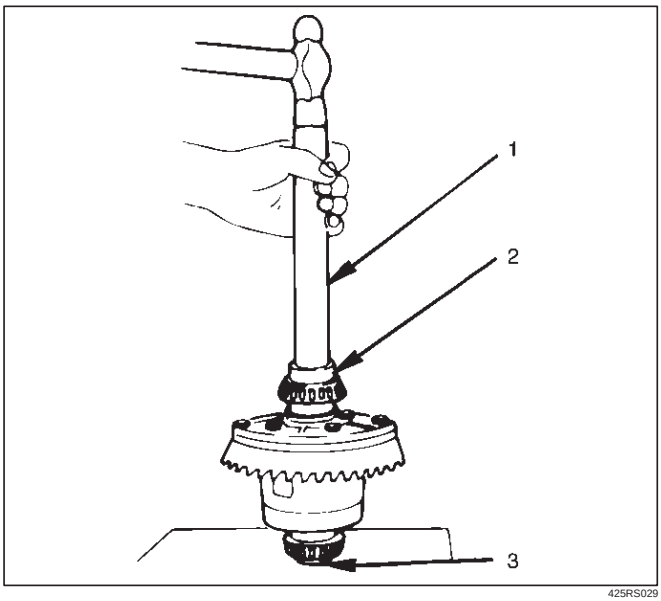

425RS029

Legend

(1) Drive handle:5–8840–0007–0
(2) Installer:9–8522–1164–0
(3) Pilot:9–8521–1743–0

2. Insert the differential cage assembly with bearing outer races into the side bearing bores of the carrier.

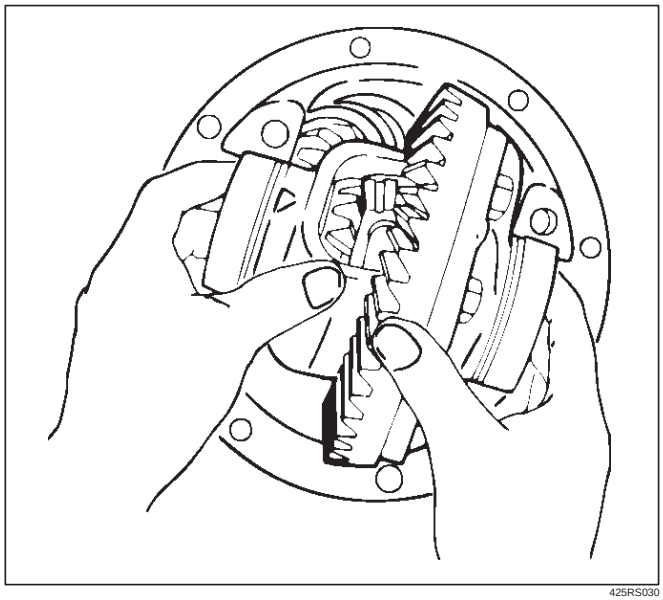

425RS030

3. Using two sets of feeler gauges, insert a feeler stock of sufficient thickness between each bearing outer race and the carrier to remove all end play. Make certain the feeler stock is pushed to the bottom of the bearing bores.

   Mount the dial indicator 5–8840–0126–0 on the carrier so that the indicator stem is at right angles to a tooth on the ring gear.

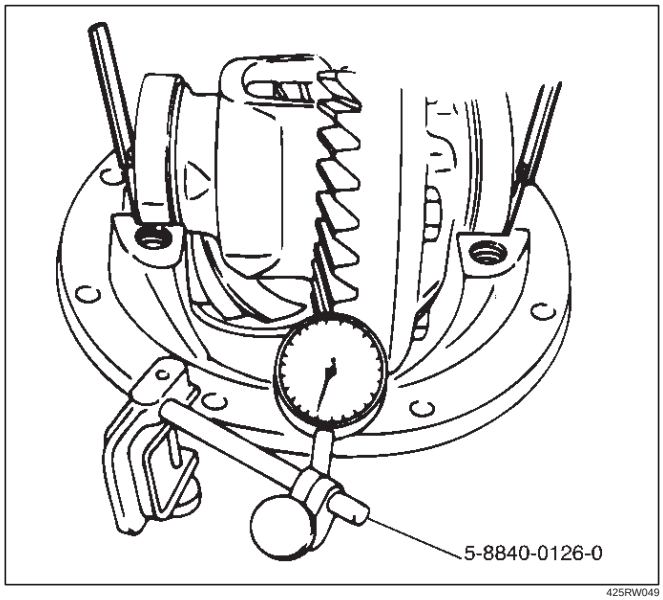

425RW049

4. Adjust feeler gauge thickness from side to side until ring gear backlash is in the specified range.

Backlash: 0.13–0.18 mm(0.005 –0.007 in)

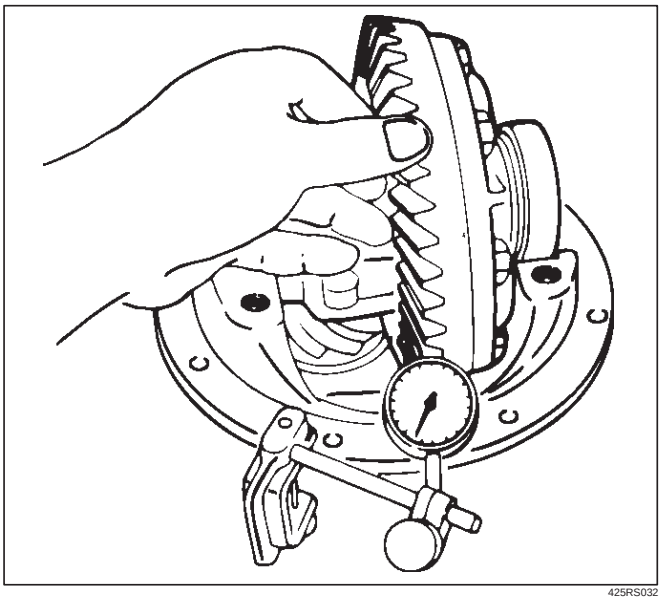

425RS032

With zero end play and correct backlash established, remove the feeler gauge packs, determine the thickness of the shims required and add 0.05 mm (0.002 in) to each shim pack to provide side bearing preload. Always use new shims.

5. Use bearing remover 5–8840–0013–0 and 5–8840–0014–0 and pilot 9–8521–1743–0 to remove side bearing.

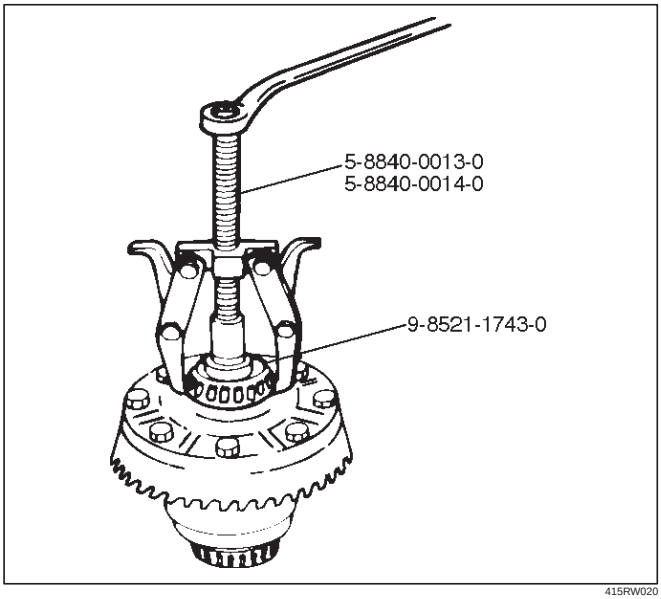

415RW020

13. Install the side bearings together with the selected shims.

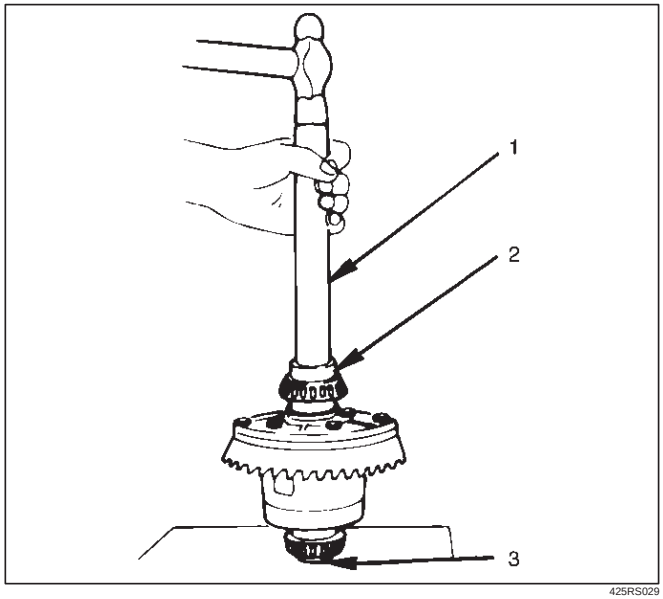

425RS029

Legend

(1) Drive Handle:5–8840–0007–0
(2) Installer: 9–8522–1164–0
(3) Pilot: 9–8521–1743–0

14. Install side bearing outer race.
15. Install differential cage assembly.
16. Install bearing cap then align the setting marks(1) applied at disassembly.

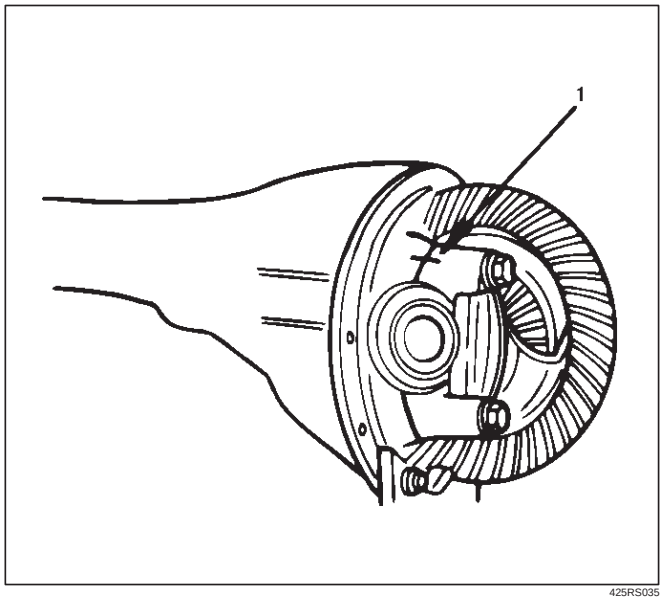

425RS035

17. Tighten the cap bolt to the specified torque.

Torque: 98 N·m (10kg·m/72 lb ft)

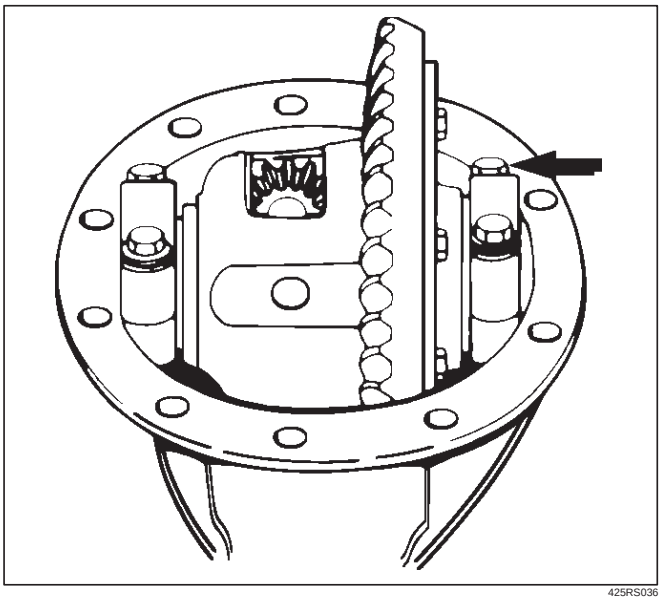

425RS036

1. Measure the amount of run–out of the ring gear at its rear face.

Standard: 0.02 mm (0.001 in)

Limit: 0.05 mm (0.002 in)

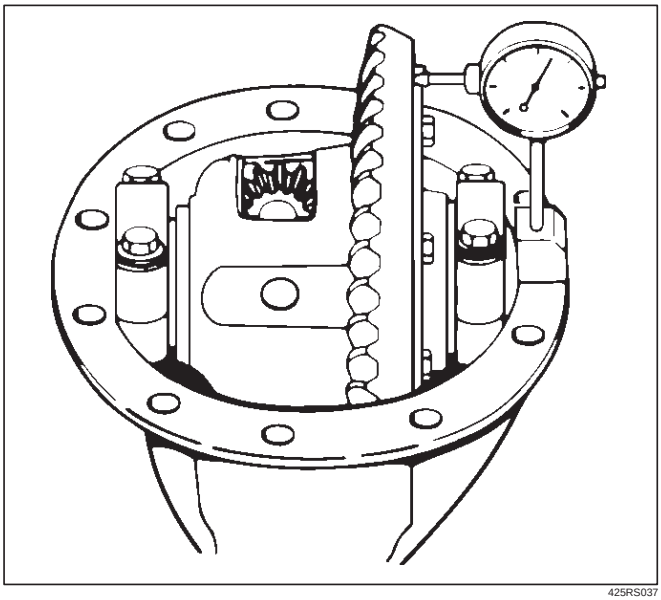

425RS037

Gear Tooth Contact Pattern Check and Adjustment

1. Apply a thin coat of prussian blue or equivalent to the faces of the 7–8 teeth of the ring gear. Check the impression of contact on the ring gear teeth and make necessary adjustment as described in illustration if the contact is abnormal.

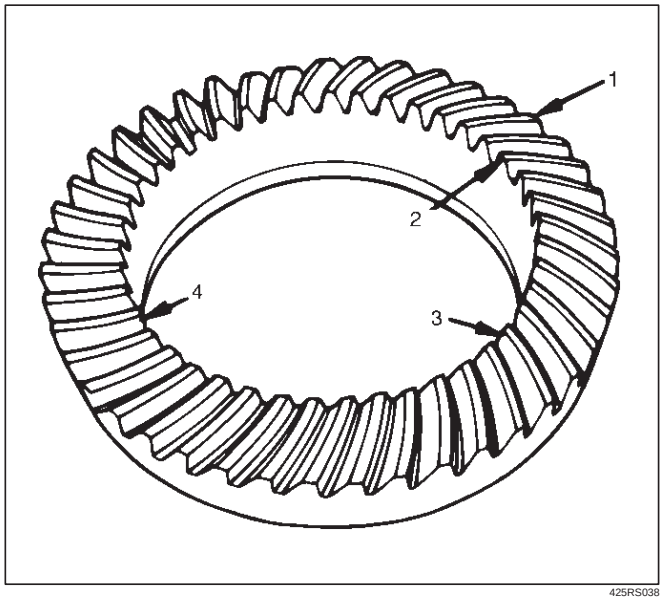

425RS038

Legend

(1) Heel
(2) Toe
(3) Concave Side(Coast)
(4) Convex Side(Drive)

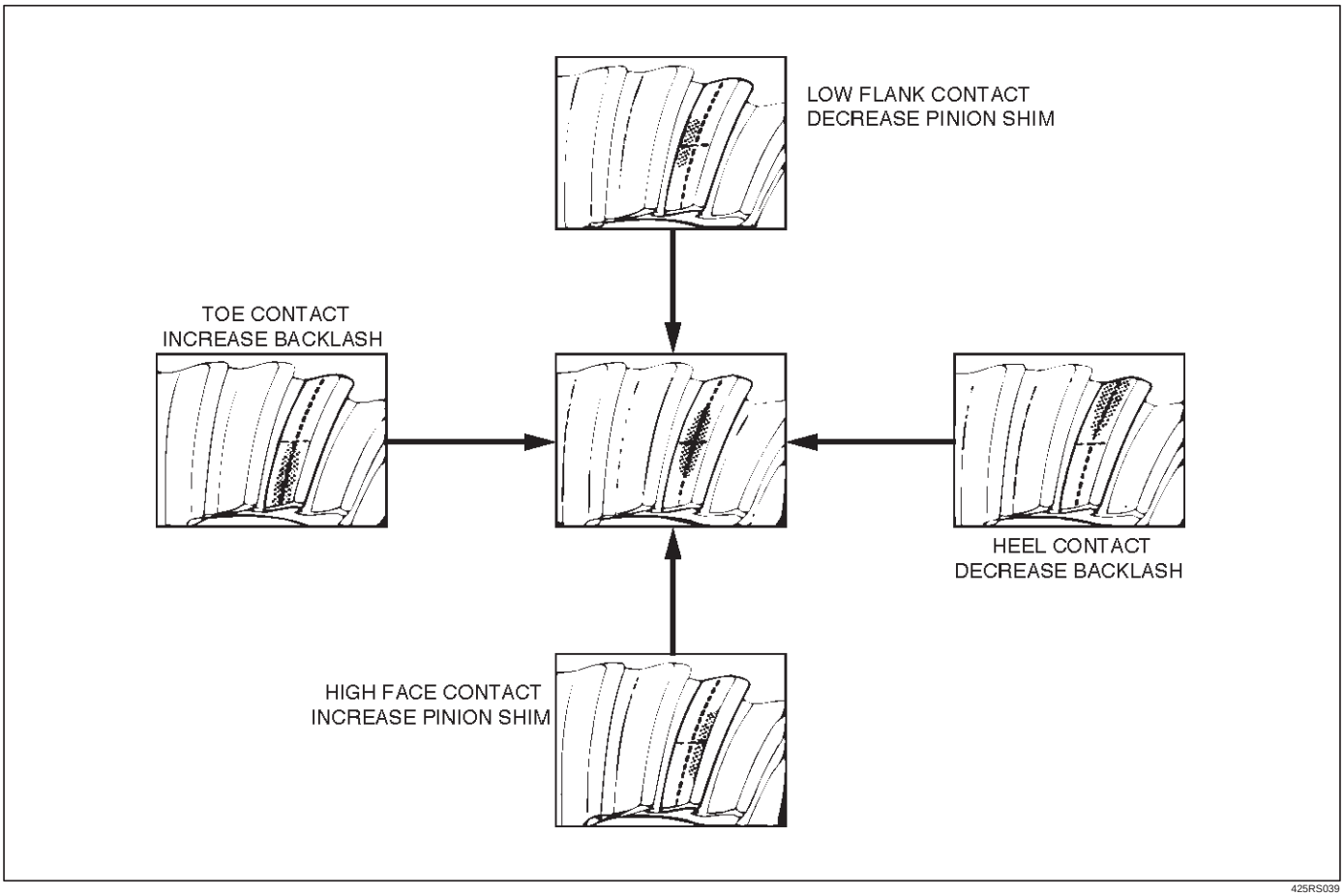

425RS039

18. Install differential assembly.
    1. Clean the faces of the front axle case and differential carrier.
       Apply Three Bond TB1215 or equivalent to the sealing side of the axle case and the carrier.
    2. Attach the differential case and the carrier assembly to the front axle case and tighten the nuts and bolts.

    Torque: 25 N·m (2.5kg·m/19 lb ft)

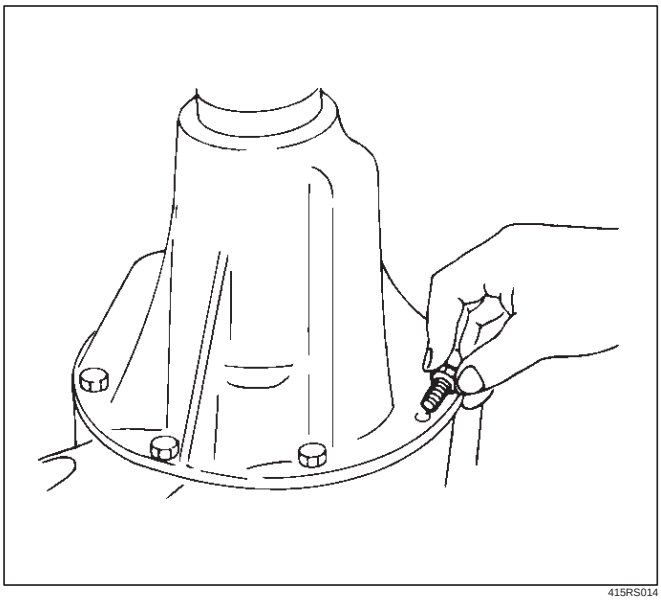

415RS014

    3. Fill the axle case with hypoid gear lubricant, to just below the filler hole.

    Lubricant capacity: 1.4 liter(1.2 Imp qt/1.5 US qt)

19. Install damper.
    1. Clean the faces and bolt thread hole of differential carrier.
    2. Install the bracket with new bolts.
    3. Install the damper to the bracket with new bolts.

    Torque: 25 N·m (2.5kg·m/19 lb ft)

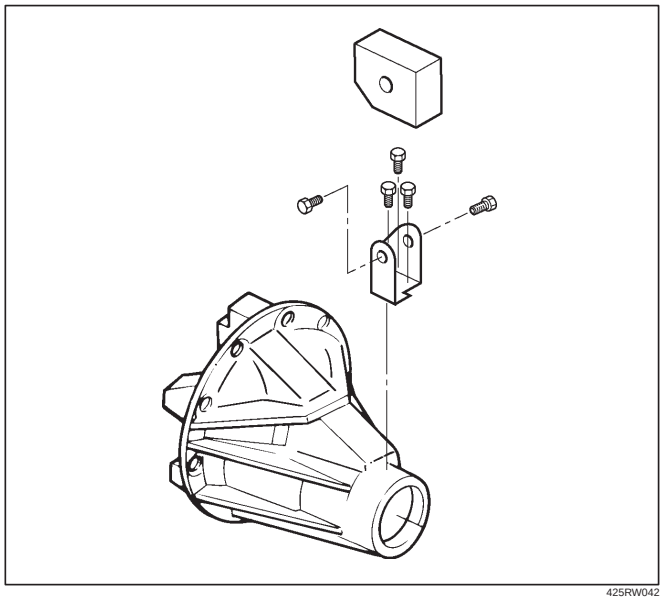

425RW042

Differential Cage Assembly

Disassembled View

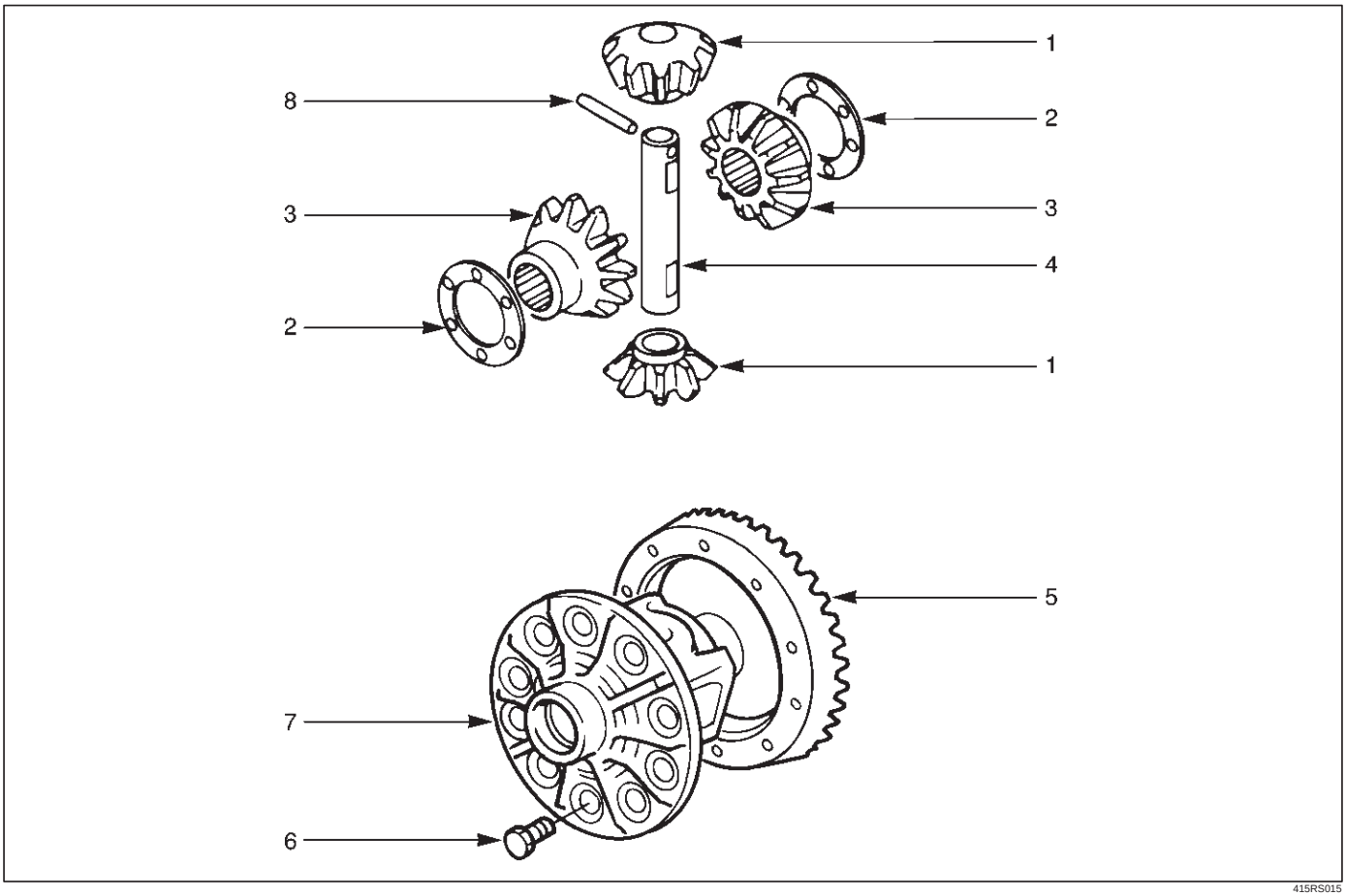

415RS015

Legend

(1) Pinion Gear
(2) Thrust Washer
(3) Side Gear
(4) Cross Pin
(5) Ring Gear
(6) Bolt
(7) Differential Cage
(8) Lock Pin

Disassembly

1. Remove bolt.
2. Remove ring gear.
3. Remove lock pin, break staking on the lock pin, using a 5 mm (0.20 in) diameter drill.

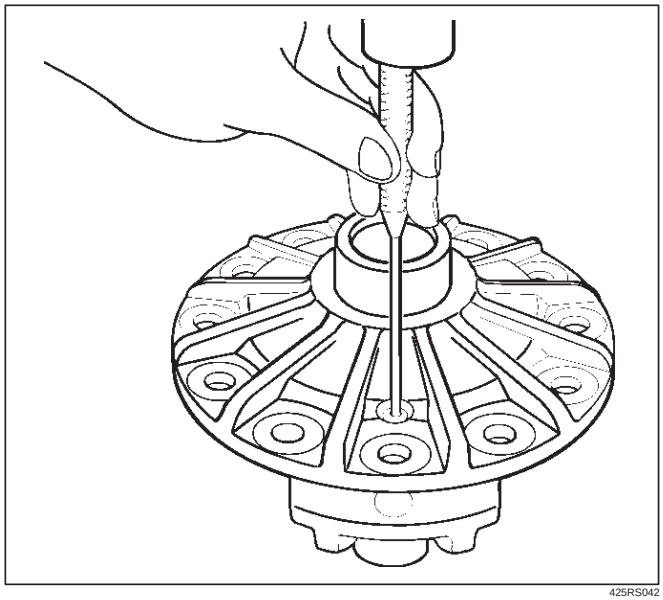

425RS042

4. Remove the cross pin, using a soft metal rod and a hammer.

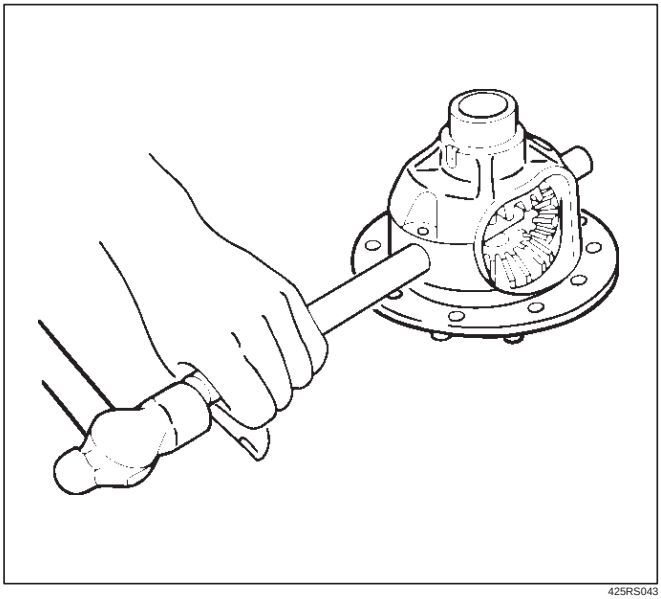

425RS043

5. Remove pinion gear.
6. Remove side gear.
7. Remove thrust washer.

Inspection and Repair

Make necessary correction or parts replacement if wear, damage, corrosion or any other abnormal conditions are found through inspection.
Check the following parts:

1. Ring gear, pinion gear
2. Bearing
3. Side gear, pinion gear, cross pin
4. Differential cage, carrier
5. Thrust washer
6. Oil seal

Ring gear replacement:

1. The ring gear should always be replaced with the drive pinion as a set.
2. Clean the ring gear threaded holes to remove the locking agent.
3. When installing the ring gear, apply LOCTITE 271 or equivalent to all the threaded area and half of the unthreaded area of the bolt.
4. Discard used bolts and install new ones.

Torque: 108 N·m (11kg·m/80 lb ft)

5. Tighten the fixing bolts in a diagonal sequence as illustrated.

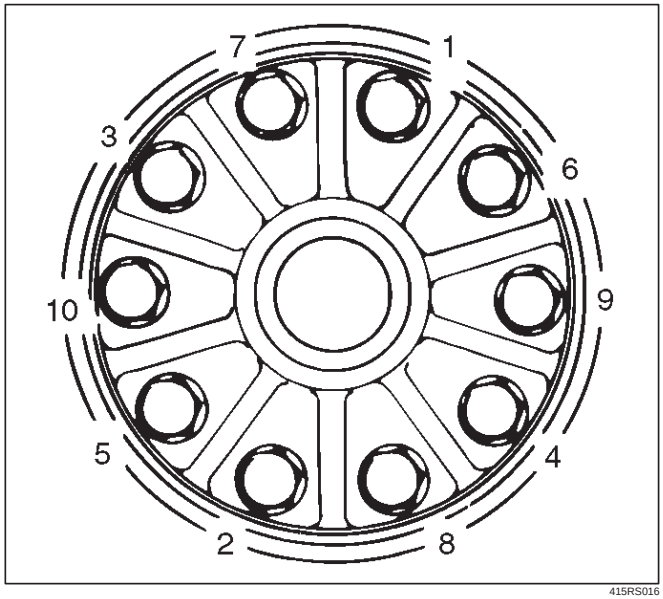

415RS016

Clearance between the differential pinion and the cross pin measurement:

Standard: 0.06 – 0.12 mm (0.002–0.005 in)

Limit: 0.2 mm (0.008 in)

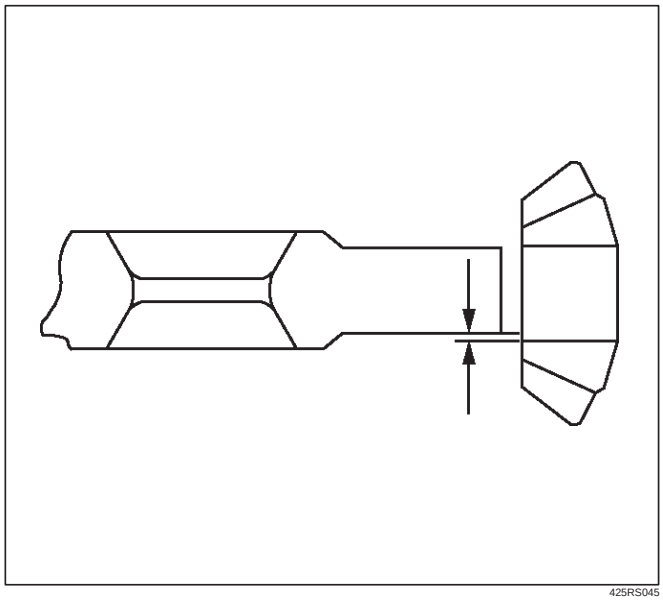

425RS045

Clearance between the side gear and the differential box:

Standard: 0.03–0.10 mm (0.001–0.004 in)

Limit: 0.15 mm(0.006 in)

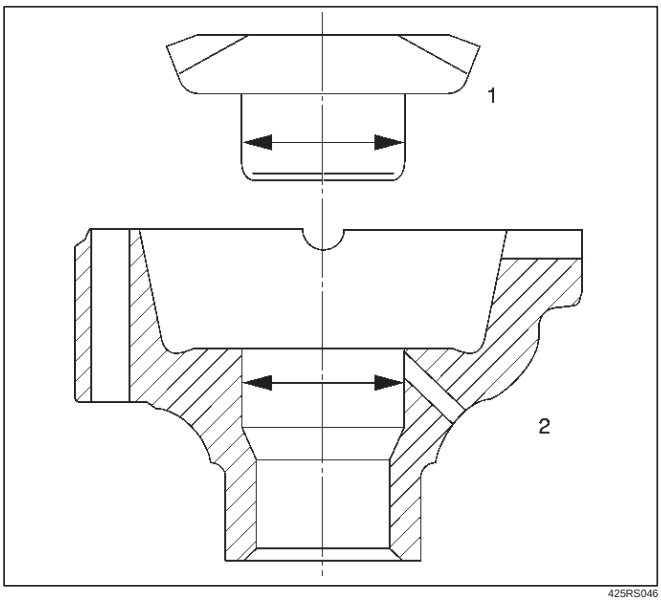

425RS046

Legend

(1) Side Gear
(2) Differential Box

Play in splines between the side gear and the axle shaft:

Standard: 0.08–0.36 mm(0.003 –0.014 in)

Limit:0.5m (0.02 in)

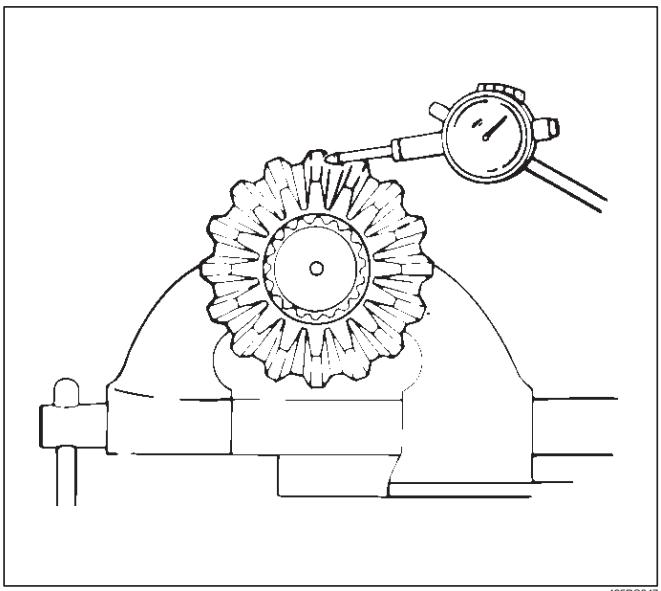

425RS047

Reassembly

1. Install thrust washer.
2. Install side gear.
3. Install the pinion gear by engaging it with the side gears while turning both pinion gears simultaneously in the same direction.

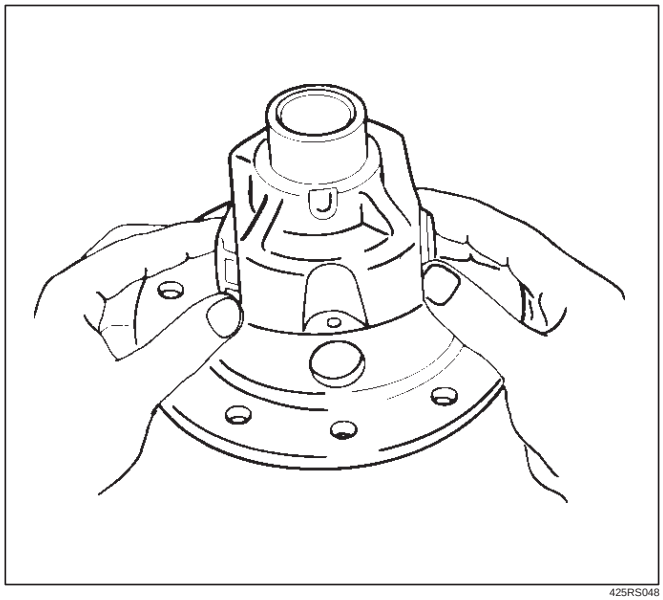

425RS048

4. Install cross pin.
   1. Be sure to install the cross pin so that it is in alignment with the lock pin hole in the differential cage.

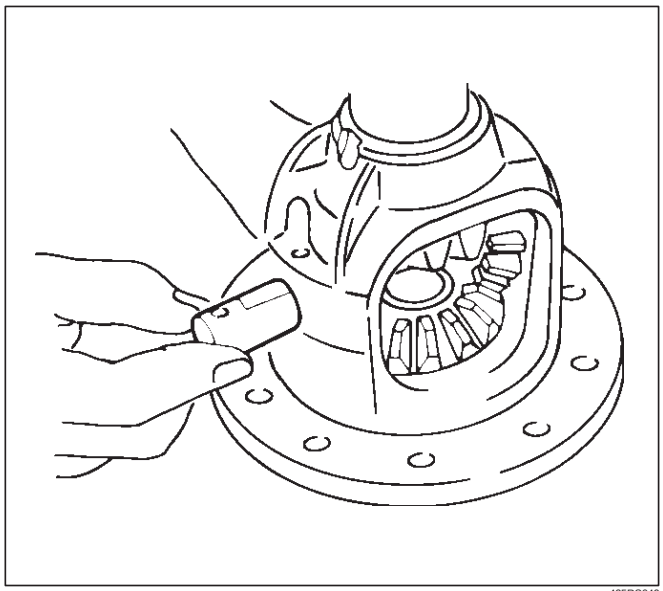

425RS049

   2. Adjust the backlash between the side gear and the pinion gear.

Backlash:0.03 – 0.08 mm (0.001– 0.003 in)

Thickness of thrust washers available:

1.00 mm, 1.05 mm, 1.10 mm (0.039 in, 0.041 in, 0.043 in)

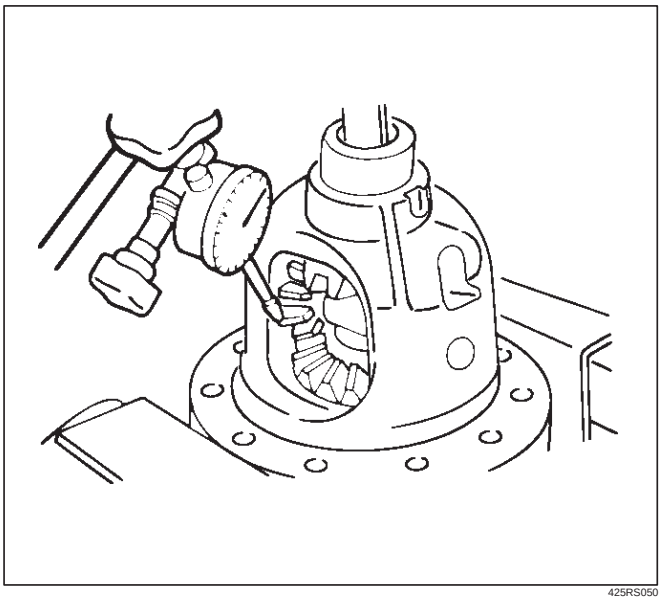

425RS050

5. Install lock pin. After lock pin installation, stake the cage to secure the lock pin.

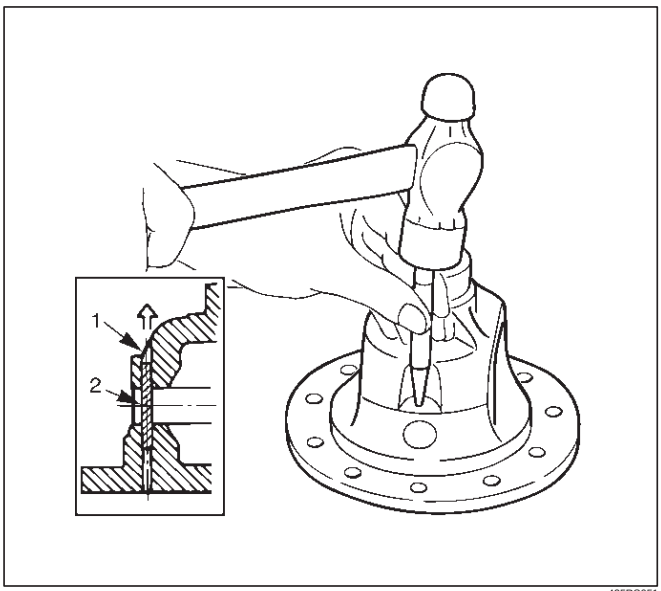

425RS051

Legend

(1) Staked Portion

(2) Lock Pin

6. Clean the ring gear threaded holes to remove the locking agent. When installing the ring gear, apply LOCTITE 271 or equivalent to all the threaded area and half of the unthreaded area of the bolt.

7. Tighten the bolts in diagonal sequence as illustrated.

Torque: 108 N·m (11kg·m/80 lb ft)

NOTE: Discard used bolts and install new ones.

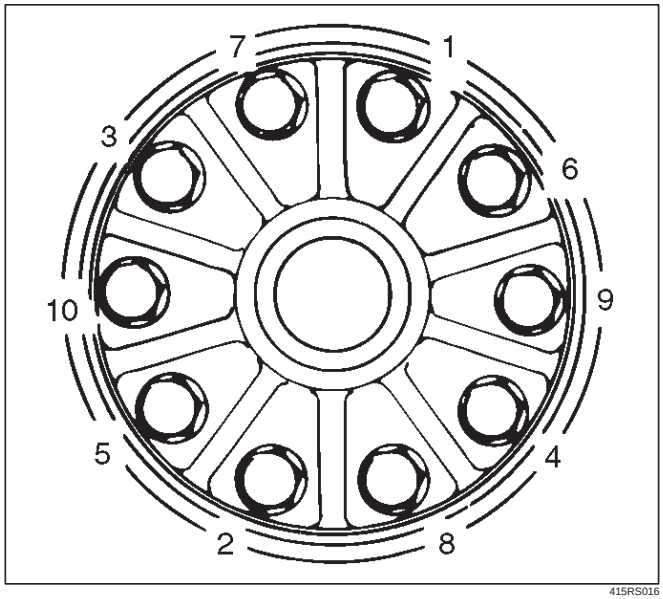

415RS016

Main Data and Specifications

General Specifications

Axle tube Type		It consists of the duct, a cast iron housing and the axle tube.
Gear type		Hypoid
Gear ratio	(to 1)	4.100(6VE1) 4.300(4JX1, 6VE1) 4.555(4JG2–TC, 6VD1) 4.777(4JG2)
Differential type		Two pinion
Oil capacity	liter (Imp qt/US qt)	1.4 (1.2/1.5) (Differential) 0.12 (0.11/0.13) (Actuator Housing: Shift on the fly)
Type of lubricant		75W–90 GL–5 (Multi grade type) Refer to General Information
Axle shaft type		Constant velocity joint (Birfield joint type and double offset joint)

Torque Specifications

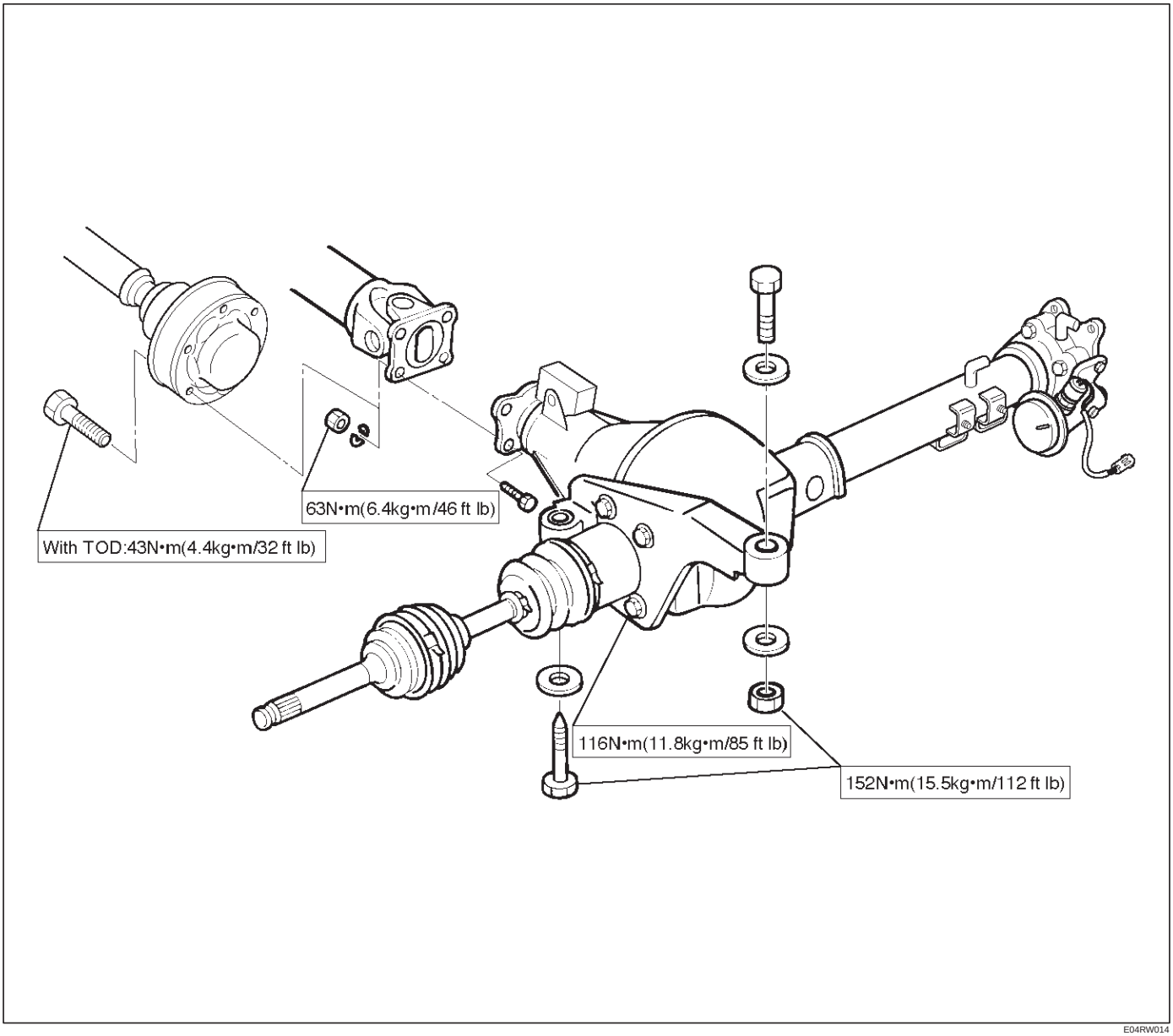

E04RW014

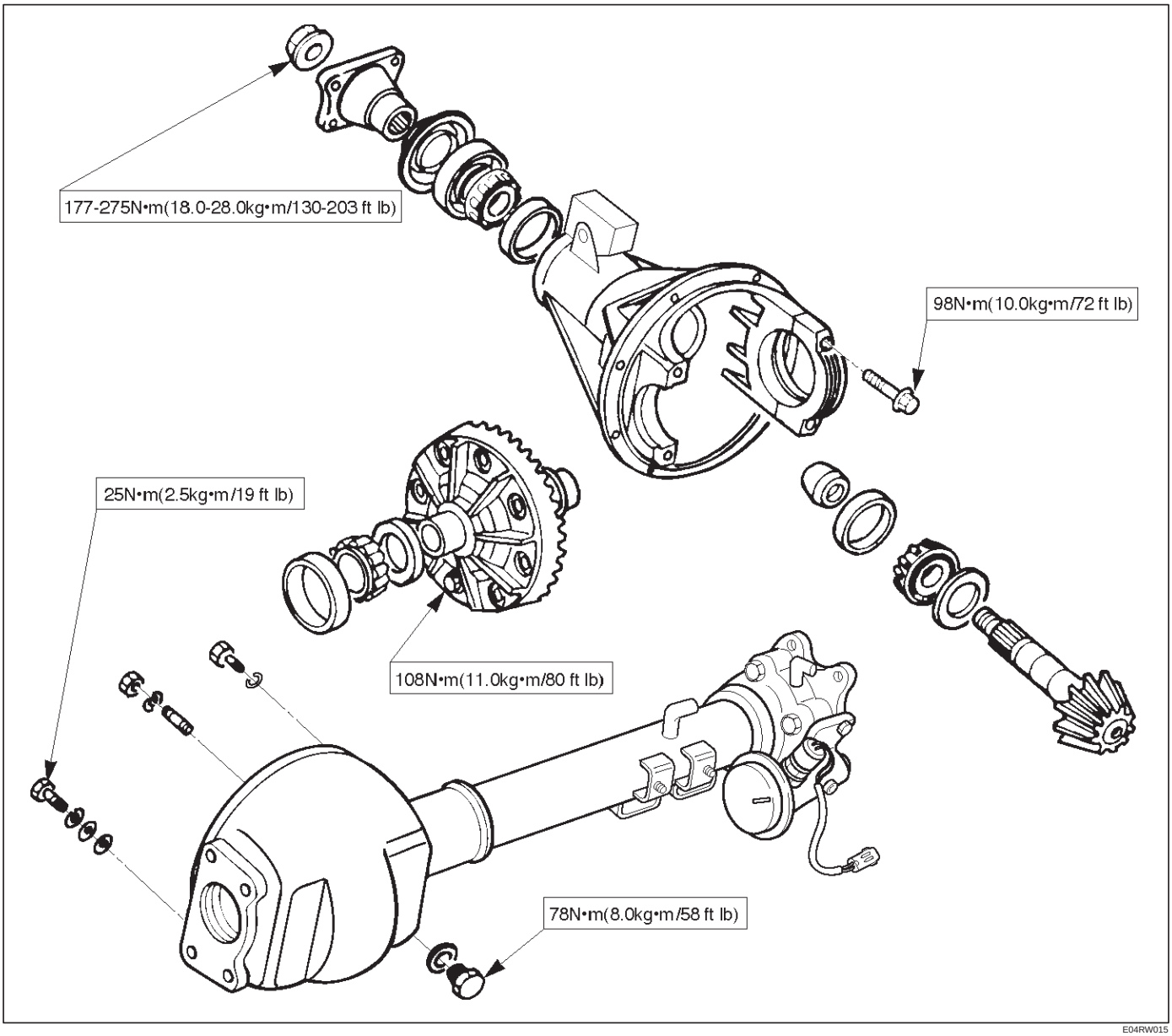
177-275N•m(18.0-28.0kg•m/130-203 ft lb)
98N•m(10.0kg•m/72 ft lb)
25N•m(2.5kg•m/19 ft lb)
108N•m(11.0kg•m/80 ft lb)
78N•m(8.0kg•m/58 ft lb)

E04RW015

Special Tools

ILLUSTRATION	TOOL NO. TOOL NAME
	5–8840–2157–0 **(J–37221)** Holder; Pinion flange
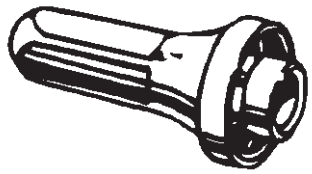	**9–8522–1275–0** **(J–24250)** Installer; Oil seal
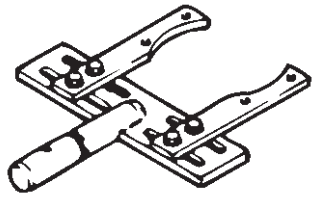	**5–8840–0275–0** **(J–37264)** Differential holding fixture (Use with 5–8840–0003–0 base)
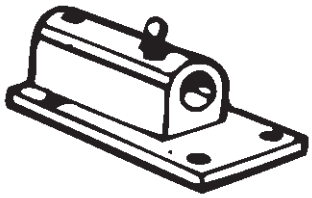	**5–8840–0003–0** **(J–3289–20)** Holding fixture base
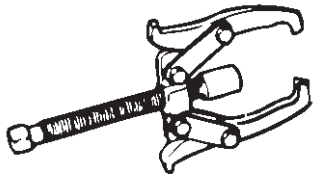	**5–8840–0013–0** **5–8840–0014–0** **(J–22888)** Puller; Side bearing
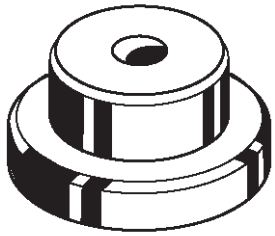	**9–8521–1743–0** **(J–8107–2)** Adapter; Side bearing plug

ILLUSTRATION	TOOL NO. TOOL NAME
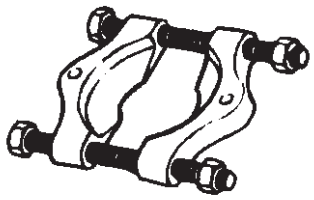	**5–8840–0015–0** **(J–22912–01)** Separator
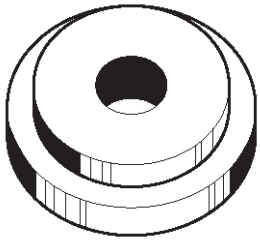	**9–8522–1141–0** **(J–24256)** Installer; Outer bearing outer race
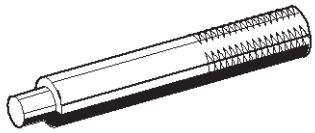	**5–8840–0007–0** **(J–8092)** Driver handle
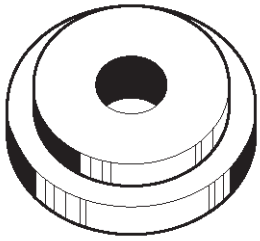	**9–8522–1274–0** **(J–24252)** Installer; Inner bearing outer race
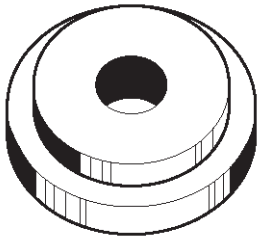	**5–8840–2085–0** **(J–21777–42)** Pilot
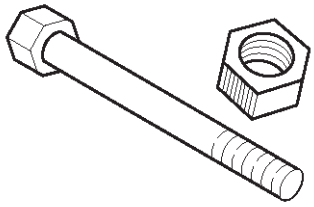	**5–8840–2089–0** **(J–23597–9)** Nut and bolt

ILLUSTRATION	**TOOL NO.** TOOL NAME
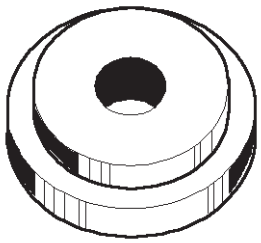 901RS243	**5–8840–2087–0** **(J–23597–7)** Gauge plate
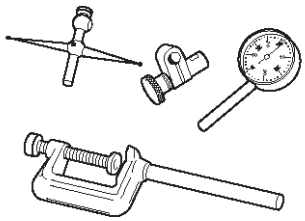 901RS224	**5–8840–0126–0** **(J–8001)** Dial indicator
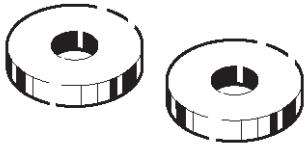 901RS244	**5–8840–2088–0** **(J–23597–8)** Disc
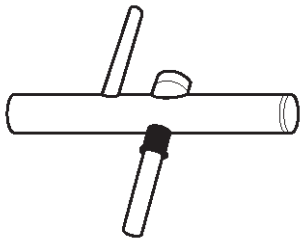 901RS226	**5–8840–0128–0** **(J–23597–1)** Arbor
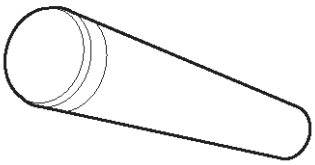 901RS227	**9–8522–1165–0** **(J–6133–01)** Installer; Pinion bearing
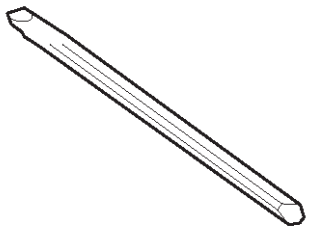 901RS228	**5–8840–2293–0** **(J–39209)** Punch; End nut lock

ILLUSTRATION	**TOOL NO.** TOOL NAME
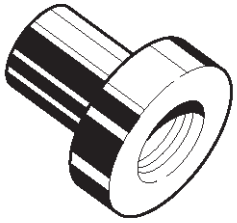 901RS245	**9–8522–1164–0** **(J–24244)** Installer; Side bearing
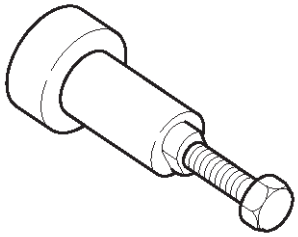 901RS230	**5–8840–2323–0** **(J–39602)** Remover; Outer bearing

DRIVELINE/AXLE

DIFFERENTIAL (Rear 220mm)

CONTENTS

Service Precaution 4A2A–1
General Description 4A2A–2
Diagnosis 4A2A–3
Axle Housing 4A2A–4
Axle Housing and Associated Parts 4A2A–4
Removal 4A2A–4
Oil Seal Replacement 4A2A–5
Installation 4A2A–5
Axle Shaft 4A2A–6
Axle Shaft and Associated Parts 4A2A–6
Removal 4A2A–6
Inspection and Repair 4A2A–7
Oil Seal Replacement 4A2A–8
Installation 4A2A–8
Pinion Oil Seal 4A2A–9
Pinion Oil Seal and Associated Parts 4A2A–9
Removal 4A2A–9
Inspection and Repair 4A2A–10
Installation 4A2A–10
Differential Assembly 4A2A–11
Differential Assembly and Associated Parts 4A2A–11
Removal 4A2A–11
Installation 4A2A–12
Disassembled View 4A2A–13
Disassembly 4A2A–14
Reassembly 4A2A–16
Differential Cage Assembly 4A2A–24
Disassembled View 4A2A–24
Disassembly 4A2A–24
Inspection and Repair 4A2A–25
Reassembly 4A2A–26
Limited Slip Differential 4A2A–28
Disassembled View 4A2A–28
Disassembly 4A2A–29
Inspection and Repair 4A2A–29
Reassembly 4A2A–31
Main Data and Specifications 4A2A–35
Special Tools 4A2A–37

Service Precaution

WARNING: IF SO EQUIPPED WITH A SUPPLEMENTAL RESTRAINT SYSTEM (SRS), REFER TO THE SRS COMPONENT AND WIRING LOCATION VIEW IN ORDER TO DETERMINE WHETHER YOU ARE PERFORMING SERVICE ON OR NEAR THE SRS COMPONENTS OR THE SRS WIRING. WHEN YOU ARE REFORMING SERVICE ON OR NEAR THE SRS COMPONENTS OR THE SRS WIRING, REFER TO THE SRS SERVICE INFORMATION. FAILURE TO FOLLOW WARNINGS COULD RESULT IN POSSIBLE AIR BAG DEPLOYMENT, PERSONAL INJURY, OR OTHERWISE UNNEEDED SRS SYSTEM REPAIRS.

CAUTION: Always use the correct fastener in the proper location. When you replace a fastener, use ONLY the exact part number for that application. ISUZU will call out those fasteners that require a replacement after removal. ISUZU will also call out the fasteners that require thread lockers or thread sealant. UNLESS OTHERWISE SPECIFIED , do not use supplemental coatings (Paints, greases, or other corrosion inhibitors) on threaded fasteners or fastener joint interfaces. Generally,such coatings adversely affect the fastener torque and the joint clamping force, and may damage the fastener. When you install fasteners, use the correct tightening sequence and specification. Following these instructions can help you avoid damage to parts and systems.

General Description

The rear axle assembly is of the semi–floating type in which the vehicle weight is carried on the axle housing . The center line of the pinion gear is below the center line of the ring gear (hypoid drive).
All parts necessary to transmit power from the propeller shaft to the rear wheels are enclosed in a banjo type axle housing.
The 8.7 inch ring gear rear axle uses a conventional ring and pinion gear set to transmit the driving force of the engine to the rear wheels. This gear set transfers this driving force at a 90 degree angle from the propeller shaft to the drive shafts.
The axle shafts are supported at the wheel end of the shaft by a roller bearing.
The pinion gear is supported by two tapered roller bearings. The pinion depth is set by a shim pack located between the gear end of the pinion and the roller bearing that is pressed onto the pinion. The pinion bearing preload is set by crushing a collapsible spacer between the bearings in the axle housing.

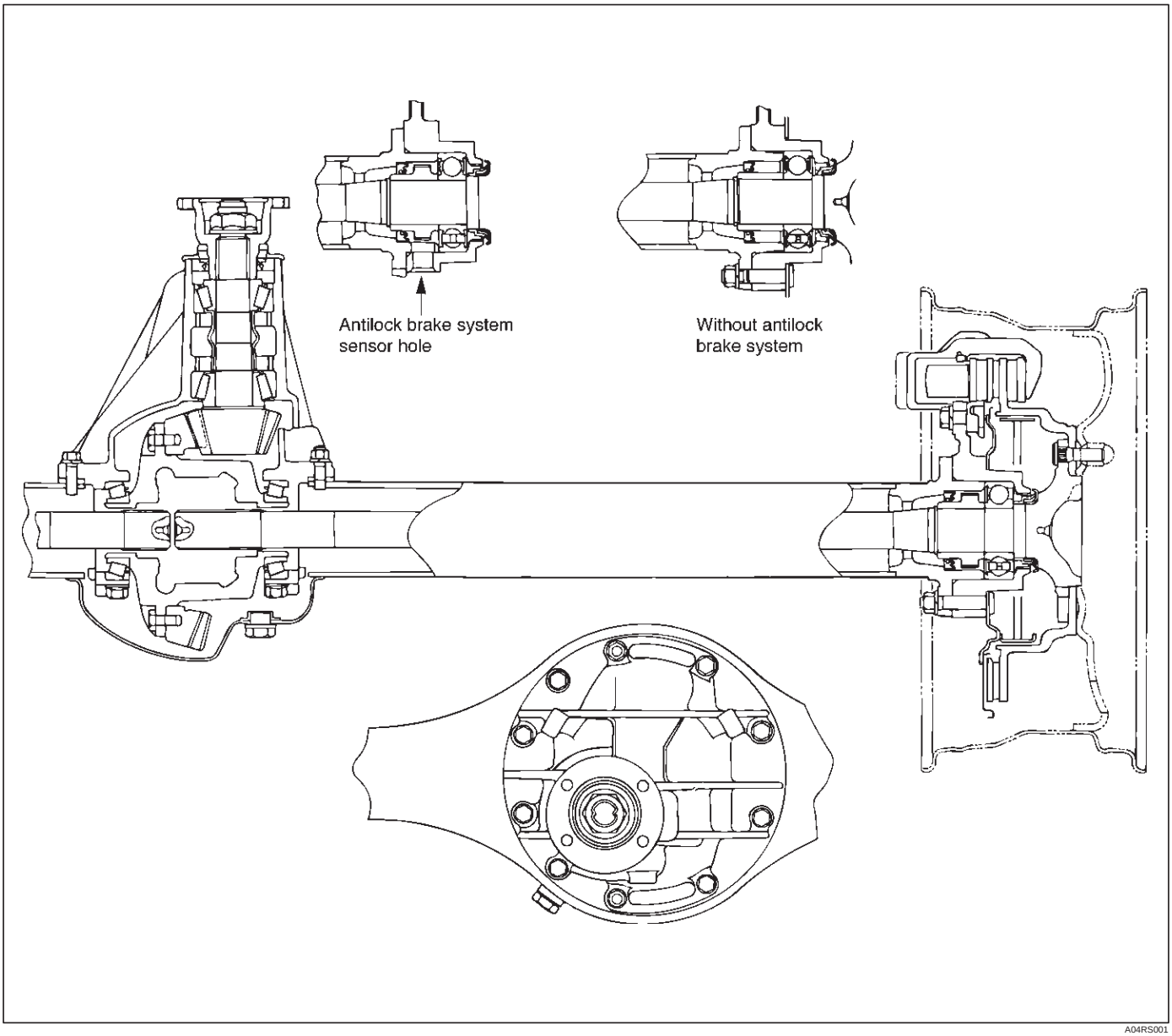

A04RS001

The ring gear is bolted onto the differential cage with 12 bolts.
The differential cage is supported in the axle housing by two tapered roller bearings. The differential and ring gear are located in relationship to the pinion by using selective shims and spacers between the bearing and the axle housing. To move the ring gear, shims are deleted from one side and an equal amount are added to the other side. These shims are also used to preload the bearings which are pressed onto the differential cage. Two bearing caps are used to hold the differential into the rear axle housing.
The differential is used to allow the wheels to turn at different rates of speed while the rear axle continues to transmit the driving force. This prevents tire scuffing when going around corners and prevents premature wear on internal axle parts.
The rear axle is sealed with a pinion seal, a seal at each axle shaft end, and by a liquid gasket between the differential carrier and the axle housing.

Diagnosis

Many noises that seem to come from the rear axle actually originate from other sources such as tires, road surface, wheel bearings, engine, transmission, muffler, or body drumming. Investigate to find the source of the noise before disassembling the rear axle. Rear axles, like any other mechanical device, are not absolutely quiet but should be considered quiet unless some abnormal noise is present.

To make a systematic check for axle noise, observe the following:

1. Select a level asphalt road to reduce tire noise and body drumming.
2. Check rear axle lubricant level to assure correct level, and then drive the vehicle far enough to thoroughly warm up the rear axle lubricant.
3. Note the speed at which noise occurs. Stop the vehicle and put the transmission in neutral. Run the engine speed slowly up and down to determine if the noise is caused by exhaust, muffler noise, or other engine conditions.
4. Tire noise changes with different road surfaces; axle noises do not. Temporarily inflate all tires to 344 kPa (3.5kg/cm^2, 50 psi) (for test purposes only). This will change noise caused by tires but will not affect noise caused by the rear axle.

   Rear axle noise usually stops when coasting at speeds under 48 km/h (30 mph); however, tire noise continues with a lower tone. Rear axle noise usually changes when comparing pull and coast, but tire noise stays about the same.

   Distinguish between tire noise and rear axle noise by noting if the noise changes with various speeds or sudden acceleration and deceleration. Exhaust and axle noise vary under these conditions, while tire noise remains constant and is more pronounced at speeds of 32 to 48 km/h (20 to 30 mph). Further check for tire noise by driving the vehicle over smooth pavements or dirt roads (not gravel) with the tires at normal pressure. If the noise is caused by tires, it will change noticeably with changes in road surface.
5. Loose or rough front wheel bearings will cause noise which may be confused with rear axle noise; however, front wheel bearing noise does not change when comparing drive and coast. Light application of the brake while holding vehicle speed steady will often cause wheel bearing noise to diminish. Front wheel bearings may be checked for noise by jacking up the wheels and spinning them or by shaking the wheels to determine if bearings are loose.
6. Rear suspension rubber bushings and spring insulators dampen out rear axle noise when correctly installed. Check to see that there is no link or rod loosened or metal–to–metal contact.
7. Make sure that there is no metal–to–metal contact between the floor and the frame.

After the noise has been determined to be in the axle, the type of axle noise should be determined, in order to make any necessary repairs.

Gear Noise

Gear noise (whine) is audible from 32 to 89 km/h (20 to 55 mph) under four driving conditions.

1. Driving under acceleration or heavy pull.
2. Driving under load or under constant speed.
3. When using enough throttle to keep the vehicle from driving the engine while the vehicle slows down gradually (engine still pulls slightly).
4. When coasting with the vehicle in gear and the throttle closed. The gear noise is usually more noticeable between 48 and 64 km/h (30 and 40 mph) and 80 and 89 km/h (50 and 55 mph).

Bearing Noise

Bad bearings generally produce a rough growl or grating sound, rather than the whine typical of gear noise. Bearing noise frequently “wow–wows” at bearing rpm, indicating a bad pinion or rear axle side bearing. This noise can be confused with rear wheel bearing noise.

Rear Wheel Bearing Noise

Rear wheel bearing noise continues to be heard while coasting at low speed with transmission in neutral. Noise may diminish by gentle braking. Jack up the rear wheels, spin them by hand and listen for noise at the hubs. Replace any faulty wheel bearings.

Knock At Low Speeds

Low speed knock can be caused by worn universal joints or a side gear hub counter bore in the cage that is worn oversize. Inspect and replace universal joints or cage and side gears as required.

Backlash Clunk

Excessive clunk on acceleration and deceleration can be caused by a worn rear axle pinion shaft, a worn cage, excessive clearance between the axle and the side gear splines, excessive clearance between the side gear hub and the counterbore in the cage, worn pinion and side gear teeth, worn thrust washers, or excessive drive pinion and ring gear backlash. Remove worn parts and replace as required. Select close–fitting parts when possible. Adjust pinion and ring gear backlash.

Axle Housing

Axle Housing and Associated Parts

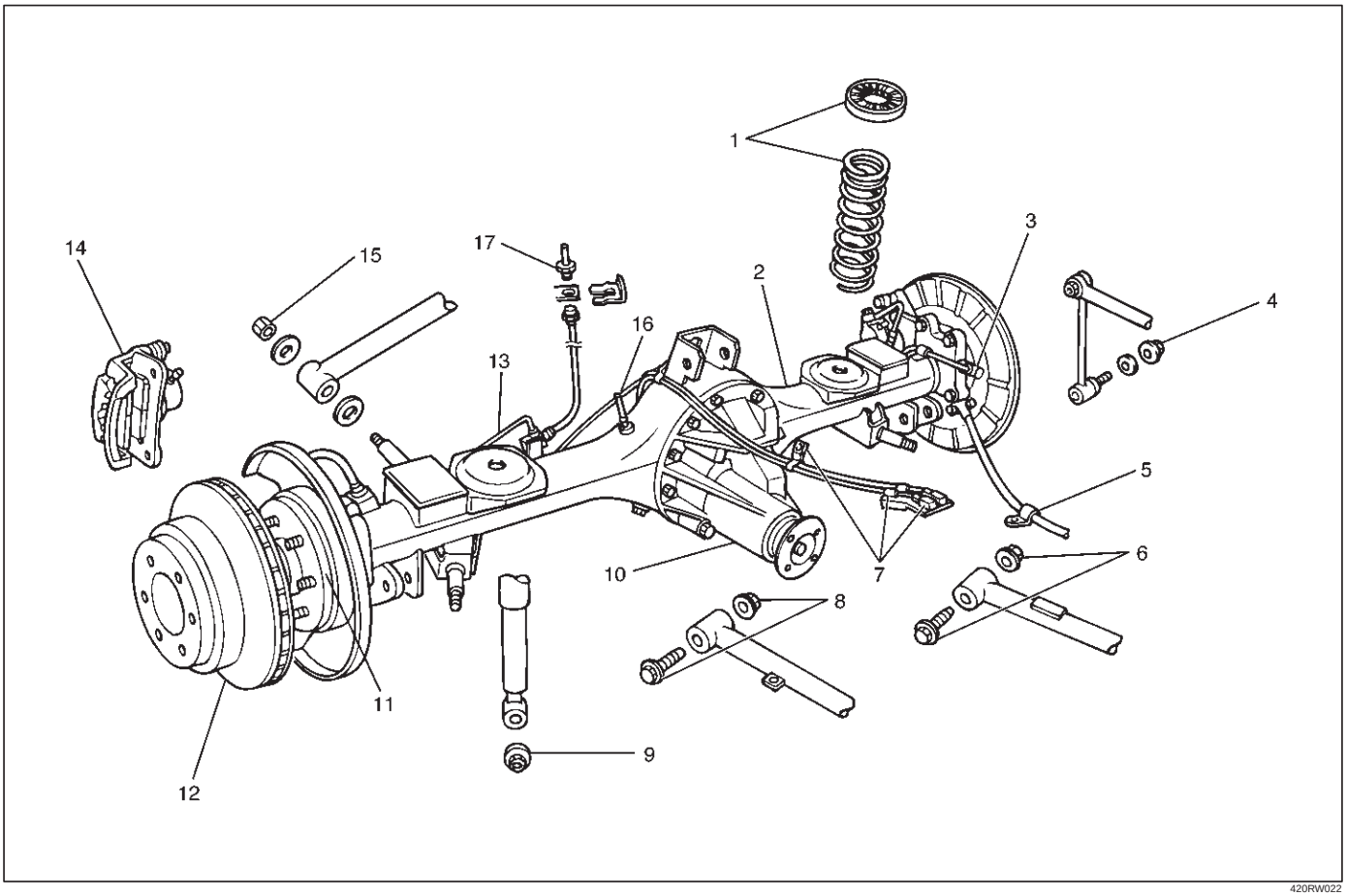

Legend

(1) Coil Spring and Insulator
(2) Axle Housing Assembly
(3) ABS Speed Sensor and Harness(if equipped)
(4) Nut
(5) Parking Brake Cable
(6) Bolt and Nut
(7) Antilock Brake System (ABS) Connector and Bracket (if equipped)
(8) Bolt and Nut
(9) Nut
(10) Differential Assembly
(11) Axle Shaft Assembly
(12) Brake Disc
(13) Brake Pipe
(14) Brake Caliper
(15) Nut
(16) Breather Hose
(17) Flare Nut

Removal

1. Raise the vehicle and support it with suitable safety stands.
   The hoist must remain under the rear axle housing.
2. Drain brake fluid. Refer to Hydraulic Brakes in Brake section.
3. Remove rear wheels and tires. Refer to Wheel in Suspension section.
4. Remove propeller shaft. Refer to Rear Propeller Shaft in this section.
5. Drain the rear axle oil into a proper container.
6. Remove parking brake cable, release the connection between the cable fixing clip equalizer. Refer to Parking Brakes in Brake section.
7. Move the clip aside and pull out the breather hose.

8. Disconnect the ABS connectors (1) and remove the brackets (2) attached to the frame and center link (ABS model only).

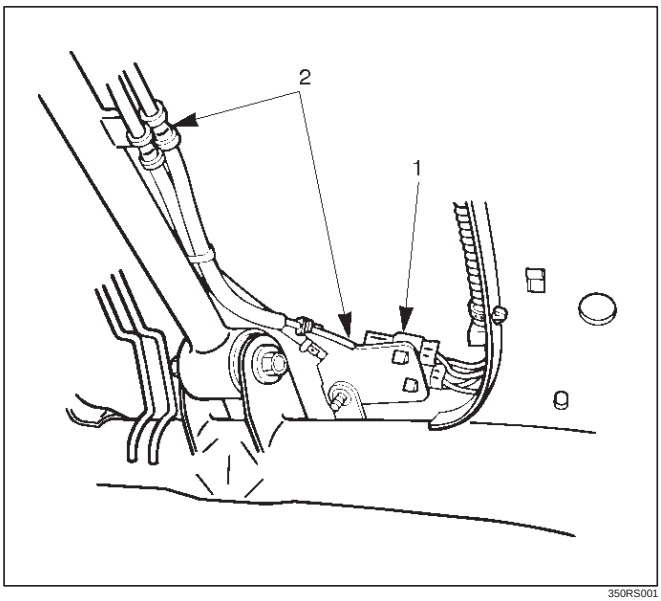

350RS001

9. Loosen the brake tube flare nut, remove the clip and take out the brake tube.
10. Remove the shock absorber fixing nut from the axle housing.
11. Remove the stabilizer linkage mounting nut from the axle housing.
12. Remove the lateral rod fixing nut from the axle housing.
13. Remove the center link mounting bolt and nut from the axle housing.
14. Remove the trailing link fixing bolt and nut from the axle housing.
15. Jack down and remove the coil spring and insulator.
16. Axle housing assembly can be separated from the vehicle on completion of steps 1 – 11.
17. Remove the brake caliper fixing bolt (3), loosen the flare nut (1), release the clip (2) and take out the brake caliper together with the flexible hose.

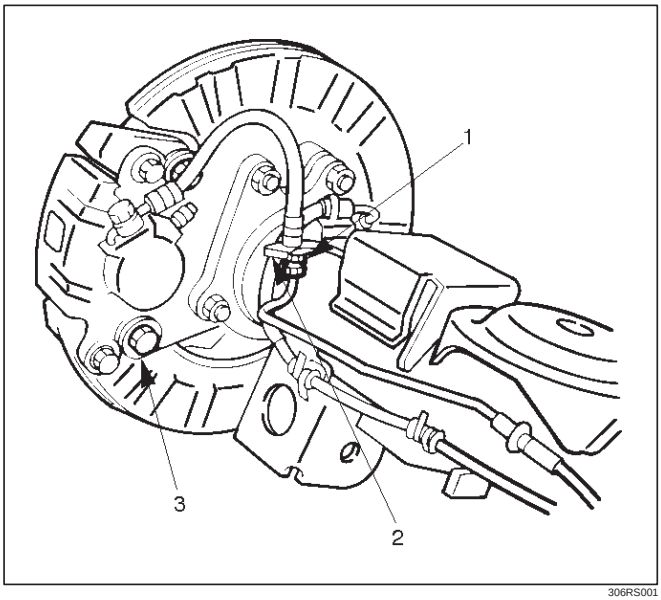

306RS001

18. Remove brake disc.
19. Remove antilock brake system speed sensor fixing bolt and the clip and bracket on the axle housing (ABS model only).
20. Remove the brake pipe clip and fixing bolt on the axle housing and take out the brake pipe.
21. Remove the bearing holder fixing nut and take out the axle shaft assembly, be sure not to damage the oil seal by the spline of the shaft, Refer to Axle Shaft in this section.
22. Remove differential assembly, refer to Differential Assembly in this section.

Oil Seal Replacement

Remove the oil seal, carefully not to damage the housing, and mount new oil seal using oil seal installer 5–8840–2294–0.

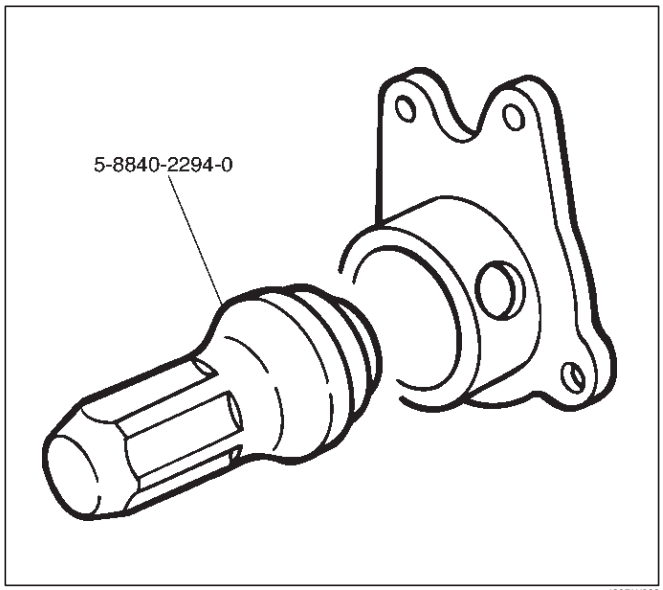

420RW028

Installation

1. Install differential assembly, refer to Differential Assembly in this section.
2. Install axle shaft assembly then tighten the bearing holder mounting nut to the specified torque. Be sure not to damage the oil seal by the spline of the shaft.

   Torque: 74N·m (7.5kg·m/54lb ft)
3. Install brake pipe.
4. Connect antilock brake system (ABS) speed sensor and harness, refer to 4–Wheel Anti–Lock Brake System (ABS) in Brake section (ABS model only).
5. Install brake disc.
6. Install brake caliper. Refer to Disk Brakes in Brake section.
7. Install axle housing assembly.
8. Install coil spring and insulator.
9. Install the trailing link fixing bolt and nut to the axle housing. For the procedures in items 9–13, refer to Suspension section.
10. Install the center link bolt and nut to the axle housing.

11. Install the lateral rod fixing nut to the axle housing.
12. Install the stabilizer linkage mounting nut to the axle housing.
13. Install the shock absorber fixing nut to the axle housing.
14. Install brake tube flare nut, Refer to Disk Brakes in Brake section.
15. Install ABS connector and bracket (ABS model only).
16. Connect breather hose.
17. Install parking brake cable, Refer to Parking Brakes in Brake section.
18. Bleed brakes. Refer to Hydraulic Brakes in Brake section.

Axle Shaft

Axle Shaft and Associated Parts

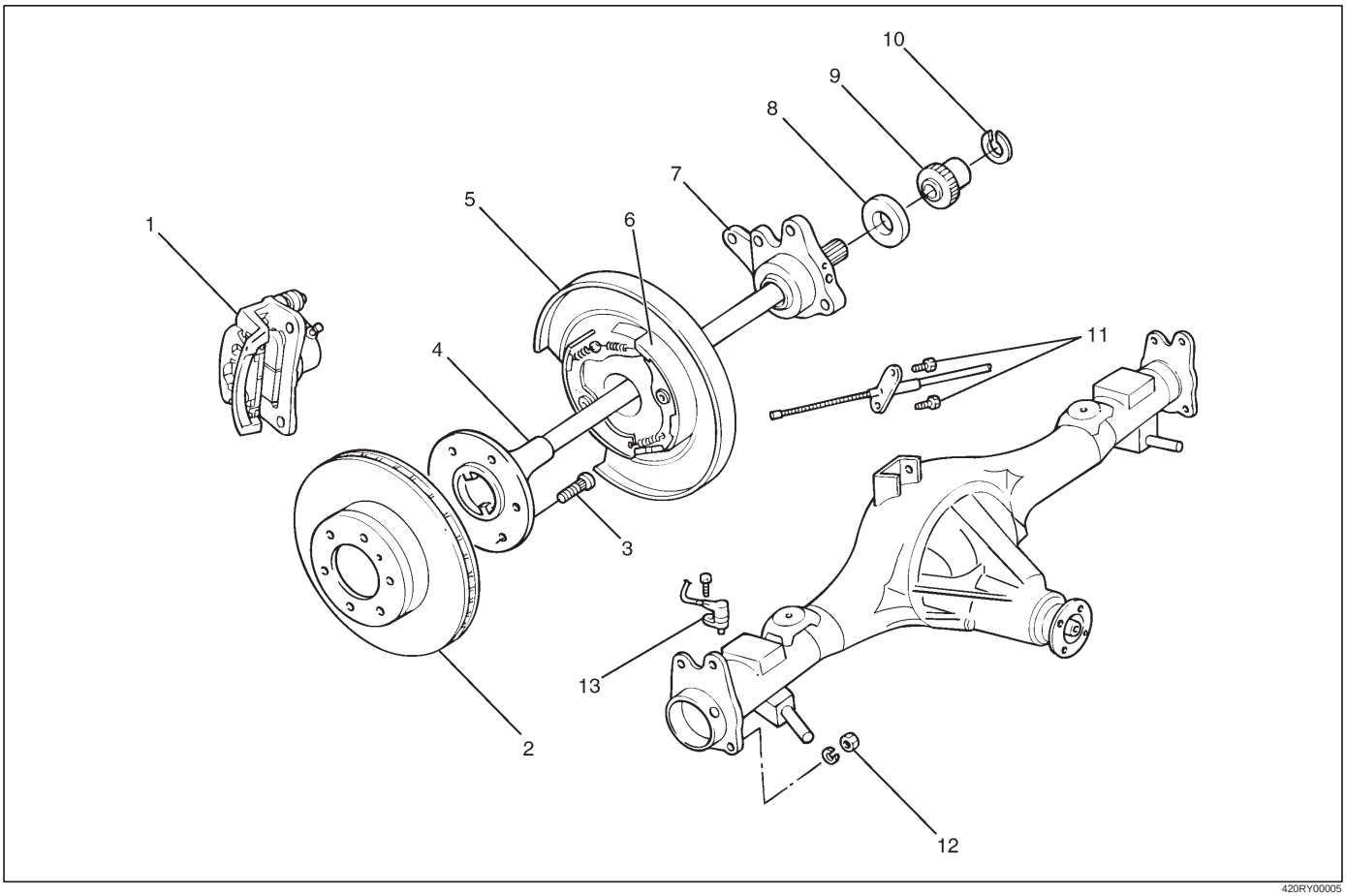

420RY00005

Legend

(1) Brake Caliper
(2) Brake Disc
(3) Wheel Pin
(4) Axle Shaft Assembly
(5) Back Plate
(6) Parking Brake Assembly
(7) Bearing Holder
(8) Bearing
(9) Retainer
(10) Snap Ring
(11) Bolt
(12) Nut
(13) Antilock Brake System (ABS) Speed Sensor

Removal

1. Raise the vehicle.
2. Remove tires and wheels. Refer to Wheel in Steering section.
3. Remove brake caliper. Use a wire to attach the brake caliper to the frame. Refer to Disk Brakes in Brake section.
4. Remove brake disc.
5. Remove ABS sensor.
6. Remove Parking brake assembly. Refer to Parking Brakes in Brake section.

7. Remove the parking brake cable mounting bolts(Behind the back plate)(1).

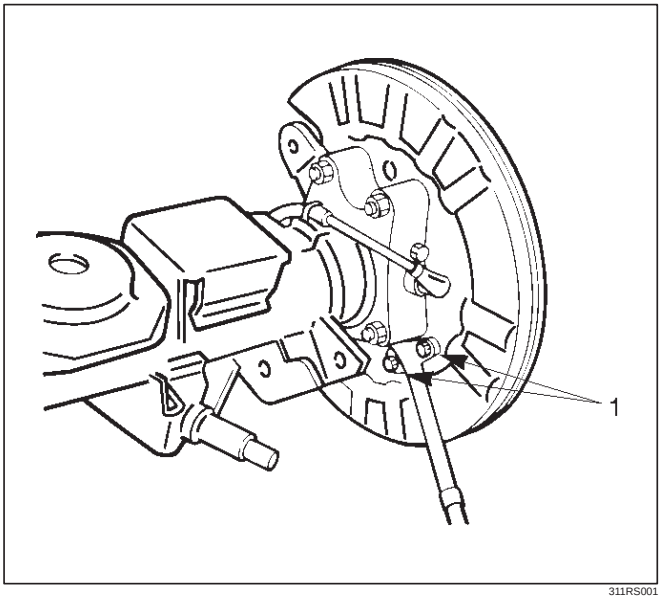

311RS001

8. Remove the bearing holder mounting nuts.
9. Remove axle shaft assembly.

NOTE: Be sure not to damage the oil seal.

10. Remove snap ring.
11. Using a bearing remover 5–8840–2295–0 and press, remove retainer together with the bearing holder.

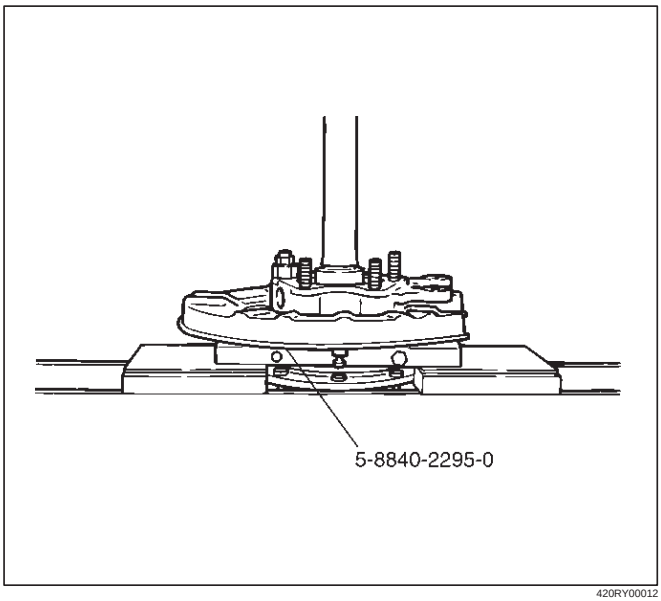

420RY00012

12. Remove bearing.
13. Remove bearing holder.
14. Remove back plate.
15. Remove the wheel pins using a remover 5–8840–0029–0.

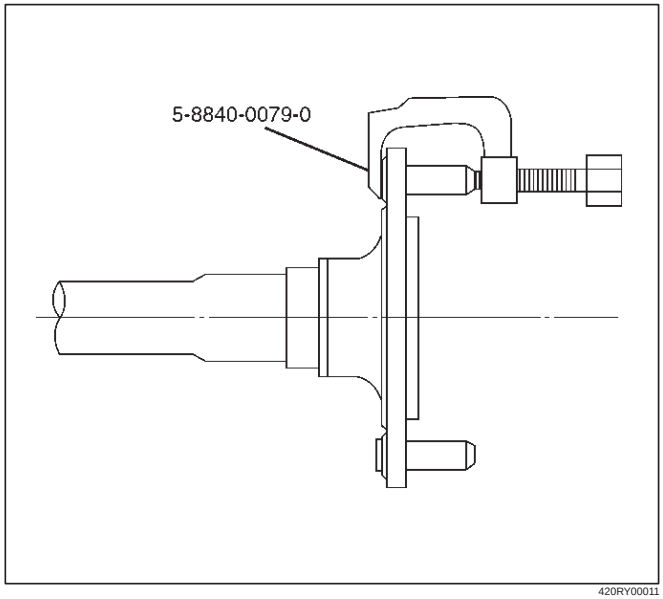

420RY00011

Inspection and Repair

Make necessary correction or parts replacement if wear, corrosion or any other abnormal conditions are found through inspection.

Visual Check:

Check the following parts for wear, damage, noise or any other abnormal conditions:

1. Axle shaft
2. Bearing

When checking the axle shaft, pay special attention to the splined portions and replace the shaft if distortion or step wear is noticeable. Correct slight step wear with a grinder.

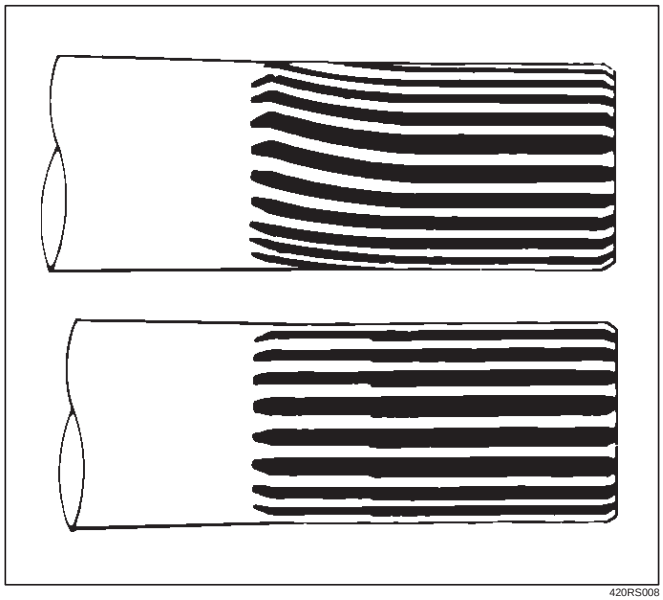

420RS008

Axle Shaft Run–out

Limit: 1.0 mm (0.039 in)

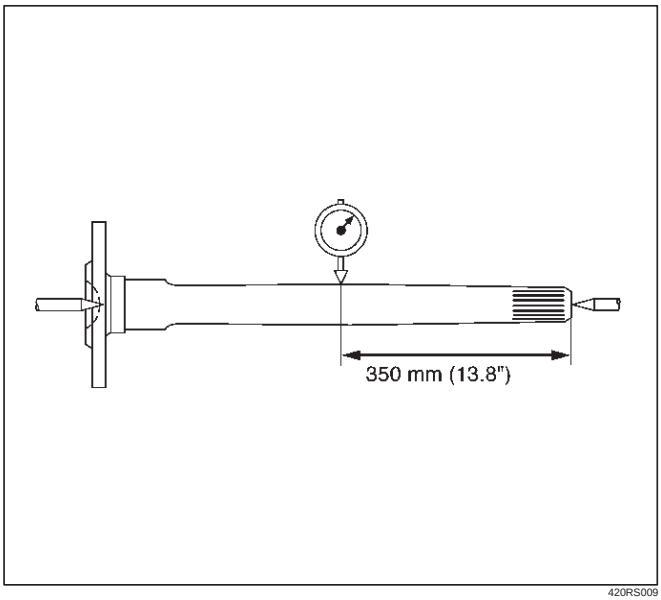

420RS009

Axle Shaft Flange Run–out

Limit: 0.08 mm (0.003 in)

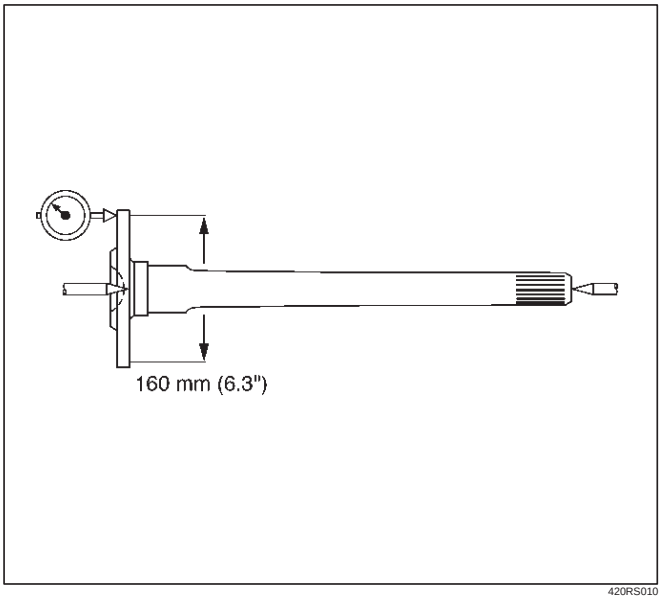

420RS010

Oil Seal Replacement

Remove the oil seal carefully not to damage the bearing holder bore .
When installing, use oil seal installer 5–8840–2310–0.

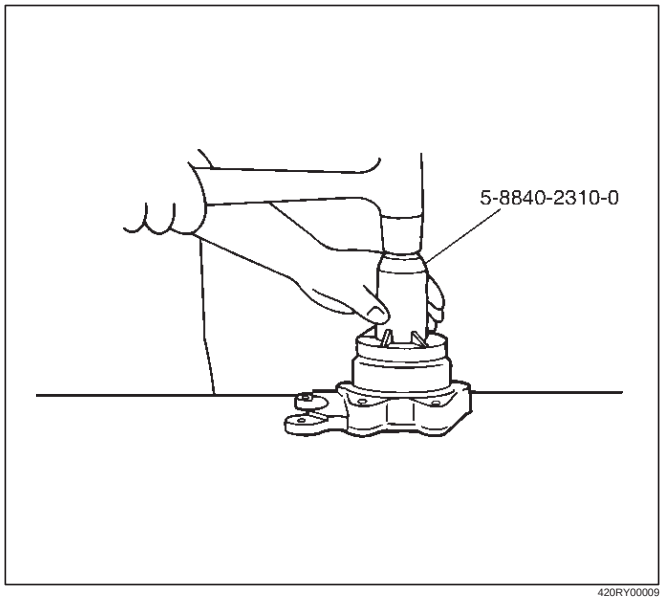

420RY00009

Installation

1. Install wheel pin.
2. Install back plate.
3. Install bearing holder.
4. Install bearing.
5. Install retainer by using a bearing installer 5–8840–2296–0, press fit together with the bearing.

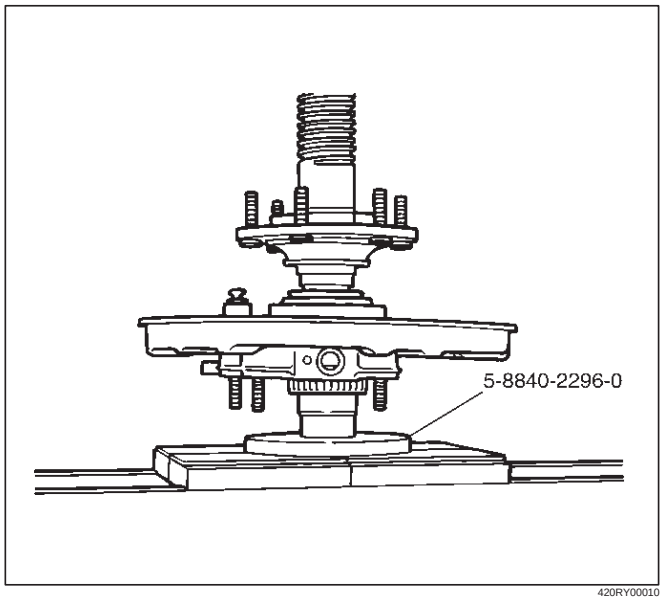

420RY00010

6. Install snap ring.
7. Install axle shaft assembly.

NOTE: Be sure not to damage the oil seal.

8. Tighten the bearing holder mounting nut to the specified torque.

   Torque: 74N·m (54 lb ft)

9. Fix the parking brake cable mounting bolt (Behind the back plate).
10. Install parking brake assembly, refer to Parking Brakes in Brake section.
11. Install antilock brake system sensor.
12. Install brake disc.
13. Install brake caliper, refer to Disk Brakes in Brake section.

Pinion Oil Seal

Pinion Oil Seal and Associated Parts

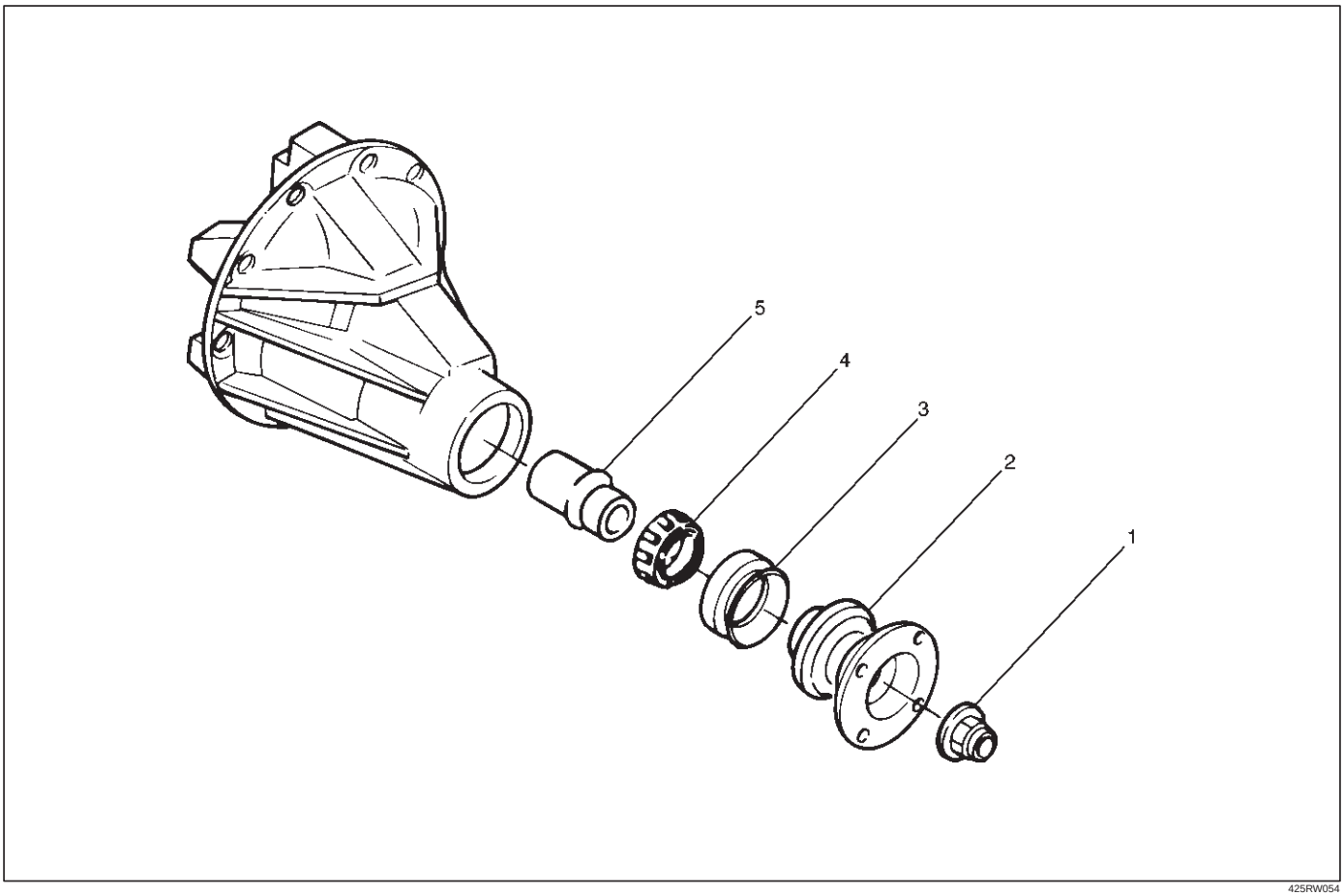

425RW054

Legend

(1) Flange Nut and Washer
(2) Flange
(3) Oil Seal
(4) Outer Bearing
(5) Collapsible Spacer

Removal

1. Remove the rear propeller shaft. Refer to Rear Propeller Shaft in this section.
2. Drain the rear axle oil.

3. Remove flange nut and washer by using pinion flange holder 5–8840–2157–0 after raising up its staked parts completely.

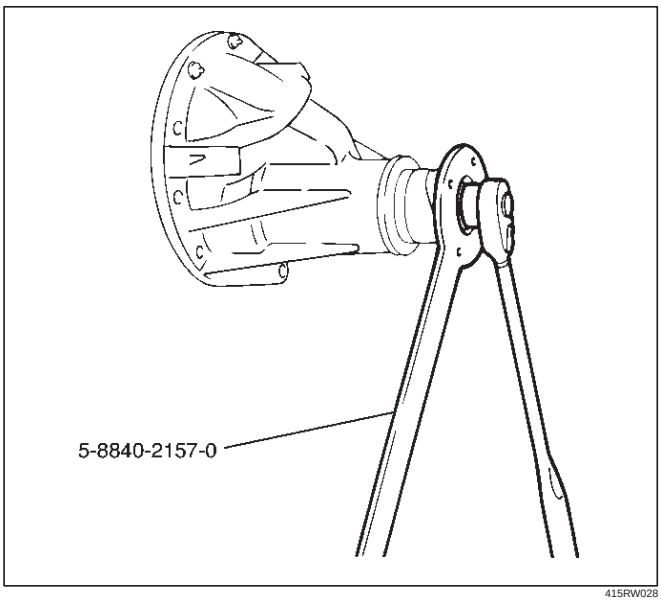

415RW028

4. Remove flange.
5. Remove oil seal.
6. Remove outer bearing by using remover 5–8840–2323–0.

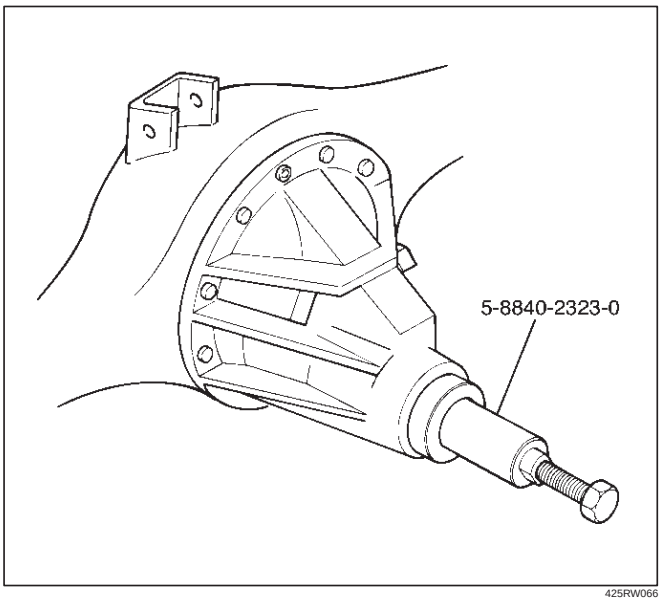

425RW066

7. Remove collapsible spacer.

Inspection and Repair

Make necessary correction or parts replacement if wear, damage, corrosion or any other abnormal conditions are found through inspection.
Check the following parts:

1. Seal surface of the pinion.
2. Cage bore for burns.

Installation

1. Install collapsible spacer, discard the used collapsible spacer and install a new one.
2. Install outer bearing.

NOTE: Do not drive in, but just temporarily set in the outer bearing by hand, which should be indirectly pressed in finally by tightening the flange nut.

3. By using the seal installer 5–8840–2165–0, install a new oil seal (1) that has grease on seal lip.

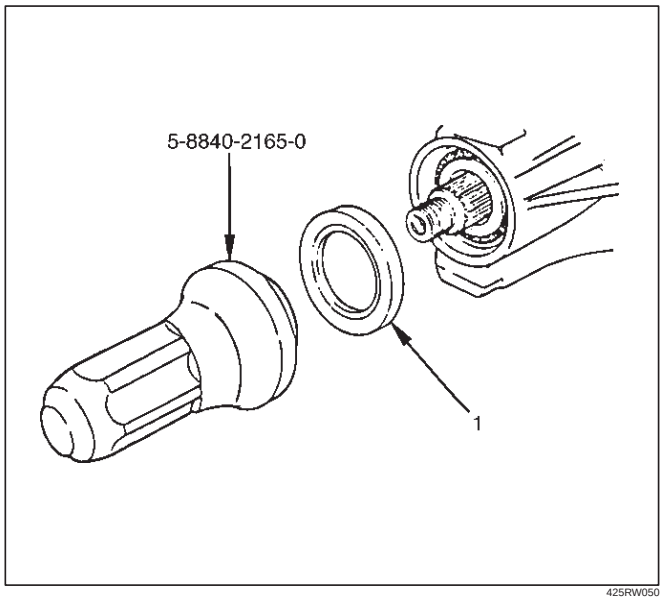

425RW050

4. Install flange.
5. Install flange nut and washer. Refer to Differential Assembly in this section for flange nut reassembly.

NOTE: Discard the used nut and install a new one.

Differential Assembly

Differential Assembly and Associated Parts

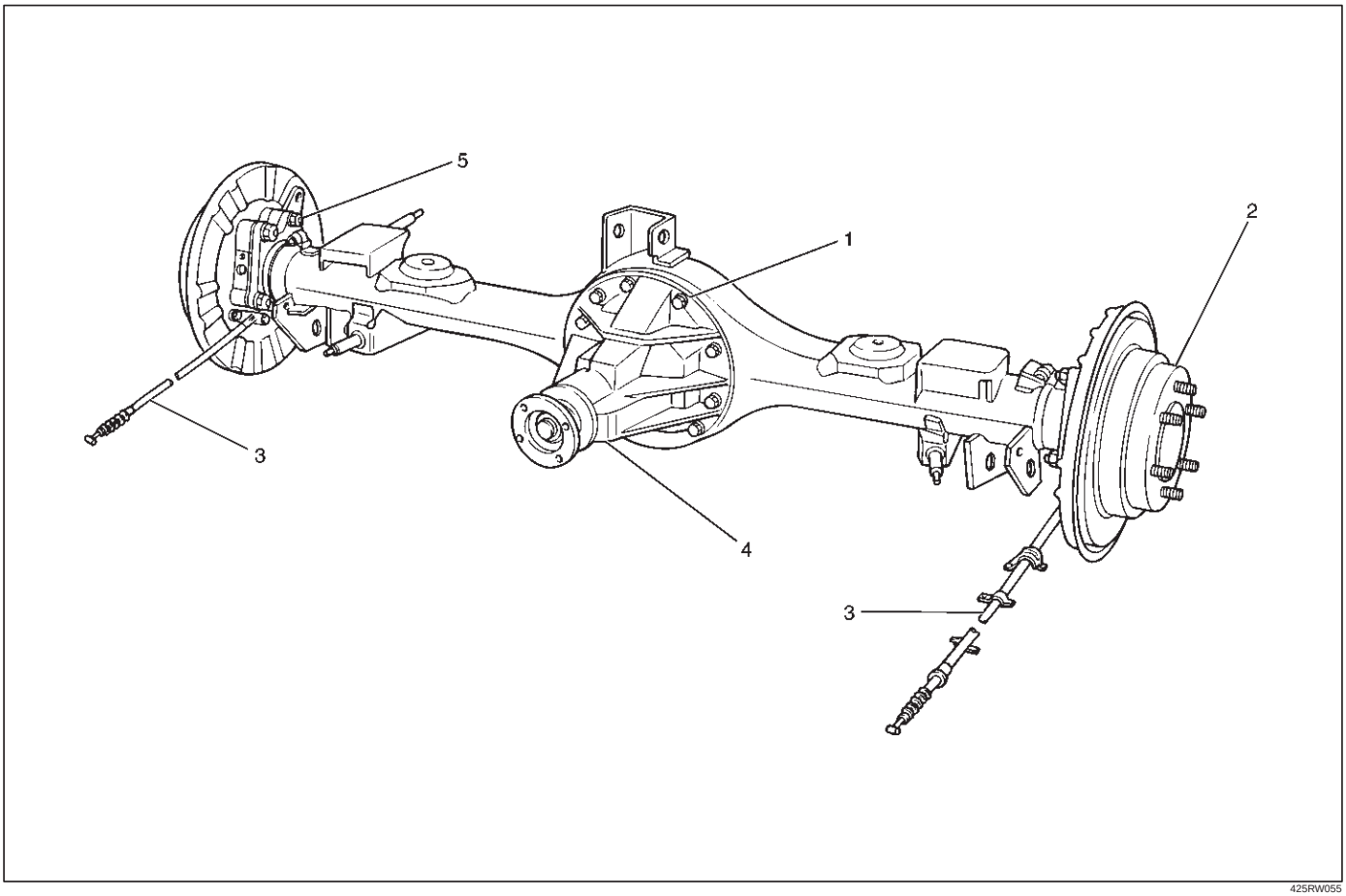

425RW055

Legend

(1) Bolt and Nut
(2) Axle Shaft Assembly
(3) Parking Brake Cable
(4) Differential Assembly
(5) Nut

Removal

1. Jack up and support the frame with stands.
2. Remove the wheel and tire. Refer to Wheel in Steering section.
3. Drain the differential oil.
4. Remove the propeller shaft. Refer to Rear Propeller Shaft in this section.
5. Remove the ABS speed sensor(ABS model only). Refer to 4–Wheel Anti–lock Brake System (ABS) in Brake section.
6. Remove the parking brake cable fastening clip and disconnect the equalizer section. Refer to Parking Brakes in Brake section.
7. Remove the bearing holder fixing nuts.
8. Remove axle shaft assembly, be sure not to damage the oil seal by axle shaft.
9. Remove differential carrier mounting bolts and nuts.
10. Remove differential assembly.

Installation

1. Clean the contact surfaces of the axle and differential carrier. As shown in the drawing, apply Three Bond TB1215 or equivalent then install differential assembly.

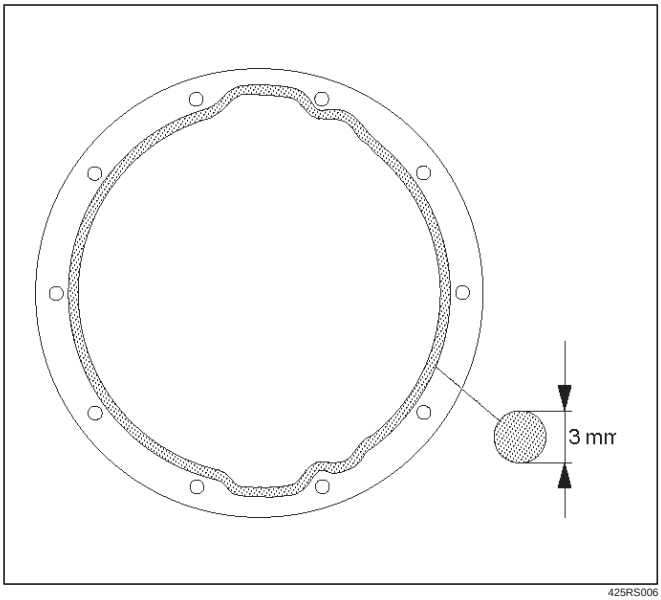

2. Install bolt and nut. Tighten the differential carrier mounting bolts and nuts to the specified torque.

   Torque:Nuts 44N·m (4.5kg·m/33lb ft)

   Bolts 64N·m (6.5kg·m/47lb ft)

3. Install axle shaft assembly. Be sure not to damage the oil seal by axle shaft.
4. Install nut, refer to Axle Shaft in this section.
5. Install parking brake cable, refer to Parking Brakes in Brake section.

NOTE: After completing the assembling work, fill the prescribed gear oil to the filler hole.

Lubricant capacity: 1.8 liter (1.6 Imp qt/1.9US qt)

6. Tighten the oil filler plug to the specified torque.

   Torque: 78N·m (8.0kg·m/58lb ft)

Disassembled View

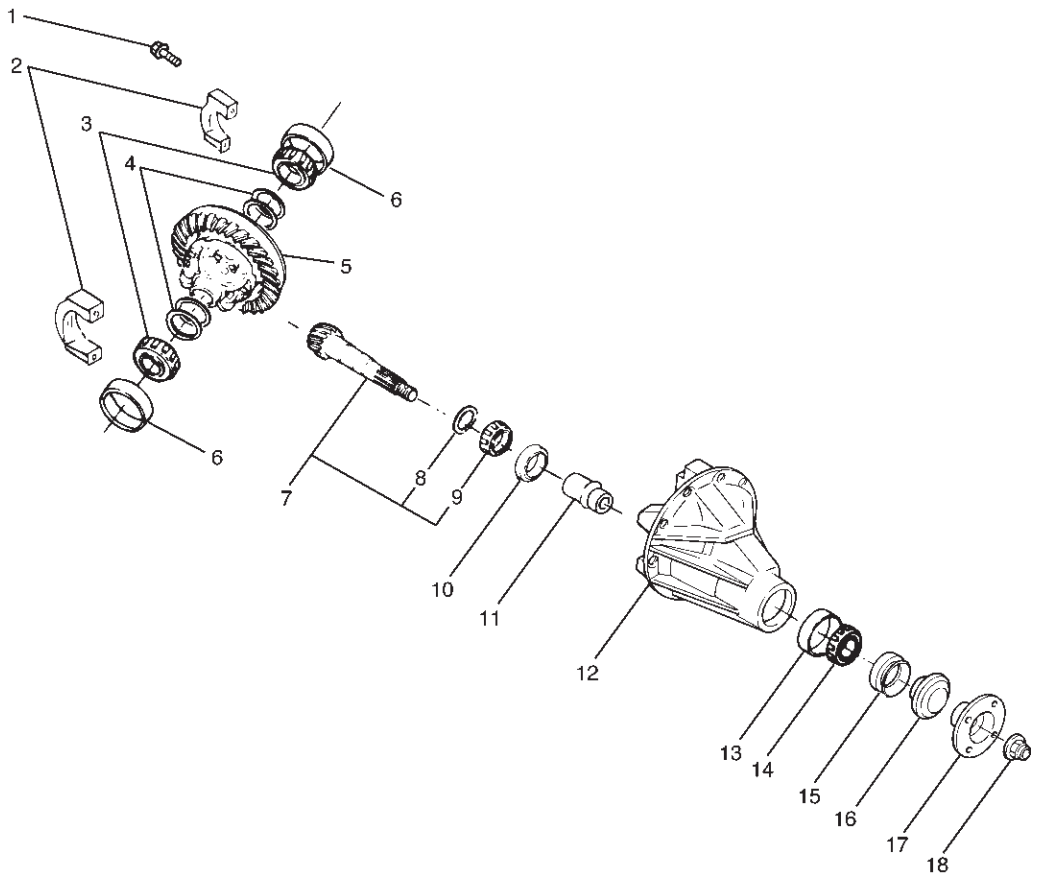

415RW035

Legend

(1) Bolt
(2) Bearing Cap
(3) Side Bearing
(4) Adjust Shim
(5) Diff Cage Assembly
(6) Side Bearing Outer Race
(7) Pinion Gear
(8) Adjust Shim
(9) Inner Bearing
(10) Inner Bearing Outer Race
(11) Collapsible Spacer
(12) Differential Carrier
(13) Outer Bearing Outer Race
(14) Outer Bearing
(15) Oil Seal
(16) Dust Cover
(17) Flange
(18) Flange Nut

Disassembly

1. Using holding fixture 5–8840–0275–0 and holding fixture base 5–8840–0003–0, fix the differential assembly to the bench.

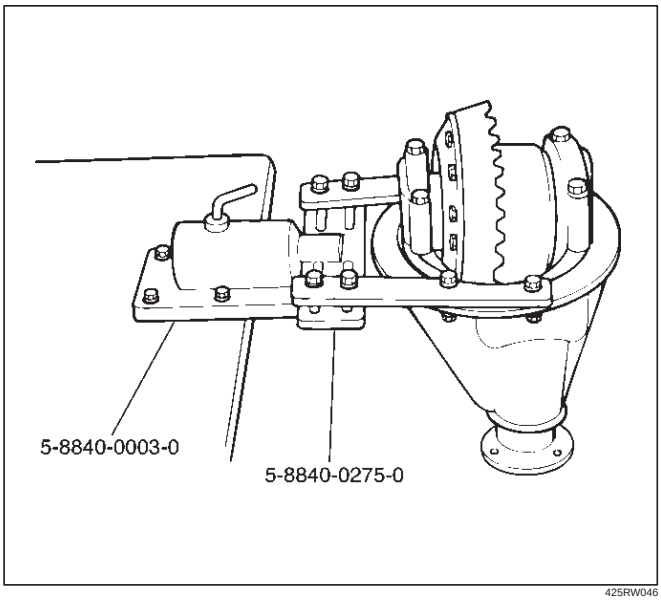

425RW046

2. Remove bearing cap bolt.
3. Apply a setting mark to the side bearing cap and the differential carrier then remove bearing cap.

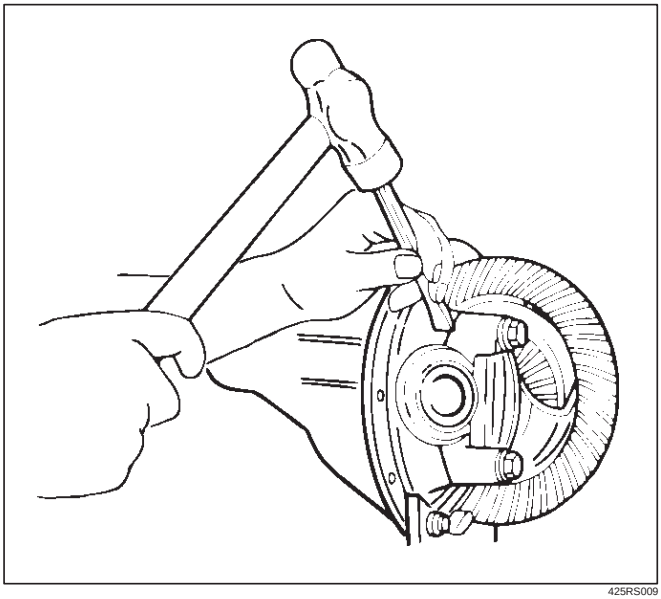

425RS009

4. Remove differential cage assembly.
5. Remove side bearing outer race, after removal, keep the right and left hand side bearing assemblies separate to maintain inner and outer race combinations.
6. Remove side bearing, using remover 5–8840–0013/0014–0 and adapter 5–8840–2196–0.

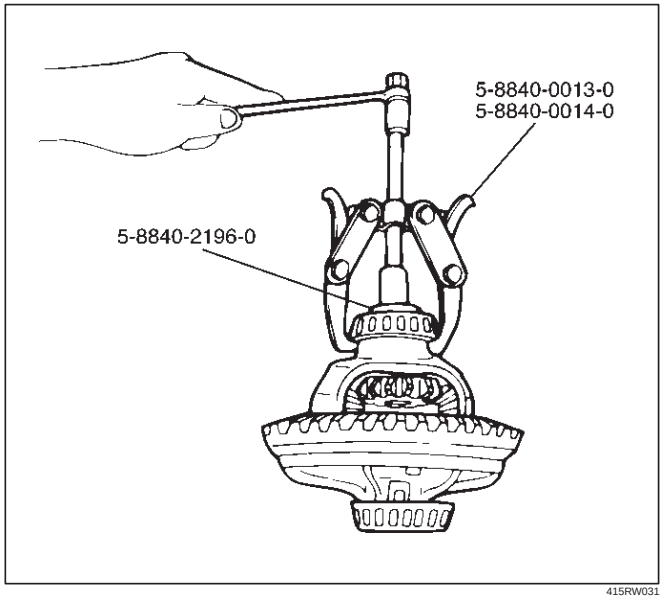

415RW031

7. Remove adjust shim, note the thickness and position of the shims removed.
8. Remove the flange nut using holding wrench 5–8840–2157–0 after raising up its staked parts completely.

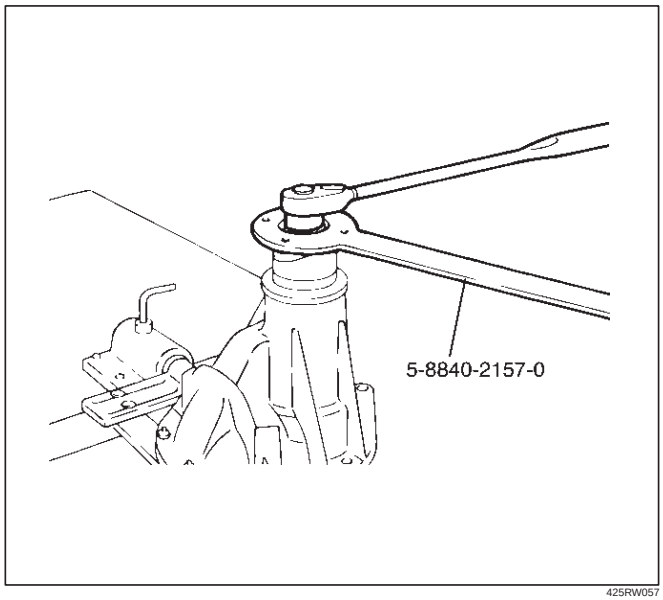

425RW057

9. Remove flange.
10. Remove dust cover.

11. Remove the drive pinion assembly using a soft metal rod and a hammer.

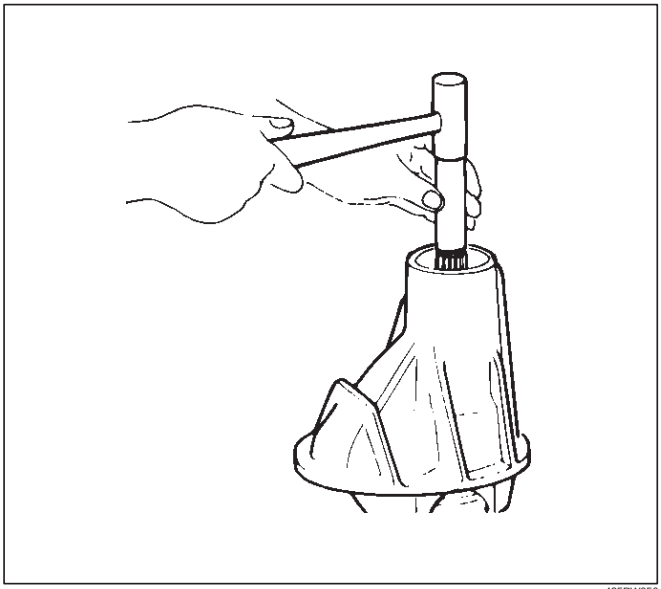

425RW056

12. Remove collapsible spacer.
13. Remove the inner bearing using a separator 5–8840–2197–0 and a press.

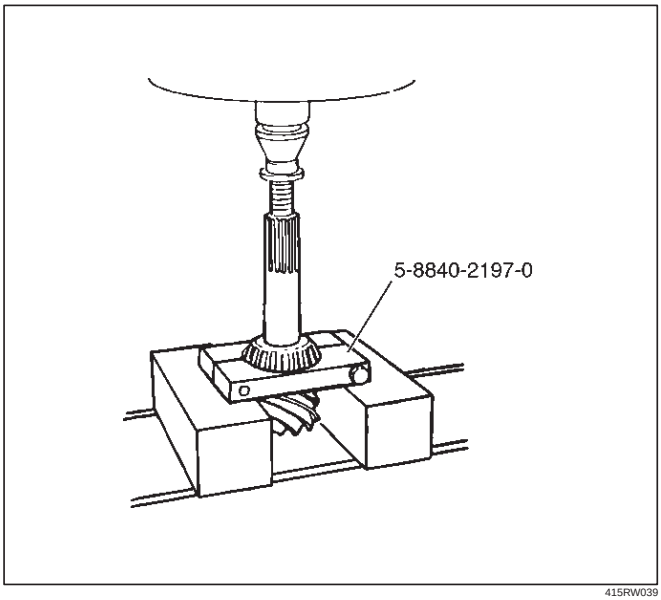

415RW039

14. Remove adjust shim.
15. Remove inner bearing outer race.
16. Remove oil seal.
17. Remove outer bearing.
18. Remove the inner bearing outer race (1) and the outer bearing outer race (2) by using a brass bar and a hammer.

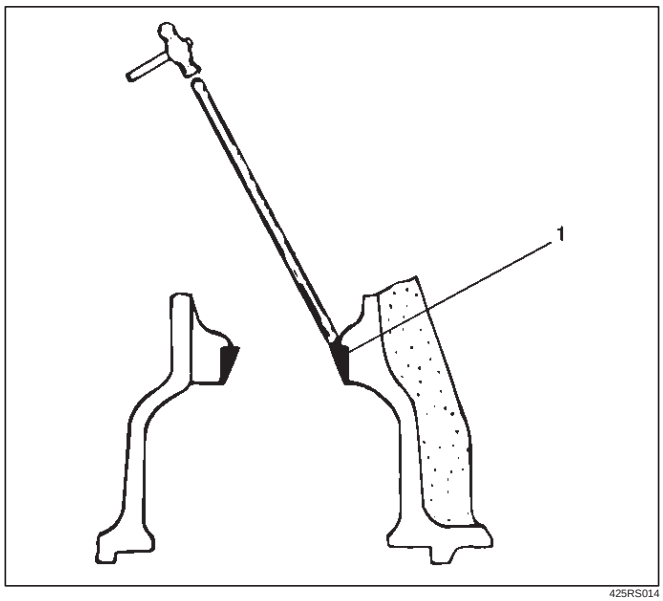

425RS014

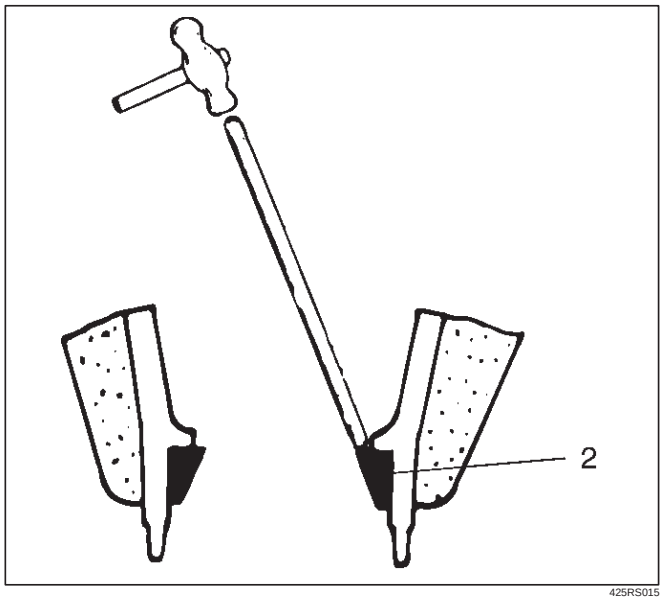

425RS015

Reassembly

1. Using installer 5–8840–2164–0 and grip 5–8840–0007–0, install outer bearing outer race.

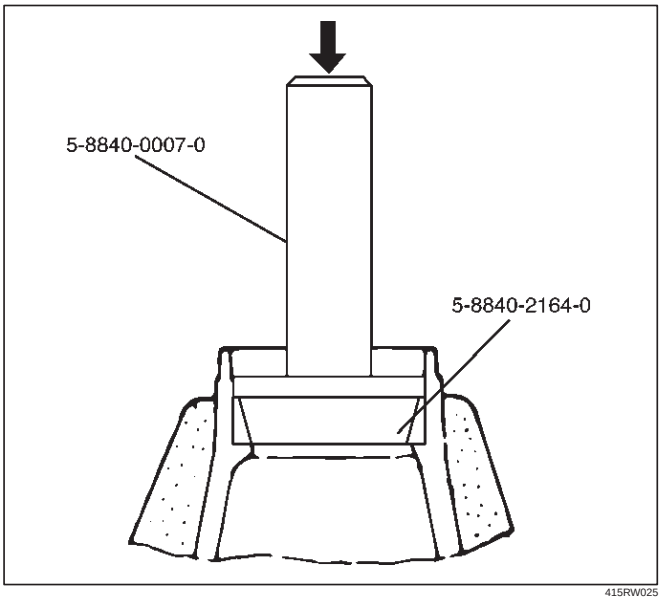

415RW025

2. Using installer 5–8840–2163–0 and grip 5–8840–0007–0, install Inner bearing outer race.

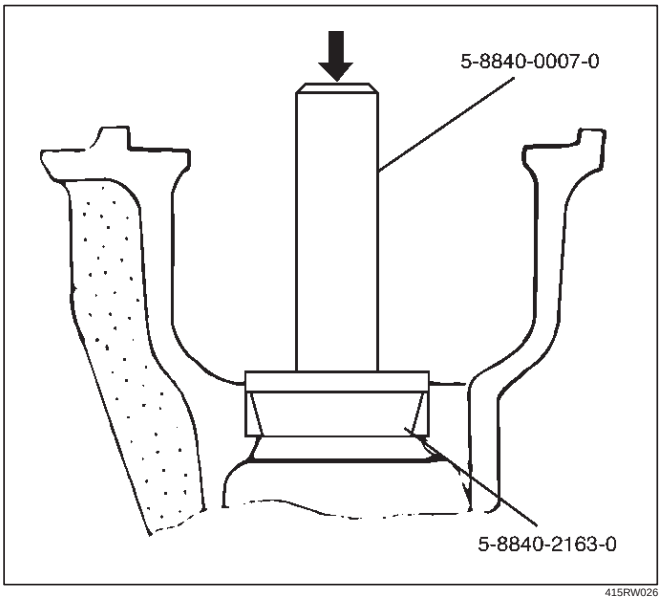

415RW026

3. Install adjust shim and adjust drive pinion mounting distance
   1. Apply gear oil to the inner and outer drive pinion bearing.
      Clean the pinion setting gauge set.
      Then install the gauge set together with the inner and outer bearings.
   2. Tighten the nut to the specified torque.

Torque: 2.3 N·m (0.23kg·m/20 lb in)

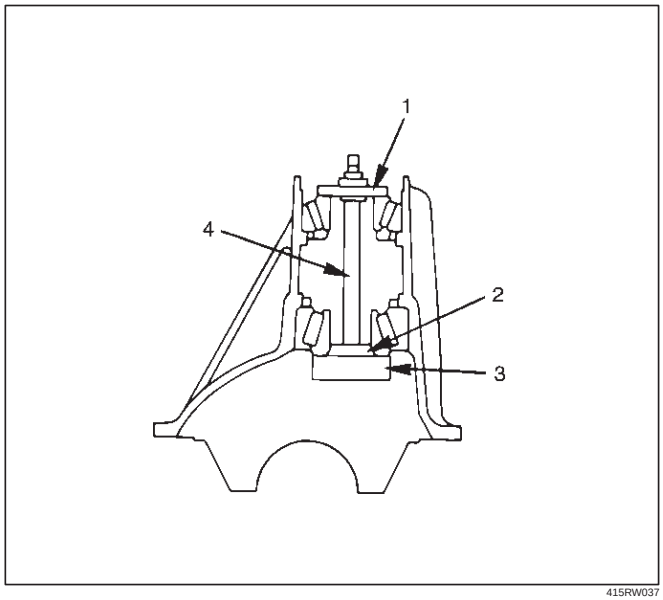

415RW037

Legend

(1) Front Pilot: 5–8840–2085–0
(2) Rear Pilot: 5–8840–0129–0
(3) Gauge Plate: 5–8840–2166–0
(4) Bolt and Nut: 5–8840–0127–0

3. Clean the side bearing bores. Install the dial indicator with the discs and arbor. Install and tighten the bearing caps to the specified torque.

Torque: 108 N·m (11.0kg·m/80 lb ft)

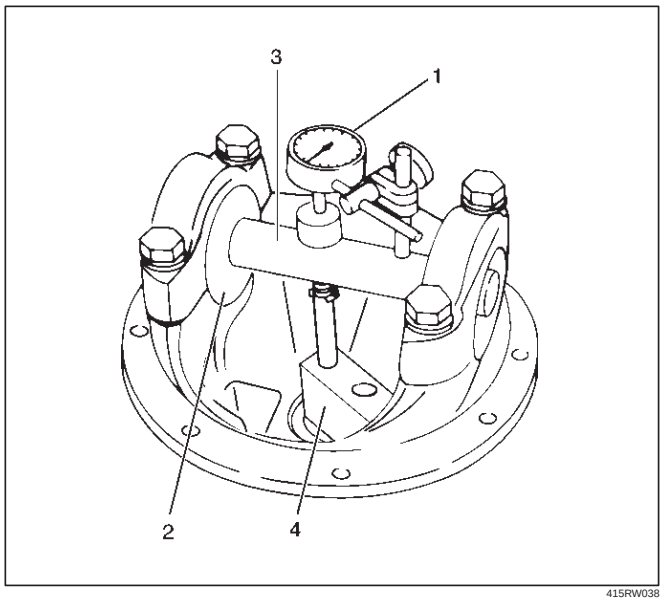

415RW038

Legend

(1) Dial Indicator: 5–8840–0126–0
(2) Disc (2 pcs.): 5–8840–2167–0
(3) Arbor: 5–8840–0128–0
(4) Gauge Plate: 5–8840–2166–0

4. Set the dial indicator to “0”. Place it on the mounting post of the gauging arbor with the contact button touching the indicator pad. Force the dial indicator downward until the needle has made a half turn clockwise. Tighten down the dial indicator in this position.

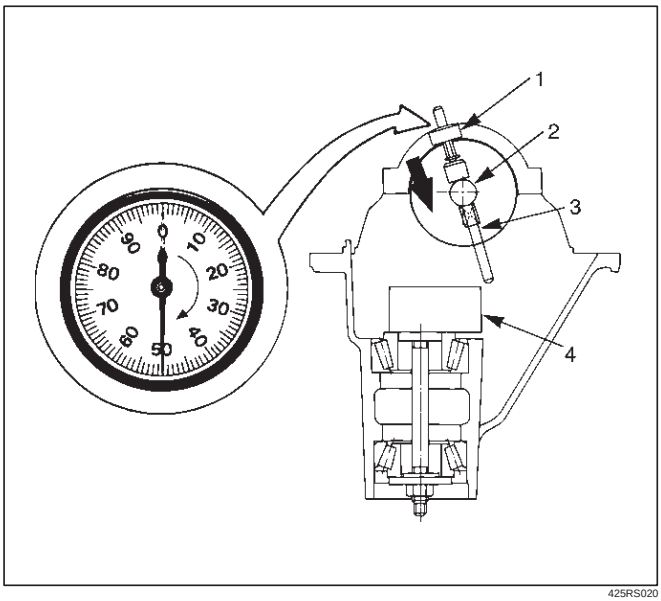

425RS020

Legend

(1) Dial Indicator
(2) Ganging Arbor
(3) Plunger
(4) Gauge Plate

5. Position the plunger on the gauge plate. Move the gauging arbor slowly back and forth and locate the position at which the dial indicator shows the greatest defection. At this point, once again set the dial indicator to “0”.

   Repeat the procedure to verify the “0” setting.

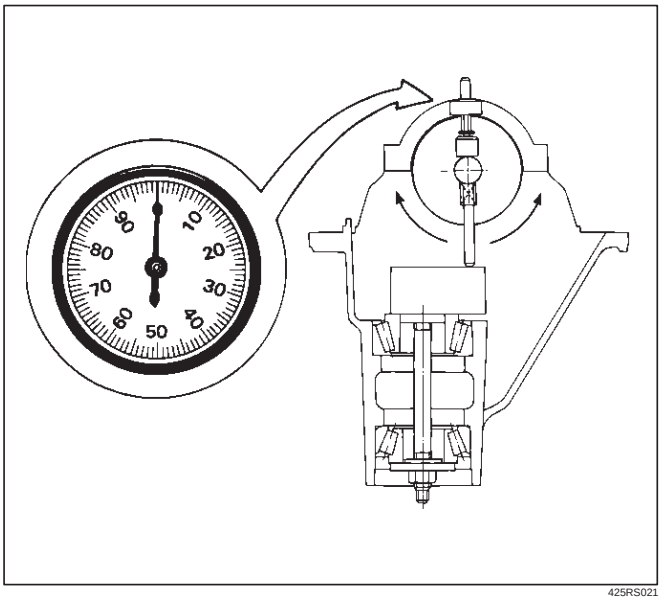

425RS021

6. After the ZERO setting is obtained, rotate the gauging arbor until the dial indicator rod does not touch the gauging plate.

   Record the number the dial indicator needle points to.

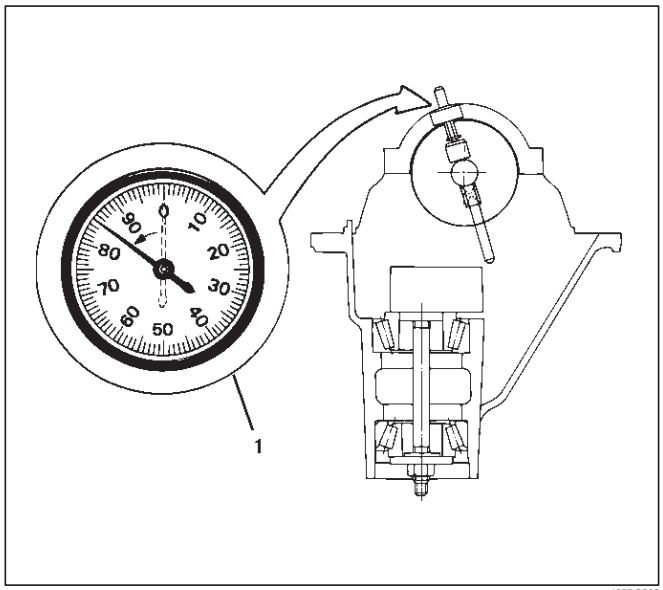

425RS022

Legend

(1) Example=Dial indicator reading of 0.085

7. Record the pinion depth code on the head of the drive pinion.

   The number indicates a necessary change in the pinion mounting distance. A plus number indicates the need for a greater mounting distance (which can be achieved by decreasing the shim thickness). A minus number indicates the need for a smaller mounting distance (which can be achieved by increasing the shim thickness). If examination reveals pinion depth code “0”, the pinion is “nominal”.

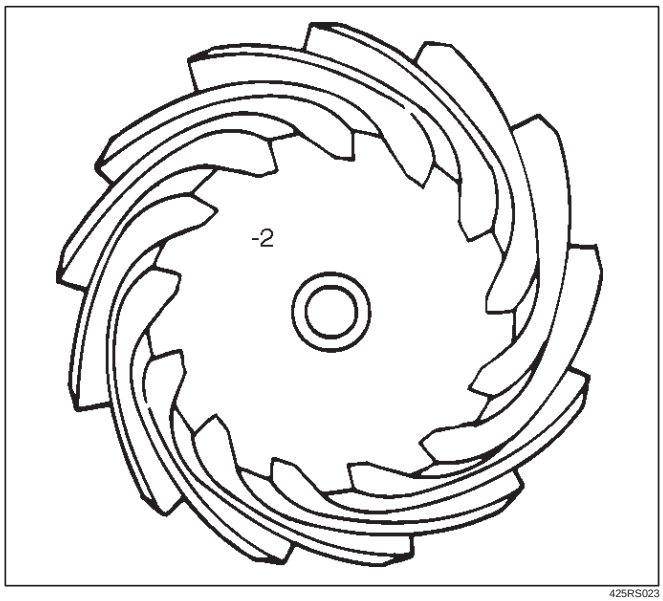

425RS023

8. Select the shim using the chart;

Pinion marking Dial indicator reading (Inches)	+10	+8	+6	+4	+2	0	–2	–4	–6	–8	–10
0.073										1.94 (0.0764)	1.96 (0.0772)
0.074									1.94 (0.0764)	1.96 (0.0772)	1.98 (0.0779)
0.075								1.94 (0.0764)	1.96 (0.0772)	1.98 (0.0779)	2.00 (0.0787)
0.076						1.94 (0.0764)	1.96 (0.0772)	1.98 (0.0779)	2.00 (0.0787)	2.02 (0.0795)	2.04 (0.0803)
0.077						1.96 (0.0772)	1.98 (0.0779)	2.00 (0.0787)	2.02 (0.0795)	2.04 (0.0803)	2.06 (0.0811)
0.078				1.94 (0.0764)	1.96 (0.0772)	1.98 (0.0779)	2.00 (0.0787)	2.02 (0.0795)	2.04 (0.0803)	2.06 (0.0811)	2.08 (0.0819)
0.079			1.94 (0.0764)	1.96 (0.0772)	1.98 (0.0779)	2.00 (0.0787)	2.02 (0.0795)	2.04 (0.0803)	2.06 (0.0811)	2.08 (0.0819)	2.10 (0.0827)
0.080	1.94 (0.0764)	1.96 (0.0772)	1.98 (0.0779)	2.00 (0.0787)	2.02 (0.0795)	2.04 (0.0803)	2.06 (0.0811)	2.08 (0.0819)	2.10 (0.0827)	2.12 (0.0835)	2.14 (0.0842)
0.081	1.96 (0.0772)	1.98 (0.0779)	2.00 (0.0787)	2.02 (0.0795)	2.04 (0.0803)	2.06 (0.0811)	2.08 (0.0819)	2.10 (0.0827)	2.12 (0.0835)	2.14 (0.0842)	2.16 (0.0850)
0.082	1.98 (0.0779)	2.00 (0.0787)	2.02 (0.0795)	2.04 (0.0803)	2.06 (0.0811)	2.08 (0.0819)	2.10 (0.0827)	2.12 (0.0835)	2.14 (0.0842)	2.16 (0.0850)	2.18 (0.0858)
0.083	2.00 (0.0787)	2.02 (0.0795)	2.04 (0.0803)	2.06 (0.0811)	2.08 (0.0819)	2.10 (0.0827)	2.12 (0.0835)	2.14 (0.0842)	2.16 (0.0850)	2.18 (0.0858)	2.20 (0.0866)
0.084	2.04 (0.0803)	2.06 (0.0811)	2.08 (0.0819)	2.10 (0.0827)	2.12 (0.0835)	2.14 (0.0842)	2.16 (0.0850)	2.18 (0.0858)	2.20 (0.0866)	2.22 (0.0874)	2.24 (0.0882)
0.085	2.06 (0.0811)	2.08 (0.0819)	2.10 (0.0827)	2.12 (0.0835)	2.14 (0.0842)	2.16 (0.0850)	2.18 (0.0858)	2.20 (0.0866)	2.22 (0.0874)	2.24 (0.0882)	2.26 (0.0890)
0.086	2.08 (0.0819)	2.10 (0.0827)	2.12 (0.0835)	2.14 (0.0842)	2.16 (0.0850)	2.18 (0.0858)	2.20 (0.0866)	2.22 (0.0874)	2.24 (0.0882)	2.26 (0.0890)	2.28 (0.0898)
0.087	2.12 (0.0835)	2.14 (0.0842)	2.16 (0.0850)	2.18 (0.0858)	2.20 (0.0866)	2.22 (0.0874)	2.24 (0.0882)	2.26 (0.0890)	2.28 (0.0898)	2.30 (0.0906)	2.32 (0.0913)
0.088	2.14 (0.0842)	2.16 (0.0850)	2.18 (0.0858)	2.20 (0.0866)	2.22 (0.0874)	2.24 (0.0882)	2.26 (0.0890)	2.28 (0.0898)	2.30 (0.0906)	2.32 (0.0913)	2.34 (0.0921)
0.089	2.16 (0.0850)	2.18 (0.0858)	2.20 (0.0866)	2.22 (0.0874)	2.24 (0.0882)	2.26 (0.0890)	2.28 (0.0898)	2.30 (0.0906)	2.32 (0.0913)	2.34 (0.0921)	2.36 (0.0929)
0.090	2.18 (0.0858)	2.20 (0.0866)	2.22 (0.0874)	2.24 (0.0882)	2.26 (0.0890)	2.28 (0.0898)	2.30 (0.0906)	2.32 (0.0913)	2.34 (0.0921)	2.36 (0.0929)	
0.091	2.22 (0.0874)	2.24 (0.0882)	2.26 (0.0890)	2.28 (0.0898)	2.30 (0.0906)	2.32 (0.0913)	2.34 (0.0921)	2.36 (0.0929)			
0.092	2.24 (0.0882)	2.26 (0.0890)	2.28 (0.0898)	2.30 (0.0906)	2.32 (0.0913)	2.34 (0.0921)	2.36 (0.0929)				
0.093	2.26 (0.0890)	2.28 (0.0898)	2.30 (0.0906)	2.32 (0.0913)	2.34 (0.0921)	2.36 (0.0929)					
0.094	2.28 (0.0898)	2.30 (0.0906)	2.32 (0.0913)	2.34 (0.0921)	2.36 (0.0929)						
0.095	2.32 (0.0913)	2.34 (0.0921)	2.36 (0.0929)								
0.096	2.34 (0.0921)	2.36 (0.0929)									
0.097	2.36 (0.0929)										

NOTE: When ordering shims, find the part number in the parts catalog by using the thickness of shims listed in the above table.

4. Place the shim on the drive pinion, with the chamfered side turned towards the pinion head then install the inner bearing onto the pinion using an installer 9–8522–1165–0 and a press.

NOTE: Do not apply pressure to the roller cage and apply pressure only to the inner race.

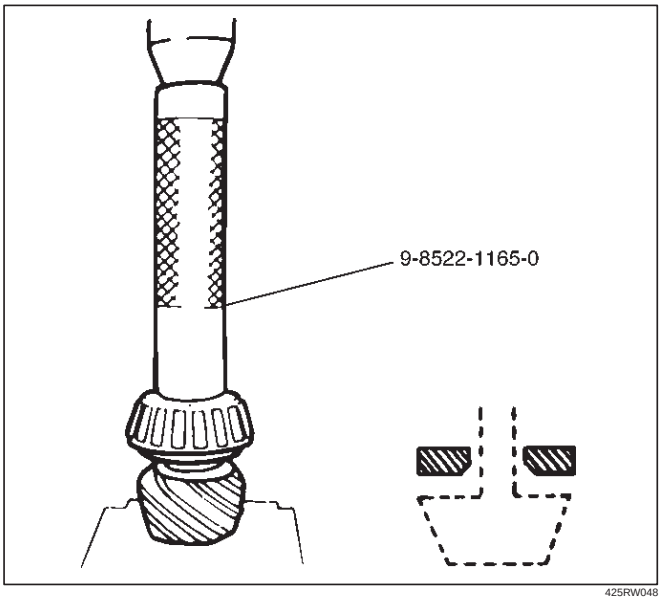

425RW048

5. Discard the used collapsible spacer and install a new one.
6. Install pinion gear.
7. Install outer bearing.
8. Use oil seal installer 5–8840–2165–0 to install a new oil seal that has been soaked in rear axle lubricant.

NOTE: Take care to use a front differential oil seal, NOT the rear differential oil seal.

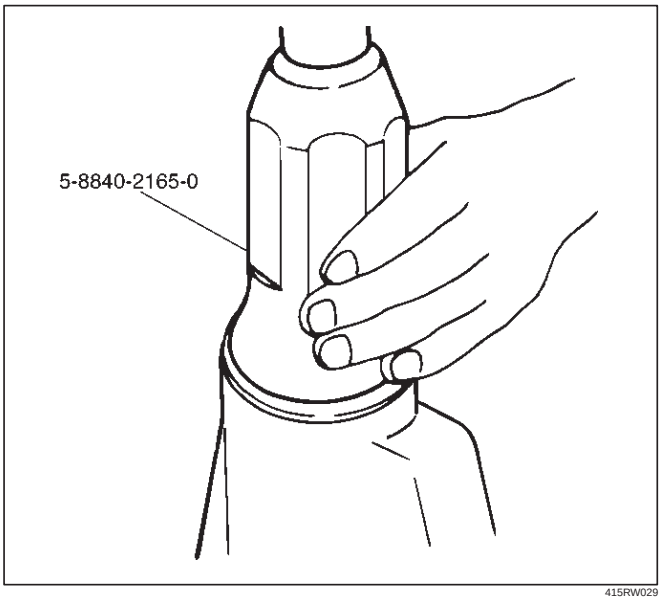

415RW029

9. Install dust cover.
10. Install flange.
11. Install flange nut.
    1. Apply lubricant to the pinion threads.
    2. Tighten the nut to the specified torque using the pinion flange holder 5–8840–2157–0.

Torque: 245–294N·m (25.0–28.0kg·m/181–217 lb f t)

NOTE: Discard used flange nut and install new one and do not over tighten the flange nut.

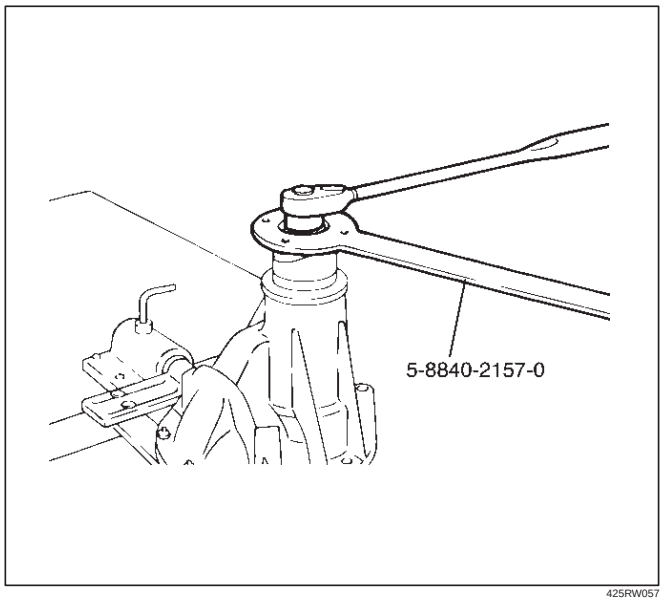

425RW057

3. Adjust pinion bearing preload.
    a. Measure the bearing preload by using a torque meter. Note the scale reading required to rotate the flange.
    b. Continue tightening flange nut until the specified starting torque is obtained.

Starting torque:

New bearing 0.7–1.3 N·m(0.07-0.13kg·m/6.08–11.28 lb in)

Used bearing 0.4–0.6N·m(0.04–0.06kg·m/3.04-5.64 lb in)

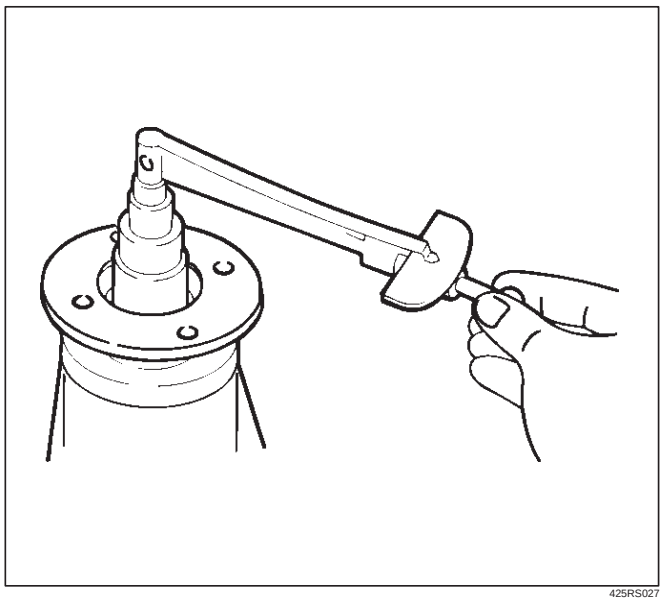

425RS027

4. Using punch 5–8840–2293–0, stake the flange nut at two points.

NOTE: When staking, be sure to turn the nut to insure that there is no change in bearing preload. Make sure of preload again as instructed in 3).

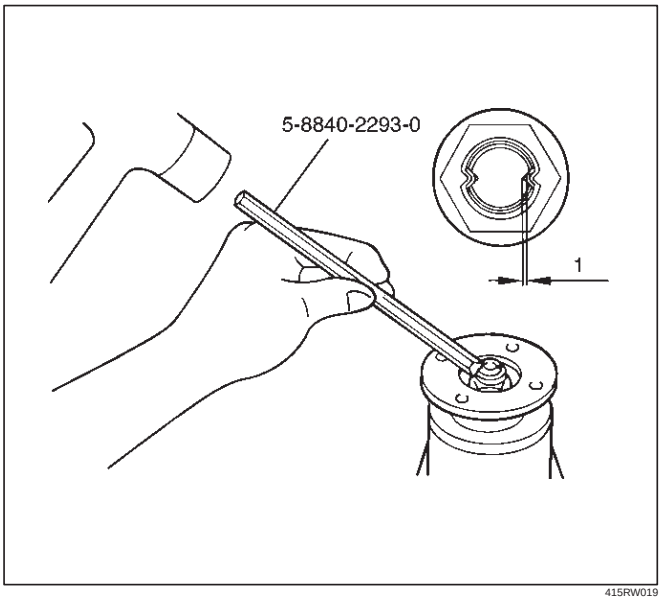

415RW019

Legend

(1) 1.5mm or less

12. Install adjust shim.
    1. Attach the side bearing to the differential assembly without shims. Support the opposite side using a pilot to prevent bearing damage.

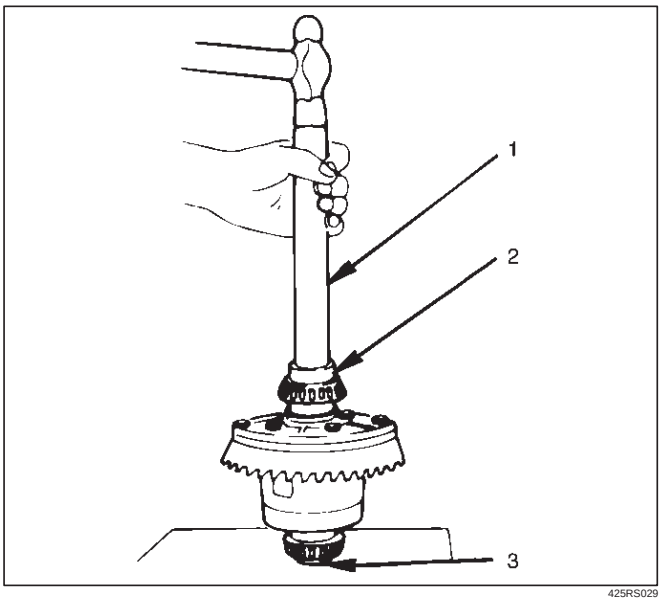

425RS029

Legend

(1) Drive handle: 5–8840–0007–0
(2) Installer: 5–8840–2162–0
(3) Pilot: 5–8840–2196–0

2. Insert the differential cage assembly with bearing outer races into the side bearing bores of the carrier.

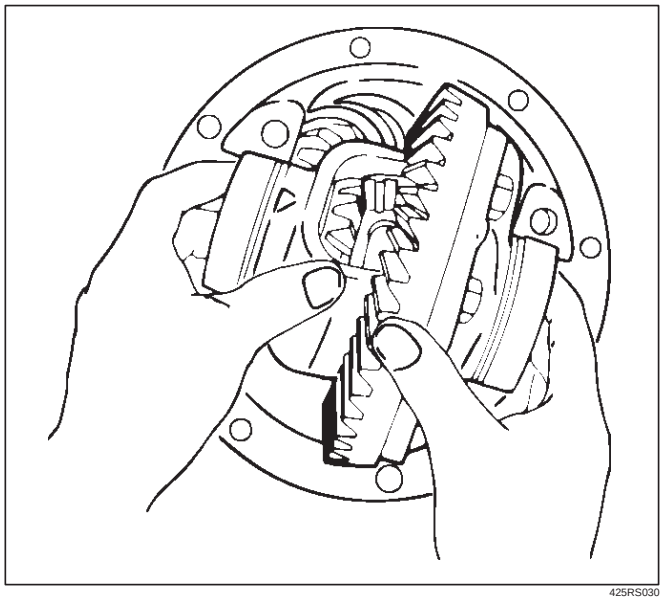

425RS030

3. Using two sets of feeler gauges, insert a feeler stock of sufficient thickness between each bearing outer race and the carrier to remove all end play. Make certain the feeler stock is pushed to the bottom of the bearing bores.

   Mount the dial indicator 5–8840–0126–0 on the carrier so that the indicator stem is at right angles to a tooth on the ring gear.

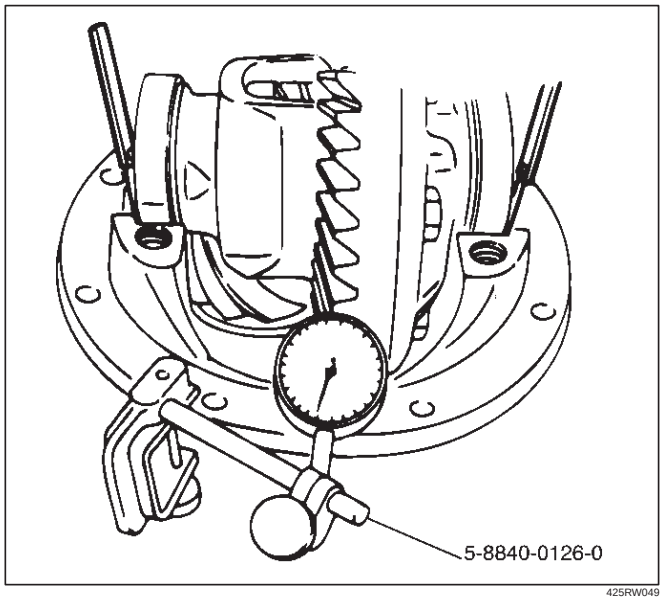

425RW049

4. Adjust feeler gauge thickness from side to side until ring gear backlash is in the specified range.

Backlash: 0.15–0.2 mm(0.006 –0.008 in)

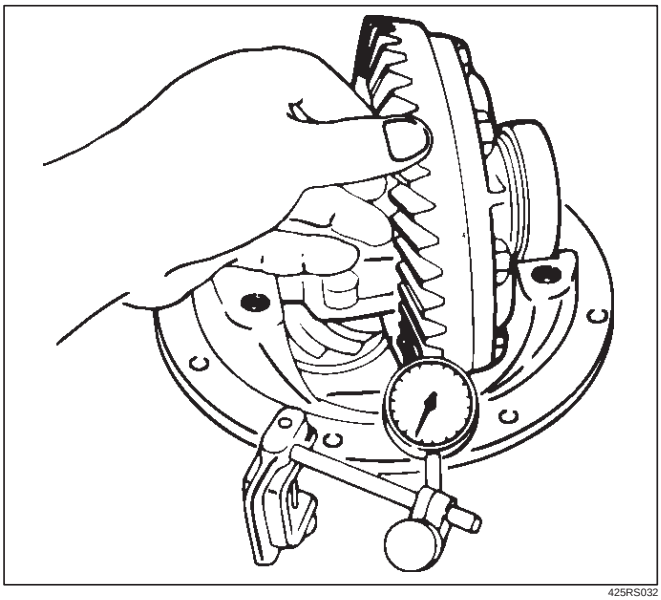

425RS032

With zero end play and correct backlash established, remove the feeler gauge packs, determine the thickness of the shims required and add 0.05 mm (0.002 in) to each shim pack to provide side bearing preload. Always use new shims.

5. Use bearing remover 5–8840–0013/0014–0 and pilot 5–8840–2196–0 to remove side bearing.

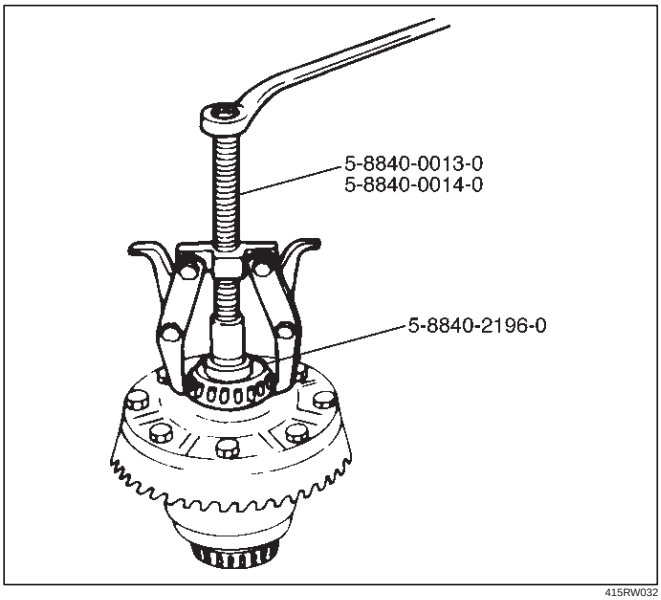

415RW032

13. Install the side bearings together with the selected shims.

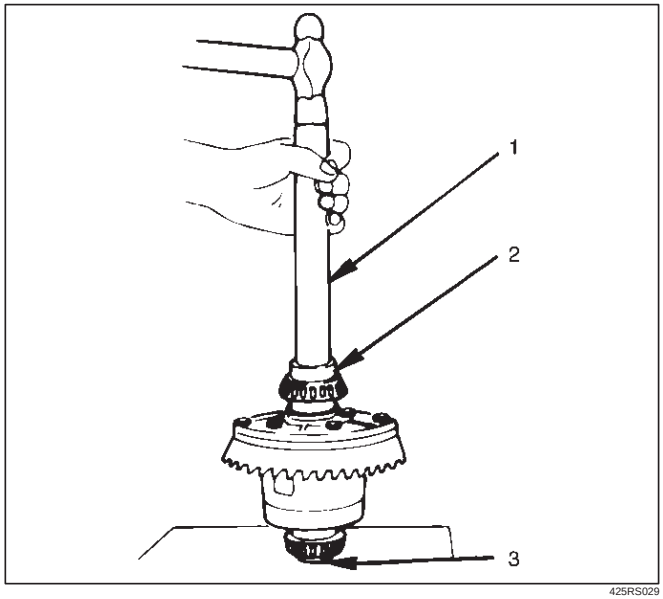

425RS029

Legend

(1) Drive Handle: 5–8840–0007–0
(2) Installer: 5–8840–2162–0
(3) Pilot: 5–8840–2196–0

14. Install side bearing outer race.
15. Install differential cage assembly.
16. Install bearing cap then align the setting marks(1) applied at disassembly.

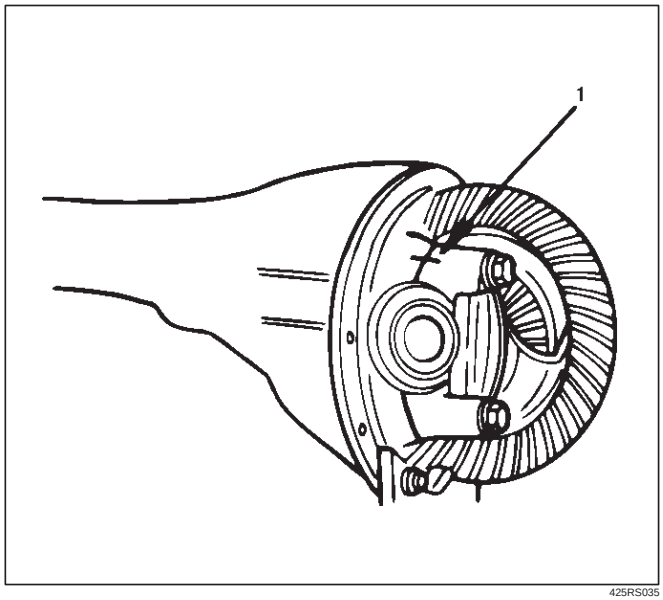

425RS035

17. Tighten the cap bolt to the specified torque.

Torque: 108 N·m (11.0kg·m/80 lb ft)

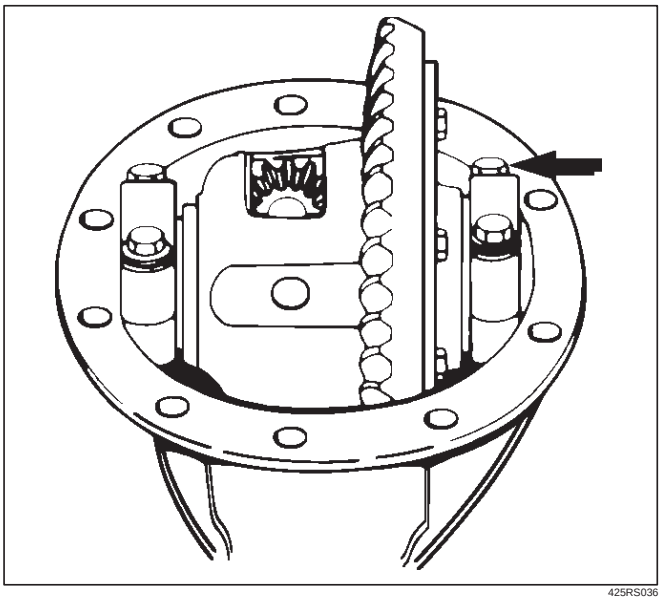

425RS036

1. Measure the amount of run–out of the ring gear at its rear face.

Standard: 0.02 mm (0.001 in)

Limit: 0.05 mm (0.002 in)

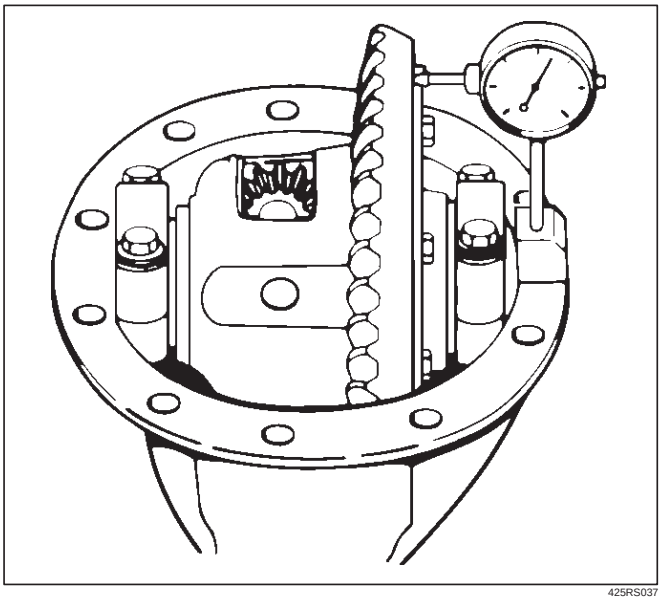

425RS037

Gear Tooth Contact Pattern Check and Adjustment

1. Apply a thin coat of prussian blue or equivalent to the faces of the 7–8 teeth of the ring gear. Check the impression of contact on the ring gear teeth and make necessary adjustment as described in illustration if the contact is abnormal.

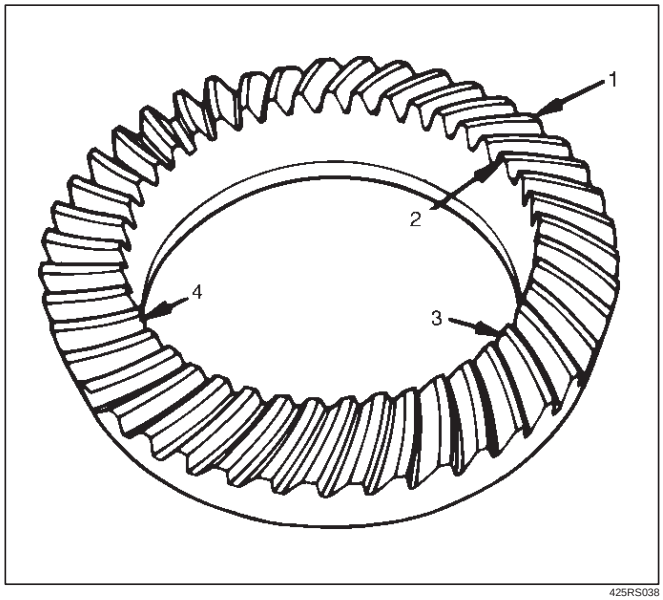

425RS038

Legend

(1) Heel
(2) Toe
(3) Concave Side(Coast)
(4) Convex Side(Drive)

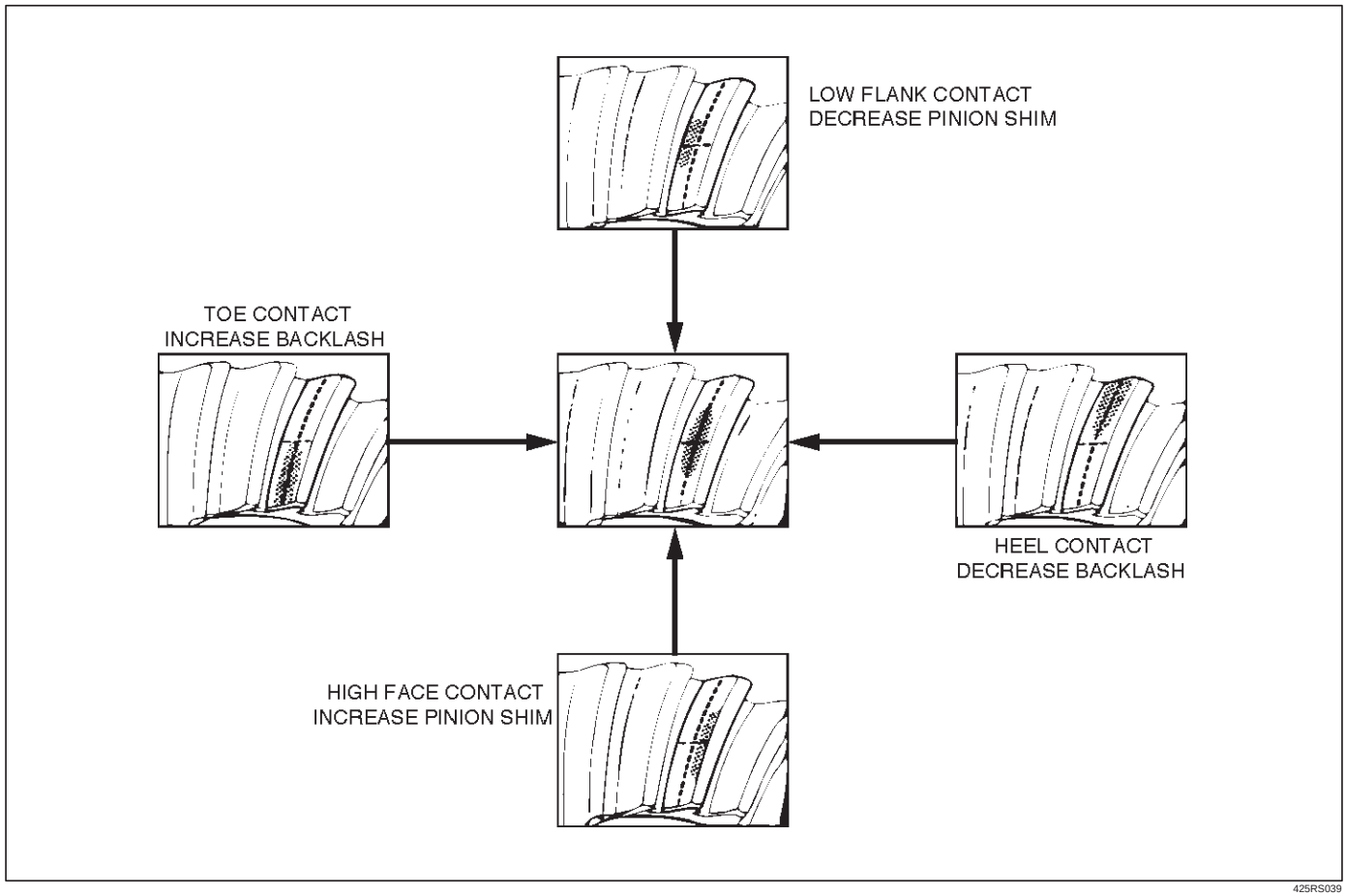
LOW FLANK CONTACT
DECREASE PINION SHIM
TOE CONTACT
INCREASE BACKLASH
HEEL CONTACT
DECREASE BACKLASH
HIGH FACE CONTACT
INCREASE PINION SHIM

425RS039

Differential Cage Assembly

Disassembled View

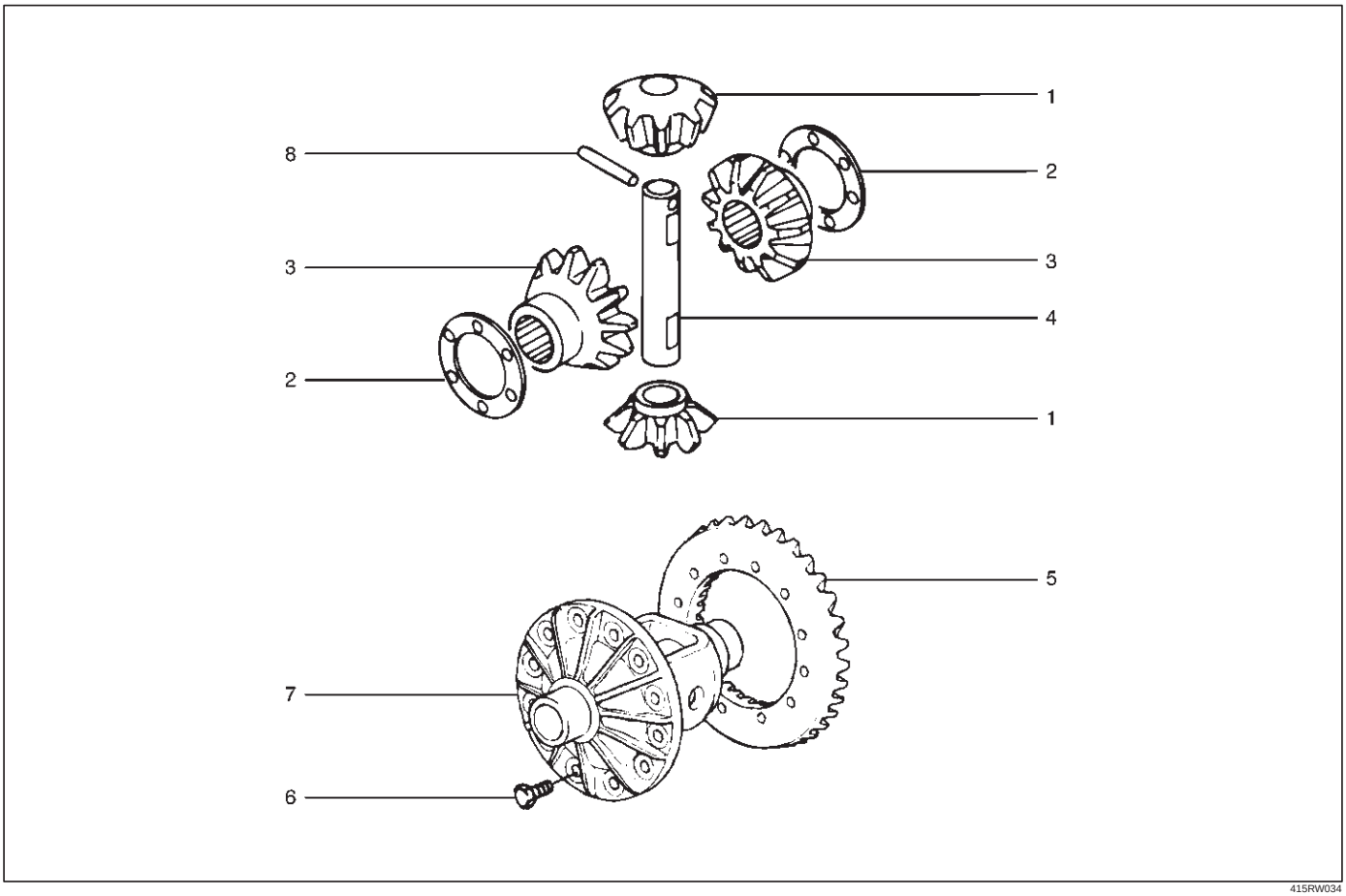

415RW034

Legend

(1) Pinion Gear
(2) Thrust Washer
(3) Side Gear
(4) Cross Pin
(5) Ring Gear
(6) Bolt
(7) Differential Cage
(8) Lock Pin

Disassembly

1. Remove bolt.
2. Remove ring gear.
3. Remove lock pin, break staking on the lock pin, using a 5 mm (0.20 in) diameter drill.

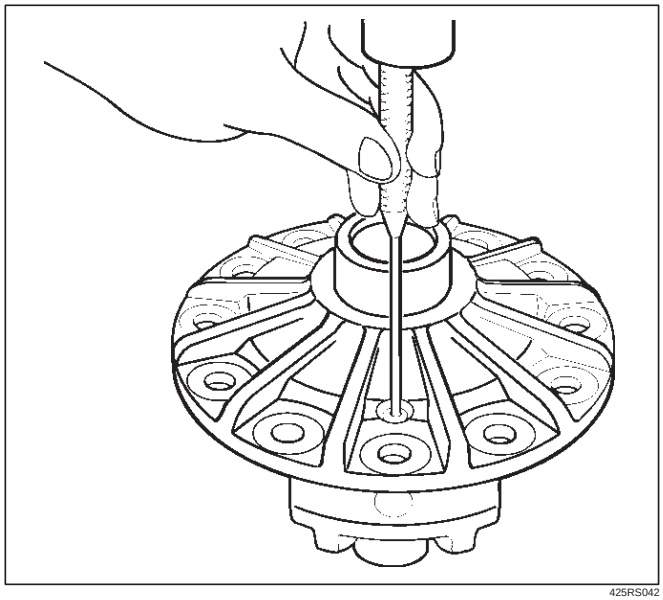

425RS042

4. Remove the cross pin, using a soft metal rod and a hammer.

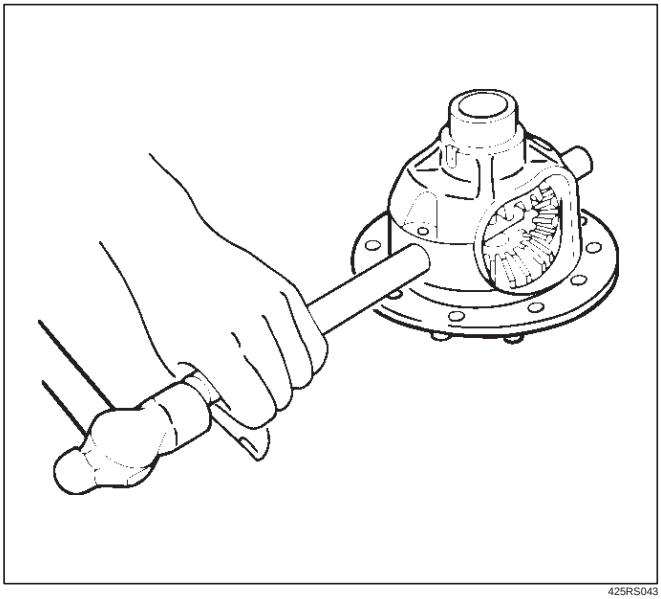

425RS043

5. Remove pinion gear.
6. Remove side gear.
7. Remove thrust washer.

Inspection and Repair

Make necessary correction or parts replacement if wear, damage, corrosion or any other abnormal conditions are found through inspection.
Check the following parts:

1. Ring gear, pinion gear
2. Bearing
3. Side gear, pinion gear, cross pin
4. Differential cage, carrier
5. Thrust washer
6. Oil seal

Ring gear replacement:

1. The ring gear should always be replaced with the drive pinion as a set.
2. Clean the ring gear threaded holes to remove the locking agent.
3. When installing the ring gear, apply LOCTITE 271 or equivalent to all the threaded area and half of the unthreaded area of the bolt.
4. Discard used bolts and install new ones.

Torque: 108 N·m (11.0kg·m/80 lb ft)

5. Tighten the fixing bolts in a diagonal sequence as illustrated.

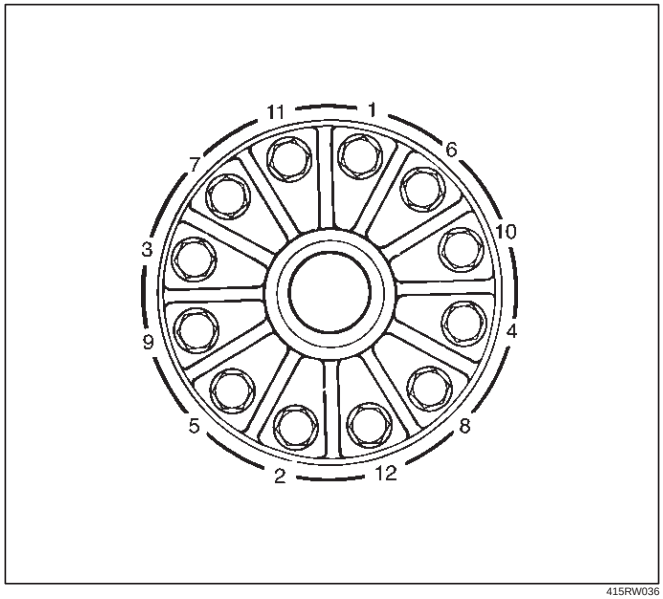

415RW036

Clearance between the differential pinion and the cross pin measurement:

Standard: 0.06 – 0.12 mm (0.002–0.005 in)

Limit: 0.2 mm (0.008 in)

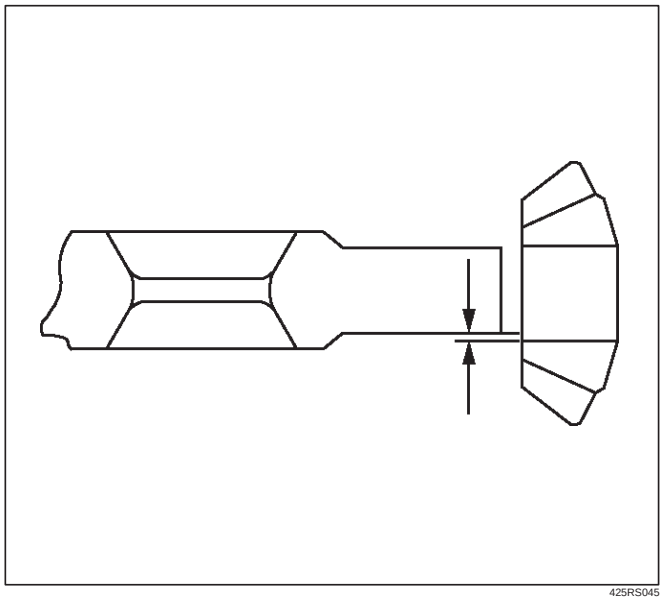

425RS045

Clearance between the side gear and the differential box:

Standard: 0.05–0.12 mm (0.002–0.005 in)

Limit: 0.15 mm(0.006 in)

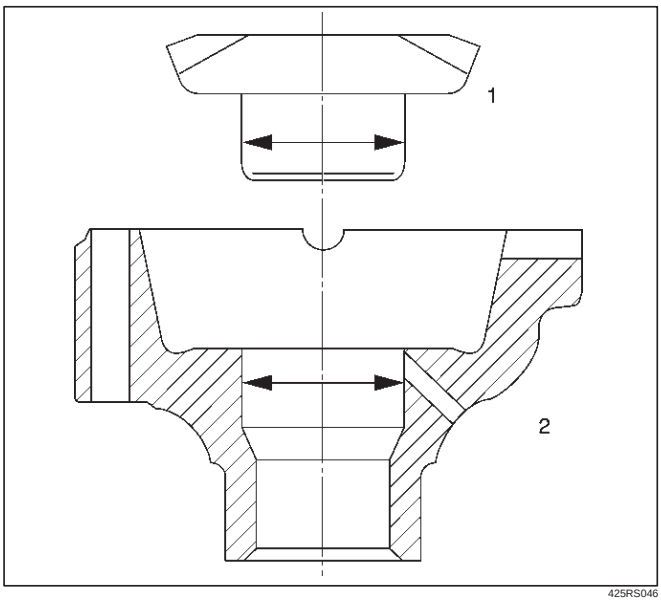

425RS046

Legend

(1) Side Gear
(2) Differential Box

Play in splines between the side gear and the axle shaft:

Standard: 0.07–0.38 mm(0.003 –0.014 in)

Limit:0.5m (0.02 in)

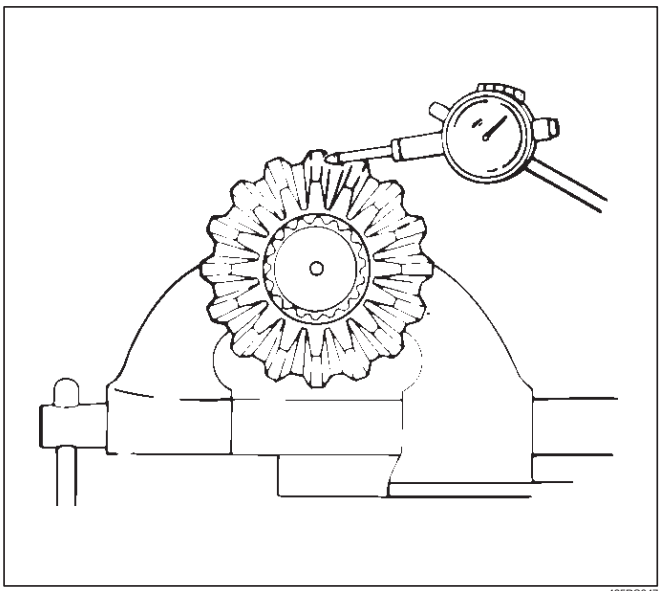

425RS047

Reassembly

1. Install thrust washer.
2. Install side gear.
3. Install the pinion gear by engaging it with the side gears while turning both pinion gears simultaneously in the same direction.

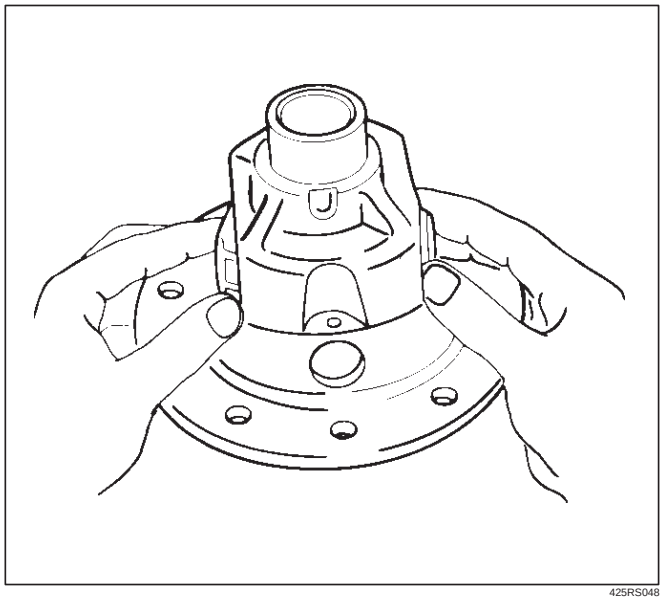

425RS048

4. Install cross pin.
   1. Be sure to install the cross pin so that it is in alignment with the lock pin hole in the differential cage.

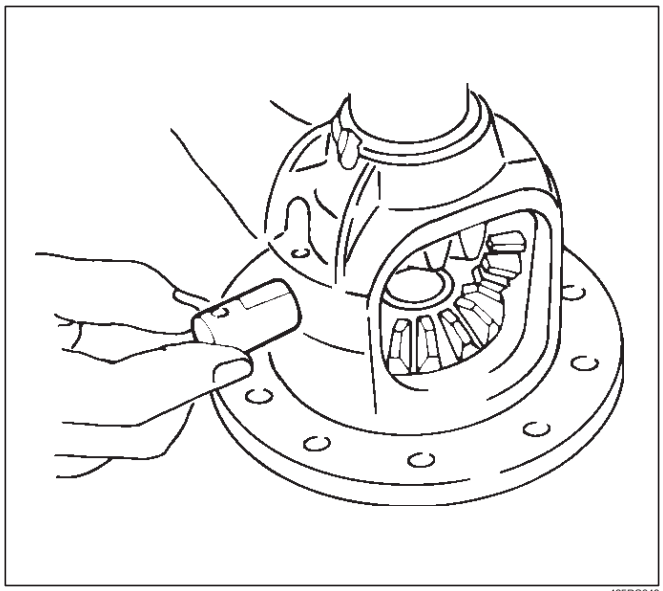

425RS049

   2. Adjust the backlash between the side gear and the pinion gear.

Backlash:0.13 – 0.18 mm (0.005– 0.007 in)

Thickness of thrust washers available:

0.80 mm, 0.90 mm, 1.00 mm 1.10 mm, 1.20 mm, 1.30 mm (0.031 in, 0.035 in, 0.039 in,0.043 in, 0.047 in, 0.051 in)

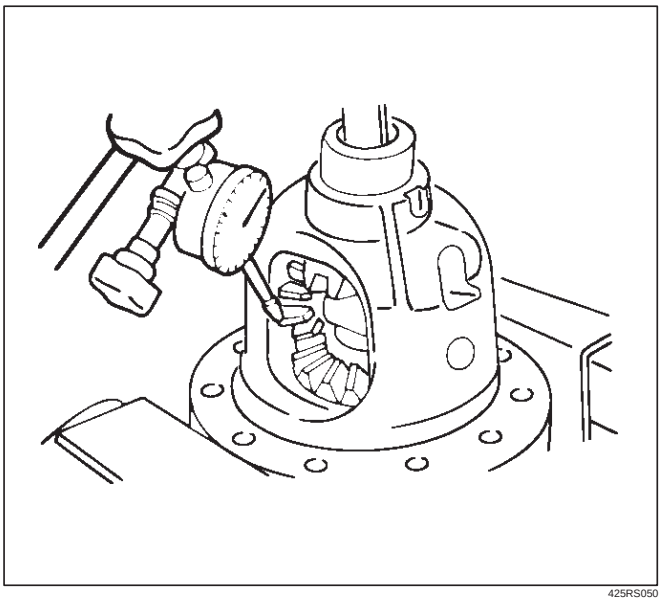

425RS050

5. Install lock pin. After lock pin installation, stake the cage to secure the lock pin.

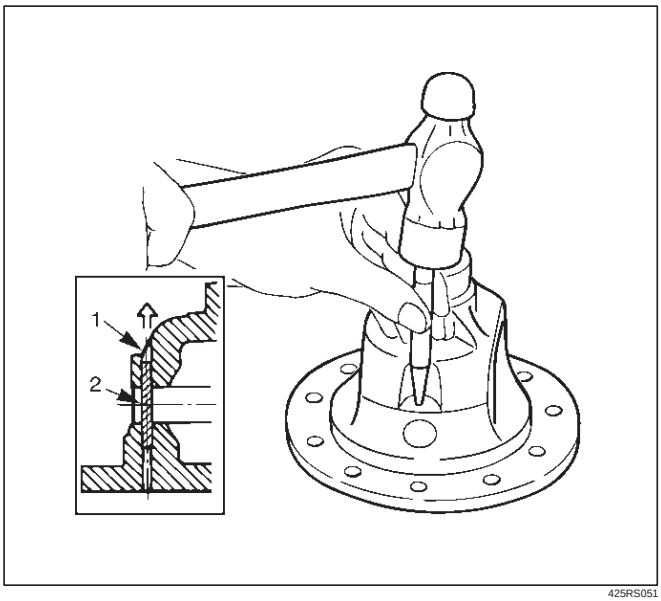

425RS051

Legend

(1) Staked Portion
(2) Lock Pin

6. Clean the ring gear threaded holes to remove the locking agent. When installing the ring gear, apply LOCTITE 271 or equivalent to all the threaded area and half of the unthreaded area of the bolt.

7. Tighten the bolts in diagonal sequence as illustrated.

Torque: 108 N·m (11.0kg·m/80 lb ft)

NOTE: Discard used bolts and install new ones.

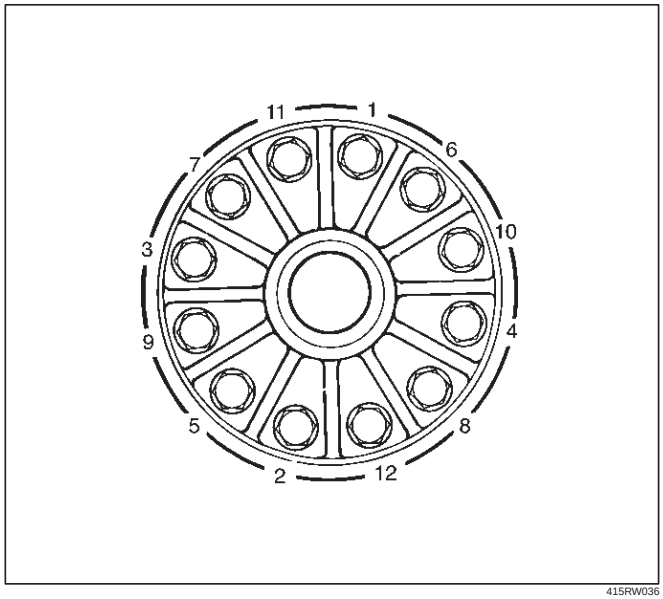

415RW036

Limited Slip Differential

Disassembled View

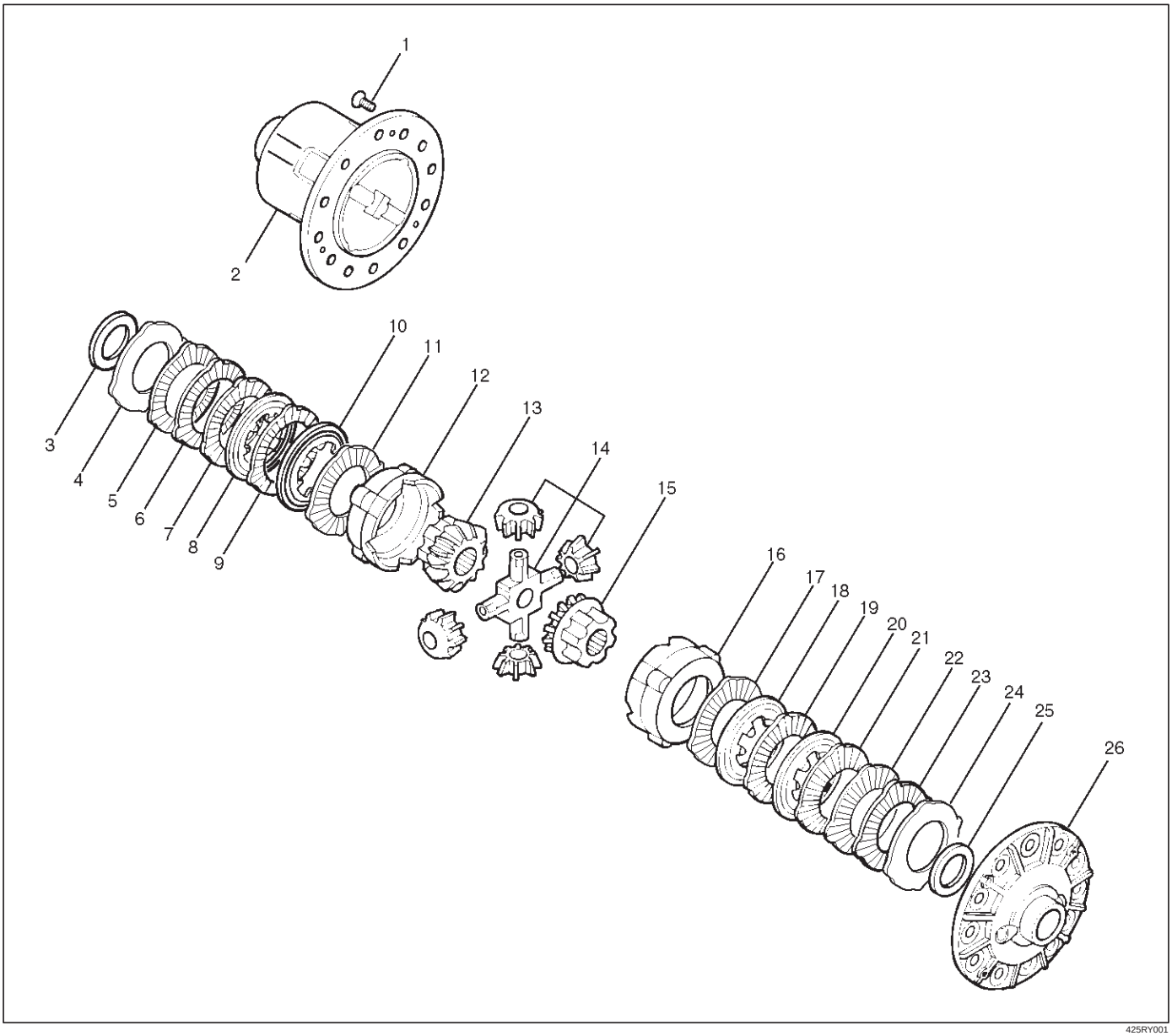

425RY001

Legend

(1) Screw
(2) Differential cage A
(3) Thrust washer
(4) Spring disc
(5) Friction Plate
(6) Friction plate
(7) Friction Plate
(8) Friction disc
(9) Friction Plate
(10) Friction disc
(11) Friction Plate
(12) Pressure ring
(13) Side gear
(14) Pinion and Pinion shaft
(15) Side gear
(16) Pressure ring
(17) Friction Plate
(18) Friction disc
(19) Friction Plate
(20) Friction disc
(21) Friction Plate
(22) Friction Plate
(23) Friction Plate
(24) Spring disc
(25) Thrust washer
(26) Differential cage B

Disassembly

Differential Cages A and B

1. To ensure installation of the parts in original position apply a setting mark before removing the differential cages A and B.
2. Using special tool, 5–8840–2682–0, grip it with a vice, and set the differential.

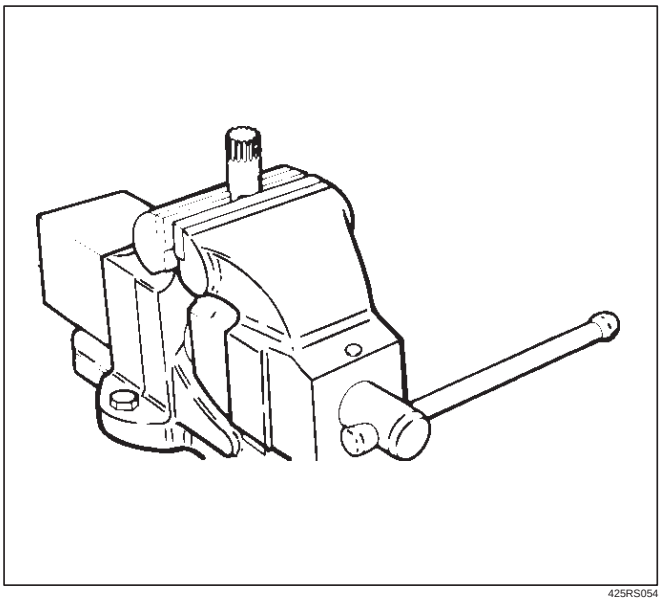

425RS054

3. Gradually and evenly loosen the 3 fixing screws of the differential cages A and B.

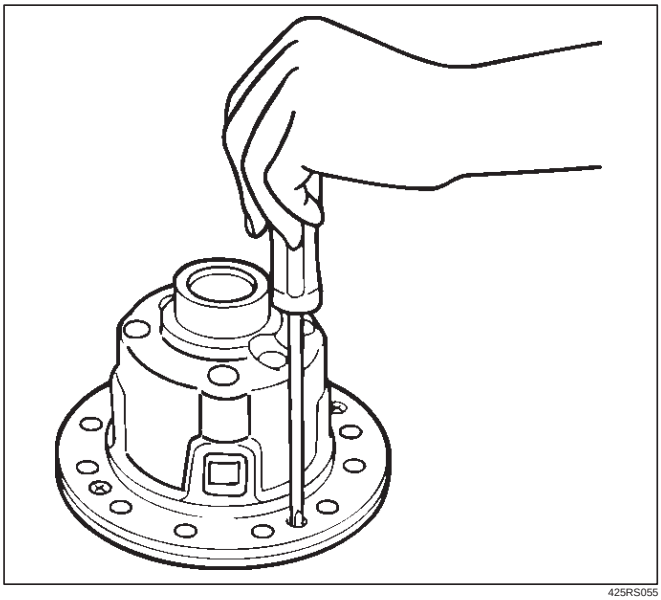

425RS055

4. Remove Differential cage A.
5. Remove Thrust washer.
6. Remove Spring disc.

NOTE: When removing the spring disc, friction disc, and friction plate, place them in order for clear distinction of left and right use.

7. Remove Spring disc.
8. Remove Friction plate.
9. Remove Friction plate.
10. Remove Friction disc.
11. Remove Friction plate.
12. Remove Friction disc.
13. Remove Friction plate.
14. Remove Pressure ring.
15. Remove Side gear.
16. Remove Pinion and pinion shaft.
17. Remove Side gear.
18. Remove Pressure ring.
19. Remove Friction plate.
20. Remove Friction disc.
21. Remove Friction plate.
22. Remove Friction disc.
23. Remove Friction plate.
24. Remove Friction plate.
25. Remove Friction plate.
26. Remove Friction disc.
27. Remove Thrust washer.
28. Remove Differential cage B.

Inspection and Repair

Make necessary correction or parts replacement if wear, damage, corrosion or any other abnormal condition is found through inspection.

Visual check

Check the following parts for wear, damage, noise or any other abnormal conditions.

- **Friction disc, friction plate and spring disc**

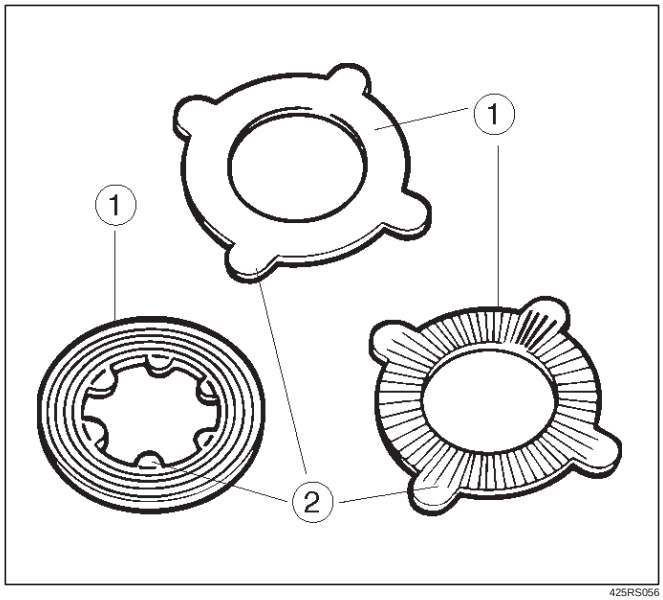

425RS056

Legend

(1) Sliding surfaces
(2) Projections

- **Pressure ring**

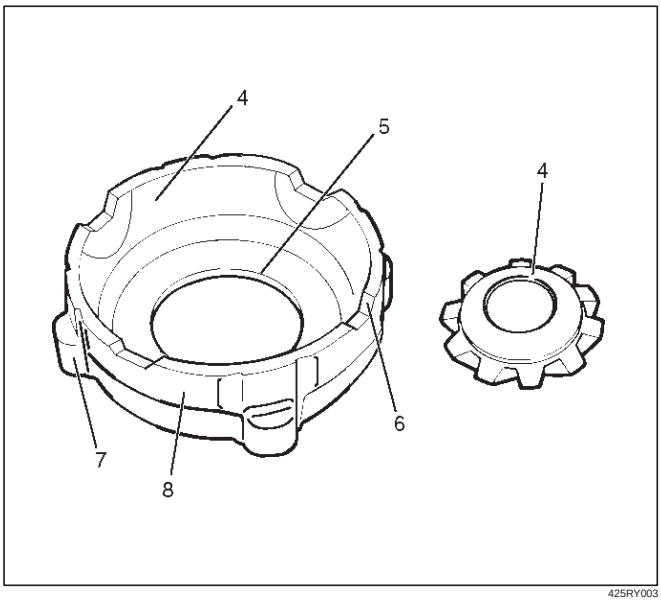

425RY003

Legend

(3) Sliding surface with the friction disc. When nicks or scratches are found, polish with an oil stone and repair on a level block using a compound.
(4) Sliding spherical surface with the pinion gear.
(5) Sliding surface with the side gear.
(6) V–shaped groove of the pressure ring and V –shaped section of the pinion shaft.
(7) Fitting section with the case.
(8) Face contacting the inner surface of the differential case. Repair burrs and nicks using an oil stone.

- **Thrust washer**

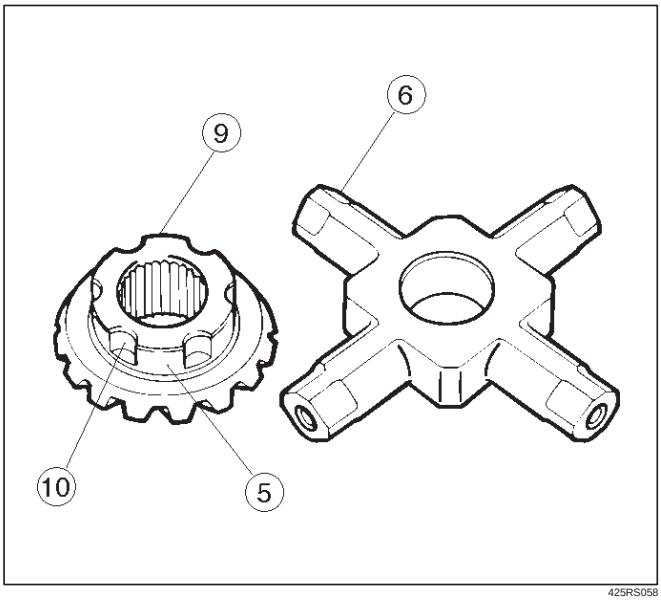

425RS058

Legend

(9) Sliding surface with the side gear or case.
(10) Peripheral groove of the side gear.
Repair light nicks and burrs using an oil stone.

- **Case**

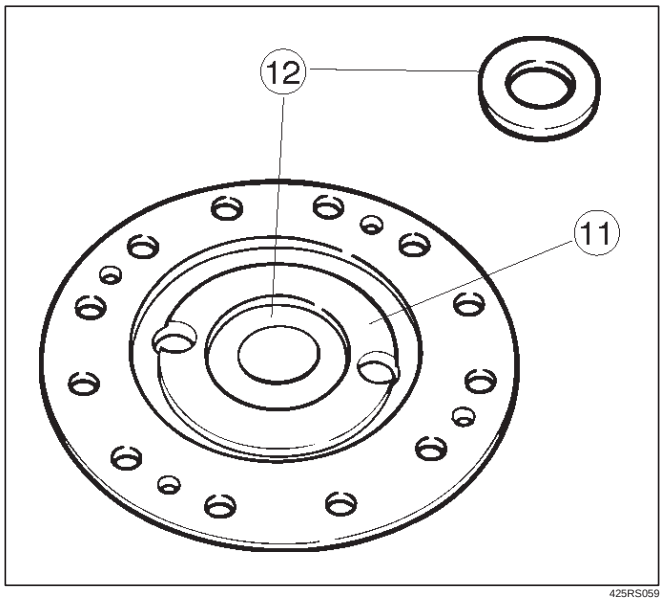

425RS059

Legend

(11) Contact surface with the spring disc.
(12) Inner groove of the differential cage B.
Repair light nicks and burrs using an oil stone.

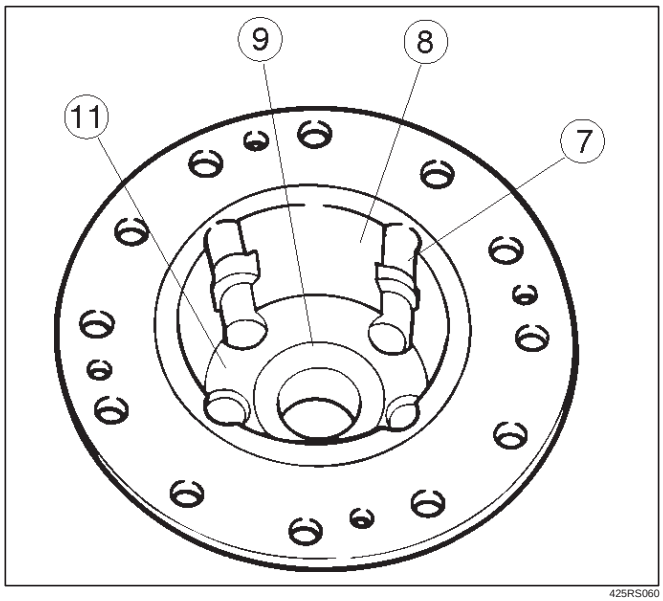

425RS060

Legend

(7) Fitting section with the case.
(8) Face contacting the inner surface of the differential case.
Repair burrs and nicks using an oil stone.
(9) Sliding surface with the side gear or case.
(11) Contact surface with spring disc.

Measure the Deformation of the friction disc & plate.

Limit: 0.1 mm (0.004 in)

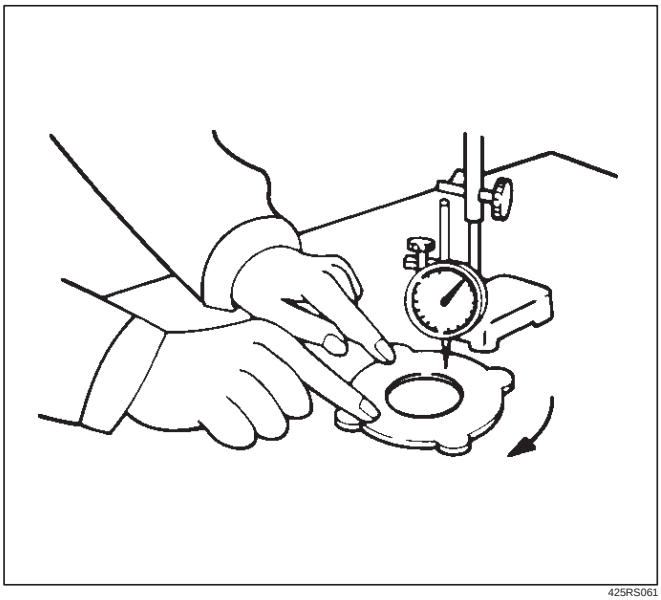

425RS061

Measure the wear of the friction plate & disc

Limit(A–B): 0.1 mm (0.004 in)

Remarks:

A=Inner or outer projections

B=Sliding surface subjected to abrasion

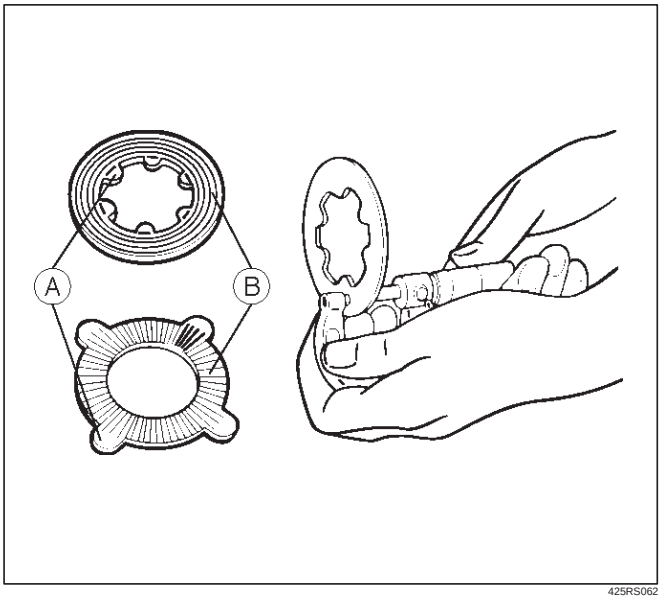

425RS062

Measure the wear of the thrust washer

Limit: 1.3 mm (0.05 in)

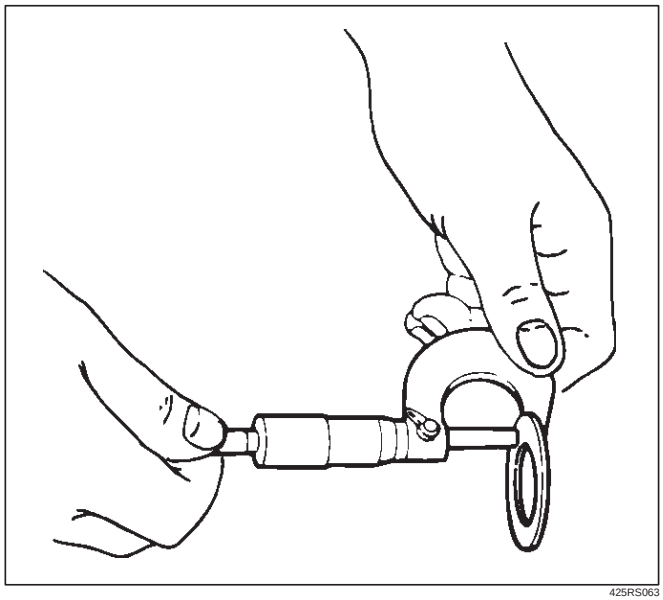

425RS063

Reassembly

Adjust the clearance between the friction disc and plate.

1. Measuring the depth of the differential cage.

Standard (A–B): 89.13 mm (3.51 in)

(C): 9.13 mm (0.36 in)

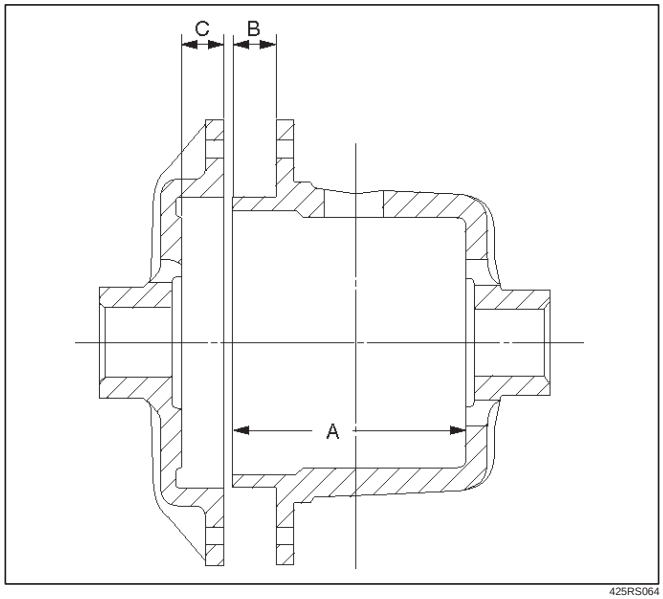

425RS064

2. Measuring the overall length of the pressurering, friction disc and friction plate.
   - Mount the pinion shaft in the pressurering and then install the friction disc & plate.
   - Measure the length between the plates over the V–groove. (D)

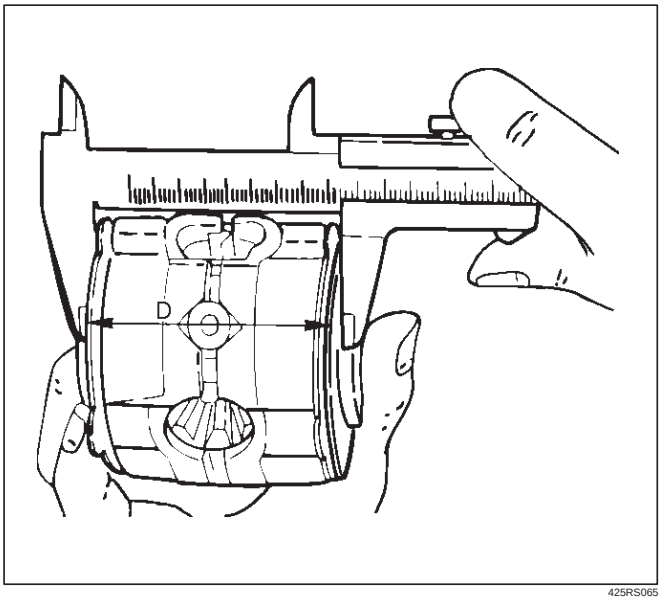

425RS065

3. After measuring dimensions A,B,C and D, make adjustment in the following manner:
   - Measure the thickness (E) of the spring disc.
     1.75mm (0.069in) ×2 discs
4. Select the friction disc & plate so as to satisfy the following equation:
   {(A-B)+C}-(D+E)=0.06-0.20mm (0.002-0.008in)
   Also, the total size difference of the friction disc & plate and spring disc should be 0.05mm (0.02in) or less.

Thickness
:1.65–1.75–1.85mm(0.065–0.069–0.073 in)

Backlash adjustment of the side gear in the direction of the shaft

1. Measuring the depth of the differential cage.

   (F–B): 95.63 mm (3.76 in)

   (G): 15.63 mm (0.62 in)

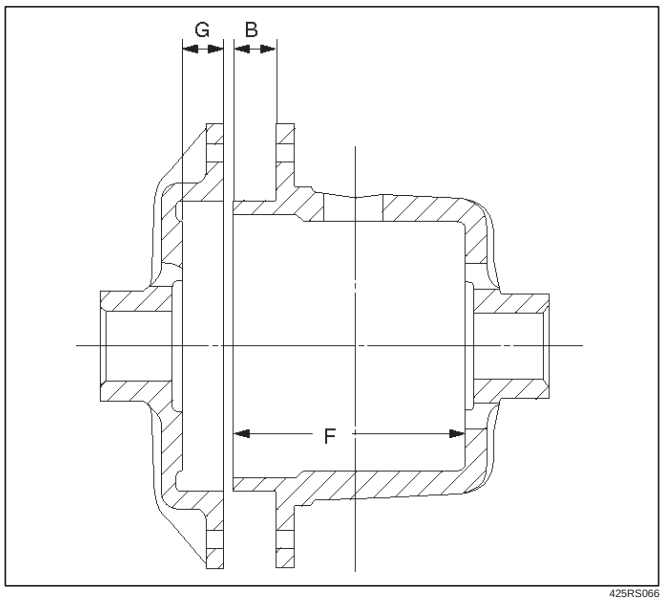

425RS066

2. Measuring the dimension between the thrust washers at both ends.
   - Assemble the side gear, pinion, pinion shaft, pressure ring and thrust washer, and pressing the pressure ring to–the pinion shaft in the direction of the shaft to make the clearance 0.
   - Have the side gear contact to the pinion to make the backlash 0.
   - Measure the dimension (H) between thrust washers at both ends.

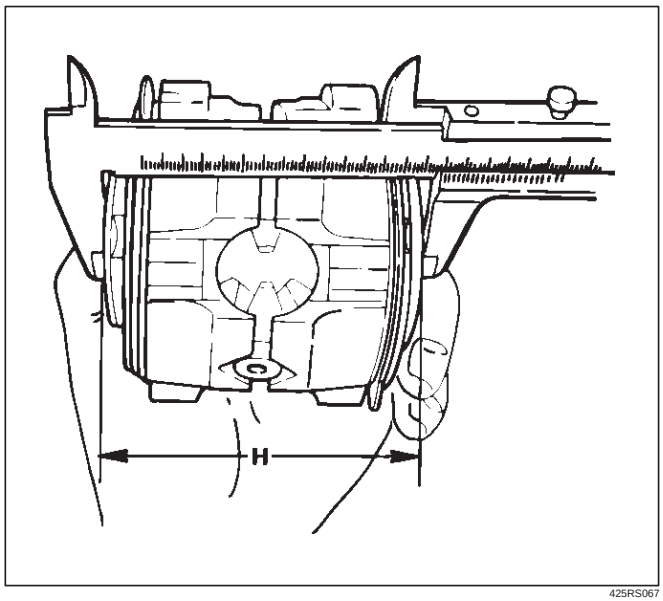

425RS067

3. After measuring dimensions of each of the above sections, proceed with the adjustment in the following manner:
   Adjust the clearance to satisfy the equation below.
   {(F – B) + G – H}=0.05 – 0.20 mm
   Also, select the thrust washers so that the dimensional difference between the back surfaces of the left and right pressure rings to the thrust washers is 0.05mm or less.

Thickness : 1.5mm (0.059 in)
1.6 mm(0.063 in)
1.7 mm(0.067 in)

NOTE: When assembling the parts, apply recommended gear oil sufficiently to each of the parts, especially, to the contact surfaces and sliding surfaces.

1. Install Differential cage B.
2. Install Thrust washer.
3. Install Spring disc.
   - When assembling the spring disc, make sure the mounting direction is correct as shown in figure.

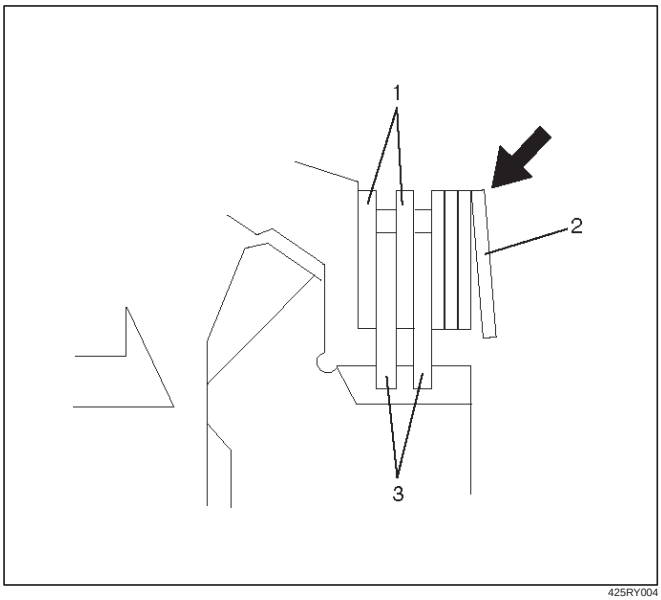

425RY004

Legend
(1) Friction Plate
(2) Spring Disc
(3) Friction Disc

4. Install Friction disc.
5. Install Friction plate.
6. Install Friction plate.
7. Install Friction disc.
8. Install Friction plate.
9. Install Friction disc.
10. Install Friction plate.
11. Install Pressure ring.
12. Install Side gear.
13. Install Pinion and pinion shaft.
14. Install Side gear.
15. Install Pressure ring.
16. Install Friction plate.
17. Install Friction disc.
18. Install Friction plate.
19. Install Friction disc.
20. Install Friction plate.
21. Install Friction plate.
22. Install Friction plate.
23. Install Spring disc.
    - When assembling the spring disc, make sure the mounting direction is correct.
24. Install Spring disc.
25. Install Thrust washer.
26. Install Differential cage A.
27. Install Screw.
    - Matching the guide marks of the differential cages A and B, tighten the screws evenly in the diagonal order.

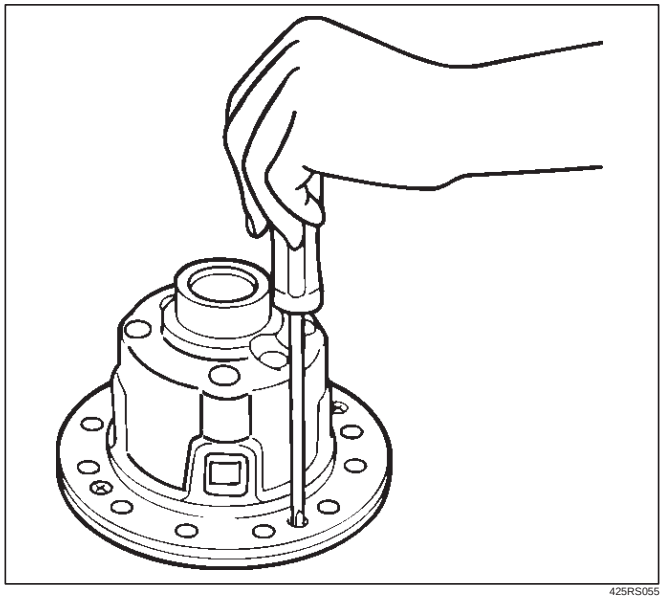
425RS055

28. Check the operation.
    - Measure the starting torque using the side gear holder.

    Starting torque:

    29 – 45 N·m (3.0 – 4.6 kg·m/ 22 – 33lb ft)

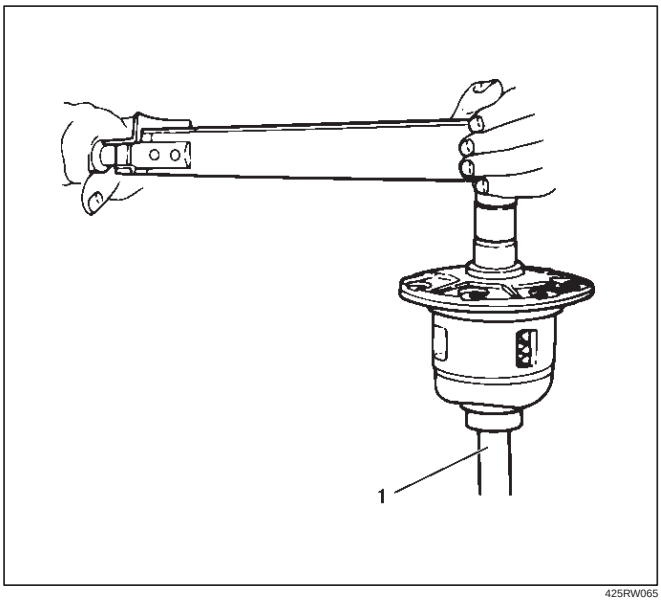

425RW065

Legend

(1) Side Gear Holder : 5–8840–2381–0

Main Data and Specifications

General Specifications

Rear axle	
Type	Banjo, Semi–floating
Rear axle Size	220mm(8.66in)
Gear type	Hypoid
Gear ratio (to 1)	4.555(6VD1,4JG2–TC) 4.777(4JG2)
Differential type	Pinion (STD), Four pinion (LSD)
Lubricant Grade	GL–5: (Standard differential)
	GL–5, LSD: (Limited slip differential)
Locking Differential Lubricant	80W90 GL–5 Limited Slip Differential Gear Lubricant together with Limited Slip Differential Lubricant Additive (Part No. 8–01052–358–0) or equivalent.
Capacity	1.8liter(1.6 Imp qt/1.9 US qt)

Torque Specifications

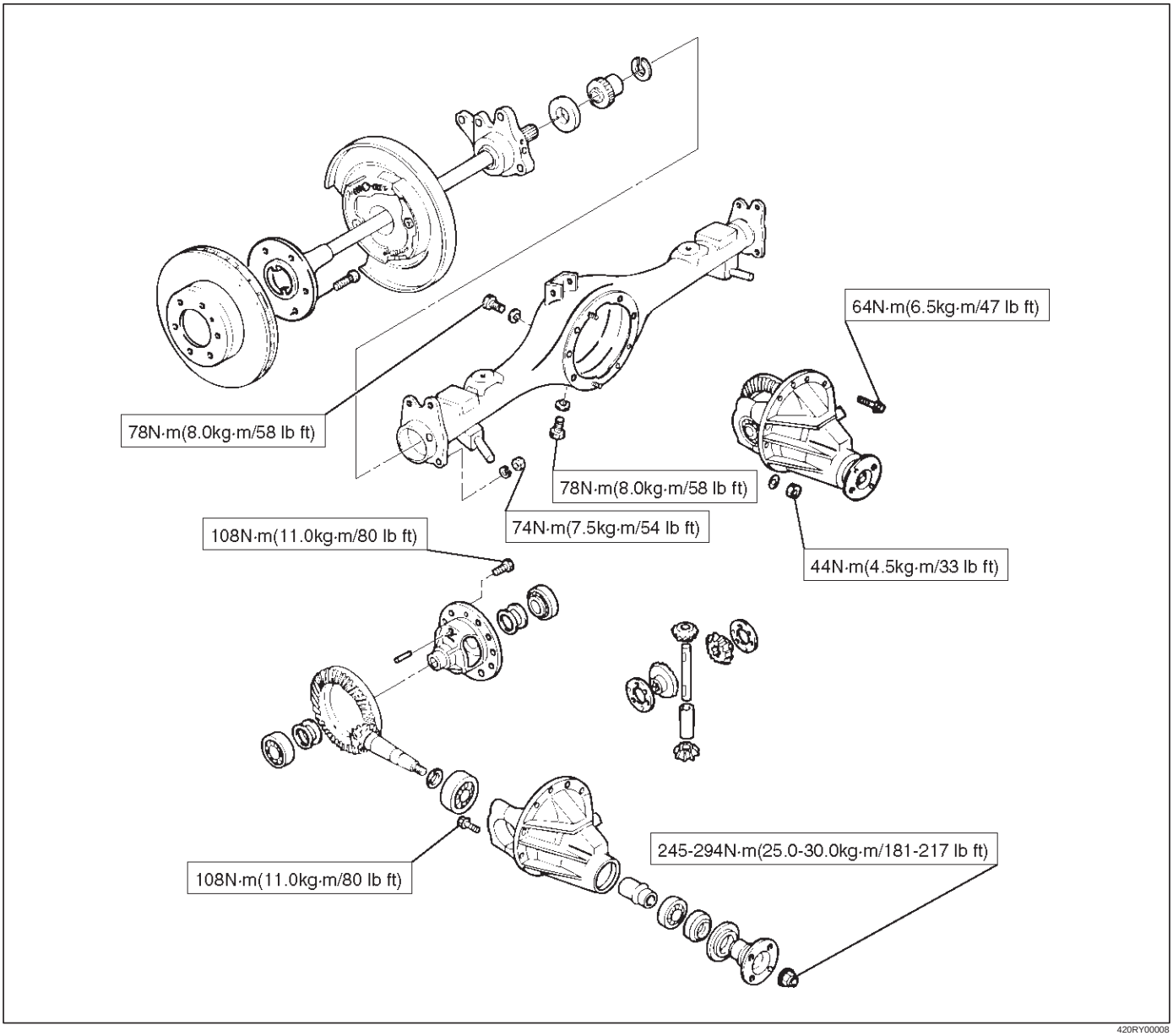

420RY00008

Special Tools

ILLUSTRATION	TOOL NO. TOOL NAME
	5–8840–2157–0 **(J–37221)** Holder; Pinion flange
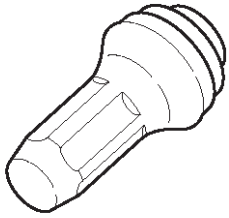	**5–8840–2294–0** **(J–24250)** Installer; Oil seal
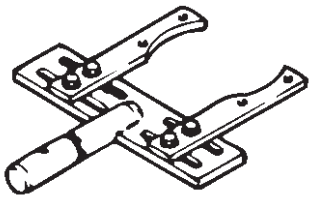	**5–8840–0275–0** **(J–37264)** Differential holding fixture (Use with 5–8840–0003–0)
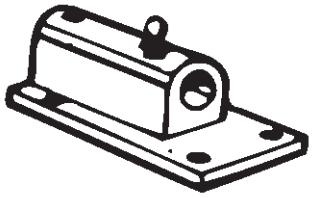	**5–8840–0003–0** **(J–3289–20)** Holding fixture base
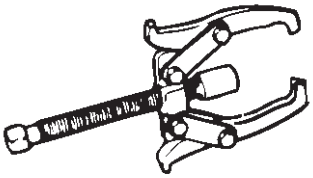	**5–8840–0013–0** **5–8840–0014–0** **(J–22888)** Puller; Side bearing
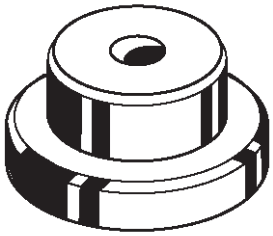	**5–8840–2196–0** **(J–8107–2)** Adapter; Side bearing plug

ILLUSTRATION	TOOL NO. TOOL NAME
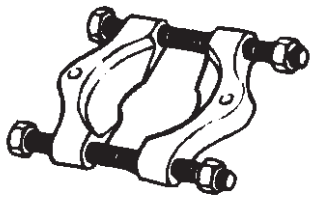	**5–8840–2197–0** **(J–22912–01)** Separator
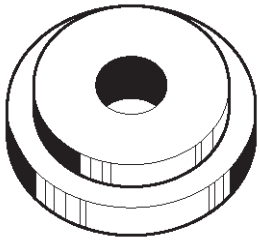	**5–8840–2164–0** **(J–24256)** Installer; Outer bearing outer race
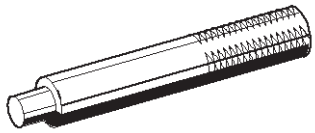	**5–8840–0007–0** **(J–8092)** Driver handle
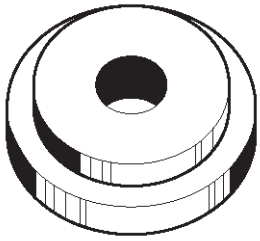	**5–8840–2163–0** **(J–24252)** Installer; Inner bearing outer race
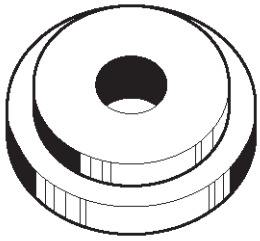	**5–8840–2085–0** **(J–21777–42)** Front Pilot
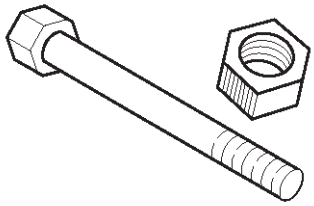	**5–8840–0127–0** **(J–23597–9)** Nut and bolt

ILLUSTRATION	**TOOL NO.** TOOL NAME
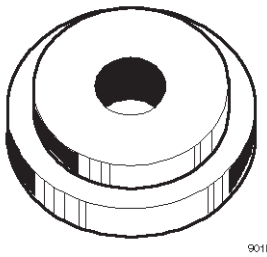 901RS243	**5–8840–2166–0** **(J–23597–7)** Gauge plate
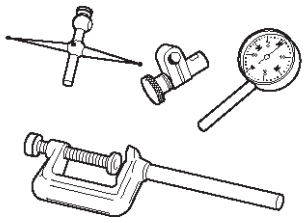 901RS224	**5–8840–0126–0** **(J–8001)** Dial indicator
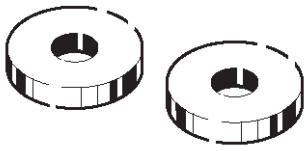 901RS244	**5–8840–2167–0** **(J–23597–8)** Disc
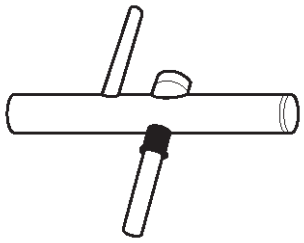 901RS226	**5–8840–0128–0** **(J–23597–1)** Arbor
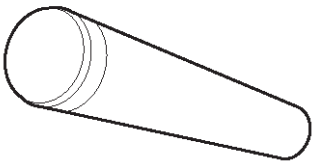 901RS227	**9–8522–1165–0** **(J–6133–01)** Installer; Pinion bearing
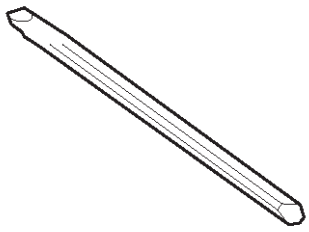 901RS228	**5–8840–2293–0** **(J–39209)** Punch; End nut lock

ILLUSTRATION	**TOOL NO.** TOOL NAME
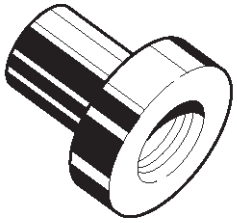 901RS245	**5–8840–2162–0** **(J–24244)** Installer; Side bearing
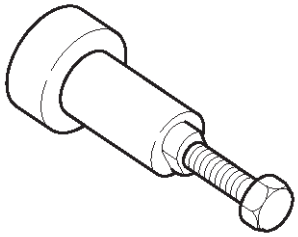 901RS230	**5–8840–2323–0** **(J–39602)** Remover; Outer bearing
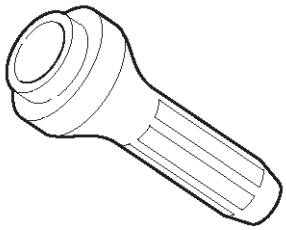 901RS211	**5–8840–2165–0** **(J–37263)** Installer; Pinion oil seal
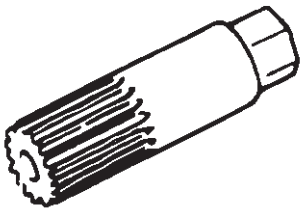 901RW250	**5–8840–2682–0** **(J–44450)** Holder; Side gear
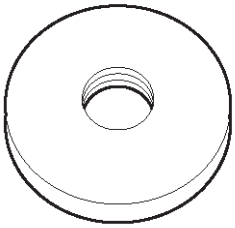 901RS222	**5–8840–0129–0** **(J–23597–12)** Rear pilot

DRIVELINE/AXLE

DIFFERENTIAL (REAR 244mm)

CONTENTS

Service Precaution 4A2B–1
General Description 4A2B–3
Diagnosis 4A2B–4
Axle Housing 4A2B–5
Axle Housing and Associated Parts 4A2B–5
Removal 4A2B–5
Oil Seal Replacement 4A2B–6
Installation 4A2B–6
Axle Shaft 4A2B–7
Axle Shaft and Associated Parts 4A2B–7
Removal 4A2B–7
Inspection and Repair 4A2B–8
Oil Seal Replacement 4A2B–9
Installation 4A2B–9
Pinion Oil Seal 4A2B–10
Pinion Oil Seal and Associated Parts 4A2B–10
Removal 4A2B–10
Inspection and Repair 4A2B–11
Installation 4A2B–11
Differential Assembly 4A2B–12
Differential Assembly and Associated Parts 4A2B–12
Removal 4A2B–12
Installation 4A2B–13
Disassembled View 4A2B–14
Disassembly 4A2B–15
Reassembly 4A2B–17
Differential Cage Assembly 4A2B–24
Disassembled View 4A2B–24
Disassembly 4A2B–25
Inspection and Repair 4A2B–25
Reassembly 4A2B–26
Limited Slip Differential 4A2B–28
Disassembled View 4A2B–28
Disassembly 4A2B–29
Inspection and Repair 4A2B–29
Reassembly 4A2B–31
Main Data and Specifications 4A2B–35
Special Tools 4A2B–37

Service Precaution

WARNING: IF SO EQUIPPED WITH A SUPPLEMENTAL RESTRAINT SYSTEM (SRS), REFER TO THE SRS COMPONENT AND WIRING LOCATION VIEW IN ORDER TO DETERMINE WHETHER YOU ARE PERFORMING SERVICE ON OR NEAR THE SRS COMPONENTS OR THE SRS WIRING. WHEN YOU ARE REFORMING SERVICE ON OR NEAR THE SRS COMPONENTS OR THE SRS WIRING, REFER TO THE SRS SERVICE INFORMATION. FAILURE TO FOLLOW WARNINGS COULD RESULT IN POSSIBLE AIR BAG DEPLOYMENT, PERSONAL INJURY, OR OTHERWISE UNNEEDED SRS SYSTEM REPAIRS.

CAUTION: Always use the correct fastener in the proper location. When you replace a fastener, use ONLY the exact part number for that application. ISUZU will call out those fasteners that require a replacement after removal. ISUZU will also call out the fasteners that require thread lockers or thread sealant. UNLESS OTHERWISE SPECIFIED , do not use supplemental coatings (Paints, greases, or other corrosion inhibitors) on threaded fasteners or fastener joint interfaces. Generally,such coatings adversely affect the fastener torque and the joint clamping force, and may damage the fastener. When you install fasteners, use the correct tightening sequence and specification. Following these instructions can help you avoid damage to parts and systems.

The ϕ244 differential has two N types A-type and B-type.

A-type: the sticker with bar code is attached.

B-type: the sticker with no bar code on the lower part of carrier is attached.

In case of Work Shop Manual;

A-type: Refer to ’98 UBS Work Shop Manual.
B-type: Described in ’00UBS Work Shop Manual.

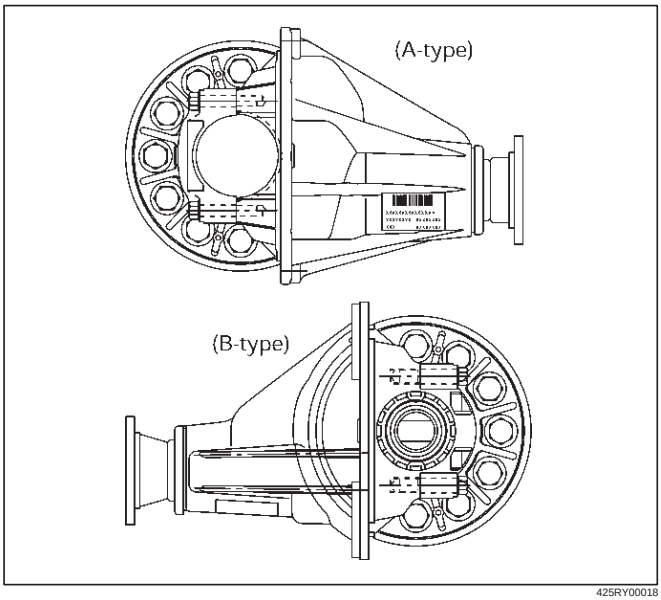

425RY00018

General Description

The rear axle assembly is of the semi–floating type in which the vehicle weight is carried on the axle housing . The center line of the pinion gear is below the center line of the ring gear (hypoid drive).
All parts necessary to transmit power from the propeller shaft to the rear wheels are enclosed in a banjo type axle housing.
The 9.61 inch ring gear rear axle uses a conventional ring and pinion gear set to transmit the driving force of the engine to the rear wheels. This gear set transfers this driving force at a 90 degree angle from the propeller shaft to the drive shafts.
The axle shafts are supported at the wheel end of the shaft by a roller bearing.
The pinion gear is supported by two tapered roller bearings. The pinion depth is set by a shim pack located between the gear end of the pinion and the roller bearing that is pressed onto the pinion. The pinion bearing preload is set by crushing a collapsible spacer between the bearings in the axle housing.

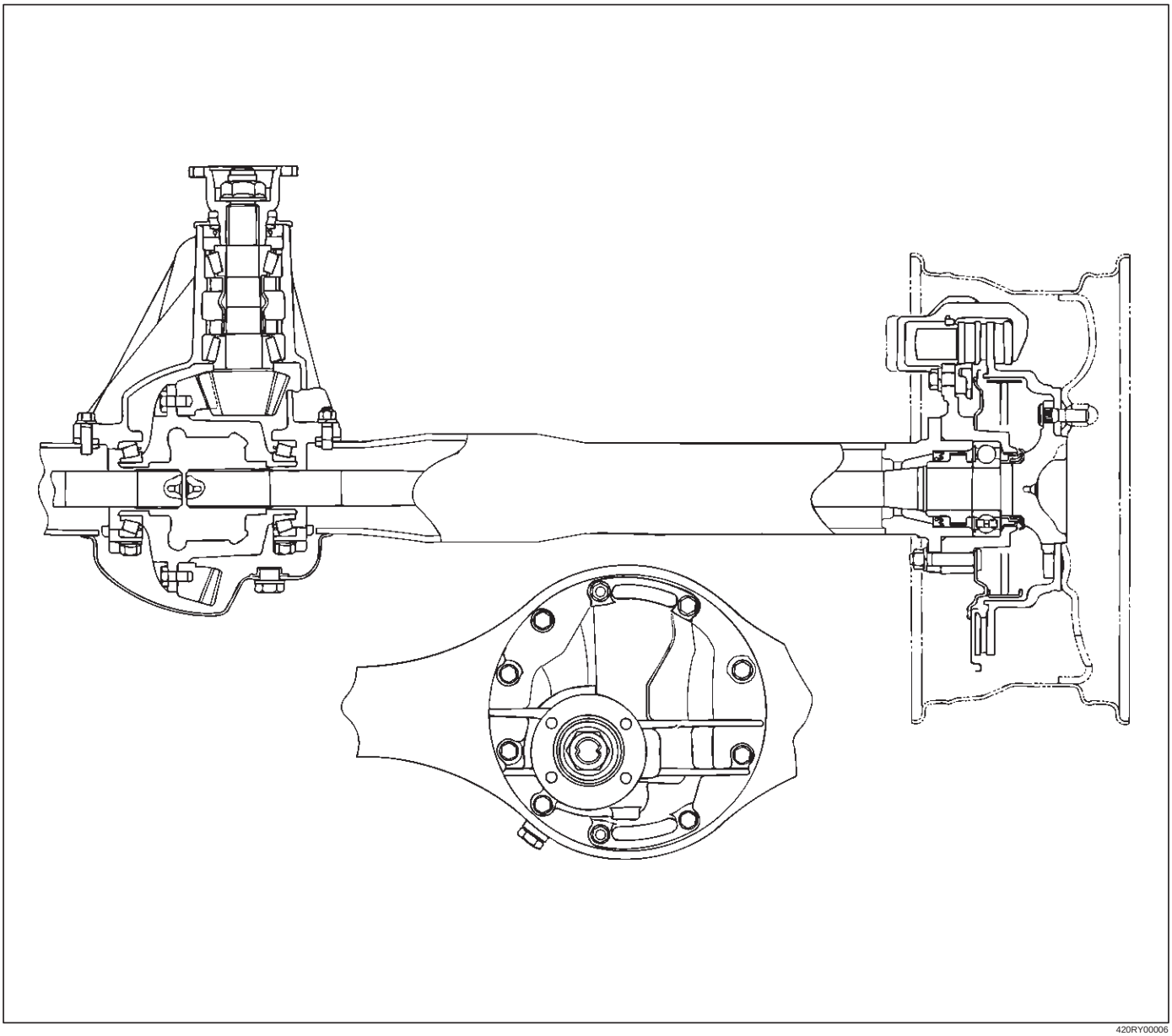

420RY00006

The ring gear is bolted onto the differential cage with 12 bolts.
The differential cage is supported in the axle housing by two tapered roller bearings. The differential and ring gear are located in relationship to the pinion by using selective shims and spacers between the bearing and the axle housing. To move the ring gear, shims are deleted from one side and an equal amount are added to the other side. These shims are also used to preload the bearings which are pressed onto the differential cage. Two bearing caps are used to hold the differential into the rear axle housing.
The differential is used to allow the wheels to turn at different rates of speed while the rear axle continues to transmit the driving force. This prevents tire scuffing when going around corners and prevents premature wear on internal axle parts.
The rear axle is sealed with a pinion seal, a seal at each axle shaft end, and by a liquid gasket between the differential carrier and the axle housing.

Diagnosis

Many noises that seem to come from the rear axle actually originate from other sources such as tires, road surface, wheel bearings, engine, transmission, muffler, or body drumming. Investigate to find the source of the noise before disassembling the rear axle. Rear axles, like any other mechanical device, are not absolutely quiet but should be considered quiet unless some abnormal noise is present.

To make a systematic check for axle noise, observe the following:

1. Select a level asphalt road to reduce tire noise and body drumming.
2. Check rear axle lubricant level to assure correct level, and then drive the vehicle far enough to thoroughly warm up the rear axle lubricant.
3. Note the speed at which noise occurs. Stop the vehicle and put the transmission in neutral. Run the engine speed slowly up and down to determine if the noise is caused by exhaust, muffler noise, or other engine conditions.
4. Tire noise changes with different road surfaces; axle noises do not. Temporarily inflate all tires to 344 kPa (3.5kg/cm^2, 50 psi) (for test purposes only). This will change noise caused by tires but will not affect noise caused by the rear axle.

   Rear axle noise usually stops when coasting at speeds under 48 km/h (30 mph); however, tire noise continues with a lower tone. Rear axle noise usually changes when comparing pull and coast, but tire noise stays about the same.

   Distinguish between tire noise and rear axle noise by noting if the noise changes with various speeds or sudden acceleration and deceleration. Exhaust and axle noise vary under these conditions, while tire noise remains constant and is more pronounced at speeds of 32 to 48 km/h (20 to 30 mph). Further check for tire noise by driving the vehicle over smooth pavements or dirt roads (not gravel) with the tires at normal pressure. If the noise is caused by tires, it will change noticeably with changes in road surface.
5. Loose or rough front wheel bearings will cause noise which may be confused with rear axle noise; however, front wheel bearing noise does not change when comparing drive and coast. Light application of the brake while holding vehicle speed steady will often cause wheel bearing noise to diminish. Front wheel bearings may be checked for noise by jacking up the wheels and spinning them or by shaking the wheels to determine if bearings are loose.
6. Rear suspension rubber bushings and spring insulators dampen out rear axle noise when correctly installed. Check to see that there is no link or rod loosened or metal–to–metal contact.
7. Make sure that there is no metal–to–metal contact between the floor and the frame.

After the noise has been determined to be in the axle, the type of axle noise should be determined, in order to make any necessary repairs.

Gear Noise

Gear noise (whine) is audible from 32 to 89 km/h (20 to 55 mph) under four driving conditions.

1. Driving under acceleration or heavy pull.
2. Driving under load or under constant speed.
3. When using enough throttle to keep the vehicle from driving the engine while the vehicle slows down gradually (engine still pulls slightly).
4. When coasting with the vehicle in gear and the throttle closed. The gear noise is usually more noticeable between 48 and 64 km/h (30 and 40 mph) and 80 and 89 km/h (50 and 55 mph).

Bearing Noise

Bad bearings generally produce a rough growl or grating sound, rather than the whine typical of gear noise. Bearing noise frequently “wow–wows” at bearing rpm, indicating a bad pinion or rear axle side bearing. This noise can be confused with rear wheel bearing noise.

Rear Wheel Bearing Noise

Rear wheel bearing noise continues to be heard while coasting at low speed with transmission in neutral. Noise may diminish by gentle braking. Jack up the rear wheels, spin them by hand and listen for noise at the hubs. Replace any faulty wheel bearings.

Knock At Low Speeds

Low speed knock can be caused by worn universal joints or a side gear hub counter bore in the cage that is worn oversize. Inspect and replace universal joints or cage and side gears as required.

Backlash Clunk

Excessive clunk on acceleration and deceleration can be caused by a worn rear axle pinion shaft, a worn cage, excessive clearance between the axle and the side gear splines, excessive clearance between the side gear hub and the counterbore in the cage, worn pinion and side gear teeth, worn thrust washers, or excessive drive pinion and ring gear backlash. Remove worn parts and replace as required. Select close–fitting parts when possible. Adjust pinion and ring gear backlash.

Axle Housing

Axle Housing and Associated Parts

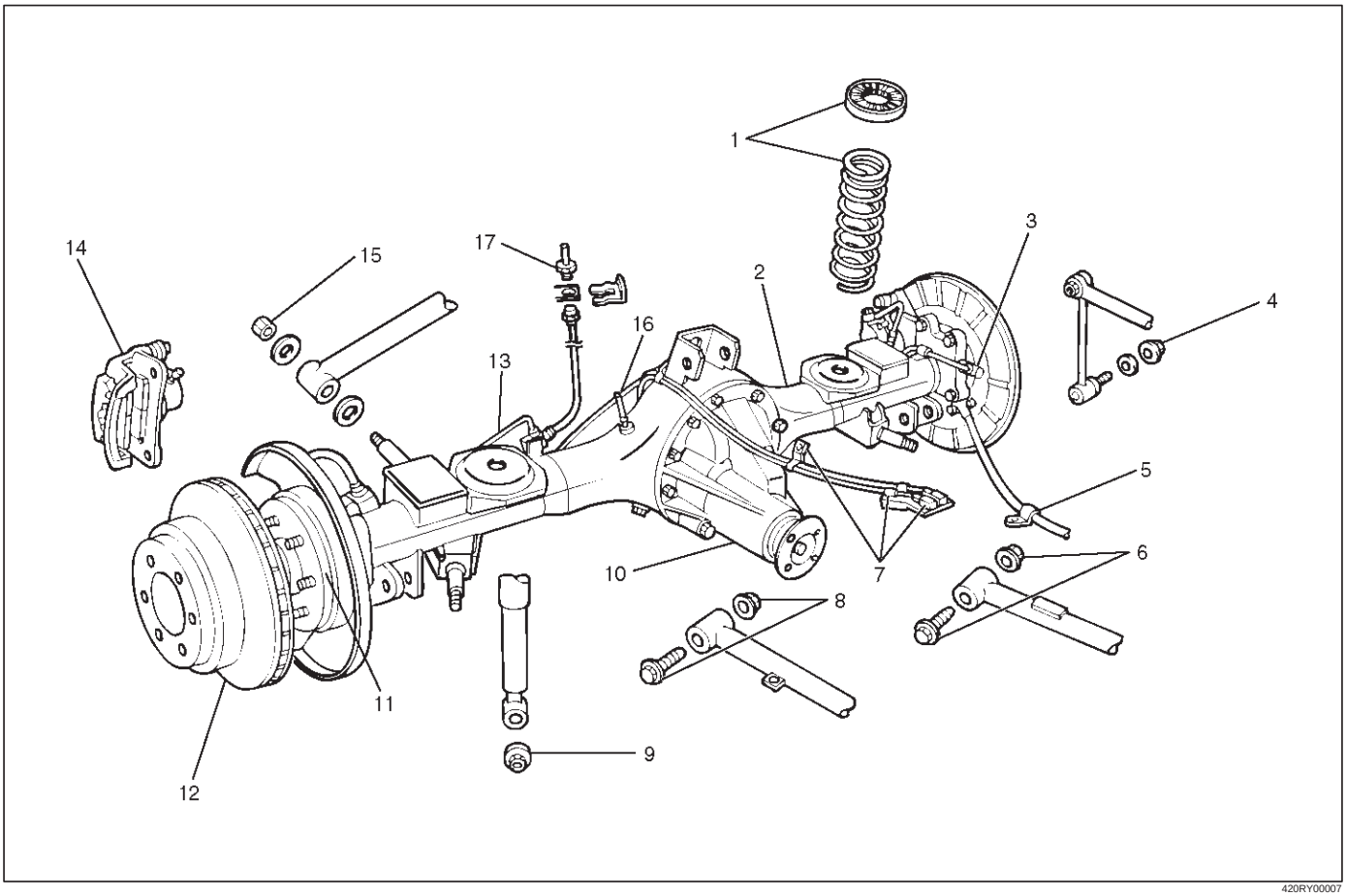

Legend

(1) Coil Spring and Insulator
(2) Axle Housing Assembly
(3) ABS Speed Sensor and Harness (if so equipped)
(4) Nut
(5) Parking Brake Cable
(6) Bolt and Nut
(7) Antilock Brake System (ABS) Connector and Bracket (if so equipped)
(8) Bolt and Nut
(9) Nut
(10) Differential Assembly
(11) Axle Shaft Assembly
(12) Brake Disc
(13) Brake Pipe
(14) Brake Caliper
(15) Nut
(16) Breather Hose
(17) Flare Nut

Removal

1. Raise the vehicle and support it with suitable safety stands.
   The hoist must remain under the rear axle housing.
2. Drain brake fluid. Refer to Hydraulic Brakes in Brakes section.
3. Remove rear wheels and tires. Refer to Wheel in Suspension section.
4. Remove propeller shaft. Refer to Rear Propeller Shaft in this section.
5. Drain the rear axle oil into a proper container.
6. Remove parking brake cable, release the connection between the cable fixing clip equalizer. Refer to Parking Brakes in Brakes section.
7. Move the clip aside and pull out the breather hose.

8. Disconnect the ABS connectors (1) and remove the brackets (2) (if so equipped) attached to the frame and center link.

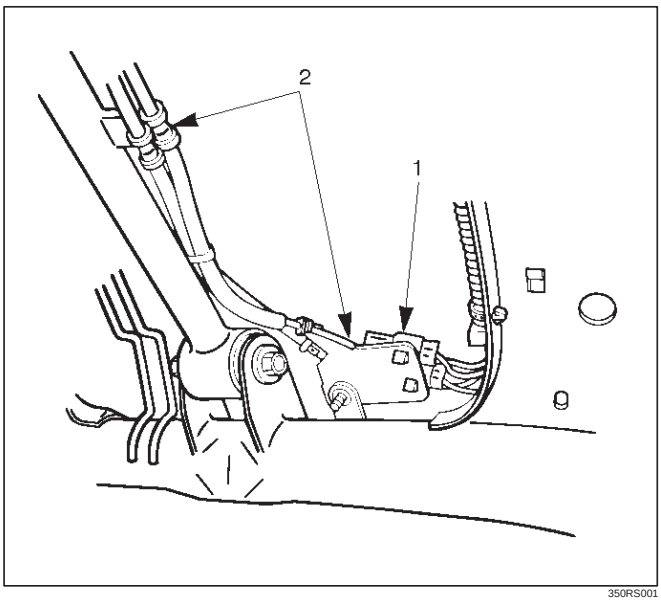

350RS001

9. Loosen the brake tube flare nut, remove the clip and take out the brake tube.
10. Remove the shock absorber fixing nut from the axle housing.
11. Remove the stabilizer linkage mounting nut from the axle housing.
12. Remove the lateral rod fixing nut from the axle housing.
13. Remove the center link mounting bolt and nut from the axle housing.
14. Remove the trailing link fixing bolt and nut from the axle housing.
15. Jack down and remove the coil spring and insulator.
16. Axle housing assembly can be separated from the vehicle on completion of steps 1 – 11.
17. Remove the brake caliper fixing bolt (3), loosen the flare nut (1), release the clip (2) and take out the brake caliper together with the flexible hose.

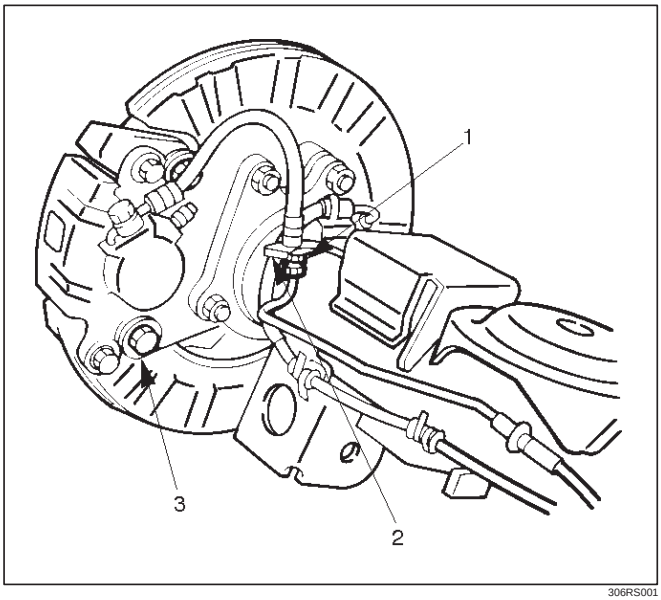

306RS001

18. Remove brake disc.
19. Remove antilock brake system speed sensor fixing bolt and the clip and bracket (if so equipped) on the axle housing.
20. Remove the brake pipe clip and fixing bolt on the axle housing and take out the brake pipe.
21. Remove the bearing holder fixing nut and take out the axle shaft assembly, be sure not to damage the oil seal by the spline of the shaft, Refer to Axle Shaft in this section.
22. Remove differential assembly, refer to Differential Assembly in this section.

Oil Seal Replacement

Remove the oil seal, carefully not to damage the housing, and mount new oil seal using oil seal installer 5–8840–2294–0

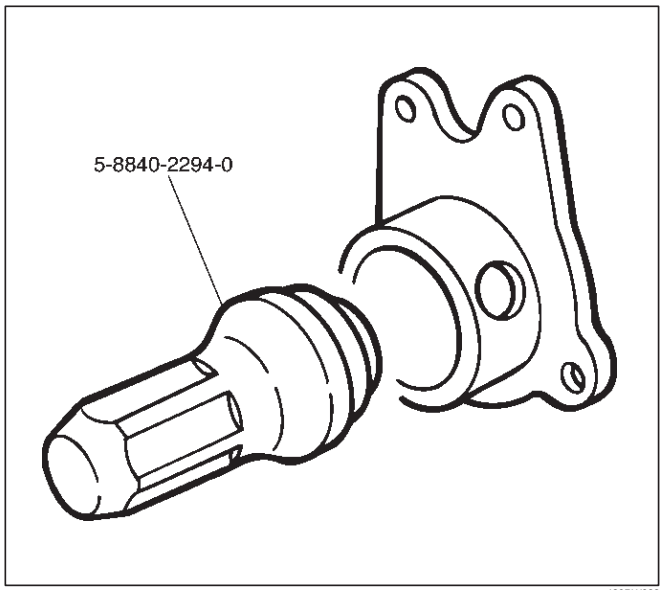

420RW028

Installation

1. Install differential assembly, refer to Differential Assembly in this section.
2. Install axle shaft assembly then tighten the bearing holder mounting nut to the specified torque. Be sure not to damage the oil seal by the spline of the shaft.

   Torque: 74N·m (7.5kg·m/54 lb ft)
3. Install brake pipe.
4. Connect antilock brake system (ABS) speed sensor and harness (if so equipped), refer to Anti–Lock Brake System in Brake section.
5. Install brake disc.
6. Install brake caliper. Refer to Disk Brakes in Brake section.
7. Install axle housing assembly.
8. Install coil spring and insulator.
9. Install the trailing link fixing bolt and nut to the axle housing. For the procedures in items 9–13, refer to Suspension section.
10. Install the center link bolt and nut to the axle housing.

11. Install the lateral rod fixing nut to the axle housing.
12. Install the stabilizer linkage mounting nut to the axle housing.
13. Install the shock absorber fixing nut to the axle housing.
14. Install brake tube flare nut, Refer to Disk Brakes in Brake section.
15. Install ABS connector and bracket (if so equipped).
16. Connect breather hose.
17. Install parking brake cable, Refer to Parking Brakes in Brake section.
18. Bleed brakes. Refer to Hydraulic Brakes in Brake section.

Axle Shaft

Axle Shaft and Associated Parts

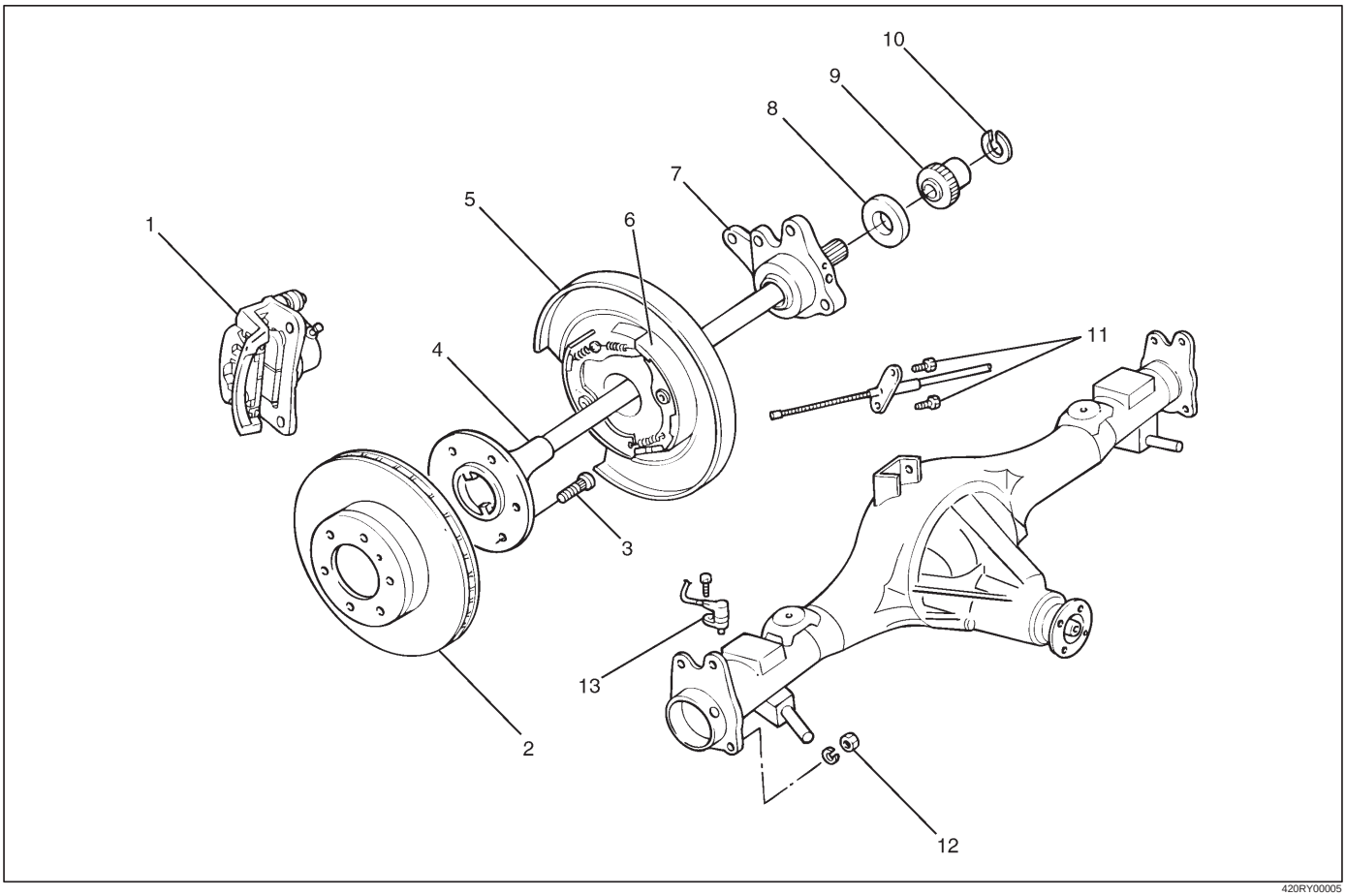

420RY00005

Legend

(1) Brake Caliper
(2) Brake Disc
(3) Wheel Pin
(4) Axle Shaft Assembly
(5) Back Plate
(6) Parking Brake Assembly
(7) Bearing Holder
(8) Bearing
(9) Retainer
(10) Snap Ring
(11) Bolt
(12) Nut
(13) Antilock Brake System (ABS) Speed Sensor

Removal

1. Raise the vehicle.
2. Remove tires and wheels. Refer to Wheel in Steering section.
3. Remove brake caliper. Use a wire to attach the brake caliper to the frame. Refer to Disk Brakes in Brake section.
4. Remove brake disc.
5. Remove ABS sensor.
6. Remove Parking brake assembly. Refer to Parking Brakes in Brake section.

7. Remove the parking brake cable mounting bolts(Behind the back plate)(1).

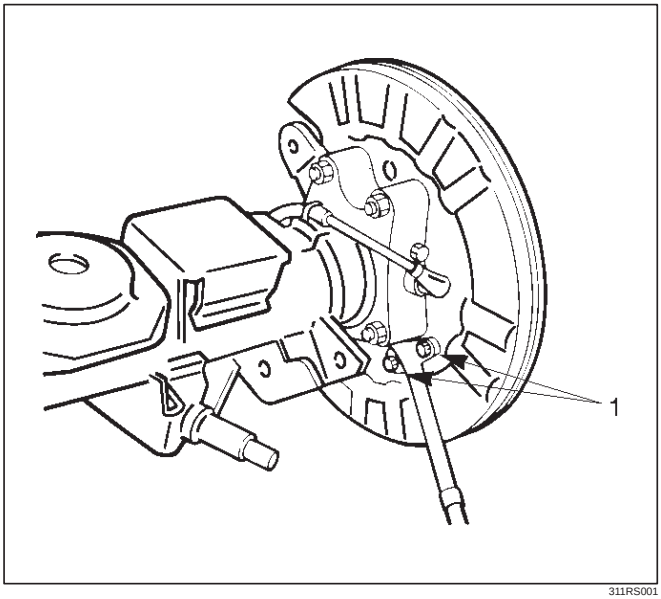

311RS001

8. Remove the bearing holder mounting nuts.
9. Remove axle shaft assembly.

NOTE: Be sure not to damage the oil seal.

10. Remove snap ring.
11. Using a bearing remover 5–8840–2295–0 and press, remove retainer together with the bearing holder.

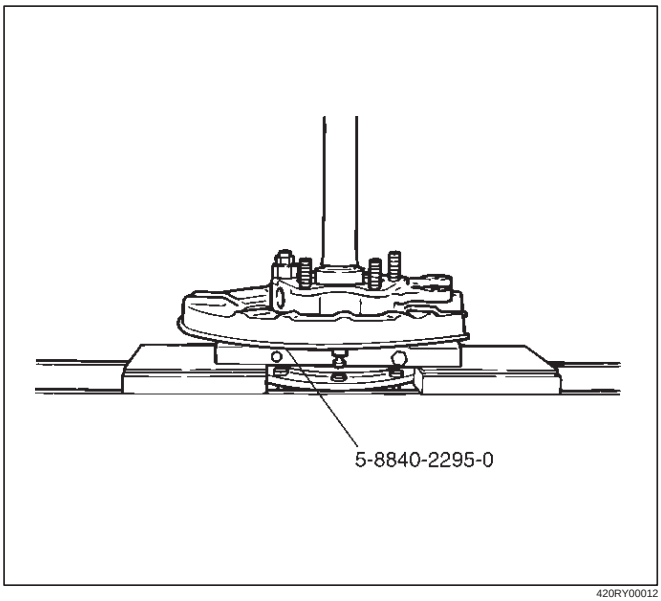

420RY00012

12. Remove bearing.
13. Remove bearing holder.
14. Remove back plate.
15. Remove the wheel pins using a remover 5–8840–0029–0.

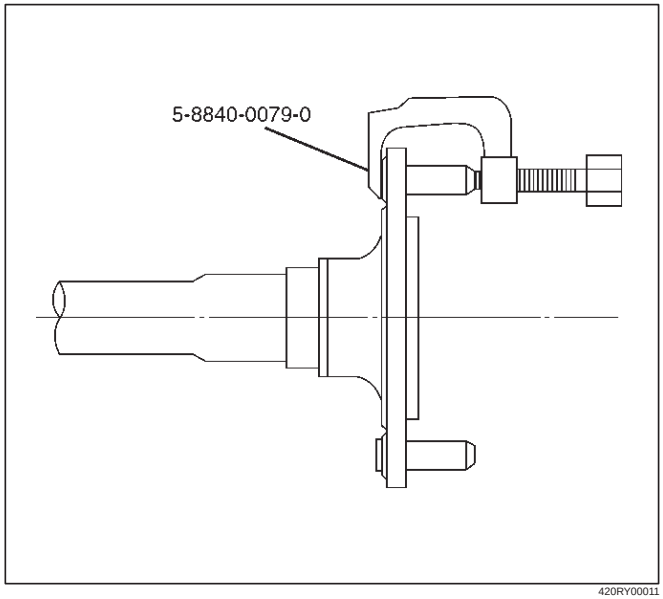

420RY00011

Inspection and Repair

Make necessary correction or parts replacement if wear, corrosion or any other abnormal conditions are found through inspection.

Visual Check:

Check the following parts for wear, damage, noise or any other abnormal conditions:

1. Axle shaft
2. Bearing

When checking the axle shaft, pay special attention to the splined portions and replace the shaft if distortion or step wear is noticeable. Correct slight step wear with a grinder.

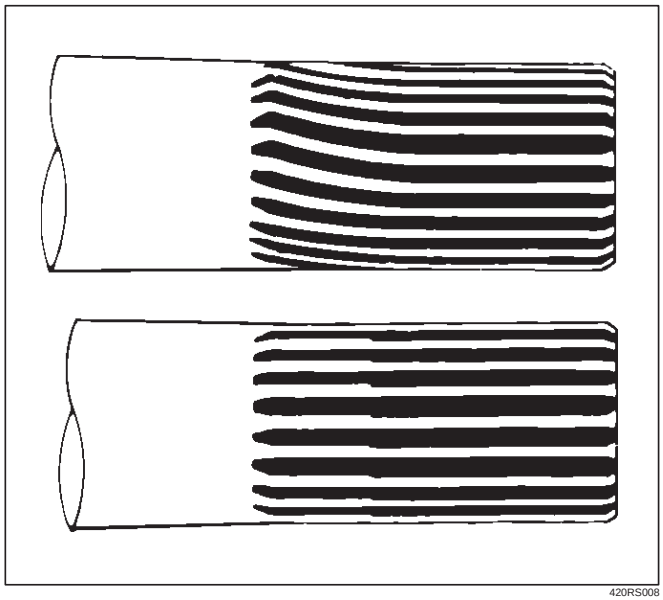

420RS008

Axle Shaft Run–out

Limit: 1.0 mm (0.039 in)

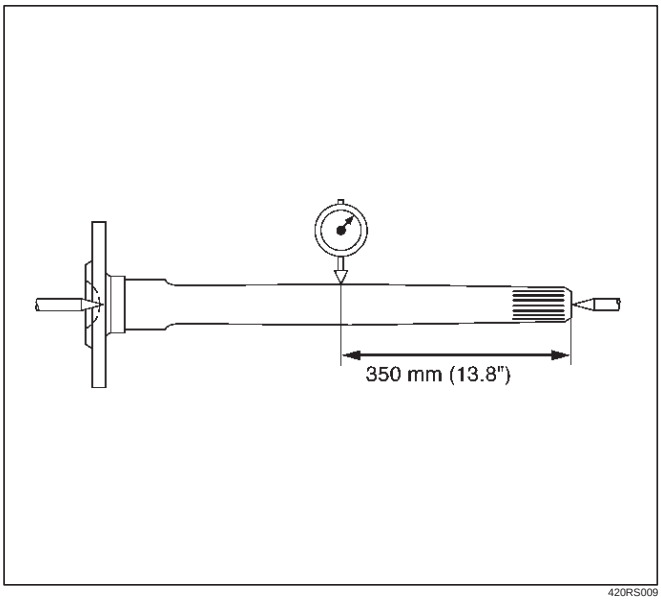

420RS009

Axle Shaft Flange Run–out

Limit: 0.08 mm (0.003 in)

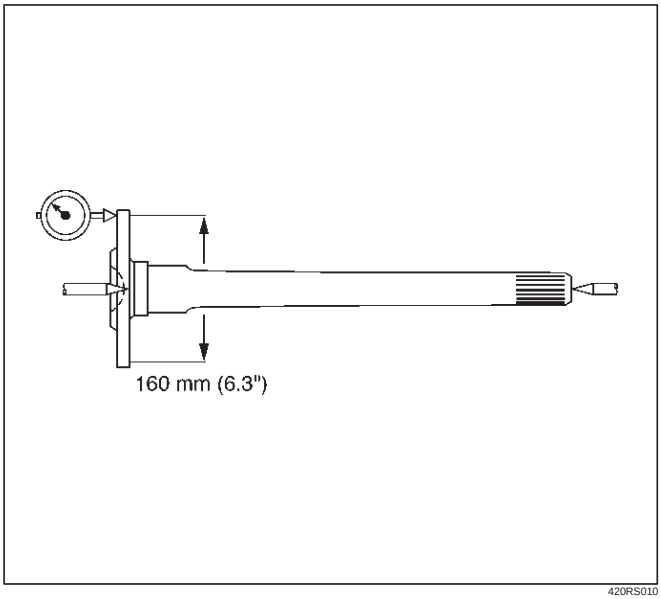

420RS010

Oil Seal Replacement

Remove the oil seal carefully not to damage the bearing holder bore .
When installing, use oil seal installer 5–8840–2310–0.

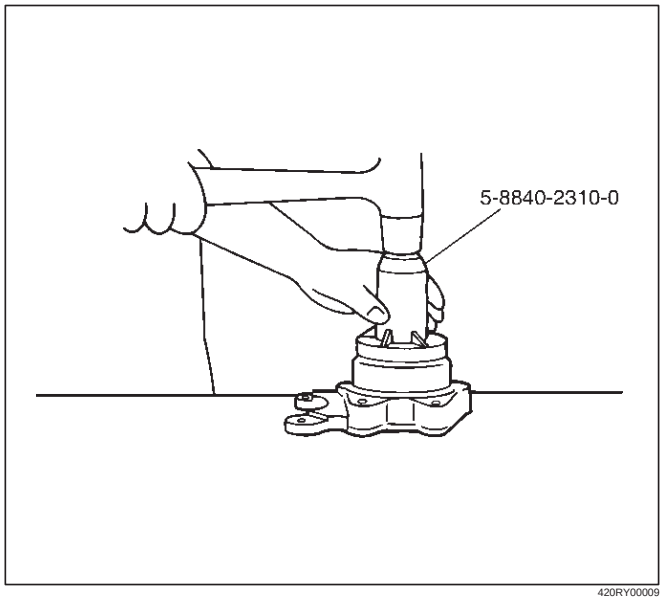

420RY00009

Installation

1. Install wheel pin.
2. Install back plate.
3. Install bearing holder.
4. Install bearing.
5. Install retainer by using a bearing installer 5–8840–2296–0, press fit together with the bearing.

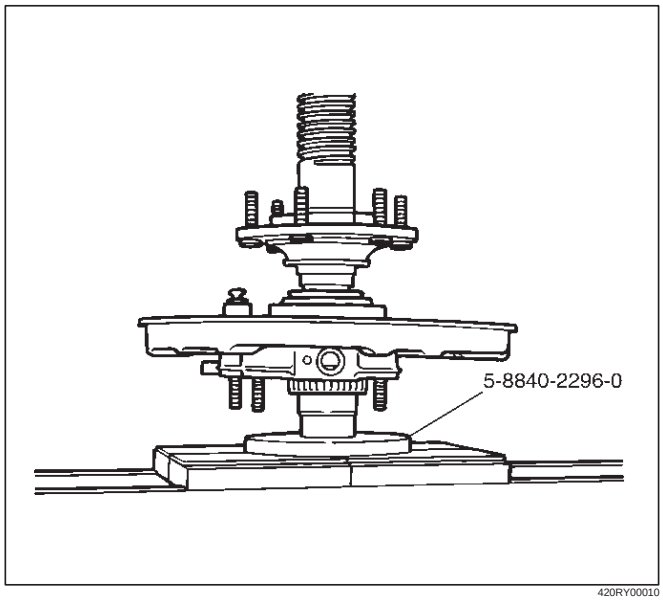

420RY00010

6. Install snap ring.
7. Install axle shaft assembly.

NOTE: Be sure not to damage the oil seal.

8. Tighten the bearing holder mounting nut to the specified torque.

   Torque: 74N·m (54 lb ft)

9. Fix the parking brake cable mounting bolt (Behind the back plate).
10. Install parking brake assembly, refer to Parking Brakes in Brake section.
11. Install antilock brake system sensor.
12. Install brake disc.
13. Install brake caliper, refer to Disk Brakes in Brake section.

Pinion Oil Seal

Pinion Oil Seal and Associated Parts

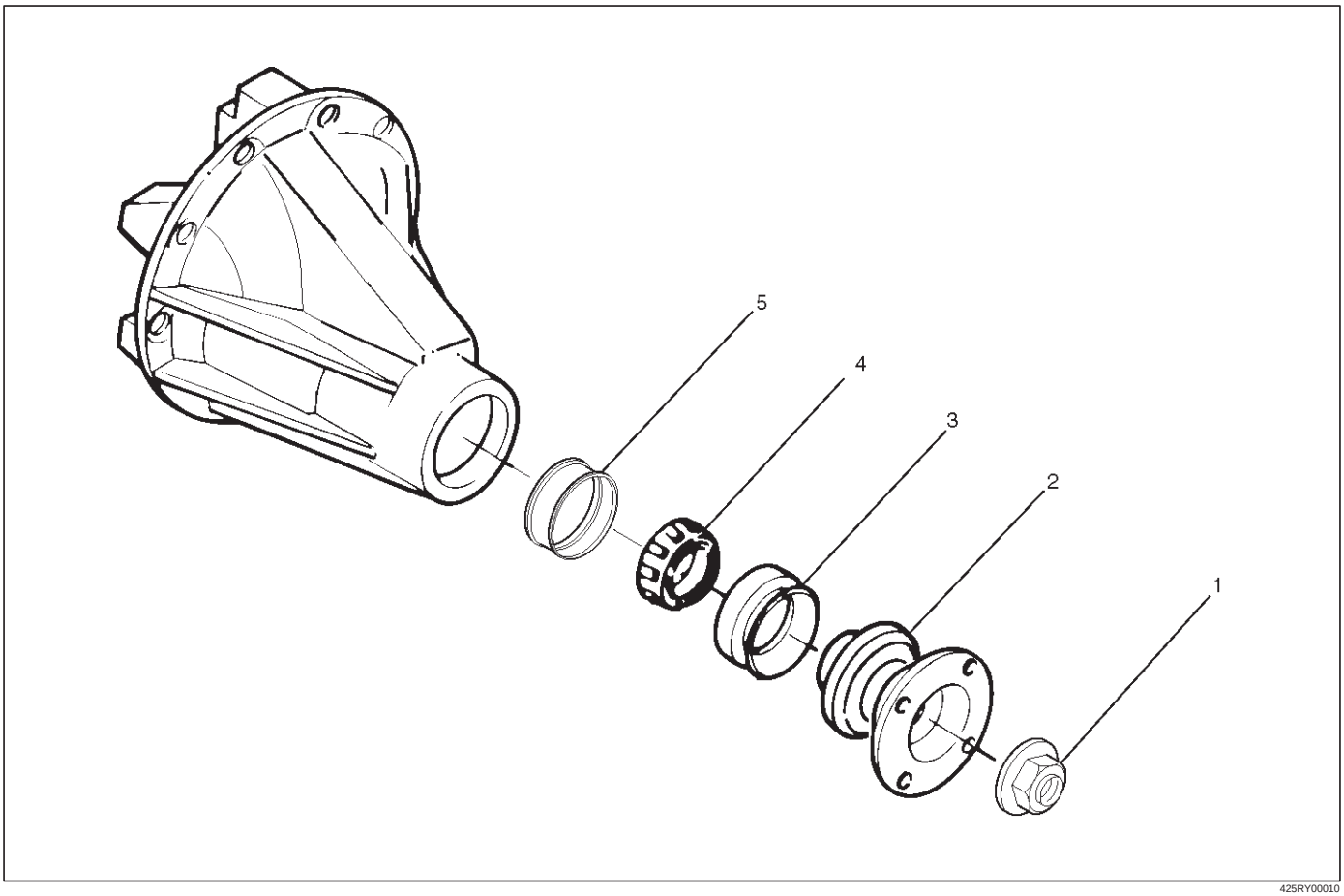

425RY00010

Legend

(1) Flange Nut and Washer
(2) Flange
(3) Oil Seal
(4) Outer Bearing
(5) Collapsible Spacer

Removal

1. Remove the rear propeller shaft. Refer to Rear Propeller Shaft in this section.
2. Drain the rear axle oil.

3. Remove flange nut and washer by using pinion flange holder 5–8840–0133–0 after raising up its staked parts completely.

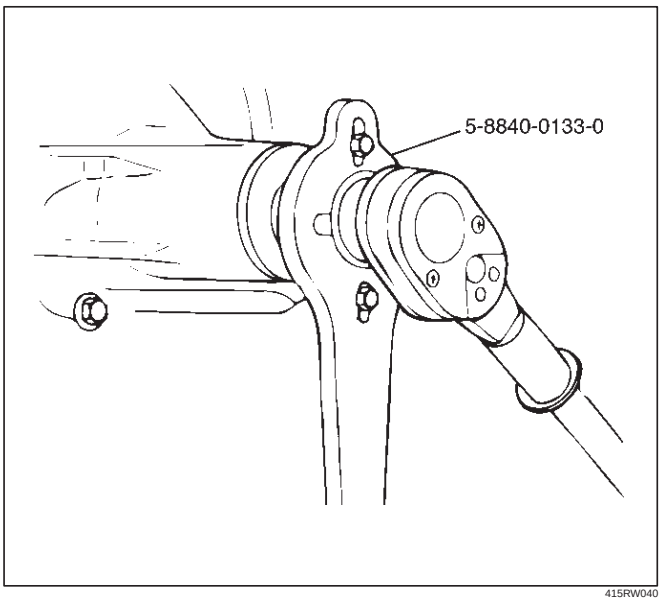

415RW040

4. Remove flange.
5. Remove oil seal.
6. Remove outer bearing by using remover 5–8840–2323–0.

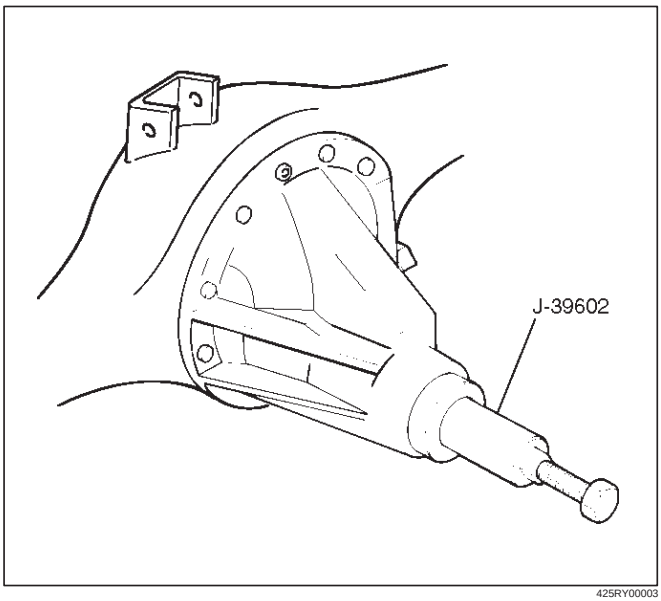

425RY00003

7. Remove collapsible spacer.

Inspection and Repair

Make necessary correction or parts replacement if wear, damage, corrosion or any other abnormal conditions are found through inspection.
Check the following parts:

1. Seal surface of the pinion.
2. Cage bore for burns.

Installation

1. Install collapsible spacer, discard the used collapsible spacer and install a new one.
2. Install outer bearing.

NOTE: Do not drive in, but just temporarily set in the outer bearing by hand, which should be indirectly pressed in finally by tightening the flange nut.

3. By using the seal installer 5–8840–2165–0, install a new oil seal (1) that has grease on seal lip.

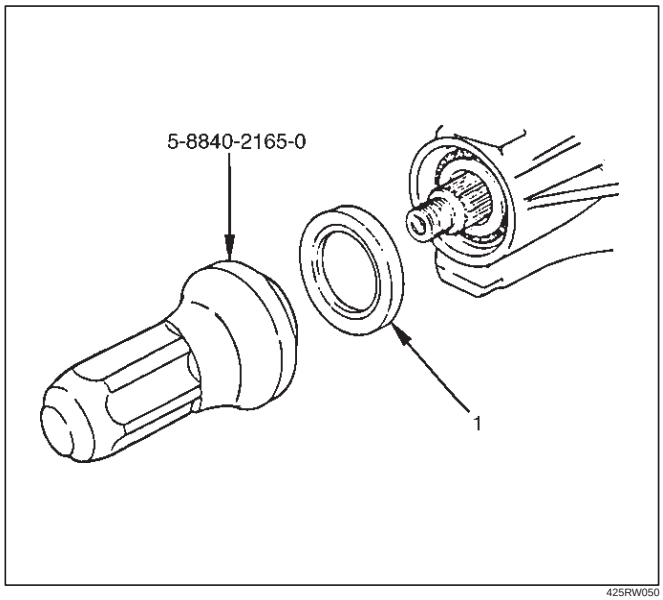

425RW050

4. Install flange.
5. Install flange nut and washer. Refer to Differential Assembly in this section for flange nut reassembly.

NOTE: Discard the used nut and install a new one.

Differential Assembly

Differential Assembly and Associated Parts

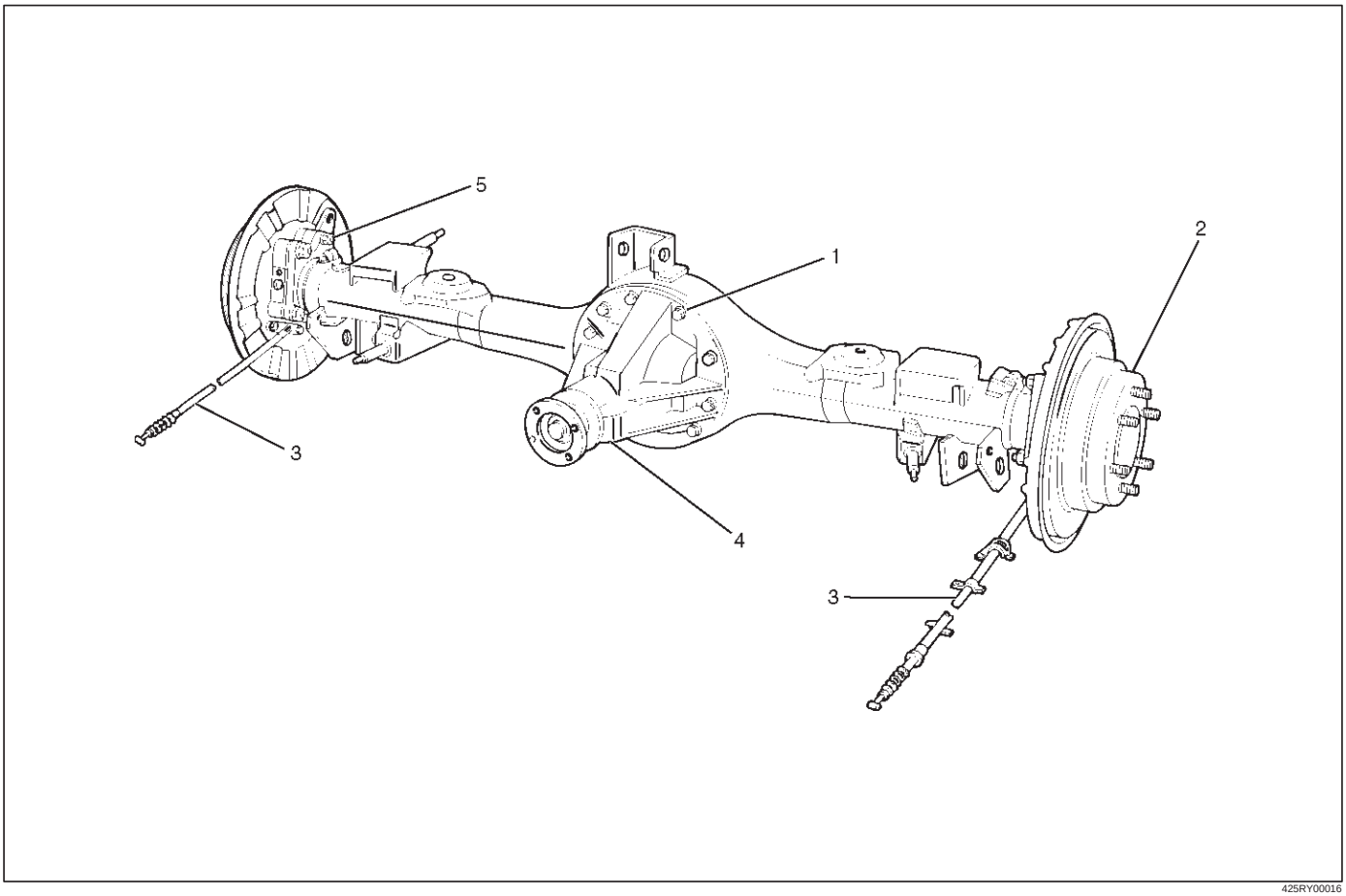

Legend

(1) Bolt and Nut
(2) Axle Shaft Assembly
(3) Parking Brake Cable
(4) Differential Assembly
(5) Nut

Removal

1. Jack up and support the frame with stands.
2. Remove the wheel and tire. Refer to Wheel in Steering section.
3. Drain the differential oil.
4. Remove the propeller shaft. Refer to Rear Propeller Shaft in this section.
5. Remove the ABS speed sensor. Refer to Anti–lock Brake System in Brakes section.
6. Remove the parking brake cable fastening clip and disconnect the equalizer section. Refer to Parking Brakes in Brake section.
7. Remove the bearing holder fixing nuts.
8. Remove axle shaft assembly, be sure not to damage the oil seal by axle shaft.
9. Remove differential carrier mounting bolts and nuts.
10. Remove differential assembly.

Installation

1. Clean the contact surfaces of the axle and differential carrier. As shown in the drawing, apply Three Bond TB1215 or equivalent then install differential assembly.

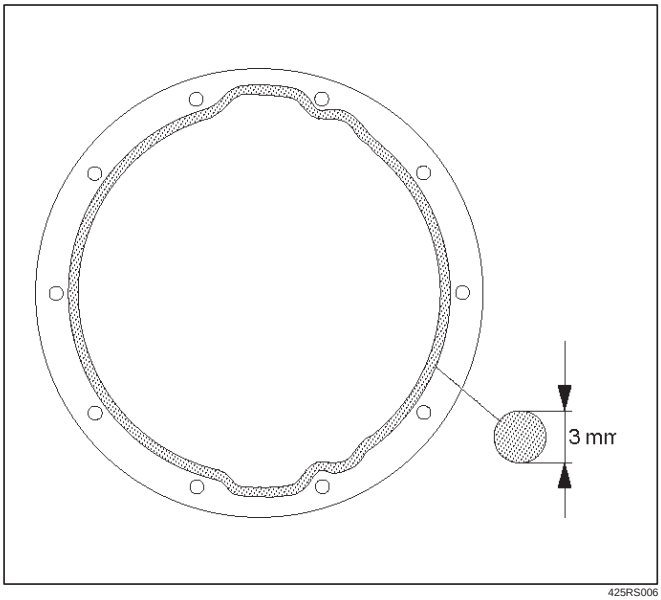

2. Install bolt and nut. Tighten the differential carrier mounting bolts and nuts to the specified torque.

   Torque:Nuts 44N·m (4.5kg·m/33 lb ft)

   Bolts 64N·m (6.5kg·m/47 lb ft)

3. Install axle shaft assembly. Be sure not to damage the oil seal by axle shaft.
4. Install nut, refer to Axle Shaft in this section.
5. Install parking brake cable, refer to Parking Brakes in Brake section.

NOTE: After completing the assembling work, fill the prescribed gear oil to the filler hole.

Lubricant capacity: 3.0 liter (2.6 Imp qt/3.2 US qt)

6. Tighten the oil filler plug to the specified torque.

   Torque: 78N·m (8.0kg·m/58 lb ft)

Disassembled View

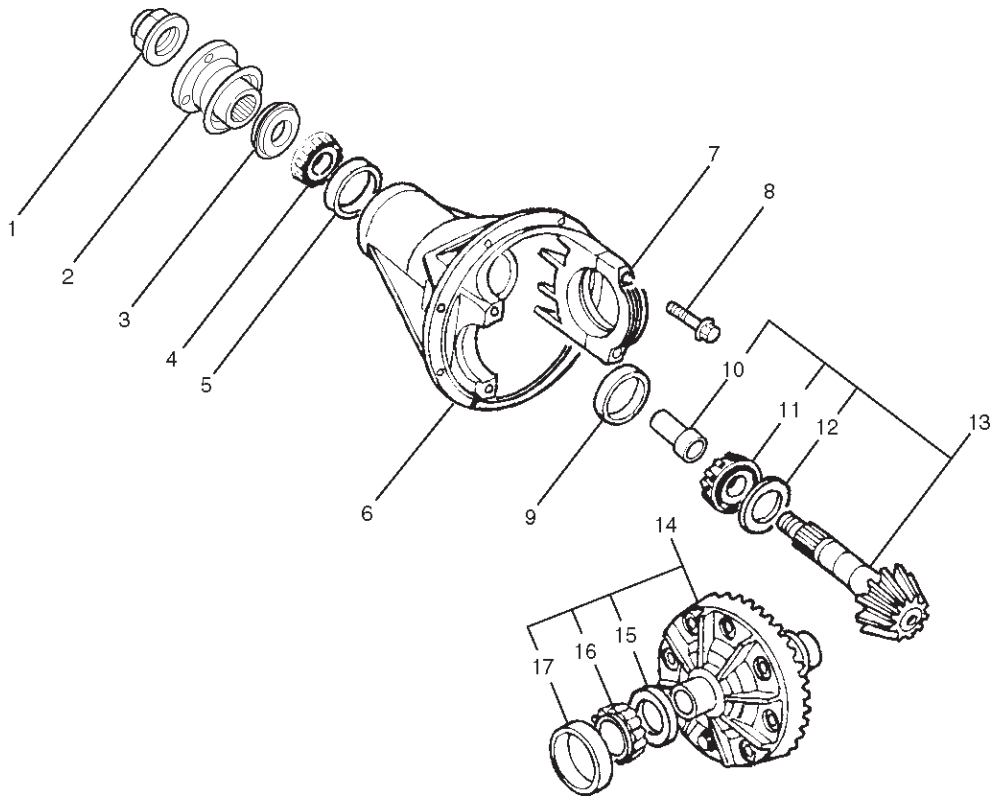

415RY00002

Legend

(1) Flange Nut and Washer
(2) Flange
(3) Oil Seal
(4) Outer Bearing
(5) Outer Bearing Outer Race
(6) Diff Carrier
(7) Bearing Cap
(8) Bolt
(9) Inner Bearing Outer Race
(10) Collapsible Spacer
(11) Inner Bearing
(12) Adjust Shim (Pinion Position)
(13) Drive Pinion Shaft
(14) Adjust Shim (Diff Cage Assembly)
(15) Diff Preload/Backlash
(16) Side Bearing
(17) Side Bearing Outer Race

Disassembly

1. Using holding fixture 5–8840–2029–0 and holding fixture base 5–8840–0003–0, fix the differential assembly to the bench.

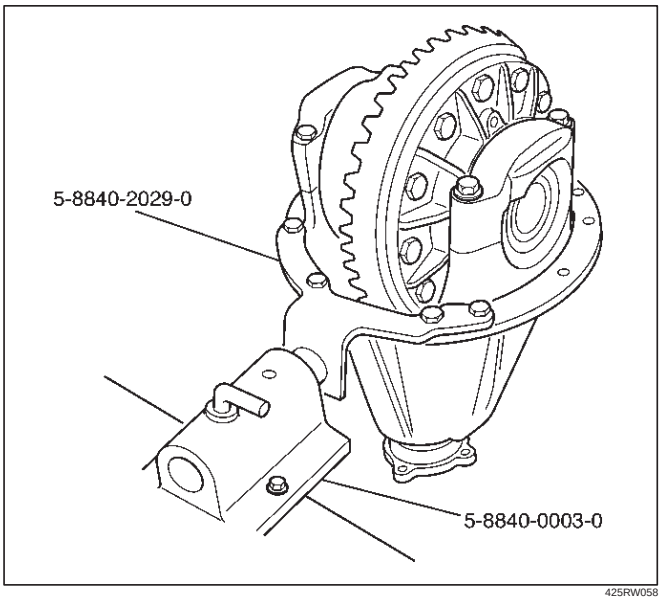

425RW058

2. Apply a setting mark to the side bearing cap and the differential carrier then remove bearing cap.

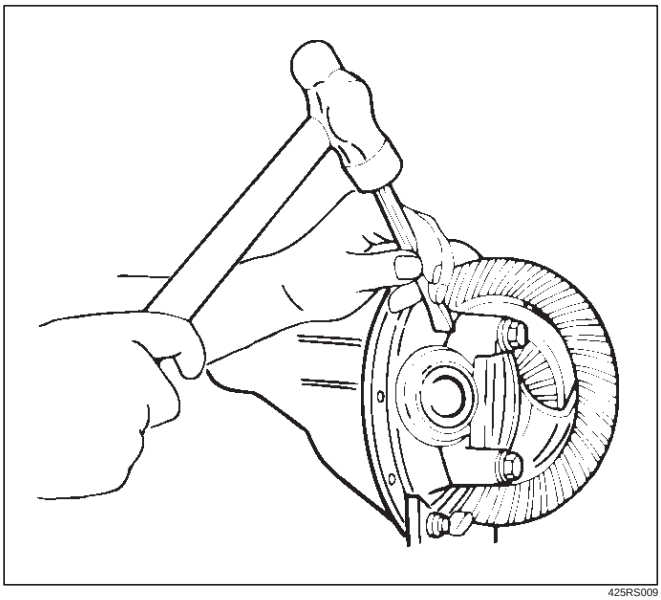

425RS009

3. Remove differential cage assembly.
4. Remove side bearing outer race. After removal, keep the right and left hand side bearing assemblies separate to maintain inner and outer race combinations.
5. Remove side bearing by using remover 5–8840–2587–0 and adapter 5–8840–2576–0. Select collet halves 44803 in remover kit 5–8840–2587–0 for side bearing removal and insert is not required for this operation.

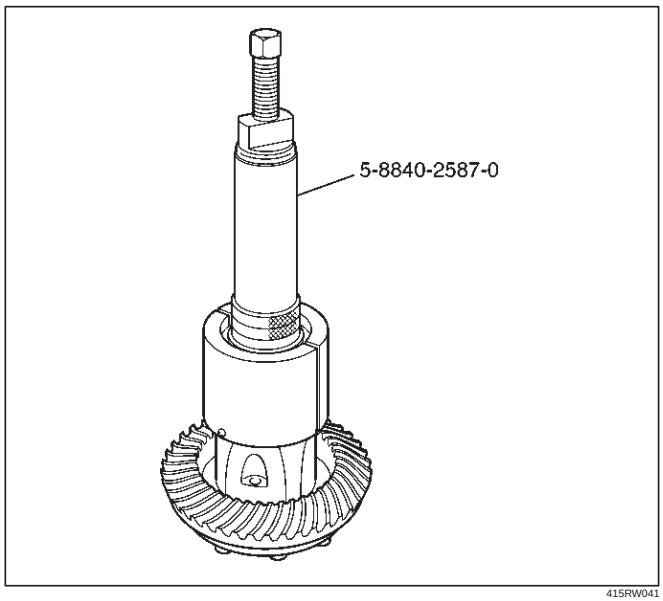

415RW041

6. Note the thickness and position of the shims then remove adjust shim.
7. Remove the flange nut and washer by using pinion flange holder 5–8840–0133–0 after raising up its staked parts completely.

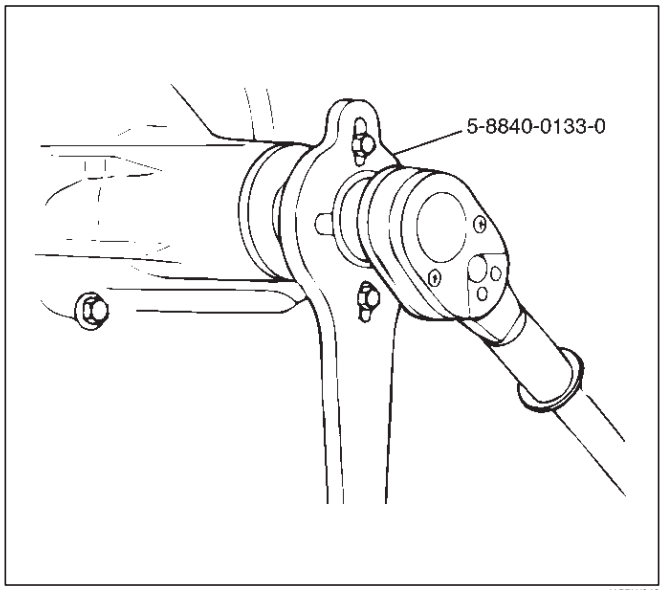

415RW040

8. Removed flange assembly.
9. Remove the drive pinion assembly using a soft metal rod and a hammer.

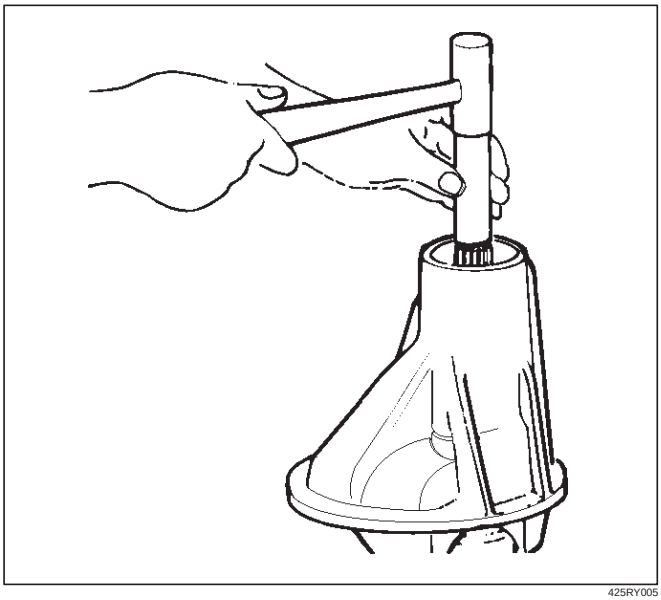

425RY005

10. Remove collapsible spacer.
11. Remove the inner bearing by using remover 5–8840–2587–0. Select insert 303174 and collet halves 44803 in remover kit 5–8840–2587–0 for inner bearing removal.

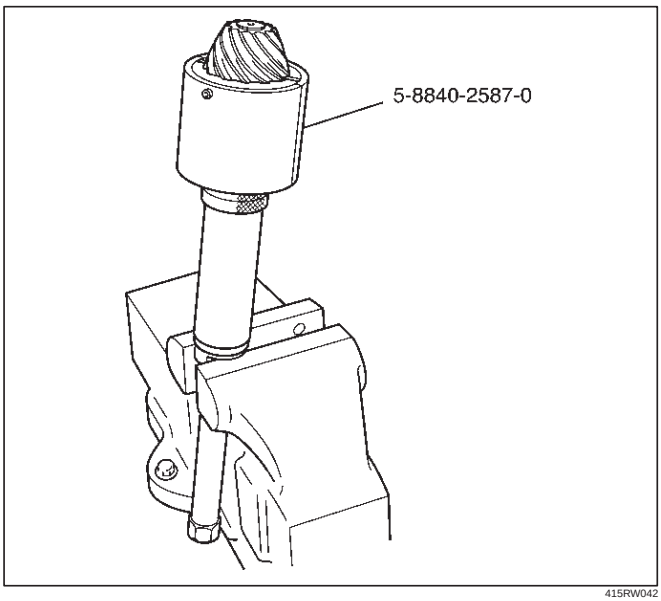

415RW042

12. Remove adjust shim.
13. Remove oil seal.
14. Remove oil seal slinger.
15. Remove outer bearing.
16. Remove the inner bearing outer race (1) and the outer bearing outer race (2) by using a brass bar and a hammer.

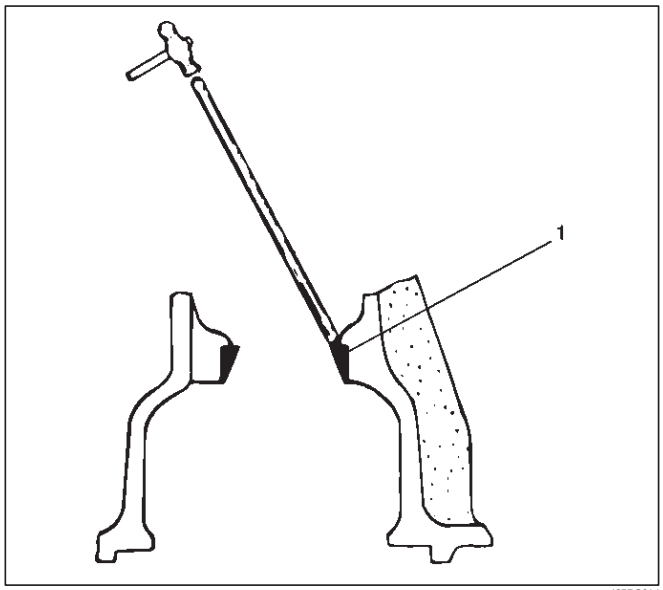

425RS014

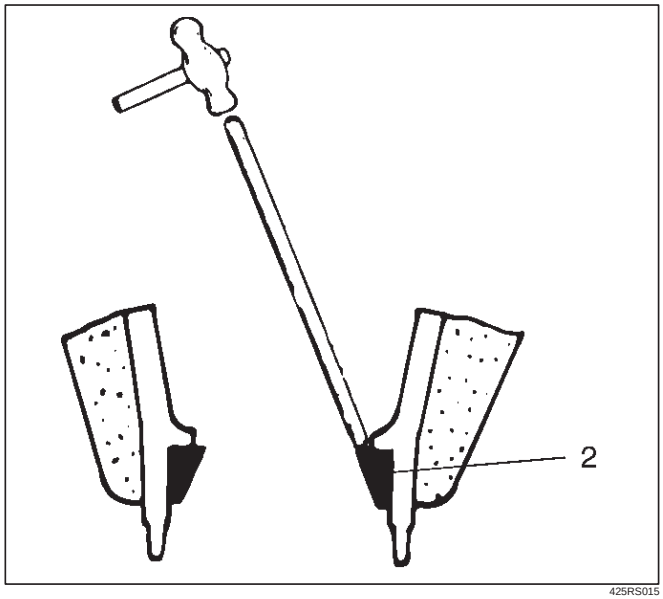

425RS015

Reassembly

1. Install outer bearing outer race by using installer 5–8840–2689–0 and grip 5–8840–0007–0.

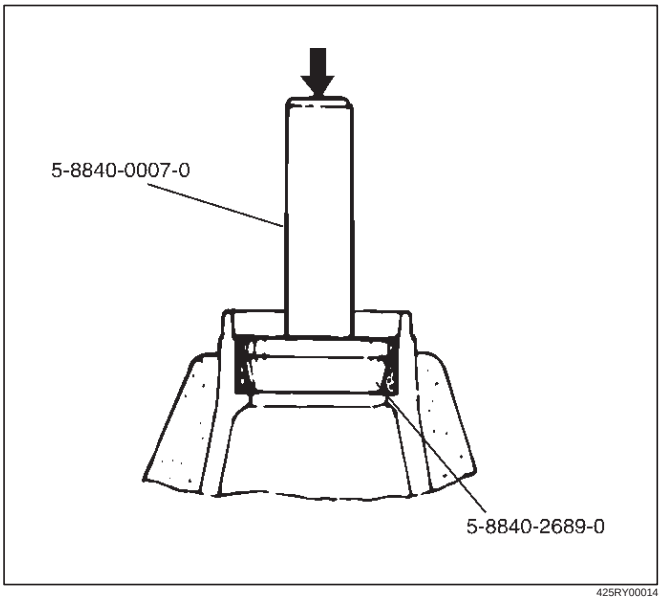

425RY00014

2. Install inner bearing outer race by using installer 5–8840–2690–0 and grip 5–8840–0007–0.

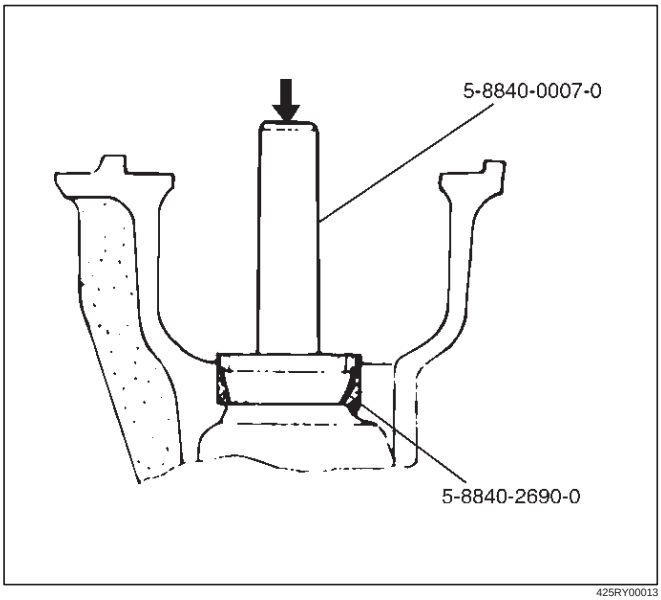

425RY00013

3. Adjust the drive pinion mounting distance as follows:
   1. Apply gear oil to the inner and outer drive pinion bearing. Clean the pinion setting gauge set. Then install the gauge set together with the inner and outer bearings.

   Install gauge plate 5–8840–2678–0 (3), inner pilot 5–8840–2680–0 (2) ,bolt and nut 5–8840–0127–0 (4) and outer pilot 5–8840–2681–0 (1) through inner and outer bearings.

   2. Tighten the nut to the specified torque.

   Torque: 2.3 N·m (23kg·cm/20 lb in)

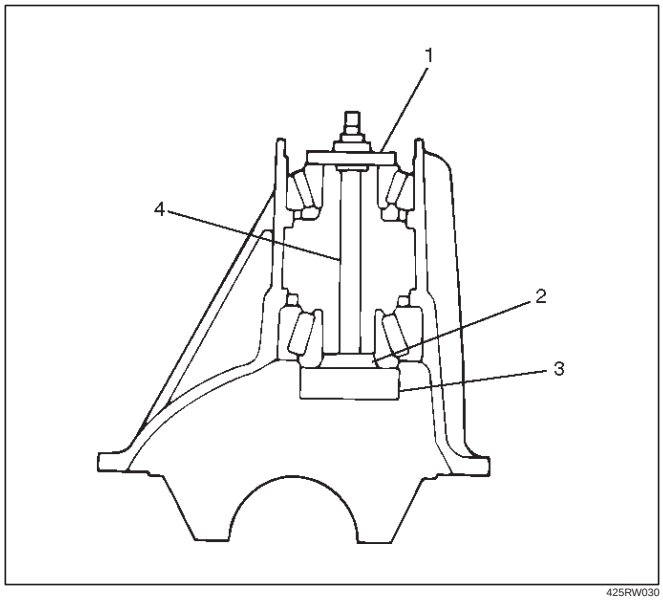

425RW030

   3. Clean the side bearing bores. Place discs and dial indicator on to arbor, and place tool into position in side bearing bores. Install and tighten the bearing caps to the specified torque.

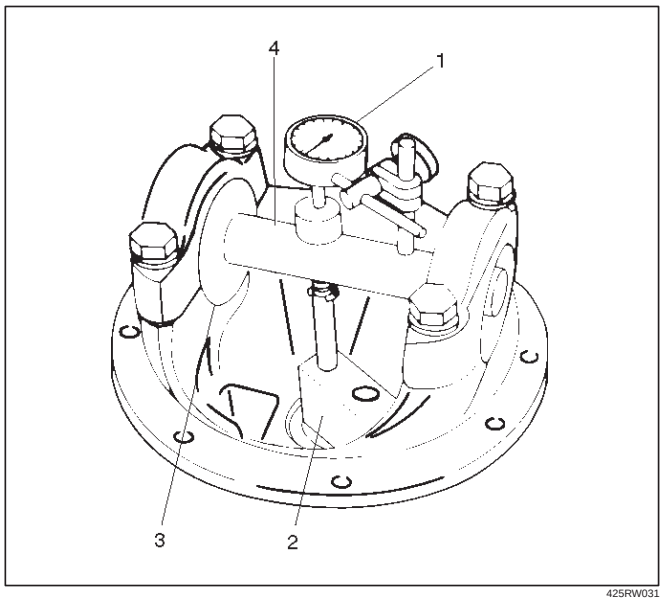

425RW031

Legend

(1) Dial Indicator: 5–8840–0126–0
(2) Gauge Plate: 5–8840–2678–0
(3) Disc (2 pcs.): 5–8840–2679–0
(4) Arbor: 5–8840–0128–0

4. Set the dial indicator 5–8840–0126–0 to “0”. Place it on the mounting post of the gauging arbor with the contact button touching the indicator pad. Force the dial indicator downward until the needle has made a half turn clockwise. Tighten down the dial indicator in this position.

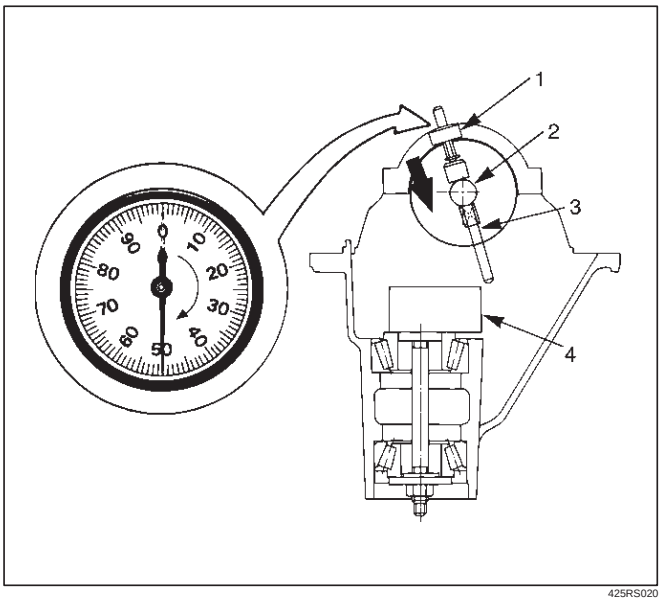

425RS020

Legend

(1) Dial Indicator
(2) Ganging Arbor
(3) Plunger
(4) Gauge Plate

5. Position the plunger on the gauge plate. Move the gauging arbor slowly back and forth and locate the position at which the dial indicator shows the greatest defection. At this point, once again set the dial indicator to “0”. Repeat the procedure to verify the “0” setting.

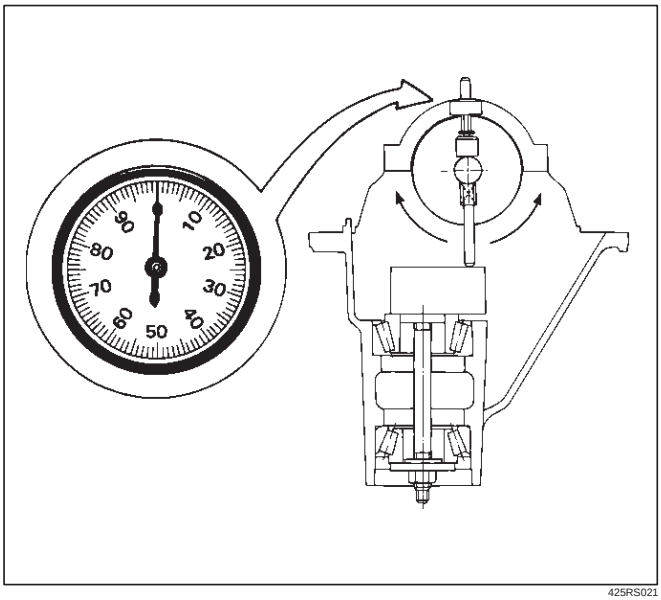

425RS021

6. After the ZERO setting is obtained, rotate the gauging arbor until the dial indicator rod does not touch the gauging plate. Record the number the dial indicator needle points to.

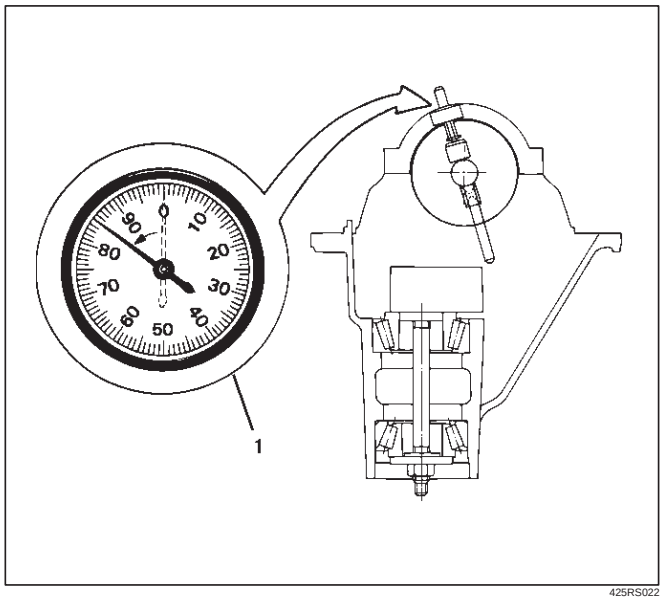

425RS022

Legend

(1) Example=Dial indicator reading od 0.085

7. Record the pinion depth code on the head of the drive pinion. The number indicates a necessary change in the pinion mounting distance. A plus number indicates the need for a greater mounting distance (which can be achieved by decreasing the shim thickness). A minus number indicates the need for a smaller mounting distance (which can be achieved by increasing the shim thickness). If examination reveals pinion depth code “0”, the pinion is “nominal”.

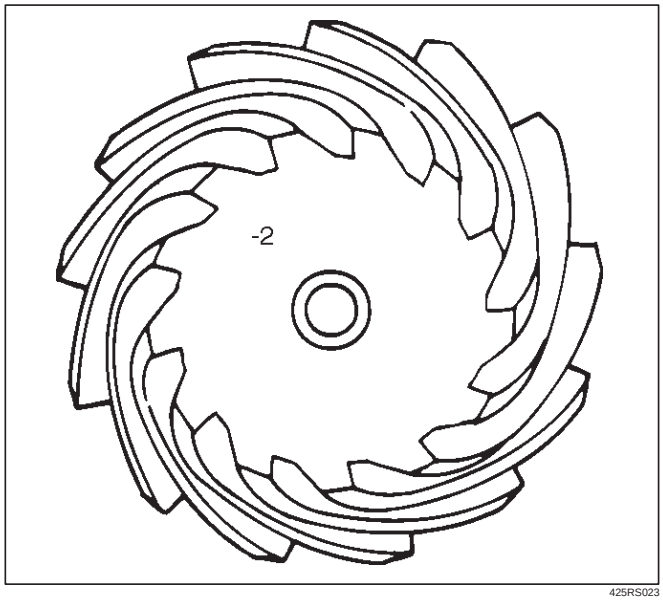

425RS023

8. Select the shim thickness using the chart;

Pinion marking Dial indicator reading (inches)	+10	+9	+8	+7	+6	+5	+4	+3	+2	+1	0	–1	–2	–3	–4	–5	–6	–7	–8	–9	–10
0.080																				2.12 (0.0835)	2.12 (0.0835)
0.081																	2.12 (0.0835)	2.12 (0.0835)	2.14 (0.0843)	2.14 (0.0843)	2.16 (0.0850)
0.082														2.12 (0.0835)	2.12 (0.0835)	2.14 (0.0843)	2.14 (0.0843)	2.16 (0.0850)	2.16 (0.0850)	2.18 (0.0858)	2.18 (0.0858)
0.083												2.12 (0.0835)	2.12 (0.0835)	2.14 (0.0843)	2.14 (0.0843)	2.16 (0.0850)	2.16 (0.0850)	2.18 (0.0858)	2.18 (0.0858)	2.20 (0.0866)	2.20 (0.0866)
0.084										2.12 (0.0835)	2.12 (0.0835)	2.14 (0.0843)	2.14 (0.0843)	2.16 (0.0850)	2.16 (0.0850)	2.18 (0.0858)	2.18 (0.0858)	2.20 (0.0866)	2.20 (0.0866)	2.22 (0.0874)	2.22 (0.0874)
0.085							2.12 (0.0835)	2.12 (0.0835)	2.14 (0.0843)	2.14 (0.0843)	2.16 (0.0850)	2.16 (0.0850)	2.18 (0.0858)	2.18 (0.0858)	2.20 (0.0866)	2.20 (0.0866)	2.22 (0.0874)	2.22 (0.0874)	2.24 (0.0822)	2.24 (0.0822)	2.26 (0.0890)
0.086				2.12 (0.0835)	2.12 (0.0835)	2.14 (0.0843)	2.14 (0.0843)	2.16 (0.0850)	2.16 (0.0850)	2.18 (0.0858)	2.18 (0.0858)	2.20 (0.0866)	2.20 (0.0866)	2.22 (0.0874)	2.22 (0.0874)	2.24 (0.0882)	2.24 (0.0882)	2.26 (0.0890)	2.26 (0.0890)	2.28 (0.0898)	2.28 (0.0898)
0.087		2.12 (0.0835)	2.12 (0.0835)	2.14 (0.0843)	2.14 (0.0843)	2.16 (0.0850)	2.16 (0.0850)	2.18 (0.0858)	2.18 (0.0858)	2.20 (0.0866)	2.20 (0.0866)	2.22 (0.0874)	2.22 (0.0874)	2.24 (0.0882)	2.24 (0.0882)	2.26 (0.0890)	2.26 (0.0890)	2.28 (0.0898)	2.28 (0.0898)	2.30 (0.0905)	2.30 (0.0905)
0.088	2.14 (0.0843)	2.14 (0.0843)	2.16 (0.0850)	2.16 (0.0850)	2.18 (0.0858)	2.18 (0.0858)	2.20 (0.0866)	2.20 (0.0866)	2.22 (0.0874)	2.22 (0.0874)	2.24 (0.0882)	2.24 (0.0882)	2.26 (0.0890)	2.26 (0.0890)	2.28 (0.0898)	2.28 (0.0898)	2.30 (0.0905)	2.30 (0.0905)	2.32 (0.0914)	2.32 (0.0914)	2.34 (0.0921)
0.089	2.16 (0.0850)	2.18 (0.0858)	2.18 (0.0858)	2.20 (0.0866)	2.20 (0.0866)	2.22 (0.0874)	2.22 (0.0874)	2.24 (0.0882)	2.24 (0.0882)	2.26 (0.0890)	2.26 (0.0890)	2.28 (0.0898)	2.28 (0.0898)	2.30 (0.0905)	2.30 (0.0905)	2.32 (0.0914)	2.32 (0.0914)	2.34 (0.0921)	2.34 (0.0921)	2.36 (0.0929)	2.36 (0.0929)
0.090	2.18 (0.0858)	2.20 (0.0866)	2.20 (0.0866)	2.22 (0.0874)	2.22 (0.0874)	2.24 (0.0882)	2.24 (0.0882)	2.26 (0.0890)	2.26 (0.0890)	2.28 (0.0898)	2.28 (0.0898)	2.30 (0.0905)	2.30 (0.0905)	2.32 (0.0914)	2.32 (0.0914)	2.34 (0.0921)	2.34 (0.0921)	2.36 (0.0929)	2.36 (0.0929)	2.38 (0.0937)	2.38 (0.0937)
0.091	2.20 (0.0866)	2.22 (0.0874)	2.22 (0.0874)	2.24 (0.0882)	2.24 (0.0882)	2.26 (0.0890)	2.26 (0.0890)	2.28 (0.0898)	2.28 (0.0898)	2.30 (0.0905)	2.30 (0.0905)	2.32 (0.0914)	2.32 (0.0914)	2.34 (0.0921)	2.34 (0.0921)	2.36 (0.0929)	2.36 (0.0929)	2.38 (0.0937)	2.38 (0.0937)	2.40 (0.0945)	2.40 (0.0945)
0.092	2.24 (0.0882)	2.24 (0.0882)	2.26 (0.0890)	2.26 (0.0890)	2.28 (0.0898)	2.28 (0.0898)	2.30 (0.0905)	2.30 (0.0905)	2.32 (0.0914)	2.32 (0.0914)	2.34 (0.0921)	2.34 (0.0921)	2.36 (0.0929)	2.36 (0.0929)	2.38 (0.0937)	2.38 (0.0937)	2.40 (0.0945)	2.40 (0.0945)	2.42 (0.0953)	2.42 (0.0953)	2.44 (0.0961)
0.093	2.26 (0.0890)	2.28 (0.0898)	2.28 (0.0898)	2.30 (0.0905)	2.30 (0.0905)	2.32 (0.0914)	2.32 (0.0914)	2.34 (0.0921)	2.34 (0.0921)	2.36 (0.0929)	2.36 (0.0929)	2.38 (0.0937)	2.38 (0.0937)	2.40 (0.0945)	2.40 (0.0945)	2.42 (0.0953)	2.42 (0.0953)	2.44 (0.0961)	2.44 (0.0961)	2.46 (0.0969)	2.46 (0.0969)
0.094	2.28 (0.0898)	2.30 (0.0905)	2.30 (0.0905)	2.32 (0.0914)	2.32 (0.0914)	2.34 (0.0921)	2.34 (0.0921)	2.36 (0.0929)	2.36 (0.0929)	2.38 (0.0937)	2.38 (0.0937)	2.40 (0.0945)	2.40 (0.0945)	2.42 (0.0953)	2.42 (0.0953)	2.44 (0.0961)	2.44 (0.0961)	2.46 (0.0969)	2.46 (0.0969)	2.48 (0.0977)	2.48 (0.0977)
0.095	2.30 (0.0905)	2.32 (0.0914)	2.32 (0.0914)	2.34 (0.0921)	2.34 (0.0921)	2.36 (0.0929)	2.36 (0.0929)	2.38 (0.0937)	2.38 (0.0937)	2.40 (0.0945)	2.40 (0.0945)	2.42 (0.0953)	2.42 (0.0953)	2.44 (0.0961)	2.44 (0.0961)	2.46 (0.0969)	2.46 (0.0969)	2.48 (0.0977)	2.48 (0.0977)	2.50 (0.0987)	2.50 (0.0987)
0.096	2.34 (0.0921)	2.34 (0.0921)	2.36 (0.0929)	2.36 (0.0929)	2.38 (0.0937)	2.38 (0.0937)	2.40 (0.0945)	2.40 (0.0945)	2.42 (0.0953)	2.42 (0.0953)	2.44 (0.0961)	2.44 (0.0961)	2.46 (0.0969)	2.46 (0.0969)	2.48 (0.0977)	2.48 (0.0977)	2.50 (0.0987)	2.50 (0.0987)	2.52 (0.0992)	2.52 (0.0992)	2.54 (0.1000)
0.097	2.36 (0.0929)	2.38 (0.0937)	2.38 (0.0937)	2.40 (0.0945)	2.40 (0.0945)	2.42 (0.0953)	2.42 (0.0953)	2.44 (0.0961)	2.44 (0.0961)	2.46 (0.0969)	2.46 (0.0969)	2.48 (0.0977)	2.48 (0.0977)	2.50 (0.0984)	2.50 (0.0984)	2.52 (0.0992)	2.52 (0.0922)	2.54 (0.1000)	2.54 (0.1000)	2.56 (0.1008)	2.56 (0.1008)
0.098	2.38 (0.0937)	2.40 (0.0945)	2.40 (0.0945)	2.42 (0.0953)	2.42 (0.0953)	2.44 (0.0961)	2.44 (0.0961)	2.46 (0.0969)	2.46 (0.0969)	2.48 (0.0977)	2.48 (0.0977)	2.50 (0.0984)	2.50 (0.0984)	2.52 (0.0992)	2.52 (0.0922)	2.54 (0.1000)	2.54 (0.1000)	2.56 (0.1008)	2.56 (0.1008)	2.58 (0.1016)	2.58 (0.1016)
0.099	2.42 (0.0953)	2.42 (0.0953)	2.44 (0.0961)	2.44 (0.0961)	2.46 (0.0969)	2.46 (0.0969)	2.48 (0.0977)	2.48 (0.0977)	2.50 (0.0984)	2.50 (0.0984)	2.52 (0.0992)	2.52 (0.0922)	2.54 (0.1000)	2.54 (0.1000)	2.56 (0.1008)	2.56 (0.1008)	2.58 (0.1016)	2.58 (0.1016)			
0.000	2.44 (0.0961)	2.46 (0.0969)	2.46 (0.0969)	2.48 (0.0977)	2.48 (0.0977)	2.50 (0.0984)	2.50 (0.0984)	2.52 (0.0992)	2.52 (0.0922)	2.54 (0.1000)	2.54 (0.1000)	2.56 (0.1008)	2.56 (0.1008)	2.58 (0.1016)	2.58 (0.1016)						
0.001	2.46 (0.0969)	2.48 (0.0977)	2.48 (0.0977)	2.50 (0.0984)	2.50 (0.0984)	2.52 (0.0992)	2.52 (0.0922)	2.54 (0.1000)	2.54 (0.1000)	2.56 (0.1008)	2.56 (0.1008)	2.58 (0.1016)	2.58 (0.1016)								
0.002	2.48 (0.0977)	2.50 (0.0984)	2.50 (0.0984)	2.52 (0.0992)	2.52 (0.0922)	2.54 (0.1000)	2.54 (0.1000)	2.56 (0.1008)	2.56 (0.1008)	2.58 (0.1016)	2.58 (0.1016)										
0.003	2.52 (0.0992)	2.52 (0.0922)	2.54 (0.1000)	2.54 (0.1000)	2.56 (0.1008)	2.56 (0.1008)	2.58 (0.1016)	2.58 (0.1016)													
0.004	2.54 (0.1000)	2.56 (0.1008)	2.56 (0.1008)	2.58 (0.1016)	2.58 (0.1016)																
0.005	2.56 (0.1008)	2.58 (0.1016)	2.58 (0.1016)																		
0.006	2.58 (0.1016)																				

4. Place the shim (1) on the drive pinion, then install the inner bearing (2) onto the pinion by using installer 5–8840–2574–0 and a press .

NOTE: Do not apply pressure to the roller cage. Apply pressure only to the inner race.

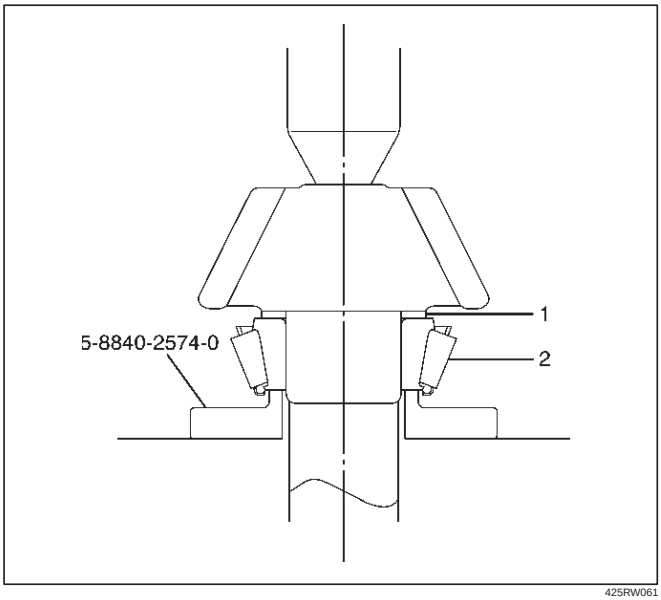

425RW061

5. Install collapsible spacer. Discard the used collapsible spacer and install a new one.
6. Install drive pinion shaft assembly.
7. Install outer bearing and oil seal slinger.
8. Use oil seal installer 5–8840–2165–0 to install a new oil seal that has grease on seal lip.

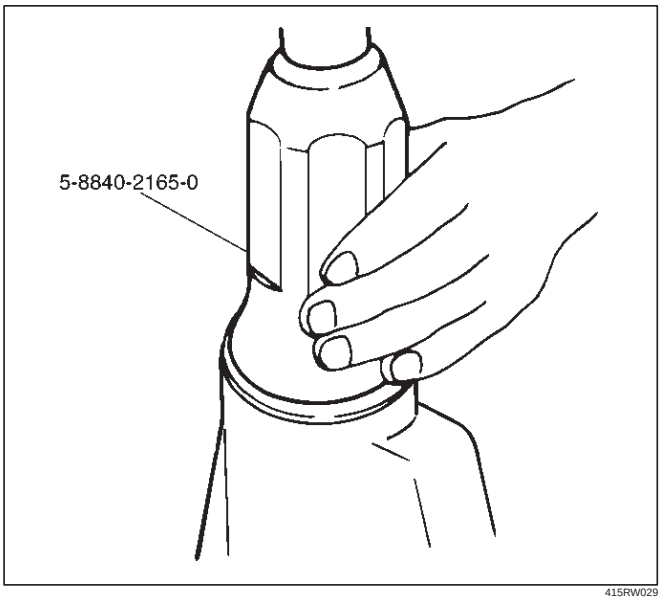

415RW029

9. Install flange assembly.
10. Install flange nut and washer.
    1. Apply lubricant to the pinion threads.
    2. Using the pinion flange holder 5–8840–0133–0, tighten the nut only enough to remove the shaft end play.

NOTE: Discard used flange nut and install new one.

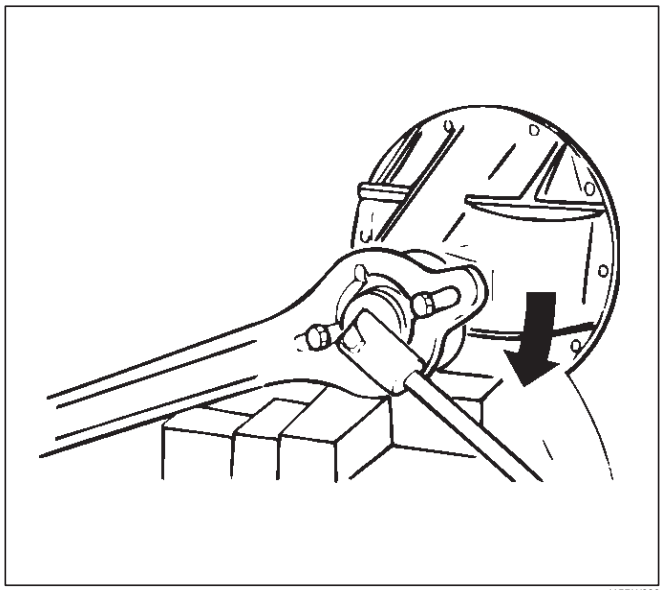

415RW006

3. Adjust pinion bearing preload.
   a. Measure the bearing preload by using a torque meter and note the scale reading required to rotate the flange.
   b. Continue tightening flange nut until the specified starting torque is obtained.

Starting torque: 1.1–1.6 N·m (11–16kg·cm/10–14 lb in)

NOTE:

a. Do not overtighten or loosen and then retighten the nut.
b. Pinion nut torque should be in the range of 298–380 N·m (30.4–38.8kg·m/220–281 lb ft).

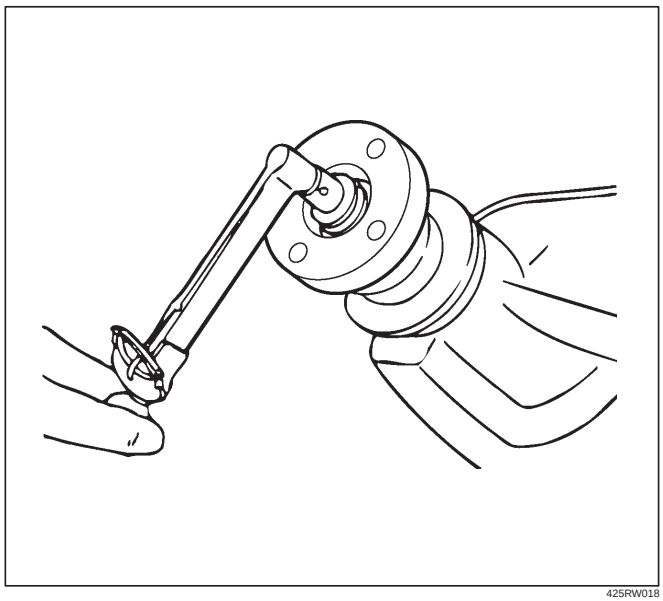

425RW018

4. Using punch 5–8840–2293–0, stake the flange nut at two points.

NOTE: When staking, be sure to turn the nut to ensure that there is no change in bearing preload. Make sure of preload again as instructed in 3).

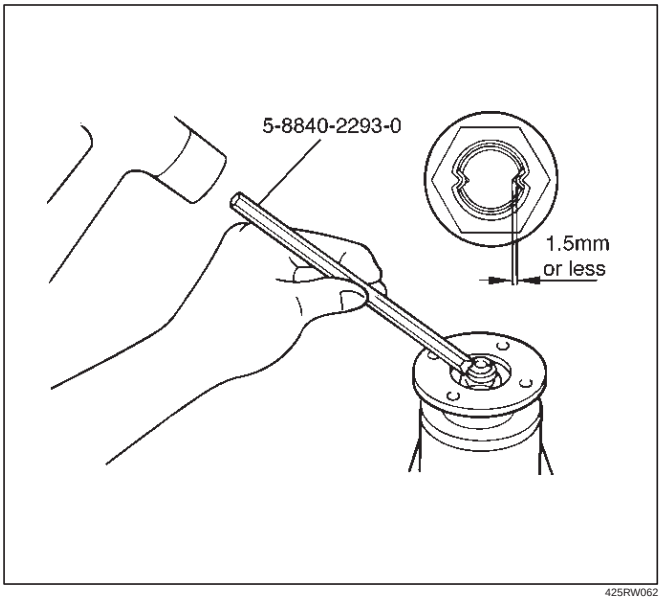

425RW062

11. Adjust ring gear backlash.
    1. Attach the side bearing to the differential assembly without shims by using installer 5–8840–2050–0 and grip 5–8840–0007–0.

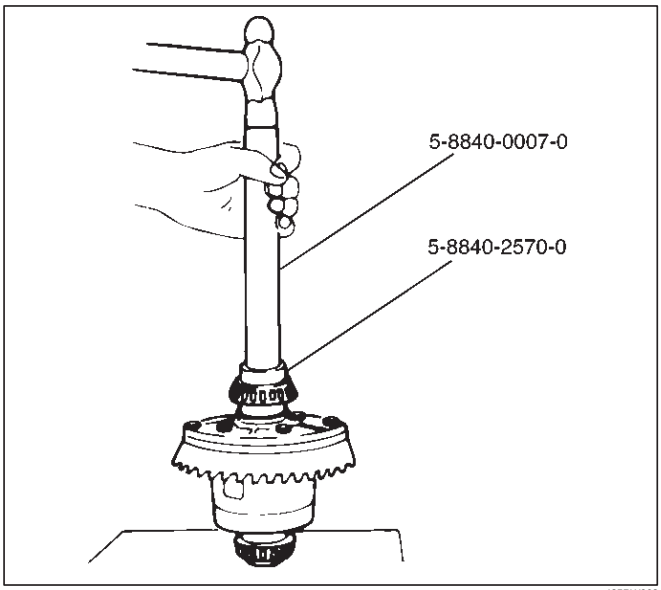

425RW063

2. Insert the differential cage assembly with bearing outer races into the side bearing bores of the carrier.

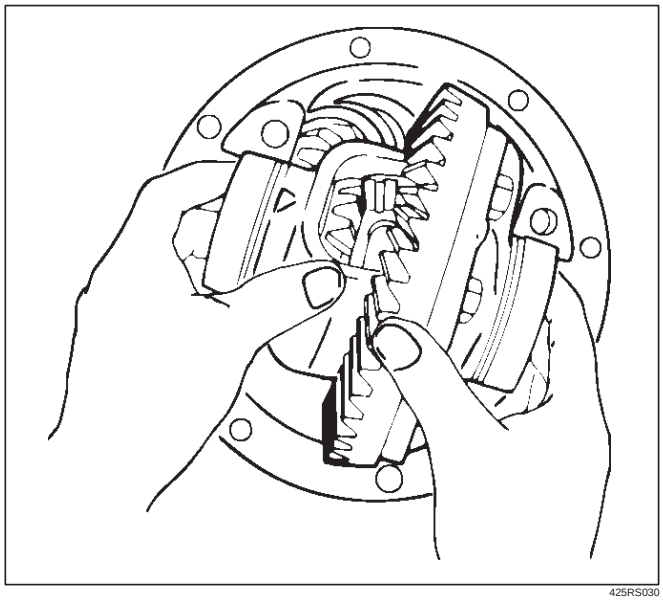

425RS030

3. Using two sets of feeler gauges, insert a feeler stock of sufficient thickness between each bearing outer race and the carrier to remove all end play. Make certain the feeler stock is pushed to the bottom of the bearing bores.

Mount the dial indicator 5–8840–0126–0 on the carrier so that the indicator stem is at right angles to a tooth on the ring gear.

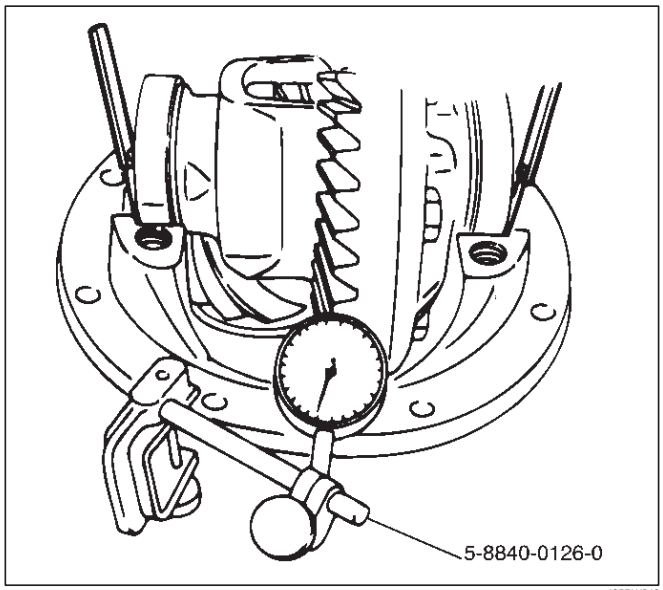

425RW049

4. Adjust feeler gauge thickness from side to side until ring gear backlash is in the specified range.

Backlash: 0.13– 0.2mm (0.005– 0.008in)

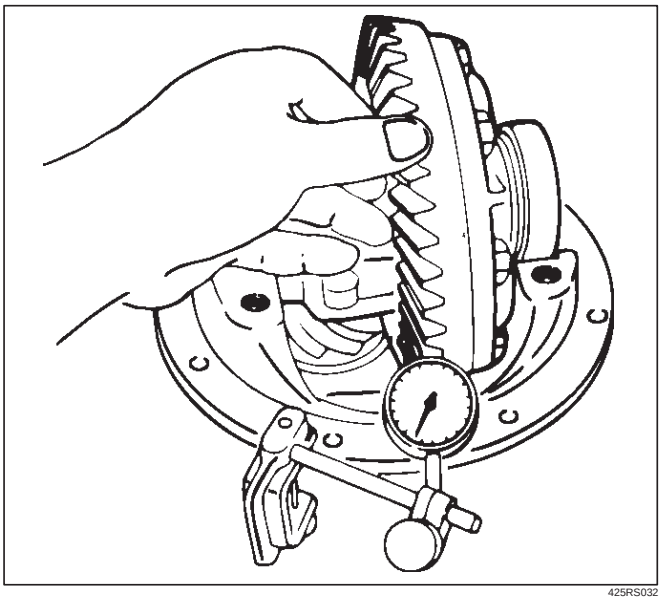

425RS032

With zero end play and correct backlash established, remove the feeler gauge packs, determine the thickness of the shims required and add 0.05 mm (0.002 in) to each shim pack to provide side bearing preload. Always use new shims.

5. Remove side bearing by using remover 5–8840–2587–0 and adapter 5–8840–2576–0.

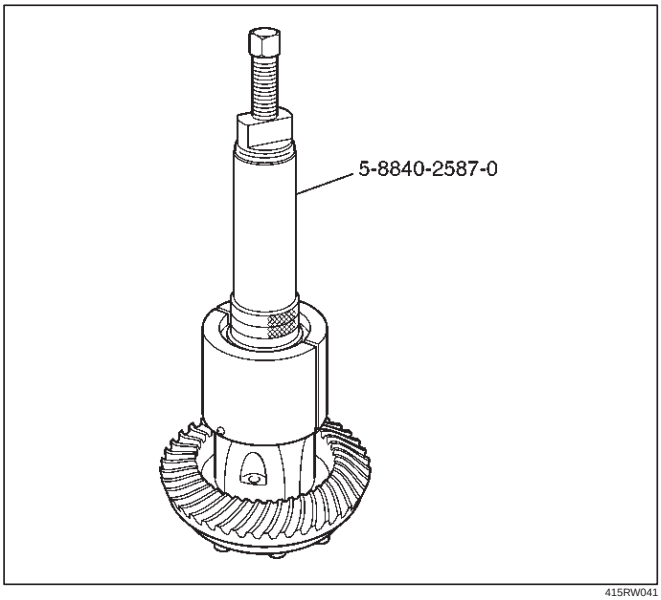

415RW041

12. Install the side bearings together with the selected shims by using installer 5–8840–2050–0 (2) and grip 5–8840–0007–0 (1).

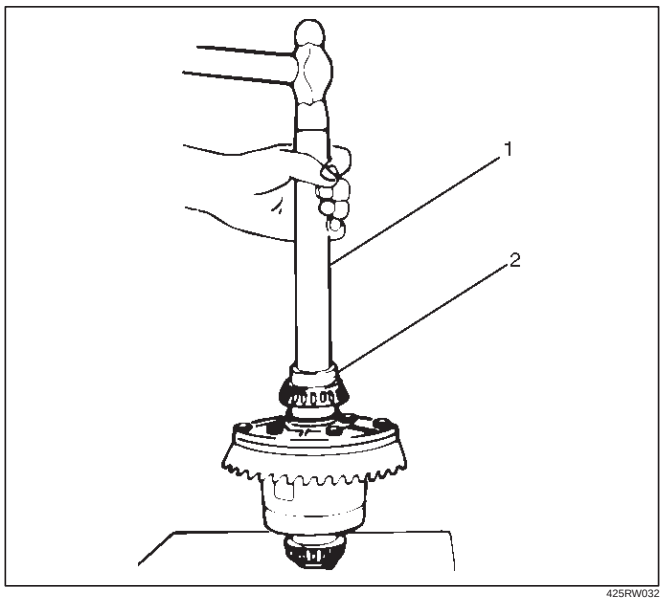

425RW032

13. Install side bearing outer race.
14. Install differential cage assembly.
15. Align the setting marks (1) applied at disassembly then install the bearing cap.

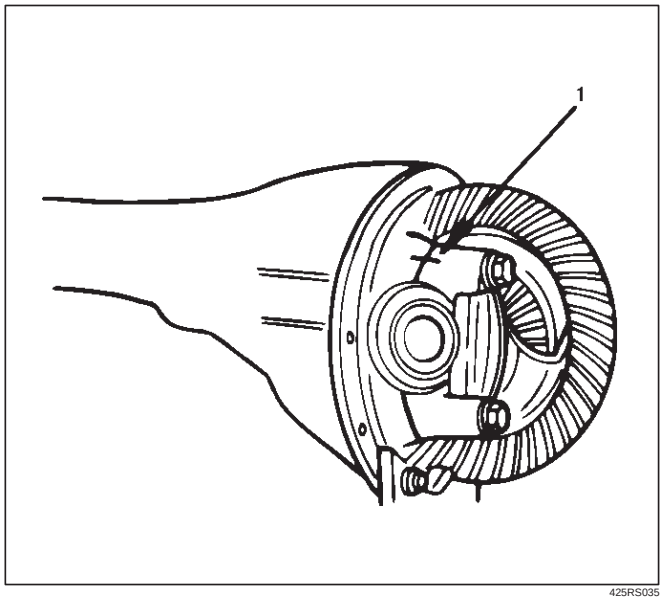

425RS035

16. Tighten the bolt to the specified torque.

Torque:108N·m (11.0kg·m/80 lb ft)

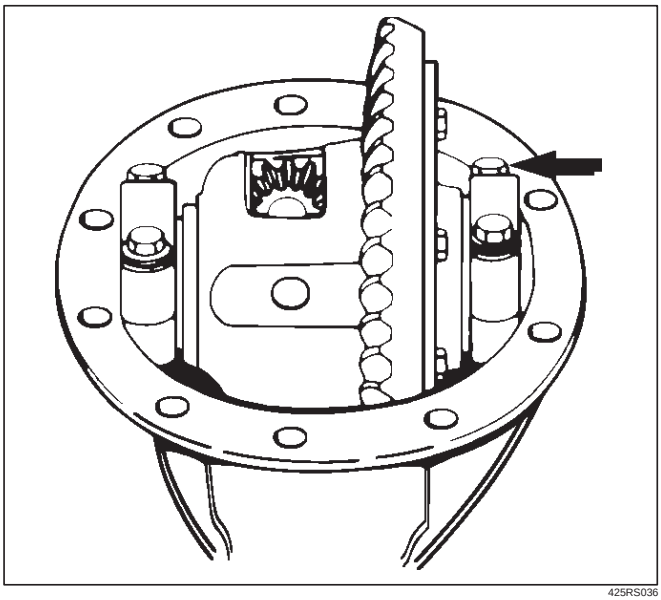

425RS036

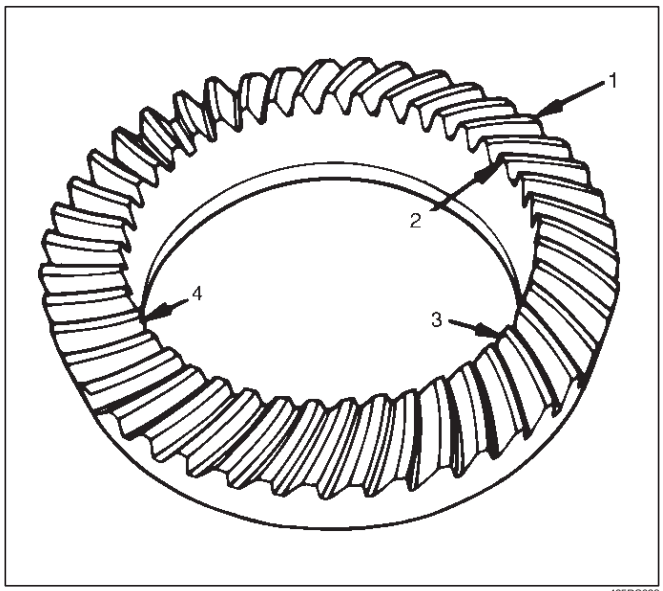

425RS038

Legend

(1) Heel
(2) Toe
(3) Concave Side(Coast)
(4) Convex Side(Drive)

Gear Tooth Contact Pattern Check and Adjustment

1. Apply a thin coat of Prussian blue or equivalent to the faces of the 7–8 teeth of the ring gear. Check the impression of contact on the ring gear teeth and make necessary adjustment as described in illustration if the contact is abnormal.

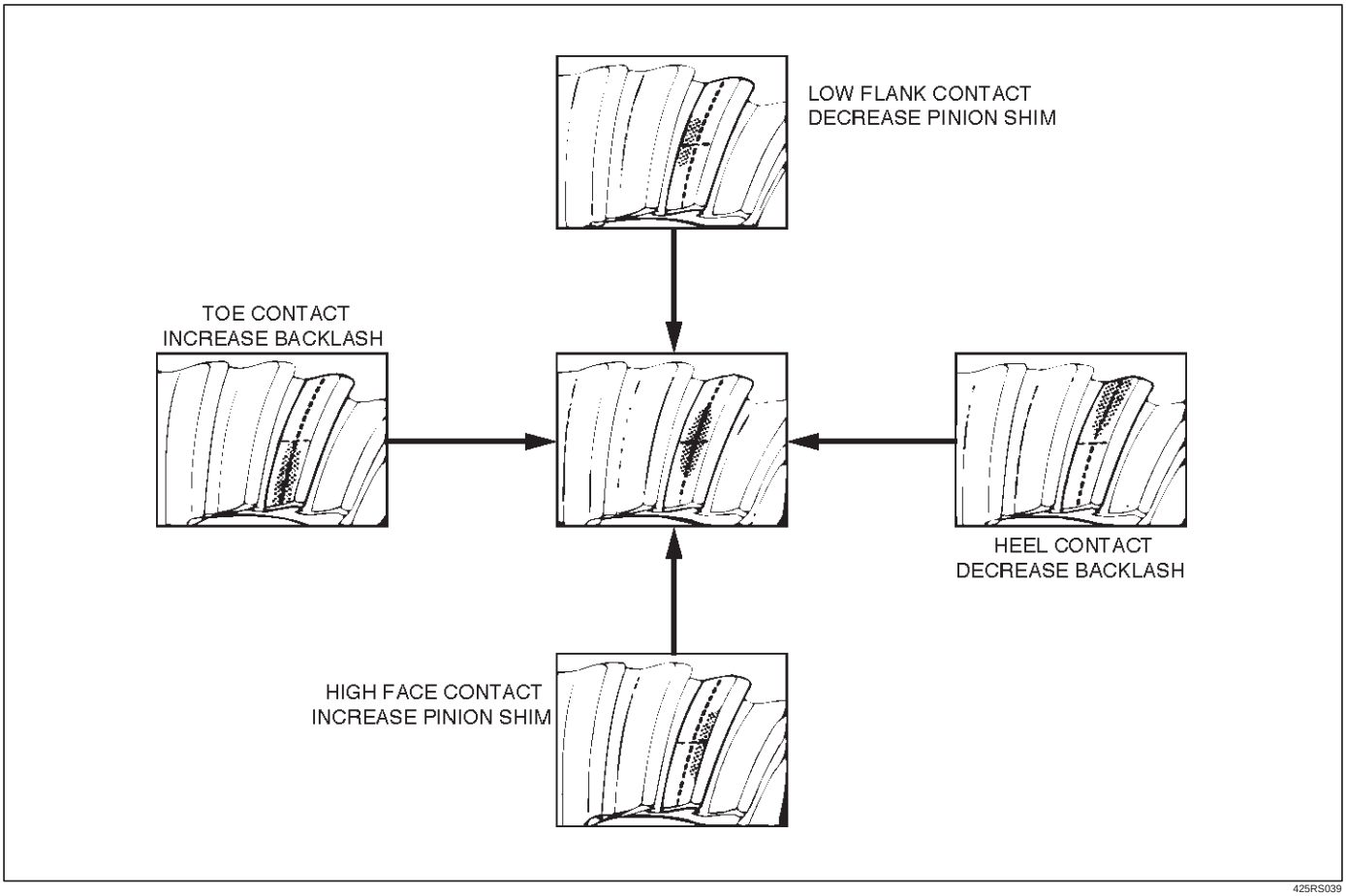

425RS039

Differential Cage Assembly

Disassembled View

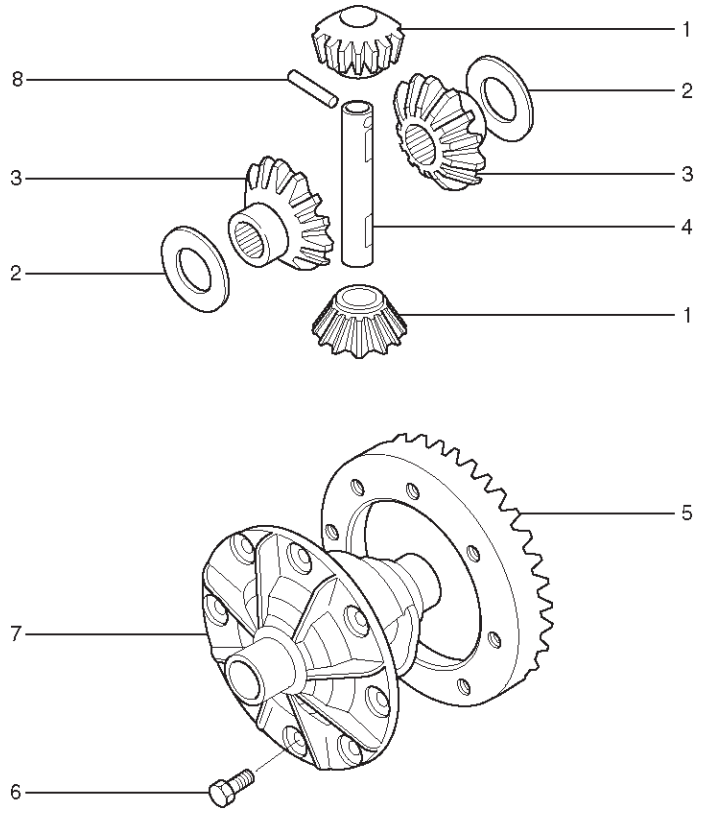

415RY00001

Legend

(1) Pinion Mate Gear
(2) Thrust Washer(for Side Gear)
(3) Side Gear
(4) Differential Shaft
(5) Ring Gear
(6) Bolt
(7) Differention Cage
(8) Lock Pin

Disassembly

1. Remove bolt.
2. Remove ring gear.
3. Remove lock pin using a small drift.

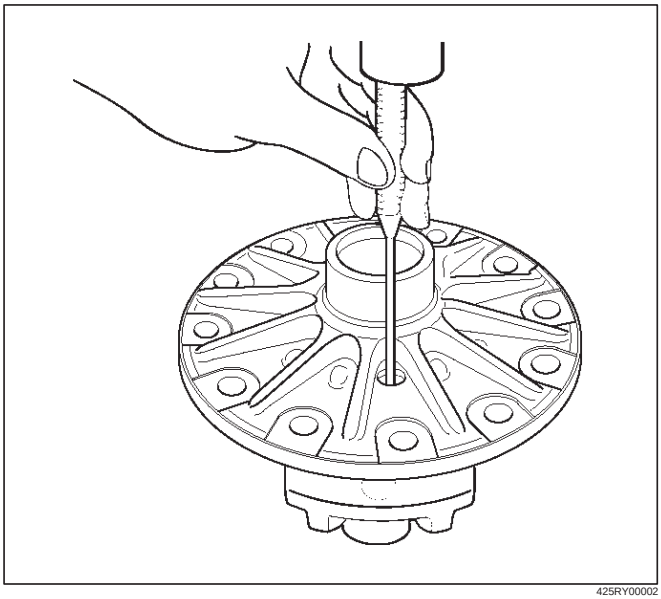

425RY00002

4. Remove the differential shaft by using a hard metal rod and a hammer.

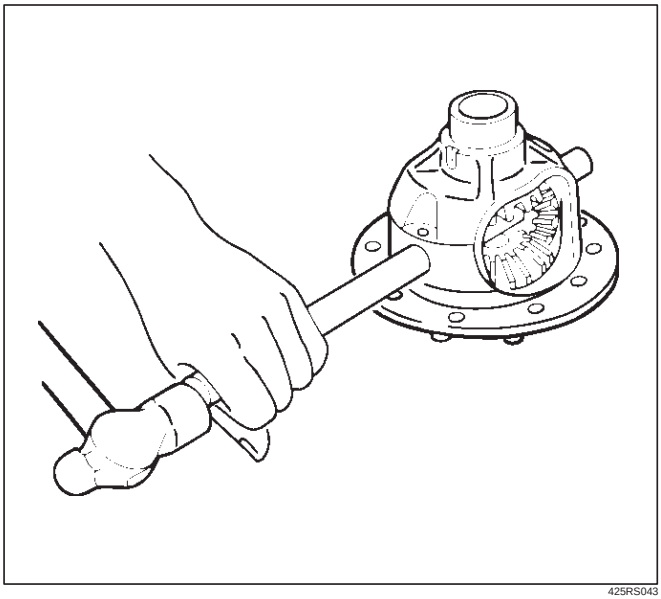

425RS043

5. Remove pinion mate gear and thrust washer.
6. Remove side gear and thrust washer.

Inspection and Repair

Make necessary correction or parts replacement if wear, damage, corrosion or any other abnormal conditions are found through inspection.
Check the following parts:

- Ring gear, pinion gear
- Bearing
- Side gear, pinion mate gear, differential shaft
- Differential cage, carrier
- Thrust washer
- Oil seal

Ring gear replacement:

1. The ring gear should always be replaced with the drive pinion as a set.
2. Clean the ring gear threaded holes to remove the locking argent.
3. Discard used bolts and install new ones.
4. When installing the ring gear, apply LOCTITE 271 or equivalent to all the threaded area and ha of the unthreaded area of the bolt.

   Torque: 127N·m (13.0kg·m/94 lb ft)

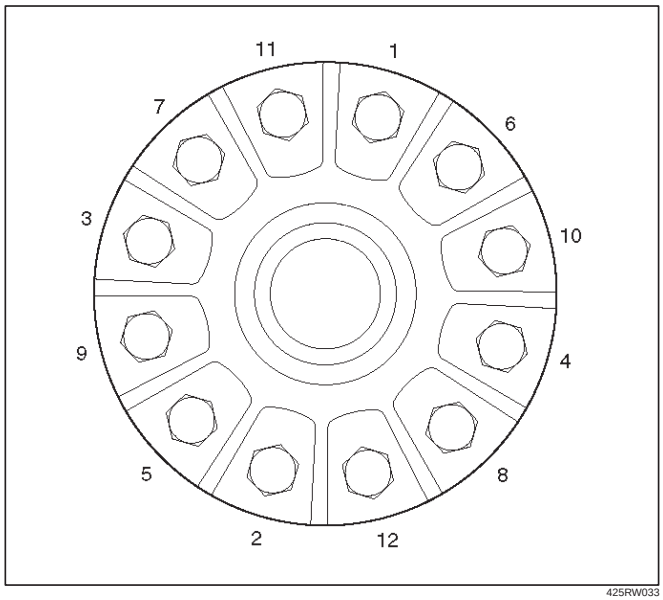

425RW033

Clearance between the differential pinion and the pinion shaft measurement.

Standard: 0.07 – 0.13 mm (0.003 – 0.005 in)

Limit: 0.2 mm (0.008 in)

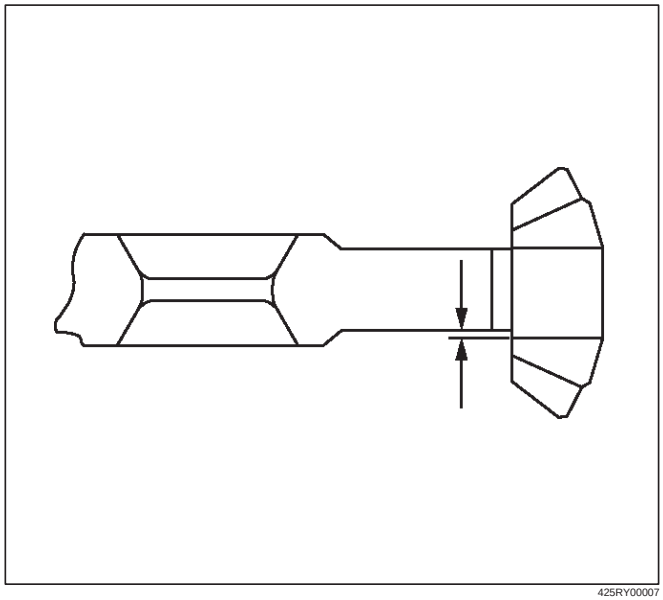

425RY00007

Clearance between the side gear and the differential box.

Standard: 0.032 – 0.105 mm (0.001 – 0.004 in)

Limit: 0.105 mm (0.004 in)

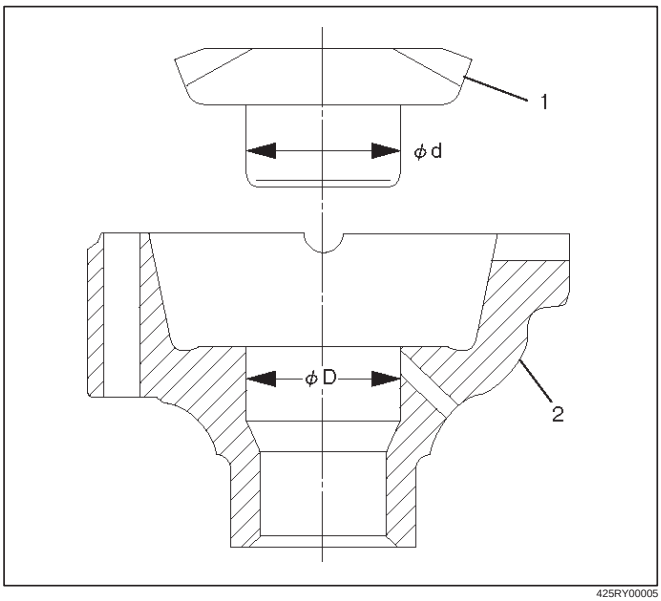

425RY00005

Legend

(1) Side gear
(2) Differential box

Play in splines between the side gear and the axle shaft.

Standard: 0.07 – 0.38 mm (0.003 – 0.014 in)

Limit: 0.5 mm (0.02 in)

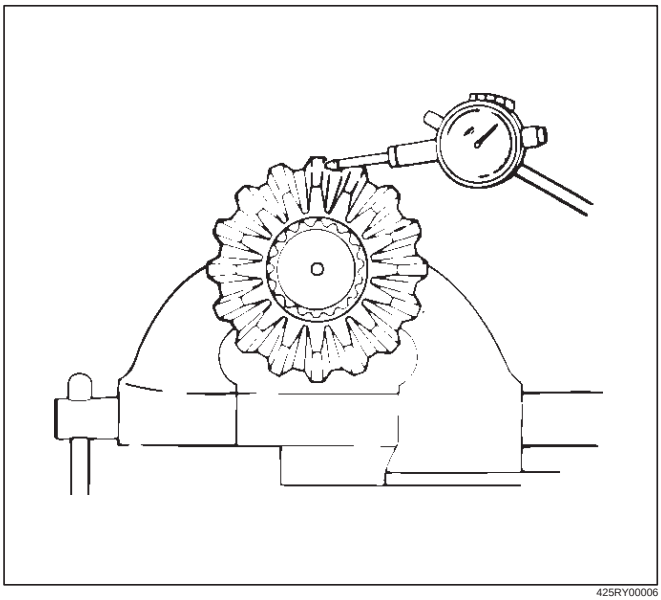

425RY00006

Reassembly

Differential cage
Thrust washer
Side gear
Pinion gear

1. Install the pinion gear by engaging it with the side gears while turning both pinion gears simultaneously in the same direction.
2. Install the pinion mate gear with thrust washer by engaging it with the side gears while turning both pinion mate gears simultaneously in the same direction.

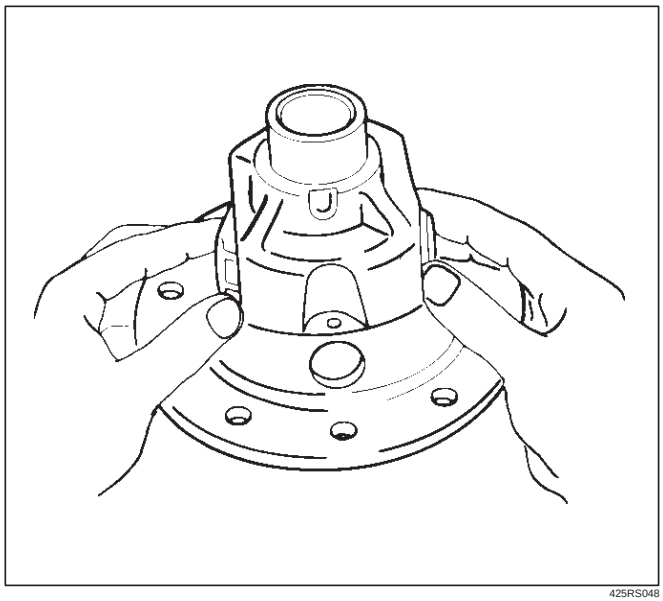

425RS048

3. Install differential shaft.
   1. Be sure to install the differential shaft so that it is in alignment with the lock pin hole in the differential cage.

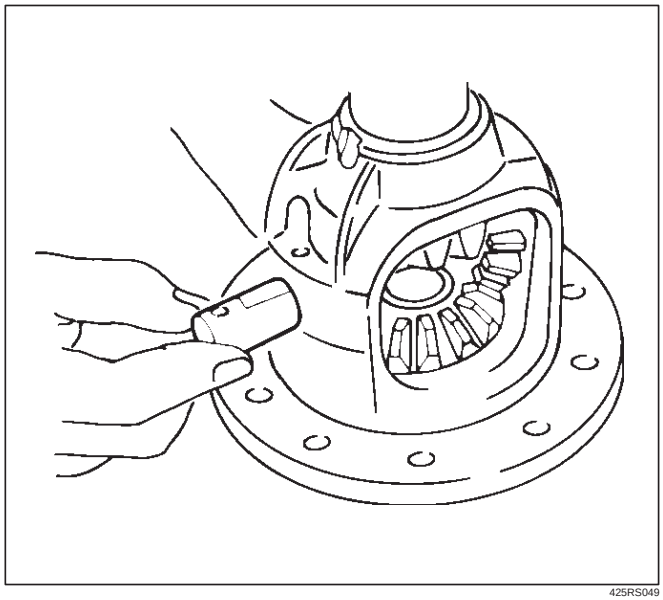

425RS049

2. Adjust the backlash between the side gear and the pinion gear.

Backlash: 0.15 – 0.20 mm (0.006 – 0.008 in)

Thickness of thrust washers available

mm	0.80	0.90	1.00	1.10	1.20	1.30
in	0.031	0.035	0.039	0.043	0.047	0.051

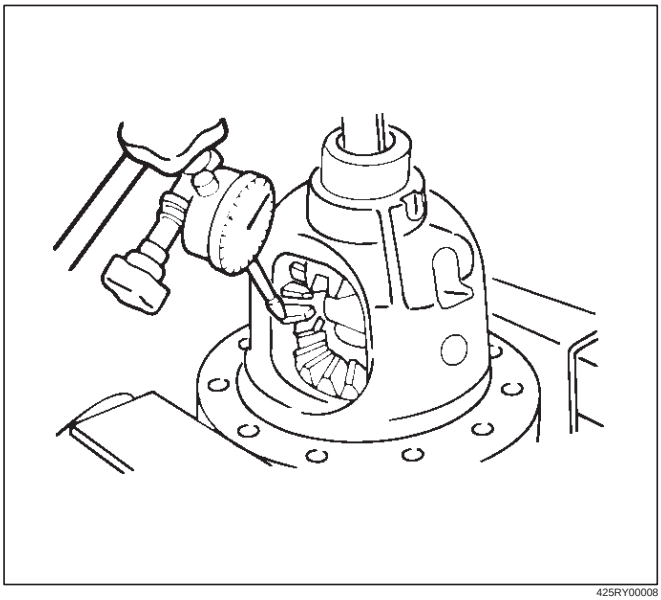

425RY00008

4. Install lock pin.
   - Install the lock pin using small drift.

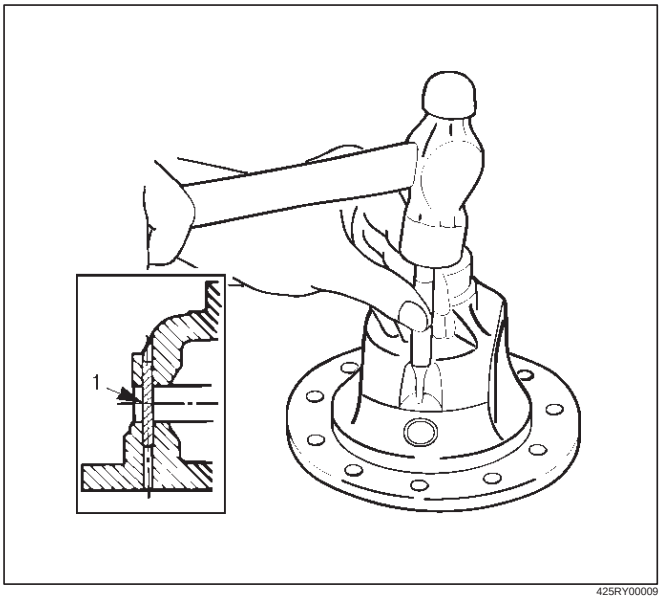

425RY00009

5. Install exciter ring (If equipped with rear wheel antilock).
   - Press the exciter ring on the differential cage using the ring gear as a pilot.

NOTE: Discard used exciter ring and install new one.

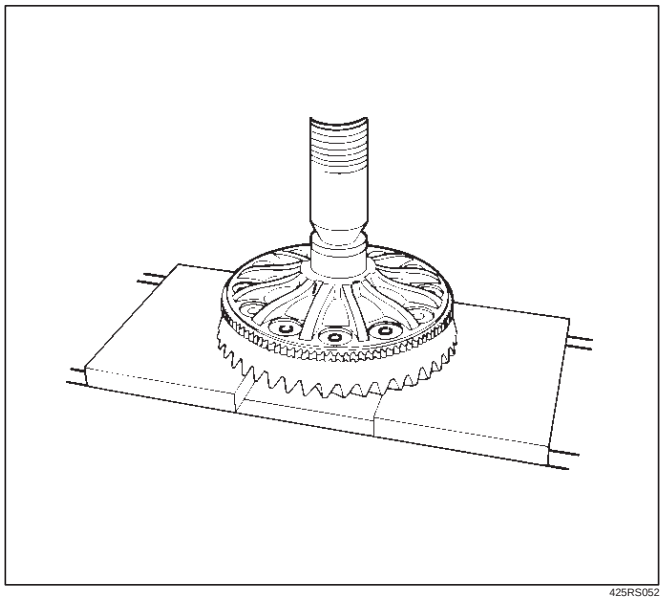

425RS052

6. Tighten the bolts in diagonal sequence as illustrated.

Torque: 127N·m (13.0kg·m/94 lb ft)

NOTE: Discard used bolts and install new ones.

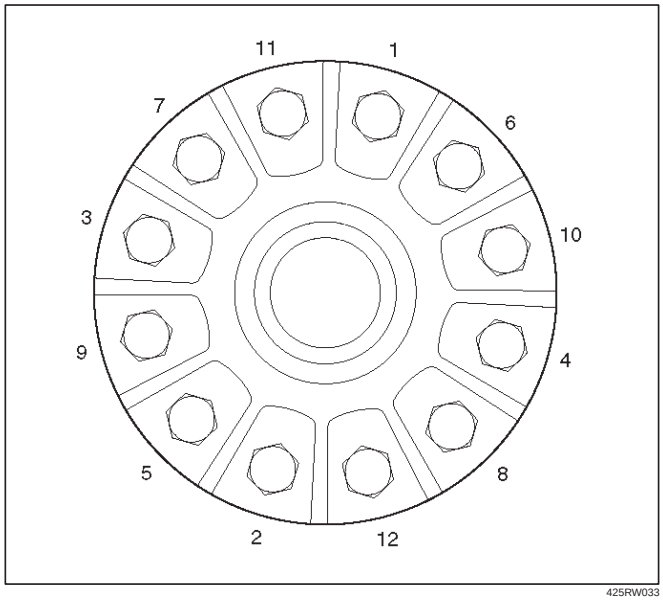

425RW033

Limited Slip Differential

Disassembled View

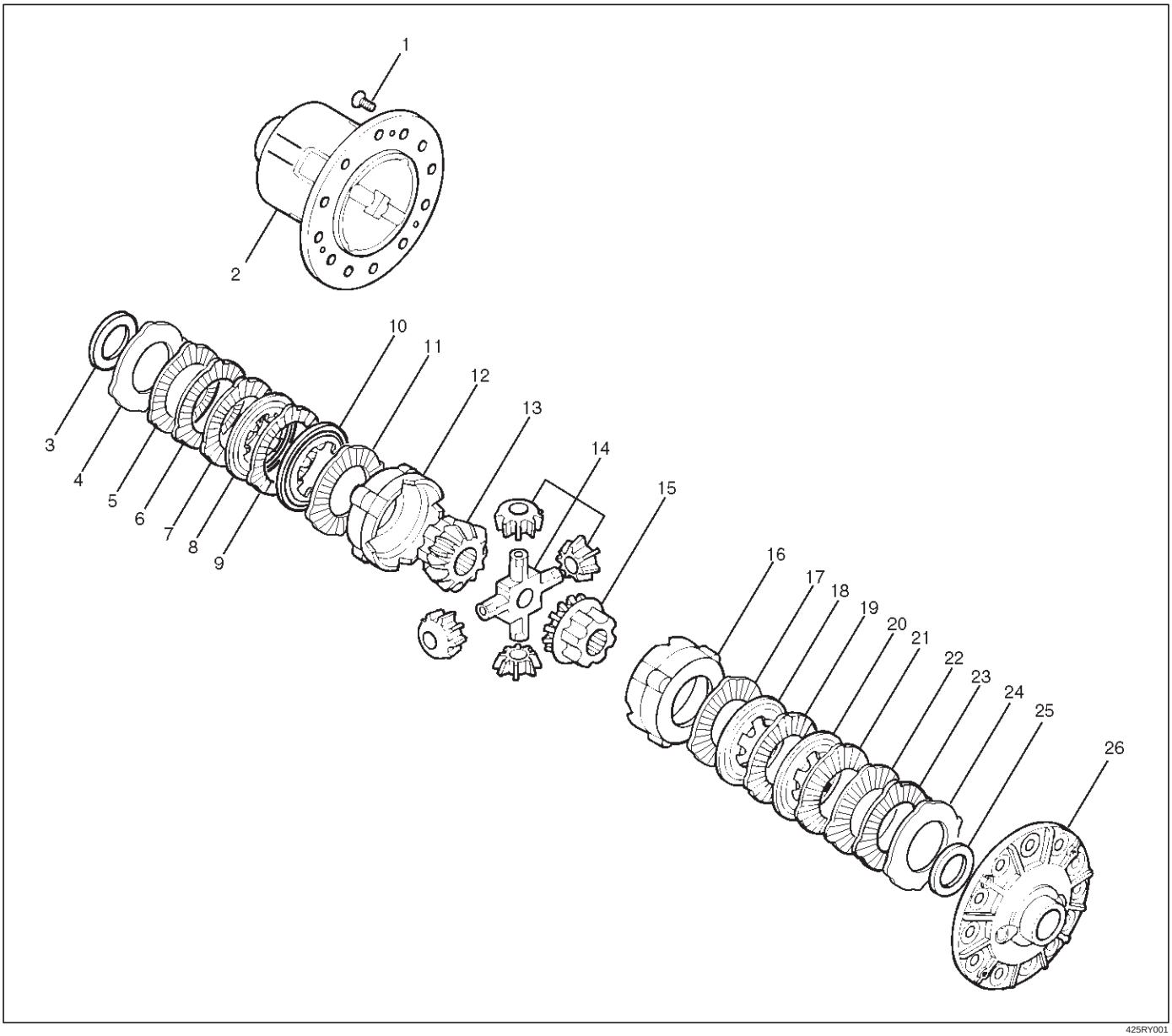

425RY001

Legend

(1) Screw
(2) Differential cage A
(3) Thrust washer
(4) Spring disc
(5) Friction Plate
(6) Friction plate
(7) Friction Plate
(8) Friction disc
(9) Friction Plate
(10) Friction disc
(11) Friction Plate
(12) Pressure ring
(13) Side gear
(14) Pinion and Pinion shaft
(15) Side gear
(16) Pressure ring
(17) Friction Plate
(18) Friction disc
(19) Friction Plate
(20) Friction disc
(21) Friction Plate
(22) Friction Plate
(23) Friction Plate
(24) Spring disc
(25) Thrust washer
(26) Differential cage B

Disassembly

Differential Cages A and B

1. To ensure installation of the parts in original position apply a setting mark before removing the differential cages A and B.
2. Using special tool, 5–8840–2682–0, grip it with a vice, and set the differential.

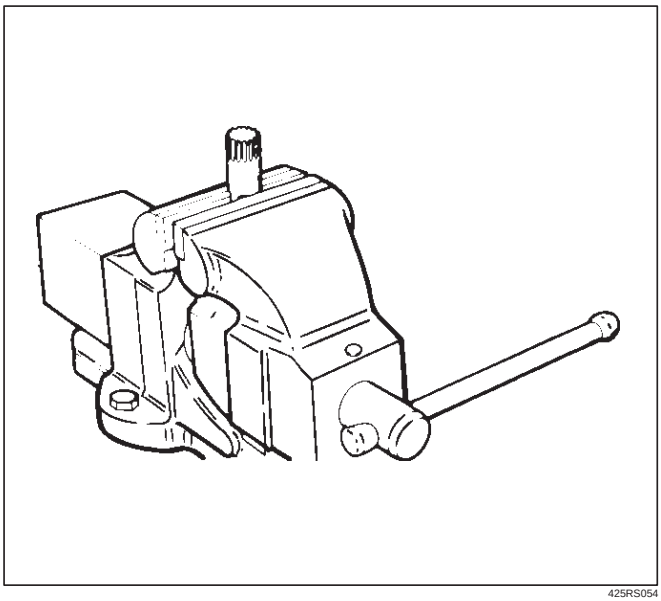

425RS054

3. Gradually and evenly loosen the 3 fixing screws of the differential cages A and B.

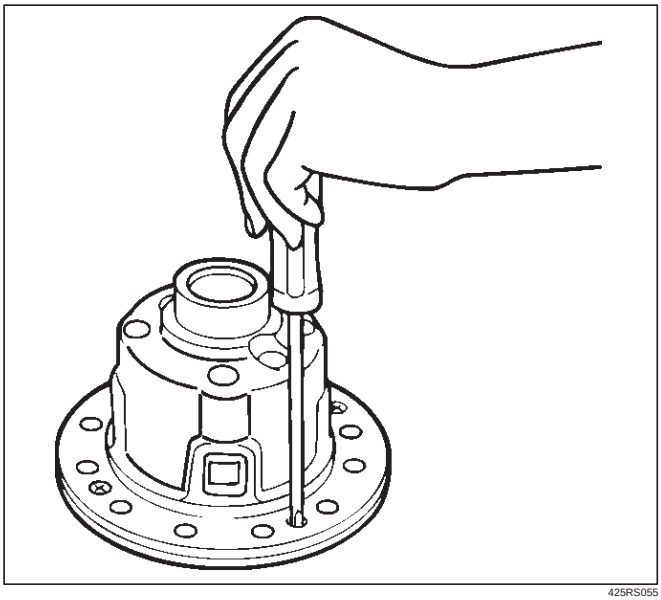

425RS055

4. Remove Differential cage A.
5. Remove Thrust washer.
6. Remove Spring disc.

NOTE: When removing the spring disc, friction disc, and friction plate, place them in order for clear distinction of left and right use.

7. Remove Spring disc.
8. Remove Friction plate.
9. Remove Friction plate.
10. Remove Friction disc.
11. Remove Friction plate.
12. Remove Friction disc.
13. Remove Friction plate.
14. Remove Pressure ring.
15. Remove Side gear.
16. Remove Pinion and pinion shaft.
17. Remove Side gear.
18. Remove Pressure ring.
19. Remove Friction plate.
20. Remove Friction disc.
21. Remove Friction plate.
22. Remove Friction disc.
23. Remove Friction plate.
24. Remove Friction plate.
25. Remove Friction plate.
26. Remove Friction disc.
27. Remove Thrust washer.
28. Remove Differential cage B.

Inspection and Repair

Make necessary correction or parts replacement if wear, damage, corrosion or any other abnormal condition is found through inspection.

Visual check

Check the following parts for wear, damage, noise or any other abnormal conditions.

- **Friction disc, friction plate and spring disc**

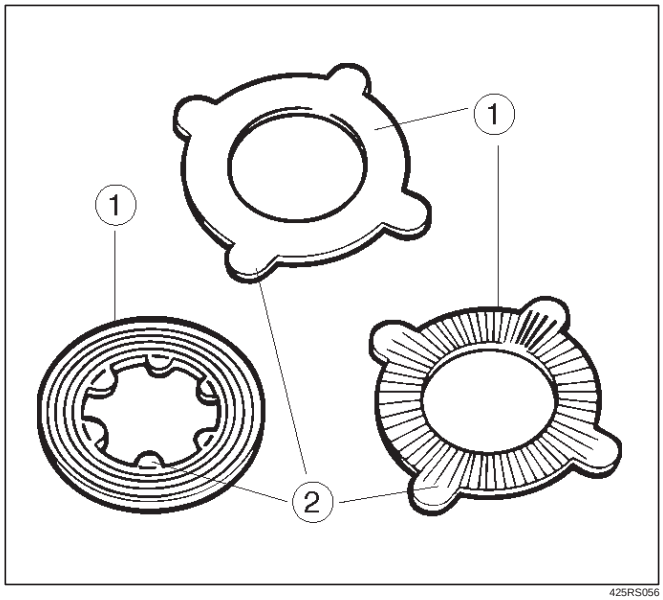

425RS056

Legend

(1) Sliding surfaces
(2) Projections

- **Pressure ring**

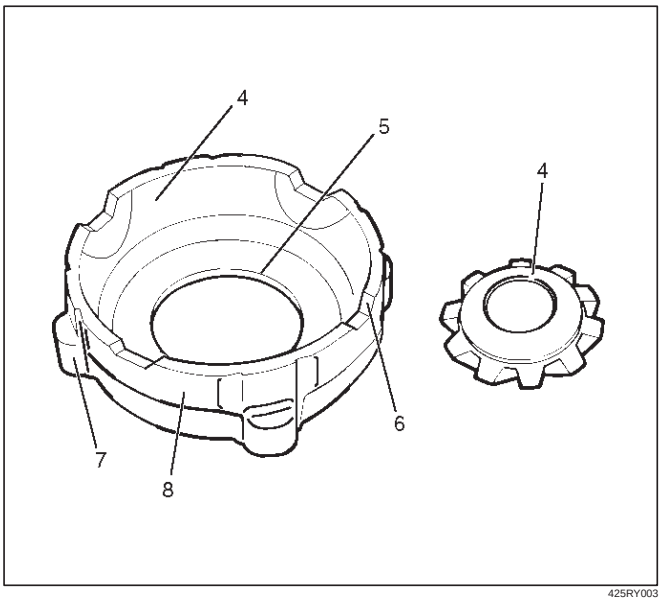

425RY003

Legend

(3) Sliding surface with the friction disc. When nicks or scratches are found, polish with an oil stone and repair on a level block using a compound.
(4) Sliding spherical surface with the pinion gear.
(5) Sliding surface with the side gear.
(6) V–shaped groove of the pressure ring and V –shaped section of the pinion shaft.
(7) Fitting section with the case.
(8) Face contacting the inner surface of the differential case. Repair burrs and nicks using an oil stone.

- **Thrust washer**

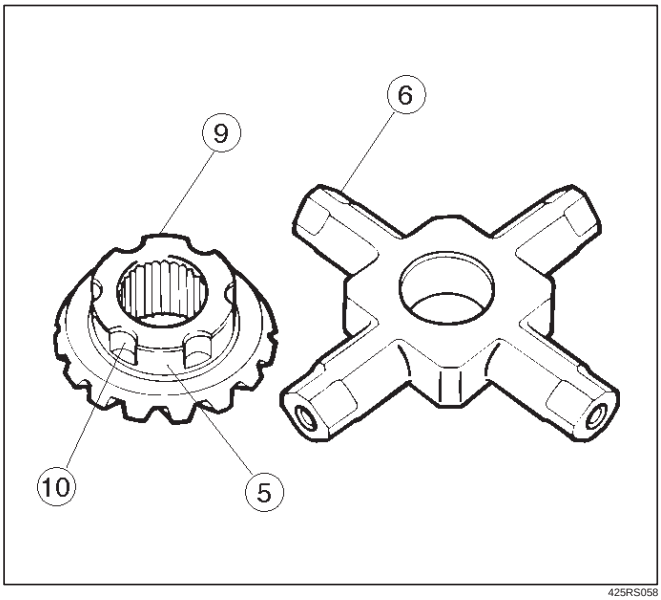

425RS058

Legend

(9) Sliding surface with the side gear or case.
(10) Peripheral groove of the side gear.
Repair light nicks and burrs using an oil stone.

- **Case**

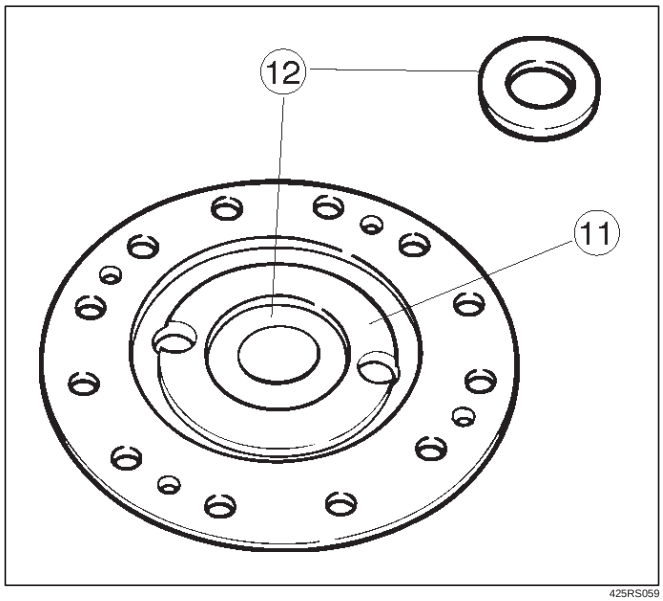

425RS059

Legend

(11) Contact surface with the spring disc.
(12) Inner groove of the differential cage B.
Repair light nicks and burrs using an oil stone.

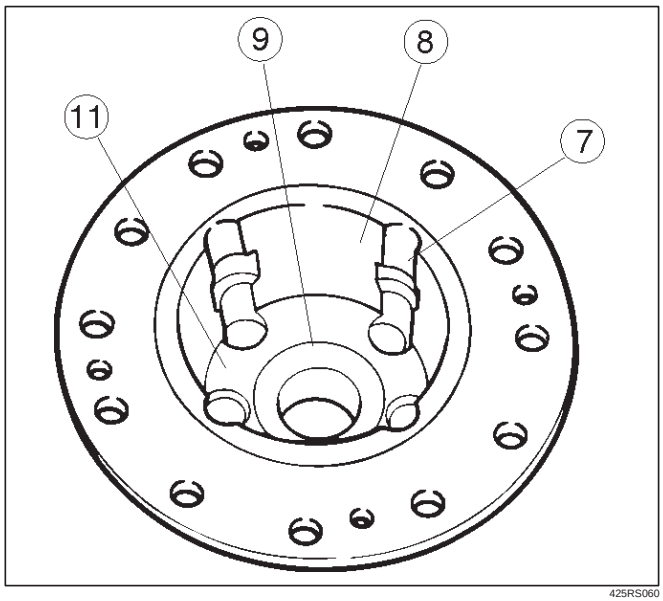

425RS060

Legend

(7) Fitting section with the case.
(8) Face contacting the inner surface of the differential case.
Repair burrs and nicks using an oil stone.
(9) Sliding surface with the side gear or case.
(11) Contact surface with spring disc.

Measure the Deformation of the friction disc & plate.

Limit: 0.1 mm (0.004 in)

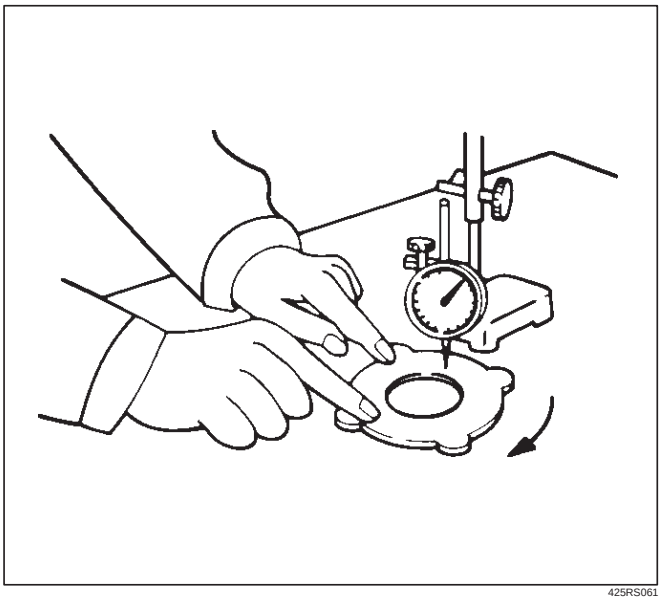

425RS061

Measure the wear of the friction plate & disc

Limit(A–B): 0.1 mm (0.004 in)

Remarks:

A=Inner or outer projections

B=Sliding surface subjected to abrasion

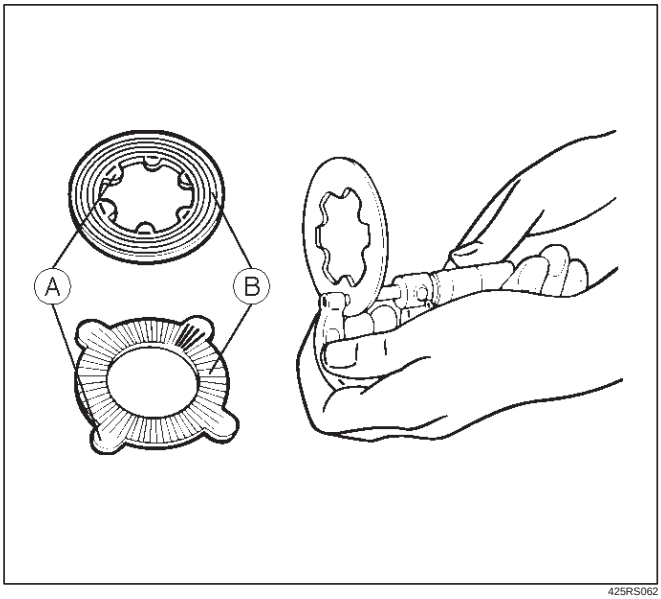

425RS062

Measure the wear of the thrust washer

Limit: 1.3 mm (0.05 in)

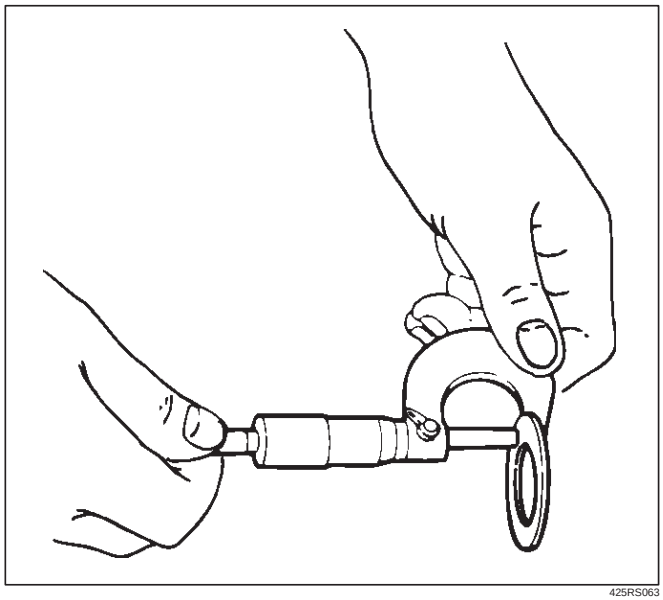

425RS063

Reassembly

Adjust the clearance between the friction disc and plate.

1. Measuring the depth of the differential cage.

Standard (A–B): 89.13 mm (3.51 in)

(C): 9.13 mm (0.36 in)

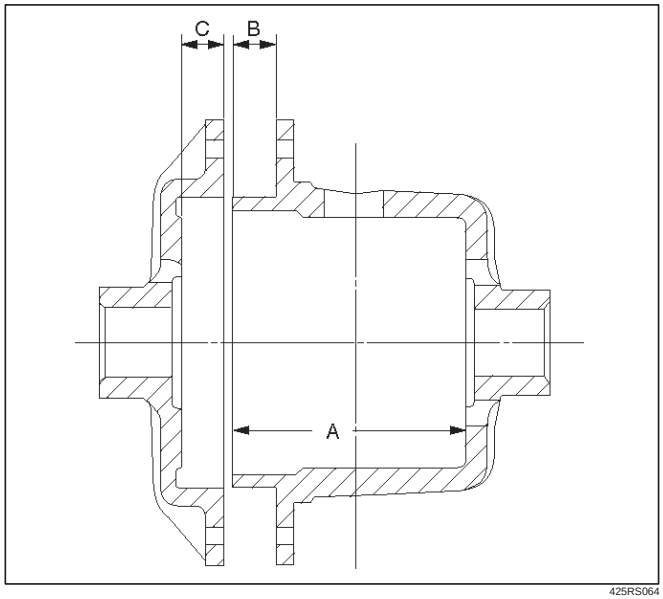

425RS064

2. Measuring the overall length of the pressurering, friction disc and friction plate.
   - Mount the pinion shaft in the pressurering and then install the friction disc & plate.
   - Measure the length between the plates over the V–groove. (D)

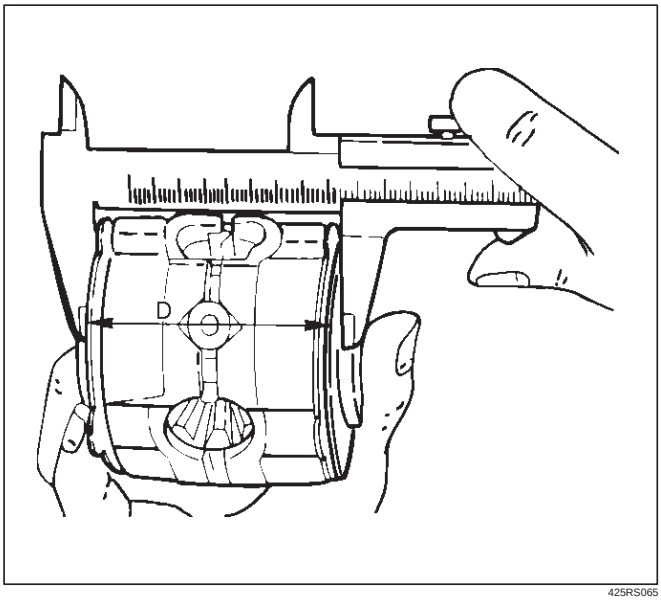

425RS065

3. After measuring dimensions A,B,C and D, make adjustment in the following manner:
   - Measure the thickness (E) of the spring disc.
     1.75mm (0.069in) ×2 discs
4. Select the friction disc & plate so as to satisfy the following equation:
   {(A-B)+C}-(D+E)=0.06-0.20mm (0.002-0.008in)
   Also, the total size difference of the friction disc & plate and spring disc should be 0.05mm (0.02in) or less.

Thickness
:1.65–1.75–1.85mm(0.065–0.069–0.073 in)

Backlash adjustment of the side gear in the direction of the shaft

1. Measuring the depth of the differential cage.

   (F–B): 95.63 mm (3.76 in)

   (G): 15.63 mm (0.62 in)

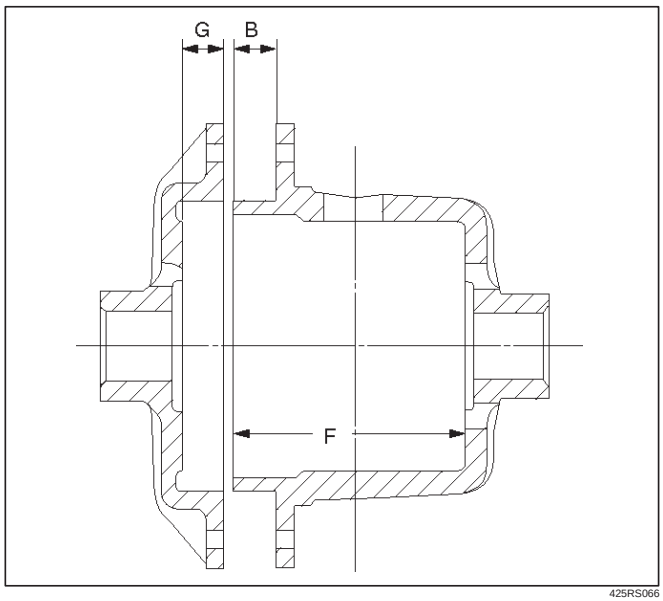

425RS066

2. Measuring the dimension between the thrust washers at both ends.
   - Assemble the side gear, pinion, pinion shaft, pressure ring and thrust washer, and pressing the pressure ring to–the pinion shaft in the direction of the shaft to make the clearance 0.
   - Have the side gear contact to the pinion to make the backlash 0.
   - Measure the dimension (H) between thrust washers at both ends.

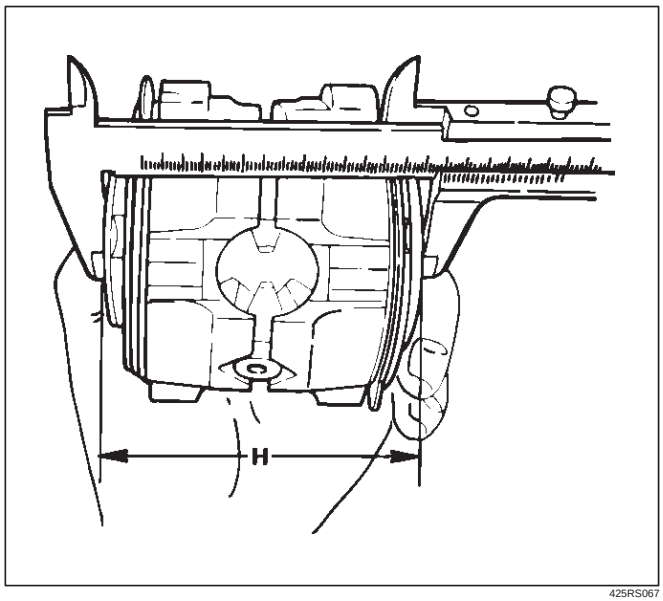

425RS067

3. After measuring dimensions of each of the above sections, proceed with the adjustment in the following manner:
   Adjust the clearance to satisfy the equation below.
   {(F – B) + G – H}=0.05 – 0.20 mm
   Also, select the thrust washers so that the dimensional difference between the back surfaces of the left and right pressure rings to the thrust washers is 0.05mm or less.

Thickness : 1.5mm (0.059 in)
1.6 mm(0.063 in)
1.7 mm(0.067 in)

NOTE: When assembling the parts, apply recommended gear oil sufficiently to each of the parts, especially, to the contact surfaces and sliding surfaces.

1. Install Differential cage B.
2. Install Thrust washer.
3. Install Spring disc.
   - When assembling the spring disc, make sure the mounting direction is correct as shown in figure.

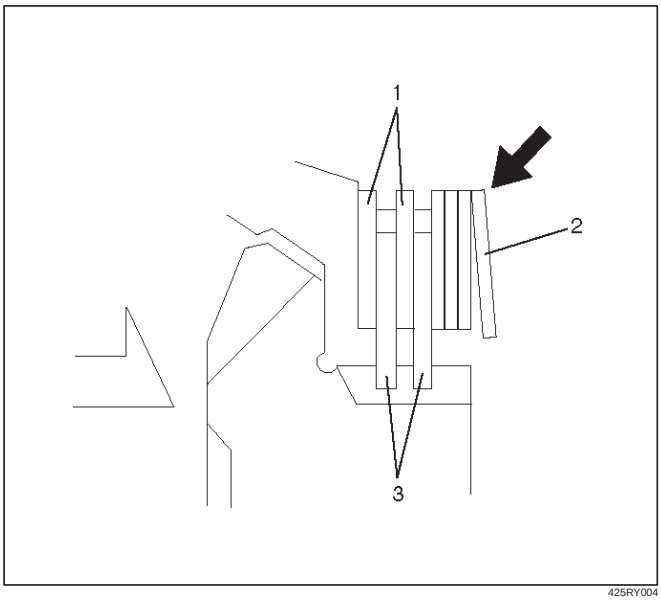

425RY004

Legend
(1) Friction Plate
(2) Spring Disc
(3) Friction Disc

4. Install Friction disc.
5. Install Friction plate.
6. Install Friction plate.
7. Install Friction disc.
8. Install Friction plate.
9. Install Friction disc.
10. Install Friction plate.
11. Install Pressure ring.
12. Install Side gear.
13. Install Pinion and pinion shaft.
14. Install Side gear.
15. Install Pressure ring.
16. Install Friction plate.
17. Install Friction disc.
18. Install Friction plate.
19. Install Friction disc.
20. Install Friction plate.
21. Install Friction plate.
22. Install Friction plate.
23. Install Spring disc.
    - When assembling the spring disc, make sure the mounting direction is correct.
24. Install Spring disc.
25. Install Thrust washer.
26. Install Differential cage A.
27. Install Screw.
    - Matching the guide marks of the differential cages A and B, tighten the screws evenly in the diagonal order.

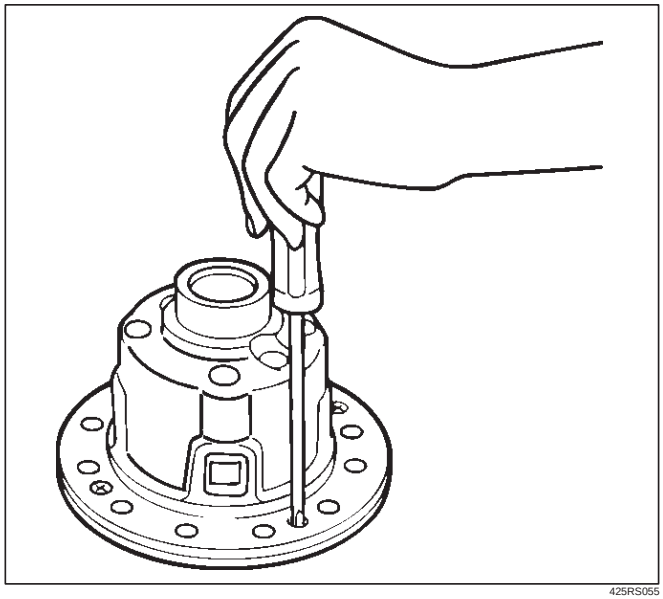
425RS055

28. Check the operation.
    - Measure the starting torque using the side gear holder.

    Starting torque:

    29 – 45 N·m (3.0 – 4.6 kg·m/ 22 – 33lb ft)

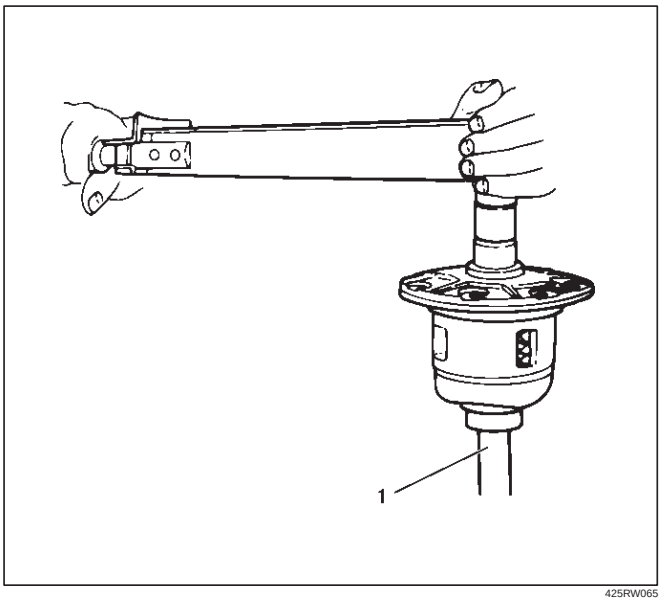

425RW065

Legend

(1) Side Gear Holder : 5–8840–2381–0

Main Data and Specifications

General Specifications

Rear axle	
Type	Banjo, Semi–floating
Rear axle Size	244 mm (9.61 in)
Gear type	Hypoid
Gear ratio (to 1)	4.100(6VE1 with A/T) 4.300(6VE1 with M/T,4JX1)
Differential type	Pinion (STD), Four pinion (LSD)
Lubricant Grade	GL–5: (Standard differential)
	GL–5, LSD: (Limited slip differential)
Locking Differential Lubricant	80W90 GL–5 Limited Slip Differential Gear Lubricant together with Limited Slip Differential Lubricant Additive (Part No. 8–01052–358–0) or equivalent.
Capacity	3.0 liter (2.6 Imp qt/3.2 US qt)

Torque Specifications

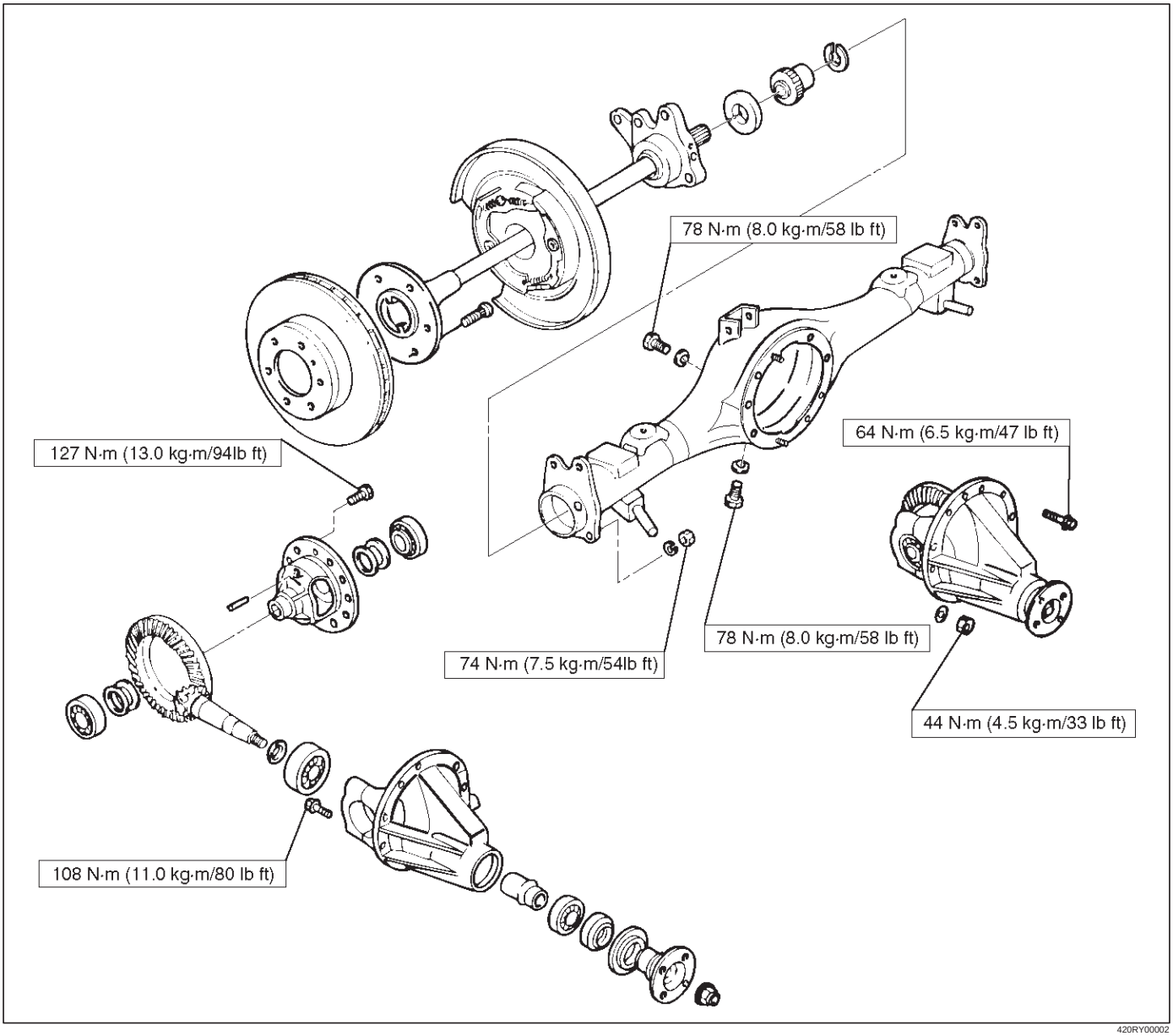

420RY00002

Special Tools

ILLUSTRATION	TOOL NO. TOOL NAME
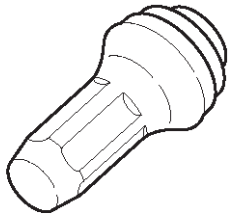 901RS205	**5–8840–2294–0** **(J–39210)** Installer; Axle shaft inner seal
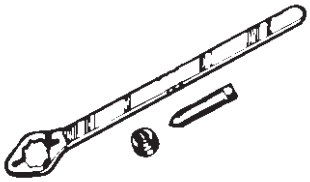 901RW037	**5–8840–0133–0** **(J–8614–01)** Pinion flange holder
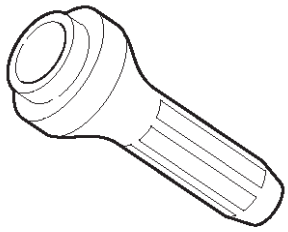 901RS211	**5–8840–2165–0** **(J–37263)** Installer; Pinion oil seal
901RW038	**5–8840–2029–0** **(J–42832)** Holding fixture
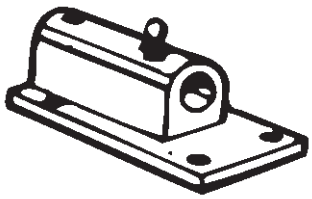 901RS212	**5–8840–0003–0** **(J–3289–20)** Holding fixture base
901RW039	**5–8840–2587–0** **(J–42379)** Remover; Bearing

ILLUSTRATION	TOOL NO. TOOL NAME
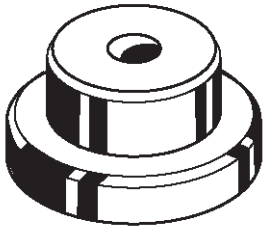 901RS215	**5–8840–2576–0** **(J–8107–3)** Adapter; Side bearing plug
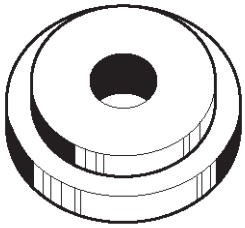 901RS217	**5–8840–2689–0** **(J–44461)** Installer; Outer bearing outer race
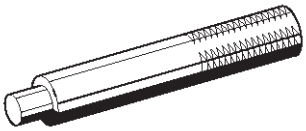 901RS218	**5–8840–0007–0** **(J–8092)** Grip
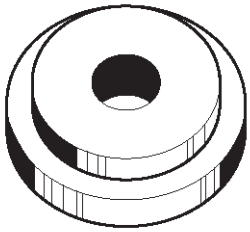 901RS219	**5–8840–2690–0** **(J–44462)** Installer; Inner bearing outer race
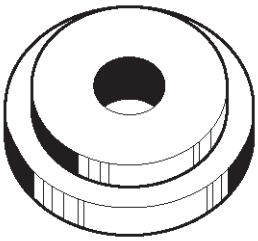 901RS220	**5–8840–2681–0** **(J–42824)** Pilot;Outer
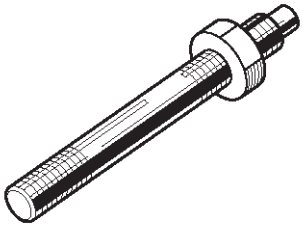 901RS221	**5–8840–0127–0** **(J–21777–43)** Nut & Bolt

ILLUSTRATION	**TOOL NO.** TOOL NAME
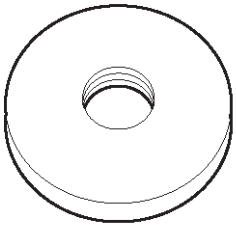 901RS222	**5–8840–2680–0** **(J–44453)** Pilot; Inner
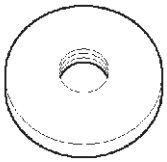	**5–8840–2681** **(J–44449)** Pilot; Outer bearing
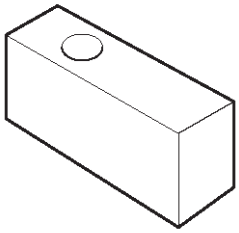 901RS223	**5–8840–2678–0** **(J–44451)** Gage plate
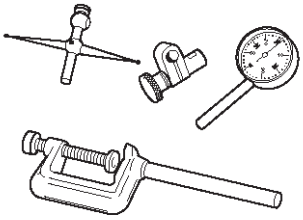 901RS224	**5–8840–0126–0** **(J–8001)** Dial indicator
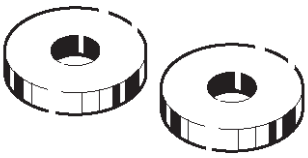 901RS225	**5–8840–2679–0** **(J–44452)** Disc (2 required)
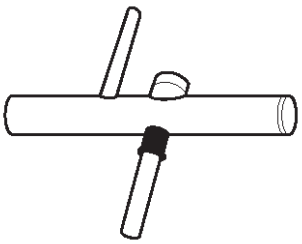 901RS226	**5–8840–0128–0** **(J–23597–1)** Arbor

ILLUSTRATION	**TOOL NO.** TOOL NAME
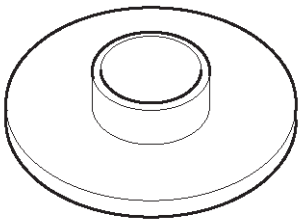 901RS208	**5–8840–2574–0** **(J–42828)** Installer; Pinion bearing
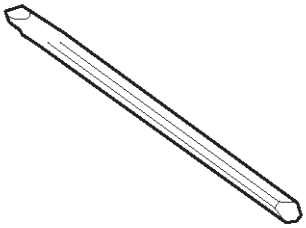 901RS228	**5–8840–2293–0** **(J–39209)** Punch; End nut lock
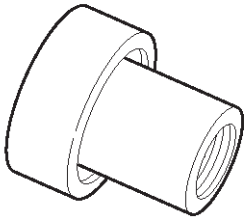 901RS229	**5–8840–2570–0** **(J–42829)** Installer; Side bearing
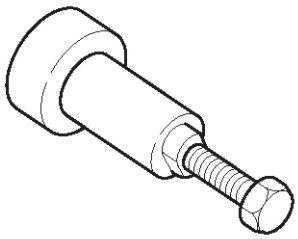 901RS230	**5–8840–2323–0** **(J–39602)** Remover; Outer bearing
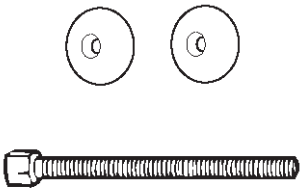 901RW064	**5–8840–2586–0** **(J–39858)** Clutch pack unloading tool kit Includes Screw cap, Cap and Forcing screw

DRIVELINE/AXLE

DRIVELINE CONTROL SYSTEM (SHIFT ON THE FLY)

CONTENTS

Service Precaution 4B1–1
Shift on the Fly System (Lever Type) 4B1–2
Outline of Shift on the Fly System (Lever Type) 4B1–2
Shift on the Fly Vacuum Piping and Electric Equipment (For Lever Control Type) 4B1–3
Vacuum Piping Diagram 4B1–3
Inspection and Repair 4B1–4
Shift on the Fly System (Push Button Type) . 4B1–7
Outline of Shift on the Fly System (Push Button Type) 4B1–7
Functions of Indicator Lamp 4B1–11
Diagnosis 4B1–11
Front Axle Diagnosis 4B1–30
Shift on the Fly Vacuum Piping and Electric Equipment (For Push Button Type) 4B1–32
Vacuum Piping Diagram 4B1–32
Inspection and Repair 4B1–33
4WD Control Unit (For Push Button Type) . . 4B1–36
4WD Control Unit Associated Parts 4B1–36
Removal 4B1–37
Installation 4B1–37

Service Precaution

WARNING: IF SO EQUIPPED WITH A SUPPLEMENTAL RESTRAINT SYSTEM (SRS), REFER TO THE SRS COMPONENT AND WIRING LOCATION VIEW IN ORDER TO DETERMINE WHETHER YOU ARE PERFORMING SERVICE ON OR NEAR THE SRS COMPONENTS OR THE SRS WIRING. WHEN YOU ARE PERFORMING SERVICE ON OR NEAR THE SRS COMPONENTS OR THE SRS WIRING, REFER TO THE SRS SERVICE INFORMATION. FAILURE TO FOLLOW WARNINGS COULD RESULT IN POSSIBLE AIR BAG DEPLOYMENT, PERSONAL INJURY, OR OTHERWISE UNNEEDED SRS SYSTEM REPAIRS.

CAUTION: Always use the correct fastener in the proper location. When you replace a fastener, use ONLY the exact part number for that application. ISUZU will call out those fasteners that require a replacement after removal. ISUZU will also call out the fasteners that require thread lockers or thread sealant. UNLESS OTHERWISE SPECIFIED, do not use supplemental coatings (Paints, greases, or other corrosion inhibitors) on threaded fasteners or fastener joint interfaces. Generally, such coatings adversely affect the fastener torque and the joint clamping force, and may damage the fastener. When you install fasteners, use the correct tightening sequence and specifications. Following these instructions can help you avoid damage to parts and systems.

Shift on the Fly System (Lever Type)

Outline of Shift on the Fly System (Lever Type)

The shift on the fly system (Lever type) switches between 2 wheel drive (2WD) and 4 wheel drive (4WD) by driver's shifting the transfer control lever on the floor.
This system controls below operations.

1. Connecting front wheels to, and disconnecting them from, the front axles by vacuum actuator.
2. Indicator on instrument panel.
3. 4WD signal to Electronic Hydraulic Control Unit for brake system (If anti–lock brake system is equipped).

Shift on the Fly Vacuum Piping and Electric Equipment (For Lever Control Type)

Vacuum Piping Diagram

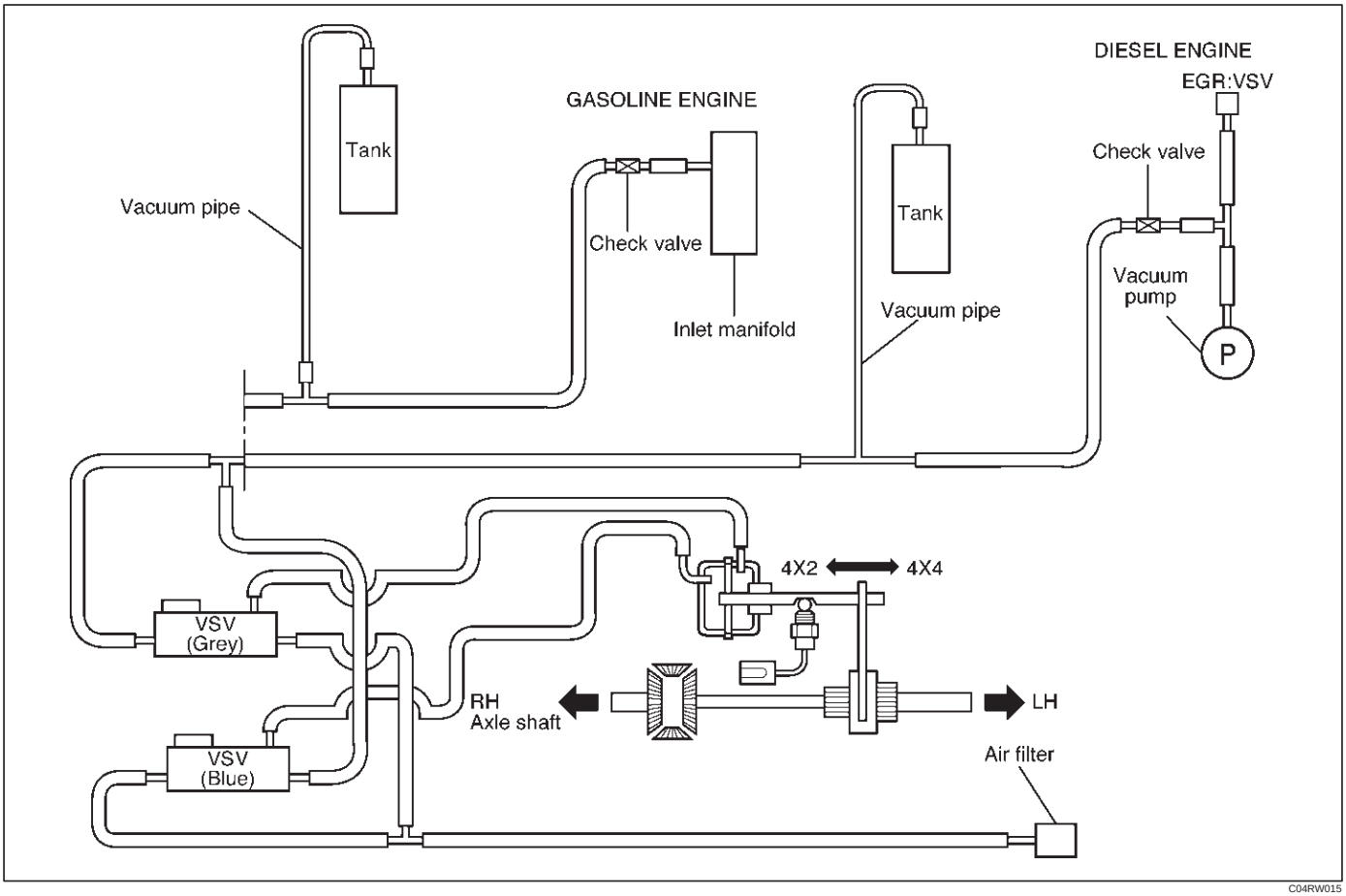

C04RW015

VSV Assembly, Actuator Assembly

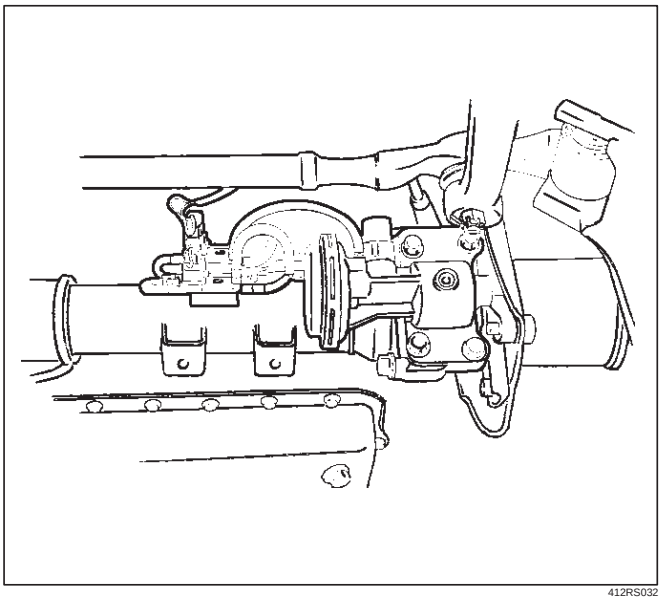

412RS032

Vacuum Tank

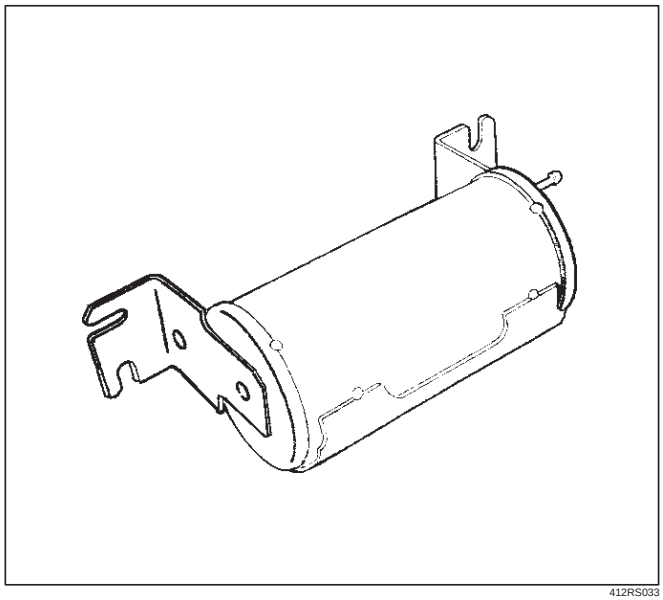

412RS033

Inspection and Repair

Vacuum Piping

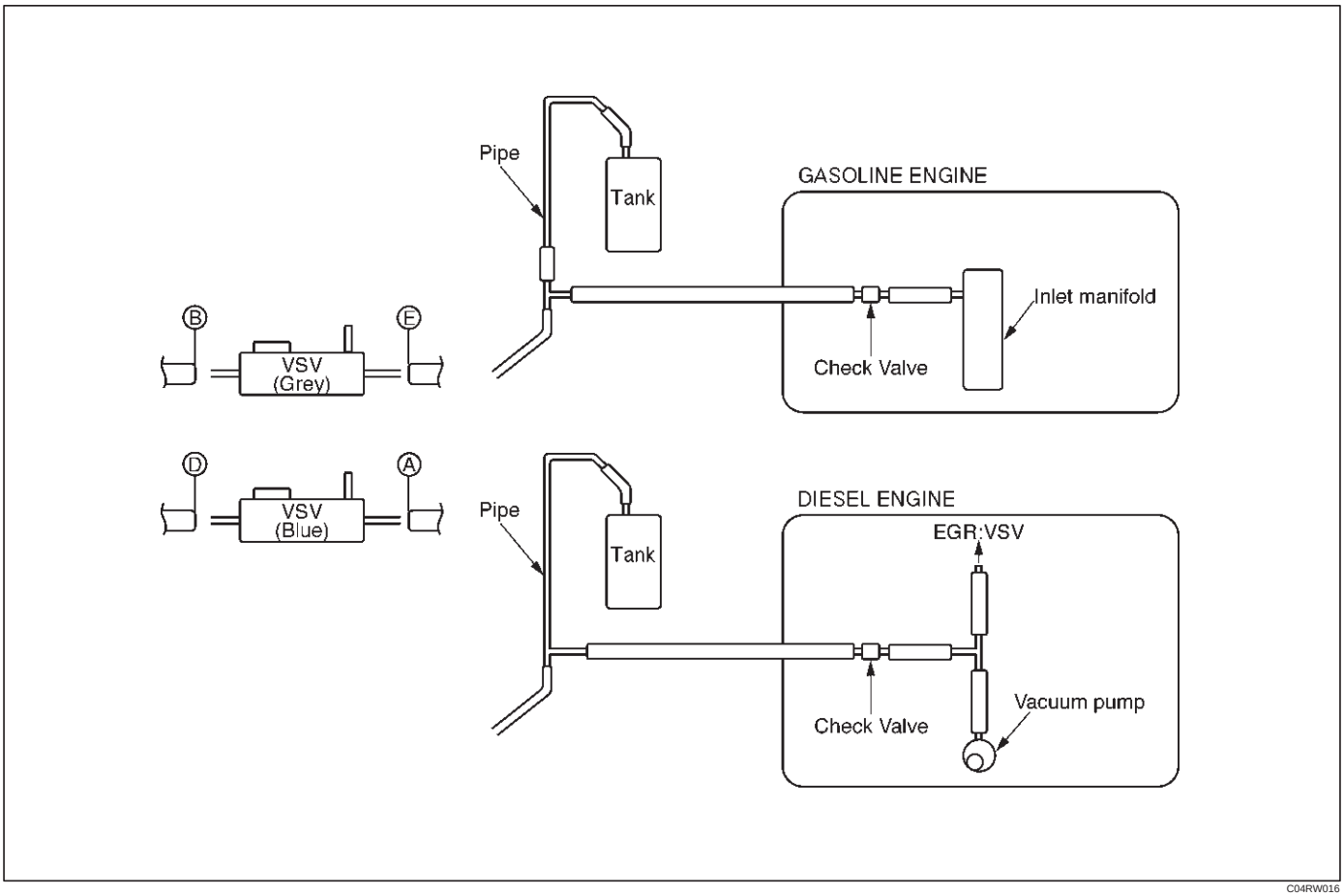

C04RW016

1. Pull out the Hose A in figure and install a vacuum gauge.
2. Plug up Hose B in figure to prevent the leak of vacuum.
3. Start the engine and measure vacuum 2 or 3 minutes afterward.
4. Repeat 1) and 2) but with Hose A plugged and Hose B pulled out.
5. If vacuum measures –400mmHg, or if it shows a sudden drop immediately after engine stop, inspect the hose, tank, and pipe for damage.

NOTE: Be careful not to permit the entry of dust and water during inspection.

6. Pull out Hose D in above illustration.
7. Plug Hose E in above illustration.
8. Make sure that Hose D in above illustration is under atmospheric pressure.
9. Pull out Hose E and plug Hose D, and make sure that Hose E is under atmospheric pressure.
10. If Check 8) or 9) has revealed stoppage, check and see that there is no bend, foreign matter in the hose or in the filter. If there is trouble, repair or replace.

Check Valve

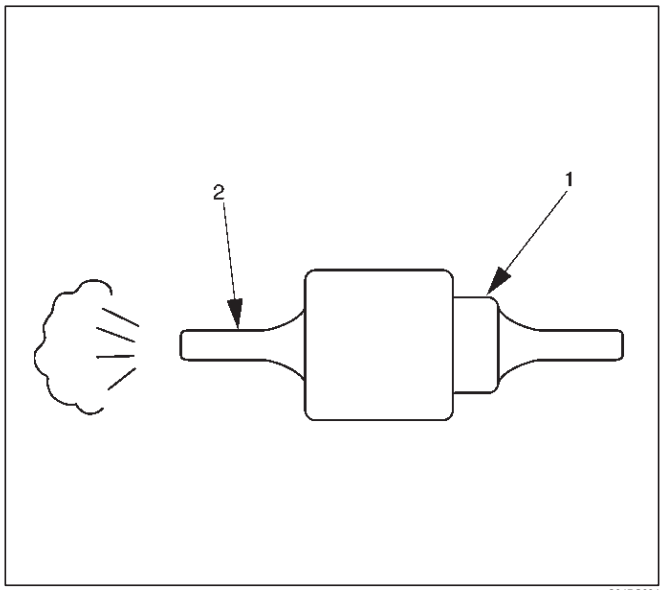

C04RS004

1. Apply vacuum from the orange colored side(1).

   Vacuum:–400mmHg
2. Check leakage of vacuum.
3. Make sure that vacuum cannot be applied from the black colored side(2).

4. If vacuum is not applicable as much as –400mmHg, and if there is resistance on the intake side, replace with a new check valve.

VSV Assembly

Inspect the vehicle side harness as follows:

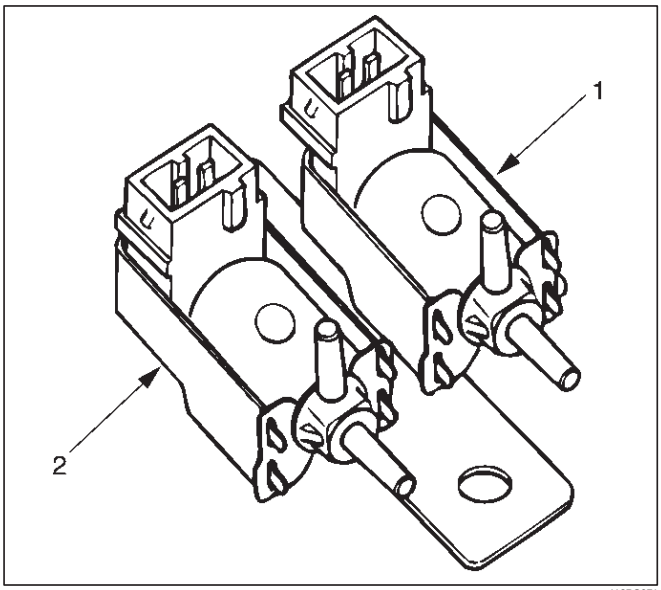

412RS071

Legend
(1) Grey
(2) Blue

1. Remove connector.
2. Shift transfer lever to 2H and start the engine.

NOTE: Do not move the vehicle while inspection.

3. Make sure that there is continuity in the vehicle side of harness. If there is no continuity, check transfer shift switch and wiring.

Inspect both VSVs as follows:

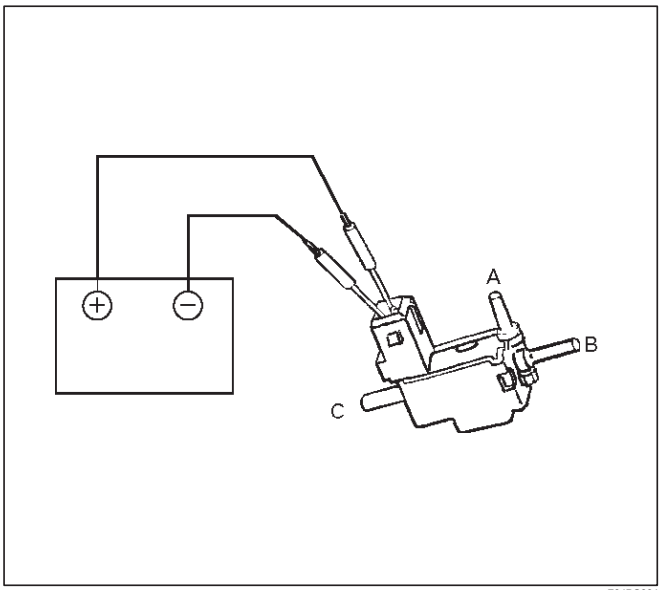

F04RS004

1. With battery not connected (Usual).
   A–C:There is continuity
   B:Closed
2. With battery connected
   A – B:There is continuity
   C:Closed
3. If 1) and 2) fail, replace with a new VSV.

Axle Position Switch

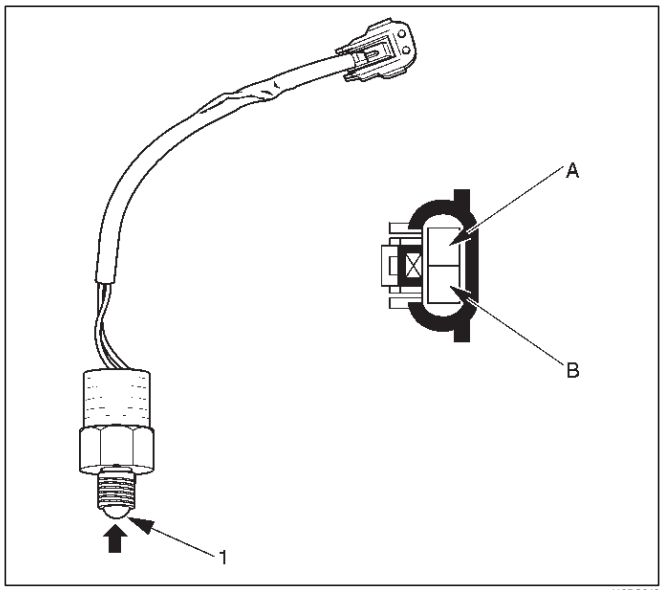

412RS048

1. With ball (1) being free
   A – B:There is continuity
2. With ball forced into the switch
   A – B:No continuity
3. If 1) and 2) fail, replace with a new switch.

Transfer Position Switch

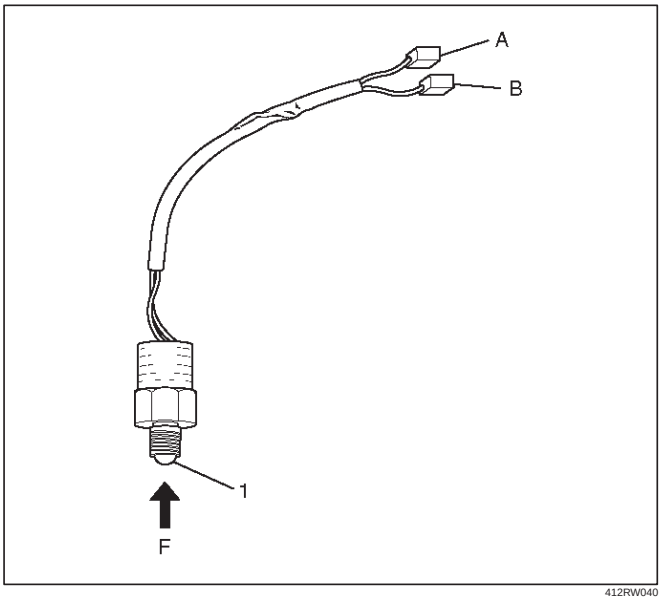

Legend

(1) Ball

1. With ball being free.
   A–B : There is continuity.
2. With ball forced into the switch.
   A–B : No continuity.
3. If 1) and 2) fail, replace with a new switch.

Shift on the Fly System (Push Button Type)

Outline of Shift on the Fly System (Push Button Type)

The shift on the fly system switches between 2 wheel drive (2WD) and 4 wheel drive (4WD) electrically by driver's pressing the 4WD switch (push button type) on instrument panel.
This system controls below operations. (Shifting between "4H" and "4L" must be performed by transfer control lever on the floor.)

1. Shifting the transfer front output gear (Connecting to, and disconnecting from, front propeller shaft by motor actuator).
2. Retrial of shifting the transfer front output gear.
3. Connecting front wheels to, and disconnecting them from, the front axles by vacuum actuator.
4. Indicator on instrument panel.
5. 4WD out signal to other Electronic Hydraulic Control Unit (If anti–lock brake system is equipped).

System Diagrams

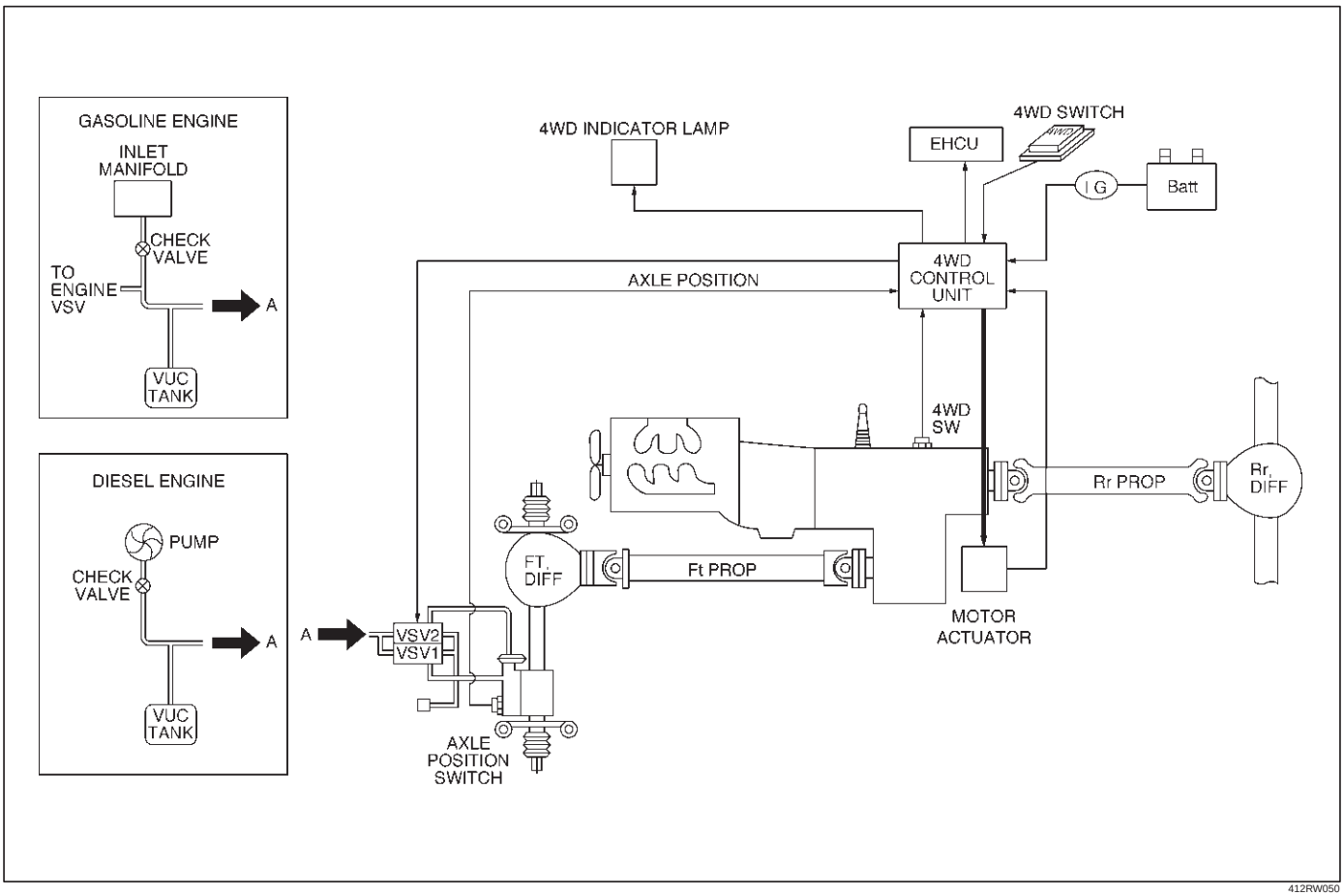

412RW050

Normal Operation

The motor actuator mounted on transfer rear case is driven by signal from 4WD switch on instrument panel. After complete the connecting transfer front output gear to, or disconnecting it from, front propeller shaft, condition of the transfer position switch changes. The vacuum solenoid valve (VSV) is driven by the signal from transfer position switch and the vacuum actuator connects front wheels to, or disconnect them from, front axles.

Time Chart of Shifting Under Normal Condition

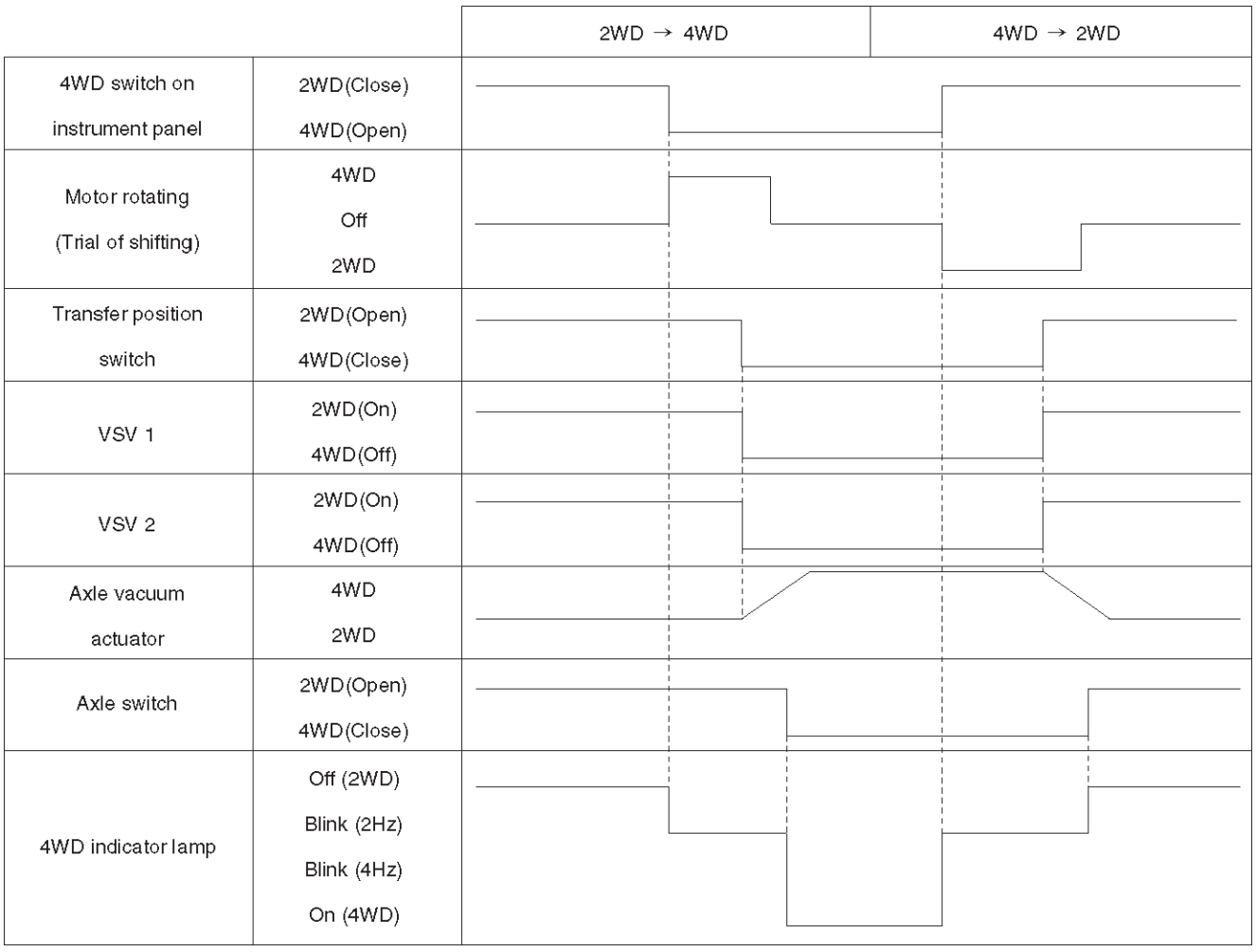

F04RW002

Retrial

The motor actuator starts transfer gear shifting after signal from 4WD switch on instrument panel has been received. But the shifting may be impossible in cold weather or under high speed condition. When 2 seconds have passed since transfer gear shifting started and the transfer position switch dose not turn on (the gear engagement is not completed), the motor reverses its rotation for 1.2 seconds and tries again to shift transfer gear. This procedure is repeated 3 times in maximum. While this procedure, 4WD indicator lamp blinks by 2 Hz. If the transfer position switch does not turn on after aforementioned procedure has been repeated 3 times, the gear shifting is stopped and 4WD indicator lamp's blinking changes from 2Hz to 4Hz to notify driver that the gear shifting is stopped. This blinking of indicator lamp continues until 4WD switch is returned from 4WD to 2WD.

Time Chart of Shifting Under Severe Condition (re-trial)

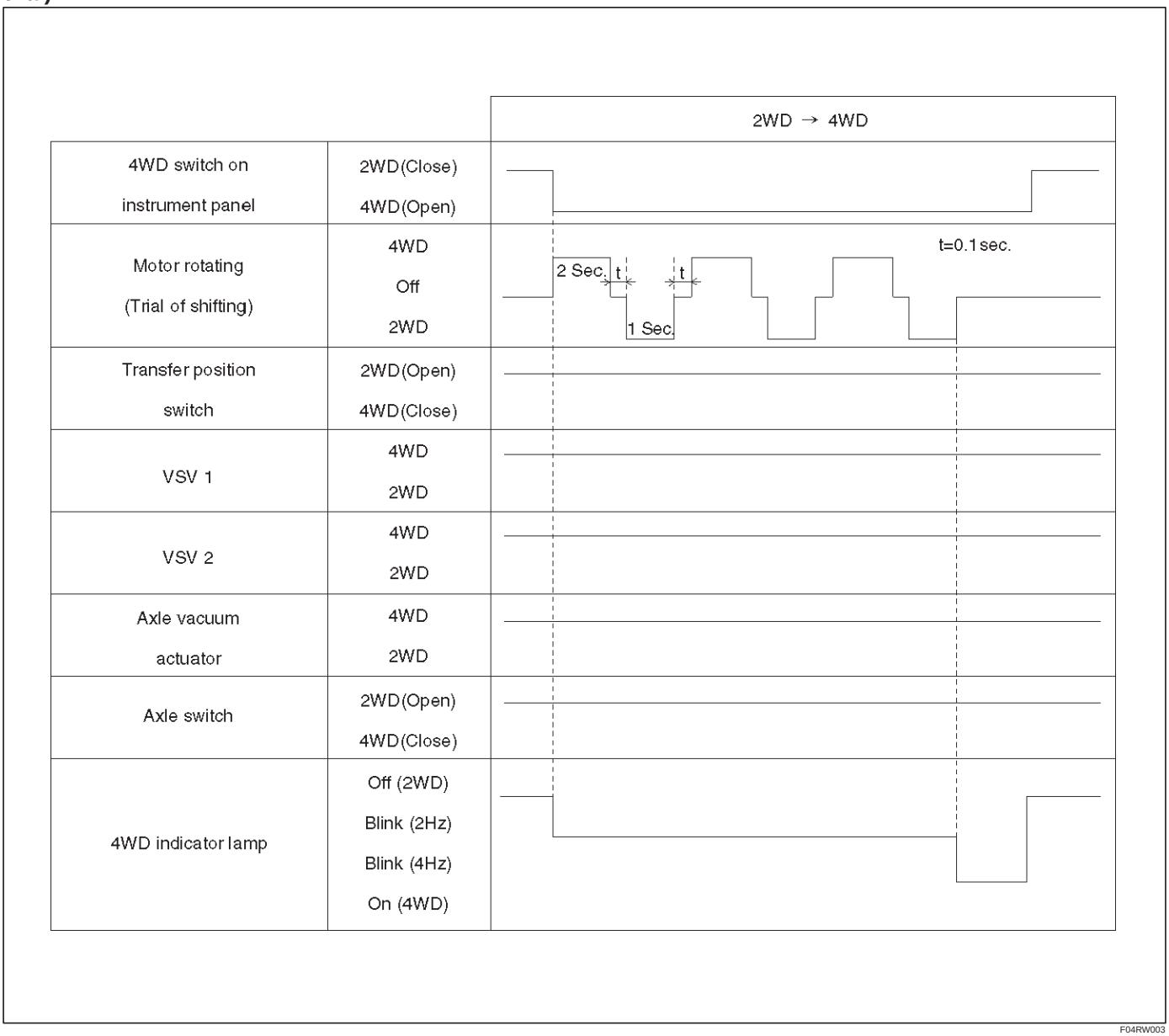

F04RW003

Warning at "4L" position : In view of the shifting mechanism of transfer, the gear shifting from 4WD to 2WD at "4L" condition is impossible. Therefore, the transfer position switch can not be turned off by 4WD switch when vehicle is in "4L" condition. In the case this condition continues for 2 seconds, the shifting to 2WD is stopped and the indicator lamp's blinking changes from 2Hz to 4Hz to notify driver of wrong operation.

Time Chart of Shifting from 4WD to 2WD at "4L" Condition

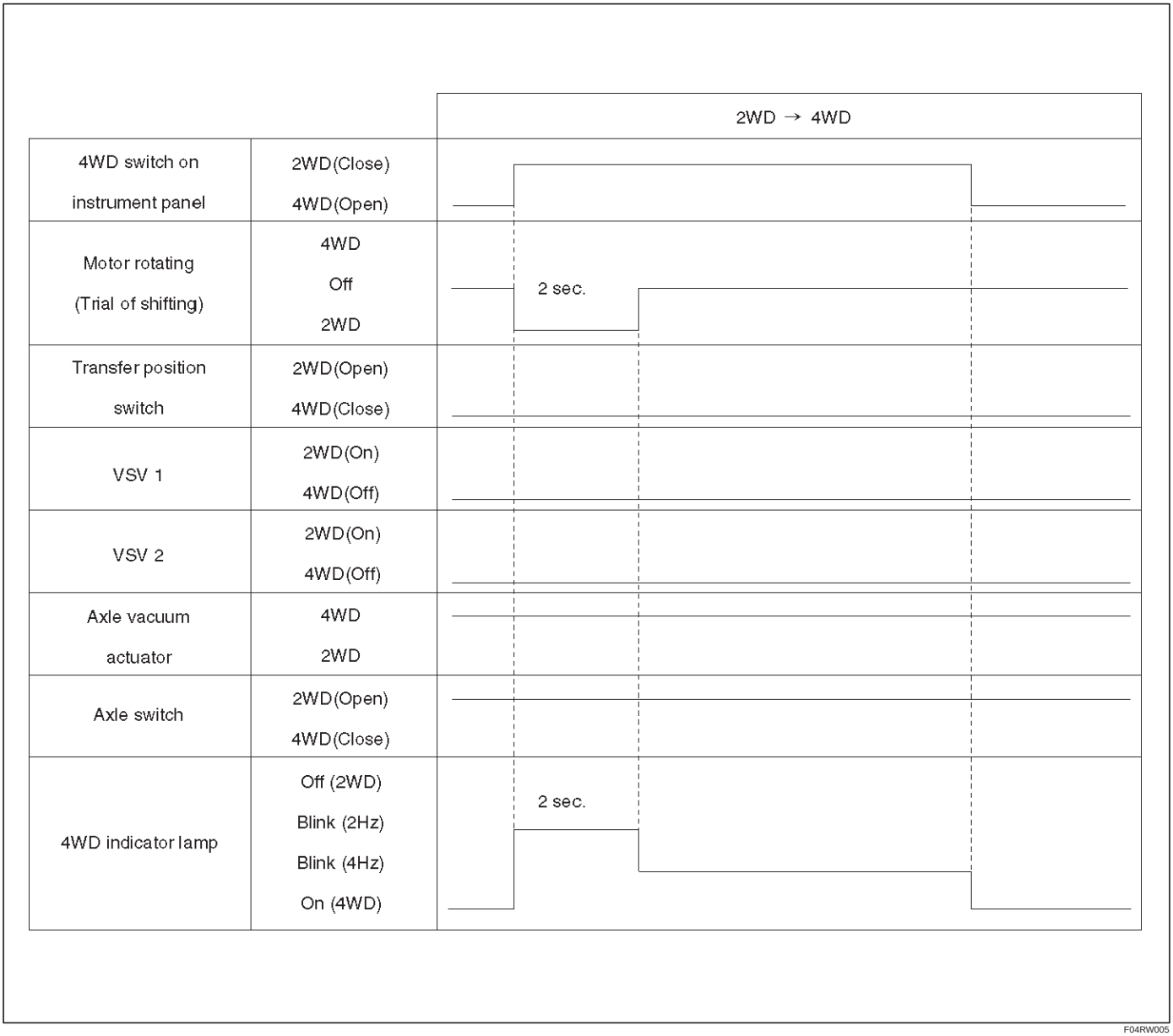

F04RW005

4WD out signal to other Electronic Hydraulic Control Unit : 4WDcontrol unit sends 4WD out signal to other Electronic Hydraulic Control Unit as below.

4WD out signal (Period)	Vehicle Condition	Transfer position switch	Front axle switch
120 ms	2WD	2WD (Open)	2WD (Open)
240 ms	4WD	4WD (Close)	4WD (Close)

Functions of Indicator Lamp

Indication of vehicle condition : Indicator lamp is controlled by 4WD control unit and shows vehicle conditions as below.

Indicator	Vehicle condition	4WD switch	Transfer position switch	Front axle switch
Off	2WD	Off (Close)	2WD (Open)	2WD (Open)
On	4WD	On (Open)	4WD (Close)	4WD (Close)
Blink (2Hz)	Operating	On (Open)	4WD (Close)	2WD (Open)
		Off (Close)	2WD (Open)	4WD (Close)
Blink (4Hz)	Stop operating	On (Open)	2WD (Open)	2WD (Open)
		Off (Close)	4WD (Close)	4WD (Close)

Bulb check : To check the bulb of indicator lamp, the indicator lamp comes on when ignition key is turned on, and goes off when the engine is started.
Retrials from 2WD to 4WD : In cold weather or under high speed condition, the gear shifting (engagement) sometimes does not complete by 3 trials. In such case, the indicator lamp inform driver of this incident as aforementioned chart (shown at Retrial in Outline of shift on the fly system).

Diagnosis

Before Judging That Troubles Occur (Unfaulty mode)

When Switching from 2WD to 4WD

1. **In case that blinking frequency of the 4WD indicator changes from 2Hz to 4Hz.**
   When heavy synchronization load is needed, the motor actuator tries the shifting transfer gear three times including the activation shifting. While the motor actuator tries shifting, the indicator blinks by 2Hz. If the third shifting fails, the indicator's blinking changes from 2Hz to 4Hz at the same time that the motor actuator shifted back to 2WD.
   Heavy synchronization load occurs by:
   - extremely lower temperature.
   - higher speed, rotation difference of wheels during cornering.

   Solution 1: Operate again after stop the vehicle or slow down.
2. **In case that the 4WD indicator continues blinking by 2Hz for more than 11.5 seconds.**
   When there is rotation difference of wheels or there is phase difference between front wheels and axles, it is difficult to connect front wheels to front axles. The blinking by 2Hz shows that shifting the transfer gear or connecting the front wheels is in the middle of operating. In above case, the indicator's blinking by 2Hz shows that connecting the front wheels is not completed (because the indicator's blinking changes to 4Hz when the shifting transfer gear is impossible.). And removal of rotation or phase difference make connecting the front wheels possible.

   Solution 2: When vehicle is running, drive straight ahead while accelerating and decelerating. When vehicle is at a stop, move the vehicle forward and backward from 2 to 3 meters.

When switching from 4WD to 2WD

1. **In case that the 4WD indicator continues blinking by 2Hz .**
   The 4WD indicator continues blinking by 2Hz until both shifting the transfer gear and disconnecting the front wheels are completed when switching 4WD to 2WD. When driveline is loaded with torsional torque, the shifting transfer gear and disconnecting front wheels are impossible. In this case, removal of torsional torque on driveline make the shifting transfer gear and disconnecting front wheels possible.

   Solution 3: When vehicle is running, drive straight ahead while accelerating and decelerating. When vehicle is at a stop, move the vehicle forward and backward from 2 to 3 meters.
2. **In case that the 4WD indicator's blinking changes from 2Hz to 4Hz.**
   Check the position of transfer lever. Is it at "4L" position? In view of the shifting mechanism of transfer, the gear shifting from 4WD to 2WD at "4L" condition is impossible.

   Solution 4: Push the 4WD switch to 4WD, shift the transfer lever to "High" position and re–operate the 4WD switch to 2WD.

Parts Location (LHD / Diesel Engine Model)

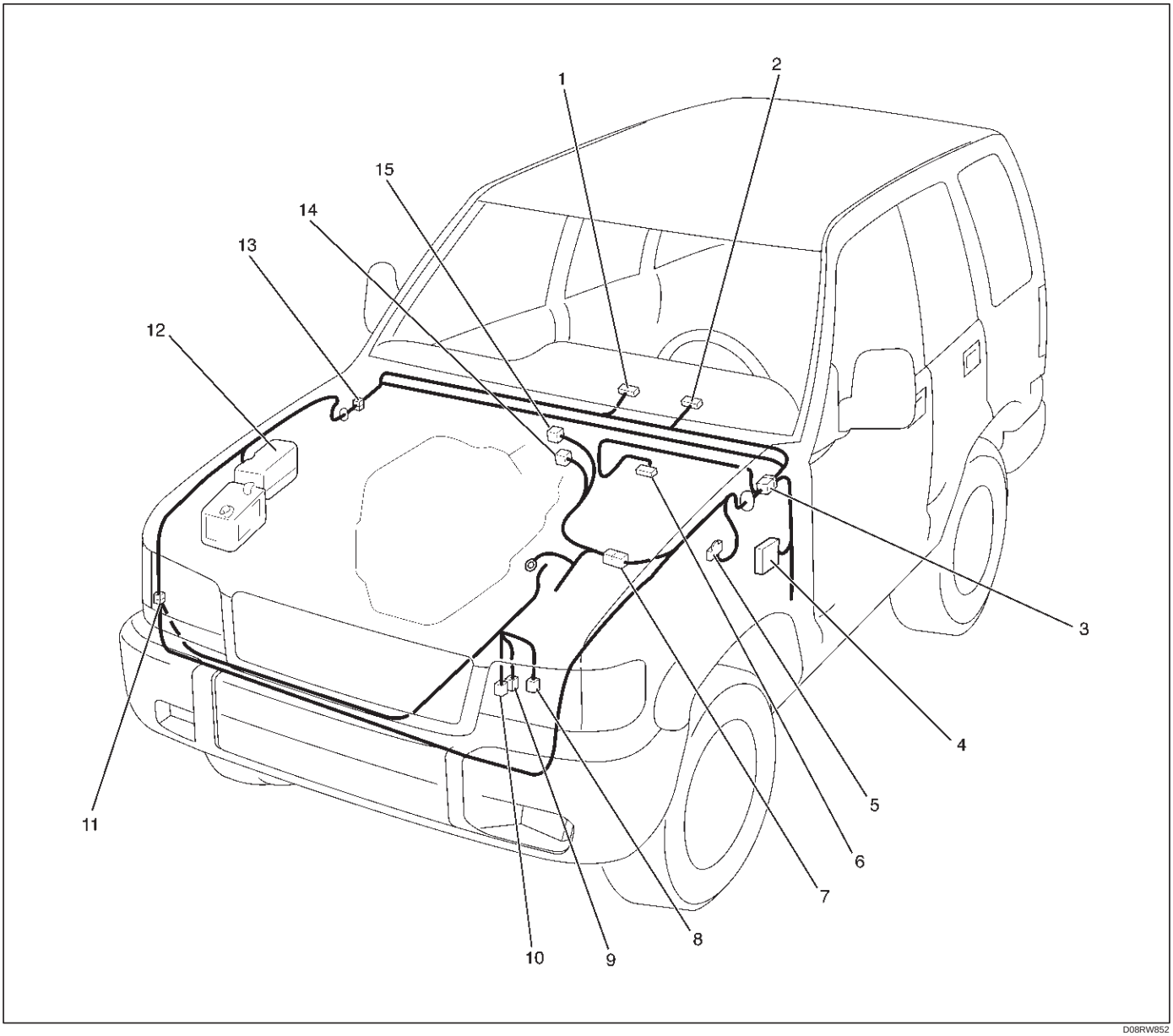

Legend

(1) I–12
(2) I–9
(3) H–7, H–8, H–24, H–25
(4) Fuse Box
(5) C–16
(6) C–94
(7) H–4, H–5
(8) P–17
(9) P–18
(10) P–19
(11) H–60
(12) Relay & Fuse Box
(13) H–12, H–16
(14) E–21
(15) E–45

Parts Location (LHD / Gasoline Engine Model)

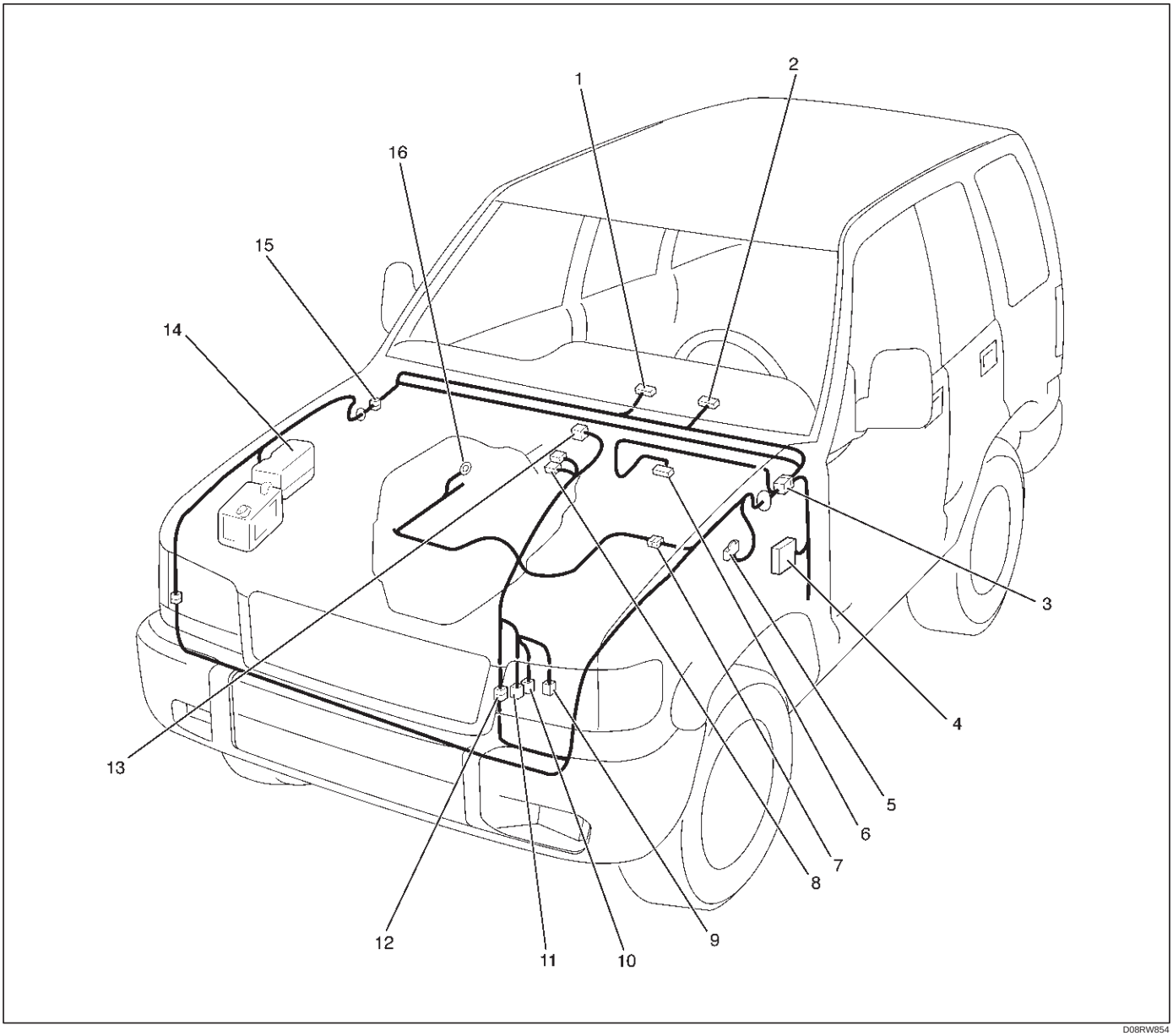

Legend

(1) I–12
(2) I–9
(3) H–7, H–8, H–24, H–25
(4) Fuse Box
(5) C–16
(6) C–94
(7) H–5
(8) M–11, M–12
(9) M–22
(10) M–23
(11) M–24
(12) H–10
(13) M–26
(14) Relay & Fuse Box
(15) H–12, H–16
(16) E–30

Parts Location (RHD / Diesel Engine Model)

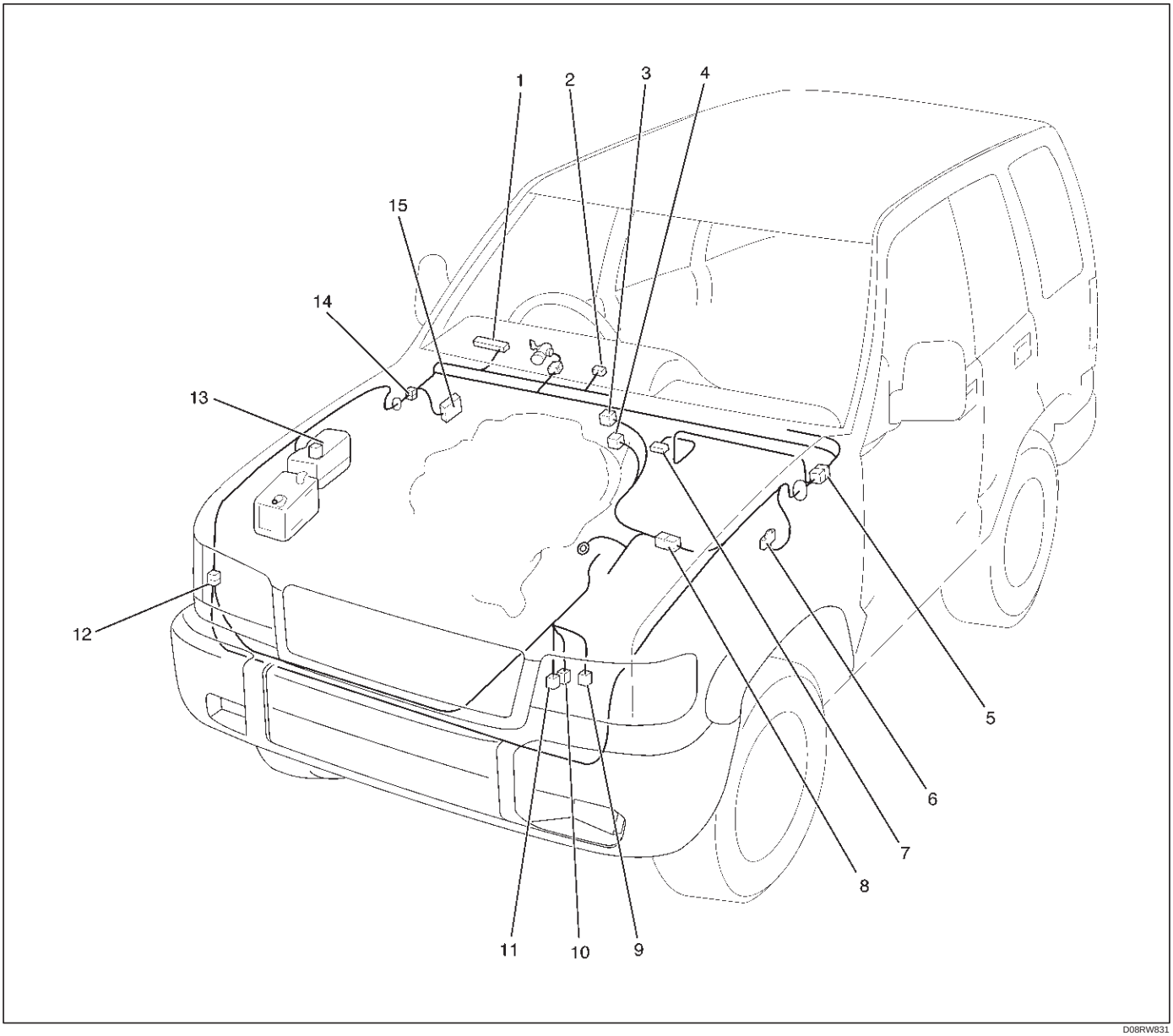

D08RW831

Legend

(1) I–9
(2) I–12
(3) E–45
(4) E–21
(5) H–7, H–9
(6) C–16
(7) C–94
(8) H–4, H–5
(9) P–17
(10) P–18
(11) P–19
(12) H–60
(13) Relay & Fuse Box
(14) H–15, H–16, H–25, H–26, H–27
(15) Fuse Box

Parts Location (RHD / Gasoline Engine Model)

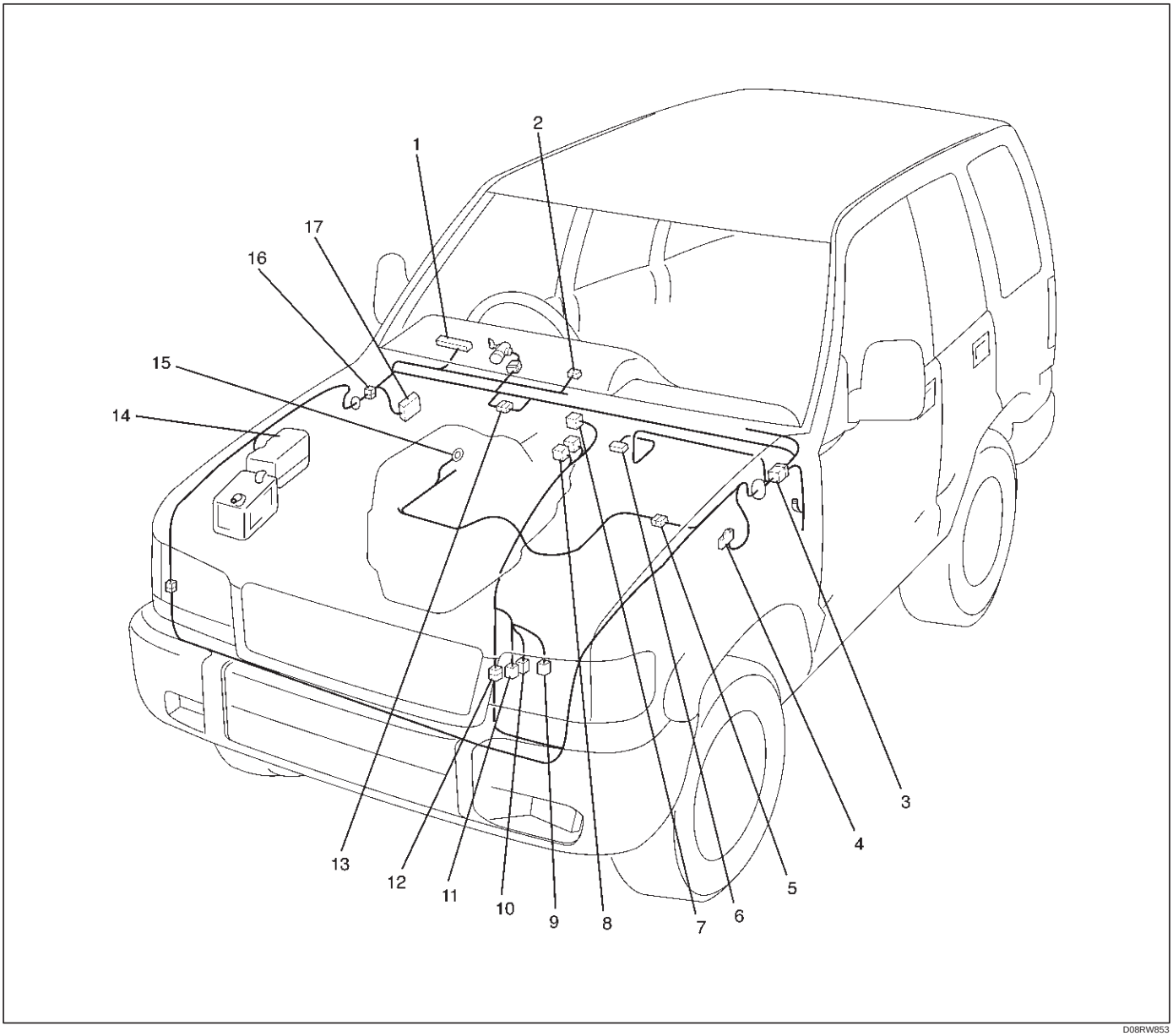

D08RW853

Legend

(1) I–9
(2) I–12
(3) H–7, H–9
(4) C–16
(5) H–5
(6) C–94
(7) M–26
(8) M–11, M–12
(9) M–22
(10) M–23
(11) M–24
(12) H–10
(13) H–12
(14) Relay & Fuse Box
(15) E–30
(16) H–15, H–16, H–25, H–26, H–27
(17) Fuse Box

Wiring Diagram (LHD Model)

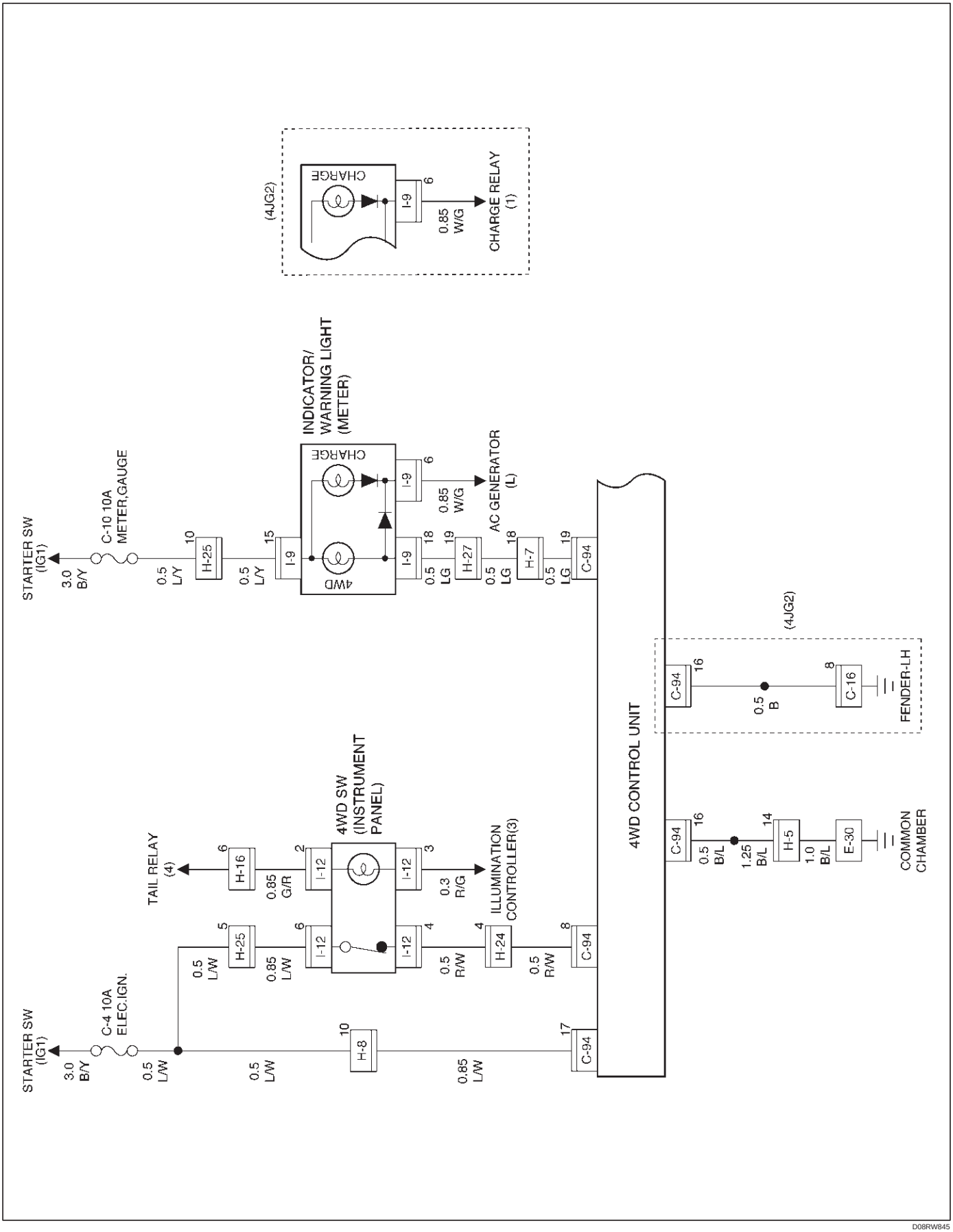

D08RW845

Wiring Diagram (LHD / Diesel Engine Model)

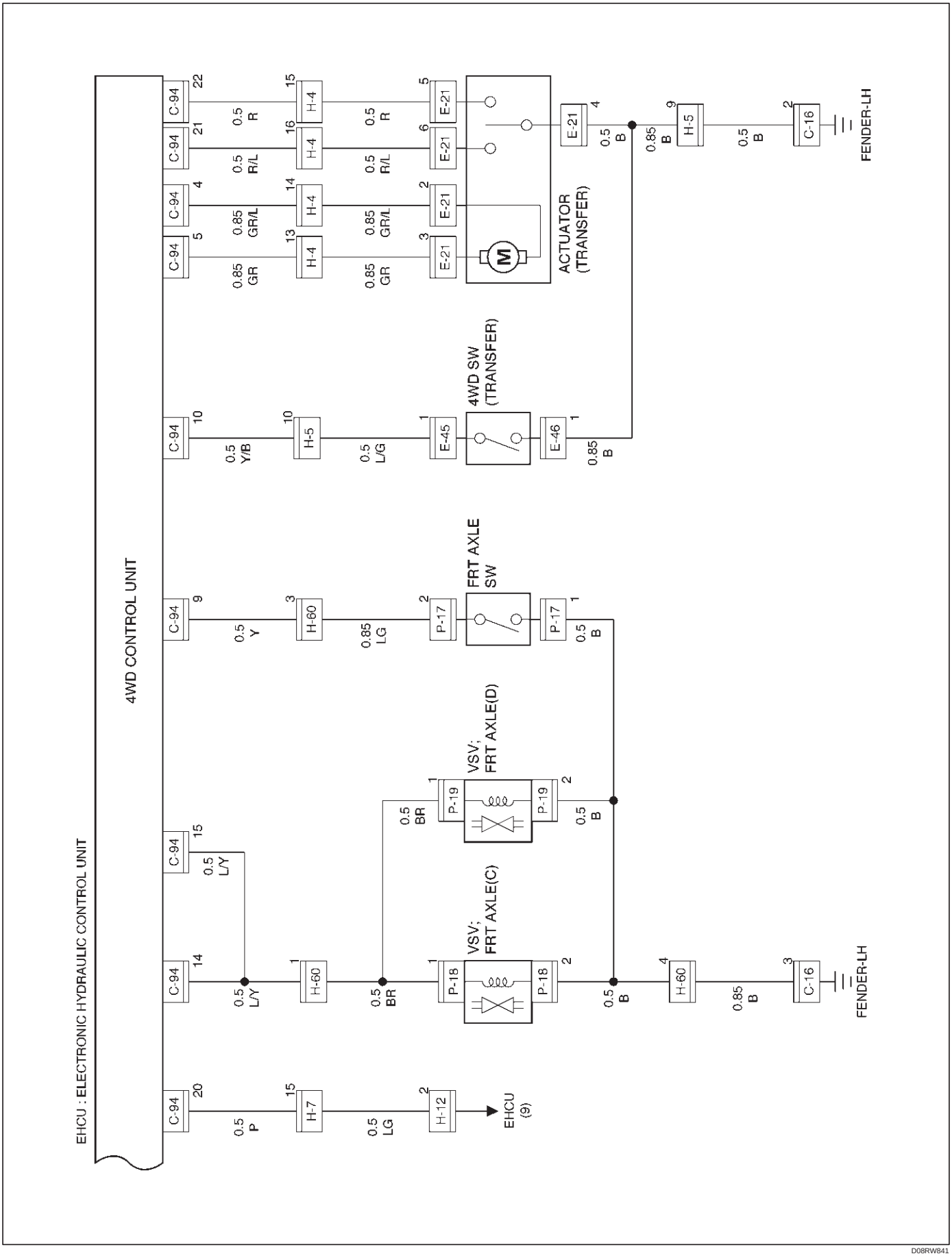

D08RW841

Wiring Diagram (LHD / Gasoline Engine Model)

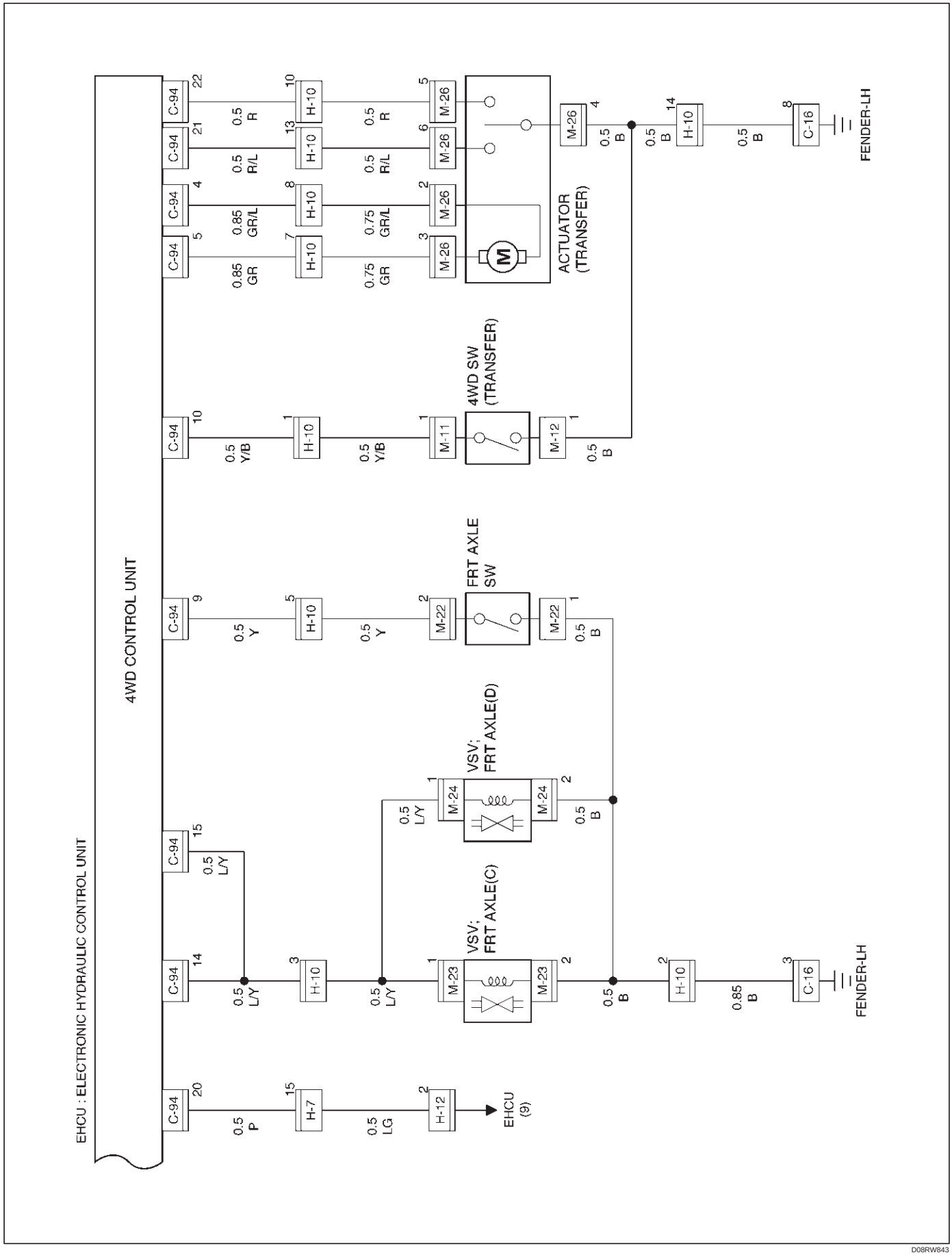

D08RW843

Wiring Diagram (RHD Model)

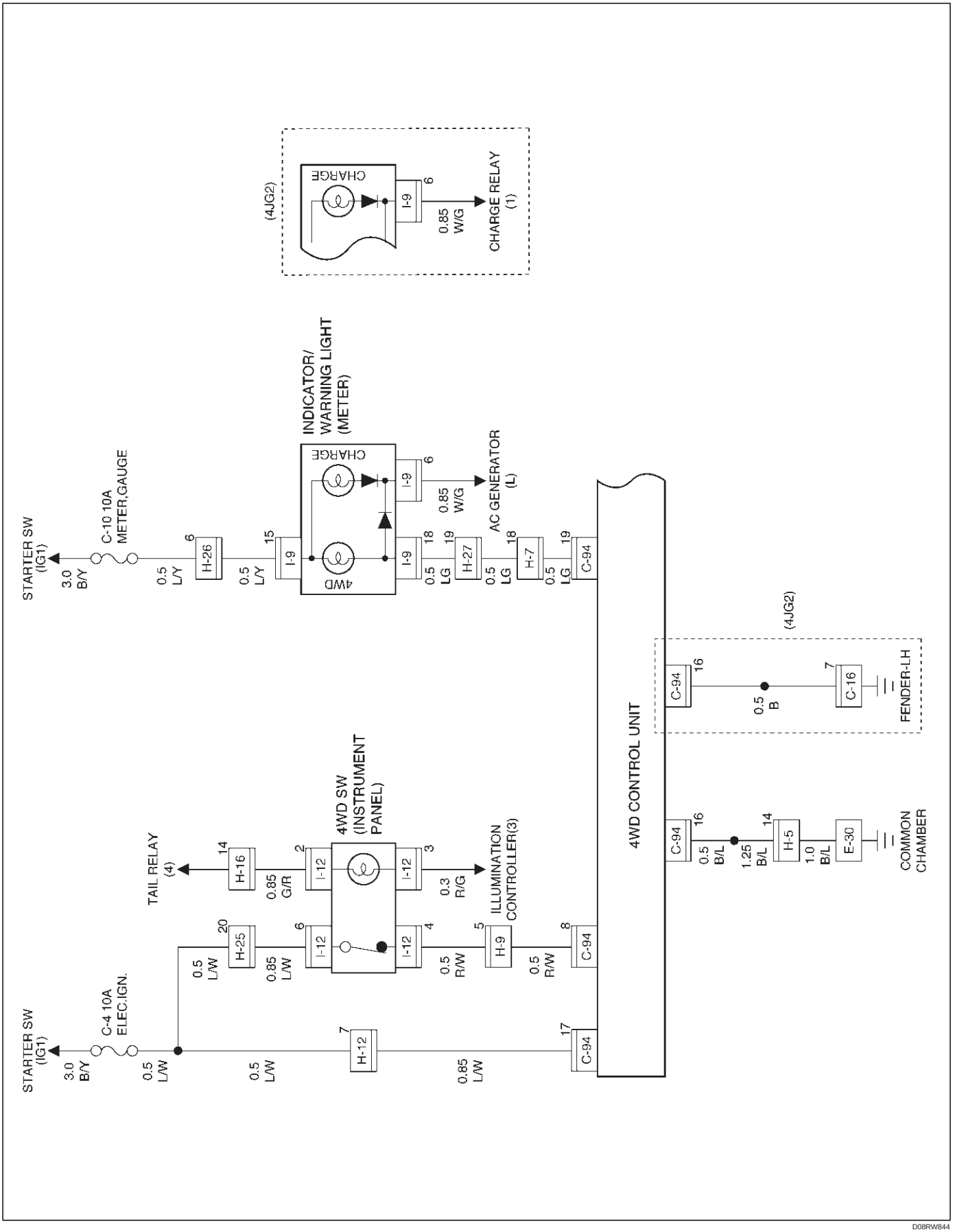

D08RW844

Wiring Diagram (RHD / Diesel Engine Model)

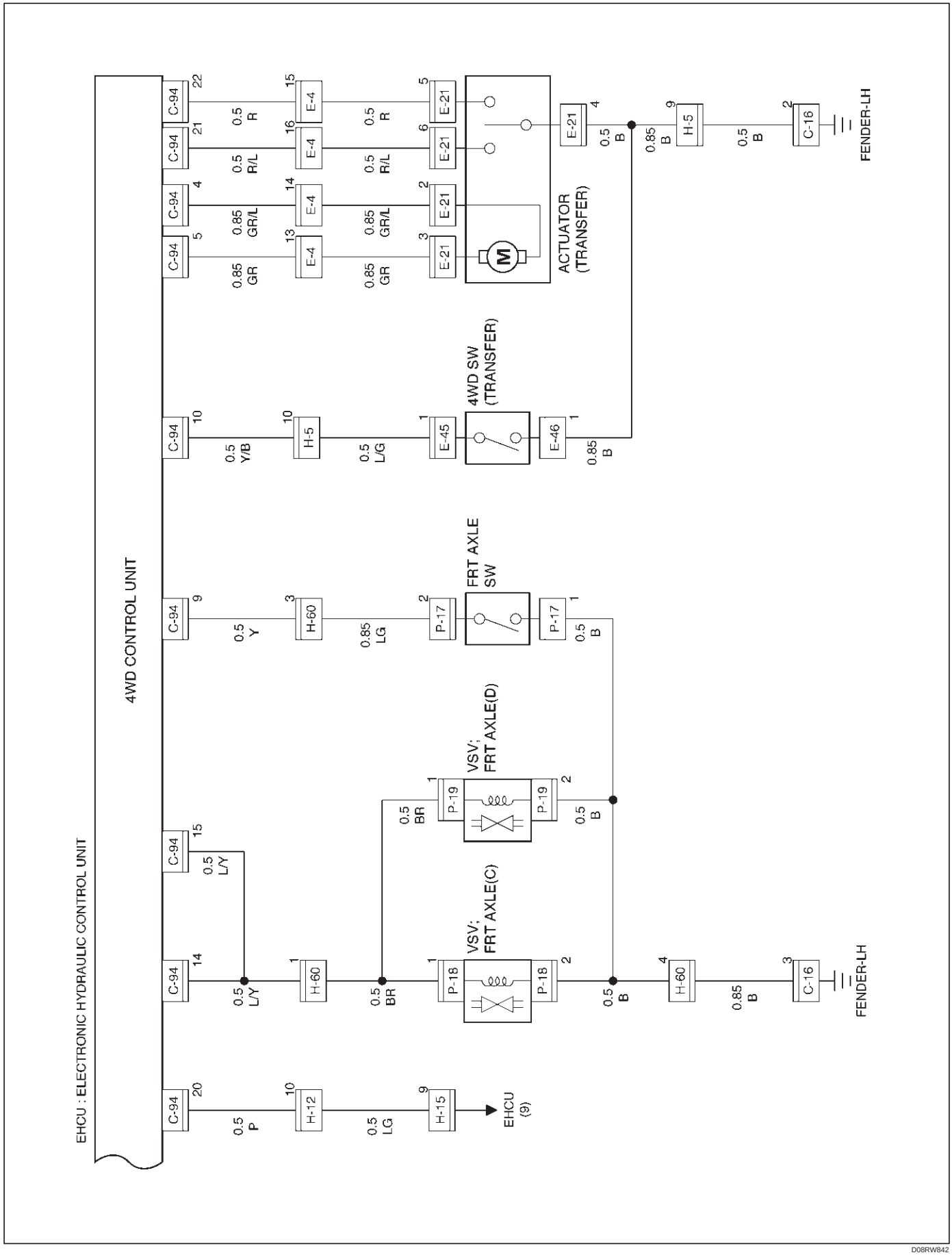

Wiring Diagram (RHD / Gasoline Engine Model)

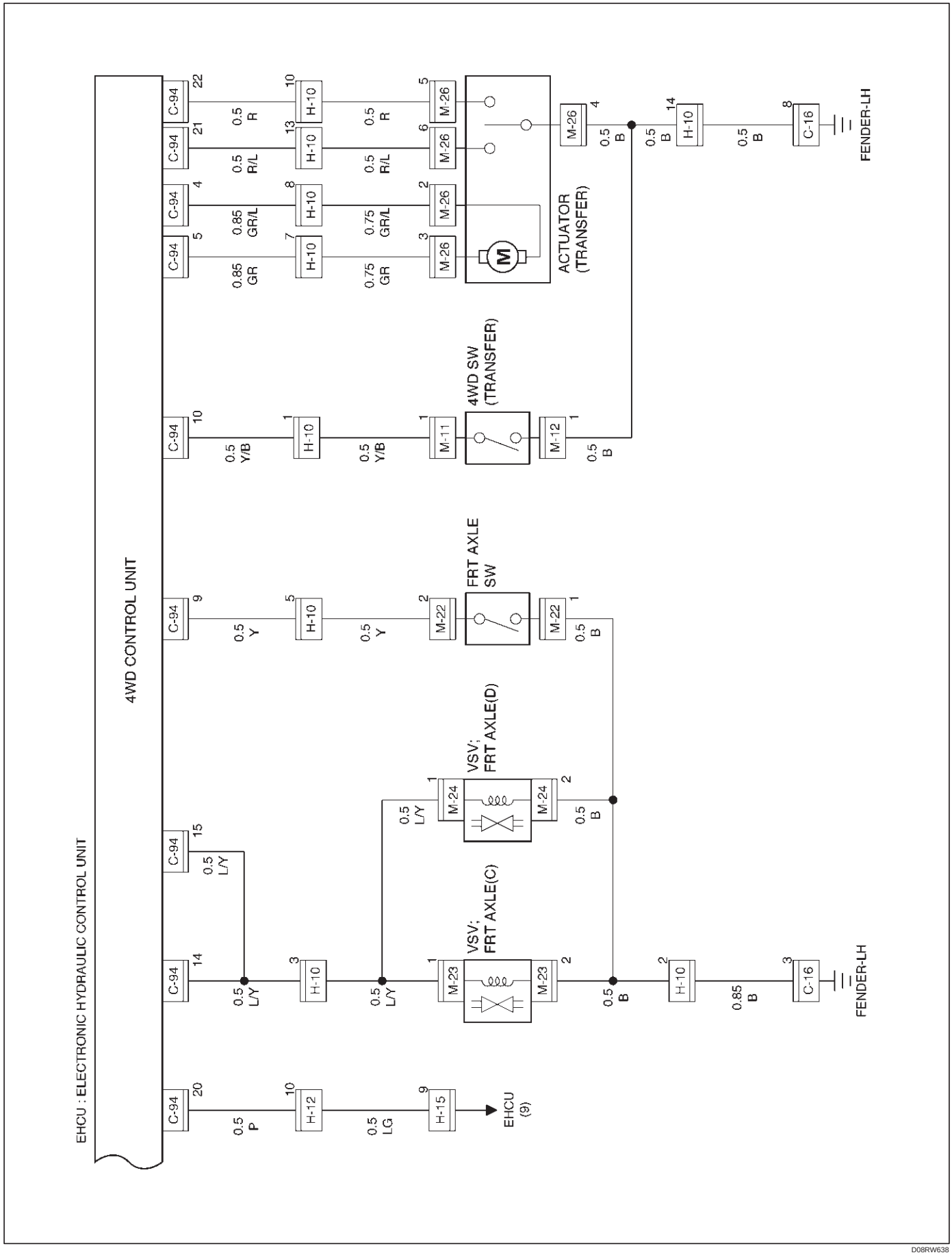

D08RW638

Connector List

No.	Connector face	No.	Connector face
C-16	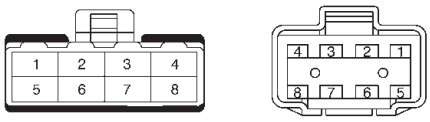	H-8 (LHD)	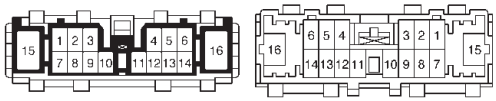
C-94	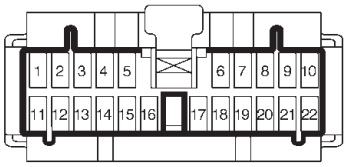	H-8 (RHD)	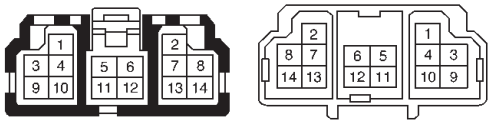
E-21		H-9 (LHD)	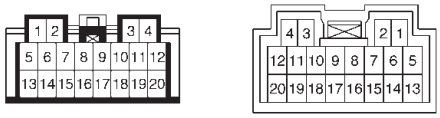
E-30	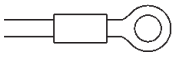	H-9 (RHD)	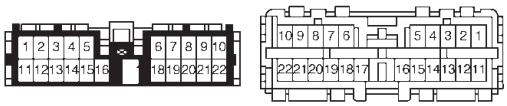
E-45		H-10	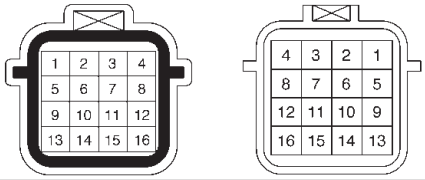
H-4	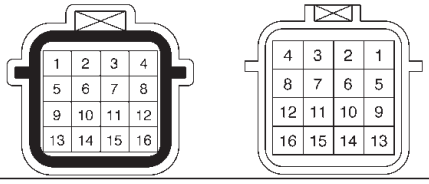	H-12 (LHD)	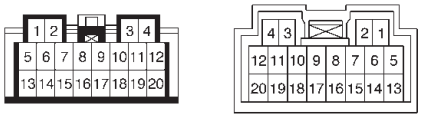
H-5	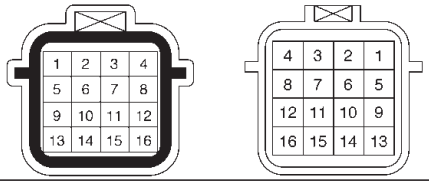	H-12 (RHD)	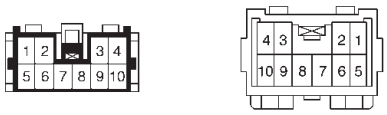
H-7	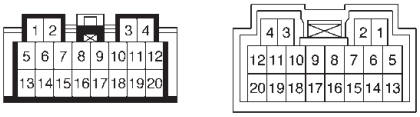	H-15 (LHD)	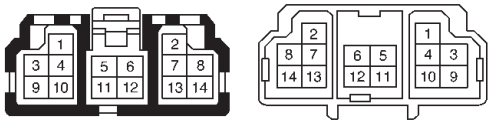

No.	Connector face	No.	Connector face
H-15 (RHD)	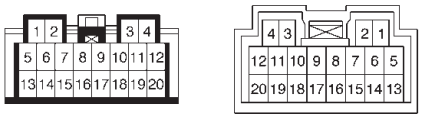	H-60	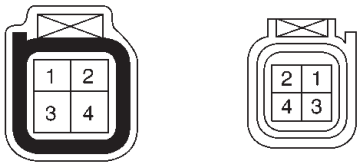
H-16 (LHD)	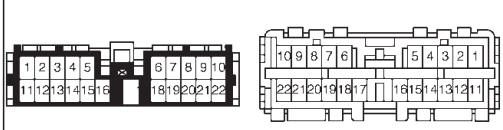	I-9	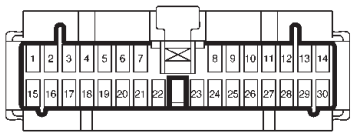
H-16 (RHD)	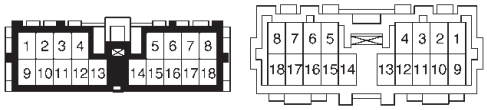	I-12	
H-24 (LHD)	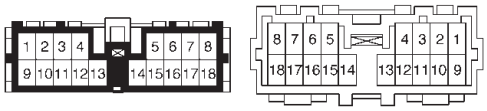	M-11	
H-24 (RHD)	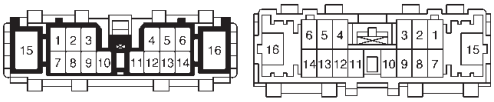	M-12	
H-25	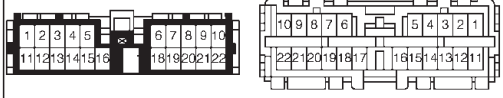	M-22	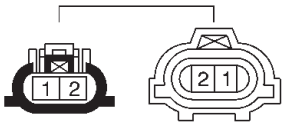
H-26	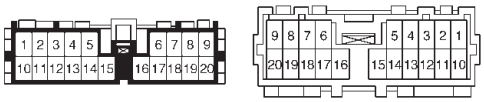	M-23	
H-27	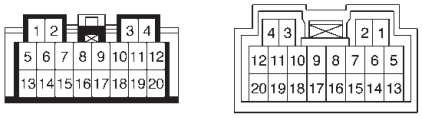	M-24	

No.		No.	Connector face
M-26			
P-17	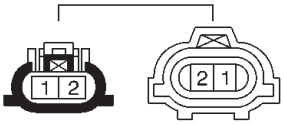		
P-18			
P-19			

Diagnosis of the Faults Based on the Status of 4WD Indicator Lamp, 4WD Switch and T/F Change Lever

Diagnosis charts are shown on below. If troubles can not be solved after every chart was traced, troubles may occur in the 4WD control unit. In this case, replace the 4WD control unit and trace every chart again.

Fault on switching from 2WD to 4WD

1. **In case that 4WD indicator's blinking changes from 2Hz to 4Hz after Solution 1 is carried out.**
   Faults occur in the motor actuator or the transfer case assembly. Remove the motor actuator and check function. If problem was found and it was repaired, try **Solution 1** again. After that, disassemble the transfer case assembly for check and repair or replace. If incident is not improved after above mentioned actions were taken, replace the 4WD control unit.
2. **In case that 4WD indicator does not blink nor light, when switching from 2WD to 4WD.**

Step	Action	Yes	No
1	Is ignition turned on?	Go to Step 2	Turn on the ignition and trace this chart from start.
2	Does the indicator light comes on when the engine is not started?	Go to Step 3	Burning out of indicator lamp or disconnection of harness wire. Trace this chart from the start after repair or replace.
3	Start the engine. Is the 4WD switch turned from 2WD to 4WD?	Short-circuit (body short) on harness of the 4WD switch. Fault of the 4WD switch (holding the closed condition). Trace this chart from the start after repair or replace.	Push the 4WD switch to 4WD.

3. **Case that the indicator keeps blinking by 2Hz after aforementioned Solution 2 is carried out.**

Step	Action	Yes	No
1	Check the air pressure and wear of all tires. Were problems found?	Try **Solution 2** after adjust the air pressure and replace worn tires.	Go to Step 2
2	Can the transfer lever be operated from High to 4L or vice versa?	Go to Step 3	Disconnection of the motor actuator harness wiring. Trace this chart from the start after repair or replace. Faults on the motor actuator. Trace this chart from the start after replace. Internal faults of transfer case. Disassemble the transfer case for check. Trace this chart from the start after repair or replace.
3	Pull out the hoses from vacuum actuator and operate 4WD switch. Is there negative pressure on either of hoses?	Go to Step 4	Faults on the transfer position switch or its harness. Trace this chart from the start after repair or replace. Faults on the VSV main body, its harness or vacuuming system. Trace the front axle diagnosis chart in this section. After that, trace this chart from the start.
4	Check the axle switch. Were problems found?	Internal faults on axle switch. Trace this chart from the start after replace.	Disconnection on the axle harness. Trace this chart from the start after repair or replace. Faults on Front Axle ASM. Trace the front axle diagnosis chart in this section. After that, trace this chart from the start.

Fault on switching from 4WD to 2WD

1. **Case that indicator does not blink nor turn out.**

Step	Action	Yes	No
1	Does the indicator turn out by ignition off?	Go to Step 2	Short circuit of the indicator harness.
2	Is the 4WD switch on 2WD position?	Disconnection on the 4WD switch harness or breakdown of the 4WD switch in open state. Trace this chart from the start after repair or replace.	Turn the 4WD switch to 2WD position. Trace this chart from the start.

2. **Case that indicator keeps 2Hz blinking after aforementioned Solution 3 is carried out.**

Step	Action	Yes	No
1	Check the air pressure and wear of all tires. Were problems found?	Try **Solution 3** after adjust the air pressure and replace worn tires.	Go to Step 2
2	Can the transfer lever be operated from High to 4L or vice versa?	Faults on the harness wiring of motor actuator. Trace this chart from the start after repair or replace. Internal faults on transfer case. Disassemble the transfer case for check. Trace this chart from the start after repair or replace. Faults on the motor actuator. Trace this chart from the start after or replace.	Go to Step 3
3	Pull out the hoses from vacuum actuator and operate 4WD switch. Is there negative pressure on either of hoses?	Go to Step 4	Faults on the transfer position switch or its harness. Trace this chart from the start after repair or replace. Faults on the VSV main body, its harness or vacuuming system. Trace the front axle diagnosis chart in this section. After that, trace this chart from the start.
4	Check the axle switch. Were problems found?	Internal faults on axle switch. Trace this chart from the start after replace. Faults on Front Axle ASM. Trace the front axle diagnosis chart in this section. After that, trace this chart from the start.	Short circuit (body short) or disconnection of the axle harness. Trace this chart from the start after repair or replace.

3. **Case that indicator's blinking changes to 4Hz after aforementioned Solution 4 is carried out.**

Step	Action	Yes	No
1	Can the transfer lever be operated from High to 4L or vice versa?	Faults on the harness wiring of motor actuator. Trace this chart from the start after repair or replace. Faults on the motor actuator. Trace this chart from the start after replace. Internal faults on transfer case. Disassemble the transfer case for check. Trace this chart from the start after repair or replace.	Faults on the 4WD control unit. Trace this chart from the start after replace.

Front Axle Diagnosis

- When the 4WD switch is operated from 4H to 2H, indicator light does not go out.

Step	Action	Yes	No
1	Drive slow 100 — 200m after a few minutes” idling. Has indicator light gone out?	All right.	Go to Step 2
2	Jack up front tires. Does the right side of front wheel rotate when the left side of front wheel is rotated?	Go to Step 4	Go to Step 3
3	1. Check the actuator switch. 2. Check the circuit to indicator. Was a problem found?	Trace this chart from the start after repair or replace.	Disassemble axle ASM for check. Trace this chart from the start after repair or replace.
4	1. Check the VSV valve. 2. Check the circuit to VSV valve. Was a problem found?	Trace this chart from the start after repair or replace.	Go to Step 5
5	Is vacuum piping all right? (tank, hose, & pipe damage or trouble)	Go to Step 6	Trace this chart from the start after repair or replace.
6	Does actuator work all right?	Trace this chart from the start.	Disassemble axle ASM for check. Trace this chart from the start after repair or replace.

- When the 4WD switch is operated from 2H to 4H, indicator light is not actuated.

Step	Action	Yes	No
1	Drive slow 100 — 200m after a few minutes" idling. Has indicator light actuated?	All right.	Go to Step 2
2	Jack up front tires. Does not the right side of front wheel rotate when the left side of front wheel is rotated?	Go to Step 4	Go to Step 3
3	1. Check the actuator switch. 2. Check the circuit to indicator. Was a problem found?	Trace this chart from the start after repair or replace.	Disassemble axle ASM for check. Trace this chart from the start after repair or replace.
4	1. Check the VSV valve. 2. Check the circuit to VSV valve. Was a problem found?	Trace this chart from the start after repair or replace.	Go to Step 5
5	Is vacuum piping all right? (tank, hose, & pipe damage or trouble)	Go to Step 6	Trace this chart from the start after repair or replace.
6	Does actuator work all right?	Trace this chart from the start.	Disassemble axle ASM for check. Trace this chart from the start after repair or replace.

Shift on the Fly Vacuum Piping and Electric Equipment (For Push Button Type)

Vacuum Piping Diagram

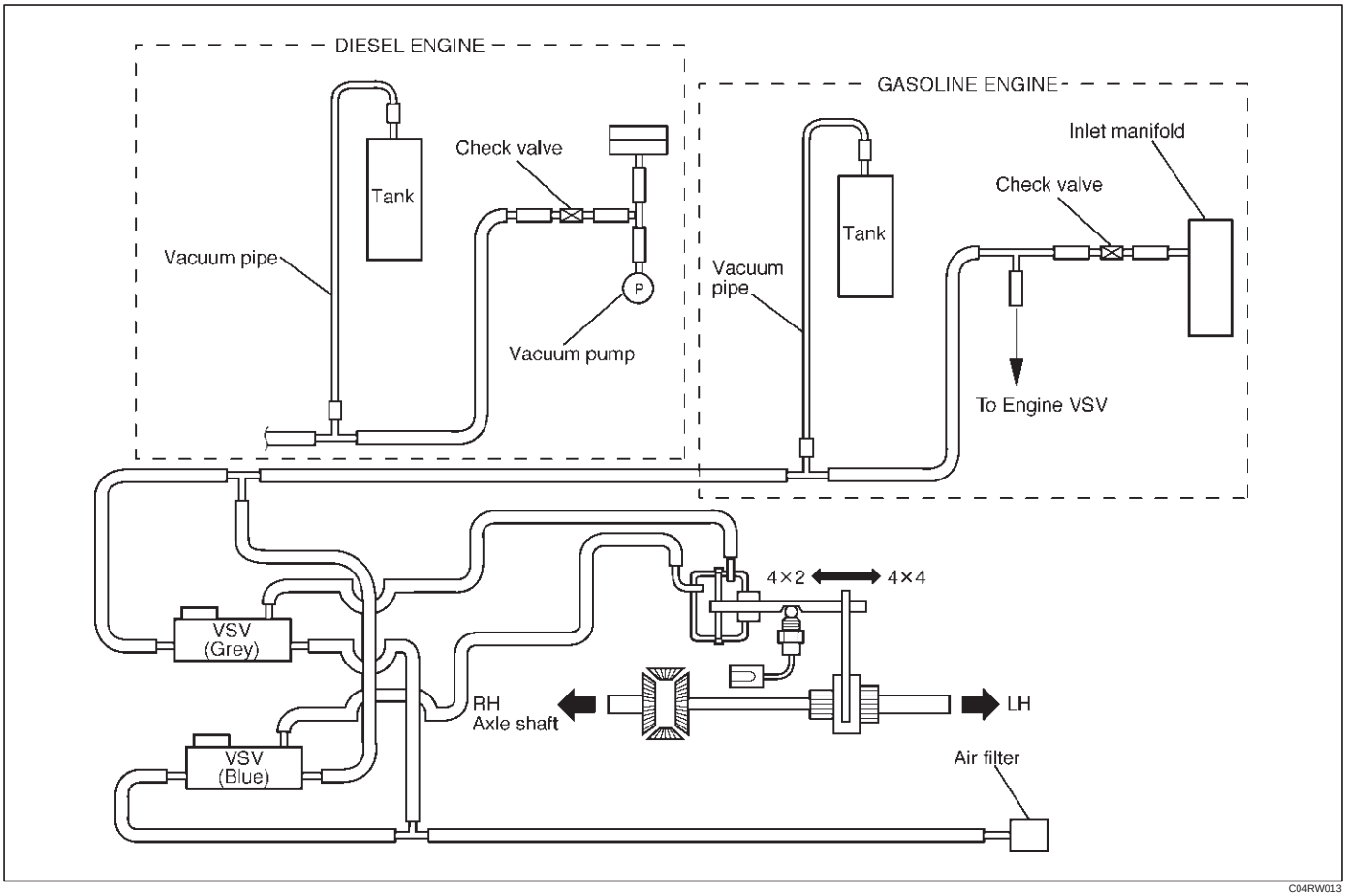

C04RW013

VSV Assembly, Actuator Assembly

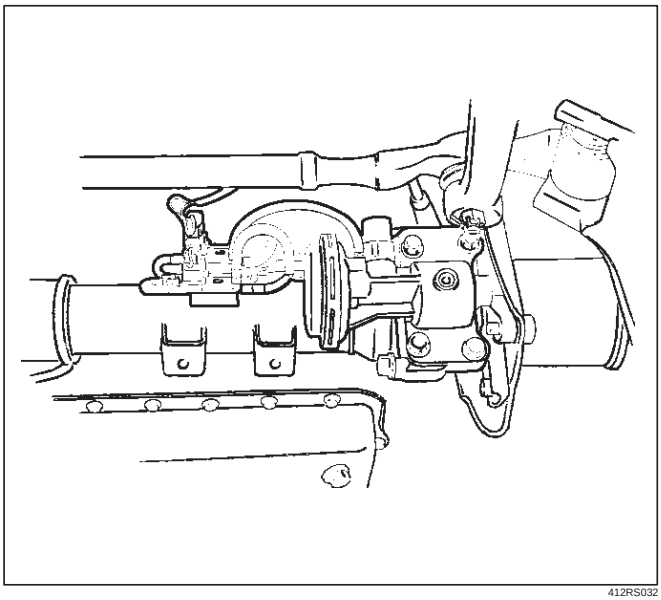

412RS032

Vacuum Tank

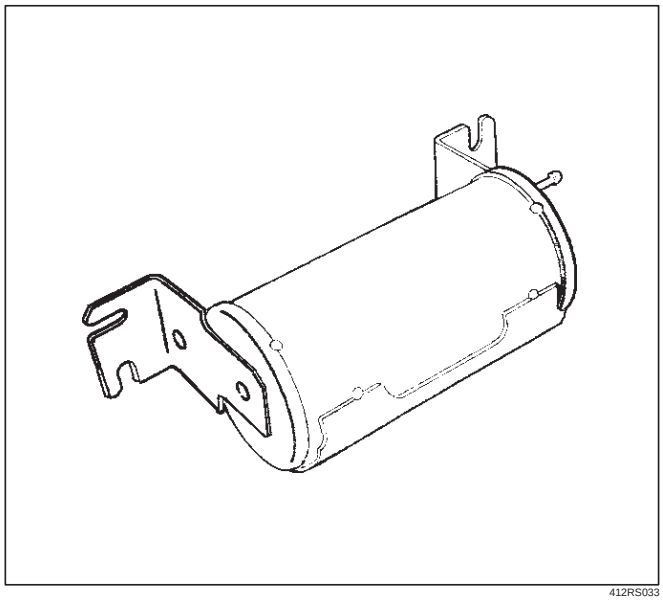

412RS033

Inspection and Repair

Vacuum Piping

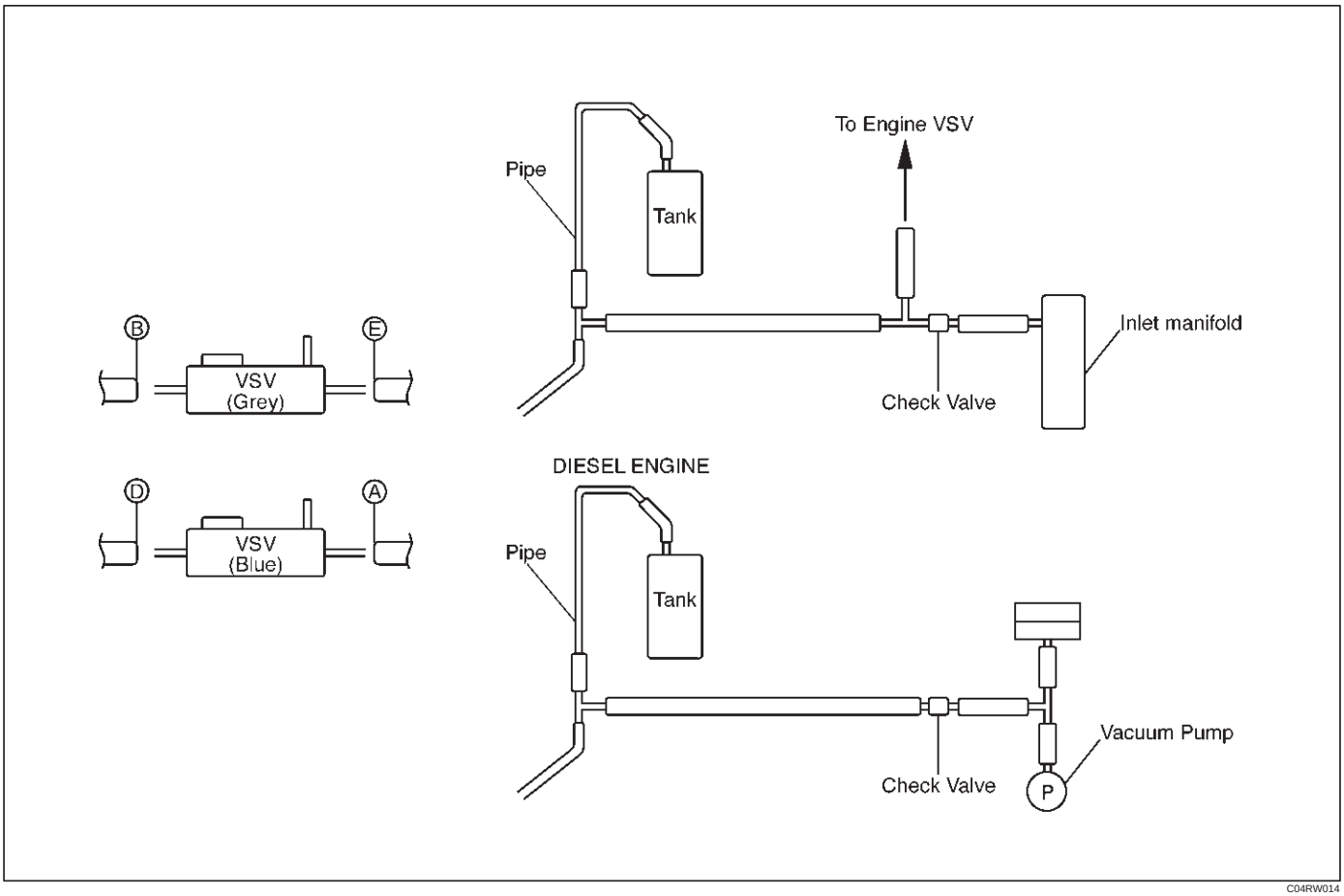

C04RW014

1. Pull out the Hose A in figure and install a vacuum gauge.
2. Plug up Hose B in figure to prevent the leak of vacuum.
3. Start the engine and measure vacuum 2 or 3 minutes afterward.
4. Repeat 1) and 2) but with Hose A plugged and Hose B pulled out.
5. If vacuum measures –400mmHg, or if it shows a sudden drop immediately after engine stop, inspect the hose, tank, and pipe for damage.

NOTE: Be careful not to permit the entry of dust and water during inspection.

6. Pull out Hose D in above illustration.
7. Plug Hose E in above illustration.
8. Make sure that Hose D in above illustration is under atmospheric pressure.
9. Pull out Hose E and plug Hose D, and make sure that Hose E is under atmospheric pressure.
10. If Check 8) or 9) has revealed stoppage, check and see that there is no bend, foreign matter in the hose or in the filter. If there is trouble, repair or replace.

Check Valve

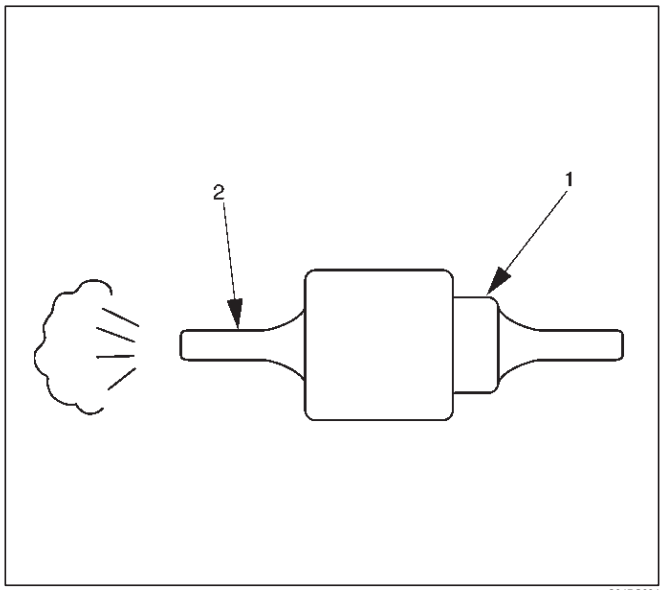

C04RS004

1. Apply vacuum from the orange colored side(1).

   Vacuum:–400mmHg
2. Check leakage of vacuum.
3. Make sure that vacuum cannot be applied from the black colored side(2).

4. If vacuum is not applicable as much as –400mmHg, and if there is resistance on the intake side, replace with a new check valve.

VSV Assembly

Inspect the vehicle side harness as follows:

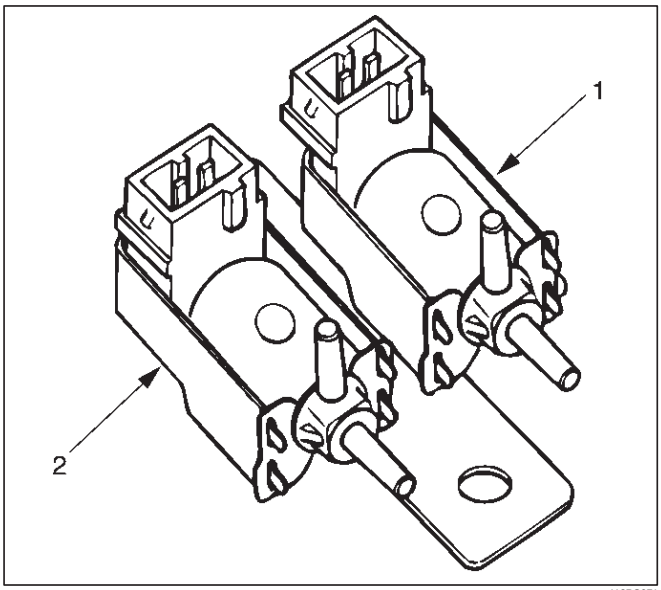

412RS071

Legend
(1) Grey
(2) Blue

1. Remove connector.
2. Shift transfer lever to 2H and start the engine.

NOTE: Do not move the vehicle while inspection.

3. Make sure that there is continuity in the vehicle side of harness. If there is no continuity, check transfer shift switch and wiring.

Inspect both VSVs as follows:

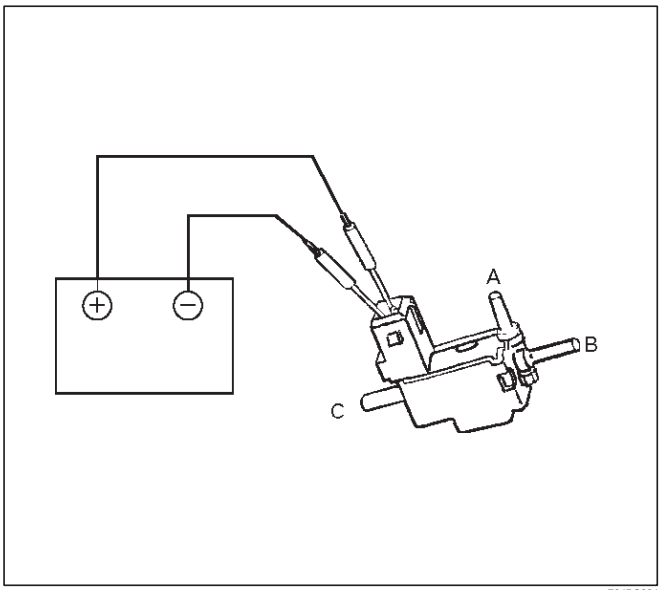

F04RS004

1. With battery not connected (Usual).
   A–C:There is continuity
   B:Closed
2. With battery connected
   A – B:There is continuity
   C:Closed
3. If 1) and 2) fail, replace with a new VSV.

Axle Position Switch

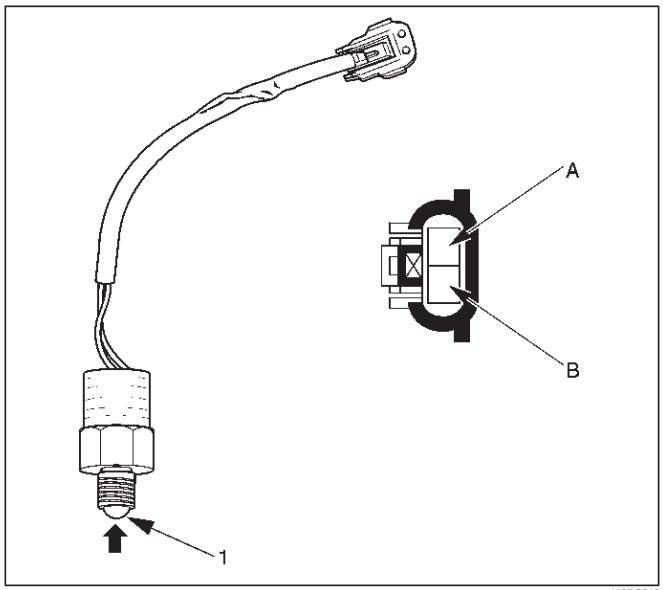

412RS048

1. With ball (1) being free
   A – B:There is continuity
2. With ball forced into the switch
   A – B:No continuity
3. If 1) and 2) fail, replace with a new switch.

Motor Actuator Assembly

Inspect the function of the motor actuator assembly as follows:

1. Disassemble the motor actuator from transfer rear case.

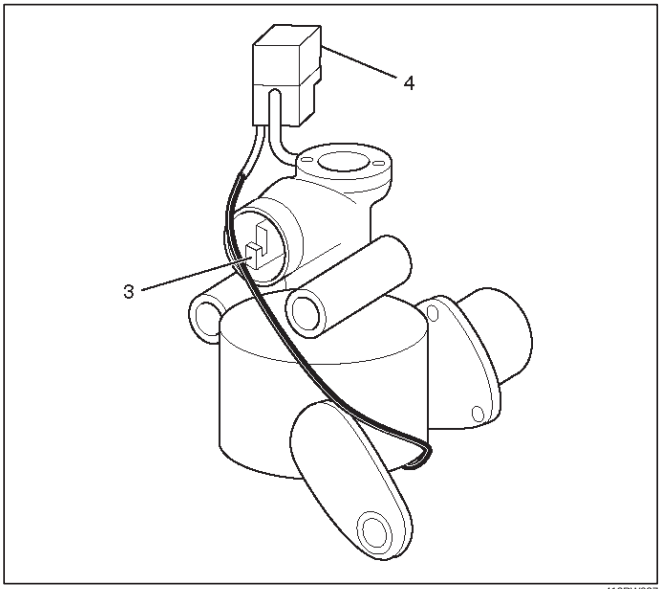

412RW037

Legend
(3) Shift Rod
(4) Connector

2. Connect the terminals as shown in figure.

Shift rod of the motor actuator moves and stops at 4WD position.

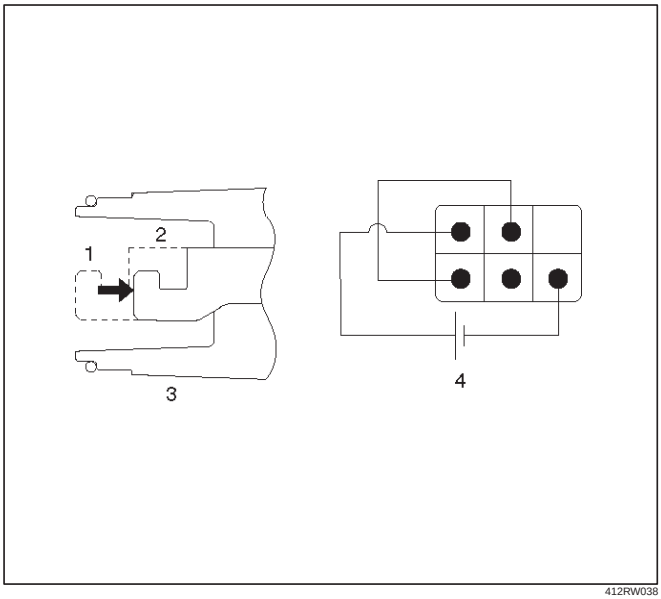

412RW038

Legend
(1) 2WD
(2) 4WD
(3) Shift Rod
(4) Connector

3. Connect the terminals as shown in figure.

Shift rod of the motor actuator moves and stops at 2WD position.

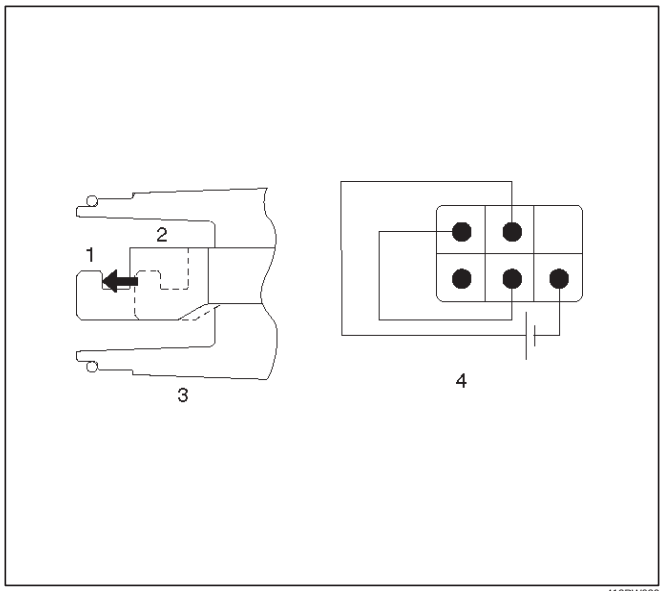

412RW039

Legend
(1) 2WD
(2) 4WD
(3) Shift Rod
(4) Connector

4. If 2) and 3) fail, replace with a new motor actuator.

Transfer Position Switch

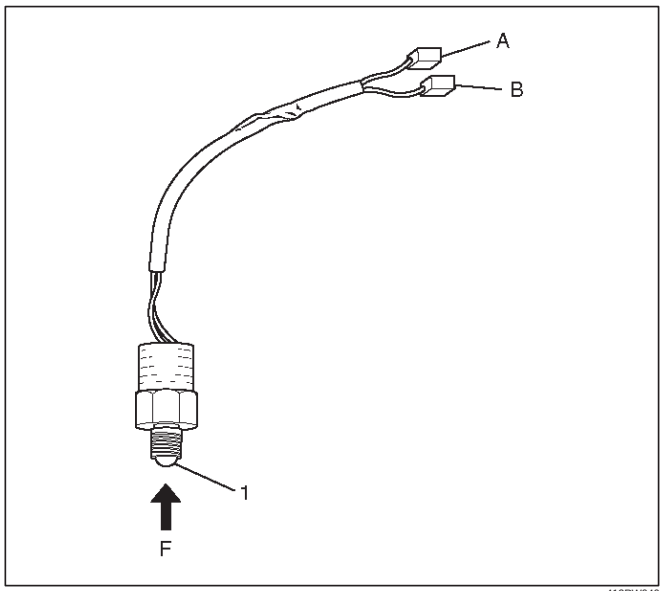

412RW040

Legend
(1) Ball

1. With ball being free.

A–B : There is continuity.

2. With ball forced into the switch.

A–B : No continuity.

3. If 1) and 2) fail, replace with a new switch.

4WD Control Unit (For Push Button Type)

4WD Control Unit Associated Parts

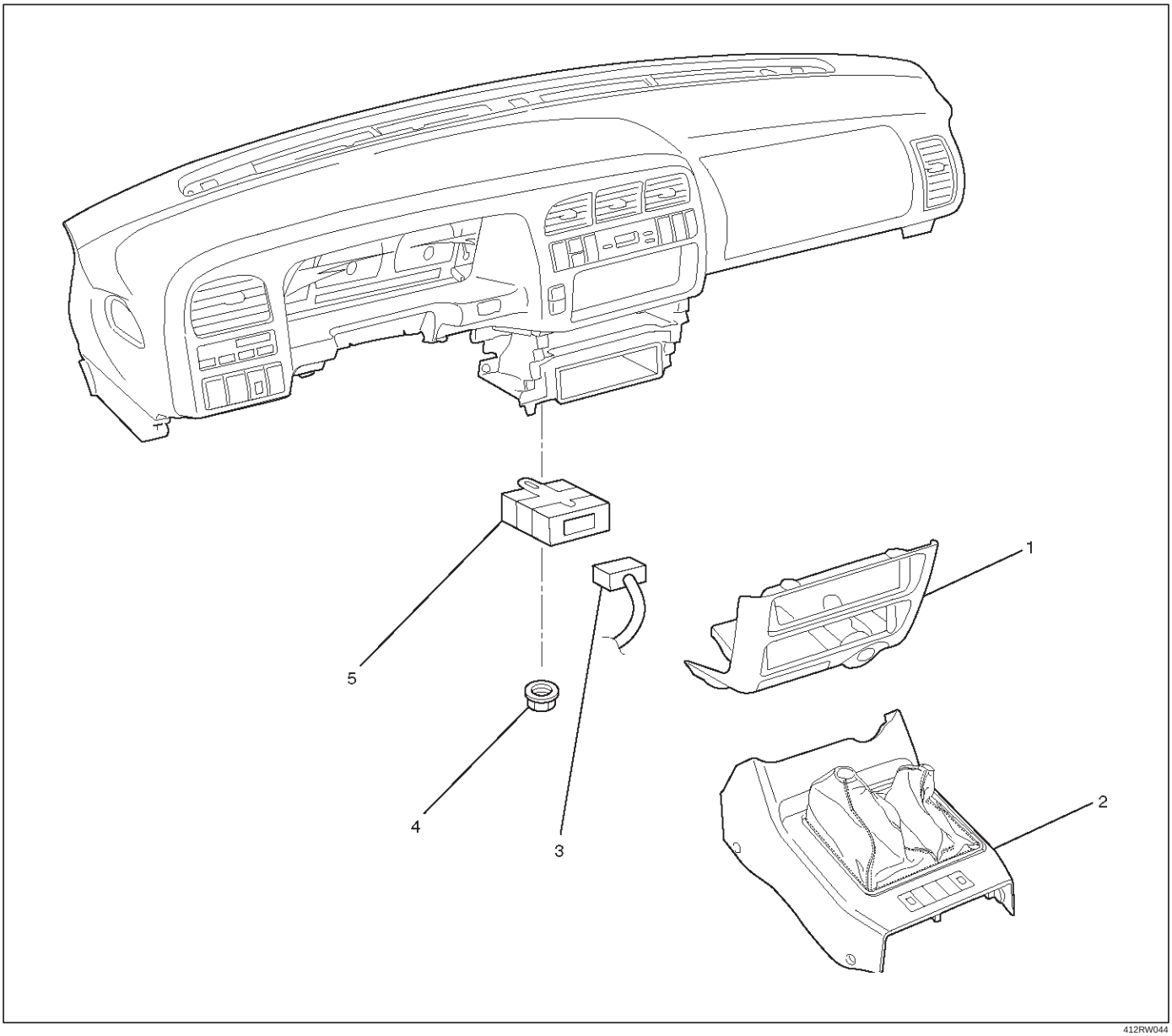

412RW044

Legend

(1) Lower Cluster Assembly
(2) Front Console Assembly
(3) Harness Connector
(4) Nut
(5) 4WD Control Unit

Removal

1. Remove lower cluster assembly and front console assembly.
   Refer to Interior Trim in Body and Accessories section.
2. Remove nut.
3. Remove 4WD control unit.
4. Disconnect harness connector (1).

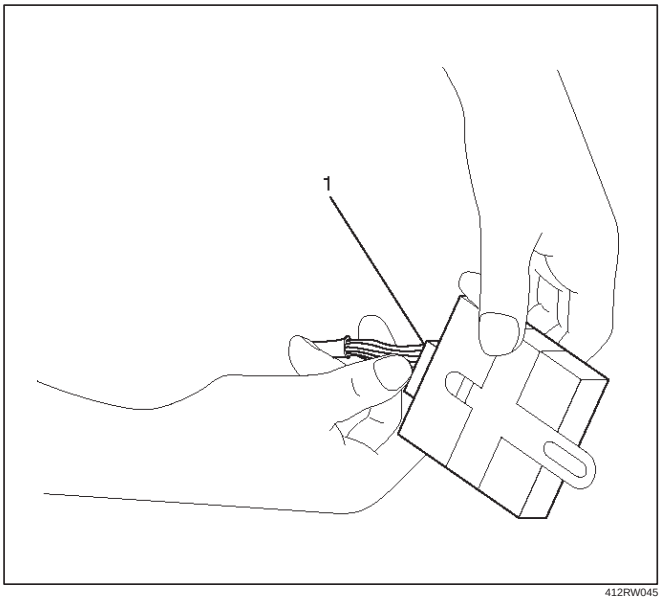

412RW045

Legend

(1) Harness Connector

Installation

1. Connect harness connector, then install 4WD control unit.
2. Install lower cluster assembly and front console assembly.

MEMO

DRIVELINE/AXLE

DRIVELINE CONTROL SYSTEM (TOD)

CONTENTS

Service Precaution 4B2–1
General Description 4B2–2
System Components 4B2–4
Parts Location 4B2–4
Functions of Indicator Lamp 4B2–8
Diagnosis 4B2–13
Basic Diagnostic Flow Chart 4B2–17
Parts Location 4B2–18
Circuit Diagram 4B2–22
Connector List 4B2–34
Checking Failed Pin 4B2–36
Checking Failed TOD Control Unit Pin 4B2–39
Diagnostic Trouble Codes 4B2–43
Diagnosis from Trouble Codes 4B2–44
Trouble Diagnosis Depending on The Status of TOD Indicator 4B2–74
Diagnosis from Symptom 4B2–114

Service Precaution

WARNING: IF SO EQUIPPED WITH A SUPPLEMENTAL RESTRAINT SYSTEM (SRS), REFER TO THE SRS COMPONENT AND WIRING LOCATION VIEW IN ORDER TO DETERMINE WHETHER YOU ARE PERFORMING SERVICE ON OR NEAR THE SRS COMPONENTS OR THE SRS WIRING. WHEN YOU ARE PERFORMING SERVICE ON OR NEAR THE SRS COMPONENTS OR THE SRS WIRING, REFER TO THE SRS SERVICE INFORMATION. FAILURE TO FOLLOW WARNINGS COULD RESULT IN POSSIBLE AIR BAG DEPLOYMENT, PERSONAL INJURY, OR OTHERWISE UNNEEDED SRS SYSTEM REPAIRS.

CAUTION: Always use the correct fastener in the proper location. When you replace a fastener, use ONLY the exact part number for that application. ISUZU will call out those fasteners that require a replacement after removal. ISUZU will also call out the fasteners that require thread lockers or thread sealant. UNLESS OTHERWISE SPECIFIED, do not use supplemental coatings (Paints, greases, or other corrosion inhibitors) on threaded fasteners or fastener joint interfaces. Generally, such coatings adversely affect the fastener torque and the joint clamping force, and may damage the fastener. When you install fasteners, use the correct tightening sequence and specifications. Following these instructions can help you avoid damage to parts and systems.

General Description

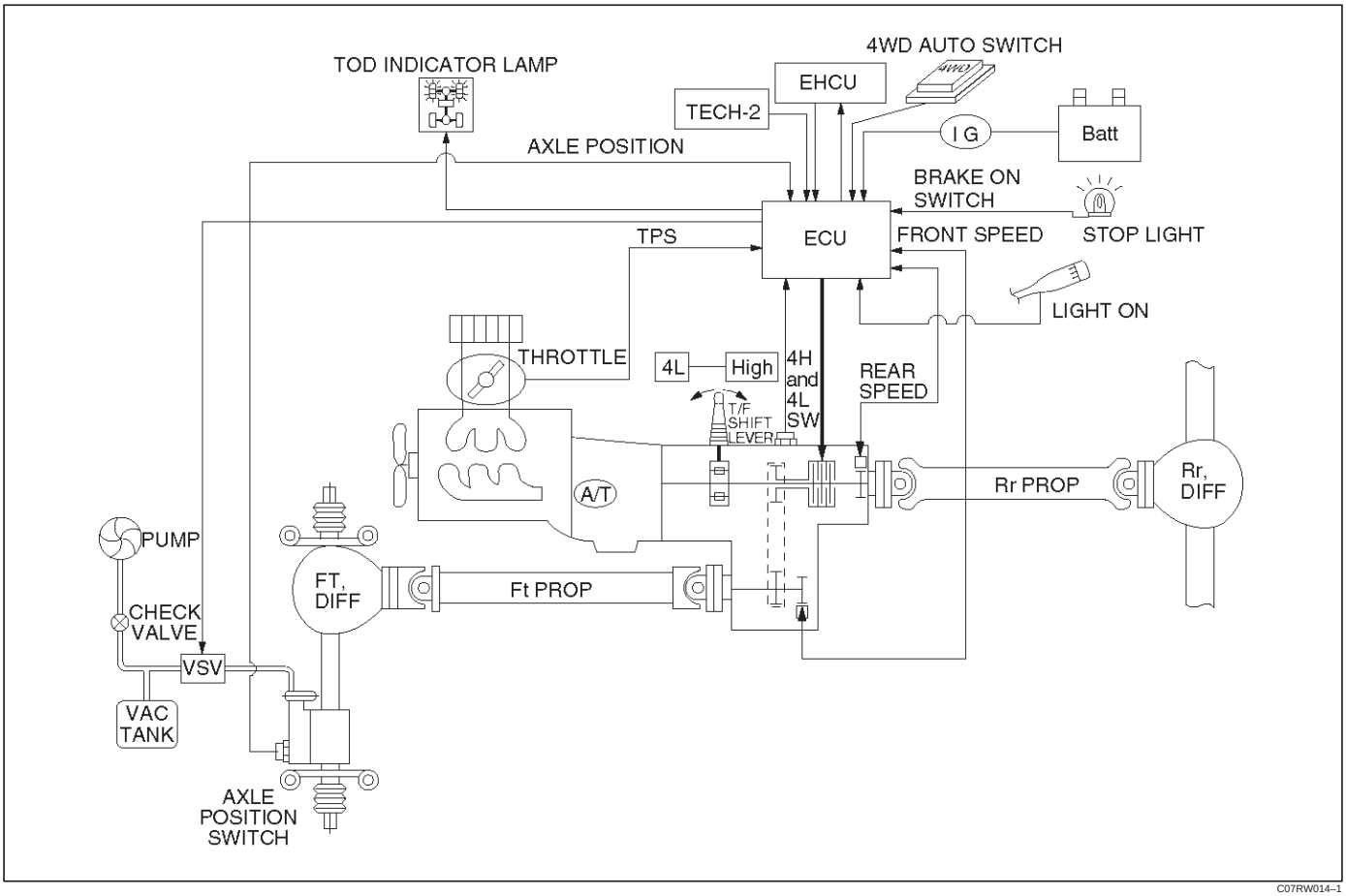

TOD (Torque on Demand) system is traction state control system to vehicle.

Transfer Position and Drive Mode

Three drive modes can be selected through operation of 4WD AUTO switch and transfer lever.

Transfer Position	4WD AUTO SW	Mode	Drive mode
HIGH	ON (NORMAL)	2H	Rear wheel drive
	OFF (PUSHED)	TOD	Electronically controlled torque split four wheel drive
4L	ON/OFF	4L	Low-speed mechanical lock-up four wheel drive

The electronic control unit (ECU) judges the signals from the transfer lever and 4WD AUTO switch, and controls the transfer drive mode and shift-on-the-fly system status.

TOD Control

The TOD position usually drives the rear wheels, and transmits the torque to the front wheels with the help of electronically controlled torque split mechanism according to running conditions encountered. The driving force is directly transmitted to the rear wheels. This force is split by the transfer and delivered to the front wheels. The magnitude of the torque transmitted to the front wheels is controlled by changing the pressing force of the multi plate disk clutch built in the transfer unit. The pressing force of the clutch is controlled by changing the duty cycle to the electromagnetic coil mounted to the rear of the clutch. When the clutch is completely disengaged, the rear wheels are driven. When the clutch is completely engaged, a rigid four wheel drive mode is obtained. The torque split status is controlled continuously between the rear wheel and four wheel drive modes. This system includes front and rear speed sensors, and receives throttle position sensor information from ECM.

The control unit receives signals sent from these sensors and changes the pressing force of the multi plate disk clutch to determine the torque distribution on the front and rear wheels. Therefore, when the slip of the rear wheels is increased against the current torque level in the normal rear wheel drive mode, the control unit detects the slip

condition, determines the optimum torque based on the feedback control logic, and increases the torque to the front wheels.

The control unit uses the signal from the throttle position sensor to predict the future vehicle condition and the intention of the driver with respect to acceleration and deceleration, and determines the initial torque distribution using these data and the information from the speed sensors.

In case of small circle turning in the parking lot, for example, the control unit minimizes the clutch pressing force to restrict a braking phenomenon. When the ABS becomes active, the control unit optimizes the clutch pressing force to ensure stable braking.

TOD Indicator Control

The TOD indicator on the instrument panel informs the driver of the current working status of the transfer unit. The information consists of two items: the drive mode (2H, TOD, 4L, transition) and the torque split status of the TOD (torque distribution level). The indicator can display occasional errors and corresponding error codes.

System Components

Parts Location

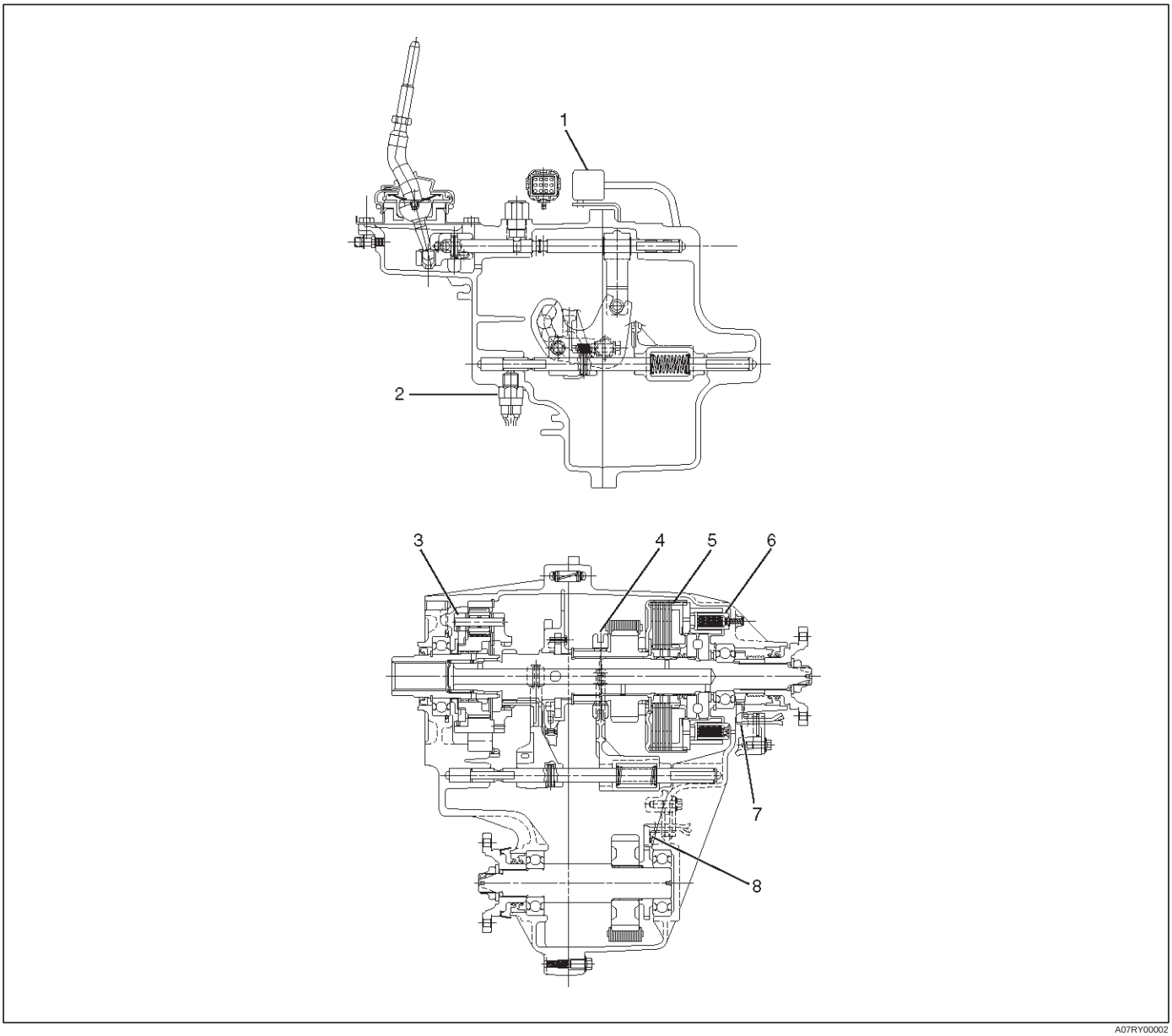

A07RY00002

Legend

(1) T/F Connector
(2) 4H and 4L Switch
(3) High-Low Planetary Gear Set
(4) Mechanical Lock
(5) Multi Plate Disk Clutch Pack
(6) Electromagnetic Coil
(7) Rear Speed Sensor
(8) Front Speed Sensor

Front and Rear Speed Sensors

The sensors are built in the transfer case, detect the rotation of rotors directly coupled to the propeller shafts. Thirty rectangular pulses are output per one rotation of the propeller shaft.

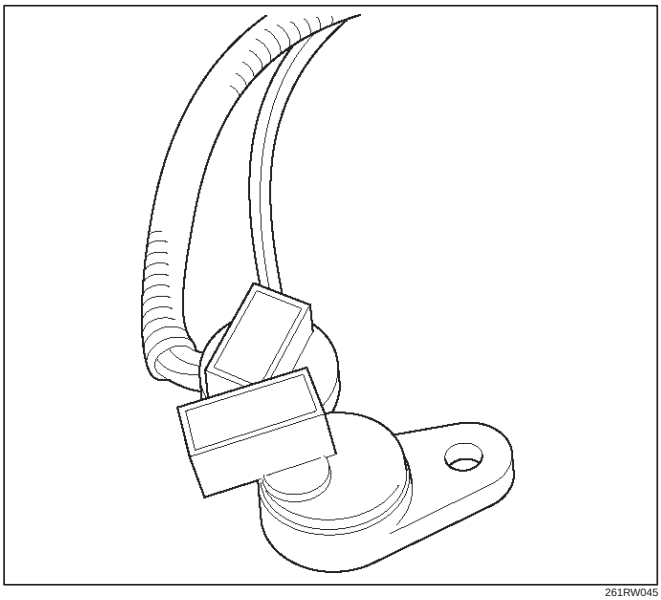

261RW045

Electromagnetic Coil

Receives the duty signals from the TOD control unit and controls the pressing force of the clutch pressure cam.

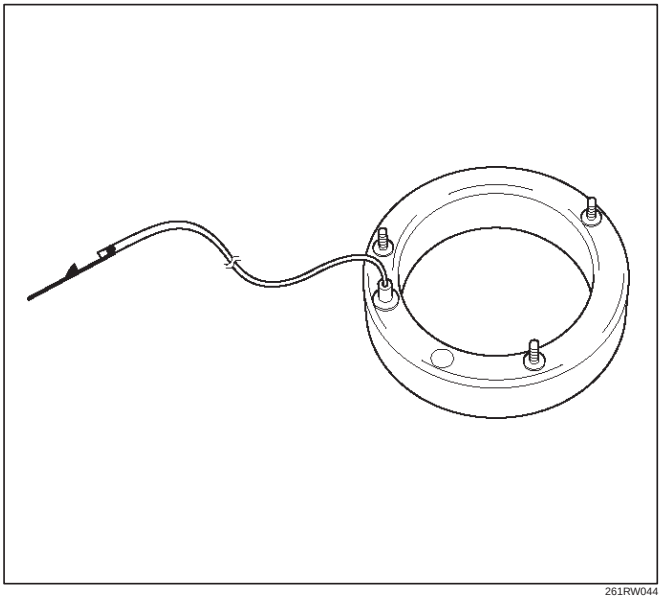

261RW044

Multi Plate Disk Clutch Pack

Transmits the torque determined by the clutch pressing force to the front propeller shaft via the front drive chain.

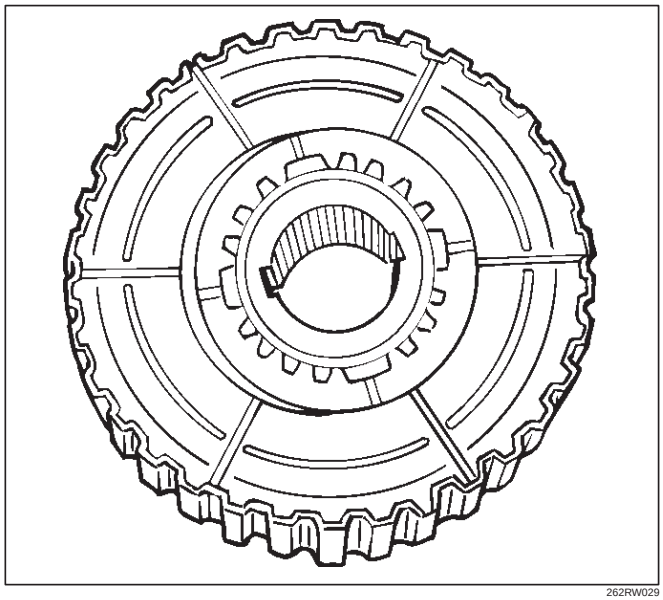

262RW029

Mechanical Lock Sleeve

Couples the front and rear propeller shaft mechanically when the transfer shaft is in the 4L position.

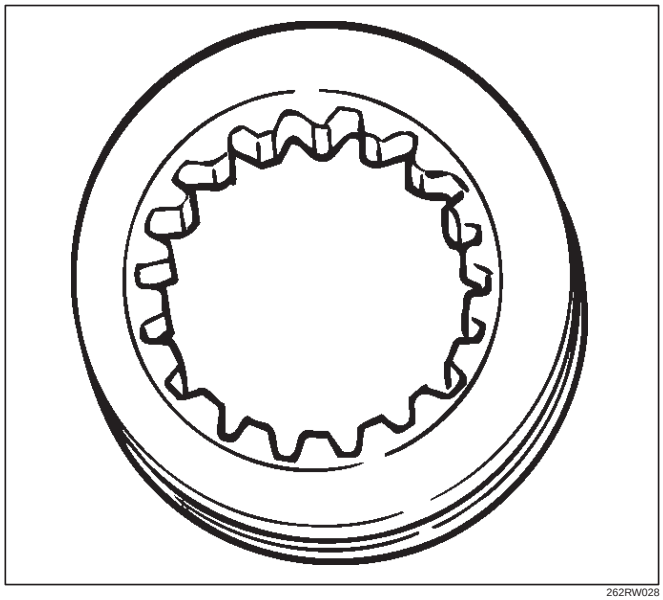

262RW028

High-Low Planetary Gear Set

Establishes an auxiliary transmission mechanism. When the transfer shift lever is set to the 2H or TOD position, the reduction gear ratio is 1.000 and the corresponding driving force is generated. When the transfer shift lever is set to the 4L position, the reduction gear ratio is 2.480 and the corresponding driving force is generated.

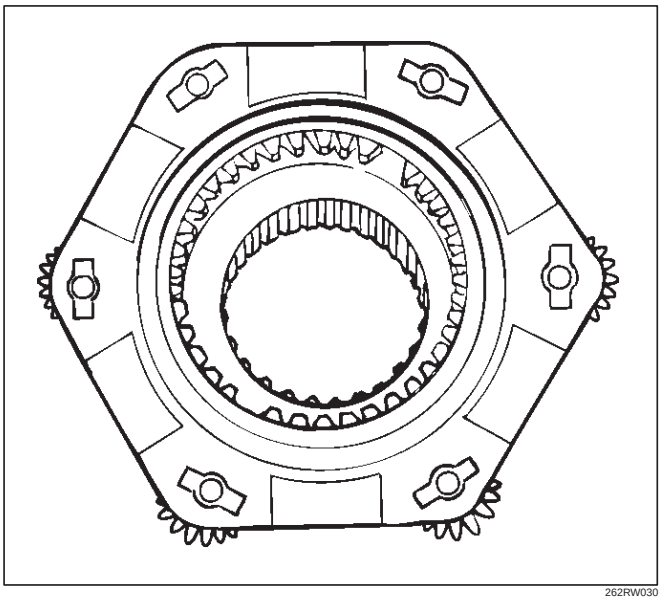

262RW030

4H and 4L Switch

Detects the shift position of the transfer from the movement of the transfer lever and outputs signals to the TOD control unit.

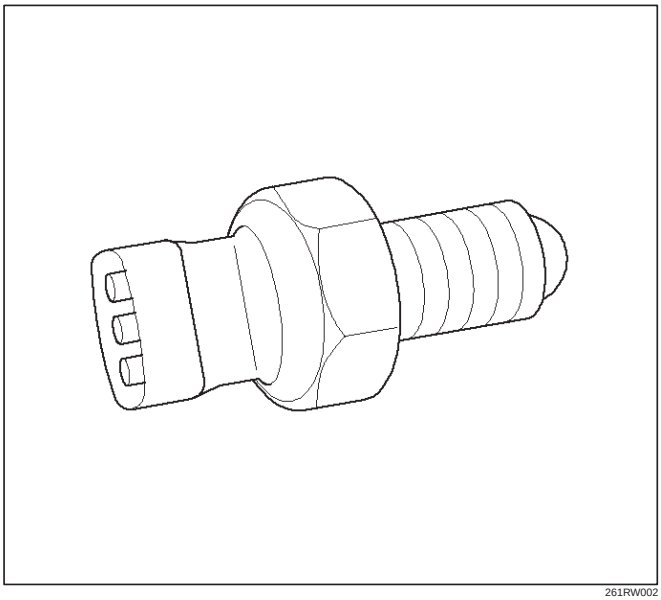

261RW002

Transfer Connector

Transmits the input and output signals of the speed sensors, electromagnetic coil, and 4H and 4L switche to the vehicle harness. A waterproof 12-pin type is used.

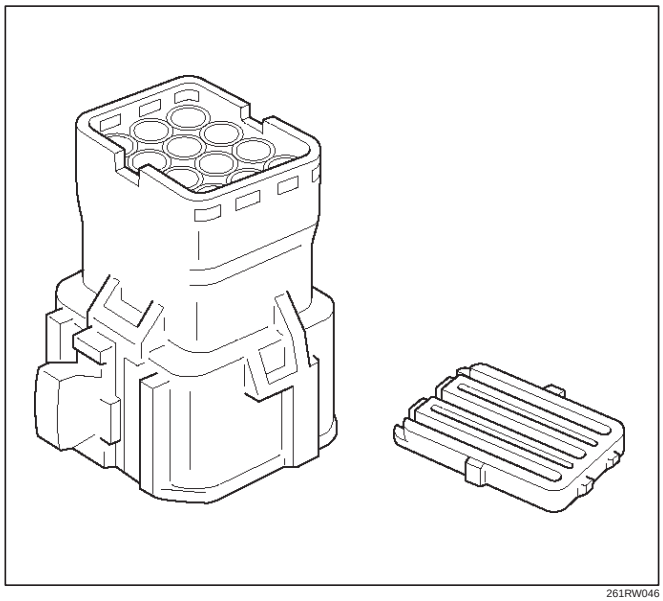

261RW046

TOD Indicator Lamps (on the instrument panel)

Inform the following items.

- Bulb check
- Drive mode
- ABS IN status
- BRAKE ON status

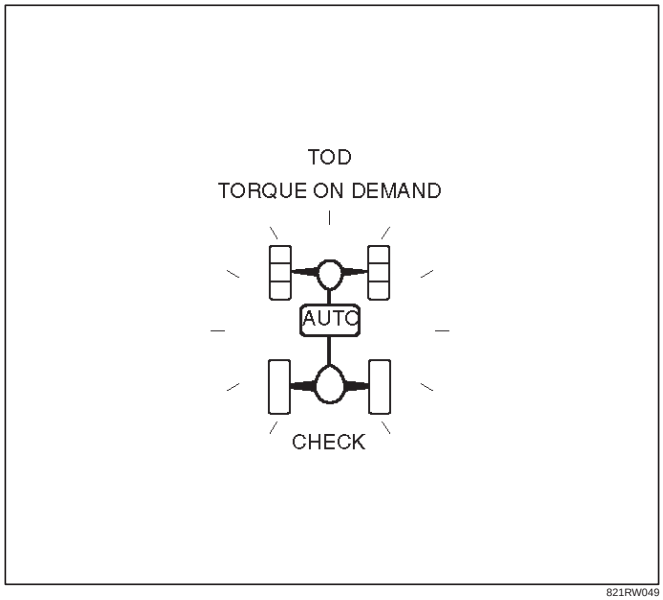

821RW049

Check Lamp

Inform the following items.

- Bulb check
- Fail (fail alarm)
- Trouble code
- Diesel/gasoline MAP

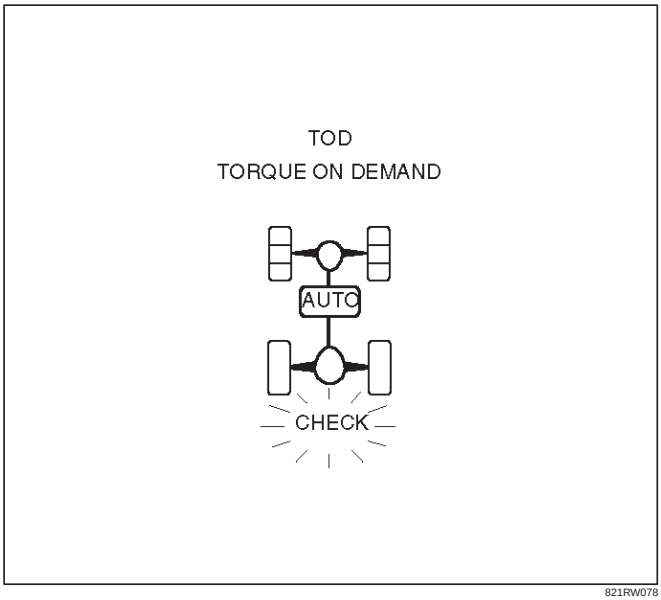

821RW078

TOD ECU

This control unit is mounted to the front right hand seat via a special bracket.

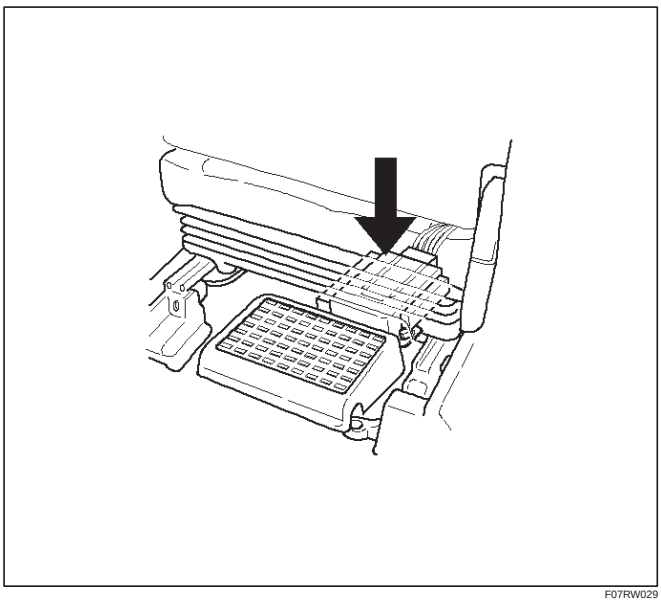

F07RW029

Functions of Indicator Lamp

TOD Indicator Lamps

Output condition					Indicator indicate state	Remark	4WD Auto sw state	Each sw state			
ECU Terminal No.								4WD AUTO SW point of contact	4H SW	4L SW	AXLE SW
25	26	27	28	29							
1	1	1	1	0	2H Mode			ON	OFF	OFF	OFF
0	0	0	1	0	4L Mode		ON / OFF	OFF	ON	ON
1	1	1	1	1	N Mode		ON / OFF	ON	ON	OFF
1	1	1	0	0	TOD Mode1	Traction distribution about 0:100					
1	1	0	0	0	TOD Mode2	Traction distribution about 15:85					
1	0	0	0	0	TOD Mode3	Traction distribution about 30:70		OFF	OFF	OFF	ON
0	0	0	0	0	TOD Mode4	Traction distribution about 50:50					

1=12V 0=GND

NOTE : Traction distribution is about a standard.

C04RY00014

Indication During Transition of Transfer Lever

When the 4WD AUTO SW is selected or the transfer lever is shifted, and the signals from the AXLE switch do not comply with the signal conditions of the 4H and 4L switch, the transfer lever position signals generated by the 4H and 4L switch and the N position signals are repeatedly output at an interval of 0.8 second.

NOTE: After the 4WD AUTO SW and the transfer lever is set to the specified position and the AXLE switch generates compliant signals, the normal output status is returned.

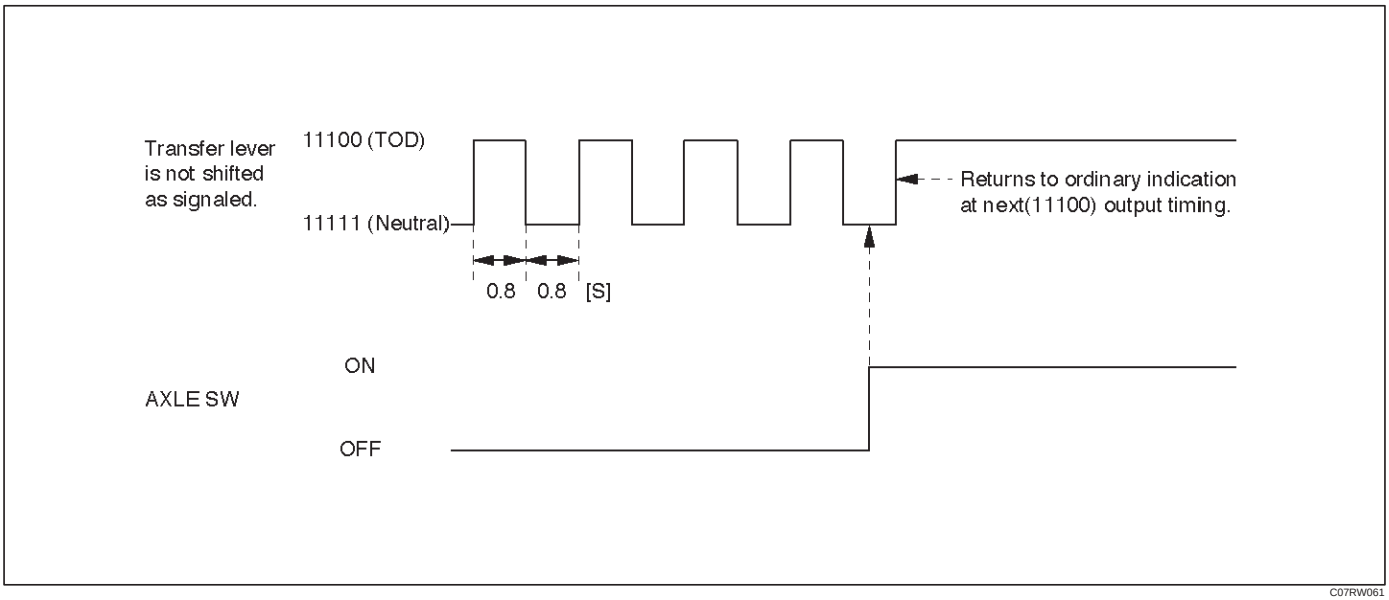

C07RW061

Bulb Check

When the starter switch is turned on, the TOD indicator lamps go on as shown below.

NOTE: Once the starter switch is turned on, all the TOD indicator lamps are lit for two seconds even if the transfer lever is in any position.

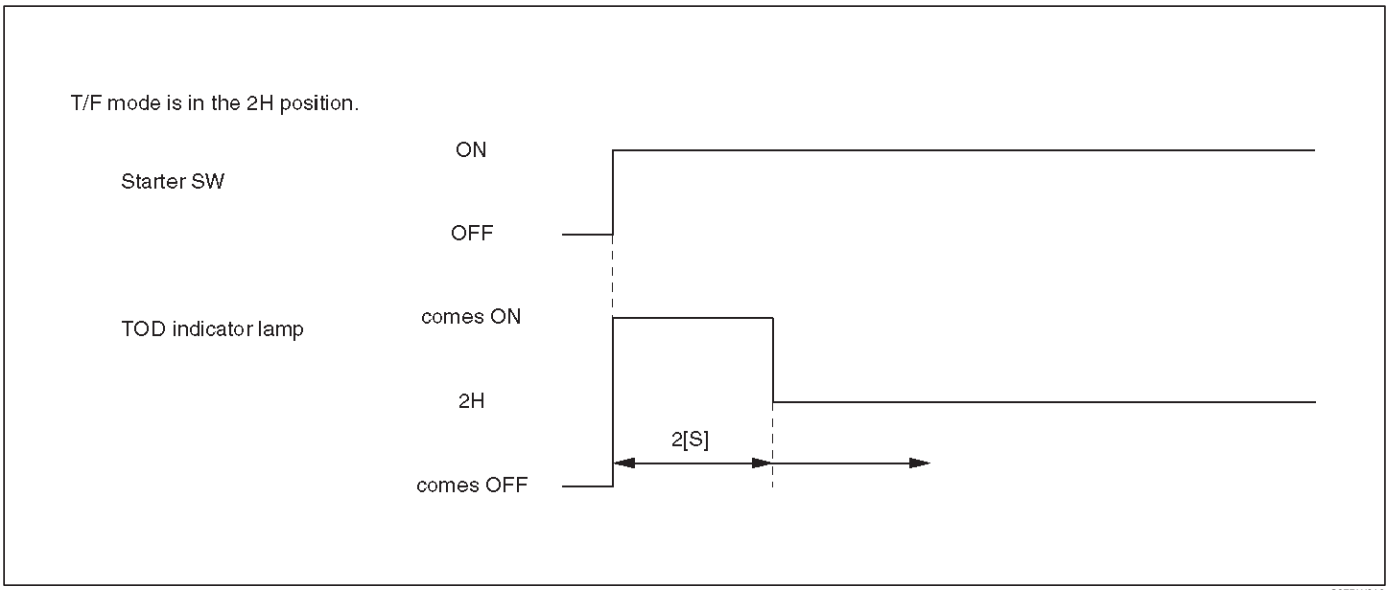

C07RW016

Simplified checking method of ABS IN and BRAKE ON signals:

In the event that any of the signal inputs listed below are observed while the self-diagnostic code is being displayed (the self-diagnostic connector is short-circuited to GND), you can simply check the ABS IN and BRAKE ON signals as shown in the figures below.

1	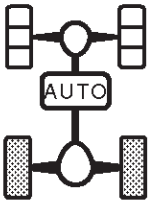	• In case of ABS IN signal being inputted, TOD indicator light is on as illustrated while the signal is inputted.
2	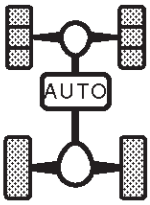	• In case of BRAKE ON signal being inputted, TOD indicator light is on as illustrated while the signal is inputted.
3	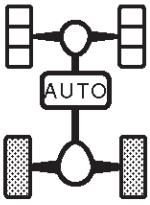	• When “1, 2” signals are inputted simultaneously, signal “1” (ABS IN) is indicated preferentially.
4	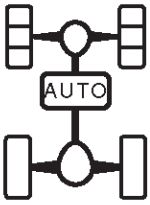	• In cases other than “1, 2, 3”, the indication is always as illustrated. (This is light-off mode) • TOD indicator light returns to usual control (mode) at 12 km/h or more.

C07RW017

Check Lamp

Check Lamp Bulb Check

When the starter switch is turned on in the normal state, the control unit turns on the CHECK lamp to check the bulb.

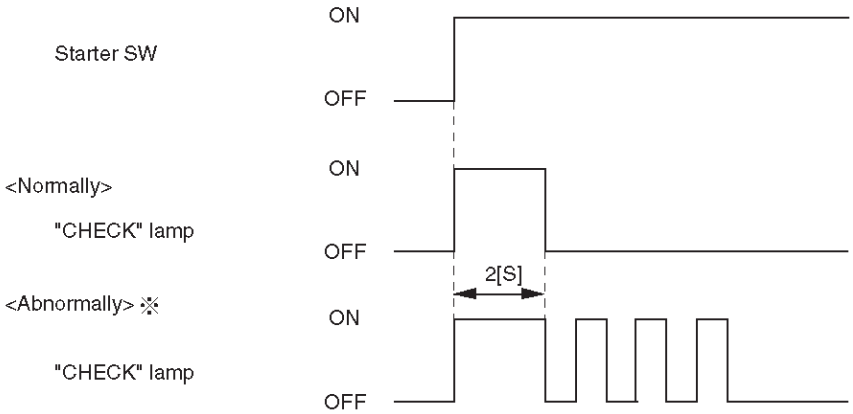

C07RW019

The CHECK lamp also has the following functions.

D-G MAP recognition and display (The control unit displays what type of vehicle, diesel or gasoline vehicle, it recognizes.)

1. Short-circuit the self-diagnostic connector.
2. Turn on the starter switch. (Displays with respect to the self-diagnosis begin to appear.)

NOTE: Do not start the engine.

3. Shift the transfer lever to the neutral position between HIGH and 4L.
4. After all the conditions in 1 through 3 above are met, set the throttle to the WOT (wide open throttle) position (i.e., full open position). The display of the self-diagnosis is temporarily suspended, and the CHECK lamp begins to display that MAP is recognized by the TPS (throttle position sensor) according to the current conditions.

NOTE: If the TPS has failed, this function might not work.

1. When the control unit recognizes the vehicle as gasoline type, the CHECK lamp is turned on for five seconds and this mode is repeated at an interval of 0.3 second.
2. When the control unit recognizes the vehicle as diesel type, the CHECK lamp is turned off for five seconds and this mode is repeated at an interval of 0.3 seconds.
3. Upon completion of step 4, the system resumes the self-diagnosis. (The self-diagnosis is executed from the beginning.)
5. Turn off the starter switch once. When above conditions are met again in the future, the TPS MAP control can be started.

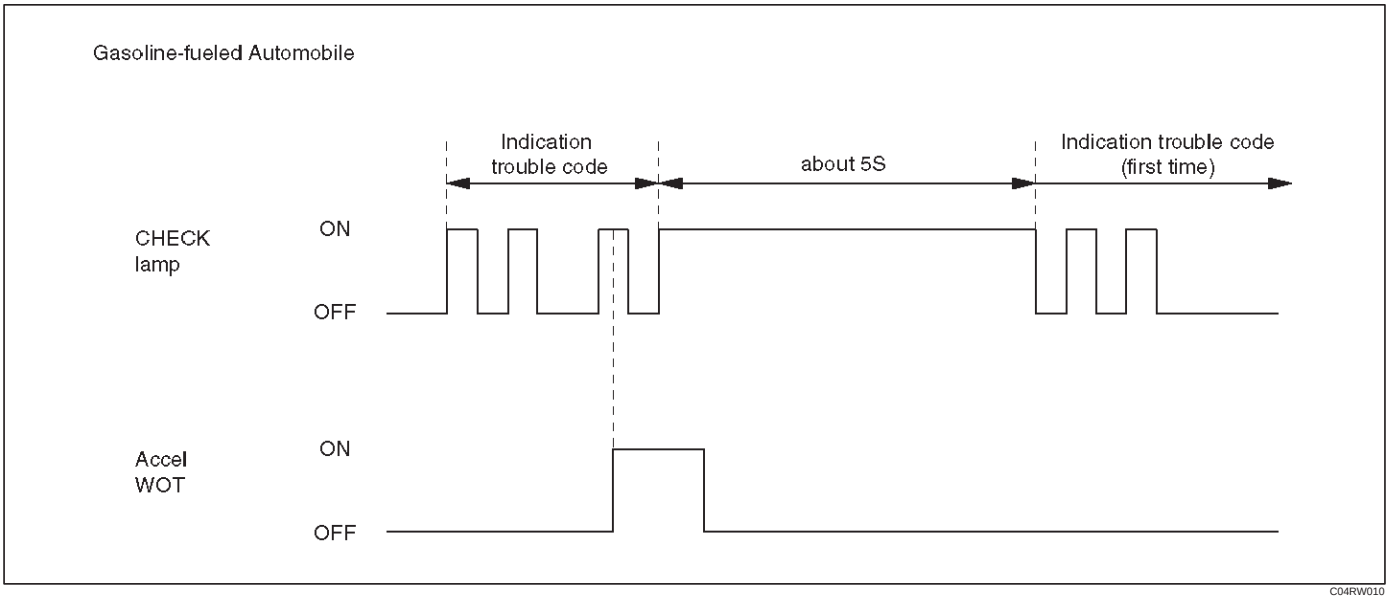

If the accelerator wide–open–throttle(WOT) timing check lamp is on, the subsequent timing will display immediately after the WOT timing check lamp turns off. If the WOT timing check lamp is off, the subsequent lamp timing will display immediately.

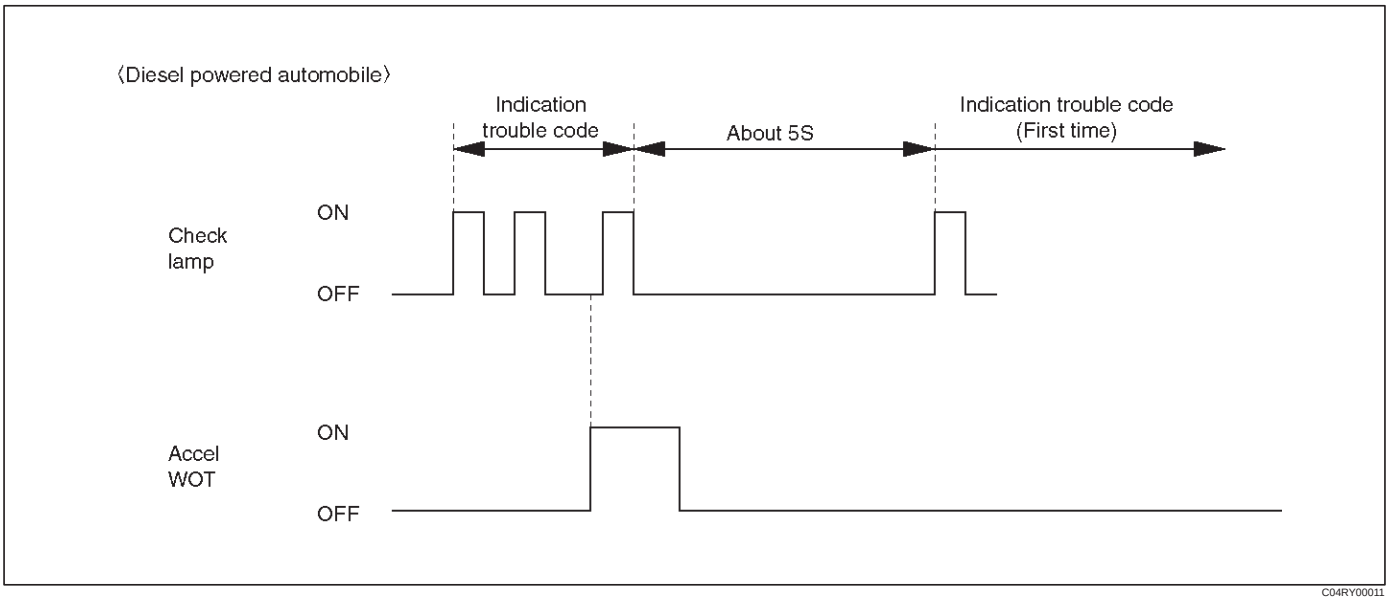

If the WOT timing check lamp is off, the subsequent timing will display immediately after the WOT timing check lamp turns on.
If the WOT timing check lamp is on, the subsequent lamp timing will display immediately.

Diagnosis

General Information Diagnosis

The troubles on TOD are classified into the group that can be identified by the lighting status of the TOD indicator lamps and those that can be recognized as abnormal phenomena of the vehicle by the driver.
The troubles that can be identified by the lighting status of the TOD indicator lamps are examined by the procedures “Diagnosis from Trouble Codes” and “Trouble Diagnosis Depending on The Status of TOD indicator”. The troubles that can be recognized as abnormal phenomena of the vehicle by the driver are examined by the procedure “Diagnosis from symptom”.

Self-diagnosis

The control unit has a function of self-diagnosis. If a trouble occurs in the course of system startup, the control unit blinks the CHECK lamp and saves the trouble code.

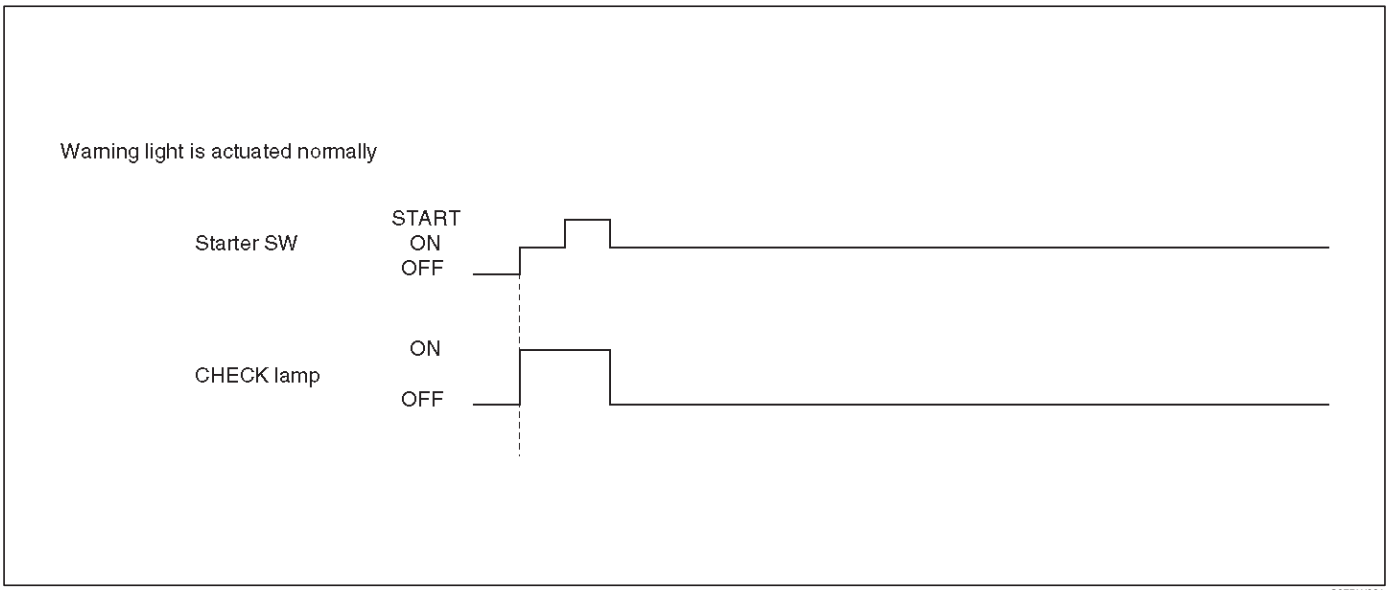

NOTE: If an intermittent fault occurs, the control unit stops blinking upon removal of the fault. The trouble code is saved to the control unit.

Indication Method of Trouble Code

- Short-circuit terminal 8 of the self-diagnostic connector to GND to display the trouble code on the CHECK lamp.

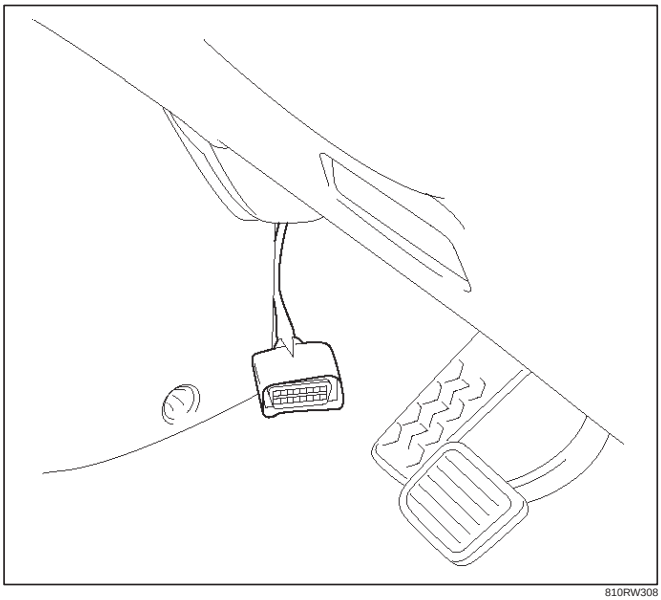

810RW308

- If no trouble codes exist, code “12” is displayed continuously.
- If trouble codes exist, code “12” is displayed three times, and the trouble codes, starting from the smaller code number, are displayed three times respectively.

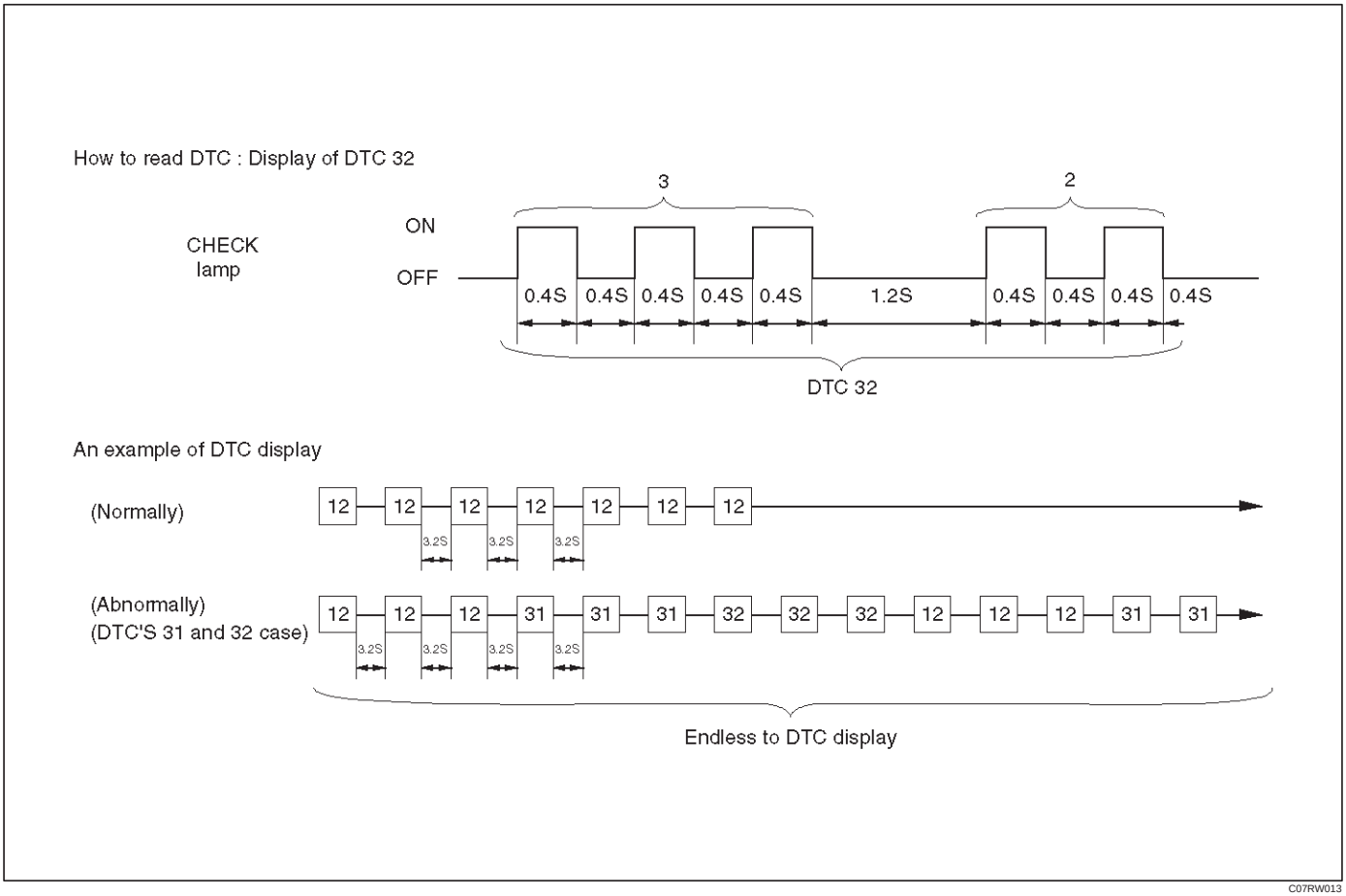

C07RW013

How to Clear The Trouble Code

The trouble codes saved to the control unit can be deleted by the following procedure if the starter switch is being in the OFF position.

1. Shift the transfer lever to the neutral position between HIGH and 4L, and short-circuit the self-diagnostic connector.

NOTE: The neutral position between HIGH and 4L refers to the point that turns off the TOD indicator lamps. (However, be sure to check the position before short-circuiting the self-diagnostic connector.)

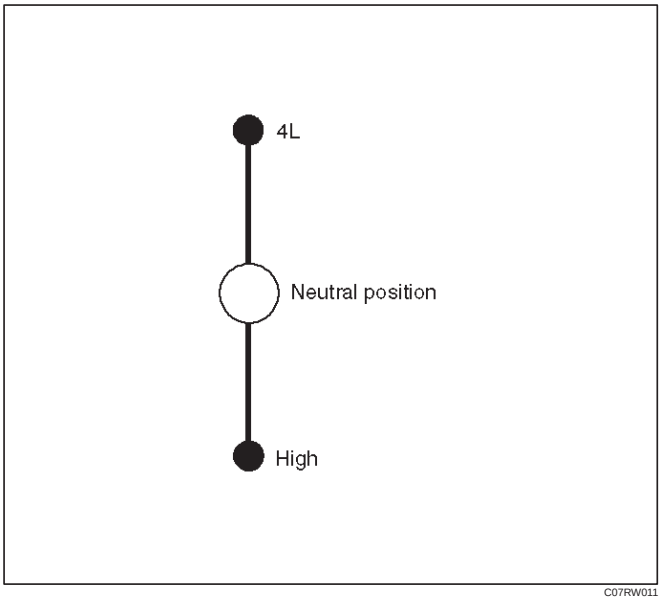

C07RW011

2. Turn on the starter switch while maintaining the state of step 1, and step on the brake pedal five times within five seconds from the first step on. (Note that “five times” includes the first step on). (The TOD indicator lamps display the 4L mode whenever the brake pedal is stepped on.)
3. If the conditions shown in steps 1 and 2 are met, the trouble codes saved to the control unit are cleared. (After the codes are completely deleted, the code 12 that indicates the normal condition is continuously displayed.)

Precautions on Diagnosis

Replacement of Control Unit

The control unit itself rarely fails. In most cases, the harnesses have failed (i.e. short-circuit) to cause secondary troubles. Other cases include that the cause has been unknown due to intermittent occurrence of troubles and the troubles are removed accidentally along with replacement of control unit, resulting in misjudgment of cause. Therefore, before replacing the control unit, check the connector joints and whether the unspecified current flows in the control unit due to short-circuit between harnesses.

Trouble Intermittently Observed

Troubles intermittently observed are mostly attributable to temporary imperfect connection of harnesses and connectors.

When such troubles are found, check the associated circuit according to the following procedure.

1. Check whether improper connectors are plugged in or connector terminals are completely engaged.
2. Check whether the terminals are deformed or damaged. If yes, remove the deformation or damage and connect the terminals securely.
3. It is likely that wires in the harness are falsely broken. Therefore, in examination of failed harness circuit, shake the harness for check to such extent that the harness will not be damaged.

Test Run of Failed TOD Vehicle

If the TOD indicator lamps experienced faulty operation even once in the past, the failed portion can be identified by use of the procedure “Diagnosis from Trouble Codes” or “Trouble Diagnosis Depending on The Status of TOD Indicator”. If the troubles that are only recognized as abnormal phenomena of the vehicle by the driver are observed, conduct the test run in the following procedure to reproduce the faulty phenomena and diagnose the fault for each phenomenon.

1. Start the engine, and check that the TOD indicator lamps are turned on for about two seconds for initial check; the CHECK lamp goes off; and the TOD indicator lamps display the specified drive mode. (If the CHECK lamp starts blinking, read the trouble codes and identify the failed portion.)
2. While keeping the vehicle standstill, operate the 4WD switch and shift the transfer lever to change the modes: 2H mode→TOD mode→4L mode→TOD mode→2H mode. Check that the TOD indicator lamps correctly display the status whenever the mode is changed. If the transition status is displayed during the shift operation, run the vehicle a little to complete shifting.
3. Slowly start the vehicle in the TOD mode, and add the power to accelerate to at least 40 km/h and maintain the speed for about two minutes. Apply the brake to completely stop the vehicle. Repeat this test pattern at least three times.
4. Turn the steering to the right end (or left end) in the TOD mode, and slowly start the vehicle and make a circle five times. Next, conduct the same test in the 2H mode.
5. Slowly start the vehicle in the TOD mode, and accelerate to at least 40 km/h. Keep the established speed, carefully change the mode in the sequence “TOD mode→2H mode →TOD mode” while checking that the shift is complete in each mode change. After the test, apply the brake to completely stop the vehicle.
6. Slowly start the vehicle in the TOD mode, and accelerate to at least 40 km/h. Apply the brake strongly so that the ABS works, and completely stop the vehicle.

7. Slowly start the vehicle in the 4L mode, and accelerate to at least 20 km/h. Apply the brake to completely stop the vehicle.

If the CHECK lamp starts blinking during the test run, read the trouble codes and give appropriate maintenance according to the diagnostic procedure. If the TOD indicator lamps are lit abnormally during the run, check the lighting condition and give appropriate maintenance according to the diagnostic procedure. Even if the phenomena are not observed, try to reproduce the abnormal state reported by the customer to the possible extent.

Post-Repair Check

As long as the starter is not turned off, the TOD indicator lamps continue blinking even after the failed portion repaired. Therefore, upon completion of repair, be sure to turn off the starter switch once and then turn on it to conduct the test run sequence specified in steps 1 through 7 above and check that the TOD indicator lamps no longer show any faulty status.

Basic Diagnostic Flow Chart

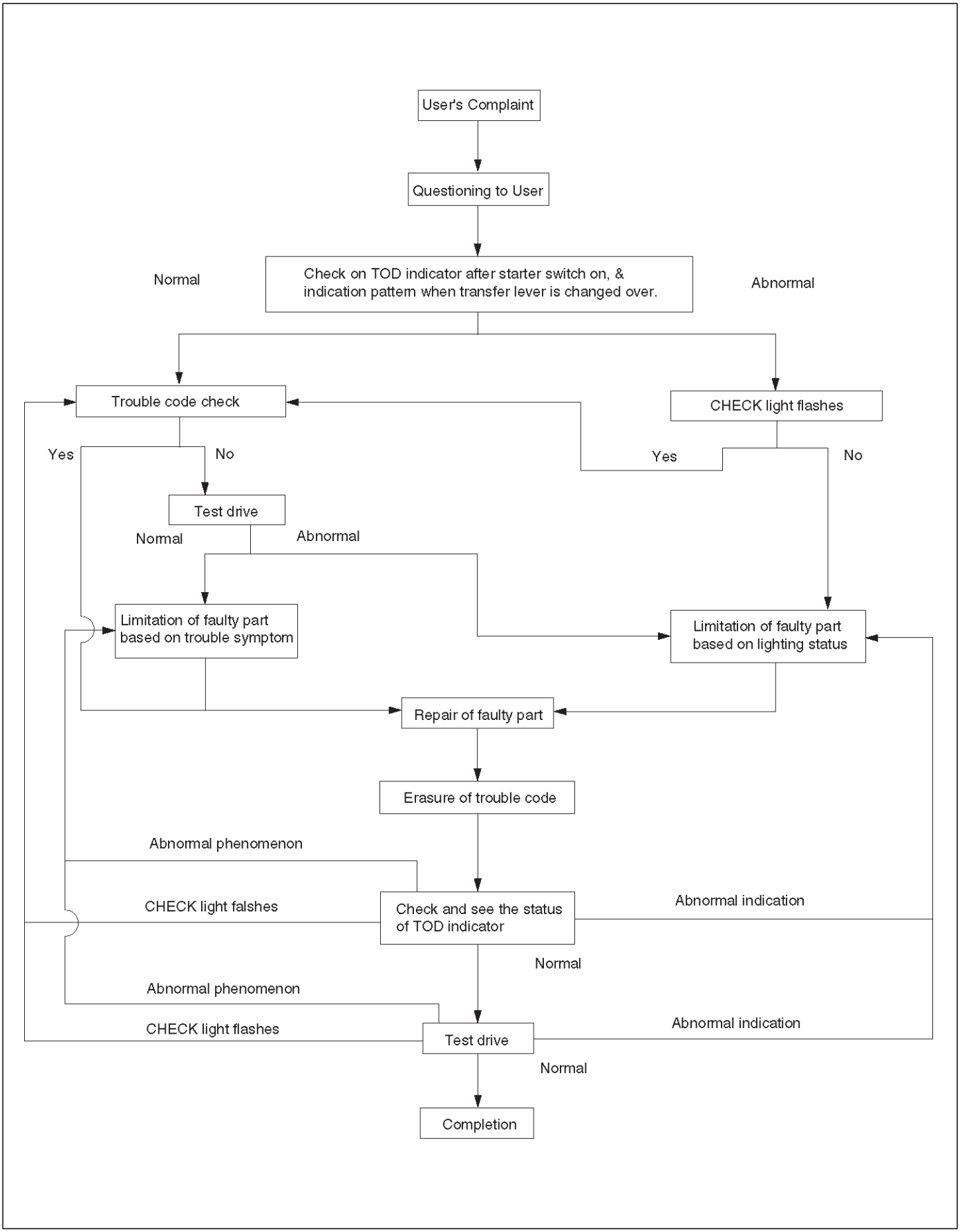

C04RY00015

Parts Location (RHD 6VE1)

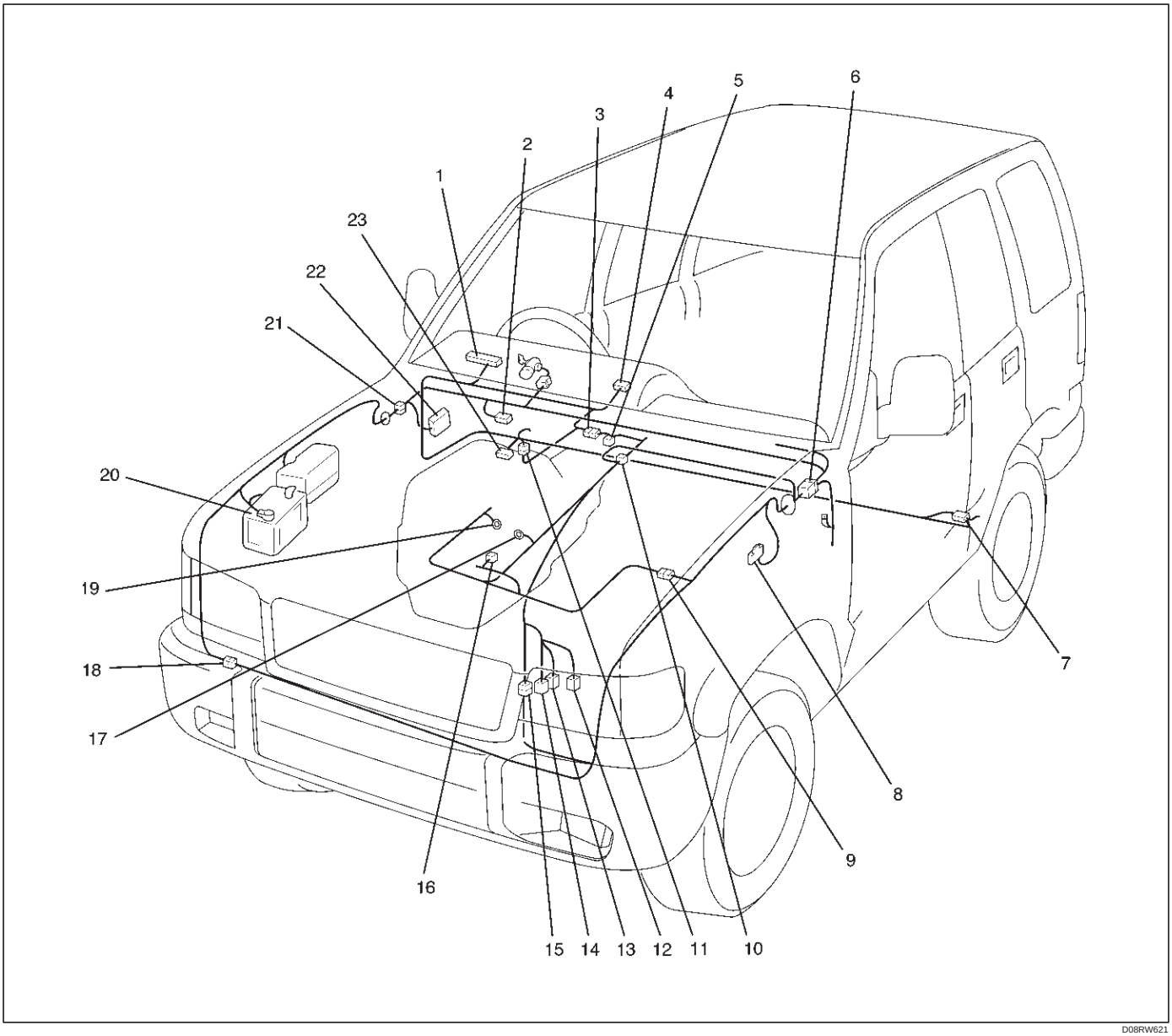

D08RW621

Legend

(1) I–9
(2) B–13 or B–14
(3) H–12
(4) I–12
(5) A–3
(6) H–7, H–8
(7) H–32
(8) C–16
(9) H–5, H–6
(10) C–63
(11) H–49
(12) M–22
(13) M–23
(14) M–24
(15) H–10
(16) E–5
(17) E–29
(18) H–42
(19) E–30
(20) Battery
(21) H–13, H–15, H–25, H–26, H–27
(22) Fuse Box
(23) B–67, B–68

Parts Location (RHD 4JX1)

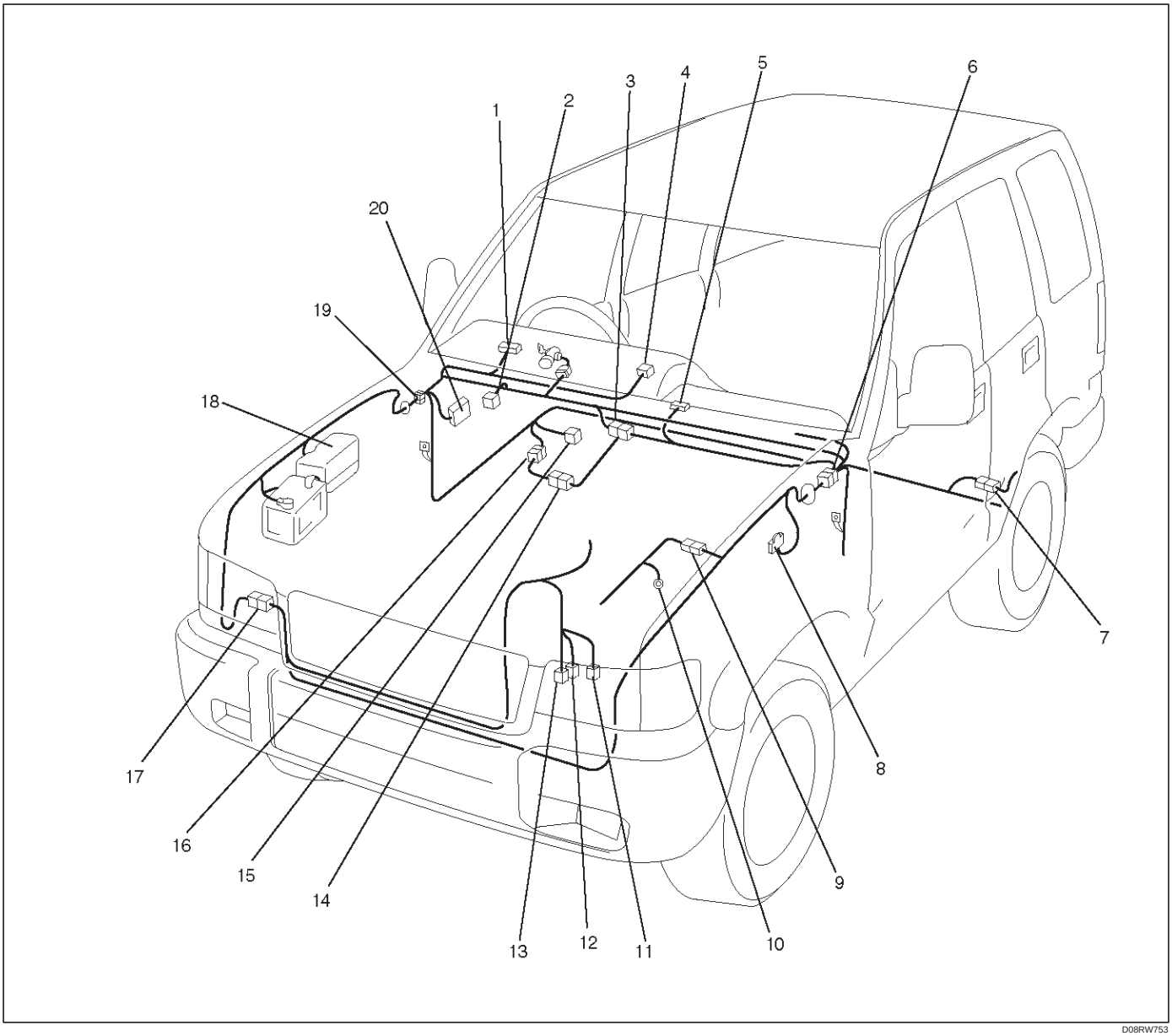

D08RW753

Legend

(1) I–9
(2) B–13 or B–14
(3) H–12
(4) I–12
(5) C–63
(6) H–7, H–8
(7) H–32
(8) C–16
(9) H–5, H–6
(10) E–4
(11) P–17
(12) P–18
(13) P–19
(14) A–3
(15) B–67, B–68
(16) H–49
(17) H–60
(18) Relay and Fuse Box
(19) H–15, H–25, H–26, H–27
(20) Fuse Box

Parts Location (LHD 6VE1)

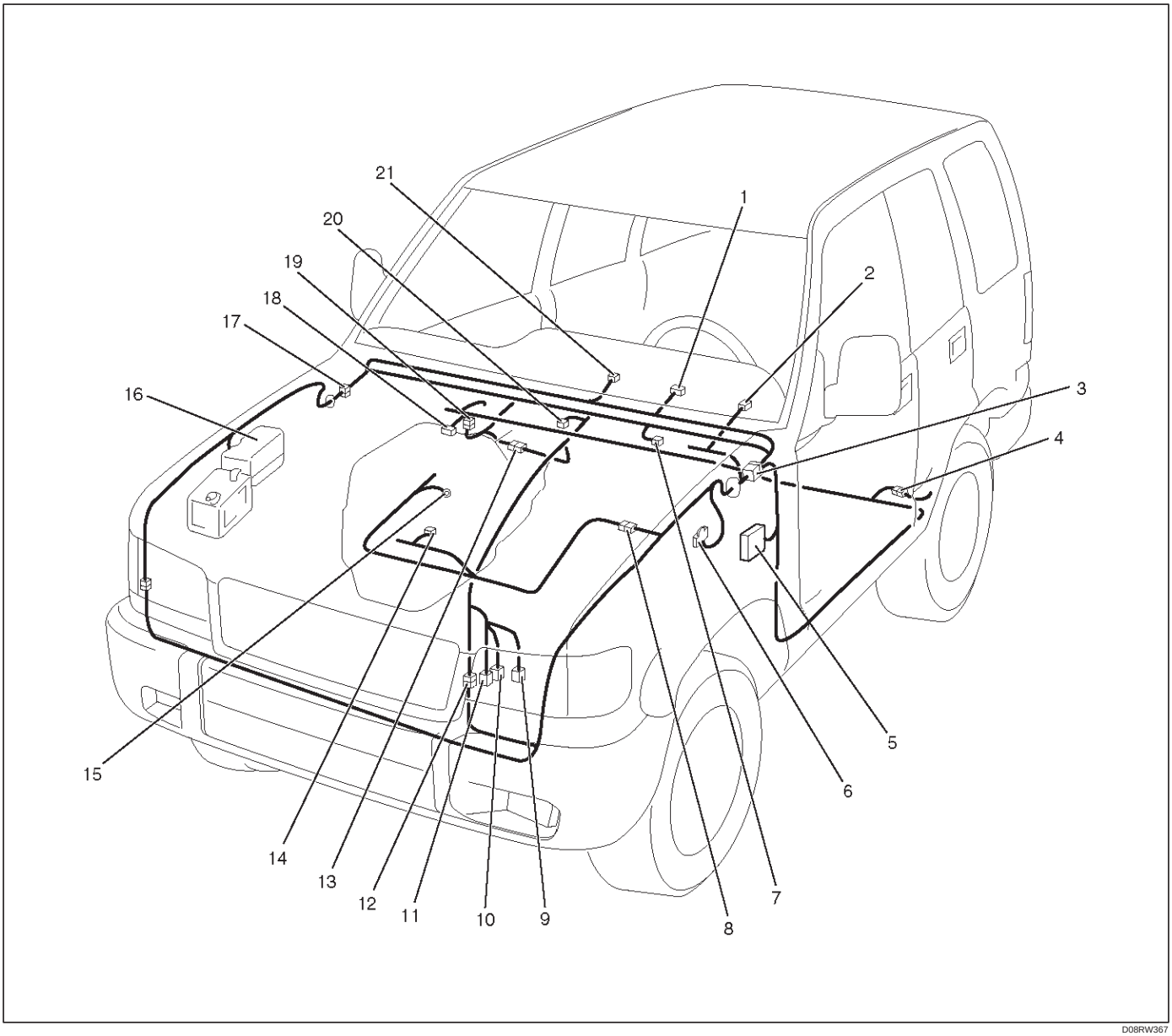

D08RW367

Legend

(1) I–9
(2) C–63
(3) H–7, H–8, H–25, H–26
(4) H–32
(5) Fuse Box
(6) C–6
(7) B–13 or B–14
(8) H–5, H–6
(9) M–22
(10) M–23
(11) M–24
(12) H–10
(13) H–49
(14) E–5
(15) E–30
(16) Relay and Fuse Box
(17) H–12, H–15
(18) B–67, B–68
(19) Not Used
(20) A–3
(21) I–12

Parts Location (LHD 4JX1)

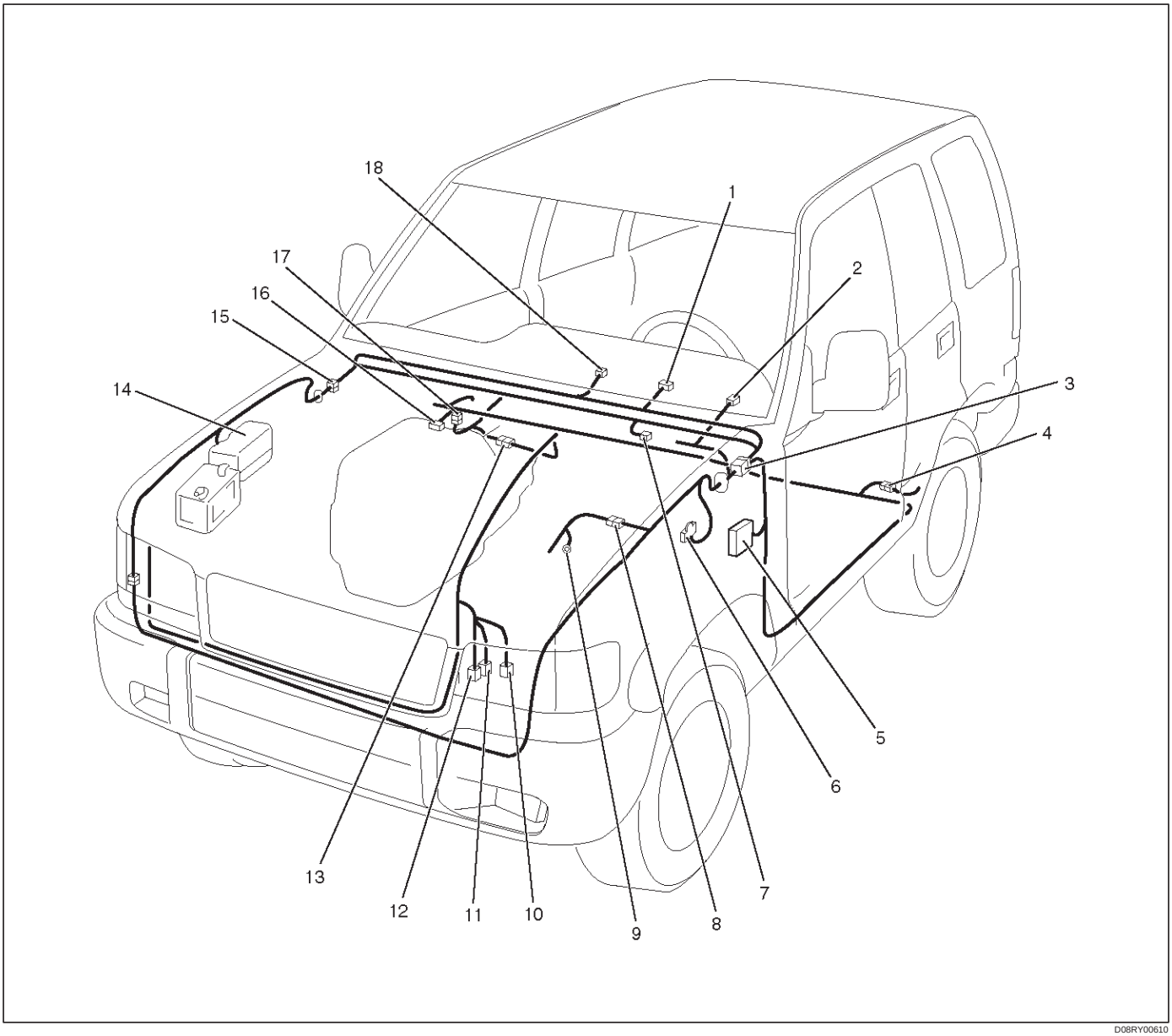

D08RY00610

Legend

(1) I–9
(2) C–63
(3) H–15, H–25, H–26
(4) H–32
(5) Fuse Box
(6) C–16
(7) B–14
(8) H–5, H–6
(9) E–4
(10) P–17
(11) P–18
(12) P–19
(13) A–3
(14) Relay and Fuse Box
(15) H–7, H–8
(16) B–67, B–68
(17) H–49
(18) I–12

Circuit Diagram–1 (RHD 6VE1)

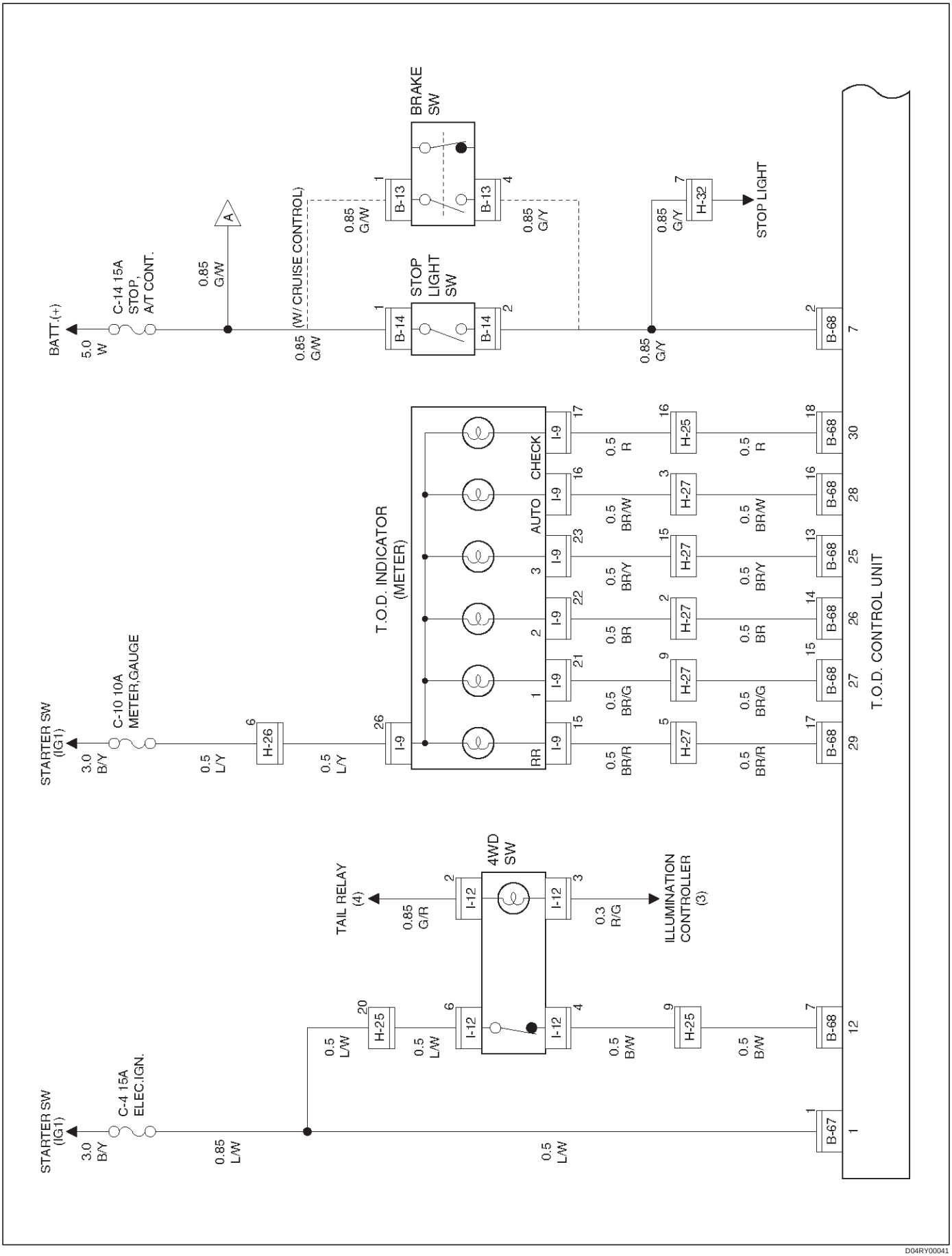

D04RY00041

Circuit Diagram–2 (RHD 6VE1)

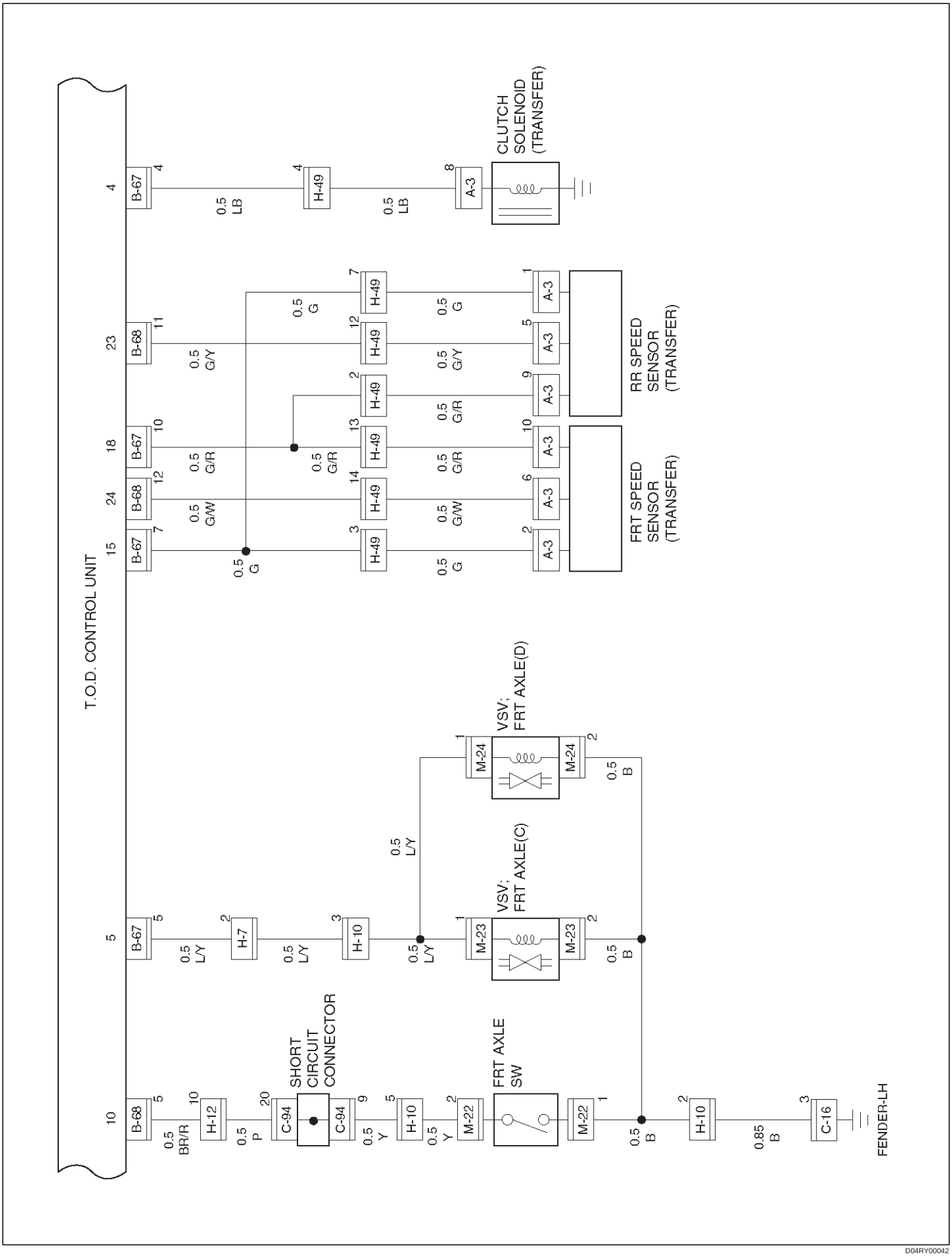

D04RY00042

Circuit Diagram–3 (RHD 6VE1)

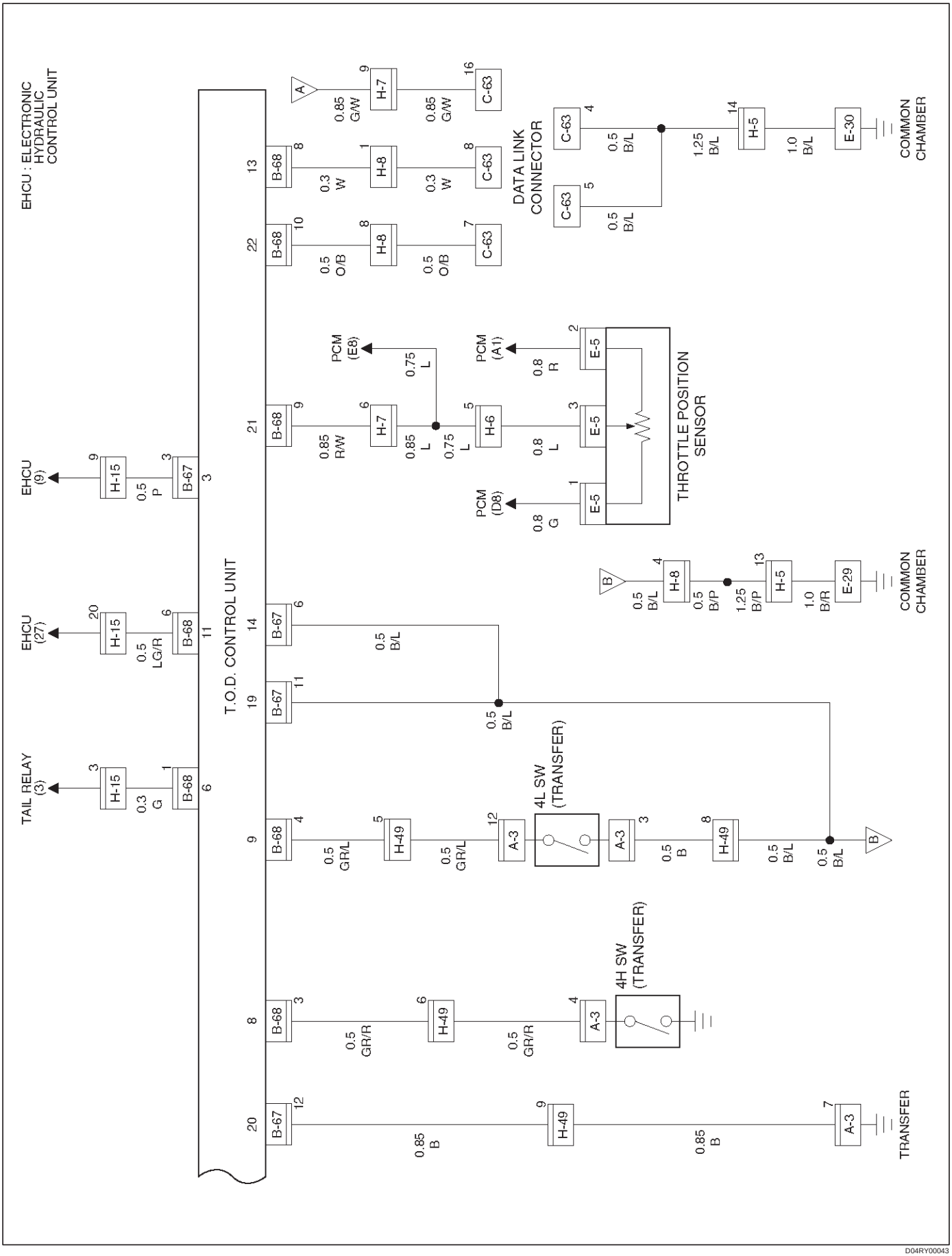

D04RY00043

Circuit Diagram–1 (RHD 4JX1)

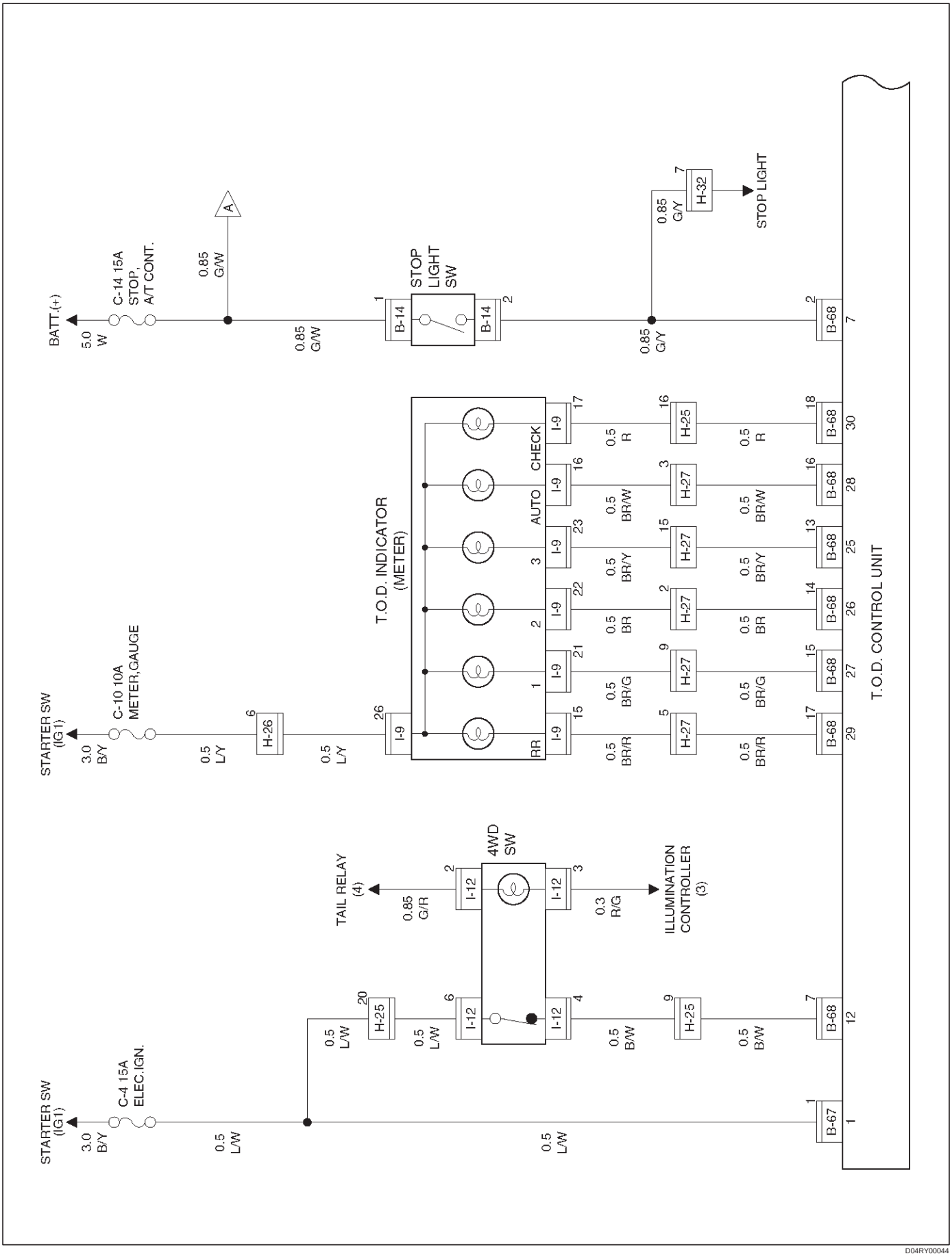

D04RY00044

Circuit Diagram–2 (RHD 4JX1)

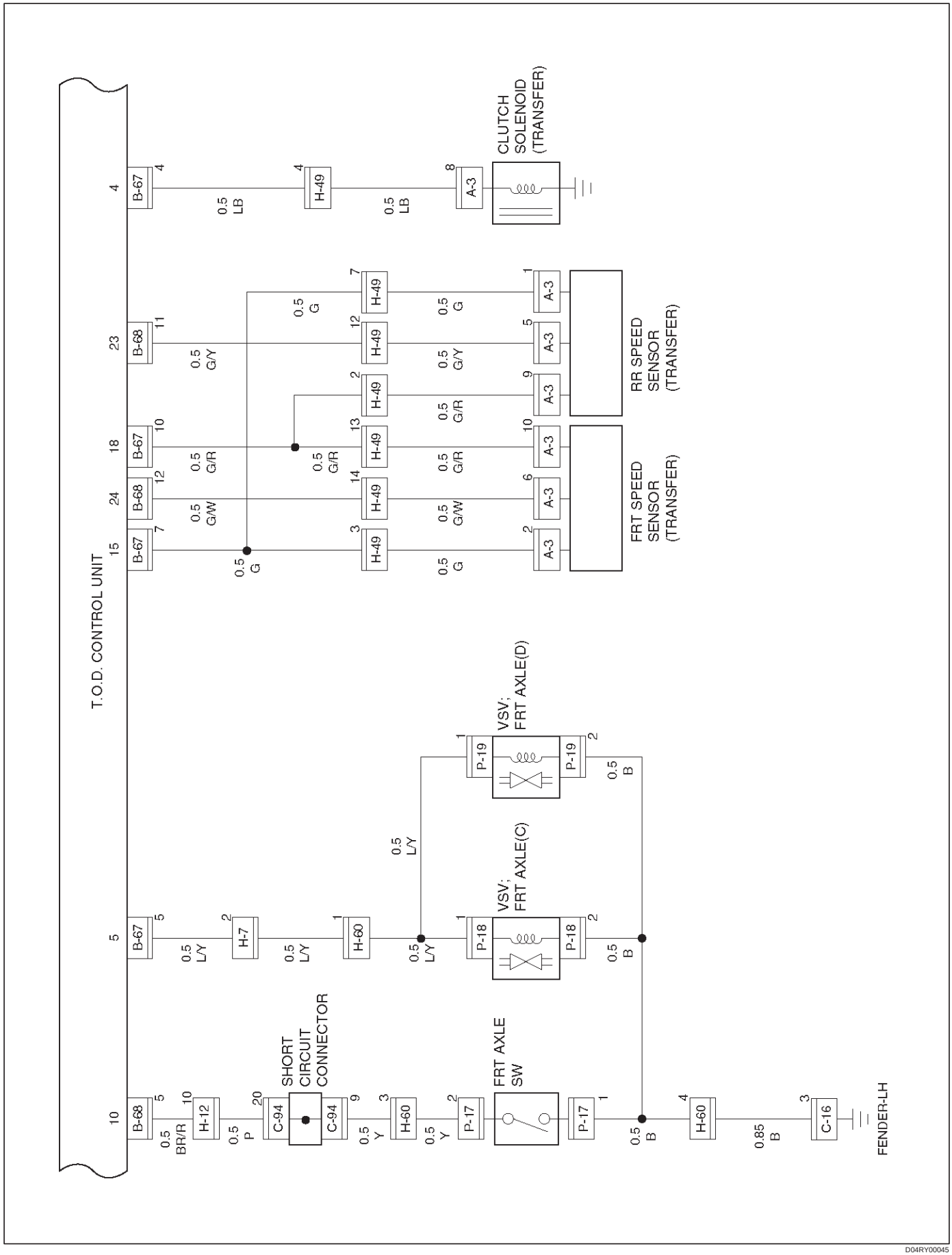

D04RY00045

Circuit Diagram–3 (RHD 4JX1)

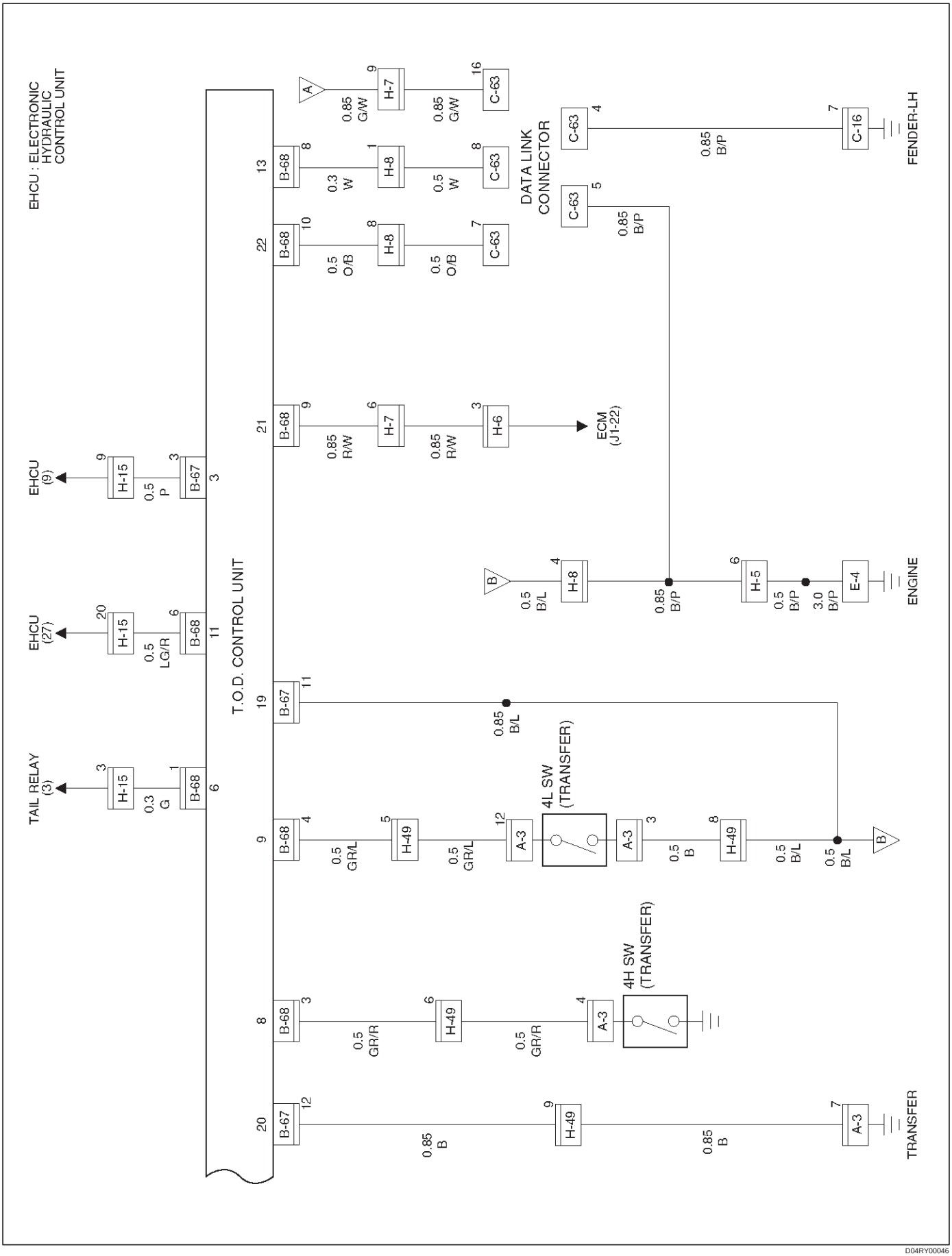

D04RY00046

Circuit Diagram–1 (LHD 6VE1)

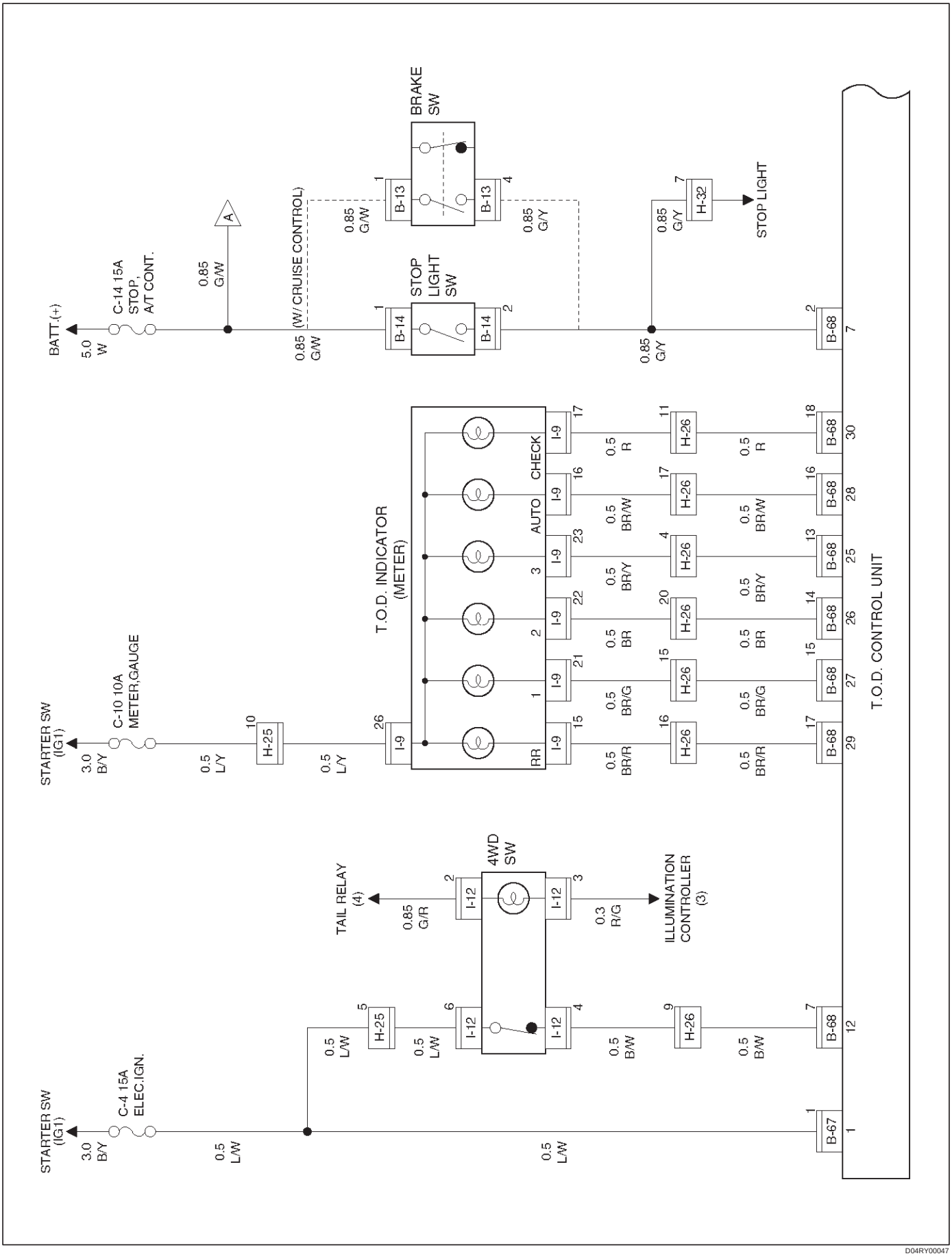

D04RY00047

Circuit Diagram–2 (LHD 6VE1)

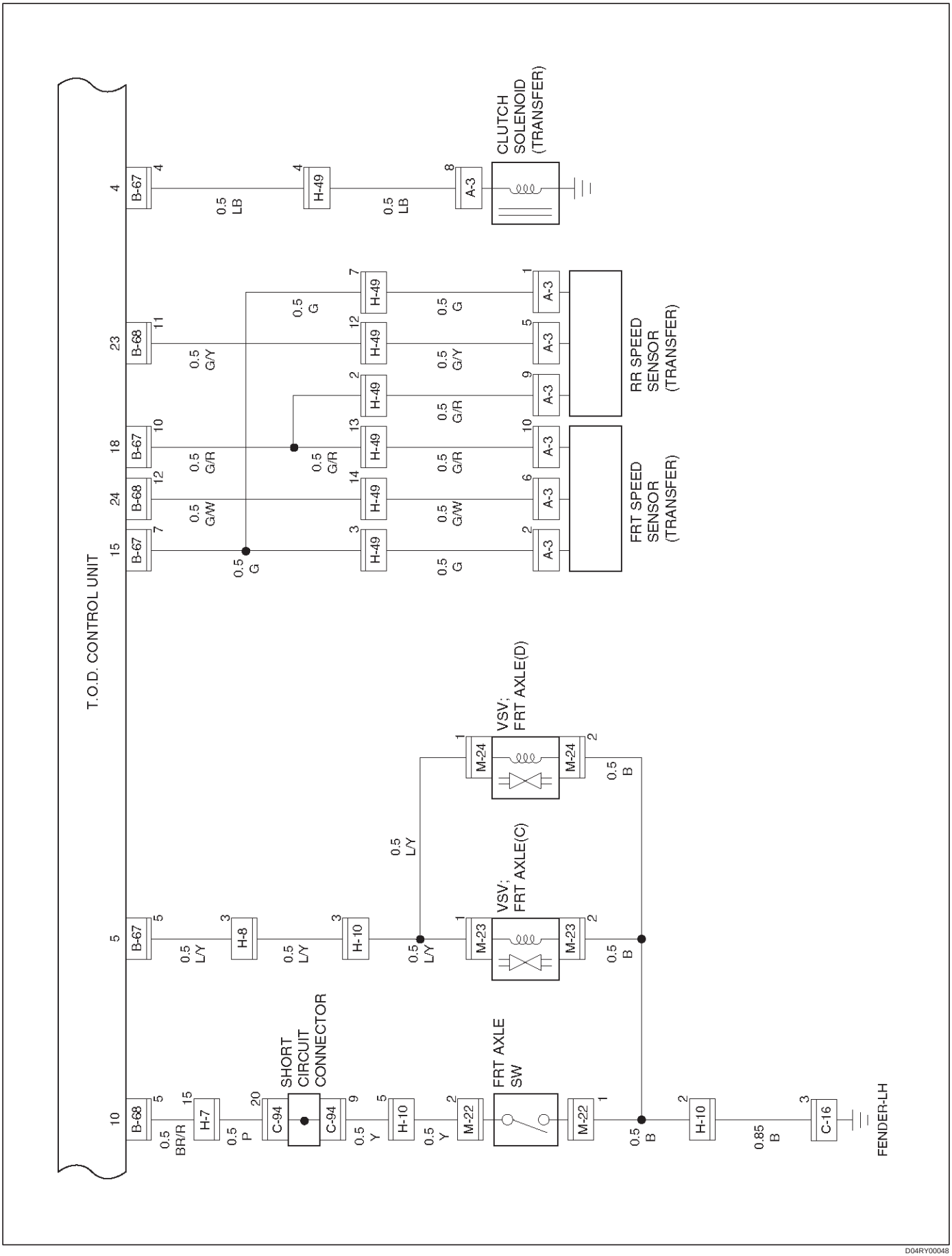

D04RY00048

Circuit Diagram–3 (LHD 6VE1)

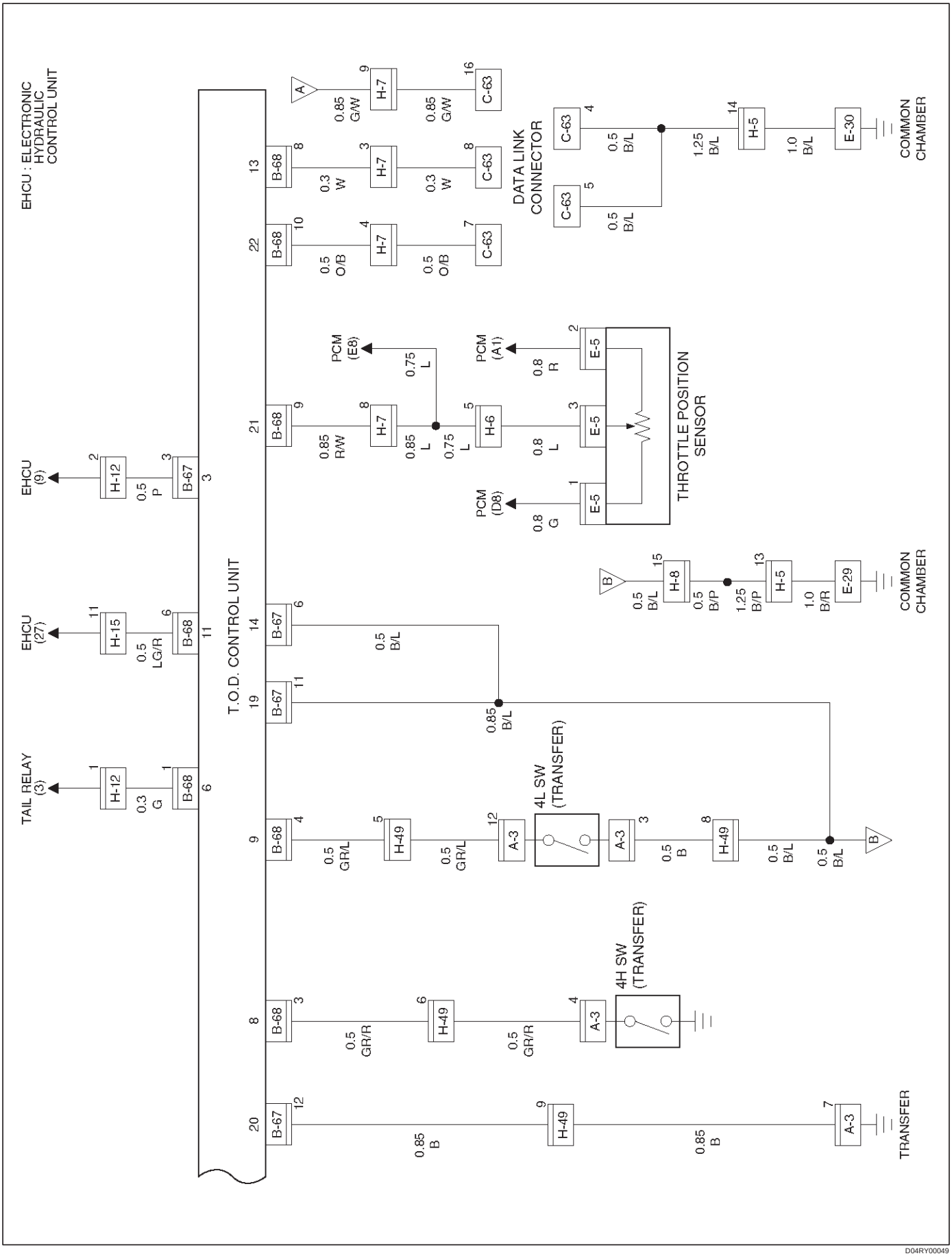

Circuit Diagram–1 (LHD 4JX1)

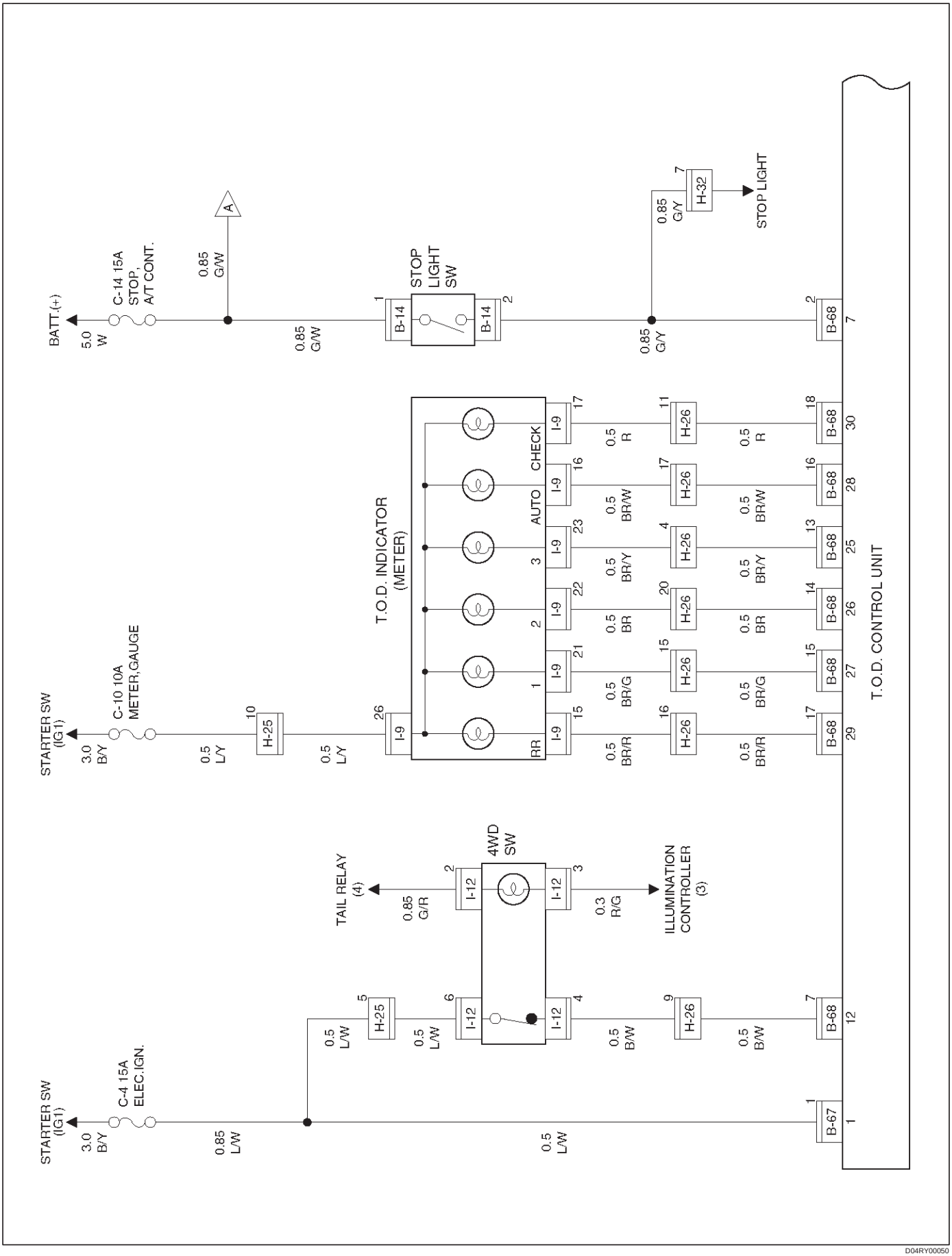

D04RY00050

Circuit Diagram–2 (LHD 4JX1)

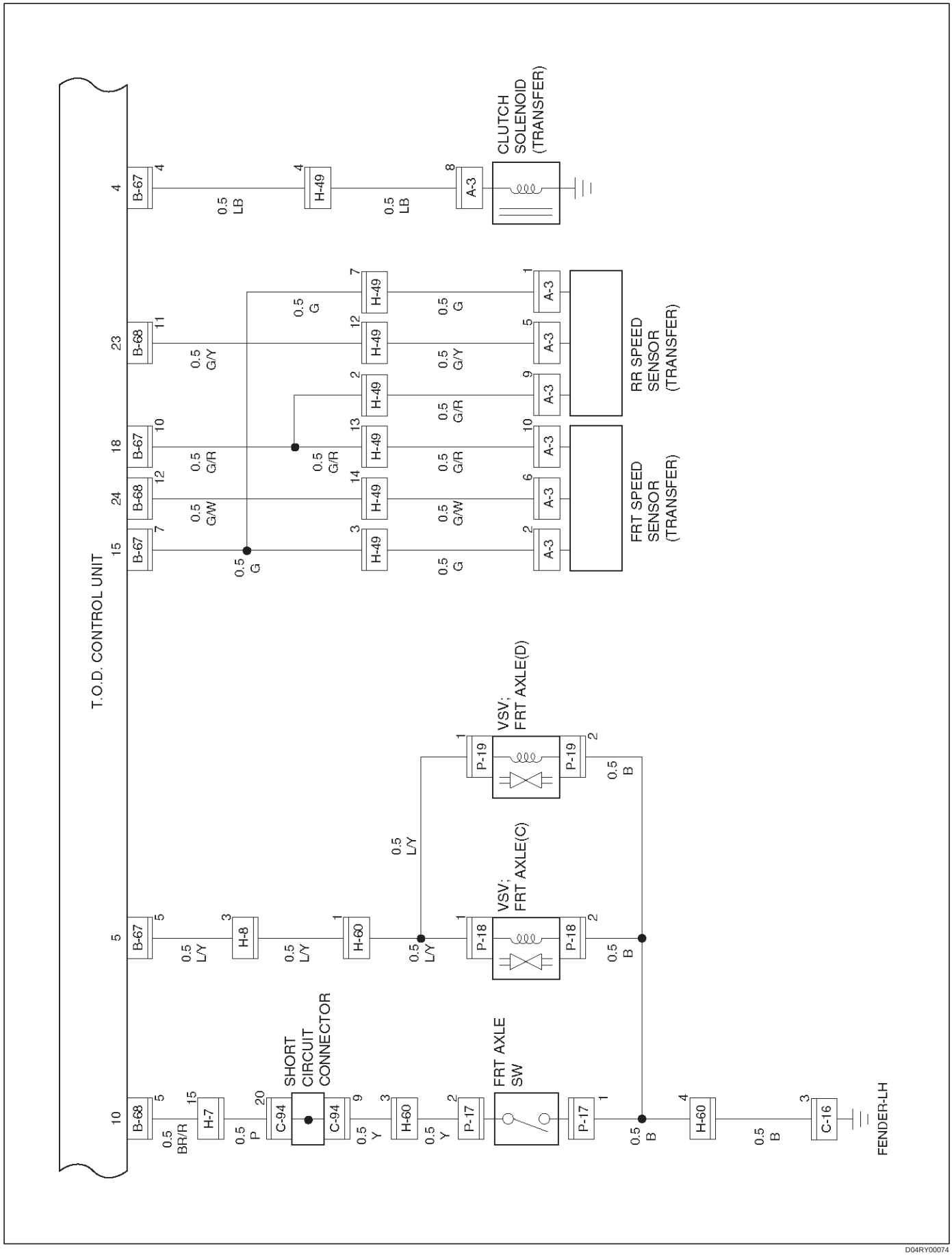

D04RY00074

Circuit Diagram–3 (LHD 4JX1)

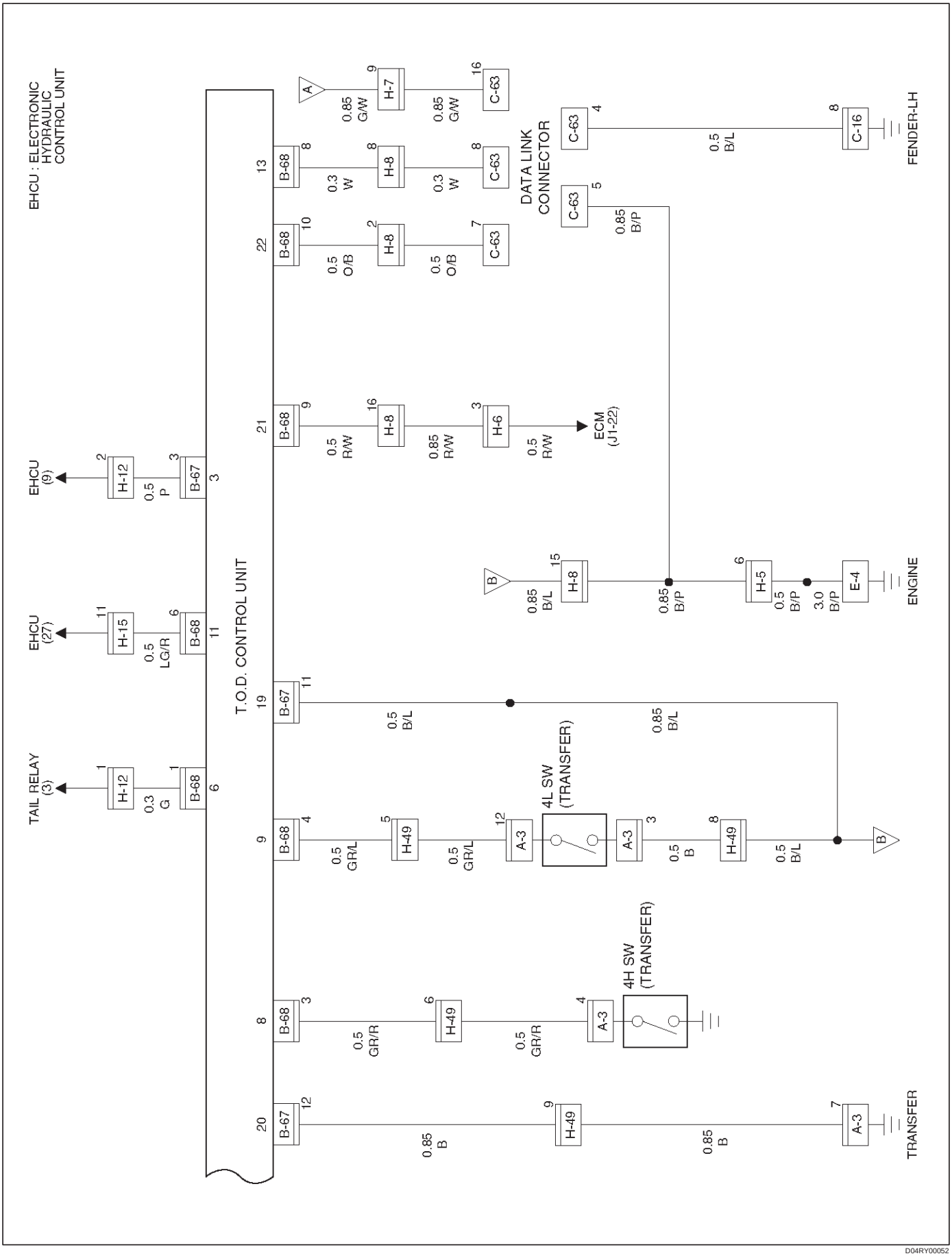

D04RY00052

Connector List

No.	Connector face
A-3	
B-13	
B-14	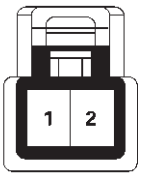
B-67	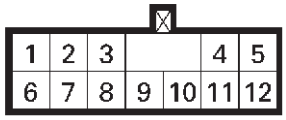
B-68	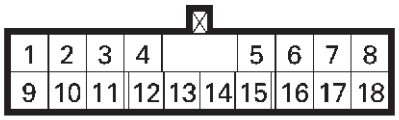
C-16	
C-63	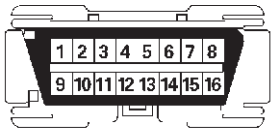
E-4 (6VE1)	
E-4 (4JX1)	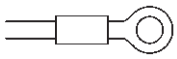

No.	Connector face
E-5 (6VE1)	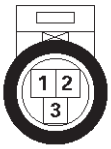
E-29 (6VE1)	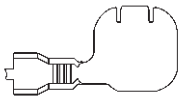
E-30 (6VE1)	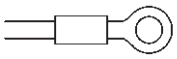
H-5 (6VE1) (4JX1 –A/T)	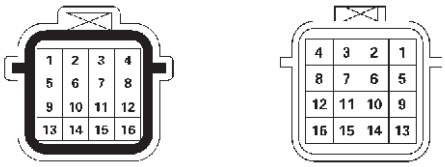
H-6	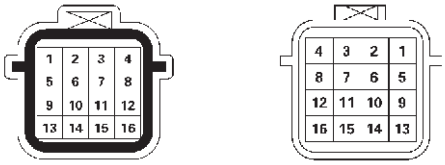
H-7	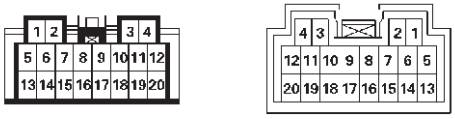
H-8	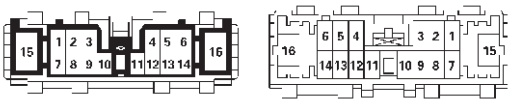
H-10	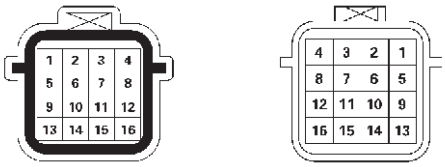
H-12	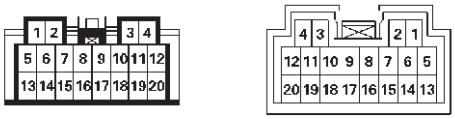

No.	Connector face
H-13	
H-15	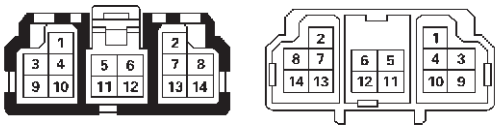
H-25	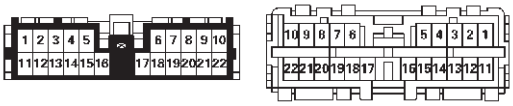
H-26	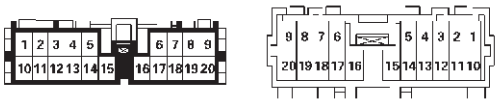
H-27	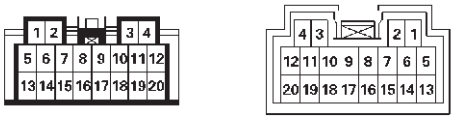
H-32	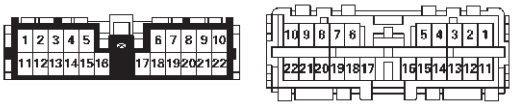
H-42	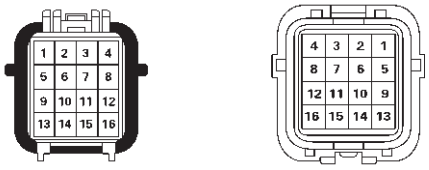
H-49	
H-60	

No.	Connector face
I-9	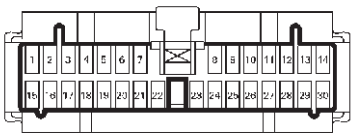
I-12	
M-22	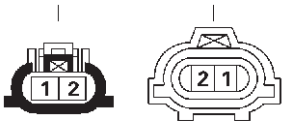
M-23	
M-24	
P-17 (4JX1)	
P-18 (4JX1)	
P-19 (4JX1)	

Checking Failed Pin

Connector Pin Assignment

- ECU pin assignment

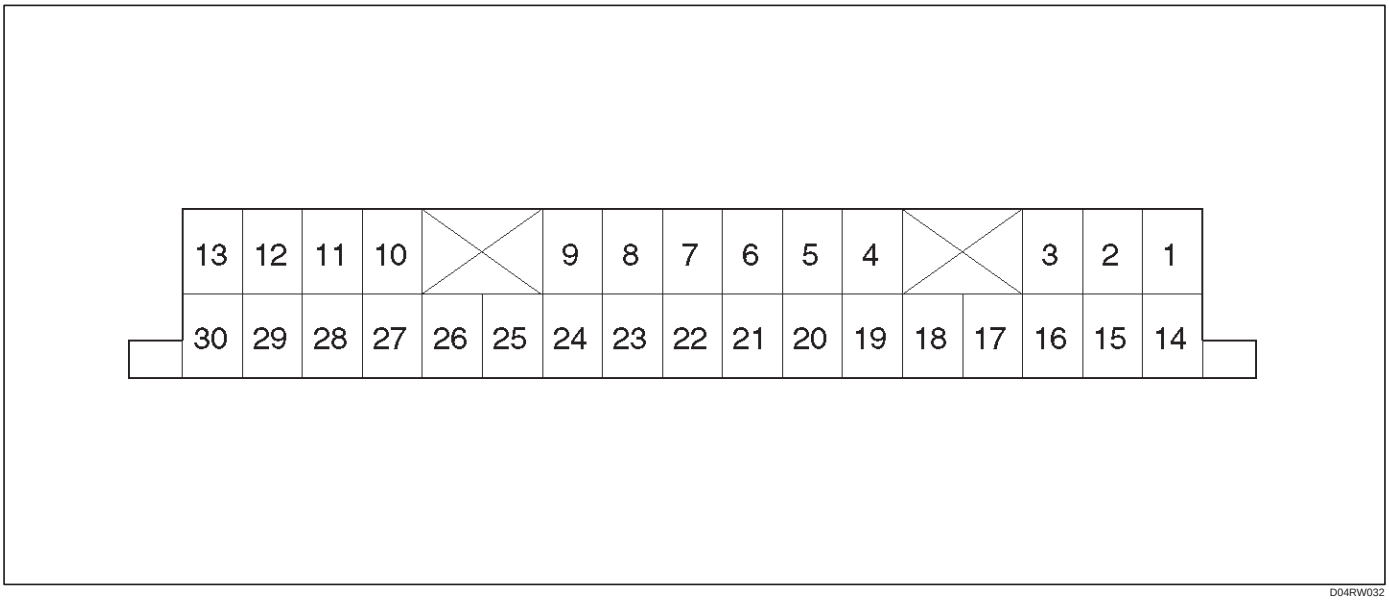

No.	NAME	CONTENTS
1	VIG	Power supply (IG)
2	N.C	Not used
3	4WD OUT	4WD signal output
4	SOL (+)	Electromagnetic solenoid
5	ADC (+)	Axle disconnect output
6	LIGHTING SW	Lighting SW input
7	BRAKE	Brake SW input
8	4H SW	4H SW input
9	4L SW	4L SW input
10	AXEL SW	AXEL SW input
11	ABS IN	Operation signal input
12	TOD SW	TOD SW input
13	DIAG	Self-diagnosis input
14	D-G MAP	D-G MAP recognition input (Only V6 engine)
15	Ref.	Vehicle speed sensor supply
16	N.C	Not used
17	N.C	Not used
18	COM (–)	Vehicle speed sensor GND
19	S-GND	Sensor GND
20	P-GND	Power GND
21	TPS	Throttle position sensor
22	TECH 2	TECH 2 output
23	Rer. Sig	Rear vehicle speed sensor input
24	Frt. Sig	Front vehicle speed sensor input
25	IND.a	4WD display signal a
26	IND.b	4WD display signal b
27	IND.c	4WD display signal c
28	IND.AUTO	AUTO display output
29	IND Rr	Rear display output
30	CHECK	TOD warning lamp

Reference

- Transfer connector pin assignment (connector on the transfer case)
  for inspection of transfer pins.

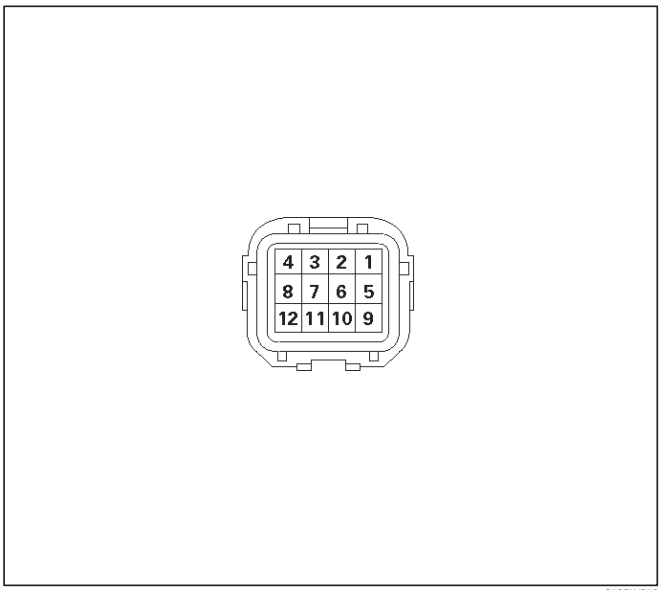

810RW310

No.	NAME	CONTENTS
1	Ref. (Rer.)	Rear speed sensor reference output
2	Ref. (Frt.)	Front speed sensor reference output
3	SW GND	SW GND
4	4H SW (+)	4H SW plus terminal
5	Rer. (+)	Rear speed sensor plus
6	Frt. (+)	Front speed sensor plus
7	POWER GND	Power GND
8	SOL (+)	Electromagnetic solenoid
9	COM (–) (Rer.)	Rear speed sensor GND
10	COM (–) (Frt.)	Front speed sensor GND
11	NC	Not used
12	4L SW (+)	4L SW plus terminal

Checking Failed TOD Control Unit Pin

NOTE:

1. Unplug the ECU connector and the pins, unless otherwise specified.
2. Before removing the ECU, turn off the ignition switch.
3. If the standard values are not observed, check the pins with other testers.

Check Pin No.	Circuit to be tested	Ignition Switch Position	Engine State	Multimeter Scale/ Range	Measure between Pin Number	Standard Valve	Note
14	D-G MAP	OFF	STOP	Ω	14, 19	Continuity : OK (Gasoline) No continuity : OK (Diesel)	
20	P-GND	OFF	STOP	Ω	20, 19	Continuity : OK	
19	GND	OFF	STOP	Ω	19, GND	Continuity : OK	
8	4H SW	OFF	STOP	Ω	8, 19	No continuity (high, 4L) and continuity (N) : OK	
9	4L SW	OFF	STOP	Ω	9, 19	No continuity (high) and continuity (4L, N) : OK	
10	AXLE SW	ON	RUN	Ω	10, 19	Continuity : OK	Remove ECU and start the engine. Move the vehicle forth and back to connect axle surely.
13	DIAG	OFF	STOP	Ω	13 (TOD), 8 (DLC Connector)	Continuity : OK	DLC connector terminal 8
25	IND.a	ON	STOP	DCV	25 (+), 19 (–)	8.0 ~14.5 V	When the indicator lamp is turned off.
26	IND.b	ON	STOP	DCV	26 (+), 19 (–)	8.0 ~14.5 V	When the indicator lamp is turned off.
27	IND.c	ON	STOP	DCV	27 (+), 19 (–)	8.0 ~14.5 V	When the indicator lamp is turned off.
30	CHECK LAMP	ON	STOP	DCV	30 (+), 19 (–)	8.0 ~14.5 V	When the indicator lamp is turned off.
11	ABS IN	ON	STOP	DCV	11 (+), 19 (–)	11.5 ~14.5 V	
15	Ref.	ON	STOP	DCV	15 (+), 19 (–)	5 ~9 V	Connect ECU
24	Ft.(+)	ON	STOP	DCV	24 (+), 19 (–)	0.7 ~6 V	Connect ECU (off one tooth of speed sensor ring) and move the vehicle making sure of voltage change.
23	Rr.(+)	ON	STOP	DCV	23 (+), 19 (–)	0.7 ~6 V	Connect ECU (off one tooth of speed sensor ring) and move the vehicle making sure of voltage change.
18	COM(-)	ON	STOP	DCV	18 (+), 19 (–)	0V	Connect ECU
1	Vig	ON	STOP	DCV	1 (+), 19 (–)	8 ~14.5 V	
7	BRAKE	OFF	STOP	DCV	7 (+), 19 (–)	8 ~14.5 V	Press brake pedal
21	TPS	ON	STOP	DCV	21 (+), 19 (–)	0.2 ~4.6 V	Step on the accelerator pedal and make sure that voltage changes.
3	4WD OUT	OFF	STOP	Ω	3, 19	7 ~12 kΩ	Disconnect battery GND terminal
5	ADC(+)	OFF	STOP	Ω	5, 19	10 ~30 Ω	Disconnect battery GND terminal
4	SOL(+)	OFF	STOP	Ω	4, 19	1.0 ~5.0 Ω	Disconnect battery GND terminal
12	4WD SW	ON	STOP	DCV	12 (+), 19 (–)	SW OFF : 0 V SW ON : 8.0 ~14.5 V	SW OFF : Contact point open SW ON : Contact point close
6	LIGHTING	ON	STOP	DCV	6 (+), 19 (–)	SW OFF : 8.0 ~14.5 V SW ON : 0 V	
28	AUTO INDI	ON	STOP	DCV	28 (+), 19 (–)	TOD : 0 V 2H & 4L : 8.0 ~14.5 V	Connect ECU
29	RR INDI	ON	STOP	DCV	29 (+), 19 (–)	0 V	Connect ECU. When the indicator lamp is turned on.

Tech 2 Scan Tool

From 98 MY, Isuzu dealer service departments are recommended to use Tech 2. Please refer to Tech 2 scan tool user guide.

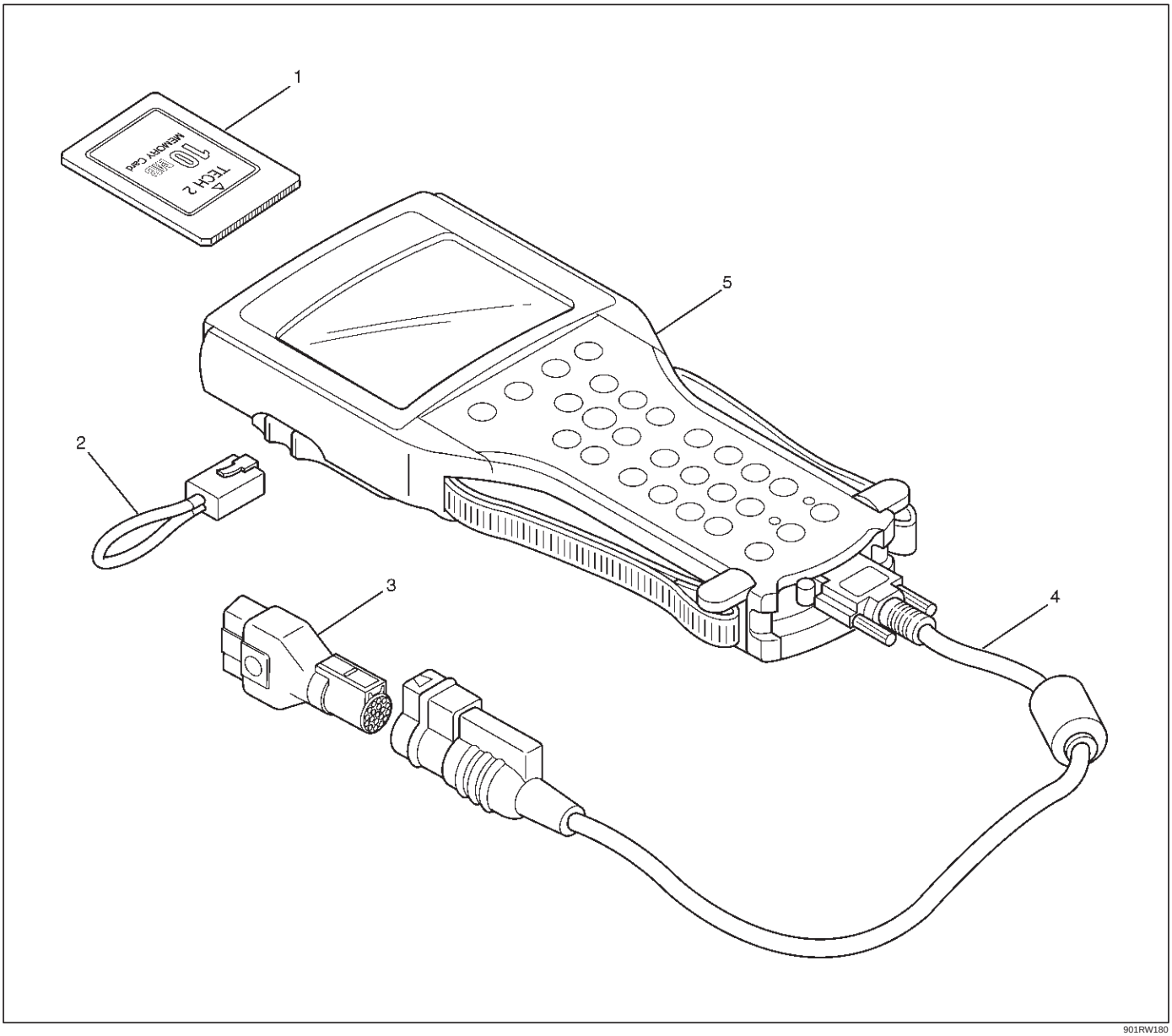

901RW180

Legend

(1) PCMCIA Card
(2) RS 232 Loop Back Connector
(3) SAE 16/19 Adaptor
(4) DLC Cable
(5) Tech–2

Getting Started

- Before operating the Isuzu PCMCIA card with the Tech 2, the following steps must be performed:

1. The Isuzu 00 System PCMCIA card (1) inserts into the Tech 2 (5).
2. Connect the SAE 16/19 adapter (3) to the DLC cable (4).
3. Connect the DLC cable to the Tech 2 (5)
4. Mark sure the vehicle ignition is off.
5. Connect the Tech 2 SAE 16/19 adapter to the vehicle ALDL/DLC connector.

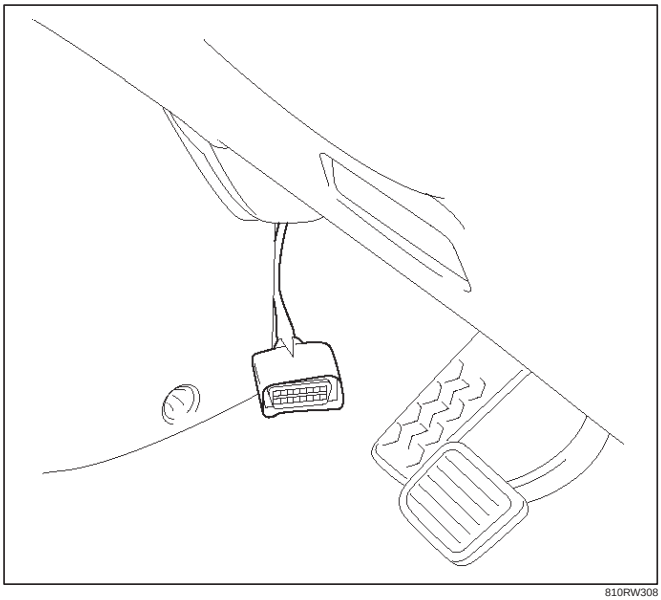

810RW308

6. The vehicle ignition turns on.
7. Verify the Tech 2 power up display.

060RW009

NOTE: The RS232 Loop back connector is only to use for diagnosis of Tech 2 and refer to user guide of the Tech 2.

Operating Procedure

The power up screen is displayed when you power up the tester with the Isuzu systems PCMCIA card. Follow the operating procedure below.

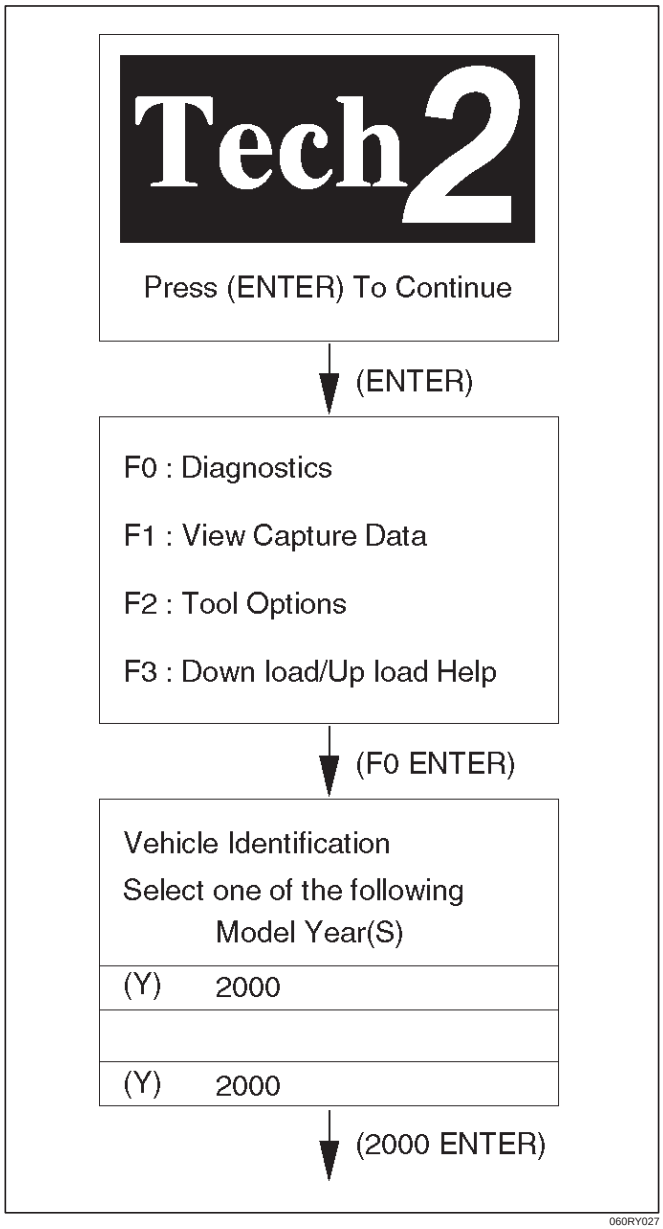

060RY027

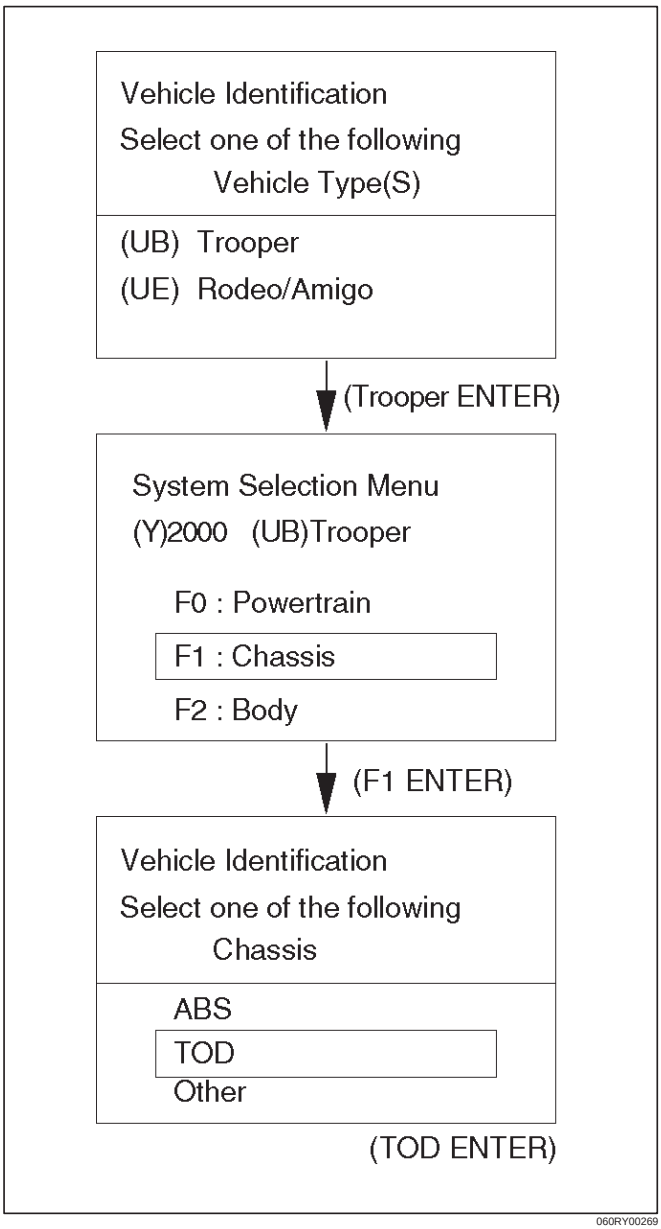
Vehicle Identification
Select one of the following
Vehicle Type(S)
(UB) Trooper
(UE) Rodeo/Amigo
(Trooper ENTER)
System Selection Menu
(Y)2000 (UB)Trooper
F0 : Powertrain
F1 : Chassis
F2 : Body
(F1 ENTER)
Vehicle Identification
Select one of the following
Chassis
ABS
TOD
Other
(TOD ENTER)
060RY00269

Diagnostic Trouble Codes

Code	Tech 2 code (P code)	Item	Diagnosis	Check flow No.
12	—	Start code	Normal	—
13	P1735	Ref	Shorted GND	6
14	P1731	Front speed sensor	Input abnormality (open, sig or com)	2
15	P1736	Ref	Shorted V_B	6
16	P1737	Front speed sensor	Input abnormality	3
21	P1716	TPS	Shorted or disconnected wiring, abnormality in input	7
23	—	ECU	CPU abnormality	1
24	P1733	Rear speed sensor	Input abnormality (open, sig or com)	5
25	—	CHECK lamp	Shorted	14
26	—	EMC (+)	Shorted GND	10
27	P1738	Rear speed sensor	Input abnormality	4
28	P1760	ADC (+) & AXLE SW	Output abnormality	11
31	P1721	EMC (+)	Shorted or disconnected coil/wiring	9
32	P1761	ADC (+)	Shorted or disconnected coil/wiring	12
33	P1762	ADC (+)	Shorted GND	13
34	—	D-G MAP	Input abnormality	8
35	—	CHECK lamp	Shorted or disconnected wiring	14
36	—	ECU	CPU abnormality	1
37	P1712	ECU	CPU abnormality	1
38	P1714	ECU	CPU abnormality	1

TPS : Throttle Position Sensor
EMC : Electromagnetic coil
ADC : Shift on the fly (Axle Dis Connect)
D-G MAP : Discrimination engine type

Diagnosis from Trouble Codes

- Diagnose the TOD based on the fault that has been saved to the control unit according to the system self-diagnostic function.

Check flow	Trouble code	Phenomenon	Standard
1	23, 36, 37(P1712), 38(P1714)	The ECU has failed.	—

Step	Action	Yes	No
1	Turn on the starter switch. Is the trouble reproduced?	Replace the ECU and conduct the test run. Go to Step 3	Go to Step 2
2	1. Clear the trouble codes. 2. Conduct the test run. Is the trouble reproduced during the test run?	Replace the ECU and conduct the test run. Go to Step 3	The trouble is not reproduced. Refer to “Troubles intermittently observed”.
3	1. Check that all the parts are mounted. 2. Clear the trouble codes. Is this step complete?	Repeat the “Diagnosis Flow”.	Return to Step 3

Check flow	Trouble code	Phenomenon	Standard
2	14 (P1733)	Front speed sensor signal open or GND short, speed sensor com open.	0.3V > sensor voltage

NOTE: The following procedure shows the case that the front or rear sensor reference or common grounding line is broken.

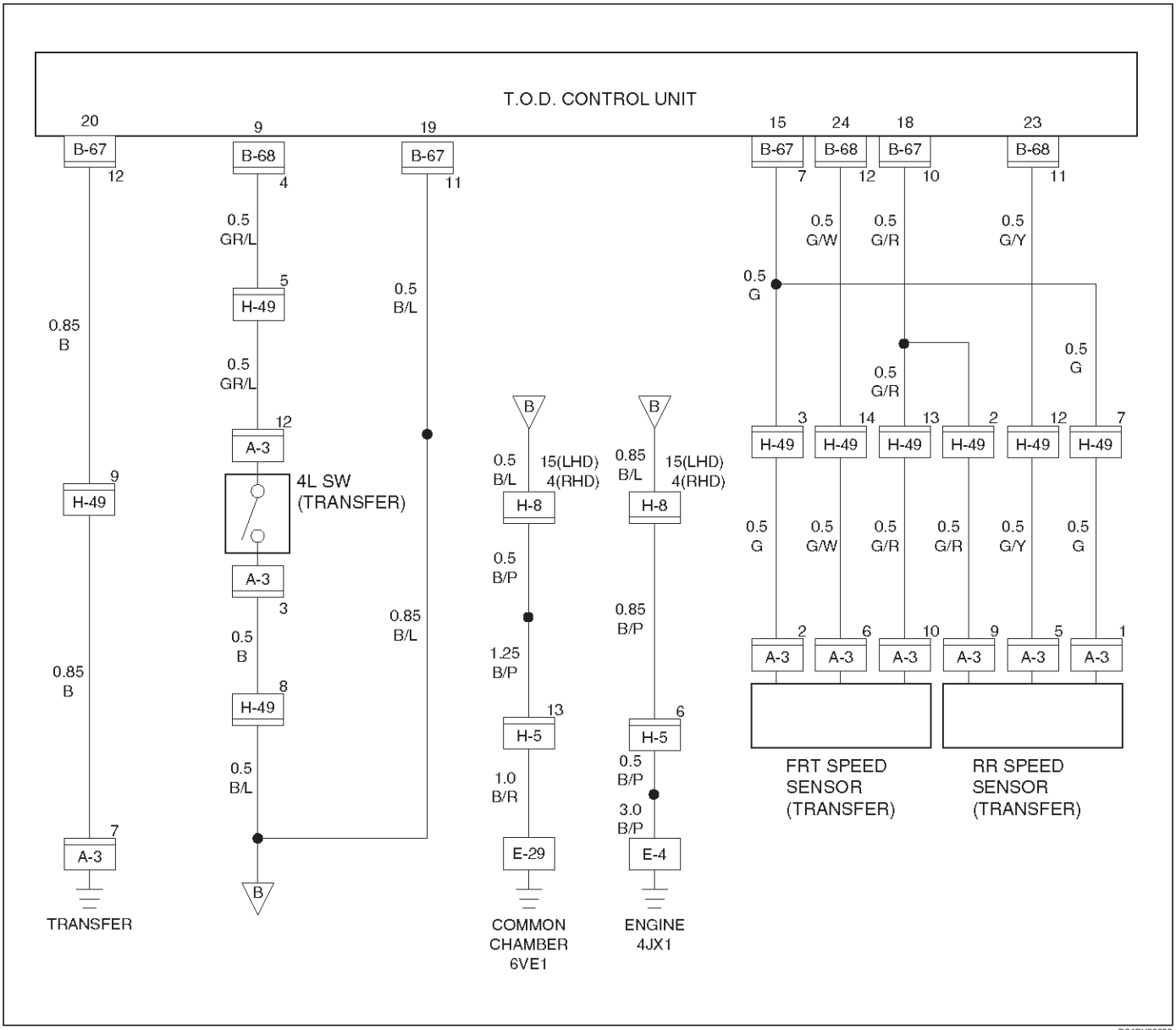

Step	Action	Yes	No
1	1. Start the engine. 2. Select TOD mode. Is there the memory except DTC 14(P1731)?	Go to *Step 4*	Go to *Step 2*
2	1. Turn off the starter switch. 2. Disconnect the ECU connector (B–67) and (B–68). Is there the continuity between the connector (B–68) terminal 12 and connector (B–67) terminal 11?	Repair the circuit. Go to *Step 7*	Go to *Step 3*
3	1. Disconnect the transfer connector (A–3). Is there the continuity between the connector (B–68) terminal 12 and the connector (A–3) terminal 6, the connector (B–67) terminal 7 and connector (A–3) terminal 2, and the connector (B–67) terminal 10 and connector (A–3) terminal 10?	Replace the front speed sensor. Go to *Step 7*	Repair the circuit. Go to *Step 7*
4	Is the memory DTC 24(P1733)?	Go to *Step 5*	Refer to *other trouble check flow.*
5	Is there the continuity between harnesses of terminal 24 and 23 (vehicle side terminal of the front and rear speed sensor)?	Go to *Step 6*	Repair the circuit. Go to *Step 7*
6	Is there the continuity between harnesses of terminal 18 and 15 (vehicle side terminal of the speed sensor COM(–) and ref)?	Replace front and rear speed sensor. Go to *Step 7*	Repair the circuit. Go to *Step 7*
7	1. Check that all the parts are mounted. 2. Clear the trouble code. Is the step complete?	Verify the repair.	Return to *Step 7*

Check flow	Trouble code	Phenomenon	Standard
3	16 (P1737)	The front speed sensor no pulse.	Hi level : 4.5 ~ 6.0 V Lo level : 0.7 ~ 2.0 V Frequency (F) = 700–850 Hz (at 50 km/h)

NOTE: Find the trouble in which the pulse corresponding to the running speed is not input.

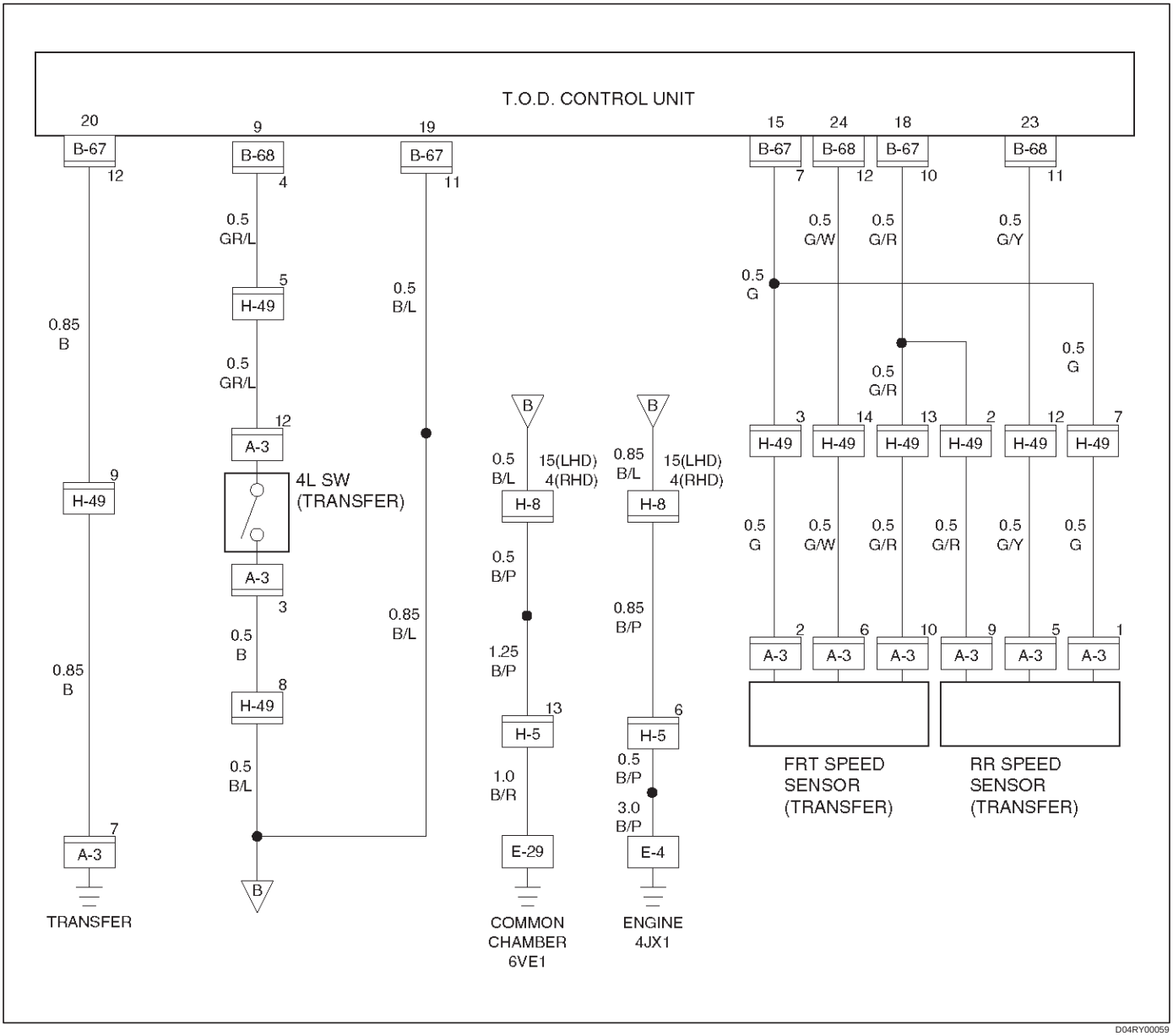

Step	Action	Yes	No
1	1. Connect TECH 2. While running in TOD mode, does TECH–2's front speed sensor indication change with vehicle speed?	Go to *Step 2*	Repair and inspection front speed sensor tone wheel. Go to *Step 6*
2	1. Clear the trouble code. While running at 40 km/h or 25 mph in TOD mode for 30 consecutive sec, is the trouble code reissued?	Go to *Step 3*	The trouble is not reproduced. Refer to *"Troubles intermittently observed".*
3	1. Turn off the starter switch. 2. Disconnect the ECU connector (B–67) and (B–68). Is there the continuity between the connector (B–68) terminal 12 and connector (B–67) terminal 11?	Repair the circuit. Go to *Step 6*	Go to *Step 4*
4	1. Disconnect the transfer connector (A–3). Is there the continuity between the connector (B–68) terminal 12 and the connector (A–3) terminal 6, the connector (B–67) terminal 7 and connector (A–3) terminal 2, and the connector (B–67) terminal 10 and connector (A–3) terminal 10?	Replace the front speed sensor. Go to *Step 5*	Repair the circuit. Go to *Step 5*
5	1. Clear the trouble code. While running at 40 km/h or 25 mph in TOD mode for 30 consecutive sec, is the trouble code reissued?	Replace ECU. Go to *Step 6*	Go to *Step 6*
6	1. Check that all the parts are mounted. 2. Clear the trouble code. Is this step complete?	Repeat the "Diagnosis Flow".	Return to Step 6

Check flow	Trouble code	Phenomenon	Standard
4	27 (P1738)	The rear speed sensor no pulse.	Hi level : 4.5 ~ 6.0 V Lo level : 0.7 ~ 2.0 V Frequency (F) = 700–850 Hz (at 50 km/h)

NOTE: Find the trouble in which the pulse corresponding to the running speed is not input.

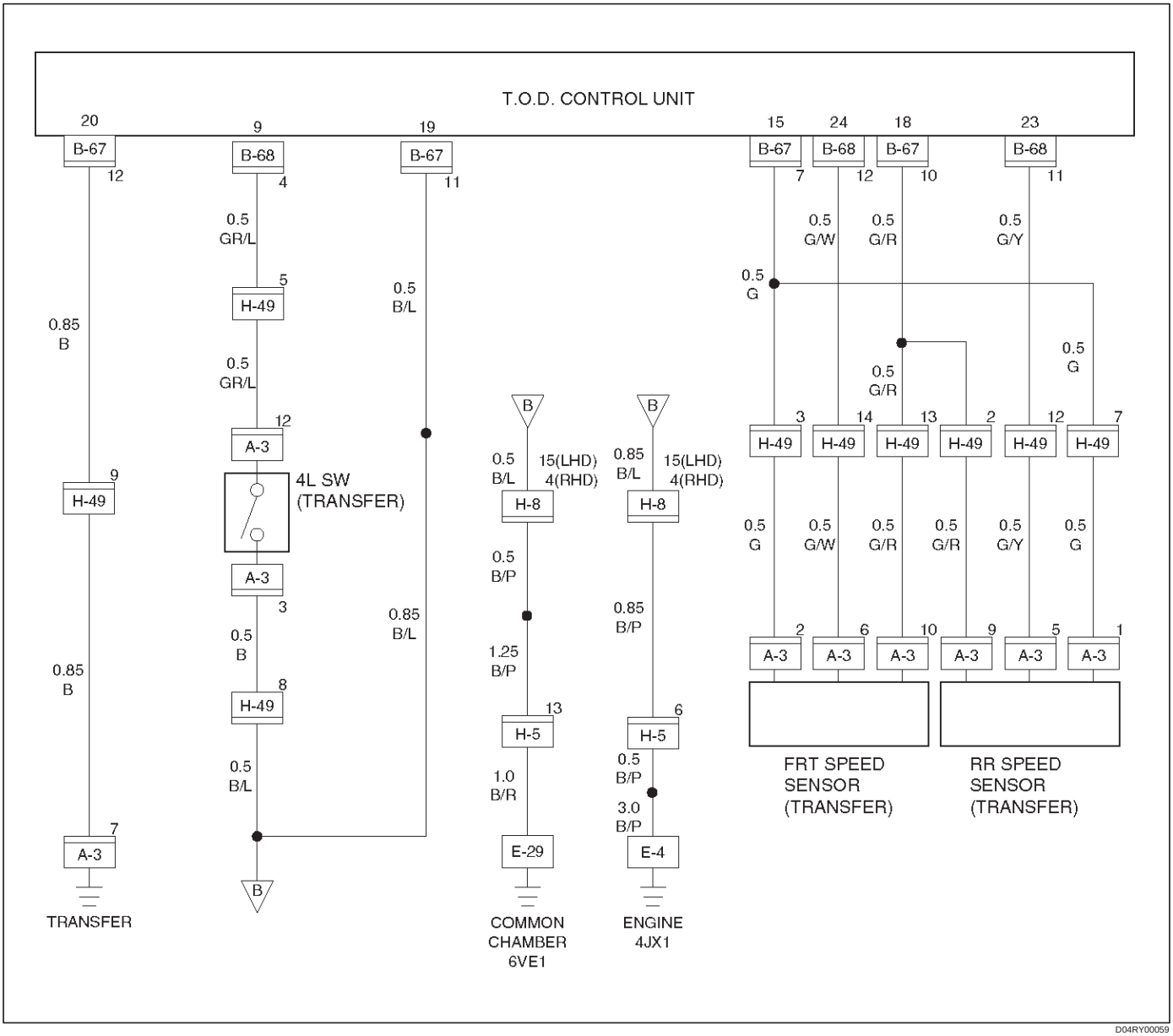

D04RY00059

Step	Action	Yes	No
1	1. Connect TECH 2. While running in TOD mode, does TECH–2's rear speed sensor indication change with vehicle speed?	Go to *Step 2*	Repair and inspection front speed sensor tone wheel. Go to *Step 6*
2	1. Clear the trouble code. While running at 40 km/h or 25 mph in TOD mode for 30 consecutive sec, is the trouble code reissued?	Go to *Step 3*	The trouble is not reproduced. Refer to *"Troubles intermittently observed".*
3	1. Turn off the starter switch. 2. Disconnect the ECU connector (B–67) and (B–68). Is there the continuity between the connector (B–68) terminal 11 and connector (B–67) terminal 11?	Repair the circuit. Go to *Step 5*	Go to *Step 4*
4	1. Disconnect the transfer connector (A–3). Is there the continuity between the connector (B–68) terminal 11 and the connector (A–3) terminal 5, the connector (B–67) terminal 7 and connector (A–3) terminal 1, and the connector (B–67) terminal 10 and connector (A–3) terminal 9?	Replace the rear speed sensor. Go to *Step 5*	Repair the circuit. Go to *Step 5*
5	1. Clear the trouble code. While running at 40 km/h or 25 mph in TOD mode for 30 consecutive sec, is the trouble code reissued?	Replace ECU. Go to *Step 6*	Go to *Step 6*
6	1. Check that all the parts are mounted. 2. Clear the trouble code. Is this step complete?	Repeat the "Diagnosis Flow".	Return to *Step 6*

Check flow	Trouble code	Phenomenon	Standard
5	24 (P1733)	Rear speed sensor signal open or GND short, speed sensor COM open.	0.3V > sensor voltage

NOTE: The following procedure shows the case that the front or rear sensor reference or common grounding line is broken.

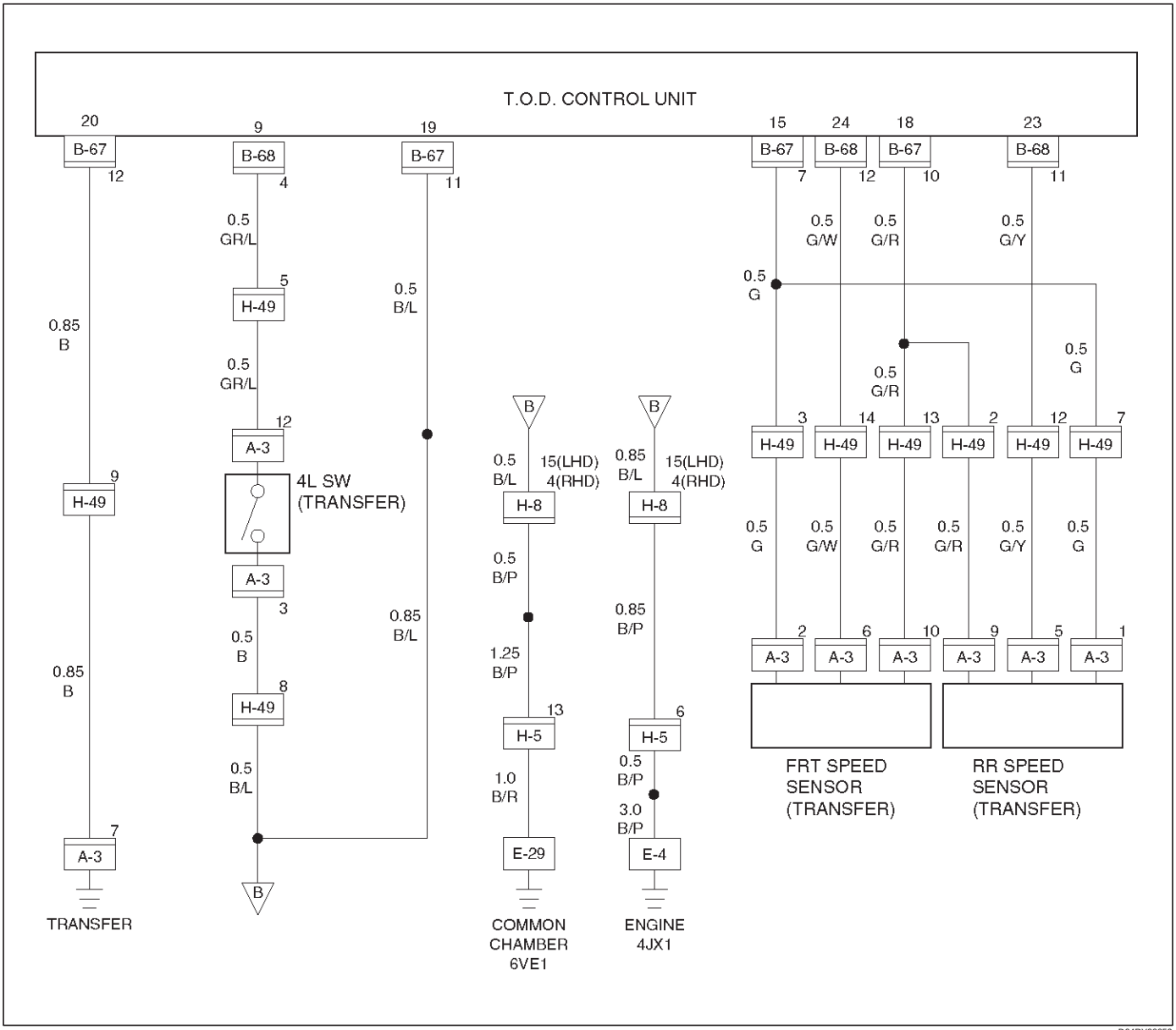

Step	Action	Yes	No
1	1. Start the engine. 2. Select TOD mode. Is there the memory except DTC 24(P1733)?	Go to *Step 4*	Go to *Step 2*
2	1. Turn off the starter switch. 2. Disconnect the ECU connector (B–67) and (B–68). Is there the continuity between the connector (B–68) terminal 11 and connector (B–67) terminal 11?	Repair the circuit. Go to *Step 7*	Go to *Step 3*
3	1. Disconnect the transfer connector (A–3). Is there the continuity between the connector (B–68) terminal 11 and the connector (A–3) terminal 5, the connector (B–67) terminal 7 and connector (A–3) terminal 1, and the connector (B–67) terminal 10 and connector (A–3) terminal 9?	Replace the rear speed sensor. Go to *Step 7*	Repair the circuit. Go to *Step 7*
4	Is the memory DTC 14(P1731)?	Go to *Step 5*	Refer to *other trouble cheek flow.*
5	Is there the continuity between harnesses of terminal 24 and 23 (vehicle side terminal of the front and rear speed sensor)?	Go to *Step 6*	Repair the circuit Go to *Step 7*
6	Is there the continuity between harnesses of terminal 18 and 15 (vehicle side terminal of the speed sensor COM(–) and ref)?	Replace front and rear speed sensor. Go to *Step 7*	Repair the circuit. Go to *Step 7*
7	1. Check that all the parts are mounted. 2. Clear the trouble code. Is the step complete?	Verify the repair	Return to *Step 7*

Check flow	Trouble code	Phenomenon	Standard
6	13 (P1735)	The reference is short-circuited to GND.	Reference ≃ 5 V
	15 (P1736)	The reference is short-circuited to Vb.	

If the reference wire (15) is short-circuited to GND, the speed signal is not generated. If the wire is short-circuited to the battery voltage, the signal level becomes faulty.

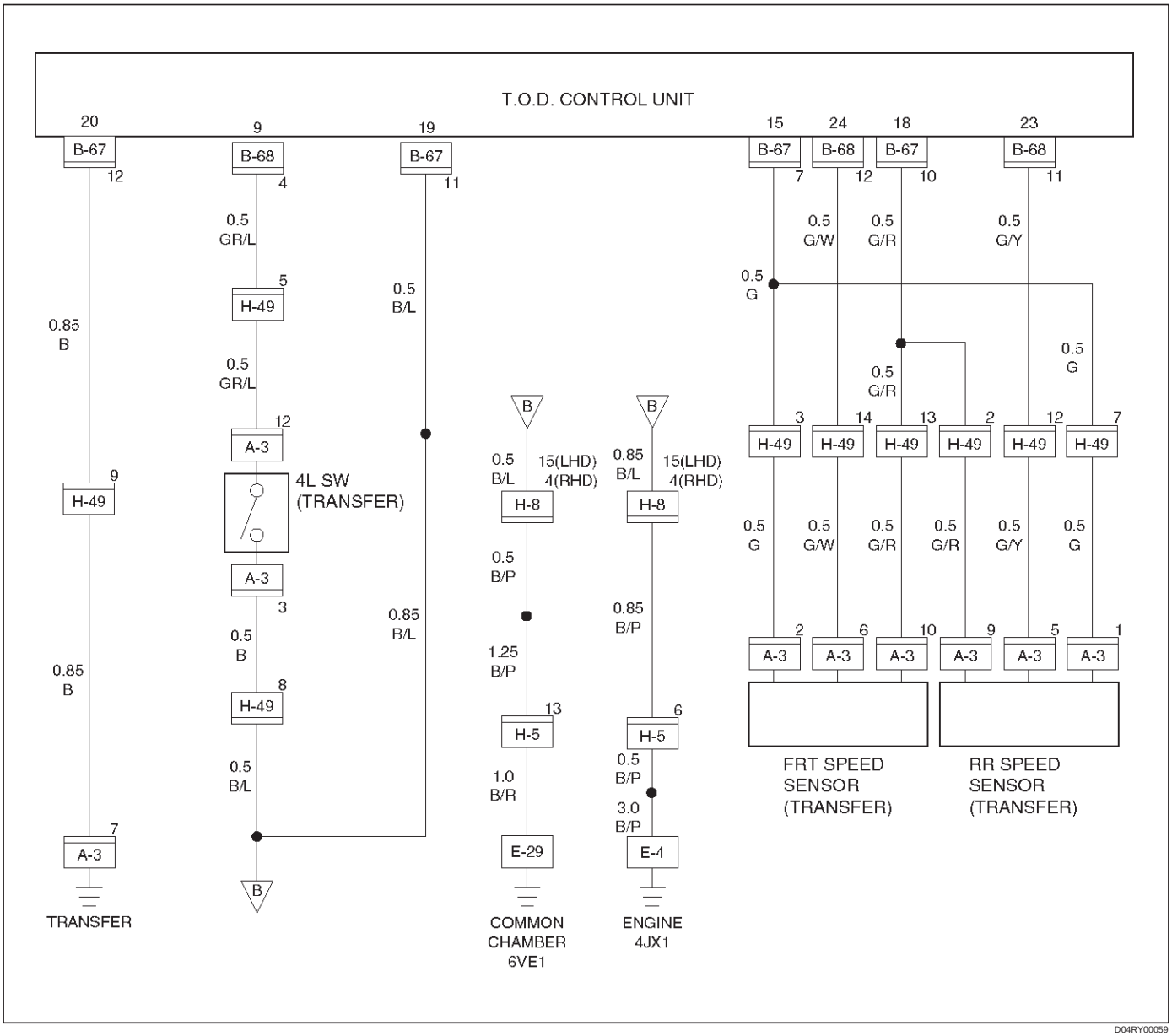

Step	Action	Yes	No
1	1. Start the engine. Does the voltage between terminals 15 and 19 meet the standard 5V?	The trouble is not reproduced. Refer to “Trouble intermittently boserved”. Or verify repair.	Go to Step 2
2	Is the voltage below the standard?	Go to Step 3	Go to Step 7
3	1. Turn off the starter switch. 2. Disconnect the ECU connector. Is the continuity established between vehicle harness terminals (B–67)7 and (B–67)11?	Go to Step 4	The ECU is failed. Replace the ECU. Go to Step 8
4	1. Disconnect the H-49 connector. Is the continuity established between floor harness connector terminals (H-49)3 and (H-49)9?	Go to Step 5	Short to GND between (B–67)7 and (H–49)3. Repair the circuit. Go to Step 8
5	1. Disconnect the A–3 connector. Is the continuity established between transfer harness connector terminals (A–3)2 and (A–3)7?	Replace the front speed sensor. Go to Step 8	The reference harness for the front speed sensor is short–circuited to GND. Repair the circuit. Go to Step 6
6	1. Disconnect the A–3 connector. Is the continuity established between transfer harness connector terminals (A–3)1 and (A–3)7?	Replace the rear speed sensor. Go to Step 8	The reference harness for the rear speed sensor is short–circuited to GND. Repair the circuit. Go to Step 8
7	1. Turn off the starter switch. 2. Disconnect the ECU connector. 3. Turn on the starter switch. Is the battery voltage observed between harness connector terminals (B–67)7 and (B–67)11?	Repair the harness circuit. Go to Step 8	The ECU has failed. Replace the ECU. Go to Step 8
8	1. Check that all the parts are mounted. 2. Clear the trouble code. Is this step complete?	Repeat the “Diagnosis Flow”	Go to Step 8

Check flow	Trouble code	Phenomenon	Standard
7	21 (P1716)	The voltage of the throttle position sensor (TPS) is faulty.	V 6VE1 / 4JX1 Idling: 0.44 ~ 0.87 / 0.2 ~ 0.5 Wide open throttle (WOT): 3.7 ~ 4.6 / 3.69 ~ 4.51

The signal voltage from the TPS deviates from the standard range.

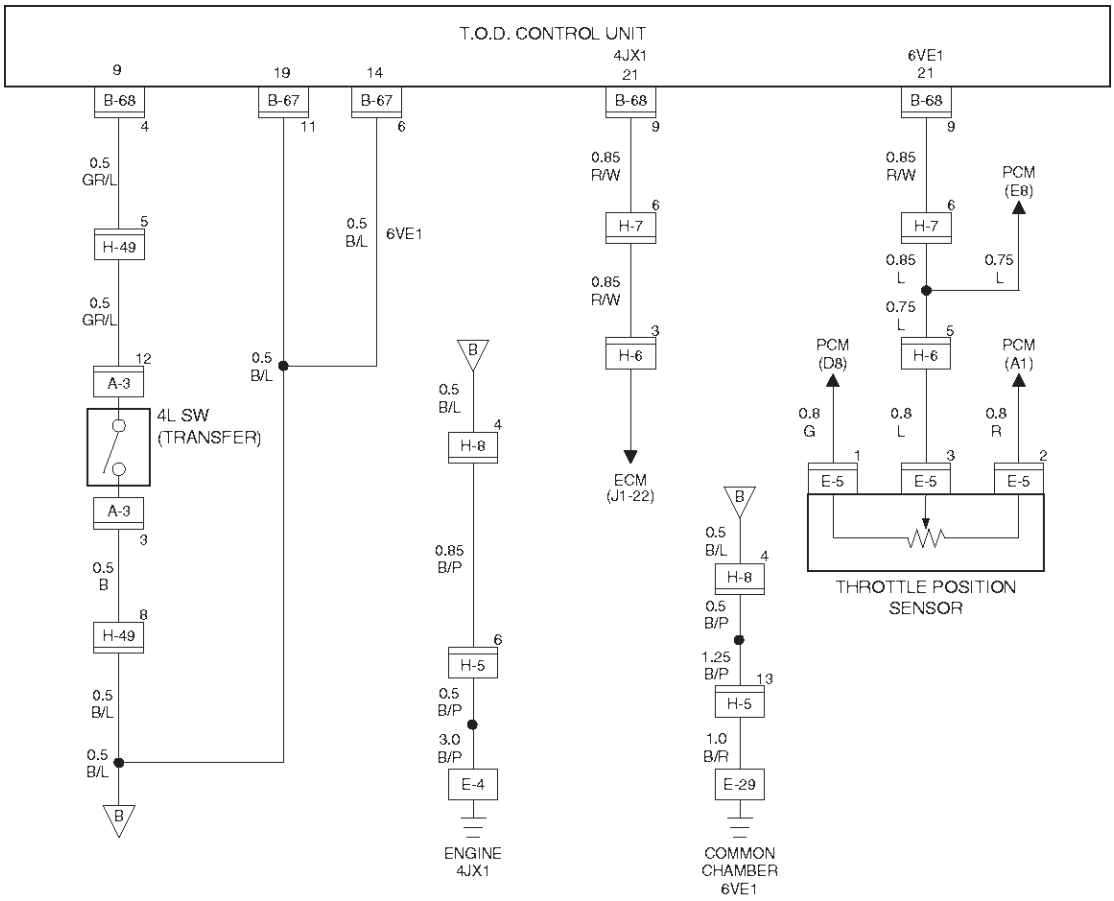

D04RY00053

Step	Action	Yes	No
1	1. Turn off the starter switch. Is the battery voltage normal?	Go to Step 2	Charge or replace the battery. Go to Step 6
2	1. Turn on the starter switch. Does the voltage between terminals 21 and 19 fall within the standard range above?	Go to Step 3	Go to Step 3
3	1. Turn off the starter switch. 2. Disconnect the ECU connector. 3. Turn on the starter switch. Does the voltage between terminals (B–68)9 and (B–67)11 fall within the standard range above?	The ECU has failed. Replace the ECU. Go to Step 6	Go to Step 4
4	Is the harness healthy?	Go to Step 5	Repair the harness. Go to Step 6
5	Is the TPS healthy?	Go to Step 6	Replace the TPS. Go to Step 6
6	1. Check that all the parts are mounted. 2. Clear the trouble code. Is this step complete?	Repeat the “Diagnosis Flow”.	Go to Step 6

Check flow	Trouble code	Phenomenon	Standard
8	34	The diesel/gasoline engine identification signal is faulty.	6VE1: Continuity established 4JX1: No continuity

The engine identification signals of 6VE1 and 4JX1 are changed each other.

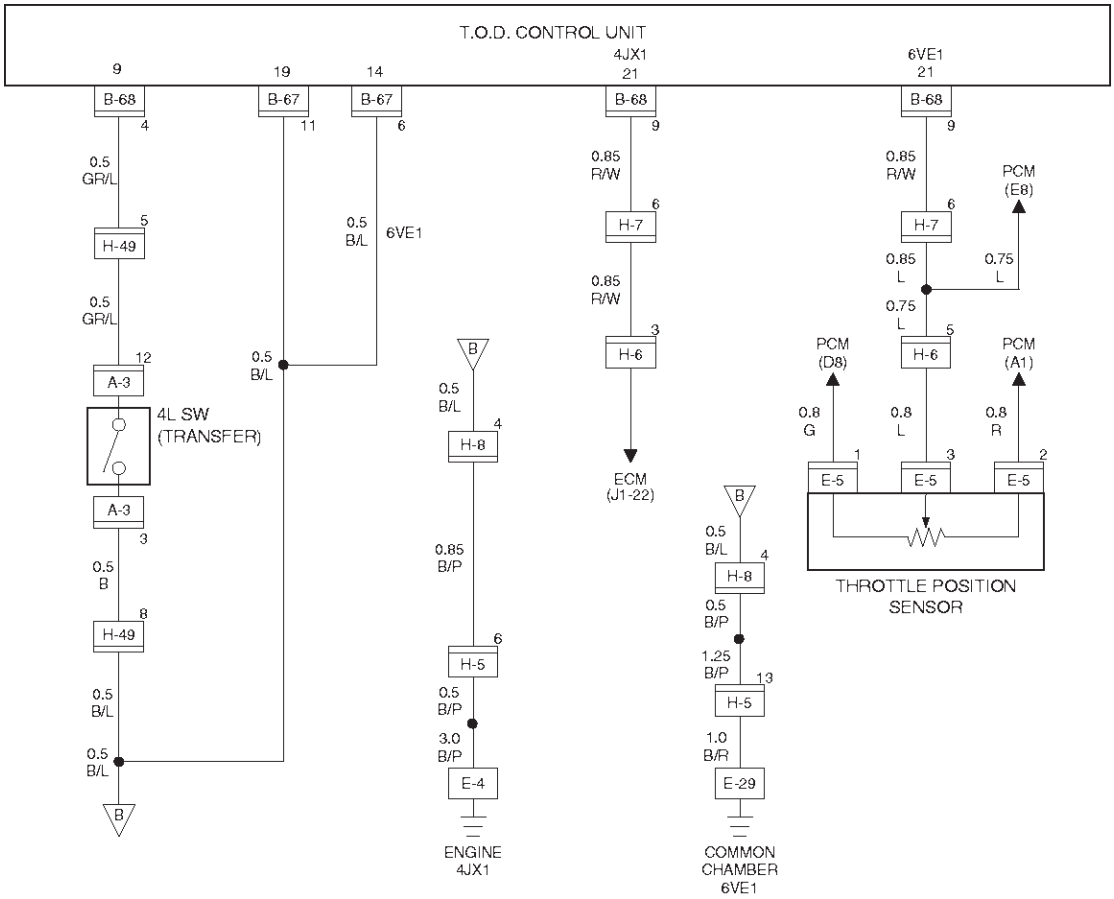

D04RY00053

6VE1

Step	Action	Yes	No
1	1. Turn off the starter switch. Is the continuity established between terminals 14 and 19?	Go to Step 2	The harness is broken. Repair the circuit. Go to Step 3
2	1. Turn on the starter switch. Does the voltage between terminals 14 and 19 indicate 0V?	The phenomenon is not reproduced. Refer to “Troubles intermittently observed”	The ECU has failed. Replace the ECU. Go to Step 3
3	1. Check that all the parts are mounted. 2. Clear the trouble code. Is this step complete?	Repeat the “Diagnosis Flow”.	Return to Step 3

4JX1

Step	Action	Yes	No
1	1. Turn off the starter switch. Is the continuity established between terminals 14 and 19?	The harness for terminal 14 is short–circuited to GND. Repair the circuit. Go to Step 3	Go to Step 2
2	1. Turn on the starter switch. Does the voltage between terminals 14 and 19 indicate 5V?	The phenomenon is not reproduced. Refer to “Troubles intermittently observed”	The ECU has failed. Replace the ECU. Go to Step 3
3	1. Check that all the parts are mounted. 2. Clear the trouble code. Is this step complete?	Repeat the “Diagnosis Flow”.	Return to Step 3

Check flow	Trouble code	Phenomenon	Standard
9	31 (P1721)	The electromagnetic coil is broken or shorted to the battery or GND.	—

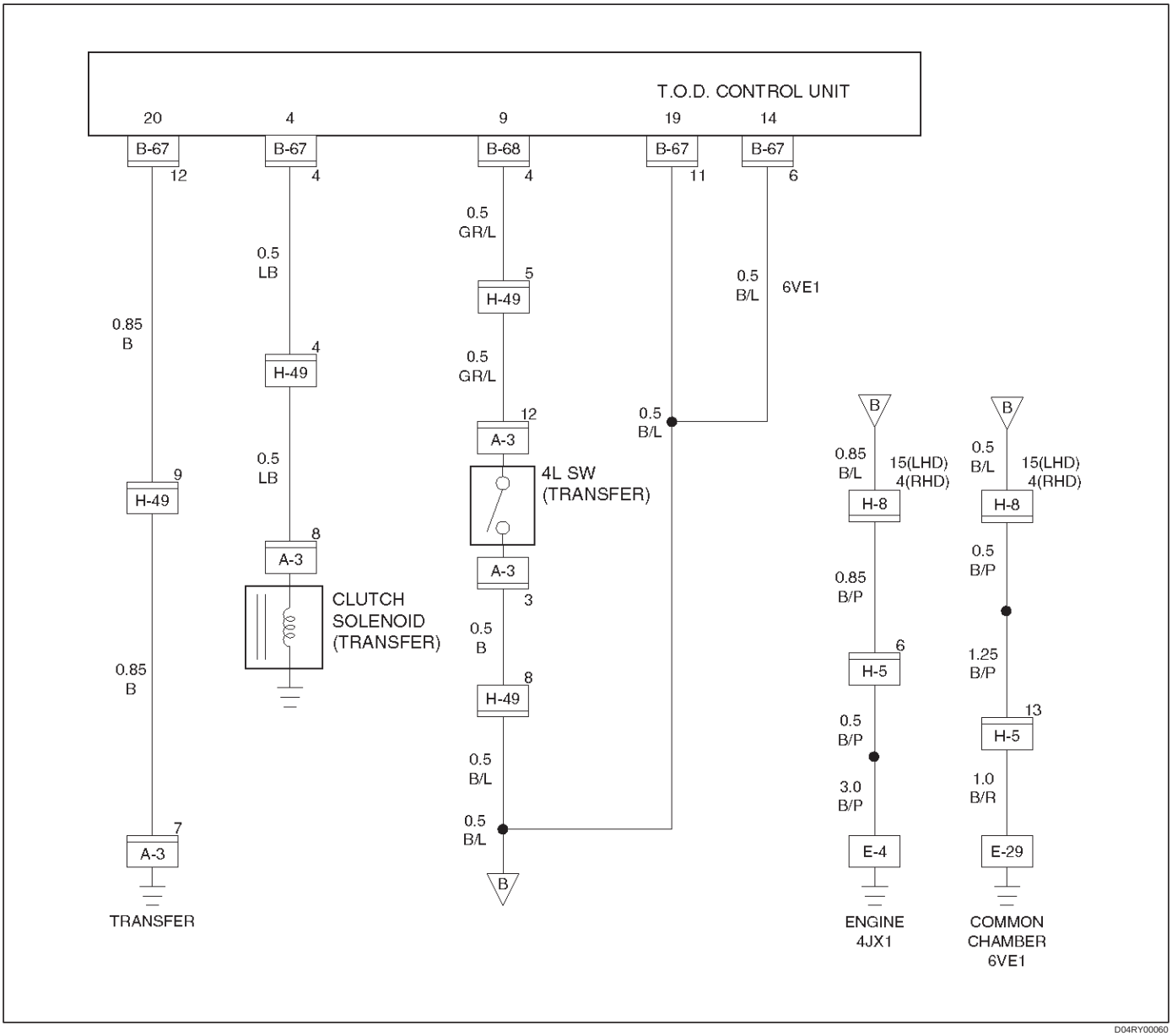

D04RY00060

Step	Action	Yes	No
1	1. Clear the trouble code. 2. Start the engine 3. Set the TOD mode. Is there DTC31 (P1721)?	Go to *Step 2*	Refer to *"Trouble intermittently observed".*
2	1. Turn off the starter switch. 2. Disconnect the ECU connector from ECU. Is the continuity established between terminals (B–67)4 and (B–67)12?	Go to *Step 3*	Go to *Step 5*
3	1. Connect the ECU connector. 2. Start the engine. 3. Set the TOD mode. Does the voltage between terminals 4 and 20 indicate at least 0.4V?	Go to *Step 4*	Go to *Step 6*
4	Is the battery voltage always observed between terminals 4 and 20?	The harness is short–circuited on the battery. Repair the circuit. Go to *Step 8*	Go to *Step 6*
5	1. Disconnect the A–3 connector. Is the continuity established between transfer connector terminals (A–3)8 and (A–3)7?	The harness is broken. Repair the circuit. Go to *Step 8*	Replace the transfer electromagnetic coil (solenoid clutch). Go to *Step 8*
6	1. Turn off the starter switch. 2. Disconnect the ECU connector from ECU. Is the resistance between the connector (B–67) terminal 4 and 12 1.0 ~ 5.0Ω?	The ECU has failed. Replace the ECU Go to *Step 8*	Go to *Step 7*
7	Is the resistance between the transfer connector (A–3) terminal 8 and 7 1.0 ~ 5.0Ω?	The harness is disconnection or short to GND. Repair the circuit. Go to *Step 8*	Replace the transfer electromagnetic coil (solenoid clutch). Go to *Step 8*
8	1. Check that all the parts are mounted. 2. Clear the trouble code. Is this step complete?	Repeat the "Diagnosis Flow".	Return to Step 8

Check flow	Trouble code	Phenomenon	Standard
10	26	The electromagnetic coil is short-circuited to GND.	Resistance: 1.0 to 5.0 ohm (at ordinary temperature)

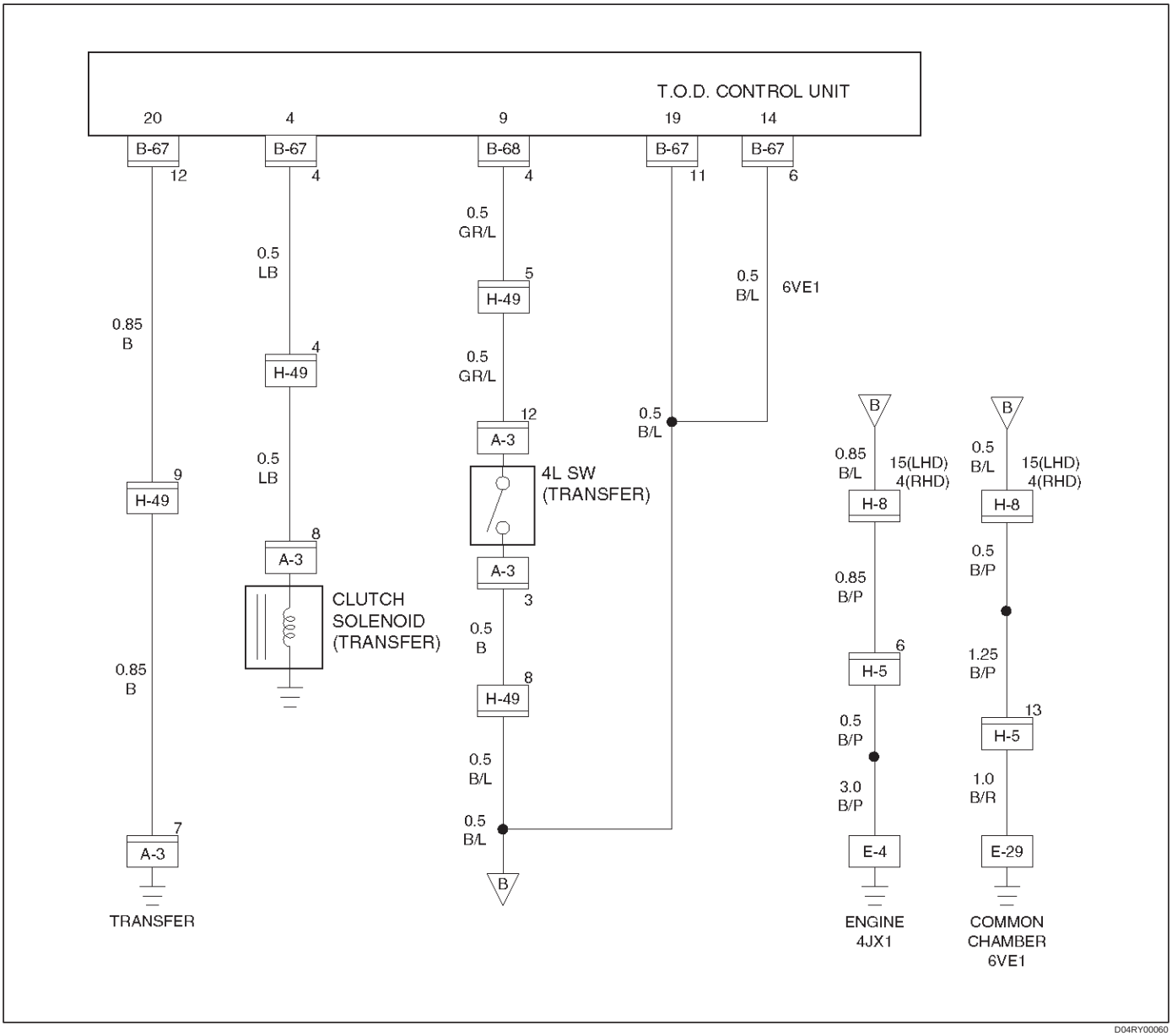

D04RY00060

Step	Action	Yes	No
1	1. Turn off the starter switch. 2. Disconnect the ECU connector from ECU. Does the resistance between terminals (B–67)4 and (B–67)12? indicate 1.0 to 5.0 ohm?	Go to Step 2	Go to Step 3
2	1. Connect the ECU connector. 2. Start the engine. 3. Set the TOD mode. When the throttle is operated between full close and full open positions, does the voltage between terminals 4 and 20 indicate 0.1 to 1.0 V?	The phenomenon is not reproduced. Refer to “Troubles intermittently observed”.	The ECU has failed. Replace the ECU. Go to Step 4
3	Does the resistance between transfer connector terminals (A–3)8 and (A–3)7 indicate 1.0 to 5.0ohm?	The harness is broken. Repair the circuit. Go to Step 4	Replace the transfer electromagnetic coil. Go to Step 4
4	1. Check that all the parts are mounted. 2. Clear the trouble code. Is this step complete?	Repeat the “Diagnosis Flow”.	Return to Step 4

Check flow	Trouble code	Phenomenon	Standard
11	28 (P1760)	The shift on the fly system (front axle disconnect) works incorrectly.	—

NOTE: The shift on the fly system is not changed between 2WD and 4WD modes normally.

CAUTION: If code 32 or 33 is also observed, remove the trouble associated with code 32 or 33 first.

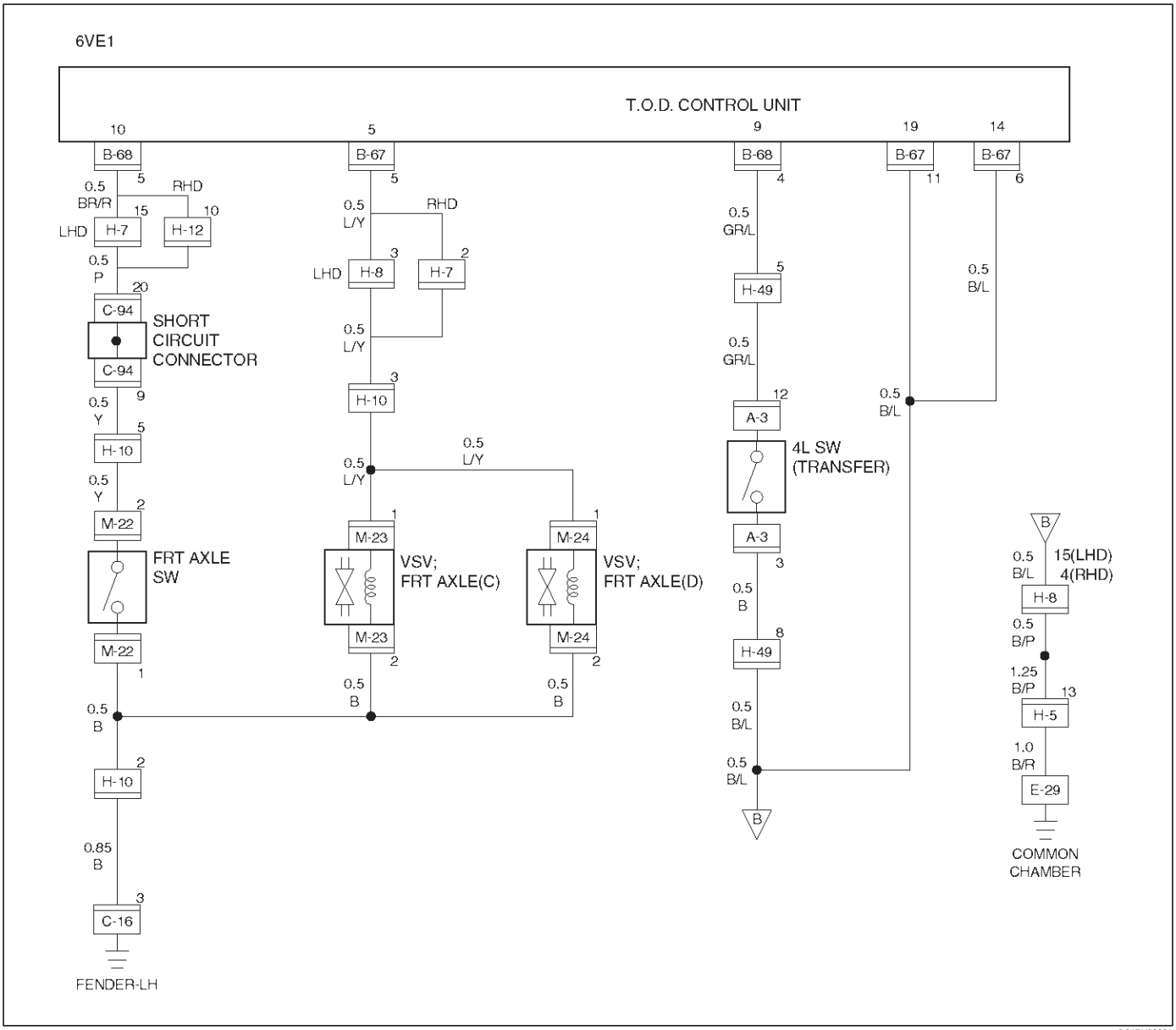

D04RY00061

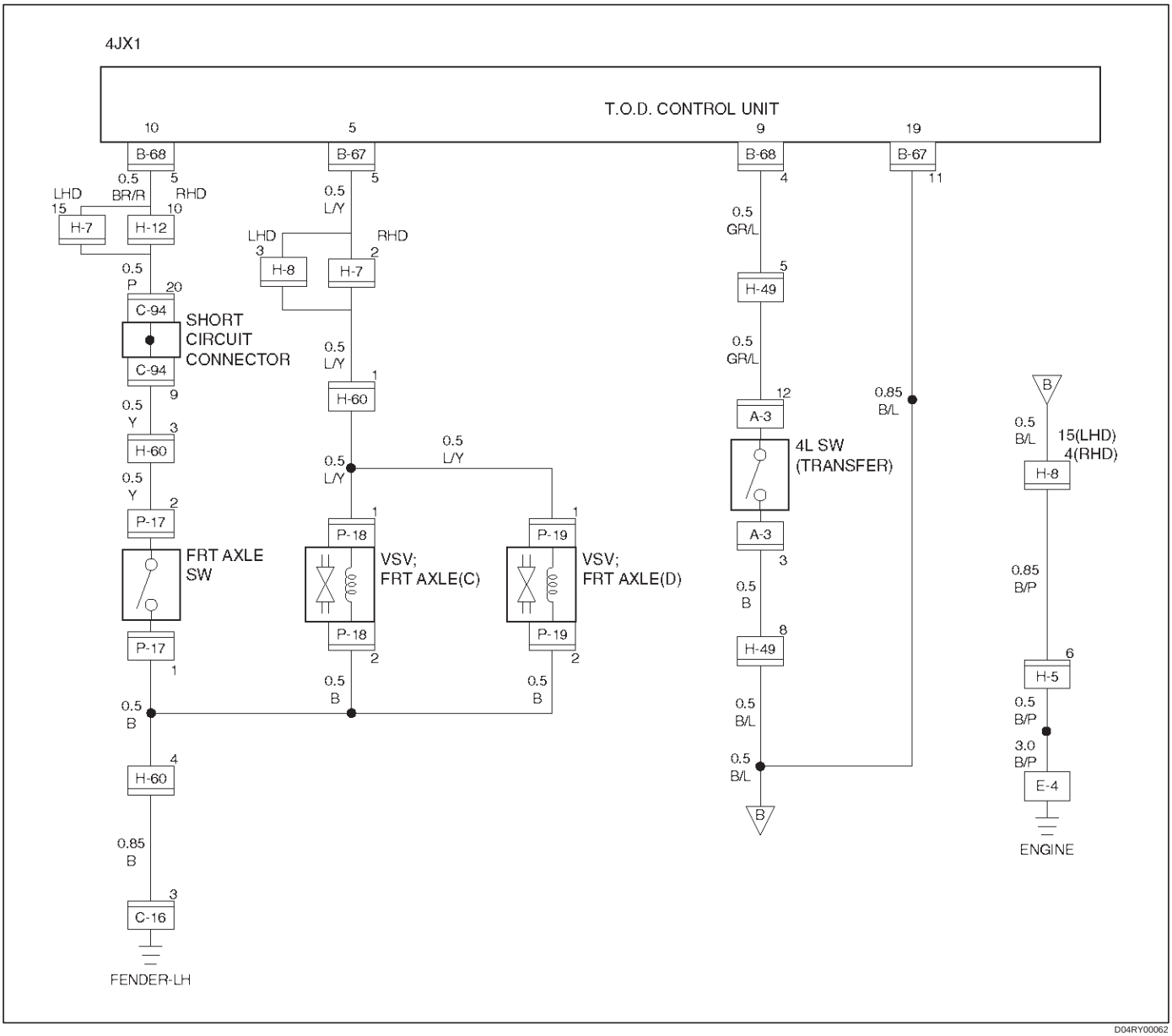
4JX1
T.O.D. CONTROL UNIT
10
5
9
19
B-68
B-67
B-68
B-67
0.5
BR/R
5
LHD
15
RHD
10
H-7
H-12
0.5
P
20
C-94
SHORT
CIRCUIT
CONNECTOR
C-94
9
0.5
Y
3
H-60
0.5
Y
2
P-17
FRT AXLE
SW
P-17
1
0.5
B
4
H-60
0.85
B
3
C-16
FENDER-LH
0.5
L/Y
LHD
3
RHD
2
H-8
H-7
0.5
L/Y
1
H-60
0.5
L/Y
0.5
L/Y
1
P-18
VSV;
FRT AXLE(C)
P-18
2
1
P-19
VSV;
FRT AXLE(D)
P-19
2
0.5
B
0.5
B
0.5
GR/L
5
H-49
0.5
GR/L
12
A-3
4L SW
(TRANSFER)
A-3
3
0.5
B
8
H-49
0.5
B/L
0.5
B/L
B
0.85
B/L
B
0.5
B/L
15(LHD)
4(RHD)
H-8
0.85
B/P
6
H-5
0.5
B/P
3.0
B/P
E-4
ENGINE
D04RY00062

Step	Action	Yes	No
1	1. Turn on the starter switch. 2. Set the transfer to the 2H mode. Is the battery voltage observed between terminals 5 and 19?	Go to Step 2	Go to Step 5
2	Is 5V observed between terminals 10 and 19?	Go to Step 3	Go to Step 6
3	1. Set the transfer to the high (TOD) mode. Does the voltage between terminals 5 and 19 indicate 0V?	Go to Step 4	The ECU has failed. Replace the ECU. Go to Step 7
4	Does the voltage between terminals 10 and 19 indicate 0V?	The phenomenon is not reproduced. Refer to “Troubles intermittently observed”.	The shift on the fly system is failed (refer to Section 4B and 4C of Chassis Repair Manual).
5	Does the TOD indicator show the 2H mode?	The ECU has failed. Replace the ECU. Go to Step 7	See “Trouble Diagnosis Depending on The Status of TOD Indicator”.
6	Set the transfer to the high (TOD) mode. Does the voltage between terminals 5 and 19 indicate 0V?	The shift on the fly system has failed (refer to Section 4B1 and 4C of Chassis Repair Manual).	The ECU has failed. Replace the ECU. Go to Step 7
7	1. Check that all the parts are mounted. 2. Clear the trouble code. Is this step complete?	Repeat the “Diagnosis Flow”.	Return to Step 7

Check flow	Trouble code	Phenomenon	Standard
12	32 (P1761)	The on/off signal (ADC) line of the shift on the fly system (front axle disconnect) is broken, or the line is short-circuited to the battery.	—

NOTE: The on/off signal line of the shift on the fly system is broken, or the line is short–circuited to the battery.

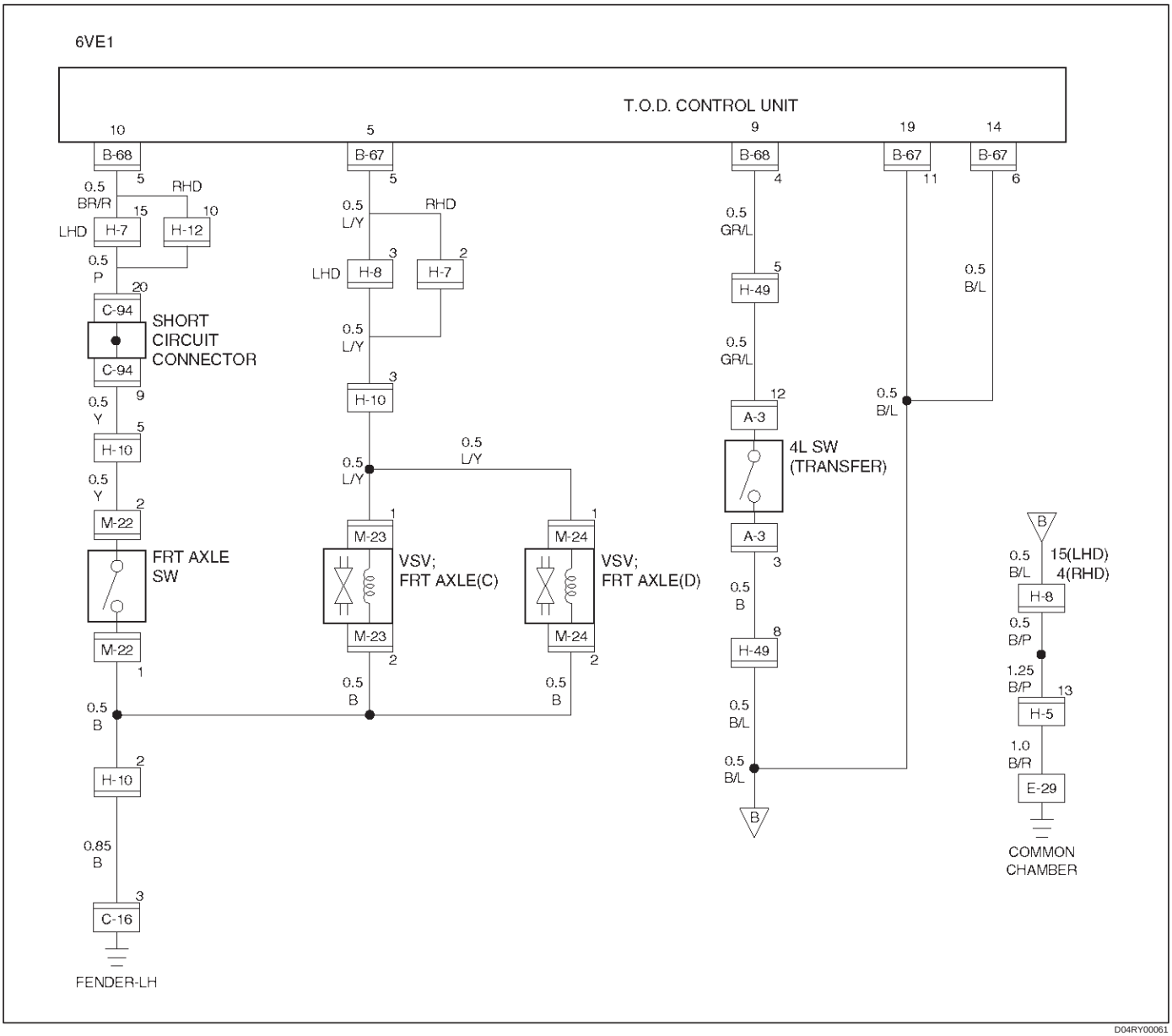

D04RY00061

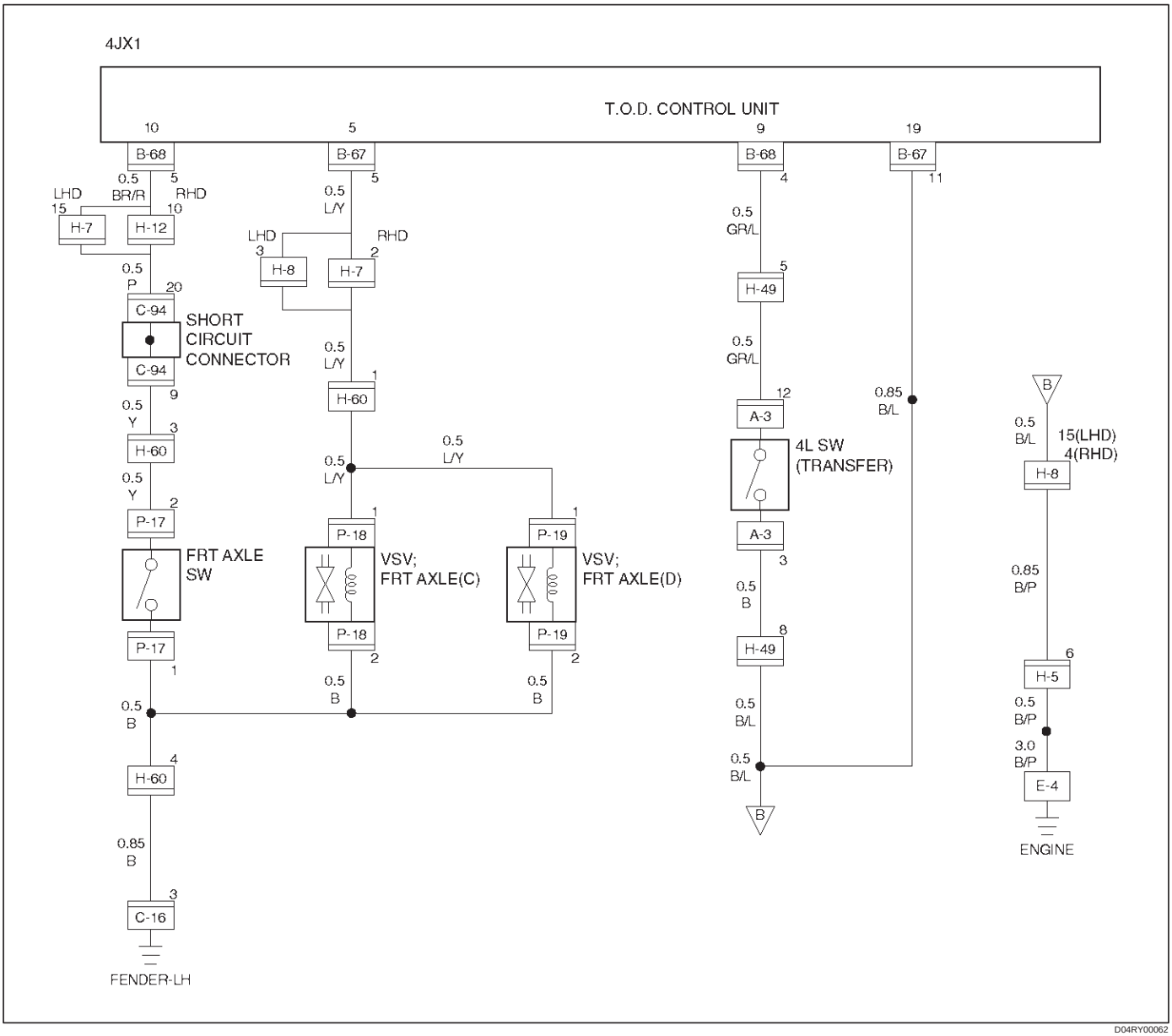
4JX1
T.O.D. CONTROL UNIT
10
5
9
19
B-68
B-67
B-68
B-67
0.5
BR/R
LHD
RHD
15
10
H-7
H-12
0.5
P
20
C-94
SHORT
CIRCUIT
CONNECTOR
C-94
9
0.5
Y
3
H-60
0.5
Y
2
P-17
FRT AXLE
SW
P-17
1
0.5
B
4
H-60
0.85
B
3
C-16
FENDER-LH
0.5
L/Y
LHD
3
RHD
2
H-8
H-7
0.5
L/Y
1
H-60
0.5
L/Y
0.5
L/Y
1
P-18
VSV;
FRT AXLE(C)
P-18
2
1
P-19
VSV;
FRT AXLE(D)
P-19
2
0.5
B
0.5
B
0.5
GR/L
5
H-49
0.5
GR/L
12
A-3
4L SW
(TRANSFER)
A-3
3
0.5
B
8
H-49
0.5
B/L
0.5
B/L
B
0.85
B/L
B
0.5
B/L
15(LHD)
4(RHD)
H-8
0.85
B/P
6
H-5
0.5
B/P
3.0
B/P
E-4
ENGINE

D04RY00062

Step	Action	Yes	No
1	1. Turn off the starter switch. 2. Disconnect the ECU connector from ECU. Is the continuity established between terminals (B–67)5 and (B–67)11?	Go to Step 2	The harness is broken. Repair the circuit. Go to Step 3
2	Does the voltage between terminals (B–67) 5 and (B–67) 11 indicate 0V?	Go to Step 3	The battery is short-circuited. Repair the circuit. Go to Step 4
3	1. Turn off the starter switch. 2. Connect ECU connector. 3. Turn on the starter switch. 4. Set the transfer to the 2H mode. Is the battery voltage observed between terminals 5 and 19?	The phenomenon is not reproduced Refer to “Troubles intermittently observed”.	The ECU has failed. Replace the ECU. Go to Step 4
4	1. Check that all the parts are mounted. 2. Clear the trouble code. Is this step complete?	Repeat the “Diagnosis Flow”.	Return to Step 4

Check flow	Trouble code	Phenomenon	Standard
13	33 (P1762)	The ADC line is short-circuited to GND.	—

NOTE:

- The on/off signal line of the shift on the fly system is short–circuited to GND.
- The system enters into the fail-safe mode because of fusing or system protection.

  (If a short–circuit is observed on GND, the output to the on/off signal line becomes 0V.)

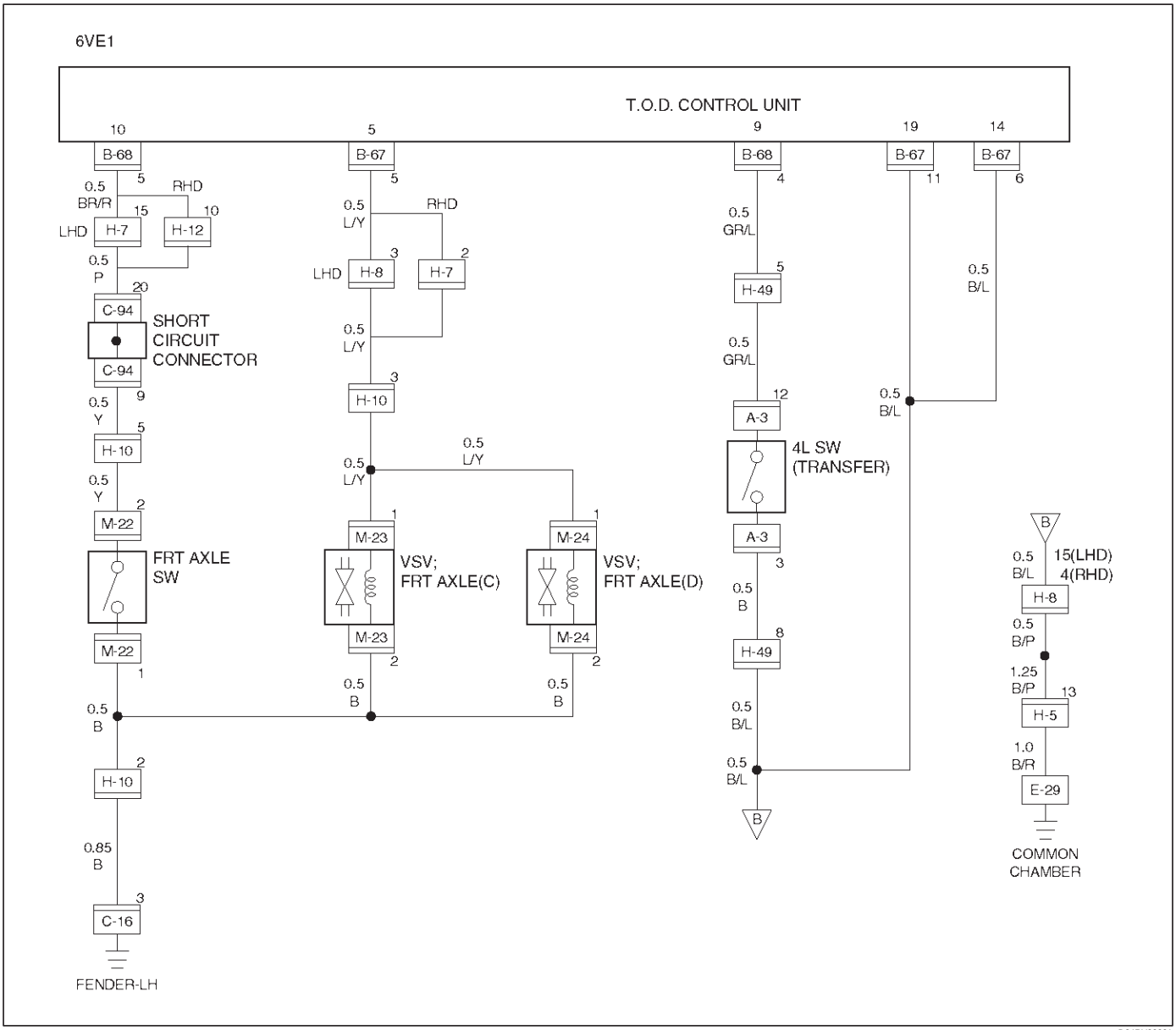

D04RY00061

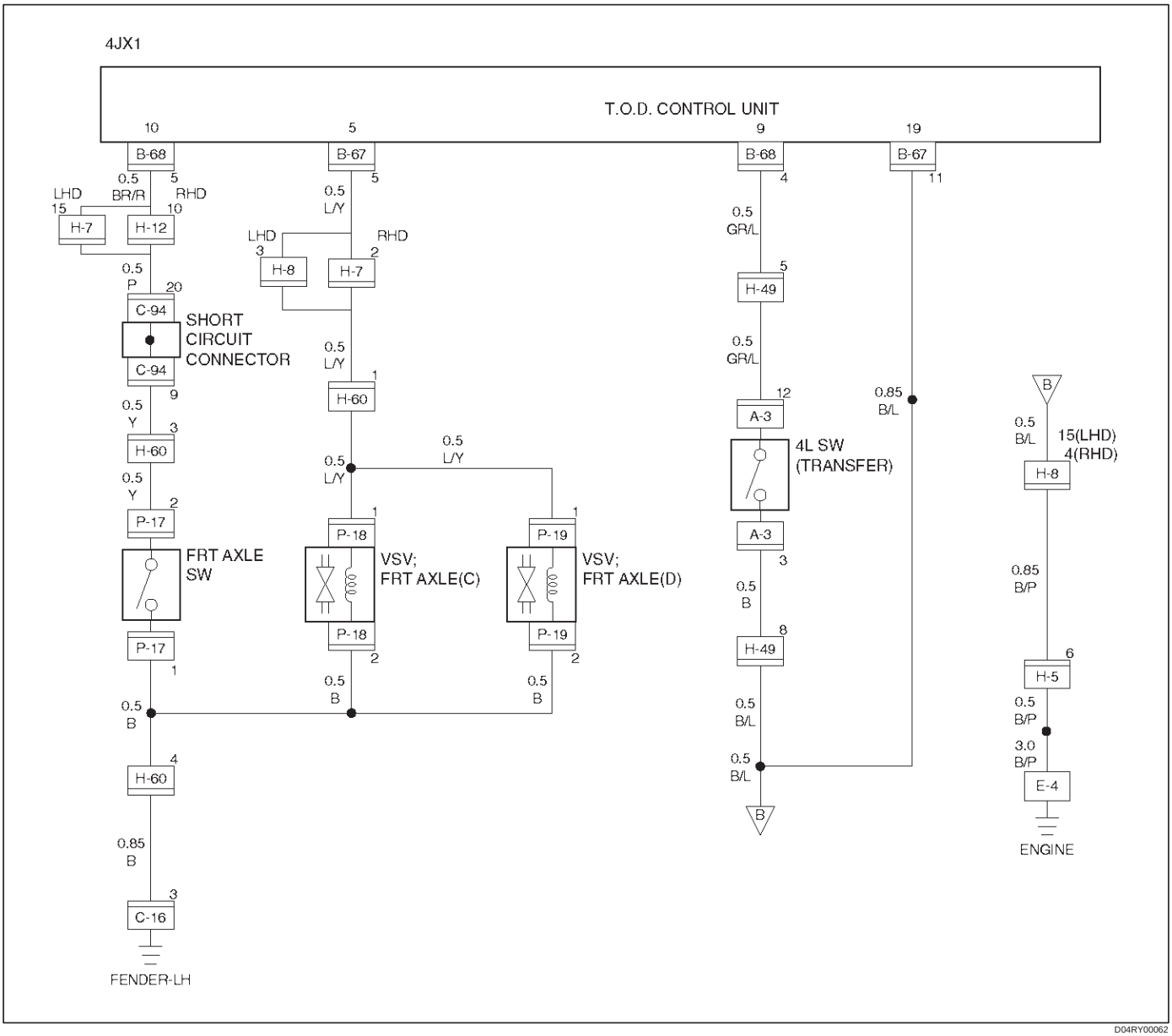
4JX1
T.O.D. CONTROL UNIT
10
5
9
19
B-68
B-67
B-68
B-67
0.5
BR/R
5
LHD
15
RHD
10
H-7
H-12
0.5
P
20
C-94
SHORT
CIRCUIT
CONNECTOR
C-94
9
0.5
Y
3
H-60
0.5
Y
2
P-17
FRT AXLE
SW
P-17
1
0.5
B
4
H-60
0.85
B
3
C-16
FENDER-LH
0.5
L/Y
LHD
3
RHD
2
H-8
H-7
0.5
L/Y
1
H-60
0.5
L/Y
0.5
L/Y
1
P-18
VSV;
FRT AXLE(C)
P-18
2
1
P-19
VSV;
FRT AXLE(D)
P-19
2
0.5
B
0.5
B
0.5
GR/L
5
H-49
0.5
GR/L
12
A-3
4L SW
(TRANSFER)
A-3
3
0.5
B
8
H-49
0.5
B/L
0.5
B/L
B
0.85
B/L
B
0.5
B/L
15(LHD)
4(RHD)
H-8
0.85
B/P
6
H-5
0.5
B/P
3.0
B/P
E-4
ENGINE
D04RY00062

Step	Action	Yes	No
1	1. Turn off the starter switch. 2. Disconnect the ECU connector from ECU. Does the resistance between terminals (B–67) 5 and (B–67) 11 meet the standard, 17<R<25 ohms?	The phenomenon is not reproduced. Refer to “Troubles intermittently observed”.	Go to Step 2
2	Is the resistance between terminals (B–67) 5 and (B–67) 11 R<2 ohms?	The signal line circuit of the shift on the fly system is short-circuited to GND. Repair the circuit. Go to Step 4	Go to Step 3
3	Is the resistance between terminals (B–67) 5 and (B–67) 11 R= 9±7ohms?	The signal line circuit of the shift on the fly system is layer short-circuited*. Replace the valve (VSV). Go to Step 4	Go to Step 4
4	1. Check that all the parts are mounted. 2. Clear the trouble code. Is this step complete?	Repeat the “Diagnosis Flow”.	Return to Step 4

*Layer short-circuit : The coil is damaged by overcurrent.

Check flow	Trouble code	Phenomenon	Standard
14	25	The CHECK lamp indicator line is short–circuited to the battery.	—
	35	The line is broken or short–circuited to GND.	—

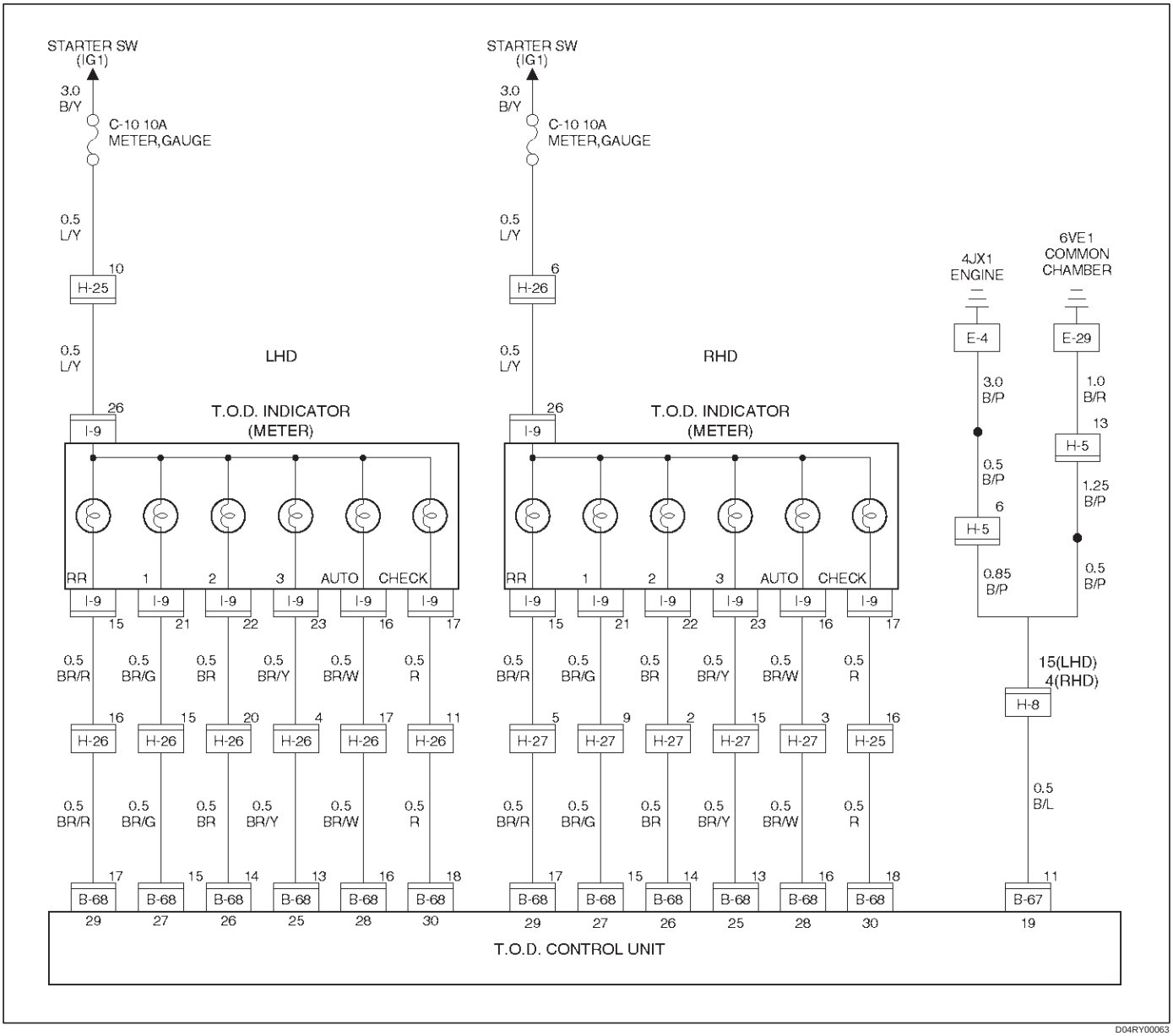

Step	Action	Yes	No
1	1. Turn on the starter switch. Is the CHECK lamp always turned on?	Go to Step 2	Go to Step 3
2	1. Turn off the starter switch. 2. Disconnect the ECU connector. 3. Turn on the starter switch. Is the CHECK lamp always turned on?	The CHECK circuit is short-circuited to GND. Repair the circuit. Go to Step 7	The ECU has failed. Replace the ECU. Go to Step 7
3	Turn on the starter switch. Is the CHECK lamp always turned off?	Go to Step 4	Go to Step 6
4	Turn on the starter switch. Is the battery voltage observed between terminals 30 and 19?	Go to Step 5	The CHECK circuit wires are broken or the CHECK lamp is failed. Repair the circuit. Go to Step 7
5	Turn off the starter switch. Is the battery voltage observed between terminals 30 and 19?	The battery is short–circuited. Repair the CHECK lamp circuit. Go to Step 7	The ECU has failed. Replace the ECU. Go to Step 7
6	Turn on the starter switch. Does the CHECK lamp go off two seconds after?	The phenomenon is not reproduced.Refer to “Troubles intermittently observed”.	Go to Step 7
7	1. Check that all the parts are mounted. 2. Clear the trouble code. Is this step complete?	Repeat the “Diagnosis Flow”.	Return to Step 7

Trouble Diagnosis Depending on The Status of TOD Indicator

Functional check with TOD indicator light is conducted prior to check on Charts A–H.

- After the starter is switched on, check and see if the status has become as tabulated below.

Is the continuity established between ECU terminal :					TOD Indicator indicate state
25 and 20	26 and 20	27 and 20	28 and 20	29 and 20	
Yes	Yes	Yes	Yes	Yes	CHECK
No	No	No	No	No	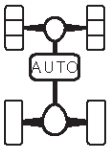 CHECK

C07RW012–1

- If the status is as tabulated above, there is no problem. If not as tabulated above, inspect the harness.

Chart A	Indicator drive circuit	
Function of circuit	The circuit informs the indicator of the working condition of the ECU.	
Fail condition	All the TOD indicator lamps and CHECK lamp are lit, and go off momentarily at an interval of about two seconds.	
Indicator lamp status	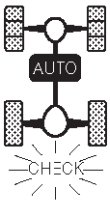	—
Transfer position	2H, TOD, 4L	—

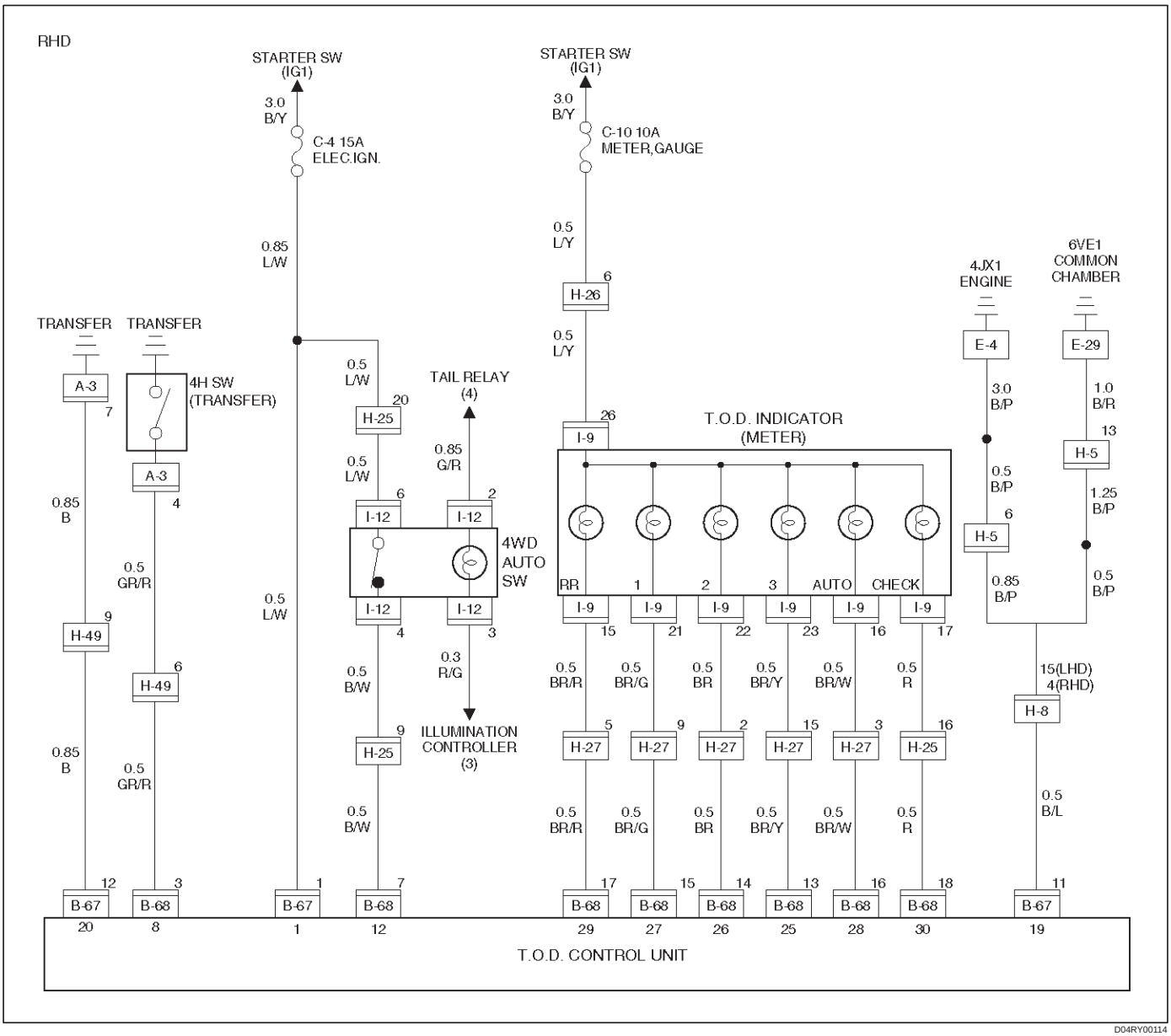

D04RY00114

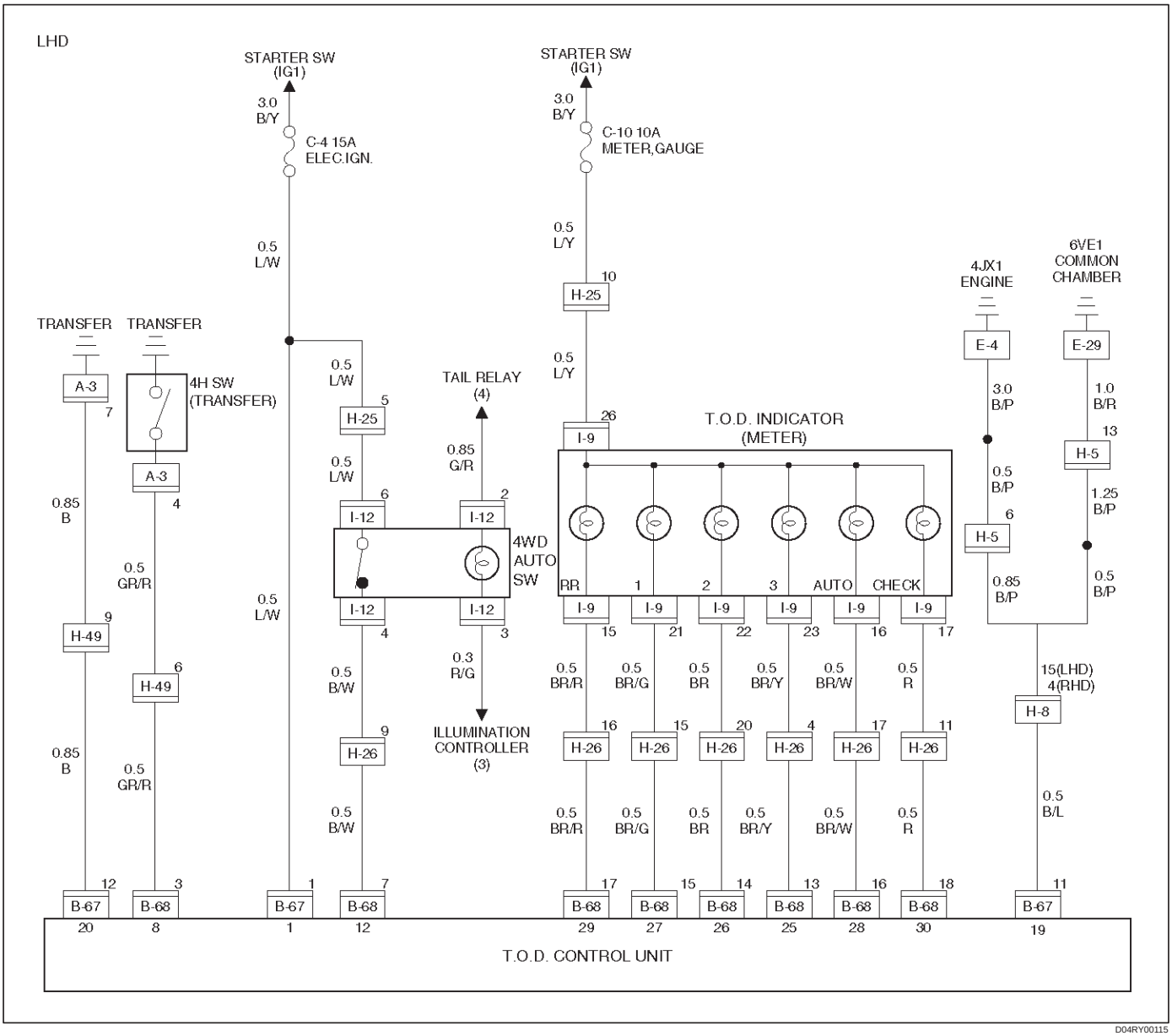

Step	Action	Yes	No
1	Turn on the starter switch. Is the battery voltage observed between terminals 1 and 19?	The ECU has failed. Replace the ECU. Go to Step 2	Check the battery circuit. Go to Step 2
2	Check that all the parts are mounted. Is this step complete?	Repeat the “Diagnosis Flow”.	Return to Step 2

Chart B–1	The 4WD AUTO switch circuit wires are broken or short-circuited to the GND	
Function of circuit	—	
Fail condition	Even after the transfer mode is selected from TOD to 2H, the indicator lamp status is not changed.	
Indicator lamp status	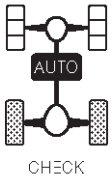	—
Transfer position	2H	—

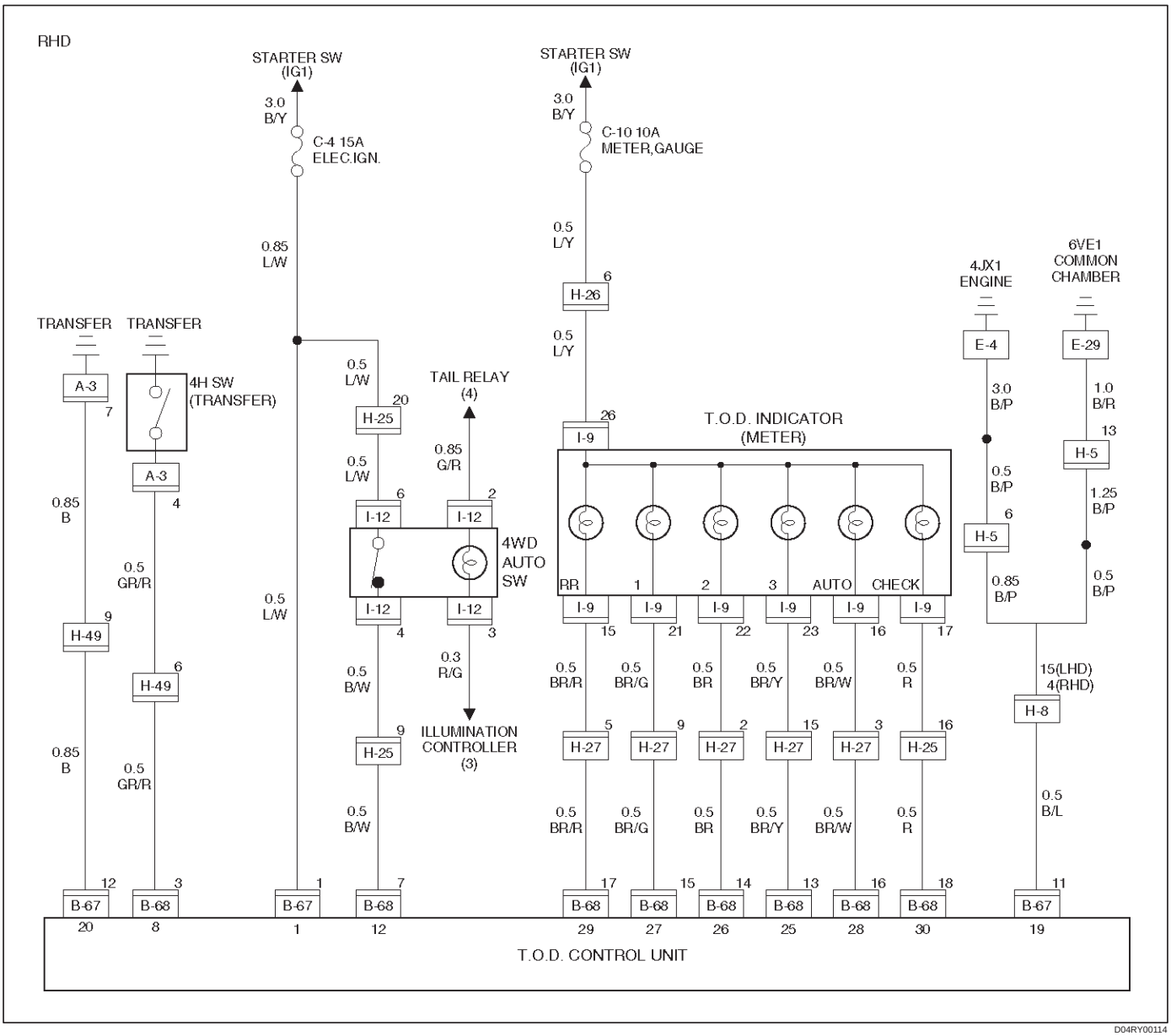

D04RY00114

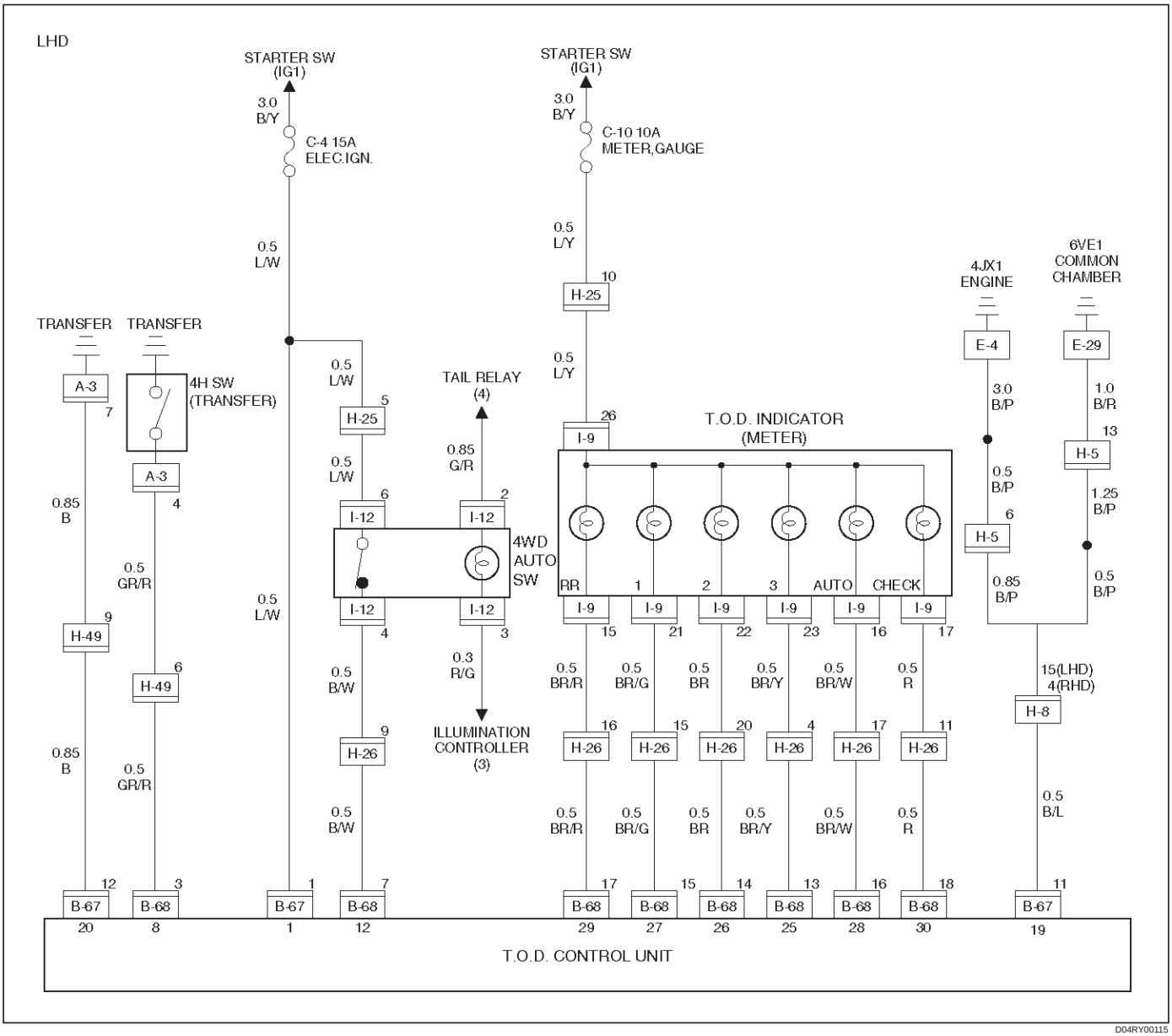
LHD
STARTER SW (IG1)
3.0 B/Y
C-4 15A ELEC.IGN.
0.5 L/W
STARTER SW (IG1)
3.0 B/Y
C-10 10A METER,GAUGE
0.5 L/Y
H-25
10
TRANSFER
TRANSFER
A-3
7
4H SW (TRANSFER)
A-3
4
0.85 B
0.5 GR/R
H-49
9
H-49
6
0.85 B
0.5 GR/R
0.5 L/W
H-25
5
0.5 L/W
I-12
6
I-12
4
0.5 B/W
H-26
9
0.5 B/W
TAIL RELAY (4)
0.85 G/R
I-12
2
I-12
3
0.3 R/G
ILLUMINATION CONTROLLER (3)
4WD AUTO SW
0.5 L/Y
H-25
26
I-9
T.O.D. INDICATOR (METER)
RR
1
2
3
AUTO
CHECK
I-9
15
I-9
21
I-9
22
I-9
23
I-9
16
I-9
17
0.5 BR/R
0.5 BR/G
0.5 BR
0.5 BR/Y
0.5 BR/W
0.5 R
H-26
16
H-26
15
H-26
20
H-26
4
H-26
17
H-26
11
0.5 BR/R
0.5 BR/G
0.5 BR
0.5 BR/Y
0.5 BR/W
0.5 R
4JX1 ENGINE
E-4
3.0 B/P
0.5 B/P
H-5
6
0.85 B/P
6VE1 COMMON CHAMBER
E-29
1.0 B/R
13
H-5
1.25 B/P
0.5 B/P
15(LHD) 4(RHD)
H-8
0.5 B/L
B-67
12
B-68
3
B-67
1
B-68
7
B-68
17
B-68
15
B-68
14
B-68
13
B-68
16
B-68
18
B-67
11
20
8
1
12
29
27
26
25
28
30
19
T.O.D. CONTROL UNIT

D04RY00115

Step	Action	Yes	No
1	1. Turn on the starter switch. When the 4WD SW is selected to the 4WD position, is 0 V observed between terminal 12 and 19?	Go to Step 2	Repair the 4WD AUTO SW circuit. Go to Step 4
2	When the 4WD AUTO SW is selected to the 2WD position, is 12 V observed between terminals 12 and 19?	Go to Step 3	Repair the 4WD AUTO SW circuit. Go to Step 4
3	When the transfer lever is shifted to the 4L position, is battery voltage observed between terminals 28 and 19?	The phenomenon is not reproduced. Refer to “Troubles intermittently observed”.	Replace the ECU. Go to Step 4
4	Check that all the parts are mounted. Is this step complete?	Repeat the “Diagnosis Flow”.	Return to Step 4

Chart B–2	The 4WD AUTO switch circuit is short to battery.
Function of circuit	—
Fail condition	Even after the transfer mode is selected from 2H to TOD, the indicator lamp status dose not change.
Indicator lamp status	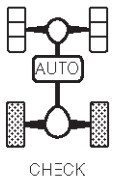
Transfer position	TOD

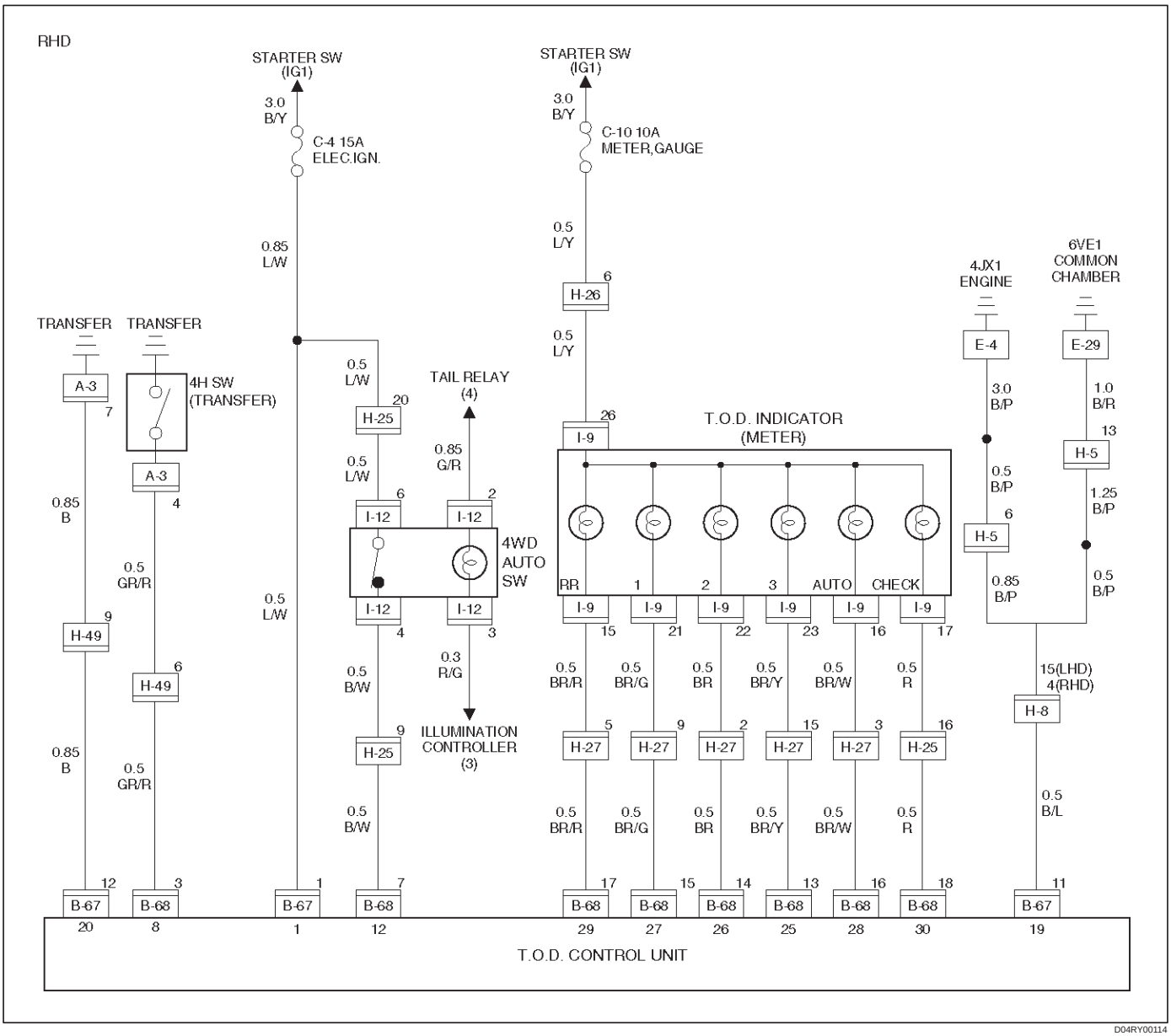

D04RY00114

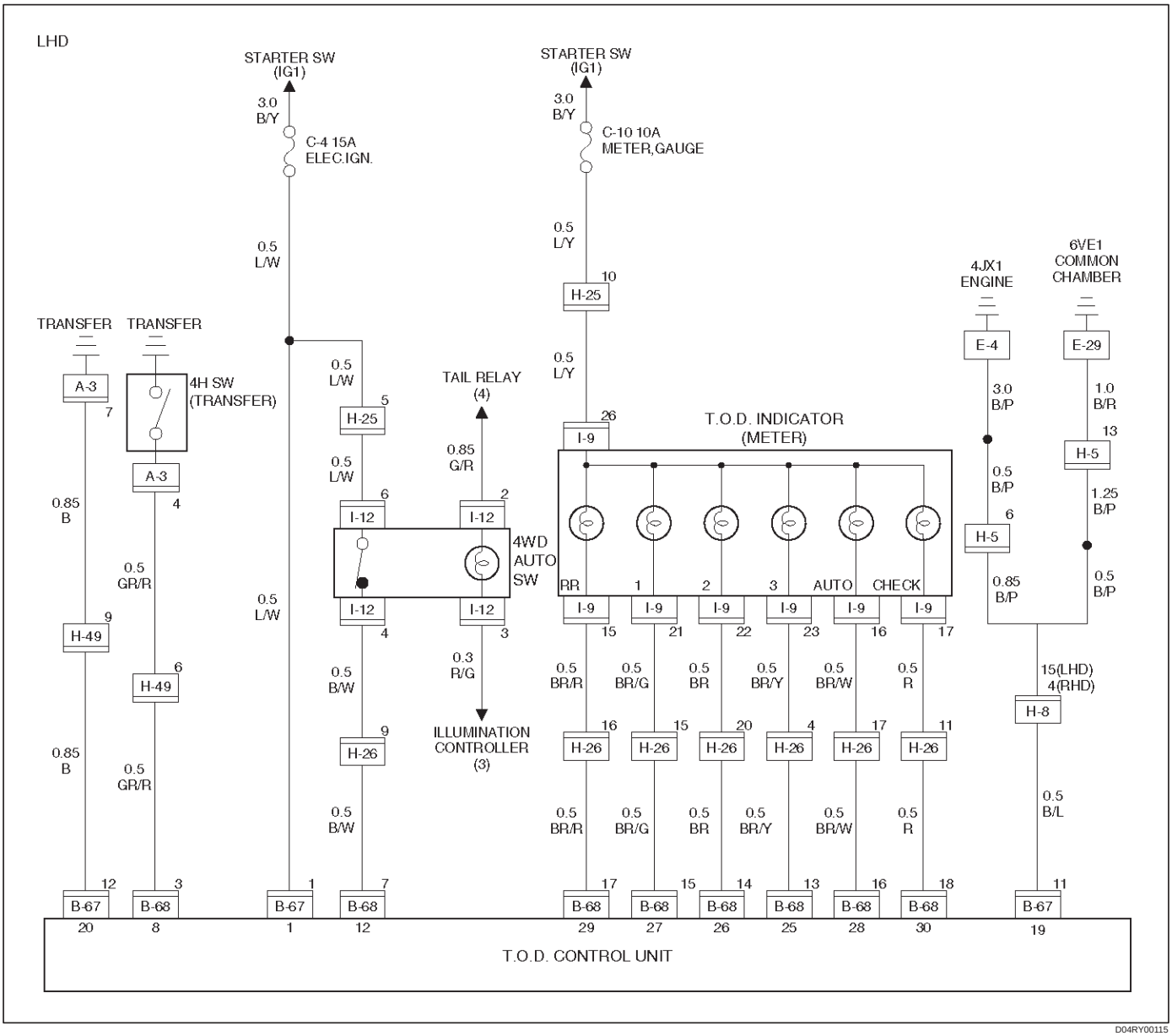
LHD
STARTER SW (IG1)
3.0 B/Y
C-4 15A ELEC.IGN.
0.5 L/W
STARTER SW (IG1)
3.0 B/Y
C-10 10A METER,GAUGE
0.5 L/Y
10
H-25
TRANSFER
TRANSFER
A-3
7
4H SW (TRANSFER)
A-3
4
0.85 B
0.5 GR/R
9
H-49
6
H-49
0.85 B
0.5 GR/R
0.5 L/W
5
H-25
0.5 L/W
6
I-12
I-12
4
0.5 B/W
9
H-26
0.5 B/W
TAIL RELAY (4)
0.85 G/R
2
I-12
4WD AUTO SW
I-12
3
0.3 R/G
ILLUMINATION CONTROLLER (3)
0.5 L/Y
26
I-9
T.O.D. INDICATOR (METER)
RR
1
2
3
AUTO
CHECK
I-9
15
I-9
21
I-9
22
I-9
23
I-9
16
I-9
17
0.5 BR/R
0.5 BR/G
0.5 BR
0.5 BR/Y
0.5 BR/W
0.5 R
16
H-26
15
H-26
20
H-26
4
H-26
17
H-26
11
H-26
0.5 BR/R
0.5 BR/G
0.5 BR
0.5 BR/Y
0.5 BR/W
0.5 R
4JX1 ENGINE
E-4
3.0 B/P
0.5 B/P
6
H-5
0.85 B/P
6VE1 COMMON CHAMBER
E-29
1.0 B/R
13
H-5
1.25 B/P
0.5 B/P
15(LHD) 4(RHD)
H-8
0.5 B/L
12
B-67
20
3
B-68
8
1
B-67
1
7
B-68
12
17
B-68
29
15
B-68
27
14
B-68
26
13
B-68
25
16
B-68
28
18
B-68
30
11
B-67
19
T.O.D. CONTROL UNIT

D04RY00115

Step	Action	Yes	No
1	When the 4WD AUTO SW is selected to the 4WD position, is 0 V observed between terminal 12 and 19?	Go to Step 2	Repair the 4WD AUTO SW circuit. Go to Step 7
2	When the 4WD AUTO SW is selected to the 2WD position, is 12 V observed between terminals 12 and 19?	Go to Step 3	Repair the 4WD AUTO SW circuit. Go to Step 7
3	1. Disconnect the ECU connector. Is the continuity established between terminals (B–67)1 and (B–68)13?	Go to Step 4	Replace TOD indicator lamp bulb. Go to Step 7
4	Is the continuity established between terminals (B–67)1 and (B–68)14?	Go to Step 5	Replace TOD indicator lamp bulb. Go to Step 7
5	Is the continuity established between terminals (B–67)1 and (B–68)15?	Go to Step 6	Replace TOD indicator lamp bulb. Go to Step 7
6	Is the continuity established between terminals (B–67)1 and (B–68)16?	Replace ECU. Go to Step 7	Replace TOD indicator lamp bulb. Go to Step 7
7	Check that all the parts are mounted. Is this step complete?	Repeat the “Diagnosis Flow”.	Return to Step 7

Chart C–1	4H switch circuit wires are broken or the battery is short-circuited.
Function of circuit	—
Fail condition	When the 4WD AUTO SW is 4WD mode. When the lever is shifted from 4L to HIGH, the 4L mode remains on the indicator and the TOD mode is displayed without turning off the previous mode.
Indicator lamp status	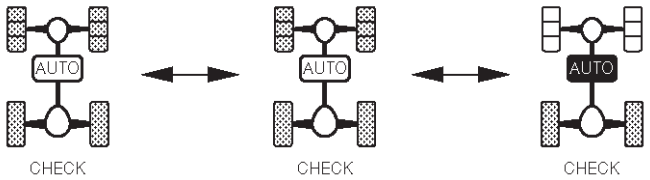
Transfer position	4L <——> Neutral <——> TOD

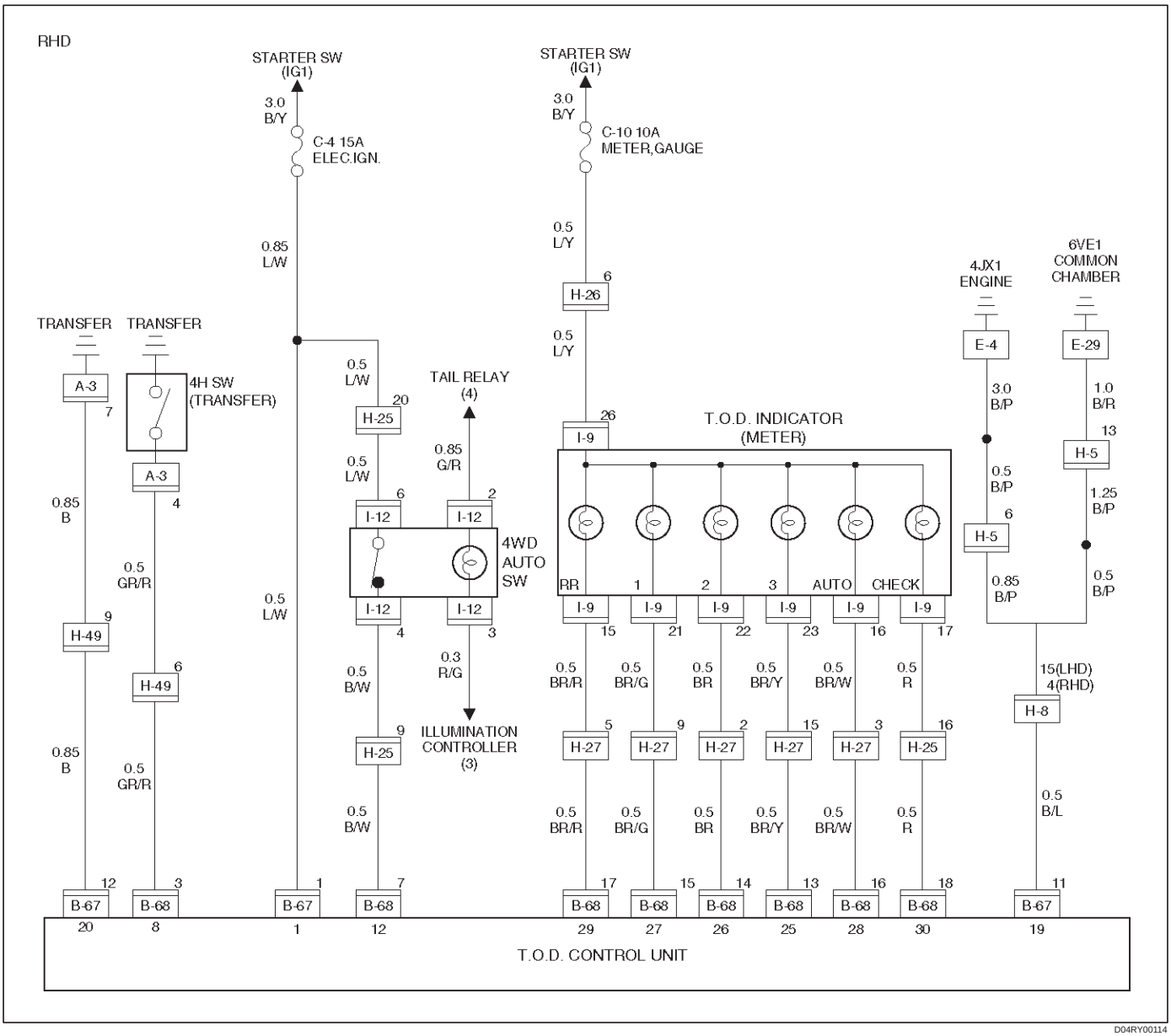

D04RY00114

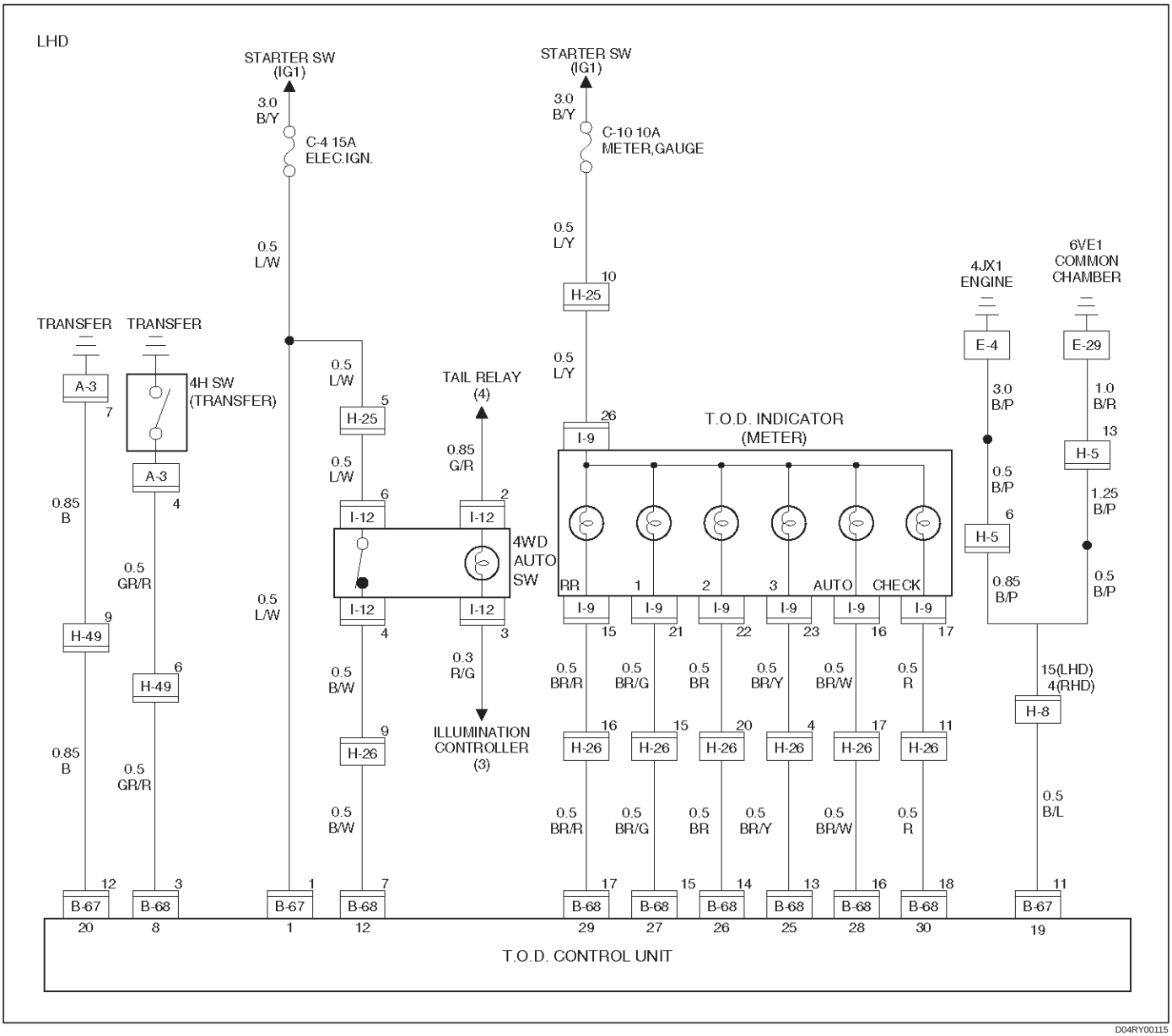
LHD
STARTER SW (IG1)
3.0 B/Y
C-4 15A ELEC.IGN.
0.5 L/W
STARTER SW (IG1)
3.0 B/Y
C-10 10A METER,GAUGE
0.5 L/Y
H-25
10
TRANSFER
TRANSFER
A-3
7
4H SW (TRANSFER)
A-3
4
0.85 B
0.5 GR/R
H-49
9
H-49
6
0.85 B
0.5 GR/R
0.5 L/W
H-25
5
0.5 L/W
I-12
6
I-12
4
0.5 B/W
H-26
9
0.5 B/W
TAIL RELAY (4)
0.85 G/R
I-12
2
I-12
3
0.3 R/G
ILLUMINATION CONTROLLER (3)
0.5 L/Y
H-25
26
I-9
T.O.D. INDICATOR (METER)
4WD AUTO SW
RR
1
2
3
AUTO
CHECK
I-9
15
I-9
21
I-9
22
I-9
23
I-9
16
I-9
17
0.5 BR/R
0.5 BR/G
0.5 BR
0.5 BR/Y
0.5 BR/W
0.5 R
H-26
16
H-26
15
H-26
20
H-26
4
H-26
17
H-26
11
0.5 BR/R
0.5 BR/G
0.5 BR
0.5 BR/Y
0.5 BR/W
0.5 R
4JX1 ENGINE
E-4
3.0 B/P
0.5 B/P
H-5
6
0.85 B/P
6VE1 COMMON CHAMBER
E-29
1.0 B/R
13
H-5
1.25 B/P
0.5 B/P
15(LHD) 4(RHD)
H-8
0.5 B/L
B-67
12
B-68
3
B-67
1
B-68
7
B-68
17
B-68
15
B-68
14
B-68
13
B-68
16
B-68
18
B-67
11
20
8
1
12
29
27
26
25
28
30
19
T.O.D. CONTROL UNIT

D04RY00115

Step	Action	Yes	No
1	1. Turn on the starter switch. When the transfer lever is shifted to the high position, is 5V observed between terminals 8 and 19 (4H switch)?	Go to Step 2	Go to Step 4
2	When the transfer lever is shifted to the 4L position, is 5V observed between terminals 8 and 19 (4H switch)?	Go to Step 3	Go to Step 4
3	When the transfer lever is shifted to the neutral position, is 0V observed between terminals 8 and 19 (4H switch)?	Replace the ECU. Go to Step 13	Go to Step 4
4	1. Turn off the starter switch. 2. Disconnect the ECU connector. 3. Turn on the starter switch. When the transfer lever is shifted to the high position, is 12V observed between terminals 8 and 19 (4H switch)?	Go to Step 5	Go to Step 7
5	When the transfer lever is shifted to the neutral position, is 0V observed between terminals 8 and 19 (4H switch)?	Go to Step 6	Go to Step 7
6	When the transfer lever is shifted to the 4L position, is 12V observed between terminals 8 and 19 (4H switch)?	The 4H switch circuit is short-circuited between ECU and transfer on battery.Repair the circuit. Go to Step 13	Go to Step 7
7	Turn off the starter switch. When the transfer lever is shifted to the neutral position, is the continuity established between terminals 8 and 19 (4H switch)?	Go to Step 8	Go to Step 10
8	When the transfer lever is shifted to the high position, is the continuity established between terminals 8 and 19?	Go to Step 11	Go to Step 9
9	When the transfer lever is shifted to the 4L position, is the continuity established between terminals 8 and 19?	Go to Step 12	The ECU has failed. Replace the ECU. Go to Step 13
10	When the transfer lever is shifted to the neutral position, is the continuity established between terminals (A–3)4 and (A–3)7?	The 4H switch circuit is broken between ECU and transfer.Repair the circuit. Go to Step 13	Repair the transfer assembly. Go to Step 13
11	When the transfer lever is shifted to the high position, is the continuity established between transfer connector terminals (A–3)4 and (A–3)7?	Repair the transfer assembly. Go to Step 13	Repair the 4HSW circuit. Go to Step 13
12	When the transfer lever is shifted to the 4L position, is the continuity established between transfer connector terminals (A–3)7 and (A–3)4?	Repair the transfer assembly. Go to Step 13	Repair the 4H SW circuit. Go to Step 13

Step	Action	Yes	No
13	Check that all the parts are mounted. Is this step complete?	Repeat the “Diagnosis Flow”.	Return to Step 13

Chart C–2	The 4H switch circuit is short-circuited to GND.
Function of circuit	—
Fail condition	When the transfer lever is shifted to 4L, the indicator lamp status is not changed.
Indicator lamp status	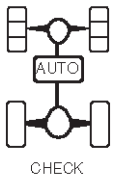
Transfer position	4L

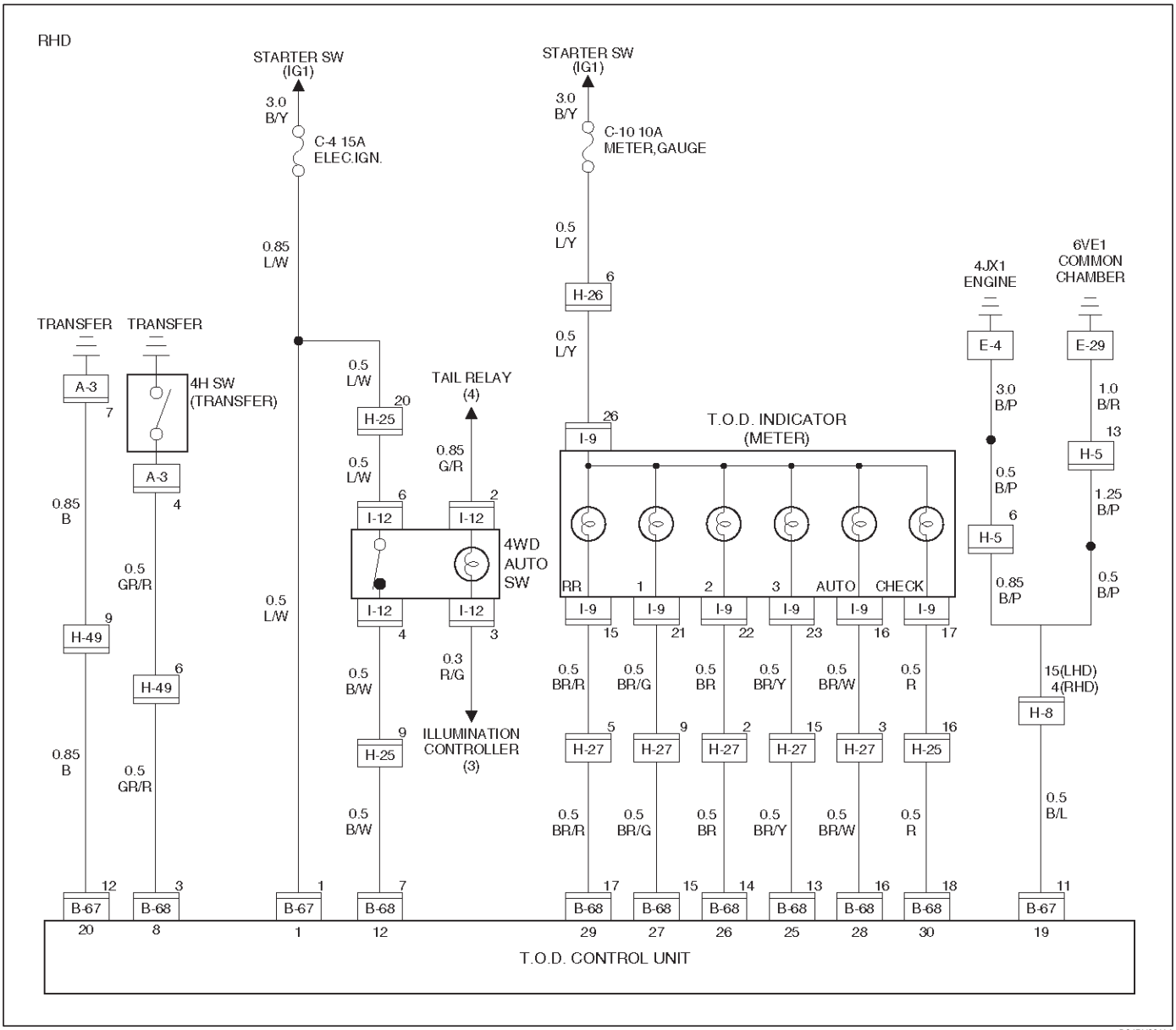

D04RY00114

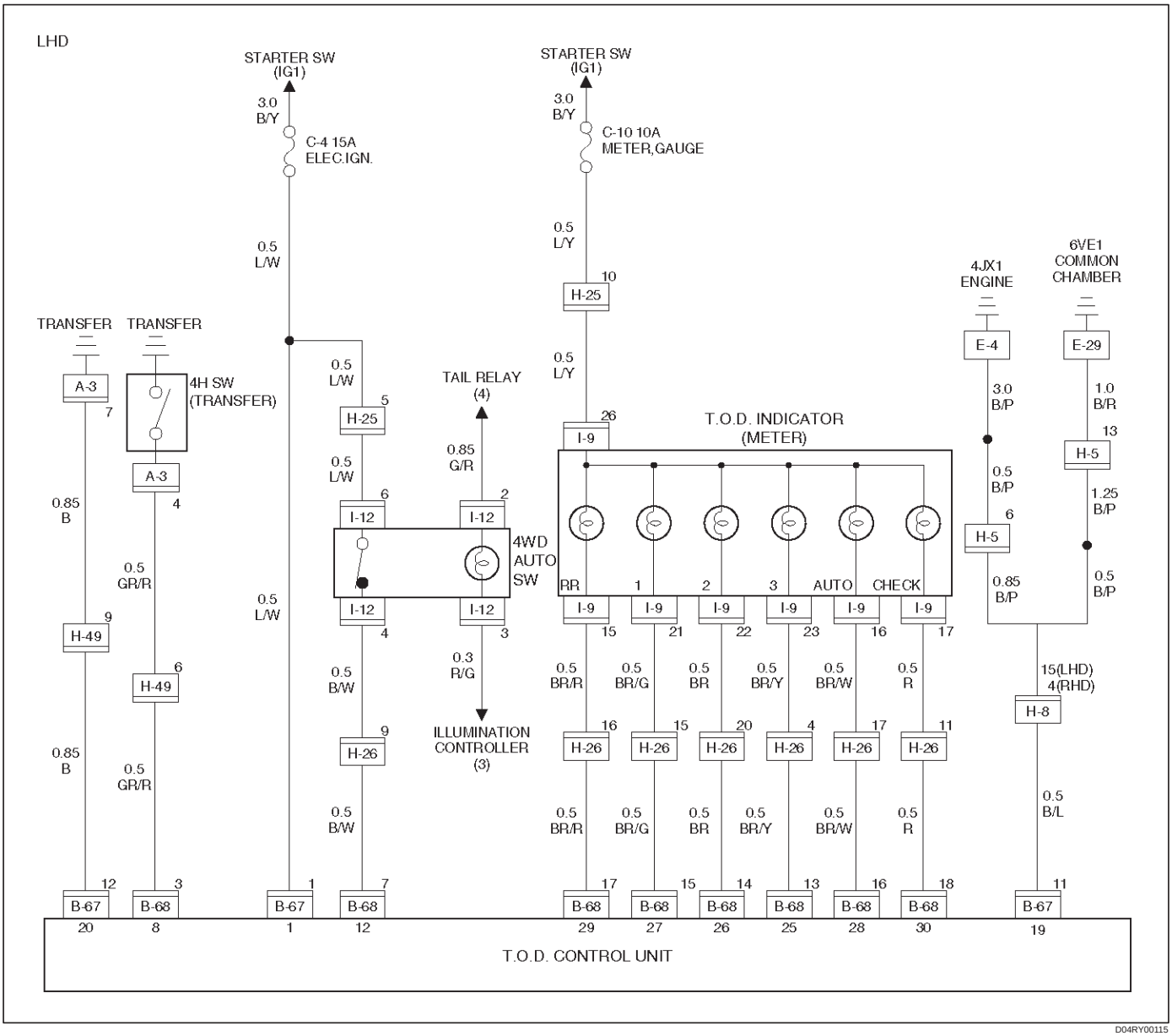
LHD
STARTER SW (IG1)
3.0 B/Y
C-4 15A ELEC.IGN.
0.5 L/W
STARTER SW (IG1)
3.0 B/Y
C-10 10A METER,GAUGE
0.5 L/Y
10
H-25
TRANSFER
TRANSFER
A-3
7
4H SW (TRANSFER)
A-3
4
0.85 B
0.5 GR/R
9
H-49
6
H-49
0.85 B
0.5 GR/R
0.5 L/W
5
H-25
0.5 L/W
6
I-12
I-12
4
0.5 B/W
9
H-26
0.5 B/W
TAIL RELAY (4)
0.85 G/R
2
I-12
4WD AUTO SW
I-12
3
0.3 R/G
ILLUMINATION CONTROLLER (3)
0.5 L/Y
26
I-9
T.O.D. INDICATOR (METER)
RR
1
2
3
AUTO
CHECK
I-9
15
I-9
21
I-9
22
I-9
23
I-9
16
I-9
17
0.5 BR/R
0.5 BR/G
0.5 BR
0.5 BR/Y
0.5 BR/W
0.5 R
16
H-26
15
H-26
20
H-26
4
H-26
17
H-26
11
H-26
0.5 BR/R
0.5 BR/G
0.5 BR
0.5 BR/Y
0.5 BR/W
0.5 R
4JX1 ENGINE
E-4
3.0 B/P
0.5 B/P
6
H-5
0.85 B/P
6VE1 COMMON CHAMBER
E-29
1.0 B/R
13
H-5
1.25 B/P
0.5 B/P
15(LHD) 4(RHD)
H-8
0.5 B/L
12
B-67
20
3
B-68
8
1
B-67
1
7
B-68
12
17
B-68
29
15
B-68
27
14
B-68
26
13
B-68
25
16
B-68
28
18
B-68
30
11
B-67
19
T.O.D. CONTROL UNIT

D04RY00115

Step	Action	Yes	No
1	When the transfer lever is shifted to the High position, is 5V observed between terminals 8 and 19 (4H switch)?	Go to Step 2	Go to Step 14
2	When the transfer lever is shifted to the neutral position, is 0V observed between terminals 8 and 19 (4H switch)?	Go to Step 3	Go to Step 14
3	When the transfer lever is shifted to the 4L position, is 5V observed between terminals 8 and 19 (4H switch)?	Go to Step 4	Go to Step 14
4	1. Turn off the starter switch. Is the continuity established between terminals 1 and 25?	Go to Step 5	Replace TOD indicator lamp bulb, or repair the circuit. Go to Step 23
5	Is the continuity established between terminals 1 and 26?	Go to Step 6	Replace TOD indicator lamp bulb, or repair the circuit. Go to Step 23
6	Is the continuity established between terminals 1 and 27?	Go to Step 7	Replace TOD indicator lamp bulb, or repair the circuit. Go to Step 23
7	Is the continuity established between terminals 1 and 28?	Go to Step 8	Replace TOD indicator lamp bulb, or repair the circuit. Go to Step 23
8	Is the continuity established between terminals 1 and 29?	Go to Step 9	Replace TOD indicator lamp bulb, or repair the circuit. Go to Step 23
9	1. Turn on the starter switch. 2. Shift the transfer lever is shifted to the 4L position. Is 0 V observed between terminals 25 and 20?	Go to Step 10	The ECU has failed. Replace the ECU. Go to Step 23
10	Is 0 V observed between terminals 26 and 20?	Go to Step 11	The ECU has failed. Replace the ECU. Go to Step 23
11	Is 0 V observed between terminals 27 and 20?	Go to Step 12	The ECU has failed. Replace the ECU. Go to Step 23
12	Is 12 V observed between terminals 28 and 20?	Go to Step 13	The ECU has failed. Replace the ECU. Go to Step 23
13	Is 0 V observed between terminals 29 and 20?	The phenomenon is not reproduced. Refer to “Troubles intermittently observed”.	The ECU has failed. Replace the ECU. Go to Step 23

Step	Action	Yes	No
14	1. Turn off the starter switch. 2. Disconnect the ECU connector. When the transfer lever is shifted to the neutral position, is the continuity established between terminals (B–68)3 and (B–67)11 (4H switch)?	Go to Step 15	Go to Step 17
15	When the transfer lever is shifted to the high position, is the continuity established between terminals (B–68)3 and (B–67)11?	Go to Step 17	Go to Step 16
16	When the transfer lever is shifted to the 4L position, is the continuity established between terminals (B–68)3 and (B–67)11?	Go to Step 17	The ECU has failed. Replace the ECU. Go to Step 23
17	1. Disconnect the H–49 connector. When the transfer lever is shifted to the neutral position between high and 4L, is the continuity established between terminals (H-49)6 and (B-67)11?	Go to Step 18	Go to Step 20
18	When the transfer lever is shifted to the high position, is the continuity established between transfer connector terminals (H-49)6 and (B-67)11?	Go to Step 20	Go to Step 19
19	When the transfer lever is shifted to the 4L position, is the continuity established between transfer connector terminals (H-49)6 and (B-67)11?	Go to Step 20	GND is short-circuited between terminals (B-68)3 and (H-49)6. Repair the circuit. Go to Step 23
20	1. Disconnect the A–3 connector. When the transfer lever is shifted to the neutral position between high and 4L, is the continuity established between terminals (A-3)4 and (A-3)7?	Go to Step 21	Repair the transfer assembly. Go to Step 23
21	When the transfer lever is shifted to the high position, is the continuity established between terminals (A-3)4 and (A-3)7?	Repair the transfer assembly. Go to Step 23	Go to Step 22
22	When the transfer lever is shifted to the 4L position, is the continuity established between terminals (A-3)4 and (A-3)7?	Repair the transfer assembly. Go to Step 23	GND is short-circuited between terminals (B-68)3 and (A–3)4. Repair the circuit. Go to Step 23
23	Check that all the parts are mounted. Is this step complete?	Repeat the “Diagnosis Flow”.	Return to Step 23

Chart D–1	4L switch circuit wires are broken or the battery is short-circuited.	
Function of circuit	—	
Fail condition	The TOD mode is displayed in the neutral position between high and 4L. When the lever is shifted to the 4L position, the TOD mode is displayed.	
Indicator lamp status	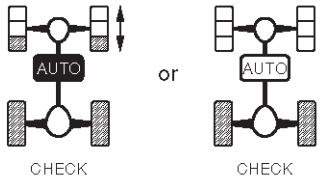	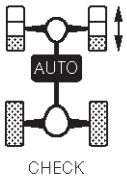
Transfer position	4L	Neutral

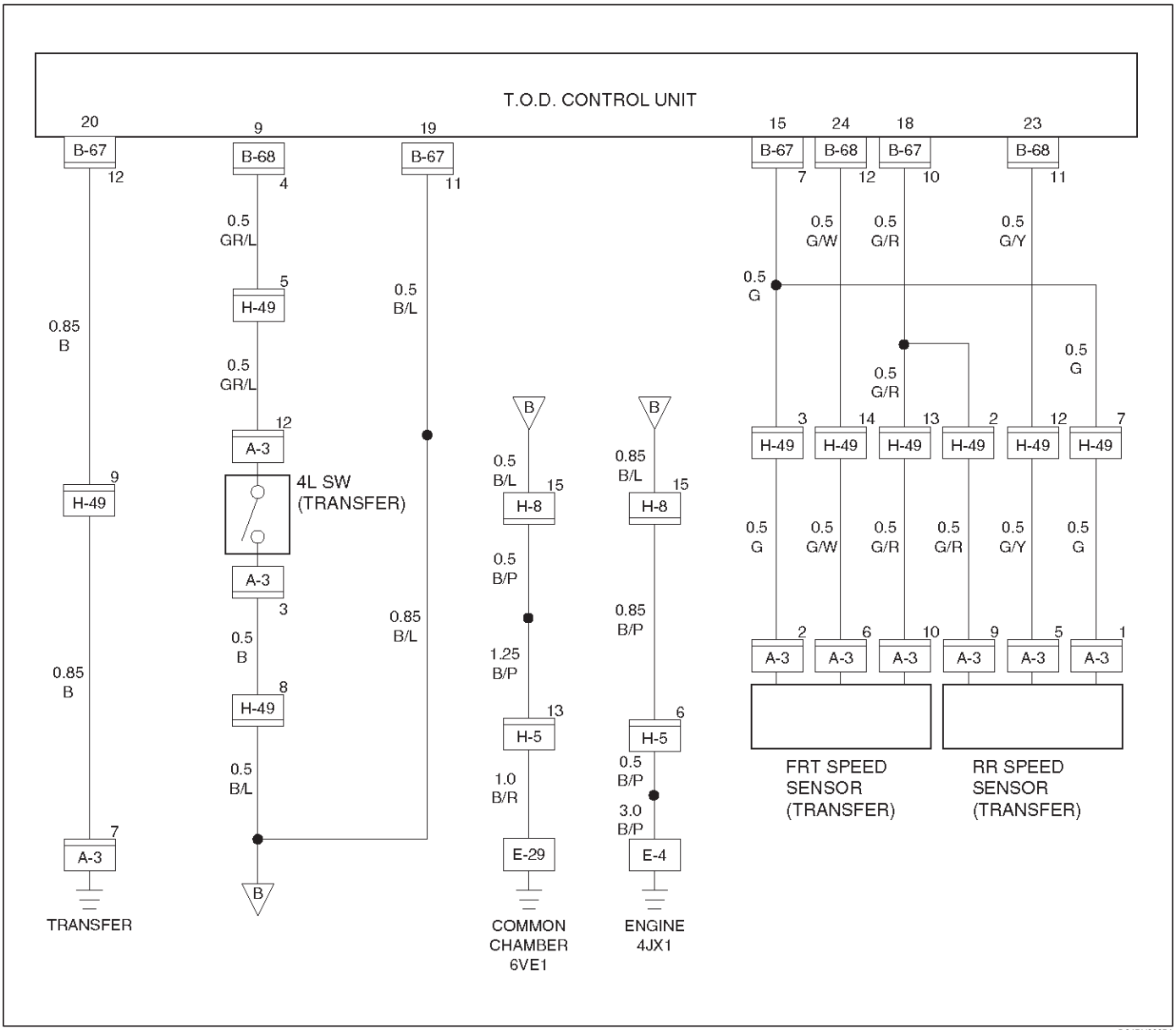

D04RY00054

Step	Action	Yes	No
1	Turn on the starter switch. When the transfer lever is shifted to the high position, is 5V observed between terminals 9 and 19 (4L switch)?	Go to Step 2	Go to Step 4
2	When the transfer lever is shifted to the neutral position, is 0V observed between terminals 9 and 19 (4L switch)?	Go to Step 3	Go to Step 4
3	When the transfer lever is shifted to the 4L position, is 0V observed between terminals 9 and 19 (4L switch)?	The ECU has failed. Replace the ECU. Go to Step 13	Go to Step 4
4	1. Turn off the starter switch. 2. Disconnect the ECU connector. 3. Turn on the starter switch. When the transfer lever is shifted to the high position, is 12V observed between terminals (B–68)4 and (B–67)11?	Go to Step 5	Go to Step 7
5	When the transfer lever is shifted to the neutral position, is 0V observed between terminals (B–68)4 and (B–67)11?	Go to Step 6	Go to Step 7
6	When the transfer lever is shifted to the 4L position, is 0V observed between terminals (B–68)4 and (B–67)11?	The 4L switch circuit is short-circuited on battery between ECU and transfer.Repair the circuit. Go to Step 13	Go to Step 7
7	Turn off the starter switch. When the transfer lever is shifted to the high position, is the continuity established between terminals (B–68)4 and (B–67)11?	Go to Step 12	Go to Step 8
8	When the transfer lever is shifted to the neutral position between high and 4L, is the continuity established between terminals (B–68)4 and (B–67)11?	Go to Step 9	Go to Step 10
9	When the transfer lever is shifted to the 4L position, is the continuity established between terminals (B–68)4 and (B–67)11?	The phenomenon is not reproduced. Refer to “Troubles intermittently observed”.	Go to Step 11
10	1. Disconnect the A–3 connector. When the transfer lever is shifted to the neutral position between high and 4L, is the continuity established between transfer connector terminals (A–3)12 and GND?	Wires are broken between transfer connector (A–3)12 and connector (B-68)4.Repair the circuit. Go to Step 13	Repair the transfer assembly. Go to Step 13
11	When the transfer lever is shifted to the 4L position, is the continuity established between transfer connector terminals (A–3)12 and GND?	Wires are broken between transfer connector (A–3)12 and connector (B-68)4.Repair the circuit. Go to Step 13	Repair the transfer assembly. Go to Step 13

Step	Action	Yes	No
12	When the transfer lever is shifted to the high position, is the continuity established between transfer connector terminals (A–3)12 and GND?	Repair the transfer assembly. Go to Step 13	Wires are broken between transfer connector (A–3)12 and connector (B-68)4.Repair the circuit. Go to Step 13
13	Check that all the parts are mounted. Is this step complete?	Repeat the “Diagnosis Flow”.	Return to Step 13

Chart D–2	The 4L switch circuit is short-circuited to GND.
Function of circuit	—
Fail condition	The 4L mode is displayed even in the 2H or TOD.
Indicator lamp status	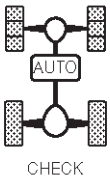
Transfer position	HIGH (2H or TOD)

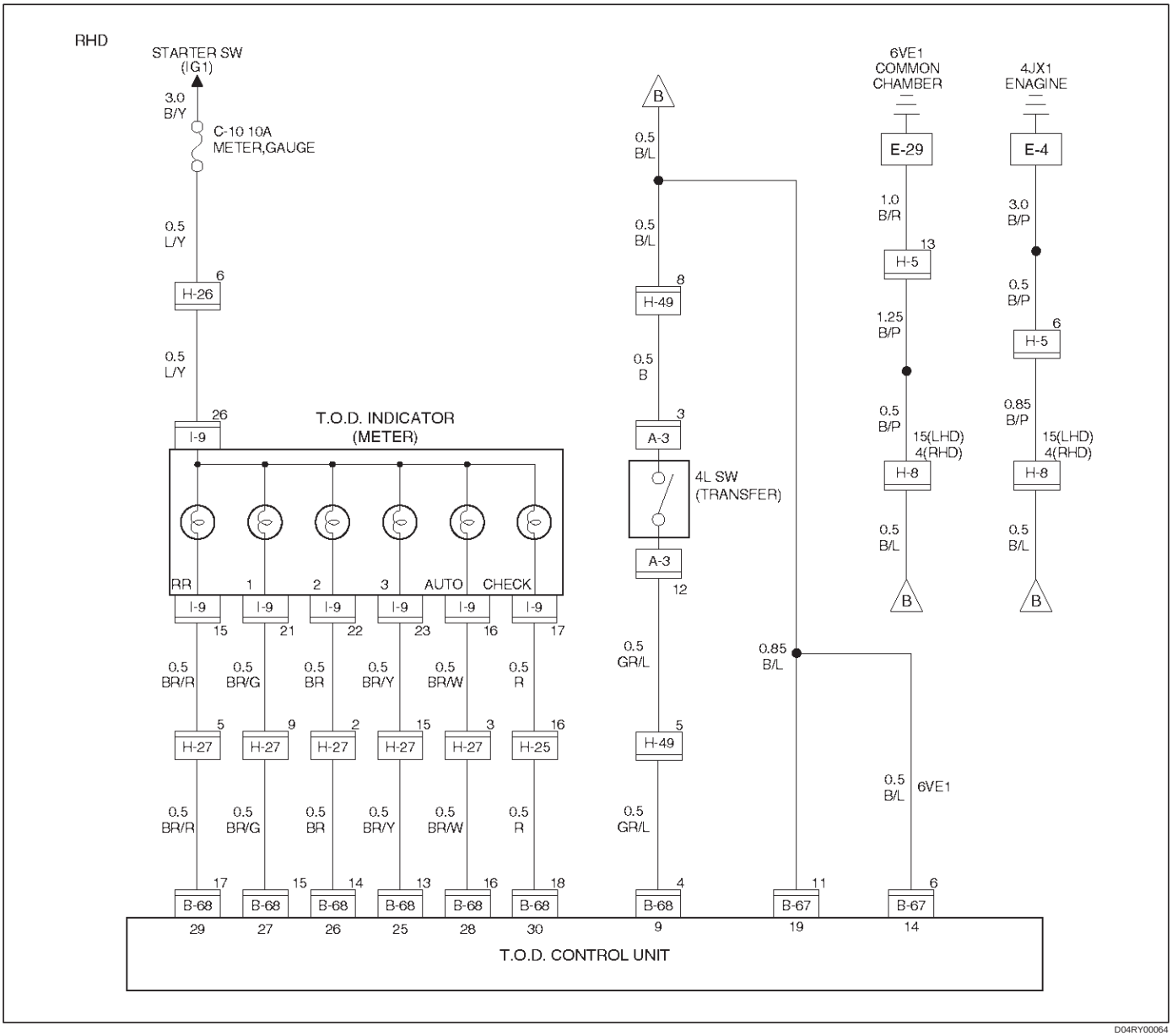

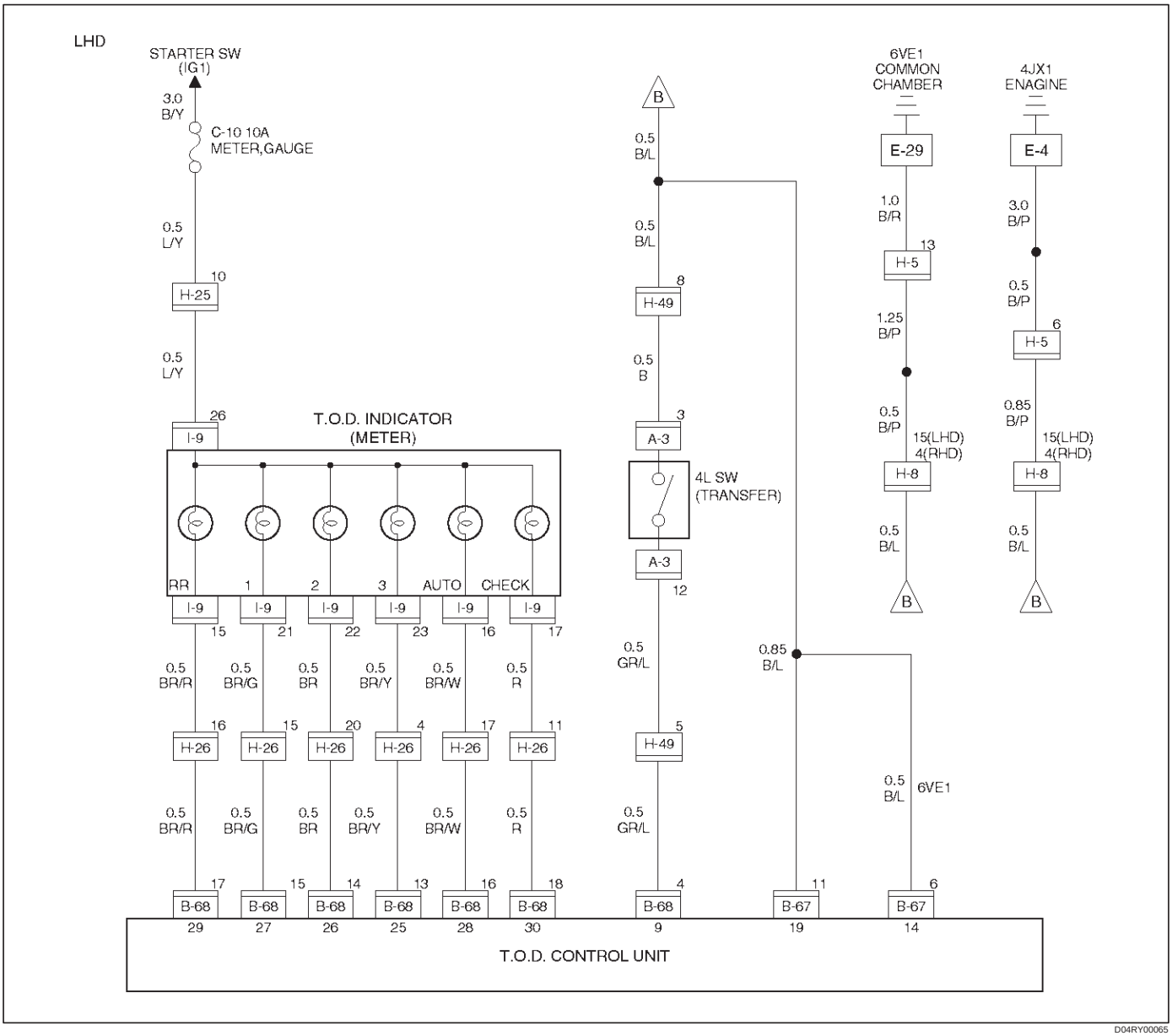
LHD
STARTER SW
(IG1)
3.0
B/Y
C-10 10A
METER,GAUGE
0.5
L/Y
10
H-25
0.5
L/Y
26
I-9
T.O.D. INDICATOR
(METER)
RR
1
2
3
AUTO
CHECK
I-9
15
21
22
23
16
17
0.5
BR/R
0.5
BR/G
0.5
BR
0.5
BR/Y
0.5
BR/W
0.5
R
16
15
20
4
17
11
H-26
0.5
BR/R
0.5
BR/G
0.5
BR
0.5
BR/Y
0.5
BR/W
0.5
R
17
15
14
13
16
18
B-68
29
27
26
25
28
30
B
0.5
B/L
0.5
B/L
8
H-49
0.5
B
3
A-3
4L SW
(TRANSFER)
A-3
12
0.5
GR/L
5
H-49
0.5
GR/L
4
B-68
9
0.85
B/L
11
B-67
19
6VE1
COMMON
CHAMBER
E-29
1.0
B/R
13
H-5
1.25
B/P
0.5
B/P
15(LHD)
4(RHD)
H-8
0.5
B/L
B
0.5
B/L
6VE1
6
B-67
14
4JX1
ENAGINE
E-4
3.0
B/P
0.5
B/P
6
H-5
0.85
B/P
15(LHD)
4(RHD)
H-8
0.5
B/L
B
T.O.D. CONTROL UNIT

D04RY00065

Step	Action	Yes	No
1	When the transfer lever is shifted to the high position, is 5V observed between terminals 9 and 19 (4L switch)?	Go to Step 2	Go to Step 7
2	When the transfer lever is shifted to the neutral position, is 0V observed between terminals 9 and 19 (4L switch)?	Go to Step 3	Go to Step 7
3	When the transfer lever is shifted to the 4L position, is 0V observed between terminals 9 and 19 (4L switch)?	Go to Step 4	Go to Step 7
4	1. Shift the 4WD AUTO SW to the 2H position. Is 12V observed between terminals 25 and 19?	Go to Step 5	The ECU has failed. Replace the ECU. Go to Step 16
5	Is 12V observed between terminals 26 and 19?	Go to Step 6	The ECU has failed. Replace the ECU. Go to Step 16
6	Is 12V observed between terminals 27 and 19?	The phenomenon is not reproduced. Refer to “Troubles intermittently observed”.	The ECU has failed. Replace the ECU. Go to Step 16
7	1. Turn off the starter switch. 2. Disconnect the ECU connector. When the transfer lever is shifted to the neutral position between High and 4L, is the continuity established between terminals (B–68)4 and (B–67)11?	Go to Step 8	Go to Step 10
8	When the transfer lever is shifted to the 4L position, is the continuity established between terminals (B–68)4 and (B–67)11?	Go to Step 9	Go to Step 10
9	When the transfer lever is shifted to the high position, is the continuity established between terminals (B–68)4 and (B–67)11?	Go to Step 10	The ECU has failed. Replace the ECU. Go to Step 16
10	1. Disconnect the H-49 connector. When the transfer lever is shifted to the neutral position between high and 4L, is the continuity established between terminals (H-49)5 and (B-67)11?	Go to Step 11	Go to Step 13
11	When the transfer lever is shifted to the 4L position, is the continuity established between transfer connector terminals (H-49)5 and (B-67)11?	Go to Step 12	Go to Step 13
12	When the transfer lever is shifted to the high position, is the continuity established between terminals (H-49)5 and (B-67)11?	Go to Step 13	GND is short-circuited between terminals (B–68)4 and (H-49)5. Repair the circuit. Go to Step 16
13	1. Disconnect the A-3 connector. When the transfer lever is shifted to the neutral position between high and 4L, is the continuity established between terminals (A-3)12 and GND?	Go to Step 14	Repair the transfer assembly. Go to Step 16
14	When the transfer lever is shifted to the 4L position, is the continuity established between terminals (A-3)12 and GND?	Go to Step 15	Repair the transfer assembly. Go to Step 16

Step	Action	Yes	No
15	When the transfer lever is shifted to the high position, is the continuity established between terminals (A-3)12 and GND?	Repair the transfer assembly. Go to Step 16	GND is short-circuited between terminals (H–49)5 and (A-3)12. Repair the circuit. Go to Step 16
16	Check that all the parts are mounted. Is this step complete?	Repeat the “Diagnosis Flow”.	Return to Step 16

Chart E–1	AXLE switch circuit wires are broken.	
Function of circuit	—	
Fail condition	Both the TOD and 4L modes are disabled. (The transition status is not removed.)	
Indicator lamp status	AUTO CHECK Blinking	AUTO CHECK Blinking
Transfer position	TOD	4L

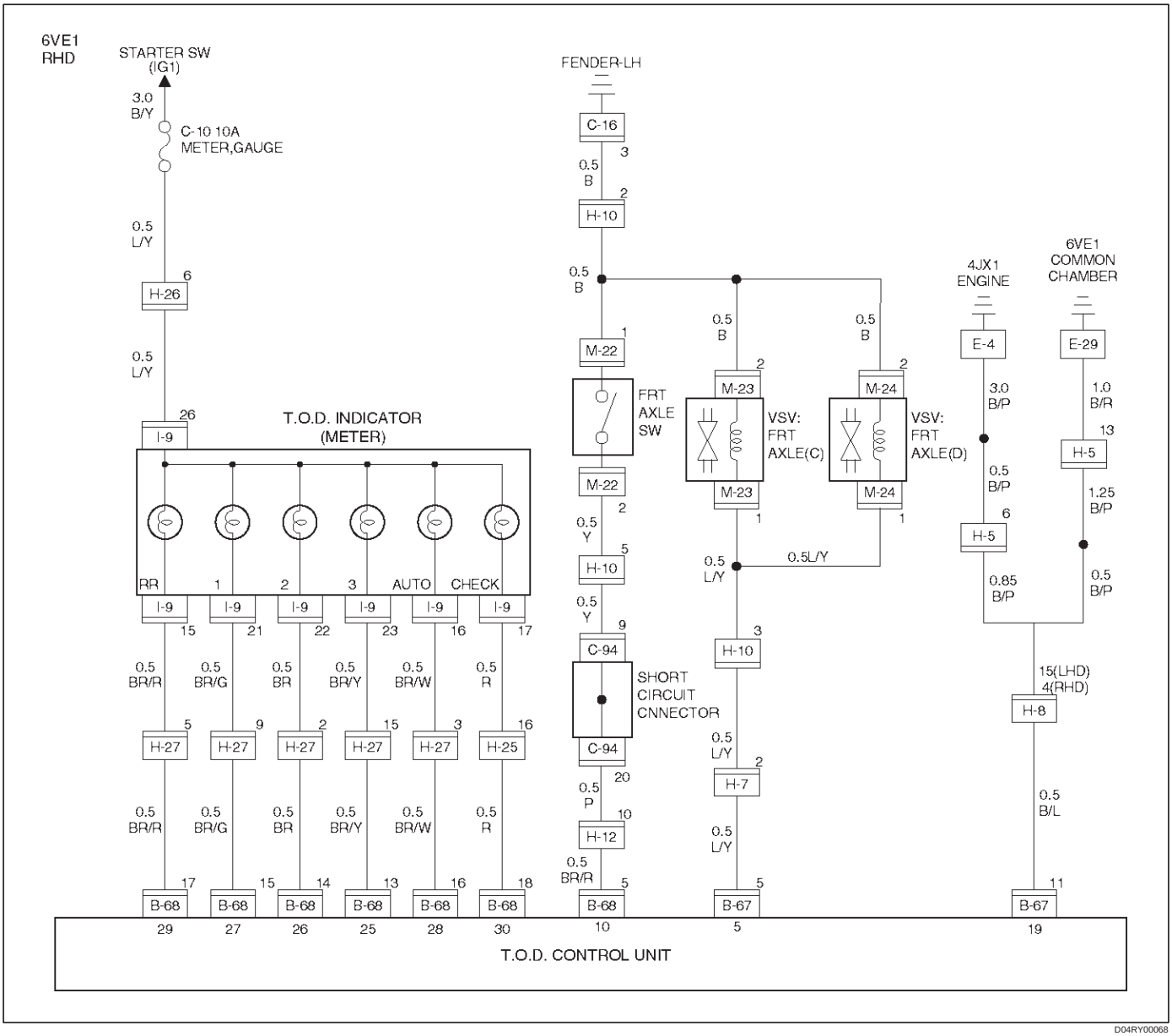

D04RY00068

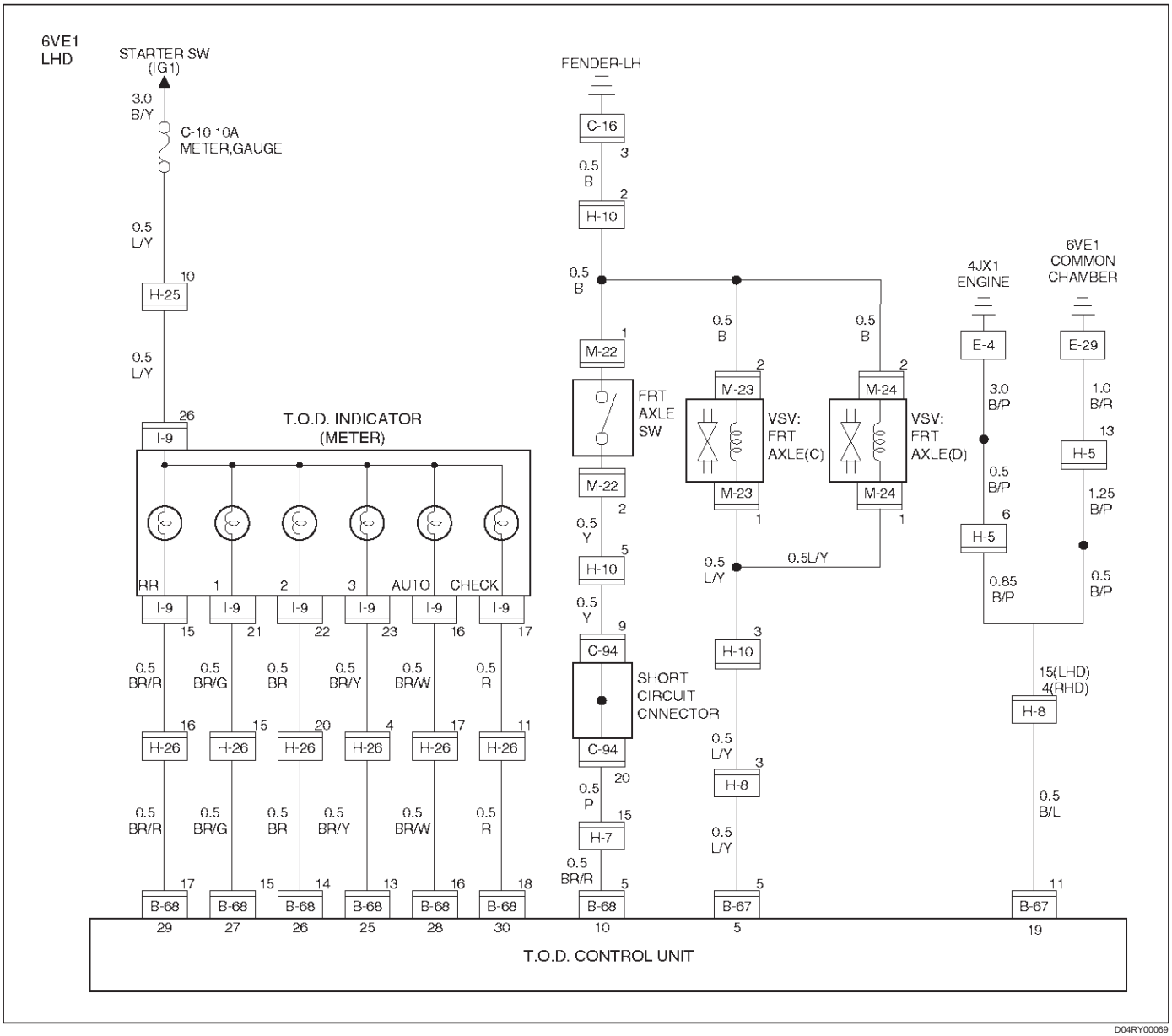
6VE1
LHD
STARTER SW
(IG1)
3.0
B/Y
C-10 10A
METER,GAUGE
0.5
L/Y
H-25
10
0.5
L/Y
I-9
26
T.O.D. INDICATOR
(METER)
RR
1
2
3
AUTO
CHECK
I-9
15
21
22
23
16
17
0.5
BR/R
0.5
BR/G
0.5
BR
0.5
BR/Y
0.5
BR/W
0.5
R
H-26
16
15
20
4
17
11
0.5
BR/R
0.5
BR/G
0.5
BR
0.5
BR/Y
0.5
BR/W
0.5
R
B-68
17
15
14
13
16
18
29
27
26
25
28
30
FENDER-LH
C-16
3
0.5
B
2
H-10
0.5
B
M-22
1
FRT
AXLE
SW
M-22
2
0.5
Y
H-10
5
0.5
Y
C-94
9
SHORT
CIRCUIT
CNNECTOR
C-94
20
0.5
P
H-7
15
0.5
BR/R
B-68
5
10
0.5
B
2
M-23
VSV:
FRT
AXLE(C)
M-23
1
0.5
B
2
M-24
VSV:
FRT
AXLE(D)
M-24
1
0.5
L/Y
0.5L/Y
H-10
3
0.5
L/Y
H-8
3
0.5
L/Y
B-67
5
5
4JX1
ENGINE
E-4
3.0
B/P
0.5
B/P
6
H-5
0.85
B/P
6VE1
COMMON
CHAMBER
E-29
1.0
B/R
13
H-5
1.25
B/P
0.5
B/P
15(LHD)
4(RHD)
H-8
0.5
B/L
B-67
11
19
T.O.D. CONTROL UNIT

D04RY00069

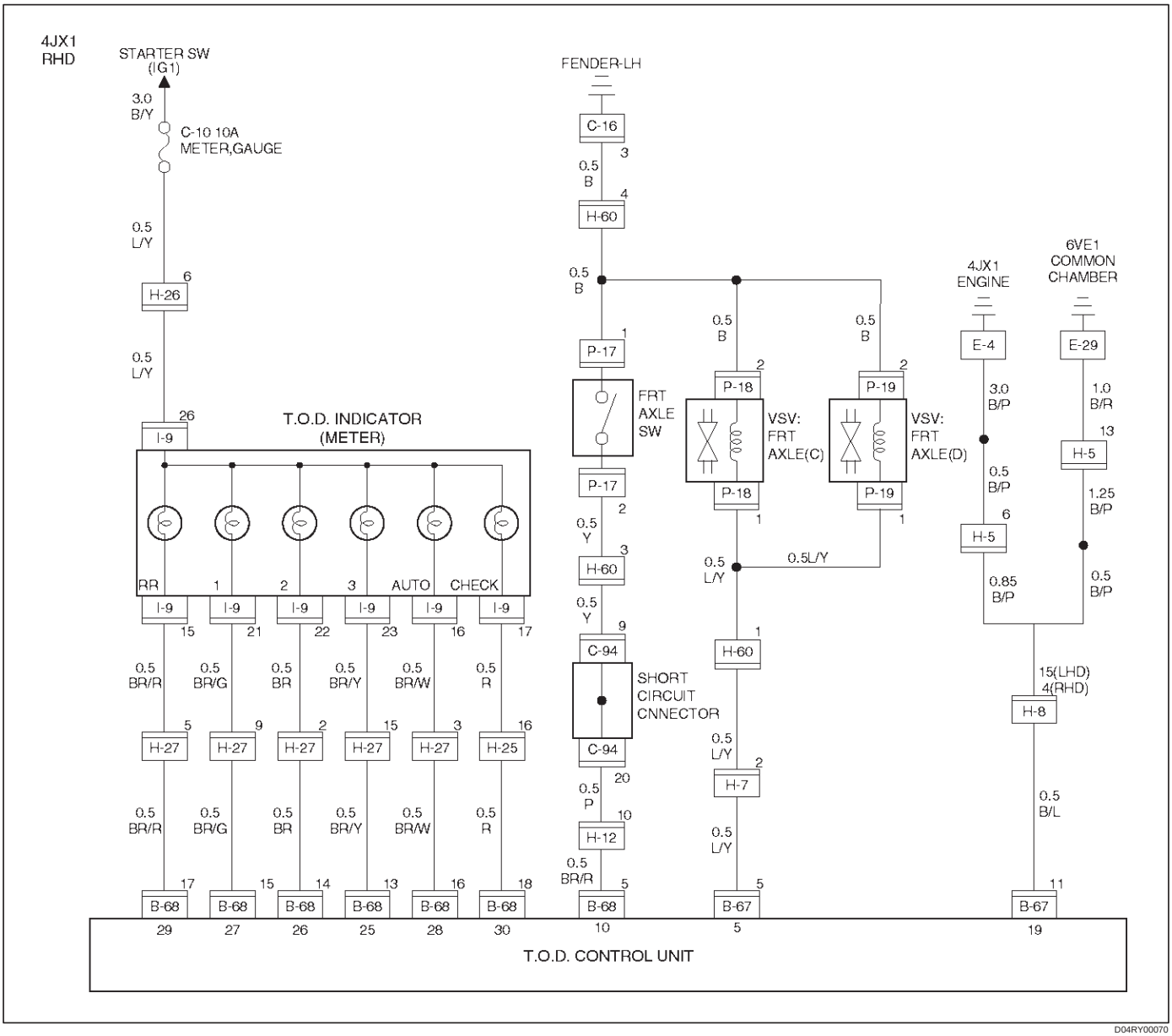
4JX1
RHD
STARTER SW
(IG1)
3.0
B/Y
C-10 10A
METER,GAUGE
0.5
L/Y
H-26
6
0.5
L/Y
26
I-9
T.O.D. INDICATOR
(METER)
RR
1
2
3
AUTO
CHECK
I-9
15
21
22
23
16
17
0.5
BR/R
0.5
BR/G
0.5
BR
0.5
BR/Y
0.5
BR/W
0.5
R
H-27
H-25
5
9
2
15
3
16
0.5
BR/R
0.5
BR/G
0.5
BR
0.5
BR/Y
0.5
BR/W
0.5
R
B-68
17
15
14
13
16
18
29
27
26
25
28
30
FENDER-LH
C-16
3
0.5
B
4
H-60
0.5
B
P-17
1
FRT
AXLE
SW
P-17
2
0.5
Y
3
H-60
0.5
Y
9
C-94
SHORT
CIRCUIT
CNNECTOR
C-94
20
0.5
P
10
H-12
0.5
BR/R
5
B-68
10
0.5
B
0.5
B
2
P-18
VSV:
FRT
AXLE(C)
P-18
1
2
P-19
VSV:
FRT
AXLE(D)
P-19
1
0.5
L/Y
0.5L/Y
1
H-60
0.5
L/Y
2
H-7
0.5
L/Y
5
B-67
5
4JX1
ENGINE
E-4
3.0
B/P
0.5
B/P
6
H-5
0.85
B/P
6VE1
COMMON
CHAMBER
E-29
1.0
B/R
13
H-5
1.25
B/P
0.5
B/P
15(LHD)
4(RHD)
H-8
0.5
B/L
11
B-67
19
T.O.D. CONTROL UNIT

D04RY00070

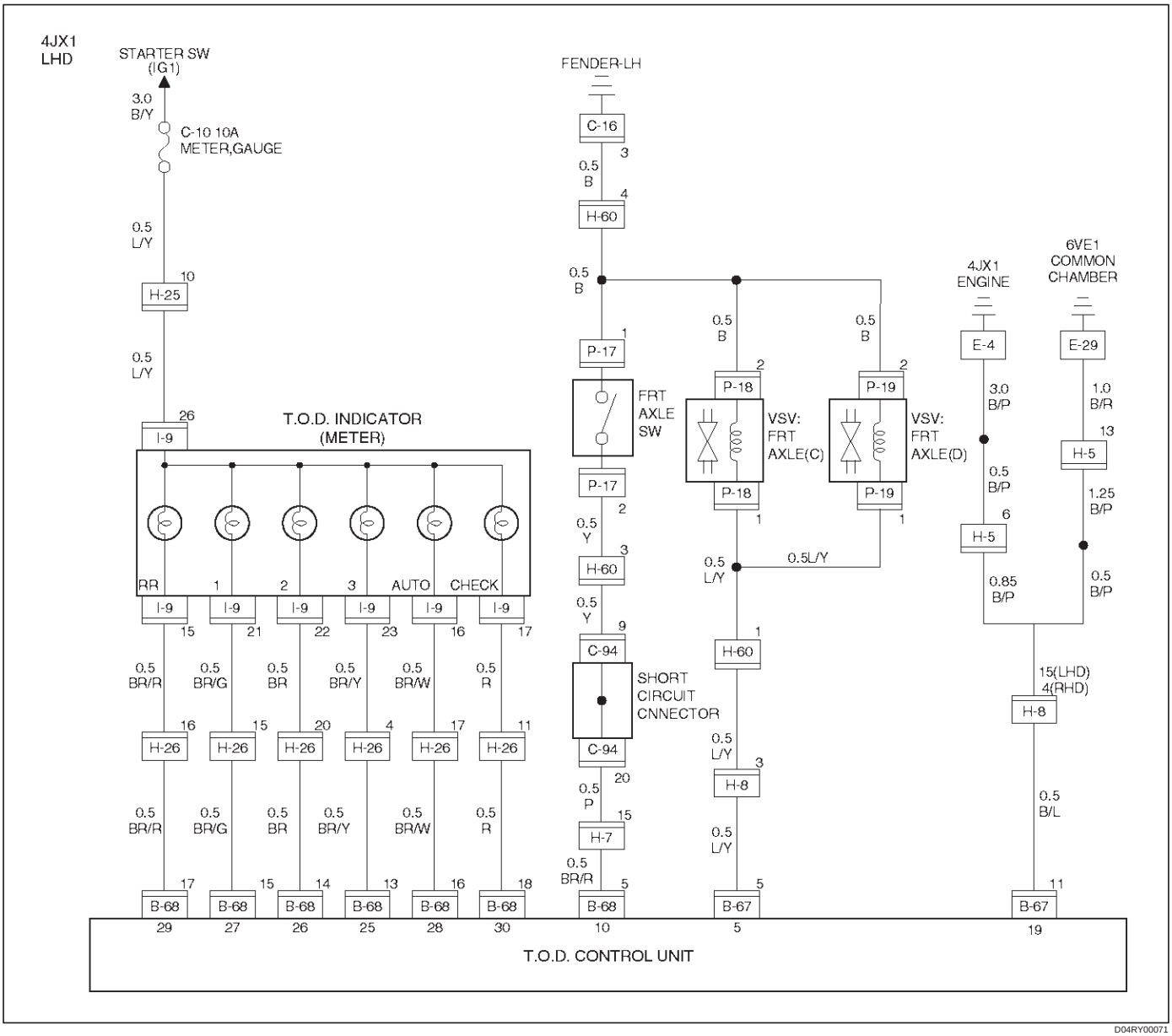
4JX1
LHD
STARTER SW
(IG1)
3.0
B/Y
C-10 10A
METER,GAUGE
0.5
L/Y
H-25
10
0.5
L/Y
I-9
26
T.O.D. INDICATOR
(METER)
RR
1
2
3
AUTO
CHECK
I-9
15
21
22
23
16
17
0.5
BR/R
0.5
BR/G
0.5
BR
0.5
BR/Y
0.5
BR/W
0.5
R
H-26
16
15
20
4
17
11
0.5
BR/R
0.5
BR/G
0.5
BR
0.5
BR/Y
0.5
BR/W
0.5
R
B-68
17
15
14
13
16
18
29
27
26
25
28
30
FENDER-LH
C-16
3
0.5
B
4
H-60
0.5
B
P-17
1
FRT
AXLE
SW
P-17
2
0.5
Y
3
H-60
0.5
Y
9
C-94
SHORT
CIRCUIT
CNNECTOR
C-94
20
0.5
P
15
H-7
0.5
BR/R
5
B-68
10
0.5
B
P-18
2
VSV:
FRT
AXLE(C)
P-18
1
0.5
B
P-19
2
VSV:
FRT
AXLE(D)
P-19
1
0.5
L/Y
0.5L/Y
1
H-60
0.5
L/Y
3
H-8
0.5
L/Y
5
B-67
5
4JX1
ENGINE
E-4
3.0
B/P
0.5
B/P
6
H-5
0.85
B/P
6VE1
COMMON
CHAMBER
E-29
1.0
B/R
13
H-5
1.25
B/P
0.5
B/P
15(LHD)
4(RHD)
H-8
0.5
B/L
11
B-67
19
T.O.D. CONTROL UNIT

D04RY00071

Step	Action	Yes	No
1	Start the engine. When the transfer lever is shifted to the neutral position between high and 4L, is 5V observed between terminals 10 and 19?	Go to Step 2	Go to Step 7
2	When the transfer lever is shifted to the high position and 4WD AUTO SW is selected to the 4WD position, is 0V observed between terminals 10 and 19?	Go to Step 3	Go to Step 7
3	When the transfer lever is shifted to the 4L position, is 0V observed between terminals 10 and 19?	The ECU has failed. Replace the ECU. Go to Step 4	Go to Step 7
4	Shift the transfer lever to the 4L position. Is 0V observed between terminals 25 and 19?	Go to Step 5	The ECU has failed. Replace the ECU. Go to Step 19
5	Is 0V observed between terminals 26 and 19?	Go to Step 6	The ECU has failed. Replace the ECU. Go to Step 19
6	Is 0V observed between terminals 27 and 19?	The phenomenon is not reproduced. Refer to “Troubles intermittently observed”.	The ECU has failed. Replace the ECU. Go to Step 19
7	When the transfer lever is shifted to the high position and 4WD AUTO SW is selected to the 2H position, is the battery voltage observed between terminals 5 and 19?	Go to Step 8	Go to Step 11
8	When the transfer lever is shifted to the neutral position between high and 4L, is the battery voltage observed between terminals 5 and 19?	Go to Step 9	Go to Step 11
9	When the transfer lever is shifted to the high position and 4WD AUTO SW is selected to the 4WD position (TOD mode), is 0V observed between terminals 5 and 19?	Go to Step 10	Go to Step 11
10	When the transfer lever is shifted to the 4L position, is 0V observed between terminals 5 and 19?	Go to Step 12	Go to Step 11
11	Is any of the trouble codes 28, 32 and 33 recorded?	Examine the trouble based on “Diagnosis from Trouble Codes”.	The ECU has failed. Replace the ECU.
12	1. Turn off the starter switch. 2. Disconnect the ECU connector. Does the resistance between terminals (B–67)5 and (B–67)11 meet the standard, 17< R < 25 ohm?	Go to Step 13	Repair the circuit or replace the VSV. Go to Step 19
13	1. Turn on the starter switch. When the 4WD AUTO SW is selected to the 2WD position, is the battery voltage supplied to each VSV?	Go to Step 14	Repair the circuit or replace the VSV. Go to Step 19
14	When the transfer lever is shifted to the neutral position between high and 4L, is the battery voltage supplied to each VSV?	Go to Step 15	Repair the circuit or replace the VSV. Go to Step 19

Step	Action	Yes	No
15	When the transfer lever is shifted to the high position and 4WD AUTO SW is selected to the 4WD position, is 0V observed on each VSV?	Go to Step 16	Repair the circuit or replace the VSV. Go to Step 19
16	When the transfer lever is shifted to the 4L position, is 0V observed on each VSV?	Go to Step 17	Repair the circuit or replace the VSV. Go to Step 19
17	Is the vacuum pressure supplied to the VSV?	Go to Step 18	Repair the vacuum system. Go to Step 19
18	Can the single AXLE switch enable and disable the continuity?	Repair the shift on the fly system (refer to Section 4B1 and 4C.)	Replace the AXLE switch (refer to Section 4B1 and 4C of Chassis Repair Manual).
19	Check that all the parts are mounted. Is this step complete?	Repeat the “Diagnosis Flow”.	Return to Step 19

Chart E–2	The AXLE switch circuit is short-circuited to GND.
Function of circuit	—
Fail condition	Even after the 4WD AUTO SW is select to the 2WD position, the 2WD mode is not enabled. (The transition status is not removed.)
Indicator lamp status	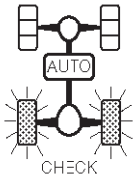
Transfer position	2H

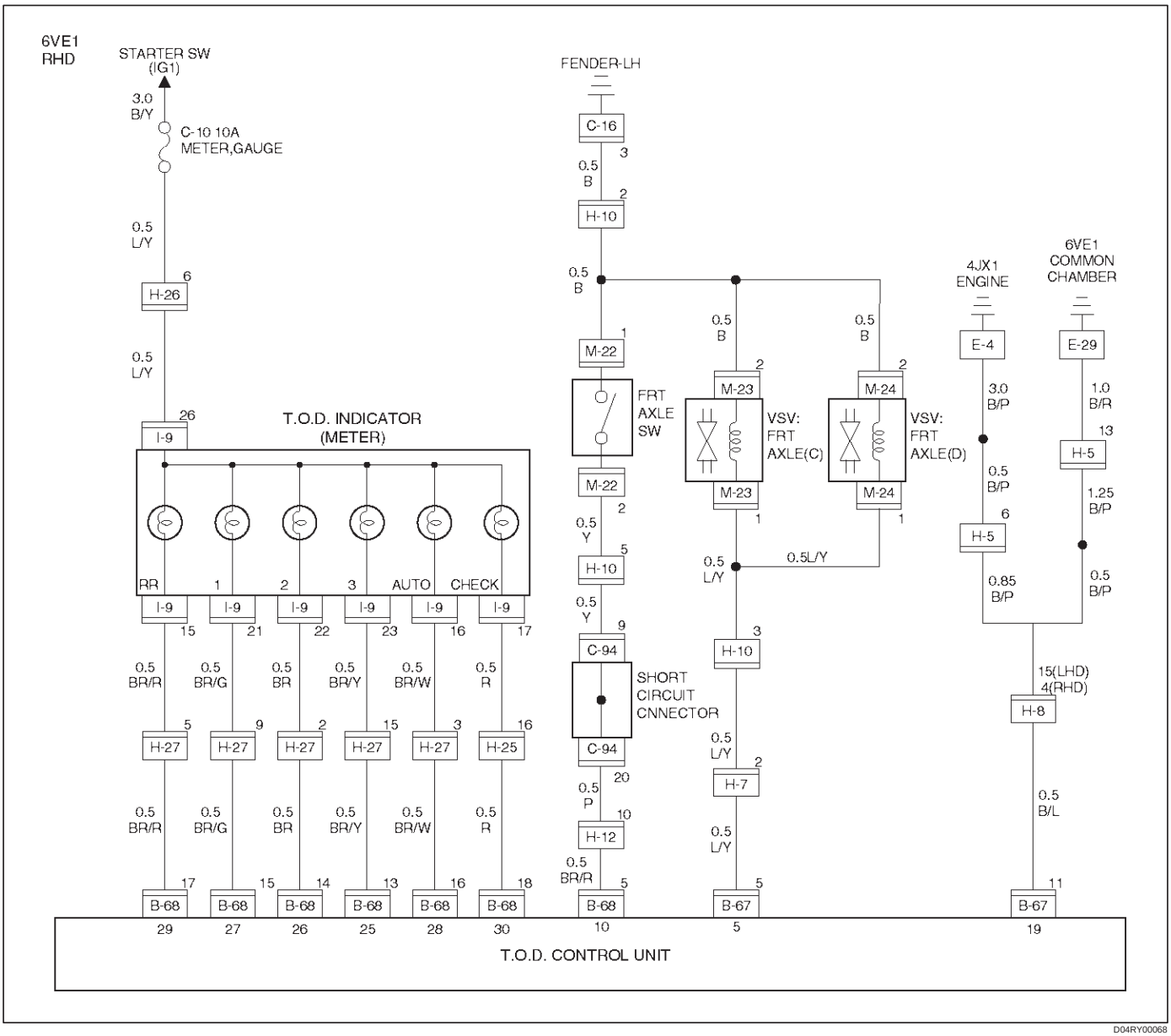

D04RY00068

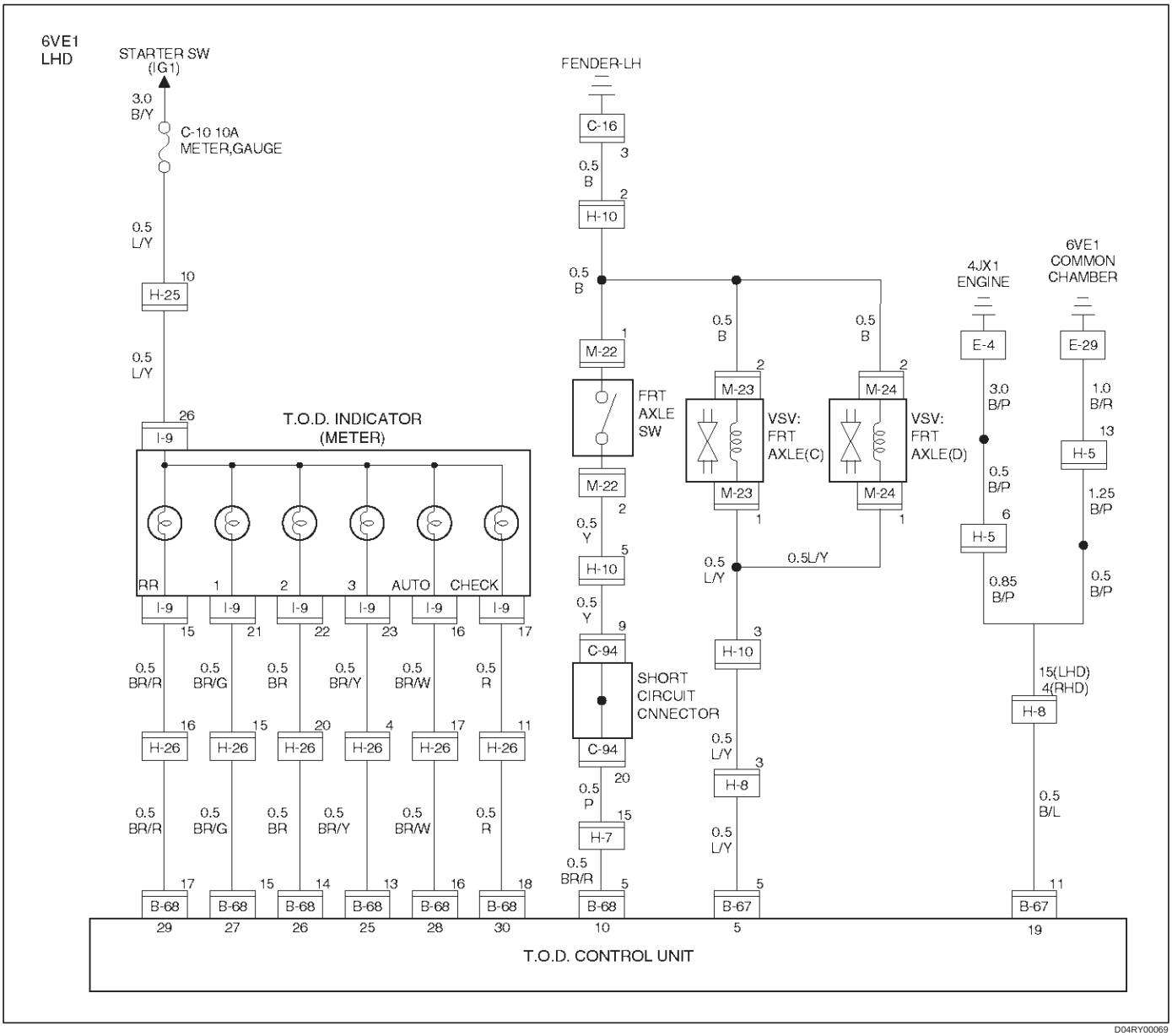
6VE1
LHD
STARTER SW
(IG1)
3.0
B/Y
C-10 10A
METER,GAUGE
0.5
L/Y
H-25
10
0.5
L/Y
26
I-9
T.O.D. INDICATOR
(METER)
RR
1
2
3
AUTO
CHECK
I-9
15
21
22
23
16
17
0.5
BR/R
0.5
BR/G
0.5
BR
0.5
BR/Y
0.5
BR/W
0.5
R
16
15
20
4
17
11
H-26
H-26
H-26
H-26
H-26
H-26
0.5
BR/R
0.5
BR/G
0.5
BR
0.5
BR/Y
0.5
BR/W
0.5
R
17
15
14
13
16
18
B-68
B-68
B-68
B-68
B-68
B-68
29
27
26
25
28
30
FENDER-LH
C-16
3
0.5
B
2
H-10
0.5
B
1
M-22
FRT
AXLE
SW
M-22
2
0.5
Y
5
H-10
0.5
Y
9
C-94
SHORT
CIRCUIT
CNNECTOR
C-94
20
0.5
P
15
H-7
0.5
BR/R
5
B-68
10
0.5
B
2
M-23
VSV:
FRT
AXLE(C)
M-23
1
0.5
B
2
M-24
VSV:
FRT
AXLE(D)
M-24
1
0.5
L/Y
0.5L/Y
3
H-10
0.5
L/Y
3
H-8
0.5
L/Y
5
B-67
5
4JX1
ENGINE
E-4
3.0
B/P
0.5
B/P
6
H-5
0.85
B/P
6VE1
COMMON
CHAMBER
E-29
1.0
B/R
13
H-5
1.25
B/P
0.5
B/P
15(LHD)
4(RHD)
H-8
0.5
B/L
11
B-67
19
T.O.D. CONTROL UNIT

D04RY00069

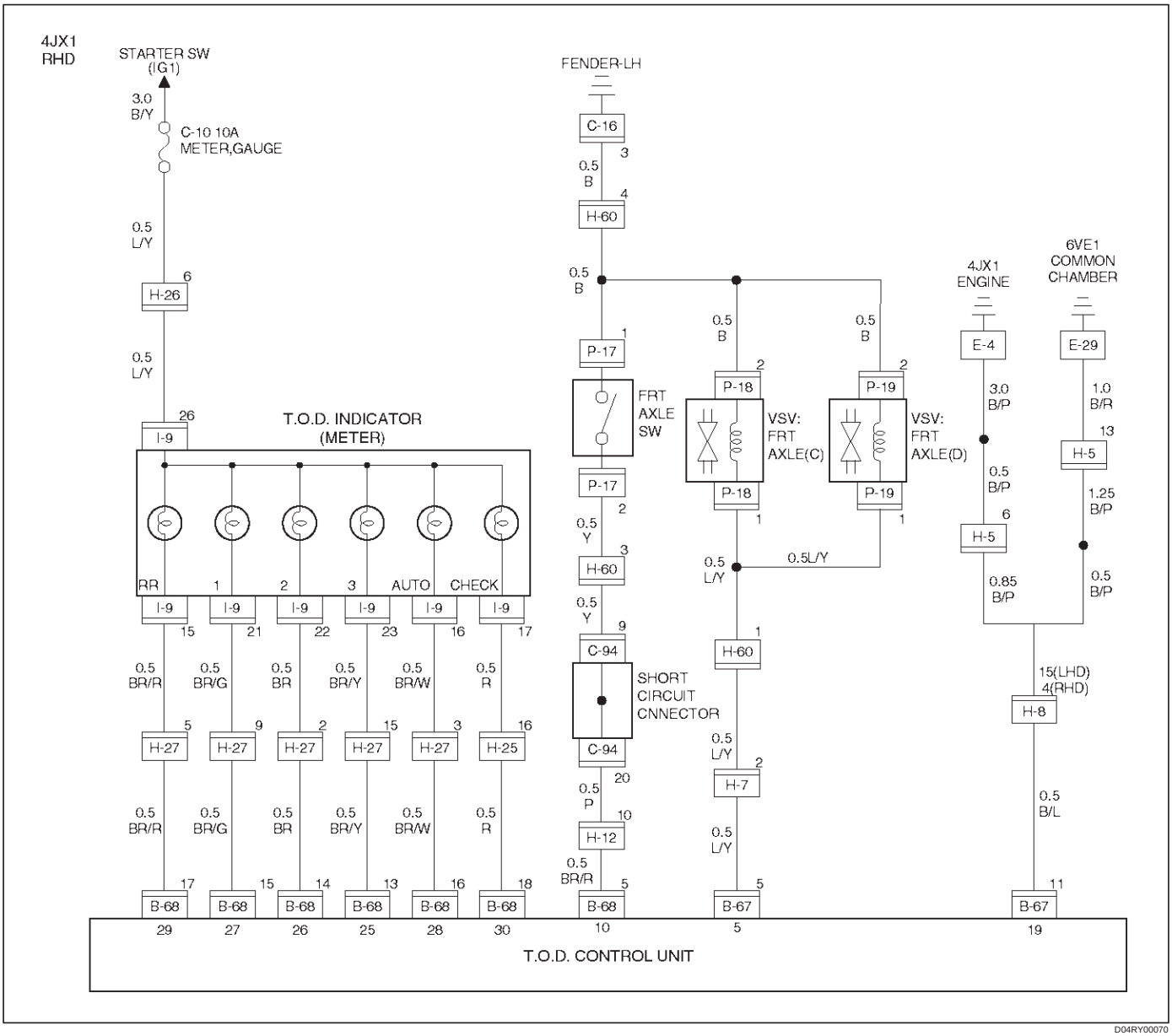
4JX1
RHD
STARTER SW
(IG1)
3.0
B/Y
C-10 10A
METER,GAUGE
0.5
L/Y
H-26
6
0.5
L/Y
26
I-9
T.O.D. INDICATOR
(METER)
RR
1
2
3
AUTO
CHECK
I-9
15
21
22
23
16
17
0.5
BR/R
0.5
BR/G
0.5
BR
0.5
BR/Y
0.5
BR/W
0.5
R
H-27
H-25
5
9
2
15
3
16
0.5
BR/R
0.5
BR/G
0.5
BR
0.5
BR/Y
0.5
BR/W
0.5
R
B-68
17
15
14
13
16
18
29
27
26
25
28
30
FENDER-LH
C-16
3
0.5
B
4
H-60
0.5
B
P-17
1
FRT
AXLE
SW
P-17
2
0.5
Y
3
H-60
0.5
Y
9
C-94
SHORT
CIRCUIT
CNNECTOR
C-94
20
0.5
P
10
H-12
0.5
BR/R
5
B-68
10
0.5
B
0.5
B
2
P-18
VSV:
FRT
AXLE(C)
P-18
1
2
P-19
VSV:
FRT
AXLE(D)
P-19
1
0.5
L/Y
0.5L/Y
1
H-60
0.5
L/Y
2
H-7
0.5
L/Y
5
B-67
5
4JX1
ENGINE
E-4
3.0
B/P
0.5
B/P
6
H-5
0.85
B/P
6VE1
COMMON
CHAMBER
E-29
1.0
B/R
13
H-5
1.25
B/P
0.5
B/P
15(LHD)
4(RHD)
H-8
0.5
B/L
11
B-67
19
T.O.D. CONTROL UNIT

D04RY00070

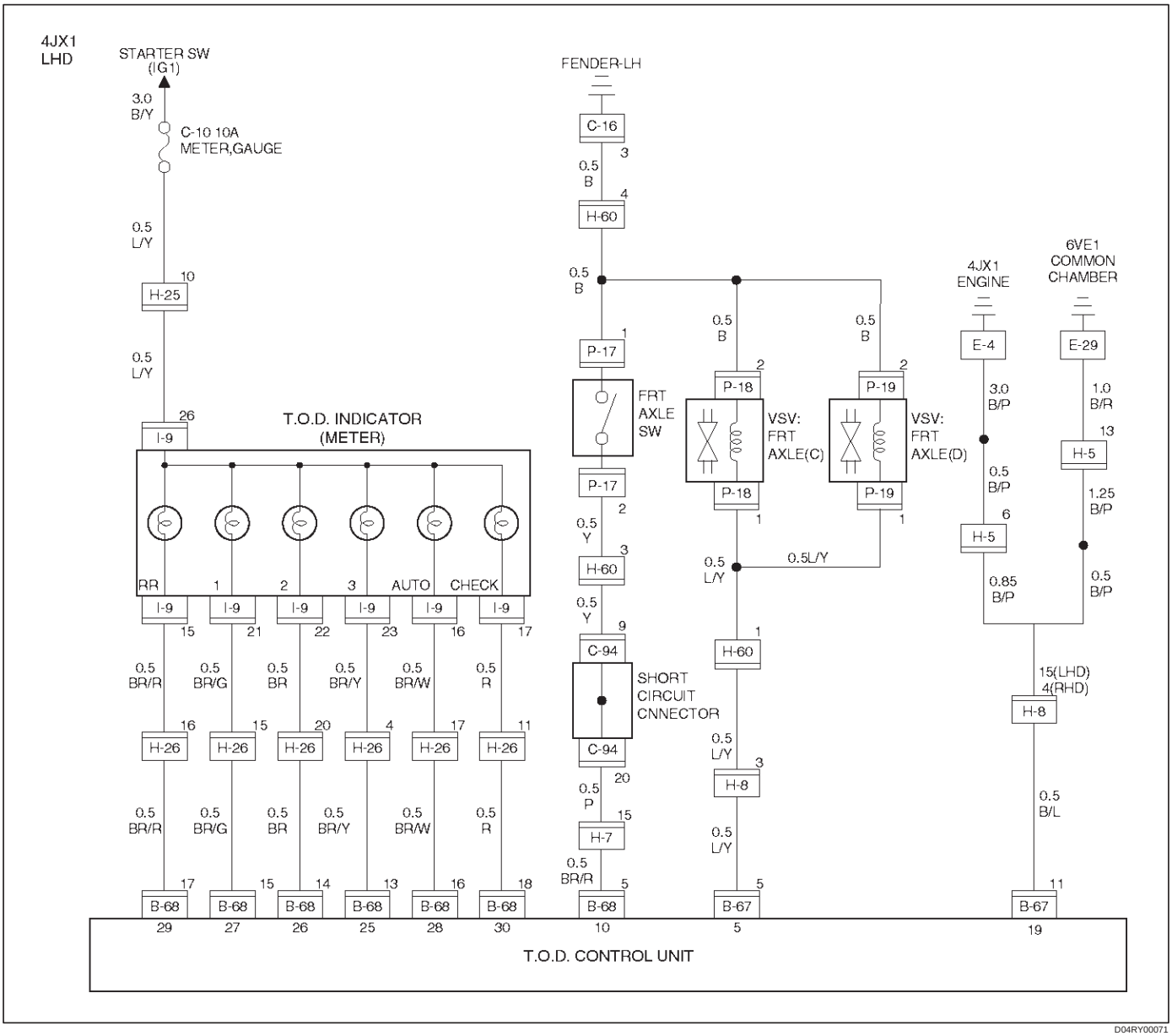
4JX1
LHD
STARTER SW
(IG1)
3.0
B/Y
C-10 10A
METER,GAUGE
0.5
L/Y
H-25
10
0.5
L/Y
26
I-9
T.O.D. INDICATOR
(METER)
RR
1
2
3
AUTO
CHECK
I-9
15
21
22
23
16
17
0.5
BR/R
0.5
BR/G
0.5
BR
0.5
BR/Y
0.5
BR/W
0.5
R
16
15
20
4
17
11
H-26
H-26
H-26
H-26
H-26
H-26
0.5
BR/R
0.5
BR/G
0.5
BR
0.5
BR/Y
0.5
BR/W
0.5
R
17
15
14
13
16
18
B-68
B-68
B-68
B-68
B-68
B-68
29
27
26
25
28
30
FENDER-LH
C-16
3
0.5
B
4
H-60
0.5
B
1
P-17
FRT
AXLE
SW
P-17
2
0.5
Y
3
H-60
0.5
Y
9
C-94
SHORT
CIRCUIT
CNNECTOR
C-94
20
0.5
P
15
H-7
0.5
BR/R
5
B-68
10
0.5
B
2
P-18
VSV:
FRT
AXLE(C)
P-18
1
0.5
L/Y
0.5
B
2
P-19
VSV:
FRT
AXLE(D)
P-19
1
0.5L/Y
1
H-60
0.5
L/Y
3
H-8
0.5
L/Y
5
B-67
5
4JX1
ENGINE
E-4
3.0
B/P
0.5
B/P
6
H-5
0.85
B/P
6VE1
COMMON
CHAMBER
E-29
1.0
B/R
13
H-5
1.25
B/P
0.5
B/P
15(LHD)
4(RHD)
H-8
0.5
B/L
11
B-67
19
T.O.D. CONTROL UNIT

D04RY00071

Step	Action	Yes	No
1	Start the engine. When the transfer lever is shifted to the neutral position between high and 4L, is 5V observed between terminals 10 and 19?	Go to Step 2	Go to Step 7
2	When the transfer lever is shifted to the high position and 4WD AUTO SW is selected to the 4WD position, is 0V observed between terminals 10 and 19?	Go to Step 3	Go to Step 7
3	When the transfer lever is shifted to the 4L position, is 0V observed between terminals 10 and 19?	Go to Step 4	Go to Step 7
4	Select the 4WD AUTO SW to the 2WD position. Is 12V observed between terminals 25 and 19?	Go to Step 5	Replace the ECU. Go to Step 19
5	Is 12V observed between terminals 26 and 19?	Go to Step 6	Replace the ECU. Go to Step 19
6	Is 12V observed between terminals 27 and 19?	The phenomenon is not reproduced. Refer to “Troubles intermittently observed”.	The ECU has failed. Replace the ECU. Go to Step 19
7	When the 4WD AUTO SW is selected to the 2WD position, is the battery voltage observed between terminals 5 and 19?	Go to Step 8	Go to Step 11
8	When the transfer lever is shifted to the neutral position between high and 4L, is the battery voltage observed between terminals 5 and 19?	Go to Step 9	Go to Step 11
9	When the transfer lever is shifted to the high position and 4WD AUTO SW is selected to the 4WD position, is 0V observed between terminals (B–67)5 and (B–67)11?	Go to Step 10	Go to Step 11
10	When the transfer lever is shifted to the 4L position, is 0V observed between terminals 5 and 19?	Go to Step 12	Go to Step 11
11	Is any of the trouble codes 28, 32 and 33 recorded?	Examine the trouble based on “Diagnosis from Trouble Codes”.	The ECU has failed. Replace the ECU.
12	1. Turn off the starter switch. 2. Disconnect the ECU connector. Does the resistance between terminals 5 and 19 meet the standard, 17< R < 25 ohm?	Go to Step 13	Repair the circuit or replace the VSV. Go to Step 19
13	1. Connect the ECU connector. 2. Turn on the starter switch. When the 4WD AUTO SW is selected to the 2WD position, is the battery voltage supplied to each VSV?	Go to Step 14	Repair the circuit or replace the VSV. Go to Step 19
14	When the transfer lever is shifted to the neutral position between high and 4L, is the battery voltage supplied to each VSV?	Go to Step 15	Repair the circuit or replace the VSV. Go to Step 19
15	When the transfer lever is shifted to the high position and 4WD AUTO SW is selected to the 4WD position, is 0V observed on each VSV?	Go to Step 16	Repair the circuit or replace the VSV. Go to Step 19

Step	Action	Yes	No
16	When the transfer lever is shifted to the 4L position, is 0V observed on each VSV?	Go to Step 17	Repair the circuit or replace the VSV. Go to Step 19
17	Is the vacuum pressure supplied to the VSV?	Go to Step 18	Repair the vacuum system. Go to Step 19
18	Can the single AXLE switch enable and disable the continuity?	Repair the shift on the fly system Refer to Section 4B1 and 4C. Go to Step 19	Replace the AXLE switch Refer to Section 4B1 and 4C. Go to Step 19
19	Check that all the parts are mounted. Is this step complete?	Repeat the “Diagnosis Flow”.	Return to Step 19

Chart G	The trouble codes are displayed.
Function of circuit	—
Fail condition	The CHECK lamp continues blinking irregularly. 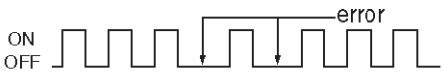
Indicator lamp status	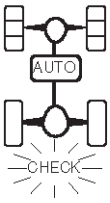
Transfer position	—

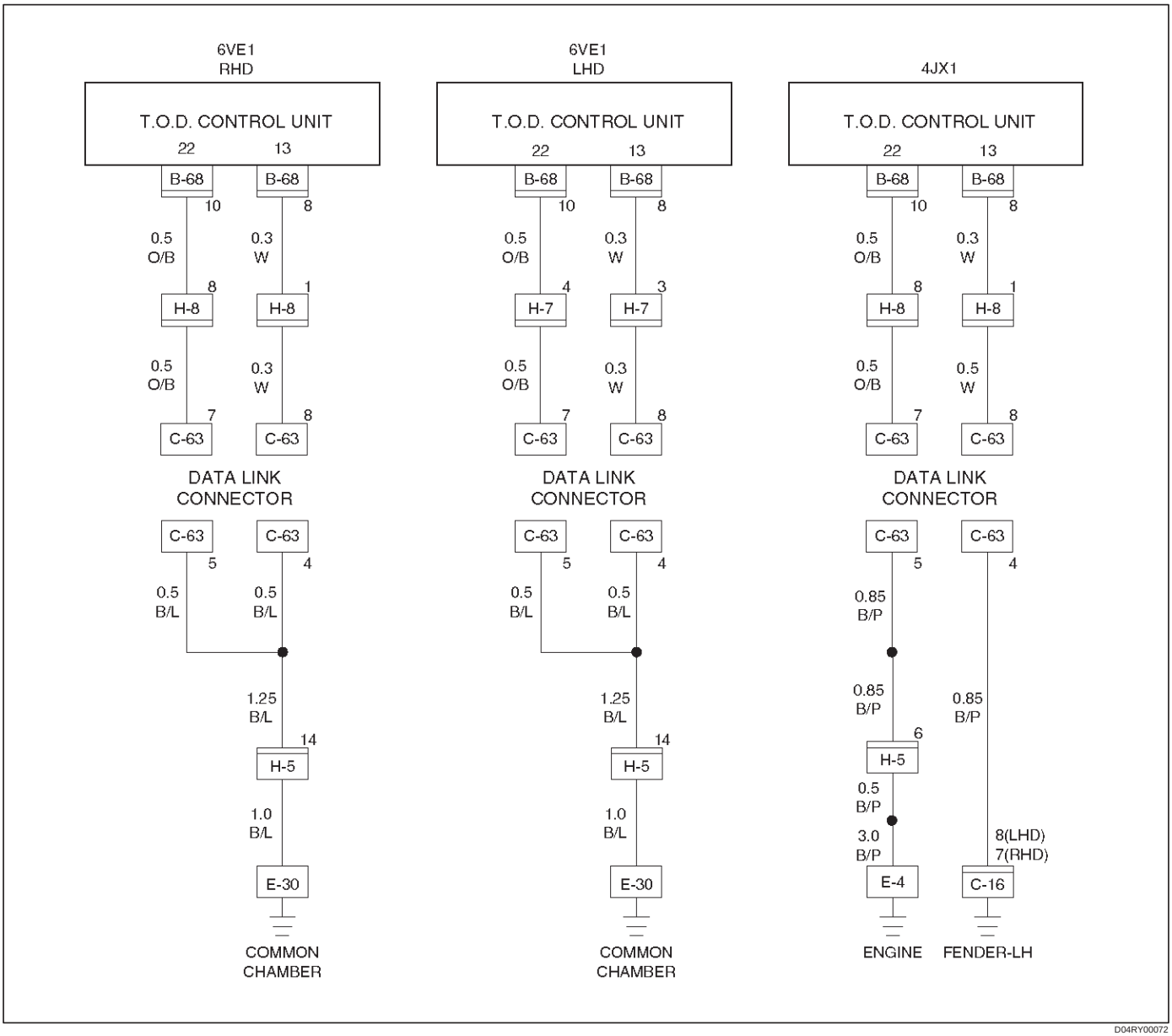

Step	Action	Yes	No
1	Disconnect the ECU connector from ECU. Is the continuity established between terminals (B–68)8 and (B–67)11?	Go to Step 2	The ECU has failed. Replace the ECU. Go to Step 3
2	Is the self-diagnostic connector short-circuited?	Go to Step 3	Repair the self-diagnostic connector circuit. Go to Step 3
3	1. Check that all the parts are mounted. 2. Clear the trouble codes. Is this step complete?	Repeat the “Diagnosis Flow”.	Return to Step 3

Chart H	lighting switch circuit
Function of circuit	Reads in the status of lighting switch and reduces the indicator brightness at night.
Fail condition	Even if the lighting switch is pressed on and off, brightness does not change.
Indicator lamp status	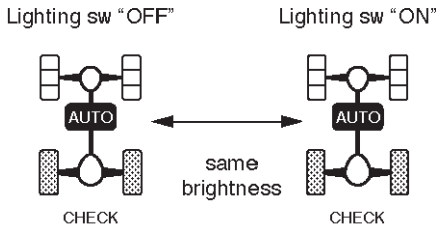
Transfer position	All position (example TOD mode)

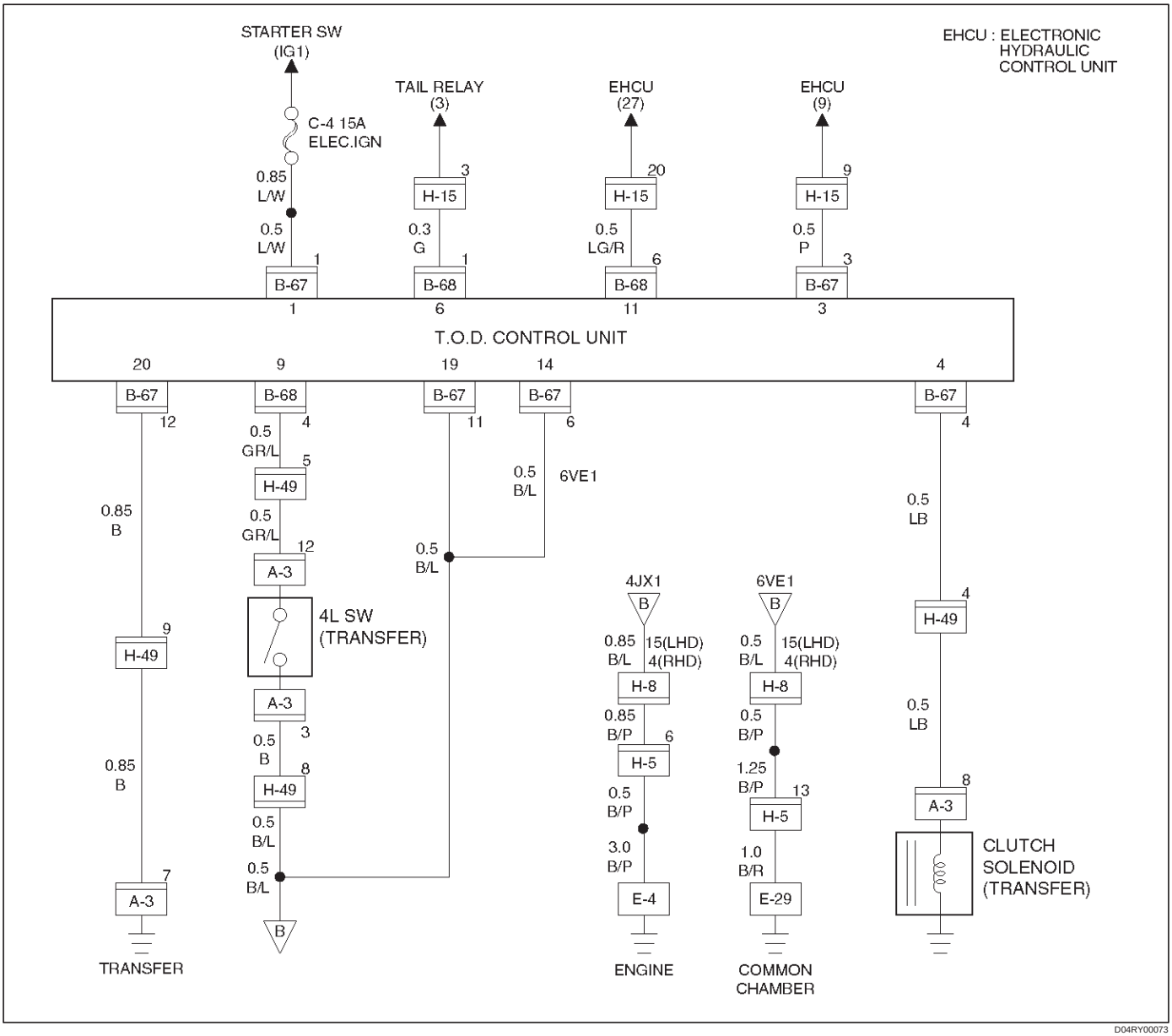

Step	Action	Yes	No
1	1. Disconnect ECU connector. 2. Turn on the starter switch. Is battery voltage observed between ECU terminals (B–68)1 and (B–67)11?	Go to Step 2	Wirers are broken lighting SW circuit. Repair the circuit. Go to Step 4
2	Turn lighting SW “ON”. Is 0 V observed between ECU terminal (B–68)1 and (B–67)11?	Go to Step 3	Lighting SW circuit battery short. Repair the circuit. Go to Step 4
3	Connect ECU terminal. While the lighting switch is pressed on and off, does the brightness of the indicator change?	The phenomenon is not reproduced. Refer to “Troubles intermittently observed”	The ECU has failed. Replace the ECU. Go to Step 4
4	Check that all the parts are mounted. Is this step complete?	Repeat the “Diagnosis Flow”.	Return to Step 4

Diagnosis from Symptom

Troubles that are not indicated by the warning lamp are listed in the table below. These troubles are caused by the faults that cannot be detected by the self-diagnostic function of the control unit.
If this type of trouble is observed, interview the customer and conduct test runs to reproduce the trouble, cross-check the reported trouble with the listed phenomena, and diagnose and analyze the trouble on the item by item basis.

	Phenomena	Major cause	Corrective action
1	The tight corner braking is observed when the vehicle is subject to full steering.	● The standard tires are not used. ● The tire pressure is incorrect. ● The tires are worn inuniformity. ● The transfer or wiring is imperfect. ● The limited slip differential is failed.	Check and recondition the vehicle according to Chart 1.
2	Even if the 4WD AUTO SW is select to the 4WD position, the 4WD mode is not active, resulting in remarkable rear wheel spin.	● The transfer or wiring is imperfect. ● The shift on the fly system is failed.	Check and recondition the vehicle according to Chart 2.
3	● When the 4WD AUTO SW is selected to the 4WD position, the drive resistance of the 4WD system is too large to get sufficient running speed. ● Noised drive line.	● The standard tires are not used. ● The tire pressure is incorrect. ● The tires are worn inuniformity. ● The transfer or wiring is imperfect. ● The limited slip differential is failed.	Check and recondition the vehicle according to Chart 1.
4	The shift on the fly system (front axle) generates gear noises.	● The wiring is imperfect. ● The shift on the fly system is failed.	Check and recondition the vehicle according to Chart 3.
5	The braking distance gets long even when the ABS is active.	● The wiring is imperfect. ● The ABS is failed.	Check and recondition the vehicle according to Chart 4.

Chart 1	The tight corner braking is observed.
Function of circuit	—
Fail condition	When the vehicle is subject to full steering in the TOD mode, the drive resistance gets large or the judder occurs. Otherwise, the above phenomenon is observed only when the brake is applied.

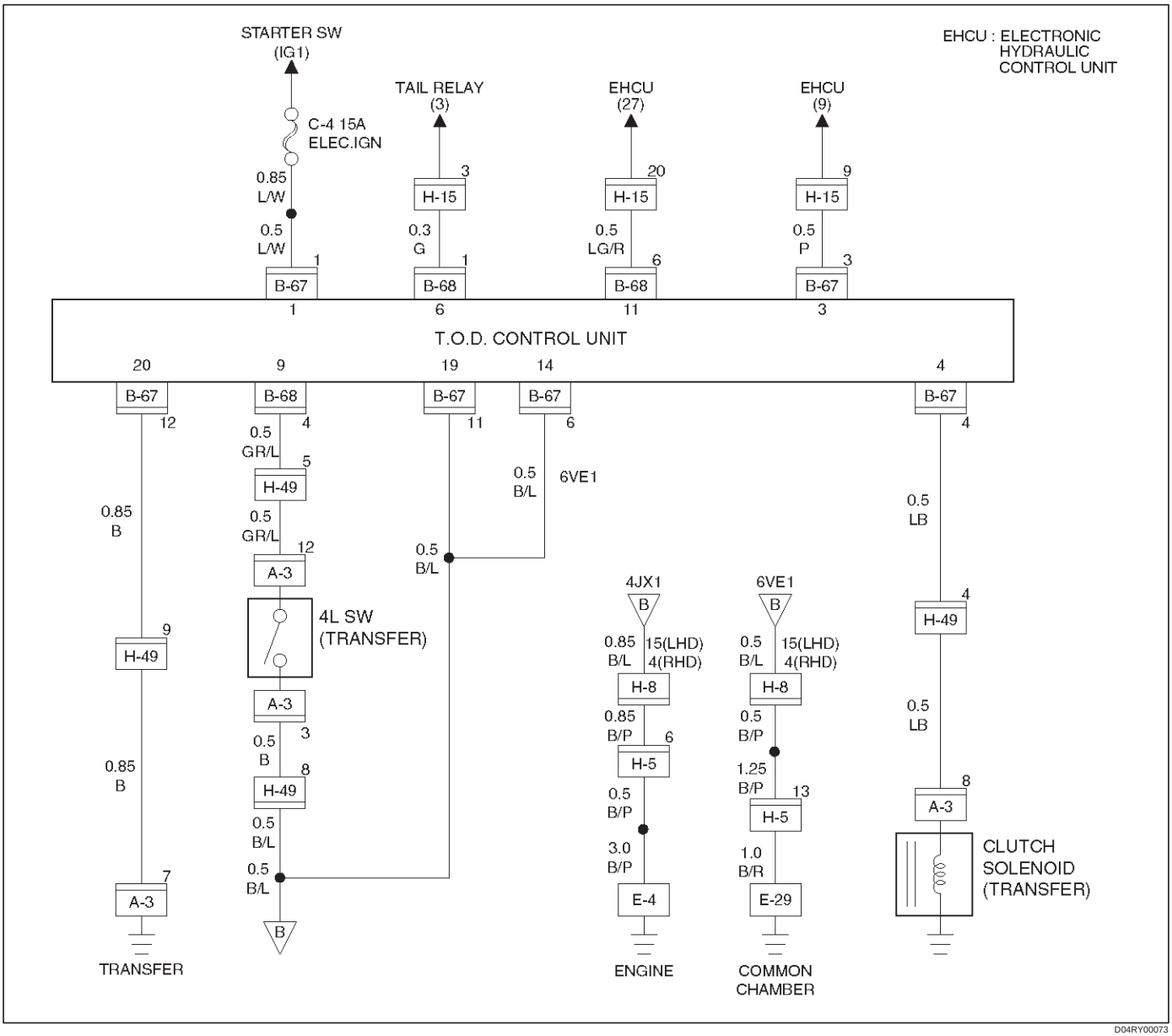

Step	Action	Yes	No
1	Are the front and rear tires in specified size?	Go to Step 2	Replace the tires with specified ones, and service the new tires. Go to Step 16
2	Is the tire pressure correct?	Go to Step 3	In flate tries to recommended pressure. Go to Step 16
3	Are the tires free from abnormal wear?	Go to Step 4	Replace the tires with specified ones, and service the new tires. Go to Step 16
4	Are different types of tires used?	Go to Step 5	Replace the tires with specified ones, and service the new tires. Go to Step 16
5	1. Start the engine. 2. Shift the transfer lever to the high position and switch the 4WD AUTO SW to 4WD position. 3. Fully turn the steering to the left (or right) end, and select the D range and start the creep run. Does the tight corner braking occur? Is the judder with chug-chug sound observed? * Use caution on the operation.	Go to Step 6	Go to Step 11
6	1. Shift the transfer lever to the high position and switch the 4WD AUTO SW to the 2H position. 2. Fully turn the steering to the left (or right) end, and select the D range and start the creep run. Does the tight corner braking occur? Is the judder with chug-chug sound observed? * Use caution on the operation.	Go to Step 7	Go to Step 14
7	Is an LSD mounted to the rear differential?	Go to Step 8	Go to Step 9
8	Is the genuine LSD oil used in the rear differential?	Go to Step 9	Replace the differential oil. Go to Step 16
9	Does the engine output the power correctly?	Go to Step 10	Check the engine. Go to Step 16
10	Do the speed sensors work correctly? (Check trouble codes.)	The ECU has failed. Replace the ECU. Go to Step 16	Replace the speed sensors. Go to Step 16
11	Is the tight corner braking observed only when the brake is applied?	Go to Step 12	Conduct full steering under WOT. Go to Step 5
12	1. Turn on the starter switch. Is the battery voltage observed between terminals 11 and 19?	Go to Step 13	Repair the circuit of terminal 11 (ABS IN). Go to Step 16

Step	Action	Yes	No
13	1. Apply the brake and fully turn the steering to the left (or right) end, and start the creep run. Does the voltage between terminals 4 and 20 range between 0.1 and 1.0V?	Repair the transfer assembly. Go to Step 16	The ECU has failed. Replace the ECU. Go to Step 16
14	1. Shift the transfer lever to the high position and switch the 4WD AUTO SW to 4WD position. 2. Fully turn the steering to the left (or right) end, and select the D range and start the creep run. Does the voltage between terminals 4 and 20 range between 0.1 and 1.0V?	Go to Step 15	Go to Step 10
15	1. Select the 4WD AUTO SW to the 2WD position. 2. Jack up the right front wheel. Does the front tire rotate smoothly?	The phenomenon is not reproduced. Refer to “Troubles intermittently observed”. Go to Step 16	Repair the transfer assembly. Go to Step 16
16	Check that all the parts are mounted. Is this step complete?	Repeat the “Diagnosis Flow”.	Return to Step 16

*NOTE: Before checking this item, run the vehicle more than 10 meters with the steering wheel in straight position so that the 4L mechanical lock sleeve can be released certainly.

Chart 2	The 4WD mode is not active.
Function of circuit	—
Fail condition	The rear wheels spin in the TOD mode, so the driving torque is not transmitted to the front wheels. The indicator lamps will not show the 4L and TOD status.

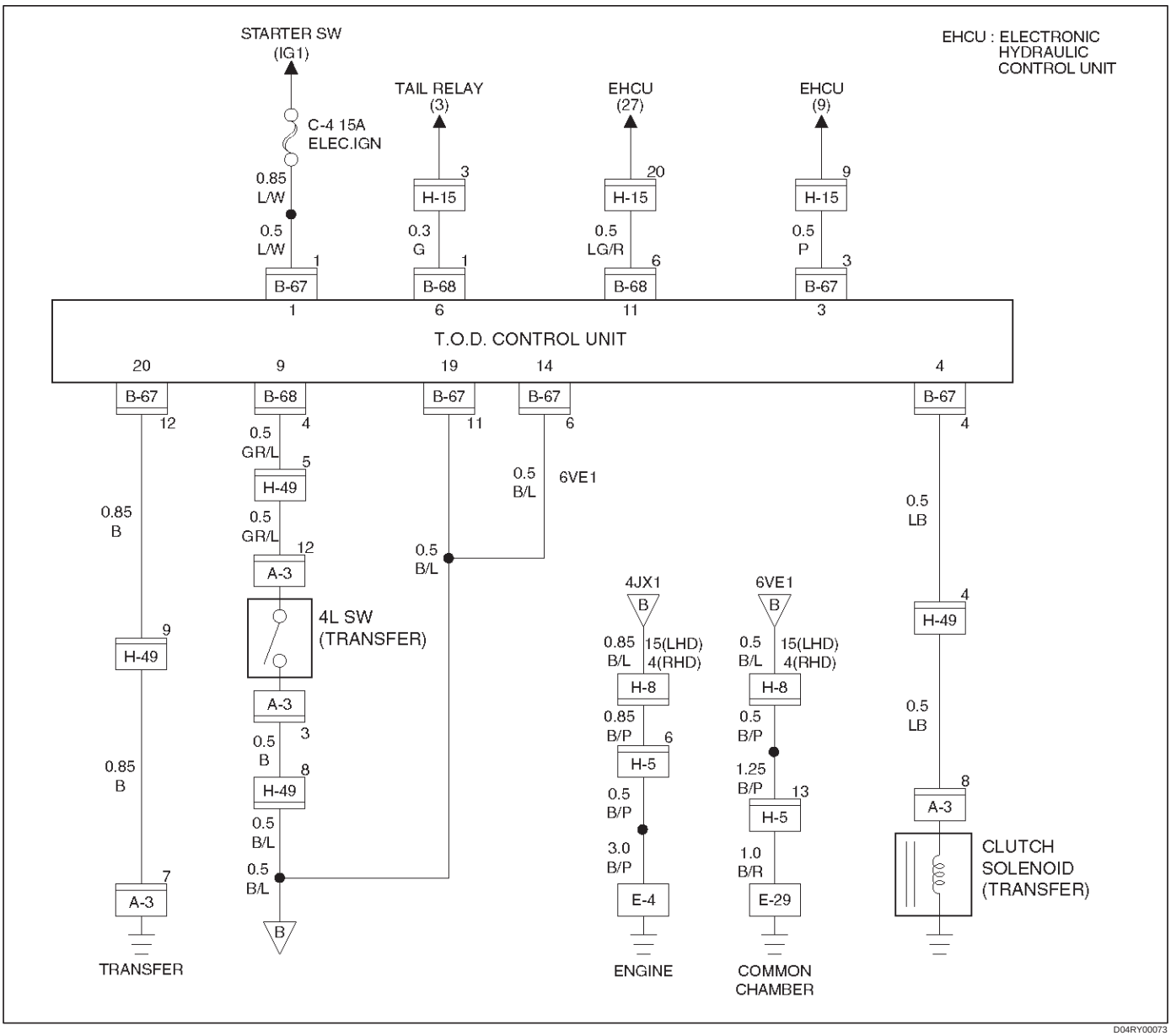

Step	Action	Yes	No
1	Is the trouble code 31 or 26 recorded?	Examine the trouble based on “Diagnosis from Trouble Codes”.	Go to Step 2
2	Is any of the trouble codes 28(P1760), 32(P1761) and 33(1762) recorded?	Examine the trouble based on “Diagnosis from Trouble Codes”.	Go to Step 3
3	When the transfer lever is in the specified position, do the TOD indicator lamps show the correct status?	Go to Step 4	Examine the trouble based on “Trouble Diagnosis Depending on The Status of TOD Indicator”.
4	Shift the transfer lever to the 4L position, fully turn the steering to the left (or right) end, and start the creep run. Does the tight corner braking occur?	Go to Step 5	Repair the transfer assembly. Go to Step 7
5	1. Shift the transfer lever to the high (TOD) position. 2. Turn on the starter switch. Does the voltage between terminals 4 and 20 indicate at least 3V while the throttle is completely open?	Go to Step 6	The ECU has failed. Replace the ECU. Go to Step 7
6	Does the voltage between terminals 4 and 20 indicate at least 0.1V while the throttle is completely closed?	The TOD clutch is worn. Repair the transfer assembly. Go to Step 7	The ECU has failed. Replace the ECU. Go to Step 7
7	Check that all the parts are mounted. Is this step complete?	Repeat the “Diagnosis Flow”.	Return to Step 7

Chart 3	The shift on the fly system generates gear noises. (The fuel economy is bad in the 2H mode.)
Function of circuit	—
Fail condition	When the vehicle is run in the 2H mode, the shift on the fly system generates gear noises or the front wheel gears are engaged to generate a shock.

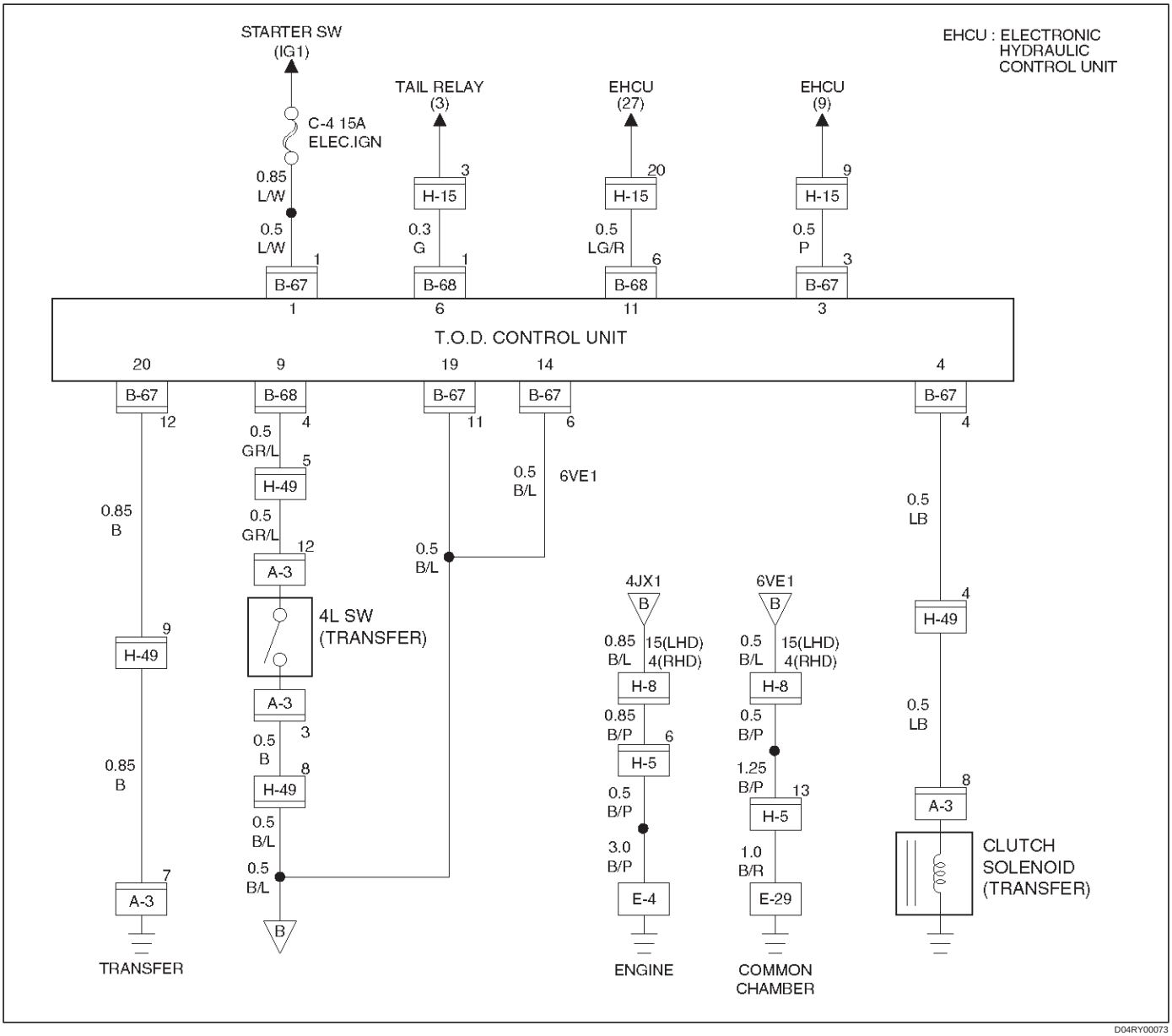

Step	Action	Yes	No
1	Do the indicator lamps show the correct status?	Go to Step 2	Examine the trouble based on “Touble Diagnosis Depending on The Status of TOD Indicator”.
2	Is any of the trouble codes 28(P1760), 32(P1761) and 33(P1762) recorded?	Examine the trouble based on “Diagnosis from Trouble Codes”.	Go to Step 3
3	Turn on the starter switch. Is the battery voltage observed between terminals 1 and 20?	Go to Step 4	Go to Step 5
4	When the 4WD AUTO SW is selected to the 2WD position, are the front axle gears correctly disengaged (and when the left front tire is jacked up and turned, is the front propeller shaft standstill)?	The phenomenon is not reproduced. Refer to “Troubles intermittently observed”.	The shift on the fly system is failed (refer to Section 4B1 and 4C.) Go to Step 6
5	Does the battery voltage maintain the correct level?	Repair the battery circuit. Go to Step 6	Repair the battery and charging system. Go to Step 6
6	Check that all the parts are mounted. Is this step complete?	Repeat the “Diagnosis Flow”.	Return to Step 6

Chart 4	The braking distance gets long even when the ABS is active.
Function of circuit	—
Fail condition	Enough deceleration is not obtained and the braking distance gets long even when the ABS is active in the 2H mode.

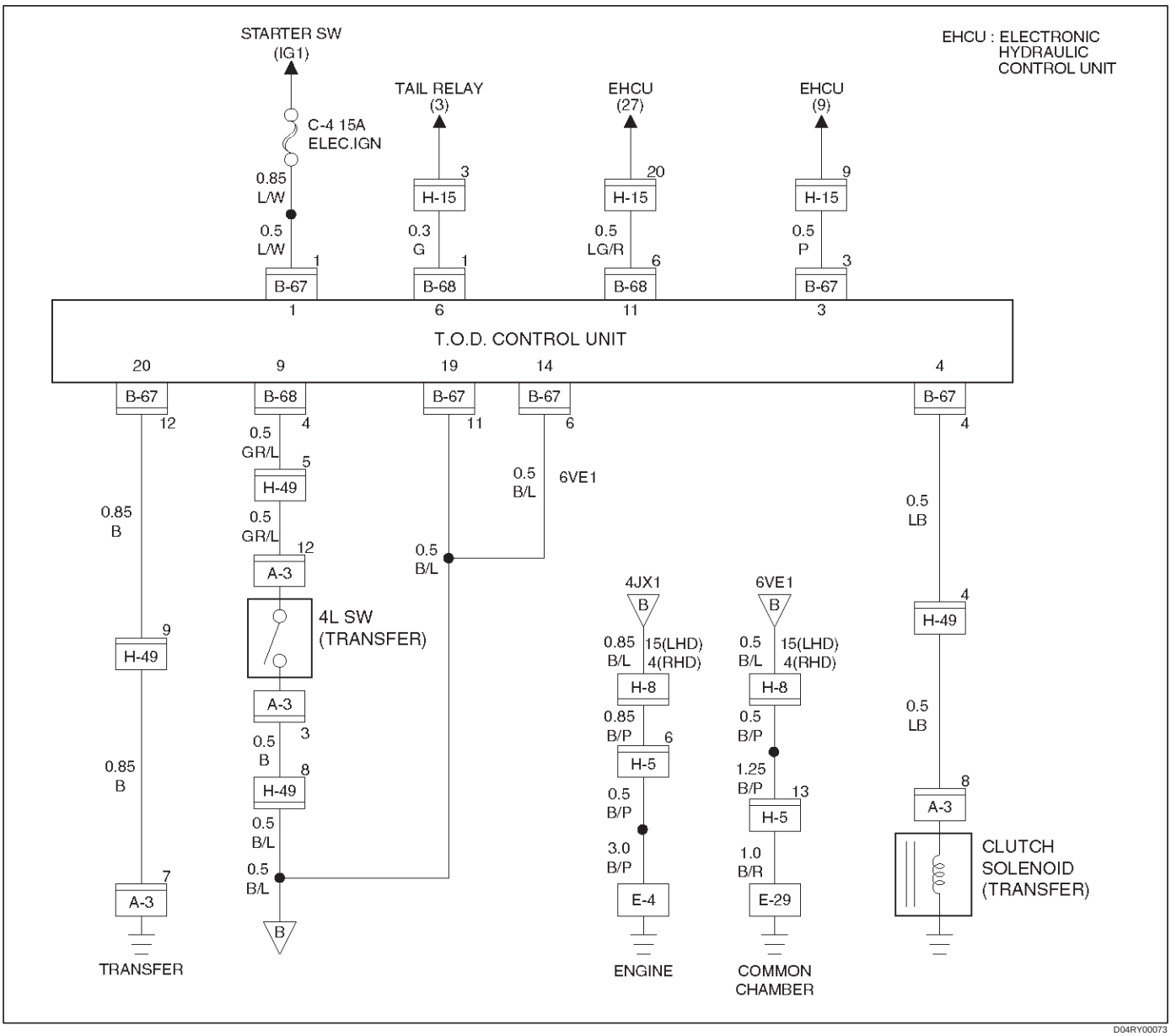

Step	Action	Yes	No
1	Are the brake and ABS systems healthy?	Go to Step 2	Repair the brake and ABS. Refer to section 5A.
2	Turn on the starter switch. Is the battery voltage observed between terminals 1 and 20?	Go to Step 3	Repair the battery system. Go to Step 4
3	1. Select the 4WD AUTO SW to the 2WD position. 2. The voltage between terminals 3 and 19 range between 7.5 and 16V (0.12 seconds make a cycle) 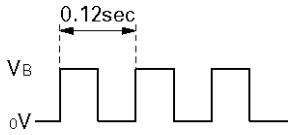 Does the voltage within the range specified?	Go to Step 4	The ECU has failed. Replace the ECU. Go to Step 4
4	Check that all the parts are mounted. Is this step complete?	Repeat the “Diagnosis Flow".	Return to Step 4

DRIVELINE/AXLE

DRIVE SHAFT SYSTEM

CONTENTS

Service Precaution 4C–2
General Description 4C–2
Diagnosis 4C–3
Rear Axle Shaft 4C–4
Rear Axle Shaft and Associated Parts 4C–4
Removal 4C–4
Inspection and Repair 4C–5
Oil Seal Replacement 4C–6
Installation 4C–6
Special Tools 4C–8
Front Hub and Disc (with Shift on the Fly) . . 4C–9
Disassembled View 4C–9
Disassembly 4C–9
Inspection and Repair 4C–10
Reassembly 4C–11
Front Hub and Disc with Manual Locking Hub 4C–14
Disassembled View 4C–14
Disassembly 4C–14
Inspection and Repair 4C–16
Reassembly 4C–16
Main Data and Specifications 4C–20
Special Tools 4C–21
Front Drive Shaft Joint 4C–22
Front Drive Shaft Joints Replacement 4C–22
Front Axle Drive Shaft 4C–23
Front Axle Drive Shaft and Associated Parts 4C–23
Disassembly 4C–24
Inspection and Repair 4C–25
Bushing Replacement 4C–25
Reassembly 4C–26
Shift On The Fly System 4C–28
Shift On The Fly System and Associated Parts 4C–28
Disassembly 4C–28
Inspection and Repair 4C–30
Main Data and Specifications 4C–35
Special Tools 4C–36
Front Propeller Shaft 4C–37
General Description 4C–37
Front Propeller Shaft and Associated Parts 4C–38
Removal 4C–38
Installation 4C–39
Disassembly (Except TOD 4×4) 4C–40
Universal Joint Disassembly 4C–41
Inspection and Repair 4C–42
Universal Joint Reassembly 4C–45
Reassembly (Except TOD 4×4) 4C–46
Main Data and Specifications 4C–47
Rear Propeller Shaft 4C–48
General Description 4C–48
Rear Propeller Shaft and Associated Parts 4C–48
Removal 4C–49
Installation 4C–49
Disassembly 4C–50
Universal Joint Disassembly 4C–51
Inspection and Repair 4C–52
Universal Joint Reassembly 4C–53
Reassembly 4C–54
Main Data and Specifications 4C–55

Service Precaution

WARNING: IF SO EQUIPPED WITH A SUPPLEMENTAL RESTRAINT SYSTEM (SRS), REFER TO THE SRS COMPONENT AND WIRING LOCATION VIEW IN ORDER TO DETERMINE WHETHER YOU ARE PERFORMING SERVICE ON OR NEAR THE SRS COMPONENTS OR THE SRS WIRING. WHEN YOU ARE PERFORMING SERVICE ON OR NEAR THE SRS COMPONENTS OR THE SRS WIRING, REFER TO THE SRS SERVICE INFORMATION. FAILURE TO FOLLOW WARNINGS COULD RESULT IN POSSIBLE AIR BAG DEPLOYMENT, PERSONAL INJURY, OR OTHERWISE UNNEEDED SRS SYSTEM REPAIRS.

CAUTION: Always use the correct fastener in the proper location. When you replace a fastener, use ONLY the exact part number for that application. ISUZU will call out those fasteners that require a replacement after removal. ISUZU will also call out the fasteners that require thread lockers or thread sealant. UNLESS OTHERWISE SPECIFIED , do not use supplemental coatings (Paints, greases, or other corrosion inhibitors) on threaded fasteners or fastener joint interfaces. Generally, such coatings adversely affect the fastener torque and the joint clamping force, and may damage the fastener. When you install fasteners, use the correct tightening sequence and specifications. Following these instructions can help you avoid damage to parts and systems.

General Description

This publication contains essential removal, installation, adjustment and maintenance procedures.
The front axle utilizes a central disconnect type front axle/transfer case system.
The drive axles are completely flexible assemblies, consisting of inner and outer constant velocity (CV) drive shaft joints connected by an axle shaft.
For description of propeller shaft and universal joint, refer to Front/Rear Propeller Shaft in this section.

Diagnosis

Condition	Possible cause	Correction
Oil Leak At Front Axle	Worn or defective oil seal.	Replace the oil seal.
	Front axle housing cracked.	Repair or replace.
Oil Leak At Pinion Shaft	Too much gear oil.	Correct the oil level.
	Oil seal worn or defective.	Replace the oil seal.
	Pinion flange loose or damaged.	Tighten or replace.
Noises In Front Axle Drive Shaft Joint	Broken or worn drive shaft joints and bellows (BJ and DOJ).	Replace the drive shaft joints and bellows.
“Clank” When Accelerating From “Coast”	Loose drive shaft joint to output shaft bolts.	Tighten.
	Damaged inner drive shaft joint.	Replace.
Shudder or Vibration During Acceleration	Excessive drive shaft joint angle.	Repair.
	Worn or damaged drive shaft joints.	Replace.
	Sticking spider assembly (inner drive shaft joint).	Lubricate or replace.
	Sticking joint assembly (outer drive shaft joint).	Lubricate or replace.
Vibration At Highway Speeds	Out of balance or out of round tires.	Balance or replace.
	Front end out of alignment.	Align.
Noises in Front Axle	Insufficient gear oil.	Replenish the gear oil.
	Wrong or poor grade gear oil.	Replace the gear oil.
	Drive pinion to ring gear backlash incorrect.	Adjust the backlash.
	Worn or chipped ring gear, pinion gear or side gear.	Replace the ring gear, pinion gear or side gear.
	Pinion shaft bearing worn.	Replace the pinion shaft bearing.
	Wheel bearing worn.	Replace the wheel bearing.
	Differential bearing loose or worn.	Tighten or replace.
Wanders and Pulls	Wheel bearing preload too tight.	Adjust the wheel bearing preload.
	Incorrect front alignment.	Adjust the front alignment.
	Steering linkage loose or worn.	Tighten or replace.
	Steering gear out of adjustment.	Adjust or replace the steering gear.
	Tire worn or improperly inflated.	Adjust the inflation or replace.
	Front or rear suspension parts loose or broken.	Tighten or replace.
Front Wheel Shimmy	Wheel bearing worn or improperly adjusted.	Adjust or replace.
	Incorrect front alignment.	Adjust the front alignment.
	Worn ball joint or bush.	Replace the ball joint or bush.
	Steering linkage loose or worn.	Tighten or replace.
	Steering gear out of adjustment.	Tighten or replace.
	Tire worn or improperly inflated.	Replace or adjust the inflation.
	Shock absorber worn.	Replace the shock absorber.

Rear Axle Shaft

Rear Axle Shaft and Associated Parts

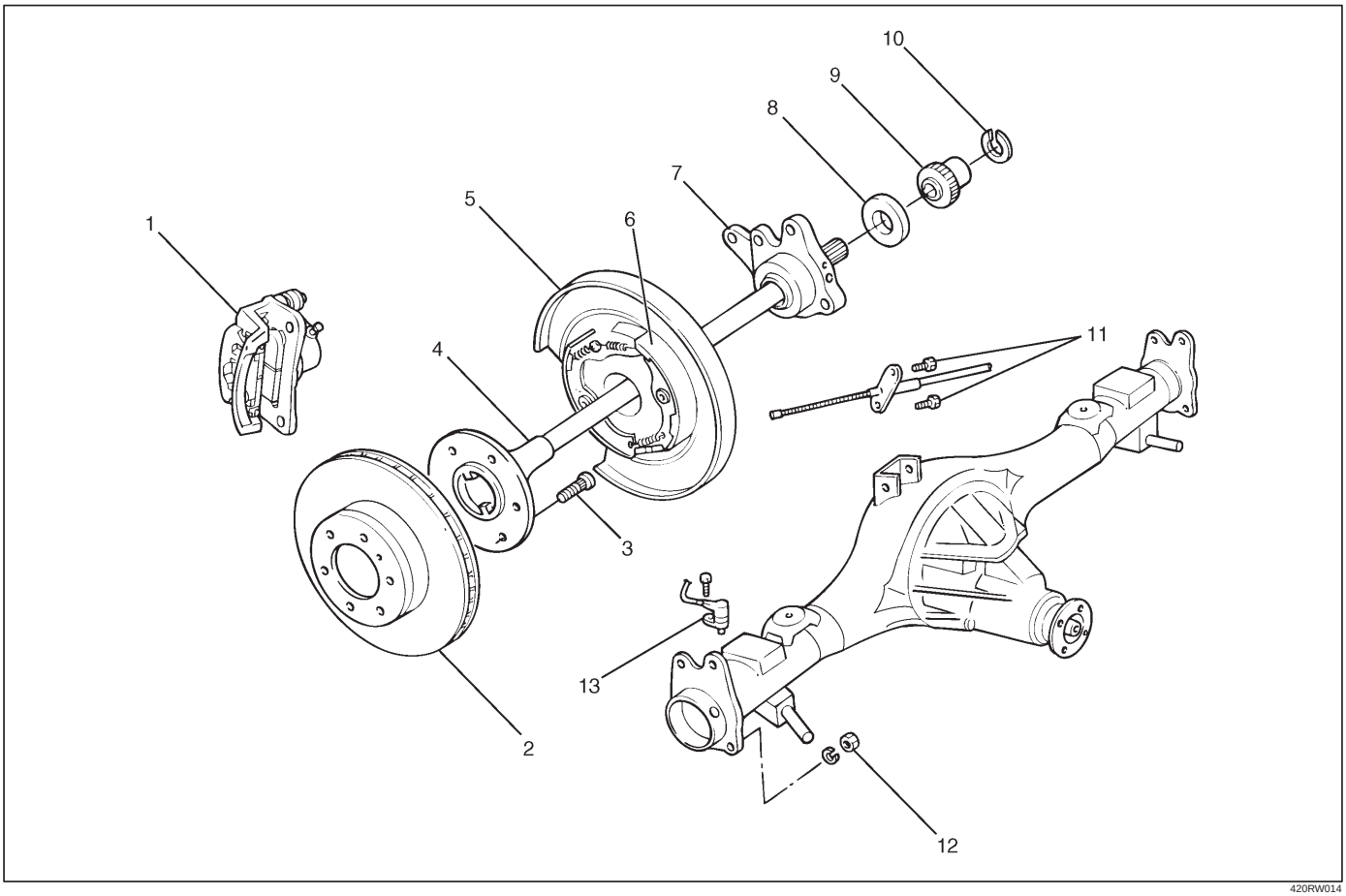

420RW014

Legend

(1) Brake Caliper
(2) Brake Disc
(3) Wheel Pin
(4) Axle Shaft Assembly
(5) Back Plate
(6) Parking Brake Assembly
(7) Bearing Holder
(8) Bearing
(9) Retainer
(10) Snap Ring
(11) Bolt
(12) Nut
(13) Antilock Brake System (ABS) Speed Sensor (if so equipped)

Removal

1. Raise the vehicle.
2. Remove tires and wheels. Refer to Wheel in Steering section.
3. Remove brake caliper. Use a wire to attach the brake caliper to the frame. Refer to Disk Brakes in Brake section.
4. Remove brake disc.
5. Remove ABS sensor (if so equipped).
6. Remove Parking brake assembly. Refer to Parking Brakes in Brake section.

7. Remove the parking brake cable mounting bolts(Behind the back plate)(1).

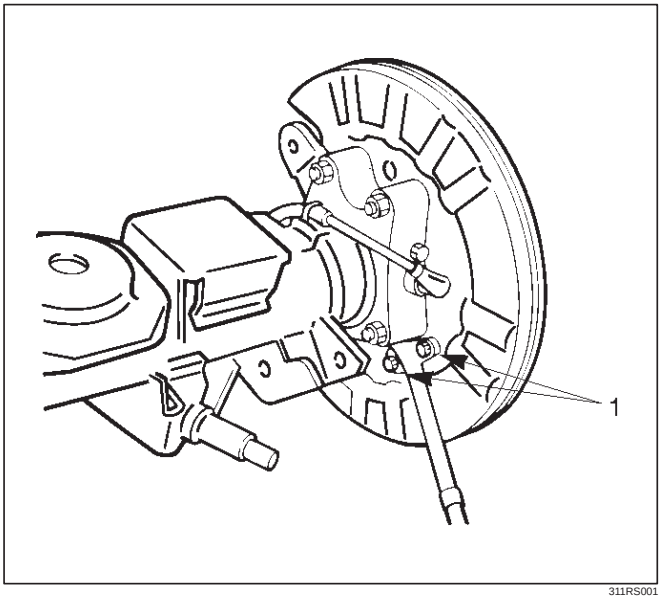

311RS001

8. Remove the bearing holder mounting nuts.
9. Remove axle shaft assembly.

NOTE: Be sure not to damage the oil seal.

10. Remove snap ring.
11. Using a bearing remover 5–8840–2295–0 and press, remove retainer together with the bearing holder.

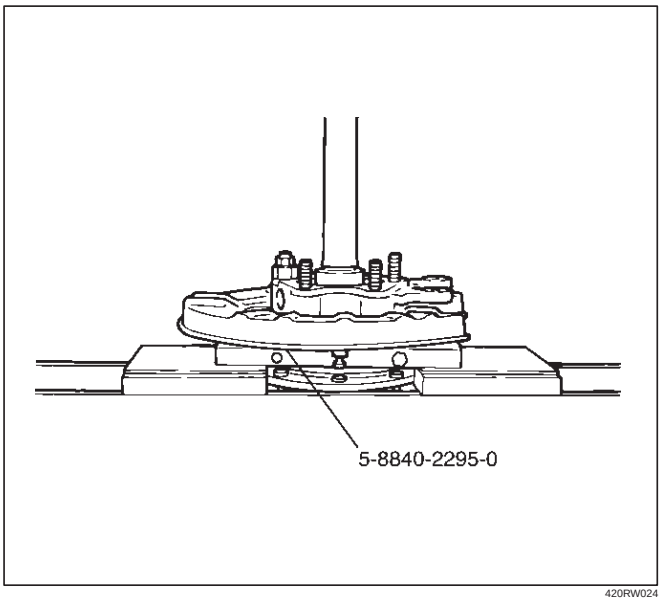

420RW024

12. Remove bearing.
13. Remove bearing holder.
14. Remove back plate.
15. Remove the wheel pins using a remover 5–8840–0079–0.

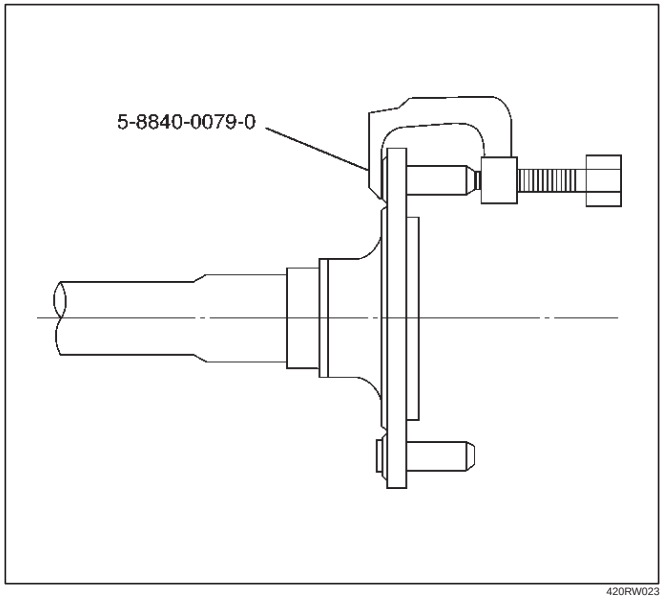

420RW023

Inspection and Repair

Make necessary correction or parts replacement if wear, corrosion or any other abnormal conditions are found through inspection.

Visual Check:

Check the following parts for wear, damage, noise or any other abnormal conditions:

1. Axle shaft
2. Bearing

When checking the axle shaft, pay special attention to the splined portions and replace the shaft if distortion or step wear is noticeable. Correct slight step wear with a grinder.

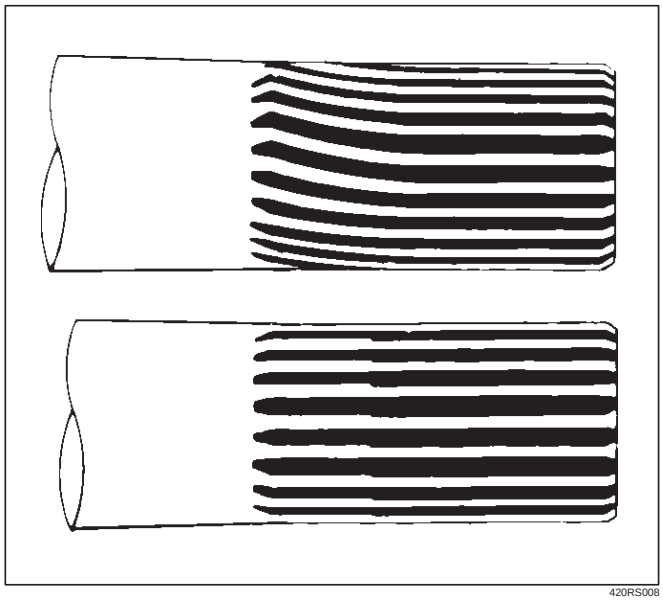

420RS008

Axle Shaft Run–out

Limit: 1.0 mm (0.039 in)

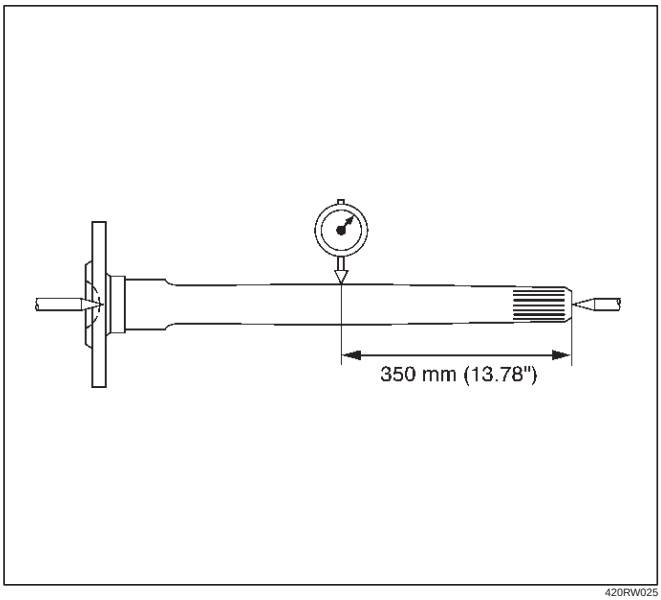

420RW025

Axle Shaft Flange Run–out

Limit: 0.08 mm (0.003 in)

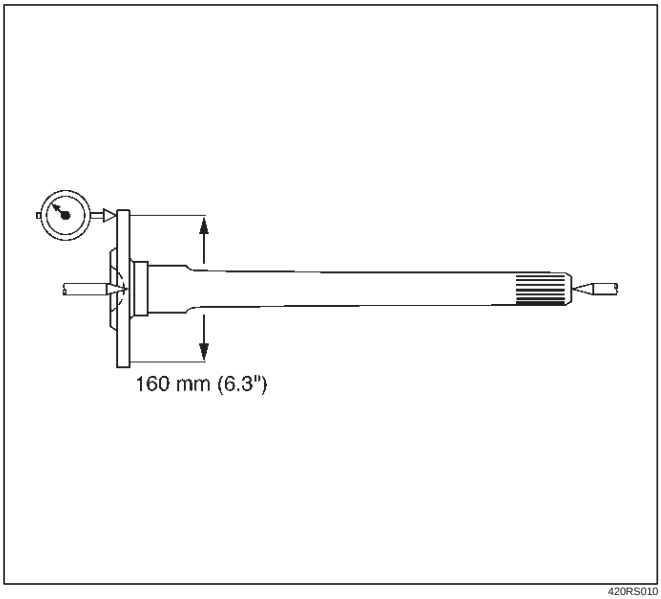

420RS010

Oil Seal Replacement

Remove the oil seal carefully not to damage the bearing holder bore .
When installing, use oil seal installer 5–8840–2310–0.

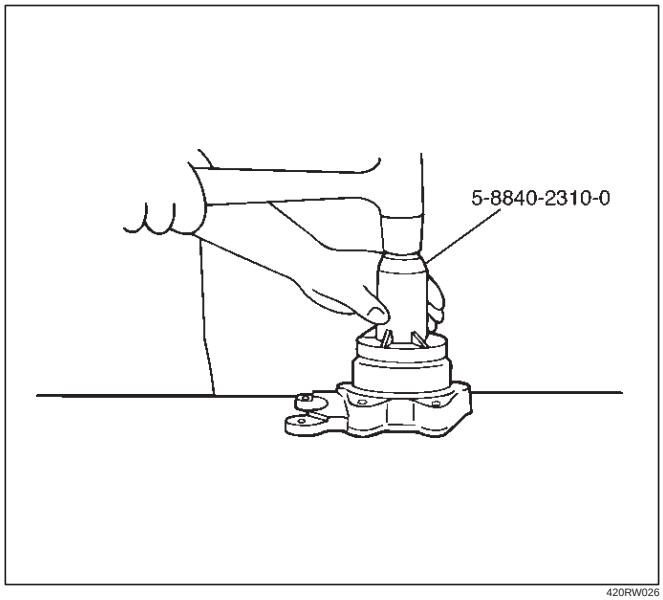

420RW026

Installation

1. Install wheel pin.
2. Install back plate.
3. Install bearing holder.
4. Install bearing.
5. Install retainer by using a bearing installer 5–8840–2296–0, press fit together with the bearing.

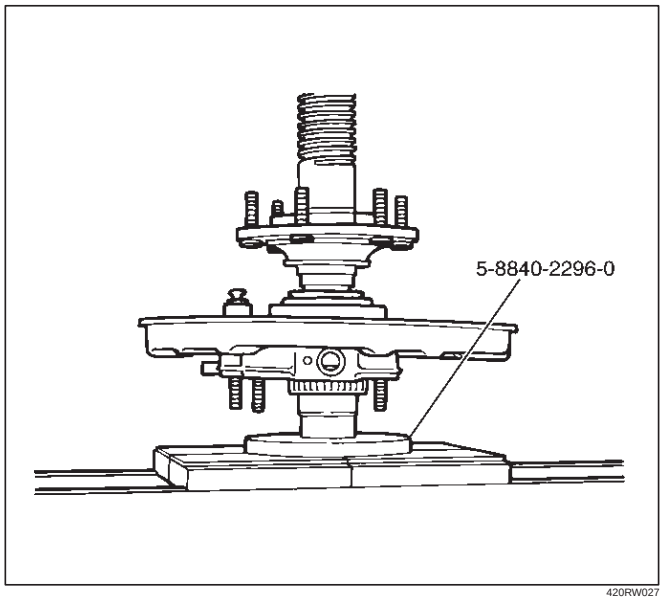

420RW027

6. Install snap ring.
7. Install axle shaft assembly.

NOTE: Be sure not to damage the oil seal.

8. Tighten the bearing holder mounting nut to the specified torque.

   Torque: 74N·m (7.5kg·m/54 lb ft)

9. Fix the parking brake cable mounting bolt (Behind the back plate).
10. Install parking brake assembly, refer to Parking Brakes in Brake section.
11. Install antilock brake system sensor (if so equipped).
12. Install brake disc.
13. Install brake caliper, refer to Disk Brakes in Brake section.

Special Tools

ILLUSTRATION	**TOOL NO.** TOOL NAME
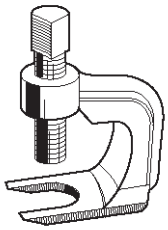 901RS206	**5–8840–0079–0** **(J–6627–A)** Wheel pin remover
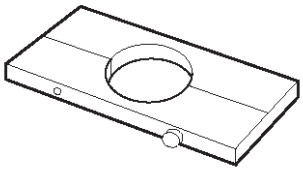 901RS207	**5–8840–2295–0** **(J–39211)** Remover; Axle shaft bearing
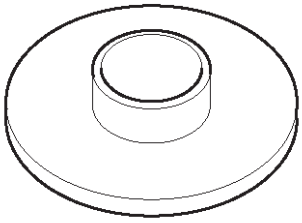 901RS208	**5–8840–2296–0** **(J–39212)** Installer; Axle shaft bearing
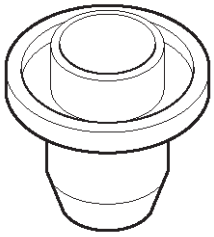 901RS209	**5–8840–2310–0** **(J–39379)** Installer; Outer axle seal

Front Hub and Disc (with Shift on the Fly)

Disassembled View

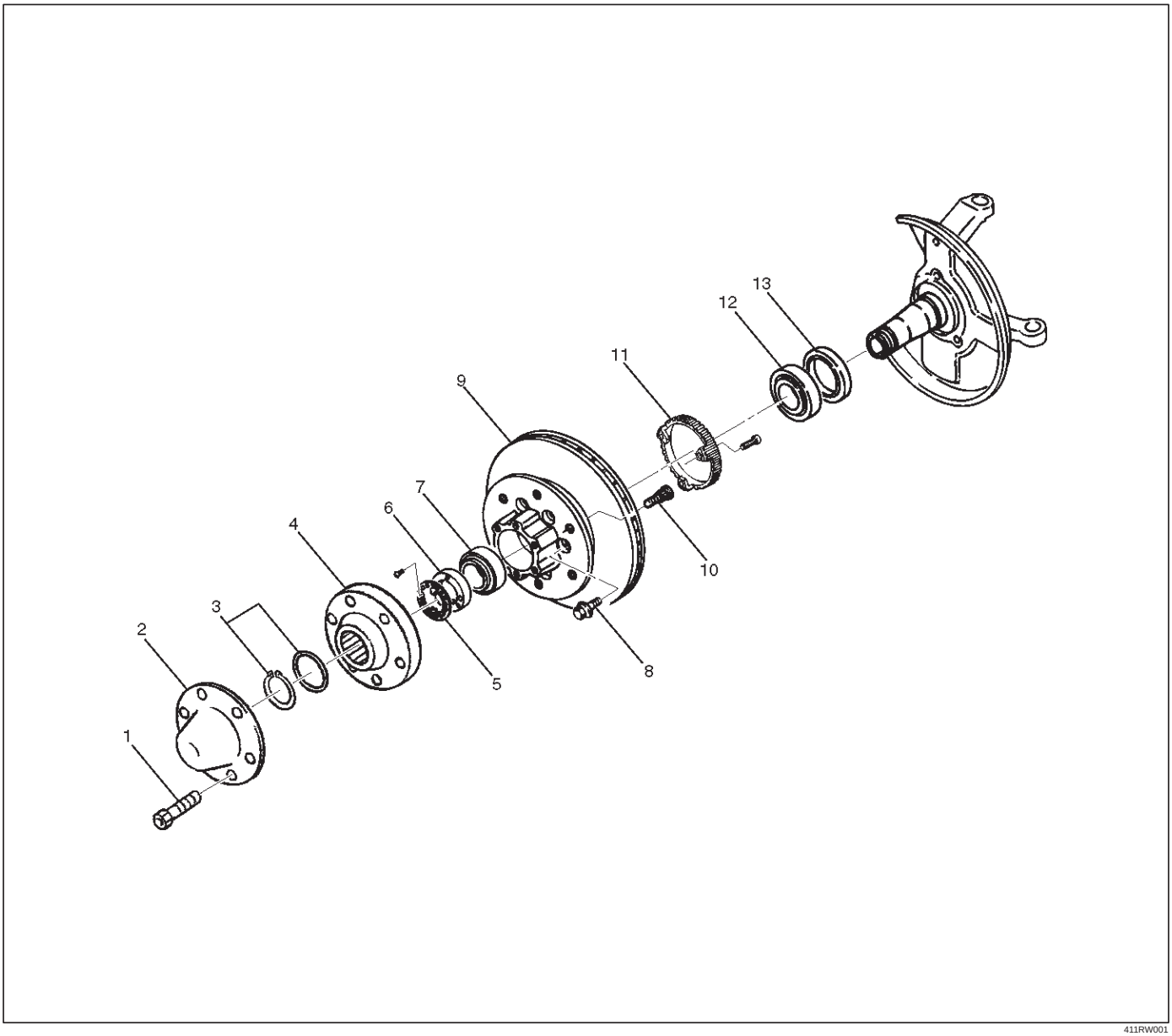

411RW001

Legend

(1) Bolt
(2) Cap
(3) Snap Ring and Shim
(4) Hub Flange
(5) Lock Washer and Lock Screw
(6) Hub Nut
(7) Outer Bearing
(8) Bolt
(9) Hub and Disc Assembly
(10) Wheel Pin
(11) ABS Sensor Ring (If equipped)
(12) Inner Bearing
(13) Oil Seal

Disassembly

1. Before disassembly, select the 2WD position.
2. Jack up the front of vehicle and support frame with jack stands.
3. Remove the disc brake caliper assembly and hang it on the frame with wires. Refer to Front Disc Brake Caliper Assembly in Brakes section.
4. Remove bolt.
5. Remove cap.
6. Remove snap ring and shim.
7. Remove hub flange.

8. Remove lock washer and lock screw.
9. Use wrench 5–8840–2117–0, remove hub nut.

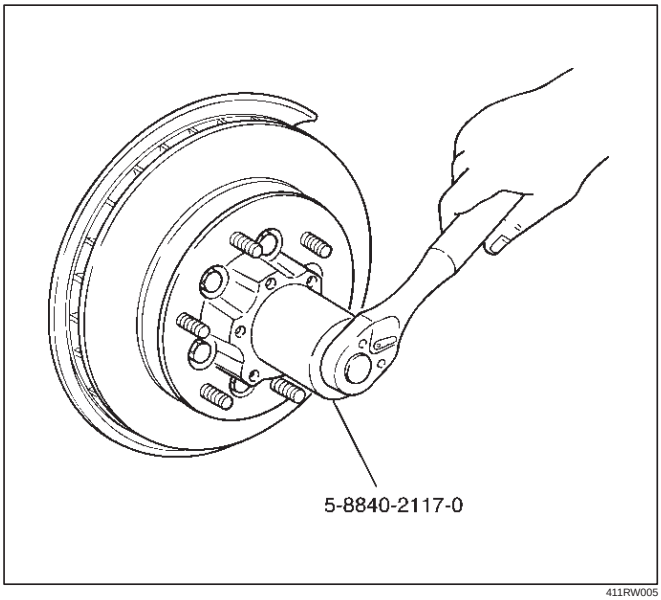

411RW005

10. Remove hub and disc assembly.
11. Remove ABS sensor ring (If equipped).
12. Remove outer bearing.
13. Remove oil seal.
14. Remove inner bearing.
15. Remove bolt , if necessary, replace the wheel pin in the following manner.
    - Apply a scribe mark(1) to disc to hub.
    - Clamp the hub and disc assembly in a vise, using protective pads. Remove the 6 disc–to–hub retaining bolts.

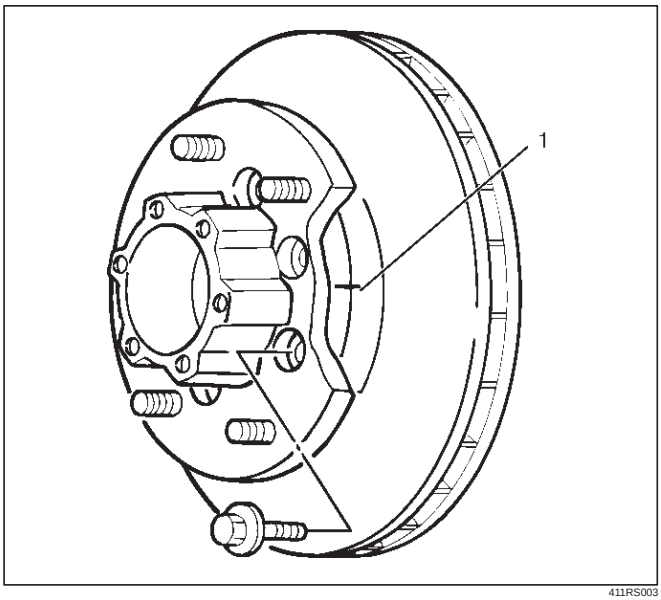

411RS003

- Place hub on a suitable work surface and remove the studs by using a hammer.

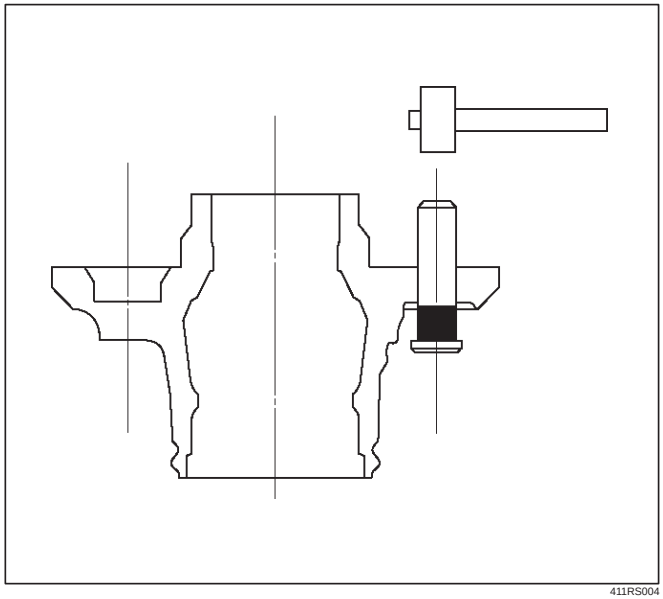

411RS004

Inspection and Repair

Make necessary correction or parts replacement if wear, damage, corrosion or any other abnormal conditions are found through inspection.
Check the following parts:

- Hub
- Hub bearing oil seal
- Knuckle spindle
- Disc
- Caliper
- Shift on the fly system parts (Cap, Hub flange, Shim, Snap ring)
- ABS sensor ring (If equipped)

For inspection and servicing of disc caliper and related parts, refer to Brakes section.

Reassembly

1. Install wheel pin.
   - Place the hub on a wood workbench or a block of wood approx. 6” by 6” to protect the wheel stud ends and threads.
   - Insert a wheel stud using a hammer.

     Be sure the wheel stud is started squarely and seats completely.

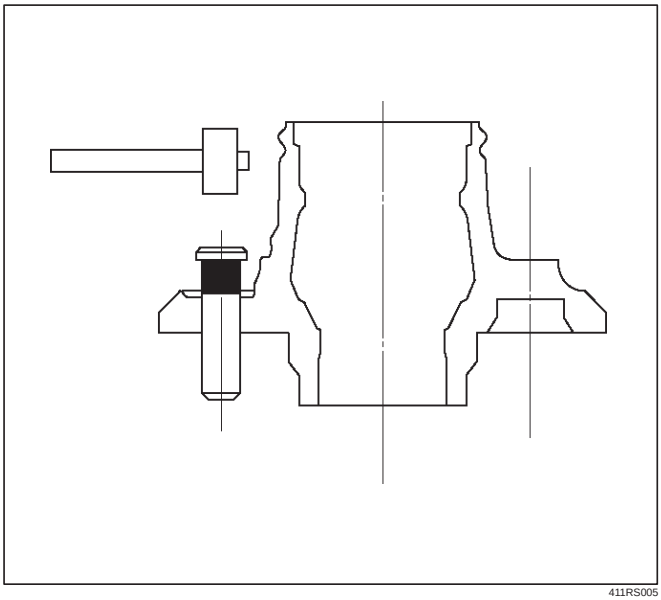

411RS005

2. Align scribe marks(1) and attach the hub to the disc, then tighten the bolts to the specified torque.

   Torque: 103 N·m (10.5 kg·m/76 lb ft)

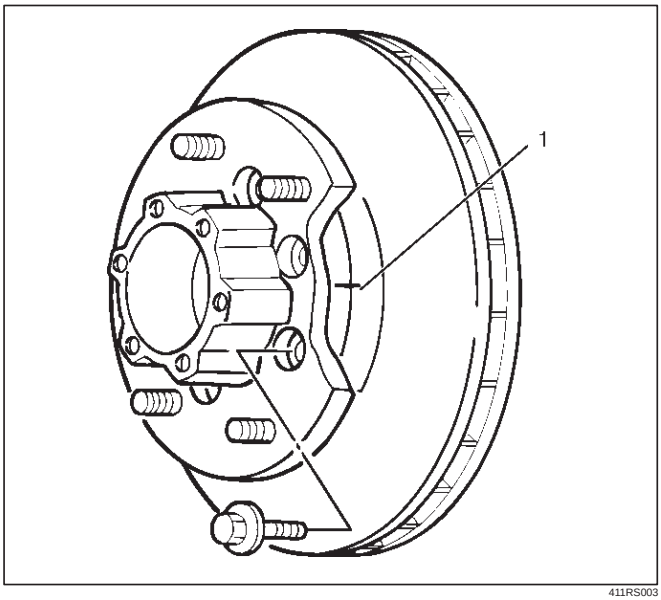

411RS003

3. Use installer 5–8840–2119–0 and grip 5–8840–0007–0, then install the inner bearing by driving it into the hub.

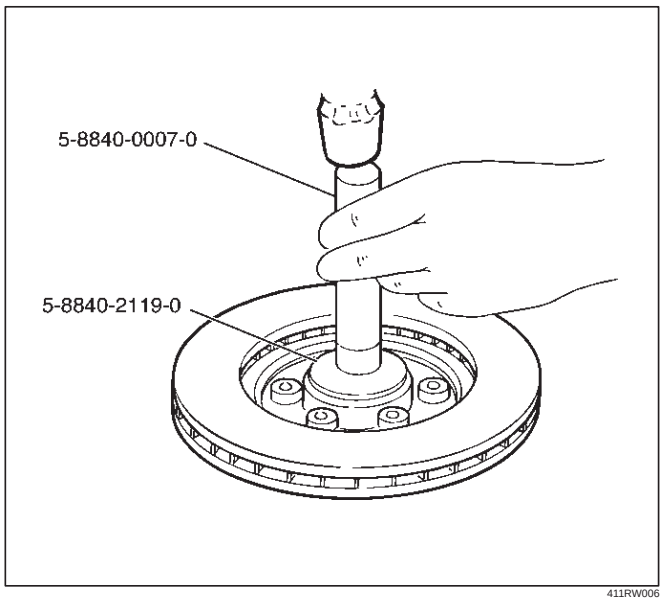

411RW006

4. Use installer 5–8840–2118–0 and grip 5–8840–0007–0, then install the outer bearing by driving it into the hub.

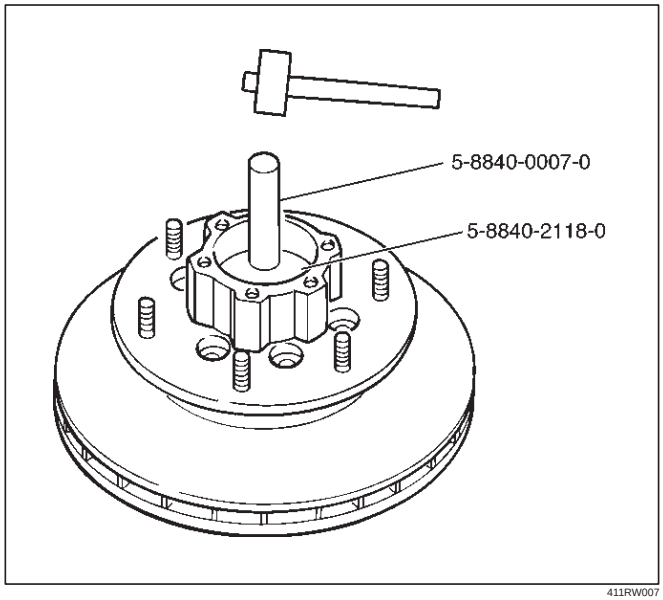

411RW007

5. Apply grease (NLGI No.2 or equivalent) to the lip portion, then install oil seal by using installer 5–8840–2120–0 and grip 5–8840–0007–0.

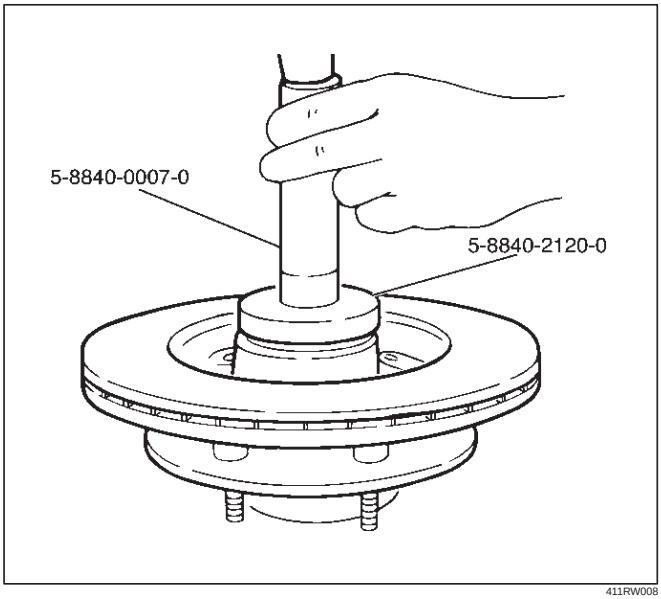

411RW008

6. Install ABS sensor ring, then tighten the bolts to the specified torque.

Torque: 18 N·m (1.8 kg·m/13 lb ft)

7. Install hub and disc assembly.
   - Apply grease in the hub.
   - Apply wheel bearing type grease NLGI No. 2 or equivalent to the outer and inner bearing.

Grease Amount

Hub: 35 g (1.23 oz)

Outer bearing: 10 g (0.35 oz)

Inner bearing: 15 g (0.53 oz)

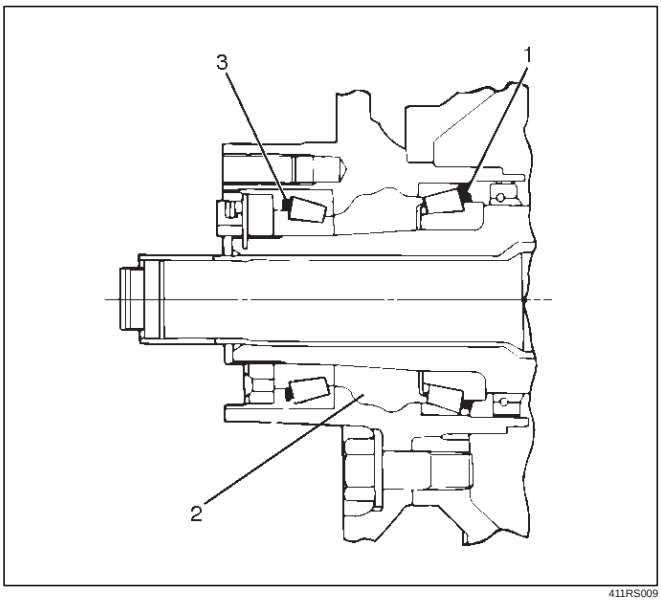

411RS009

Legend

(1) Inner Bearing
(2) Hub
(3) Outer Bearing

8. Install hub nut. Turn the place where there is a chamfer in the tapped hole to the outer side, then attach the nut by using front hub nut wrench 5–8840–2117–0.

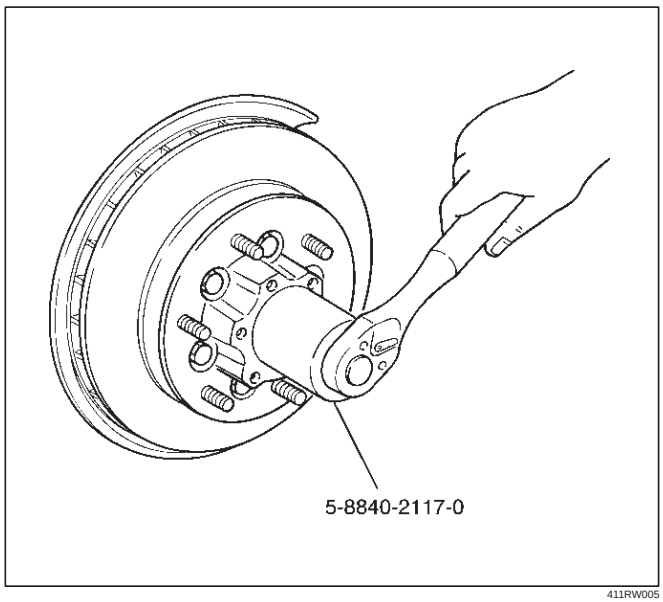

411RW005

Preload Adjustment

1. Tighten the hub nut to 29 N·m (3.0 kg·m/22 lb ft), then fully loosen the nut.
2. Tighten the hub nut to the value given below, using a spring scale on the wheel pin.

New bearing and New oil seal

Bearing Preload: 20 – 25 N (2.0–2.5 kg/4.4 – 5.5 lb)

Used bearing and New oil seal

Bearing Preload: 12 – 18 N (1.2–1.8 kg/2.6 – 4.0 lb)

If the measured bearing preload is outside the specifications, adjust it by loosening or tightening the bearing nut.

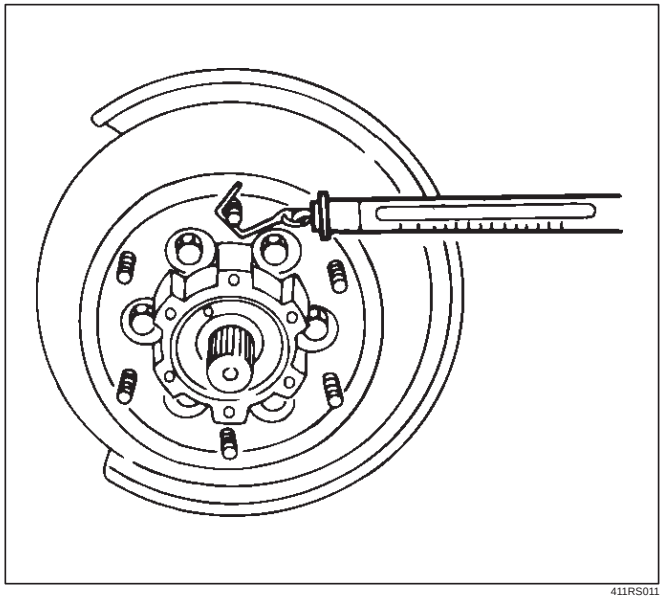

411RS011

9. Install lock washer and lock screw in the following manner.
   - Turn the side with larger diameter of the tapered bore to the vehicle outer side, then attach the washer.
   - If the bolt holes in the lock plate are not aligned with the corresponding holes in the nut, reverse the lock plate.
   - If the bolt holes are still out of alignment, turn in the nut just enough to obtain alignment.
   - Screw is to be fastened tightly so its head may come lower than the surface of the washer.

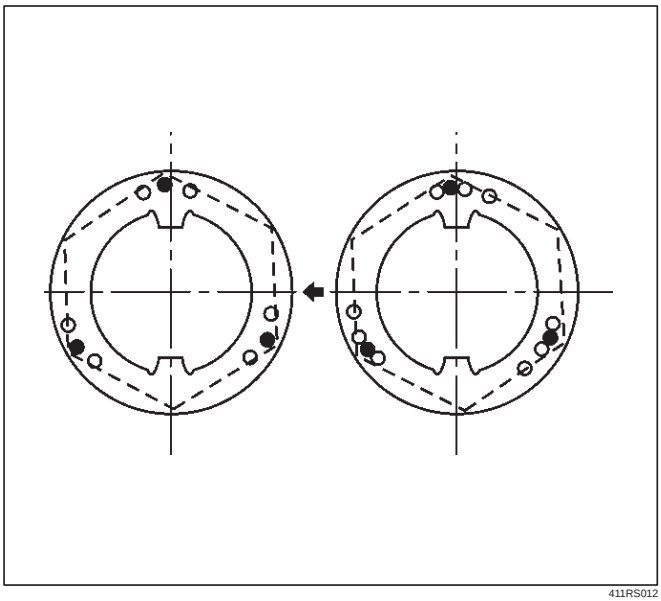

411RS012

10. Apply adhesive (LOCTITE 515 or equivalent) to both joining flange faces then install hub flange.
11. Install snap ring and shim.
    - Adjust the clearance between the free wheeling hub body and the snap ring.

    Clearance: 0 mm–0.3 mm (0 in–0.012 in)

    Shims Available: 0.2 mm, 0.3 mm, 0.5 mm, 1.0 mm (0.008 in, 0.012 in, 0.020 in, 0.039 in)

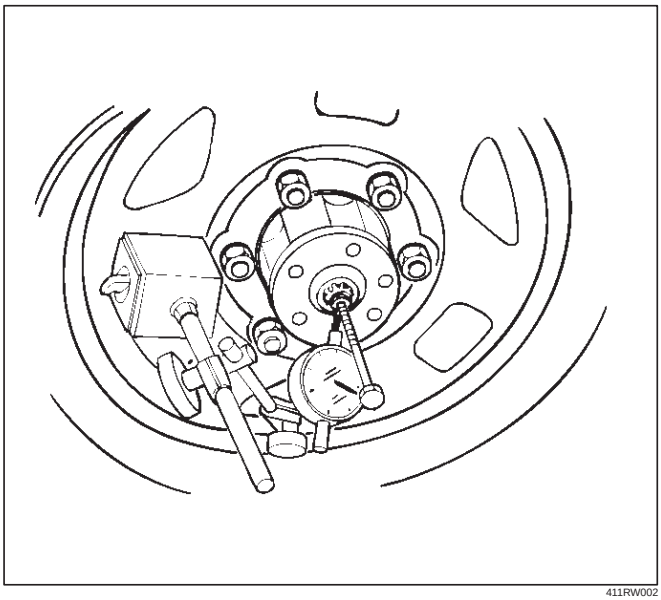

411RW002

12. Install hub cap.
13. Tighten the bolts to the specified torque.

    Torque: 59 N·m (6.0 kg·m/43 lb ft)

Front Hub and Disc with Manual Locking Hub

Disassembled View

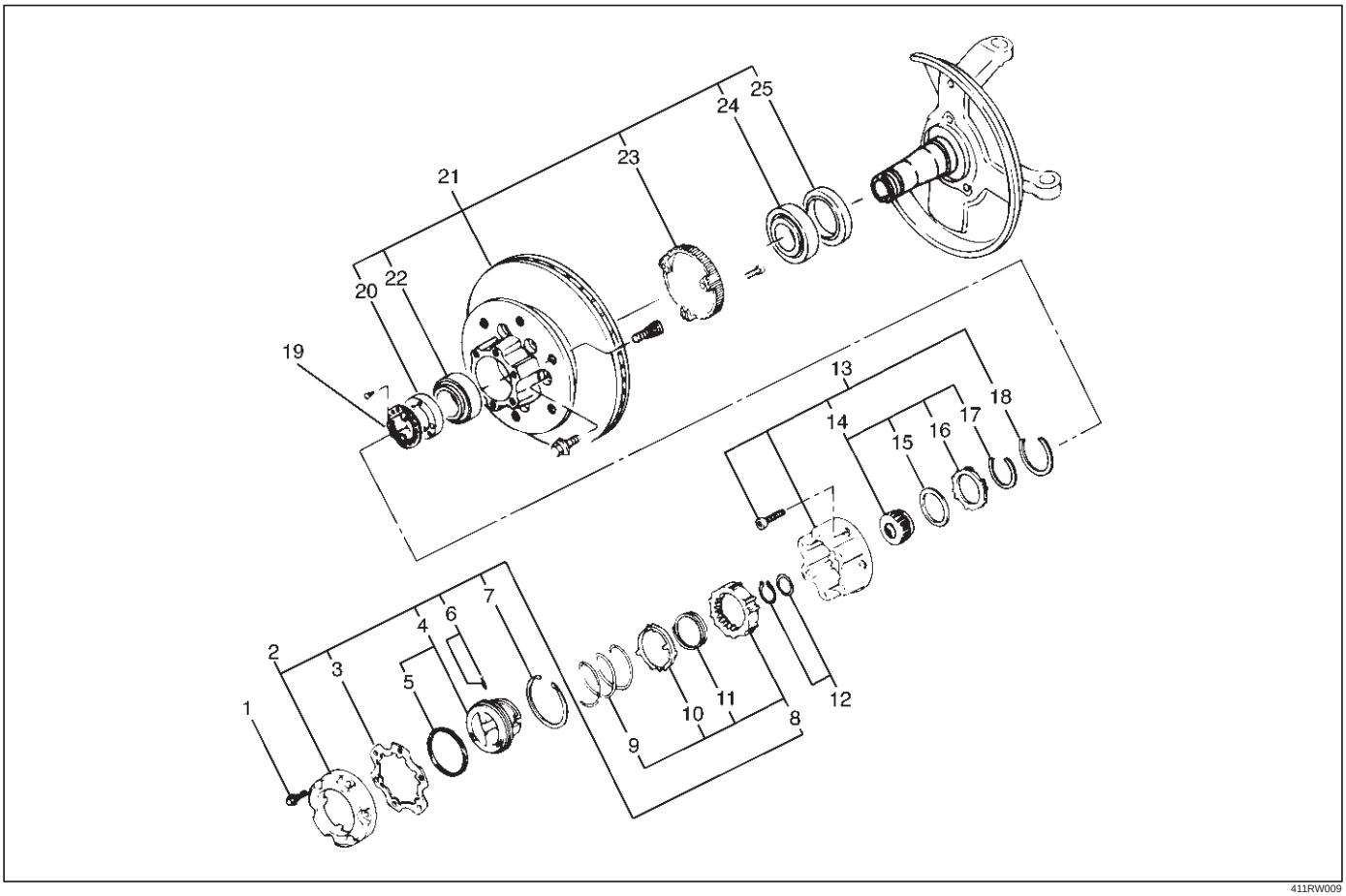

Legend

(1) Bolt
(2) Cover Assembly
(3) Gasket
(4) Knob
(5) X–ring
(6) Detent Ball and Spring
(7) Snap Ring
(8) Clutch Assembly
(9) Compression Spring
(10) Follower
(11) Retaining Spring
(12) Snap Ring and Shim
(13) Body Assembly
(14) Inner Assembly
(15) Spacer
(16) Ring
(17) Snap Ring
(18) Snap Ring
(19) Lock Washer and Lock Screw
(20) Hub Nut
(21) Hub and Disc Assembly
(22) Outer Bearing Outer Race
(23) ABS Sensor Ring (if so equipped)
(24) Inner Bearing Outer Race
(25) Oil Seal

Disassembly

1. Before disassembly, jack up the front of vehicle and support frame with jack stands.
2. Remove the disc brake caliper assembly and hang it on the frame with wires. Refer to Front Disk Brake Caliper Assembly in Brakes section.

3. Remove bolt.
   Before removal, shift transfer lever into “2H” position, set free wheeling hub knob into “FREE” position (1), and run the vehicle about 50m (160 ft).

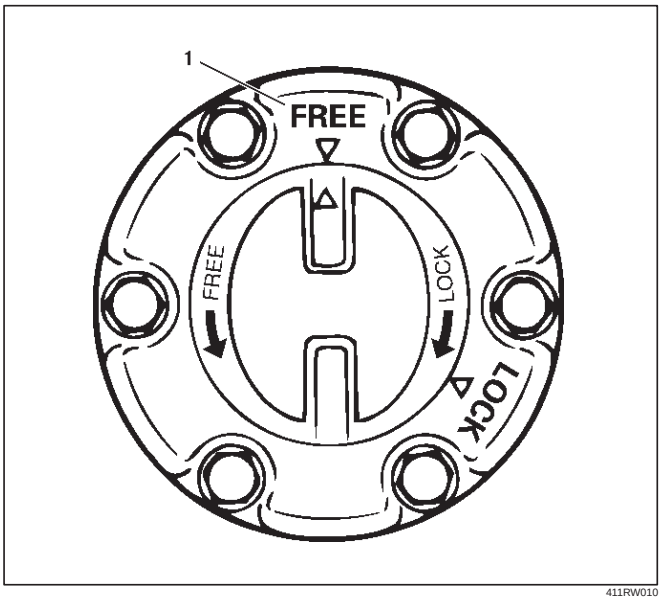

411RW010

4. Remove cover assembly.
5. Remove snap ring and shim.
6. Remove body assembly.
7. Remove lock washer and lock screw.
8. Remove hub nut by using wrench 5–8840–2117–0.

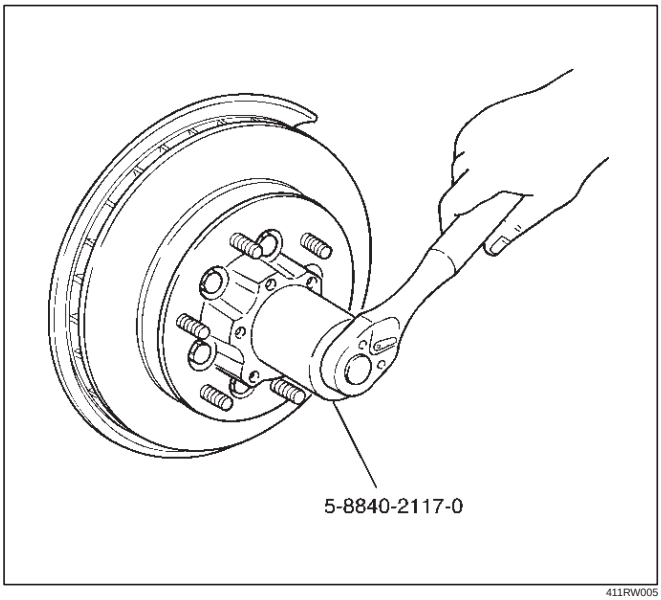

411RW005

9. Remove hub and disc assembly.
10. Remove ABS sensor ring (If equipped).
11. Remove outer bearing outer race.
12. Remove oil seal.
13. Remove inner bearing outer race.
14. While pushing follower knob against cover, turn clutch assembly clockwise and then remove clutch assembly from knob.

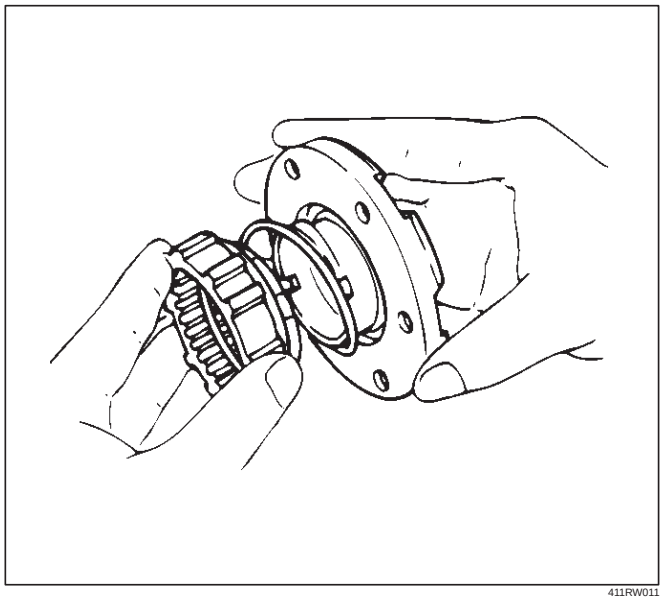

411RW011

15. Remove gasket.
16. Remove snap ring.
17. Remove knob.
18. Remove compression spring.
19. Remove follower.
20. Remove retaining spring from clutch assembly by turning it counterclockwise.

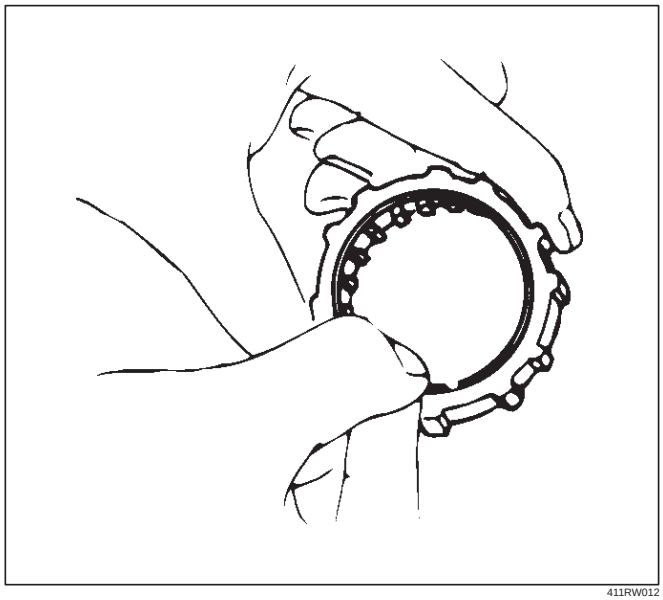

411RW012

21. Remove dedent ball and spring.
22. Remove X–ring.
23. Remove snap ring.
24. Remove inner assembly.
25. Remove snap ring.
26. Remove ring.
27. Remove spacer.

Inspection and Repair

Make necessary correction or parts replacement if wear, damage, corrosion or any other abnormal condition are found through inspection.
Check the following parts.

- Hub
- Hub bearing, oil seal
- Knuckle spindle
- Disc
- Caliper
- Free wheeling hub parts (Clutch, knob, follower, inner, ring and spring)
- ABS sensor ring (if so equipped)

For inspection and servicing of disc caliper, and relative parts, refer to Brakes section.

Reassembly

1. Install spacer.
   Apply about 1 g wheel bearing grease to both face of spacer.
2. Install ring.
   Apply about 3 g wheel bearing grease to inside face of ring.
3. Install snap ring
   Assembly with grease surplus being left unwiped up as illustrated.

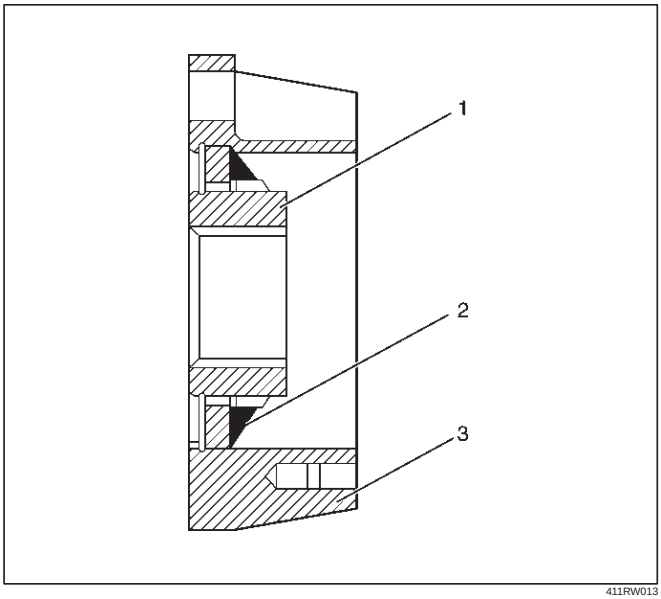

411RW013

Legend

(1) Inner Assembly
(2) Apply Grease
(3) Body

4. Install inner assembly.
   Apply grease to splined portion of body.
5. Install snap ring.
6. Install X–ring.
   Apply wheel bearing grease to hub lock ring and fit it in knob paying attention to mounting direction.

NOTE: After fitting, make sure that the hub lock ring is not twisted.

7. Apply wheel bearing grease to ball and spring and fit them in knob.
8. Install knob.
   1. Apply grease to outer circumference of knob and inner circumference of cover.
   2. Align detent ball (1) to a groove cut in the cover.

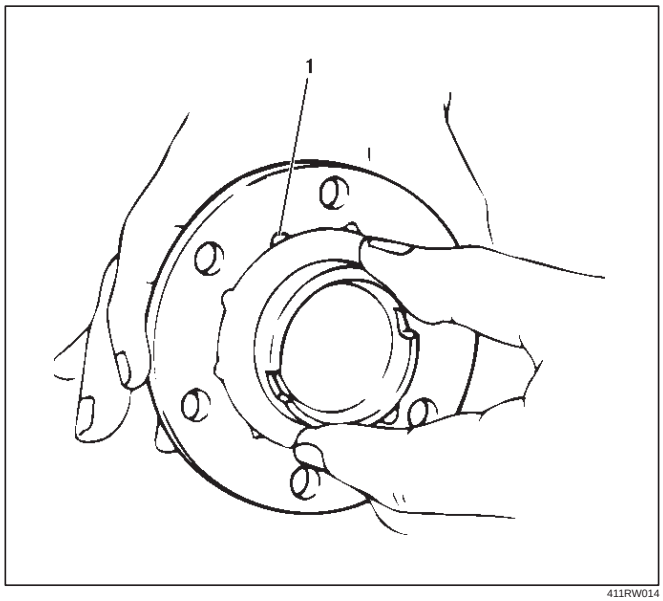

411RW014

9. Install snap ring.
   Turn the smoother face to knob side.
10. Align the end of retaining spring (1) with clutch spring groove (2) and fit in the spring.

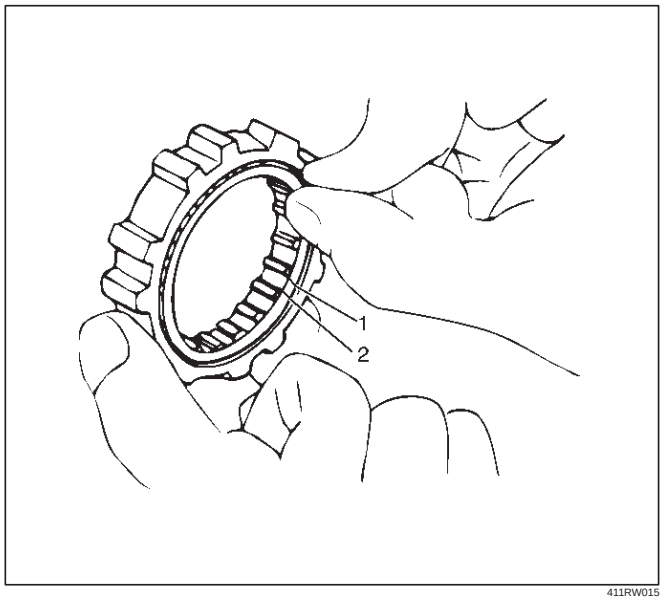

411RW015

11. Install follower to clutch so that follower nails (large) (1) will come closer to the bent portion of retaining spring by aligning follower stopper nail with outer teeth of clutch. Then, fit in with follower's nails (small) (2) caught in spring.

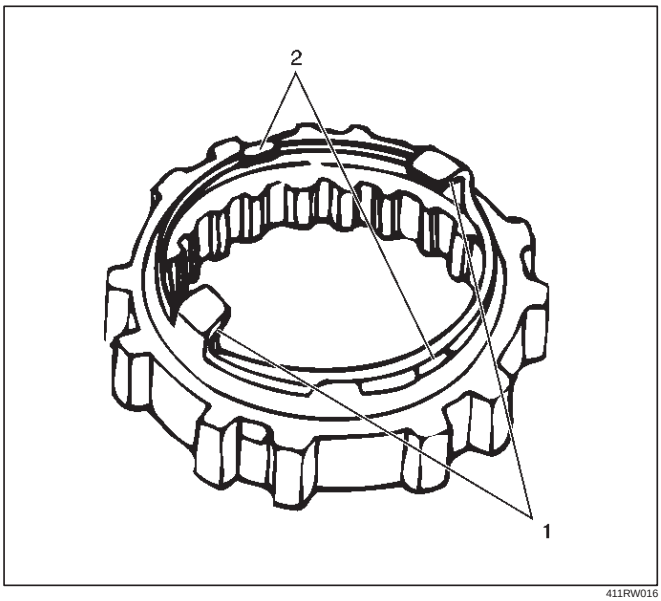

411RW016

12. Install compression ring.
    Turn the smaller diameter side toward follower and fit spring in clutch.
13. Align follower nail (1) to handle groose (2). and then assemble clutch with knob by pushing and turning clutch counterclockwise to knob.

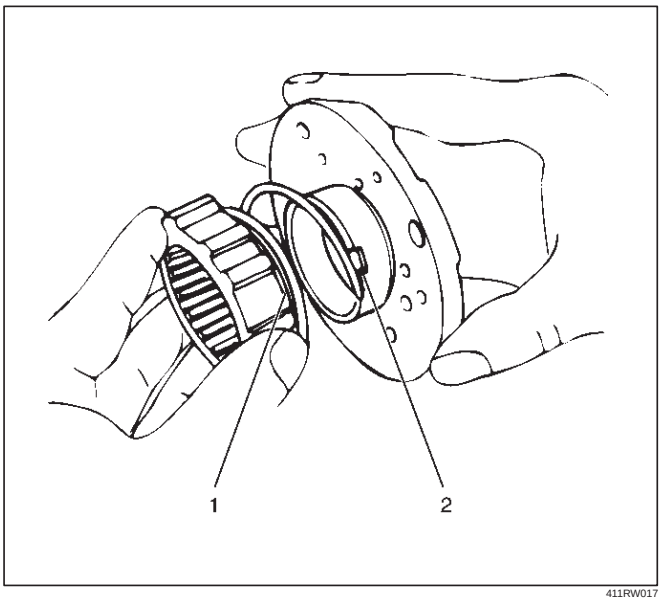

411RW017

14. Install gasket.
    Make sure that there is no breakage, etc.
15. Install outer bearing outer race by driving it into the hub, by using installer 5–8522–2118–0 and grip 5–8840–0007–0.

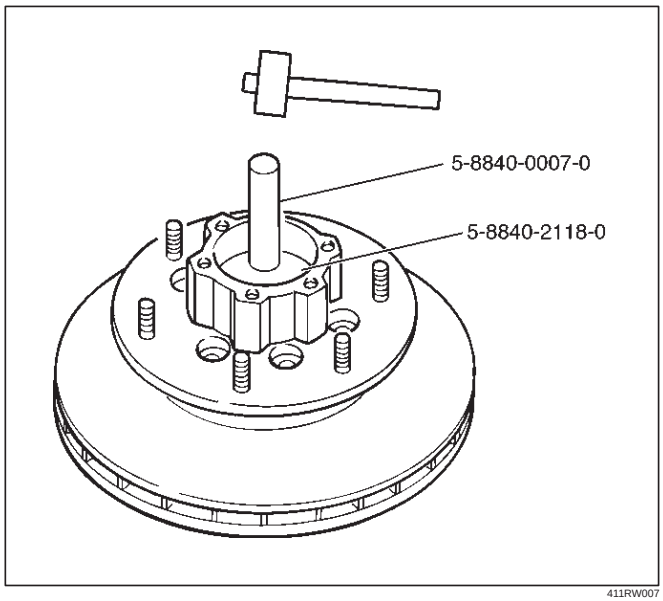

411RW007

16. Install inner bearing outer race by driving it into the hub, by using installer 5–8840–2119–0 and grip 5–8840–0007–0.

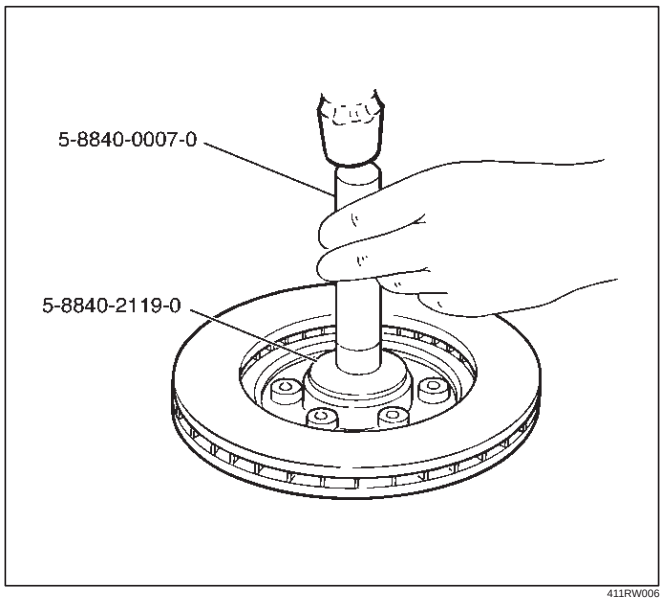

411RW006

17. Install oil seal by using installer 5–8840–2120–0 and grip 5–8840–0007–0.
    Apply grease (NLGI No.2 or equivalent) to the lip portion.

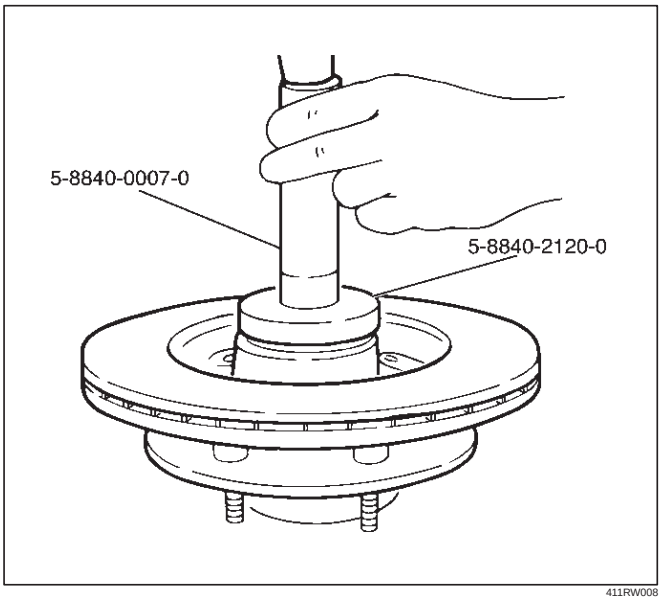

411RW008

18. Install ABS sensor ring (if so equipped).
    Tighten the bolts to the specified torque.

    Torque: 18 N·m (1.8 kg·m/13 lb ft)

19. Install hub and disc assembly.
    1. Apply grease in the hub.
    2. Apply wheel bearing type grease NLGI No.2 or equivalent to the outer and inner bearing.

    Grease Amount

    Hub: 35 g (1.23 oz)

    Outer bearing: 10 g (0.35 oz)

    Inner bearing: 15 g (0.53 oz)

20. Install hub nut.
    1. Turn the place where there is a chamfer in the tapped hole to the outer side, and attach the nut by using wrench 5–8840–2117–0.

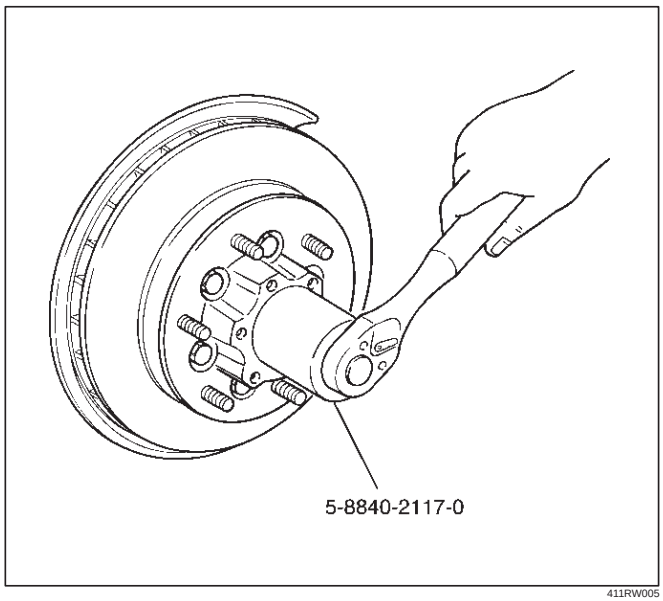

411RW005

Preload Adjustment

Tighten the hub nut to 29 N·m (3.0 kg·m/22 lb·ft), then fully loosen the nut.

Tighten the hub nut to the value given below, using a spring scale on the wheel pin.

Bearing Preload

New bearing and New oil seal:
20-25N (2-2.5 kg/4.4-5.5 lb)

Used bearing and New oil seal:
12-18N (1.2-1.8 kg/2.6-4.0 lb)

If the measured bearing preload is outside the specifications, adjust it by loosening or tightening the bearing nut.

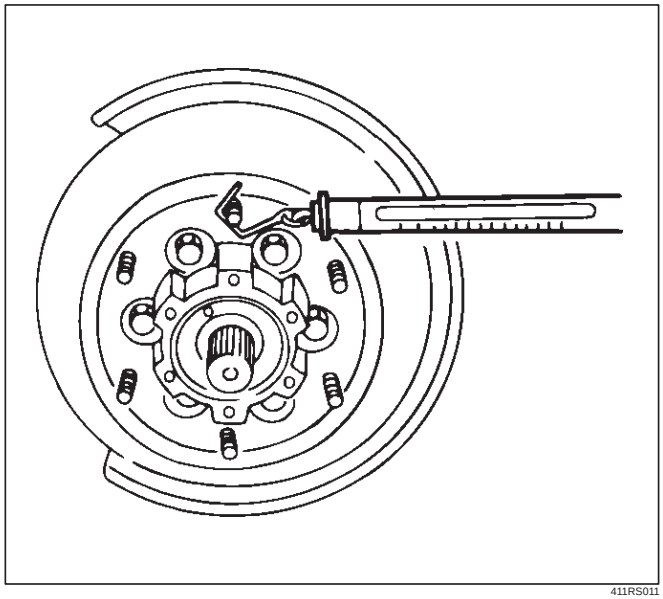

411RS011

21. Install lock washer and lock screw in the following manner.
    - Turn the side with larger diameter of the tapered bore to the vehicle outer side, and attach the washer.
    - If the bolt holes in the lock plate are not aligned with the corresponding holes in the nut, reverse the lock plate.
    - If the bolt holes are still out of alignment, trun in the nut just enough to obtain alignment.
    - Screw is to be fastened tightly so its head may come lower than the surface of the washer.

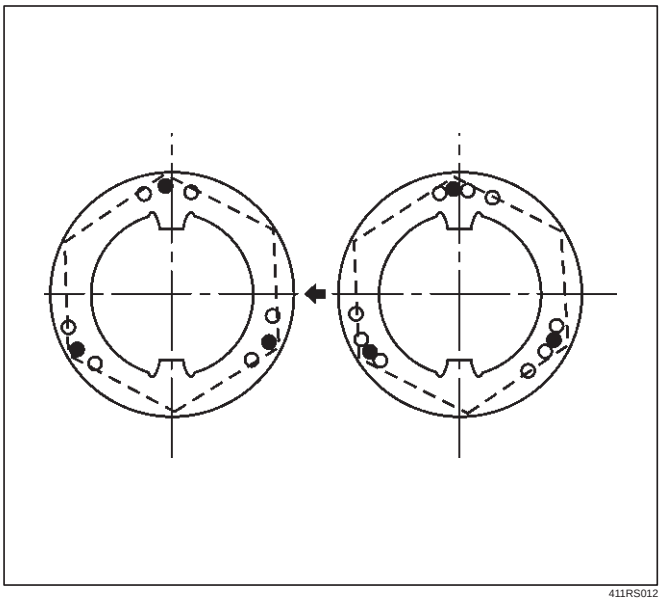

411RS012

22. Install body assembly.
    - Apply adhesive (LOCTITE 515 or equivalent) to both joining faces.
    - Tighten the bolts to the specified torque.

    Torque: 59 N·m (6.0 kg·m/43 lb ft)

23. Install snap ring and shim.
    Adjust the clearance between the free wheeling hub body and the snap ring.

    Clearance:
    0-0.3mm (0-0.012in)

    Shims Available:
    0.2mm, 0.3mm, 0.5mm, 1.0mm, (0.008in, 0.012in, 0.020in, 0.039in)

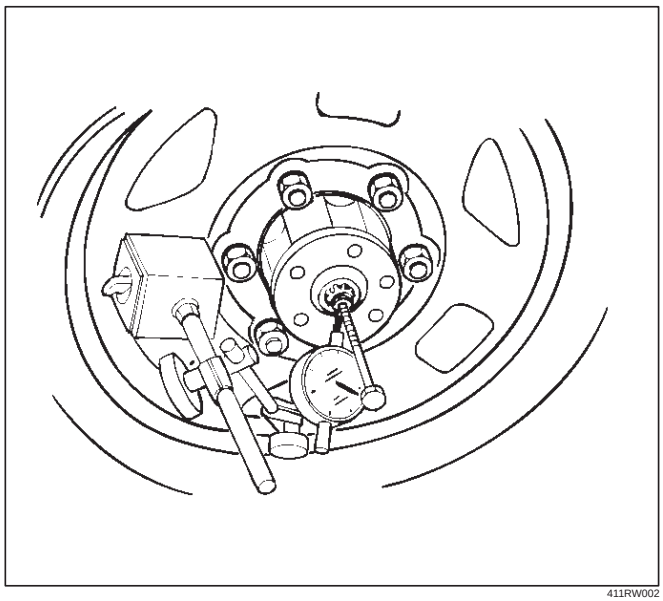

411RW002

24. Install cover assembly.
    Align stopper nails (1) to grooves of body (2).

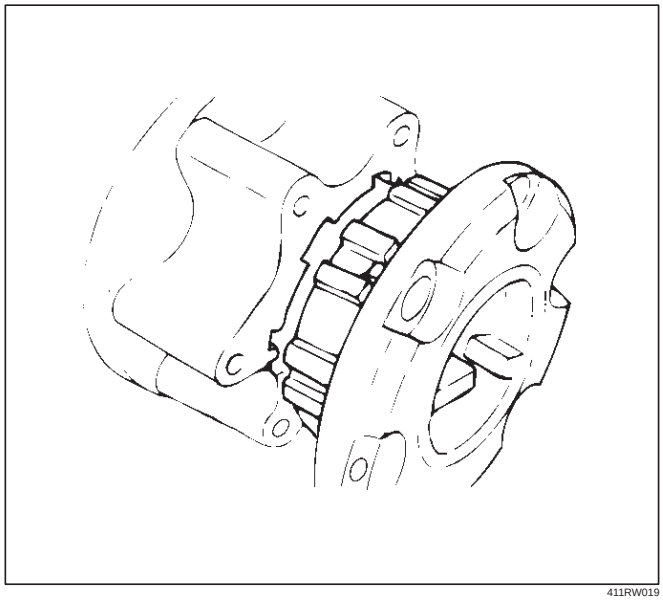

411RW019

25. Tighten the cover bolts to the specified torque.

    Torque: 12 N·m (1.2 kg·m/104 lb in)

Main Data and Specifications

Torque Specifications

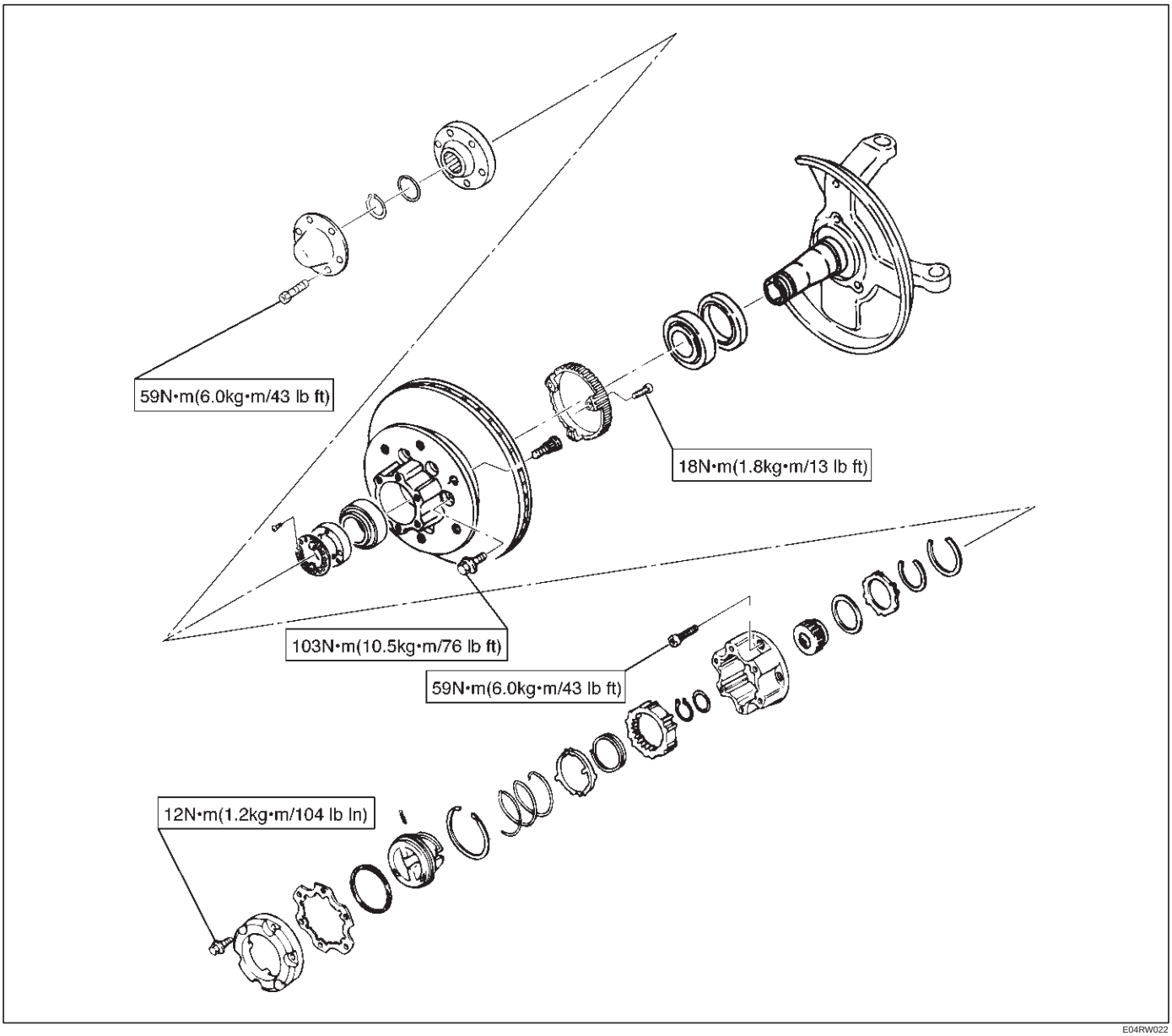

E04RW022

Special Tools

ILLUSTRATION	**TOOL NO.** TOOL NAME
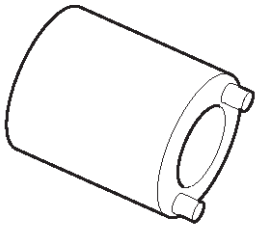 901RS246	**5–8840–2117–0** **(J–36827)** Wrench; Hub nut
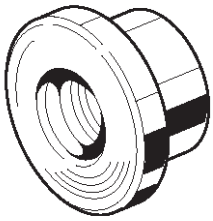 901RS247	**5–8840–2119–0** **(J–36829)** Installer; Inner bearing
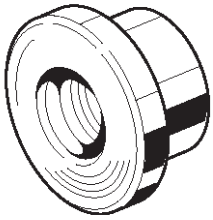 901RS248	**5–8840–2118–0** **(J–36828)** Installer; Outer bearing
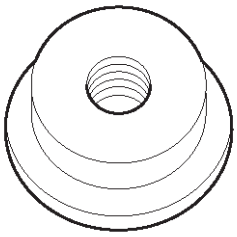 901RS249	**5–8840–2120–0** **(J–36830)** Installer; Oil seal
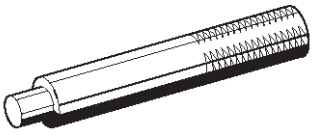 901RS241	**5–8840–0007–0** **(J–8092)** Grip

Front Drive Shaft Joint

Front Drive Shaft Joints Replacement

- Refer to Front Drive Axle Assembly Replacement in this section, and refer to Front Hub and Disc in Suspension section.

Front Hub Bearing Preload Check

Check the hub bearing preload at the wheel pin.

New bearing and New oil seal

Preload: 20 – 25 N (2.0 – 2.5 kg/4.4–5.5 lb)

New bearing and New oil seal

Preload: 12 –18 N (1.2 – 1.8 kg/2.6–4.0 lb)

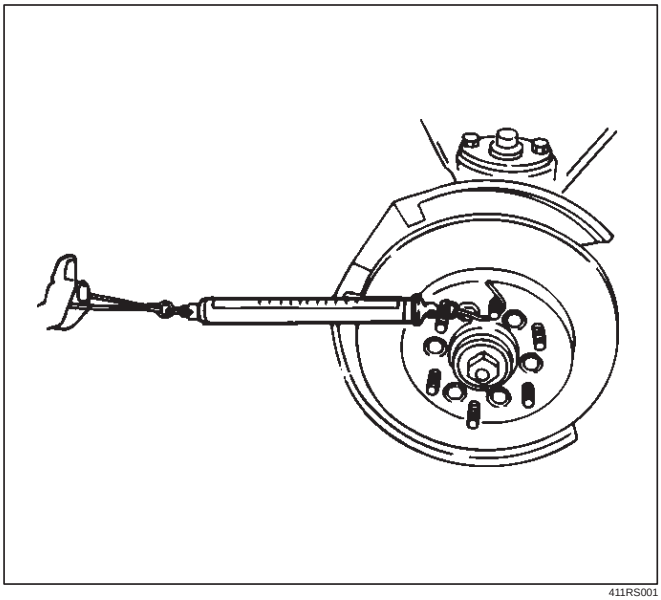

411RS001

Inspection Of Shift On The Fly System Gear Oil

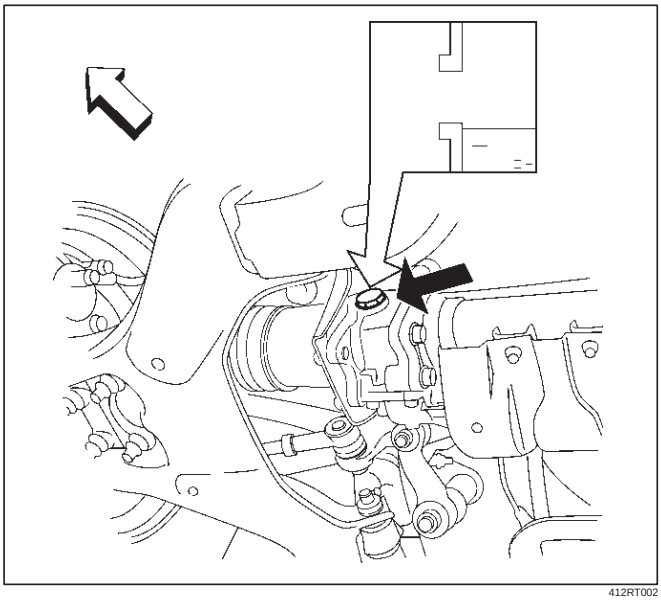

412RT002

1. Open filler plug and make sure that the oil is up to the plug port.
   If the level oil is low, replenish with gear oil GL–5 grade.
2. Tighten the filler plug to specified torque.

Torque: 7.8 N·m (7.9 kg·cm/58 lb in)

Front Axle Drive Shaft

Front Axle Drive Shaft and Associated Parts

This illustration is based on the model equipped with shift on the fly system.

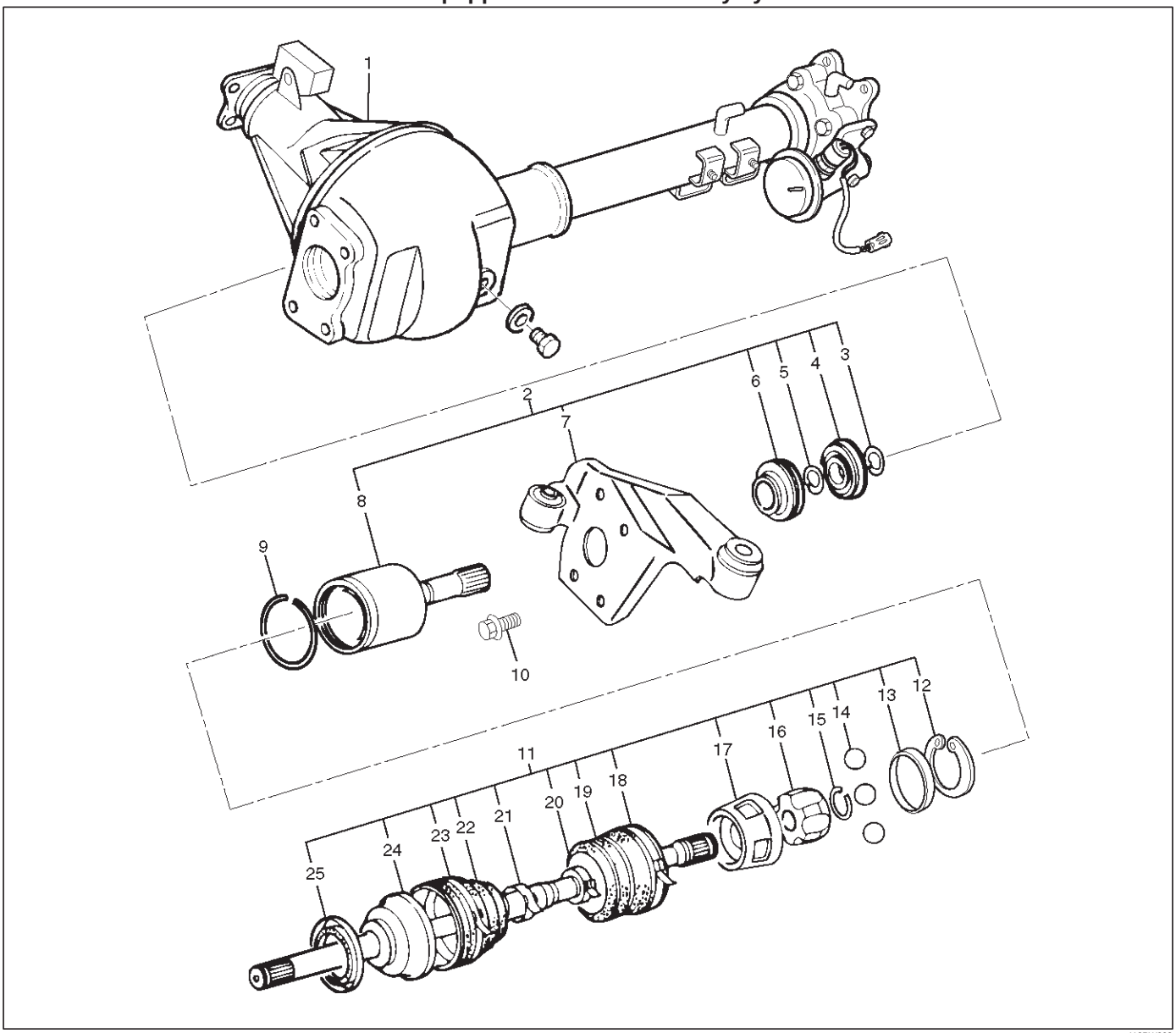

412RW003

Legend

(1) Axle Case and Differential
(2) DOJ Case Assembly
(3) Snap Ring
(4) Bearing
(5) Snap Ring
(6) Oil Seal
(7) Bracket
(8) DOJ Case
(9) Circlip
(10) Bolt
(11) Drive Shaft Joint Assembly
(12) Snap Ring
(13) Spacer
(14) Ball
(15) Snap Ring
(16) Ball Retainer
(17) Ball Guide
(18) Band
(19) Bellows
(20) Band
(21) Band
(22) Bellows
(23) Band
(24) BJ Shaft
(25) Dust Seal

Disassembly

NOTE: For the left side, follow the same steps as right side.

1. Raise the hooked end of the band (1) with a screwdriver or equivalent.

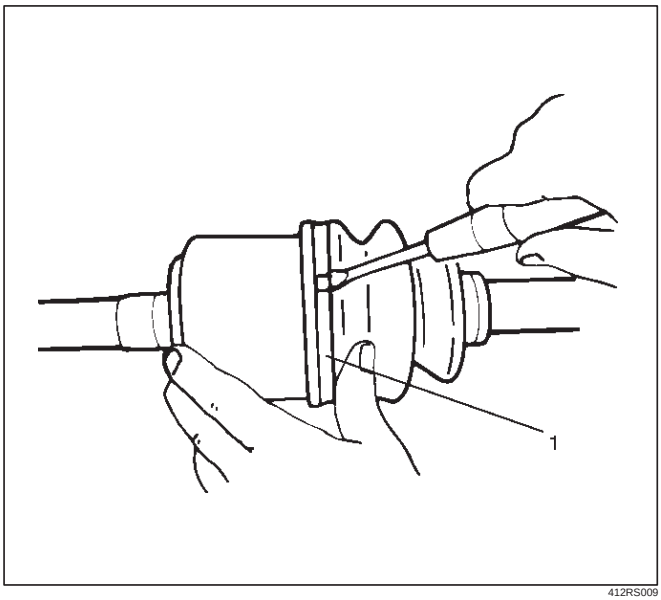

412RS009

2. Remove band.
3. Pry off circlip (1) with a screwdriver or equivalent.

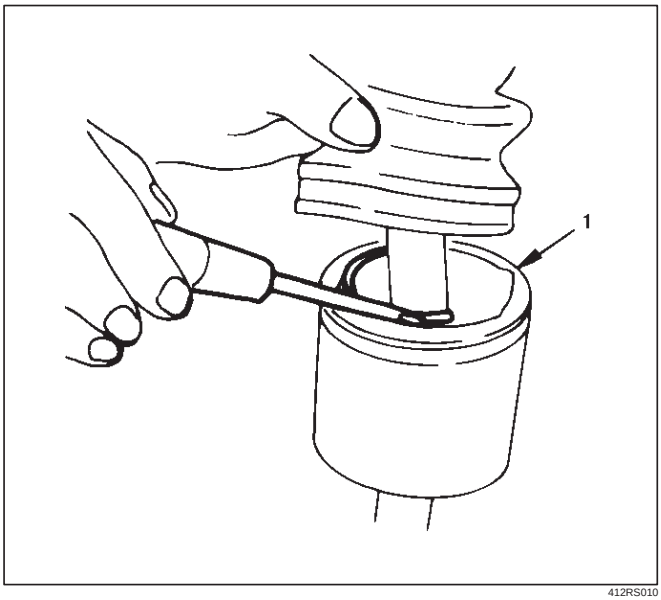

412RS010

4. Remove drive shaft joint assembly.
5. Using snap ring pliers, remove the snap ring.

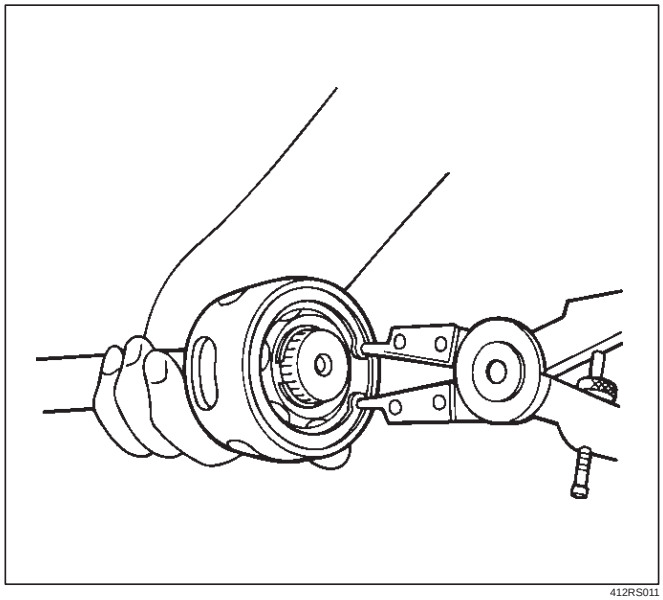

412RS011

6. Remove spacer.
7. Remove the six balls (1) with a screwdriver or equivalent.

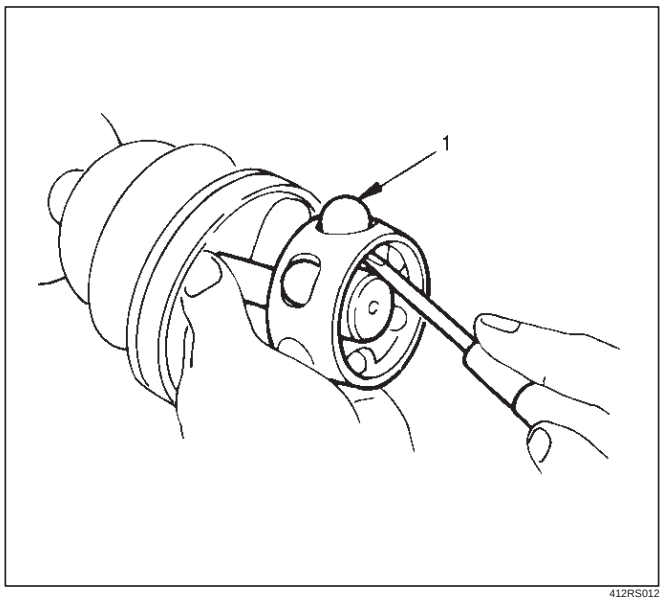

412RS012

8. Using snap ring pliers, remove the snap ring (1) fastening the ball retainer to the center shaft.

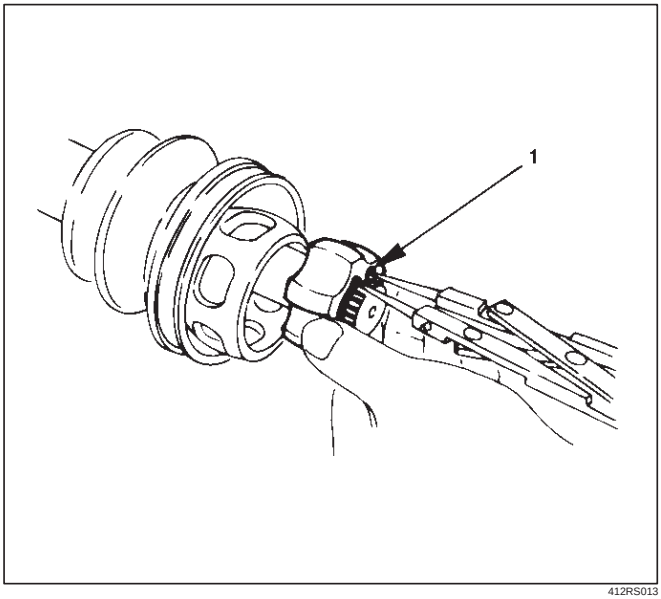

412RS013

9. Remove ball retainer, ball guide and bellows.
10. Raise the hooked end of the band (1) with a screwdriver or equivalent.

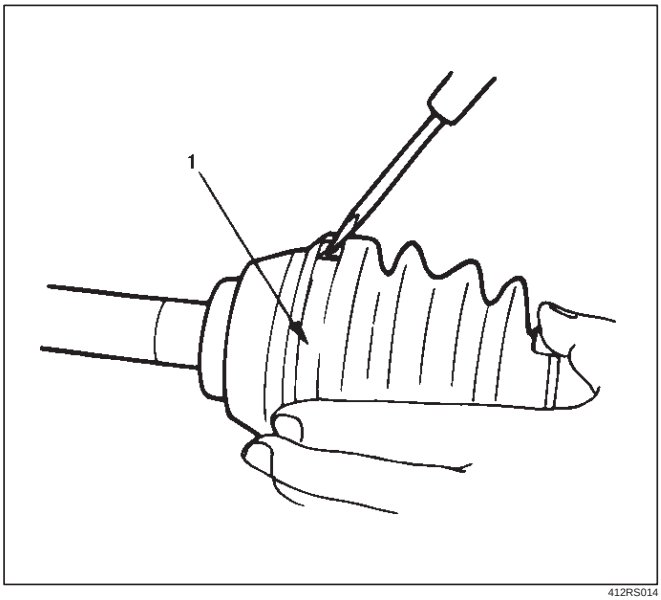

412RS014

11. Remove band.
12. Remove bellows.
13. Remove dust seal.
14. Remove BJ shaft assembly.
15. Remove the mounting bracket fixing bolts, and then remove DOJ case assembly from the axle case.
16. Remove snap ring and bearing.
17. Remove snap ring and oil seal.
18. Remove bracket.

Inspection and Repair

Make necessary correction or parts replacement if wear, damage, corrosion or any other abnormal conditions are found through inspection.
Check the following parts:

1. Drive shaft joint assembly
2. DOJ case, ball, ball guide, ball retainer
3. Bellows
4. Bearing
5. Dust seal, oil seal

Bushing Replacement

- Remove the bushings using a remover 5–8840–2309–0 and hammer.

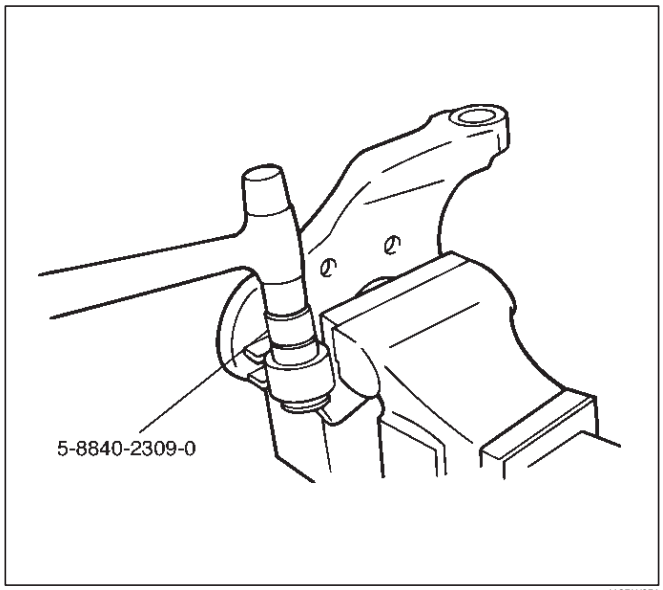

412RW051

- By using installer and base 5–8840–2309–0, press fit the bushings into the bracket.

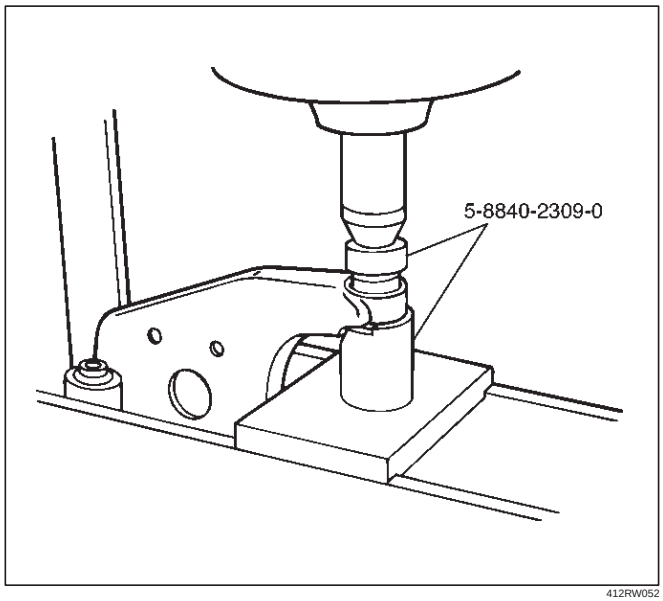

412RW052

Reassembly

1. Install DOJ case to bracket.
2. Install oil seal and fix snap ring.
3. Install bearing and fix snap ring.
4. Install bracket to axle case. Tighten the bracket bolt to the specified torque.

   Torque: 116 N·m (11.8 kg·m/85 lb ft)
5. Apply 150g of the specified grease in BJ .
6. Install dust seal .
7. Apply a thin coat of grease to the shaft for smooth installation then install bellows.
8. Install band. Note the setting direction. After installation, check that the bellows is free from distortion.

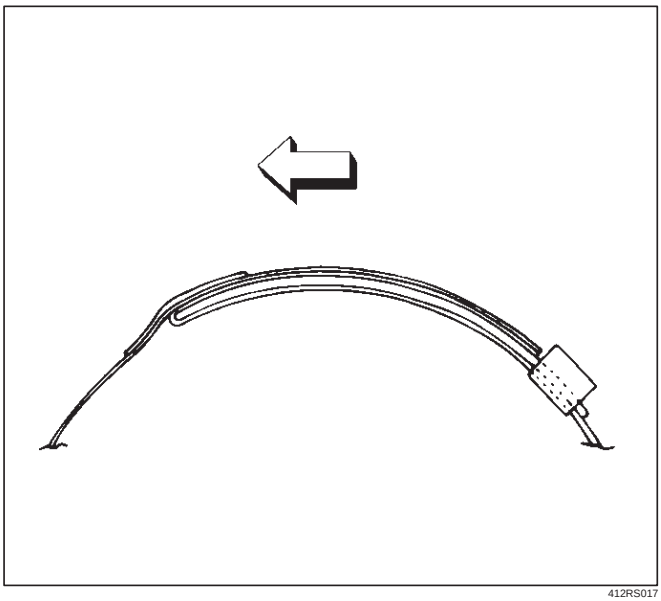

412RS017

9. Install another bellows and fix band.
10. Install the ball guide with the smaller diameter side ahead onto the shaft.
11. Install ball retainer.
12. Using snap ring pliers, install the snap ring (1) securing the ball retainer to the shaft.

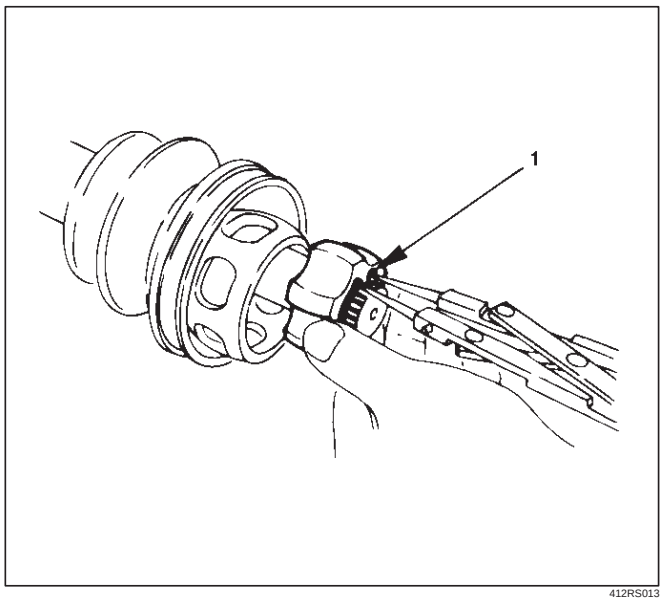

412RS013

13. Align the track on the ball (1) retainer with the window in the cage, and install the six balls into position.

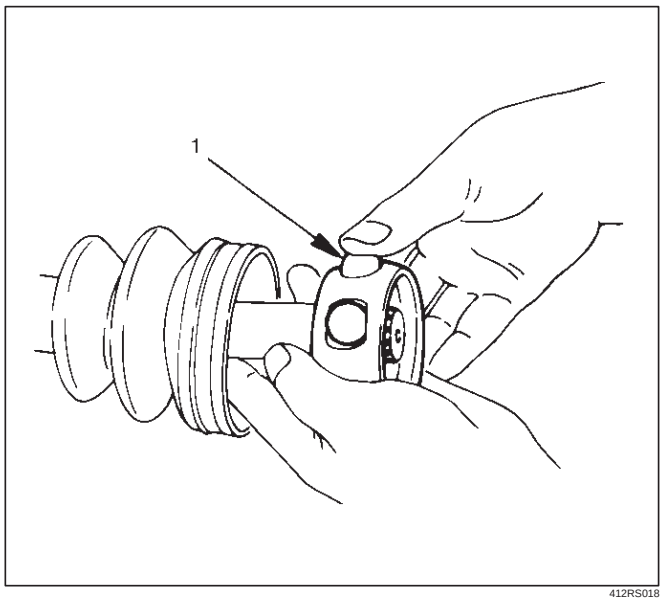

412RS018

14. Install spacer.
15. Install snap ring.
16. Enclose 150g of the specified grease in DOJ case, then install drive shaft joint assembly. After reassembly, move the DOJ longitudinally several times to get to fit.
17. Install the circlip (1) so that open ends are positioned away from the ball groove.

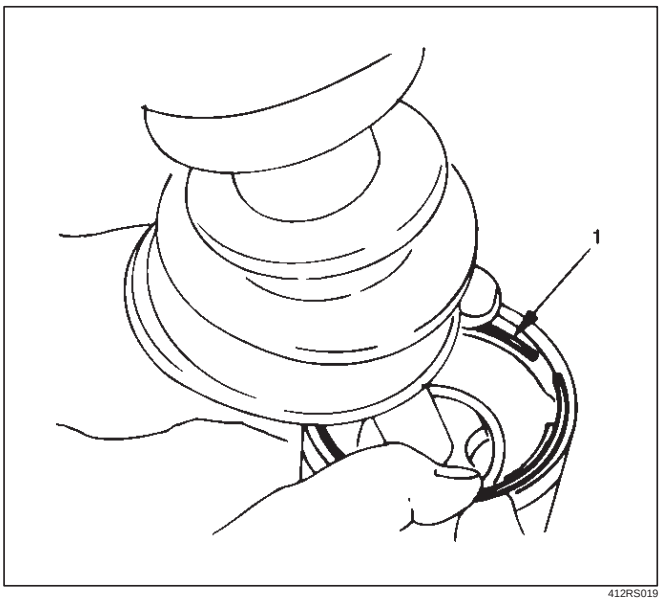

412RS019

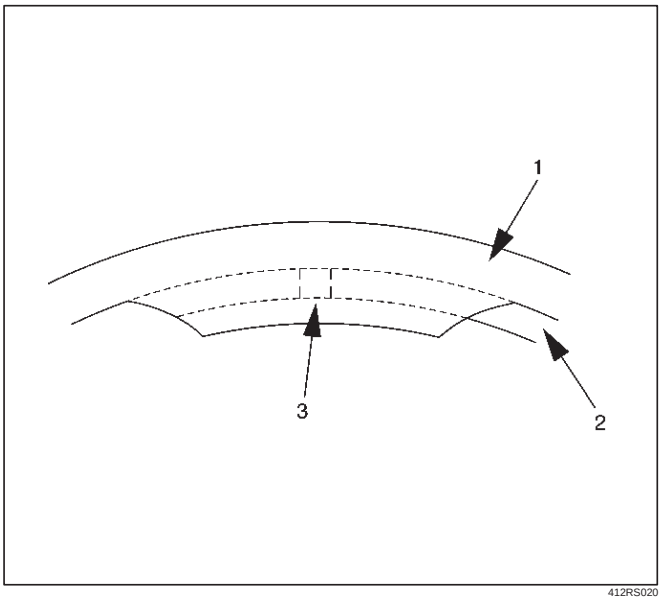

412RS020

Legend

(1) Outer Case
(2) Circlip
(3) Open Ends

18. Install bellows. Adjust the air pressure within the bellows by inserting a screwdriver or equivalent, so that it equals atmospheric pressure.

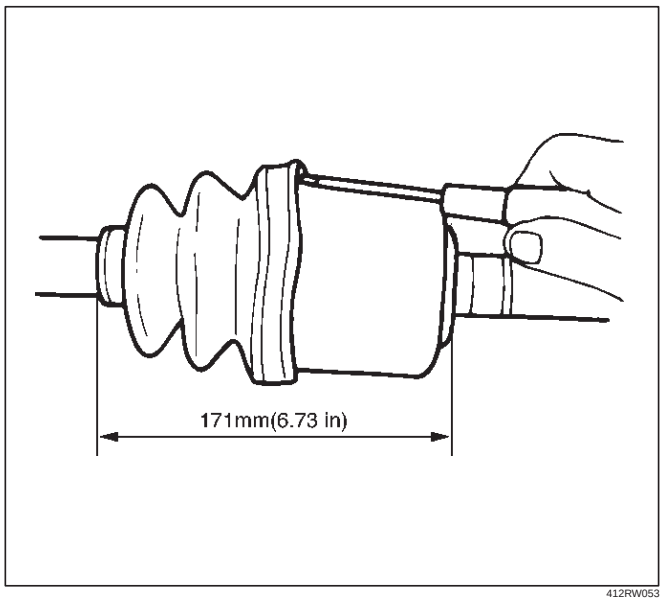

412RW053

19. Install Band. After installation, check that the bellows is free from distortion.

Shift On The Fly System

Shift On The Fly System and Associated Parts

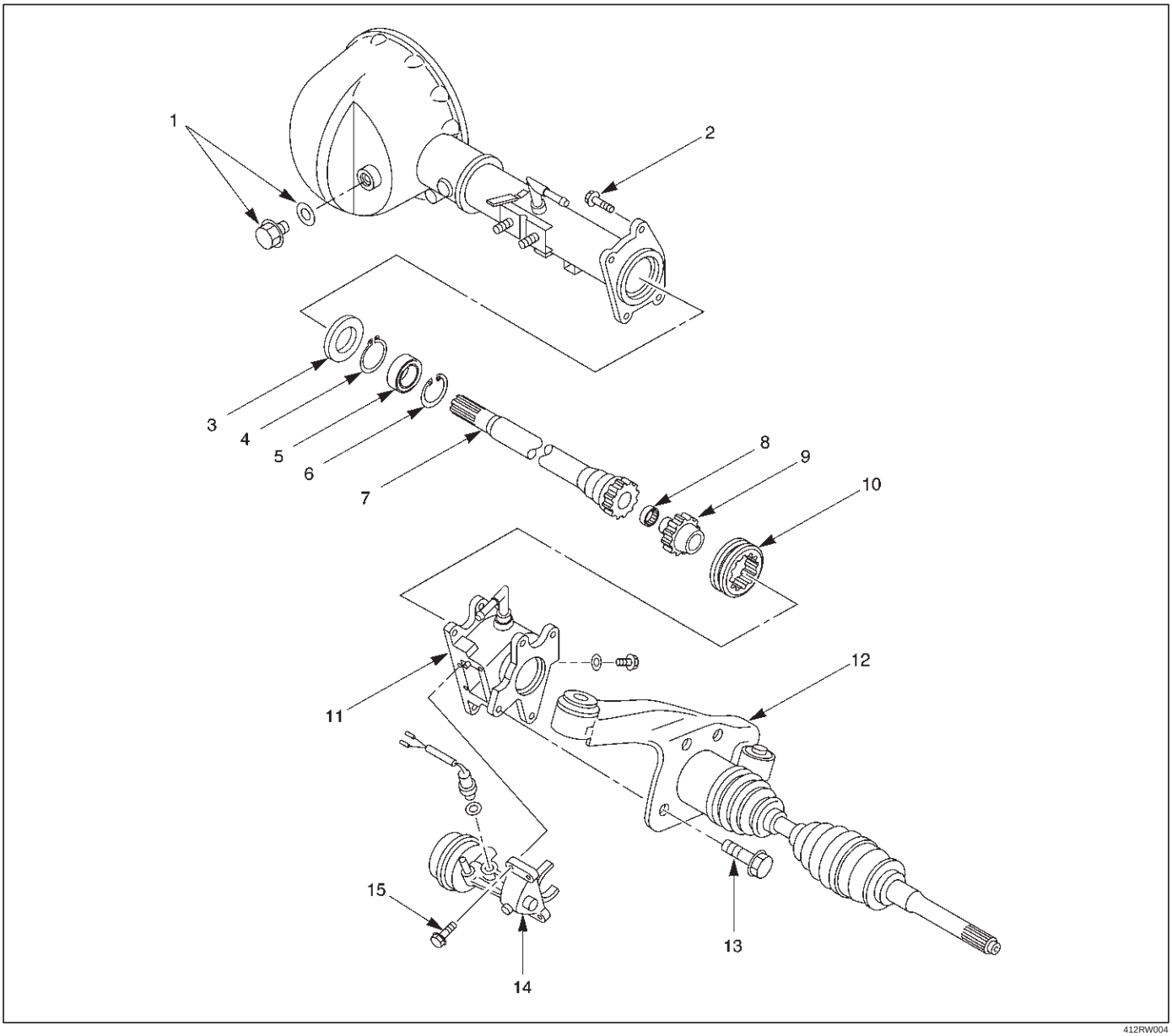

Legend

(1) Filler Plug
(2) Bolt
(3) Oil Seal
(4) Snap Ring(External)
(5) Inner Shaft Bearing
(6) Snap Ring(Internal)
(7) Inner Shaft
(8) Needle Bearing
(9) Clutch Gear
(10) Sleeve
(11) Housing
(12) Front Axle Drive Shaft (LH side)with Bracket
(13) Bolt
(14) Actuator Assembly
(15) Bolt

Disassembly

1. Remove filler plug and gasket, drain oil.
2. Loosen mounting bracket fitting bolts and remove front axle drive shaft from front axle case.
3. Remove Actuator Assembly and draw out actuator ASM.
4. Remove housing.
5. Remove sleeve.
6. Remove clutch gear.

7. Remove snap ring from front axle case by using snap ring pliers.

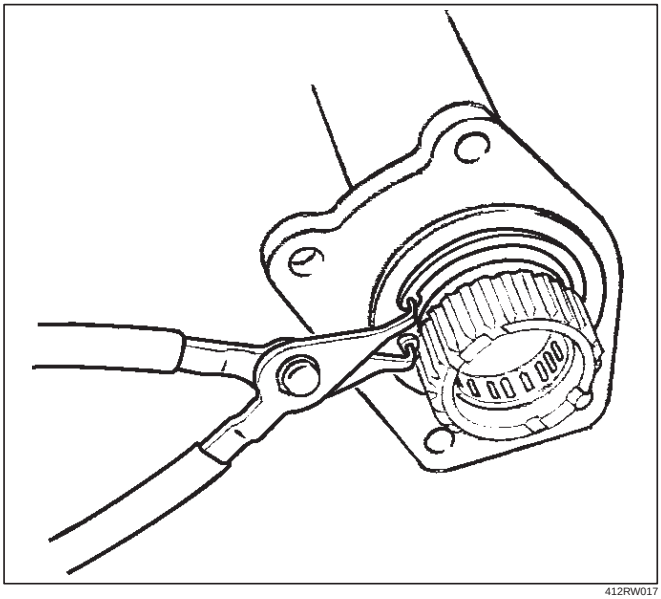

412RW017

8. Take out inner shaft from front axle case.
9. Remove snap ring from inner shaft by using snap ring pliers.

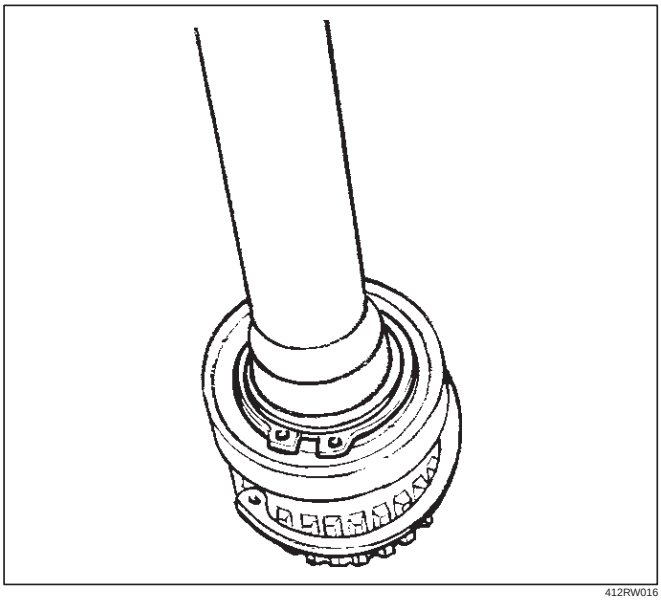

412RW016

10. Remove inner shaft bearing by using a remover 5–8840–2197–0 and press.

NOTE: Be careful not to damage the shaft.

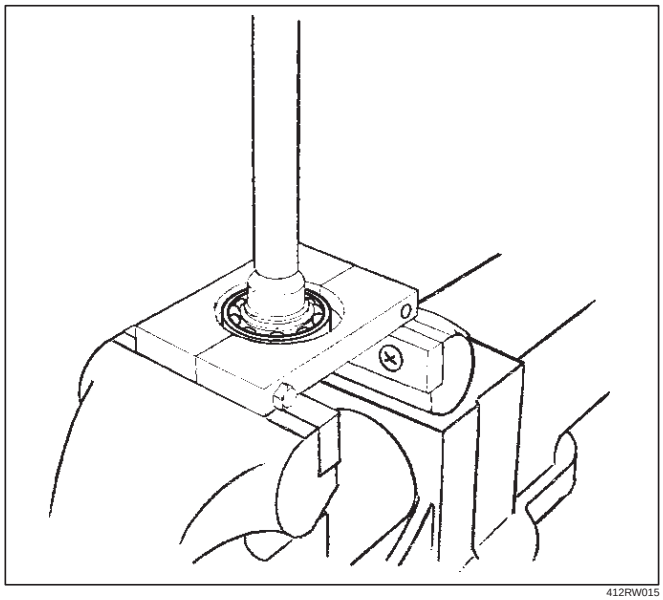

412RW015

11. Remove needle bearing from inner shaft by using a remover 5–8840–0027–0 and sliding hammer 5–8840–0084–0.

NOTE: Be careful not to damage the shaft.

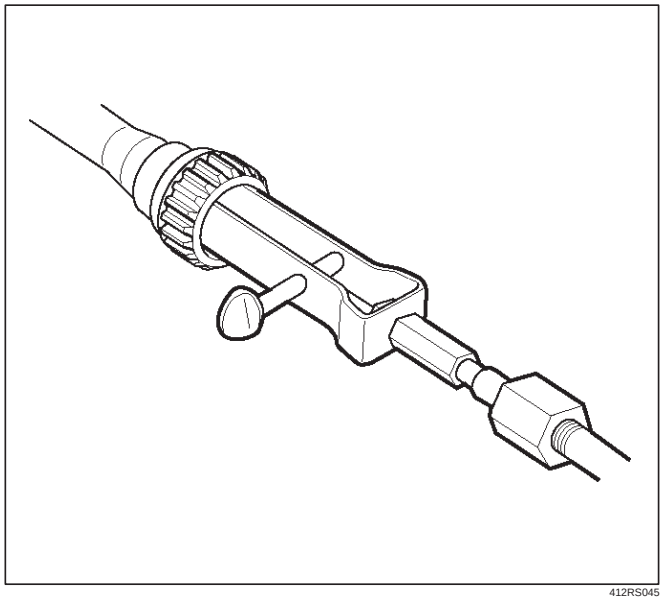

412RS045

12. Remove oil seal from front axle case.

NOTE: Be careful not to damage the front axle case.

Inspection and Repair

Inspect the removed parts. If there are abnormalities such as wear and damage, take corrective action or replace.

Visual Check

1. Check and see if the inner shaft has any abnormalities such as wear and damage.

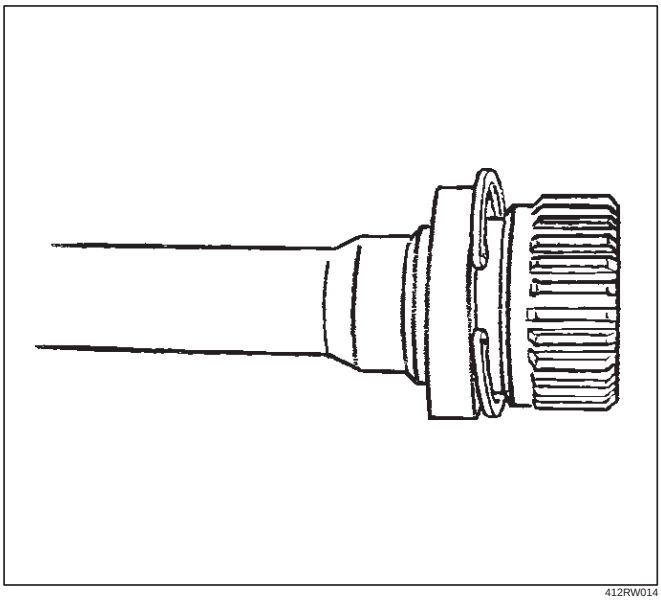

412RW014

2. When inspecting the inner shaft, be sure to check and see if its splined part is twisted, worn, or cracked. If so, replace with a new shaft. In case of an abnormality in its gear part (a slide with sleeve), replace the shaft.

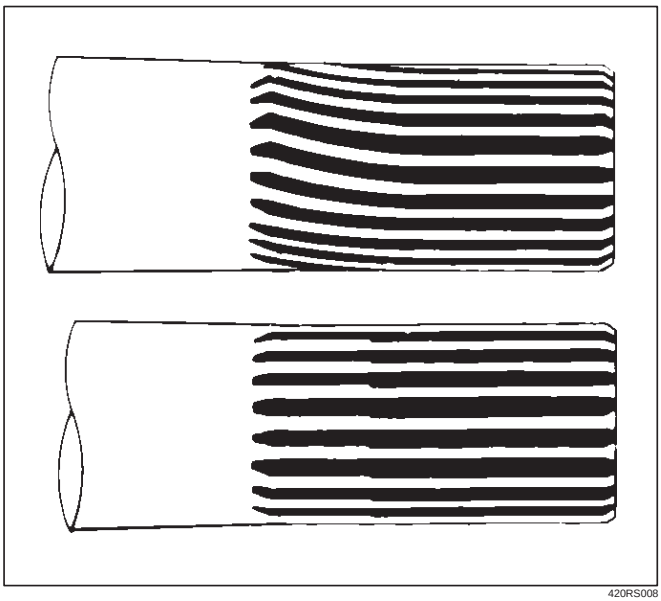

420RS008

Inner Shaft Run–Out

With both end centers supported, rotate the shaft slowly and measure deflection with a dial gauge.

Limit: 0.5 mm (0.02 in)max.

NOTE: Do not heat the shaft to correct its bend.

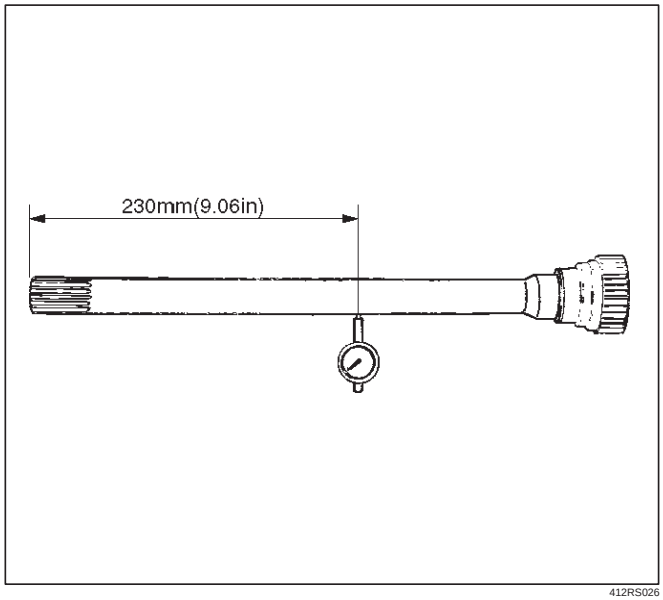

412RS026

Inner Shaft Bearing

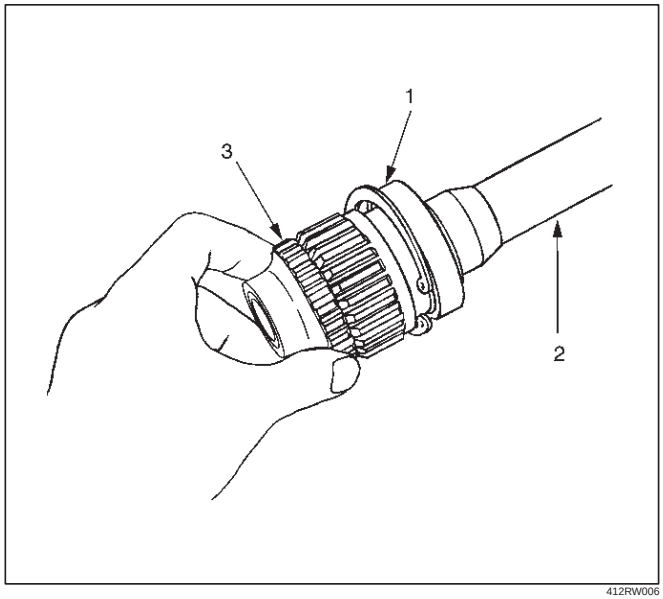

412RW006

Legend

(1) Inner Shaft Bearing
(2) Inner Shaft
(3) Clutch Gear

1. Inspect the state of inner shaft bearing. If any abnormality such as roughness is found, replace with a new inner shaft bearing.
2. Insert a clutch gear and check the state of needle bearing.
3. If there is an abnormality such as roughness, replace the needle bearing.

Sleeve Condition

Check and see that there is no wear, damage, or cracking in the sleeve.

NOTE: Close inspection of the groove and inner gear are required because those are important parts.

Sleeve Function

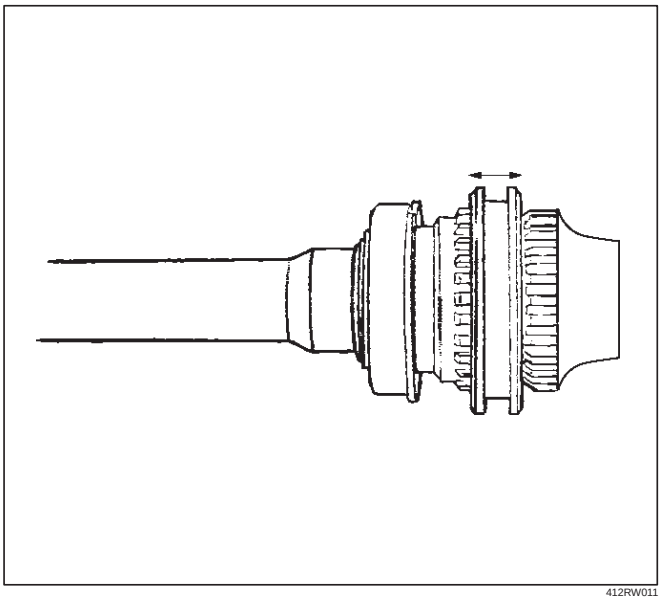

412RW011

Operate the sleeve with the inner shaft combined with the clutch gear. If roughness is felt, replace the sleeve.

NOTE: Gear oil should be applied to the contact surface of gear.

Check the width of sleeve center groove.

Limit: 7.1 mm (0.28 in) max.

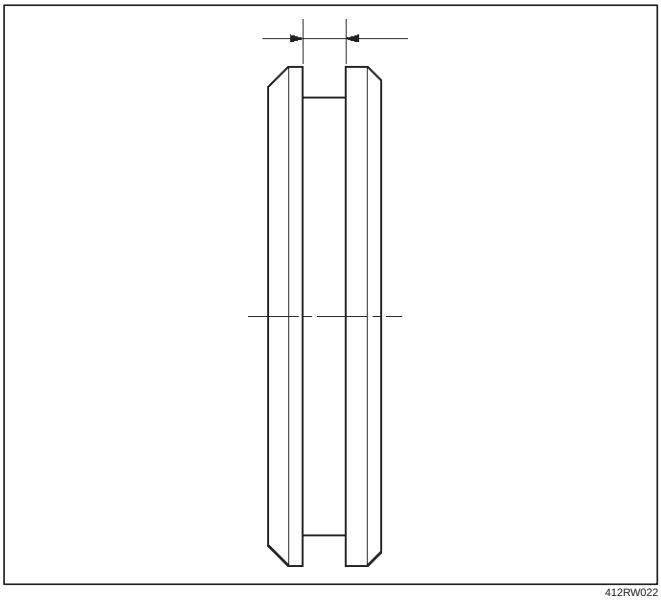

412RW022

Clutch Gear Condition

Check and see that there is no wear, damage, cracking, or any other abnormality in the clutch gear.

Clutch Gear Function

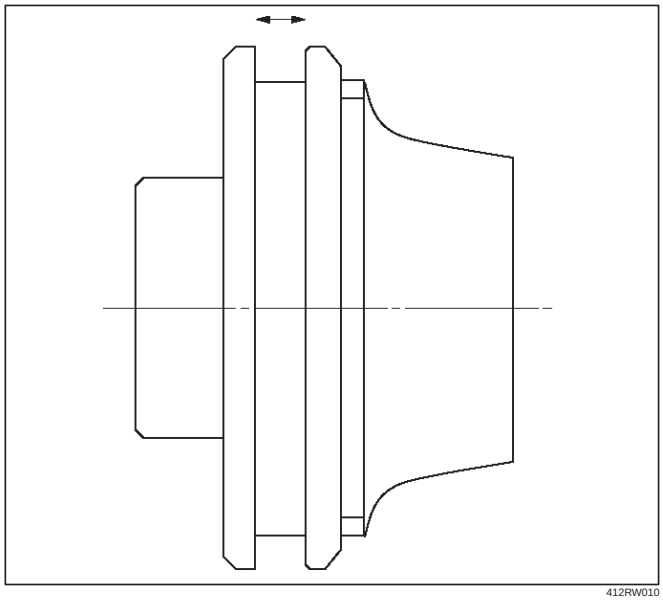

412RW010

If there is an abnormality such as roughness when operated in combination with sleeve, replace the clutch gear.

NOTE: When inspecting, gear oil should be applied to the contact surface of gear.

Clutch Gear Journal Diameter

Make sure of the size illustrated.

Limit: 36.98 mm (1.456 in) min.

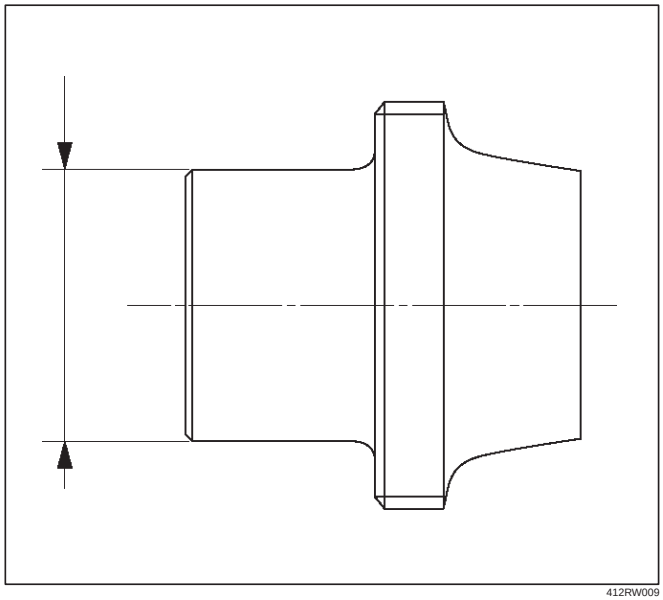

412RW009

Actuator

Check and see that there is no damage, cracking, or other abnormality.

Functional Check

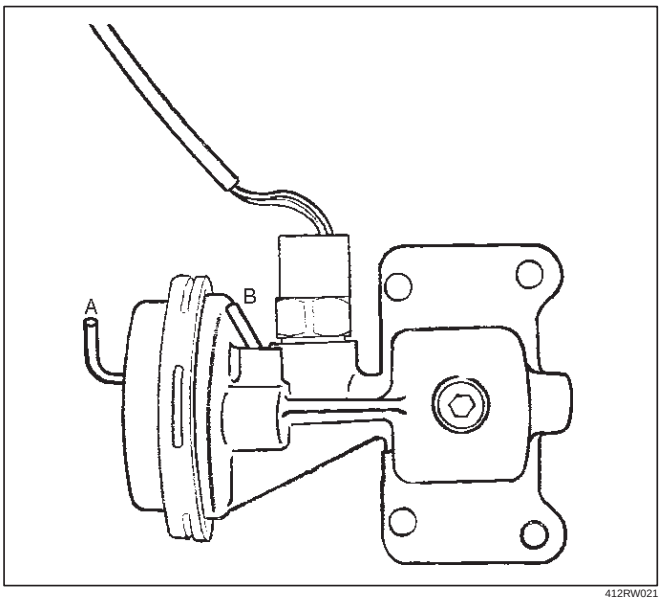

412RW021

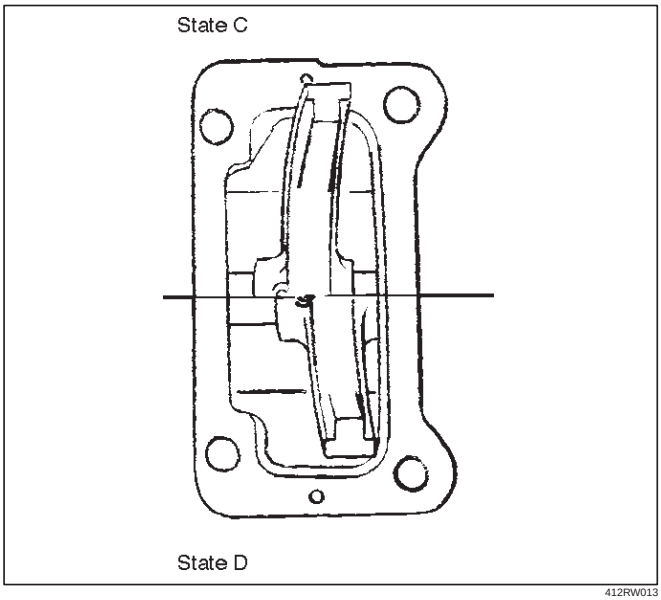

412RW013

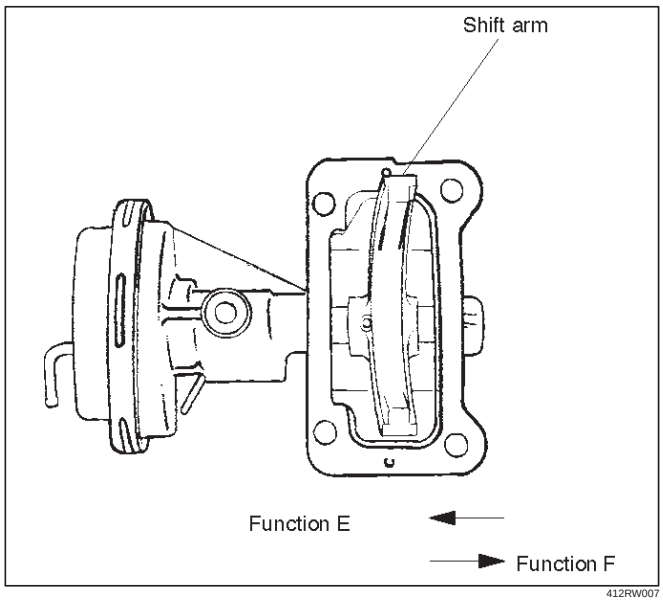

412RW007

Disconnect the shift position switch and make sure of function with a vacuum of –400 mmHg applied to Ports A and B, in accordance with the table below.

State	Port A	Port B	Function
C	–400 mmHg	A/P	E
D	A/P	–400 mmHg	F

If there is an abnormality, replace the actuator as an assembly.

NOTE:

1. If the actuator works under –400mmHg or less, there is no functional problem.
2. Be careful not to permit the entry of water or dust into the ports of the actuator.

Dimensional Check

Measure illustrated sizes 1, 2, and 3.

Limit

1=64.3 mm (2.53 in) max.

2=6.7 mm (0.26 in) min.

3=6.7 mm (0.26 in) min.

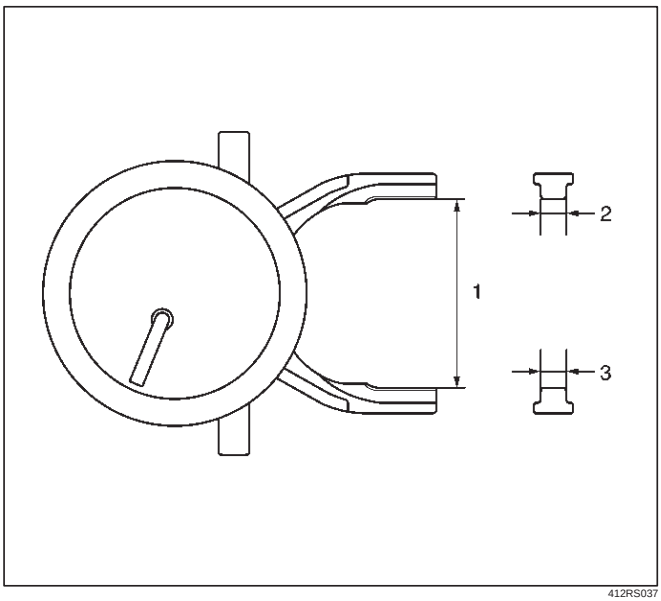

412RS037

Reassembly

1. Install the new oil seal which has been immersed in differential gear oil, by using an oil seal installer 5–8840–2407–0 and grip 5–8840–0007–0.

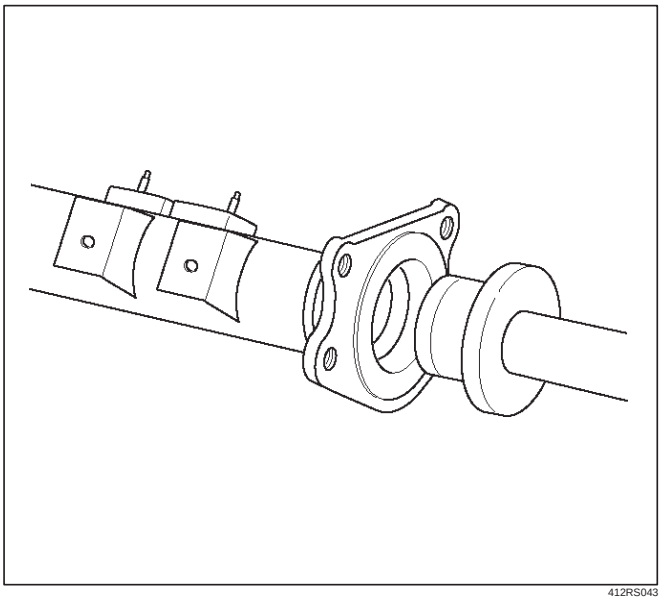

412RS043

2. Force a new needle bearing into inner shaft by using a installer 5–8840–2408–0 and grip 5–8840–0007–0.

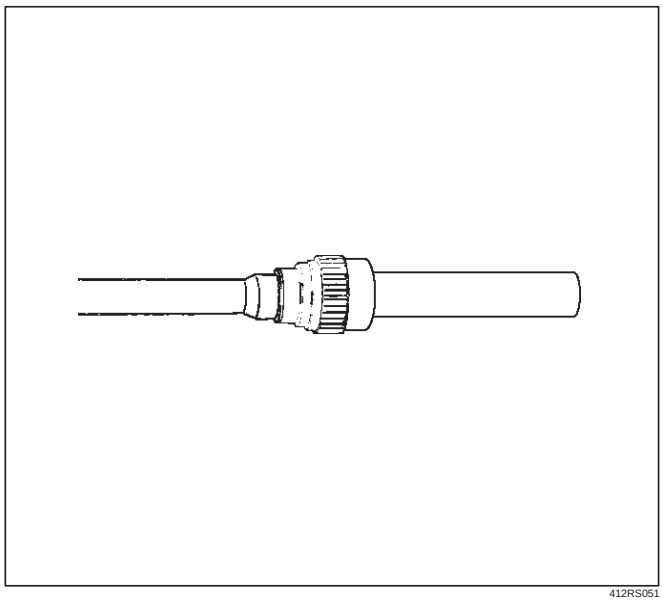

412RS051

3. Place a new snap ring(internal) in inner shaft.
   Force a new inner shaft bearing into the inner shaft by using a installer 5–8840–2197–0 and press.

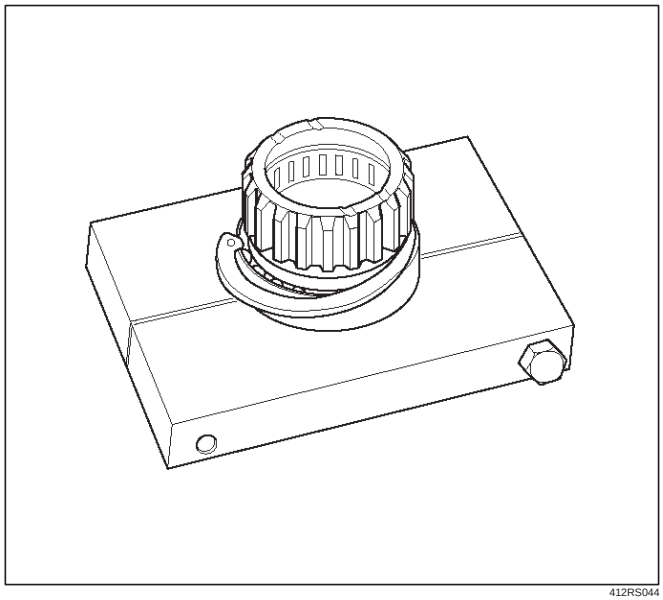

412RS044

4. Install snap ring(external).

NOTE: Be careful not to damage the inner shaft.

5. Clean the housing contact surface of the front axle case and insert inner shaft assembly into the front axle case.

NOTE: Be careful not to damage seal.

6. Install snap ring (internal) in the groove of front axle case.

NOTE: Be sure to install the snap ring properly.

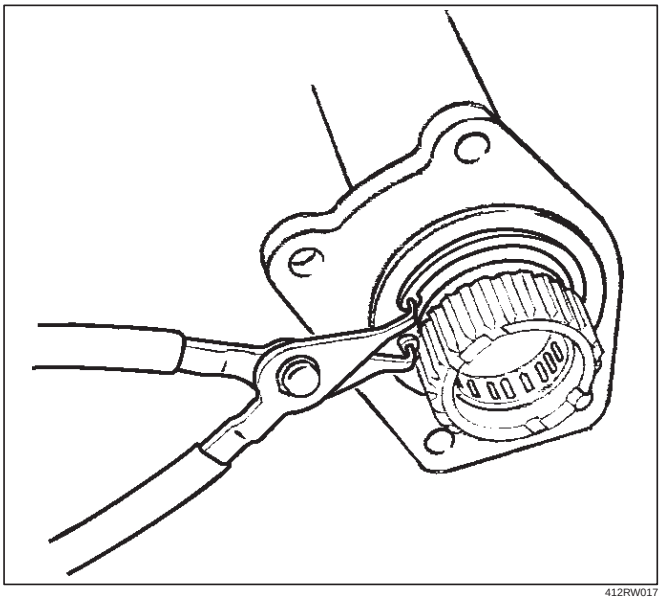

412RW017

7. Apply differential gear oil to clutch gear, then install clutch gear.
8. Apply differential gear oil to sleeve, then install sleeve.
9. Clean contact surface with the front axle and actuator mounting surface. Apply liquid gasket to the contact surface on the front axle case, then install in the housing.

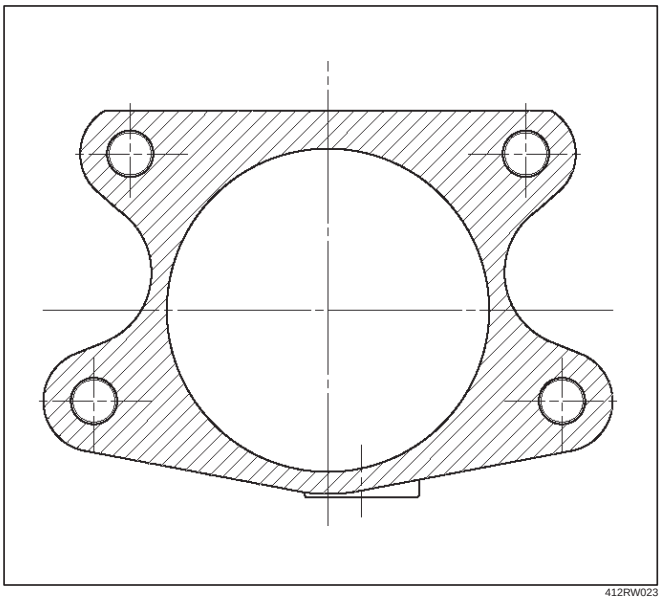

412RW023

10. Tighten bolts to specified torque.

    Torque: 116N·m (11.8 kg·m/85 lb ft)

11. Clean the actuator contact surface with the housing then Install and tighten shift position switch to specified torque.

    Torque: 39N·m (4.0 kg·m/29 lb ft)

12. Apply liquid gasket to the contact surface on the actuator side.

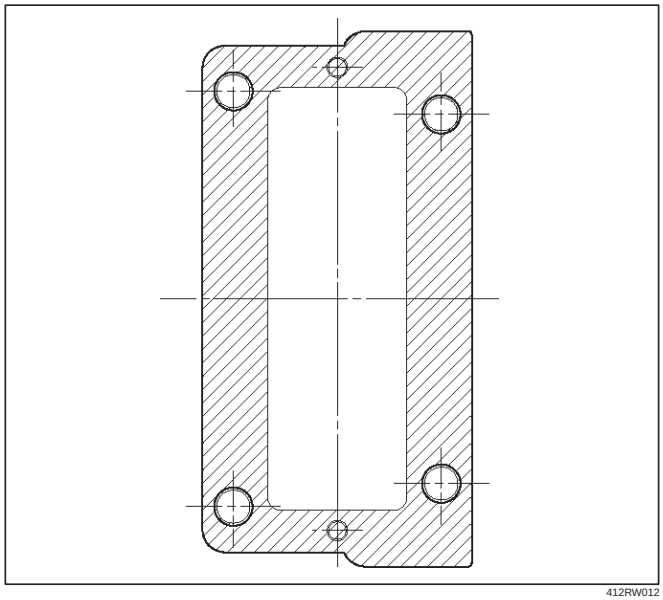

412RW012

13. Align shift arm with the groove of sleeve and install the actuator.
14. Tighten bolts to specified torque.

    Torque: 13N·m (1.3 kg·m/113 lb in)

15. Install front axle drive shaft and mounting bracket. Tighten fitting bolts to specified torque.

    Torque: 116N·m (11.8 kg·m/85 lb ft)

16. Pour specified amount of differential gear oil to filler plug.

    Front Differential

    Oil Capacity: 1.4lit (1.23 Imp qt/1.48 US qt)

    Actuator Housing

    Oil Capacity: 0.12lit (0.10 Imp qt/0.13 US qt)

17. Install filler plug through gasket and tighten to specified torque.

    Torque: 78N·m (58lb ft)

Main Data and Specifications

General Specifications

Front drive axle oil capacity	1.4 liter (1.23 Imp qt/1.48 US qt)(Differential)
	0.12 liter (0.10 Imp qt/0.13 US qt)(Actuator Housing:Shift on the fly)
Type of lubricant	GL–5 (Multi grade type) Refer to chart in General Information
Axle shaft type	Constant velocity joint(Birfield joint type and double offset joint)

Torque Specifications

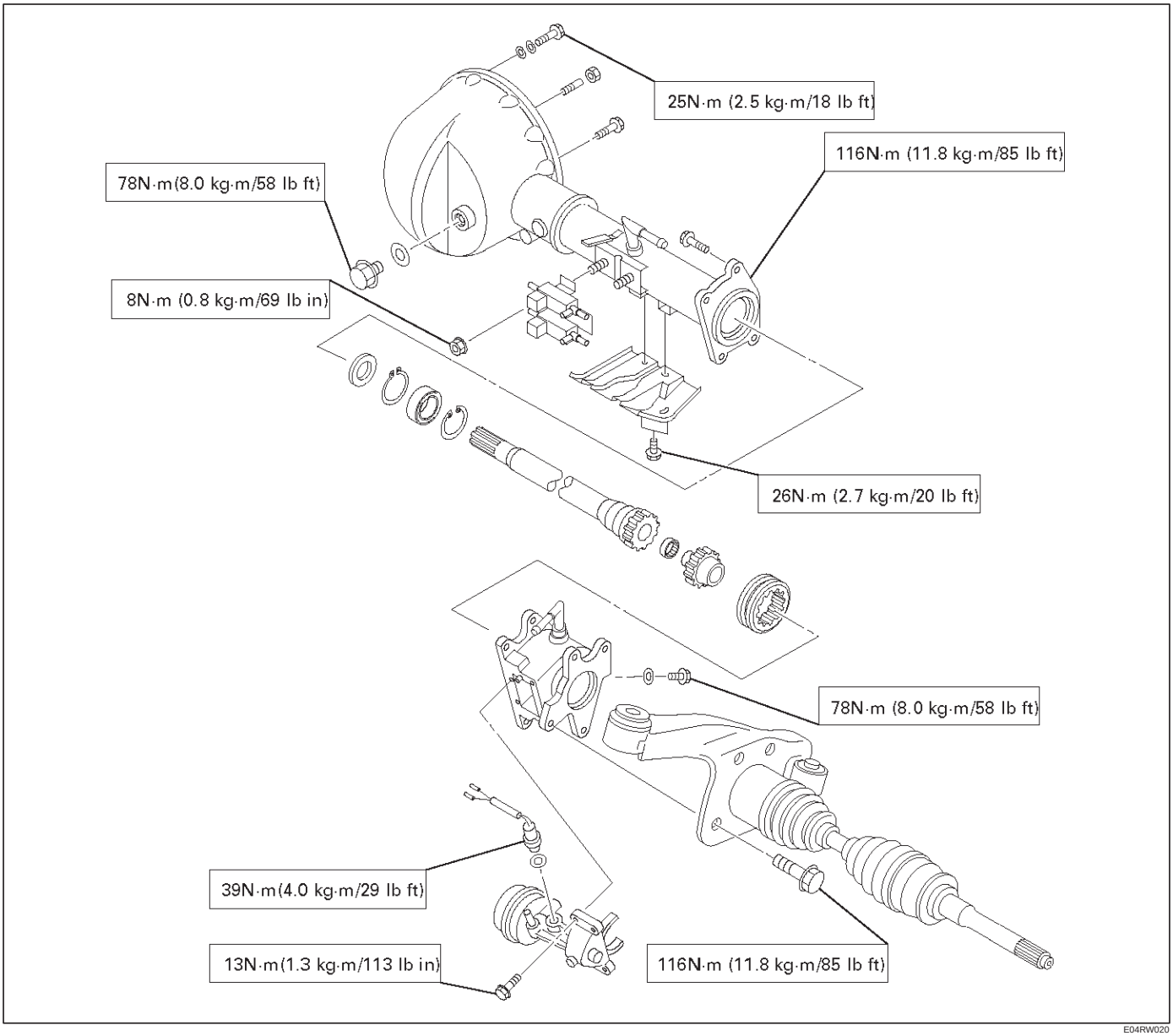

E04RW020

Special Tools

ILLUSTRATION	**TOOL NO.** TOOL NAME
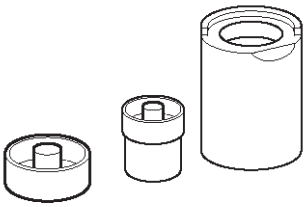 901RS233	**5–8840–2309–0** **(J–39378)** Remover and Installer; Front Axle mount bushing
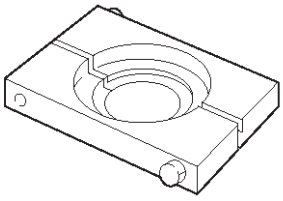 901RS216	**5–8840–2197–0** **(J–37452)** Remover and Installer; Inner shaft bearing
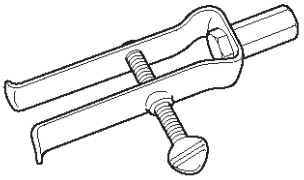 901RS234	**5–8840–0027–0 (J–26941)** Remover;Bearing needle
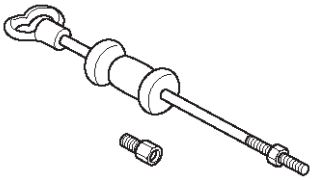 901RS235	**5–8840–0084–0** **(J–2619–01)** Hammer; Sliding
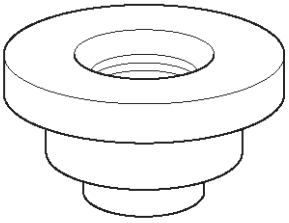 901RS236	**5–8840–2407–0** **(J–41693)** Installer; Oil seal
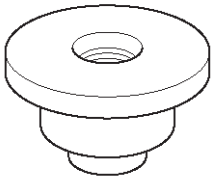 901RS177	**5–8840–2408–0** **(J–41694)** Installer; Bearing needle

ILLUSTRATION	**TOOL NO.** TOOL NAME
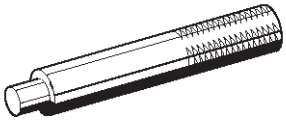 901RS285	**5–8840–0007–0** **(J–8092)** Grip

Front Propeller Shaft

General Description

Since the propeller shaft is balanced carefully, welding or any other modifications are not permitted.

Alignment marks should be applied to each propeller shaft before removal.

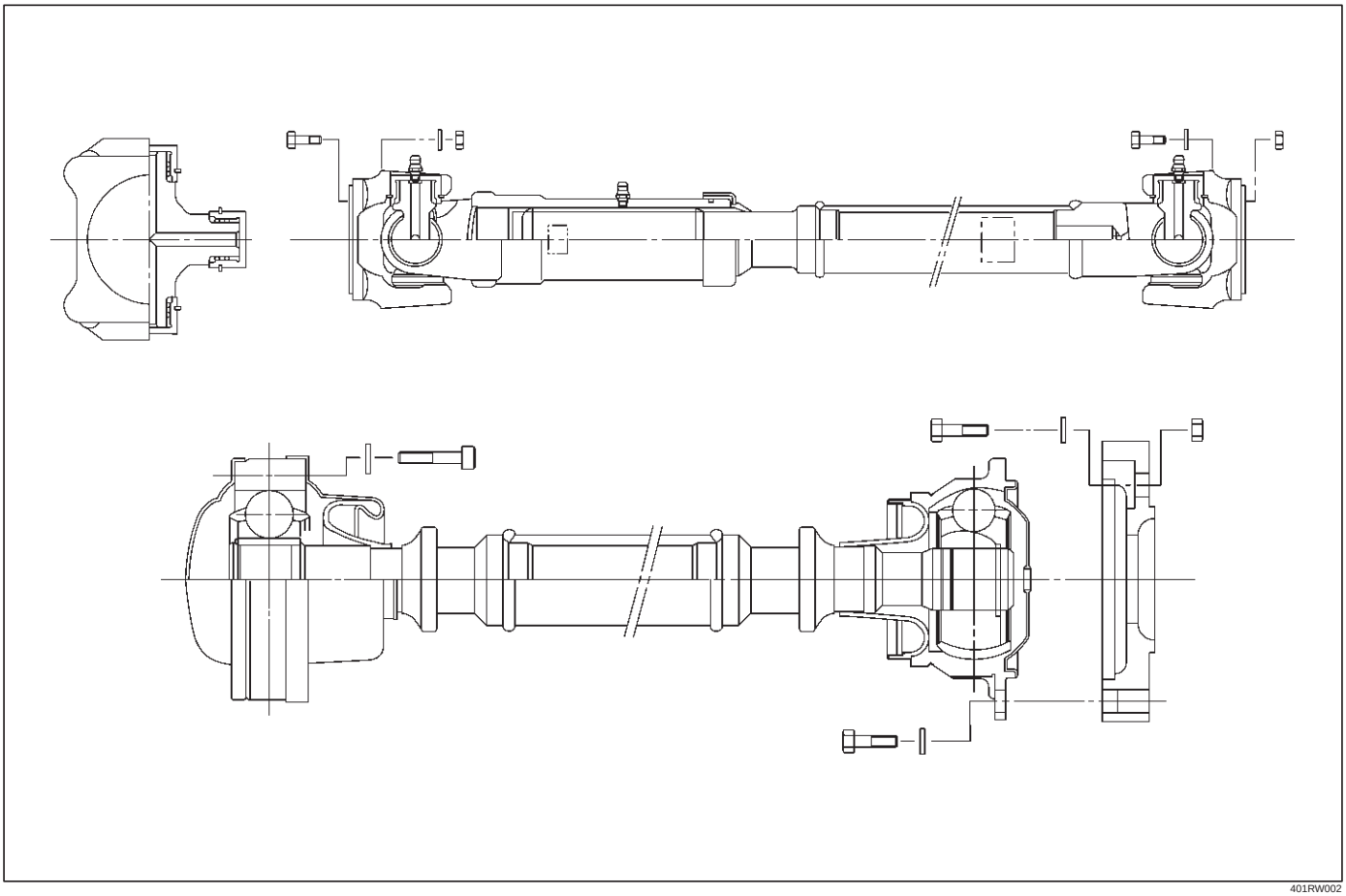

401RW002

Front Propeller Shaft and Associated Parts

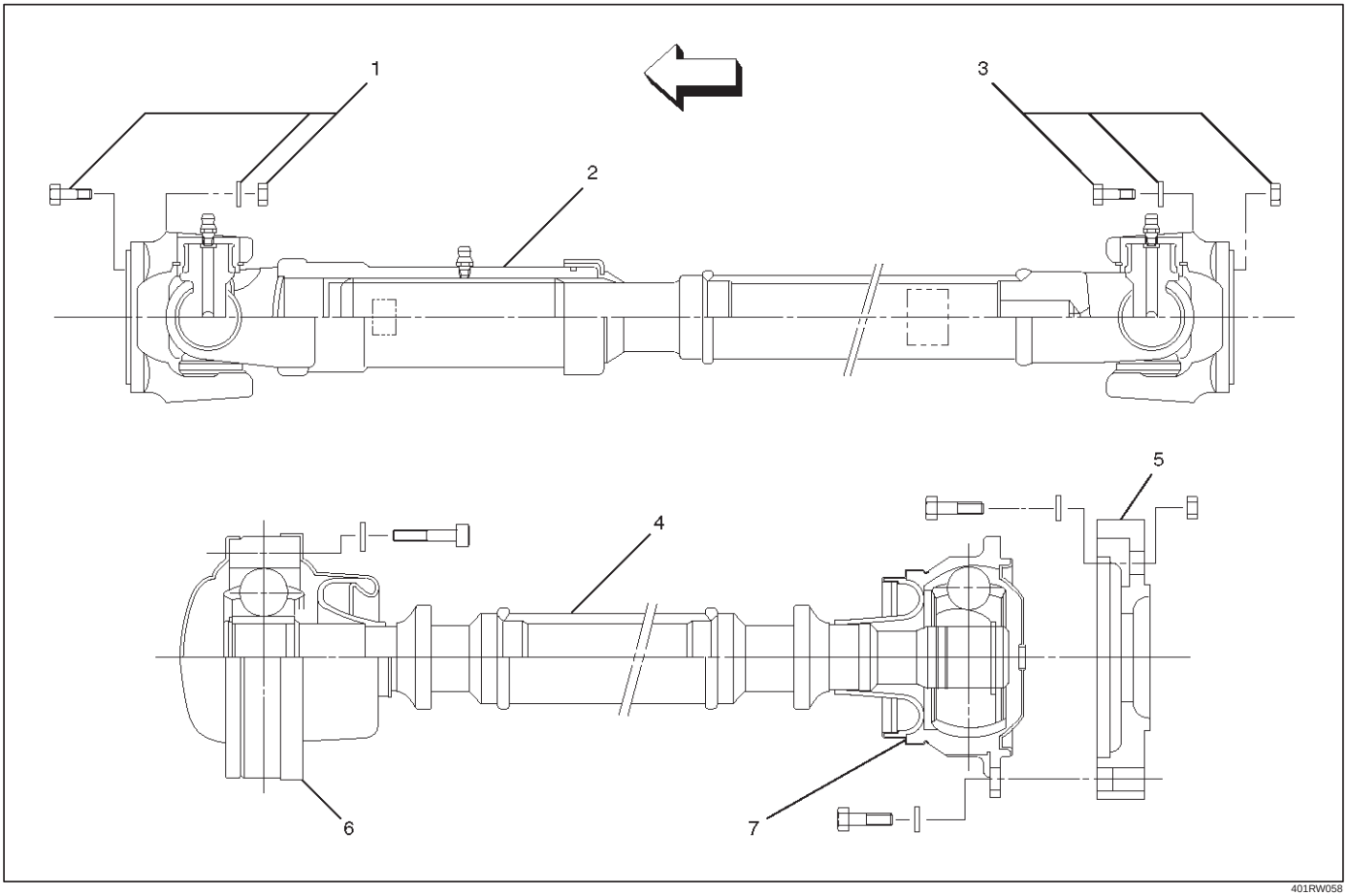

401RW058

Legend

(1) Bolt, Nut and Washer (Front Axle Side)
(2) Front Propeller Shaft
(3) Bolt, Nut and Washer (Transfer Side)
(4) Front Propeller Shaft (with TOD)
(5) Coupling
(6) LJ Constant Velocity Joint
(7) BJ Constant Velocity Joint

Removal

1. Jack up the vehicle and support it on the chassis stands.
2. Gear shift lever should be placed in neutral position and parking brake released.
3. Remove the exhaust and transfer protectors.

NOTE: Apply alignment marks on the flange at the front propeller shaft both front and rear side.

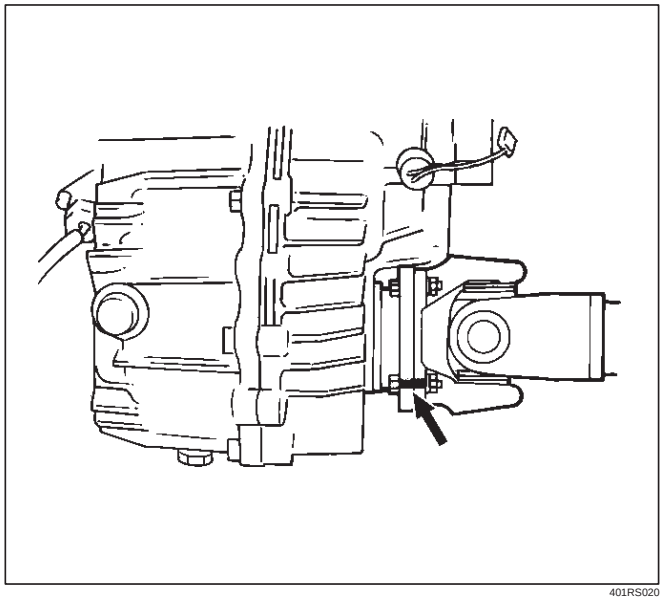

401RS020

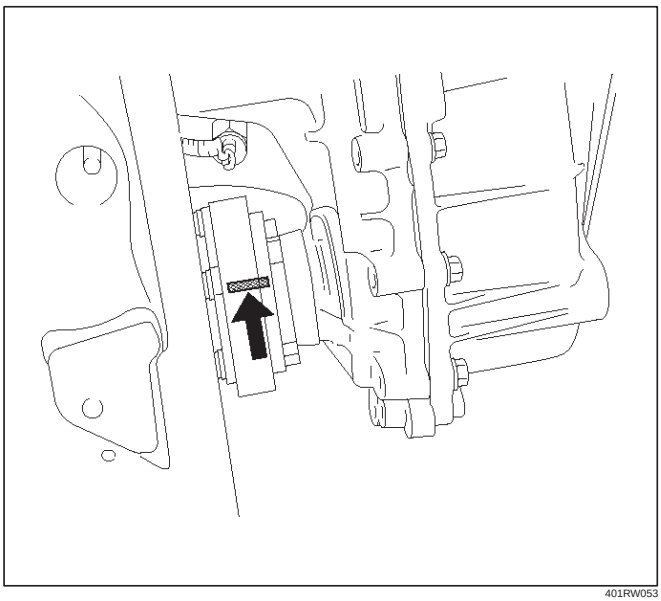

401RW053

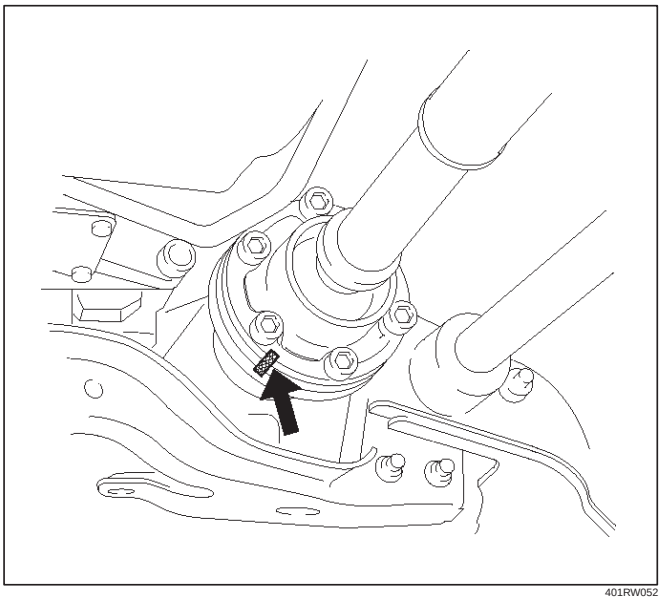

401RW052

4. Remove bolt, nut and washer (Front axle side).
5. Remove bolt, nut and washer (Transfer side).
6. Remove front propeller shaft.

NOTE: If equipped with torque on demand (TOD), when removing, installing or carring for front propeller shaft, be sure to wind a piece of cloth round the part of the boot with which fittings may interfere so that the boot can be protected. The boot may be damaged if bending force is applied to the constant velocity joint of the shaft.

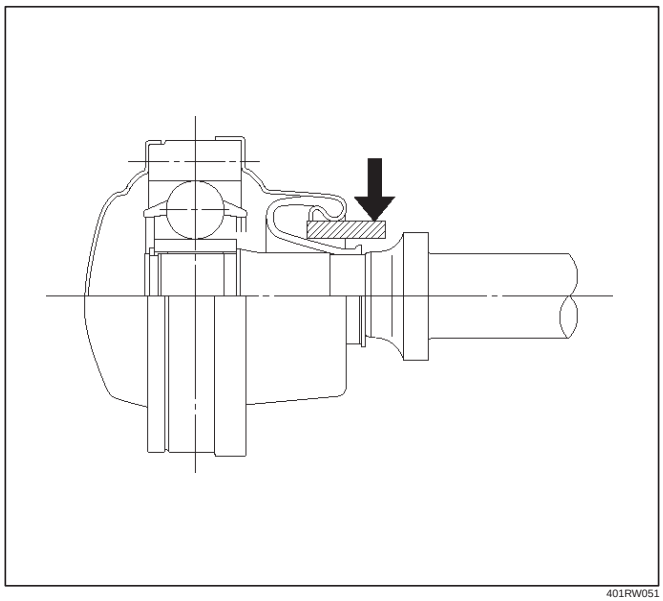

401RW051

Installation

NOTE: Never install the shaft assembly backwards. Completely remove the black paint from the connecting surface of flange coupling on each end of propeller shaft. Clean so that no foreign matter will be caught in between.

1. Align the mark which was applied at removal. Install front propeller shaft and tighten the bolts to the specified torque.

   Torque: 63 N·m (6.4 kg·m/46 lb ft)

2. Install the exhaust and transfer protectors.
3. After installing the propeller shaft, be sure to apply black paint (1) to exposed area (other than connecting surface) of the entire surface of flange coupling .

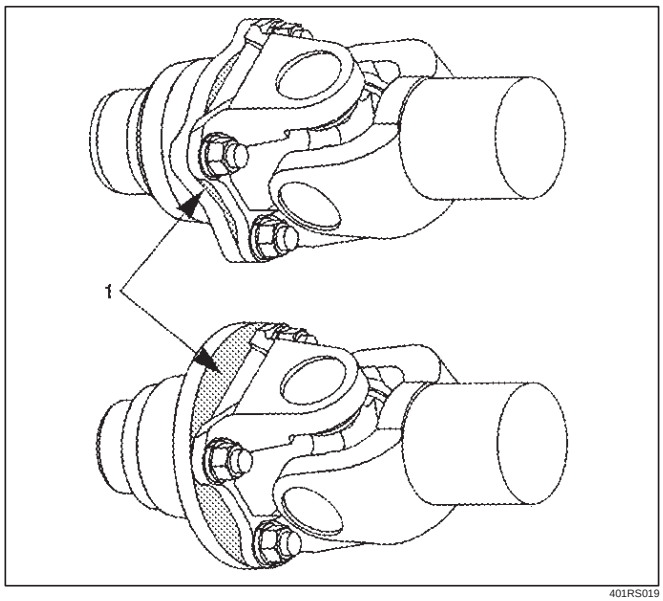

401RS019

Disassembly (Except TOD 4×4)

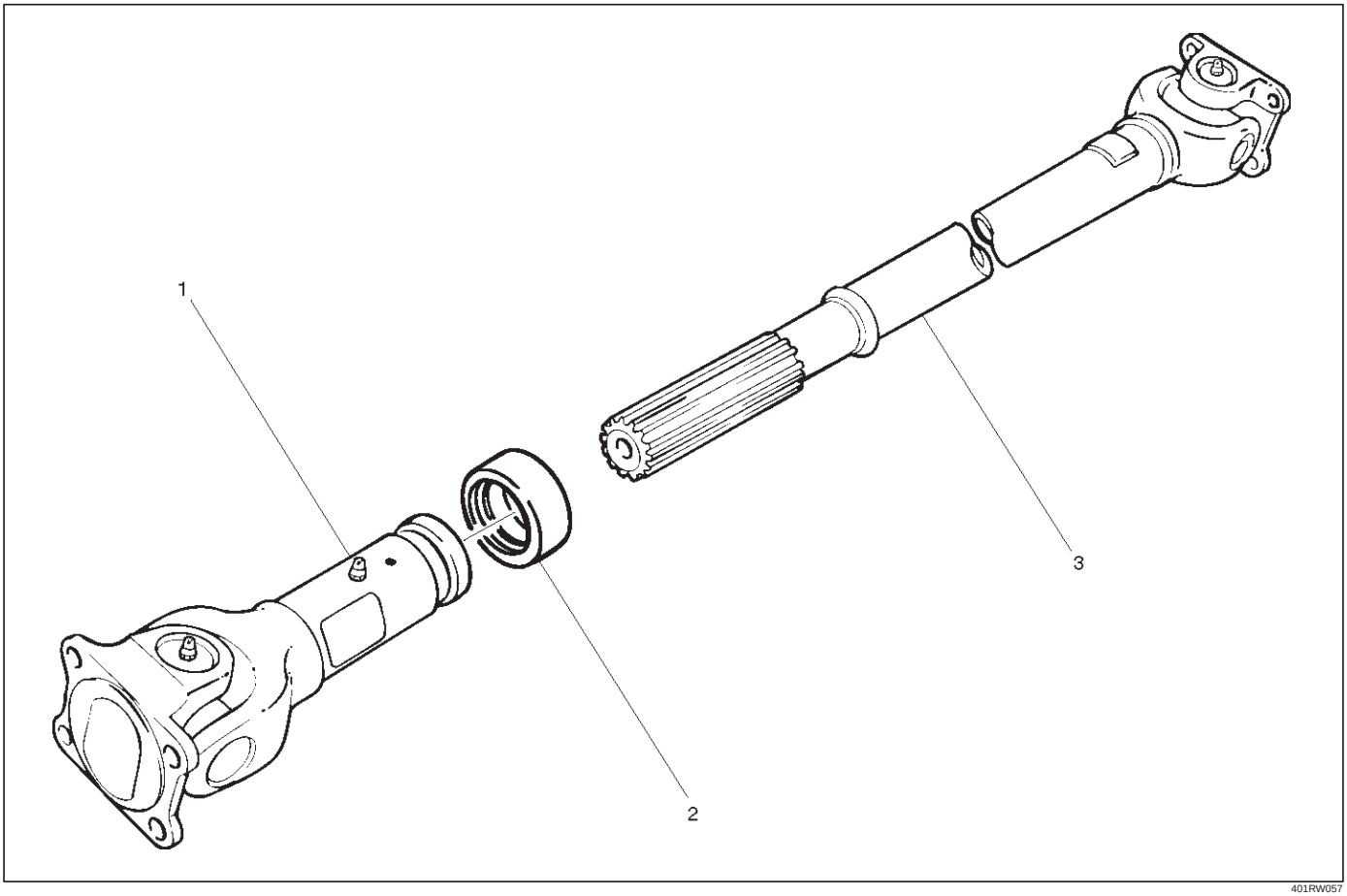

401RW057

Legend

(1) Sleeve Yoke
(2) Seal
(3) Tube Assembly

1. Apply alignment marks (1) on the sleeve yoke and tube assembly then remove sleeve yoke.

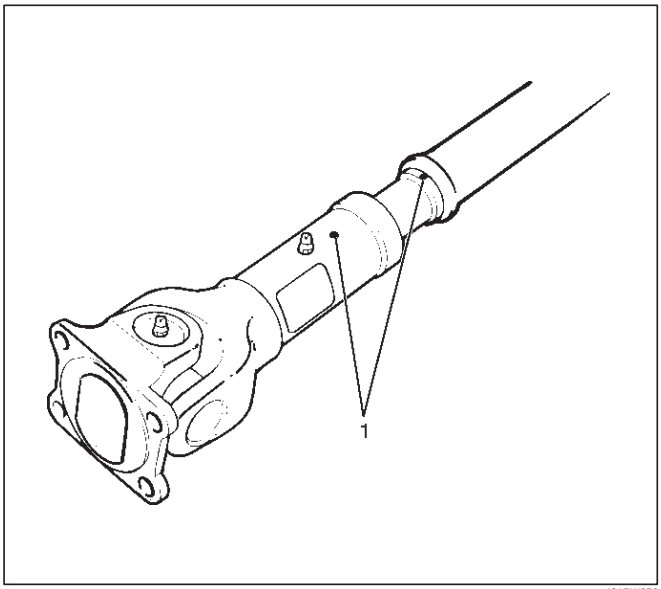

401RW056

2. Remove seal.
3. Remove tube assembly.

Universal Joint Disassembly

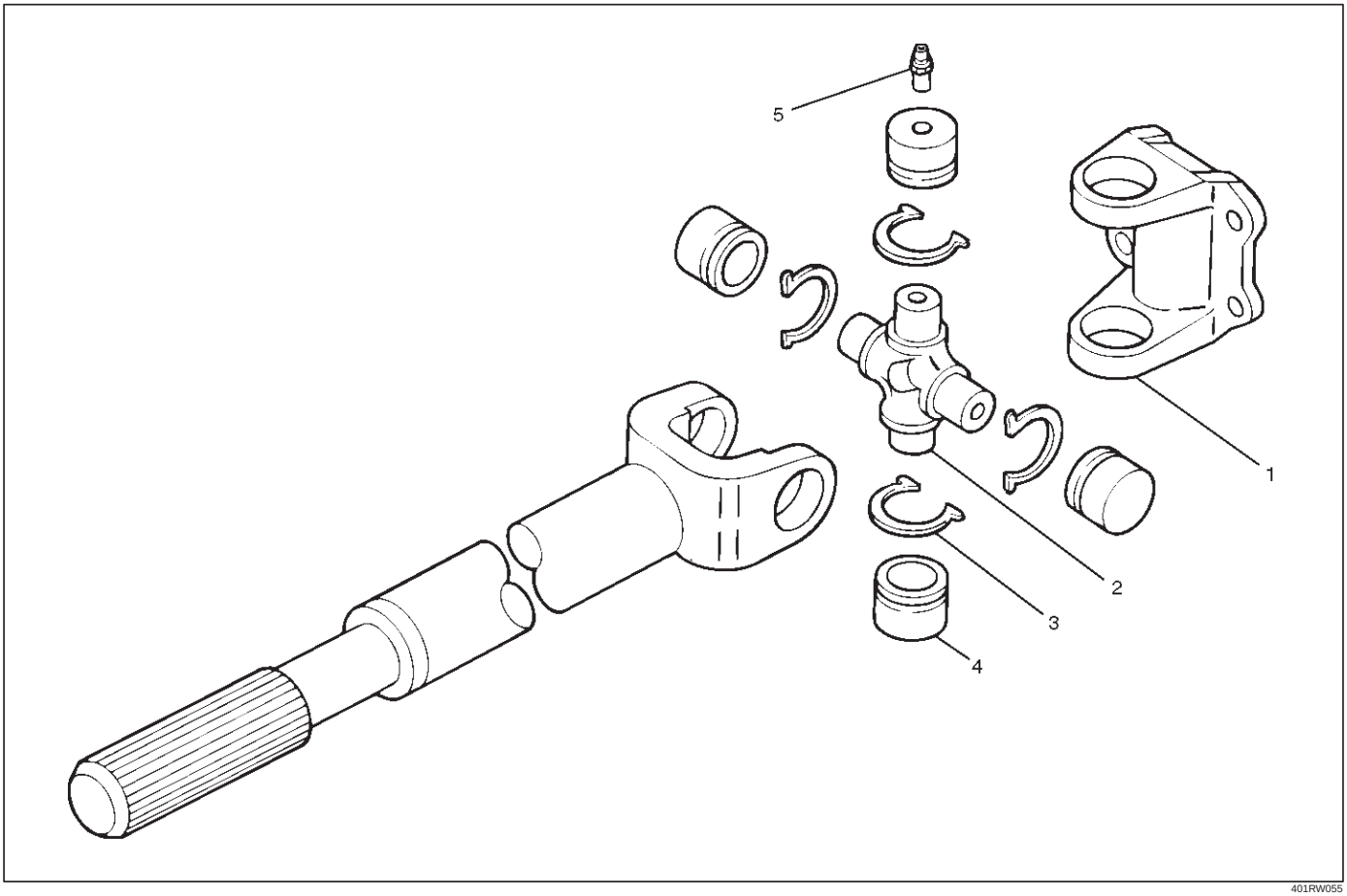

401RW055

Legend

(1) Flange Yoke
(2) Spider
(3) Snap Ring
(4) Needle Roller Bearing
(5) Grease Fitting

1. Apply alignment marks (1) on the yokes of the universal joint, then remove snap ring.

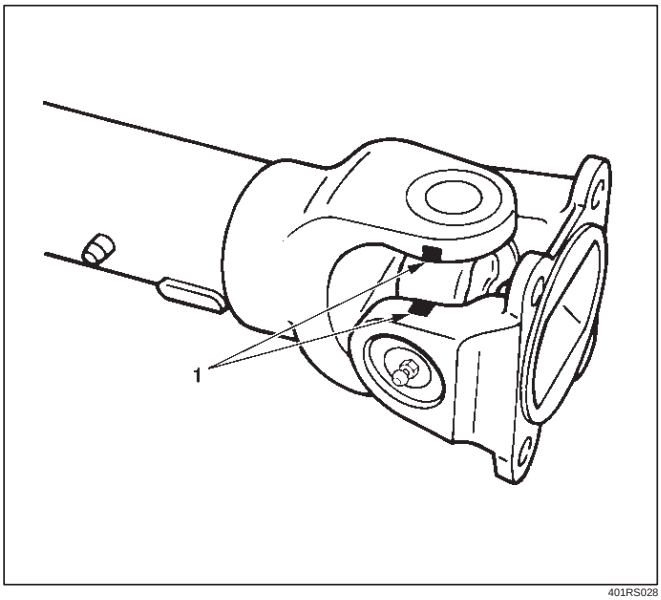

401RS028

2. Tap out the needle roller bearing by gently striking the shoulder of the yoke, using a mallet or a copper hammer.

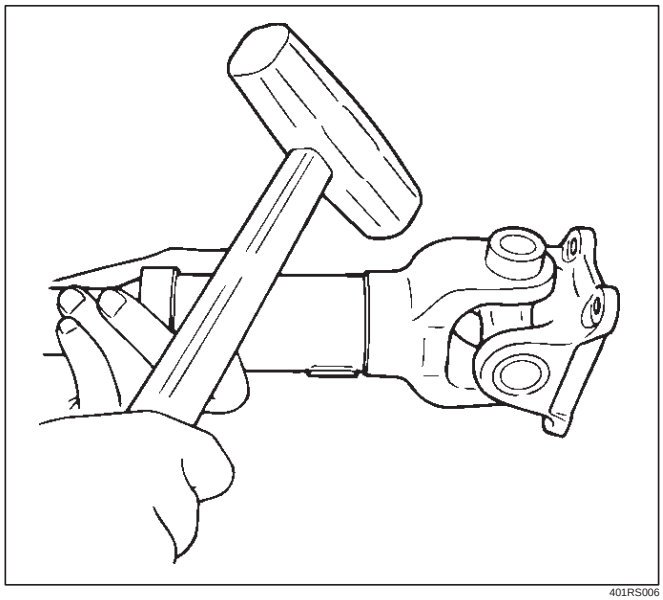

401RS006

3. Make sure of proper position for reinstallation by applying setting marks, then remove spider .

Inspection and Repair

Make necessary correction or parts replacement if wear, damage, corrosion or any other abnormal condition is found through inspection.

NOTE: When any part of the journal assembly (spider, needle roller bearing) requires replacement, be sure to replace the entire assembly.

Check the following parts for wear, damage, noise or any other abnormal conditions:

1. Spider
2. Needle roller bearing
3. Yoke
4. Flange
5. Constant velocity joint

Outside Diameter of Spider Pin

Standard: 17.00 mm (0.669 in)

Limit: 16.90 mm (0.665 in)

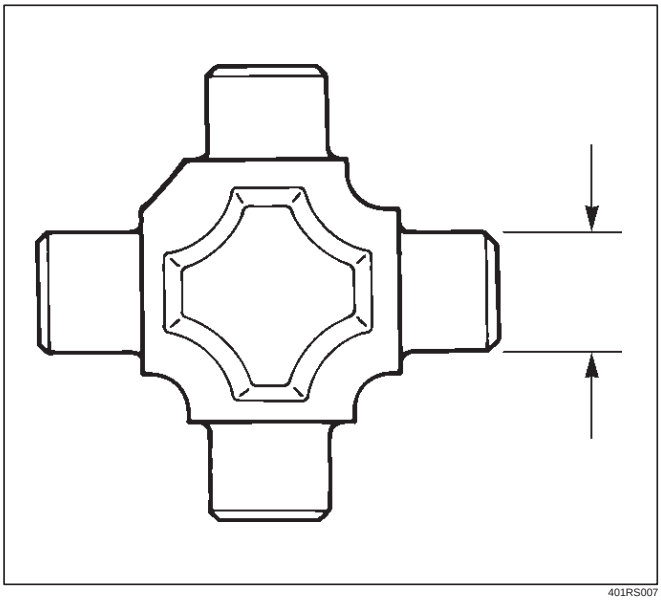

401RS007

Propeller Shaft Run–out

Support the ends of the propeller shaft on V-blocks (2) and check for run–out by holding the probe of a dial indicator (1) in contact with the center part of the shaft. If the amount of run–out is beyond the standard value for assembly, correct with a bench press or replace the shaft with a new propeller shaft assembly.

Standard: 0.3 mm (0.012 in)

Limit: 0.5 mm (0.02 in)

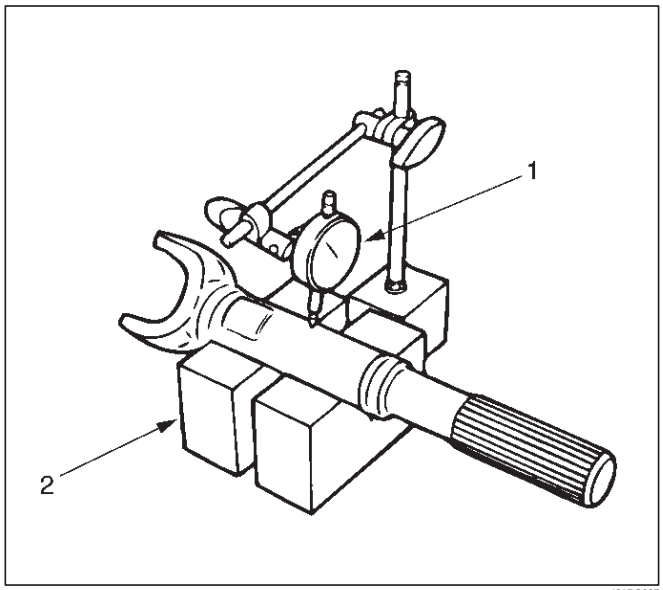

401RS027

Play in Splines in Normal Direction of Rotation

Check the amount of play between the sleeve yoke (1) and the propeller shaft spline (2) in the direction of rotation, using a pointed feeler gauge.

Standard: 0.073 – 0.156 mm (0.003 – 0.006 in)

Limit: 0.3 mm (0.012 in)

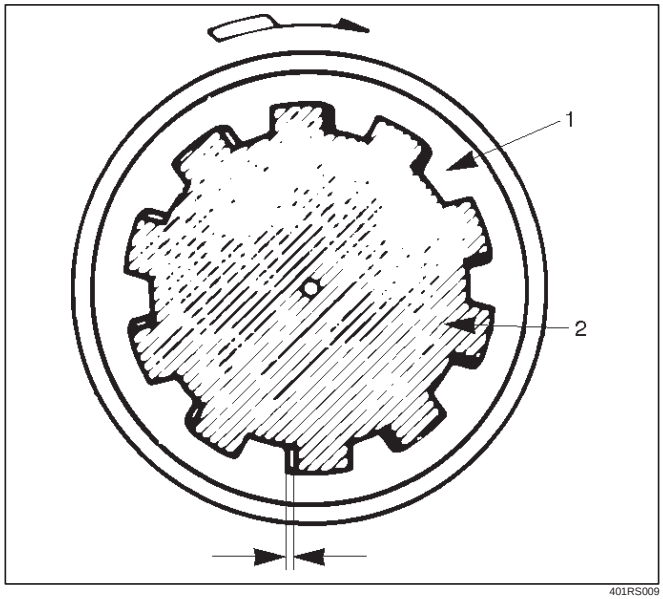

401RS009

Play in Universal Joint

Limit: Less than 0.1 mm (0.004 in)

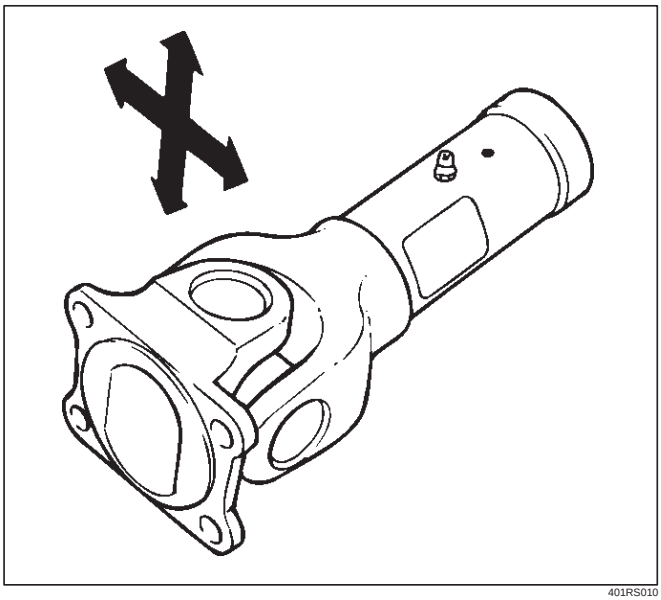

401RS010

Constant Velocity Joint

NOTE: LJ and BJ constant velocity joints are unremovable types. Check the joint for play and the boot for damage, wear, and leak of grease. If abnormality is found, replace propeller shaft as an assembly.

Play in Constant Velocity Joint

Fix the shaft in a vise throrgh pieces of wood, and try to move the joint vertically, right and left, and back and forth to make sure of smooth motions and no remarkable play.

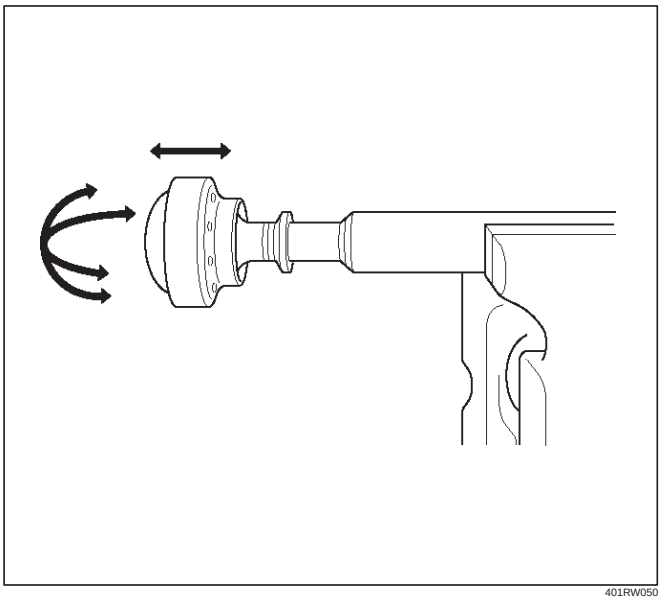

401RW050

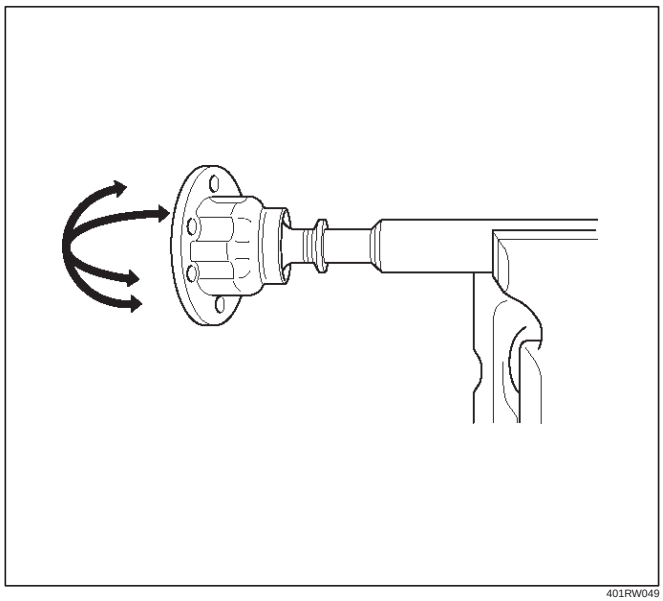

401RW049

Boot of Constant Velocity Joint

Check the boot (2) for crack, damage and grease leak, and the boot band (1) for loosening and damage. Check the both sides of the joint and make sure that there is no leak of grease from the cover press-in parts(3).

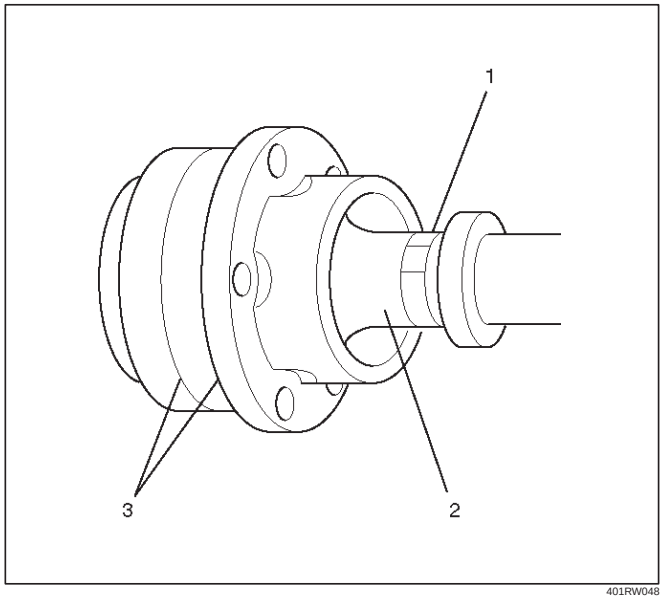

401RW048

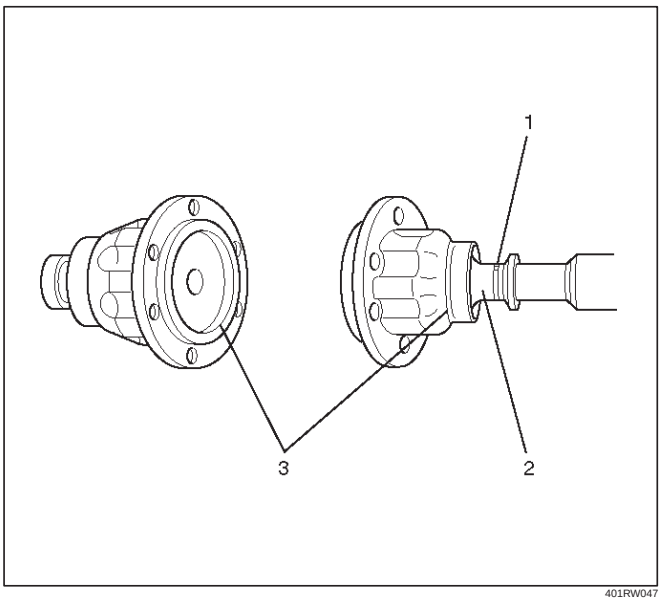

401RW047

Front Axle Flange Run-out

1. Set a dial gage at right angle near the outer circumference of the flange face and check the run-out of the flange face.

Limit: 0.15 mm (0.006 in)

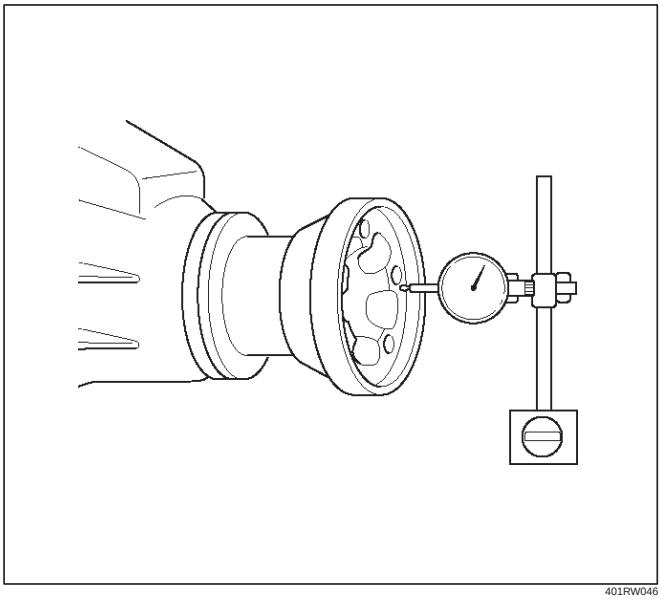

401RW046

2. Set a dial gage at right angle near the inner circumference and check the run-out of the flange.

Limit: 0.15 mm (0.006 in)

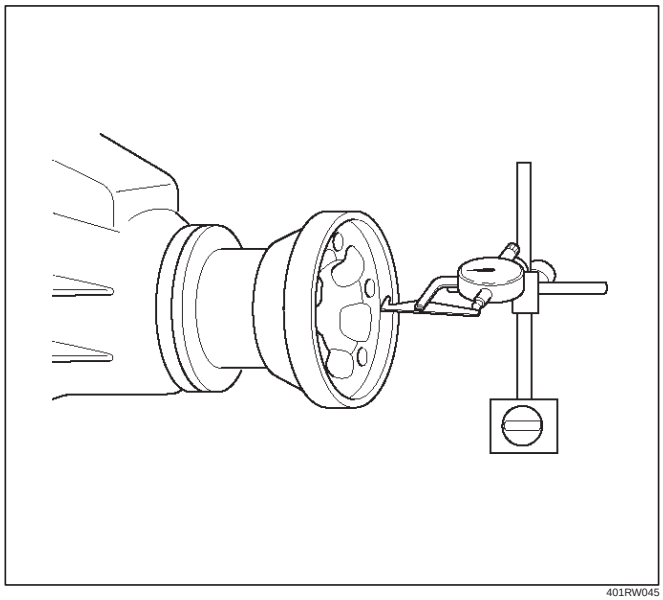

401RW045

3. If vibration is felt during the 4H AUTO drive, disconnct the propeller shaft at the front axle. Reinstall the propeller shaft at 60˚, 120˚, 180˚, 240˚, and 300˚ and conduct test drive in each position and check if there is vibration.

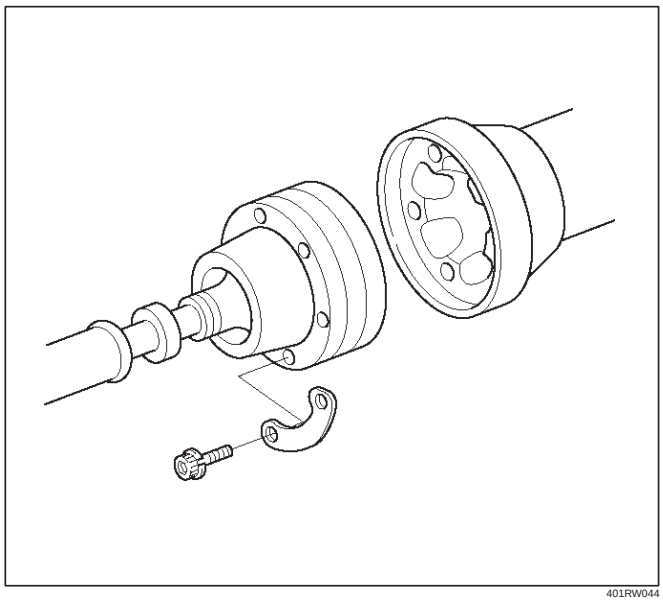

401RW044

Universal Joint Reassembly

1. Install spider to flange yoke. Be sure to install the spider by aligning the setting marks made during disassembly.
2. Apply a molybdenum–disulfide grease or a multi–purpose type grease NLGI No. 2 to inside of the bearing cap.

Grease Amount: Approx. 1.2 g (0.042 oz)

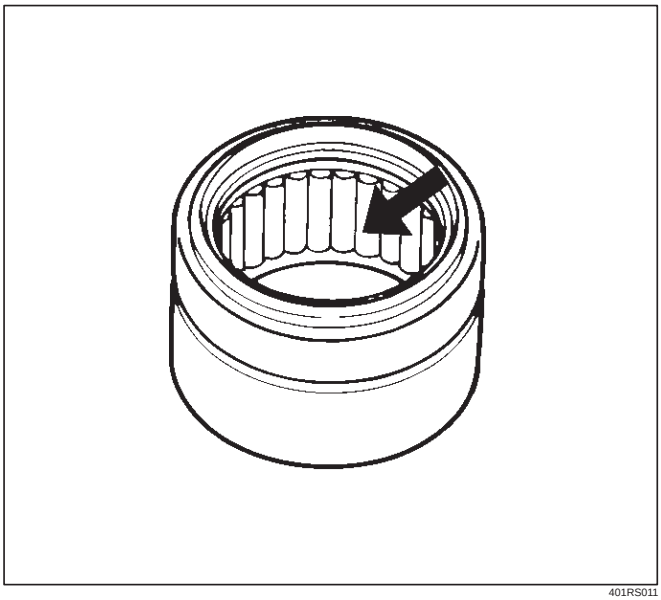

401RS011

3. Using either a mallet (or copper hammer) or a press, install the needle roller bearing into the yoke so that the snap ring can be installed in its groove.

CAUTION: The needle roller bearing cannot be installed smoothly if it is set at an incorrect angle with the flange and excessive hammering will damage the needle roller bearing.

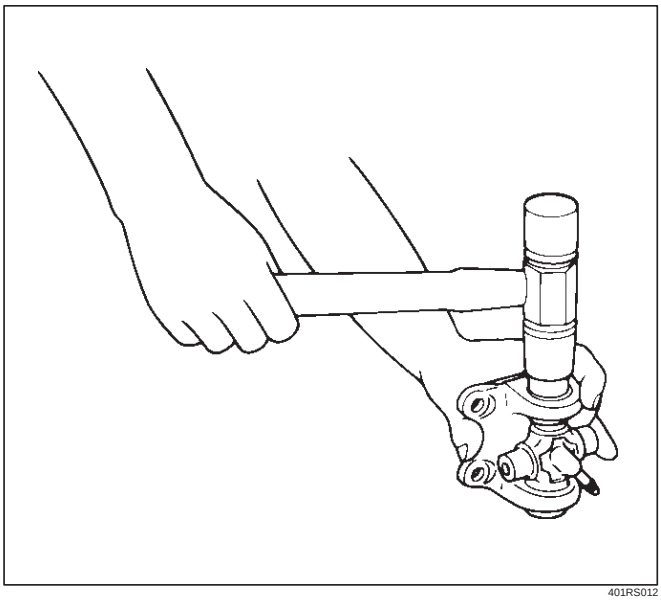

401RS012

4. Align setting marks (1) and join the yokes.

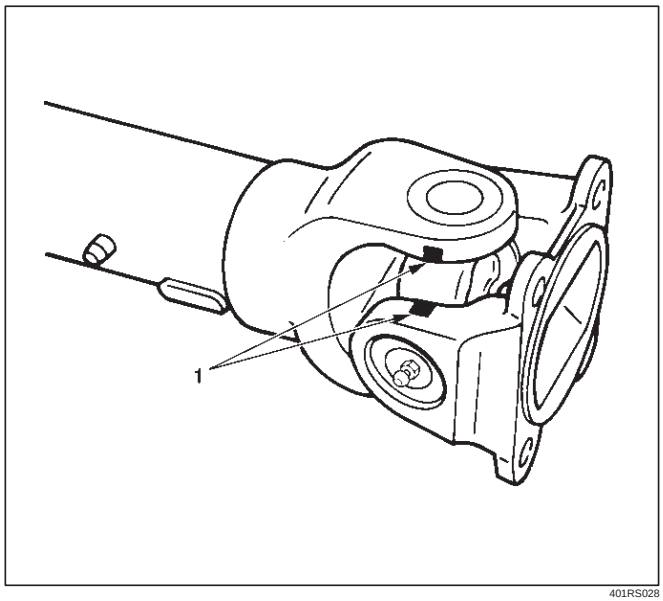

401RS028

5. Install snap ring.

NOTE: Discard used snap rings and install new ones.

When the bearing cap is in position, select and attach a snap ring of suitable thickness so that the end play of the spider pin is held within 0.1 mm (0.004 in).

Snap ring thickness and Identification color

1.5 mm (0.059 in); Blue

1.53 mm (0.060 in); White

1.59 mm (0.063 in); Yellow

1.62 mm (0.064 in); Green

1.68 mm (0.066 in); Not colored

NOTE: Be sure to use snap rings of the same thickness on both sides.

Reassembly (Except TOD 4×4)

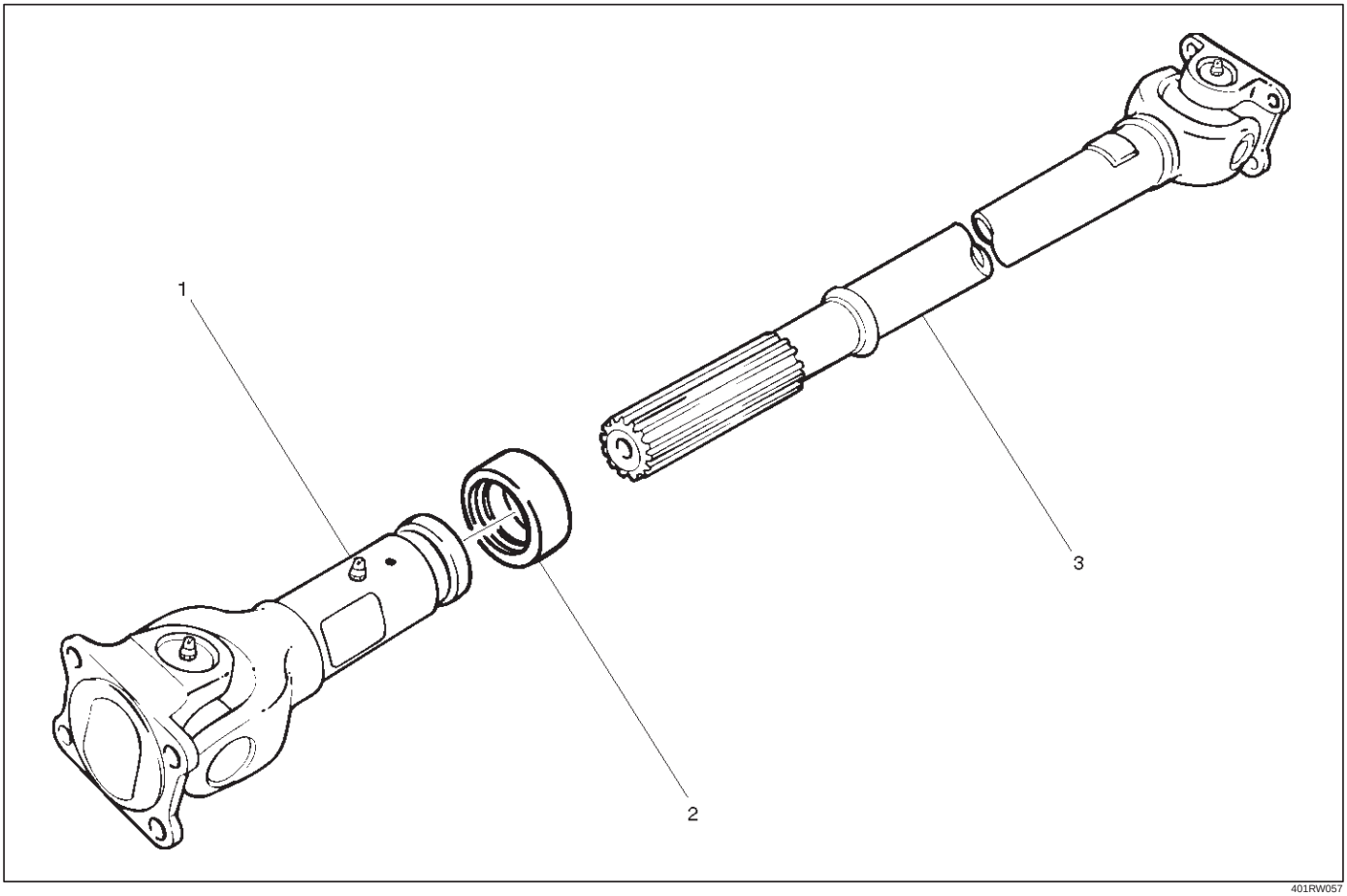

401RW057

Legend

(1) Sleeve Yoke
(2) Seal
(3) Tube Assembly

1. Discard used seal and install new one.
2. Align the alignment marks and install tube assembly to sleeve yoke.

Main Data and Specifications

General Specifications

Engine	6VE1 (3.5L)			6VD1 (3.2L)			4JX1 (3.0L)		4JG2 (3.1L)	
Transmission	M/T	A/T	A/T with TOD	M/T	A/T	A/T with TOD	M/T	A/T	M/T	A/T
Construction	Hollow steel tube with yoke and spider type universal joint		Hollow steel tube with constant velocity joints	Hollow steel tube with yoke and spider type universal joint		Hollow steel tube with constant velocity joints	Hollow steel tube with yoke and spider type universal joint			
Outside diameter	40.0mm (1.57 in)									
Length	559mm (22.01in)	559mm (22.01in)	577mm (22.72in)	393mm (15.47in)	559mm (22.01in)	577mm (22.72in)	627mm (24.69in)	627mm (24.69in)	421mm (16.57in)	627mm (24.69in)

Torque Specifications

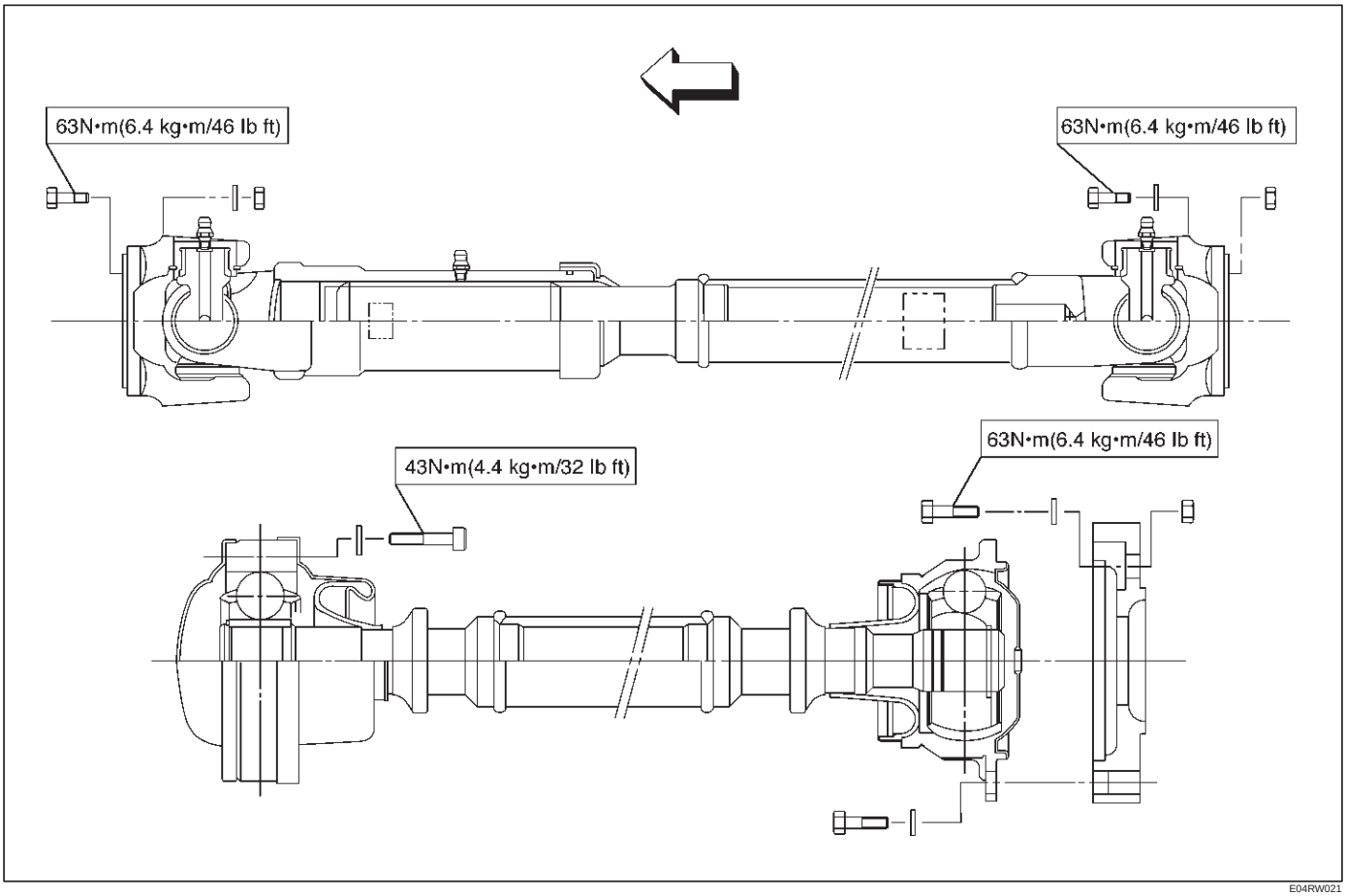

E04RW021

Rear Propeller Shaft

General Description

Since the propeller shaft is balanced carefully, welding or any other modifications are not permitted.

Alignment marks should be applied to each propeller shaft before removal.

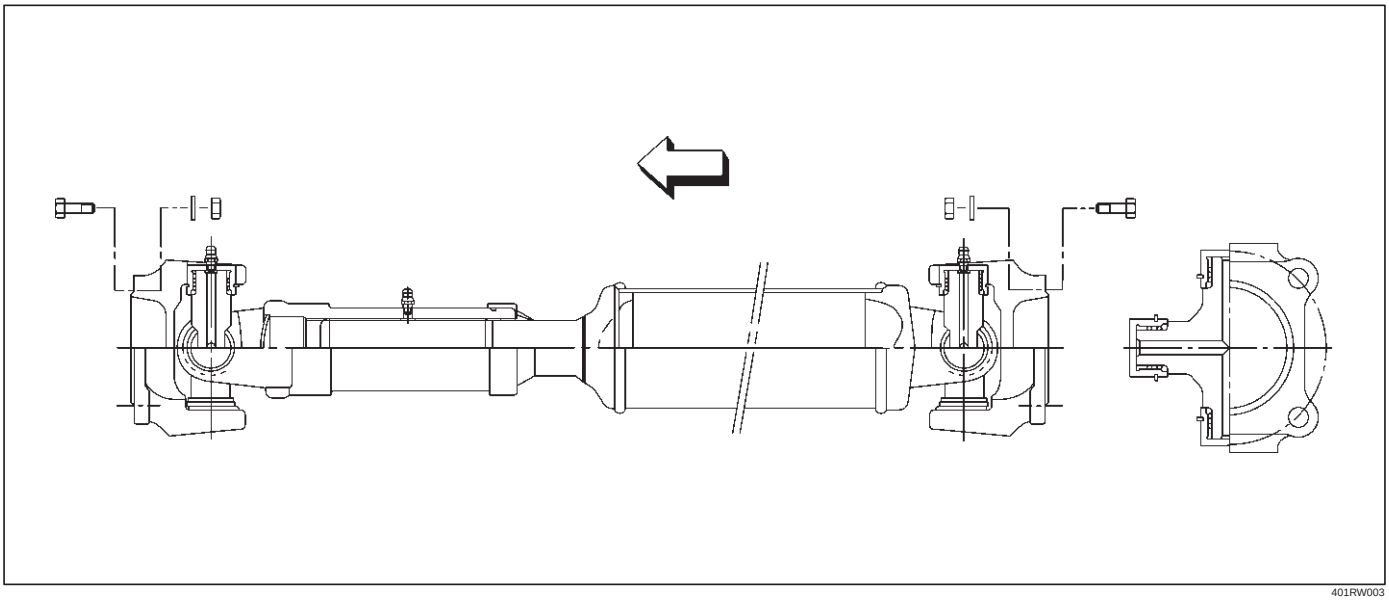

401RW003

Rear Propeller Shaft and Associated Parts

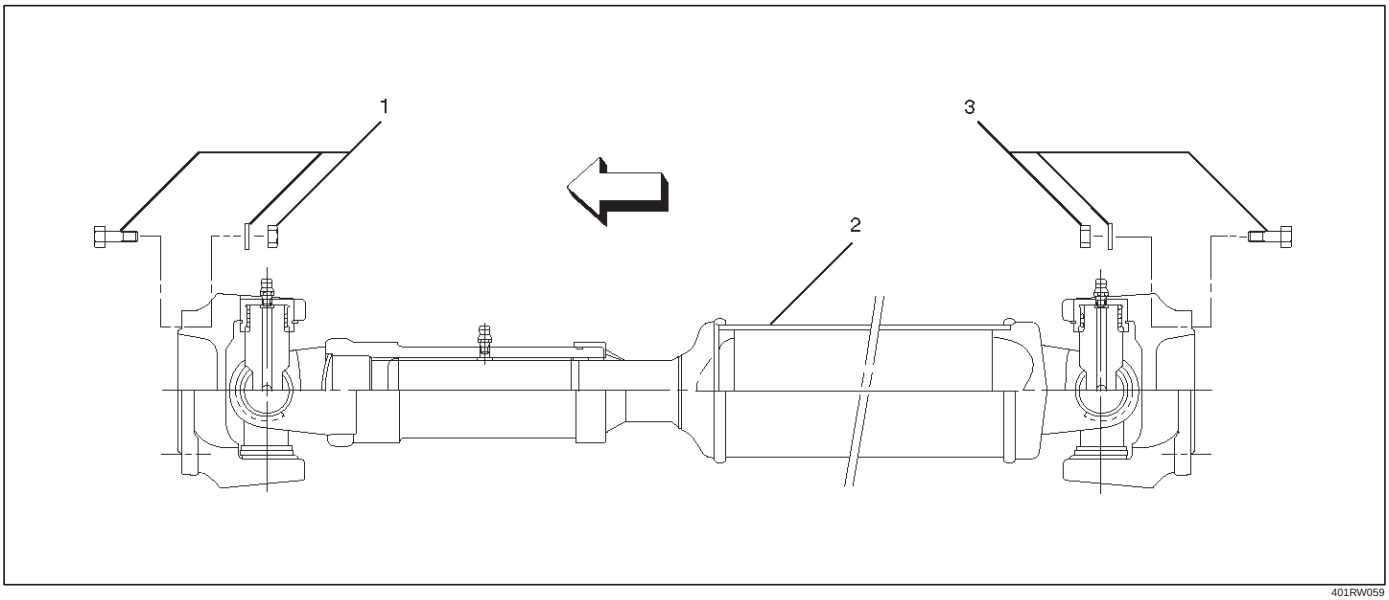

401RW059

Legend

(1) Bolt, Nut and Washer
(2) Rear Propeller Shaft
(3) Bolt, Nut and Washer

Removal

1. Jack up the vehicle and support it on the chassis stands.
2. Gear shift lever should be placed in neutral position and parking brake released.

NOTE: Apply alignment marks on the flange at the rear propeller shaft both front and rear side.

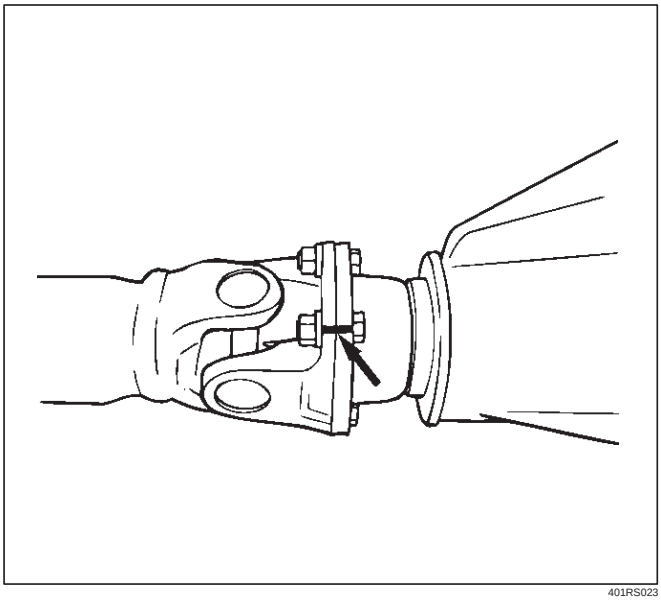

401RS023

3. Remove bolt, nut and washer (Rear axle side).
4. Remove bolt, nut and washer (Transfer side).
5. Remove rear propeller shaft.

Installation

NOTE: Never install the shaft assembly backwards.

1. Completely remove the black paint from the connecting surface of flange coupling on each end of propeller shaft. Clean so that no foreign matter will be caught in between.
2. Align the mark which is applied at removal .
   Install rear propeller shaft and tighten the bolts to the specified torque.

   Torque: 63 N·m (6.4 kg·m/46 lb ft)

3. After installing the propeller shaft, be sure to apply black paint (1) to exposed area (other than connecting surface) of the entire surface of flange coupling .

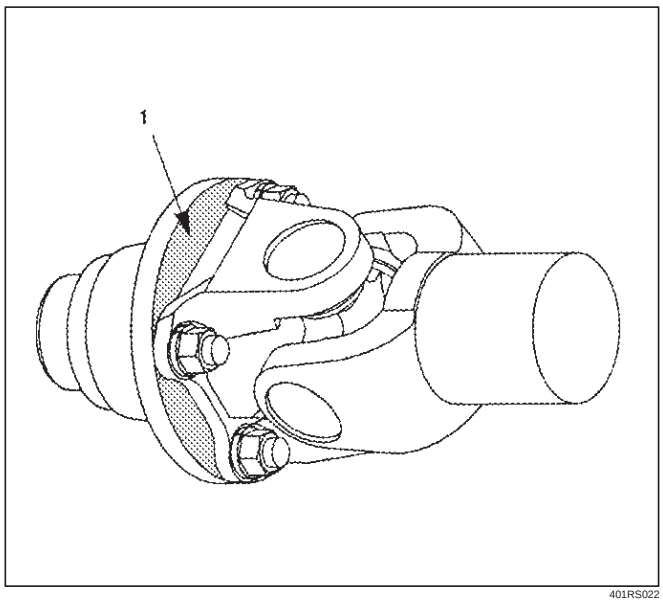

401RS022

Disassembly

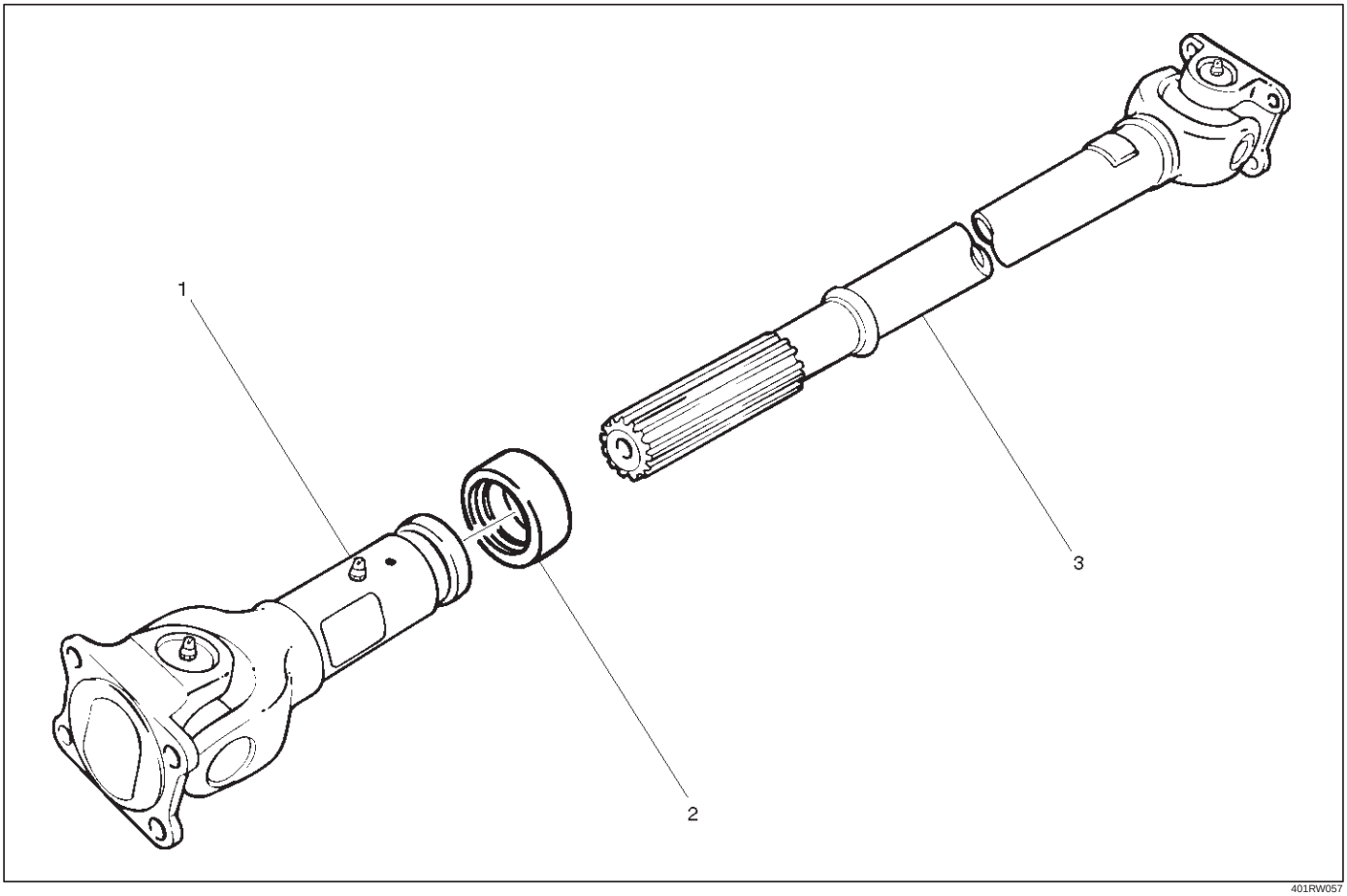

401RW057

Legend

(1) Sleeve Yoke
(2) Seal
(3) Tube Assembly

1. Apply alignment marks (1) on the sleeve yoke and tube assembly then remove sleeve yoke.

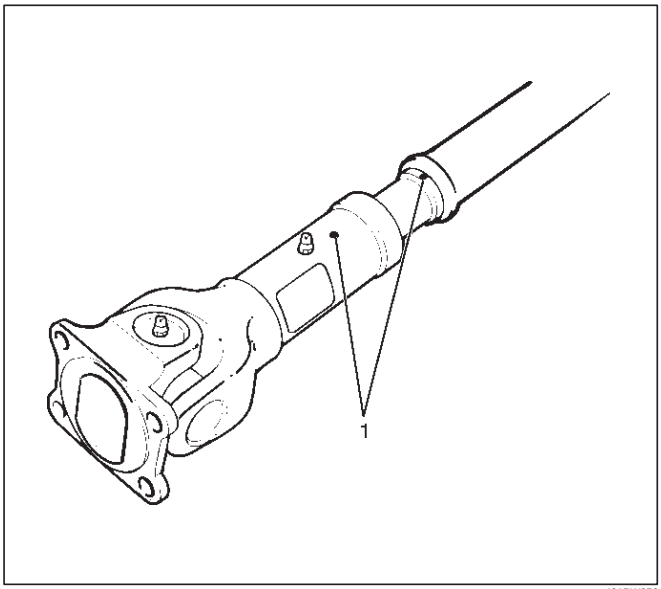

401RW056

2. Remove seal.
3. Remove tube assembly.

Universal Joint Disassembly

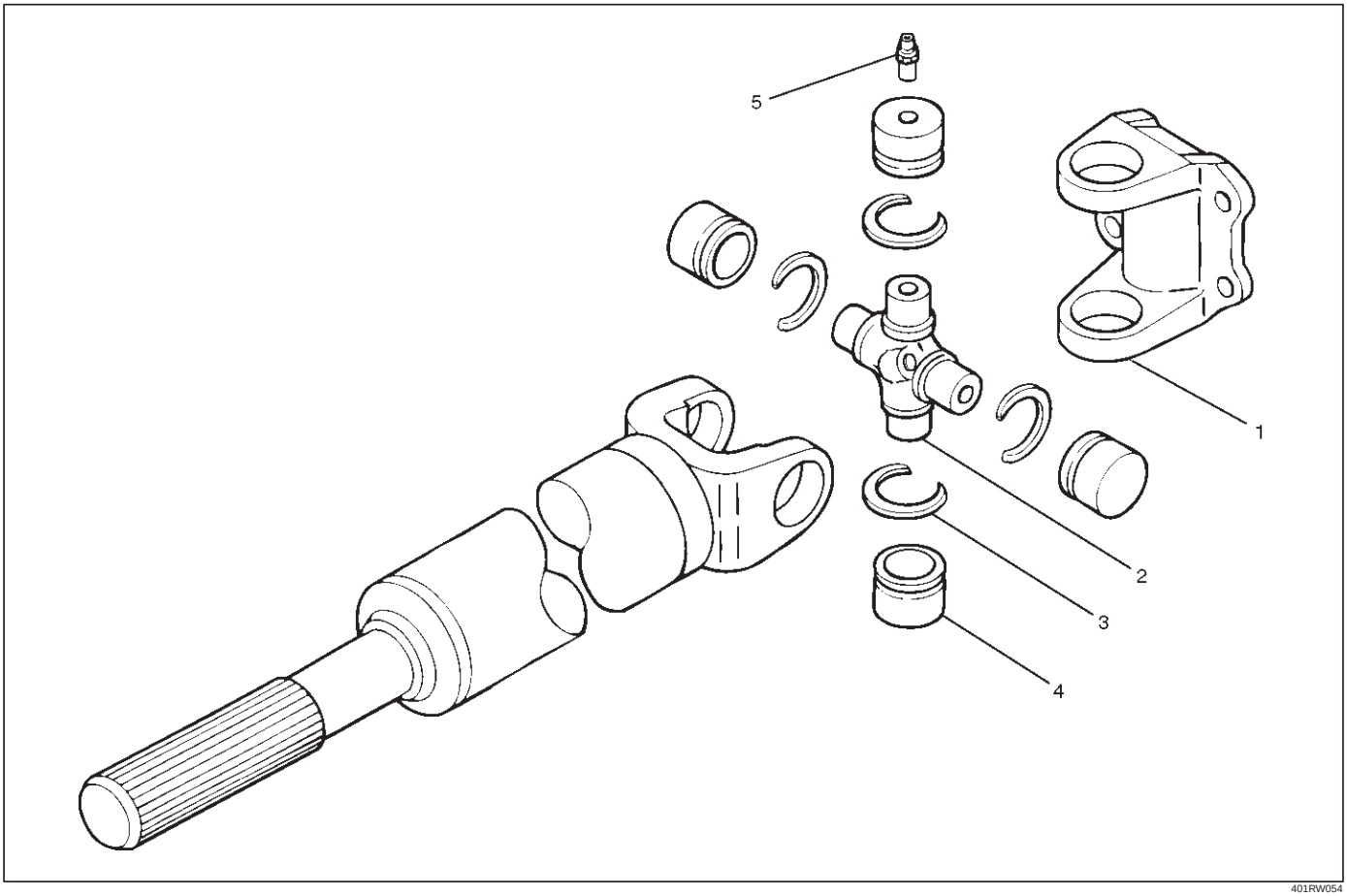

401RW054

Legend

(1) Flange Yoke
(2) Spider with Grease Fitting
(3) Snap Ring
(4) Needle Roller Bearing
(5) Grease Fitting

1. Apply alignment marks (1) on the yokes of the universal joint, then remove snap ring.

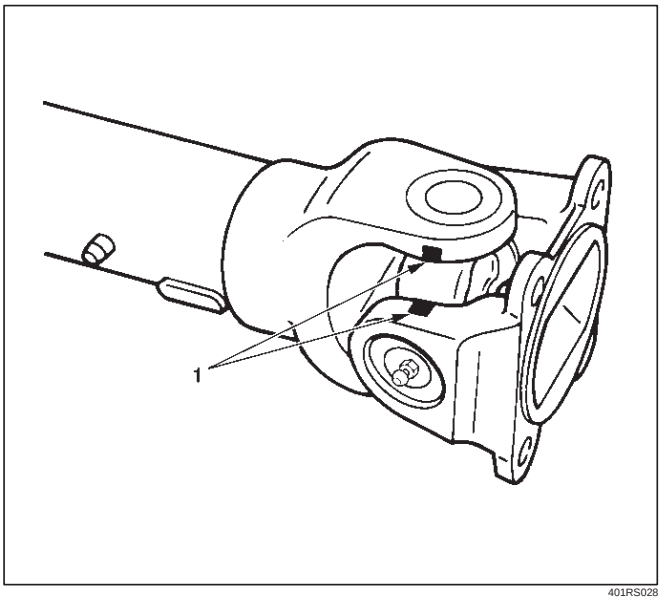

401RS028

2. Tap out the needle roller bearing by gently striking the shoulder of the yoke, using a mallet or a copper hammer.

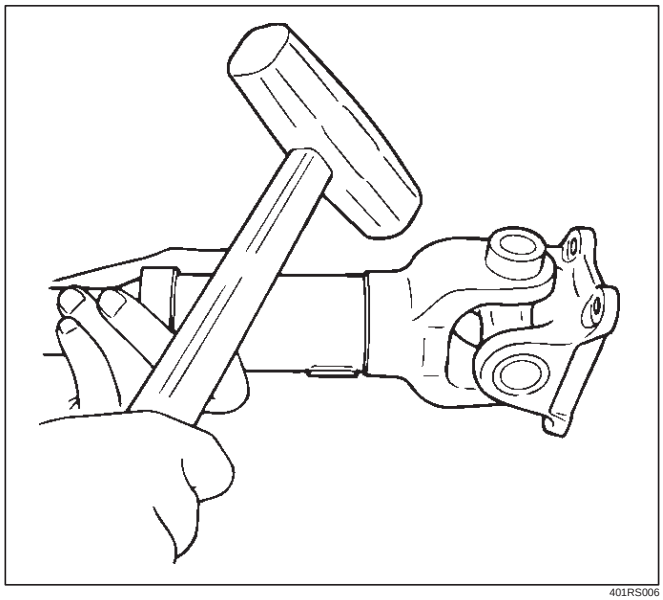

401RS006

3. Make sure of proper position for reinstallation by applying setting marks, then remove spider with grease fitting.

Inspection and Repair

Make necessary correction or parts replacement if wear, damage, corrosion or any other abnormal condition is found through inspection.

NOTE: When any part of the journal assembly (spider, needle roller bearing, grease fitting) requires replacement, be sure to replace the entire assembly.

Check the following parts for wear, damage, noise or any other abnormal conditions:

1. Spider
2. Needle roller bearing
3. Yoke
4. Flange

Outside Diameter of Spider Pin

Standard: 17.00 mm (0.669 in)

Limit: 16.90 mm (0.665 in)

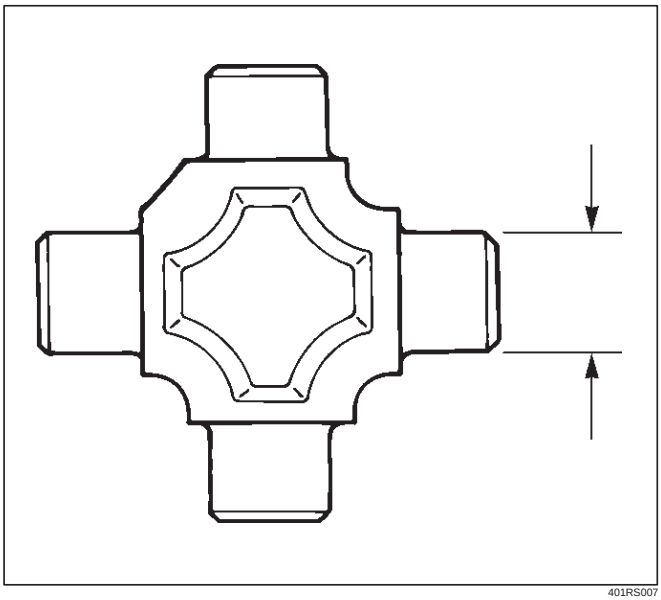

401RS007

Propeller Shaft Run-out

Support the ends of the propeller shaft on V-blocks (2) and check for run-out by holding the probe of a dial indicator (1) in contact with the center part of the shaft. If the amount of run-out is beyond the standard value for assembly, correct with a bench press or replace the shaft with a new propeller shaft assembly .

Standard: 0.3 mm (0.012 in)

Limit: 0.5 mm (0.02 in)

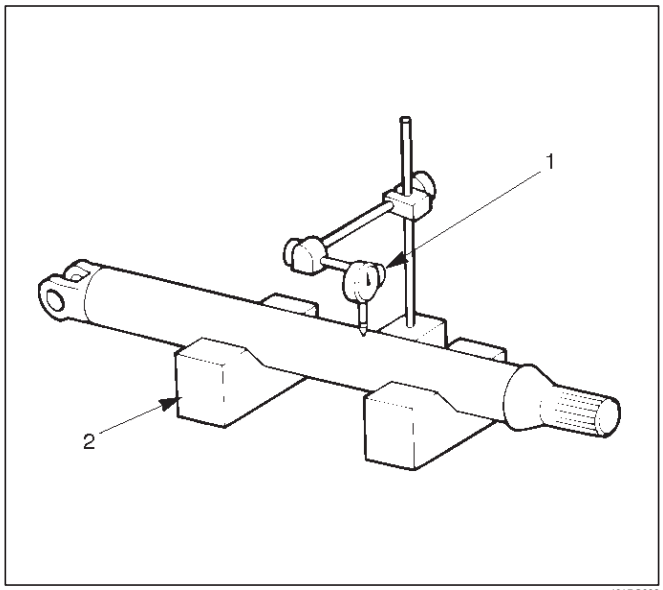

401RS008

Play in Splines in Normal Direction of Rotation

Check the amount of play between the sleeve yoke (1) and the propeller shaft spline (2) in the direction of rotation, using a pointed feeler gauge.

Standard: 0.073 – 0.156 mm (0.003 – 0.006 in)

Limit: 0.3 mm (0.012 in)

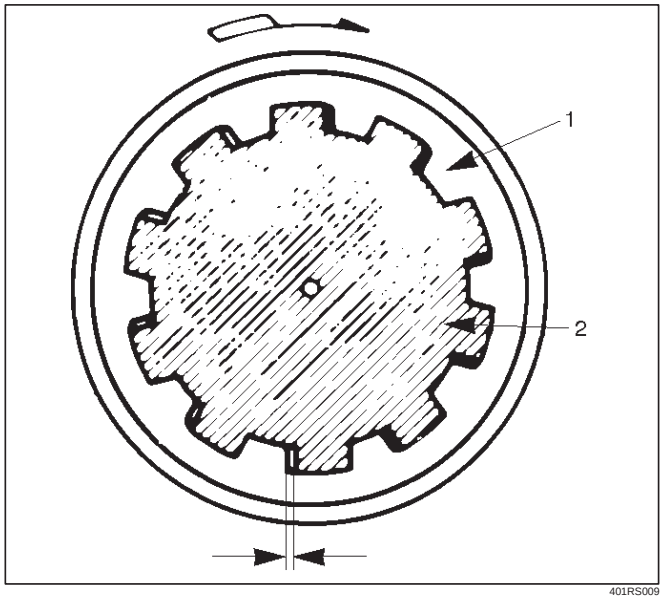

401RS009

Play in Universal Joint

Limit: Less than 0.1 mm (0.004 in)

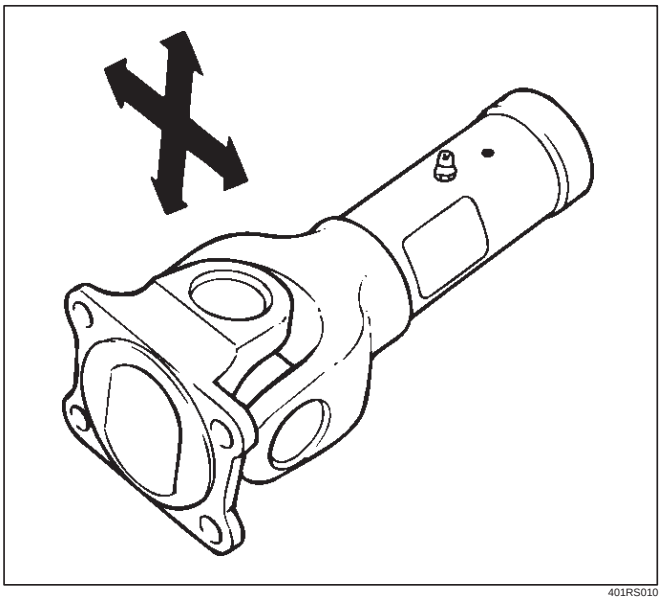

401RS010

Universal Joint Reassembly

1. Install spider to flange yoke. Be sure to install the spider by aligning the setting marks made during disassembly.
2. Before installing needle roller bearing, apply a molybdenum–disulfide grease or a multi–purpose type grease NLGI No. 2 to inside of the bearing cap.

Grease Amount: Approx. 1.2 g (0.042 oz)

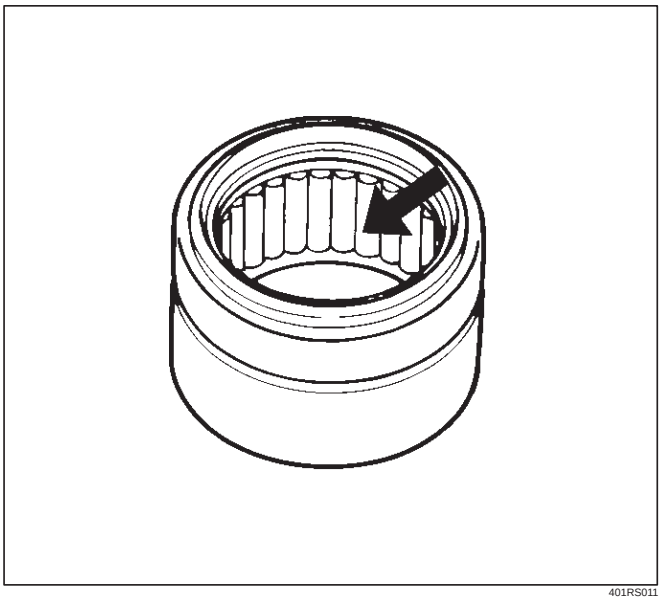

401RS011

3. Using either a mallet (or copper hammer) or a press, install the needle roller bearing into the yoke so that the snap ring can be installed in its groove.

CAUTION: The needle roller bearing cannot be installed smoothly if it is set at an incorrect angle with the flange and excessive hammering will damage the needle roller bearing.

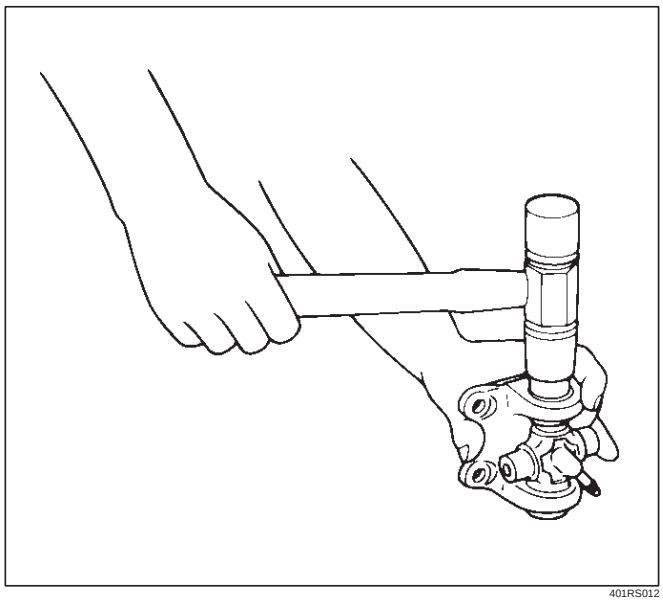

401RS012

4. Align setting marks (1) and join the yokes.

NOTE: Assemble the spider and spline yoke so that their grease fittings are arranged on the same side.

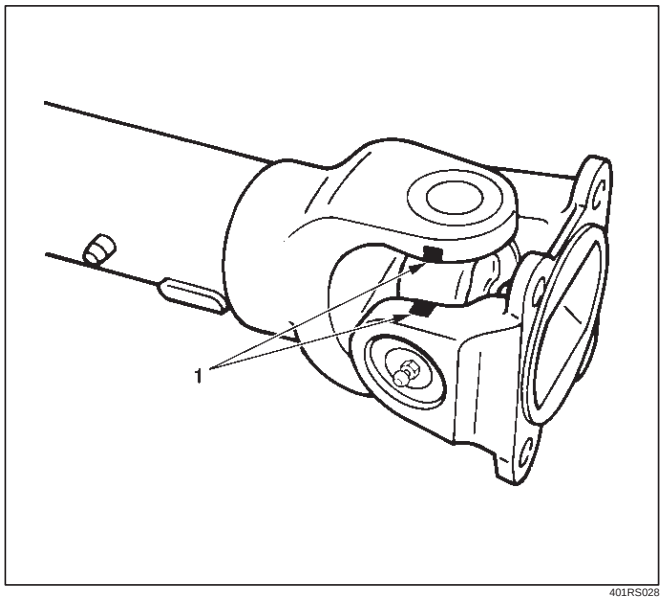

401RS028

5. Install snap ring.

NOTE: Discard used snap rings and install new ones.

When the bearing cap is in position, select and attach a snap ring of suitable thickness so that the end play of the spider pin is held within 0.1 mm (0.004 in).

Snap ring thickness and identification color

1.5 mm (0.059 in): Blue

1.545 mm (0.061 in): White

1.59 mm (0.063 in): Yellow

1.635 mm (0.064 in): Green

1.68 mm (0.066 in): Not colored

NOTE: Be sure to use snap rings of the same thickness on both sides.

Reassembly

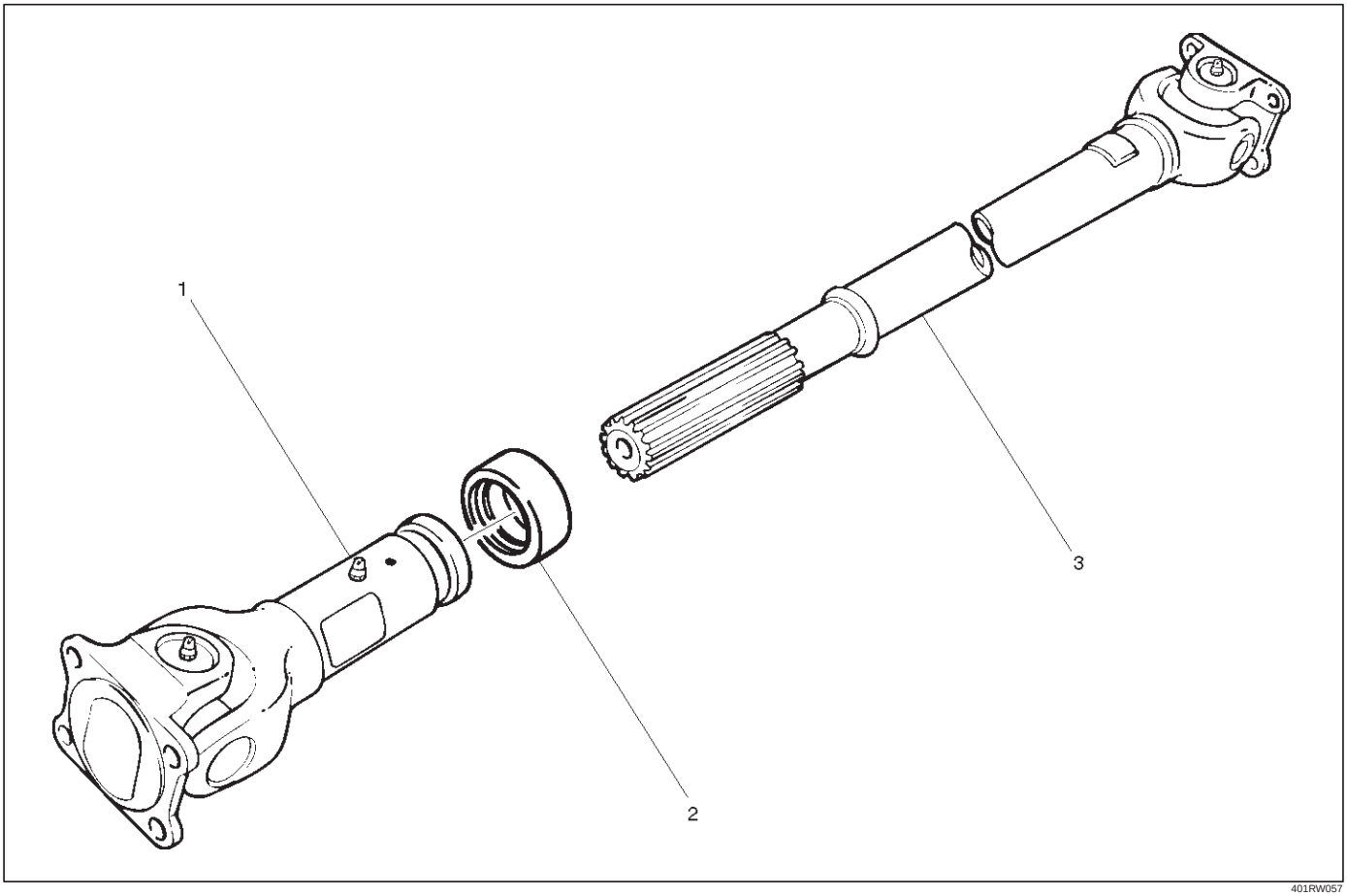

401RW057

Legend

(1) Sleeve Yoke
(2) Seal
(3) Tube Assembly

1. Discard used seal and install new one.
2. Align the alignment marks and install tube assembly to sleeve yoke.

Main Data and Specifications

General Specifications

Engine		6VE1 (3.5L)			6VD1 (3.2L)			4JX1 (3.0L)		4JG2 (3.1L)	
Transmission		M/T	A/T	A/T with TOD	M/T	A/T	A/T with TOD	M/T	A/T	M/T	A/T
Construction		Hollow steel tube with yoke and spider type universal joint									
Length	SWB	668mm (26.30in)		—	846mm (33.31in)	678mm (26.69in)	—	604mm (23.78in)		810mm (31.89in)	—
	LWB	1093mm (43.03in)		1075mm (42.32in)	1271mm (50.04in)	1103mm (43.43in)	1083mm (42.64in)	1029mm (40.51in)		1236mm (48.66in)	1037mm (40.83in)
Outside diamter	SWB	68.9mm (2.71in)		—	68.9mm (2.71in)		—	68.9mm (2.71in)			—
	LWB	68.9mm (2.71in)			82.6mm (3.25in)	68.9mm (2.71in)				82.6mm (3.25in)	68.9mm (2.71in)

Torque Specifications

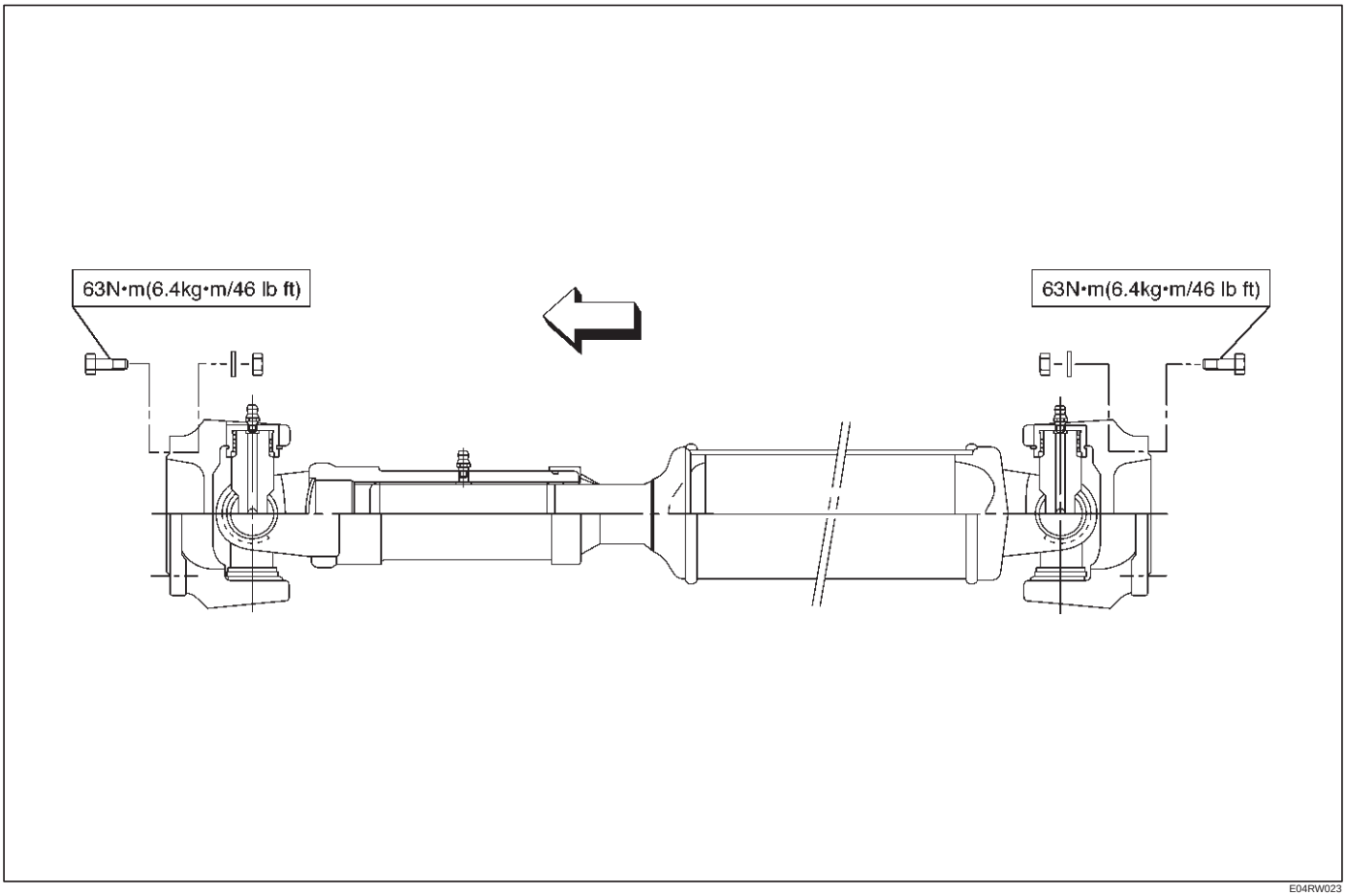

E04RW023

DRIVELINE/AXLE

TRANSFER CASE (STANDARD TYPE)

CONTENTS

Service Precaution 4D1–1
General Description 4D1–2
Transfer Rear Oil Seal 4D1–8
Removal 4D1–8
Installation 4D1–8
Transfer Case Assembly 4D1–9
Removal 4D1–9
Installation 4D1–10
Transfer Rear Cover Assembly (4WD Switch Model) 4D1–11
Transfer Rear Cover Assembly and Associated Parts 4D1–11
Removal 4D1–12
Installation 4D1–13
Disassembly 4D1–16
Inspection and Repair 4D1–17
Reassembly 4D1–17
Transfer Rear Cover Assembly (Except 4WD Switch Model) 4D1–19
Transfer Rear Cover Assembly and Associated Parts 4D1–19
Removal 4D1–20
Installation 4D1–20
Disassembly 4D1–23
Inspection and Repair 4D1–24
Reassembly 4D1–24
Detent, Shift Arm, and Interlock Pin 4D1–26
Disassembled View 4D1–26
Disassembly 4D1–26
Inspection and Repair 4D1–28
Reassembly 4D1–28
Transfer Case Assembly 4D1–30
Disassembled View 4D1–30
Disassembly 4D1–31
Inspection and Repair 4D1–33
Reassembly 4D1–37
Main Data and Specifications 4D1–43
Special Tools 4D1–46

Service Precaution

WARNING: THIS VEHICLE HAS A SUPPLEMENTAL RESTRAINT SYSTEM (SRS). REFER TO THE SRS COMPONENT AND WIRING LOCATION VIEW IN ORDER TO DETERMINE WHETHER YOU ARE PERFORMING SERVICE ON OR NEAR THE SRS COMPONENTS OR THE SRS WIRING. WHEN YOU ARE PERFORMING SERVICE ON OR NEAR THE SRS COMPONENTS OR THE SRS WIRING, REFER TO THE SRS SERVICE INFORMATION. FAILURE TO FOLLOW WARNINGS COULD RESULT IN POSSIBLE AIR BAG DEPLOYMENT, PERSONAL INJURY, OR OTHERWISE UNNEEDED SRS SYSTEM REPAIRS.

CAUTION: Always use the correct fastener in the proper location. When you replace a fastener, use ONLY the exact part number for that application. ISUZU will call out those fasteners that require a replacement after removal. ISUZU will also call out the fasteners that require thread lockers or thread sealant. UNLESS OTHERWISE SPECIFIED, do not use supplemental coatings (Paints, greases, or other corrosion inhibitors) on threaded fasteners or fastener joint interfaces. Generally, such coatings adversely affect the fastener torque and the joint clamping force, and may damage the fastener. When you install fasteners, use the correct tightening sequence and specifications. Following these instructions can help you avoid damage to parts and systems.

General Description

M/T, W/Shift On The Fly, W/4WD Switch, model

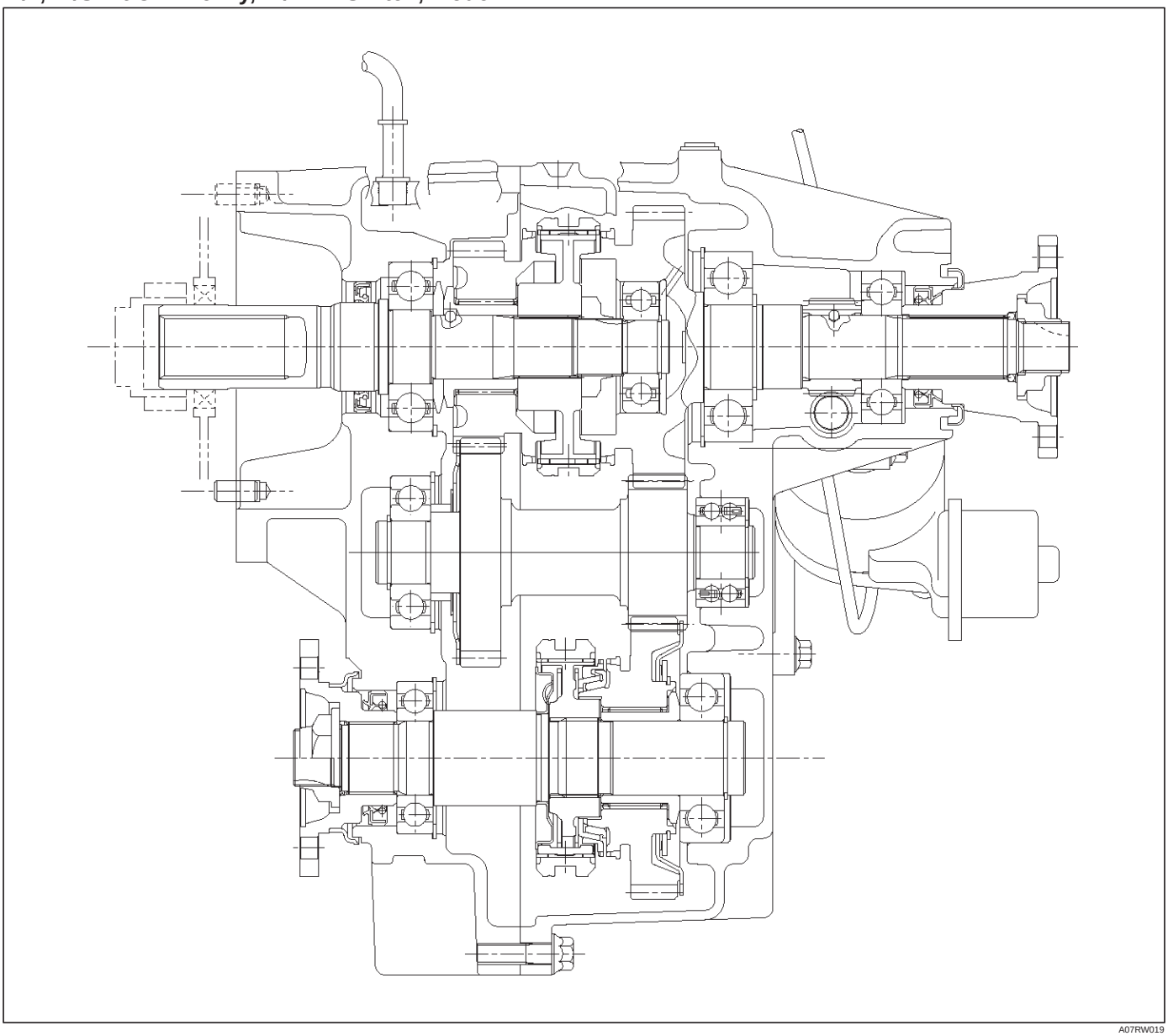

A07RW019

M/T, W/Shift On The Fly, WO/4WD Switch, model

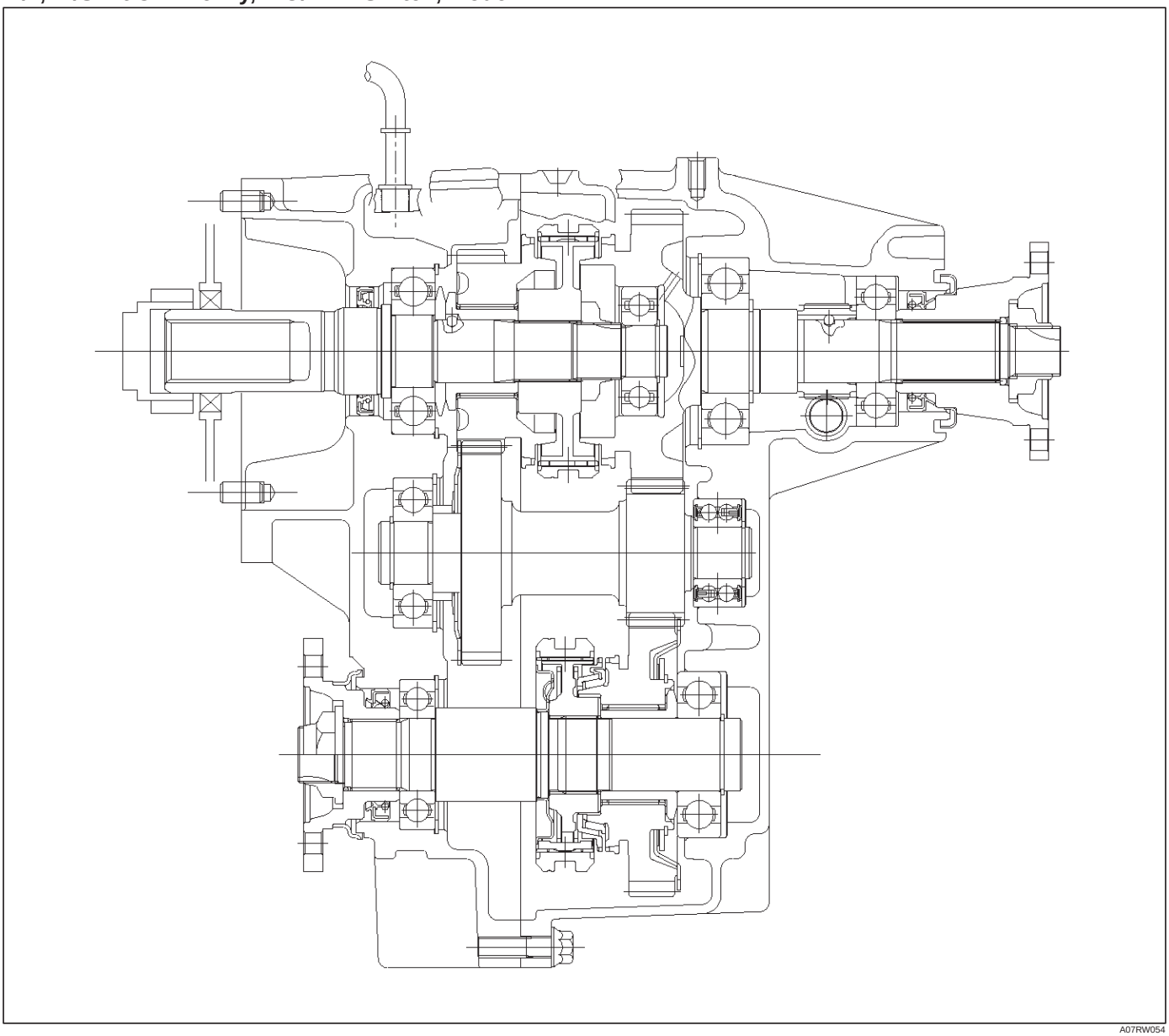

A07RW054

M/T, WO/Shift On The Fly, WO/4WD Switch, model

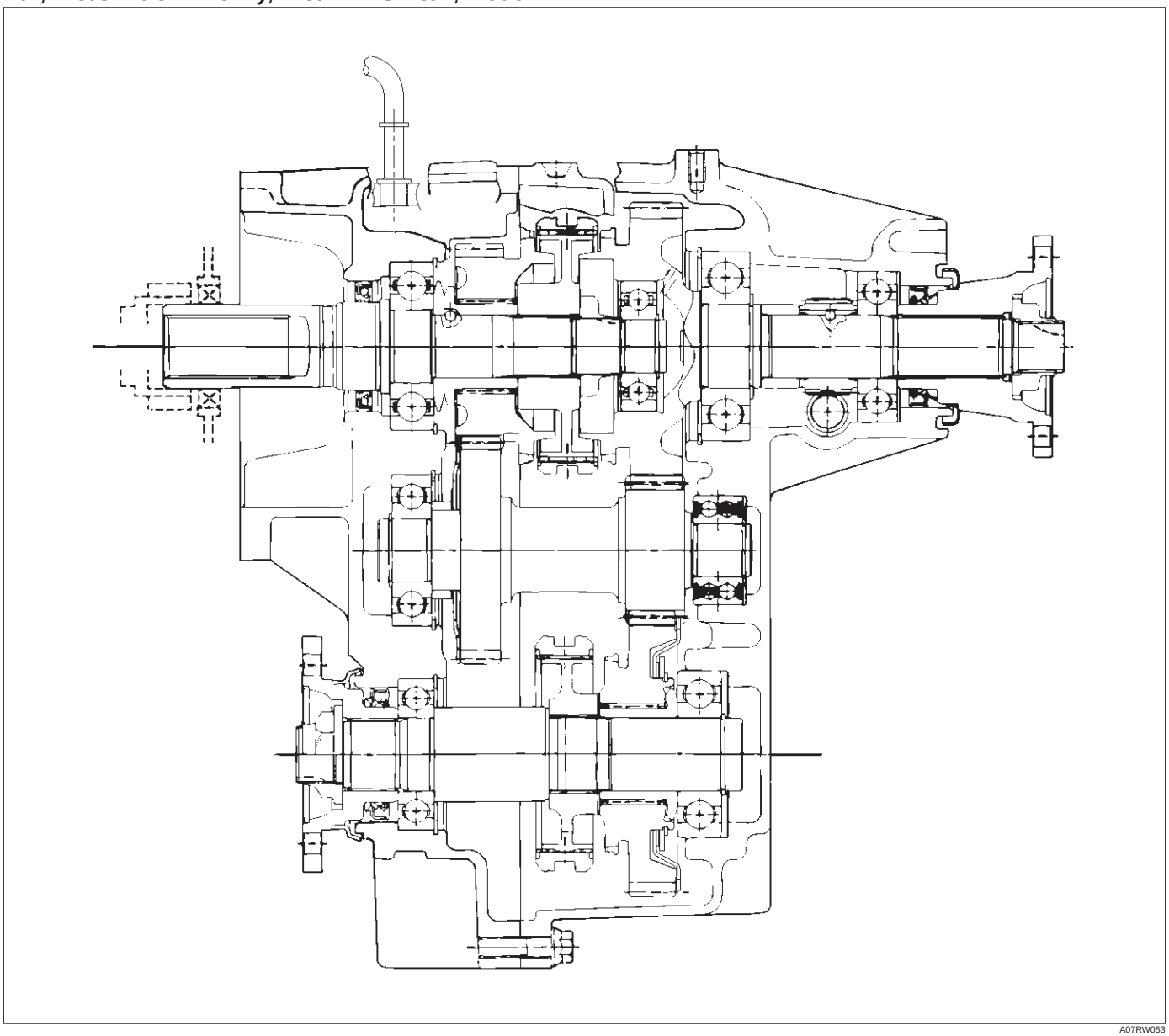

A07RW053

A/T, W/Shift On The Fly, W/4WD Switch, model

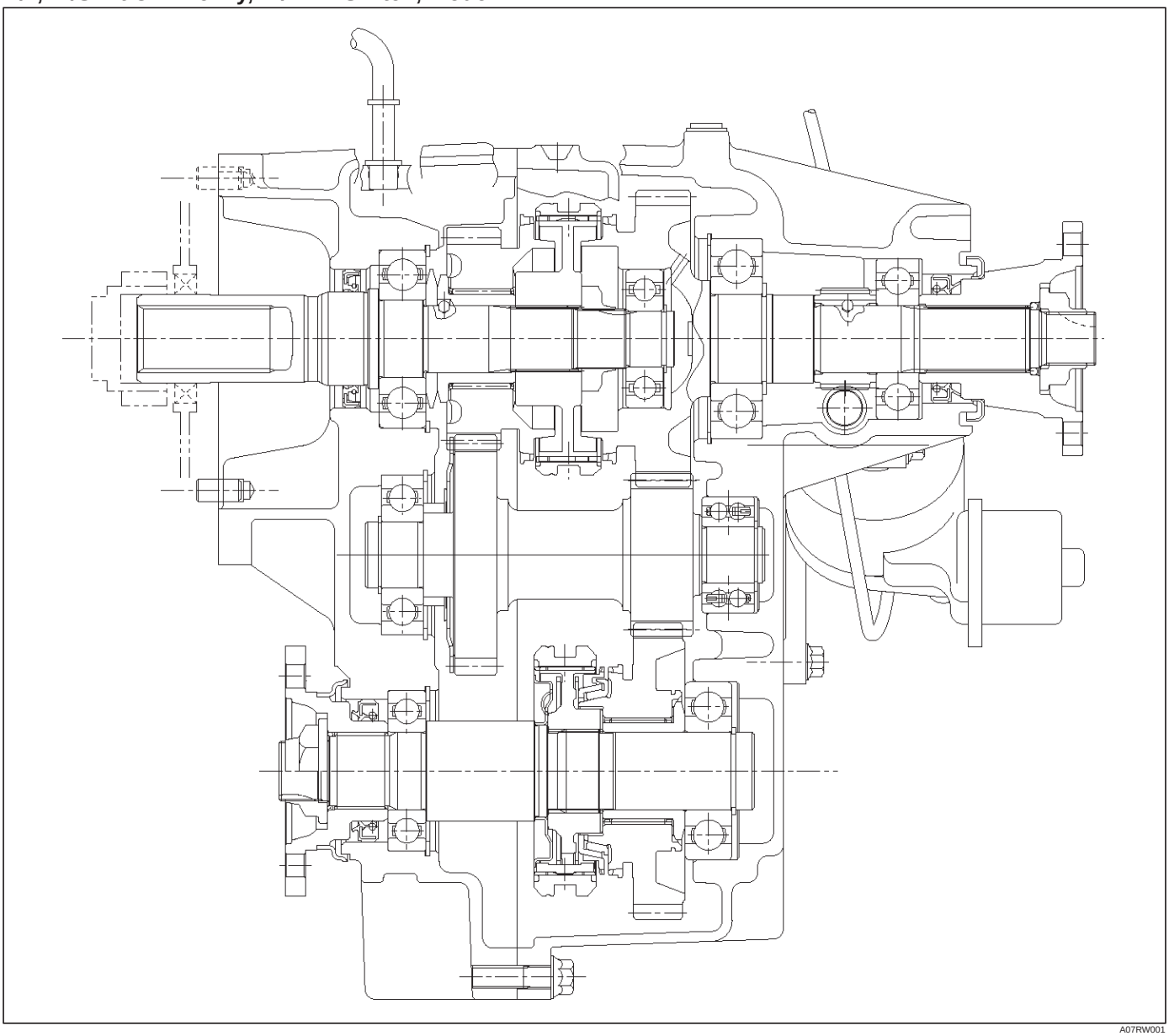

A07RW001

A/T, W/Shift On The Fly, WO/4WD Switch, model

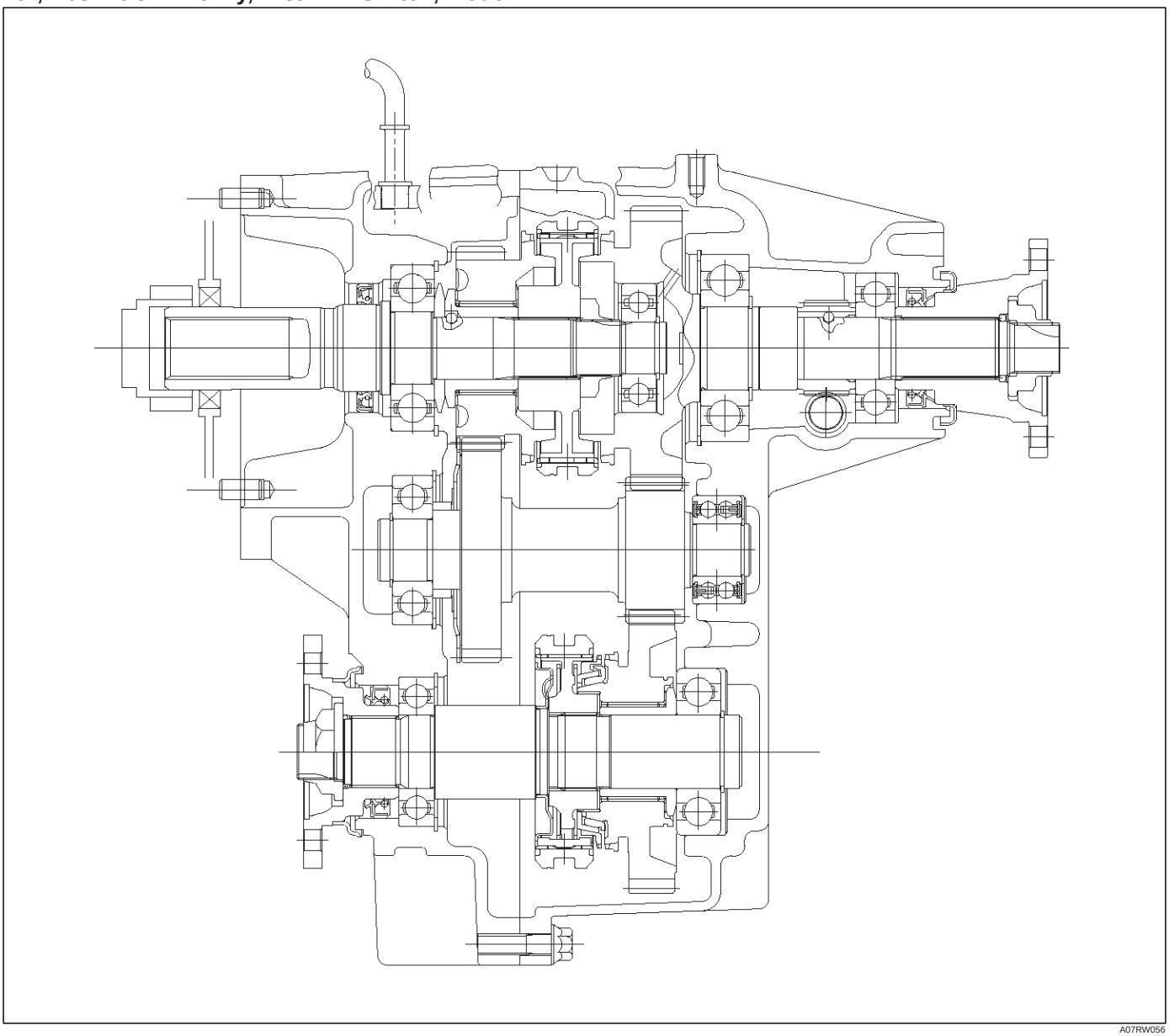

A07RW056

A/T, WO/Shift On The Fly, WO/4WD Switch, model

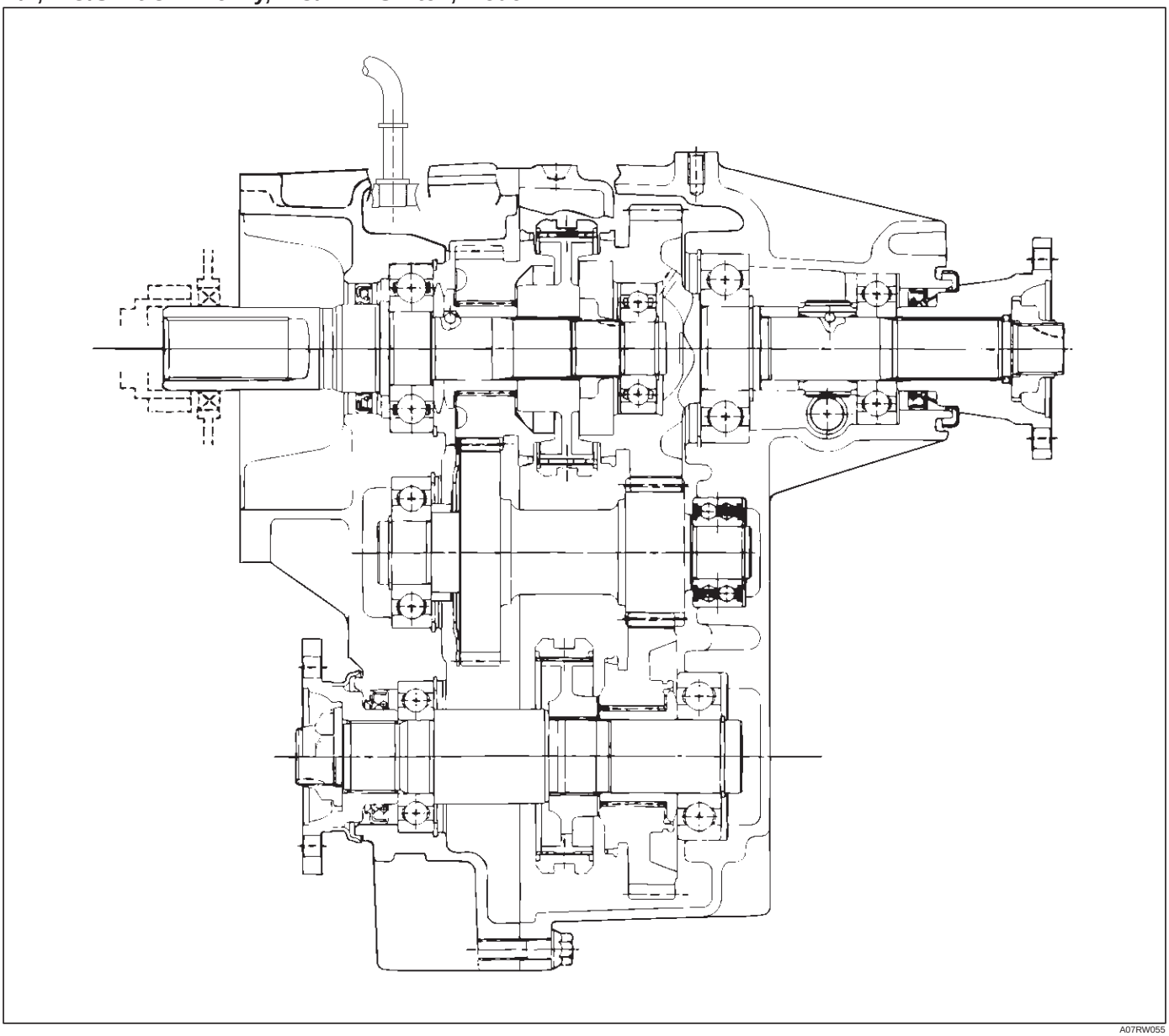

A07RW055

The transfer case is used to provide a means of providing power flow to the front axle. The transfer case also provides a means of disconnecting the front axle, providing better fuel economy and quieter operation when the vehicle is driven on improved roads where four wheel drive is not required. In addition, the transfer case provides an additional gear reduction when placed in low range, which is useful when difficult off–road conditions are encountered.

A floor mounted shift lever is used to select the high–low range. When four wheel drive switch has been turned on, the four wheel drive indicator light is designed to come on when the front axle has been engaged.

Transfer Rear Oil Seal

Removal

1. Disconnect the rear propeller shaft from the transfer case side.
2. Remove end nut and rear companion flange, using the companion flange holder 5–8840–0133–0 (J–8614–11).

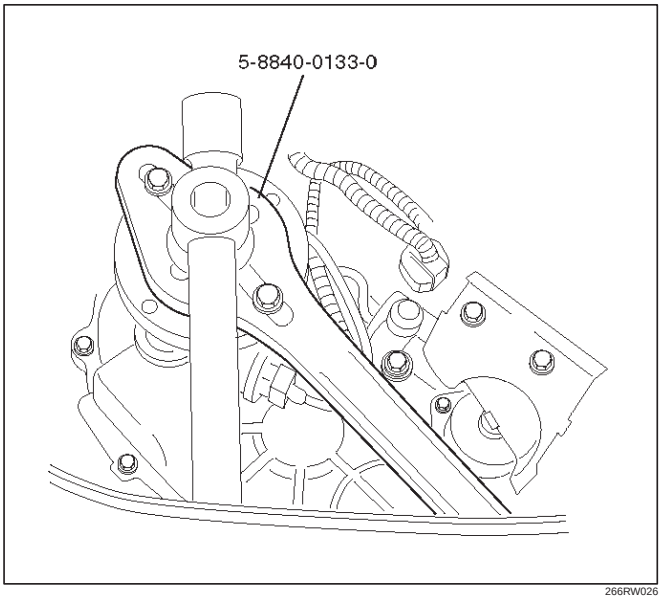

266RW026

3. Use the universal puller to remove the rear companion flange and O–ring.
4. Remove the oil seal from the transfer case.

Installation

To install, follow the removal steps in the reverse order, noting the following points:

1. Install oil seal and apply engine oil to the oil seal outer surfaces.
2. Apply the recommended grease (BESCO L2) or equivalent to the oil seal lip.
3. Use the oil seal installer 5–8840–2292–0 (J–39208) to install the rear seal to the transfer rear case.

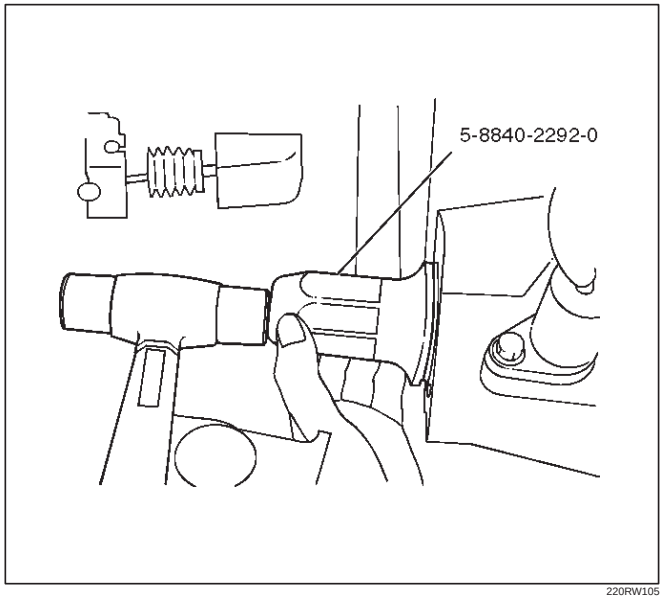

220RW105

4. Install the rear companion flange and O–ring.
5. Use the companion flange holder 5–8840–0133–0 (J–8614–11) to install a new end nut and tighten to the specified torque.

   Torque: 167 N·m (17.0kg·m/123 lb ft)

6. Use the punch 5–8840–2293–0 (J–39209) to stake the end nut at two spots.

NOTE: Be sure to confirm that there is no crack at the staked portion of the end nut after staking.

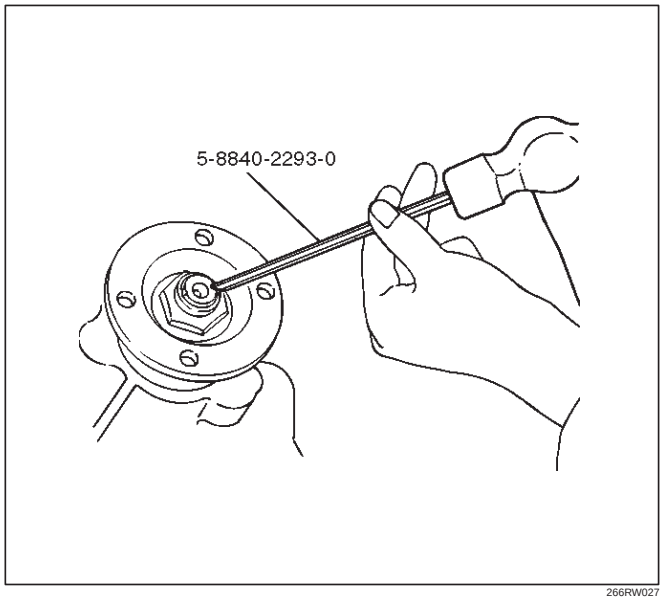

266RW027

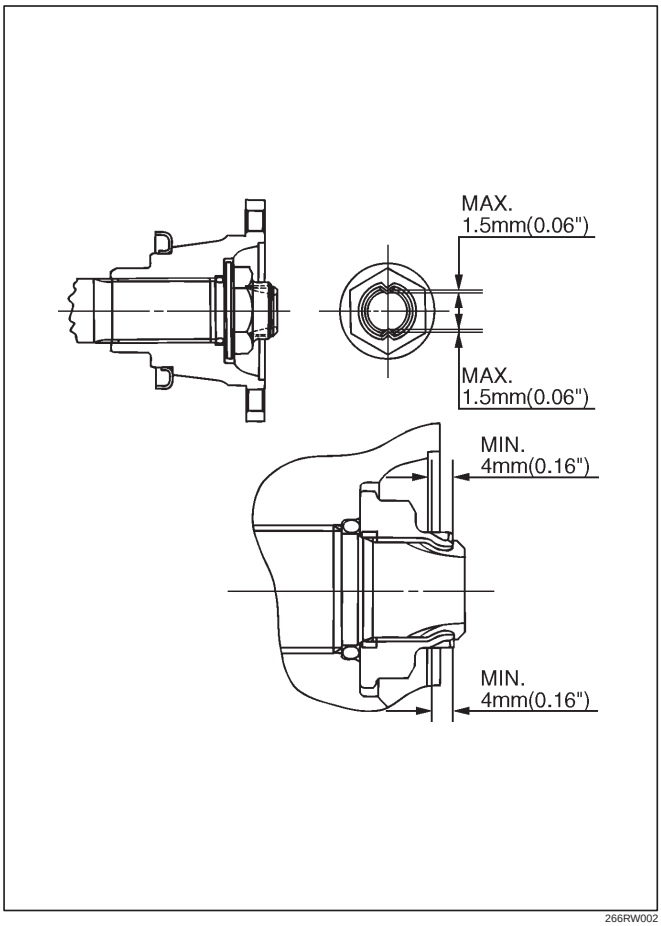

266RW002

7. Connect the rear propeller shaft to the transfer case and tighten to the specified torque.

Torque: 63 N·m (6.4kg·m/46 lb ft)

Transfer Case Assembly

Removal

NOTE: Before removing the transmission & transfer assembly from the vehicle, change the transfer mode to 2WD by pushing button switch on dash panel. (4WD Switch Model)

1. Disconnect the battery ground cable.
2. Drain the transfer case fluid, if overhauling the transter case assembly.
3. Remove the exhaust and transfer protectors.
4. Remove the rear and front propeller shafts from the transfer case side.
5. Remove the transfer control lever knob.
6. Disconnect the harness connectors and remove the front console.
7. Remove the selector lever assembly. Refer to Selector Lever in the Section 7A.
8. Remove the transfer control lever.
9. Disconnect the 4WD switch connector, speed sensor harness connector and 2WD–4WD actuator harness connector (4WD Switch Model) from the transmission harness.
10. Support the transfer case with a transmission jack.
11. Remove the transmission–transfer bolts and the nut (M/T).
12. Remove the transfer case assembly from the vehicle.

Installation

To install, follow the removal steps in the reverse order, noting the following points:

1. Apply a thin coat of molybdenum disulfide grease to the input shaft spline and install the transter case assembly to the vehicle.

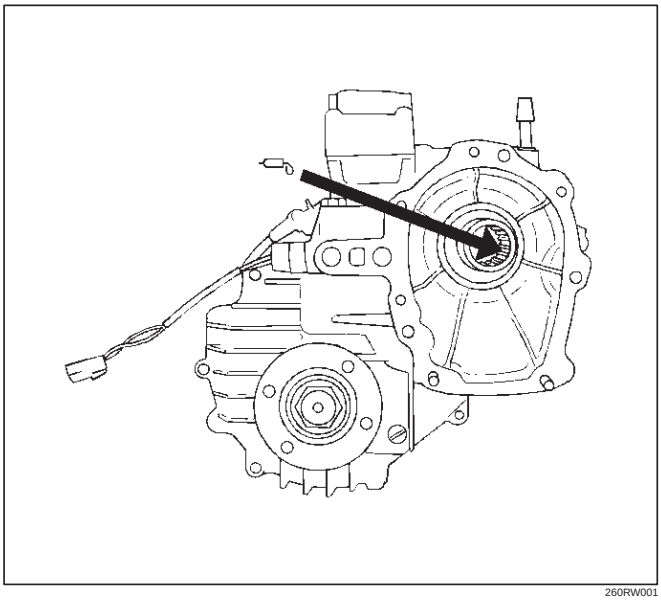

260RW001

2. Tighten the transmission–transfer bolts and the nut (M/T) to the specified torque.

   Torque: 46 N·m (4.7kg·m/34 lb ft)

3. Tighten the propeller shaft bolts to the specified torque.

   Torque: 63 N·m (6.4kg·m/46 lb ft)

4. Tighten the transfer protector bolts to the specified torque.

   Torque: 37 N·m (3.8kg·m/27 lb ft)

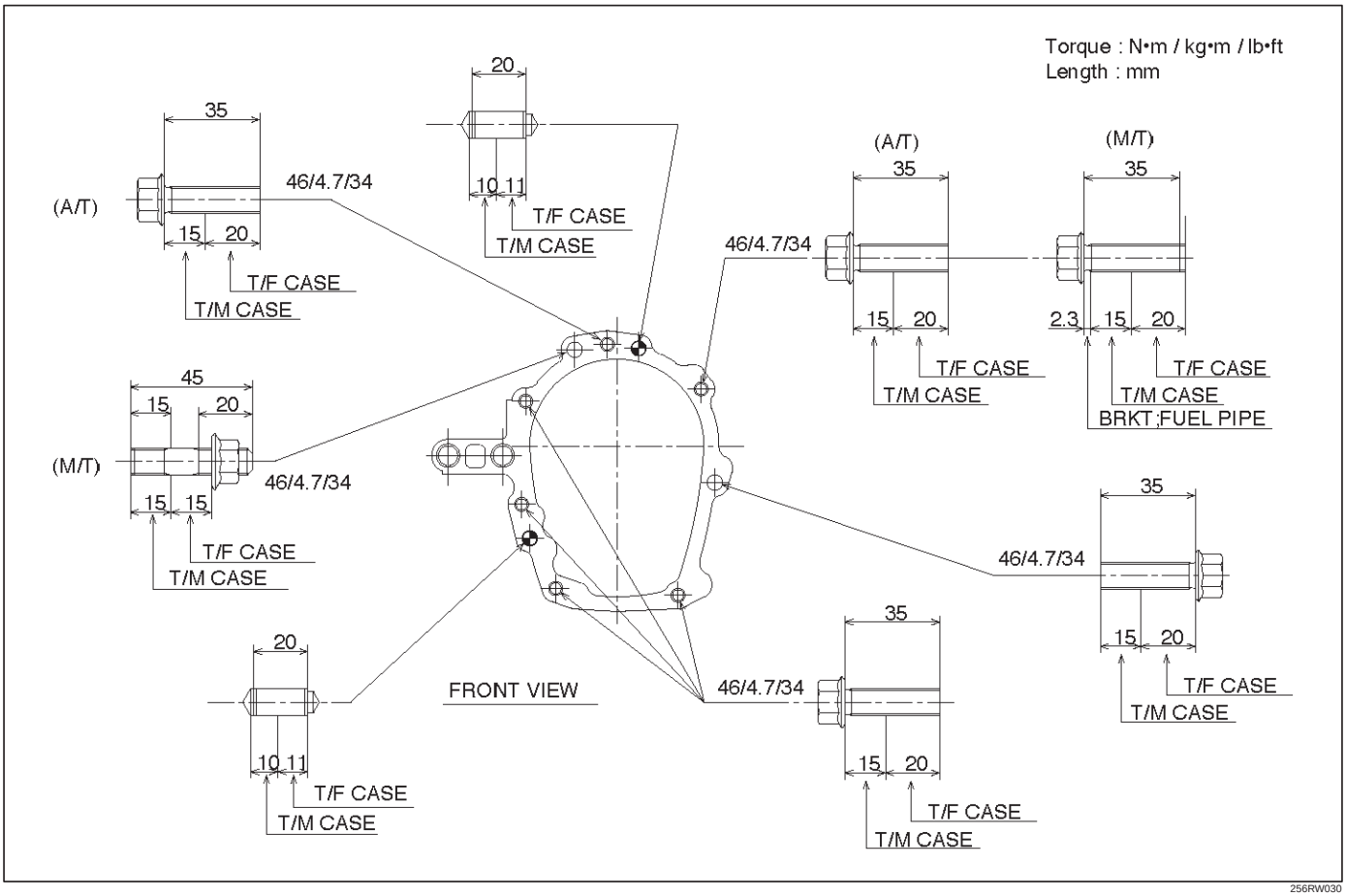

256RW030

Transfer Rear Cover Assembly (4WD Switch Model)

Transfer Rear Cover Assembly and Associated Parts

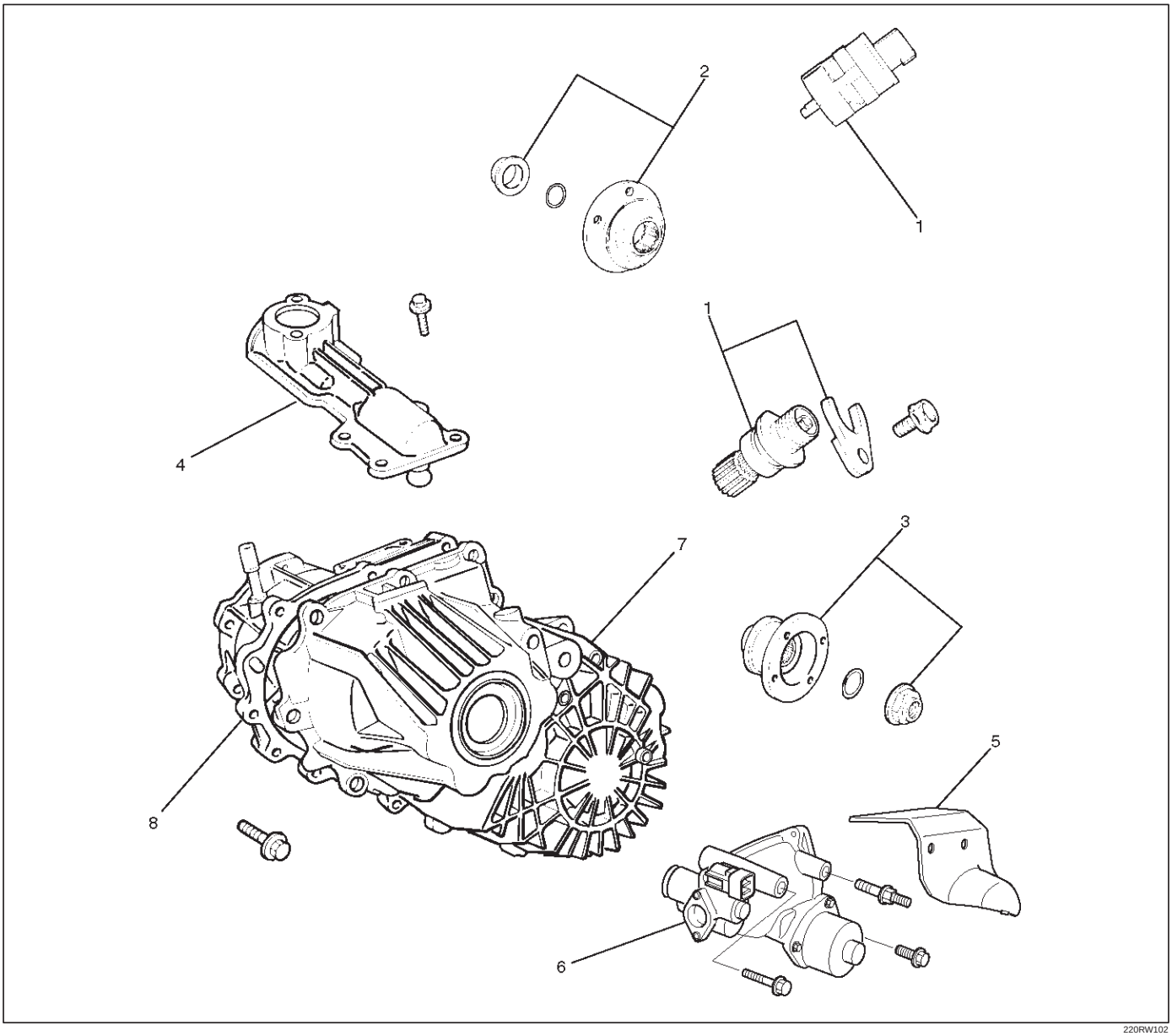

Legend

(1) Speedometer Sensor, Speedometer Driven Gear and Plate
(2) Front Companion Flange
(3) Rear Companion Flange
(4) Control Box Assembly
(5) 2WD–4WD Actuator Heat Protector
(6) 2WD–4WD Actuator Assembly
(7) Transfer Rear Cover Assembly
(8) Transfer Case Assembly

Removal

1. Remove the speedometer sensor.
2. Remove the plate.
3. Remove the speedometer driven gear bushing and driven gear.

NOTE: Apply a reference mark to the driven gear bushing before removal.

4. Remove the front companion flange and the rear companion flange, using the flange companion holder 5–8840–0133–0 (J–8614–11) to remove the end nuts.

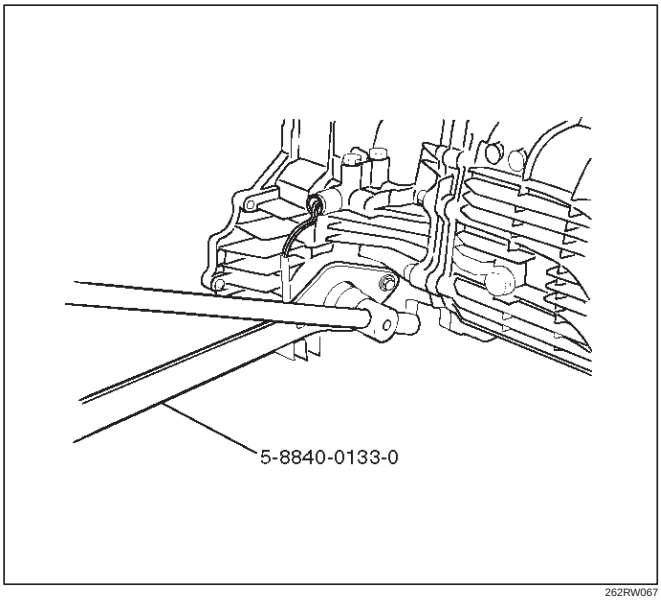

262RW067

NOTE: Use a universal puller to remove the rear companion flange.

5. Disconnect the actuator breather hose and the transfer breather hose from the control box.
6. Remove the control box assembly.
7. Disconnect the actuator breather hose and remove the 2WD–4WD actuator heat protector from the 2WD–4WD actuator assembly.

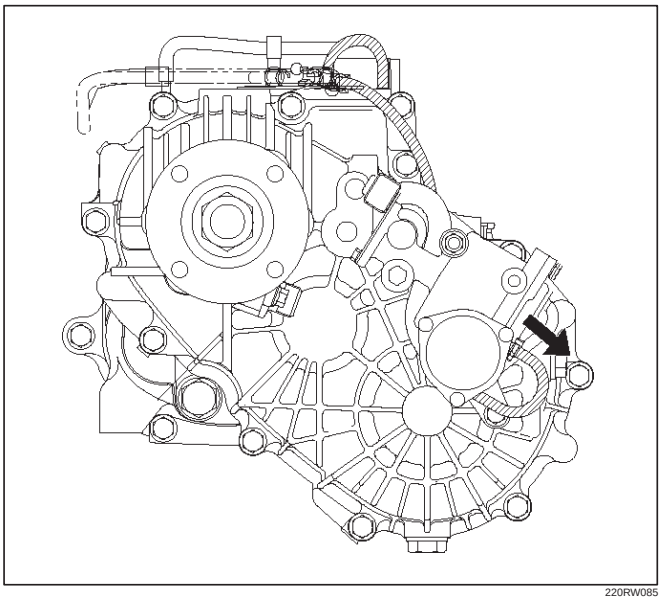

220RW085

8. Remove the 2WD–4WD actuator assembly bolts.
9. Pull the 2WD–4WD actuator assembly with 2WD–4WD shift rod.

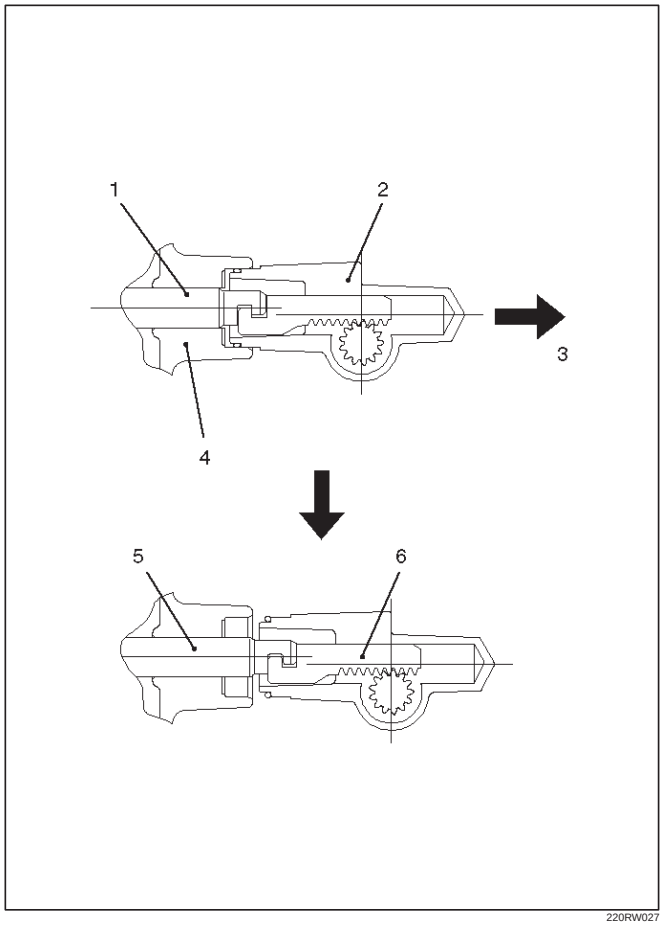

220RW027

Legend

(1) Shift Rod: 2WD–4WD (Position: 2WD)
(2) 2WD–4WD Actuator Assembly
(3) Pull Cover
(4) Rear Cover Assembly
(5) Position: 4WD
(6) Mode: 2WD

10. Offset the actuator assembly.

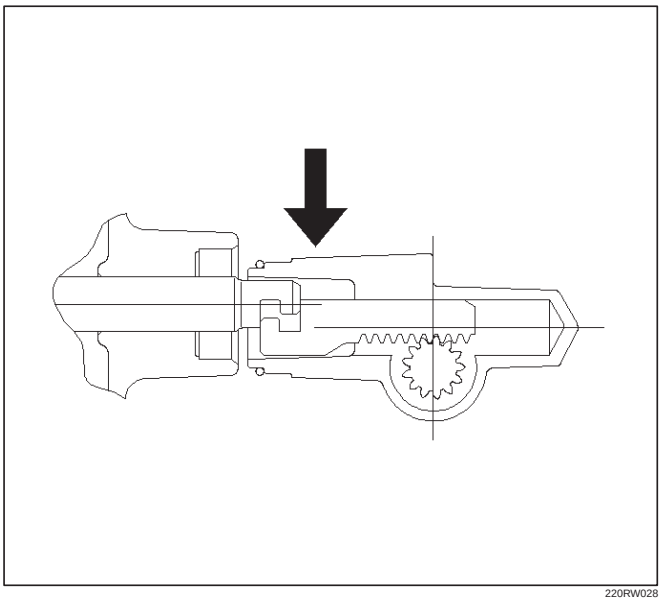

220RW028

11. Remove the actuator assembly.

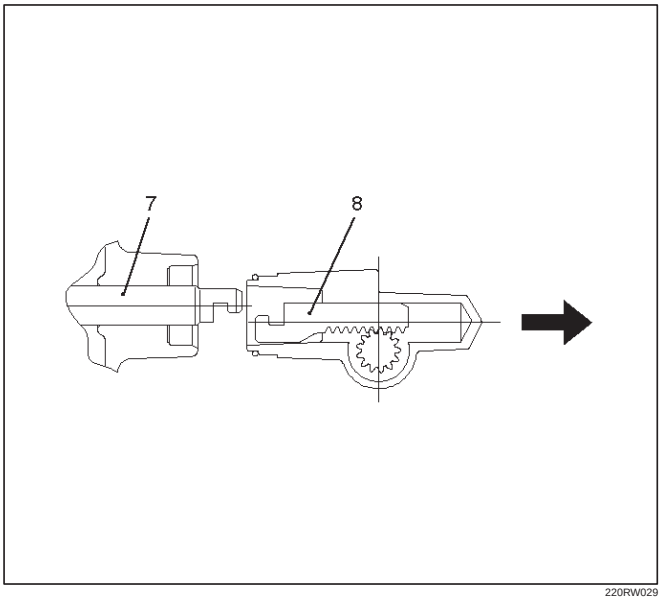

220RW029

Legend

(7) Position: 4WD
(8) Mode: 2WD

12. Remove the transfer rear cover assembly from the transfer case assembly.

Installation

1. Apply the recommended liquid gasket (LOCTITE 17430) or its equivalent to the transfer rear cover fitting faces.

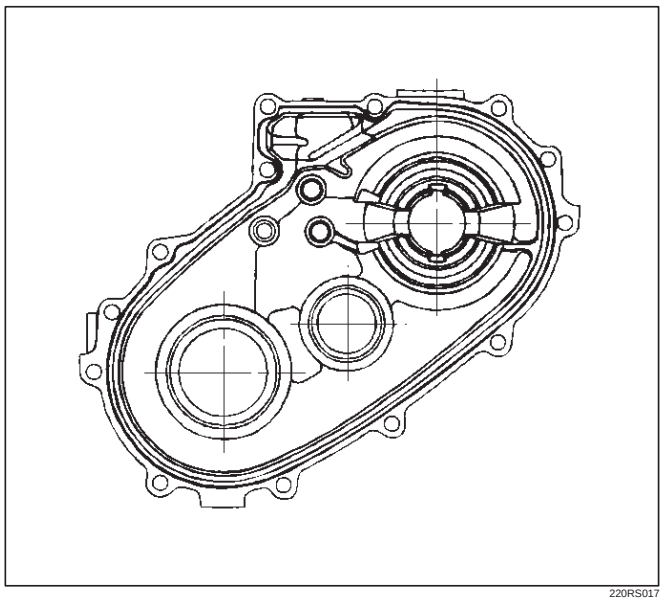

220RS017

2. Install the transfer rear cover assembly to the transfer case assembly.
3. Perform the following steps before fitting the transfer rear case:
   1. Shift the high–low shift rod to the 4H side.
   2. The cut–away portion of the select rod head (9) should align with that of the rear case hole's stopper (10).

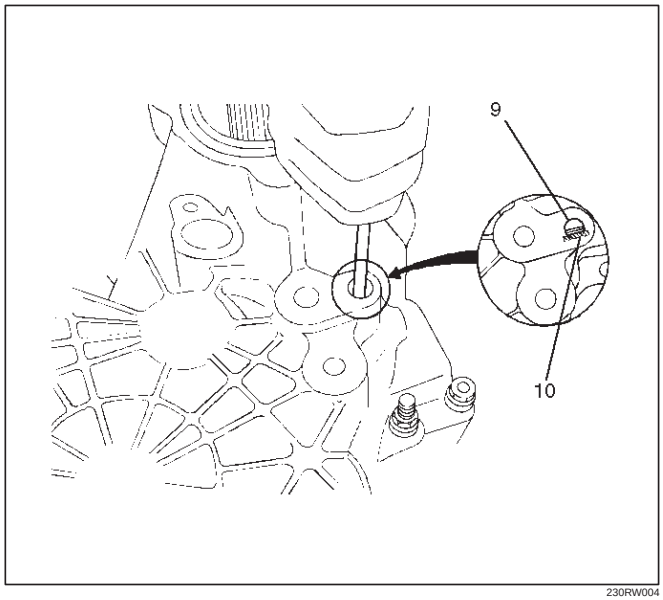

230RW004

4. Tighten the transfer rear case bolts to the specified torque.

   Torque: 37 N·m (3.8kg·m/27 lb ft)

5. Shift the 2WD–4WD shift rod (11) to the 4WD side.

6. Join the rod grooves of 2WD–4WD actuator assembly (12) and shift rod (11).

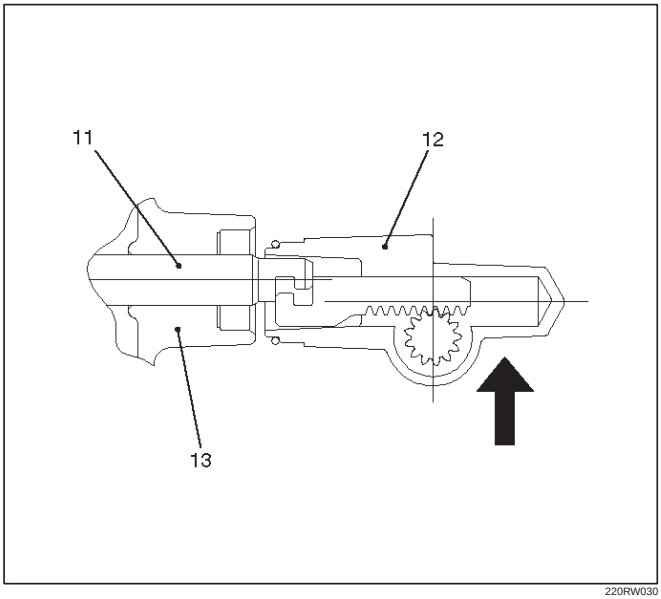

220RW030

Legend

(11) Shift Rod: 2WD–4WD (Position: 4WD)
(12) 2WD–4WD Actuator Assembly (Mode: 2WD)
(13) Rear Cover Assembly

7. Push the 2WD–4WD actuator assembly (12) with 2WD–4WD shift rod (11) till the shift rod (11) reaches the 2WD position.

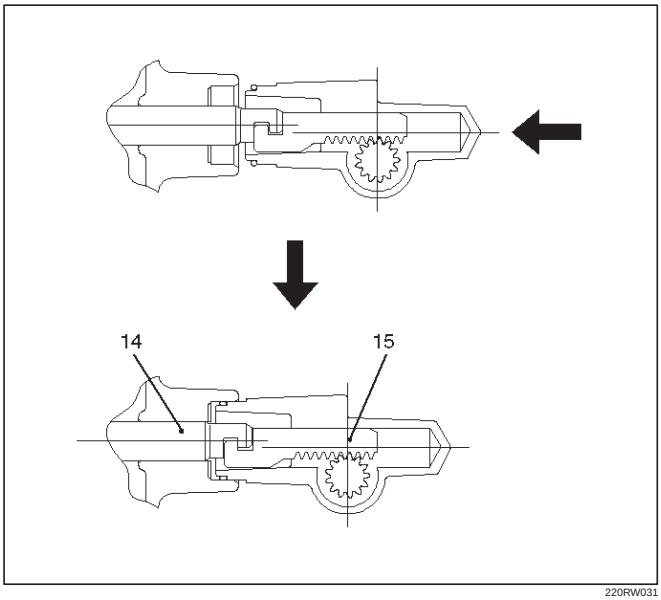

220RW031

Legend

(14) Position: 2WD
(15) Mode: 2WD

8. Tighten the 2WD–4WD actuator bolts to the specified torque.

   Torque: 19 N·m (1.9kg·m/14 lb ft)

9. Install the actuator heat protector.
10. Connect the actuator breather hose to the actuator.
11. Install the control box assembly.

    Torque: 19 N·m (1.9kg·m/14 lb ft)

12. Connect the breather hoses to the control box.
13. Install the rear companion flange and front companion flange, using the companion flange holder 5–8840–0133–0 (J–8614–11) to tighten the flange nuts to the transfer case.

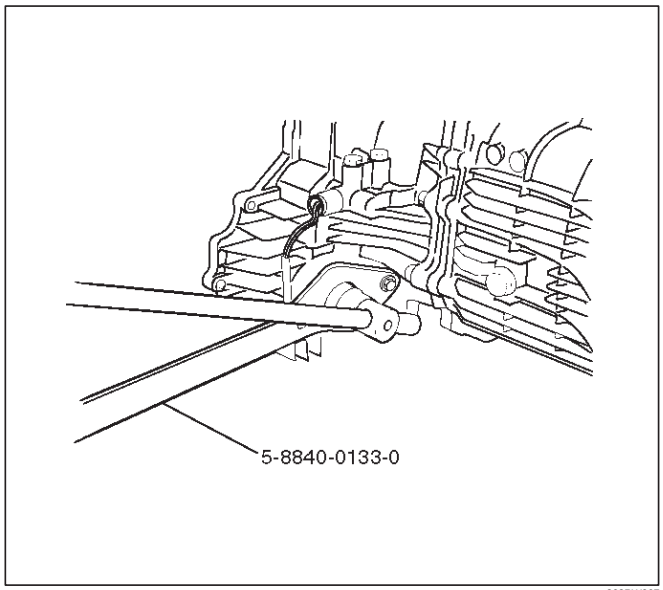

262RW067

14. Tighten the new transfer flange nuts to the specified torque.

    Torque

    Rear companion flange: 167 N·m (17.0kg·m/123 lb ft)

    Front companion flange: 137 N·m (14.0kg·m/101 lb ft)

15. Use the punch 5–8840–2293–0 (J–39209) to stake the rear companion flange nut at two spots.

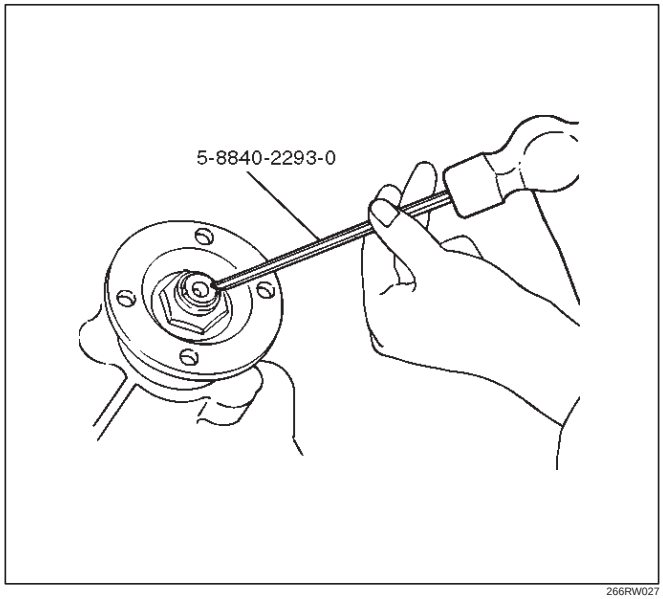

266RW027

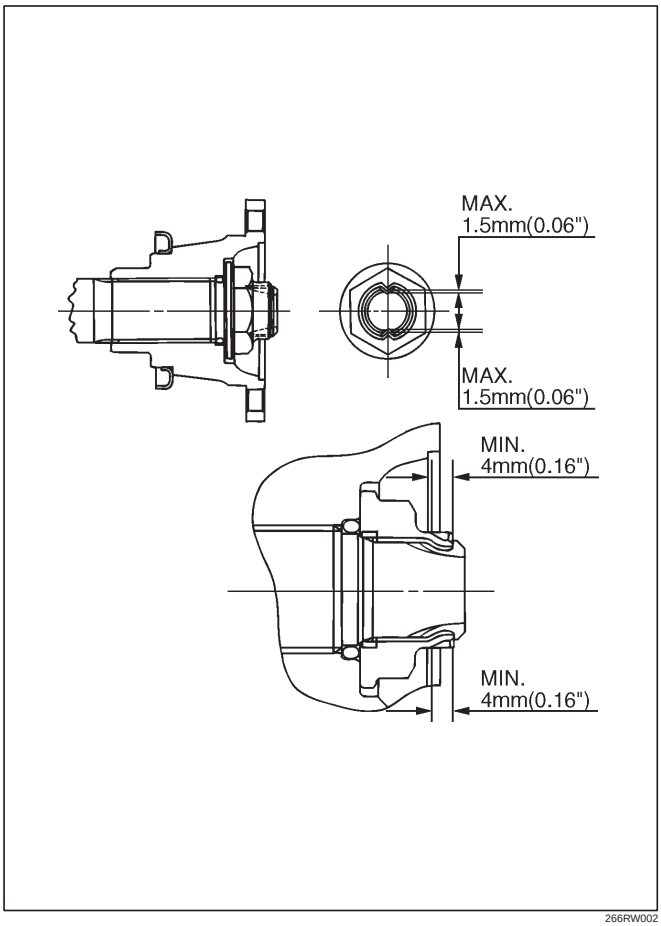

266RW002

16. Stake the front companion flange nut at one spot.

NOTE: Be sure to confirm that there is no crack at the staked portion of the flange nut after staking.

17. Install the O–ring (8) to the speedometer driven gear bushing (7).
18. Install the driven gear to the speedometer driven gear bushing (7).
19. Install the speedometer driven gear assembly to the transfer rear cover.
20. Install the plate (6) to the transfer rear case and tighten to the specified torque.

    Torque: 15 N·m (1.5kg·m/11 lb ft)

21. Install the speedometer sensor and tighten to the specified torque.

    Torque: 27 N·m (2.8kg·m/20 lb ft)

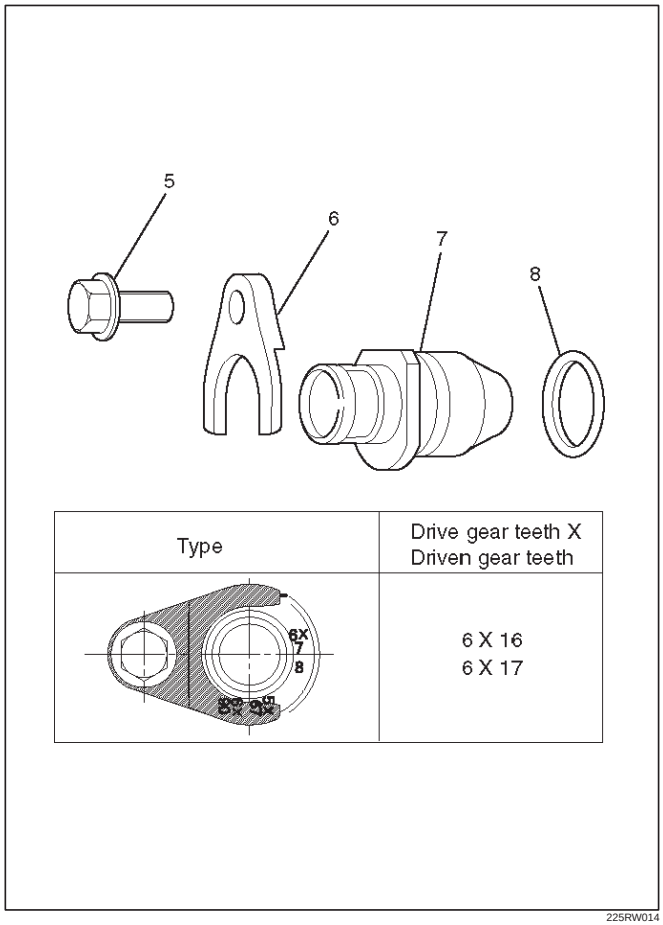

225RW014

Disassembly

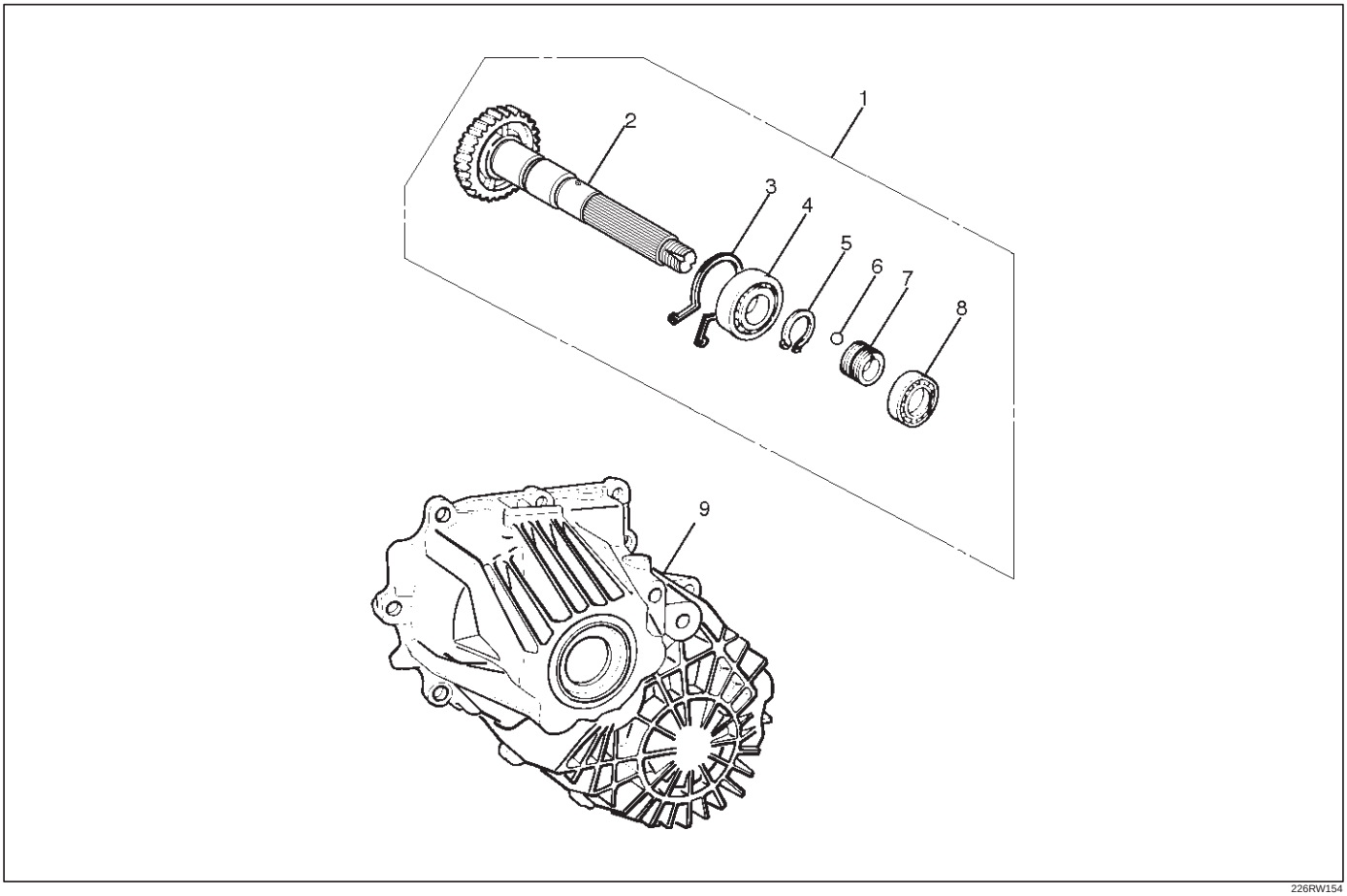

226RW154

Legend

(1) Rear Output Shaft Assembly
(2) Rear Output Shaft
(3) Bearing Snap Ring
(4) Ball Bearing
(5) Bearing Snap Ring
(6) Ball
(7) Speedometer Drive Gear
(8) Ball Bearing
(9) Transfer Rear Cover (with oil seal)

1. Remove the bearing snap ring (3), using a pair of snap ring pliers.

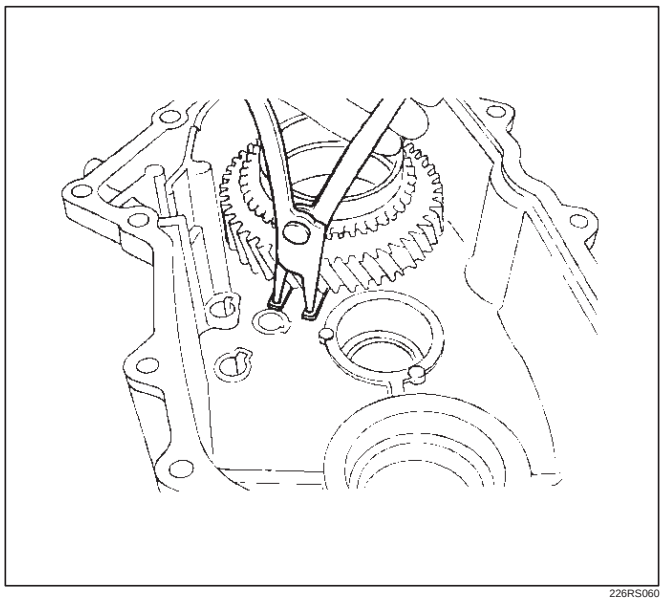

226RS060

2. Remove the rear output shaft assembly (1) from the transfer rear cover (with oil seal).
3. Remove ball bearing (8), using a bench press and the bearing remover 5–8840–0015–0 (J–22912–01) .

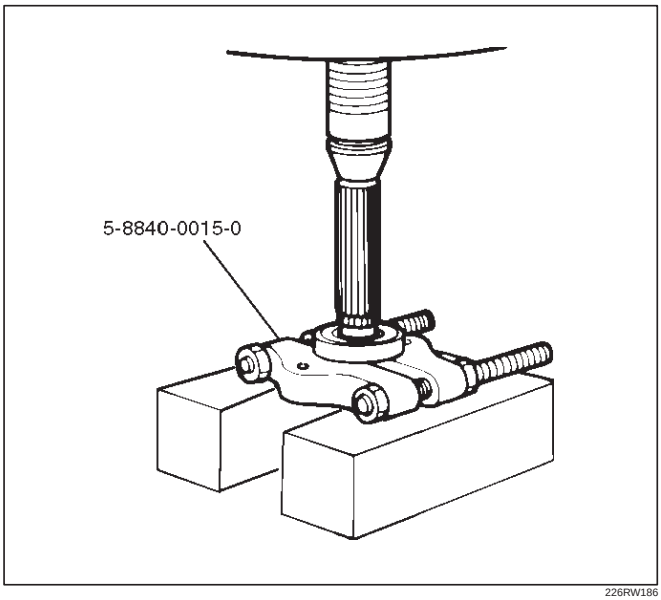

226RW186

4. Remove the speedometer drive gear (7).
5. Remove the ball (6).
6. Remove the bearing snap ring (5), using a pair of snap ring pliers.
7. Remove the ball bearing (4) from the rear output shaft, using a bench press and the bearing remover 5–8840–0015–0 (J–22912–01).

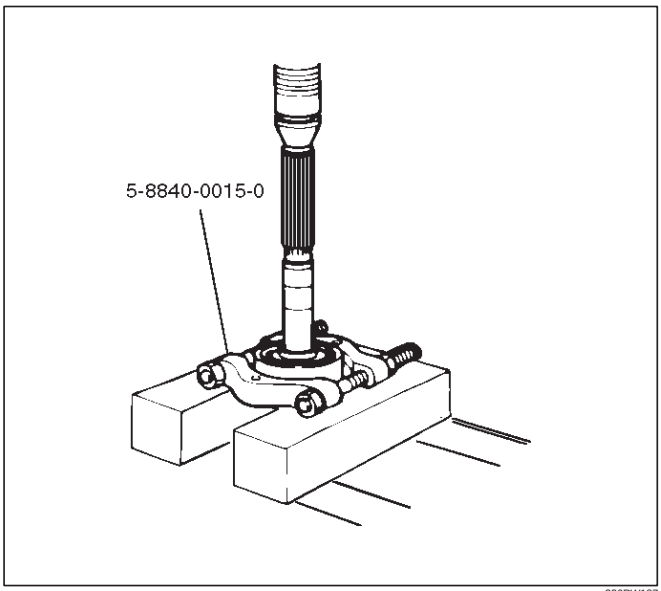

226RW187

Inspection and Repair

Refer to “TRANSFER CASE ASSEMBLY” in this section for inspection and repair.

Reassembly

1. Install transfer rear cover (with oil seal).
   Oil seal replacement
   - Remove the oil seal from the transfer rear cover.
   - Apply engine oil to the oil seal outer surfaces.
   - Fill in recommended grease (BESCO L2) or equivalent in the oil seal lip.
   - Use the oil seal installer 5–8840–2292–0 (J–39208) to install the rear oil seal to the transfer rear cover.

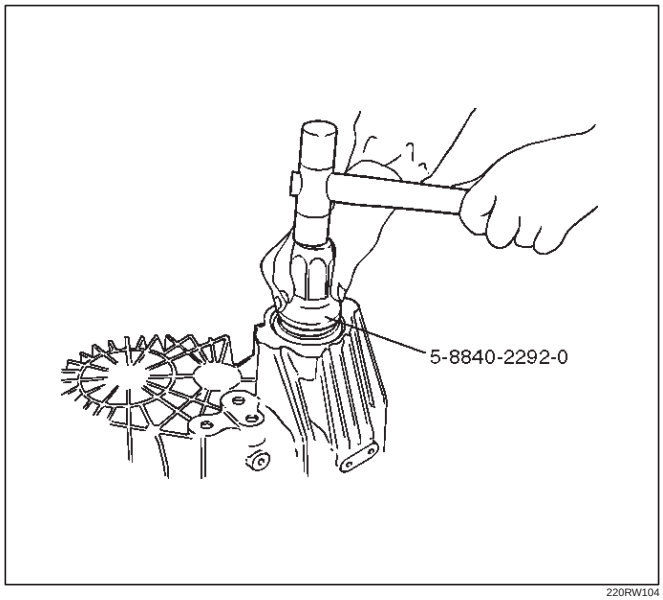

220RW104

2. Set the snap ring (3), and install ball bearing (4) to the rear output shaft (2), using the ball bearing installer 5–8840–2159–0 (J–37223) and the adapter 5–8840–2192–1 (J–37486–A).

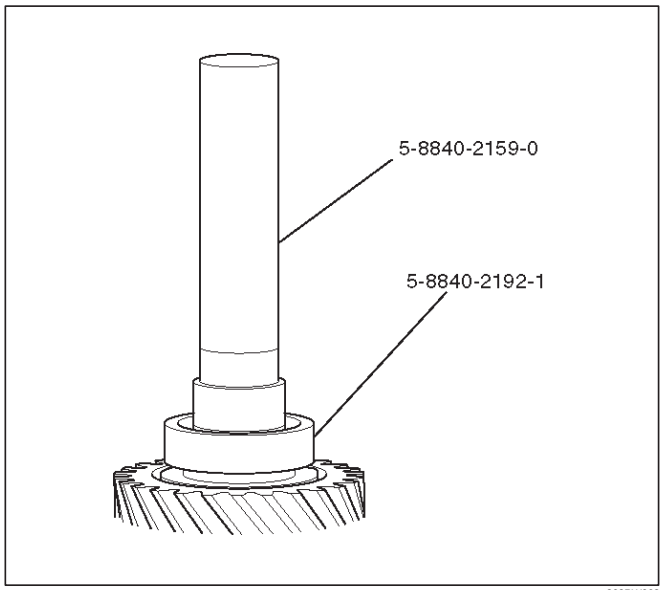

262RW068

3. Install the bearing snap ring (5).
4. Install the ball (6).
5. Install the speedometer drive gear (7).

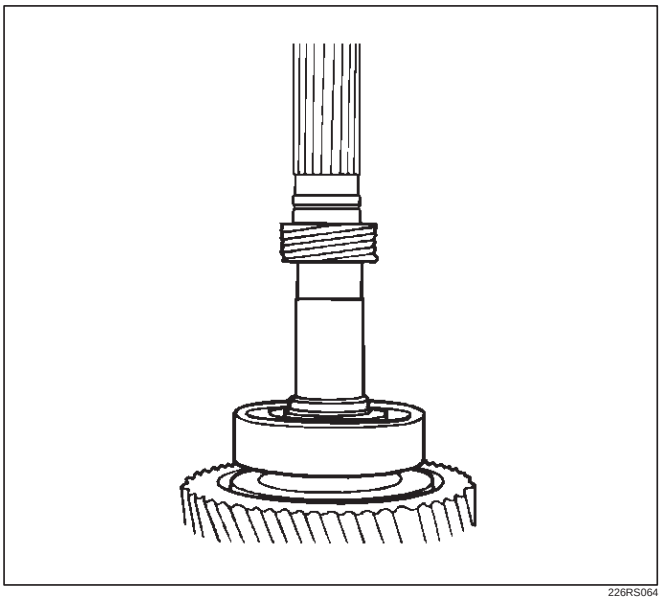

226RS064

6. Install ball bearing (8), using the ball bearing installer 5–8840–2159–0 (J–37223).

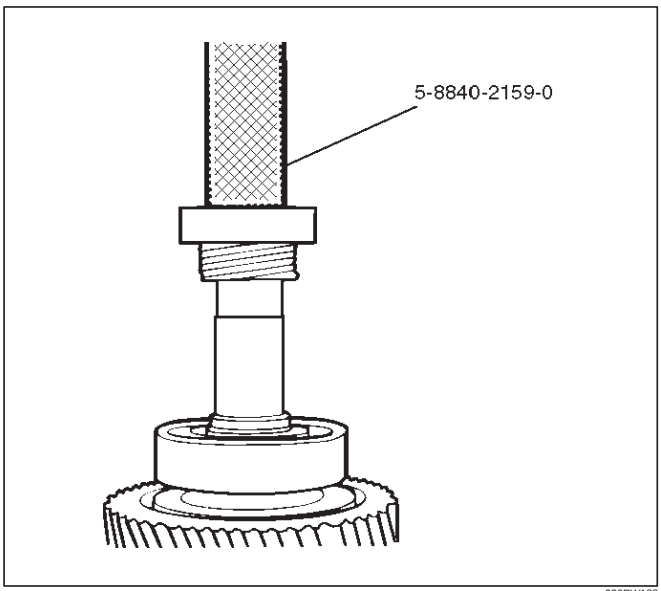

226RW188

7. Install the rear output shaft assembly (1) to the transfer rear cover.
8. Install the bearing snap ring (3).

NOTE: The snap ring must be fully inserted into the transfer rear case snap ring groove.

Transfer Rear Cover Assembly (Except 4WD Switch Model)

Transfer Rear Cover Assembly and Associated Parts

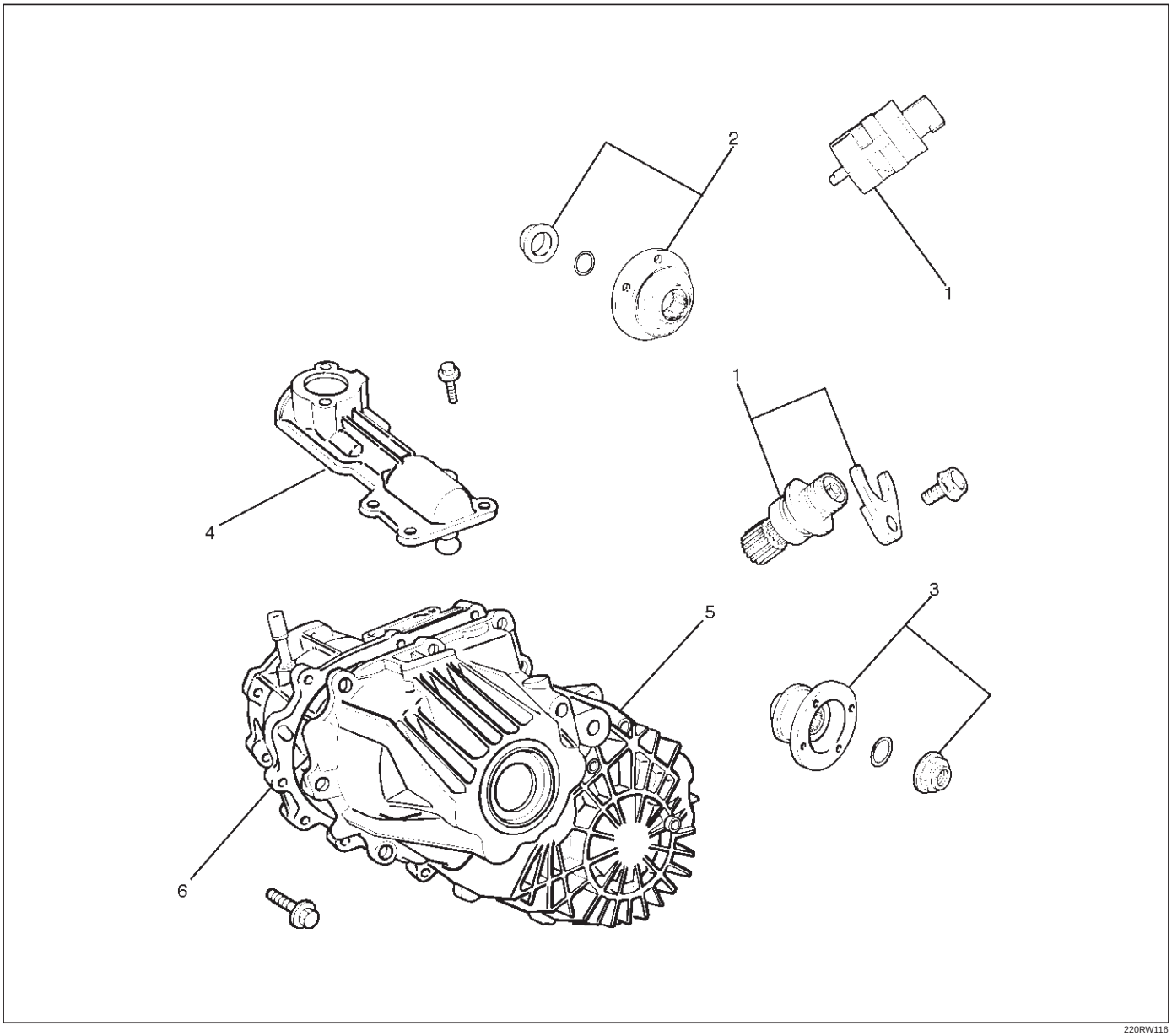

220RW116

Legend

(1) Speedometer Sensor, Speedometer Driven Gear and Plate
(2) Front Companion Flange
(3) Rear Companion Flange
(4) Control Box Assembly
(5) Transfer Rear Cover Assembly
(6) Transfer Case Assembly

Removal

1. Remove the speedometer sensor.
2. Remove the plate.
3. Remove the speedometer driven gear bushing and driven gear.

NOTE: Apply a reference mark to the driven gear bushing before removal.

4. Remove the front companion flange and the rear companion flange, using the flange companion holder 5–8840–0133–0 (J–8614–11) to remove the end nuts.

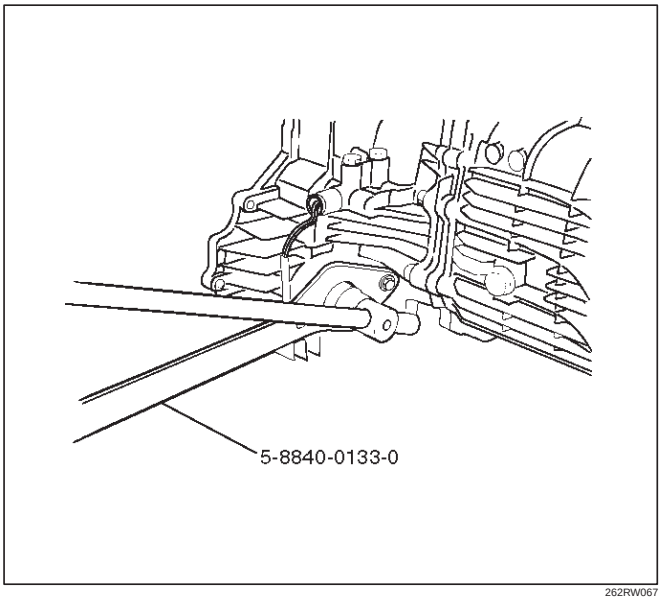

262RW067

NOTE: Use a universal puller to remove the rear companion flange.

5. Disconnect the transfer breather hose from the control box.
6. Remove the control box assembly.
7. Remove the transfer rear cover assembly from the transfer case assembly.

Installation

1. Apply the recommended liquid gasket (LOCTITE 17430) or its equivalent to the transfer rear cover fitting faces.

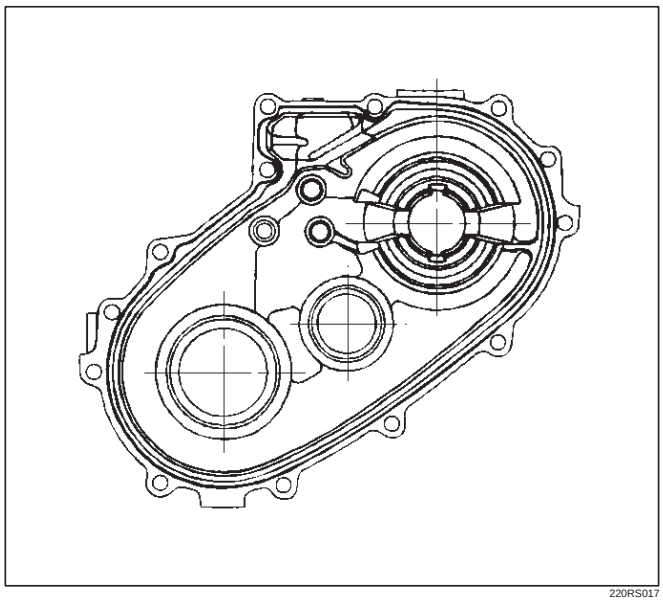

220RS017

2. Install the transfer rear cover assembly to the transfer case assembly.
3. Perform the following steps before fitting the transfer rear case:
   1. Shift the high–low shift rod to the 4H side.
   2. Turn the select rod counterclockwise so that the select block projection may enter into the 2WD–4WD shift block.
   3. The cut–away portion of the select rod head (9) should align with that of the rear case hole's stopper (10).

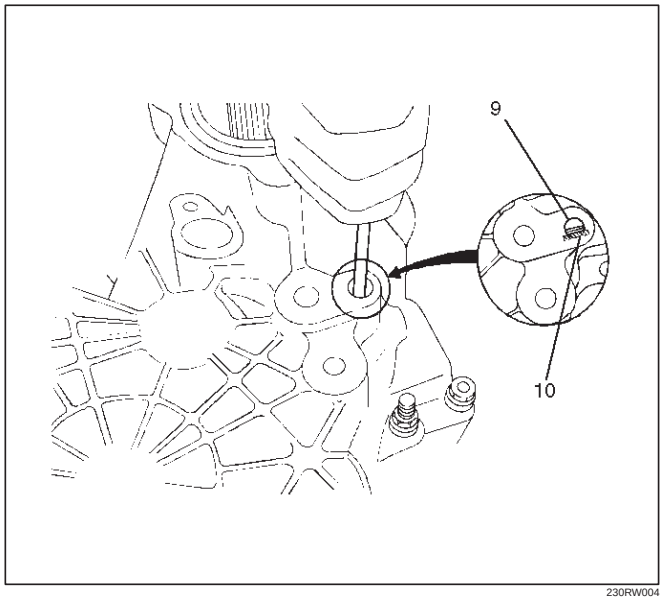

230RW004

4. Tighten the transfer rear case bolts to the specified torque.

Torque: 37 N·m (3.8kg·m/27 lb ft)

5. Install the control box assembly.

   Torque: 19 N·m (1.9kg·m/14 lb ft)

6. Connect the breather hoses to the control box.
7. Install the rear companion flange and front companion flange, using the companion flange holder 5–8840–0133–0 (J–8614–11) to tighten the flange nuts to the transfer case.

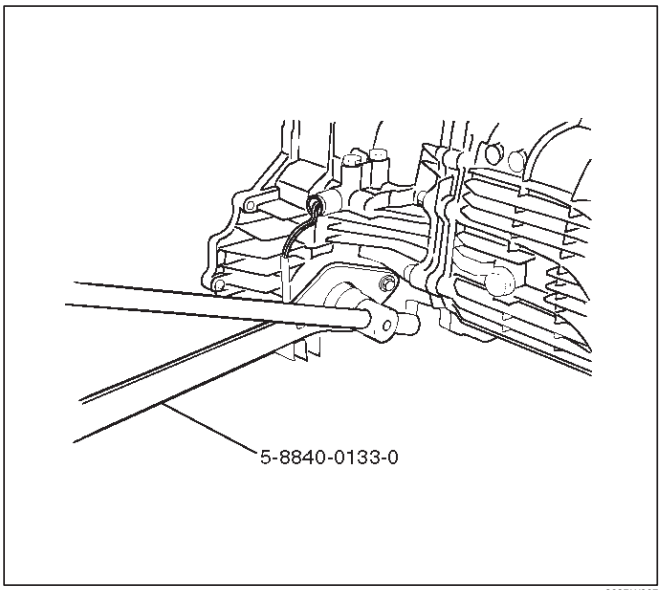

262RW067

8. Tighten the new transfer flange nuts to the specified torque.

   Torque

   Rear companion flange: 167 N·m (17.0kg·m/123 lb ft)

   Front companion flange: 137 N·m (14.0kg·m/101 lb ft)

9. Use the punch 5–8840–2293–0 (J–39209) to stake the rear companion flange nut at two spots.

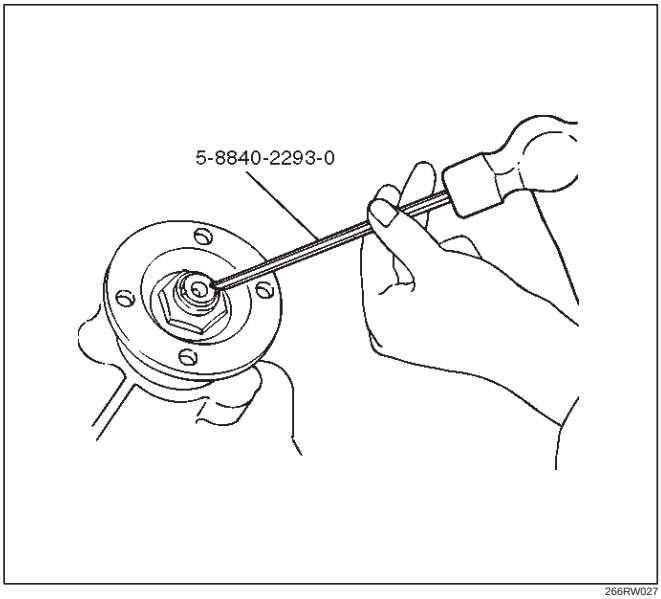

266RW027

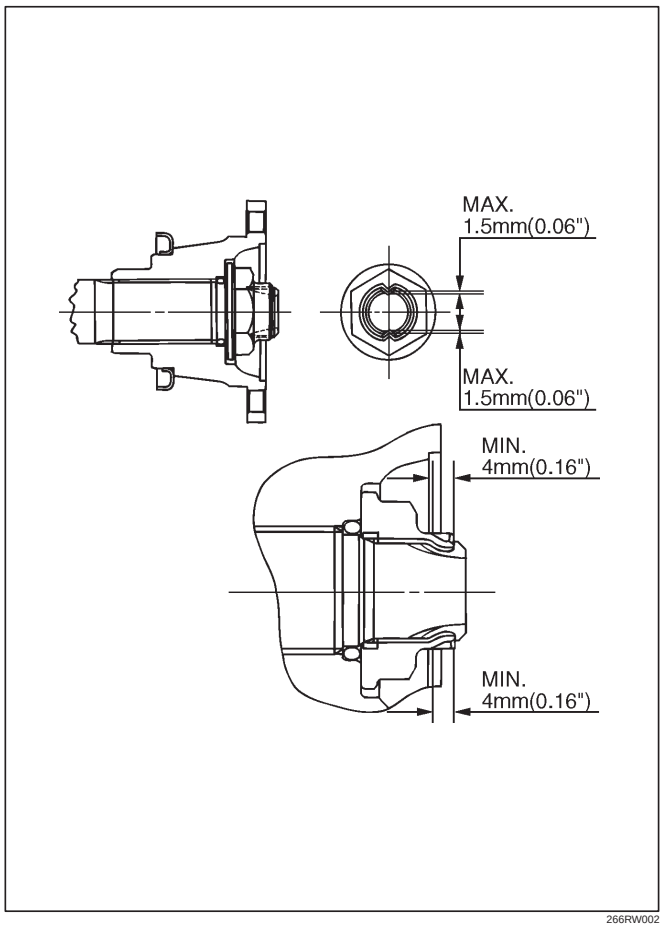

266RW002

10. Stake the front companion flange nut at one spot.

NOTE: Be sure to confirm that there is no crack at the staked portion of the flange nut after staking.

11. Install the O–ring (8) to the speedometer driven gear bushing (7).
12. Install the driven gear to the speedometer driven gear bushing (7).
13. Install the speedometer driven gear assembly to the transfer rear cover.
14. Install the plate (6) to the transfer rear case and tighten to the specified torque.

    Torque: 15 N·m (1.5kg·m/11 lb ft)

15. Install the speedometer sensor and tighten to the specified torque.

Torque: 27 N·m (2.8kg·m/20 lb ft)

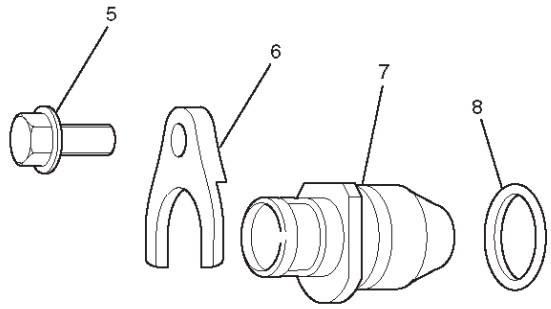

Type	Drive gear teeth X Driven gear teeth
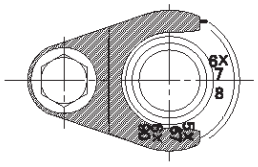	6 X 16 6 X 17

225RW014

Disassembly

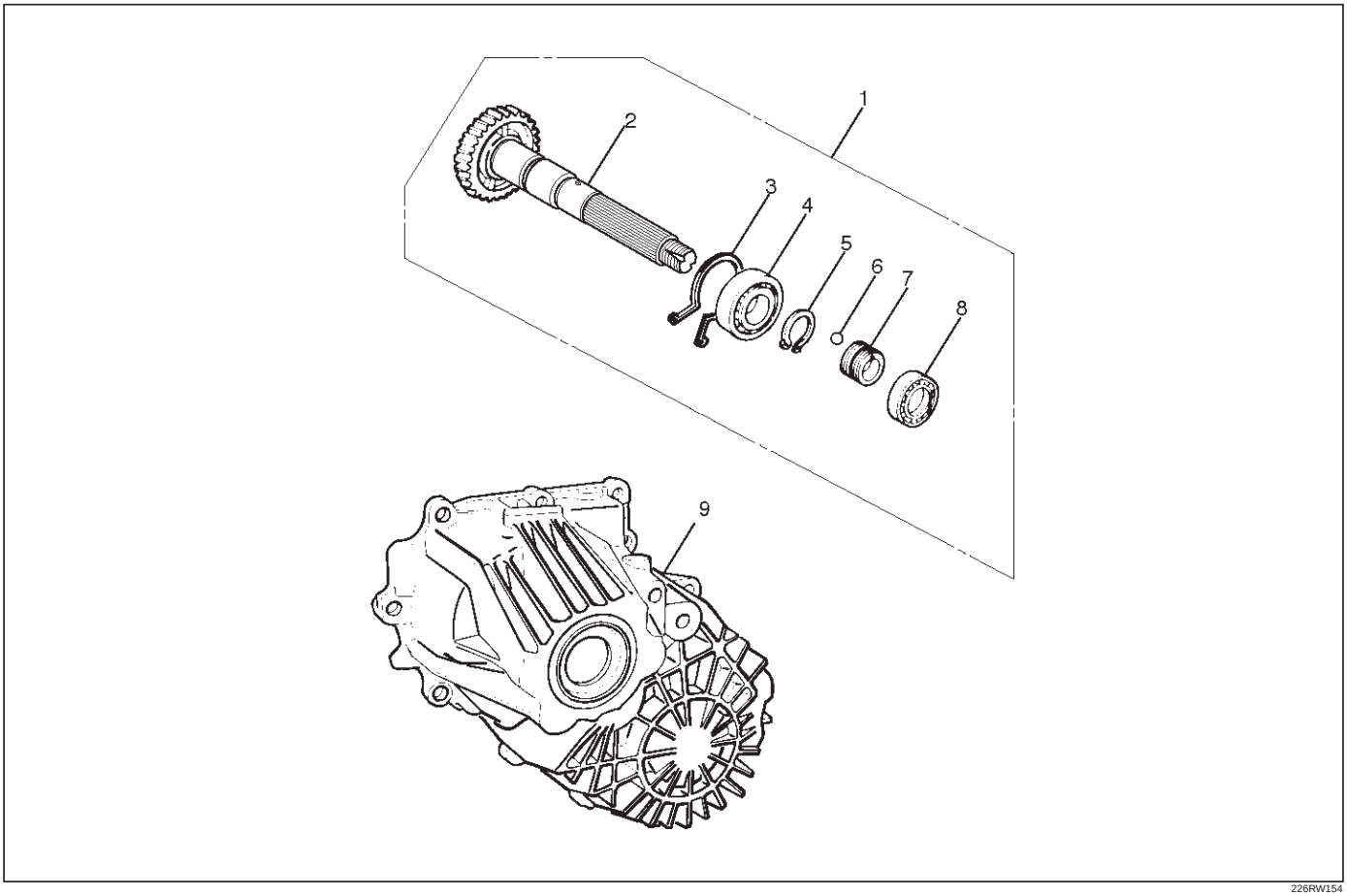

226RW154

Legend

(1) Rear Output Shaft Assembly
(2) Rear Output Shaft
(3) Bearing Snap Ring
(4) Ball Bearing
(5) Bearing Snap Ring
(6) Ball
(7) Speedometer Drive Gear
(8) Ball Bearing
(9) Transfer Rear Cover (with oil seal)

1. Remove the bearing snap ring (3), using a pair of snap ring pliers.

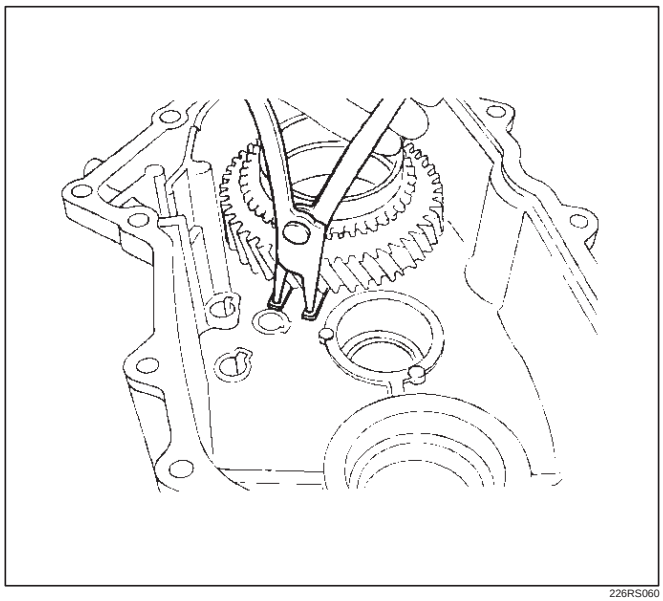

226RS060

2. Remove the rear output shaft assembly (1) from the transfer rear cover (with oil seal).
3. Remove ball bearing (8), using a bench press and the bearing remover 5–8840–0015–0 (J–22912–01) .

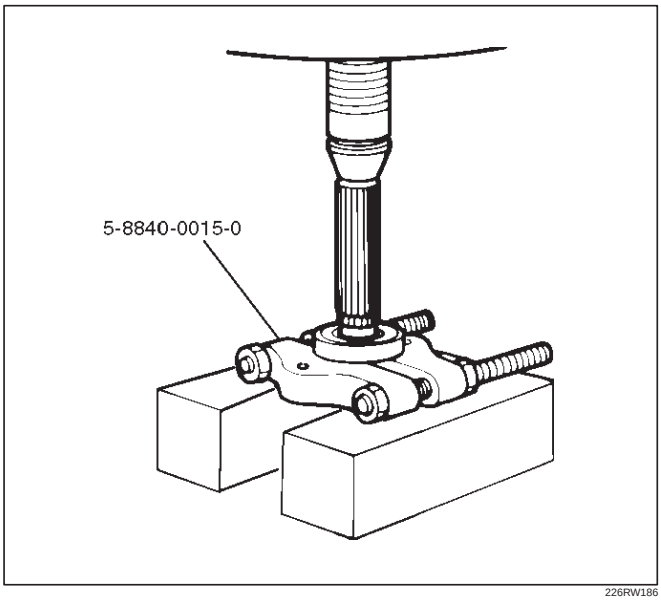

226RW186

4. Remove the speedometer drive gear (7).
5. Remove the ball (6).
6. Remove the bearing snap ring (5), using a pair of snap ring pliers.
7. Remove the ball bearing (4) from the rear output shaft, using a bench press and the bearing remover 5–8840–0015–0 (J–22912–01).

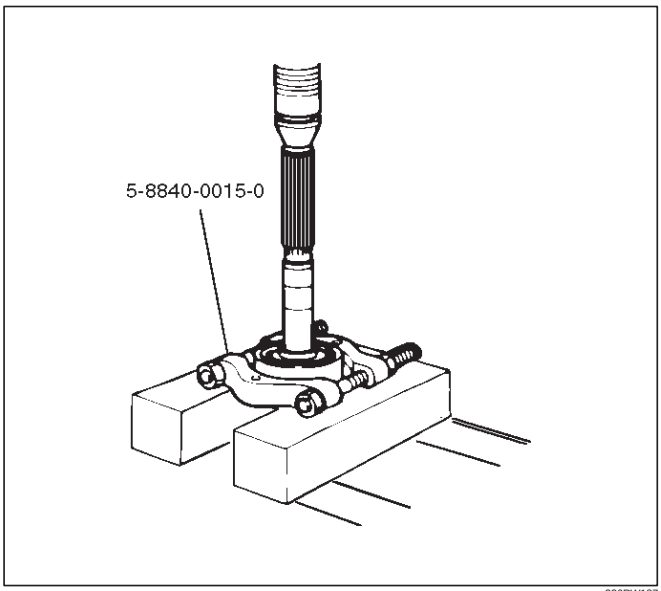

226RW187

Inspection and Repair

Refer to “TRANSFER CASE ASSEMBLY” in this section for inspection and repair.

Reassembly

1. Install transfer rear cover (with oil seal).
   Oil seal replacement
   - Remove the oil seal from the transfer rear cover.
   - Apply engine oil to the oil seal outer surfaces.
   - Fill in recommended grease (BESCO L2) or equivalent in the oil seal lip.
   - Use the oil seal installer 5–8840–2292–0 (J–39208) to install the rear oil seal to the transfer rear cover.

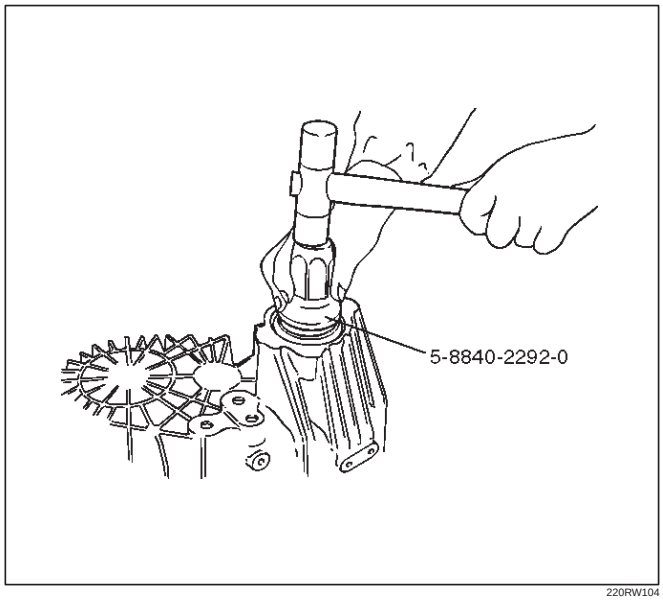

220RW104

2. Set the snap ring (3), and install ball bearing (4) to the rear output shaft (2), using the ball bearing installer 5–8840–2159–0 (J–37223) and the adapter 5–8840–2192–1 (J–37486–A).

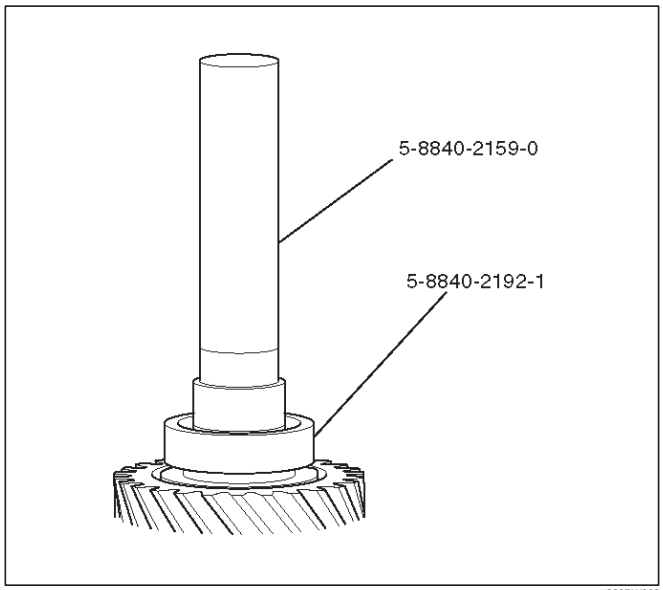

262RW068

3. Install the bearing snap ring (5).
4. Install the ball (6).
5. Install the speedometer drive gear (7).

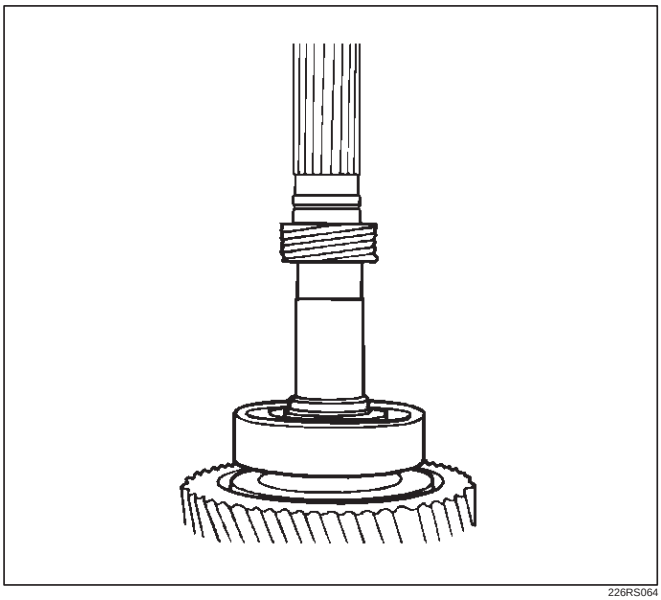

226RS064

6. Install ball bearing (8), using the ball bearing installer 5–8840–2159–0 (J–37223).

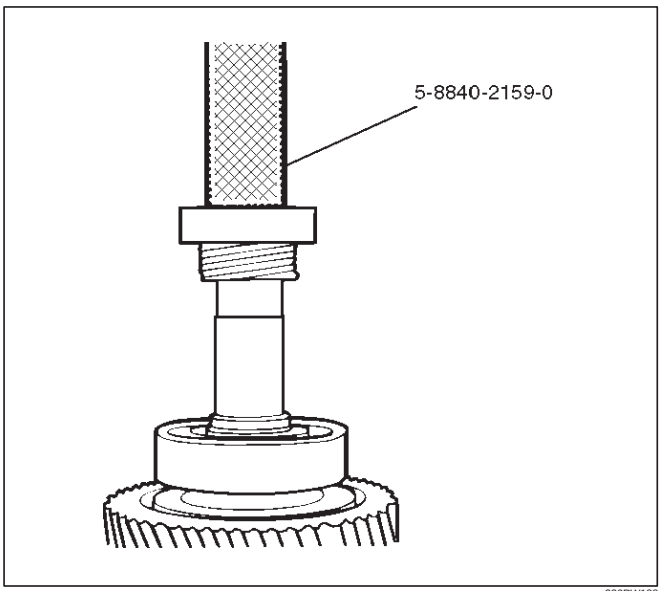

226RW188

7. Install the rear output shaft assembly (1) to the transfer rear cover.
8. Install the bearing snap ring (3).

NOTE: The snap ring must be fully inserted into the transfer rear case snap ring groove.

Detent, Shift Arm, and Interlock Pin

Disassembled View

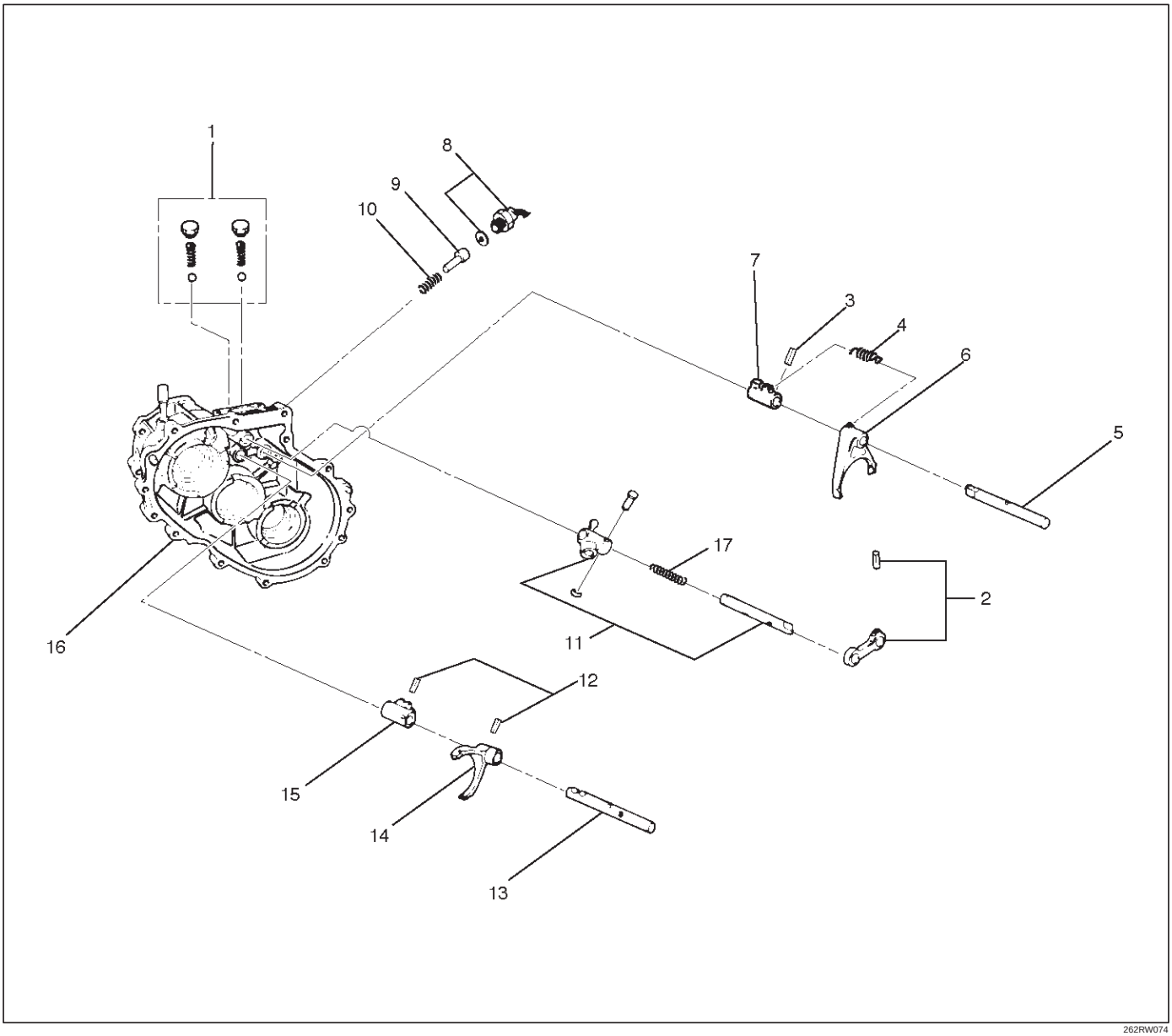

262RW074

Legend

(1) Detent Ball, Spring and Plug
(2) Spring Pin and Bridge
(3) Spring Pin
(4) Spring
(5) 2WD–4WD Shift Rod
(6) Shift Arm
(7) Shift Block
(8) 4WD Indicator Switch
(9) Interlock Pin
(10) Spring
(11) Select Rod Assembly
(12) Spring Pin
(13) High–Low Shift Rod
(14) Shift Arm
(15) Shift Block
(16) Transfer Case
(17) Spring (Except Shift On The Fly Model)

Disassembly

1. Remove the detent ball, spring and plug (1).

2. Use a spring pin remover to remove the spring pin (2) from the bridge (2).

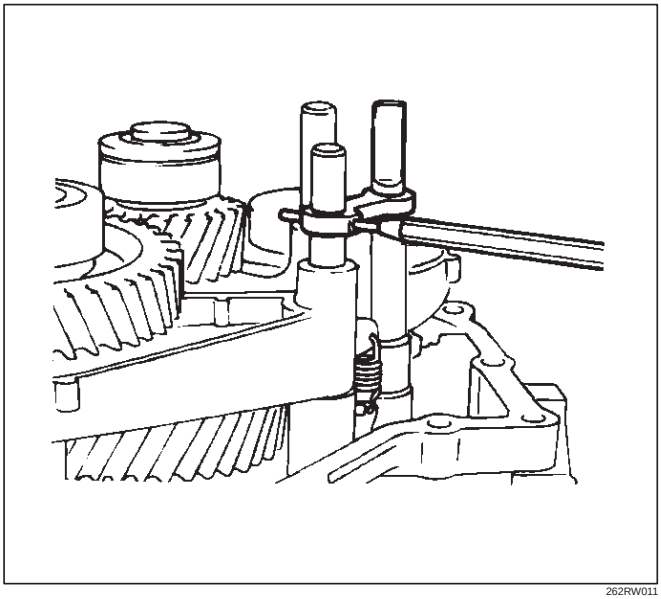

262RW011

3. Remove the spring (4).
4. Engage the 2WD–4WD sleeve with the front output gear. Remove the spring pin (3) from the block (7). Remove the 2WD–4WD shift rod (5).

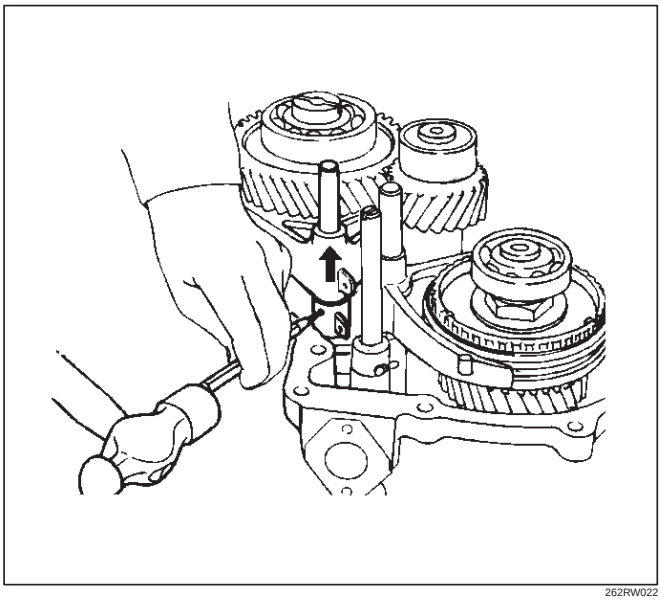

262RW022

5. Remove the shift arm (6).
6. Remove the shift block (7).
7. Remove the 4WD indicator switch (8).
8. Use a magnetic tool to remove the interlock pin (9) and spring (10) from the transfer case (16).

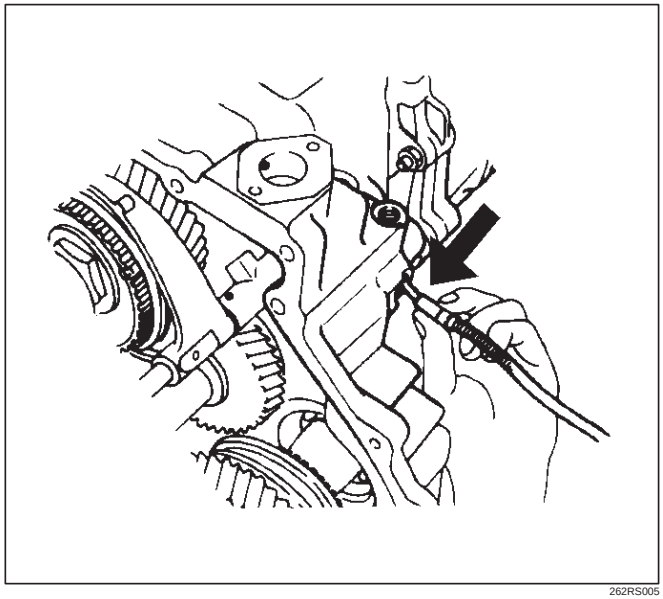

262RS005

9. Remove the select rod assembly (11).
10. Use a spring pin remover to remove the shift arm spring pins (12) from the shift arm (14) and shift block (15). Remove the high–low shift rod (13) from the transfer case (16).

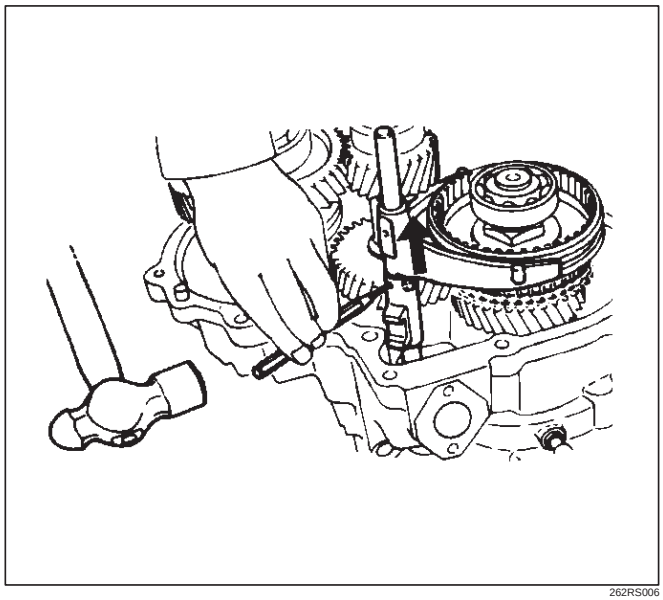

262RS006

11. Remove the shift arm (14).
12. Remove the shift block (15) from the transfer case (16).

Inspection and Repair

Refer to “TRANSFER CASE ASSEMBLY” in this section for inspection and repair.

Reassembly

1. Place the shift block (15) in the transfer case (16).
2. Set the shift arm (14) on the High–Low sleeve.
3. Push the High–Low shift rod (13) through the shift arm (14) and block (14).
4. Engage the High–Low sleeve with the 4H (1) side.
5. Install the spring pins (12) to the shift block (15) and shift arm (14).

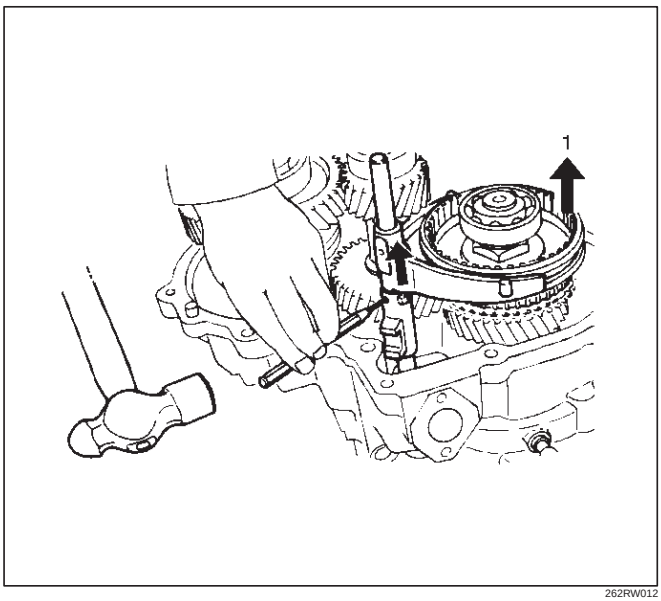

262RW012

6. Install the select rod assembly (11), joining its lever to the shift block groove.
7. Engage the High–Low sleeve with the 4H side and install the the interlock pin (9) and spring (10) in the proper direction.
8. Place the 2WD–4WD shift block (7) in the transfer case (16).
9. Set the 2WD–4WD shift arm (6) on the 2WD–4WD sleeve.
10. Push the 2WD–4WD shift rod (5) through the 2WD–4WD shift arm (6) and 2WD–4WD shift block (7).
11. Install the 2WD–4WD shift rod (5) with the interlock pin pushed in.

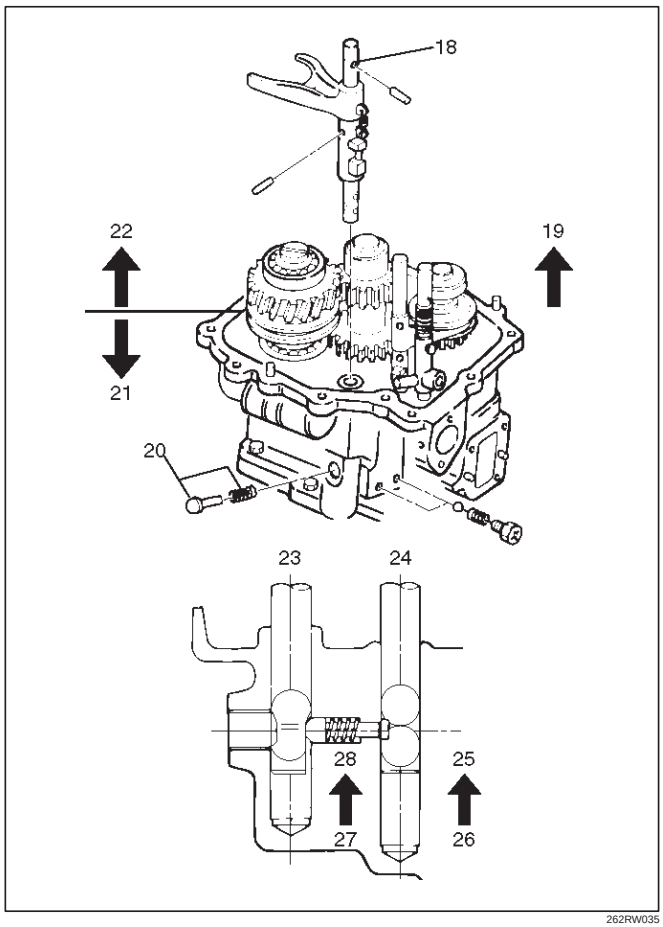

262RW035

Legend

(18) 2WD–4WD
(19) 4H Side
(20) Interlock pin
(21) 2WD
(22) 4WD
(23) Rod: 2–4
(24) Rod: H–L
(25) 4H
(26) 4L
(27) 4×2
(28) 4×4

12. Install the 4WD indicator switch and gasket (8). Tighten to the specified torque.

    Torque: 39 N·m (4.0kg·m/29 lb ft)

13. Install the spring (4).

14. Engage the 2WD–4WD sleeve with the 4WD side and install the spring pin (3).

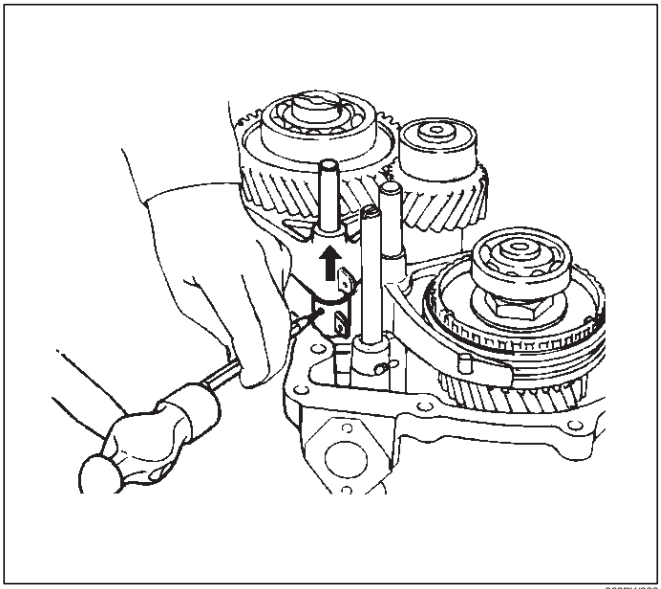

262RW022

15. Install the spring pin and bridge (2).
16. Install the detent ball, spring and plug and tighten the plug (1) to the specified torque.

Torque: 25 N·m (2.5kg·m/18 lb ft)

Transfer Case Assembly

Disassembled View

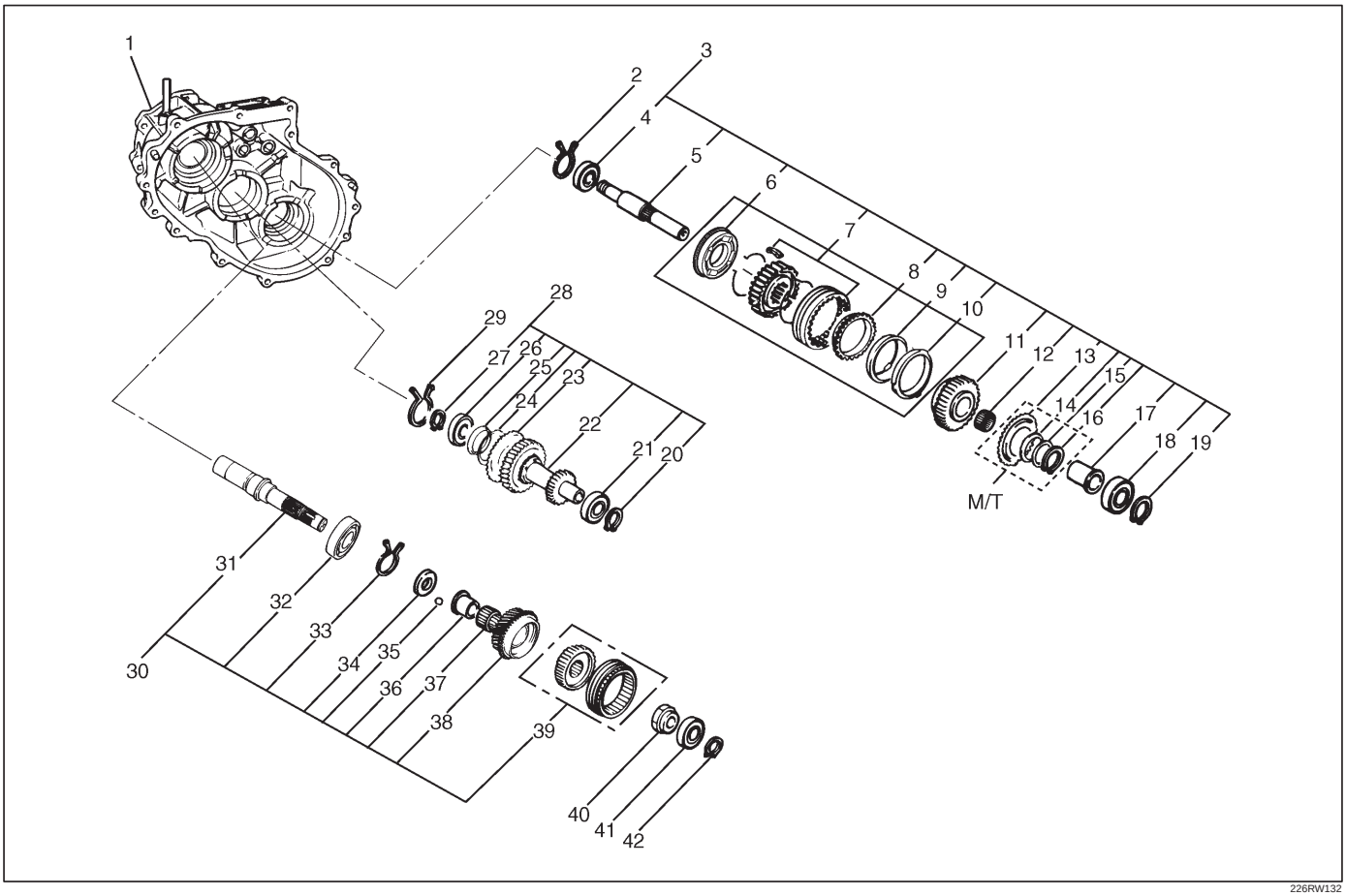

226RW132

Legend

(1) Transfer Case (with oil seal)
(2) Bearing Snap Ring
(3) Front Output Gear Assembly
(4) Ball Bearing
(5) Front Output Shaft
(6) Stopper Plate (Shift On The Fly model)
(7) 2WD–4WD Clutch Hub and Sleeve Assembly
(8) Block Ring (Shift On The Fly model)
(9) Outside Ring (Shift On The Fly model)
(10) Inside Ring (Shift On The Fly model)
(11) Front Output Gear
(12) Needle Bearing
(13) Sub–Gear (anti–lash plate) (M/T)
(14) Belleville Spring (M/T)
(15) Spacer (M/T)
(16) Sub–Gear Snap Ring (M/T)
(17) Bearing Collar
(18) Ball Bearing
(19) Bearing Snap Ring
(20) Snap Ring
(21) Ball Bearing
(22) Counter Gear
(23) Sub–Gear (anti–lash plate)
(24) Belleville Spring
(25) Spacer
(26) Ball Bearing
(27) Snap Ring
(28) Counter Gear Assembly
(29) Bearing Snap Ring
(30) Input Shaft Assembly
(31) Input Shaft
(32) Ball Bearing
(33) Snap Ring
(34) Plate
(35) Ball
(36) Bearing Collar
(37) Needle Bearing
(38) Transfer Input Gear
(39) High–Low Clutch Hub and Sleeve Assembly
(40) Lock Nut
(41) Ball Bearing
(42) Bearing Snap Ring

Disassembly

1. Use a pair of snap ring pliers to remove the snap ring (42).
2. Use a bearing remover 5–8840–2155–0 (J–37217) and puller 5–8840–2027–0 (J–37487) to remove the ball bearing (41).

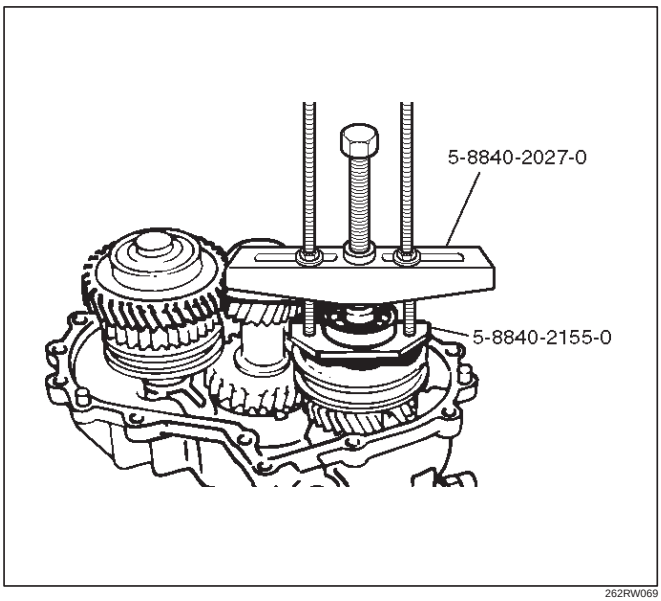

262RW069

3. Install the front companion flange temporarily.
4. Use the Companion flange holder 5–8840–0133–0 (J–8614–11) and lock nut wrench 5–8840–2156–0 (J–37219) to remove the lock nut (40).

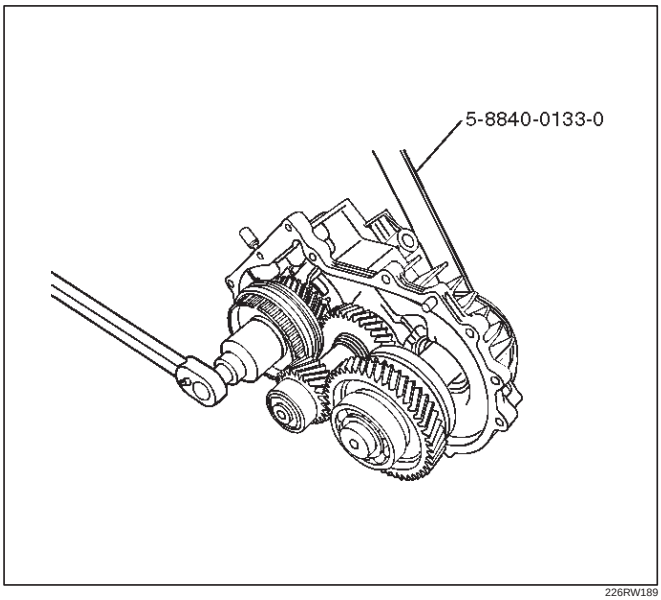

226RW189

5. Remove the front companion flange.
6. Remove the snap ring (33) from the transfer case (1).
7. Remove the input shaft assembly (30) from the transfer case.

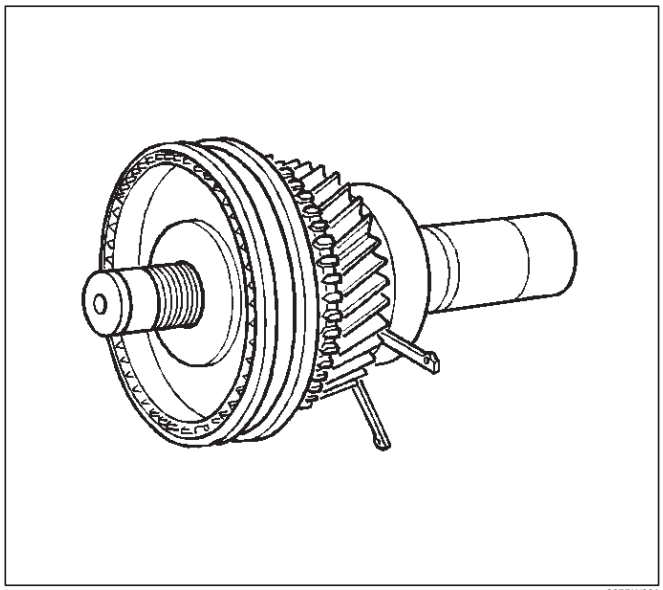

265RW001

8. Use a universal puller to remove the high–low clutch hub and sleeve (39), and transfer input gear (38).

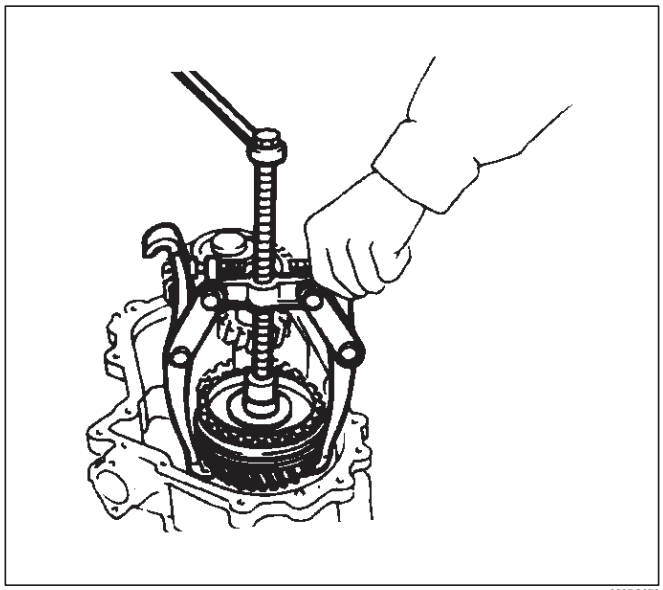

226RS070

9. Remove needle bearing (37).

10. Remove the bearing collar (36).

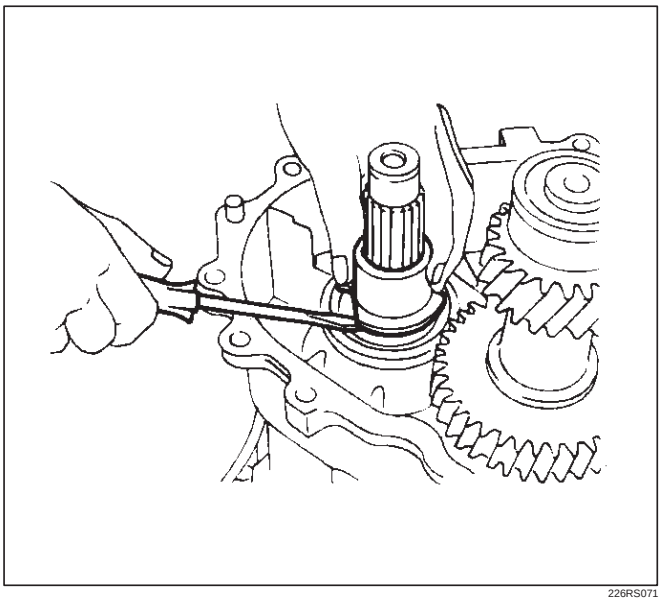

226RS071

11. Remove the ball (35).
12. Remove the plate (34).
13. Use a bench press and the ball bearing remover 5–8840–0015–0 (J–22912–01) to remove the ball bearing (32) from input shaft (31).

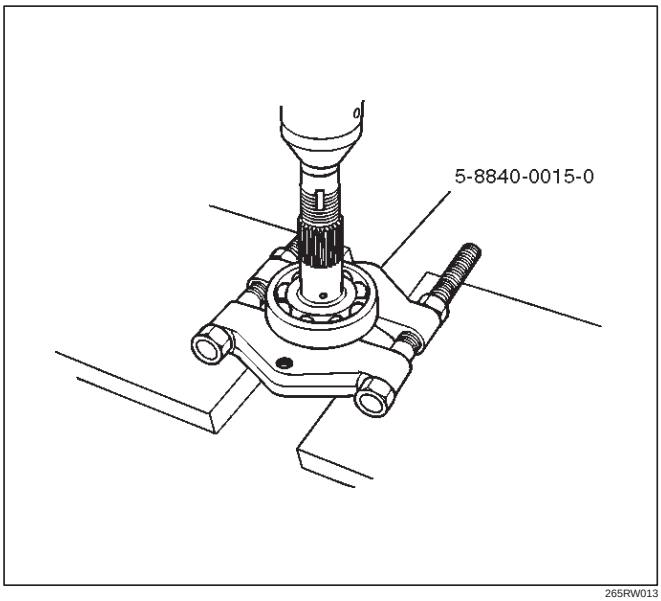

265RW013

14. Remove the bearing snap ring (2) from the transfer case, using a pair of snap ring pliers.
15. Use a plastic hammer to tap the front output gear assembly (3) free.

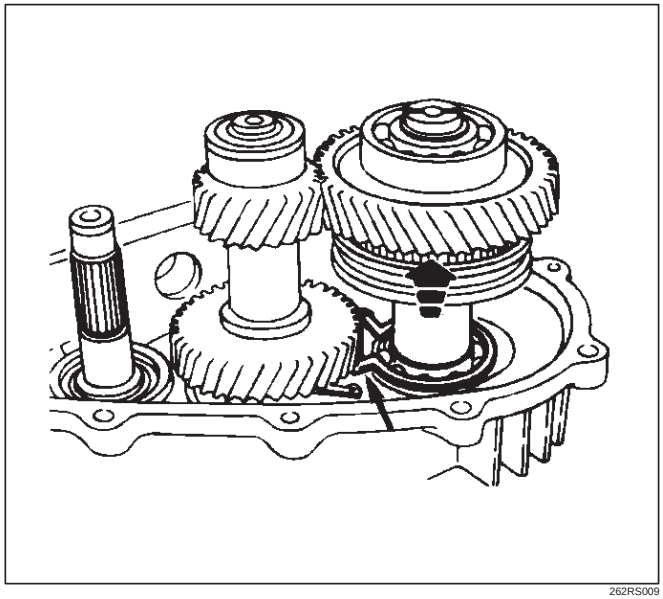

262RS009

16. Remove the bearing snap ring (19). Remove the ball bearing (18) and bearing collar (17) together with front output gear assembly: including following parts.
17. Use a bench press and the bearing remover 5–8840–0015–0 (J–22912–01) to remove the following parts.
18. Remove the sub–gear snap ring (16), spacer (15), belleville spring (14), and sub–gear (anti–lash plate) (13).(M/T)
19. Remove the front output gear (11) and needle bearing (12).

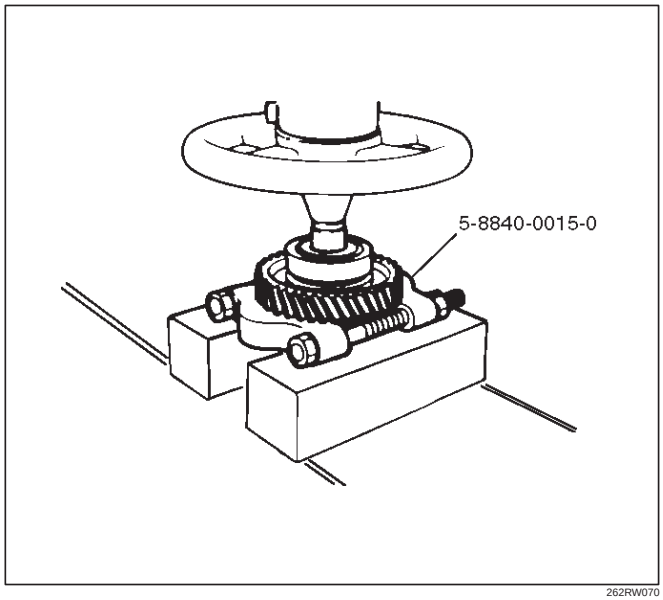

262RW070

20. Remove the inside ring (10). (Shift On The Fly model)
21. Remove the outside ring (9). (Shift On The Fly model)
22. Remove the block ring (8). (Shift On The Fly model)
23. Use a bench press and bearing remover 5–8840–0015–0 (J–22912–01) to remove the 2WD–4WD clutch hub and sleeve assembly (7) and stopper plate (6). (Shift On The Fly model)

NOTE: Do not reuse the stopper plate. (Shift On The Fly model)

24. Disassemble the 2WD–4WD clutch hub and sleeve assembly.
    - Springs (1) (Shift On The Fly model)
    - Inserts (2) (Shift On The Fly model)
    - Clutch Hub (3)
    - Sleeve (4)

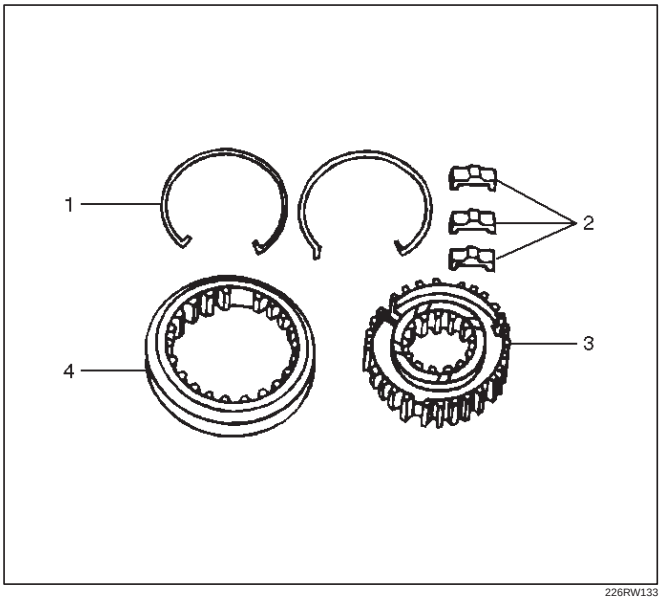

226RW133

25. Use a bench press and the ball bearing remover 5–8840–0015–0 (J–22912–01) to remove the ball bearing (4) from front output shaft (5).

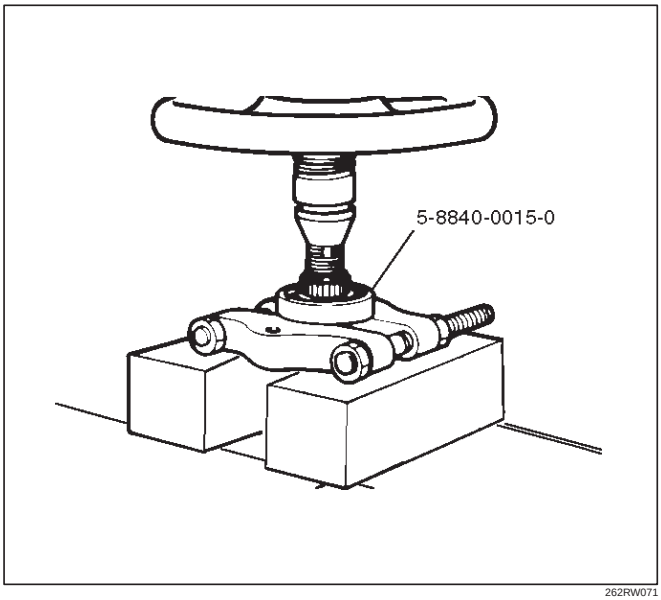

262RW071

26. Remove bearing snap ring (29) from transfer case.
27. Remove the counter gear assembly (28) from the transfer case (1).
28. Use a pair of snap ring pliers to remove the snap ring (20).
29. Use a bench press and the bearing remover 5–8840–0015–0 (J–22912–01) to remove the ball bearing (21).
30. Use a pair of snap ring pliers to remove the snap ring (27).
31. Use a bench press and the bearing remover 5–8840–0015–0 (J–22912–01) to remove the ball bearing (26).

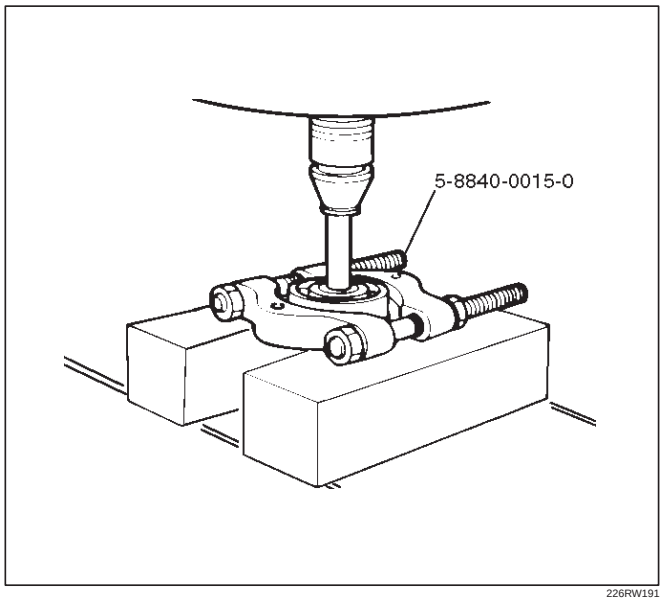

226RW191

32. Remove the spacer (25).
33. Remove the belleville spring (24).
34. Remove the sub–gear (anti–lash plate) (23) from the counter gear (22).

Inspection and Repair

1. Make the necessary repair or parts replacement if wear, damage or any other abnormal conditions are found during inspection.
2. Wash all parts thoroughly in clean solvent. Be sure all old lubricant, metallic particles, dirt, or foreign material are removed from the surfaces of every part. Apply compressed air to each oil feed port and channel in each case half to remove any obstructions or cleaning solvent residue.

Gears

1. Inspect all the gear teeth for signs of excessive wear or damage and check all the gear splines for burrs, nicks, wear or damage. Remove the minor nicks or scratches on an oil stone. Replace any part exhibiting excessive wear or damage.

Front Output Gear Inside Diameter

1. Use an inside dial indicator to measure the gear inside diameter.

2. If the measured value exceeds the specified limit, the gear must be replaced.

Gear inside diameter

Standard : 48.000–48.013 mm (1.8898–1.8903 in)

Limit : 48.10 mm (1.894 in)

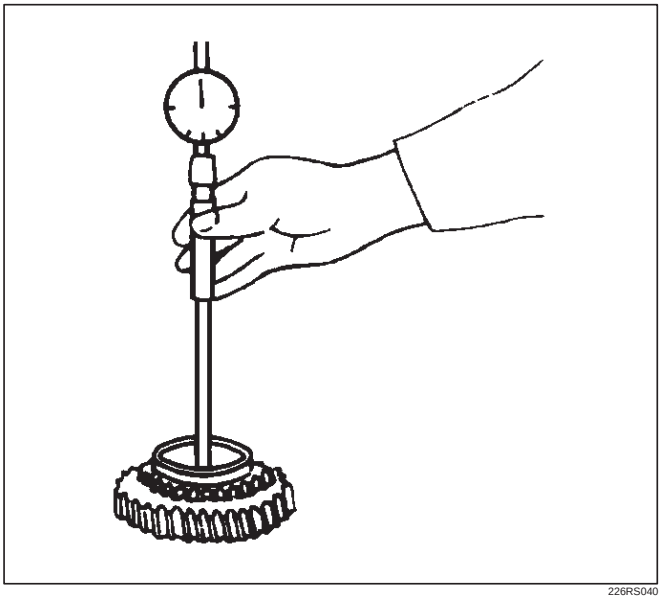

226RS040

Clutch Hub Spline Play

1. Set a dial indicator to the clutch hub to measured.
2. Move the clutch hub as far as possible to both the right and the left.
   Note the dial indicator reading.
3. If the measured value exceeds the specified limit, the clutch hub must be replaced.

Clutch hub spline play

Standard : 0–0.1 mm (0–0.004 in)

Limit : 0.2 mm (0.008 in)

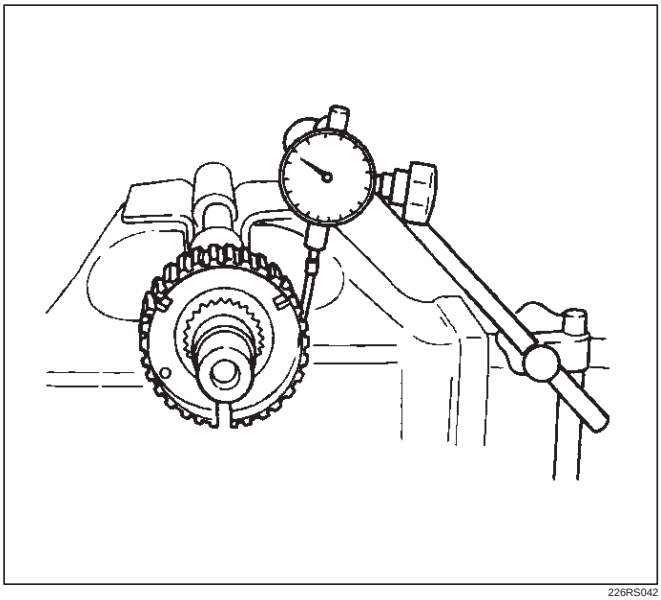

226RS042

Bearings

1. Inspect the condition of all the needles and ball bearings. Wash bearings thoroughly in a cleaning solvent. Apply compressed air to the bearings.

NOTE: Do not allow the bearings to spin. Turn them slowly by hand. Spinning bearings may damage the rollers.

2. Lubricate the bearings with a light oil and check them for roughness by slowly turning the race by hand.

Ball Bearing Play

1. Use a dial indicator to measure the ball bearing play.
2. If the measured value exceeds the specified limit, the ball bearing must be replaced.

Limit : 0.2 mm (0.008 in)

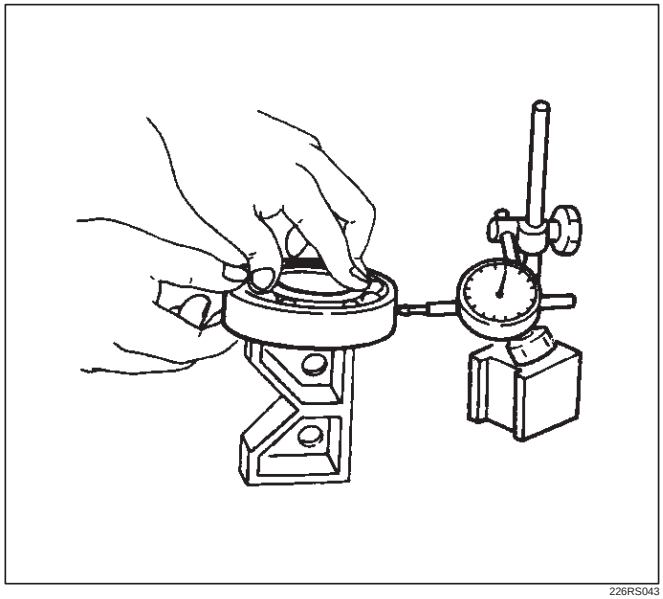

226RS043

Synchronizers

The synchronizer hubs and sliding sleeves are a selected assembly and should be kept together as originally assembled.
Clean synchronizer components with clean solvent and air dry.
Inspect the components for the following:

- Teeth for wear, scuffs, nicks, burrs or breaks.
- Keys and springs for wear, cracks or distortion, replace if these conditions are present.
- If scuffed, nicked or burred conditions cannot be corrected with a soft stone or crocus cloth, replace the component.

Block Ring and Insert Clearance

1. Use a vernier caliper to measure the clearance between the block ring and the insert.
2. If the measured value exceeds the specified limit, the block ring and the insert must be replaced.

Block ring and insert clearance

Standard : 2.46–2.74 mm (0.097–0.108 in)

Limit : 3.0 mm (0.118 in)

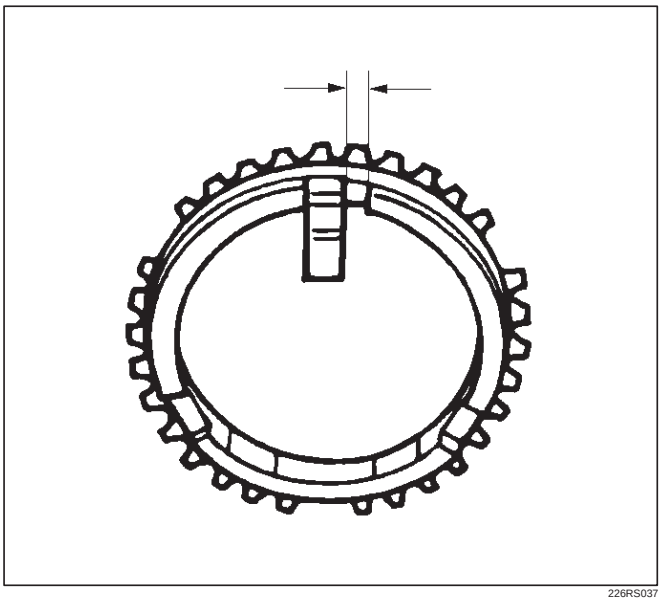

226RS037

2WD–4WD 3–Cone Synchronizer (Shift On The Fly model)

1. Use a thickness gauge to measure the clearance between the block ring and the dog teeth.
2. If the measured value exceeds the specified limit, the 2WD–4WD synchronizer assembly must be replaced.

Block ring and insert clearance

Standard : 1.5 mm (0.059 in)

Limit : 0.8 mm (0.031 in)

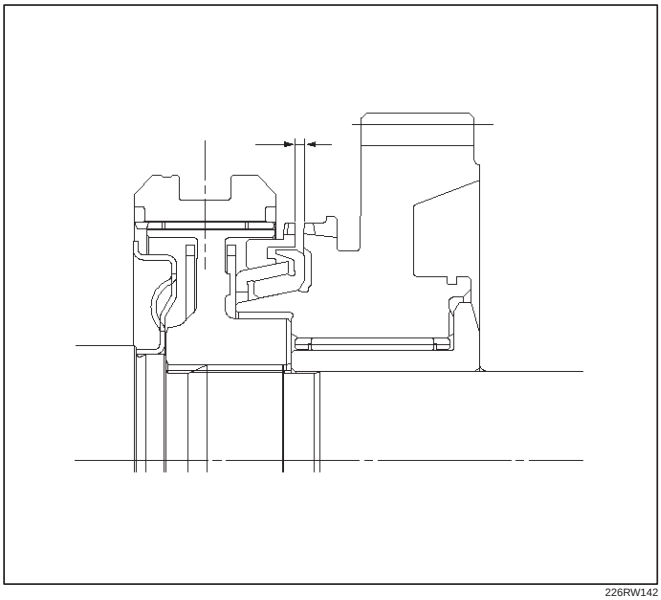

226RW142

Clutch Hub and Insert Clearance

1. Use a thickness gauge to measure the clearance between the clutch hub and the insert.
2. If the measured value exceeds the specified limit, the clutch hub and the insert must be replaced.

Clutch hub and insert clearance

Standard : 0.01–0.19 mm (0.0004–0.0075 in)

Limit : 0.3 mm (0.012 in)

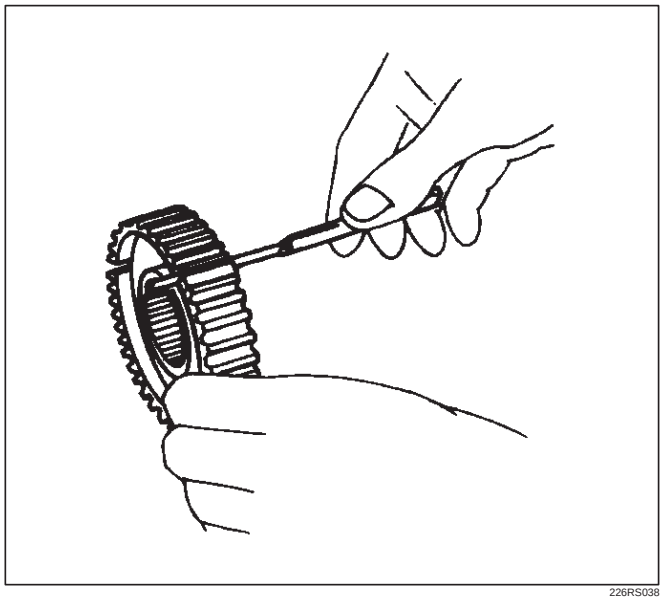

226RS038

Detent Springs

1. Inspect the springs for distortion, cracks or wear. Replace if these conditions are present.

Detent Spring Free Length

1. Use a vernier caliper to measure the detent spring free length.

2. If the measured value is less than the specified limit, the detent spring must be replaced.

Detent spring free length

Detent ball

Standard : 23.4 mm (0.921 in)

Limit : 22.8 mm (0.898 in)

Interlock pin

Standard : 1.59 mm (0.063 in)

Limit : 1.53 mm (0.060 in)

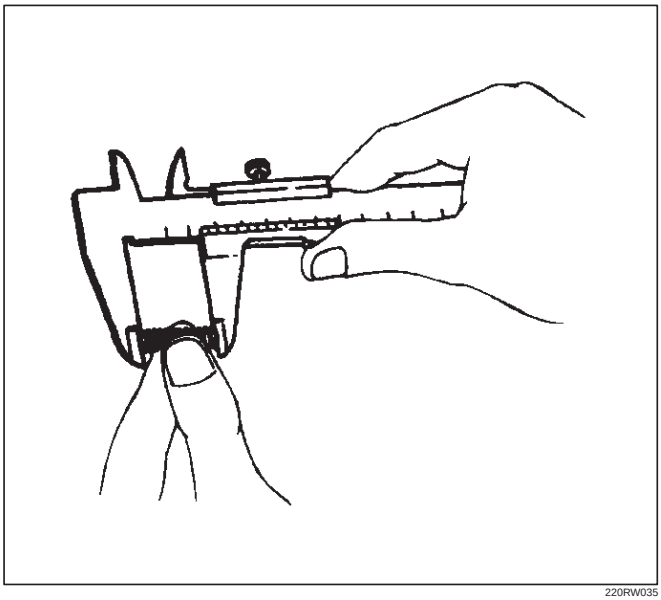

220RW035

Detent Spring Tension

1. Use a spring tester to measure the detent spring tension.
2. If the measured value is less than the specified limit, the detent spring must be replaced.

Detent spring free length

Detent ball

Compressed height : 18.7 mm (0.736 in)

Standard : 68.6–88.2 N (7.0–9.0kg/15.4–19.8 lb)

Interlock pin

Compressed height : 11.5 mm (0.453 in)

Standard : 9.8 N (1.0kg/2.2 lb)

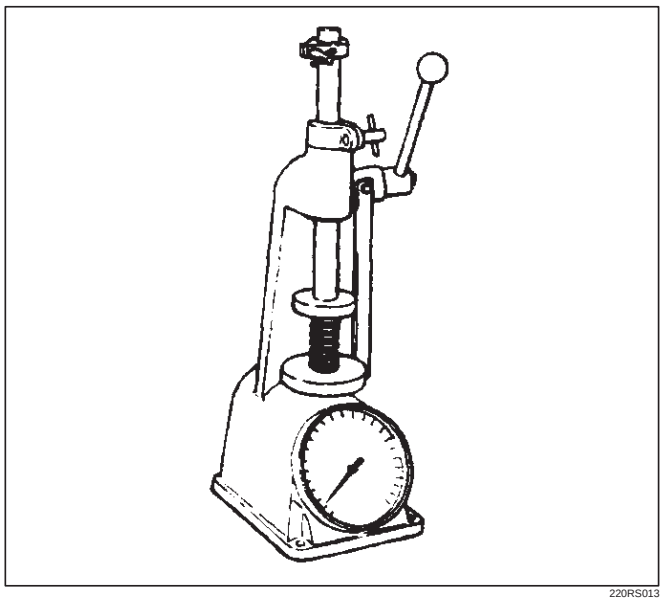

220RS013

Shift Arm

1. Inspect the shift arms for wear, distortion or scoring. Replace if these conditions are present.

Shift Arm Thickness

1. Use a micrometer to measure the shift arm thickness.
2. If the measured value is less than the specified limit, the shift arm must be replaced.

Shift arm thickness

Standard : 9.60–9.85 mm (0.378–0.388 in)

Limit : 9.0 mm (0.354 in)

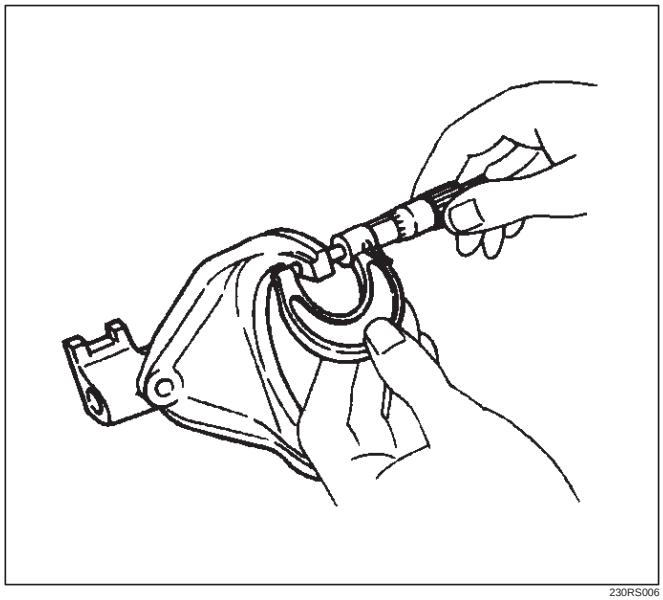

230RS006

Reassembly

1. Put the transfer case (with oil seal) as the following illustration.

Input shaft oil seal (1) replacement

1. Remove the oil seal from the transfer case.
2. Apply engine oil to the oil seal outer surfaces.
3. Apply recommended grease (BESCO L2) or equivalent to the oil seal lip.
4. Use the oil seal installer 5–8840–2279–0 (J–38592) to install the oil seal to the transfer case.

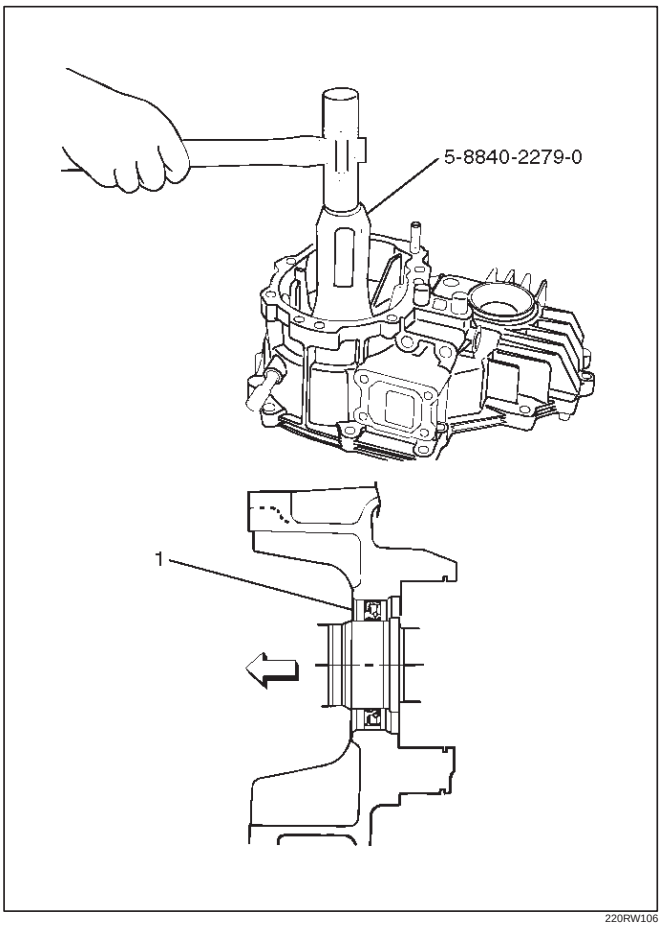

220RW106

Front output shaft oil seal (2) replacement

1. Remove the oil seal from the transfer case.
2. Apply engine oil to the oil seal outer surfaces.
3. Apply recommended grease (BESCO L2) or equivalent to the oil seal lip.
4. Use the oil seal installer 5–8840–2281–0 (J–38594) to install the oil seal to the transfer case.

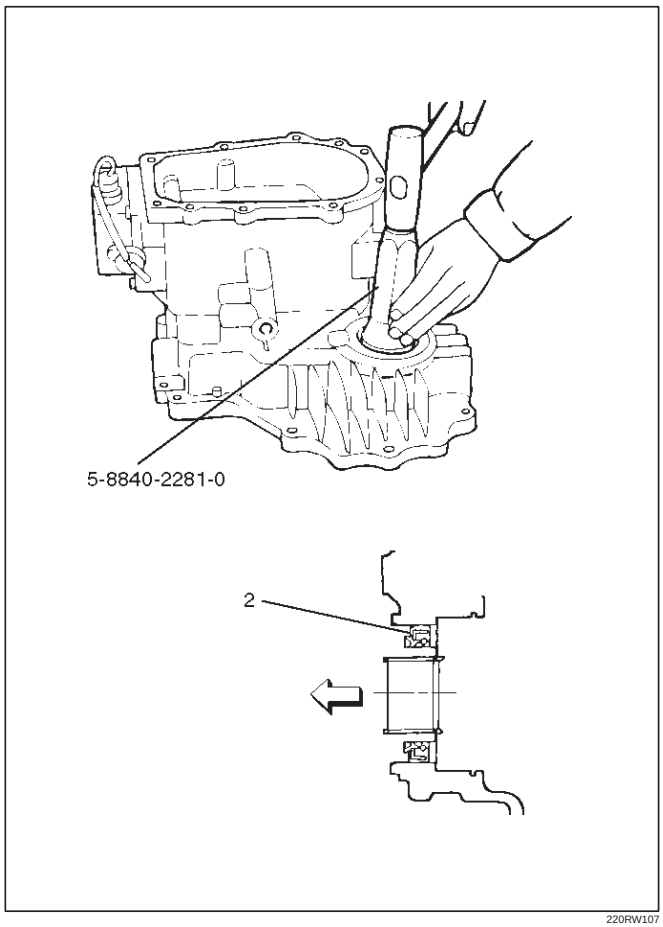

220RW107

Legend

(2) Front output shaft oil seal

2. Apply chassis grease (3) to the sub–gear (23) and the counter gear (22) thrust surfaces.

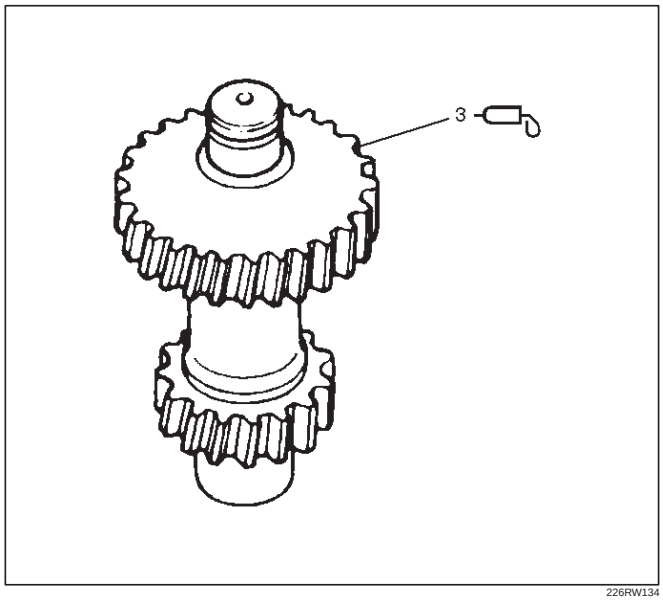

226RW134

3. Install the sub–gear (23) to the counter gear (22).
4. Install the belleville spring (24).
5. Install the spacer (25) and put the snap ring (29) on the sub–gear (23).
6. Install the ball bearing (26), using a bench press.
7. Select a snap ring that will allow the minimum axial play.

Clearance : 0–0.1 mm (0–0.004 in)

Snap ring availability:	
Thickness	Color–coding
1.50 mm (0.059 in)	White
1.55 mm (0.061 in)	Yellow
1.60 mm (0.063 in)	Blue

8. Use a pair of snap ring pliers to install the snap ring (27) to the counter gear (22).

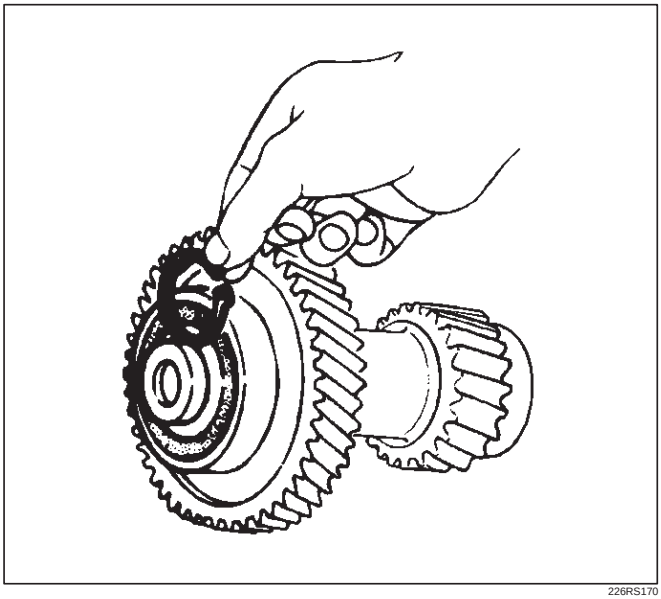

226RS170

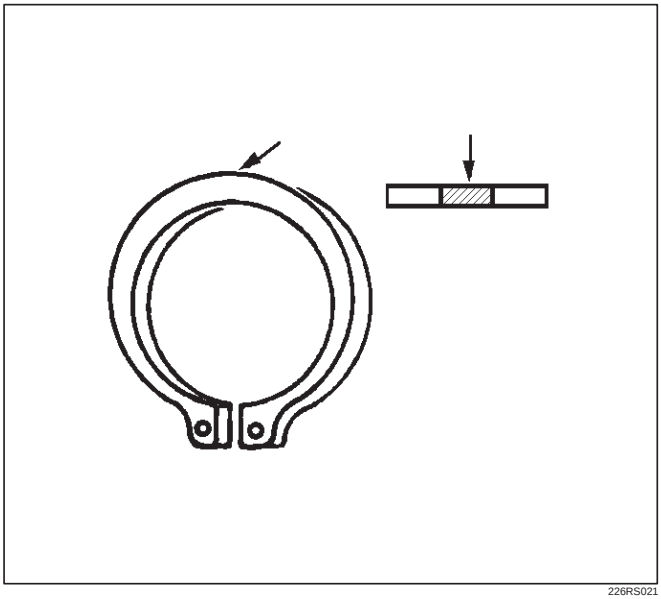

226RS021

Sub–Gear (anti–lash plate) Preload

1. Hook a length of piano wire (4) over one of the sub–gear (5) teeth.
2. Attach the other end of the piano wire (4) to a spring balancer.
3. Measure the sub–gear preload.

Preload : 59–98 N (6.0–10kg/13–22 lb)

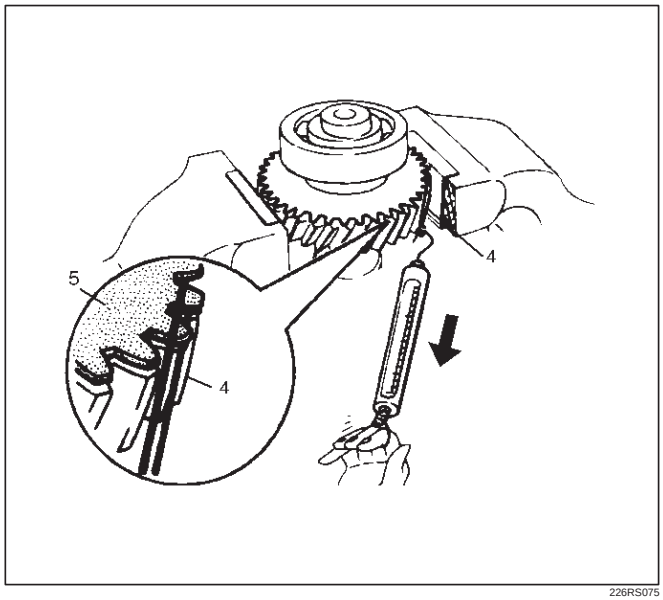

226RS075

9. Install ball bearing (21), using a bench press.
10. Install snap ring (20).
11. Install the counter gear assembly (28) to the transfer case (1).
12. Use a pair of snap ring pliers to install the snap ring (29) to the transfer case (1).

NOTE: The snap ring must be fully inserted into the transfer case snap ring groove.

13. Use a bench press to install the ball bearing (4) to the front output shaft (5).

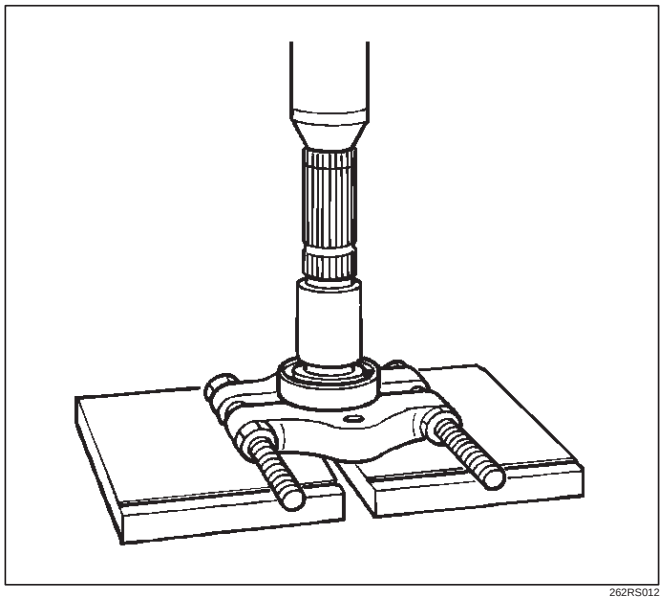

262RS012

14. Assemble the 2WD–4WD clutch hub and sleeve assembly (7).

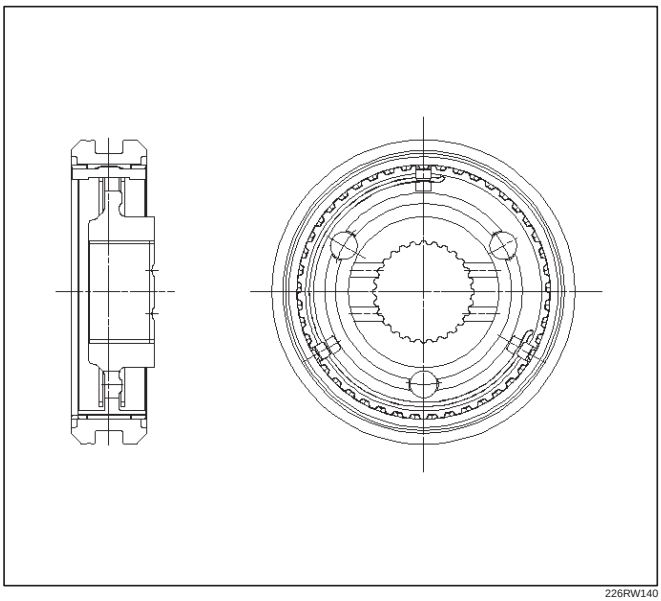

226RW140

15. Engage the springs in the same insert with the open ends away from each other. (Shift On The Fly model)

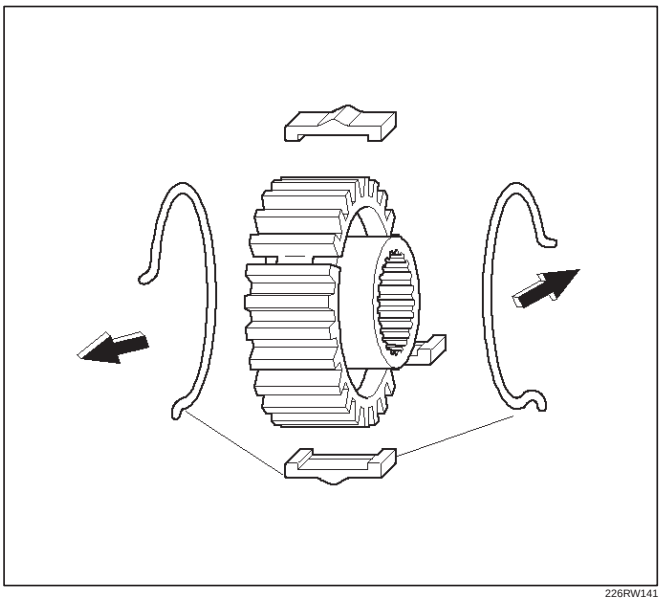

226RW141

16. Place the snap ring (2), a new stopper plate (6) (Shift On The Fly model) and the clutch sleeve and hub assembly (7) on the front output shaft (5).

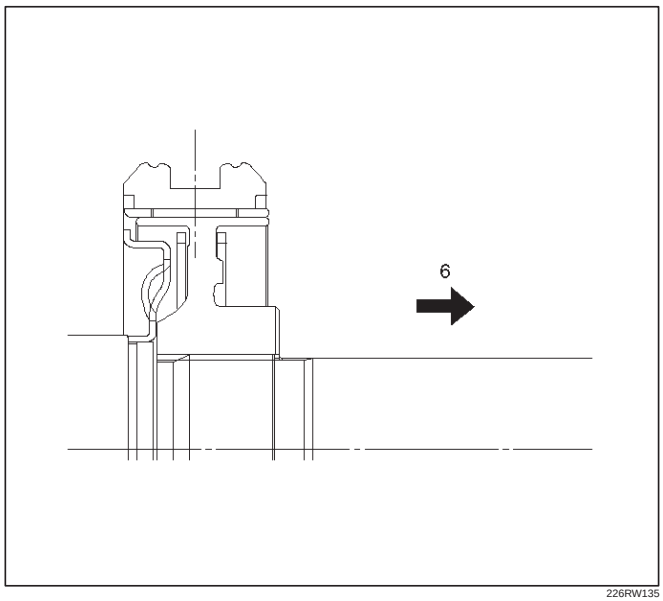

226RW135

Legend

(6) Front Output Gear

17. The clutch hub face (with the heavy boss) must be facing the front output gear side.
18. Use a bench press to slowly force the clutch hub and sleeve assembly (7) together with the stopper plate (6) (Shift On The Fly model) into place.
19. Align the inserts with the block ring insert grooves. Install the block ring (8) (Shift On The Fly model) to the clutch sleeve and hub assembly (7).
20. Install the outside ring (9) (Shift On The Fly model), inside ring (10) (Shift On The Fly model) and needle bearing (12) to the front output gear (11) and bearing collar (17).

NOTE: Coat all parts with transmission oil before installing them.

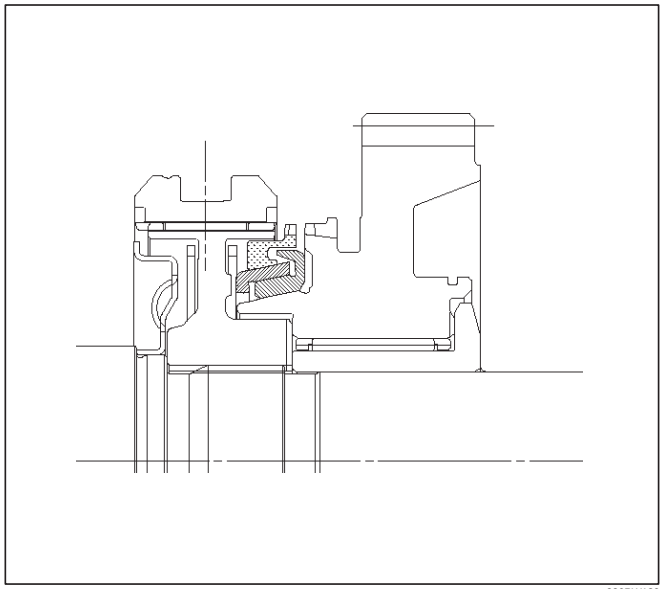

226RW139

21. Apply engine oil to the thrust surfaces of the sub–gear (13), the belleville spring (14), and the spacer (15). (M/T)

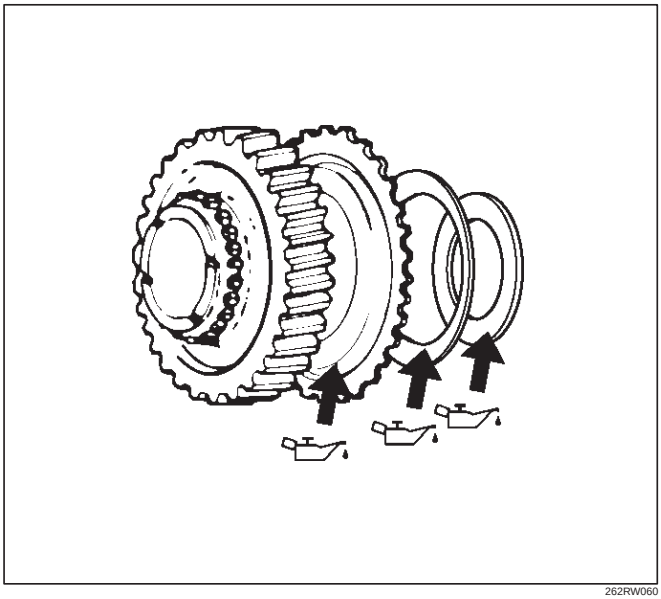

262RW060

22. Install the sub–gear (anti–lash plate) (13), belleville spring (14), and spacer (15) to the front output gear (11).(M/T)
23. Install the sub–gear snap ring (16). (M/T)
24. Use a bench press to install the needle bearing collar (17) together with the front output gear, aligning inside ring claw with block ring groove.

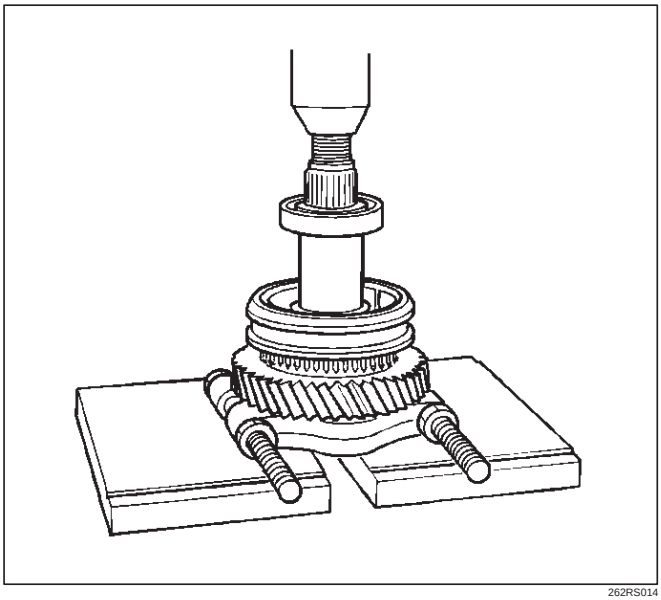

262RS014

25. Install ball bearing (18), using a bench press.
26. Select a snap ring that will allow the minimum axial play.

Clearance : 0–0.1 mm (0–0.004 in)

Snap ring availability:	
Snap ring thickness	Color coding
1.55 mm (0.061 in)	White
1.60 mm (0.063 in)	Yellow
1.65 mm (0.065 in)	Blue
1.70 mm (0.067 in)	Pink
1.75 mm (0.069 in)	Green
1.80 mm (0.071 in)	Brown
1.85 mm (0.073 in)	Red
1.90 mm (0.075 in)	Orange

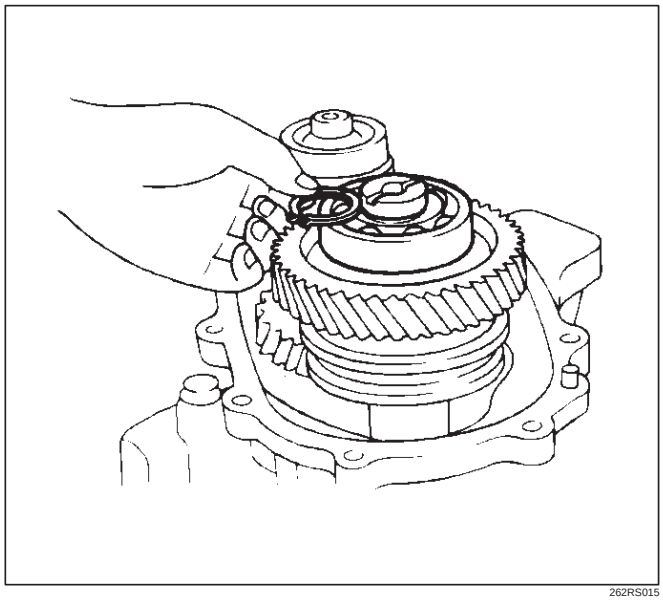

262RS015

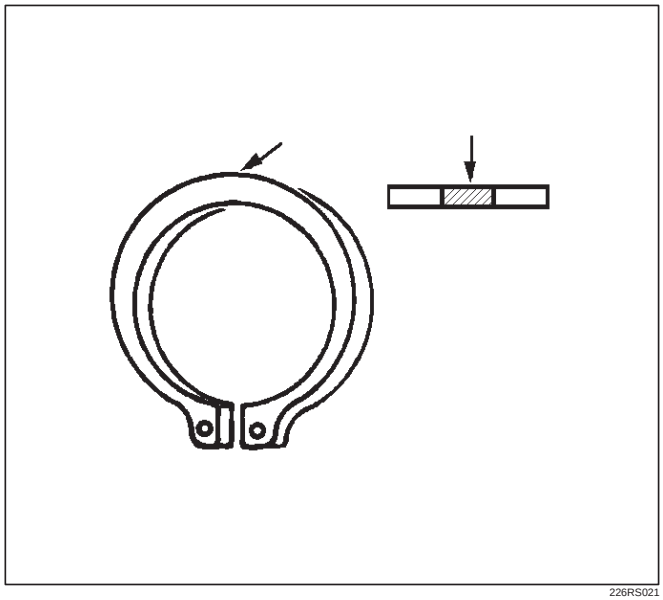

226RS021

27. Use a pair of snap ring pliers to install the snap ring (19) to the output shaft (5).

Sub gear (anti lash plate) preload (M/T)

1. Hook a length of piano wire (4) over one of the sub–gear (5) teeth.
2. Attach the other end of the piano wire to (4) a spring balancer.
3. Measure the sub–gear preload.

Preload: 59–98 N (6.0–10.0kg/13–22 lb)

(M/T)

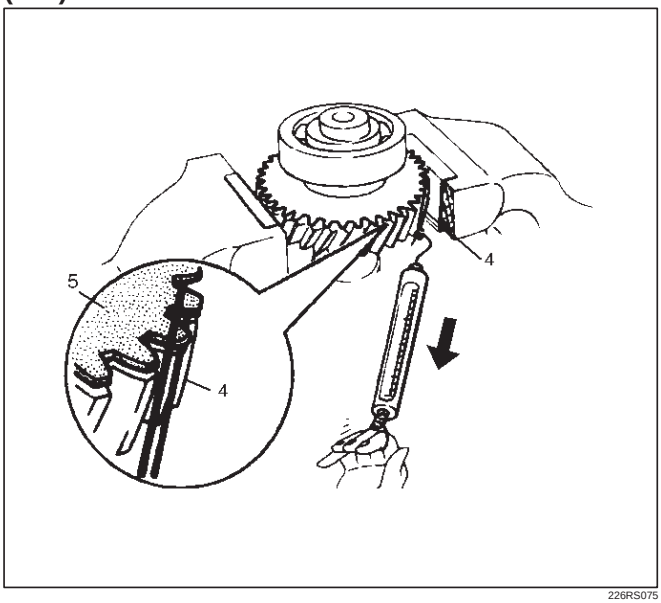

226RS075

28. Install front output gear assembly (3) to the transfer case (1).
29. Use a pair of snap ring pliers to install the snap ring (2) to the transfer case (1).

NOTE: The snap ring must be fully inserted into the transfer case snap ring groove.

30. Use a bench press to install the ball bearing (32) to the input shaft (31).

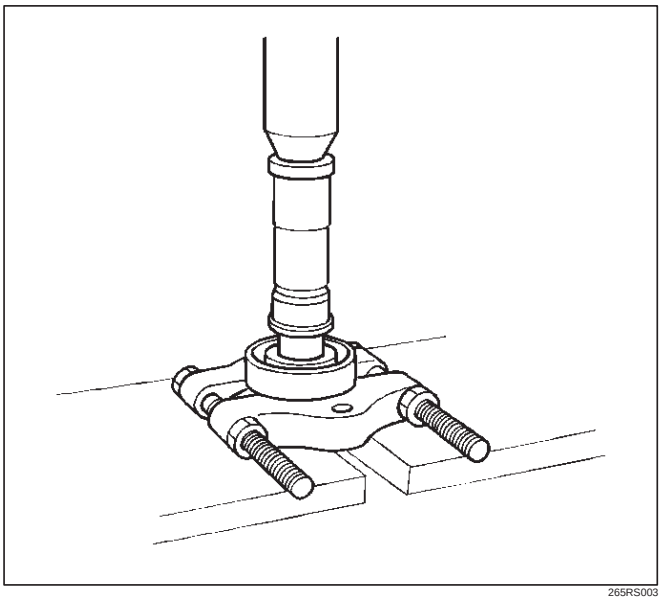

265RS003

31. Install the plate (34), ball (35), and bearing collar (36) and place the snap ring (33).
32. Install the needle bearing (37) and input gear (38).
33. The clutch hub face (with the heavy boss) must be facing the transfer input gear side (7).

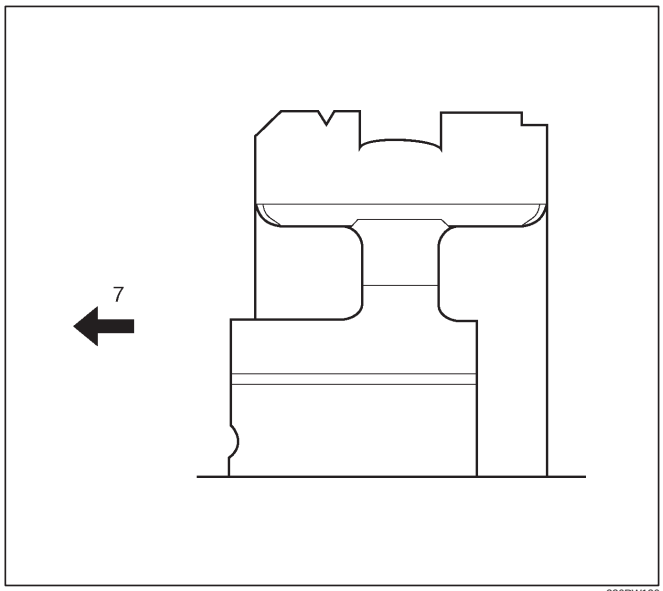

226RW136

34. Install the high–low clutch hub and sleeve (39), using a bench press.
35. Install the input shaft assembly (30) to the transfer case (1).
36. Install the snap ring (33) to the transfer case (1).

NOTE: The snap ring must be fully inserted into the transfer case snap ring groove.

37. Install the front companion flange temporarily and use the flange holder 5–8840–0133–0 (J–8614–11) and lock nut wrench 5–8840–2156–0 (J–37219) to install the lock nut (40).

Torque: 137 N·m (14.0kg·m/101 lb ft)

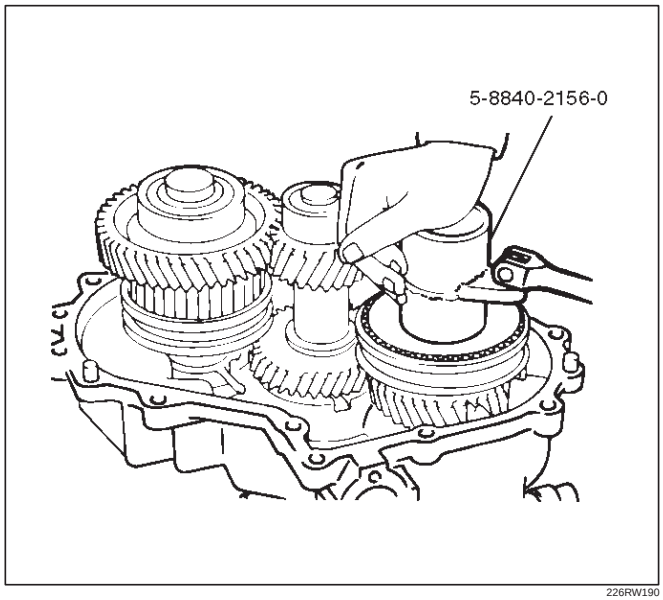

226RW190

38. Use the punch to stake the lock nut (40) at one spot.

39. Use a suitable drift and hammer to install the ball bearing (41).

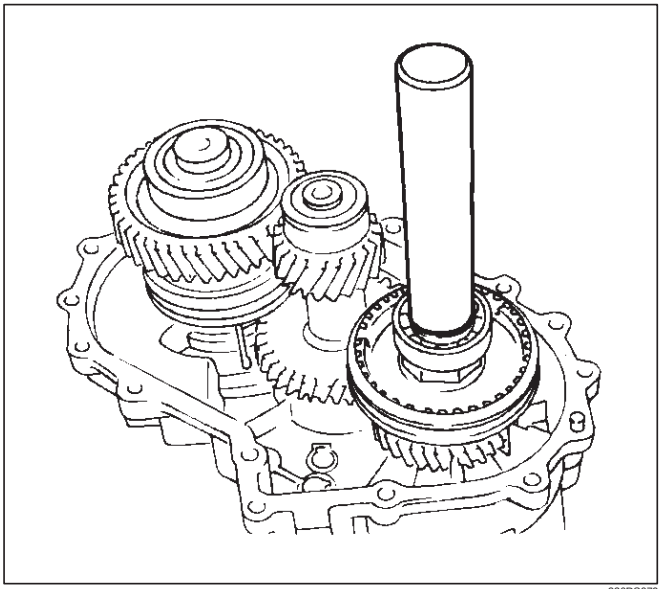

226RS079

40. Install the bearing snap ring (42).

Main Data and Specifications

General Specifications

Type	W/Shift On The Fly System model Synchronized type gears shifting between the 2 and 4 wheel drive mode. Constant mesh type gears shifting between “low” and “high”. WO/Shift On The Fly System model Constant mesh type gears shifting between the 2 and 4 wheel drive mode, and between “low” and “high”.
Control method	W/4WD Switch model Electric control with the button switch on the instrument panel for gear shifting between the 2 and 4 wheel drive mode. Remote control with the gear shift lever on the floor for gear shifting between “low and high” . WO/4WD Switch model Remote control with the gear shift lever on the floor for gear shifting.
Gear ratio	High; 1.000 Low; 2.050
Oil capacity	1.45 lit. (1.53 U.S. quart)
Type of lubricant	Engine oil Refer to chart in Section 0

Torque Specifications

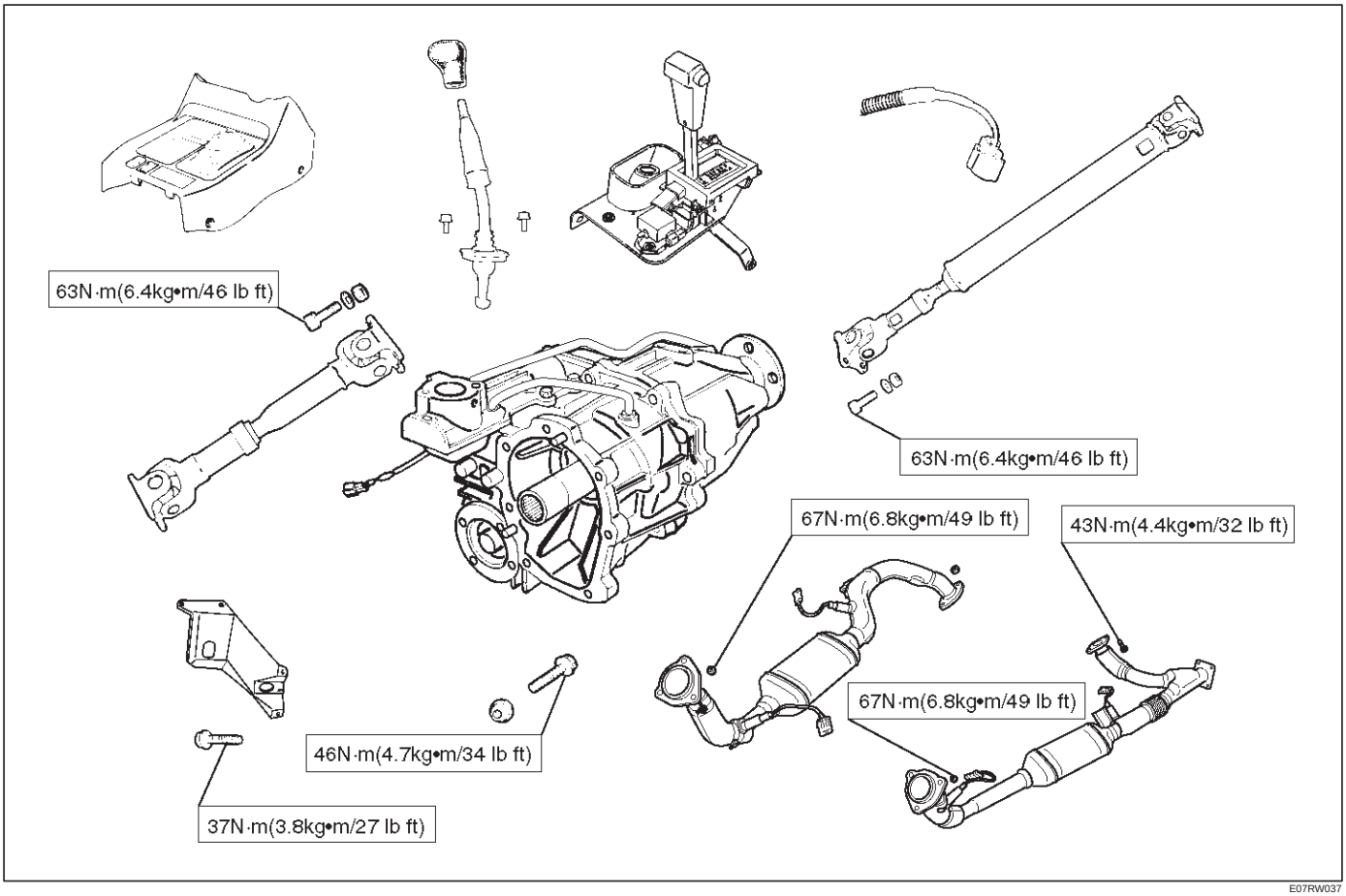

E07RW037

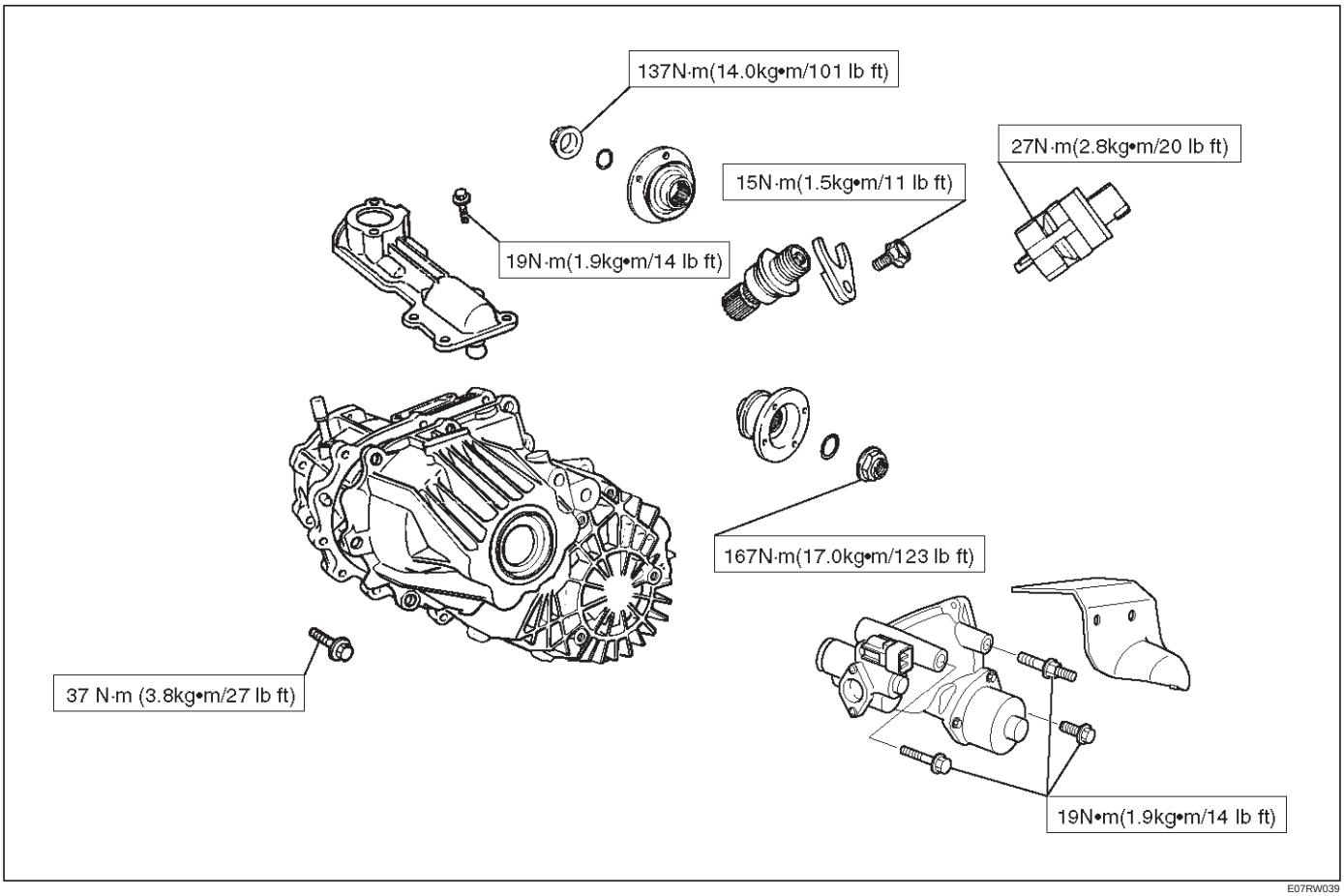
137N·m(14.0kg•m/101 lb ft)
27N·m(2.8kg•m/20 lb ft)
15N·m(1.5kg•m/11 lb ft)
19N·m(1.9kg•m/14 lb ft)
167N·m(17.0kg•m/123 lb ft)
37 N·m (3.8kg•m/27 lb ft)
19N•m(1.9kg•m/14 lb ft)

E07RW039

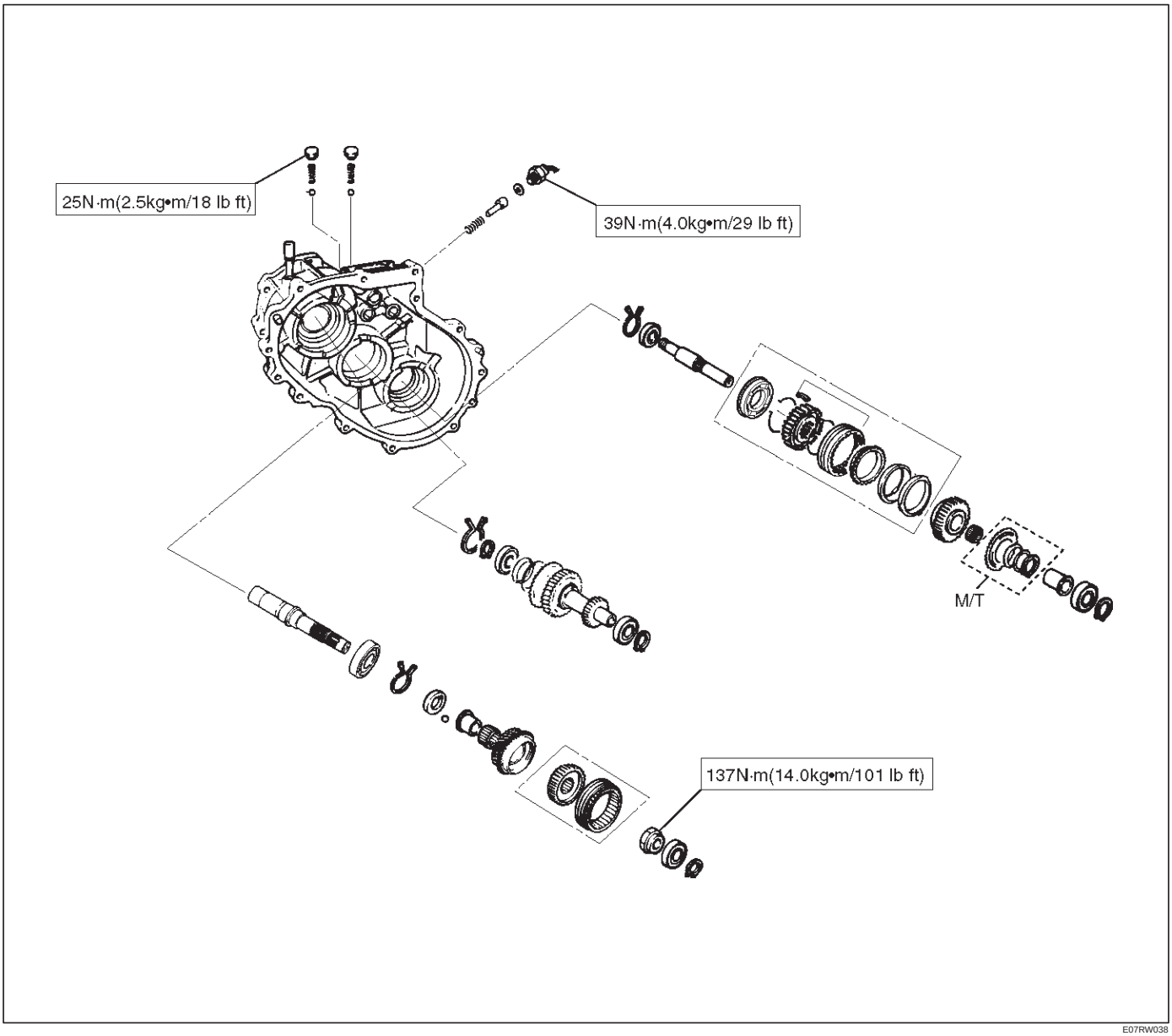
25N·m(2.5kg•m/18 lb ft)
39N·m(4.0kg•m/29 lb ft)
M/T
137N·m(14.0kg•m/101 lb ft)

E07RW038

Special Tools

ILLUSTRATION	PART NO. PART NAME
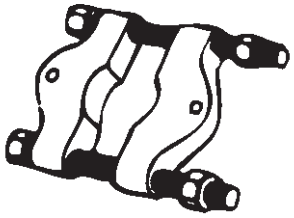 901RS258	**5–8840–0015–0** **(J–22912–01)** Bearing remover/installer
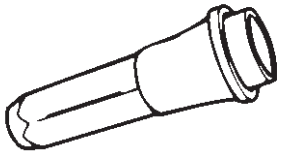 901RS269	**5–8840–2279–0** **(J–38592)** Transfer case oil seal installer
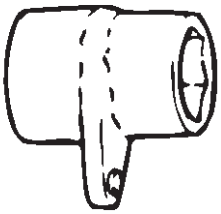 901RS255	**5–8840–2156–0** **(J–37219)** Mainshaft nut wrench
901RS257	**5–8840–2159–0** **(J–37223)** Rear output shaft and bearing installer
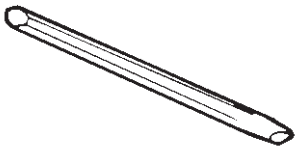 901RS263	**5–8840–2293–0** **(J–39209)** Punch, end nut
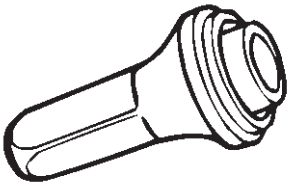 901RS271	**5–8840–2281–0** **(J–38594)** Front output shaft oil seal installer

ILLUSTRATION	PART NO. PART NAME
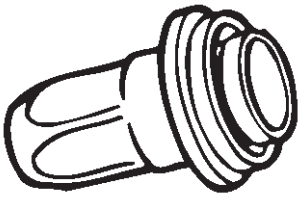 901RS272	**5–8840–2292–0** **(J–39208)** Rear oil seal installer
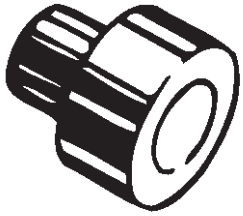 901RS273	**5–8840–2192–1** **(J–37486–A)** Bearing installer adapter
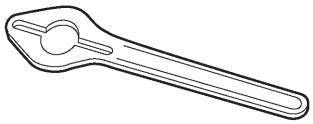 901RW071	**5–8840–0133–0** **(J–8614–11)** Flange holder
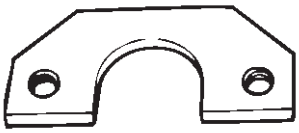 901RS274	**5–8840–2155–0** **(J–37217)** Mainshaft end bearing remover
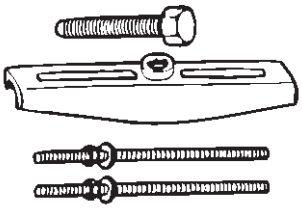 901RS252	**5–8840–2027–0** **(J–37487)** Puller
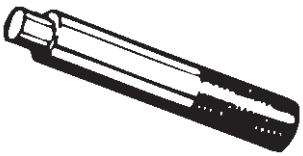 901RS268	**5–8840–0007–0** **(J–8092)** Driver handle

DRIVELINE/AXLE

TRANSFER CASE (TOD)

CONTENTS

Service Precaution 4D2–1
Transfer Case Assembly 4D2–2
Removal 4D2–2
Installation 4D2–3
Transfer Rear Oil Seal 4D2–5
Transfer Rear Oil Seal and Associated Parts 4D2–5
Removal 4D2–5
Installation 4D2–5
TOD ECU 4D2–7
Removal 4D2–7
Installation 4D2–7
Unit Repair 4D2–8
Inspection 4D2–8
Transfer Case 4D2–9
Disassembled View 4D2–9
Disassembly 4D2–9
Reassembly 4D2–10
Transfer Cover Assembly 4D2–12
Disassembled View 4D2–12
Disassembly 4D2–12
Reassembly 4D2–14
Transfer Case Assembly Clutch Pack and Clutch Cam 4D2–16
Disassembled View 4D2–16
Disassembly 4D2–16
Sprocket and Mechanical Lock 4D2–18
Disassembled View 4D2–18
Disassembly 4D2–18
Output Shafts and Shift Control Shaft 4D2–20
Disassembled View 4D2–20
Disassembly 4D2–21
Transfer Case 4D2–23
Disassembled View 4D2–23
Disassembly 4D2–24
Inspection and Repair 4D2–26
Transfer Case 4D2–30
Disassembled View 4D2–30
Reassembly 4D2–30
Output Shafts and Shift Control Shaft 4D2–34
Disassembled View 4D2–34
Reassembly 4D2–34
Sprocket and Mechanical Lock 4D2–37
Disassembled View 4D2–37
Reassembly 4D2–37
Clutch Pack and Clutch Cam 4D2–39
Disassembled View 4D2–39
Reassembly 4D2–39
Main Data and Specifications 4D2–41
Special Tools 4D2–43

Service Precaution

WARNING: IF SO EQUIPPED WITH A SUPPLEMENTAL RESTRAINT SYSTEM (SRS), REFER TO THE SRS COMPONENT AND WIRING LOCATION VIEW IN ORDER TO DETERMINE WHETHER YOU ARE PERFORMING SERVICE ON OR NEAR THE SRS COMPONENTS OR THE SRS WIRING. WHEN YOU ARE PERFORMING SERVICE ON OR NEAR THE SRS COMPONENTS OR THE SRS WIRING, REFER TO THE SRS SERVICE INFORMATION. FAILURE TO FOLLOW WARNINGS COULD RESULT IN POSSIBLE AIR BAG DEPLOYMENT, PERSONAL INJURY, OR OTHERWISE UNNEEDED SRS SYSTEM REPAIRS.

CAUTION: Always use the correct fastener in the proper location. When you replace a fastener, use ONLY the exact part number for that application. ISUZU will call out those fasteners that require a replacement after removal. ISUZU will also call out the fasteners that require thread lockers or thread sealant. UNLESS OTHERWISE SPECIFIED, do not use supplemental coatings (Paints, greases, or other corrosion inhibitors) on threaded fasteners or fastener joint interfaces. Generally, such coatings adversely affect the fastener torque and the joint clamping force, and may damage the fastener. When you install fasteners, use the correct tightening sequence and specifications. Following these instructions can help you avoid damage to parts and systems.

Transfer Case Assembly

Removal

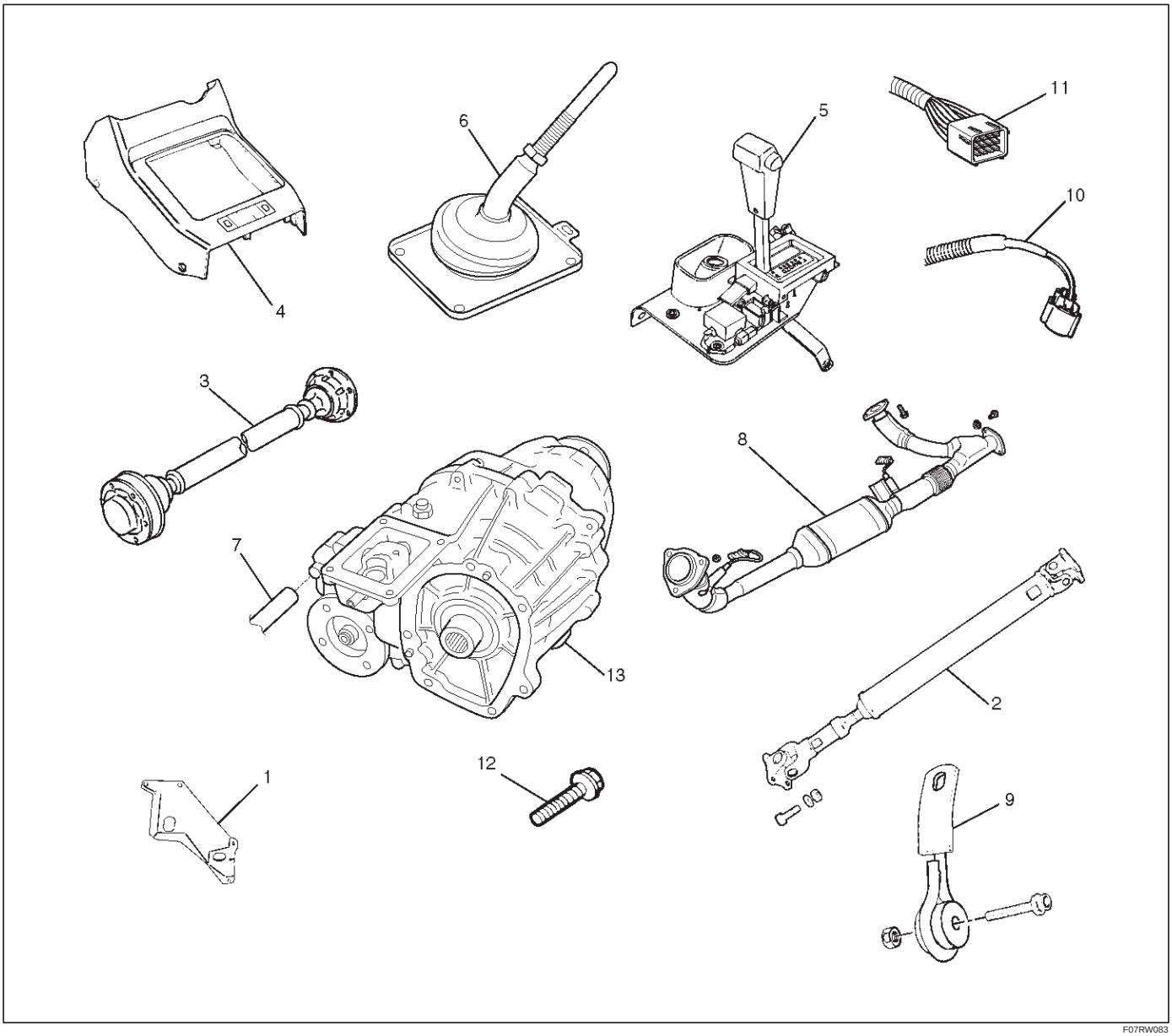

F07RW083

Legend

(1) Transfer Protector
(2) Rear Propeller Shaft
(3) Front Propeller Shaft
(4) Front Console
(5) Selector Lever Assembly
(6) Transfer Control Lever
(7) Breather Hose
(8) Exhaust Pipe
(9) Seat Belt Tension Rod
(10) Speed Sensor Harness Connector
(11) Transfer Harness Connector
(12) Transfer Case Bolt
(13) Transfer Case

1. Disconnect the ground cable.
2. Remove the transfer protector.
3. Remove the rear propeller shaft from the transfer case.
4. Remove the front propeller shaft from the transfer case.
5. Remove the shift control rod from the selector lever assembly.

6. Disconnect the wiring harness connector, transfer control lever knob and shift lock cable and then remove the front console.
7. Remove the selector lever assembly and put it aside.
8. Remove the transfer control lever.
9. Disconnect the breather hose.
10. Remove the left front exhaust pipe fixing bolts and nuts, and put the exhaust pipe aside.
11. Remove the left seat belt tension rod and put the rear proper shaft aside.

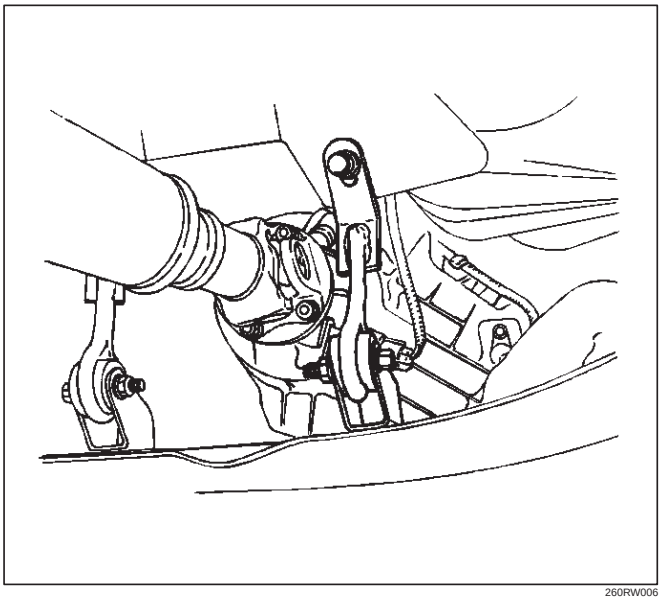

260RW006

12. Disconnect the transfer harness connector from the top of the transfer case.
13. Disconnect the speed sensor harness connector.
14. Remove the fuel pipe clip fixing bolt on the transfer case.
15. Support the transmission with a jack.
16. Remove the seven bolts from the transfer case.
17. Remove the transfer case assembly.

Installation

To install, follow the removal steps in the reverse order, noting the following points:

1. Apply a thin coat of grease (Besco L2) or equivalent to the input shaft spline.

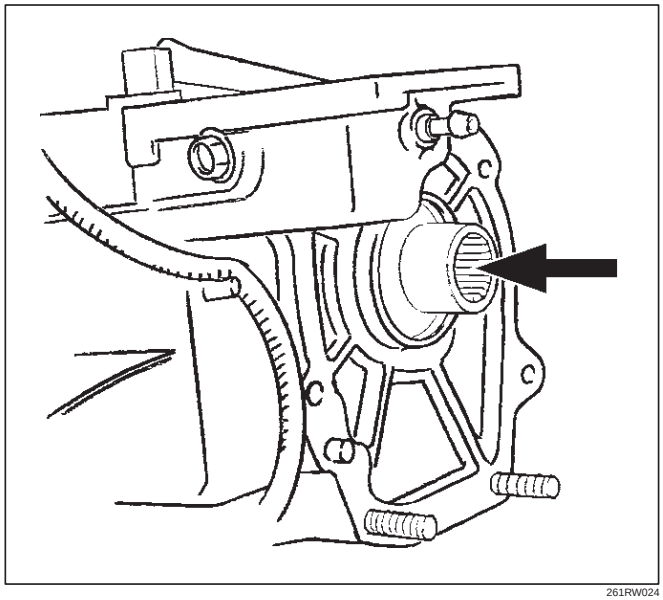

261RW024

2. Mount the transfer case.

3. Tighten the transfer case bolts (see the figure below).

Torque : 46 N·m (4.7 kg·m/34 lb ft)

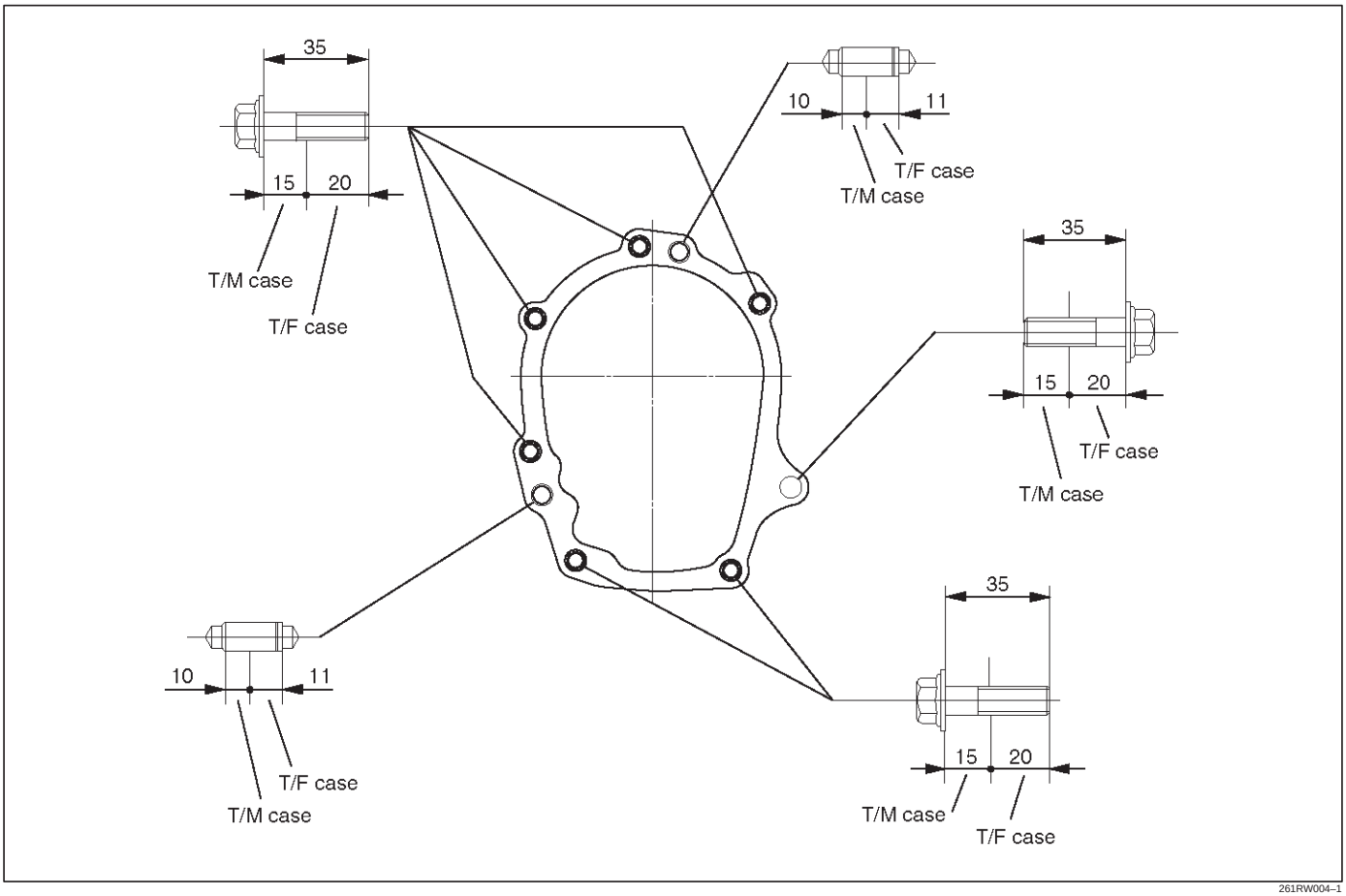

261RW004–1

4. Tighten the propeller shaft bolts.

Torque : 63 N·m (6.4 kg·m/46 lb ft)

Transfer Rear Oil Seal

Transfer Rear Oil Seal and Associated Parts

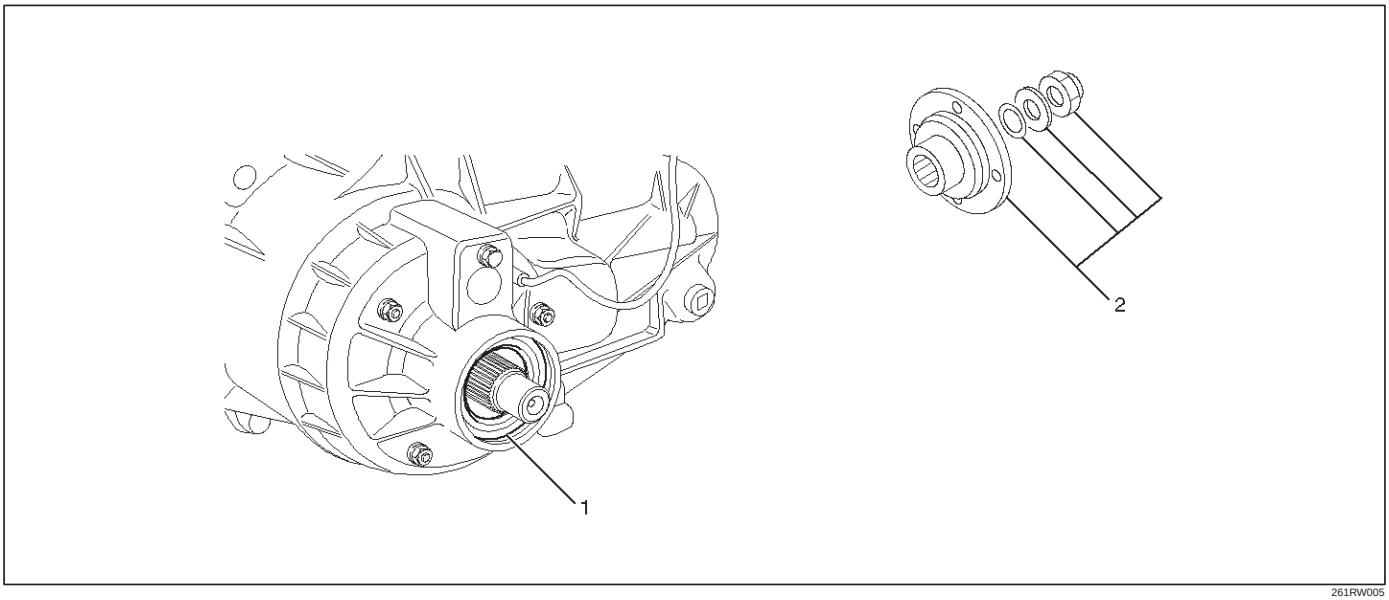

261RW005

Legend
(1) Oil Seal
(2) End Nut and Rear Companion Flange

Removal

1. Remove the rear propeller shaft from the transfer case.
2. Using the flange holder 5-8840-0133-0 (J-8614-11), remove the end nut.
3. Using the universal puller, remove the rear companion flange, washer and O-ring.
4. Remove the oil seal from the transfer rear case.

Installation

1. Apply engine oil to the oil seal outer surfaces. Fill the oil seal lip with grease (Besco L2).

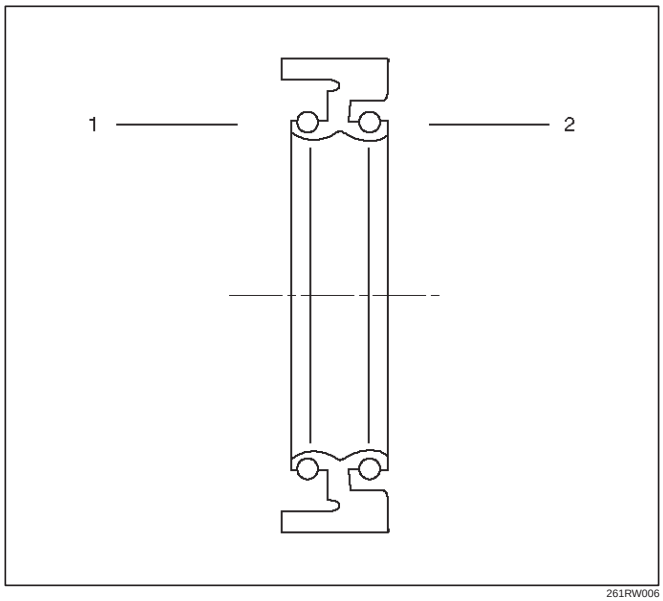

261RW006

Legend
(1) Inside
(2) Outside

2. Using the oil seal installer 5-8840-2412-0 (J-42804), install the oil seal.

NOTE: When installing the oil seal, pay attention to the direction.

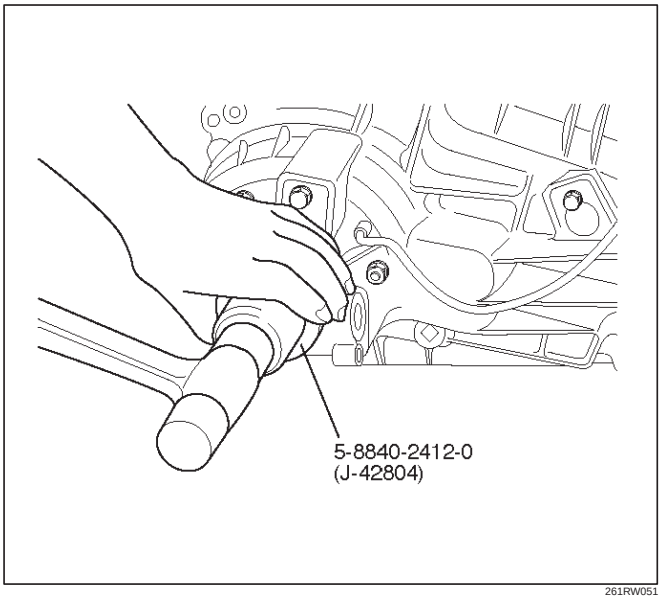

261RW051

Rear Output Shaft Oil Seal

Distance between the transfer case end and oil seal.

NOTE: When installing the oil seal to the specified dimension, be careful not to damage it.

Distance : 9.85 — 10.35mm (0.39 — 0.41 in)

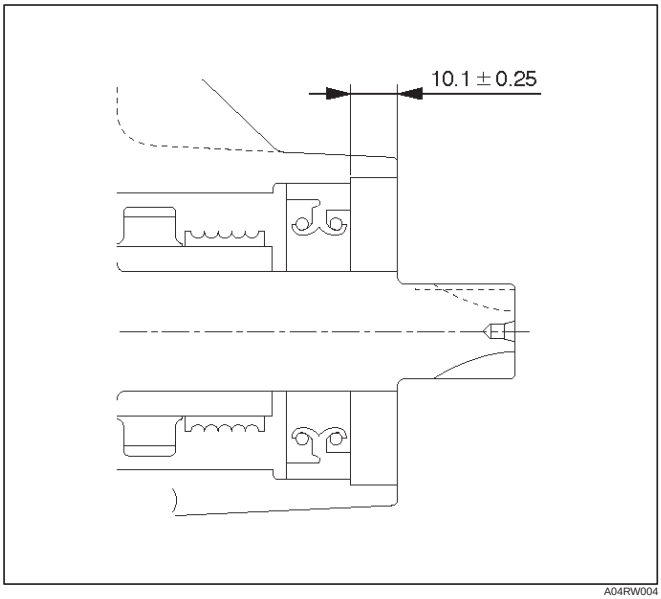

A04RW004

3. Mount the rear companion flange, O-ring , washer, and nut to the transfer case in this order.
4. Using the flange holder 5-8840-0133-0 (J-8614-11), install a new end nut.

Torque : 167 N·m (17 kg·m /123 lb ft)

5. Using the punch 5-8840-2293-0 (J-39209), stake the end nut at two spots.

NOTE: Check the staked end nut is free from cracks.

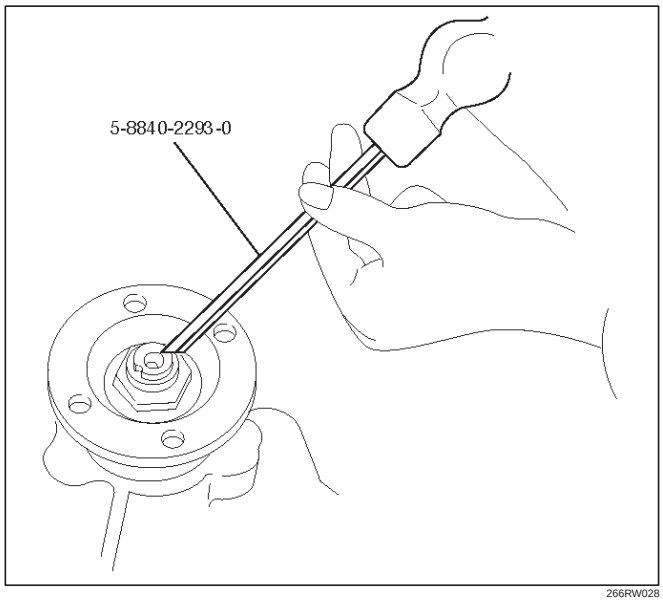

266RW028

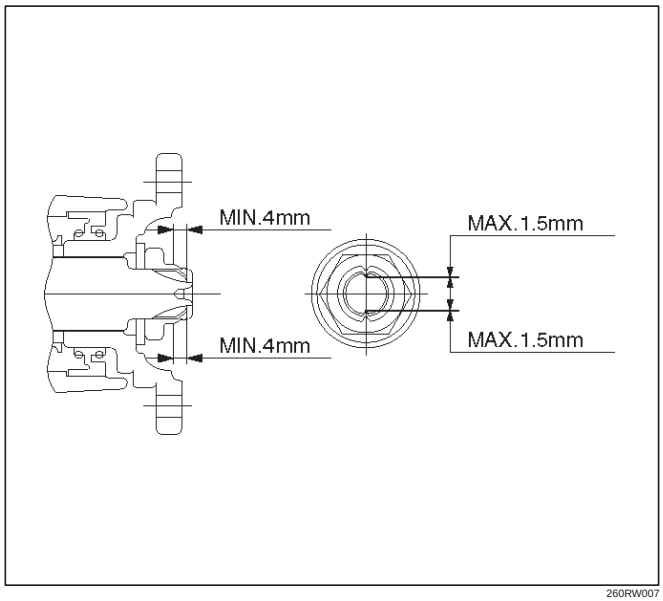

260RW007

6. Install the rear propeller shaft to the transfer case and tighten to the specified torque.

Torque : 63 N·m (6.4 kg·m /46 lb ft)

TOD ECU

Removal

1. Disconnect the ground cable.
2. Move the right-hand seat forward and remove the second seat foot rest (1).
3. Disconnect the connector from the ECU (2).
4. Remove the bolts and detach the ECU (2) from the bracket.

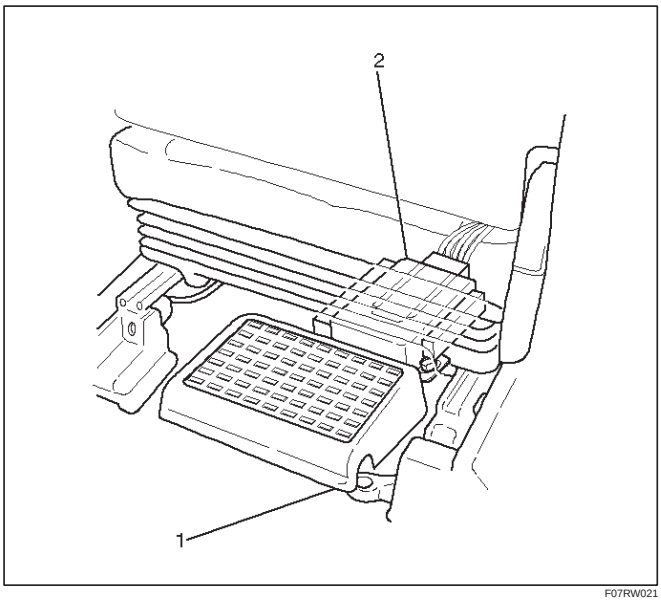

F07RW021

Installation

1. Perform the removal step in reverse order.

Unit Repair

Inspection

Before disassembling and after assembling, check the following items on the transfer connector terminals.

No.	NAME	CONTENTS
1	Ref . (Rr .)	Rear speed sensor reference output
2	Ref . (Frt .)	Front speed sensor reference output
3	SW GND	SW GND
4	4H SW (+)	4H SW plus terminal
5	Rer . (+)	Rear speed sensor plus
6	Frt . (+)	Front speed sensor plus
7	POWER GND	Power GND
8	EMC (+)	Electromagnetic coil
9	COM (–) (Rr .)	Rear speed sensor GND
10	COM (–) (Frt .)	Front speed sensor GND
11	NC	Not used
12	4L SW (+)	4L SW plus terminal

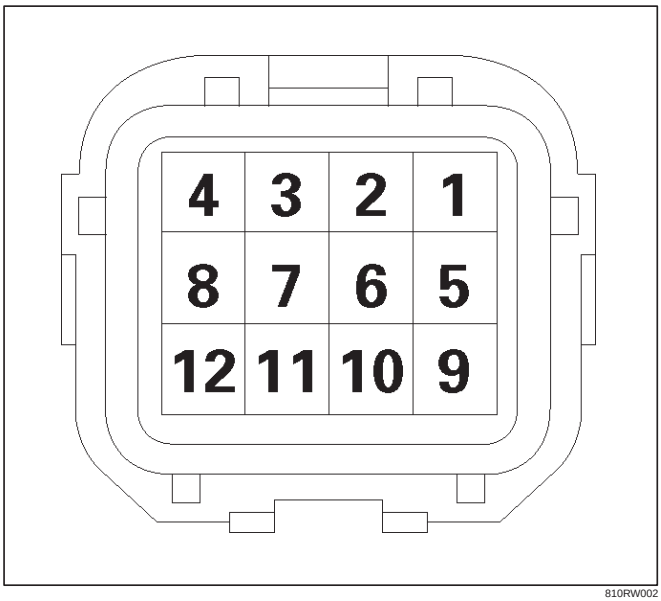

810RW002

4H and 4L switch

Check whether the 4H switch (terminals 4 and 7) and 4L switch (terminals 12 and 3) work as specified in the table below. If yes, the continuity is established on these switches. If not, check the switches, shift rails, transfer case, and rear cover, and replace the failed parts.

SHIFT POSITION	PIN 4 (4 to 7) 4H SW	PIN 12 (3 to 12) 4L SW
HIGH	OFF	OFF
(NEUTRAL)	ON	ON
4L	OFF	ON

Power GND

Check that there is a continuity between the power GND pin (terminal 7) and transfer case. If not, replace the grounding wire.

Resistance of electromagnetic coil

Check the resistance between electromagnetic coil (terminal 8) and power GND (terminal 7). If not, replace the electromagnetic coil.

Standard : 1.4 ~ 2.0Ω

Allowable : 1.0 ~ 5.0Ω

Transfer Case

Disassembled View

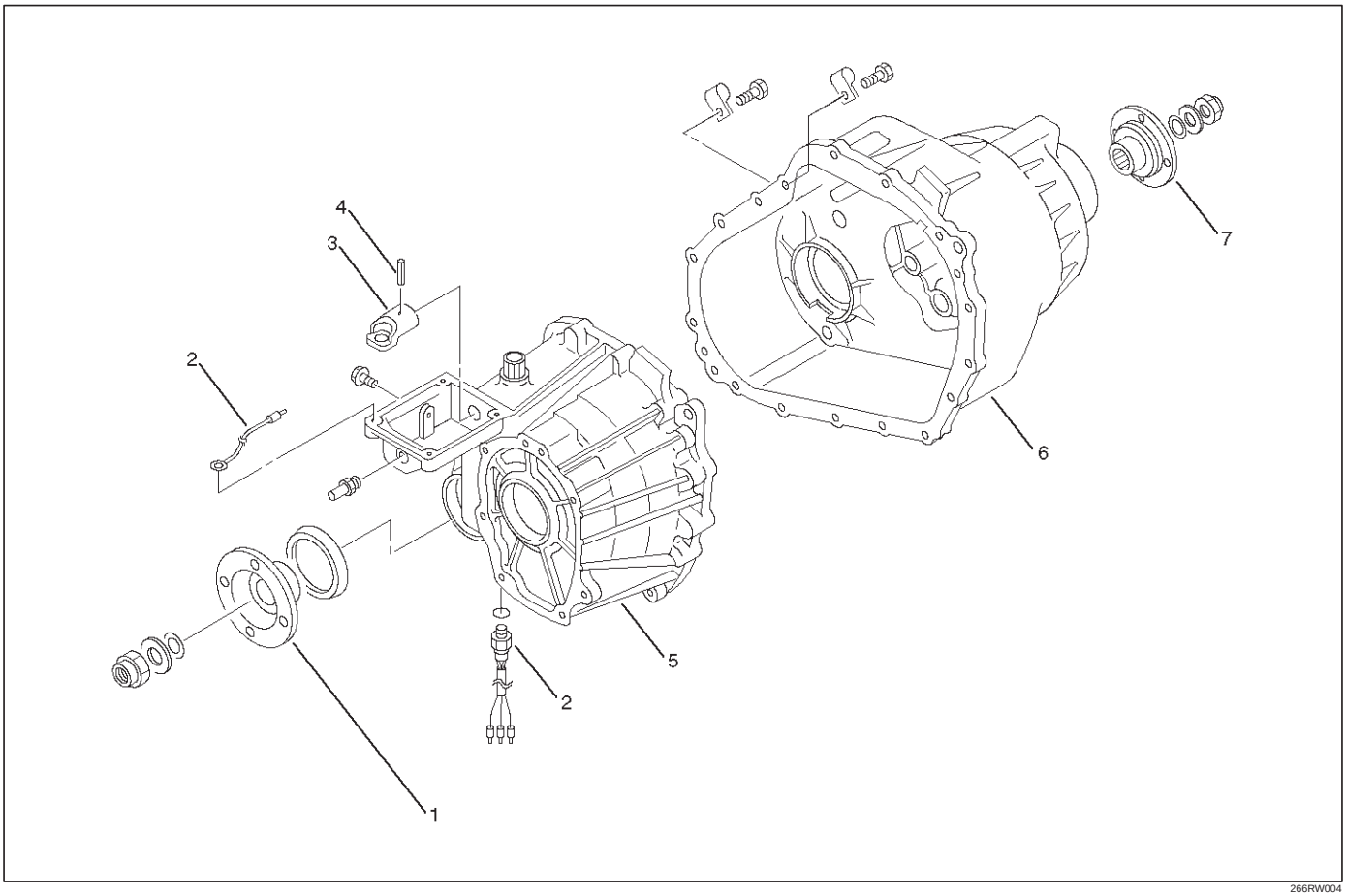

266RW004

Legend

(1) Front Companion Flange
(2) 4H and 4L Switch, Ground Cable, and Center Connector
(3) Offset Lever
(4) Spring Pin
(5) Transfer Case Assembly
(6) Transfer Cover Assembly
(7) Rear Companion Flange

Disassembly

1. Remove the drain plug from the transfer case and drain the oil.
2. Disconnect the 4H and 4L switch and ground cable.
3. Remove the clip fixing the harness.
4. Using the flange holder 5-8840-0133-0 (J-8614-11), remove the flange nut, and remove front companion flange.
5. Using the flange folder 5-8840-0133-0 (J-8614-11), remove the flange nut, and remove rear companion flange.

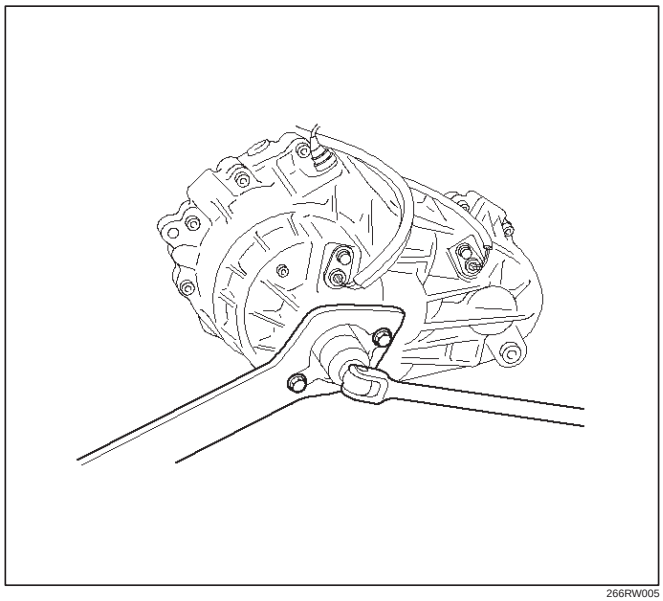

266RW005

6. Remove the offset lever set bolt on the right side.

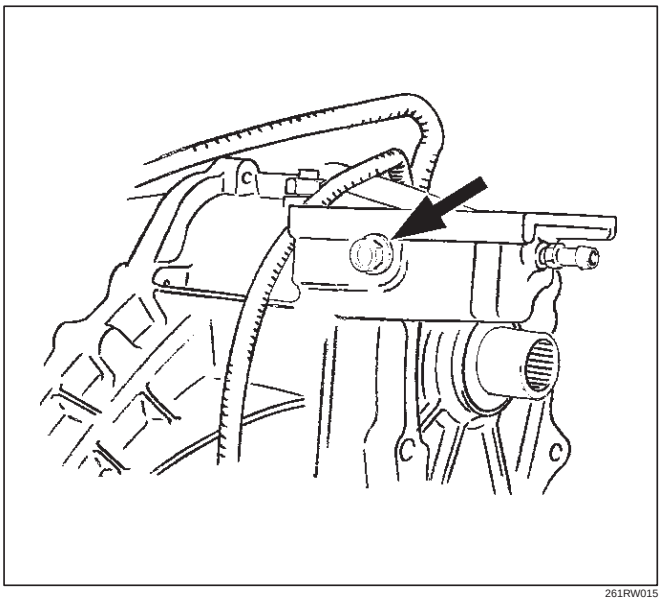

261RW015

7. Remove the offset lever lock spring pin.

NOTE: When removing the spring pin, note the recess position of the pin.

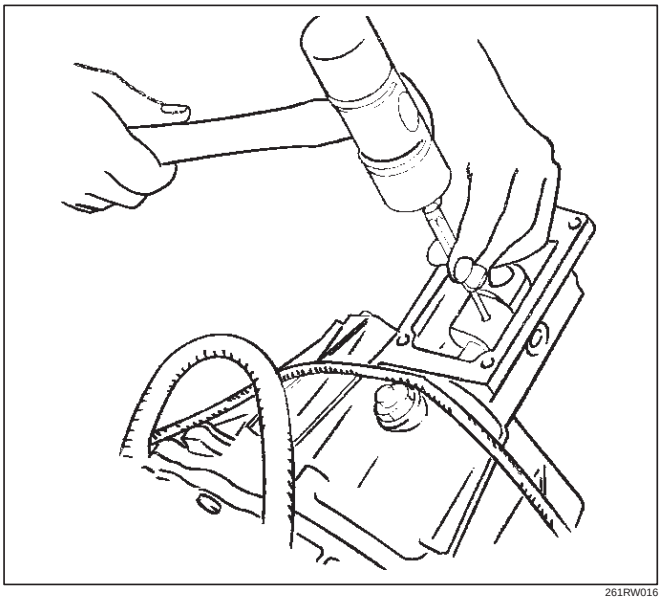

261RW016

8. Remove the offset lever.

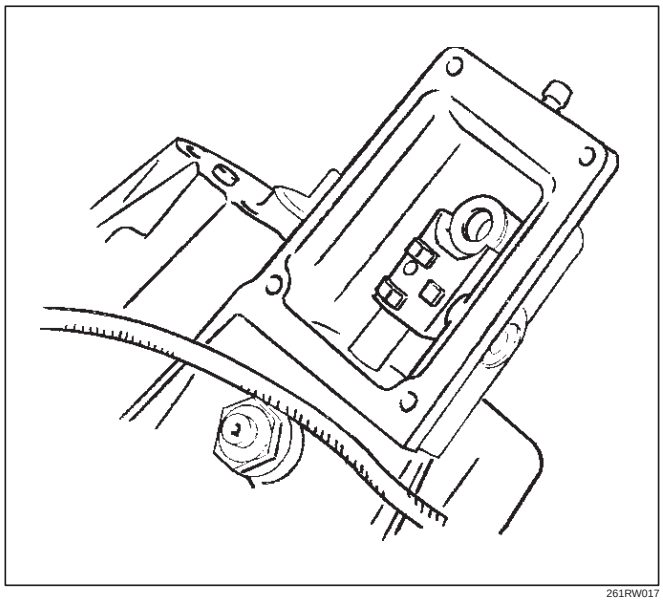

261RW017

9. Remove the sixteen bolts and detach the transfer cover assembly from the transfer case assembly.

NOTE: When removing the transfer cover assembly, be careful not to damage the oil seal.

Reassembly

1. Apply liquid gasket (Loctite 598 or equivalent) uniformly to the mating face that contacts the transfer case.

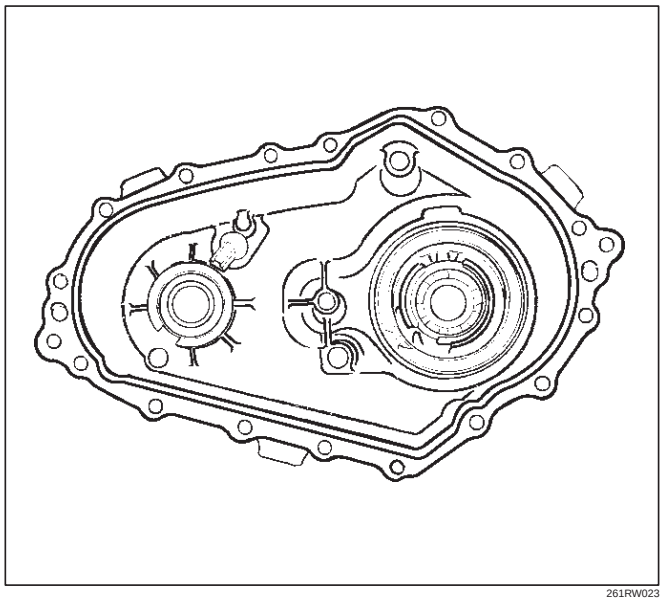

261RW023

2. Tighten the sixteen bolts to the specified torque.

   Torque : 31 N·m (3.2 kg·m/23 lb ft)

3. Wind the sealing tape around the drain plug thread and tighten the plug to the specified torque.

   Torque : 25 N·m (2.5 kg·m/18 lb ft)

4. Mount the offset lever to the transfer shift and install the spring pin.

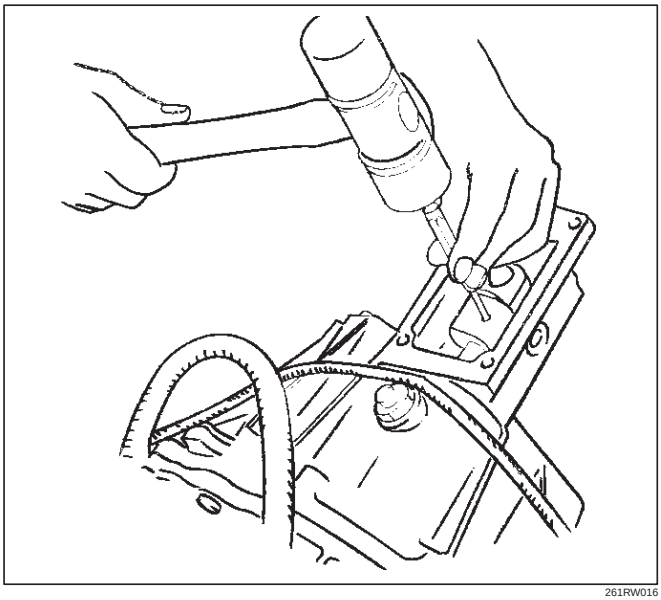

261RW016

5. Attach the O-ring and washer to the companion flange.

NOTE: Securely push the O-ring to the hollow of the companion flange, and then attach the washer.

6. Use the flange holder 5-8840-0133-0 (J-8614-11) to tighten the flange nut.
7. Tighten the flange nut to the specified torque.

   Torque : 167 N·m (17.0 kg·m/123 lb ft)

8. Using the punch 5-8840-2293-0 (J-39209), securely stake the flange nut at two spots.

NOTE: Check the staked flange nut is free from cracks.

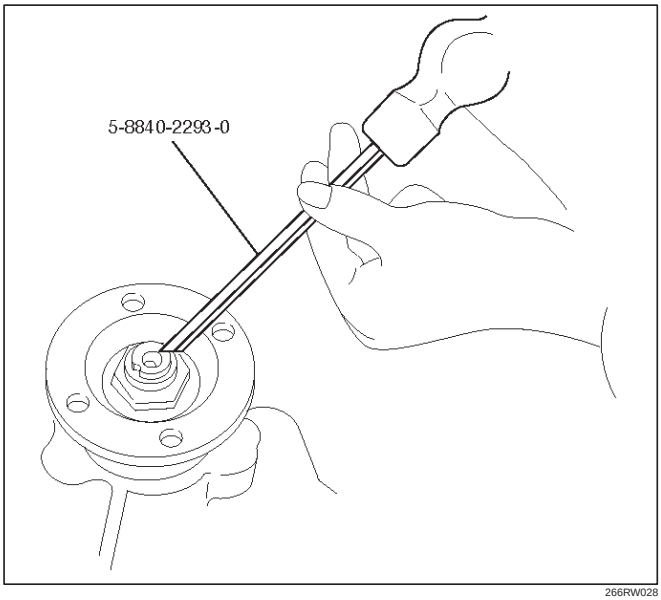

266RW028

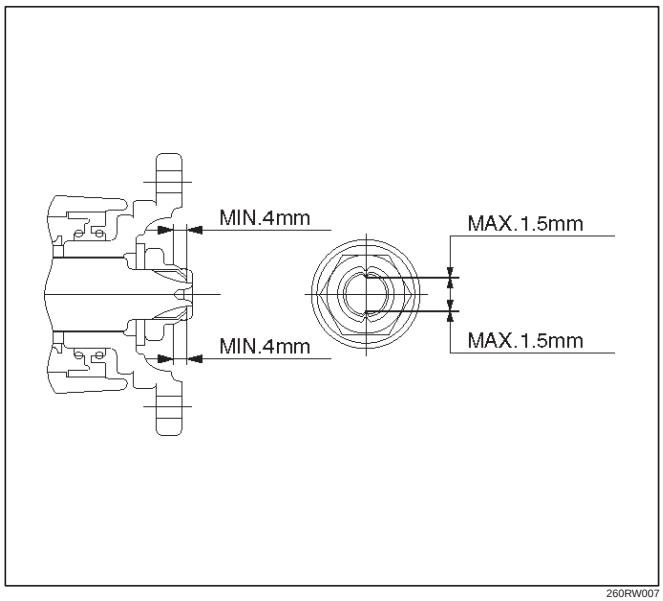

260RW007

9. Fix the harness with the clip.
10. Tighten the 4L and 4H switch to the specified torque.

    Torque : 24 N·m (2.4 kg·m/17 lb ft)

11. Fill the transfer case with ATF II or III (1.9 liters).
12. Wind the sealing tape around the filler plug thread and tighten the plug to the specified torque.

    Torque : 25 N·m (2.5 kg·m/18 lb ft)

Transfer Cover Assembly

Disassembled View

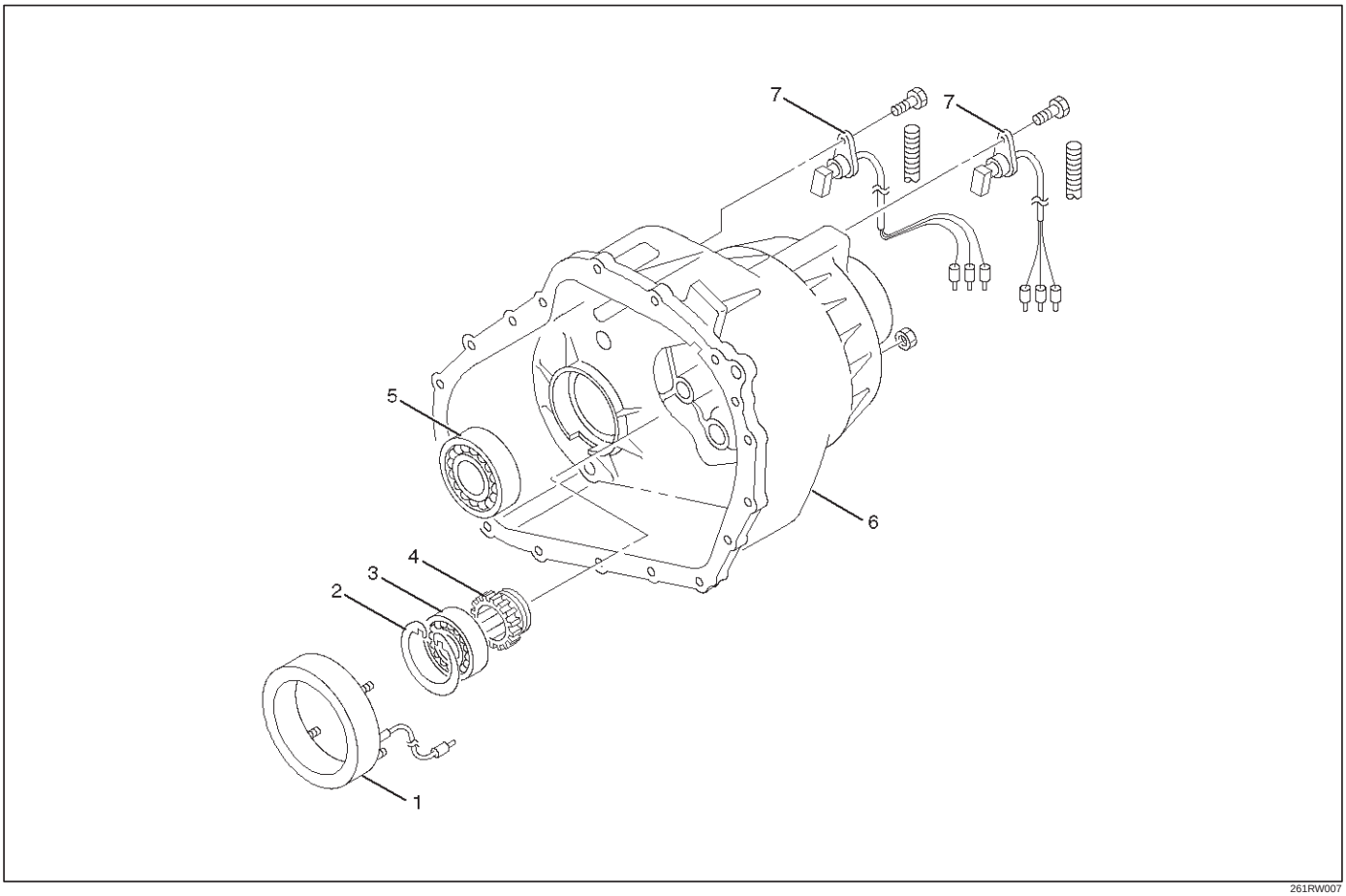

261RW007

Legend

(1) Coil Assembly
(2) Snap Ring
(3) Ball Bearing
(4) Speed Gear and Tone Wheel
(5) Ball Bearing
(6) Transfer Cover Assembly
(7) Front and Rear Speed Sensors

Disassembly

1. Using snap ring pliers, remove the snap ring.

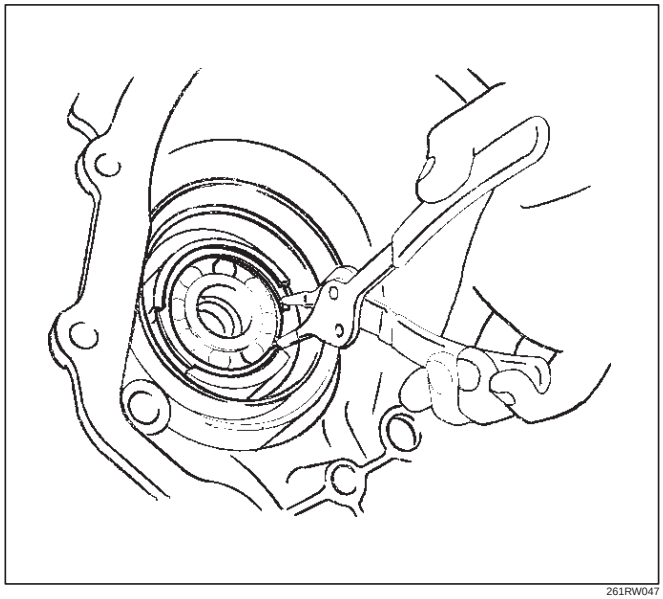

261RW047

2. Strike the speed gear and tone wheel with a rod or other appropriate tool from the outside of the transfer cover assembly, and remove the ball bearing and speed gear and tone wheel.

NOTE: Be careful not to damage the speed gear teeth.

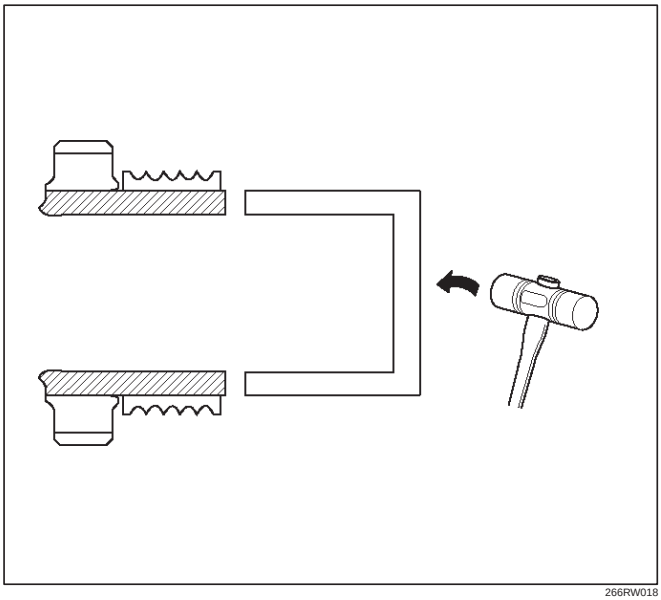

266RW018

3. Remove the stopper plate on the back with a precision screwdriver or other appropriate tool starting from the small lock of the plate.

NOTE: Be careful not to damage the stopper plate during the work.

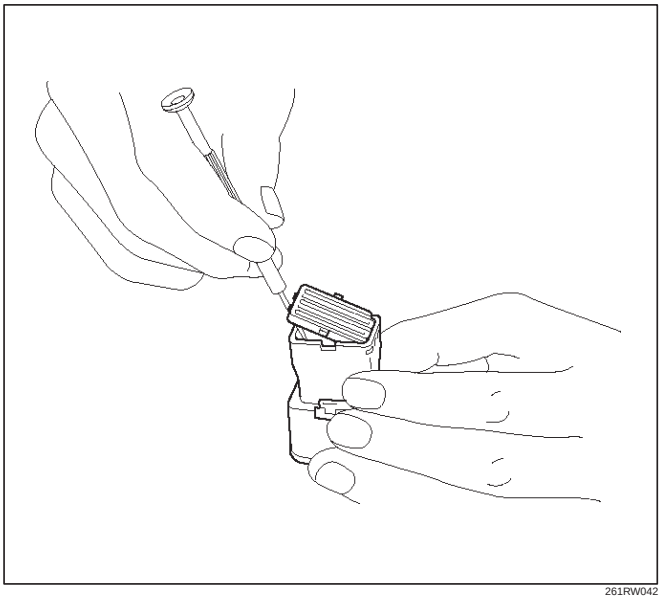

261RW042

4. Using a terminal pull-out tool or an equivalent tool, push down the lock to unlatch the terminal for the coil assembly, and pull the terminal out.

NOTE: Be careful not to damage other terminals.

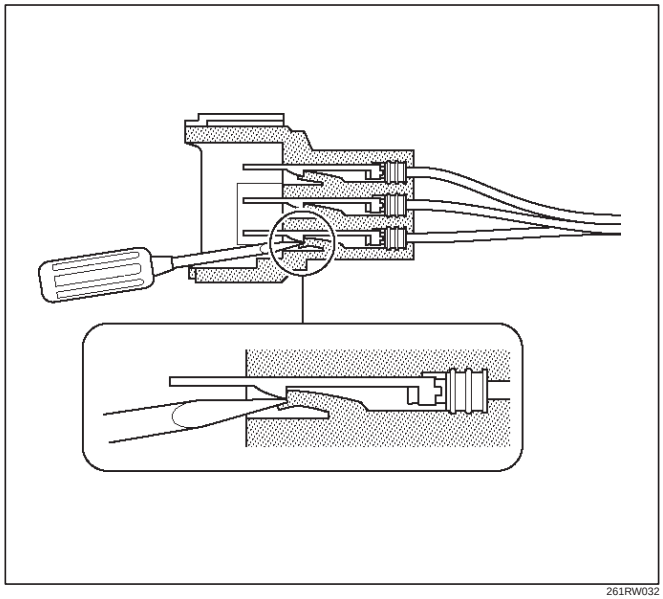

261RW032

5. Remove the fixing nuts of the coil assembly from the outside of the transfer cover assembly. Remove the coil assembly from the transfer cover.

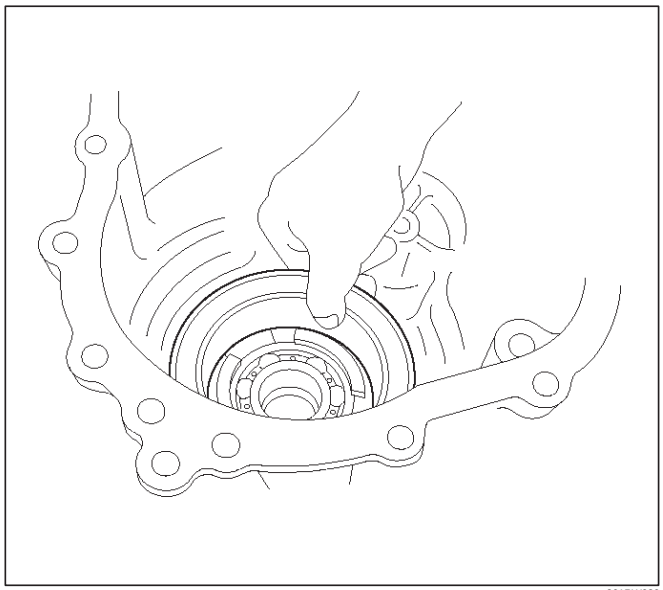

261RW030

6. Using the bearing remover 5-8840-2409-0 (J-42805) and slide hammer 5-8840-0084-0 (J-2619-01), remove the ball bearing for the front output shaft.

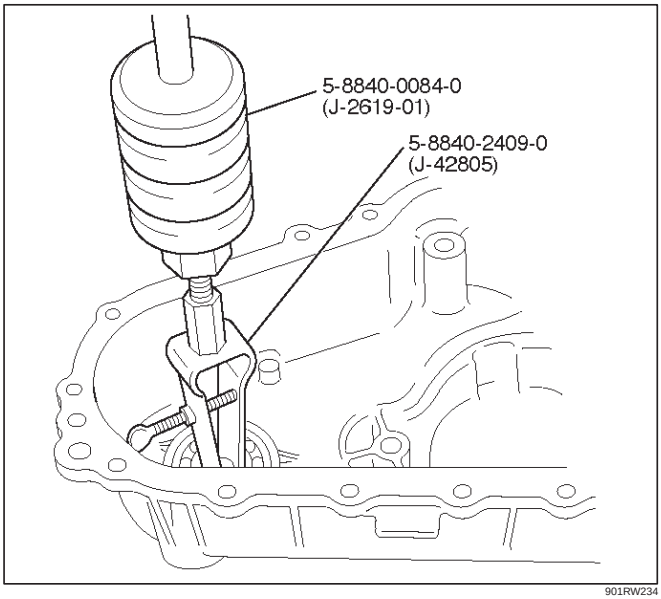

901RW234

7. Remove the bolts and front and rear speed sensors.

NOTE: Be careful not to damage the speed sensors during the work.

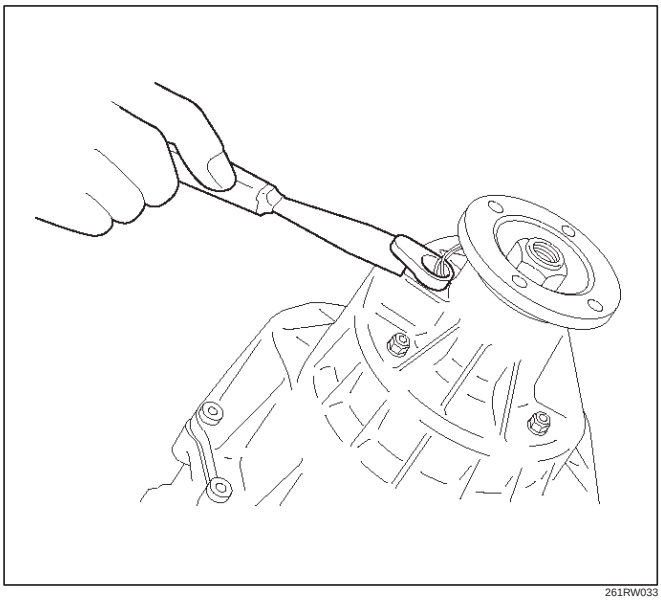

261RW033

Reassembly

1. Remove the oil seal from the transfer cover assembly.
2. Apply oil to the circumference of the new oil seal and fill the lip with grease (Besco L2 or equivalent).
3. Using the oil seal installer 5-8840-2412-0 (J-42804), install the oil seal to the transfer cover assembly.

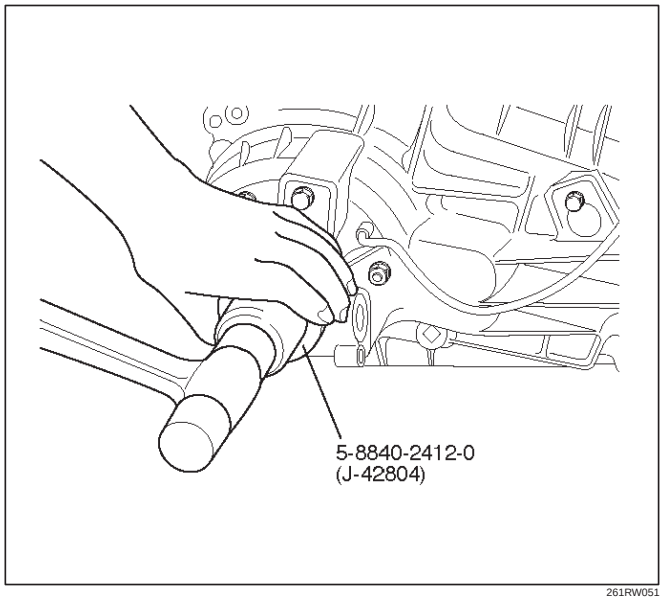

261RW051

Rear Output Shaft Oil Seal

Distance between the transfer case end and oil seal.

NOTE: When installing the oil seal to the specified dimension, be careful not to damage it.

Dimension : 9.85 — 10.35mm (0.39 — 0.41 in)

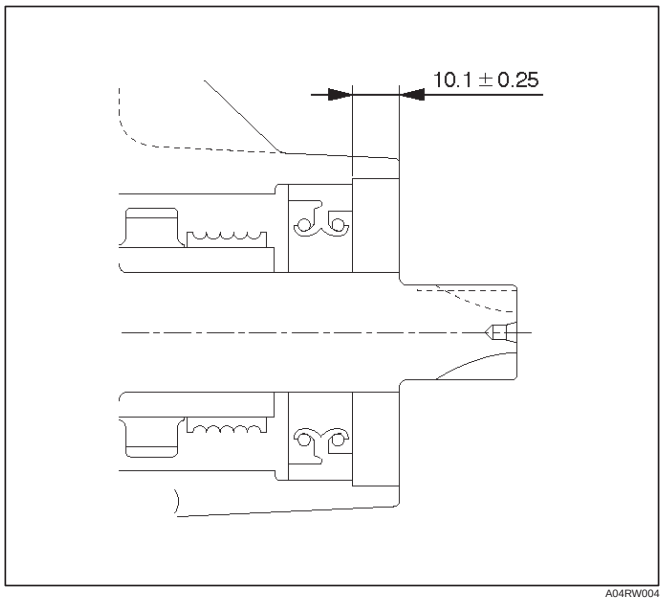

A04RW004

4. Apply a thin coat of grease to the seal ring of each front and rear speed sensor, and mount the sensors carefully.
5. Tighten the bolts to the specified torque.

Torque : 5 N·m (0.5 kg·m/43 lb in)

NOTE: Pay attention not to mount the front (or rear) sensor to the rear (or front) sensor position.

6. Install the ball bearing (1) for the front output shaft as flat as shown in the figure.

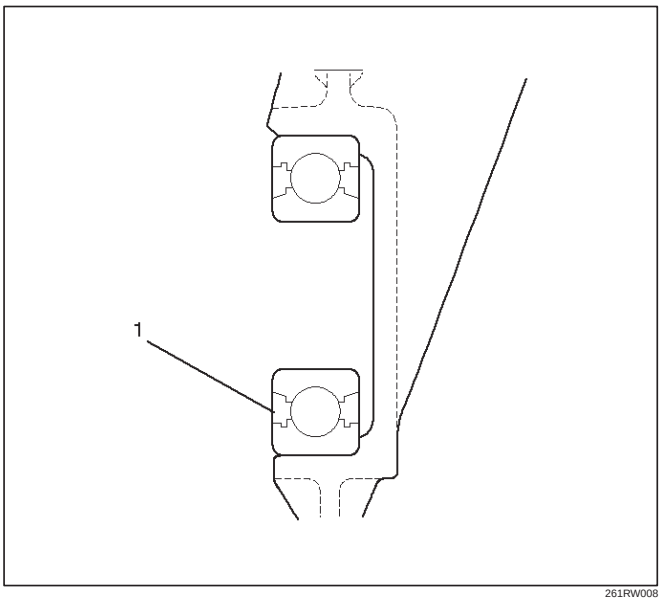

261RW008

7. Mount the coil assembly and tighten the nuts to the specified torque.

Torque : 10 N·m (1.0 kg·m/87 lb in)

8. Connect the terminal in the central connector.

NOTE: Be careful not to damage other terminals.

9. Install speed gear and tone wheel.
10. Mount the ball bearing (2) as flat as shown in the figure.

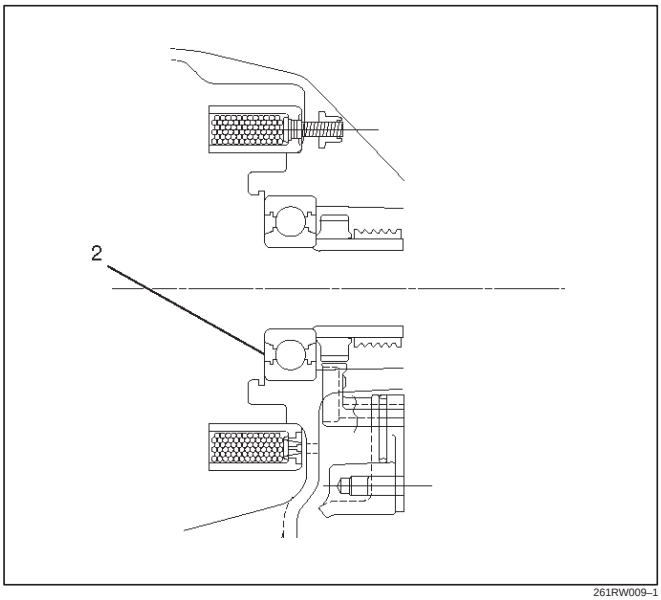

261RW009–1

11. Using snap ring pliers, install the snap ring to the transfer cover assembly.

NOTE: Securely install the snap ring to the groove of the transfer cover assembly.

Transfer Case Assembly Clutch Pack and Clutch Cam

Disassembled View

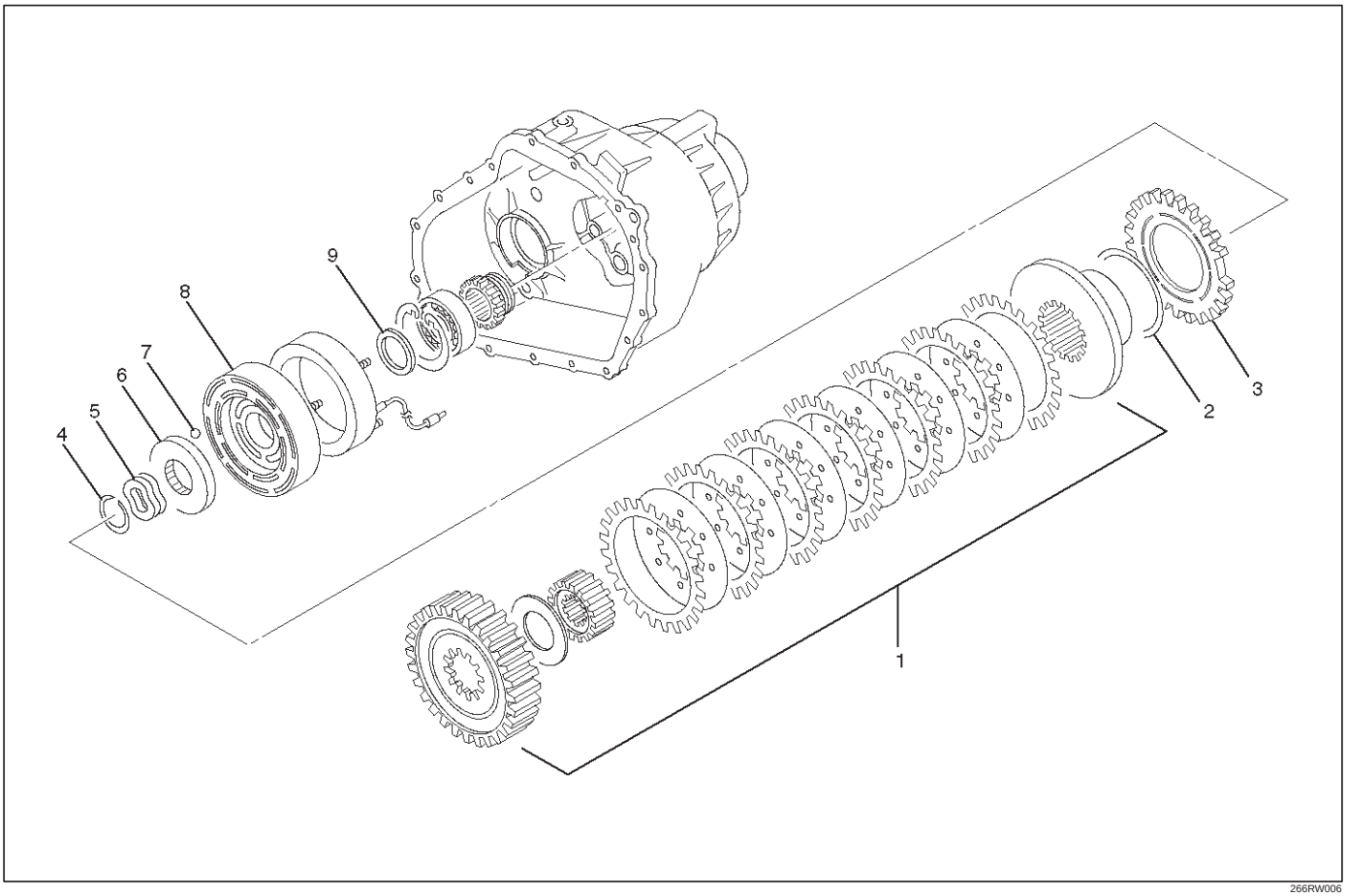

266RW006

Legend

(1) Clutch Pack Assembly
(2) Insulator Washer
(3) Armature Plate
(4) Snap Ring
(5) Wave Spring
(6) Cam Pulley
(7) Cam Ball
(8) Cam and Coil Housing
(9) Thrust Bearing

Disassembly

1. Remove the thrust bearing.
2. Remove the cam and coil housing.

NOTE: When the cam and coil housing is removed, the cam balls may be detached together with the housing. Be careful not to lose the ball.

3. Remove the cam ball.

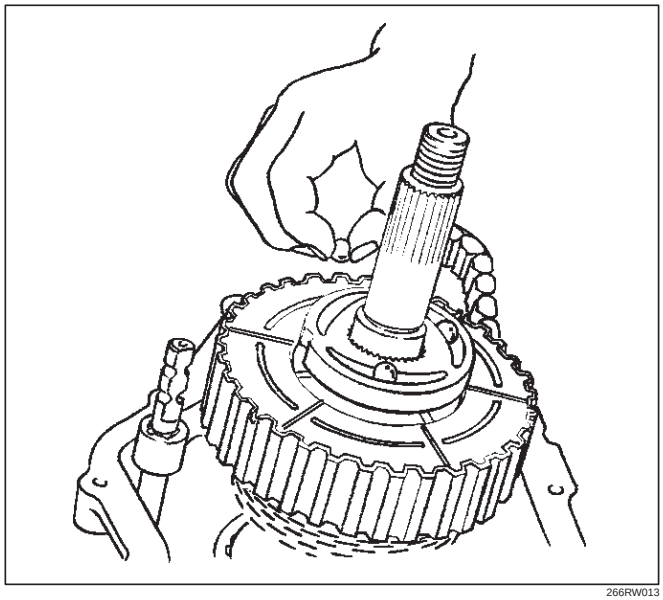

266RW013

4. Remove the cam pulley.
5. Remove the wave spring.
6. Using snap ring pliers, remove the snap ring.

NOTE: Be careful not to damage the snap ring.

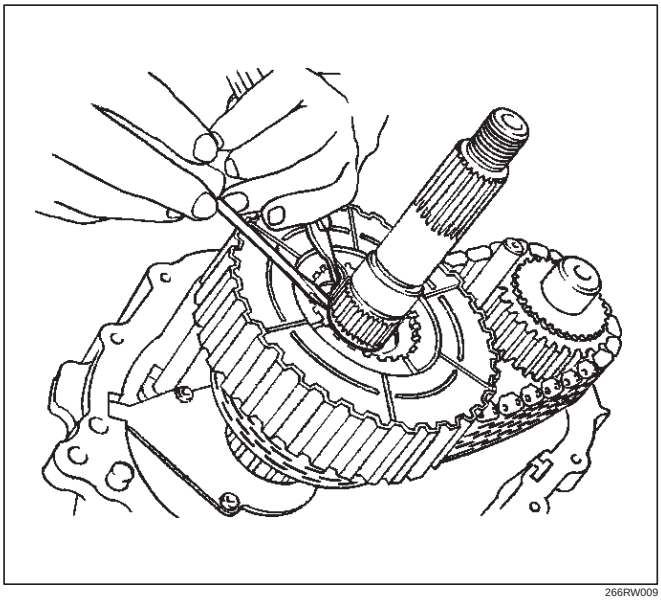

266RW009

7. Remove the armature plate.
8. Remove the insulator washer.
9. Remove the clutch pack assembly as a package.

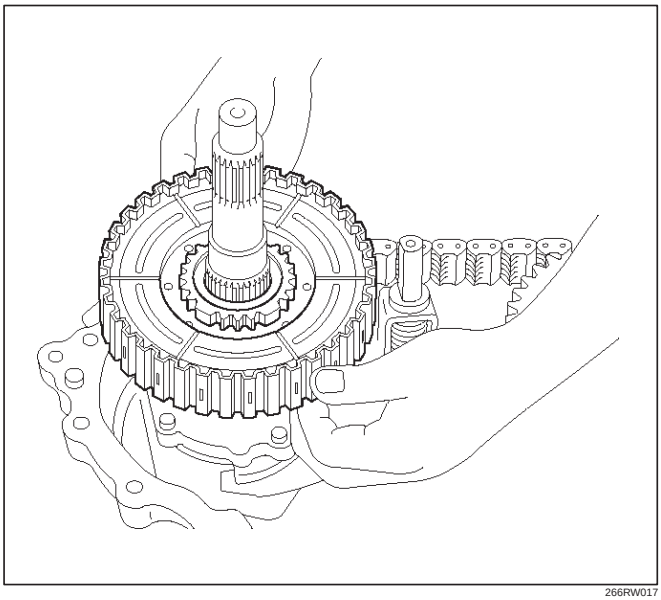

266RW017

Sprocket and Mechanical Lock

Disassembled View

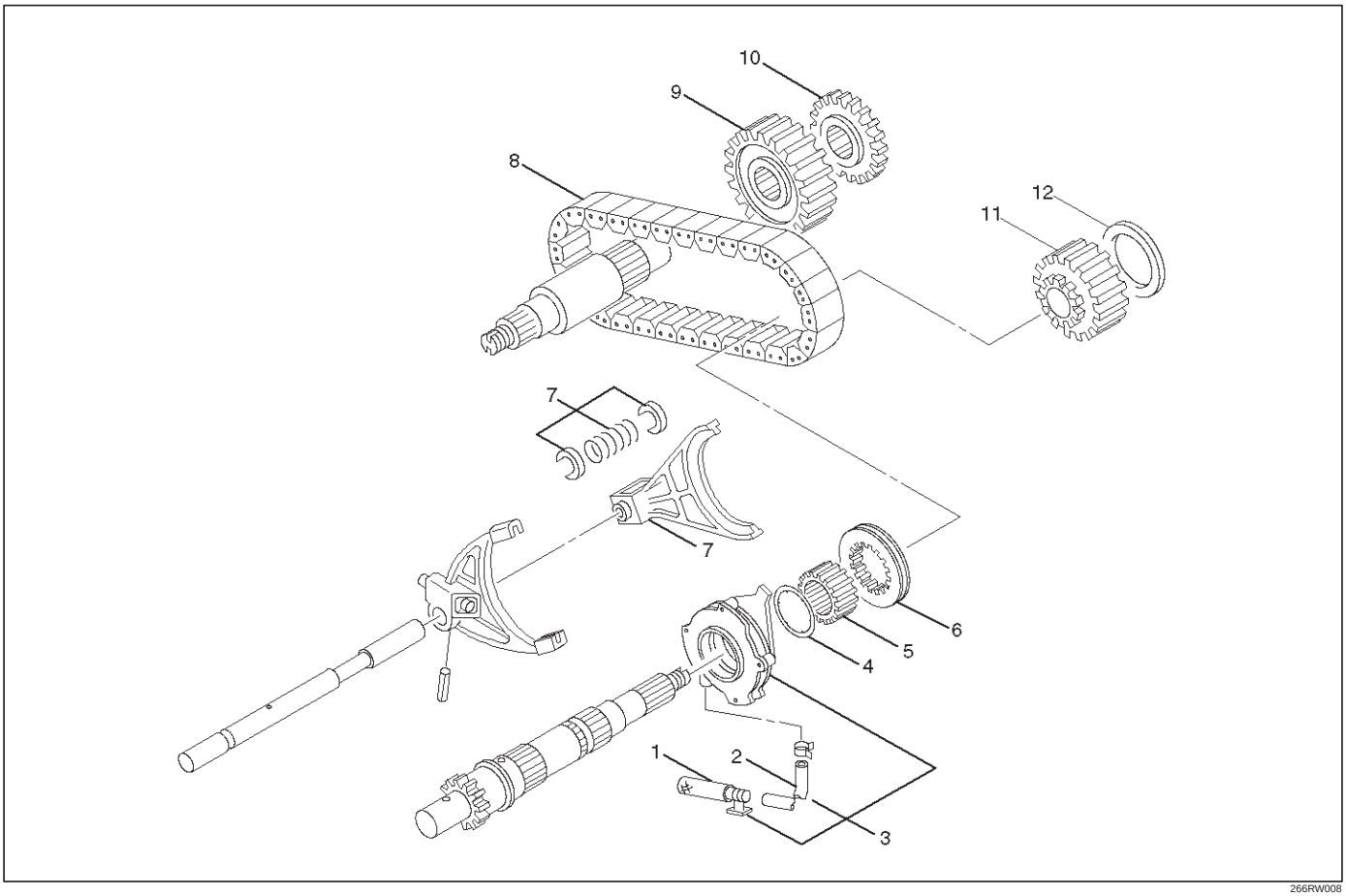

266RW008

Legend

(1) Strainer
(2) Hose
(3) Oil Pump Assembly
(4) Thrust Washer
(5) Mechanical Lock Hub
(6) Lock-up Sleeve
(7) Lock-up Fork
(8) Chain
(9) Lower Driven Sprocket
(10) Front Tone Wheel
(11) Drive Sprocket
(12) Sprocket Spacer

Disassembly

1. Remove the sprocket spacer.
2. Remove the front tone wheel.

3. Remove the drive sprocket, lower driven sprocket, and chain together from the front and rear output shafts.

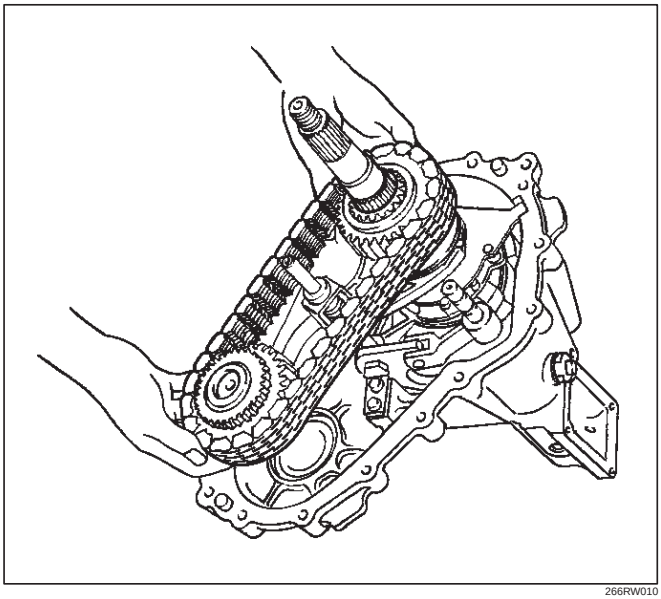

266RW010

4. Remove the mechanical lock hub.
5. Remove the lock-up fork.
6. Remove the spring retainers from the connection between the rail shaft and lock-up fork.
7. Remove the lock-up sleeve.

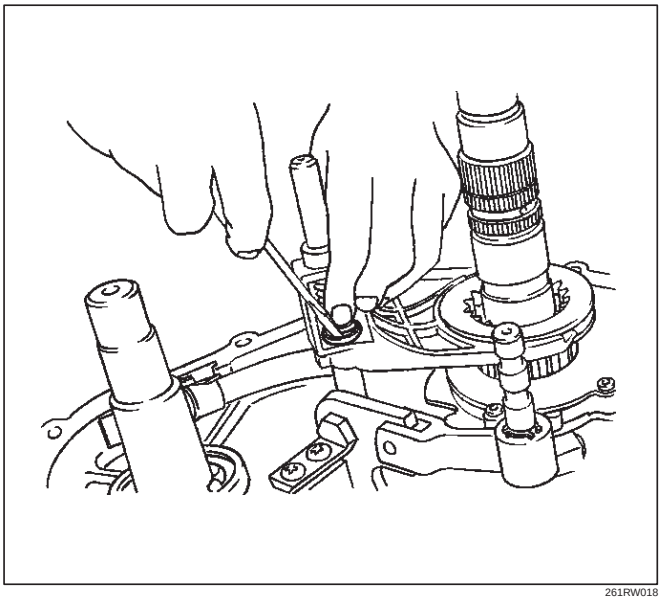

261RW018

8. Remove the thrust washer.
9. Remove the magnet from the strainer set position together with the oil pump assembly.
10. Remove the strainer from the oil pump assembly.
11. Remove the hose from the oil pump assembly.

Output Shafts and Shift Control Shaft

Disassembled View

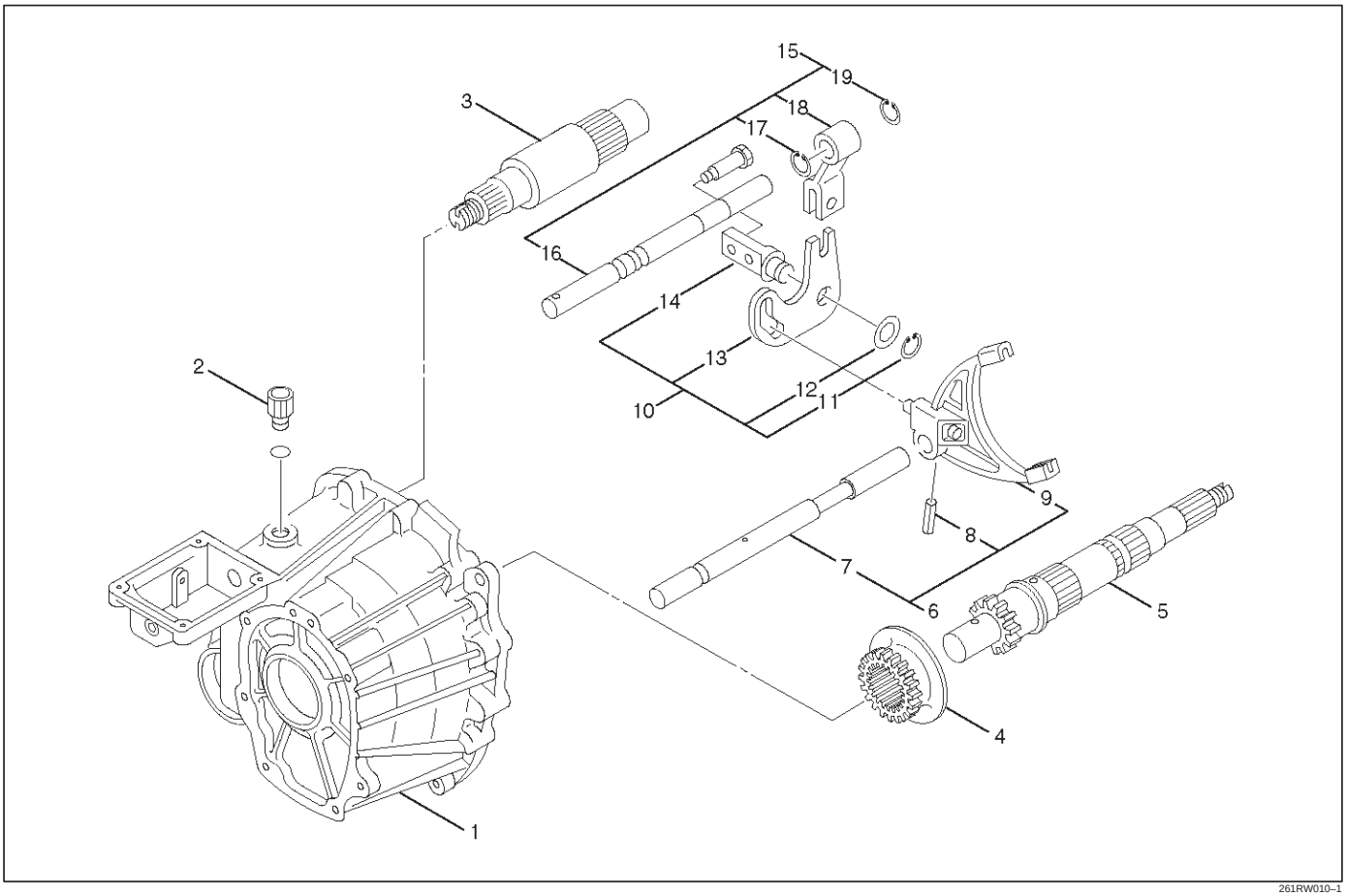

261RW010–1

Legend

(1) Transfer Case Assembly
(2) Detent Spring
(3) Front Output Shaft
(4) Reduction Hub
(5) Output Shaft
(6) Reduction Fork Assembly
(7) Lock-up Shaft
(8) Spring Pin
(9) Reduction Fork
(10) Cam Assembly
(11) Snap Ring
(12) Washer
(13) Cam
(14) Cam Pilot Block
(15) Shifter Shaft Assembly
(16) Shifter Lever Shaft
(17) Snap Ring
(18) Reduction Lever Assembly
(19) Snap Ring

Disassembly

1. Remove the output shaft.

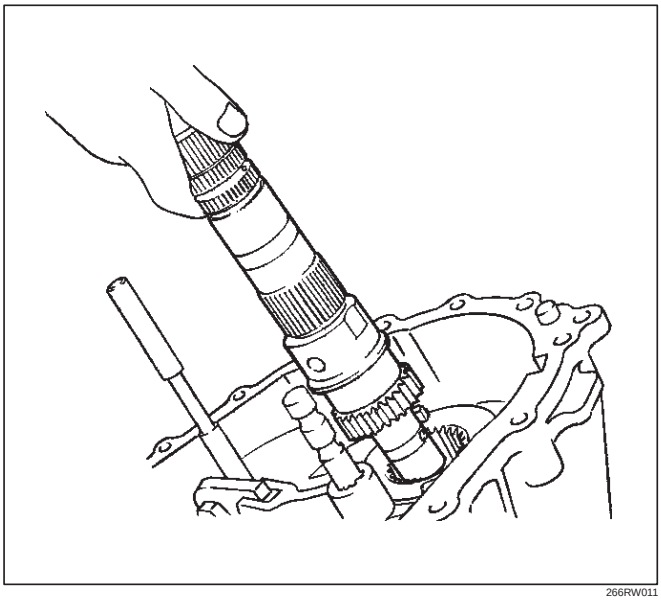

266RW011

2. Remove the detent spring.
3. Remove the cam pilot block bolts.
4. Remove the shifter shaft assembly and cam assembly.
5. Remove the reduction fork assembly together with reduction hub.

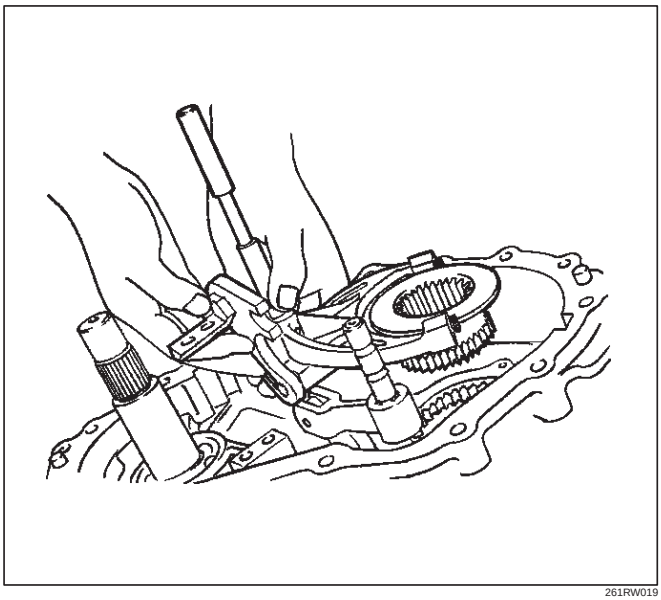

261RW019

6. Remove the spring pin that fixes the reduction fork to the lock-up shaft.

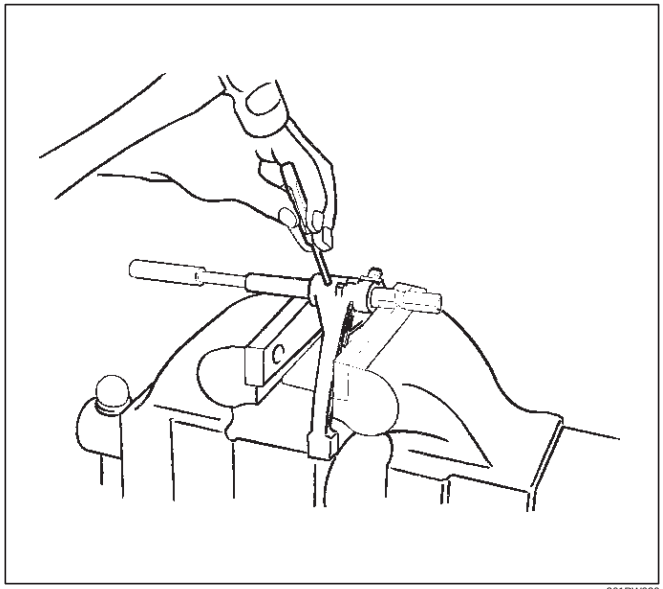

261RW020

7. Remove the reduction fork.
8. Remove the lock-up shaft.
9. Using snap ring pliers, remove the snap ring from cam pilot block.

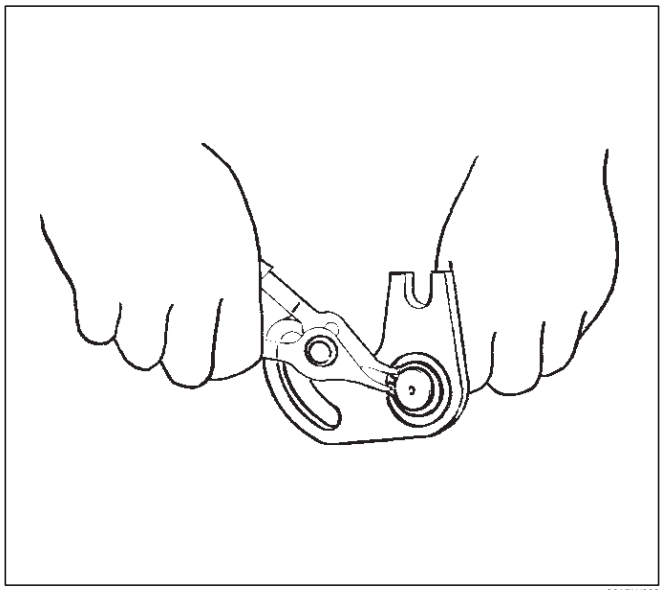

261RW029

10. Remove the washer.
11. Remove the cam.
12. Remove the cam pilot block.

13. Using snap ring pliers, remove the snap ring from the shifter shaft assembly.

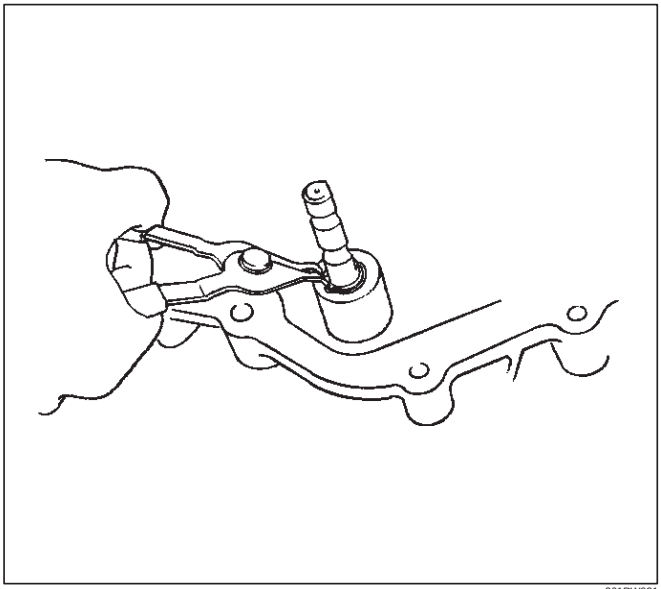

261RW021

14. Remove the reduction lever assembly.
15. Remove the snap ring.
16. Remove the shifter lever shaft.
17. Remove the front output shaft.

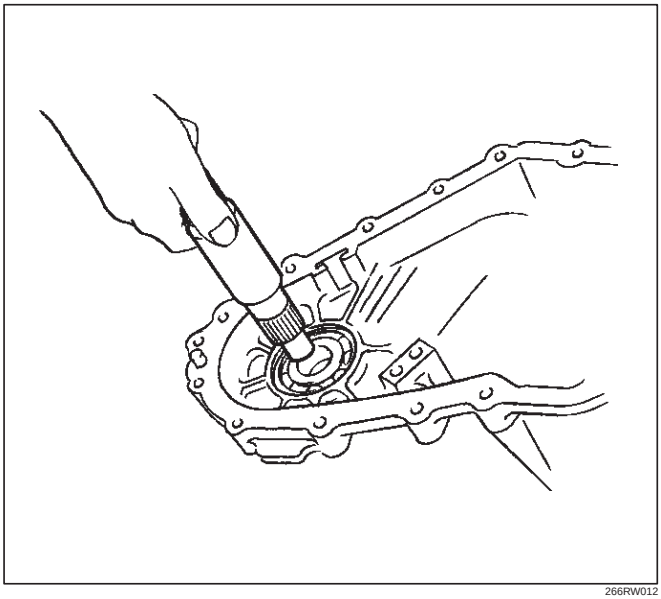

266RW012

18. Remove the transfer case assembly.

Transfer Case

Disassembled View

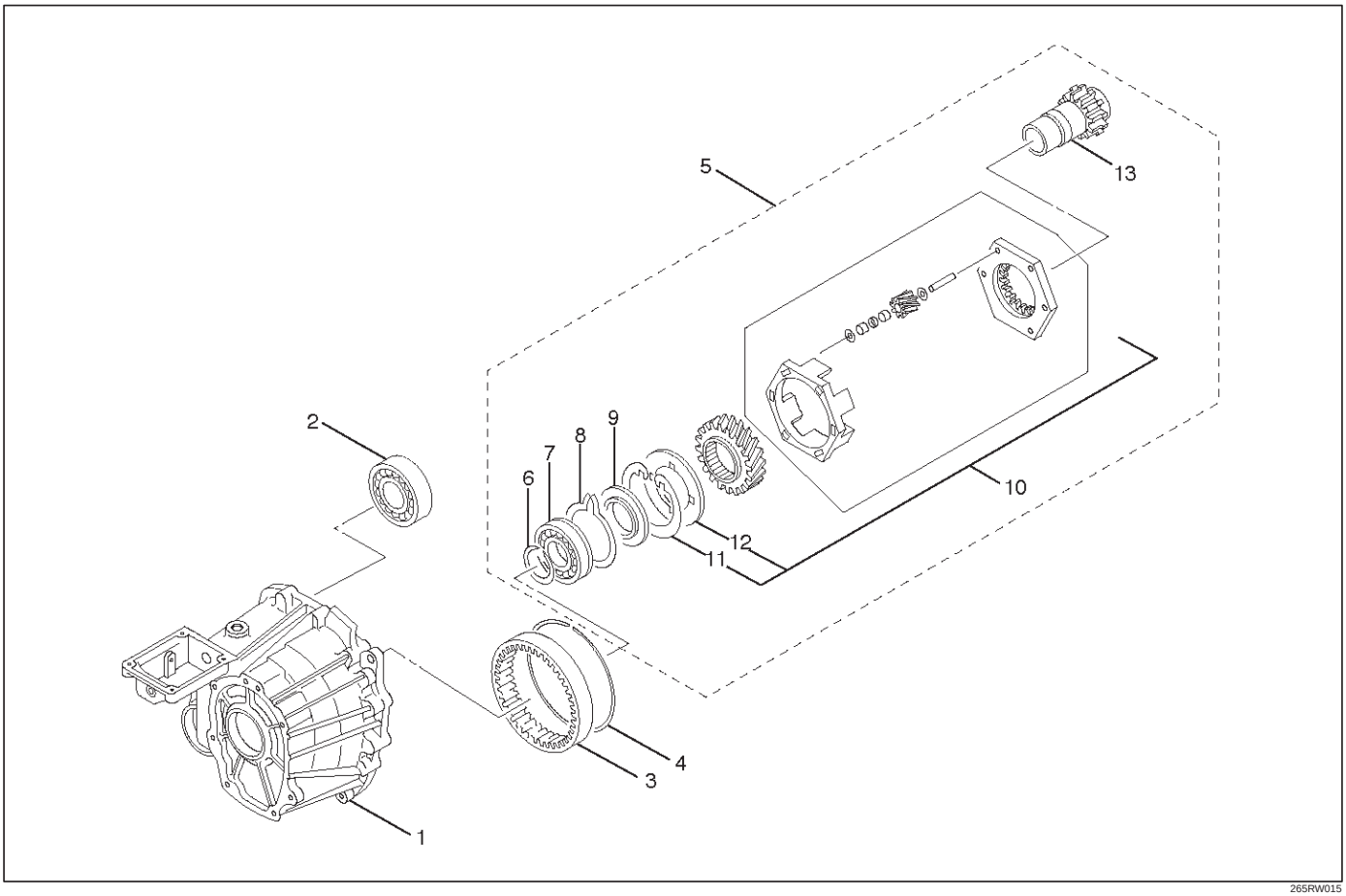

265RW015

Legend

(1) Transfer Case
(2) Ball Bearing
(3) Ring Gear
(4) Snap Ring
(5) Input Shaft and Carrier Assembly
(6) Snap Ring
(7) Ball Bearing
(8) Snap Ring
(9) Thrust Plate
(10) Carrier Assembly
(11) Snap Ring
(12) Circular Hub
(13) Input Shaft

Disassembly

1. Remove the ball bearing (for front output shaft).
2. Expand the snap ring through the opening in the planetary gear assembly.

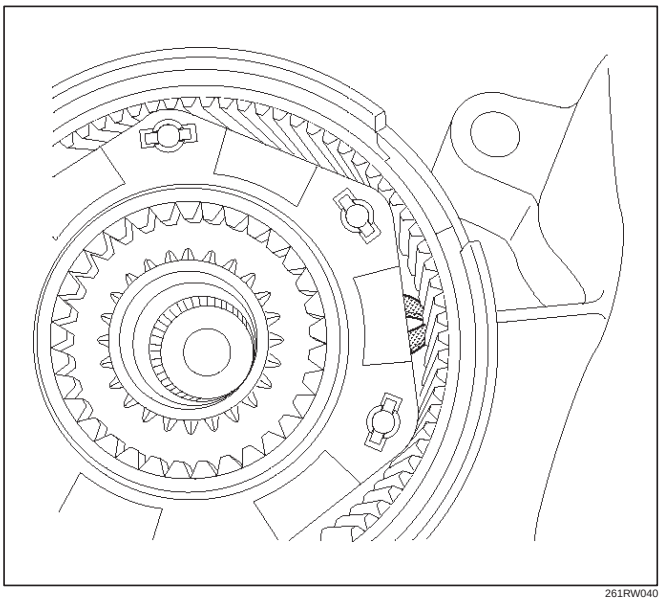

261RW040

3. While expanding the snap ring, remove the input shaft, ball bearing, carrier assembly, and thrust plate from the transfer case.

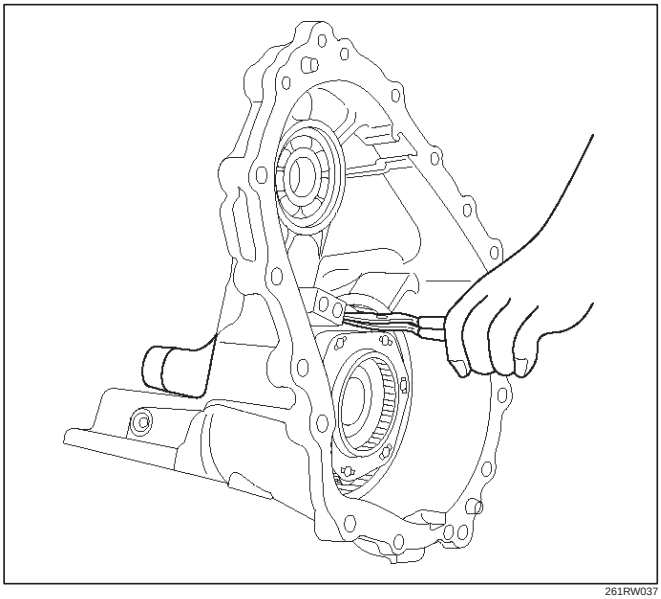

261RW037

4. Remove the snap ring from the transfer case.

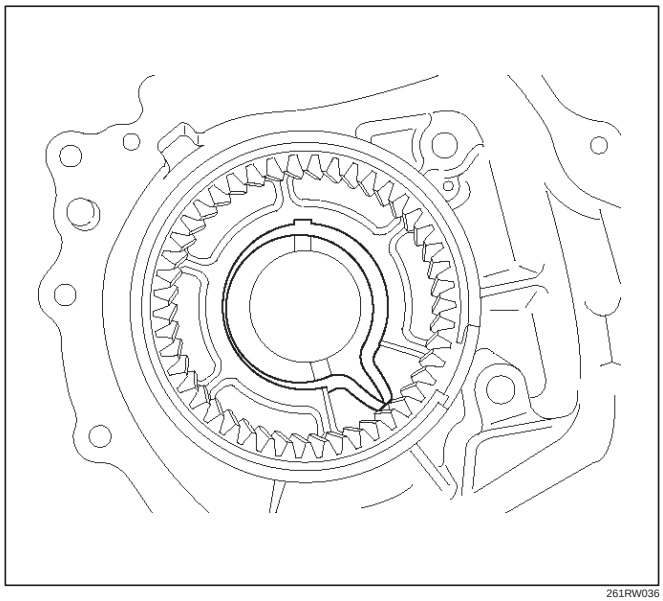

261RW036

5. Using snap ring pliers, remove the snap ring before the ball bearing.

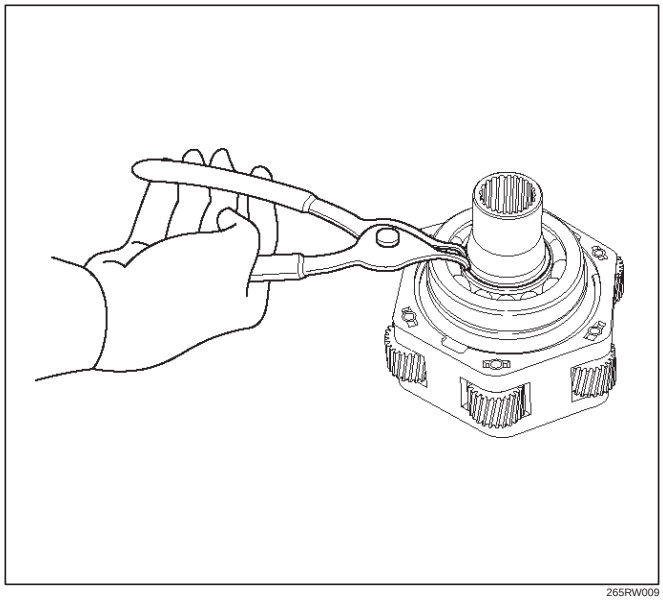

265RW009

6. Using the bearing remover 5-8840-0015-0 (J-22912-01), remove the ball bearing from the input shaft.

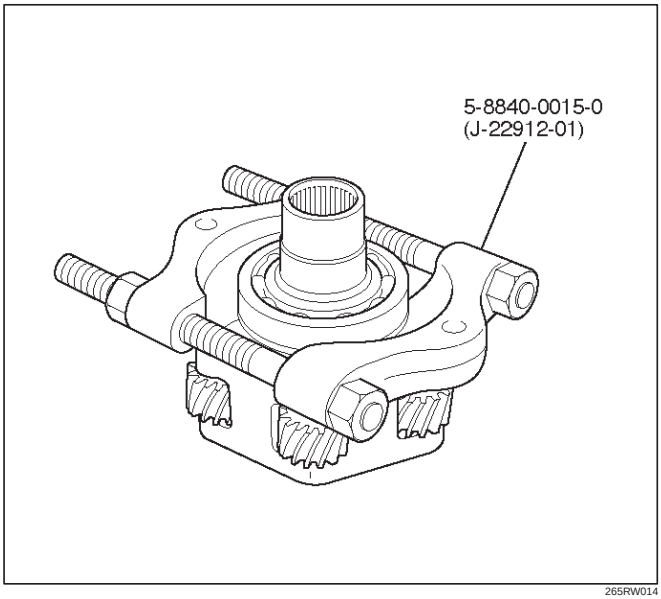

265RW014

7. Remove the thrust plate.
8. Remove the carrier assembly.
9. Remove the snap ring from the carrier assembly.

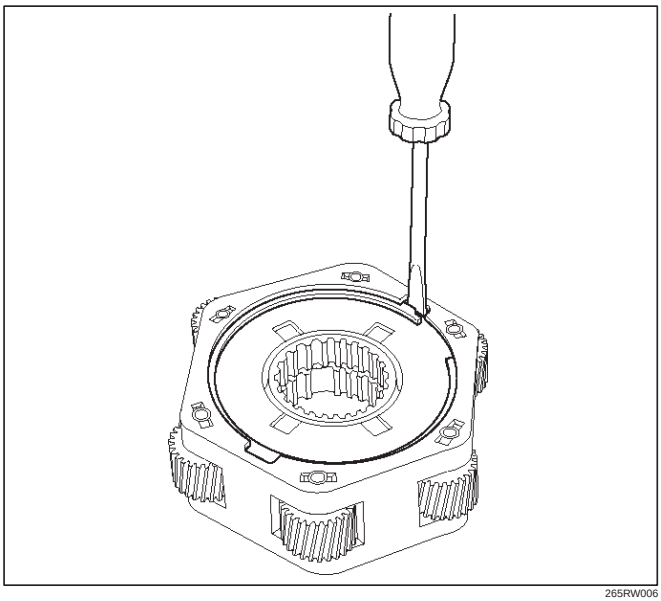

265RW006

10. Remove the circular hub.
11. Remove the snap ring before the ring gear.

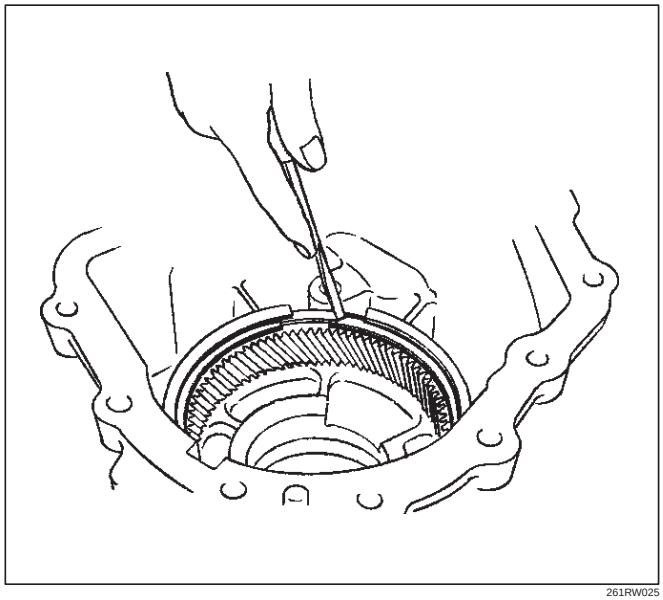

261RW025

12. Using the replacer 5-8840-2413-0 (J-42806), remove the ring gear.

NOTE: Removing the ring gear needs a high-load press. This means the transfer case may be damaged. To remove and replace the ring gear, it is recommended that the transfer case assembly should be replaced.

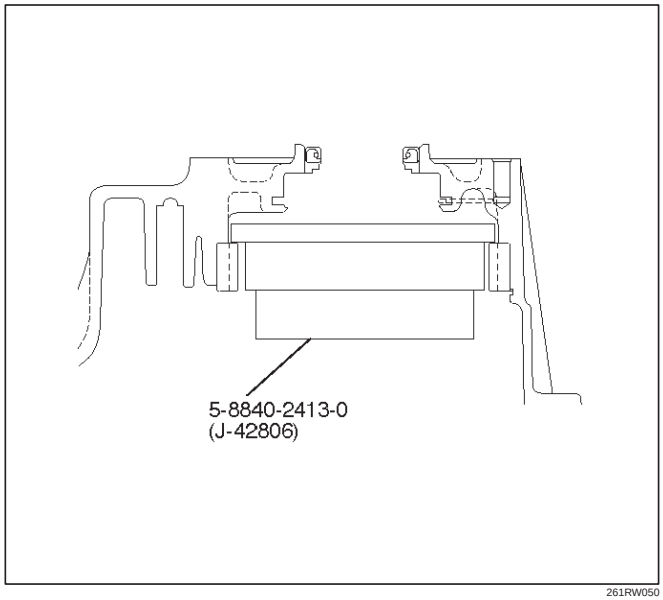

261RW050

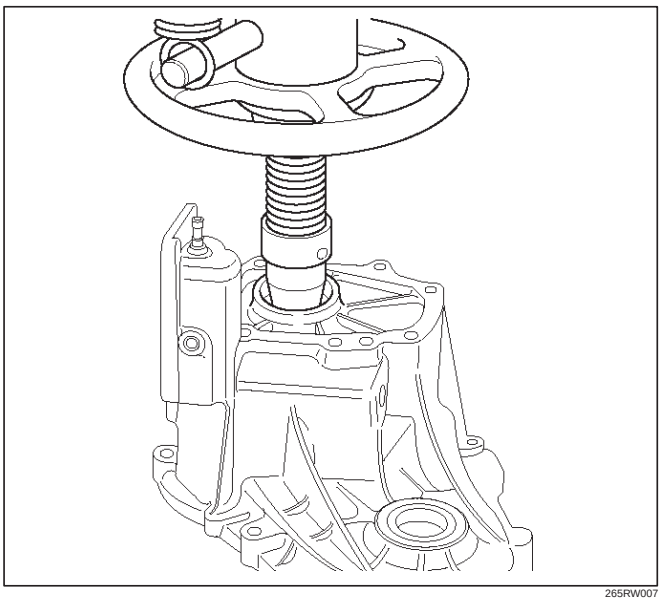

265RW007

Inspection and Repair

When wear, damage, or any other defects are observed during the inspection, the part or parts must be repaired or replaced. Wash all the parts with clean solvent, and check that old oil, metallic particles, dirt, or foreign materials are completely removed. Blow the air into oil holes and grooves to remove foreign materials or residual detergent.

Chain

- Check whether the face that contacts the sprocket is free from excessive wear or damage. If defects are observed, replace the part.
- If the chain interference mark is found on the inside wall of the transfer cover or the chain is so slack that a skipped engagement occurs between the chain and sprocket, replace the chain.

Sprocket

- Check whether the sprocket tooth surface is excessively worn or damaged, and there is evidence of burrs, chipping, wear, or damage on the gear spline. Remove minor flaws or scratches with oil stone. If excessive wear or damage is observed, replace the part.
- If excessive wear or damage is observed on the sprocket inside sliding surface, replace the part.

Gear

Check whether the gear tooth surface is excessively worn or damaged, and there is evidence of burrs, chipping, wear, or damage on the gear spline. Remove minor flaws or scratches with oil stone. If excessive wear or damage is observed, replace the part.

Thickness of Reduction Hub

- Measure the thickness with a micrometer.
- If the measurement exceeds the limit, replace the reduction hub.

  Standard : 3.05-3.30 mm (0.120-0.130 in)

  Allowable limit : 2.5 mm (0.098 in)

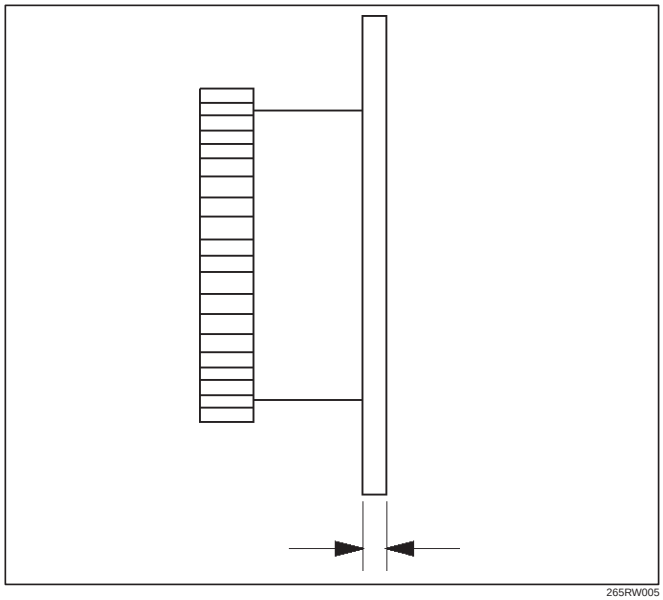

265RW005

Lock-up Sleeve

Mount the mechanical lock hub, drive sprocket assembly, and lock-up sleeve to the output shaft.

If the lock-up sleeve does not move smoothly, replace the sleeve.

NOTE: Apply ATF to the area engaging the gear.

Thickness of Lock-up Sleeve

- If the measurement exceeds the limit, replace the lock-up sleeve.

  Standard : 7.16-7.32 mm (0.282-0.288 in)

  Allowable limit : 7.9 mm (0.311 in)

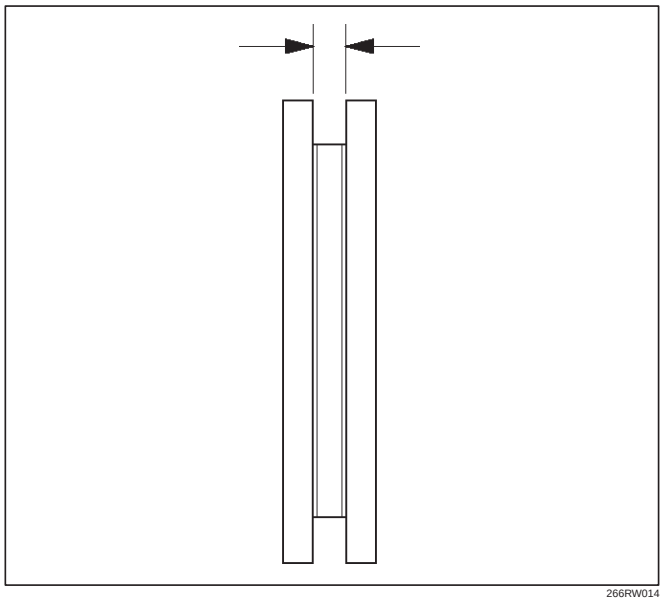

266RW014

Reduction Fork

Check the reduction fork and shaft for wear, distortion, and scratches. If defects are observed, replace the parts.

Thickness of Reduction Fork

- If the measurement exceeds the limit, replace the reduction fork.

  Standard : 3.41-3.79 mm (0.134-0.149 in)

  Allowable limit : 4.4 mm (0.173 in)

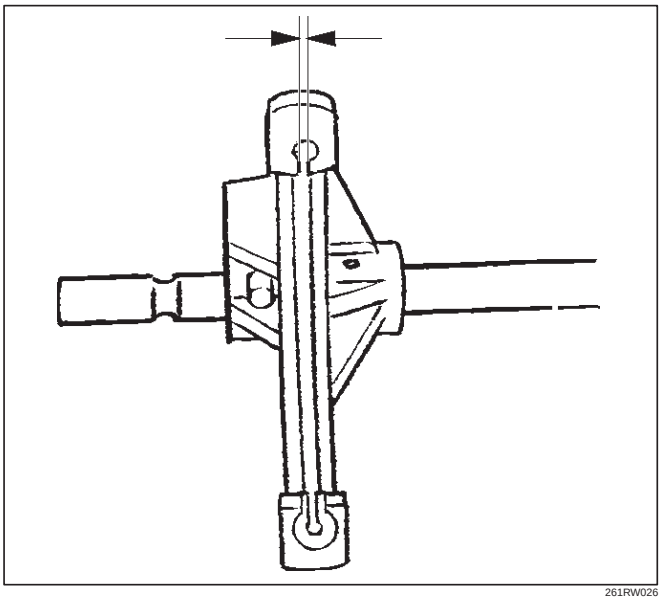

261RW026

Lock-up Fork

- Check the lock-up fork and shaft for wear, distortion, and scratches. If defects are observed, replace the parts.

Thickness Lock-up Fork

If the measurement exceeds the limit, replace the lock-up fork.

Standard : 6.99-7.09 mm (0.275-0.279 in)

Allowable limit : 6.3 mm (0.248 in)

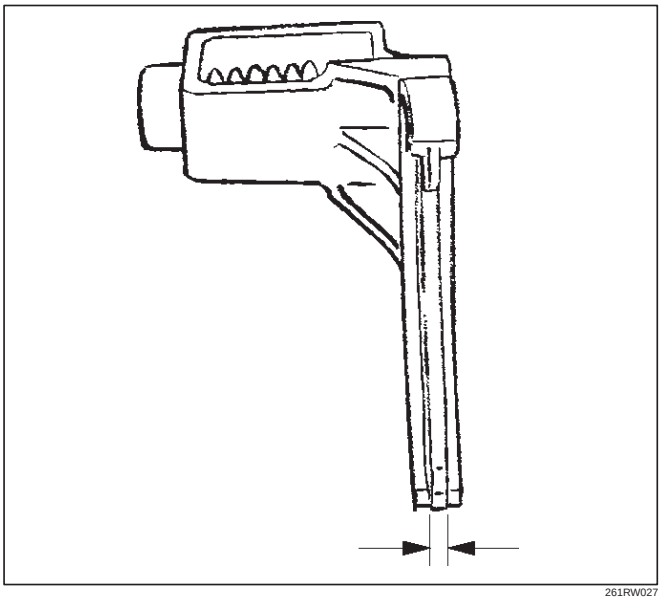

261RW027

Bearing

Check the profile of the needle, roller, ball, and thrust bearings. Wash the bearings with clean solvent completely, and dry with air.

NOTE: If the bearing is rotated excessively, the rollers may be damaged. So, rotate the bearing slowly with your hand. Apply grease to the bearing, and check the smoothness of the bearing while slowly rotating the race with your hand.

- Use a dial indicator to measure the ball bearing play.

  Allowable limit : 0.23 mm (0.009 in)

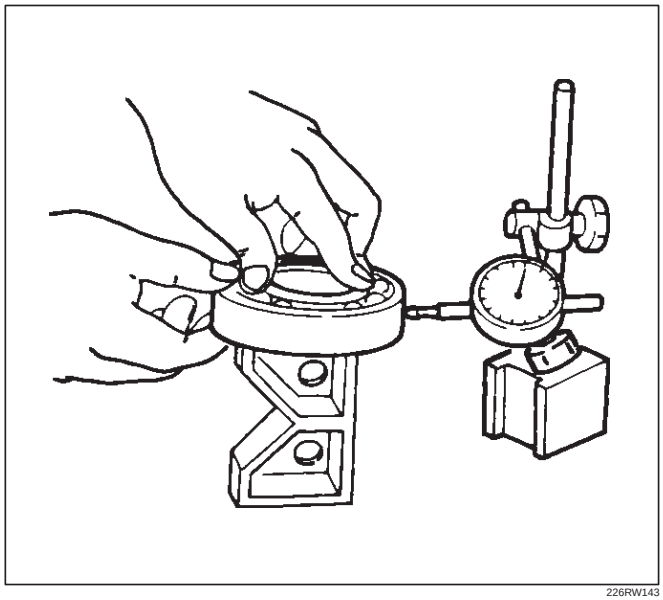

226RW143

Lock-up Fork Spring

Check the lock-up fork spring for distortion, cracking, and wear. If defects are observed, replace the part.

Free Length of the Lock-up Fork Spring

- If the measurement exceeds the limit, replace the spring.

  Standard : 60.96 mm (2.40 in)

  Allowable limit : 55.0 mm (2.17 in)

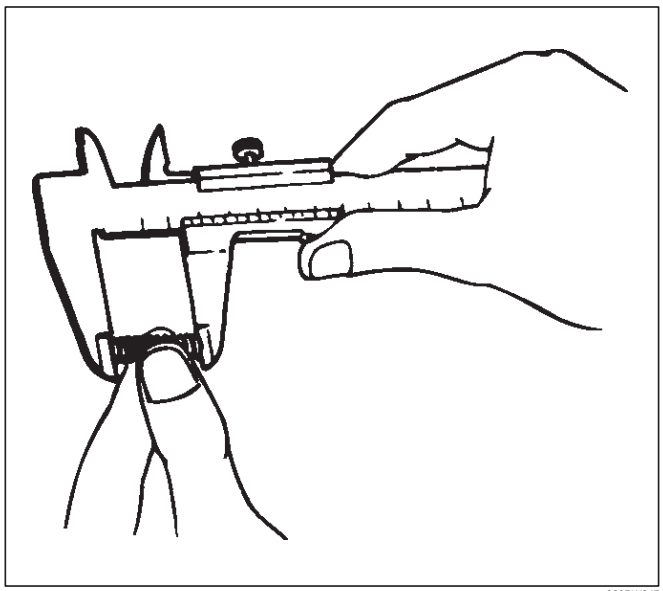

220RW045

Tension of Lock-up Fork Spring

- If the measurement exceeds the limit, replace the spring. (When compressed to 41.4 mm)

  Standard : 27.1-33.8 N {2.76-3.45 kg/6.08-7.61 lb}

  Allowable limit : 24.5 N {2.5 kg/5.5 lb}

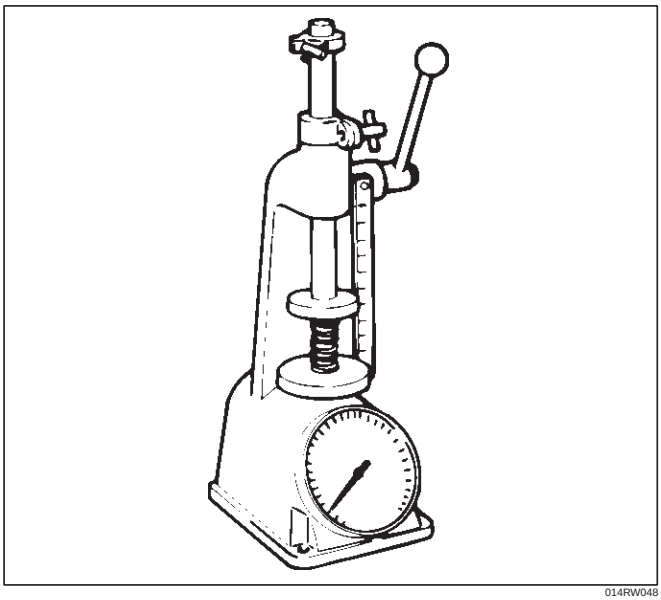

014RW048

Tension of Detent Spring Assembly

- If the measurement exceeds the limit, replace the spring. N {kg} (When compressed by 3 mm from the free length)

  Standard : 139 N -203 {14.2-20.7 kg/31.3-45.6 lb}

  Allowable limit : 130 N {13.3 kg/29.3 lb}

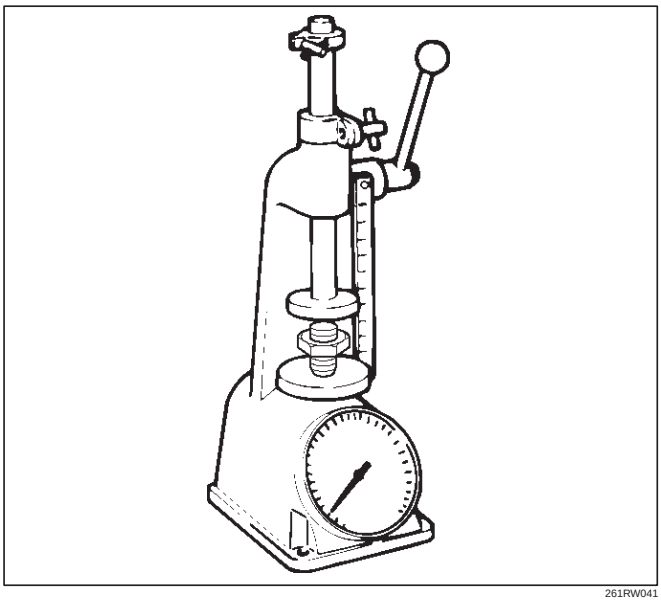

261RW041

Oil Pump

- Remove foreign materials from the strainer. If the strainer is damaged, replace it.
- If the area into which the shaft is inserted is excessively worn or damaged, replace the pump.

Multi Plate Disk Clutch

- If the burned, mirror-surfaced clutch facing, or scraping is observed on the clutch plates, clutch housing, armature plate, and insulator washer, replace the part or parts.

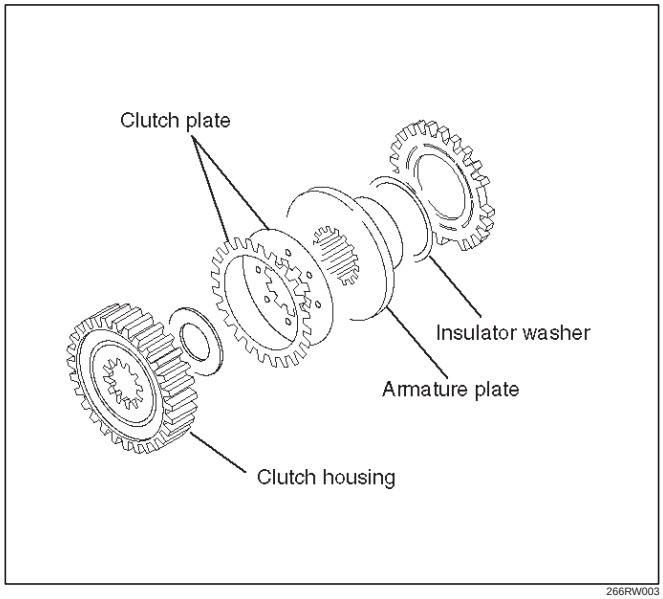

266RW003

Coil Assembly

- Check the resistance of the coil with a tester. If defects are observed, replace the assembly.
  * (ordinary temperature)

  Standard : 1.4~2.0 Ω

  Allowable limit : 1.0~5.0 Ω

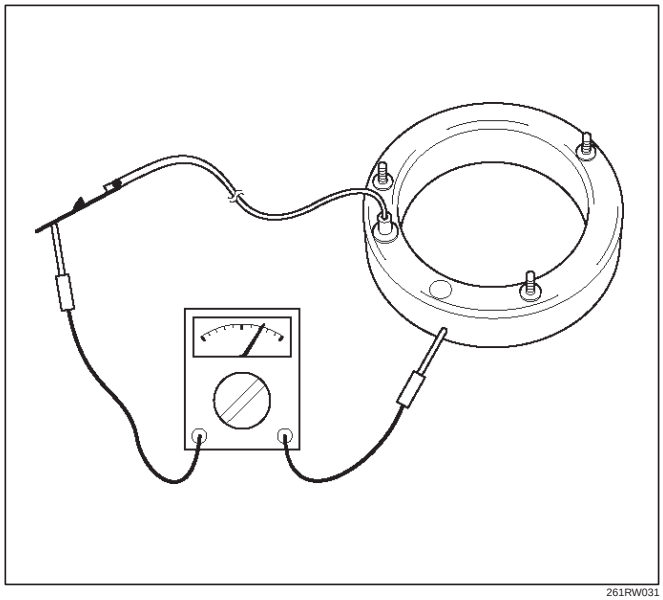

261RW031

Cam Pulley, Cam Ball, and Cam&Coil Housing

- Check the cam balls and cam for excessive wear or damage. If defective, replace the parts.

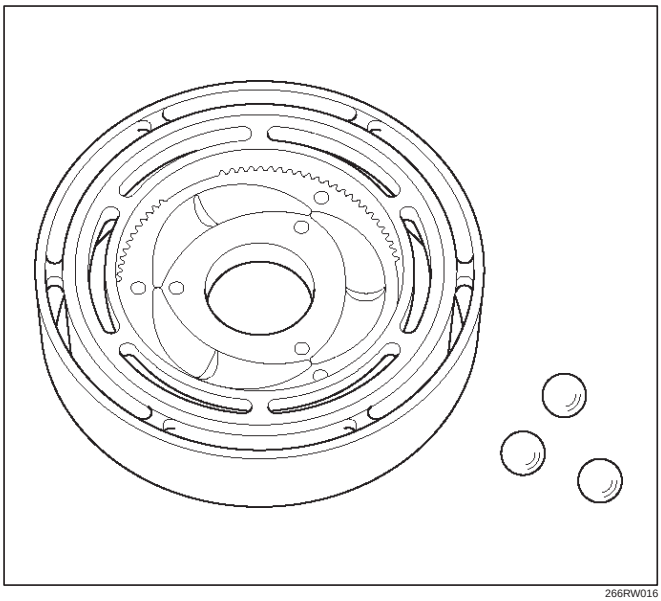

266RW016

The Parts 4H and 4L Switch

- Check the continuity of 4H and 4L switch.

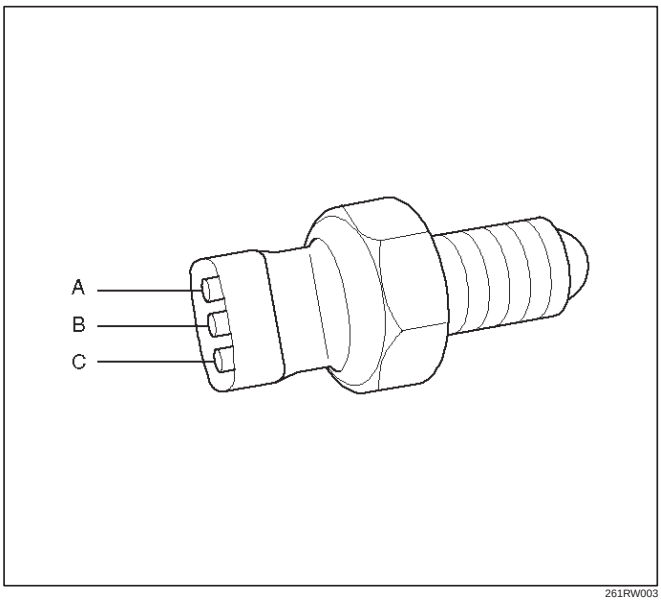

261RW003

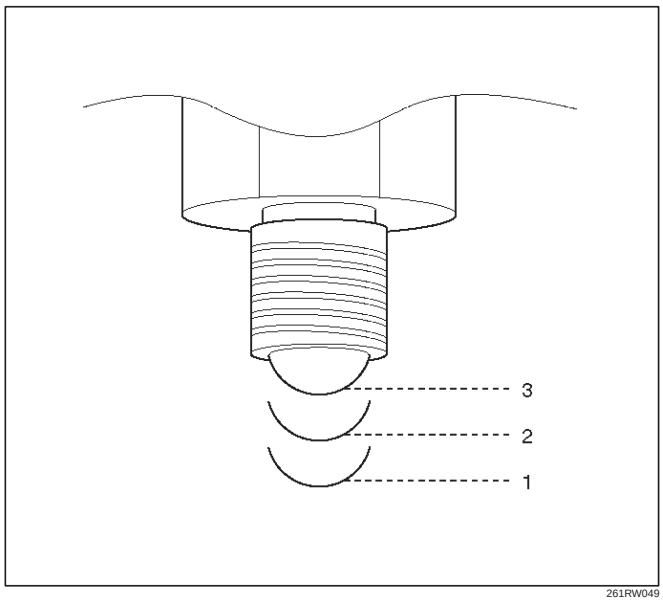

261RW049

Switch Stroke	4H Switch Signal	4L Switch Signal	The correspo nding position of transfer lever
	B to Switch Body	A to C	
1	Open	Open	High
2	Open	Close	4L
3	Close	Close	Neutral

Transfer Case

Disassembled View

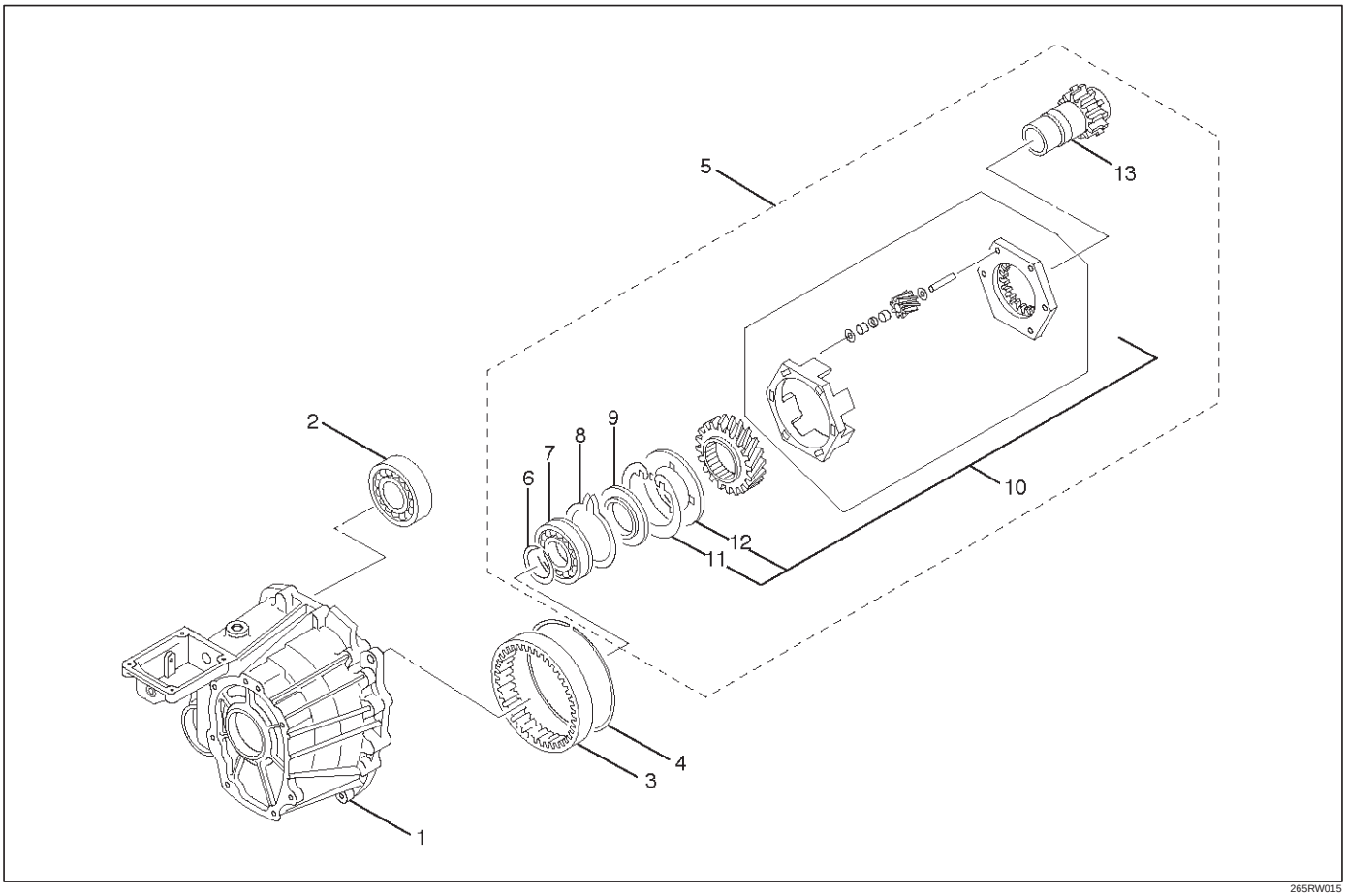

265RW015

Legend

(1) Transfer Case
(2) Ball Bearing
(3) Ring Gear
(4) Snap Ring
(5) Input Shaft and Carrier Assembly
(6) Snap Ring
(7) Ball Bearing
(8) Snap Ring
(9) Thrust Plate
(10) Carrier Assembly
(11) Snap Ring
(12) Circular Hub
(13) Input Shaft

Reassembly

1. Remove the oil seal from the transfer case.
2. Apply engine oil to the circumference of the new oil seal and fill the lip with grease (Besco L2 or equivalent).

3. Using the front output shaft oil seal installer 5-8840-2410-0 (J-42807), install the oil seal to the transfer case.

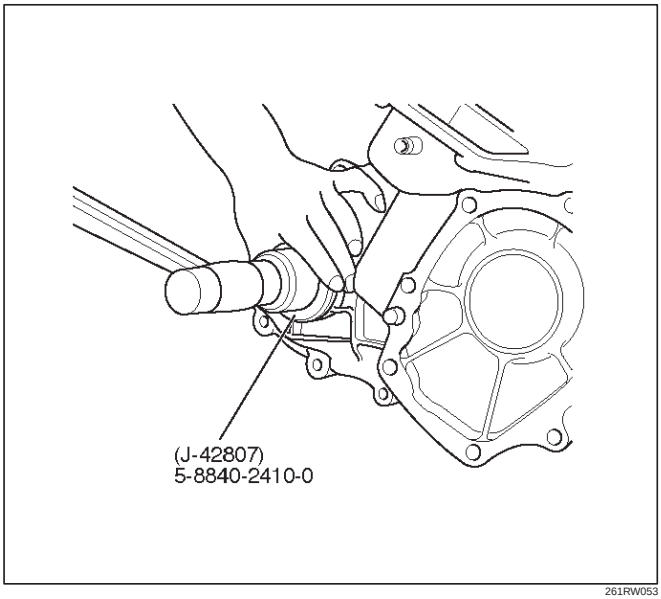

261RW053

Front Output Shaft Oil Seal

Distance between the transfer case end and oil seal.

NOTE: When installing the oil seal to the specified dimension, be careful not to damage it.

Distance : 0.93 — 1.43mm (0.037 — 0.056 in)

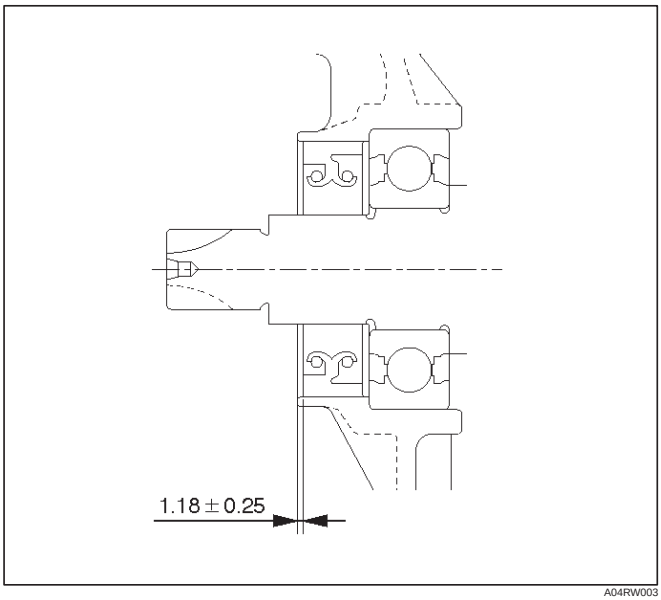

A04RW003

4. Using the input shaft (main) oil seal installer 5-8840-2411-0 (J-42808), install the oil seal to the transfer case.

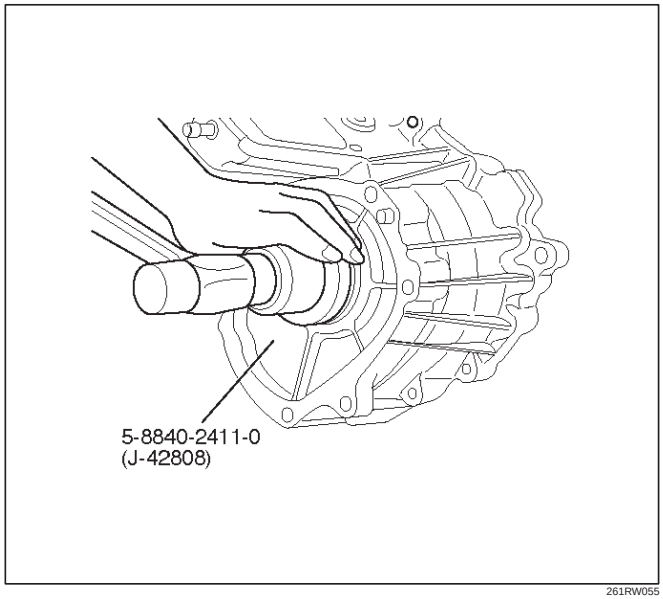

261RW055

Input Shaft Oil Seal

Distance between the transfer case end and oil seal.

NOTE: When installing the oil seal to the specified dimension, be careful not to damage it.

Distance : 3.25 — 3.75mm (0.13 — 0.15 in)

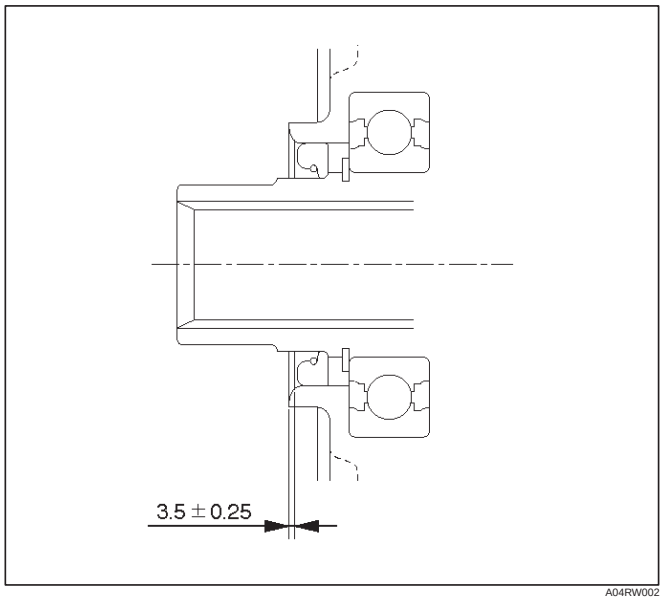

A04RW002

5. Using the installer 5-8840-2416-0 (J-42809), press-fit the ring gear.

Pay attention to the following points.

- Identify the correct direction of gear.
- Do not damage the gear.
- Do not press-fit the ring gear slantingly.
- Press-fit the ring gear to the innermost.
- Remove burrs generated by press-fitting.
- If the transfer case has serrations, match them with those of the gear and press-fit the gear.

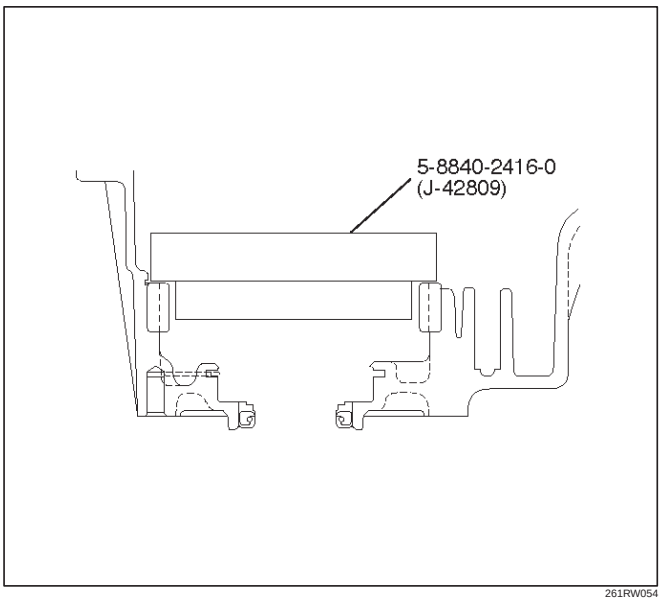

261RW054

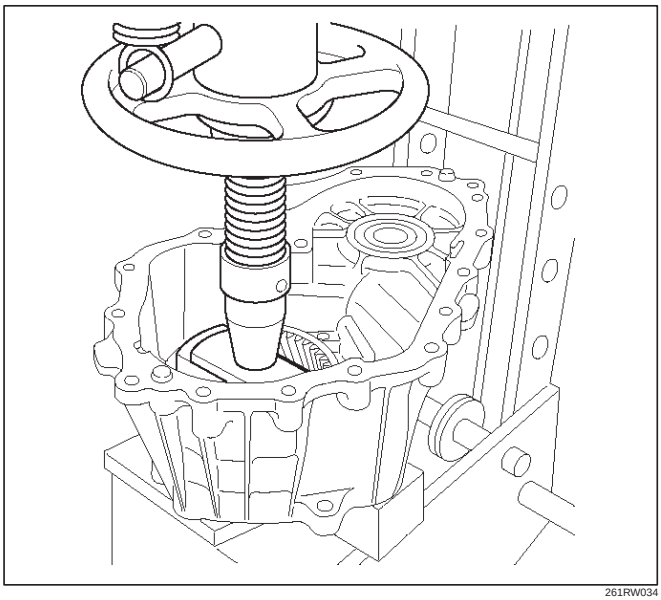

261RW034

6. Install the snap ring to the transfer case.
7. Install the circular hub.
8. Install the snap ring to the carrier.
9. Mount the carrier assembly to the input shaft.
10. Check the direction of thrust plate and mount it to the input shaft.

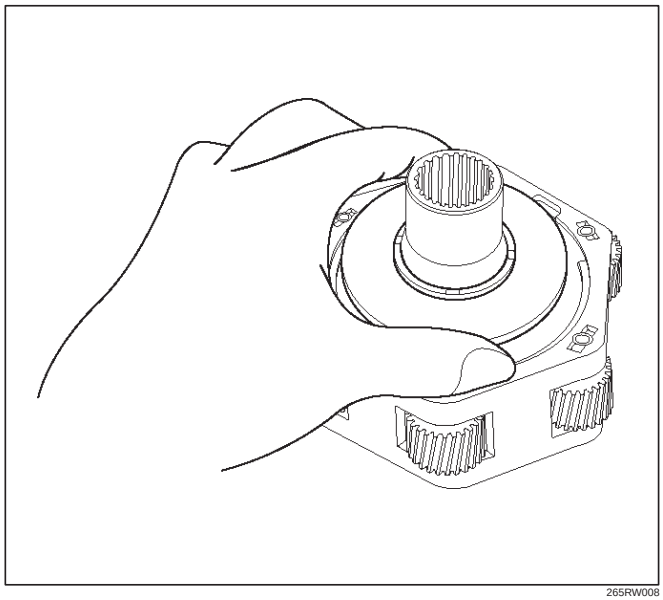

265RW008

11. Mount the ball bearing to the input shaft so that the snap ring will be installed to the input shaft.

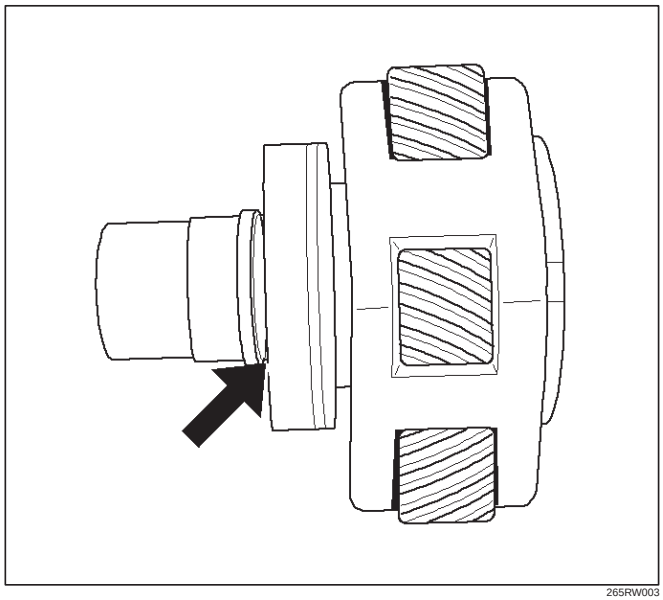

265RW003

12. Install the snap ring to the input shaft.
13. Install the snap ring to the transfer case.

14. Using the snap ring pliers, expand the snap ring through the opening between the ring gear and carrier assembly and securely install the input shaft and carrier assembly.

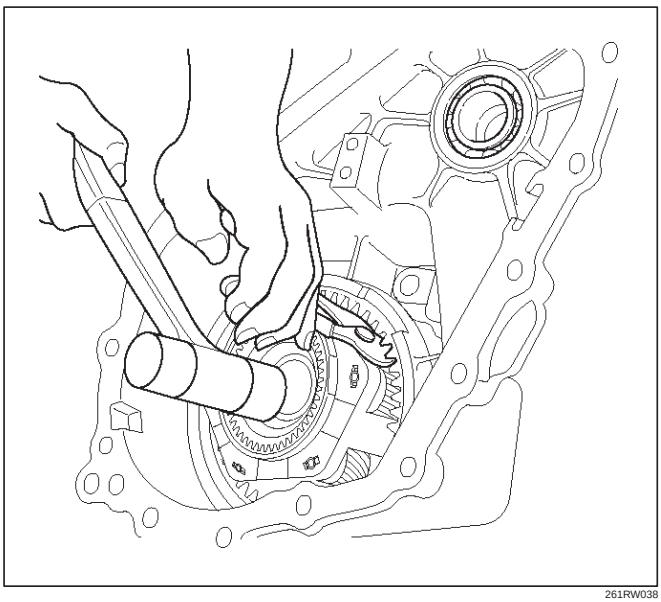

261RW038

15. Install the ball bearing (for front output shaft)

Output Shafts and Shift Control Shaft

Disassembled View

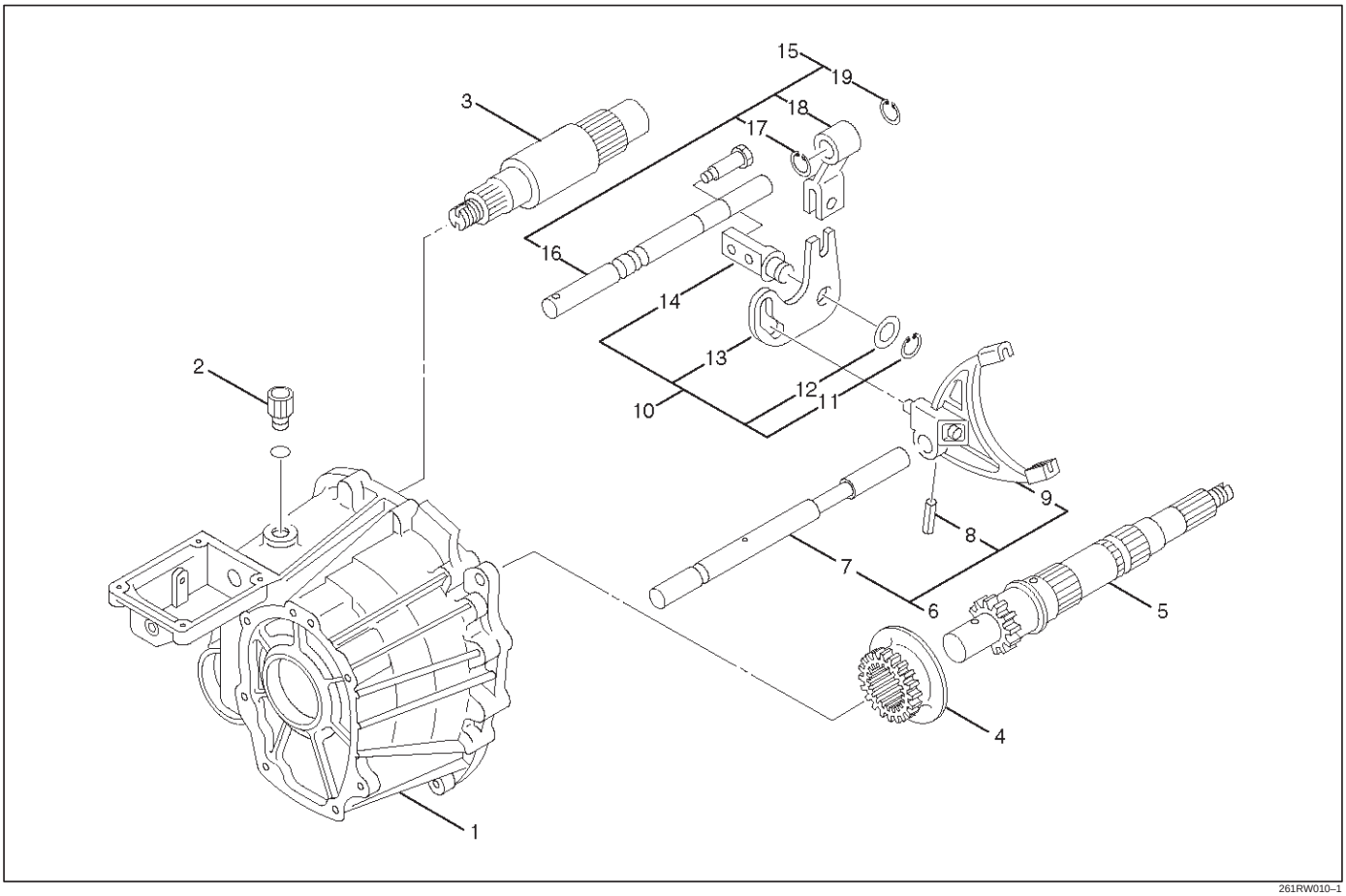

261RW010–1

Legend

(1) Transfer Case Assembly
(2) Detent Spring
(3) Front Output Shaft
(4) Reduction Hub
(5) Output Shaft
(6) Reduction Fork Assembly
(7) Lock-up Shaft
(8) Spring Pin
(9) Reduction Fork
(10) Cam Assembly
(11) Snap Ring
(12) Washer
(13) Cam
(14) Cam Pilot Block
(15) Shifter Shaft Assembly
(16) Shifter Lever Shaft
(17) Snap Ring
(18) Reduction Lever Assembly
(19) Snap Ring

Reassembly

1. Apply ATF to the inside of the ball bearing for the front output shaft.

2. Mount the front output shaft to the transfer case.

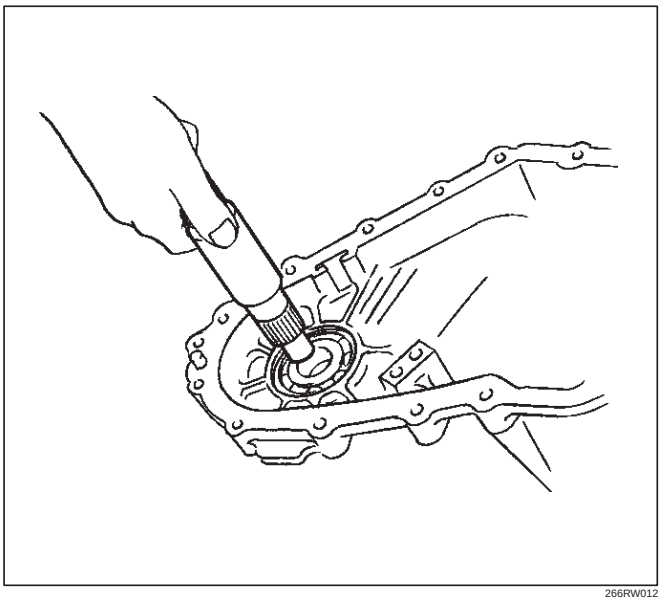

266RW012

3. Install the shifter lever shaft to the transfer case assembly.
4. Install the snap ring to the shifter lever shaft.
5. Install the reduction lever assembly to the shifter lever shaft and fix the assembly with the snap ring.

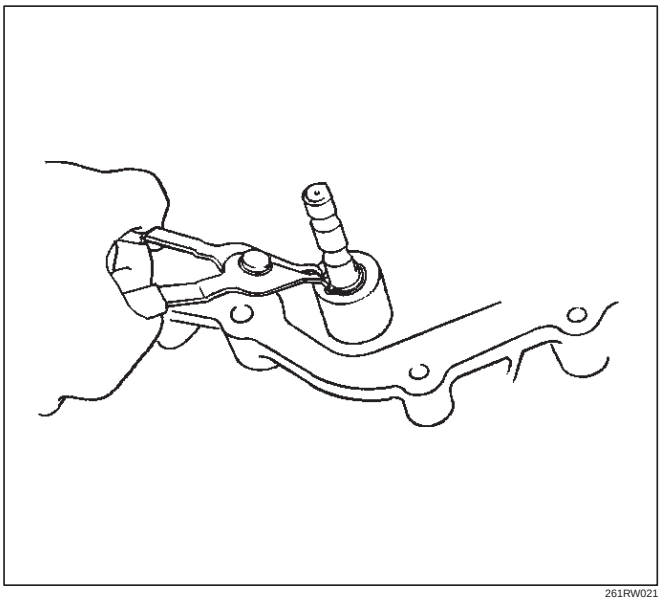

261RW021

6. Install the cam to the cam pilot block.
7. Attach the washer to the cam pilot block and fix the washer with the snap ring.

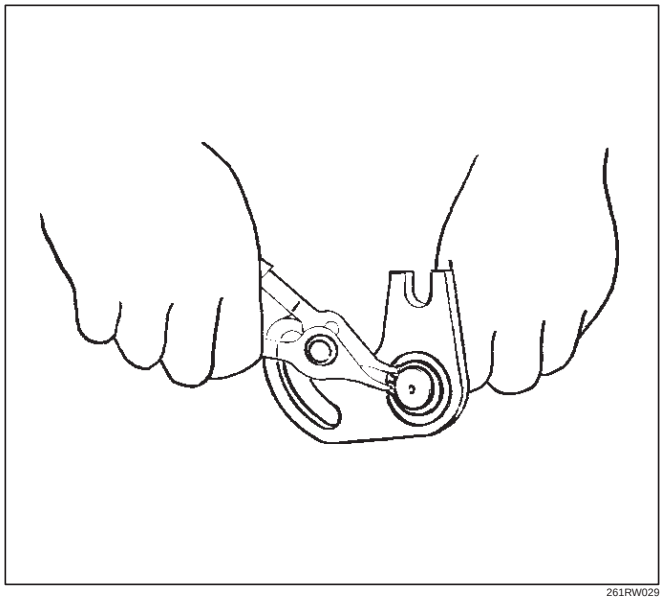

261RW029

8. Mount the reduction fork to the lock-up shaft.
9. Install the spring pin to the reduction fork and lock-up shaft.

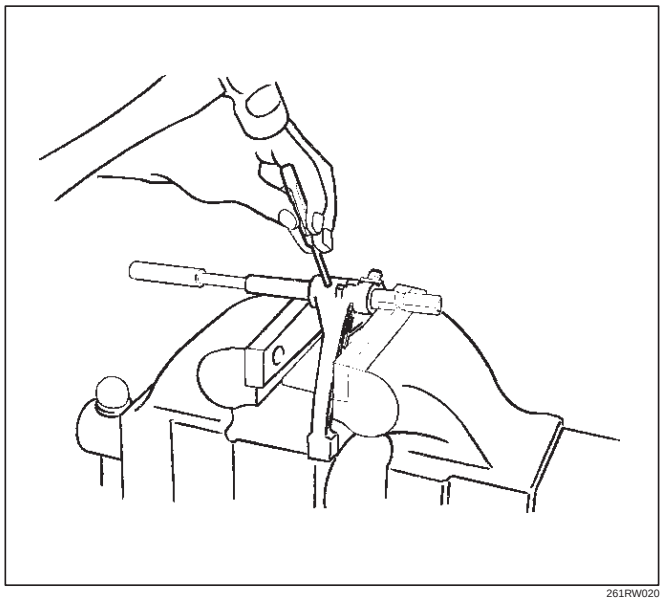

261RW020

10. Install the reduction fork assembly together with reduction hub to the transfer case assembly.

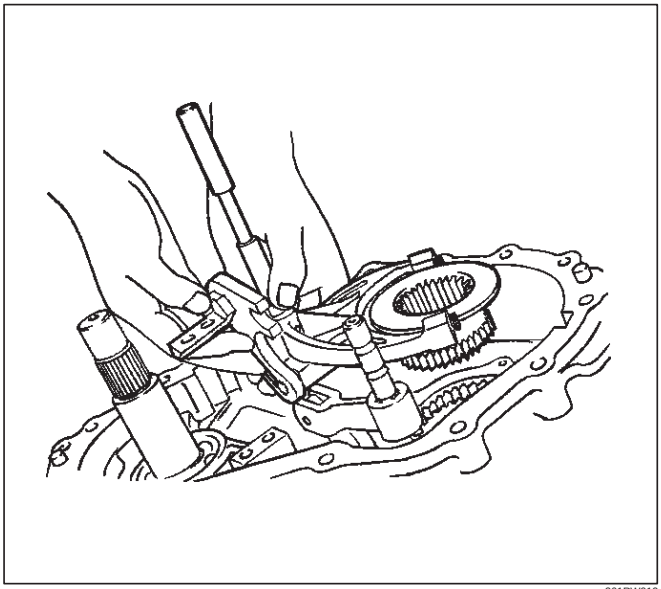

261RW019

11. Install the cam assembly and tighten the cam pilot block set bolts to the specified torque.

    Torque : 12 N·m (1.2 kg·m/104 lb in)

12. Tighten the detent spring to the specified torque.

    Torque : 24 N·m (2.4 kg·m/17 lb in)

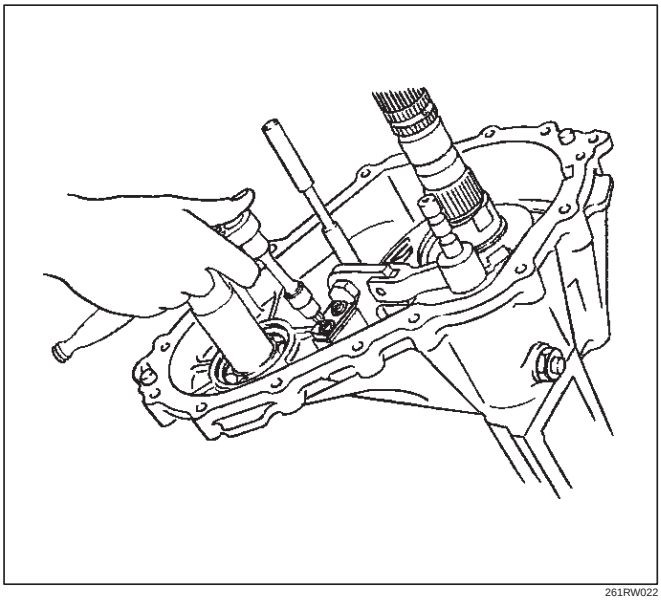

261RW022

13. Apply ATF to the needle bearing inside the input shaft assembly.
14. Install the output shaft to the transfer case assembly.

Sprocket and Mechanical Lock

Disassembled View

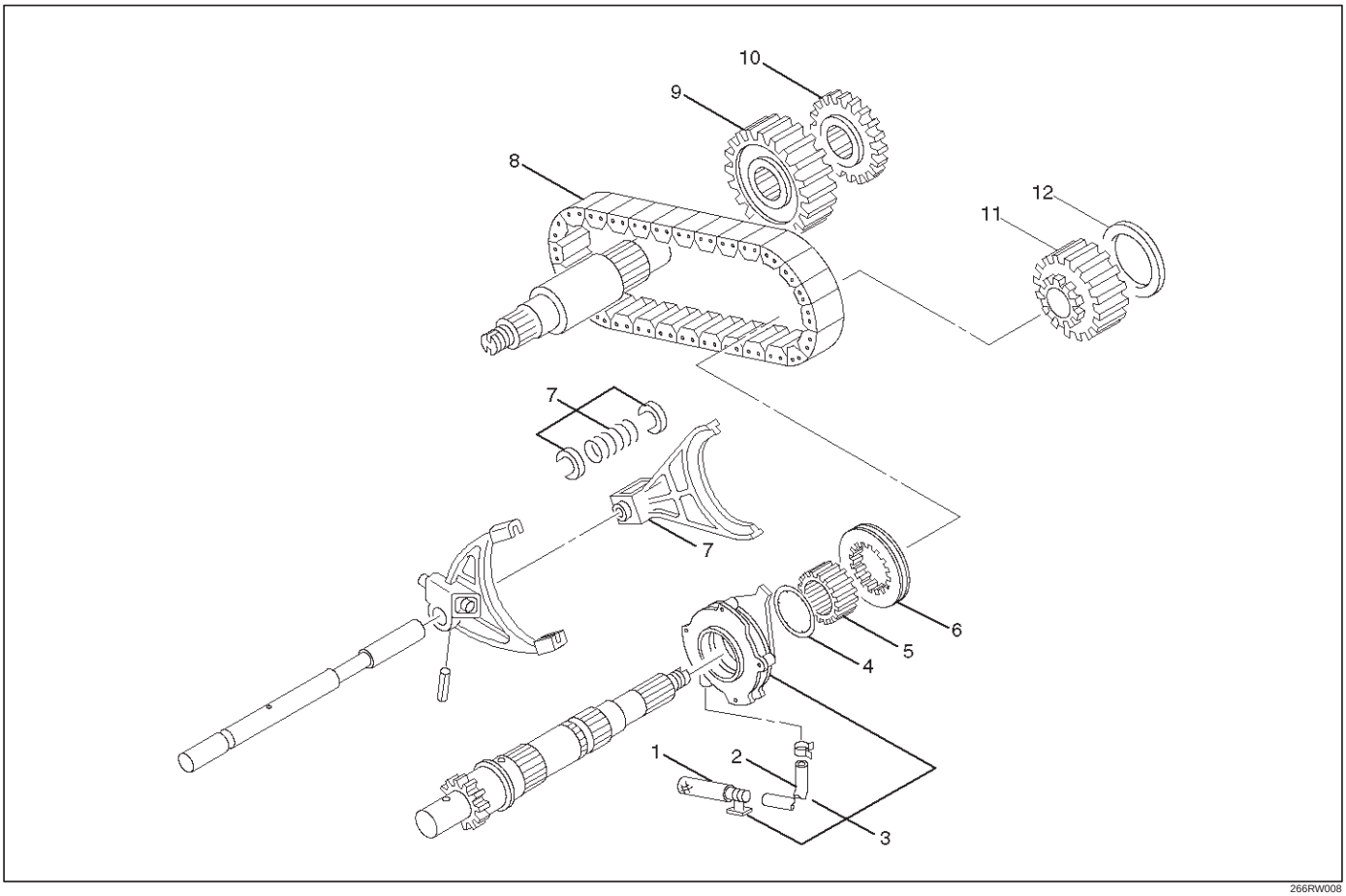

266RW008

Legend

(1) Strainer
(2) Hose
(3) Oil Pump Assembly
(4) Thrust Washer
(5) Mechanical Lock Hub
(6) Lock-up Sleeve
(7) Lock-up Fork
(8) Chain
(9) Lower Drive Sprocket
(10) Front Tone Wheel
(11) Drive Sprocket
(12) Sprocket Spacer

Reassembly

1. Connect the hose and strainer to the oil pump assembly.
2. Install the oil pump assembly to the output shaft and set the magnet to the strainer position.
3. Install the thrust washer.
4. Install the spring to the lock-up fork.

5. Install the lock-up sleeve together with the lock-up fork to the output shaft and lock-up shaft assembly.
6. Install the spring retainers to the lock-up fork.

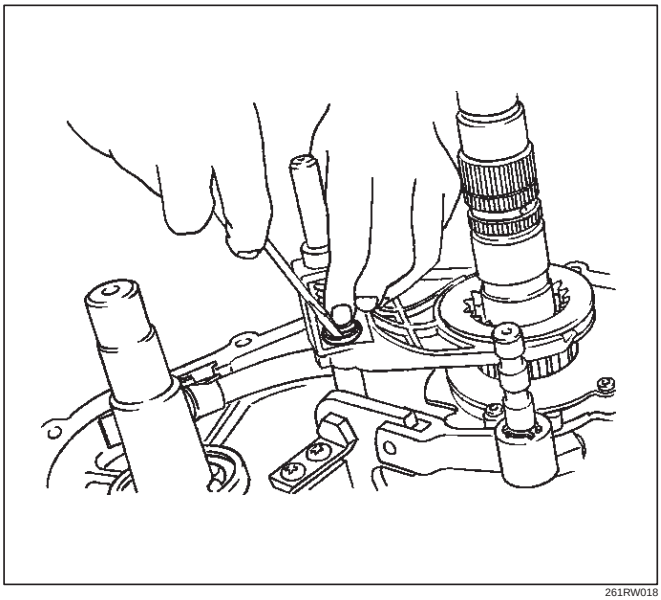

261RW018

7. Install the mechanical lock hub.
8. Apply ATF to the chain.
9. Engage the chain to both sprockets.
10. Install the chain and sprocket assembly to both output shafts.

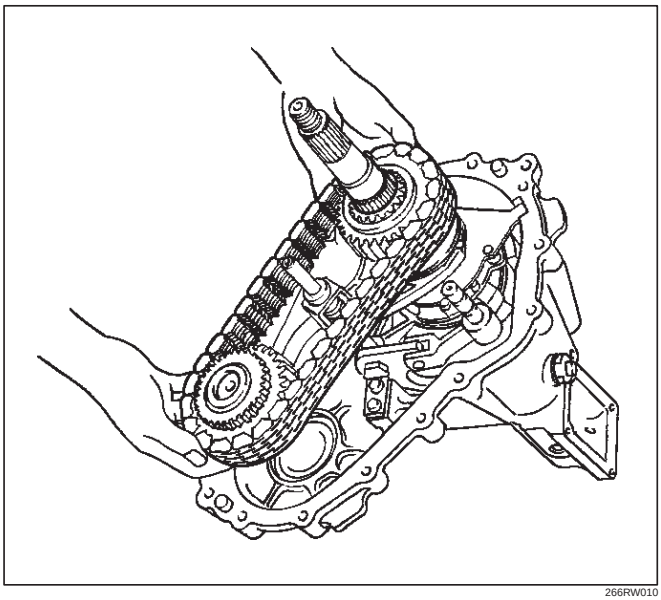

266RW010

11. Install the front tone wheel and sprocket spacer.

Clutch Pack and Clutch Cam

Disassembled View

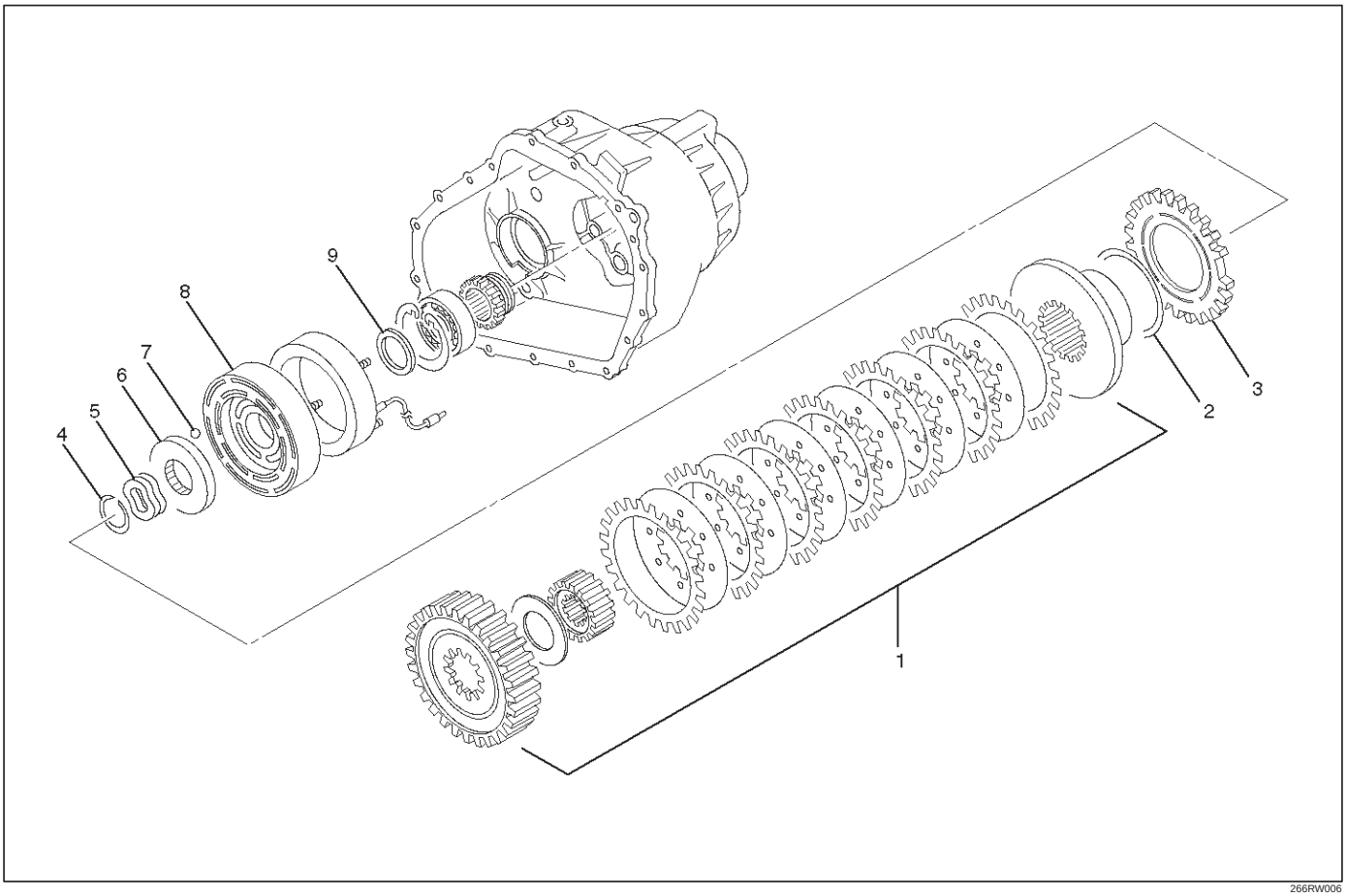

Legend

(1) Clutch Pack Assembly
(2) Insulator Washer
(3) Armature Plate
(4) Snap Ring
(5) Wave Spring
(6) Cam Pulley
(7) Cam Ball
(8) Cam and Coil Housing
(9) Thrust Bearing

Reassembly

1. Mount the clutch pack assembly to which the multi plate disk clutch is already installed to the output shaft.

NOTE: Mount the clutch pack assembly while adjusting the phase of both the clutch housing and drive sprocket.

2. Install the insulator washer.
3. Install the armature plate.

4. Using snap ring pliers, install the snap ring.

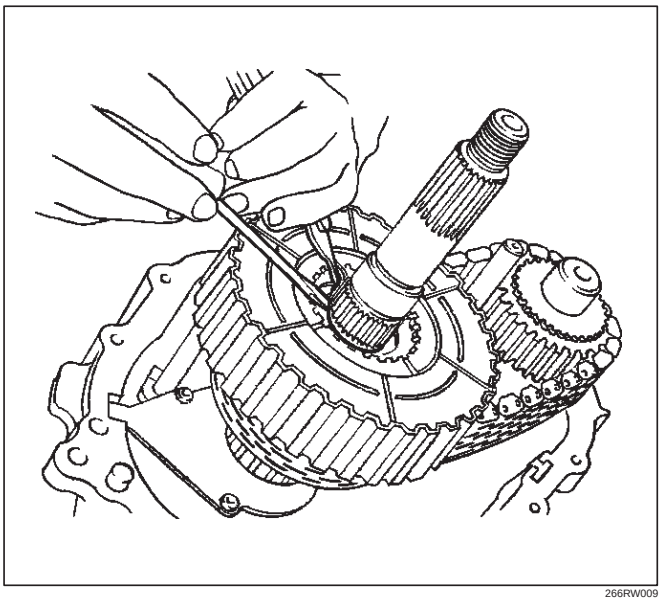

266RW009

5. Install the wave spring.
6. Install the cam pulley.
7. Place a ball on each groove of the cam pulley.

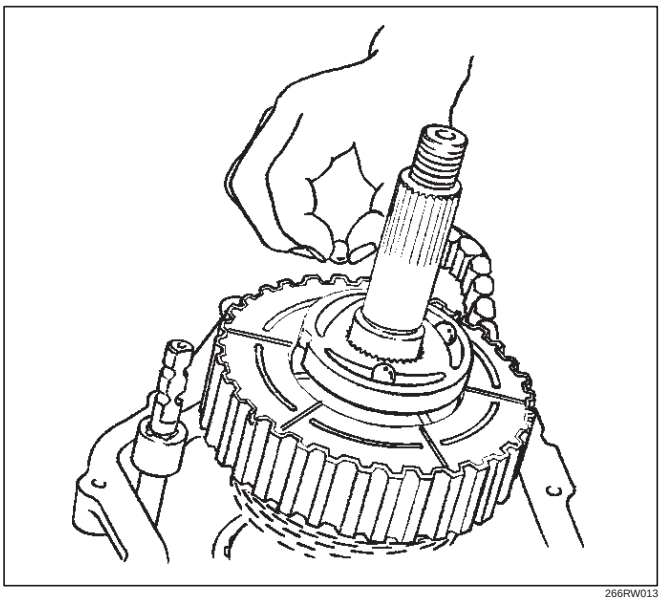

266RW013

8. Install the cam and coil housing.
9. Install the thrust bearing.

Main Data and Specifications

Leading Particulars

Type		Transfer case with low range reduction mechanism
	2H	Rear wheel drive
	TOD	Electronically controlled torque split four wheel drive
	4L	Low-speed mechanical lock-up four wheel drive
Control system		Floor direct control
Gear ratio	H	1.000
	L	2.480
Oil quantity, Lit		1.9
Oil		ATF DEXRON®-IIE or ATF DEXRON®-III

Torque Specifications

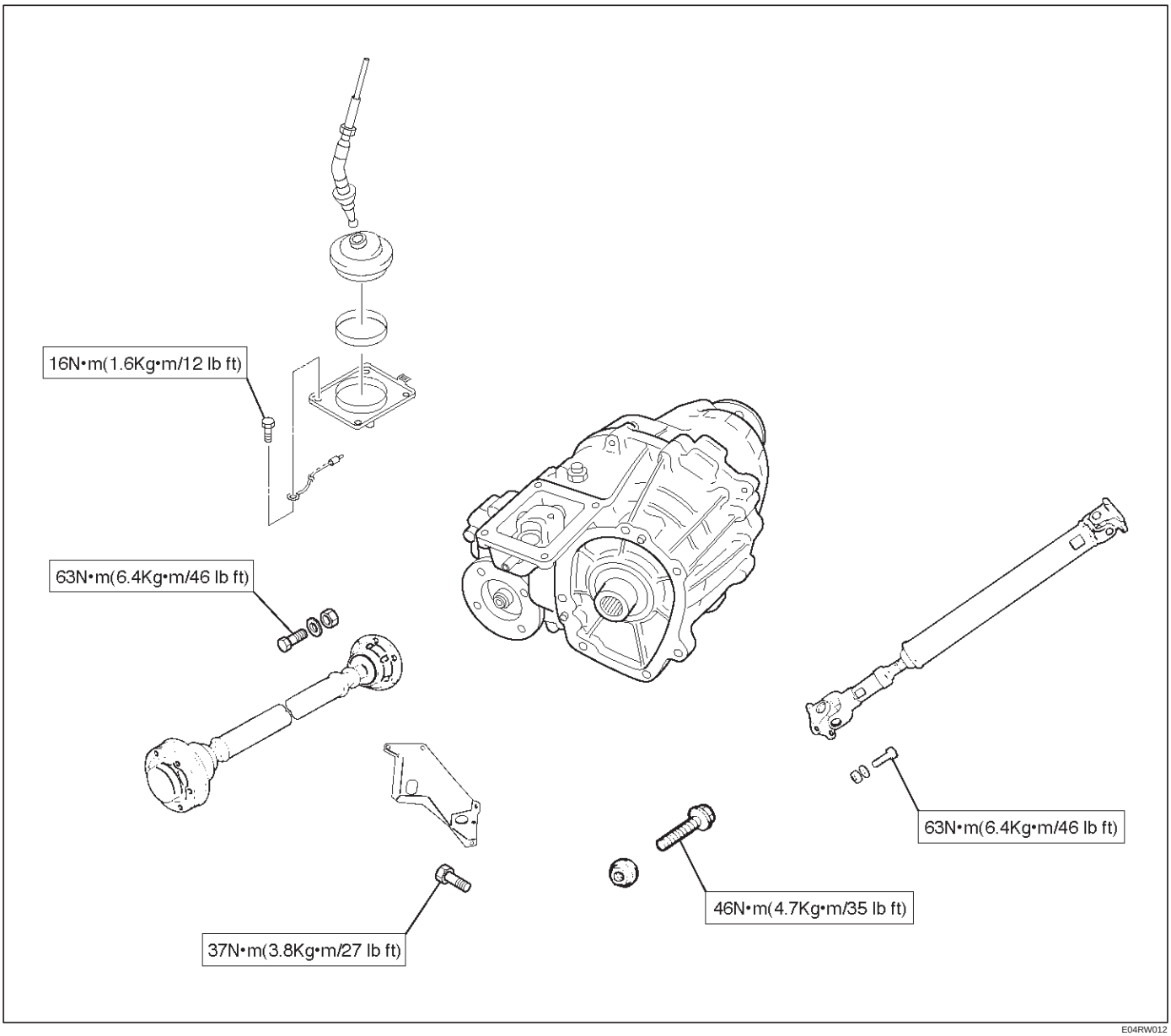

E04RW012

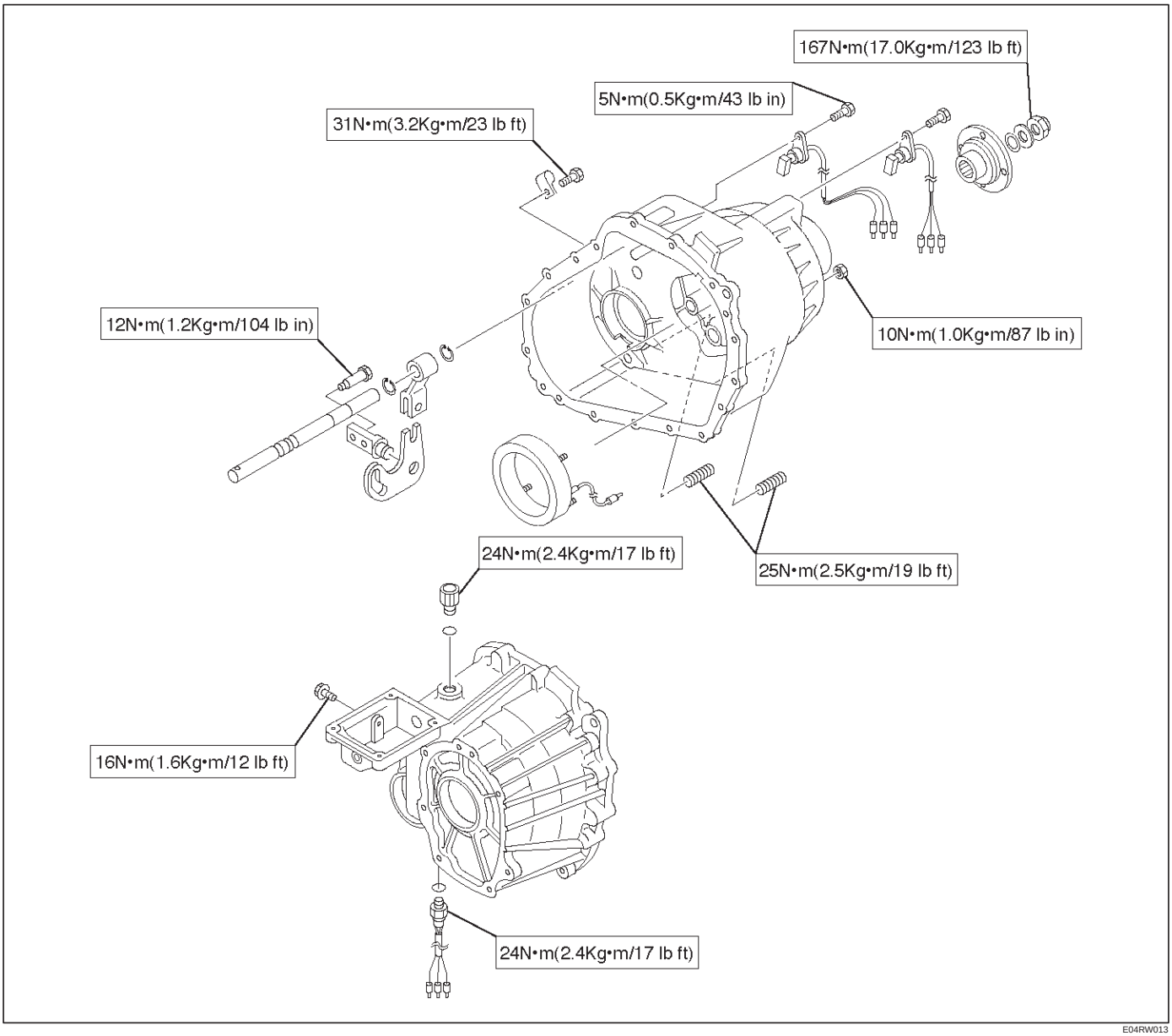
167N•m(17.0Kg•m/123 lb ft)
5N•m(0.5Kg•m/43 lb in)
31N•m(3.2Kg•m/23 lb ft)
12N•m(1.2Kg•m/104 lb in)
10N•m(1.0Kg•m/87 lb in)
24N•m(2.4Kg•m/17 lb ft)
25N•m(2.5Kg•m/19 lb ft)
16N•m(1.6Kg•m/12 lb ft)
24N•m(2.4Kg•m/17 lb ft)

E04RW013

Special Tools

ILLUSTRATION	TOOL NO. TOOL NAME
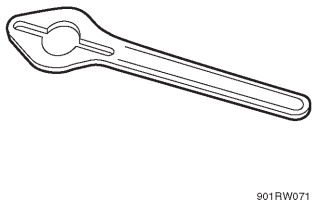 901RW071	**5–8840–0133–0** **(J–8614–11)** Flange Holder
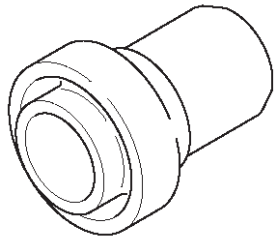 901RW095	**5–8840–2412–0** **(J–42804)** Rear Oil Seal Installer
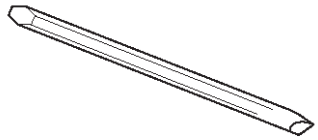 901RW089	**5–8840–2293–0** **(J–39209)** Punch
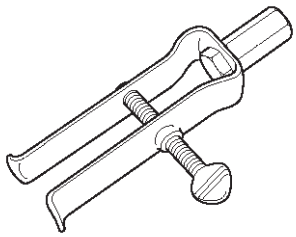 901RW094	**5–8840–2409–0** **(J–42805)** Bearing Remover
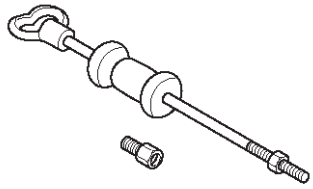 901RW096	**5–8840–0084–0** **(J–2619–01)** Slide Hammer
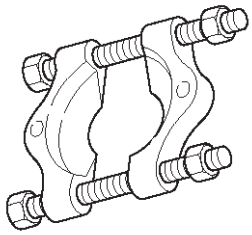 901RW091	**5–8840–0015–0** **(J–22912–01)** Bearing Remover

ILLUSTRATION	TOOL NO. TOOL NAME
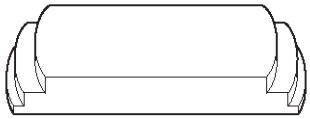 901RW093	**5–8840–2413–0** **(J–42806)** Ring Gear Replacer
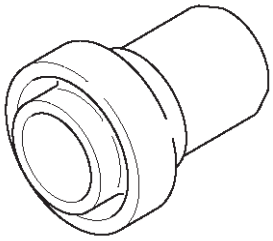 901RW095	**5–8840–2410–0** **(J–42807)** Front Out Oil Seal Installer
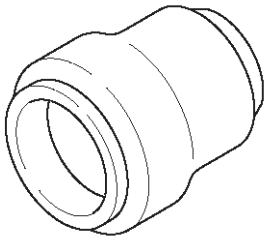 901RW097	**5–8840–2411–0** **(J–42808)** Input Shaft Oil Seal Installer
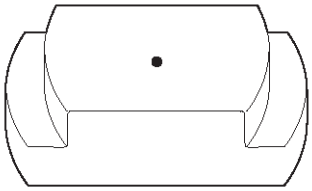 901RW098	**5–8840–2416–0** **(J–42809)** Ring Gear Installer

BRAKES

CONTENTS

Brake Control System 5A
Anti–lock Brake System 5B
Power–Assisted Brake System 5C
Parking Brakes 5D

BRAKE CONTROL SYSTEM

CONTENTS

Service Precaution 5A–2
General Description 5A–3
System Components 5A–3
Electronic Hydraulic Control Unit (EHCU) . 5A–3
ABS Warning Light 5A–4
Wheel Speed Sensor 5A–4
G-Sensor 5A–4
Normal and Anti-lock Braking 5A–4
Brake Pedal Travel 5A–4
Acronyms and Abbreviations 5A–4
General Diagnosis 5A–5
General Information 5A–5
ABS Service Precautions 5A–5
Computer System Service Precautions . . . 5A–5
General Service Precautions 5A–5
Note on Intermittents 5A–5
Test Driving ABS Complaint Vehicles 5A–6
“ABS” Warning Light 5A–6
Normal Operation 5A–6
Basic Diagnostic Flow Chart 5A–6
Basic Inspection Procedure 5A–7
Tech 2 Scan Tool 5A–8
Getting Started 5A–9
Operating Procedure 5A–10
Data List 5A–11
EHCU Connector Pin-out Checks 5A–12
Circuit Diagram (LHD model / 6VD1 and 4JG2) 5A–13
Circuit Diagram (LHD model / 4JG2) 5A–14
Circuit Diagram (LHD model / 4JG2) 5A–15
Circuit Diagram (LHD model / 6VD1) 5A–16
Circuit Diagram (LHD model / 6VD1) 5A–17
Connector List (LHD model) 5A–18
Part Location (LHD model) 5A–20
Circuit Diagram (RHD model / 6VD1 and 4JG2) 5A–21
Circuit Diagram (RHD model / 4JG2) 5A–22
Circuit Diagram (RHD model / 4JG2) 5A–23
Circuit Diagram (RHD model / 6VD1) 5A–24
Circuit Diagram (RHD model / 6VD1) 5A–25
Circuit Diagram (RHD model / 6VE1 and 4JX1) 5A–26
Circuit Diagram (RHD model / 4JX1) 5A–27
Circuit Diagram (RHD model / 4JX1) 5A–28
Circuit Diagram (RHD model / 6VE1) 5A–29
Circuit Diagram (RHD model / 6VE1) 5A–30
Connector List (RHD model) 5A–31
Part Location (RHD model) 5A–34
Symptom Diagnosis 5A–35
Chart A–1 ABS Works Frequently But Vehicle Does Not Decelerate 5A–35
Chart TA-1 ABS Works Frequently But Vehicle Does Not Decelerate (Use TECH 2) 5A–36
Chart A-2 Uneven Braking Occurs While ABS Works 5A–36
Chart A-3, TA-3 The Wheels Are Locked . 5A–36
Chart A-4 Brake Pedal Feed Is Abnormal . 5A–37
Chart A-5, TA-5 Braking Sound (From EHCU) Is Heard While Not Braking 5A–38
Diagnostic Trouble Codes 5A–39
Diagnosis By “ABS” Warning Light Illumination Pattern 5A–40
Diagnostic Trouble Codes (DTCs) 5A–40
Chart B-1 With the key in the ON position (Before starting the engine). Warning light (W/L) is not activated. 5A–43
Chart B-2 EHCU Abnormality (DTC 14) . . . 5A–43
Chart B-3 Power Voltage Drop (DTC 15) . . 5A–44
Chart B-4 CLASS-2 Communication Line Abnormality (DTC 16) 5A–44
Chart B-5 G-Sensor Circuit (DTC 21) 5A–45
Chart B-6 Abnormal Transmission Input (DTC 23) 5A–46
Chart B-7 Transfer Monitor (DTC 24) 5A–47
Chart B-8 EHCU Pump Motor And Motor Relay Circuit (DTC 32) 5A–47
Chart B-9 EHCU Pump Valve And Valve Relay Circuit (DTC 35) 5A–47
Chart B-10 FL Isolation Solenoid Valve Abnormality (DTC 41) 5A–48
Chart B-11 FL Dump Solenoid Valve Abnormality (DTC 42) 5A–48
Chart B-12 FR Isolation Solenoid Valve Abnormality (DTC 43) 5A–48
Chart B-13 FR Dump Solenoid Valve Abnormality (DTC 44) 5A–49
Chart B-14 Rear Isolation Solenoid Valve Abnormality (DTC 45) 5A–49
Chart B-15 Rear Dump Solenoid Valve Abnormality (DTC 46) 5A–49

Chart B-16 FL Speed Sensor Disconnection (DTC 51) 5A–50
Chart B-17 FR Speed Sensor Disconnection (DTC 52) 5A–50
Chart B-18 RL Speed Sensor Disconnection (DTC 53) 5A–51
Chart B-19 RR Speed Sensor Disconnection (DTC 54) 5A–51
Chart B-20 FL Speed Sensor Short Circuit (DTC 61) 5A–52
Chart B-21 FR Speed Sensor Short Circuit (DTC 62) 5A–53
Chart B-22 RL Speed Sensor Short Circuit (DTC 63) 5A–54
Chart B-23 RR Speed Sensor Short Circuit (DTC 64) 5A–55
Chart B-24 Sensor Signal Input Abnormality (DTC 65) 5A–56
Sensor Signal Abnormality Criteria using TECH 2 . . . . . 5A–56
Unit Inspection Procedure 5A–57
Chart C-1-1 FL Sensor Output Inspection Procedure 5A–57
Chart C-1-2 FR Sensor Output Inspection Procedure 5A–58
Chart C-1-3 RL Sensor Output Inspection Procedure 5A–58
Chart C-1-4 RR Sensor Output Inspection Procedure 5A–59
Chart TC-1 Sensor Output Inspection Procedure (Use TECH 2) 5A–59
Chart C-2 Transmission Input Inspection Procedure 5A–60
Chart TC-2 Transmission Input Inspection Procedure (Use TECH 2) 5A–61
Special Tools 5A–62

Service Precaution

WARNING: IF SO EQUIPPED WITH A SUPPLEMENTAL RESTRAINT SYSTEM (SRS), REFER TO THE SRS COMPONENT AND WIRING LOCATION VIEW IN ORDER TO DETERMINE WHETHER YOU ARE PERFORMING SERVICE ON OR NEAR THE SRS COMPONENTS OR THE SRS WIRING. WHEN YOU ARE PERFORMING SERVICE ON OR NEAR THE SRS COMPONENTS OR THE SRS WIRING, REFER TO THE SRS SERVICE INFORMATION. FAILURE TO FOLLOW WARNINGS COULD RESULT IN POSSIBLE AIR BAG DEPLOYMENT, PERSONAL INJURY, OR OTHERWISE UNNEEDED SRS SYSTEM REPAIRS.

CAUTION: Always use the correct fastener in the proper location. When you replace a fastener, use ONLY the exact part number for that application. ISUZU will call out those fasteners that require a replacement after removal. ISUZU will also call out the fasteners that require thread lockers or thread sealant. UNLESS OTHERWISE SPECIFIED, do not use supplemental coatings (Paints, greases, or other corrosion inhibitors) on threaded fasteners or fastener joint interfaces. Generally, such coatings adversely affect the fastener torque and the joint clamping force, and may damage the fastener. When you install fasteners, use the correct tightening sequence and specifications. Following these instructions can help you avoid damage to parts and systems.

General Description

The Anti-lock Brake System (ABS) works on all four wheels. A combination of wheel speed sensor and Electronic Hydraulic Control Unit (EHCU) can determine when a wheel is about to stop turning and adjust brake pressure to maintain best braking.

This system helps the driver maintain greater control of the vehicle under heavy braking conditions.

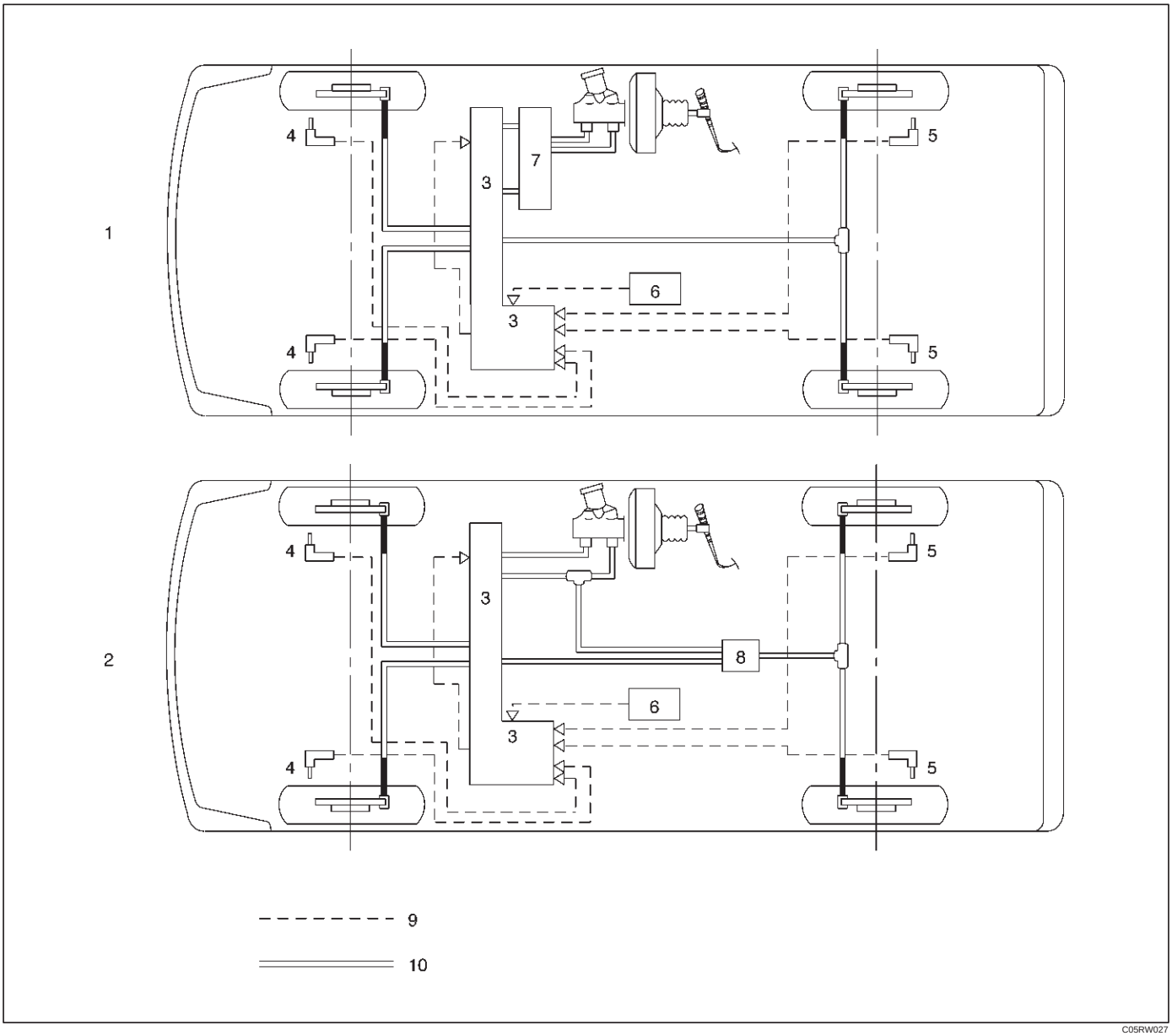

C05RW027

Legend

(1) With P&B Valve Model
(2) With LSPV Model
(3) Electronic Hydraulic Control Unit (EHCU)
(4) Front Wheel Speed Sensor
(5) Rear Wheel Speed Sensor
(6) G-Sensor
(7) Proportioning and Bypass (P&B) Valve
(8) Load Sensing Proportioning Valve (LSPV)
(9) Electronic Line
(10) Hydraulic Line

System Components

Electronic Hydraulic Control Unit (EHCU), four Wheel Speed Sensors, Warning Light, and G-sensor.

Electronic Hydraulic Control Unit (EHCU)

The EHCU consists of ABS control circuits, fault detector, and a fail-safe. It drives the hydraulic unit according to the signal from each sensor, cancelling ABS to return to

normal braking when a malfunction has occurred in the ABS.
The EHCU has a self-diagnosing function which can indicate faulty circuits during diagnosis.
The EHCU is mounted on the engine compartment front right side. It consists of a Motor, Plunger Pump, Solenoid Valves and Check Valve.
On the outside, the relay box containing a motor relay and a valve relay is installed.
Solenoid Valves: Reduces or holds the caliper fluid pressure for each front disc brake or both rear disc brakes according to the signal sent from the EHCU.
Reservoir: Temporarily holds the brake fluid that returns from the front and rear disc brake caliper so that pressure of front disc brake caliper can be reduced smoothly.
Plunger Pump: Feeds the brake fluid held in the reservoir to the master cylinder.
Motor: Drives the pump according to the signal from EHCU.
Check Valve: Controls the brake fluid flow.

ABS Warning Light

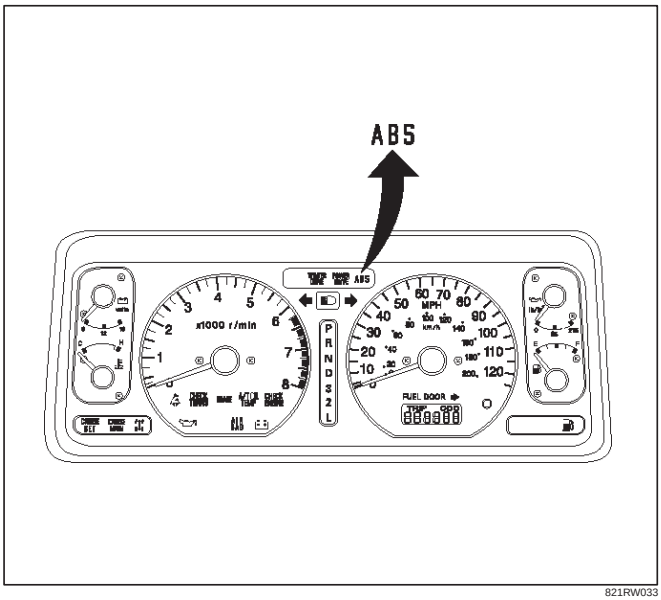

821RW033

Vehicles equipped with the Anti-lock Brake System have an amber “ABS” warning light in the instrument panel. The “ABS” warning light will illuminate if a malfunction in the Anti-lock Brake System is detected by the Electronic Hydraulic Control Unit (EHCU). In case of an electronic malfunction, the EHCU will turn “ON” the “ABS” warning light and disable the Anti-lock braking function.
The “ABS” light will turn “ON” for approximately three seconds after the ignition switch is to the “ON” position.
If the “ABS” light stays “ON” after the ignition switch is the “ON” position, or comes “ON” and stays “ON” while driving, the Anti-lock Brake System should be inspected for a malfunction according to the diagnosis procedure.

Wheel Speed Sensor

It consists of a sensor and a rotor. The sensor is attached to the knuckle on the front wheels and to the axle shaft bearing holder on the rear wheels.
The rotor is press-fit in the axle shaft.
The flux generated from electrodes magnetized by a magnet in the sensor varies due to rotation of the rotor, and the electromagnetic induction generates alternating voltage in the coil. This voltage draws a “sine curve” with the frequency proportional to rotor speed and it allows detection of wheel speed.

G-Sensor

The G-sensor installed inside the center console detects the vehicle deceleration speed and sends a signal to the EHCU. In 4WD operation, all four wheels may be decelerated in almost the same phase, since all wheels are connected mechanically.
This tendency is noticeable particularly on roads with low friction coefficient, and the ABS control is adversely affected.
The G-sensor judges whether the friction coefficient of road surface is low or high, and changes the EHCU’s operating system to ensure ABS control.

Normal and Anti-lock Braking

Under normal driving conditions, the Anti-lock Brake System functions the same as a standard power assisted brake system. However, with the detection of wheel lock-up, a slight bump or kick-back will be felt in the brake pedal. This pedal “bump” will be followed by a series of short pedal pulsations which occurs in rapid succession. The brake pedal pulsation will continue until there is no longer a need for the anti-lock function or until the vehicle is stopped. A slight ticking or popping noise may be heard during brake applications when the Anti-lock features is being used.
When the Anti-lock feature is being used, the brake pedal may rise even as the brakes are being applied. This is also normal. Maintaining a constant force on the pedal will provide the shortest stopping distance.

Brake Pedal Travel

Vehicles equipped with the Anti-lock Brake System may be stopped by applying normal force to the brake pedal. Although there is no need to push the pedal beyond the point where it stops or holds the vehicle, by applying more force the pedal will continue to travel toward the floor. This extra brake pedal travel is normal.

Acronyms and Abbreviations

Several acronyms and abbreviations are commonly used throughout this section:

ABS
Anti-lock Brake System

CKT
Circuit

DLC
Data Link Connector

EHCU
Electronic Hydraulic Control Unit

FL
Front Left

FR
Front Right

GEN
Generator

MV
Millivolts

RL
Rear Left

RR
Rear Right

RPS
Revolution per Second

VDC
Volts DC

VAC
Volts AC

W/L
Warning Light

WSS
Wheel Speed Sensor

General Diagnosis

General Information

ABS malfunction can be classified into two types, those which can be detected by the ABS warning light and those which can be detected as a vehicle abnormality by the driver.
In either case, locate the fault in accordance with the "BASIC DIAGNOSTIC FLOWCHART" and repair.
Please refer to Section 5C for the diagnosis of mechanical troubles such as brake noise, brake judder (brake pedal or vehicle vibration felt when braking), uneven braking, and parking brake trouble.

ABS Service Precautions

Required Tools and Items:

- Box Wrench
- Brake Fluid
- Special Tool

Some diagnosis procedures in this section require the installation of a special tool.

J-39200 High Impedance Multimeter

When circuit measurements are requested, use a circuit tester with high impedance.

Computer System Service Precautions

The Anti-lock Brake System interfaces directly with the Electronic Hydraulic Control Unit (EHCU) which is a control computer that is similar in some regards to the Powertrain Control Module. These modules are designed to withstand normal current draws associated with vehicle operation. However, care must be taken to avoid overloading any of the EHCU circuits. In testing for opens or shorts, do not ground or apply voltage to any of the circuits unless instructed to do so by the appropriate diagnostic procedure. These circuits should only be tested with a high impedance multimeter (J-39200) or special tools as described in this section. Power should never be removed or applied to any control module with the ignition in the "ON" position.
Before removing or connecting battery cables, fuses or connectors, always turn the ignition switch to the "OFF" position.

General Service Precautions

The following are general precautions which should be observed when servicing and diagnosing the Anti-lock Brake System and/or other vehicle systems. Failure to observe these precautions may result in Anti-lock Brake System damage.

- If welding work is to be performed on the vehicle using an electric arc welder, the EHCU and valve block connectors should be disconnected before the welding operation begins.
- The EHCU and valve block connectors should never be connected or disconnected with the ignition "ON" .
- EHCU of the Anti-lock Brake System are not separately serviceable and must be replaced as assemblies. Do not disassemble any component which is designated as non-serviceable in this Section.
- If only rear wheels are rotated using jacks or drum tester, the system will diagnose a speed sensor malfunction and the "ABS" warning light will illuminate. But actually no trouble exists. After inspection stop the engine once and re-start it, then make sure that the "ABS" warning light does not illuminate.

If the battery has been discharged

The engine may stall if the battery has been completely discharged and the engine is started via jumper cables. This is because the Anti-lock Brake System (ABS) requires a large quantity of electricity. In this case, wait until the battery is recharged, or set the ABS to a non-operative state by removing the fuse for the ABS (40A). After the battery has been recharged, stop the engine and install the ABS fuse. Start the engine again, and confirm that the ABS warning light does not light.

Note on Intermittents

As with virtually any electronic system, it is difficult to identify an intermittent failure. In such a case duplicating the system malfunction during a test drive or a good description of vehicle behavior from the customer may be helpful in locating a "most likely" failed component or circuit. The symptom diagnosis chart may also be useful in isolating the failure. Most intermittent problems are caused by faulty electrical connections or wiring. When an intermittent failure is encountered, check suspect circuits for:

- Suspected harness damage.
- Poor mating of connector halves or terminals not fully seated in the connector body (backed out).
- Improperly formed or damaged terminals.

Test Driving ABS Complaint Vehicles

In case that there has been an malfunction in the lighting pattern of “ABS” warning light, the fault can be located in accordance with the “DIAGNOSIS BY “ABS” WARNING LIGHT ILLUMINATION PATTERN” . In case of such trouble as can be detected by the driver as a vehicle symptom, however, it is necessary to give a test drive following the test procedure mentioned below, thereby reproducing the symptom for trouble diagnosis on a symptom basis:

1. Start the engine and make sure that the “ABS” W/L goes OFF. If the W/L remains ON, it means that the Diagnostic Trouble Code (DTC) is stored. Therefore, read the code and locate the fault.
2. Start the vehicle and accelerate to about 30 km/h (19 mph) or more.
3. Slowly brake and stop the vehicle completely.
4. Then restart the vehicle and accelerate to about 40 km/h (25 mph) or more.
5. Brake at a time so as to actuate the ABS and stop the vehicle.
6. Be cautious of abnormality during the test. If the W/L is actuated while driving, read the DTC and locate the fault.
7. If the abnormality is not reproduced by the test, make best efforts to reproduce the situation reported by the customer.
8. If the abnormality has been detected, repair in accordance with the “SYMPTOM DIAGNOSIS” .

NOTE:

- Be sure to give a test drive on a wide, even road with little traffic.
- If an abnormality is detected, be sure to suspend the test and start trouble diagnosis at once.

“ABS” Warning Light

When ABS trouble occurs and actuates when possible the “ABS” warning light, the trouble code corresponding to the trouble is stored in the EHCU. Only the ordinary brake system is available when the ABS is turned off. When the “ABS” warning light is actuated, if the starter switch is set ON after setting it OFF once, the EHCU checks up on the entire system and, if there is no abnormality, judges ABS to work currently and the warning light works normally even though the trouble code is stored.

NOTE: Illumination of the “ABS” warning light indicates that anti-lock braking is no longer available. Power assisted braking without anti-lock control is still available.

Normal Operation

“ABS” Warning Light

When the ignition is first moved from “OFF” to “RUN” , the amber “ABS” warning light will turn “ON” . The “ABS” warning light will turn “ON” during engine starting and will usually stay “ON” for approximately three seconds after the ignition switch is returned to the “ON” position. The warning light should remain “OFF” at all other times.

Basic Diagnostic Flow Chart

Step	Action	Yes	No
1	1. Customer complaint. 2. Questioning to customer. 3. Basic inspection (Refer to “Basic inspection procedure”) Using TECH 2?	Go to Step 2	Go to Step 4
2	Make sure of DTC by mode “F0: Diagnostic Trouble Codes”. Is EHCU including DTC?	Go to Step 3	Go to Step 5
3	1. Repair of faulty part. 2. Elimination of DTC. 3. Inspection of “ABS” W/L Illumination pattern with ignition SW “ON”. 4. Test drive. Does repeat trouble?	Repeat the diagnosis it the symptom or DTC appears again Go to Step 1	Go to Step 5
4	Check if the DTC is stored. Is EHCU including DTC?	Go to Step 3	Trouble diagnosis based on symptom (Refer to “SYMPTOM DIAGNOSIS”) Go to Step 3
5	1. Reconnect all components and ensure all component are properly mounted. 2. Clear diagnostic trouble code. Was this step finished?	Finished	Go to Step 5

Basic Inspection Procedure

1. Basic Inspection of System Brake

Step	Action	Yes	No
1	Is the fluid level normal?	Go to Step 2	Replenish with fluid. Go to Step 2
2	Does fluid leak?	Repair. Go to Step 3	Go to Step 3
3	Is the booster functioning normal?	Go to Step 4	Repair. Go to Step 4
4	Is the pad and rotor normal?	Go to Step 5	Repair. Go to Step 5
5	Reconnect all components and ensure all component are properly mounted. Was this step finished?	Finished	Go to Step 5

2. Inspection of Front Axle Switch

Step	Action	Yes	No
1	Turn the key switch on and shift the T/F to 4WD position. Does the 4WD light come on?	Go to Step 2	Repair. Go to Step 2
2	Reconnect all components and ensure all components are properly mounted. Was this step finished?	Finished	Go to Step 2

3. Ground Inspection

Step	Action	Yes	No
1	Are ABS—related ground points ok?	Go to Step 2	Repair. Go to Step 2
2	Reconnect all components and ensure all components are properly mounted. Was this step finished?	Finished	Go to Step 2

Tech 2 Scan Tool

From 98 MY, Isuzu dealer service departments are recommended to use Tech 2. Please refer to Tech 2 scan tool user guide.

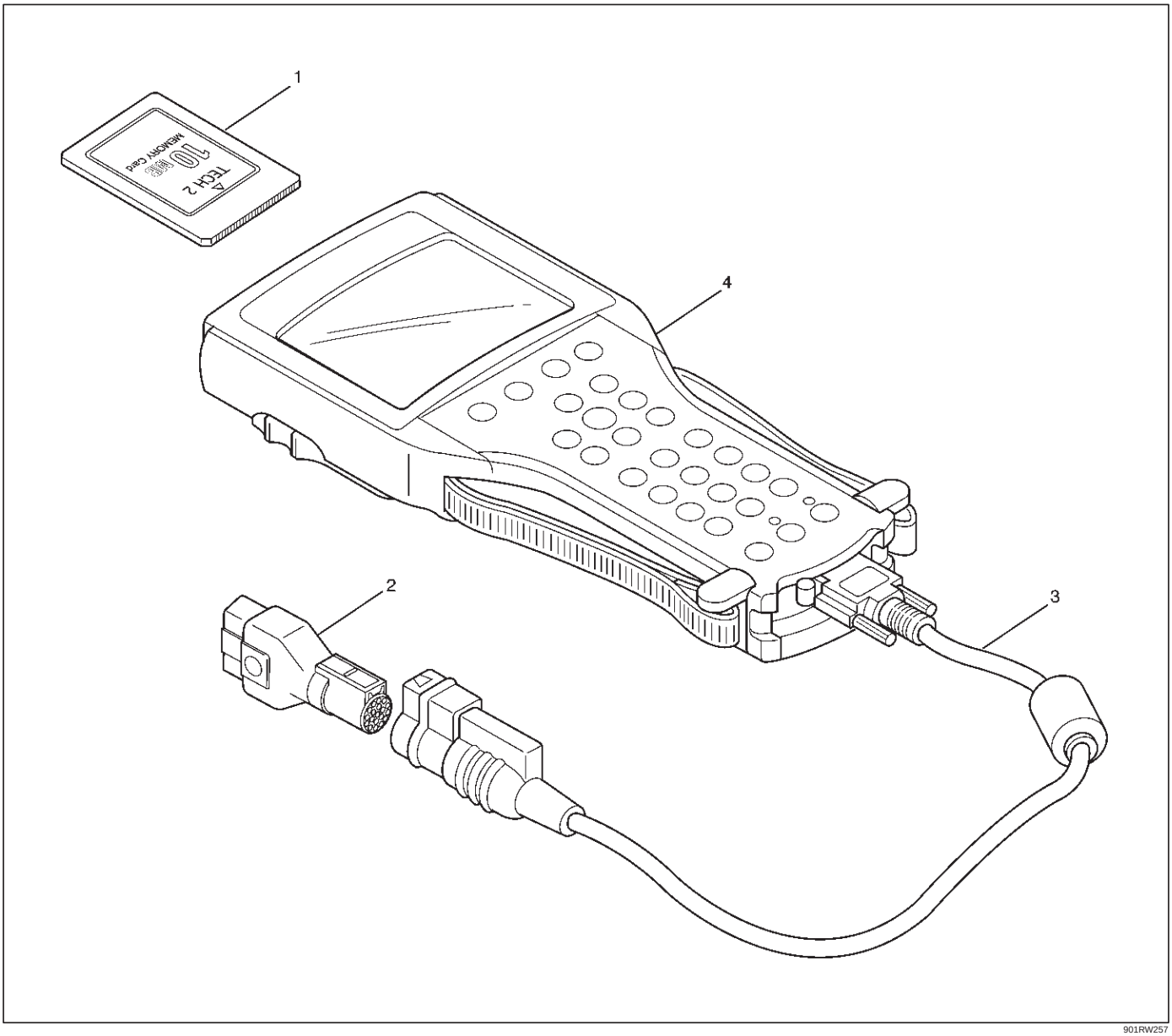

901RW257

Legend

(1) PCMCIA Card
(2) SAE 16/19 Adaptor
(3) DLC Cable
(4) Tech–2

Getting Started

- Before operating the Isuzu PCMCIA card with the Tech 2, the following steps must be performed:

1. The Isuzu 98 System PCMCIA card (1) inserts into the Tech 2 (4).
2. Connect the SAE 16/19 adapter (2) to the DLC cable (3).
3. Connect the DLC cable to the Tech 2 (4).
4. Make sure the vehicle ignition is off.
5. Connect the Tech 2 SAE 16/19 adapter to the vehicle DLC connector.

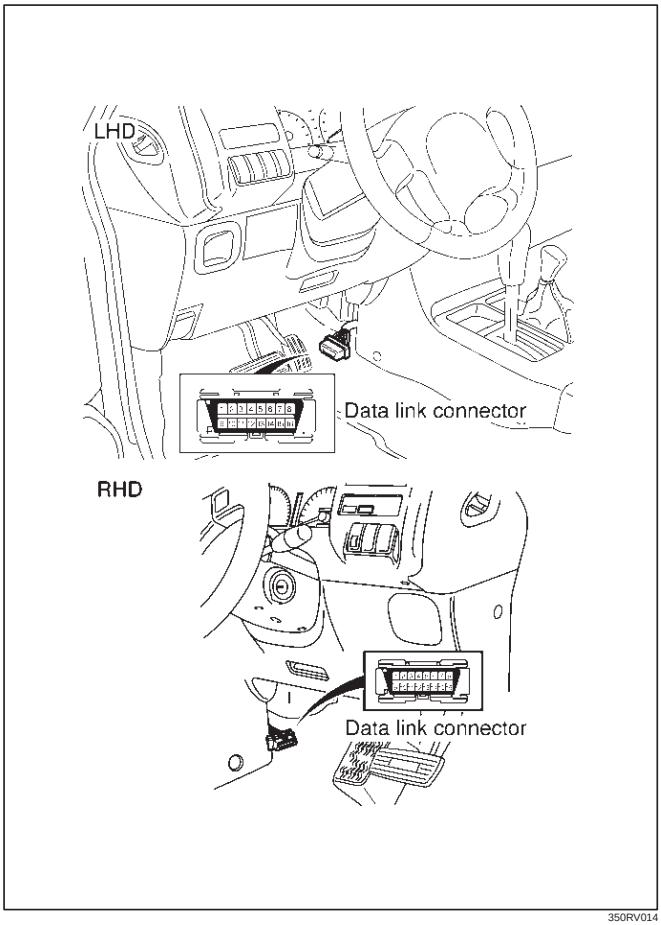

350RV014

6. The vehicle ignition turns on.
7. Power up the Tech 2.
8. Verify the Tech 2 power up display.

060RW009

Operating Procedure

The power up screen is displayed when you power up the tester with the Isuzu systems PCMCIA card. Follow the operating procedure below.

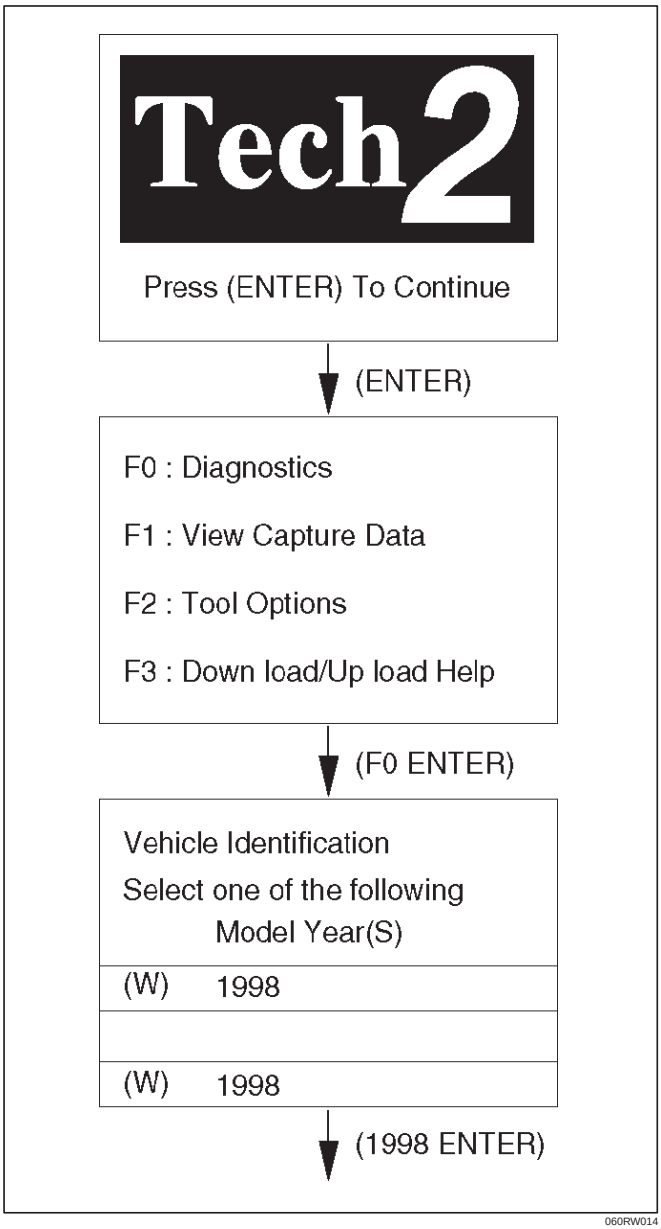

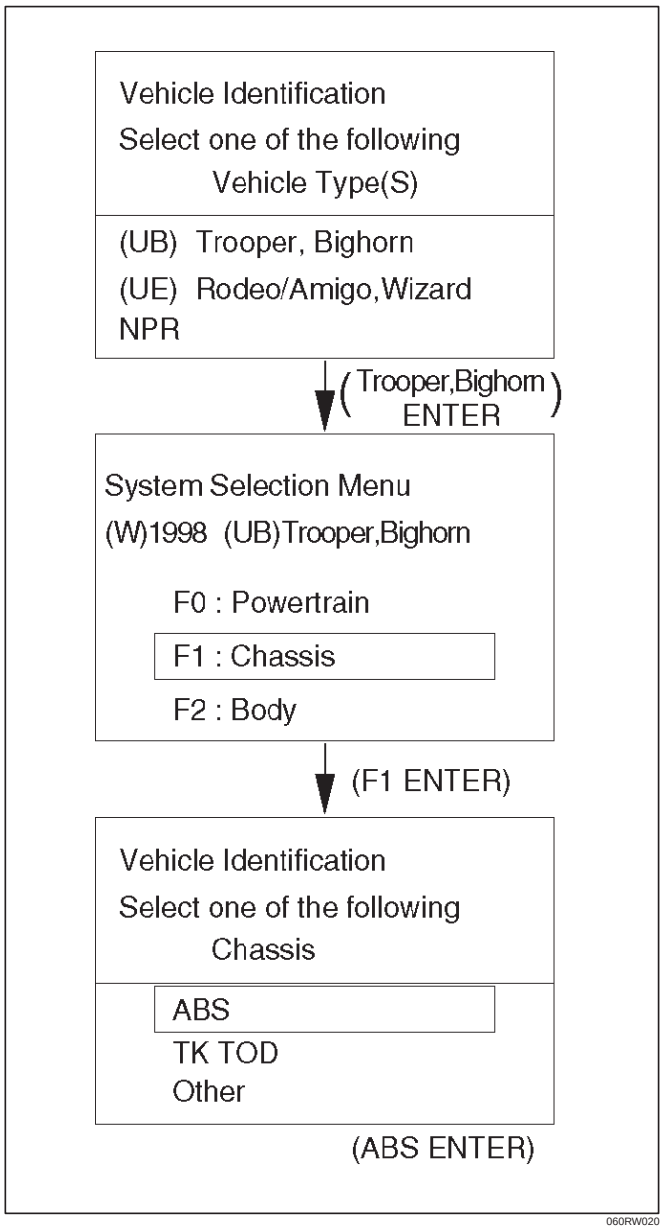

Data List

Display	Content	OK/NG Criteria for Data
Battery Voltage	Voltage	● Between 10-16.9V
Brake Light Switch	Open/Close	● Open(0V) when pedal is released
		● Closed(12V) when pedal is depressed.
Front Left Wheel Speed Front Right Wheel Speed Rear Left Wheel Speed Rear Right Wheel Speed	MPH(km/h)	● Start the vehicle and make sure of linear change in each wheel speed. ● Turn each wheel by hand and make sure that each speed data change.
Wheel Sensor Status	OK/NG	● To be OK usually
G-sensor	Low/High	● To be Low usually
Transfer Monitor(TOD)	2 Wheel Drive 4 Wheel Drive	● When 2WD: 2 Wheel Drive ● When 4WD: 4 Wheel Drive
Off-Road Switch (Transmission Input)	Active/Inactive	● When shift lever position is 1, 2 and R: Active (M/T)
		● When shift lever position is L and R: Active (A/T)
Valve Relay	Active/Inactive	● To be Active usually
ABS State	ON/OFF	● To be OFF usually
ABS Relay	Active/Inactive	● To be Active usually
Return Pump Relay	Active/Inactive	● To be Inactive usually
Front Left Isolation Valve	Active/Inactive	● To be Inactive usually
Front Left Dump Valve		
Front Right Isolation Valve		
Front Right Dump Valve		
Rear Isolation Valve		
Rear Dump Valve		
ABS Warning Lamp	ON/OFF	● To be ON usually (while engine stopped)

EHCU Connector Pin-out Checks

- Disconnect Electronic Brake Control Module.
- Perform checks with high impedance digital multimeter (5-8840-0366-0) or equivalent.

No.	Circuit to be Tested	Ignition Switch Position	Multimeter Scale/Range	Measure between Pin Number	Nominal Value	Note
1	Ignition enable	OFF	20DCV	8 (+), 15 (–)	0V to 0.1V	
		ON	20DCV	8 (+), 15 (–)	11.5V to 14.5V	
2	Stop light switch	OFF	20DCV	10, 15	10.5V to 14.5V	Press brake pedal
3	Ground connection	OFF	200Ω	12, Ground 15, Ground	Less than 2Ω	
4	FL speed sensor	OFF	2kΩ	20, 21	1.3k to 1.9kΩ	Internal Resistance
		OFF	200kΩ	20, 15	more than 100kΩ	Insulation Resistance
		OFF	200mACV	20, 21	more than 200mV	Turn wheel at 1RPS
5	FR speed sensor	OFF	2kΩ	4, 5	1.3k to 1.9kΩ	Internal Resistance
		OFF	200kΩ	4, 15	more than 100kΩ	Insulation Resistance
		OFF	200mACV	4, 5	more than 200mV	Turn wheel at 1RPS
6	RL speed sensor	OFF	2kΩ	22, 23	1.3k to 1.9kΩ	Insulation Resistance
		OFF	200kΩ	22, 15	more than 100kΩ	Internal Resistance
		OFF	200mACV	22, 23	more than 200mV	Turn wheel at 1RPS
7	RR speed sensor	OFF	2kΩ	2, 3	1.3k to 1.9kΩ	Internal Resistance
		OFF	200kΩ	2, 15	more than 100kΩ	Insulation Resistance
		OFF	200mACV	2, 3	more than 200mV	Turn wheel at 1RPS
8	G-sensor	ON		26,8	1k to 2kΩ	Horizontal vehicle
9	Transmission Input	ON	20DCV	6 (+), 15 (–)	Less than 6V (Shift lever position – L, R) 6.6 to 9.0V (other shift position)	A/T Battery voltage 12V
					More than 9.6V (Shift lever position – 1, 2, R) 6.6 to 9.0V (other shift position)	M/T Battery voltage 12V

Circuit Diagram (LHD model / 6VD1 and 4JG2)

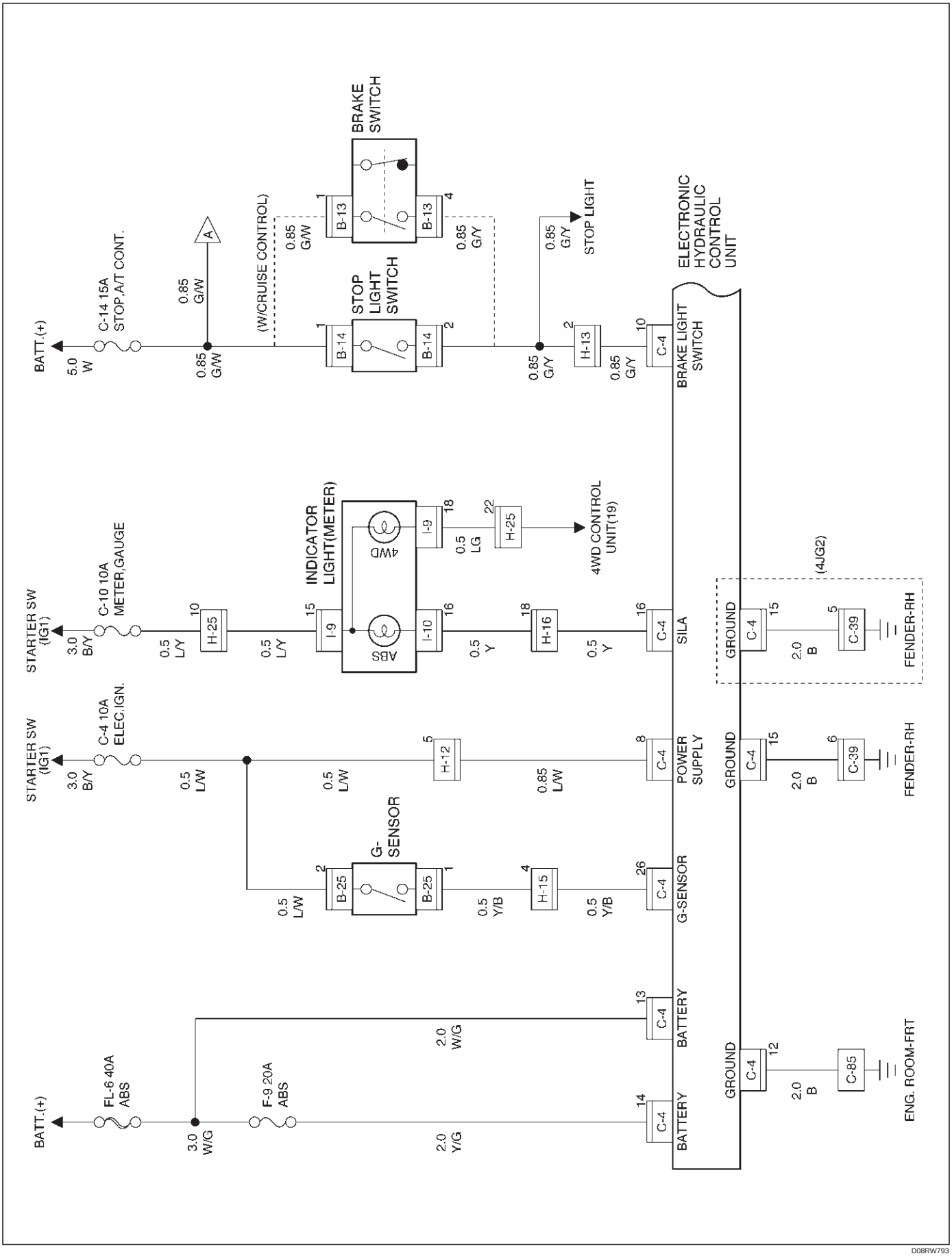

D08RW793

Circuit Diagram (LHD model / 4JG2)

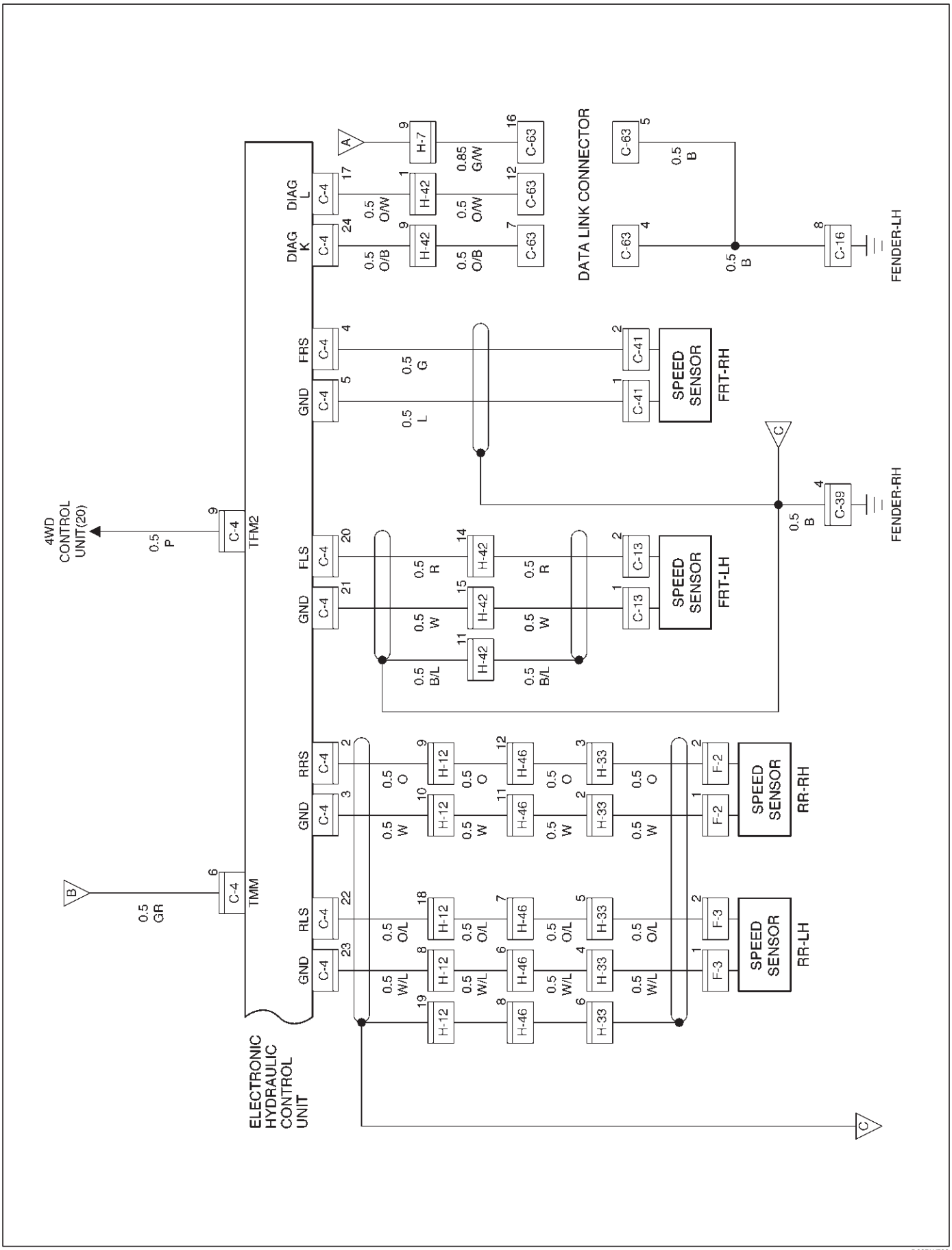

D08RW792

Circuit Diagram (LHD model / 4JG2)

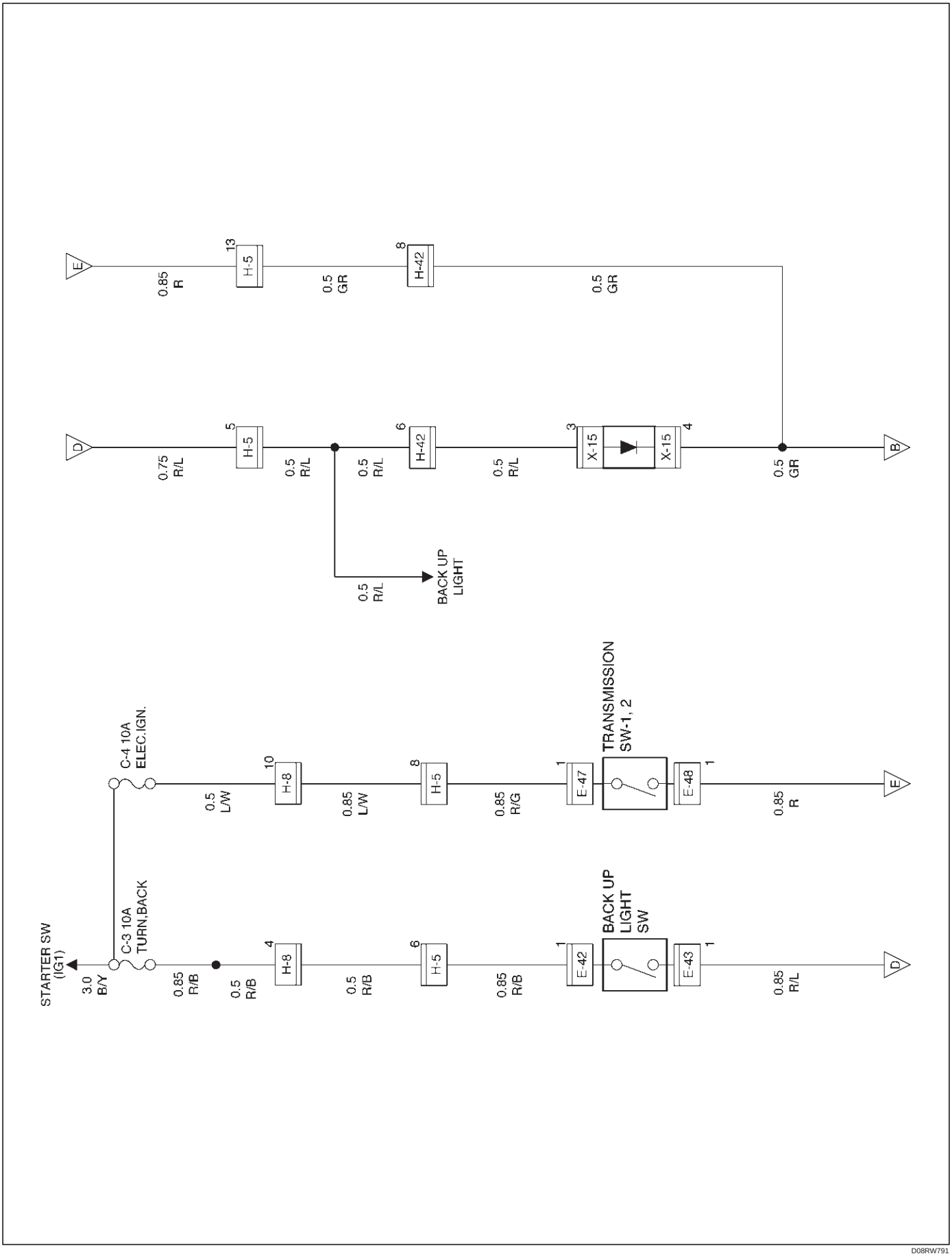

D08RW791

Circuit Diagram (LHD model / 6VD1)

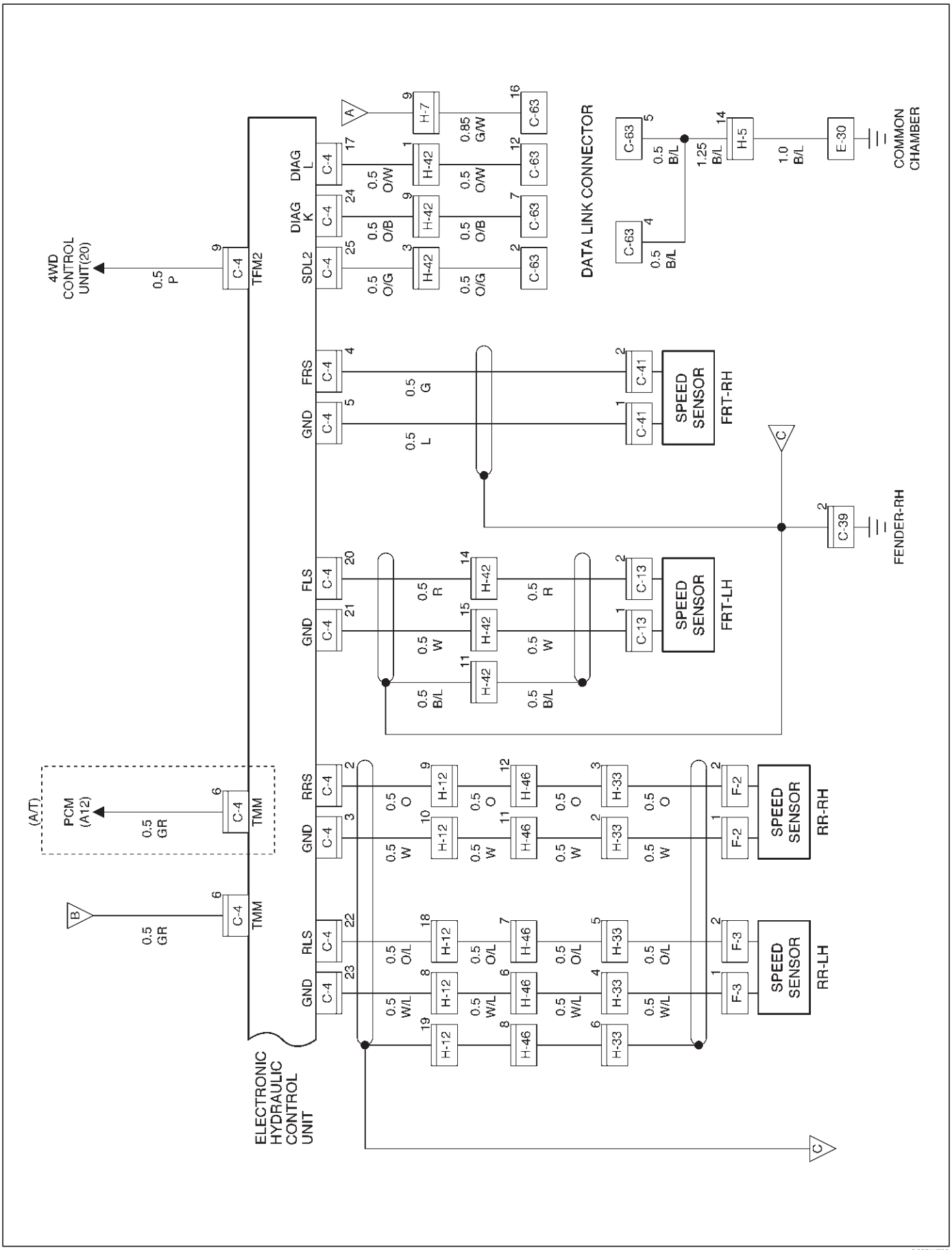

D08RW790

Circuit Diagram (LHD model / 6VD1)

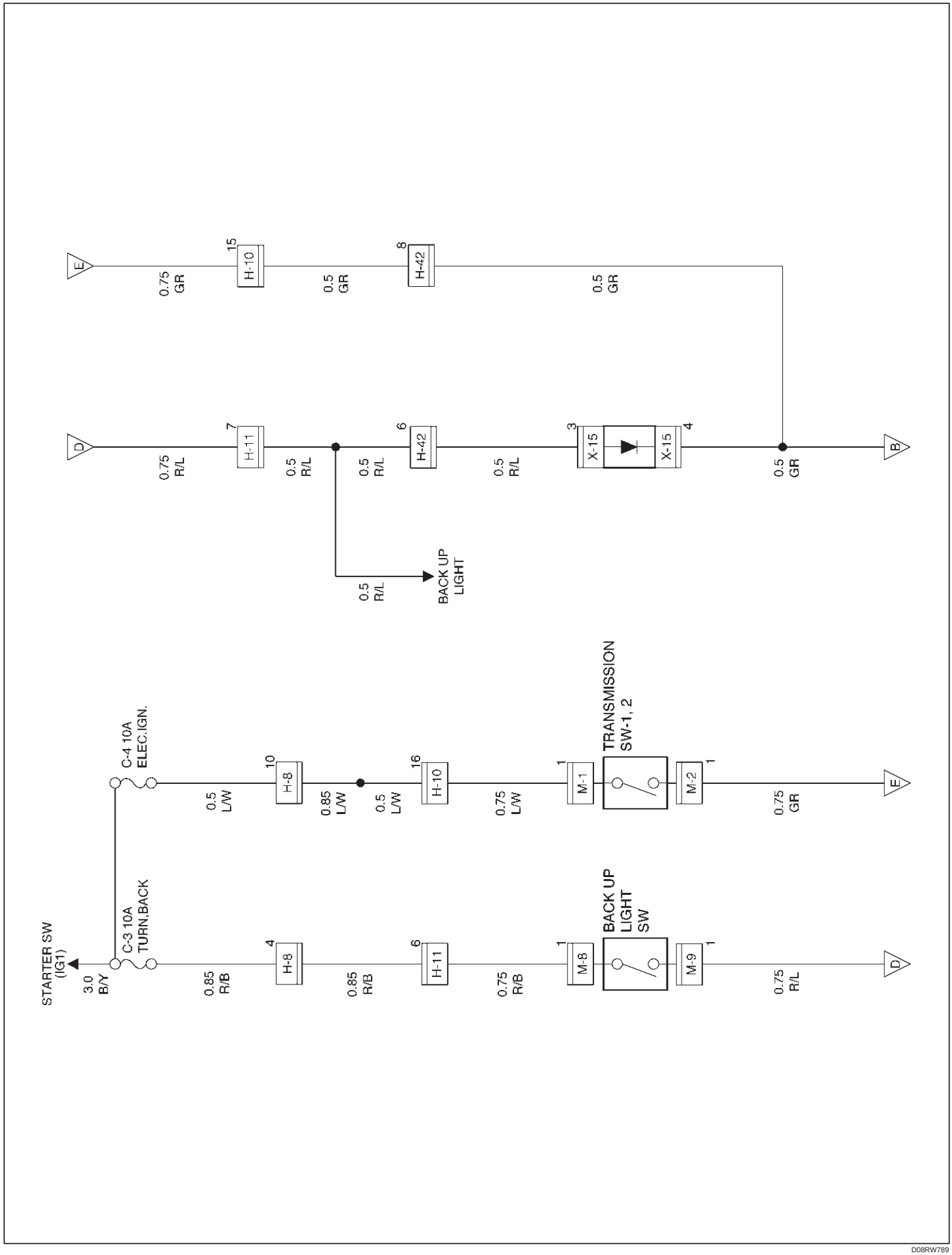

D08RW789

Connector List (LHD model)

No.	Connector face	No.	Connector face
B-13		C-85	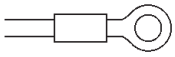
B-14		E-30	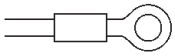
B-25		E-42	
C-4	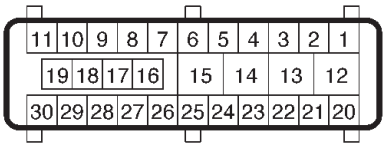	E-43	
C-13	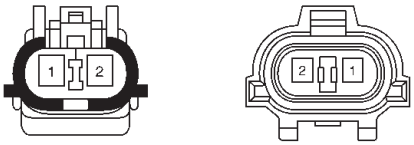	E-47	
C-16		E-48	
C-39		F-2	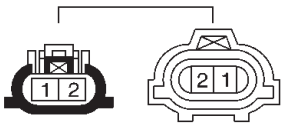
C-41	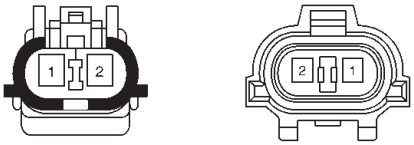	F-3	
C-63	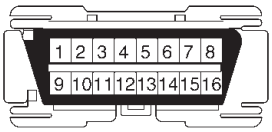	H-5	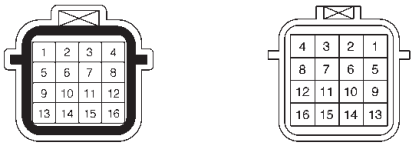

No.	Connector face	No.	Connector face
H-7	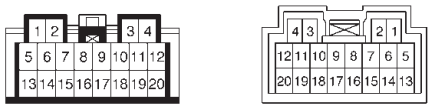	H-33	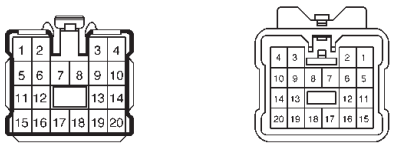
H-8	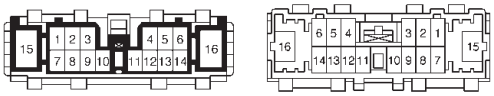	H-42	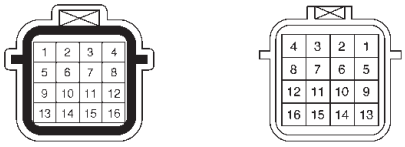
H-10	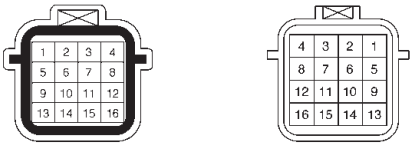	H-46	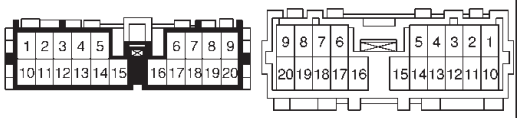
H-11	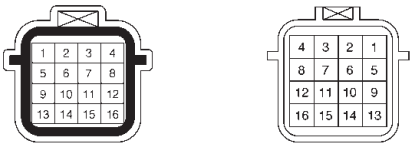	I-9	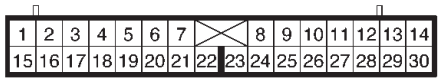
H-12	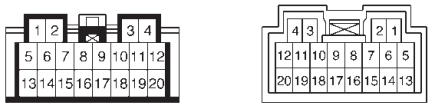	I-10	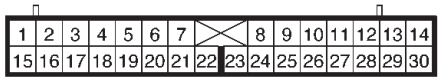
H-13		M-1	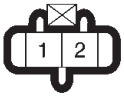
H-15	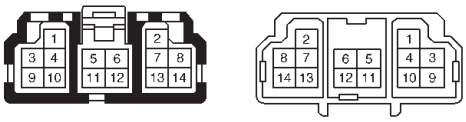	M-8	
H-16	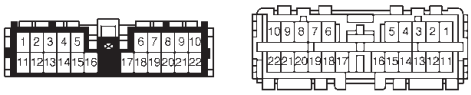		
H-25	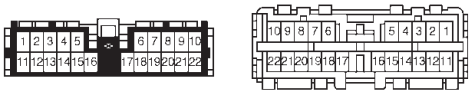		

Part Location (LHD model)

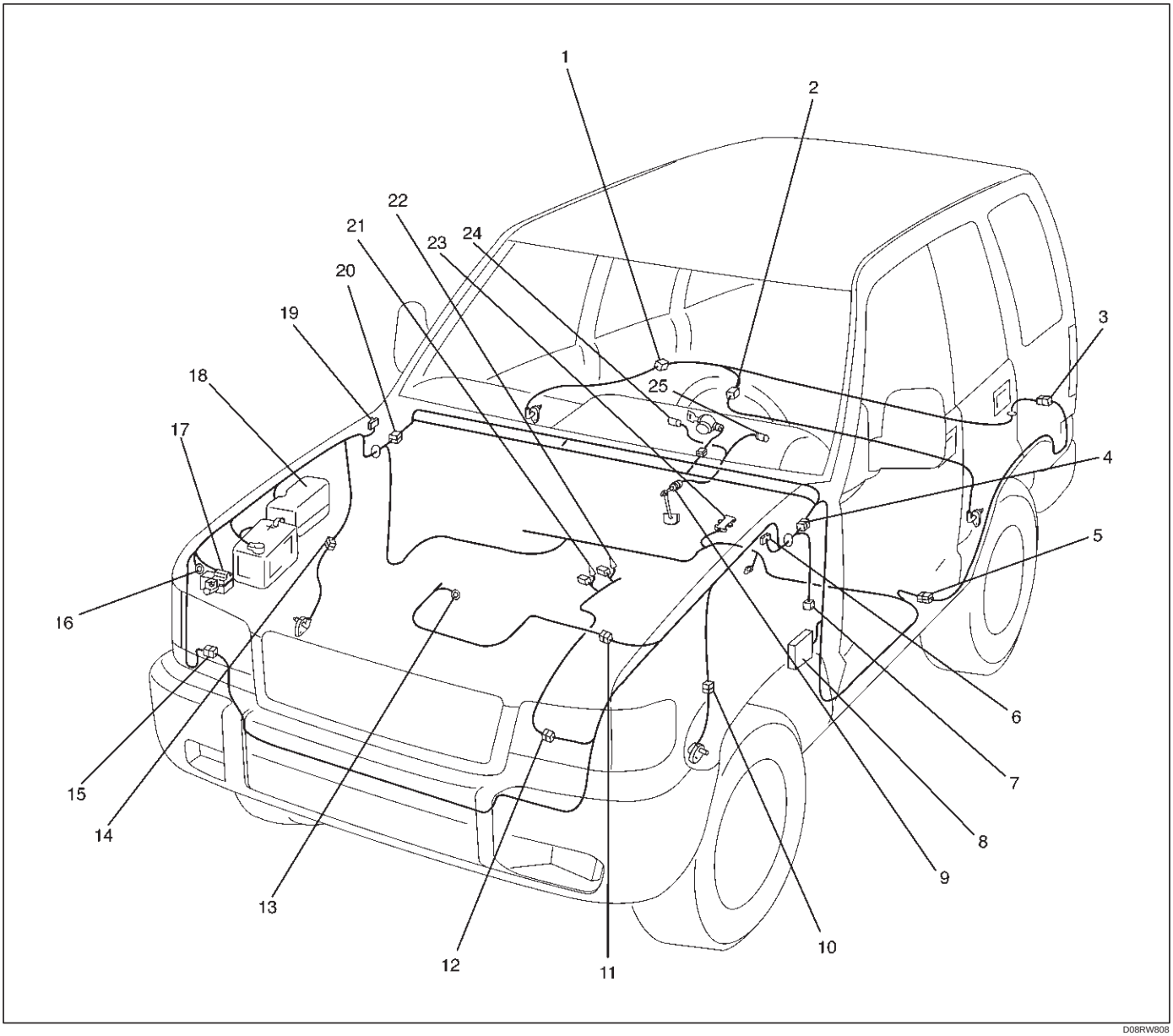

D08RW808

Legend

(1) F–2
(2) F–3
(3) H–33
(4) H–7, H–8, H–25
(5) H–46
(6) C–16
(7) C–63
(8) Fuse Box
(9) B–13 or B–14
(10) C–13
(11) H–5
(12) H–10, H–11
(13) E–30
(14) C–41
(15) H–42
(16) C–85
(17) C–4 (EHCU)
(18) Relay & Fuse Box
(19) C–39
(20) H–12, H–13, H–15, H–16
(21) E–47, E–48, M–1
(22) E–42, E–43, M–8
(23) B–25
(24) I–10
(25) I–9

Circuit Diagram (RHD model / 6VD1 and 4JG2)

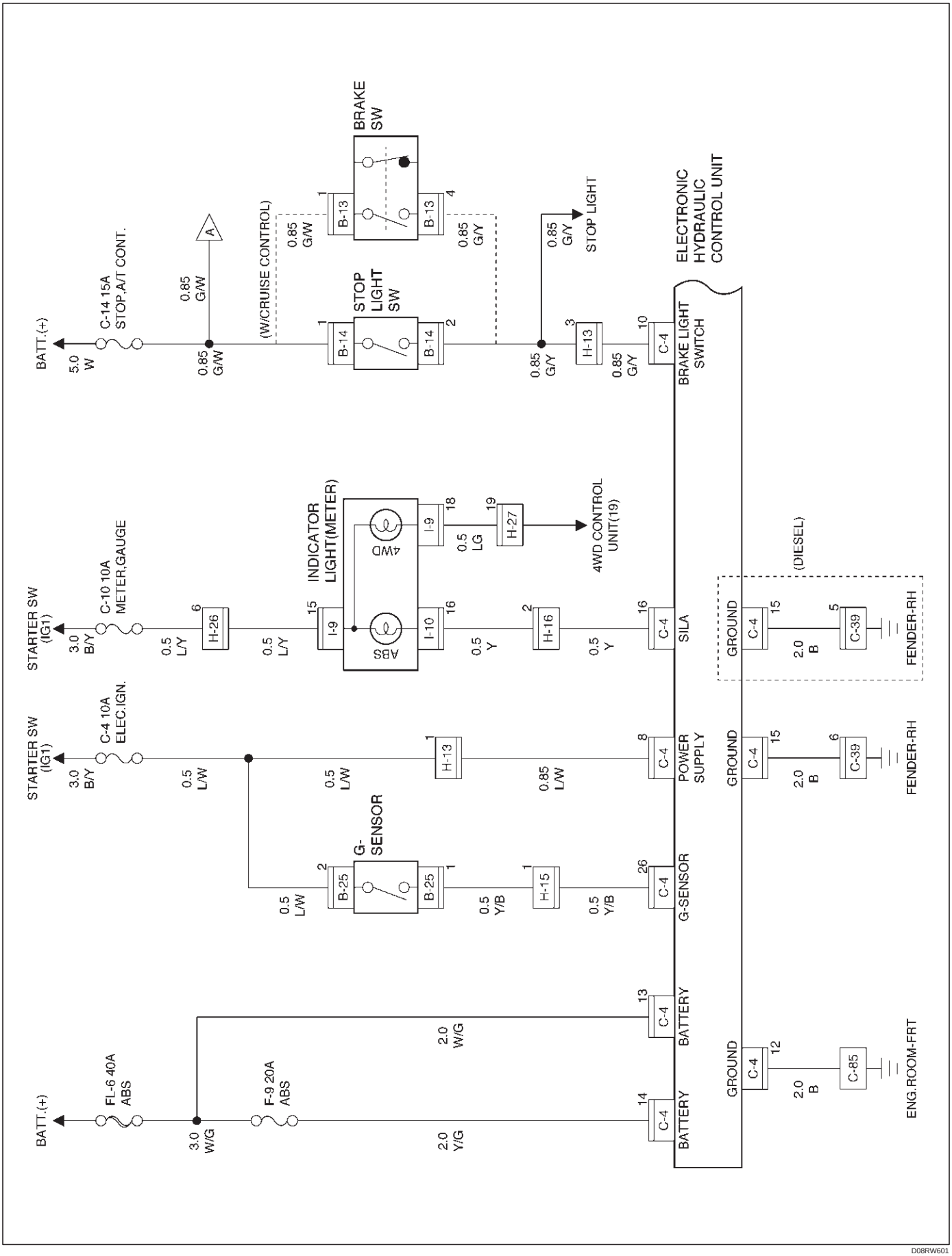

D08RW601

Circuit Diagram (RHD model / 4JG2)

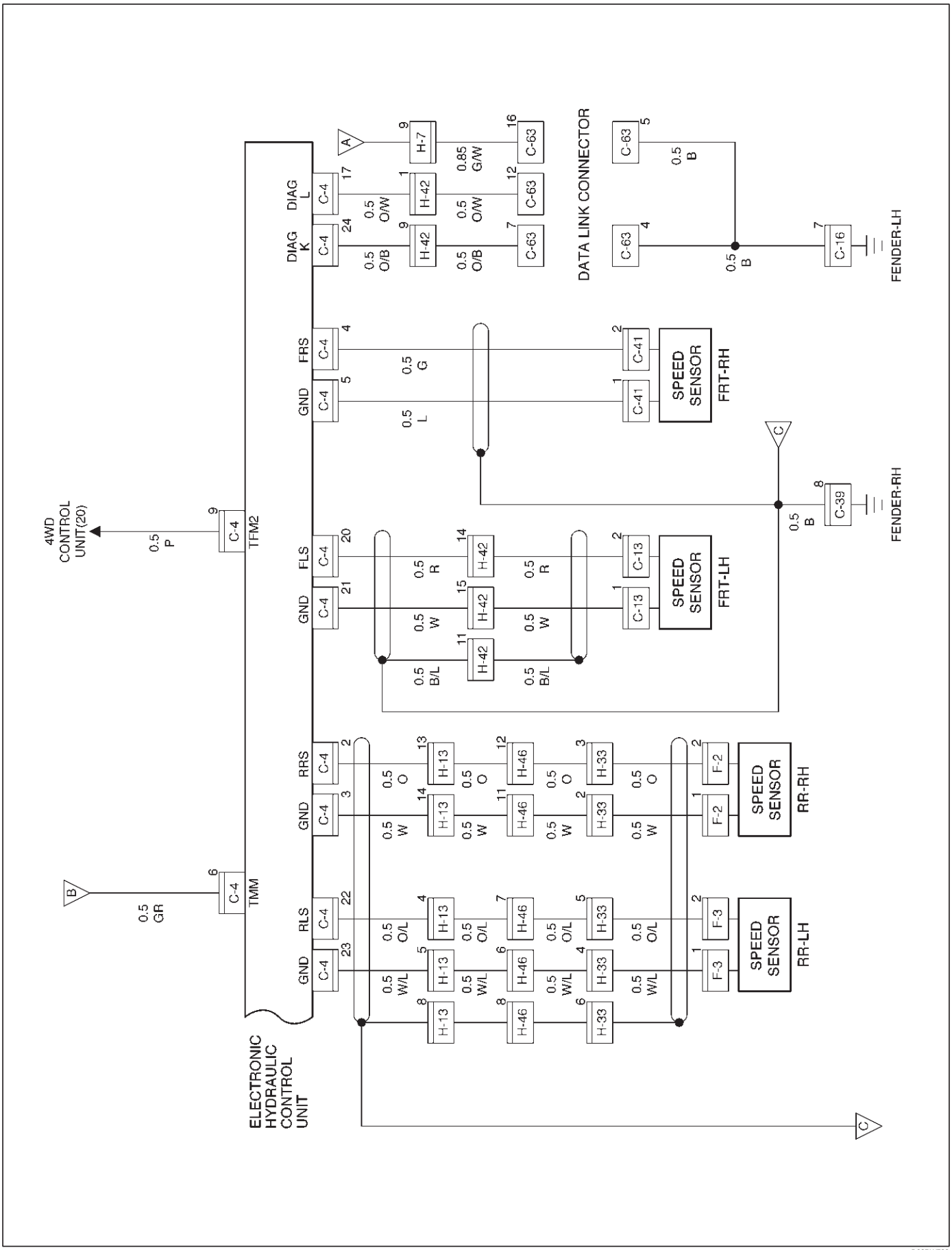

D08RW788

Circuit Diagram (RHD model / 4JG2)

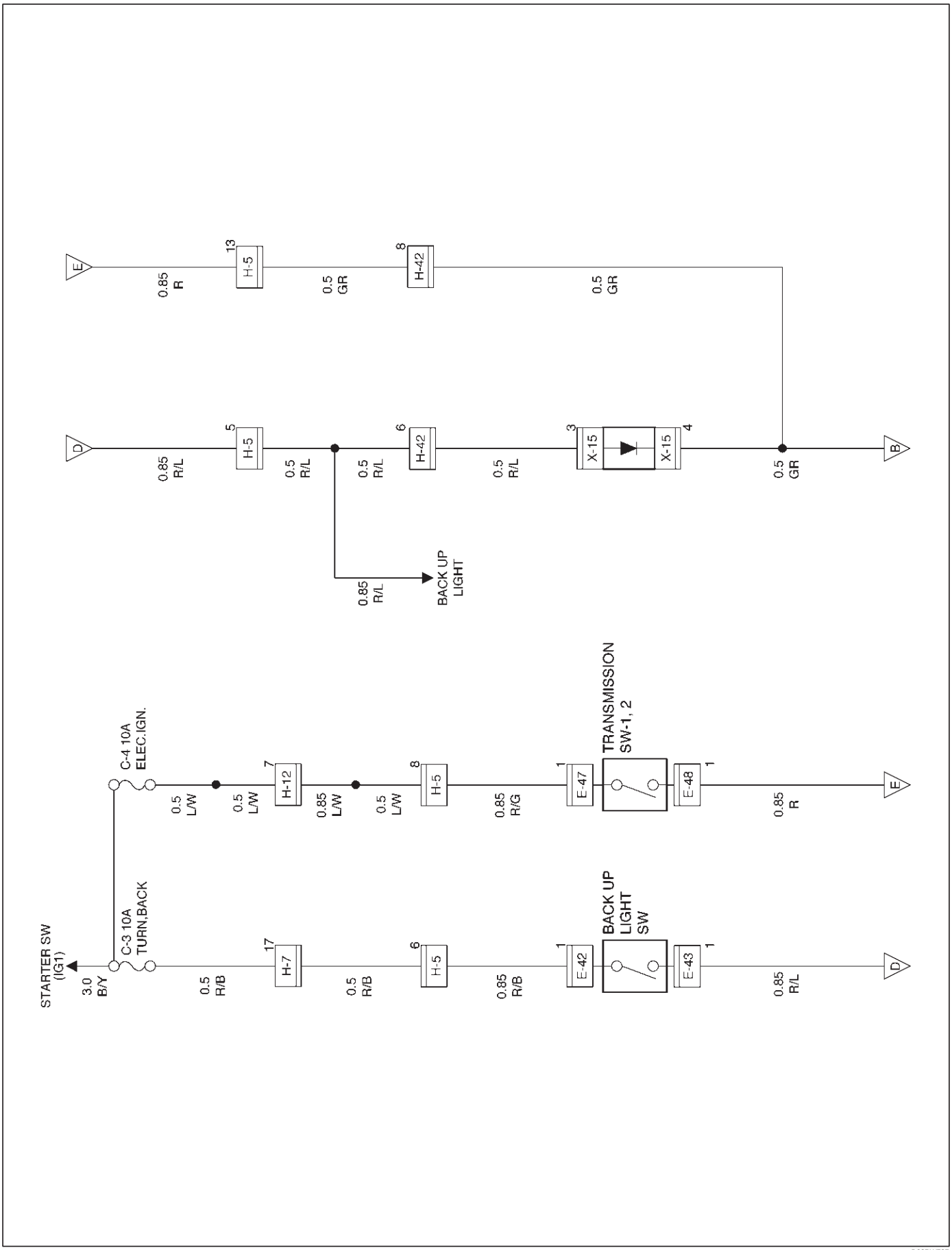

D08RW787

Circuit Diagram (RHD model / 6VD1)

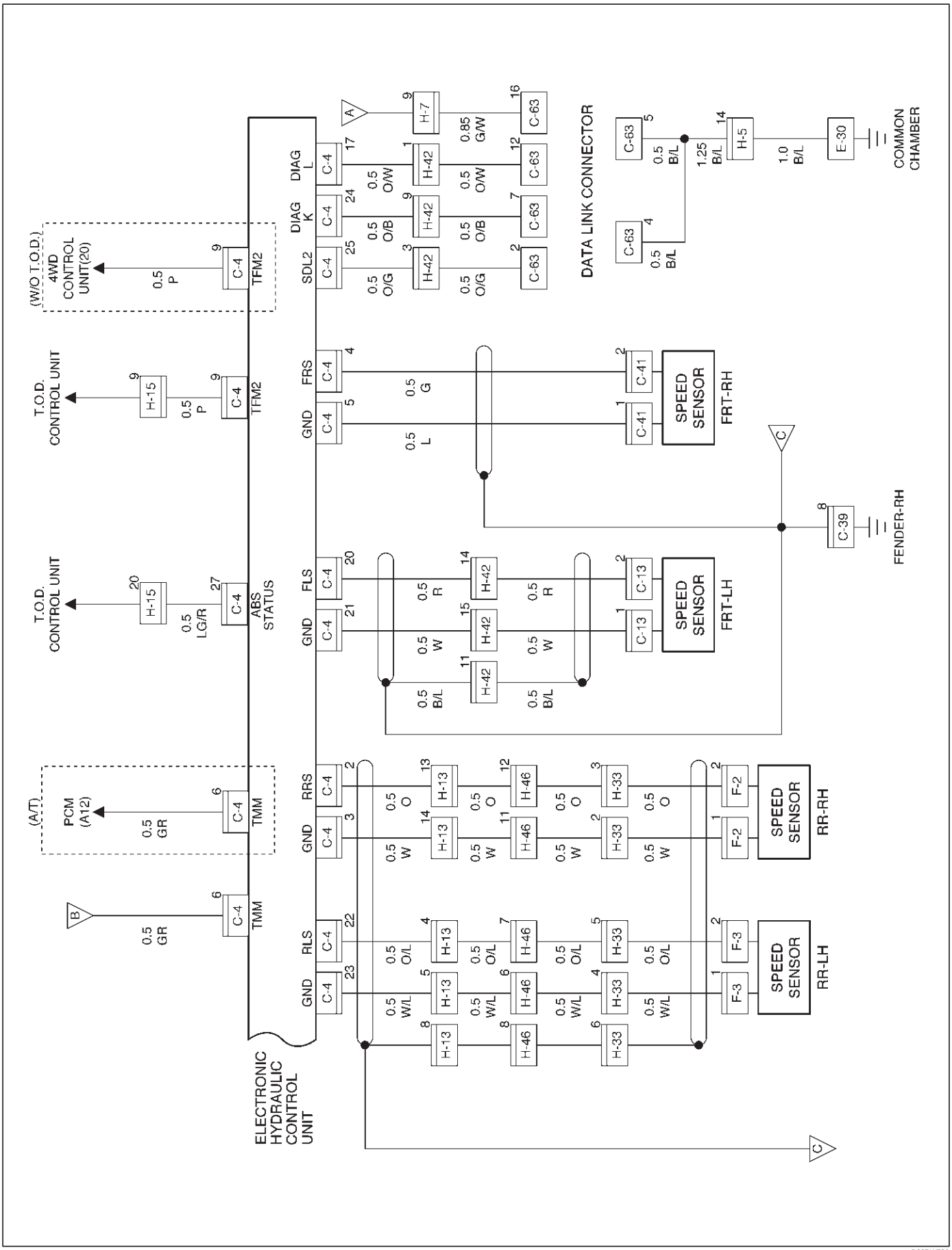

D08RW786

Circuit Diagram (RHD model / 6VD1)

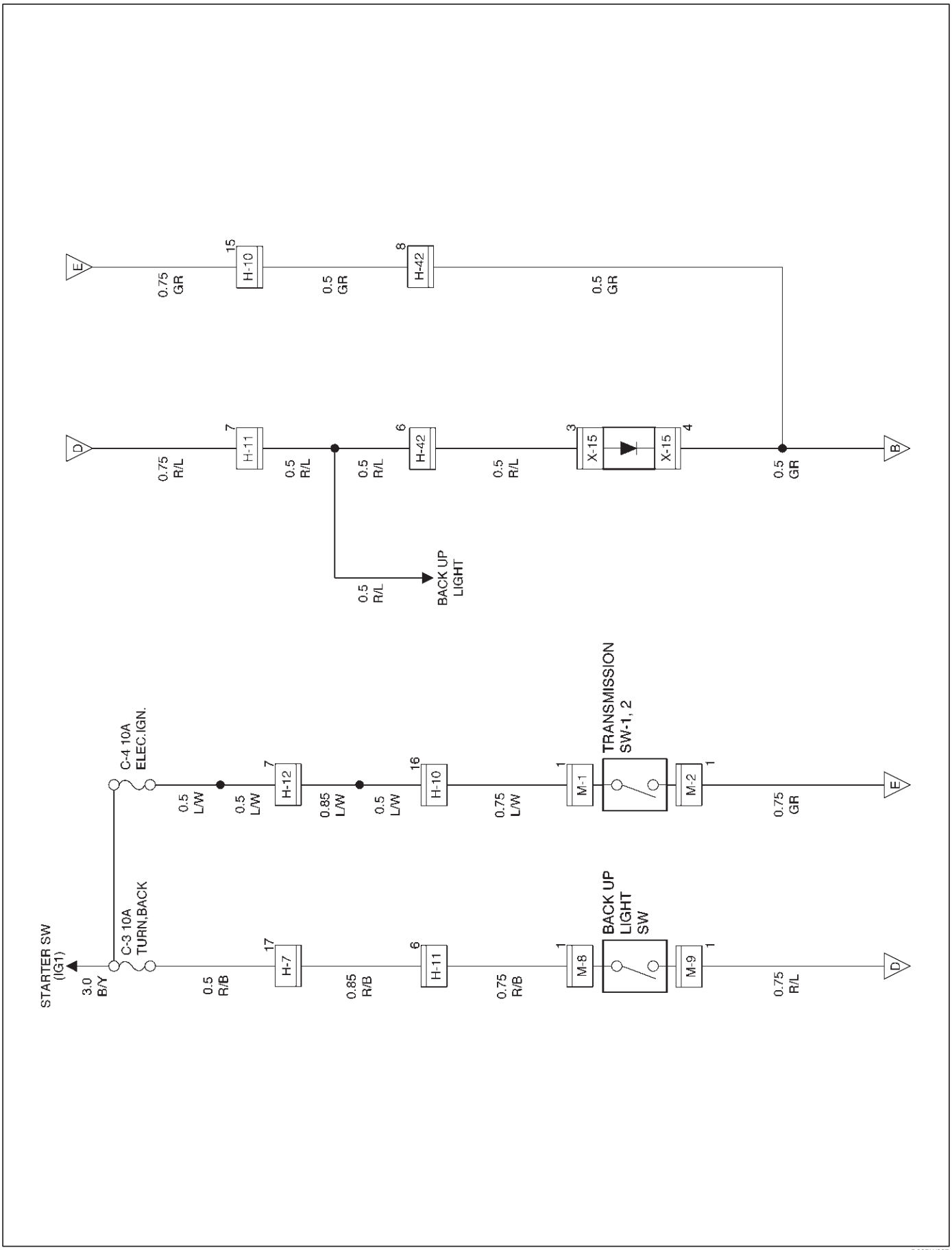

D08RW827

Circuit Diagram (RHD model / 6VE1 and 4JX1)

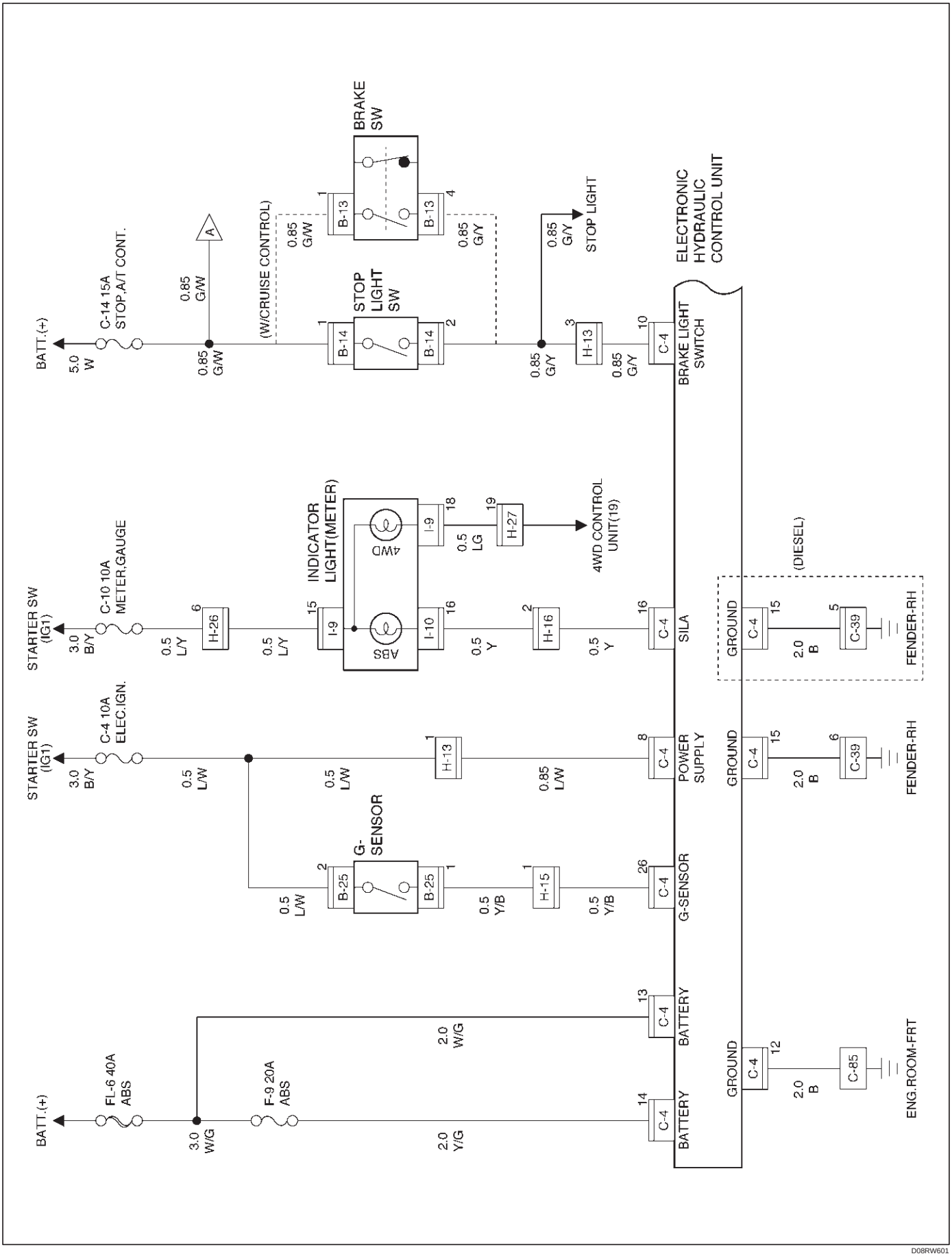

D08RW601

Circuit Diagram (RHD model / 4JX1)

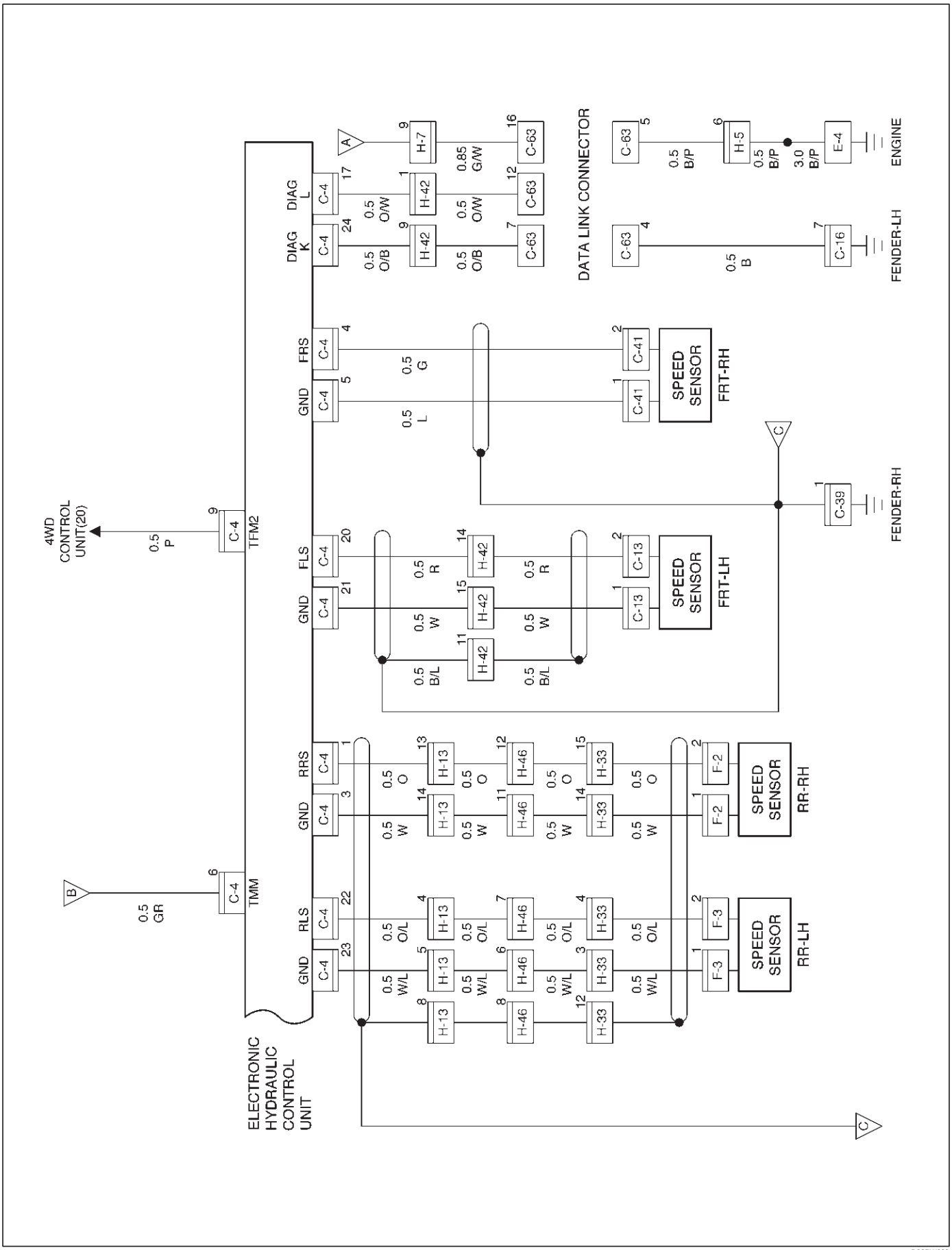

D08RW600

Circuit Diagram (RHD model / 4JX1)

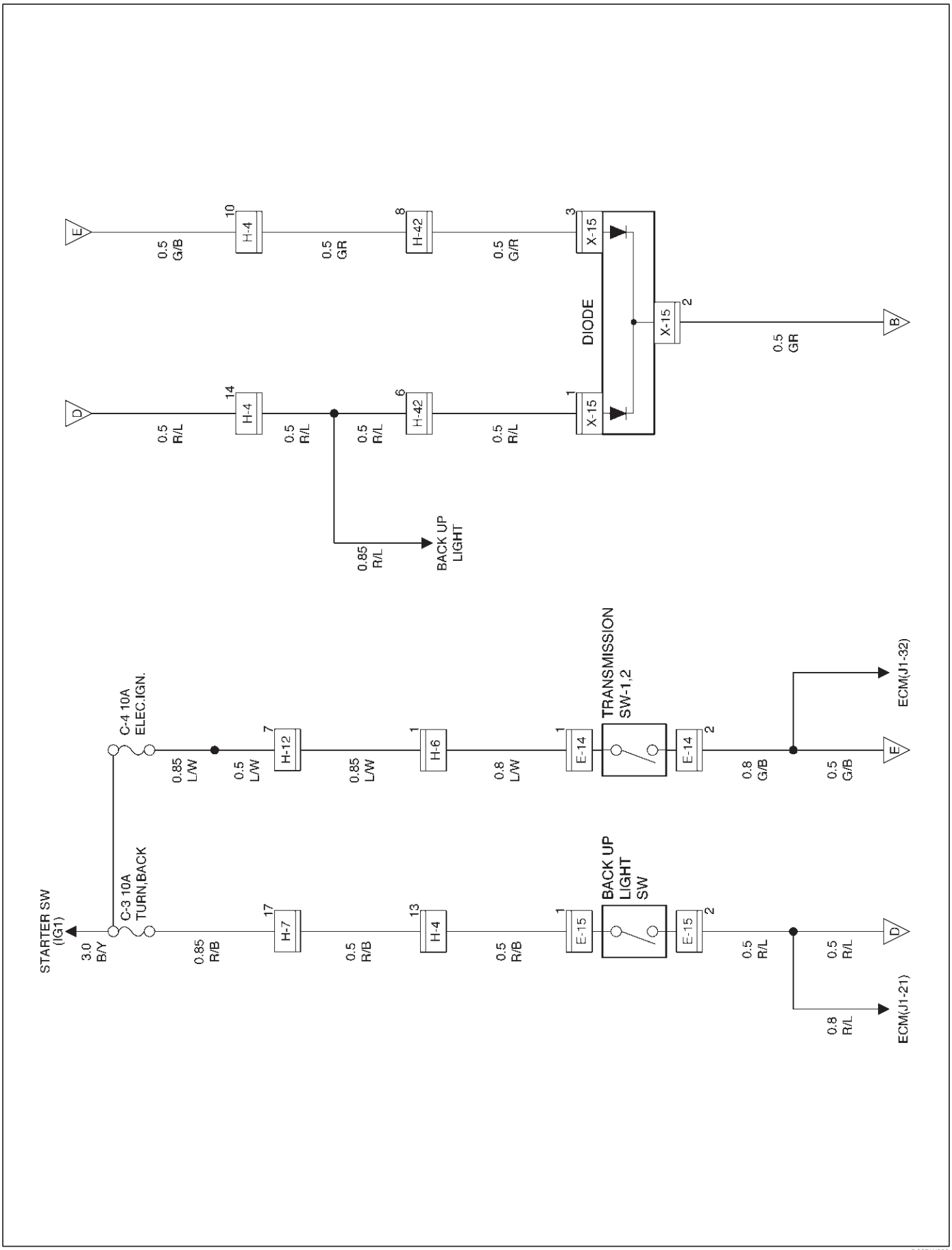

D08RW602

Circuit Diagram (RHD model / 6VE1)

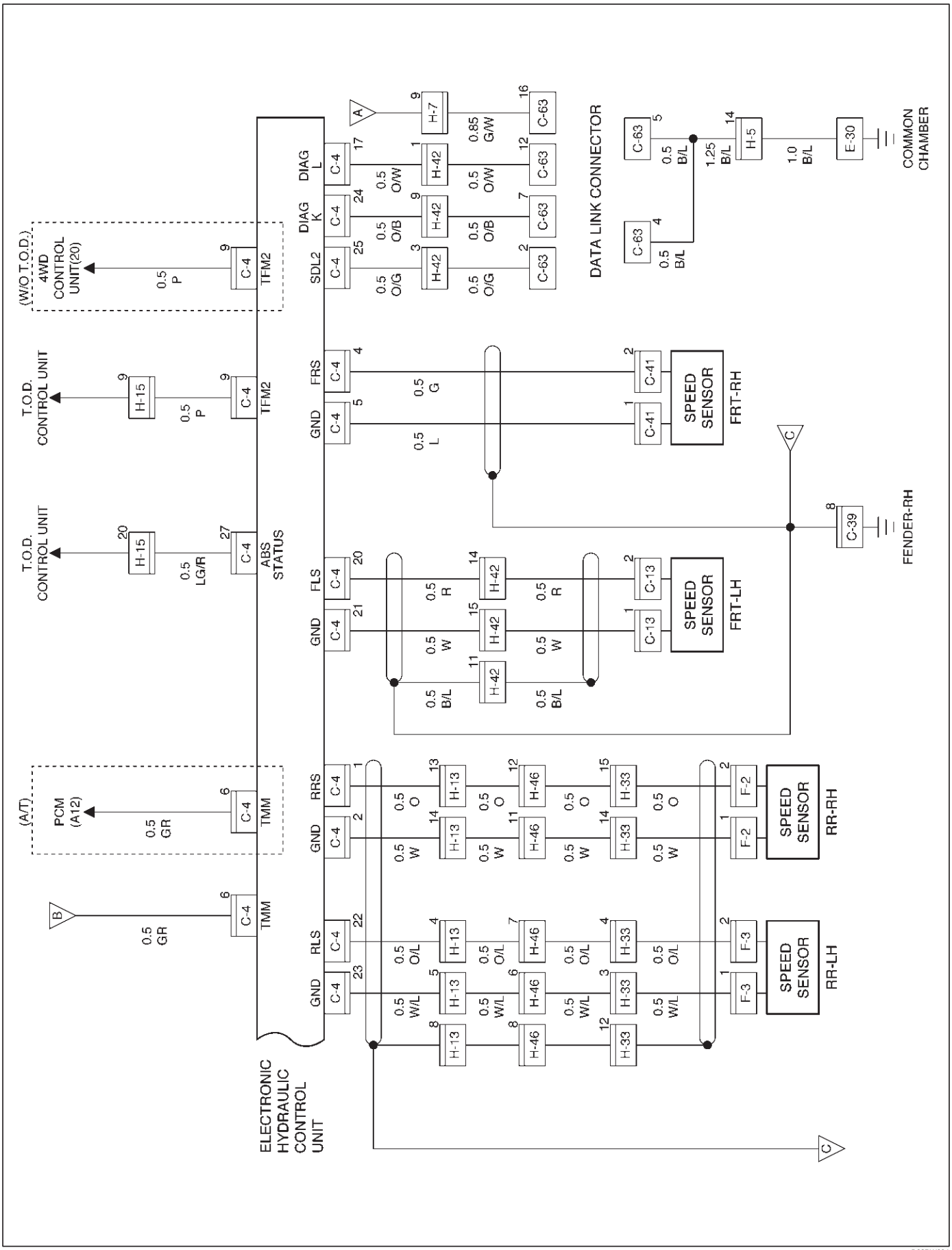

D08RW604

Circuit Diagram (RHD model / 6VE1)

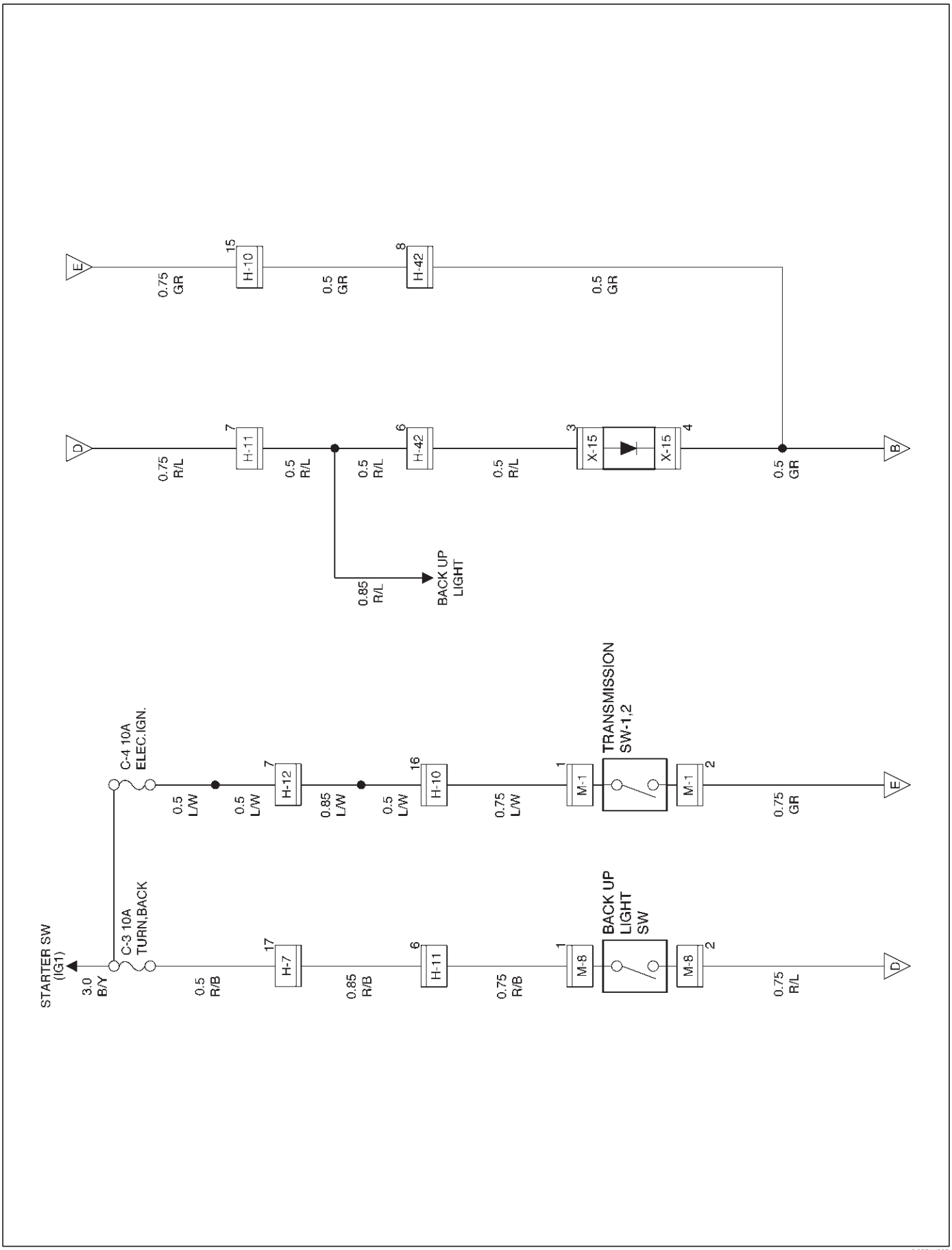

D08RW603

Connector List (RHD model)

No.	Connector face	No.	Connector face
B-13		C-85	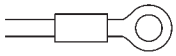
B-14		E-4	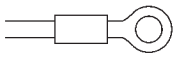
B-25		E-14	
C-4	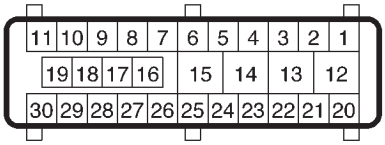	E-15	
C-13	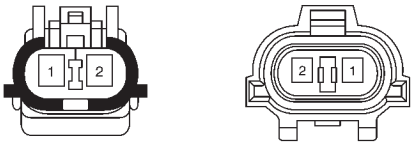	E-30	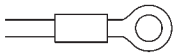
C-16		E-42	
C-39		E-43	
C-41	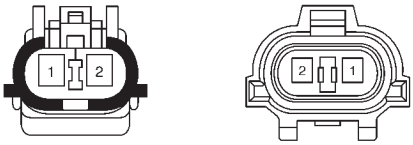	E-47	
C-63	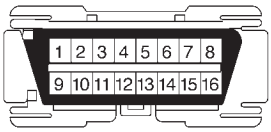	E-48	

No.	Connector face	No.	Connector face
F-2	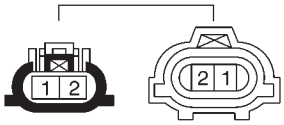	H-13	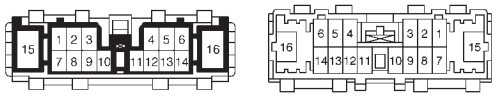
F-3		H-15	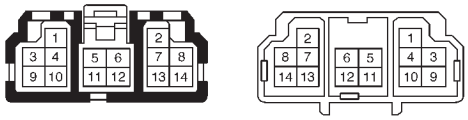
H-4	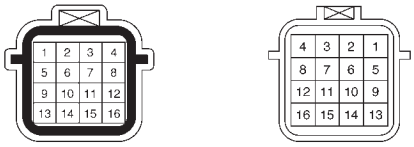	H-16	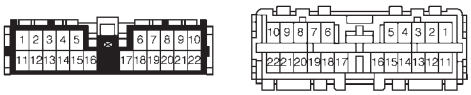
H-5	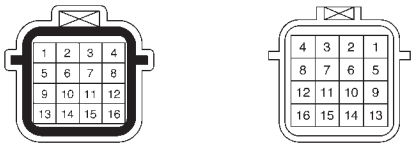	H-26	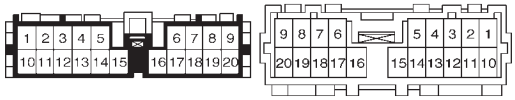
H-6	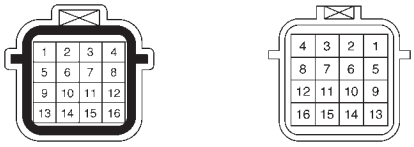	H-27	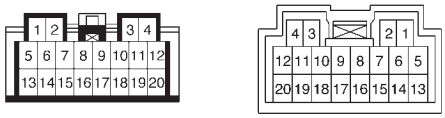
H-7	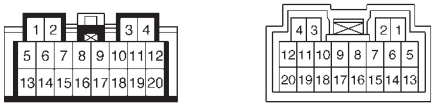	H-33	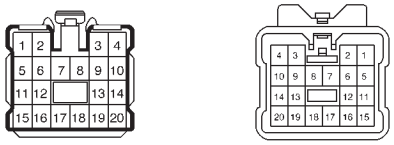
H-10	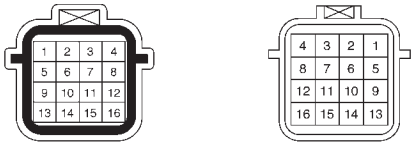	H-41	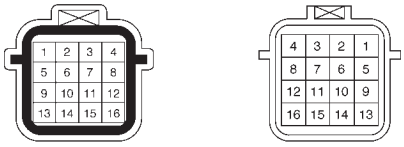
H-11	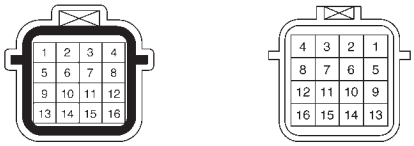	H-42	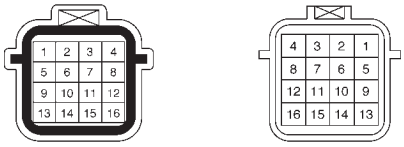
H-12	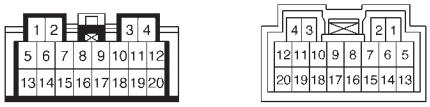	H-46	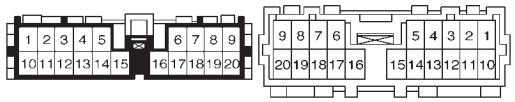

No.	Connector face	No.	Connector face
I-9	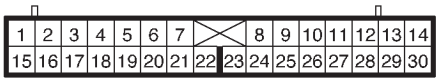		
I-10	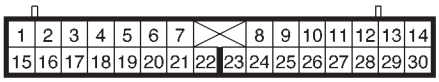		
M-1			
M-8			
X-15	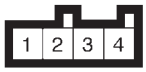		

Part Location (RHD model)

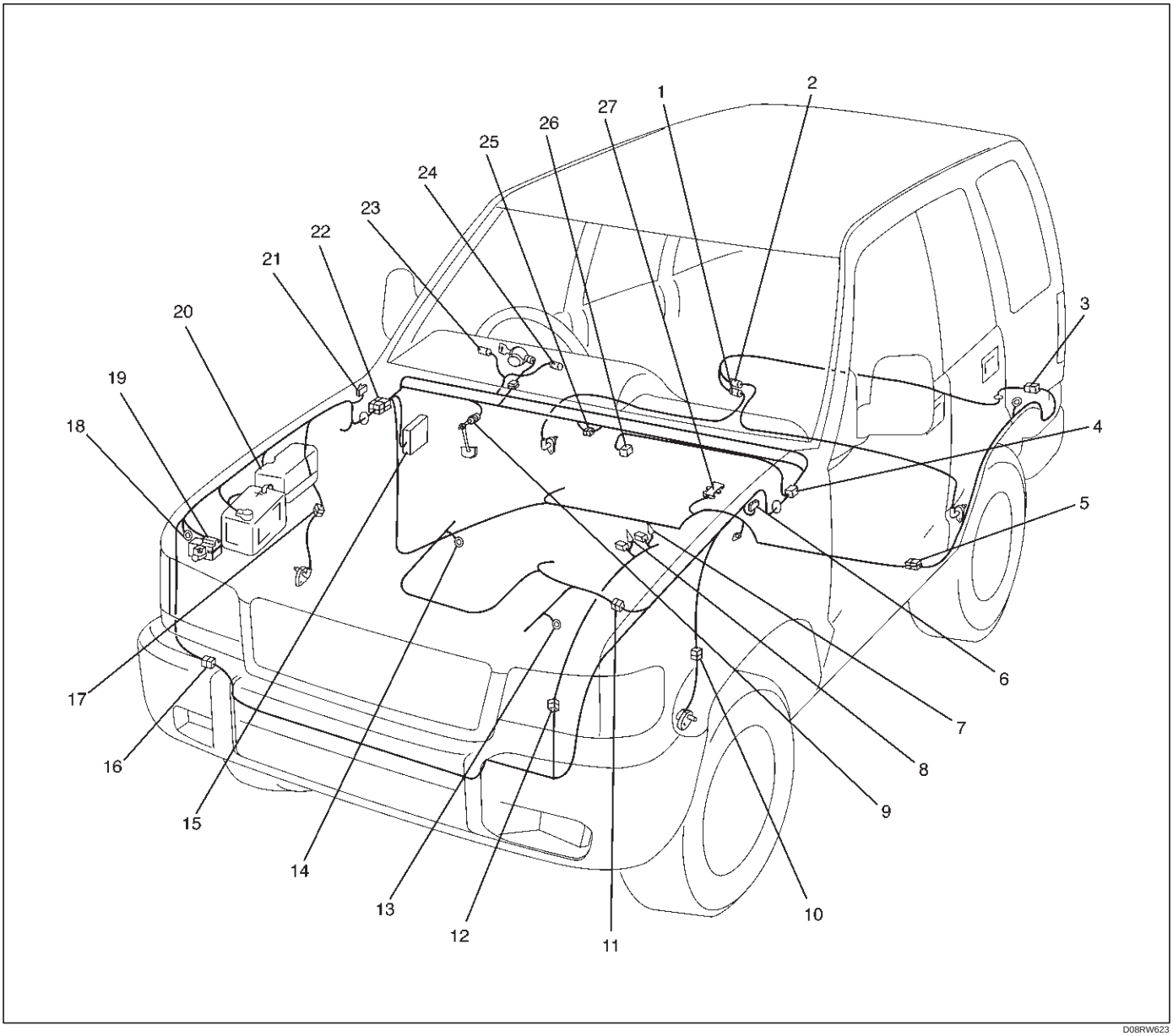

Legend

(1) F–2
(2) F–3
(3) H–33
(4) H–7
(5) H–46
(6) C–16
(7) E–42, E–43, M–8
(8) E–47, E–48, M–1
(9) B–13 or B–14
(10) C–13
(11) H–4, H–5, H–6
(12) H–10, H–11
(13) E–4 (4JX1)
(14) E–30 (4GJ2, 6VD1/6VE1)
(15) Fuse Box
(16) H–42
(17) C–41
(18) C–85
(19) C–4 (EHCU)
(20) Relay & Fuse Box
(21) C–39
(22) H–13, H–15, H–16, H–26, H–27
(23) I–10
(24) I–9
(25) H–12
(26) C–63
(27) B–25

Symptom Diagnosis

The symptoms that cannot be indicated by the warning light can be divided in the following five categories:

1. ABS works frequently but vehicle does not decelerate.
2. Uneven braking occurs while ABS works.
3. The wheels lock during braking.
4. Brake pedal feel is abnormal.
5. Braking sound (from EHCU) is heard while not braking.

These are all attributable to problems which cannot be detected by EHCU self-diagnosis. Use the customer complaint and a test to determine which symptom is present. Then follow the appropriate flow chart listed below.

No.	Symptom	Diagnostic Flow Charts	
		Without TECH 2	With TECH 2
1	ABS works frequently but vehicle does not decelerate.	Chart A–1	Chart TA–1
2	Uneven braking occurs while ABS works.	Chart A–2	—
3	The wheels are locked.	Chart A–3	Chart TA–3
4	Brake pedal feel is abnormal.	Chart A–4	—
5	Braking sound (from EHCU) is heard while not braking.	Chart A–5	Chart TA–5

Chart A–1 ABS Works Frequently But Vehicle Does Not Decelerate

Step	Action	Yes	No
1	1. Turn key off. 2. G Sensor connector and EHCU connector disconnected. Is there continuity between EHCU terminals 26 and 8?	Go to Step 2	Go to Step 3
2	Connect EHCU connector. Is there continuity between the G sensor and the EHCU?	Go to Step 3	Repair circuit. Go to Step 1
3	Is the G sensor normal? (Refer to chart B-5)	Go to Step 4	Replace G sensor. Go to Step 11
4	Is braking force distribution normal between the front and rear of the vehicle?	Go to Step 5	Repair brake parts. Go to Step 11
5	Are axle parts installed normally?	Go to Step 6	Repair axle parts. Go to Step 11
6	Is there play in each wheel speed sensor?	Repair wheel speed sensor. Go to Step 11	Go to Step 7
7	Is there damage, or powered iron sticking to each wheel speed sensor/sensor ring?	Replace sensor or sensor ring. Go to Step 11	Go to Step 8
8	Is the output of each wheel speed sensor normal? (Refer to chart C-1 or TC-1)	Go to Step 9	Replace wheel speed sensor or repair harness. Go to Step 11
9	Is the input of transmission normal? (Refer to chart C-2 or TC-2)	Go to Step 10	Replace switch or repair harness. Go to Step 11

Step	Action	Yes	No
10	Is the input of 4WD controller normal?	Go to Step 11	Replace controller or repair harness. Go to Step 11
11	Reconnect all components and ensure all components are properly mounted. Was this step finished?	Repeat the “Basic diagnostic flow chart.”	Go to Step 11

Chart TA-1 ABS Works Frequently But Vehicle Does Not Decelerate (Use TECH 2)

Step	Action	Yes	No
1	1. Connect TECH 2. 2. Make sure of the output conditions of each wheel speed sensor by mode “F1: Data Display”. Is the output of each sensor normal?	Go to Step 2	Replace wheel speed sensor. Go to Step 3
2	Return to Chart A-1. Was the Chart A-1 finished?	Go to Step 3	Go to Step 2
3	Reconnect all components, ensure all components are properly mounted. Was this step finished?	Repeat the “Basic diagnostic flow chart.”	Go to Step 3

Chart A-2 Uneven Braking Occurs While ABS Works

Step	Action	Yes	No
1	Is there play in each sensor?	Repair. Go to Step 5	Go to Step 2
2	Is there damage or powdered iron sticking to each sensor/sensor ring?	Repair. Go to Step 5	Go to Step 3
3	Is the output of each sensor normal? (Refer to chart C-1 or TC-1)	Go to Step 4	Replace sensor or repair harness. Go to Step 5
4	Is brake pipe connecting order correct?	Replace EHCU. Go to Step 5	Reconnect brake pipe correctly. Go to Step 5
5	Reconnect all components, ensure all components are properly mounted. Was this step finished?	Repeat the “Basic diagnostic flow chart.”	Go to Step 5

Chart A-3, TA-3 The Wheels Are Locked

Step	Action	Yes	No
1	Is ABS working?	Go to Step 2	Go to Step 6
2	Is vehicle speed under 10 km/h (6mph)?	Normal.	Go to Step 3
3	Is sensor output normal? (Chart C-1 or TC-1)	Go to Step 4	Replace sensor or repair harness. Go to Step 9
4	Is transmission input normal? (Chart C-2 or TC-2)	Go to Step 5	Replace SW or repair harness. Go to Step 9

Step	Action	Yes	No
5	Is front 4WD controller normal?	Replace EHCU. Go to Step 9	Replace 4WD controller or repair harness. Go to Step 9
6	Is transmission input normal? (Chart C-2 or TC-2)	Go to Step 7	Replace SW or repair harness Go to Step 9
7	Is front 4WD controller normal?	Go to Step 8	Replace 4WD controller or repair harness. Go to Step 9
8	Is hydraulic unit grounded properly?	Replace EHCU. Go to Step 9	Correct. Go to Step 9
9	Reconnect all components, ensure all components are properly mounted. Was this step finished?	Repeat the “Basic diagnostic flow chart.”	Go to Step 9

Chart A-4 Brake Pedal Feed Is Abnormal

Step	Action	Yes	No
1	Is the stop light actuated when the brake pedal is depressed?	Go to Step 2	Go to Step 3
2	1. Turn the ignition switch off. 2. Disconnected EHCU connector. 3. Measure voltage between the EHCU connector terminal 10 and 15 when brake pedal is depressed. Is the voltage equal to the battery voltage?	Go to Step 4	Harness NG between brake SW and EHCU. Go to Step 7
3	Is stop light fuse C-14 normal?	Go to Step 5	Replace fuse C-14. Go to Step 7
4	Is there continuity between EHCU connector terminals, 12 and 15 to body ground?	Go to Step 6	Repair body grounded harness. Go to Step 7
5	Is the brake SW normal?	Repair stop light harness. Go to Step 7	Replace brake SW. Go to Step 7
6	Is the check harness/connector for suspended disconnection?	Hydraulic system leakage or air entry (Refer to servicing “Leakage or brake fluid”) Go to Step 7	Repair harness. Go to Step 7
7	Reconnect all components and ensure all components are properly mounted. Was this step finished?	Repeat the “Basic diagnostic flow chart.”	Go to Step 7

Chart A-5, TA-5 Braking Sound (From EHCU) Is Heard While Not Braking

Step	Action	Yes	No
1	Is this the first time the vehicle is being driven after starting the engine?	It is self checking sound. Normal.	Go to Step 2
2	Is vehicle speed under 10 km/h (6 mph)?	It is self checking sound. Normal.	Go to Step 3
3	Check for the following condition: ● At the time of shift down or clutch operation. ● At the time of low μ drive (ice or snow road) or rough road drive. ● At the time of high-speed turn. ● At the time of passing curb. ● At the time of operating electrical equipment switches. ● At the time of racing the engine (over 5000 rpm). Did it occur under any one condition above?	ABS may sometime be actuated even when brake pedal is not applied.	Go to Step 4
4	Is there play in each sensor/wheel speed sensor rings?	Go to Step 5	Repair. Go to Step 7
5	Damage or powdered iron sticking to each sensor/wheel speed sensor ring?	Go to Step 6	Repair. Go to Step 7
6	Is each sensor output normal?(Refer to chart C-1 or TC-1).	Check harness/ connector for suspected disconnection. If no disconnection is found, replace EHCU. Go to Step 7	Repair. Go to Step 7
7	Reconnect all components, ensure all components are properly mounted. Was this step finished?	Repeat the “Basic diagnostic flow chart.”	Go to Step 7

Diagnostic Trouble Codes

Choose and trace an appropriate flowchart by the numbers listed below to find fault and repair.

Code	Item	Diagnosis	Chart No.
12	Start Code	Normal	—
14	EHCU Function	Abnormality in input/output, operational and control circuits	B-2
15	Power Voltage Drop		B-3
16	CLASS–2 Communication Line Abnormality		B-4
21	G-sensor	Wiring disconnection	B-5
23	Transmission Input	Input abnormality	B-6
24	Transfer Monitor		B-7
32	Motor & Motor Relay	Shorted or disconnected coil	B-8
35	Valve Relay	Shorted or disconnected coil/wiring	B-9
41	FL Holding Solenoid Valve	Shorted or disconnected coil/wiring	B-10
42	FL Decompression Solenoid Valve	Shorted or disconnected coil/wiring	B-11
43	FR Holding Solenoid Valve	Shorted or disconnected coil/wiring	B-12
44	FR Decompression Solenoid Valve	Shorted or disconnected coil/wiring	B-13
45	Rear Holding Solenoid Valve	Shorted or disconnected coil/wiring	B-14
46	Rear Decompression Solenoid Valve	Shorted or disconnected coil/wiring	B-15
51	FL Wheel Speed Sensor	Disconnected coil/wiring	B-16
52	FR Wheel Speed Sensor	Disconnected coil/wiring	B-17
53	RL Wheel Speed Sensor	Disconnected coil/wiring	B-18
54	RR Wheel Speed Sensor	Disconnected coil/wiring	B-19
61	FL Wheel Speed Sensor	Shorted coil/wiring	B-20
62	FR Wheel Speed Sensor	Shorted coil/wiring	B-21
63	RL Wheel Speed Sensor	Shorted coil/wiring	B-22
64	RR Wheel Speed Sensor	Shorted coil/wiring	B-23
65	Sensor Signal Input	Wrong number of teeth	B-24

Diagnosis By “ABS” Warning Light Illumination Pattern

In the event that there is abnormality in the “ABS” warning light illumination pattern while the key is in the ON position or if the warning light is actuated during driving, trouble should be diagnosed on a illumination pattern basis as follows:

No.	Condition	“ABS” Warning Light Illumination Pattern	Diagnostic
1	Warning light is actuated normally	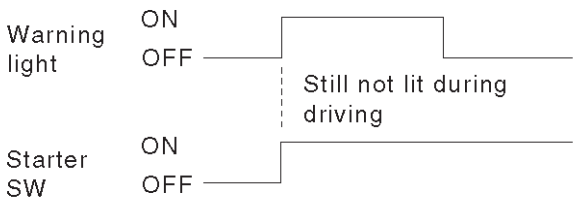	Normal
2	Warning light is not lit	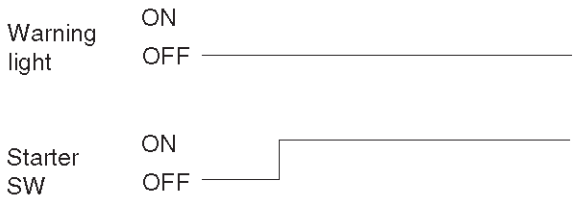	Warning light lighting circuit trouble→Go to Chart B-1
3	Warning light remains ON	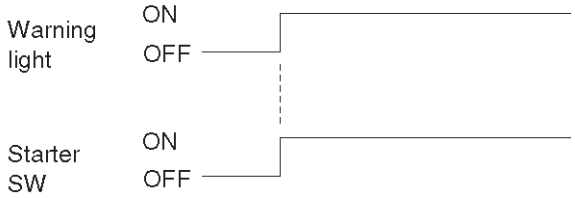	Diagnostic trouble codes are stored. Display diagnostic trouble codes and diagnose on a code basis according to the flow charts.
4	Warning light is actuated while driving	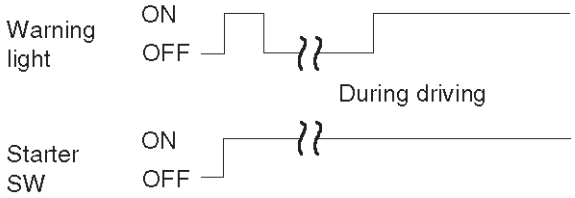	Diagnostic trouble codes are stored. Display diagnostic trouble codes and diagnose on a code basis according to the flow charts.

Diagnostic Trouble Codes (DTCs)

When the warning light in the meter remains ON, the EHCU stores the fault identification and disables the ABS.

1. How to display and erase DTCs:

NOTE:

- If DTCs are not displayed, harness C-4 connector terminal 30 and I-10 connector terminal 2 may be disconnected. Repair the harness and try DTC display again.
- DTCs can be displayed also by TECH 2. Select mode “F0: Diagnostic Trouble Codes” from Application Menu.

1. How to start DTC display:
   - Confirm that the vehicle has come to a complete stop (with the wheels standing still) and that the brake pedal is not depressed. (Unless these two conditions are satisfied, DTC display cannot be started.)
   - With IGN OFF, connect #12 terminal with #4 terminal or # 5 terminal (GND) . Then turn IGN ON.

The DLC is located behind the center console

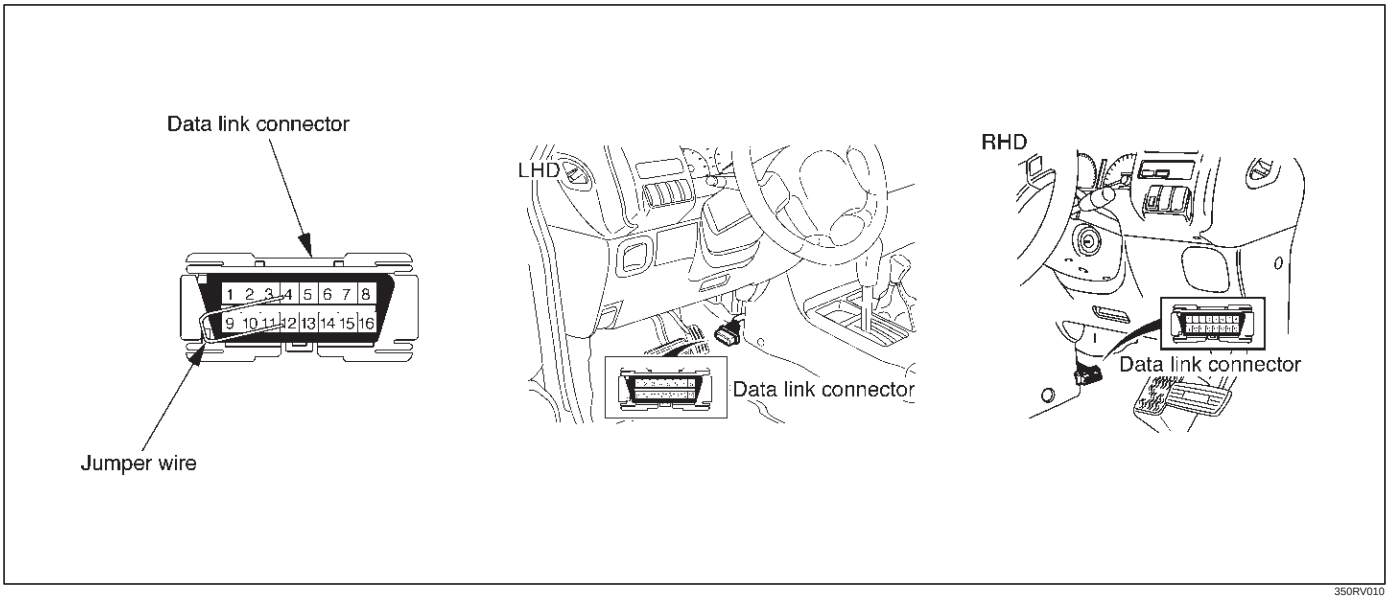

350RV010

- Keep #12 terminal connected with #4 terminal or # 5 terminal (GND) during DTC display. (If #12 terminal is separated from #4 terminal or # 5 terminal (GND) during display, display will stop.)

2. DTC display:
   - DTC is displayed by blinking warning light.
   - Double-digit display.
   - First, normal DTC 12 is displayed three times and then any other DTCs are displayed three times. (If no other DTCs have been stored, the display of DTC 12 will be repeated.)
3. How to erase code:
   - Conduct brake switch ON/OFF operation 6 or more times within 3 seconds of self-diagnosis startup.
   - The code cannot be erased if more than 3 seconds have passed since self-diagnosis startup, or if self-diagnosis has started with brake switched on (brake pedal depressed).

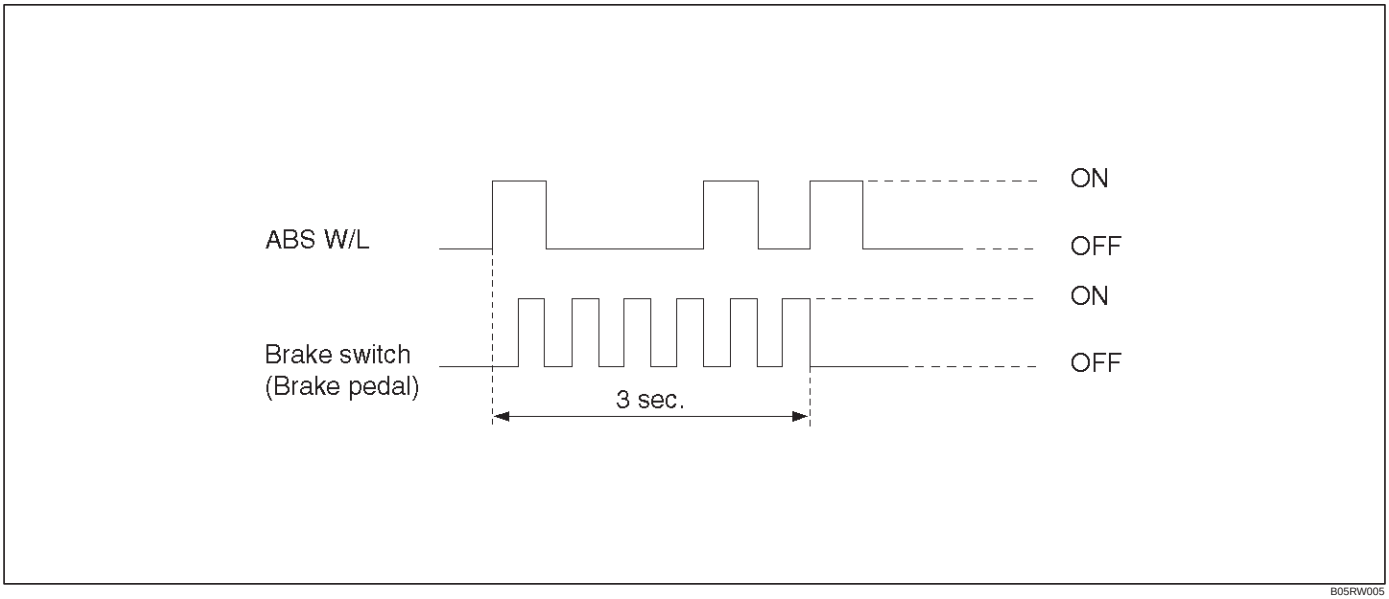

B05RW005

4. Notes
   - If the following should occurs during Diagnostic Trouble Code (DTC) display the display will be discontinued. After initial check, the status that is under the control of ABS will be returned :
     - The vehicle starts (The wheels turn) or the brake pedal is depressed.
   - Up to 3 different codes can be stored.
   - If the ABS should turn OFF due to an intermittent defect, the system will be restored at the next key cycle, if the initial check finds no abnormality (when IGN is switched from OFF to ON).
5. An example of DTC display

   Display of DTC 23

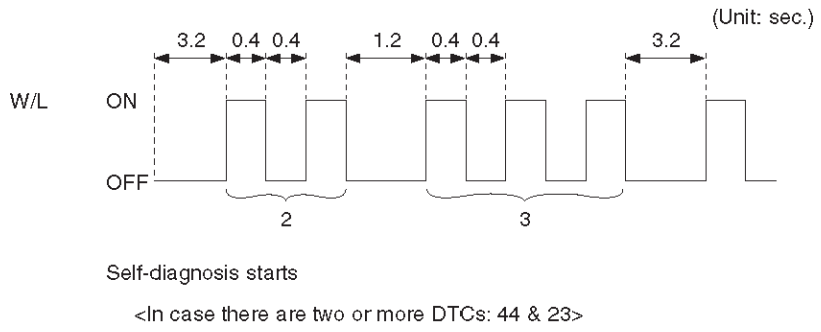

B05RW006

After displaying DTC 12 three times, one DTC after another is displayed, starting with the most recent one. (However, display is discontinued after about 5 minutes.)

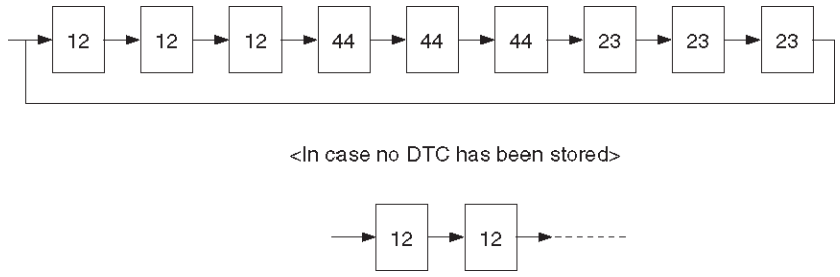

B05RS005

The DTC 12 is displayed repeatedly. (display is discontinued after about 5 minutes)

Chart B-1 With the key in the ON position (Before starting the engine). Warning light (W/L) is not activated.

Step	Action	Yes	No
1	Is W/L fuse C-10 disconnected?	Replace fuse. Go to Step 5	Go to Step 2
2	Is W/L burnt out?	Replace W/L bulb. Go to Step 5	Go to Step 3
3	1. Turn the key off. 2. Disconnect EHCU connector. 3. Turn the key ON. 4. Measure the voltage between EHCU connector terminal 13 and 14. Is the voltage equal to the battery voltage?	Go to Step 4	Repair harness and connector. Go to Step 5
4	Is there continuity between EHCU connector terminals, 12 and 15 and body ground.	Check harness for suspected disconnection. No fault found: Replace EHCU. Go to Step 5	Repair harness and connector. Go to Step 5
5	Reconnect all components, ensure all components are properly mounted. Was this step finished?	Repeat the “Basic diagnostic flow chart.”	Go to Step 5

Chart B-2 EHCU Abnormality (DTC 14)

Step	Action	Yes	No
1	1. Turn the key off. 2. Disconnect the EHCU connector. 3. Inspect EHCU ground. Is there resistance between the EHCU connector terminals, 12 and 15 and body ground?	Go to Step 2	Repair the body ground harness. Go to Step 3
2	1. Turn the key off, connect the EHCU. 2. Erase the trouble code. 3. Turn Ignition off, then on, to perform system self-check. 4. If warning light remains on, display trouble codes once again. Is the check trouble code 14?	Replace EHCU. Go to Step 3	Inspect in accordance with the DTC displayed.
3	1. Reconnect all components and ensure all components are properly mounted. 2. Clear diagnostic trouble code. Was this step finished?	Repeat the “Basic diagnostic flow chart.”	Go to Step 3

Chart B-3 Power Voltage Drop (DTC 15)

Step	Action	Yes	No
1	Is the battery voltage normal? (Battery capacity check)	Go to Step 2	Charge or replace battery. Go to Step 2
2	1. Turn the key off. 2. Disconnect EHCU connector. 3. Turn the key on. Is the voltage between EHCU connector terminals 8 and 15, higher than 10V?	Check harness connector for suspected disconnection. Fault found: Repair, and perform system self-check. No fault found: replace EHCU. Go to Step 3	Repair harness or connector. Go to Step 3
3	1. Reconnect all components, ensure all components are properly mounted. 2. Clear diagnostic trouble code. Was this step finished?	Repeat the “Basic diagnostic flow chart.”	Go to Step 3

Chart B-4 CLASS-2 Communication Line Abnormality (DTC 16)

Step	Action	Yes	No
1	1. Turn the key off. 2. Disconnect EHCU and PCM connector. Is there continuity between EHCU connector terminals 25 and ground?	Go to Step 2	Repair harness or connector. Go to Step 3
2	1. Connect EHCU connector. 2. Clear diagnostic trouble code. 3. Turn the key on. Is the diagnostic trouble code 16 shown on the displayed?	Check the PCM harness. Refer to 6E section. Go to Step 3	Replace EHCU. Go to Step 3
3	1. Reconnect all components, ensure all components are properly mounted. 2. Clear diagnostic trouble code. Was this step finished?	Repeat the “Basic diagnostic flow chart.”	Go to Step 3

Chart B-5 G-Sensor Circuit (DTC 21)

Step	Action	Yes	No
1	Vehicle placed horizontal. Is the resistance between the G sensor connector terminals 1 and 2 within 4.0-6.0 kΩ?	Check harness connector for short. Fault found : Repair , and perform system self-check. No fault found : replace EHCU. Go to Step 3	Go to Step 2
2	Is the bracket installed horizontally?	Go to Step 4	Repair or replace bracket. Go to Step 4
3	Remove G sensor. Is the resistance between the G sensor connector terminals 1 and 2 within 1.0-2.0 kΩ when G sensor is horizontal?	Go to Step 4	Replace G sensor. Go to Step 5
4	Measure resistance between G sensor connector terminals 1 and 2 within 4.0-6.0 kΩ when G sensor tilted to 30˚ or more?	Harness between EHCU and G sensor is faulty and short. Repair the harness Go to Step 5	Replace G sensor. Go to Step 5
5	1. Reconnect all components and ensure all components are properly mounted. 2. Clear diagnostic trouble code. Was this step finished?	Repeat the “Basic diagnostic flow chart.”	Go to Step 5

Chart B-6 Abnormal Transmission Input (DTC 23)

Step	Action	Yes	No
1	1. Turn the key off. 2. Disconnect EHCU connector. Is there continuity between EHCU connector terminal 6 to 15 (Gear position-P(A/T), N(M/T))?	Shorted switch harness. Repair switch or harness. Go to Step 6	Go to Step 2
2	Is the vehicle an A/T model?	Go to Step 3	Go to Step 4
3	Turn the key on and measure the voltage between EHCU connector terminal 6 and 15. Is the 6V under when the gear position is L, and R(Battery voltage 12V)?	Go to Step 5	Transmission SW trouble. Disconnected harness. Repair SW and harness. Go to Step 6
4	Turn the key on and measure the voltage between EHCU connector terminal 6 and 15. Is the 9.6V over when the gear position is 1, 2, R(Battery voltage 12V)?	Go to Step 5	Transmission SW trouble. Disconnected harness. Repair SW and harness. Go to Step 6
5	Is there 6.6 to 9.0V when the gear position is 3, 4, 5 and N(M/T) or 2,3,D,N and P(A/T)(Battery voltage 12V)?	Suspected harness/ connector short power source/GND. Suspected shorted transmission SW. Fault found: repair, and perform system self-check. No fault found: replace EHCU. Go to Step 6	Transmission SW trouble. Disconnected harness. Repair SW and harness. Go to Step 6
6	1. Reconnect all components, ensure all components are properly mounted. 2. Clear diagnostic trouble code. Was this step finished?	Repeat the “Basic diagnostic flow chart.”	Go to Step 6

Chart B-7 Transfer Monitor (DTC 24)

Step	Action	Yes	No
1	1. Turn the key off. 2. Disconnect EHCU connector. Is the EHCU connector terminal 9 line normally?	Go to Step 2	Repair Go to Step 3
2	Is the TOD ECU or 4WD controller normal?	Replace EHCU. Go to Step 3	Repair or replace TOD ECU or 4WD contrder. Go to Step 3
3	1. Reconnect all components, ensure all components are properly mounted. 2. Clear diagnostic trouble code. Was this step finished?	Repeat the “Basic diagnostic flow chart.”	Go to Step 3

Chart B-8 EHCU Pump Motor And Motor Relay Circuit (DTC 32)

Step	Action	Yes	No
1	1. Turn the key off. 2. Disconnect EHCU connector. 3. Measure voltage between EHCU connector terminal 13 and body ground. Is the voltage equal to battery voltage?	Go to Step 2	Repair fuse/harness between battery and EHCU connector terminal 13. Go to Step 3
2	Is there continuity between EHCU connector terminal 12 and ground?	Go to Step 3	Repair between EHCU connector terminal 12 and ground. Go to Step 3
3	1. Reconnect all components and ensure all components are properly mounted. 2. Clear diagnostic trouble code. Was this step finished?	Repeat the “Basic diagnostic flow chart.”	Go to Step 3

Chart B-9 EHCU Pump Valve And Valve Relay Circuit (DTC 35)

Step	Action	Yes	No
1	1. Turn the key off. 2. Disconnect EHCU connector. 3. Measure voltage between EHCU connector terminal 14 and body ground. Is the voltage equal to battery voltage?	Replace EHCU. Go to Step 2	Repair fuse and harness EHCU connector terminal 14 and battery. Go to Step 2
2	1. Reconnect all components and ensure all components are properly mounted. 2. Clear diagnostic trouble code. Was this step finished?	Repeat the “Basic diagnostic flow chart.”	Go to Step 2

Chart B-10 FL Isolation Solenoid Valve Abnormality (DTC 41)

Step	Action	Yes	No
1	Was the “EHCU Connector Pin-out Checks” performed?	Go to Step 2	Go to “EHCU Connector Pin-out Checks”.
2	Is the EHCU connector free from damage or corrosion?	Go to Step 3	Repair the connector. Repeat the “Basic Diagnostic Flow Chart”.
3	1. Replace the EHCU. 2. Reconnect all component, ensure all component are properly mounted. Was this step finished?	Repeat the “Basic Diagnostic Flow Chart”.	Go to Step 3

Chart B-11 FL Dump Solenoid Valve Abnormality (DTC 42)

Step	Action	Yes	No
1	Was the “EHCU Connector Pin-out Checks” performed?	Go to Step 2	Go to “EHCU Connector Pin-out Checks”.
2	Is the EHCU connector free from damage or corrosion?	Go to Step 3	Repair the connector. Repeat the “Basic Diagnostic Flow Chart”.
3	1. Replace the EHCU. 2. Reconnect all component, ensure all component are properly mounted. Was this step finished?	Repeat the “Basic Diagnostic Flow Chart”.	Go to Step 3

Chart B-12 FR Isolation Solenoid Valve Abnormality (DTC 43)

Step	Action	Yes	No
1	Was the “EHCU Connector Pin-out Checks” performed?	Go to Step 2	Go to “EHCU Connector Pin-out Checks”.
2	Is the EHCU connector free from damage or corrosion?	Go to Step 3	Repair the connector. Repeat the “Basic Diagnostic Flow Chart”.
3	1. Replace the EHCU. 2. Reconnect all component, ensure all component are properly mounted. Was this step finished?	Repeat the “Basic Diagnostic Flow Chart”.	Go to Step 3

Chart B-13 FR Dump Solenoid Valve Abnormality (DTC 44)

Step	Action	Yes	No
1	Was the “EHCU Connector Pin-out Checks” performed?	Go to Step 2	Go to “EHCU Connector Pin-out Checks”.
2	Is the EHCU connector free from damage or corrosion?	Go to Step 3	Repair the connector. Repeat the “Basic Diagnostic Flow Chart”.
3	1. Replace the EHCU. 2. Reconnect all component, ensure all component are properly mounted. Was this step finished?	Repeat the “Basic Diagnostic Flow Chart”.	Go to Step 3

Chart B-14 Rear Isolation Solenoid Valve Abnormality (DTC 45)

Step	Action	Yes	No
1	Was the “EHCU Connector Pin-out Checks” performed?	Go to Step 2	Go to “EHCU Connector Pin-out Checks”.
2	Is the EHCU connector free from damage or corrosion?	Go to Step 3	Repair the connector. Repeat the “Basic Diagnostic Flow Chart”.
3	1. Replace the EHCU. 2. Reconnect all component, ensure all component are properly mounted. Was this step finished?	Repeat the “Basic Diagnostic Flow Chart”.	Go to Step 3

Chart B-15 Rear Dump Solenoid Valve Abnormality (DTC 46)

Step	Action	Yes	No
1	Was the “EHCU Connector Pin-out Checks” performed?	Go to Step 2	Go to “EHCU Connector Pin-out Checks”.
2	Is the EHCU connector free from damage or corrosion?	Go to Step 3	Repair the connector. Repeat the “Basic Diagnostic Flow Chart”.
3	1. Replace the EHCU. 2. Reconnect all component, ensure all component are properly mounted. Was this step finished?	Repeat the “Basic Diagnostic Flow Chart”.	Go to Step 3

Chart B-16 FL Speed Sensor Disconnection (DTC 51)

Step	Action	Yes	No
1	1. Turn the key off. 2. Disconnect EHCU connector. 3. Measure the resistance between EHCU connector terminals 20 and 21. Is the resistance between 1.3k and 1.9k ohms?	Check for faults in harness between speed sensor and EHCU. Fault found: Repair, and perform system self-check. No fault found: Replace EHCU. Go to Step 3	Go to Step 2
2	Measure the FL speed sensor resistance at the sensor connector. Is the resistance between 1.3k and 1.9k ohms?	Repair harness abnormality between sensors and EHCU. Go to Step 3	Replace sensor. Go to Step 3
3	1. Reconnect all components, ensure all components are properly mounted. 2. Clear diagnostic trouble code. Was this step finished?	Repeat the “Basic diagnostic flow chart.”	Go to Step 3

Chart B-17 FR Speed Sensor Disconnection (DTC 52)

Step	Action	Yes	No
1	1. Turn the key off. 2. Disconnect EHCU connector. 3. Measure the resistance between EHCU connector terminals 4 and 5. Is the resistance between 1.3k and 1.9k ohms?	Check for faults in harness between speed sensor and EHCU. Fault found: Repair, and perform system self-check. No fault found: Replace EHCU. Go to Step 3	Go to Step 2
2	Measure the FR speed sensor resistance at the sensor connector. Is the resistance between 1.3k and 1.9k ohms?	Repair harness abnormality between sensors and EHCU. Go to Step 3	Replace sensor. Go to Step 3
3	1. Reconnect all components and ensure all components are properly mounted. 2. Clear diagnostic trouble code. Was this step finished?	Repeat the “Basic diagnostic flow chart.”	Go to Step 3

Chart B-18 RL Speed Sensor Disconnection (DTC 53)

Step	Action	Yes	No
1	1. Turn the key off. 2. Disconnect EHCU connector. 3. Measure the resistance between EHCU connector terminals 22 and 23. Is the resistance between 1.3k and 1.9k ohms?	Check for faults in harness between speed sensor and EHCU. Fault found: Repair, and perform system self-check. No fault found: Replace EHCU. Go to Step 3	Go to Step 2
2	Measure the RL speed sensor resistance at the sensor connector. Is the resistance between 1.3k and 1.9k ohms?	Repair harness abnormality between sensors and EHCU. Go to Step 3	Replace sensor. Go to Step 3
3	1. Reconnect all components and ensure all components are properly mounted. 2. Clear diagnostic trouble code. Was this step finished?	Repeat the “Basic diagnostic flow chart.”	Go to Step 3

Chart B-19 RR Speed Sensor Disconnection (DTC 54)

Step	Action	Yes	No
1	1. Turn the key off. 2. Disconnect EHCU connector. 3. Measure the resistance between EHCU connector terminals 2 and 3. Is the resistance between 1.3K and 1.9k ohms?	Check for faults in harness between speed sensor and EHCU. Fault found: Repair, and perform system self-check. No fault found: Replace EHCU. Go to Step 3.	Go to Step 2
2	Measure the RR speed sensor resistance at the sensor connector. Is the sensor resistance between 1.3k and 1.9k ohms?	Repair harness abnormality between sensors and EHCU. Go to Step 3	Replace sensor. Go to Step 3
3	1. Reconnect all components and ensure all components are properly mounted. 2. Clear diagnostic trouble code. Was this step finished?	Repeat the “Basic diagnostic flow chart.”	Go to Step 3

Chart B-20 FL Speed Sensor Short Circuit (DTC 61)

Step	Action	Yes	No
1	1. Turn the key off. 2. Disconnect EHCU connector 3. Measure the FL speed sensor resistance between EHCU connector terminals 20 and 21. Is the resistance between 1.3k and 1.9k ohms?	Go to Step 2	Go to Step 3
2	Is there play in the sensor/sensor rotor?	Go to Step 4	Repair. Go to Step 6
3	Measure the FL speed sensor resistance at the sensor connector. Is the resistance between 1.3k and 1.9k ohms?	Repair harness abnormality between sensors and EHCU. Go to Step 6	Replace sensor. Go to Step 6
4	Damage and powdered iron sticking to sensor/sensor ring?	Go to Step 5	Repair. Go to Step 6
5	Is sensor output normal? (Chart C-1-1 or TC-1)	Check for faults in harness between speed sensor and EHCU. Fault found: repair, and perform system self-check. No fault found: replace EHCU. Go to Step 6	Replace sensor. Go to Step 6
6	1. Reconnect all components and ensure all components are properly mounted. 2. Clear diagnostic trouble code. Was this step finished?	Repeat the “Basic diagnostic flow chart.”	Go to Step 6

NOTE: Even after repairing the faulty part the warning light (W/L) does not go out if the vehicle is at a stop. Turn the ignition switch to the ON position and drive the vehicle at 12 km/h or higher to make sure that the warning light goes out.

Chart B-21 FR Speed Sensor Short Circuit (DTC 62)

Step	Action	Yes	No
1	1. Turn the key off. 2. Disconnect EHCU connector. 3. Measure the FR speed sensor resistance between EHCU connector terminals 4 and 5. Is the resistance between 1.3k and 1.9k ohms?	Go to Step 2	Go to Step 3
2	Is there play in the sensor/sensor rotor?	Go to Step 4	Repair. Go to Step 6
3	Measure the FR speed sensor resistance at the sensor connector. Is the resistance between 1.3k and 1.9k ohms?	Repair harness abnormality between sensors and EHCU. Go to Step 6	Replace sensor. Go to Step 6
4	Damage and powdered iron sticking to sensor/sensor ring?	Go to Step 5	Repair. Go to Step 6
5	Is sensor output normal? (Chart C-1-2 or TC-1)	Check for faults in harness between speed sensor and EHCU. Fault found: repair, and perform system self-check. No fault found: replace EHCU. Go to Step 6	Replace sensor. Go to Step 6
6	1. Reconnect all components and ensure all components are properly mounted. 2. Clear diagnostic trouble code. Was this step finished?	Repeat “Basic diagnostic flow chart.”	Go to Step 6

NOTE: Even after repairing the faulty part the warning light (W/L) does not go out if the vehicle is at a stop. Turn the ignition switch to the ON position and drive the vehicle at 12 km/h or higher to make sure that the warning light goes out.

Chart B-22 RL Speed Sensor Short Circuit (DTC 63)

Step	Action	Yes	No
1	1. Turn the key off. 2. Disconnect EHCU connector 3. Measure the RL speed sensor resistance between EHCU connector terminals 22 and 23. Is the resistance between 1.3k and 1.9k ohms?	Go to Step 2	Go to Step 3
2	Is there play in the sensor/sensor rotor?	Go to Step 4	Repair. Go to Step 6
3	Measure the RL speed sensor resistance at the sensor connector. Is the resistance between 1.3k and 1.9k ohms?	Repair harness abnormality between sensors and EHCU. Go to Step 6	Replace sensor. Go to Step 6
4	Damage and powdered iron sticking to sensor/sensor ring?	Go to Step 5	Repair. Go to Step 6
5	Is sensor output normal? (Chart C-1-3 or TC-1)?	Check for faults in harness between speed sensor and EHCU. Fault found: repair, and perform system self-check. No fault found: replace EHCU. Go to Step 6	Replace sensor. Go to Step 6
6	1. Reconnect all components and ensure all components are properly mounted. 2. Clear diagnostic trouble code. Was this step finished?	Repeat the “Basic diagnostic flow chart.”	Go to Step 6

NOTE: Even after repairing the faulty part the warning light (W/L) does not go out if the vehicle is at a stop. Turn the ignition switch to the ON position and drive the vehicle at 12 km/h or higher to make sure that the warning light goes out.

Chart B-23 RR Speed Sensor Short Circuit (DTC 64)

Step	Action	Yes	No
1	1. Turn the key off. 2. Disconnect EHCU connector. 3. Measure the RR speed sensor resistance between EHCU connector terminals 2 and 3. Is the resistance between 1.3k and 1.9k ohms?	Go to Step 2	Go to Step 3
2	Is there play in the sensor/sensor rotor?	Go to Step 4	Repair. Go to Step 6
3	Measure the RR speed sensor resistance at the sensor connector. Is the resistance between 1.3k and 1.9k ohms?	Repair harness abnormality between sensors and EHCU. Go to Step 6	Replace sensor. Go to Step 6
4	Damage and powdered iron sticking to sensor/sensor ring?	Go to Step 5	Repair. Go to Step 6
5	Is sensor output normal? (Chart C-1-4 or TC-1)	Check for faults in harness between speed sensor and EHCU. Fault found: repair, and perform system self-check. No fault found: replace EHCU. Go to Step 6	Replace sensor. Go to Step 6
6	1. Reconnect all components and ensure all components are properly mounted. 2. Clear diagnostic trouble code. Was this step finished?	Repeat “Basic diagnostic flow chart.”	Go to Step 6

NOTE: Even after repairing the faulty part the warning light (W/L) does not go out if the vehicle is at a stop. Turn the ignition switch to the ON position and drive the vehicle at 12 km/h or higher to make sure that the warning light goes out.

Chart B-24 Sensor Signal Input Abnormality (DTC 65)

Step	Action	Yes	No
1	Using TECH 2?	Go to Step 2	Go to Step 3
2	1. Connect TECH 2. 2. Select Snap shot manual trigger. 3. With wheel speed data displayed, run the vehicle when speed has arrived at 30 km/h (18 mph). 4. Check speed data on each wheel (refer to the criterion given below). *1 Is the abnormal sensor condition found?	Replace. Go to Step 8	Go to Step 3 All the sensors should follow the following flowchart (without using TECH 2).
3	Is there play in sensor/sensor ring?	Repair. Go to Step 8	Go to Step 4
4	Is there powdered iron sticking to sensor/sensor ring?	Repair. Go to Step 8	Go to Step 5
5	Is there a broken tooth or indentation in sensor ring?	Replace sensor ring. Go to Step 8	Go to Step 6
6	Is there play in wheel bearing?	Adjust or repair. Go to Step 8	Go to Step 7
7	Is the check wiring between sensor and EHCU normal?	Replace EHCU. Go to Step 8	Repair, and perform system self-check. Go to Step 8
8	1. Reconnect all components, ensure all components are properly mounted. 2. Clear diagnostic trouble code. Was this step finished?	Repeat “Basic diagnostic flow chart.”	Go to Step 8

Sensor Signal Abnormality Criteria using TECH 2

1. While driving, the speed of one or two wheels 25% or more higher than that of the other wheels.
2. The speed of one or two wheels is 10 km/h (6 mph) or more higher than that of the other wheels.
3. During steady driving, wheel speed changes abruptly.

*1 The vehicle must run on a level paved road.

NOTE: Even after repairing the faulty part the warning light (W/L) does not go out if the vehicle is at a stop.

Turn the ignition switch to the ON position and drive the vehicle at 12 km/h or higher to make sure that the warning light goes out.

It is important to verify that the correct tires are installed on vehicle.

Unit Inspection Procedure

This section describes the following inspection procedures referred to during “SYMPTOM DIAGNOSIS” and “DIAGNOSIS BY ‘ABS’ WARNING LIGHT ILLUMINATION PATTERN” :

	without TECH 2	with TECH 2
Wheel Speed Sensor Output Inspection	Chart C-1-1 to C-1-4	Chart TC-1
Transmission SW Inspection	Chart C-2	Chart TC-2

Chart C-1-1 FL Sensor Output Inspection Procedure

Step	Action	Yes	No
1	1. Turn the key off. 2. Disconnect EHCU connector. 3. Jack up the vehicle, With all four wheels off the ground. Measure the AC voltage between EHCU connector terminals while turning FL wheel at a speed of 1 RPS: Is voltage between EHCU connector terminals 20 and 21 under 200 mV?	Go to Step 2	Ok. Go to Step 3
2	1. Disconnect the wheel speed sensor. 2. Measure resistance between the wheel speed sensor connector terminals 1 and 2. Is resistance between connector (C-13) terminals 1 and 2 within 1.3k - 1.9k ohms?	Connector is faulty, or open or short circuit in harness between wheel speed sensor connector and EHCU. Inspect and correct the connector or harness Go to Step 3	Wheel speed sensor is faulty. Replace the wheel speed sensor. Go to Step 3
3	Reconnect all components and ensure all components are properly mounted. Was this step finished?	Repeat the “Basic diagnostic flow chart.”	Go to Step 3

Chart C-1-2 FR Sensor Output Inspection Procedure

Step	Action	Yes	No
1	1. Turn the key off. 2. Disconnect EHCU connector. 3. Jack up the vehicle with all four wheels off the ground. Measure the AC voltage between EHCU connector terminals while turning FR wheel at a speed of 1 RPS: Is voltage between EHCU connector terminals 4 and 5 under 200 mV?	Go to Step 2	Ok. Go to Step 3
2	1. Disconnect the wheel speed sensor. 2. Measure resistance between the wheel speed sensor connector terminals 1 and 2. Is resistance between connector (C-41) terminals 1 and 2 within 1.3k - 1.9k ohms?	Connector is faulty, or open or short circuit of harness between wheel speed sensor connector and EHCU. Inspect and correct the connector or harness Go to Step 3	Wheel speed sensor is faulty. Replace the wheel speed sensor. Go to Step 3
3	Reconnect all components and ensure all components are properly mounted. Was this step finished?	Repeat the “Basic diagnostic flow chart.”	Go to Step 3

Chart C-1-3 RL Sensor Output Inspection Procedure

Step	Action	Yes	No
1	1. Turn the key off. 2. Disconnect EHCU connector. 3. Jack up the vehicle with all four wheels off the ground. Measure the AC voltage between EHCU connector terminals while turning RL wheel at a speed of 1 RPS: Is voltage between EHCU connector terminals 22 and 23 under 200 mV?	Go to Step 2	Ok. Go to Step 3
2	1. Disconnect the wheel speed sensor. 2. Measure resistance between the wheel speed sensor connector terminals 1 and 2. Is resistance between connector (F-3) terminals 1 and 2 within 1.3k - 1.9k ohms?	Connector is faulty, or open or short circuit of harness between wheel speed sensor connector and EHCU. Inspect and correct the connector or harness Go to Step 3	Wheel speed sensor is faulty. Replace the wheel speed sensor. Go to Step 3
3	Reconnect all components and ensure all components are properly mounted. Was this step finished?	Repeat the “Basic diagnostic flow chart.”	Go to Step 3

Chart C-1-4 RR Sensor Output Inspection Procedure

Step	Action	Yes	No
1	1. Turn the key off. 2. Disconnect EHCU connector. 3. Jack up the vehicle with all four wheels off the ground. Measure the AC voltage between EHCU connector terminals while turning RR wheel at a speed of 1 RPS: Is voltage between EHCU connector terminals 2 and 3 under 200 mV?	Go to Step 2	Ok. Go to Step 3
2	1. Disconnect the wheel speed sensor. 2. Measure resistance between the wheel speed sensor connector terminals 1 and 2. Is resistance between connector (F-2) terminals 1 and 2 within 1.3k - 1.9k ohms?	Connector is faulty, or open or short circuit of harness between wheel speed sensor connector and EHCU. Inspect and correct the connector or harness Go to Step 3	Wheel speed sensor is faulty. Replace the wheel speed sensor. Go to Step 3
3	Reconnect all components and ensure all components are properly mounted. Was this step finished?	Repeat the “Basic diagnostic flow chart.”	Go to Step 3

Chart TC-1 Sensor Output Inspection Procedure (Use TECH 2)

Step	Action	Yes	No
1	1. Connect TECH 2. 2. While driving the vehicle, check the wheel speed of each sensor by Data List. Is the vehicle speed value is normal?	Go to Step 6	Go to Step 2
2	Check the sensor harness for suspected disconnection (Check while shaking harness/connector). Is the sensor harness connection normal?	Replace speed sensor. Go to Step 3	Repair. Go to Step 6
3	While driving the vehicle, check the wheel speed of each sensor by Data List. Is the vehicle speed value is normal?	Go to Step 6	Go to Step 4
4	Check the sensor rotor. Is the sensor rotor normal?	Go to Step 6	Replace sensor rotor. Go to Step 5
5	While driving the vehicle, check the wheel speed of each sensor by Data List. Is the vehicle speed value is normal?	Go to Step 6	Repair harness or connector between EHCU and speed sensor. Go to Step 6
6	Reconnect all components, ensure all components are properly mounted. Was this step finished?	Repeat the “Basic diagnostic flow chart.”	Go to Step 6

Chart C-2 Transmission Input Inspection Procedure

Step	Action	Yes	No
1	1. Turn the key off. 2. Disconnect EHCU connector. Is there continuity between EHCU connector terminals 6 and 15 (Gear position-P(A/T), N(M/T))?	Shorted switch harness. Repair switch or harness. Go to Step 6	Go to Step 2
2	Is the vehicle an A/T model?	Go to Step 3	Go to Step 5
3	Turn the key on and measure voltage between EHCU connector terminals 6 and 15. Is there less than 6V when the gear position is L, and R(Battery voltage 12V)?	Go to Step 5	Transmission SW trouble. Disconnected harness. Repair SW and harness. Go to Step 6
4	Turn the key on and measure the voltage between EHCU connector terminal 6 and 15. Is there more than 9.6V when the gear position is 1, 2, R(Battery voltage 12V)?	Go to Step 5	Transmission SW trouble. Disconnected harness. Repair SW and harness. Go to Step 6
5	Measure the voltage between EHCU connector terminals 6 and 15. Is there 6.6 to 9.0V when the gear position is 3, 4, 5 and N(M/T) or 2,3,D,N and P(A/T)(Battery voltage 12V)?	Go to Step 6	Transmission SW trouble. Disconnected harness. Repair SW and harness. Go to Step 6
6	1. Reconnect all components and ensure all components are properly mounted. 2. Clear diagnostic trouble code. Was this step finished?	Repeat the “Basic diagnostic flow chart.”	Go to Step 6

Chart TC-2 Transmission Input Inspection Procedure (Use TECH 2)

Step	Action	Yes	No
1	1. Connect TECH 2. 2. Select Data List. Is this vehicle an A/T model ?	Go to Step 2	Go to Step 4
2	Is “Off-Road Switch(Transmission Input): Active” when the shift lever is the L and R?	Go to Step 3	Go to Step 6
3	Is “Off-Road Switch(Transmission Input): Inactive” when the shift lever is other than the L and R?	Go to Step 7	Go to Step 6
4	Is “Off-Road Switch(Transmission Input): Active” when the shift lever is in 1, 2 and R?	Go to Step 5	Go to Step 6
5	Is “Off-Road Switch(Transmission Input): Inactive” when the shift lever is other than the 1, 2 and R?	Go to Step 7	Go to Step 6
6	1. Abnormal T/M SW, inhibitor SW, or harness. 2. Repair T/M SW, inhibitor SW, or harness. Is the T/M SW, inhibitor SW, or harness repaired?	Go to Step 7	Go to Step 6
7	Reconnect all components, ensure all components are properly mounted. Was this step finished?	Repeat the “Basic diagnostic flow chart.”	Go to Step 7

Special Tools

ILLUSTRATION	**TOOL NO.** TOOL NAME
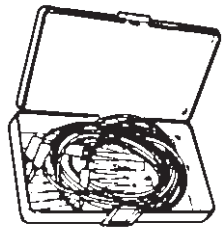	**5–8840–0385–0** **(J–35616)** Connector test adapter kit
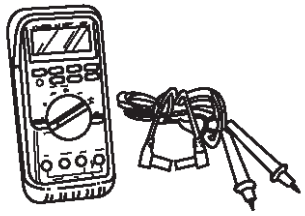	**5–8840–0366–0** **(J–39200)** High impedance multimeter
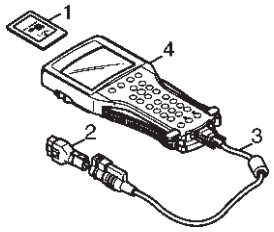	(1) PCMCIA Card (2) SAE 16/19 Adapter (3) DLC Cable (4) Tech–2

BRAKES

ANTI-LOCK BRAKE SYSTEM

CONTENTS

Service Precaution 5B–1
Electronic Hydraulic Control Unit 5B–2
Electronic Hydraulic Control Unit and Associated Parts 5B–2
Removal 5B–2
Installation 5B–2
G-Sensor 5B–3
Removal 5B–3
Inspection and Repair 5B–3
Installation 5B–3
Front Wheel Speed Sensor 5B–4
Front Wheel Speed Sensor and Associated Parts 5B–4
Removal 5B–4
Inspection and Repair 5B–5
Installation 5B–5
Rear Wheel Speed Sensor 5B–6
Rear Wheel Speed Sensor and Associated Parts 5B–6
Removal 5B–6
Inspection and Repair 5B–6
Installation 5B–6

Service Precaution

WARNING: IF SO EQUIPPED WITH A SUPPLEMENTAL RESTRAINT SYSTEM(SRS), REFER TO THE SRS COMPONENT AND WIRING LOCATION VIEW IN ORDER TO DETERMINE WHETHER YOU ARE PERFORMING SERVICE ON OR NEAR THE SRS COMPONENTS OR THE SRS WIRING. WHEN YOU ARE PERFORMING SERVICE ON OR NEAR THE SRS COMPONENTS OR THE SRS WIRING, REFER TO THE SRS SERVICE INFORMATION. FAILURE TO FOLLOW WARNINGS COULD RESULT IN POSSIBLE AIR BAG DEPLOYMENT, PERSONAL INJURY, OR OTHERWISE UNNEEDED SRS SYSTEM REPAIRS.

CAUTION: Always use the correct fastener in the proper location. When you replace a fastener, use ONLY the exact part number for that application. ISUZU will call out those fasteners that require a replacement after removal. ISUZU will also call out the fasteners that require thread lockers or thread sealant. UNLESS OTHERWISE SPECIFIED, do not use supplemental coatings (Paints, greases, or other corrosion inhibitors) on threaded fasteners or fastener joint interfaces. Generally, such coatings adversely affect the fastener torque and the joint clamping force, and may damage the fastener. When you install fasteners, use the correct tightening sequence and specifications. Following these instructions can help you avoid damage to parts and systems.

CAUTION: Replace all components included in repair kits used to service this system. Lubricate rubber parts with clean, fresh brake fluid to ease assembly. Do not use shop air with in–line lubricators on brake parts, as damage to rubber components may result. If any hydraulic component is removed or brake line disconnected, it may be necessary to bleed part or all of the brake system.

NOTE: The use of rubber hoses or parts other than those furnished specifically for the Anti–lock Brake System may lead to functional problems requiring major overhaul.

Electronic Hydraulic Control Unit

Electronic Hydraulic Control Unit and Associated Parts

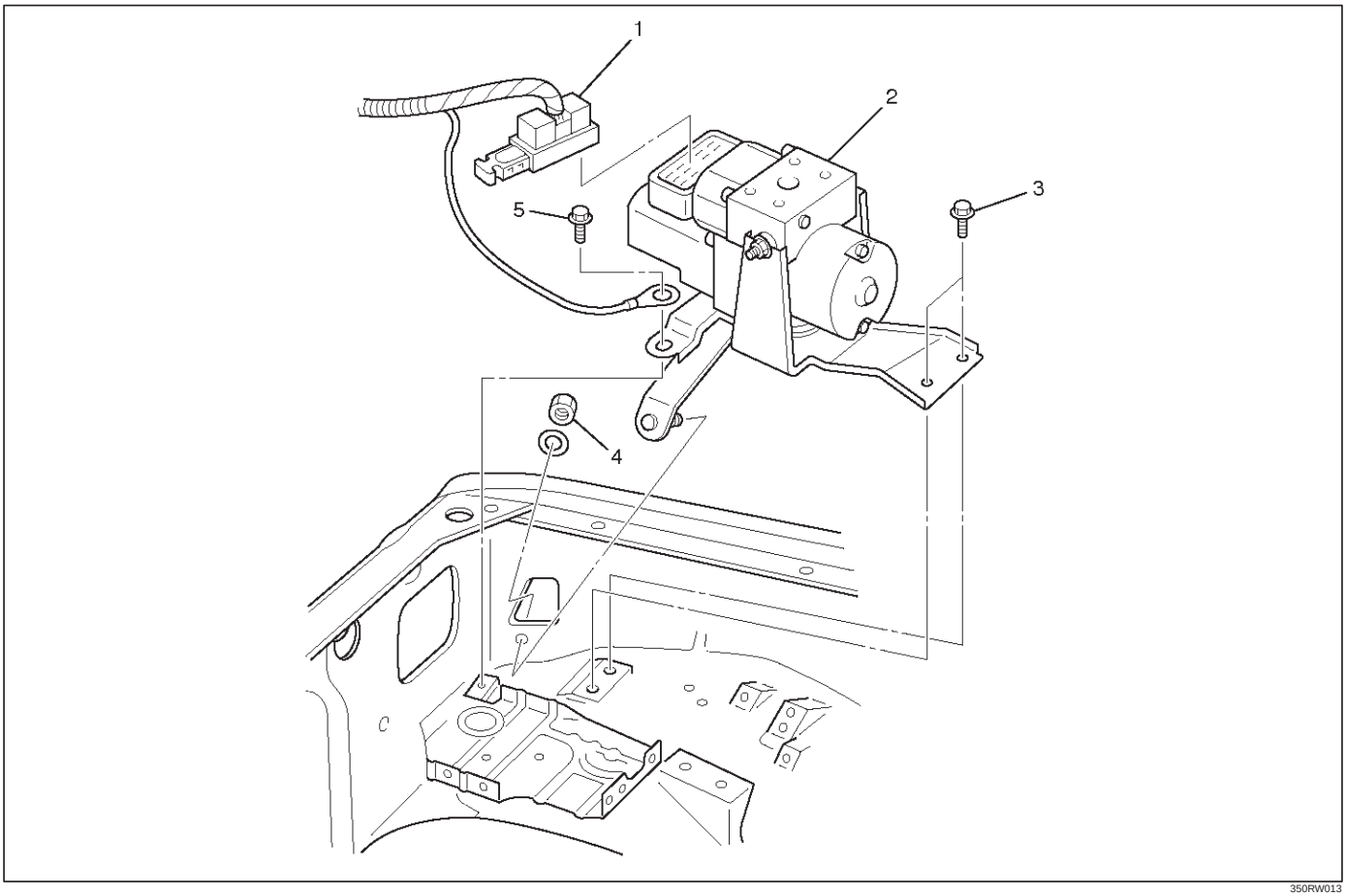

Legend

(1) Connector
(2) Hydraulic Unit ASM
(3) Bolts
(4) Nut
(5) Bolt

Removal

1. Remove battery ASM.
2. Remove harness connector.
3. Remove EHCU fixing nuts.
4. Remove brake pipes.
   - After disconnecting brake pipe, cap or tape the openings of the brake pipe to prevent the entry of foreign matter.
5. Remove hydraulic unit fixing nuts.

Installation

To install, follow the removal steps in the reverse order, noting the following points:

Torque

Hydraulic unit fixing nuts : 22 N·m (2.2kg·m/16 lb ft)

Ground cable : 14 N·m (1.4kg·m/10 lb ft)

Brake pipe (joint bolts) : 16 N·m (1.6kg·m/12 lb ft)

- After installing the hydraulic unit, bleed brakes completely. Refer to Servicing in Power Assisted Brake System section.

G-Sensor

Removal

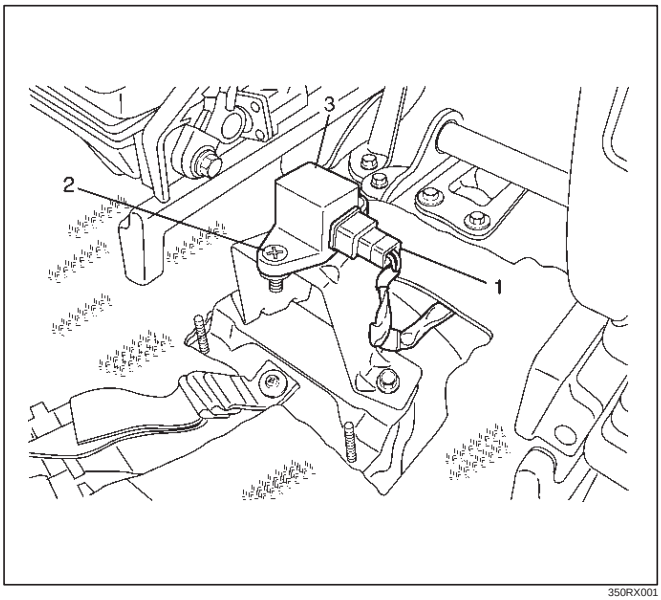

350RX001

1. Remove center console.
   - Refer to Consoles in Body and Accessories section.
2. Remove clip from G-sensor connector (1), then disconnect connector.
3. Remove G-sensor assembly fixing bolt (2).
4. Remove G-sensor assembly (3).

Inspection and Repair

Refer to Chart B-5 in Brake Control System section.

Installation

1. Install G-sensor assembly (3).
   - Care should be taken so that the G-sensor is not installed in the wrong direction.
2. Install G-sensor assembly fixing bolt (2).
   - Tighten the fixing bolt to the specified torque.

   Torque : 10 N·m (1.0kg·m/87 lb in)
3. Install G-sensor wiring connector (1).
4. Install center console.
   - Refer to Consoles in Body and Accessories section.

Front Wheel Speed Sensor

Front Wheel Speed Sensor and Associated Parts

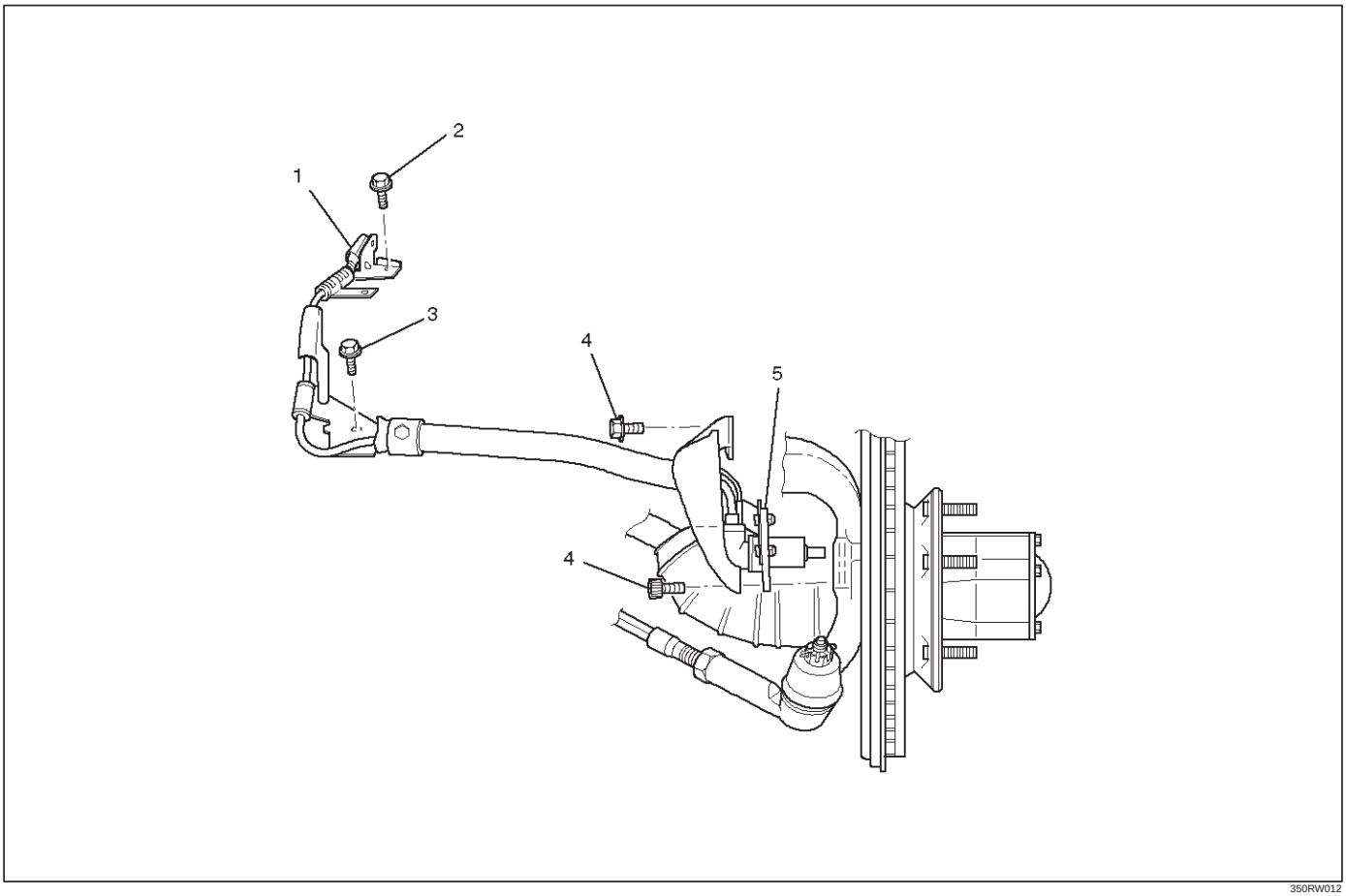

350RW012

Legend

(1) Speed Sensor Connector
(2) Sensor Cable Fixing Bolt (Upper side)
(3) Sensor Cable Fixing Bolt (Lower side)
(4) Sensor Cable Fixing Bolt (Sensor side)
(5) Speed Sensor

Removal

1. Remove speed sensor connector.
2. Remove sensor cable fixing bolt (Upper side).
3. Remove sensor cable fixing bolt (Lower side).
4. Remove the speed sensor cable fixing bolts (1) and caliper fixing bolt (2) from caliper side speed sensor cable bracket (3).

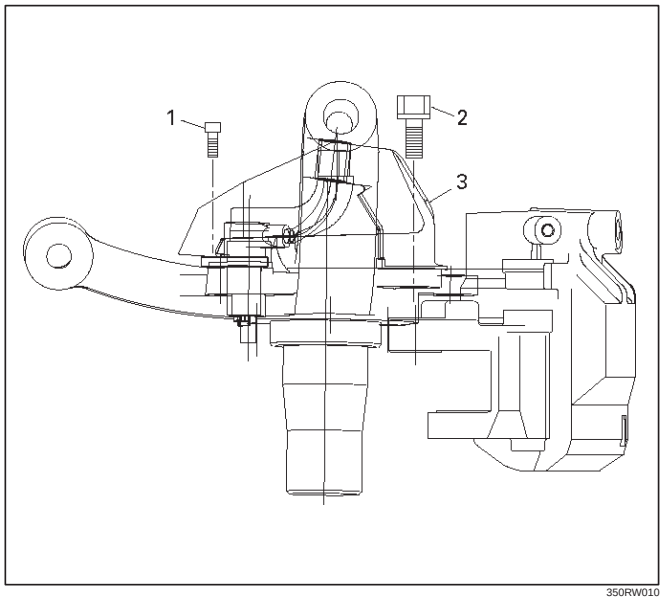

350RW010

5. Remove speed sensor.

Inspection and Repair

1. Check the speed sensor pole piece for presence of foreign materials; remove any dirt, etc.
2. Check the pole piece for damage; replace speed sensor if necessary.
3. Check the speed sensor cable for short or open circuit, and replace with a new one if necessary.
   To check for cable short or open, bend or stretch the cable while checking for continuity.
4. Check the sensor ring for damage including tooth chipping, and if damaged, replace the sensor ring assembly. Refer to Front Hub and Disc in Drive Shaft System section.

Installation

1. Install speed sensor and take care not to hit the speed sensor pole piece during installation.
2. Install speed sensor fixing bolt and tighten the fixing bolt to the specified torque.

   Torque

   Sensor side : 8 N·m (0.8kg·m/69 lb in)

   Caliper side : 155 N·m (15.8kg·m/115 lb ft)

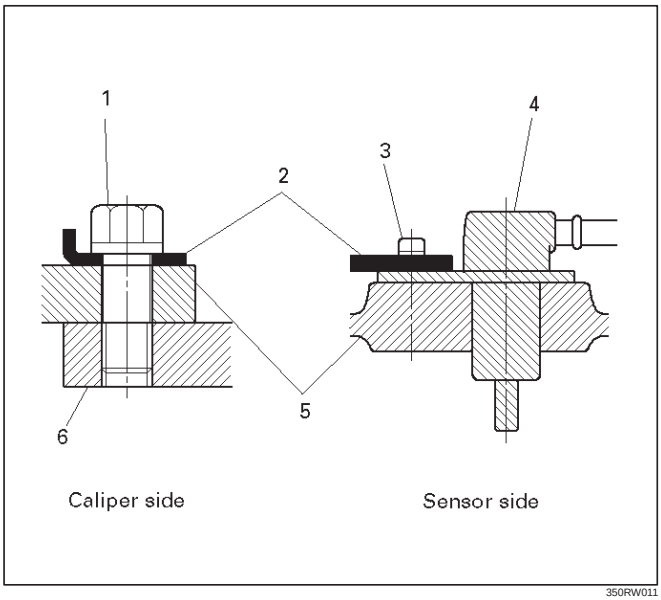

350RW011

Legend

(1) Caliper Fixing Bolt
(2) Bracket
(3) Sensor Fixing Bolt
(4) Sensor
(5) Knuckle
(6) Brake Caliper

3. Install speed sensor cable fixing bolt (Lower side) and tighten the fixing bolt to the specified torque.

   Torque : 24 N·m (2.4kg·m/18 lb ft)

4. Install speed sensor cable fixing bolt (Upper side) and tighten the fixing bolt to the specified torque.

   Torque : 6 N·m (0.6kg·m/52 lb in)

NOTE: Confirm that a white line marked on the cable is not twisted when connecting the speed sensor cable.

5. Install speed sensor connector.

Rear Wheel Speed Sensor

Rear Wheel Speed Sensor and Associated Parts

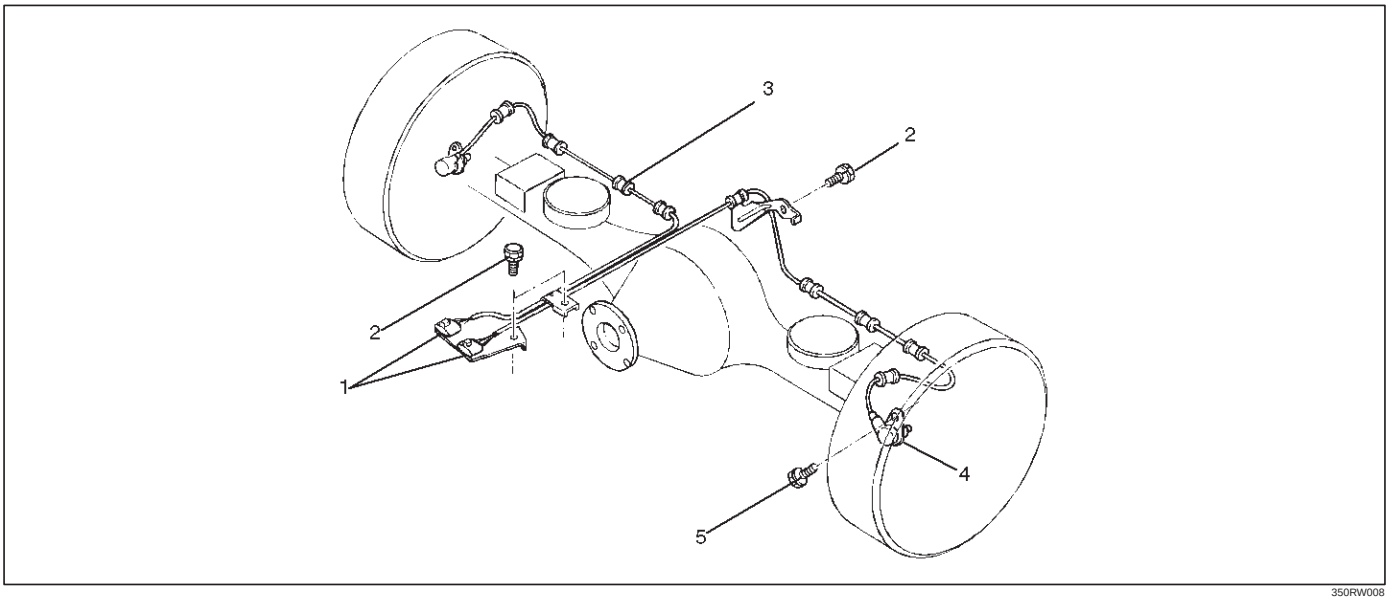

350RW008

Legend

(1) Speed Sensor Connector
(2) Sensor Cable Fixing Bolt
(3) Clip (11 pieces)
(4) Speed Sensor
(5) Sensor Fixing Bolt

Removal

1. Remove speed sensor connector.
2. Remove clip.
3. Remove sensor cable fixing bolt.
4. Remove sensor fixing bolt.
5. Remove speed sensor.

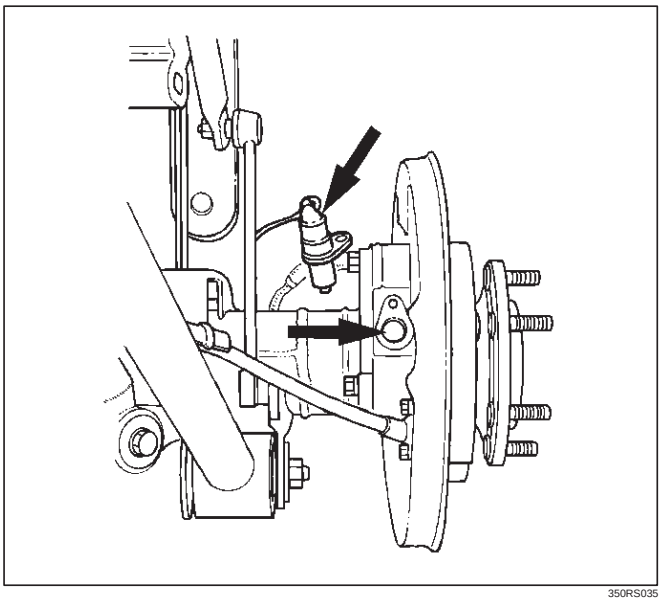

350RS035

Inspection and Repair

1. Check the speed sensor pole piece for presence of foreign materials; remove any dirt, etc.
2. Check the pole piece for damage, and replace the speed sensor if necessary.
3. Check the speed sensor cable for a short or an open, and replace with a new one if necessary. To check for cable short or open, bend or stretch the cable while checking for continuity.
4. Check the sensor ring for damage including tooth chipping. If damaged replace the axle shaft assembly. Refer to Front Hub and Disc in Drive Shaft System section.

Installation

1. Install the speed sensor and take care not to hit the speed sensor pole piece during installation.
2. Install the sensor fixing bolt and tighten it to the specified torque.

   Torque : 18 N·m (1.8kg·m/13 lb ft)

3. Install the sensor cable fixing bolt and tighten it to the specified torque.

   Torque : 24 N·m (2.4kg·m/18 lb ft)

NOTE: Confirm that the cable is not twisted when connecting the speed sensor cable.

4. Install clip.
5. Install speed sensor connector.

SECTION 5C

POWER ASSISTED BRAKE SYSTEM

CONTENTS

PAGE

Service Precaution 5C- 2
Brake System Diagnosis 5C- 3
Troubleshooting 5C- 5
Main Data and Specifications 5C- 7
Service Standard 5C- 8
Servicing 5C- 9
Fixing Torque 5C-18
Special Tools 5C-21
General Description 5C-22
- Master Cylinder 5C-22
- Vacuum Booster 5C-23
- Disc Brakes 5C-24

On-Vehicle Service 5C-25
- Brake Hose Replacement 5C-25
- Brake Pipe Replacement 5C-27
- P & B Valve 5C-28
- P & B Valve Replacement 5C-29
- Load Sensing Proportioning Valve (LSPV) 5C-30
- Brake Pedal Replacement 5C-34
- Stoplight Switch Replacement 5C-36
- Fluid Reservoir Tank 5C-38
- Master Cylinder Assembly 5C-39
- Vacuum Booster Assembly 5C-41
- Exterior Components 5C-44

Front Disc Brakes 5C-47
Brake Pads Replacement 5C-47
Caliper Replacement 5C-50
Rebuilding the Caliper 5C-53
Rear Disc Brakes 5C-56
Brake Pads Replacement 5C-56
Caliper Replacement 5C-59
Rebuilding the Caliper 5C-62
Unit Repair 5C-65
Master Cylinder 5C-65
Vacuum Booster 5C-67

SERVICE PRECAUTION

WARNING:
IF SO EQUIPPED WITH A SUPPLEMENTAL RESTRAINT SYSTEM (SRS), REFER TO THE SRS COMPONENT AND WIRING LOCATION VIEW IN ORDER TO DETERMINE WHETHER YOU ARE PERFORMING SERVICE ON OR NEAR THE SRS COMPONENTS OR THE SRS WIRING. WHEN YOU ARE PERFORMING SERVICE ON OR NEAR THE SRS COMPONENTS OR THE SRS WIRING, REFER TO THE SRS SERVICE INFORMATION. FAILURE TO FOLLOW WARNINGS COULD RESULT IN POSSIBLE AIR BAG DEPLOYMENT, PERSONAL INJURY, OR OTHERWISE UNNEEDED SRS SYSTEM REPAIRS.

CAUTION:
Always use the correct fastener in the proper location. When you replace a fastener, use ONLY the exact part number for that application. ISUZU will call out those fasteners that require a replacement after removal. ISUZU will also call out the fasteners that require thread lockers or thread sealant. UNLESS OTHERWISE SPECIFIED, do not use supplemental coatings (Paints, greases, or other corrosion inhibitors) on threaded fasteners or fastener joint interfaces. Generally, such coatings adversely affect the fastener torque and the joint clamping force, and may damage the fastener. When you install fasteners, use the correct tightening sequence and specification. Following these instructions can help you avoid damage to parts and systems.

BRAKE SYSTEM DIAGNOSIS

ROAD TESTING THE BRAKES

Brake Test

Brakes should be tested on a dry, clean, reasonably smooth and level roadway. A true test of brake performance cannot be made if the roadway is wet, greasy or covered with loose dirt so that all tires do not grip the road equally. Testing will also be adversely affected if the roadway is crowned so as to throw the weight of the vehicle toward wheels on one side or if the roadway is so rough that wheels tend to bounce. Test the brakes at different vehicle speeds with both light and heavy pedal pressure; however, avoid locking the wheels and sliding the tires. Locked wheels and sliding tires do not indicate brake efficiency, since heavily braked but turning wheels will stop the vehicle in less distance than locked wheels. More tire-to-road friction is present with a heavily braked turning tire then with a sliding tire.

The standard brake system is designed and balanced to avoid locking the wheels except at very high deceleration levels.

It is designed this way because the shortest stopping distance and best control is achieved without brake lock-up.

Because of high deceleration capability, a firmer pedal may be felt at higher deceleration levels.

External Conditions That Affect Brake Performance

1. Tires: Tires having unequal contact and grip on the road will cause unequal braking. Tires must be equally inflated, identical in size, and the tread pattern of right and left tires must be approximately equal.
2. Vehicle loading: A heavily loaded vehicle requires more braking effort.
3. Wheel Alignment: Misalignment of the wheels, particularly in regard to excessive camber and caster, will cause the brakes to pull to one side.

BRAKE FLUID LEAKS

With engine running at idle and the transmission in “Neutral”, depress the brake pedal and hold a constant foot pressure on the pedal. If pedal gradually falls away with the constant pressure, the hydraulic system may be leaking.

Check the master cylinder fluid level. While a slight drop in reservoir level will result from normal lining wear, an abnormally low level in resevoir indicates a leak in the system. The hydraulic system may be leaking internally as well as externally. Refer to “Master Cylinder Inspection”. Also, the system may appear to pass this test but still have slight leakage. If fluid level is normal, check the vacuum booster push

rod length. If an incorrect length push rod is found, adjust or replace the push rod. Check the brake pedal travel and the parking brake adjustment.

When checking the fluid level, the master cylinder fluid level may be low from the "MAX" mark if the front and rear linings are worn. This is not abnormal.

WARNING LIGHT OPERATION

When the ignition switch is in the START position, the "BRAKE" warning light should glow and go OFF when the ignition switch returns to the ON position.

The following conditions will activate the "BRAKE" light:

1. Parking brake applied. The light should be ON whenever the parking brake is applied and the ignition switch is ON.
2. Low fluid level. A low fluid level in the master cylinder will turn the "BRAKE" light ON.
3. During engine cranking the "BRAKE" light should remain ON. This notifies the driver that the warning circuit is operating properly.
4. Low vacuum warning light. The vacuum warning device is equipped on the diesel engine equipped vehicles. The "BRAKE" light comes on when the reserved vacuum is lowered to a critical level or power brake line is damaged.

NOTE:

Depressing the brake pedal repeatedly may cause the brake warning light to come ON when the engine is running at idling speed or at low speed. This is because the amount of vacuum is used more than that supplied by the vacuum pump, however, no problem will occur actually.

If the lamp is still lighting even after 2 or 3 seconds at idling speed, the vacuum line may be defective.

ANTILOCK BRAKE SYSTEM (ABS)

Refer to Brake Control System for inspection and diagnosis procedure of the hydraulic unit.

TROUBLESHOOTING

Condition	Possible Cause	Correction
Brake Pull	1. Tire inflation pressures unequal. 2. Front wheel alignment incorrect. 3. Unmatched tires on same axle. 4. Restricted brake pipes or hoses. 5. Water or oil on brake pads. 6. Brake pads hardened. 7. Brake pads worn excessively. 8. Brake rotor worn or scored. 9. Disc brake caliper malfunctioning. 10. Front hub bearing preload incorrect. 11. Loose suspension parts. 12. Loose calipers.	1. Adjust 2. Adjust 3. Tire with approx. the same amount of tread should be used on the same axle. 4. Check for soft hoses and damaged lines. Replace with new hoses and new double-walled steel brake piping. 5. Clean or replace. 6. Replace. 7. Replace. 8. Grind or replace. 9. Clean or replace. 10. Adjust or replace. 11. Check all suspension mountings. 12. Check and tighten bolts to specifications.
Brake Roughness-or Chatter (Pulsates)	1. Excessive lateral runout. 2. Parallelism not within specifications. 3. Wheel bearings not adjusted. 4. Pad reversed (steel against iron).	1. Check per instructions. If not within specifications, replace or machine the rotor. 2. Check per instructions. If not within specifications, replace or machine the rotor. 3. Adjust wheel bearings to correct specifications. 4. Replace brake pad and machine rotor to within specifications.
Excessive Pedal Effort	1. Malfunctioning vacuum booster. 2. Partial system failure. 3. Excessively worn pad. 4. Piston in caliper stuck or sluggish. 5. Fading brakes due to incorrect pad. 6. Vacuum leak to vacuum booster. 7. Check direction of check valve within vacuum hose. 8. Grease on the brake pads.	1. Check vacuum booster operation and repair, if necessary. 2. Check front and rear brake system for failure and repair. Also, check brake warning light. If a failed system is found, the light should indicate a failure. 3. Check and replace pads in sets. 4. Remove caliper and rebuild. 5. Remove and replace with original equipment pad or equivalent. 6. Check for ruptured or loose hose. 7. Correct vacuum hose direction. 8. Replace or clean.
Excessive Brake Pedal Travel	1. Air in hydraulic circuit. 2. Level of brake fluid in resevoir too low. 3. Master cylinder push rod clearance excessive. 4. Leakage in hydraulic system.	1. Bleed hydraulic circuit. 2. Replenish brake fluid resevoir to specified level and bleed hydraulic circuit as necessary. 3. Adjust. 4. Correct or replace defective parts.

Condition	Possible Cause	Correction
Brake Drag	1. Master cylinder pistons not returning correctly. 2. Restricted brake pipes or hoses. 3. Parking brake maladjusted. 4. Parking brake lining clearance insufficient. 5. Brake pedal free play insufficient. 6. Piston in master cylinder sticking. 7. Piston in disc brake caliper sticking. 8. Brake pads sticking in caliper. 9. Return spring weakened. 10. Parking brake binding. 11. Front hub bearing preload incorrect. 12. Parking brake shoes not returning. 13. Obstructions in hydraulic circuit. 14. Rotor warped excessively. 15. Rear brake drum distorted. 16. Parking cable sticking.	1. Adjust stop light switch and vacuum booster operating rod. If necessary, rebuild. 2. Check for soft hoses or damaged pipes, and replace with new hoses and new double-walled steel brake piping. 3. Adjust. 4. Adjust. 5. Adjust brake pedal height or power cylinder operating rod. 6. Replace. 7. Replace piston seals. 8. Clean. 9. Replace. 10. Overhaul parking brakes and correct. 11. Adjust or replace. 12. Correct or replace brake back plate and brake shoe as necessary. 13. Clean. 14. Grind or replace. 15. Grind or replace. 16. Clean or replace.
Grabbing or Uneven Braking Action (All conditions listed under "Pulls")	1. Malfunctioning vacuum booster. 2. Binding brake pedal mechanism. 3. Corroded caliper assembly.	1. Check operation and correct as necessary. 2. Check and lubricate, if necessary. 3. Clean and lubricate.
Brake Noisy	1. Brake pads worn. 2. Brake pads hardened. 3. Brake pads in poor contact with rotor. 4. Brake disc(s) warped, worn or damaged. 5. Disc brake anti-squeak shims fatigued. 6. Front hub bearings loose or preload is incorrect. 7. Brake disc rusted.	1. Replace. 2. Replace. 3. Correct. 4. Grind or replace. 5. Replace. 6. Adjust or replace. 7. Grind or replace.
Poor Brake Action	1. Master cylinder faulty. 2. Vacuum booster faulty. 3. Level of brake fluid in reservoir too low. 4. Air in hydraulic circuit. 5. Disc brake caliper faulty. 6. Water or oil on brake pads. 7. Brake pads in poor contact with rotor. 8. Brake pads worn. 9. Brake disc rusted. 10. Check valve in vacuum hose faulty.	1. Correct or replace. 2. Correct or replace. 3. Replenish and bleed. 4. Bleed. 5. Clean or replace. 6. Clean or replace. 7. Correct. 8. Replace. 9. Grind or replace. 10. Correct or replace.

MAIN DATA AND SPECIFICATIONS

MASTER CYLINDER		
Type		Dual-circuit
Piston Bore Diameter	mm (in)	25.4 (1.000)
VACUUM BOOSTER		
Diaphragm Diameter		
	Front; mm (in)	205 (8.07) (Gasoline) / 180 (7.09) (Diesel)
	Rear; mm (in)	230 (9.06) (Gasoline) / 205 (8.07) (Diesel)
Push Rod Stroke	mm (in)	More than 32.0 (1.26)
Plunger Diameter	mm (in)	10.13 (0.399)
Push Rod Diameter	mm (in)	27.4 (1.08)
FRONT DISC BRAKE		
Type		Floating, Pin Slide
Pad Dimension	cm^2 (in^2)	55 (8.52)
Adjusting Method		Self-adjusting
Piston Diameter	mm (in)	60.33 (2.38)
Disc (Rotor) Type		Ventilated
Disc (Rotor) Thickness	mm (in)	26 (1.02)
Disc (Rotor) Effective Diameter	mm (in)	222 (8.74)
REAR DISC BRAKE		
Type		Floating, Pin Slide
Pad Dimension	cm^2 (in^2)	33 (5.11)
Adjusting Method		Self-adjusting
Piston Diameter	mm (in)	41.3 (1.63)
Disc (Rotor) Type		Ventilated
Disc (Rotor) Thickness	mm (in)	18 (0.71)
Disc (Rotor) Effective Diameter	mm (in)	269.2 (10.60)

SERVICE STANDARD

HYDRAULIC BRAKE FLUID		DOT 3 grade
BRAKE PEDAL		
Pedal Free Play	mm (in)	6 to 10 (0.23 to 0.39)
Pedal Height (LHD / RHD)	mm (in)	208 to 218 (8.19 to 8.58) / 211 to 221 (8.31 to 8.70)
Stop Light Switch Clearance	mm (in)	0 to 0.2 (0 to 0.008)
FRONT DISC BRAKE		
Pad Thickness Minimum Limit	mm (in)	1.0 (0.039)
Disc (Rotor) Maximum Runout	mm (in)	0.13 (0.005)
Disc (Rotor) Maximum Parallelism	mm (in)	0.010 (0.0004)
Disc (Rotor) Minimum Wear Dimensions (Thickness)	mm (in)	24.60 (0.969)
Disc (Rotor) Minimum Refinish Dimensions (Thickness)	mm (in)	24.97 (0.983)
REAR DISC BRAKE		
Pad Thickness Minimum Limit	mm (in)	1.0 (0.039)
Disc (Rotor) Maximum Runout	mm (in)	0.13 (0.005)
Disc (Rotor) Maximum Parallelism	mm (in)	0.010 (0.0004)
Disc (Rotor) Minimum Wear Dimensions (Thickness)	mm (in)	16.60 (0.654)
Disc (Rotor) Minimum Refinish Dimensions (Thickness)	mm (in)	16.97 (0.668)

SERVICING

FILLING MASTER CYLINDER RESERVOIR

CAUTION:

1) **Use only specified brake fluid. Do not use any fluid which contains a petroleum base. Do not use a container which has been used for petroleum based fluids or a container which is wet with water. Petroleum based fluids will cause swelling and distortion of rubber parts in the hydraulic brake system. Water mixed with brake fluid lowers the fluid boiling point. Keep all fluid containers capped to prevent contamination.**
2) **Always fill the master cylinder reservoid when the engine is cold.**
3) **Never allow the brake fluid to come in contact with the painted surfaced.**

The master cylinder reservoir must be kept properly filled to ensure adequate reserve and to prevent air and moisture from entering the hydraulic system.
However, because of expansion due to heat absorbed from the brakes and the engine, the reservoir must not be overfilled. The brake fluid reservoir is on the master cylinder, which is located under the hood on the driver side of the cowl. Thoroughly clean reservoir cap before removal to avoid getting dirt into reservoir. Remove cap and diaphragm. Add fluid as required to bring level to the “MAX” mark on the reservoir tank. Use “DOT 3“ Hydraulic Brake Fluid. If the fluid cap diaphragm is stretched, return it to the original position before installing.

DETERIORATION OF BRAKE FLUID

Using any other brake fluid than speficied or brake fluid with mineral oil or water mixed in will drop the boiling point of brake fluid. It may, in turn, reuslt in vapor lock or deteriorated rubber parts of the hydraulic system. Be sure to change brake fluid at specified intervals.
If rubber parts are deteriorated, remover all the system parts and clean them with alcohol. Prior to reassembly, dry the cleaned parts with air to remove the alcohol. Replace all hoses and rubber parts of the system.

LEAKAGE OF BRAKE FLUID

With engine idling, set shift lever in the neutral position and continue to depress brake pedal at a constant pedal application force.
Should the pedal stroke become deeper gradually, leak from the hydraulic pressure system is possible.
Make sure by visual check that there is no leak.

BLEEDING BRAKE HYDRAULIC SYSTEM

A bleeding operation is necessary to remove air from the hydraulic brake system whenever air is introduced into the hydraulic system. It may be necessary to bleed the hydraulic system at all four brakes if air has been introduced through a low fluid level or by disconnecting brake pipes at the master cylinder. If a brake pipe is disconneted at one wheel, only that wheel cylinder/caliper needs to be bled. If pipes are disconnected at any fitting located between master cylinder and brakes, then the brake system served by the disconnected pipe must be bled.

1. For 4-wheel Antilock Brake System (ABS) equipped vehicle, be sure to remove the ABS main fuse 40A located at the relay and fuse box before bleeding air. If you attempt to bleed air without removing the main fuse, air cannot be let out thoroughly, and this may cause damage to the hydraulic unit. After bleeding air, be sure to replace the ABS main fuse back to its original position.
2. Set the parking brake completely, then start the engine.

NOTE:
The vacuum booster will be damaged if the bleeding operation is performed with the engine off.

3. Remove the master cylinder reservoir cap.
4. Fill the master cylinder reservoir with brake fluid. Keep the reservoir at least half full during the air bleeding operation.
5. Always use new brake fluid for replenishment.
6. In replenishing brake fluid, take care that air bubbles do not enter the brake fluid.
   - When the master cylinder is replaced or overhauled, first bleed the air from the master cylinder, then from each wheel cylinder and caliper following the procedures described below.

Bleeding the Master Cylinder

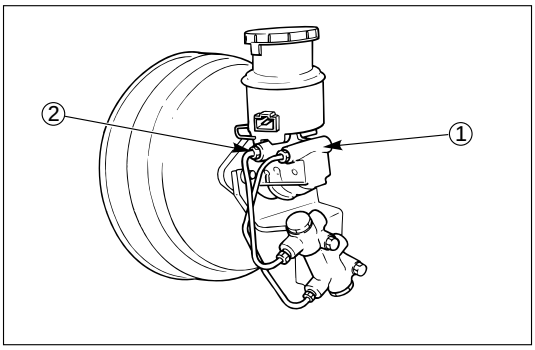

7. Disconnect the rear wheel brake pipe ① from the master cylinder. Check the fluid level and replenish as necessary. If replenished, leave the system for at least one minute.
8. Depress the brake pedal slowly once and hold it depressed.
9. Completely seal the delivery port of the master cylinder where the pipe was disconnected with your finger, then release the brake pedal slowly.
10. Release your finger from the delivery port when the brake pedal returns completely.
11. Repeat steps 7 through 9 until the brake fluid comes out of the delivery port during step 7.

NOTE:
Do not allow the fluid level in the reservoir to go below the half-way mark.

12. Reconnect the brake pipe ① to the master cylinder and tighten the pipe.
13. Depress the brake pedal slowly once and hold it depressed.
14. Loosen the rear wheel brake pipe ① at the master cylinder.
15. Retighten the brake pipe, then release the brake pedal slowly.
16. Repeat steps 13 through 15 until no air comes out from the port when the brake pipe is loosened.

NOTE:
Be very careful not to allow the brake fluid to come in contact with painted surfaces.

17. Bleed the air from the front wheel brake pipe connection ② by repeating steps 7 through 16.

Bleeding the Caliper

18. Bleed the air from each wheel in the order listed below.
    LHD models:
    1) Right rear caliper
    2) Left rear caliper
    3) Load sensing proportioning valve (only for Europe and South Africa)
    4) Right front caliper
    5) Left front caliper
    RHD models:
    1) Left rear caliper
    2) Right rear caliper
    3) Load sensing proportioning valve (only for Europe and South Africa)
    4) Left front caliper
    5) Right front caliper

Conduct air bleeding from the wheels in the above order. If no brake fluid comes out, it suggests that air is mixed in the master cylinder. In this case, bleed air from the master cylinder in accordance with Steps 7 through 17, and then bleed air from the caliper.

19. Place the proper size box end wrench over the bleeder screw.
20. Cover the bleeder screw with a transparent tube, and submerge the free end of the transparent tube in a transparent container containing brake fluid.
21. Pump the brake pedal slowly three (3) times (once/sec), then hold it depressed.
22. Loose the bleeder screw until fluid flows through the tube.
23. Retighten the bleeder screw.
24. Release the brake pedal slowly.
25. Repeat step 21 through 24 until the air is compeletely removed. It may be necessary to repeat the bleeding procedure 10 or more times for front wheels and 15 or more times for rear wheels.
26. Go to the next wheel in the sequence after each wheels is bled. Be sure to monitor reservoir fluid level.

27. Depress the brake pedal to check if you feel "sponginess" after the air has been removed from all wheel cylinders and calipers. If the pedal feels "spongy", the entire bleeding procedure must be repeated.
28. After the bleeding operation is completed on each individual wheel, check the level of brake fluid in the reservoir and replenish up to the "MAX" level if necessary.
29. Attach the reservoir cap.
    - If the diaphragm inside the cap is deformed, reform it and install.
30. Stop the engine.

FLUSHING BRAKE HYDRAULIC SYSTEM

It is recommended that the entire hydraulic system be thoroughly flushed with clean brake fluid whenever new parts are installed in the hydraluic system. Approximately one quart of fluid is required to flush the hydraulic system.

The system must be flushed if there is any doubt as to the grade of fluid in the system or if fluid has been used which contains the slightest trace of mineral oil. All rubber parts that have been subjected to a contaminated fluid must be replaced.

BRAKE PIPES AND HOSES

The hydraulic brake system components are interconnected by special steel piping and flexible hoses. Flexible hoses are used between the frame and the front calipers, the frame and rear axle case and the rear axle and the rear calipers.

When the hydraulic pipes have been disconnected for any reason, the brake system must be bled after reconnecting the pipe; refer to "Bleeding Brake Hydraulic System" in this section.

BRAKE HOSE INSPECTION

The brake hoses should be inspected at least twice a year. The brake hose assembly should be checked for road hazard, cracks and chafing of the outer cover, and for leaks and blisters. Inspect for proper routing and mounting of the hose. A brake hose that rubs on suspension components will wear and eventually fail. A light and mirror may be needed for an adequate inspection. If any of the above conditions are observed on the brake hose, adjust or replace the hose as necessary.

CAUTION:
Never allow brake components such as calipers to hang from the brake hoses, as damage to the hoses may occur.

CHECKING BRAKE PEDAL HEIGHT

The push rod serves as the brake pedal stopper when the pedal is fully released. Brake pedal height adjustment should be performed as follows:

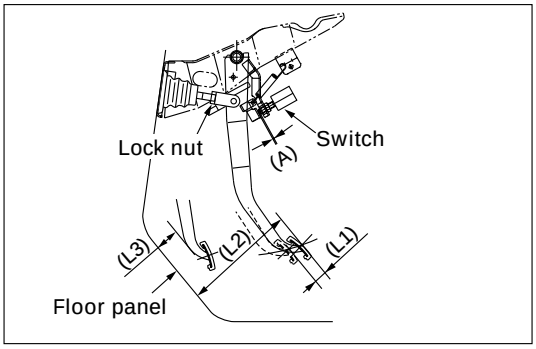

Adjust Brake Pedal

1. Measure the brake pedal height after making sure the pedal is fully returned by the pedal return spring.
   Pedal height (L2) must be measured after starting the engine and revving it several times.

Pedal Free Play (L1)	mm (in)
6 – 10 (0.23 – 0.39)	

Pedal Height (L2)	mm (in)
LHD	RHD
208 – 218 (8.19 – 8.58)	211 – 221 (8.31 – 8.70)

NOTE:
Pedal free play (L1) must be measured after turning off the engine and stepping on the brake pedal firmly five times or more.

2. If the measured value is not within the above range, adjust the brake pedal as follows:
   a) Disconnect the stop light switch connector.
   b) Loosen the stop light switch lock nut.
   c) Rotate the stop light switch so that it moves away from the brake pedal.
   d) Loosen the lock nut on the push rod.
   e) Adjust the brake pedal to the specified height by rotating the push rod in the appropriate direction.
   f) Tighten the lock nut to the specified torque.

Lock Nut Torque	N·m (kg·m/lb·ft)
20 (2.0 / 15)	

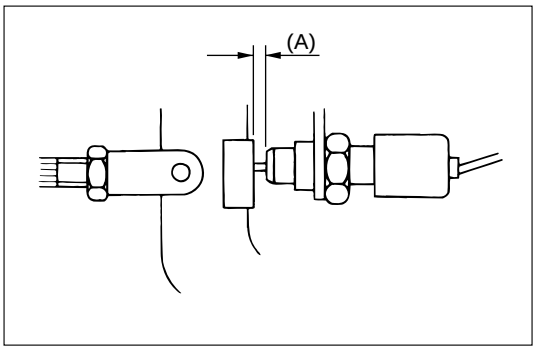

   g) Adjust the stop light switch to the specified clearance (between switch housing and brake pedal) by rotating the switch housing.

Clearance	mm (in)
0 – 0.2 (0 – 0.008)	

NOTE:
While adjusting the installation of the stoplight switch, make sure that the threaded part of the stoplight switch does not push the brake pedal.

   h) Tighten the stop light switch lock nut.
   i) Connect the stop light switch connector.

CHECKING BRAKE PEDAL TRAVEL

1. Pedal height (L3) must be measured after starting the engine and removing it several times to apply vacuum to the vacuum booster fully.

NOTE:
Pedal height (L3) must be 100 mm (3.9 in)/85 mm (3.5 in) (LHD/RHD) or more when about 50 kg (110.25 lb) of stepping force is applied.

2. If the measured value is lower than the above range, air existing in the hydrauic system is suspected and perform bleeding procedure.

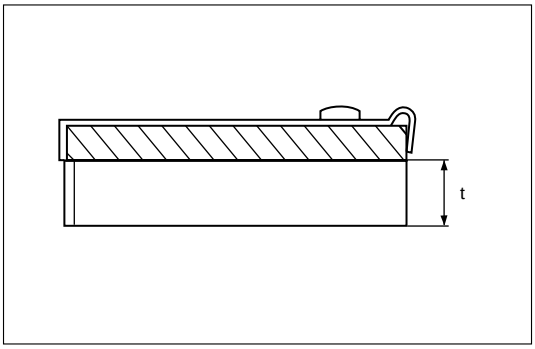

FRONT AND REAR DISC BRAKE PADS INSPECTION

Check the outer pad by looking at each caliper from above. Check the thickness on the inner pad by looking down through the inspection hole in the top of the caliper. Whenever the pad is worn to about the thickness of the pad base, the pad should be removed for further measurements. The pad should be replaced anytime the pad thickness (t) is worn to within 1.0 mm (0.039 in) of the pad itself.
The disc pads have a wear indicator that makes a noise when the pad wears to where replacement is required.

Minimum Limit	mm (in)
1.0 (0.039)	

SERVICING THE FRONT BRAKE ROTOR

In the manufacturing of the front brake rotor, all the tolerances regarding surface finish, parallelism and lateral runout are held very closely. The maintenance of these tolerances provide the surface necessary to assure smooth brake operation.

LATERAL RUNOUT

Lateral runout is the movement of the rotor from side to side as it rotates on the spindle. This could also be referred to as “rotor wobble”.
This movement causes the piston to be knocked back into its bore. This results in additional pedal travel and a vibration during braking.

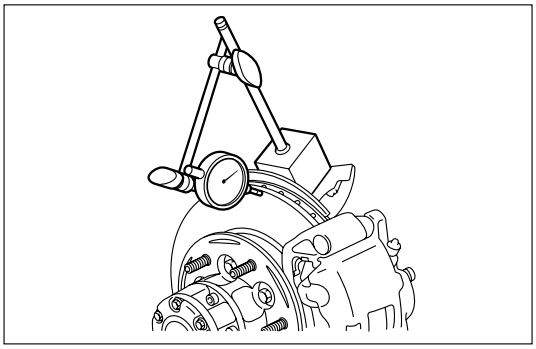

CHECKING LATERAL RUNOUT

1. Adjust the wheel bearing correctly.
   - Refer to Front Hub and Disc in Driveline / Axle Section.
2. Attach a dial indicator to some portion of the suspension so that the stem contacts the rotor face about 29 mm (1.14 in) from the rotor edge.
3. Move the rotor one complete rotation.
   - The lateral runout should not exceed 0.13 mm (0.005 in).

Maximum Runout	mm (in)
0.13 (0.005)	

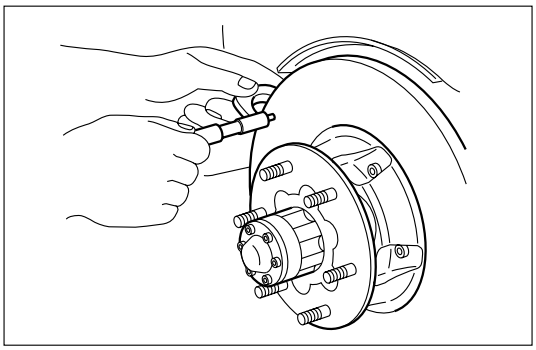

PARALLELISM

Parallelism is the measurement of the thickness of the rotor at four or more points around the circumference of the rotor. All measurement must be made at 29 mm (1.14 in) from the edge of the rotor.
The rotor thickness must not vary more than 0.010 mm (0.004 in) from point to point.

Maximum Parallelism	mm (in)
0.010 (0.0004)	

REPLACING FRONT BRAKE ROTORS

When installing new brake rotors, do not refinish the surfaces. These parts are at the correct level of surface finish.

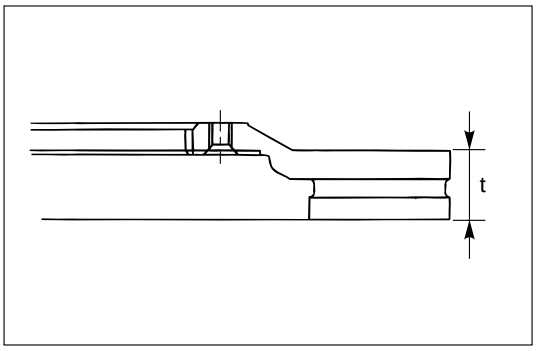

REFINISHING FRONT BRAKE ROTORS

Accurate control of the rotor tolerances is necessary for proper performance of the disc brakes. Machining of the rotor should be done only with precision equipment. All brake rotors have a minimum thickness dimension cast into them. This dimension is the minimum wear dimension and not a refinish dimension. The minimum wear dimension is 24.60 mm (0.969 in). The minimum refinish dimension is 24.97 mm (0.983 in).
When refinishing rotors, always use sharp cutting tools or bits. Dull or worn tools leave a poor surface finish which will affect initial braking performance. Vibration dampening attachments should always be used when refinishing braking surfaces. These attachments eliminate tool chatter and will result in better surface finish.
After refinishing, replace any rotor that does not meet the minimum thickness of 24.97 mm (0.983 in). Do not use a brake rotor that will not meet the specification.

Minimum Wear Dimension	mm (in)
24.60 (0.969)	

Refinish Dimension	mm (in)
24.97 (0.983)	

SERVICING THE REAR BRAKE ROTOR

In the manufacturing of the rear brake rotor, all the tolerances regarding surface finish, parallelism and lateral runout are held very closely. The maintenance of these tolerances provide the surface necessary to assure smooth brake operation.

LATERAL RUNOUT

Lateral runout is the movement of the rotor from side to side as it rotates on the spindle. This could also be referred to as “rotor wobble”.
This movement causes the piston to be knocked back into its bore. This results in additional pedal travel and a vibration during braking.

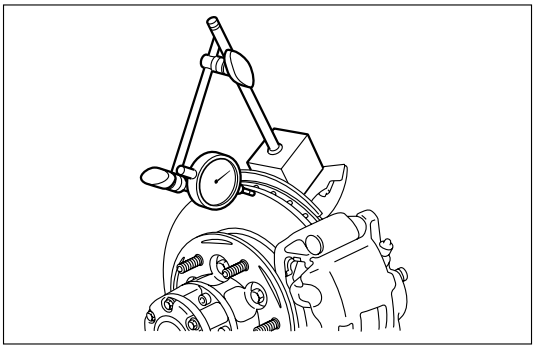

CHECKING LATERAL RUNOUT

1. Attach a dial indicator to some portion of the suspension so that the stem contacts the rotor face about 22 mm (0.87 in) from the rotor edge.
2. Move the rotor one complete rotation.
   - The lateral runout should not exceed 0.13 mm (0.005 in).

Maximum Runout	mm (in)
0.13 (0.005)	

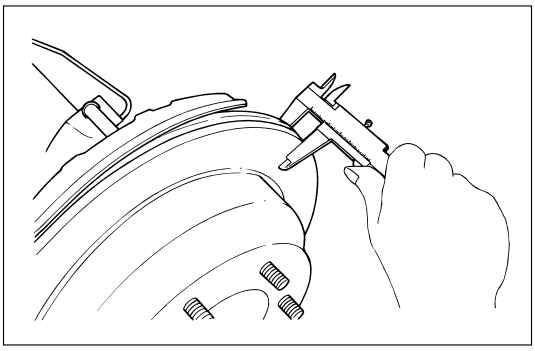

PARALLELSIM

Parallelism is the measurement of the thickness of the rotor at four or more points around the circumference of the rotor. All measurements must be made at 22 mm (0.87 in) from the edge of the rotor.
The rotor thickness must not vary more than 0.010 mm (0.0004 in) from point to point.

Maximum Parallelism Variation	mm (in)
0.010 (0.0004)	

REPLACING REAR BRAKE ROTORS

When installing new brake rotors, do not refinish the surfaces. These parts are at the correct level of surface finish.

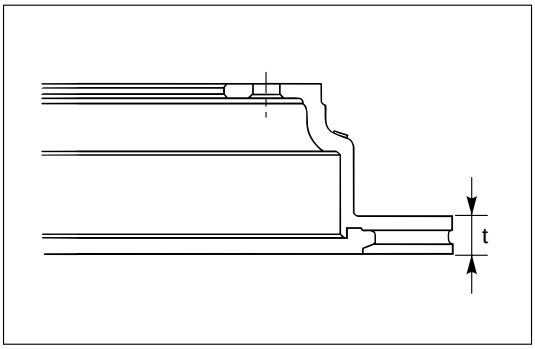

REFINISHING REAR BRAKE ROTORS

Accurate control of the rotor tolerances is necessary for proper performance of the disc brakes. Machining of the rotor should be done only with precision equipment. All brake rotors have a minimum thickness dimension cast into them. This dimension is the minimum wear dimension and not a refinish dimension. The minimum wear dimension is 16.60 mm (0.654 in). The refinish dimension is 16.97 mm (0.668 in).
When refinishing rotors, always use sharp cutting tools or bits. Dull or worn tools leave a poor surface finish which will affect initial braking performance.

Vibration dampening attachments should always be used when refinishing braking surfaces. These attachments eliminate tool chatter and will result in better surface finish.

After refinishing, replace any rotor does not meet the minimum thickness of 16.97 mm (0.668 in). Do not use a brake rotor that will not meet the specification.

Minimum Wear Dimension	mm (in)
16.60 (0.654)	

Refinish Dimension	mm (in)
16.97 (0.668)	

FIXING TORQUE

Brake Hydraulic Lines

N·m (kg·m/lb·ft)

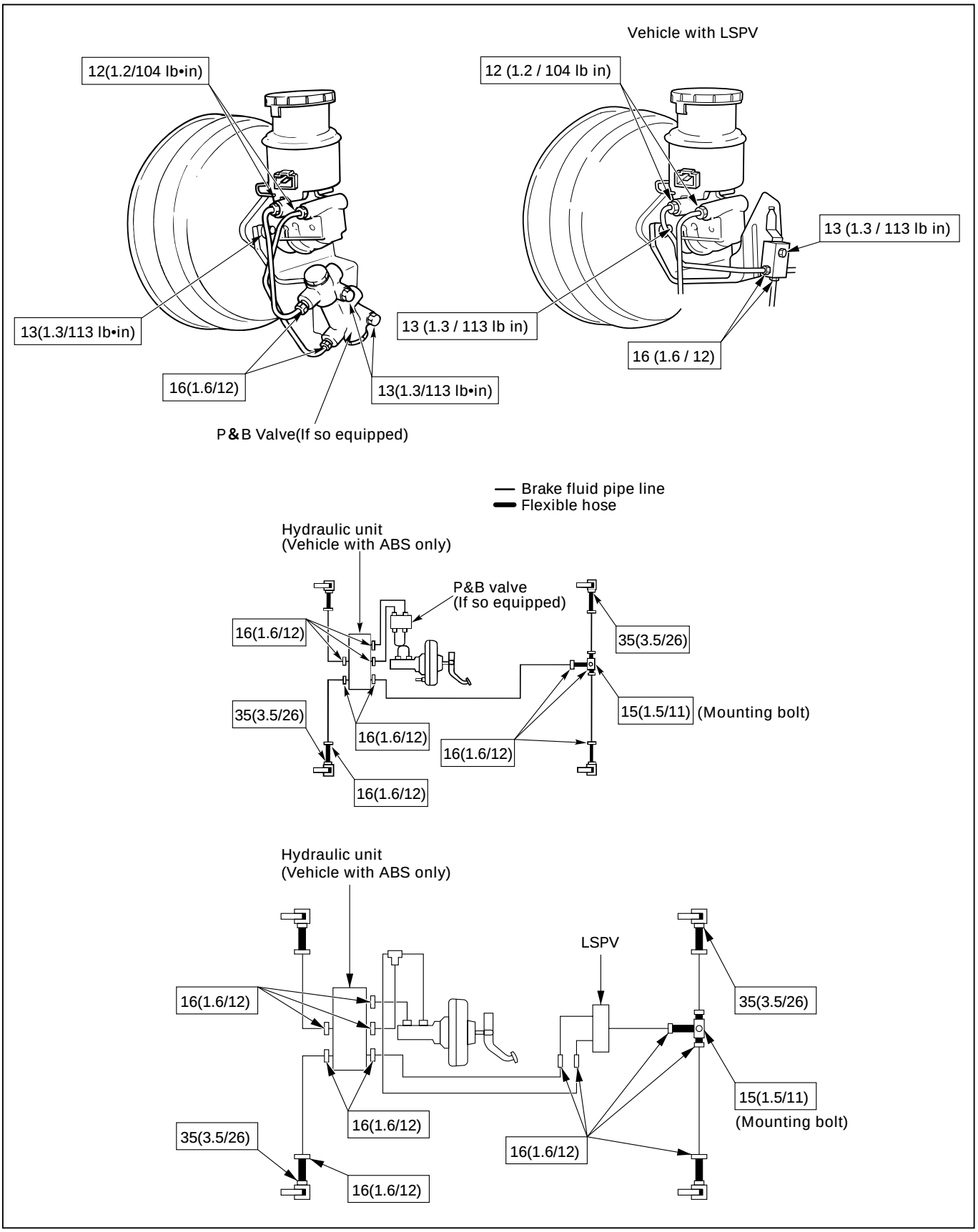

Brake Pedal

N·m (kg·m/lb·ft)

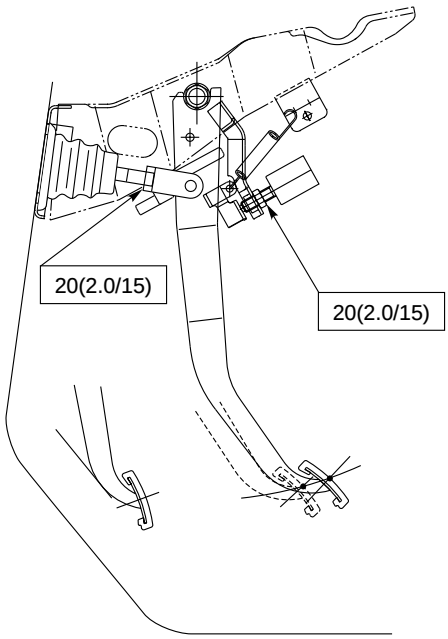

Front and Rear Brakes

N·m (kg·m/lb·ft)

Front disc brake

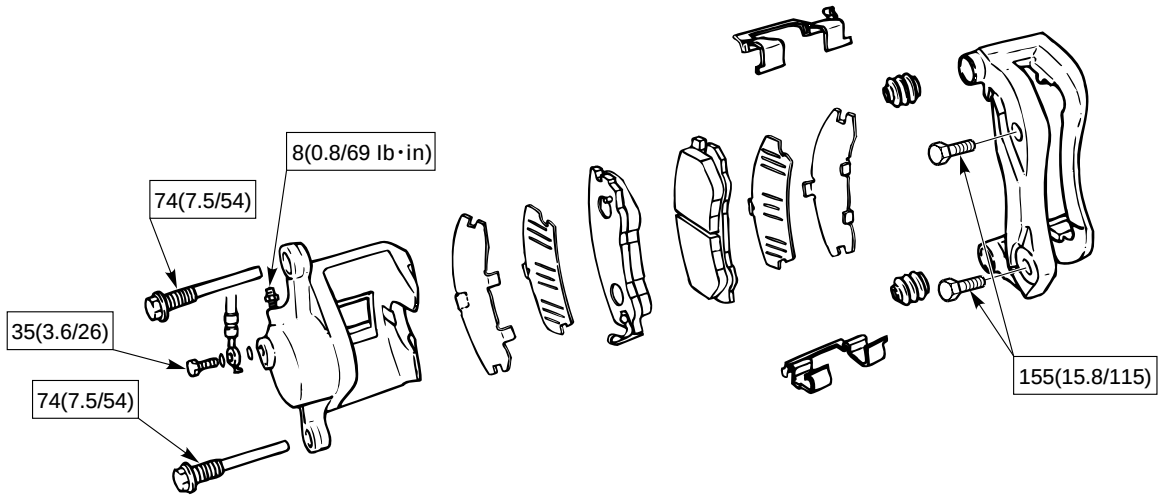

Rear disc brake

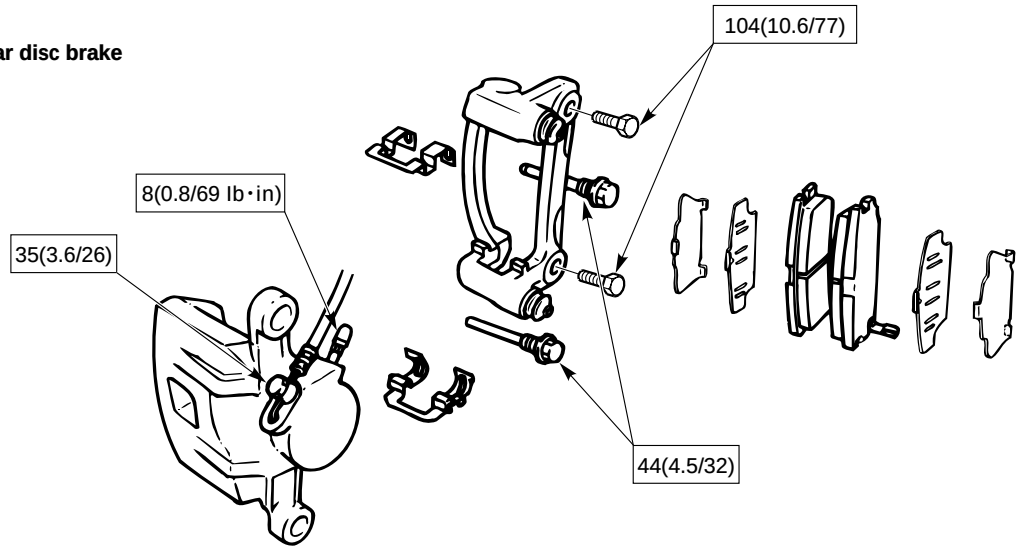

SPECIAL TOOLS

ILLUSTRATION	PART NO.	PARTNAME
	5-8840-2306-0 (J-39242)	Primary piston holder (including master cylinder attach-ment and master cylinder plug)
	5-8840-0277-0 (J-24460-01)	Radiator cap tester
	5-8840-2300-0 (J-39216)	Push rod gauge
	5-8840-0279-0 (J-23738-A)	Vacuum pump
	5-8840-2305-0 (J-39241)	Push rod support

GENERAL DESCRIPTION

MASTER CYLINDER

The master cylinder contains two pistons that supply the hydraulic pressure for a dual-circuit braking system. The primary piston provides the fluid pressure to the front brakes, while the secondary piston provides the fluid pressure to the rear brakes. If the pressure is lost from either system, the remaining system will function to stop the vehicle.

CAUTION:

1) **The master cylinder is not repairable. If found defective, it must be replaced as complete assembly.**
2) **If any hydraulic component is removed or disconneted, it may be necessary to bleed all or part of the brake system.**
3) **The torque values specified are for dry, unlubricated fasteners.**
4) **Perform service operations on a clean bench free from all mineral oil materials.**

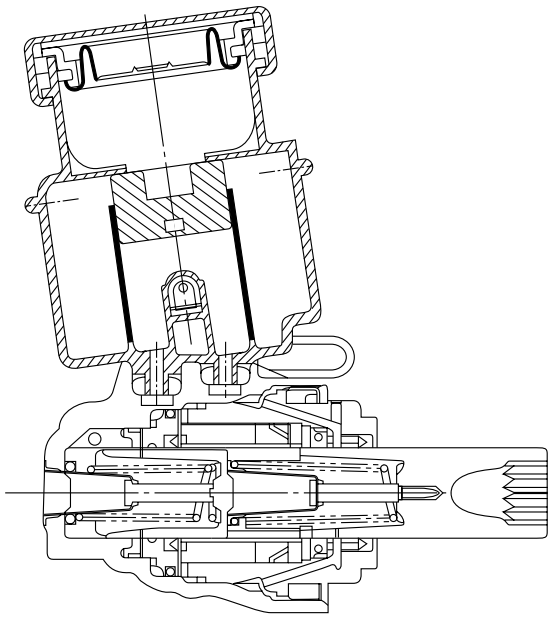

330RW013

VACUUM BOOSTER

This booster is a tandem vacuum unit with a diaphragm effective diameter 205 mm + 230 mm (gasoline engine model) / 180 mm + 205 mm (diesel engine model). In normal operating mode, with the service brakes in the released position, the tandem vacuum booster operates with vacuum on both sides of its diaphragms. When the brakes are applied, air at atmospheric pressure is admitted to one side of each diaphragm to provide the power assist. When the service brake is released, the atmospheric air is shut off from the one side of each diaphragm. The air is then drawn from the booster through the vacuum check valve to the vacuum source.

CAUTION:

1) **If any hydraulic component is removed or disconnected, it may be necessary to bleed all or part of the brake system.**
2) **The torque values specified are for dry, unlubricated fasteners.**
3) **The vacuum booster is not repairable and must be replaced as complete assembly.**

DISC BRAKES

The disc brake assembly consists of a caliper, piston, rotor, pad assembly and support bracket. The caliper assembly has a single bore and is mounted to the support bracket with 2 mounting bolts. The support bracket allows the caliper to move laterally against the rotor. The caliper is a one-piece casting with the inboard side containing the piston bore. A square cut rubber seal is located in a groove in the piston bore which provides the hydraulic seal between the piston and the cylinder wall.

NOTE:

1) **Replace all components included in repair kits used to service this caliper.**
2) **Lubricate rubber parts with clean brake fluid to ease assembly.**
3) **If any hydraulic component is removed or disconnected, it may be necessary to bleed all or part of the brake system.**
4) **Replace pads in axle sets only.**
5) **The torque values specified are for dry, unlubricated fasteners.**
6) **Perform service operation a clean bench free from all mineral oil materials.**

OPERATION

Hydraulic pressure, created by applying the brake pedal, is converted by the caliper to a stopping force. This force acts equally against the piston and the bottom of the caliper bore to move the piston outward and to move (slide) the caliper inward resulting in a clamping action on the rotor. This clamping action forces the linings against the rotor, creating friction to stop the vehicle.

Front disc brakes

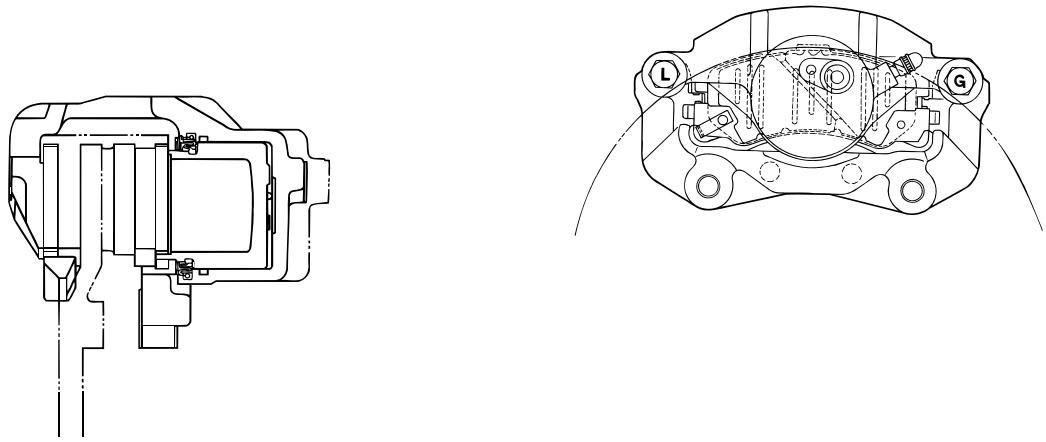

Rear disc brakes

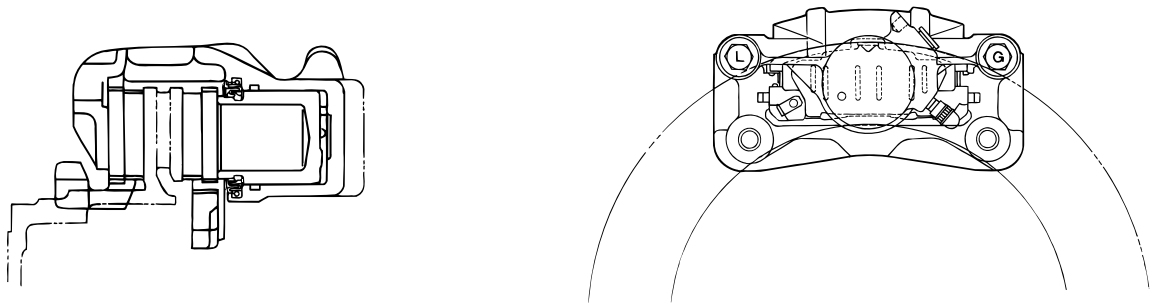

ON-VEHICLE SERVICE

BRAKE HOSE REPLACEMENT

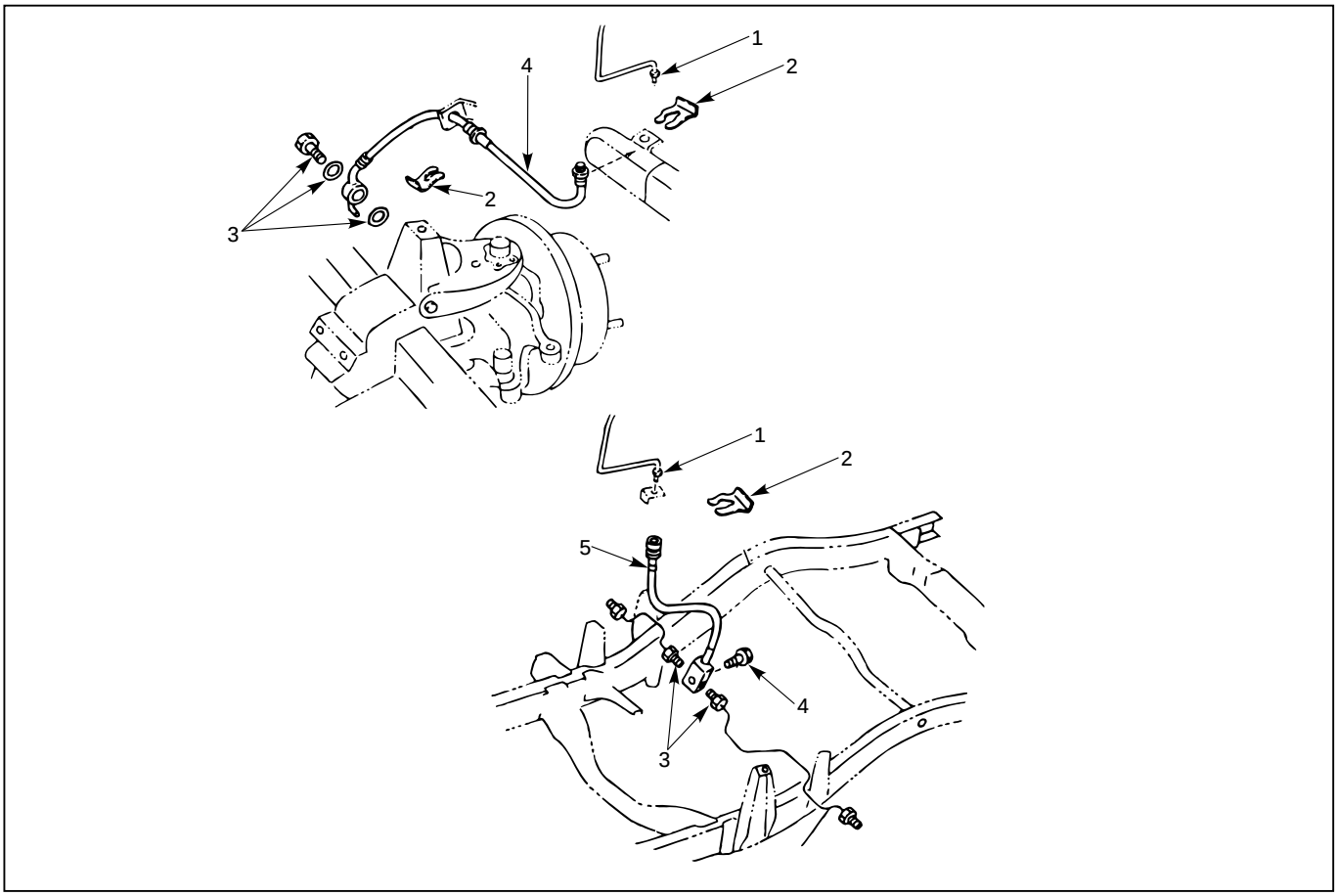

Front/Rear Caliper Brake Hose

Removal Steps

1. Brake pipe
2. Clip
3. Bolt and gasket
4. Hose

Installation Steps

To install, follow the removal steps in the reverse order.

Rear Axle Brake Hose

Removal Steps

1. Brake pipe
2. Clip
3. Brake pipe
4. Bolt
5. Hose

Installation Steps

To install, follow the removal steps in the reverse order.

REMOVAL

Preparation:

1) Raise the vehicle and support it with suitable safety stands.
2) Remove wheel and tire assembly.
3) Clean dirt, grease, and other foreign material off the hose fittings at both ends.

Front/Rear Caliper Brake Hose

1. **Brake Pipe**
2. **Clip**
3. **Bolt and Gasket**
4. **Hose**

Rear Axle Brake Hose

1. **Brake Pipe**
2. **Clip**
3. **Brake Pipe**
4. **Bolt**
5. **Hose**

INSTALLATION

To install, follow the removal steps in the reverse order, noting the following points. After installing the brake hoses, bleed brakes as described in this section.

Front/Rear Caliper Brake Hose

1. Tighten the brake pipes to the specified torque.

Brake Pipe Torque	N·m(kg·m/lb·ft)
16 (1.6 / 12)	

2. Tighten the bolt to the specified torque.

Bolt Torque	N·m(kg·m/lb·ft)
35 (3.5 / 26)	

NOTE:

- **Always use new copper gaskets.**
- **Be sure to put the hooked edge of the flexible hose end into the anti-rotation cavity.**

Rear Axle Brake Hose

1. Tighten the brake pipes to the specified torque.

Brake Pipe Torque	N·m(kg·m/lb·ft)
16 (1.6 / 12)	

2. Tighten the bolt to the specified torque.

Bolt Torque	N·m(kg·cm/lb·in)
13 (130 / 113)	

BRAKE PIPE REPLACEMENT

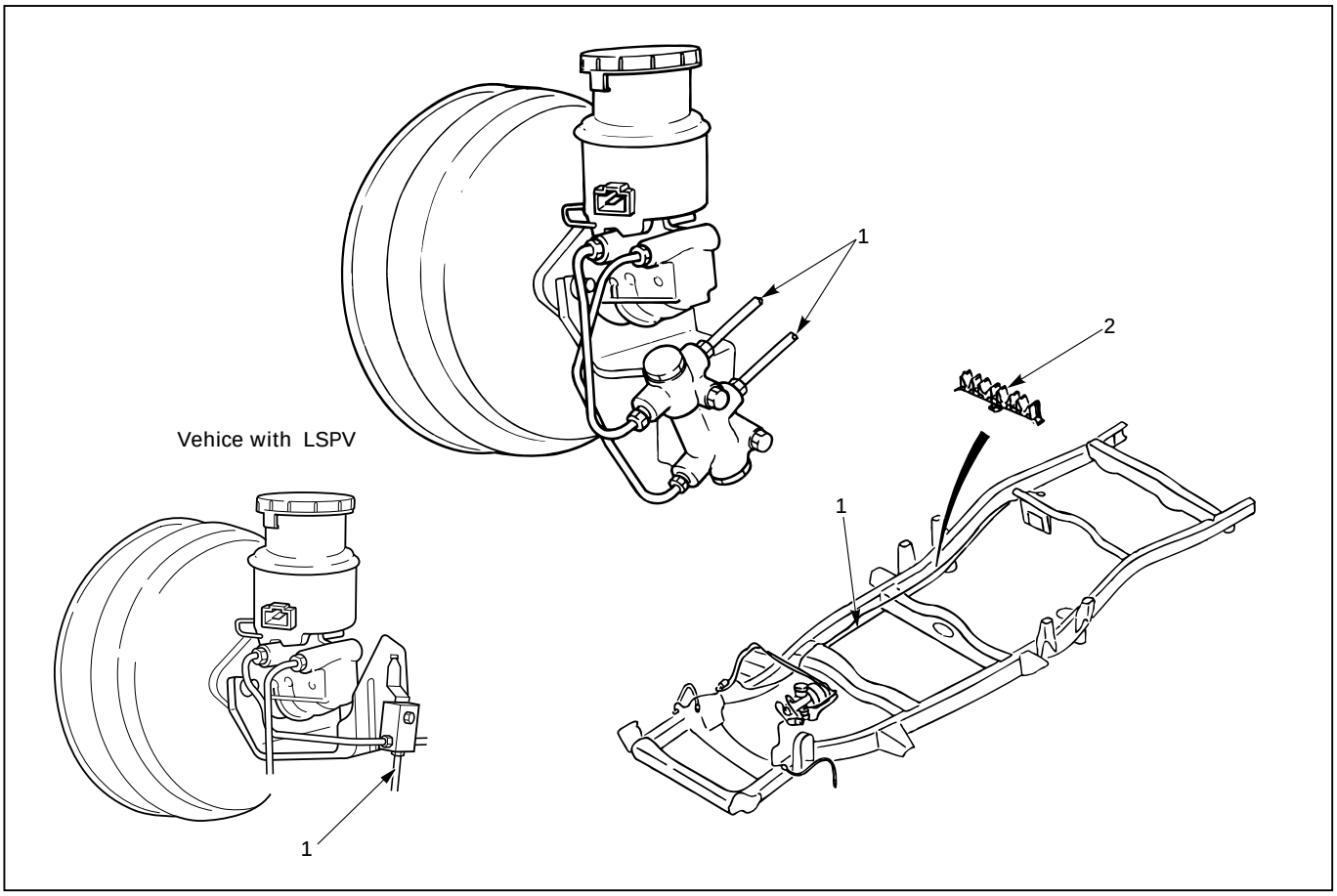

Removal Steps

1. Brake pipe
2. Plastic clip

Installation Steps

To install, follow the removal steps in the reverse order.

REMOVAL

Preparation:

1) Raise the vehicle and support it with suitable safety stands.
2) Remove wheel and tire assembly as necessary.
3) Clean dirt, grease, and other foreign material off the pipe fittings at both ends.

1. Brake Pipe

2. Plastic Clip

INSTALLATION

To install, follow the removal steps in the reverse order, noting the following points. After installing the brake pipes, bleed brakes as described in this section.

1. Tighten the brake pipes to the specified torque.

Brake Pipe Torque	N·m(kg·m/lb·ft)
Master Cylinder Side	Others
12 (1.2/9)	16 (1.6/12)

P & B (PROPORTIONING AND BYPASS) VALVE

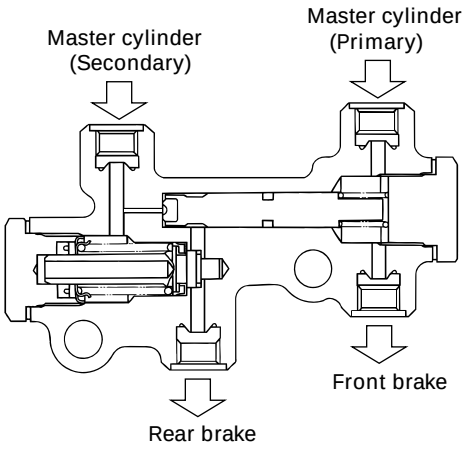

The P & B valve contains two sections, each serving a different function.
The proportioning section of the P & B valve proportions outlet pressure to the rear brakes after a predetermined rear input pressure has been reached. This is done to prevent rear wheel lock-up on the vehicles with light rear wheel loads.
The valve has a By-bass feature which assures full system pressure to the rear brakes in the event of a font brake mulfunction, also full front pressure is retained in the event of rear brake mulfunction.
The P & B valve is not repairable and must be replaced as a complete assembly.

P & B VALVE REPLACEMENT

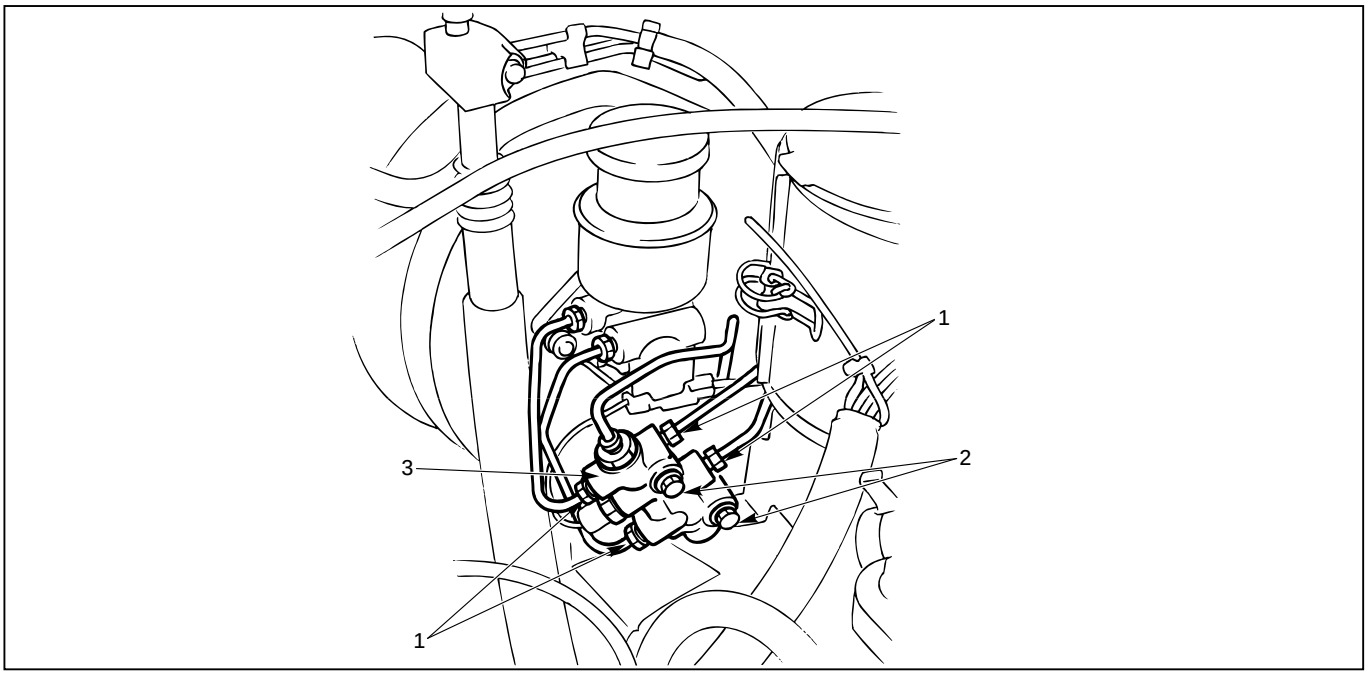

Removal Steps

1. Hydraulic pipes
2. Bolt
3. P & B valve

Installation Steps

To install, follow the removal steps in the reverse order.

REMOVAL

- P & B valve is not repairable and must be replaced as a complete assembly.
- Care must be taken to prevent brake fluid from contacting any painted surface.

1. Hydraulic Pipes

- Plug the pipes to prevent the loss of fluid or the entrance of dirt.

2. Bolt

3. P & B Valve

INSTALLATION

3. P & B Valve

2. Bolt

Bolt Torque	N·m(kg·cm/lb·in)
13 (130/113)	

1. Hydraulic Pipes

Hydraulic Pipe Torque	N·m(kg·m/lb·ft)
16 (1.6/12)	

After installing the brake pipes, bleed brakes as described in Bleeding Brake Hydrauric System this section.

LOAD SENSING PROPORTIONING VALVE (LSPV) (FOR EUROPE AND SOUTH AFRICA)

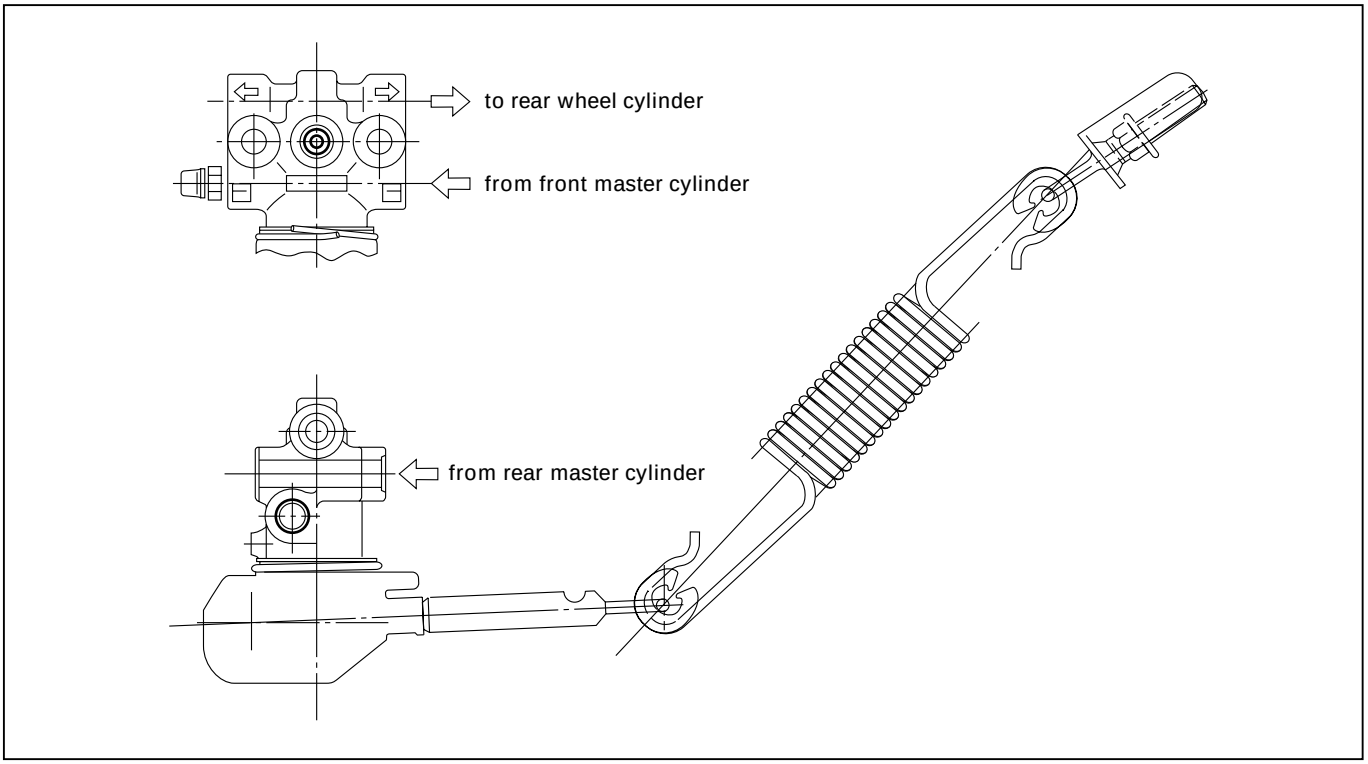

F05RW003

Structure and Operation

The following is an explanation of the structure and operation of the linkage type load sensing device. This device controls the fluid pressure to the rear brakes in accordance with changes in rear axle load (vertical displacements of the rear axle springs).

- Structure

  This device consists of a load sensing lever and a valve.

  The valve is mounted through a bracket to the frame. One end of the load sensing lever is fixed to the valve at the frame and the other end to the rear axle housing through a spring.

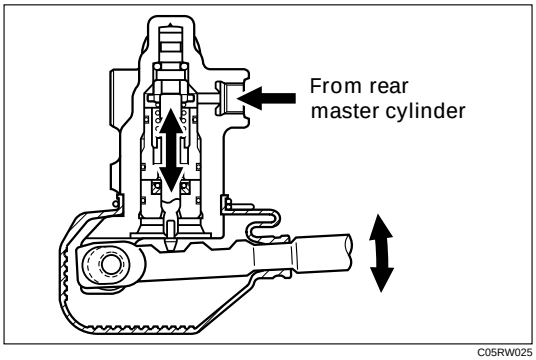

C05RW025

- Operation

1) Outline

When the L.S.P.V. (Load Sensing Proportioning Valve) detects a change in load weight, the load sensing lever moves. Its reaction force is transmitted to the bottom of the load sensing valve to secure an optimum rear wheel cylinder fluid pressure break point in proportion to the actual load weight.
Besides, if the front brake system should fail, the devices is designed to prevent the master cylinder fluid pressure from decreasing and to apply it directly to the rear wheel cylinder to obtain a sufficient braking performance.

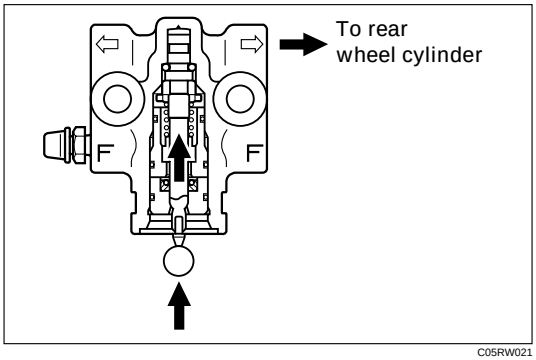

C05RW021

2) Operation

(1) When the fluid pressure is under the break point.
The fluid pressure of the rear master cylinder passes through a clearance between the valve seal and the piston and acts on the rear wheel cylinder. At this moment, a downward force is applied to the piston. However, the compression spring force and reaction force of the load sensing lever keep the piston in the upper position by pushing upwards. (See the left figure.)

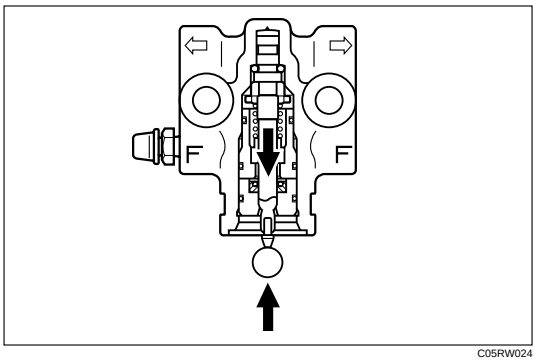

C05RW024

(2) When the fluid pressure is equal to the break point.
As the rear wheel cylinder pressure increases, it surpasses the compression spring force and reaction force of the load sensing lever, causing the pistion to move downwards, so that the pistion butts against the valve seal to shut off the fluid line between the master cylinder and rear wheel cylinder. (See the left figure.)

(3) When the fluid pressure is over the break point.
When the fluid pressure increases further, the piston moves upwards. The moment the piston comes apart from the valve seal, fluid pressure is applied to the rear wheel cylinder and the piston moves downwards so that the fluid line is shut off again. This process goes on repeatedly to control the fluid pressure to the rear wheel cylinder.

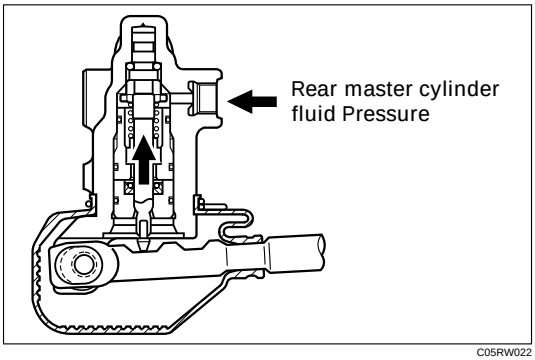

C05RW022

(4) When the front brake system fails.
When there is a failure in the front brake system, the fluid pressure from the front master cylinder decreases. As a result, the balance between the front and rear brake side fluid pressures is lost at the control valve sleeve so that the control valve sleeve moves upwards.
The control valve sleeve strikes against the piston, thereby pushing the piston upwards.
Accordingly, the fluid pressure of the rear master cylinder is not decreased and is applied directly to the rear wheel cylinder to secure a sufficient braking performance of the rear brakes. (See the left figure.)

Valve Maintenance
In the case of fluid leak or other abnormalities, faulty valve should be replaced.

Note:
The load sensing proportioning valve is not repairable and must be replaced as a complete assembly.

ADJUSTMENT PROCEDURE OF LSPV

1. Adjust the rear axle weight by loading the laggage compartmemt as necessary.

Rear Axle Weight	N (kg / lb)
10,300 (1,050 / 2,315)	

Note:
The rear axle weight should be adjusted to the specified value with a man seated in the driver seat.

2. Check the rear wheel cylinder fluid pressure. Install the pressure gauge on bleeder screws on the front and rear brakes.
   a. Depress the brake pedal slowly until the front wheel cylinder fluid pressure reaches 7845 kPa (80 kg/cm^2 / 114 psi)

      Note:
      - **The brake pedal should be depressed gradually until specified pressure is reached without pumping or adjusting foot pressure.**
      - **If the front wheel cylinder fluid pressure rises abobe 7845 kPa (80 kg/cm^2 / 114 psi), release the pedal fully, then depress the pedal again.**

   b. Hold the front wheel cylinder fluid pressure at 7845 kPa (80 kg/cm^2 / 114 psi) for 2 seconds, check the rear wheel cylinder fluid pressure.

Rear wheel cylinder fluid pressure	kPa (kg/cm^2 / psi)
6374±539 (65±5.5 / 924±78)	

   c. If the rear wheel cylinder fluid pressure is not within the specified range, adjust the fluid pressure.

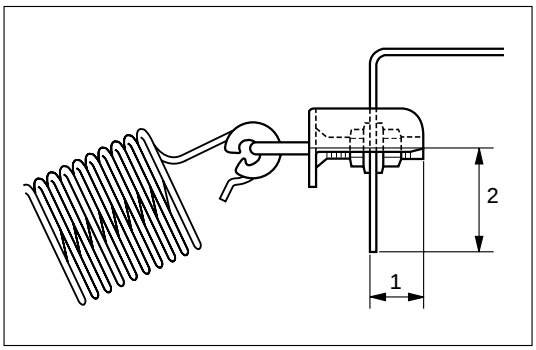

C05RW023

3. Adjust the rear wheel cylinder fluid pressure. The fluid pressure can be adjusted by the bolt projection (1) or bolt projection (2).
   a. If the fluid pressure is lower than specified range, increase the dimention (1) or (2).
   b. If the fluid pressure is higher than the specified range, decrease the dimention (1) or (2).

      Reference:

      Dimention (1): The fluid pressure can be adjusted about 196 kPa (2 kg/cm^2 / 28 psi) by one turning of the nut.

      Dimention (2): The fluid pressure can be adjusted about 98 kPa (1 kg/cm^2 / 14 psi) by sliding the bolt position (per 1 mm / 0.039 in).
4. Check the rear wheel cylinder fluid pressure. If the rear wheel cylinder fluid pressure is not within the specified range, try the adjustment again.
5. Bleed the brake hydraulic line and check the fluid leak.

BRAKE PEDAL REPLACEMENT

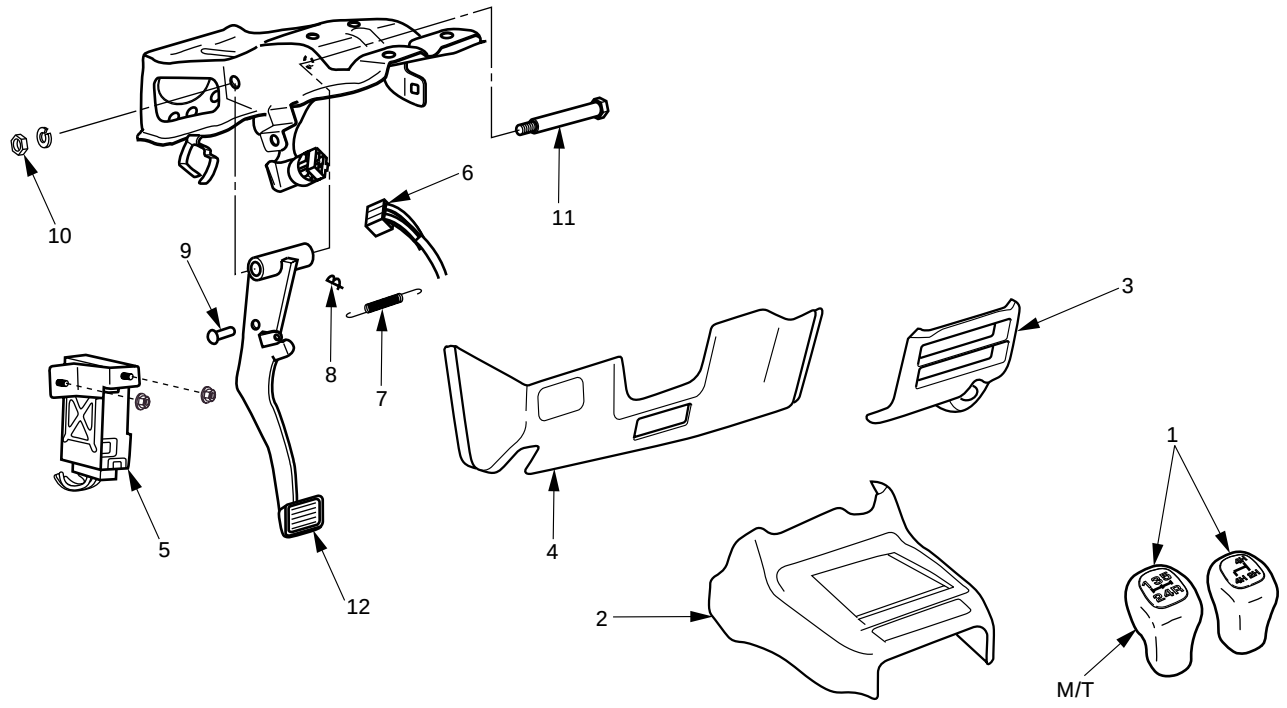

This illustration is based on the LHD model.

Removal Steps

1. Shift knob
2. Front console assembly
3. Lower cluster assembly
4. Instrument panel driver lower cover assembly
5. Anti-theft controller
6. Stoplight switch connector
7. Return spring
8. Snap pin
9. Pin
10. Nut
11. Pin, fulcrum
12. Brake pedal

Installation Steps

12. Brake pedal
11. Pin, fulcrum
10. Nut
9. Pin
8. Snap pin
7. Return spring
6. Stoplight switch connector
5. Anti-theft controller
4. Instrument panel driver lower cover assembly
3. Lower cluster assembly
2. Front console assembly
1. Shift knob

REMOVAL

1. **Shift Knob**
2. **Front Console Assembly**
3. **Lower Cluster Assembly**
4. **Instrument Panel Driver Lower Cover Assembly**
5. **Anti-theft Controller**
6. **Stoplight switch Connector**
7. **Return Spring**
8. **Snap Pin**
9. **Pin**
10. **Nut**
11. **Pin, Fulcrum**
12. **Brake Pedal**

INSTALLATION

12. **Brake Pedal**
11. **Pin, Fulcrum**
    - Apply grease to the entire circumference of the fulcrum pin.
10. **Nut**

Bolt and Nut Torque	N·m (kg·m / lb·ft)
	33 (3.3 / 24)

9. **Pin**
    - Apply grease to the entire circumference of the push rod pin.
8. **Snap Pin**
    - Adjust pedal free travel. Refer to “Brake Pedal Adjustment” previously in this section.
7. **Return Spring**
6. **Stoplight Switch Connector**
5. **Anti-theft Connector**
4. **Instrument Panel Driver Lower Cover Assembly**
3. **Lower Cluster Assembly**
2. **Front Console Assembly**
1. **Shift Knob**

STOPLIGHT SWITCH REPLACEMENT

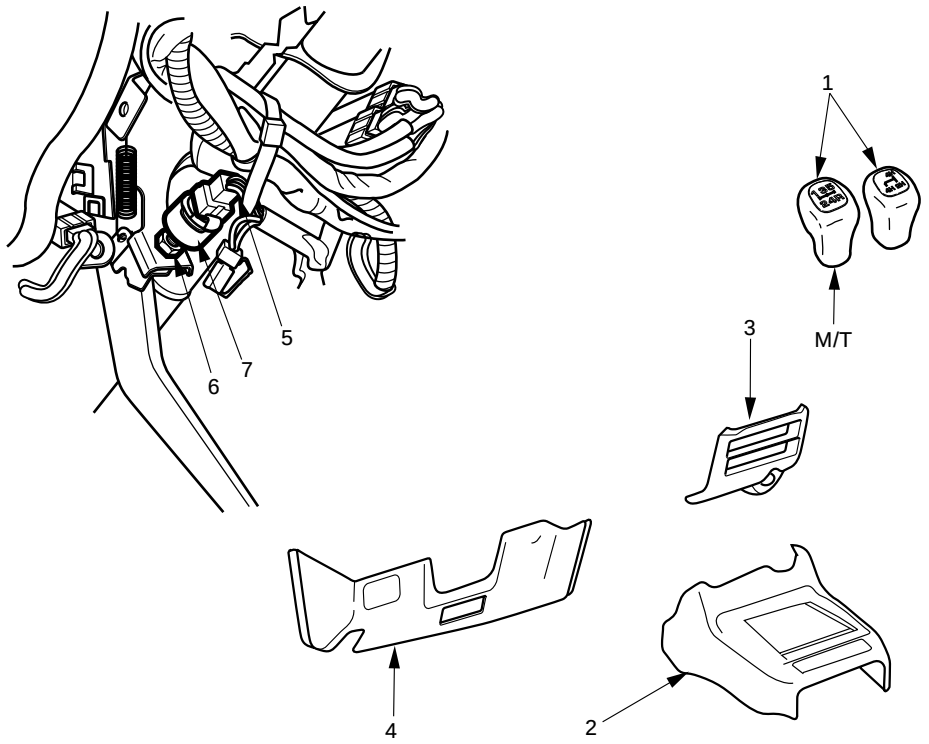

This illustration is based on the LHD model.

Removal Steps

1. Shift Knob
2. Front Console Assembly
3. Lower Cluster Assembly
4. Instrument Panel Driver Lower Cover Assembly
5. Stoplight Switch Connector
6. Lock Nut
7. Switch

Installation Steps

7. Switch
6. Lock Nut
5. Stoplight Switch Connector
4. Instrument Panel Driver Lower Cover Assembly
3. Lower Cluster Assembly
2. Front Console Assembly
1. Shift Knob

REMOVAL

1. **Shift Knob**
2. **Front Console Assembly**
3. **Lower Cluster Assembly**
4. **Instrument Panel Driver Lower Cover Assembly**
5. **Stoplight Switch Connector**
6. **Lock Nut**
7. **Switch**

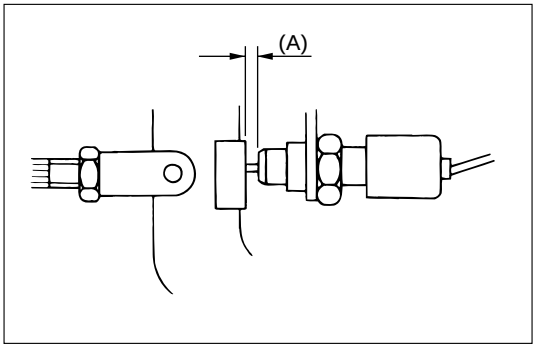

INSTALLATION

7. **Switch**
   - Adjust the stoplight switch to the specified clearance (between switch housing and brake pedal) by rotating the switch housing.

Clearance	mm (in)
0 – 0.2 (0 – 0.008)	

NOTE:
While adjusting the installation of the stoplight switch, make sure that the threaded part of the stoplight switch does not push the brake pedal.

6. **Lock Nut**
5. **Stoplight Switch Connector**
4. **Instrument Panel Driver Lower Cover Assembly**
3. **Lower Cluster Assembly**
2. **Front Console Assembly**
1. **Shift Knob**

FLUID RESERVOIR TANK

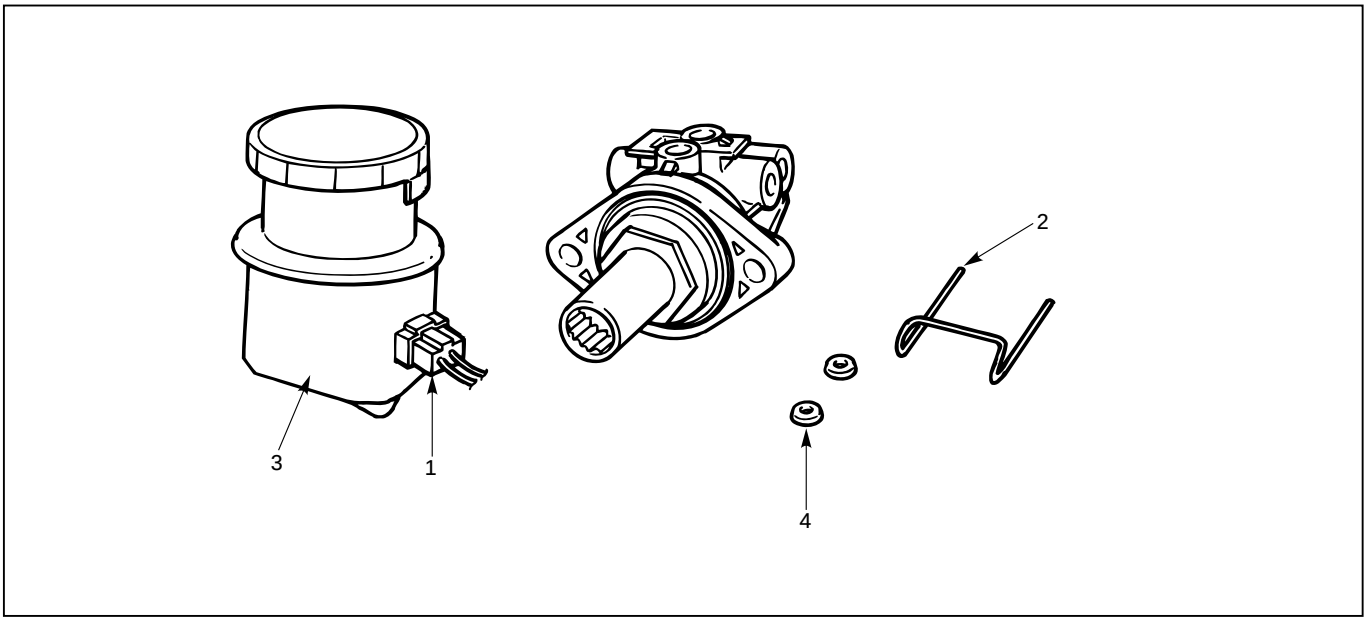

Removal Steps

1. Electrical connector
2. Retainer
3. Fluid reservoir
4. O-ring

Installation Steps

To install, follow the removal steps in the reverse order.

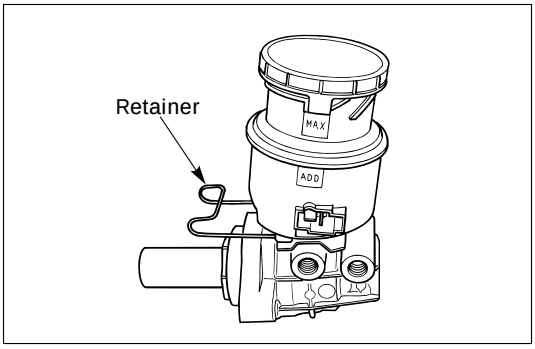

REMOVAL

NOTE:
Before removing fluid reservoir, remove brake fluid from fluid reservoir.

1. **Electrical Connector**
2. **Retainer**
3. **Fluid Reservoir**
   - The fluid level sensor is built into the fluid reservoir. It cannot be removed for servicing.
4. **O-ring**

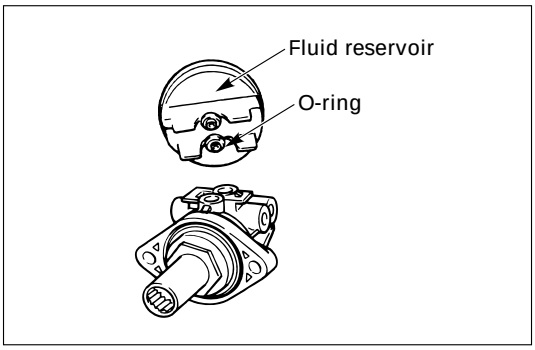

INSTALLATION

To install, follow the removal steps in the reverse order, noting the following points;

4. **O-ring**
   - O-ring must be set onto the fluid reservoir, before installing fluid reservoir.

MASATER CYLINDER ASSEMBLY

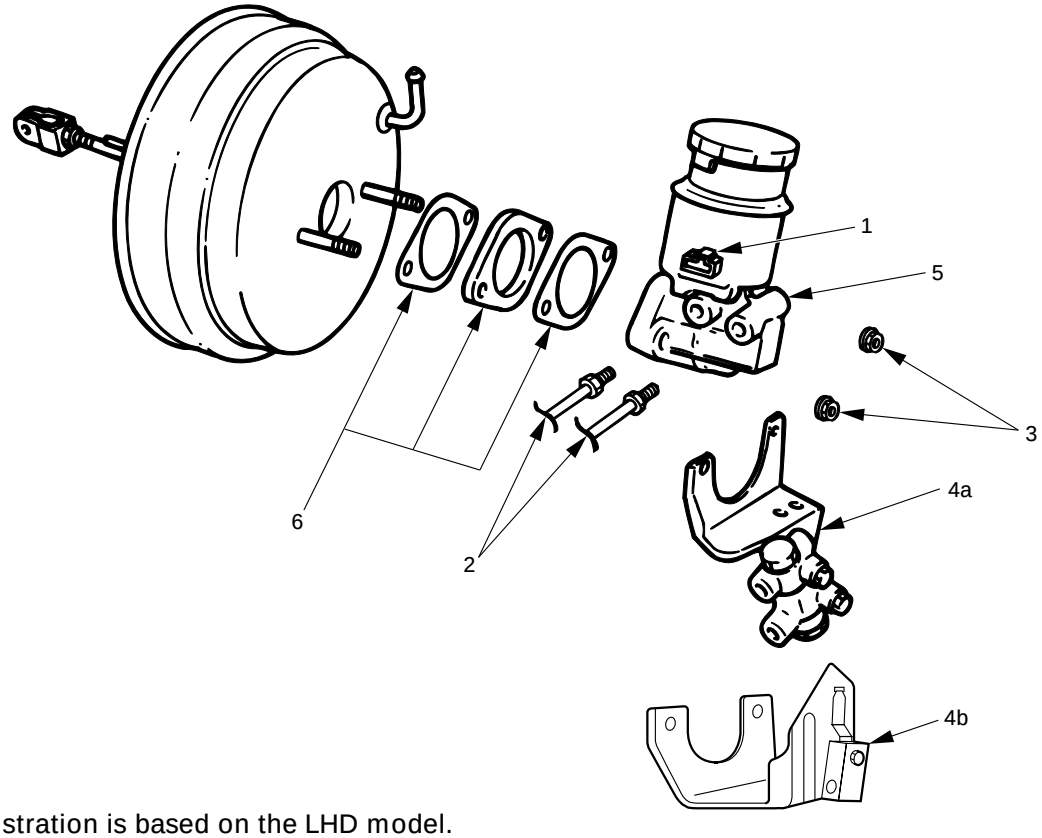

This illustration is based on the LHD model.

330RW015

Removal Steps

1. Electrical connector
2. Brake pipes
3. 2 attaching nuts

4a. P&B valve and bracket

4b. 3-way connector and bracket (Vehicle with LSPV only)

5. Master cylinder
6. Spacer and 2 gaskets

Installation Steps

To install, follow the removal steps in the reverse order.

REMOVAL

CAUTION:
When removing master cylinder from vacuum booster, be sure to get rid of the internal negative pressure of the vacuum booster (by, for instance, disconnecting vacuum hose) in advance.
If any negative pressure remains in the vacuum booster, the piston may possibly come out when the master cylinder is being removed, letting the brake fluid run out.
While removing master cylinder, further, do not hold the piston as it can be easily pulled out.
Outside surface of the piston is the surface on which seals are to slide. Care should be taken to keep the surface free of cuts and dents.

1. **Electrical Connector**
2. **Brake Pipes**
   - After disconnecting the brake pipe, cap or tape the openings of the brake pipe to prevent the entry of foreign matter.
3. **2 Attaching Nuts**

4a. **P & B Valve and Bracket**

4b. **3-way Connector and Bracket (Vehicle with LSPV Only)**

5. **Master Cylinder**
6. **Spacer and 2 Gaskets**

INSTALLATION

6. **Spacer and 2 Gaskets**
5. **Master Cylinder**
   - When replacing the master cylinder or vacuum booster or both, always measure the vacuum booster push rod protrusion and adjust it as necessary. (Refer to Vacuum Booster Assembly in this section.)

4a. **P & B Valve and Bracket**

4b. **3-way Connector and Bracket (Vehicle with LSPV Only)**

3. **2 Attaching Nuts**
   - Tighten the attaching nuts to the specified torque.

Attaching Nut Torque	N·m (kg·cm / lb·in)
13 (130 / 113)	

2. **Brake Pipes**
   - Tighten the brake pipe to the specified torque.

Brake Pipe Torque	N·m (kg·m / lb·ft)
Master Cylinder Side	Others
12 (1.2 / 9)	16 (1.6 / 12)

1. **Electrical Connector**

VACUUM BOOSTER ASSEMBLY

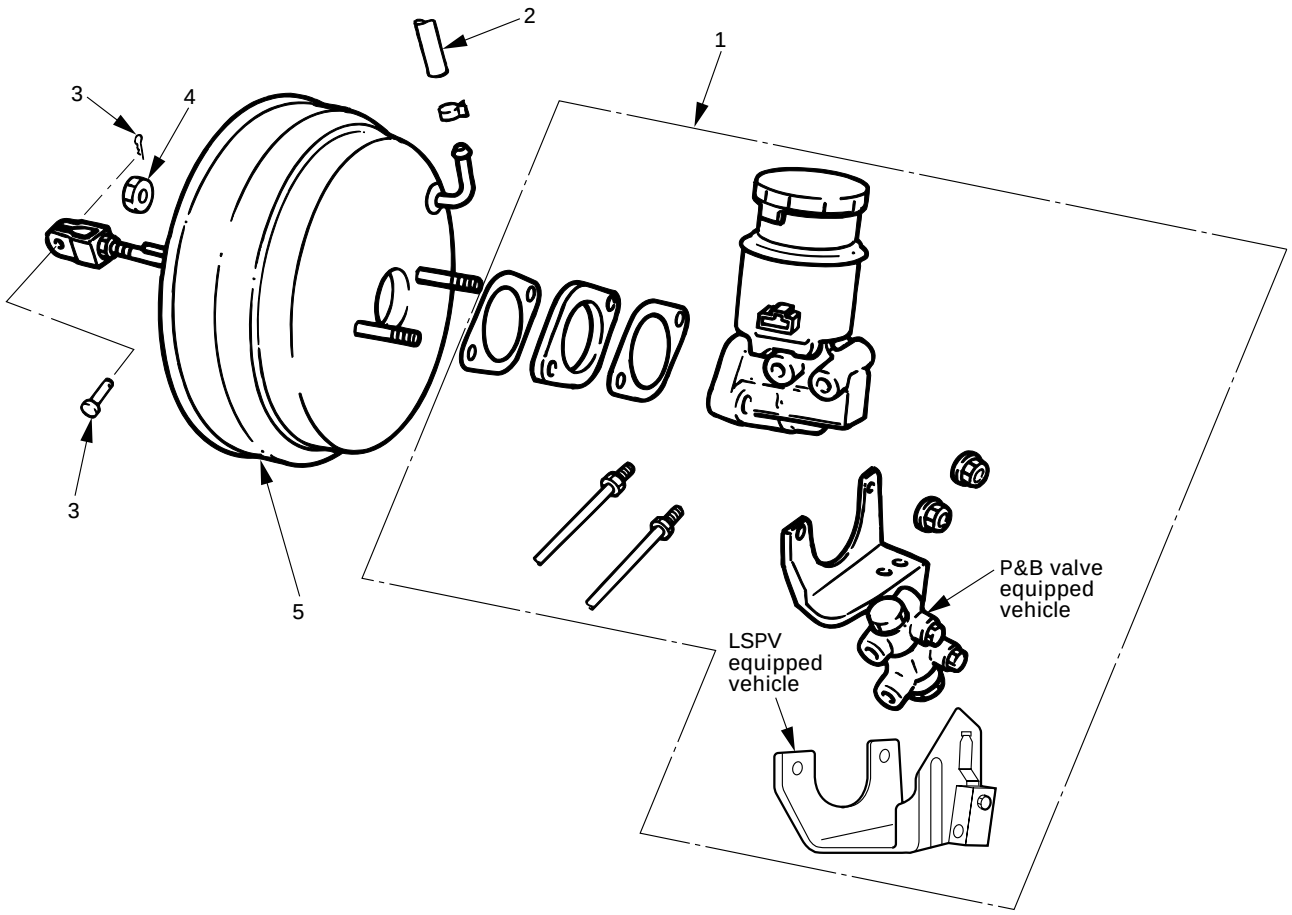

This illustration is based on the LHD model.

331RW010

Removal Steps

1. Master cylinder
2. Vacuum hose
3. Yoke clevis
4. Vacuum booster fixing nut
5. Vauum booster

Installation Steps

To install, follow the removal steps in the reverse order.

REMOVAL

- Before removing the vacuum booster assembly, disconnect and remove brake pipes.

1. **Master Cylinder**
   - Refer to Master Cylinder Assembly in this Section.

CAUTION:
When removing master cylinder from vacuum booster, be sure to get rid of the internal negative pressure of the vacuum booster (by, for instance, disconnecting vacuum hose) in advance.
If any negative pressure remains in the vacuum booster, the piston may possibly come out when the master cylinder is being removed, letting the brake fluid run out.
While removing master cylinder, further, do not hold the piston as it can be easily pulled out.
Outside surface of the piston is the surface on which seals are to slide. Care should be taken to keep the surface free of cuts and dents.

2. **Vacuum Hose**
3. **Yoke Clevis**
   - Disconnect the yoke clevis from the brake pedal.
4. **Vacuum Booster Fixing Nut**
5. **Vacuum Booster**

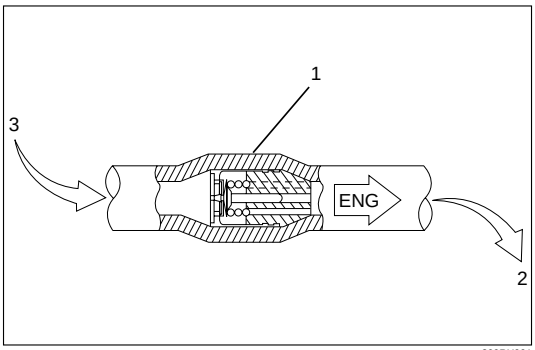

360RX001

INSPECTION AND REPAIR

Vacuum Hose

Inspect the check valve (1), which is installed inside the vacuum hose.

1) Air should pass freely from the vacuum booster side (3) to the engine side (2).
2) Air should not pass from the engine side (2) to the vacuum booster side (3). If it does, the check valve is inoperative and vacuum hose must be replaced.

INSTALLATION

5. **Vacuum Booster**

Vacuum booster push rod adjustment.

NOTE:
When replacing either master cylinder or vacuum booster, be sure to measure push rod, and adjust required.

Push rod gauge: 5-8840-2300-0 (J-39216)
Vacuum pump: 5-8840-0279-0 (J-23738-A)
Push rod support: 5-8840-2305-0 (J-39241)

1) Remove retainer from vacuum booster front shell using a small screwdriver. Then gently draw plate and seal assembly out of the shell inside.

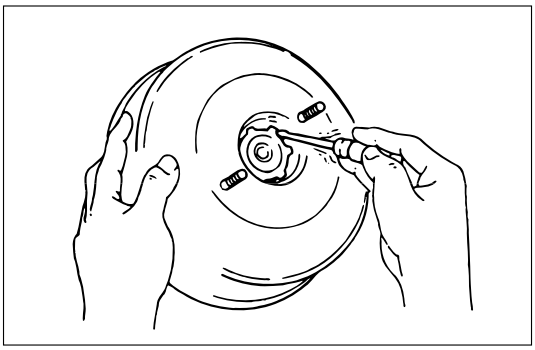

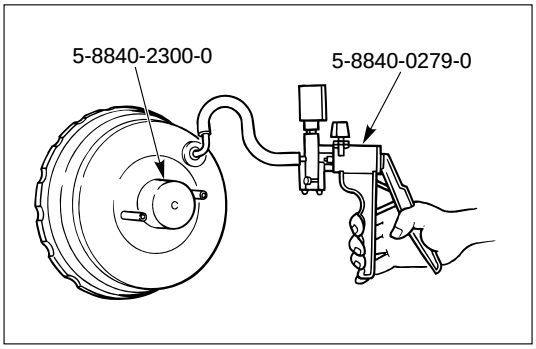

2) Set push rod gauge on vacuum booster, and apply negative pressure by means of vacuum pump so that the pressure in the vacuum booster becomes 500 mm Hg.

NOTE:
Be sure to apply. NEGATIVE pressure after installing a push rod gauge on vacuum booster.

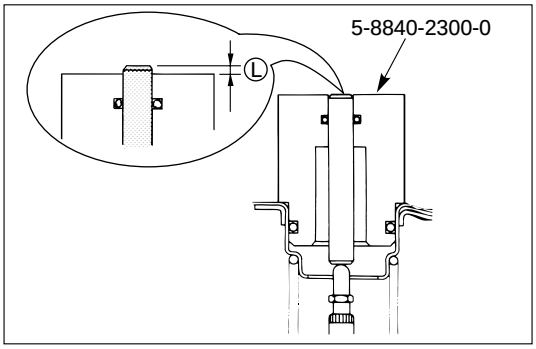

3) Measure dimension Ⓛ

Dimension Ⓛ (Standard)	mm
0 ± 0.1	

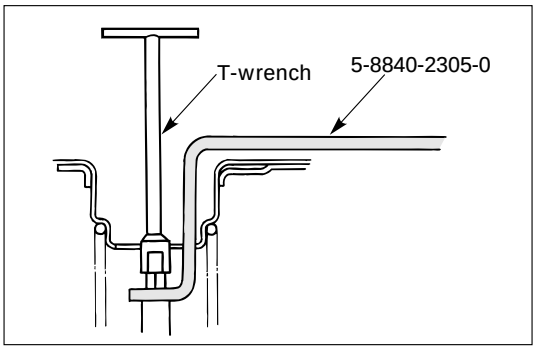

4) If dimension Ⓛ is out of the standard range, adjust push rod using the special tool.
5) Mount plate and seal assembly in vacuum booster front shell. Then install retainer.

4. Vacuum Booster Fixing Nut

Vacuum Booster Fixing Nut Torque	N·m (kg·m / lb·ft)
21 (2.1 / 16)	

3. Yoke Clevis

2. Vacuum Hose

- In case of the gasoline engine model, make sure that the arrow on the hose points in the direction of the engine.

1. Master Cylinder

- Refer to Master Cylinder Assembly in this Section.

EXTERIOR COMPONENTS

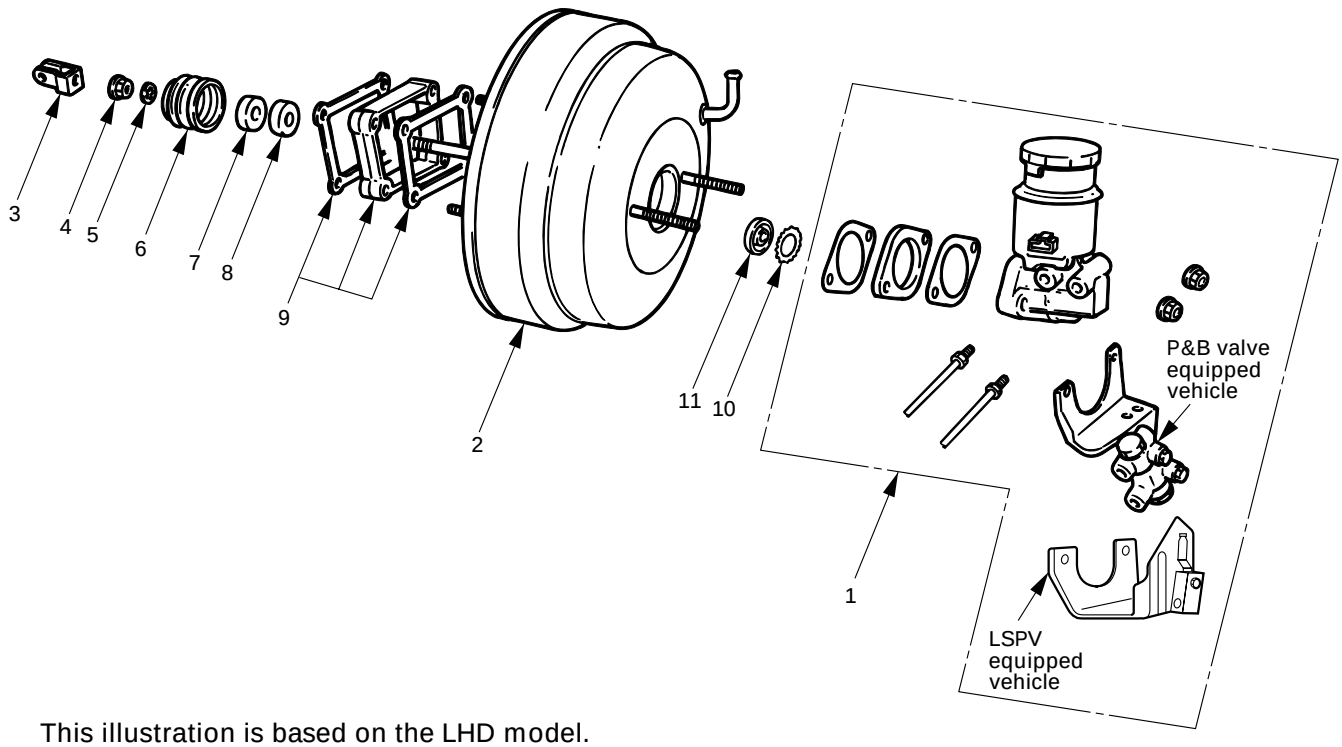

This illustration is based on the LHD model.

331RW011

Removal Steps

1. Master cylinder
2. Vacuum booster
3. Yoke clevis
4. Lock nut
5. Retaining clip
6. Valve body guard
7. Silencer
8. Filter
9. 2 gaskets and spacer
10. Retainer
11. Plate and seal assembly

Installation Steps

To install, follow the removal steps in the reverse order.

REMOVAL

1. **Master Cylinder**
   - Refer to Master Cylinder Assembly in this Section.
2. **Vacuum Booster**
   - Refer to Vacuum Booster Assembly in this section.
3. **Yoke Clevis**
4. **Lock Nut**
5. **Retaining Clip**
6. **Valve Body Guard**
7. **Silencer**
8. **Filter**
9. **2 gaskets and Spacer**
10. **Retainer**
    - Use a small screwdriver to pry out the retainer. Gently pull out the plate and seal assembly from the shell.

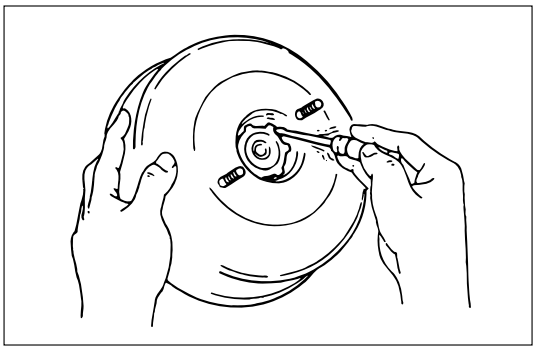

11. **Plate and Seal Assembly**

INSPECTION AND REPAIR

Visual Check:

Make necessary parts replacement if cuts, nicks, excessive wear, or other abnormal conditions are found through inspection. Check the following parts.

1) Yoke clevis
2) Valve body guard
3) Silencer
4) Filter
5) Plate and seal assembly

INSTALLATION

11. **Plate and Seal Assembly**
10. **Retainer**
9. **2 gaskets and Spacer**
8. **Filter**
7. **Silencer**
6. **Valve Body Guard**
5. **Retaining Clip**
4. **Lock Nut**

Lock Nut Torque	N·m (kg·m / lb·ft)
	20 (2.0 / 15)

3. **Yoke Clevis**
2. **Vacuum Booster**
   - Refer to Vacuum Booster Assembly in this section.
1. **Master Cylinder**
   1) Refer to Master Cylinder Assembly in this Section.
   2) After installation, perform brake pedal check and adjustment. Refer to Checking Brake Pedal Height / Travel in this section.

FRONT DISC BRAKE

BRAKE PADS REPLACEMENT

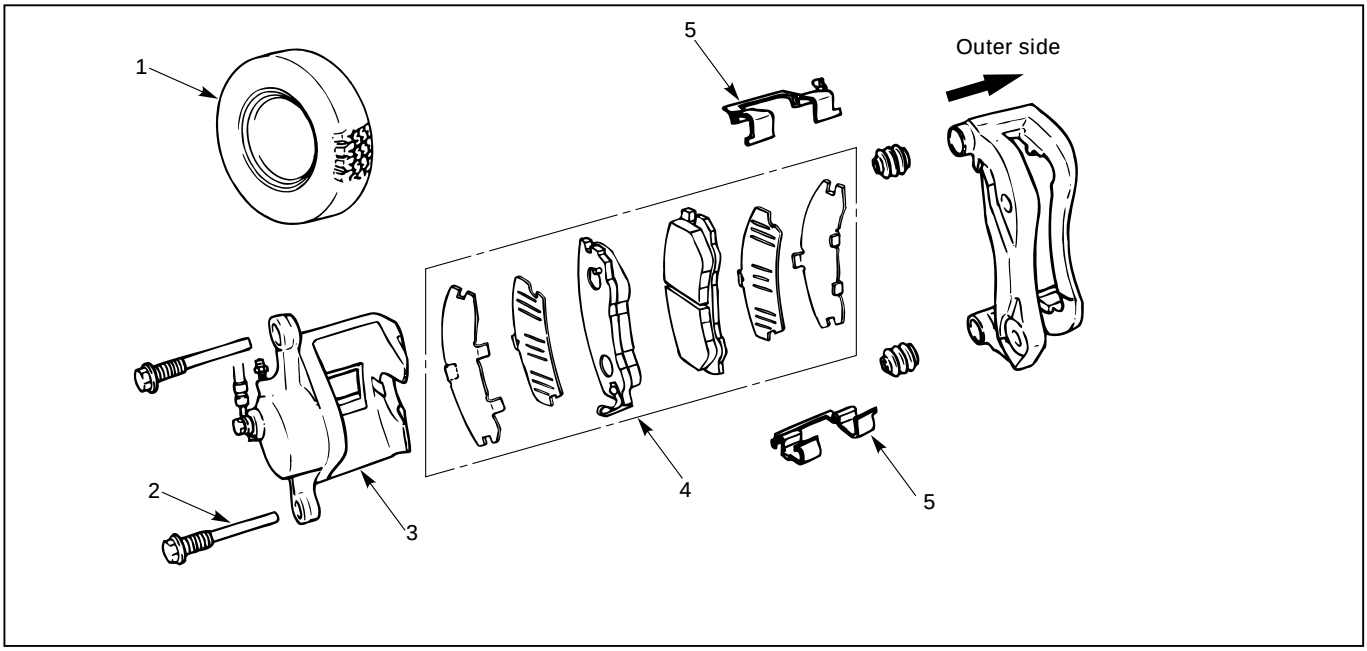

Removal Steps

1. Wheel and tire assembly
2. Lock bolt
3. Caliper assembly
4. Pad assembly with shim
5. Clip

Installation Steps

To install, follow the removal steps in the reverse order.

REMOVAL

NOTE:
If a squealing noise occurs from the front brake while driving, check the pad wear indicator plate. If the indicator plate contacts the rotor, the disc pad assembly should be replaced.

Preparation:

1) Draw out two-thirds of the brake fluid from the reservoir.
2) Raise the vehicle and support it with suitable safety stands.

1. Wheel and Tire Assembly

- Refer to Wheels and Tires in Suspension section.

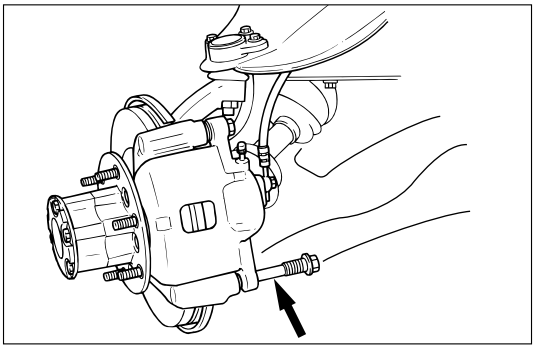

2. **Lock Bolt**

3. **Caliper Assembly**
   - Support the caliper assembly so that the brake hose is not stretched or damaged.
4. **Pad Assembly with Shim**
5. **Clip**

INSTALLATION

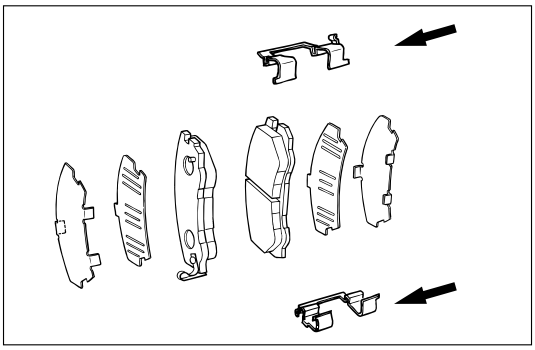

5. **Clip**

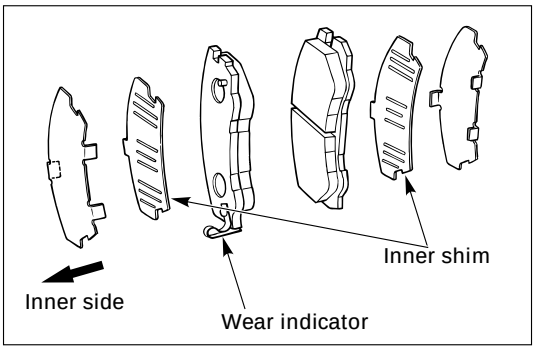

4. **Pad Assembly with Shim**
   - Apply special grease (approx 0.2 g) to both contacting surfaces of inner shims. Wipe off extruded grease after installing.

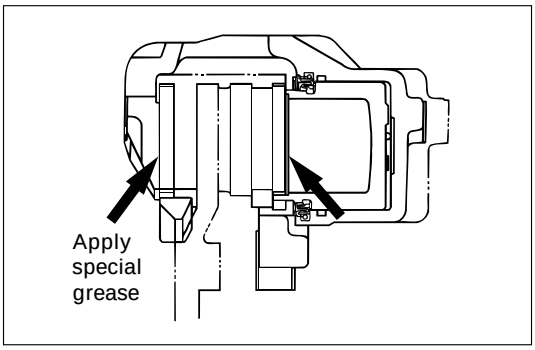

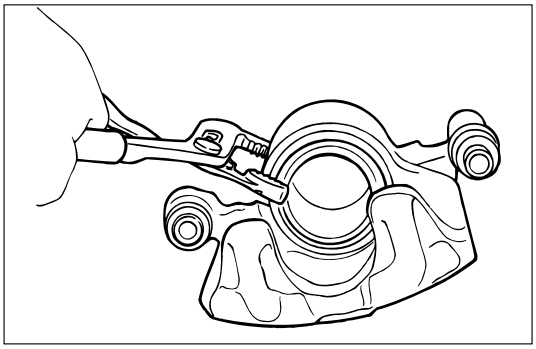

3. Caliper Assembly

1) Use adjustable pliers to bottom the piston into the caliper bore. Be careful not to damage the piston dust boot.
2) Do not damage the flexible hose by twisting or pulling it.

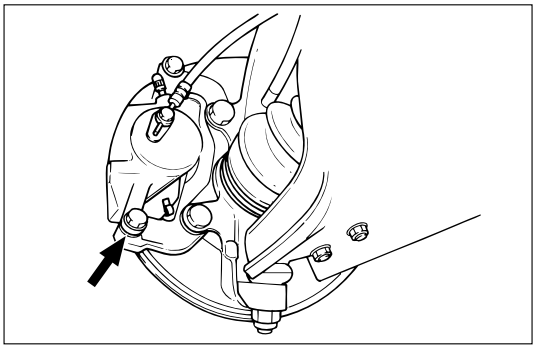

2. Lock Bolt

Lock Bolt Torque	N·m (kg·m / lb·ft)
74 (7.5 / 54)	

1. Wheel and Tire Assembly

1) Refer to Wheels and Tires in Suspension section.
2) Pump the brake pedal several times to make sure that the pedal is firm. Check the brake fluid level in the reservoir after pumping the brakes.

CALIPER REPLACEMENT

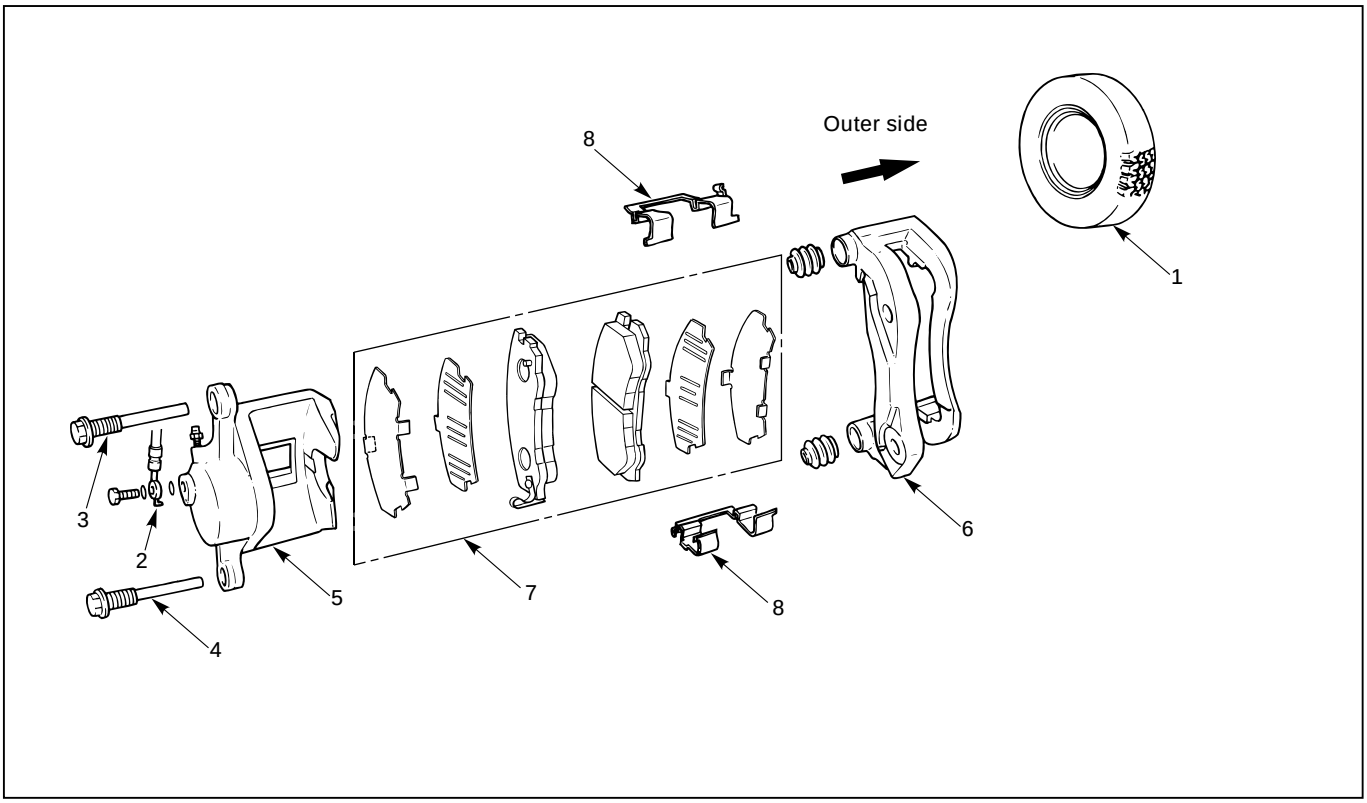

Removal Steps

1. Wheel and tire assembly
2. Brake flexible hose
3. Guide bolt
4. Lock bolt
5. Caliper assembly
6. Support bracket with pad assembly
7. Pad assembly with shim
8. Clip

Installation Steps

To install, follow the removal steps in the reverse order.

REMOVAL

Raise the vehicle and support with suitable safety stands

1. Wheel and Tire Assembly

- Refer to Wheels and Tires in Suspension section.

2. Brake Flexible Hose

1) Remove the bolt and gaskets, then disconnect the flexible hose from the caliper.
2) After disconnecting the flexible hose, cap or tape the openings to prevent entry of foreign material.
3) Since the brake fluid flows out from the connecting coupler, place a drain pan under the vehicle.

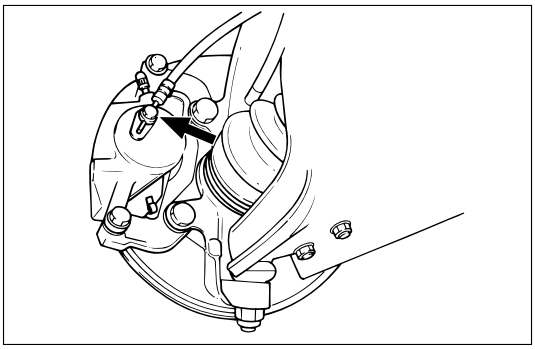

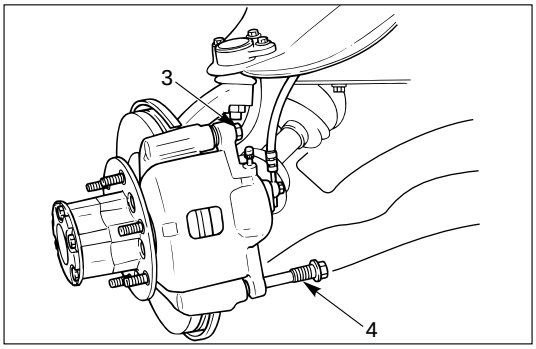

3. **Guide Bolt**
4. **Lock Bolt**

5. **Caliper Assembly**
6. **Support Bracket with Pad Assembly**
   - Take care not to damage the flexible brake hose when removing the support bracket.
7. **Pad Assembly with Shim**
   - Mark the lining locations if they are to be reinstalled.
8. **Clip**

INSTALLATION

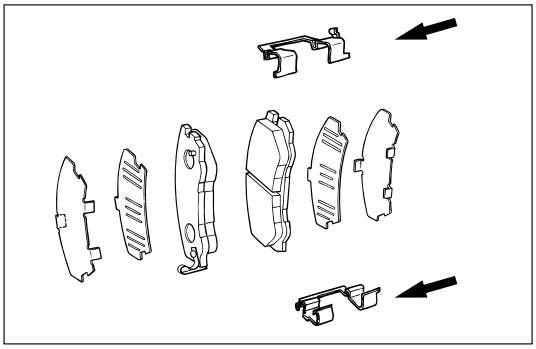

8. **Clip**

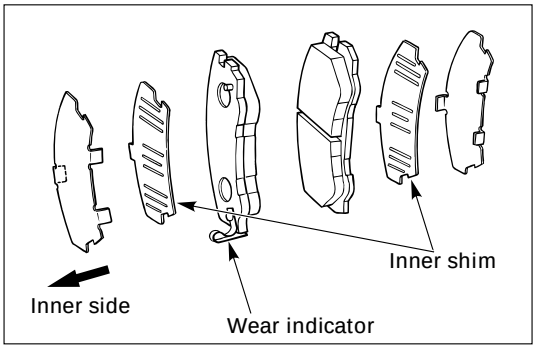

7. **Pad Assembly with Shim**
   - Apply special greae (approx 0.2 g) to the both contacting surfaces of inner shims. Wipe off extruded grease after installing.

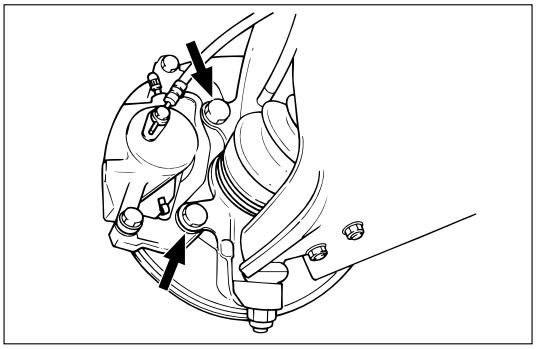

6. **Support Bracket**

Support Bracket Torque	N·m (kg·m / lb·ft)
155 (15.8 / 115)	

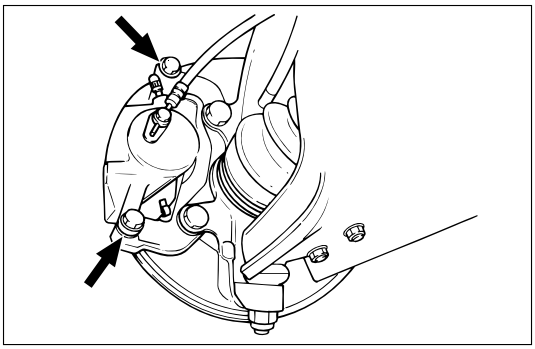

5. Caliper Assembly

4, 3. Lock Bolt and Guide Bolt

Lock Bolt and Guide Bolt Torque	N·m (kg·m / lb·ft)
74 (7.5 / 54)	

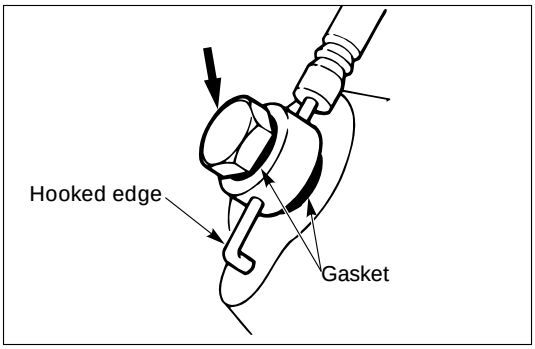

2. Brake Flexible Hose

1) Always use new gaskets.
2) Be sure to put the hooked edge of the flexible hose end into the anti-rotation cavity.

Brake Flexible Hose Torque	N·m (kg·m / lb·ft)
35 (3.5 / 26)	

1. Wheel and Tire Assembly

1) Refer to Wheels and Tires in Suspension section.
2) Bleed brakes. Refer to Bleeding Brake Hydraulic System in this section.

REBUILDING THE CALIPER

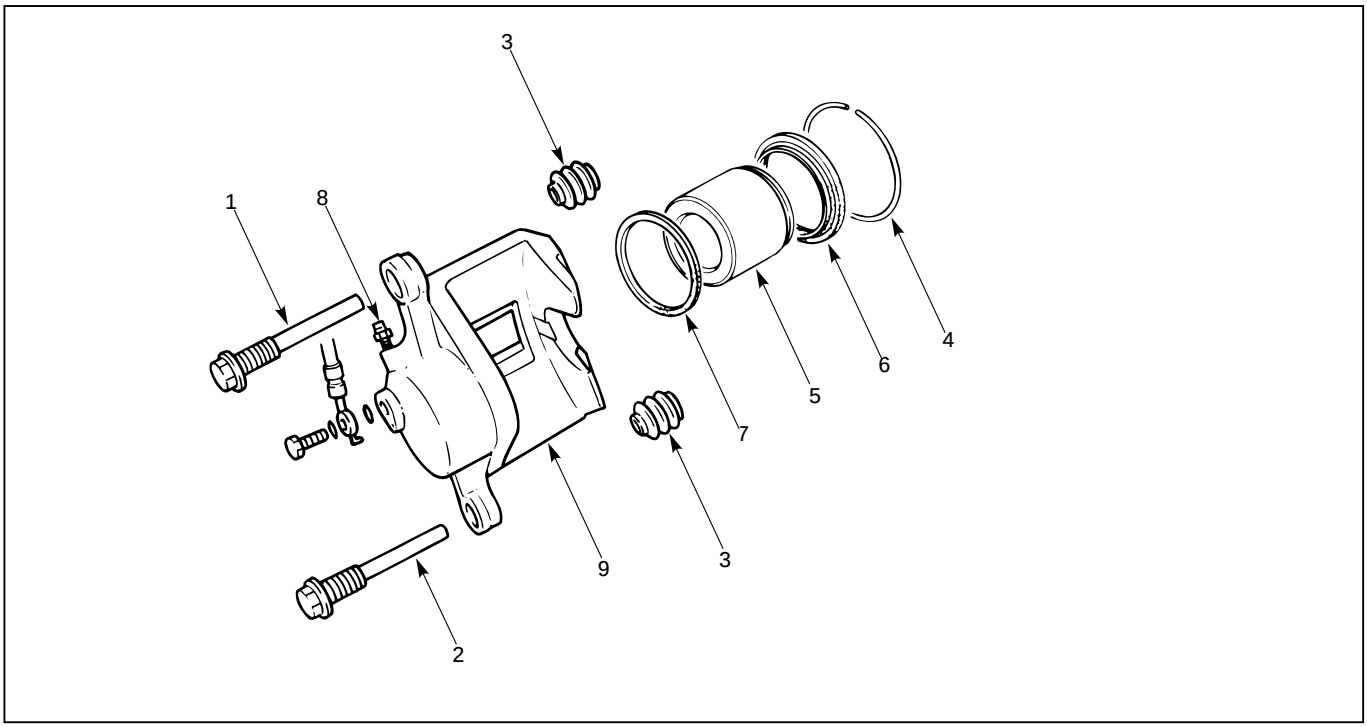

Disassembly Steps

1. Guide bolt
2. Lock bolt
3. Dust boot; guide bolt and lock bolt
4. Dust boot ring
5. Piston
6. Dust boot; piston
7. Piston seal
8. Bleeder with cap
9. Caliper body

Reassembly Steps

9. Caliper body
8. Bleeder with cap
7. Piston seal
5. Piston
6. Dust boot; piston
4. Dust boot ring
3. Dust boot; guide bolt and lock bolt
2. Lock bolt
1. Guide bolt

DISASSEMBLY

1. **Guide Bolt**
2. **Lock Bolt**
3. **Dust Boot; Guide Bolt and Lock Bolt**
4. **Dust Boot Ring**
   - Using a small screwdriver, remove the dust boot ring.

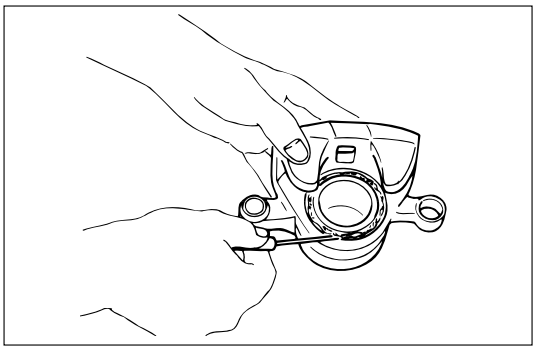

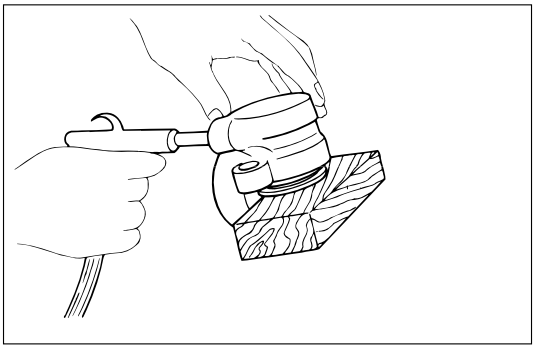

5. **Piston**
   - Insert a block of wood into the caliper and force out the piston by blowing compressed air into the caliper at the flexible hose attachment. This procedure must be done prior to removal of dust boot.

WARNING:
DO NOT PLACE YOUR FINGERS IN FRONT OF THE PISTON IN AN ATTEMPT TO CATCH OR PROTECT IT WHEN APPLYING COMPRESSED AIR. THIS COULD RESULT IN PERSONAL INJURY.

CAUTION:
Use just enough air to ease the piston out of the bore. If the piston is blown out, it may be damaged.

6. **Dust Boot; Piston**
7. **Piston Seal**
8. **Bleeder with Cap**
9. **Caliper Body**

INSPECTION AND REPAIR

Make necessary parts replacement, if wear, damage, corrosion or any other abnormal conditions are found through inspection.
Check the following parts;
- Rotor
- Cylinder body
- Cylinder bore
- Piston
- Guide bolt, Lock bolt
- Support bracket

NOTE:
The piston seal, boot ring and dust boot are to be replaced each time the caliper is overhauled. Discard these used rubber parts and replace with new ones.

REASSEMBLY

9. **Caliper Body**
8. **Bleeder with Cap**

Bleeder Torque	N·m (kg·cm / lb·in)
	8 (80 / 69)

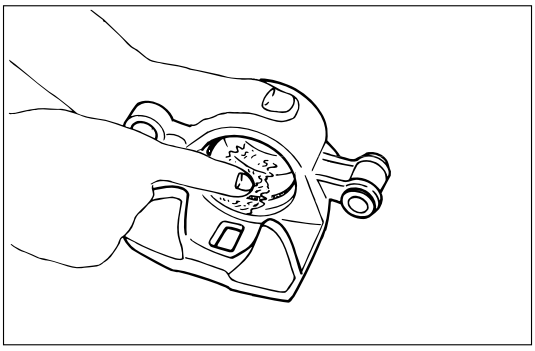

7. **Piston Seal**
   - Apply special rubber grease to the piston seal and cylinder wall, then insert the piston seal into the cylinder. The special rubber grease is included in the repair kit.

5. **Piston**

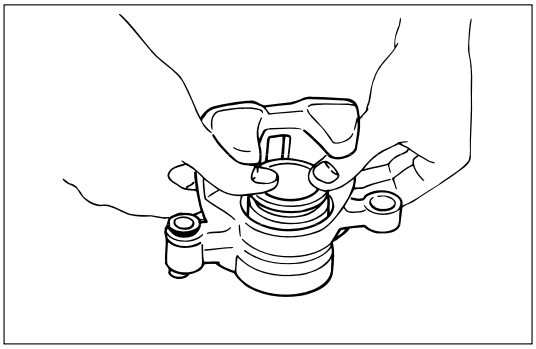

6. Dust Boot; Piston

- When inserting the piston into the cylinder, use finger pressure only. Do not use a mallet or other impact tools, since damage to the cylinder wall or piston seal can result.

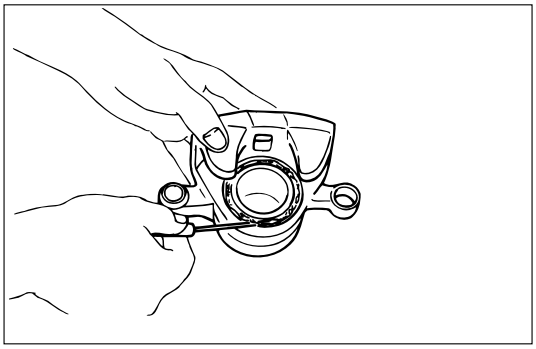

4. Dust Boot Ring

- Apply special grease (Approx. 1 g) to the piston and attach the dust boot to the piston and caliper. Insert the dust boot ring into the dust boot.

3. Dust Boot; Guide Bolt and Lock Bolt

2, 1. Lock Bolt and Guide Bolt

Lock and Guide Bolt Torque	N·m (kg·m / lb·ft)
74 (7.5 / 54)	

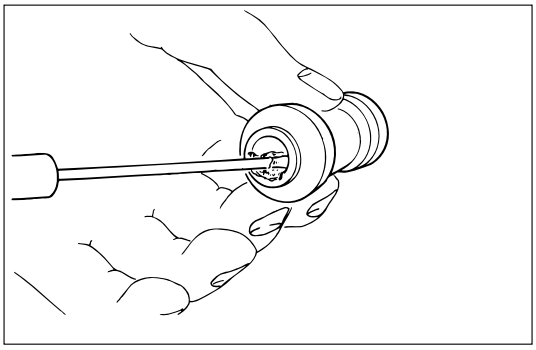

- Install the dust boot on the support bracket after applying special grease (Approx. 1 g) onto the dust boot inner surface. Also apply special grease onto the lock bolt and guide bolt setting hole of the support bracket.

REAR DISC BRAKE

BRAKE PADS REPLACEMENT

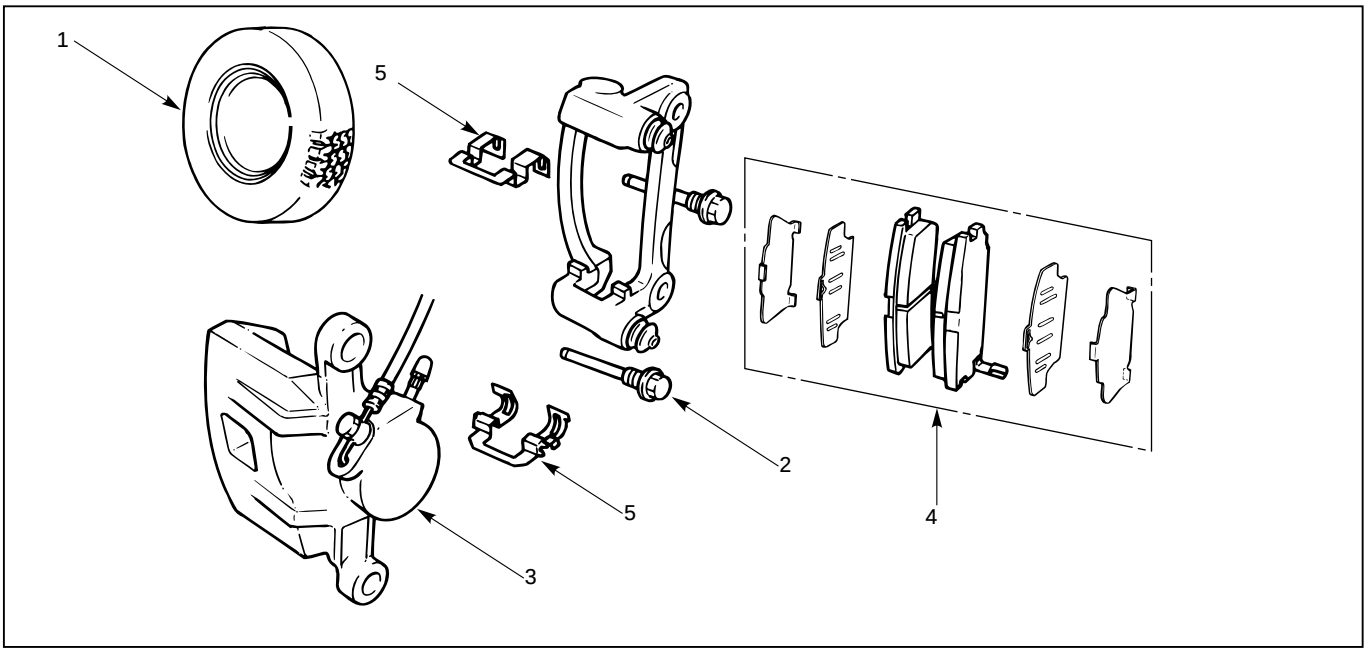

Removal Steps

1. Wheel and tire assembly
2. Lock bolt
3. Caliper assembly
4. Pad assembly with shim
5. Clip

Installation Steps

To install, follow the removal steps in the reverse order.

REMOVAL

NOTE:
If a squealing noise occurs from the rear brake while driving, check the pad wear indicator plate. If the indicator plate contacts the rotor, the disc pad assembly should be replaced.

1) Draw out two-thirds of the brake fluid from the reservoir.
2) Raise the vehicle and support it with suitable safety stands.

1. Wheel and Tire Assembly

- Refer to Wheels and Tires in Suspension section.

2. Lock Bolt

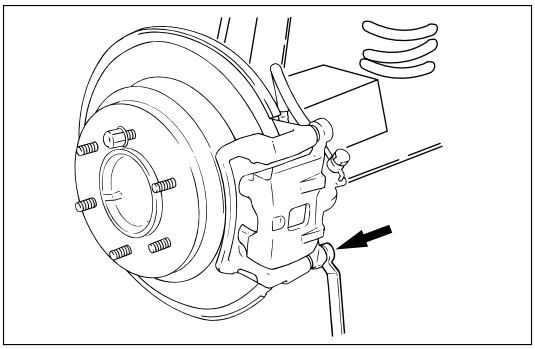

3. **Caliper Assembly**
   - Support the caliper assembly so that the brake hose is not stretched or damaged.
4. **Pad Assembly with Shim**
5. **Clip**

INSTALLATION

5. **Clip**

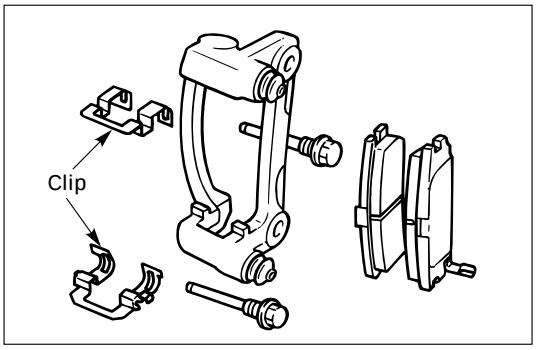

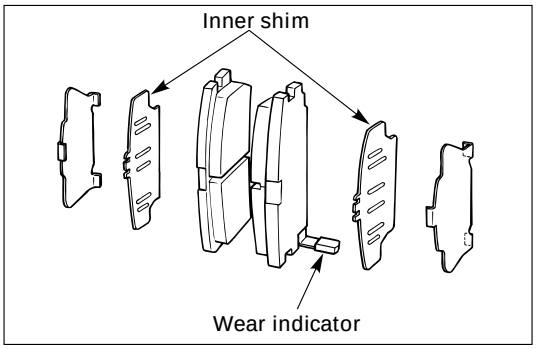

4. **Pad Assembly with Shim**
   - Apply special grease (approx. 0.2 g) to both contacting surfaces of inner shims. Wide off extruded grease after installing.

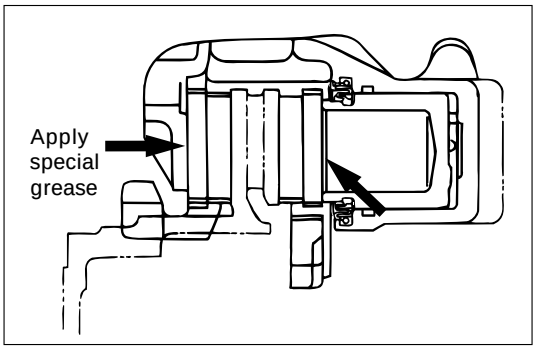

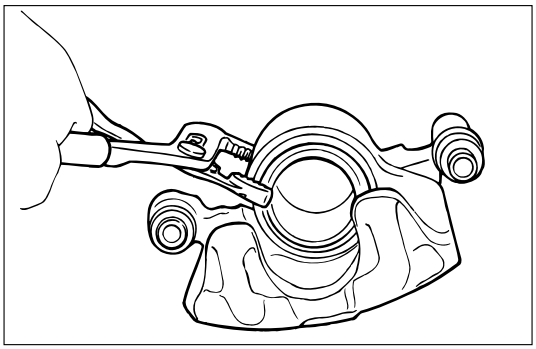

3. **Caliper Assembly**
   1) Use adjustable pliers to bottom the piston into the caliper bore. Be careful not to damage the piston dust boot.
   2) Do not damage the flexible hose by twisting or pulling it.

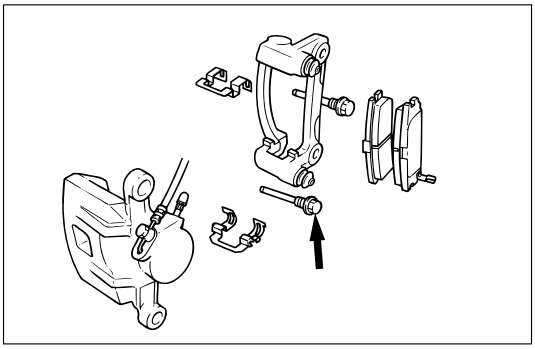

2. Lock Bolt

Lock Bolt Torque	N·m (kg·m / lb·ft)
44 (4.5 / 32)	

1. Wheel and Tire Assembly

1) Refer to Wheels and Tires in Suspension section.
2) Pump the brake pedal several times to make sure that the pedal is firm. Check the brake fluid level in the reservoir after pumping the brakes.

CALIPER REPLACEMENT

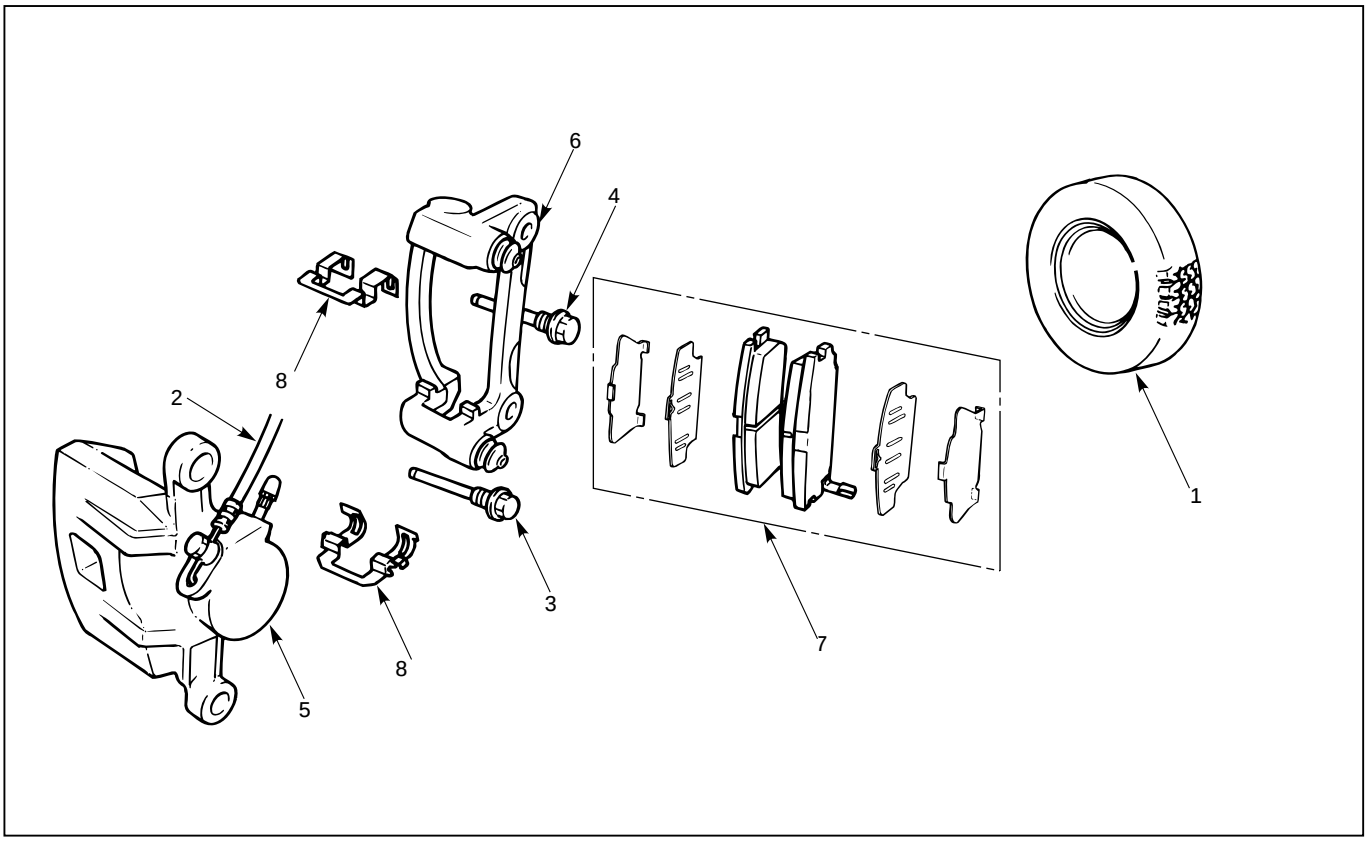

Removal Steps

1. Wheel and tire assembly
2. Brake flexible hose
3. Lock bolt
4. Guide bolt
5. Caliper assembly
6. Support bracket
7. Pad assembly with shim
8. Clip

Installation Steps

To install, follow the removal steps in the reverse order.

REMOVAL

- Raise the vehicle and support with suitable safety stands.

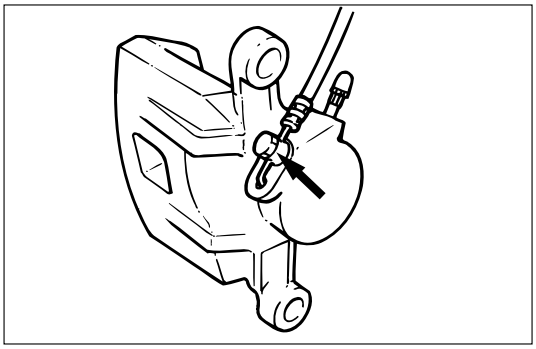

1. Wheel and Tire Assembly

- Refer to Wheels and Tires in Suspension section.

2. Brake Flexible Hose

1) Remove the bolt and gaskets, then disconnect the flexible hose from the caliper.
2) After disconnecting the flexible hose, cap or tape the openings to prevent entry of foreign material.
3) Since the brake fluid flows out from the connecting coupler, place a drain pan under the vehicle.

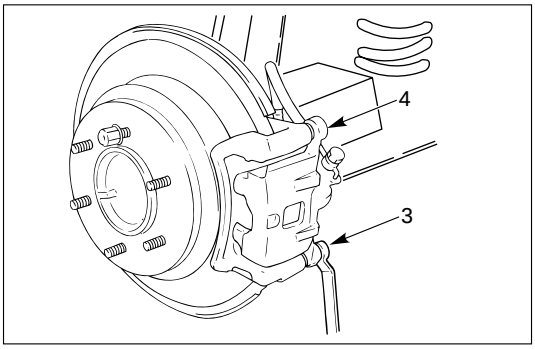

3. **Lock Bolt**
4. **Guide Bolt**

5. **Caliper Assembly**
6 **Support Bracket**
   - Take care not to damage the flexible brake hose when removing the support bracket.
7. **Pad Assembly with Shim**
   - Mark the lining locations if they are to be reinstalled.
8. **Clip**

INSTALLATION

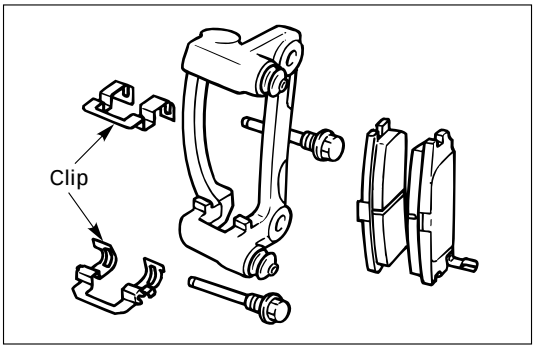

8. **Clip**

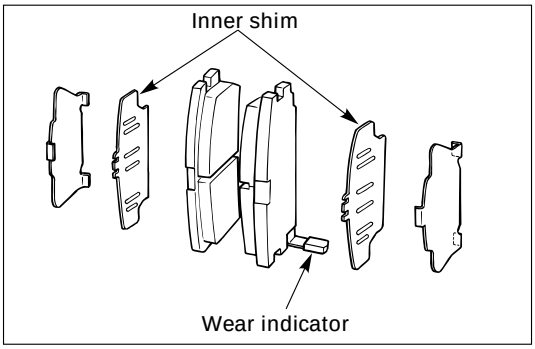

7. **Pad Assembly with Shim**
   - Apply special grease (approx. 0.2 g) to both contacting surfaces of inner shims. Wipe off extruded grease after installing.

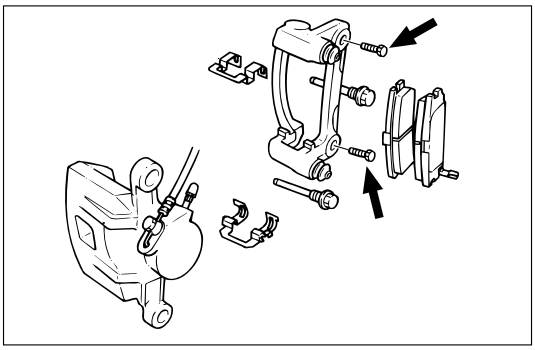

6. **Support Bracket**

Support Bracket Torque	N·m (kg·m / lb·ft)
104 (10.6 / 77)	

5. **Caliper Assembly**

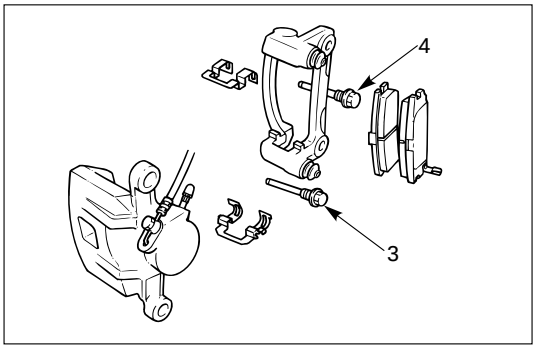

4. Guide Bolt

3. Lock Bolt

Lock Bolt Torque	N·m (kg·m / lb·ft)
44 (4.5 / 32)	

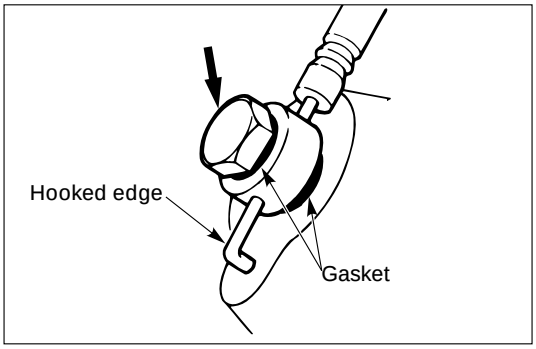

2. Brake Flexible Hose

1) Always use new gaskets.
2) Be sure to put the hooked edge of the flexible hose end into the anti-rotation cavity.

Brake Flexible Hose Torque	N·m (kg·m / lb·ft)
35 (3.5 / 26)	

1. Wheel and Tire Assembly

1) Refer to Wheels and Tires in Suspension section.
2) Bleed brakes.

REBUILDING THE CALIPER

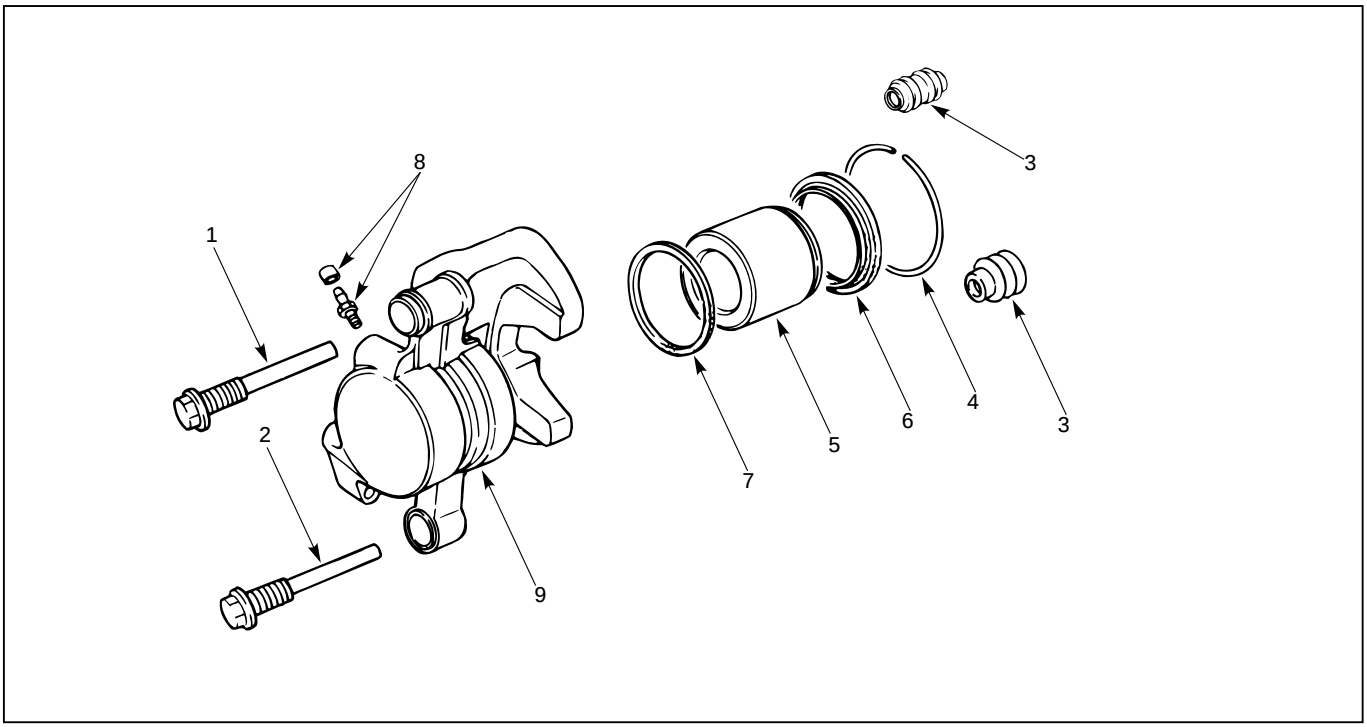

Disassembly Steps

1. Guide bolt
2. Lock bolt
3. Dust boot
4. Dust boot ring
5. Piston
6. Dust boot; piston
7. Piston seal
8. Bleeder with cap
9. Caliper body

Reassembly Steps

9. Caliper body
8. Bleeder with cap
7. Piston seal
5. Piston
6. Dust boot; pisotn
4. Dust boot ring
3. Dust boot
2. Lock bolt
1. Guide bolt

DISASSEMBLY

1. **Guide Bolt**
2. **Lock Bolt**
3. **Dust Boot**
4. **Dust Boot Ring**
   - Using a small screwdriver, remove the dust boot ring.

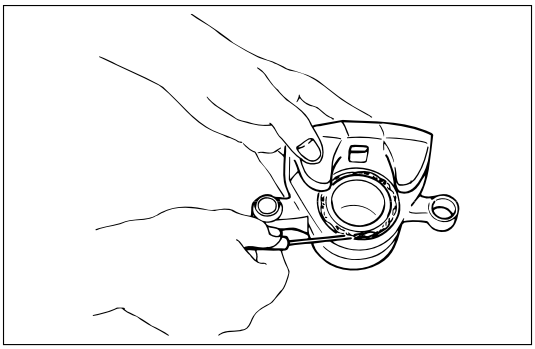

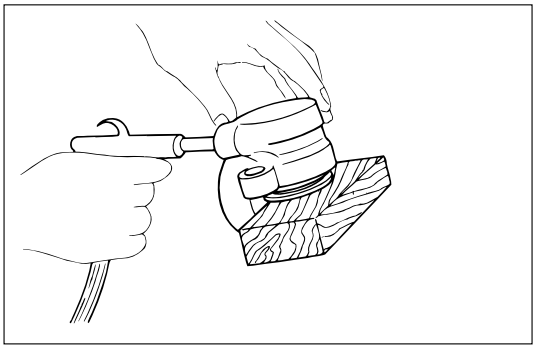

5. **Piston**
   - Insert a block of wood into the caliper and force out the piston by blowing compressed air into the caliper at the flexible hose attachment. This procedure must be done prior to removal of dust boot.

WARNING:
DO NOT PLACE YOUR FINGERS IN FRONT OF THE PISTON IN AN ATTEMPT TO CATCH OR PROTECT IT WHEN APPLYING COMPRESSED AIR. THIS COULD RESULT IN PERSONAL INJURY.

CAUTION:
Use just enough air to ease the piston out of the bore. If the piston is blown out, it may be damaged.

6. **Dust Boot; Piston**
7. **Piston Seal**
8. **Bleeder with Cap**
9. **Caliper Body**

INSPECTION AND REPAIR

Make necessary parts replacement, if wear, damage, corrosion or any other abnormal conditions are found through inspection.
Check the following parts;
- Rotor
- Cylinder body
- Cylinder bore
- Piston
- Slide pin
- Support bracket

NOTE:
The piston dust seal and dust boot are to be replaced each time the caliper is overhauled.
Discard these used rubber parts and replace with new ones.

REASSEMBLY

9. **Caliper Body**
8. **Bleeder with Cap**

Bleeder Torque	N·m (kg·cm / lb·in)
8 (80 / 69)	

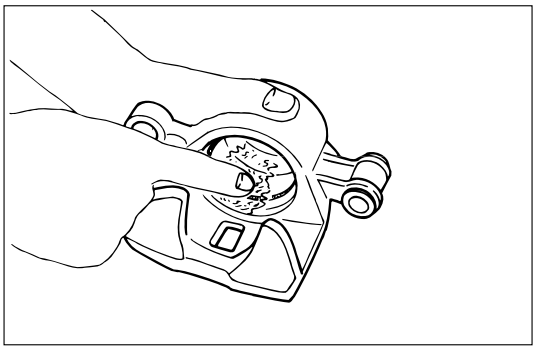

7. **Piston Seal**
   - Apply special rubber grease to the piston seal and cylinder wall, then insert the piston seal into the cylinder. The special rubber grease is included in the repair kit.
5. **Piston**

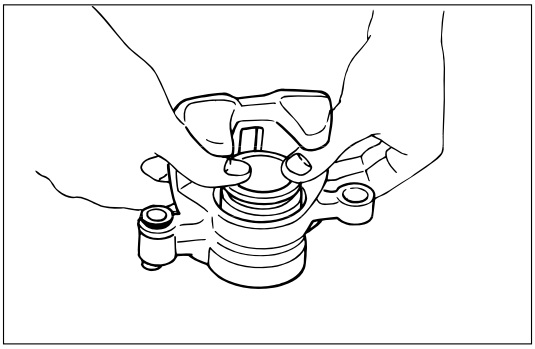

6. Dust Boot; Piston

- When inserting the piston into the cylinder, use finger pressure only. Do not use a mallet or other impact tools, since damage to the cylinder wall or piston seal can result.

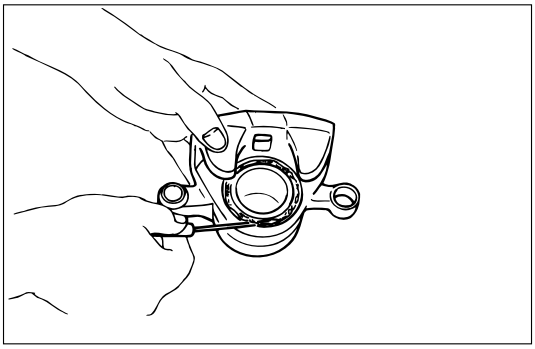

4. Dust Boot Ring

- Apply special grease (Approx. 1 g) to the piston and attach the dust boot to the piston and caliper. Insert the dust boot ring into the dust boot.

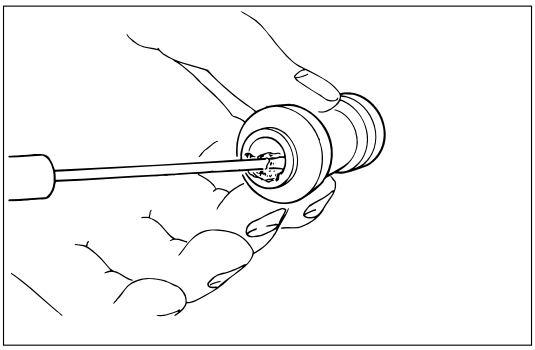

3. Dust Boot

- Install the dust boot on the support bracket after applying special grease (Approx 1 g) onto the dust boot inner surface. Also apply special grease onto the lock bolt and guide bolt setting hole of the support bracket.

2. Lock Bolt

1. Guide Bolt

Guide Bolt Torque	N·m (kg·m / lb·ft)
44 (4.5 / 32)	

UNIT REPAIR

MASTER CYLINDER

The master cylinder is not repairable and must be replaced as complete assembly if found defective.

INSPECTION

Excessive brake pedal travel, malfunction or dragging brake suggests that the master cylinder is defective. In such cases perform the following visual check.

Visual check

Make parts replacement as required if wear, distortion, nicks, cuts, corrosion, or other abnormal conditions are found through the following parts inspection;

- Master cylinder body
- Fluid reservoir
- O-ring

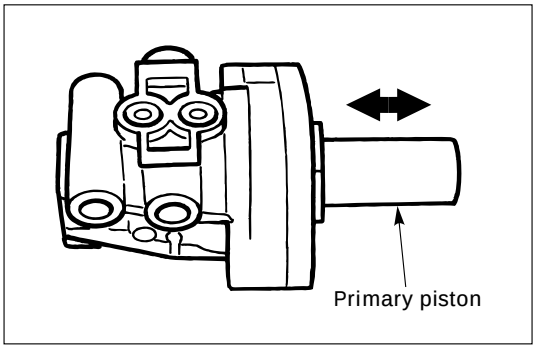

FUNCTIONAL INSPECTION OF MASTER CYLINDER PISTON

Push the primary piston with your fingers to check that it travels smoothly. If the motion is questionable, replace the master cylinder as a complete assembly.

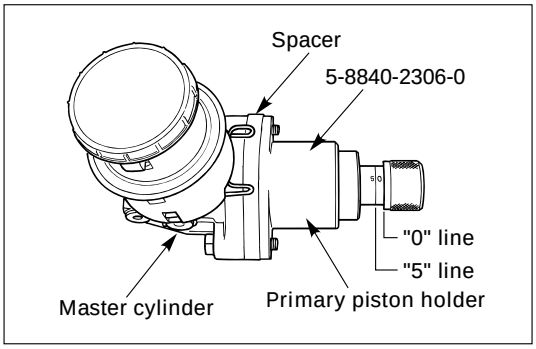

FUNCTIONAL INSPECTION OF MASTER CYLINDER

Inspect the master cylinder for function as follows. If any abnormal function is found, replace with a new one.

Primary piston holder: 5-8840-2306-0 (J-39242) (including master cylinder attachment and master cylinder plug)

- Install the primary piston holder onto the master cylinder with the spacer (2 bolts) with its adjusting bolt screwed in up to the “0” line.

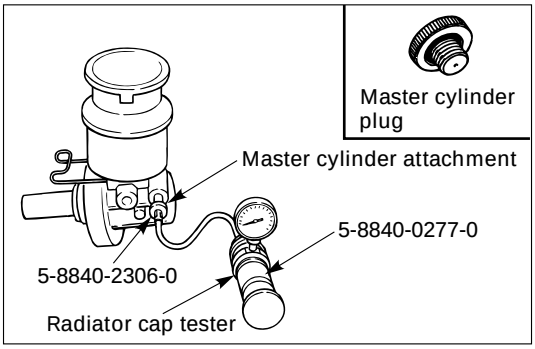

Radiator cap tester: 5-8840-0277-0 (J-24460-01)

- Connect master cylinder attachment with the end of radiator cap tester, and apply air pressure with the cap tester. Make sure there is no rise in pressure and that with the adjusting bolt further screwed in 5 mm (align the adjusting bolt to the “5” line). There should be a pressure increase of 49 kpa (0.5 kg/cm^2/7.1 psi) or more.

NOTE:
When checking the front (or primary) side, be sure to mount master cylinder plug in the rear (or secondary) port.

	“0” line	“5” line
Apply air pressure to the front and rear ports	No pressure rise.	Pressure increase of 49 kpa (0.5 kg/cm^2/ 7.1 psi) more
Remarks	Check port into the atmospheric pressure chamber	Checks air tightness of the pressure chamber

NOTE:
1) **Do not use an air compressor, as the air from compressor is mixed with compressor oil.**
2) **When installing the master cylinder onto the vacuum booster, always adjust vacuum booster push rod. (Refer to Vacuum Booster Assembly in this section.)**
3) **After the master cylinder is installed onto the vehicle, check for leakage, pedal travel and pedal free play.**

VACUUM BOOSTER

- The vacuum booster cannot be disassembled for repair. Replace a defective vacuum booster with a new one.

SECTION 5D
PARKING BRAKES

CONTENTS

PAGE
Service Precaution 5D- 1
Main Data and Specifications 5D- 2
Service Standard 5D- 2
Servicing 5D- 3
Fixing Torque 5D- 5
General Description 5D- 6
On-Vehicle Service 5D- 7
Parking Brake Lever Replacement 5D- 7
Parking Brake Cable 5D- 9

SERVICE PRECAUTION

WARNING:
IF SO EQUIPPED WITH A SUPPLEMENTAL RESTRAINT SYSTEM (SRS), REFER TO THE SRS COMPONENT AND WIRING LOCATION VIEW IN ORDER TO DETERMINE WHETHER YOU ARE PERFORMING SERVICE ON OR NEAR THE SRS COMPONENTS OR THE SRS WIRING. WHEN YOU ARE PERFORMING SERVICE ON OR NEAR THE SRS COMPONENTS OR THE SRS WIRING, REFER TO THE SRS SERVICE INFORMATION. FAILURE TO FOLLOW WARNINGS COULD RESULT IN POSSIBLE AIR BAG DEPLOYMENT, PERSONAL INJURY, OR OTHERWISE UNNEEDED SRS SYSTEM REPAIRS.

CAUTION:
Always use the correct fastener in the proper location. When you replace a fastener, use ONLY the exact part number for that application. ISUZU will call out those fasteners that require a replacement after removal. ISUZU will also call out the fasteners that require thread lockers or thread sealant. UNLESS OTHERWISE SPECIFIED, do not use supplemental coatings (Paints, greases, or other corrosion inhibitors) on threaded fasteners or fastener joint interfaces. Generally, such coatings adversely affect the fastener torque and the joint clamping force, and may damage the fastener. When you install fasteners, use the correct tightening sequence and specification. Following these instructions can help you avoid damage to parts and systems.

MAIN DATA AND SPECIFICATIONS

REAR PARKING BRAKE		
Type		Duo-servo
Lining Dimensions	cm^2 (in^2)	121.2 (18.79)
Adjusting Method		Manual Adjusting
Rear Drum (in Disc)		
Inside Diameter	mm (in)	210 (8.27)
Parking Brake Lever Stroke		6 to 7 notches When pulled with a force of 30 kg (66 lb)

SERVICE STANDARD

REAR PARKING BRAKE		
Rear Drum (in Disc) Minimum Wear		
Inside Diameter	mm (in)	211.4 (8.32)
Parking Brake Lining Thickness		
Minimum Limit	mm (in)	1.0 (0.039)
Parking Brake Lever Stroke		6 to 7 notches When pulled with a force of 30 kg (66 lb)

SERVICING

REAR DRUM (IN DISC) INSIDE DIAMETER CHECK

Check the rear drum inside diameter by measuring at more than two portions as shown in the figure.
If the inside diameter is greater than the limit, replace the rear rotor.

Rear Drum Inside Diameter — mm (in)

Standard	Limit
210.0 (8.27)	211.4 (8.32)

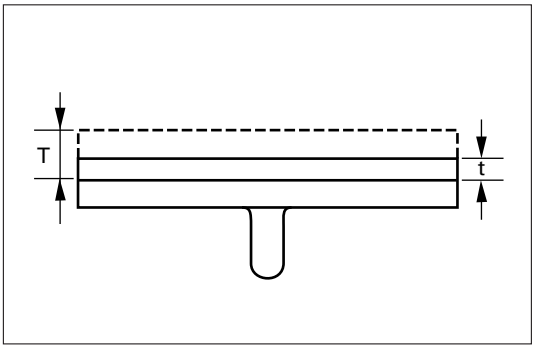

PARKING BRAKE LINING INSPECTION

Check the shoe assemblies for wear by removing the brake drum rotor.
Replace the shoe assemblies, if the lining thickness is less than 1.0 mm (0.039 in).

Minimum Limit	mm (in)
1.0 (0.039)	

PARKING BRAKE ADJUSTMENT

1. **Adjustment of Parking Brake Assembly**
   - Prior to lever stroke adjustment, adjust the rear brake shoe/rotor (drum) gap. Perform this procedure by loosening the adjust nut of the equalizer.

   a) Remove the adjusting hole plug (rubber) and turn the shoe adjusting screw downward with a small screwdriver so that shoes will expand until they get into close touch with the rotor. (Turn down the adjusting screw notch by notch until the rotor does not turn.)

   b) Turn the adjusting screw in the opposite direction (upward) until the rotor can be turned lightly. Standard number of notches to turn upward: 7 or 8.
   Turn the rotor and make sure that there is no brake dragging.

2. Adjustment of Parking Brake Cable

a) Turn the equalizer nut so that the parking brake lever travels 6 or 7 notches when pulled up with a force of 30 kg (66 lb).

b) Make sure there is no brake dragging and tighten the cable lock nut.

Cable Lock Nut Torque	N·m (kg·cm/lb·in)
6 (60 / 52)	

3. Break-in of Parking Brake Shoe

- When poor braking effect possibly resulting from insufficient break-in is felt, or just after replacement of parking brake shoe, be sure to conduct break-in by driving vehicle as follows:

a) Forward 50 km/h (30 mph) x 400 m (About 30 seconds) with a lever pull force of 15 kg (33 lb), and

b) Backward 10 km/h (6 mph) x 50 m (18 seconds) with a lever pull force of 15kg (33 lb).

NOTE:
Break-in procedure must be performed under the safety conditions and traffic rules.

- If braking effect still remains poor after the above break-in, wait for some time until parking brake shoe cools down and repeat the procedures a) and b) notes above.
- On completion of break-in, inspect parking brake lever stroke, and if the lever does not come within the specified number of notches when pulled up, readjust.
- Excessive break-in may cause premature wear of the parking brake lining.

FIXING TORQUE

N·m (kg·m/lb·ft)

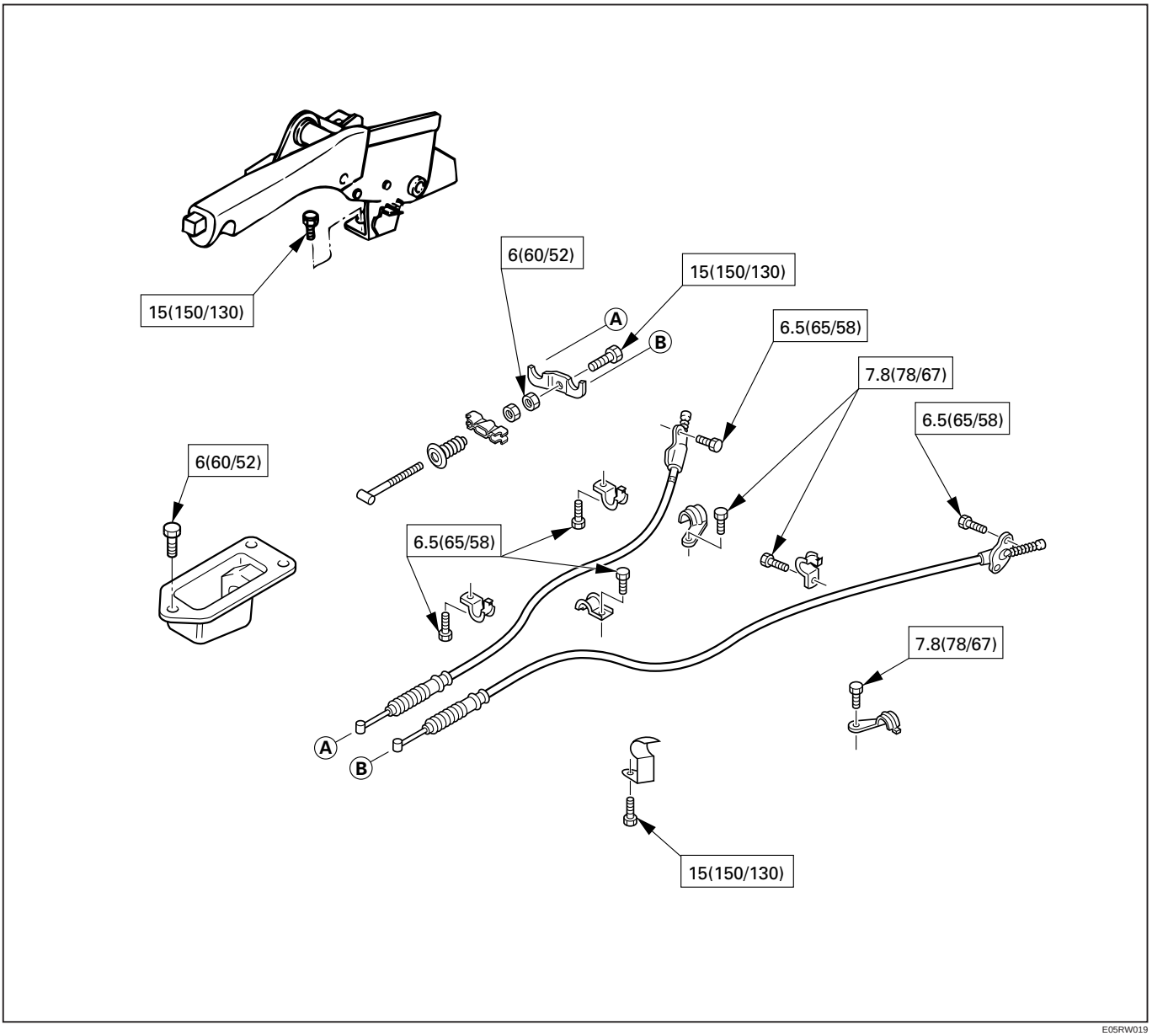

E05RW019

GENERAL DESCRIPTION

Pulling up the parking brake lever by hand will set the parking brake. Once pulled up, the lever is held by means of a ratchet type lock until it is released. The position of the lever is transmitted through cable/lever systems to the rear wheels. These parts are designed to obtain sufficient braking force when parking on slopes. When the parking brake is set, or when the ignition SW is in the “ON” position, the brake warning light illuminates. The rear wheel parking brake is a duo-servo brake (mechanical inside expansion type) built-in to rear disc brake. Parking brake adjustment is made through the adjusting hole (bored through back plate). Parking brake lever stroke should be adjusted to 6 or 7 notches.

OPERATION

When pulled in the direction “A”, the parking lever presses the secondary shoe against the brake drum using the lever/shoe joint “B” as a fulcrum and pushes the strut in the direction “C”. The strut, in turn, presses the primary shoe against the brake drum. Counter force “D” to the primary shoe is transmitted again to the secondary shoe through the fulcrum “B”. The secondary shoe contacts the drum, thereby producing braking effect. Clearance which may result from worn parking brake shoe lining can be adjusted by turning the adjusting screw

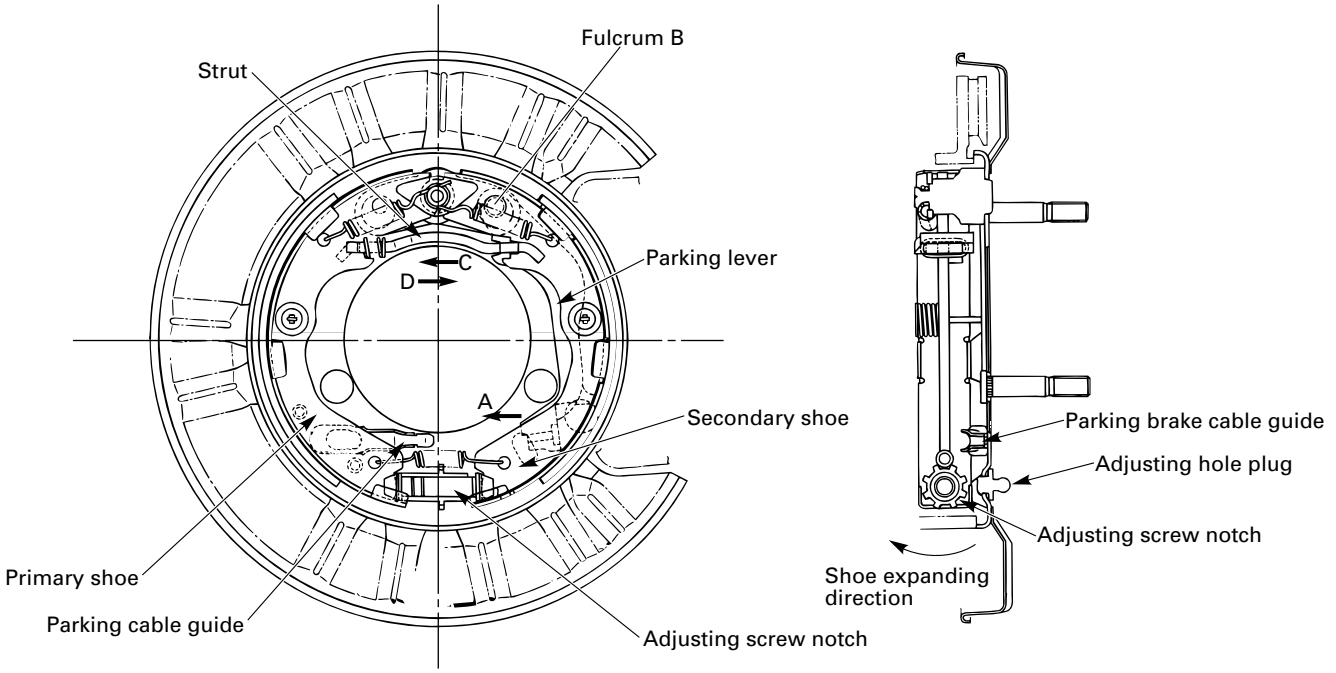

ON-VEHICLE SERVICE

PARKING BRAKE LEVER REPLACEMENT

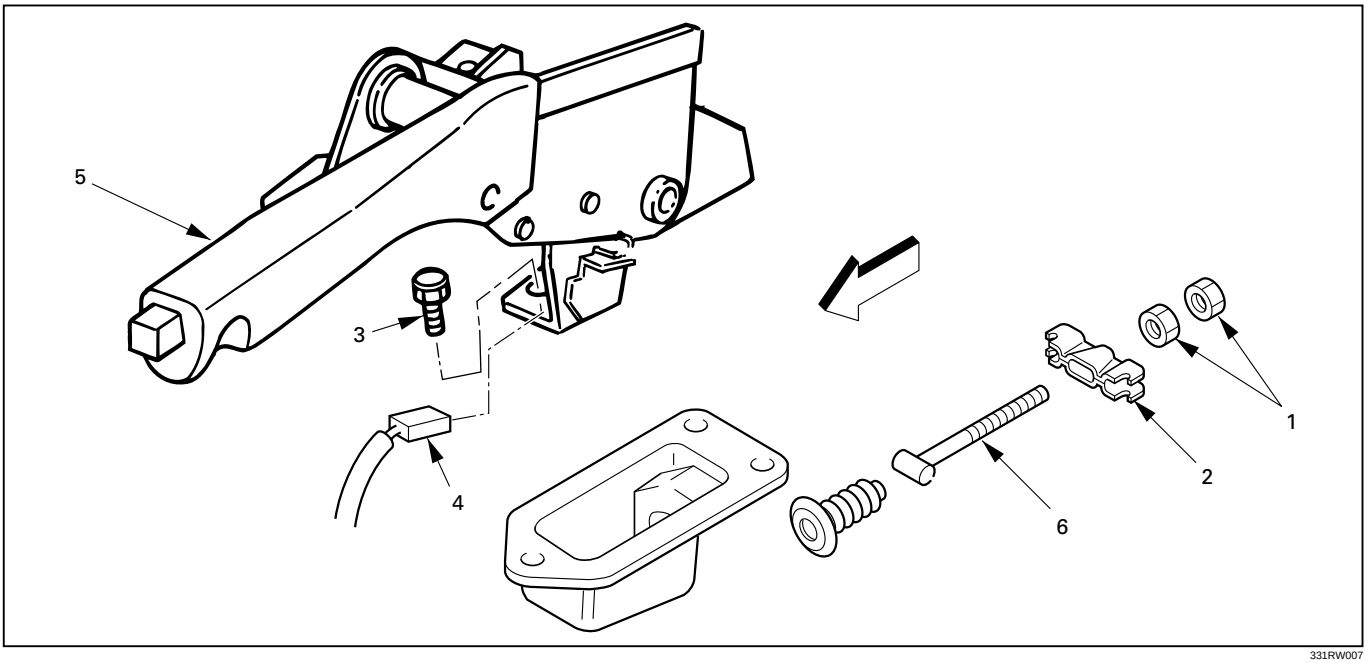

331RW007

Removal Steps

1. Ajusting nut
2. Equalizer
3. Bolt
4. Switch connector
5. Parking brake lever
6. Parking brake front cable

Installation Steps

To install, follow the removal steps in the reverse order.

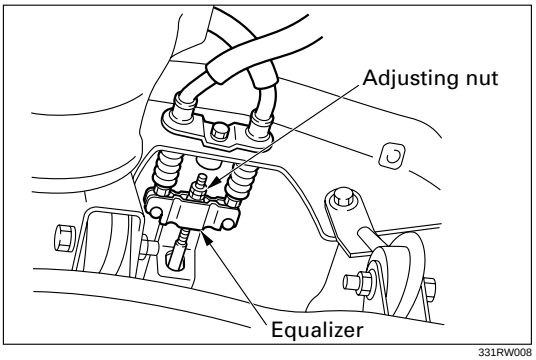

331RW008

REMOVAL

1. **Ajusting Nut**
2. **Equalizer**
3. **Bolt**

   Remove the center console as described in Body and Accessories section.
   Then remove the fixing bolt.
4. **Switch Connector**
5. **Parking Brake Lever**
6. **Parking Brake Front Cable**

INSTALLATION

6. **Parking Brake Front Cable**
5. **Parking Brake Lever**
   - Apply grease (BESCO L-2 or equivalent) to front cable contact point.
4. **Switch Connector**
3. **Bolt**
   - Tighten the parking brake lever fixing bolt to the specified torque.

Bolt Torque	N·m (kg·m / lb·ft)
15 (1.5 / 11)	

   - Install the center console.
2. **Equalizer**
1. **Adjusting Nut**

PARKING BRAKE CABLE

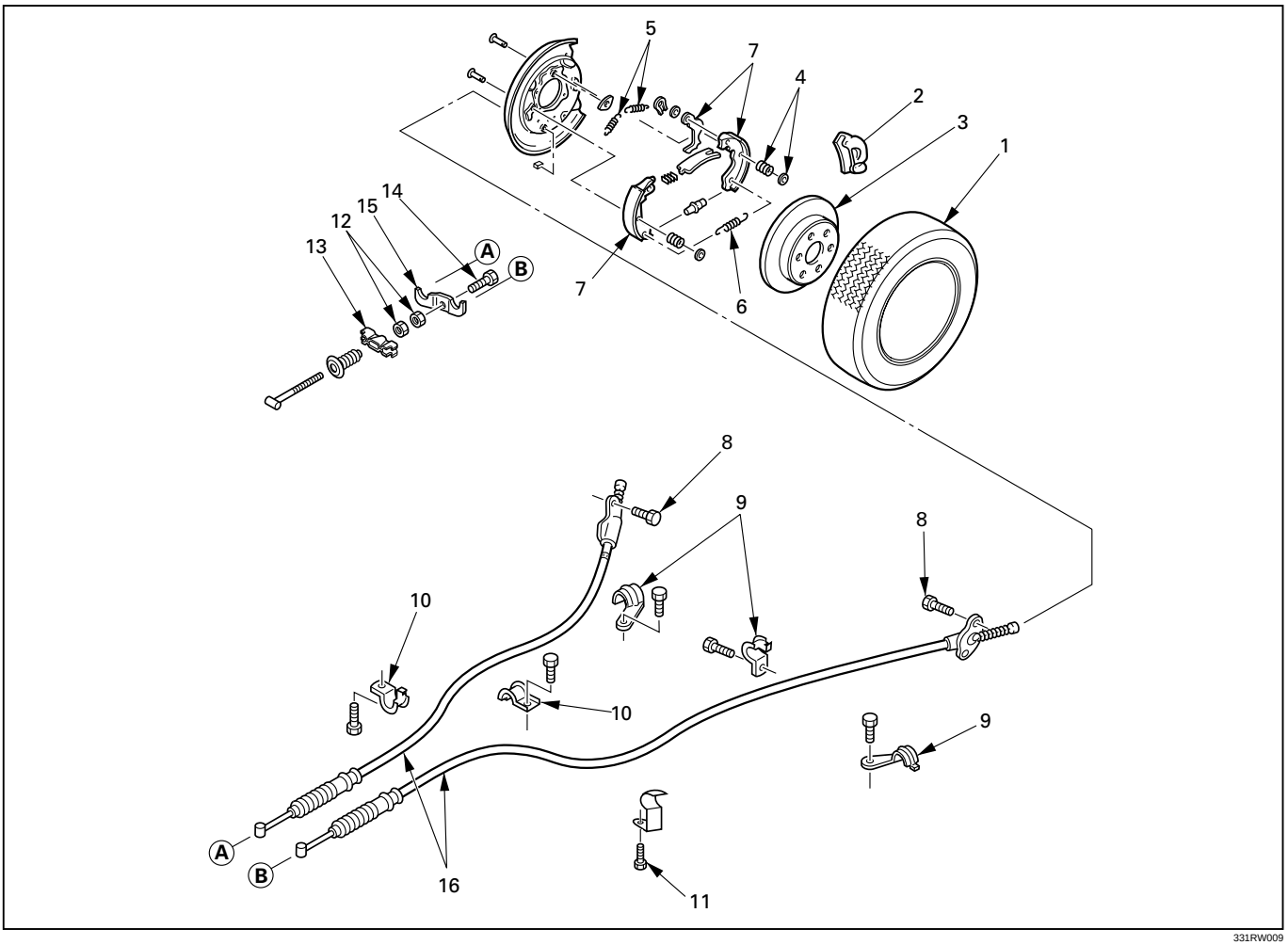

331RW009

Removal Steps

1. Rear wheels
2. Caliper assembly
3. Rotor (Drum)
4. Holding spring
5. Return spring; upper
6. Return spring; lower
7. Shoe assembly
8. Cable fixing bolt
9. Clip
10. Clip
11. Clip
12. Adjust nut
13. Equalizer
14. Bolt
15. Retaining plate
16. Parking brake cable

Installation Steps

To install, follow the removal steps in the reverse order.

REMOVAL

1. **Rear Wheels**
2. **Caliper Assembly**
   - Remove 2 bolts to remove the caliper assembly from the support bracket. (Refer to Rear Disc Brakes in Power Assisted Brake System section.) Temporarily hang the caliper with wire to avoid stretching the brake hose.
3. **Rotor (Drum)**
4. **Holding Spring**
5. **Return Spring; Upper**
6. **Return Spring; Lower**
7. **Shoe Assembly**
   - Remove the brake shoe assembly. Then remove the parking brake cable from the parking brake lever.
8. **Cable Fixing Bolt**
9. **Clip**
10. **Clip**
11. **Clip**
12. **Adjust Nut**
13. **Equalizer**
14. **Bolt**
15. **Retaining Plate**
16. **Parking Brake Cable**

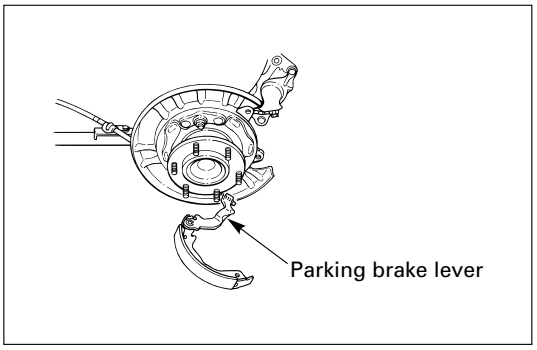

INSTALLATION

To install, follow the removal steps in the reverse order, noting the following points.

15. **Parking Brake Cable**
    - Apply grease (BESCO L-2 or equivalent) to the connecting portion of the rear cable and equalizer.
12. **Adjust Nut**
    - Tighten the adjust nut to the specified torque.

Adjust Nut Torque	N·m (kg·cm / lb·in)
6 (60 / 52)	

    - To adjust the parking brake, refer to Parking Brake Adjustment in this section.
11. **Clip**
    - Tighten the fixing bolt to the specified torque.

Fixing Bolt Torque	N·m (kg·cm / lb·in)
15 (150 / 130)	

10. **Clip**
    - Tighten the fixing bolt to the specified torque.

Fixing Bolt Torque	N·m (kg·cm / lb·in)
6.5 (65 / 58)	

9. Clip

- Tighten the fixing bolt to the specified torque.

Fixing Bolt Torque	N·m (kg·cm / lb·in)
7.8 (78 / 67)	

8. Cable Fixing Bolt

- Tighten the cable fixing bolt to the specified torque.

Cable Fixing Bolt Torque	N·m (kg·cm / lb·in)
6.5 (65 / 58)	

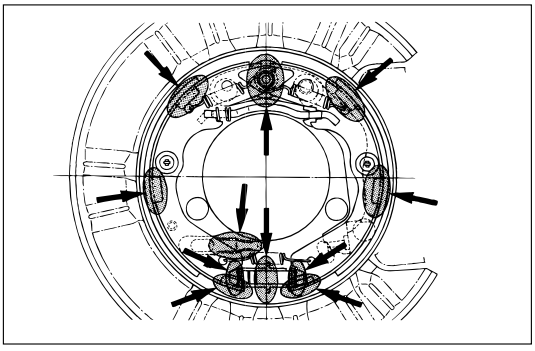

7. Shoe Assembly

- After installation of the shoe and cable assembly, apply special grease (included in the repair kit) to the following portions indicated in the left figure.

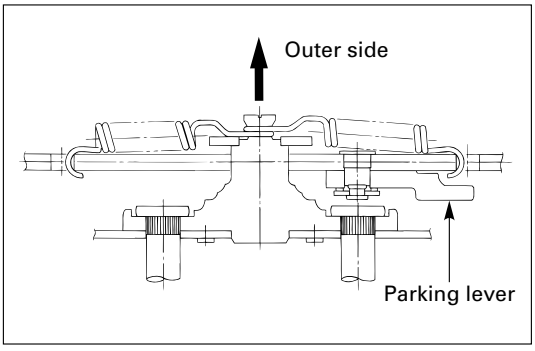

5. Return Spring; Upper

- The parking brake lever side (secondary side) return spring must be installed on the outer side of the primary side return spring.

ENGINE

CONTENTS

Engine Mechanical 6A
Engine Cooling 6B
Engine Fuel 6C
Engine Electrical 6D1
Ignition System 6D2
Starting and Charging System 6D3
Driveability and Emissions 6E
Engine Exhaust 6F
Engine Lubrication 6G
Engine Speed Control System 6H
Inducton 6J

ENGINE MECHANICAL

CONTENTS

Service Precaution 6A–2
General Description 6A–3
Engine Diagnosis 6A–4
Cylinder Head Cover LH 6A–18
Removal 6A–18
Installation 6A–19
Cylinder Head Cover RH 6A–21
Removal 6A–21
Installation 6A–22
Common Chamber 6A–24
Removal 6A–24
Installation 6A–24
Exhaust Manifold LH 6A–26
Removal 6A–26
Installation 6A–26
Exhaust Manifold RH 6A–27
Removal 6A–27
Installation 6A–27
Crankshaft Pulley 6A–28
Removal 6A–28
Installation 6A–28
Timing Belt 6A–29
Removal 6A–29
Installation 6A–30
Camshaft 6A–33
Removal 6A–33
Installation 6A–33
Cylinder Head 6A–37
Removal 6A–37
Installation 6A–37
Valve Stem Oil Controller , Valve Spring and Valve Guide 6A–39
Removal 6A–39
Installation 6A–39
Piston, Piston Ring and Connecting Rod . . . 6A–40
Removal 6A–40
Installation 6A–41
Crankshaft and Main Bearings 6A–42
Removal 6A–42
Installation 6A–43
Rear Oil Seal 6A–47
Removal 6A–47
Installation 6A–47
Engine Assembly 6A–48
Removal 6A–48
Installation 6A–48
Cylinder Head 6A–52
Cylinder Head and Associated Parts 6A–52
Disassembly 6A–52
Clean 6A–53
Inspection and Repair 6A–53
Reassembly 6A–53
Valve Spring, Oil Controller, Valve, Valve Guide 6A–56
Valve Spring, Oil Controller, Valve, Valve Guide and Associated Parts 6A–56
Disassembly 6A–56
Inspection and Repair 6A–57
Reassembly 6A–60
Valve Clearance Adjustments 6A–61
Camshaft 6A–63
Camshaft and Associated Parts 6A–63
Disassembly 6A–63
Inspection and Repair 6A–64
Reassembly 6A–66
Crankshaft 6A–69
Crankshaft and Associated Parts 6A–69
Disassembly 6A–69
Inspection and Repair 6A–70
Inspection and Repair 6A–71
Reassembly 6A–73

Piston and Connecting Rod 6A–77
Piston, Connecting Rod and Associate Parts 6A–77
Disassembly 6A–77
Inspection and Repair 6A–78
Reassembly 6A–82
Cylinder Block 6A–85
Cylinder Block and Associated Parts 6A–85
Disassembly 6A–85
Inspection and Repair 6A–86
Reassembly 6A–87
Main Data and Specification 6A–90
Special Tool 6A–96

Service Precaution

WARNING: IF SO EQUIPPED WITH A SUPPLEMENTAL RESTRAINT SYSTEM (SRS), REFER TO THE SRS COMPONENT AND WIRING LOCATION VIEW IN ORDER TO DETERMINE WHETHER YOU ARE PERFORMING SERVICE ON OR NEAR THE SRS COMPONENTS OR THE SRS WIRING. WHEN YOU ARE PERFORMING SERVICE ON OR NEAR THE SRS COMPONENTS OR THE SRS WIRING, REFER TO THE SRS SERVICE INFORMATION. FAILURE TO FOLLOW WARNINGS COULD RESULT IN POSSIBLE AIR BAG DEPLOYMENT, PERSONAL INJURY, OR OTHERWISE UNNEEDED SRS SYSTEM REPAIRS.

CAUTION: Always use the correct fastener in the proper location. When you replace a fastener, use ONLY the exact part number for that application. ISUZU will call out those fasteners that require a replacement after removal. ISUZU will also call out the fasteners that require thread lockers or thread sealant. UNLESS OTHERWISE SPECIFIED, do not use supplemental coatings (Paints, greases, or other corrosion inhibitors) on threaded fasteners or fastener joint interfaces. Generally, such coatings adversely affect the fastener torque and the joint clamping force, and may damage the fastener. When you install fasteners, use the correct tightening sequence and specifications. Following these instructions can help you avoid damage to parts and systems.

General Description

Engine Cleanliness And Care

An automobile engine is a combination of many machined, honed, polished and lapped surfaces with tolerances that are measured in the thousandths of a millimeter (ten thousandths of an inch). Accordingly, when any internal engine parts are serviced, care and cleanliness are important. Throughout this section, it should be understood that proper cleaning and protection of machined surfaces and friction areas is part of the repair procedure. This is considered standard shop practice even if not specifically stated.

- A liberal coating of engine oil should be applied to all friction areas during assembly to protect and lubricate the surfaces on initial operation.
- Whenever valve train components, pistons, piston rings, connecting rods, rod bearings, and crankshaft journal bearings are removed for service, they should be retained in order.
- At the time of installation, they should be installed in the same locations and with the same mating surfaces as when removed.
- Battery cables should be disconnected before any major work is performed on the engine. Failure to disconnect cables may result in damage to wire harness or other electrical parts.
- The six cylinders of this engine are identified by numbers; Right side cylinders 1, 3 and 5, Left side cylinders 2, 4 and 6, as counted from crankshaft pulley side to flywheel side.

General Information on Engine Service

The following information on engine service should be noted carefully, as it is important in preventing damage and contributing to reliable engine performance:

- When raising or supporting the engine for any reason, do not use a jack under the oil pan. Due to the small clearance between the oil pan and the oil pump strainer, jacking against the oil pan may cause damage to the oil pick–up unit.
- The 12–volt electrical system is capable of damaging circuits. When performing any work where electrical terminals could possibly be grounded, the ground cable of the battery should be disconnected at the battery.
- Any time the intake air duct or air cleaner is removed, the intake opening should be covered. This will protect against accidental entrance of foreign material into the cylinder which could cause extensive damage when the engine is started.

Cylinder Block

The cylinder block is made of aluminum die–cast casting for 75˚V–type six cylinders. It has a rear plate integrated structure and employs a deep skint. The cylinder liner is cast and the liner inner diameter and crankshaft journal diameter are classified into grades. The crankshaft is supported by four bearings of which width of No.3 bearing on the body side is different in order to support the thrust bearing. The bearing cap is made of nodular cast iron and each bearing cap uses four bolts and two side bolts.

Cylinder Head

The cylinder head, made of aluminum alloy casting employs a pent–roof type combustion chamber with a spark plug in the center. The intake and exhaust valves are placed in V–type design. The ports are cross–flow type.

Valve Train

Intake and exhaust camshaft on the both side of banks are driven through an camshaft drive gear by timing belt. The valves are operated by the camshaft and the valve clearance is adjusted to select suitable thickness shim.

Intake Manifold

The intake manifold system is composed of the aluminum cast common chamber and intake manifold attached with six fuel injectors.

Exhaust Manifold

The exhaust manifold is made of nodular cast iron.

Pistons and Connecting Rods

Aluminum pistons are used after selecting the grade that meets the cylinder bore diameter. Each piston has two compression rings and one oil ring. The piston pin is made of chromium steel is offset 1mm toward the thrust side, and the thrust pressure of piston to the cylinder wall varies gradually as the piston travels. The connecting rods are made of forged steel. The connecting rod bearings are graded for correct seze selection.

Crankshaft and Bearings

The crankshaft is made of Ductile cast–iron. Pins and journals are graded for correct size selection for their bearing.

Engine Lubrication

The oil discharged by a trochoid–type oil pump driven by the crankshaft is fed through full–flow oil filter and to the oil gallery provided under the crankshaft bearing cap. The oil is then led to the crankshaft journals and cylinder head. The crank pins are lubricated with oil from crankshaft journals through oil holes. Also, an oil jet is fed to each cylinder from crankshaft juornals on the connecting rod for piston cleaning. The oil pan flange is dealed with liquid packing only; do not deform or damage the flange surface during removal or installation.

Engine Diagnosis

Hard Starting

1. Starting Motor Does Not Turn Over

Troubleshooting Procedure

Turn on headlights and starter switch.

Condition	Possible cause	Correction
Headlights go out or dim considerably	Battery run down or under charged	Recharge or replace battery
	Terminals poorly connected	Clean battery posts and terminals and connect properly
	Starting motor coil circuit shorted	Overhaul or replace
	Starting motor defective	Overhaul or replace

2. Ignition Trouble — Starting Motor Turns Over But Engine Does Not Start

Spark Test

Disconnect an igniton coil from any spark plug. Connect the spark plug tester 5–8840–0607–0, start the engine, and check if a spark is generated in the spark plug tester. Before starting the engine, make sure that the spark plug tester is properly grounded. To avoid electrical shock, do not touch the part where insulation of the igniton coil is broken while the engine is running.

Condition	Possible cause	Correction
Spark jumps across gap	Spark plug defective	Clean, adjust spark gap or replace
	Ignition timing incorrect	Refer to Ignition System
	Fuel not reaching fuel injector(s) or engine	Refer to item 3 (Trouble in fuel system)
	Valve timing incorrect	Adjust
	Engine lacks compression	Refer to item 4 (Engine lacks compression)
No sparking takes place	Ignition coil disconnected or broken	Connect properly or replace
	Electronic Ignition System with module	Replace
	Poor connections in engine harness	Correct
	Powertrain Control Module cable disconnected or defective	Correct or replace

3. Trouble In Fuel System

Condition	Possible cause	Correction
Starting motor turns over and spark occurs but engine does not start.	Fuel tank empty	Fill
	Water in fuel system	Clean
	Fuel filter clogged	Replace filter
	Fuel pipe clogged	Clean or replace
	Fuel pump defective	Replace
	Fuel pump circuit open	Correct or replace
	Evaporative Emission Control System circuit clogged	Correct or replace
	Multiport Fuel Injection System faulty	Refer to “Electronic Fuel Injection” section

4. Engine Lacks Compression

Condition	Possible cause	Correction
Engine lacks compression	Spark plug loosely fitted or spark plug gasket defective	Tighten to specified torque or replace gasket
	Valve timing incorrect	Adjust
	Cylinder head gasket defective	Replace gasket
	Valve incorrectly seated	Lap valve
	Valve stem seized	Replace valve and valve guide
	Valve spring weakened or broken	Replace
	Cylinder or piston rings worn	Overhaul engine
	Piston ring seized	Overhaul engine.

Engine Compression Test Procedure

1. Start and run the engine until the engine reaches normal operating temperature.
2. Turn the engine off.
3. Remove all the spark plugs.
4. Remove ignition coil fuse (15A) and disable the ignition system.
5. Remove the fuel pump relay from the relay and fuse box.
6. Engage the starter and check that the cranking speed is approximately 300 rpm.
7. Install cylinder compression gauge into spark plug hole.
8. With the throttle valve opened fully, keep the starter engaged until the compression gage needle reaches the maximum level. Note the reading.
9. Repeat the test with each cylinder.
   If the compression pressure obtained falls below the limit, engine overhaul is necessary.

   Limit; 1000 kPa (145 psi)

Rough Engine Idling or Engine Stalling

Condition	Possible cause	Correction
Trouble in fuel injection system	Idle air control valve defective	Replace
	Throttle shutting off incomplete	Correct or replace
	Throttle position sensor circuit open or shorted	Correct or replace
	Fuel injector circuits open or shorted	Correct or replace
	Fuel injectors damaged	Replace
	Fuel pump relay defective	Replace
	Mass Airflow Sensor circuit open or poor connections	Correct or replace
	Mass Airflow Sensor defective	Replace
	Manifold Absolute Pressure Sensor circuit open or poor connections	Correct or replace
	Manifold Absolute Pressure Sensor defective	Replace
	Engine Coolant Temperature Sensor circuit open or poor connections	Correct or replace
	Engine Coolant Temperature Sensor defective	Replace
	Intake Air Temperature sensor circuit open or poor connections	Correct or replace
	Intake Air Temperature sensor defective	Replace
	Knock Sensor (KS) cable broken or poor connections	Correct or replace
	KS defective	Replace
	KS Module circuits open or ground	Correct or replace
	KS Module defective	Replace
	Vehicle Speed Sensor circuit open or shorted	Correct or replace
	Vehicle Speed Sensor defective	Replace
Trouble in emission control system	Powertrain Control Module defective	Replace
	Exhaust Gas Recirculation Valve circuit open or poor connections	Correct or replace
	Exhaust Gas Recirculation Valve faulty	Replace
	Canister purge valve circuit open or poor connections	Correct or replace
	Canister purge valve defective	Replace
	Evaporative Emission Canister Purge control valve defective	Replace
	Trouble in ignition system	Refer to “Hard Start”

Condition	Possible cause	Correction
Others	Engine lacks compression	Refer to “Hard Start”
	Valve incorrectly seated	Lap valve
	Air Cleaner Filter clogged	Replace filter element
	Valve timing incorrect	Readjust
	Idle air control valve broken	Replace
	Fast idle solenoid defective	Replace
	Positive Crankcase Ventilation valve defective or clogged	Replace

Rough Engine Running

Condition	Possible cause	Correction
Engine misfires periodically	Ignition coil layer shorted	Replace
	Spark plugs fouling	Clean or install hotter type plug
	Spark plug(s) insulator nose leaking	Replace
	Fuel injector(s) defective	Replace
	Powertrain control module faulty	Replace
Engine knocks periodically	Spark plugs running too hot	Install colder type spark plugs
	Powertrain control module faulty	Replace
Engine lacks power	Spark plugs fouled	Clean
	Fuel injectors defective	Replace
	Mass Airflow Sensor or Intake Airflow Sensor circuit defective	Correct or replace
	Manifold Absolute Pressure (MAP) Sensor or Manifold Absolute Pressure Sensor circuit defective	Correct or replace
	Engine Coolant Temperature Sensor or Engine Coolant Temperature Sensor circuit defective	Correct or replace
	Powertrain Control Module faulty	Replace
	Intake Air Temperature Sensor or Intake Air Temperature Sensor circuit defective	Correct or replace
	Throttle Position Sensor or Throttle Position Sensor circuit defective	Correct or replace
	Knock Sensor or Knock Sensor circuits defective	Correct or replace
	Knock Sensor Module or Knock Sensor Module circuits defective	Correct or replace

Hesitation

Condition	Possible cause	Correction
Hesitation on acceleration	Throttle Position Sensor adjustment incorrect	Replace throttle valve assembly
	Throttle Position Sensor circuit open or shorted	Correct or replace
	Excessive play in accelerator linkage	Adjust or replace
	Mass Airflow Sensor circuit open or poor connections	Correct or replace
	Mass Airflow Sensor defective	Replace
	Manifold Absolute Pressure (MAP) Sensor circuit open or shorted	Correct or replace
	MAP Sensor defective	Replace
	Intake Air Temperature (IAT) Sensor circuit open or shorted	Correct or replace
	Knock Sensor (KS) Circuit open or poor connections	Correct or replace
	KS defective	Replace
	KS Module circuits open or shorted	Correct or replace
	KS Module defective	Replace
	IAT Sensor defective	Replace
Hesitation at high speeds (Fuel pressure too low)	Fuel tank strainer clogged	Clean or replace
	Fuel pipe clogged	Clean or replace
	Fuel filter clogged	Replace
	Defective fuel pump system	Check and replace
	Fuel Pressure Control Valve leaking	Replace
Hesitation at high speeds (Fuel injector not working normally)	Power supply or ground circuit for Multiport Fuel Injection System shorted or open	Check and correct or replace
	Fuel Injector defective	Replace
	Cable of Multiport Fuel Injection System circuit open or poor connections	Correct or replace

Condition	Possible cause	Correction
Hesitation at high speeds	Powertrain Control Module defective	Replace
	Throttle Position Sensor cable broken or poor connections	Correct or replace
	Throttle Position Sensor defective	Replace
	Engine Coolant Temperature Sensor circuit open or shorted	Correct or replace
	Engine Coolant Temperature Sensor defective	Replace
	Mass Airflow Sensor circuit open or poor connections	Correct or replace
	Mass Airflow Sensor defective	Replace
	MAP Sensor cable broken or poor connections	Correct or replace
	MAP Sensor defective	Replace
	IAT Sensor circuit open or poor connections	Correct or replace
	IAT Sensor defective	Replace
	KS circuit open or poor connections	Correct or replace
	KS defective	Replace
	KS Module circuit open or shorted	Correct or replace
	KS Module defective	Replace
	Throttle valve not fully opened	Check and correct or replace
	Air Cleaner Filter clogged	Replace filter element
	Power supply voltage too low	Check and correct or replace

Engine Lacks Power

Condition	Possible cause	Correction
Trouble in fuel system	Fuel Pressure Control Valve not working normally	Replace
	Fuel injector clogged	Clean or replace
	Fuel pipe clogged	Clean
	Fuel filter clogged or fouled	Replace
	Fuel pump drive circuit not working normally	Correct or replace
	Fuel tank not sufficiently breathing due to clogged Evaporative Emission Control System circuit	Clean or replace
	Water in fuel system	Clean
	Inferior quality fuel in fuel system	Use fuel of specified octane rating
	Powertrain Control Module supplied poor voltage	Correct circuit
	Throttle Position Sensor cable broken or poor connections	Correct or replace
	Throttle Position Sensor defective	Replace
	Mass Airflow Sensor not working normally	Replace
	Manifold Absolute Pressure Sensor not working normally	Replace
	Intake Air Temperature Sensor not working normally	Replace
	Engine Coolant Temperature Sensor circuit open or shorted	Correct or replace
	Engine Coolant Temperature Sensor defective	Replace
	Powertrain Control Module defective	Replace
Trouble in intake or exhaust system	Air Cleaner Filter clogged	Replace filter element
	Air duct kinked or flattened	Correct or replace
Ignition failure	———	Refer to Hard Start Troubleshooting Guide
	Heat range of spark plug inadequate	Install spark plugs of adequate heat range
	Ignition coil defective	Replace

Condition	Possible cause	Correction
Engine overheating	Level of Engine Coolant too low	Replenish
	Fan clutch defective	Replace
	Incorrect fan installed	Replace
	Thermostat defective	Replace
	Engine Coolant pump defective	Correct or replace
	Radiator clogged	Clean or replace
	Radiator filler cap defective	Replace
	Level of oil in engine crankcase too low or wrong engine oil	Change or replenish
	Resistance in exhaust system increased	Clean exhaust system or replace defective parts
	Throttle Position Sensor adjustment incorrect	Replace with Throttle Valve ASM
	Throttle Position Sensor circuit open or shorted	Correct or replace
	Cylinder head gasket damaged	Replace
Engine overcooling	Thermostat defective	Replace (Use a thermostat set to open at 82˚C (180˚F))
Engine lacks compression	———	Refer to Hard Start
Others	Tire inflation pressure abnormal	Adjust to recommended pressures
	Brake drag	Adjust
	Clutch slipping	Adjust or replace
	Level of oil in engine crankcase too high	Correct level of engine oil
	Exhaust Gas Recirculation Valve defective	Replace

Engine Noisy

Abnormal engine noise often consists of various noises originating in rotating parts, sliding parts and other moving parts of the engine. It is, therefore, advisable to locate the source of noise systematically.

Condition	Possible cause	Correction
Noise from crank journals or from crank bearings (Faulty crank journals and crank bearings usually make dull noise that becomes more evident when accelerating)	Oil clearance increased due to worn crank journals or crank bearings	Replace crank bearings and crankshaft or regrind crankshaft and install the undersize bearing
	Crankshaft out of round	Replace crank bearings and crankshaft or regrind crankshaft and install the undersize bearing
	Crank bearing seized	Crank bearing seized. Replace crank bearings and crankshaft or regrind crankshaft and install the undersize bearing

Troubleshooting Procedure

Short out each spark plug in sequence using insulated spark plug wire removers. Locate cylinder with defective bearing by listening for abnormal noise that stops when spark plug is shorted out.

Condition	Possible cause	Correction
Noise from connecting rods or from connecting rod bearings (Faulty connecting rods or connecting rod bearings usually make an abnormal noise slightly higher than the crank bearing noise, which becomes more evident when engine is accelerated)	Bearing or crankshaft pin worn	Replace connecting rod bearings and crankshaft or regrind crankshaft pin and install the undersize bearing
	Crankpin out of round	Replace connecting rod bearings and crankshaft or regrind crankshaft pin and install the undersize bearing
	Connecting rod bent	Correct or replace
	Connecting rod bearing seized	Replace connecting rod bearings and crankshaft or regrind crankshaft pin and install the undersize bearing

Troubleshooting Procedure

Abnormal noise stops when the spark plug on the cylinder with defective part is shorted out.

Condition	Possible cause	Correction
Piston and cylinder noise (Faulty piston or cylinder usually makes a combined mechanical thumping noise which increases when engine is suddenly accelerated but diminishes gradually as the engine warms up)	Piston clearance increased due to cylinder wear	Replace piston and cylinder body
	Piston seized	Replace piston and cylinder body
	Piston ring broken	Replace piston and cylinder body
	Piston defective	Replace pistons and others

Troubleshooting Procedure

Short out each spark plug and listen for change in engine noise.

Condition	Possible cause	Correction
Piston pin noise (Piston makes noise each time it goes up and down)	Piston pin or piston pin hole worn	Replace piston, piston pin and connecting rod assy

Troubleshooting Procedure

The slapping sound stops when spark plug on bad cylinder is shorted out.

Condition	Possible cause	Correction
Timing belt noise	Timing belt tension is incorrect	Replace pusher or adjust the tension pulley or replace timing belt
	Tensioner bearing defective	Replace
	Timing belt defective	Replace
	Timing pulley defective	Replace
	Timing belt comes in contact with timing cover	Replace timing belt and timing cover
Valve noise	Valve clearance incorrect	Replace adjusting shim
	Valve and valve guide seized	Replace valve and valve guide
	Valve spring broken or weakened	Replace
	Valve seat off–positioned	Correct
	Camshaft worn out	Replace
Crankshaft noise	Crankshaft end play excessive (noise occurs when clutch is engaged)	Replace thrust bearing

Condition	Possible cause	Correction
Engine knocking	Preignition due to use of spark plugs of inadequate heat range	Install Spark Plugs of adequate heat range
	Carbon deposits in combustion chambers	Clean
	Fuel too low in octane rating	Replace fuel
	Wide Open Throttle enrichment system failure	Refer to Section 6E
	Selection of transmission gear incorrect	Caution operator of incorrect gear selection
	Engine overheating	Refer to “Engine Lacks Power”
Others	Water pump defective	Replace
	Drive belt slipping	Replace auto tentioner or drive belt

Abnormal Combustion

Condition	Possible cause	Correction
Trouble in fuel system	Fuel pressure control valve defective	Replace
	Fuel filter clogged	Replace
	Fuel pump clogged	Clean or replace
	Fuel tank or fuel pipe clogged	Clean or replace
	Fuel injector clogged	Clean or replace
	Fuel pump relay defective	Replace
	Power supply cable for fuel pump broken or poor connections	Reconnect, correct or replace
	Mass Airflow (MAF) sensor circuit open or defective	Correct or replace
	MAF Sensor defective	Replace
	Manifold Absolute Pressure Sensor circuit open or shorted	Correct or replace
	Manifold Absolute Pressure Sensor defective	Replace
	Engine Coolant Temperature (ECT) Sensor circuit open or shorted	Correct or replace
	ECT Sensor defective	Replace
	Throttle Position Sensor adjustment incorrect	Readjust
	Throttle Position Sensor defective	Replace
	Throttle Position Sensor connector poor connections	Reconnect
	Vehicle Speed Sensor cable poor connections or defective	Correct or replace
	Vehicle Speed Sensor loosely fixed	Fix tightly
	Vehicle Speed Sensor in wrong contact or defective	Replace
	Powertrain Control Module cable poor connections or defective	Correct or replace

Condition	Possible cause	Correction
Trouble in emission control system	Heated Oxygen Sensor circuit open	Correct or replace
	Heated Oxygen Sensor defective	Replace
	Signal vacuum hose loosely fitted or defective	Correct or replace
	EGR Valve circuit open or shorted	Correct or replace
	Exhaust Gas Recirculation Valve defective	Replace
	ECT Sensor circuit open or shorted	Correct or replace
	Canister Purge Valve circuit open or shorted	Correct or replace
	Canister Purge Valve defective	Replace
	ECT Sensor defective	Replace
	Positive Crankcase Ventilation (PCV) valve and hose clogged	Correct or replace
	Evaporator system	Refer to Section 6E
Trouble in ignition system	———	Refer to “Engine Lacks Power”
Trouble in cylinder head parts	Carbon deposits in combustion chamber	Remove carbon
	Carbon deposit on valve, valve seat and valve guide	Remove carbon

Engine Oil Consumption Excessive

Condition	Possible cause	Correction
Oil leaking	Oil pan drain plug loose	Retighten or replace gasket
	Crankcase fixing bolts loosened	Retighten
	Oil pan setting bolts loosened	Retighten
	Oil pan gasket broken	Replace gasket
	Front cover retaining bolts loose or gasket broken	Retighten or replace gasket
	Head cover fixing bolts loose or gasket broken	Retighten or replace gasket
	Oil cooler adapter cracked	Replace
	Oil cooler center bolt loose	Retighten
	Oil cooler O–ring broken	Replace
	Oil cooler piping loose or broken	Retighten or replace
	Oil filter adapter cracked	Replace
	Oil filter attaching bolt loose or rubber gasket broken	Retighten or replace oil filter
	Oil cooler broken	Replace
	Crankshaft front or rear oil seal defective	Replace oil seal
	Oil pressure unit loose or broken	Retighten or replace
	Blow–by gas hose broken	Replace hose
	Positive Crankcase Ventilation Valve clogged	Clean
	Engine/Transmission coupling failed	Replace oil seal

Condition	Possible cause	Correction
Oil leaking into combustion chambers due to poor seal in valve system	Valve stem oil seal defective	Replace
	Valve stem or valve guide worn	Replace valve and valve guide
Oil leaking into combustion chambers due to poor seal in cylinder parts	Cylinders and pistons worn excessively	Replace cylinder body assembly and pistons
	Piston ring gaps incorrectly positioned	Correct
	Piston rings set with wrong side up	Correct
	Piston ring sticking	Replace cylinder body assembly and pistons
	Piston ring and ring groove worn	Replace pistons and others
	Return ports in oil rings clogged	Clean piston and replace rings
Positive Crankcase Ventilation System malfunctioning	Positive Crankcase Ventilation Valve clogged	Clean
Others	Improper oil viscosity	Use oil of recommended S.A.E. viscosity
	Continuous high speed driving and/or severe usage such as trailer towing	Continuous high speed operation and/or severe usage will normally cause increased oil consumption

Fuel Consumption Excessive

Condition	Possible cause	Correction
Trouble in fuel system	Mixture too rich or too lean due to trouble in fuel injection system	Refer to “Abnormal Combustion”
	Fuel cut function does not work	Refer to “Abnormal Combustion”
Trouble in ignition system	Misfiring or abnormal combustion due to trouble in ignition system	Refer to “Hard Start” or “Abnormal Combustion”
Others	Engine idle speed too high	Reset Idle Air Control Valve
	Returning of accelerator control sluggish	Correct
	Fuel system leakage	Correct or replace
	Clutch slipping	Correct
	Brake drag	Correct
	Selection of transmission gear incorrect	Caution operator of incorrect gear selection
	Excessive Exhaust Gas Recirculation flow due to trouble in Exhaust Gas Recirculation system	Refer to “Abnormal Combustion”

Lubrication Problems

Condition	Possible cause	Correction
Oil pressure too low	Wrong oil in use	Replace with correct engine oil
	Relief valve sticking	Replace
	Oil pump not operating properly	Correct or replace
	Oil pump strainer clogged	Clean or replace strainer
	Oil pump worn	Replace
	Oil pressure gauge defective	Correct or replace
	Crankshaft bearing or connecting rod bearing worn	Replace
Oil contamination	Wrong oil in use	Replace with correct engine oil
	Oil filter clogged	Replace oil filter
	Cylinder head gasket damage	Replace gasket
	Burned gases leaking	Replace piston and piston rings or cylinder body assembly
Oil not reaching valve system	Oil passage in cylinder head or cylinder body clogged	Clean or correct

Engine Oil Pressure Check

1. Check for dirt, gasoline or water in the engine oil.
   a. Check the viscosity of the oil.
   b. Change the oil if the viscosity is outside the specified standard.
   c. Refer to the “Maintenance and Lubrication” section of this manual.
2. Check the engine oil level.
   The level should fall somewhere between the “ADD” and the “FULL” marks on the oil level dipstick.
   If the oil level does not reach the “ADD” mark on the oil level dipstick, engine oil must be added.
3. Remove the oil pressure unit.
4. Install an oil pressure gauge.
5. Start the engine and allow the engine to reach normal operating temperature (About 80˚C).
6. Measure the oil pressure.
   Oil pressure should be:
   392–550 kPa (56.9–80.4 psi) at 3000 rpm.
7. Stop the engine.
8. Remove the oil pressure gauge.
9. Install the oil pressure unit.
10. Start the engine and check for leaks.

Malfunction Indicator Lamp

The instrument panel “CHECK ENGINE” Malfunction Indicator Lamp (MIL) illuminates by self diagnostic system when the system checks the starting of engine, or senses malfunctions.

Condition	Possible cause	Correction
“CHECK ENGINE” MIL does not illuminate at the starting of engine	Bulb defective	Replace
	MIL circuit open	Correct or replace
	Command signal circuit to operate self diagnostic system shorted	Correct or replace
	Engine Control Module (PCM) cable loosely connected, disconnected or defective	Correct or replace
	PCM defective	Replace
“CHECK ENGINE” MIL illuminates, and stays on	Deterioration of heated oxygen sensor internal element	Replace
	Heated oxygen sensor connector terminal improper contact	Reconnect properly
	Heated oxygen sensor lead wire shorted	Correct
	Heated oxygen sensor circuit open	Correct or replace
	Deterioration of engine coolant temperature sensor internal element	Replace
	Engine coolant temperature sensor connector terminal improper contact	Reconnect properly
	Engine coolant temperature sensor lead wire shorted	Correct
	Engine coolant temperature sensor circuit open	Correct or replace
	Throttle position sensor open or shorted circuits	Correct or replace
	Deterioration of crankshaft position sensor	Replace
	Crankshaft position sensor circuit open or shorted	Correct or replace
	Vehicle speed sensor circuit open	Correct or replace
	Manifold absolute pressure sensor circuit open or shorted	Correct or replace
	Intake air temperature sensor circuit open or shorted	Correct or replace
	Fuel injector circuit open or shorted	Correct or replace
	PCM driver transistor defective	Replace PCM
	Malfunctioning of PCM RAM (Random Access Memory) or ROM (Read Only Memory)	Replace PCM

Cylinder Head Cover LH

Removal

1. Disconnect battery ground cable.
2. Drain engine coolant from faucet bottom of radiator.
3. Remove engine cover from the dowels on the common chamber.

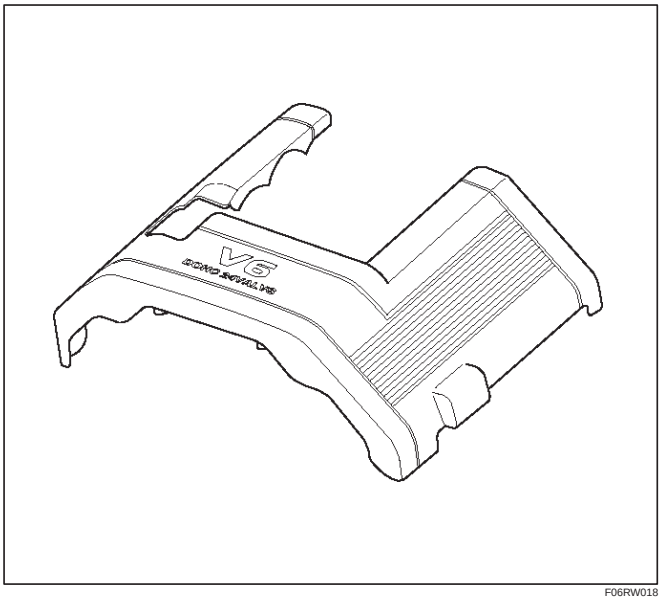

F06RW018

4. Remove air cleaner duct assembly (3) and air cleaner element (4).

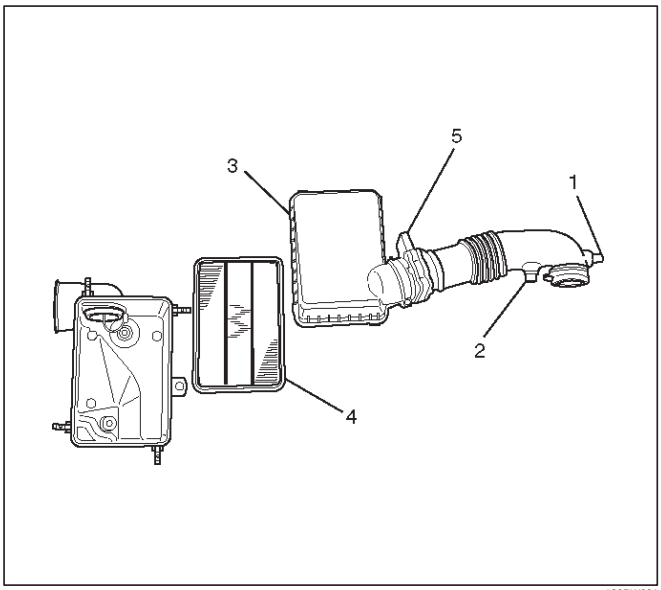

130RW001

Legend

(1) Positive Crankcase Ventilation Hose Connector
(2) Intake Air Temperature Sensor
(3) Air Cleaner Duct Assembly
(4) Air Cleaner Element
(5) Mass Air Flow Sensor

NOTE: Disconnect the mass air flow (MAF) sensor connector, intake air temperature (IAT) sensor connector, and positive crankcase ventilation (PCV) hose before hand the air cleaner duct assembly is removed.

5. Disconnect following wiring connectors and bonding cable:
   - Manifold Absolute Pressure (MAP) sensor
   - Vacuum Switching Valve (VSV) for Induction Air Control Valve (IACV) actuator
   - Ignition coils for left bank
   - Fuel injectors for left bank
   - Idle air control (IAC) valve
   - Throttle position sensor (TPS)
   - Bonding cable
   - Others as necessitated
6. Disconnect following vacuum hoses:
   - Brake master VAC
   - Canister
   - VSV for IACV actuator
   - Duty solenoid valve
   - PCV
7. Disconnect radiator upper and lower hoses
8. Remove engine harness from the cylinder head cover.
9. Remove the upper fan guide.
10. Remove cooling fan and clutch assembly.
11. Remove drive belt by pushing down the auto tensioner using spanner as illustrated.

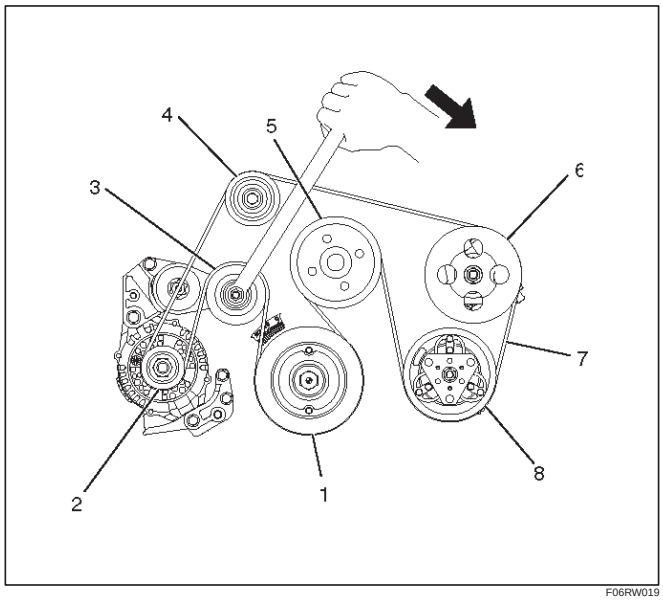

F06RW019

Legend

(1) Crankshaft Pulley
(2) Generator
(3) Auto Tensioner
(4) Idle Pulley
(5) Cooling Fan Pulley
(6) Power Steering Oil Pump
(7) Drive Belt
(8) Air Conditioner Compressor

12. Remove power steering oil pump pulley.
13. Remove fan pulley and bracket assembly.
14. Remove idle pulley assembly.
15. Remove auto tensioner assembly.
16. Remove crankshaft pulley using 5–8840–0133–0 crankshaft holder.
17. Remove timing belt covers from the right bank side to the left bank side in order.
18. Remove ignition coil assemblies for the left side bank.

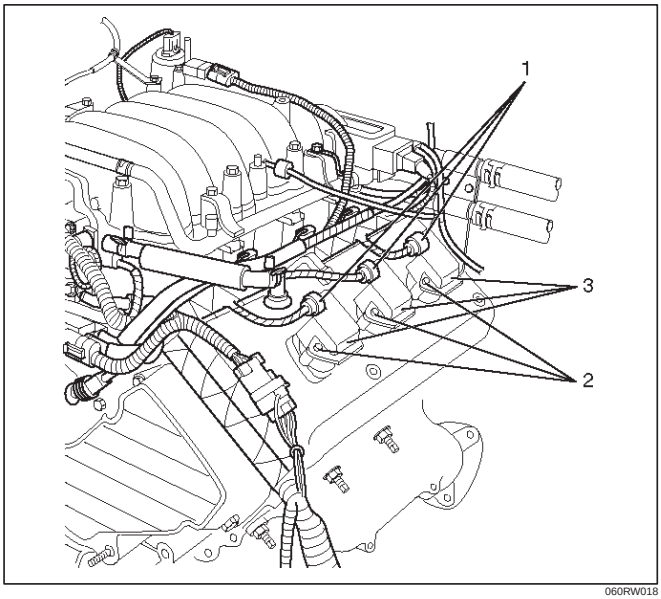

060RW018

Legend

(1) Ignition Coil Connectors
(2) Bolts
(3) Ignition Coil Assemblies

19. Remove cylinder head cover assembly.

Installation

1. Install cylinder head cover.
   - Clean the sealing surface of cylinder head and cylinder head cover to remove oil and sealing materials completely.
   - Apply sealant (TB-1207B or equivalent) of bead diameter 2-3 mm at eight place of arched area of camshaft bracket on front and rear sides.
   - The cylinder head cover must be installed within 5 minutes after sealant application to prevent premature hardening of sealant.

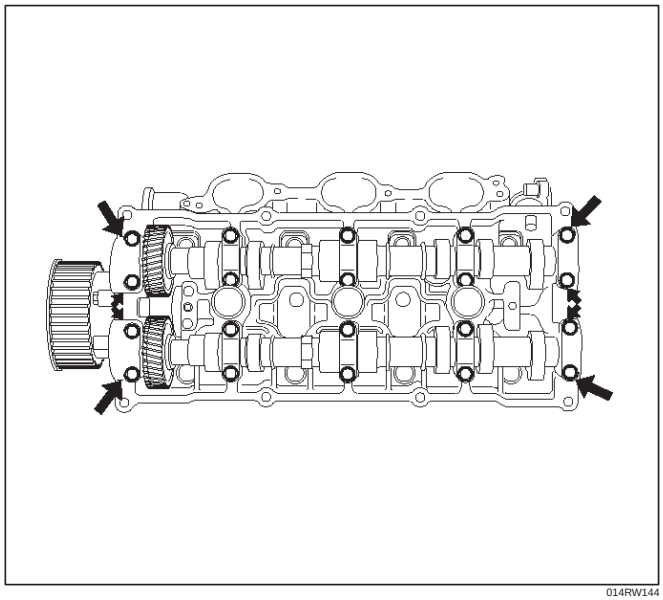

014RW144

   - Tighten bolts to the specified torque.

   Torque : 9 N·m (0.9 Kg·m/78 lb in)

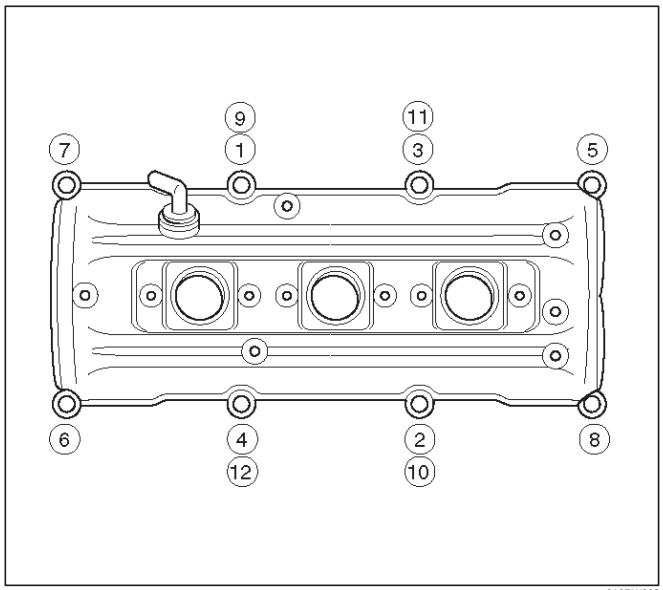

010RW008

2. Install ignition coil assemblies and tighten the fixing bolts to the specified torque.

   Torque : 4 N·m (0.4 Kg·m/35 lb in)

3. Install timing belt covers from left bank side to right bank side, and tighten the fixing bolts and nut to the specified torque.

   Torque : 19 N·m (1.9 Kg·m/14 lb ft)

4. Install crankshaft pulley and tighten the fixing bolt using 5–8840–0133–0 crankshaft holder to the specified torque.

   Torque : 167 N·m (17.0 Kg·m/123 lb ft)

5. Install auto tensioner assembly and tighten the fixing bolts to the specified torque.

   Torque :

   Shorter Bolt : 20 N·m (2.0 Kg·m/14 lb ft)

   Longer Bolt : 39 N·m (4.0 Kg·m/29 lb ft)

6. Install idle pulley and bracket assembly and tighten the fixing bolt to the specified torque.

   Torque : 52 N·m (5.3 Kg·m/38 lb ft)

7. Install fan pulley and bracket assembly and tighten the fixing bolts and nut to the specified torque.

   Torque : 22 N·m (2.2 Kg·m/16 lb ft)

8. Install power steering oil pump pulley and tighten the fixing bolt to the specified torque.

   Torque : 78 N·m (8.0 Kg·m/58 lb ft)

9. Install drive belt by pushing down the auto tensioner using spanner as shown in the removal step of drive belt.
10. Install cooling fan and clutch assembly and tighten the fixing bolts to the specified torque.

    Torque : 10 N·m (1.0 Kg·m/87 lb in)

11. Install upper fan guide and clip both side and tighten the fixing bolts to the specified torque.

    Torque : 4 N·m (0.4 Kg·m/35 lb in)

12. Install engine harness and tighten the fixing bolts of the retaining clip and bracket to the specified torque.

    Torque : 4 N·m (0.4 Kg·m/35 lb in)

13. Connect radiator upper and lower hoses and clip them securely.
14. Connect vacuum hoses of those which were disconnected in the removal step.
15. Connect wiring connectors and bonding cable of those which were disconnected in the removal step.
16. Install air cleaner element and air cleaner duct assembly, and clip the both end securely.
17. Connect MAF sensor connector, IAT sensor connector and PCV hose.
18. Install engine cover mating with the dowels.

Cylinder Head Cover RH

Removal

1. Disconnect battery ground cable.
2. Remove battery from the vehicle.
3. Drain engine coolant from faucet bottom of radiator.
4. Remove engine cover from the dowels on the common chamber.

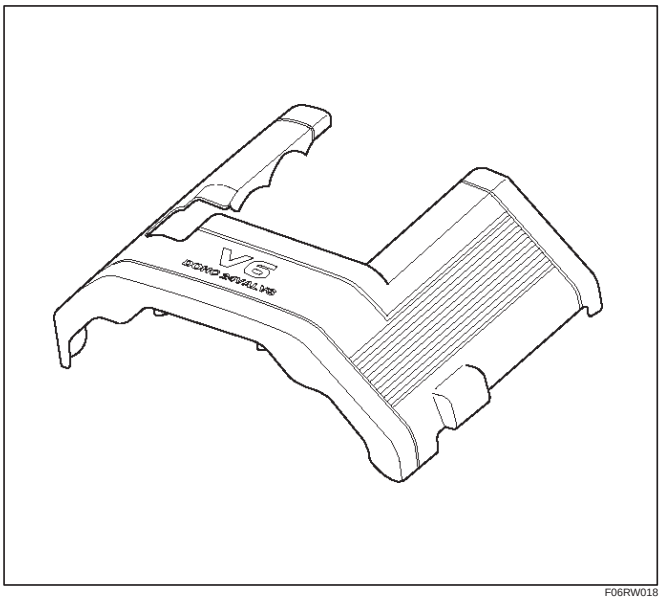

F06RW018

5. Remove air cleaner duct assembly (3) and air cleaner element (4).

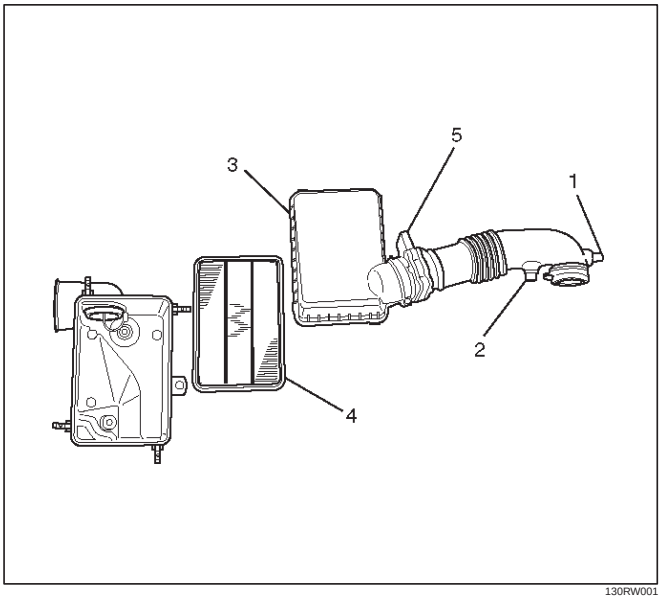

130RW001

Legend

(1) Positive Crankcase Ventilation Hose Connector
(2) Intake Air Temperature Sensor
(3) Air Cleaner Duct Assembly
(4) Air Cleaner Element
(5) Mass Air Flow Sensor

NOTE: Disconnect the mass air flow (MAF) sensor connector, intake air temperature (IAT) sensor connector, and positive crankcase ventilation (PCV) hose before hand the air cleaner duct assembly is removed.

6. Disconnect following wiring connectors and bonding cable:
   - Exhaust Gas Recirculation (EGR) valve
   - Fuel injectors for right bank
   - Ignition coils for right bank
   - Bonding cable
   - Othres as necessitated
7. Disconnect radiator upper and lower hoses.
8. Remove engine harness from the cylinder head cover.
9. Remove the upper fan guide.
10. Remove cooling fan and clutch assembly.
11. Remove drive belt by pushing down the auto tensioner using spanner as illustrated.

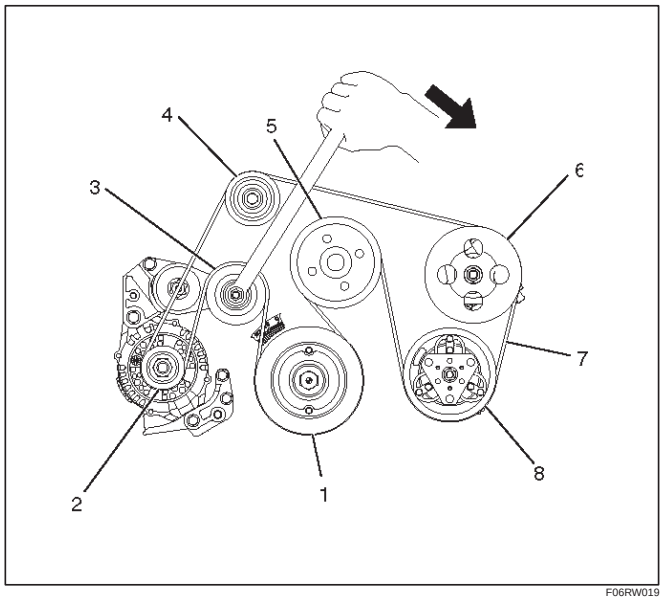

F06RW019

Legend

(1) Crankshaft Pulley
(2) Generator
(3) Auto Tensioner
(4) Idle Pulley
(5) Cooling Fan Pulley
(6) Power Steering Oil Pump
(7) Drive Belt
(8) Air Conditioner Compressor

12. Remove fan pulley and bracket assembly.
13. Remove idle pulley assembly.
14. Remove auto tensioner assembly.
15. Remove crankshaft pulley using 5–8840–0133–0 crankshaft holder.

16. Remove timing belt covers for right bank side.
17. Reomve timing belt covers for right bank side.

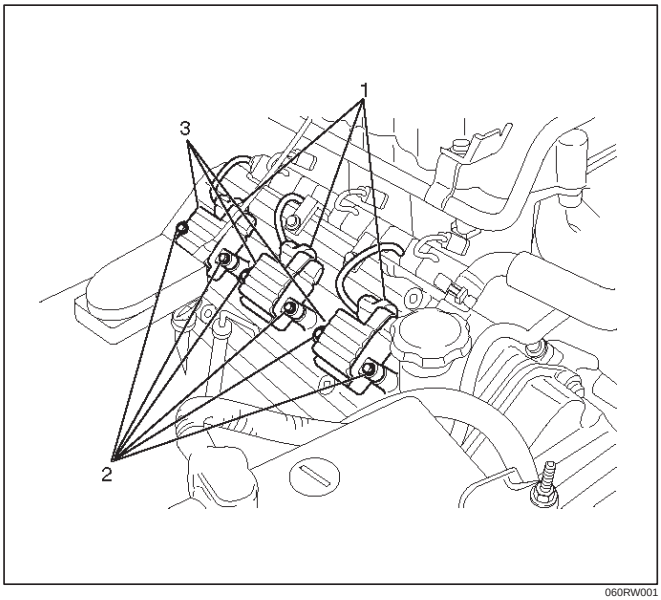

060RW001

Legend

(1) Ignition Coil Connectors
(2) Bolts
(3) Ignition Coil Assemblies

18. Remove ignition coil assemblies for the right side bank.
19. Remove cylinder head cover assembly.

Installation

1. Install cylinder head cover.
   - Clean the sealing surface of cylinder head and cylinder head cover to remove oil and sealing materials completely.
   - Apply sealant (TB-1207B or equivalent) of bead diameter 2-3 mm at eight place of arched area of camshaft bracket on front and rear sides.
   - The cylinder head cover must be installed within 5 minutes after sealant application before the sealant hardens.

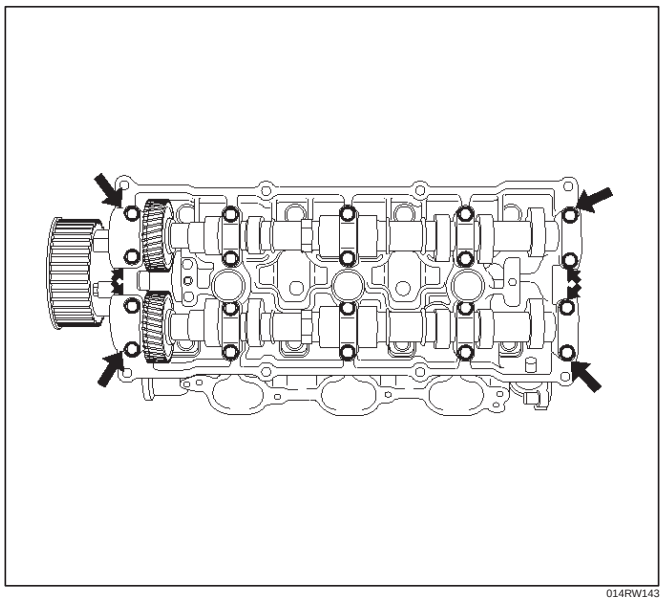

014RW143

- Tighten bolts in turn to the specified torque.

Torque : 8.8 N·m (0.9 Kg·m/78 lb in)

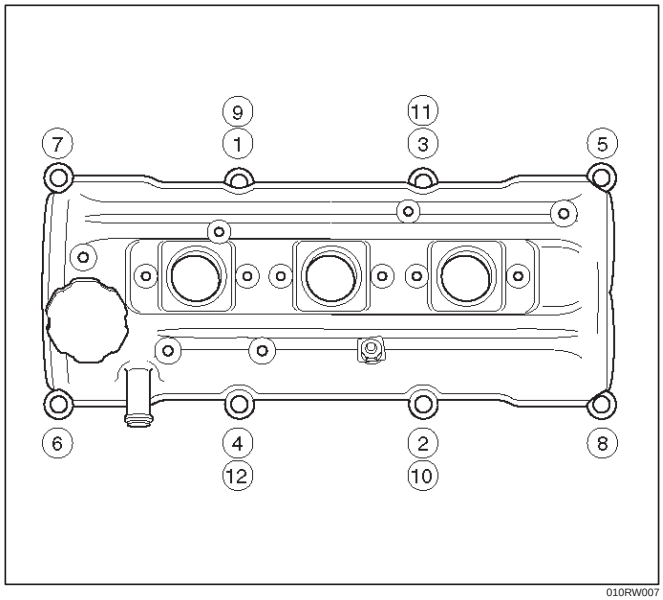

010RW007

2. Install ignition coil assemblies and tighten the fixing bolts to the specified torque.

   Torque : 4 N·m (0.4 Kg·m/35 lb in)

3. Install timing belt cover and tighten the fixing bolts and nut to the specified torque.

   Torque : 19 N·m (1.9 Kg·m/14 lb ft)

4. Install crankshaft pulley and tighten the fixing bolt using 5–8840–0133–0 crankshaft holder to the specified torque.

   Torque : 167 N·m (17 Kg·m/123 lb ft)

5. Install auto tensioner assembly and tighten the fixing bolts to the specified torque.

   Torque :

   Shorter Bolt : 20 N·m (2.0 Kg·m/14.8 lb ft)

   Longer Bolt : 39 N·m (4.0 Kg·m/28.8 lb ft)

6. Install idle pulley assembly and tighten the fixing bolt to the specified torque.

   Torque : 52 N·m (5.3 Kg·m/38.4 lb ft)

7. Install fan pulley and bracket assembly and tighten the fixing bolts and nut to the specified torque.

   Torque : 22 N·m (2.2 Kg·m/16.2 lb ft)

8. Install drive belt by pushing down the auto tensioner using spanner as shown in the removal step of drive belt.
9. Install cooling fan clutch assembly and tighten the fixing bolts to the specified torque.

   Torque : 10 N·m (1.0 Kg·m/88.5 lb in)

10. Install upper fan guide and clip both side and tighten the fixing bolts to the specified torque.

    Torque : 4 N·m (0.4 Kg·m/35.4 lb in)

11. Install engine harness and tighten the fixing bolts of the retaining clip and brackets to the specified torque.

    Torque : 4 N·m (0.4 Kg·m/35.4 lb in)

12. Connect radiator upper and lower hoses and clip them securely.
13. Connect wiring connectors and bonding cable of those which were disconnected in the removal step.
14. Install air cleaner element and air cleaner duct assembly, and the clip both end securely.
15. Connect MAF sensor connector, IAT sensor connector and PCV hose.
16. Install engine cover mating with the dowels.

Common Chamber

Removal

1. Disconnect battery ground cable.
2. Remove air cleaner duct assembly.

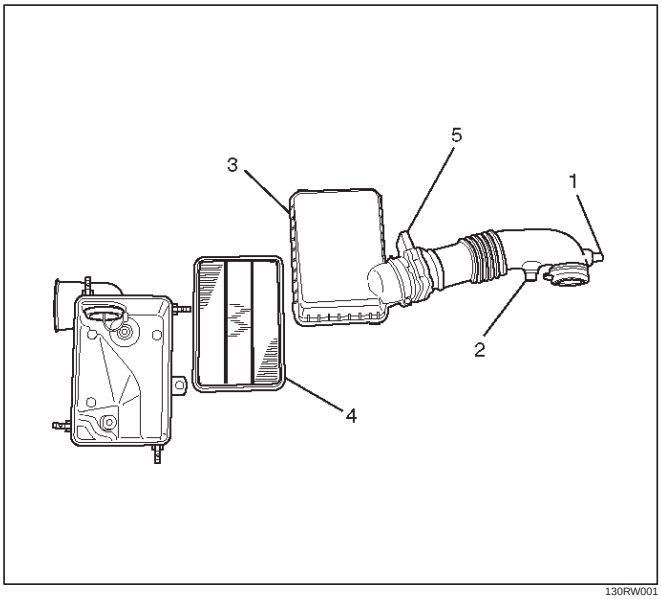

130RW001

Legend

(1) Positive Crankcase Ventilation Hose Connector
(2) Intake Air Temperature Sensor
(3) Air Cleaner Duct Assembly
(4) Air Cleaner Element
(5) Air Flow Sensor

3. Disconnect accelerator pedal cable from throttle body and cable bracket.
4. Disconnect vacuum booster hose from common chamber.
5. Disconnect connector from manifold absolute pressure sensor, idle air control valve, throttle position sensor, solenoid valve, electric vacuum sensing valve, and EGR valve.
6. Disconnect vacuum hose on canister VSV and positive crankcase ventilation hose, fuel rail assembly with pressure control valve bracket.
7. Remove ventilation hose from throttle valve and intake duct and remove water hose.
8. Remove the four throttle body fixing bolts.
9. Remove exhaust gas recirculation valve assembly fixing bolt and nut on common chamber and remove EGR valve assembly.
10. Remove two bolts from common chamber rear side for remove fuel hose bracket.
11. Remove common chamber four bolts and four nuts then remove the common chamber.

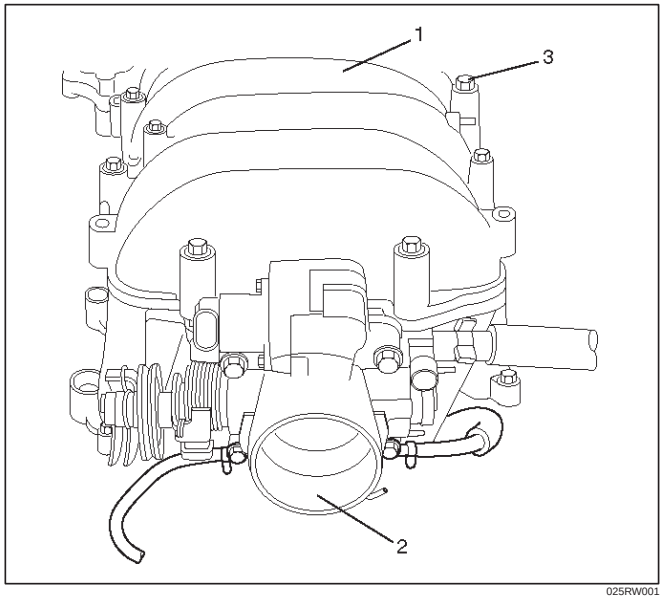

025RW001

Legend

(1) Common Chamber
(2) Throttle Valve Assembly
(3) Bolt

Installation

1. Install common chamber and tighten bolts and nuts to the specified torque.

   Torque :

   Bolt : 25 N·m (2.5 Kg·m/18 lb ft)

   Nut : 25 N·m (2.5 Kg·m/18 lb ft)
2. Install fuel hose bracket and tighten bolts to specified torque.

   Torque : 10 N·m (1.0 Kg·m/89 lb in)
3. Install exhaust gas recirculation valve assembly and tighten bolt and nut to the specified torque.

   Torque : 25 N·m (2.5 Kg·m/18 lb ft)
4. Install throttle body and tighten bolts to the specified torque.

   Torque : 25 N·m (2.5 Kg·m/18 lb ft)
5. Install ventilating hose to throttle valve and intake duct.
6. Connect vacuum hoses on canister VSV and positive crankcase ventilation hose. Tighten bolts for fuel rail assembly with pressure control valve bracket.

   Torque : 25 N·m (2.5 Kg·m/18 lb ft)
7. Connect each connector without fail.
8. Connect vacuum booster hose.
9. Connect accelerator pedal cable.

   Accelerator pedal cable adjustment

   1. Loosen the adjusting nut and screw cap.
   2. Pull outer cable while fully closing the throttle valve.

3. Tighten adjusting nut and lock nut temporarily.
4. Loosen adjusting nut by three turns and tighten lock nut.

   Then manually operating the throttle valve, make sure that the valve lever returns up to the stopper screw.
   If it does not reach the stopper screw, repeat from step 1.

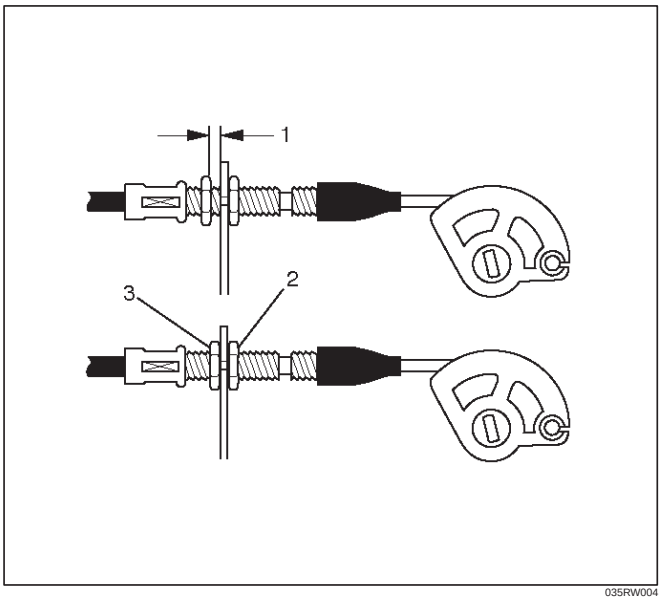

035RW004

Legend
(1) Clearance
(2) Lock Nut
(3) Adjusting Nut

10. Install air cleaner duct assembly.

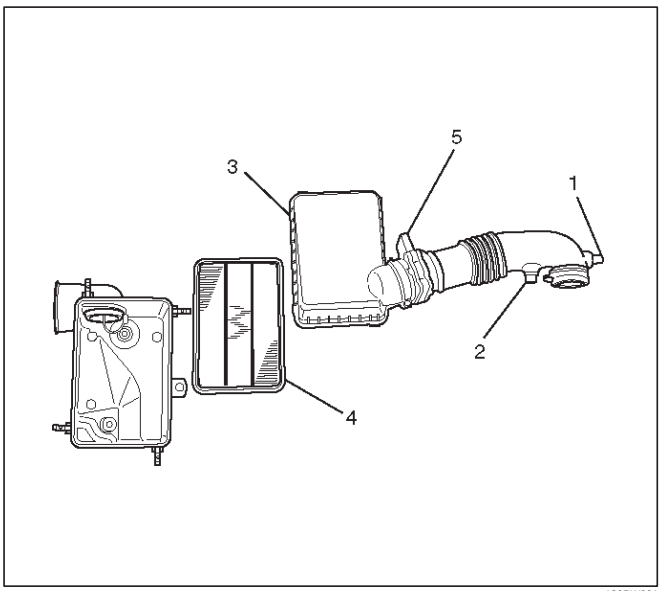

130RW001

Legend
(1) Positive Crankcase Ventilation Hose Connector
(2) Intake Air Temperature Sensor
(3) Air Cleaner Duct Assembly
(4) Air Cleaner Element.
(5) Mass Air Flow Sensor

Exhaust Manifold LH

Removal

1. Disconnect battery ground cable.
2. Remove air cleaner duct assembly.

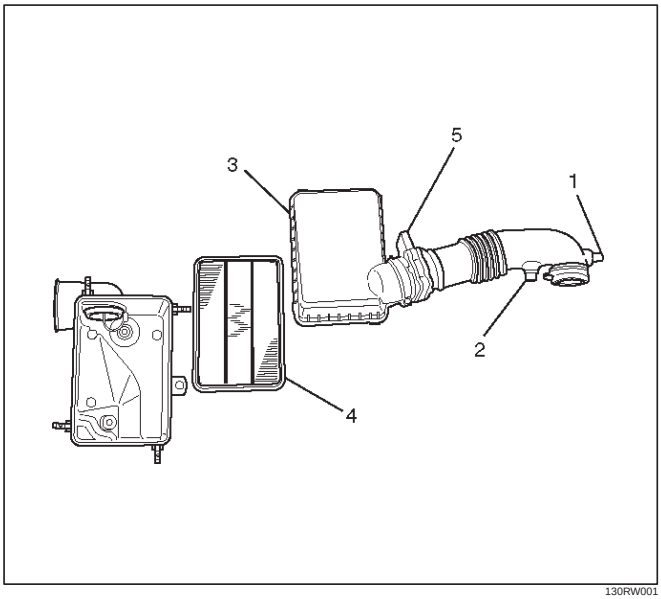

130RW001

Legend

(1) Positive Crankcase Ventilation Hose Connector
(2) Intake Air Temperature Sensor
(3) Air Cleaner Duct Assembly
(4) Air Cleaner Element
(5) Mass Air Flow Sensor

3. Remove exhaust front pipe three stud nuts from exhaust side and two nuts from rear end of exhaust front pipe.

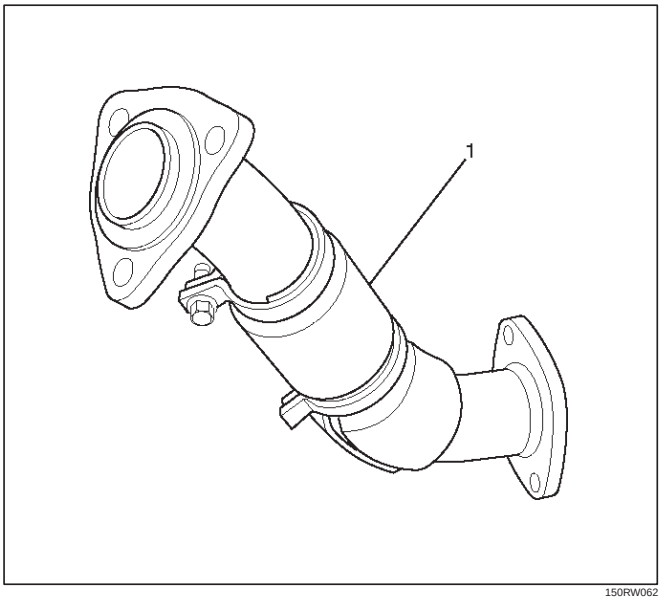

150RW062

Legend

(1) Exhaust Front Pipe LH

4. Remove heat protector two fixing bolts then the heat protector.
5. Remove a bolt on engine LH side for air conditioner (A/C) compressor bracket and loosen two bolts for A/C compressor then move A/C compressor to front side.
6. Remove exhaust manifold eight fixing nuts and remove exhaust manifold from the engine.

Installation

1. Install exhaust manifold and tighten exhaust manifold fixing nuts to the specified torque with new nuts.

   Torque: 57 N·m (5.8 Kg·m/42 lb ft)

2. Install heat protector.
3. Install exhaust front pipe and tighten three stud nuts and two nuts to the specified torque.

   Torque :

   Stud nuts: 67 N·m (6.8 Kg·m/49 lb ft)

   Nuts: 43 N·m (4.4 Kg·m/32 lb ft)

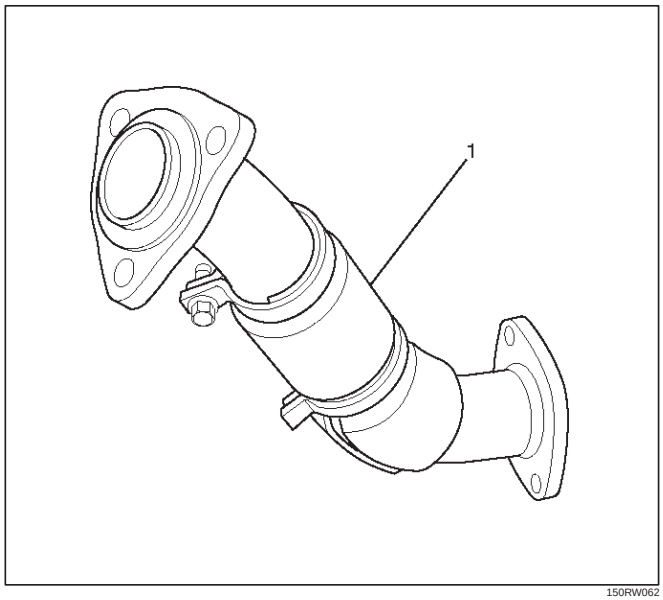

150RW062

Legend

(1) Exhaust Front Pipe LH

4. Set A/C compressor to normal position and tighten two bolts and a bolt to the specified torque.

   Torque : 40 N·m (4.1 Kg·m/30 lb ft)

5. Install air cleaner duct assembly.

Exhaust Manifold RH

Removal

1. Disconnect battery ground cable.
2. Remove torsion bar. Refer to removal procedure in Front Suspension section.
3. Remove exhaust front pipe three stud nuts and two nuts then disconnect exhaust front pipe.

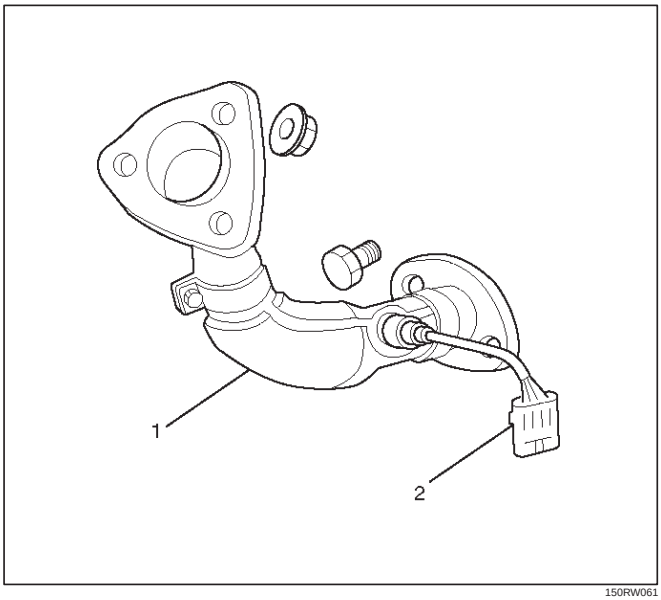

150RW061

Legend

(1) Exhaust Front Pipe RH
(2) O_2 Sensor (for IGM)

4. Remove heat protector two fixing bolts then the heat protector.
5. Remove exhaust gas recirculation (EGR) pipe fixing bolt and nut from exhaust manifold, remove a nut from EGR valve and a bolt from rear side of cylinder head for bracket of EGR pipe then remove the EGR pipe.

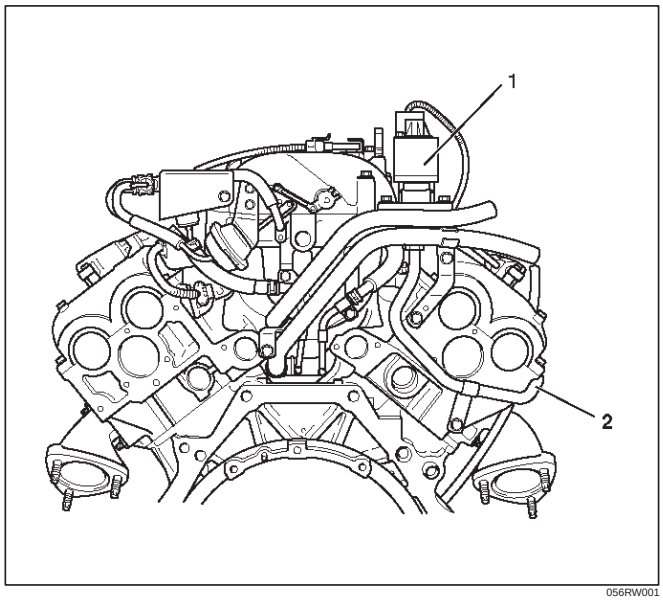

056RW001

Legend

(1) Exhaust Gas Recirculation (EGR) Valve
(2) EGR Pipe

6. Remove exhaust manifold eight fixing nuts then the exhaust manifold.

Installation

1. Install exhaust manifold and tighten bolts to the specified torque.

   Torque : 57 N·m (5.8 Kg·m/42 lb ft)

2. Install the EGR pipe, tighten bolt and nut on exhaust manifold to specified torque.

   Torque : 28 N·m (2.9 Kg·m/21 lb ft)

   Tighten nut to EGR valve to the specified torque.

   Torque : 44 N·m (4.5 Kg·m/33 lb ft)

   Tighten the bolt for EGR pipe bracket to specified torque.

   Torque : 25 N·m (2.5 Kg·m/18 lb ft)

3. Install heat protector
4. Install exhaust front pipe and tighten three stud nuts and two nuts to the specified torque.

   Torque:

   Stud nuts: 67 N·m (6.8 Kg·m/49 lb ft)

   Nuts: 43 N·m (4.4 Kg·m/32 lb ft)

5. Install the torsion bar and readjust the vehicle height. Refer to installation and vehicle height adjustment procedure for Front Suspension.

Crankshaft Pulley

Removal

1. Disconnect battery ground cable.
2. Remove air cleaner assembly.

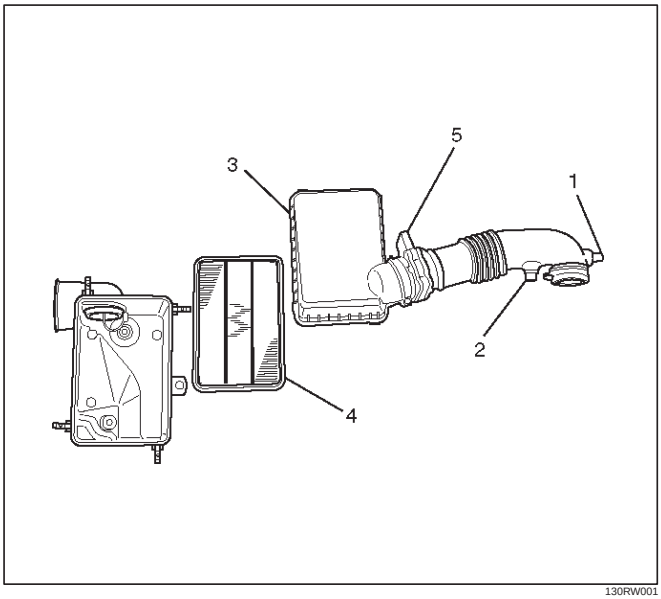

130RW001

Legend

(1) Positive Crankcase Ventilation Hose Connector
(2) Intake Air Temperature Sensor
(3) Air Cleaner Duct Assembly
(4) Air Cleaner Element
(5) Mass Air Flow Sensor

3. Remove radiator upper fan shroud from radiator.
4. Move serpentine belt tensioner to loose side using wrench then remove serpentine belt.

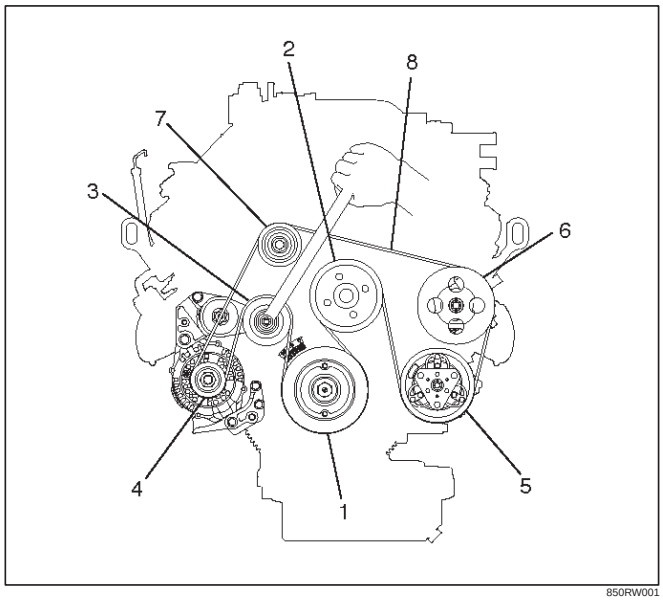

850RW001

Legend

(1) Crankshaft Pulley
(2) Cooling Fan Pulley
(3) Tensioner
(4) Generator
(5) Air Conditioner Compressor
(6) Power Steering Oil Pump
(7) Serpentine Belt

5. Remove cooling fan assembly four fixing nuts, then the cooling fan assembly.
6. Remove crankshaft pulley assembly using J-8614-01 crankshaft holder, hold crankshaft pulley then remove center bolt and pulley.

Installation

1. Install crankshaft pulley using J-8614-01 crankshaft holder, hold the crankshaft pulley and tighten center bolt to the specified torque.

   Torque : 167 N·m (17.0 Kg·m/123 lb ft)

2. Install cooling fan assembly and tighten bolts/nuts to the specified torque.

   Torque : 22 N·m (2.2 Kg·m/16 lb ft) for fan pulley and fan bracket.

   Torque : 10 N·m (1.0 Kg·m/88.5 lb in) for fan and clutch assembly.

3. Move serpentine belt tensioner to loose side using wrench, then install serpentine belt to normal position.
4. Install radiator upper fan shroud.
5. Install air cleaner assembly.

Timing Belt

Removal

1. Disconnect battery ground cable.
2. Remove air cleaner assembly.
3. Remove radiator upper fan shroud from radiator.
4. Move drive belt tensioner to loose side using wrench then remove drive belt.

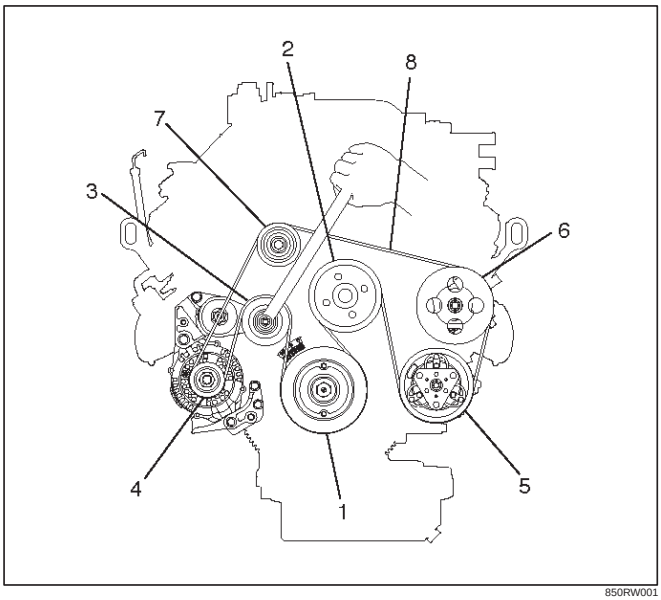

850RW001

Legend

(1) Crankshaft Pulley
(2) Cooling Fan Pulley
(3) Tensioner
(4) Generator
(5) Air Conditioner Compressor
(6) Power Steering Oil Pump
(7) Drive Belt

5. Remove cooling fan assembly four nuts, then the cooling fan assembly.
6. Remove cooling fan drive pulley assembly.
7. Remove idle pulley assembly.
8. Remove serpentine belt tensioner assembly.
9. Remove power steering pump assembly.
10. Remove crankshaft pulley assembly using 5–8840–0133–0 crankshaft holder, hold crankshaft pulley remove center bolt, then the pulley.
11. Remove right side timing belt cover then left side timing belt cover.
12. Remove lower timing belt cover
13. Remove pusher.

CAUTION: The pusher prevents air from entering the oil chamber. Its rod must always be facing upward.

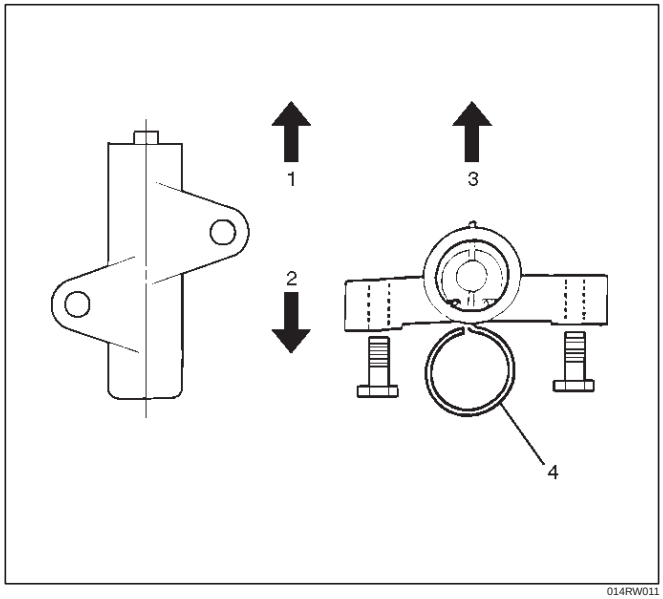

014RW011

Legend

(1) Up Side
(2) Down Side
(3) Direction For Installation
(4) Locking Pin

14. Remove timing belt.

CAUTION:

1. **Do not bend or twist the belt, otherwise its core could be damaged. The belt should not be bent at a radius less than 30 mm.**
2. **Do not allow oil or other chemical substances to come in contact with the belt. They will shorten the life.**
3. **Do not attempt to pry or stretch the belt with a screw driver or any other tool during installation.**
4. **Store timing belt in a cool and dark place. Never expose the belt direct sunlight or heat.**

Installation

NOTE: For correct belt installation, the letter on the belt must be able to be read as viewed from the front of the vehicle.

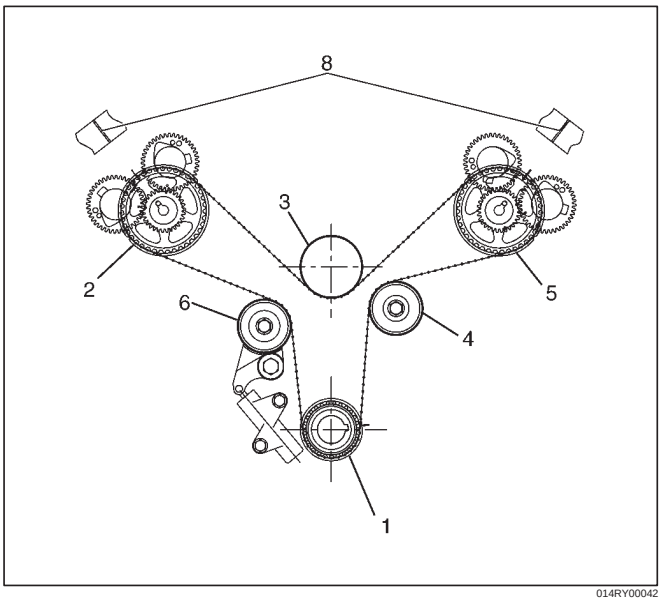

014RY00042

Legend

(1) Crankshaft Timing Pulley
(2) RH Bank Camshaft Drive Gear Pulley
(3) Water Pump Pulley
(4) Idle Pulley
(5) LH Bank Camshaft Drive Gear Pulley
(6) Tension Pulley

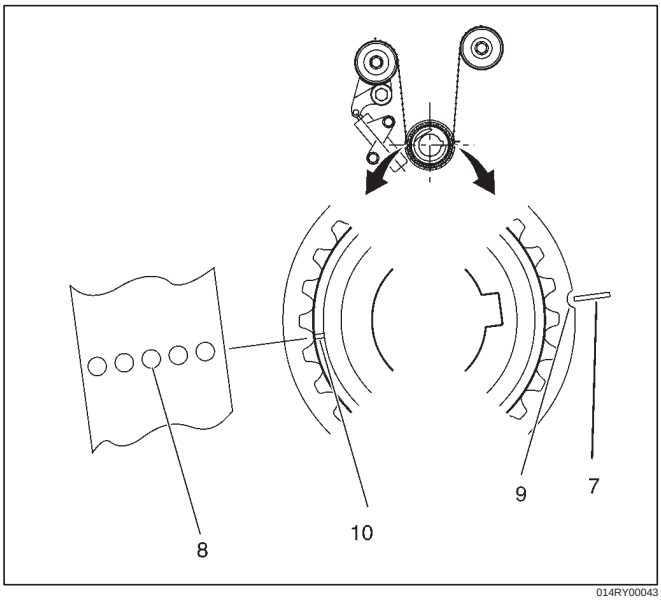

014RY00043

Legend

(7) Alignment Mark on Oil Pump.
(8) Alignment Mark on Timing Belt
(9) Alignment Mark (notch) on Crankshaft Timing Pulley.
(10) Alignment Mark (groove) on Crankshaft Timing Pulley.

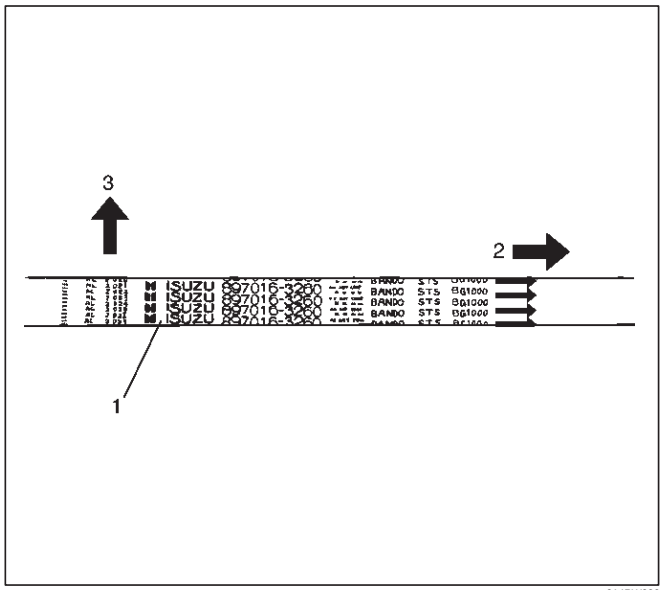

014RW006

Legend

(1) Timing Belt
(2) Engine Rotation Direction
(3) Cylinder Head Side

1. Install timing belt.
   1. Align the mark (notch) of crankshaft timing pulley (2) with mark on oil pump (1).
      Align the mark (groove) on the crankshaft timing pulley (3) with alignment mark (white dots line) on the timing belt (4).

NOTE: When timing marks are aligned, No.2 piston will be on Top Dead Center.

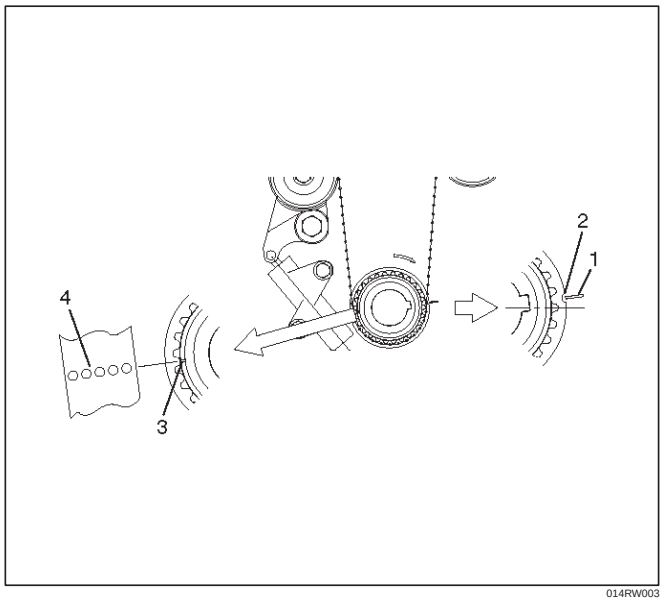

014RW003

Legend

(1) Alignment Mark on Oil Pump
(2) Groove on Crankshaft Timing Pulley
(3) Alignment Mark on Crankshaft Timing Pulley
(4) Alignment Mark on Timing Belt

2. Align the alignment mark on the RH bank camshaft drive gear pulley (2) to the alignment mark of the cylinder head cover RH (3).
3. Align the alignment mark (white line) on the timing belt (1) with alignment mark on the RH bank camshaft drive gear pulley (2) (on the left side as viewed from the front of the vehicle) and put the timing belt on the camshaft drive gear pulley.

   Secure the belt with a double clip or equivalent clip.

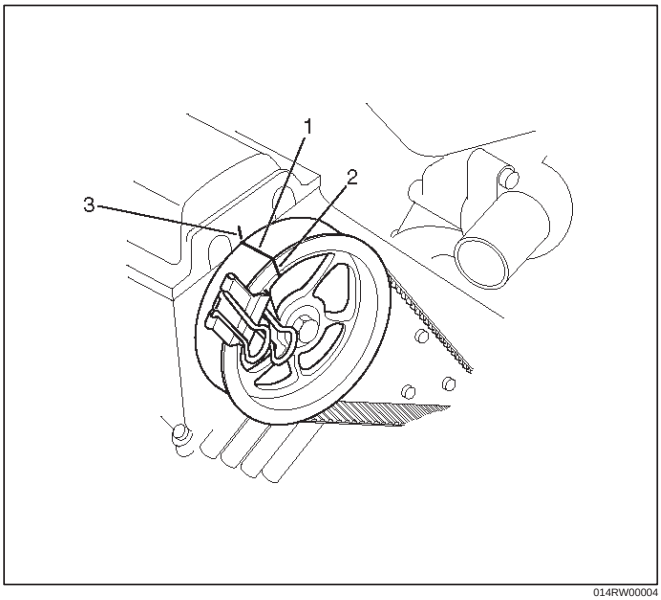

014RW00004

Legend

(1) Alignment Mark on Timing Belt (White line).
(2) Alignment Mark on Camshaft Drive Gear Pulley.
(3) Alignemnt Mark on Cylinder Head Cover RH.

4. Align the alignment mark on the LH bank camshaft drive gear pulley (2) to the alignment mark of the cylinder head cover LH (3).
5. Align the alignment mark (white line) on the timing belt (1) with the alignment mark on the LH bank camshaft drive gear pulley (2).

   When aligning the timing marks, use a wrench to turn the camshaft drive gear pulley, then set the timing mark between timing belt and camshaft drive gear pulley and put the timing belt on the camshaft drive gear pulley.
   Secure the belt with a double clip or equivalent clip.

NOTE: It is recommended for easy installation that the belt be secured with a double clip or equivalent clip after it is installed the timing belt to each pulley.

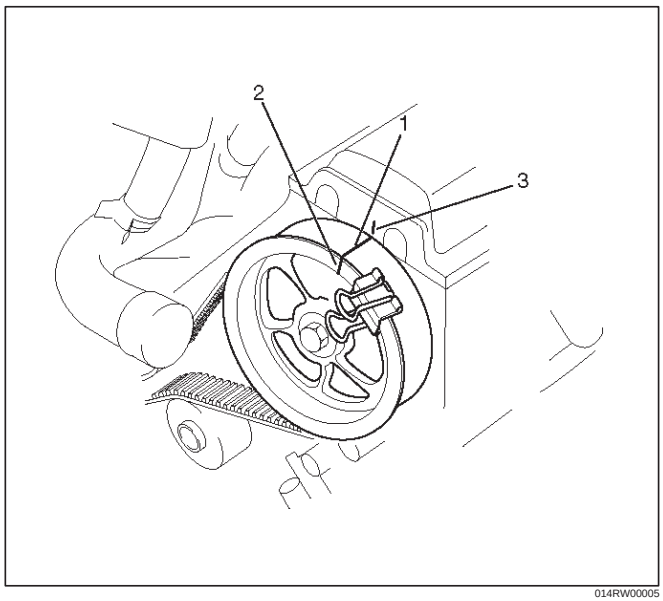

014RW00005

Legend

(1) Alignment Mark on Timing Belt (White line).
(2) Alignment Mark on Camshaft Drive Gear Pulley.
(3) Alignemnt Mark on Cylinder Head Cover LH.

6. Install crankshaft pulley temporarily and tighten center bolt by hand (do not use a wrench).

   Turn the crankshaft pulley clockwise to give some belt slack between the crankshaft timing pulley and the RH bank camshaft drive gear pulley.

2. Install pusher and tighten bolt to the specified torque.

Torque : 25 N·m (2.5 Kg·m/18 lb ft)

1. Install the pusher while pushing the tension pulley to the belt.
2. Pull out pin from the pusher.

NOTE: When reusing the pusher, press the pusher with approximately 100Kg to retract the rod, and insert a pin (1.4 mm piano wire).

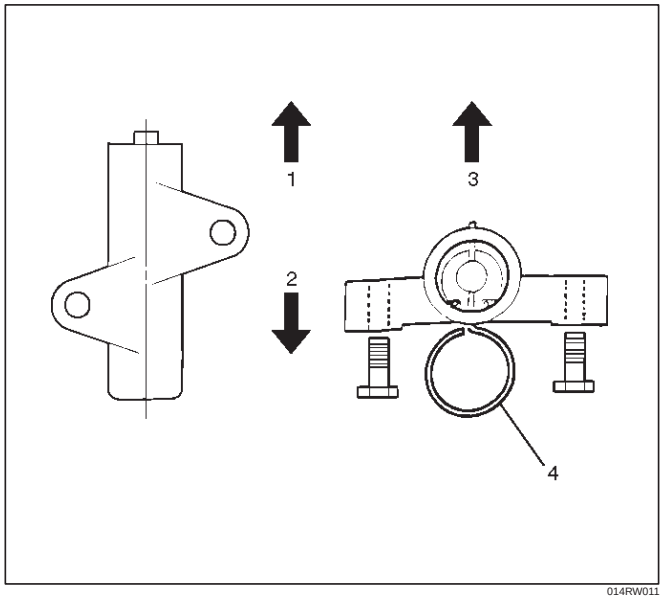

014RW011

Legend
(1) Up Side
(2) Down Side
(3) Direction for Installation
(4) Locking Pin

3. Remove double clips or equivalent clips, from timing belt pulleys.

   Turn the crankshaft pulley clockwise by two turns.

3. Install timing belt cover.

   Remove crankshaft pulley that was installed in step 1 item 5.

   Tighten bolts to the specified torque.

   Torque: 19 N·m (1.9 Kg·m/14 lb ft)

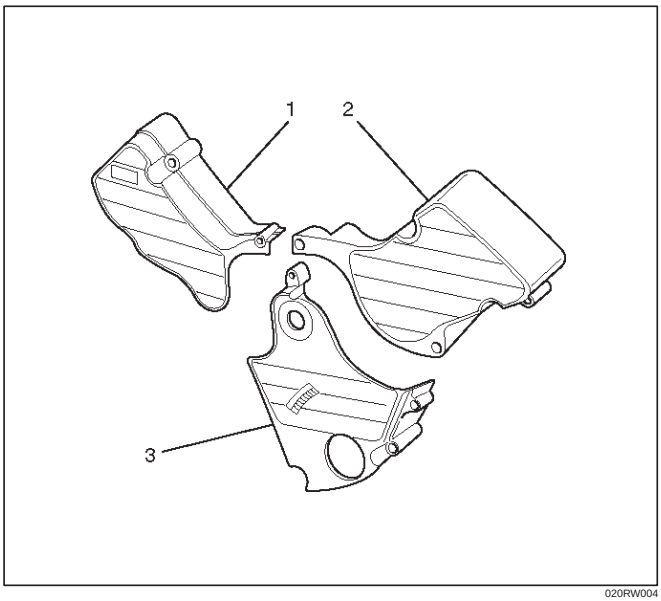

020RW004

Legend
(1) Timing Belt Cover RH
(2) Timing Belt Cover LH
(3) Timing Belt Cover Lower

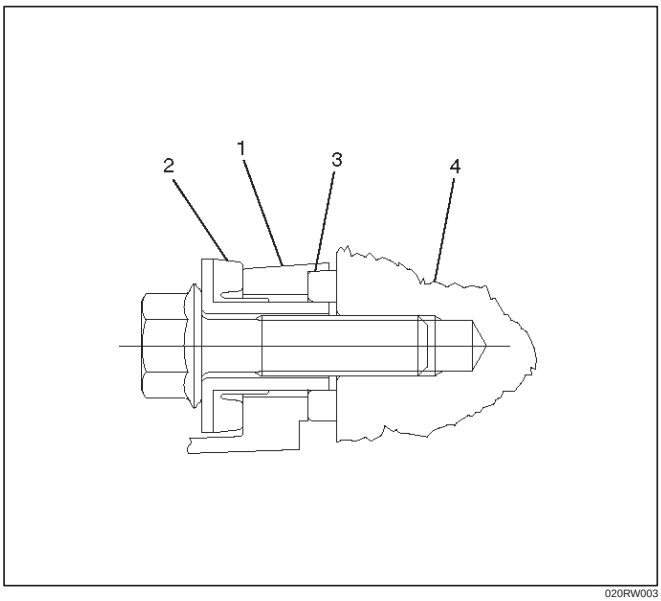

020RW003

Legend
(1) Timing Belt Cover
(2) Rubber Bushing
(3) Sealing Rubber
(4) Cylinder Body

4. Install crankshaft pulley using 5–8840–0133–0, hold the crankshaft pulley and tighten center bolt to the specified torque.

   Torque : 167 N·m (17.0 Kg·m/123 lb ft)

5. Install fan pulley bracket and tighten fixing bolts to the specified torque.

   Torque : 22 N·m (2.2 Kg·m/16 lb ft)

6. Install power steering pump assembly and tighten to the specified torque.

   Torque :

   M8 bolt : 22 N·m (2.2 Kg·m/16 lb ft)

   M10 bolt : 46 N·m (4.7 Kg·m/34 lb ft)

7. Install cooling fan assembly and tighten bolts/nuts to the specified torque.

   Torque : 22 N·m (2.2 Kg·m/16 lb ft) for fan pulley and fan bracket.

   Torque : 10 N·m (1.0 Kg·m/88.5 lb in) for fan and clutch assembly.

8. Move drive belt tensioner to loose side using wrench, then install drive belt to normal position.

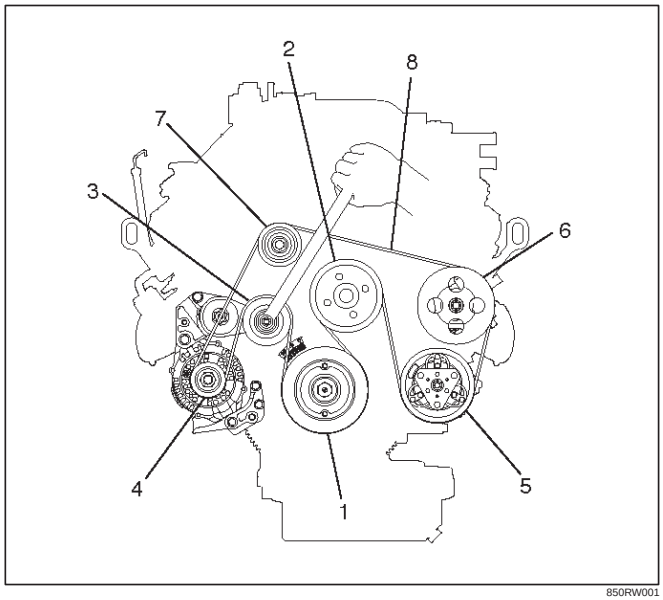

850RW001

Legend
(1) Crankshaft Pulley
(2) Cooling Fan Pulley
(3) Auto Tensioner
(4) Generator
(5) Air Conditioner Compressor
(6) Power Steering Oil Pump
(7) Idle Pulley
(8) Drive Belt

9. Install radiator upper fan shroud.
10. Install air cleaner assembly.

Camshaft

Removal

1. Disconnect battery ground cable.
2. Remove crankshaft pulley.
   - Refer to removal procedure for Crankshaft Pulley in this manual.
3. Remove timing belt.
   - Refer to removal procedure for Timing Belt in this manual.
4. Remove cylinder head cover LH.
   - Refer to removal procedure for Cylinder Head Cover LH in this manual.
5. Remove cylinder head cover RH.
   - Refer to removal procedure for Cylinder Head Cover RH in this manual.
6. Remove twenty fixing bolts from inlet and exhaust camshaft bracket on one side bank, then camshaft brackets.

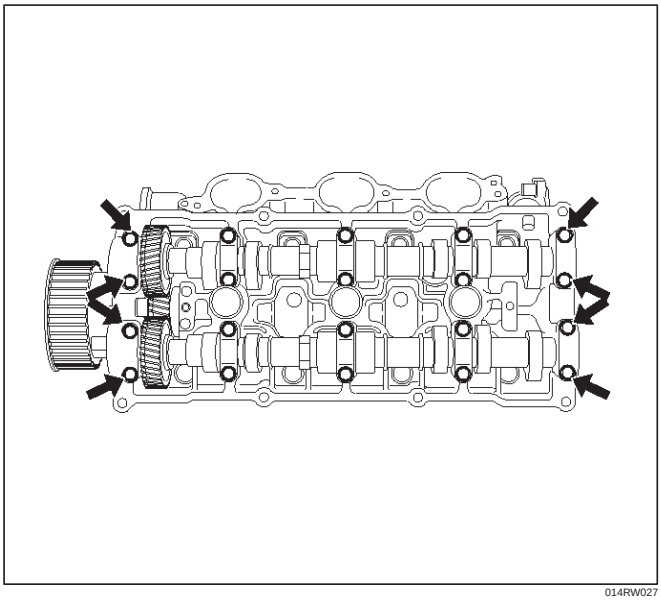

014RW027

7. Remove camshaft assembly.
8. Remove fixing bolt for camshaft drive gear pulley.
9. Remove three fixing bolts from camshaft drive gear retainer, then camshaft drive gear assembly.

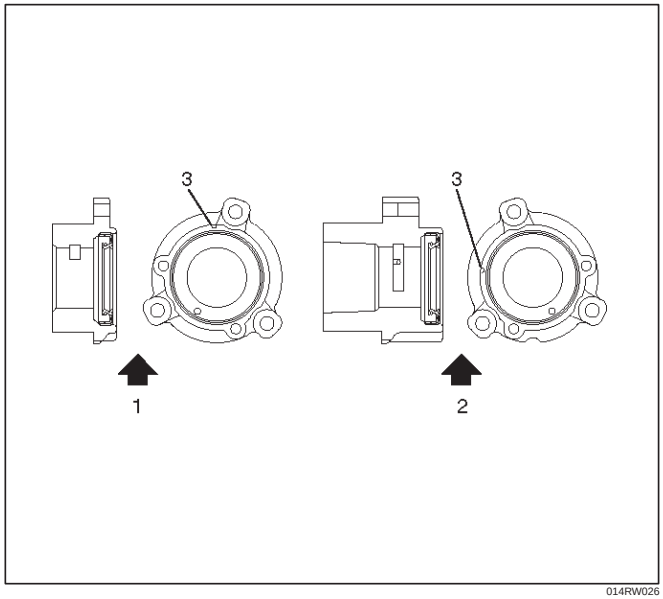

014RW026

Legend

(1) Right Bank
(2) Left Bank
(3) Timing Mark on Retainer

Installation

1. Install camshaft drive gear assembly and tighten three bolts to the specified torque.

   Torque : 10 N·m (1.0 Kg·m/89 lb in)

2. Tighten bolt for camshaft drive gear assembly pulley to the specified torque.

   Torque : 98 N·m (10.0 Kg·m/72 lb ft)

3. Tighten sub gear setting bolt.
   1. Use the 5–8840–2443–0 gear spring lever to turn sub gear to right direction until it aligns with the M5 bolt hole between camshaft driven gear and sub gear.
   2. Tighten the M5 bolt to a suitable torque to prevent the sub gear from moving.

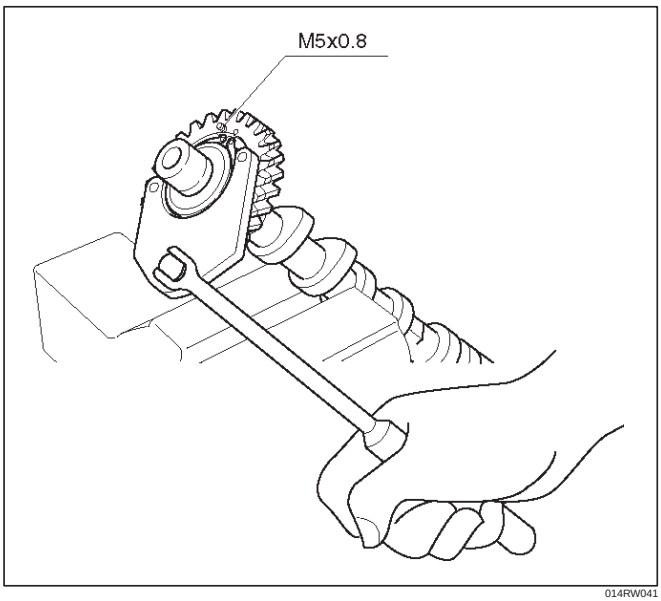

014RW041

4. Install camshaft assembly and camshaft brackets, tighten twenty bolts on one side bank to the specified torque.
   1. Apply engine oil to camshaft journal and bearing surface of camshaft bracket.
   2. Align timing mark on intake camshaft (one dot for right bank, two dot for left bank) and exhaust camshaft (one dot for right bank, two dots for left bank) to timing mark on camshaft drive gear (one dot).

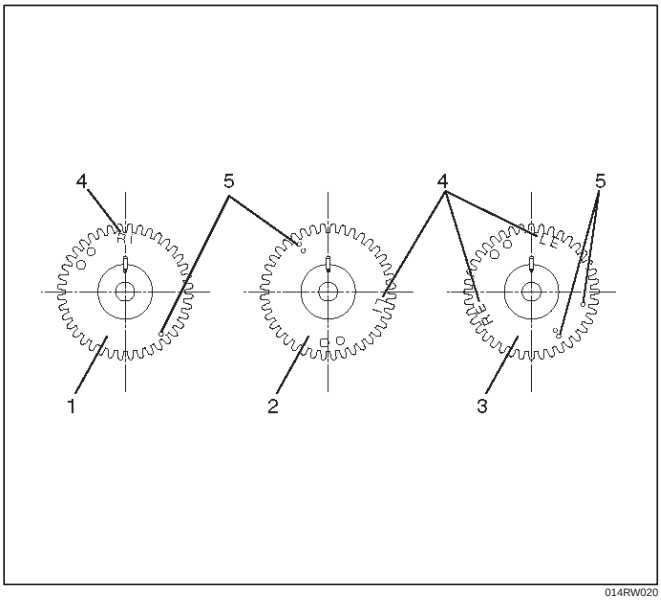

014RW020

Legend

(1) Intake Camshaft Timing Gear for Right Bank
(2) Intake Camshaft Timing Gear for Left Bank
(3) Exhaust Camshaft Timing Gear
(4) Discrimination Mark
(LI: Left bank intake, RI: Right bank intake)
(LE: Left bank exhaust, RE: Right bank exhaust)

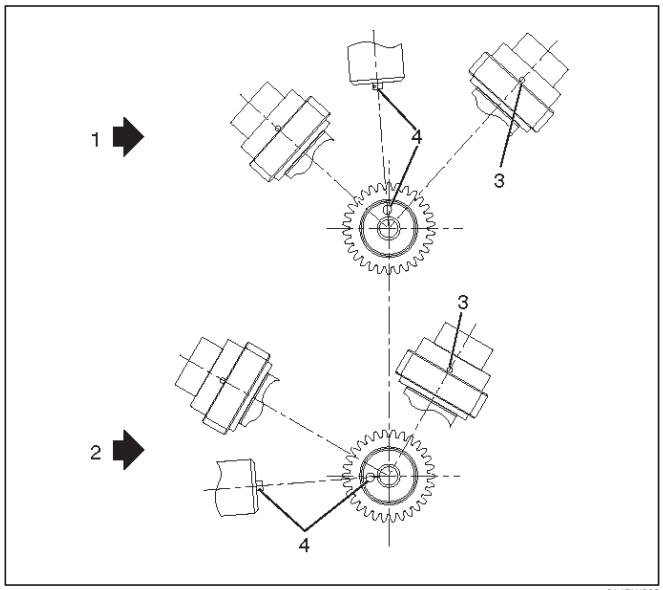

014RW023

Legend

(1) Right Bank Camshaft Drive Gear
(2) Left Bank Camshaft Drive Gear
(3) Timing Mark on Drive Gear
(4) Dowel Pin

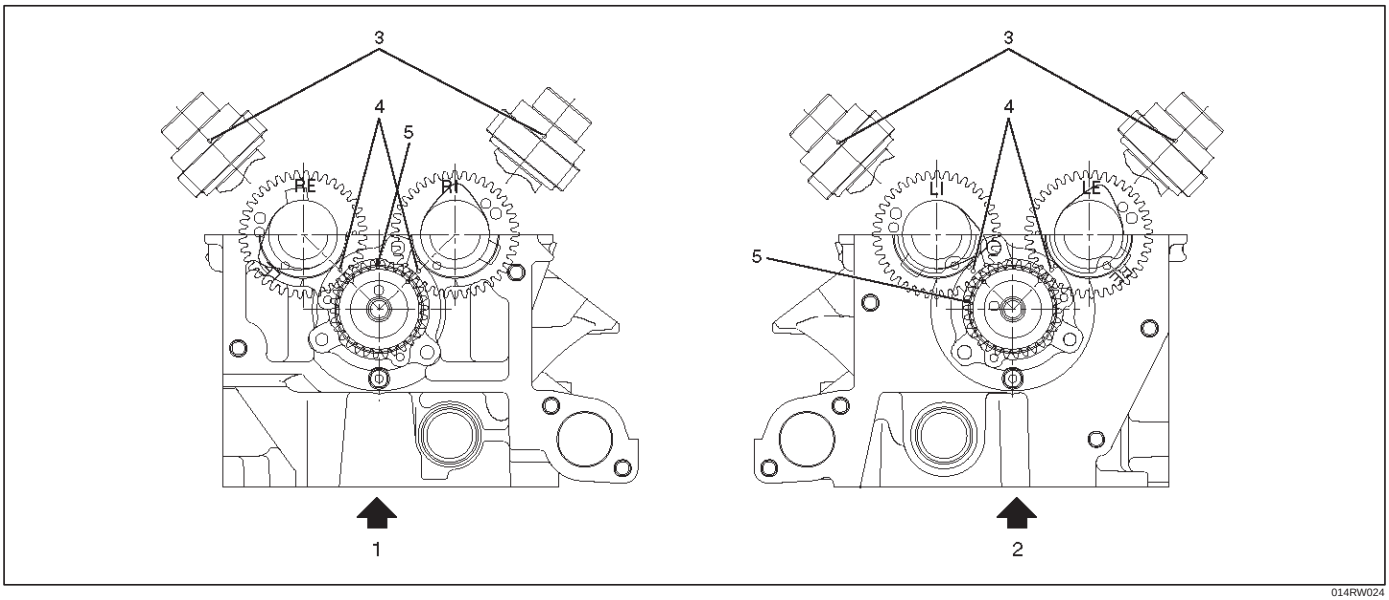

014RW024

Legend

(1) Right Bank
(2) Left Bank
(3) Alignment Mark on Camshaft Drive Gear
(4) Alignment Mark on Camshaft
(5) Alignment Mark on Retainer

3. Tighten twenty bolts on numerical order an one side bank as shown in the illustration.

Torque : 10 N·m (1.0 Kg·m/89 lb in)

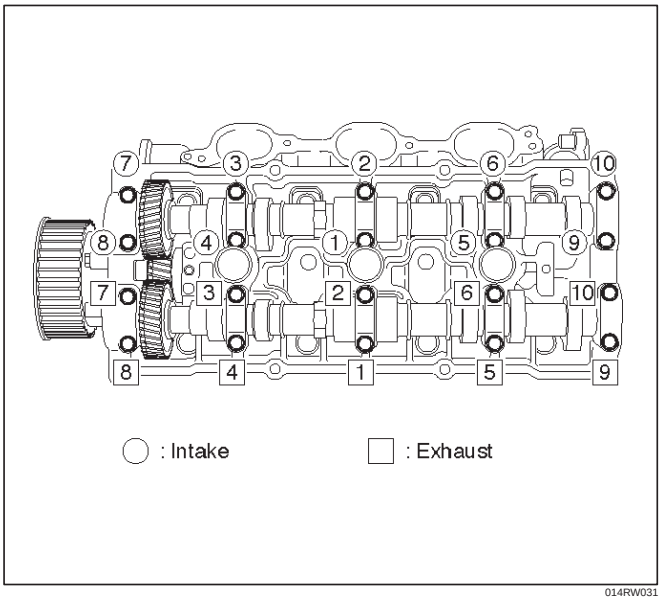

014RW031

5. Install cylinder head cover RH.
   - Refer to installation procedure for CYLINDER HEAD COVER RH in this manual.
6. Install cylinder head cover LH.
   - Refer to installation procedure for CYLINDER HEAD COVER LH in this manual.
7. Install timing belt.
   - Refer to installation procedure for TIMING BELT in this manual.
8. Install crankshaft pulley.
   - Refer to installation procedure for CRANKSHAFT PULLEY in this manual.

   Accelerator pedal cable adjustment

   1. Loosen adjusting nut and lock nut.
   2. Pull outer cable while closing fully the throttle valve.
   3. Tighten adjusting nut and lock nut temporarily.

4. Loosen adjusting nut by three turns and tighten lock nut.

   Then, manually operating the throttle valve, make sure that the valve lever returns up to the stopper screw.
   If it does not reach the stopper screw, repeat from step 1.

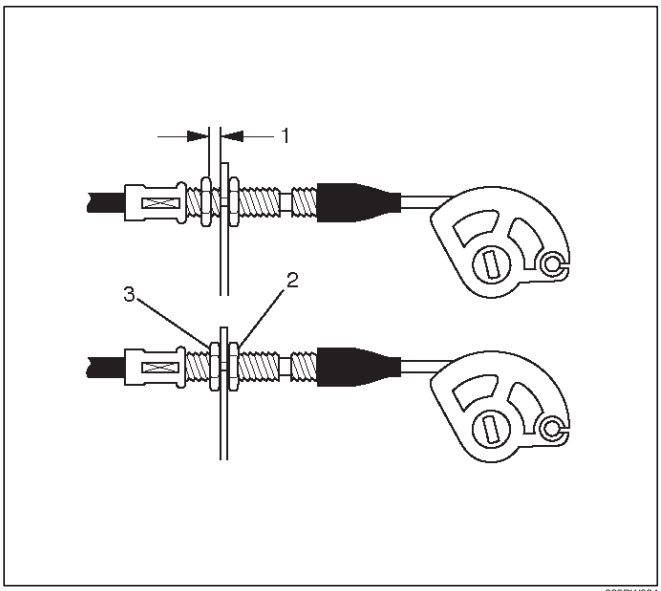

035RW004

Legend

(1) Clearance
(2) Lock Nut
(3) Adjusting Nut

Cylinder Head

Removal

1. Remove engine hood.
2. Disconnect battery ground cable.
3. Drain radiator coolant.
4. Drain engine oil.
5. Remove crankshaft pulley.
   - Refer to removal procedure for Crankshaft Pulley in this manual.
6. Remove timing belt.
   - Refer to removal procedure for Timing Belt in this manual.
7. Remove cylinder head cover LH.
   - Refer to removal procedure for Cylinder Head Cover LH in this manual.
8. Remove cylinder head cover RH.
   - Refer to removal procedure for Cylinder Head Cover RH in this manual.
9. Remove common chamber.
   - Refer to removal procedure for Common Chamber in this manual.
10. Remove cylinder head assembly.
    1. Loosen eights bolts for tight cylinder head.
    2. Remove cylinder head assembly.

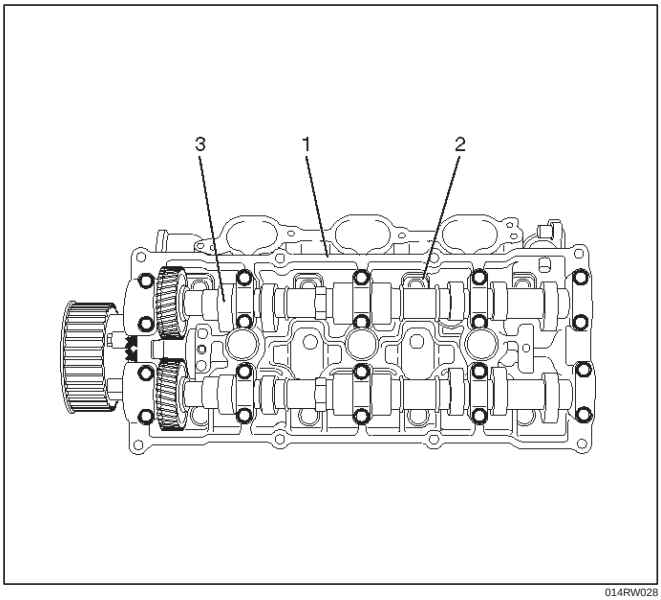

014RW028

Legend

(1) Cylinder Head
(2) Cylinder Head Bolt
(3) Camshaft

Installation

1. Install cylinder head assembly to cylinder block.
   1. Put cylinder head gasket on the cylinder block.

NOTE: There is discrimination mark “R” for right bank and “L” for left bank on the cylinder head gasket as shown in the illustration.

Do not reuse cylinder head gasket.

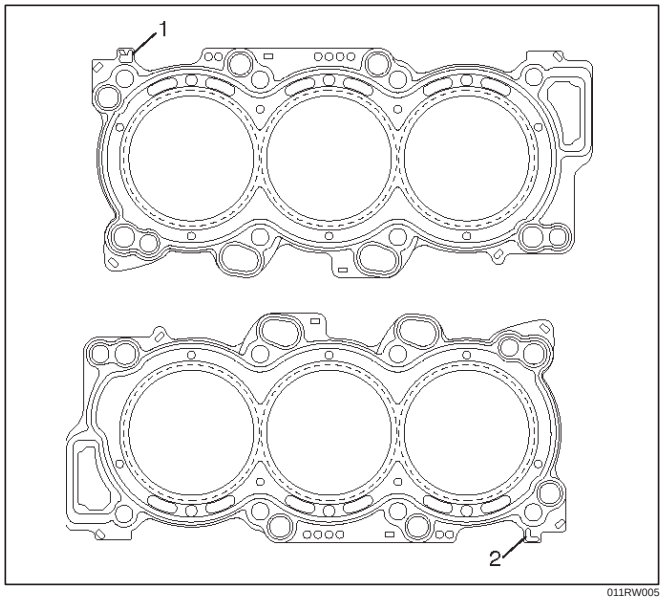

011RW005

   2. Align dowel pin hole to dowel pin on the cylinder block.
   3. Tighten two bolts temporarily by hand to prevent the cylinder head assembly from moving.
   4. Using 9–8511–4209–0 cylinder head bolt wrench, tighten bolts in numerical order as shown in the illustration to the specified torque.

NOTE: Do not reuse cylinder head bolts.

Do not apply any lubricant to the cylinder head bolts.

Torque :

Temporary : 29 N·m (3.0 Kg·m/21 lb ft)

Final : 64 N·m (6.5 Kg·m/47 lb ft)

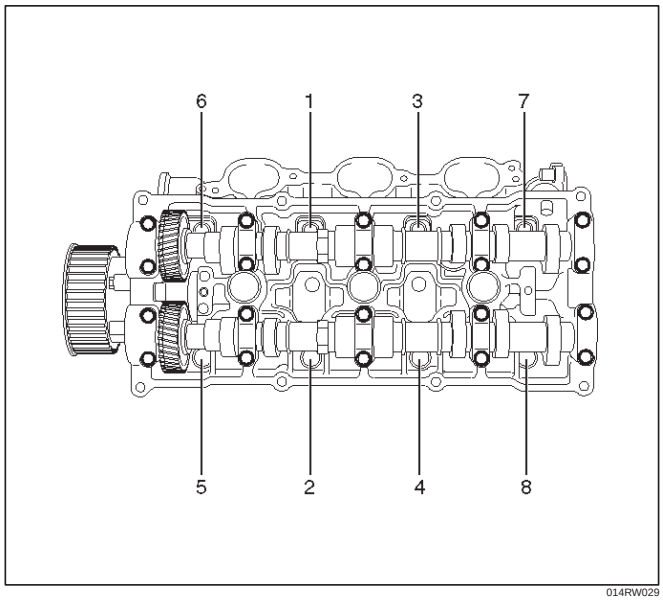

014RW029

2. Install common chamber.
   - Refer to installation procedure for Common Chamber in this manual.
3. Install cylinder head cover RH.
   - Refer to installation procedure for Cylinder Head Cover RH in this manual.
4. Install cylinder head cover LH.
   - Refer to installation procedure for Cylinder Head Cover LH in this manual.
5. Install timing belt.
   - Refer to installation procedure for Timing Belt in this manual.
6. Install crankshaft pulley.
   - Refer to installation procedure for Crankshaft Pulley in this manual.

Accelerator pedal cable adjustment

1. Loosen adjusting nut and lock nut.
2. Pull outer cable while closing fully the throttle valve.
3. Tighten adjusting nut and lock nut temporarily.
4. Loosen adjusting nut by three turns and tighten lock nut.

   Then, manually operating the throttle valve, make sure that the valve lever returns up to the stopper screw.
   If it does not reach the stopper screw, repeat from step 1.

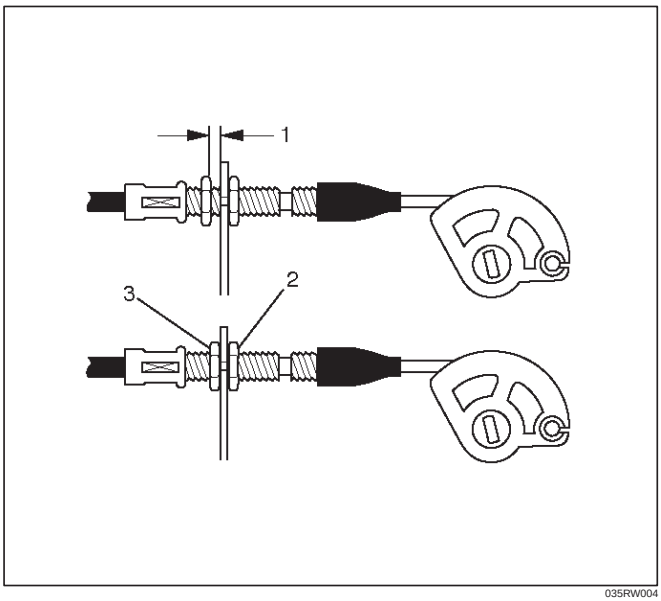

035RW004

Legend

(1) Clearance
(2) Lock Nut
(3) Adjusting Nut

Valve Stem Oil Controller , Valve Spring and Valve Guide

Removal

1. Disconnect battery ground cable.
2. Drain engine oil.
   - Drain engine coolant.
3. Remove cylinder head assembly.
   - Refer to removal procedure for Cylinder Head in this manual.
4. Remove camshaft.
   - Refer to removal procedure for Camshaft in this manual.
5. Remove tappets with shim.

NOTE: Do not damage shim surface.

6. Remove valve springs using 5–8840–2446–0 valve spring compressor and 5–8840–2547–0 valve spring compressor adapter then remove upper valve spring seat and lower seat.

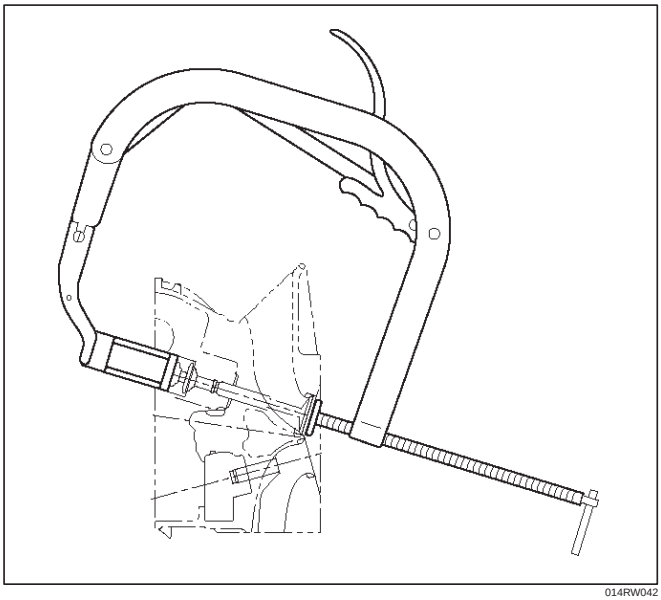

014RW042

7. Remove oil controller using 5–8840–0623–0 oil controller remover, remove each valve stem oil controller.
8. Remove valve guide using 5–8840–2549–0 valve guide replacer.

Installation

1. Install valve guide using 5–8840–2442–0 valve guide installer.
2. Install oil controller using 5–8840–0624–0 oil controller installer.
3. Install lower valve spring seat, valve spring and upper valve spring seat then put split collars on the upper spring seat, using 5–8840–2446–0 valve spring compressor and 5–8840–2547–0 valve spring compressor adapter to install the split collars.

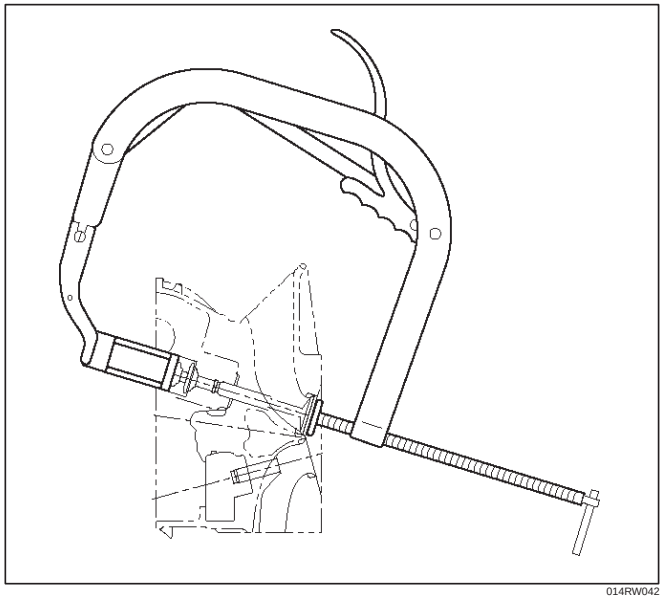

014RW042

4. Install tappet with shim.
5. Install camshaft assembly.
   - Refer to installation procedure for Camshaft in this manual.
6. Install cylinder head assembly.
   - Refer to installation procedure for Cylinder Head in this manual.
7. Fill engine oil until full level.
8. Fill engine coolant.

Piston, Piston Ring and Connecting Rod

Removal

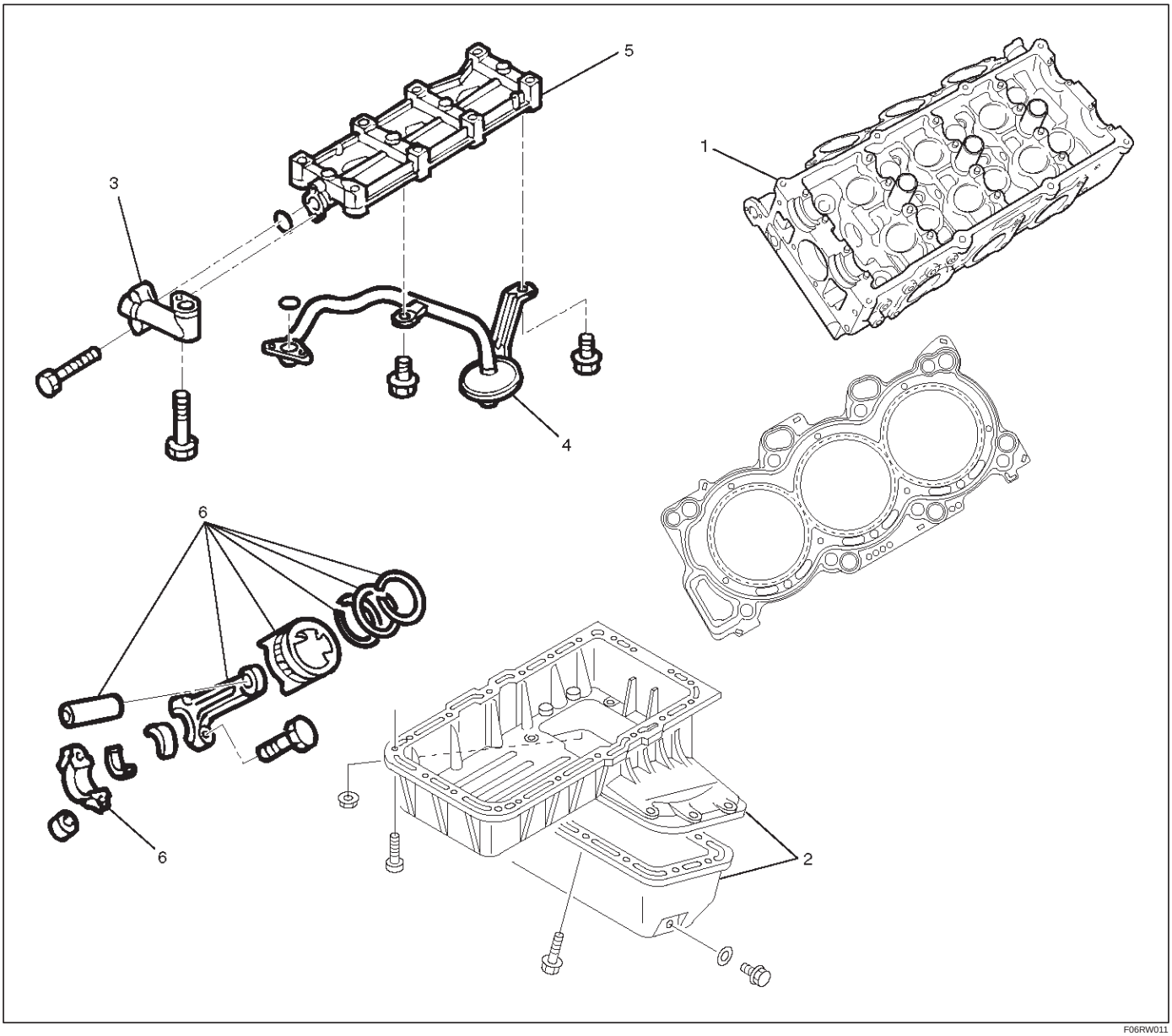

F06RW011

Legend

(1) Cylinder Head
(2) Crankcase with Oil Pan
(3) Oil Pipe
(4) Oil Strainer
(5) Oil Gallery
(6) Piston with Connecting Rod Assembly

1. Remove cylinder head assembly.
   - Refer to removal procedure for Cylinder Head in this manual.
2. Remove crankcase with Oil Pan.
   - Refer to removal procedure for Oil Pan and Crankcase in this manual.

3. Remove oil strainer fixing bolts, remove oil strainer assembly with O-ring.

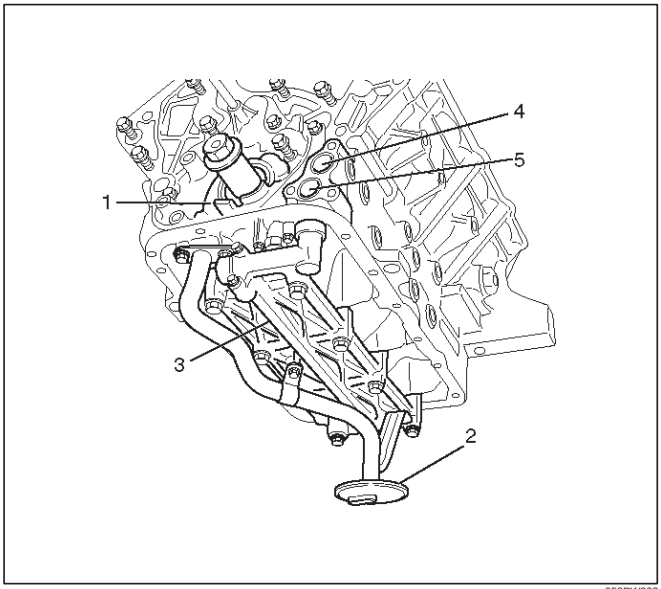

050RW002

Legend
(1) Oil Pump
(2) Oil Strainer
(3) Oil Gallery
(4) From Oil Filter
(5) To Oil Filter

4. Remove three fixing bolts, oil pipe with O-ring.
5. Remove eight fixing bolts, oil gallery.
6. Remove piston with connecting rod assembly, before removing the bearing cap, remove carbon on the top of cylinder bore and push piston with connecting rod out from the top of cylinder bore.

Installation

1. Install piston with connecting rod assembly.
   - Apply engine oil to cylinder bore, connecting rod bearing and crank pin.
     When installing the piston, its front mark must face the engine front side.
   - The bearing cap number must be the same as connecting rod number.
   - Apply engine oil to the thread and seating surface of each nut.
   - Tighten nuts to the specified torque.

   Torque : 54 N·m (5.5 Kg·m/40 lb ft)

   - After tightening the nuts, make sure that the crankshaft rotates smoothly.

NOTE: Do not apply engine oil to the bearing back faces and connecting rod bearing fitting surfaces.

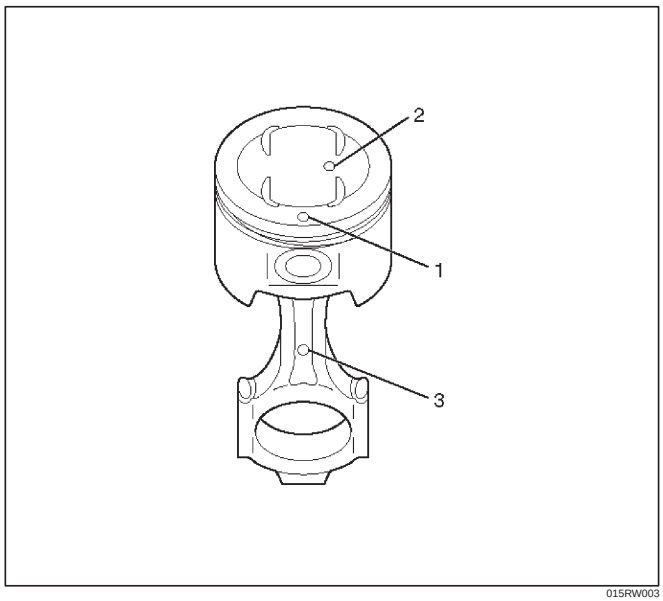

015RW003

Legend
(1) Piston Front Mark
(2) Piston Grade
(3) Connecting Rod Front Mark

2. Install oil gallery and tighten the bolts in two steps, in the order shown in illustration.

   Torque :

   1st step : 29 N·m (3.0 Kg·m/21 lb ft)

   2nd step : 55°–65°

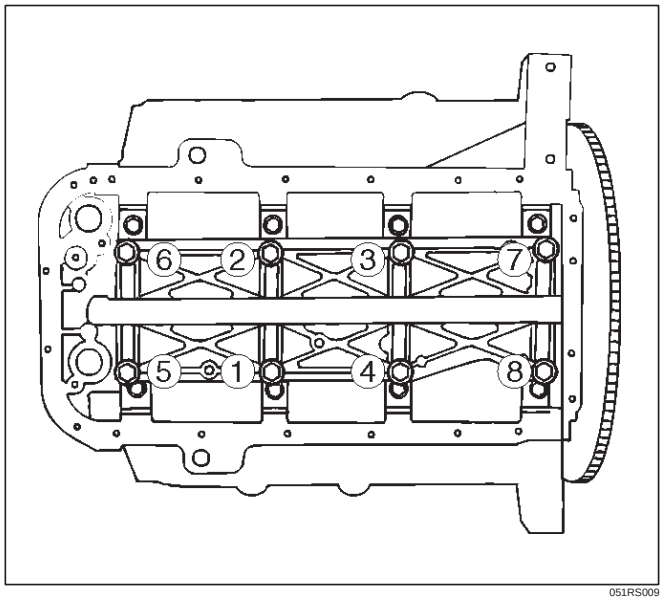

051RS009

3. Install oil pipe with O-ring.

   Torque : 10 N·m (1.0 Kg·m/89 lb in)

4. Install oil strainer assembly with O-ring.

   Torque : 25 N·m (2.5 Kg·m/18 lb ft)

5. Install crankcase with Oil Pan.
   - Refer to installation procedure for Oil Pan and Crankcase in this manual.
6. Install cylinder head assembly.
   - Refer to installation procedure for Cylinder Head in this manual.

Crankshaft and Main Bearings

Removal

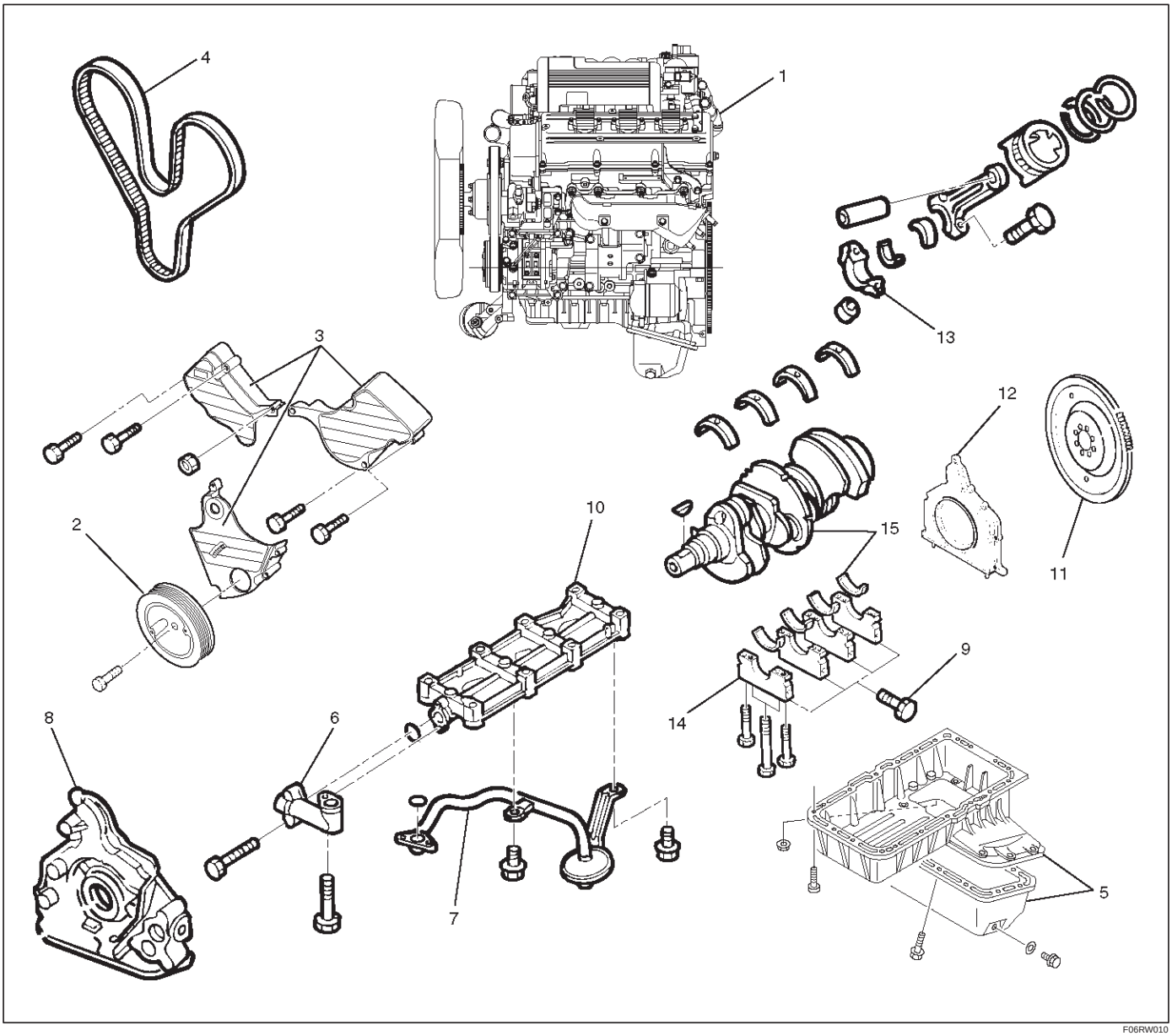

F06RW010

Legend

(1) Engine Assembly
(2) Crankshaft Pulley
(3) Timing Belt Cover
(4) Timing Belt
(5) Crankcase with Oil Pan
(6) Oil Pipe
(7) Oil Strainer
(8) Oil Pump Assembly
(9) Cylinder Body Side Bolt
(10) Oil Gallery
(11) Flywheel
(12) Rear Oil Seal Retainer
(13) Connecting Rod Cap
(14) Crankshaft Main Bearing Cap
(15) Crankshaft and Main Bearing

1. Remove engine assembly.
   - Refer to removal procedure for Engine Assembly in this manual.
2. Remove timing belt.
   - Refer to removal procedure for Timing Belt in this manual.
3. Remove oil pan and crankcase.
   - Refer to removal procedure for Oil Pan and Crankcase in this manual.
4. Remove oil pipe with O-ring.
5. Remove oil strainer assembly with O-ring.

6. Remove oil pump assembly.
   - Refer to removal procedure for Oil Pump in this manual.
7. Remove cylinder body side bolts.
8. Remove oil gallery.
9. Remove flywheel.
10. Remove rear oil seal retainer.
    - Refer to removal procedure for Rear Oil Seal in this manual.
11. Remove connecting rod caps.
12. Remove crankshaft main bearing caps.
13. Remove crankshaft and main bearings.

Installation

1. Install crankshaft and main bearings.
   - Install main bearing in the cylinder block and main bearing cap respectively.
     Apply new engine oil to upper and lower main bearings.

NOTE:

- Do not apply engine oil to the bearing back faces.
- Make sure that main bearings are in correct position.
- Install crankshaft with care.
- Apply engine oil to the thrust washer.
- Install thrust washer on No.3 journal.
- Oil grooves in thrust washer must face the crankshaft.

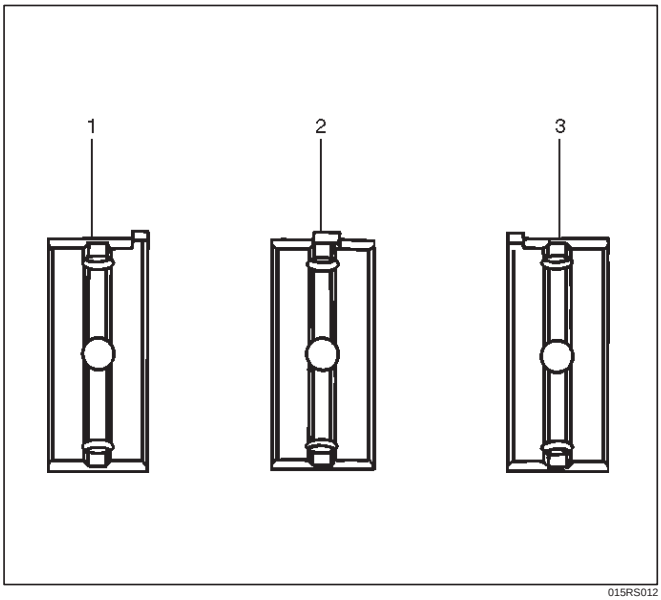

015RS012

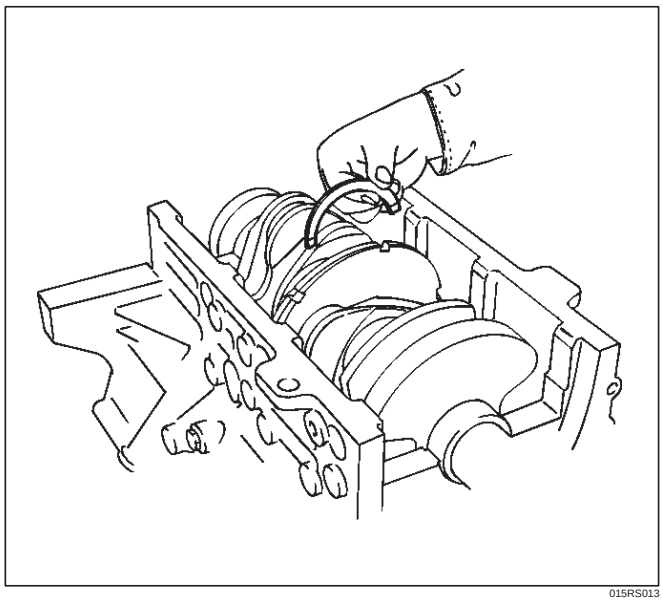

015RS013

2. Install crankshaft main bearing caps.
   - Apply engine oil to the thread and seating surface of each bearing cap fixing bolt.

NOTE:

- Do not apply engine oil to the bearing back faces.
- Install bearing caps in the order of numbers, starting with cylinder block front side.
- Tighten main bearing fixing bolts to the specified torque.

  Torque : 39 N·m (4.0 Kg·m/29 lb ft)
- After tightening the bolts, make sure that the crankshaft rotates smoothly.

3. Install connecting rod caps.
   - The cap number must be same as connecting rod number.
   - Apply engine oil to the thread and seating surface of each nut.
   - Tighten nuts to the specified torque.

   Torque : 54 N·m (5.5 Kg·m/40 lb ft)
   - After tightening the nuts, make sure that the crankshaft rotates smoothly.
4. Install rear oil seal retainer.
   - Remove oil on cylinder block and retainer fitting surface.
   - Apply sealant (TB1207B or equivalent) to retainer fitting surface as shown in illustration.

- The oil seal retainer must be installed within 5 minutes after sealant application before the sealant hardens.

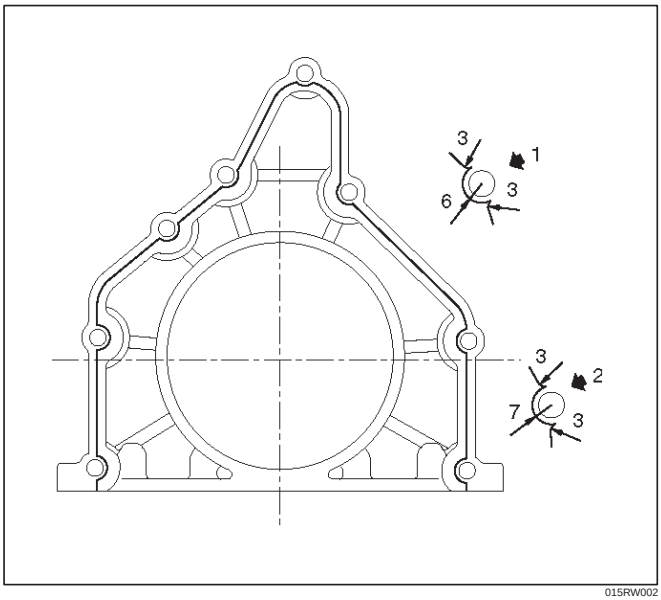

015RW002

Legend

(1) Around Bolt Holes
(2) Around Dowel Pin

- Apply engine oil to oil seal lip and align a dowel pin hole in the cylinder block with that in the retainer.
- Tighten retainer fixing bolts to the specified torque.

Torque : 18 N·m (1.8 Kg·m/13 lb ft)

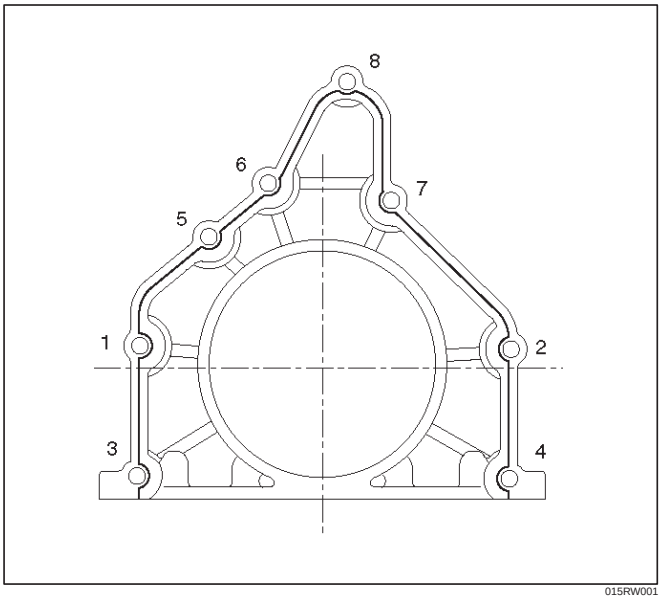

015RW001

5. Install flywheel.
   - Clean tapped holes in the crankshaft.
   - Remove oil on crankshaft and flywheel fitting surface.

NOTE:

- Do not reuse the bolts.
- Do not apply oil or thread lock to the bolts.
- Tighten fixing bolts to the specified torque.

Torque : 54 N·m (5.5 Kg·m/40 lb ft)

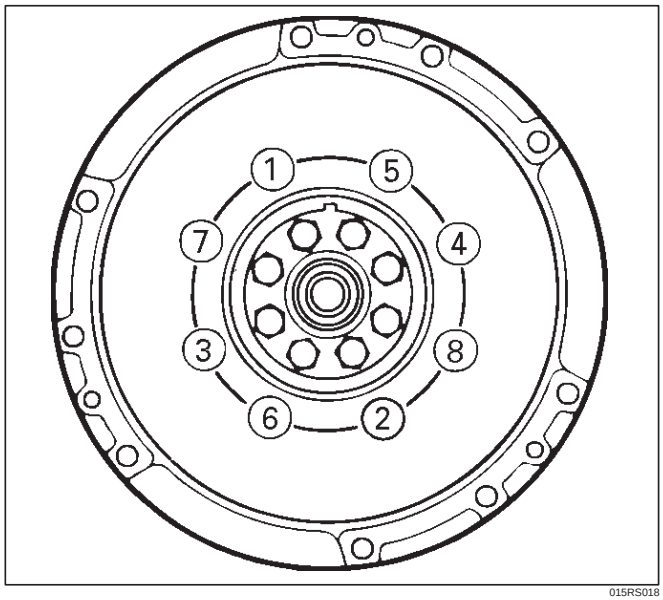

015RS018

6. Install oil gallery.
   - Clean contact surface of oil gallery and main bearing cap.
     Apply engine oil to oil gallery fixing bolts and tighten the bolts in two steps, in the order shown in illustration.

Torque :

1st step : 29 N·m (3.0 Kg·m/21 lb ft)

2nd step : 55˚–65˚

7. Install cylinder body side bolts and tighten bolts in order to the specified torque.

Torque : 39 N·m (4.0 Kg·m/29 lb ft)

NOTE: Do not apply the oil to the bolts.

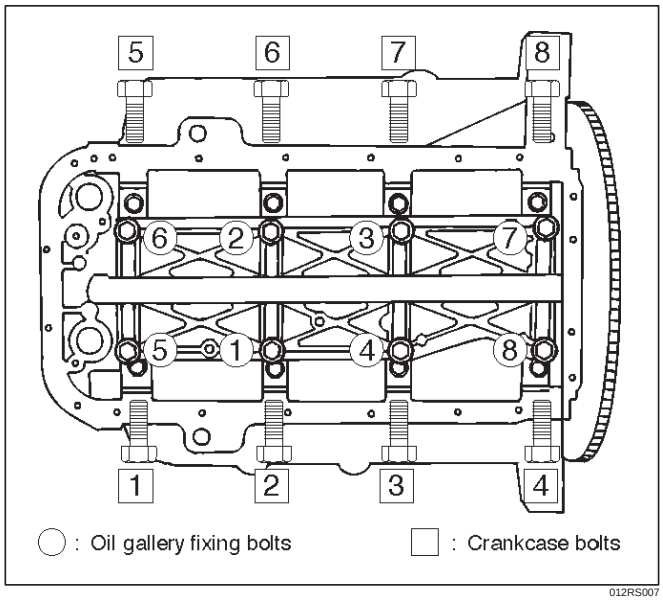

012RS007

8. Install oil pump assembly.
   - Remove oil on cylinder block and oil pump mounting surface.

- Apply sealant (TB1207B or equivalent) to the oil pump mounting surface.
- The oil pump assembly must be installed within 5 minutes after sealant application before the sealant hardens.
- Apply engine oil to oil seal lip.
- Install oil pump in the cylinder block and tighten fixing bolts to the specified torque.

Torque : 25 N·m (2.5 Kg·m/18 lb ft)

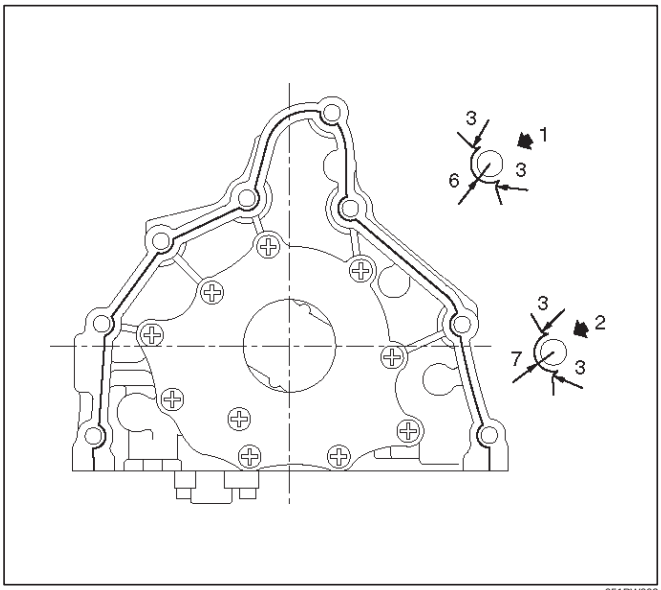

051RW002

Legend

(1) Around Bolt Holes
(2) Around Dowel Pin

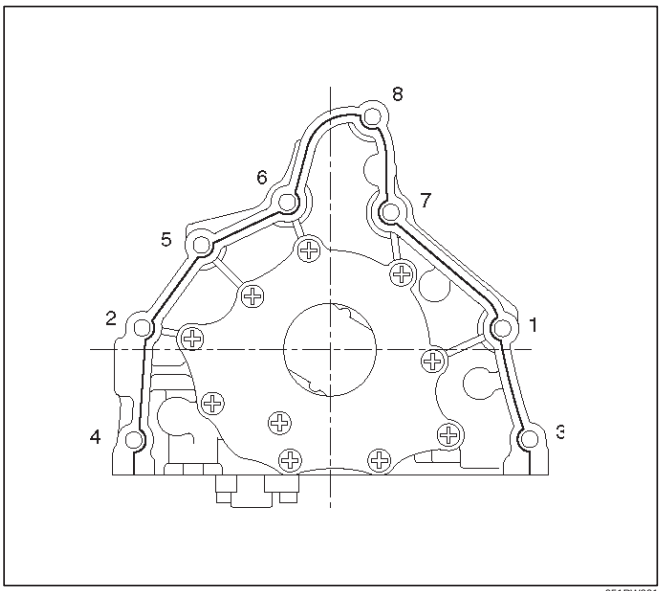

051RW001

9. Install oil strainer with O-ring, tighten to the specified torque.

   Torque : 25 N·m (2.5 Kg·m/18 lb ft)

10. Install oil pipe with O-ring, tighten fixing bolts to the specified torque.

    Torque : 25 N·m (2.5 Kg·m/18 lb ft)

11. Install crankcase.
    - Remove oil on crankcase mounting surface and dry the surface.
    - Properly apply a 4.5 mm (0.7 in) wide bead of sealant (TB1207C or equivalent) to the crankcase mounting surface. The bead must be continuous.
    - The crankcase must be installed within 5 minutes after sealant application before the sealant hardens.
    - Tighten fixing bolts to the specified torque.

    Torque : 10 N·m (1.0 Kg·m/89 lb in)

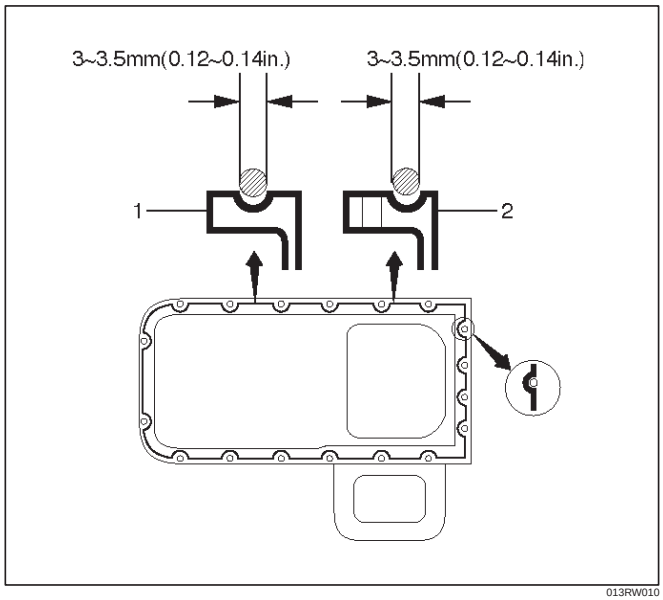

013RW010

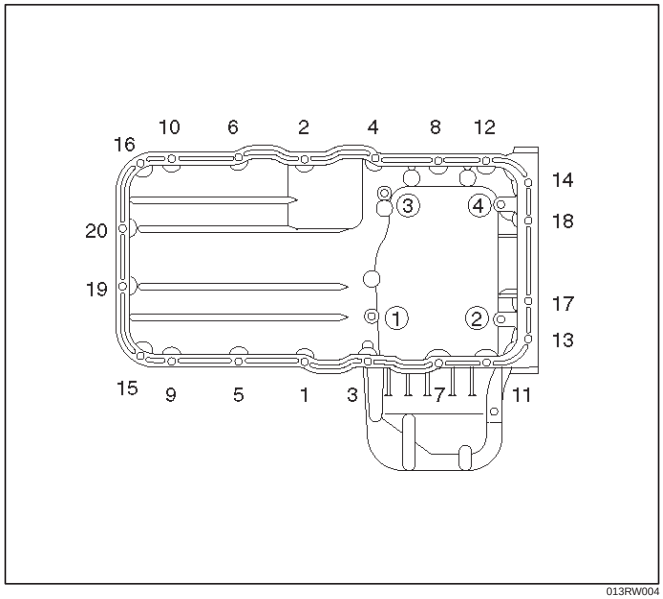

013RW004

12. Install oil pan
    - Remove oil on oil pan mounting surface and dry the surface.
    - Properly apply a 4.5 mm (0.7 in) wide bead of sealant (TB1207C or equivalent) to the oil pan mounting surface. The bead must be continuous.
    - The oil pan must be installed within 5 minutes after sealant application to prevent premature hardening of sealant.

- Tighten fixing bolts to the specified torque.

Torque : 25 N·m (2.5 Kg·m/18 lb ft)

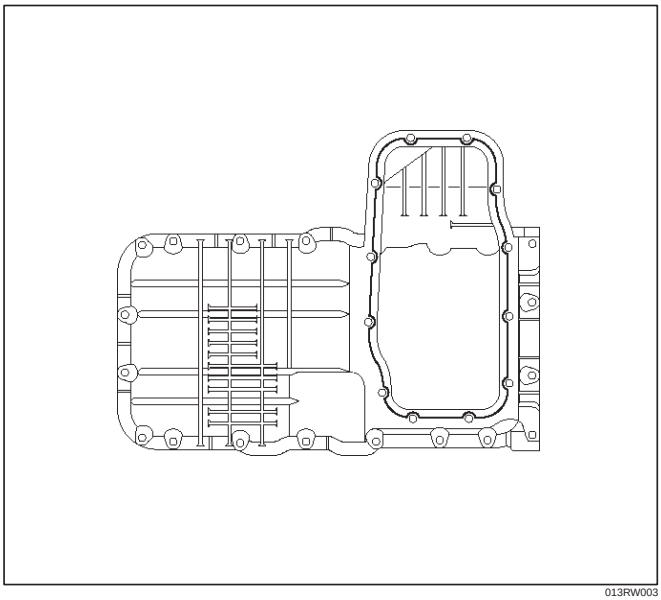

013RW003

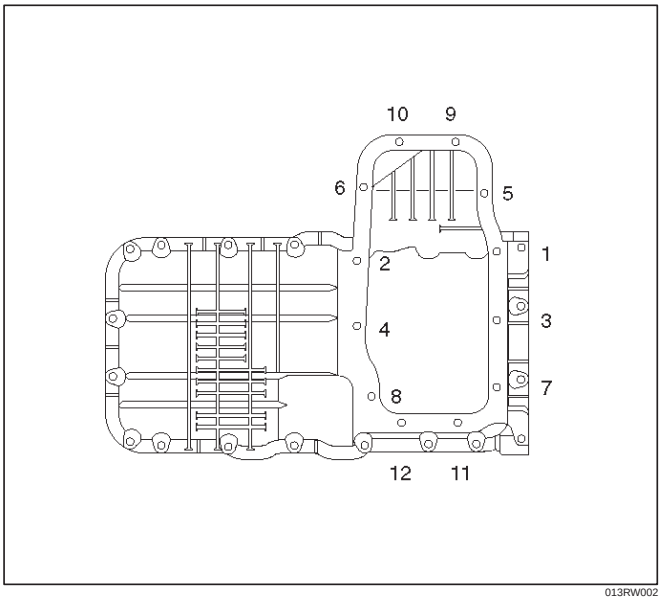

013RW002

13. Install timing belt.
    - Refer to installation procedure for Timing Belt in this manual.
14. Install engine assembly.
    - Refer to installation procedure for Engine in this manual.

Rear Oil Seal

Removal

1. Remove transmission assembly.
   - Refer to removal procedure for Transmission section in this manual.
2. Remove flywheel.
3. Remove rear oil seal using a seal remover.

NOTE: Take care not to damage the crankshaft or oil seal retainer when removing oil seal.

Installation

1. Apply engine oil to oil seal lip and install oil seal using 5–8840–2286–0.

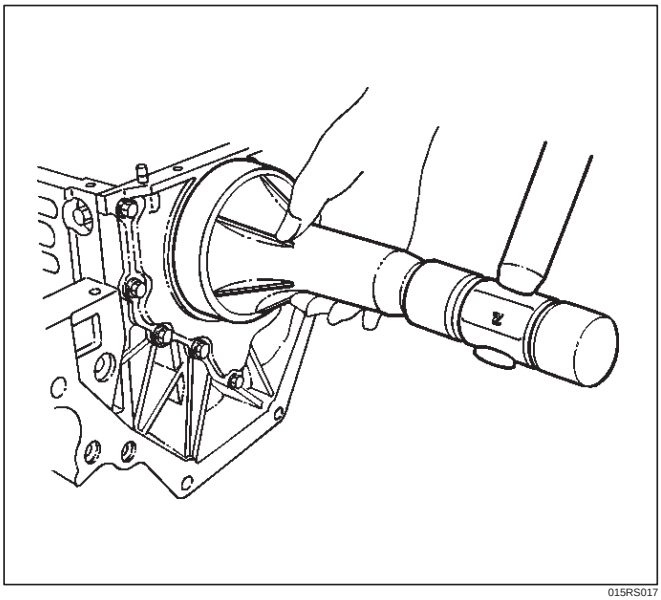

015RS017

2. Install flywheel.
   - Clean tapped holes in the crankshaft.
   - Remove oil on the crankshaft and flywheel mounting surface.
   - Tighten fixing bolts to the specified torque.

NOTE: Do not reuse the bolts and do not apply oil or thread lock to the bolts.

Torque : 54 N·m (5.5 Kg·m/40 lb ft)

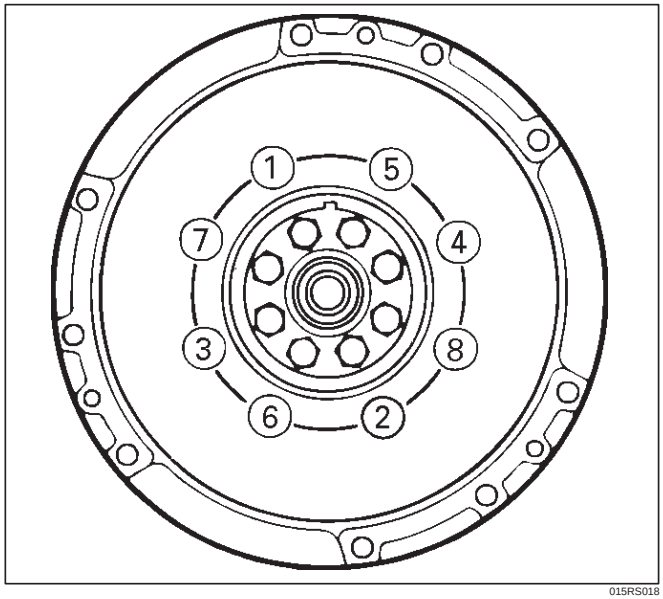

015RS018

3. Install transmission.
   - See Transmission section in this manual.

CAUTION: When assembling the engine and transmission, confirm that dowels have been mounted in the specified positions at the engine side. Take care that dowel positions are different between the manual transmission and the automatic transmission.
Otherwise, the transmission may be damaged.

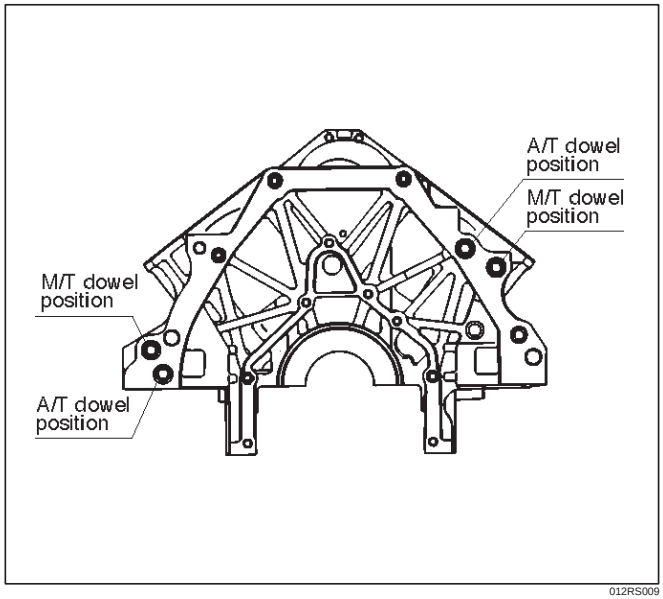

012RS009

Engine Assembly

Removal

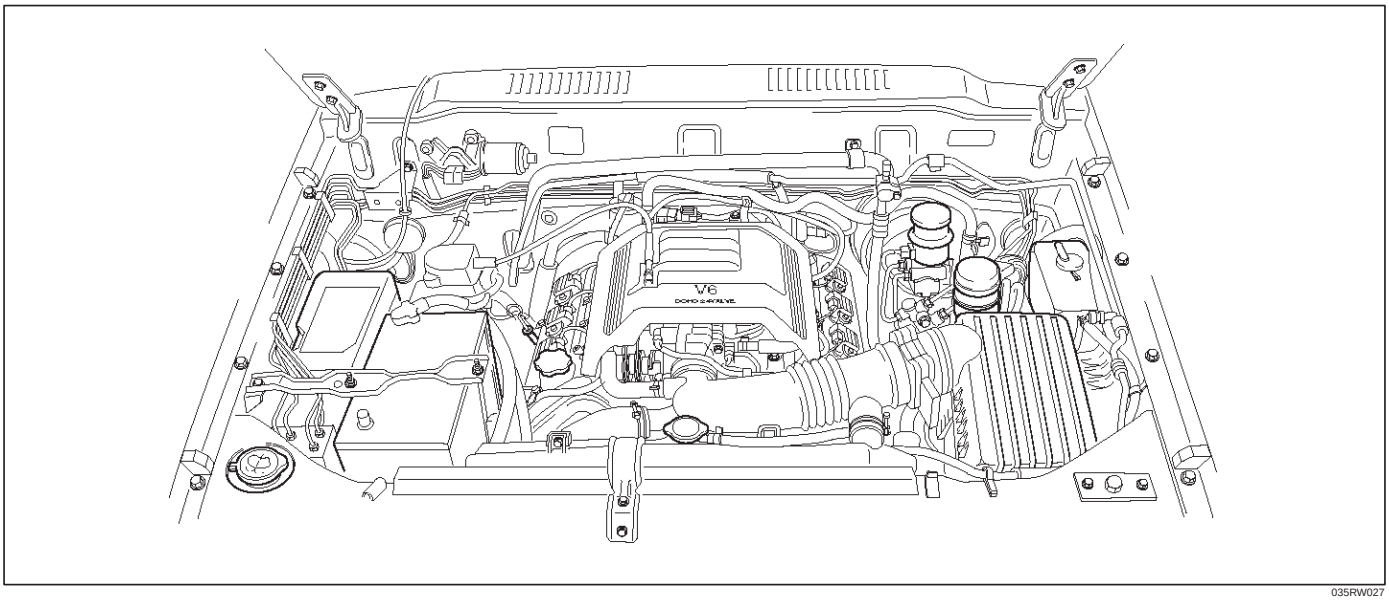

035RW027

1. Disconnect battery ground and positive cable.
2. Remove battery.
3. Make alignment mark on the engine hood and hinges before removal in order to return the hood to original position exactly.
4. Remove engine hood.
5. Drain radiator coolant.
6. Disconnect accelerator cable and automatic cruise control cable from throttle valve on common chamber.
7. Disconnect air duct with air cleaner cover.
8. Remove air cleaner assembly.
9. Disconnect canister vacuum hose.
10. Disconnect vacuum booster hose.
11. Disconnect three engine harness connectors.
12. Disconnect harness connector to transmission (left front side of engine compartment), disconnect shift on the fly harness connector from front side of front axle and remove transmission harness bracket from engine left side.
13. Disconnect ground cable between engine and frame.
14. Disconnect bonding cable connector on the back of right dash panel.
15. Disconnect bonding cable terminal on the left bank.
16. Disconnect starter harness connector from starter.
17. Disconnect generator harness connector from generator.
18. Disconnect coolant reserve tank hose from radiator.
19. Remove radiator upper and lower hoses.
20. Remove upper fan shroud.
21. Remove cooling fan assembly four fixing nuts, then the cooling fan assembly.
22. Move drive belt tensioner to loose side using wrench then remove drive belt.
23. Remove power steering pump fixing bolts, then power steering pump. Place the power steering pump along with piping on the body side.
24. Remove air conditioning compressor fixing bolts from bracket and place the compressor along with piping on the body side.
25. Remove O_2 sensor harness connectors from exhaust front pipe.
26. Remove three exhaust pipe fixing nuts from each bank.
27. Remove two exhaust pipe fixing nuts from each exhaust pipe, then move exhaust pipe to rear side of vehicle.
28. Remove flywheel dust covers.
29. Disconnect two heater hoses from engine.
30. Disconnect fuel hoses from right side of transmission.

CAUTION: Plug fuel pipes on engine side and fuel hoses from fuel tank.

31. Remove transmission assembly. Refer to Transmission section in this manual.
32. Support the engine by engine hoist.
33. Remove two left side engine mount fixing bolts from engine mount on chassis side.
34. Remove two right side engine mount fixing bolts from engine mount on chassis side.
35. Remove engine assembly.

Installation

CAUTION: When assembling the engine and transmission, confirm that dowels have been mounted in the specified positions at the engine side. Take care that dowel positions are different between the manual transmission and the automatic transmission.

If the engine is assembled in the condition that the dowels have not been mounted in the specified positions, the transmission may be damaged the transmission.

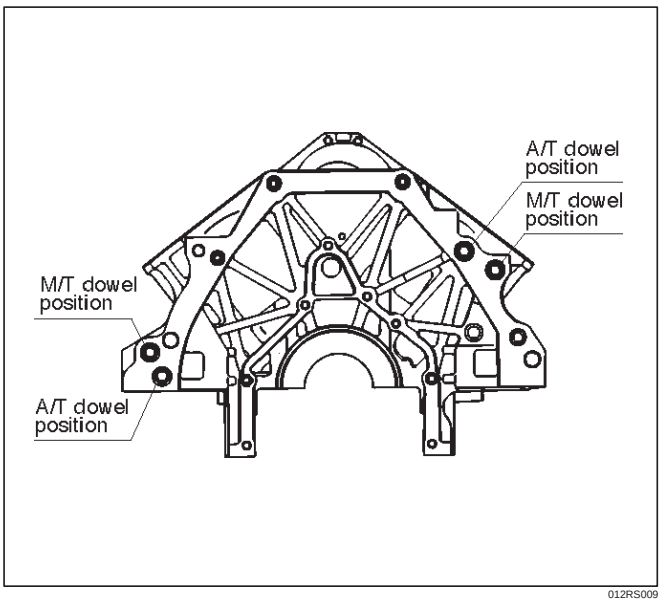

012RS009

1. Install engine assembly. Tighten engine mount fixing bolts to frame to the specified torque.

   Torque: 41 N·m (4.2 Kg·m/30 lb ft)

2. Reconnect fuel hose to fuel pipe on engine.
3. Install transmission assembly. Refer to Transmission section in this manual.
4. Reconnect two heater hoses to engine.
5. Install flywheel dust covers.
6. Install exhaust pipe and temporally tighten two (each bank) rear exhaust flange nuts then tighten three stud nuts (each bank) between exhaust manifold and exhaust pipe, finally tighten rear side nuts to the specified torque.

   Torque:

   Nuts: 43 N·m (4.4 Kg·m/32 lb ft)

   Stud nuts: 67 N·m (6.8 Kg·m/49 lb ft)

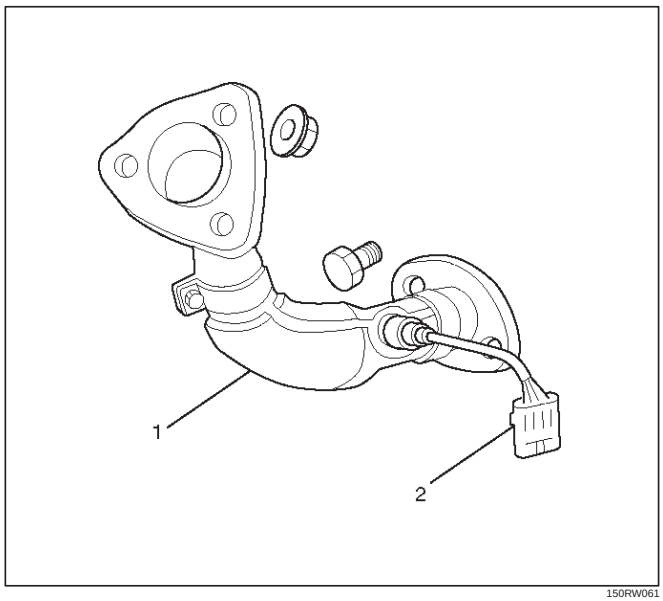

150RW061

Legend

(1) Exhaust Front Pipe RH

(2) O_2 Sensor (for IGM)

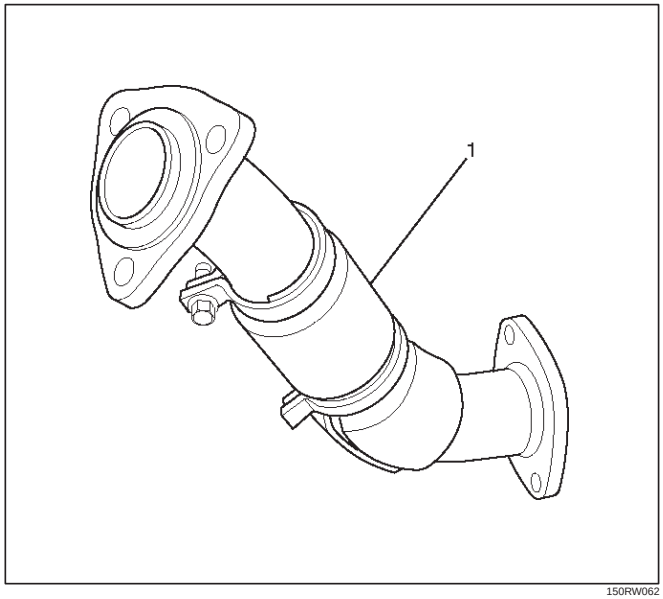

150RW062

Legend

(1) Exhaust Front Pipe LH

7. Reconnect O_2 sensor connector.
8. Install cooling fan assembly and tighten bolts/nuts to the specified torque.

   Torque : 22 N·m (2.2 Kg·m/16 lb ft) for fan pulley and fan bracket.

   Torque : 10 N·m (1.0 Kg·m/88.5 lb in) for fan and clutch assembly.

9. Install air conditioner compressor to engine and tighten to the specified torque.

   Torque :

   M8 bolts : 22 N·m (2.2 Kg·m/16 lb ft)

   M10 bolts : 43 N·m (4.4 Kg·m/32 lb ft)

10. Install power steering pump, tighten fixing bolt to the specified torque.

    Torque :

    M8 bolts : 22N·m (2.2 Kg·m/16 lb ft)

    M10 bolts : 46 N·m (4.7 Kg·m/34 lb ft)

11. Move drive belt tensioner to loose side using wrench, then install drive belt to normal position.

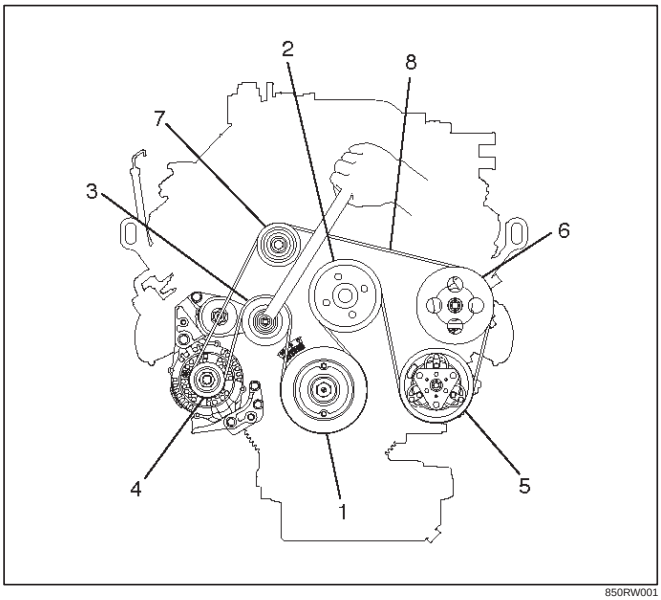

850RW001

Legend

(1) Crankshaft Pulley
(2) Cooling Fan Pulley
(3) Tensioner
(4) Generator
(5) Air Conditioner Compressor
(6) Power Steering Oil Pump
(7) Drive Belt

12. Install upper fan shroud.
13. Reconnect radiator upper and lower hoses.
14. Reconnect coolant reserve tank hose to radiator.
15. Reconnect generator harness connector.
16. Reconnect starter harness connector.
17. Reconnect bonding cable terminal on left bank
18. Reconnect bonding cable terminal on the back of right dash panel.
19. Reconnect ground cable between engine and chassis.
20. Reconnect harness connector to transmission and install transmission harness bracket on engine left side.
21. Reconnect three engine harness connectors.
22. Reconnect vacuum booster hose.
23. Reconnect canister vacuum hose.
24. Install air cleaner assembly.
25. Reconnect air duct.
26. Reconnect accelerator cable and automatic cruise control cable to throttle valve on common chamber.

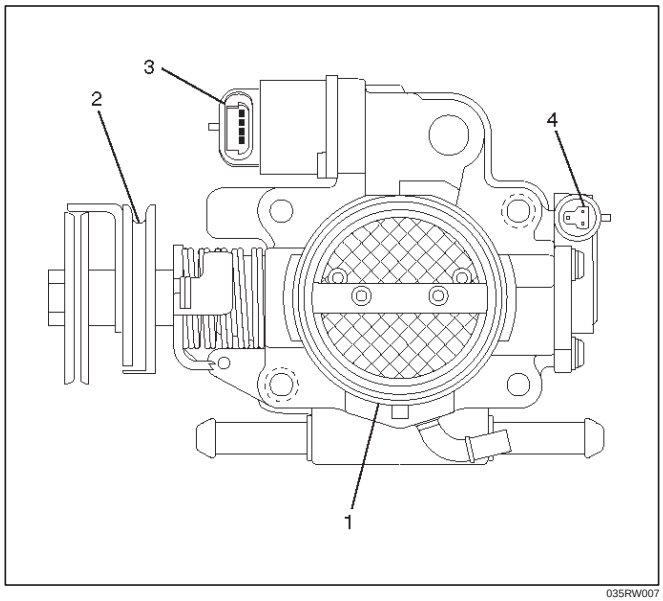

035RW007

Legend

(1) Throttle Valve Assembly
(2) Throttle Lever
(3) Idle Air Control Valve
(4) Throttle Position Sensor

27. Install engine hood to the original position.
    - Refer to installation procedure for Body section in this manual.

    Accelerator pedal cable adjustment

    1. Loosen adjusting nut and lock nut.
    2. Pull outer cable while fully closing the throttle valve.
    3. Tighten adjusting nut and lock nut temporarily.
    4. Loosen adjusting nut by three turns and tighten lock nut.

       Then, manually operating the throttle valve, make sure that the valve lever returns up to the stopper screw.

If it does not reach the stopper screw, repeat from step 1.

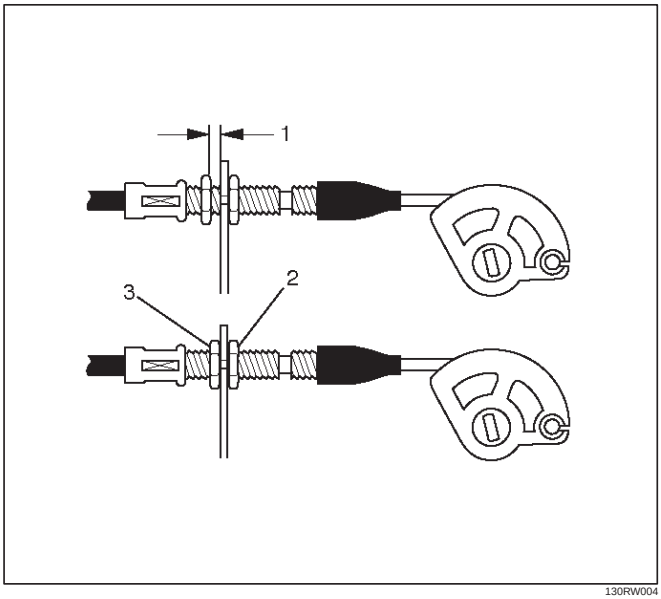

130RW004

Legend

(1) Clearance
(2) Lock Nut
(3) Adjusting Nut

Cylinder Head

Cylinder Head and Associated Parts

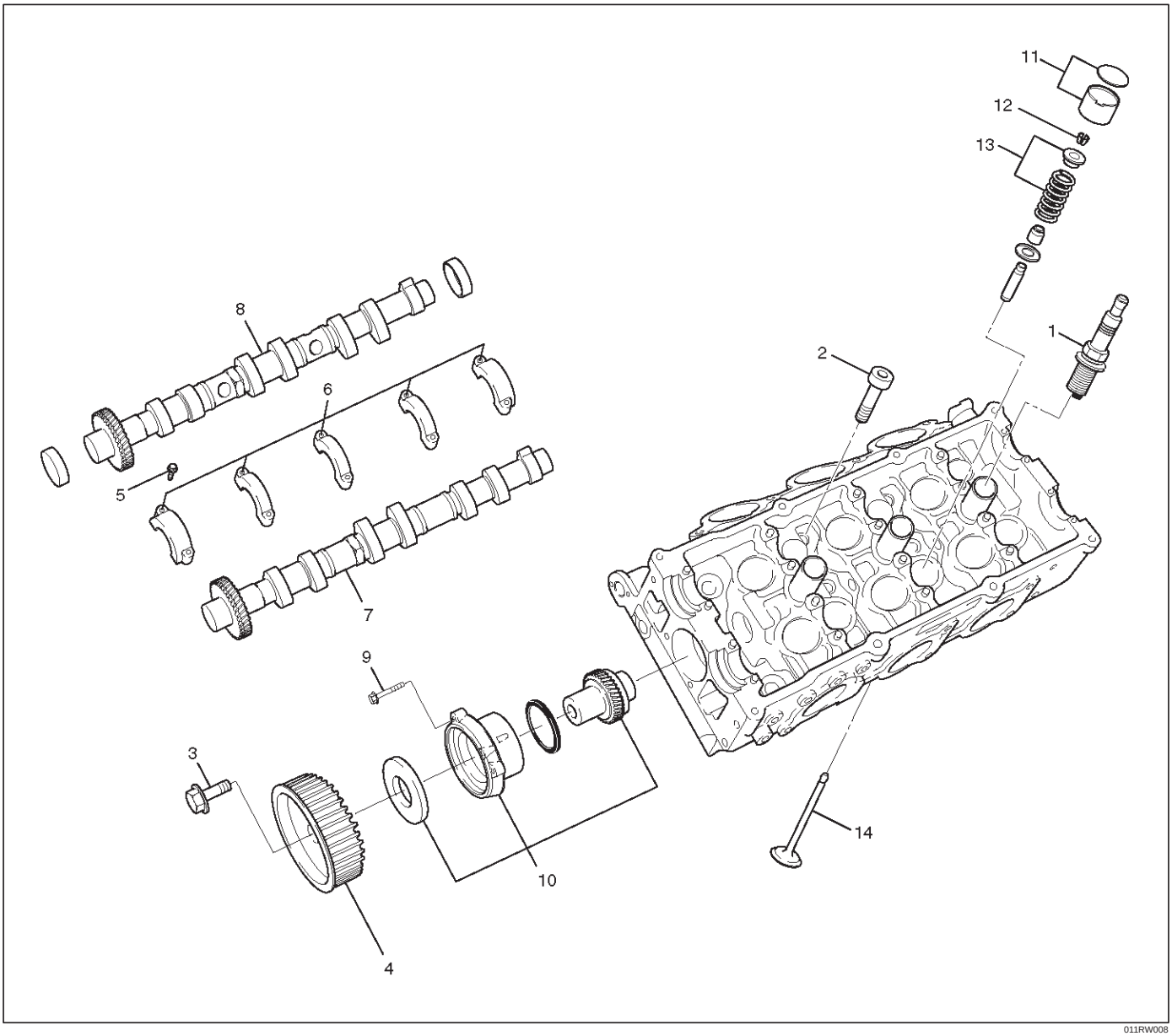

011RW008

Legend

(1) Spark Plug
(2) Cylinder Head Bolt
(3) Camshaft Drive Gear Pulley Fixing Bolt
(4) Camshaft Drive Gear Pulley
(5) Camshaft Bracket Fixing Bolt
(6) Camshaft Bracket
(7) Camshaft Exhaust
(8) Camshaft Intake
(9) Retainer Fixing Bolt
(10) Retainer Assembly
(11) Tappet with Shim
(12) Split Collar
(13) Valve Spring and Spring Upper Seat
(14) Valve

Disassembly

NOTE:

- During disassembly, be sure that the valve train components are kept together and identified so that they can be reinstalled in their original locations.
- Before removing the cylinder head from the engine and before disassembling the valve mechanism, perform a compression test and note the results.

1. Remove camshaft drive gear pulley fixing bolt (3), then pulley (4).

2. Remove camshaft bracket fixing bolt (5), camshaft bracket (6), then camshaft exhaust (7), and intake side (8).
3. Remove tappet with shim (11).
4. Use the 5–8840–2446–0 valve spring compressor and 5–8840–2547–0 valve spring compressor adapter to remove the split collar (12), valve spring with upper seat (13) and valve (14).

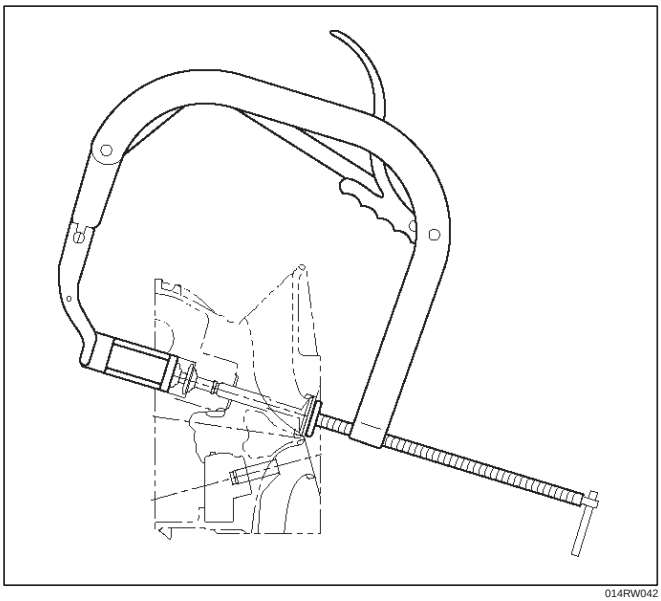

014RW042

5. Remove spark plug (1).

CAUTION: Do not remove the spark plugs when the head and plugs are hot. Clean dirt and debris from spark plug recess areas before removal.

Clean

Cylinder head

Carefully remove all varnish, soot and carbon from the bare metal. Do not use a motorized wire brush on any gasket sealing surface.

Inspection and Repair

1. Cylinder head gasket and mating surfaces for leaks, corrosion and blow–by. If the gasket has failed, determine the cause.
   – Insufficient torque on head bolts.
   – Improper installation
   – Loose or warped cylinder head
   – Missing dowel pins
   – Warped case surface
2. Cylinder head for cracks, especially between valve seats and in the exhaust ports.
3. Cylinder head deck for corrosion, sand particles in head and porosity.

CAUTION:

- **Do not attempt to weld the cylinder head. Replace it.**
- **Do not reuse cylinder head bolts.**

4. Cylinder head deck, common chamber and exhaust manifold mating surfaces for flatness. These surfaces may be reconditioned by milling. If the surfaces are “out of flat” by more than specification, the surface should be ground to within specifications. Replace the head if it requires machining beyond the repairable limit.

   Head surface and manifold surface

   Standard: 0.05 mm (0.002 in) or less

   Warpage limit: 0.2 mm (0.0079 in)

   Maximum Repairable limit: 0.2 mm (0.0079 in)

   Head height

   Standard height : 133.2 mm (5.2441 in)

   Warpage limit : 0.2 mm (0.0079 in)

   Maximum Repairable limit : 133.0 mm (5.2362 in)

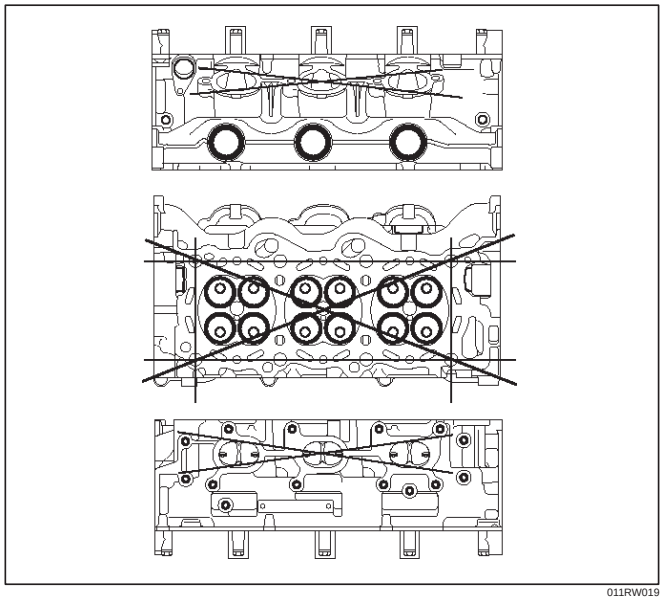

011RW019

5. Water jacket sealing plugs seating surfaces.

Reassembly

1. Install Spark plug and tighten all the spark plugs to specified torque.

   Torque: 18 N·m (1.8 Kg·m/13 lb ft)

2. Tighten sub gear setting bolt.
   1. Use 5–8840–2443–0 gear spring lever to turn sub gear to right direction until the M5 bolt aligns with the hole between camshaft driven gear and sub gear.

2. Tighten the M5 bolt to a suitable torque to prevent the sub gear from moving .

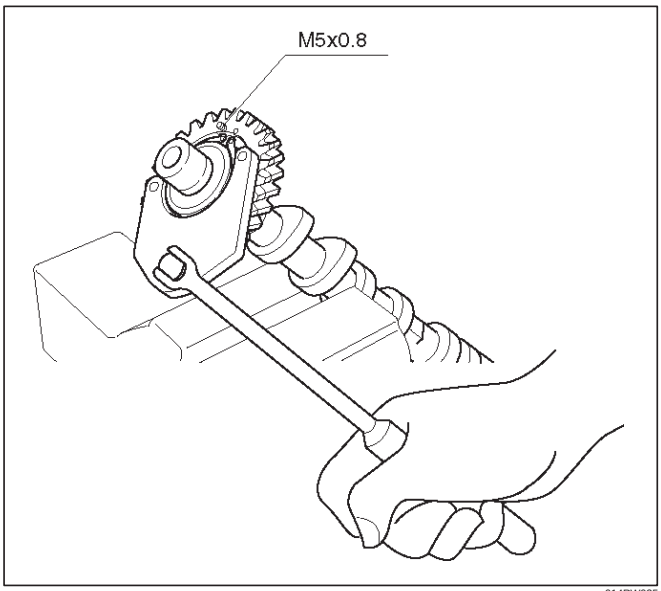

014RW025

3. Install camshaft drive gear assembly and tighten three bolts to the specified torque.

Torque: 10 N·m (1.0 Kg·m/89 lb in)

4. Install camshaft assembly and camshaft brackets, tighten twenty bolts on one side bank to the specified torque.
   1. Apply engine oil to camshaft journal and bearing surface of camshaft bracket.
   2. Align timing mark on intake camshaft (one dot for right bank, two dots for left bank) and exhaust camshaft (one dot for right bank, two dots for left bank) to timing mark on camshaft drive gear (one dot).

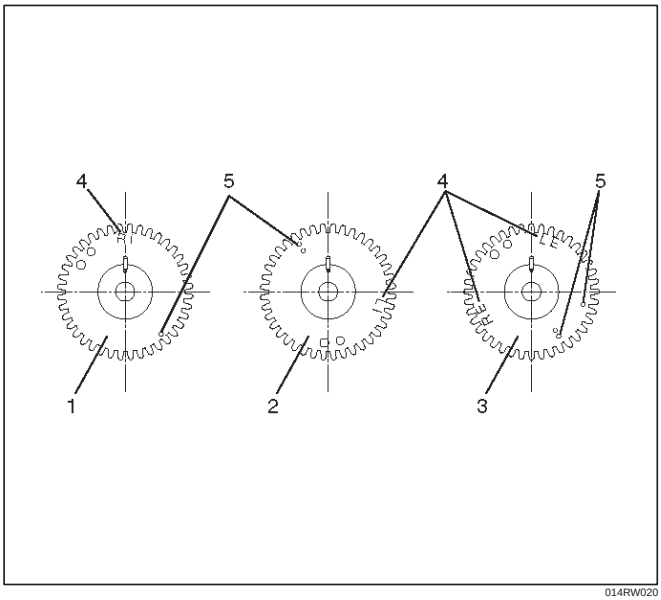

014RW020

Legend

(1) Intake Camshaft Timing Gear for Right Bank
(2) Intake Camshaft Timing Gear for Left Bank
(3) Exhaust Camshaft Timing Gear
(4) Discrimination Mark
LI: Left Bank Intake
RI: Right Bank Intake
LE: Left Bank Exhaust
RE: Right Bank Exhaust

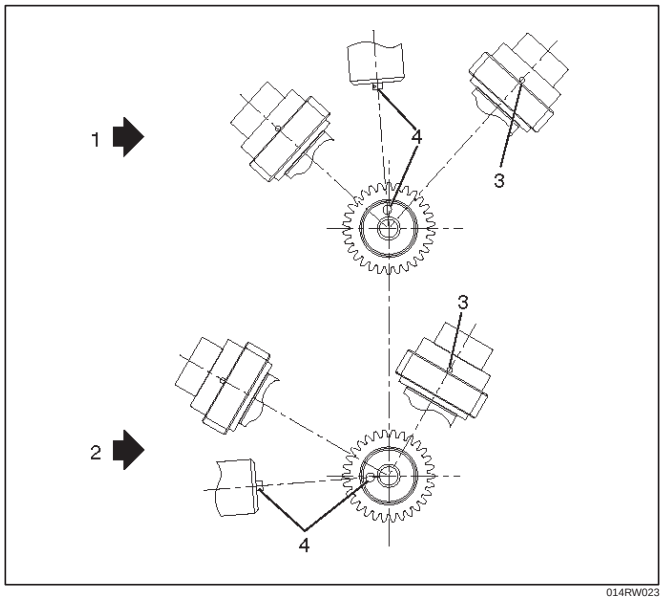

014RW023

Legend

(1) Right Bank Camshaft Drive Gear
(2) Left Bank Camshaft Drive Gear
(3) Timing Mark on Drive Gear
(4) Dowel Pin

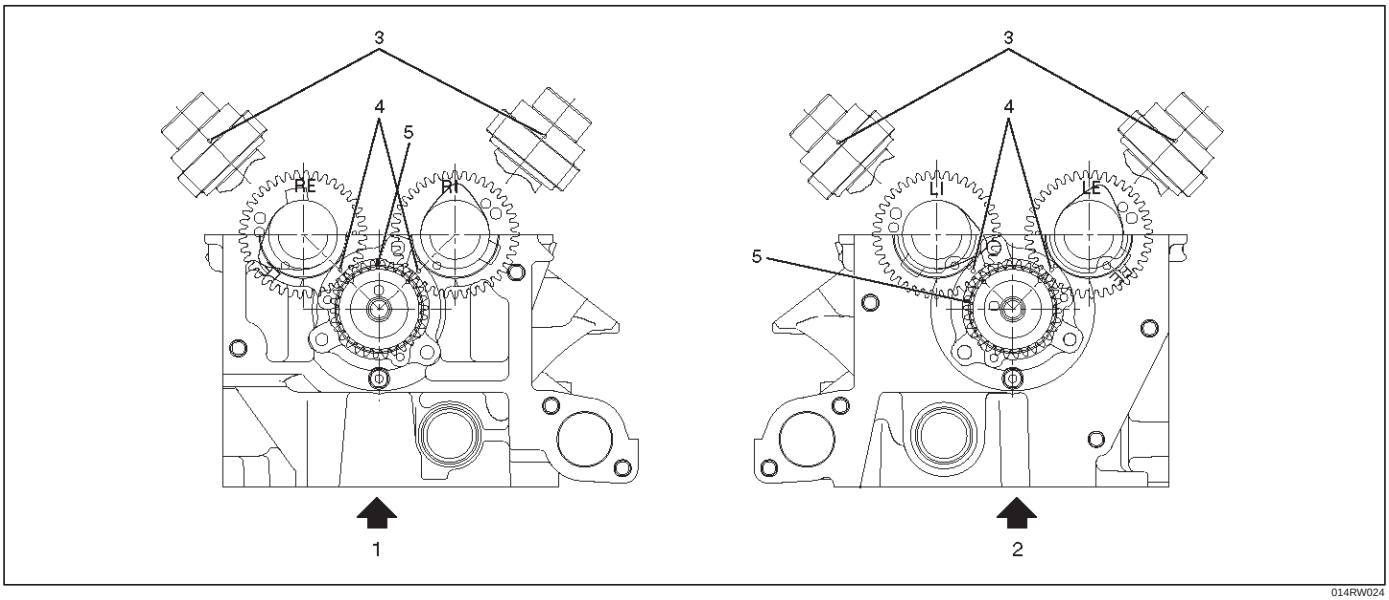

014RW024

Legend

(1) Right Bank
(2) Left Bank
(3) Alignment Mark on Camshaft Drive Gear
(4) Alignment Mark on Camshaft
(5) Alignment Mark on Retainer

3. Tighten twenty bolts in numerical order on one side bank as shown in the illustration.

Torque: 10 N·m (1.0 Kg·m/89 lb in)

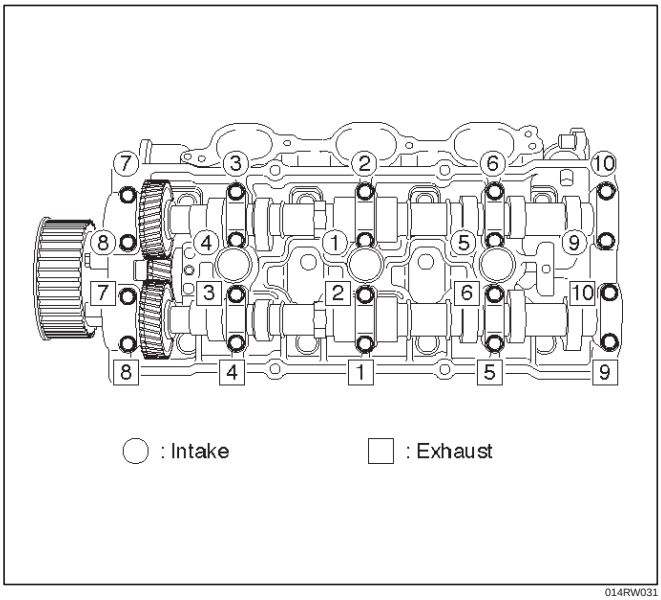

014RW031

5. Tighten bolt for camshaft drive gear assembly pulley to the specified torque.

Torque: 98 N·m (10.0 Kg·m/72 lb ft)

Valve Spring, Oil Controller, Valve, Valve Guide

Valve Spring, Oil Controller, Valve, Valve Guide and Associated Parts

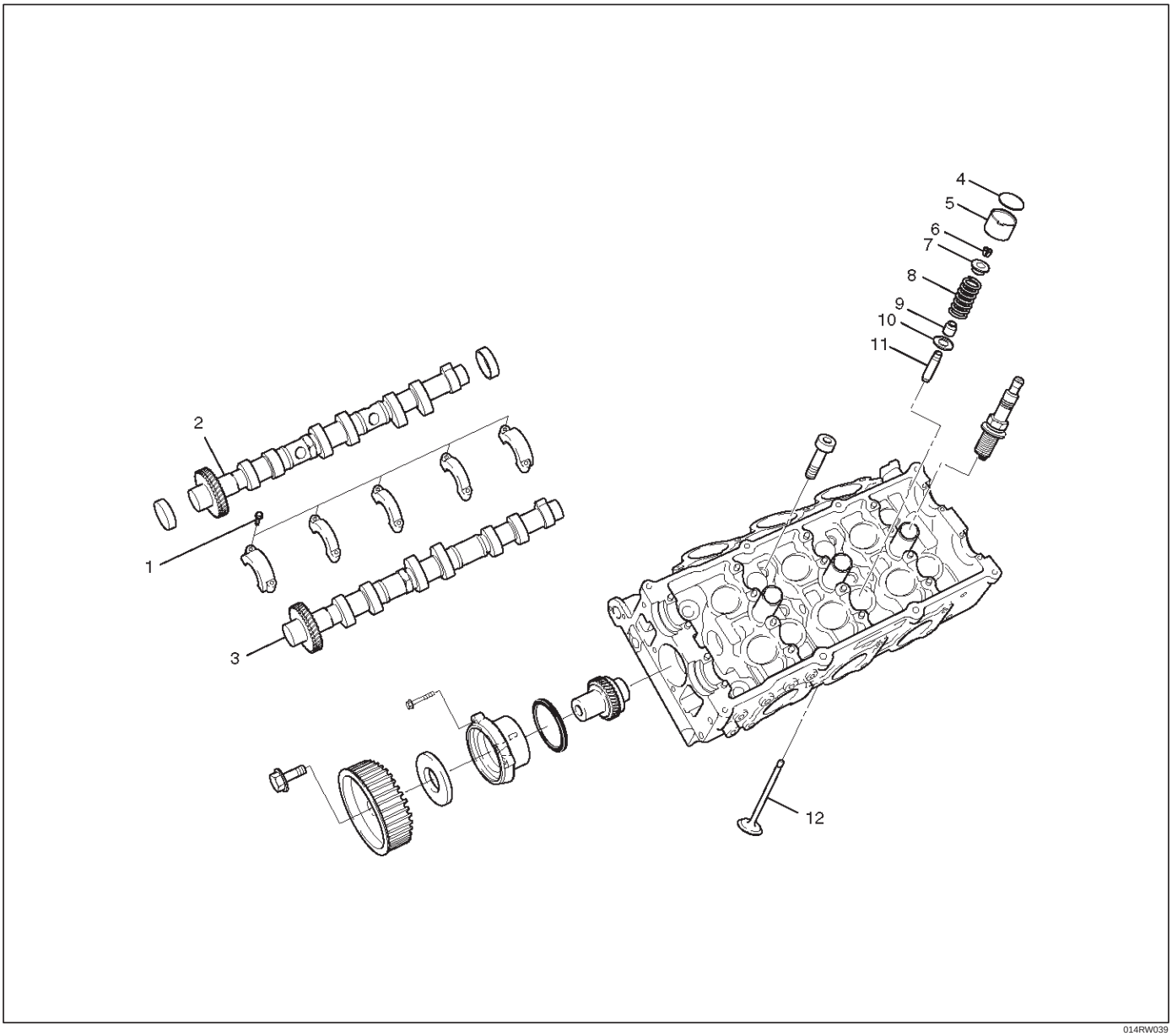

014RW039

Legend

(1) Camshaft Bracket Fixing Bolts
(2) Camshaft Assembly Inlet
(3) Camshaft Assembly Exhaust
(4) Shim
(5) Tappet
(6) Split Collar
(7) Spring Upper Seat
(8) Valve Spring
(9) Oil Controller
(10) Spring Lower Seat
(11) Valve Guide
(12) Valve

Disassembly

1. Remove camshaft bracket fixing bolts (1).
2. Remove camshaft assembly (intake).
3. Remove camshaft assembly (Exhaust side).
4. Remove shim (4) and tappet (5).

5. Use 5–8840–2446–0 valve spring compressor and 5–8840–2547–0 valve spring compressor adapter to remove split collar.

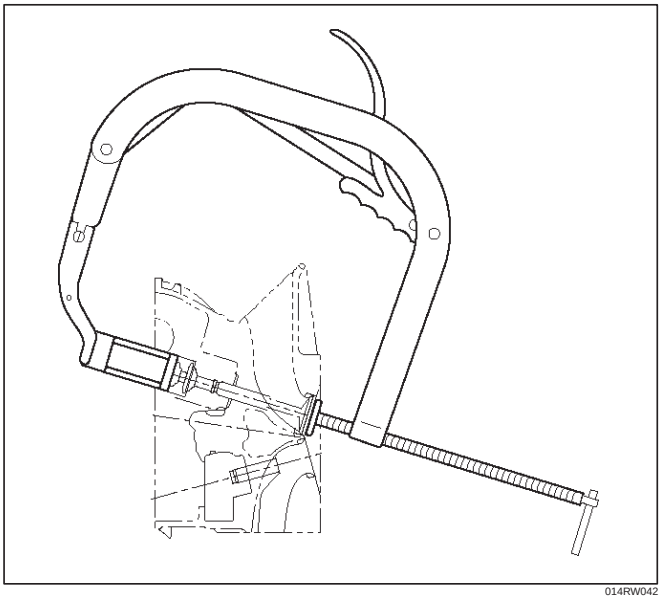

014RW042

6. Remove valve spring.
7. Remove valve.
8. Remove oil controller and spring lower seat.
9. Remove the valve guide using the 5–8840–2442–0 valve guide replacer.

Inspection and Repair

Valve Spring

CAUTION: Visually inspect the valve springs and replace them if damage or abnormal wear is evident.

1. Measure the free height of the springs. The springs must be replaced if the free height is below the specified limit.

   Standard : 44.6 mm (1.7559 in)

   Limit : 43.6 mm (1.7165 in)

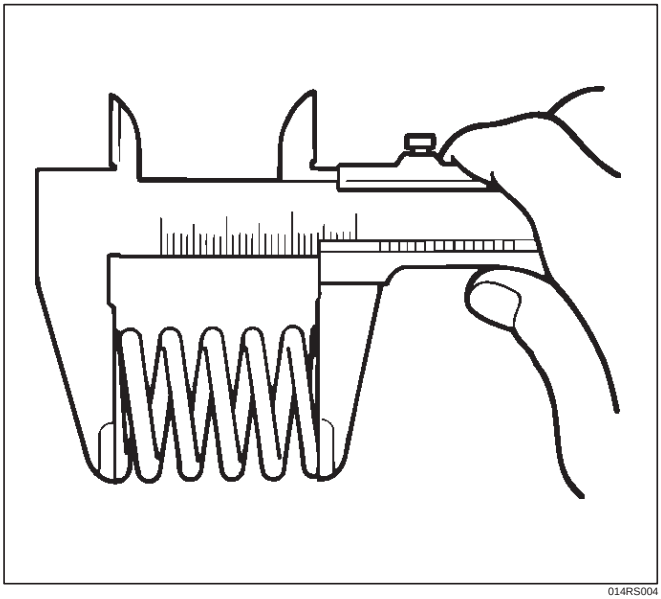

014RS004

2. Measure the valve spring squareness with a steel square and replace the valve springs if the measured value exceeds the specified limit.

   Limit : 2 mm (0.0787 in)

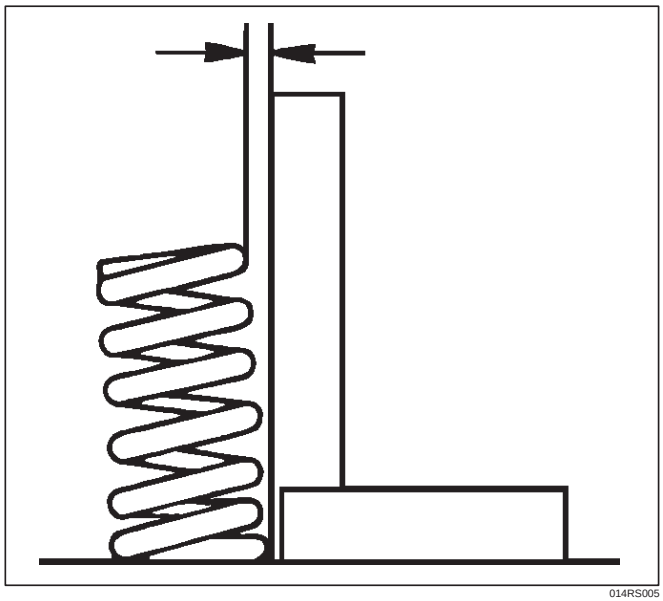

014RS005

3. Using a spring tester to compress the springs to the installed height, measure the compressed spring tension, and replace the springs if the measured tension is below the specified limit.

   At installed height: 35.0 mm (1.38 in)

   Standard: 196 N (44 lb)

   Limit: Less than 181 N (41 lb)

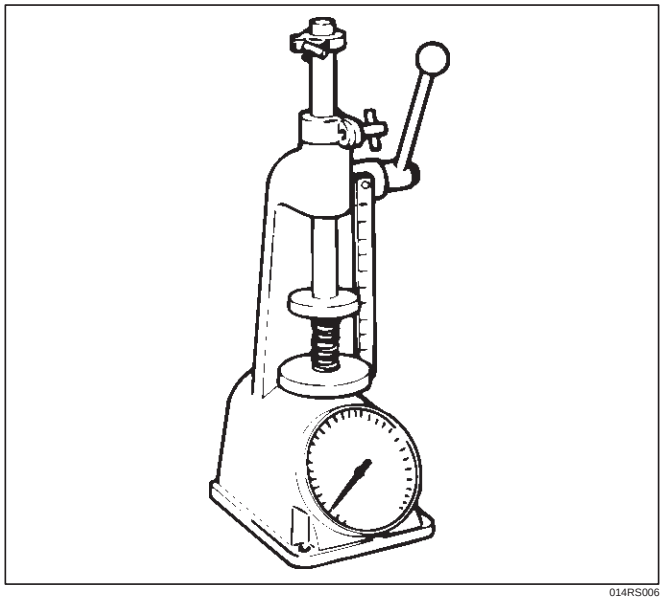

014RS006

Valve Guide

CAUTION: Take care not to damage the valve seat contact surface, when removing carbon adhering to the valve head. Carefully inspect the valve stem for scratchs or abnormal wear. If these conditions are present, the valve and the valve guide must be replaced as a set.

1. Measure the valve stem diameter with a micrometer. If the valve stem diameter is less than the specified limit, the valve and the valve guide must be replaced as a set.

Diameter of Valve Stem

Intake

Standard : 5.977 mm–5.959 mm (0.2353 in–0.2346 in)

Limit : 5.90 mm (0.2323 in)

Exhaust

Standard : 5.952 mm–5.970 mm (0.2343 in–0.2350 in)

Limit : 5.90 mm (0.2323 in)

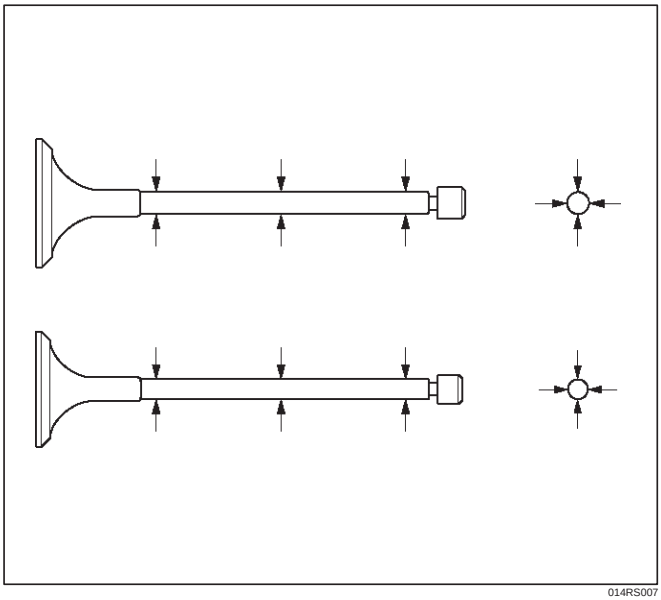

014RS007

2. Measure the inside diameter of the valve guide with a micrometer. Subtract the measured outer diameter of the valve stem from the measured inner diameter of the valve guide. If the value exceeds the specified limit, the valve and the valve guide must be replaced as a set.

Inside Diameter of the Vale Guide

Inlet clearance

Standard : 0.023 mm–0.056 mm (0.0009 in–0.0002 in)

Limit : 0.20 mm (0.00787 in)

Exhaust clearance

Standard : 0.030 mm–0.063 mm (0.0012 in–0.0025 in)

Limit : 0.20 mm (0.00787 in)

Valve Guide Replacement

1. Using Valve guide replacer: 5–8840–2442–0, drive out the valve guide from the combustion chamber side.

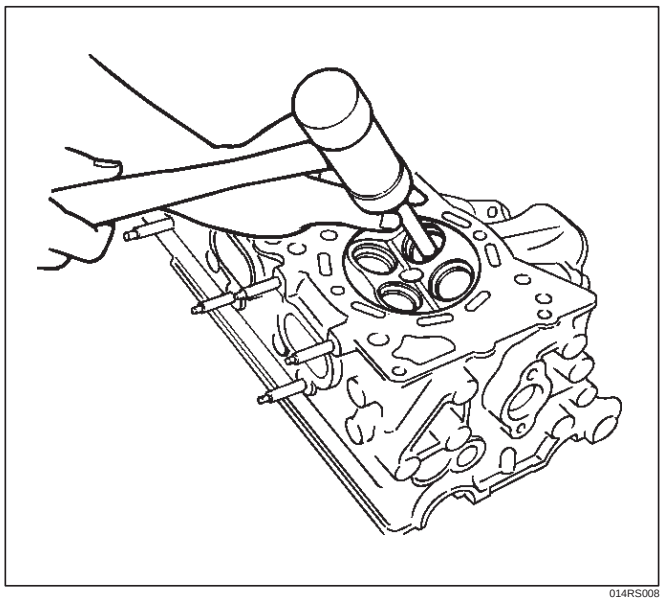

014RS008

2. Apply engine oil to the outside of the valve guide. Using valve guide replacer 5–8840–2442–0, drive in a new valve guide from the camshaft side, and check the valve guide height.

Valve guide upper end height: 13.0 mm (0.5118 in)

(Measured from the cylinder head upper face)

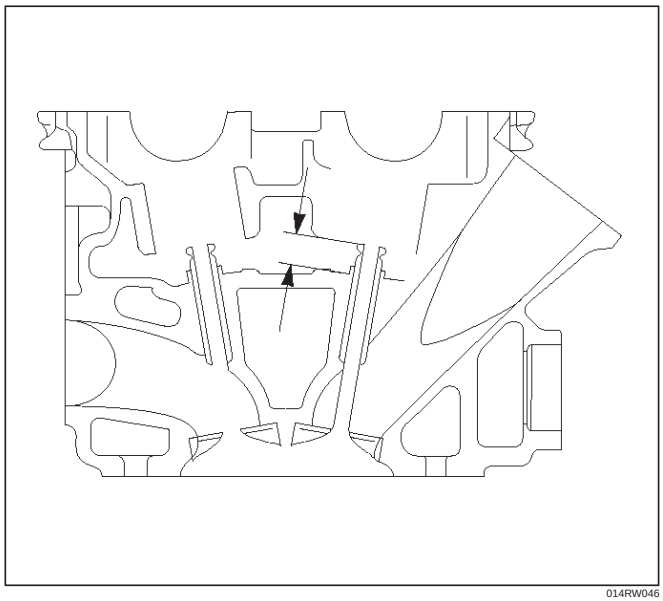

014RW046

3. Check the clearance. If the clearance is less than the specified value, ream the inside diameter of valve guide. Using a sharp 6 mm reamer, ream the valve guide to obtain the specified clearance.

Valve Seat

1. Measure the protrusion of the valve stem when a new valve is installed in the cylinder head. If the protrusion of the valve stem exceeds the limit, replace the valve seat insert or the cylinder head assembly.

Protrusion of valve stem

Intake

Standard: 39.32 mm (1.5480 in)

Limit: 39.47 mm (1.5539 in)

Exhaust

Standard: 39.30 mm (1.5472 in)

Limit: 39.45 mm (1.5531 in)

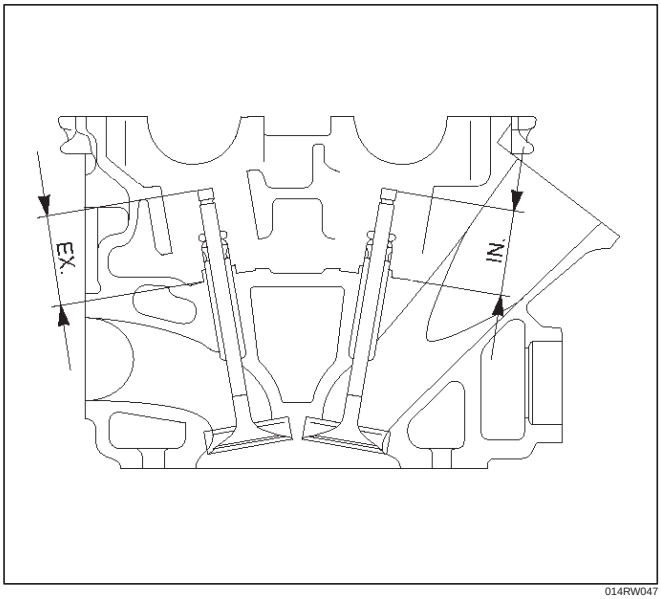

014RW047

2. Measure the valve seat contact width. Make the necessary corrections if the seat contact surface is damaged or rough or if the contact width wear exceeds the limit.

Valve seat contact width

Standard: 1.1 mm (0.0433 in)

Limit: 1.7 mm (0.0669 in)

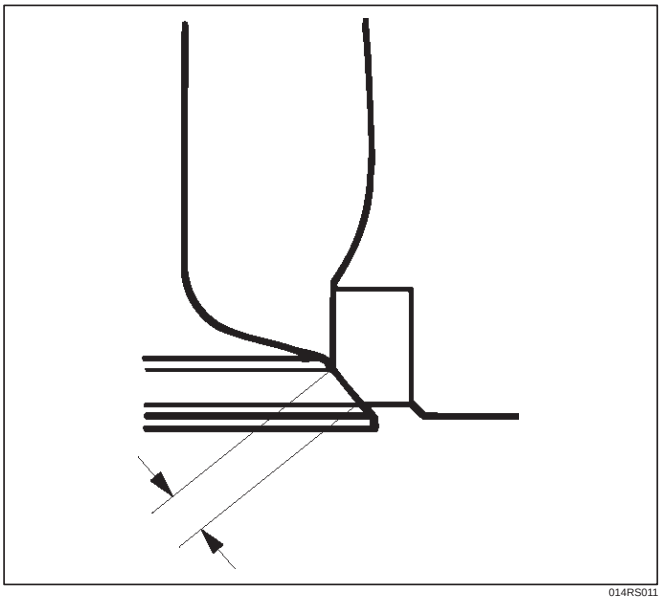

014RS011

Contact Surface Angle on Valve Seat on Valve

1. Measure contact surface angle on valve seat.
2. If the measured value exceeds the limit, replace valve, valve guide and valve seat as a set.

Valve contact surface angle: 45˚

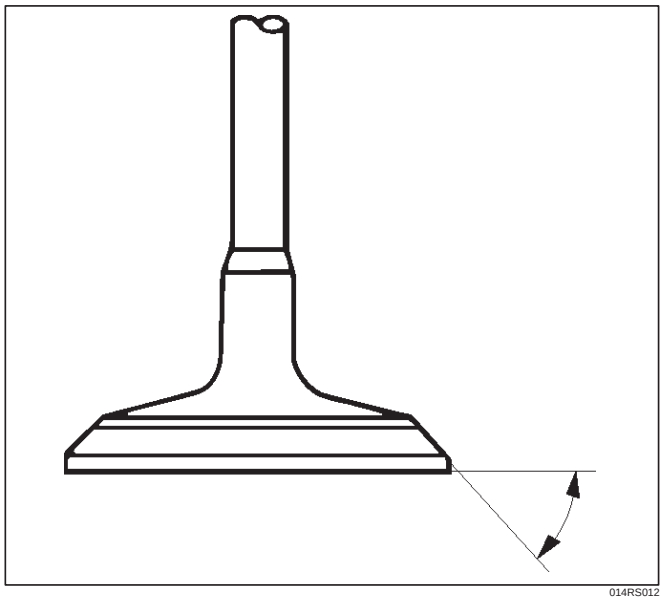

014RS012

Valve Seat Insert Correction

1. Remove the carbon from the valve seat insert surface.
2. Use a valve cutter to minimize scratches and other rough areas. This will bring the contact width back to the standard value. Remove only the scratches and rough areas. Do not cut away too much. Take care not to cut away unblemished areas of the valve seat surface.

Valve seat angle degree: 90˚

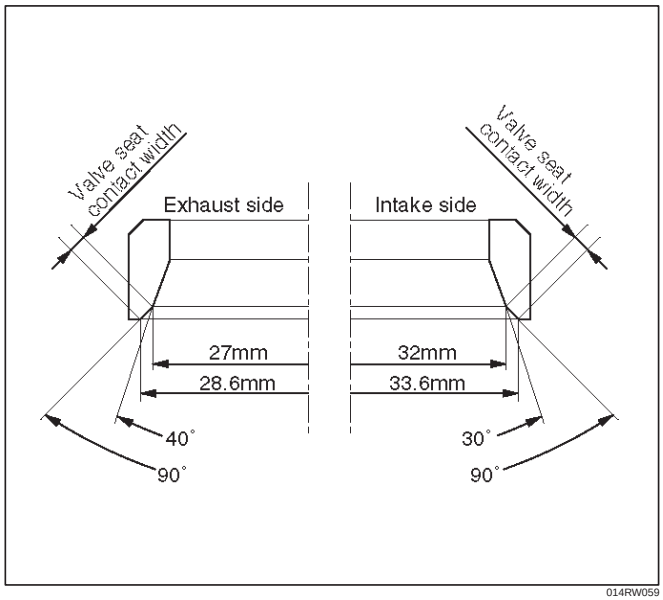

014RW059

3. Apply abrasive compound to the valve seat insert surface.
4. Insert the valve into the valve guide.
5. Turn the valve while lapping it to fit the valve seat insert.

6. Check that the valve contact width is correct.
7. Check that the valve seat insert surface is in contact with the entire circumference of the valve.

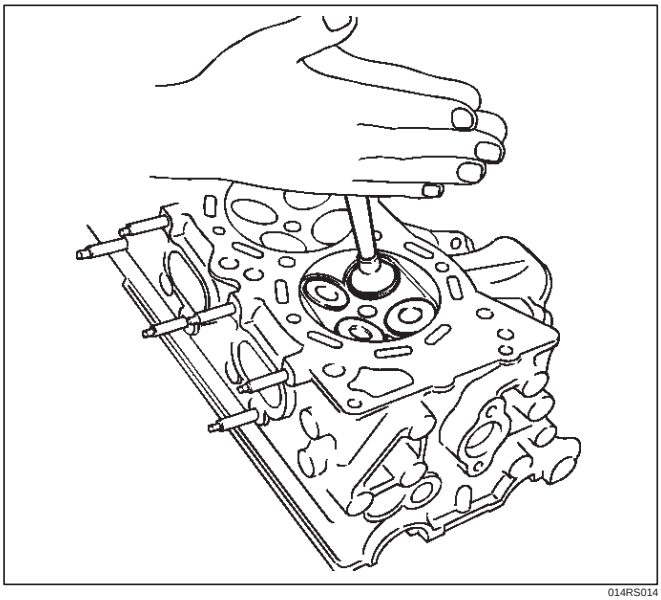

014RS014

Valve Seat Insert Replacement

1. Arc weld the rod at several points. Be careful not to damage the aluminum section.
2. Allow the rod to cool for a few minutes. This will cause the valve seat to shrink.
3. Strike the rod and pull it out.

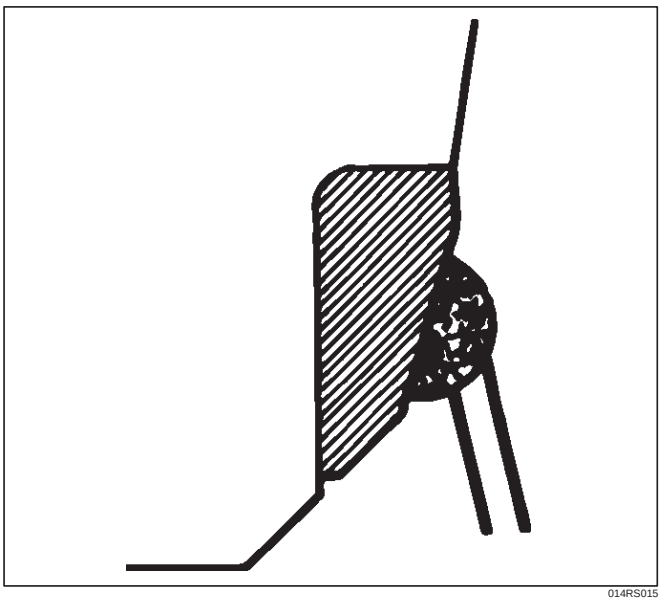

014RS015

4. Carefully clean the valve seat press–fit section on the cylinder head side.
5. Heat the press–fit section with steam or some other means to cause expansion. Cool the valve seat with dry ice or some other means.
6. Insert the press–fit section into the valve seat horizontally.

   Standard fitting interference: 0.14 mm–0.09 mm (0.0055 in–0.0035 in)

7. After insertion, use a seat grinder to grind finish the seating face. Carefully note the seating angle, the contact width, and the depression.
8. Lap the valve and the seat.

Reassembly

1. Install valve guide (1) to cylinder head. Apply engine oil to the outside of the valve guide. Using valve guide replacer 5–8840–2442–0, drive in a new valve guide from the camshaft side.
2. Install oil controller (3) and spring lower seat (2). Using oil controller replacer 5–8840–0623–0, drive in a new oil controller.

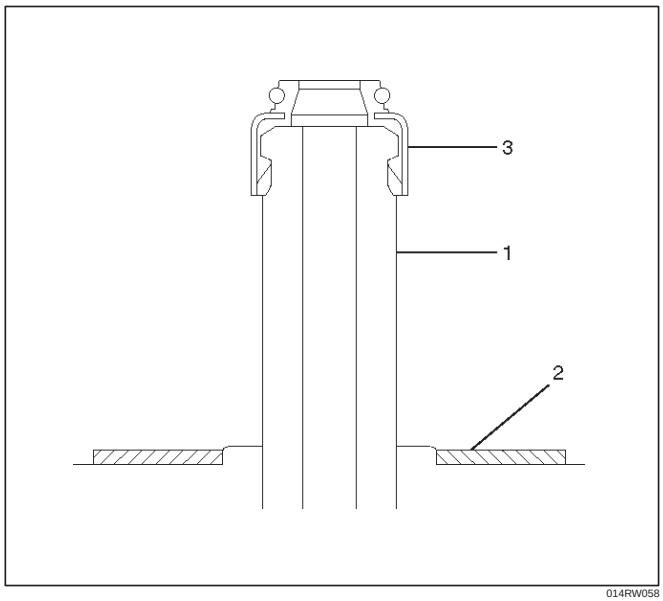

014RW058

3. Install valve to valve guide. Before install valve guide apply engine oil to the outside of the valve stem.
4. Install valve spring to cylinder head. Attach the valve spring to the lower spring seat. The painted area of the valve spring should be facing downward.

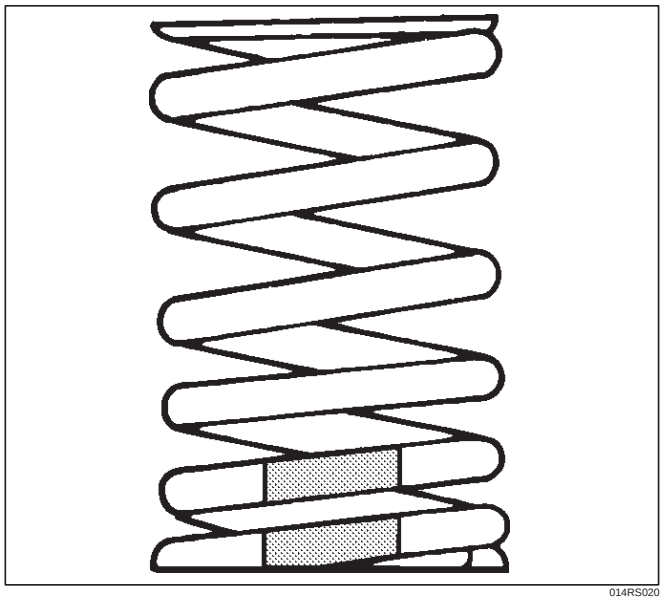

014RS020

5. Install lower valve spring seat, valve spring and upper valve spring seat then put split collars on the upper spring seat, using the 5–8840–2446–0 valve spring compressor and 5–8840–2547–0 valve spring compressor adapter to install the split collars.

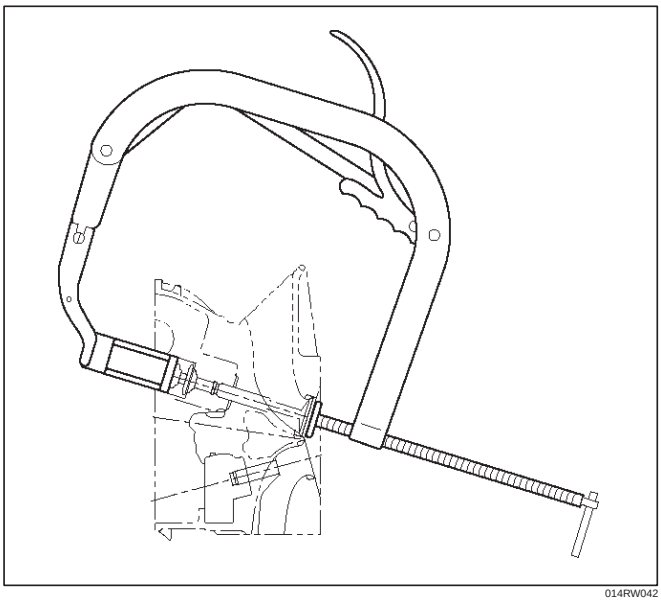

014RW042

6. Install tappet with shim.
7. Install camshaft assembly.
   - Refer to installation procedure for Camshaft in this manual.

Valve Clearance Adjustments

NOTE: To adjust valve clearance, apply engine oil to the cam as well as to the adjusting shim (2) with the cylinder head built on the cylinder block, give a few turns to the camshaft by means of timing pulley tightening bolt, and measure valve clearance when the nose of cam is just opposite to maximum cam lift (1) as shown in illistration below.

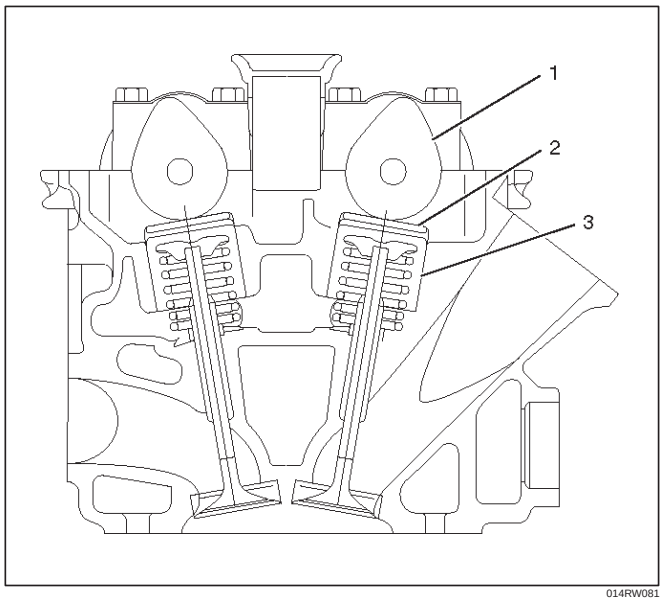

014RW081

Legend

(1) Cam
(2) Shim
(3) Tappet

Valve Clearance Standard Value (cold)

Intake: 0.23 mm–0.33 mm (0.0091 in–0.0130 in)

Exhaust: 0.25 mm–0.35 mm (0.0098 in–0.0138 in)

Selection of Adjusting Shim

Shim to be selected = (Thickness of removed shim) + (Valve clearance measurement – Standard valve)
Based on the above formula, the best suited shim should be selected from 41 sorts of shim (differently thick at 0.02mm (0.0008 in) intervals from 2.40mm (0.0945 in) through 3.2mm (0.1260 in) thick). Install the shim and check valve clearance.

Replacement of Shim

Let the cam push down the edge of tappet by using 5–8840–2444–0 valve clearance adjusting tool and push out the shim with a flat blade screw driver as shown in illustrations below.

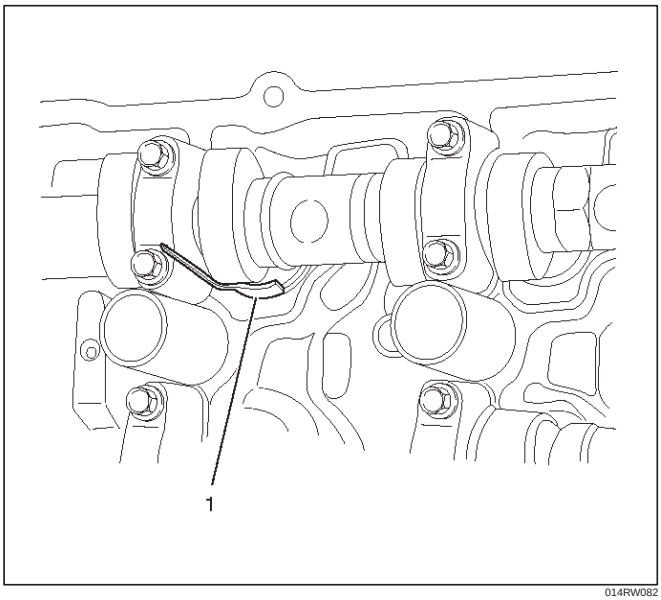

014RW082

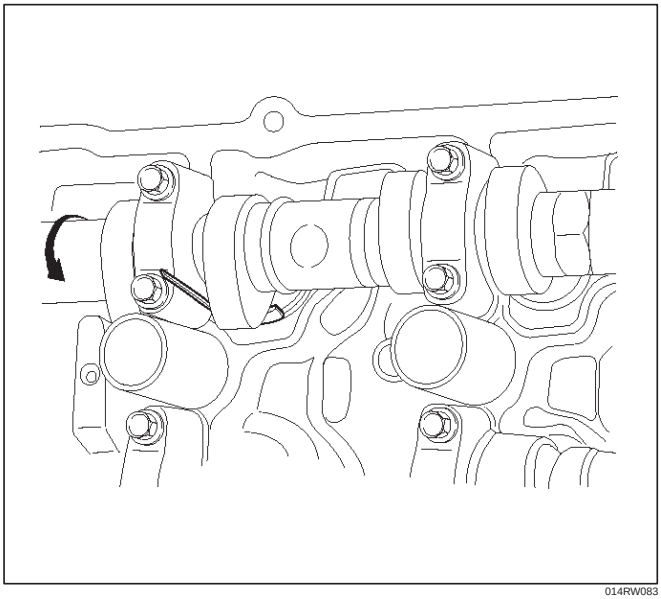

014RW083

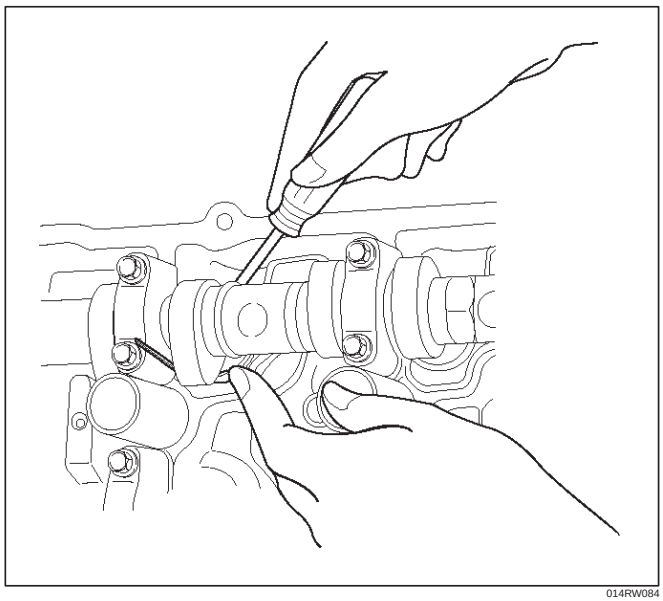

014RW084

Camshaft

Camshaft and Associated Parts

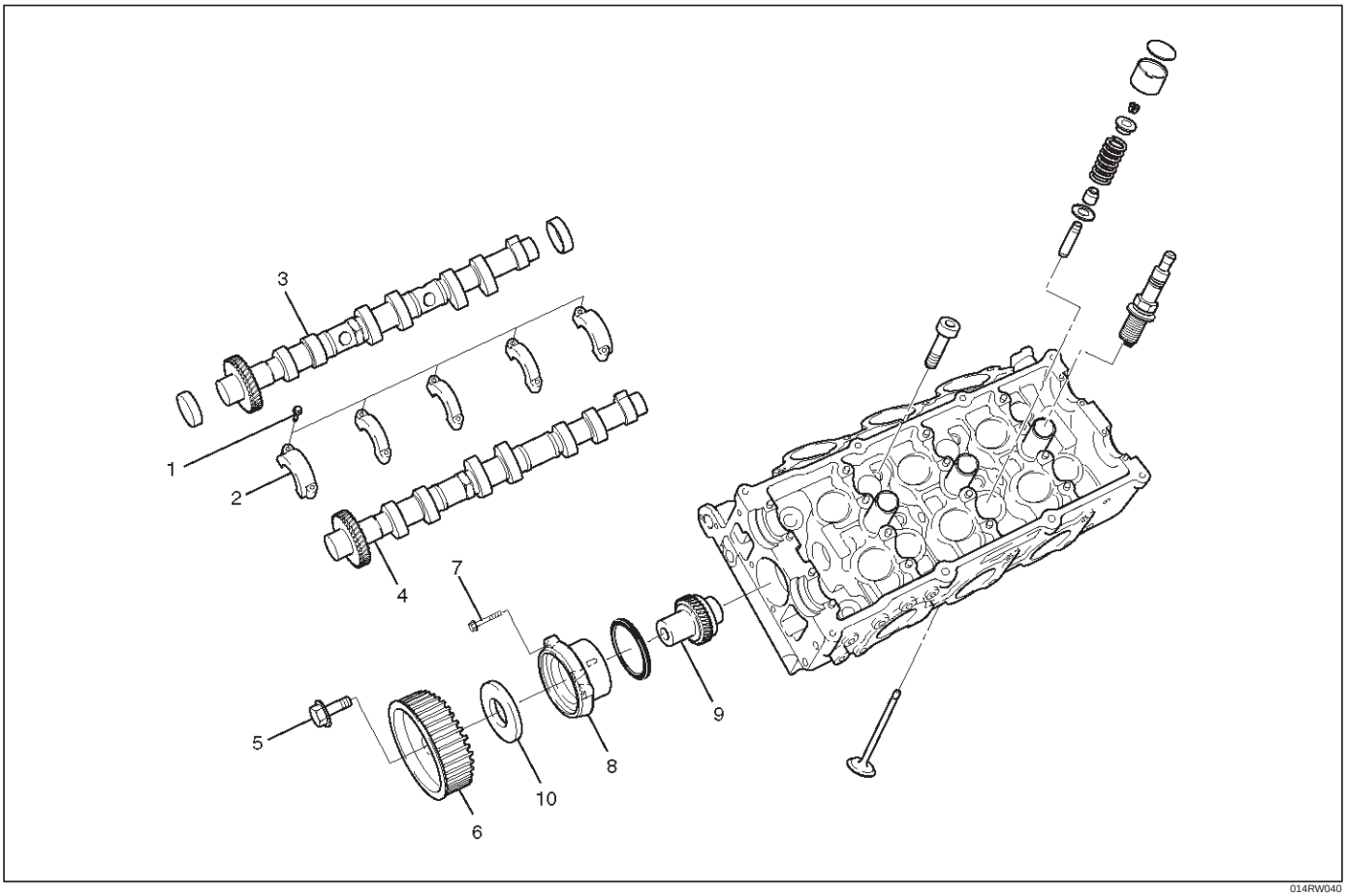

014RW040

Legend

(1) Camshaft Bracket Fixing Bolt
(2) Camshaft Bracket
(3) Camshaft Assembly Intake
(4) Camshaft Assembly Exhaust
(5) Pulley Fixing Bolt
(6) Camshaft Drive Gear Pulley
(7) Retainer Fixing Bolt
(8) Retainer
(9) Camshaft Drive Gear
(10) Oil Seal

Disassembly

1. Remove fixing bolt (5) for camshaft drive gear pulley using the 5–8840–2447–0 universal holder.

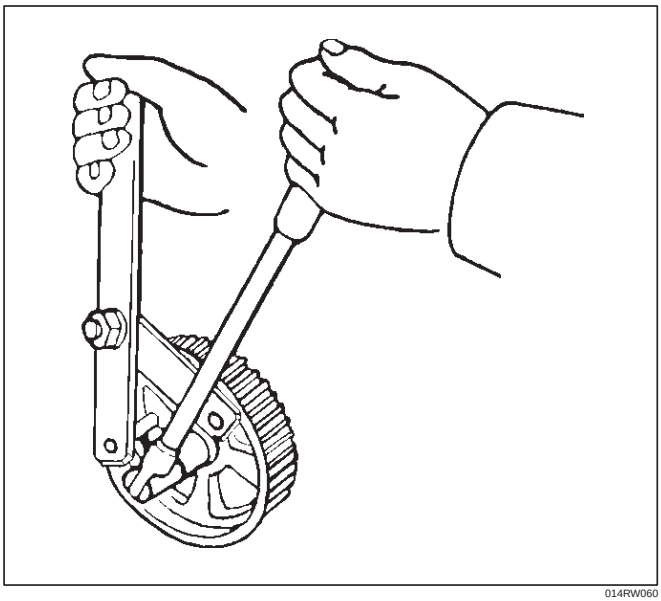

014RW060

2. Remove twenty fixing bolts from inlet and exhaust camshaft bracket on one side bank, then camshaft brackets (2).

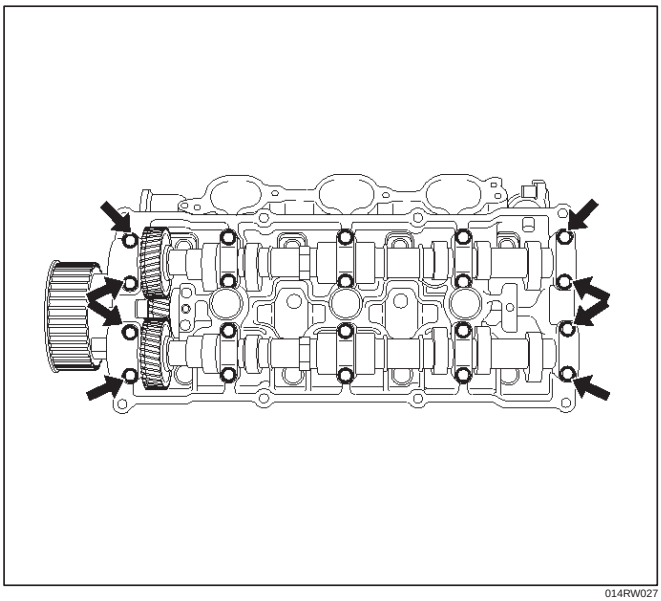

014RW027

3. Remove camshaft assembly (3), (4).
4. Remove three fixing bolts (7) from camshaft drive gear retainer (8), then camshaft drive gear assembly.

Inspection and Repair

1. Use a micrometer to measure the cam lobe height and uneven wear. Replace the camshaft if either the lobe height or the uneven wear exceeds the specified limit.

Lobe height : 44.709 mm (1.7602 in)

Uneven wear : 0.05 mm (0.0020 in)

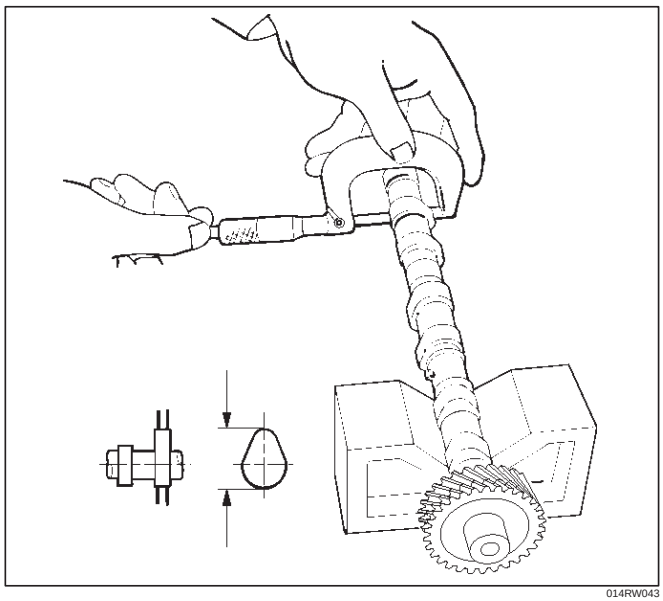

014RW043

2. Use a micrometer to measure the diameter and the uneven wear of the camshaft journals.
   Replace the camshaft if the diameter or the uneven wear exceeds the specified limit.

Journal Diameter

Standard : 25.972 mm–25.993 mm (1.0225 in–1.0233 in)

Limit : 25.8 mm (1.0157 in)

Uneven wear : 0.05 mm (0.0020 in)

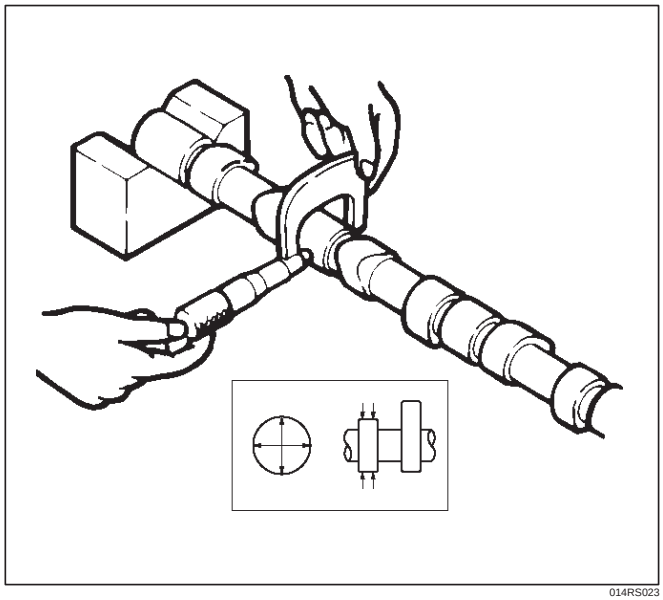

014RS023

3. Place the camshaft on V–blocks.
   Slowly rotate the camshaft and measure the runout with a dial indicator.
   Replace the camshaft if the runout exceeds the specified limit.

Runout

Limit : 0.1 mm (0.0039 in)

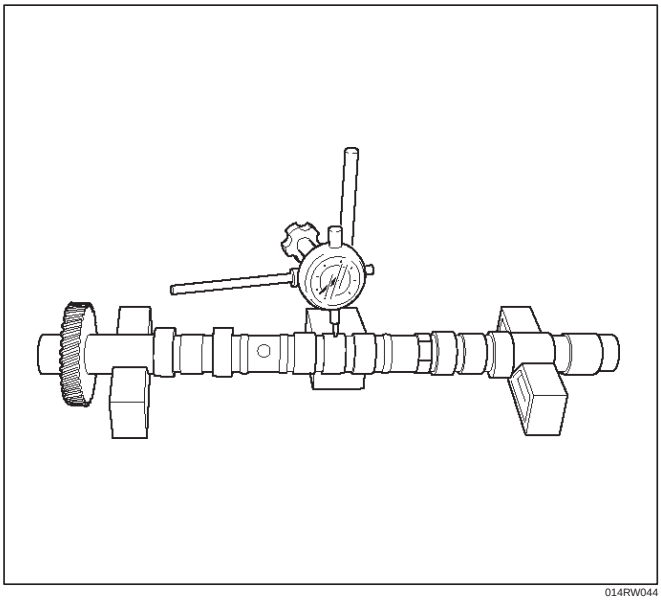

014RW044

4. Measure the camshaft journal oil clearance.
   1. Measure the camshaft bracket housing inside diameter.

NOTE: Tighten camshaft bracket (2) to specified torque before measuring the camshaft bracket inside diameter.

Torque : 10 N·m (1.0 Kg·m/89 lb in)

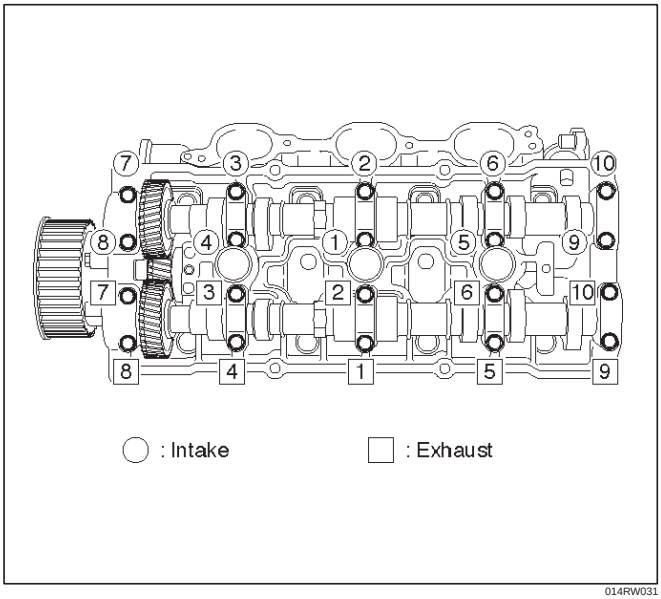

014RW031

   2. Subtract the camshaft outside diameter from the camshaft bracket housing inside diameter.

Oil Clearance

Standard : 0.027 mm–0.078 mm (0.0011 in–0.0031 in)

Limit : 0.11 mm (0.0043 in)

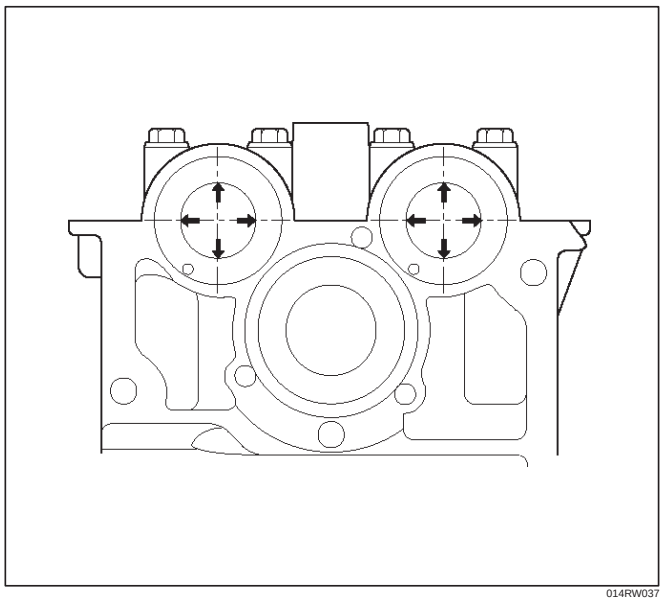

014RW037

5. Replace the cylinder head and/or camshaft if the measured oil clearance exceeds the specified limit.
   1. Carefully clean the camshaft journal, the camshaft bracket, and the cylinder head.
   2. Install camshaft assembly and camshaft brackets (2), tighten twenty bolts (1) on one side bank to the specified torque.

Torque: 10 N·m (1.0 Kg·m/89 lb in)

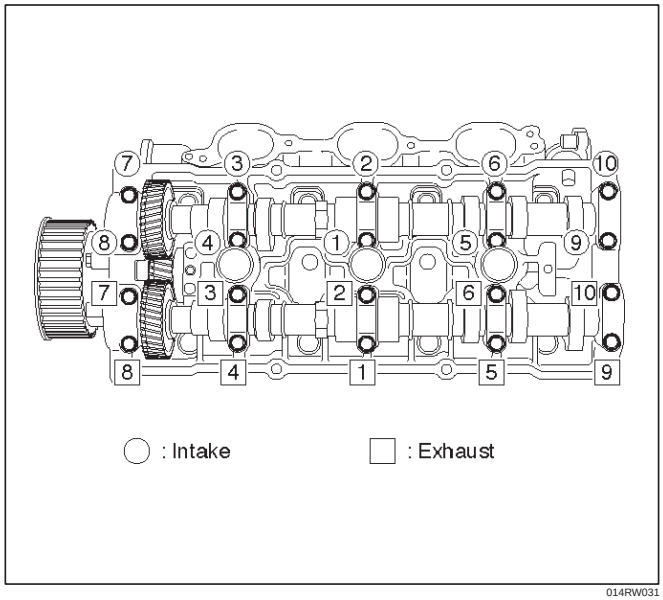

014RW031

   3. Measure the camshaft thrust clearance with a dial indicator. Replace the camshaft and/or the cylinder head if the camshaft thrust clearance exceeds the specified limit.

Camshaft thrust Clearance

Standard : 0.03 mm–0.08 mm (0.0012 in.–0.0031 in.)

Limit : 0.12 mm (0.0047 mm)

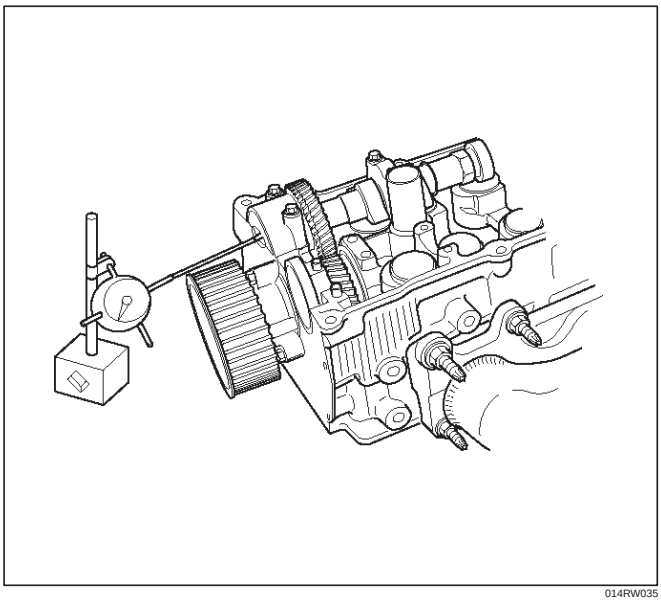

014RW035

Reassembly

1. Install camshaft drive gear assembly and tighten three bolts to specified torque.

   Torque: 10 N·m (1.0 Kg·m/89 lb in)

2. Tighten sub gear setting bolt.
   1. Use 5–8840–2443–0 to turn sub gear to right direction until the M5 bolt hole aligns between camshaft driven gear and sub gear.
   2. Tighten M5 bolt suitable torque for prevent moving the sub gear.

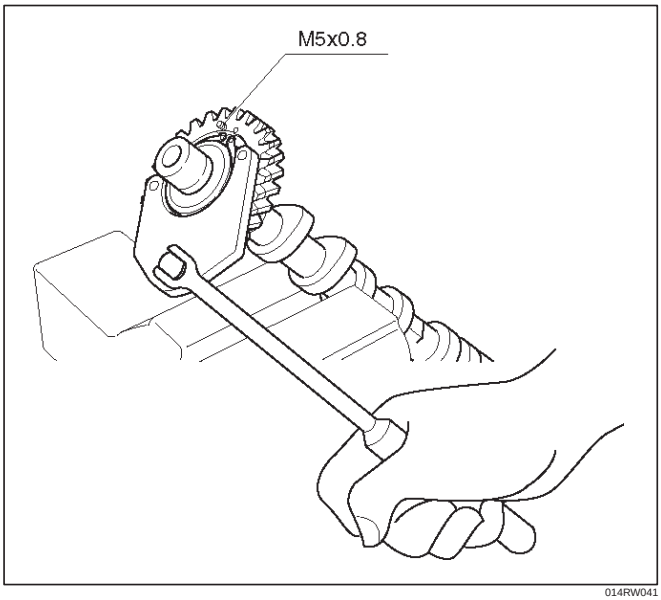

014RW041

3. Install camshaft assembly and camshaft brackets, tighten twenty bolts on one side bank to the specified torque.
   1. Apply engine oil to camshaft journal and bearing surface of camshaft bracket.
   2. Align timing mark on intake camshaft (one dot for right bank, two dots for left bank) and exhaust camshaft (one dot for right bank, two dots for left bank) to timing mark on camshaft drive gear (one dot).

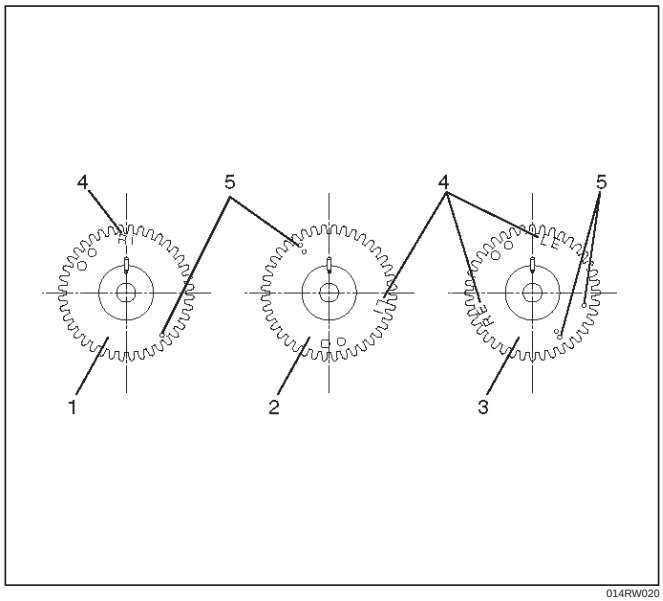

014RW020

Legend

(1) Intake Camshaft Timing Gear for Right Bank
(2) Intake Camshaft Timing Gear for Left Bank
(3) Exhaust Camshaft Timing Gear
(4) Discerning Mark
LI: Left Bank Intake
RI: Right Bank Intake
LE: Left Bank Exhaust
RE: Right Bank Exhaust

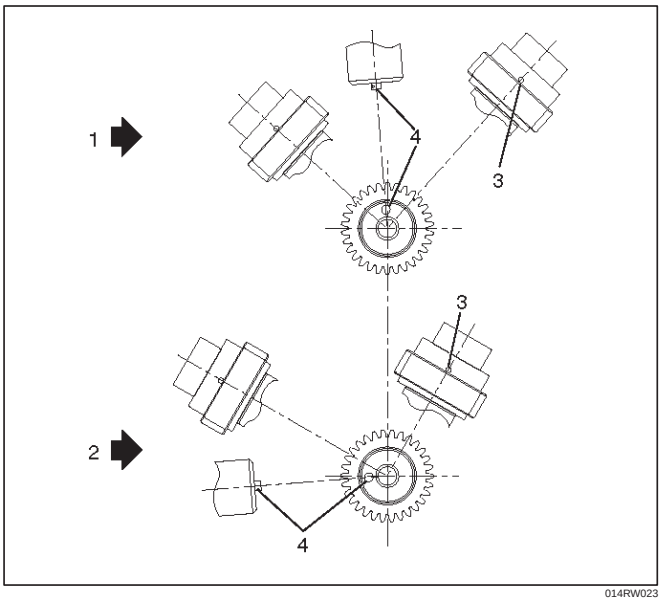

Legend

(1) Right Bank Camshaft Drive Gear
(2) Left Bank Camshaft Drive Gear
(3) Timing Mark on Drive Gear
(4) Dowel Pin

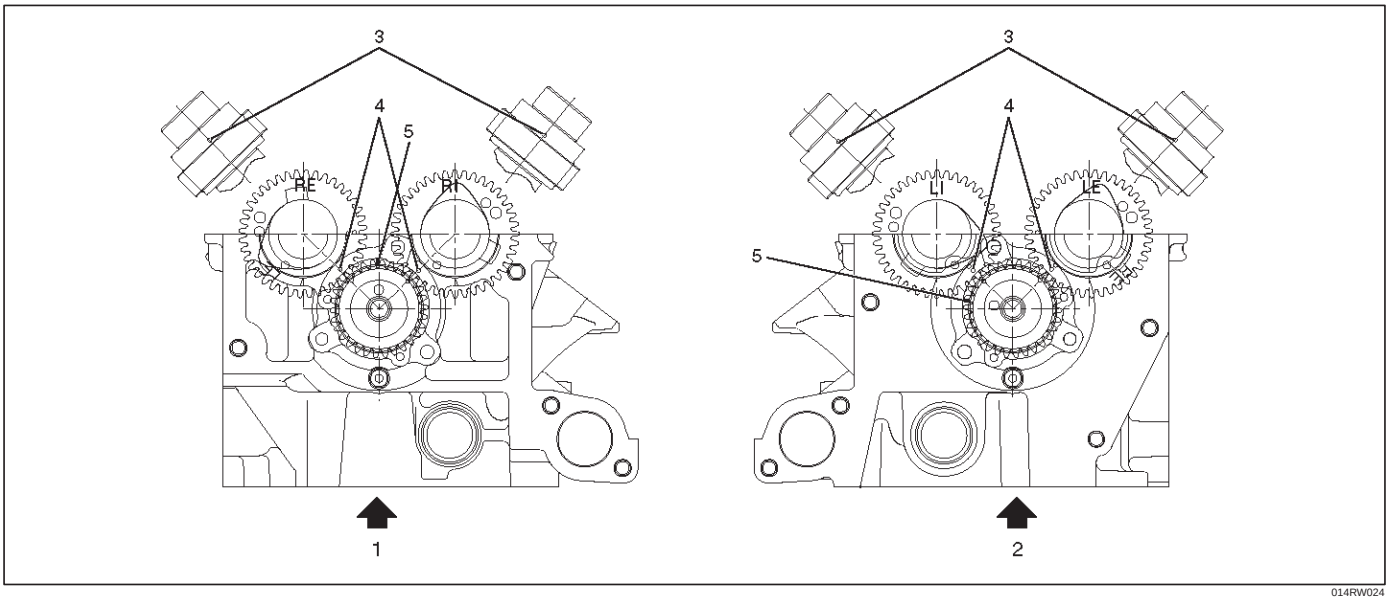

Legend

(1) Right Bank
(2) Left Bank
(3) Alignment Mark on Camshaft Drive Gear
(4) Alignment Mark on Camshaft
(5) Alignment Mark on Retainer

3. Tighten twenty bolts in numerical order on one side bank as shown in the illustration.

Torque: 10 N·m (1.0 Kg·m/89 lb in)

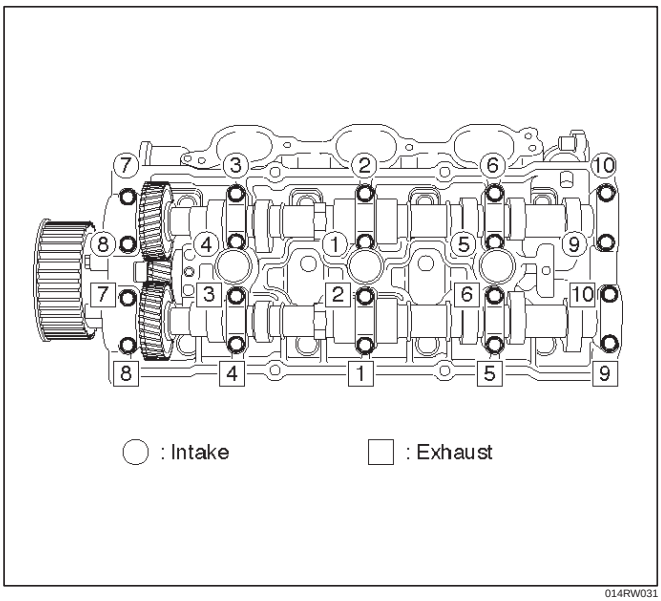

014RW031

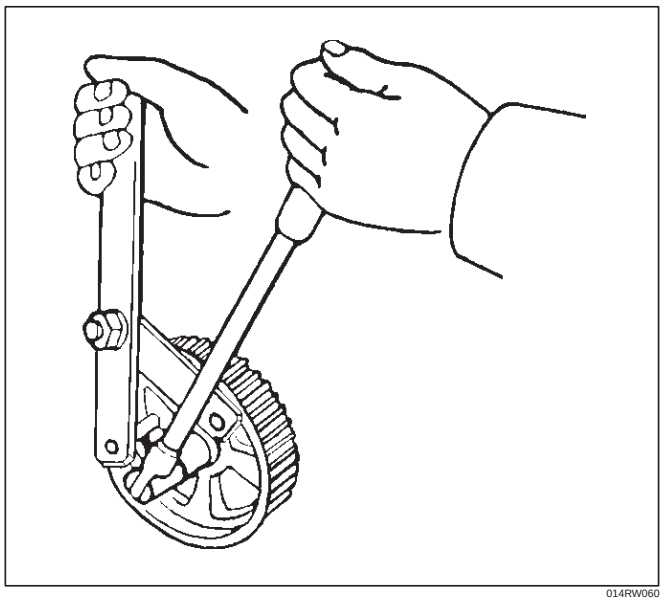

014RW060

4. If the oil seal requires replacement, use the 5–8840–2445–0 to install the oil seal.

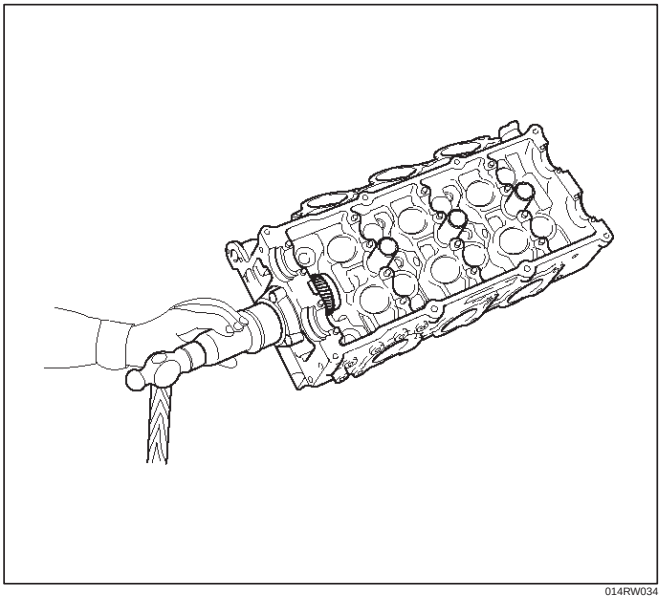

014RW034

5. Tighten bolt for camshaft drive gear pulley to the specified torque using the 5–8840–2447–0 universal holder.

Torque: 98 N·m (10.0 Kg·m/72 lb ft)

Crankshaft

Crankshaft and Associated Parts

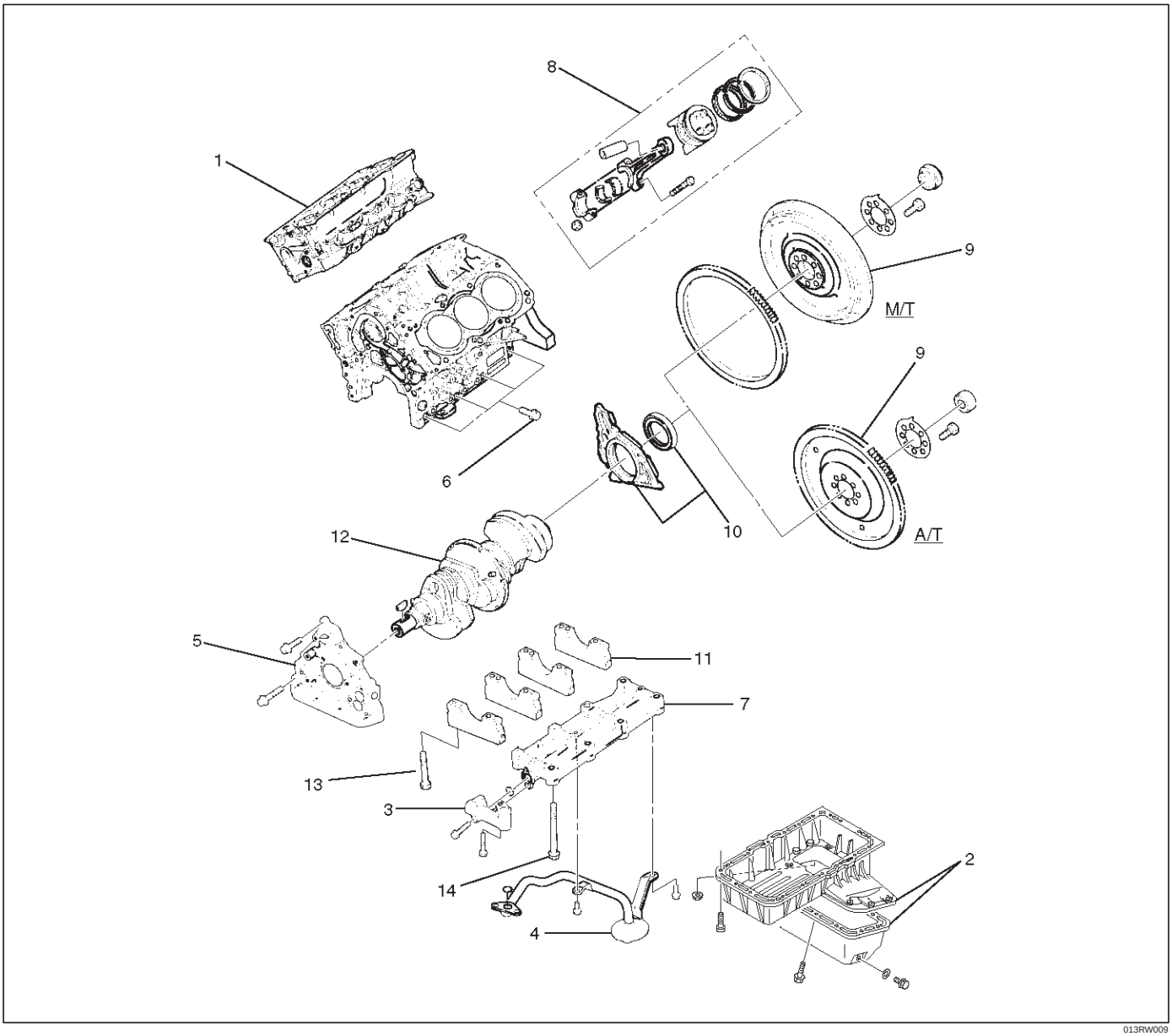

013RW009

Legend

(1) Cylinder Head Assembly
(2) Crankcase with Oil Pan
(3) Oil Pipe and O-Ring
(4) Oil Strainer and O-Ring
(5) Oil Pump Assembly
(6) Cylinder Block Side Bolts
(7) Oil Gallery
(8) Piston and Connecting Rod Assembly
(9) Flywheel
(10) Rear Oil Seal Retainer and Oil Seal
(11) Main Bearing Cap
(12) Crankshaft
(13) Main Bearing Cap Fixing Bolts
(14) Oil Gallery Fixing Bolts

Disassembly

1. Remove cylinder head assembly (1). Refer to “Cylinder Head” in this manual.
2. Remove crankcase with oil pan (2). Refer to “Oil Pan and Crankcase” in this manual.

CAUTION: Take care not to damage or deform the sealing flange surface of crankcase.

3. Remove oil pipe and O-ring (3).
4. Remove oil strainer and O-ring (4).
5. Remove oil pump assembly (5).
6. Remove crankcase side bolts (6).

7. Remove oil gallery (7).
8. Remove piston and connecting rod assembly (8). Refer to “Piston, Piston Ring and Connecting Rod” in this manual.
9. Remove flywheel (9).
10. Remove rear oil seal retainer (10).
11. Remove main bearing cap (11).
12. Remove crankshaft (12).

Inspection and Repair

1. Crankshaft
   Set the dial indicator as shown in the illustration and measure the crankshaft thrust clearance. If the thrust clearance exceeds the specified limit, replace the thrust bearings as a set.

   Thrust Clearance

   Standard : 0.06 mm–0.24 mm (0.0024 in–0.0094 in)

   Limit : 0.30 mm (0.0118 in)

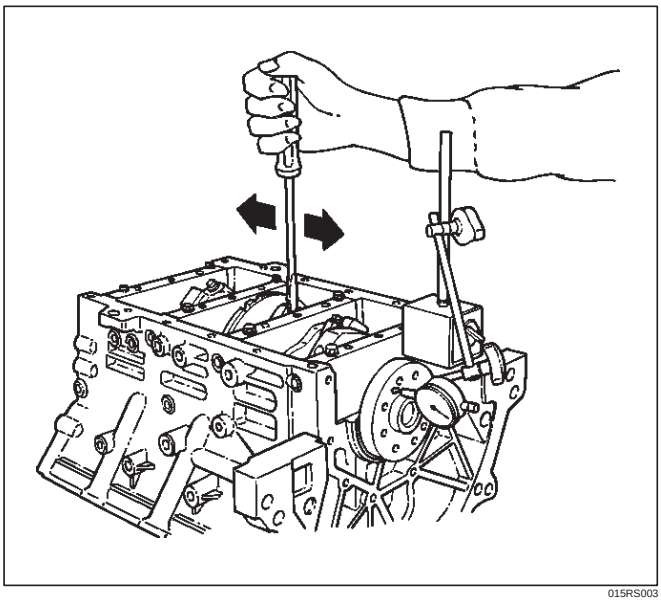

015RS003

Main Bearing Clearance

1. Remove the bearing caps and measure the oil clearance.
2. Remove the main bearing cap fixing bolts in the sequence shown in the illustration.
   Arrange the removed main bearing caps in the cylinder number order.
   Remove the main bearings.

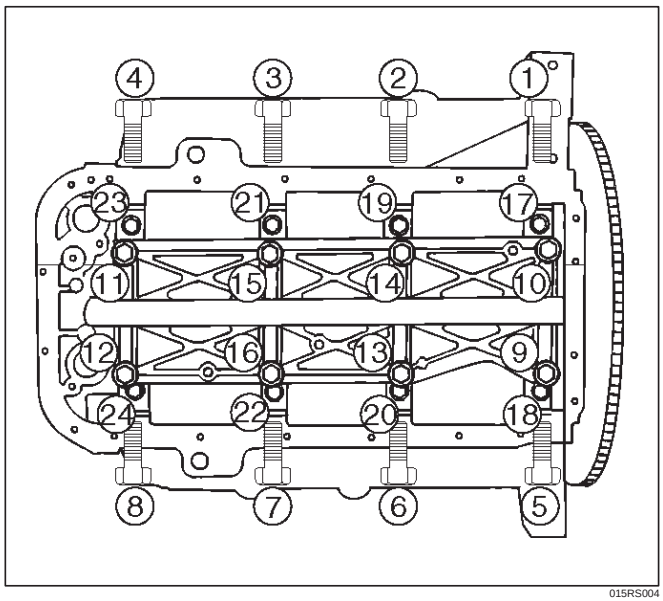

015RS004

3. Remove the crankshaft.
   Remove the main bearings.
4. Clean the upper and lower bearings as well as the crankshaft main journal.
5. Check the bearings for damage or excessive wear.
   The bearings must be replaced as a set if damage or excessive wear is discovered during inspection.
6. Set the upper bearings and the thrust washers to their original positions.
   Carefully install the crankshaft.
7. Set the lower bearings to the bearing cap original position.
8. Apply plastigage to the crankshaft journal unit as shown in the illustration.

NOTE: Do not set the plastigage on the oil hole.

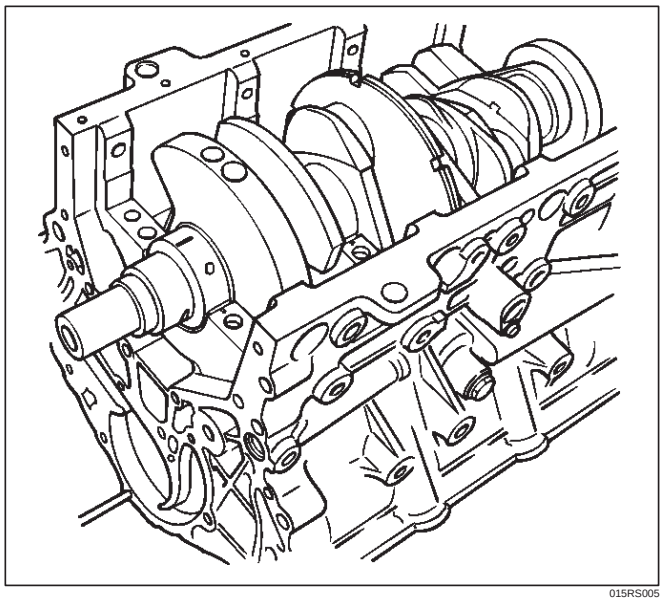

015RS005

9. Install main bearing caps, oil gallery and crank case bolts in the order shown, and tighten each bolt to the specified torque.

NOTE: Do not apply engine oil to the crank case side bolts.

Main bearing cap bolts.

Torque: 39 N·m (4.0 Kg·m/29 lb ft)

Oil gallery fixing bolts.

Torque:

1st step: 29 N·m (3.0 Kg·m/21 lb ft)

2nd step 55°~ 65°

Crank case side bolts

Torque : 39 N·m (4.0 Kg·m/29 lb ft)

NOTE: Do not allow the crankshaft to rotate.

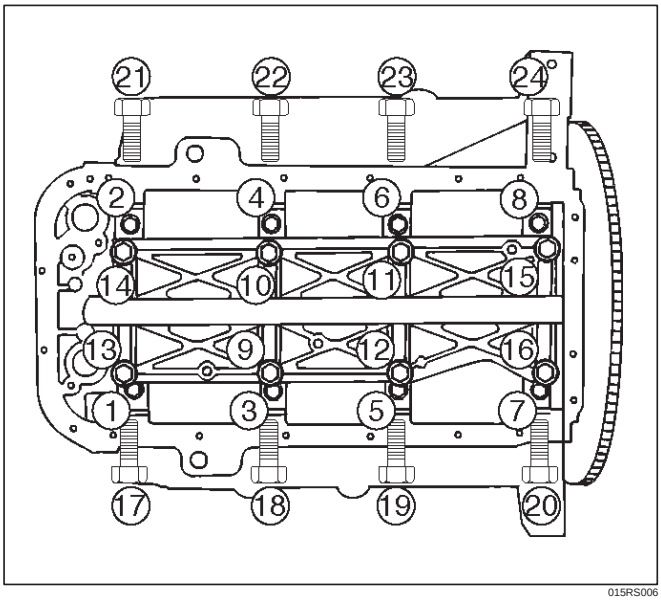

015RS006

10. Remove the main bearing caps in the sequence shown in the illustration.

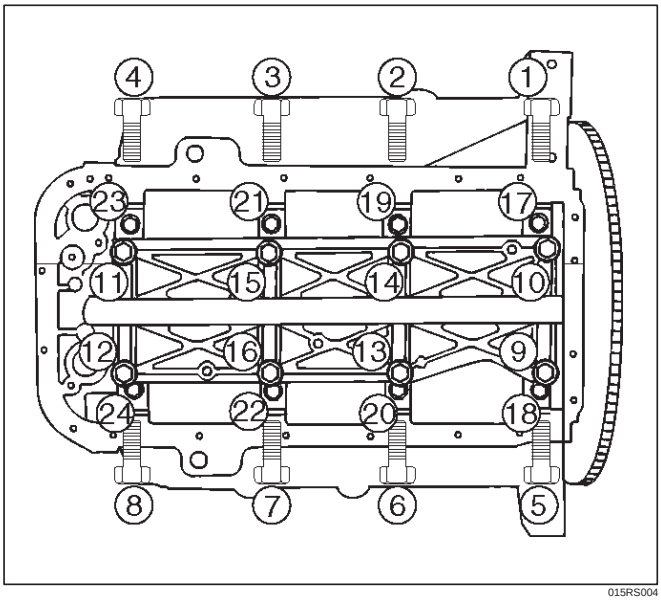

015RS004

11. Measure the plastigage width and determine the oil clearance. If the oil clearance exceeds the specified limit, replace the main bearings as a set and/or replace the crankshaft.

Standard : 0.019 mm–0.043 mm (0.0007 in–0.0017 in)

Limit : 0.08 mm (0.0031 in)

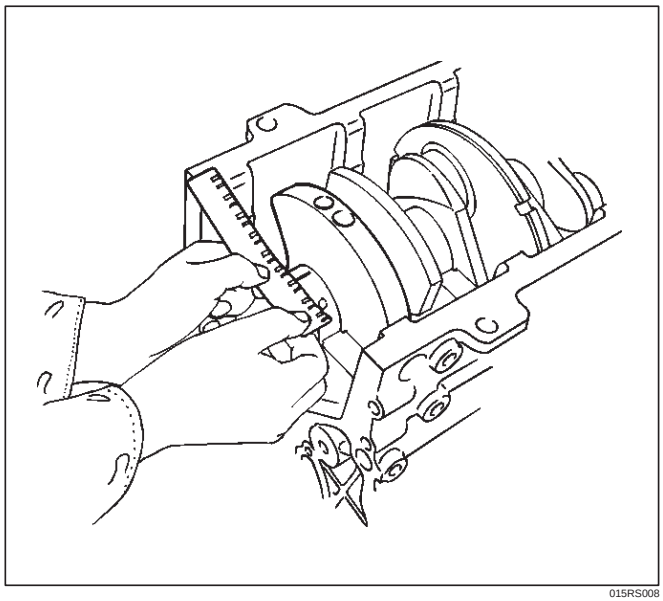

015RS008

12. Clean the plastigage from the bearings and the crankshaft.
    Remove the crankshaft and the bearings.

Crankshaft (12) Inspection

Inspect the surface of the crankshaft journal and crank pins for excessive wear and damage. Inspect the oil seal fitting surfaces for excessive wear and damage. Inspect the oil ports for obstructions.

Inspection and Repair

1. Carefully set the crankshaft on the V–blocks. Slowly rotate the crankshaft and measure the runout. If the crankshaft runout exceeds the specified limit, the crankshaft must be replaced.

Runout : 0.04 mm (0.0016 in)

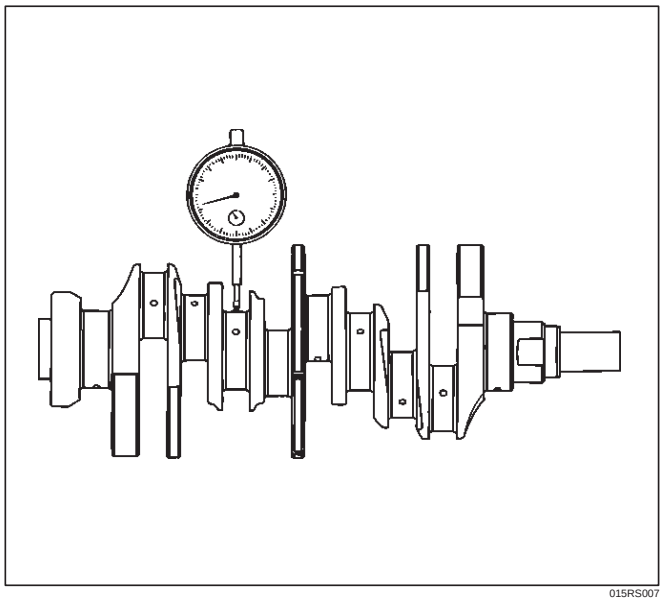

015RS007

2. Measure the diameter and the uneven wear of main journal and crank pin. If the crankshaft wear exceeds the specified limit, crankshaft must be replaced.

Main journal diameter : 63.918 mm–63.933 mm (2.5165 in–2.5170 in)

Crank pin diameter : 53.922 mm–53.937 mm (2.1229 in.–2.1235 in.)

Uneven wear limit : 0.005 mm (0.0002 in)

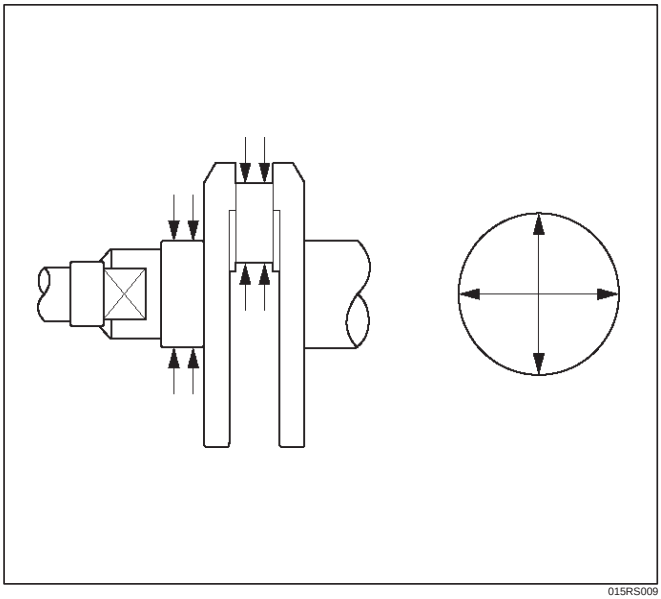

015RS009

Crankshaft Bearing Selection

When installing new crankshaft bearings or replacing bearings, refer to the selection table below. Select and install the new crankshaft bearings, paying close attention to the cylinder block journal hole.

1. Diameter size mark (1) and the crankshaft journal.

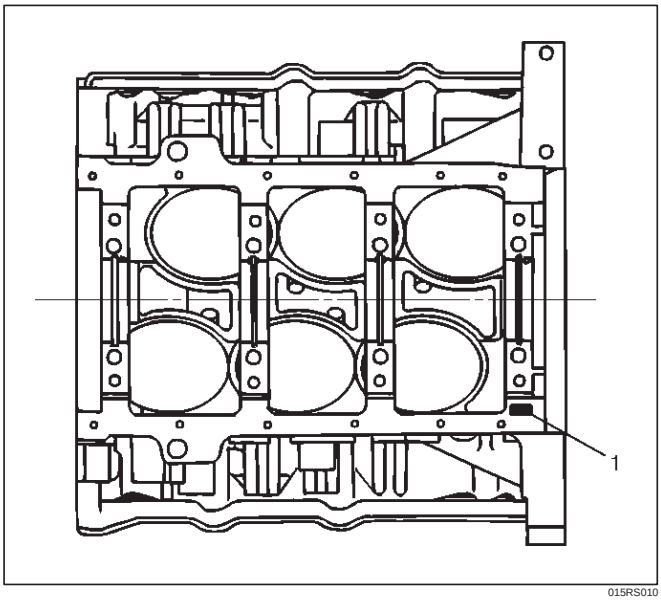

015RS010

2. Diameter size mark (1).
   The diameter size marks are stamped on the No.1 crankshaft balancer as shown in the illustration.

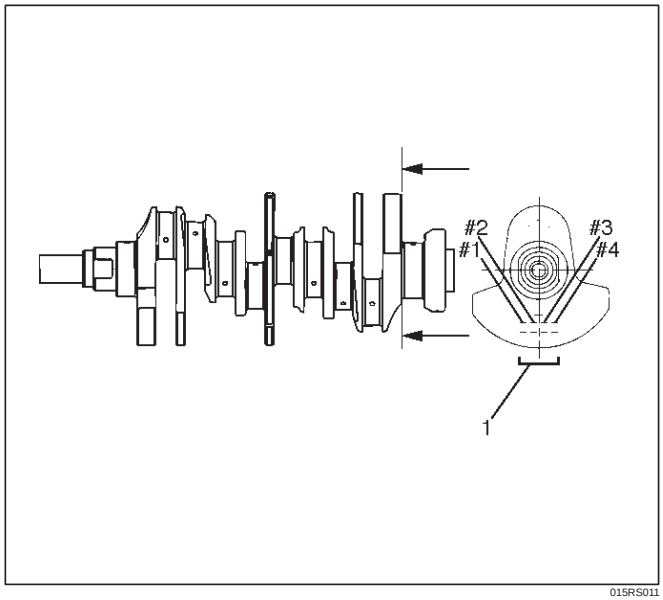

015RS011

NOTE: Take care to ensure the bearings are positioned correctly.

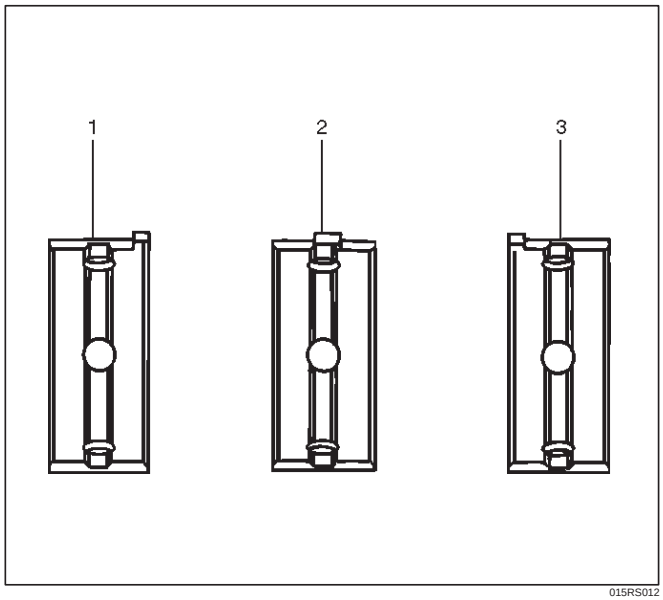

015RS012

Legend

(1) Number 1 and 4 main bearing upper and lower
(2) Number 2 and 3 main bearing upper
(3) Number 2 and 3 main bearing lower

1 Size Mark	Main Bearing Bore Diameter	Crank Shaft Main Journal Diameter	2 Size Mark	Crank Shaft Bearing Size Mark (Upper Side)	Crank Shaft Bearing Size Mark (Lower Side)	Oil Clearance (Reference)
1	68.994-69.000 (2.7163-2.7165)	63.918-63.925 (2.5165-2.5167)	2	Blue	Blue	0.030-0.049 (0.0012-0.0019)
		63.926-63.933 (2.5168-2.5170)	1	Brown	Brown	0.028-0.047 (0.0011-0.0019)
2	68.987-68.993 (2.7160-2.7163)	63.918-63.925 (2.5165-2.5167)	2			0.029-0.048 (0.0011-0.0019)
		63.926-63.933 (2.5168-2.5170)	1	Green	Green	0.027-0.046 (0.0011-0.0018)
3	68.980-68.986 (2.7157-2.7160)	63.918-63.925 (2.5165-2.5167)	2			0.028-0.047 (0.0011-0.0019)
		63.926-63.933 (2.5168-2.5170)	1	Yellow	Yellow	0.026-0.045 (0.0010-0.0018)

Reassembly

1. Crankshaft (12)
   - Install the main bearings to the cylinder block and the main bearing caps.
   - Be sure that they are positioned correctly.
   - Apply new engine oil to the upper and lower main bearing faces.

NOTE: Do not apply engine oil to the main bearing back faces.

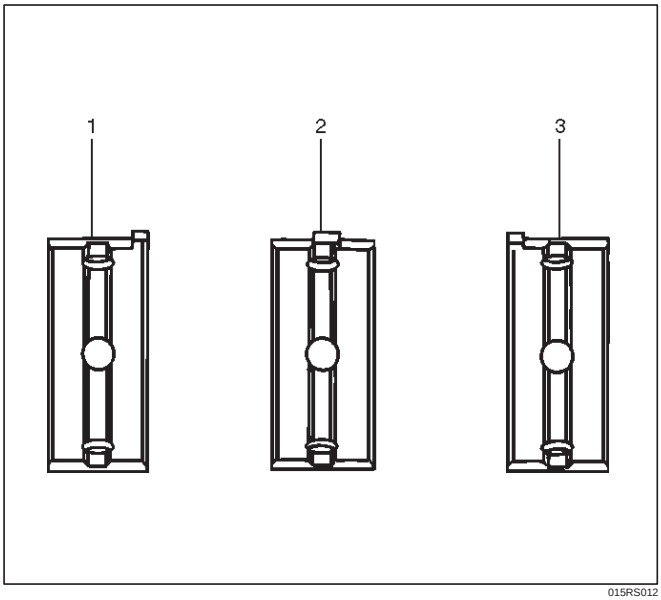

015RS012

- Carefully mount the crankshaft.
- Apply engine oil to the thrust washer.
- Assemble the thrust washer to the No.3 bearing journal. The oil grooves must face the crankshaft.

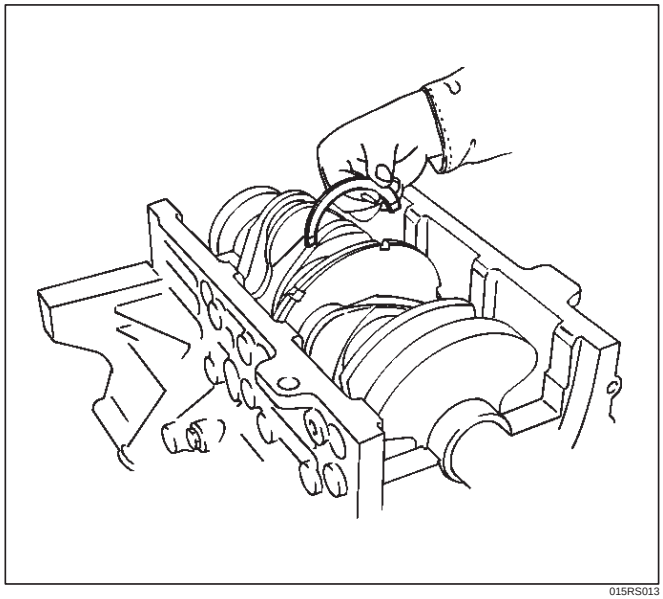

015RS013

2. Rear oil seal (10)
   - Remove the oil from the cylinder block and the retainer mounting surface.
   - Apply sealant (TB–1207B or equivalent) to the retainer mounting surface, following the pattern shown in the illustration.

     The retainer must be installed within 5 minutes after sealant application befor the sealant hardens.

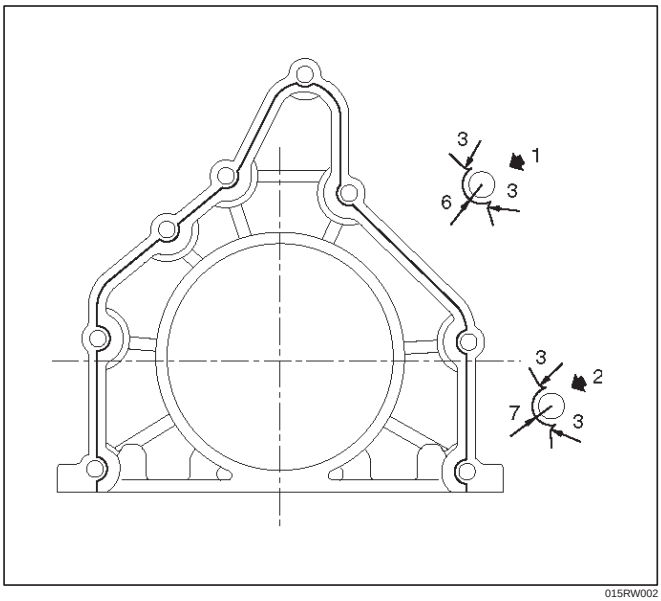

015RW002

Legend

(1) Around Bolt Holes
(2) Around Dowel Pin

- Apply engine oil to the oil seal lip.
- Align the cylinder block dowel pin holes with the rear retainer dowel pins.
- Tighten the rear retainer fixing bolts. New bolts should be used when installing rear retainer.

Torque: 18 N·m (1.8 Kg·m/13 lb ft)

NOTE: Be very careful not to disengage the oil seal garter spring during installation of the rear retainer.

If the seal was removed from retainer for replacement, apply engine oil to the oil seal lip and install the oil seal using 5–8840–2286–0 oil seal installer.

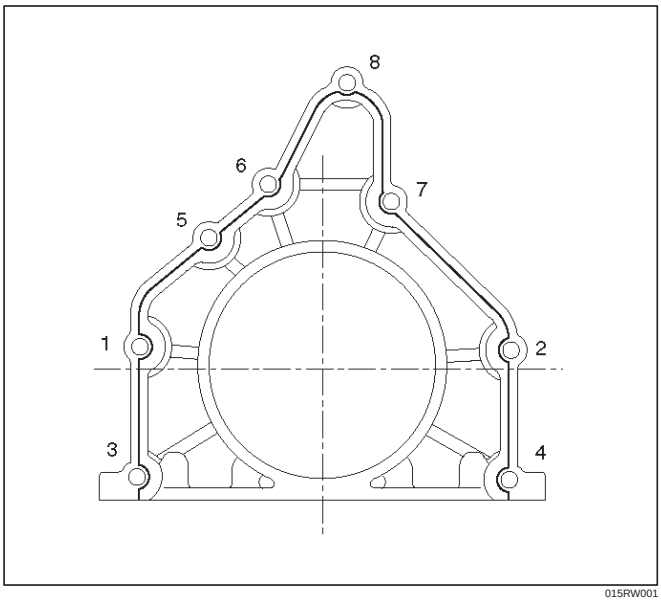

015RW001

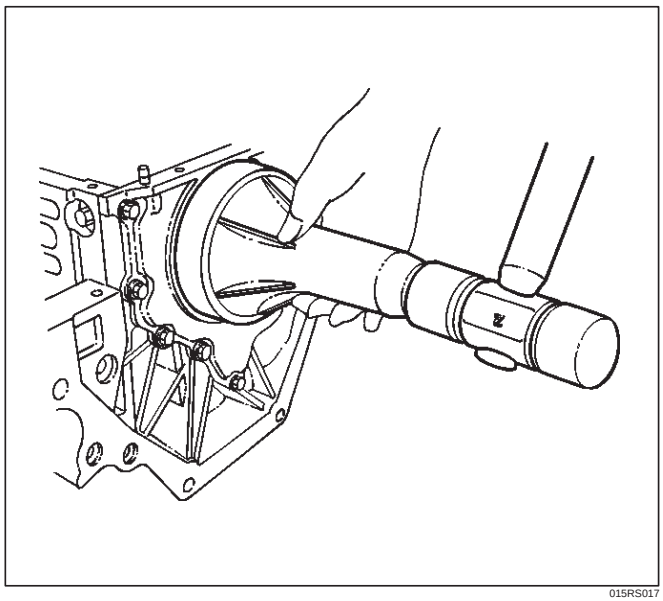

015RS017

3. Flywheel (9)
   1. Thoroughly clean and remove the oil from the threads of crankshaft.
   2. Remove the oil from the crankshaft and flywheel mounting faces.
   3. Mount the flywheel on the crankshaft and then install the washer.
   4. Hold the crankshaft to prevent from rotating then install the bolts in the order shown to the specified torque.

Torque: 54 N·m (5.5 Kg·m/40 lb ft)

NOTE: Do not reuse the bolt and do not apply oil or thread lock to the bolt.

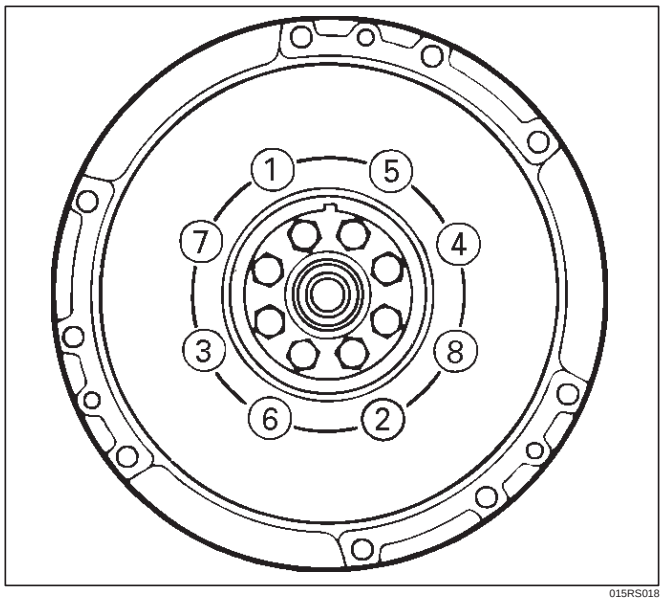

015RS018

4. Piston and connecting rod assembly (8)
   - Apply engine oil to the cylinder bores, the connecting rod bearings and the crankshaft pins. Check to see that the piston ring end gaps are correctly positioned.

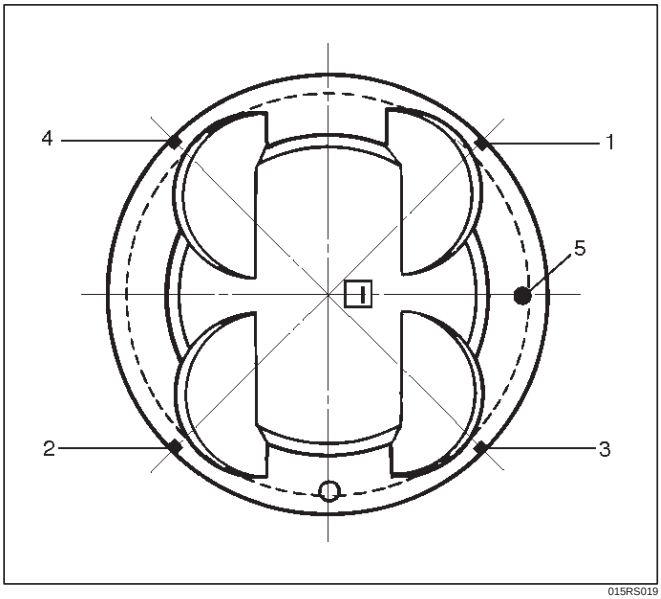

015RS019

Legend

(1) No.1 Compression Ring
(2) No.2 Compression Ring
(3) Oil Ring Side Rail Upper
(4) Oil Ring Side Rail Lower
(5) Piston Front Mark

- Insert the piston/connecting rod assemblies into each cylinder with the piston ring compressor. The front marks must be facing the front of the engine.
- Match the numbered caps with the numbers on the connecting rods. Align the punched marks on the connecting rods and caps.
- Apply engine oil to the threads and seating faces of the nuts.
- Tighten the nuts.

Torque: 54 N·m (5.5 Kg·m/40 lb ft)

After tightening the cap nuts, check to see that the crankshaft rotates smoothly.

NOTE: Do not apply engine oil to the bearing back faces.

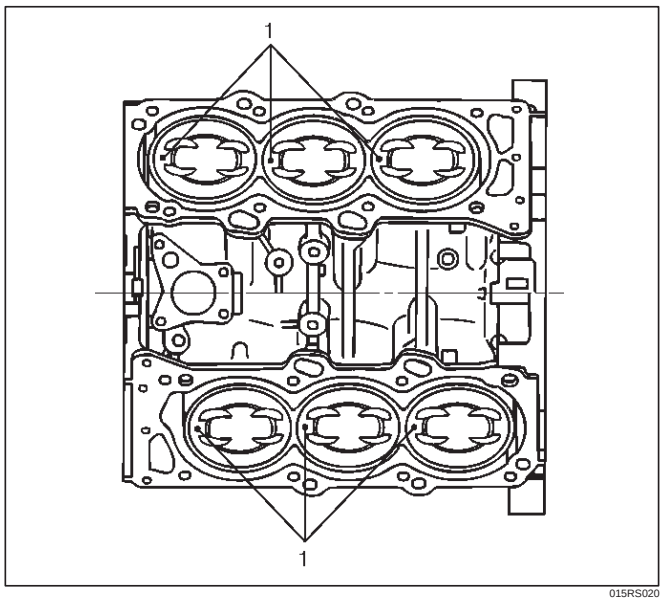

015RS020

5. Install oil gallery (7) and tighten the bolts in 2 steps, in the order shown.

1st step: 29 N·m (3.0 Kg·m/22 lb ft)

2nd step: 55°~ 65°

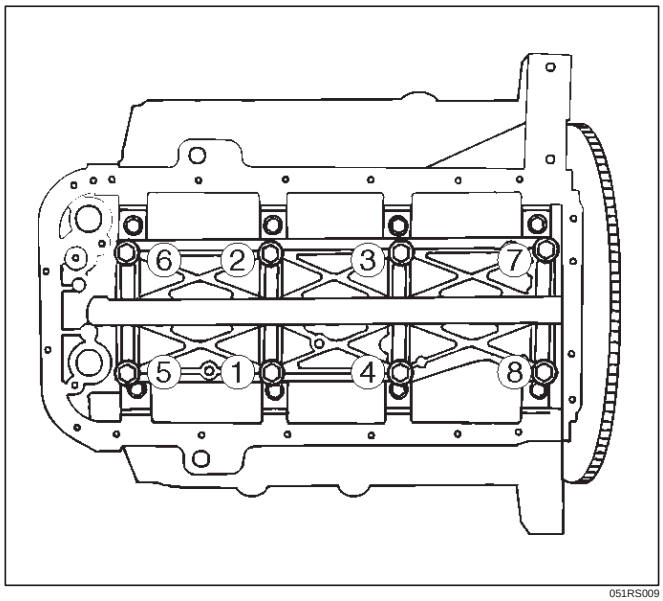

051RS009

6. Cylinder block side bolts (6)
   - Tighten all the bolts to the specified torque in the order shown.

NOTE: Do not apply engine oil to the crank case side bolts.

Torque: 39 N·m (4.0 Kg·m/29 lb ft)

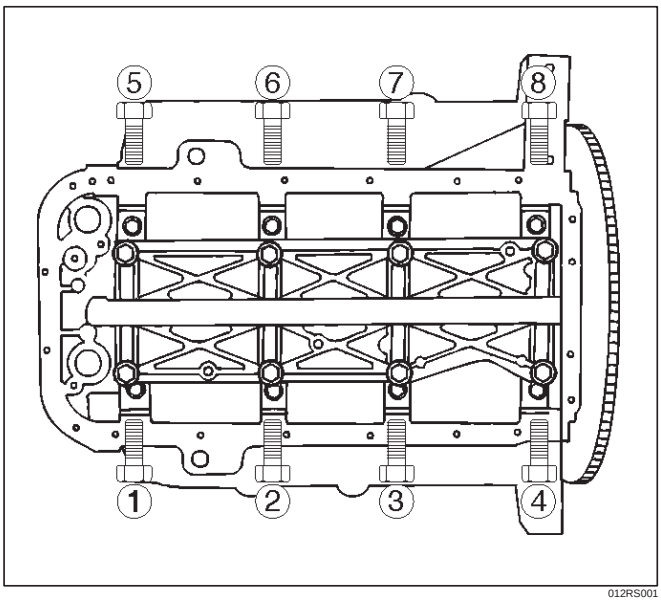

012RS001

7. Install oil pump assembly (5), refer to “Oil pump” in this manual.
8. Install oil strainer and O-ring (4).
9. Install oil pipe and O-ring (3) and tighten the bolts.

Torque: 25 N·m (2.5 Kg·m/18 lb ft)

10. Install crankcase with oil pan (2).
    1. Completely remove all residual sealant, lubricant and moisture from the sealing surfaces. The surfaces must be perfectly dry.
    2. Apply a correct width bead of sealant (TB—1207C or its equivalent) to the contact surfaces of the oil pan. There must be no gaps in the bead.
    3. The crankcase assembly must be installed within 5 minutes after sealant application to prevent premature hardening of the sealant.
    4. Tighten the bolts and nuts to the specified torque.

Torque : 10 N·m (1.0 Kg·m/89 lb in)

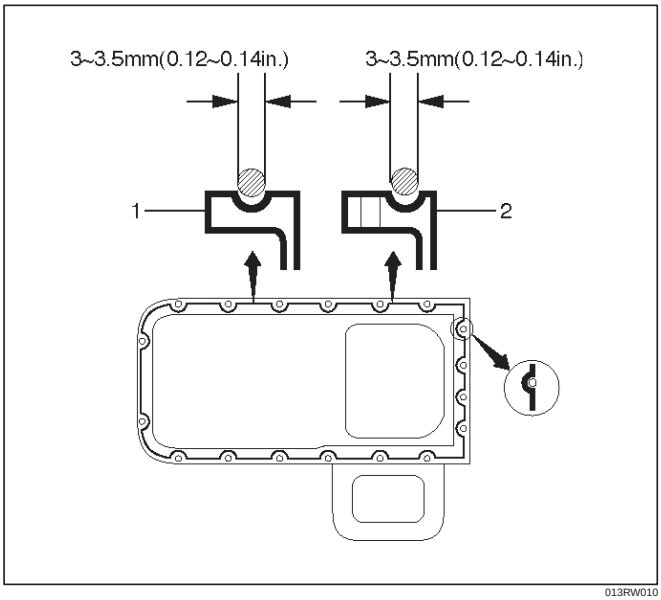

013RW010

Legend

(1) Portion Between Bolt Holes
(2) Bolt Hole Portion

11. Install cylinder head assembly, refer to “Cylinder head” in this manual.

Piston and Connecting Rod

Piston, Connecting Rod and Associate Parts

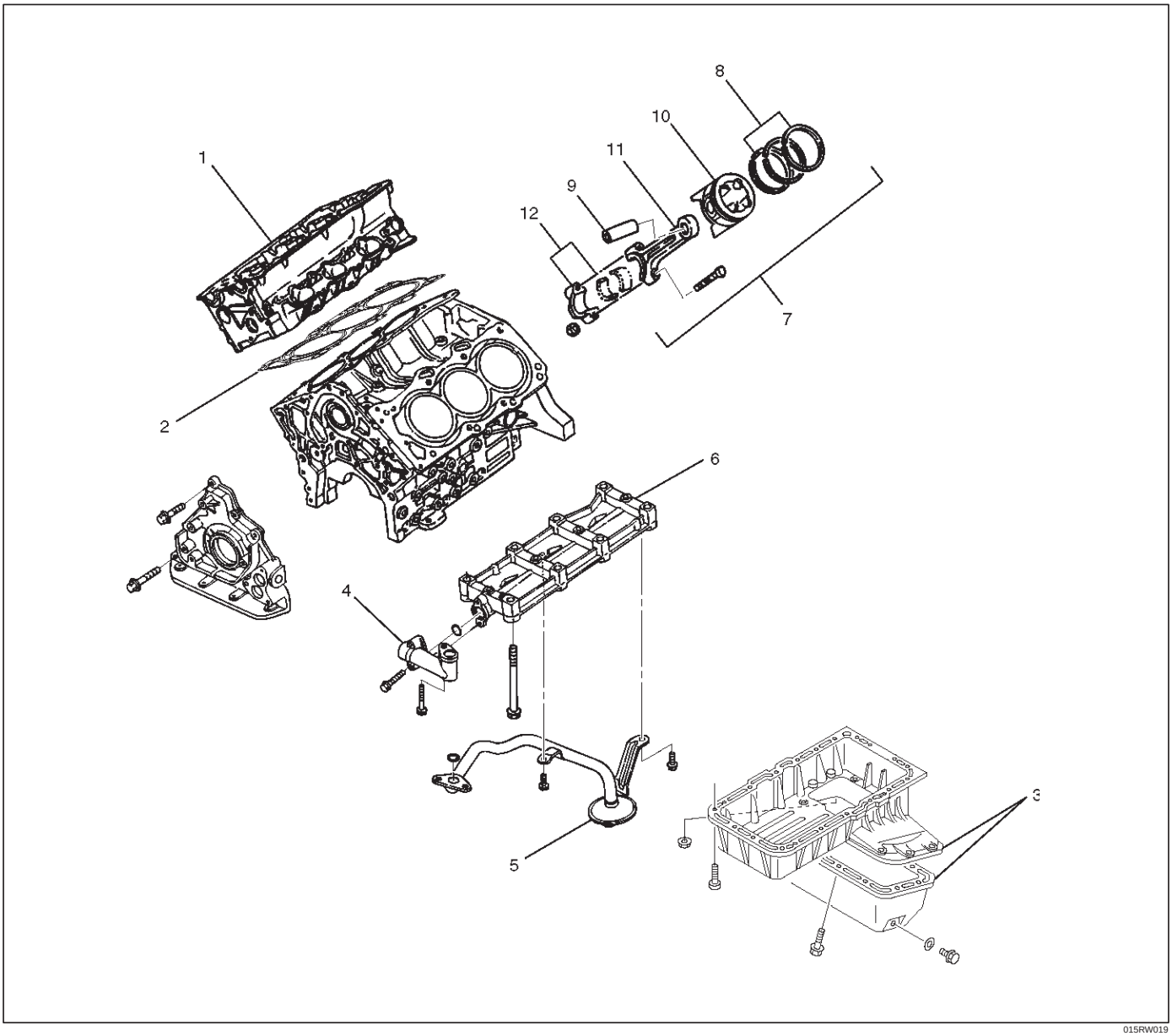

015RW019

Legend

(1) Cylinder Head Assembly
(2) Cylinder Head Gasket
(3) Crankcase with Oil Pan
(4) Oil Pipe and O-Ring
(5) Oil Strainer and O-Ring
(6) Oil Gallery
(7) Piston and Connecting Rod Assembly
(8) Piston Ring
(9) Piston Pin
(10) Piston
(11) Connecting Rod
(12) Connecting Rod Cap

Disassembly

1. Remove cylinder head assembly (1). Refer to “Cylinder Head Removal” in this manual.
2. Remove cylinder head gasket (2).
3. Remove crankcase with oil pan (3). Refer to“Oil Pan and Crankcase” in this manual.
4. Remove oil pipe and O-ring (4).
5. Remove oil strainer and O-ring (5).
6. Remove oil gallery (6).
7. Remove connecting rod cap with connecting rod lower bearing (12).
8. Remove piston and connecting rod assembly (7).

NOTE: Before removing piston and connecting rod assembly, measure thrust clearance.

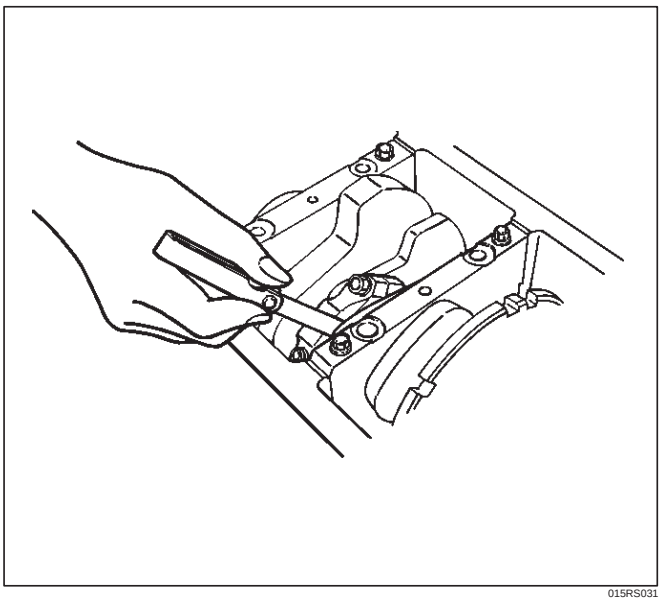

015RS031

- Remove any ridge or carbon build up from the top end of the cylinder.

9. Remove the piston rings (8) with a piston ring expander. Arrange the removed piston rings in the cylinder number order.

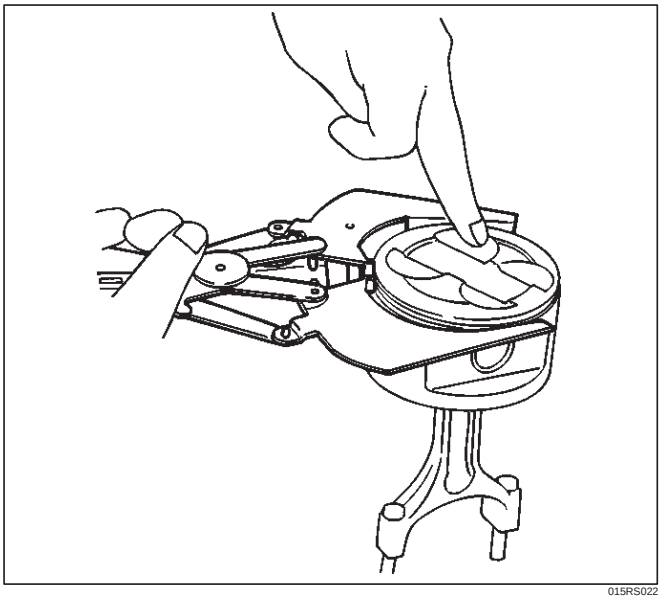

015RS022

10. Remove the piston pin (9) using 5–8840–0551–0 piston pin service set and piston support with a press.

NOTE: Keep the parts removed from each cylinder separate. All parts must be reinstalled in their original positions. Heating the connecting rod will permit easy removal of the piston pin.

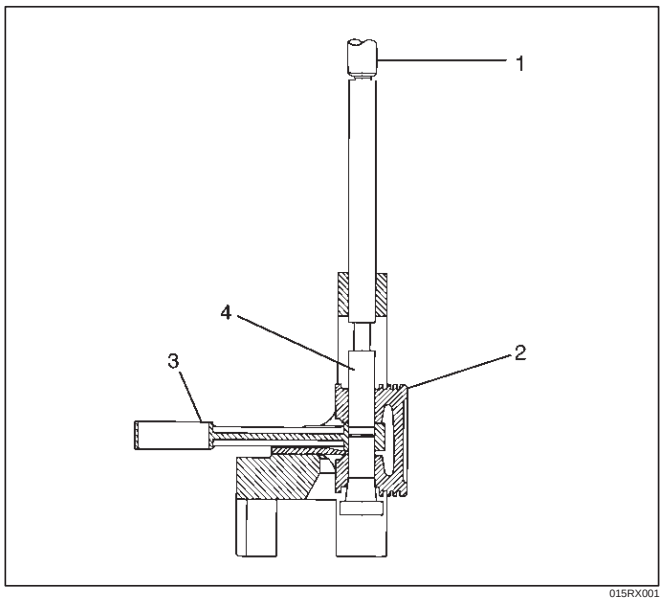

015RX001

Legend

(1) Press Ram
(2) Piston
(3) Connecting Rod
(4) Piston Pin

11. Piston (10)
12. Connecting rod (11)

Inspection and Repair

Pistons (10)

Carefully clean away all the carbon adhering to the piston head and the piston ring grooves.

NOTE: Never use a wire brush to clean the pistons. Damage will result. Visually check each piston for cracking, scoring, and other signs of excessive wear. If any of the above conditions are found, the piston must be replaced.

Piston Diameter

1. Measure the piston outside diameter with micrometer at the piston grading position and a right angle to the piston pin.
   Piston grading position (from piston head)

Piston grading position : 43.0 mm (1.6929 in)

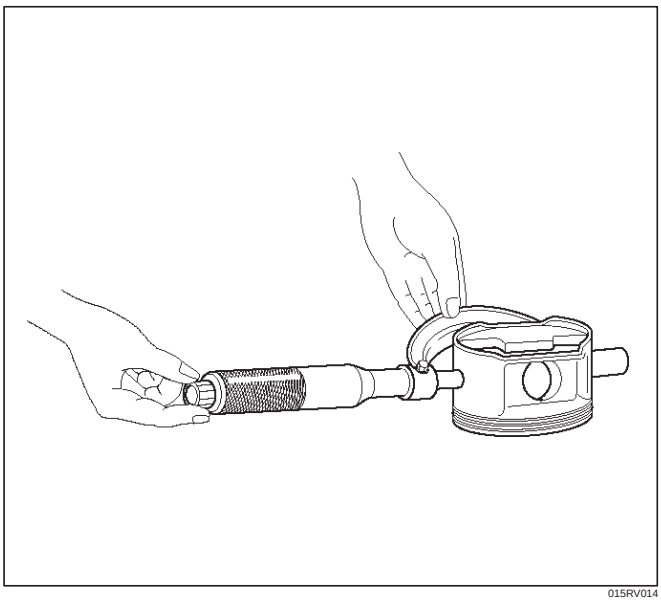

015RV014

The size mark (1) for piston outside diameter is represented as shown in illustration below.

Outside Diameter

Size Mark A : 93.360 mm–93.370 mm (3.6756 in–3.6760 in)

Size Mark B : 93.371 mm–93.380 mm (3.6760 in–3.6764 in)

Size Mark C : 93.381 mm–93.390 mm (3.6764 in–3.6768 in)

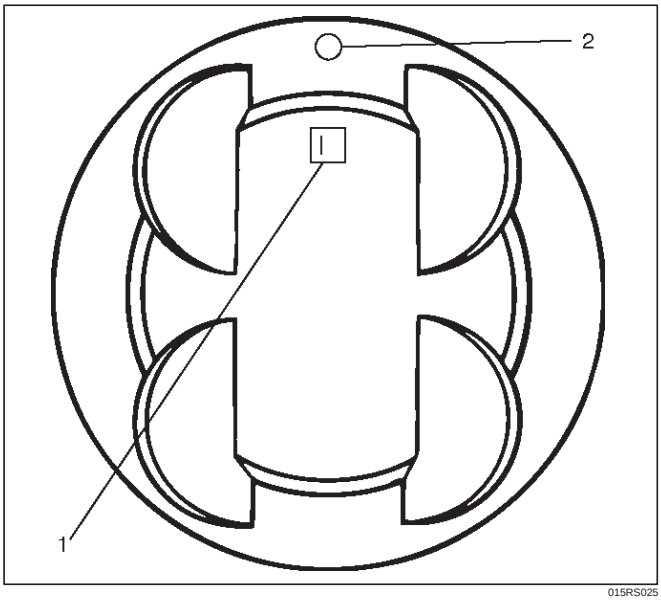

015RS025

Measure the cylinder bore inside diameter (refer to “Cylinder Block” in this manual).

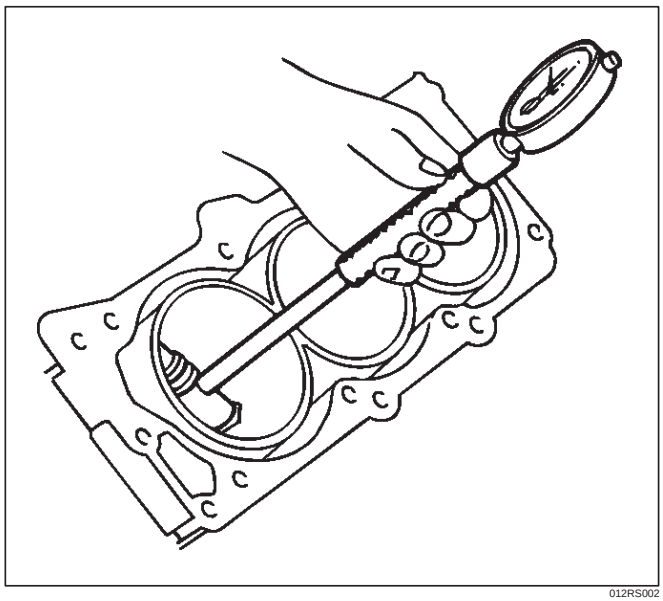

012RS002

Piston Rings (8)

Any worn or damaged part discovered during engine overhaul must be replaced with a new one.

1. Ring end gap measurement
   - Insert the piston ring into the bore.
   - Push the ring by the piston, at a right angle to the wall, into the point at which the cylinder bore diameter is the smallest.
   - Measure the ring end gap.

Compression Ring

1st ring	
Standard:	**0.300 mm–0.400 mm (0.0118 in–0.0157 in)**
Limit:	**1.0 mm (0.0394 in)**
2nd ring	
Standard:	**0.450 mm–0.600 mm (0.0177 in–0.0236 in)**
Limit:	**1.2 mm (0.0472 in)**
Oil ring	
Standard:	**0.150 mm–0.450 mm (0.0059 in–0.0177 in)**
Limit:	**1.05 mm (0.0413 in)**

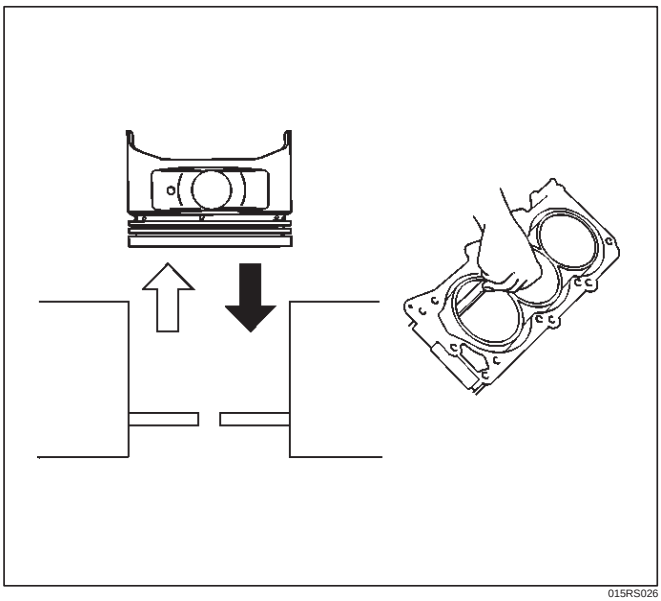

015RS026

- Positioning mark (1) is painted as shown in the illustration.

Marked T : No.1 Compression ring

Marked T2 : No.2 Compression ring

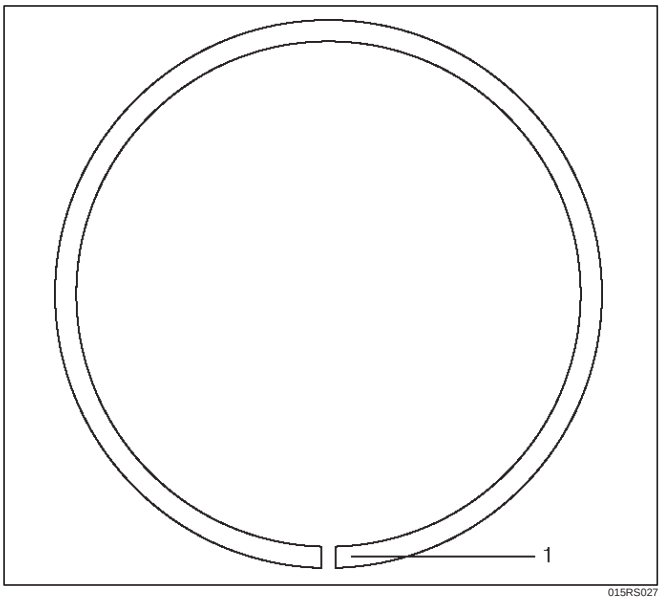

015RS027

2. Measure the clearance between the piston ring groove and the piston ring with a feeler gauge. If the piston ring groove / piston ring clearance exceeds the specified limit, the piston must be replaced.

Compression Ring Clearance

Standard : 0.016 mm–0.038 mm (0.0006 in.–0.0015 in)

Limit : 0.15mm (0.0059 in)

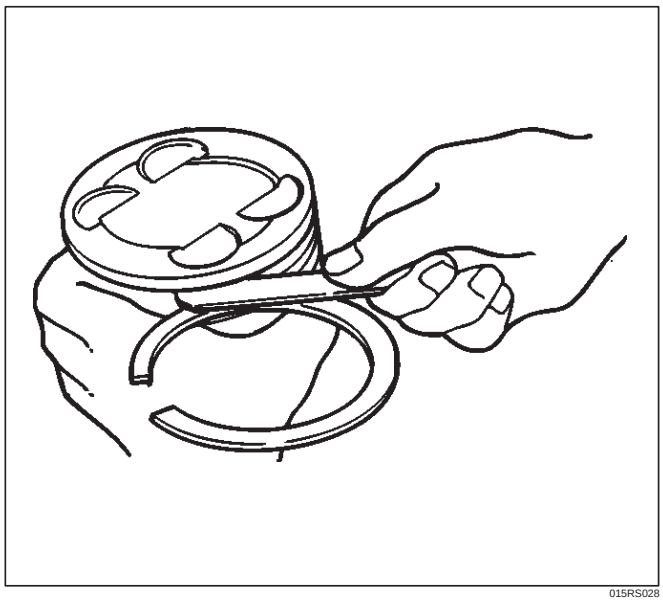

015RS028

Piston Pin (9)

NOTE: Do not reuse the old piston pin.

1. Use a micrometer to measure the new piston pin outside diameter in both directions at three different positions.
2. Measure the inside diameter of the connecting rod small end. If the fitting interference between the small end and pin does not conform to the specified value, the connecting rod must be replaced.

Standard : 0.023 mm–0.038 mm (0.0009 in–0.0015 in)

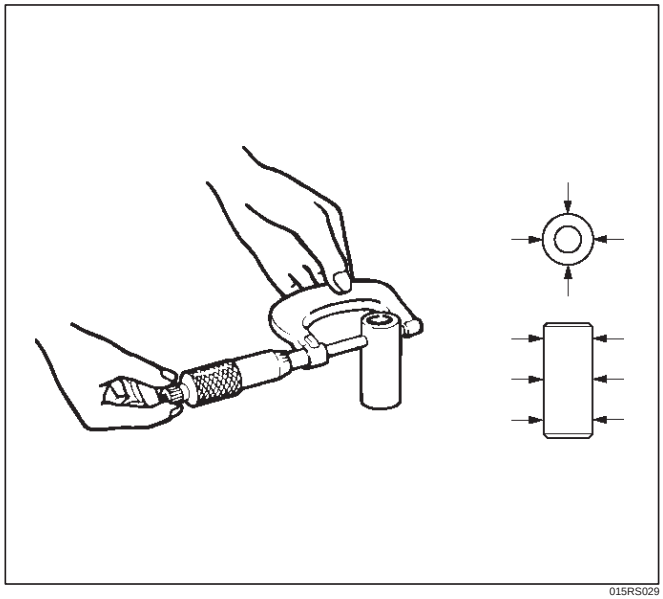

015RS029

3. Insert the new pin into the piston and rotate it. If the pin rotates smoothly with no backlash, the clearance is normal. If there is backlash or roughness, measure the clearance. If the clearance exceeds the specified limit, the piston must be replaced.

Clearance

Standard : 0.010 mm–0.017 mm (0.0004 in.–0.0007 in)

Limit : 0.040 mm (0.0016 in)

Connecting Rods (11)

1. Check the connecting rod alignment If either the bend or the twist exceeds the specified limit, the connecting rod must be replaced.

   Bend per 100 mm (3.937 in)

   Limit: 0.15 (0.0059)

   Twist per 100 mm (3.937 in)

   Limit: 0.20 (0.0078)

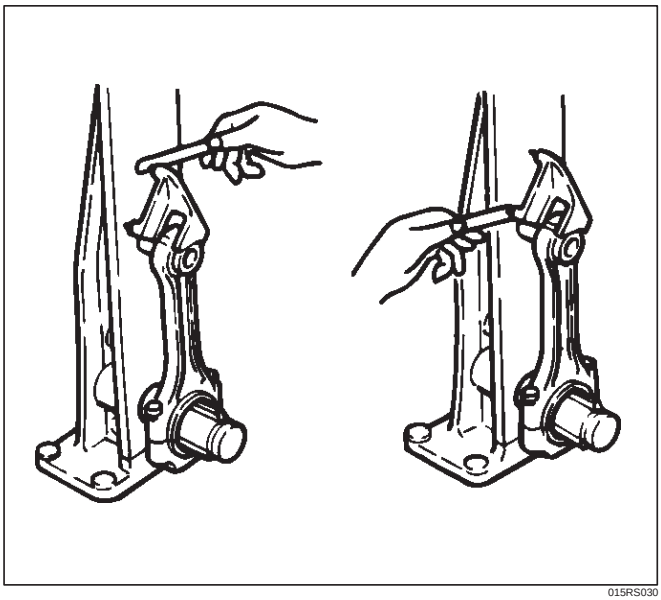

015RS030

2. Measure the connecting rod thrust clearance. Use a feeler gauge to measure the thrust clearance at the large end of the connecting rod If the clearance exceeds the specified limit, the connecting rod must be replaced.

   Standard : 0.16 mm–0.35 mm (0.0063 in.–0.0138 in)

   Limit : 0.40 mm (0.0157 in)

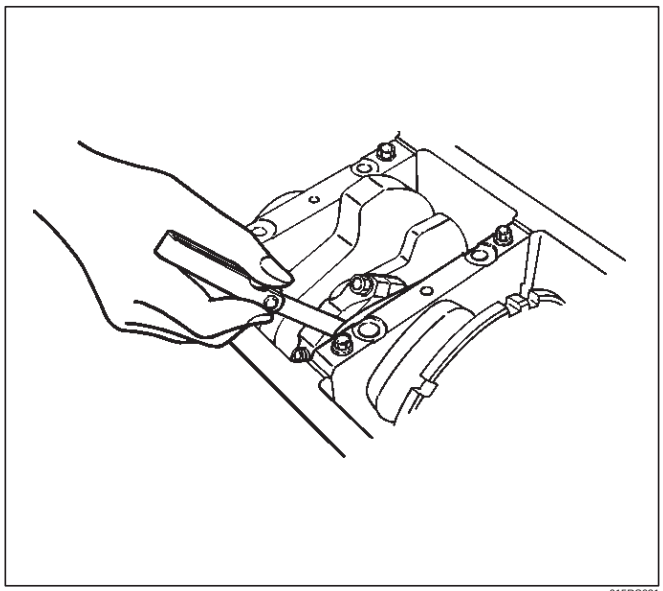

015RS031

3. Measure the oil clearance between the connecting rod and the crankshaft.
   1. Remove the connecting rod cap nuts and the rod caps (12).
      Arrange the removed rod caps in the cylinder number order.
   2. Clean the rod bearings and the crankshaft pins.
   3. Carefully check the rod bearings. If even one bearing is found to be damaged or badly worn, the entire bearing assembly must be replaced as a set. Reinstall the bearings in their original positions. Apply plastigage to the crank pin.

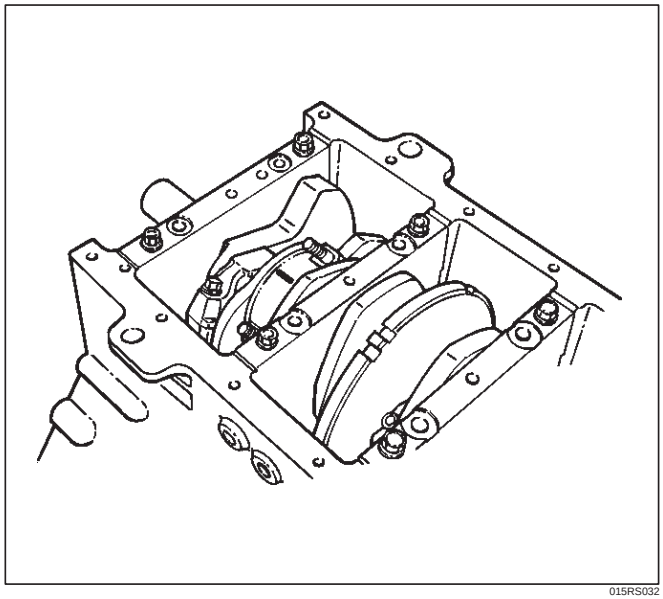

015RS032

4. Reinstall the rod caps (12) to their original positions.

   Tighten the rod cap nuts.

Torque: 54 N·m (5.5 Kg·m/40 lb ft)

NOTE: Do not allow the crankshaft to rotate.

5. Remove the rod caps.
6. Measure the width of the plastigage and determine the oil clearance. If the oil clearance exceeds the limit, replace the rod bearing as a set.

Standard : 0.019 mm–0.043 mm (0.0007 in–0.0017 in)

Limit : 0.08 mm (0.003 in)

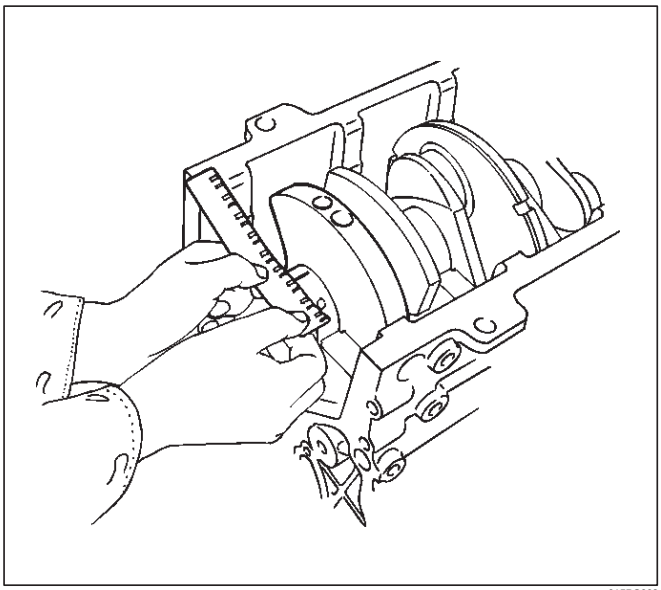

015RS008

7. Clean the plastigage from the bearings and the crankshaft pins.

Con–rod Bearing Selection

Select and install the new connecting rod bearings, paying close attention to the connecting rod big end diameter size mark (1).

NOTE: Take care not to confuse the alignment mark (2) and the size mark (1) during the installation procedure.

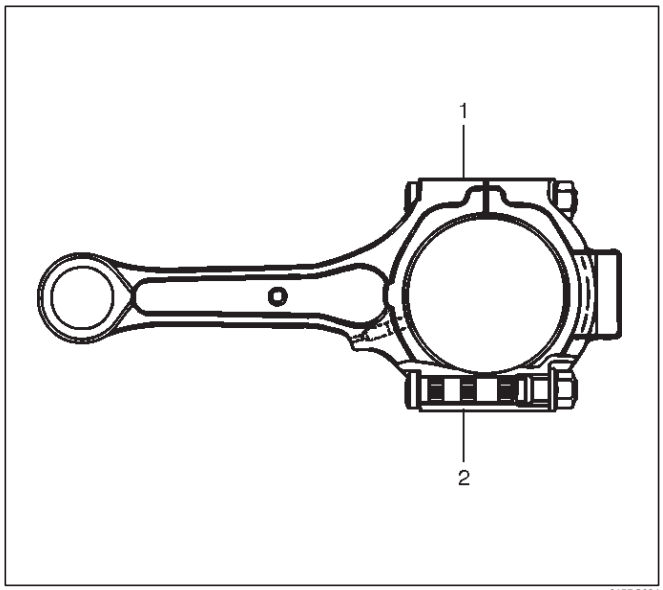

015RS034

1 Size Mark	Big end Bore Diameter	Crankshaft Pin Diameter	Connecting Rod Bearing Thickness (Reference)	Color of Size Mark	Oil Clearance (Reference)
A	56.994-57.000 (2.2439-2.2441)	53.922-53.937 (2.1229-2.1235)	1.512-1.516 (0.0595-0.0597)	Yellow	0.025-0.054 (0.0010-0.0021)
B	56.988-56.994 (2.2436-2.2439)		1.508-1.512 (0.0594-0.0595)	Green	0.027-0.056 (0.0011-0.0022)
C	56.982-56.988 (2.2434-2.2436)		1.504-1.508 (0.0592-0.0594)	Pink	0.029-0.058 (0.0011-0.0023)

Reassembly

1. Install connecting rod
2. Install piston
3. Install piston pin
   - Apply a thin coat of engine oil to the piston pin. Try to insert the piston pin into the piston pin hole with normal finger pressure.

NOTE: When changing piston / connecting rod combinations, do not change the piston / piston pin combination and do not reuse the old piston pin.

- Attach the piston to the connecting rod with the piston front mark and the connecting rod front mark on the same side.

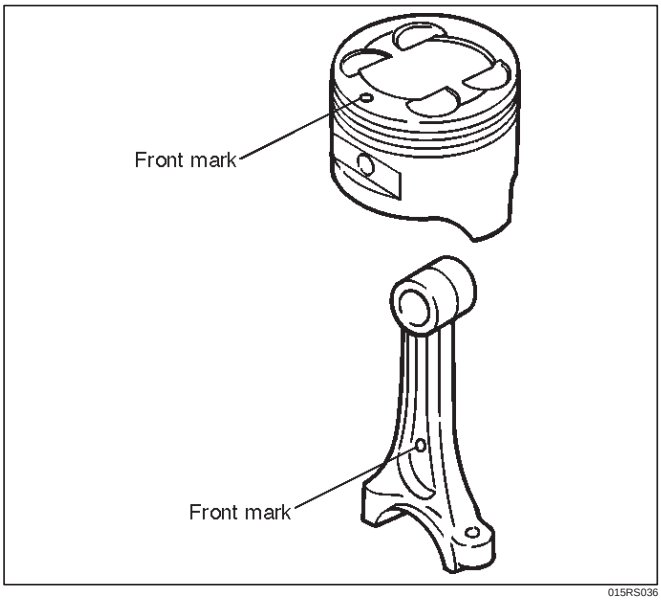

015RS036

- With 5–8840–0551–0 Piston pin service set and a press, press fit the piston pin.

NOTE: Heat the connecting rod small end to a suitable temperature to ensure smooth installation.

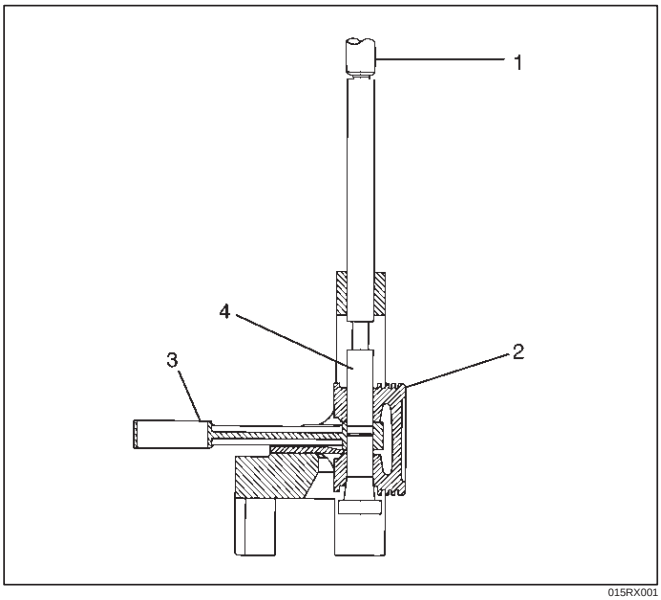

015RX001

Legend

(1) Press Ram
(2) Piston
(3) Connecting Rod
(4) Piston Pin

4. Install piston ring with the piston ring expander. The compression ring must be set with the T mark (1) facing up.

Marked T : No.1 Compression ring

Marked T2 : No.2 Compression ring

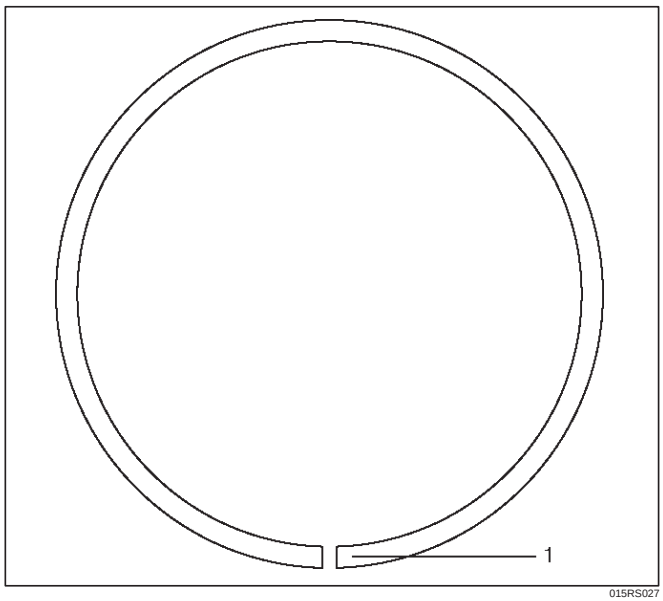

015RS027

- Install piston rings in the following sequence.

1. Oil ring
   1. Expander ring
   2. Upper side rail
   3. Lower side rail
2. 2nd compression ring
3. 1st compression ring

- The compression rings must be set with the T or T2 mark facing up.

Marked T : No.1 Compression ring

Marked T2 : No.2 Compression ring

- After installation, apply engine oil to the entire circumference of the piston rings. Check to see that all the rings rotate smoothly.

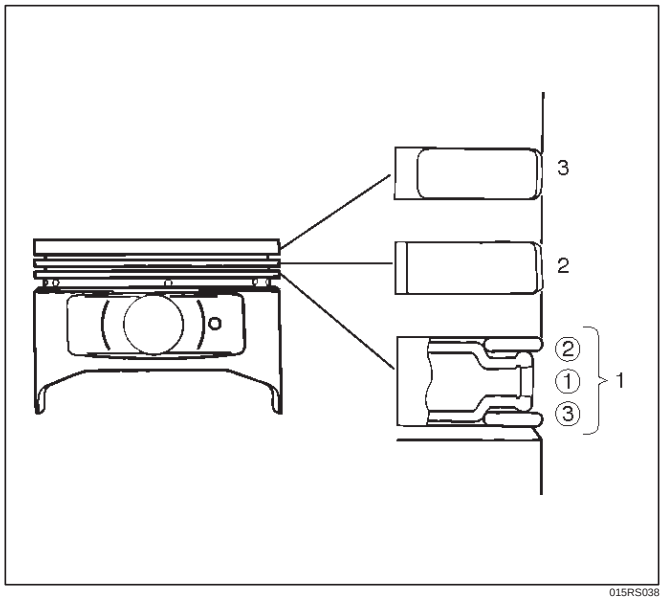

015RS038

5. Install piston and connecting rod assembly.

- Insert the bearings into the connecting rods and caps. Apply new engine oil to the bearing faces and nuts.

- Tighten the connecting rod cap nuts

Torque : 54 N·m (5.5 Kg·m/40 lb ft)

NOTE: Do not apply engine oil to the bearing back faces.

6. Oil gallery, refer to “Crankshaft and main bearing” in this manual.
7. Oil strainer and O-ring.
8. Oil pipe and O-ring.
9. Install crankcase with oil pan, refer to “Oil pan and Crankcase” in this manual.
10. Install cylinder head gasket.
11. Install Cylinder head assembly.
    - Refer to “Cylinder head” in this manual.

Cylinder Block

Cylinder Block and Associated Parts

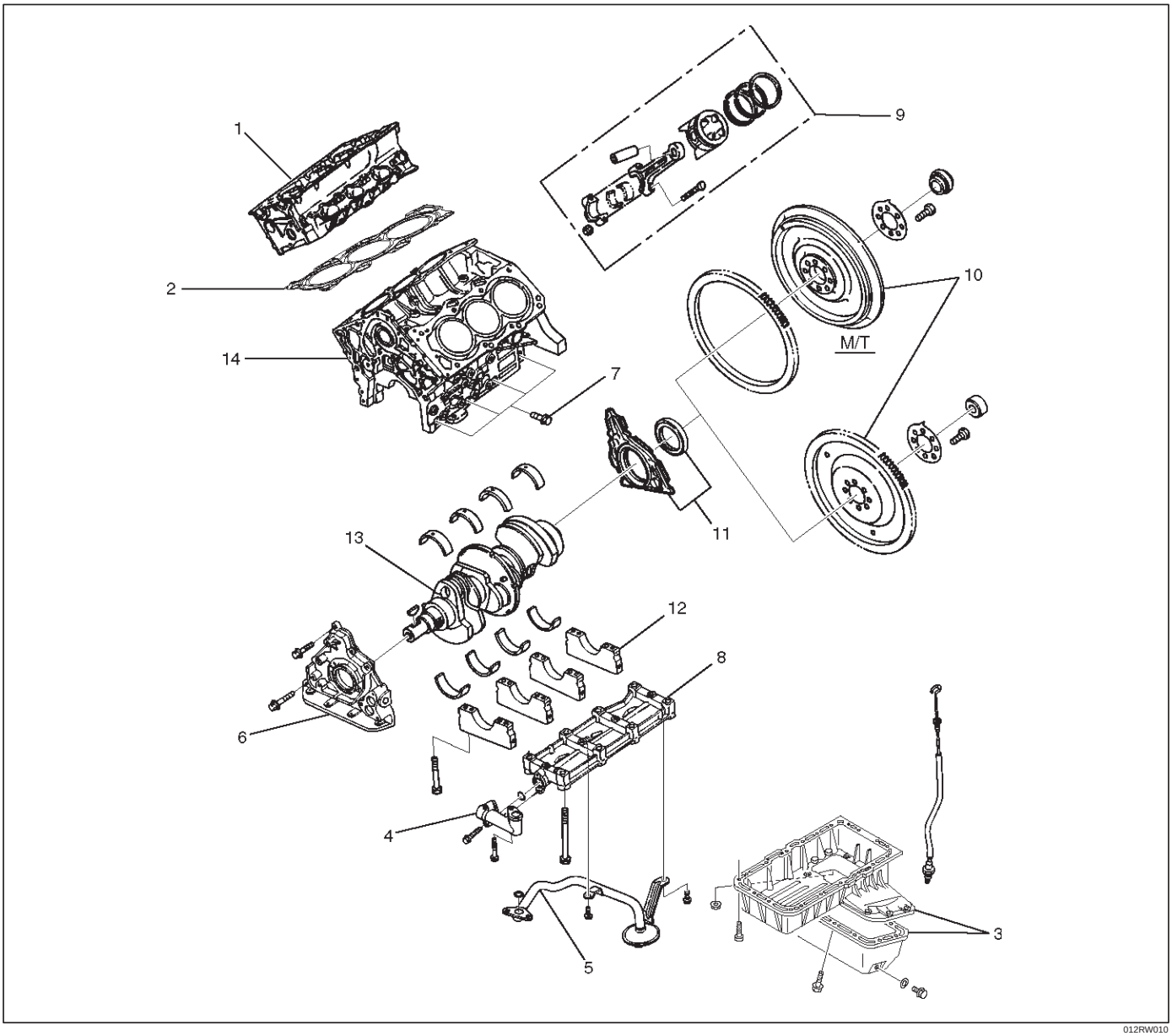

012RW010

Legend

(1) Cylinder Head Assembly
(2) Cylinder Head Gasket
(3) Crankcase with Oil Pan
(4) Oil Pipe and O-Ring
(5) Oil Strainer and O-Ring
(6) Oil Pump Assembly
(7) Cylinder Block Side Bolts
(8) Oil Gallery
(9) Piston and Connecting Rod Assembly
(10) Flywheel
(11) Rear Oil Seal Retainer Assembly
(12) Main Bearing Cap
(13) Crankshaft
(14) Cylinder Block

Disassembly

1. Remove cylinder head assembly.
2. Remove cylinder head gasket.
3. Remove crankcase with oil pan.
4. Remove oil pipe and O-ring.
5. Remove oil strainer and O-ring.
6. Remove oil pump assembly.
7. Remove crankcase side bolts.
8. Remove oil gallery.
9. Remove piston and connecting rod assembly.
10. Remove flywheel.

11. Remove rear oil seal retainer assembly.
12. Remove main bearing cap.
13. Remove crankshaft.
14. Remove cylinder block.

Inspection and Repair

1. Remove the cylinder head gasket and any other material adhering to the upper surface of the cylinder block. Be very careful not to allow any material to accidentally drop into the cylinder block. Be very careful not to scratch the cylinder block.
2. Carefully remove the oil pump, rear oil seal retainer, and crankcase assembly installation surface seal.
3. Wipe the cylinder block clean.
4. Visually inspect the cylinder block. If necessary, use a flaw detector to perform a dye penetrate and hydraulic (or air pressure) test. If cracking or other damage is discovered, the cylinder block must either be repaired or replaced.

Flatness

1. Using a straight–edge and feeler gauge, check that the upper surface of the cylinder block is not warped.

CAUTION: Be very careful not to allow any material to accidentally drop into the upper surface of the cylinder block. Be very careful not to scratch the upper surface of the cylinder block.

2. The cylinder block must be reground or replaced if the warpage exceeds the limit.

Warpage

Limit : 0.15 mm (0.0059 in)

Maximum repairable limit: 0.15 mm (0.0059 in)

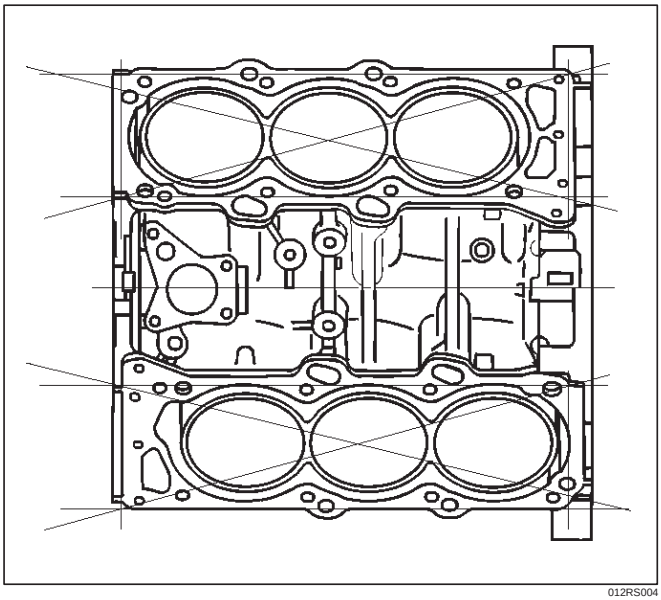

012RS004

Cylinder Bore

Use a cylinder gauge to measure the cylinder bore diameter in both the axial and thrust directions. Each measurement should be made at six points.

CAUTION: Be very careful not to allow any material to accidentally drop into the upper surface of the cylinder block. Be very careful not to scratch the upper surface of the cylinder block.

Cylinder Bore Inside Diameter

Limit : 93.530 (3.6823)

If the measurement exceed the specified limit, the cylinder block must be replaced.

Diameter

Grade A : 93.400 mm–93.410 mm (3.6772 in–3.6776 in)

Grade B : 93.411 mm–93.420 mm (3.6776 in–3.6779 in)

Grade C : 93.421 mm–93.430 mm (3.6780 in–3.6783 in)

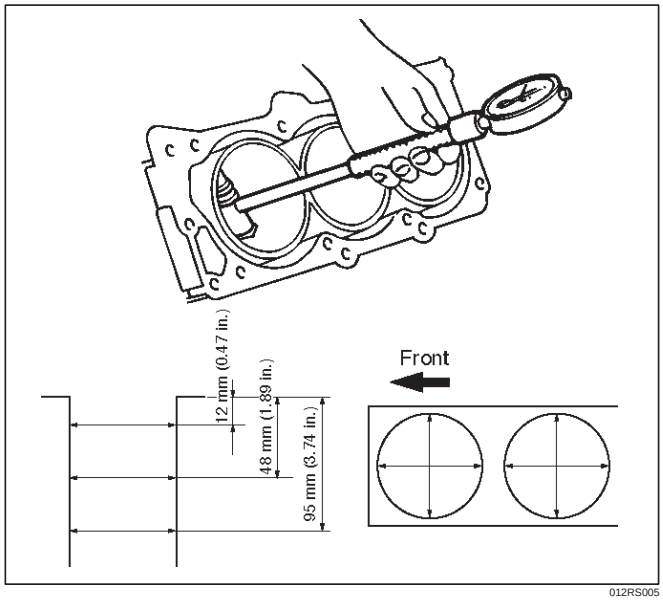

012RS005

NOTE: For information on piston diameter, please refer to the section ”Inspection of the Piston and Connecting Rod Assembly” in this manual.

- The ”Grade” mark (1) is stamped at the position illustrated.

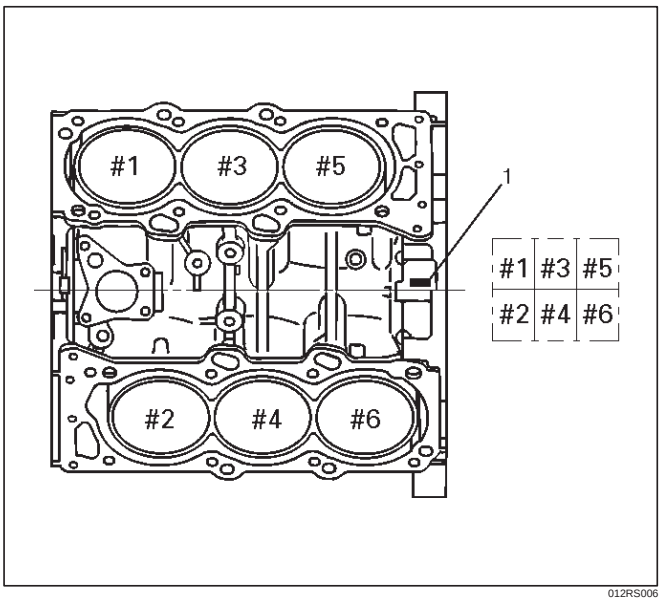

012RS006

Reassembly

1. Install cylinder block.
2. Install crankshaft.
   - Install the main bearings to the cylinder block and the main bearing caps.
   - Be sure that they are positioned correctly.
   - Apply new engine oil to the upper and lower main bearing faces.

NOTE: Do not apply engine oil to the bearing back faces.

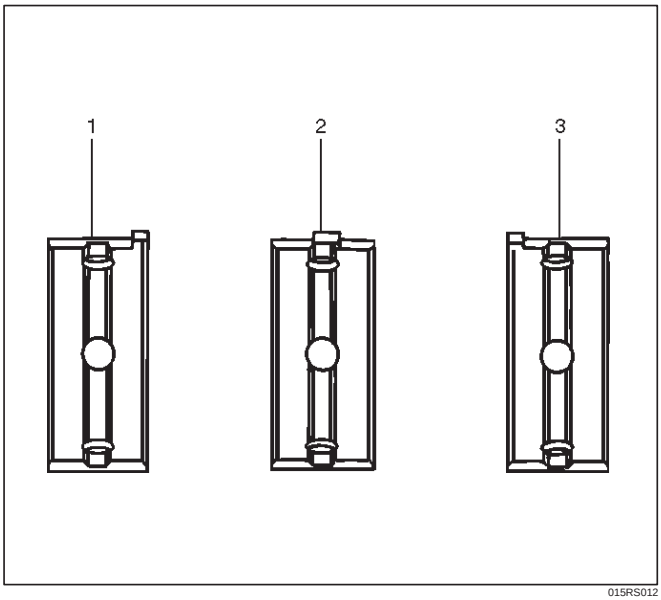

015RS012

Legend

(1) Number 1 and 4 main bearing upper and lower.
(2) Number 2 and 3 main bearing upper.
(3) Number 2 and 3 main bearing lower.

- Carefully mount the crankshaft.
- Apply engine oil to the thrust washer.
- Assemble the thrust washer to the No. 3 bearing journal. The oil grooves must face the crankshaft.

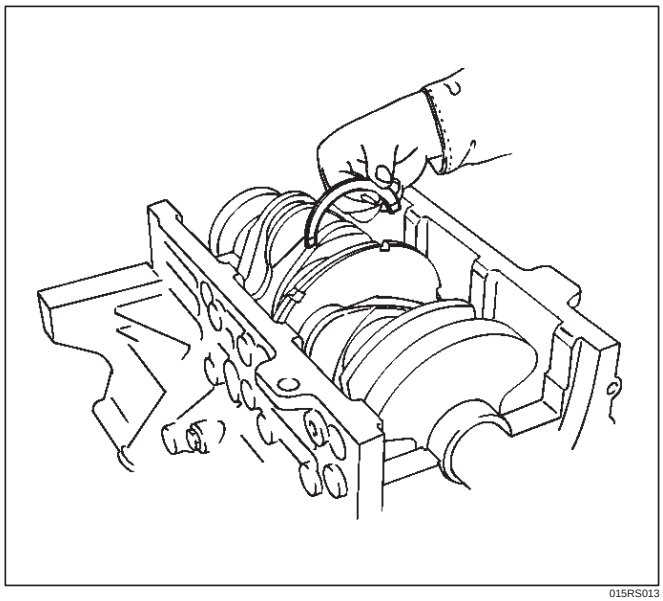

015RS013

3. Install rear oil seal retainer.
   - Remove oil on cylinder block and retainer fitting surface.
   - Apply sealant (TB1207B or equivalent) to retainer fitting surface as shown in illustration.
   - The oil seal retainer must be installed within 5 minutes after sealant application before the sealant hardens.

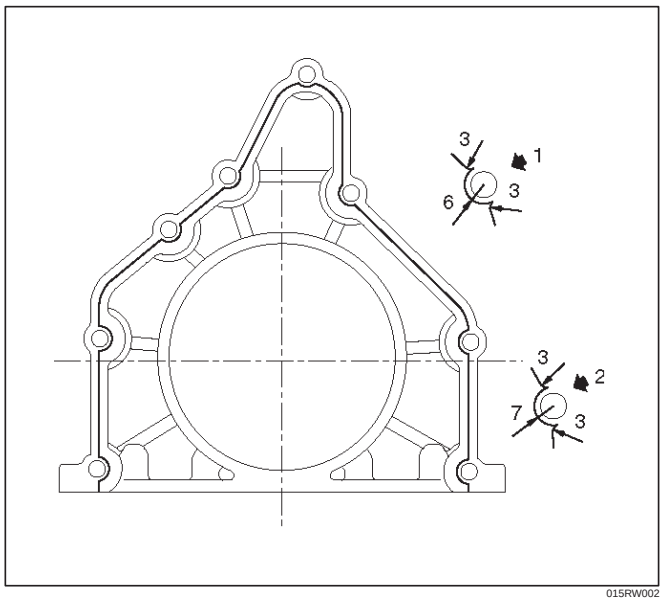

015RW002

Legend

(1) Around Bolt Holes
(2) Around Dowel Pin

- Apply engine oil to oil seal lip and align a dowel pin hole in the cylinder block with that in the retainer.
- Tighten retainer fixing bolts to the specified torque.

Torque: 25 N·m (2.5 Kg·m/18.4 lb ft)

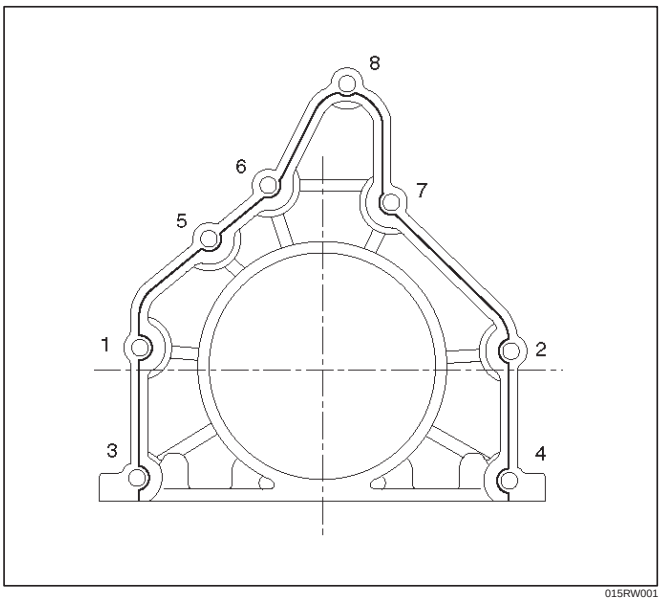

015RW001

4. Install flywheel
   1. Thoroughly clean and remove the oil from the threads of crankshaft.
   2. Remove the oil from the crankshaft and flywheel mounting faces.
   3. Mount the flywheel on the crankshaft and then install the washer.
   4. Holding the crankshaft stationary, tighten the flywheel bolts in the order shown.

Torque: 54 N·m (5.5 Kg·m/40 lb ft)

NOTE: Do not reuse the bolts and do not apply oil or thread lock to the bolts.

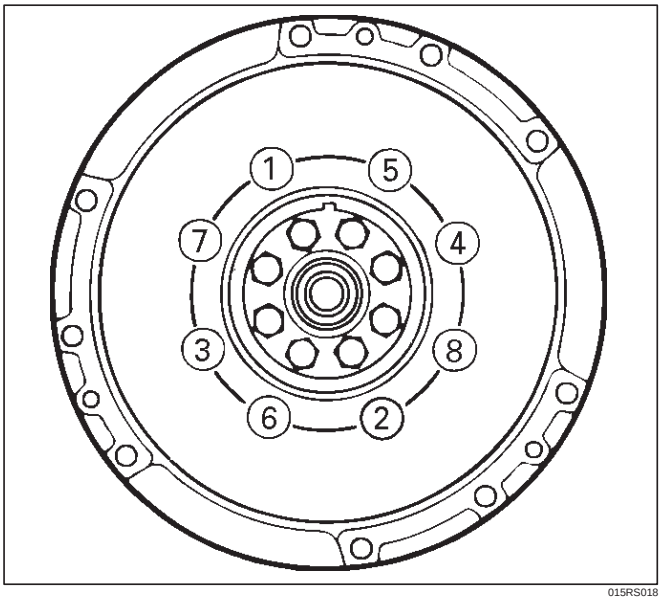

015RS018

5. Install piston and connecting rod assembly.
   - Apply engine oil to the cylinder bores, the connecting rod bearings and the crankshaft pins.

NOTE: Do not apply engine oil to the bearing back faces.

- Check to see that the piston ring end gaps are correctly positioned.

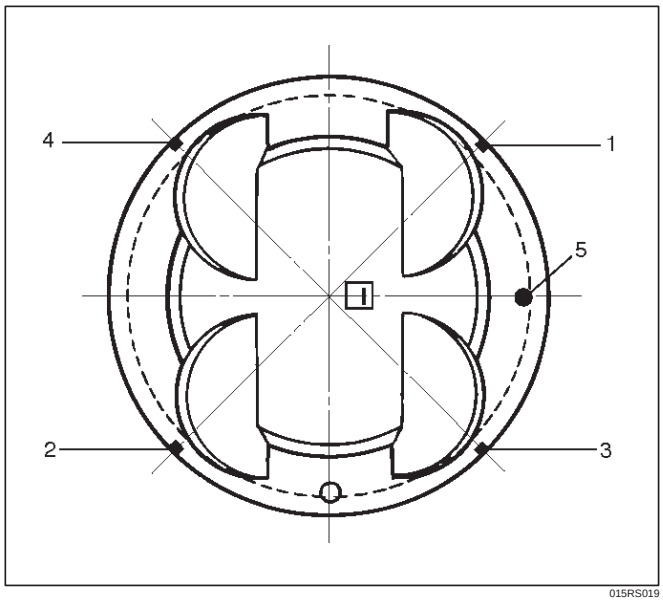

015RS019

Legend

(1) No.1 Compression Ring
(2) No.2 Compression Ring
(3) Oil Ring Side Rail Upper
(4) Oil Ring Side Rail Lower
(5) Piston Front Mark

- Insert the piston/connecting rod assemblies into each cylinder with the piston ring compressor.
- The front marks (1) must be facing the front of the engine.

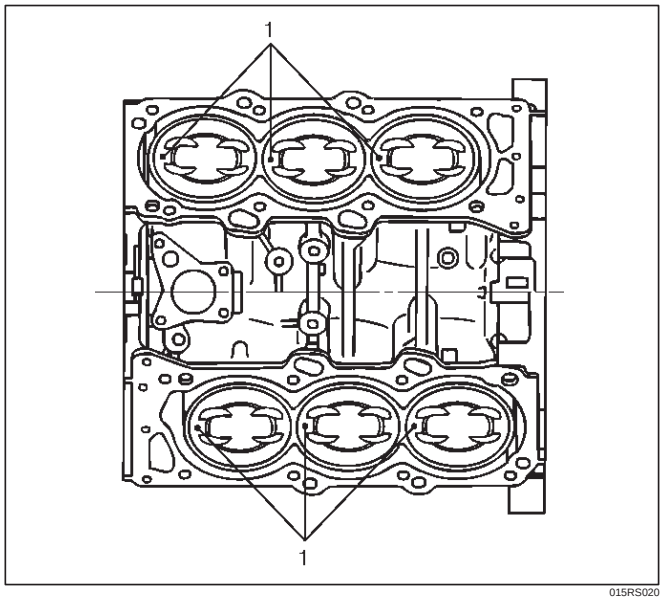

015RS020

6. Install oil gallery and tighten the bolts in 2 steps in the order shown.

1st step : 29 N·m (3.0 Kg·m/22 lb ft)

2nd step : 55˚~ 65˚

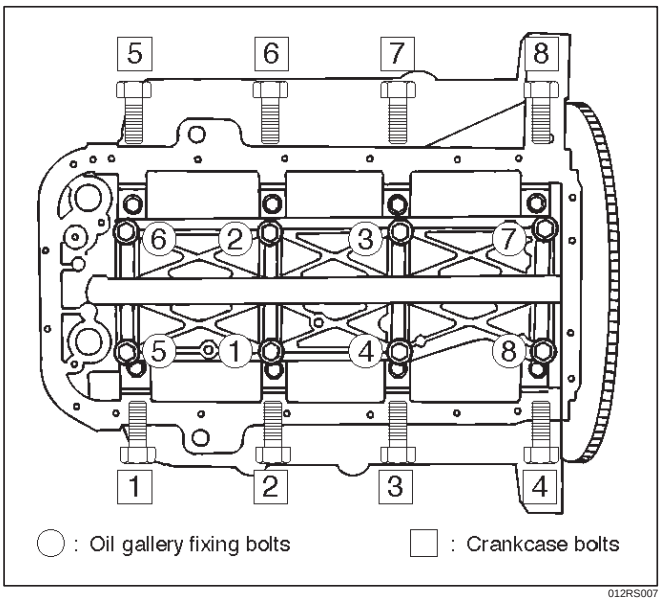

012RS007

7. Install cylinder block side bolts (1) and tighten crankcase bolts in sequence shown in the illustration.

Torque : 39 N·m (4.0 Kg·m/29 lb ft)

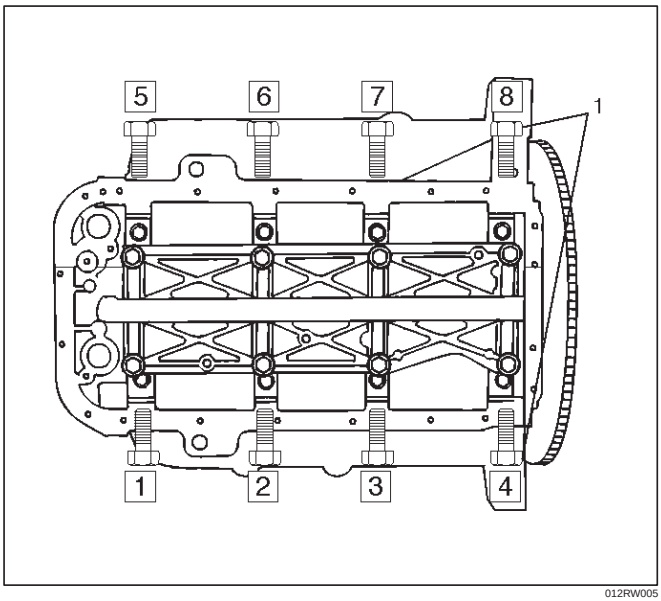

012RW005

8. Install oil pump assembly. Refer to “Oil Pump” in this manual.
9. Install oil strainer and O-ring.
10. Install oil pipe and O-ring.
11. Install crankcase with oil pan.
    1. Completely remove all residual sealant, lubricant and moisture from the sealing surfaces. The surfaces must be perfectly dry.
    2. Apply a correct width bead of sealant (TB– 1207C or its equivalent) to the contact surfaces of the crankcase. There must be no gaps in the bead.
    3. The oil pan must be installed within 5 minutes after sealant application to prevent premature hardening of sealant.
    4. Tighten the bolts and nuts to the specified torque.

Torque : 10 N·m (1.0 Kg·m/89 lb in)

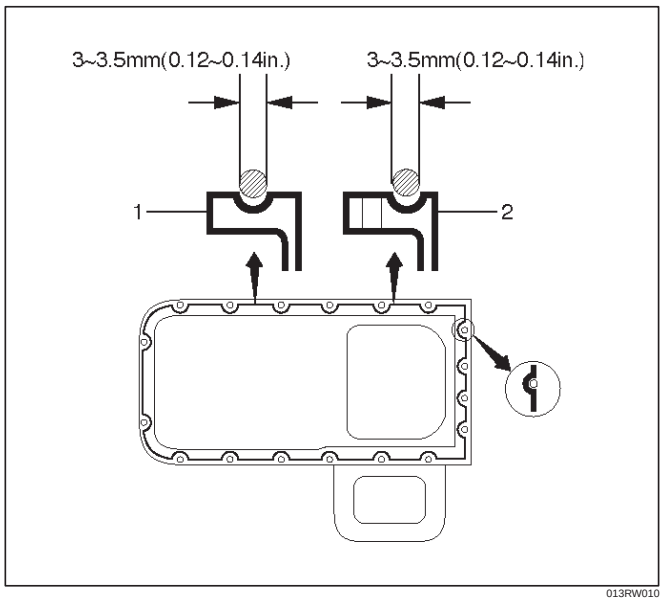

013RW010

Legend

(1) Portion Between Both Holes
(2) Bolt Hole Portions

12. Install cylinder head gasket.
13. Install cylinder head assembly. Refer to “Cylinder Head” in this manual.

Main Data and Specification

General Specification

Item	Specifications	
	6VD1	6VE1
Engine type, number of cylinders and arrangement	Water cooled, four cycle V6	
Form of combustion chamber	Pent roof type	
Valve mechanism	4-Cams, 4-Valves, DOHC Gear & Belt Drive	
Cylinder liner type	Casted in cylinder drive	
Total piston displacement	3165 cc	3494 cc
Cylinder bore x stroke	93.4mm x 77.0mm (3.6772 in x 3.0315 in)	93.4mm x 85.0mm (3.6772 in x 3.3465 in)
Compression ratio	9.1 : 1	
Compression pressure at 300rpm	14.0 Kg/cm^2	
Engine idling speed rpm	Non adjustable (750)	
Valve clearance	Intake: 0.28 mm (0.11 in)	
	Exhaust: 0.30mm (0.12in)	
Oil capacity	5.3 liters	
Ignition timing	Non adjustable 16˚ BTDC at idle rpm)	Non adjustable (20˚ BTDC at idle rpm)
Spark plug	K16PR–P11, PK16PR11, RC10PYP4	
Plug gap	1.0 mm–1.1 mm(0.0394 in – 0.0433 in)	

Torque Specifications

Ignition coil, Spark plug, Crankshaft angle sensor and Under cover

N·m (Kg·m/lb ft)

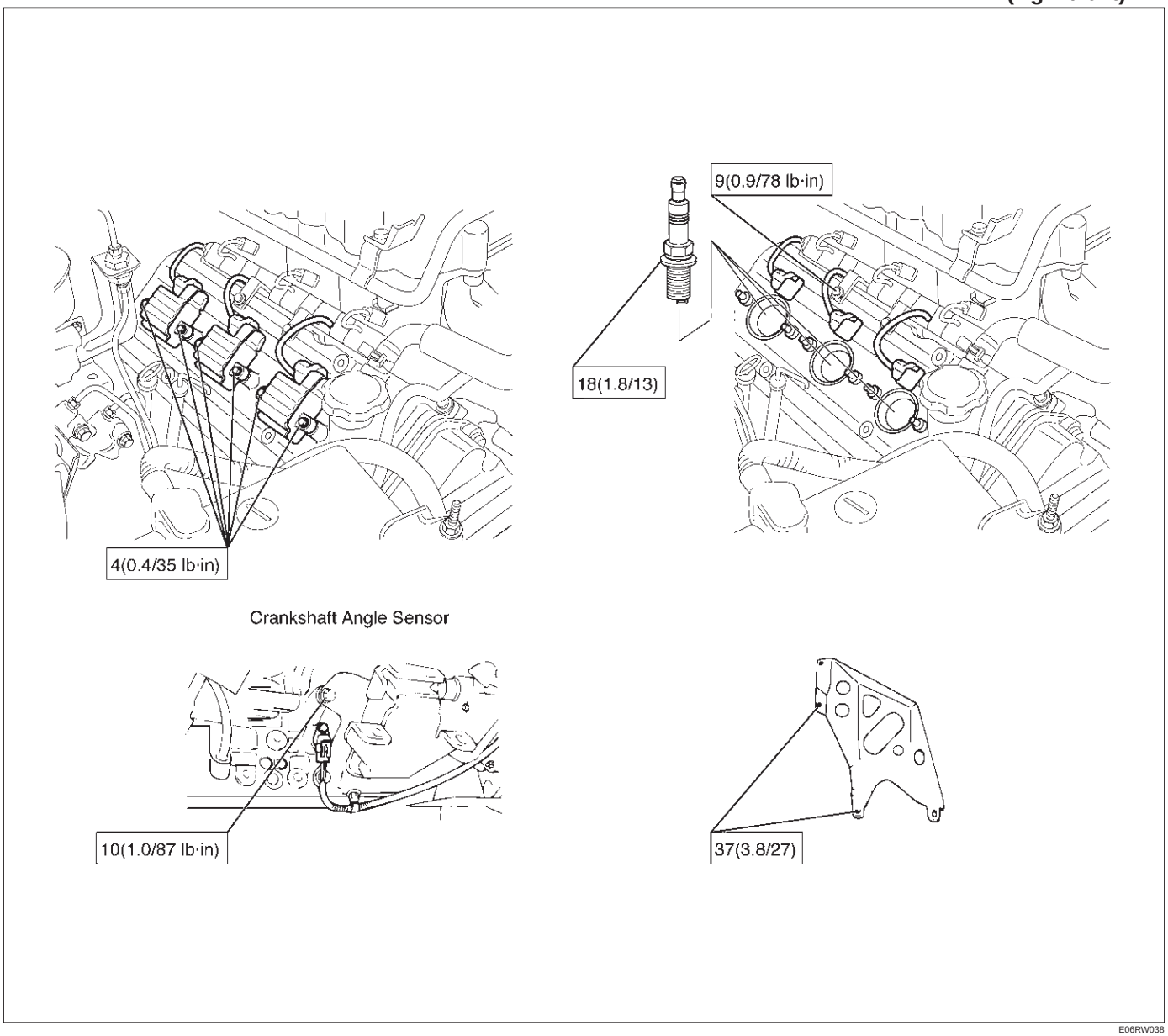

E06RW038

Cylinder head cover, Cylinder head, Camshaft bracket, Common chamber, EGR valve and EGR pipe

N·m (Kg·m/lb ft)

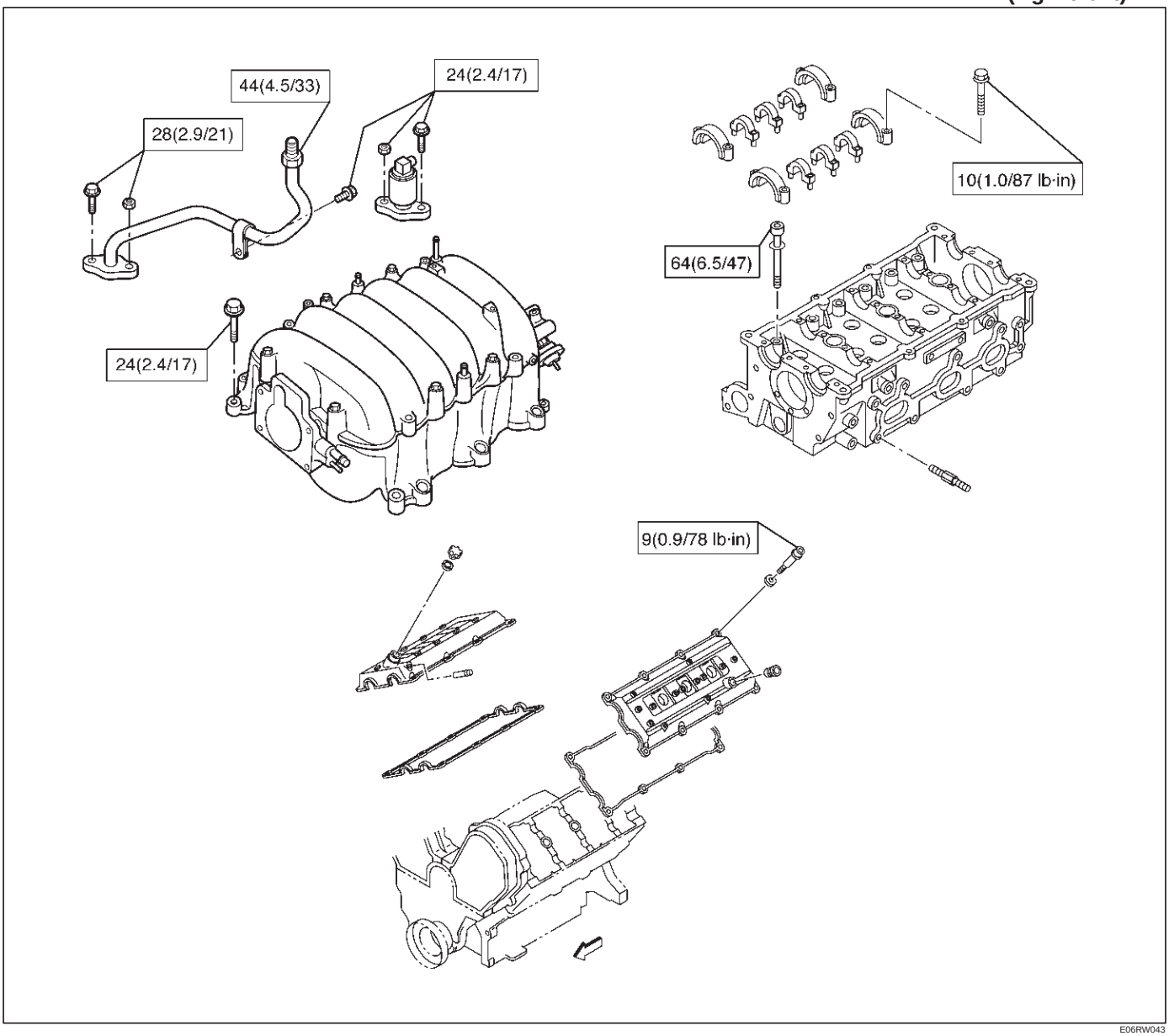

E06RW043

Crankshaft main bearing, Flywheel, Crankcase, Oil pan, Timing belt tensioner, Timing pulley, Timing belt cover, Oil pump, Oil gallery, Oil strainer and Water pump

N·m (Kg·m/lb ft)

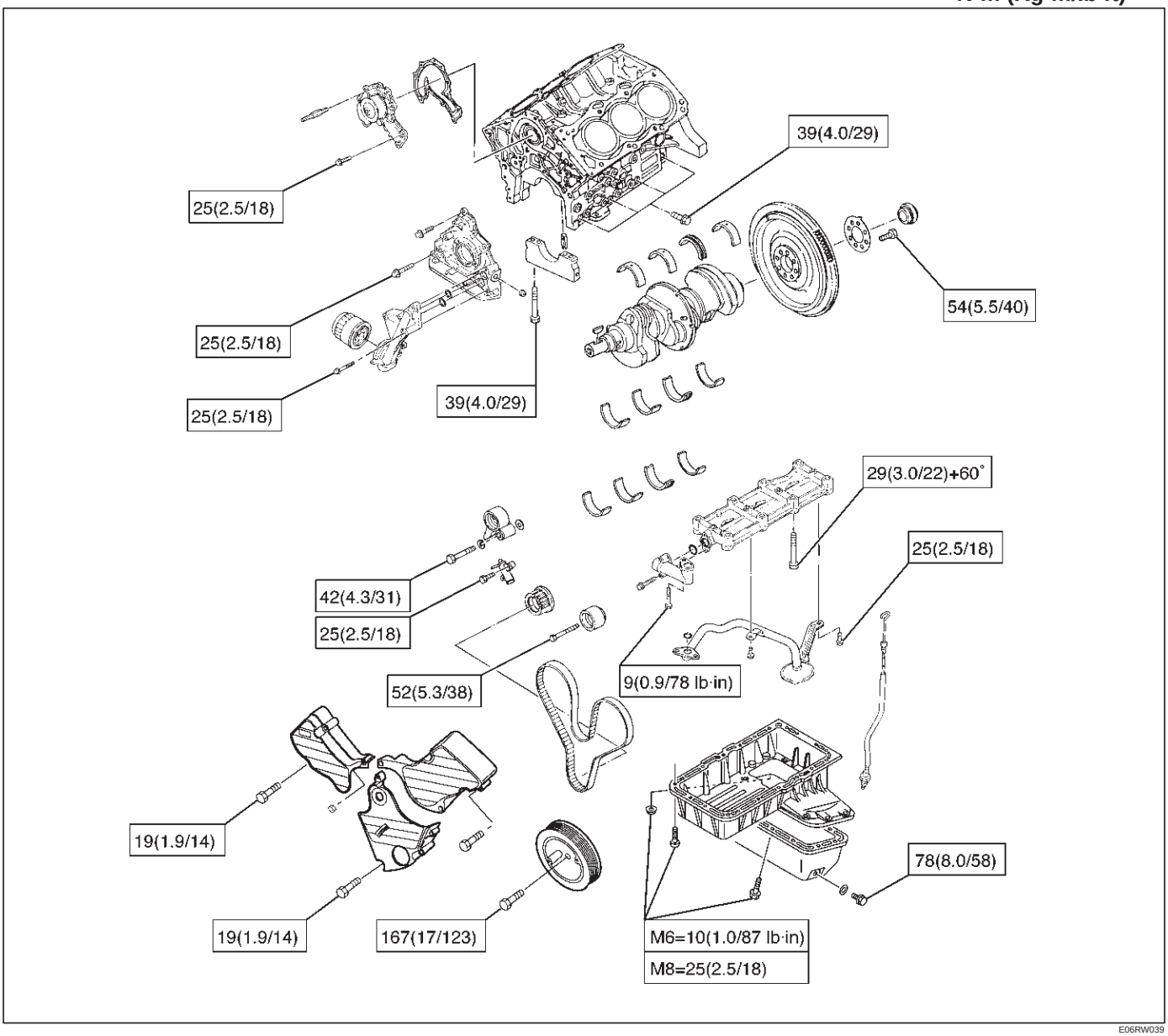

E06RW039

Connecting rod and Water pump

N·m (Kg·m/lb ft)

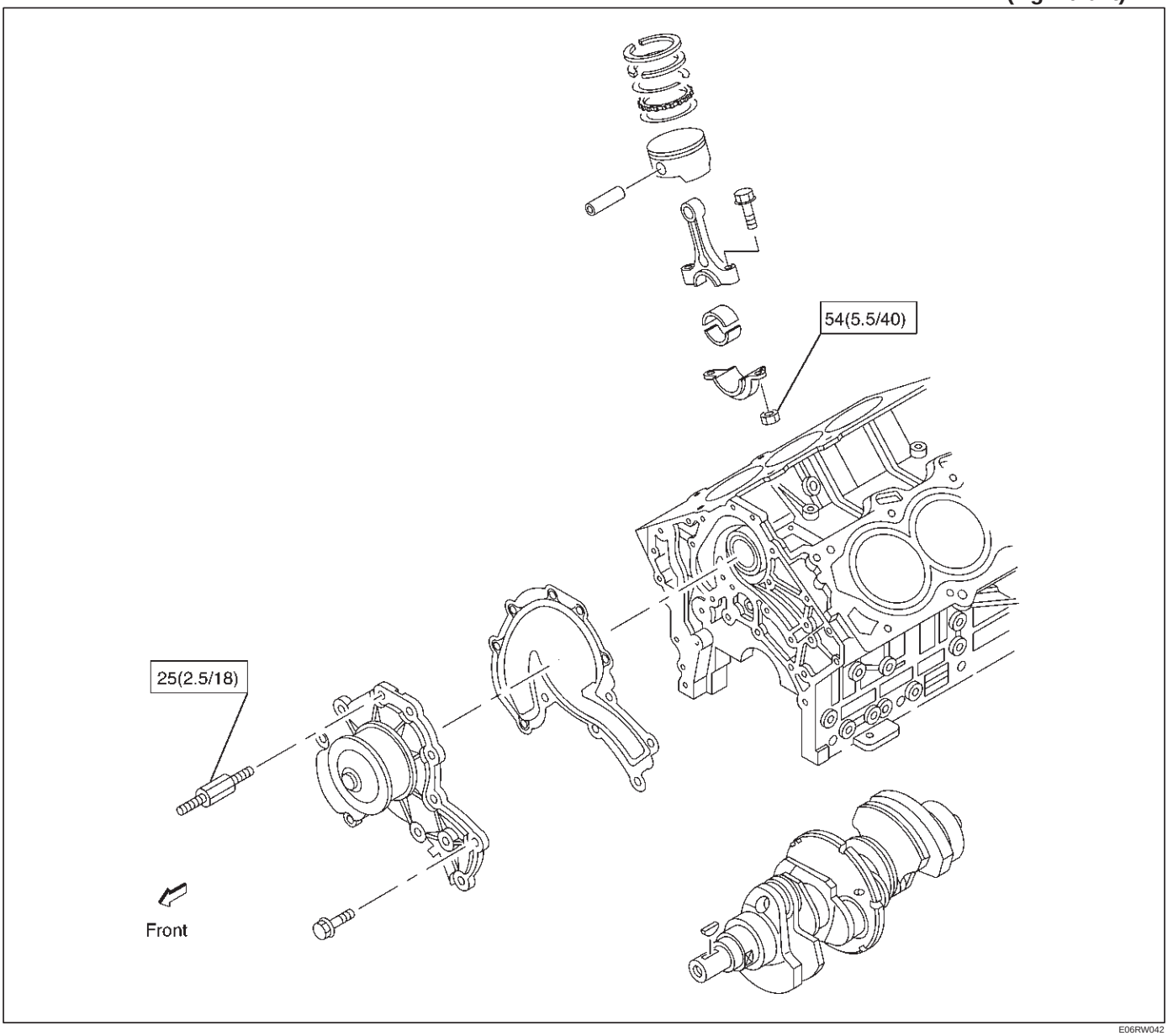

E06RW042

Engine mount

N·m (Kg·m/lb ft)

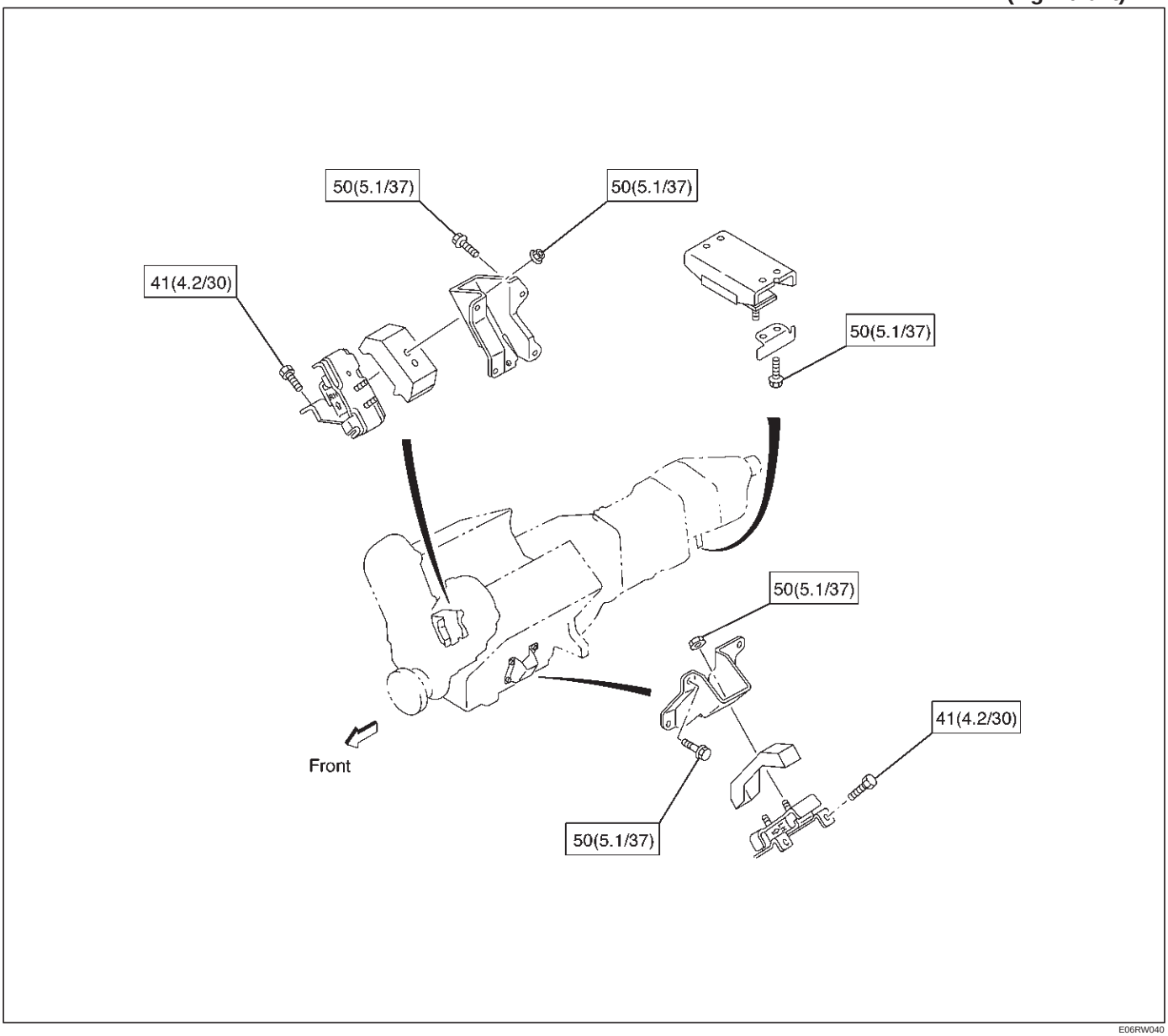

E06RW040

Special Tool

ILLUSTRATION	TOOL NO. TOOL NAME
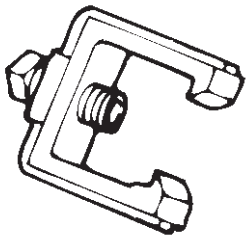 901RT033	**5–8840–0011–0** **(J–21687–02)** Remover; tie rod end
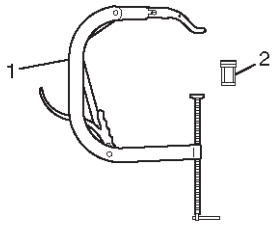 F06RW002	**5–8840–2441–0** Set Number of Valve Compressor **5–8840–2446–0** **(J–8062)** Compressor; Valve Spring (1) **5–8840–2547–0** **(J–42898)** Adapter; Compressor Valve Spring (2)
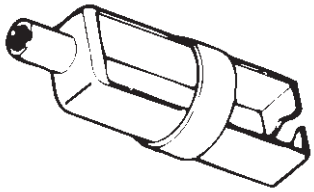 901RT036	**5–8840–0623–0** **(J–37281)** Remover; Oil controller
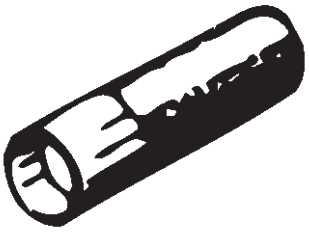 901RT037	**5–8840–0624–0** **(J–38537)** Installer; Oil controller
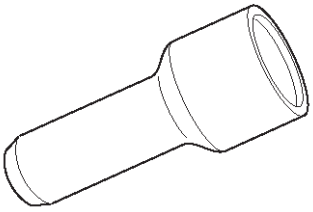 901RW171	**5–8840–2445–0** **(J–42985)** Installer; Camshaft oil seal
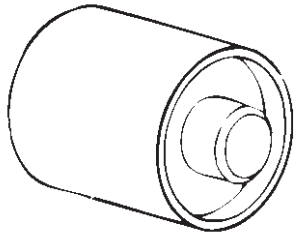 901RT040	**5–8840–2545–0** **(J–39206)** Installer; Pilot bearing

ILLUSTRATION	TOOL NO. TOOL NAME
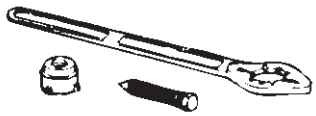 901RT041	**5–8840–0133–0** **(J–8614–01)** Holder; Crankshaft
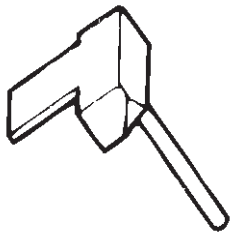 901RT042	**5–8840–2153–0** **(J–37228)** Seal cutter
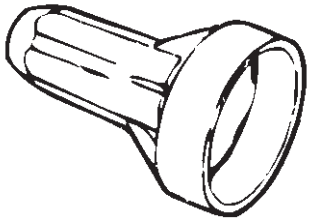 901RT043	**5–8840–2286–0** **(J–39201)** Installer; Real oil seal
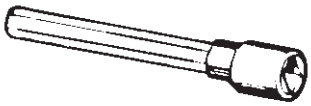 901RT046	**9–8511–4209–0** **(J–24239–1)** Cylinder head bolt wrench
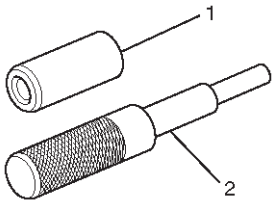 901RW182	**5–8840–2442–0** **(J–42899)** Replacer; Valve guide (set) (1,2) **5–8840–2548–0** **(J–42687)** Installer; Valve guide (1) **5–8840–2549–0** **(J–37985–1)** Remover; Valve guide (2)
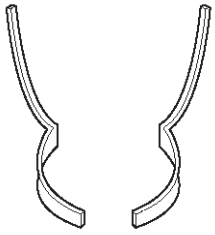 901RW109	**5–8840–2444–0** **(J–42689)** Adjusting Tool: Valve clearance

ILLUSTRATION	**TOOL NO.** TOOL NAME
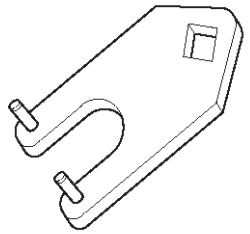 901RW110	**5–8840–2443–0** **(J–42686)** Lever; Gear spring
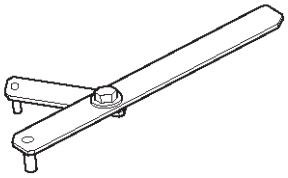 901RW115	**5–8840–2447–0** **(J–43041)** Holder; Universal

ENGINE

ENGINE COOLING

CONTENTS

Service Precaution 6B–1
General Description 6B–2
Diagnosis 6B–5
Draining and Refilling Cooling System 6B–6
Water Pump 6B–7
Water Pump and Associated Parts 6B–7
Removal 6B–7
Inspection 6B–7
Installation 6B–7
Thermostat 6B–8
Thermostat and Associated Parts 6B–8
Removal 6B–8
Inspection 6B–8
Installation 6B–8
Radiator 6B–9
Radiator and Associated Parts 6B–9
Removal 6B–9
Inspection 6B–10
Installation 6B–11
Drive Belt and Cooling Fan 6B–12
Drive Belt and Associated Parts 6B–12
Inspection 6B–12
Installation 6B–12
Main Data and Specifications 6B–13
Special Tool 6B–14

Service Precaution

WARNING: IF SO EQUIPPED WITH A SUPPLEMENTAL RESTRAINT SYSTEM (SRS), REFER TO THE SRS COMPONENT AND WIRING LOCATION VIEW IN ORDER TO DETERMINE WHETHER YOU ARE PERFORMING SERVICE ON OR NEAR THE SRS COMPONENTS OR THE SRS WIRING. WHEN YOU ARE PERFORMING SERVICE ON OR NEAR THE SRS COMPONENTS OR THE SRS WIRING, REFER TO THE SRS SERVICE INFORMATION. FAILURE TO FOLLOW WARNINGS COULD RESULT IN POSSIBLE AIR BAG DEPLOYMENT, PERSONAL INJURY, OR OTHERWISE UNNEEDED SRS SYSTEM REPAIRS.

CAUTION: Always use the correct fastener in the proper location. When you replace a fastener, use ONLY the exact part number for that application. ISUZU will call out those fasteners that require a replacement after removal. ISUZU will also call out the fasteners that require thread lockers or thread sealant. UNLESS OTHERWISE SPECIFIED, do not use supplemental coatings (Paints, greases, or other corrosion inhibitors) on threaded fasteners or fastener joint interfaces. Generally, such coatings adversely affect the fastener torque and the joint clamping force, and may damage the fastener. When you install fasteners, use the correct tightening sequence and specifications. Following these instructions can help you avoid damage to parts and systems.

General Description

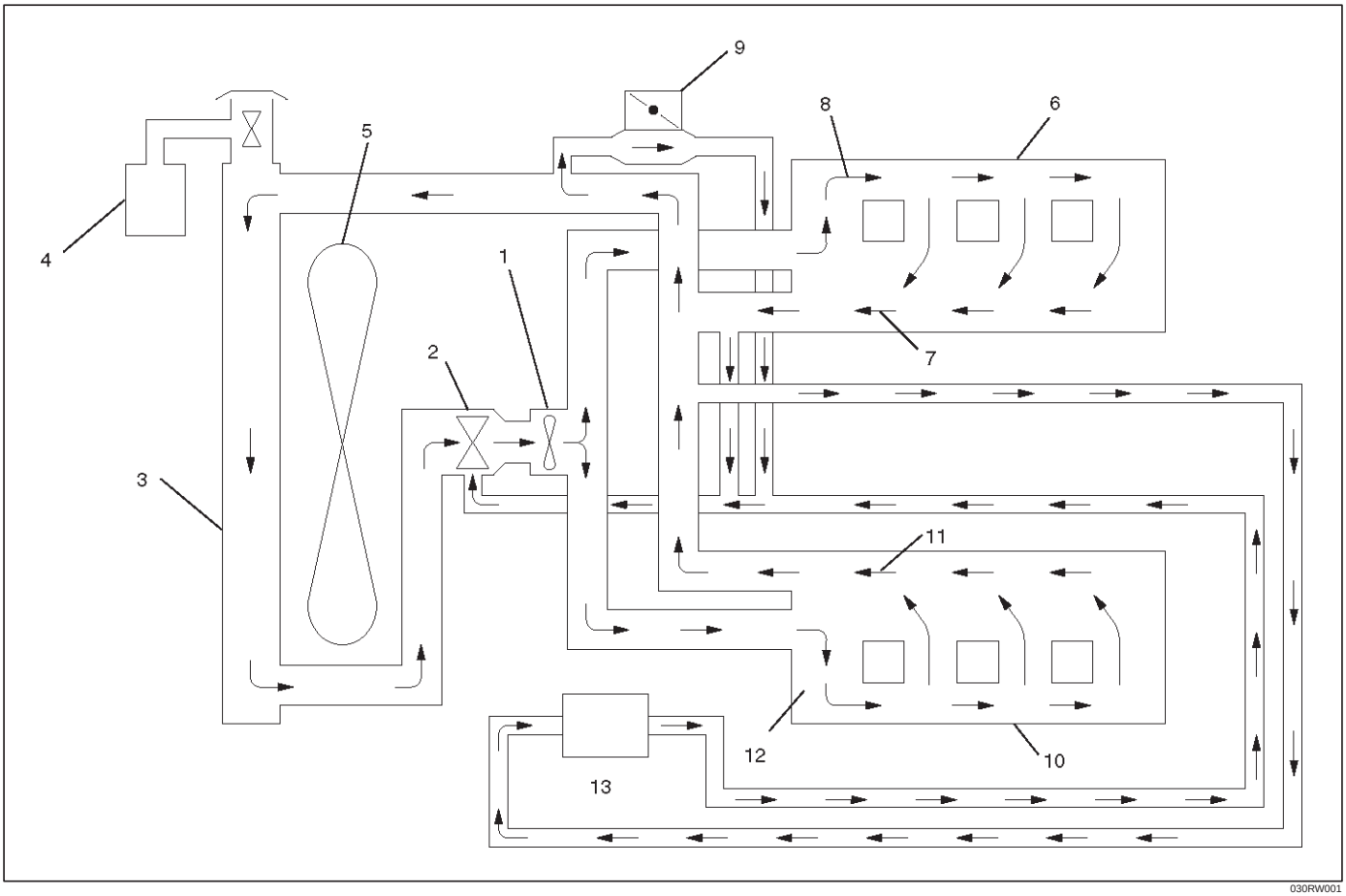

030RW001

Legend

(1) Water Pump
(2) Thermostat
(3) Radiator
(4) Reserve Tank
(5) Cooling Fan
(6) Cylinder Block
(7) Cylinder Head
(8) Right Bank
(9) Throttle Body
(10) Cylinder Block
(11) Cylinder Head
(12) Left Bank
(13) Heater

The cooling system is a pressurized Engine Coolant (EC) forced circulation type which consists of a water pump, thermostat cooling fan, radiator and other components. The automatic transmission fluid is cooled by the EC in radiator.

Water Pump

The EC pump is a centrifugal impeller type and is driven by a timing belt.

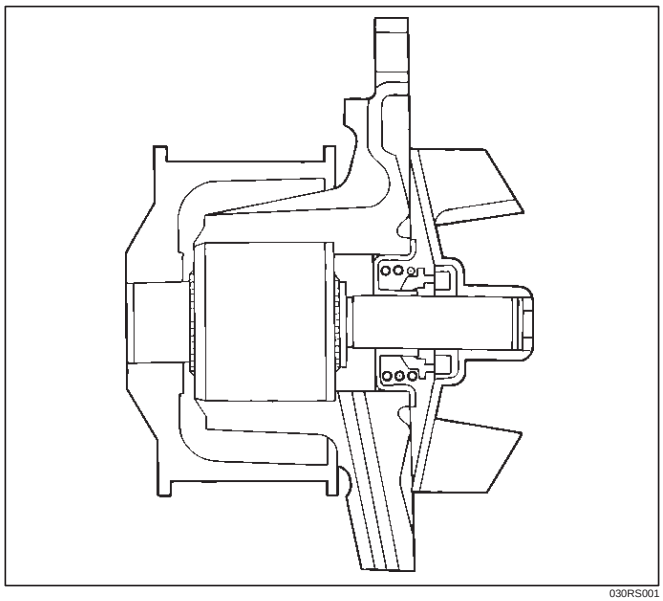

030RS001

Thermostat

The thermostat is a wax pellet type with a air hole(1) and is installed in the thermostat housing.

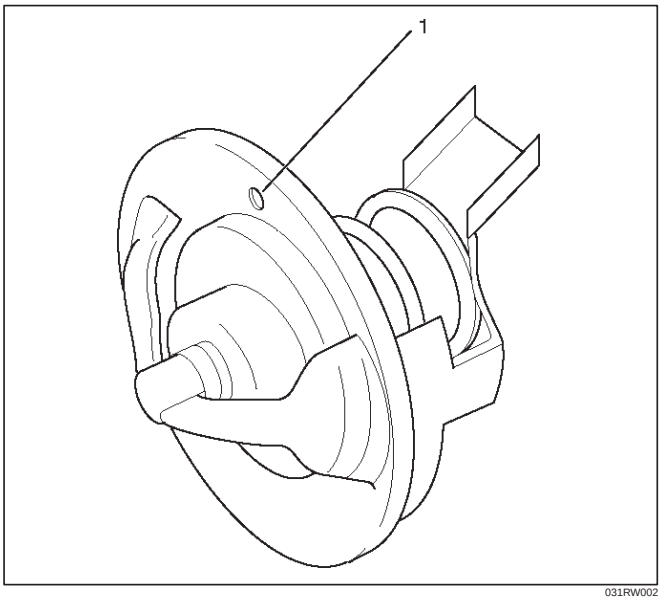

031RW002

Radiator

The radiator is a tube type with corrugated fins. In order to raise the boiling point of the coolant, the radiator is fitted with a cap in which the valve is operated at 88.2 ~ 117.6 kPa (12.8 ~ 17.0 psi) pressure. (No oil cooler provided for M/T)

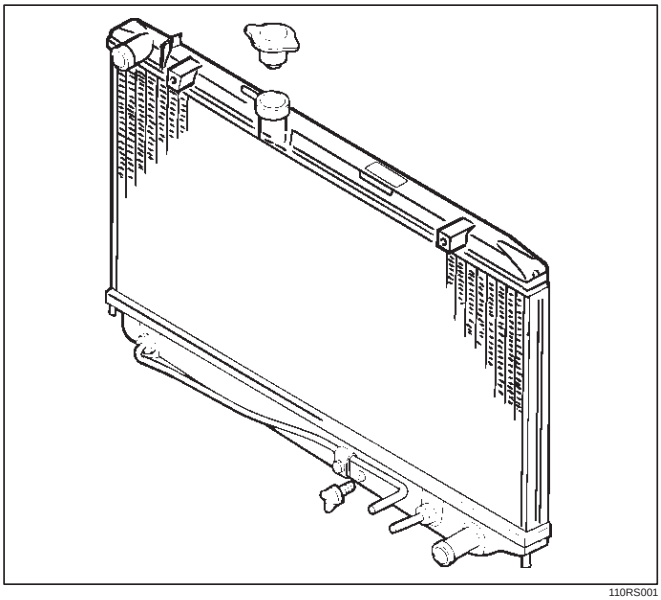

110RS001

Anti Freeze Solution

- Relation between the mixing ratio and freezing temperature of the EC varies with the ratio of anti–freeze solution in water. Proper mixing ratio can be determined by referring to the chart. Supplemental inhibitors or additives claiming to increase cooling capability that have not been specifically approved by Isuzu are not recommended for addition to the cooling system.
- Calculating mixing ratio

$$\text{Mixing ratio} = \frac{\text{Anti freeze solution (Lit/gal.)}}{\text{Anti freeze solution (Lit/gal.)} + \text{Water (Lit/gal.)}}$$

F06RW005

NOTE: Antifreeze solution + Water = Total cooling system capacity.

- **Total Cooling System Capacity**
- **M/T 8.8Lit (2.32Us gal)**
- **A/T 8.4Lit (2.22Us gal)**

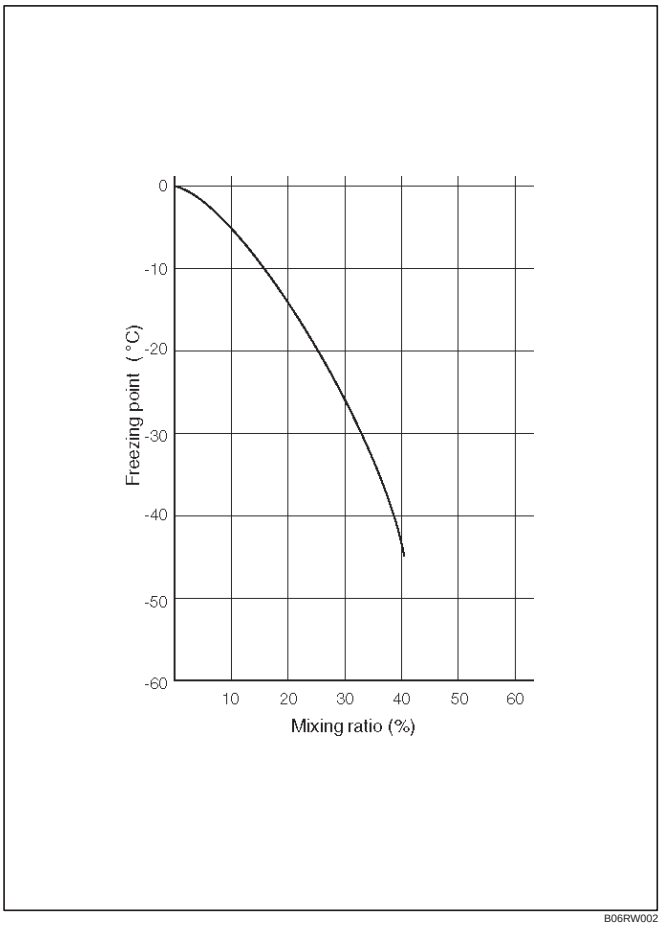

B06RW002

- Mixing ratio

  Check the specific gravity of engine coolant in the cooling system temperature ranges from 0˚C to 50˚C using a suction type hydrometer, then determine the density of the engine coolant by referring to the table.

NOTE:

1. Even in the areas where the atmospheric temperature is higher than 0˚C, be sure not to use antifreeze solution at a mixing ratio lower than 20% so that the inside of the engine may not be corroded.
2. If antifreeze solution is used at a mixing ratio higher than 60%, the specific heat of the coolant falls and the engine may be overheated. Moreover, antifreeze performance drop and the coolant may be frozen. The density of the solution must be adjusted as occasion calls.

Antifreeze solution lower than 20% may not have sufficient anticorrosive performance, and therefore, please never fail to adjust as occasion demands within the range of 20% to 60%.

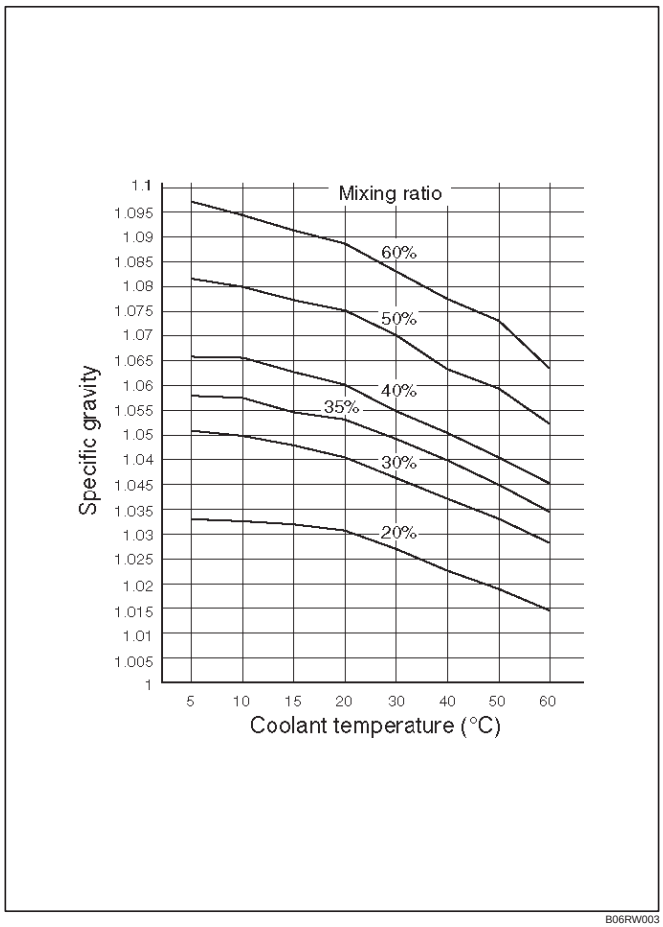

B06RW003

Diagnosis

Engine Cooling Trouble

Condition	Possible cause	Correction
Engine overheating	Low Engine Coolant level	Replenish
	Incorrect fan installed	Replace
	Thermo meter unit faulty	Replace
	Faulty thermostat	Replace
	Faulty Engine Coolant temperature sensor	Repair or replace
	Clogged radiator	Clean or replace
	Faulty radiator cap	Replace
	Low engine oil level or use of improper engine oil	Replenish or change oil
	Clogged exhaust system	Clean exhaust system or replace faulty parts
	Faulty Throttle Position sensor	Replace throttle valve assembly
	Open or shorted Throttle Position sensor circuit	Repair or replace
	Damaged cylinder head gasket	Replace
Engine overcooling	Faulty thermostat	Replace
Engine slow to warm–up	Faulty thermostat	Replace
	Thermo unit faulty	Replace

Draining and Refilling Cooling System

Before draining the cooling system, inspect the system and perform any necessary service to ensure that it is clean, does not leak and is in proper working order. The engine coolant (EC) level should be between the “MIN” and “MAX” lines of reserve tank when the engine is cold. If low, check for leakage and add EC up to the “MAX” line. There should not be any excessive deposit of rust or scales around the radiator cap or radiator filler hole, and the EC should also be free from oil.
Replace the EC if excessively dirty.

1. Completely drain the cooling system by opening the drain plug (2) at the bottom of the radiator.

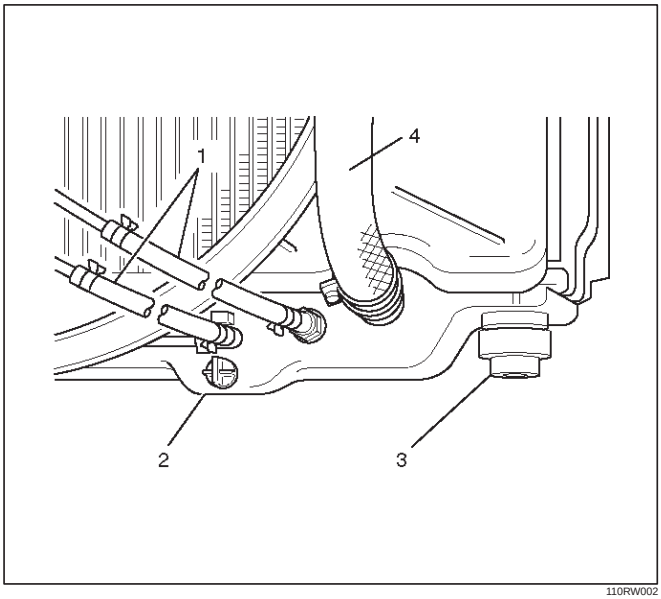

110RW002

2. Remove the radiator cap.

WARNING: TO AVOID THE DANGER OF BEING BURNED, DO NOT REMOVE THE CAP WHILE THE ENGINE AND RADIATOR ARE STILL HOT. SCALDING FLUID AND STEAM CAN BE BLOWN OUT UNDER PRESSURE.

3. Disconnect all hoses from the EC reserve tank.
   Scrub and clean the inside of the reserve tank with soap and water. Flush it well with clean water, then drain it. Install the reserve tank and hoses.
4. Refill the cooling system with the EC using a solution that is at least 50 percent antifreeze but no more than 70 percent antifreeze.
5. Fill the radiator to the base of the filler neck.
   Fill the EC reserve tank to “MAX” line when the engine is cold.
6. Block the drive wheels and firmly apply the parking brake. Shift an automatic transmission to “P” (Park) or a manual transmission to neutral.
7. Remove the radiator cap. Start the engine and warm it up at 2,500 ~ 3,000 rpm for about 30 minutes.
8. When the air comes out from the radiator filler neck and the EC level has gone down, replenish with the EC. Repeat this procedure until the EC level does not go down. Then stop the engine and install the radiator cap. Let the engine cool down.
9. After the engine has cooled, replenish with EC up to the “MAX” line of the reserve tank.
10. Start the engine. With the engine running at 3,000 rpm, make sure there is no running water sound from the heater core (behind the center console).
11. If the running water sound is heard, repeat steps 8 to 10.

Water Pump

Water Pump and Associated Parts

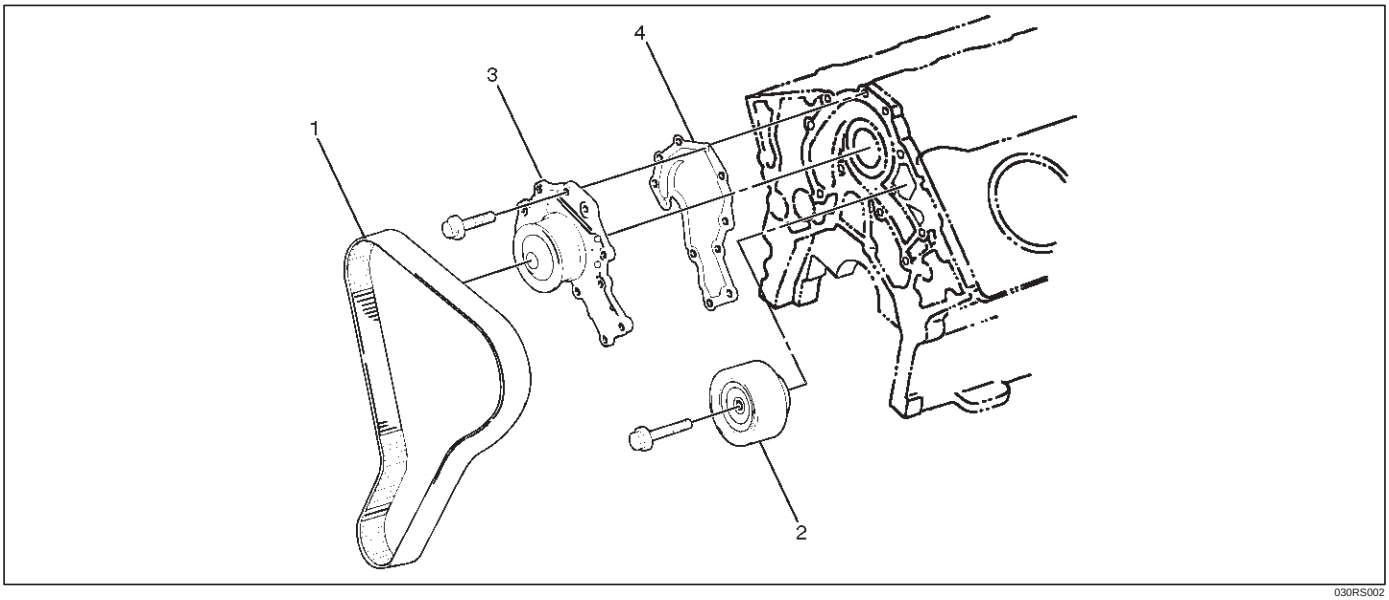

030RS002

Legend
(1) Timing Belt
(2) Idle Pulley
(3) Water Pump Assembly
(4) Gasket

Removal

1. Disconnect battery ground cable.
2. Drain coolant.
3. Radiator hose (on inlet pipe side).
4. Remove timing belt. Refer to “Timing Belt” in this manual.
5. Remove Idle pulley.
6. Remove water pump assembly.
7. Remove gasket.

Inspection

Make necessary repair and parts replacement if extreme wear or damage is found during inspection. Should any of the following problems occur, the entire water pump assembly must be replaced:

- Crack in the water pump body
- EC leakage from the seal unit
- Play or abnormal noise in the bearing
- Cracks or corrosion in the impeller.

Installation

1. Install gasket, clean the mating surface of gasket before installation.
2. Install water pump assembly and tighten bolts to the specified torque.

   Torque: 25 N·m (2.5 Kg·m/18 lb ft)

   - Tightening order
     The tightening order are in the illustrate.

NOTE: To prevent the oil leakage, apply the LOCTITE 262 or an equivalent, to the arrow marked fixing bolt thread.

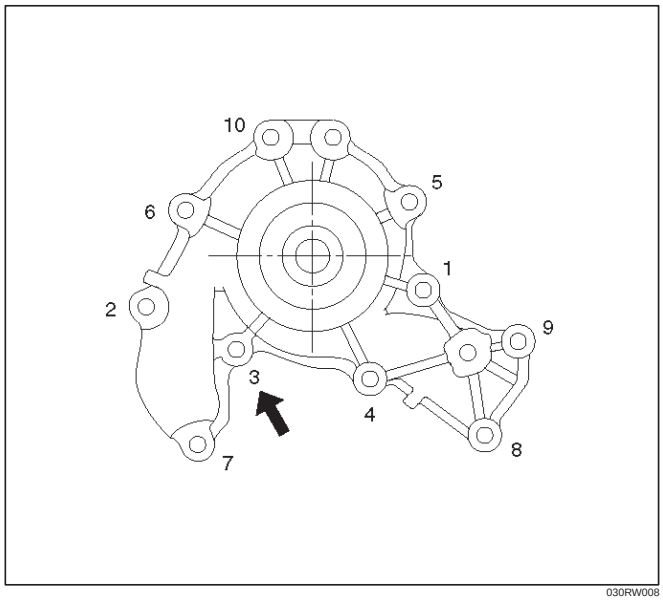

030RW008

3. Idle pulley
   - Install idle pulley and tighten bolt to the specified torque.

   Torque: 52 N·m (5.3 Kg·m/38 lb ft)

4. Timing belt
   - Install timing belt. Refer to timing belt installation step in “Timing Belt” in this manual.
5. Connect radiator inlet hose and replenish EC.
6. Connect battery ground cable.

Thermostat

Thermostat and Associated Parts

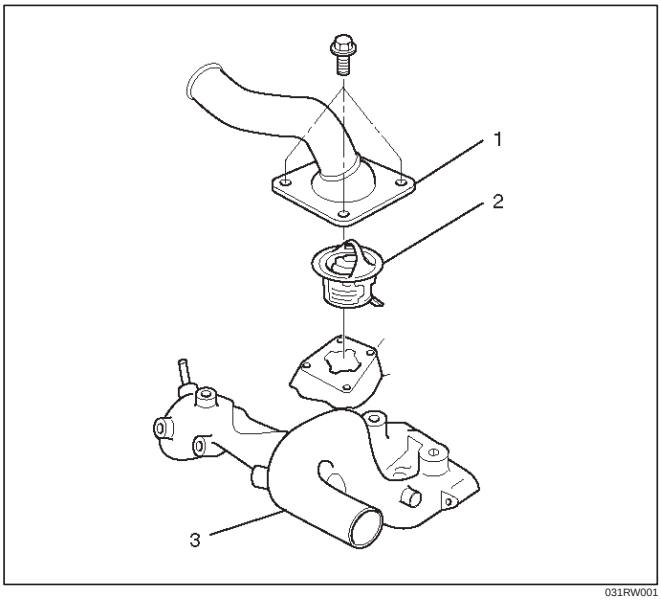

031RW001

Legend

(1) Thermostat Housing
(2) Thermostat
(3) Outlet Pipe

Removal

1. Disconnect battery ground cable.
2. Drain engine coolant from the radiator and engine.
3. Disconnect radiator hose from the inlet pipe.
4. Remove thermostat housing.
5. Remove thermostat(2).

Inspection

Suspend the thermostat in a water–filled container using thin wire. Place a thermometer next to the thermostat. Do not directly heat the thermostat.
Gradually increase the water temperature. Stir the water so that the entire water is same temperature.

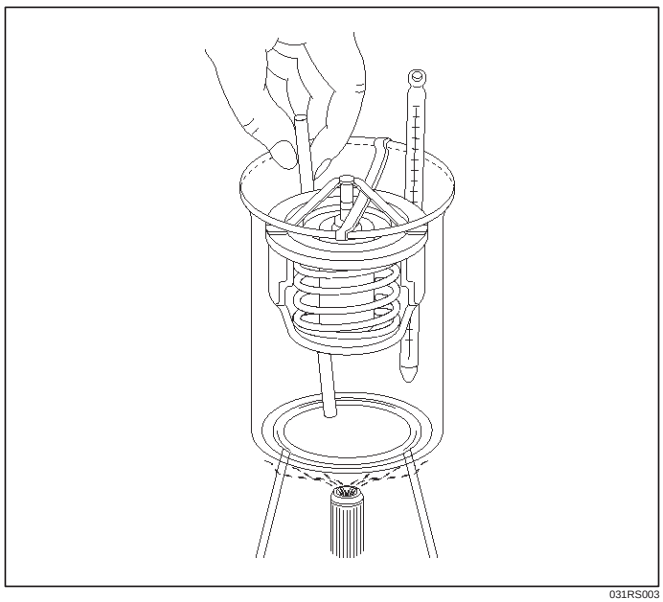

031RS003

Confirm the temperature when the valve first begins to open.

Valve opening temperature 74.5C ~ 78.5˚C (166.1˚F ~ 173.3˚F)

Confirm the temperature when the valve is fully opened.

Valve full open temperature and lift More than 8.5mm (0.33 in) at 90˚C (194˚F)

Make necessary repair and parts replacement if extreme wear or damage is found during inspection.

Installation

1. Install thermostat into the outlet pipe(4) making sure that the air hole is in the up position.
2. Install thermostat housing and tighten bolts to the specified torque.

   Torque: 25 N·m (2.5 Kg·m/18 lb ft)

3. Installation rubber hose.
4. Replenish engine coolant (EC).
5. Start engine and check for EC leakage.

Radiator

Radiator and Associated Parts

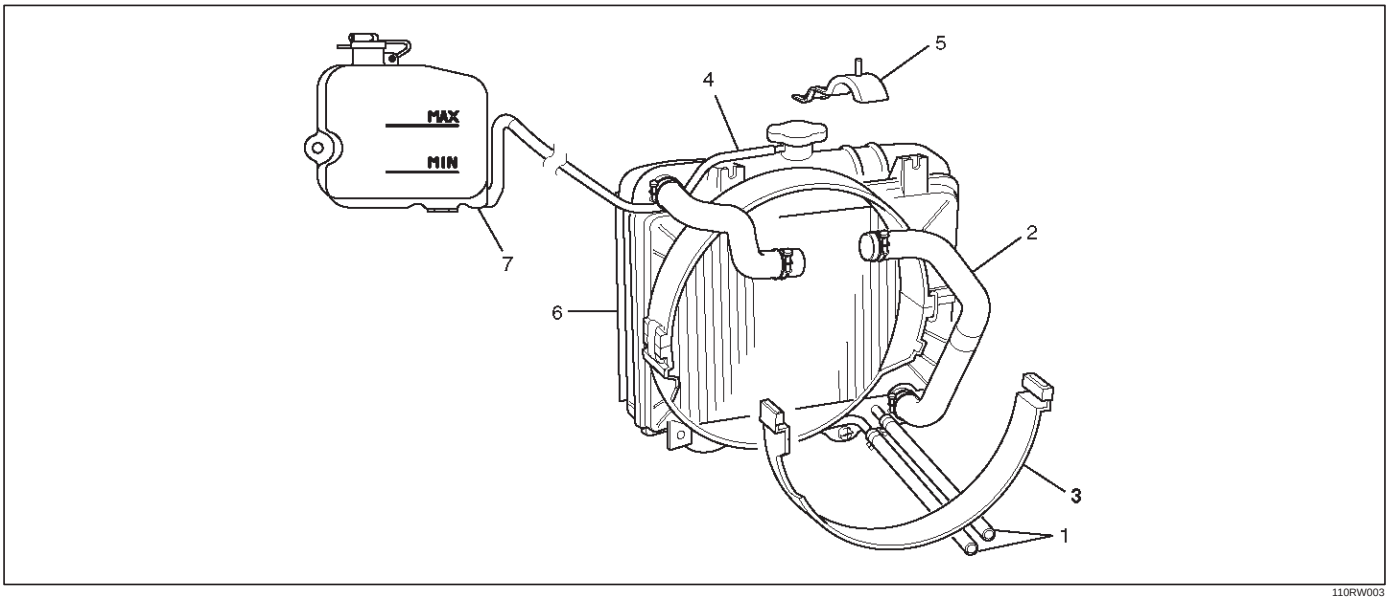

110RW003

Legend

(1) Oil Cooler Hose For Automatic Transmission
(2) Radiator Hose
(3) Fan Guide, Lower
(4) Reserve Tank Hose
(5) Bracket
(6) Radiator Assembly
(7) Reserve Tank

Removal

1. Disconnect battery ground cable.
2. Loosen a drain plug(2) to drain EC.
3. Disconnect oil cooler hose(1) on automatic transmission (A/T).
4. Disconnect radiator inlet hose and outlet hose from the engine.

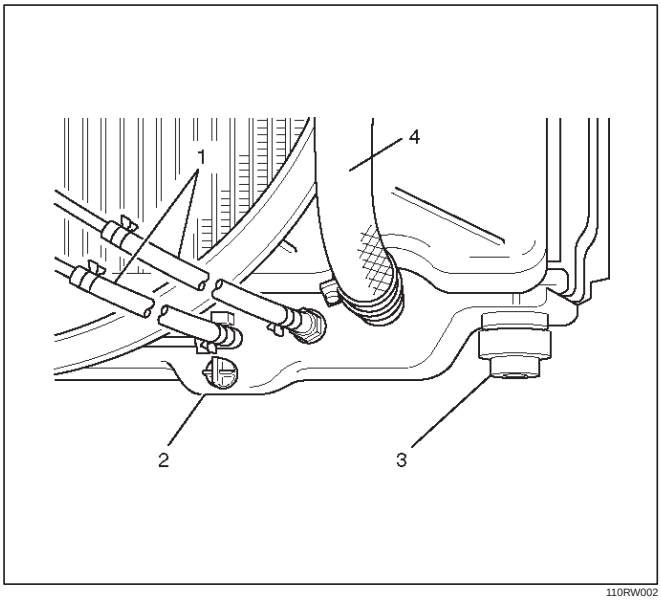

110RW002

5. Remove fan guide(1), clips(3) on both sides and the bottom lock, then remove lower fan guide(3) with fan shroud(4).

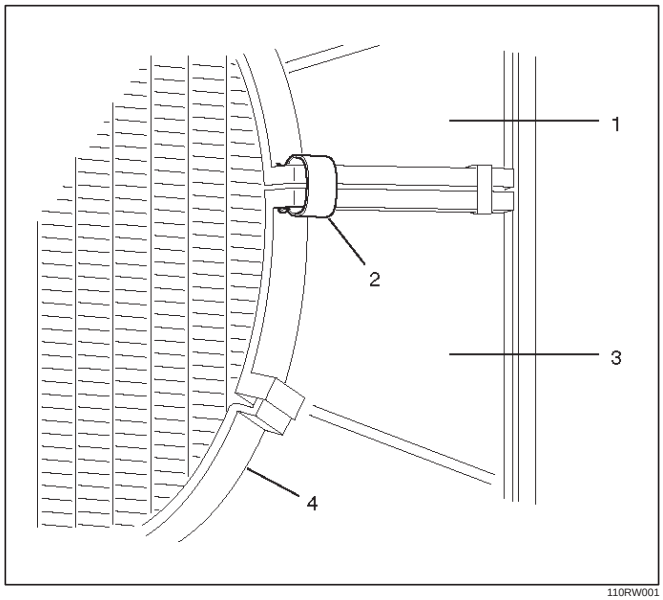

110RW001

6. Disconnect the reserve tank hose(4) from radiator.
7. Remove bracket(5).

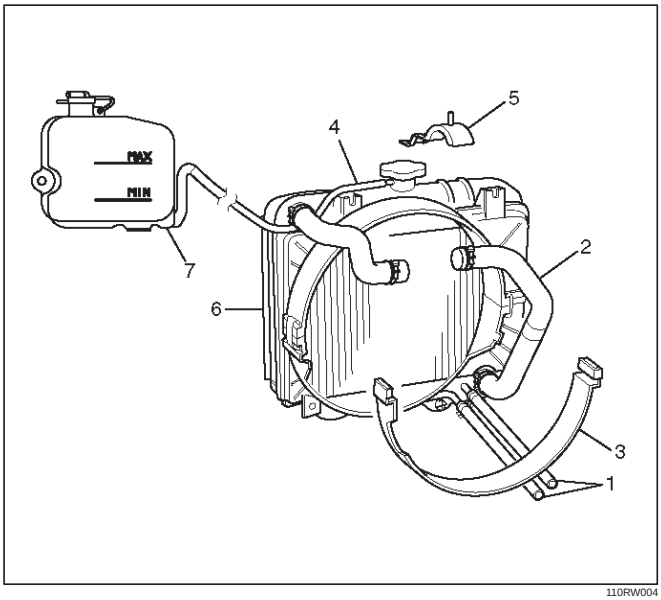

110RW004

8. Lift up and remove the radiator assembly with hose, taking care not to damage the radiator core with a fan blade.
9. Remove rubber cushions on both sides at the bottom.

Inspection

Radiator Cap

Measure the valve opening pressure of the pressurizing valve with a radiator filler cap tester.
Replace the cap if the valve opening pressure is outside the standard range.

Valve opening pressure kPa (psi) 88.3 ~ 117.7 (12.8 ~17.1)

Cap tester: 5–8840–0277–0
Adapter: 5–8840–2603–0
Check the condition of the vacuum valve in the center of the valve seat side of the cap. If considerable rust or dirt is found, or if the valve seat cannot be moved by hand, clean or replace the cap.

Valve opening vacuum kPa (psi) 1.96 ~ 4.91 (0.28 ~ 0.71)

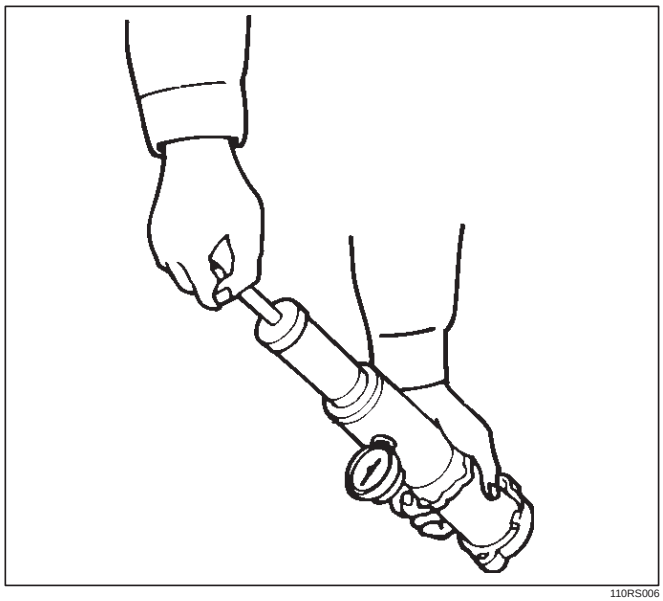
110RS006

Radiator Core

1. A bent fin may result in reduced ventilation and overheating may occur. All bent fins must be straightened. Pay close attention to the base of the fin when it is being straightened.
2. Remove all dust, bugs and other foreign material.

Flushing the Radiator

Thoroughly wash the inside of the radiator and the engine coolant passages with cold water and mild detergent. Remove all signs of scale and rust.

Cooling System Leakage Check

Use a radiator cap tester to force air into the radiator through the filler neck at the specified pressure of 196 kPa (28.5 psi) with a cap tester:

- Leakage from the radiator
- Leakage from the coolant pump
- Leakage from the water hoses
- Check the rubber hoses for swelling.

Cap tester: 5–8840–0277–0
Adapter: 5–8840–2603–0

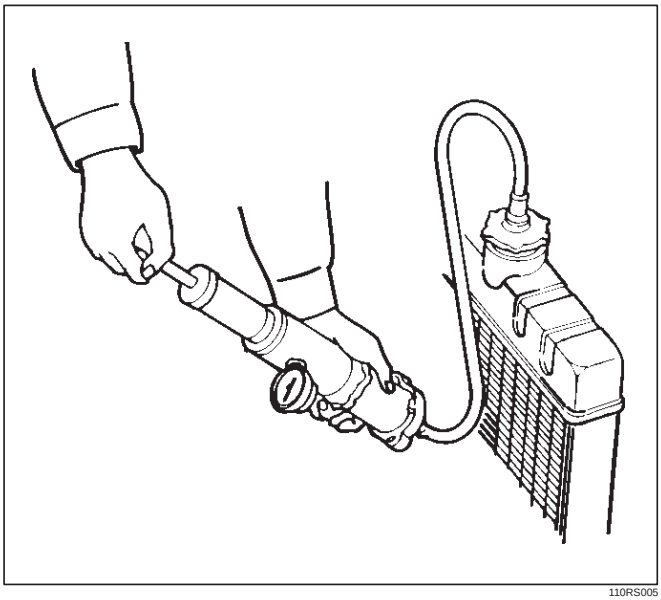

110RS005

Installation

1. Install rubber cushions on both sides of radiator bottom.
2. Install radiator assembly with hose, taking care not to damage the radiator core with a fan blade.
3. Install bracket (6) and support the radiator upper tank with the bracket (5) and secure the radiator.
4. Connect reserve tank hose (4).
5. Install lower fan guide (3).
6. Connect radiator inlet hose and outlet hose to the engine.
7. Connect oil cooler hose (1) to automatic transmission.

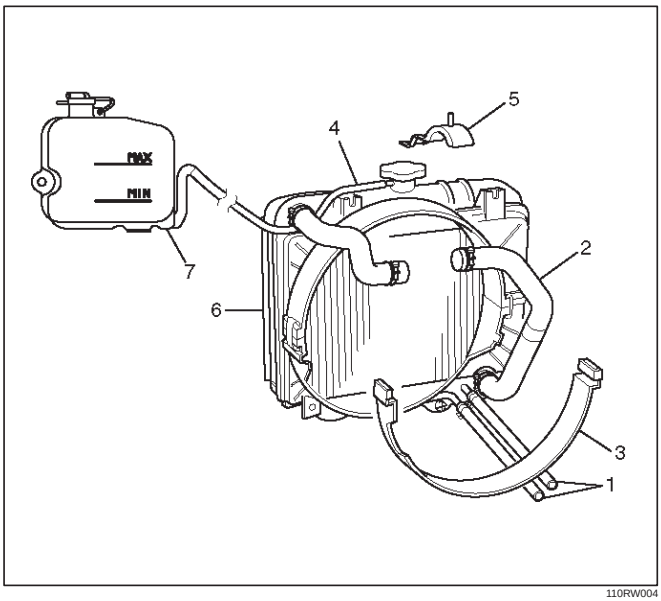

110RW004

8. Connect battery ground cable.
9. Pour engine coolant up to filler neck of radiator, and up to MAX mark of reserve tank.

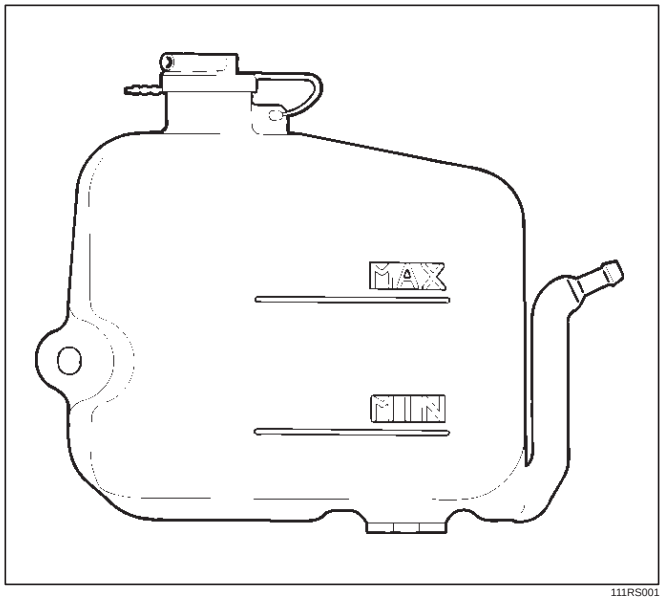

111RS001

Important operation (in case of 100% engine coolant change) procedure for filling with engine coolant.

1. Make sure that the engine is cool.
2. Open radiator cap pour coolant up to filler neck.
3. Pour coolant into reservoir tank up to “MAX” line.
4. Tighten radiator cap and start the engine. After idling for 2 to 3 minutes, stop the engine and reopen radiator cap. If the water level is lower, replenish.

WARNING: WHEN THE COOLANT IS HEATED TO A HIGH TEMPERATURE, BE SURE NOT TO LOOSEN OR REMOVE THE RADIATOR CAP. OTHERWISE YOU MIGHT GET SCALDED BY HOT VAPOR OR BOILING WATER. TO OPEN THE RADIATOR CAP, PUT A PIECE OF THICK CLOTH ON THE CAP AND LOOSEN THE CAP SLOWLY TO REDUCE THE PRESSURE WHEN THE COOLANT HAS BECOME COOLER.

5. After tightening radiator cap, warm up the engine at about 2000 rpm. Set heater adjustment to the highest temperature position, and let the coolant circulate also into heater water system.
6. Check to see the thermostat has opened through the needle position of water thermometer, conduct a 5–minute idling again and stop the engine.
7. When the engine has been cooled, check filler neck for water level and replenish if required. Should extreme shortage of coolant is found, check the cooling system and reservoir tank hose for leakage.
8. Pour coolant into reservoir tank up tp “MAX” line.

Drive Belt and Cooling Fan

Drive Belt and Associated Parts

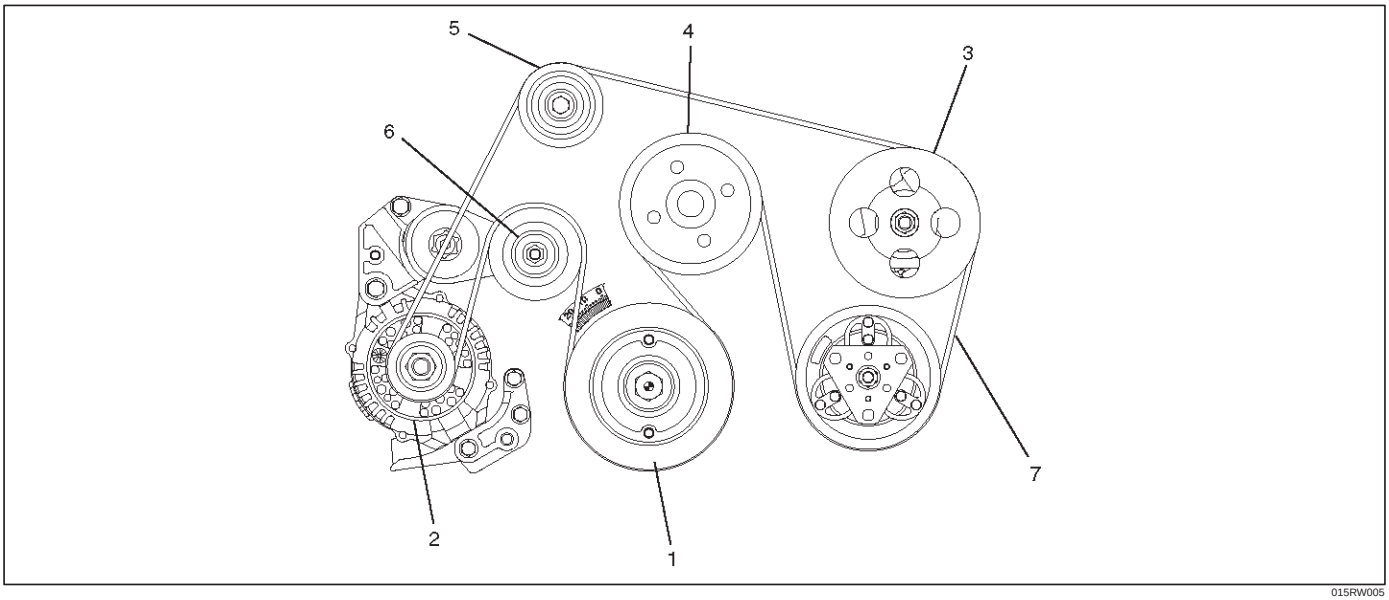

015RW005

Legend

(1) Crankshaft Pulley
(2) Generator
(3) Power Steering Pump
(4) Water Pump and Cooling Fan Pulley
(5) Idle Pulley
(6) Tension Pulley
(7) Drive Belt

The drive belt adjustment is not required as automatic drive belt tensioner is equipped.

Inspection

Check drive belt for wear or damage, and replace with a new one as necessary.

Installation

Install cooling fan assembly and tighten bolts/nuts to the specified torque.

Torque : 22 N·m (2.2 Kg·m/16 lb ft) for fan pulley and fan bracket.

Torque : 10 N·m (1.0 Kg·m/88.5 lb in) for fan and clutch assembly.

NOTE: Fan belts for 6VE1 Gasoline Engine mounted on 98MY (UX) have been brought into one. As a result, the rotating direction of a fan belt is opposite to the direction of cooling fan for 92 to 97MY 6VD1 with no interchangeability.

Therefore, incorrect installation of a fan may cause the air for cooling to flow in the opposite direction, this resulting in the poor performance of the air-conditioner and a rise temperature in engine cooling water.

Main Data and Specifications

General Specifications

	M/T	A/T
Cooling system	Engine coolant forced circulation	
Radiator	(1 tube in row) Tube type corrugated (2 tube in row)	
Heat radiation capacity	68,000 kcal/h	77,000 kcal/h
Heat radiation area	9.445m^2 (0.878ft^2)	11.21m^2 (1.04ft^2)
Radiator front area	0.302m^2 (0.028ft^2)	
Radiator dry weight	39N (8.8lb)	44N (9.9lb)
Radiator cap valve opening pressure	93.3 ~ 122.7kpa (13.5 ~ 17.8psi)	
Engine coolant capacity	2.5lit (2.6U.S q.t.)	2.4lit (2.5U.S q.t.)
Engine coolant pump	Centrifugal impeller type	
Delivery	300 (317) or more	
Pump speed	5000 ± 50 rpm	
Thermostat	Wax pellet type with air hole	
Valve opening temperature	74.5 ~ 78.5˚C (166.1 ~ 173.3˚F)	
Engine coolant total capacity	10.4lit (11.0U.S qt)	10.5lit (11.1U.S qt)

Torque Specifications

N·m (Kg·m/lb ft)

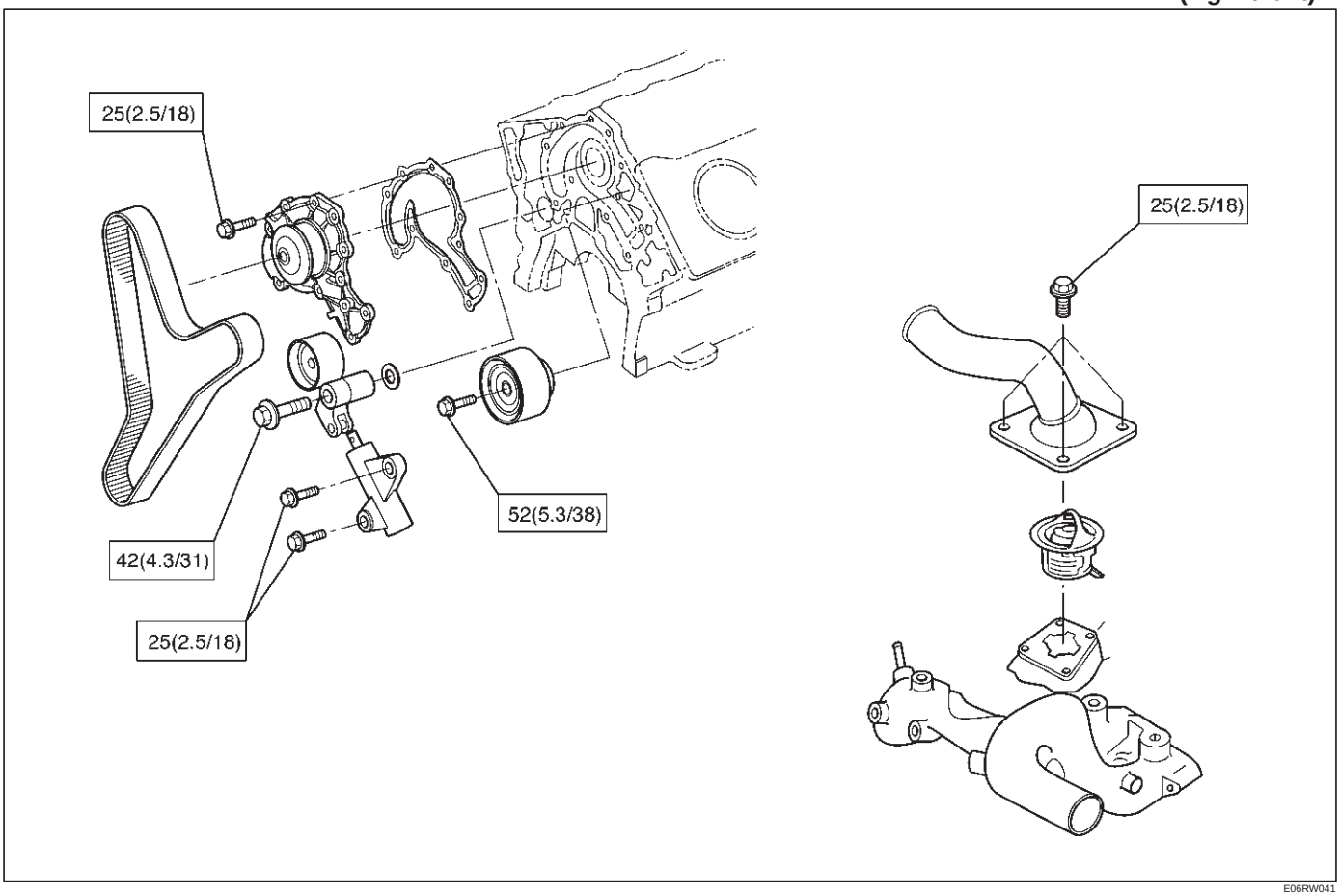

E06RW041

Special Tool

ILLUSTRATION	**TOOL NO.** TOOL NAME
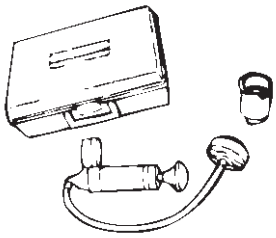	**5–8840–0277–0** **(J–24460–01)** Tester; radiator cap
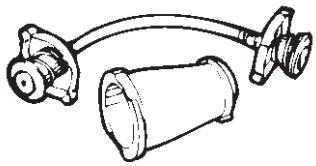	**5–8840–2603–0** **(J–33984–A)** Adapter; radiator cap

ENGINE

ENGINE FUEL

CONTENTS

Service Precaution 6C–1
General Description 6C–2
Fuel Metering 6C–3
Fuel Filter 6C–4
Fuel Filter and Associated Parts 6C–4
Removal 6C–4
Inspection 6C–4
Installation 6C–5
Inspection 6C–5
In–Tank Fuel Filter 6C–5
Fuel Pump Flow Test 6C–5
Fuel Pump 6C–6
Fuel Pump and Associated Parts 6C–6
Removal 6C–6
Installation 6C–6
Fuel Pump Relay 6C–7
General Description 6C–7
Fuel Tank 6C–7
Fuel Tank and Associated Parts 6C–7
Removal 6C–7
Installation 6C–8
Fuel Tube / Quick – Connect Fittings 6C–8
Precautions 6C–8
Cautions During Work 6C–8
Removal 6C–8
Reuse of Quick–Connector 6C–10
Assembling Advice 6C–10
Fuel Gauge Unit 6C–11
Fuel Gauge Unit and Associated Parts . . . 6C–11
Removal 6C–11
Installation 6C–11
Fuel Filler Cap 6C–12
General Description 6C–12
Inspection 6C–12
Main Data and Specifications 6C–12

Service Precaution

WARNING: IF SO EQUIPPED WITH A SUPPLEMENTAL RESTRAINT SYSTEM (SRS), REFER TO THE SRS COMPONENT AND WIRING LOCATION VIEW IN ORDER TO DETERMINE WHETHER YOU ARE PERFORMING SERVICE ON OR NEAR THE SRS COMPONENTS OR THE SRS WIRING. WHEN YOU ARE PERFORMING SERVICE ON OR NEAR THE SRS COMPONENTS OR THE SRS WIRING, REFER TO THE SRS SERVICE INFORMATION. FAILURE TO FOLLOW WARNINGS COULD RESULT IN POSSIBLE AIR BAG DEPLOYMENT, PERSONAL INJURY, OR OTHERWISE UNNEEDED SRS SYSTEM REPAIRS.

CAUTION: Always use the correct fastener in the proper location. When you replace a fastener, use ONLY the exact part number for that application. ISUZU will call out those fasteners that require a replacement after removal. ISUZU will also call out the fasteners that require thread lockers or thread sealant. UNLESS OTHERWISE SPECIFIED, do not use supplemental coatings (Paints, greases, or other corrosion inhibitors) on threaded fasteners or fastener joint interfaces. Generally, such coatings adversely affect the fastener torque and the joint clamping force, and may damage the fastener. When you install fasteners, use the correct tightening sequence and specifications. Following these instructions can help you avoid damage to parts and systems.

General Description

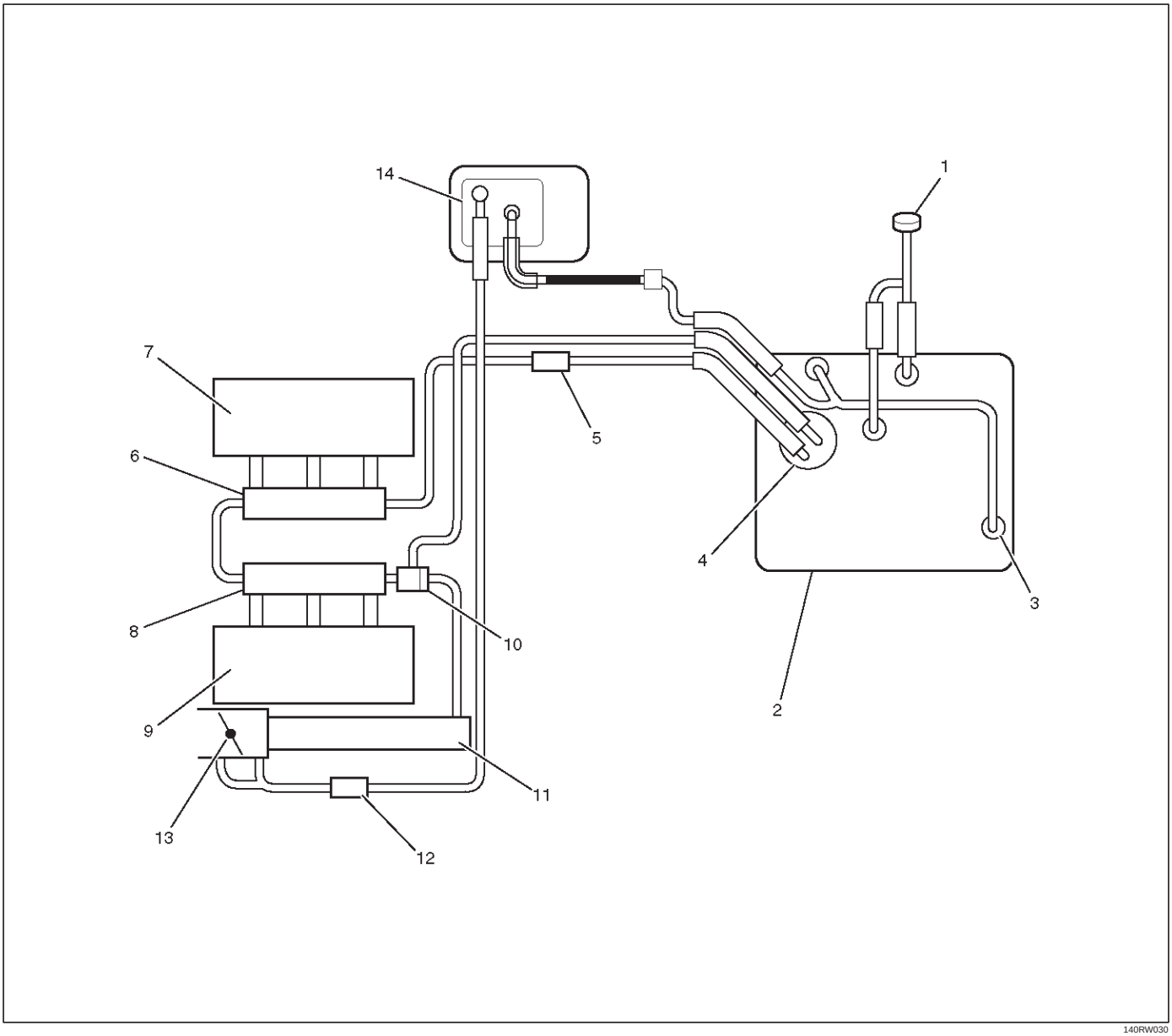

140RW030

Legend

(1) Fuel Filler Cap
(2) Fuel Tank
(3) Rollover Valve
(4) Fuel Pump
(5) Fuel Filter
(6) Fuel Rail Right
(7) Right Bank
(8) Fuel Rail Left
(9) Left Bank
(10) Fuel Pressure Control Valve
(11) Common Chamber
(12) Duty Solenoid Valve
(13) Throttle Valve
(14) Canister

When working on the fuel system, there are several things to keep in mind:

- Any time the fuel system is being worked on, disconnect the negative battery cable except for those tests where battery voltage is required.
- Always keep a dry chemical (Class B) fire extinguisher near the work area.
- Replace all pipes with the same pipe and fittings that were removed.
- Clean and inspect “O” rings. Replace if required.
- Always relieve the line pressure before servicing any fuel system components.
- Do not attempt repairs on the fuel system until you have read the instructions and checked the pictures relating to that repair.

- Adhere to all Notices and Cautions.

All gasoline engines are designed to use only unleaded gasoline. Unleaded gasoline must be used for proper emission control system operation.
Its use will also minimize spark plug fouling and extend engine oil life. Using leaded gasoline can damage the emission control system and could result in loss of emission warranty coverage.
All cars are equipped with an Evaporative Emission Control System. The purpose of the system is to minimize the escape of fuel vapors to the atmosphere.

Fuel Metering

The Engine Control Module (ECM) is in complete control of this fuel delivery system during normal driving conditions.
The intake manifold function, like that of a diesel, is used only to let air into the engine. The fuel is injected by separate injectors that are mounted over the intake manifold.
The Manifold Absolute Pressure (MAP) sensor measures the changes in the intake manifold pressure which result from engine load and speed changes, which the MAP sensor converts to a voltage output.
This sensor generates the voltage to change corresponding to the flow of the air drawn into the engine. The changing voltage is transformed into an electric signal and provided to the ECM.
With receipt of the signals sent from the MAP sensor, Intake Air Temperature sensor and others, the ECM determines an appropriate fuel injection pulse width feeding such information to the fuel injector valves to effect an appropriate air/fuel ratio.
The Multiport Fuel Injection system utilizes an injection system where the injectors turn on at every crankshaft revolution. The ECM controls the injector on time so that the correct amount of fuel is metered depending on driving conditions.
Two interchangeable “O” rings are used on the injector that must be replaced when the injectors are removed.
The fuel rail is attached to the top of the intake manifold and supplies fuel to all the injectors.
Fuel is recirculated through the rail continually while the engine is running. This removes air and vapors from the fuel as well as keeping the fuel cool during hot weather operation.
The fuel pressure control valve that is mounted on the fuel rail maintains a pressure differential across the injectors under all operating conditions. It is accomplished by controlling the amount of fuel that is recirculated back to the fuel tank based on engine demand.
See Section “Driveability and Emission” for more information and diagnosis.

Fuel Filter

Fuel Filter and Associated Parts

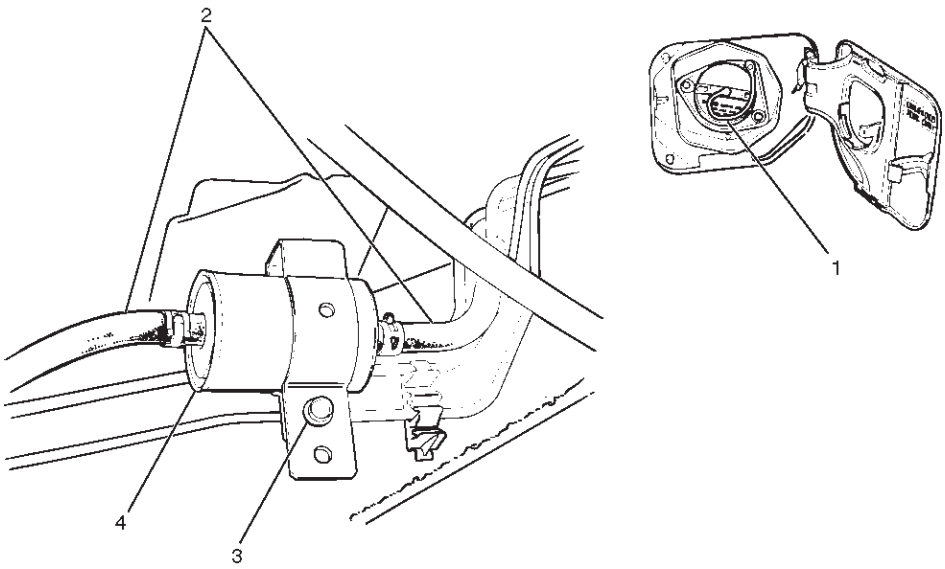

041RW014

Legend

(1) Fuel Filler Cap
(2) Fuel Hose
(3) Fuel Filter Fixing Bolt
(4) Fuel Filter

Removal

CAUTION: When repair to the fuel system has been completed, start engine and check the fuel system for loose connection or leakage. For the fuel system diagnosis, see Section “Driveability and Emission”.

1. Disconnect battery ground cable.
2. Remove Fuel filler cap(1).
3. Disconnect fuel hoses(2) from fuel filter on both engine side and fuel tank side.
4. Fuel filter fixing bolt(3).
   - Remove the fuel filter fixing bolt(3) on fuel filter holder.
5. Remove fuel filter(4).

Inspection

1. Replace the fuel filter if the fuel leaks from fuel filter body or if the fuel filter body itself is damaged.
2. Replace the filter if it is clogged with dirt or sediment.
3. Check the drain of receive rubber and if it is clogged with dust, clean it up with air.

Installation

1. Install the fuel filter in the proper direction.
2. Install fuel filter holder fixing bolt.
3. Connect fuel hoses on engine side(1) and fuel tank side(2).

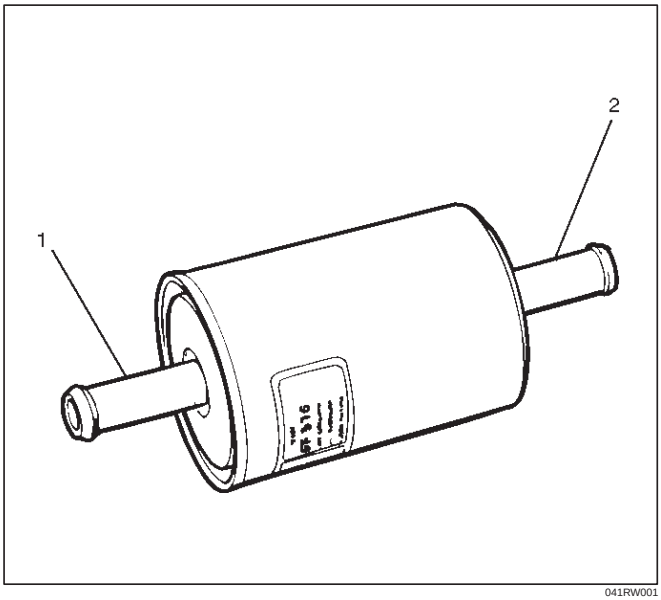

041RW001

4. Install fuel filler cap
5. Connect the battery ground cable.

Inspection

After installation, start engine and check for fuel leakage.

In–Tank Fuel Filter

The filter is located on the lower end of fuel pickup tube in the fuel tank. It prevents dirt from entering the fuel pipe and also stops water unless the filter is completely submerged in the water. It is a self cleaning type, not requiring scheduled maintenance. Excess water and sediment in the tank restricts fuel supply to the engine, resulting in engine stoppage. In such a case, the tank must be cleaned thoroughly.

Fuel Pump Flow Test

If reduction of fuel supply is suspected, perform the following checks:

1. Make sure that there is fuel in the tank.
2. With the engine running, check the fuel feed pipe and hose from fuel tank to injector for evidence of leakage. Retighten, if pipe or hose connection is loose. Also, check pipes and hoses for squashing or clogging.
3. Insert the hose from fuel feed pipe into a clean container, and check for fuel pump flow rate.
4. Connect the pump relay terminals with a jumper wire(1) as shown and start the fuel pump to measure delivery.

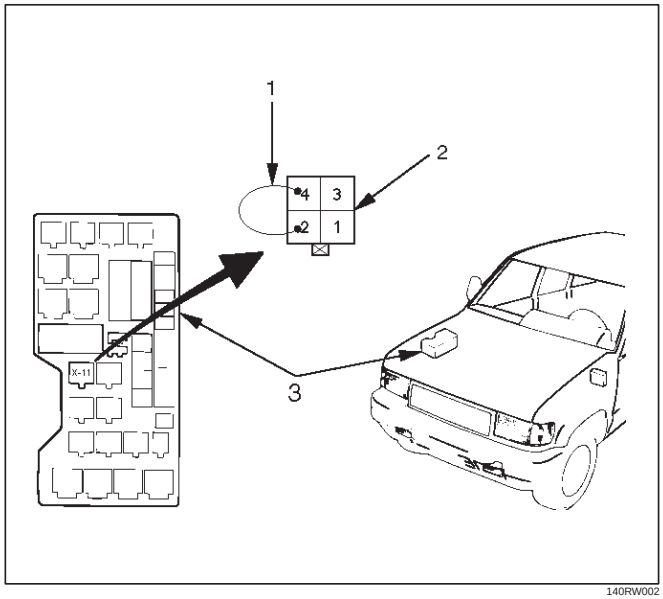

140RW002

CAUTION: Never generate sparks when connecting a jumper wire.

Delivery	Delivery
15 seconds	0.38 liters minimum

If the measure value is out of standard, conduct the pressure test.

Pressure test

For the pressure test to the fuel system, see Section 6E “Fuel Control System”.

Fuel Pump

Fuel Pump and Associated Parts

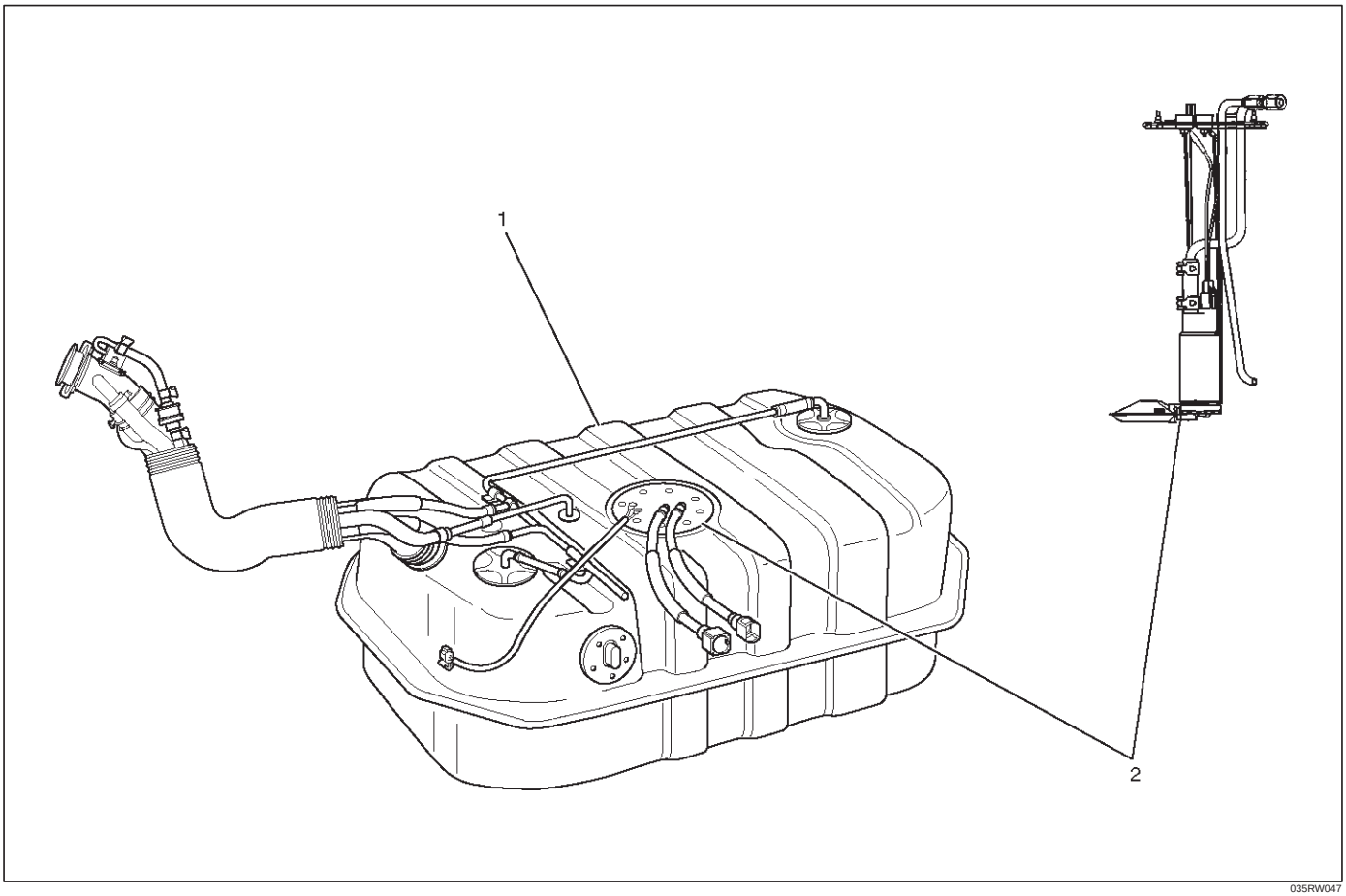

035RW047

Removal

CAUTION: When repair to the fuel system has been completed, start engine and check the fuel system for loose connection or leakage. For the fuel system diagnosis, see Section "Driveability and Emission".

1. Disconnect battery ground cable.
2. Loosen fuel filler cap.
3. Drain fuel.
   Tighten drain plug to the specified torque after draining fuel.

   Torque: 20 N·m (2.0 Kg·m/14 lb ft) — M8
4. Remove fuel tank assembly(1). Refer to "Fuel Tank Removal" in this section.
5. Remove fuel pump (FP) assembly(2) fixing screws and remove the FP assembly.

NOTE: After removing FP, cover fuel tank to prevent any dust entering.

Installation

1. Install FP assembly(2).
2. Install fuel tank assembly(1). Refer to "Fuel Tank Installation".
3. Fill the tank with fuel and tighten fuel filler cap.
4. Connect battery ground cable.

Fuel Pump Relay

General Description

In order to control the FP operation, the FP relay is provided. When the starter switch is turned to “ON” position, the FP relay operates the FP for 2 seconds. When it is turned to “START” position, the Power Train Control Module (PCM) receives the reference pulse from the Ignition Control Module and it operates the relay, again causing the FP to feed fuel.

Fuel Tank

Fuel Tank and Associated Parts

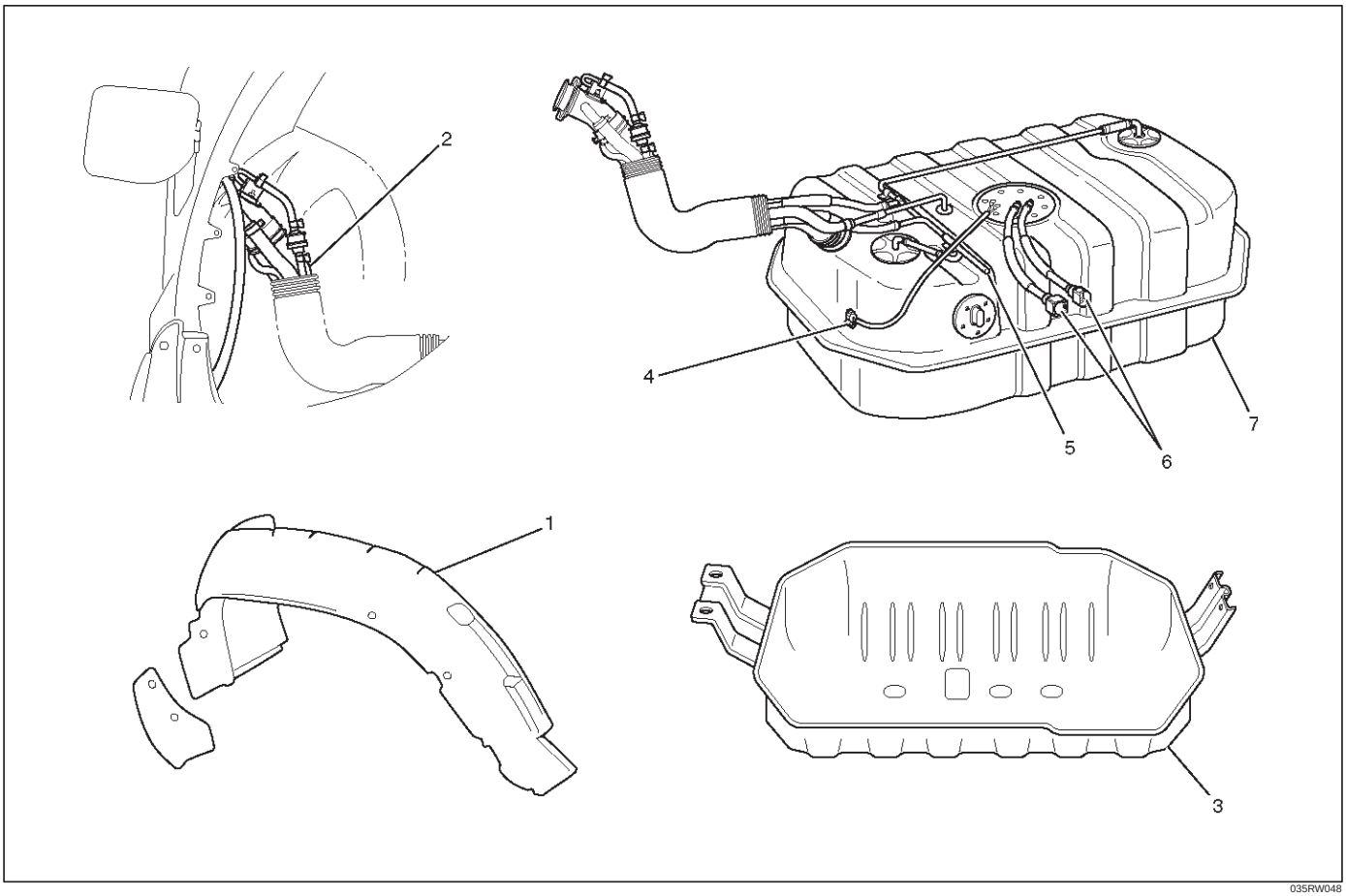

035RW048

Legend

(1) Fender Liner
(2) Fuel Filler Hose and Air Breather Hose and Evapo Hose
(3) Undercover
(4) Fuel Tank Wiring Connector
(5) Evapo Fuel Hose
(6) Fuel Feed Tube and Fuel Return Tube/Quick–Connect Fittings
(7) Fuel Tank

Removal

CAUTION: When repair to the fuel system has been completed, start engine and check the fuel system for loose connection or leakage. For the fuel system diagnosis, see Section “Driveability and Emission”.

1. Disconnect battery ground cable.
2. Loosen fuel filler cap.
3. Drain fuel.
   Tighten drain plug to the specified torque after draining fuel.

   Torque: 20 N·m (2.0 Kg·m/14 lb ft) — M8
4. Remove fender liner (1) of wheel well on rear right side.
5. Fuel filler hose, air breather hose and evapo hose (2).
6. Remove undercover fixing bolts on both sides and remove under cover(3).

7. Disconnect two fuel tank wiring connectors(4) on front right side of tank.
8. Disconnect evapo fuel hose(5).
9. Disconnect fuel feed tube and fuel return tube(6).

NOTE: Handling of the fuel tube, be sure to refer “Fuel Tube/Quick–Connect Fittings” in this section.

10. Remove fuel tank fixing bolts on both sides and remove fuel tank(7).

Installation

1. Install fuel tank(7).
   - Place a flange on right side of tank on the bracket.
   - Install a flange on left side on the bracket from the bottom, and tighten bolts to the specified torque.

   Torque: 36 N·m (3.7 Kg·m/27 lb ft)
2. Connect fuel feed tube and fuel return tube(6).
3. Connect evapo fuel hose(5).
4. Connect fuel tank wiring connector(4).
5. Install undercover(3).
6. Connect fuel filler hose, air breather hose and evapo hose(2).
7. Install fender liner(1).
   - Mount fender liner to the wheel well.
   - Fill the tank with fuel and tighten fuel filler cap.
   - Connect battery ground cable.

Fuel Tube / Quick – Connect Fittings

Precautions

- Lighting of Fires Prohibited.
- Keep flames away from your work area to prevent the inflammable from catching fire.
- Disconnect the battery negative cable to prevent shorting during work.
- When welding or conducting other heat-generating work on other parts, be sure to provide pretreatment to protect the piping system from thermal damage or spattering.

Cautions During Work

Do not expose the assembly to battery electrolyte or do not wipe the assembly with a cloth used to wipe off spilt battery electorolyte.
The piping wet with battery electrolyte cannot be used.
Be careful not to give a bending or twisting force to the piping during the work. If deformed, replace with a new piping.

Removal

1. Open the fuel cap to relieve the fuel pressure in the tank.
   If the fuel quick-connect fittings are dusty, clean with an air blower, etc. and then remove it.

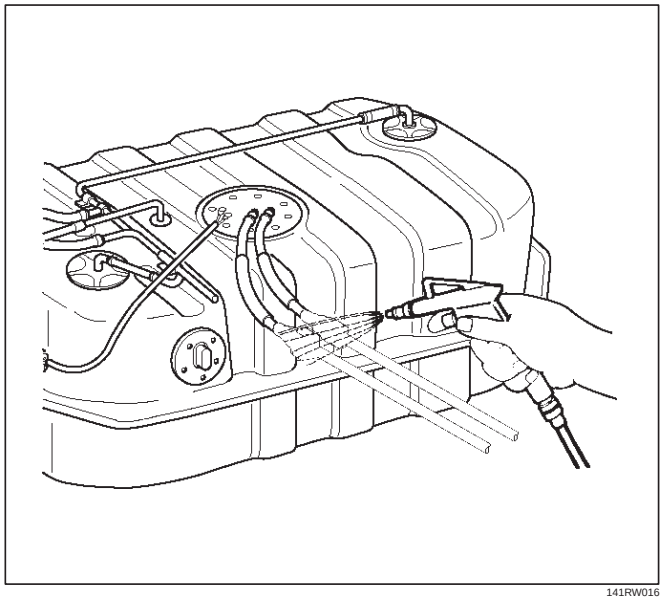

141RW016

As some pressure may remain in the piping, cover the connector with a cloth, etc. to prevent the splashing of fuel in the first disconnection of the piping.

2. For removal of the delivery pipe (feeding fuel to the engine), hold the connector in one hand, and hold the retainer tab with the other hand and pull out the connector, as illustrated. The pipe can be removed with the retainer attached.

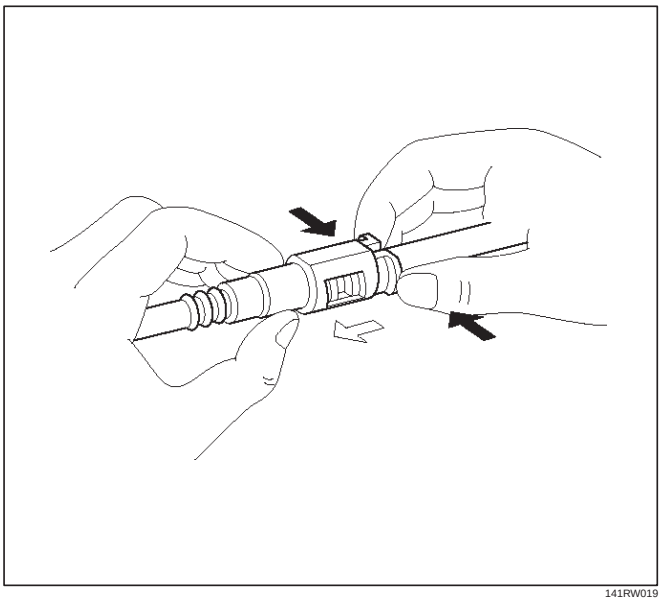

141RW019

3. For removal of the return pipe (returning fuel to the tank), hold the pipe in one hand, and pull out the connentor with the other hand while pressing the square relieve button of the retainer, as illustrated.

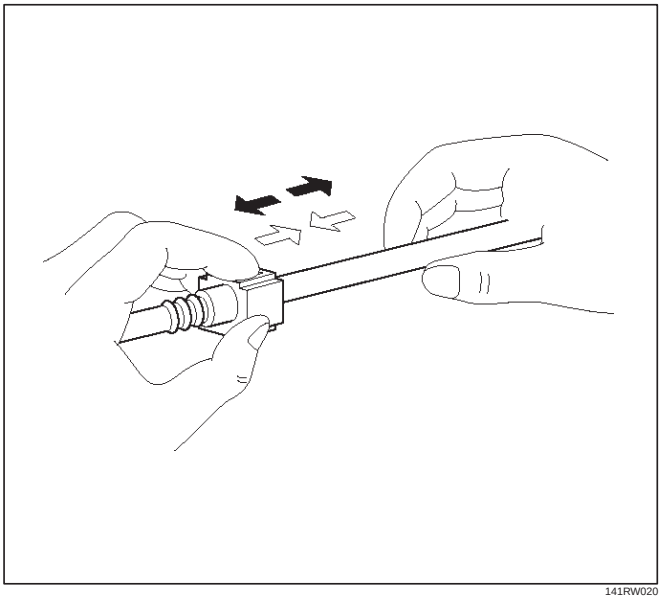

141RW020

NOTE: This work should be done by hands. Do not use any tools. Should the pipe can hardly be removed from the connector, use a lubricant (light oil) and/or push and pull the connector longitudinally until the pipe is removed.

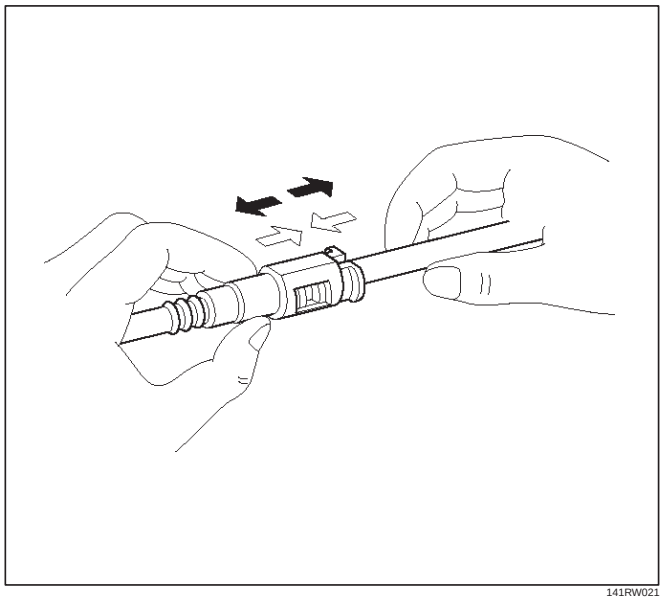

141RW021

When reusing the delivery pipe retainer, reuse without removing the retainer from the pipe. If the retainer is damaged or deformed, however, replace with a new retainer.

Cover the connectors removed with a plastic bag, etc. to prevent the entry of dust or rain water.

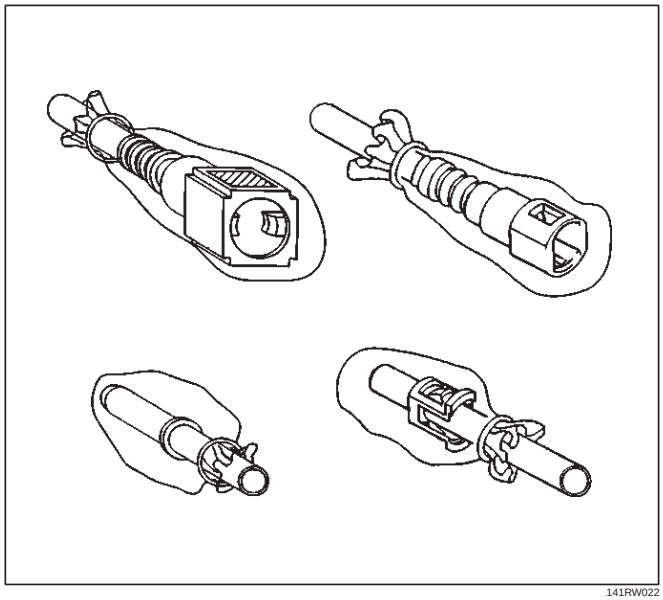

141RW022

Reuse of Quick–Connector

(Delivery Pipe)

- Replace the pipe and connector if scratch, dent or crack is found.
- Remove mud and dust from the pipe and make sure that the end including spool is free of defects, such as scratch, rust, and dent, which may cause poor sealability. If defective, replace with a new pipe.
- If the retainer removed according to the removal step above is attached to the pipe, clean and insert it straight into the quick-connector till it clicks. After it clicks, try pulling it out to make sure that it is not drawn and is securely locked.

NOTE: The retainer, once removed from the pipe, cannot be reused. Just replace with a new retainer. Insert the new retainer into the connector side until it clicks, and connect the pipe as inserting it into the retainer until it clicks.

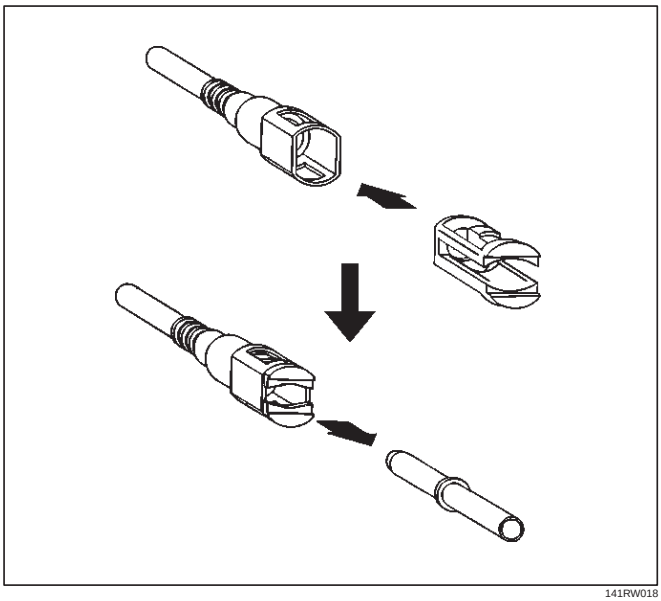

141RW018

(Return Pipe)

- Replace the pipe and connector if scratch, dent or crack is found.
- Remove mud or dust from the pipe and make sure that the end including spool is free from defects, such as scratch, rust, and dent, which may cause poor sealability. If defective, replace with a new pipe.
- After cleaning the pipe, insert it straight into the connector until it clicks. After it clicks, try pulling it out to make sure that it is not drawn and is securely locked.

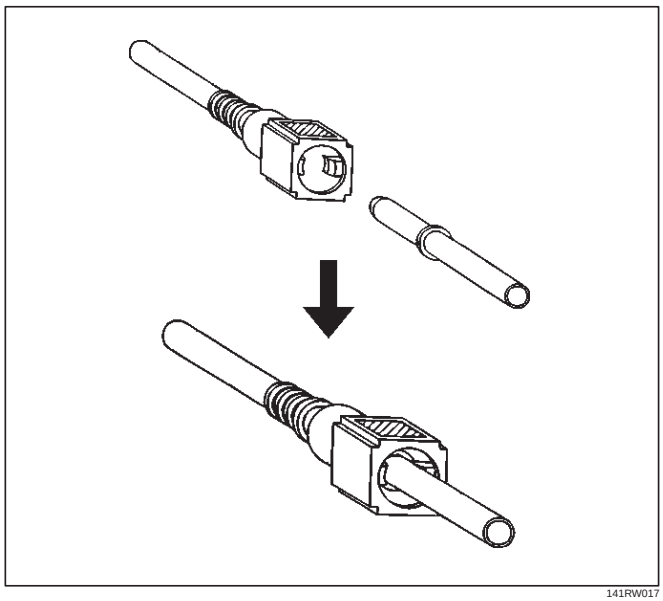

141RW017

Assembling Advice

Application of engine oil or light oil to the pipe facilitates connecting work. The work should be started immediately after lubrication, since dust may stick to the pipe surface to cause poor sealability if a long time passes after lubrication.

Test/Inspection After Assembling

1. Reconnect the battery negative cable.
2. Turn the ignition key to the “ON” position and check pump startup sound. As the pump is actuated to raise fuel pressure, check and see fuel leak from the piping system.
3. Make sure of no fuel leakage by conducting the above fuel leak check a few times.
4. Start the engine and make sure of stable idling speed and normal vehicle run.The entry of dust during the work may sometimes affect the fuel injection system.

Fuel Gauge Unit

Fuel Gauge Unit and Associated Parts

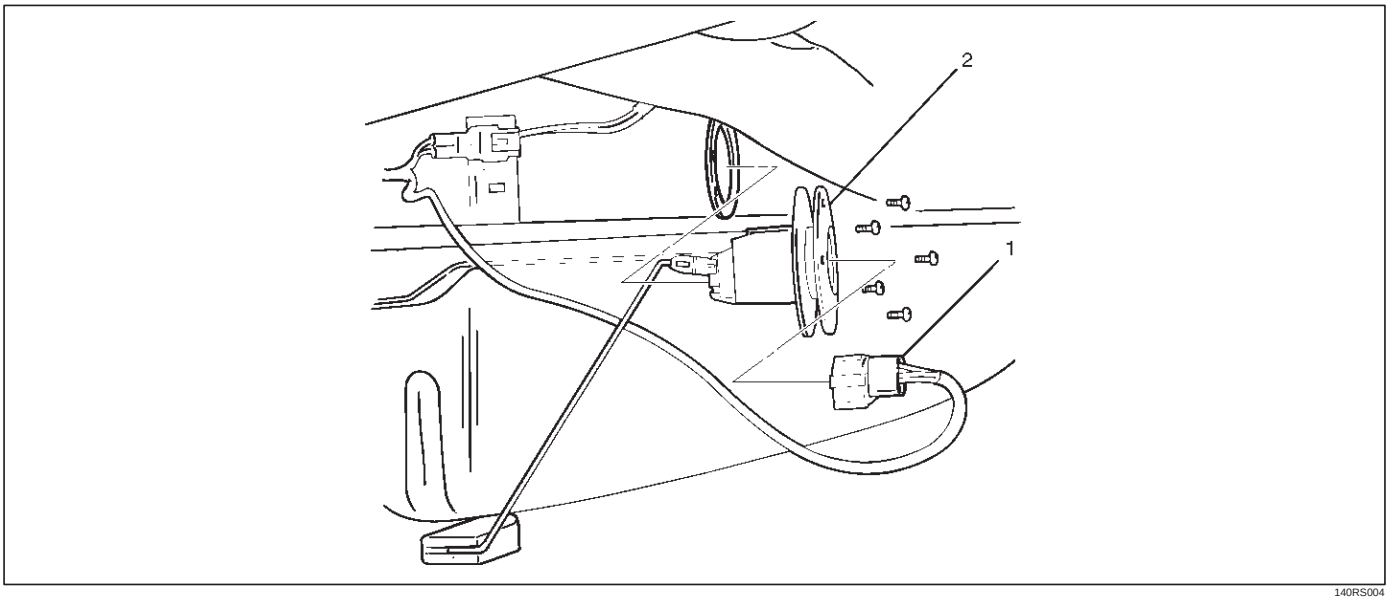

140RS004

Legend

(1) Wiring Connector
(2) Fuel Gauge Unit

Removal

CAUTION: When repair to the fuel system has been completed, start engine and check the fuel system for loose connection or leakage. For the fuel system diagnosis, see Section "Driveability and Emission".

1. Disconnect battery ground cable.
2. Loosen fuel filler cap.
3. Drain fuel.
   Tighten drain plug to the specified torque after draining fuel.

   Torque: 20 N·m (2.0 Kg·m/14 lb ft) — M8
4. Wiring connector
   - Disconnect wiring connector(1) from the unit.
5. Fuel gauge unit
   - Remove the fixing screws, then the fuel gauge unit(2).

NOTE: After removing fuel gauge unit, cover fuel tank to prevent any dust entering

Installation

1. Fuel gauge unit(2).
2. Wiring connector(1).
   - Connect the wiring connector to the fuel gauge unit.
   - Fill the tank with fuel and tighten fuel filler cap.
   - Connect battery ground cable.

Fuel Filler Cap

General Description

Fuel filler cap includes vacuum valve and pressure valve. In case any high vacuum and any high pressure happen in tank, each valve works to adjust the pressure to prevent the tank from being damaged.

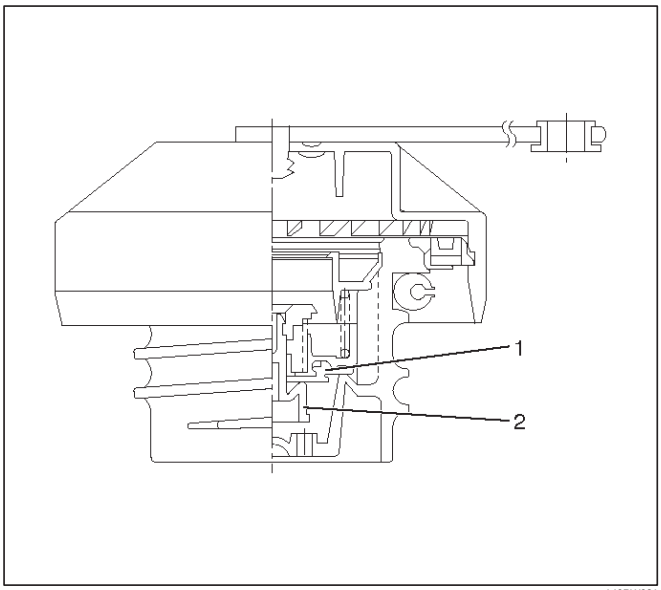

140RW021

Legend

(1) Vacuum Valve
(2) Pressure Valve

Inspection

Check the seal ring in the filler cap for presence of any abnormality and for seal condition.
Replace the filler cap, if abnormal.

CAUTION: The fuel filler cap valves have characteristics.

A defective valve, no valve at all or a valve with the wrong characteristics will do a lot of harm to engine operating characteristics; be sure to use the same fuel filler cap as installed in this vehicle.

Main Data and Specifications

Torque Specification

N·m (Kg·m/lb ft)

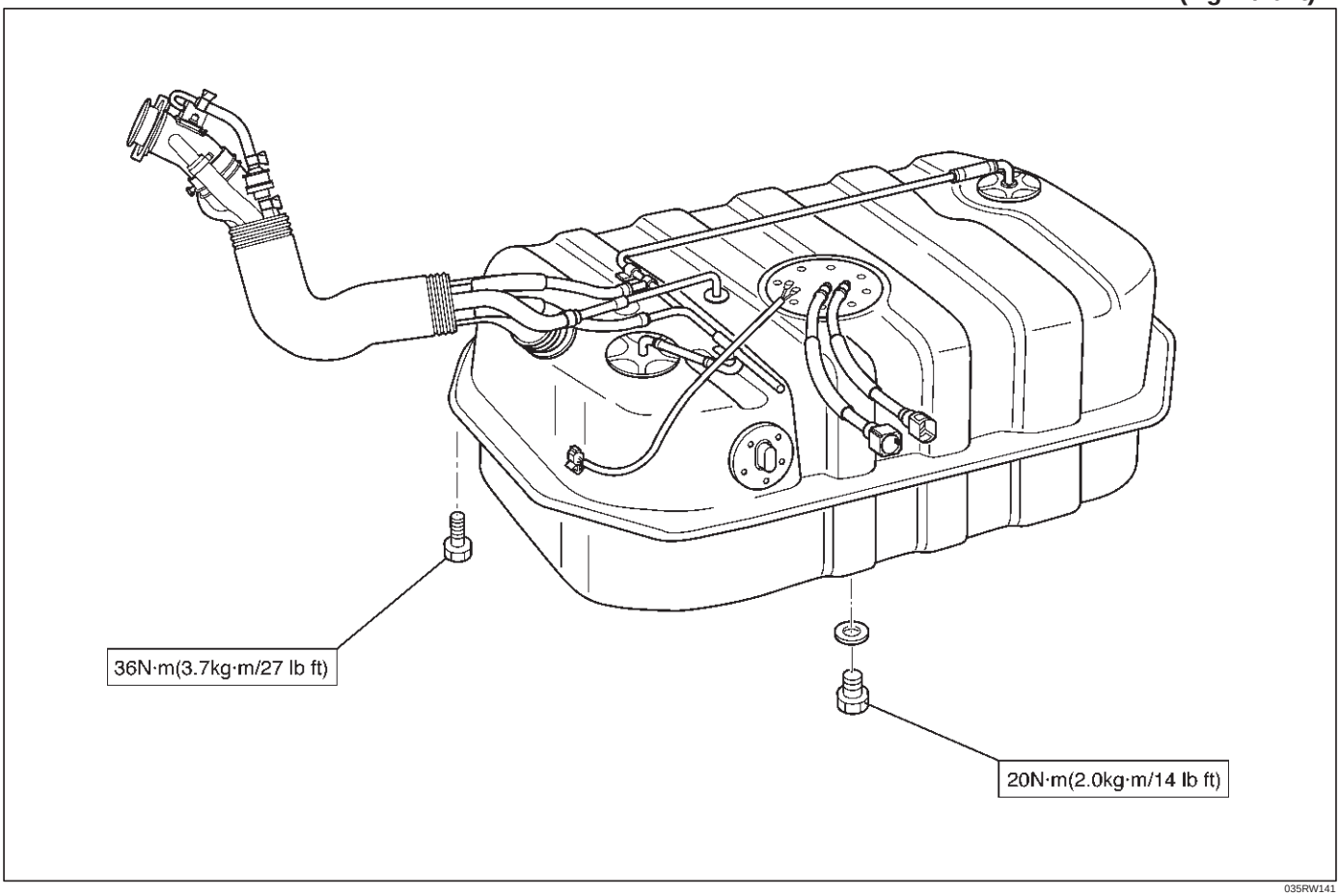

035RW141

ENGINE

ENGINE ELECTRICAL

CONTENTS

Service Precaution 6D1–1
Battery 6D1–2
General Description 6D1–2
Diagnosis 6D1–2
Battery Charging 6D1–3
Jump Starting 6D1–3
Battery Removal 6D1–4
Battery Installation 6D1–4
Main Data and Specifications 6D1–5

Service Precaution

WARNING: IF SO EQUIPPED WITH A SUPPLEMENTAL RESTRAINT SYSTEM (SRS), REFER TO THE SRS COMPONENT AND WIRING LOCATION VIEW IN ORDER TO DETERMINE WHETHER YOU ARE PERFORMING SERVICE ON OR NEAR THE SRS COMPONENTS OR THE SRS WIRING. WHEN YOU ARE PERFORMING SERVICE ON OR NEAR THE SRS COMPONENTS OR THE SRS WIRING, REFER TO THE SRS SERVICE INFORMATION. FAILURE TO FOLLOW WARNINGS COULD RESULT IN POSSIBLE AIR BAG DEPLOYMENT, PERSONAL INJURY, OR OTHERWISE UNNEEDED SRS SYSTEM REPAIRS.

CAUTION: Always use the correct fastener in the proper location. When you replace a fastener, use ONLY the exact part number for that application. ISUZU will call out those fasteners that require a replacement after removal. ISUZU will also call out the fasteners that require thread lockers or thread sealant. UNLESS OTHERWISE SPECIFIED, do not use supplemental coatings (Paints, greases, or other corrosion inhibitors) on threaded fasteners or fastener joint interfaces. Generally, such coatings adversely affect the fastener torque and the joint clamping force, and may damage the fastener. When you install fasteners, use the correct tightening sequence and specifications. Following these instructions can help you avoid damage to parts and systems.

Battery

General Description

There are six battery fluid caps on top of the battery. These are covered by a paper label.
The battery is completely sealed except for the six small vent holes on the side. These vent holes permit the escape of small amounts of gas generated by the battery.
This type of battery has the following advantages over conventional batteries:

1. There is no need to add water during the entire service life of the battery.
2. The battery protects itself against overcharging.
   The battery will refuse to accept an extensive charge.
   (A conventional battery will accept an excessive charge, resulting in gassing and loss of battery fluid.)
3. The battery is much less vulnerable to self discharge than a conventional type battery.

Diagnosis

1. Visual Inspection

Inspect the battery for obvious physical damage, such as a cracked or broken case, which would permit electrolyte loss.
Replace the battery if obvious physical damage is discovered during inspection.
Check for any other physical damage and correct it as necessary.

2. Hydrometer Check

There is a built–in hydrometer (Charge test indicator(1)) at the top of the battery. It is designed to be used during diagnostic procedures.
Before trying to read the hydrometer, carefully clean the upper battery surface.
If your work area is poorly lit, additional light may be necessary to read the hydrometer.

a. BLUE RING OR DOT VISIBLE(5) – Go to Step 4.
b. BLUE RING OR DOT NOT VISIBLE(4) – Go to Step 3.

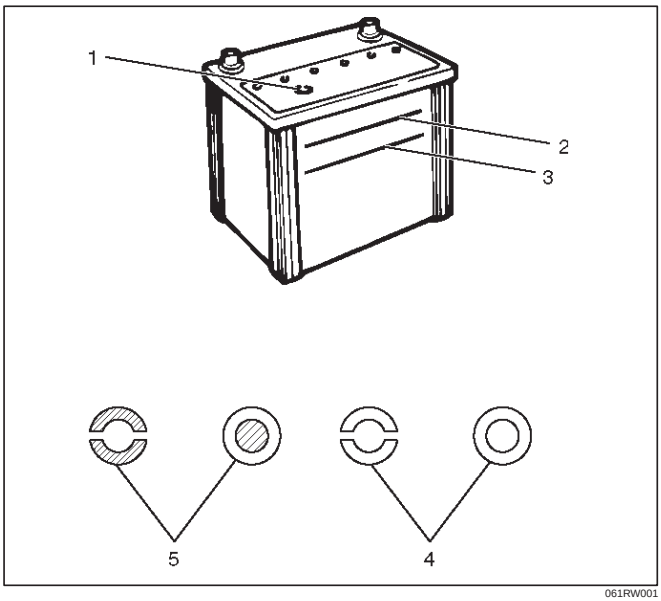

061RW001

3. Fluid Level Check

The fluid level should be between the upper level line(2) and lower level line(3) on side of battery.

a. CORRECT FLUID LEVEL – Charge the battery.
b. BELOW LOWER LEVEL – Replace battery.

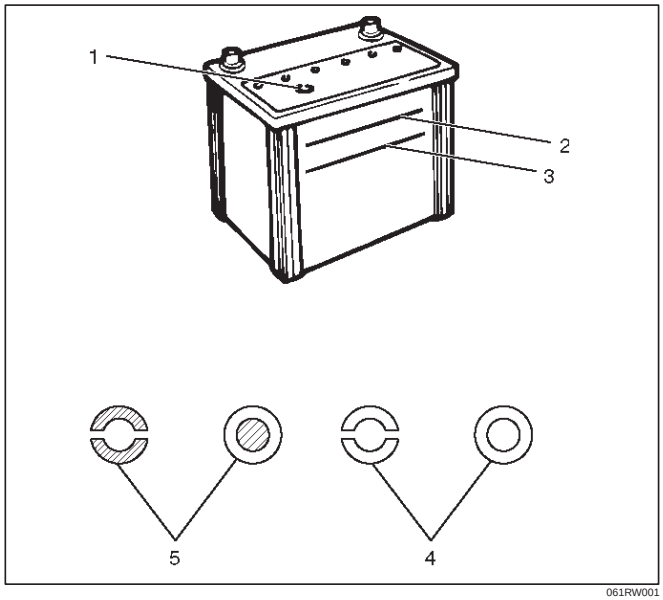

061RW001

4. Voltage Check

1. Put voltmeter test leads to battery terminals.
   a. VOLTAGE IS 12.4V OR ABOVE – Go to Step 5.
   b. VOLTAGE IS UNDER 12.4V – Go to procedure (2) below.
2. Determine fast charge amperage from specification. (See Main Data and Specifications in this section).
   Fast charge battery for 30 minutes at amperage rate no higher than specified value.
   Take voltage and amperage readings after charge.
   a. VOLTAGE IS ABOVE 16V AT BELOW 1/3 OF AMPERAGE RATE – Replace battery.
   b. VOLTAGE IS ABOVE 16V AT ABOVE 1/3 OF AMPERAGE RATE – Drop charging voltage to 15V and charge for 10 – 15 hours. Then go to Step 5.
   c. VOLTAGE IS BETWEEN 12V AND 16V – Continue charging at the same rate for an additional 3–1/2 hours. Then go to Step 5.
   d. VOLTAGE BELOW 12V – Replace Battery.

5. Load Test

1. Connect a voltmeter and a battery load tester across the battery terminals.
2. Apply 300 ampere load for 15 seconds to remove surface charge from the battery. Remove load.
3. Wait 15 seconds to let battery recover. Then apply specified load from specifications (See Main Data and Specifications in this section).
   Read voltage after 15 seconds, then remove load.

a. VOLTAGE DOES NOT DROP BELOW THE MINIMUM LISTED IN THE TABLE – The battery is good and should be returned to service.

b. VOLTAGE IS LESS THAN MINIMUM LISTED – Replace battery.

ESTIMATED TEMPERATURE		MINIMUM VOLTAGE
˚F	˚C	V
70	21	9.6
60	16	9.5
50	10	9.4
40	4	9.3
30	–1	9.1
20	–7	8.9
10	–12	8.7
0	–18	8.5
The battery temperature must be estimated by feel and by the temperature the battery has been exposed to for the preceding few hours.		

Battery Charging

Observe the following safety precautions when charging the battery:

1. Never attempt to charge the battery when the fluid level is below the lower level line on the side of the battery. In this case, the battery must be replaced.
2. Pay close attention to the battery during charging procedure.

   Battery charging should be discontinued or the rate of charge reduced if the battery feels hot to the touch.

   Battery charging should be discontinued or the rate of charge reduced if the battery begins to gas or spew electrolyte from the vent holes.
3. In order to more easily view the hydrometer blue dot or ring, it may be necessary to jiggle or tilt the battery.
4. Battery temperature can have a great effect on battery charging capacity.
5. The sealed battery used on this vehicle may be either quick charged or slow charged in the same manner as other batteries.

   Whichever method you decide to use, be sure that you completely charge the battery. Never partially charge the battery.

Jump Starting

Jump Starting with an Auxiliary (Booster) Battery

CAUTION: Never push or tow the vehicle in an attempt to start it. Serious damage to the emission system as well as other vehicle parts will result.

Treat both the discharged battery and the booster battery with great care when using jumper cables. Carefully follow the jump starting procedure, being careful at all times to avoid sparking.

WARNING: FAILURE TO CAREFULLY FOLLOW THE JUMP STARTING PROCEDURE COULD RESULT IN THE FOLLOWING:

1. Serious personal injury, particularly to your eyes.
2. Property damage from a battery explosion, battery acid, or an electrical fire.
3. Damage to the electronic components of one or both vehicles particularly.

Never expose the battery to an open flame or electrical spark. Gas generated by the battery may catch fire or explode.

Remove any rings, watches, or other jewelry before working around the battery. Protect your eyes by wearing an approved set of goggles.

Never allow battery fluid to come in contact with your eyes or skin.

Never allow battery fluid to come in contact with fabrics or painted surfaces.

Battery fluid is a highly corrosive acid.

Should battery fluid come in contact with your eyes, skin, fabric, or a painted surface, immediately and thoroughly rinse the affected area with clean tap water.

Never allow metal tools or jumper cables to come in contact with the positive battery terminal, or any other metal surface of the vehicle. This will protect against a short circuit.

Always keep batteries out of reach of young children.

Jump Starting Procedure

1. Set the vehicle parking brake.

   If the vehicle is equipped with an automatic transmission, place the selector level in the “PARK” position.

   If the vehicle is equipped with a manual transmission, place the shift lever in the “NEUTRAL” position.

   Turn “OFF” the ignition.

   Turn “OFF” all lights and any other accessory requiring electrical power.
2. Look at the built–in hydrometer.

   If the indication area of the built–in hydrometer is completely clear, do not try to jump start.
3. Attach the end of one jumper cable to the positive terminal of the booster battery.

   Attach the other end of the same cable to the positive terminal of the discharged battery.

   Do not allow the vehicles to touch each other. This will cause a ground connection, effectively neutralizing the charging procedure.

   Be sure that the booster battery has a 12 volt rating.

4. Attach one end of the remaining cable to the negative terminal of the booster battery.

   Attach the other end of the same cable to a solid engine ground (such as the air conditioning compressor bracket or the generator mounting bracket) of the vehicle with the discharged battery.

   The ground connection must be at least 450 mm (18 in.) from the battery of the vehicle whose battery is being charged.

WARNING: NEVER ATTACH THE END OF THE JUMPER CABLE DIRECTLY TO THE NEGATIVE TERMINAL OF THE DEAD BATTERY.

5. Start the engine of the vehicle with the good battery.
   Make sure that all unnecessary electrical accessories have been turned “OFF”.
6. Start the engine of the vehicle with the dead battery.
7. To remove the jumper cables, follow the above directions in reverse order.
   Be sure to first disconnect the negative cable from the vehicle with the discharged battery.

Battery Removal

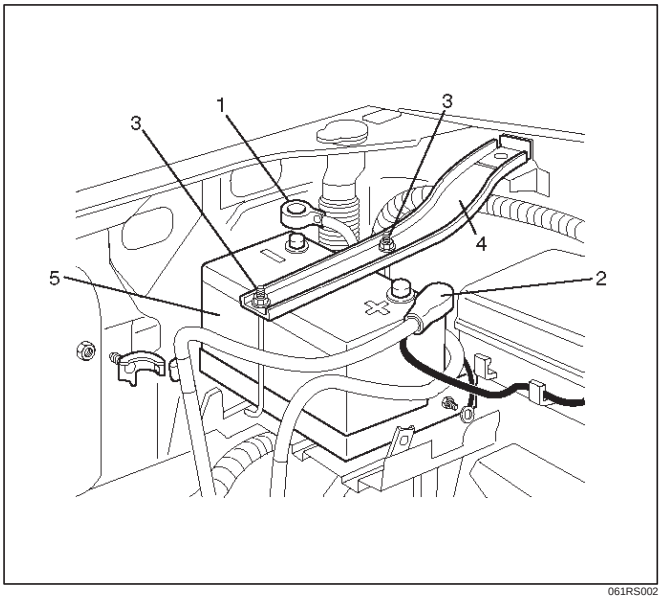

061RS002

1. Remove negative cable (1).
2. Remove positive cable (2).
3. Remove retainer screw and rods (3).
4. Remove retainer (4).
5. Remove battery (5).

Battery Installation

1. Install battery (5).
2. Install retainer (4).
3. Instal retainer screw and rods (3).

NOTE: Make sure that the rod is hooked on the body side.

4. Install positive cable (2).
5. Install negative cable (1).

Main Data and Specifications

General Specifications

Model (JIS)	95D31R–MF	80D26R–MF	75D26R–MF
Voltage (V)	12	12	12
Cold Cranking Performance (Amp)	622	582	490
Reserve Capacity (Min)	159	133	123
Load Test (Amp)	310	290	245
Fast Charge Maximum Amperage (Amp)	20	20	20
BCI Group No.	27	24	24

MEMO

ENGINE

IGNITION SYSTEM

CONTENTS

Service Precaution 6D2–1
General Description 6D2–2
Diagnosis 6D2–2
Ignition Coil 6D2–3
Removal 6D2–3
Inspection and Repair 6D2–3
Installation 6D2–3
Spark Plug 6D2–4
Removal 6D2–4
Inspection and Repair 6D2–4
Installation 6D2–4
Crankshaft Angle Sensor 6D2–5
Removal 6D2–5
Installation 6D2–5
Main Data and Specifications 6D2–6

Service Precaution

WARNING: IF SO EQUIPPED WITH A SUPPLEMENTAL RESTRAINT SYSTEM (SRS), REFER TO THE SRS COMPONENT AND WIRING LOCATION VIEW IN ORDER TO DETERMINE WHETHER YOU ARE PERFORMING SERVICE ON OR NEAR THE SRS COMPONENTS OR THE SRS WIRING. WHEN YOU ARE PERFORMING SERVICE ON OR NEAR THE SRS COMPONENTS OR THE SRS WIRING, REFER TO THE SRS SERVICE INFORMATION. FAILURE TO FOLLOW WARNINGS COULD RESULT IN POSSIBLE AIR BAG DEPLOYMENT, PERSONAL INJURY, OR OTHERWISE UNNEEDED SRS SYSTEM REPAIRS.

CAUTION: Always use the correct fastener in the proper location. When you replace a fastener, use ONLY the exact part number for that application. ISUZU will call out those fasteners that require a replacement after removal. ISUZU will also call out the fasteners that require thread lockers or thread sealant. UNLESS OTHERWISE SPECIFIED, do not use supplemental coatings (Paints, greases, or other corrosion inhibitors) on threaded fasteners or fastener joint interfaces. Generally, such coatings adversely affect the fastener torque and the joint clamping force, and may damage the fastener. When you install fasteners, use the correct tightening sequence and specifications. Following these instructions can help you avoid damage to parts and systems.

General Description

Ignition is done by the electronic ignition (EI) that directly fires the spark plugs from ignition coils through spark plug wires without using a distributor. A pair of ignition coils for the cylinders having different phases by 360˚ (No.1 and No.4,No.2 and No.5,No.3 and No.6) are fired simultaneously.

Since the cylinder on exhaust stroke requires less energy to fire its ignition plug, energy from the ignition coils can be utilized to fire the mating cylinder on compression stroke. After additional 360˚ rotation, respective cylinder strokes are reversed.

The EI consists of six ignition coils,ignition control module, crank angle sensor, powertrain control module (PCM) and other components.

The ignition coils are connected with the PCM by means of a 32 pin connector.

The ignition control module turns on/off the primary circuit of ignition coils, and also it controls the ignition timing at the engine speed below 538 rpm.

A notch in the timing disc on the crankshaft activates the crank angle sensor which then sends information such as firing order and starting timing of each ignition coil to the PCM.

Further, the EI employs ignition control (IC) to control similar to a distributor system.

By receiving signals such as crank position,engine speed, water temperature and Manifold Absolute Pressure (MAP), the PCM controls the ignition timing.

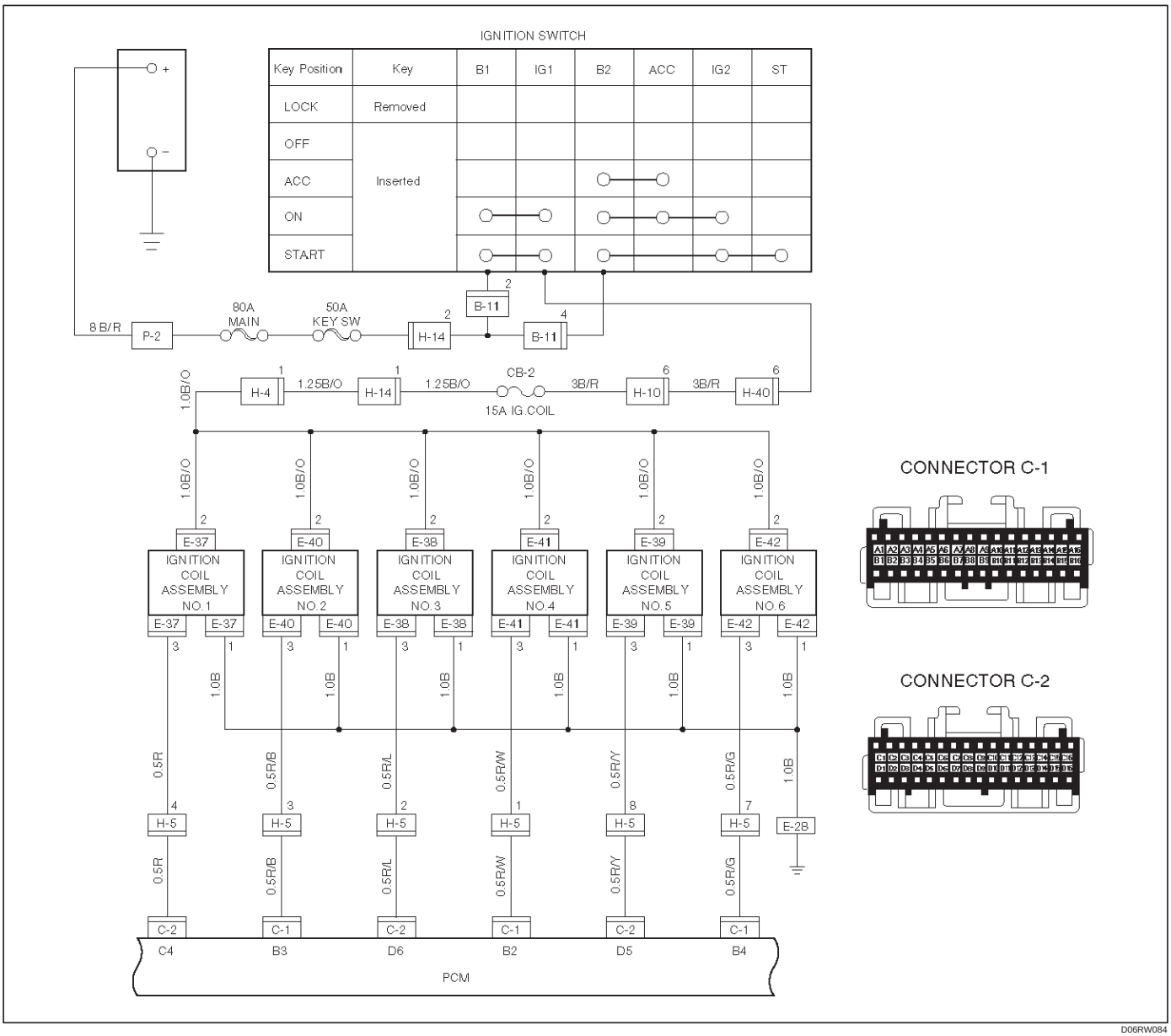

D06RW084

Diagnosis

Refer to Section Drivability and Emissions for the diagnosis to electronic ignition system (EI system).

Ignition Coil

Removal

1. Disconnect battery ground cable.
2. Ignition coil connector and ignition coil.
   - Disconnect three connector from ignition coil.
   - Remove harness bracket bolt on cylinder head cover.
   - Remove fixing bolts on ignition coil.

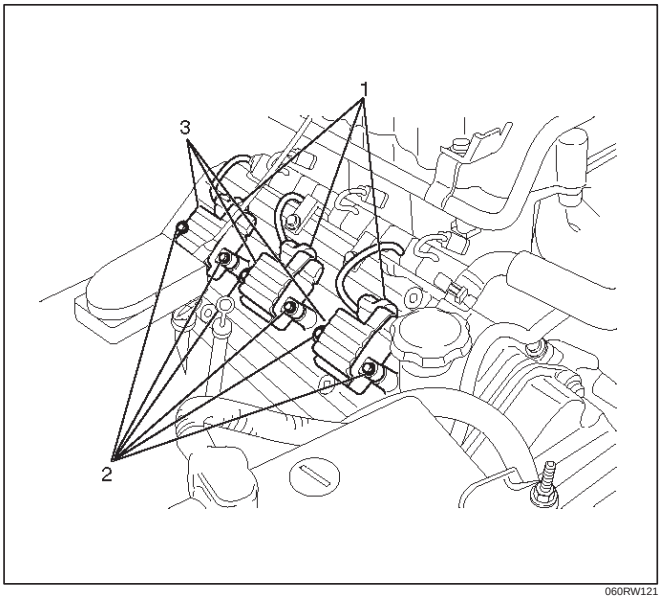

060RW121

Legend

(1) Ignition Coil Connector
(2) Bolt
(3) Ignition Coil Assembly

Inspection and Repair

Check the ignition coil assembly for insulation. Check terminals for corrosion or damage, and replace as necessary.
Measuring resistance of ignition coil assembly.

Terminal No.	Limit
1 to 2	Without 0 ohm or infinity maximum ohm.
1 to 3	Same as above
2 to 3	Same as above

Measure resistance of ignition coil assembly, and replace the ignition coil assembly if its value exceeds the standard.

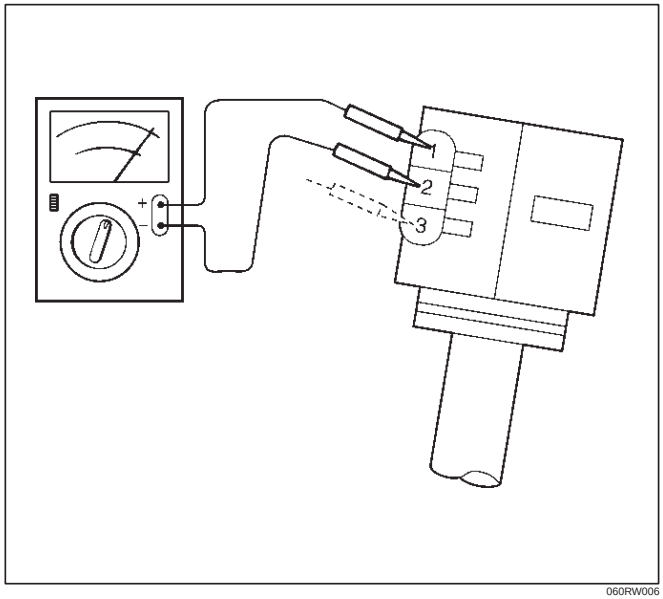

060RW006

Installation

1. Install the ignition coil assembly (3).
   Connect ignition coil connector (1) and ignition coil (3), then tighten bolt (2) to the specified torque.

   Torque: 4 N·m (0.4 Kg·m/35 lb in)

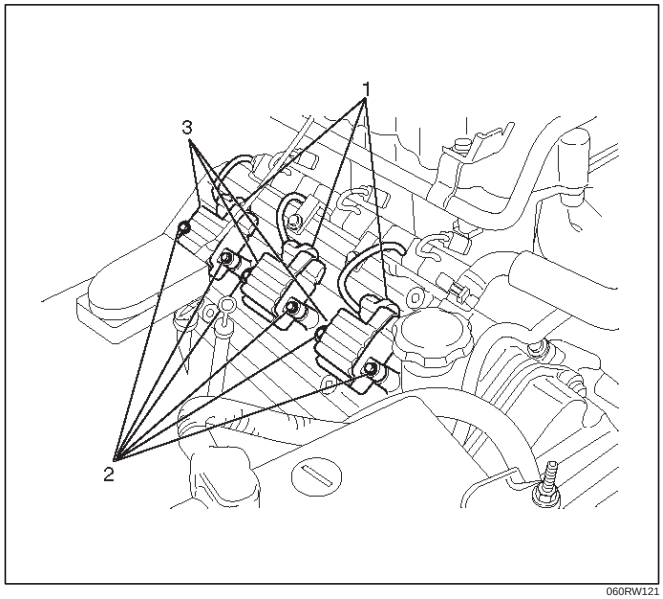

060RW121

2. Connect battery ground cable.

Spark Plug

Removal

1. Remove spark plugs.

Inspection and Repair

The spark plug affects entire engine performance and therefore its inspection is very important.

- Check electrode and insulator for presence of cracks, and replace if any.
- Check electrode for wear, and replace if necessary.
- Check gasket for damage, and replace if necessary.
- Measure insulation resistance with an ohmmeter, and replace if faulty.
- Adjust spark plug gap to 1.0 mm (0.04 in) ~ 1.1 mm (0.043 in).
- Check fuel and electrical systems if spark plug is extremely dirty.
- Use spark plugs having low heat value (hot type plug) if fuel and electrical systems are normal.
- Use spark plugs having high heat value (cold type plug) if insulator and electrode are extremely burned.

Sooty Spark Plugs

Much deposit of carbon or oil on the electrode and insulator of spark plug reduces the engine performance.

Possible causes:

- Too rich mixture
- Presence of oil in combustion chamber
- Incorrectly adjusted spark plug gap

Burning Electrodes

This fault is characterized by scorched or heavily oxidized electrode or blistered insulator nose.

Possible causes:

- Too lean mixture
- Improper heat value

Measuring Insulation Resistance

- Measure insulation resistance using a 500 volt megaohm meter.
- Replace spark plugs if measured value is out of standard.

Insulation resistance: 50 MΩ or more

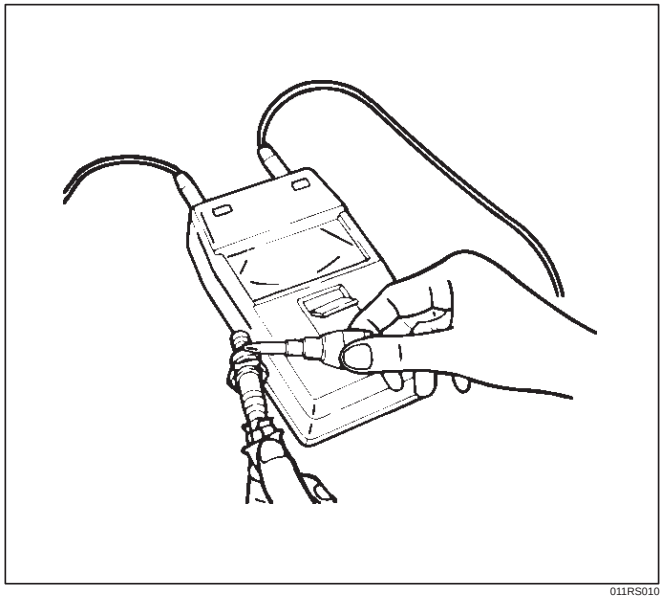

011RS010

Cleaning Spark Plugs

- Clean spark plugs with a spark plug cleaner.
- Raise the ground electrode to an angle of 45 to 60 degrees. If electrode is wet, dry it before cleaning.
- After spark plug is thoroughly cleaned, check insulator for presence of cracks.
- Clean threads and metal body with a wire brush.
- File the electrode tip if electrode is extremely worn.
- Bend the ground electrode to adjust the spark plug gap.

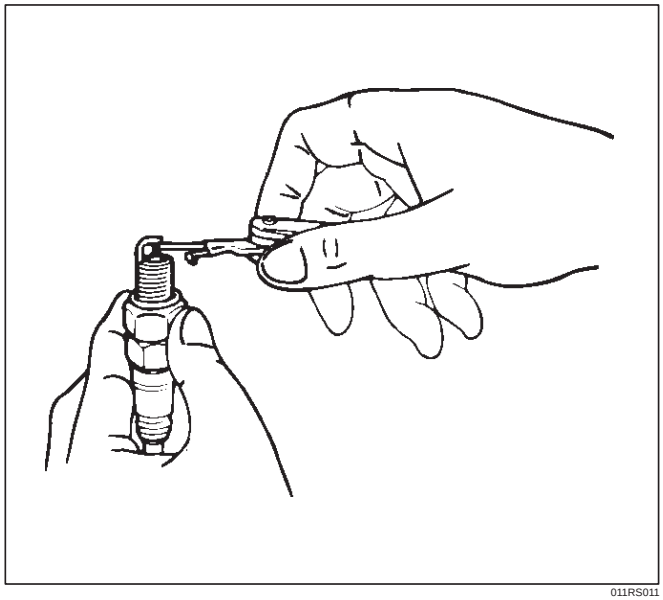

011RS011

Installation

1. Spark plugs
   - Tighten spark plugs to the specified torque.

   Torque: 18 N·m (1.8 Kg·m/13 lb ft)

Crankshaft Angle Sensor

Removal

1. Disconnect battery ground cable
2. Wiring connector from crankshaft angle sensor.
3. Remove crankshaft angle sensor from cylinder block.

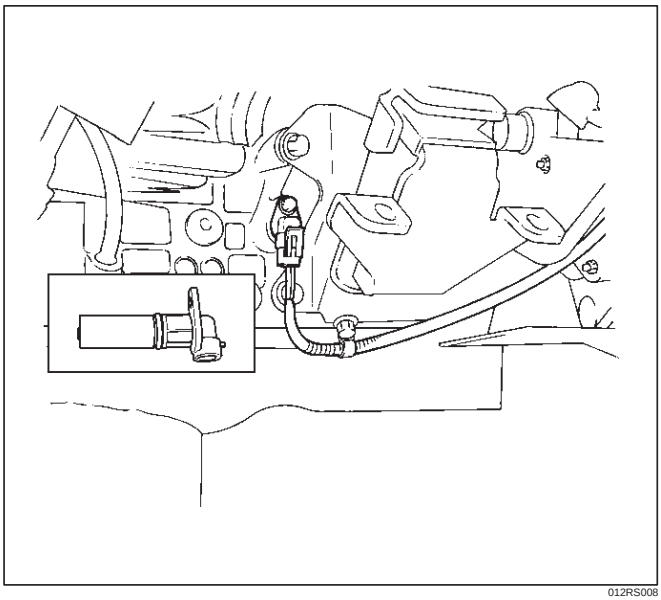

012RS008

Installation

1. Install crankshaft angle sensor into the cylinder block. Before installation,apply small amount of engine oil to the O–ring.

   Torque: 10 N·m (1.0 Kg·m/89 lb in)

2. Reconnect wiring connector to crankshaft angle sensor.

Main Data and Specifications

General Specifications

Ignition System	
Ignition Form	Electronic Ignition System (El system) with Crankshaft angle Sensor
Spark Plug	
Type	K16PR–P11 RC10PYP4 PK16PR11
Plug gap	1.0 mm (0.04 in) – 1.1 mm (0.043 in)
Torque	18 N·m (1.8 Kg·m/13 lb ft)

Torque Specifications

N·m (Kg·m/lb ft)

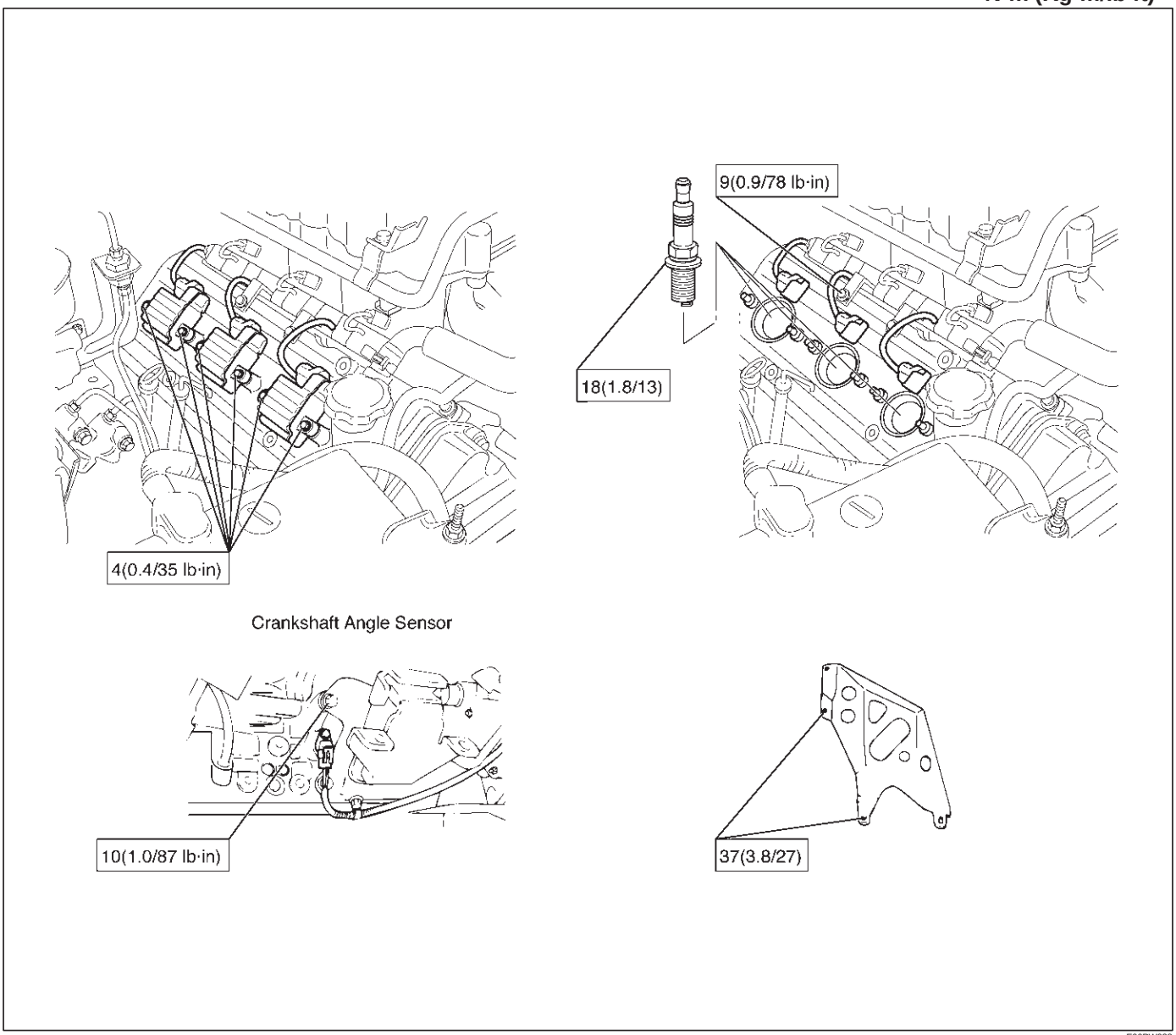

E06RW038

ENGINE

STARTING AND CHARGING SYSTEM

CONTENTS

Service Precaution 6D3–1
Starting System 6D3–2
General Description 6D3–2
Diagnosis 6D3–4
Starter 6D3–5
Removal 6D3–5
Installation 6D3–5
Disassembled View 6D3–6
Disassembly 6D3–7
Inspection and Repair 6D3–9
Reassembly 6D3–13
Main Data and Specifications 6D3–15
Charging System 6D3–18
General Description 6D3–18
General On–Vehicle Inspection 6D3–18
Generator 6D3–19
Removal 6D3–19
Inspection 6D3–19
Installation 6D3–19
Disassembled View 6D3–20
Disassembly 6D3–21
Inspection and Repair 6D3–23
Reassembly 6D3–24
Bench Test 6D3–25
Main Data and Specifications 6D3–26

Service Precaution

WARNING: IF SO EQUIPPED WITH A SUPPLEMENTAL RESTRAINT SYSTEM (SRS), REFER TO THE SRS COMPONENT AND WIRING LOCATION VIEW IN ORDER TO DETERMINE WHETHER YOU ARE PERFORMING SERVICE ON OR NEAR THE SRS COMPONENTS OR THE SRS WIRING. WHEN YOU ARE PERFORMING SERVICE ON OR NEAR THE SRS COMPONENTS OR THE SRS WIRING, REFER TO THE SRS SERVICE INFORMATION. FAILURE TO FOLLOW WARNINGS COULD RESULT IN POSSIBLE AIR BAG DEPLOYMENT, PERSONAL INJURY, OR OTHERWISE UNNEEDED SRS SYSTEM REPAIRS.

CAUTION: Always use the correct fastener in the proper location. When you replace a fastener, use ONLY the exact part number for that application. ISUZU will call out those fasteners that require a replacement after removal. ISUZU will also call out the fasteners that require thread lockers or thread sealant. UNLESS OTHERWISE SPECIFIED, do not use supplemental coatings (Paints, greases, or other corrosion inhibitors) on threaded fasteners or fastener joint interfaces. Generally, such coatings adversely affect the fastener torque and the joint clamping force, and may damage the fastener. When you install fasteners, use the correct tightening sequence and specifications. Following these instructions can help you avoid damage to parts and systems.

Starting System

General Description

Cranking Circuit

The cranking system consists of a battery, starter, starter switch, starter relay, etc. These main components are connected.

Starter

The cranking system employs a magnetic type reduction starter in which the motor shaft is also used as a pinion shaft. When the starter switch is turned on, the contacts of magnetic switch are closed, and the armature rotates. At the same time, the plunger is attracted, and the pinion is pushed forward by the shift lever to mesh with the ring gear.

Then, the ring gear runs to start the engine. When the engine starts and the starter switch is turned off, the plunger returns, the pinion is disengaged from the ring gear, and the armature stops rotation. When the engine speed is higher than the pinion, the pinion idles, so that the armature is not driven.

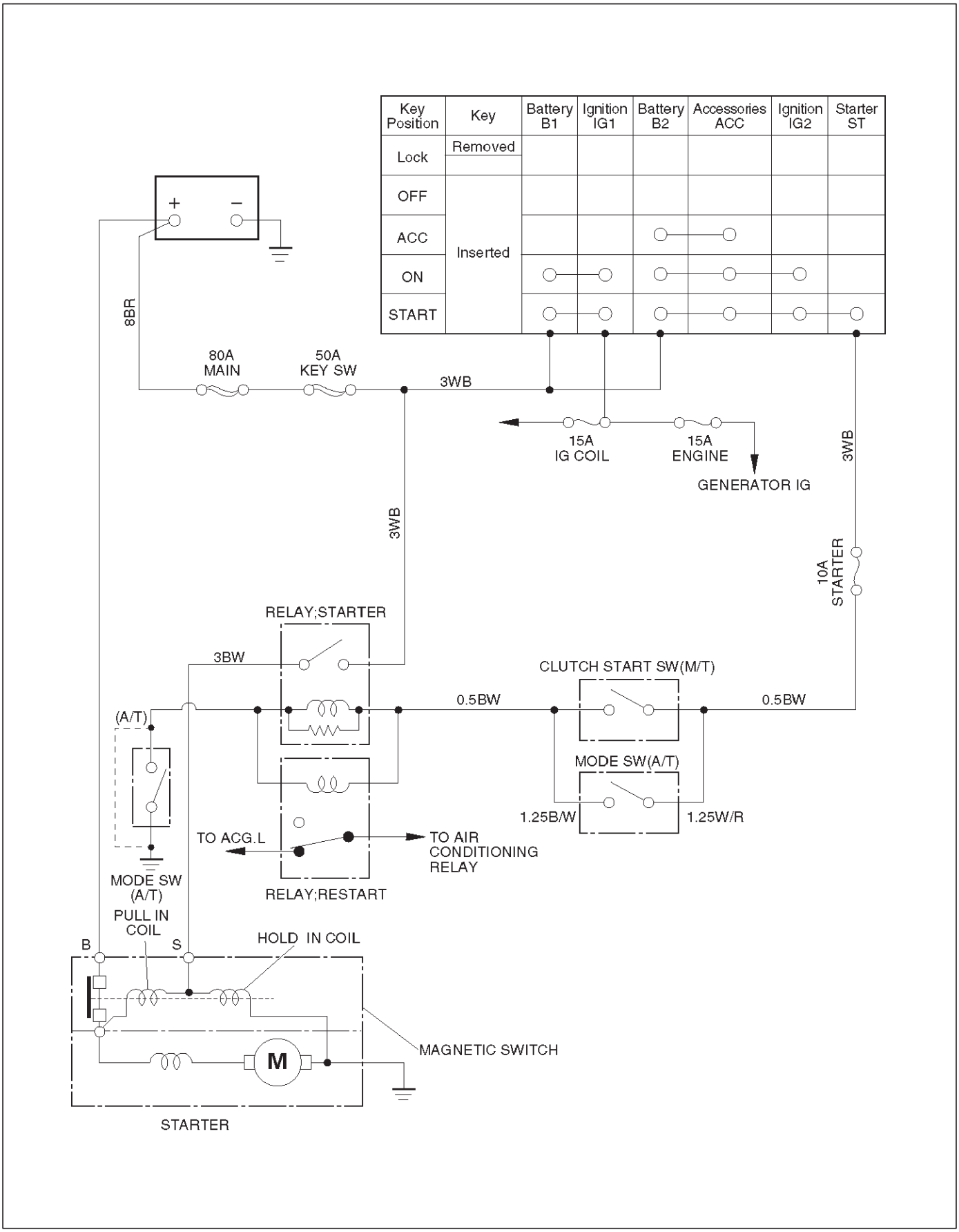
Key Position
Key
Battery B1
Ignition IG1
Battery B2
Accessories ACC
Ignition IG2
Starter ST
Lock
Removed
OFF
ACC
ON
START
Inserted
+
–
8BR
80A MAIN
50A KEY SW
3WB
15A IG COIL
15A ENGINE
GENERATOR IG
3WB
3WB
10A STARTER
RELAY;STARTER
3BW
CLUTCH START SW(M/T)
0.5BW
0.5BW
(A/T)
MODE SW(A/T)
1.25B/W
1.25W/R
TO ACG.L
TO AIR CONDITIONING RELAY
MODE SW (A/T)
RELAY;RESTART
PULL IN COIL
B
S
HOLD IN COIL
MAGNETIC SWITCH
M
STARTER

C06RW005

Diagnosis

Condition	Possible cause	Correction
Starter does not run	Charging failure	Repair charging system
	Battery Failure	Replace Battery
	Terminal connection failure	Repair or replace terminal connector and/or wiring harness
	Starter switch failure	Repair or replace starter switch
	Starter failure	Repair or replace starter

Starter

Removal

1. Battery ground cable.
2. Remove exhaust front left pipe(1).

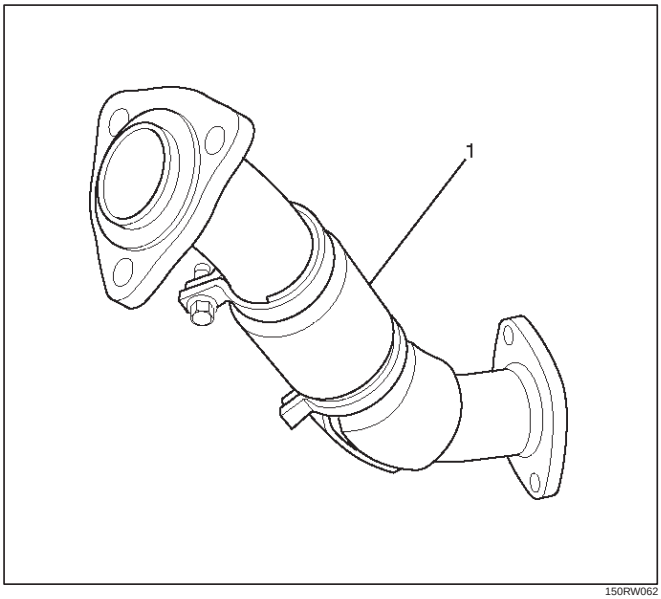

150RW062

3. Remove heat protector(3).
4. Disconnect starter wiring connector from terminals “B” and “S”(4).
5. Remove starter assembly mounting bolts on inside and outside(5).
6. Remove starter assembly toward the bottom of engine(6).

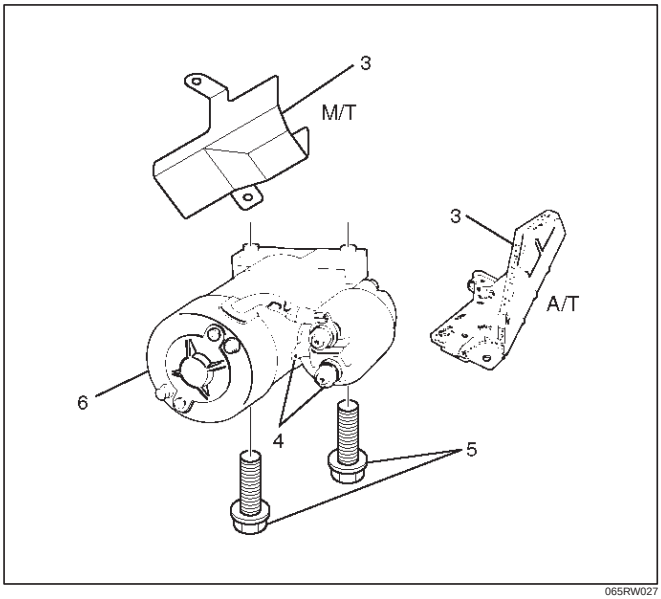

065RW027

Installation

1. Install starter assembly(6).
2. Install mounting bolts and tighten bolts to specified torque(5).

   Torque: 40 N·m (4.1 Kg·m/30 lb ft)
3. Reconnect the connectors to terminals “B” and “S” and tighten Terminals “B” to specified torque.

   Torque: 9 N·m (0.9 Kg·m/80 lb in)
4. Install heat protector(3).

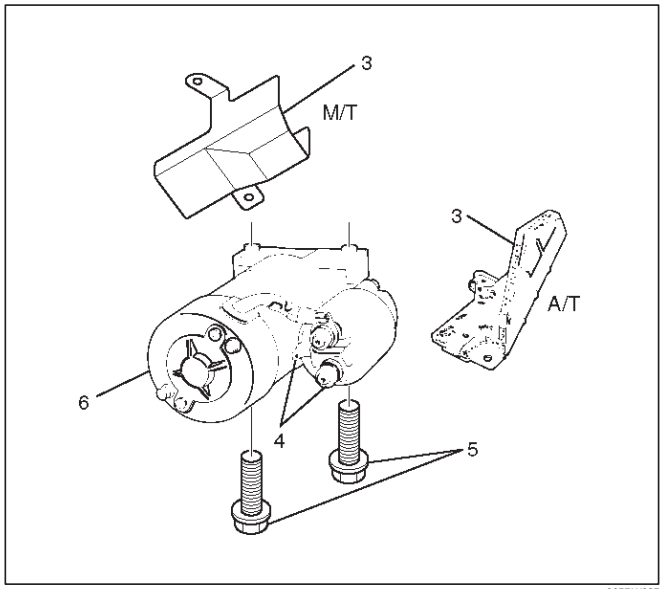

065RW027

5. Install exhaust front left pipe and tighten bolts and nuts to specified torque(2).

   Stud Nuts

   Torque: 67 N·m (6.8 Kg·m/49 lb ft)

   Nuts

   Torque: 43 N·m (4.4 Kg·m/32 lb ft)

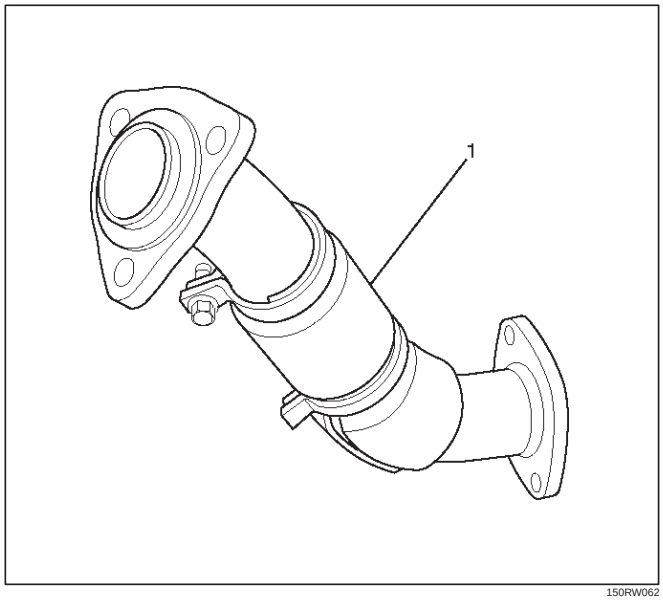

150RW062

6. Reconnect the battery ground cable.

Disassembled View

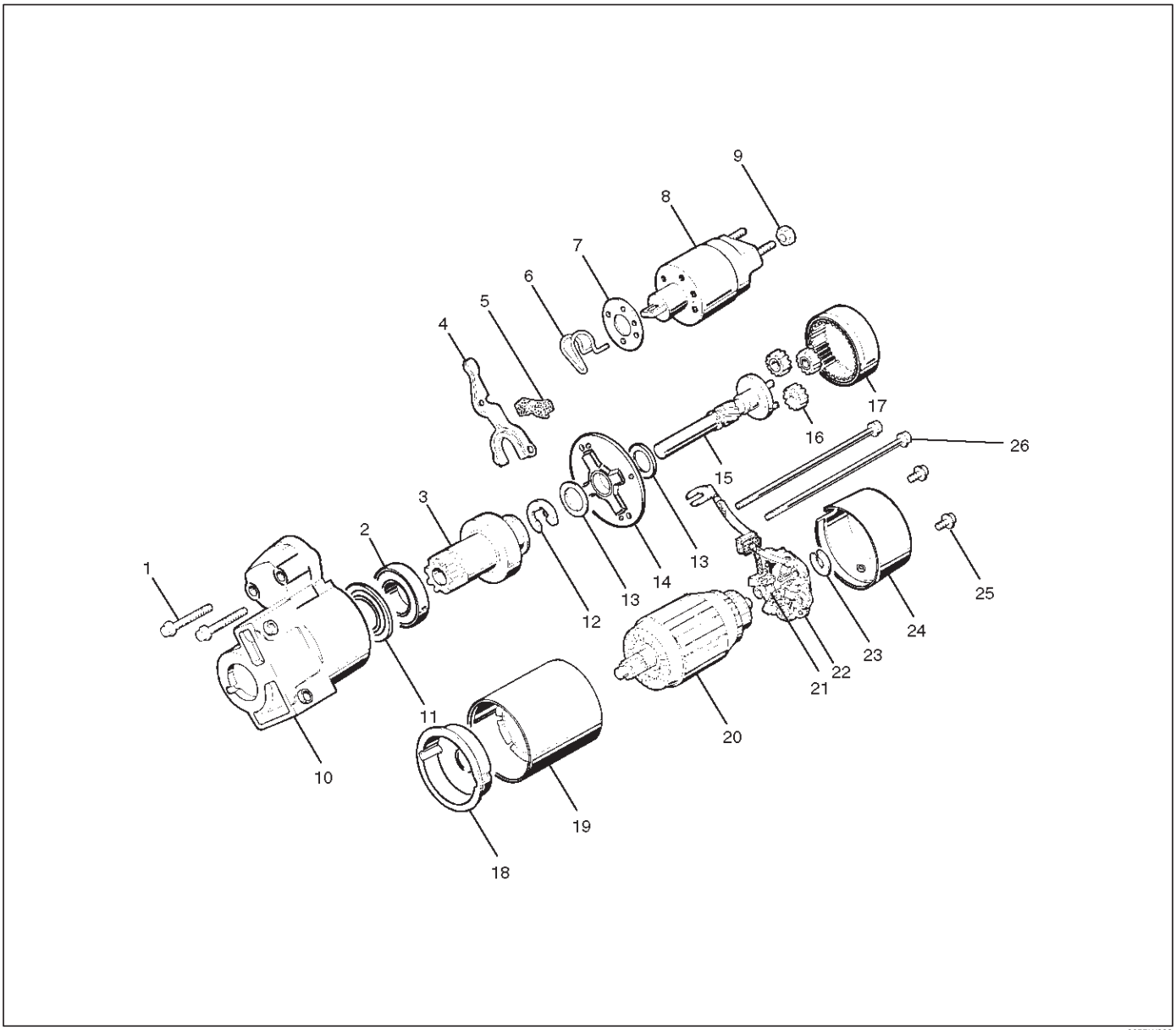

065RW002

Legend

(1) Bolt (2 pcs)
(2) Ball Bearing
(3) Pinion
(4) Shift Lever
(5) Dust Cover
(6) Torsion Spring
(7) Dust Cover
(8) Magnetic Switch
(9) Nut
(10) Gear Case
(11) Bearing Cover
(12) E–Ring
(13) Thrust Washer (2)
(14) Center Bracket
(15) Pinion Shaft
(16) Planet Gear (3)
(17) Internal Gear
(18) Center Bracket (A)
(19) Yoke Assembly
(20) Armature
(21) Brush
(22) Brush Holder
(23) Thrust Washer
(24) Rear Cover
(25) Screw (2 pcs)
(26) Through Bolt (2 pcs)

Disassembly

1. Loosen the nut(1) on terminal “M” of magnetic switch and disconnect the connector cable.
2. Remove bolt (2 pcs) (2).

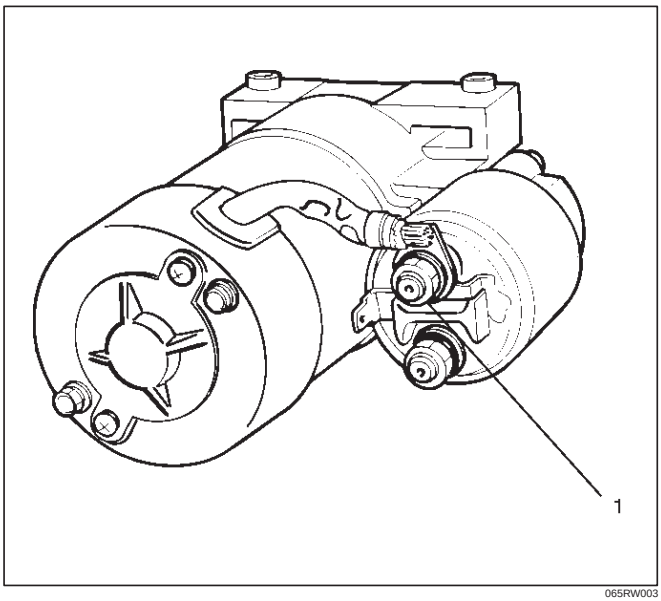

065RW003

3. Remove magnetic switch(5).
4. Remove dust cover(4).
5. Remove torsion spring bolts, then the magnetic switch assembly.
6. Remove torsion spring(3) from magnetic switch assembly(5).

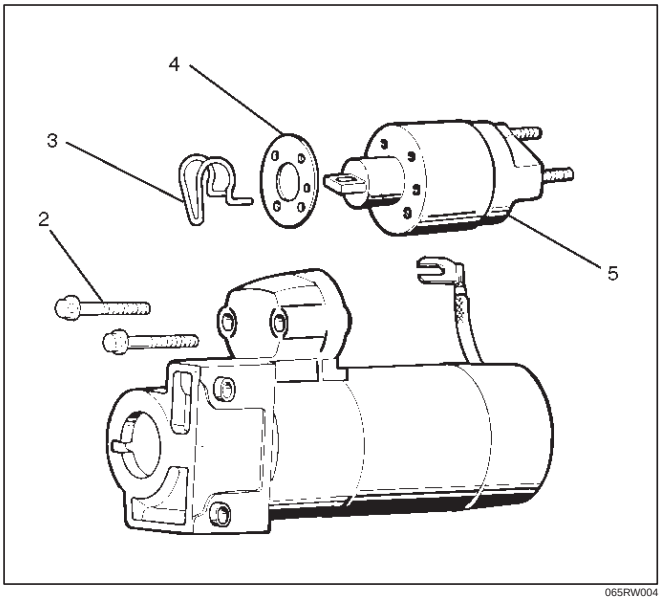

065RW004

7. Remove screw (2 pcs) (8).
8. Remove through bolt (2 pcs) (7).
9. Remove screws and through bolts, then the rear cover(9) then remove thrust washer(10).
10. Remove brush holder(6).

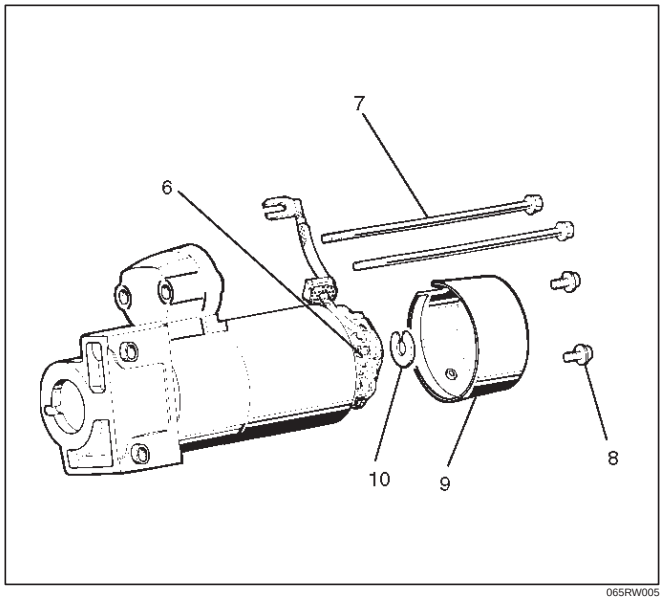

065RW005

11. Raise a brush spring to detach brushes (4 pcs) from the commutator face and pull off the brush holder(12) and brush(11).

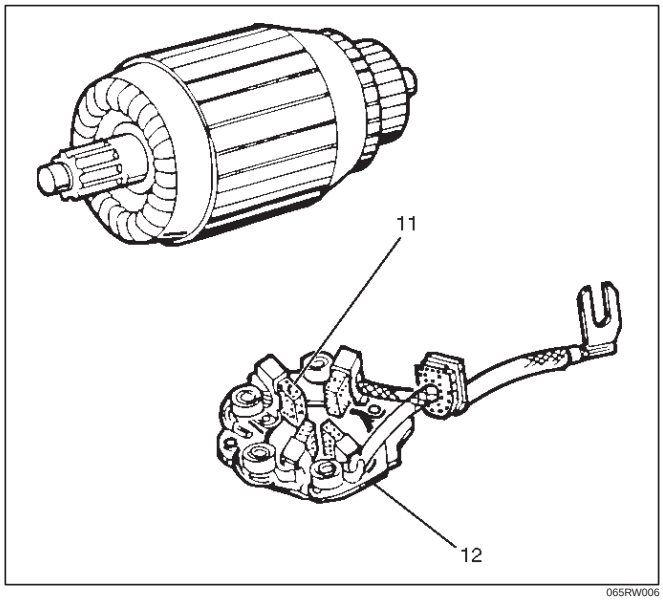

065RW006

12. Remove yoke assembly(14).
13. Remove armature(15).
14. Pull off the yoke assembly, then remove armature, washer and center bracket.(A) (13).

NOTE: In disassembling the yoke assembly, hold the armature and pull off slowly the yoke assembly. Because of strong magnetic force, avoid placing a metallic part near armature.

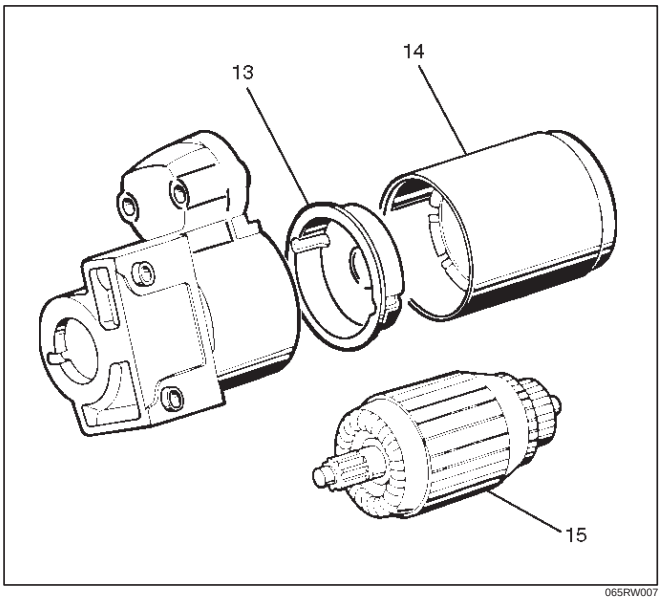

065RW007

15. Remove dust cover(17).
16. Remove a dust cover and shift lever(16) from the gear case.

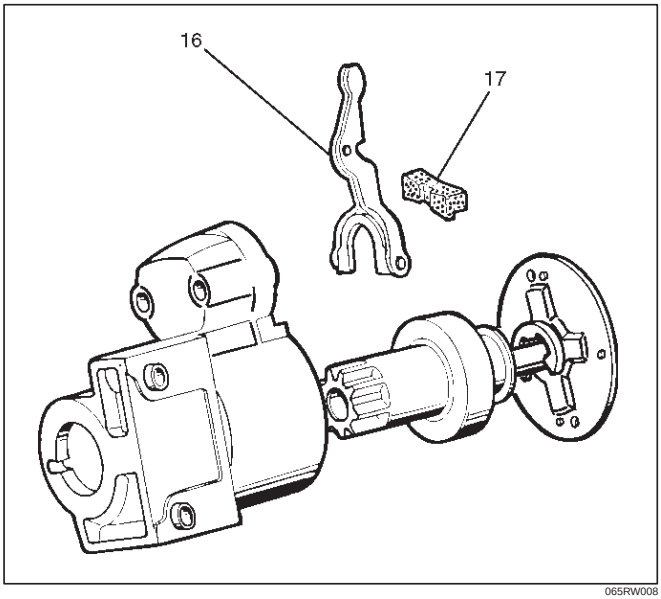

065RW008

17. Remove ball bearing(19).
18. Remove bearing cover(20).
19. Remove a ball bearing and bearing cover from the gear case(18).

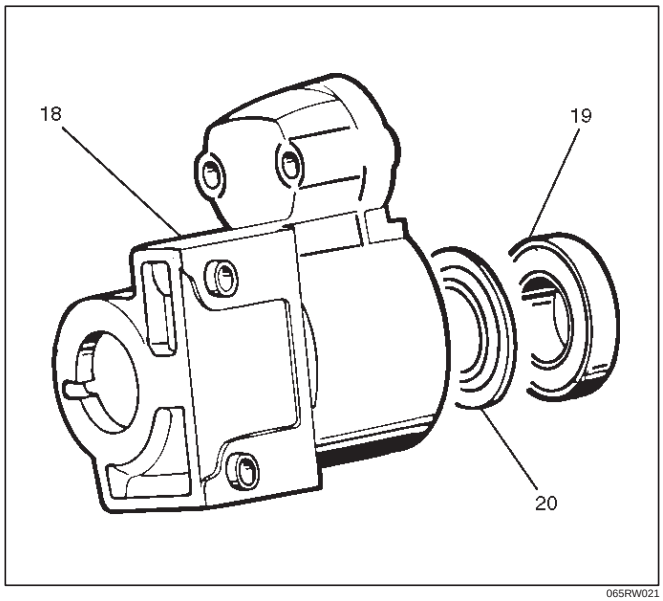

065RW021

20. Internal gear(21).
21. Remove internal gear and planet gear(3) (22).

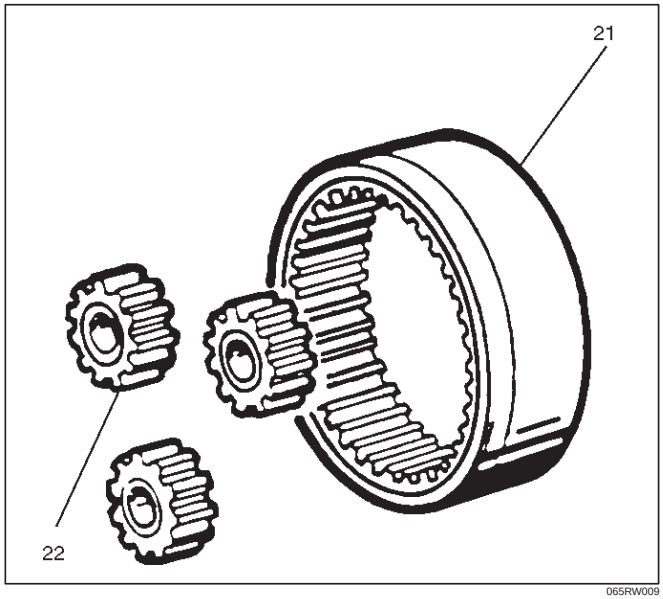

065RW009

22. Remove an E–ring(23) from the pinion shaft using a flat blade screwdriver.

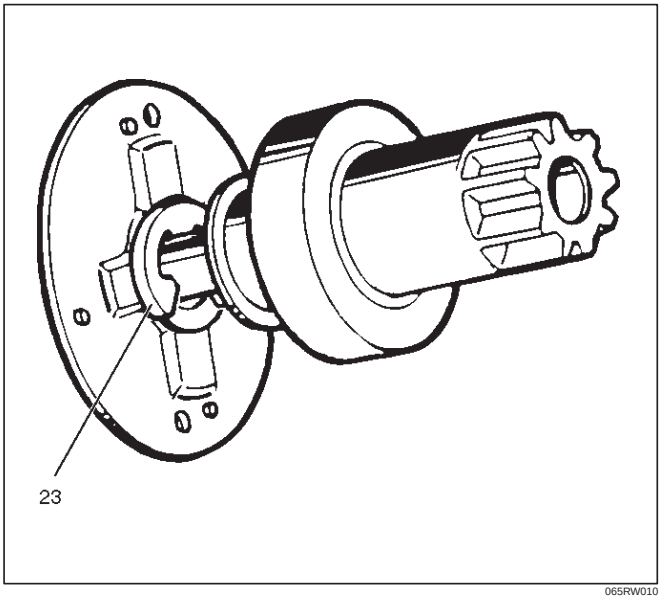

065RW010

23. Holding the pinion shaft, push pinion toward the center bracket. and turn the pinion clockwise or counterclockwise by one tooth of spline, then pull off the pinion.
24. Remove thrust washer(24).
25. Remove center bracket
26. Remove pinion shaft.

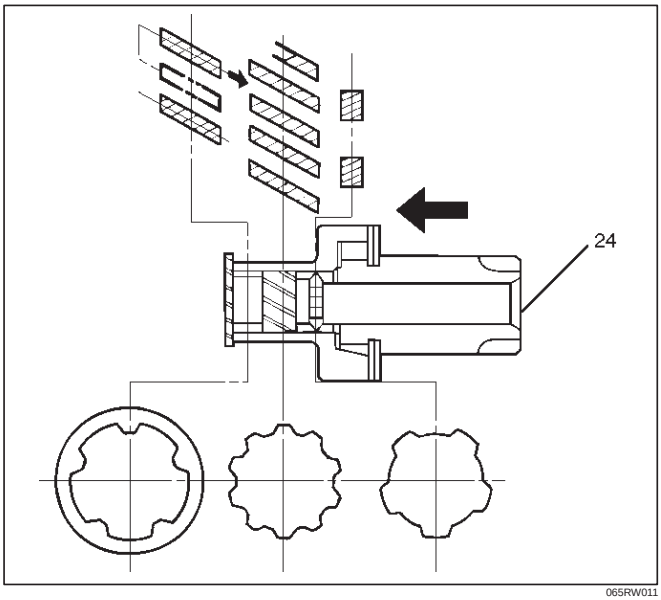

065RW011

Inspection and Repair

Repair or replace necessary parts if extreme wear or damage is found during inspection.

Armature

Measure the outer diameter of commutator, and replace with a new one if it is out of the limit.

Standard: 33.0 mm (1.30 in)

Limit: 32.0 mm (1.26 in)

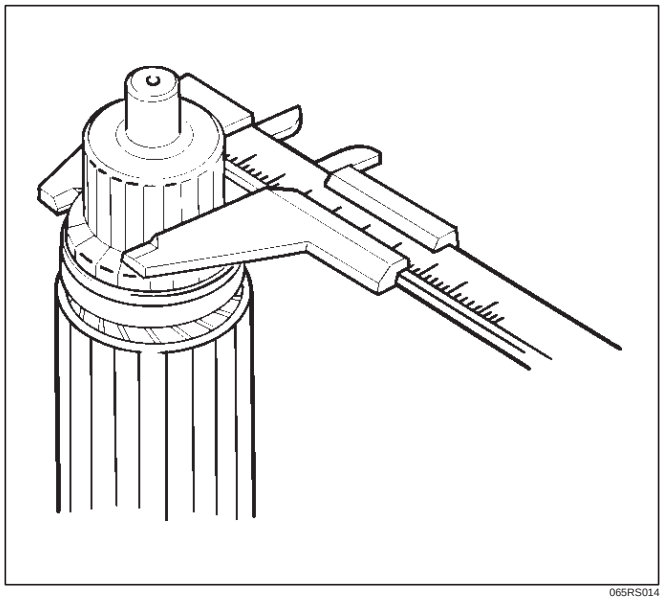

065RS014

Check for continuity between commutator and segment. Replace commutator if there is no continuity (i.e., disconnected).

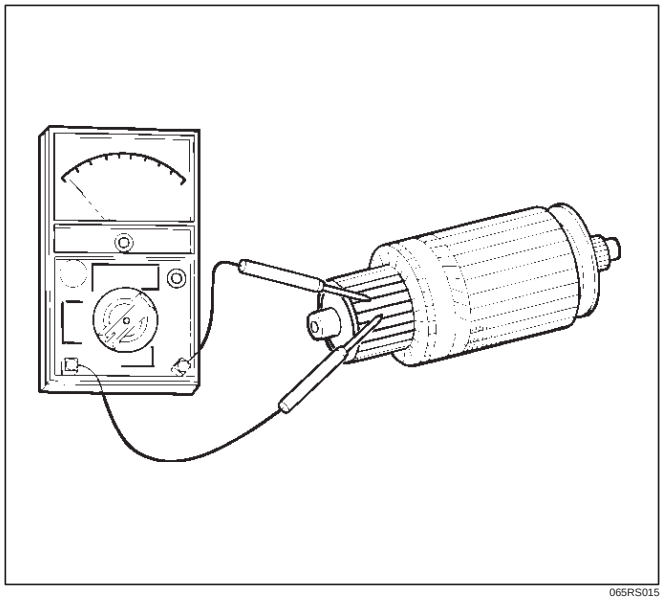

065RS015

Check for continuity between commutator and shaft. Also, check for continuity between commutator and armature core,armature core and shaft. Replace commutator if there is continuity (i.e., internally grounded).

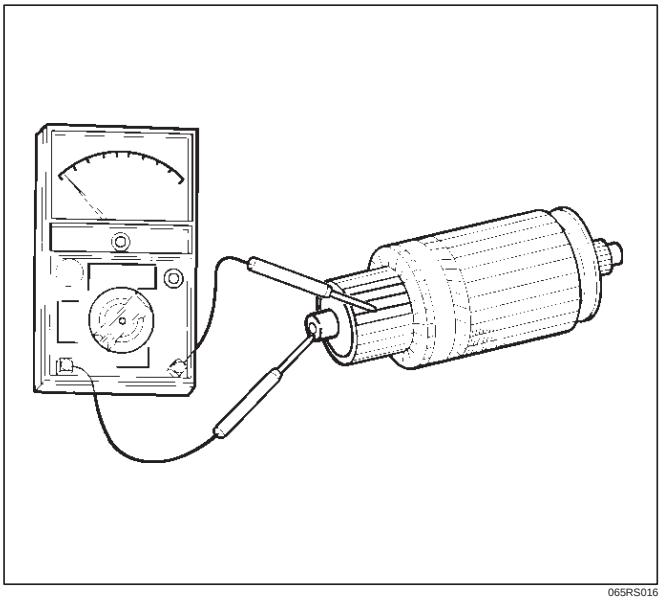

065RS016

Measure runout of armature core and commutator with a dial gauge. Repair or replace, if it exceeds the limit.

Armature

Standard: 0.05 mm (0.002 in) Max.

Limit: 0.10 mm (0.004 in)

Commutator

Standard: 0.05 mm (0.002 in) Max.

Limit: 0.10 mm (0.004 in)

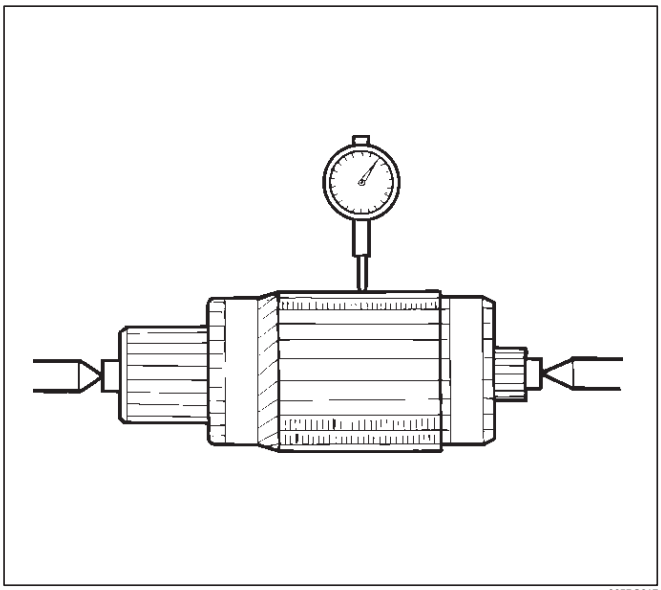

065RS017

Polish the commutator surface with sandpaper #500 to #600 if it is rough.

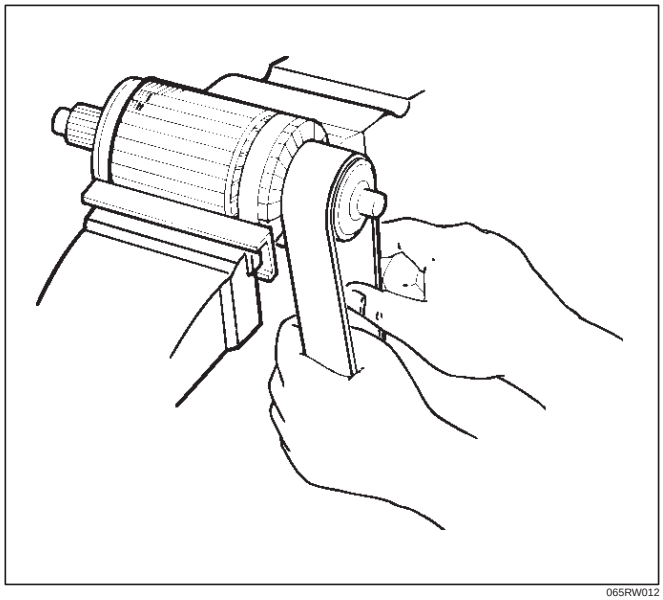

065RW012

Measure the depth of insulator in commutator. Repair, if it is below the limit.

Standard: 0.05 mm to 0.8 mm (0.02 in to 0.03 in)

Limit: 0.2 mm (0.008 in)

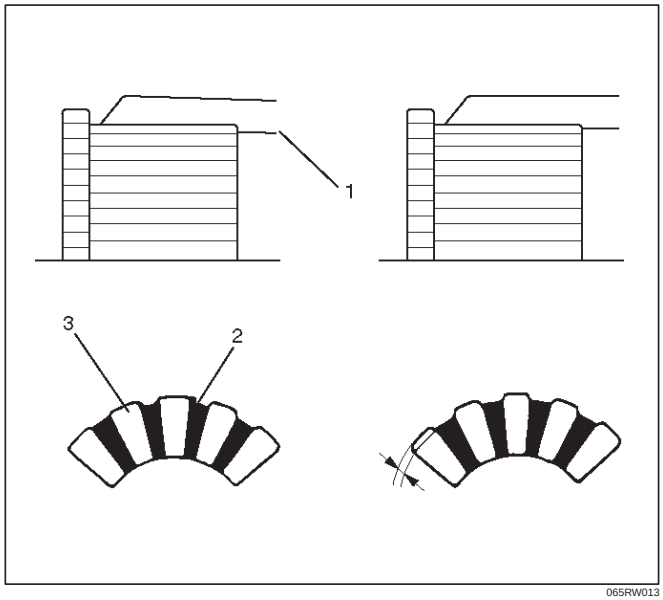

065RW013

Legend

(1) Steel Saw
(2) Insulator
(3) Commutator Segments

Brush

Measure the length of brush.
Replace with a new one, if it is below the limit.

Standard: 16 mm (0.63 in)

Limit: 11 mm (0.43 in)

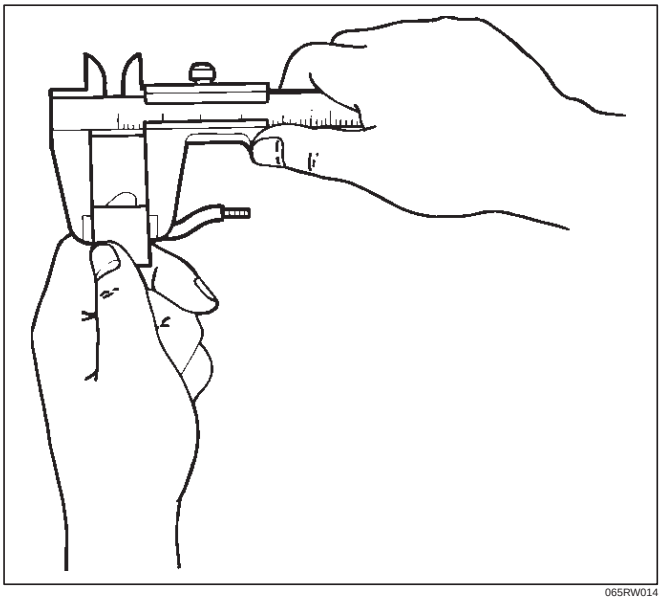

065RW014

Brush Holder

Check for continuity between brush holder (+) (4) and base (–). Replace, if there is continuity (i.e., insulation is broken).

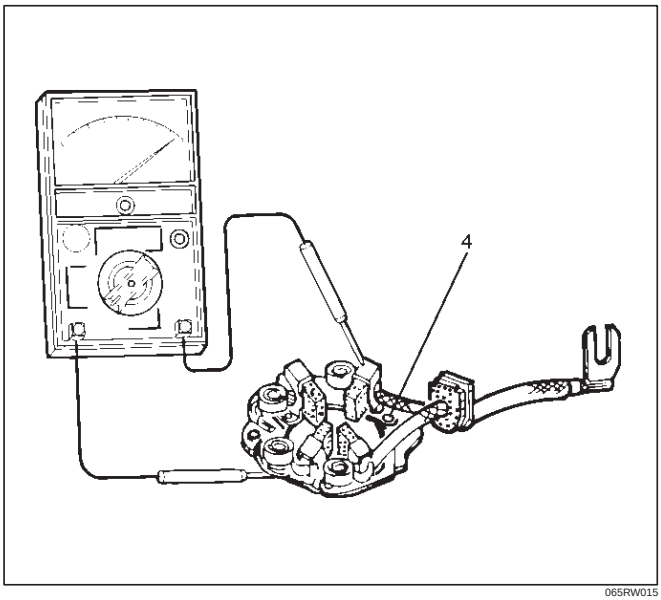

065RW015

Magnetic Switch

Check for continuity of shunt coil between terminals S and M.
Replace, if there is no continuity (i.e., coil is disconnected).

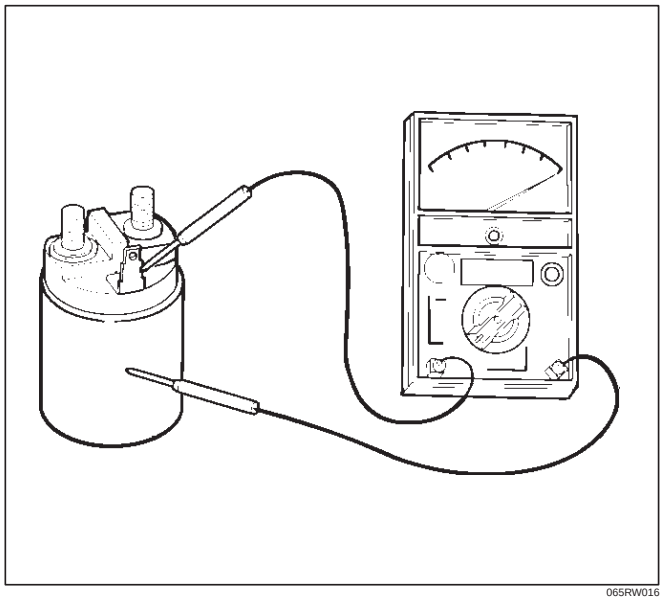

065RW016

Continuity of Series Coil

Check for continuity between terminals S and M.
Replace, if there is no continuity (i.e., coil is disconnected).

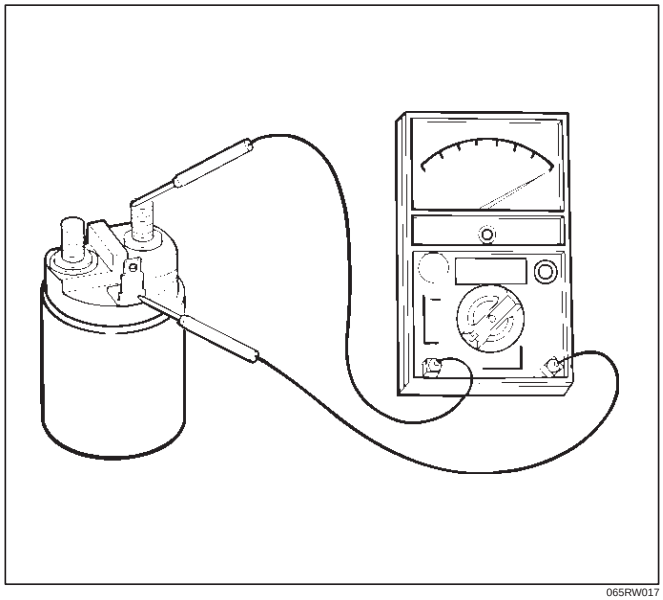

065RW017

Continuity of Contacts

With the plunger faced downward, push down the magnetic switch. In this state, check for continuity between terminals B and M. Replace, if there is no continuity (i.e., contacts are faulty).

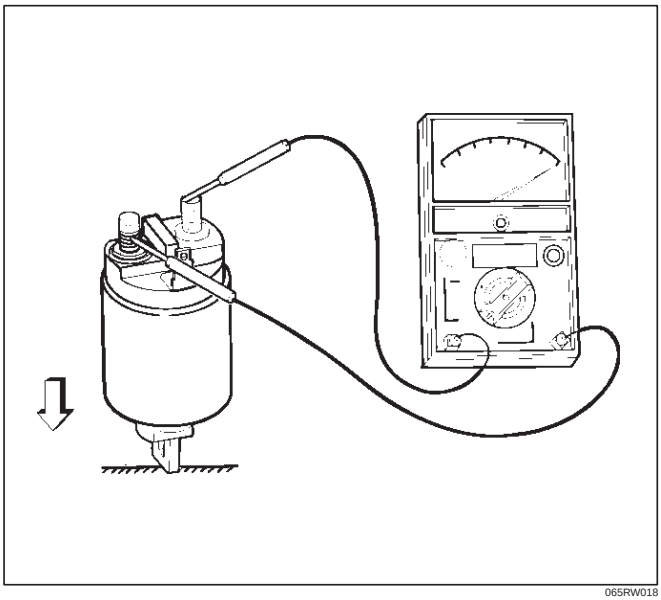

065RW018

Pinion

Check if the pinion rotates smoothly in drive direction by hand, or if it is locked when it is rotated in reverse. If not, replace the pinion.

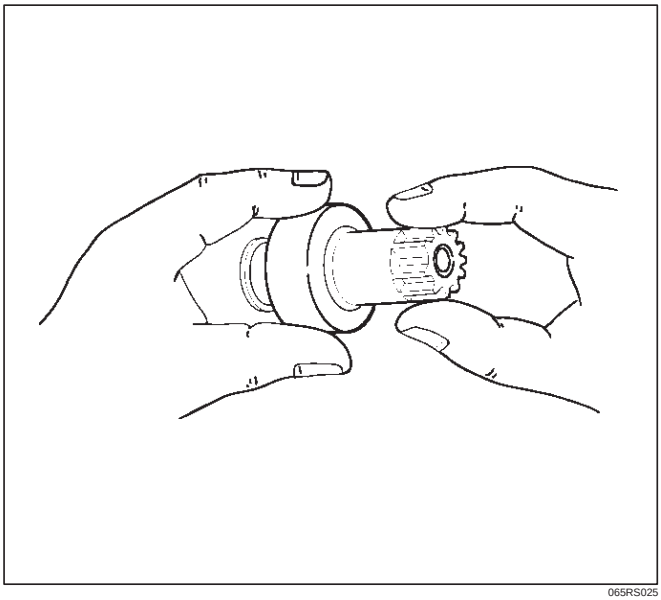

065RS025

Yoke Assembly

Check a magnet inside the yoke.
Replace the yoke assembly if it is broken.

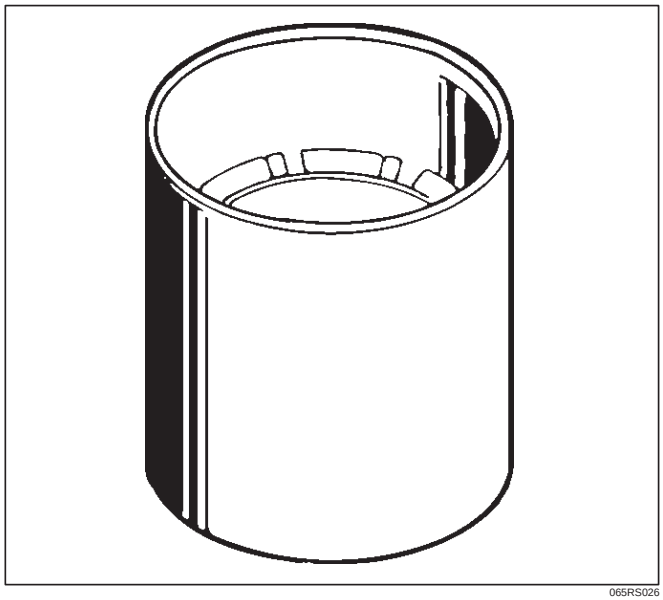

065RS026

Ball Bearing

Clamp the inner race of the ball bearing with your finger, and check for sticking or play when rotating the outer race.
Replace, if abnormality is found.

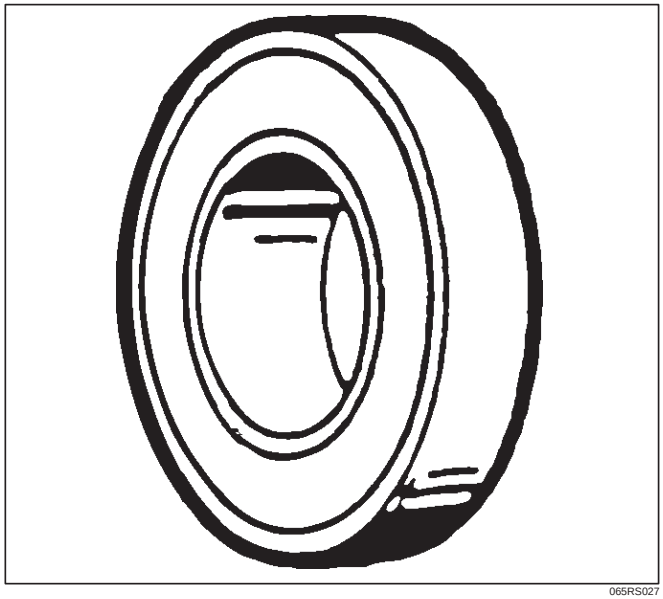

065RS027

Measure inner diameter of bushing in the rear cover, and replace if it exceeds the limit.

Standard: 12.50 mm to 12.527 mm (0.492 in to 0.4932 in)

Limit: 12.60 mm (0.4961 in)

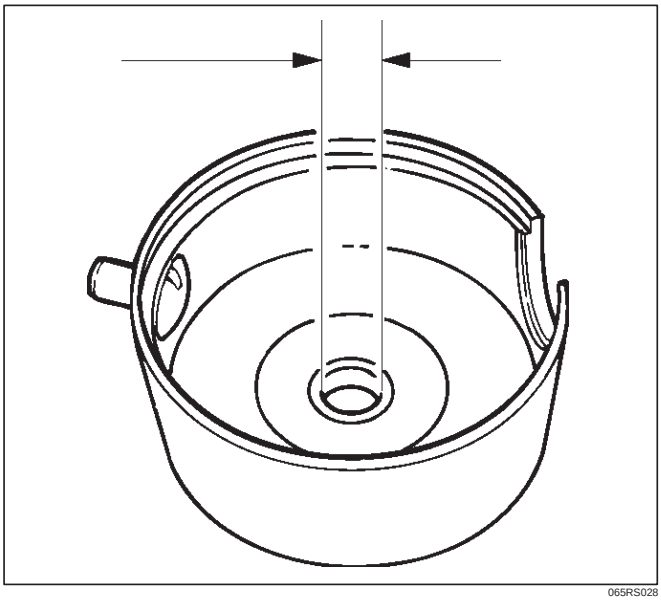

065RS028

Measure inner diameter of bushing in the center bracket (P), and replace if it exceeds the limit.

Standard: 18.01 mm to 18.127 mm (0.7091 in to 0.7137 in)

Limit: 18.15 mm (0.7146 in)

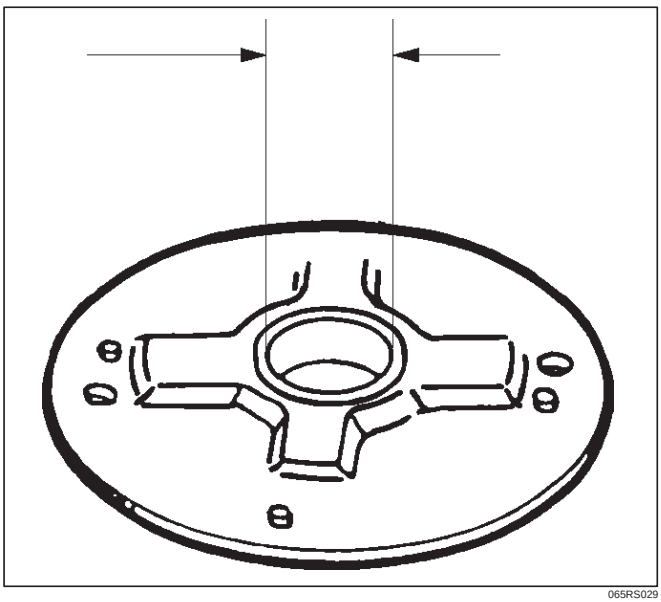

065RS029

Reassembly

To install, follow the removal steps in the reverse order, noting the following points:

Grease application places

- Bushing in rear cover and center bracket
- Gears in reduction gear
- Shift lever operating portion
- Sliding portion of pinion
- Plunger sliding portion of magnetic switch

Reassembling Yoke Assembly

Before reassembly, make sure that no metallic parts attach to the yoke assembly. Because of strong magnetic force, hold the yoke assembly and insert it slowly into the armature.

Torque

Torque for each part (See Torque Specifications in this section)

Pinion Jump–out Dimension

Connect the “+” cable of battery to terminal S and the “–” cable to terminal M. Turn the switch on, and measure pinion travel dimension in thrust direction from the jump–out position.

In measuring the dimension, pull the pinion out a little in the arrow direction.

Dimension(L): 0.05 mm to 1.5 mm (0.002 in to 0.06 in)

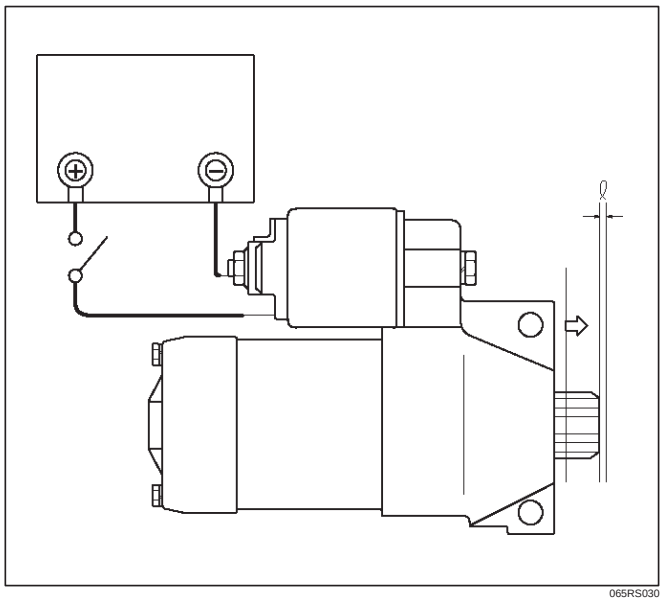

065RS030

If the measured value is out of standard, insert dust cover, or disassemble and adjust.

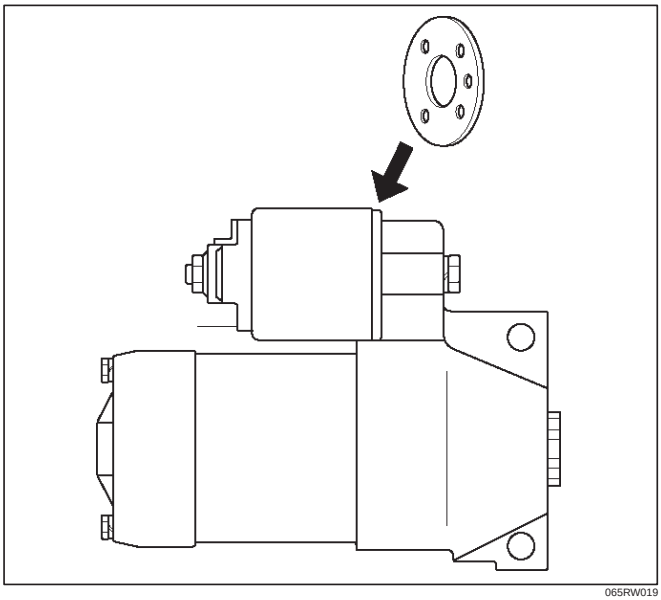

065RW019

Characteristic Test

For easily confirming the characteristics, conduct the no load test as follows:
Rating as short as 30 seconds requires rapid testing.
Fix the starter on the test bench, and wire as shown in illustration. When the switch is closed, the current flows and the starter runs under no load. At this time, measure current, voltage and speed to check if they satisfy the standard.

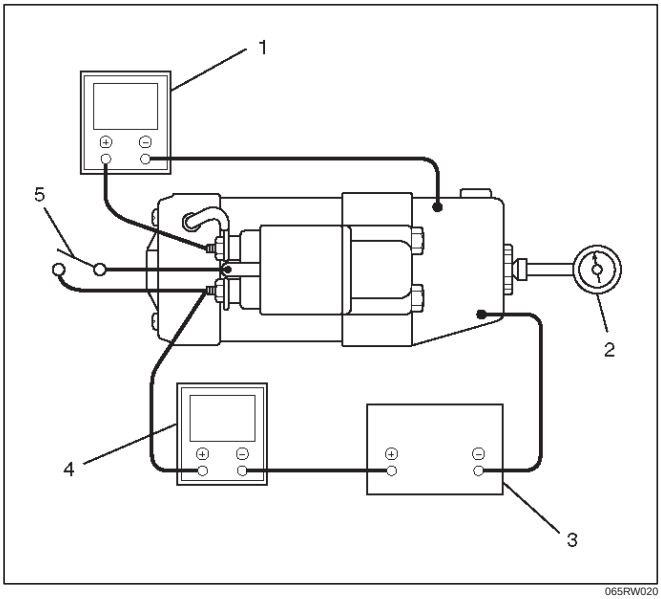

065RW020

Legend

(1) Volt Meter
(2) Tachometer
(3) Battery
(4) Ammeter
(5) Switch

Main Data and Specifications

General Specifications

Model	HITACHI GD002350
Rating	
Voltage	12 V
Output	1.4 Kw
Time	30 sec
Number of teeth of pinion	9
Rotating direction(as viewed from pinion)	Clockwise
Weight(approx.)	34 N
No load characteristics	
Voltage /Current	11V/90A or less
Speed	2700rpm or more
Load characteristics	
Voltage/current	8.4V/250A
Torque	7.3N·m(64lb·in.) or more
Speed	1200rpm or more
Locking characteristics	
Voltage/current	3V/750A or less
Torque	19N·m(14lb·in) or more

Torque Specifications

N·m (Kg·m/lb ft)

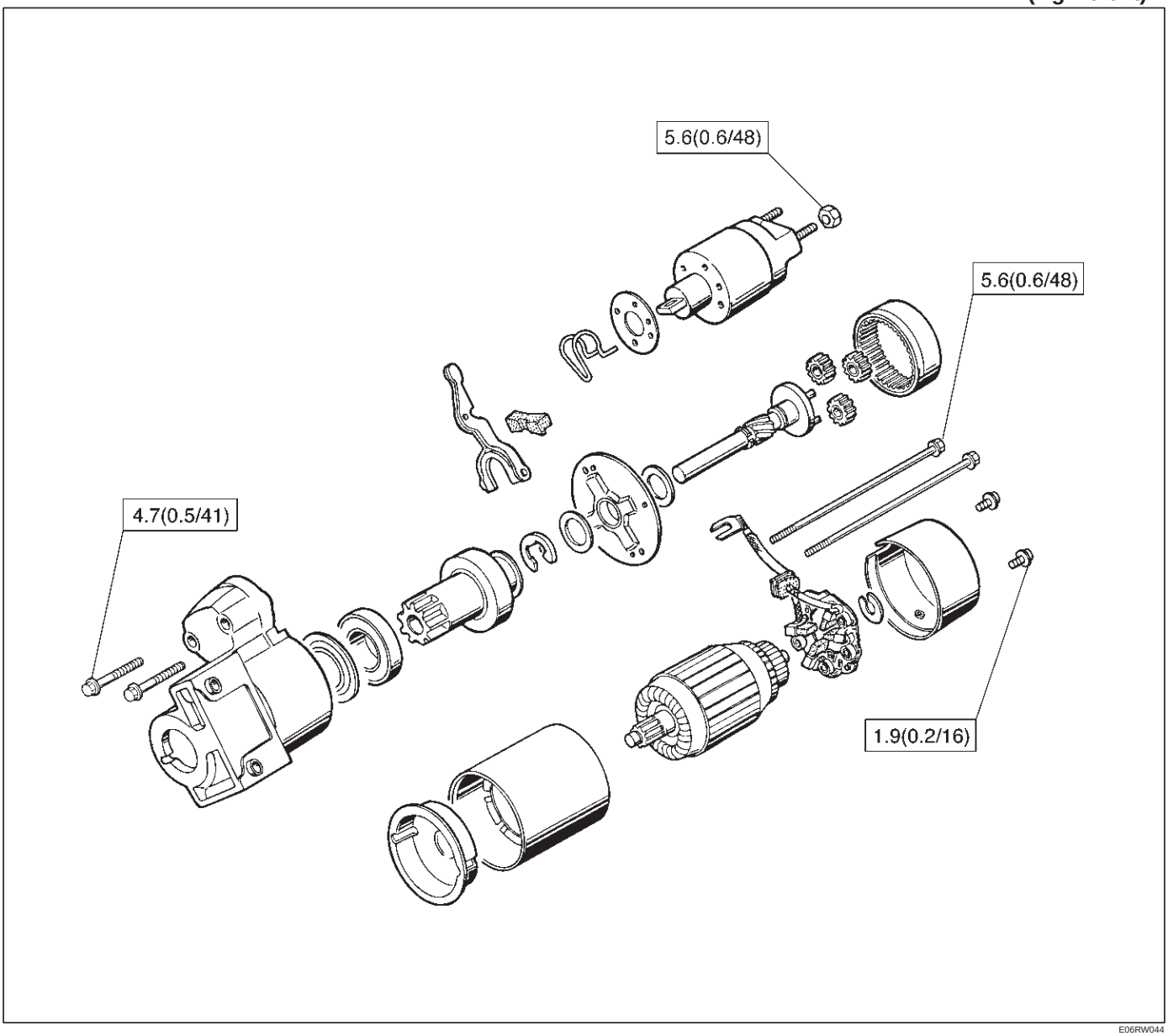

E06RW044

N·m (Kg·m/lb ft)

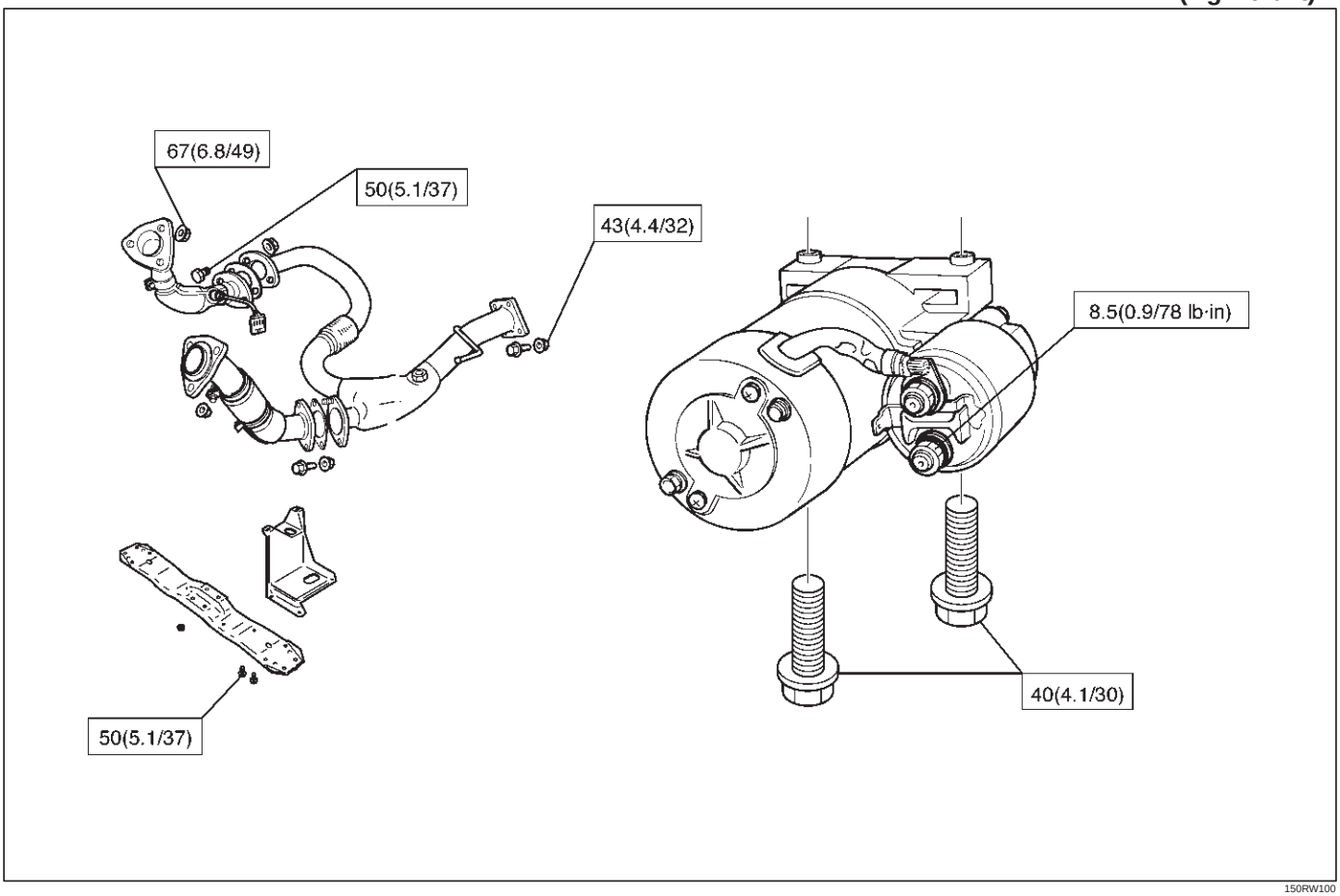

150RW100

Charging System

General Description

The IC integral regulator charging system and its main components are connected as shown in the illustration.
The regulator is a solid state type and it is mounted along with the brush holder assembly inside the generator installed on the rear end cover.
The generator does not require particular maintenance such as voltage adjustment.
The rectifier connected to the stator coil has eight diodes to transform AC voltage into DC voltage.
This DC voltage is connected to the output terminal of generator.

General On–Vehicle Inspection

The operating condition of charging system is indicated by the charge warning lamp. The warning lamp comes on when the starter switch is turned to “ON” position. The charging system operates normally if the lamp goes off when the engine starts.
If the warning lamp shows abnormality or if undercharged or overcharged battery condition is suspected, perform diagnosis by checking the charging system as follows:

1. Check visually the belt and wiring connector.
2. With the engine stopped, turn the stator switch to “ON” position and observe the warning lamp.

   If lamp does not come on:

   Disconnect wiring connector from generator, and ground the terminal “L” on connector side.

   If lamp comes on:

   Repair or replace the generator.

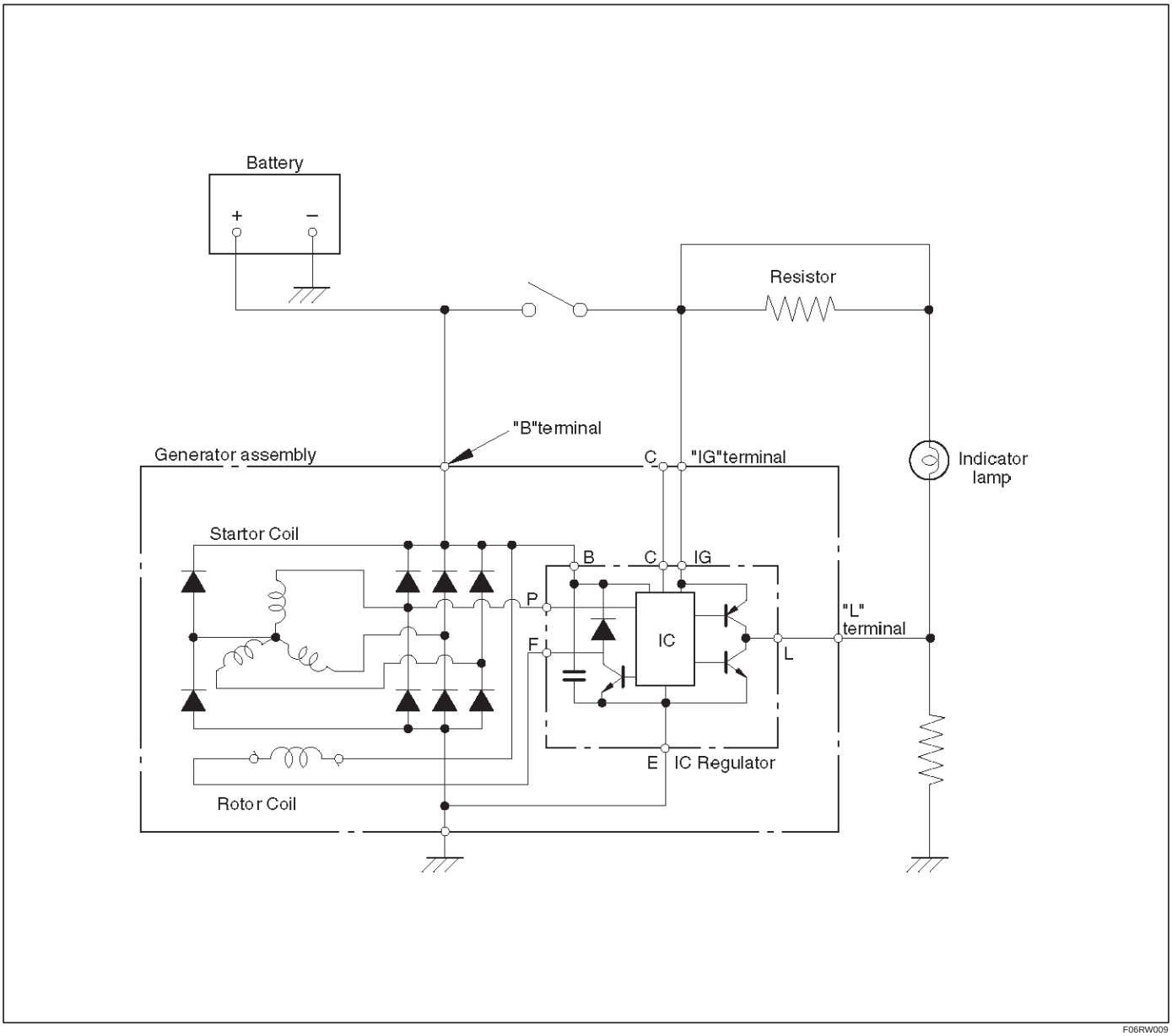

F06RW009

Generator

Removal

1. Disconnect battery ground cable.
2. Move drive belt tensioner to loose side using wrench then remove drive belt (1).
3. Disconnect the wire from terminal “B” and disconnect the connector (4).
4. Remove generator fixing bolt (3).
5. Remove generator assembly (2).

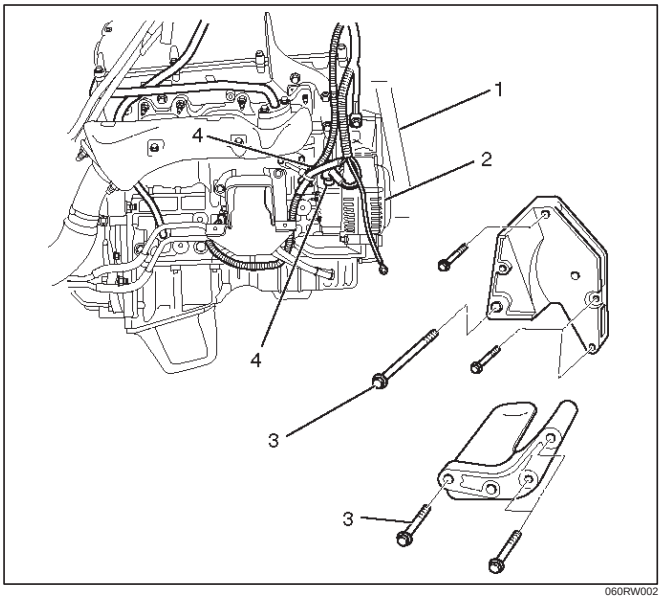

060RW002

Inspection

1. Disconnect the wiring connector from generator.
2. With the engine stopped, turn starter switch to “ON” and connect a voltmeter between connector terminal L (2) and ground or between terminal IG (1) and ground.

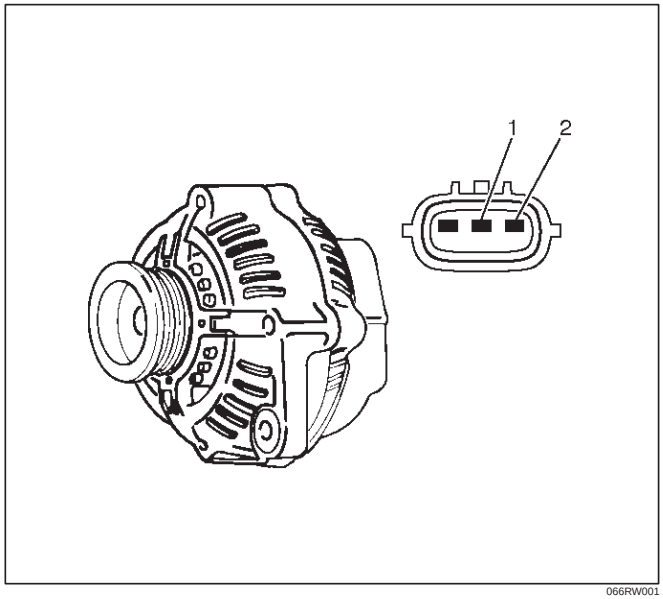

066RW001

If voltage is not present, the line between battery and connector is disconnected and so requires repair.

3. Reconnect the wiring connector to the generator, run the engine at middle speed, and turn off all electrical devices other than engine.
4. Measure battery voltage. If it exceeds 16V, repair or replace the generator.
5. Connect an ammeter to output terminal of generator, and measure output current under load by turning on the other electrical devices (eg., head lights). At this time, the voltage must not be less than 13V.

Installation

1. Install generator assembly to the position to be installed.
2. Install generator assembly and tighten the fixing bolts to the specified torque.

   Torque:

   M10 bolt: 41 N·m (4.2 Kg·m/30 lb ft)

   M8 bolt: 21 N·m (2.1 Kg·m/15 lb ft)
3. Connect wiring harness connector and direct terminal “B”.
4. Move drive belt tensioner to loose side using wrench, then install drive belt to normal position.
5. Reconnect battery ground cable.

Disassembled View

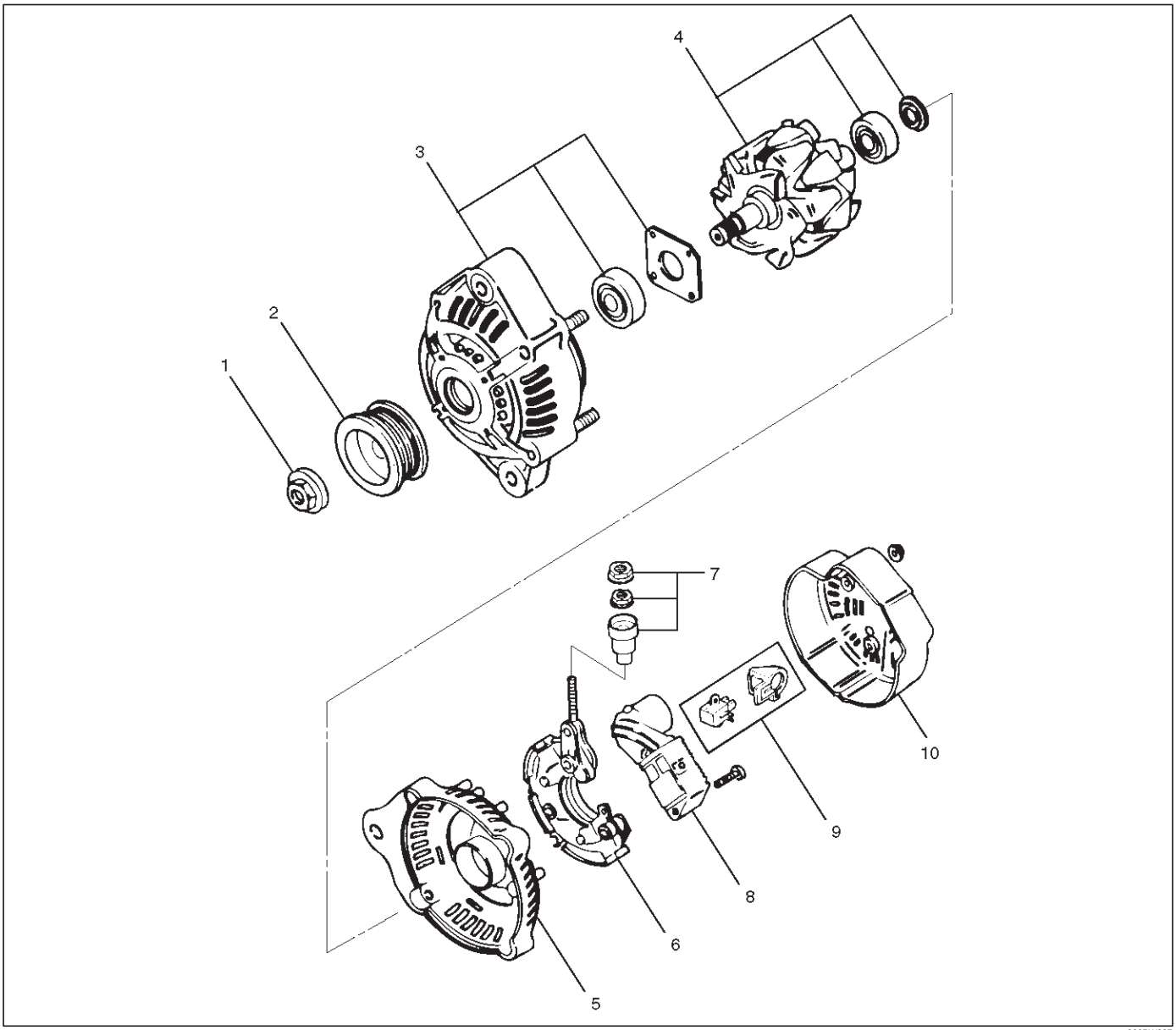

066RW007

Legend

(1) Pulley Nut
(2) Pulley
(3) Front Cover Assembly
(4) Rotor Assembly
(5) Rear End Cover
(6) Rectifier
(7) Terminal Insulator and Nut
(8) Regulator Assembly
(9) Brush Holder Assembly
(10) Rear Cover

Disassembly

1. Terminal insulator and nut(2).
2. Remove three nuts(1) on the rear cover and a nut on terminal B and insulator, then remove the rear cover(3).

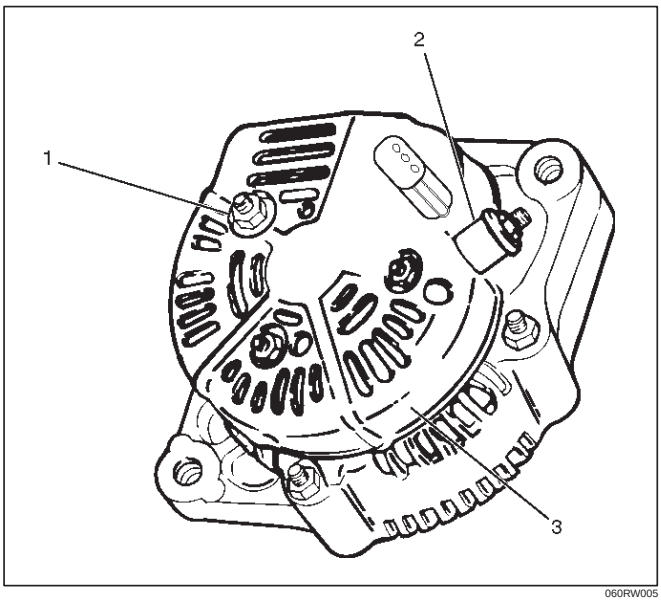

060RW005

3. Remove two screws that fix the brush holder(5) and rectifier, then remove the brush holder assembly(4).

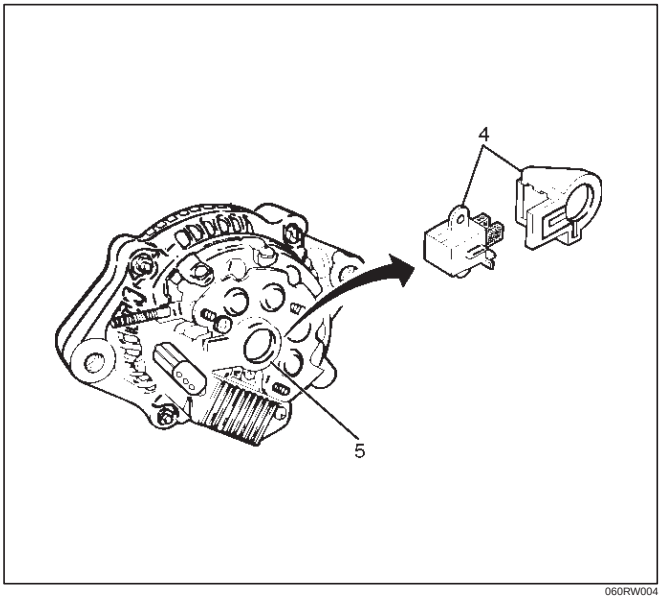

060RW004

4. Remove three screws on the IC regulator, then the IC regulator assembly(6).

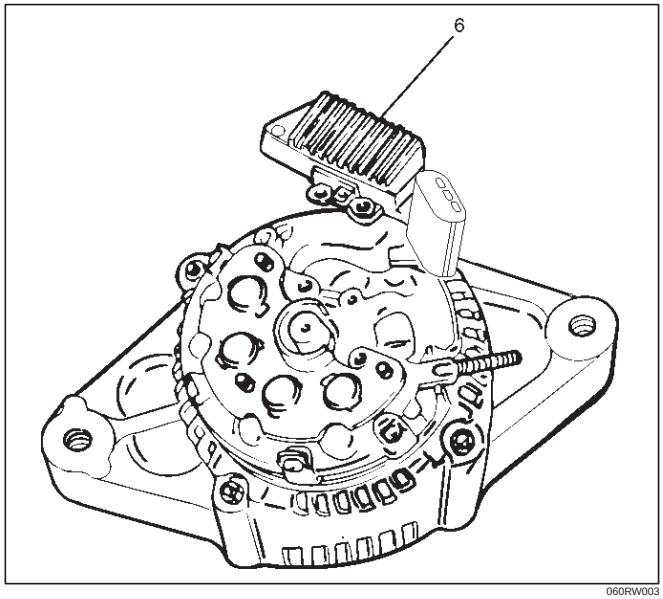

060RW003

5. Remove four screws that fix rectifier(7) and stator lead wires.

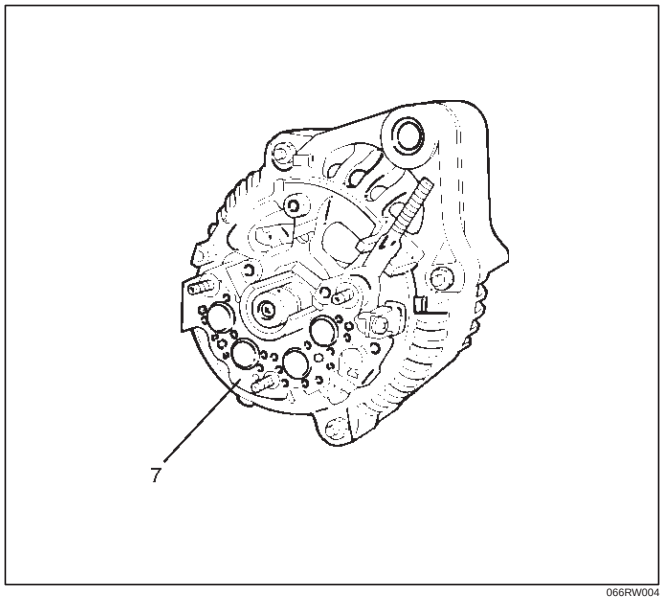

066RW004

6. Secure the pulley directly in the vise between two copper plates, and remove the nut and pulley.

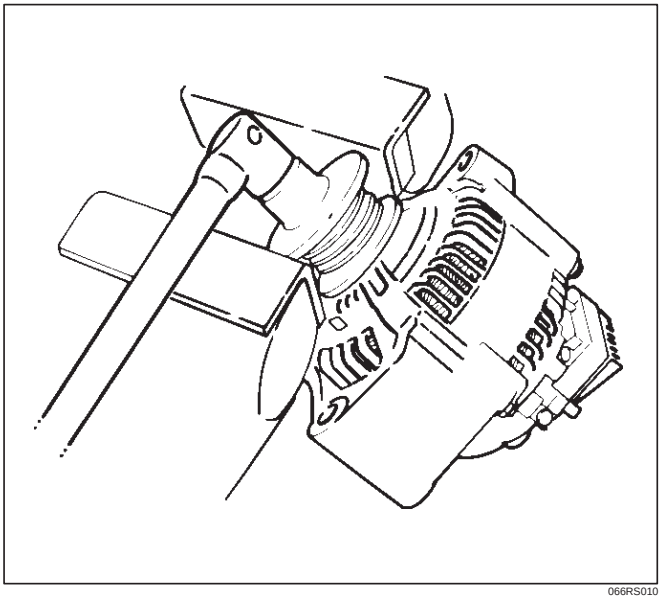

066RS010

7. Remove four nuts(8) that secure the front cover assembly and rear end cover, and an insulator(9).

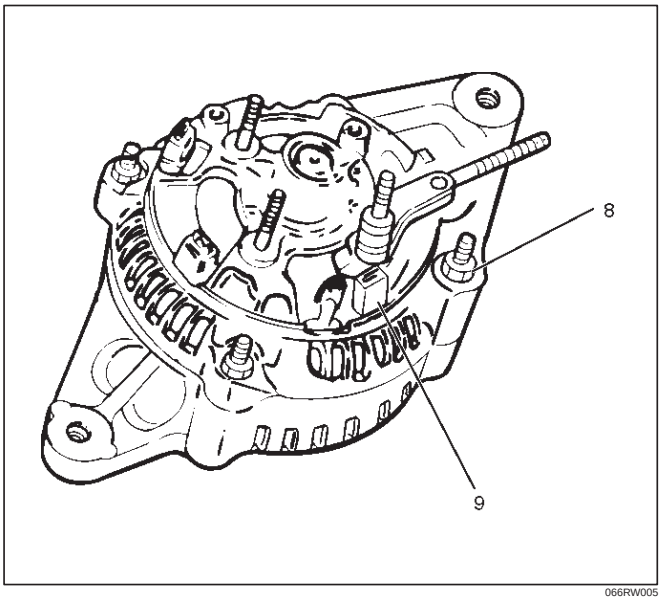

066RW005

8. Use the puller to remove the rear end cover.
9. Rotor assembly

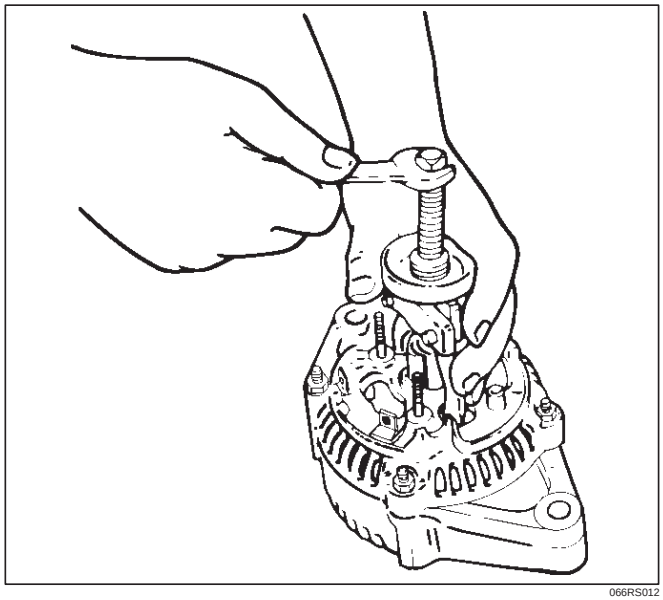

066RS012

10. Pull the rotor assembly(10) off the front cover assembly(12) using a bench press(11).

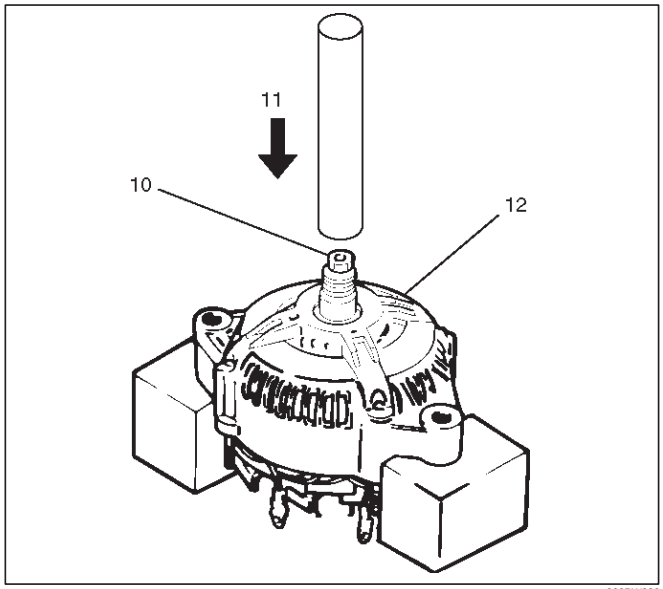

066RW006

Inspection and Repair

Repair or replace necessary parts if extreme wear or damage is found during inspection.

Rotor Assembly

1. Check the rotor slip ring surfaces for contamination and roughness. If rough, polish with #500—600 sandpaper.

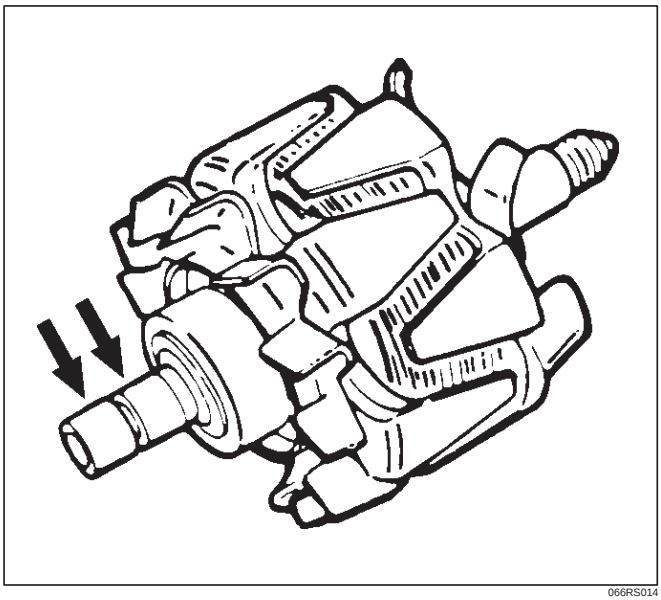

066RS014

2. Measure the slip ring diameter, and replace if it exceeds the limit.

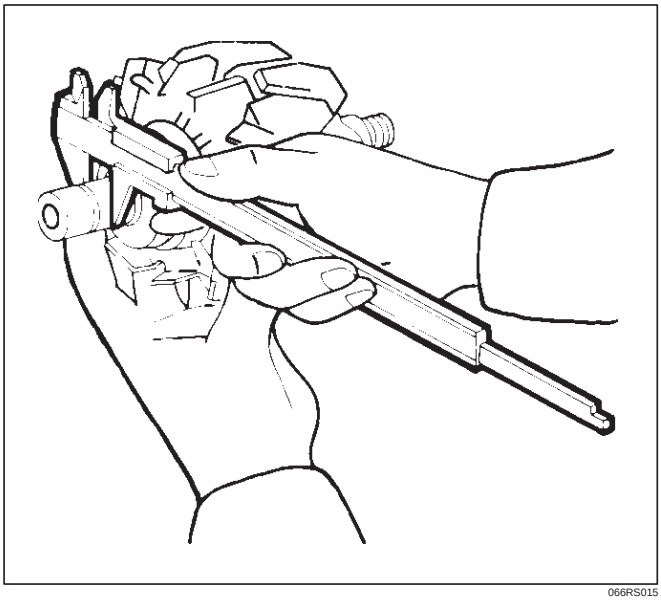

066RS015

3. Check resistance between slip rings, and replace if there is no continuity.

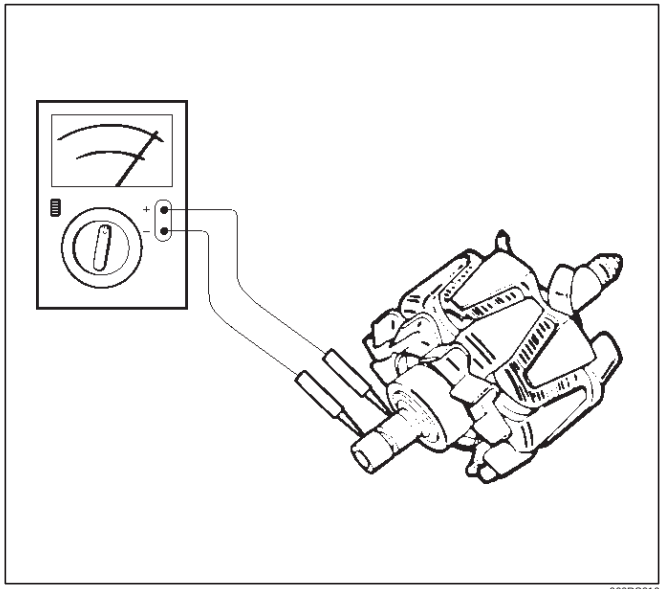

066RS016

4. Check for continuity between slip ring and rotor core. In case of continuity, replace the rotor assembly.

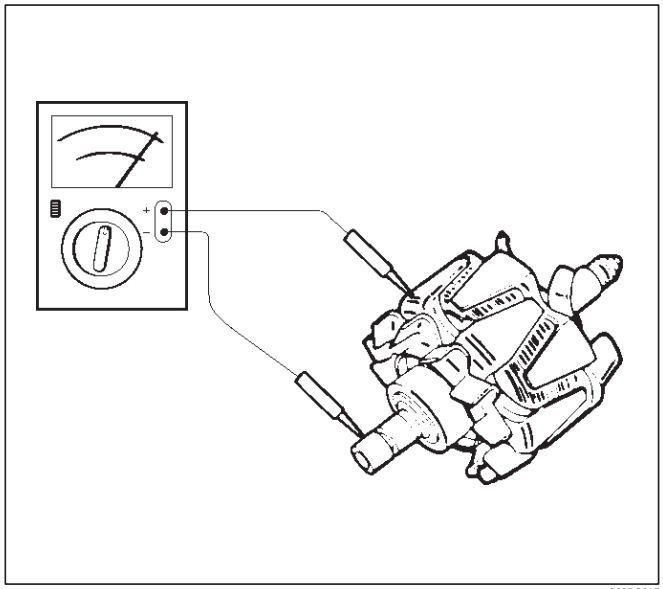

066RS017

Stator Coil

1. Measure resistance between respective phases.
2. Measure insulation resistance between stator coil and core with a mega–ohmmeter.
   If less than standard, replace the coil.

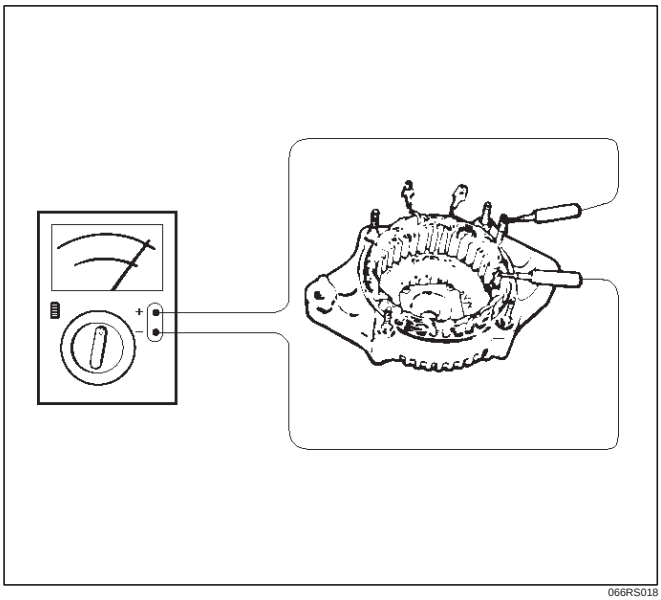

066RS018

Brush

Measure the brush length.
If more than limit, replace the brush.

Standard: 10.mm (0.4134 in)

Limit: 8.4.mm (0.3307 in)

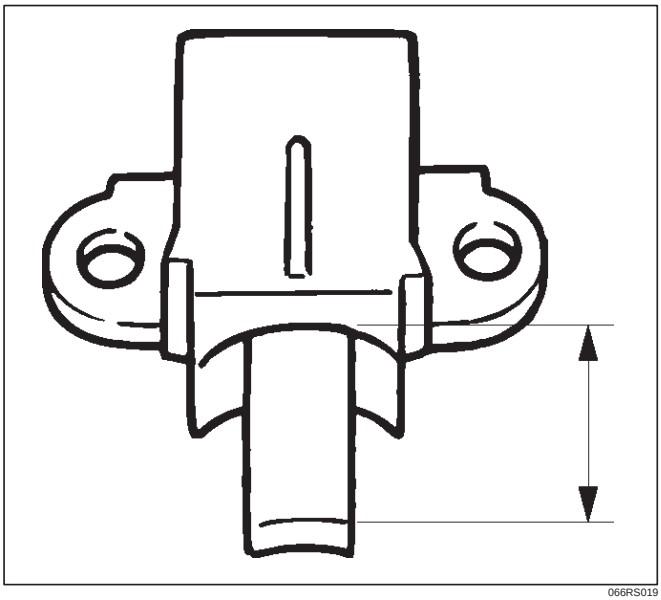

066RS019

Rectifier Assembly

Check for continuity across “P” and “E” in the × 100W range of multimeter.

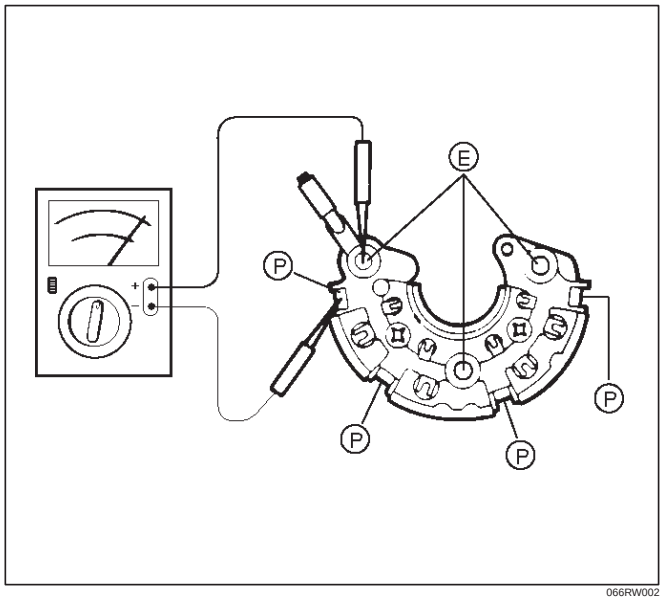

066RW002

Change polarity, and make sure that there is continuity in one direction, and not in the reverse direction. In case of continuity in both directions, replace the rectifier assembly.

IC Regulator Assembly

Check for continuity across “B” and “F” in the × 100W range of multimeter.

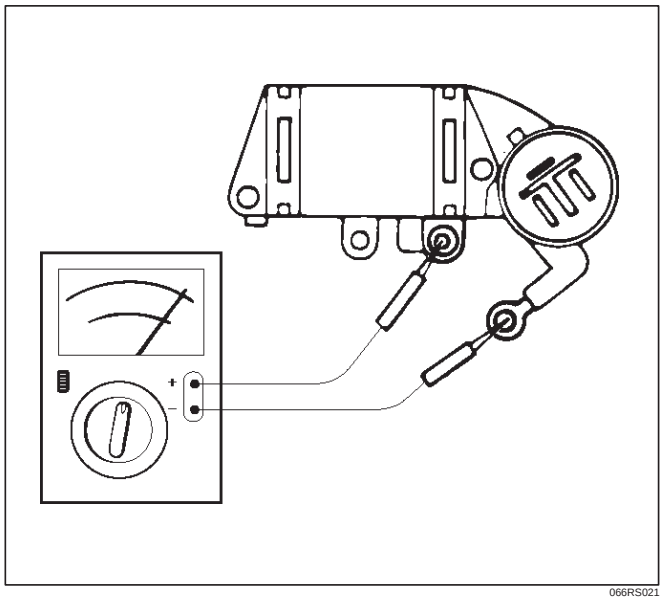

066RS021

Change polarity, and make sure that there is continuity in one direction, and not in the reverse direction. In case of continuity in both directions, replace the IC regulator assembly.

Reassembly

To reassemble, follow the disassembly steps in the reverse order, noting the following points:

1. Using a press with a socket wrench attached, reassemble rotor and rear end cover assembly in the front cover.

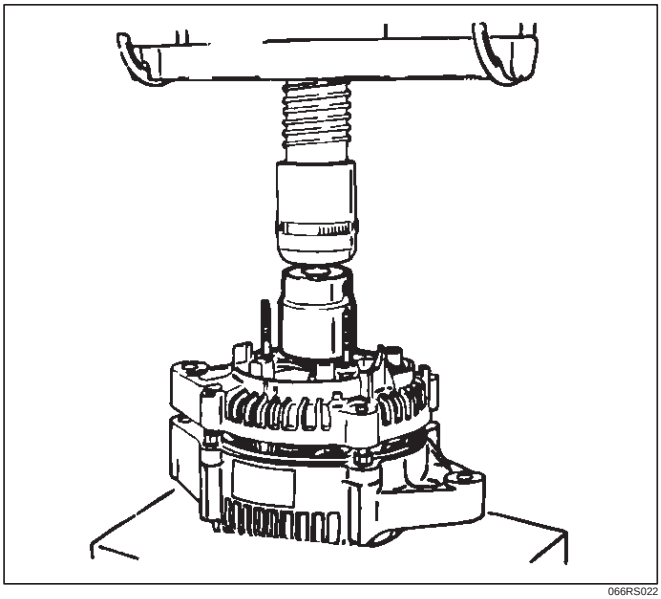

066RS022

2. Install pulley on the rotor.
   Secure the pulley directly in the vise between two copper plates, and tighten nut to the specified torque.

Torque: 111 N·m (11.3 Kg·m/82 lb ft)

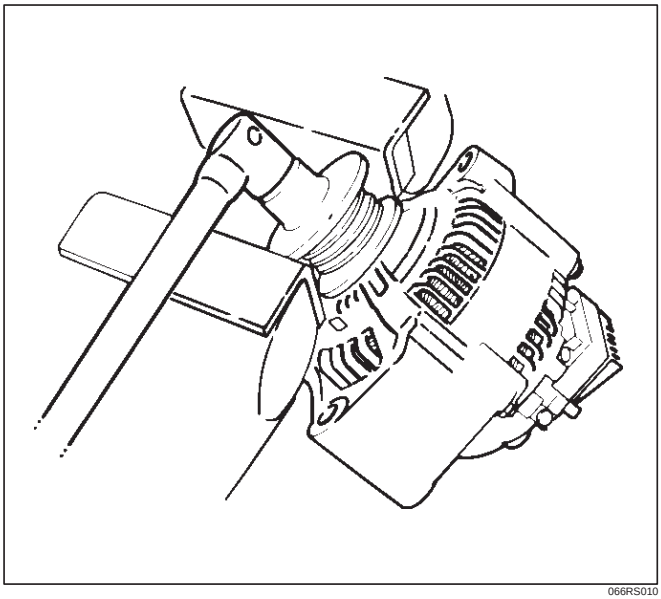

066RS010

Bench Test

Conduct a bench test of the generator.

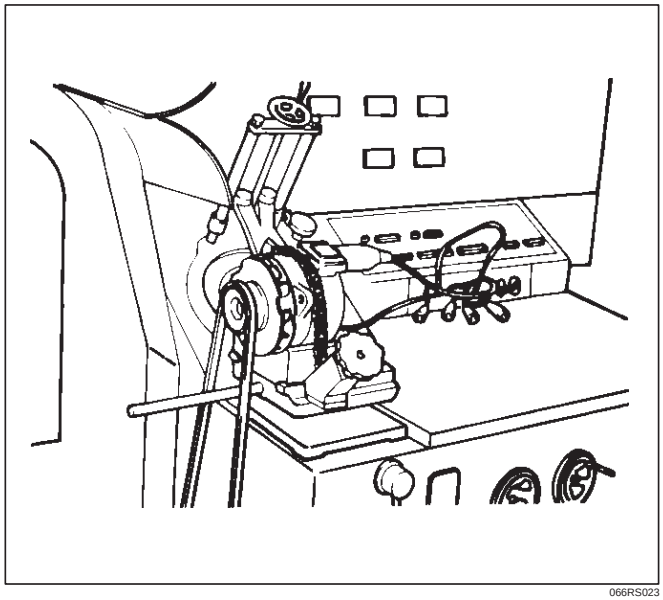

066RS023

Preparation

Remove generator from the vehicle (see “Generator removal”).

1. Secure generator to the bench test equipment and connect wires.
   Terminal “IG” for energization
   Terminal “L” for neutral (warning lamp)
   Terminal “B” for output
2. Conduct the generator characteristic test.
   Characteristics of generator are shown in illustration.
   Repair or replace the generator if its outputs are abnormal.

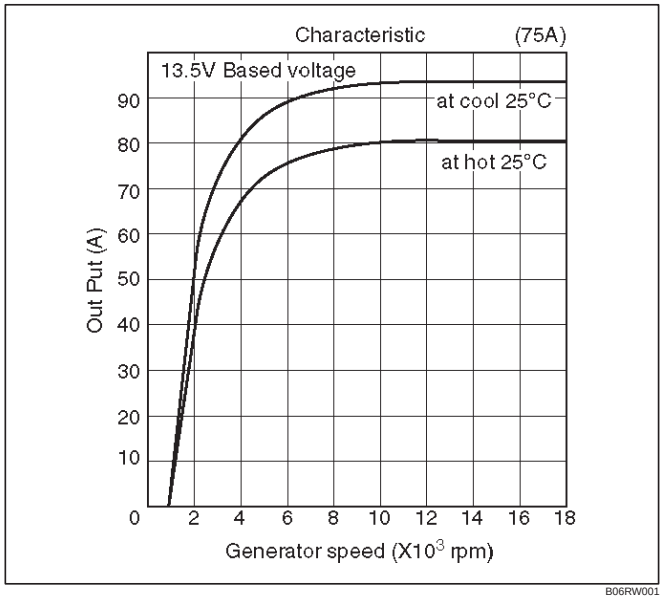

B06RW001

Main Data and Specifications

General Specifications

Parts Number (Nippon denso)	102211—5030
Model	ACHD04
Rated voltage	12 V
Rated output	75 A
Rotating direction (As viewed from pulley)	Clockwise
Pulley effective diameter	50 mm (1.97 in)
Weight	44 N (33 lb)

ENGINE

ENGINE DRIVEABILITY AND EMISSIONS

CONTENTS

Specifications 6E–5
Tightening Specifications 6E–5
Vehicle Type Specifications 6E–5
Diagrams and Schematics 6E–6
PCM Wiring Diagram (1 of 11) 6E–6
PCM Wiring Diagram (2 of 11) For EC, THAILAND, SOUTH EAST ASIA, LATIN AMERICA, GULF, SAUDI, CHINA. 6E–7
PCM Wiring Diagram (3 of 11) For SOUTH AFRICA and EXP. 6E–8
PCM Wiring Diagram (4 of 11) 6E–9
PCM Wiring Diagram (5 of 11) 6E–10
PCM Wiring Diagram (6 of 11) For AUSTRALIA, THAILAND, SOUTH EAST ASIA, LATIN AMERICA, GULF, SAUDI, LATIN AMERICA. 6E–11
PCM Wiring Diagram (7 of 11) For EC. . . . 6E–12
PCM Wiring Diagram (8 of 11) For EXPORT and SOUTH AFRICA. 6E–13
PCM Wiring Diagram (9 of 11) Except EXP and SOUTH AFRICA 6E–14
PCM Wiring Diagram (10 of 11) For EXPORT and SOUTH AFRICA 6E–15
PCM Wiring Diagram (11 of 11) 6E–16
PCM Pinouts 6E–17
PCM Pinout Table, 32-Way Red Connector – Row “A” 6E–17
PCM Pinout Table, 32-Way Red Connector – Row “B” 6E–19
PCM Pinout Table, 32-Way White Connector – Row “C” (For EC) 6E–20
PCM Pinout Table, 32-Way White Connector – Row “C” (For except EC) . . . 6E–21
PCM Pinout Table, 32-Way White Connector – Row “D” (For except EXPORT and SOUTH AFRICA) 6E–22
PCM Pinout Table, 32-Way White Connector – Row “D” (For EXPORT and SOUTH AFRICA) 6E–23
PCM Pinout Table, 32-Way Blue Connector – Row “E” (For except EXPORT and SOUTH AFRICA) 6E–24
PCM Pinout Table, 32-Way Blue Connector – Row “E” (For EXPORT and SOUTH AFRICA) 6E–26
PCM Pinout Table, 32-Way Blue Connector – Row “F” 6E–27
Component Locators 6E–28
Engine Component Locator (This illustration is based on RHD model.) 6E–28
Engine Component Locator Table 6E–29
Engine Component Locator Table 6E–31
Undercarriage Component Locator 6E–32
Undercarriage Component Locator Table (Automatic Transmission) 6E–32
Undercarriage Component Locator Table (Manual Transmission) 6E–33
Fuse and Relay Panel (Underhood Electrical Center) 6E–33
Sensors and Miscellaneous Component Locators 6E–34
Diagnosis 6E–37
Strategy-Based Diagnostics 6E–37
Strategy-Based Diagnostics 6E–37
DTC Stored 6E–37
No DTC 6E–37
No Matching Symptom 6E–37
Intermittents 6E–37
No Trouble Found 6E–37
Verifying Vehicle Repair 6E–37
General Service Information 6E–38
OBD Serviceablity Issues 6E–38
Maintenance Schedule 6E–38
Visual / Physical Engine Compartment Inspection 6E–38
Basic Knowledge of Tools Required 6E–38
Serial Data Communications 6E–38
Class II Serial Data Communications 6E–38
On-Board Diagnostic (OBD) 6E–39
On-Board Diagnostic Tests 6E–39
Comprehensive Component Monitor Diagnostic Operation 6E–39
Common OBD Terms 6E–40
The Diagnostic Executive 6E–40
DTC Types 6E–41
Verifying Vehicle Repair 6E–42
Reading Diagnostic Trouble Codes Using A Tech 2 . . . . . 6E–42
Tech 2 Tech 2 . . . . . 6E–43
Tech 2 Features 6E–43
Getting Started 6E–44
Operating Procedure (For Example) 6E–44
DTC Modes 6E–45
DTC Information Mode 6E–46
Injector Balance Test 6E–46
EGR Control Test 6E–47
Idle Air Control System Test 6E–48

Primary System-Based Diagnostic 6E–50
Primary System-Based Diagnostic 6E–50
Fuel Control Heated Oxygen Sensor 6E–50
HO2S Heater 6E–50
Fuel Trim System Monitor Diagnostic Operation 6E–50
Fuel Trim System Monitor Diagnostic Operation 6E–50
Fuel Trim Cell Diagnostic Weights 6E–50
On-Board Diagnostic (OBD) System Check . 6E–51
A/C Clutch Control Circuit Diagnosis 6E–54
Electronic Ignition System Diagnosis 6E–60
Fuel Metering System Check 6E–60
Idle Air Control (IAC) Valve 6E–60
Fuel System Pressure Test 6E–60
Fuel Injector Coil Test Procedure and Fuel Injector Balance Test Procedure 6E–60
Knock Sensor Diagnosis 6E–65
Powertrain Control Module (PCM) Diagnosis 6E–65
Multiple PCM Information Sensor DTCS Set 6E–65
Exhaust Gas Recirculation (EGR) Diagnosis (For except EXPORT and SOUTH AFRICA) 6E–68
Engine Tech 2 Data Definitions and Ranges 6E–68
Typical Scan Data Values 6E–70
No Malfunction Indicator Lamp (MIL) 6E–74
Malfunction Indicator Lamp (MIL) “ON” Steady 6E–77
Engine Cranks But Will Not Run 6E–79
Fuel System Electrical Test 6E–85
Fuel System Diagnosis 6E–88
Idle Air Control (IAC) System Check 6E–93
Knock Sensor (KS) System Check (Engine Knock, Poor Performance, or Poor Economy) 6E–95
Exhaust Gas Recirculation (EGR) System Check 6E–97
Manifold Absolute Pressure (MAP) Output Check 6E–99
PCM Diagnostic Trouble Codes 6E–101
Diagnostic Trouble Code (DTC) P0101 MAF System Performance 6E–104
Diagnostic Trouble Code (DTC) P0102 MAF Sensor Circuit Low Frequency 6E–107
Diagnostic Trouble Code (DTC) P0103 MAF Sensor Circuit High Frequency 6E–110
Diagnostic Trouble Code (DTC) P0107 MAP Sensor Circuit Low Voltage 6E–112
Diagnostic Trouble Code (DTC) P0108 MAP Sensor Circuit High Voltage 6E–115
Diagnostic Trouble Code (DTC) P0112 IAT Sensor Circuit Low Voltage 6E–118
Diagnostic Trouble Code (DTC) P0113 IAT Sensor Circuit High Voltage 6E–121
Diagnostic Trouble Code (DTC) P0117 ECT Sensor Circuit Low Voltage 6E–124
Diagnostic Trouble Code (DTC) P0118 ECT Sensor Circuit High Voltage 6E–127
Diagnostic Trouble Code (DTC) P0121 TP System Performance 6E–130
Diagnostic Trouble Code (DTC) P0122 TP Sensor Circuit Low Voltage 6E–133
Diagnostic Trouble Code (DTC) P0123 TP Sensor Circuit High Voltage 6E–136
Diagnostic Trouble Code (DTC) P0131 HO2S Circuit Low Voltage Bank 1 Sensor 1 . . . . . 6E–139
Diagnostic Trouble Code (DTC) P0132 HO2S Circuit High Voltage Bank 1 Sensor 1 . . . . . 6E–142
Diagnostic Trouble Code (DTC) P0134 HO2S Circuit Insufficient Activity Bank 1 Sensor 1 . . . . . 6E–145
Diagnostic Trouble Code (DTC) P0151 HO2S Circuit Low Voltage Bank 2 Sensor 1 . . . . . 6E–148
Diagnostic Trouble Code (DTC) P0152 HO2S Circuit HIGH Voltage Bank 2 Sensor 1 . . . . . 6E–151
Diagnostic Trouble Code (DTC) P0171 Fuel Trim System Lean Bank 1 . . . . . 6E–154
Diagnostic Trouble Code (DTC) P0172 Fuel Trim System Rich Bank 1 . . . . . 6E–158
Diagnostic Trouble Code (DTC) P0174 Fuel Trim System Lean Bank 2 . . . . . 6E–162
Diagnostic Trouble Code (DTC) P0175 Fuel Trim System Rich Bank 2 . . . . . 6E–166
Diagnostic Trouble Code (DTC) P0201 Injector 1 Control Circuit 6E–170
Diagnostic Trouble Code (DTC) P0202 Injector 2 Control Circuit 6E–173
Diagnostic Trouble Code (DTC) P0203 Injector 3 Control Circuit 6E–176
Diagnostic Trouble Code (DTC) P0204 Injector 4 Control Circuit 6E–179
Diagnostic Trouble Code (DTC) P0205 Injector 5 Control Circuit 6E–182
Diagnostic Trouble Code (DTC) P0206 Injector 6 Control Circuit 6E–185
Diagnostic Trouble Code (DTC) P0325 KS Module Circuit 6E–188
Diagnostic Trouble Code (DTC) P0327 KS Sensor Circuit 6E–190
Diagnostic Trouble Code (DTC) P0336 58X Reference Signal Circuit 6E–193
Diagnostic Trouble Code (DTC) P0337 CKP Sensor Circuit Low Frequency 6E–195
Diagnostic Trouble Code (DTC) P0341 CMP Sensor Circuit Performance 6E–198
Diagnostic Trouble Code (DTC) P0342 CMP Sensor Circuit Low 6E–202

Diagnostic Trouble Code (DTC) P0351 Ignition 1 Control Circuit 6E–206
Diagnostic Trouble Code (DTC) P0352 Ignition 2 Control Circuit 6E–209
Diagnostic Trouble Code (DTC) P0353 Ignition 3 Control Circuit 6E–212
Diagnostic Trouble Code (DTC) P0354 Ignition 4 Control Circuit 6E–215
Diagnostic Trouble Code (DTC) P0355 Ignition 5 Control Circuit 6E–218
Diagnostic Trouble Code (DTC) P0356 Ignition 6 Control Circuit 6E–221
Diagnostic Trouble Code (DTC) P0402 EGR Pintle Crank Error 6E–224
Diagnostic Trouble Code (DTC) P0404 EGR Open Stuck 6E–226
Diagnostic Trouble Code (DTC) P0405 EGR Low Voltage 6E–228
Diagnostic Trouble Code (DTC) P0406 EGR High Voltage 6E–231
Diagnostic Trouble Code (DTC) P0502 VSS Circuit Low Input 6E–234
Diagnostic Trouble Code (DTC) P0562 System Voltage Low 6E–237
Diagnostic Trouble Code (DTC) P0563 System Voltage High 6E–239
Diagnostic Trouble Code (DTC) P0601 PCM Memory 6E–240
Diagnostic Trouble Code (DTC) P1154 HO2S Circuit Transition Time Ratio Bank 2 Sensor 1 . . . . . 6E–241
Diagnostic Trouble Code (DTC) P1171 Fuel System Lean During Acceleration 6E–245
Diagnostic Trouble Code (DTC) P1380 ABS Rough Road ABS System Fault 6E–248
Diagnostic Trouble Code (DTC) P1404 EGR Closed Stuck 6E–249
Diagnostic Trouble Code (DTC) P1508 IAC System Low RPM 6E–251
Diagnostic Trouble Code (DTC) P1509 IAC System High RPM 6E–254
Diagnostic Trouble Code (DTC) P1618 Serial Peripheral Interface (SPI) PCM Interprocessor Communication Error 6E–257
Diagnostic Trouble Code (DTC) P1625 PCM Unexpected Reset 6E–258
Diagnostic Trouble Code (DTC) P1640 Driver-1-Input High Voltage 6E–259
Symptom Diagnosis 6E–262
Default Matrix Table 6E–288
Camshaft Position (CMP) Sensor 6E–291
Crankshaft Position (CKP) Sensor 6E–292
Engine Coolant Temperature (ECT) Sensor . 6E–292
Heated Oxygen Sensor (HO2S) 6E–293
Intake Air Temperature (IAT) Sensor 6E–295
Knock Sensor (KS) 6E–296
Mass Air Flow (MAF) Sensor 6E–297
Manifold Absolute Pressure (MAP) Sensor . 6E–297
Malfunction Indicator Lamp (MIL) 6E–298
Powertrain Control Module (PCM) 6E–298
EEPROM 6E–300
Power Steering Pressure (PSP) Switch 6E–300
Throttle Position (TP) Sensor 6E–301
Vehicle Speed Sensor (VSS) 6E–302
Air Cleaner/Air Filter 6E–303
Idle Air Control (IAC) Valve 6E–304
Common Chamber 6E–305
Accelerator Cable Assembly 6E–305
Accelerator Pedal Replacement 6E–308
Fuel Filter Cap 6E–310
Fuel Filter 6E–310
Fuel Gauge Unit 6E–313
Fuel Injectors 6E–314
Fuel Pressure Regulator 6E–315
Fuel Metering System 6E–317
Fuel Pump Assembly 6E–318
Fuel Pump Relay 6E–319
Fuel Rail Assembly 6E–319
Fuel Tank 6E–321
Throttle Body (TB) 6E–323
Electronic Ignition System 6E–324
Catalytic Converter 6E–325
Air Conditioning Relay 6E–325
EVAP Canister Hoses 6E–326
EVAP Canister 6E–326
EVAP Canister Purge Solenoid 6E–327
Fuel Tank Vent Valve 6E–328
Linear Exhaust Gas Recirculation (EGR) Valve 6E–328
Positive Crankcase Ventilation (PCV) Valve . 6E–329
Wiring and Connectors 6E–330
PCM Connectors and Terminals 6E–330
Wire Harness Repair: Twisted Shielded Cable 6E–330
Twisted Leads 6E–331
Weather-Pack Connector 6E–332
Com-Pack III 6E–333
Metri-Pack 6E–333
General Description 6E–335
General Description (PCM and Sensors) . . . 6E–335
58X Reference PCM Input 6E–335
A/C Request Signal 6E–335
Crankshaft Position (CKP) Sensor 6E–335
Camshaft Position (CMP) Sensor and Signal 6E–335
Engine Coolant Temperature (ECT) Sensor 6E–335
Electrically Erasable Programmable Read Only Memory (EEPROM) 6E–336
Fuel Control Heated Oxygen Sensors 6E–336
Intake Air Temperature (IAT) Sensor 6E–336

Knock Sensor 6E–337
Linear Exhaust Gas Recirculation (EGR) Control 6E–337
Mass Air Flow (MAF) Sensor 6E–337
Manifold Absolute Pressure (MAP) Sensor 6E–338
Powertrain Control Module (PCM) 6E–338
PCM Function 6E–338
PCM Components 6E–339
PCM Voltage Description 6E–339
PCM Input/Outputs 6E–339
PCM Service Precautions 6E–339
Reprogramming The PCM 6E–339
Throttle Position (TP) Sensor 6E–339
Transmission Fluid Temperature (TFT) Sensor 6E–340
Transmission Range Switch 6E–340
Vehicle Speed Sensor (VSS) 6E–340
Use of Circuit Testing Tools 6E–340
Aftermarket Electrical and Vacuum Equipment 6E–340
Electrostatic Discharge Damage 6E–341
Upshift Lamp 6E–341
General Description (Air Induction) 6E–341
Air Induction System 6E–341
General Description (Fuel Metering) 6E–341
Acceleration Mode 6E–341
Accelerator Controls 6E–341
Battery Voltage Correction Mode 6E–341
CMP Signal 6E–341
Clear Flood Mode 6E–342
Deceleration Mode 6E–342
Engine Speed/Vehicle Speed/Fuel Disable Mode 6E–342
Fuel Cutoff Mode 6E–342
Fuel Injector 6E–342
Fuel Metering System Components 6E–342
Fuel Metering System Purpose 6E–342
Fuel Pressure Regulator 6E–343
Fuel Pump Electrical Circuit 6E–343
Fuel Rail 6E–343
Idle Air Control (IAC) Valve 6E–343
Run Mode 6E–344
Starting Mode 6E–344
Throttle Body Unit 6E–344
General Description (Electronic Ignition System) 6E–344
Camshaft Position (CMP) Sensor 6E–344
Crankshaft Position (CKP) Sensor 6E–345
Electronic Ignition 6E–345
Ignition Coils 6E–345
Ignition Control 6E–345
Ignition Control PCM Output 6E–347
Knock Sensor (KS) PCM Input 6E–347
Powertrain Control Module (PCM) 6E–347
Spark Plug 6E–347
A/C Clutch Diagnosis 6E–349
A/C Clutch Circuit Operation 6E–349
A/C Clutch Circuit Purpose 6E–349
A/C Request Signal 6E–349
General Description (Exhaust Gas Recirculation (EGR) System) 6E–349
EGR Purpose 6E–349
Linear EGR Valve 6E–349
Linear EGR Control 6E–349
Linear EGR Valve Operation and Results of Incorrect Operation 6E–349
EGR Pintle Position Sensor 6E–350
General Description (Positive Crankcase Ventilation (PCV) System) 6E–350
Crankcase Ventilation System Purpose . . . 6E–350
Crankcase Ventilation System Operation . 6E–350

Specifications

Tightening Specifications

Application	N·m	Lb Ft.	Lb In.
Camshaft Position Sensor Retaining Screw	9	—	78
Crankshaft Position Sensor Mounting Bolt	10	—	87
EGR Bolt	28	21	—
EGR Nut	28	21	—
Engine Coolant Temperature Sensor	20	7.7	—
Fuel Drain Plug	29	22	—
Fuel Pressure Regulator Attaching Screw	6.5	—	60
Fuel Rail Bolts	25	18	—
Fuel Tank Undercover Retaining Bolts	36	27	—
Heated Oxygen Sensor	42	31	—
Lower Intake Manifold to Engine Block Bolts	25	18	—
Lower Intake Manifold to Engine Block Nuts	25	18	—
Spark Plugs	18	13	—
Throttle Body Mounting Bolts	25	18	—
Upper Intake Manifold to Lower Intake Manifold Bolts	25	18	—
VSS Retaining Bolt	13	—	120

Vehicle Type Specifications

EC		AUSTRALIA		THAILAND SOUTH-EAST-ASIA LATIN AMERICA		GULF CONTRIES SAUDI CHINA		SOUTH AFRICA	EXPORT		Specifications			
UBS		UBS		UBS		UBS		UBS	UBS		OBD	O_2 SENSOR	CATA	EGR
MT	AT	MT	AT	MT	AT	MT	AT	MT	MT	AT				
•											I	2	1	●
	•										I	2	1	●
		•										1	1	●
			•									1	1	●
				•								1	1	●
					•							1	1	●
						•						1		●
							•					1		●
								•						
									•		I			
										•				

Diagrams and Schematics

PCM Wiring Diagram (1 of 11)

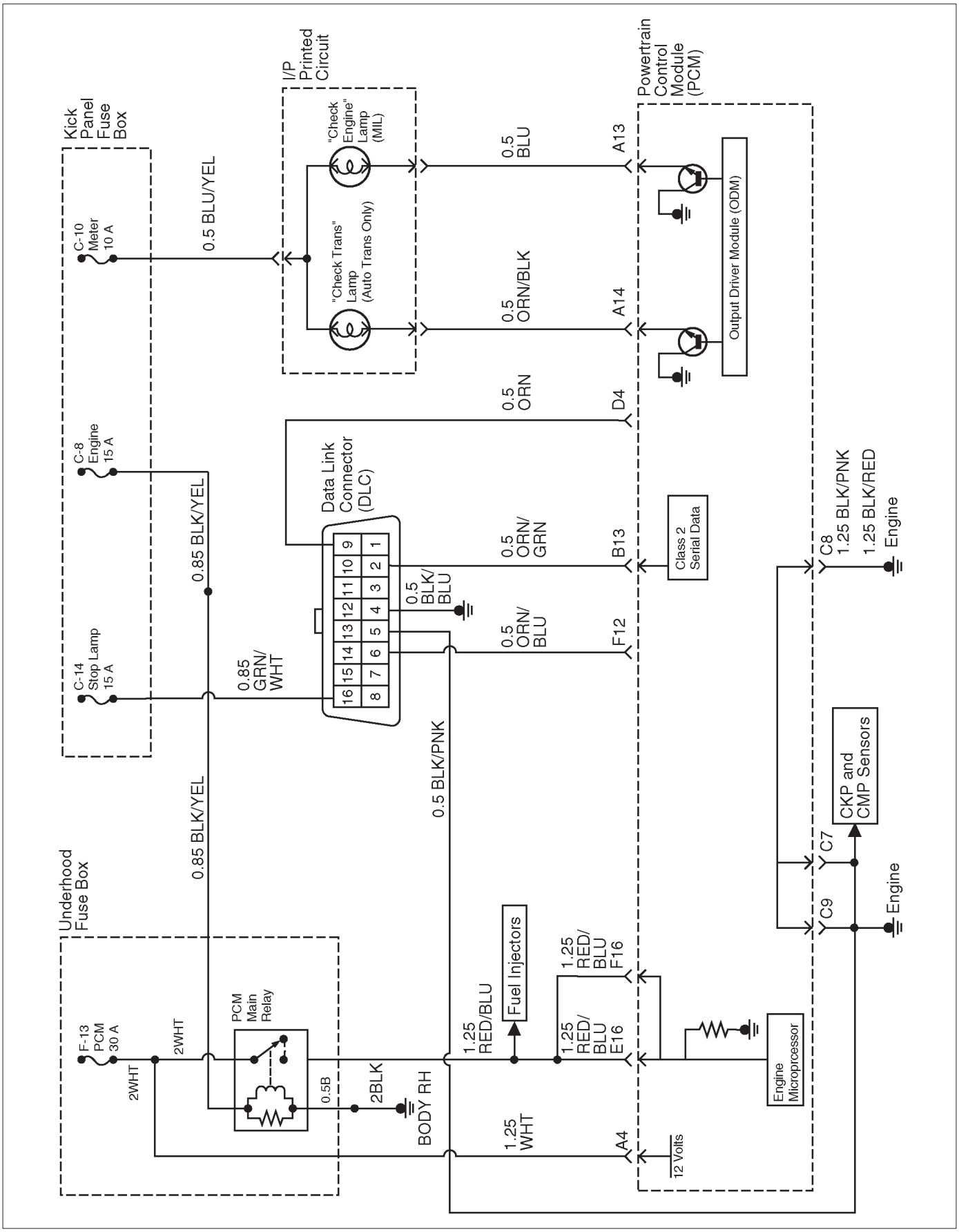

D06RW00005

PCM Wiring Diagram (2 of 11) For EC, THAILAND, SOUTH EAST ASIA, LATIN AMERICA, GULF, SAUDI, CHINA.

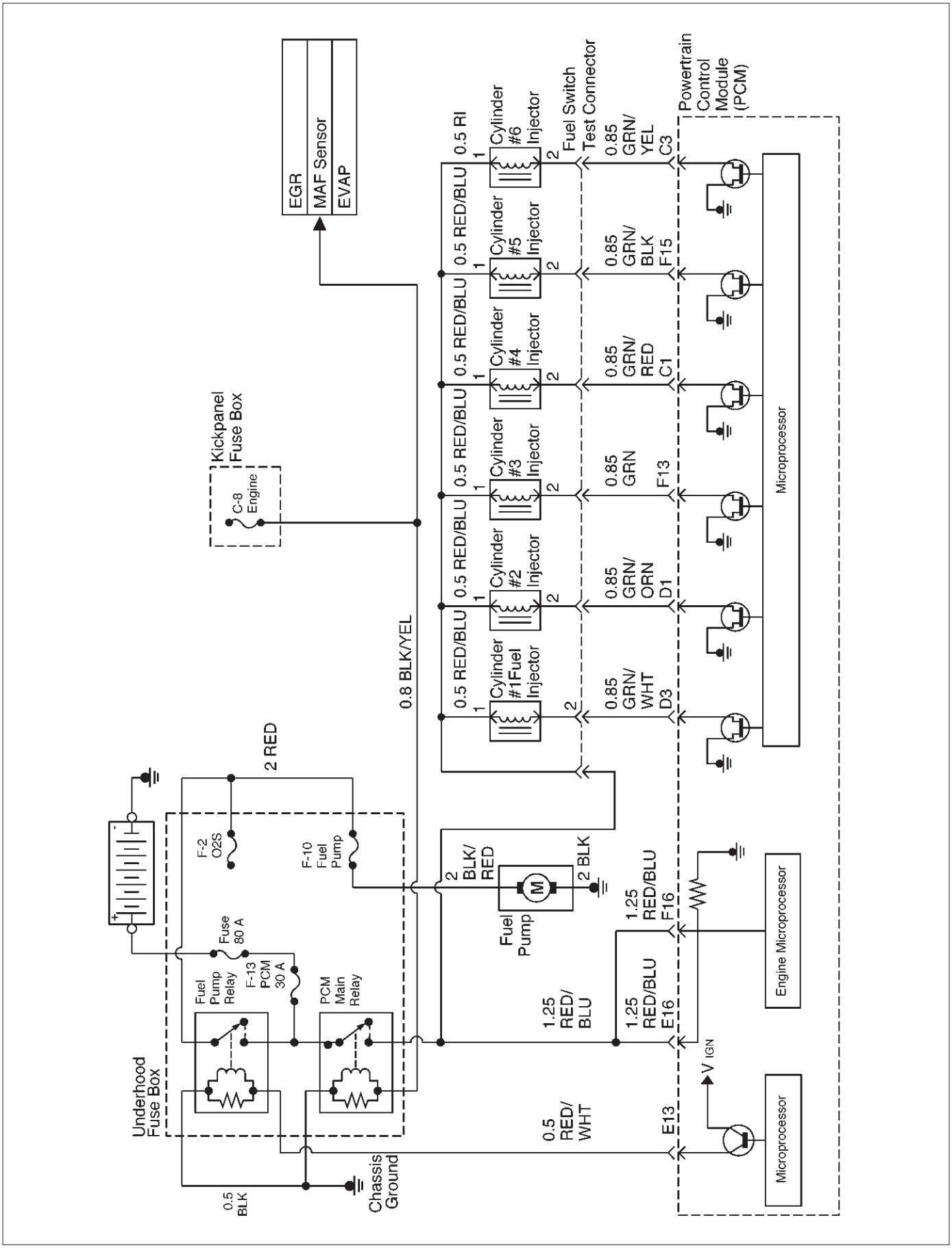

D06RW134

PCM Wiring Diagram (3 of 11) For SOUTH AFRICA and EXP.

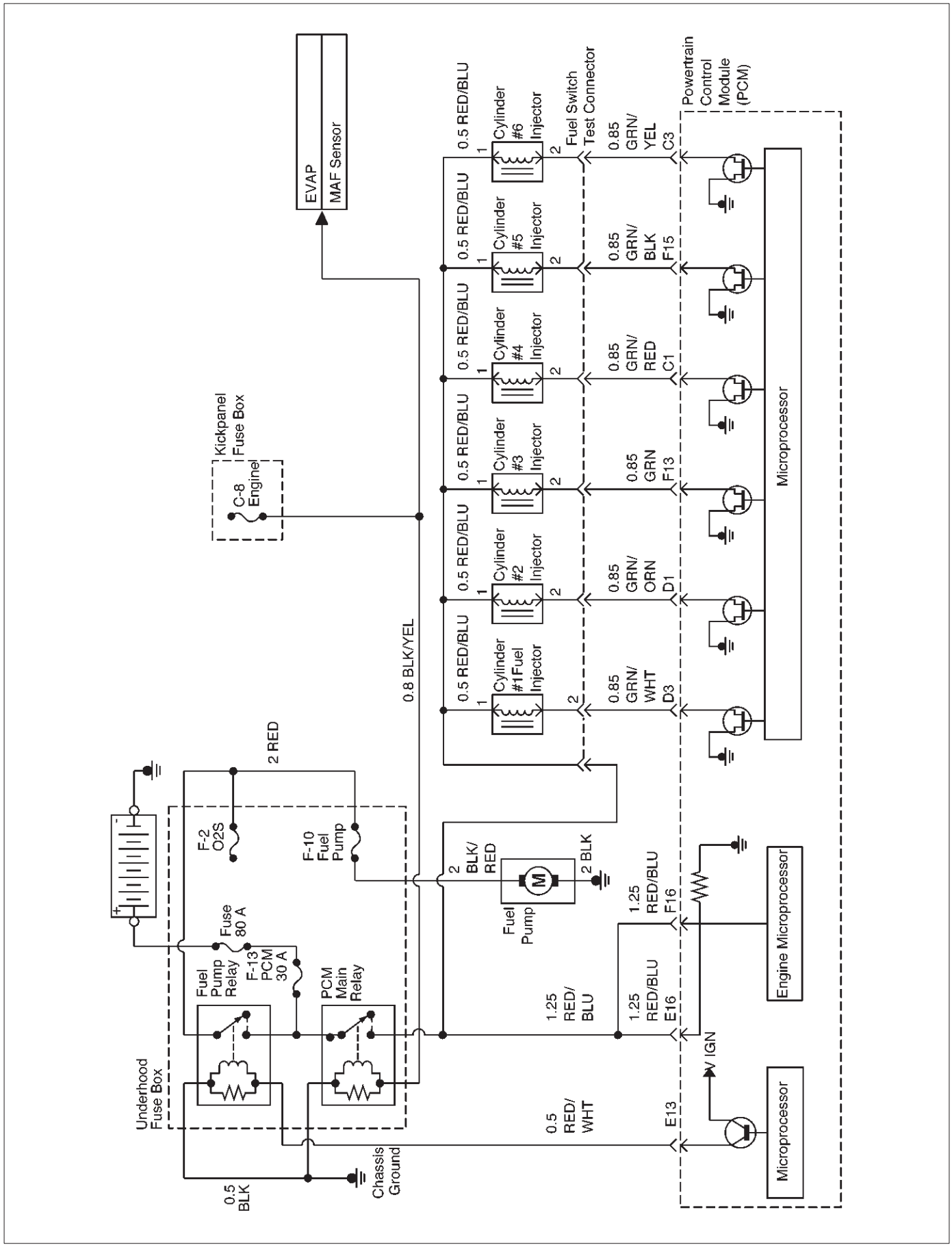

D06RW140

PCM Wiring Diagram (4 of 11)

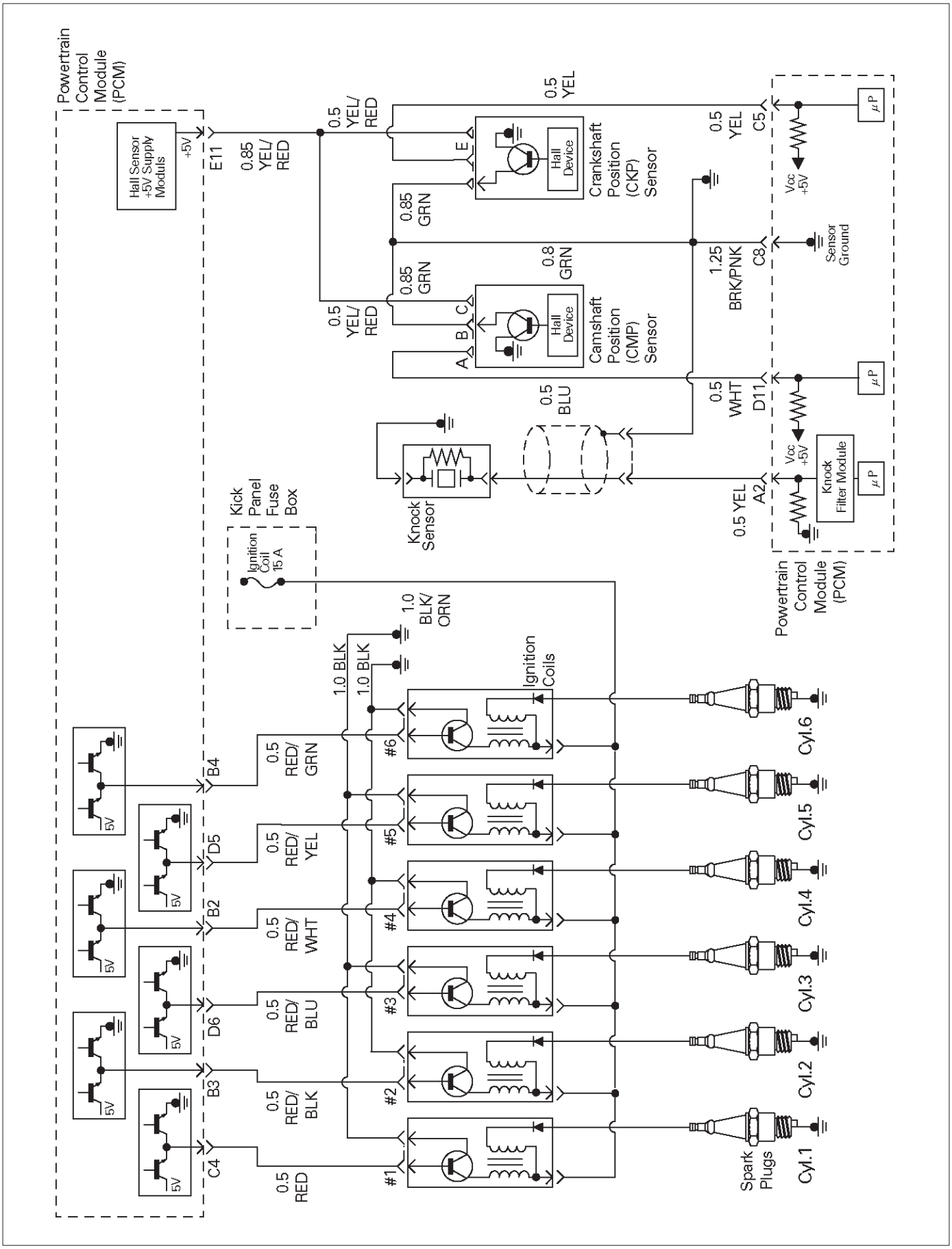

D06RX00003

PCM Wiring Diagram (5 of 11)

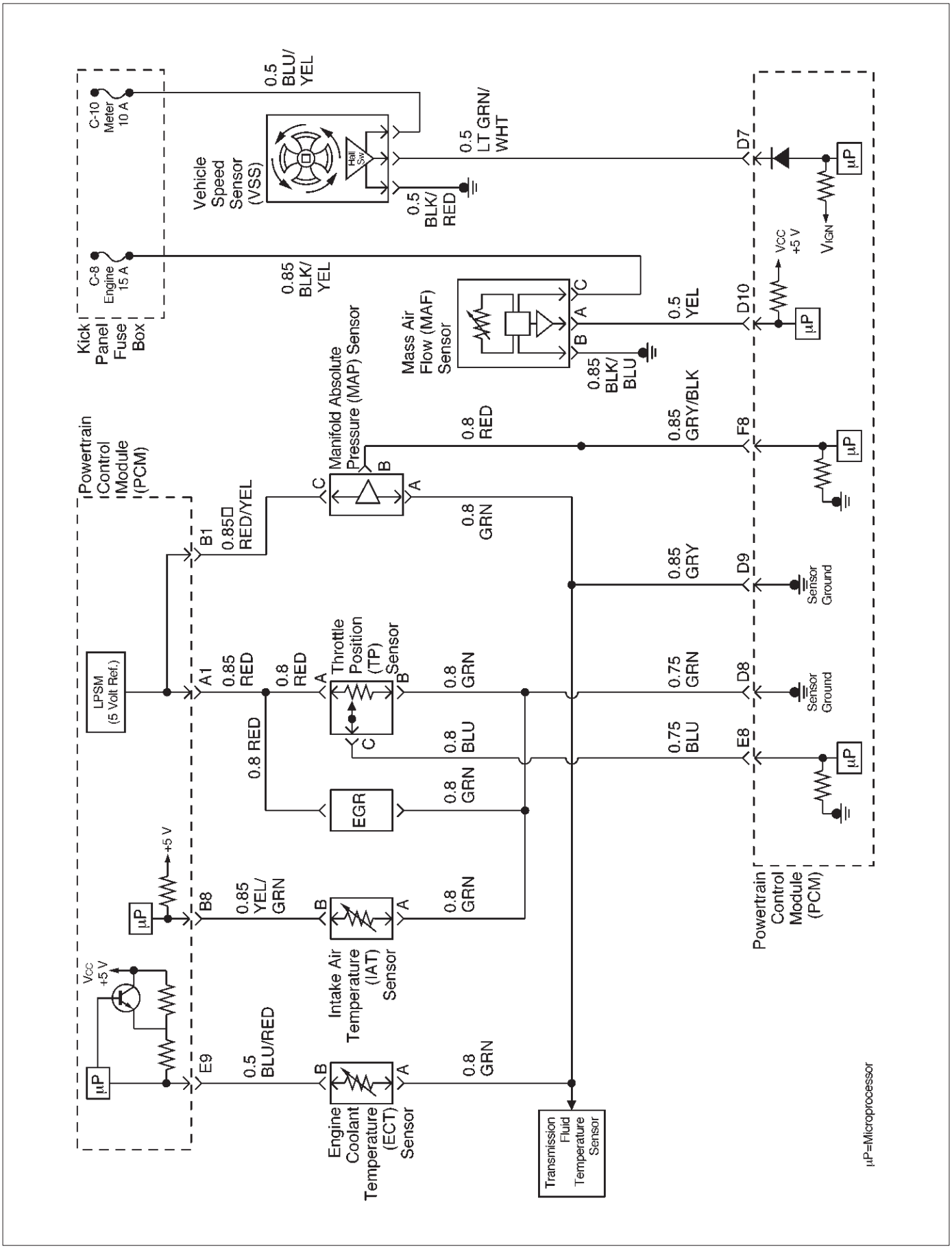

PCM Wiring Diagram (6 of 11) For AUSTRALIA, THAILAND, SOUTH EAST ASIA, LATIN AMERICA, GULF, SAUDI, LATIN AMERICA.

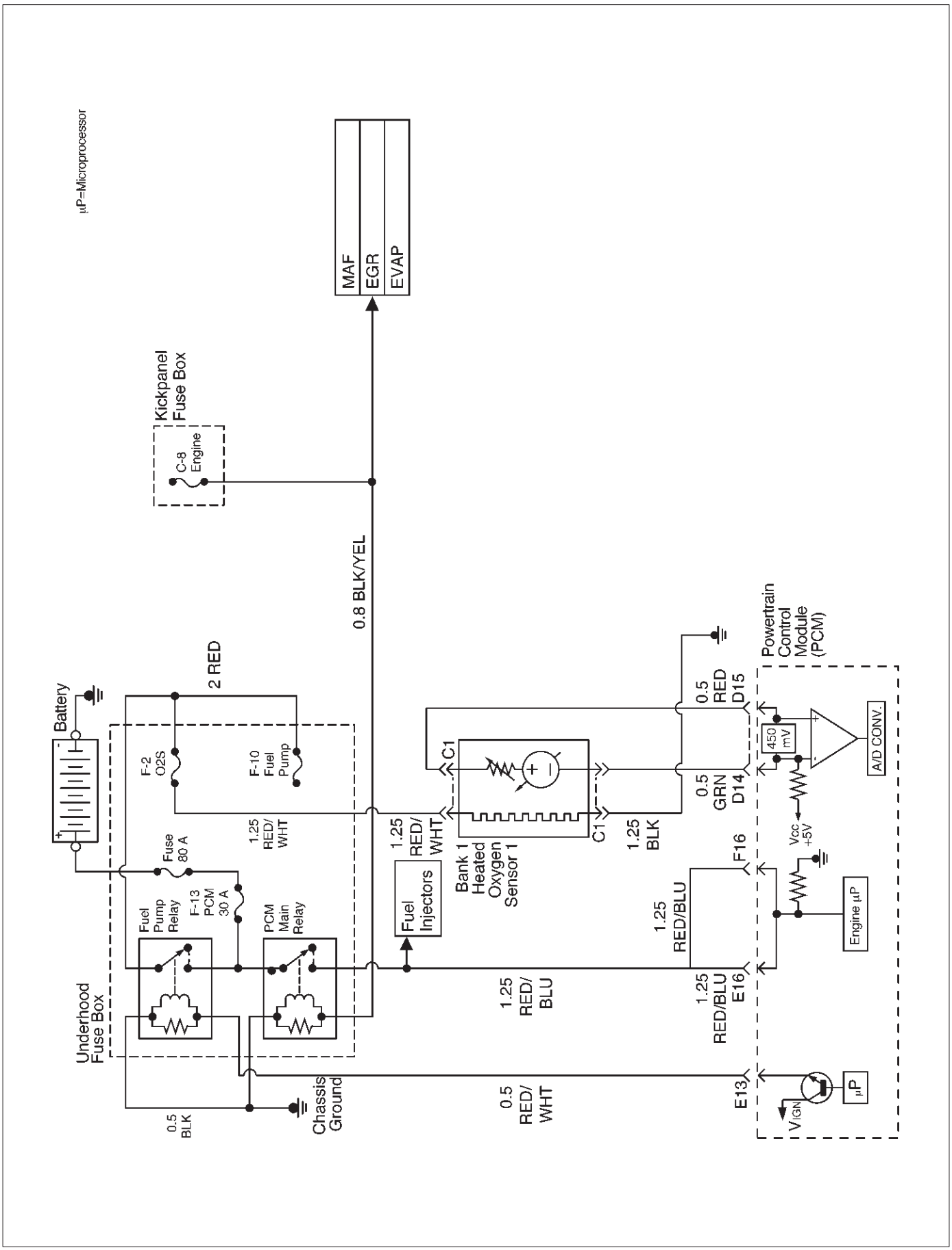

D06RW137

PCM Wiring Diagram (7 of 11) For EC.

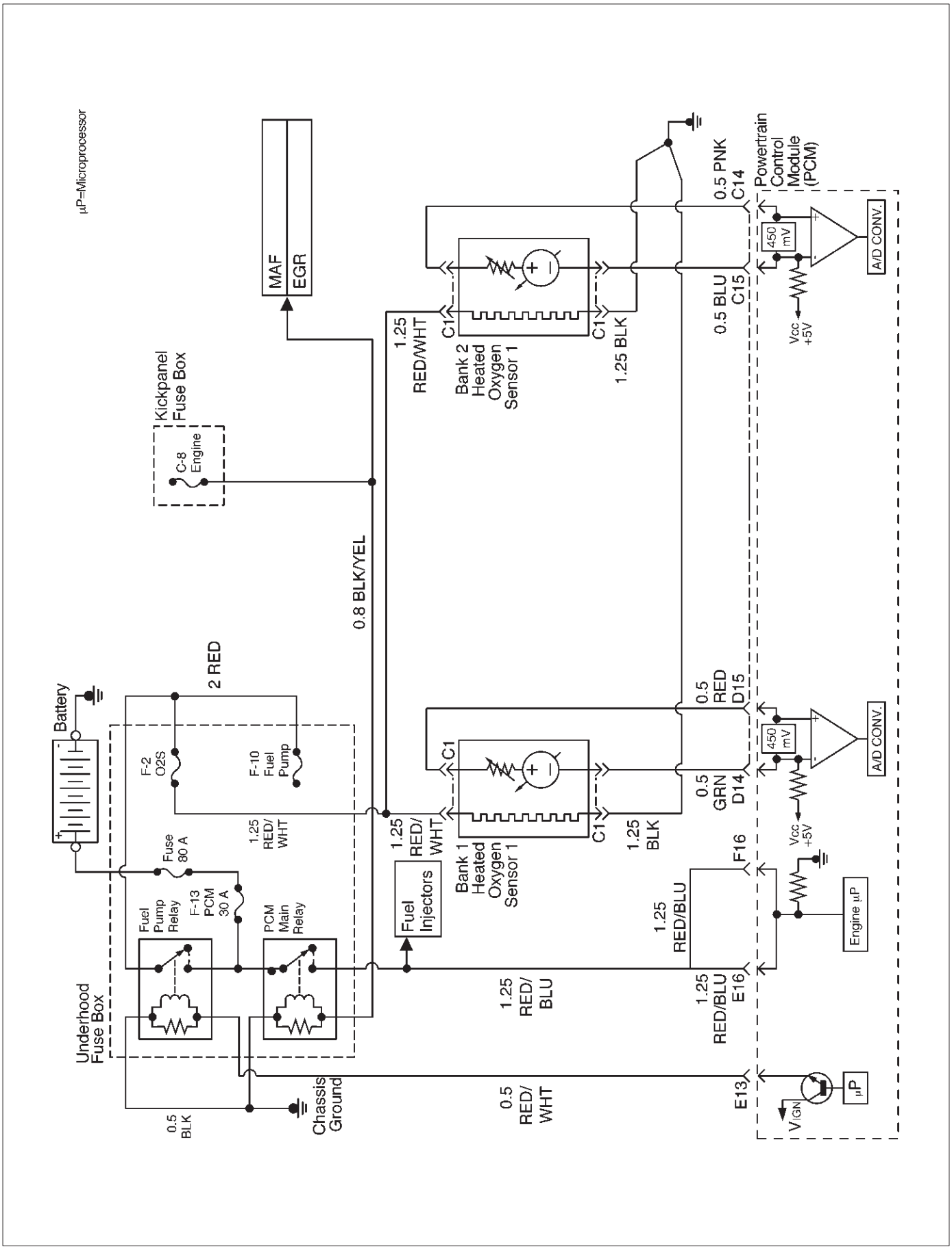

D06RW100

PCM Wiring Diagram (8 of 11) For EXPORT and SOUTH AFRICA.

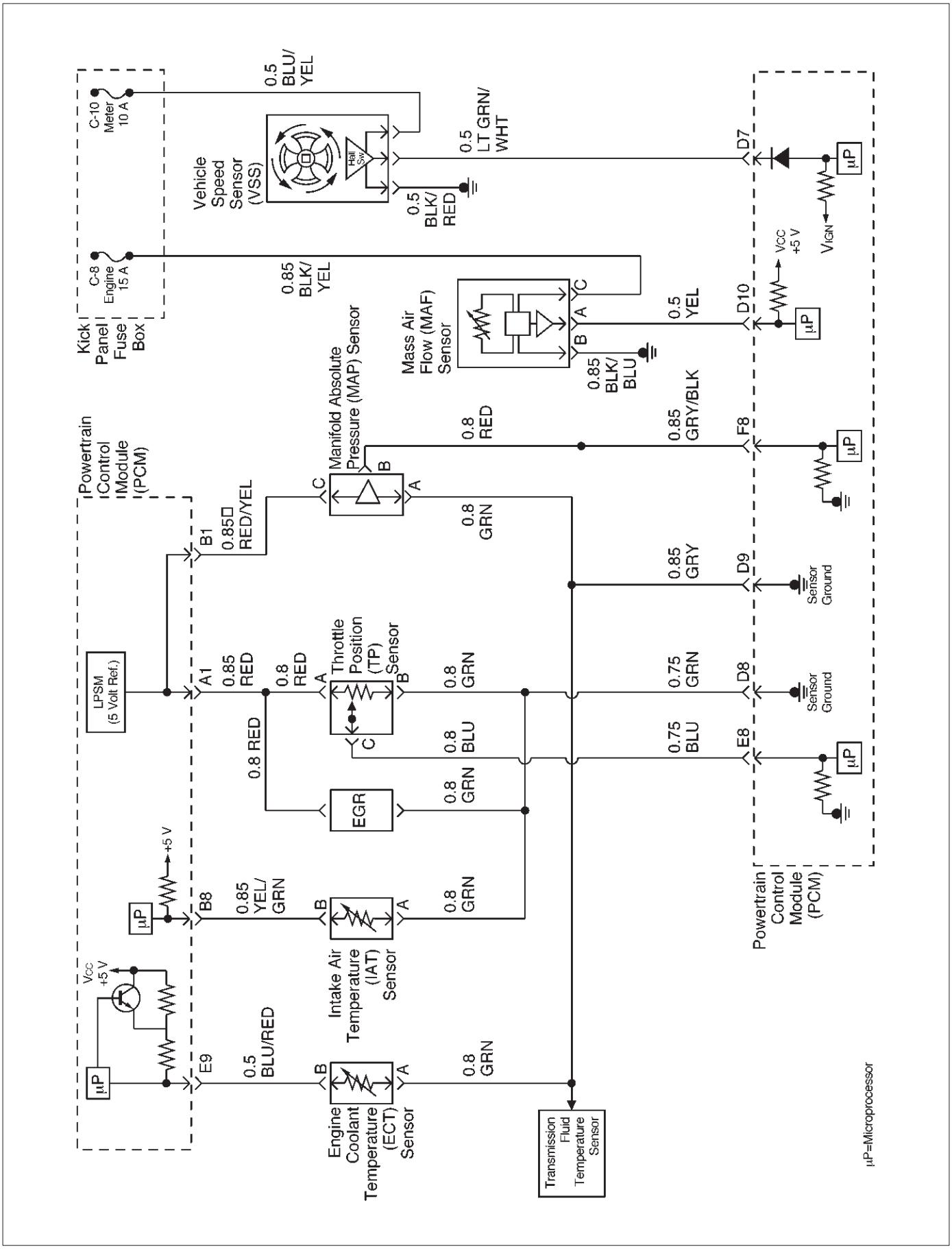

D06RW138

PCM Wiring Diagram (9 of 11) Except EXP and SOUTH AFRICA

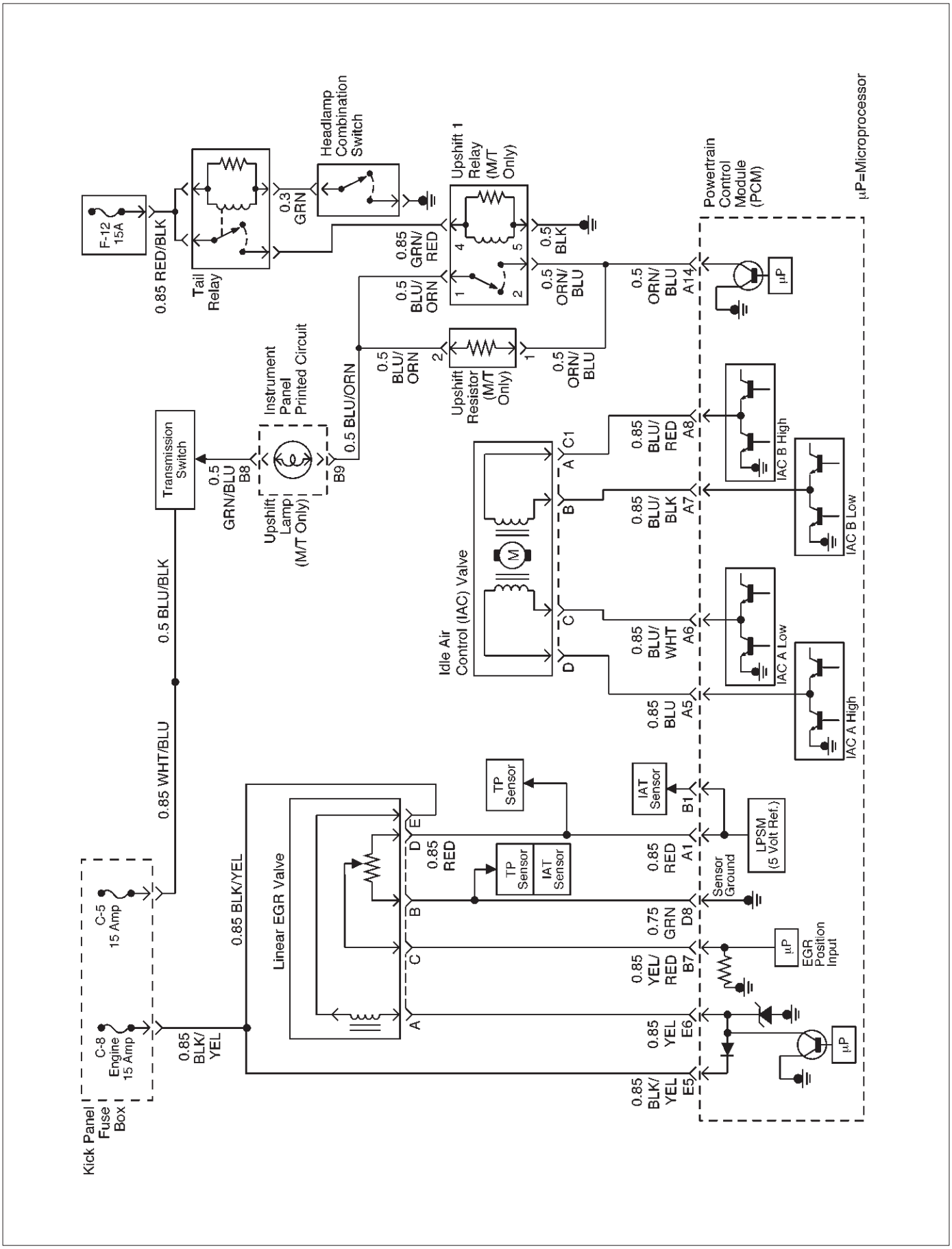

D06RW099

PCM Wiring Diagram (10 of 11) For EXPORT and SOUTH AFRICA

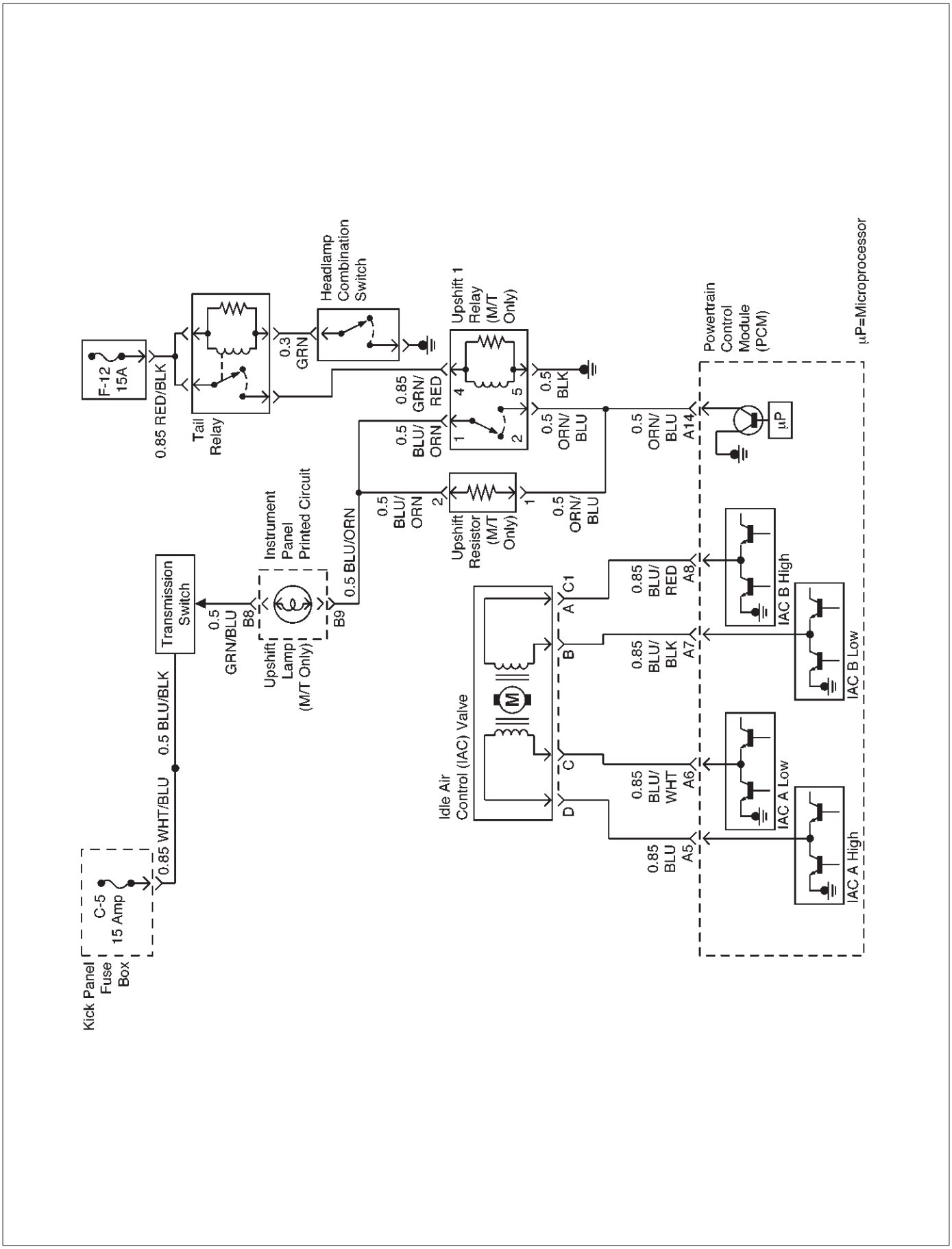

D06RW141

PCM Wiring Diagram (11 of 11)

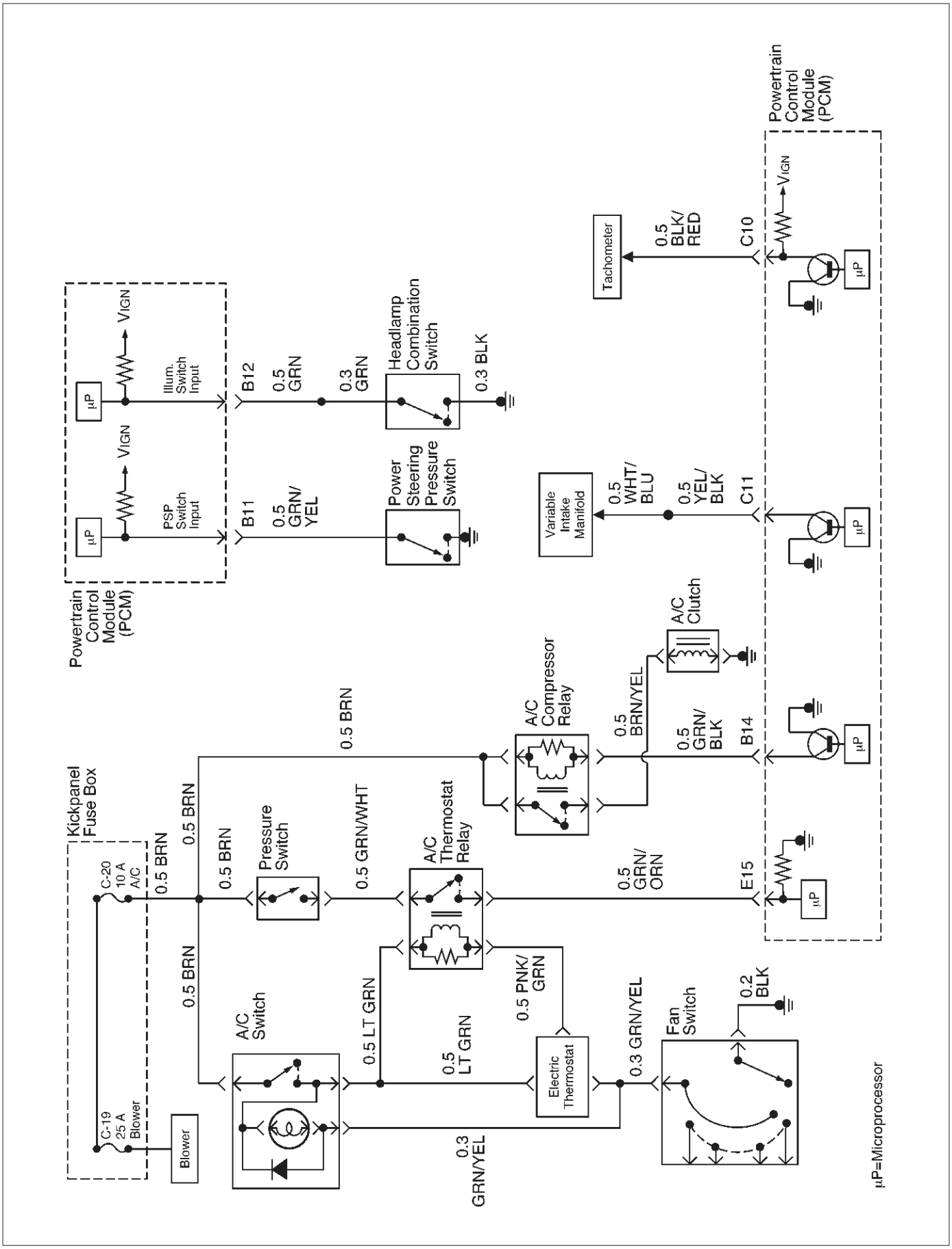

D06RW136

PCM Pinouts

PCM Pinout Table, 32-Way Red Connector – Row “A”

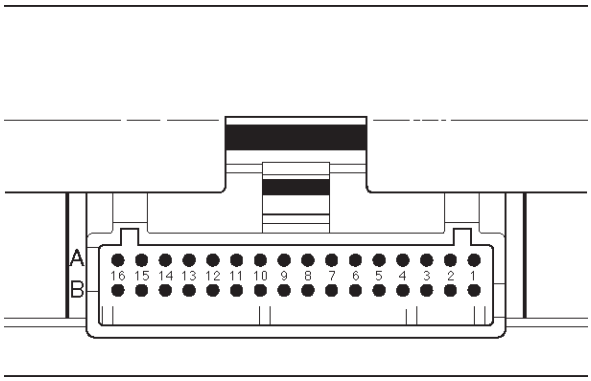

TS23344

PIN	PIN Function	Wire Color	IGN ON	ENG RUN	Refer To
A1	5 Volt Reference “A”	RED	5.0 V	5.0 V	Appropriate Sensor
A2	Knock Sensor	YEL	0.0 V DC 2mV AC	0.0 V DC 18mV AC (at idle)	General Description and Operation, Knock Sensor
A3	Not Used	—	—	—	—
A4	Battery Feed	WHT	B+	B+	Chassis Electrical
A5	Idle Air Control (IAC) “A” High	BLU	B+/0.8 V	B+/0.8 V	General Description and Operation, IAC
A6	IAC “A” Low	BLU/WHT	B+/0.8 V	B+/0.8 V	General Description and Operation, IAC
A7	IAC “B” Low	BLU/BLK	B+/0.8 V	B+/0.8 V	General Description and Operation, IAC
A8	IAC “B” High	BLU/RED	B+/0.8 V	B+/0.8 V	General Description and Operation, IAC
A9	Automatic Transmission Fluid (ATF) Lamp	ORN/BLU	B+	B+	Automatic Transmission (4L30E)
A10	Winter Lamp	PNK/GRN	B+	B+	Automatic Transmission (4L30E)
A11	Power Lamp	GRY/WHT	B+	B+	Automatic Transmission (4L30E)
A12	Antilock Brake System (ABS)	GRY	B+	B+	Antilock Brake System
A13	Malfunction Indicator (Check Engine or MIL) Lamp	BLU	0.0 V	B+	Chassis Electrical
A14	“Check Transmission” Lamp Driver (AT) Up Shift Lamp Driver (MT)	ORN/BLK ORN/BLU	B+	B+	Chassis Electrical

PIN	PIN Function	Wire Color	IGN ON	ENG RUN	Refer To
A15	EVAP	RED/BLU	B+	5.0 V	—
A16	Band Apply (AT) Air Pump (MT)	BRN/YEL	B+	B+	Automatic Transmission (4L30E)

PCM Pinout Table, 32-Way Red Connector – Row “B”

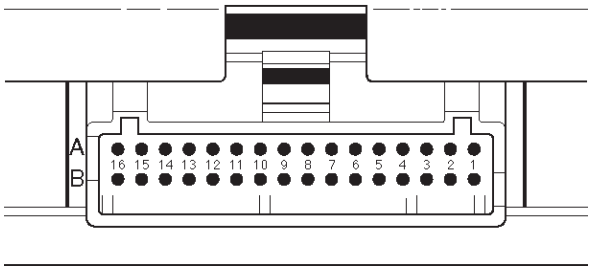

TS23344

PIN	PIN Function	Wire Color	IGN ON	ENG RUN	Refer To
B1	5 Volt Reference “B”	RED/YEL	5.0 V	5.0 V	Appropriate Sensor
B2	Ignition coil	RED/WHT	0.0 V	0.1 V	General Description and Operation
B3	Ignition coil	RED/BLK	0.0 V	0.1 V	General Description and Operation
B4	Ignition coil	RED/GRN	0.0 V	0.1 V	General Description and Operation
B5	Not Used	—	—	—	—
B6	Not Used	—	—	—	—
B7	Exhaust Gas Recirculation (EGR)	YEL/RED	0.6 V	0.6 V	General Description and Operation, Linear EGR Control
B8	Intake Air Temperature (IAT) Sensor	YEL/GRN	0.5-4.9 V (depends on temperature)	0.5-4.9 V (depends on temperature)	General Description and Operation, IAT
B9	Not Used	—	—	—	—
B10	Not Used	—	—	—	—
B11	Power Steering Pressure (PSP) Switch	GRN/YEL	B+	B+	General Description and Operation, PSP
B12	Illuminated Switch	GRN	B+	B+	Chassis Electrical
B13	Class 2 Data	ORN/GRN	0.0 V	0.0 V	Diagnosis, Class 2 Serial Data
B14	A/C Clutch	GRN/BLK	B+ (A/C OFF)	B+ (A/C OFF)	General Description and Operation, A/C Clutch Circuit Operation
B15	ECM to ECU Communication	Violet	0.0 V	0.1 V	—
B16	Not Used	—	—	—	—

PCM Pinout Table, 32-Way White Connector – Row “C” (For EC)

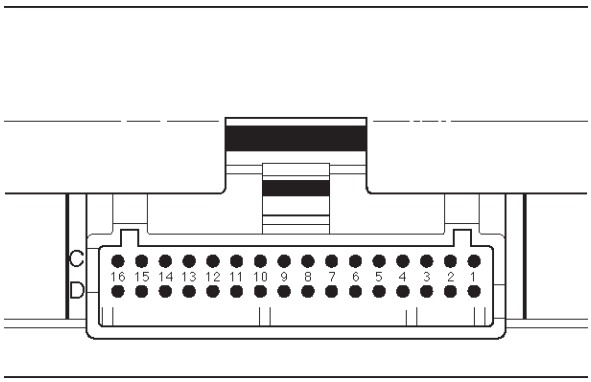

TS23345

PIN	PIN Function	Wire Color	IGN ON	ENG RUN	Refer To
C1	Injector Cylinder #4	GRN/RED	B+	B+	General Description and Operation, Fuel Injector
C2	Shift “B” Solenoid	BRN/BLK	0.0 V	0.0 V	Automatic Transmission (4L30E)
C3	Injector Cylinder #6	GRN/YEL	B+	B+	General Description and Operation, Fuel Injector
C4	Ignition Control (IC) Cylinder #1	RED	0.0 V	0.1 V	General Description and Operation, Fuel Injector
C5	Crankshaft Position Sensor, “A” Circuit	YEL	0.3 V to 5 V	2.2 V	General Description and Operation, Crankshaft Position Sensor
C6	Not Used	—	—	—	—
C7	PCM Ground	YEL	0.0 V	0.0 V	Chassis Electrical
C8	PCM Ground	BLK/PNK	0.0 V	0.0 V	Chassis Electrical
C9	PCM Ground	BLK/BLU	0.0 V	0.0 V	Chassis Electrical
C10	Tachometer	BLK/RED	8.8 V	10.0 V (at idle)	Chassis Electrical
C11	Variable Intake Manifold	YEL/BLK	0.0 V	B+ (rpm 3600 over)	Manual Transmission
C12	Alternator Control Gain	WHT/BLU	10.5 V	B+	Chassis Electrical
C13	Fuel PWM	BLU/PNK	B+	B+	—
C14	Bank 2 HO2S 1 High	PNK	0.4 V	0.1-0.9 V	General Description and Operation, Fuel HO2S 1
C15	Bank 2 HO2S 1 Low	BLU	0.0 V	0.1 V	General Description and Operation, Fuel HO2S 1
C16	Not Used	—	—	—	—

PCM Pinout Table, 32-Way White Connector – Row “C” (For except EC)

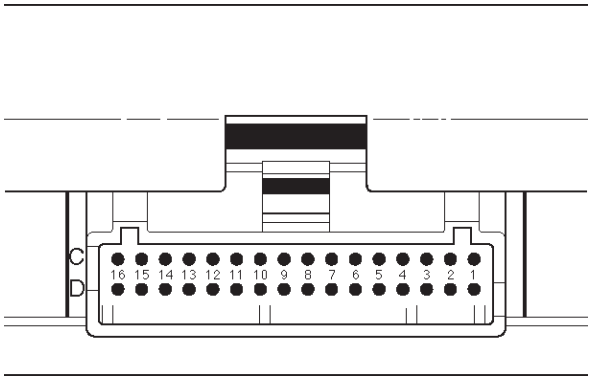

TS23345

PIN	PIN Function	Wire Color	IGN ON	ENG RUN	Refer To
C1	Injector Cylinder #4	GRN/RED	B+	B+	General Description and Operation, Fuel Injector
C2	Shift “B” Solenoid	BRN/BLK	0.0 V	0.0 V	Automatic Transmission (4L30E)
C3	Injector Cylinder #6	GRN/YEL	B+	B+	General Description and Operation, Fuel Injector
C4	Ignition Control (IC) Cylinder #1	RED	0.0 V	0.1 V	General Description and Operation, Fuel Injector
C5	Crankshaft Position Sensor, “A” Circuit	YEL	0.3 V to 5 V	2.2 V	General Description and Operation, Crankshaft Position Sensor
C6	Not Used	—	—	—	—
C7	PCM Ground	BLK/BLU	0.0 V	0.0 V	Chassis Electrical
C8	PCM Ground	BLK/PNK	0.0 V	0.0 V	Chassis Electrical
C9	PCM Ground	BLK/BLU	0.0 V	0.0 V	Chassis Electrical
C10	Tachometer	BLK/RED	8.8 V	10.0 V (at idle)	Chassis Electrical
C11	Variable Intake Manifold	YEL/BLK	0.0 V	B+ (rpm 3600 over)	Manual Transmission
C12	Not Used	—	—	—	—
C13	Not Used	—	—	—	—
C14	Not Used	—	—	—	—
C15	Not Used	—	—	—	—
C16	Not Used	—	—	—	—

PCM Pinout Table, 32-Way White Connector – Row “D” (For except EXPORT and SOUTH AFRICA)

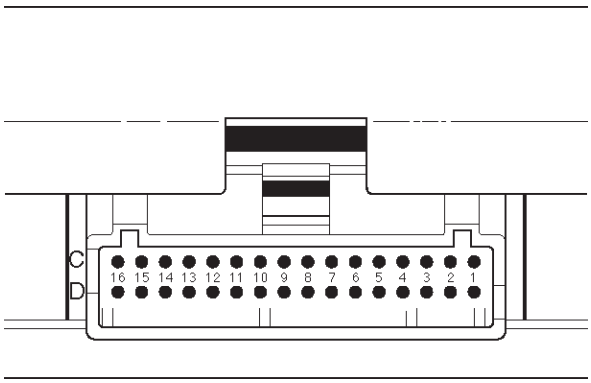

TS23345

PIN	PIN Function	Wire Color	IGN ON	ENG RUN	Refer To
D1	Injector Cylinder #2	GRN/ORN	B+	B+	General Description and Operation, Fuel Injector
D2	Torque Converter Clutch (TCC)	BRN/BLU	0.0 V	0.0 V	On-Vehicle Service, Torque Converter Clutch
D3	Injector Cylinder #1	GRN/WHT	B+	B+	General Description and Operation, Fuel Injector
D4	Serial Data (8192)	ORN	5.0 V	5.0 V	Chassis Electrical
D5	Ignition Control, Cylinder #5	RED/YEL	0.0 V	0.1 V	General Description and Operation, Ignition Coil
D6	Ignition Control, Cylinder #3	RED/BLUE	0.0 V	0.0 V	General Description and Operation, Ignition Coil
D7	VSS Input / IMOB Response	WHT/BLK	0.0 V	0.1 V (at rest)	Chassis Electrical
D8	Sensor Ground 5V Reference A Return	GRN	0.0 V	0.0 V	Appropriate Sensor
D9	Sensor Ground 5 V Reference B Return	GRY	0.0 V	0.0 V	Appropriate Sensor
D10	Mass Air Flow (MAF)	YEL	4.9 V	4.2 V	General Description, Mass Air Flow Sensor
D11	Camshaft Position Sensor	WHT	5.0 V or less than 1.0 V	4.6 V	General Description and Operation, Camshaft Position Sensor
D12	Not Used	—	—	—	—
D13	Not Used	—	—	—	—
D14	Bank 1 HO2S 1 Low	GRN	0.0 V	0.1 V	General Description and Operation, Fuel HO2S 1
D15	Bank 1 HO2S 1 Signal	RED	0.4 V	0.1-0.9 V	General Description and Operation, Fuel HO2S 1
D16	Not Used	—	—	—	—

PCM Pinout Table, 32-Way White Connector – Row “D” (For EXPORT and SOUTH AFRICA)

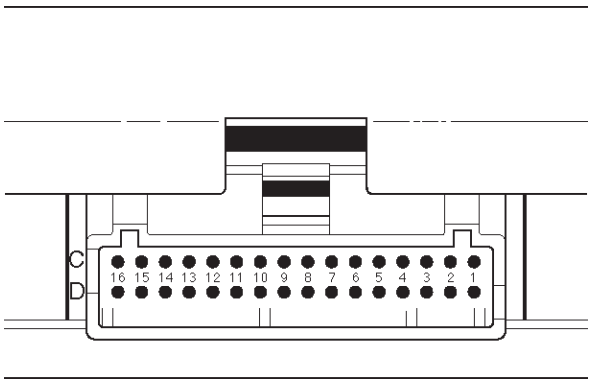

TS23345

PIN	PIN Function	Wire Color	IGN ON	ENG RUN	Refer To
D1	Injector Cylinder #2	GRN/ORN	B+	B+	General Description and Operation, Fuel Injector
D2	Torque Converter Clutch (TCC)	BRN/BLU	0.0 V	0.0 V	On-Vehicle Service, Torque Converter Clutch
D3	Injector Cylinder #1	GRN/WHT	B+	B+	General Description and Operation, Fuel Injector
D4	Serial Data (8192)	ORN	5.0 V	5.0 V	Chassis Electrical
D5	Ignition Control, Cylinder #5	RED/YEL	0.0 V	0.1 V	General Description and Operation, Ignition Coil
D6	Ignition Control, Cylinder #3	RED/BLUE	0.0 V	0.0 V	General Description and Operation, Ignition Coil
D7	VSS Input / IMOB Response	LIGHT GRN/WHT	0.0 V	0.1 V (at rest)	Chassis Electrical
D8	Sensor Ground 5V Reference A Return	GRN	0.0 V	0.0 V	Appropriate Sensor
D9	Sensor Ground 5 V Reference B Return	GRY	0.0 V	0.0 V	Appropriate Sensor
D10	Mass Air Flow (MAF)	YEL	4.9 V	4.2 V	General Description, Mass Air Flow Sensor
D11	Camshaft Position Sensor	WHT	5.0 V or less than 1.0 V	4.6 V	General Description and Operation, Camshaft Position Sensor
D12	Not Used	—	—	—	—
D13	Not Used	—	—	—	—
D14	Not Used	—	—	—	—
D15	Not Used	—	—	—	—
D16	Not Used	—	—	—	—

PCM Pinout Table, 32-Way Blue Connector – Row “E” (For except EXPORT and SOUTH AFRICA)

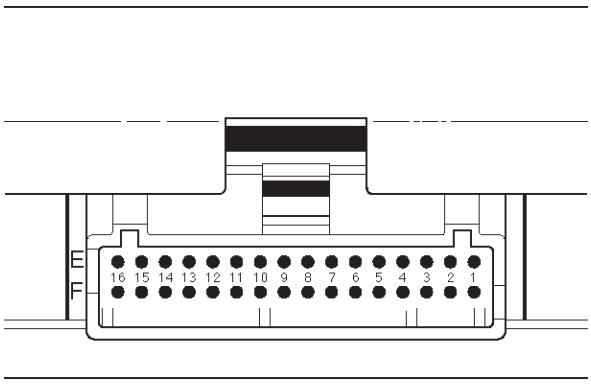

TS23346

PIN	PIN Function	Wire Color	IGN ON	ENG RUN	Refer To
E1	Transmission Output Shaft Sensor (TOSS) High	RED	0.0 V	0.1 V	Automatic Transmission (4L30E)
E2	Transmission Output Shaft Sensor (TOSS) Low	WHT	0.0 V	0.0 V	Automatic Transmission (4L30E)
E3	Pressure Control Solenoid Low	PPL/RED	0.0 V	1.1 V	Automatic Transmission (4L30E)
E4	Pressure Control Solenoid High	PPL/WHT	0.0 V	4.9 V	Automatic Transmission (4L30E)
E5	Exhaust Gas Recirculation (EGR) Control High	BLK/YEL	B+	B+	General Description and Operation, EGR Control
E6	Exhaust Gas Recirculation (EGR) Control Low	YEL	B+	B+	General Description and Operation, EGR Control
E7	Transmission Range Signal “B”	BLU/YEL	0.0 V	0.0 V	Automatic Transmission (4L30E)
E8	Throttle Position (TP) Sensor	BLU	0.5-0.8 V	0.5-0.8 V (at idle)	General Description and Operation, Throttle Position Sensor
E9	Engine Coolant Temperature (ECT) Sensor	BLU/RED	0.5-4.9 V (depends on temperature)	0.5-4.9 V (depends on temperature)	General Description and Operation, Engine Coolant Temperature (ECT) Sensor
E10	Not Used	—	—	—	—
E11	Crankshaft Position (CKP) Sensor +5 Volt Reference	YEL/RED	5.0 V or less than 1.0 V	5.0 V	General Description and Operation, Crankshaft Position Sensor
E12	Transmission Range Signal “A”	BLU/WHT	B+	B+	Automatic Transmission (4L30E)
E13	Fuel Pump (FP) Relay	RED/WHT	0.0 V	B+	On-Vehicle Service, Fuel Pump Relay
E14	Shift High (BAND APPLY)	BRN/WHT	B+	B+	Automatic Transmission (4L30E)

PIN	PIN Function	Wire Color	IGN ON	ENG RUN	Refer To
E15	A/C Request	GRN/ORN	0.0 V	0.0 V	Electric Cooling Fans
E16	Ignition Feed (1 of 2 F16)	RED/BLU	B+	B+	—

PCM Pinout Table, 32-Way Blue Connector – Row “E” (For EXPORT and SOUTH AFRICA)

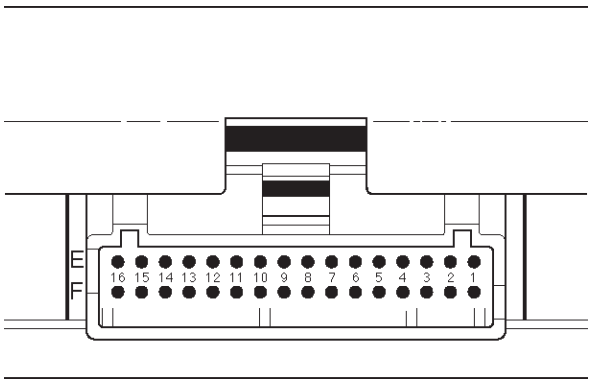

TS23346

PIN	PIN Function	Wire Color	IGN ON	ENG RUN	Refer To
E1	Transmission Output Shaft Sensor (TOSS) High	RED	0.0 V	0.1 V	Automatic Transmission (4L30E)
E2	Transmission Output Shaft Sensor (TOSS) Low	WHT	0.0 V	0.0 V	Automatic Transmission (4L30E)
E3	Pressure Control Solenoid Low	PPL/RED	0.0 V	1.1 V	Automatic Transmission (4L30E)
E4	Pressure Control Solenoid High	PPL/WHT	0.0 V	4.9 V	Automatic Transmission (4L30E)
E5	Not Used	—	—	—	—
E6	Not Used	—	—	—	—
E7	Transmission Range Signal “B”	BLU/YEL	0.0 V	0.0 V	Automatic Transmission (4L30E)
E8	Throttle Position (TP) Sensor	BLU	0.5-0.8 V	0.5-0.8 V (at idle)	General Description and Operation, Throttle Position Sensor
E9	Engine Coolant Temperature (ECT) Sensor	BLU/RED	0.5-4.9 V (depends on temperature)	0.5-4.9 V (depends on temperature)	General Description and Operation, Engine Coolant Temperature (ECT) Sensor
E10	Not Used	—	—	—	—
E11	Crankshaft Position (CKP) Sensor +5 Volt Reference	YEL/RED	5.0 V or less than 1.0 V	5.0 V	General Description and Operation, Crankshaft Position Sensor
E12	Transmission Range Signal “A”	BLU/WHT	B+	B+	Automatic Transmission (4L30E)
E13	Fuel Pump (FP) Relay	RED/WHT	0.0 V	B+	On-Vehicle Service, Fuel Pump Relay
E14	Shift High (BAND APPLY)	BRN/WHT	B+	B+	Automatic Transmission (4L30E)
E15	A/C Request	GRN/ORN	0.0 V	0.0 V	Electric Cooling Fans
E16	Ignition Feed (1 of 2 F16)	RED/BLU	B+	B+	—

PCM Pinout Table, 32-Way Blue Connector – Row “F”

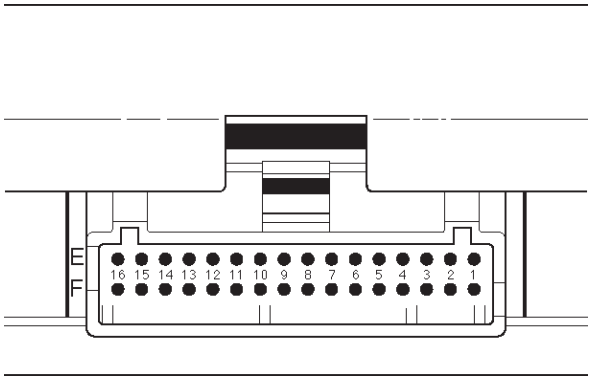

TS23346

PIN	PIN Function	Wire Color	IGN ON	ENG RUN	Refer To
F1	Not Used	—	—	—	—
F2	Transmission Range Signal “C”	BLU/BLK	0.0 V	0.0 V	Automatic Transmission (4L30E)
F3	Transmission Range Signal “P”	YEL/GRN	B+	0.0 V	Automatic transmission (4L30E)
F4	Brake Switch	GRN/YEL	0.0 V	0.0 V	Automatic transmission (4L30E)
F5	Power Switch	PPL/RED	B+	B+	Automatic Transmission (4L30E)
F6	Winter Switch	PPL/GRN	B+	B+	Automatic Transmission (4L30E)
F7	Transmission Fluid Temperature	RED/BLK	0.5-4.9 V (depends on temperature)	0.5-4.9 V (depends on temperature)	Automatic Transmission (4L30E)
F8	Manifold Absolute Pressure (MAP)	GRY/BLK	3.5-4.9 V (depends on altitude and barometric pressure)	0.6-1.3 V	General Description and Operation, Manifold Absolute Pressure
F9	Not Used	—	—	—	—
F10	Cruise Control	GRY/BLU	B+	B+	Automatic transmission (4L30E)
F11	Kickdown Switch	LT BLU	B+	B+	Automatic Transmission (4L30E)
F12	DIAG	ORN/BLU	B+	B+	—
F13	Injector “C” Cylinder #3	GRN	B+	B+	General Description and Operation, Fuel Injector
F14	Shift “A” Solenoid	BRN/RED	B+	B+	Automatic Transmission (4L30E)
F15	Injector Cylinder #5	GRN/BLK	B+	B+	General Description and Operation, Fuel Injector
F16	Ignition Feed (1 of 2 E16)	RED/BLU	B+	B+	—

Component Locators

Engine Component Locator (This illustration is based on RHD model.)

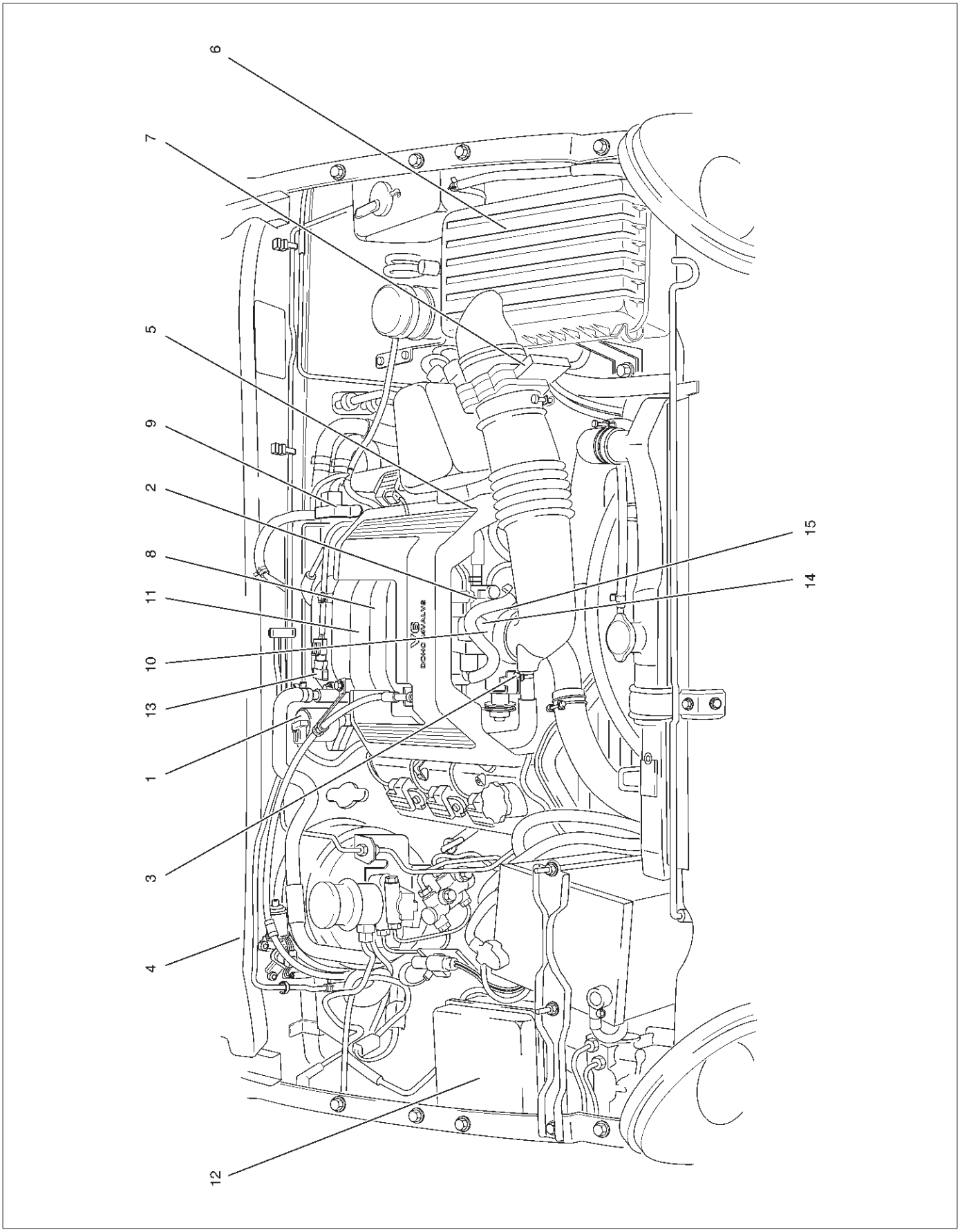

060RW210

Engine Component Locator Table

Number	Name	Location
1	Linear Exhaust Gas Recirculation (EGR) Valve	Rear right side of the engine
2	Throttle Position (TP) Sensor	On the rear of the throttle body
3	Intake Air Temperature (IAT) Sensor	On the intake air duct near the throttle body
4	Check Engine (MIL) Light	On the instrument panel beneath the tachometer
5	Positive Crankcase Ventilation (PCV) Valve	On the left of the cylinder head cover
6	Air Cleaner	Left front of the engine bay
7	Mass Air Flow (MAF) Sensor	Attached to the air filter box
8	Camshaft Position (CMP) Sensor	On the rear right side at the left of the cylinder head cover
9	Fuel Pressure Regulator	Rear right side of the engine
10	Idle Air Control (IAC) Valve	On the left of the throttle body
11	Upper Intake Manifold	Top of the engine
12	Fuse/Relay Box	Along the inside of the right fender
13	Manifold Absolute Pressure (MAP) Sensor	Bolted to the top of the upper intake manifold
14	Throttle Body	Between the intake air duct and the upper intake manifold
15	Engine Coolant Temperature Sensor	On the coolant crossover pipe at the front of the engine, near the throttle body

Engine Component Locator (This illustration is based on LHD model.)

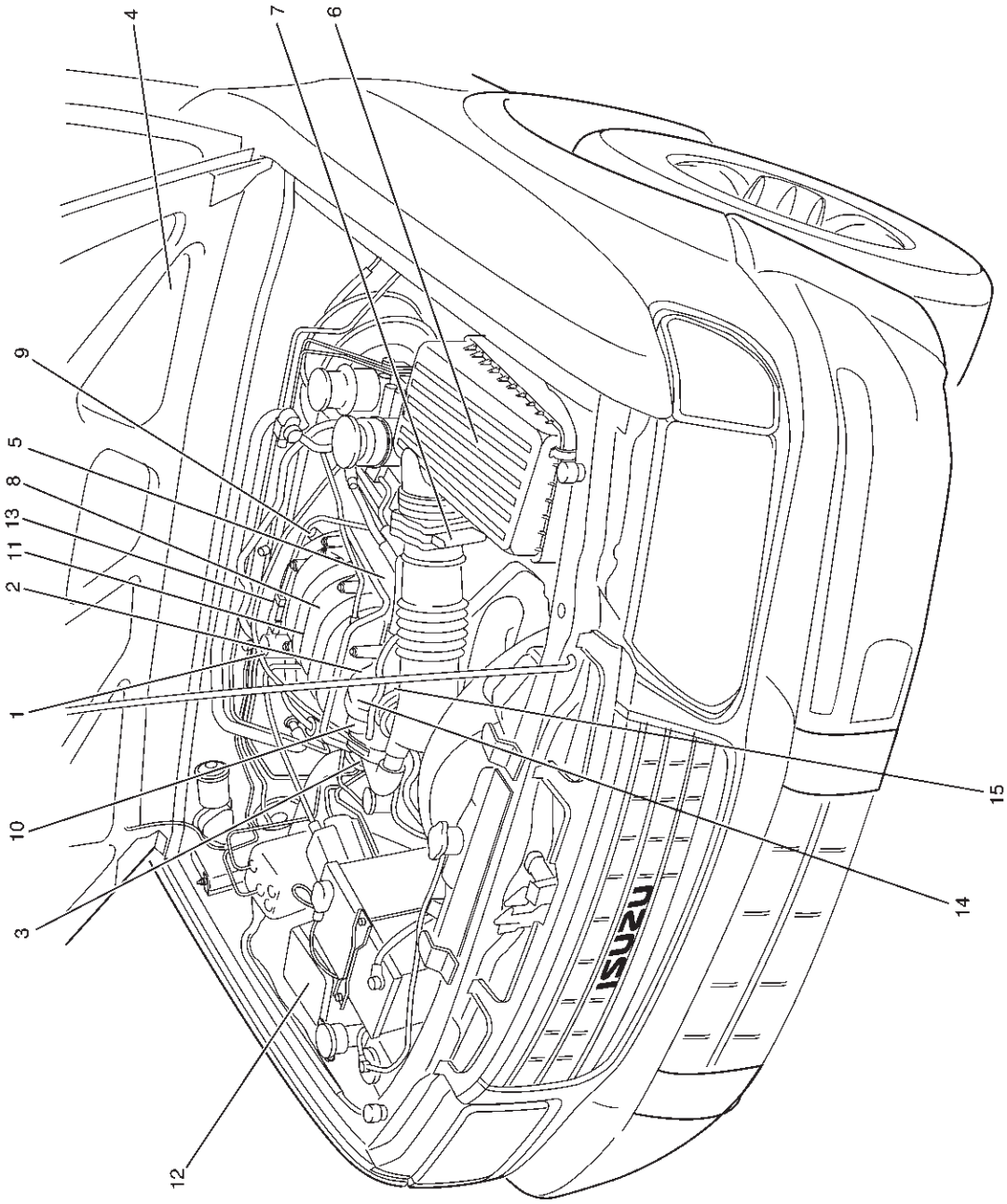

755RW062

Engine Component Locator Table

Number	Name	Location
1	Linear Exhaust Gas Recirculation (EGR) Valve	Rear right side of the engine
2	Throttle Position (TP) Sensor	On the rear of the throttle body
3	Intake Air Temperature (IAT) Sensor	On the intake air duct near the throttle body
4	Check Engine (MIL) Light	On the instrument panel beneath the tachometer
5	Positive Crankcase Ventilation (PCV) Valve	On the left of the cylinder head cover
6	Air Cleaner	Left front of the engine bay
7	Mass Air Flow (MAF) Sensor	Attached to the air filter box
8	Camshaft Position (CMP) Sensor	On the rear right side at the left of the cylinder head cover
9	Fuel Pressure Regulator	Rear right side of the engine
10	Idle Air Control (IAC) Valve	On the left of the throttle body
11	Upper Intake Manifold	Top of the engine
12	Fuse/Relay Box	Along the inside of the right fender
13	Manifold Absolute Pressure (MAP) Sensor	Bolted to the top of the upper intake manifold
14	Throttle Body	Between the intake air duct and the upper intake manifold
15	Engine Coolant Temperature Sensor	On the coolant crossover pipe at the front of the engine, near the throttle body

Undercarriage Component Locator

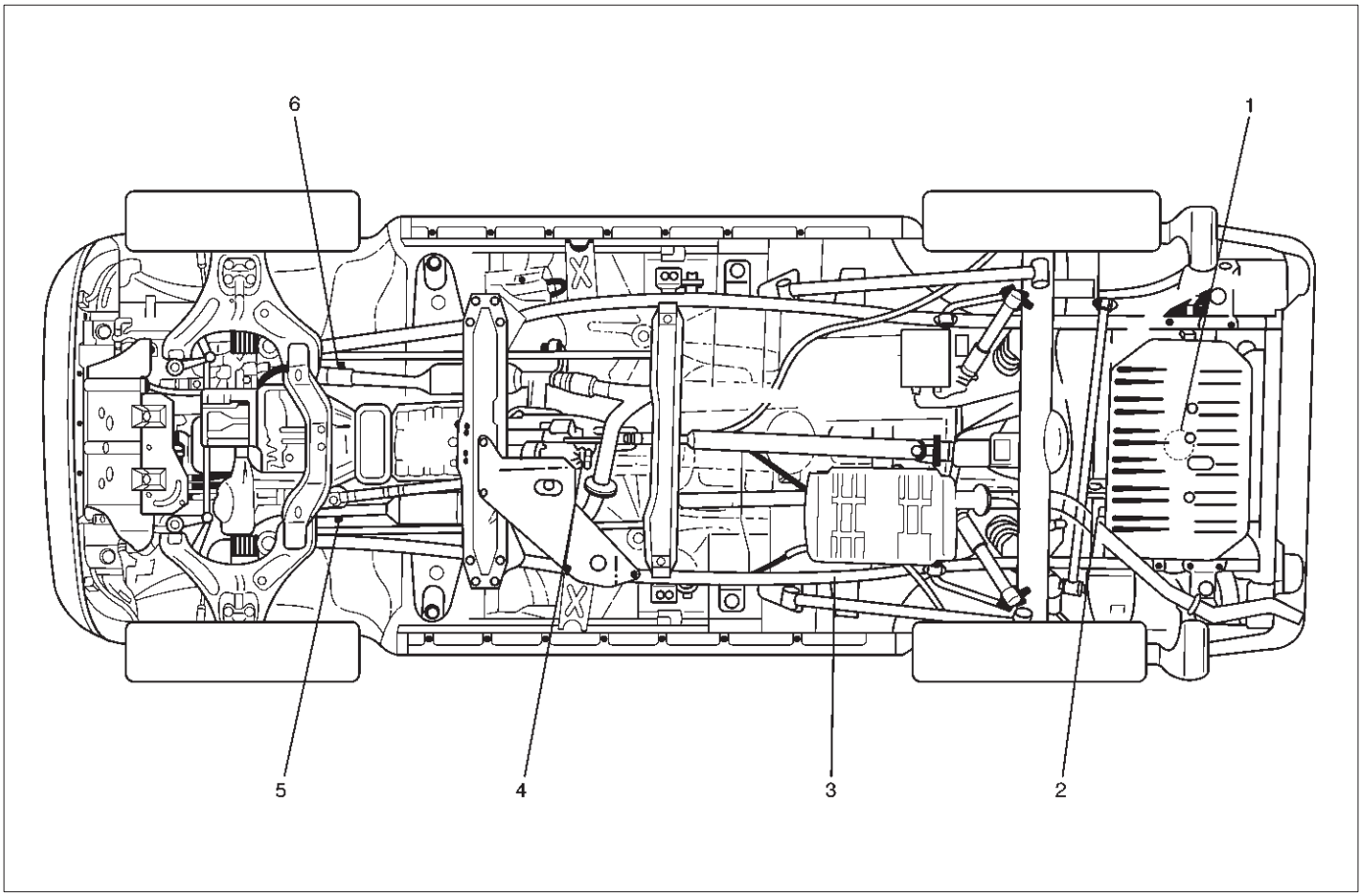

F00RW040

Undercarriage Component Locator Table (Automatic Transmission)

Number	Name	Location
1	Fuel Pump Assembly	Installed in the top of the fuel tank
2	Fuel Gauge Unit	Installed in the front edge of the fuel tank, on the right side
3	Fuel Filter	Located along the inside of the right frame rail, ahead of the rear axle
4	Vehicle Speed Sensor (VSS)	2WD: Protrudes from the transmission housing, just ahead of the propeller shaft. 4WD: Protrudes from the rear output shaft housing of the transfer case.
5	Heated Oxygen Sensor (Bank 1, HO2S 1)	Threaded into the exhaust pipe ahead of the right-hand catalytic converter
6	Heated Oxygen Sensor (Bank 2, HO2S 1)	Threaded into the exhaust pipe ahead the left-hand catalytic converter

Undercarriage Component Locator Table (Manual Transmission)

Number	Name	Location
1	Fuel Pump Assembly	Installed in the top of the fuel tank
2	Fuel Gauge Unit	Installed in the front edge of the right frame rail, ahead of the rear axle
3	Fuel Filter	Located along the inside of the right frame rail, ahead of the rear axle
4	Vehicle Speed Sensor (VSS)	2WD: Protrudes from the transmission housing, just ahead of the propeller shaft. 4WD: Protrudes from the rear output shaft housing of the transfer case.
5	Heated Oxygen Sensor (Bank 1, HO2S 1)	Threaded into the exhaust pipe ahead of the right-hand catalytic converter
6	Heated Oxygen Sensor (Bank 2, HO2S 1)	Threaded into the exhaust pipe ahead of the left-hand catalytic converter

Fuse and Relay Panel (Underhood Electrical Center)

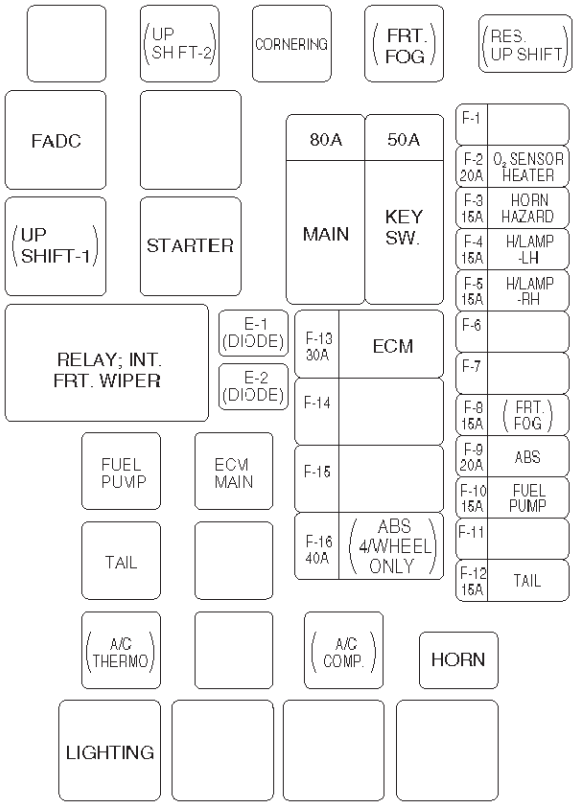

TS23336

Sensors and Miscellaneous Component Locators

- **For EC.**

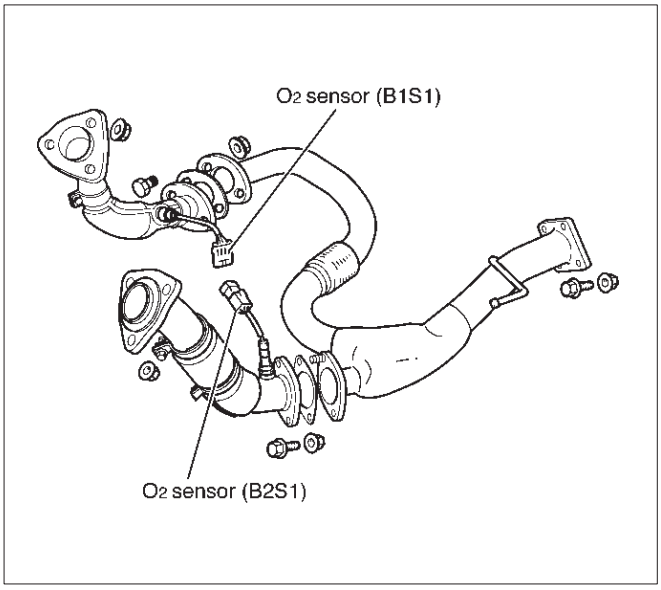

060RW194

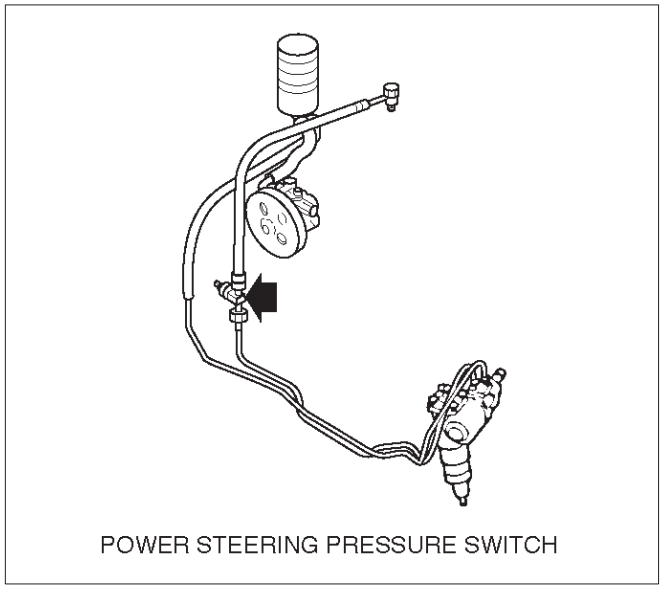

T321066

- **For AUSTRALIA, THAILAND, SOUTH EAST ASIA, LATIN AMERICA, GULF, SAUDI, CHINA.**

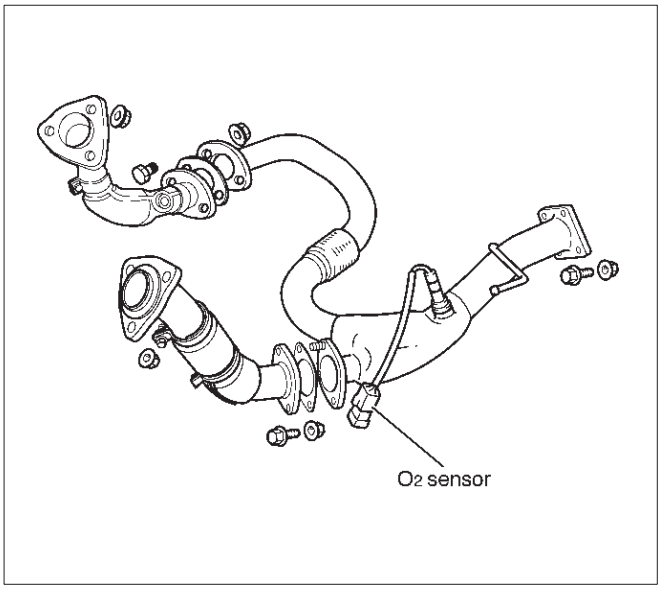

150RW101

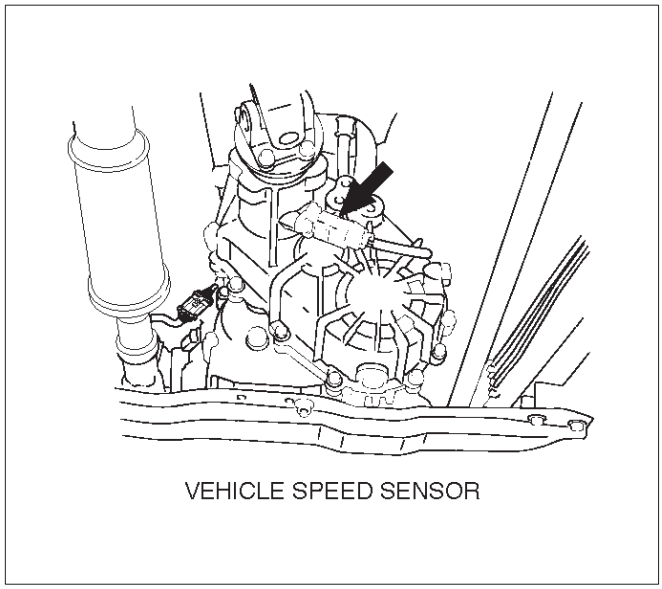

T321067

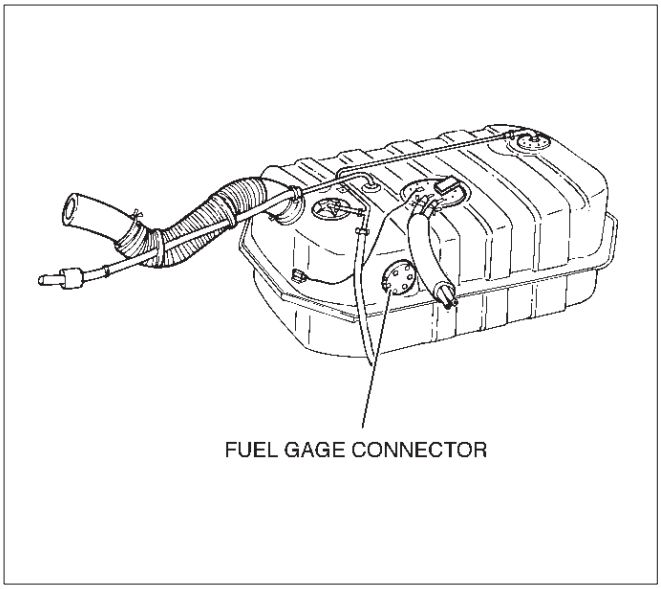

140RW032

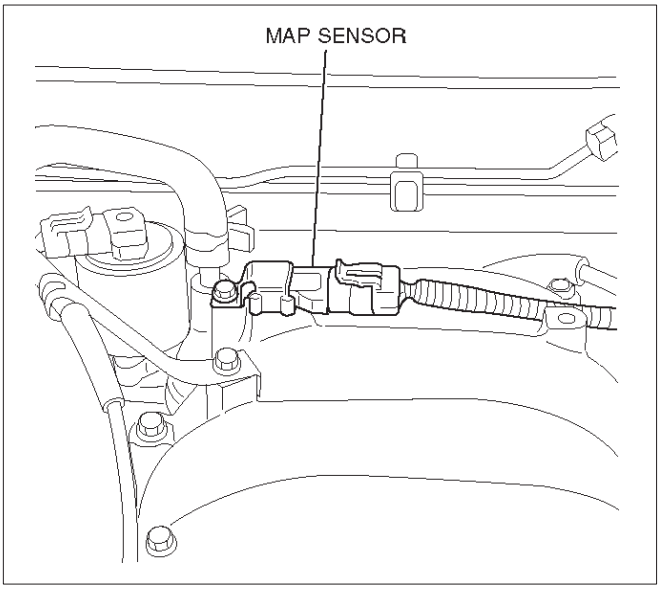

055RW003

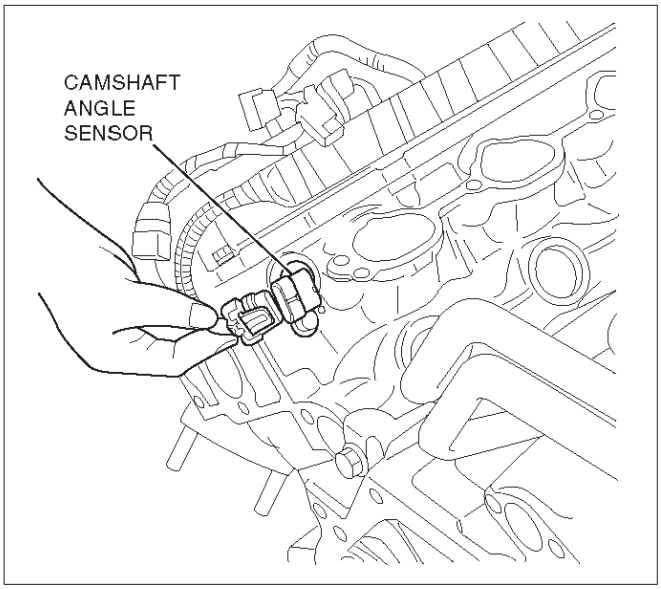

014RW125

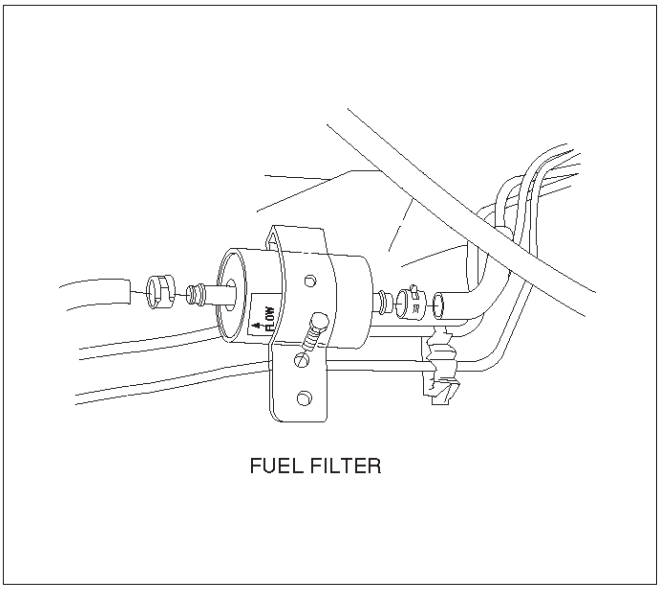

041RW004

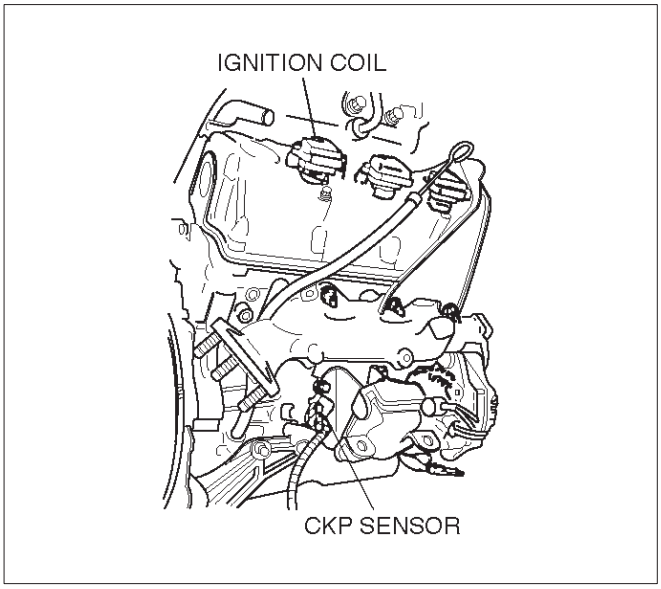

T321070

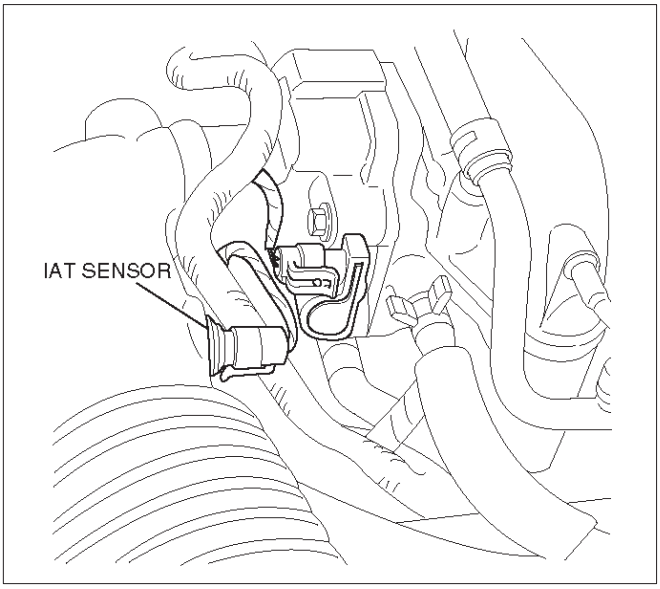

025RW005

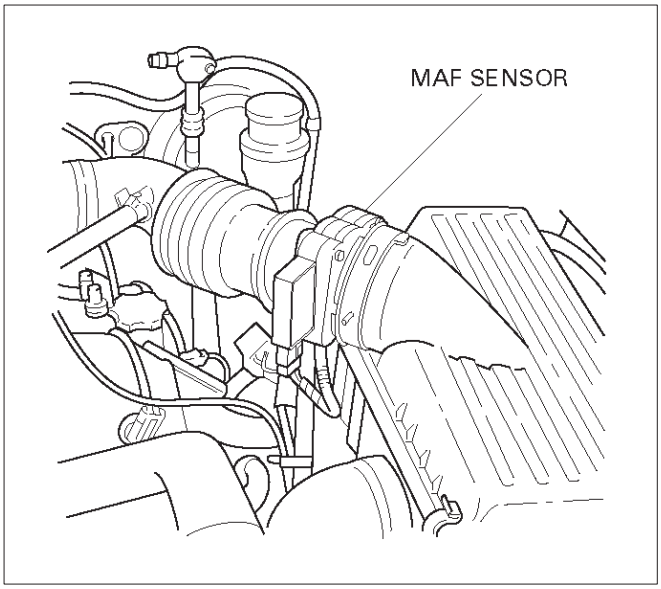

T321078

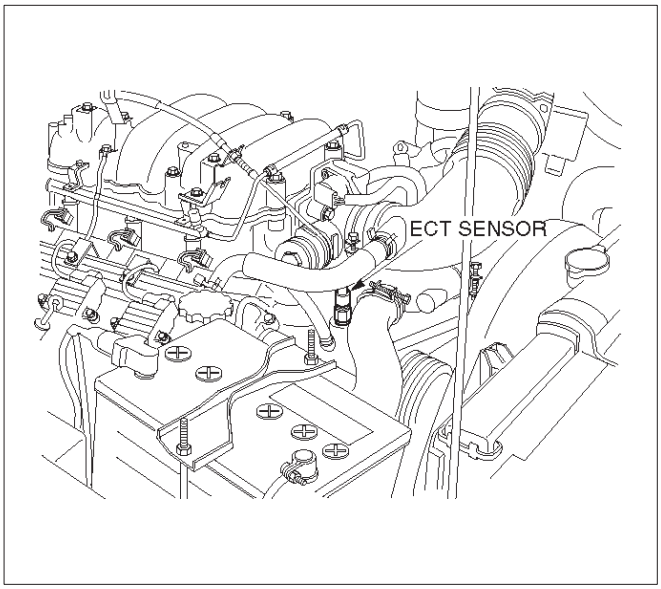

060RW007

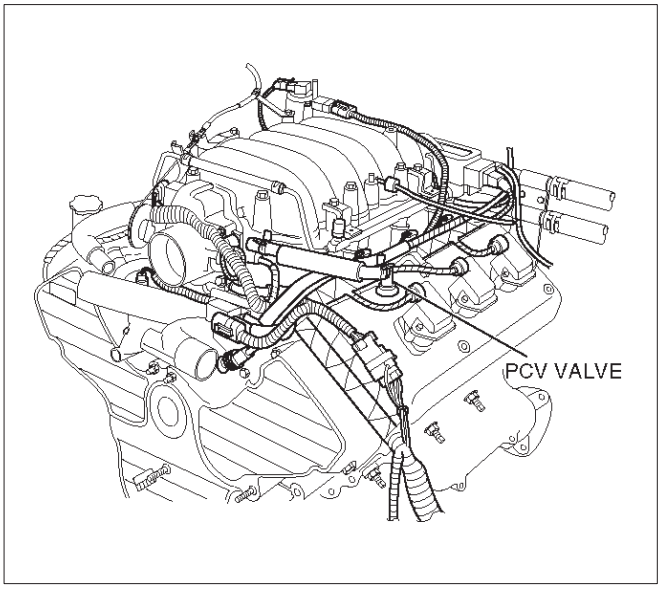

028RW001

Diagnosis

Strategy-Based Diagnostics

Strategy-Based Diagnostics

The strategy-based diagnostic is a uniform approach to repair all Electrical/Electronic (E/E) systems. The diagnostic flow can always be used to resolve an E/E system problem and is a starting point when repairs are necessary. The following steps will instruct the technician how to proceed with a diagnosis:

1. Verify the customer complaint.
   - To verify the customer complaint, the technician should know the normal operation of the system.
2. Perform preliminary checks.
   - Conduct a thorough visual inspection.
   - Review the service history.
   - Detect unusual sounds or odors.
   - Gather diagnostic trouble code information to achieve an effective repair.
3. Check bulletins and other service information.
   - This includes videos, newsletters, etc.
4. Refer to service information (manual) system check(s).
   - “System checks” contain information on a system that may not be supported by one or more DTCs. System checks verify proper operation of the system. This will lead the technician in an organized approach to diagnostics.
5. Refer to service diagnostics.

DTC Stored

Follow the designated DTC chart exactly to make an effective repair.

No DTC

Select the symptom from the symptom tables. Follow the diagnostic paths or suggestions to complete the repair. You may refer to the applicable component/system check in the system checks.

No Matching Symptom

1. Analyze the complaint.
2. Develop a plan for diagnostics.
3. Utilize the wiring diagrams and the theory of operation.

Call technical assistance for similar cases where repair history may be available. Combine technician knowledge with efficient use of the available service information.

Intermittents

Conditions that are not always present are called intermittents. To resolve intermittents, perform the following steps:

1. Observe history DTCs, DTC modes, and freezeframe data.
2. Evaluate the symptoms and the conditions described by the customer.
3. Use a check sheet or other method to identify the circuit or electrical system component.
4. Follow the suggestions for intermittent diagnosis found in the service documentation.

Most Tech 2s, such as the Tech II and the 5–8840–0285–0 (Fluke model 87 DVOM), have data-capturing capabilities that can assist in detecting intermittents.

No Trouble Found

This condition exists when the vehicle is found to operate normally. The condition described by the customer may be normal. Verify the customer complaint against another vehicle that is operating normally. The condition may be intermittent. Verify the complaint under the conditions described by the customer before releasing the vehicle.

1. Re-examine the complaint.

   When the Complaint cannot be successfully found or isolated, a re-evaluation is necessary. The complaint should be re-verified and could be intermittent as defined in *Intermittents*, or could be normal.
2. Repair and verify.

   After isolating the cause, the repairs should be made. Validate for proper operation and verify that the symptom has been corrected. This may involve road testing or other methods to verify that the complaint has been resolved under the following conditions:
   - Conditions noted by the customer.
   - If a DTC was diagnosed, verify a repair by duplicating conditions present when the DTC was set as noted in the Failure Records or Freeze Frame data.

Verifying Vehicle Repair

Verification of the vehicle repair will be more comprehensive for vehicles with OBD system diagnostics. Following a repair, the technician should perform the following steps:

IMPORTANT: Follow the steps below when you verify repairs on OBD systems. Failure to follow these steps could result in unnecessary repairs.

1. Review and record the Failure Records and the Freeze Frame data for the DTC which has been diagnosed (Freeze Frame data will only be stored for an A or B type diagnostic and only if the MIL(”Check Engine” lamp) has been requested).
2. Clear the DTC(S).
3. Operate the vehicle within conditions noted in the Failure Records and Freeze Frame data.
4. Monitor the DTC status information for the specific DTC which has been diagnosed until the diagnostic test associated with that DTC runs.

General Service Information

OBD Serviceablity Issues

The list of non-vehicle faults that could affect the performance of the OBD system has been compiled. These non-vehicle faults vary from environmental conditions to the quality of fuel used.
The illumination of the MIL ("Check Engine" lamp) due to a non-vehicle fault could lead to misdiagnosis of the vehicle, increased warranty expense and customer dissatisfaction. The following list of non-vehicle faults does not include every possible fault and may not apply equally to all product lines.

Fuel Quality

Using fuel with the wrong octane rating for your vehicle may cause driveability problems. Many of the major fuel companies advertise that using "premium" gasoline will improve the performance of your vehicle. Most premium fuels use alcohol to increase the octane rating of the fuel. Although alcohol-enhanced fuels may raise the octane rating, the fuel's ability to turn into vapor in cold temperatures deteriorates. This may affect the starting ability and cold driveability of the engine.
Low fuel levels can lead to fuel starvation, lean engine operation, and eventually engine misfire.

Non-OEM Parts

All of the OBD diagnostics have been calibrated to run with OEM parts. Something as simple as a high-performance exhaust system that affects exhaust system back pressure could potentially interfere with the operation of the EGR valve and thereby turn on the MIL ("Check Engine" lamp). Small leaks in the exhaust system near the post catalyst oxygen sensor can also cause the MIL ("Check Engine" lamp) to turn on.
Aftermarket electronics, such as cellular phones, stereos, and anti-theft devices, may radiate EMI into the control system if they are improperly installed. This may cause a false sensor reading and turn on the MIL ("Check Engine" lamp).

Environment

Temporary environmental conditions, such as localized flooding, will have an effect on the vehicle ignition system. If the ignition system is rain-soaked, it can temporarily cause engine misfire and turn on the MIL ("Check Engine" lamp).

Poor Vehicle Maintenance

The sensitivity of OBD diagnostics will cause the MIL ("Check Engine" lamp) to turn on if the vehicle is not maintained properly. Restricted air filters, fuel filters, and crankcase deposits due to lack of oil changes or improper oil viscosity can trigger actual vehicle faults that were not previously monitored prior to OBD. Poor vehicle maintenance can not be classified as a "non-vehicle fault", but with the sensitivity of OBD diagnostics, vehicle maintenance schedules must be more closely followed.

Related System Faults

Many of the OBD system diagnostics will not run if the PCM detects a fault on a related system or component. One example would be that if the PCM detected a Misfire fault, the diagnostics on the catalytic converter would be suspended until Misfire fault was repaired. If the Misfire fault was severe enough, the catalytic converter could be damaged due to overheating and would never set a Catalyst DTC until the Misfire fault was repaired and the Catalyst diagnostic was allowed to run to completion. If this happens, the customer may have to make two trips to the dealership in order to repair the vehicle.

Maintenance Schedule

Refer to the *Maintenance Schedule*.

Visual / Physical Engine Compartment Inspection

Perform a careful visual and physical engine compartment inspection when performing any diagnostic procedure or diagnosing the cause of an emission test failure. This can often lead to repairing a problem without further steps. Use the following guidelines when performing a visual/physical inspection:

- Inspect all vacuum hoses for punches, cuts, disconnects, and correct routing.
- Inspect hoses that are difficult to see behind other components.
- Inspect all wires in the engine compartment for proper connections, burned or chafed spots, pinched wires, contact with sharp edges or contact with hot exhaust manifolds or pipes.

Basic Knowledge of Tools Required

NOTE: Lack of basic knowledge of this powertrain when performing diagnostic procedures could result in an incorrect diagnosis or damage to powertrain components. Do not attempt to diagnose a powertrain problem without this basic knowledge.

A basic understanding of hand tools is necessary to effectively use this section of the Service Manual.

Serial Data Communications

Class II Serial Data Communications

This vehicle utilizes the "Class II" communication system. Each bit of information can have one of two lengths: long or short. This allows vehicle wiring to be reduced by transmitting and receiving multiple signals over a single wire. The messages carried on Class II data streams are also prioritized. If two messages attempt to establish communications on the data line at the same time, only the message with higher priority will continue. The device with the lower priority message must wait. The most significant result of this regulation is that it provides Tech 2 manufacturers with the capability to access data from any make or model vehicle that is sold.

The data displayed on the other Tech 2 will appear the same, with some exceptions. Some Tech 2s will only be able to display certain vehicle parameters as values that are a coded representation of the true or actual value. For more information on this system of coding, refer to *Decimal/Binary/Hexadecimal Conversions.* On this vehicle Tech 2 displays the actual values for vehicle parameters. It will not be necessary to perform any conversions from coded values to actual values.

On-Board Diagnostic (OBD)

On-Board Diagnostic Tests

A diagnostic test is a series of steps, the result of which is a pass or fail reported to the diagnostic executive. When a diagnostic test reports a pass result, the diagnostic executive records the following data:

- The diagnostic test has been completed since the last ignition cycle.
- The diagnostic test has passed during the current ignition cycle.
- The fault identified by the diagnostic test is not currently active.

When a diagnostic test reports a fail result, the diagnostic executive records the following data:

- The diagnostic test has been completed since the last ignition cycle.
- The fault identified by the diagnostic test is currently active.
- The fault has been active during this ignition cycle.
- The operating conditions at the time of the failure.

Remember, a fuel trim DTC may be triggered by a list of vehicle faults. Make use of all information available (other DTCs stored, rich or lean condition, etc.) when diagnosing a fuel trim fault.

Comprehensive Component Monitor Diagnostic Operation

Input Components:

Input components are monitored for circuit continuity and out-of-range values. This includes rationality checking. Rationality checking refers to indicating a fault when the signal from a sensor does not seem reasonable, i.e. Throttle Position (TP) sensor that indicates high throttle position at low engine loads or MAP voltage. Input components may include, but are not limited to the following sensors:

- Vehicle Speed Sensor (VSS)
- Crankshaft Position (CKP) sensor
- Knock Sensor (KS)
- Throttle Position (TP) sensor
- Engine Coolant Temperature (ECT) sensor
- Camshaft Position (CMP) sensor
- Manifold Absolute Pressure (MAP) sensor
- Mass Air Flow (MAF) sensor

In addition to the circuit continuity and rationality check, the ECT sensor is monitored for its ability to achieve a steady state temperature to enable closed loop fuel control.

Output Components:

Output components are diagnosed for proper response to control module commands. Components where functional monitoring is not feasible will be monitored for circuit continuity and out-of-range values if applicable. Output components to be monitored include, but are not limited to, the following circuits:

- Idle Air Control (IAC) Motor
- Electronic Transmission controls
- A/C relays
- Cooling fan relay
- VSS output
- MIL control
- Cruise control inhibit

Refer to PCM and Sensors in General Descriptions.

Passive and Active Diagnostic Tests

A passive test is a diagnostic test which simply monitors a vehicle system or component. Conversely, an active test, actually takes some sort of action when performing diagnostic functions, often in response to a failed passive test. For example, the EGR diagnostic active test will force the EGR valve open during closed throttle decel and/or force the EGR valve closed during a steady state. Either action should result in a change in manifold pressure.

Intrusive Diagnostic Tests

This is any on-board test run by the Diagnostic Management System which may have an effect on vehicle performance or emission levels.

Warm-Up Cycle

A warm-up cycle means that engine at temperature must reach a minimum of 70˚C (160˚F) *and* rise at least 22˚C (40˚F) over the course of a trip.

Freeze Frame

Freeze Frame is an element of the Diagnostic Management System which stores various vehicle information at the moment an emissions-related fault is stored in memory and when the MIL is commanded on. These data can help to identify the cause of a fault. Refer to *Storing And Erasing Freeze Fame Data* for more detailed information.

Failure Records

Failure Records data is an enhancement of the OBD Freeze Frame feature. Failure Records store the same vehicle information as does Freeze Frame, but it will store that information for any fault which is stored in on-board memory, while Freeze Frame stores information only for emission-related faults that command the MIL on.

Common OBD Terms

Diagnostic

When used as a noun, the word diagnostic refers to any on-board test run by the vehicle's Diagnostic Management System. A diagnostic is simply a test run on a system or component to determine if the system or component is operating according to specification. There are many diagnostics, shown in the following list:

- Oxygen sensors
- Oxygen sensor heaters
- EGR
- Catalyst monitoring

Enable Criteria

The term "enable criteria" is engineering language for the conditions necessary for a given diagnostic test to run. Each diagnostic has a specific list of conditions which must be met before the diagnostic will run. "Enable criteria" is another way of saying "conditions required".
The enable criteria for each diagnostic is listed on the first page of the DTC description under the heading "Conditions for Setting the DTC". Enable criteria varies with each diagnostic, and typically includes, but is not limited to the following items:

- engine speed
- vehicle speed
- ECT
- MAF/MAP
- barometric pressure
- IAT
- TP
- fuel trim
- TCC enabled
- A/C on

Trip

Technically, a trip is a key on-run-key off cycle in which all the enable criteria for a given diagnostic are met, allowing the diagnostic to run. Unfortunately, this concept is not quite that simple. A trip is official when all the enable criteria for a given diagnostic are met. But because the enable criteria vary from one diagnostic to another, the definition of trip varies as well. Some diagnostic are run when the vehicle is at operating temperature, some when the vehicle first start up; some require that the vehicle be cruising at a steady highway speed, some run only when the vehicle is idle; some diagnostics function with the TCC disables. Some run only immediately following a cold engine start-up.
A trip then, is defined as a key on-run-key off cycle in which the vehicle was operated in such a way as to satisfy the enables criteria for a given diagnostic, and this diagnostic will consider this cycle to be one trip. However, another diagnostic with a different set of enable criteria (which were not met) during this driving event, would not consider it a trip. No trip will occur for that particular diagnostic until the vehicle is driven in such a way as to meet all the enable criteria.

The Diagnostic Executive

The Diagnostic Executive is a unique segment of software which is designed to coordinate and prioritize the diagnostic procedures as well as define the protocol for recording and displaying their results. The main responsibilities of the Diagnostic Executive are listed as following:

- Commanding the MIL ("Check Engine" lamp) on and off
- DTC logging and clearing
- Freeze Frame data for the first emission related DTC recorded
- Non-emission related Service Lamp (future)
- Operating conditions Failure Records buffer, (the number of records will vary)
- Current status information on each diagnostic

The Diagnostic Executive records DTCs and turns on the MIL when emission-related faults occur. It can also turn off the MIL if the conditions cease which caused the DTC to set.

Diagnostic Information

The diagnostic charts and functional checks are designed to locate a faulty circuit or component through a process of logical decisions. The charts are prepared with the requirement that the vehicle functioned correctly at the time of assembly and that there are not multiple faults present.
There is a continuous self-diagnosis on certain control functions. This diagnostic capability is complemented by the diagnostic procedures contained in this manual. The language of communicating the source of the malfunction is a system of diagnostic trouble codes. When a malfunction is detected by the control module, a diagnostic trouble code is set and the Malfunction Indicator Lamp (MIL) ("Check Engine" lamp) is illuminated.

Malfunction Indicator Lamp (MIL)

The Malfunction Indicator Lamp (MIL) looks the same as the MIL you are already familiar with ("Check Engine" lamp). However, OBD requires that the it illuminate under a strict set of guide lines.
Basically, the MIL is turned on when the PCM detects a DTC that will impact the vehicle emissions.
The MIL is under the control of the Diagnostic Executive. The MIL will be turned on if an emissions-related diagnostic test indicates a malfunction has occurred. It will stay on until the system or component passes the same test, for three consecutive trips, with no emissionsrelated faults.

Extinguishing the MIL

When the MIL is on, the Diagnostic Executive will turn off the MIL after *three consecutive* trips that a "test passed" has been reported for the diagnostic test that originally caused the MIL to illuminate.
Although the MIL has been turned off, the DTC will remain in the PCM memory (both Freeze Frame and Failure Records) until *forty(40) warm-up cycles after no faults* have been completed.

If the MIL was set by either a fuel trim or misfire-related DTC, additional requirements must be met. In addition to the requirements stated in the previous paragraph, these requirements are as follows:

- The diagnostic tests that are passed must occur with 375 RPM of the RPM data stored at the time the last test failed.
- Plus or minus ten (10) percent of the engine load that was stored at the time the last failed.
- Similar engine temperature conditions (warmed up or warming up) as those stored at the time the last test failed.

Meeting these requirements ensures that the fault which turned on the MIL has been corrected.

The MIL ("Check Engine" lamp) is on the instrument panel and has the following function:

- It informs the driver that a fault affects vehicle emission levels has occurred and that the vehicle should be taken for service as soon as possible.
- As a bulb and system check, the MIL will come "ON" with the key "ON" and the engine not running. When the engine is started, the MIL will turn "OFF."
- When the MIL remains "ON" while the engine is running, or when a malfunction is suspected due to a driveability or emissions problem, a Powertrain On-Board Diagnostic (OBD ll) System Check must be performed. The procedures for these checks are given in On-Board Diagnostic (OBD) System Check. These checks will expose faults which may not be detected if other diagnostics are performed first.

DTC Types

Each DTC is directly related to a diagnostic test. The Diagnostic Management System sets DTC based on the failure of the tests during a trip or trips. Certain tests must fail two (2) consecutive trips before the DTC is set. The following are the four (4) types of DTCs and the characteristics of those codes:

- Type A
  - Emissions related
  - Requests illumination of the MIL of the first trip with a fail
  - Stores a History DTC on the first trip with a fail
  - Stores a Freeze Frame (if empty)
  - Stores a Fail Record
  - Updates the Fail Record each time the diagnostic test fails
- Type B
  - Emissions related
  - "Armed" after one (1) trip with a fail
  - "Disarmed" after one (1) trip with a pass
  - Requests illumination of the MIL on the *second consecutive trip* with a fail
  - Stores a History DTC on the second consecutive trip with a fail (The DTC will be armed after the first fail)
  - Stores a Freeze Frame on the second consecutive trip with a fail (if empty)
  - Stores a Fail Record when the first test fails (not dependent on *consecutive trip* fails)
  - Updates the Fail Record each time the diagnostic test fails
- Type C (if the vehicle is so equipped)
  - Non-Emissions related
  - Requests illumination of the Service Lamp or the service message on the Drive Information Center (DIC) on the *first trip* with a fail
  - Stores a History DTC on the *first trip* with a fail
  - *Does not* store a Freeze Frame
  - Stores Fail Record when test fails
  - Updates the Fail Record each time the diagnostic test fails
- Type D (*Type D* non-emissions related are not utilized on certain vehicle applications).
  - Non-Emissions related
  - Dose not request illumination of any lamp
  - Stores a History DTC on the *first trip* with a fail
  - *Does not* store a Freeze Frame
  - Stores Fail Record when test fails
  - Updates the Fail Record each time the diagnostic test fails

IMPORTANT: Only four Fail Records can be stored. Each Fail Record is for a different DTC. It is possible that there will not be Fail Records for every DTC if multiple DTCs are set.

Storing and Erasing Freeze Frame Data and Failure Records

The data captured is called Freeze Frame data. The Freeze Frame data is very similar to a single record of operating conditions. Whenever the MIL is illuminated, the corresponding record of operating conditions is recorded to the Freeze Frame buffer.

Data from these faults take precedence over data associated with any other fault. The Freeze Frame data will not be erased unless the associated history DTC is cleared.

Each time a diagnostic test reports a failure, the current engine operating conditions are recorded in the *Failure Records* buffer. A subsequent failure will update the recorded operating conditions. The following operating conditions for the diagnostic test which failed *typically* include the following parameters:

- Air Fuel Ratio
- Air Flow Rate
- Fuel Trim
- Engine Speed
- Engine Load
- Engine Coolant Temperature
- Vehicle Speed
- TP Angle
- MAP/BARO
- Injector Base Pulse Width
- Loop Status

Intermittent Malfunction Indicator Lamp

In the case of an “intermittent” fault, the MIL (“Check Engine” lamp) may illuminate and then (after three trips) go “OFF”. However, the corresponding diagnostic trouble code will be stored in the memory. When unexpected diagnostic trouble codes appear, check for an intermittent malfunction.

A diagnostic trouble code may reset. Consult the “Diagnostic Aids” associated with the diagnostic trouble code. A physical inspection of the applicable sub-system most often will resolve the problem.

Data Link Connector (DLC)

The provision for communication with the control module is the Data Link Connector (DLC). The DLC is used to connect to Tech 2. Some common uses of Tech 2 are listed below:

- Identifying stored Diagnostic Trouble Codes (DTCs).
- Clearing DTCs.
- Performing output control tests.
- Reading serial data.

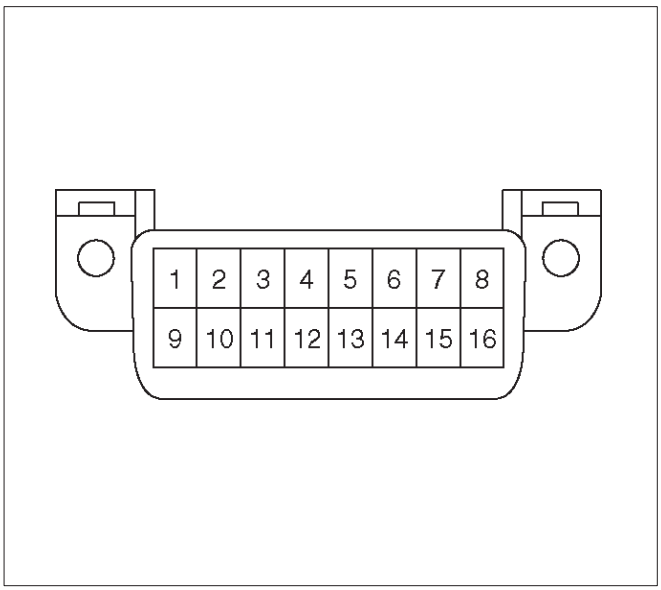

TS24064

Verifying Vehicle Repair

Verification of vehicle repair will be more comprehensive for vehicles with OBD system diagnostic. Following a repair, the technician should perform the following steps:

1. Review and record the Fail Records and/or Freeze Frame data for the DTC which has been diagnosed (Freeze Frame data will only be stored for an A or B type diagnostic and only if the MIL has been requested).
2. Clear DTC(s).
3. Operate the vehicle within conditions noted in the Fail Records and/or Freeze Frame data.
4. Monitor the DTC status information for the specific DTC which has been diagnosed until the diagnostic test associated with that DTC runs.

Following these steps are very important in verifying repairs on OBD systems. Failure to follow these steps could result in unnecessary repairs.

Reading Diagnostic Trouble Codes Using A Tech 2

The procedure for reading diagnostic trouble code(s) is to used a diagnostic Tech 2. When reading DTC(s), follow instructions supplied by Tech 2 manufacturer.

Clearing Diagnostic Trouble Codes

IMPORTANT: Do not clear DTCs unless directed to do so by the service information provided for each diagnostic procedure. When DTCs are cleared, the Freeze Frame and Failure Record data which may help diagnose an intermittent fault will also be erased from memory.

If the fault that caused the DTC to be stored into memory has been corrected, the Diagnostic Executive will begin to count the “warm-up” cycles with no further faults detected, the DTC will automatically be cleared from the PCM memory.

To clear Diagnostic Trouble Codes (DTCs), use the diagnostic Tech 2 “clear DTCs”. When clearing DTCs follow instructions supplied by the tool manufacturer.

When Tech 2 is not available, DTCs can also be cleared by disconnecting *one* of the following sources for at least thirty (30) seconds.

NOTE: To prevent system damage, the ignition key must be “OFF” when disconnecting or reconnecting battery power.

- The power source to the control module. Examples: fuse, pigtail at battery PCM connectors etc.
- The negative battery cable. (Disconnecting the negative battery cable will result in the loss of other on-board memory data, such as preset radio tuning).

Tech 2

From 98 MY, Isuzu dealer service departments are recommended to use Tech 2. Please refer to Tech 2 Tech 2 user guide.

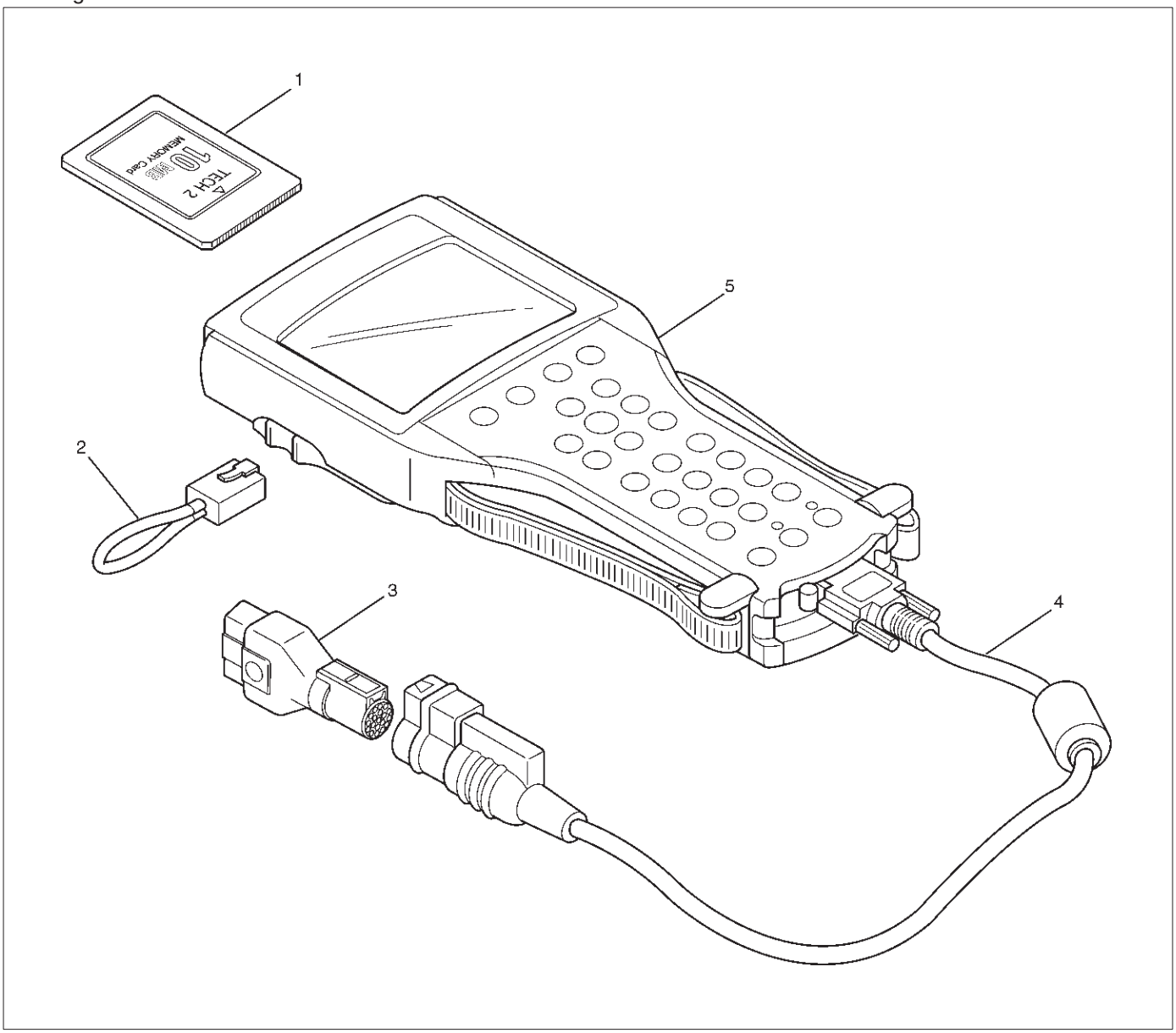

901RW180

Legend

(1) PCMCIA Card
(2) RS 232 Loop Back Connector
(3) SAE 16/19 Adaptor
(4) DLC Cable
(5) Tech–2

Tech 2 Features

1. Tech 2 is 12 volt system. Do not apply 24 volt.
2. After connect and/or install Tech 2 body, Vehicle Communications Interface (VCI) module, PCMCIA card and DLC connector, connect them to the vehicle DLC.
3. After power off to the Tech 2, remove and reinstall the PCMCIA card.
4. The PCMCIA card has a capacity of 10 Megabytes which is 10 times greater than the memory of the Tech 1 Mass Storage Cartridge.
5. The Tech 2 has the capability of two snapshots.
6. The PCMCIA card is sensitive to magnetism and static electricity, so care should be taken in the handling of the card.
7. The Tech 2 can plot a graph when replaying a snapshot.
8. Always return to the Main Menu to press EXIT key several times before shutting down.
9. To clear Diagnostic Trouble Codes (DTCs), open Application Menu and press “F1: Clear DTC Info”.

Getting Started

- Before operating the Isuzu PCMCIA card with the Tech 2, the following steps must be performed:

1. The Isuzu 98 System PCMCIA card (1) inserts into the Tech 2 (5).
2. Connect the SAE 16/19 adapter (3) to the DLC cable (4).
3. Connect the DLC cable to the Tech 2 (5)
4. Make sure the vehicle ignition is off.
5. Connect the Tech 2 SAE 16/19 adapter to the vehicle DLC.
   1. For RHD model: Right front side in the console box.
   2. For LHD model: Left front side in the console box.

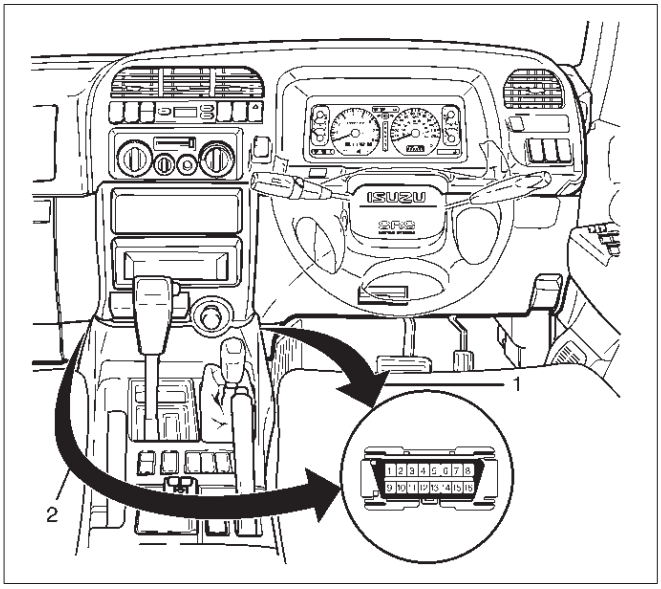

060RW220

6. The vehicle ignition turns on.
7. Verify the Tech 2 power up display.

060RW009

NOTE: The RS232 Loop back connector is only to use for diagnosis of Tech 2 and refer to user guide of the Tech 2.

Operating Procedure (For Example)

The power up screen is displayed when you power up the tester with the Isuzu systems PCMCIA card. Follow the operating procedure below. (Ver. 5.471)

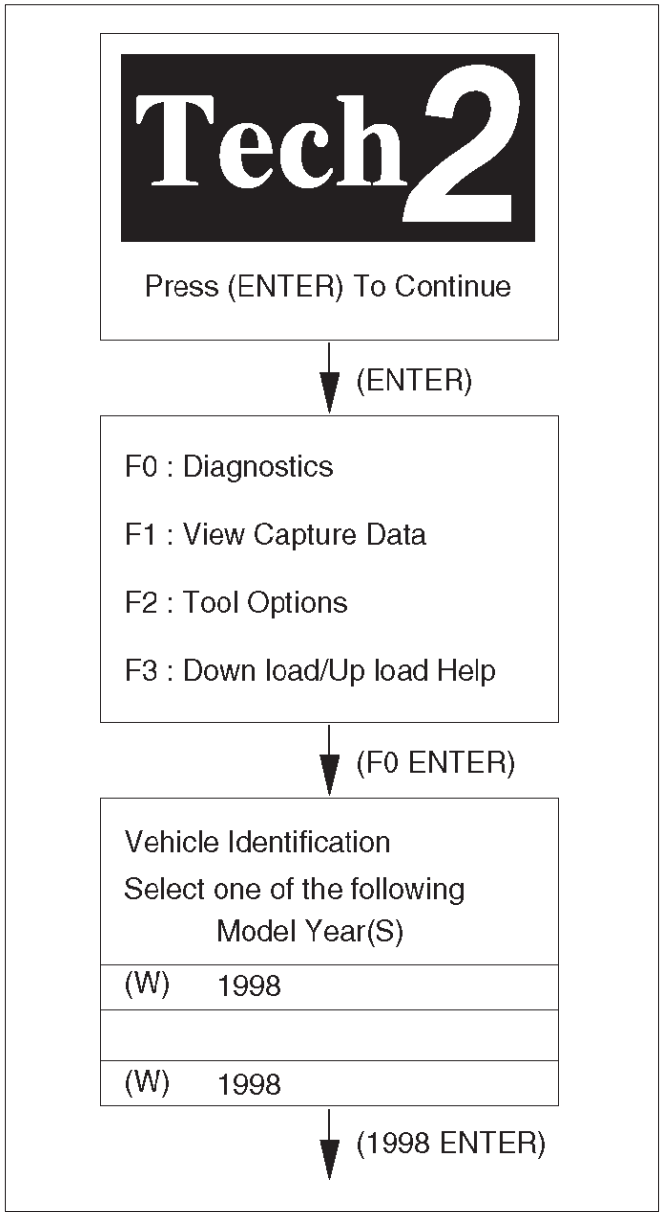

060RW014

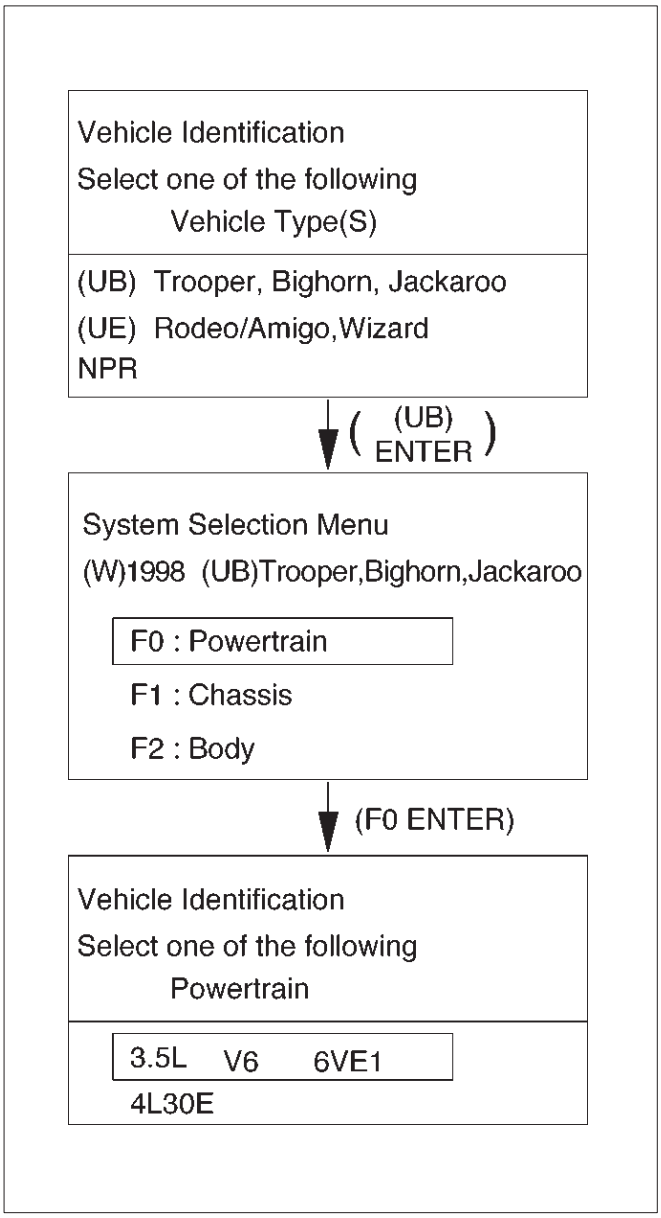

060RW218

Menu

- The following table shows, which functions are used the available equipment versions.

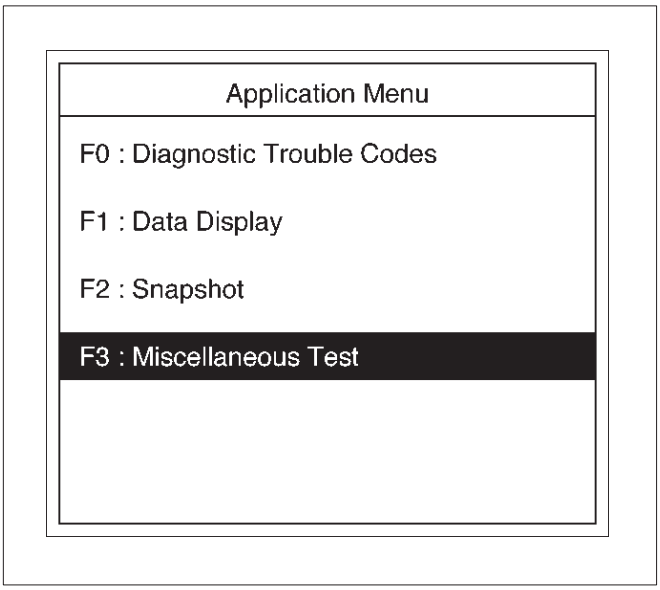

060RW228

DTC Modes

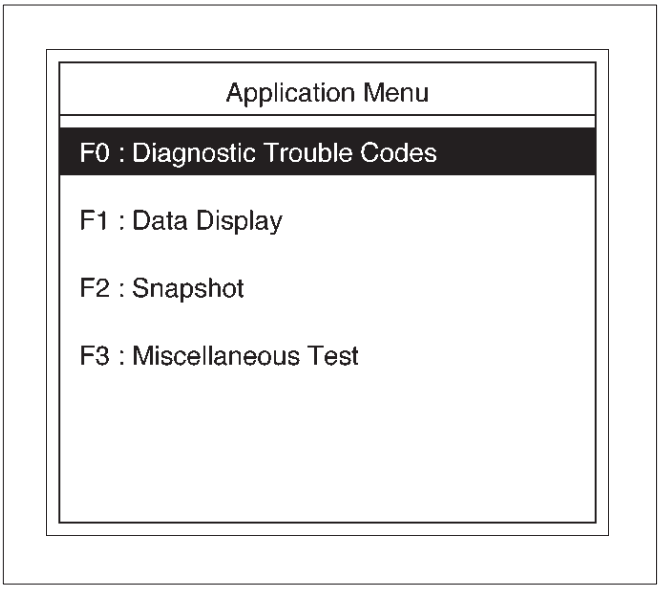

060RW229

On OBD passenger cars there are five options available in Tech 2 DTC mode to display the enhanced information available. A description of the new modes, DTC Info follows. After selecting DTC, the following menu appears:

- DTC Info
- Freeze Frame
- Fail Records (not all applications)
- Clear Info

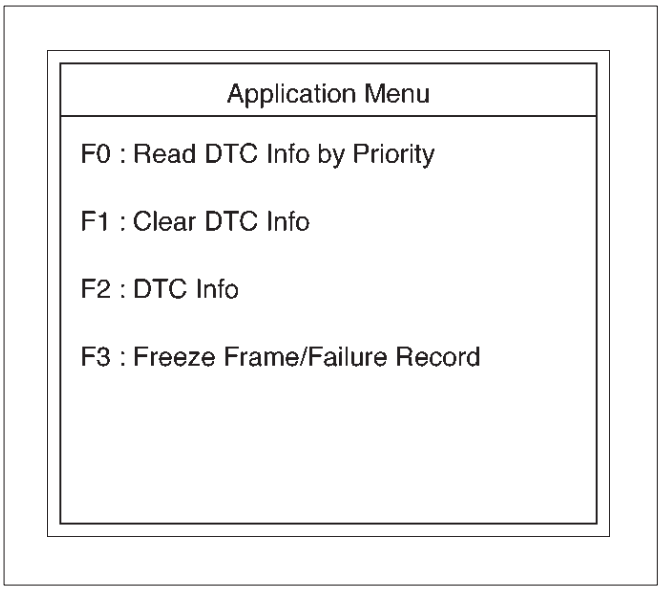

060RW223

The following is a brief description of each of the sub menus in DTC Info and Specific DTC. The order in which they appear here is alphabetical and not necessarily the way they will appear on the Tech 2.

DTC Information Mode

Use the DTC info mode to search for a specific type of stored DTC information. There are seven choices. The service manual may instruct the technician to test for DTCs in a certain manner. Always follow published service procedures.

To get a complete description of any status, press the "Enter" key before pressing the desired F-key. For example, pressing "Enter" then an F-key will display a definition of the abbreviated Tech 2 status.

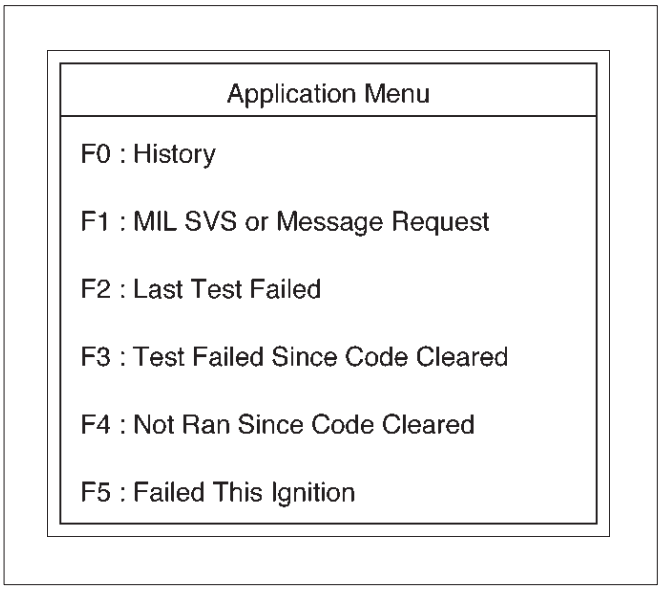

060RW221

DTC Status

This selection will display any DTCs that have not run during the current ignition cycle or have reported a test failure during this ignition up to a maximum of 33 DTCs. DTC tests which run and pass will cause that DTC number to be removed from Tech 2 screen.

Fail This Ignition

This selection will display all DTCs that have failed during the present ignition cycle.

History

This selection will display only DTCs that are stored in the PCM's history memory. It will not display Type B DTCs that have not requested the MIL ("Check Engine" lamp). It will display all type A and B DTCs that have requested the MIL and have failed within the last 40 warm-up cycles. In addition, it will display all type C and type D DTCs that have failed within the last 40 warm-up cycles.

Last Test Failed

This selection will display only DTCs that have failed the last time the test ran. The last test may have run during a previous ignition cycle if a type A or type B DTC is displayed. For type C and type D DTCs, the last failure must have occurred during the current ignition cycle to appear as Last Test Fail.

MILSVC or Message Requested

This selection will display only DTCs that are requesting the MIL. Type C and type D DTCs cannot be displayed using this option. This selection will report type B DTCs only after the MIL has been requested.

Not Run Since Code Clear

This option will display up to 33 DTCs that have not run since the DTCs were last cleared. Since any displayed DTCs have not run, their condition (passing or failing) is unknown.

Test Failed Since Code Clear

This selection will display all active and history DTCs that have reported a test failure since the last time DTCs were cleared. DTCs that last failed more than 40 warm-up cycles before this option is selected will not be displayed.

Injector Balance Test

This test is conducted to make it sure that appropriate electric signals are being sent to injectors Nos. 1–6.

Tech 2 must be used for this test.

Test Procedure:

1. Connect Tech 2 to the vehicle DLC.
2. Run the Engine at idle.

3. Select F3: Miscellaneous Test in the Application Menu.

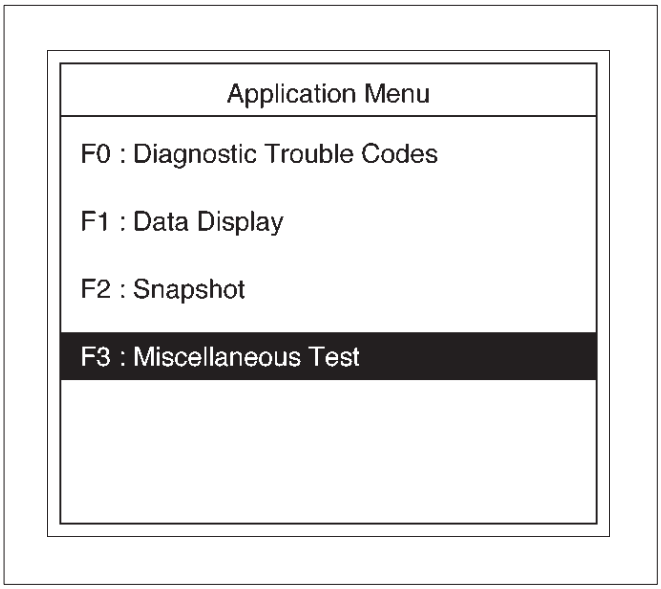

060RW228

4. Select F7: Injector Balance Test in the Miscellaneous Test.

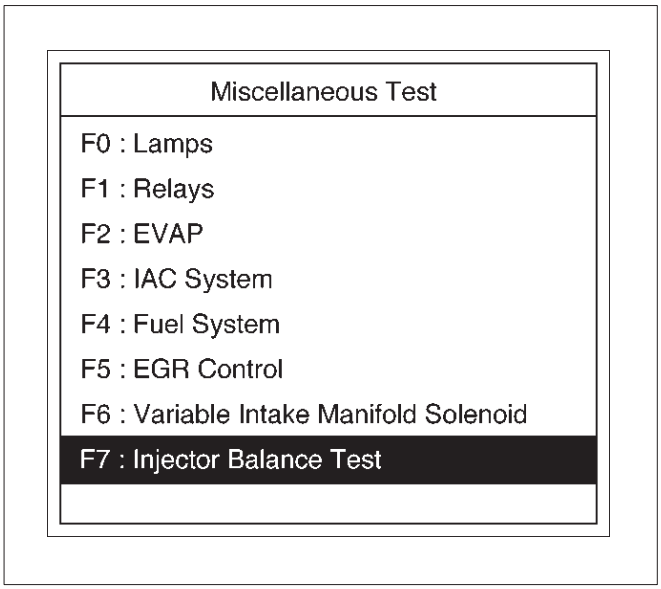

060RX006

5. Select injector number and push “injector off” of soft key.

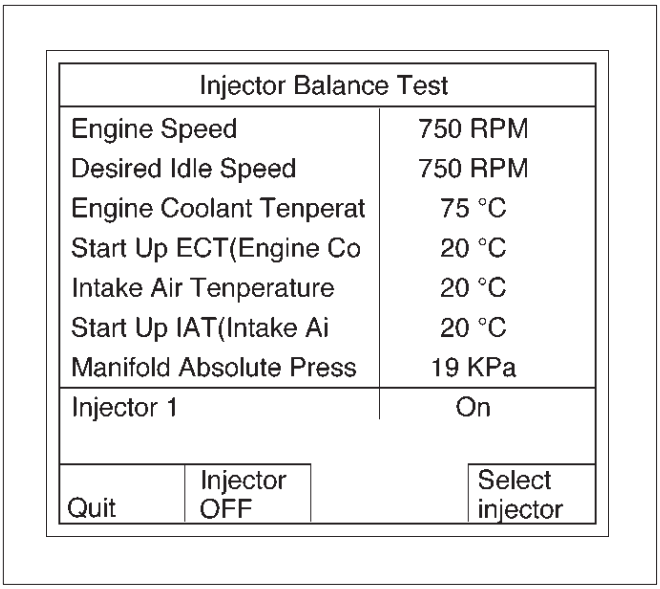

060RW230

6. Make sure of engine speed change.
7. In the engine speed whose change has been confirmed, the injector electric circuit can be regard as normal.

   As for the engine speed whose change has not been confirmed, the injector electric circuit or the injector proper is faulty.

EGR Control Test

This test is conducted check EGR valve for its working. Tech 2 must be used for this test.
Test Procedure:

1. Connect Tech 2 to the vehicle DLC.
2. Run the Engine at idle.
3. Select F3: Miscellaneous Test in the Application Menu.

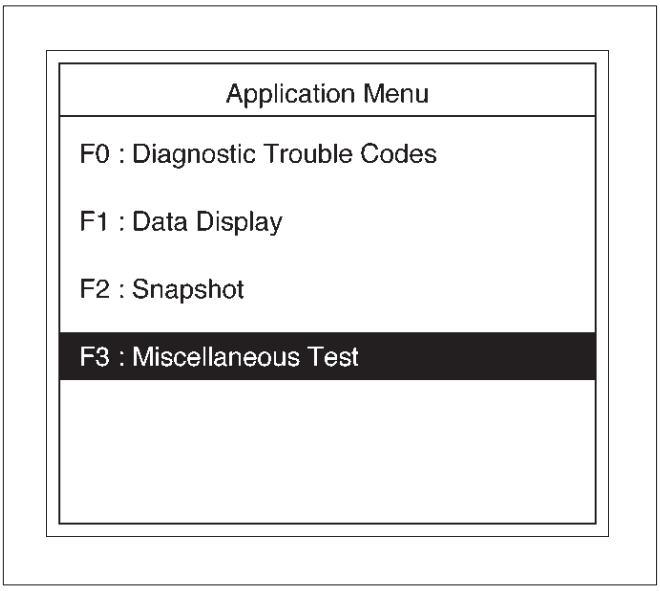

060RW228

4. Select F5: EGR Control Test in the Miscellaneous Test.

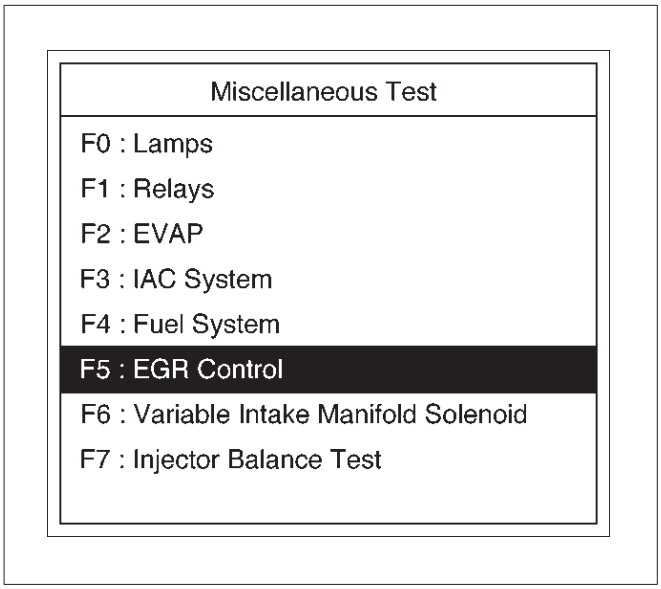

060RX008

5. Instruct EGR Valve to check a data list.

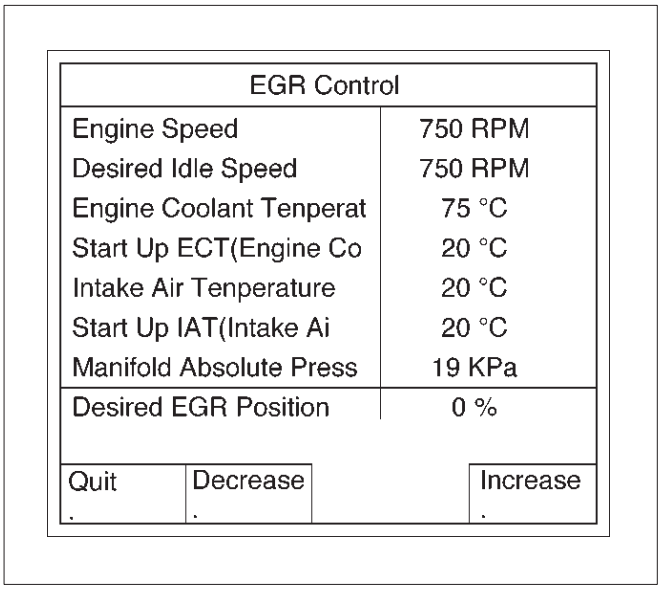

060RW234

6. If change in the data list shows a normal valve.

Idle Air Control System Test

This test is conducted check IAC system for its working. Tech 2 must be used for this test.

Test Procedure:

1. Connect Tech 2 to the vehicle DLC.
2. Run the Engine at idle.
3. Select F3: Miscellaneous Test in the Application Menu.

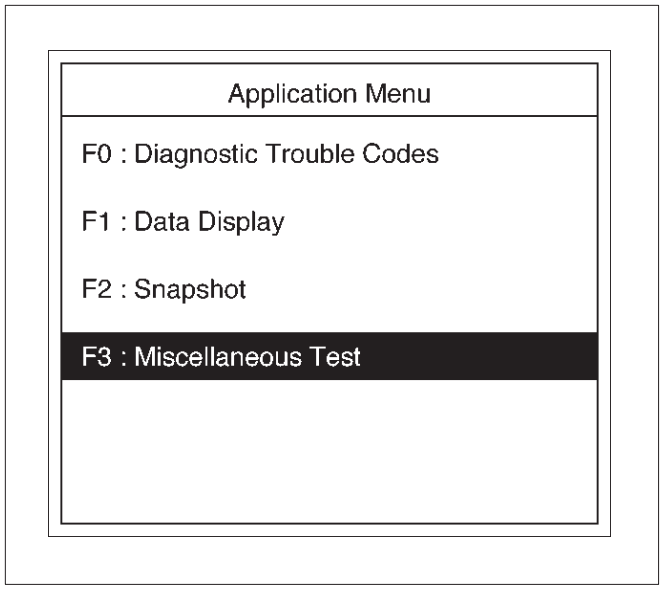

060RW228

4. Select F3: IAC System Test in the Miscellaneous Test.

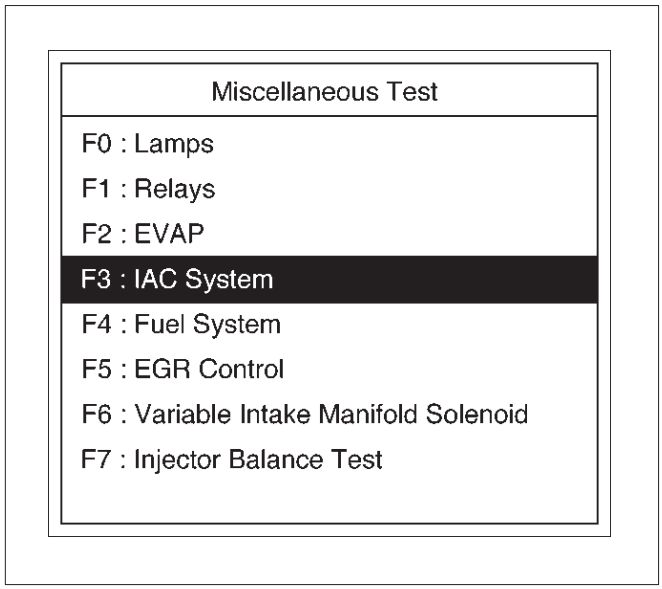

060RX007

5. Select F1: IAC Control Test.

Application Menu
F0 : RPM Control
F1 : IAC Control
F2 : IAC Reset

060RW235

6. Instruct IAC system to check a data list.

IAC Control	
Engine Speed	750 RPM
Desired Idle Speed	750 RPM
Engine Coolant Tenperat	75 °C
Start Up ECT(Engine Co	20 °C
Intake Air Tenperature	20 °C
Start Up IAT(Intake Ai	20 °C
Manifold Absolute Press	19 KPa
Idle Air Control	21 Steps

Quit	Decrease	Increase
.	.	.

060RW233

- F0: RPM Control

RPM Control	
Engine Speed	750 RPM
Desired Idle Speed	750 RPM
Engine Coolant Tenperat	75 °C
Start Up ECT(Engine Co	20 °C
Intake Air Tenperature	20 °C
Start Up IAT(Intake Ai	20 °C
Manifold Absolute Press	19 KPa
Desired Idle Speed	750 RPM

Quit	Decrease	Increase
.	.	.

060RW232

- F2: IAC Reset

IAC Reset	
Engine Speed	750 RPM
Desired Idle Speed	750 RPM
Engine Coolant Tenperat	75 °C
Start Up ECT(Engine Co	20 °C
Intake Air Tenperature	20 °C
Start Up IAT(Intake Ai	20 °C
Manifold Absolute Press	19 KPa
Idle Air Control	21 Steps

Quit	Reset IAC

060RW231

7. If change in the data list shows a normal IAC.

Primary System-Based Diagnostic

Primary System-Based Diagnostic

There are primary system-based diagnostics which evaluate system operation and its effect on vehicle emissions. The primary system-based diagnostics are listed below with a brief description of the diagnostic function:

Oxygen Sensor Diagnosis

The fuel control heated oxygen sensors (Bank 1 HO2S 1 and Bank 2 HO2S 1) are diagnosed for the following conditions:

- Inactive signal (output steady at bias voltage – approx. 450 mV)
- Signal fixed high
- Signal fixed low

If the oxygen sensor pigtail wiring, connector or terminal are damaged, the entire oxygen sensor assembly must be replaced. DO NOT attempt to repair the wiring, connector or terminals. In order for the sensor to function properly, it must have clean reference air provided to it. This clean air reference is obtained by way of the oxygen sensor wire(s). Any attempt to repair the wires, connector or terminals could result in the obstruction of the reference air and degrade oxygen sensor performance. Refer to *On-Vehicle Service, Heated Oxygen Sensors.*

Fuel Control Heated Oxygen Sensor

The main function of the fuel control heated oxygen sensors is to provide the control module with exhaust stream oxygen content information to allow proper fueling and maintain emissions within mandated levels. After it reaches operating temperature, the sensor will generate a voltage, inversely proportional to the amount of oxygen present in the exhaust gases. The control module uses the signal voltage from the fuel control heated oxygen sensors while in closed loop to adjust fuel injector pulse width. While in closed loop, the PCM can adjust fuel delivery to maintain an air/fuel ratio which allows the best combination of emission control and driveability.

HO2S Heater

Heated oxygen sensors are used to minimize the amount of time required for closed loop fuel control to begin operation and to allow accurate catalyst monitoring. The oxygen sensor heater greatly decreases the amount of time required for fuel control sensors (Bank 1 HO2S 1 and Bank2 HO2S 1) to become active. Oxygen sensor heaters are required to maintain a sufficiently high temperature which allows accurate exhaust oxygen content readings further away from the engine.

Fuel Trim System Monitor Diagnostic Operation

Fuel Trim System Monitor Diagnostic Operation

This system monitors the averages of short-term and long-term fuel trim values. If these fuel trim values stay at their limits for a calibrated period of time, a malfunction is indicated. The fuel trim diagnostic compares the averages of short-term fuel trim values and long-term fuel trim values to rich and lean thresholds. If either value is within the thresholds, a pass is recorded. If both values are outside their thresholds, a rich or lean DTC will be recorded.

The fuel trim system diagnostic also conducts an intrusive test. This test determines if a rich condition is being caused by excessive fuel vapor from the EVAP canister. In order to meet OBD requirements, the control module uses weighted fuel trim cells to determine the need to set a fuel trim DTC. A fuel trim DTC can only be set if fuel trim counts in the weighted fuel trim cells exceed specifications. This means that the vehicle could have a fuel trim problem which is causing a problem under certain conditions (i.e., engine idle high due to a small vacuum leak or rough idle due to a large vacuum leak) while it operates fine at other times. No fuel trim DTC would set (although an engine idle speed DTC or HO2S DTC may set). Use a Tech 2 to observe fuel trim counts while the problem is occurring.

A fuel trim DTC may be triggered by a number of vehicle faults. Make use of all information available (other DTCs stored, rich or lean condition, etc.) when diagnosing a fuel trim fault.

Fuel Trim Cell Diagnostic Weights

No fuel trim DTC will set regardless of the fuel trim counts in cell 0 unless the fuel trim counts in the weighted cells are also outside specifications. This means that the vehicle could have a fuel trim problem which is causing a problem under certain conditions (i.e. engine idle high due to a small vacuum leak or rough due to a large vacuum leak) while it operates fine at other times. No fuel trim DTC would set (although an engine idle speed DTC or HO2S DTC may set). Use a Tech 2 to observe fuel trim counts while the problem is occurring.

On-Board Diagnostic (OBD) System Check

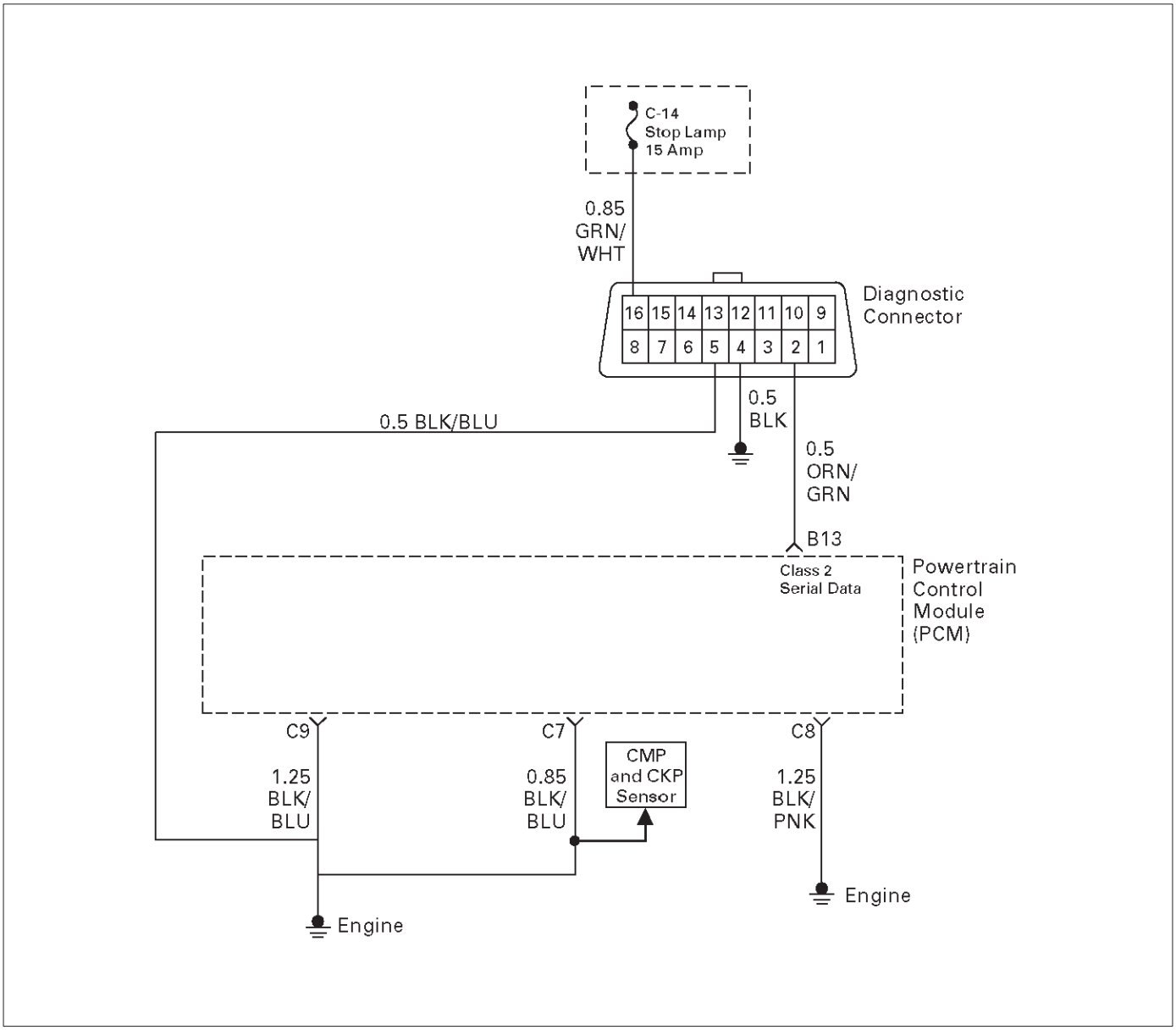

TS321119

Circuit Description

The on-board diagnostic system check is the starting point for any driveability complaint diagnosis. Before using this procedure, perform a careful visual/physical check of the PCM and engine grounds for cleanliness and tightness.

The on-board diagnostic system check is an organized approach to identifying a problem created by an electronic engine control system malfunction.

Diagnostic Aids

An intermittent may be caused by a poor connection, rubbed-through wire insulation or a wire broken inside the insulation. Check for poor connections or a damaged harness. Inspect the PCM harness and connector for improper mating, broken locks, improperly formed or damaged terminals, poor terminal-to-wire connection, and damaged harness.

Test Description

Number(s) below refer to the step number(s) on the Diagnostic Chart:

1. The MIL (“Check Engine” lamp) should be “ON” steady with the ignition “ON”/engine “OFF.” If not, Chart A-1 should be used to isolate the malfunction.
2. Checks the Class 2 data circuit and ensures that the PCM is able to transmit serial data.
3. This test ensures that the PCM is capable of controlling the MIL (“Check Engine” lamp) and the MIL (“Check Engine” lamp) driver circuit is not shorted to ground.
4. If the engine will not start, the *Cranks But Will Not Run* chart should be used to diagnose the condition.
7. A Tech 2 parameter which is not within the typical range may help to isolate the area which is causing the problem.

10. This vehicle is equipped with a PCM which utilizes an electrically erasable programmable read only memory (EEPROM). When the PCM is replaced, the new PCM must be programmed. *Refer to UBS 98 model year Immobilizer Workshop Manual.*

On-Board Diagnostic (OBD) System Check

Step	Action	Value(s)	Yes	No
1	1. Ignition “ON,” engine “OFF.” 2. Observe the malfunction indicator lamp (MIL or “Check Engine” lamp). Is the MIL (“Check Engine” lamp)“ON?”	—	Go to *Step 2*	Go to *No MIL (“Check Engine” lamp)*
2	1. Ignition “OFF.” 2. Install a Tech 2. 3. Ignition “ON.” 4. Attempt to display PCM engine data with the Tech 2. Does the Tech 2 display PCM data?	—	Go to *Step 3*	Go to *Step 8*
3	1. Using the Tech 2 output tests function, select MIL (“Check Engine” lamp) dash lamp control and command the MIL (“Check Engine” lamp) “OFF.” 2. Observe the MIL (“Check Engine” lamp). Did the MIL (“Check Engine” lamp) turn “OFF?”	—	Go to *Step 4*	Go to *MIL (“Check Engine” lamp) On Steady*
4	Attempt to start the engine. Did the engine start and continue to run?	—	Go to *Step 5*	Go to *Cranks But Will Not Run*
5	Select “Display DTCs” with the Tech 2. Are any DTCs stored?	—	Go to *Step 6*	Go to *Step 7*
6	Are two or more of the following DTCs stored? P0107, P0108, P0113, P0118, P0122, P0123, P0712.?	—	Go to *“Multiple PCM Information Sensor DTCs Set”*	Go to applicable DTC table
7	Compare PCM data values displayed on the Tech 2 to the typical engine scan data values. Are the displayed values normal or close to the typical values?	—	Refer to *Typical scan data value*	Refer to indicated *Component System Checks*
8	1. Ignition “OFF,” disconnect the PCM. 2. Ignition “ON,” engine “OFF.” 3. Check the Class 2 data circuit for an open, short to ground, or short to voltage. Also, check the DLC ignition feed circuit for an open or short to ground and the DLC ground circuit for an open. 4. If a problem is found, repair as necessary. Was a problem found?	—	Go to *Step 2*	Go to *Step 9*
9	Attempt to display PCM data with the Tech 2. Does the Tech 2 display PCM engine data?	—	Go to *Step 2*	Go to *Step 10*
10	Replace the PCM. **IMPORTANT:** The replacement PCM must be programmed. Refer to *Powertrain Control Module (PCM) in On-Vehicle Service.* Is the action complete?	—	Go to *Step 2*	—

A/C Clutch Control Circuit Diagnosis

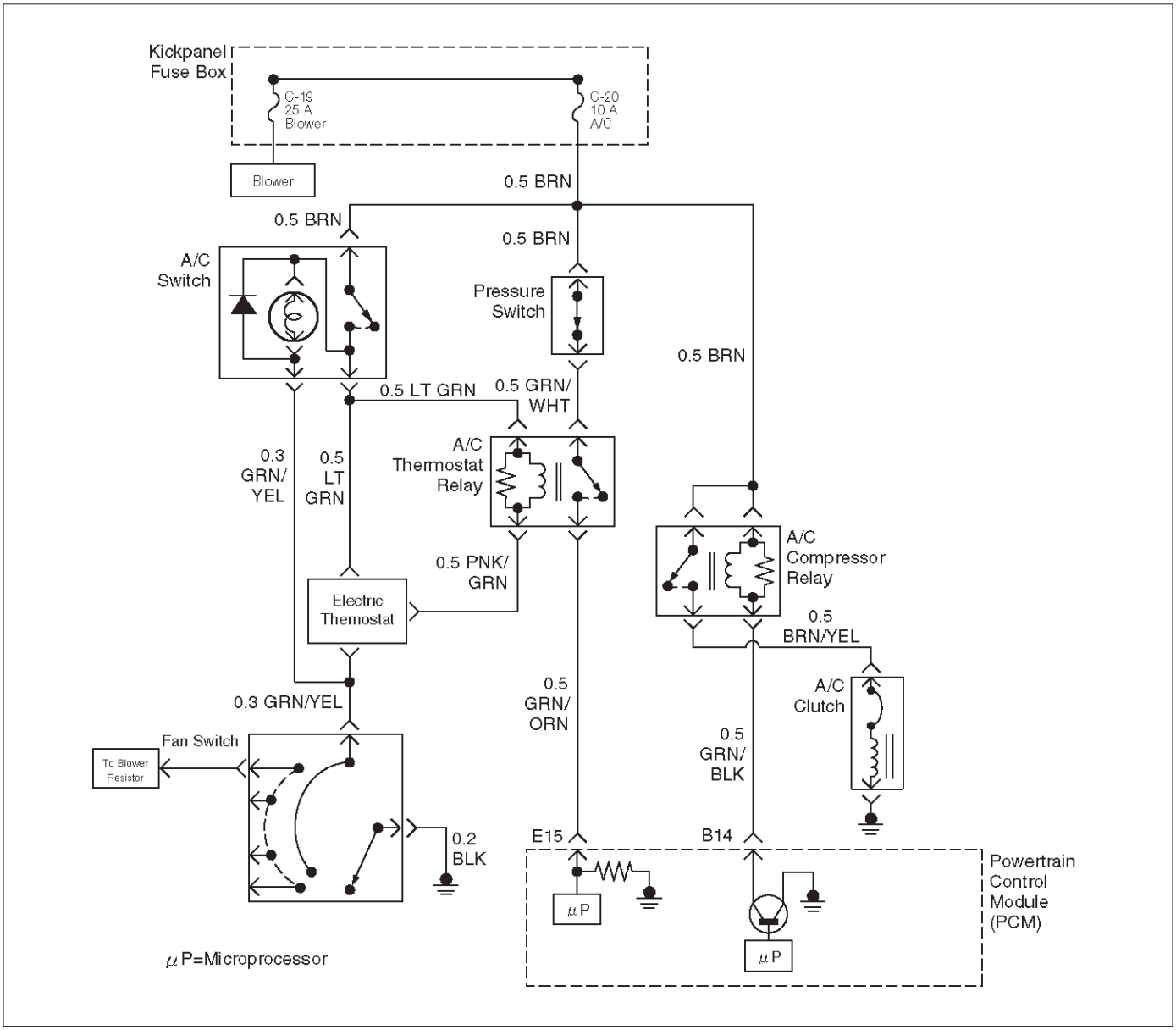

D06RW085

Circuit Description

When air conditioning and blower fan are selected, and if the system has a sufficient refrigerant charge, a 12-volt signal is supplied to the A/C request input of the powertrain control module (PCM). The A/C request signal may be temporarily canceled during system operation by the electronic thermostat in the evaporator case. The electronic thermostat may intermittently remove the control circuit ground for the A/C thermostat relay to prevent the evaporator from forming ice. When the A/C request signal is received by the PCM, the PCM supplies a ground from the compressor clutch relay if the engine operating conditions are within acceptable ranges. With the A/C compressor relay energized, voltage is supplied to the compressor clutch coil.

The PCM will enable the compressor clutch to engage whenever A/C has been selected with the engine running, unless any of the following conditions are present:

- The throttle is greater than 90%.
- The ignition voltage is below 10.5 volts.
- The engine speed is greater than 4500 RPM for 5 seconds or 5400 RPM.
- The engine coolant temperature (ECT) is greater than 125 °C (257 °F).
- The intake air temperature (IAT) is less than 5°C (41°F).
- The power steering pressure switch signals a cramped position.

Diagnostic Aids

To diagnose an the intermittent fault, check for the following conditions:

- Poor connection at the PCM–Inspect connections for backed-out terminals, improper mating, broken locks, improperly formed or damaged terminals, and poor terminal-to-wire connection.

- Damaged harness–Inspect the wiring harness for damage. If the harness appears to OK, observe the A/C clutch while moving connectors and wiring harnesses related to the A/C. A sudden clutch malfunction will indicate the source of the intermittent fault.

A/C Clutch Diagnosis

This chart should be used for diagnosing the electrical portion of the A/C compressor clutch circuit. A Tech 2 will be used in diagnosing the system. The Tech 2 has the ability to read the A/C request input to the PCM. The Tech 2 can display when the PCM has commanded the A/C clutch "ON." The Tech 2 should have the ability to override the A/C request signal and energize the A/C compressor relay.

Test Description

IMPORTANT: Do not engage the A/C compressor clutch with the engine running if an A/C mode is not selected at the A/C control switch.

The numbers below refer to the step numbers on the Diagnostic Chart:

3. This a test determine is the problem is with the refrigerant system. If the switch is open, A/C pressure gauges will be used to determine if the pressure switch is faulty or if the system is partially discharged or empty.
4. Although the normal complaint will be the A/C clutch failing to engage, it is possible for a short circuit to cause the clutch to run when A/C has not been selected. This step is a test for that condition.
7. There is an extremely low probability that both relays will fail at the same time, so the substitution process is one way to check the A/C Thermostat relay. Use a known good relay to do a substitution check.
9. The blower system furnishes a ground for the A/C control circuit, and it also shares a power source through the Heater and A/C Relay. The blower must be "ON" in order to test the A/C system.

A/C Clutch Control Circuit Diagnosis

Step	Action	Value(s)	Yes	No
1	Was the "On-Board Diagnostic (OBD) System Check" performed?	—	Go to *Step 2*	Go to *OBD System Check*
2	Are any other DTCs stored?	—	Go to the other DTC chart(s) first	Go to *Step 3*
3	1. Disconnect the electrical connector at the pressure switch located on the receiver/drier. 2. Use an ohmmeter to check continuity across the pressure switch. Is the pressure switch open?	—	Go to Air *Conditioning* to diagnose the cause of the open pressure switch	Go to *Step 4*
4	**IMPORTANT:** Before continuing with the diagnosis, the following conditions must be met: ● The intake air temperature must be greater than 15˚C. (60˚F). ● The engine coolant temperature must be less than 119˚C (246˚F). 1. A/C "OFF." 2. Start the engine and idle for 1 minute. 3. Observe the A/C compressor. Is the A/C compressor clutch engaged even though A/C has not been requested?	—	Go to *Step 45*	Go to *Step 5*
5	1. Idle the engine. 2. A/C "ON". 3. Blower "ON". 4. Observe the A/C compressor. Is the A/C compressor magnetic clutch engaged?	—	Refer to *Diagnostic Aids*	Go to *Step 6*

A/C Clutch Control Circuit Diagnosis (Cont'd)

Step	Action	Value(s)	Yes	No
6	1. Engine idling. 2. A/C "ON". 3. Blower "ON". 4. Observe the "A/C Request" display on the Tech 2. Does the tool "A/C Request" display indicate "Yes?"	—	Go to *Step 34*	Go to *Step 7*
7	Temporarily substitute the A/C compressor relay in place of the A/C thermostat relay, then repeat Step 5. Did the "A/C Request" display indicate "Yes?"	—	Go to *Step 8*	Go to *Step 9*
8	Replace the original A/C thermostat relay. Is the action complete?	—	Verify repair	—
9	Dose the blower operate?	—	Go to *Step 10*	Go to *Step 11*
10	Repair the blower. Is the action complete?	—	Verify repair	—
11	Check for a faulty 10a A/C fuse in the underdash fuse panel. Was the 10A fuse OK?	—	Go to *Step 13*	Go to *Step 12*
12	Check for short circuit and make repairs if necessary. Replace the 10A A/C fuse. Is the action complete?	—	Verify repair	—
13	1. Ignition "ON." 2. Use a DVM to check voltage at the positive A/C switch wire (BRN). Was voltage equal to the specified value?	+B	Go to *Step 15*	Go to *Step 14*
14	Repair the open wire (BRN) between the A/C switch and the A/C fuse. Is the action complete?	—	Verify repair	—
15	1. Remove the glove box to gain access to the A/C thermostat. 2. Disconnect the thermostat connector. 3. Attach a fused jumper between ground and the PNK/GRN wire at the thermostat. 4. A/C "ON." 5. Blower "ON." Dose A/C request indicate "YES" on the Tech 2?	—	Go to *Step 16*	Go to *Step 23*
16	1. Ignition "ON." 2. Use a DVM to check voltage at the electronic A/C thermostat. Was voltage equal to the specified value?	+B	Go to *Step 20*	Go to *Step 17*
17	Check for an open (LT GRN) between the thermostat and the A/C switch. Was the wire open?	—	Go to *Step 18*	Go to *Step 19*
18	Repair the open wire (LT GRN) between the thermostat and the A/C switch. Is the action complete?	—	Verify repair	—

A/C Clutch Control Circuit Diagnosis (Cont'd)

Step	Action	Value(s)	Yes	No
19	Replace the A/C switch. Is the action complete?	—	Verify repair	—
20	Use an ohmmeter to check continuity between the electronic A/C thermostat and the blower switch. Was there an open circuit?	—	Go to *Step 21*	Go to *Step 22*
21	Repair the open wire (GRN/YEL) between the thermostat and the blower switch. Is the action complete?	—	Verify repair	—
22	Replace the electronic A/C thermostat. Is the an action complete?	—	Verify repair	—
23	Check for an open circuit between A/C thermostat relay and PCM A/C request terminal (E-15). Was there an open circuit?	—	Go to *Step 24*	Go to *Step 25*
24	Repair the open circuit between the PCM and A/C thermostat relay. Is the action complete?	—	Verify repair	—
25	Check for an open circuit between the A/C switch (LT GRN) and the A/C thermostat relay (LT GRN). Was there an open circuit?	—	Go to *Step 26*	Go to *Step 27*
26	Repair the open circuit between the A/C switch and the A/C thermostat relay. Is the action complete?	—	Verify repair	—
27	1. Ignition "ON." 2. Use a DVM to check voltage at the A/C pressure switch (BRN). Was voltage equal to the specified value?	+B	Go to *Step 29*	Go to *Step 28*
28	Repair the open circuit between the 10A A/C fuse and the pressure switch. Is the action complete?	—	Verify repair	—
29	Use an ohmmeter to check continuity between the pressure switch (GRN/WHT) and the A/C thermostat relay (GRN/WHT). Was the circuit open?	—	Go to *Step 30*	Go to *Step 31*
30	Repair the open circuit between the pressure switch and the A/C thermostat relay. Is the action complete?	—	Verify repair	—
31	Check for damaged pin or terminal at E-15 of the PCM. Was a damaged pin or terminal found?	—	Go to *Step 32*	Go to *Step 33*
32	Repair the damaged pin or terminal. Is the action complete?	—	Verify repair	—
33	Replace the PCM. **IMPORTANT:** The replacement PCM must be programmed. Refer to *UBS 98model year Immobilizer Workshop Manual.* Is the action complete?	—	Verify repair	—

A/C Clutch Control Circuit Diagnosis (Cont'd)

Step	Action	Value(s)	Yes	No
34	1. Remove the A/C compressor relay. 2. Ignition "ON." 3. Use a DVM to check voltage at both of the BRN wires at the A/C compressor relay socket. Is the voltage equal to the specified value?	+B	Go to *Step 36*	Go to *Step 35*
35	Repair the faulty BRN wire between the A/C fuse and the A/C compressor relay . Is the action complete?	—	Verify repair	—
36	1. A/C compressor relay removed. 2. Engine idling. 3. A/C "ON." 4. Blower "ON." 5. Use a DVM to measure voltage between the GRN/BLK wire at the A/C compressor relay socket and battery±. Did the DVM indicate the specified value?	+B	Go to *Step 40*	Go to *Step 37*
37	Check for an open GRN/BLK wire between PCM terminal B-14 and the A/C compressor relay. Was the wire open?	—	Go to *Step 38*	Go to *Step 39*
38	Repair the open GRN/BLK wire between the PCM and the A/C compressor relay. Is the action complete?	—	Verify repair	—
39	Check for a damaged pin or terminal at B-14 of the PCM. Was a damaged pin or a terminal found?	—	Go to *Step 32*	Go to *Step 33*
40	1. A/C compressor relay removed. 2. Connect a fused jumper at the A/C compressor relay socket between either BRN wire and the BRN/YEL wire. 3. Engine idling. 4. A/C "ON." 5. Blower "ON." Did the compressor magnetic clutch engage?	—	Go to *Step 41*	Go to *Step 42*
41	Repair the A/C compressor relay. Is the action complete?	—	Verify repair	—
42	Check for an open circuit between the A/C compressor relay and the A/C clutch. Was an open circuit found?	—	Go to *Step 43*	Go to *Step 44*
43	Repair the open circuit between the compressor Clutch and the A/C compressor relay. Is the action complete?	—	Verify repair	—
44	Service the compressor clutch or replace the compressor due to a faulty internal overheat switch. Is the action complete?	—	Verify repair	—

A/C Clutch Control Circuit Diagnosis (Cont'd)

Step	Action	Value(s)	Yes	No
45	1. Remove the A/C compressor relay. 2. Idle the engine. Is the compressor clutch still engaged when A/C is not selected?	—	Go to *Step 46*	Go to *Step 47*
46	Repair the short to voltage between the A/C clutch and A/C compressor relay. Is the action complete?	—	Verify repair	—
47	1. Reinstall the A/C compressor relay. 2. Remove the A/C thermostat relay. 3. Engine idling. Is the compressor clutch still engaged when A/C is not selected?	—	Go to *Step 48*	Go to *Step 50*
48	Use a DVM to check for a short to ground between the A/C compressor relay and B-14 of the PCM. Was a short detected?	—	Go to *Step 49*	Go to *Step 33*
49	Repair the short to ground between the PCM and A/C compressor relay. Is the action complete?	—	Verify repair	—
50	Repair the short to ground between the A/C thermostat relay and the electronic thermostat. Is the action complete?	—	Verify repair	—

Electronic Ignition System Diagnosis

If the engine cranks but will not run or immediately stalls, the Engine Cranks But Will Not Start chart must be used to determine if the failure is the ignition system or the fuel system. If DTC P0341, or P0336 is set, the appropriate diagnostic trouble code chart must be used for diagnosis. If a misfire is being experienced with no DTC set, refer to the *Symptoms* section for diagnosis.

Fuel Metering System Check

Some failures of the fuel metering system will result in an "Engine Cranks But Will Not Run" symptom. If this condition exists, refer to the *Cranks But Will Not Run* chart. This chart will determine if the problem is caused by the ignition system, the PCM, or the fuel pump electrical circuit.

Refer to *Fuel System Electrical Test* for the fuel system wiring schematic.

If there is a fuel delivery problem, refer to *Fuel System Diagnosis*, which diagnoses the fuel injectors, the fuel pressure regulator, and the fuel pump. If a malfunction occurs in the fuel metering system, it usually results in either a rich HO2S signal or a lean HO2S signal. This condition is indicated by the HO2S voltage, which causes the PCM to change the fuel calculation (fuel injector pulse width) based on the HO2S reading. Changes made to the fuel calculation will be indicated by a change in the long term fuel trim values which can be monitored with a Tech 2. Ideal long term fuel trim values are around 0%; for a lean HO2S signal, the PCM will add fuel, resulting in a fuel trim value above 0%. Some variations in fuel trim values are normal because all engines are not exactly the same. If the fuel trim values are greater than +23%, refer to *DTC P0131, DTC P0151, DTC P0171, and DTC 1171* for items which can cause a lean HO2S signal.

Idle Air Control (IAC) Valve

The Tech 2 displays the IAC pintle position in counts. A count of "0" indicates the PCM is commanding the IAC pintle to be driven all the way into a fully-seated position. This is usually caused by a large vacuum leak.

The higher the number of counts, the more air is being commanded to bypass the throttle blade. Refer to IAC System Check in order to diagnose the IAC system. Refer to *Rough, Unstable, or Incorrect Idle, Stalling* in *Symptoms* for other possible causes of idle problems.

Fuel System Pressure Test

A fuel system pressure test is part of several of the diagnostic charts and symptom checks. To perform this test, refer to *Fuel Systems Diagnosis.*

Fuel Injector Coil Test Procedure and Fuel Injector Balance Test Procedure

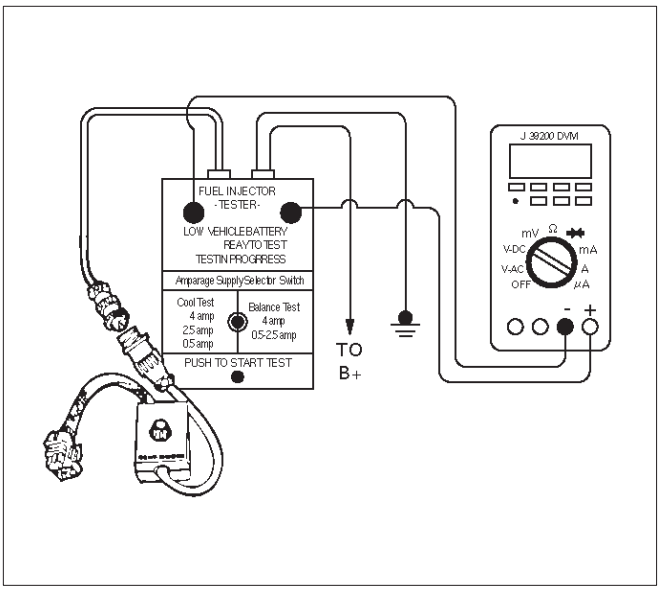

T32003

Test Description

Number(s) below refer to the step number(s) on the Diagnostic Chart:

2. Relieve the fuel pressure by connecting the 5-8840-0378-0 Fuel Pressure Gauge to the fuel pressure connection on the fuel rail.

CAUTION: In order to reduce the risk of fire and personal injury, wrap a shop towel around the fuel pressure connection. The towel will absorb any fuel leakage that occurs during the connection of the fuel pressure gauge. Place the towel in an approved container when the connection of the fuel pressure gauge is complete.

Place the fuel pressure gauge bleed hose in an approved gasoline container.

With the ignition switch "OFF," open the valve on the fuel pressure gauge.

3. Record the lowest voltage displayed by the DVM after the first second of the test. (During the first second, voltage displayed by the DVM may be inaccurate due to the initial current surge.)

Injector Specifications:

Resistance Ohms	Voltage Specification at 10˚C-35˚C (50˚F-95˚F)
11.8 – 12.6	5.7 – 6.6

- The voltage displayed by the DVM should be within the specified range.
- The voltage displayed by the DVM may increase throughout the test as the fuel injector windings warm and the resistance of the fuel injector windings changes.

- An erratic voltage reading (large fluctuations in voltage that do not stabilize) indicates an intermittent connection within the fuel injector.

5. Injector Specifications:

Highest Acceptable Voltage Reading Above/Below 35˚C/10˚C (95˚F/50˚F)	Acceptable Subtracted Value
9.5 Volts	0.6 Volts

7. The Fuel Injector Balance Test portion of this chart (Step 7 through Step 11) checks the mechanical (fuel delivery) portion of the fuel injector. An engine cool-down period of 10 minutes is necessary in order to avoid irregular fuel pressure readings due to “Hot Soak” fuel boiling.

Injector Coil Test Procedure (Steps 1-6) and Injector Balance Test Procedure (Steps 7-11)

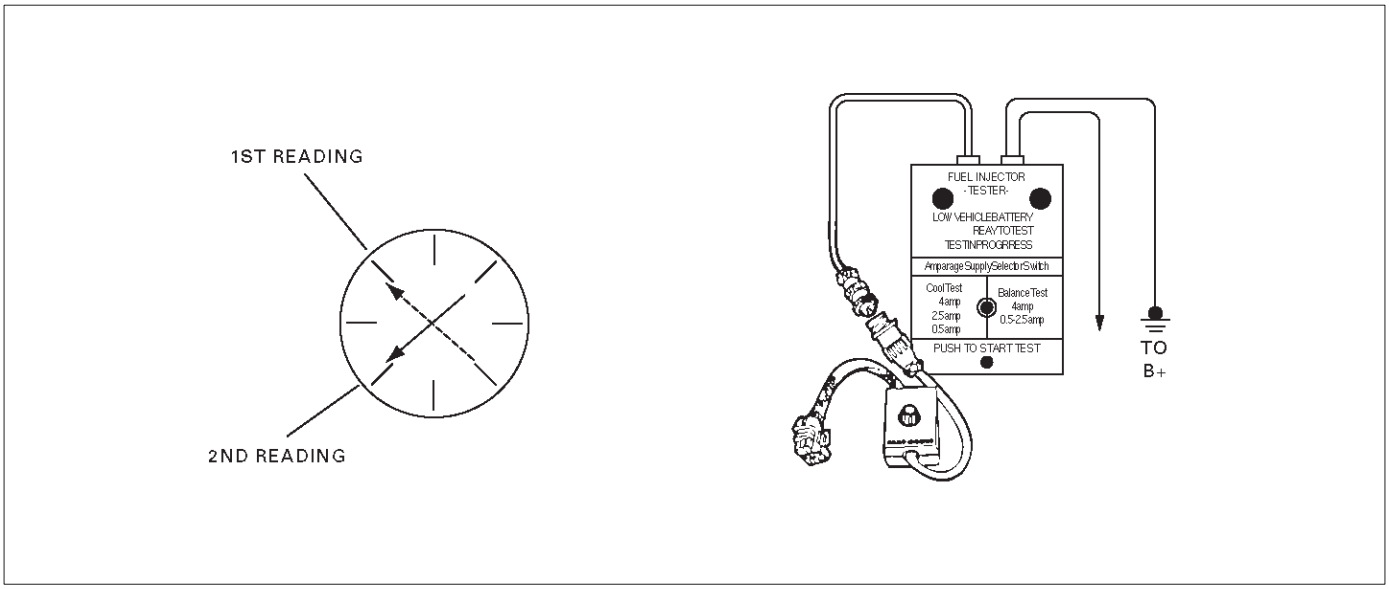

R262001

CYLINDER	1	2	3	4	5	6
1st Reading (1)	296 kPa (43 psi)	296 kPa (43 psi)	296 kPa (43 psi)	296 kPa (43 psi)	296 kPa (43 psi)	296 kPa (43 psi)
2nd Reading (2)	131 kPa (19 psi)	117 kPa (17 psi)	124 kPa (18 psi)	145 kPa (21 psi)	131 kPa (19 psi)	130 kPa (19 psi)
Amount of Drop (1st Reading–2nd Reading)	165 kPa (24 psi)	179 kPa (26 psi)	172 kPa (25 psi)	151 kPa (22 psi)	165 kPa (24 psi)	166 kPa (24 psi)
Av.drop = 166 kPa/24 psi ± 10 kPa/1.5 psi = 156 – 176 kPa or 22.5 – 25.5 psi	OK	Faulty, Rich (Too Much Fuel Drop)	OK	Faulty, Lean (Too Little Fuel Drop)	OK	OK

NOTE: These figures are examples only.

Injector Coil Test Procedure (Steps 1-6) and Injector Balance Test Procedure (Steps 7-11)

Step	Action	Value(s)	Yes	No
1	Was the “On-Board Diagnostic (OBD) System Check” performed?	—	Go to Step 2	Go to *OBD System Check*
2	1. Turn the engine “OFF.” NOTE: In order to prevent flooding of a single cylinder and possible engine damage, relieve the fuel pressure before performing the fuel injector coil test procedure. 2. Relieve the fuel pressure. Refer to *Test Description Number 2.* 3. Connect the 5-8840-2638-0 Fuel Injector Tester to B+ and ground, and to the 5-8840-2619-0 Injector Switch Box. 4. Connect the injector switch box to the grey fuel injector harness connector located on the front of the EVAP canister bracket. 5. Set the amperage supply selector switch on the fuel injector tester to the “Coil Test” 0.5 amp position. 6. Connect the leads from the 5-8840-0285-0 Digital Voltmeter (DVM) to the injector tester. Refer to the illustrations associated with the test description. 7. Set the DVM to the tenths scale (0.0). 8. Observe the engine coolant temperature. Is the engine coolant temperature within the specified values?	10˚C (50˚F) to 35˚C (95˚F)	Go to *Step 3*	Go to *Step 5*
3	1. Set injector switch box injector #1. 2. Press the “Push to Start Test” button on the fuel injector tester. 3. Observe the voltage reading on the DVM. **IMPORTANT:** The voltage reading may rise during the test. 4. Record the lowest voltage observed after the first second of the test. 5. Set the injector switch box to the next injector and repeat steps 2, 3, and 4. Did any fuel injector have an erratic voltage reading (large fluctuations in voltage that did not stabilize) or a voltage reading outside of the specified values?	5.7-6.6 V	Go to *Step 4*	Go to *Step 7*
4	Replace the faulty fuel injector(s). Refer to *Fuel Injector.* Is the action complete?	—	Go to *Step 7*	—

Injector Coil Test Procedure (Steps 1-6) and Injector Balance Test Procedure (Steps 7-11) (Cont'd)

Step	Action	Value(s)	Yes	No
5	1. Set injector switch box injector #1. 2. Press the "Push to Start Test" button on the fuel injector tester. 3. Observe the voltage reading on the DVM. **IMPORTANT:** The voltage reading may rise during the test. 4. Record the lowest voltage observed after the first second of the test. 5. Set the injector switch box to the next injector and repeat steps 2, 3, and 4. Did any fuel injector have an erratic voltage reading (large fluctuations in voltage that did not stabilize) or a voltage reading above the specified value?	9.5 V	Go to *Step 4*	Go to *Step 6*
6	1. Identify the highest voltage reading recorded (other than those above 9.5 V). 2. Subtract the voltage reading of each injector from the highest voltage selected in step 1. Repeat until you have a subtracted value for each injector. For any injector, is the subtracted Value in step 2 greater than the specified value?	0.6 V	Go to *Step 4*	Go to *Step 7*
7	**CAUTION: In order to reduce the risk of fire and personal injury, wrap a shop towel around the fuel pressure connection. The towel will absorb any fuel leakage that occurs during the connection of the fuel pressure gauge. Place the towel in an approved container when the connection of the fuel pressure gauge is complete.** 1. Connect the 5-8840-0378-0 Fuel Pressure Gauge to the fuel pressure test port. 2. Energize the fuel pump using the scan tool. 3. Place the bleed hose of the fuel pressure gauge into an approved gasoline container. 4. Bleed the air out of the fuel pressure gauge. 5. With the fuel pump running, observe the reading on the fuel pressure gauge. Is the fuel pressure within the specified values?	296-376 kPa (43-55 psi)	Go to *Step 8*	Go to *Fuel System Diagnosis*
8	Turn the fuel pump "OFF." Does the fuel pressure remain constant?	—	Go to *Step 9*	Go to *Fuel System Diagnosis*

Injector Coil Test Procedure (Steps 1-6) and Injector Balance Test Procedure (Steps 7-11) (Cont'd)

Step	Action	Value(s)	Yes	No
9	1. Connect the 5-8840-2638-0 Fuel Injector Tester and 5-8840-2619-0 Injector Switch Box the fuel injector harness connector. 2. Set the amperage supply selector switch on the fuel injector tester to the "Balance Test" 0.5–2.5 amp position. 3. Using the scan tool turn the fuel pump "ON" then "OFF" in order to pressurize the fuel system. 4. Record the fuel pressure indicated by the fuel pressure gauge after the fuel pressure stabilizes. This is the first pressure reading. 5. Energize the fuel injector by depressing the "Push to Start Test" button on the fuel injector tester. 6. Record the fuel pressure indicated by the fuel pressure gauge after the fuel pressure gauge needle has stopped moving. This is the second pressure reading. 7. Repeat steps 1 through 6 for each fuel injector. 8. Subtract the second pressure reading from the first pressure reading for one fuel injector. The result is the pressure drop value. 9. Obtain a pressure drop value for each fuel injector. 10. Add all of the individual pressure drop values. This is the total pressure drop. 11. Divide the total pressure drop by the number of fuel injectors. This is the average pressure drop. Does any fuel injector have a pressure drop value that is either higher than the average pressure drop or lower than the average pressure drop by the specified value?	10 kPa (1.5 psi)	Go to *Step 10*	Go to *OBD System Check*
10	Re-test any fuel injector that does not meet the specification. Refer to the procedure in step 11. NOTE: Do not repeat any portion of this test before running the engine in order to prevent the engine from flooding. Does any fuel injector still have a pressure drop value that is either higher than the average pressure drop or lower than the average pressure drop by the specified value?	10 kPa (1.5 psi)	Go to *Step 11*	Go to *Symptoms*
11	Replace the faulty fuel injector(s). Refer to *Fuel Injector.* Is the action complete?	—	Verify repair	—

Knock Sensor Diagnosis

The Tech 2 has two data displays available for diagnosing the knock sensor (KS) system. The two displays are described as follows:

- "Knock Retard" indicates the number of degrees that the spark timing is being retarded due to a knock condition.
- "KS Noise Channel" indicates the current voltage level being monitored on the noise channel.

DTCs P0325 and P0327 are designed to diagnose the KS module, the knock sensor, and the related wiring. The problems encountered with the KS system should set a DTC. However, if no DTC was set but the KS system is suspect because of a detonation complaint, refer to *Detonation/Spark Knock in Symptoms.*

Powertrain Control Module (PCM) Diagnosis

To read and clear diagnostic trouble codes, use a Tech 2.

IMPORTANT: Use of a Tech 2 is recommended to clear diagnostic trouble codes from the PCM memory. Diagnostic trouble codes can also be cleared by turning the ignition "OFF" and disconnecting the battery power from the PCM for 30 seconds. Turning off the ignition and disconnecting the battery power from the PCM will cause all diagnostic information in the PCM memory to be cleared. Therefore, all the diagnostic tests will have to be re-run.

Since the PCM can have a failure which may affect only one circuit, following the diagnostic procedures in this section will determine which circuit has a problem and where it is.

If a diagnostic chart indicates that the PCM connections or the PCM is the cause of a problem, and the PCM is replaced, but this does not correct the problem, one of the following may be the reason:

- There is a problem with the PCM terminal connections. The terminals may have to be removed from the connector in order to check them properly.
- The problem is intermittent. This means that the problem is not present at the time the system is being checked. In this case, refer to the *Symptoms* portion of the manual and make a careful physical inspection of all component and wiring associated with the affected system.
- There is a shorted solenoid, relay coil, or harness. Solenoids and relays are turned "ON" and "OFF" by the PCM using internal electronic switches called drivers. A shorted solenoid, relay coil, or harness will not damage the PCM but will cause the solenoid or relay to be inoperative.

Multiple PCM Information Sensor DTCS Set

Circuit Description

The powertrain control module (PCM) monitors various sensors to determine the engine operating conditions. The PCM controls fuel delivery, spark advance, transmission operation, and emission control device operation based on the sensor inputs.

The PCM provides a sensor ground to all of the sensors. The PCM applies 5 volts through a pull-up resistor, and determines the status of the following sensors by monitoring the voltage present between the 5-volt supply and the resistor:

- The engine coolant temperature (ETC) sensor
- The intake air temperature (IAT) sensor
- The transmission fluid temperature (TFT) sensor

The PCM provides the following sensors with a 5-volt reference and a sensor ground signal:

- The exhaust gas recirculating (EGR) pintle position sensor
- The throttle position (TP) sensor
- The manifold absolute pressure (MAP) sensor

The PCM monitors the separate feedback signals from these sensors in order to determine their operating status.

Diagnostic Aids

IMPORTANT: Be sure to inspect PCM and engine grounds for being secure and clean.

A short to voltage in one of the sensor input circuits may cause one or more of the following DTCs to be set:

- P0108
- P0113
- P0118
- P0123
- P0560
- P0712
- P0406

IMPORTANT: If a sensor input circuit has been shorted to voltage, ensure that the sensor is not damaged. A damaged sensor will continue to indicate a high or low voltage after the affected circuit has been repaired. If the sensor has been damaged, replace it.

An open in the sensor ground circuit between the PCM and the splice will cause one or more of the following DTCs to be set:

- P0108
- P0113
- P0118
- P0123
- P0712
- P0406

A short to ground in the 5-volt reference A or B circuit will cause one or more of the following DTCs to be set:

- P0107
- P0122

In the 5-volt reference circuit A, between the PCM and the splice, will cause one or more of the following DTCs to be set:

- P0122

In the 5-volt reference circuit B, between the PCM and the splice, will cause one or more of the following DTCs to be set:

- P0107

Check for the following conditions:

- **Poor connection at PCM.** Inspect the harness connectors for backed-out terminals, improper mating, broken locks, improperly formed or damage terminals, and a poor terminal-to-wire connection.
- **Damaged harness.** Inspect the wiring harness for damage. If the harness is not damaged, observe an affected sensor's displayed value on the Tech 2 with the ignition "ON" and the engine "OFF" while you move the connectors and the wiring harnesses related to the following sensors:
  - IAT
  - ECT
  - TP
  - MAP
  - EGR
  - TFT

Multiple PCM Information Sensor DTCs Set

Step	Action	Value(s)	Yes	No
1	Was the "On-Board Diagnostic (OBD) System Check" performed?	—	Go to *Step 2*	Go to *OBD System Check*
2	1. Turn the ignition "OFF," disconnect the PCM. 2. Turn the ignition "ON," check the 5 volt reference A circuit for the following conditions: • A poor connection at the PCM. • An open between the PCM connector and the splice. • A short to ground. • A short to voltage. Is there an open or short?	—	Go to *Step 3*	Go to *Step 4*
3	Repair the open or short. Is the action complete?	—	Verify repair	—
4	Check the sensor ground circuit for the following conditions: • A poor connection at the PCM or the affected sensors. • An open between the PCM connector and the affected sensors. Is there an open or a poor connection?	—	Go to *Step 5*	Go to *Step 6*
5	Repair the open or the poor connection. Is the action complete?	—	Verify repair	—
6	Measure the voltage between the EGR pintle position sensor signal circuit at the PCM harness connector and ground. Does the voltage measure near the specified value?	0 V	Go to *Step 7*	Go to *Step 12*
7	Measure the voltage between the MAP sensor signal circuit at the PCM harness connector and ground. Does the voltage measure near the specified value?	0 V	Go to *Step 8*	Go to *Step 15*
8	Measure the voltage between the TP sensor signal circuit at the PCM harness connector and ground. Does the voltage measure near the specified value?	0 V	Go to *Step 9*	Go to *Step 16*
9	Measure the voltage between the IAT sensor signal circuit at the PCM harness connector and ground. Does the voltage measure near the specified value?	0 V	Go to *Step 10*	Go to *Step 17*
10	Measure the voltage between the ECT sensor signal circuit at the PCM harness connector and ground. Does the voltage measure near the specified value?	0 V	Go to *Step 11*	Go to *Step 18*

Multiple PCM Information Sensor DTCs Set (Cont'd)

Step	Action	Value(s)	Yes	No
11	1. Disconnect the EGR valve. 2. Measure the voltage between the EGR pintle position sensor signal circuit at the PCM harness connector and ground. Does the voltage measure near the specified value?	0 V	Go to *Step 13*	Go to *Step 18*
12	Measure the voltage between the TFT sensor signal circuit at the PCM harness connector and ground. Does the voltage measure near the specified value?	0 V	Go to *Step 20*	Go to *Step 19*
13	Replace the EGR valve. Is the action complete?	—	Verify repair	—
14	Locate and repair the short to voltage in the MAP sensor signal circuit. Is the action complete?	—	Verify repair	—
15	Locate and repair the short to voltage in the TP sensor signal circuit. Is the action complete?	—	Verify repair	—
16	Locate and repair the short to voltage in the IAT sensor signal circuit. Is the action complete?	—	Verify repair	—
17	Locate and repair the short to voltage in the ECT sensor signal circuit. Is the action complete?	—	Verify repair	—
18	Locate and repair the short to voltage in the EGR pintle position sensor signal circuit. Is the action complete?	—	Verify repair	—
19	Locate and repair the short to voltage in the TFT sensor signal circuit. Is the action complete?	—	Verify repair	—
20	Replace the PCM. **IMPORTANT:** The replacement PCM must be programmed. Refer to *UBS 98model year Immobilizer Workshop Manual.* Is the action complete?	—	Go to *OBD System Check*	—

Exhaust Gas Recirculation (EGR) Diagnosis (For except EXPORT and SOUTH AFRICA)

Pintle position error diagnosis is covered by DTC P0402, P0404, P1404, P0405, P0406. If EGR diagnostic trouble codes P0402, P0404, P1404, P0405, P0406 are encountered, refer to the DTC charts.

Engine Tech 2 Data Definitions and Ranges

A/C CLUTCH – Tech 2 Displays ON or OFF –
Indicates whether the PCM has commanded the A/C clutch ON. Used in A/C system diagnostic.

A/C REQUEST — Tech 2 Displays YES or NO —
Indicates the state of the A/C request input circuit from the HVAC controls. The PCM uses the A/C request signal to determine whether A/C compressor operation is being requested.

AIR/FUEL RATIO — Tech 2 Range 0.0-25.5 —
Air/fuel ratio indicates the PCM commanded value. In closed loop, the air/fuel ratio should normally be displayed around “14.2-14.7.” A lower air/fuel ratio indicates a richer commanded mixture, which may be seen during power enrichment or TWC protection modes. A higher air/fuel ratio indicates a leaner commanded mixture. This can be seen during deceleration fuel mode.

BAROMETRIC PRESSURE — Tech 2 Range 10-105 kPa/0.00-5.00 Volts —
The barometric pressure reading is determined from the MAP sensor signal monitored during key up and wide open throttle (WOT) conditions. The barometric pressure is used to compensate for altitude differences and is normally displayed around “61-104” depending on altitude and barometric pressure.

CHECK TRANS LAMP — AUTO TRANSMISSION —
Indicates the need to check for a DTC with the Tech 2 when the lamp is flashing 0.2 seconds ON and 0.2 seconds OFF.

CMP ACT. COUNTER – Cam Position Activity
DECEL FUEL MODE — Tech 2 Display ACTIVE or INACTIVE —
“ACTIVE” displayed indicates that the PCM has detected conditions appropriate to operate in deceleration fuel mode. The PCM will command the deceleration fuel mode when it detects a closed throttle position while the vehicle is traveling over 20 mph. While in the deceleration fuel delivered by entering open loop and decreasing the injector pulse width.

DESIRED EGR POS. — Tech 2 Range 0%-100% —
Represents the EGR pintle position that the PCM is commanding.

DESIRED IDLE — Tech 2 Range 0-3187 RPM —
The idle speed that the PCM is commanding. The PCM will compensate for various engine loads based on engine coolant temperature, to keep the engine at the desired speed.

ECT — (Engine Coolant Temperature) Tech 2 Range –40˚C to 151˚C (–40˚F to 304˚F) —
The engine coolant temperature (ECT) is mounted in the coolant stream and sends engine temperature information to the PCM. The PCM applies 5 volts to the ECT sensor circuit. The sensor is a thermistor which changes internal resistance as temperature changes. When the sensor is cold (high resistance), the PCM monitors a high signal voltage and interprets that as a cold engine. As the sensor warms (decreasing resistance), the voltage signal will decrease and the PCM will interpret the lower voltage as a warm engine.

EGR DUTY CYCLE — Tech 2 Range 0%-100% —
Represents the EGR valve driver PWM signal from the PCM. A duty cycle of 0% indicates that no EGR flow is being commanded; a 100% duty cycle indicates maximum EGR flow commanded.

EGR FEEDBACK — Tech 2 Range 0.00-5.00 Volts —
Indicates the EGR pintle position sensor signal voltage being monitored by the PCM. A low voltage indicates a fully extended pintle (closed valve); a voltage near 5 volts indicates a retracted pintle (open valve).

ENGINE LOAD — Tech 2 Range 0%-100% —
Engine load is calculated by the PCM from engine speed and MAF sensor readings. Engine load should increase with an increase in RPM or air flow.

ENGINE RUN TIME — Tech 2 Range 00:00:00-99:99:99 Hrs:Min:Sec —
Indicates the time elapsed since the engine was started. If the engine is stopped, engine run time will be reset to 00:00:00.

ENGINE SPEED — Range 0-9999 RPM —
Engine speed is computed by the PCM from the 58X reference input. It should remain close to desired idle under various engine loads with engine idling.

FUEL PUMP — Tech 2 Displays ON or OFF —
Indicates the PCM commanded state of the fuel pump relay driver circuit.

FUEL TRIM CELL — Tech 2 Range 0-21 —
The fuel trim cell is dependent upon engine speed and MAF sensor readings. A plot of RPM vs. MAF is divided into 22 cells. Fuel trim cell indicates which cell is currently active.

FUEL TRIM LEARN — Tech 2 Displays NO or YES —
When conditions are appropriate for enabling long term fuel trim corrections, fuel trim learn will display “YES.” This indicates that the long term fuel trim is responding to the short term fuel trim. If the fuel trim learn displays “NO,” then long term fuel trim will not respond to changes in short term fuel trim.

HO2S BANK 1, SEN. 1 — Tech 2 Range 0-1132 mV —
Represents the fuel control exhaust oxygen sensor output voltage. Should fluctuate constantly within a range between 10 mV (lean exhaust) and 1000 mV (rich exhaust) while operating in closed loop.

HO2S BANK2, SEN. 1—Tech 2 Range 0-1132 mV—
Represents the fuel control exhaust oxygen sensor output voltage. Should fluctuate constantly within a range between 10mV (lean exhaust) and 1000 mV (rich exhaust) while operating in closed loop.

HO2S BANK 1, SEN. 1—Tech 2 Displays NOT READY or READY—
Indicates the status of the exhaust oxygen sensor. The Tech 2 will indicate that the exhaust oxygen sensor is ready when the PCM detects a fluctuating HO2S voltage sufficient to allow closed loop operation. This will not occur unless the exhaust oxygen sensor is warmed up.

HO2S BANK 2, SEN. 1 — Tech 2 Displays NOT READY or READY —
Indicates the status of the exhaust oxygen sensor. The Tech 2 will indicate that the exhaust oxygen sensor is ready when the PCM detects a fluctuating HO2S voltage sufficient to allow closed loop operation. This will not occur unless the exhaust oxygen sensor is warmed up.

HO2S WARM UP TIME BANK 1, SEN. 1/BANK 2 SEN. 1 — Tech 2 Range 00:00:00-99:99:99 HRS:MIN:SEC —
Indicates warm-up time for each HO2S. The HO2S warm-up time is used for the HO2S heater test. The PCM will run the heater test only after a cold start (determined by engine coolant and intake air temperature at the time of start-up) and only once during an ignition cycle. When the engine is started the PCM will monitor the HO2S voltage. When the HO2S voltage indicates a sufficiently active sensor, the PCM looks at how much time has elapsed since start-up. If the PCM determines that too much time was required for the HO2S to become active, a DTC will set. If the engine was warm when started, HO2S warm-up will the display “00:00:00”.

IAC POSITION — Tech 2 Range 0-255 Counts —
Displays the commanded position of the idle air control pintle in counts. A larger number of counts means that more air is being commanded through the idle air passage. Idle air control should respond fairly quickly to changes in engine load to maintain desired idle RPM.

IAT (INTAKE AIR TEMPERATURE) — Tech 2 Range –40˚C to 151˚C (–40˚F to 304˚F) —
The PCM converts the resistance of the intake air temperature sensor to degrees. Intake air temperature (IAT) is used by the PCM to adjust fuel delivery and spark timing according to incoming air density.

IGNITION 1 — Tech 2 Range 0-25.5 Volts —
This represents the system voltage measured by the PCM at its ignition feed.

INJ. PULSE BANK 1/INJ. PULSE BANK 2 — Tech 2 Range 0-1000 msec. —
Indicates the amount of time the PCM is commanding each injector “ON” during each engine cycle. A longer injector pulse width will cause more fuel to be delivered. Injector pulse width should increase with increased engine load.

KS NOISE CHANNEL (Knock Sensor) —
Indicates the output from the KS noise channel. There is always some electrical noise in an engine compartment and to avoid mistaking this as engine knock, the output from the knock sensor is compared to the output from the noise channel. A knock condition is not set unless the knock sensor output is greater than the noise channel output.

LONG TERM FUEL TRIM BANK 1/BANK 2 —
The long term fuel trim is derived from the short term fuel trim values and represents a long term correction of fuel delivery for the bank in question. A value of 0% indicates that fuel delivery requires no compensation to maintain the PCM commanded air/fuel ratio. A negative value significantly below 0% indicates that the fuel system is rich and fuel delivery is being reduced (decreased injector pulse width). A positive value significantly greater than 0% indicates that a lean condition exists and the PCM is compensating by adding fuel (increased injector pulse width). Because long term fuel trim tends to follow short term fuel trim, a value in the negative range due to canister purge at idle should not be considered unusual. Fuel trim values at maximum authority may indicate an excessively rich or lean system.

LOOP STATUS — Tech 2 Displays OPEN or CLOSED —
“CLOSED” indicates that the PCM is controlling fuel delivery according to oxygen sensor voltage. In “OPEN” the PCM ignores the oxygen sensor voltage and bases the amount of fuel to be delivered on TP sensor, engine coolant, and MAF sensor inputs only.

MAF — Tech 2 Range 0.0-512 gm/s —
MAF (mass air flow) is the MAF input frequency converted to grams of air per second. This indicates the amount of air entering the engine.

MAP — Tech 2 Range 10-105 kPa (0.00-4.97 Volts) —
The manifold absolute pressure (MAP) sensor measures the change in the intake manifold pressure from engine load, EGR flow, and speed changes. As intake manifold pressure increases, intake vacuum decreases, resulting in a higher MAP sensor voltage and kPa reading. The MAP sensor signal is used to monitor intake manifold pressure changes during the EGR flow test, to update the BARO reading, and as an enabling factor for several of the diagnostics.

MIL — Tech 2 Displays ON or OFF —
Indicates the PCM commanded state of the malfunction indicator lamp.

POWER ENRICHMENT — Tech 2 Displays ACTIVE or INACTIVE —
“ACTIVE” displayed indicates that the PCM has detected conditions appropriate to operate in power enrichment mode. The PCM will command power enrichment mode when a large increase in throttle position and load is detected. While in power enrichment mode, the PCM will increase the amount of fuel delivered by entering open loop and increasing the injector pulse width. This is done to prevent a possible sag or hesitation from occurring during acceleration.

SPARK — Tech 2 Range –64˚ to 64˚ —
Displays the amount of spark advance being commanded by the PCM on the IC circuit.

START-UP ECT — Tech 2 Range –40˚C to 151˚C (–40˚F to 304˚F) —
Indicates the engine coolant temperature at the time that the vehicle was started. Used by the HO2S diagnostic to determine if the last start-up was a cold start.

START-UP IAT — Tech 2 Range –40˚C to 151˚C (–40˚F to 304˚F) —
Indicates the intake air temperature at the time that the vehicle was started. Used by the HO2S diagnostic to determine if the last start-up was a cold start.

TP — Tech 2 Range 0%-100% —
TP (throttle position) angle is computed by the PCM from the TP sensor voltage. TP angle should display “0%” at idle and “100%” at wide open throttle.

TP SENSOR — Tech 2 Range 0.00-5.00 Volts —
The voltage being monitored by the PCM on the TP sensor signal circuit.

CATALYST PROTECTION MODE — Tech 2 Displays YES or NO —
“YES” displayed indicates that the PCM has detected conditions appropriate to operate in TWC protection mode. The PCM will decrease the air/fuel ratio to a value that depends on mass air flow (higher mass air flow = lower air/fuel ratio).

UPSHIFT LAMP (MANUAL TRANSMISSION)
VEHICLE SPEED — Tech 2 Range 0-255 km/h (0-155 mph) —
The vehicle speed sensor signal is converted into km/h and mph for display.

WEAK CYLINDER — Tech 2 Displays Cylinder Number —
This indicates that the PCM has detected crankshaft speed variations that indicate 2% or more cylinder firing events are misfires.

Typical Scan Data Values

Use the Typical Scan Data Values Table only after the On-Board Diagnostic System Check has been completed, no DTC(s) were noted, and you have determined that the on-board diagnostics are functioning properly. Tech 2 values from a properly-running engine may be used for comparison with the engine you are diagnosing. The typical scan data values represent values that would be seen on a normally-running engine.

NOTE: A Tech 2 that displays faulty data should not be used, and the problem should be reported to the Tech 2 manufacturer. Use of a faulty Tech 2 can result in misdiagnosis and unnecessary replacement of parts.

Only the parameters listed below are referred to in this service manual for use in diagnosis. For further information on using the Tech 2 to diagnose the PCM and related sensors, refer to the applicable reference section listed below. If all values are within the typical range described below, refer to the *Symptoms* section for diagnosis.

Test Conditions

Engine running, lower radiator hose hot, transmission in park or neutral, closed loop, accessaries off, brake not applied and air conditioning off.

3.2/3.5L V-6 Engine

Tech 2 Parameter	Data List	Units Displayed	Typical Data Values (IDLE)	Typical Data Values (2500 RPM)	Refer To
A/C Clutch	Engine	On/Off	Off	Off	General Description and Operation, A/C Clutch Circuit Operation
A/C Request	Engine	Yes/No	No	No	General Description and Operation, A/C Request Signal
Air/Fuel Ratio	Engine	Ratio: _ to 1	14.7	14.7	General Description and Operation, Fuel System Metering Purpose
Barometric Pressure	Engine	kPa	61-104 (depends on altitude and barometric)	61-104 (depends on altitude and barometric)	General Description and Operation
CMP Act. Counter (Cam Position Activity)	Engine	Counts	0-255, always increasing	0-255, always increasing	DTC P0341 and P0342
Decel Fuel Mode	Engine	Active/Inactive	Inactive	Inactive	General Description and Operation, Deceleration Mode
Desired EGR Position	Engine	Percent	0%	0%	General Description and Operation, EGR Pintle Position Sensor
Desired Idle	Engine	RPM	750	—	General Description and Operation, Idle Air Control (IAC) Valve
ECT (Engine Coolant Temp)	Engine	Degrees C, Degrees F	80-100˚C (176-212˚F)	80-100˚C (176-212˚F)	General Description and Operation, Engine Coolant Temperature (ECT) Sensor
EGR Closed Valve Pintle Position	Engine	Steps	20-40	20-40	General Description and Operation, EGR Pintle Position Sensor
EGR Duty Cycle	Engine	Percent	0%	0%	General Description and Operation, Linear EGR Operation and Results of Incorrect Operation
EGR Feedback	Engine	Volts	0.45-0.80	0.45-0.80	—
EGR Normalized	Engine	Percent	0%	0%	—
Engine Load	Engine	Percent	2.0% - 5.5%	8.0% - 16.0%	General Description and Operation, Mass Air Flow (MAF) Sensor
Time From Start	Engine	Sec	Varies. Resets at each engine start.	Varies. Resets at each engine start.	—
Engine Speed	Engine	RPM	Within –50 to +100 of “Desired Idle”	Actual engine speed	DTCs: P1508, P1509
Fuel Pump	Engine	On/Off	On	On	Engine Fuel
HO2S Bank 1 Sen.1 (millivolts)	O2 Sensor Data	Millivolts	50-950 changing quickly	50-950, always changing quickly	General Description and Operation, Fuel control HO2S

Tech 2 Parameter	Data List	Units Displayed	Typical Data Values (IDLE)	Typical Data Values (2500 RPM)	Refer To
HO2S Bank 2 Sen.1 (millivolts)	O2 Sensor Data	Millivolts	50-950 changing quickly	50-950 changing quickly	General Description and Operation, Fuel Control HO2S
HO2S Bank 1 Sen.1 (ready/not ready)	O2 Sensor Data	Ready Yes/No	Ready Yes	Ready Yes	General Description and Operation, Fuel Control HO2S; DTC: P0135
HO2S Bank 2 Sen.1 (ready/not ready)	O2 Sensor Data	Ready Yes/No	Ready Yes	Ready Yes	General Description and Operation, Fuel Control HO2S
HO2S Warm-Up Time Bank 1 Sen.1	O2 Sensor Data	Seconds	25-45	25-45	General Description and Operation, Fuel Control HO2S
HO2S Warm-Up Time Bank 2 Sen.1	O2 Sensor Data	Seconds	25-45	25-45	General Description and Operation, Fuel Control HO2S
IAT (Intake Air Temp)	Engine	Degrees C, Degrees F	0-100˚C, depends on underhood	0-80˚C, depends on underhood	General Description and Operation, Intake Air Temperature (IAT) Sensor
Ignition Voltage	Engine	Volts	12.8-14.1	12.8-14.1	General Description and Operation, Electronic Ignition System
Inj. Pulse Bank 1	Engine	Milliseconds	2.0-4.0	2.5-4.0	General Description, Fuel Metering, Fuel Injector
Inj. Pulse Bank 2	Engine	Milliseconds	2.0-4.0	2.5-4.0	General Description, Fuel Metering, Fuel Injector
KS Noise Channel (Knock Sensor)	Engine	Volts	0.10-0.40	0.50-1.75	General Description and Operation, Knock Sensor Purpose and Operation; DTCs: P0352, P0327
Loop Status	Engine	Open/Closed	Closed	Closed	General Description and Operation, Fuel Metering System; DTCs: P0125-P0155
MAF (Mass Air Flow)	Engine	Grams per second	2.85-6.65	9.5-16.5	General Description and Operation, MAF; DTCs: P101, P0102, P0103
MAP kPa (Manifold Absolute Pressure)	Engine	Kilopascals	—	—	General Description and Operation, Manifold Absolute Pressure (MAP) Sensor; DTCs: P0106, P0107, P0108
MIL	Engine	On/Off	Off	Off	On-Board Diagnostic System Check
Power Enrichment	Engine	Inactive/Active	Inactive	Inactive	General Description and Operation, Acceleration Mode
Spark (Advance)	Engine	Degrees Before Top Dead Center	15-22	34-44	General Description and Operation, Electronic Ignition System

Tech 2 Parameter	Data List	Units Displayed	Typical Data Values (IDLE)	Typical Data Values (2500 RPM)	Refer To
Start-Up ECT (Engine Coolant Temp)	Engine	Degrees C, Degrees F	Depends on engine coolant temperature at time of start-up	Depends on engine coolant temperature at time of start-up	General Description and Operation, Engine Coolant Temperature (ECT) Sensor
Start-Up IAT (Intake Air Temp)	Engine	Degrees C, Degrees F	Depends on intake air temperature at time of start-up	Depends on intake air temperature at time of start-up	General Description and Operation, Intake Air Temperature (IAT) Sensor
TP (Throttle Position)	Engine	Percent	0	—	General Description and Operation, Throttle Position (TP) Sensor; DTCs: P0121, P0122,P0123
TP Sensor (Throttle Position)	Engine	Volts	0.50-0.82	0.60-1.00	General Description and Operation, Throttle Position (TP) Sensor; DTCs: P0121, P0122,P0123
Catalyst Protection Mode	Engine	No/Yes	No	No	General Description, Fuel Metering, catalytic Converter Protection Mode
Vehicle Speed	Engine	MPH / km/h	0	0	4L30-E Automatic Transmission Diagnosis
EVAP Purge Solenoid	Engine	Percent	65	99	General Description
VIM Solenoid	Engine	On/Off	On	On	General Description
Security Wait Time	Engine	Active/Inactive	Inactive	Inactive	—

No Malfunction Indicator Lamp (MIL)

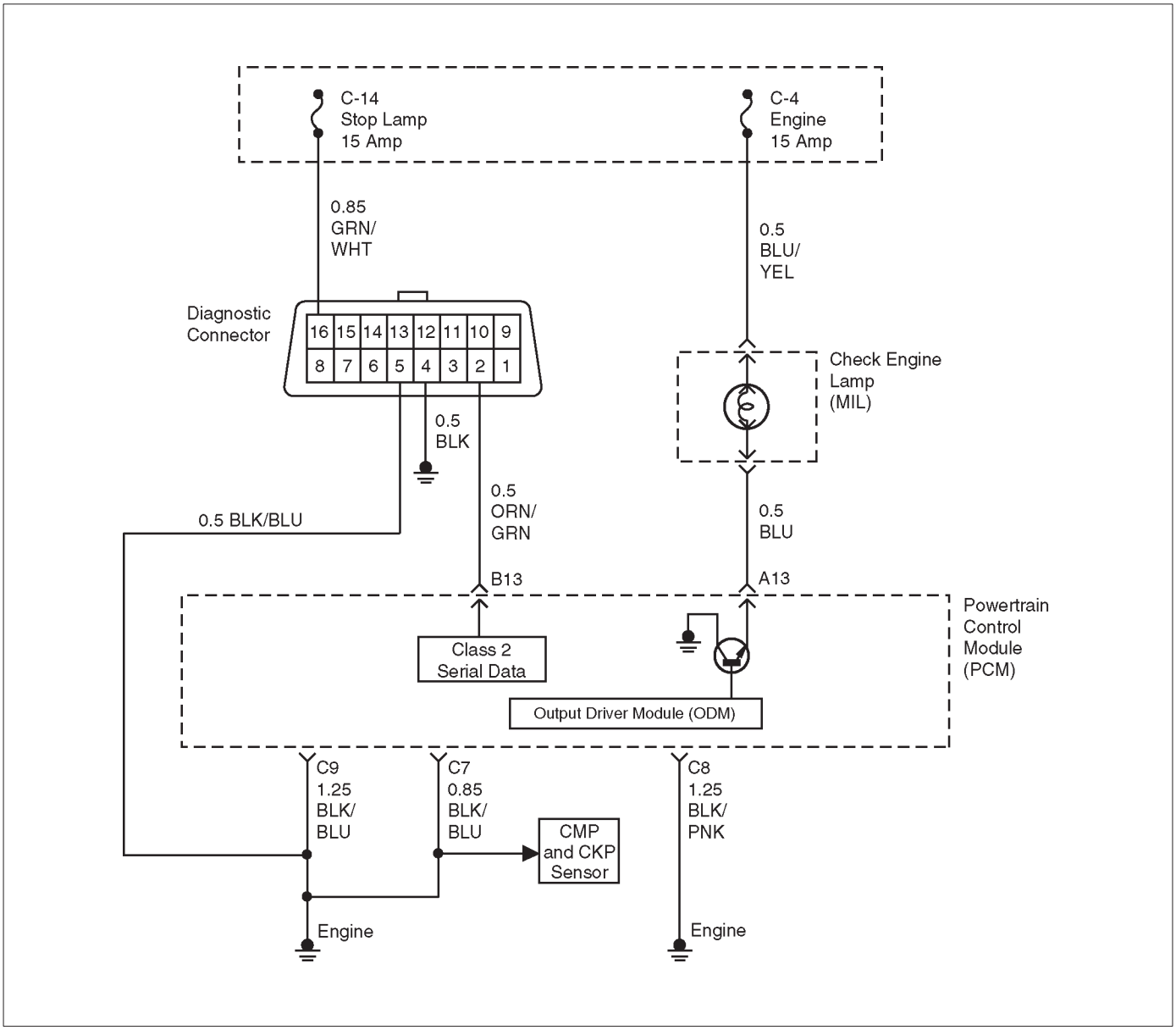

D06RW00006

Circuit Description

The “Check Engine” lamp (MIL) should always be illuminated and steady with the ignition “ON” and the engine stopped. Ignition feed voltage is supplied to the MIL bulb through the meter fuse. The powertrain control module (PCM) turns the MIL “ON” by grounding the MIL driver circuit.

Diagnostic Aids

An intermittent MIL may be cased by a poor connection, rubbed-through wire insulation, or a wire broken inside the insulation. Check for the following items:

- Inspect the PCM harness and connections for improper mating, broken locks, improperly formed or damaged terminals, poor terminal-to-wire connection, and damaged harness.
- If the engine runs OK, check for a faulty light bulb, an open in the MIL driver circuit, or an open in the instrument cluster ignition feed.
- If the engine cranks but will not run, check for an open PCM ignition or battery feed, or a poor PCM to engine ground.

Test Description

Number(s) below refer to the step number(s) on the Diagnostic Chart.

2. A “No MIL” condition accompanied by a no-start condition suggests a faulty PCM ignition feed or battery feed circuit.

9. Using a test light connected to B+, probe each of the PCM ground terminals to ensure that a good ground is present. Refer to *PCM Terminal End View* for terminal locations of the PCM ground circuits.

12. In this step, temporarily substitute a known good relay for the PCM relay. The horn relay is nearby, and it can be verified as “good” simply by honking the horn. Replace the horn relay after completing this step.

17. This vehicle is equipped with a PCM which utilizes an electrically erasable programmable read only memory (EEPROM). When the PCM is replaced, the new PCM must be programmed. Refer to *UBS 98 model year Immobilizer Workshop Manual.*

No Malfunction Indicator Lamp (MIL)

Step	Action	Value(s)	Yes	No
1	Was the "On-Board Diagnostic (OBD) System Check" performed?	—	Go to *Step 2*	Go to *OBD System Check*
2	Attempt to start the engine. Does the engine start?	—	Go to *Step 3*	Go to *Step 6*
3	Check the meter fuse for the instrument cluster ignition feed circuit. Is the fuse OK?	—	Go to *Step 4*	Go to *Step 16*
4	Ignition "ON," probe the ignition feed circuit at the cluster connector with a test light to ground. Is the test light "ON?"	—	Go to *Step 5*	Go to *Step 13*
5	1. Ignition "OFF." 2. Disconnect the PCM. 3. Jumper the MIL driver circuit at the PCM connector to ground. 4. Ignition "ON." Is the MIL "ON?"	—	Go to *Step 10*	Go to *Step 11*
6	Check the PCM ignition feed and battery feed fuses (15 A engine fuse and 15 A PCM fuse). Are both fuses OK?	—	Go to *Step 7*	Go to *Step 15*
7	1. Ignition "OFF." 2. Disconnect the PCM. 3. Ignition "ON." 4. Probe the ignition feed circuit at the PCM harness connector with a test light to ground. Is the test light "ON?"	—	Go to *Step 8*	Go to *Step 12*
8	Probe the battery feed circuit at the PCM harness connector with a test light to ground. Is the test light "ON?"	—	Go to *Step 9*	Go to *Step 14*
9	Check for a faulty PCM ground connection. Was a problem found?	—	Verify repair	Go to *Step 10*
10	Check for damaged terminals at the PCM. Was a problem found?	—	Verify repair	Go to *Step 17*
11	Check for an open MIL driver circuit between the PCM and the MIL. Was a problem found?	—	Verify repair	Go to *Step 18*
12	Substitute a known "good" relay for the PCM main relay. Was the malfunction fixed?	—	Verify repair	Go to *Step 13*
13	Repair the open in the ignition feed circuit. Is the action complete?	—	Verify repair	—

No Malfunction Indicator Lamp (MIL) (Cont'd)

Step	Action	Value(s)	Yes	No
14	Locate and repair the open PCM battery feed circuit. Is the action complete?	—	Verify repair	—
15	Locate and repair the short to ground in the PCM ignition feed circuit or PCM battery feed circuit. Is the action complete?	—	Verify repair	—
16	Locate and repair the short to ground in the ignition feed circuit to the instrument cluster, and replace the fuse. Is the action complete?	—	Verify repair	—
17	Replace the PCM. **IMPORTANT:** The replacement PCM must be programmed. Refer to *PCM* in *ON-Vehicle Service* for procedures. Is the action complete?	—	Verify repair	—
18	Check the MIL driver circuit for a poor connection at the instrument panel connector. Was a problem found?	—	Verify repair	Go to *Instrument Panel* in *Electrical Diagnosis*

Malfunction Indicator Lamp (MIL) “ON” Steady

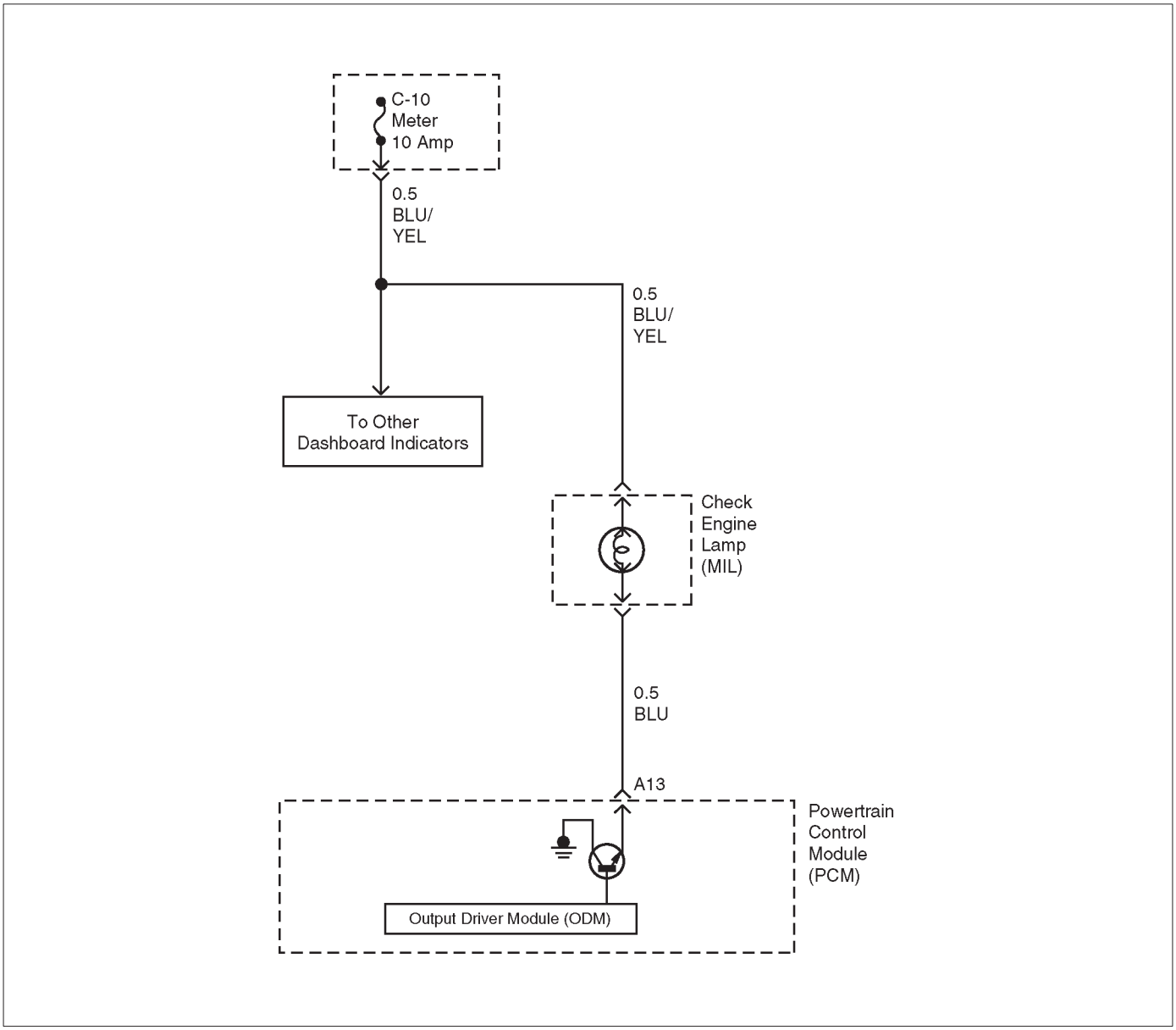

D06RW00007

Circuit description

The malfunction indicator lamp (MIL) should always be illuminated and steady with ignition “ON” and the engine stopped. Ignition feed voltage is supplied directly to the MIL indicator. The powertrain control module (PCM) turns the MIL “ON” by grounding the MIL driver circuit. The MIL should not remain “ON” with the engine running and no DTC(s) set. A steady MIL with the engine running and no DTC(s) suggests a short to ground in the MIL driver circuit.

Diagnostic Aids

An intermittent may be caused by a poor connection, rubbed-through wire insulation, or a wire broken inside the insulation. Check for the following items:

- Poor connection or damaged harness – Inspect the PCM harness and connectors for improper mating, broken locks, improperly formed or damaged terminals, poor terminal-to-wire connection, and damaged harness.

Test Description

Number(s) below refer to the step number(s) on the Diagnostic Chart.

2. If the MIL does not remain “ON” when the PCM is disconnected, the MIL driver wiring is not faulty.
3. If the MIL driver circuit is OK, the instrument panel cluster is faulty.
6. This vehicle is equipped with a PCM which utilizes an electrically erasable programmable read only memory (EEPROM). When the PCM is replaced, the new PCM must be programmed. Refer to *UBS 98 model year Immobilizer Workshop Manual.*

Malfunction Indicator Lamp (MIL) “ON” Steady

Step	Action	Value(s)	Yes	No
1	Was the “On-Board diagnostic (OBD) System Check” performed?	—	Go to *Step 2*	Go to *OBD System Check*
2	1. Ignition “OFF,” disconnect PCM. 2. Ignition “ON,” observe the MIL (Service Engine Soon lamp). Is the MIL “ON?”	—	Go to *Step 3*	Go to *Step 5*
3	1. Ignition “OFF,” disconnect the instrument panel cluster. 2. Check the MIL driver circuit between the PCM and the instrument panel cluster for a short to ground. 3. If a problem is found, repair as necessary. Was the MIL driver circuit shorted to ground?	—	Go to *OBD System Check*	Go to *Step 4*
4	Replace the instrument panel cluster. Is the action complete?	—	Go to *OBD System Check*	—
5	1. Ignition “OFF,” reconnect the PCM. 2. Using Tech 2, select “Output Miscellaneous Test” and command the MIL “OFF.” Did the MIL turn “OFF?”	—	Go to *OBD System Check*	Go to *Step 6*
6	Replace the PCM. **IMPORTANT:** The replacement PCM must be programmed. Refer to *UBS 98model year Immobilizer Workshop Manual.* Is the action complete?	—	Go to *OBD System Check*	—

Engine Cranks But Will Not Run

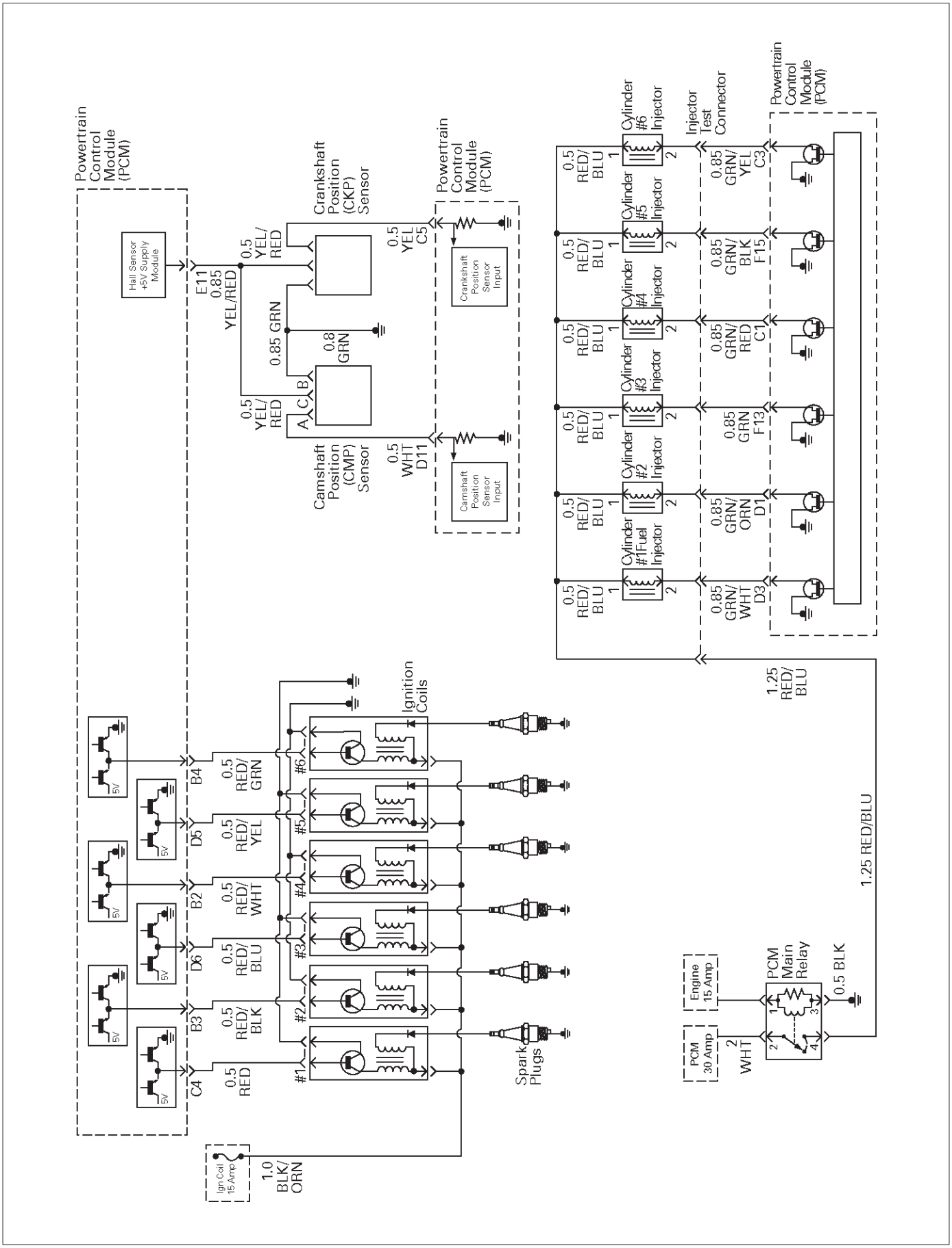

D06RX00004

Circuit Description

The electronic Ignition system uses a coil-at-plug method of spark distribution. In this type of ignition system, the powertrain control module (PCM) triggers the correct driver inside the ignition coil, which then triggers the correct ignition coil based on the 58X signal received from the crankshaft position sensor (CKP). The spark plug connected to the coil fires when the ICM opens the ground circuit for the coil's primary circuit.

During crank, the PCM monitors the CKP 58X signal. The CKP signal is used to determine which cylinder will fire first. After the CKP 58X signal has been processed by the PCM, it will command all six injectors to allow a priming shot of fuel for all the cylinders. After the priming, the injectors are left "OFF" during the next six 58X reference pulses from the CKP. This allows each cylinder a chance to use the fuel from the priming shot. During this waiting period, a camshaft position (CMP) signal pulse will have been received by the PCM. The CMP signal allows the PCM to operate the injectors sequentially based on camshaft position. If the camshaft position signal is not present at start-up, the PCM will begin sequential fuel delivery with a 1-in-6 chance that fuel delivery is correct. The engine will run without a CMP signal, but will set a DTC code.

Diagnostic Aids

An intermittent problem may be caused by a poor connection, rubbed-through wire insulation or a wire broken inside the insulation. Check for the following items:

- Poor connection or damaged harness – Inspect the PCM harness and connectors for improper mating, broken locks, improperly formed or damaged terminals, poor terminal-to-wire connection, and damaged harness.
- Faulty engine coolant temperature sensor – Using Tech 2, compare engine coolant temperature with intake air temperature on a completely cool engine. Engine coolant temperature should be within 10˚C of intake air temperature. If not, replace the ECT sensor.

Test Description

Number(s) below refer to the step number(s) on the Diagnostic Chart.

5. An obvious cause of low fuel pressure would be an empty fuel tank.

6. The engine will easily start and run if a few injectors are disabled. It is not necessary to test all injectors at this time since this step is only a test to verify that all of the injectors have not been disabled by fuel contamination.

7. A blinking test light verifies that the PCM is monitoring the 58X crankshaft reference signal and is capable of activating the injectors. If there is an open or shorted driver circuit, DTCs 201-206 should be set.

19. By using a spark tester, each ignition coil's ability to produce 25,000 volts is verified.

25. If there is an open or shorted driver circuit, DTCs 201-206 should be set. All six injector driver circuits can be checked at one time without removing the intake manifold if a 5-8840-2636-0 test light is available. This is the alternative procedure:
    - With the ignition "OFF," disconnect the gray connector located at the rear of the air filter, attached to a bracket on the purge canister.
    - Connect test light 5-8840-2636-0 to the connector. Do any of the light constantly illuminate or fail to blink when the engine is cranked? If so, repair the short or open circuit, or replace the PCM if indicated.

This procedure only tests the driver circuit as far as the test connection, so step 31 is added to test the circuit all the way to the injector.

Engine Cranks But Will Not Run

Step	Action	Value(s)	Yes	No
1	Was the “On-Board Diagnostic (OBD) System Check” performed?	—	Go to *Step 2*	Go to *OBD System Check*
2	Check the 15 A ignition coil fuse, the 15 A engine fuse, and the 30 A PCM fuse. Was a fuse blown?	—	Go to *Step 3*	Go to *Step 4*
3	Check for a short to ground and replace the fuse. Is the action complete?	—	Verify repair	—
4	1. Ignition “OFF,” install a fuel pressure gauge at the test fitting on the fuel supply line in the engine compartment. (Use a shop cloth to absorb any fuel leakage while making the connection.) 2. Ignition “ON,” observe the fuel pressure. Is the fuel pressure within the specified values, and does it hold steady?	285-376 kPa (43-55 psi)	Go to *Step 6*	Go to *Step 5*
5	Is any fuel pressure indicated?	—	Go to *Fuel System Electrical Test*	Go to *Fuel System Diagnosis*
6	Install an injector switch box to the injector test connector, and attempt to operate the injector. Did the fuel pressure drop when the injector is operated?	—	Go to *Step 7*	Go to *Step 12*
7	Install an injector test light at the #2 cylinder injector harness connector. Does the light blink when the engine is cranked?	—	Go to *Step 8*	Go to *Step 18*
8	1. Ignition “ON.” 2. While the coil connectors are disconnected, touch each coil connector’s ignition feed terminal with a grounded test light (the ignition feed wire is black with orange tracer). Did the test light illuminate?	—	Go to *Step 10*	Go to *Step 9*
9	Repair the open ignition feed circuit. Is the action complete?	—	Verify repair	—
10	While the coil connectors are disconnected, touch each connector’s secondary ground terminal with a test light to B+. (The ground wires are black.) Did the test light illuminate at each coil connector?	—	Go to *Step 12*	Go to *Step 11*
11	Repair the open secondary ground circuit. Is the action complete?	—	Verify repair	—
12	1. Test the fuel for contamination. 2. If a problem is found, clean the fuel system and correct the contaminated fuel condition as necessary. Replace the fuel filter and replace any injectors that are not delivering fuel (see Injector Balance Test). Was a problem found?	—	Verify repair	Go to *Step 13*

Engine Cranks But Will Not Run (Cont'd)

Step	Action	Value(s)	Yes	No
13	1. Remove any ignition coil and install a spark tester at the spark plug end of the coil. 2. Observe the tester while the engine is cranking. Was a crisp, blue spark observed? Only one or two sparks followed by no result is considered the same as "No Spark."	—	Go to *Step 15*	Go to *Step 14*
14	Replace the ignition coil, and return to Step 13 to test the remaining coils. Is the action complete?	—	Verify repair	—
15	Repeat Step 13 for each coil. Remove only one coil at a time, and reinstall each coil on its spark plug after testing, but do not refasten coils with screws at this time. After all coils have passed the spark test, does the engine start?	—	Refasten all coils with their screws	Go to *Step 16*
16	1. Remove the spark plugs from all cylinders. 2. Visually inspect the spark plug electrodes. 3. Replace any spark plugs with loose or missing electrodes or cracked insulators. Did your inspection reveal any spark plugs exhibiting excessive fouling?	—	Correct the fouling condition	Go to *Step 17*
17	Refer to *Engine Mechanical Diagnosis* to diagnose the following conditions: ● Faulty or incorrect camshaft drive belts ● Leaking or sticky valves or rings ● Excessive valve deposits ● Loose or worn rocker arms ● Weak valve springs ● Incorrect valve timing ● Leaking head gasket Is the action complete?	—	Verify repair	Go to *Step 19*
18	Observe the "Engine Speed" data display on the scan tool while cranking the engine. Is the engine RPM indicated? (If the scan tool is normally powered from the cigarette lighter socket, and if the scan tool display goes blank while cranking the engine, it will be necessary to power the scan tool directly from the vehicle battery.)	—	Go to *Step 19*	Go to *Step 28*
19	1. Disconnect the 7-pin gray connector at the rear of the air filter beneath the point where the air duct attaches to the MAF sensor. 2. Ignition "ON." 3. Using a test light connected to ground, probe the ignition terminal at the PCM (female) side of the 7-pin connector. Is the test light "ON?"	—	Go to *Step 20*	Go to *Step 26*

Engine Cranks But Will Not Run (Cont'd)

Step	Action	Value(s)	Yes	No
20	1. At the PCM (female) side of the connector, connect a test light between the ignition + terminal and one of the injector driver circuits at the same connector. 2. Ignition "ON." 3. Observe the test light, and repeat the test for each injector driver circuit. Did the test light stay on when checking any of the 6 injector driver circuits?	—	Go to *Step 21*	Go to *Step 23*
21	1. Ignition "OFF," disconnect the PCM. 2. Ignition "ON," observe the test light. Is the test light "ON?"	—	Go to *Step 22*	Go to *Step 27*
22	Locate and repair the short to ground in the injector driver circuit. Is the action complete?	—	Verify repair	—
23	1. Using the same test location as in step 20, connect a test light between the ignition terminal and one of the driver circuits. 2. Crank the engine and observe the test light. 3. Repeat for each injector driver circuit. Did the light blink during the test for each circuit?	—	Go to *Step 25*	Go to *Step 24*
24	Check for an open injector driver circuit. Was a problem found?	—	Verify repair	Go to *Step 27*
25	1. At the injector (male) side of the gray connector, connect an ohmmeter between the ignition pin and one of the driver circuit pins. 2. Check for continuity in the circuit. 3. Repeat for each injector circuit. The readings should be approximately equal to the specified value for injector resistance. Was a problem found?	12.5 ohms	Verify repair	Go to *Step 8*
26	Repair the ignition feed circuit. Is the action complete?	—	Verify repair	—
27	Replace the PCM. **IMPORTANT:** The replacement PCM must be programmed. Refer to *UBS 98model year Immobilizer Workshop Manual.* Is the action complete?	—	Verify repair	—
28	1. Raise the vehicle and disconnect the CKP sensor harness. 2. Ignition "ON." 3. With a test light to ground, probe the harness ignition feed terminal. Did the light illuminate?	—	Go to *Step 30*	Go to *Step 29*
29	Check the ignition feed wire between the sensor and the PCM for a short to ground or open circuit. Is the action complete?	—	Verify repair	—

Engine Cranks But Will Not Run (Cont'd)

Step	Action	Value(s)	Yes	No
30	1. Ignition "ON." 2. At the CKP harness connector, connect a test light between the ignition and ground terminals. Did the light illuminate?	—	Go to *Step 32*	Go to *Step 31*
31	Check the sensor ground circuit for an open or short to voltage. Is the action complete?	—	Verify repair	—
32	Check the signal circuit between the sensor and the PCM for a short to ground, short to voltage, or an open. Was a problem found?	—	Verify repair	Go to *Step 33*
33	Replace the CKP sensor. Is the action complete?	—	Verify repair	Go to *Step 27*

Fuel System Electrical Test

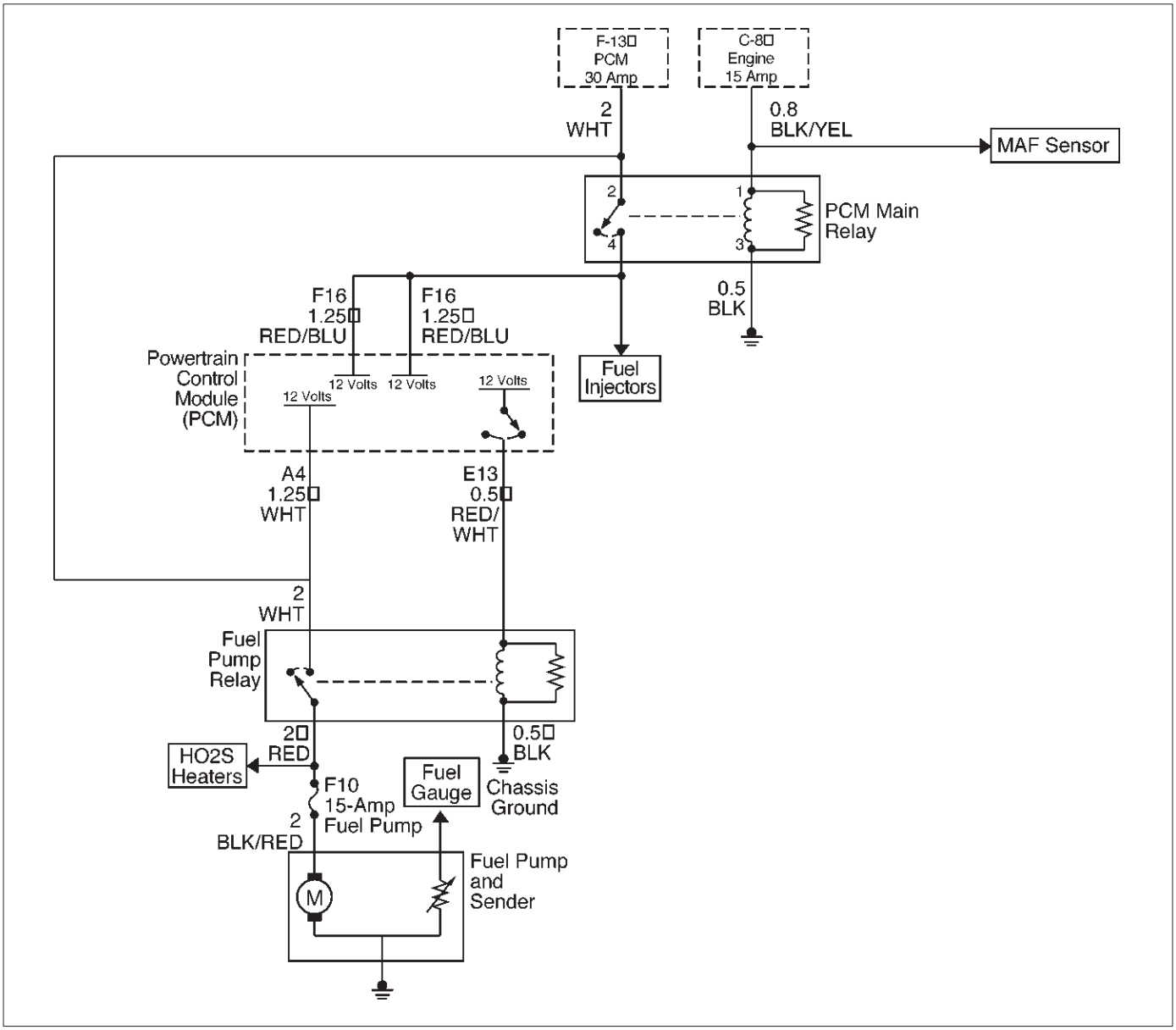

D06RW101

Circuit Description

When the ignition switch is first turned "ON," the powertrain control module (PCM) energizes the fuel pump relay which applies power to the in-tank fuel pump. The fuel pump relay will remain "ON" as long as the engine is running or cranking and the PCM is receiving 58X crankshaft position pulses. If no 58X crankshaft position pulses are present, the PCM de-energizes the fuel pump relay within 2 seconds after the ignition is turned "ON" or the engine is stopped.

The fuel pump delivers fuel to the fuel rail and injectors, then to the fuel pressure regulator. The fuel pressure regulator controls fuel pressure by allowing excess fuel to be returned to the fuel tank. With the engine stopped and ignition "ON," the fuel pump can be turned "ON" by using a command by Tech 2.

Diagnostic Aids

An intermittent may be caused by a poor connection, rubbed-through wire insulation, or a wire broken inside the insulation. Check for the following items:

- Poor connection or damaged harness – Inspect the PCM harness and connectors for improper mating, broken locks, improperly formed or damaged terminals, poor terminal-to-wire connection, and damaged harness.

Test Description

Number(s) below refer to the step number(s) on the Diagnostic Chart.

2. If the fuel pump is operating but incorrect pressure is noted, the fuel pump wiring is OK and the "Fuel System Pressure Test" chart should be used for diagnosis.

CAUTION: To reduce the risk of fire and personal injury:

- **It is necessary to relieve fuel system pressure before connecting a fuel pressure gauge. Refer to Fuel Pressure Relief Procedure, below.**
- **A small amount of fuel may be released when disconnecting the fuel lines. Cover fuel line fittings with a shop towel before disconnecting, to catch any fuel that may leak out. Place the towel in an approved container when the disconnect is completed.**

Fuel Pressure Relief Procedure

1. Remove the fuel cap.
2. Remove the fuel pump relay from the underhood relay center.
3. Start the engine and allow it to stall.
4. Crank the engine for an additional 3 seconds.

Fuel Gauge Installation

1. Remove the shoulder fitting cap.
2. Install fuel gauge 5-8840-0378-0 to the fuel feed line located in front of and above the right side valve train cover .
3. Reinstall the fuel pump relay.

Fuel System Electrical Test

Step	Action	Value(s)	Yes	No
1	Was the “On-Board Diagnostic (OBD) System Check” performed?	—	Go to *Step 2*	Go to *OBD System Check*
2	1. Read the “Caution” above. 2. Relieve the fuel system pressure and install the fuel pump pressure gauge to the test fitting. 3. Use Tech 2 to command the fuel pump “ON.” Is there an immediate pressure build-up which indicates the pump is running?	—	Go to *Step 3*	Go to *Step 4*
3	1. Verify that the pump is not running by removing the fuel filler cap and listening. 2. Command the pump “ON” with Tech 2. Did the pump turn “OFF” after 2 seconds?	—	Test completed	Go to *Step 12*
4	1. Ignition “OFF.” 2. Remove the fuel pump relay. 3. Using a test light connected to ground, probe the battery feed to the relay. Did the light illuminate?	—	Go to *Step 6*	Go to *Step 5*
5	Repair short or open battery feed to fuel pump relay. Is the action complete?	—	Verify repair	—
6	1. Connect a test light between the two wires that connect to the fuel pump relay pull-in coil. 2. Ignition “ON.” Did the test light illuminate for 2 seconds and then turn off?	—	Go to *Step 12*	Go to *Step 7*
7	1. With a test light connected to battery (–), probe the fuel pump relay connector at the wire which runs from the relay pull-in coil to the PCM. 2. Ignition “ON.” Did the test light illuminate for 2 seconds and then turn off?	—	Go to *Step 8*	Go to *Step 9*
8	Locate and repair open in the fuel pump relay ground circuit. Is the action complete?	—	Verify repair	—

Fuel System Electrical Test (Cont'd)

Step	Action	Value(s)	Yes	No
9	Check for short or open between the PCM and the fuel pump relay. Was a problem found?	—	Verify repair	Go to *Step 10*
10	1. Check the fuel pump relay circuit for a poor terminal connection at the PCM. 2. If a problem is found, replace terminal as necessary. Was a problem found?	—	Verify repair	Go to *Step 11*
11	Replace the PCM. **IMPORTANT:** The replacement PCM must be programmed. Refer to *UBS 98model year Immobilizer Workshop Manual.* Is the action complete?	—	Verify repair	—
12	1. Reconnect the fuel pump relay. 2. Disconnect the fuel pump electrical connector at the fuel tank. 3. Using a test light connected to ground, probe the fuel pump feed wire (harness side). 4. Command the fuel pump "ON" with Tech 2. Did the light illuminate for 2 seconds?	—	Go to *Step 15*	Go to *Step 13*
13	1. Honk the horn to verify that the horn relay is functioning. 2. Substitute the horn relay for the fuel pump relay. 3. Leave the test light connected as in step 12. 4. Command the fuel pump "ON" with Tech 2. Did the test light illuminate for 2 seconds when the fuel pump was commanded "ON?"	—	Go to *Step 17*	Go to *Step 14*
14	1. Re-connect the horn relay in its proper location. 2. Check for a short circuit, blown fuse or open circuit between the relay and the fuel tank. Is the action complete?	—	Verify repair	—
15	1. With the fuel pump electrical connector at the fuel tank disconnected, connect a test light between the feed wire and the ground wire (harness side). 2. Command the fuel pump "ON" with Tech 2. Did the test light illuminate for 2 seconds?	—	Go to *Step 18*	Go to *Step 16*
16	Repair the open circuit in the fuel pump ground wire. Is the action complete?	—	Verify repair	—
17	1. Re-connect the horn relay in its proper location. 2. Replace the fuel pump relay. Is the action complete?	—	Verify repair	—
18	Replace the fuel pump. Is the action complete?	—	Verify repair	—

Fuel System Diagnosis

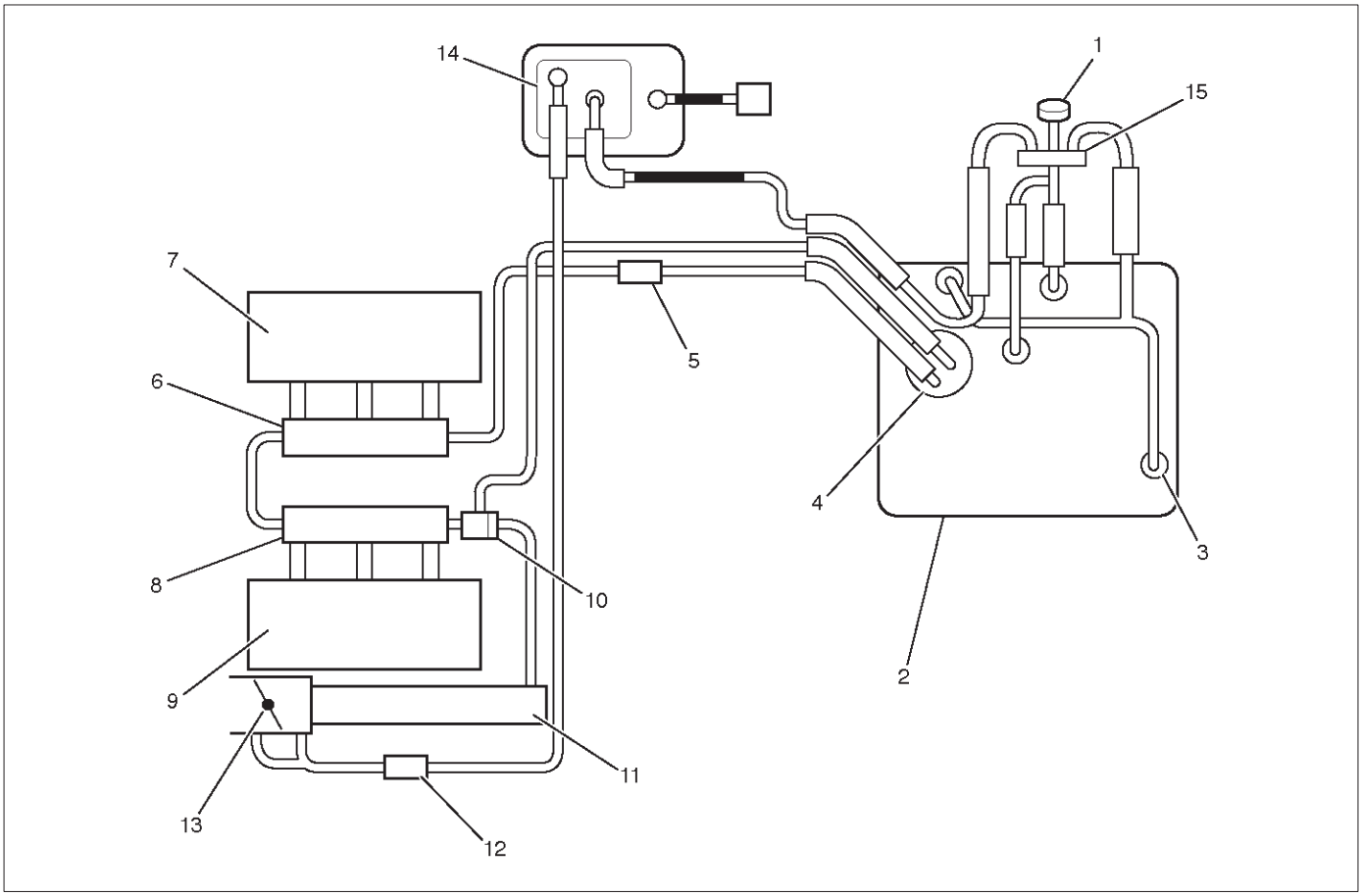

140RW020

Legend

(1) Fuel Filler Cap
(2) Fuel Tank
(3) Rollover Valve
(4) Fuel Pump and Sender Assembly
(5) Fuel Filter
(6) Fuel Rail Right
(7) Right Bank
(8) Fuel Rail Left
(9) Left Bank
(10) Fuel Pressure Control Valve
(11) Common Chamber
(12) Duty Solenoid Valve
(13) Throttle Valve
(14) Canister
(15) Evapo Shut Off Valve

Circuit Description

When the ignition switch is turned "ON," the powertrain control module (PCM) will turn "ON" the in-tank fuel pump. The in-tank fuel pump will remain "ON" as long as the engine is cranking or running and the PCM is receiving 58X crankshaft position pulses. If there are no 58X crankshaft position pulses, the PCM will turn the in-tank fuel pump "OFF" 2 seconds after the ignition switch is turned "ON" or 2 seconds after the engine stops running. The in-tank fuel pump is an electric pump within an integral reservoir. The in-tank fuel pump supplies fuel through an in-line fuel filter to the fuel rail assembly. The fuel pump is designed to provide fuel at a pressure above the pressure needed by the fuel injectors. A fuel pressure regulator, attached to the fuel rail, keeps the fuel available to the fuel injectors at a regulated pressure. Unused fuel is returned to the fuel tank by a separate fuel return line.

Test Description

Number(s) below refer to the step number(s) on the Diagnostic Chart.

2. Connect the fuel pressure gauge to the fuel feed line as shown in the fuel system illustration. Wrap a shop towel around the fuel pressure connection in order to absorb any fuel leakage that may occur when installing the fuel pressure gauge. With the ignition switch "ON" and the fuel pump running, the fuel pressure indicated by the fuel pressure gauge should be 333-376 kPa (48-55 psi). This pressure is controlled by the amount of pressure the spring inside the fuel pressure regulator can provide.
3. A fuel system that cannot maintain a constant fuel pressure has a leak in one or more of the following areas:
   - The fuel pump check valve.
   - The fuel pump flex line.

- The valve or valve seat within the fuel pressure regulator.
- The fuel injector(s).

4. Fuel pressure that drops off during acceleration, cruise, or hard cornering may case a lean condition. A lean condition can cause a loss of power, surging, or misfire. A lean condition can be diagnosed using a Tech II Tech 2. If an extremely lean condition occurs, the oxygen sensor(s) will stop toggling. The oxygen sensor output voltage(s) will drop below 500 mV. Also, the fuel injector pulse width will increase.

IMPORTANT: Make sure the fuel system is not operating in the "Fuel Cut-Off Mode."

When the engine is at idle, the manifold pressure is low (high vacuum). This low pressure (high vacuum) is applied to the fuel pressure regulator diaphragm. The low pressure (high vacuum) will offset the pressure being applied to the fuel pressure regulator diaphragm by the spring inside the fuel pressure regulator. When this happens, the result is lower fuel pressure. The fuel pressure at idle will vary slightly as the barometric pressure changes, but the fuel pressure at idle should always be less than the fuel pressure noted in step 2 with the engine "OFF."

16. Check the spark plug associated with a particular fuel injector for fouling or saturation in order to determine if that particular fuel injector is leaking. If checking the spark plug associated with a particular fuel injector for fouling or saturation does not determine that a particular fuel injector is leaking, use the following procedure:
    - Remove the fuel rail, but leave the fuel lines and injectors connected to the fuel rail. Refer to *Fuel Rail Assembly* in *On-Vehicle Service.*
    - Lift the fuel rail just enough to leave the fuel injector nozzles in the fuel injector ports.

CAUTION: In order to reduce the risk of fire and personal injury that may result from fuel spraying on the engine, verify that the fuel rail is positioned over the fuel injector ports and verify that the fuel injector retaining clips are intact.

- **Pressurize the fuel system by connecting a 10 amp fused jumper between B+ and the fuel pump relay connector.**
- **Visually and physically inspect the fuel injector nozzles for leaks.**

17. A rich condition may result from the fuel pressure being above 376 kPa (55 psi). A rich condition may cause a DTC P0132 or a DTC P0172 to set. Driveability conditions associated with rich conditions can include hard starting (followed by black smoke) and a strong sulfur smell in the exhaust.
20. This test determines if the high fuel pressure is due to a restricted fuel return line or if the high fuel pressure is due to a faulty fuel pressure regulator.
21. A lean condition may result from fuel pressure below 333 kPa (48 psi). A lean condition may cause a DTC P0131 or a DTC P0171 to set. Driveability conditions associated with lean conditions can include hard starting (when the engine is cold), hesitation, poor driveability, lack of power, surging , and misfiring.
22. Restricting the fuel return line causes the fuel pressure to rise above the regulated fuel pressure. Command the fuel pump "ON" with Tech 2. The fuel pressure should rise above 376 kPa (55 psi) as the fuel return line becomes partially closed.

NOTE: Do not allow the fuel pressure to exceed 414 kPa (60 psi). Fuel pressure in excess of 414 kPa (60 psi) may damage the fuel pressure regulator.

CAUTION: To reduce the risk of fire and personal injury:

- **It is necessary to relieve fuel system pressure before connecting a fuel pressure gauge. Refer to Fuel Pressure Relief Procedure, below.**
- **A small amount of fuel may be released when disconnecting the fuel lines. Cover fuel line fittings with a shop towel before disconnecting, to catch any fuel that may leak out. Place the towel in an approved container when the disconnect is completed.**

Fuel Pressure Relief Procedure

1. Remove the fuel cap.
2. Remove the fuel pump relay from the underhood relay center.
3. Start the engine and allow it to stall.
4. Crank the engine for an additional 3 seconds.

Fuel Gauge Installation

1. Remove the shoulder fitting cap.
2. Install fuel gauge 5-8840-0378-0 to the fuel feed line located in front of and above the right side valve train cover.
3. Reinstall the fuel pump relay.

Fuel System Diagnosis

Step	Action	Value(s)	Yes	No
1	Was the “On-Board Diagnostic (OBD) System Check” performed?	—	Go to *Step 2*	Go to *OBD System Check*
2	1. Turn the ignition “OFF.” 2. Turn the air conditioning system “OFF.” 3. Relieve fuel system pressure and install the fuel pressure gauge. 4. Turn the ignition “ON.” NOTE: The fuel pump will run for approximately 2 seconds. Use Tech 2 to command the fuel pump “ON”. 5. Observe the fuel pressure indicated by the fuel pressure gauge with the fuel pump running. Is the fuel pressure within the specified limits?	290-376 kPa (42-55 psi)	Go to *Step 3*	Go to *Step 17*
3	NOTE: The fuel pressure will drop when the fuel pump stops running, then it should stabilize and remain constant. Does the fuel pressure indicated by the fuel pressure gauge remain constant?	—	Go to *Step 4*	Go to *Step 12*
4	1. When the vehicle is at normal operation temperature, turn the ignition “ON” to build fuel pressure and observe the measurement on the gauge. 2. Start the engine and observe the fuel pressure gauge. Did the reading drop by the amount specified after the engine was started?	21-105 kPa (3-15 psi)	Go to *Step 5*	Go to *Step 9*
5	Is fuel pressure dropping off during acceleration, cruise, or hard cornering?	—	Go to *Step 6*	Check for improper fuel
6	Visually and physically inspect the following items for a restriction: ● The in-pipe fuel filter. ● The fuel feed line. Was a restriction found?	—	Verify repair	Go to *Step 7*
7	Remove the fuel tank and visually and physically inspect the following items: ● The fuel pump strainer for a restriction. ● The fuel line for a leak. ● Verify that the correct fuel pump is in the vehicle. Was a problem found in any of these areas?	—	Verify repair	Go to *Step 8*
8	Replace the fuel pump. Is the action complete?	—	Verify repair	—
9	1. Disconnect the vacuum hose from the fuel pressure regulator. 2. With the engine idling, apply 12-14 inches of vacuum to the fuel pressure regulator. Does the fuel pressure indicated by the fuel pressure gauge drop by the amount specified?	21-105 kPa (3-15 psi)	Go to *Step 10*	Go to *Step 11*

Fuel System Diagnosis (Cont'd)

Step	Action	Value(s)	Yes	No
10	Locate and repair the loss of vacuum to the fuel pressure regulator. Is the action complete?	—	Verify repair	—
11	Replace the fuel pressure regulator. Is the action complete?	—	Verify repair	—
12	1. Run the fuel pump with Tech 2. 2. After pressure has built up, turn off the pump and clamp the supply hose shut with suitable locking pliers. Does the fuel pressure indicated by the fuel pressure gauge remain constant?	—	Go to *Step 13*	Go to *Step 15*
13	Visually inspect the fuel supply line and repair any leaks. Was a problem found?	—	Verify repair	Go to *Step 14*
14	Remove the fuel tank and inspect for leaky hose or in-tank fuel line. Was a problem found?	—	Verify repair	Go to *Step 8*
15	1. If the pliers are still clamped to the fuel supply hose, remove the locking pliers. 2. With suitable locking pliers, clamp the fuel return line to prevent fuel from returning to the fuel tank. 3. Run the fuel pump with Tech 2. 4. After pressure has built up, remove power to the pump. Does the fuel pressure indicated by the fuel pressure gauge remain constant?	—	Go to *Step 11*	Go to *Step 16*
16	Locate and replace any leaking fuel injector(s). Is the action complete?	—	Verify repair	—
17	Is the fuel pressure indicated by the fuel pressure gauge above the specified limit?	376 kPa (55 psi)	Go to *Step 18*	Go to *Step 21*
18	1. Relieve the fuel pressure. Refer to the *Fuel Pressure Relief.* 2. Disconnect the fuel return line from the fuel rail. 3. Attach a length of flexible hose to the fuel rail return outlet passage. 4. Place the open end of the flexible hose into an approved gasoline container. 5. Run the fuel pump with Tech 2. 6. Observe the fuel pressure indicated by the fuel pressure gauge with the fuel pump running. Is the fuel pressure within the specified limits?	290-376 kPa (42-55 psi)	Go to *Step 19*	Go to *Step 20*
19	Locate and correct the restriction in the fuel return line. Is the action complete?	—	Verify repair	—
20	Visually and physically inspect the fuel rail outlet passages for a restriction. Was a restriction found?	—	Verify repair	Go to *Step 11*
21	Is the fuel pressure indicated by the fuel pressure gauge above the specified value?	0 kPa (0 psi)	Go to *Step 22*	Go to *Step 23*

Fuel System Diagnosis (Cont'd)

Step	Action	Value(s)	Yes	No
22	1. Command the fuel pump "ON" with Tech 2. 2. Using suitable pliers which will not damage the fuel hose, gradually apply pressure with the pliers to pinch the flexible fuel return hose closed. **CAUTION: Do not let the fuel pressure exceed the second specified value.** Does the fuel pressure indicated by the fuel pressure gauge rise above the first specified value?	376 kPa (55 psi) 414 kPa (60 psi)	Go to *Step 11*	Go to *Step 7*
23	1. Command the fuel pump "ON" with Tech 2. 2. Remove the fuel filler cap and listen for the sound of the fuel pump running. 3. Turn the pump off. Was the fuel pump running?	—	Go to *Step 7*	Go to *Fuel System Electrical Test Chart*

Idle Air Control (IAC) System Check

Circuit Description

The powertrain control module (PCM) controls engine idle speed with the idle air control (IAC) valve. To increase idle speed, the PCM retracts the IAC valve pintle away from its seat, allowing more air to bypass the throttle bore. To decrease idle speed, it extends the IAC valve pintle towards its seat, reducing by pass air flow. Tech 2 will read the PCM commands to the IAC valve in counts. Higher counts indicate more air bypass (higher idle). Lower counts indicate less air is allowed to bypass (lower idle).

Diagnostic Aids

A slow, unstable, or fast idle may be caused by a non-IAC system problem that cannot be overcome by the IAC valve. Out of control range IAC Tech 2 counts will be above 60 if idle is too low, and zero counts if idle is too high. The following checks should be made to repair a non-IAC system problem:

- Vacuum leak (high idle) – If idle is too high, stop the engine. Fully extend (low) IAC with the Tech 2. Start the engine. If idle speed is above 800 RPM, locate and correct the vacuum leak, including the PCV system. Check for binding of the throttle blade or linkage.
- Lean heated oxygen sensor signal (high air/fuel ratio) – The idle speed may be too high or too low. Engine speed may vary up and down, and disconnecting the IAC valve does not help. Diagnostic trouble codes P0131, P0151, P0171, or P0174 may be set. Tech 2 oxygen (O2) voltage will be less than 100 mV (0.1 V). Check for low regulated fuel pressure, water in fuel, or a restricted injector.
- Rich heated oxygen sensor signal (low air/fuel ratio) – The idle speed will be too low. Tech 2 IAC counts will usually be above 80. The system is obviously rich and may exhibit black smoke in the exhaust.

  Tech 2 O2 voltage will be fixed at about 750 mV (0.75 V). Check for high fuel pressure, or a leaking or sticking injector. A silicon-contaminated heated oxygen sensor will show an O2 voltage slow to respond on Tech 2.
- Throttle body – Remove the IAC valve and inspect the bore for foreign material.
- IAC valve electrical connections – IAC valve connections should be carefully checked for proper contact.
- PCV valve – An incorrect or faulty PCV valve may result in an incorrect idle speed. Refer to *Diagnosis, Rough Idle, Stalling.* If intermittent poor driveability or idle symptoms are resolved by disconnecting the IAC, carefully recheck the connections and valve terminal resistance, or replace the IAC.

Test Description

Number(s) below refer to the step number(s) on the Diagnostic Chart.

1. The Tech 2 is used to extend and retract the IAC valve. Valve movement is verified by an engine speed change. If no change in engine speed occurs, the valve can be resettled when removed from the throttle body.
2. This step checks the quality of the IAC movement in step 1. Between 700 revolutions per minute (RPM) and about 1500 RPM, the engine speed should change smoothly with each flash of the tester light in both extend and retract. If the IAC valve is retracted beyond the control range (about 1500 RPM), it may take many flashes to extend the IAC valve before engine speed will begin to drop. This is normal on certain engines. Fully extending the IAC may cause engine stall. This may be normal.

Idle Air Control (IAC) System Check

Step	Action	Value(s)	Yes	No
1	1. Ignition “OFF.” 2. Connect the Tech 2. 3. Set the parking brake. 4. Block the wheels. 5. Turn the air conditioning “OFF.” 6. Idle the engine in Park (A/T) or Neutral (M/T). 7. Operate the IAC test. 8. The engine speed should decrease and increase as the IAC is cycled. Does the RPM change?	—	Go to *Step 2*	Go to *Step 3*
2	RPM should change smoothly. Does the RPM change within the range specified?	700-1500 RPM	—	Go to *Step 3*
3	Check the IAC passages. Are the IAC passages OK?	—	Go to *Step 4*	Go to *Step 5*
4	Clear any obstruction from the IAC passages. Is the action complete?	—	Verify repair	—
5	Replace the IAC. Refer to *On-Vehicle Service, Idle Air Control Valve.* Is the action complete?	—	Verify repair	—

Knock Sensor (KS) System Check (Engine Knock, Poor Performance, or Poor Economy)

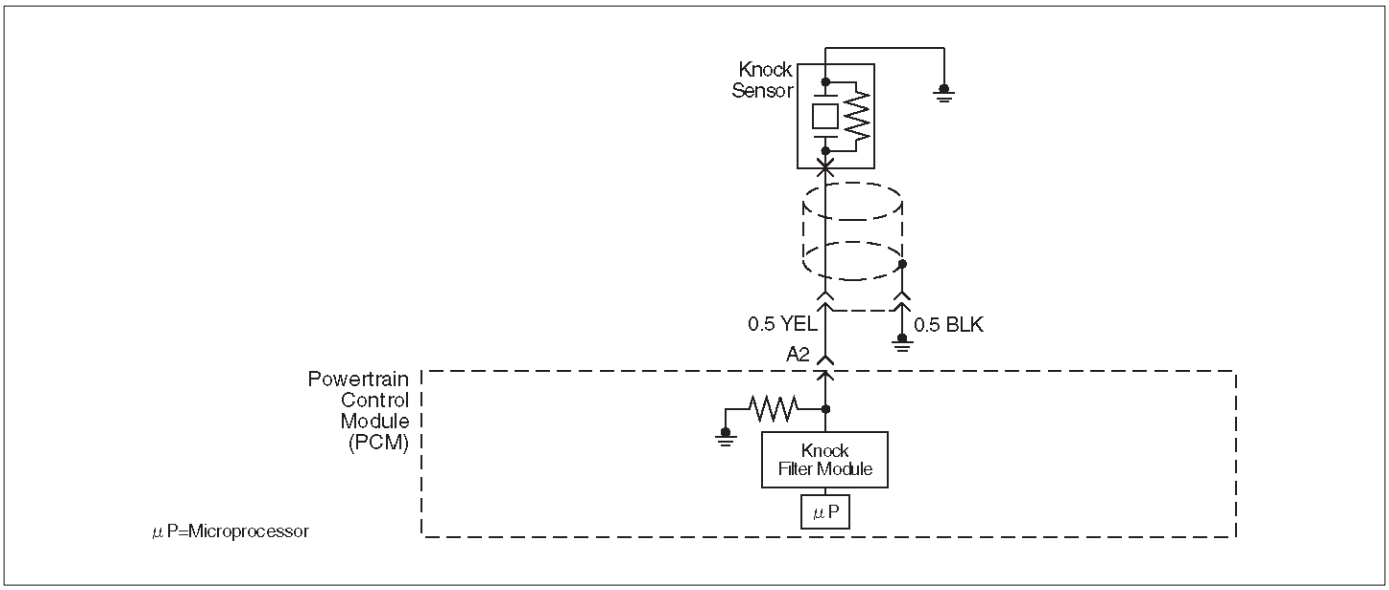

D06RW035

Circuit Description

The knock sensor (KS) sends an AC voltage signal to the powertrain control module (PCM). As the KS detects engine knock, the signal to the PCM changes in amplitude and frequency. The PCM retards timing if the engine speed is over 900 RPM.

Diagnostic Aids

If the KS system checks OK, but detonation is the complaint, refer to *Diagnosis, Detonation/Spark Knock.*

Test Description

The numbers below refer to the step numbers on the Diagnostic Chart.

9. The change in signal speed depends on how hard the tapping is done. Normally there is about 1.5 to 10 mV at PCM pin A2 with the engine off. Loud tapping should be able to make the reading jump to 20-25 mV AC.

Knock Sensor (KS) System Check (Engine Knock, Poor Performance, or Poor Economy)

Step	Action	Value(s)	Yes	No
1	Is DTC P0325 or P0327 set?	—	Go to *DTC P0325 or DTC P0327*	Go to *Step 2*
2	Run the engine at 1500 RPM. Is there an internal engine knock?	—	Go to *Step 3*	Go to *Step 4*
3	Repair the mechanical problem. Is the action complete?	—	Verify repair	—
4	1. Install Tech 2. 2. Turn the ignition “ON.” 3. Cycle through the list until “Knock Retard” is displayed. Is knock retard at the specified value?	0˚	Go to *Step 6*	Go to *Step 7*
5	Replace the PCM. **IMPORTANT:** The replacement PCM must be programmed. Refer to *UBS 98model year Immobilizer Workshop Manual.* Is the action complete?	—	Verify repair	—
6	1. Start the engine. 2. Monitor the knock retard display on Tech 2 while changing the throttle setting to place different loads on the engine. Is knock retard at the specified value? (Turn the ignition “OFF.”)	0˚	Go to *Step 9*	Go to *Step 7*
7	1. At the rear of the engine, behind the rear fuel injector on the lift side, disconnect the 2-wire knock sensor harness connector. 2. Attach the positive lead of DVM to B+. 3. On the main harness side of the connector, use the negative lead of the DVM to probe the connector pin that is connected to the black wire. Dose the DVM indicate the specified value? (Reconnect the knock sensor harness.)	B+	Go to *Step 9*	Go to *Step 8*
8	Repair the open black wire ground for the shield which prevents stray electromagnetic pulses from affecting the knock signal. Is the action complete?	—	Verify repair	—
9	1. Reconnect the wire harness. 2. Set a DVM to AC voltage. 3. With the DVM, backprobe the PCM connector at A2. 4. Tap the engine lift brackprobe with a socket extension. Did the DVM show an increase in AC voltage while tapping on the lift bracket?	—	System OK	Go to *Step 10*
10	Replace the knock sensor. Is the action complete?	—	Verify repair	—

Exhaust Gas Recirculation (EGR) System Check

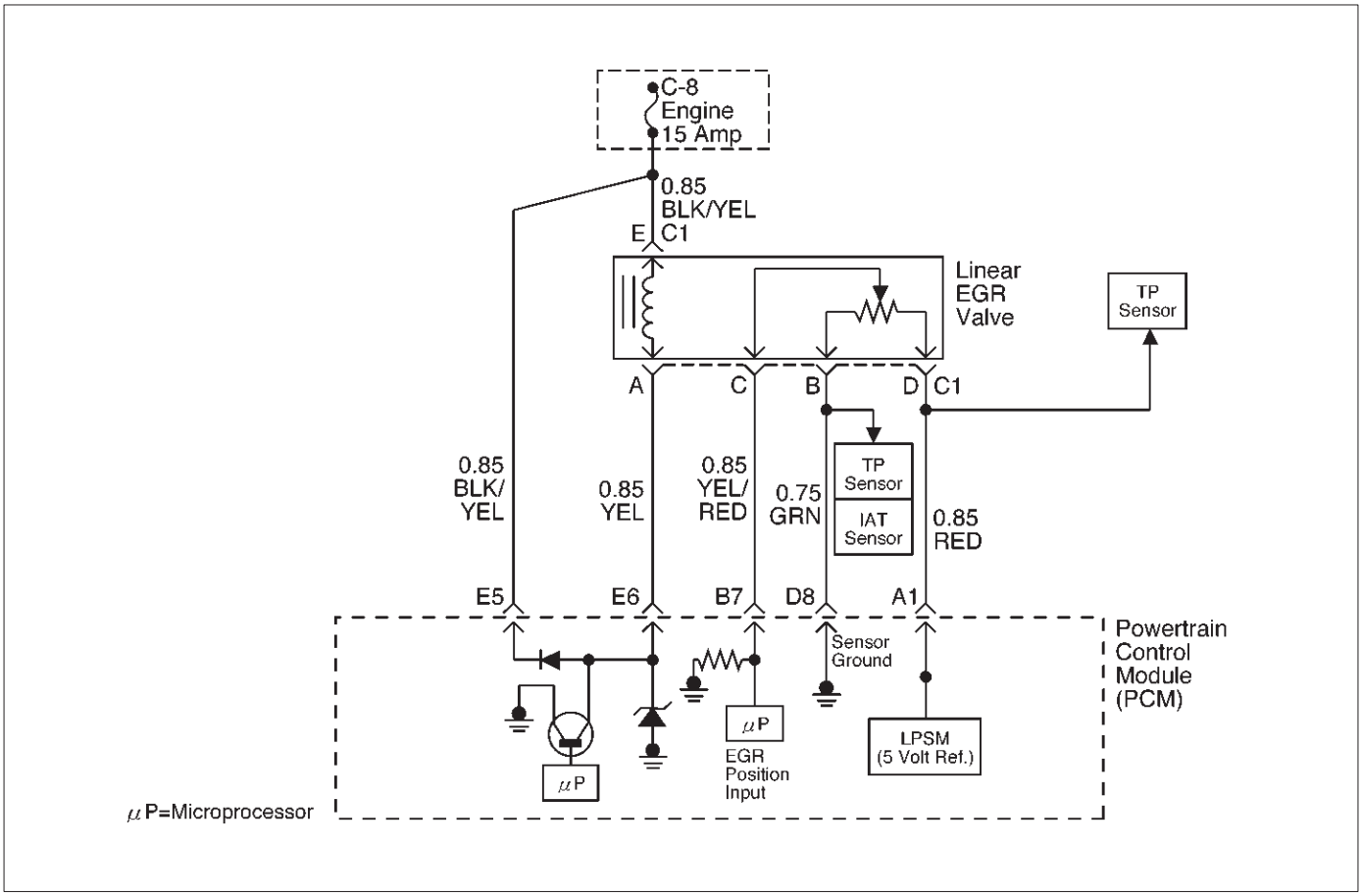

D06RW106

Circuit Description

A properly operation exhaust gas recirculation (EGR) system will directly affect the air/fuel requirements of the engine. Since the exhaust gas introduced into the air/fuel mixture is an inert gas (contains very little or no oxygen), less fuel is required to maintain a correct air/fuel ratio.

Introducing exhaust gas into the combustion chamber lowers combustion temperatures and reduces the formation of oxides of nitrogen (NOx) in the exhaust gas. Lower combustion temperatures also prevent detonation. If the EGR pintle were to stay closed, the inert exhaust gas would be replaced with air and the air/fuel mixture would be leaner. The powertrain control module (PCM) would compensate for the lean condition by adding fuel, resulting in higher long term fuel trim values.

Diagnostic Aids

The EGR valve chart is a check of the EGR system. An EGR pintle constantly in the closed position could cause detonation and high emissions of NOx. It could also result in high long term fuel trim values in the open throttle cell, but not in the closed throttle cell. An EGR pintle constantly in the open position would cause a rough idle. Also, an EGR mounted incorrectly (rotated 180˚) could cause rough idle. Check for the following items:

- EGR passages – Check for restricted or blocked EGR passages.
- Manifold absolute pressure sensor – A manifold absolute pressure sensor may shift in calibration enough to affect fuel delivery. Refer to *Manifold Absolute Pressure Output Check.*

Exhaust Gas Recirculation (EGR) System Check

Step	Action	Value(s)	Yes	No
1	Check the EGR valve for looseness. Is the EGR valve Loose?	—	Go to *Step 2*	Go to *Step 3*
2	Tighten the EGR valve. Is the action complete?	—	Verify repair	—
3	1. Place the transmission selector in Park or Neutral. 2. Start the engine and idle until warm. 3. Using Tech 2, command EGR “50% ON.” Does the engine idle rough and lose RPMs?	—	EGR system working properly. No problem found.	Go to *Step 4*
4	1. Engine “OFF.” 2. Ignition “ON.” 3. Using a test light to ground, check the EGR harness between the EGR valve and the ignition feed. Does the test light illuminate?	—	Go to *Step 6*	Go to *Step 5*
5	Repair the EGR harness ignition feed. Was the problem corrected?	—	Verify repair	Go to *Step 6*
6	1. Remove the EGR valve. 2. Visually and physically inspect the EGR valve pintle, valve passages and adapter for excessive deposits, obstructions or any restrictions. Does the EGR valve have excessive deposits, obstructions or any restrictions?	—	Go to *Step 7*	Go to *Step 8*
7	Clean or replace EGR system components as necessary. Was the problem corrected?	—	Verify repair	Go to *Step 8*
8	1. Ground the EGR valve metal case to battery (–). 2. Using Tech 2, command EGR “ON” and observe the EGR valve pintle for movement. Does the EGR valve pintle move according to command?	—	Go to *Step 9*	Go to *DTC P1406 chart*
9	1. Remove the EGR inlet and outlet pipes from the intake and exhaust manifolds. 2. Visually and physically inspect manifold EGR ports and EGR inlet and outlet pipes for blockage or restriction caused by excessive deposits or other damage. Do the manifold EGR ports or inlet and outlet pipes have excessive deposits, obstructions, or any restrictions?	—	Go to *Step 10*	EGR system working properly. No problem found.
10	Clean or replace EGR system components as necessary. Is the action complete?	—	Verify repair	—

Manifold Absolute Pressure (MAP) Output Check

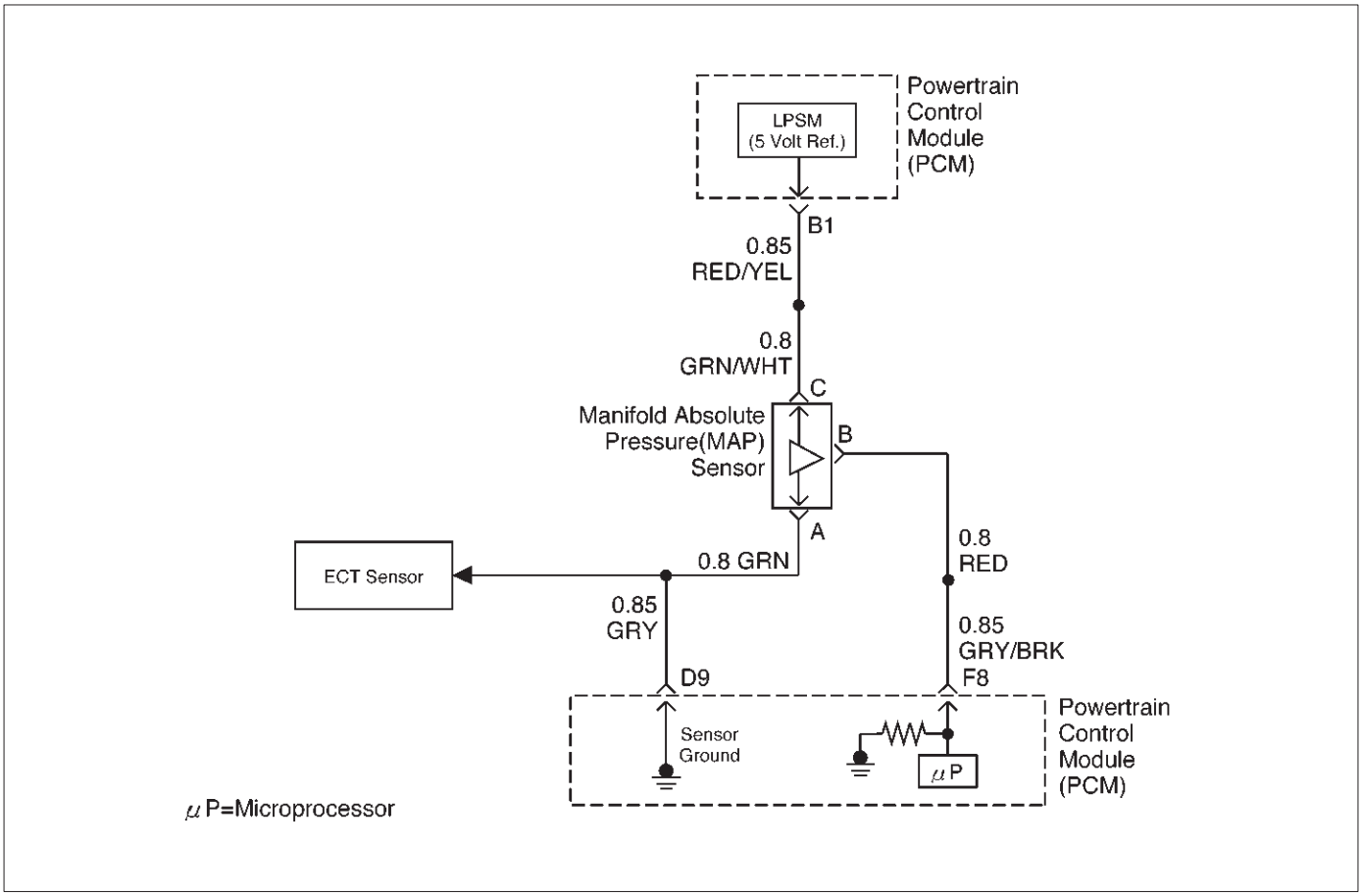

D06RW102

Circuit Description

The manifold absolute pressure (MAP) sensor measures the changes in the intake MAP which result from engine load (intake manifold vacuum) and engine speed changes; and converts these into a voltage output. The powertrain control module (PCM) sends a 5-volt reference voltage to the MAP sensor. As the MAP changes, the output voltage of the sensor also changes. By monitoring the the sensor output voltage, the PCM knows the MAP. A lower pressure (low voltage) output voltage will be about 1-2 volts at idle. Higher pressure (high voltage) output voltage will be about 4-4.8 volts at wide open throttle. The MAP sensor is also used, under certain conditions, to measure barometric pressure, allowing the PCM to make adjustments for different altitudes. The PCM uses the MAP sensor to diagnose proper operation of the EGR system, in addition to other functions.

Test Description

IMPORTANT: Be sure to used the same diagnostic test equipment for all measurements.

The number(s) below refer to the step number(s) on the Diagnostic Chart.

2. Applying 34 kPa (10 Hg) vacuum to the MAP sensor should cause the voltage to be 1.5-2.1 volts less than the voltage at step 1. Upon applying vacuum to the sensor, the change in voltage should be instantaneous. A slow voltage change indicates a faulty sensor.
3. Check the vacuum hose to the sensor for leaking or restriction, Be sure that no other vacuum devices are connected to the MAP hose.

IMPORTANT: Make sure the electrical connector remains securely fastened.

4. Disconnect the sensor from the bracket. Twist the sensor with your hand to check for an intermittent connection. Output changes greater than 0.10 volt indicate a bad sensor.

Manifold Absolute Pressure (MAP) Output Check

Step	Action	Value(s)	Yes	No
1	1. Turn the ignition “OFF”and leave it “OFF” for 15 seconds. 2. Ignition “ON.” Don’t crank engine. 3. Tech 2 should indicate a manifold absolute pressure (MAP) sensor voltage. 4. Compare this scan reading to scan reading of a known good vehicle obtained using the exact same procedure as in Steps 1-4. Is the voltage reading the same +/–0.40 volt?	—	Go to *Step 2*	Go to *Step 5*
2	1. Disconnect the vacuum hose at the MAP sensor and plug the hose. 2. Connect a hand vacuum pump to the MAP sensor. 3. Start the engine. 4. Apply 34 kPa (10 Hg) of vacuum and note the voltage change. Is the voltage change 1.5-2.1 volts less than Step 1?	—	Go to *Step 3*	Go to *Step 4*
3	No trouble found. Check the sensor cover for leakage or restriction. Does the hose supply vacuum to the MAP sensor only?	—	Go to *Step 5*	Go to *Step 4*
4	Repair the material to block. Is the action complete?	—	Verify repair	—
5	Check the sensor connection. Is the sensor connection good?	—	Go to *Step 6*	Go to *Step 7*
6	Replace the sensor. Refer to *On-Vehicle Service, MAP Sensor.* Is the action complete?	—	Verify repair	—
7	Repair the poor connection. Is the action complete?	—	Verify repair	—

PCM Diagnostic Trouble Codes

The following table lists the diagnostic trouble codes supported by this vehicle application. If any DTCs not listed here are displayed by a Tech 2, the Tech 2 data may be faulty; notify the Tech 2 manufacturer of any DTCs displayed that are not included in the following table.

A - Emission related P-code, check engine light on as soon as a failure detected.

B - Emission related P-code, check engine light on if a failure detected in two consecutive trips.

C - Non emission related P-code, check engine light on if a failure detected in one trip.

D - Non emission related P-code, no check engine light, but P-code will be set if a failure detected.

X - Do not check.

PCM Diagnostic Trouble Codes

DTC	Description / Countries	G. EXP A/T w/o immobi	G. EXP M/T w/o immobi	EC A/T w/ immobi	EC A/T w/o immobi	EC M/T w/ immobi	EC M/T w/o immobi	AUST A/T w/ immobi	AUST M/T w/ immobi
P0101	MAF system performance	B	B	B	B	B	B	B	B
P0102	MAF sensor circuit low frequency	A	A	A	A	A	A	A	A
P0103	MAF sensor circuit high frequency	A	A	A	A	A	A	A	A
P0107	MAP sensor circuit low voltage	A	A	A	A	A	A	A	A
P0108	MAP sensor circuit high voltage	A	A	A	A	A	A	A	A
P0112	ITA sensor circuit low voltage	A	A	A	A	A	A	A	A
P0113	ITA sensor circuit high voltage	A	A	A	A	A	A	A	A
P0117	ETC sensor circuit low voltage	A	A	A	A	A	A	A	A
P0118	ETC sensor circuit high voltage	A	A	A	A	A	A	A	A
P0121	TP system performance	A	A	A	A	A	A	A	A
P0122	TP sensor circuit low voltage	A	A	A	A	A	A	A	A
P0123	TP sensor circuit high voltage	A	A	A	A	A	A	A	A
P0131	HO2S circuit low voltage bank 1 sensor 1	X	X	A	A	A	A	A	A
P0132	HO2S circuit high voltage bank 1 sensor 1	X	X	A	A	A	A	A	A
P0134	HO2S circuit insufficient activity bank 1 sensor 1	X	X	X	X	X	X	A	A
P0151	HO2S circuit low voltage bank 2 sensor 1	X	X	A	A	A	A	X	X
P0152	HO2S circuit high voltage bank 2 sensor 1	X	X	A	A	A	A	X	X
P0171	Fuel trim system lean bank 1	X	X	B	B	B	B	B	B
P0172	Fuel trim system rich bank 1	X	X	B	B	B	B	B	B
P0174	Fuel trim system lean bank 2	X	X	B	B	B	B	X	X
P0175	Fuel trim system rich bank 2	X	X	B	B	B	B	X	X
P0201	Injector 1 control circuit	A	A	A	A	A	A	A	A
P0202	Injector 2 control circuit	A	A	A	A	A	A	A	A
P0203	Injector 3 control circuit	A	A	A	A	A	A	A	A
P0204	Injector 4 control circuit	A	A	A	A	A	A	A	A
P0205	Injector 5 control circuit	A	A	A	A	A	A	A	A
P0206	Injector 6 control circuit	A	A	A	A	A	A	A	A
P0218	T overtemp	D	X	D	D	X	X	D	X
P0325	KS sensor circuit	B	B	B	B	B	B	B	B
P0327	KS sensor circuit	B	B	B	B	B	B	B	B
P0336	58X reference signal circuit	B	B	B	B	B	B	B	B
P0337	CKP sensor circuit low frequency	B	B	B	B	B	B	B	B
P0341	CMP sensor circuit performance	B	B	B	B	B	B	B	B
P0342	CMP sensor circuit low	B	B	B	B	B	B	B	B
P0351	Injector 1 control circuit	A	A	A	A	A	A	A	A
P0352	Injector 2 control circuit	A	A	A	A	A	A	A	A
P0353	Injector 3 control circuit	A	A	A	A	A	A	A	A
P0354	Injector 4 control circuit	A	A	A	A	A	A	A	A
P0355	Injector 5 control circuit	A	A	A	A	A	A	A	A
P0356	Injector 6 control circuit	A	A	A	A	A	A	A	A
P0402	EGR pintle crank error	X	X	B	B	B	B	A	A
P0404	EGR open stuck	X	X	B	B	B	B	A	A
P0405	EGR low voltage	X	X	A	A	A	A	A	A
P0406	EGR high voltage	X	X	A	A	A	A	A	A
P0502	VSS circuit low input	B	B	B	B	B	B	B	B
P0560	T voltage	C	X	C	C	X	X	C	X
P0562	System voltage low	D	D	D	D	D	D	D	D
P0563	System voltage high	B	B	B	B	B	B	B	B
P0601	PCM memory	A	A	A	A	A	A	A	A
P0705	T range circuit	D	X	D	D	X	X	D	X
P0706	T range rat	D	X	D	D	X	X	D	X
P0712	T temp LO	D	X	D	D	X	X	D	X
P0713	T temp HI	D	X	D	D	X	X	D	X
P0719	T switch B LO	D	X	D	D	X	X	D	X
P0722	T shaft speed no signal	C	X	C	C	X	X	C	X
P0723	T shaft speed rat	C	X	C	C	X	X	C	X
P0730	T gear ratio	C	X	C	C	X	X	C	X
P0748	press solenoid circuit	C	X	C	C	X	X	C	X
P0753	T solenoid A circuit	C	X	C	C	X	X	C	X
P0758	T solenoid B circuit	C	X	C	C	X	X	C	X
P1127	CO ADJUST ERROR	A	A	X	X	X	X	X	X
P1154	HO2S circuit transition time ratio bank 2 sensor 1	X	X	A	A	A	A	X	X
P1171	Fuel system lean during acceleration	X	X	A	A	A	A	A	A
P1380	ABS rough road ABS system fault	X	X	X	X	X	X	A	A
P1404	EGR closed stuck	X	X	B	B	B	B	A	A
P1508	IAC system low RPM	B	B	B	B	B	B	B	B
P1509	IAC system high RPM	B	B	B	B	B	B	B	B
P1618	Serial peripheral interface(SPI)	C	X	C	C	X	X	C	X
P1625	PCM unexpected reset	D	D	D	D	D	D	D	D
P1626	immobi no response	X	X	D	X	D	X	D	D
P1631	immobi incorrect response	X	X	D	X	D	X	D	D
P1640	Driver 1 input high voltage	D	D	D	D	D	D	D	D
P1648	immobi wrong key	X	X	D	X	D	X	D	D
P1649	immobi no key	X	X	D	X	D	X	D	D
P1790	T ROM checksum	C	X	C	C	X	X	C	X
P1792	EEPROM checksum	C	X	C	C	X	X	C	X
P1835	T kick down switch	D	X	D	D	X	X	D	X
P1850	brake band solenoid	D	X	D	D	X	X	D	X
P1860	TCC PWM circuit	D	X	D	D	X	X	D	X

PCM Diagnostic Trouble Codes (Cont'd)

DTC	Description / Countries	LAO A/T w/o immobi	LAO M/T w/o immobi	S.A. M/T w/ ommobi	SAUD/CHINA A/T w/o immobi	SAUD/CHINA M/T w/o immobi
P0101	MAF system performance	B	B	B	B	B
P0102	MAF sensor circuit low frequency	A	A	A	A	A
P0103	MAF sensor circuit high frequency	A	A	A	A	A
P0107	MAP sensor circuit low voltage	A	A	A	A	A
P0108	MAP sensor circuit high voltage	A	A	A	A	A
P0112	ITA sensor circuit low voltage	A	A	A	A	A
P0113	ITA sensor circuit high voltage	A	A	A	A	A
P0117	ETC sensor circuit low voltage	A	A	A	A	A
P0118	ETC sensor circuit high voltage	A	A	A	A	A
P0121	TP system performance	A	A	A	A	A
P0122	TP sensor circuit low voltage	A	A	A	A	A
P0123	TP sensor circuit high voltage	A	A	A	A	A
P0131	HO2S circuit low voltage bank 1 sensor 1	A	A	X	A	A
P0132	HO2S circuit high voltage bank 1 sensor 1	A	A	X	A	A
P0134	HO2S circuit insufficient activity bank 1 sensor 1	A	A	X	X	X
P0151	HO2S circuit low voltage bank 2 sensor 1	X	X	X	A	A
P0152	HO2S circuit high voltage bank 2 sensor 1	X	X	X	A	A
P0171	Fuel trim system lean bank 1	B	B	X	B	B
P0172	Fuel trim system rich bank 1	B	B	X	B	B
P0174	Fuel trim system lean bank 2	X	X	X	B	B
P0175	Fuel trim system rich bank 2	X	X	X	B	B
P0201	Injector 1 control circuit	A	A	A	A	A
P0202	Injector 2 control circuit	A	A	A	A	A
P0203	Injector 3 control circuit	A	A	A	A	A
P0204	Injector 4 control circuit	A	A	A	A	A
P0205	Injector 5 control circuit	A	A	A	A	A
P0206	Injector 6 control circuit	A	A	A	A	A
P0218	T overtemp	D	X	X	D	X
P0325	KS sensor circuit	B	B	B	B	B
P0327	KS sensor circuit	B	B	B	B	B
P0336	58X reference signal circuit	B	B	B	B	B
P0337	CKP sensor circuit low frequency	B	B	B	B	B
P0341	CMP sensor circuit performance	B	B	B	B	B
P0342	CMP sensor circuit low	B	B	B	B	B
P0351	Injector 1 control circuit	A	A	A	A	A
P0352	Injector 2 control circuit	A	A	A	A	A
P0353	Injector 3 control circuit	A	A	A	A	A
P0354	Injector 4 control circuit	A	A	A	A	A
P0355	Injector 5 control circuit	A	A	A	A	A
P0356	Injector 6 control circuit	A	A	A	A	A
P0402	EGR pintle crank error	A	A	X	B	B
P0404	EGR open stuck	A	A	X	B	B
P0405	EGR low voltage	A	A	X	A	A
P0406	EGR high voltage	A	A	X	A	A
P0502	VSS circuit low input	B	B	B	B	B
P0560	T voltage	C	X	X	C	X
P0562	System voltage low	D	D	D	D	D
P0563	System voltage high	B	B	B	B	B
P0601	PCM memory	A	A	A	A	A
P0705	T range circuit	D	X	X	D	X
P0706	T range rat	D	X	X	D	X
P0712	T temp LO	D	X	X	D	X
P0713	T temp HI	D	X	X	D	X
P0719	T switch B LO	D	X	X	D	X
P0722	T shaft speed no signal	C	X	X	C	X
P0723	T shaft speed rat	C	X	X	C	X
P0730	T gear ratio	C	X	X	C	X
P0748	press solenoid circuit	C	X	X	C	X
P0753	T solenoid A circuit	C	X	X	C	X
P0758	T solenoid B circuit	C	X	X	C	X
P1127	CO ADJUST ERROR	X	X	A	X	X
P1154	HO2S circuit transition time ratio bank 2 sensor 1	X	X	X	A	A
P1171	Fuel system lean during acceleration	A	A	X	A	A
P1380	ABS rough road ABS system fault	A	A	X	X	X
P1404	EGR closed stuck	A	A	X	B	B
P1508	IAC system low RPM	B	B	B	B	B
P1509	IAC system high RPM	B	B	B	B	B
P1618	Serial peripheral interface(SPI)	C	X	X	C	X
P1625	PCM unexpected reset	D	D	D	D	D
P1626	immobi no response	X	X	D	X	X
P1631	immobi incorrect response	X	X	D	X	X
P1640	Driver 1 input high voltage	D	D	D	D	D
P1648	immobi wrong key	X	X	D	X	X
P1649	immobi no key	X	X	D	X	X
P1790	T ROM checksum	C	X	X	C	X
P1792	EEPROM checksum	C	X	X	C	X
P1835	T kick down switch	D	X	X	D	X
P1850	brake band solenoid	D	X	X	D	X
P1860	TCC PWM circuit	D	X	X	D	X

Diagnostic Trouble Code (DTC) P0101 MAF System Performance

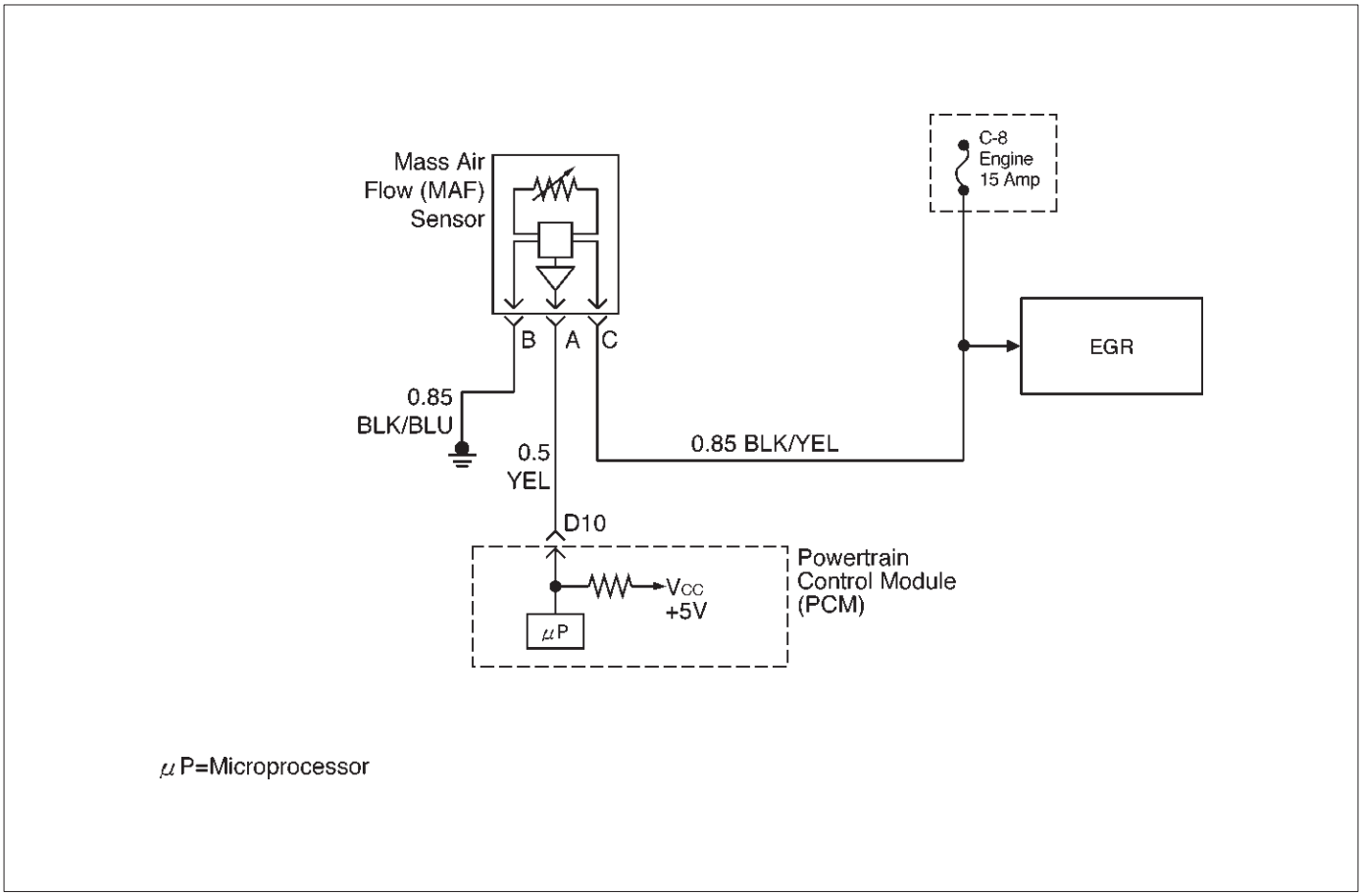

D06RW103

Circuit Description

The mass air flow (MAF) sensor measures the amount of air which passes through it into the engine during a given time. The powertrain control module (PCM) uses the mass air flow information to monitor engine operating conditions for fuel delivery calculations. A large quantity of air entering the engine indicates an acceleration or high load situation, while a small quantity or air indicates deceleration or idle.

The MAF sensor produces a frequency signal which can be monitored using a Tech 2. DTC P0101 will be set if the signal from the MAF sensor does not match a predicted value based on throttle position and engine RPM.

Conditions for Setting the DTC

- The engine is running.
- No TP sensor or MAP sensor DTCs are set.
- The throttle is steady, TP angle doesn't change by more than 1%.
- System voltage is between 11.5 volts and 16 volts.
- Calculated air flow is between 25 g/second and 40 g/second.
- Above conditions present for at least 1 second.
- MAF signal frequency indicates an airflow significantly higher or lower than a predicted value based on throttle position and engine RPM for a total of 12.5 seconds over a 25-second period of time.

Action Taken When the DTC Sets

- The PCM will illuminate the malfunction indicator lamp (MIL) after the second consecutive trip in which the fault is detected.
- The PCM calculates an airflow value based on idle air control valve position, throttle position, RPM and barometric pressure.
- The PCM will store conditions which were present when the DTC was set as Freeze Frame and in the Failure Records data.

Conditions for Clearing the MIL/DTC

- DTC P0101 can be cleared by using the Tech 2 "Clear Info" function or by disconnecting the PCM battery feed.

Diagnostic Aids

An intermittent may be caused by the following:

- Poor connections.
- Mis-routed harness.
- Rubbed through wire insulation.
- Broken wire inside the insulation.

Refer to Intermittents under service category Symptoms.

Any un-metered air may cause this DTC to set. Check for the following:

- The duct work at the MAF sensor for leaks.
- An engine vacuum leak.
- The PCV system for vacuum leaks.
- An incorrect PCV valve.

- The engine oil dip stick not fully seated.
- The engine oil fill cap loose or missing.

Test Description

Number(s) below refer to the step number(s) on the Diagnostic Chart.

2. The MAF system performance or “rationality” diagnostic uses the MAP sensor signal along with other input to calculate an expected airflow rate that is then compared to the actual measured airflow from the MAF sensor. The first few steps of this table verify that the MAP sensor is working properly.

6. Using Freeze Frame and/or Failure Records data may aid in locating an intermittent condition. If the DTC cannot be duplicated, the information included in the Freeze Frame and/or Failure Records data can be useful in determining how many miles since the DTC set. The Fail Counter and Pass Counter can also be used to determine how many ignition cycles the diagnostic reported a pass and/or a fail. Operate the vehicle within the same Freeze Frame conditions (RPM, load, vehicle speed , temperature, etc.) that were noted. This will isolate when the DTC failed.

   For any test that requires back probing the PCM or component harness connectors, use the Connector Test Adapter Kit J 35616-A. Using this kit will prevent any damage to the harness connector terminals.

7. Any un-metered air may cause this DTC to set. Check the PVC system for vacuum leaks. Also inspect the dip stick for being pulled out. Check the oil fill cap for being loose.

8. Verifies the signal circuit from the MAF sensor electrical connector to the PCM.

9. Verifies whether a ground and B+ circuit is available.

10. Checks a signal circuit for an open.

11. Checks for a signal circuit shorted to B+.

DTC P0101 – MAF System Performance

Step	Action	Value(s)	Yes	No
1	Was the “On-Board Diagnostic (OBD) System Check” performed?	—	Go to *Step 2*	Go to *OBD System Check*
2	1. Ignition “ON,” engine “OFF.” 2. Using a Tech 2, select “MAP” from the Engine 1 Data List. Is the value displayed greater than the value shown?	85 kPa	Go to *Step 3*	Go to*Step 13*
3	1. Remove the MAP sensor from the intake manifold but leave the electrical harness connected. 2. Connect a hand operated vacuum pump to the MAP sensor. 3. Observe the MAP display while slowly applying vacuum up to 20” Hg as indicated on the pump gauge. Each 1” of vacuum applied should result in a 3 to 4 kPa drop in the MAP sensor value on the Tech 2 and the value should change smoothly with each increase in vacuum. Did the MAP value change smoothly through the entire range of the test without any erratic readings?	—	Go to *Step 13*	Go to *Step 4*
4	With 20” Hg vacuum applied to the MAP sensor, is the MAF sensor reading the same or less than the value shown?	34 kPa	Go to *Step 5*	Go to *Step 13*
5	Disconnect the vacuum source from the MAP sensor. Does the MAP sensor reading return to its original value?	—	Go to *Step 6*	Go to *Step 13*

DTC P0101 – MAF System Performance (Cont'd)

Step	Action	Value(s)	Yes	No
6	1. Ignition "ON," engine "OFF." 2. Review the Freeze Frame and/or Failure Records data for this DTC and note parameters. 3. Ignition "OFF" for 15 seconds. 4. Start the engine and operate the vehicle within the conditions required for this diagnostic to run, and as close to the conditions recorded in Freeze Frame /Failure Records possible. (Special operating conditions that need to be met before the PCM will run this diagnostic (where applicable) are listed in "Conditions for Setting the DTC"). 5. Using the Tech 2, select "DTC," then enter the DTC number which was set. Does the Tech 2 indicate that this diagnostic failed this ignition?	—	Go to *Step 7*	Refer to *Diagnostic Aids*
7	1. Check for the following conditions: • Objects blocking the MAF sensor inlet screen; • Intake manifold vacuum leaks; • Vacuum leaks at throttle body; • Vacuum leaks EGR value flange and pipes. • Crankcase ventilation valve faulty, missing, or incorrectly installed. 2. If a problem is found, repair as necessary. Was a problem found?	—	Verify repair	Go to*Step 8*
8	1. Ignition "OFF." 2. Disconnect the MAF sensor connector. 3. Ignition "ON," engine "OFF." 4. Using DVM 5-8840-0285-0, measure voltage between the MAF sensor signal circuit and chassis ground. Is the voltage near the specified value?	5 V	Go to *Step 9*	Go to*Step 10*
9	Connect a test light (5-8840-0607-0) between the MAF sensor ignition feed and ground circuits at the MAF sensor harness connector. Is the test light "ON?"	—	Go to *Step 13*	Go to*Step 12*
10	Is the voltage less than the specified value?	4.5 V	Go to *Step 13*	Go to*Step 11*
11	1. Ignition "OFF," disconnect the PCM. 2. Ignition "ON," engine "OFF." 3. Measure voltage between the MAF signal circuit and ground. Does the voltage measure near the specified value?	0 V	Go to *Step 13*	Go to*Step 12*
12	Connect a test light (5-8840-0607-0) between the MAF sensor ignition feed circuit and chassis ground. Is the test light "ON?"	—	Go to *Step 13*	Go to*Step 7*
13	1. Check for a poor connection at the MAF sensor. 2. If a poor connection is found, replace faulty terminal(s). Refer to *Repair Procedures in Electrical Diagnosis (8A Cell 5).* Was a poor connection found?	—	Verify repair	Solved

Diagnostic Trouble Code (DTC) P0102 MAF Sensor Circuit Low Frequency

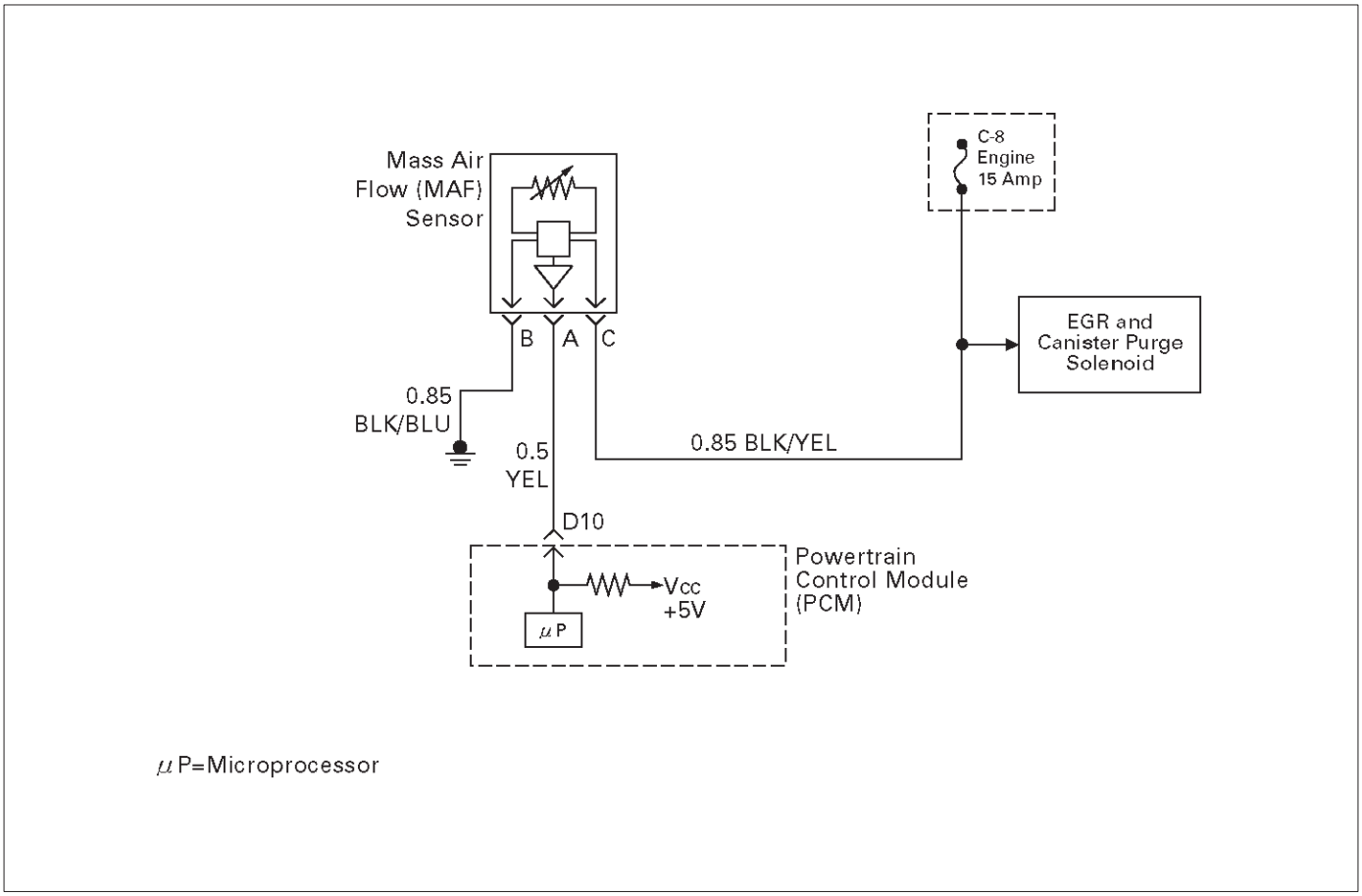

T321122

Circuit Description

The mass air flow (MAF) sensor measures the amount of air which passes through it into the engine during a given time. The powertrain control module (PCM) uses the mass air flow information to monitor engine operating conditions for fuel delivery calculations. A large quantity of air entering the engine indicates an acceleration or high load situation, while a small quantity of air indicates deceleration or idle.

The MAF sensor produces a frequency signal which can be monitored using a Tech 2. The frequency will vary within a range of around 2500 Hz at idle to around 1900 Hz at maximum engine load. DTC P0102 will be set if the signal from the MAF sensor is below the possible range of a normally operating MAF sensor.

Conditions for Setting the DTC

- The engine is running above 500 RPM for greater than 10 seconds.
- System voltage is above 11.5 volts.
- MAF signal frequency is below 1000 Hz for a total of 50-percent of the last 1000 samples monitored. A sample is taken every cylinder event.

Action Taken When the DTC Sets

- The PCM will illuminate the malfunction indicator lamp (MIL) the first time the fault is detected.
- The PCM calculates an air flow value based on idle air control valve position, throttle position, RPM and barometric pressure.
- The PCM will store conditions which were present when the DTC was set as Freeze Frame and in the Failure Records data.

Conditions for Clearing the MIL/DTC

- DTC P0102 can be cleared by using the Tech 2 “Clear Info” function or by disconnecting the PCM battery feed.

Diagnostic Aids

Check for the following conditions:

- Poor connection at PCM – Inspect harness connectors for backed-out terminals, improper mating, broken locks, improperly formed or damaged terminals, and poor terminal-to-wire connection.
- Misrouted harness – Inspect the MAF sensor harness to ensure that it is not routed too close to high voltage wires.
- Damaged harness – Inspect the wiring harness for damage. If the harness appears to be OK, observe the Tech 2 while moving connectors and wiring harnesses related to the MAF sensor. A change in the display will indicate the location of the fault.
- Plugged intake air duct or filter element – A wide-open throttle acceleration from a stop should cause the mass air flow displayed on a Tech 2 to increase from about 3-6 g/second at idle to 100 g/second or greater at the time of the 1-2 shift. If not, check for a restriction.

If DTC P0102 cannot be duplicated, the information included in the Failure Records data can be useful in determining vehicle mileage since the DTC was last set.

Test Description

Number(s) below refer to the step number(s) on the Diagnostic Chart.

2. This step verifies that the problem is present at idle.
4. A voltage reading of less than 4 or over 5 volts at the MAF sensor signal circuit indicates a fault in the wiring or a poor connection.
5. This verifies that ignition feed voltage and a good ground are available at the MAF sensor.

DTC P0102 – MAF Sensor Circuit Low Frequency

Step	Action	Value(s)	Yes	No
1	Was the “On-Board Diagnostic (OBD) System Check” performed?	—	Go to *Step 2*	Go to *OBD System Check*
2	1. Start the engine. 2. With the engine idling, monitor “MAF Frequency” display on the Tech 2. Is the “MAF Frequency” below the specified value?	3 g/Sec	Go to *Step 4*	Go to *Step 5*
3	1. Ignition “ON,” engine “OFF.” 2. Review and record Tech 2 Failure Records data. 3. Operate the vehicle within Failure Records conditions as noted. 4. Using a Tech 2, monitor “DTC” info for DTC P0102. Does the Tech 2 indicate DTC P0102 failed this ignition?	—	Go to *Step 4*	Refer to *Diagnostic Aids*
4	1. Ignition “OFF.” 2. Disconnect the MAF sensor connector. 3. Ignition “ON,” engine “OFF.” 4. Using a DVM, measure voltage between the MAF sensor signal circuit and battery ground. Is the voltage near the specified value?	5 V	Go to *Step 5*	Go to *Step 8*
5	Connect a test light between the MAF sensor ignition feed and ground circuits at the MAF sensor harness connector. Is the test light “ON?”	—	Go to *Step 13*	Go to *Step 6*
6	Connect a test light between the MAF sensor ignition feed circuit and battery ground. Is the test light “ON?”	—	Go to *Step 12*	Go to *Step 7*
7	1. Check for a poor connection at the MAF sensor. 2. If a poor connection is found, replace the faulty terminal(s). Was a poor connection found?	—	Verify repair	Go to *Step 11*
8	1. Ignition “OFF.” 2. Disconnect the MAF sensor. 3. Disconnect the PCM connector for the MAF signal circuit. 4. Ignition “ON,” engine “OFF.” 5. With the DVM, measure the voltage between the MAF signal terminal at the PCM and battery ground. Is the voltage under the specified value?	4 V	Go to *Step 9*	Go to *Step 10*

DTC P0102 – MAF Sensor Circuit Low Frequency (Cont'd)

Step	Action	Value(s)	Yes	No
9	1. Ignition "OFF." 2. Disconnect the PCM white connector. 3. Ignition "ON." 4. Check the MAF sensor signal circuit for a short to 5 volts. Is the action complete?	—	Verify repair	—
10	1. Ignition "OFF." 2. Disconnect the PCM white connector. 3. Ignition "ON." 4. Check the MAF sensor signal circuit between the PCM and the MAF sensor for an open, short to ground, or short to the MAF ground circuit. Is the action complete?	—	Verify repair	Go to *Step 13*
11	Locate and repair the open in the ground circuit to the MAF sensor. Is the action complete?	—	Verify repair	—
12	Locate and repair the open in the ignition feed circuit to the MAF sensor. Is the action complete?	—	Verify repair	—
13	Replace the MAF sensor. Is the action complete?	—	Verify repair	Go to *Step 14*
14	Replace the PCM. **IMPORTANT:** The replacement PCM must be programmed. Refer to *UBS 98model year Immobilizer Workshop Manual.* Is the action complete?	—	Verify repair	—

Diagnostic Trouble Code (DTC) P0103 MAF Sensor Circuit High Frequency

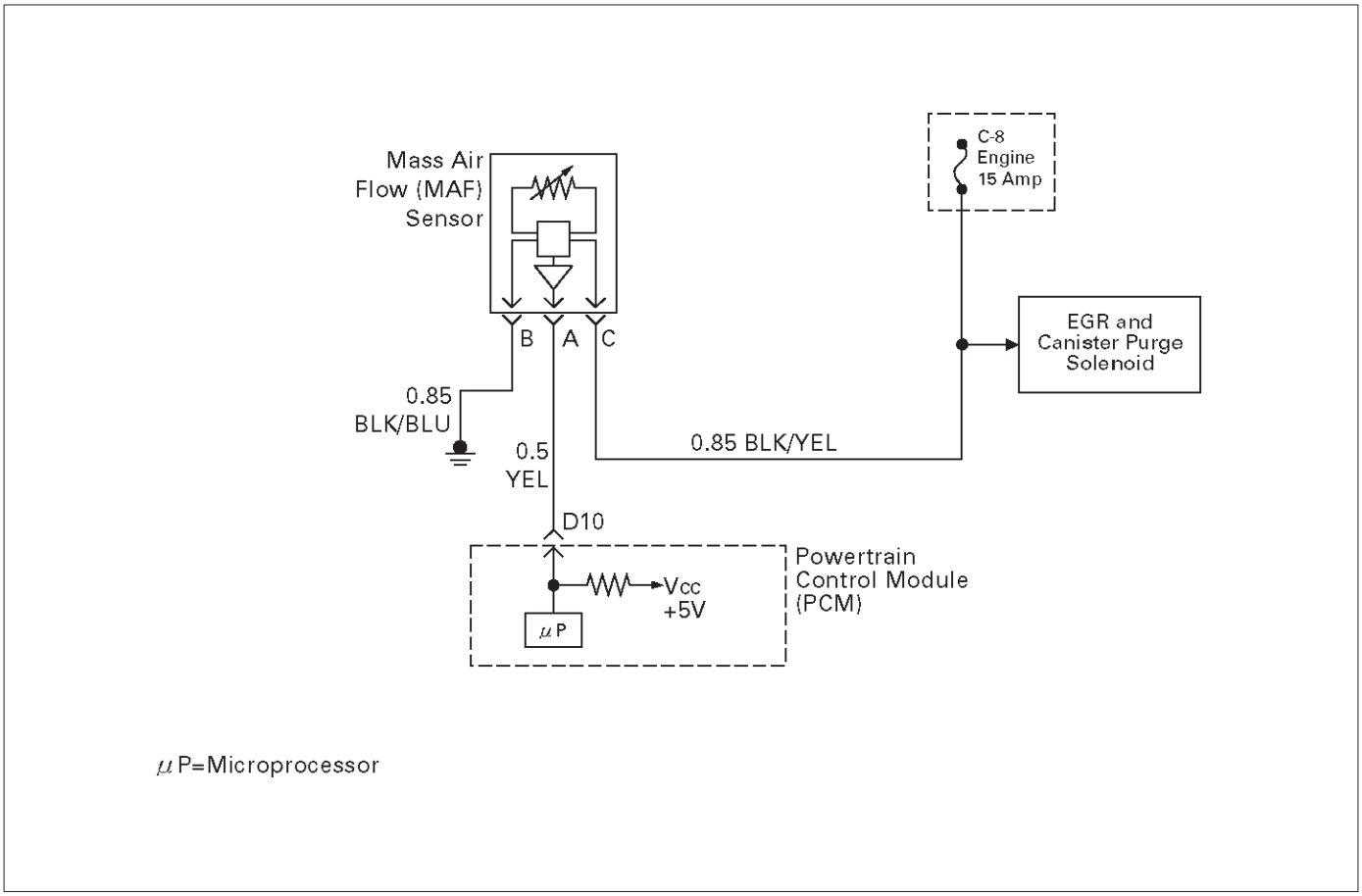

T321122

Circuit Description

The mass air flow (MAF) sensor measures the amount of air which passes through it into the engine during a given time. The powertrain control module (PCM) uses the mass air flow information to monitor engine operating conditions for fuel delivery calculations. A large quantity of air entering the engine indicates an acceleration or high load situation, while a small quantity of air indicates deceleration or idle.

The MAF sensor produces a frequency signal which can be monitored using a Tech 2. The frequency will vary within a range of around 2500 Hz at idle to around 9000 Hz at maximum engine load. DTC P0103 will be set if the signal from the MAF sensor is above the possible range of a normally operating MAF sensor.

Conditions for Setting the DTC

- The engine is running above 500 RPM for more than 10 seconds.
- System voltage is above 11.5 volts.
- MAF signal frequency is above 10,000 Hz (10.0 kHz) for a total of 50 percent of the last 200 samples monitored. A sample is taken every cylinder event.

Action Taken When the DTC Sets

- The PCM will illuminate the malfunction indicator lamp (MIL) the first time the fault is detected.
- The PCM calculates an airflow value based on idle air control valve position, throttle position, RPM and barometric pressure.
- The PCM will store conditions which were present when the DTC was set as Freeze Frame and in the Failure Records data.

Conditions for clearing the MIL/DTC

- DTC P0103 can be cleared by using the Tech 2 “Clear Info” function or by disconnecting the PCM battery feed.

Diagnostic Aids

If DTC P0103 cannot be duplicated, the information included in the Failure Records data can be useful in determining vehicle mileage since the DTC was last set.

Test Description

Number(s) below refer to the step number(s) on the Diagnostic Chart.

2. This step verifies that the problem is present at idle.

4. A frequency reading with the MAF sensor connector disconnected indicates an electromagnetic interfernce (EMI) related fault.

DTC P0103 – MAF Sensor Circuit High Frequency

Step	Action	Value(s)	Yes	No
1	Was the “On-Board Diagnostic (OBD) System Check” performed?	—	Go to *Step 2*	Go to *OBD System Check*
2	1. Ignition “ON,” engine “OFF.” 2. Review and record Tech 2 Failure Records data. 3. Operate the vehicle within Failure Records conditions as noted. 4. Using a Tech 2, monitor “DTC” info for DTC P0103. Does the Tech 2 indicate DTC P0103 failed this ignition?	—	Go to *Step 3*	Refer to *Diagnostic Aids*
3	1. Start the engine. 2. With the engine idling, monitor “MAF Frequency” display on the Tech 2. Is “MAF Frequency” above the specified value?	219 g/Sec	Go to *Step 4*	Go to *Step 7*
4	1. Ignition “OFF.” 2. Disconnect the MAF sensor connector. 3. Ignition “ON,” engine idling. 4. Using a Tech 2, monitor “MAF Frequency.” Does the Tech 2 indicate a “MAF Frequency” at the specified value?	0.0 g/Sec	Go to *Step 5*	Go to *Step 6*
5	Replace the MAF sensor. Is the action complete?	—	Verify repair	Go to *Step 8*
6	1. Check the MAF harness for incorrect routing near high voltage components (solenoids, relays, motors). 2. If incorrect routing is found, correct the harness routing. Was a problem found?	—	Verify repair	Go to *Step 7*
7	1. With the engine idling, monitor “MAF Frequency” display on the Tech 2. 2. Quickly snap open throttle to wide open throttle while under a road load and record value. Does the Tech 2 indicate “MAF Frequency” above the specified value?	219 g/Sec	Go to *Step 5*	Go to *Step 8*
8	Replace the PCM. **IMPORTANT:** The replacement PCM must be programmed. Refer to *UBS 98model year Immobilizer Workshop Manual.* Is the action complete?	—	Verify repair	—

Diagnostic Trouble Code (DTC) P0107 MAP Sensor Circuit Low Voltage

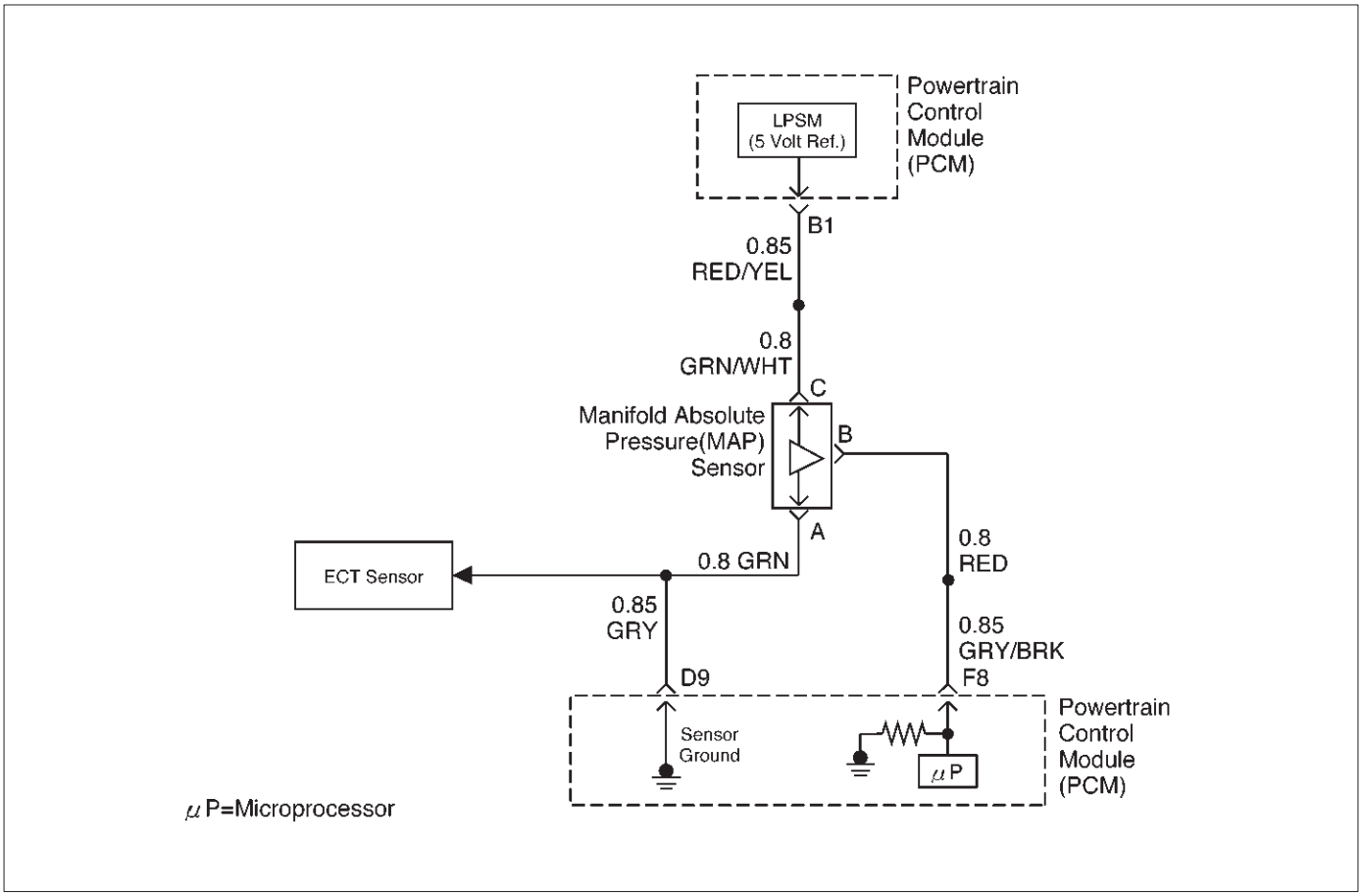

D06RW102

Circuit Description

The manifold absolute pressure (MAP) sensor responds to changes in intake manifold pressure (vacuum). The MAP sensor signal voltage to the powertrain control module (PCM) varies from below 2 volts at idle (high vacuum) to above 4 volts with the ignition "ON," engine not running or at wide-open throttle (low vacuum).

The MAP sensor is used to determine manifold pressure changes while the exhaust gas recirculation (EGR) flow test diagnostic is being run (refer to *DTC P0401*), to determine engine vacuum level for some other diagnostics and to determine barometric pressure (BARO). The PCM monitors the MAP signals for voltages outside the normal range of the MAP sensor. If the PCM detects a MAP signal voltage that is excessively low, DTC P0107 will be set.

Conditions for Setting the DTC

- No TP sensor DTCs present.
- Engine is running.
- Throttle angle is above 1% if engine speed is less than 1000 RPM.
- Throttle angle is above 2% if engine speed is above 1000 RPM.
- The MAP sensor indicates manifold absolute pressure at or below 11 kPa for a total of approximately 10 seconds over a 16-second period.
- Ignition voltage more than 11 volts.

Action Taken When the DTC Sets

- The PCM will illuminate the malfunction indicator lamp (MIL) the first time the fault is detected.
- The PCM will default to a BARO value of 79.3 kPa.
- The PCM will store conditions which were present when the DTC was set as Freeze Frame and in the Failure Records data.

Conditions for Clearing the MIL/DTC

- DTC P0107 can be cleared by using the Tech 2 "Clear Info" function or by disconnecting the PCM battery feed.

Diagnostic Aids

Check for the following conditions:

- Check for intermittent codes.
- The MAP sensor shares a 5 Volt reference with the Rough Road Sensor. If these codes are also set, it could indicate a problem with the 5 Volt reference circuit .
- The MAP sensor shares a ground with the Rough Road Sensor, the ECT sensor, and the Transmission Fluid Temperature sensor.
- Poor connection at PCM – Inspect harness connectors for backed-out terminals, improper mating, broken locks, improperly formed or damaged terminals, and poor terminal-to-wire connection.
- Damaged harness – Inspect the wiring harness for damage. If the harness appears to be OK, observe the MAP display on the Tech 2 while moving connectors

and wiring harnesses related to the sensor. A change in the display will indicate the location of the fault.

If DTC P0107 cannot be duplicated, the information included in the Failure Records data can be useful in determining vehicle mileage since the DTC was last set. If it is determined that the DTC occurs intermittently, performing the DTC P0107 Diagnostic Chart may isolate the cause of the fault.

DTC P0107 – MAP Sensor Circuit Low Voltage

Step	Action	Value(s)	Yes	No
1	Was the “On-Board Diagnostic (OBD) System Check” performed?	—	Go to *Step 2*	Go to *OBD System Check*
2	1. Ignition “ON,” engine “OFF.” 2. With the throttle closed, observe the MAP value displayed on the Tech 2. Is the MAP value near the specified value?	11 kPa at sea level	Go to *Step 4*	Go to *Step 3*
3	1. Ignition “ON,” engine “OFF.” 2. Review and record Tech 2 Failure Records data. 3. Operate the vehicle within Failure Records conditions as noted. 4. Using a Tech 2, monitor “Specific DTC” info for DTC P0107. Does the Tech 2 indicate DTC P0107 failed?	—	Go to *Step 4*	Refer to *Diagnostic Aids*
4	1. Ignition “OFF.” 2. Disconnect the MAP sensor electrical connector. 3. Jumper the 5 volt reference “A” circuit and the MAP signal together at the MAP sensor harness connector. 4. Ignition “ON.” 5. Observe the MAP value displayed on the Tech 2. Is the MAP value near the specified value?	5 V 104 kPa	Go to *Step 10*	Go to *Step 5*
5	1. Disconnect the jumper. 2. Connect a test light between B+ and the MAP sensor signal circuit at the MAP sensor harness connector. 3. Observe the MAP value displayed on the Tech 2. Is the MAP value near the specified value.	5 V 104 kPa	Go to *Step 6*	Go to *Step 8*
6	1. Ignition “OFF.” 2. Disconnect the PCM and check the 5 volt reference “A” circuit for an open or short to ground. 3. If the 5 volt reference “A” circuit is open or shorted to ground, repair it as necessary. Was the 5 volt reference “A” circuit open or shorted to ground?	—	Verify repair	Go to *Step 7*
7	Check the 5 volt reference “A” circuit for a poor connection at the PCM and replace the terminal if necessary. Did the terminal require replacement?	—	Verify repair	Go to *Step 11*
8	1. Ignition “OFF.” 2. Disconnect the PCM, and check the MAP signal circuit for an open, short to ground, or short to the sensor ground circuit. 3. If the MAP sensor signal circuit is open or shorted to ground, repair it as necessary. Was the MAP signal circuit open or shorted to ground?	—	Verify repair	Go to *Step 9*

DTC P0107 – MAP Sensor Circuit Low Voltage (Cont'd)

Step	Action	Value(s)	Yes	No
9	Check the MAP sensor signal circuit for a poor connection at the PCM and the MAP sensor; replace the terminal if necessary. Did the terminal require replacement?	—	Verify repair	Go to *Step 11*
10	Replace the MAP sensor. Is the action complete?	—	Verify repair	—
11	Replace the PCM. **IMPORTANT:** The replacement PCM must be programmed. Refer to *UBS 98model year Immobilizer Workshop Manual.* Is the action complete?	—	Verify repair	—

Diagnostic Trouble Code (DTC) P0108 MAP Sensor Circuit High Voltage

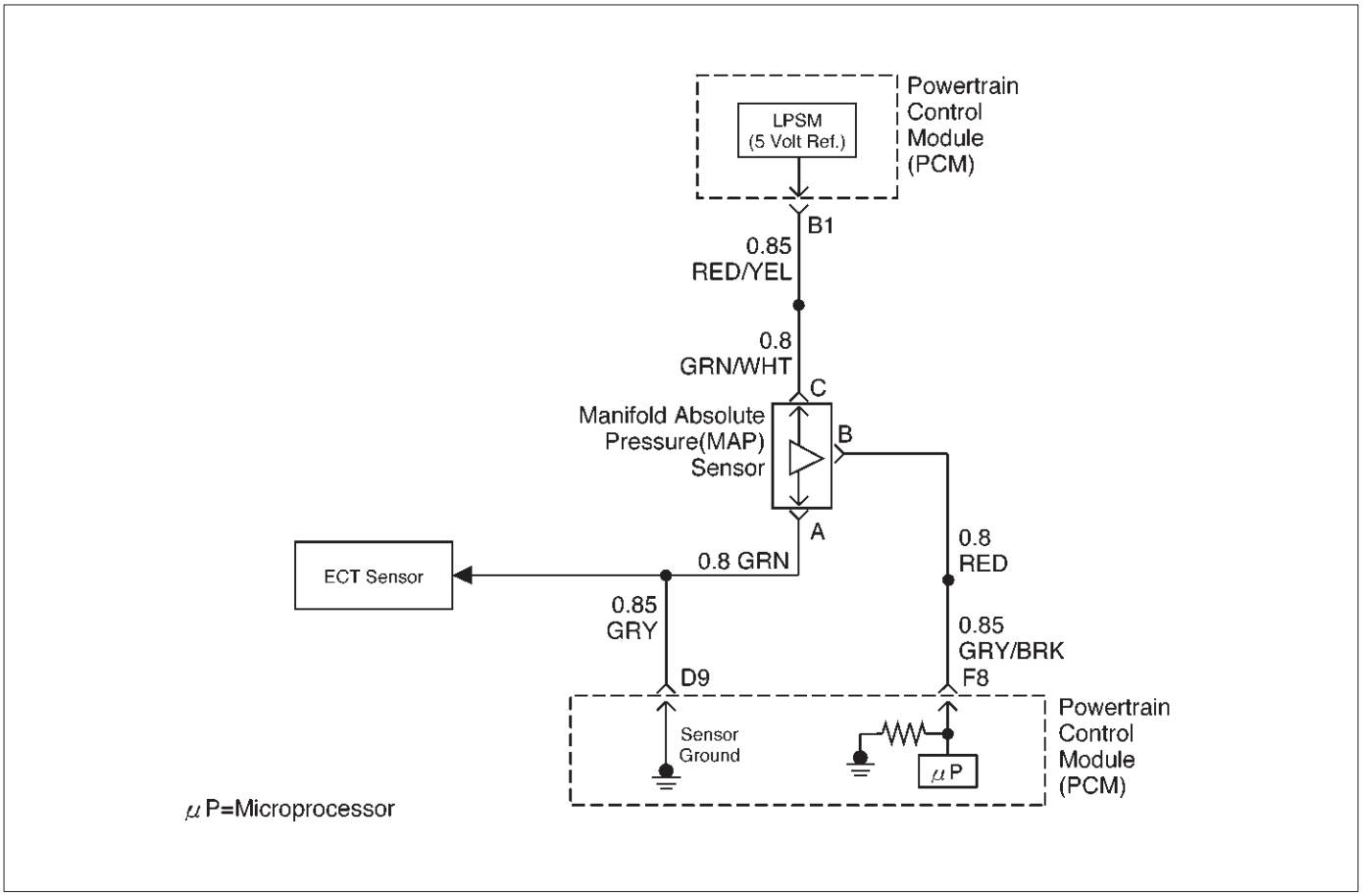

D06RW102

Circuit Description

The manifold absolute pressure (MAP) sensor responds to changes in intake manifold pressure (vacuum). The MAP sensor signal voltage to the powertrain control module (PCM) varies from below 2 volts at idle (high vacuum) to above 4 volts with the key "ON," engine not running or at wide-open throttle (low vacuum).

The MAP sensor is used to determine manifold pressure changes while the linear EGR flow test diagnostic is being run (refer to *DTC P0401*), to determine engine vacuum level for some other diagnostics and to determine barometric pressure (BARO). The PCM monitors the MAP signals for voltages outside the normal range of the MAP sensor. If the PCM detects a MAP signal voltage that is excessively high, DTC P0108 will be set.

Conditions for Setting the DTC

- No TP sensor DTCs present.
- Engine is running for more than 10 seconds.
- Throttle position is below 3% if engine speed is below 1000 RPM.
- Throttle position is below 10% if engine speed is above 1000 RPM.
- The MAP sensor indicates an intermittent manifold absolute pressure above 80 kPa for a total of approximately 10 seconds over a 16-second period.

Action Taken When the DTC Sets

- The PCM will illuminate the malfunction indicator lamp (MIL) the first time the fault is detected.
- The PCM will default to a BARO value of 79.3 kPa.
- The PCM will store conditions which were present when the DTC was set as Freeze Frame and in the Failure Records data.

Conditions for Clearing the MIL/DTC

- DTC P0108 can be cleared by using the Tech 2 "Clear Info" function or by disconnecting the PCM battery feed.

Diagnostic Aids

Check for the following conditions:

- Poor connection at PCM – Inspect harness connectors for backed-out terminals, improper mating, broken locks, improperly formed or damaged terminals, and poor terminal-to-wire connection.
- Damaged harness – Inspect the wiring harness for damage. If the harness appears to be OK, observe the MAP display on the Tech 2 while moving connectors and wiring harnesses related to the sensor. A change in the display will indicate the location of the fault.

If DTC P0108 cannot be duplicated, the information included in the Failure Records data can be useful in determining vehicle mileage since the DTC was last set. If it is determined that the DTC occurs intermittently, performing the DTC P1108 Diagnostic Chart may isolate the cause of the fault.

DTC P0108 – MAP Sensor Circuit High Voltage

Step	Action	Value(s)	Yes	No
1	Was the “On-Board Diagnostic (OBD) System Check” performed?	—	Go to *Step 2*	Go to *OBD System Check*
2	1. If the engine idle is rough, unstable or incorrect, repair the idle problem before using this chart. Refer to *Symptoms* section. 2. With the engine idling, note the MAP value on the Tech 2. Is the MAP reading above the specified value?	90 kPa	Go to *Step 4*	Go to *Step 3*
3	1. Ignition “ON,” engine “OFF.” 2. Review and record Tech 2 Failure Records data. 3. Operate the vehicle within Failure Records conditions as noted. 4. Using a Tech 2, monitor “Specific DTC” info for DTC P0108. Does the Tech 2 indicate DTC P0108 failed this ignition?	—	Go to *Step 4*	Refer to *Diagnostic Aids*
4	1. Ignition “OFF.” 2. Disconnected the MAP sensor electrical connector. 3. Ignition “ON.” 4. Note the MAP sensor voltage displayed on the Tech 2. Is the MAP sensor voltage at the specified value?	0.0 V 11 kPa	Go to *Step 5*	Go to *Step 6*
5	Probe the sensor ground circuit with a test light to B+. Is the test light “ON?”	—	Go to *Step 7*	Go to *Step 9*
6	1. Check the MAP signal circuit for a short to voltage or a short to the 5 volt reference “A” circuit. 2. If the MAP sensor signal circuit is shorted, repair circuit as necessary. Was the MAP sensor signal circuit shorted?	—	Verify repair	Go to *Step 11*
7	1. Check for a poor sensor ground terminal connection at the MAP sensor electrical connector. 2. If a problem if found, replace the faulty terminal. Did the terminal require replacement?	—	Verify repair	Go to *Step 8*
8	Check for a plugged or leaking vacuum supply to the MAP sensor. Is the vacuum supply plugged or leaking?	—	Verify repair	Go to *Step 12*
9	1. Check for a poor sensor ground terminal connection at the PCM. 2. If a problem is found, replace the faulty terminal. Did the terminal require replacement?	—	Verify repair	Go to *Step 10*
10	1. Check the continuity of the MAP sensor ground circuit. 2. If the MAP sensor ground circuit measures over 5 ohms, repair open or poor connection. Was a condition found and corrected?	—	Verify repair	Go to *Step 11*

DTC P0108 – MAP Sensor Circuit High Voltage (Cont'd)

Step	Action	Value(s)	Yes	No
11	Replace the PCM. **IMPORTANT:** The replacement PCM must be programmed. Refer to *UBS 98model year Immobilizer Workshop Manual.* Is the action complete?	—	Verify Repair	—
12	Replace the MAP sensor. Is the action complete?	—	Verify repair	—

Diagnostic Trouble Code (DTC) P0112 IAT Sensor Circuit Low Voltage

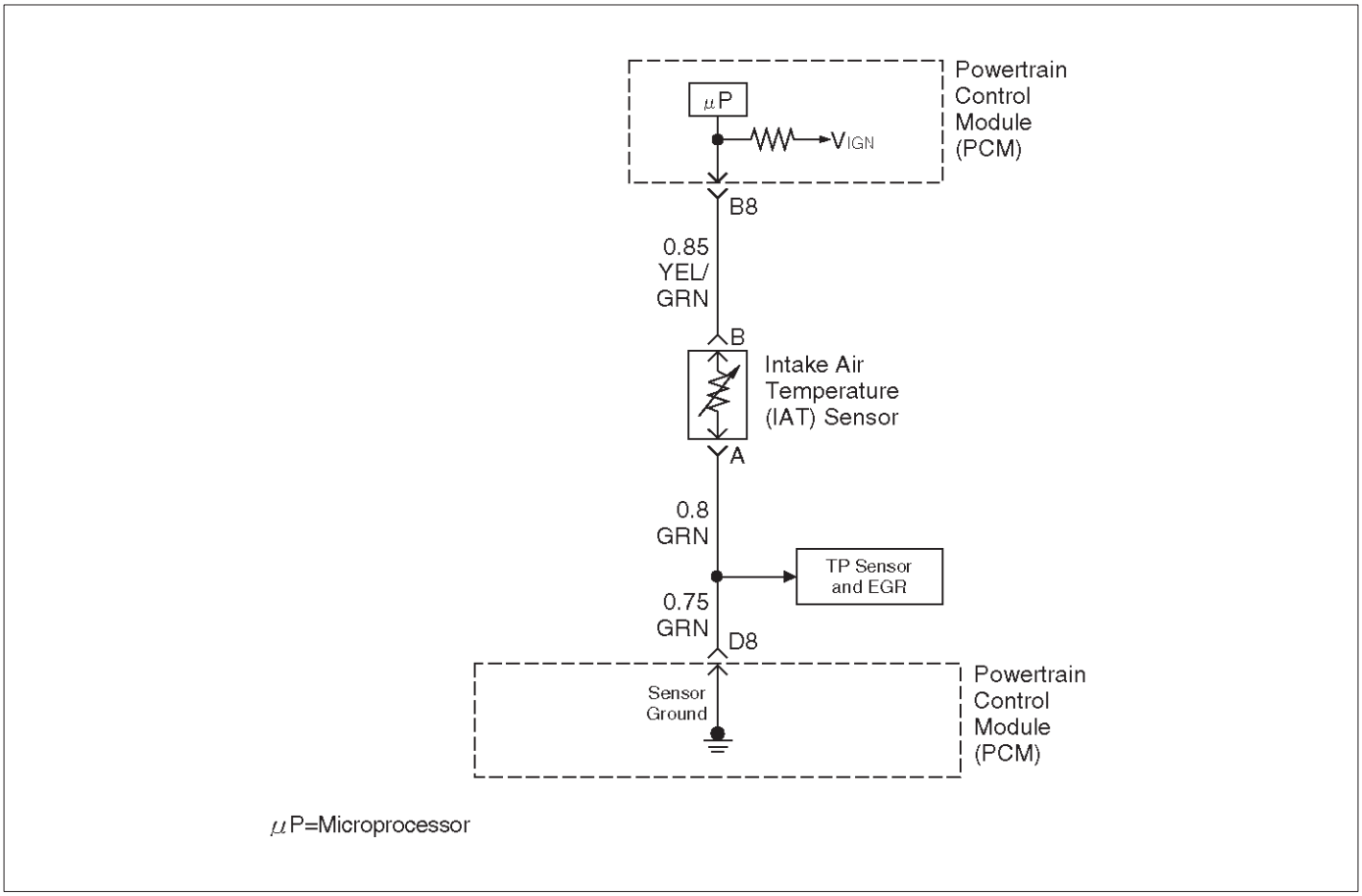

D06RW026

Circuit Description

The intake air temperature (IAT) sensor is a thermistor which measures the temperature of the air entering the engine. The powertrain control module (PCM) applies 5 volts through a pull-up resistor to the IAT sensor. When the intake air is cold, the sensor resistance is high and the PCM will monitor a high signal voltage on the IAT signal circuit. If the intake air is warm, the sensor resistance is lower, causing the PCM to monitor a lower voltage. DTC P0112 will set when the PCM detects an excessively low signal voltage on the intake air temperature sensor signal circuit.

Conditions for Setting the DTC

- The engine has been running for over 2 minutes.
- Vehicle speed is greater than 30 mph (48 km/h) .
- IAT signal voltage indicates and intake air temperature greater than 148˚C (298˚F) (about 5 volts) for a total of 12.5 seconds over a 25-second period of time.

Action Taken When the DTC Sets

- The PCM will illuminate the malfunction indicator lamp (MIL) the first time the fault is detected.
- The PCM will store conditions which were present when the DTC was set as Freeze Frame and in the Failure Records data.

Conditions for Clearing the MIL/DTC

- DTC P0112 can be cleared by using the Tech 2 “Clear Info” function or by disconnecting the PCM battery feed.

Diagnostic Aids

Check for the following conditions:

- Poor connection at PCM – Inspect harness connectors for backed-bout terminals, improper mating, broken locks, improperly formed or damaged terminals, and poor terminal-to-wire connection.
- Damaged harness – Inspect the wiring harness for damage. If the harness appears to be OK, observe the IAT display on the Tech 2 while moving connectors and wiring harnesses related to the IAT sensor. A change in the IAT display will indicate the location of the fault.

If DTC P0112 cannot be duplicated, the information included in the Failure Records data can be useful in determining vehicle mileage since the DTC was last set.

Test Description

Number(s) below refer to the step number(s) on the Diagnostic Chart:

2. Verifies that the fault is present.

3. If DTC P0112 can be repeated only by duplicating the Failure Records condition, refer to the *Temperature vs. Resistance Value* table. The table may be used to test the IAT sensor at various temperatures to evaluate the possibility of a "shifted" sensor that may be stored above or below a certain temperature. If this is the case, replace the IAT sensor. If the IAT sensor appears to be OK, the fault is intermittent; refer to *Diagnostic Aids*.

Intake Air Temperature Sensor

˚C	˚F	OHMS
Temperature vs. Resistance Values (approximate)		
100	212	177
80	176	332
60	140	667
45	113	1188
35	95	1802
25	77	2796
15	59	4450
5	41	7280
–5	23	12300
–15	5	21450
–30	–22	52700
–40	–40	100700

DTC P0112–IAT Sensor Circuit Low Voltage

Step	Action	Value(s)	Yes	No
1	Was the “On-Board Diagnostic (OBD) System Check” performed?	—	Go to *Step 2*	Go to *OBD System Check*
2	1. Ignition “ON,” engine “OFF.” 2. Using a Tech 2, monitor the intake air temperature (IAT). Is the intake air temperature greater than the specified value?	148˚C (283˚F)	Go to *Step 4*	Go to *Step 3*
3	1. Ignition “ON,” engine “OFF.” Review and record Tech 2 Failure Records data. 2. Operate the vehicle within Failure Records conditions as noted. 3. Using a Tech 2, monitor the “Specific DTC” info for DTC P0112. Does the Tech 2 indicate DTC P0112 failed this ignition?	—	Refer to *Test Description*	Refer to *Diagnostic Aids*
4	1. Ignition “OFF.” 2. Disconnect the IAT sensor electrical connector. 3. Ignition “ON.” 4. Observe the intake air temperature on the Tech 2. Is the intake air temperature below the specified value?	–38˚C (–36˚F)	Go to *Step 6*	Go to *Step 5*
5	1. Ignition “OFF.” 2. Disconnect the PCM electrical connectors. 3. Check the IAT sensor signal circuit for a short to ground. Is the IAT sensor signal circuit shorted to ground?	—	Verify repair	Go to *Step 7*
6	Replace the IAT sensor. Is the action complete?	—	Verify repair	—
7	Replace the PCM. **IMPORTANT:** The replacement PCM must be programmed. Refer to *UBS 98model year Immobilizer Workshop Manual.* Is the action complete?	—	Verify repair	—

Diagnostic Trouble Code (DTC) P0113 IAT Sensor Circuit High Voltage

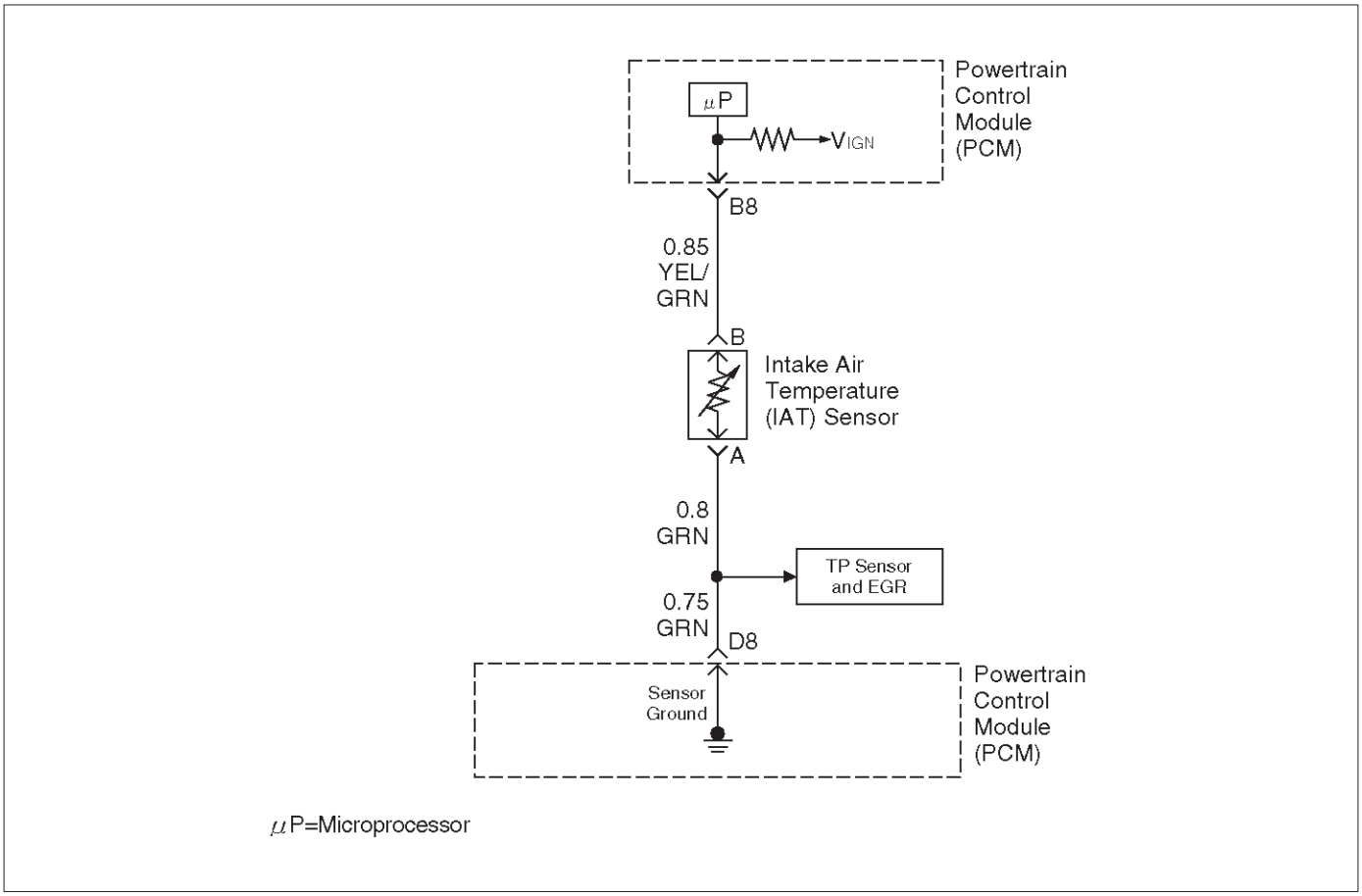

D06RW026

Circuit Description

The intake air temperature (IAT) sensor is a thermistor which measures the temperature of the air entering the engine. The powertrain control module (PCM) applies 5 volts through a pull-up resistor to the IAT sensor. When the intake air is cold, the sensor resistance is high and the PCM will monitor a high signal voltage on the IAT signal circuit. If the intake air is warm, the sensor resistance is lower causing the PCM to monitor a lower voltage. DTC P0113 will set when the PCM detects an excessively high signal voltage on the intake air temperature sensor signal circuit.

Conditions for Setting the DTC

- The engine has been running for over 4 minutes.
- Vehicle speed is less than 20 mph (32 km/h).
- ECT signal temperature is above 60˚C (140˚F).
- Mass air flow is less then 20 g/second.
- IAT signal voltage indicates an intake air temperature less than –39˚C (–38˚F) for total of 12.5 seconds over a 25-second period.

Action Taken When the DTC Sets

- The PCM will illuminate the malfunction indicator lamp (MIL) the first time the fault is detected.
- The PCM will store conditions which were present when the DTC was set as Freeze Frame and in the Failure Records data.

Conditions for Clearing the MIL/DTC

- DTC P0113 can be cleared by using the Tech 2 “Clear Info” function or by disconnecting the PCM battery feed.

Diagnostic Aids

Check for the following conditions:

- The IAT sensor shares a ground with the EGR position sensor and the TP sensor. Check the ground if these DTC’s are set.
- Poor connection at PCM – Inspect harness connectors for backed-out terminals, improper mating, broken locks, improperly formed or damaged terminals, and poor terminal-to-wire connection.
- Damaged harness – Inspect the wiring harness for damage. If the harness appears to be OK, observe the IAT display on the Tech 2 while moving connectors and wiring harnesses related to the IAT sensor. A change in the IAT display will indicate the location of the fault.

If DTC P0113 cannot be duplicated, the information included in the Failure Records data can be useful in determining vehicle mileage since the DTC was last set.

Test Description

Number(s) below refer to the step number(s) on the Diagnostic Chart:

2. Verifies that the fault is present.

3. If DTC P0113 can be repeated only by duplicating the Failure Records conditions, refer to the "Temperature vs. Resistance Values" table. The table may be used to test the IAT sensor at various temperatures to evaluate the possibility of a "shifted" sensor that may be open above or below a certain temperature. If this is the case, replace the IAT sensor. If the IAT sensor appears to be OK, the fault is intermittent; refer to *Diagnostic Aids*.

Intake Air Temperature Sensor

˚C	˚F	OHMS
Temperature vs. Resistance Values (approximate)		
100	212	177
80	176	332
60	140	667
45	113	1188
35	95	1802
25	77	2796
15	59	4450
5	41	7280
–5	23	12300
–15	5	21450
–30	–22	52700
–40	–40	100700

DTC P0113 –IAT Sensor Circuit High Voltage

Step	Action	Value(s)	Yes	No
1	Was the "On-Board Diagnostic (OBD) System Check" performed?	—	Go to *Step 2*	Go to *OBD System Check*
2	Ignition "ON," engine "OFF." Observe the "Intake Air Temp" display on the Tech 2. Is the "Intake Air Temp" below the specified value?	–38˚C (–36˚F)	Go to *Step 4*	Go to *Step 3*
3	1. Ignition "ON," engine "OFF." 2. Review and record Tech 2 Failure Records data parameters. 3. Operate the vehicle within Failure Records conditions as noted. 4. Using a Tech 2, monitor "Specific DTC" info for DTC P0113. Does the Tech 2 indicate DTC P0113 failed?	—	Refer to *Test Description*	Refer to *Diagnostic Aids*
4	1. Ignition "OFF." 2. Disconnect the IAT sensor electrical connector. 3. Jumper the IAT signal circuit and the sensor ground circuit together at the IAT sensor harness connector. 4. Ignition "ON." 5. Observe the "Intake Air Temp" display on the Tech 2. Is the "Intake Air Temp" at the specified value?	140˚C (284˚F)	Go to *Step 6*	Go to *Step 5*
5	1. Jumper the IAT signal circuit at the IAT sensor harness connector to chassis ground. 2. Observe the "Intake Air Temp" display on the Tech 2. Is the "Intake Air Temp" at the specified value?	140˚C (284˚F)	Go to *Step 7*	Go to *Step 8*

DTC P0113 –IAT Sensor Circuit High Voltage (Cont'd)

Step	Action	Value(s)	Yes	No
6	Check for poor connections at the IAT sensor and replace terminals if necessary. Did any terminals require replacement?	—	Verify repair	Go to *Step 10*
7	1. Ignition "OFF." 2. Disconnect the PCM, and check the IAT sensor ground circuit for an open. 3. If the IAT sensor ground circuit is open, repair it as necessary. Was the IAT sensor ground circuit open?	—	Verify repair	Go to *Step 9*
8	1. Ignition "OFF." 2. Disconnect the PCM, and check the IAT signal circuit for an open. 3. If the IAT sensor signal circuit is open, repair it as necessary. Was the IAT signal circuit open?	—	Verify repair	Go to *Step 9*
9	Check for a poor sensor ground or IAT signal circuit terminal connection at the PCM and replace terminal(s) if necessary. Did any of the terminals need to be replaced?	—	Verify repair	Go to *Step 11*
10	Replace the IAT sensor. Is the action complete?	—	Verify repair	—
11	Replace the PCM. **IMPORTANT:** The replacement PCM must be programmed. Refer to *UBS 98model year Immobilizer Workshop Manual.* Is the action complete?	—	Verify repair	—

Diagnostic Trouble Code (DTC) P0117 ECT Sensor Circuit Low Voltage

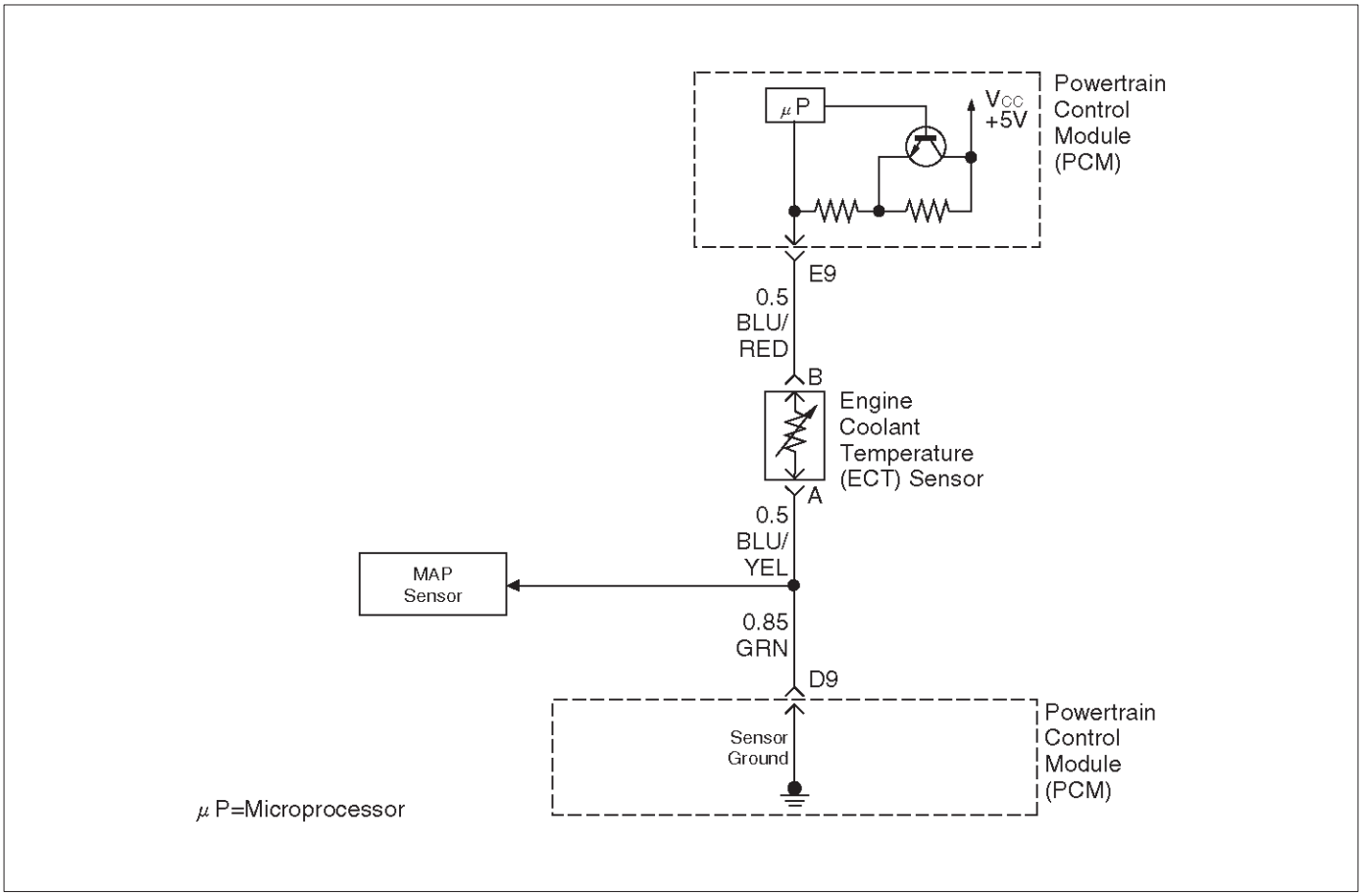

060RY00304

Circuit Description

The engine coolant temperature (ETC) sensor is a thermistor mounted on a coolant crossover pipe at the rear of the engine. The powertrain control module (PCM) applies a voltage (about 5 volts) through a pull-up resistor to the ECT signal circuit. When the engine coolant is cold, the sensor (thermistor) resistance is high, therefore the PCM will measure a high signal voltage. As the engine coolant warms, the sensor resistance becomes lower, and the ECT signal voltage measured at the PCM drops. With a fully warmed-up engine, the ECT signal voltage should measure about 1.5 to 2.0 volts.

Conditions for Setting the DTC

- Engine running time is longer than one minute.
- The ECT sensor signal indicates an engine coolant temperature greater than 150˚C (302˚F) (about 0.10 V) for a total of 50 seconds over a 100–second period.

Action Taken When the DTC Sets

- The PCM will illuminate the malfunction indicator lamp (MIL) the first time the fault is detected.
- The PCM will substitute the ECT reading with a default engine coolant temperature value. The default value is based on start-up intake air temperature and running time.
- The PCM will store conditions which were present when the DTC was set as Freeze Frame and in the Failure Records data.

Conditions for Clearing the MIL/DTC

- DTC P0117 can be cleared by using the Tech 2 “Clear Info” function or by disconnecting the PCM battery feed.

Diagnostic Aids

Check for the following conditions:

- Poor connection at PCM – Inspect harness connectors for backed-out terminals, improper mating, broken locks, improperly formed or damaged terminals, and poor terminal-to-wire connection.
- Damaged harness – Inspect the wiring harness for damage. If the harness appears to be OK, observe the ECT display on the Tech 2 while moving connectors and wiring harnesses related to the ECT sensor. A change in the ECT display will indicate the location of the fault.

If DTC P0117 cannot be duplicated, the information included in the Failure Records data can be useful in determining vehicle mileage since the DTC was last set.

Test Description

Number(s) below refer to the step number(s) on the Diagnostic Chart.

2. Verifies that the fault is present.
3. If DTC P0117 can be repeated only by duplicating the Failure Records conditions, refer to the “Temperature vs. Resistance Values” table. The table may be used to test the ECT sensor at various temperatures to evaluate the possibility of a “shifted” sensor that may be shorted above or below a certain temperature. If this is the case, replace the ECT sensor. If the ECT sensor appears to be OK, the fault is intermittent; refer to *Diagnostic Aids*.

Engine Coolant Temperature Sensor

˚C	˚F	OHMS
Temperature vs. Resistance Values (approximate)		
100	212	177
80	176	332
60	140	667
45	113	1188
35	95	1802
25	77	2796
15	59	4450
5	41	7280
–5	23	12300
–15	5	21450
–30	–22	52700
–40	–40	100700

DTC P0117 – ECT Sensor Low Voltage

Step	Action	Value(s)	Yes	No
1	Was the “On-Board Diagnostic (OBD) System Check” performed?	—	Go to *Step 2*	Go to *OBD System Check*
2	1. Ignition “ON,” engine “OFF.” 2. Observe the “Eng Cool Temp” display on the Tech 2. Is the “Eng Cool Temp” below the specified value?	139˚C (282˚F)	Go to *Step 4*	Go to *Step 3*
3	1. Ignition “ON,” engine “OFF.” 2. Review and record Tech 2 Failure Records data. 3. Operate the vehicle within Failure Records conditions as noted. 4. Using a Tech 2, monitor “Specific DTC” info for DTC P0117. Does the Tech 2 indicate DTC P0117 failed this ignition?	—	Go to *Step 4*	Refer to *Diagnostic Aids*
4	1. Disconnect the ECT sensor electrical connector. 2. Observe the “Eng Cool Temp” display on the Tech 2. Is the “Eng Cool Temp” at the specified value?	–39˚C (–38˚F)	Go to *Step 6*	Go to *Step 5*
5	1. Ignition “OFF.” 2. Disconnect the PCM and check the ECT signal circuit for a short to ground or a short to the sensor ground circuit. 3. If the ECT signal circuit is shorted. repair it as necessary. Was the ECT signal circuit shorted to ground?	—	Verify repair	Go to *Step 7*
6	Replace the ECT sensor. Is the action complete?	—	Verify repair	—
7	Replace the PCM. **IMPORTANT:** The replacement PCM must be programmed. Refer to *UBS 98model year Immobilizer Workshop Manual.* Is the action complete?	—	Verify repair	—

Diagnostic Trouble Code (DTC) P0118 ECT Sensor Circuit High Voltage

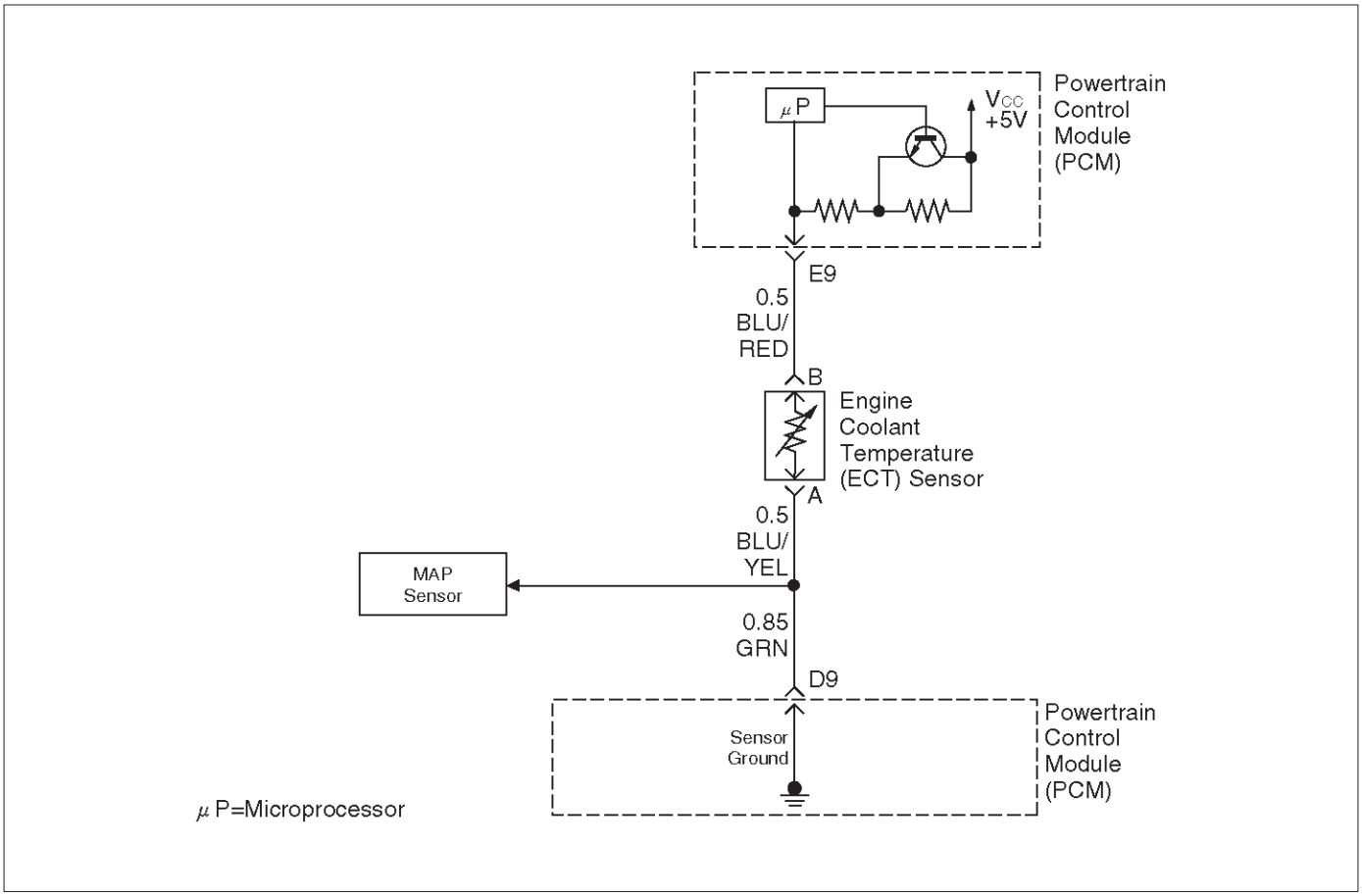

060RY00304

Circuit Description

The engine coolant temperature (ETC) sensor is a thermistor mounted in on a coolant crossover pipe at the rear of the engine. The powertrain control module (PCM) applies a voltage (about 5 volts) through a pull-up resistor to the ECT signal circuit. When the engine coolant is cold, the sensor (thermistor) resistance is high, therefore the PCM will measure a high signal voltage. As the engine coolant warms, the sensor resistance becomes less, and the ECT signal voltage measured at the PCM drops. With a fully warmed-up engine, the ECT signal voltage should measure about 1.5 to 2.0 volts.

Conditions for Setting the DTC

- Engine running time is longer than 1.5 minutes.
- The ECT sensor signal indicates an engine coolant temperature of –39˚C (–38˚F) or less (about 5 volts) for a total of 50 seconds over a 100-second period.

Action Taken When the DTC Sets

- The PCM will illuminate the malfunction indicator lamp (MIL) the first time the fault is detected.
- The PCM will substitute the ECT reading with a default engine coolant temperature value. The default value is based on start-up intake air temperature and running time.
- The PCM will store conditions which were present when the DTC was set as Freeze Frame and in the Failure Records data.

Conditions for Clearing the MIL/DTC

- DTC P0118 can be cleared by using the Tech 2 “Clear Info” function or by disconnecting the PCM battery feed.

Diagnostic Aids

Check for the following conditions:

The ECT shares a ground with the Transmission Fluid Temperature sensor, the Rough Road sensor, and the MAP sensor.

Check the ground if these DTCs are also set.

- Poor connection at PCM – Inspect harness connectors for backed-out terminals, improper mating, broken locks, improperly formed or damaged terminals, and poor terminal-to-wire connection.
- Damaged harness – Inspect the wiring harness for damage. If the harness appears to be OK, observe the ECT display on the Tech 2 while moving connectors and wiring harnesses related to the ECT sensor. A change in the ECT display will indicate the location of the fault.

If DTC P0118 cannot be duplicated, the information included in the Failure Records data can be useful in determining vehicle mileage since the DTC was last set. If it is determined that the DTC occurs intermittently, performing the DTC P1115 Diagnostic Chart may isolate the cause of the fault.

Test Description

Number(s) below refer to the step number(s) on the Diagnostic Chart.

2. Verifies that the fault is present.

3. If DTC P0118 can be repeated only by duplicating the Failure Records conditions, refer to the "Temperature vs. Resistance Value" table. The table may be used to test the ECT sensor at various temperatures to evaluate the possibility of a "shifted" sensor that may be shorted above or below a certain temperature. If this is the case, replace the ECT sensor. If the ECT sensor appears to be OK, the fault is intermittent; refer to *Diagnostic Aids*.

Engine Coolant Temperature Sensor

˚C	˚F	OHMS
Temperature vs. Resistance Values (approximate)		
100	212	177
80	176	332
60	140	667
45	113	1188
35	95	1802
25	77	2796
15	59	4450
5	41	7280
–5	23	12300
–15	5	21450
–30	–22	52700
–40	–40	100700

DTC P0118 – ECT Sensor Circuit High Voltage

Step	Action	Value(s)	Yes	No
1	Was the "On-Board Diagnostic (OBD) System Check" performed?	—	Go to *Step 2*	Go to *OBD System Check*
2	1. Ignition "ON," engine "OFF." 2. Observe the "Eng Cool Temp" display on the Tech 2. Is the "Eng Cool Temp" below the specified value?	–39˚C (–38˚F)	Go to *Step 4*	Go to *Step 3*
3	1. Ignition "ON," engine "OFF." 2. Review and record Tech 2 Failure Records data. 3. Operate the vehicle within Failure Records conditions as noted. 4. Using a Tech 2, monitor the "Specific DTC" info for DTC P0118. Does the Tech 2 indicate DTC P0118 failed?	—	Refer to *Test Description*	Refer to *Diagnostic Aids*
4	1. Disconnect the ECT sensor electrical connector. 2. Jumper the ECT signal circuit and the sensor ground circuit together at the ECT sensor harness connector. 3. Observe the "Eng Cool Temp" display on the Tech 2. Is the "Eng Cool Temp" at the specified value?	140˚C (284˚F)	Go to *Step 6*	Go to *Step 5*
5	1. Jumper the ECT signal circuit at the ECT sensor harness connector to chassis ground. 2. Observe the "Eng Cool Temp" display on the Tech 2. Is the "Eng Cool Temp" at the specified value?	140˚C (284˚F)	Go to *Step 7*	Go to *Step 8*
6	Check for poor connections at the ECT sensor and replace terminals if necessary. Did any terminals require replacement?	—	Verify repair	Go to *Step 10*

DTC P0118 – ECT Sensor Circuit High Voltage (Cont'd)

Step	Action	Value(s)	Yes	No
7	1. Ignition "OFF." 2. Disconnect the PCM, and check the ECT sensor ground circuit for an open. 3. If the ECT sensor ground circuit is open, repair it as necessary. Was the ECT sensor ground circuit open?	—	Verify repair	Go to *Step 9*
8	1. Ignition "OFF." 2. Disconnect the PCM, and check the ECT signal circuit for an open. 3. If the ECT sensor signal circuit is open, repair it as necessary. Was the ECT signal circuit open?	—	Verify repair	Go to *Step 9*
9	Check for a poor sensor ground or ECT signal circuit terminal connection at the PCM and replace terminal(s) if necessary. Did any of the terminals need to be replaced?	—	Verify repair	Go to *Step 11*
10	Replace the ECT sensor. Is the action complete?	—	Verify repair	—
11	Replace the PCM. **IMPORTANT:** The replacement PCM must be programmed. Refer to *UBS 98model year Immobilizer Workshop Manual.* Is the action complete?	—	Verify repair	—

Diagnostic Trouble Code (DTC) P0121 TP System Performance

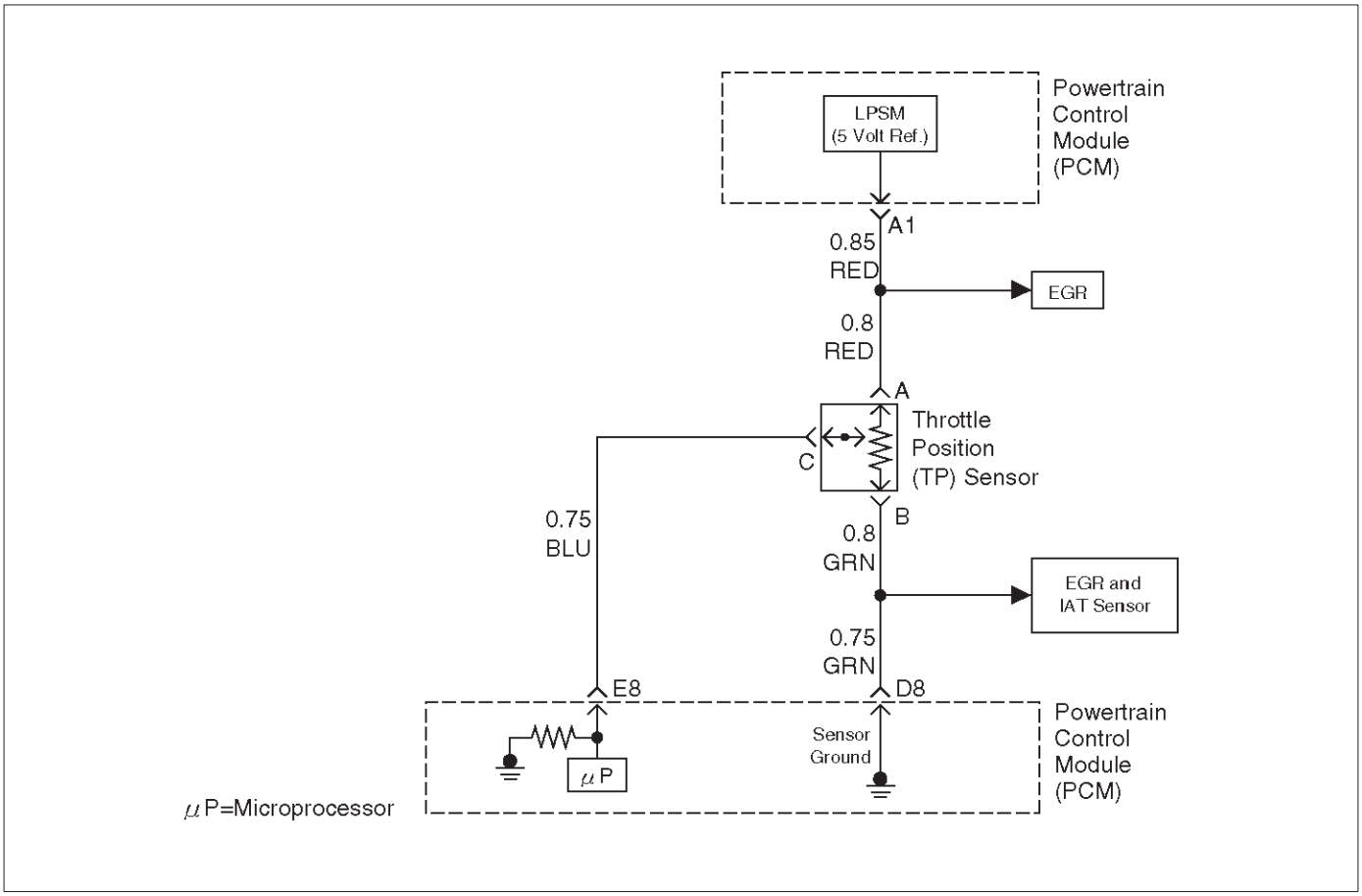

D06RW028

Circuit Description

The throttle position (TP) sensor circuit provides a voltage signal that changes relative to throttle blade angle. The signal voltage will vary from about 0.6 volts at closed throttle to about 4.5 volts at wide open throttle (WOT).
The TP signal is used by the powertrain control module (PCM) for fuel control and many of the PCM-controlled outputs. The PCM monitors throttle position and compares actual throttle position from the TP sensor to a predicted TP value calculated from engine speed. If the PCM detects an out-of-range condition, DTC P0121 will set.

Conditions for Setting the DTC

- The engine is running.
- No MAP DTCs, or P0121, P0122, P0123 are set.
- MAP reading is below 55 kPa.
- Throttle is steady, throttle angle is changing less than 1%.
- Predicted throttle angle is not close to actual throttle angle.
- Above conditions are present for a total of 12.5 seconds over a 25-second period of time.

Action Taken When the DTC Sets

- The PCM will illuminate the malfunction indicator lamp (MIL) after the second consecutive trip in which the fault is detected.
- The PCM will store conditions which were present when the DTC was set as Freeze Frame and in the Failure Records data.
- The PCM will use a default throttle position based on mass air flow and RPM.

Conditions for Clearing the MIL/DTC

- DTC P0121 can be cleared by using the Tech 2 “Clear info ” function or by disconnecting the PCM battery feed.

Diagnostic Aids

Check for the following conditions:

- Skewed MAP signal or faulty Map sensor – An incorrect MAP signal may cause the PCM to incorrectly calculate the predicted TP sensor value during high engine load situations. Check for an unusually low MAP reading. This condition can cause DTC P0121 to be set.
- Poor connection at PCM – Inspect harness connectors for backed-out terminals, improper mating, broken locks improperly formed or damaged terminals, and poor terminal-to-wire connection.
- Damaged harness – Inspect the wiring harness for damage. If the harness appears to be OK, observe the ECT display on the Tech 2 while moving connectors and wiring harnesses related to the sensor. A change in the display will indicate the location of the fault.

If DTC P0121 cannot be duplicated, the information included in the Failure Records data can be useful in determining vehicle mileage since the DTC was last set.

DTC P0121 –TP System Performance

Step	Action	Value(s)	Yes	No
1	Was the “On-Board Diagnostic (OBD) System Check” performed?	—	Go to *Step 2*	Go to *OBD System Check*
2	1. Ignition “ON,” engine not running. 2. Observe the MAP reading on the Tech 2. Is the MAP reading less than the specified value?	65 kPa	Go to *Step 3*	Go to *Step 6*
3	1. Disconnected the MAP sensor. 2. Connect a test light between the 5 volt reference “A” circuit and the MAP signal circuit at the MAP sensor harness connector. 3. Observe the MAP reading on the Tech 2. Is the MAP reading less than the specified value?	65 kPa	Go to *Step 5*	Go to *Step 4*
4	1. Check the MAP signal circuit between the PCM and the MAP sensor for an open, short to ground, or short to the MAP ground circuit. 2. If the MAP signal circuit is open or shorted, repair it as necessary. Was the MAP signal circuit open or shorted?	—	Verify repair	Go to *Step 12*
5	Replace the MAP sensor. Is the action complete?	—	Verify repair	—
6	Observe the TP angle reading on the Tech 2 while slowly opening the throttle. Does the TP angle increase steadily and evenly from the closed throttle value to the wide open throttle value?	Closed throttle = 0% Wide open throttle = 100%	Refer to *Diagnostic Aids*	Go to *Step 7*
7	1. Disconnect the TP sensor. 2. Observe the TP sensor reading on the Tech 2. Is the TP sensor reading near the specified value?	0 V	Go to *Step 8*	Go to *Step 9*
8	1. Connect a test light between the 5 volt reference “A” circuit and the TP sensor signal circuit at the TP sensor harness connector. 2. Observe the TP sensor reading on the Tech 2. Is the TP sensor reading at the specified value?	5 V	Go to *Step 11*	Go to *Step 10*
9	Check the following items: 1. TP signal circuit for a short to voltage. 2. TP sensor ground circuit for high resistance between the PCM and the TP sensor. 3. TP sensor ground circuit for a poor connection. 4. If a problem is found, repair wiring harness as necessary. Was a problem found?	—	Verify repair	Go to *Step 12*

DTC P0121 –TP System Performance (Cont'd)

Step	Action	Value(s)	Yes	No
10	Check the following items: 1. TP signal circuit or 5 volt reference "A" circuit for a poor connection. 2. TP signal circuit or 5 volt reference "A" circuit for high resistance between the PCM and the TP sensor. 3. If a problem is found, repair wiring harness as necessary. Was a problem found?	—	Verify repair	Go to *Step 12*
11	Replace the TP sensor. Is the action complete?	—	Verify repair	—
12	Replace the PCM. **IMPORTANT:** The replacement PCM must be programmed. Refer to *UBS 98model year Immobilizer Workshop Manual.* Is the action complete?	—	Verify repair	—

Diagnostic Trouble Code (DTC) P0122 TP Sensor Circuit Low Voltage

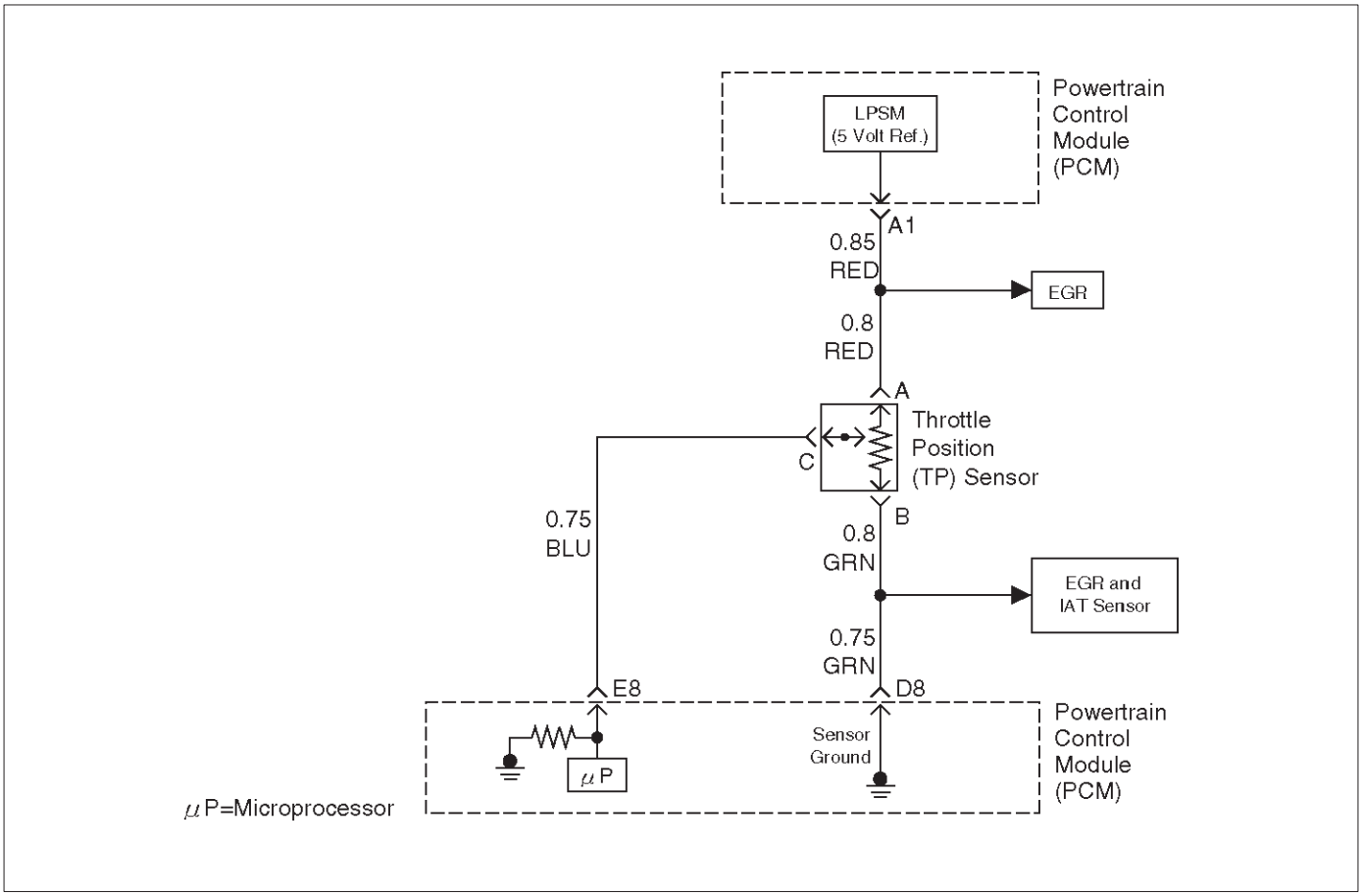

D06RW028

Circuit Description

The throttle position (TP) sensor circuit provides a voltage signal that changes relative to throttle blade angle. The signal voltage will vary from below 0.6 volts at closed throttle to about 4.5 volts at wide open throttle (WOT). The TP signal is used by the powertrain control module (PCM) for fuel control and many of the PCM–controlled outputs.

Conditions for Setting the DTC

- The ignition is “ON.”
- TP sensor signal voltage is less than 0.22 volt for a total of 0.78 second over a 1.5-second period.

Action Taken When the DTC Sets

- The PCM will illuminate the malfunction indicator lamp (MIL) the first time the fault is detected.
- The PCM will store conditions which were present when the DTC was set as Freeze Frame and in the Failure Records data.
- The PCM will use a default throttle position based on mass air flow and RPM.

Conditions for Clearing the MIL/DTC

- DTC P0122 can be cleared by using the Tech 2 “Clear Info” function or by disconnecting the PCM battery feed.

Diagnostic Aids

Check for the following conditions:

- Check intermittent codes.
- The TP sensor shares a 5 Volt reference with the EGR position sensor. Check the 5 Volt reference if these DTCs are also set.
- The TP sensor shares a ground with the IAT sensor, the EGR position sensor.
- Poor connection at PCM – Inspect harness connectors for backed-out terminals, improper mating, broken locks, improperly formed or damaged terminals, and poor terminal-to-wire connection.
- Damaged harness – Inspect the wiring harness for damage. If the harness appears to be OK, observe the throttle position display on the Tech 2 while moving connectors and wiring harnesses related to the TP sensor. A change in the display will indicate the location of the fault.

If DTC P0122 cannot be duplicated, the information included in the Failure Records data can be useful in determining vehicle mileage since the DTC was last set.

DTC P0122 –TP Sensor Circuit Low Voltage

Step	Action	Value(s)	Yes	No
1	Was the “On-Board Diagnostic (OBD) System Check” performed?	—	Go to *Step 2*	Go to *OBD System Check*
2	1. Ignition “ON,” engine “OFF.” 2. With the throttle closed, observe the “TP Sensor” display on the Tech 2. Is the “TP Sensor” below the specified value?	0.22 V	Go to *Step 4*	Go to *Step 3*
3	1. Ignition “ON,” engine “OFF.” 2. Review and record Tech 2 Failure Records data. 3. Operate the vehicle within Failure Records conditions as noted. 4. Using a Tech 2, monitor the “DTC” info for DTC P0122. Does the Tech 2 indicate DTC P0122 failed?	—	Go to *Step 4*	Refer to *Diagnostic Aids*
4	1. Ignition “OFF.” 2. Disconnect the TP sensor electrical connector. 3. Jumper the 5 volt reference “A” circuit and the TP signal together at the TP sensor harness connector. 4. Ignition “ON.” Observe the “TP Sensor” display on the Tech 2. Is the “TP Sensor” at the specified value?	5 V	Go to *Step 10*	Go to *Step 5*
5	1. Disconnect jumper. 2. Connect a test light between B+ and the TP sensor signal circuit at the TP sensor harness connector. Observe the “TP Sensor” display on the Tech 2. Is the “TP Sensor” at the specified value?	5 V	Go to *Step 6*	Go to *Step 8*
6	1. Ignition “OFF.” 2. Disconnect the PCM and check the 5 volt reference “A” circuit for an open or short to ground. 3. If the 5 volt reference “A” circuit is open or shorted to ground, repair it as necessary. Was the 5 volt reference “A” circuit open or shorted to ground?	—	Verify repair	Go to *Step 7*
7	Check the 5 volt reference “A” circuit for a poor connection at the PCM and replace the terminal if necessary. Did the terminal require replacement?	—	Verify repair	Go to *Step 12*
8	1. Ignition “OFF.” 2. Disconnect the PCM, and check the TP signal circuit for an open, short to ground, or short to the sensor ground circuit. 3. If the TP sensor signal circuit is open or shorted to ground, repair it as necessary. Was the TP signal circuit open or shorted to ground?	—	Verify repair	Go to *Step 9*
9	Check the TP sensor signal circuit for a poor connection at the PCM and replace the terminal if necessary. Did the terminal require replacement?	—	Verify repair	Go to *Step 12*

DTC P0122 –TP Sensor Circuit Low Voltage (Cont'd)

Step	Action	Value(s)	Yes	No
10	Check the TP sensor signal circuit for a poor connection at the TP sensor and replace the terminal if necessary. Did the terminal require replacement?	—	Verify repair	Go to *Step 11*
11	Replace the TP sensor. Is the action complete?	—	Verify repair	—
12	Replace the PCM. **IMPORTANT:** The replacement PCM must be programmed. Refer to *UBS 98model year Immobilizer Workshop Manual.* Is the action complete?	—	Verify repair	—

Diagnostic Trouble Code (DTC) P0123 TP Sensor Circuit High Voltage

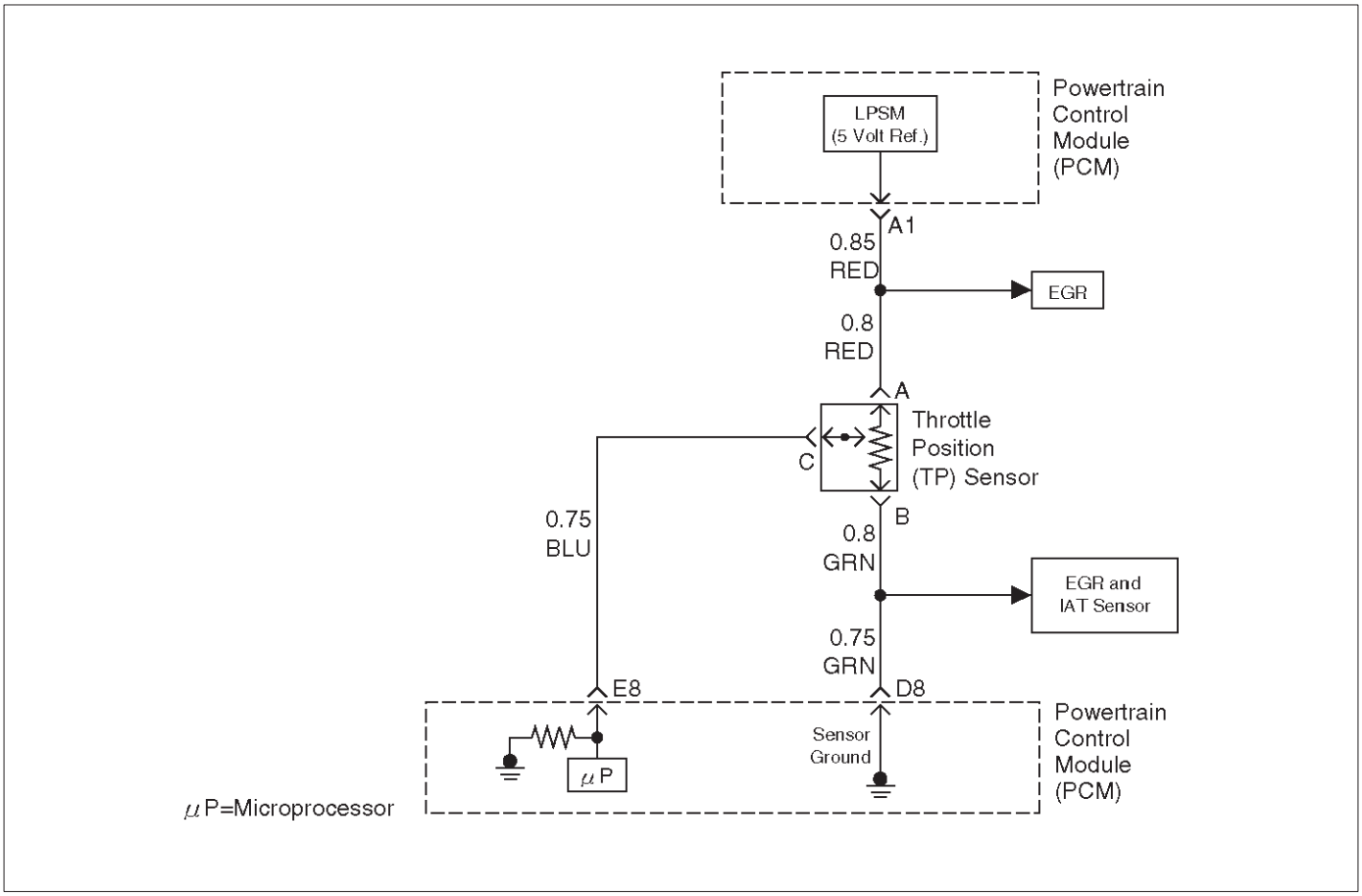

D06RW028

Circuit Description

The throttle position (TP) sensor circuit provides a voltage signal that changes relative to throttle blade angle. The signal voltage will vary from about 0.6 volts at closed throttle to about 4.5 volts at wide open throttle (WOT). The TP signal is one of the most important inputs used by the powertrain control module (PCM) for fuel control and many of the PCM-controlled outputs.

Conditions for Setting the DTC

- The ignition is “ON.”
- TP sensor signal voltage is greater than 4.88 volts for a total of 0.78 second over a 1.5-second period.

Action Taken When the DTC Sets

- The PCM will illuminate the malfunction indicator lamp (MIL) the first time the fault is detected.
- The PCM will store conditions which were present when the DTC was set as Freeze Frame and in the Failure Records data.
- The PCM will use a default throttle position based on mass air flow and RPM.

Conditions for Clearing the MIL/DTC

- DTC P0123 can be cleared by using the Tech 2 “Clear Info” function or by disconnecting the PCM battery feed.

Diagnostic Aids

Check for the following conditions:

- Check intermittent codes.
- The TP sensor shares a 5 Volt reference with the EGR position sensor. Check the 5 Volt reference if these DTCs are also set.
- The TP sensor shares a ground with the IAT sensor and the EGR position sensor. Check the ground if these other DTCs are also set.
- Poor connection at PCM – Inspect harness connectors for backed-out terminals, improper mating, broken locks, improperly formed or damaged terminals, and poor terminal-to-wire connection.
- Damaged harness – Inspect the wiring harness for damage. If the harness appears to be OK, observe the TP sensor display on the Tech 2 while moving connectors and wiring harnesses related to the TP sensor. A change in the display will indicate the location of the fault.
- Faulty TP sensor – With the ignition key “ON,” engine “OFF,” observe the TP sensor display on the Tech 2 while slowly depressing the accelerator to wide open throttle. If a voltage over 4.88 volts is seen at any point in normal accelerator travel, replace the TP sensor.

If DTC P0123 cannot be duplicated, the information included in the Failure Records data can be useful in determining vehicle mileage since the DTC was last set.

Test Description

Number (s) below refer to the step number(s) on the Diagnostic Chart.

7. Components that share the TP sensor 5 volt reference “A” circuit include the following device:

- EGR valve

Disconnect the component while observing the TP sensor display on the Tech 2. If the reading changes drastically when this component is disconnected, replace the component that affected the reading.

DTC P0123 – TP Sensor Circuit High Voltage

Step	Action	Value(s)	Yes	No
1	Was the “On-Board Diagnostic (OBD) System Check” performed?	—	Go to *Step 2*	Go to *OBD System Check*
2	1. Ignition “ON,” engine “OFF.” 2. With the throttle closed, observe the “TP Sensor” display on the Tech 2. Is the “TP Sensor” above the specified value?	4.88 V	Go to *Step 4*	Go to *Step 3*
3	1. Ignition “ON,” engine “OFF.” 2. Review and record Tech 2 Failure Records data. 3. Operate the vehicle within Failure Records conditions as noted. 4. Using a Tech 2, monitor “Specific DTC” info for DTC P0123. Does the Tech 2 indicate DTC P0123 failed.	—	Go to *Step 4*	Refer to *Diagnostic Aids*
4	1. Disconnect the TP sensor electrical connector. 2. Observe the “TP Sensor” display on the Tech 2. Is the “TP Sensor” near the specified value?	0 V	Go to *Step 5*	Go to *Step 6*
5	Probe the sensor ground circuit at the TP sensor harness connector with a test light connected to B+. Is the test light “ON?”	—	Go to *Step 7*	Go to *Step 10*
6	1. Ignition “OFF,” disconnect the PCM. 2. Ignition “ON,” engine “OFF.” 3. Check for a short to voltage on the TP sensor signal circuit. 4. If the TP sensor signal circuit is shorted, repair it as necessary. Was the TP sensor signal circuit shorted?	—	Verify repair	Go to *Step 12*
7	1. Ignition “ON.” 2. Monitor the “TP Sensor” Tech 2 display while disconnecting each of the components that share the 5 volt reference “A” circuit (one at a time). 3. If the “TP Sensor” Tech 2 display changes, replace the component that caused the display to change when disconnected. Does disconnecting any of these components cause the “TP Sensor” display to change?	—	Verify repair	Go to *Step 8*
8	1. Ignition “OFF,” disconnect the PCM. 2. Ignition “ON,” engine “OFF.” 3. Check for a short to B+ on the 5 volt reference “A” circuit. 4. If the 5 volt reference “A” circuit is shorted, repair it as necessary. Was the 5 volt reference “A” circuit shorted?	—	Verify repair	Go to *Step 9*
9	Check for poor electrical connections at the TP sensor and replace terminals if necessary. Did any terminals require replacement?	—	Verify repair	Go to *Step 11*

DTC P0123 – TP Sensor Circuit High Voltage (Cont'd)

Step	Action	Value(s)	Yes	No
10	1. Ignition "OFF." 2. Disconnect the PCM, and check for an open sensor ground circuit to the TP sensor. 3. If a problem is found, repair it as necessary. Was the sensor ground circuit to the TP sensor open?	—	Verify repair	Go to *Step 12*
11	Replace the TP sensor. Is the action complete?	—	Verify repair	—
12	Replace the PCM. **IMPORTANT:** The replacement PCM must be programmed. Refer to *UBS 98model year Immobilizer Workshop Manual.* Is the action complete?	—	Verify repair	—

Diagnostic Trouble Code (DTC) P0131 HO2S Circuit Low Voltage Bank 1 Sensor 1

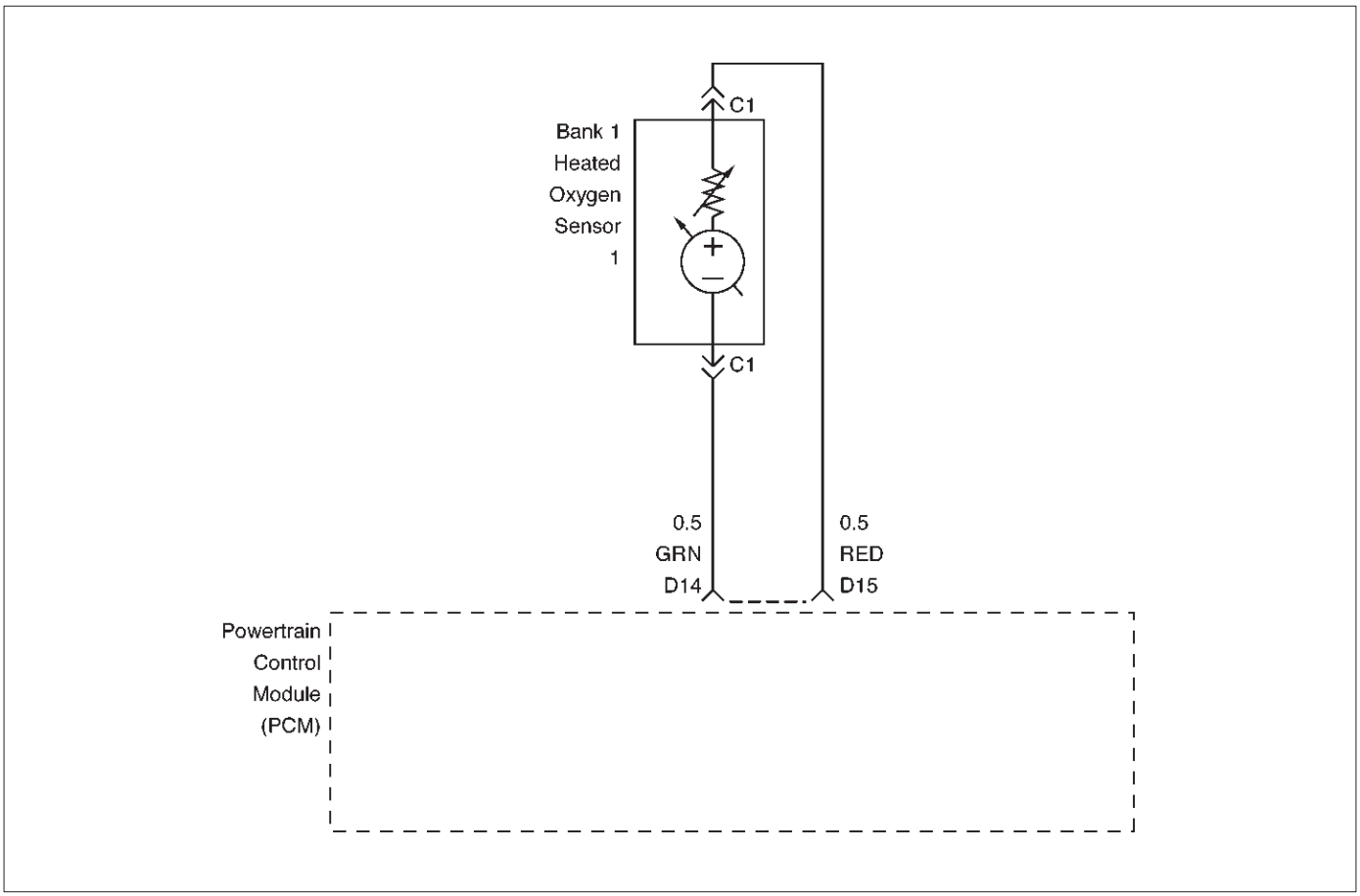

060RW236

Circuit Description

The powertrain control module (PCM) supplies a bias voltage of about 450 mV between the heated oxygen sensor (HO2S) signal high and signal low circuits. When measured with a 10 megaohm digital voltmeter, this may display as low as 350 mV. The oxygen sensor varies the voltage within a range of about 1000 mV when the exhaust is rich, down through about 10 mV when exhaust is lean. The PCM constantly monitors the HO2S signal during “closed loop” operation and compensates for a rich or lean condition by decreasing or increasing injector pulse width as necessary. If the Bank 1 HO2S 1 voltage remains excessively low for an extended period of time, DTC P0131 will be set.

Conditions for Setting the DTC

- No related DTCs.
- Vehicle is operating in “closed loop.”
- Engine coolant temperature is above 60˚C (140˚F).
- “Closed loop” commanded air/fuel ratio is between 14.5 and 14.8.
- Throttle angle is between 3% and 19%.
- Bank 1 HO2S 1 signal voltage remains below 22 mV during normal “closed loop” operation for a total of 77 seconds over a 90-second period of time.

Action Taken When the DTC Sets

- The PCM will illuminate the malfunction indicator lamp (MIL) the first time the fault is detected.
- The PCM will store conditions which were present when the DTC was set as Freeze Frame and in the Failure Records data.
- “Open loop” fuel control will be in effect.

Conditions for Clearing the MIL/DTC

- DTC P0131 can be cleared by using the Tech 2 “Clear Info” function or by disconnecting the PCM battery feed.

Diagnostic Aids

Check for the following conditions:

- Heated oxygen sensor wiring – The sensor pigtail may be routed incorrectly and contacting the exhaust system.
- Poor PCM to engine block grounds.
- Fuel pressure – The system will go lean if pressure is too low. The PCM can compensate for some decrease. However, If fuel pressure is too low, a DTC P0131 may be set. Refer to *Fuel System Diagnosis*.
- Lean injector(s) – Perform “Injector Balance Test.”
- Vacuum leaks – Check for disconnected or damaged vacuum hoses and for vacuum leaks at the intake manifold, throttle body, EGR system, and PCV system.
- Exhaust leaks – An exhaust leak may cause outside air to be pulled into the exhaust gas stream past the

HO2S, causing the system to appear lean. Check for exhaust leaks that may cause a false lean condition to be indicated.

- MAF sensor – The system can go lean if the MAF sensor signal indicates an engine airfiow measurement that is not correct. Disconnect the MAF sensor to see if the lean condition is corrected. If so, replace the MAF sensor.
- Fuel contamination – Water, even in small amounts, can be delivered to the fuel injectors. The water can cause a lean exhaust to be indicated. Excessive alcohol in the fuel can also cause this condition. Refer to *Fuel System Diagnosis* for the procedure to check for fuel contamination.
- If none of the above conditions are present, replace the affected HO2S.

Test Description

Number(s) below refer to step numbers on the diagnostic chart.

3. DTC P0131 failing during operation may indicate a condition described in the “Diagnostic Aids” above. If the DTC P0131 test passes while the Failure Records conditions are being duplicated, an intermittent condition is indicated.

Reviewing the Failure Records vehicle mileage since the diagnostic test last failed may help determine how often the condition that caused the DTC to be set occurs. This may assist in diagnosing the condition.

DTC P0131 –HO2S Circuit Low Voltage Bank 1 Sensor 1

Step	Action	Value(s)	Yes	No
1	Was the “On-Board Diagnostic (OBD) System Check” performed?	—	Go to *Step 2*	Go to *OBD System Check*
2	1. Install the Tech 2. 2. Run the engine at operating temperature. 3. Operate the vehicle within the parameters specified under “Conditions for Setting the DTC” criteria included in Diagnostic Support. 4. Using a Tech 2, monitor Bank 1 HO2S 1 voltage. Does the Bank 1 HO2S 1 voltage remain below the specified value?	22 mV	Go to *Step 4*	Go to *Step 3*
3	1. Ignition “ON,” engine “OFF,” review and record Tech 2 Failure Records data and note parameters. 2. Operate the vehicle within Failure Records conditions as noted. 3. Using a Tech 2, monitor “Specific DTC” info for DTC P0131 until the DTC P0131 test runs. Note test result. Does Tech 2 indicate DTC P0131 failed this ignition?	—	Go to *Step 4*	Refer to *Diagnostic Aids*
4	1. Turn the ignition “OFF.” 2. Disconnect the PCM. 3. Check the Bank 1 HO2S 1 high and low circuits for a short to ground or a short to the heater ground circuit. Are the Bank 1 HO2S 1 signal circuits shorted to ground?	—	Go to *Step 5*	Go to *Step 6*
5	Repair the Bank 1 HO2S 1 signal circuit. Is the action complete?	—	Verify repair	—
6	1. Turn the ignition “OFF,” HO2S 1 and PCM disconnected. 2. Check for continuity between the high and low signal circuits. Was there continuity between the high and low circuits?	—	Go to *Step 7*	Go to *Step 8*
7	Repair the short between the high and low circuits. Is the action complete?	—	Verify repair	—

DTC P0131 –HO2S Circuit Low Voltage Bank 1 Sensor 1 (Cont'd)

Step	Action	Value(s)	Yes	No
8	1. Ignition "OFF." 2. Reconnect the PCM, leave the sensor disconnected. 3. Ignition "ON." Does the Tech 2 indicate Bank 1 HO2S 1 voltage between the specified values?	425-475 mV	Refer to *Diagnostic Aids*	Go to *Step 9*
9	Replace the PCM. **IMPORTANT:** The replacement PCM must be programmed. Refer to *UBS 98model year Immobilizer Workshop Manual.* Is the action complete?	—	Verify repair	—

Diagnostic Trouble Code (DTC) P0132 HO2S Circuit High Voltage Bank 1 Sensor 1

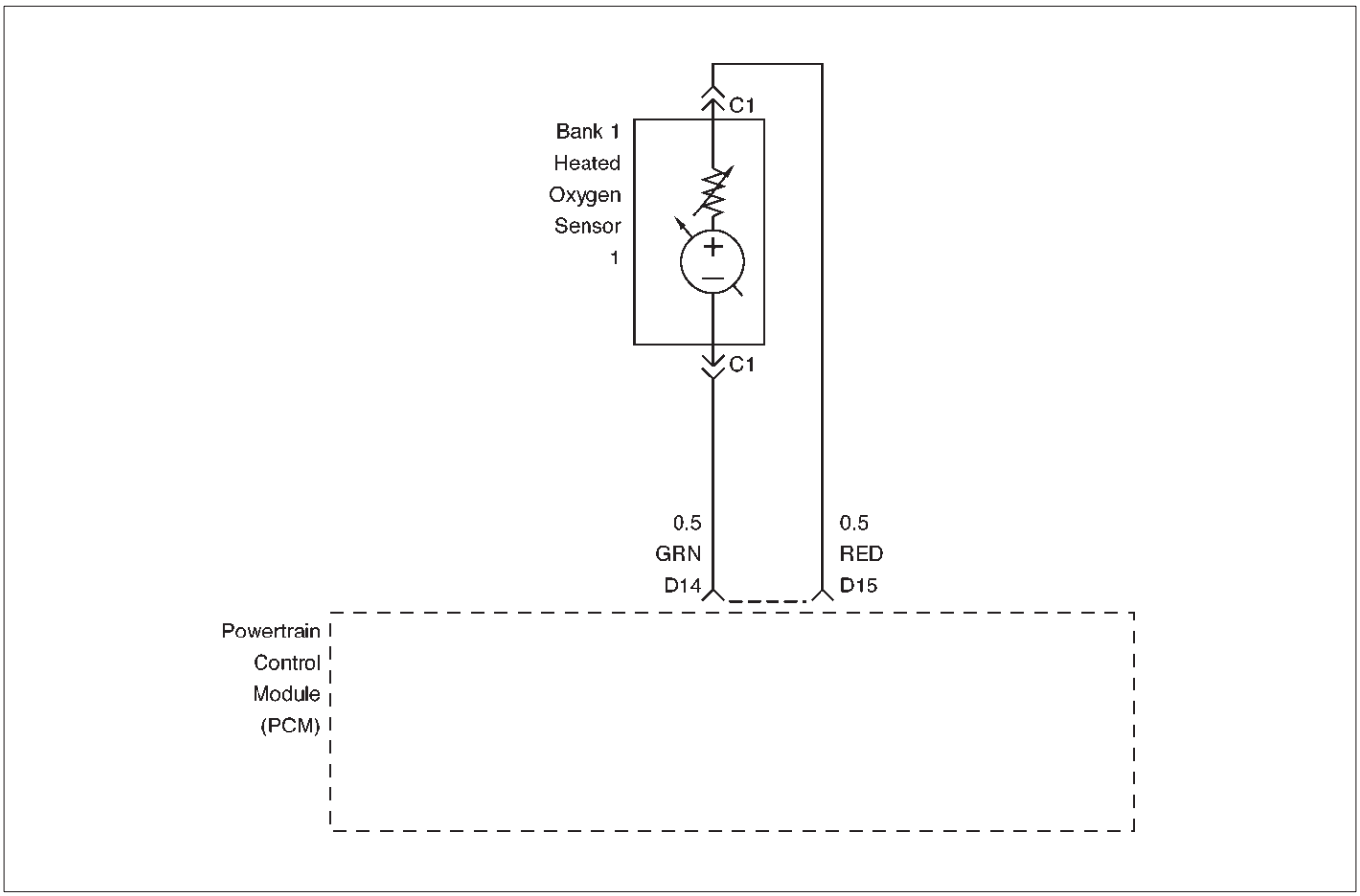

060RW236

Circuit Description

The powertrain control module (PCM) supplies a bias voltage of about 450 mV between the heated oxygen sensor (HO2S) signal and low circuits. When measured with a 10 megaohm digital voltmeter, this may display as low as 320 mV. The oxygen sensor varies the voltage within a range of about 1000 mV when exhaust is rich, down through about 10 mV when exhaust is lean. The PCM constantly monitors the HO2S signal during "closed loop" operation and compensates for a rich or lean condition by decreasing or increasing injector pulse width as necessary. If the Bank 1 HO2S 1 voltage remains excessively high for an extended period of time, DTC P0132 will be set.

Conditions for Setting the DTC

- No related DTCs.
- Engine coolant temperature is above 60˚C (140˚F)
- "Closed loop" commanded air/fuel ratio is between 14.5 and 14.8.
- Throttle angle is between 3% and 19%.
- Bank 1 HO2S 1 signal voltage remains above 952 mV during normal "closed loop" operation for a total of 77 seconds over a 90-second period.

OR

- Bank 1 HO2S 1 signal voltage remains above 500 mV during "deceleration fuel cutoff mode" operation for 3 seconds.

Action Taken When the DTC Sets

- The PCM will illuminate the malfunction indicator lamp (MIL) the first time the fault is detected.
- The PCM will store conditions which were present when the DTC was set as Freeze Frame and in the Failure Records data.
- "Open loop" fuel control will be in effect.

Conditions for Clearing the MIL/DTC

- DTC P0132 can be cleared by using the Tech 2 "Clear Info" function or by disconnecting the PCM battery feed.

Diagnostic Aids

Check the following items:

- Fuel pressure – The system will go rich if pressure is too high. The PCM can compensate for some increase. However, if fuel pressure is too high, a DTC P0132 may be set. Refer to *Fuel System Diagnosis*.
- Perform "Injector Balance Test" – Refer to *Fuel System Diagnosis*.
- MAF sensor –The system can go rich if MAF sensor signal indicates an engine airflow measurement that is not correct. Disconnect the MAF sensor to see it the rich condition is corrected. If so, replace the MAF sensor.
- Check for a leak in the fuel pressure regulator diaphragm by checking the vacuum line to the regulator for the presence of fuel. There should be no fuel in the vacuum line.

- An intermittent TP sensor output will cause the system to go rich due to a false indication of the engine accelerating.
- Shorted Heated Oxygen Sensor (HO2S) –If the HO2S is internally shorted, the HO2S voltage displayed on the Tech 2 will be over 1 volt. Try disconnecting the affected HO2S with the key "ON," engine "OFF." If the displayed HO2S voltage changes from over 1000 mV to around 450 mV, replace the HO2S. Silicon contamination of the HO2S can also cause a high HO2S voltage to be indicated. This condition is indicated by a powdery white deposit on the portion of the HO2S exposed to the exhaust stream. If contamination is noticed, replace the affected HO2S.
- Open HO2S Signal Circuit or Faulty HO2S–A poor connection or open in the HO2S signal circuit can cause the DTC to set during deceleration fuel mode. An HO2S which is faulty and not allowing a full voltage swing between the rich and lean thresholds can also cause this condition. Operate the vehicle by monitoring the HO2S voltage with a Tech 2. If the HO2S voltage is limited within a range between 300 mV to 600 mV, check the HO2S signal circuit wiring and associated terminal conditions.
- If none of the above conditions are present, replace the affected HO2S.

Test Description

Number(s) below refer to the step number(s) on the Diagnostic Chart.

3. DTC P0132 failing during "deceleration fuel cutoff mode" operation may indicate a condition described in the "Diagnostic Aids" above. If the DTC P0132 test passes while the Failure Records conditions are being duplicated, an intermittent condition is indicated.

Reviewing the Failure Records vehicle mileage since the diagnostic test last failed may help determine how often the condition that caused the DTC to be set occurs. This may assist in diagnosing the condition.

DTC P0132 – HO2S Circuit High Voltage Bank 1 Sensor 1

Step	Action	Value(s)	Yes	No
1	Was the "On-Board Diagnostic (OBD) System Check" performed?	—	Go to *Step 2*	Go to *OBD System Check*
2	1. Install the Tech 2. 2. Run the engine at operating temperature. 3. Operate the vehicle within parameters specified under "Conditions for Setting the DTC" included in Diagnostic Support. 4. Using a Tech 2, monitor Bank 1 HO2S 1 voltage. Does the Bank 1 HO2S 1 voltage remain above the specified value?	952 mV (500 mV in deceleration fuel cutoff mode)	Go to *Step 4*	Go to *Step 3*
3	1. Ignition "ON," review and record Tech 2 Failure Records data. 2. Operate the vehicle within Failure Records conditions as noted. 3. Using a Tech 2, monitor "Specific DTC" info for DTC P0132 until the DTC P0132 test runs. 4. Note the test result. Does the Tech 2 indicate DTC P0132 failed this ignition?	—	Go to *Step 4*	Refer to *Diagnostic Aids*
4	1. Ignition "OFF." 2. Disconnect Bank 1 HO2S 1. 3. Ignition "ON." 4. At HO2S Bank 1 Sensor 1 connector (PCM side) use a DVM to measure voltages at the high and low signal terminals. Are the voltages in the specified range?	3-4 V	Go to *Step 5*	Go to *Step 6*
5	Repair short to voltage in signal circuit. Is the action complete?	—	Verify repair	—

DTC P0132 – HO2S Circuit High Voltage Bank 1 Sensor 1 (Cont'd)

Step	Action	Value(s)	Yes	No
6	1. Ignition "ON," engine"OFF." 2. At Bank 1 HO2S 1 connector (PCM side) jumper both the HO2S high and low signal circuits (PCM side) to ground. 3. Using a Tech 2, monitor Bank 1 HO2S 1 voltage. Is Bank 1 HO2S 1 voltage below the specified value?	10 mV	Go to *Step 7*	Go to *Step 8*
7	1. Disconnect the jumpers to ground from Bank 1 HO2S 1 PCM-side connector. 2. With the HO2S 1 connector disconnected, monitor Bank 1 HO2S 1 voltage. Is Bank 1 HO2S 1 voltage between the specified values?	425-475 mV	Refer to *Diagnostic Aids*	Go to *Step 8*
8	Replace the PCM. **IMPORTANT:** The replacement PCM must be programmed. Refer to *UBS 98model year Immobilizer Workshop Manual.* Is the action complete?	—	Verify repair	—

Diagnostic Trouble Code (DTC) P0134 HO2S Circuit Insufficient Activity Bank 1 Sensor 1

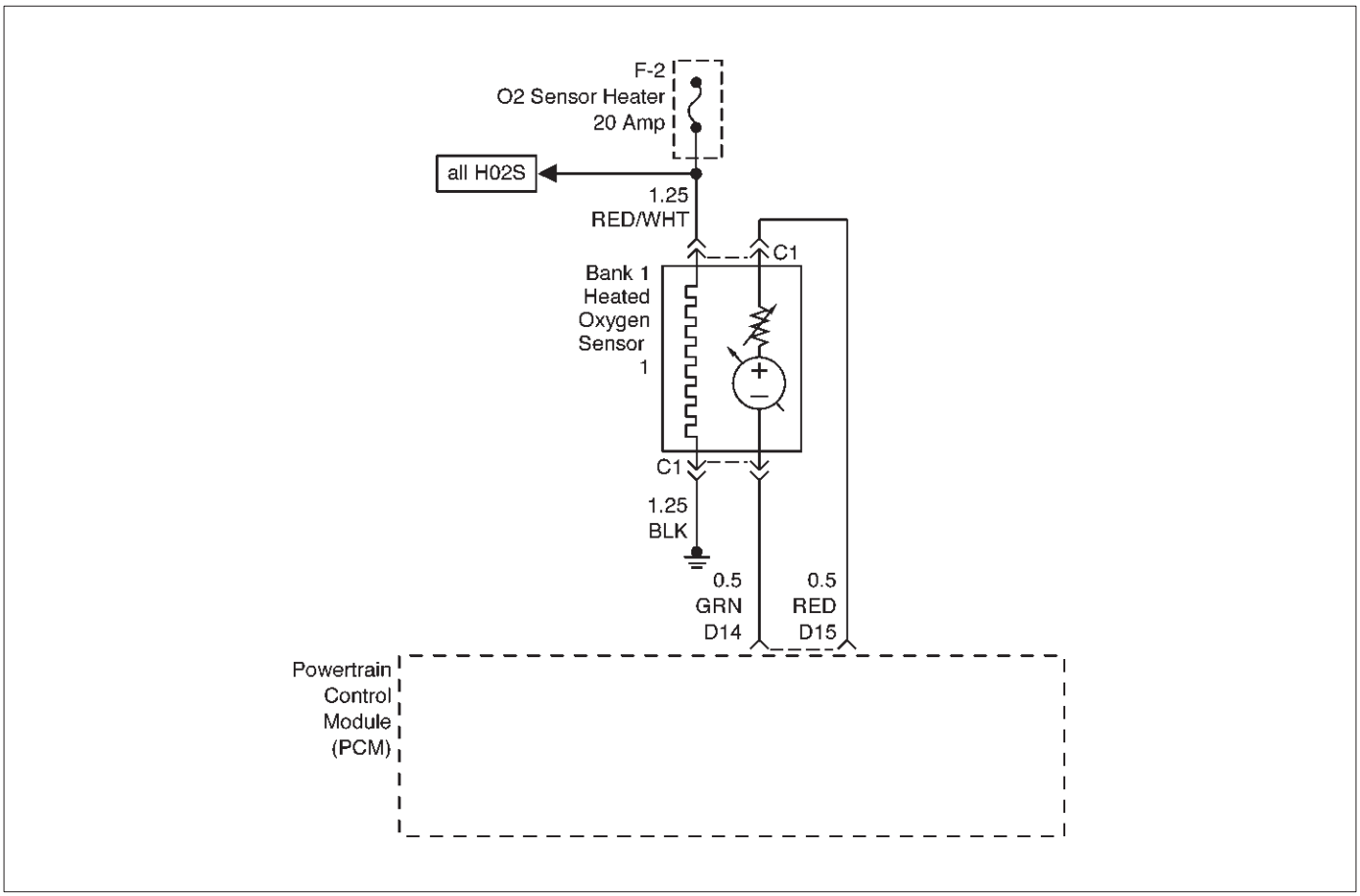

060RW237

Circuit Description

- The powertrain control module (PCM) supplies a bias voltage of about 450 mV between the heated oxygen sensor (HO2S) high and low circuits. When measured with a 10 megaohm digital voltmeter, this may display as low as 320 mV. The oxygen sensor varies the voltage within a range of about 1000 mV when the exhaust is rich, down through about 10 mV when exhaust is lean. The PCM constantly monitors the HO2S signal during “closed loop” operation and compensates for a rich or lean condition by decreasing or increasing injector pulse width as necessary. If the Bank 1 HO2S 1 voltage remains at or near the 450 mV bias for an extended period of time, DTC P0134 will be set, indicating an open sensor signal or sensor low circuit.
- Heated oxygen sensors are used to minimize the amount of time required for “closed loop” fuel control operation and to allow accurate catalyst monitoring. The oxygen sensor heater greatly decreases the amount of time required for fuel control sensors Bank 1 HO2S 1 and Bank 2 HO2S 1 to become active.
- Oxygen sensor heaters are required by post-catalyst monitor sensors to maintain a sufficiently high temperature for accurate exhaust oxygen content readings further from the engine.

Conditions for Setting the DTC

- No related DTCs.
- Battery voltage is above 10 volts.
- Engine run time is longer than 40 seconds.
- Oxygen sensor heater has been determined to be functioning properly.
- Bank 1 HO2S 1 signal voltage remains between 400 mV and 500 mV for a total of 77 seconds over a 90-second period of time.

Action Take When the DTC Sets

- The PCM will illuminate the malfunction indicator lamp (MIL) the first time the fault is detected.
- The PCM will store conditions which were present when the DTC was set as Freeze Frame and in the Failure Records data.
- “Open loop” fuel control will be in effect.

Conditions for Clearing the MIL/DTC

- DTC P0134 can be cleared by using Tech 2 “Clear Info” function or by disconnecting the PCM battery feed.

Diagnostic Aids

Check for the following conditions:

- Poor connection or damaged harness – Inspect the harness connectors for backed-out terminals, improper mating, broken locks, improperly formed or damaged terminals, poor terminal-to-wire connection, and damaged harness.
- Faulty HO2S heater or heater circuit – With the ignition “ON,” engine “OFF,” after a cool down period, the HO2S 1 voltage displayed on Tech 2 is normally 455-460 mV. A reading over 1000 mV indicates a signal line shorted to voltage. A reading under 5 mV

indicates a signal line shorted to ground or signal lines shorted together. Disconnect the HO2S and connect a test light between the HO2S ignition feed and heater ground circuits. If the test light does not light for 2 seconds when the ignition is turned on, repair the open ignition feed or sensor ground circuit as necessary. If the test light lights and the HO2S signal and low circuits are OK, replace the HO2S.

- Intermittent test – With the Ignition "ON," monitor the HO2S signal voltage while moving the wiring harness and related connectors. If the fault is induced, the HO2S signal voltage will change. This may help isolate the location of the malfunction.

Test Description

Number(s) below refer to the step number(s) on the Diagnostic Chart.

3. If the DTC P0134 test passes while the Failure Records conditions are being duplicated, an intermittent conditions is indicated.

Reviewing the Failure Records vehicle mileage since the diagnostic test last failed may help determine how often the condition that caused the DTC to be set occurs. This may assist in diagnosing the condition.

DTC P0134 –HO2S Circuit Insufficient Activity Bank 1 Sensor 1

Step	Action	Value(s)	Yes	No
1	Was the "On-Board Diagnostic (OBD) System Check" performed?	—	Go to *Step 2*	Go to *OBD System Check*
2	1. Install Tech 2. 2. Run the engine at operating temperature. 3. Operate the engine above 1200 RPM for two minutes. Does Tech 2 indicate Bank 1 HO2S 1 voltage varying outside the specified values?	400-500 mV	Go to *Step 3*	Go to *Step 4*
3	1. Ignition "ON," engine "OFF," review and record Tech 2 Failure Records data and note parameters. 2. Operate the vehicle within Failure Records conditions as noted. 3. Using Tech 2, monitor "Specific DTC" info for DTC P0134 until the DTC P0134 test runs. 4. Note the test result. Does Tech 2 indicate DTC P0134 failed this ignition?	—	Go to *Step 4*	Refer to *Diagnostic Aids*
4	Check for a damaged harness. Was a problem found?	—	Verify repair	Go to *Step 5*
5	Check for poor Bank 1 HO2S 1 high and low circuit terminal connections at the Bank 1 HO2S 1 harness connector and replace terminal(s) if necessary. Did any terminals require replacement?	—	Verify repair	Go to *Step 6*
6	Check for poor Bank 1 HO2S 1 high and low circuit terminal connections at the PCM and replace terminals if necessary. Did any terminals require replacement?	—	Verify repair	Go to *Step 7*
7	1. Ignition "OFF." 2. With the PCM disconnected, check continuity of the Bank 1 HO2S 1 high circuit. 3. If the Bank 1 HO2S 1 high circuit measures over 5.0 ohms, repair open or poor connection as necessary. Was a Bank 1 HO2S 1 high circuit problem found and corrected?	—	Verify repair	Go to *Step 8*

DTC P0134 –HO2S Circuit Insufficient Activity Bank 1 Sensor 1 (Cont'd)

Step	Action	Value(s)	Yes	No
8	1. Ignition "OFF." 2. With the PCM disconnected, check continuity of the Bank 1 HO2S 1 low circuit. 3. If the Bank 1 HO2S 1 low circuit measures over 5 ohms, repair open or poor connection as necessary. Was a Bank 1 HO2S 1 low circuit problem found and corrected?	—	Verify repair	Go to *Step 9*
9	1. Ignition "ON," engine "OFF." 2. Disconnect Bank 1 HO2S 1 and jumper the HO2S high and low circuits (PCM side) to ground. 3. Using Tech 2, monitor Bank 1 HO2S 1 voltage. Is Bank 1 HO2S 1 voltage in the specified range?	0-10 mV	Go to *Step 10*	Go to *Step 11*
10	Replace Bank 1 HO2S 1. Is the action complete?	—	Verify repair	—
11	Replace the PCM. **IMPORTANT:** The replacement PCM must be programmed. Refer to *UBS 98model year Immobilizer Workshop Manual.* Is the action complete?	—	Verify repair	—

Diagnostic Trouble Code (DTC) P0151 HO2S Circuit Low Voltage Bank 2 Sensor 1

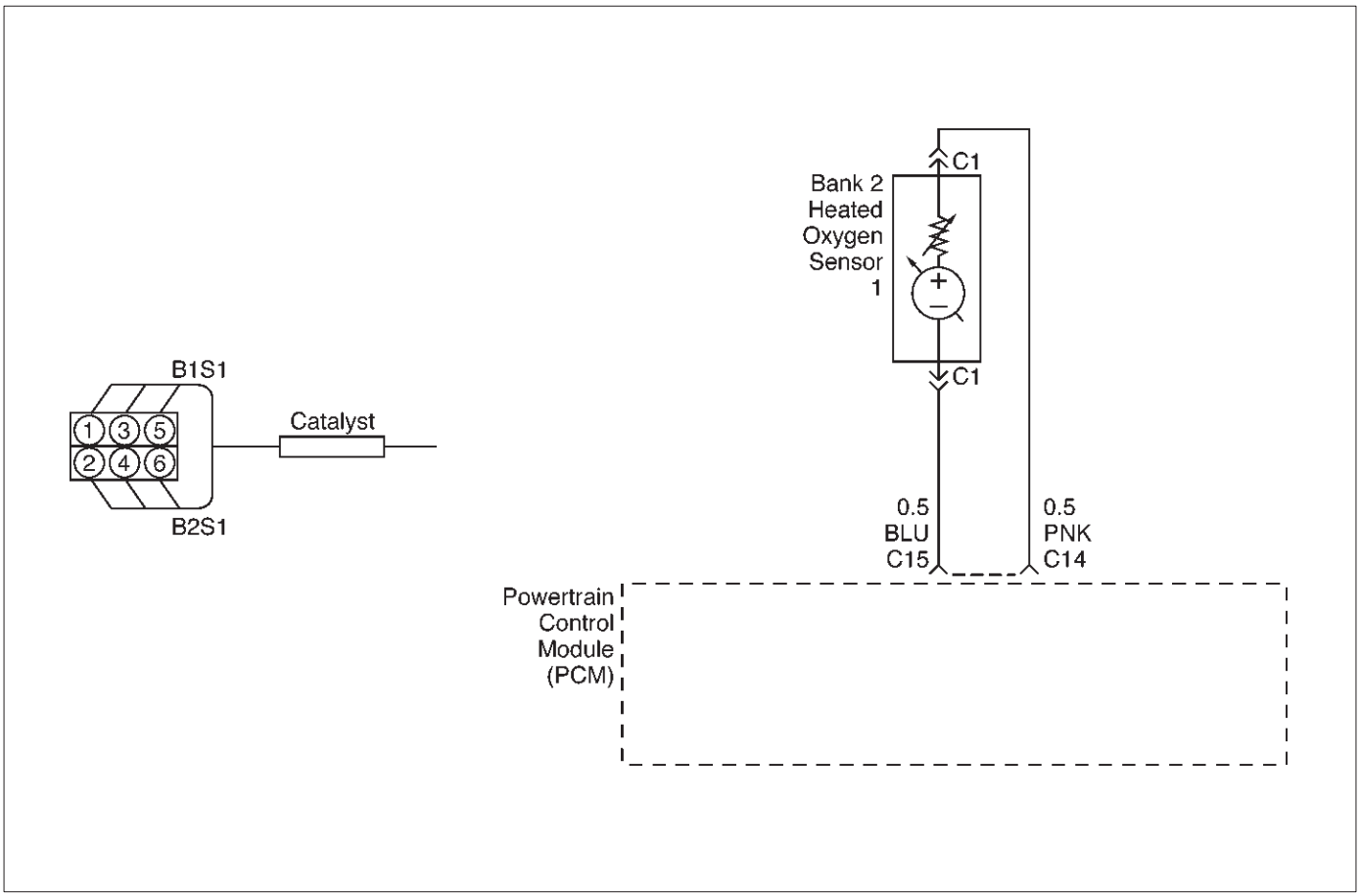

060RW190

Circuit Description

The powertrain control module (PCM) supplies a bias voltage of about 450 mV between the heated oxygen sensor (HO2S) signal high and signal low circuits. When measured with a 10 megaohm digital voltmeter, this may display as low as 320 mV. The oxygen sensor varies the voltage within a range of about 1000 mV when the exhaust is rich, down through about 10 mV when exhaust is lean. The PCM constantly monitors the HO2S signal during "closed loop" operation and compensates for a rich or lean condition by decreasing or increasing injector pulse width as necessary. If the Bank 2 HO2S 1 voltage remains excessively low for an extended period of time, DTC P0151 will be set.

Conditions for Setting the DTC

- No related DTCs.
- The engine is operating in "closed loop."
- Engine coolant temperature is above 60˚C (140˚F).
- "Closed loop" commanded air/fuel ratio is between 14.5 and 14.8.
- Throttle angle is between 3% and 19%.
- Bank 2 HO2S 1 signal voltage remains below 22 mV during normal "closed loop" operation for a total of 77 seconds over a 90-second period of time.

Action Taken When the DTC Sets

- The PCM will illuminate the malfunction indicator lamp (MIL) the first time the fault is detected.
- The PCM will store conditions which were present when the DTC was set as Freeze Frame and in the Failure Records data.
- "Open loop" fuel control will be in effect.

Conditions for Clearing the MIL/DTC

- DTC P0151 can be cleared by using Tech 2 "Clear Info" function or by disconnecting the PCM battery feed.

Diagnostic Aids

Check for the following conditions:

- Heated oxygen sensor wiring – The sensor pigtail may be mispositioned and contacting the exhaust system.
- Poor PCM to engine block grounds.
- Fuel pressure – The system will go lean if pressure is too low. The PCM can compensate for some decrease. However, if fuel pressure is too low, a DTC P0151 may be set. Refer to *Fuel System Diagnosis*.
- Lean injector(s) – Perform "Injector Balance Test."
- Vacuum leaks – Check for disconnected or damaged vacuum hoses and for vacuum leaks at the intake manifold, throttle body, EGR system, and PCV system.
- Exhaust leaks – An exhaust leak may cause outside air to be pulled into the exhaust gas stream past the HO2S, causing the system to appear lean. Check for

exhaust leaks that may cause a false lean condition to be indicated.

- MAF sensor –The system can go lean if the MAF sensor signal indicates an engine airflow measurement that is not correct. Disconnect the MAF sensor to see if the lean condition is corrected. If so, replace the MAF sensor.
- Fuel contamination – Water, even in small amounts, can be delivered to the fuel injectors. The water can cause a lean exhaust to be indicated. Excessive alcohol in the fuel can also cause this condition. Refer to *Fuel System Diagnosis* for the procedure to check for fuel contamination.
- If none of the above conditions are present, replace the affected HO2S.

Test Description

Number(s) below refer to the step number(s) on the Diagnostic Chart.

3. DTC P0151 failing during operation may indicate a condition described in the “Diagnostic Aids” above. If the DTC P0151 test passes while the Failure Records conditions are being duplicated, an intermittent condition is indicate.

Reviewing the Failure Records vehicle mileage since the diagnostic test last failed may help determine how often the condition that caused the DTC to be set occurs. This may assist in diagnosing the condition.

DTC P0151 – HO2S Circuit Low Voltage Bank 2 Sensor 1

Step	Action	Value(s)	Yes	No
1	Was the “On-Board Diagnostic (OBD) System Check” performed?	—	Go to *Step 2*	Go to *OBD System Check*
2	1. Install Tech 2. 2. Run the engine at operating temperature. 3. Operate the vehicle within the parameters specified under “Conditions for Setting the DTC” criteria included in Diagnostic Support. 4. Using Tech 2, monitor Bank 2 HO2S 1 voltage. Does the Bank 2 HO2S 1 voltage remain below the specified value?	22 mV	Go to *Step 4*	Go to *Step 3*
3	1. Ignition “ON,” engine “OFF,” review and record Tech 2 Failure Records data and note parameters. 2. Operate the vehicle within Failure Records conditions as noted. 3. Using Tech 2, monitor “Specific DTC” info for DTC P0151 until the DTC P0151 test runs. 4. Note test result. Does Tech 2 indicate DTC P0151 failed this ignition?	—	Go to *Step 4*	Refer to *Diagnostic Aids*
4	1. Turn ignition “OFF.” 2. Disconnect the PCM. 3. Check the Bank 2 HO2S 1 high and low signal circuits for a short to ground or a short to the heater ground circuit. Were Bank 2 HO2S 1 signal circuits shorted?	—	Go to *Step 5*	Go to *Step 6*
5	Repair the Bank 2 HO2S 1 signal circuit. Is the action complete?	—	Verify repair	—
6	1. Ignition “OFF.” 2. Leave the PCM and HO2S 1 disconnected. 3. Check for continuity between the high and low signal circuits. Was there continuity between the high and low circuits?	—	Go to *Step 7*	Go to *Step 8*
7	Repair the short between the high and low circuits. Is the action complete?	—	Verify repair	—

DTC P0151 – HO2S Circuit Low Voltage Bank 2 Sensor 1 (Cont'd)

Step	Action	Value(s)	Yes	No
8	1. Ignition "OFF." 2. Reconnect the PCM, leave HO2S 2 disconnected. 3. Ignition "ON." Does Tech 2 indicate Bank 2 HO2S 1 voltage near the specified value?	425-475 mV	Refer to *Diagnostic Aids*	Go to *Step 9*
9	Replace the PCM. **IMPORTANT:** The replacement PCM must be programmed. Refer to *UBS 98model year Immobilizer Workshop Manual.* Is the action complete?	—	Verify repair	—

Diagnostic Trouble Code (DTC) P0152 HO2S Circuit HIGH Voltage Bank 2 Sensor 1

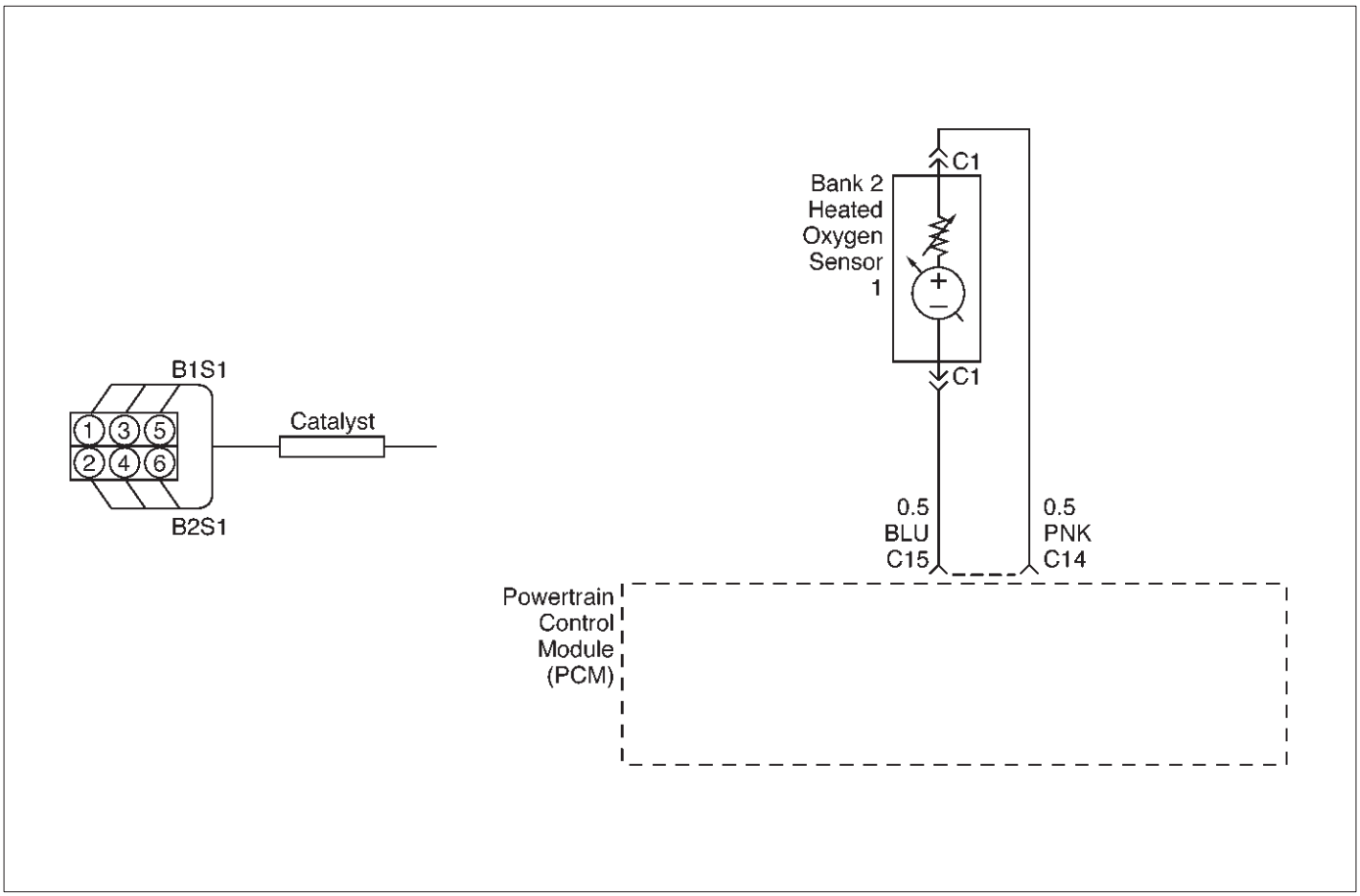

060RW190

Circuit Description

The powertrain control module (PCM) supplies a bias voltage of about 450 mV between the heated oxygen sensor (HO2S) signal high and signal low circuits. When measured with a 10 megaohm digital voltmeter, this may display as low as 320 mV. The oxygen sensor varies the voltage within a range of about 1000 mV when the exhaust is rich, down through about 10 mV when exhaust is lean. The PCM constantly monitors the HO2S signal during "closed loop" operation and compensates for a rich or lean condition by decreasing or increasing the injector pulse width as necessary. If the Bank 2 HO2S 1 voltage remains excessively high for an extended period of time, DTC P0152 will be set.

Conditions for Setting the DTC

- No related DTCs.
- The engine is operating in "closed loop."
- The engine coolant temperature is above 60˚C (140˚F).
- "Closed loop" commanded air/fuel ratio between 14.5 and 14.8.
- Throttle angle between 3% and 19%.
- Bank 2 HO2S 1 signal voltage remains above 952 mV during normal "closed loop" operation for a total of 77 seconds over a 90-second period.

OR

- Bank 2 HO2S 1 signal voltage remains above 500 mV during deceleration fuel cutoff mode operation for up to 3 seconds.

Action Taken When the DTC Sets

- The PCM will illuminate the malfunction indicator lamp (MIL) the first time the fault is detected.
- The PCM will store conditions which were present when the DTC was set as Freeze Frame and in the Failure Records data.
- "Open loop" fuel control will be in effect.

Conditions for Clearing the MIL/DTC

- DTC P0152 can be cleared by using Tech 2 "Clear Info" function or by disconnecting the PCM battery feed.

Diagnostic Aids

Check for the following conditions:

- Fuel pressure – The system will go rich if pressure is too high. The PCM can compensate for some increase. However, if fuel pressure is too high, a DTC P0152 may be set. Refer to *Fuel System Diagnosis*.
- Rich injector(s) – Perform "Injector Balance Test."
- Leaking injector – Refer to *Fuel System Diagnosis*.
- Evaporative emissions (EVAP) system – Check the canister for fuel saturation. If the canister is full of fuel, check EVAP control system components and hoses. Refer to *Evaporative Emission (EVAP) Control System*.

- MAF sensor – The system can go rich if the MAF sensor signal indicates an engine airflow measurement that is not correct. Disconnect the MAF sensor to see if rich condition is corrected. If so, replace MAF sensor.
- Check for leaking fuel pressure regulator diaphragm by checking vacuum line to regulator for the presence of fuel. There should be no fuel in the vacuum line.
- TP sensor – An intermittent TP sensor output will cause the system to go rich, due to a false indication of the engine accelerating.
- Shorted Heated Oxygen Sensor (HO2S)– If the HO2S is internally shorted, the HO2S voltage displayed on Tech 2 will be over 1 volt. Try disconnecting the affected HO2S with the key "ON," engine "OFF." If the displayed HO2S voltage changes from over 1000 mV to around 450 mV, replace the HO2S. Silicon contamination of the HO2S can cause a high HO2S voltage to be indicated. This condition is indicated by powdery white deposit on the portion of the HO2S exposed to the exhaust stream. If contamination is noticed, replace the affected HO2S.
- Open HO2S Signal Circuit of Faulty HO2S– A poor connection or open in the HO2S signal circuit can cause the DTC to set during deceleration fuel mode. An HO2S which is faulty and not allowing a full voltage switch between the rich and lean thresholds can also cause the condition. Operate the vehicle while monitoring the HO2S voltage with Tech 2. If the HO2S is limited within a range between 300 mV to 600 mV, check the HO2S signal circuit wiring and associated terminal connections.
- If none of the above conditions are present, replace the affected HO2S.

Test Description

Number(s) below refer to the step number(s) on the Diagnostic Chart.

3. DTC P0152 failing during deceleration fuel cutoff mode operation may indicate a condition described in the "Diagnostic Aids" above. If the DTC P0152 test passes while the Failure Records conditions are being duplicated, an intermittent condition is indicated.

Reviewing the Failure Records vehicle mileage since the diagnostic test last failed may help determine how often the condition that caused the DTC to be set occurs. This may assist in diagnosing the condition.

DTC P0152 – HO2S Circuit High Voltage Bank 2 Sensor 1

Step	Action	Value(s)	Yes	No
1	Was the "On-Board Diagnostic (OBD) System Check" performed?	—	Go to *Step 2*	Go to *OBD System Check*
2	1. Install Tech 2. 2. Engine is at operating temperature. 3. Operate the vehicle within the parameters specified under "Conditions for Setting the DTC" criteria included in Diagnostic Support. 4. Using Tech 2, monitor Bank 2 HO2S 1 voltage. Does the Bank 2 HO2S 1 voltage remain above the specified value?	952 mV (500 mV in deceleration fuel cut-off mode)	Go to *Step 4*	Go to *Step 3*
3	1. Ignition "ON." 2. Review and record Tech 2 Failure Records data. 3. Operate the vehicle within Failure Records conditions as noted. 4. Using Tech 2, monitor "Specific DTC" info for DTC P0152 until the DTC P0152 test runs. 5. Note the test result. Does Tech 2 indicate DTC P0152 failed this ignition?	—	Go to *Step 4*	Refer to *Diagnostic Aids*
4	1. Ignition "OFF." 2. Disconnect Bank 2 HO2S 1. 3. Ignition "ON." 4. At HO2S Bank 2 Sensor 1 connector (PCM side) use a DVM to measure voltages at the high and low signal terminals. Are the voltages in the specified range?	3-4 V	Go to *Step 5*	Go to *Step 6*
5	Repair short to voltage in signal circuit. Is the action complete?	—	Verify repair	—

DTC P0152 – HO2S Circuit High Voltage Bank 2 Sensor 1 (Cont'd)

Step	Action	Value(s)	Yes	No
6	1. Ignition "ON," engine"OFF." 2. At Bank 2 HO2S 1 connector (PCM side) jumper both the HO2S high and low signal circuits (PCM side) to ground. 3. Using Tech 2, monitor Bank 2 HO2S 1 voltage. Is Bank 2 HO2S 1 voltage below the specified value?	10 mV	Go to *Step 7*	Go to *Step 8*
7	1. Disconnect the jumpers to ground from Bank 2 HO2S 1 PCM-side connector. 2. With the HO2S 1 connector disconnected, monitor Bank 2 HO2S 1 voltage. Is the Bank 2 HO2S 1 voltage between the specified values?	425-475 mV	Refer to *Diagnostic Aids*	Go to *Step 8*
8	Replace the PCM. **IMPORTANT:** The replacement PCM must be programmed. Refer to *UBS 98model year Immobilizer Workshop Manual.* Is the action complete?	—	Verify repair	—

Diagnostic Trouble Code (DTC) P0171 Fuel Trim System Lean Bank 1

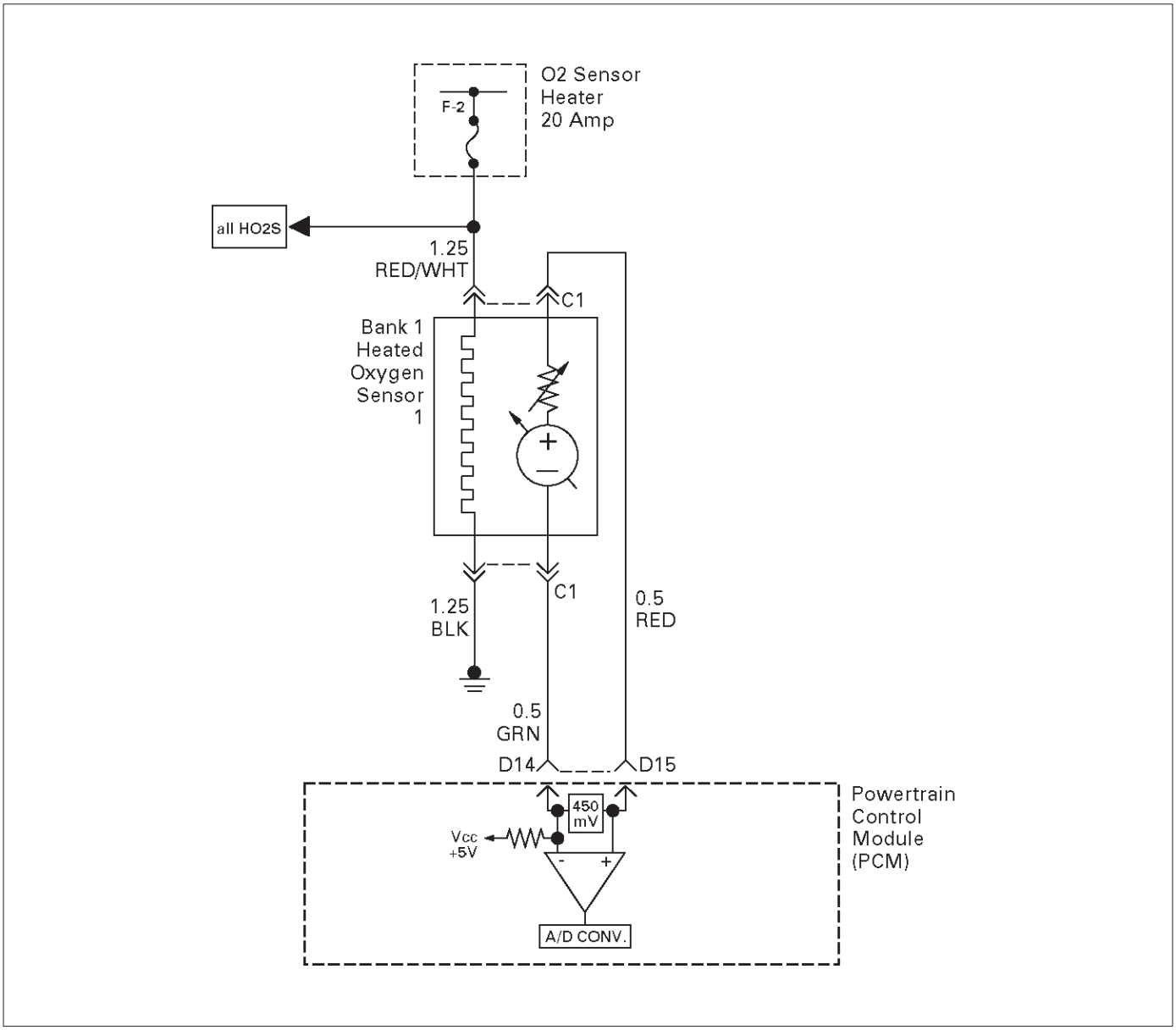

D06RW030

Circuit Description

To provide the best possible combination of driveability, fuel economy, and emission control, a “closed loop” air/fuel metering system is used. While in “closed loop,” the powertrain control module (PCM) monitors the Bank 1 HO2S 1 and Bank 2 HO2S 1 signals and adjusts fuel delivery based upon the HO2S signal voltages. A change made to fuel delivery will be indicated by the long and short term fuel trim values which can be monitored with a Tech 2. Ideal fuel trim values are around 0%; if the HO2S signals are indicating a lean condition the PCM will add fuel, resulting in fuel trim values above 0%. If a rich condition is detected, the fuel trim values will be below 0%, indicating that the PCM is reducing the amount of fuel delivered. If an excessively lean condition is detected on Bank 1, the PCM will set DTC P0171.

The PCM’s maximum authority to control long term fuel trim allows a range between –15% (automatic transmission) or –12% (manual transmission) and +20%. The PCM monitors fuel trim under various engine speed/load fuel trim cells before determining the status of the fuel trim diagnostic.

Conditions for Setting the DTC

- No Tech 2 test is being run.
- None of the following: EGR DTCs, HO2S DTCs, (response, transition, open, low volts, no activity), MAF DTCs, TP sensor DTCs, MAP DTCs, IAT DTCs, canister purge DTCs, EVAP DTCs, injector circuit DTCs, or misfire DTCs.
- Engine coolant temperature is between 25˚C (77˚F) and 100˚C (212˚F).
- Intake air temperature is between –40˚C (–40˚F) and 120˚C (248˚F).
- Manifold absolute pressure is between 24 kPa and 99 kPa.
- Throttle angle is steady below 95%.
- Vehicle speed is below 136 km/h (85 mph).
- Engine speed is between 400 and 6,000 RPM.
- Barometric pressure is greater than 72.5 kPa.

- Mass air flow is between 2 g/second and 200 g/second.
- Ignition voltage is above 9.5 volts.
- Fuel system is in “closed loop.”

Action Taken When the DTC Sets

- The PCM will illuminate the malfunction indicator lamp (MIL) after the second consecutive trip in which the fault is detected.
- The PCM will store conditions which were present when the DTC was set as Freeze Frame and in the Failure Records data.

Conditions for Clearing the MIL/DTC

- DTC P0171 can be cleared by using the Tech 2 “Clear Info” function or by disconnecting the PCM battery feed.

Diagnostic Aids

Check for the following conditions:

- Poor connection at PCM – Inspect harness connectors for backed-out terminals, improper mating, broken locks, improperly formed or damaged terminals, and poor terminal-to-wire connection.
- Damaged harness – Inspect the wiring harness for damage. If the harness appears to be OK, observe the Bank 1 HO2S 1 display on the Tech 2 while moving connectors and wiring harnesses related to the engine harness. A change in the display will indicate the location of the fault.

Reviewing the Failure Records vehicle mileage since the diagnostic test last failed may help determine how often the condition that caused the DTC to be set occurs. This may assist in diagnosing the condition.

Test Description

Number(s) below refer to the step number(s) on the Diagnostic Chart.

2. DTCs other than P0171 and P0174 may indicate a condition present which may cause a lean condition. If this is the case, repairing the condition which caused the other DTC will most likely correct the DTC P0171/P0174.

4. If the DTC P0171 test passes while the Failure Records conditions are being duplicated, the lean condition is intermittent. Refer to *Diagnostic Aids* or *Symptoms* for additional information on diagnosing intermittent problems.

DTC P0171 – Fuel Trim System Lean Bank 1

Step	Action	Value(s)	Yes	No
1	Was the “On-Board Diagnostic (OBD) System Check” performed?	—	Go to *Step 2*	Go to *OBD System Check*
2	Are any DTCs set other than P0171 and P0174?	—	Go to the applicable DTC charts and repair the other DTCs before proceeding with this chart	Go to *Step 3*
3	1. Start the engine and operate the vehicle in “closed loop.” 2. Observe the “BANK 1 L.T. FUEL TRIM” display on the Tech 2. Is the displayed value greater than the specified value?	L.T. Fuel Trim: +20%	Go to *Step 5*	Go to *Step 4*
4	1. Review and record the Tech 2 Failure Records data. 2. Clear the DTC P0171/P0174 and operate the vehicle to duplicate the Failure Records conditions. 3. Monitor the Tech 2 “Specific DTC” info for DTC P0171 while operating the vehicle to duplicate the Failure Records conditions. 4. Continue operating the vehicle until the DTC P0171 test runs and note the test result. Does the Tech 2 indicate DTC P0171 failed this ignition?	—	Go to *Step 5*	The lean condition is not present. If a driveability symptom still exists, refer to *Symptoms* section.
5	Was DTC P0174 also set?	—	Go to *Step 6*	Go to *Step 15*
6	Visually and physically inspect the vacuum hoses for disconnects, splits, kinks, improper routing and improper connections and repair any problem found. Did your inspection reveal a problem requiring repair?	—	Verify repair	Go to *Step 7*
7	Visually and physically inspect the crankcase ventilation valve for proper installation and repair any problem found (refer to *Crankcase Ventilation System*). Did your inspection reveal a problem requiring repair?	—	Verify repair	Go to *Step 8*
8	1. Inspect the MAF sensor inlet screen for damage or for the presence of foreign objects which may partially block the air flow sample through the MAF sensor. 2. Correct any problem that is found as necessary. Did your inspection of the MAF sensor reveal a condition requiring repair?	—	Verify repair	Go to *Step 9*
9	Start the engine and note the idle quality. Is a high or unsteady idle being experienced?	—	Go to *Step 10*	Go to *Step11*
10	1. Visually and physically inspect the throttle body, intake manifold, EGR valve and the EGR feed pipe for vacuum leaks. 2. Repair any vacuum leaks as necessary. Did your inspection reveal a vacuum leak?	—	Verify repair	Go to *Step 11*

DTC P0171 – Fuel Trim System Lean Bank 1 (Cont'd)

Step	Action	Value(s)	Yes	No
11	Check the fuel for excessive water, alcohol, or other contaminants (see *Diagnosis* in *Engine Fuel* for the procedure) and correct the contaminated fuel condition if present (see *Engine Fuel*). Was the fuel contaminated?	—	Verify repair	Go to *Step 12*
12	1. Visually and physically inspect the PCM injector grounds, power grounds and sensor grounds to ensure that they are clean, tight, and in their proper locations. 2. If a faulty ground condition is present, correct it as necessary. Did your inspection reveal a condition requiring repair?	—	Verify repair	Go to *Step 13*
13	1. Disconnect the MAF sensor electrical connector. 2. Operate the vehicle in "closed loop" while monitoring the "BANK 1 S.T. FUEL TRIM" displayed on the Tech 2. Does "BANK 1 S.T. FUEL TRIM" value decrease to near the specified value?	0%	Go to *Step 19*	Go to *Step 14*
14	Perform the procedure in the "Fuel System Pressure Test" and repair fuel system problem if necessary. Did Fuel System Pressure Test isolate a condition requiring repair?	—	Verify repair	Go to *Step 15*
15	1. Visually and physically inspect the intake manifold, injector O-rings, EGR adapter, EGR valve and the EGR feed pipes for vacuum leaks. 2. Repair any problem that is found. Did your inspection reveal a problem?	—	Verify repair	Go to *Step 16*
16	Visually and physically inspect the Bank 1 exhaust manifold for leaks and loose or missing hardware and correct any problem found. Did your inspection reveal a problem?	—	Verify repair	Go to *Step 17*
17	Perform the "Injector Balance Test," and correct any problem found (refer to *Fuel Metering System*). Did Injector Balance Test isolate a problem?	—	Verify repair	Go to *Step 18*
18	1. Visually and physically inspect the Bank 1 HO2S 1 to ensure that it is installed securely and that the Bank 1 HO2S 1 pigtail and wiring harness are not contacting the exhaust or otherwise damaged. 2. If a problem is found, correct it as necessary. Did your inspection reveal a problem?	—	Verify repair	Refer to *Diagnostic Aids*
19	Replace the MAF sensor. Is the action complete?	—	Verify repair	—

Diagnostic Trouble Code (DTC) P0172 Fuel Trim System Rich Bank 1

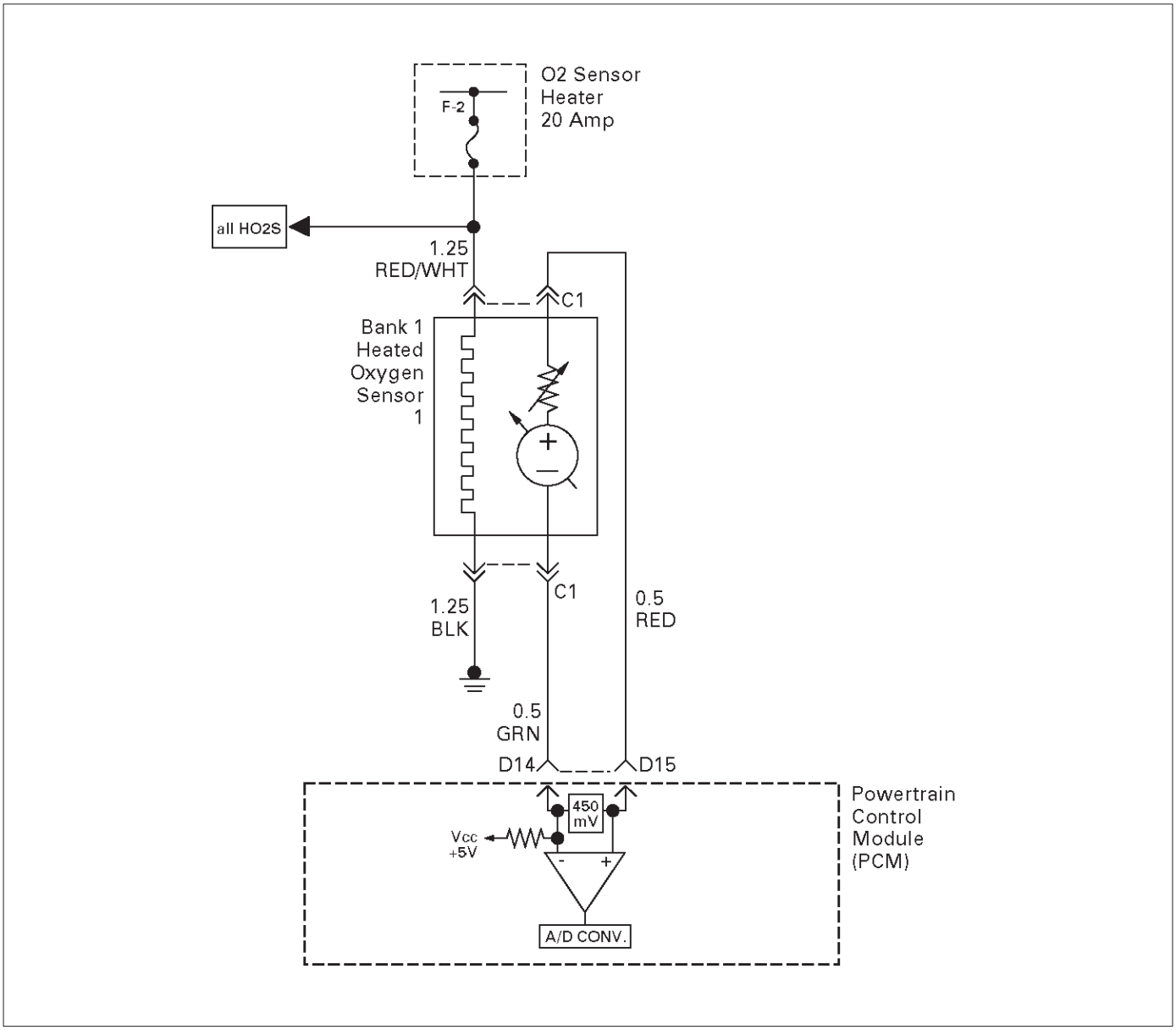

D06RW030

Circuit Description

To provide the best possible combination of driveability, fuel economy, and emission control, a “closed loop” air/fuel metering system is used. While in “closed loop,” the powertrain control module (PCM) monitors the Bank 1 heated oxygen sensors (HO2S) 1 and Bank 2 HO2S 1 signals and adjusts fuel delivery based upon the HO2S signal voltages. A change made to fuel delivery will be indicated by the long and short term fuel trim values which can be monitored with a Tech 2. Ideal fuel trim values are around 0%; if the HO2S signals are indicating a lean condition the PCM will add fuel, resulting in fuel trim values above 0%. If a rich condition is detected, the fuel trim values will be below 0%, indicating that the PCM is reducing the amount of fuel delivered. If an excessively rich condition is detected on Bank 1, the PCM will set DTC P0172.

The PCM’s maximum authority to control long term fuel trim allows a range between –15% (automatic transmission) or –12 (manual transmission) and +20%. The PCM’s maximum authority to control short term fuel trim allows a range between –11% and +20%. The PCM monitors fuel trim under various engine speed/load fuel trim cells before determining the status of the fuel trim diagnostic.

Conditions for Setting the DTC

- No Tech 2 test is being run.
- None of the following was set: EGR DTCs, HO2S DTCs, (response, transition, open, low volts, no activity), MAF DTCs, TPS DTCs, MAP DTCs, IAT DTCs, canister purge DTCs, EVAP DTCs, injector circuit DTCs, or misfire DTCs.
- Engine coolant temperature is between 25˚C (77˚F) and 100˚C (212˚F).
- Intake air temperature is between –40˚C (–40˚F) and 120˚C (248˚F).
- Manifold absolute pressure is between 24 kPa and 99 kPa.
- Throttle angle is steady below 95%.

- Vehicle speed is below 136 km/h (85 mph).
- Engine speed is between 400 and 6,000 RPM.
- Barometric pressure is greater than 72.5 kPa.
- Mass air flow is between 2 g/second and 200 g/second.
- Ignition voltage is above 9.5 volts.
- Fuel system is in “closed loop.”

Action Taken When the DTC Sets

- The PCM will illuminate the malfunction indicator lamp (MIL) after the second consecutive trip in which the fault is detected.
- The PCM will store conditions which were present when the DTC was set as Freeze Frame and in the Failure Records data.

Conditions for Clearing the MIL/DTC

- DTC P0172 can be cleared by using the Tech 2 “Clear Info” function or by disconnecting the PCM battery feed.

Diagnostic Aids

Check for the following conditions:

- Poor connection at PCM – Inspect harness connectors for backed-out terminals, improper mating, broken locks, improperly formed or damaged terminals, and poor terminal-to-wire connection.
- Damaged harness – Inspect the wiring harness for damage. If the harness appears to be OK, observe the Bank 1 HO2S 1 display on the Tech 2 while moving connectors and wiring harnesses related to the engine harness. A change in the display will indicate the location of the fault.

Reviewing the Failure Records vehicle mileage since the diagnostic test last failed may help determine how often the condition that caused the DTC to be set occurs. This may assist in diagnosing the condition.

Test Description

Number(s) below refer to the step number(s) on the Diagnostic Chart.

2. DTCs other than P0172 and P0175 may indicate a condition present which may cause a lean condition. If this is the case, repairing the condition which caused the other DTC will most likely correct the DTC P0172/P0175.

4. If the DTC P0172 test passes while the Failure Records conditions are being duplicated, the rich condition is intermittent. Refer to *Diagnostic Aids* or *Symptoms* for additional information on diagnosing intermittent problems.

DTC P0172 – Fuel Trim System Rich Bank 1

Step	Action	Value(s)	Yes	No
1	Was the “On-Board Diagnostic (OBD) System Check” performed?	—	Go to *Step 2*	Go to *OBD System Check*
2	Are any DTCs set other than P0172 and P0175?	—	Go to the applicable DTC charts and repair the other DTCs before proceeding with this chart	Go to *Step 3*
3	1. Start the engine and operate the vehicle in “closed loop.” 2. Observe “B1 Long Term Fuel Trim” display on the Tech 2. Is the displayed value more negative than the specified value?	L.T. Fuel Trim: –15% (auto. trans.) OR –12% (man. trans.)	Go to *Step 5*	Go to *Step 4*
4	1. Review and record the Tech 2 Failure Records data. 2. Clear the DTC P0172/P0175 and operate the vehicle to duplicate the Failure Records conditions. 3. Monitor the Tech 2 “DTC” info for DTC P0172 while operating the vehicle to duplicate the Failure Records conditions. 4. Continue operating the vehicle until the DTC P0172 test runs and note test result. Does the Tech 2 indicate DTC P0172 failed this ignition?	—	Go to *Step 5*	The rich condition is not present. If a driveability symptom still exists, refer to *Symptoms*.
5	Is DTC P0175 also set?	—	Go to *Step 6*	Go to *Step 15*
6	Visually and physically inspect the air filter element and replace it if necessary. Did the air filter require replacement?	—	Verify repair	Go to *Step 7*
7	Visually and physically inspect the air intake duct for collapse or restriction and repair if necessary. Did your inspection reveal a condition requiring repair?	—	Verify repair	Go to *Step 8*
8	Inspect the MAF sensor inlet screen for damage or for the presence of foreign objects which may partially block air flow through the screen and correct any problem found. Did your inspection of the MAF sensor reveal a condition requiring repair or replacement?	—	Verify repair	Go to *Step 9*
9	Start the engine and note the idle quality. Is a low or unsteady idle being experienced?	—	Go to *Step 10*	Go to *Step 11*
10	1. Ignition “OFF.” 2. Physically inspect the throttle body bore, throttle plate, and IAC passages for coking and foreign objects. 3. If a problem was found, repair as necessary. Did your inspection reveal a condition requiring repair?	—	Verify repair	Go to *Step 11*

DTC P0172 – Fuel Trim System Rich Bank 1 (Cont'd)

Step	Action	Value(s)	Yes	No
11	1. Disconnect the vacuum hose from the fuel pressure regulator and inspect the hose for the presence of fuel. 2. If fuel is present in the vacuum hose, replace the fuel pressure regulator (refer to *Fuel Metering System*). Did the fuel pressure regulator require replacement?	—	Verify repair	Go to *Step 12*
12	Ignition "ON," engine "OFF," monitor the TP Angle display on the Tech 2 while slowly depressing the accelerator pedal. Does the TP Angle display increase steadily and evenly from minimum value at closed throttle to maximum value at wide-open throttle?	Minimum 0% Maximum 100%	Go to *Step 13*	Go to *Step 18*
13	1. Disconnect the MAF sensor electrical connector. 2. Operate the vehicle in "closed loop" while monitoring the "BANK 1 L.T. FUEL TRIM" and "BANK 1 S. T. FUEL TRIM" display on the Tech 2. Did both values change to near the specified value?	0%	Go to *Step 19*	Go to *Step 14*
14	1. Perform "Fuel System Pressure Test." 2. If Fuel System Pressure Test isolates a problem, repair as necessary (refer to *Engine Fuel* or *Fuel Metering System*). Did the Fuel System Pressure Test isolate a problem requiring repair?	—	Verify repair	Go to *Step 16*
15	Replace the PCM. **IMPORTANT:** The replacement PCM must be programmed. Refer to *UBS 98model year Immobilizer Workshop Manual.* Is the action complete?	—	Verify repair	—
16	1. Perform the "Injector Balance Test." 2. If Injector Balance Test isolates a problem, repair as necessary (refer to *Fuel Metering System*). Did the Injector Balance Test isolate a problem requiring repair?	—	Verify repair	Go to *Step 17*
17	1. Remove and visually/physically inspect the Bank 1 HO2S 1 for silicon contamination. This will be indicated by a powdery white deposit on the portion of the HO2S that is exposed to the exhaust stream. 2. If contamination is evident on the Bank 1 HO2S 1, replace the contaminated sensors. Did the sensor require replacement?	—	Verify repair	Refer to *Diagnostic Aids*
18	1. Check the TP sensor mounting screws and tighten or replace them as necessary if they are loose or missing. 2. If the screws are OK, replace the TP sensor. Is the action complete?	—	Verify repair	—
19	Replace the MAF sensor. Is the action complete?	—	Verify repair	—

Diagnostic Trouble Code (DTC) P0174 Fuel Trim System Lean Bank 2

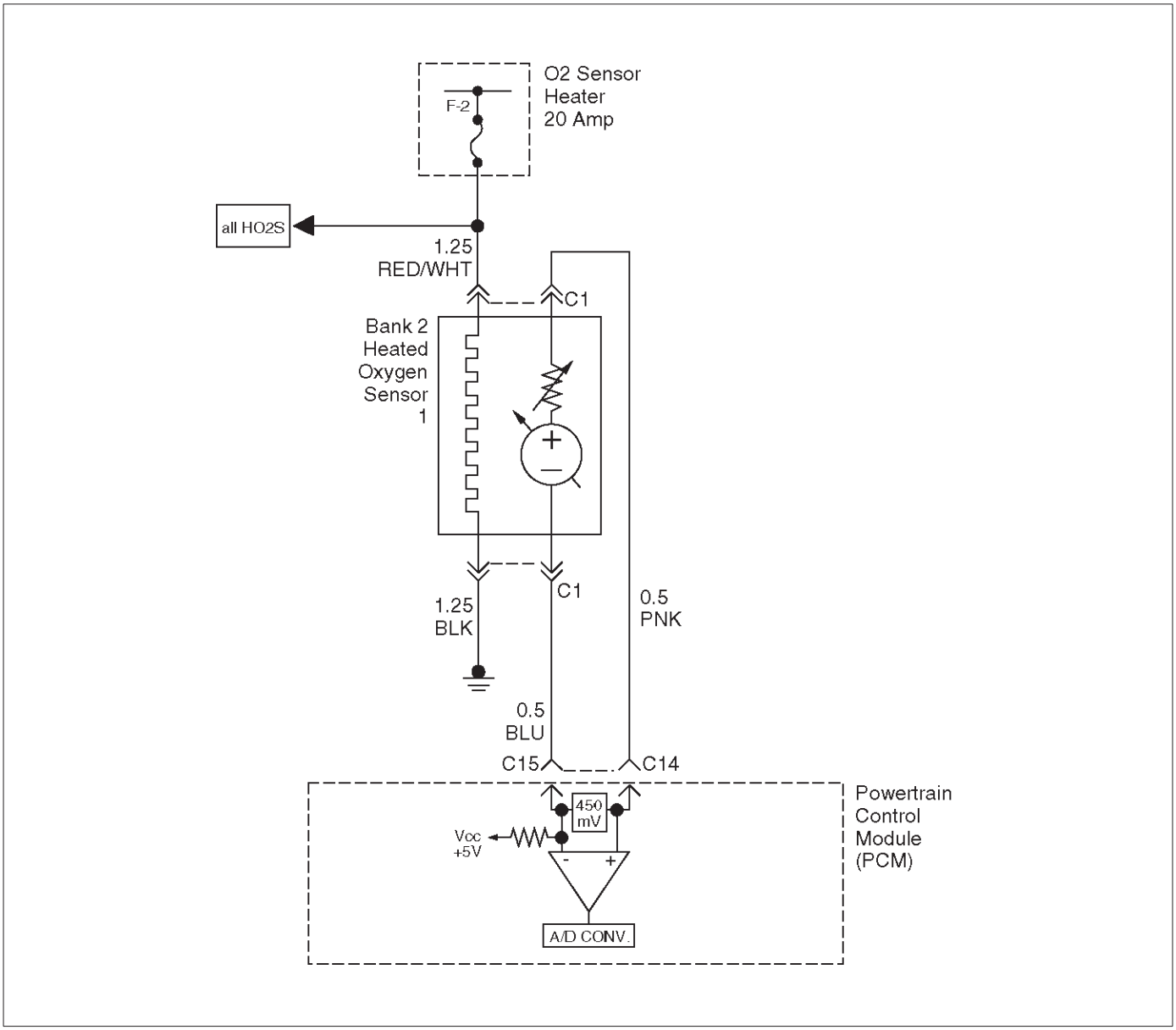

D06RW031

Circuit Description

To provide the best possible combination of driveability, fuel economy, and emission control, a “closed loop” air/fuel metering system is used. While in “closed loop,” the powertrain control module (PCM) monitors the Bank 1 HO2S 1 and Bank 2 HO2S 1 signals and adjusts fuel delivery based upon the HO2S signal voltages. A change made to fuel delivery will be indicated by the long and short term fuel trim values which can be monitored with a Tech 2. Ideal fuel trim values are around 0%; if the HO2S signals are indicating a lean condition the PCM will add fuel, resulting in fuel trim values above 0%. If a rich condition is detected, the fuel trim values will be below 0%, indicating that the PCM is reducing the amount of fuel delivered. If an excessively lean condition is detected on Bank 2, the PCM will set DTC P0174.

The PCM’s maximum authority to control long term fuel trim allows a range between –15%(automatic transmission) or –12%(manual transmission) and +20%. The PCM monitors fuel trim under various engine speed/load fuel trim cells before determining the status of the fuel trim diagnostic.

Conditions for Setting the DTC

- No Tech 2 test is being run.
- None of the following DTCs are set: idle system, EGR, HO2S, (response, transition, open, low volts, no activity), MAF, TP sensor, MAP, IAT, canister purge, EVAP, injector circuit, or misfire.
- Engine coolant temperature is between 25˚C (77˚F) and 100˚C (212˚F).
- Intake air temperature is between –40˚C (–40˚F) and 120˚C (248˚F).
- Manifold absolute pressure is between 24 kPa and 99 kPa.
- Throttle angle is steady below 95%.
- Vehicle speed is below 136 km/h (85 mph).
- Engine speed is between 400 and 6,000 RPM.
- Barometric pressure is greater than 72.5 kPa.
- Mass air flow is between 2 g/second and 200 g/second.

- Ignition voltage is above 9.5 volts.
- Fuel system is in “closed loop.”

Action Taken When the DTC Sets

- The PCM will illuminate the malfunction indicator lamp (MIL) after the second consecutive trip in which the failure is detected.
- The PCM will store conditions which were present when the DTC was set as Freeze Frame and in the Failure Records data.

Conditions for Clearing the MIL/DTC

- DTC P0174 can be cleared by using the Tech 2 “Clear Info” function or by disconnecting the PCM battery feed.

Diagnostic Aids

Check for the following conditions:

- Poor connection at PCM – Inspect harness connectors for backed-out terminals, improper mating, broken locks, improperly formed or damaged terminals, and poor terminal-to-wire connection.
- Damaged harness – Inspect the wiring harness for damage. If the harness appears to be OK, observe the Bank 2 HO2S 1 display on the Tech 2 while moving connectors and wiring harnesses related to the engine harness. A change in the display will indicate the location of the fault.

Reviewing the Failure Records vehicle mileage since the diagnostic test last failed may help determine how often the condition that caused the DTC to be set occurs. This may assist in diagnosing the condition.

Test Description

Number(s) below refer to the step number(s) on the Diagnostic Chart.

2. DTCs other than P0171 and P0174 may indicate a condition present which may cause a lean condition. If this is the case, repairing the condition which caused the other DTC will most likely correct the DTC P0171/P0174.

4. If the DTC P0174 test passes while the Failure Records conditions are being duplicated, the lean condition is intermittent. Refer to *Diagnostic Aids* or *Symptoms* for additional information on diagnosing intermittent problems.

DTC P0174 – Fuel Trim System Lean Bank 2

Step	Action	Value(s)	Yes	No
1	Was the “On-Board Diagnostic (OBD) System Check” performed?	—	Go to *Step 2*	Go to *OBD System Check*
2	Are any DTCs set other than P0174 and P0171?	—	Go to the applicable DTC charts and repair the other DTCs before proceeding with this chart.	Go to *Step 3*
3	1. Start the engine and operate the vehicle in “closed loop.” 2. Observe the “BANK 2 L.T. FUEL TRIM” display on the Tech 2. Is the displayed values greater than the specified values?	L.T. Fuel Trim: +20%	Go to *Step 5*	Go to *Step 4*
4	1. Review and record Tech 2 Failure Records data. 2. Clear the DTC P0171/P0174 and operate the vehicle to duplicate the Failure Records conditions. 3. Monitor the Tech 2 “DTC” info for DTC P0174 while operating the vehicle to duplicate the Failure Records conditions. 4. Continue operating the vehicle until the DTC P0174 test runs. 5. Note the test result. Does the Tech 2 indicate DTC P0174 failed this ignition?	—	Go to *Step 5*	The lean condition is not present. If a driveability symptom still exists, refer to *Symptoms* section.
5	Was DTC P0171 also set?	—	Go to *Step 6*	Go to *Step 15*
6	Visually and physically inspect the vacuum hoses for disconnects, splits, kinks, improper routing and improper connections and repair any problem found. Did your inspection reveal a problem requiring repair?	—	Verify repair	Go to *Step 7*
7	Visually and physically inspect the crankcase ventilation valve for proper installation and repair any problem found (refer to *Crankcase Ventilation System*). Did your inspection reveal a problem requiring repair?	—	Verify repair	Go to *Step 8*
8	1. Inspect the MAF sensor inlet screen for damage or for the presence of foreign objects which may partially block the air flow sample through the MAF sensor. 2. Correct any problem that is found as necessary. Did your inspection of the MAF sensor reveal a condition requiring repair?	—	Verify repair	Go to *Step 9*
9	Start the engine and note the idle quality. Is a high or unsteady idle being experienced?	—	Go to *Step 10*	Go to *Step 11*

DTC P0174 – Fuel Trim System Lean Bank 2 (Cont'd)

Step	Action	Value(s)	Yes	No
10	1. Visually and physically inspect the throttle body, intake manifold, EGR valve and the EGR feed pipe for vacuum leaks. 2. Repair any vacuum leaks as necessary. Did your inspection reveal a vacuum leak?	—	Verify repair	Go to *Step 11*
11	Check the fuel for excessive water, alcohol, or other contaminants (see *Diagnosis* in *Engine Fuel* for procedure) and correct the contaminated fuel condition is present (see *Engine Fuel*). Was the fuel contaminated?	—	Verify repair	Go to *Step 12*
12	1. Visually and physically inspect the PCM injector grounds, power grounds and sensor grounds to ensure that they are clean, tight, and in their proper locations. 2. If a faulty ground condition is present, correct it as necessary. Did your inspection reveal a condition requiring repair?	—	Verify repair	Go to *Step 13*
13	1. Disconnect the MAF sensor electrical connector. 2. Operate the vehicle in "closed loop" while monitoring the "BANK 1 S.T. FUEL TRIM" displayed on the Tech 2. Does the "BANK 1 S.T. FUEL TRIM" value decrease to near the specified value?	0%	Go to *Step 19*	Go to *Step 14*
14	Perform the procedure in the "Fuel System Pressure Test" and repair fuel system problem if necessary. Did the Fuel System Pressure Test isolate a condition requiring repair?	—	Verify repair	Go to *Step 15*
15	1. Visually and physically inspect the intake manifold, injector O-rings, EGR adapter, EGR valve and the EGR feed pipes for vacuum leaks. 2. Repair any problem that is found. Did your inspection reveal a problem?	—	Verify repair	Go to *Step 16*
16	Visually and physically inspect the Bank 2 exhaust manifold for leaks and loose or missing hardware and correct any problem found. Did your inspection reveal a problem?	—	Verify repair	Go to *Step 17*
17	Perform the "Injector Balance Test," and correct any problem found (refer to *Fuel Metering System*). Did the Injector Balance Test isolate a problem?	—	Verify repair	Go to *Step 18*
18	1. Visually and physically inspect the Bank 2 HO2S 1 to ensure that it is installed securely and that the Bank 2 HO2S 1 pigtail and wiring harness are not contacting the exhaust or otherwise damaged. 2. If a problem is found, correct it as necessary. Did your inspection reveal a problem?	—	Verify repair	Refer to *Diagnostic Aids*
19	Replace the MAF sensor. Is the action complete?	—	Verify repair	—

Diagnostic Trouble Code (DTC) P0175 Fuel Trim System Rich Bank 2

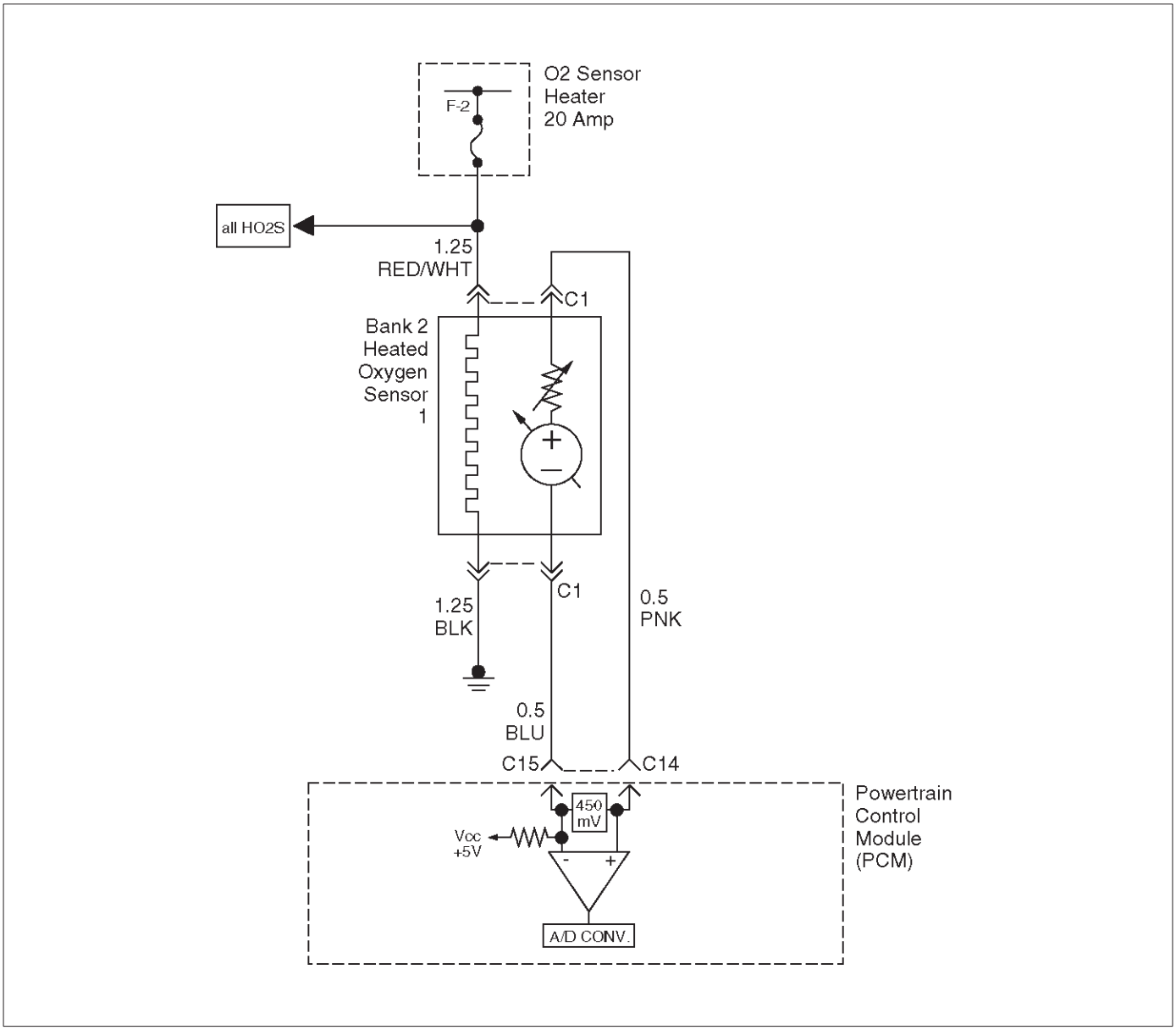

D06RW031

Circuit Description

To provide the best possible combination of driveability, fuel economy, and emission control, a “closed loop” air/fuel metering system is used. While in “closed loop,” the powertrain control module (PCM) monitors the Bank 1 HO2S 1 and Bank 2 HO2S 1 signals and adjusts fuel delivery based upon the HO2S signal voltages. A change made to fuel delivery will be indicated by the long and short term fuel trim values which can be monitored with a Tech 2. Ideal fuel trim values are around 0%; if the HO2S signals are indicating a lean condition the PCM will add fuel, resulting in fuel trim values above 0%. If a rich condition is detected, the fuel trim values will be below 0%, indicating that the PCM is reducing the amount of fuel delivered. If an excessively rich condition is detected on Bank 2, the PCM will set DTC P0175.

The PCM’s maximum authority to control long term fuel trim allows a range between –15%(automatic transmission) or –12%(manual transmission) and +20%. The PCM’s maximum authority to control short term fuel trim allows a range between –11% and +20%. The PCM monitors fuel trim under various engine speed/load fuel trim cells before determining the status of the fuel trim diagnostic.

Conditions for Setting the DTC

- No Tech 2 test is being run.
- None of the following DTCs are set: idle system, EGR, HO2S, (response, transition, open, low volts, no activity), MAF, TPS, MAP, IAT, canister purge, EVAP, injector circuit, or misfire.
- Engine coolant temperature is between 25˚C (77˚F) and 100˚C (212˚F).
- Intake air temperature is between –40˚C (–40˚F) and 120˚C (248˚F).
- Manifold absolute pressure is between 24 kPa and 99 kPa.
- Throttle angle is steady below 95%.
- Vehicle speed is below 136 km/h (85 mph).
- Engine speed is between 400 and 6,000 RPM.

- Barometric pressure is greater than 72.5 kPa.
- Mass air flow is between 2 g/second and 200 g/second.
- Ignition voltage is above 9.5 volts.
- Fuel system is in “closed loop.”

Action Taken When the DTC Sets

- The PCM will illuminate the malfunction indicator lamp (MIL) after the second consecutive trip in which the failure is detected.
- The PCM will store conditions which were present when the DTC was set as Freeze Frame and in the Failure Records data.

Conditions for Clearing the MIL/DTC

- DTC P0175 can be cleared by using the Tech 2 “Clear Info” function or by disconnecting the PCM battery feed.

Diagnostic Aids

Check for the following conditions:

- Poor connection at PCM – Inspect harness connectors for backed -out terminals, improper mating, broken locks, improperly formed or damaged terminals, and poor terminal-to-wire connection.
- Damaged harness – Inspect the wiring harness for damage. If the harness appears to be OK, observe the Bank 2 HO2S 1 display on the Tech 2 while moving connectors and wiring harnesses related to the engine harness. A change in the display will indicate the location of the fault.

Reviewing the Failure Records Vehicle mileage since the diagnostic test last failed may help determine how often the condition that caused the DTC to be set occurs. This may assist in diagnosing the condition.

Test Description

Number(s) below refer to the step number(s) on the Diagnostic Chart.

2. DTCs other than P0172 and P0175 may indicate a condition present which may cause a lean condition. If this is the case, repairing the condition which caused the other DTC will most likely correct the DTC P0172/P0175.

4. If the DTC P0175 test passes while the Failure Records conditions are being duplicated, the rich condition is intermittent. Refer to *Diagnostic Aids* or *Symptoms* for additional information on diagnosing intermittent problems.

DTC P0175 – Fuel Trim System Rich Bank 2

Step	Action	Value(s)	Yes	No
1	Was the ”On-Board Diagnostic (OBD) System Check” performed?	—	Go to Step 2	Go to *OBD System Check*
2	Are any DTCs set other than P0172 and P0175?	—	Go to the applicable DTC charts and repair the other DTCs before proceeding with this chart.	Go to *Step 3*
3	1. Start the engine and operate the vehicle in “closed loop.” 2. Observe the “BANK 2 L.T. FUEL TRIM” display on the Tech 2. Is the displayed value more negative than the specified value?	L.T. Fuel Trim: –15% (auto. trans.) OR –12% (man. trans.)	Go to *Step 5*	Go to *Step 4*
4	1. Review and record the Tech 2 Failure Records data. 2. Clear the DTC P0172/P0175 and operate the vehicle to duplicate the Failure Records conditions. 3. Monitor the Tech 2 “DTC” info for DTC P0175 while operating the vehicle to duplicate the Failure Records conditions. 4. Continue operating the vehicle until the DTC P0175 test runs. 5. Note the test result. Does the Tech 2 indicate DTC P0175 failed this ignition?	—	Go to *Step 5*	The rich condition is not present. If a driveability symptom still exists, refer to *Symptoms*.
5	Was DTC P0172 also set?	—	Go to *Step 6*	Go to *Step 15*
6	Visually and physically inspect the air filter element and replace it if necessary. Did the air filter require replacement?	—	Verify repair	Go to *Step 7*
7	Visually and physically inspect the air intake duct for collapse or restriction and repair if necessary. Did your inspection reveal a problem requiring repair?	—	Verify repair	Go to *Step 8*
8	Inspect the MAF sensor inlet screen for damage or for the presence of foreign objects which may partially block air flow through the screen and correct any problem found. Did your inspection of the MAF sensor reveal a condition requiring repair or replacement?	—	Verify repair	Go to *Step 9*
9	Start the engine and note the idle quality. Is a low or unsteady idle being experienced?	—	Go to *Step 10*	Go to *Step 11*
10	1. Turn the ignition off and physically inspect the throttle body bore, throttle plate, and IAC passages for coking and foreign objects. 2. If a problem was found, repair as necessary. Did your inspection reveal a condition requiring repair?	—	Verify repair	Go to *Step 11*

DTC P0175 – Fuel Trim System Rich Bank 2 (Cont'd)

Step	Action	Value(s)	Yes	No
11	1. Disconnect the vacuum hose from the fuel pressure regulator and inspect the hose for the presence of fuel. 2. If fuel is present in the vacuum hose, replace the fuel pressure regulator (refer to *Fuel Metering System*). Did the fuel pressure regulator require replacement?	—	Verify repair	Go to *Step 12*
12	1. Ignition "ON," engine "OFF." 2. Monitor the TP Angle display on the Tech 2 while slowly depressing the accelerator pedal. Does the TP Angle display increase steadily and evenly from minimum value at closed throttle to maximum value at wide-open throttle?	Minimum 0% Maximum 100%	Go to *Step 13*	Go to *Step 18*
13	1. Disconnect the MAF sensor electrical connector. 2. Operate the vehicle in "closed loop" while monitoring the "BANK 1 L.T. FUEL TRIM" and "BANK 1 S.T. FUEL TRIM" display on the Tech 2. Did both values change to near the specified value?	0%	Go to *Step 19*	Go to *Step 14*
14	1. Perform the "Fuel System Pressure Test." 2. If Fuel System Pressure Test isolates a problem, repair as necessary (refer to *Engine Fuel* or *Fuel Metering System*). Did the Fuel System Pressure Test isolate a condition requiring repair?	—	Verify repair	Go to *Step 16*
15	Replace the PCM. **IMPORTANT:** The replacement PCM must be programmed. Refer to *UBS 98model year Immobilizer Workshop Manual.* Is the action complete?	—	Verify repair	—
16	1. Perform the "Injector Balance Test." 2. If the Injector Balance Test isolates a problem, repair as necessary (refer to *Fuel Metering System*). Did the Injector Balance Test isolate a problem requiring repair?	—	Verify repair	Go to *Step 17*
17	1. Remove and visually/physically inspect the Bank 2 HO2S 1 for silicon contamination. This will be indicated by a powdery white deposit on the portion of the HO2S that is exposed to the exhaust stream. 2. If contamination is evident on the Bank 2 HO2S 1, replace the contaminated sensor. Did the sensor require replacement?	—	Verify repair	Refer to *Diagnostic Aids*
18	1. Check the TP sensor mounting screws and tighten or replace them as necessary if they are loose or missing. 2. If the screws are OK, replace the TP sensor. Is the action complete?	—	Verify repair	—
19	Replace the MAF sensor. Is the action complete?	—	Verify repair	—

Diagnostic Trouble Code (DTC) P0201 Injector 1 Control Circuit

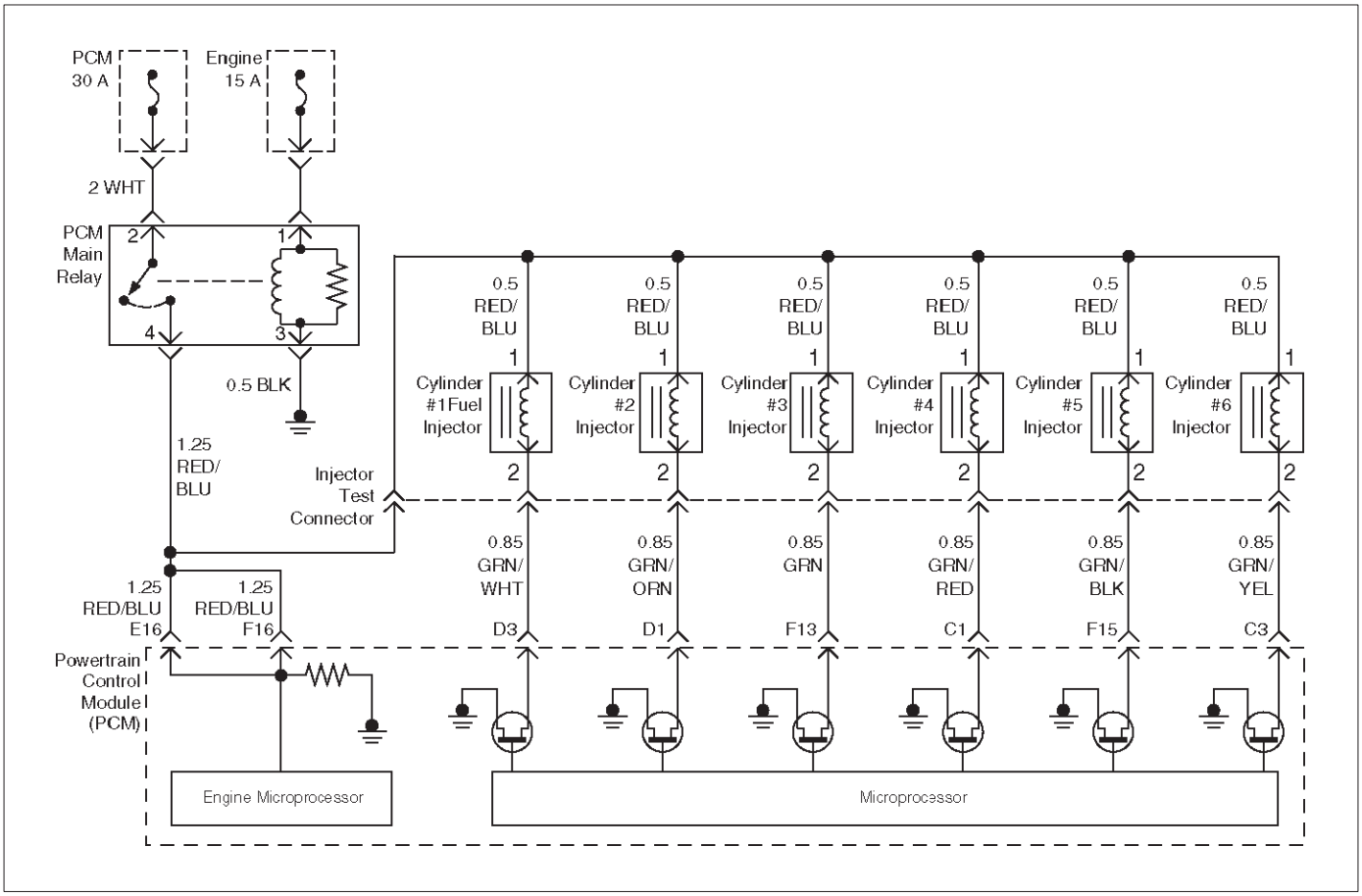

D06RW034

Circuit Description

The powertrain control module (PCM) has six individual injector driver circuits. Each controls an injector. When a driver circuit is grounded by the PCM, the injector is activated. The PCM monitors the current in each driver circuit. The voltage on each driver is monitored to detect a fault. If the voltage is not what the PCM expects to monitor on the circuit, a DTC is set. This DTC is also set if an injector driver is shorted to voltage or if there is an open circuit.

Conditions for Setting the DTC

- The battery voltage is more than 9 volts.
- The engine is turning, determined by 58X crankshaft position input signal.
- The injector voltage does not equal the ignition voltage when the injector is commanded “OFF” or the injector voltage does not equal 0 volts when the injector is commanded “ON.”
- The above conditions are met for 15 seconds.

Action Taken When the DTC Sets

- The PCM will illuminate the malfunction indicator lamp (MIL) the first time the fault is detected.
- The PCM will store conditions which were present when the DTC was set as Freeze Frame and in the Failure Records data.

Conditions for Clearing the MIL/DTC

- DTC P0201 can be cleared by using the Tech 2 “Clear Info” function or by disconnecting the PCM battery feed.

Diagnostic Aids

An injector driver circuit that is open or shorted to voltage will cause a DTC P0201 to set. It will also cause a misfire due to an inoperative injector. A misfire DTC will also be set indicating which cylinder is inoperative.
Long term and short term fuel trims that are excessively high or low are a good indication that an injector is faulty. Use Fuel Injector Coil Test Procedure to check for faulty injectors.

Test Description

The number(s) below refer to the step number(s) on the Diagnostic Chart.

3. This step determines if DTC P0201 is the result of a hard failure or an intermittent condition.

5. A special injector test connector is provided so that the injectors can be electrically tested without removal of the manifold. On the Trooper, the special 7-way gray connector is located at the front of the charcoal canister. The test connector can be identified by the blue connector lock which is tethered to the wiring harness. If the light for cylinder 1 is “ON” steady before cranking the engine as well as while cranking the engine, then the injector driver circuit is shorted to ground.

If the test light blinks while cranking, the PCM and the wiring to the injectors are OK. The Fuel Injector Coil Test Procedure will check if the injectors are faulty.

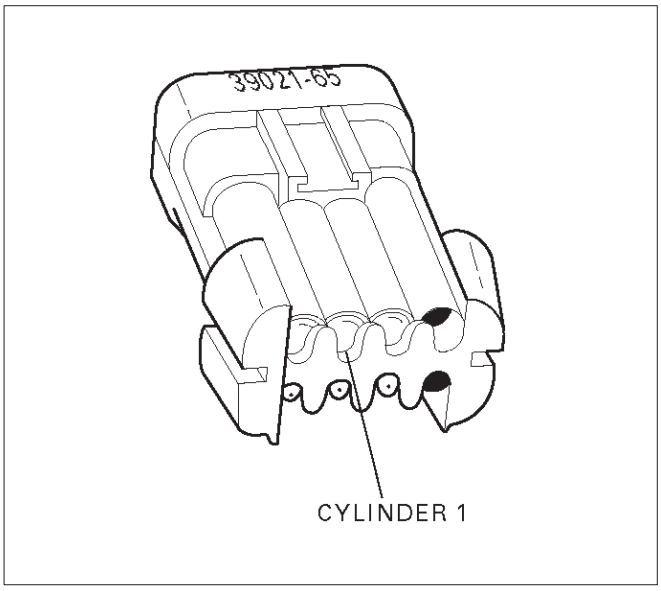

R321054

7. Because the test light was “ON” steady, voltage to the injector is OK, but the driver circuit is grounded at all times. This step determines if the circuit is shorted to ground or the PCM is faulty.
9. The reading should be about 12-14Ω.
10. Locating the open in the harness or in the injector will require removal of the manifold to provide access.

DTC P0201 – Injector 1 Control Circuit

Step	Action	Value(s)	Yes	No
1	Was the “On-Board Diagnostic (OBD) System Check” performed?	—	Go to *Step 2*	Go to *OBD System Check*
2	Will the engine start?	—	Go to *Step 3*	Go to *Engine Cranks But Will Not Run* chart
3	1. Install the Tech 2. Clear the DTC. 2. Idle the engine for one minute. Does DTC P0201 reset?	—	Go to *Step 5*	Go to *Step 4*
4	1. Review the Freeze Frame data with the ignition “ON” and the engine “OFF” and note the parameters. 2. Operate the vehicle within the Freeze Frame conditions as noted. Does P0201 reset?	—	Go to *Step 5*	Go to *Diagnostic Aids*
5	1. Engine “OFF.” 2. Disconnect the injector connector. 3. Install an injector test light 5-8840-2636-0 on the injector test connector. 4. Crank the engine and note the light. Does the injector test light blink?	—	Go to *Fuel Injector Coil Test Procedure*	Go to *Step 6*
6	Note whether the injector test light for cylinder 1 was “OFF” or “ON” steady in step 5. Was the test light “ON” steady while cranking the engine?	—	Go to *Step 7*	Go to *Step 9*

DTC P0201 – Injector 1 Control Circuit (Cont'd)

Step	Action	Value(s)	Yes	No
7	1. Disconnect the PCM connector for the affected injectors. 2. With a test light connected to B+, probe the affected injector driver circuit. Does the test light illuminate?	—	Go to *Step 8*	Go to *Step 15*
8	Repair short to ground in the injector driver circuit. Is the action complete?	—	Go to *OBD System Check*	—
9	1. Disconnect the injector test connector. 2. At the injector side of the harness, connect an ohmmeter between the positive wire (red with blue tracer) and the wire for cylinder 1 (green with white tracer). Does the ohmmeter indicate continuity?	—	Go to *Step 11*	Go to *Step 10*
10	Repair the open injector harness wire or open injector. Is the action complete?	—	Verify repair	—
11	At the PCM side of the injector test connector, check the green/white wire for a short to voltage. Was there a short to voltage?	—	Go to *Step 12*	Go to *Step 13*
12	Repair the short to voltage. Is the action complete?	—	Verify repair	—
13	Check for an open circuit between the injector test connector and the PCM. Was there an open circuit?	—	Go to *Step 14*	Go to *Step 15*
14	Repair the open circuit. Is the action complete?	—	Verify repair	—
15	Replace the PCM. **IMPORTANT:** The replacement PCM must be programmed. Refer to *UBS 98model year Immobilizer Workshop Manual.* Is the action complete?	—	Verify repair	—

Diagnostic Trouble Code (DTC) P0202 Injector 2 Control Circuit

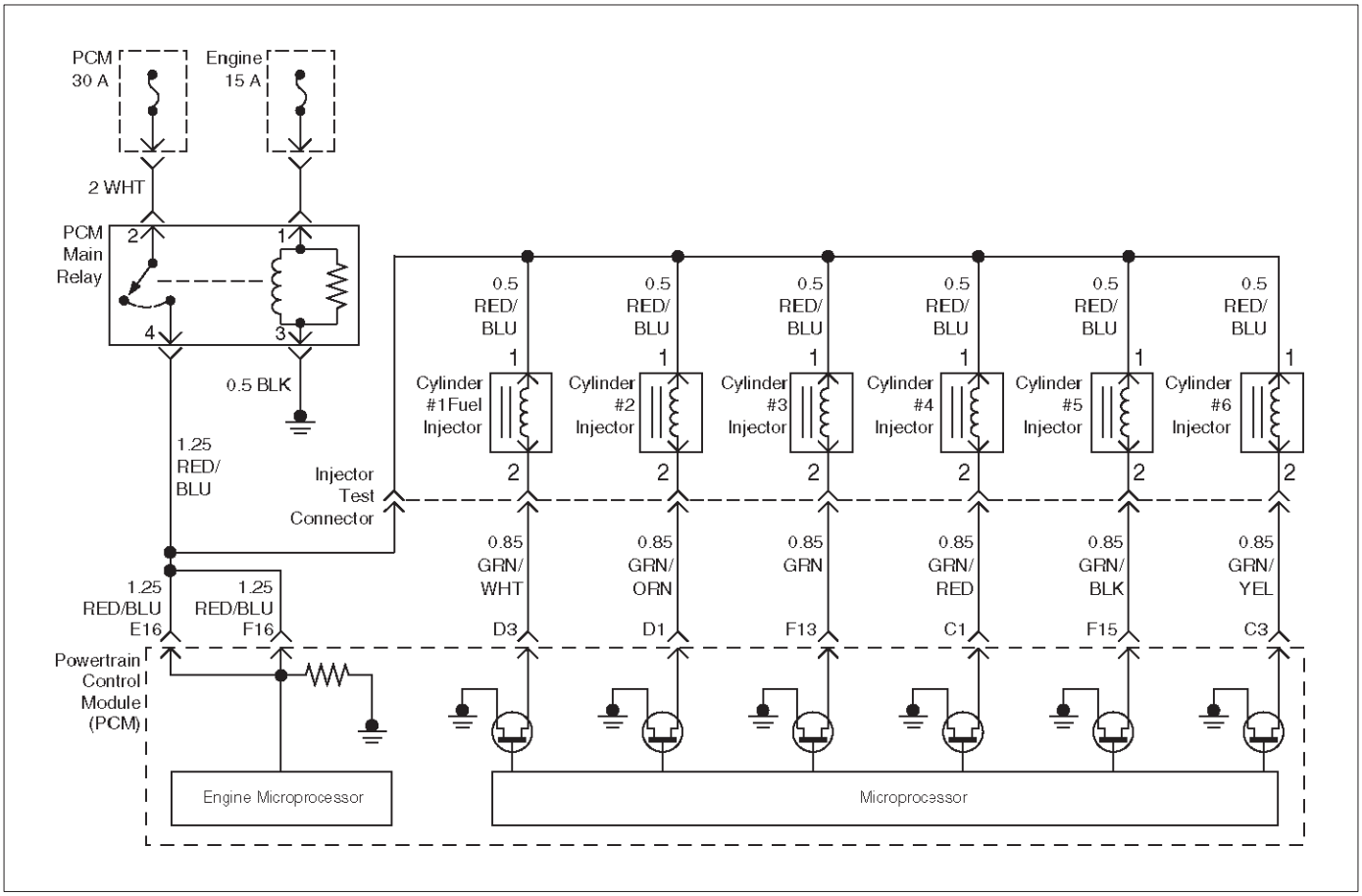

D06RW034

Circuit Description

The powertrain control module (PCM) has six individual injector driver circuits. Each controls an injector. When a driver circuit is grounded by the PCM, the injector is activated. The PCM monitors the current in each driver circuit. The voltage on each driver is monitored to detect a fault. If the voltage is not what the PCM expects to monitor on the circuit, a DTC is set. This DTC is also set if an injector driver is shorted to voltage or if there is an open circuit.

Conditions for Setting the DTC

- The battery voltage is more than 9 volts.
- The engine is turning, determined by 58X crankshaft position input signal.
- The injector voltage does not equal the ignition voltage when the injector is commanded “OFF” or the injector voltage does not equal 0 volts when the injector is commanded “ON.”
- The above conditions are met for 15 seconds.

Action Taken When the DTC Sets

- The PCM will illuminate the malfunction indicator lamp (MIL) the first time the fault is detected.
- The PCM will store conditions which were present when the DTC was set as Freeze Frame and in the Failure Records data.

Conditions for Clearing the MIL/DTC

- DTC P0202 can be cleared by using the Tech 2 “Clear Info” function or by disconnecting the PCM battery feed.

Diagnostic Aids

An injector driver circuit that is open or shorted to voltage will cause a DTC P0202 to set. It will also cause a misfire due to an inoperative injector. A misfire DTC will also be set indicating which cylinder is inoperative.
Long term and short term fuel trims that are excessively high or low are a good indication that an injector is faulty. Use Fuel Injector Coil Test Procedure to check for faulty injectors.

Test Description

The number(s) below refer to the step number(s) on the Diagnostic Chart.

3. This step determines if DTC P0202 is the result of a hard failure or an intermittent condition.

5. A special injector test connector is provided so that the injectors can be electrically tested without removal of the manifold. On the Trooper, the special 7-way gray connector is located at the front of the charcoal canister. The test connector can be identified by the blue connector lock which is tethered to the wiring harness. If the light for cylinder 2 is “ON” steady before cranking the engine as well as while cranking the engine, then the injector driver circuit is shorted to ground.

If the test light blinks while cranking, the PCM and the wiring to the injectors are OK. The Fuel Injector Coil Test Procedure will check if the injectors are faulty.

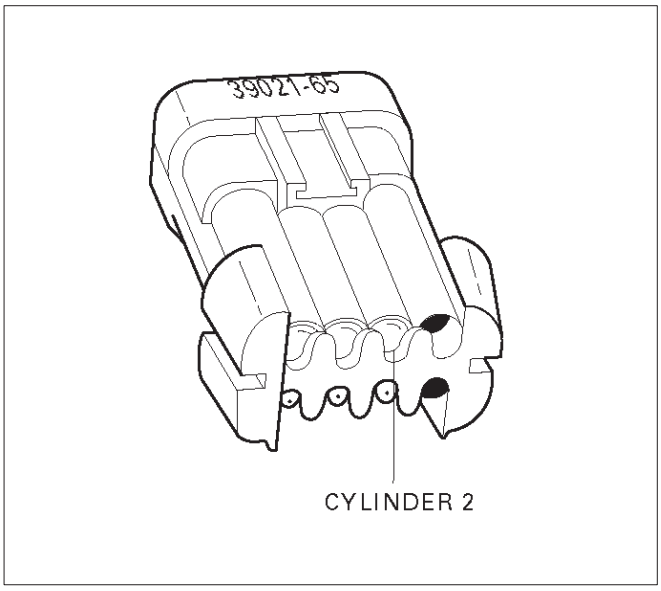

R321055

7. Because the test light was “ON” steady, voltage to the injector is OK, but the driver circuit is grounded at all times. This step determines if the circuit is shorted to ground or the PCM is faulty.

9. The reading should be about 12-14Ω.

10. Locating the open in the harness or in the injector will require removal of the manifold to provide access.

DTC P0202 – Injector 2 Control Circuit

Step	Action	Value(s)	Yes	No
1	Was the “On-Board Diagnostic (OBD) System Check” performed?	—	Go to *Step 2*	Go to *OBD System Check*
2	Will the engine start?	—	Go to *Step 3*	Go to *Engine Cranks But Will Not Run* chart
3	1. Install the Tech 2. Clear the DTC. 2. Idle the engine for one minute. Does DTC P0202 reset?	—	Go to *Step 5*	Go to *Step 4*
4	1. Review the Freeze Frame data with the ignition “ON” and the engine “OFF” and note the parameters. 2. Operate the vehicle within the Freeze Frame conditions as noted. Does P0202 reset?	—	Go to *Step 5*	Go to *Diagnostic Aids*
5	1. Engine “OFF.” 2. Disconnect the injector test connector. 3. Install an injector test light 5-8840-2636-0 on injector connector. 4. Crank the engine and note the light. Does the cylinder 2 test light blink?	—	Go to *Fuel Injector Coil Test Procedure*	Go to *Step 6*
6	Note whether the injector test light for cylinder 2 was “OFF” or “ON” steady in step 5. Was the test light “ON” steady while cranking the engine?	—	Go to *Step 7*	Go to *Step 9*

DTC P0202 – Injector 2 Control Circuit (Cont'd)

Step	Action	Value(s)	Yes	No
7	1. Disconnect the PCM connector for the affected injectors. 2. With a test light connected to B+, probe the affected injector driver circuit. Does the test light illuminate?	—	Go to *Step 8*	Go to *Step 15*
8	Repair short to ground in the injector driver circuit. Is the action complete?	—	Go to *OBD System Check*	—
9	1. Disconnect the injector test connector. 2. At the injector side of the harness, connect an ohmmeter between the positive wire (red with blue tracer) and the wire for cylinder 2 (green with orange tracer). Does the ohmmeter indicate continuity?	—	Go to *Step 11*	Go to *Step 10*
10	Repair the open injector harness wire or open injector. Is the action complete?	—	Verify repair	—
11	At the PCM side of the injector test connector, check the green/orange wire for a short to voltage. Was there a short to voltage?	—	Go to *Step 12*	Go to *Step 13*
12	Repair the short to voltage. Is the action complete?	—	Verify repair	—
13	Check for an open circuit between the injector test connector and the PCM. Was there an open circuit?	—	Go to *Step 14*	Go to *Step 15*
14	Repair the open circuit. Is the action complete?	—	Verify repair	—
15	Replace the PCM. **IMPORTANT:** The replacement PCM must be programmed. Refer to *UBS 98model year Immobilizer Workshop Manual.* Is the action complete?	—	Verify repair	—

Diagnostic Trouble Code (DTC) P0203 Injector 3 Control Circuit

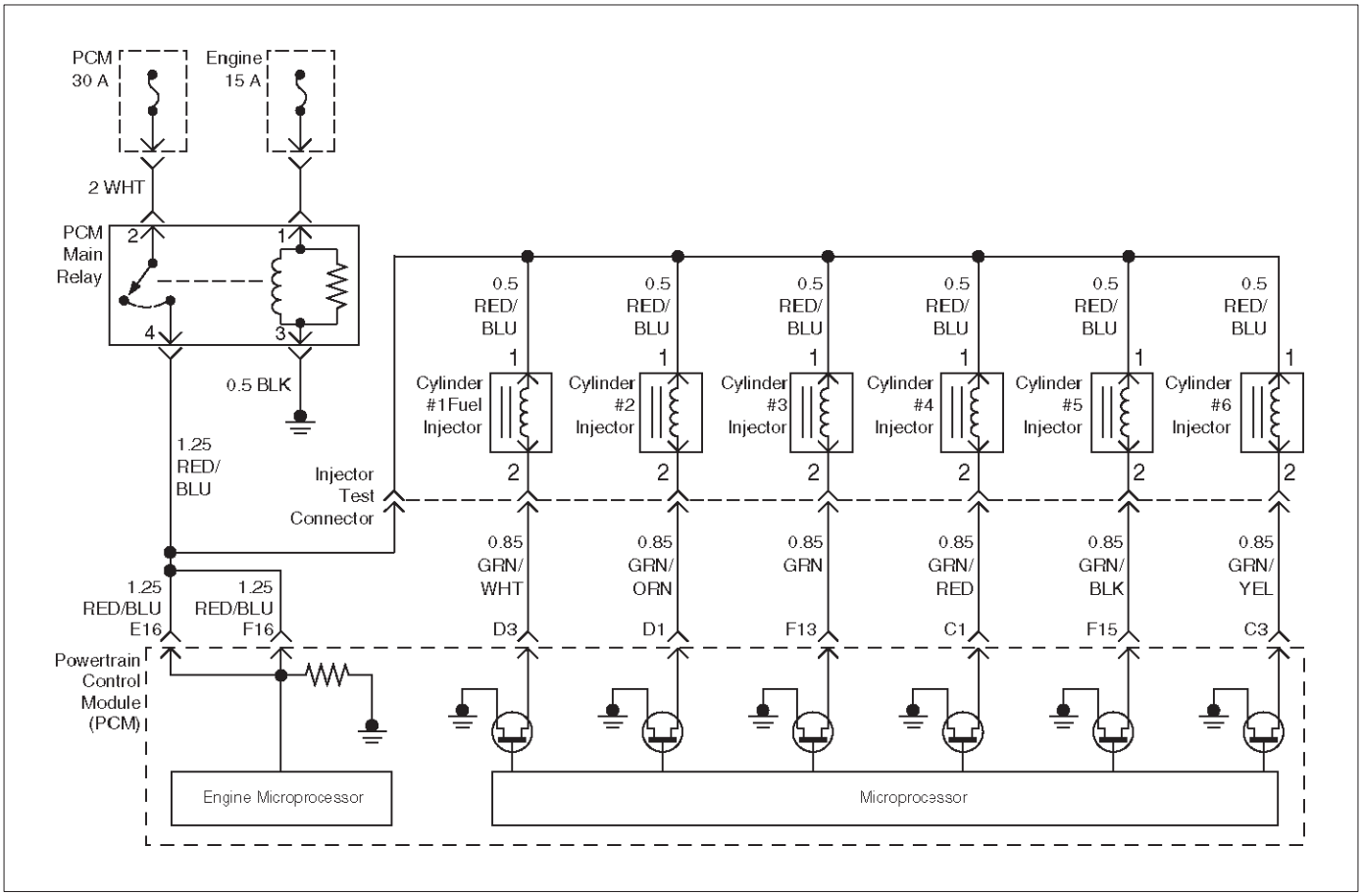

D06RW034

Circuit Description

The powertrain control module (PCM) has six individual injector driver circuits. Each controls an injector. When the driver circuit is grounded by the PCM, the injector is activated. The PCM monitors the current in each driver circuit. The voltage on each driver is monitored to detect a fault. If the voltage is not what the PCM expects to monitor on the circuit, a DTC is set. This DTC is also set if an injector driver is shorted to voltage or if there is an open circuit.

Conditions for Setting the DTC

- The battery voltage is more than 9 volts.
- The engine is turning, determined by the 58X crankshaft position input signal.
- The injector voltage does not equal the ignition voltage when the injector is commanded “OFF” or the injector voltage does not equal 0 volts when the injector is commanded “ON.”
- The above conditions are met for 15 seconds.

Action Taken When the DTC Sets

- The PCM will illuminate the malfunction indicator lamp (MIL) the first time the fault is detected.
- The PCM will store conditions which were present when the DTC was set as Freeze Frame and in the Failure Records data.

Conditions for Clearing the MIL/DTC

- DTC P0203 can be cleared by using the Tech 2 “Clear Info” function or by disconnecting the PCM battery feed.

Diagnostic Aids

An injector driver circuit that is open or shorted to voltage will cause a DTC P0203 to set. It will also cause a misfire due to an inoperative injector. A misfire DTC will also be set indicating which cylinder is inoperative.
Long term and short term fuel trims that are excessively high or low are a good indication that an injector is faulty. Use Fuel Injector Coil Test Procedure to check for faulty injectors.

Test Description

The number(s) below refer to the step number(s) on the Diagnostic Chart.

3. This step determines if DTC P0203 is the result of a hard failure or an intermittent condition.

5. A special injector test connector is provided so that the injectors can be electrically tested without removal of the manifold. On the Trooper, the special 7-way gray connector is located at the front of the charcoal canister. The test connector can be identified by the blue connector lock which is tethered to the wiring harness. If the light for cylinder 3 is “ON” steady before cranking the engine as well as while cranking the engine, then the injector driver circuit is shorted to ground.

If the test light blinks while cranking, the PCM and the wiring to the injectors are OK. The Fuel Injector Coil Test Procedure will check if the injectors are faulty.

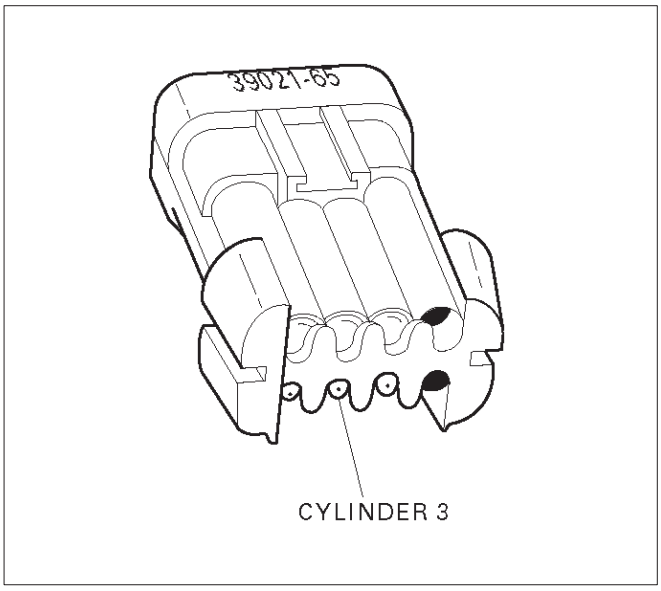

R321056

7. Because the test light was “ON” steady, voltage to the injector is OK, but the driver circuit is grounded at all times. This step determines if the circuit is shorted to ground or the PCM is faulty.
9. The reading should be about 12-14Ω.
10. Locating the open in the harness or in the injector will require removal of the manifold to provide access.

DTC P0203 – Injector 3 Control Circuit

Step	Action	Value(s)	Yes	No
1	Was the “On-Board Diagnostic (OBD) System Check” performed?	—	Go to *Step 2*	Go to *OBD System Check*
2	Will the engine start?	—	Go to *Step 3*	Go to *Engine Cranks But Will Not Run* chart
3	1. Install the Tech 2. Clear the DTC. 2. Idle the engine for one minute. Does DTC P0203 reset?	—	Go to *Step 5*	Go to *Step 4*
4	1. Review the Freeze Frame data with the ignition “ON” and the engine “OFF” and note the parameters. 2. Operate the vehicle within the Freeze Frame conditions as noted. Does P0203 reset?	—	Go to *Step 5*	Go to *Diagnostic Aids*
5	1. Engine “OFF.” 2. Disconnect the injector test connector . 3. Install an injector test light 5-8840-2636-0 on injector connector. 4. Crank the engine and note the light. Does the cylinder 3 test light blink?	—	Go to *Fuel Injector Coil Test Procedure*	Go to *Step 6*
6	Note whether the injector test light for cylinder 3 was “OFF” or “ON” steady in step 5. Was the test light “ON” steady while cranking the engine?	—	Go to *Step 7*	Go to *Step 9*

DTC P0203 – Injector 3 Control Circuit (Cont'd)

Step	Action	Value(s)	Yes	No
7	1. Disconnect the PCM connector for the affected injectors. 2. With a test light connected to B+, probe the affected injector driver circuit. Does the test light illuminate?	—	Go to *Step 8*	Go to *Step 15*
8	Repair short to ground in the injector driver circuit. Is the action complete?	—	Go to *OBD System Check*	—
9	1. Disconnect the injector test connector. 2. At the injector side of the harness, connect an ohmmeter between the positive wire (red with blue tracer) and the wire for cylinder 3 (green). Does the ohmmeter indicate continuity?	—	Go to *Step 11*	Go to *Step 10*
10	Repair the open injector harness wire or open injector. Is the action complete?	—	Verify repair	—
11	At the PCM side of the injector test connector, check the green wire for a short to voltage. Was there a short to voltage?	—	Go to *Step 12*	Go to *Step 13*
12	Repair the short to voltage. Is the action complete?	—	Verify repair	—
13	Check for an open circuit between the injector test connector and the PCM. Was there an open circuit?	—	Go to *Step 14*	Go to *Step 15*
14	Repair the open circuit. Is the action complete?	—	Verify repair	—
15	Replace the PCM. **IMPORTANT:** The replacement PCM must be programmed. Refer to *UBS 98model year Immobilizer Workshop Manual.* Is the action complete?	—	Verify repair	—

Diagnostic Trouble Code (DTC) P0204 Injector 4 Control Circuit

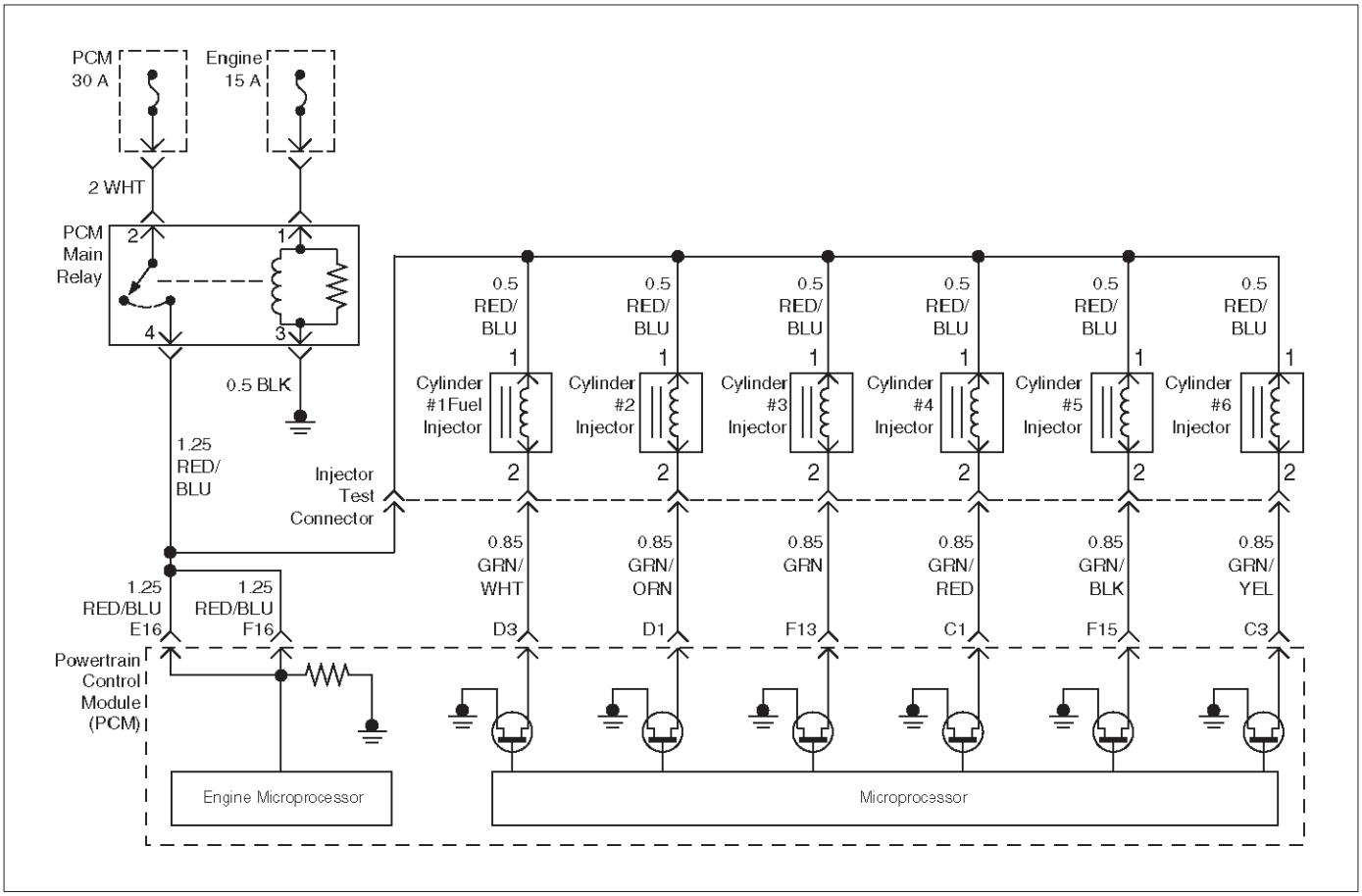

D06RW034

Circuit Description

The powertrain control module (PCM) has six individual injector driver circuits. Each controls an injector. When the driver circuit is grounded by the PCM, the injector is activated. The PCM monitors the current in each driver circuit. The voltage on each driver is monitored to detect a fault. If the voltage is not what the PCM expects to monitor on the circuit, a DTC is set. This DTC is also set if an injector driver is shorted to voltage or if there is an open circuit.

Conditions for Setting the DTC

- The battery voltage is more than 9 volts.
- The engine is turning, determined by the 58X crankshaft position input signal.
- The injector voltage does not equal the ignition voltage when the injector is commanded “OFF” or the injector voltage does not equal 0 volts when the injector is commanded “ON.”
- The above conditions are met for 15 seconds.

Action Taken When the DTC Sets

- The PCM will illuminate the malfunction indicator lamp (MIL) the first time the fault is detected.
- The PCM will store conditions which were present when the DTC was set as Freeze Frame and in the Failure Records data.

Conditions for Clearing the MIL/DTC

- DTC P0204 can be cleared by using the Tech 2 “Clear Info” function or by disconnecting the PCM battery feed.

Diagnostic Aids

An injector driver circuit that is open or shorted to voltage will cause a DTC P0204 to set. It will also cause a misfire due to an inoperative injector. A misfire DTC will also be set indicating which cylinder is inoperative.
Long term and short term fuel trims that are excessively high or low are a good indication that an injector is faulty. Use Fuel Injector Coil Test Procedure to check for faulty injectors.

Test Description

The number(s) below refer to the step number(s) on the Diagnostic Chart.

3. This step determines if DTC P0204 is the result of a hard failure or an intermittent condition.

5. A special injector test connector is provided so that the injectors can be electrically tested without removal of the manifold. On the Trooper, the special 7-way gray connector is located at the front of the charcoal canister. The test connector can be identified by the blue connector lock which is tethered to the wiring harness. If the light for cylinder 4 is “ON” steady before cranking the engine as well as while cranking the engine, then the injector driver circuit is shorted to ground.

If the test light blinks while cranking, the PCM and the wiring to the injectors are OK. The Fuel Injector Coil Test Procedure will check if the injectors are faulty.

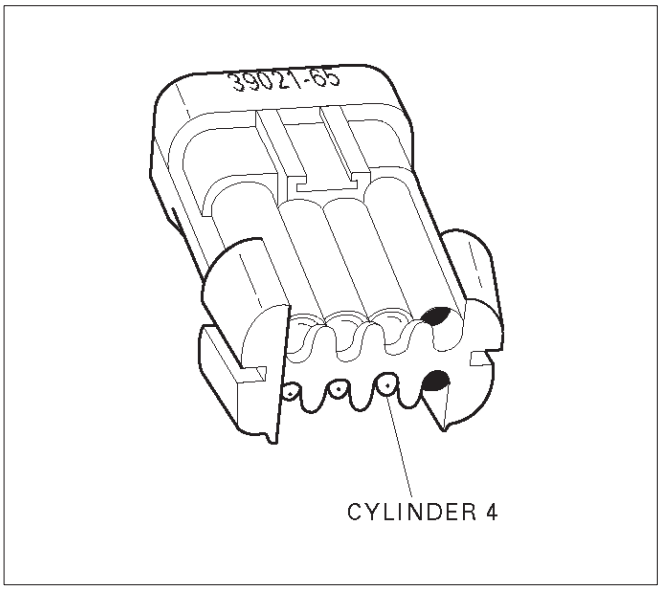

R321057

7. Because the test light was “ON” steady, voltage to the injector is OK, but the driver circuit is grounded at all times. This step determines if the circuit is shorted to ground or the PCM is faulty.
9. The reading should be about 12-14Ω.
10. Locating the open in the harness or in the injector will require removal of the manifold to provide access.

DTC P0204 – Injector 4 Control Circuit

Step	Action	Value(s)	Yes	No
1	Was the “On-Board Diagnostic (OBD) System Check” performed?	—	Go to *Step 2*	Go to *OBD System Check*
2	Will the engine start?	—	Go to *Step 3*	Go to *Engine Cranks But Will Not Run* chart
3	1. Install the Tech 2. Clear the DTC. 2. Idle the engine for one minute. Does DTC P0204 reset?	—	Go to *Step 5*	Go to *Step 4*
4	1. Review the Freeze Frame data with the ignition “ON” and the engine “OFF” and note the parameters. 2. Operate the vehicle within the Freeze Frame conditions as noted. Does P0204 reset?	—	Go to *Step 5*	Go to *Diagnostic Aids*
5	1. Engine “OFF.” 2. Disconnect the injector test connector. 3. Install an injector test light 5-8840-2636-0 on injector connector. 4. Crank the engine and note the light. Does the cylinder 4 test light blink?	—	Go to *Fuel Injector Coil Test Procedure*	Go to Step 6
6	Note whether the injector test light for cylinder 4 was “OFF” or “ON” steady in step 5. Was the test light “ON” steady while cranking the engine?	—	Go to *Step 7*	Go to *Step 9*

DTC P0204 – Injector 4 Control Circuit (Cont'd)

Step	Action	Value(s)	Yes	No
7	1. Disconnect the PCM connector for the affected injectors. 2. With a test light connected to B+, probe the affected injector driver circuit. Does the test light illuminate?	—	Go to *Step 8*	Go to *Step 15*
8	Repair short to ground in the injector driver circuit. Is the action complete?	—	Go to *OBD System Check*	—
9	1. Disconnect the injector test connector. 2. At the injector side of the harness, connect an ohmmeter between the positive wire (red with blue tracer) and the wire for cylinder 4 (green/red). Does the ohmmeter indicate continuity?	—	Go to *Step 11*	Go to *Step 10*
10	Repair the open injector harness wire or open injector. Is the action complete?	—	Verify repair	—
11	At the PCM side of the injector test connector, check the green/red wire for a short to voltage. Was there a short to voltage?	—	Go to *Step 12*	Go to *Step 13*
12	Repair the short to voltage. Is the action complete?	—	Verify repair	—
13	Check for an open circuit between the injector test connector and the PCM. Was there an open circuit?	—	Go to *Step 14*	Go to *Step 15*
14	Repair the open circuit. Is the action complete?	—	Verify repair	—
15	Replace the PCM. **IMPORTANT:** The replacement PCM must be programmed. Refer to *UBS 98model year Immobilizer Workshop Manual.* Is the action complete?	—	Verify repair	—

Diagnostic Trouble Code (DTC) P0205 Injector 5 Control Circuit

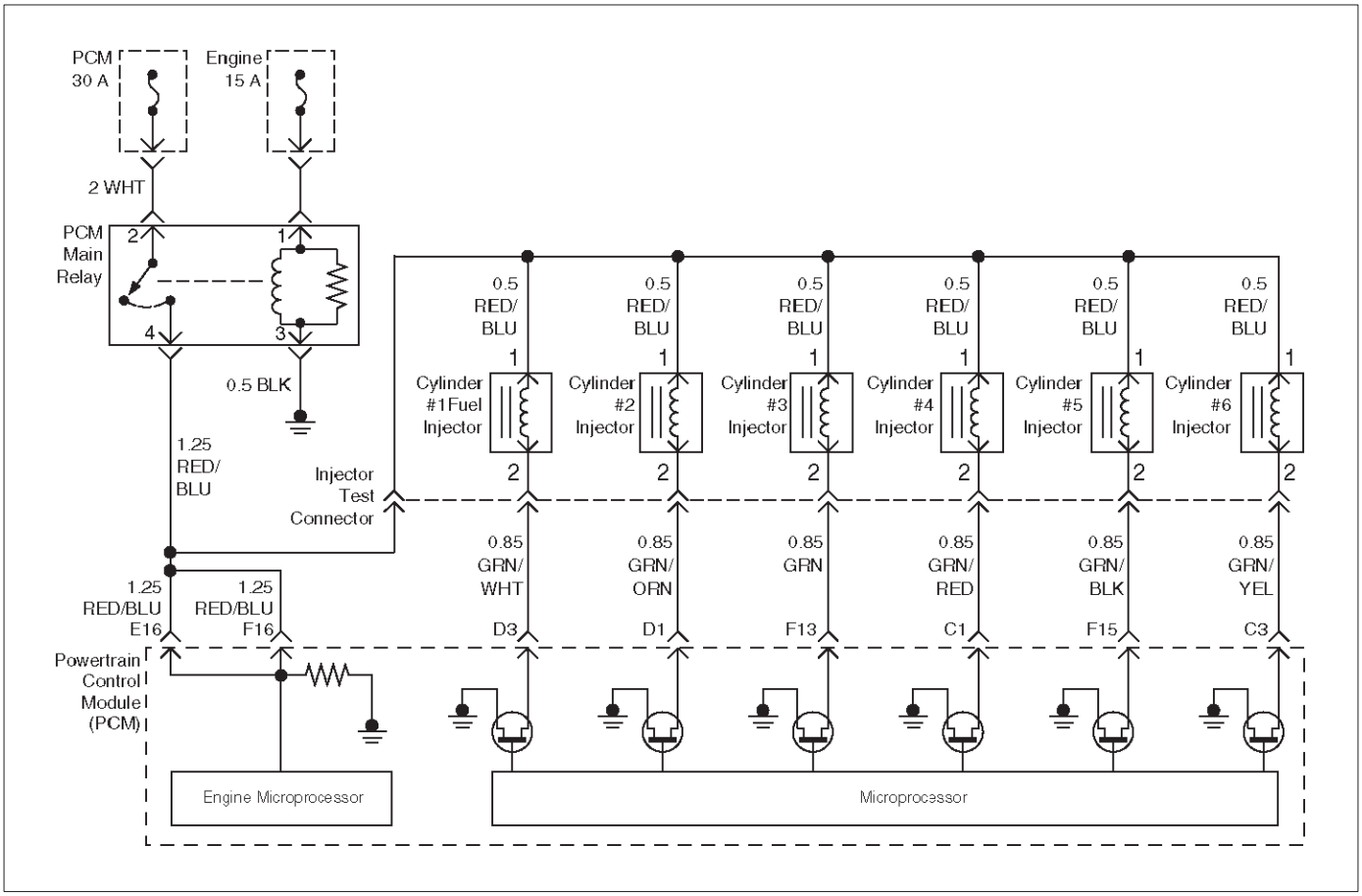

D06RW034

Circuit Description

The powertrain control module (PCM) has six individual injector driver circuits. Each controls an injector. When the driver circuit is grounded by the PCM, the injector is activated. The PCM monitors the current in each driver circuit. If the voltage is not what the PCM expects to monitor on the circuit, a DTC is set. This DTC is also set if an injector driver is shorted to voltage or if there is an open circuit.

Conditions for Setting the DTC

- The battery voltage is more than 9 volts.
- The engine is turning, determined by the 58X crankshaft position input signal.
- The injector voltage does not equal the ignition voltage when the injector is commanded “OFF” or the injector voltage does not equal 0 volts when the injector is commanded “ON.”
- The above conditions are met for 15 seconds.

Action Taken When the DTC Sets

- The PCM will illuminate the malfunction indicator lamp (MIL) the first time the fault is detected.
- The PCM will store conditions which were present when the DTC was set as Freeze Frame and in the Failure Records data.

Conditions for Clearing the MIL/DTC

- DTC P0205 can be cleared by using the Tech 2 “Clear Info” function or by disconnecting the PCM battery feed.

Diagnostic Aids

An injector driver circuit that is open or shorted to voltage will cause a DTC P0205 to set. It will also cause a misfire due to an inoperative injector. A misfire DTC will also be set indicating which cylinder is inoperative.
Long term and short term fuel trims that are excessively high or low are a good indication that an injector is faulty. Use Fuel Injector Coil Test Procedure to check for faulty injectors.

Test Description

The number(s) below refer to the step number(s) on the Diagnostic Chart.

3. This step determines if DTC P0205 is the result of a hard failure or an intermittent condition.

5. A special injector test connector is provided so that the injectors can be electrically tested without removal of the manifold. On the Trooper, the special 7-way gray connector is located at the front of the charcoal canister. The test connector can be identified by the blue connector lock which is tethered to the wiring harness. If the light for cylinder 5 is “ON” steady before cranking the engine as well as while cranking the engine, then the injector driver circuit is shorted to ground.

If the test light blinks while cranking, the PCM and the wiring to the injectors are OK. The Fuel Injector Coil Test Procedure will check if the injectors are faulty.

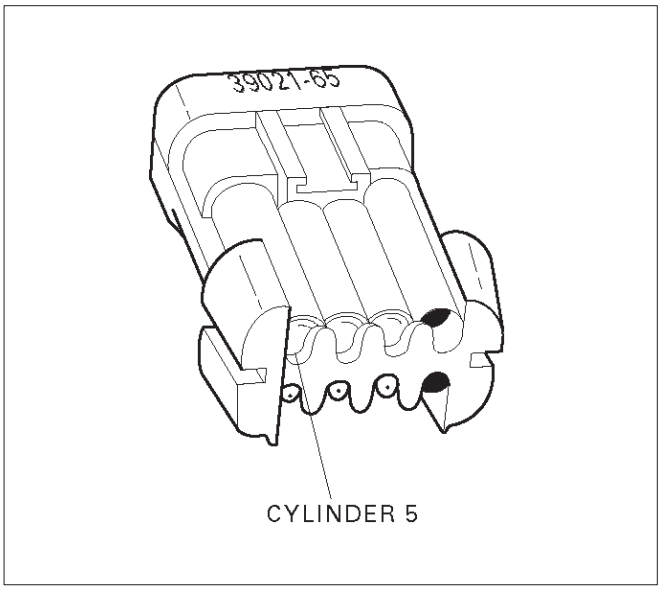

R321058

7. Because the test light was “ON” steady, voltage to the injector is OK, but the driver circuit is grounded at all times. This step determines if the circuit is shorted to ground or the PCM is faulty.
9. The reading should be about 12-14Ω.
10. Locating the open in the harness or in the injector will require removal of the manifold to provide access.

DTC P0205 – Injector 5 Control Circuit

Step	Action	Value(s)	Yes	No
1	Was the “On-Board Diagnostic (OBD) System Check” performed?	—	Go to *Step 2*	Go to *OBD System Check*
2	Will the engine start?	—	Go to *Step 3*	Go to *Engine Cranks But Will Not Run* chart
3	1. Install the Tech 2. Clear the DTC. 2. Idle the engine for one minute. Does DTC P0205 reset?	—	Go to *Step 5*	Go to *Step 4*
4	1. Review the Freeze Frame data with the ignition “ON” and the engine “OFF” and note the parameters. 2. Operate the vehicle within the Freeze Frame conditions as noted. Does P0205 reset?	—	Go to *Step 5*	Go to *Diagnostic Aids*
5	1. Engine “OFF.” 2. Disconnect the injector test connector. 3. Install an injector test light 5-8840-2636-0 on injector connector. 4. Crank the engine and note the light. Does the cylinder 5 test light blink?	—	Go to *Fuel Injector Coil Test Procedure*	Go to *Step 6*
6	Note whether the injector test light for cylinder 5 was “OFF” or “ON” steady in step 5. Was the test light “ON” steady while cranking the engine?	—	Go to *Step 7*	Go to *Step 9*

DTC P0205 – Injector 5 Control Circuit (Cont'd)

Step	Action	Value(s)	Yes	No
7	1. Disconnect the PCM connector for the affected injectors. 2. With a test light connected to B+, probe the affected injector driver circuit. Does the test light illuminate?	—	Go to *Step 8*	Go to *Step 15*
8	Repair short to ground in the injector driver circuit. Is the action complete?	—	Go to *OBD System Check*	—
9	1. Disconnect the injector test connector. 2. At the injector side of the harness, connect an ohmmeter between the positive wire (red with blue tracer) and the wire for cylinder 5 (green with black tracer). Does the ohmmeter indicate continuity?	—	Go to *Step 11*	Go to *Step 10*
10	Repair the open injector harness wire or open injector. Is the action complete?	—	Verify repair	—
11	At the PCM side of the injector test connector, check the green/black wire for a short to voltage. Was there a short to voltage?	—	Go to *Step 12*	Go to *Step 13*
12	Repair the short to voltage. Is the action complete?	—	Verify repair	—
13	Check for an open circuit between the injector test connector and the PCM. Was there an open circuit?	—	Go to *Step 14*	Go to *Step 15*
14	Repair the open circuit. Is the action complete?	—	Verify repair	—
15	Replace the PCM. **IMPORTANT:** The replacement PCM must be programmed. Refer to *UBS 98model year Immobilizer Workshop Manual.* Is the action complete?	—	Verify repair	—

Diagnostic Trouble Code (DTC) P0206 Injector 6 Control Circuit

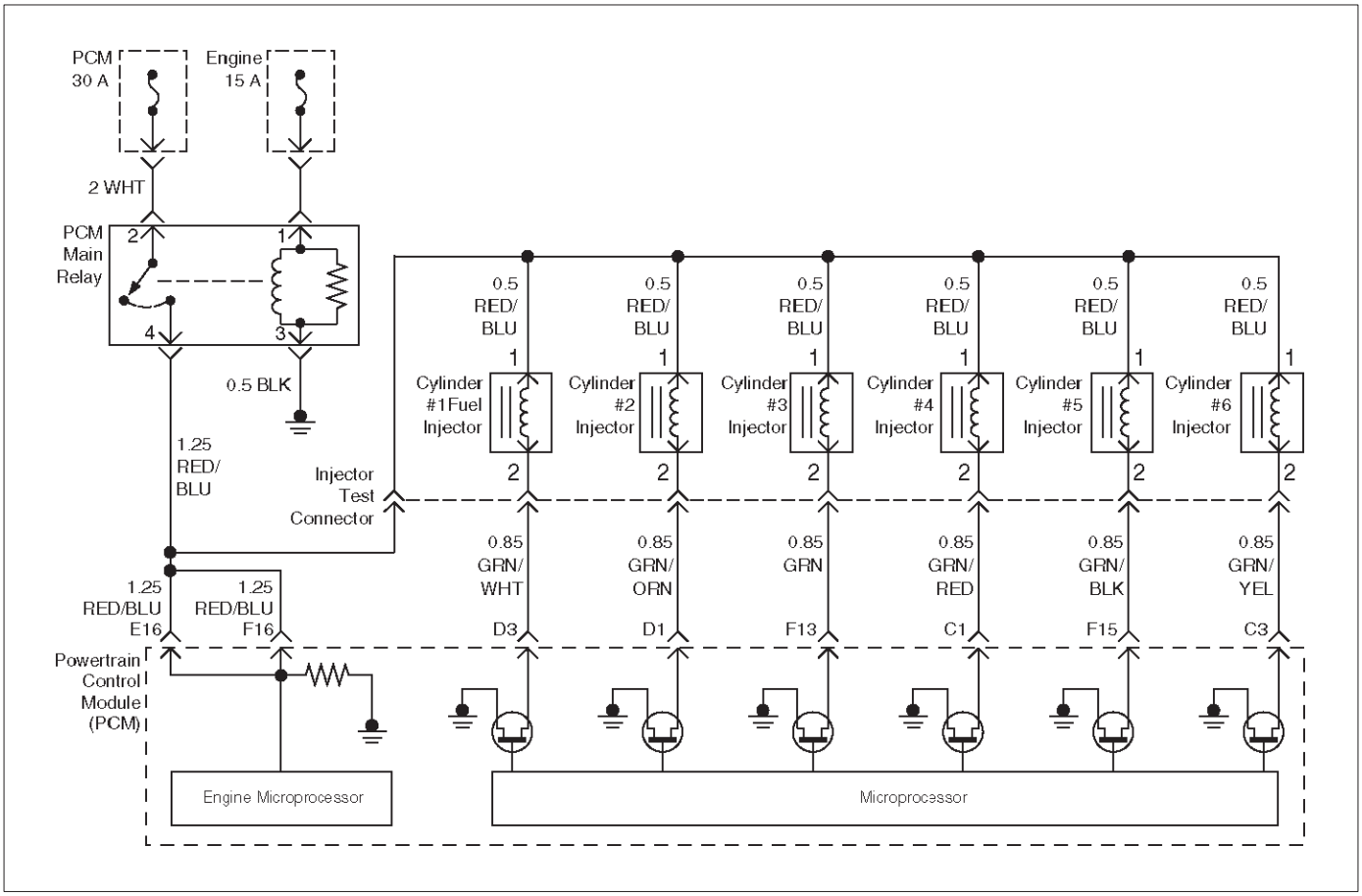

D06RW034

Circuit Description

The powertrain control module (PCM) has six individual injector driver circuits. Each controls an injector. When the driver circuit is grounded by the PCM, the injector is activated. The PCM monitors the current in each driver circuit. The voltage on each driver is monitored to detect a fault. If the voltage is not what the PCM expects to monitor on the circuit, a DTC is set. This DTC is also set if an injector driver is shorted to voltage or if there is an open circuit.

Conditions for Setting the DTC

- The battery voltage is more than 9 volts.
- The engine is turning, determined by 58X crankshaft position input signal.
- The injector voltage does not equal the ignition voltage when the injector is commanded “OFF” or the injector voltage does not equal 0 volts when the injector is commanded “ON.”
- The above conditions are met for 15 seconds.

Action Taken When the DTC Sets

- The PCM will illuminate the malfunction indicator lamp (MIL) the first time the fault is detected.
- The PCM will store conditions which were present when the DTC was set as Freeze Frame and in the Failure Records data.

Conditions for Clearing the MIL/DTC

- DTC P0206 can be cleared by using the Tech 2 “Clear Info” function or by disconnecting the PCM battery feed.

Diagnostic Aids

An injector driver circuit that is open or shorted to voltage will cause a DTC P0206 to set. It will also cause a misfire due to an inoperative injector. A misfire DTC will also be set indicating which cylinder is inoperative.
Long term and short term fuel trims that are excessively high or low are a good indication that an injector is faulty. Use Fuel Injector Coil Test Procedure to check for faulty injectors.

Test Description

The number(s) below refer to the step number(s) on the Diagnostic Chart.

3. This step determines if DTC P0206 is the result of a hard failure or an intermittent condition.

5. A special injector test connector is provided so that the injectors can be electrically tested without removal of the manifold. On the Trooper, the special 7-way gray connector is located at the front of the charcoal canister. The test connector can be identified by the blue connector lock which is tethered to the wiring harness. If the light for cylinder 6 is “ON” steady before cranking the engine as well as while cranking the engine, then the injector driver circuit is shorted to ground.

If the test light blinks while cranking, the PCM and the wiring to the injectors are OK. The Fuel Injector Coil Test Procedure will check if the injectors are faulty.

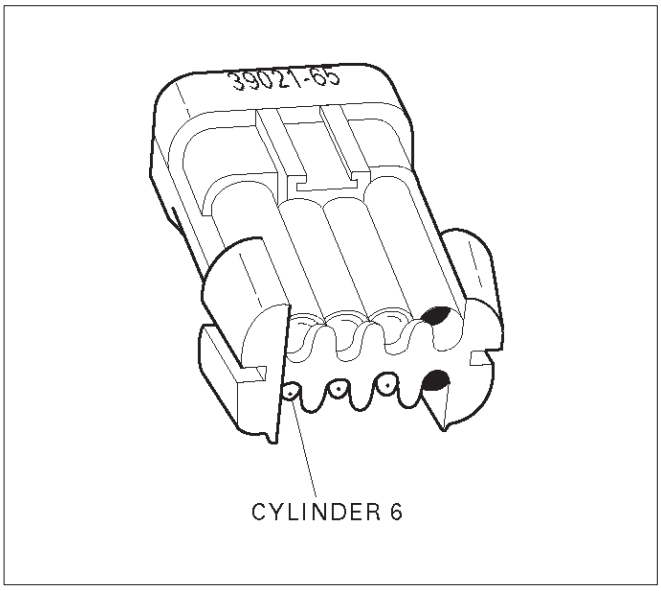

R321059

7. Because the test light was “ON” steady, voltage to the injector is OK, but the driver circuit is grounded at all times. This step determines if the circuit is shorted to ground or the PCM is faulty.
9. The reading should be about 12-14Ω.
10. Locating the open in the harness or in the injector will require removal of the manifold to provide access.

DTC P0206 – Injector 6 Control Circuit

Step	Action	Value(s)	Yes	No
1	Was the “On-Board Diagnostic (OBD) System Check” performed?	—	Go to *Step 2*	Go to *OBD System Check*
2	Will the engine start?	—	Go to *Step 3*	Go to *Engine Cranks But Will Not Run* chart
3	1. Install the Tech 2. Clear the DTC. 2. Idle the engine for one minute. Does DTC P0206 reset?	—	Go to *Step 5*	Go to *Step 4*
4	1. Review the Freeze Frame data with the ignition “ON” and the engine “OFF” and note the parameters. 2. Operate the vehicle within the Freeze Frame conditions as noted. Does P0206 reset?	—	Go to *Step 5*	Go to *Diagnostic Aids*
5	1. Engine “OFF.” 2. Disconnect the injector test connector. 3. Install an injector test light 5-8840-2636-0 on injector connector. 4. Crank the engine and note the light. Does the cylinder 6 test light blink?	—	Go to *Fuel Injector Coil Test Procedure*	Go to *Step 6*
6	Note whether the injector test light for cylinder 6 was “OFF” or “ON” steady in step 5. Was the test light “ON” steady while cranking the engine?	—	Go to *Step 7*	Go to *Step 9*

DTC P0206 – Injector 6 Control Circuit (Cont'd)

Step	Action	Value(s)	Yes	No
7	1. Disconnect the PCM connector for the affected injectors. 2. With a test light connected to B+, probe the affected injector driver circuit. Does the test light illuminate?	—	Go to *Step 8*	Go to *Step 15*
8	Repair short to ground in the injector driver circuit. Is the action complete?	—	Go to *OBD System Check*	—
9	1. Disconnect the injector test connector. 2. At the injector side of the harness, connect an ohmmeter between the positive wire (red with blue tracer) and the wire for cylinder 6 (green with yellow tracer). Does the ohmmeter indicate continuity?	—	Go to *Step 11*	Go to *Step 10*
10	Repair the open injector harness wire or open injector Is the action complete?	—	Verify repair	—
11	At the PCM side of the injector test connector, check the green/yellow wire for a short to voltage. Was there a short to voltage?	—	Go to *Step 12*	Go to *Step 13*
12	Repair the short to voltage. Is the action complete?	—	Verify repair	—
13	Check for an open circuit between the injector test connector and the PCM. Was there an open circuit?	—	Go to *Step 14*	Go to *Step 15*
14	Repair the open circuit. Is the action complete?	—	Verify repair	—
15	Replace the PCM. **IMPORTANT:** The replacement PCM must be programmed. Refer to *UBS 98model year Immobilizer Workshop Manual.* Is the action complete?	—	Verify repair	—

Diagnostic Trouble Code (DTC) P0325 KS Module Circuit

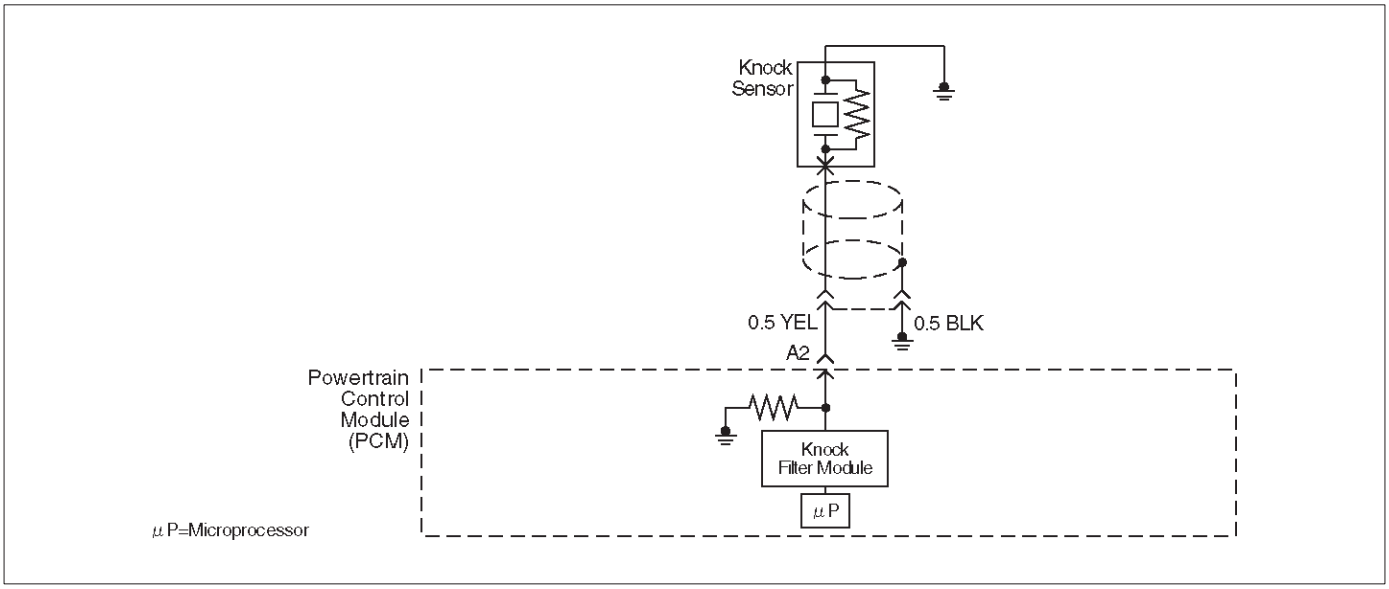

D06RW035

Circuit Description

The knock sensor is used to detect engine detonation, allowing the powertrain control module (PCM) to retard ignition control (IC) spark timing based on the knock sensor (KS) signal being received. The knock sensor produces an AC signal so that under a no knock condition the signal on the KS circuit measures about 0.007 V AC. The KS signal's amplitude and frequency depend upon the amount of knock being experienced. The PCM contains a non-replaceable knock filter module called a signal-to-noise enhancement filter (SNEF) module. This filter module in the PCM determines whether knock is occurring by comparing the signal level on the KS circuit with the voltage level on the noise channel. The noise channel allows the PCM to reject any false knock signal by knowing the amount of normal engine mechanical noise present. Normal engine noise varies depending on engine speed and load. When the PCM determines that an abnormally low noise channel voltage level is being experienced, a DTC P0325 will set.

Conditions for Setting the DTC

- Engine has been running for at least 30 seconds.
- The PCM determines that its internal signal from its knock filter module indicates a continuous knocking condition for more than 10 seconds.

Action Taken When the DTC Sets

- The PCM will store conditions which were present when the DTC was set as Freeze Frame and in the Failure Records data.
- The PCM will use a "substitute" default spark retard value of 6 degrees to minimize knock during conditions when knock is likely to occur.

Conditions for Clearing the MIL/DTC

- DTC P0325 can be cleared by using Tech 2 "Clear Info" function or by disconnecting the PCM battery feed.

Diagnostic Aids

Check for the following conditions:

- Poor connection at PCM – Inspect the knock sensor and PCM connectors for backed-out terminals, broken locks, and improperly formed or damaged terminals.
- Misrouted harness – Inspect the knock sensor harness to ensure that it is not routed too close to high voltage wires such as spark plug leads.

Reviewing the Failure Records vehicle mileage since the diagnostic test last failed may help determine how often the condition that caused the DTC to be set occurs. This may assist in diagnosing the condition.

Test Description

Number(s) below refer to the step number(s) on the Diagnostic Chart.

2. Ensures that the fault is present.

DTC P0325 – KS Module Circuit

Step	Action	Value(s)	Yes	No
1	Was the “On-Board Diagnostic (OBD) System Check” performed?	—	Go to *Step 2*	Go to *OBD System Check*
2	**IMPORTANT:** If an engine knock can be heard, repair the engine mechanical problem before proceeding with this diagnostic. 1. Operate the vehicle within parameters specified under criteria included in “Conditions for Setting the DTC.” 2. Using Tech 2, monitor “Specific DTC” info for DTC P0325 until the DTC P0325 test runs. 3. Note the test result. Does Tech 2 indicate DTC P0325 failed this ignition?	—	Go to *Step 4*	Go to *Step 3*
3	1. Ignition “ON,” engine “OFF.” 2. Review and record Tech 2 Failure Records data for DTC P0325. 3. Operate the vehicle within Failure Records conditions. 4. Using Tech 2, monitor “Specific DTC” info for DTC P0325 until the DTC P0325 test runs. Does Tech 2 indicate DTC P0325 test failed this ignition?	—	Go to *Step 4*	Refer to *Diagnostic Aids*
4	Replace the PCM. **IMPORTANT:** The replacement PCM must be programmed. Refer to *UBS 98model year Immobilizer Workshop Manual.* Is the action complete?	—	Verify repair	—

Diagnostic Trouble Code (DTC) P0327 KS Sensor Circuit

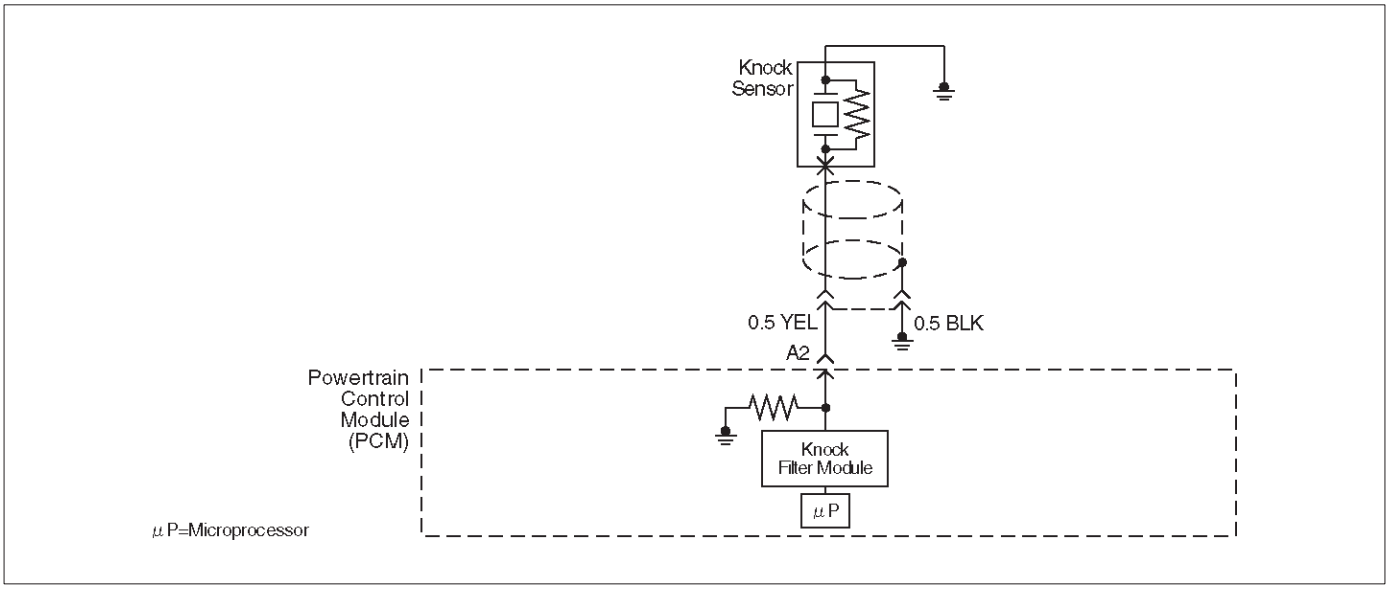

D06RW035

Circuit Description

The powertrain control module (PCM) uses the knock sensor to detect engine detonation, allowing the PCM to retard ignition control (IC) spark timing based on the knock sensor (KS) signal being received. The knock sensor produces an AC signal so that under a no knock condition the signal on the KS circuit measures about 0.007 V AC. The signal amplitude and frequency are dependent upon the amount of knock being experienced. The PCM monitors the KS signal and can diagnose the KS sensor and circuitry.

Conditions for Setting the DTC

- Engine running for at least 10 seconds.
- The TP sensor is greater than 5%.
- The ECT sensor is greater than 60˚C (140˚F).
- Engine speed is between 2000 and 4000 RPM.
- The knock sensor signal voltage is less than 0.20 volts, or greater than 4.8 volts.
- All conditions are present for more than 15 seconds.

Action Taken When the DTC Sets

- The PCM will illuminate the malfunction indicator lamp (MIL) after the second consecutive trip in which the fault is detected.
- The PCM will store conditions which were present when the DTC was set as Freeze Frame and in the Failure Records data.
- The PCM will use a calculated spark retard value to minimize knock during conditions when knock is likely to occur. The calculated value will vary based on engine speed and load.

Conditions for Clearing the MIL/DTC

- DTC P0327 can be cleared by using Tech 2 “Clear Info” function or by disconnecting the PCM battery feed.

Diagnostic Aids

Reviewing the Failure Records vehicle mileage since the diagnostic test last failed may help determine how often the condition that caused the DTC to be set occurs. This may assist in diagnosing the condition.

Test Description

Number(s) below refer to the step number(s) on the Diagnostic Chart.

2. Ensures that the fault is present.

4. The knock sensor is attached to a short jumper harness, so it can be tested without removing the intake manifold. A 2-wire connector for the knock sensor is accessible behind the left rear fuel injector.

DTC P0327 – KS Sensor Circuit

Step	Action	Value(s)	Yes	No
1	Was the “On-Board Diagnostic (OBD) System Check” performed?	—	Go to *Step 2*	Go to *OBD System Check*
2	**IMPORTANT:** If an engine knock can be heard, repair the engine mechanical problem before proceeding with this diagnostic. 1. Operate the engine within the conditions specified in diagnostic support “Conditions for Setting the DTC.” 2. Using Tech 2, monitor “Specific DTC” info for DTC P0327 until the DTC P0327 test runs. 3. Note the test result. Does Tech 2 indicate DTC P0327 failed this ignition?	—	Go to *Step 4*	Go to *Step 3*
3	1. Ignition “ON,” engine “OFF.” 2. Review and record Tech 2 Failure Records data. 3. Operate the vehicle within Failure Records conditions. 4. Using Tech 2, monitor “Specific DTC” info for DTC P0327 until the DTC P0327 test runs. 5. Note the test result. Does Tech 2 indicate DTC P0327 failed this ignition?	—	Go to *Step 4*	Refer to *Diagnostic Aids*
4	1. Check for a damaged terminal at the knock sensor connector. 2. If a problem is found, repair as necessary. Was a problem found?	—	Verify repair	Go to *Step 5*
5	Using a test light to battery +, check the black/blue wire (PCM side) to verify that the shield connection is good. Did the test light illuminate?	—	Go to *Step 7*	Go to *Step 6*
6	Repair the open shield ground. Is the action complete?	—	Verify repair	—
7	1. Ignition “OFF,” disconnect the PCM. 2. Check the KS signal circuit for a poor terminal connection at the PCM. 3. If a problem is found, replace the faulty terminal. Was a problem found?	—	Verify repair	Go to *Step 8*
8	1. Ignition “OFF,” PCM disconnected. 2. Check the KS signal circuit between the PCM and the knock sensor connector for an open, a short to voltage, or a short to ground. 3. If a problem is found, repair as necessary. Was a problem found?	—	Verify repair	Go to *Step 9*
9	1. Ignition “OFF,” PCM disconnected. 2. Knock sensor connected. 3. Measure the resistance of the knock sensor by connecting the DVM between the PCM connector and the engine block. Is the resistance of each knock sensor near the specified value?	100K ohms	Go to *Step 10*	Go to *Step 11*

DTC P0327 – KS Sensor Circuit (Cont'd)

Step	Action	Value(s)	Yes	No
10	1. Ignition "OFF," PCM disconnected. 2. Connect the DVM to monitor AC voltage between the PCM connector and engine ground. 3. Tap on the engine lift bracket with a socket extension while observing the signal indicated on the DVM. Is any signal indicated on the DVM while tapping on the engine lift bracket?	—	Go to *Step 12*	Go to *Step 11*
11	Replace the knock sensor. Is the action complete?	—	Verify repair	—
12	Replace the PCM. **IMPORTANT:** The replacement PCM must be programmed. Refer to *UBS 98model year Immobilizer Workshop Manual.* Is the action complete?	—	Verify repair	—

Diagnostic Trouble Code (DTC) P0336 58X Reference Signal Circuit

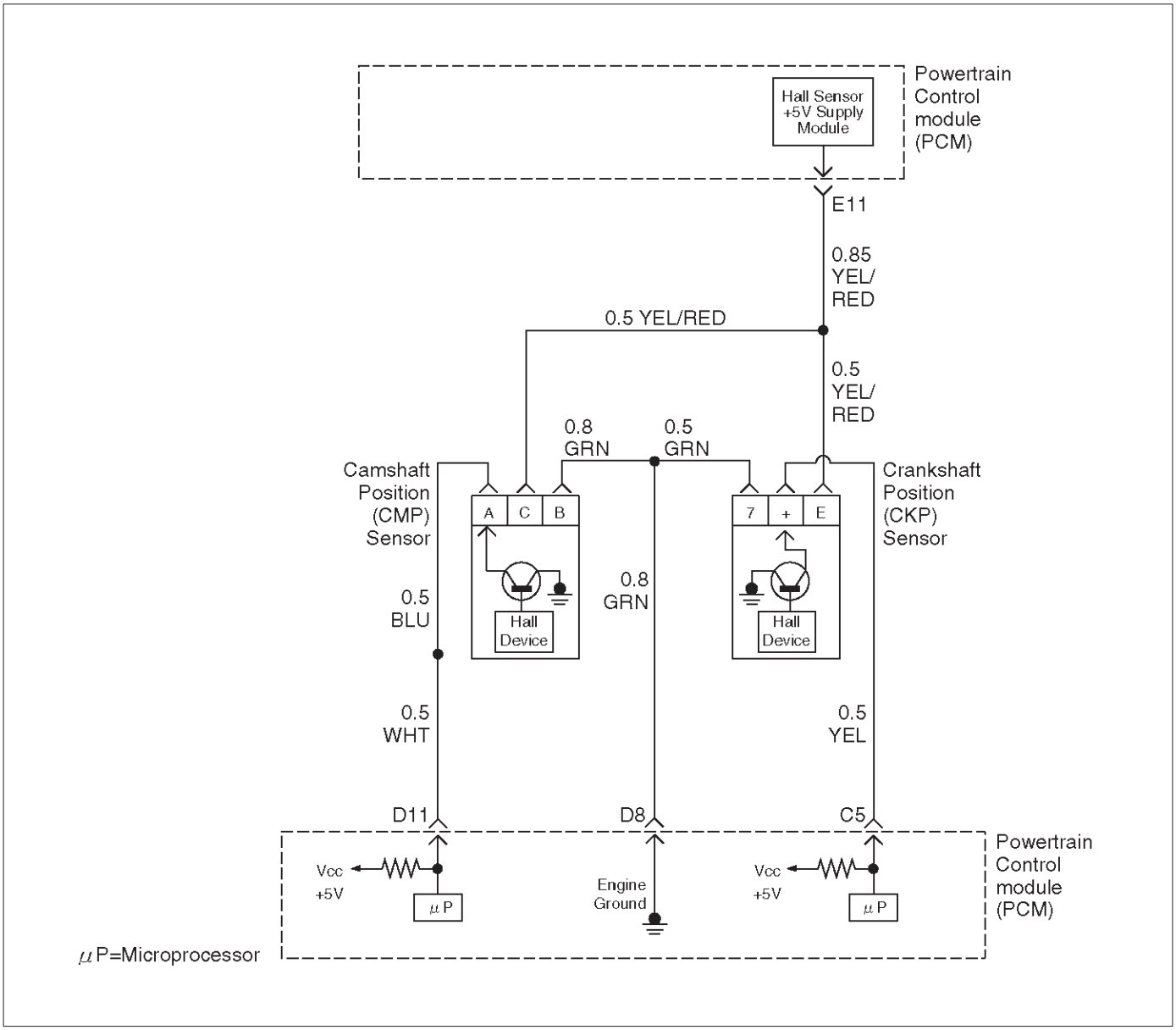

D06RW032

Circuit Description

The 58X reference signal is produced by the crankshaft position (CKP) sensor. During one crankshaft revolution, 58 crankshaft pulses will be produced. The powertrain control module (PCM) uses the 58X reference signal to calculate engine RPM and crankshaft position. The PCM constantly monitors the number of pulses on the 58X reference circuit and compares them to the number of camshaft position (CMP) signal pulses being received. If the PCM receives an incorrect number of pulses on the 58X reference circuit, DTC P0336 will set.

Conditions for Setting the DTC

- Engine is running.
- Extra or missing pulse is detected between consecutive 58X reference pulses.
- Above condition is detected in 10 of 100 crankshaft rotations.

Action Taken When the DTC Sets

- The PCM will illuminate the malfunction indicator lamp (MIL) after the second consecutive trip in which the fault is detected.
- The PCM will store conditions which were present when the DTC was set as Freeze Frame and in the Failure Records data.

Conditions for Clearing the MIL/DTC

- DTC P0336 can be cleared by using Tech 2 “Clear Info” function or by disconnecting the PCM battery feed.

Diagnostic Aids

An intermittent may be caused by a poor connection, rubbed-through wire insulation or a wire broken inside the insulation. Check for:

- Poor connection - Inspect the PCM harness and connectors for improper mating, broken locks, improperly formed or damaged terminals, and poor terminal-to-wire connection.

- Damaged harness – Inspect the wiring harness for damage. If the harness appears to be OK, disconnect the PCM, turn the ignition on and observe a voltmeter connected to the 58X reference circuit at the PCM harness connector while moving connectors and wiring harnesses related to the ICM. A change in voltage will indicate the location of the fault.

Reviewing the Failure Records vehicle mileage since the diagnostic test last failed may help determine how often the condition that caused the DTC to be set occurs. This may assist in diagnosing the condition.

DTC P0336 – 58X Reference Signal Circuit

Step	Action	Value(s)	Yes	No
1	Was the "On-Board Diagnostic (OBD) System Check" performed?	—	Go to *Step 2*	Go to *OBD System Check*
2	Attempt to start the engine. Does the engine start?	—	Go to *Step 3*	Go to *"Engine Cranks But Will Not Run"* chart
3	1. Review and record Failure Records information. 2. Clear DTC P0336. 3. Start the engine and idle for 1 minute. 4. Observe DTCs. Is DTC P0336 set?	—	Go to *Step 4*	Refer to Diagnostic Aids
4	1. Disconnect the PCM and CKP sensor. 2. Check for an open or a short to ground in the 58X reference circuit between the CKP sensor connector and the PCM harness connector. 3. If a problem is found, repair as necessary. Was a problem found?	—	Verify repair	Go to *Step 5*
5	1. Reconnect the PCM and CKP sensor. 2. Connect a DVM to measure voltage on the 58X reference circuit at the PCM connector. 3. Observe the voltage while cranking the engine. Is the voltage near the specified value?	2.5 V	Go to *Step 8*	Go to *Step 6*
6	Check the connections at the CKP sensor and replace the terminals if necessary. Did any terminals require replacement?	—	Verify repair	Go to *Step 7*
7	Replace the CKP sensor. Use caution to avoid any hot oil that may drip out. Is the action complete?	—	Verify repair	—
8	Check connections at the PCM and replace the terminals if necessary. Did any terminals require replacement?	—	Verify repair	Go to *Step 9*
9	Replace the PCM. **IMPORTANT:** The replacement PCM must be programmed. Refer to *UBS 98model year Immobilizer Workshop Manual.* Is the action complete?	—	Verify repair	—

Diagnostic Trouble Code (DTC) P0337 CKP Sensor Circuit Low Frequency

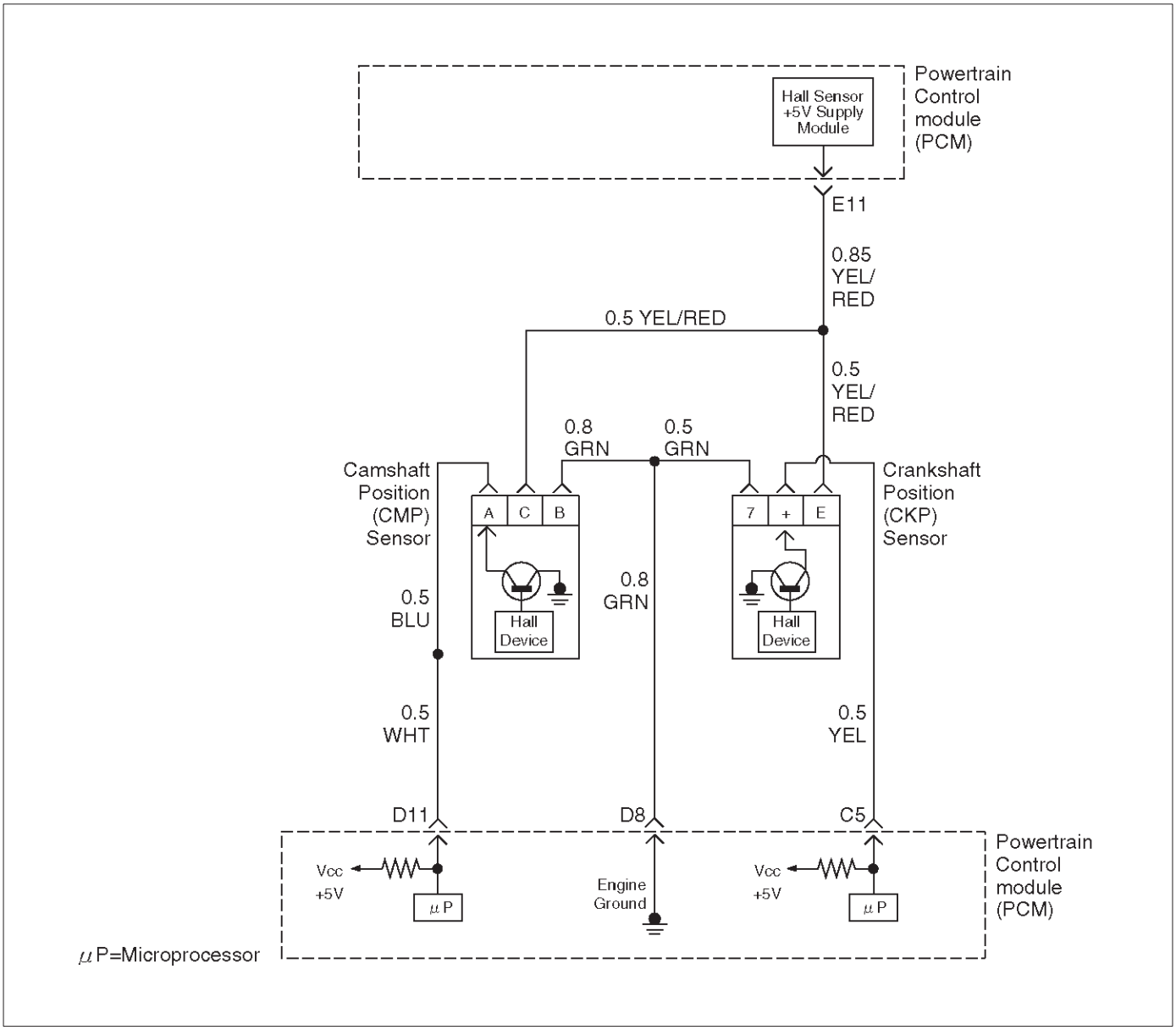

D06RW032

Circuit Description

The 58X reference signal is produced by the crankshaft position (CKP) sensor. During one crankshaft revolution, 58 crankshaft reference pulses will be produced. The powertrain control module (PCM) uses the 58X reference signal to calculate engine RPM and crankshaft position. The PCM constantly monitors the number of pulses on the 58X reference circuit and compares them to the number of camshaft position (CMP) signal pulses being received. If the PCM does not receive pulses on the 58X reference circuit, DTC P0337 will set.

Conditions for Setting the DTC

- No camshaft position (CMP) sensor DTCs are set.
- Engine cranking.
- Crankshaft position (CKP) sensor signal is not present between two cam pulses.
- CKP reference pulse is not detected within 8 CMP pulses.

Action Taken When the DTC Sets

- The PCM will illuminate the malfunction indicator lamp (MIL) after the second consecutive trip in which the fault is detected.
- The PCM will store conditions which were present when the DTC was set as Freeze Frame and in the Failure Records data.

Conditions for Clearing the MIL/DTC

- DTC P0337 can be cleared by using Tech 2 “Clear Info” function or by disconnecting the PCM battery feed.

Diagnostic Aids

An intermittent may be caused by a poor connection, rubbed-through wire insulation or a wire broken inside the insulation. Check for:

- Poor connection – Inspect the PCM harness and connectors for improper mating, broken locks, improperly formed or damaged terminals, and poor terminal-to-wire connection.

- Damaged harness – Inspect the wiring harness for damage. If the harness appears to be OK, disconnect the PCM, turn the ignition on and observe a voltmeter connected to the 58X reference circuit at the PCM harness connector while moving connectors and wiring harnesses related to the ICM. A change in voltage will indicate the location of the fault.

Reviewing the Failure Records vehicle mileage since the diagnostic test last failed may help determine how often the condition that caused the DTC to be set occurs. This may assist in diagnosing the condition.

DTC P0337 – CKP Sensor Circuit Low Frequency

Step	Action	Value(s)	Yes	No
1	Was the “On-Board Diagnostic (OBD) System Check” performed?	—	Go to *Step 2*	Go to *OBD System Check*
2	Attempt to start the engine. Does the engine start?	—	Go to *Step 3*	Go to *Chart 3*
3	1. Review and record Failure Records information. 2. Clear DTC P0337. 3. Start the engine and idle for 1 minute. 4. Observe DTCs. Is DTC P0337 set?	—	Go to *Step 4*	Refer to *Diagnostic Aid*
4	1. Disconnect the CKP sensor. 2. Ignition “ON.” 3. Using a DVM, verify that 5 V reference and ground are being supplied at the sensor connector (PCM side). Are 4-6 volts and ground available at the sensor?	—	Go to *Step 7*	Go to *Step 5*
5	1. Ignition “ON.” 2. With a DVM, backprobe the PCM connector 5 V reference and ground connections. Are 5 V reference and ground available at the PCM?	—	Go to *Step 6*	Go to *Step 11*
6	Check 5 V reference or ground between the CKP sensor and PCM and repair the open circuit, short to ground or short to voltage. Is the action complete?	—	Verify repair	—
7	1. Ignition “OFF.” 2. Disconnect the PCM and CKP sensor. 3. Check for an open or a short to ground in the 58X reference circuit between the CKP sensor connector and the PCM harness connector. 4. If a problem is found, repair as necessary. Was a problem found?	—	Verify repair	Go to *Step 8*
8	1. Reconnect the PCM and CKP sensor. 2. Connect a DVM to measure voltage on the 58X reference circuit at the PCM connector. 3. Observe the voltage while cranking the engine. Is the voltage near the specified value?	2.5 V	Go to *Step 11*	Go to *Step 9*
9	Check the connections at the CKP sensor and replace the terminals if necessary. Did any terminals require replacement?	—	Verify repair	Go to *Step 10*
10	Replace the CKP sensor. Use caution and avoid hot oil that may drip out. Is the action complete?	—	Verify repair	—

DTC P0337 – CKP Sensor Circuit Low Frequency (Cont'd)

Step	Action	Value(s)	Yes	No
11	Check the connections at the PCM and replace the terminals if necessary. Did any terminals require replacement?	—	Verify repair	Go to *Step 12*
12	Replace the PCM. **IMPORTANT:** The replacement PCM must be programmed. Refer to *UBS 98model year Immobilizer Workshop Manual.* Is the action complete?	—	Verify repair	—

Diagnostic Trouble Code (DTC) P0341 CMP Sensor Circuit Performance

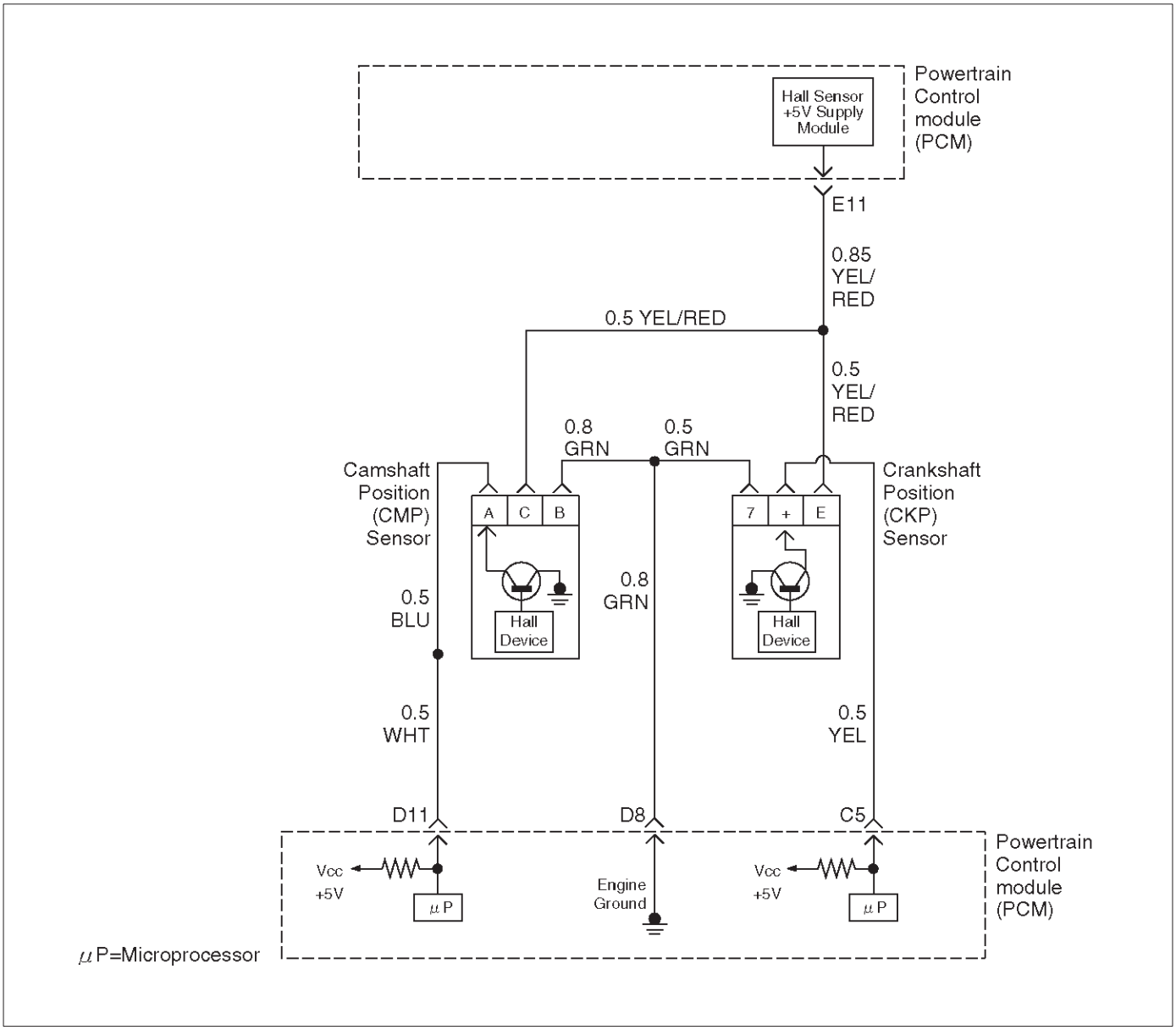

D06RW032

Circuit Description

The CMP signal is produced by the camshaft position (CMP) sensor pulses when the engine is running and crankshaft position (CKP) sync pulses are also being received. The powertrain control module (PCM) uses the CMP signal pulses to initiate sequential fuel injection. The PCM constantly monitors the number of pulses on the CMP signal circuit and compares the number of CMP pulses to the number of 58X reference pulses received. If the PCM receives an incorrect number of pulses on the CMP reference circuit, DTC P0341 will set and the PCM will initiate injector sequence without the CMP signal with a one in six chance that injector sequence is correct. The engine will continue to start and run normally, although the misfire diagnostic will be affected if a misfiring condition occurs.

Conditions for Setting the DTC

- The engine is running (1X CMP reference pulses are being received).
- The CMP sensor signal is not detected at the correct interval every 6 cylinders.
- Above condition fails for 100 occurrences within 200 test samples.

Action Taken When the DTC Sets

- The PCM will illuminate the malfunction indicator lamp (MIL) after the second consecutive trip in which the fault is detected.
- The PCM will initiate the injector sequence without the CMP signal with a one in six chance that the injector sequence is correct.
- The PCM will store conditions which were present when the DTC was set as Freeze Frame and in the Failure Records data.

Conditions for Clearing the MIL/DTC

- DTC P0341 can be cleared by using Tech 2 “Clear Info” function or by disconnecting the PCM battery feed.

Diagnostic Aids

An intermittent may be caused by a poor connection, rubbed-through wire insulation or a wire broken inside the insulation. Check for:

- Poor connection – Inspect the PCM harness and connectors for improper mating, broken locks, improperly formed or damaged terminals, and poor terminal-to-wire connection.
- Damaged harness – Inspect the wiring harness for damage. If the harness appears to be OK, disconnect the PCM, turn the ignition on and observe a voltmeter connected to the CMP signal circuit at the PCM harness connector while moving connectors and wiring harnesses related to the ICM and the CMP sensor. A change in voltage will indicate the location of the fault.

Reviewing the Failure Records vehicle mileage since the diagnostic test last failed may help determine how often the condition that caused the DTC to be set occurs. This may assist in diagnosing the condition.

Test Description

Number(s) below refer to the step number(s) on the Diagnostic Chart.

2. Ensures that the fault is present.

12. Determines whether the fault is being caused by a missing camshaft magnet or a faulty sensor. The voltage measured in this step should read around 4 volts, toggling to near 0 volts when the CMP sensor interfaces with the camshaft magnet.

DTC P0341 – CMP Sensor Circuit Performance

Step	Action	Value(s)	Yes	No
1	Was the “On-Board Diagnostic (OBD) System Check” performed?	—	Go to *Step 2*	Go to *OBD System Check*
2	1. Ignition “ON.” 2. Review and record Tech 2 Failure Records data. 3. Operate the vehicle within Failure Records conditions as noted. 4. Using Tech 2, monitor “Specific DTC” info for DTC P0341 until the DTC P0341 test runs. 5. Note the test result. Does Tech 2 indicate DTC P0341 failed this ignition?	—	Go to *Step 3*	Refer to *Diagnostic Aids*
3	1. Disconnect the CMP sensor. 2. Measure the voltage between the sensor feed circuit and the sensor ground circuit at the CMP sensor harness connector. Does the voltage measure near the specified value?	4-6 V	Go to *Step 4*	Go to *Step 5*
4	Measure the voltage between the CMP sensor signal circuit and the sensor ground circuit at the CMP sensor harness connector. Does the voltage measure near the specified value?	4-6 V	Go to *Step 11*	Go to *Step 8*
5	If the voltage measured in step 3 was less than 4-6 volts, proceed directly to step 6 without completing this step. If the voltage in step 3 was greater than 4-6 V, repair the short to voltage in the CMP feed circuit. Is the action complete?	—	Verify repair	—
6	1. Check for poor connections at the camshaft position sensor. 2. If a problem is found, repair it as necessary. Was a problem found?	—	Verify repair	Go to *Step 7*
7	1. Ignition “OFF,” disconnect the PCM and the CMP sensor. 2. Check the following circuits for an open between the ignition coil and the CMP sensor: ● The sensor feed circuit. 3. If a problem is found, repair as necessary. Was a problem found?	—	Verify repair	Go to *Step 9*
8	1. Ignition “OFF,” disconnect the PCM (leave the CMP sensor disconnected). 2. Ignition “ON,” check the following circuits: ● The CMP sensor signal circuit for an open or a short to voltage. ● The CMP sensor input signal circuit for a short to ground. 3. If a problem is found, repair it as necessary. Was a problem found?	—	Verify repair	Go to *Step 9*
9	Check for a short or open in the sensor ground circuit. Was a problem found?	—	Verify repair	Go to *Step 10*

DTC P0341 – CMP Sensor Circuit Performance (Cont'd)

Step	Action	Value(s)	Yes	No
10	1. Check for poor connections at the PCM. 2. If a problem is found, repair it as necessary. Was a problem found?	—	Verify repair	Go to *Step 11*
11	Backprobe the PCM connector with a DVM to monitor voltage on the camshaft position input signal circuit while cranking the engine with the sensor connected. (Use rubber band, tape, or an assistant to keep the DVM lead in contact with the sensor terminal during this test.) Does the voltage toggle between the specified values?	4-0 V	Go to *Step 15*	Go to *Step 12*
12	1. Remove the CMP sensor from the engine front cover (leave the sensor wiring connected). 2. Place a magnet on the CMP sensor. (If you use a magnet that is too small to cover the face of the sensor, test on every part of the sensor face because only a small area will respond to this test.) Does the DVM display a voltage near the specified value?	0 V	Go to *Step 13*	Go to *Step 14*
13	Replace the faulty or missing camshaft position sensor magnet. Is the action complete?	—	Verify repair	—
14	Replace the camshaft position sensor. Is the action complete?	—	Verify repair	—
15	Replace the PCM. **IMPORTANT:** The replacement PCM must be programmed. Refer to *UBS 98model year Immobilizer Workshop Manual.* Is the action complete?	—	Verify repair	—

Diagnostic Trouble Code (DTC) P0342 CMP Sensor Circuit Low

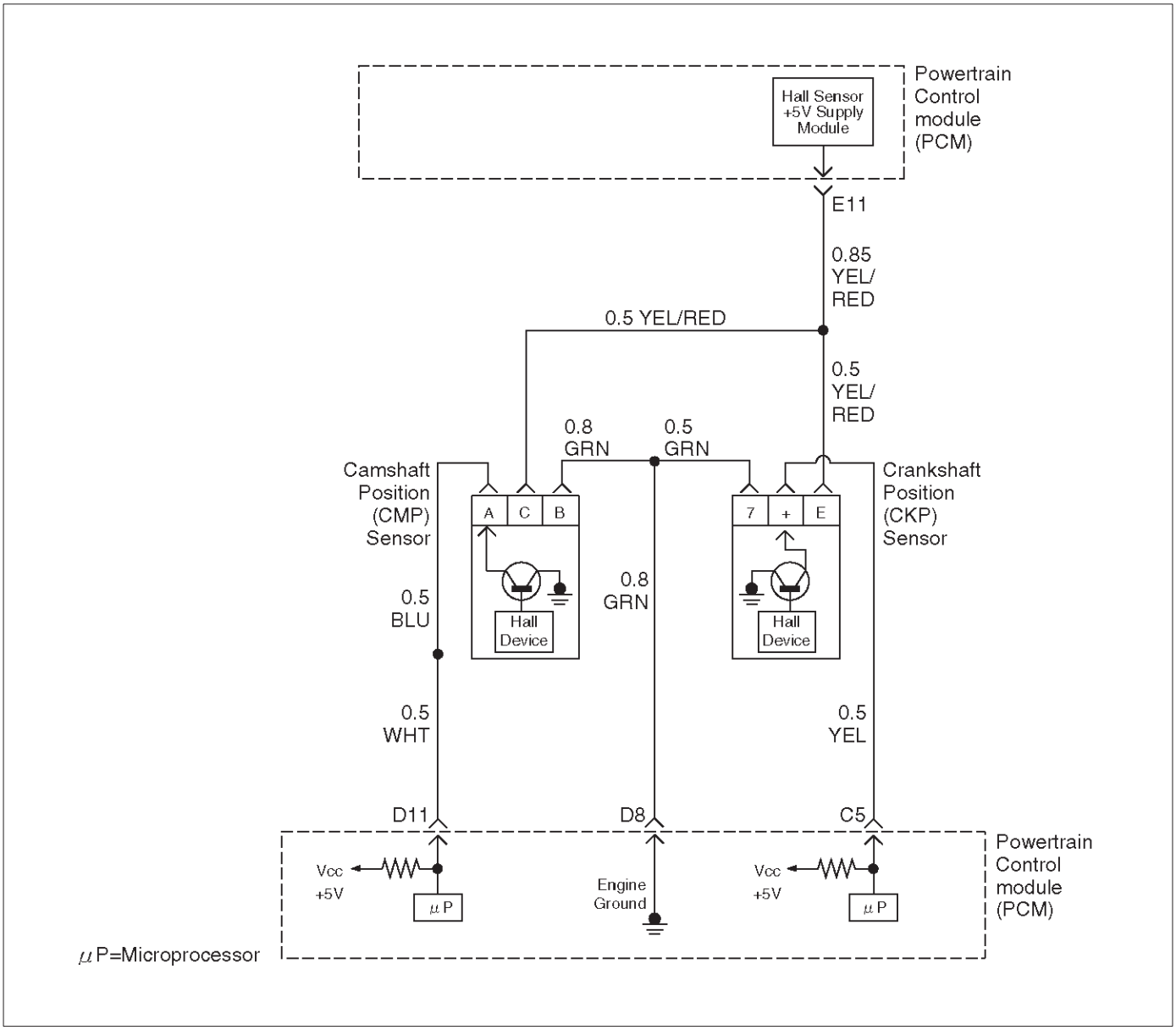

D06RW032

Circuit Description

The CMP signal produced by the camshaft position (CMP) sensor pulses when the engine is running and crankshaft position (CKP) sync pulses are also being received. The hall type CMP sensor and the CKP sensor share 5 V and ground connections at the powertrain control module (PCM). The third wire at the sensor is a signal circuit to the PCM. The PCM uses the CMP signal pulses to initiate sequential fuel injection. The PCM constantly monitors the number of pulses on the CMP signal circuit and compares the number of CMP pulses to the number of 58X reference pulses received. If the PCM does not receive pulses on the CMP reference circuit, DTC P0342 will set and the PCM will initiate injector sequence without the CMP signal with a one in six chance that injector sequence is correct. The engine will continue to start and run normally, although the misfire diagnostic will be affected if a misfiring condition occurs.

Conditions for Setting the DTC

- The engine is running.
- The CMP sensor signal is not received by the PCM once every 6 cylinders.
- The above condition occurs for 10 seconds.

Action Taken When the DTC Sets

- The PCM will illuminate the malfunction indicator lamp (MIL) after the second consecutive trip in which the fault is detected.
- The PCM will initiate injector sequence without the CMP signal with a one in six chance that the injector sequence is correct.
- The PCM will store conditions which were present when the DTC was set as Freeze Frame and in the Failure Records data.

Conditions for Clearing the MIL/DTC

- DTC P0342 can be cleared by using Tech 2 “Clear Info” function or by disconnecting the PCM battery feed.

Diagnostic Aids

An intermittent may be caused by a poor connection, rubbed-through wire insulation or a wire broken inside the insulation. Check for:

- Poor connection – Inspect the PCM harness and connectors for improper mating, broken locks, improperly formed or damaged terminals, and poor terminal to wire connection.
- Damaged harness – Inspect the wiring harness for damage. If the harness appears to be OK, disconnect the PCM, turn the ignition on and observe a voltmeter connected to the CMP signal circuit at the PCM harness connector while moving connectors and wiring harnesses related to the ICM and the CMP sensor. A change in voltage will indicate the location of the fault.

Test Description

Number(s) below refer to the step number(s) on the Diagnostic Chart.

2. Ensures that the fault is present.

14. Determines whether the fault is being caused by a missing camshaft magnet or a faulty PCM. The voltage measured in this step should read around 4 volts, toggling to near 0 volts when the CMP sensor interfaces with the camshaft magnet.

DTC P0342 – CMP Sensor Circuit Low

Step	Action	Value(s)	Yes	No
1	Was the “On-Board Diagnostic (OBD) System Check” performed?	—	Go to *Step 2*	Go to *OBD System Check*
2	1. Ignition “ON.” 2. Review and record Tech 2 Failure Records data. 3. Operate the vehicle within Failure Records conditions as noted. 4. Using Tech 2, monitor “Specific DTC” information for DTC P0342 until the DTC P0342 test runs. 5. Note test result. Does Tech 2 indicate DTC P0342 failed this ignition?	—	Go to *Step 3*	Refer to *Diagnostic Aids*
3	1. Ignition “ON.” 2. Disconnect the CMP sensor. 3. Measure the voltage between the sensor feed circuit and the sensor ground circuit at the CMP sensor harness connector. Does the voltage measure near the specified value?	4-6 V	Go to *Step 7*	Go to *Step 4*
4	1. Ignition “OFF,” disconnect the PCM and the CMP sensor. 2. Check for poor connections at the camshaft position sensor. 3. If a problem is found, repair it as necessary. Was a problem found?	—	Verify repair	Go to *Step 5*
5	1. Check for poor connections at the PCM. 2. If a problem is found, repair it as necessary. Was a problem found?	—	Verify repair	Go to *Step 6*
6	1. Check the following circuits between the PCM and the CMP sensor: • The sensor feed circuit. Open or short to ground? • The sensor ground circuit. Open or short to voltage? 2. If a problem is found, repair as necessary. Was a problem found?	—	Verify repair	—

DTC P0342 – CMP Sensor Circuit Low (Cont'd)

Step	Action	Value(s)	Yes	No
7	1. Ignition "ON," engine "OFF." 2. Measure the voltage between the CMP sensor signal circuit and the sensor ground circuit at the CMP sensor harness connector. Does the voltage measure near the specified value?	4-6 V	Go to *Step 8*	Go to *Step 9*
8	1. Turn the ignition "OFF." 2. Disconnect the PCM and connect a DVM to monitor voltage on the camshaft position signal circuit at the PCM connector. 3. Ignition "ON." 4. Monitor the voltage display on the DVM while repeatedly touching the CMP sensor signal circuit at the CMP sensor connector with a test light to ground. Does the DVM voltage display switch between 0 and approximately 5 volts when the test light is touched to the CMP sensor signal circuit?	—	Go to *Step 12*	Go to *Step 9*
9	1. Ignition "OFF." 2. Leave the PCM disconnected. 3. Ignition "ON." 4. Probe the camshaft position signal circuit at the PCM connector with a test light to B+. 5. If the test light is "ON," locate and repair the short to ground in the camshaft position input signal circuit. Was either circuit shorted to ground?	—	Verify repair	Go to *Step 10*
10	1. Ignition "OFF." 2. Leave the PCM disconnected. 3. Ignition "ON." 4. Probe the camshaft position signal circuit with a test light to ground. 5. If the test light is "ON," locate and repair the short to voltage in the camshaft position input signal circuit. Was the test light "ON"?	—	Verify repair	Go to *Step 11*
11	1. Ignition "OFF," disconnect the PCM (leave the CMP sensor disconnected). 2. Ignition "ON," check the following circuit: ● The CMP sensor signal circuit for an open. 3. If a problem is found, repair it as necessary. Was a problem found?	—	Verify repair	—
12	1. Ignition "ON." 2. Remove the CMP sensor from the engine front cover (leave the sensor wiring connected). 3. Place a magnet on the CMP sensor. If you use a magnet that is too small to cover the face of the sensor, test on every part of the sensor face because only a small area will respond to this test. Does the DVM display a voltage near the specified value?	0 V	Go to *Step 14*	Go to *Step 13*
13	Replace the camshaft position sensor. Is the action complete?	—	Verify repair	—

DTC P0342 – CMP Sensor Circuit Low (Cont'd)

Step	Action	Value(s)	Yes	No
14	1. Reinstall the CMP sensor to the engine front cover. 2. Observe the DVM connected to monitor voltage on the camshaft position signal circuit while cranking the engine. Does the voltage toggle between the specified values?	4-0 V	Go to *Step 15*	Go to *Step 16*
15	Replace the PCM. NOTE: The replacement PCM must be programmed. Refer to *UBS 98model year Immobilizer Workshop Manual.* Is the action complete?	—	Verify repair	—
16	Replace faulty or missing camshaft magnet. Is the action complete?	—	Verify repair	—

Diagnostic Trouble Code (DTC) P0351 Ignition 1 Control Circuit

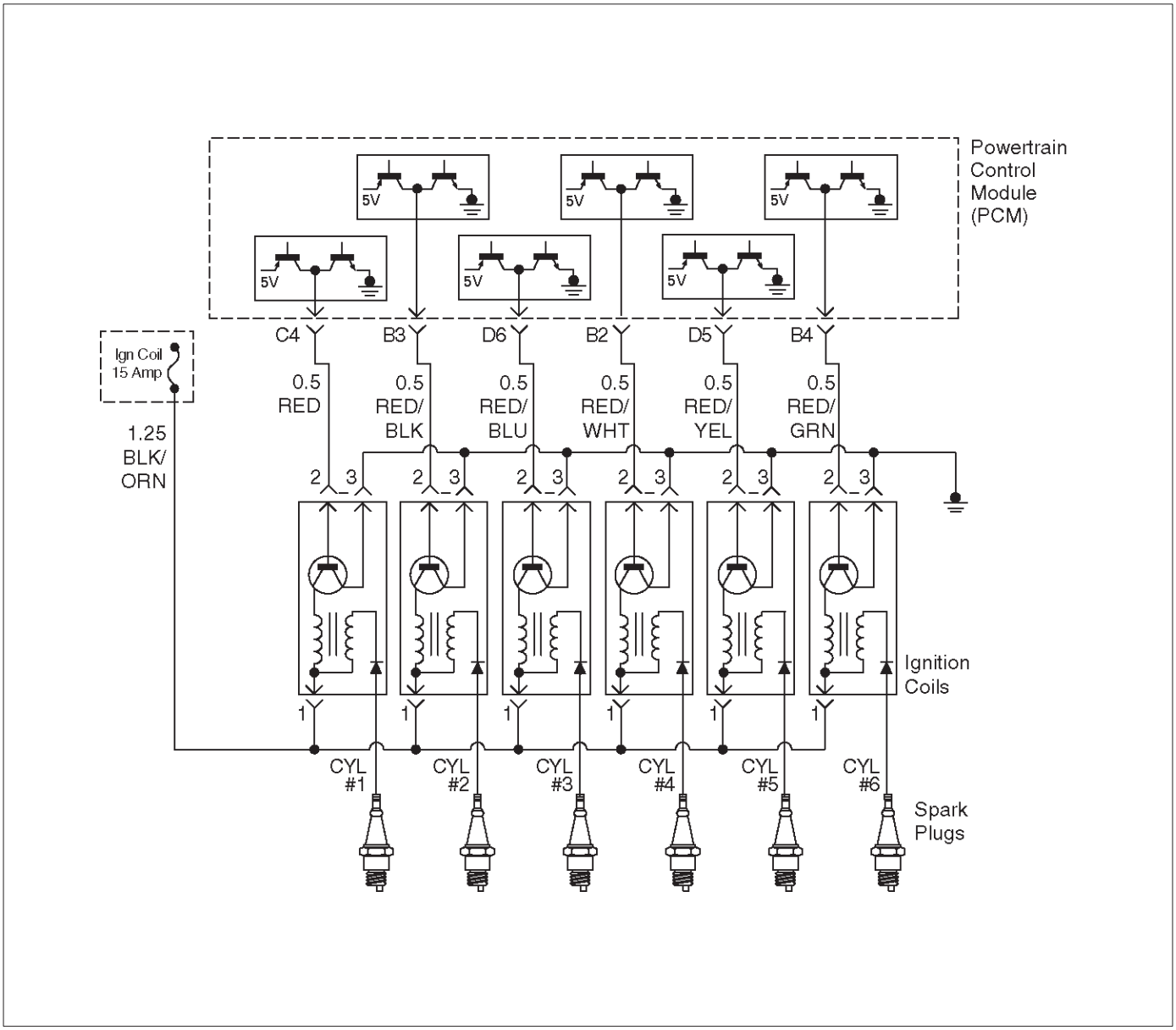

D06RW072

Circuit Description

The powertrain control module's (PCM) control circuit 1 provides a zero-volt or a 5-volt output signal to the ignition coil. The normal voltage on the circuit is zero volts. When the ignition coil receives the 5-volt signal from the PCM, it provides a ground path for the B+ supply to the primary side of the number 1 ignition coil. When the PCM shuts off the 5 volts to the ignition coil, the ignition coil turns "OFF." This causes the ignition coil primary magnetic field to collapse, producing a voltage in the secondary coil which fires the spark plug.

The circuit between the PCM and ignition coil is monitored for an open circuit, short to voltage, and short to ground. When the PCM detects a problem on ignition control circuit 1, it will set a DTC P0351.

Conditions for Setting the DTC

- The ignition is "ON."
- The engine is turning, determined by the 58X crankshaft position input signal.
- The output voltage is not equal to 5 volts when output is "ON."
- The output voltage is not equal to 0 volts when output is "OFF."
- Twenty test failures occur within 40 samples of continuous spark events.

Action Taken When the DTC Sets

- The PCM will illuminate the malfunction indicator lamp (MIL) the first time the fault is detected.
- The PCM will store conditions which were present when the DTC was set as Freeze Frame and in the Failure Records data.

Conditions for Clearing the MIL/DTC

- DTC P0351 can be cleared by using Tech 2 "Clear Info" function or by disconnecting the PCM battery feed.

Diagnostic Aids

Check for the following conditions:

- Poor connection at PCM – Inspect the harness connectors for backed-out terminals, improper mating, broken locks, improperly formed or damaged terminals, and poor terminal-to-wire connections.
- Damaged harness – Inspect the wiring harness for damage. If the harness appears to be OK, observe Tech 2 display related to DTC P0351 while moving the connector and wiring related to the ignition system. A change in the display will indicate the location of the fault.

Reviewing the Failure Records vehicle mileage since the diagnostic test last failed may help determine how often the condition that caused the DTC to be set occurs. This may assist in diagnosing the condition.

DTC P0351 – Ignition 1 Control Circuit

Step	Action	Value(s)	Yes	No
1	Was the “On-Board Diagnostic (OBD) System Check” performed?	—	Go to *Step 2*	Go to *OBD System Check*
2	1. Ignition “ON,” engine “OFF.” 2. Review and record Tech 2 Failure Records data. 3. Operate the vehicle within Failure Record conditions as noted. 4. Use Tech 2 to monitor the “Specific DTC” information for DTC P0351 until the DTC P0351 test runs. 5. Note the test result. Does Tech 2 indicate DTC P0351 failed this ignition cycle?	—	Go to *Step 3*	Go to *Diagnostic Aids*
3	Check for faulty connection at ignition coil. Was a problem found?	—	Verify repair	Go to *Step 4*
4	Check for faulty connection at PCM connector. Was a problem found?	—	Verify repair	Go to *Step 5*
5	1. Ignition “ON,” engine “OFF.” 2. Back probe the ignition control circuit 1 at the PCM with a DVM. Is the voltage near the specified value?	25-55 mV	Go to *Step 6*	Go to *Step 9*
6	1. Ignition “ON,” engine running. 2. Back probe the ignition control circuit at the PCM for the cylinder being tested. Is the voltage in the specified range, rapidly toggling back and forth to a reading 20-50 mV higher?	100-180 mV	Go to *Step 7*	Go to *Step 13*
7	1. Ignition “OFF.” 2. Disconnect the 3-pin and 5-pin connectors at the ignition coil. 3. Check ignition control circuit 1 voltage at the ignition coil connector while cranking the engine. Does the voltage measure between the specified values?	200-1200 mV	Go to *Step 8*	Go to *Step 11*
8	Replace the ignition coil. Is the action complete?	—	Verify repair	—
9	1. Ignition “OFF.” 2. Disconnect the PCM and the ignition coil. 3. Check ignition control circuit 1 for short to ground. Was a problem found?	—	Verify repair	Go to *Step 10*
10	Check ignition control circuit 1 for short to voltage. Was a problem found?	—	Verify repair	Go to *Step 13*

DTC P0351 – Ignition 1 Control Circuit (Cont'd)

Step	Action	Value(s)	Yes	No
11	Check for an open ignition control circuit 1. Was the ignition control circuit open?	—	Go to *Step 12*	Go to *Step 13*
12	Repair the open ignition control circuit. Is the action complete?	—	Verify repair	—
13	Replace the PCM. **IMPORTANT:** The replacement PCM must be programmed. Refer to *UBS 98model year Immobilizer Workshop Manual.* Is the action complete?	—	Verify repair	—

Diagnostic Trouble Code (DTC) P0352 Ignition 2 Control Circuit

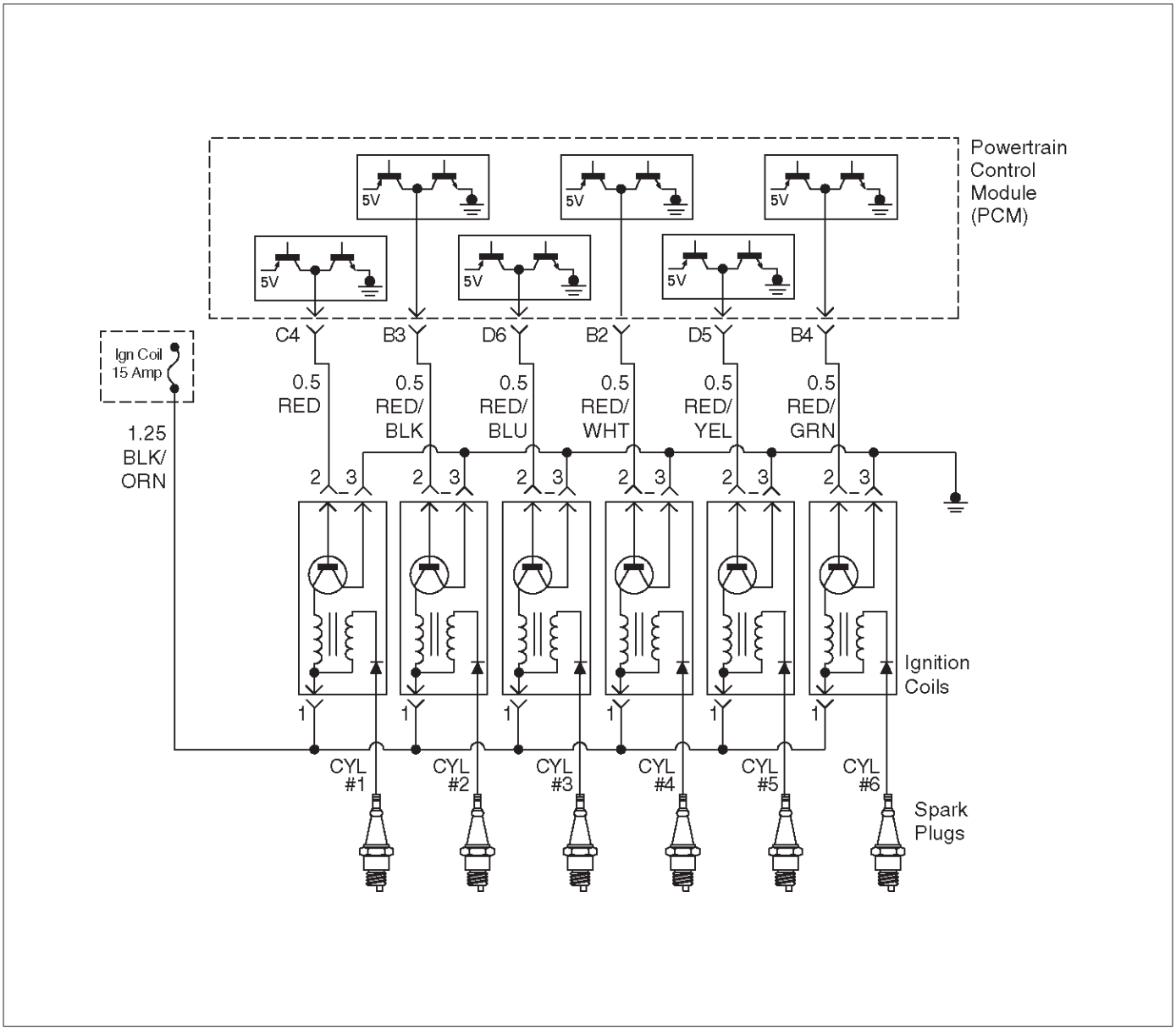

D06RW072

Circuit Description

The powertrain control module's (PCM) control circuit 2 provides a zero-volt or a 5-volt output signal to the ignition coil. The normal voltage on the circuit is zero volts. When the ignition coil receives the 5-volt signal from the PCM, it provides a ground path for the B+ supply to the primary side of the number 2 ignition coil. When the PCM shuts off the 5 volts to the ignition coil, the ignition coil turns "OFF." This causes the ignition coil primary magnetic field to collapse, producing a voltage in the secondary coil which fires the spark plug.

The circuit between the PCM and ignition coil is monitored for an open circuit, short to voltage, and short to ground. When the PCM detects a problem on ignition control circuit 2, it will set a DTC P0352.

Conditions for Setting the DTC

- The ignition is "ON."
- The engine is turning, determined by the 58 X crankshaft position input signal.
- The output voltage is not equal to 5 volts when output is "ON."
- The output voltage is not equal to 0 volts when output is "OFF."
- Twenty test failures occur within 40 samples of continuous spark events.

Action Taken When the DTC Sets

- The PCM will illuminate the malfunction indicator lamp (MIL) the first time the fault is detected.
- The PCM will store conditions which were present when the DTC was set as Freeze Frame and in the Failure Records data.

Conditions for Clearing the MIL/DTC

- DTC P0352 can be cleared by using the Tech 2 "Clear Info" function or by disconnecting the PCM battery feed.

Diagnostic Aids

Check for the following conditions:

- Poor connection at PCM – Inspect the harness connectors for backed-out terminals, improper mating, broken locks, improperly formed or damaged terminals, and poor terminal-to-wire connections.
- Damaged harness – Inspect the wiring harness for damage. If the harness appears to be OK, observe the Tech 2 display related to DTC P0352 while moving the connector and wiring related to the ignition system. A change in the display will indicate the location of the fault.

Reviewing the Failure Records vehicle mileage since the diagnostic test last failed may help determine how often the condition that caused the DTC to be set occurs. This may assist in diagnosing the condition.

DTC P0352 – Ignition 2 Control Circuit

Step	Action	Value(s)	Yes	No
1	Was the “On-Board Diagnostic (OBD) System Check” performed?	—	Go to *Step 2*	Go to *OBD System Check*
2	1. Ignition “ON,” engine “OFF.” 2. Review and record Tech 2 Failure Records data. 3. Operate the vehicle within Failure Record conditions as noted. 4. Use a Tech 2 to monitor the “Specific DTC” information for DTC P0352 until the DTC P0352 test runs. 5. Note the test result. Does the Tech 2 indicate DTC P0352 failed this ignition cycle?	—	Go to *Step 3*	Go to *Diagnostic Aids*
3	Check for faulty connection at ignition coil. Was a problem found?	—	Verify repair	Go to *Step 4*
4	Check for faulty connection at PCM connector. Was a problem found?	—	Verify repair	Go to *Step 5*
5	1. Ignition “ON,” engine “OFF.” 2. Back probe the ignition control circuit 2 at the PCM with a DVM . Is the voltage near the specified value?	25-55 mV	Go to *Step 6*	Go to *Step 9*
6	1. Ignition “ON,” engine running. 2. Back probe the ignition control circuit at the PCM for the cylinder being tested. Is the voltage in the specified range, rapidly toggling back and forth to a reading 20-50 mV higher?	100-180 mV	Go to *Step 7*	Go to *Step 13*
7	1. Ignition “OFF.” 2. Disconnect the 3-pin and 5-pin connectors at the ignition coil. 3. Check ignition control circuit 2 voltage at the ignition coil connector while cranking the engine connector. Does the voltage measure between the specified values?	200-1200 mV	Go to *Step 8*	Go to *Step 11*
8	Replace the ignition coil. Is the action complete?	—	Verify repair	—
9	1. Ignition “OFF.” 2. Disconnect the PCM and the ignition coil. 3. Check ignition control circuit 2 for short to ground. Was a problem found?	—	Verify repair	Go to *Step 10*
10	Check ignition control circuit 2 for short to voltage. Was a problem found?	—	Verify repair	Go to *Step 13*

DTC P0352 – Ignition 2 Control Circuit (Cont'd)

Step	Action	Value(s)	Yes	No
11	Check for an open ignition control circuit 1. Was the ignition control circuit open?	—	Go to *Step 12*	Go to *Step 13*
12	Repair the open ignition control circuit. Is the action complete?	—	Verify repair	—
13	Replace the PCM. **IMPORTANT:** The replacement PCM must be programmed. Refer to *UBS 98model year Immobilizer Workshop Manual.* Is the action complete?	—	Verify repair	—

Diagnostic Trouble Code (DTC) P0353 Ignition 3 Control Circuit

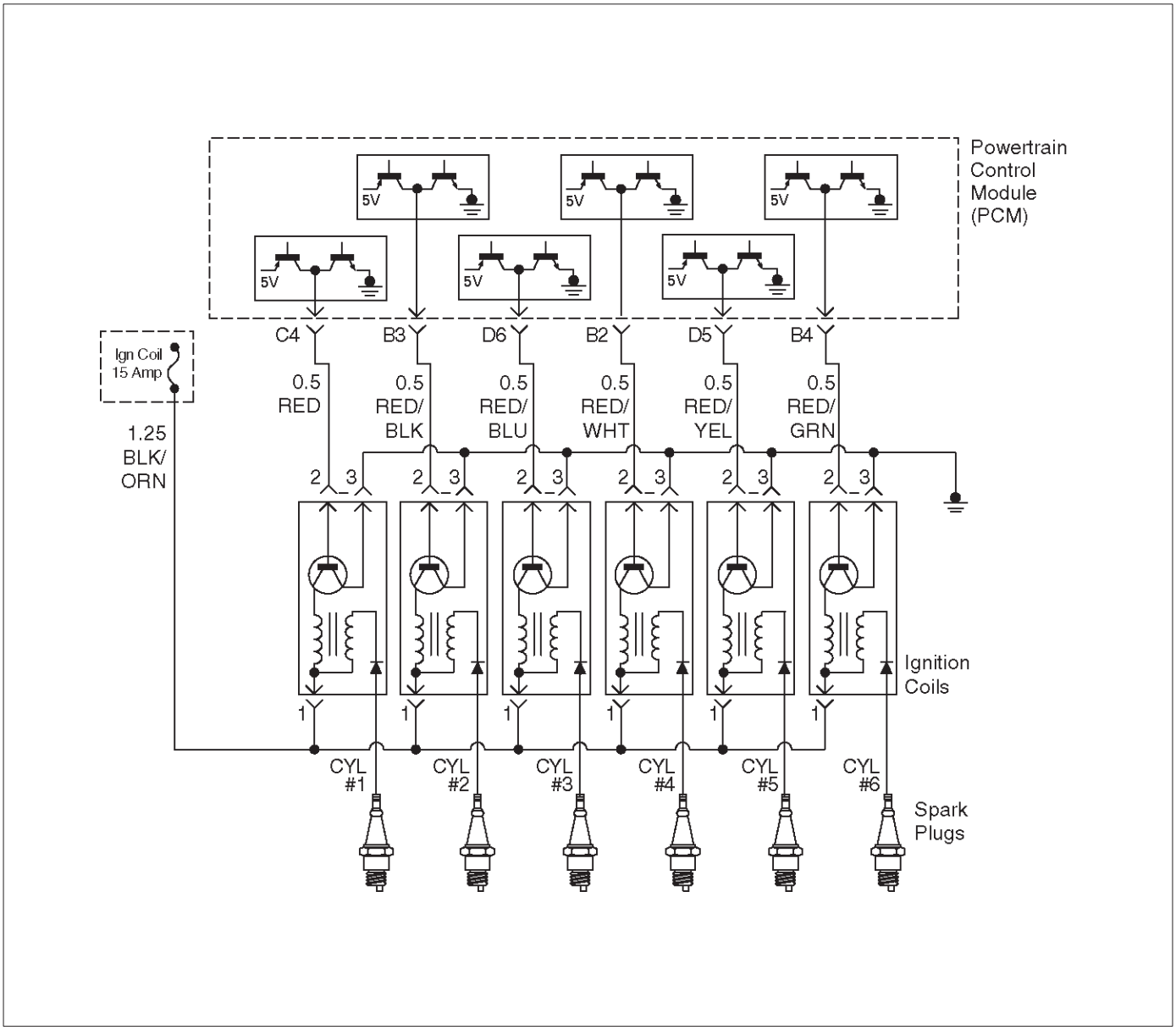

Circuit Description

The powertrain control module's (PCM) control circuit 3 provides a zero-volt or a 5-volt output signal to the ignition coil. The normal voltage on the circuit is zero volts. When the ignition coil receives the 5-volt signal from the PCM, it provides a ground path for the B+ supply to the primary side of the number 3 ignition coil. When the PCM shuts off the 5 volts to the ignition coil, the ignition coil turns "OFF." This causes the ignition coil primary magnetic field to collapse, producing a voltage in the secondary coil which fires the spark plug.

The circuit between the PCM and ignition coil is monitored for an open circuit, short to voltage, and short to ground. When the PCM detects a problem on ignition control circuit 3, it will set a DTC P0353.

Conditions for Setting the DTC

- The ignition is "ON."
- The engine is turning, determined by the 58X crankshaft position input signal.
- The output voltage is not equal to 5 volts when output is "ON."
- The output voltage is not equal to 0 volts when output is "OFF."
- Twenty test failures occur within 40 samples of continuous spark events.

Action Taken When the DTC Sets

- The PCM will illuminate the malfunction indicator lamp (MIL) the first time the fault is detected.
- The PCM will store conditions which were present when the DTC was set as Freeze Frame and in the Failure Records data.

Conditions for Clearing the MIL/DTC

- DTC P0353 can be cleared by using the Tech 2 "Clear Info" function or by disconnecting the PCM battery feed.

Diagnostic Aids

Check for the following conditions:

- Poor connection at PCM – Inspect the harness connectors for backed-out terminals, improper mating, broken locks, improperly formed or damaged terminals, and poor terminal-to-wire connections.
- Damaged harness – Inspect the wiring harness for damage. If the harness appears to be OK, observe the Tech 2 display related to DTC P0353 while moving the connector and wiring related to the ignition system. A change in the display will indicate the location of the fault.

Reviewing the Failure Records vehicle mileage since the diagnostic test last failed may help determine how often the condition that caused the DTC to be set occurs. This may assist in diagnosing the condition.

DTC P0353 – Ignition 3 Control Circuit

Step	Action	Value(s)	Yes	No
1	Was the “On-Board Diagnostic (OBD) System Check” performed?	—	Go to *Step 2*	Go to *OBD System Check*
2	1. Ignition “ON,” engine “OFF.” 2. Review and record Tech 2 Failure Records data. 3. Operate the vehicle within Failure Record conditions as noted. 4. Use a Tech 2 to monitor the “Specific DTC” information for DTC P0353 until the DTC P0353 test runs. 5. Note the test result. Does the Tech 2 indicate DTC P0353 failed this ignition cycle?	—	Go to *Step 3*	Go to *Diagnostic Aids*
3	Check for faulty connection at ignition coil. Was a problem found?	—	Verify repair	Go to *Step 4*
4	Check for faulty connection at PCM connector. Was a problem found?	—	Verify repair	Go to *Step 5*
5	1. Ignition “ON,” engine “OFF.” 2. Back probe the ignition control circuit 3 at the PCM with a DVM positive lead with the negative lead to ground. Is the voltage near the specified value?	25-55 mV	Go to *Step 6*	Go to *Step 9*
6	1. Ignition “ON,” engine running. 2. Back probe the ignition control circuit at the PCM for the cylinder being tested. Is the voltage in the specified range, rapidly toggling back and forth to a reading 20-50 mV higher?	100-180 mV	Go to *Step 7*	Go to *Step 13*
7	1. Ignition “OFF.” 2. Disconnect the 3-pin and 5-pin connectors at the ignition coil. 3. Check ignition control circuit 3 voltage at the ignition coil connector while cranking the engine. Does the voltage measure between the specified values?	200-1200 mV	Go to *Step 8*	Go to *Step 11*
8	Replace the ignition coil. Is the action complete?	—	Verify repair	—
9	1. Ignition “OFF.” 2. Disconnect the PCM and the ignition coil. 3. Check ignition control circuit 3 for short to ground. Was a problem found?	—	Verify repair	Go to *Step 10*
10	Check ignition control circuit 3 for short to voltage. Was a problem found?	—	Verify repair	Go to *Step 13*

DTC P0353 – Ignition 3 Control Circuit (Cont'd)

Step	Action	Value(s)	Yes	No
11	Check for an open ignition control circuit 1. Was the ignition control circuit open?	—	Go to *Step 12*	Go to *Step 13*
12	Repair the open ignition control circuit. Is the action complete?	—	Verify repair	—
13	Replace the PCM. **IMPORTANT:** The replacement PCM must be programmed. Refer to *UBS 98model year Immobilizer Workshop Manual.* Is the action complete?	—	Verify repair	—

Diagnostic Trouble Code (DTC) P0354 Ignition 4 Control Circuit

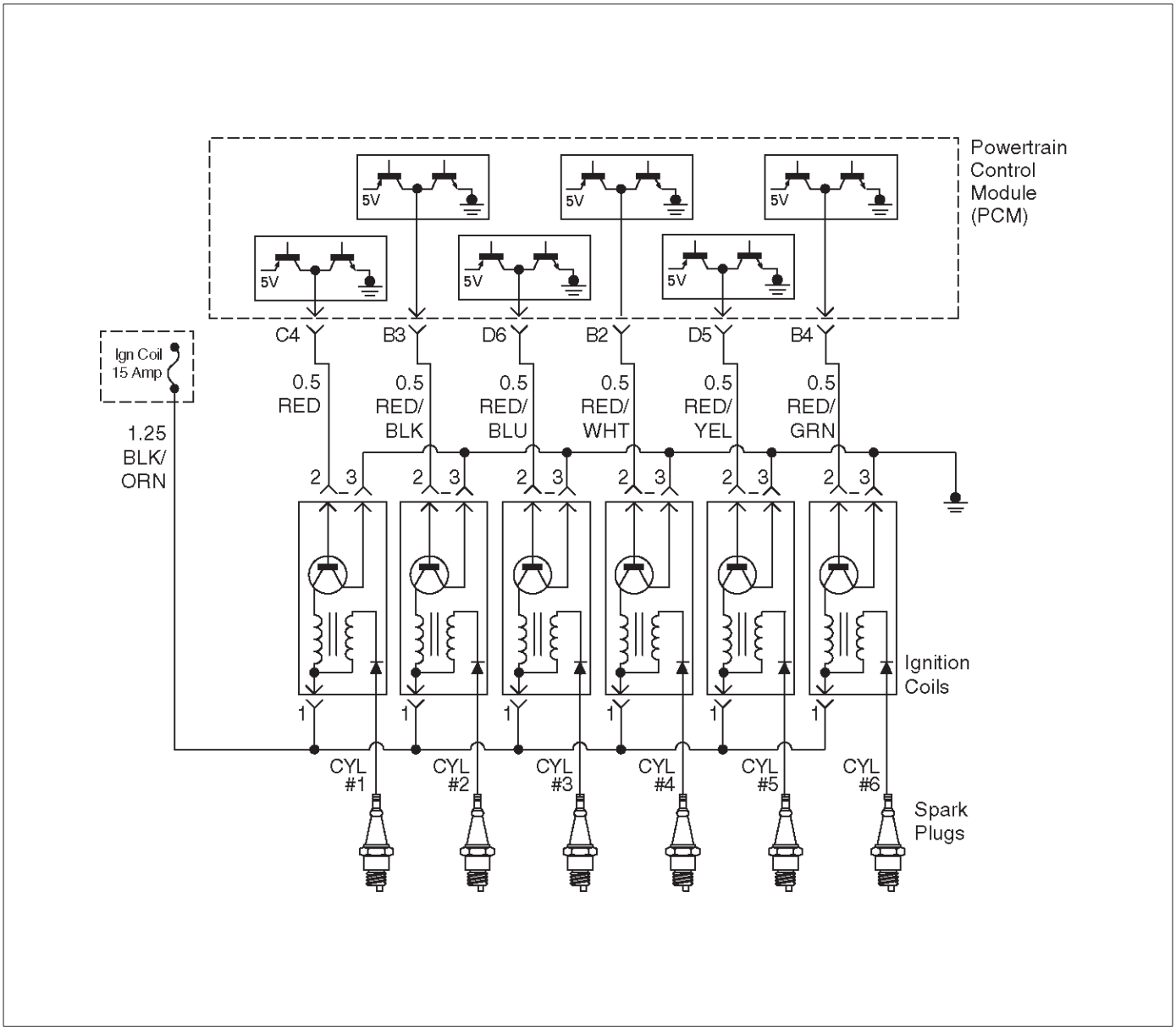

Circuit Description

The powertrain control module's (PCM) control circuit 4 provides a zero-volt or a 5-volt output signal to the ignition coil. The normal voltage on the circuit is zero volts. When the ignition coil receives the 5-volt signal from the PCM, it provides a ground path for the B+ supply to the primary side of the number 4 ignition coil. When the PCM shuts off the 5 volts to the ignition coil, the ignition coil turns "OFF." This causes the ignition coil primary magnetic field to collapse, producing a voltage in the secondary coil which fires the spark plug.

The circuit between the PCM and ignition coil is monitored for an open circuit, short to voltage, and short to ground. When the PCM detects a problem on ignition control circuit 4, it will set a DTC P0354.

Conditions for Setting the DTC

- The ignition is "ON."
- The engine is turning, determined by the 58X crankshaft position input signal.
- The output voltage is not equal to 5 volts when output is "ON."
- The output voltage is not equal to 0 volts when output is "OFF."
- Twenty test failures occur within 40 samples of continuous spark events.

Action Taken When the DTC Sets

- The PCM will illuminate the malfunction indicator lamp (MIL) the first time the fault is detected.
- The PCM will store conditions which were present when the DTC was set as Freeze Frame and in the Failure Records data.

Conditions for Clearing the MIL/DTC

- DTC P0354 can be cleared by using the Tech 2 "Clear Info" function or by disconnecting the PCM battery feed.

Diagnostic Aids

Check for the following conditions:

- Poor connection at PCM – Inspect the harness connectors for backed-out terminals, improper mating, broken locks, improperly formed or damaged terminals, and poor terminal-to-wire connections.
- Damaged harness – Inspect the wiring harness for damage. If the harness appears to be OK, observe the Tech 2 display related to DTC P0354 while moving the connector and wiring related to the ignition system. A change in the display will indicate the location of the fault.

Reviewing the Failure Records vehicle mileage since the diagnostic test last failed may help determine how often the condition that caused the DTC to be set occurs. This may assist in diagnosing the condition.

DTC P0354 – Ignition 4 Control Circuit

Step	Action	Value(s)	Yes	No
1	Was the “On-Board Diagnostic (OBD) System Check” performed?	—	Go to *Step 2*	Go to *OBD System Check*
2	1. Ignition “ON,” engine “OFF.” 2. Review and record Tech 2 Failure Records data. 3. Operate the vehicle within Failure Record conditions as noted. 4. Use a Tech 2 to monitor the “Specific DTC” information for DTC P0354 until the DTC P0354 test runs. 5. Note the test result. Does the Tech 2 indicate DTC P0354 failed this ignition cycle?	—	Go to *Step 3*	Go to *Diagnostic Aids*
3	Check for faulty connection at ignition coil. Was a problem found?	—	Verify repair	Go to *Step 4*
4	Check for faulty connection at PCM connector. Was a problem found?	—	Verify repair	Go to *Step 5*
5	1. Ignition “ON,” engine “OFF.” 2. Back probe the ignition control circuit 4 at the PCM with a DVM positive lead with the negative lead to ground. Is the voltage near the specified value?	25-55 mV	Go to *Step 6*	Go to *Step 9*
6	1. Ignition “ON,” engine running. 2. Back probe the ignition control circuit at the PCM for the cylinder being tested. Is the voltage in the specified range, rapidly toggling back and forth to a reading 20-50 mV higher?	100-180 mV	Go to *Step 7*	Go to *Step 13*
7	1. Ignition “OFF.” 2. Disconnect the 3-pin and 5-pin connectors at the ignition coil. 3. Check ignition control circuit 4 voltage at the ignition coil connector while cranking the engine. Does the voltage measure between the specified values?	200-1200 mV	Go to *Step 8*	Go to *Step 11*
8	Replace the ignition coil. Is the action complete?	—	Verify repair	—
9	1. Ignition “OFF.” 2. Disconnect the PCM and the ignition coil. 3. Check ignition control circuit 4 for short to ground. Was a problem found?	—	Verify repair	Go to *Step 10*
10	Check ignition control circuit 4 for short to voltage. Was a problem found?	—	Verify repair	Go to *Step 13*

DTC P0354 – Ignition 4 Control Circuit (Cont'd)

Step	Action	Value(s)	Yes	No
11	Check for an open ignition control circuit 1. Was the ignition control circuit open?	—	Go to *Step 12*	Go to *Step 13*
12	Repair the open in ignition control circuit. Is the action complete?	—	Verify repair	—
13	Replace the PCM. **IMPORTANT:** The replacement PCM must be programmed. Refer to *UBS 98model year Immobilizer Workshop Manual.* Is the action complete?	—	Verify repair	—

Diagnostic Trouble Code (DTC) P0355 Ignition 5 Control Circuit

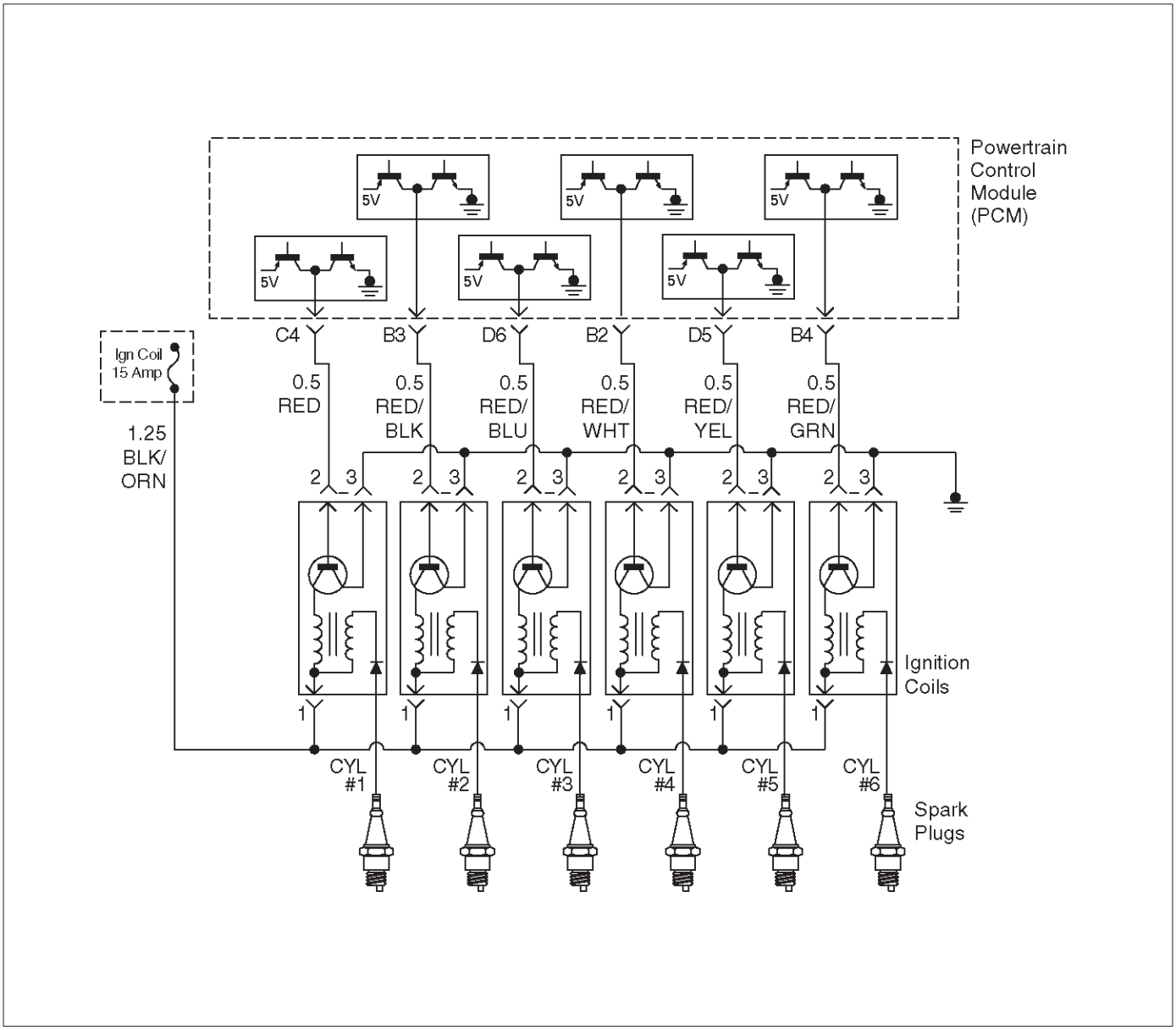

D06RW072

Circuit Description

The powertrain control module's (PCM) control circuit 5 provides a zero-volt or a 5-volt output signal to the ignition coil. The normal voltage on the circuit is zero volts. When the ignition coil receives the 5-volt signal from the PCM, it provides a ground path for the B+ supply to the primary side of the number 5 ignition coil. When the PCM shuts off the 5 volts to the ignition coil, the ignition coil turns "OFF." This causes the ignition coil primary magnetic field to collapse, producing a voltage in the secondary coil which fires the spark plug.

The circuit between the PCM and ignition coil is monitored for an open circuit, short to voltage, and short to ground. When the PCM detects a problem on ignition control circuit 5, it will set a DTC P0355.

Conditions for Setting the DTC

- The ignition is "ON."
- The engine is turning, determined by the 58X crankshaft position input signal.
- The output voltage is not equal to 5 volts when output is "ON."
- The output voltage is not equal to 0 volts when output is "OFF."
- Twenty test failures occur within 40 samples of continuous spark events.

Action Taken When the DTC Sets

- The PCM will illuminate the malfunction indicator lamp (MIL) the first time the fault is detected.
- The PCM will store conditions which were present when the DTC was set as Freeze Frame and in the Failure Records data.

Conditions for Clearing the MIL/DTC

- DTC P0355 can be cleared by using the Tech 2 "Clear Info" function or by disconnecting the PCM battery feed.

Diagnostic Aids

Check for the following conditions:

- Poor connection at PCM – Inspect the harness connectors for backed-out terminals, improper mating, broken locks, improperly formed or damaged terminals, and poor terminal-to-wire connections.
- Damaged harness – Inspect the wiring harness for damage. If the harness appears to be OK, observe the Tech 2 display related to DTC P0355 while moving the connector and wiring related to the ignition system. A change in the display will indicate the location of the fault.

Reviewing the Failure Records vehicle mileage since the diagnostic test last failed may help determine how often the condition that caused the DTC to be set occurs. This may assist in diagnosing the condition.

DTC P0355 – Ignition 5 Control Circuit

Step	Action	Value(s)	Yes	No
1	Was the “On-Board Diagnostic (OBD) System Check” performed?	—	Go to *Step 2*	Go to *OBD System Check*
2	1. Ignition “ON,” engine “OFF.” 2. Review and record Tech 2 Failure Records data. 3. Operate the vehicle within Failure Record conditions as noted. 4. Use a Tech 2 to monitor the “Specific DTC” information for DTC P0355 until the DTC P0355 test runs. 5. Note the test result. Does the Tech 2 indicate DTC P0355 failed this ignition cycle?	—	Go to *Step 3*	Go to *Diagnostic Aids*
3	Check for faulty connection at ignition coil. Was a problem found?	—	Verify repair	Go to *Step 4*
4	Check for faulty connection at PCM connector. Was a problem found?	—	Verify repair	Go to *Step 5*
5	1. Ignition “ON,” engine “OFF.” 2. Back probe the ignition control circuit 5 at the PCM with a DVM positive lead with the negative lead to ground. Is the voltage near the specified value?	25-55 mV	Go to *Step 6*	Go to *Step 9*
6	1. Ignition “ON,” engine running. 2. Back probe the ignition control circuit at the PCM for the cylinder being tested. Is the voltage in the specified range, rapidly toggling back and forth to a reading 20-50 mV higher?	100-180 mV	Go to *Step 7*	Go to *Step 13*
7	1. Ignition “OFF.” 2. Disconnect the 3-pin and 5-pin connectors at the ignition coil. 3. Check ignition control circuit 5 voltage at the ignition coil connector while cranking the engine. Does the voltage measure between the specified values?	200-1200 mV	Go to *Step 8*	Go to *Step 11*
8	Replace the ignition coil. Is the action complete?	—	Verify repair	—
9	1. Ignition “OFF.” 2. Disconnect the PCM and the ignition coil. 3. Check ignition control circuit 5 for short to ground. Was a problem found?	—	Verify repair	Go to *Step 10*
10	Check ignition control circuit 5 for short to voltage. Was a problem found?	—	Verify repair	Go to *Step 13*

DTC P0355 – Ignition 5 Control Circuit (Cont'd)

Step	Action	Value(s)	Yes	No
11	Check for an open ignition control circuit 1. Was the ignition control circuit open?	—	Go to *Step 12*	Go to *Step 13*
12	Repair the open ignition control circuit. Is the action complete?	—	Verify repair	—
13	Replace the PCM. **IMPORTANT:** The replacement PCM must be programmed. Refer to *UBS 98model year Immobilizer Workshop Manual.* Is the action complete?	—	Verify repair	—

Diagnostic Trouble Code (DTC) P0356 Ignition 6 Control Circuit

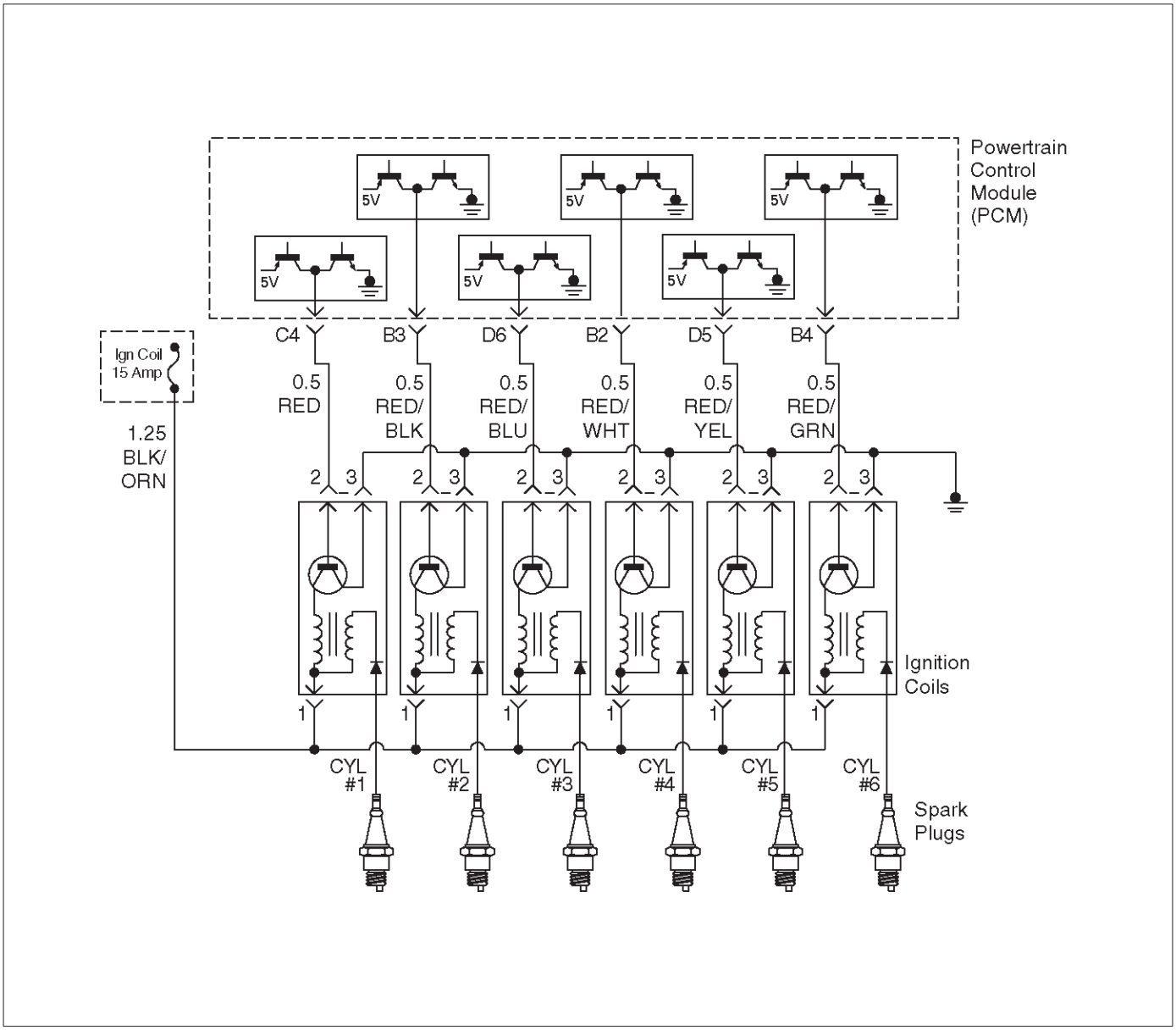

Circuit Description

The powertrain control module's (PCM) control circuit 6 provides a zero-volt or a 5-volt output signal to the ignition coil. The normal voltage on the circuit is zero volts. When the ignition coil receives the 5-volt signal from the PCM, it provides a ground path for the B+ supply to the primary side of the number 6 ignition coil. When the PCM shuts off the 5 volts to the ignition coil, the ignition coil turns "OFF." This causes the ignition coil primary magnetic field to collapse, producing a voltage in the secondary coil which fires the spark plug.

The circuit between the PCM and ignition coil is monitored for an open circuit, short to voltage, and short to ground. When the PCM detects a problem on ignition control circuit 6, it will set a DTC P0356.

Conditions for Setting the DTC

- The ignition is "ON."
- The engine is turning, determined by the 58X crankshaft position input signal.
- The output voltage is not equal to 5 volts when output is "ON."
- The output voltage is not equal to 0 volts when output is "OFF."
- Twenty test failures occur within 40 samples of continuous circuit monitoring.

Action Taken When the DTC Sets

- The PCM will illuminate the malfunction indicator lamp (MIL) the first time the fault is detected.
- The PCM will store conditions which were present when the DTC was set as Freeze Frame and in the Failure Records data.

Conditions for Clearing the MIL/DTC

- DTC P0356 can be cleared by using the Tech 2 "Clear Info" function or by disconnecting the PCM battery feed.

Diagnostic Aids

Check for the following conditions:

- Poor connection at PCM – Inspect the harness connectors for backed-out terminals, improper mating, broken locks, improperly formed or damaged terminals, and poor terminal-to-wire connections.
- Damaged harness – Inspect the wiring harness for damage. If the harness appears to be OK, observe the Tech 2 display related to DTC P0356 while moving the connector and wiring related to the ignition system. A change in the display will indicate the location of the fault.

Reviewing the Failure Records vehicle mileage since the diagnostic test last failed may help determine how often the condition that caused the DTC to be set occurs. This may assist in diagnosing the condition.

DTC P0356 – Ignition 6 Control Circuit

Step	Action	Value(s)	Yes	No
1	Was the “On-Board Diagnostic (OBD) System Check” performed?	—	Go to *Step 2*	Go to *OBD System Check*
2	1. Ignition “ON,” engine “OFF.” 2. Review and record Tech 2 Failure Records data. 3. Operate the vehicle within Failure Record conditions as noted. 4. Use a Tech 2 to monitor the “Specific DTC” information for DTC P0356 until the DTC P0356 test runs. 5. Note the test result. Does the Tech 2 indicate DTC P0356 failed this ignition cycle?	—	Go to *Step 3*	Go to *Diagnostic Aids*
3	Check for faulty connection at ignition coil. Was a problem found?	—	Verify repair	Go to *Step 4*
4	Check for faulty connection at PCM connector. Was a problem found?	—	Verify repair	Go to *Step 5*
5	1. Ignition “ON,” engine “OFF.” 2. Back probe the ignition control circuit 6 at the PCM with a DVM positive lead with the negative lead to ground. Is the voltage near the specified value?	25-55 mV	Go to *Step 6*	Go to *Step 9*
6	1. Ignition “ON,” engine running. 2. Back probe the ignition control circuit at the PCM for the cylinder being tested. Is the voltage in the specified range, rapidly toggling back and forth to a reading 20-50 mV higher?	100-180 mV	Go to *Step 7*	Go to *Step 13*
7	1. Ignition “OFF.” 2. Disconnect the 3-pin and 5-pin connectors at the ignition coil. 3. Check ignition control circuit 6 voltage at the ignition coil connector while cranking the engine. Does the voltage measure between the specified values?	200-1200 mV	Go to *Step 8*	Go to *Step 11*
8	Replace the ignition coil. Is the action complete?	—	Verify repair	—
9	1. Ignition “OFF.” 2. Disconnect the PCM and the ignition coil. 3. Check ignition control circuit 6 for short to ground. Was a problem found?	—	Verify repair	Go to *Step 10*
10	Check ignition control circuit 6 for short to voltage. Was a problem found?	—	Verify repair	Go to *Step 13*

DTC P0356 – Ignition 6 Control Circuit (Cont'd)

Step	Action	Value(s)	Yes	No
11	Check for an open ignition control circuit 1. Was the ignition control circuit open?	—	Go to *Step 12*	Go to *Step 13*
12	Repair the open ignition control circuit. Is the action complete?	—	Verify repair	—
13	Replace the PCM. **IMPORTANT:** The replacement PCM must be programmed. Refer to *UBS 98model year Immobilizer Workshop Manual.* Is the action complete?	—	Verify repair	—

Diagnostic Trouble Code (DTC) P0402 EGR Pintle Crank Error

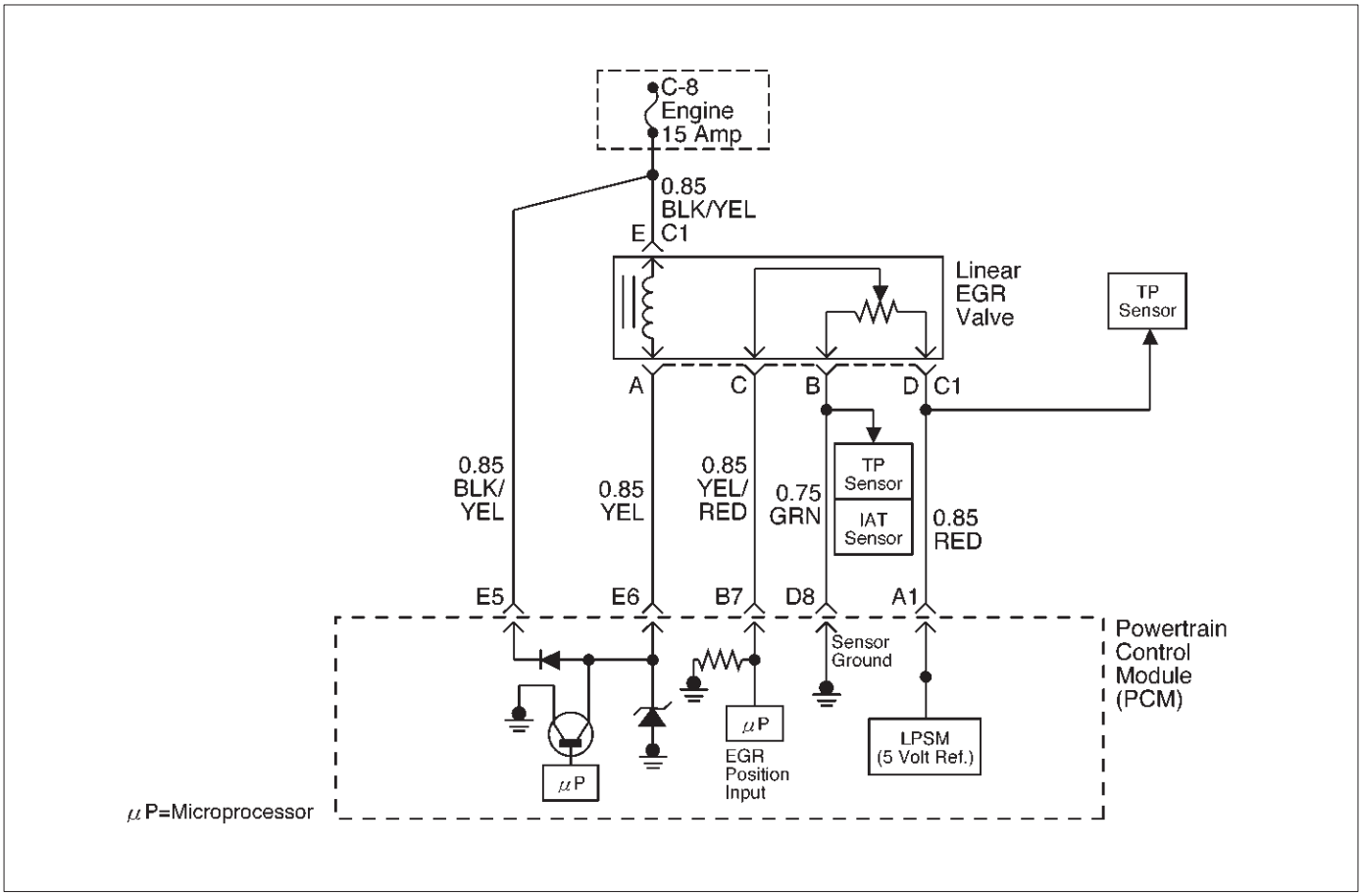

D06RW106

Circuit Description

The powertrain control module (PCM) monitors the EGR valve pintle position input to ensure that the valve responds properly to commands from the PCM, and to detect a fault if pintle position is stuck open. If the PCM detects a pintle position signal indicates more than 21.5% and more than for 625 msec during cranking, the PCM will set DTC P0402.

Conditions for Setting the DTC

- Ignition voltage is between 11 and 16 volts.
- Intake Air temp is more than 3˚C
- At Engine revolution less than 600 RPM, EGR pintle position indicates more than 21.5% and more than for 625 msecs.

Action Taken When the DTC Sets

- The PCM will illuminate the malfunction indicator lamp (MIL) after the second consecutive trip in which the fault is detected.
- The PCM will store conditions which were present when the DTC was set as Freeze Frame and in Failure Records data.

Conditions for Clearing the MIL/DTC

- DTC P0402 can be cleared by using Tech 2 “Clear Info” function or by disconnecting the PCM battery feed.

Diagnostic Aids

Check for the following conditions:

- Foreign material on EGR valve between pintle and seat may cause EGR stuck open. Inspect foreign material in EGR valve.
- Excessive carbon deposit may cause unsmooth operation of EGR valve shaft. Inspect carbon deposit and clean up inside of carbon deposit.
- Poor connection or damaged harness–inspect the wiring harness for damage If the harness appears to be OK, observe the EGR actual position display on Tech 2 while moving connectors and wiring harnesses related to EGR valve. A change in the display will indicate the location of the fault.

NOTE: If the EGR valve shows signs of excessive heat, check the exhaust system for blockage (possibly a plugged catalytic converter) using the “Restricted Exhaust System Check”.

DTC P0402 – EGR Pintle Crank Open Error

Step	Action	Value(s)	Yes	No
1	Was the “On-Board Diagnostic (OBD) System Check” performed?	—	Go to *Step 2*	Go to *OBD System Check*
2	1. Ignition “ON”, engine “OFF”, review and record Tech 2 Failure Records data. 2. Operate the vehicle within Failure Records conditions as noted. 3. Using Tech 2, monitor “Specific DTC” info for DTC P0402 until the DTC P0402 test runs. Note the result. Does Tech 2 indicates DTC P0402 failed this ignition?	—	Go to *Step 3*	Refer to *Diagnostic Aids*
3	1. Disconnect the EGR valve harness connector. 2. Inspect the EGR valve and connectors for damaged pin or terminals. Were there any damaged pins or terminals?	—	Go to *Step 4*	Go to *Step 5*
4	Repair the damaged pin or terminal. Is the action complete?	—	Verify repair	—
5	1. Remove EGR valve from Engine. 2. Inspect EGR valve whether there is any foreign material between seat and pintle. Was any foreign material in EGR valve?	—	Go to *Step 6*	Go to *Step 7*
6	1. Remove EGR valve foreign material from EGR valve and clean up inside. 2. Visually inspect damage of pintle and seat, which leakage may occur. Was there any severe damage which affects function?	—	Go to *Step 7*	Verify repair Go to *Step 8*
7	1. Reconnect. 2. Ignition “OFF”. 3. Install Tech 2. 4. Run the engine at idle. 5. On Tech-II, select special function for EGR. 6. Use the “UP” arrow to increase the EGR from 0% to 40%. Did EGR work properly?	—	—	Go to *Step 8*
8	Replace the EGR valve. Does DTC P0402 still fail “DTC” test on Tech 2?	—	Go to *Step 9*	Verify repair
9	Replace the EGR valve. Is the action complete?	—	Verify repair	—

Diagnostic Trouble Code (DTC) P0404 EGR Open Stuck

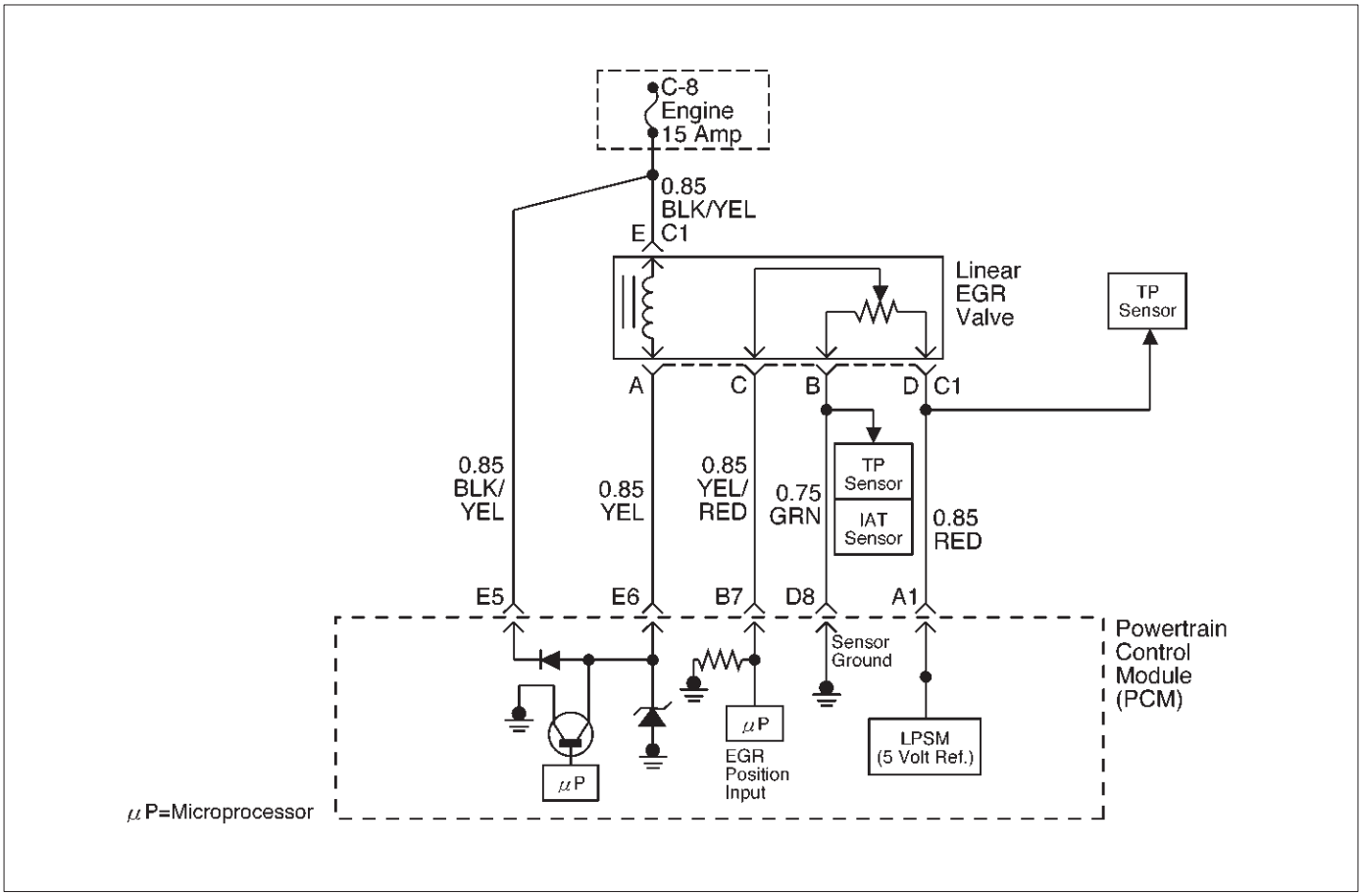

D06RW106

Circuit Description

The powertrain control module (PCM) monitors the EGR valve pintle position input to ensure that the valve responds properly to commands from the PCM, and to detect a fault if pintle position is different from commanded position. If the PCM detects a pintle position signal indicates more than 15 points different between current and commanded and more than 15 seconds, the PCM will set DTC P0404.

Conditions for Setting the DTC

- Ignition voltage is between 11 and 16 volts.
- Intake Air temp is more than 3˚C.
- Desire EGR position is more than 0.
- The difference between desired EGR and current EGR is less than 3%.
- Difference EGR pintle position between current and commanded position becomes more than 15% and last more than 15 seconds, and this condition meets three times in a trip. Then it trigger, the PCM lights on.

Action Taken When the DTC Sets

- The PCM will illuminate the malfunction indicator lamp (MIL) as soon as failure detected after consecutive 2nd trip in which the fault is detected.
- The PCM will store conditions which were present when the DTC was set as Freeze Frame and in Failure Records data.

Conditions for Clearing the MIL/DTC

- DTC P0404 can be cleared by using Tech 2 “Clear Info” function or by disconnecting the PCM battery feed.

Diagnostic Aids

Check for the following conditions:

- Excessive carbon deposit on EGR valve shaft may cause EGR stuck open or unsmooth operation. Those carbon deposit may occur by unusual port operation. Clean up carbon may make smooth function of EGR valve.
- Poor connection or damaged harness – Inspect the wiring harness for damage. If the harness appears to be OK, observe the EGR actual position display on Tech 2 while moving connectors and wiring harnesses related to EGR valve. A change in the display will indicate the location of the fault.

DTC P0404 – EGR Open Stuck

Step	Action	Value(s)	Yes	No
1	Was the “On-Board Diagnostic (OBD) System Check” performed?	—	Go to *Step 2*	Go to *OBD System Check*
2	1. Ignition “ON,” engine “OFF”, review and record Tech 2 Failure Records Data. 2. Operate the vehicle within Failure Records conditions as noted. 3. Using Tech 2, monitor “Specific DTC” info for DTC P0404 until the DTC P0404 test runs. Note the result. Does Tech 2 indicates DTC P0404 failed this ignition?	—	Go to *Step 3*	Refer to *Diagnostic Aids*
3	1. Disconnect the EGR valve harness connector. 2. Inspect the EGR valve and connectors for damaged pin or terminals. Were there any damaged pins or terminals?	—	Go to *Step 4*	Go to *Step 5*
4	Repair the damaged pin or terminal.	—	Verify repair	Is the action complete?
5	1. Remove EGR valve from Engine. 2. Inspect EGR valve whether there is any excessive carbon deposit on EGR shaft. Was excessive carbon deposit 0n EGR valve shaft?	—	Go to *Step 6*	Go to *Step 7*
6	1. Clean up EGR valve shaft and inside of EGR valve. 2. Visually inspect damage of pintle and seat whether there is bent, leakage may occur. Was there any severe damage which affects function?	—	Go to *Step 8*	Verify repair Go to *Step 7*
7	1. Reconnect. 2. Ignition “OFF”. 3. Install Tech 2. 4. Run the engine at idle. 5. On Tech 2, select F3:Misc. Test; F2:EGR. 6. Use the “UP” arrow to increase the EGR from 0% to 40%. Did EGR work properly?	—	—	Go to *Step 8*
8	Replace the EGR valve. Does DTC P0404 still fail “DTC” test on Tech 2?	—	Go to *Step 9*	Verify repair
9	Replace the PCM. **IMPORTANT:** The replacement PCM must be programmed. Refer to *UBS 98model year Immobilizer Workshop Manual.* Is the action complete?	—	Verify repair	—

Diagnostic Trouble Code (DTC) P0405 EGR Low Voltage

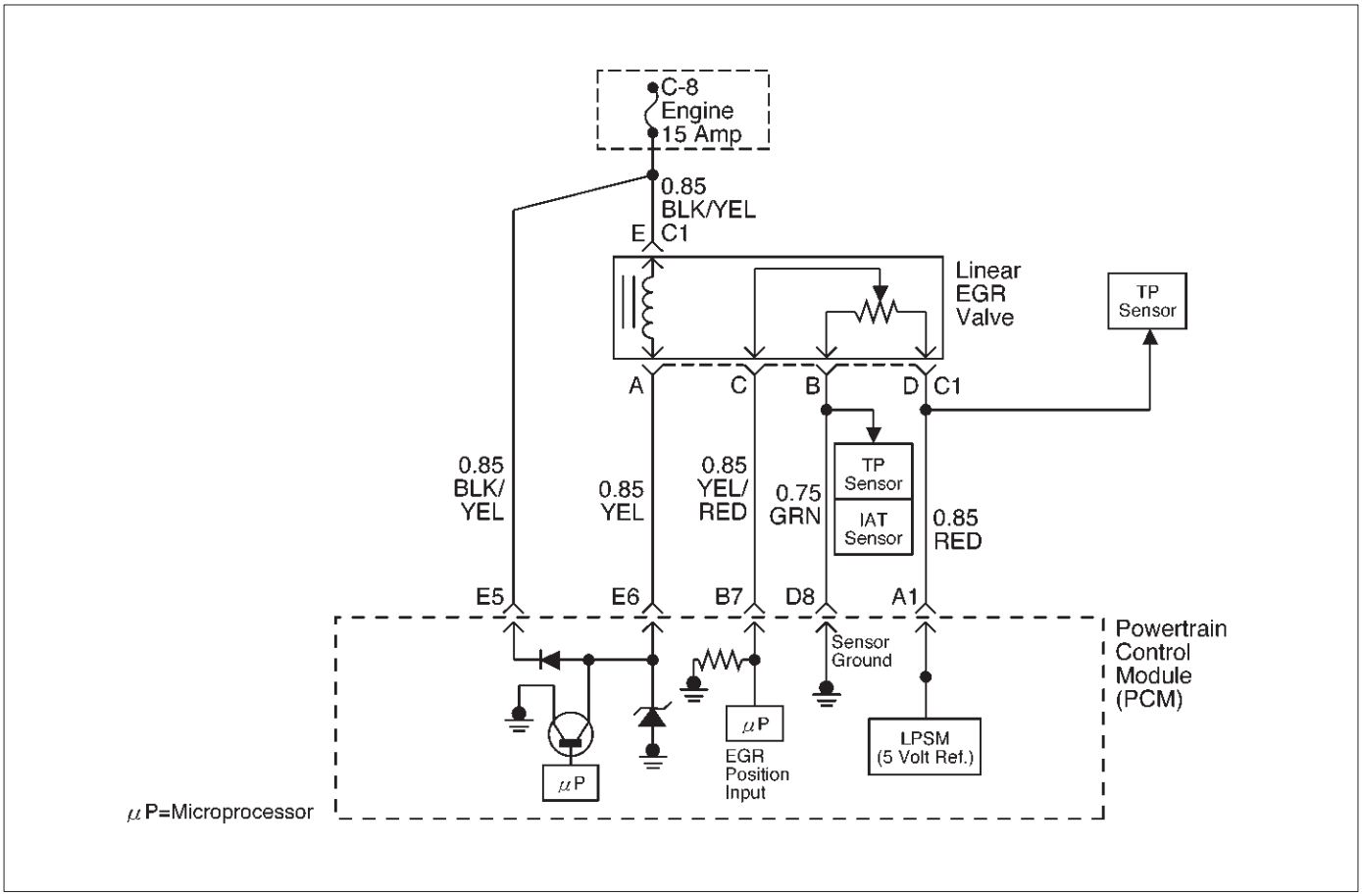

D06RW106

Circuit Description

The powertrain control module (PCM) monitors the EGR valve pintle position input to ensure that the valve responds properly to command from the PCM. If current pintle position voltage indicates less than 0.1 V and last more than 10 seconds, then the PCM will set DTC P0405.

Conditions for Setting the DTC

- Ignition voltage is between 11 and 16 volts.
- EGR pintle position output voltage is less than 0.1 volt and last more than 10 sec. Action taken when the DTC sets.

Action Taken When the DTC Sets

- The PCM will illuminate the malfunction indicator lamp (MIL) as soon as failure detected.
- The PCM will store conditions which were present when the DTC was set as Freeze Frame and in Failure Records data.

Conditions for Clearing the MIL/DTC

- DTC P0405 can be cleared by using Tech 2 “Clear Info” function or by disconnecting the PCM battery feed.

Diagnostic Aids

Check for the following conditions:

- Poor connection or damaged harness – Inspect the wiring harness for damage. If the harness appears to be OK, observe the EGR actual position display on Tech 2 while moving connectors and wiring harnesses related to EGR valve. A change in the display will indicate the location of the fault.

DTC P0405 – EGR Low Volt

Step	Action	Value(s)	Yes	No
1	Was the “On-Board Diagnostic (OBD) System Check” performed?	—	Go to *Step 2*	Go to *OBD System Check*
2	1. Ignition “ON,” engine “OFF”, review and record Tech 2 Failure Records Data. 2. Operate the vehicle within Failure Records conditions as noted. 3. Using Tech 2, monitor “DTC” info for DTC P0405 until the DTC P0405 test runs. Note the result. Does Tech 2 indicates DTC P0405 failed this ignition?	—	Go to *Step 3*	Refer to *Diagnostic Aids*
3	1. Disconnect the EGR valve harness connector. 2. Inspect the EGR valve and connectors for damaged pin or terminals. Were there any damaged pins or terminals?	—	Go to *Step 4*	Go to *Step 5*
4	Repair the damaged pin or terminal. Is the action complete?	—	Verify repair	—
5	1. Disconnect the EGR harness connector. 2. Ignition “ON”. 3. At the EGR valve, use a DVM to check the voltage at the 5 volt reference wire (RED) and ground (B). Did the DVM indicate the specified value?	4–6 V	Go to *Step 6*	Go to *Step 7*
6	1. Disconnect the EGR harness connector. 2. Measure resistance between terminal B and D. Was resistance in range?	5–5.5 KΩ	Go to *Step 10*	Go to *Step 17*
7	1. Ignition “ON”. 2. At the PCM connector, backprobe with a DVM at the 5 volt reference for the EGR valve. Did the DVM indicate the specified value?	4–6 V	Go to *Step 8*	Go to *Step 9*
8	Repair the open 5 volt reference circuit. Is the action complete?	—	Verify repair	—
9	Repair the damaged sensor ground wire. Is the action complete?	—	Verify repair	—
10	1. Disconnect the EGR harness 2. Use an ohmmeter to measure between the pintle position pin and the sensor ground pin on the EGR valve. NOTE: J-35616 Connector Test Adapter Kit may be useful for gaining access to the recessed pins on the valve. Was the ohmmeter reading approximately equal to the specified value?	1 to 1.25 KΩ	Go to *Step 11*	Go to *Step 17*
11	1. Ignition “ON”. 2. Backprobe with a DVM to measure voltage at EGR valve pintle position pin and sensor ground pin. Was voltage in range?	Less than 0.1 V	Go to *Step 17*	Go to *Step 12*

DTC P0405 – EGR Low Volt (Cont'd)

Step	Action	Value(s)	Yes	No
12	1. Ignition "ON". 2. Backprobe with a DVM to measure voltage at PCM sensor ground pin and pintle position pin. Was voltage in range?	Less than 0.1 V	Go to *Step 13*	Go to *Step 18*
13	1. Ignition "OFF". 2. Disconnect the EGR harness. 3. Check short circuit between EGR pintle position circuit and EGR ground circuit. Was any short circuit?	—	Go to *Step 14*	Go to *Step 18*
14	Locate and repair the short to ground in the pintle position circuit Is the action complete?	—	Verify repair	—
15	1. Ignition "OFF". 2. Disconnect the PCM. 3. Ignition "ON". 4. Measure the voltage between the EGR pintle position circuit and ground. Is the measured voltage near the specified value?	Less than 0.1 V	Go to *Step 17*	Go to *Step 16*
16	Check for a short circuit between other wires and the pintle position circuit Was any short circuit?	—	Repair short circuit Verify repair	Go to *Step 17*
17	Replace the EGR valve. Does DTC P1404 still fail "specific DTC test on Tech 2?	—	Go to *Step 18*	Verify repair
18	Examine the PCM pin and terminal connection. Was there a damaged terminal?	—	Go to *Step 4*	Go to *Step 19*
19	Replace the PCM. **IMPORTANT:** The replacement PCM must be programmed. Refer to *UBS 98model year Immobilizer Workshop Manual.* Is the action complete?	—	Verify repair	—

Diagnostic Trouble Code (DTC) P0406 EGR High Voltage

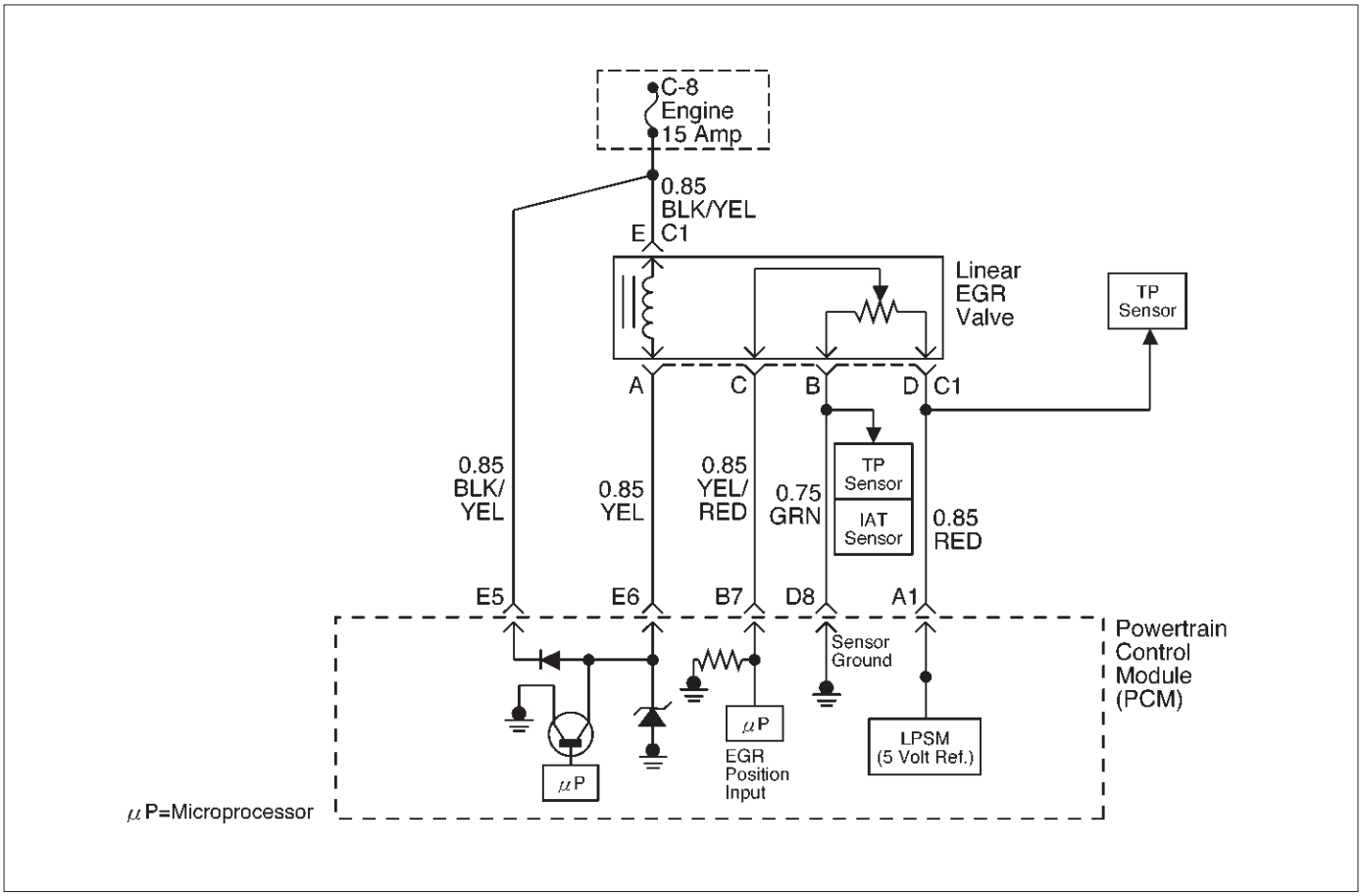

D06RW106

Circuit Description

The powertrain control module (PCM) monitors the EGR valve pintle position input to ensure that the valve responds properly to command from the PCM. If current pintle position voltage indicates more than 4.8 V and last more than 10 seconds, then the PCM will set DTC P0406.

Conditions for Setting the DTC

- Ignition voltage is between 11 and 16 volts.
- EGR pintle position output voltage is more than 4.8 volt and last more than 10 sec.

Action Taken When the DTC Sets

- The PCM will illuminate the malfunction indicator lamp (MIL) as soon as failure detected.
- The PCM will store conditions which were present when the DTC was set as Freeze Frame and in Failure Records data.

Conditions for Clearing the MIL/DTC

- DTC P0404 can be cleared by using Tech 2 “Clear Info” function or by disconnecting the PCM battery feed.

Diagnostic Aids

Check for the following conditions:

- Poor connection or damaged harness – Inspect the wiring harness for damage. If the harness appears to be OK, observe the EGR actual position display on Tech 2 while moving connectors and wiring harnesses related to EGR valve. A change in the display will indicate the location of the fault.

DTC P0406 – EGR High Voltage

Step	Action	Value(s)	Yes	No
1	Was the “On-Board Diagnostic (OBD) System Check” performed?	—	Go to *Step 2*	Go to *OBD System Check*
2	1. Ignition “ON,” engine “OFF”, review and record Tech 2 Failure Records Data. 2. Operate the vehicle within Failure Records conditions as noted. 3. Using Tech 2, monitor “DTC” info for DTC P0406 until the DTC P0406 test runs. Note the result. Does Tech 2 indicates DTC P0406 failed this ignition?	—	Go to *Step 3*	Refer to *Diagnostic Aids*
3	1. Disconnect the EGR valve harness connector. 2. Inspect the EGR valve and connectors for damaged pin or terminals. Were there any damaged pins or terminals?	—	Go to *Step 4*	Go to *Step 5*
4	Repair the damaged pin or terminal. Is the action complete?	—	Verify repair	Is the action complete?
5	1. Disconnect the EGR harness connector. 2. Ignition “ON”. 3. At the EGR valve, use a DVM to check the voltage at the 5 volt reference wire (RED). Did the DVM indicate the specified value?	4–6 V	Go to *Step 8*	Go to *Step 6*
6	1. Ignition “ON”. 2. At the PCM connector, backprobe with a DVM at the 5 volt reference for the EGR valve. Did the DVM indicate the specified value?	4–6 V	Go to *Step 7*	Go to *Step 16*
7	Repair the open 5 volt reference circuit Is the action complete?	—	Verify repair	—
8	1. Ignition “OFF” 2. Disconnect the EGR harness. 3. Use a DVM to check for an resistance between D (5 V reference) and B (Sensor Ground) at EGR sensor terminals. NOTE: J-35616 Connector Test Adapter Kit may be useful for gaining access to the recessed pins on the valve. Was there measured resistance in range?	5 to 5 KΩ	Go to *Step 9*	Go to *Step 15*
9	1. Ignition “OFF”. 2. Disconnect the EGR harness. 3. Use a DVM to check for an resistance between B and C at EGR sensor terminal. Was there open circuit?	—	Go to *Step 15*	Go to *Step 10*
10	1. Ignition “OFF”. 2. Disconnect the EGR harness at PCM connector. 3. Use a DVM to check for shorted wire between A1 and B7. Was there shorted wire?	—	Go to *Step 14*	Go to *Step 11*

DTC P0406 – EGR High Voltage (Cont'd)

Step	Action	Value(s)	Yes	No
11	1. Ignition "ON". 2. Use a DVM to backprobe at terminal C of EGR valve for voltage. Was measured voltage more than 4.8 V?	more than 4.8 V	Go to *Step 12*	Go to *Step 12*
12	1. Ignition "ON". 2. Stay the EGR harness connected. 3. Check voltage by backproving at PCM B7 terminal. Was voltage more than 4.8 V?	4.8 V	Go to *Step 16*	Go to *Step 13*
13	1. Locate short circuit at EGR harness between RED to RED or GREEN, RED to YEL. 2. Replace EGR harness. Is the action complete?	—	Verify repair	—
14	Replace EGR harness. Is the action complete?	—	Verify repair	—
15	Replace the EGR valve. Does DTC P1404 still fail "specific DTC test on Tech 2?	—	Go to *Step 16*	Verify repair
16	Replace the PCM. **IMPORTANT:** The replacement PCM must be programmed. Refer to *UBS 98model year Immobilizer Workshop Manual.* Is the action complete?	—	Verify repair	—

Diagnostic Trouble Code (DTC) P0502 VSS Circuit Low Input

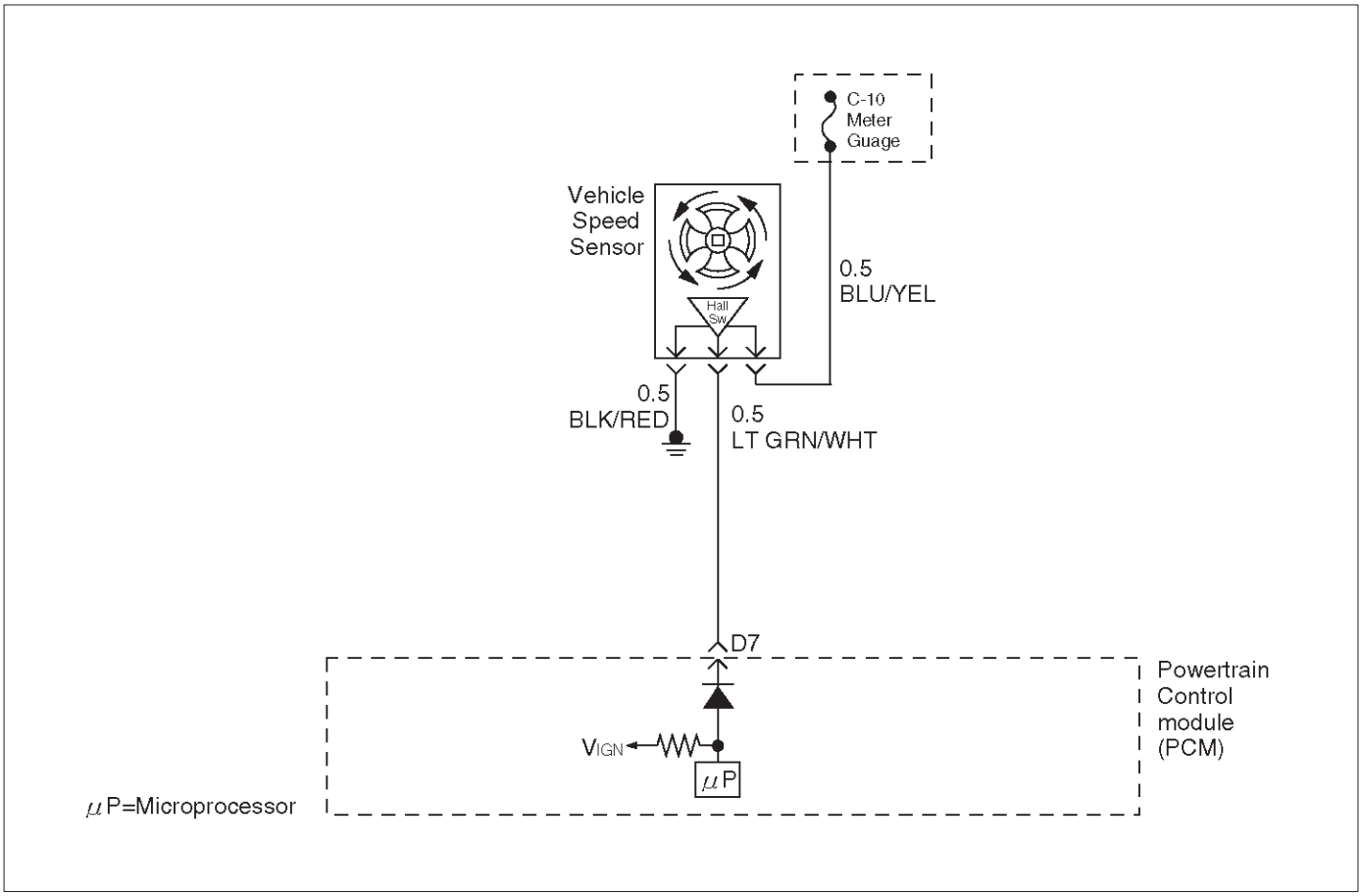

D06RW019

Circuit Description

The vehicle speed sensor has a magnet rotated by the transmission output shaft. Attached to the sensor is a hall effect circuit the interacts with the magnetic field treated by the rotating magnet. A 12-volt operating supply for the speed sensor hall circuit is supplied from the meter fuse. The VSS pulses to ground the 9-volt signal sent from the powertrain control module (PCM) on the reference circuit. The PCM interprets vehicle speed by the number of pulses to ground per second on the reference circuit.

Conditions for Setting the DTC

- Engine is running.
- Engine coolant temperature is above 60˚C (140˚F).
- Engine speed is between 1800 RPM and 2500 RPM.
- Throttle angle is between 10% and 40%.
- Engine load is greater than 50 kPa.
- MAP sensor indicates greater than 50 kPa manifold pressure.
- PCM detects no VSS signal for 12.5 seconds over a period of 25 seconds.

Action Taken When the DTC Sets

- The PCM will illuminate the malfunction indicator lamp (MIL) the first time the fault is detected.
- The PCM will store conditions which were present when the DTC was set as Freeze Frame and in the Failure Records data.

Conditions for Clearing the MIL/DTC

- DTC P0502 can be cleared by using the Tech 2 “Clear Info” function or by disconnecting the PCM battery feed.

Test Description

Number(s) below refer to the step number(s) on the Diagnostic Chart.

10. To avoid backprobing the VSS and possibly damaging a seal or terminal, the VSS output can be tested at the point where the transmission harness connects to the engine harness. Power and ground are applied by jumpers to the VSS through the connectors which are located just in front of the air cleaner assembly. The VSS signal is monitored with a DVM as the rear driveshaft turns. The wheels can be turned to rotate the driveshaft, or in 2-wheels-drive vehicles the driveshaft can be turned directly.

12. The speedometer-to-PCM VSS signal wire is spliced to a wire leading to the cruise control module. If a short to ground or voltage is indicated between the PCM and speedometer, it could be on the cruise control circuit if the vehicle is equipped with cruise control.

DTC P0502 – VSS Circuit Low Input

Step	Action	Value(s)	Yes	No
1	Was the “On-Board Diagnostic (OBD) System Check” performed?	—	Go to *Step 2*	Go to *OBD System Check*
2	Does the speedometer work?	—	Go to *Step 10*	Go to *Step 3*
3	1. Disconnect the VSS connector. 2. Ignition “ON.” 3. Using a test light to battery +, probe the connector ground wire. Did the light illuminate?	—	Go to *Step 5*	Go to *Step 4*
4	Repair the sensor ground. Is the action complete?	—	Verify repair	—
5	1. Ignition “ON,” sensor disconnected. 2. Using a DVM, measure at the VSS connector between ground and voltage supply. Was the measurement near the specified value?	Battery voltage	Go to *Step 7*	Go to *Step 6*
6	Repair the open or short to ground which may have blown the meter fuse. Is the action complete?	—	Verify repair	—
7	1. Ignition “ON,” VSS disconnected. 2. Using a DVM, measure at the VSS connector between ground and the wire from the speedometer. Was the measurement near the specified value?	7.5-8 V	Go to *Step 9*	Go to *Step 8*
8	Check for an open or short circuit between the speedometer and the VSS. Was an open or short circuit located?	—	Verify repair	Go to *Step 9*
9	Replace the speedometer. Is the action complete?	—	Verify repair	—

DTC P0502 – VSS Circuit Low Input (Cont'd)

Step	Action	Value(s)	Yes	No
10	1. Ignition "OFF." 2. Disconnect the MAF sensor and remove the air cleaner assembly and filter element to gain access to the 16-way black connector located immediately to the rear of the left front headlamp. The connector attaches the VSS wires from the transmission harness to the left-side engine harness. 3. Disconnect the black 16-way connector. 4. Select a terminal adapter from kit J 35616 that can be used with a jumper to supply B+ to the blue wire with a yellow tracer (transmission side of the connector). 5. Use another terminal adapter to attach a voltmeter to the light-green wire with a while tracer (next to the wire in the previous step.) 6. Disconnect the blue connector next to the black 16-way connector, and locate the black/red tracer wire at one corner of the blue connector. The black/red wire is the VSS ground. Use a terminal adapter to attach a jumper to ground to the black/red VSS ground wire at the transmission side of the blue connector. 7. Raise the rear wheels off the ground with transmission in neutral. Does the DVM toggle back and forth between 0.6 V and 10 V as the wheels (and driveshaft) are rotated?	—	Go to *Step 11*	Go to *Step 12*
11	Replace the VSS. Is the action complete?	—	Verify repair	—
12	Check for an open or short between the PCM and the speedometer. Was a problem found?	—	Verify repair	Go to *Step 13*
13	Replace the PCM. **IMPORTANT:** The replacement PCM must be programmed. Refer to *UBS 98model year Immobilizer Workshop Manual.* Is the action complete?	—	Verify repair	—

Diagnostic Trouble Code (DTC) P0562 System Voltage Low

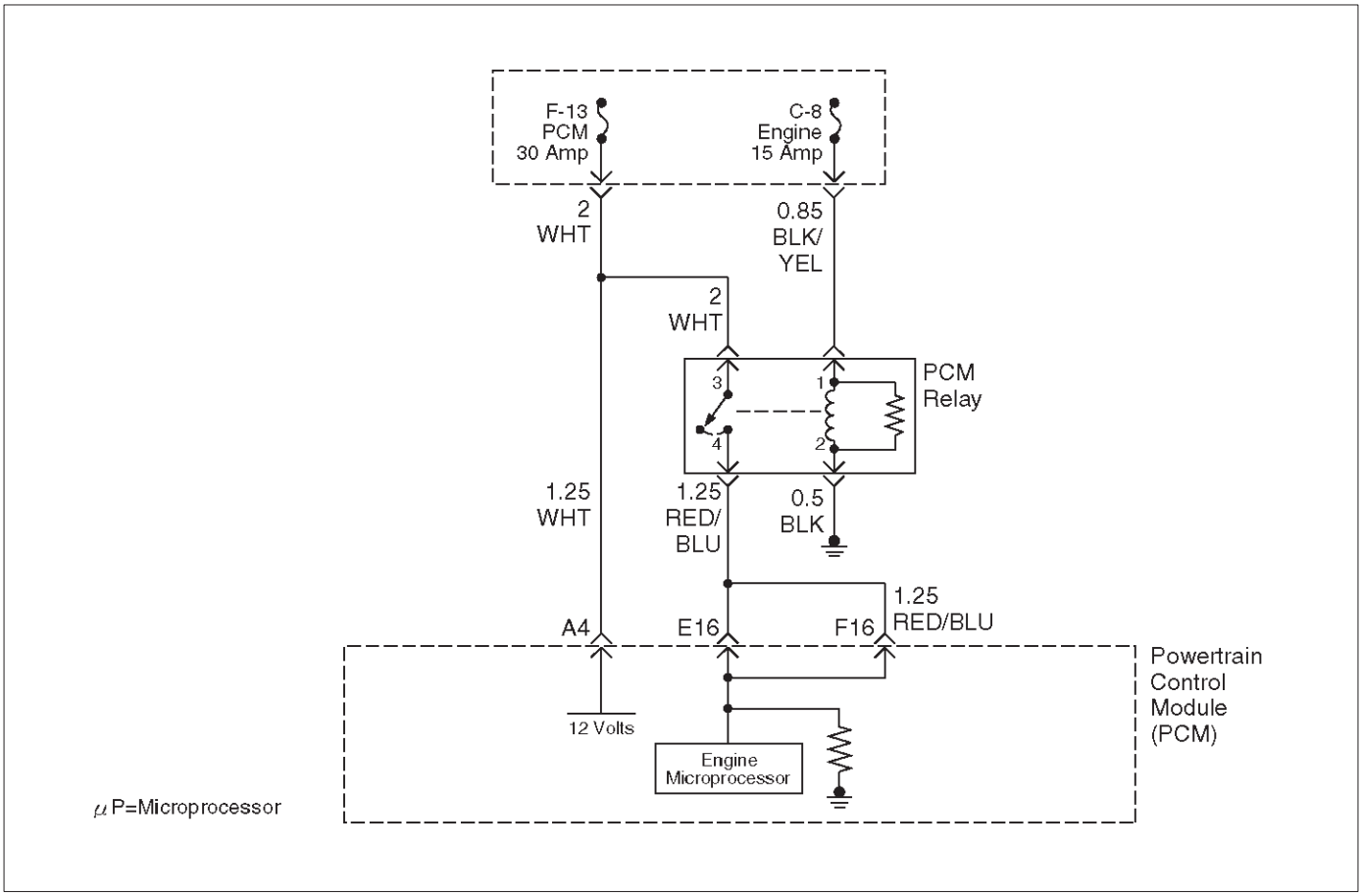

D06RW020

Circuit Description

The powertrain control module (PCM) monitors the system voltage on the ignition feed terminal to the PCM. A system voltage DTC will set whenever the voltage is below a calibrated value.

Conditions for Setting the DTC

- Ignition “ON.”
- System voltage is below 11.5 volts for 15 minutes.

Action Taken When the DTC Sets

- The PCM will not illuminate the malfunction indicator lamp (MIL).
- The PCM will store as Failure Records conditions which were present when the DTC was set. This information will not be stored as Freeze Frame data.

Conditions for Clearing the MIL/DTC

- A history DTC P0562 will clear after 40 consecutive warm-up cycles have occurred without a fault.
- DTC P0562 can be cleared by using the Tech 2 “Clear Info” function or by disconnecting the PCM battery feed.

Diagnostic Aids

If the DTC sets when an accessory is operated, check for a poor connection or excessive current draw.

DTC P0562 – System Voltage Low

Step	Action	Value(s)	Yes	No
1	Was the “On-Board Diagnostic (OBD) System Check” performed?	—	Go to *Step 2*	Go to *OBD System Check*
2	Using a Tech 2, measure the battery voltage at the battery. Is the battery voltage greater than the specified value?	11.5 V	Go to *Step 3*	Charge battery, then go to *Step 3*
3	1. Using a Tech 2. 2. Select “Ignition Volts” on the Tech 2. 3. Start the engine and raise the engine speed to the specified value. 4. Load the electrical system by turning on the headlights, high blower, etc. Is the ignition voltage approximately equal to the specified value?	2000 RPM 12.8-14.1 V	Go to *Step 4*	Go to *Starting/Charging*
4	1. Ignition “OFF.” 2. Disconnect the PCM connector at the PCM. 3. Using a DVM, measure the battery voltage at the PCM connector A-4. Is it approximately equal to battery voltage?	—	Check for excessive current draw with ignition “OFF,” engine “OFF.”	Go to *Step 5*
5	1. Check for faulty connections at the PCM harness terminals. 2. Repair as necessary. Was a repair necessary?	—	Verify repair	Go to *Step 6*
6	Check for an open battery feed circuit to the PCM. Is the action complete?	—	Verify repair	Go to *Step 7*
7	Replace the PCM. **IMPORTANT:** The replacement PCM must be programmed. Refer to *UBS 98model year Immobilizer Workshop Manual.* Is the action complete?	—	Verify repair	—

Diagnostic Trouble Code (DTC) P0563 System Voltage High

Circuit Description

The powertrain control module (PCM) monitors the system voltage on the ignition feed terminals to the PCM. A system voltage DTC will set whenever the voltage is above a calibrated value.

Conditions for Setting the DTC

- Ignition “ON.”
- System voltage is above 16 volts for 15 minutes.

Action Taken When the DTC Sets

- The PCM will not illuminate the malfunction indicator lamp (MIL).
- The PCM will store as Failure Records only conditions which were present when the DTC was set. This information will not be stored as Freeze Frame data.

Conditions for Clearing the MIL/DTC

- A history DTC P0563 will clear after 40 consecutive warm-up cycles have occurred without a fault.
- DTC P0563 can be cleared by using the Tech 2 “Clear Info” function or by disconnecting the PCM battery feed.

Diagnostic Aids

If the DTC sets when an accessory is operated, check for a poor connection or excessive current draw.

DTC P0563 – System Voltage High

Step	Action	Value(s)	Yes	No
1	Was the “ON-Board Diagnostic (OBD) System Check” performed?	—	Go to *Step 2*	Go to *OBD System Check*
2	Using a Tech 2, measure the battery voltage at the battery. Is the battery voltage less than the specified value?	11.5 V	Go to *Step 3*	Go to *Step 4*
3	1. Charge the battery and clean the battery terminals. 2. Clean the battery ground cable connection if corrosion is indicated. Is the battery voltage less than the specified value?	11.5 V	Replace battery	Go to *Step 4*
4	1. Turn “OFF” all the accessories. 2. Install a Tech 2. 3. Select the ignition voltage parameter on the Tech 2. 4. Start the engine and raise the engine RPM to the specified value. Is the voltage more than 2.5 volts greater than the measurement taken in step 2 or 3?	2000 RPM	Go to *Starting/Charging*	Go to *Step 5*
5	Replace the PCM. **IMPORTANT:** The replacement PCM must be programmed. Refer to *UBS 98 model year Immobilizer Workshop Manual.* Is the action complete?	—	Verify repair	—

Diagnostic Trouble Code (DTC) P0601 PCM Memory

Circuit Description

The powertrain control module (PCM) used in this vehicle utilizes an electrically erasable programmable read-only memory (EEPROM). The EEPROM contains program information and the calibrations required for engine, transmission, and powertrain diagnostics operation. Unlike the PROM used in past applications, the EEPROM is not replaceable.

Conditions for Setting the DTC

- The PCM detects an internal program fault (check sum error).

Action Taken When the DTC Sets

- The PCM will not illuminate the malfunction indicator lamp (MIL).
- The PCM will store conditions which were present when the DTC was set in the Failure Records data only.

Conditions for Clearing the MIL/DTC

- DTC P0601 can be cleared by using the Tech 2 “Clear Info” function or by disconnecting the PCM battery feed.

Diagnostic Aids

- DTC P0601 indicates that the contents of the EEPROM have changed since the PCM was programmed. The only possible repair is PCM replacement.

DTC P0601 – PCM Memory

Step	Action	Value(s)	Yes	No
1	Was the “On-Board Diagnostic (OBD) System Check” performed?	—	Go to *Step 2*	Go to *OBD System Check*
2	Replace the PCM. **IMPORTANT:** The replacement PCM must be programmed. Refer to *UBS 98model year Immobilizer Workshop Manual.* Is the action complete?	—	Verify repair	—

Diagnostic Trouble Code (DTC) P1154 HO2S Circuit Transition Time Ratio Bank 2 Sensor 1

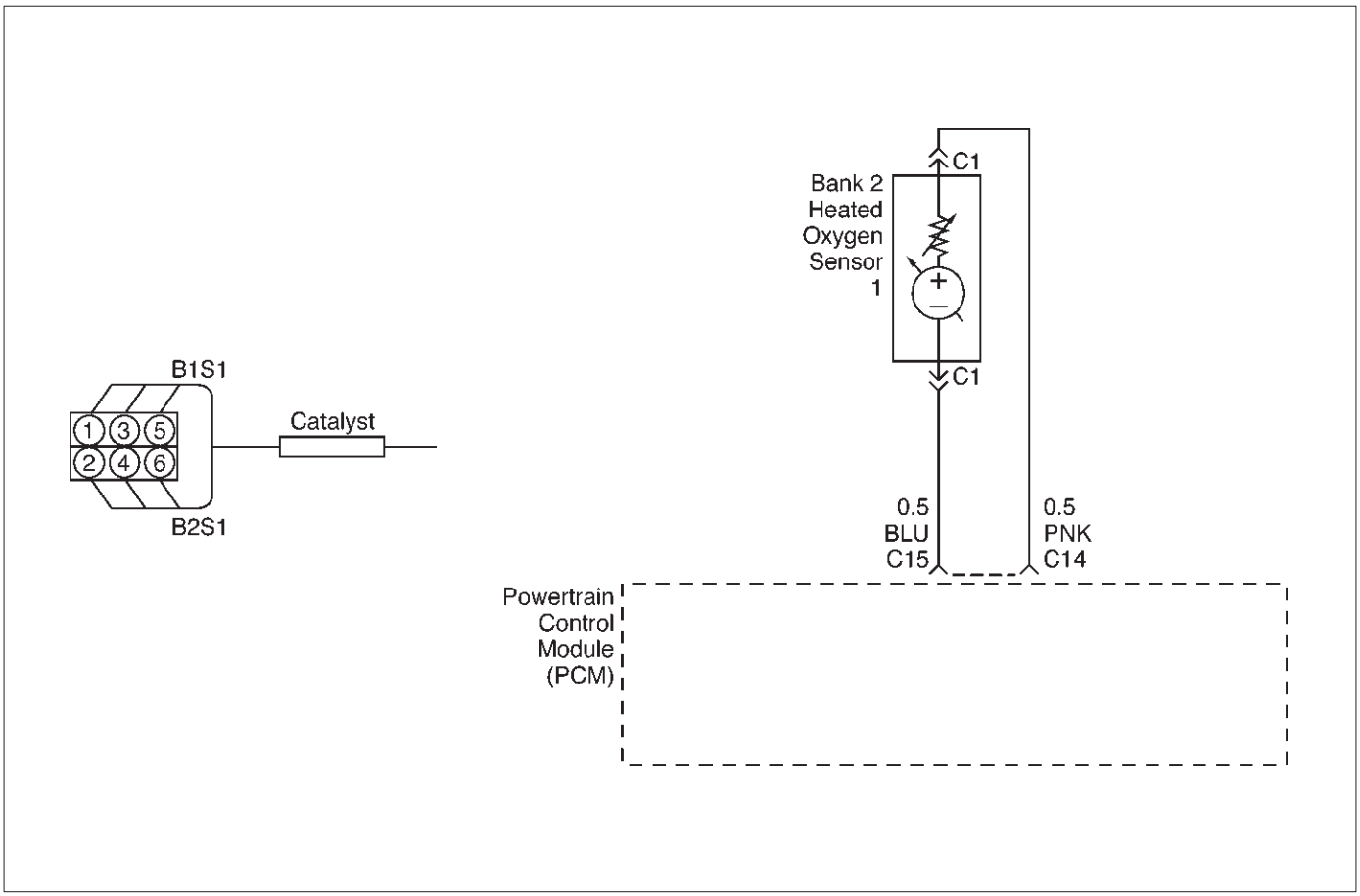

060RW190

Circuit Description

The powertrain control module (PCM) monitors the heated oxygen sensor (HO2S) activity for 90 seconds after “closed loop” and stoichiometric operation have been enabled. During the monitor period the PCM counts the number of times that the HO2S responds from rich-to-lean and from lean-to-rich and adds the amount of time it took to complete all transitions. With this information, an average time for all transitions can be determined. The PCM then divides the rich-to-lean average by the lean-to-rich average to obtain a ratio. If the HO2S transition time ratio is not within this range, DTC P1154 will be set, indicating that the oxygen sensor is not responding as expected to changes in exhaust oxygen content.

Conditions for Setting the DTC

- No related DTCs.
- Engine coolant temperature (ETC) is above 50˚C (122˚F) for automatic transmission; 75˚C (167˚F) for manual transmission.
- The engine is operating in “closed loop.”
- The engine has been running at least one minute.
- Canister purge duty cycle is greater than 2%.
- Engine speed is between 1500 RPM and 3000 RPM.
- Mass air flow is between 9 g/second and 42 g/second.
- Above conditions are present for a 3-second monitoring period.
- 90 seconds after “closed loop” and stoichiometric operation have been enabled, Bank 2 HO2S 1 transition ratio between lean to rich and rich to lean is less than 0.44 or greater than 3.8.

Action Taken When the DTC Sets

- The PCM will illuminate the malfunction indicator lamp (MIL) after the second consecutive trip in which the fault is detected.
- ”Open loop” fuel control will be in effect.
- The PCM will store conditions which were present when the DTC was set as Freeze Frame and in the Failure Records data.

Conditions for Clearing the MIL/DTC

- DTC P1154 can be cleared by using Tech 2 “Clear Info” function or by disconnecting the PCM battery feed.

Diagnostic Aids

A multifunction in the HO2S heater ignition feed or ground circuit may cause a DTC P1154 to set. Check HO2S heater circuitry for intermittent faults or poor connections. If connections and wiring are OK and DTC P1154 continues to set, replace the Bank 2 HO2S 1.

Reviewing the Failure Records vehicle mileage since the diagnostic test last failed may help determine how often

the condition that caused the DTC to be set occurs. This may assist in diagnosing the condition.

Test Description

Number(s) below refer to the step number(s) on the Diagnostic Chart.

3. A condition that affects other heated oxygen sensors indicates probable contamination. To avoid damaging replacement sensors, correct the condition which caused the contamination before replacing the affected sensors.
5. This step checks for conditions which may cause the heated oxygen sensor to appear faulty. Correct any of the described conditions if present.
8. To avoid damaging replacement sensors, correct the condition which caused the contamination before replacing the affected sensors.

DTC P1154 – HO2S Transition Time Ratio Bank 2 Sensor 1

Step	Action	Value(s)	Yes	No
1	Was the “On-Board Diagnostic (OBD) System Check” performed?	—	Go to *Step 2*	Go to *OBD System Check*
2	**IMPORTANT:** If any other DTCs are set (except P1133 and/or P1134), refer to those DTCs before proceeding with this diagnostic chart. 1. Idle the engine at operating temperature. 2. Operate the vehicle within parameters specified under “Conditions for Setting the DTC” criteria included in Diagnostic Support. 3. Using a Tech 2, monitor “Specific DTC” info for DTC P1154 until the DTC P1154 test runs. Note the test result. Does Tech 2 indicate DTC failed this ignition?	—	Go to *Step 3*	Refer to *Diagnostic Aids*
3	Did Tech 2 also indicate P1133, and/or P1134 test failed?	—	Go to *Step 17*	Go to *Step 4*
4	Check for leaks at the pipe joints. Are the joints leaking?	—	Go to *Step 5*	Go to *Step 6*
5	Tighten the U-bolt nuts at the leaking joints. Is your action complete?	—	Go to *Step 2*	—
6	Check for gaskets that are damaged or improperly installed. Are there damaged or misaligned gaskets?	—	Go to *Step 7*	Go to *Step 8*
7	1. Replace the damaged gaskets. 2. Align the connections. 3. Tighten the connections. Is your action complete?	—	Go to *Step 2*	—
8	Check for loose exhaust flange connections. Are the flange connections loose?	—	Go to *Step 9*	Go to *Step 10*
9	Tighten the stud nuts or bolts to specifications. Is your action complete?	—	Go to *Step 2*	—
10	Check for burned or corroded exhaust pipes. Are the exhaust pipes burned or corroded?	—	Go to *Step 11*	Go to *Step 12*
11	Replace the exhaust pipes, as required. Is your action complete?	—	Go to *Step 2*	—

DTC P1154 – HO2S Transition Time Ratio Bank 2 Sensor 1 (Cont'd)

Step	Action	Value(s)	Yes	No
12	Check for leaks at the exhaust manifold. Are there leaks at the exhaust manifold?	—	Go to *Step 13*	Go to *Step 14*
13	Tighten the bolts to specifications or replace the manifold if necessary. Is your action complete?	—	Go to *Step 2*	—
14	Visually/physically inspect the following items: ● Ensure that the Bank 2 HO2S 1 is securely installed. ● Check for corrosion on terminals. ● Check terminal tension (at Bank 2 HO2S 1 and at the PCM). ● Check for damaged wiring. Was a problem found in any of the above areas?	—	Go to *Step 18*	Go to *Step 15*
15	1. Disconnect Bank 1 HO2S 1. 2. Ignition "ON." 3. Using a DVM at the PCM side of the HO2S 1 connector, measure the voltage between the high signal circuit and ground. Also measure the voltage between the low signal circuit and ground. Are both voltages in the specified range?	3-4 V	Go to *Step 16*	Go to *Step 19*
16	1. With Bank 1 HO2S 1 disconnected, jumper the high and low (PCM side) signal circuits to ground. 2. Ignition "ON." 3. Using Tech 2, monitor the Bank 2 HO2S 1 voltage. Does the scan too indicate less than 10 mV and immediately return to about 450 mV when the jumper is removed?	—	Go to *Step 21*	Go to *Step 22*
17	Replace affected heated oxygen sensors. NOTE: Before replacing sensors, the cause of the contamination must be determined and corrected. ● Fuel contamination. ● Use of improper RTV sealant. ● Engine oil/coolant consumption. Is the action complete?	—	Verify repair	—
18	Repair condition as necessary. Is the action complete?	—	Verify repair	—
19	Check for faulty PCM connections or terminal damage. Is the action complete?	—	Verify repair	Go to *Step 20*
20	Repair open, short or grounded signal circuit. Is the action complete?	—	Verify repair	—

DTC P1154 – HO2S Transition Time Ratio Bank 2 Sensor 1 (Cont'd)

Step	Action	Value(s)	Yes	No
21	Replace Bank 2 HO2S 1. Is the action complete?	—	Verify repair	—
22	Replace the PCM. **IMPORTANT:** The replacement PCM must be programmed. Refer to *UBS 98model year Immobilizer Workshop Manual.* Is the action complete?	—	Verify repair	—

Diagnostic Trouble Code (DTC) P1171 Fuel System Lean During Acceleration

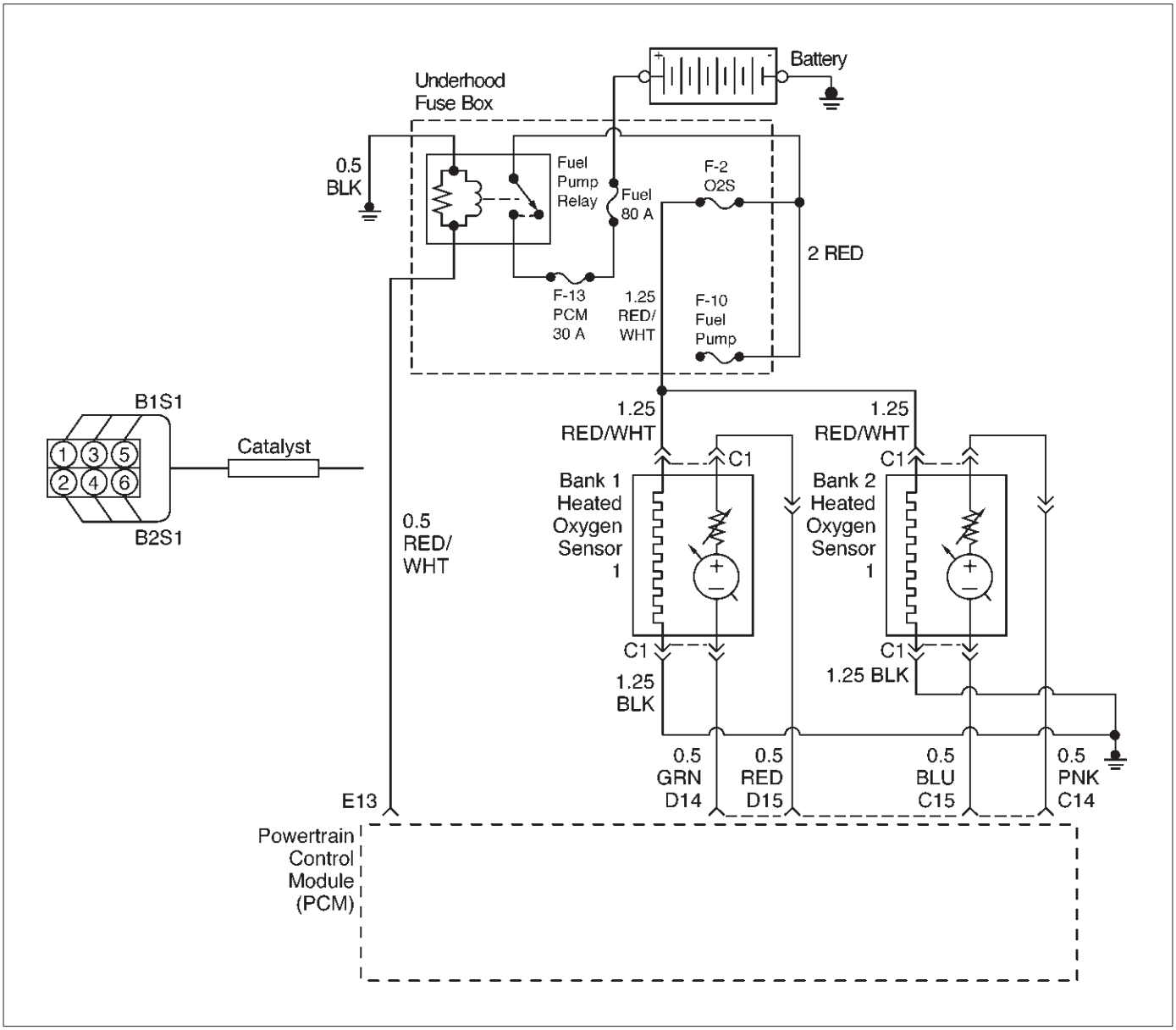

060RW193–1

Circuit Description

The powertrain control module (PCM) internal circuitry can identify if the vehicle fuel system is capable of supplying adequate amounts of fuel during heavy acceleration (power enrichment). The PCM monitors the voltage of the oxygen sensor during power enrichment. When a power enrichment mode of operation is requested during “closed loop” operation (by heavy acceleration), the PCM will provide more fuel to the engine. Under these conditions the PCM should detect a “rich” condition (high oxygen sensor voltage). If this “rich” exhaust is not detected at this time, a DTC P1171 will set. A plugged fuel filter, restricted fuel line, restricted in-tank filter or defective fuel pump can prevent adequate amounts of fuel from being supplied during power enrichment mode.

Conditions for Setting the DTC

- No related DTCs.
- Engine is operating in “closed loop power enrichment” mode for 3 seconds.
- Engine coolant temperature is above 60˚C (140˚F).
- While in “power enrichment” mode the oxygen sensor voltage remains below 400 mV for 3 seconds.

Action Taken When the DTC Sets

- The PCM will illuminate the malfunction indicator lamp (MIL) the first the fault is detected.
- The PCM will store conditions which were present when the DTC was set as Freeze Frame and in the Failure Records data.

Conditions for Clearing the MIL/DTC

- DTC P1171 can be cleared by using Tech 2 “Clear Info” function or by disconnecting the PCM battery feed.

Diagnostic Aids

- A restricted fuel filter or fuel line, restricted in-tank filter, or a defective fuel pomp may supply adequate

amounts of fuel at idle, but may not be able to supply enough fuel during heavy acceleration.

- Water or alcohol in the fuel may cause low HO2S voltage during acceleration.
- Check for faulty or plugged fuel injector(s).
- Check for low fuel.

Test Description

Number(s) below refer to the step number(s) on the Diagnostic Chart.

4. When the engine is idling or at steady cruise, the HO2S voltage should vary from between approximately 100 mV to 900 mV. It is possible to measure a satisfactory fuel pressure at idle even though the pressure may drop at high flow requirements. It may be necessary to watch fuel pressure at high engine load.
5. Wrap a shop towel around the fuel pressure connector to absorb any small amount of fuel leakage that may occur when installing gauge. Ignition “ON,” pump pressure should be 280-320 kPa.

DTC P1171 – Fuel System Lean During Acceleration

Step	Action	Value(s)	Yes	No
1	Was the “On-Board Diagnostic (OBD) System Check” performed?	—	Go to *Step 2*	Go to *OBD System Check*
2	Are any component-related DTCs set?	—	Go to component DTC charts	Go to *Step 3*
3	1. Check the vehicle’s fuel tank for an adequate amount of fuel. 2. Add fuel to the vehicle’s fuel tank if the tank is almost empty. Was fuel added to the vehicle’s fuel tank?	—	Go to *Step 4*	Go to *Step 5*
4	1. Place the transmission in park. 2. Using Tech 2, observe HO2S 1 voltage while running warm engine 75˚C-95˚C (167˚F-203˚F) at 1200 RPM. 3. HO2S 1 voltage should vary within the specified range. 4. Quickly open the throttle halfway for a few seconds. Did the voltage suddenly rise toward the high end of the specified range?	100-900 mV	Go to Chart A-7	Go to *Step 5*
5	1. Disconnect the fuel pump relay and crank the engine to relieve the fuel pressure. 2. Install the fuel pressure gauge. 3. Start the engine and idle at normal operating temperature. 4. Disconnect the vacuum line going to the fuel pressure regulator. With the engine running, is the fuel pressure within the specified range?	280-325 kPa (41-46 psi)	Go to *OBD System Check*	Go to *Step 6*
6	Check for restricted fuel lines or restricted in-line filter. Was a problem found?	—	Verify repair	Go to *Step 7*

DTC P1171 – Fuel System Lean During Acceleration (Cont'd)

Step	Action	Value(s)	Yes	No
7	1. Ignition "OFF." 2. Remove the fuel pump relay and replace it with a fused jumper which will connect the relay's battery terminal to the terminal leading to the fuel pump fuse. 3. While the fuel pump is operating, use pliers to slowly close the return line (do not exceed the first specified value). Using the pliers to restrict the return line, can the fuel pressure be manipulated to exceed the second specified value?	414 kPa (60 psi) 325 kPa (46 psi)	Go to *Diagnostic Aids*	Go to *Step 8*
8	Check for: ● Faulty fuel pump ● Restricted fuel pump strainer (sock) ● Incorrect fuel pump ● Incorrect fuel being used ● Hot fuel Is the action complete?	—	Verify repair	—

Diagnostic Trouble Code (DTC) P1380 ABS Rough Road ABS System Fault

Circuit Description

The powertrain control module (PCM) monitors ABS fault signal. When PCM receives fault signal, PCM will set DTC P1380.

Conditions for Setting the DTC

- Vehicle speed is more than 5 mph.
- Load is less than 99%.
- Engine revolution is less than 6250 rpm.
- PCM receives ABS fault signals from ABS unit.
- Ignition on.
- Misfire DTCs exist.
- 100 test failures within 120 test samples.

Action Taken When the DTC Sets

- The PCM will store DTC 1380 only, no MIL turn on.

Conditions for Clearing the MIL/DTC

- A history DTC P1380 will clear after 40 consecutive warm-up cycles have occurred without a fault.
- DTC 1380 can be cleared by using Tech-2 or disconnecting the PCM battery feed.

Diagnostic Aids

Check for the following conditions:

- PCM and ABS communication line short circuit to other line may cause faulty signal. Inspect communication line.
- Follow ABS ECU diagnosis procedure, refer to ABS procedure page.

DTC P1380 – ABS Rough Road ABS System Fault

Step	Action	Value(s)	Yes	No
1	Was the “On-Board Diagnostic (OBD) System Check” performed?	—	Go to *Step 2*	Go to *OBD System Check*
2	1. Ignition “ON,” engine “OFF”, review and record Tech 2 Failure Records Data. 2. Operate the vehicle within Failure Records conditions as noted. 3. Using a Tech 2, monitor “Specific DTC” info for DTC P1380 and Misfire DTCs until the DTC P1380 and Misfire DTCs test runs. Note the result. Does the Tech 2 indicates DTC P1380 and Misfire DTCs failed this ignition?	—	Refer to ABS diagnosis After inspect ABS, unit repeat *Step 2* Still problem exists, go to *Step 3*	Clear DTC by Tech 2
3	Check short circuit among communication line of PCM/ABS and others. Was short circuit?	—	Repair wiring Verify repair	Go to *Step 4*
4	Replace the PCM. **IMPORTANT:** The replacement PCM must be programmed. Refer to *UBS 98model year Immobilizer Workshop Manual.* Is the action complete?	—	Verify repair	—

Diagnostic Trouble Code (DTC) P1404 EGR Closed Stuck

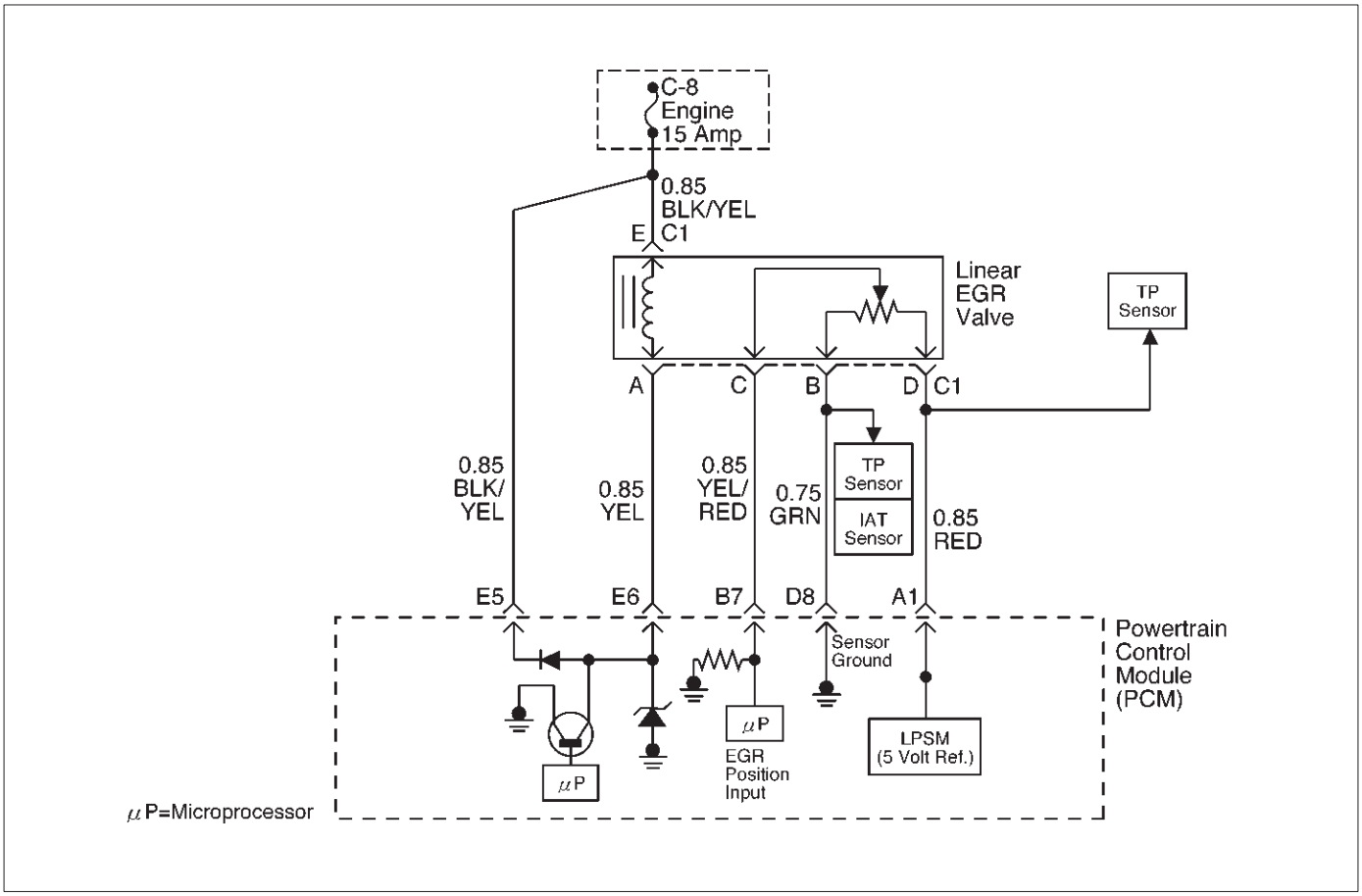

D06RW106

Circuit Description

The powertrain control module (PCM) monitors the EGR valve pintle position input to ensure that the valve responds properly to commands from the PCM, and to detect a fault if current pintle zero position is different from the learned zero position. If the PCM detects a pintle position signal indicates more than 30 % different between current zero position and the learned zero position and more than 5 seconds, and this condition meet 3 times during trip, then the PCM will set DTC P1404.

Conditions for Setting the DTC

- Ignition voltage is between 11 and 16 volts.
- Intake Air temp is more than 3˚C.
- Desire EGR position is 0.
- Difference EGR pintle position between current and the learned zero is more than 30 % last more than 5 seconds, and meet three time to the above condition during a trip. Then it trigger the PCM lights on.

Action Taken When the DTC Sets

- The PCM will illuminate the malfunction indicator lamp (MIL) after consecutive 2nd trip in which the fault is detected.
- The PCM will store conditions which were present when the DTC was set as Freeze Frame and in Failure Records data.

Conditions for Clearing the MIL/DTC

- DTC P1404 can be cleared by using the Tech 2 “Clear Info” function or by disconnecting the PCM battery feed.

Diagnostic Aids

Check for the following conditions:

- Excessive carbon deposit on EGR valve shaft or/and foreign material may cause no return to EGR valve fully seated. Those carbon deposit may occur by unusual port operation. Remove foreign material or/and excessive carbon deposit on EGR valve shaft may make return to EGR valve fully seated.
- Poor connection or damaged harness – Inspect the wiring harness for damage. Same as P1406 description

Reviewing the Failure Records vehicle mileage since the diagnostic test last failed may help determine how often the condition that caused the DTC to be set occurs. This may assist in diagnosing the condition.

DTC P1404 – EGR Closed Stuck

Step	Action	Value(s)	Yes	No
1	Was the “On-Board Diagnostic (OBD) System Check” performed?	—	Go to *Step 2*	Go to *OBD System Check*
2	1. Ignition “ON,” engine “OFF”, review and record Tech 2 Failure Records Data. 2. Operate the vehicle within Failure Records conditions as noted. 3. Using a Tech 2, monitor “DTC inf. for DTC P1404 until the DTC P1404 test runs. Note the result. Does the Tech 2 indicates DTC P1404 failed this ignition?	—	Go to *Step 3*	Refer to *Diagnostic Aids*
3	1. Disconnect the EGR valve harness connector. 2. Inspect the EGR valve and connectors for damaged pin or terminals. Were there any damaged pins or terminals?	—	Go to *Step 4*	Go to *Step 5*
4	Repair the damaged pin or terminal. Is the action complete?	—	Verify repair	—
5	1. Remove EGR valve from Engine. 2. Inspect EGR valve whether there is any excessive carbon deposit on EGR shaft. 3. Inspect any foreign material inside of EGR valve. Was excessive carbon deposit on EGR valve shaft or/and foreign material in EGR valve ?	—	Go to *Step 6*	Go to *Step 7*
6	1. Clean up EGR valve shaft and inside of EGR valve. 2. Remove foreign material from EGR valve. 3. Visually inspect damage of pintle and seat whether there is bent, leakage may occur. Was there any severe damage which affects function?	3–6 ohms	Go to *Step 8*	Verify repair Go to *Step 7*
7	1. Reconnect. 2. Ignition “OFF”. 3. Install the Tech 2. 4. Run the engine at idle. 5. On the Tech 2, select F3:Misc. Test F5:EGR. 6. Use the “UP” arrow to increase the EGR from 0% to 40%. Did EGR work properly?	—	—	Go to *Step 8*
8	1. Reset the learned zero EGR valve position. 2. Repeat step 7. Did EGR work properly?	—	Verify repair	Go to *Step 9*
9	Replace the EGR valve. Replace the EGR valve. Does DTC P1404 still fail “specific DTC” test on the Tech 2?	—	Go to *Step 10*	Verify repair
10	Replace the PCM. **IMPORTANT:** The replacement PCM must be programmed. Refer to *UBS 98model year Immobilizer Workshop Manual.* Is the action complete?	—	Verify repair	—

Diagnostic Trouble Code (DTC) P1508 IAC System Low RPM

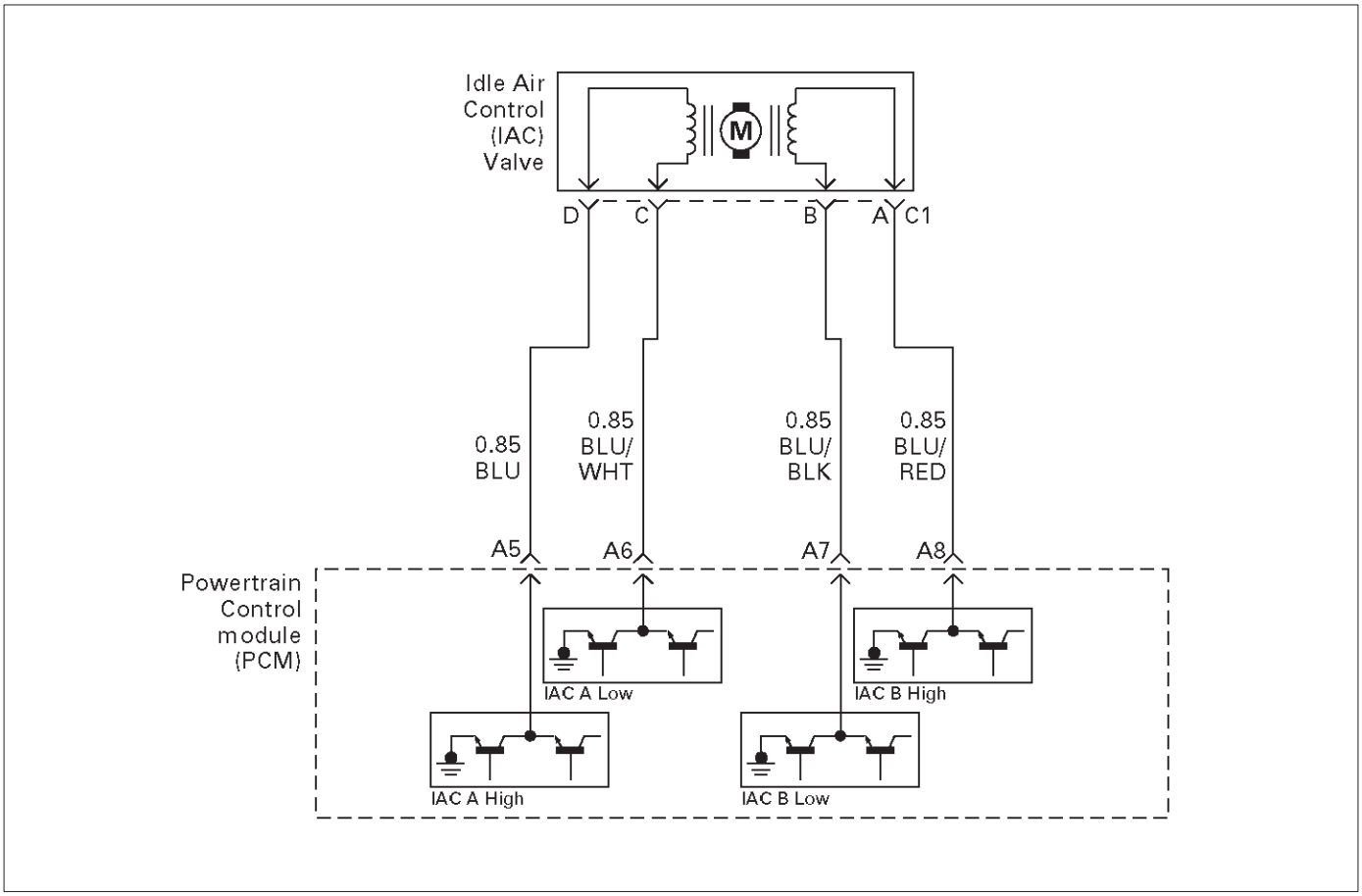

T321115

Circuit Description

The powertrain control module (PCM) controls engine idle speed by adjusting the position of the idle air control (IAC) motor pintle. The IAC is a bi-directional stepper motor driven by two coils. The PCM applies current to the IAC coils in steps (counts) to extend the IAC pintle into a passage in the throttle body to decrease air flow. The PCM reverses the current to retract the pintle, increasing air flow. This method allows highly accurate control of idle speed and quick response to changes in engine load. If the PCM detects a condition where too low of an idle speed is present and the PCM is unable to adjust idle speed by increasing the IAC counts, DTC P1508 will set, indicating a problem with the idle control system.

Conditions for Setting the DTC

- No Tech 2 test is being run.
- None of these DTCs are set: TP sensor, VSS, ECT, EGR, fuel system, MAF, MAP, IAT, canister purge, injector control or ignition control.
- Barometric pressure is above 75 kPa.
- Engine coolant temperature (ECT) is above 50˚C (120˚F).
- Engine speed is more than 100-200 RPM lower than desired idle, based upon coolant temperature.
- The engine has been running for at least 125 seconds.
- Vehicle speed is less than 1 mph.
- Canister purge duty cycle is above 10%.
- Ignition voltage is between 9.5 volts and 16.7 volts.
- The throttle is closed.
- Engine speed is lower than desired idle.
- All of the above conditions are met for 10 seconds.

Action Taken When the DTC Sets

- The PCM will illuminate the malfunction indicator lamp (MIL) after the second consecutive trip in which the fault is detected.
- The PCM will store conditions which were present when the DTC was set as Freeze Frame and in the Failure Records data.

Conditions for Clearing the MIL/DTC

- DTC P1508 can be cleared by using the Tech 2 “Clear Info” function or by disconnecting the PCM battery feed.

Diagnostic Aids

Check for the following conditions:

- Poor connection at PCM or IAC motor – Inspect harness connectors for backed-out terminals, improper mating, broken locks, improperly formed or damaged terminals, and poor terminal-to-wire connection.
- Damaged harness – Inspect the wiring for damage.
- Restricted air intake system – Check for a possible collapsed air intake duct, restricted air filter element, or foreign objects blocking the air intake system.
- Throttle body – Check for objects blocking the IAC passage or throttle bore, excessive deposits in the IAC

passage and on the IAC pintle, and excessive deposits in the throttle bore and on the throttle plate.

- Large vacuum leak – Check for a condition that causes a large vacuum leak, such as an incorrectly installed or faulty PCV valve or a disconnected brake booster hose.

Reviewing the Failure Records vehicle mileage since the diagnostic test last failed may help determine how often the condition that caused the DTC to be set occurs. This may assist in diagnosing the condition.

DTC P1508 – IAC System Low RPM

Step	Action	Value(s)	Yes	No
1	Was the “On-Board Diagnostic (OBD) System Check” performed?	—	Go to *Step 2*	Go to *OBD System Check*
2	1. Start the engine. 2. Turn all accessories “OFF”(A/C, rear defroster, etc). 3. Using a Tech 2, command RPM up to 1500, down to 500, and the up to 1500 while monitoring the “Engine Speed” on the Tech 2. NOTE: This Tech 2 command may cause the engine to “cut out” when RPM goes above 1500. If this occurs, the “cutting out” will stop when the Tech 2 command for the test is discontinued, or if the Tech 2 command is changed to less than 1500 RPM. Does the “Engine Speed” remain within the specified value of the “Desired Idle” for each RPM command?	± 50 RPM	No trouble found. Go to *Diagnostic Aids*	Go to *Step 3*
3	1. Disconnect the IAC. 2. Install IAC Node Light 5-8840-2312-0 or equivalent. 3. With the engine running, command RPM up to 1500, down to 500, and then up to 1500 while observing the node light. NOTE: This Tech 2 command may cause the engine to “cut out” when RPM goes above 1500. If this occurs, the “cutting out” will stop when the Tech 2 command for the test is discontinued, or if the Tech 2 command is changed to less than 1500 RPM. Does each node light cycle red and green (never “OFF”)?	—	Go to *Step 5*	Go to *Step 4*
4	1. Check the following circuits for an open, short to voltage, short ground, or poor connections at the PCM: • IAC “A” Low. • IAC “A” High. • IAC “B” Low. • IAC “B” High. 2. If a problem is found, repair as necessary. Was a problem found?	—	Verify repair	Go to *Step 8*

DTC P1508 – IAC System Low RPM (Cont'd)

Step	Action	Value(s)	Yes	No
5	Visually/physically inspect for following conditions: ● Restricted air intake system. Check for a possible collapsed air intake duct, restricted air filter element, or foreign objects blocking the air intake system. ● Throttle body. Check for objects blocking the IAC passage or throttle bore, excessive deposits in the IAC passage and on the IAC pintle, and excessive deposits in the throttle bore and on the throttle plate. Do any of the above require a repair?	—	Refer to appropriate section for on-vehicle service	Go to *Step 6*
6	1. Check for a poor connection at the IAC harness connector. 2. If a problem is found, replace faulty terminals as necessary. Was a problem found?	—	Verify repair	Go to *Step 7*
7	Replace the IAC valve. Is the action complete?	—	Verify repair	—
8	Replace the PCM. **IMPORTANT:** The replacement PCM must be programmed. Refer to *UBS 98model year Immobilizer Workshop Manual.* Is the action complete?	—	Verify repair	—

Diagnostic Trouble Code (DTC) P1509 IAC System High RPM

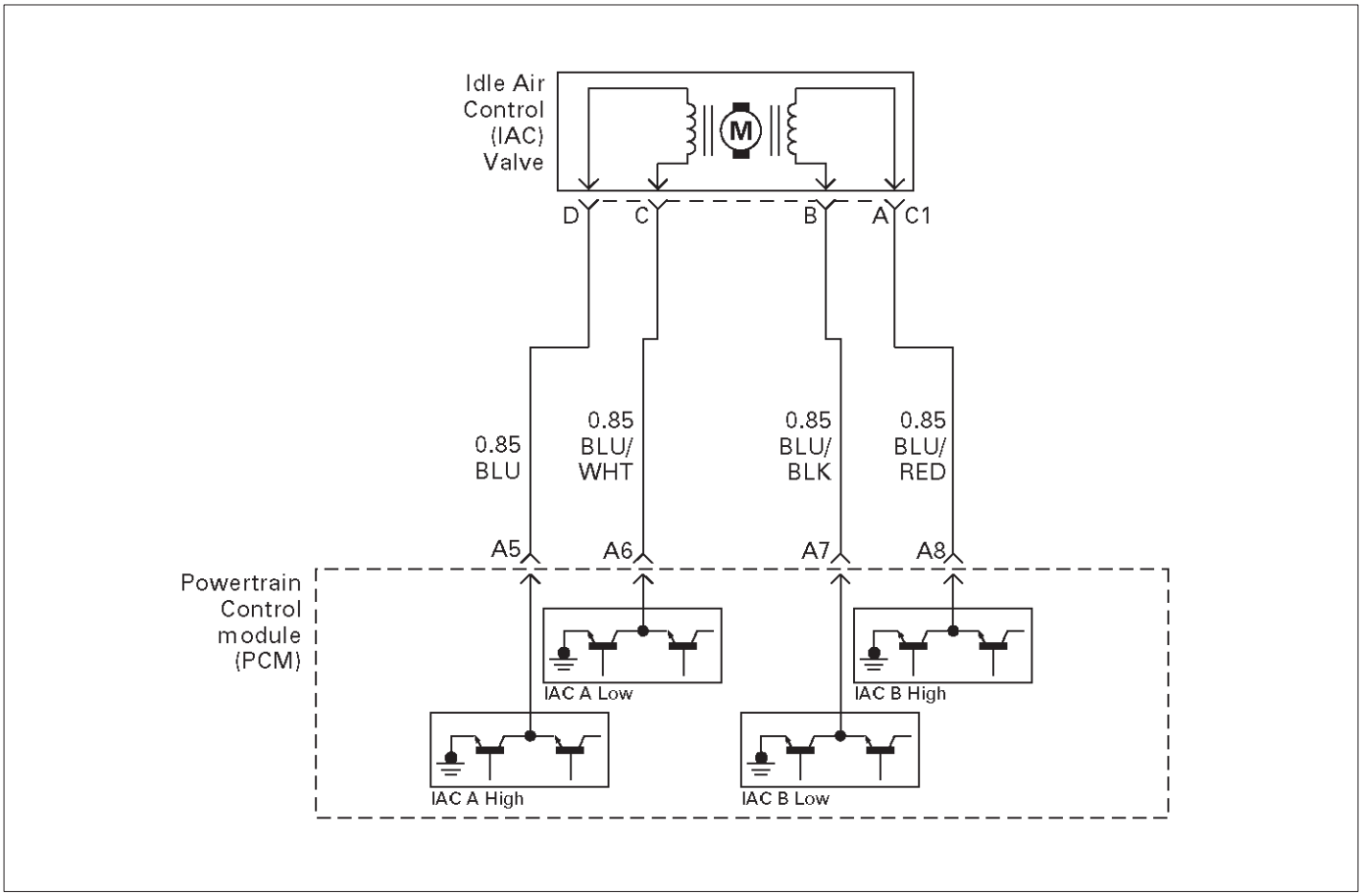

T321115

Circuit Description

The powertrain control module (PCM) controls engine idle speed by adjusting the position of the idle air control (IAC) motor pintle. The IAC is a bi-directional stepper motor driven by two coils. The PCM applies current to the IAC coils in steps (counts) to extend the IAC pintle into a passage in the throttle body to decrease air flow. The PCM reverses the current to retract the pintle, increasing air flow. This method allows highly accurate control of idle speed and quick response to changes in engine load. If the PCM detect a condition where too high of an idle speed is present and the PCM is unable to adjust idle speed by increasing the IAC counts, DTC P1509 will set, indicating a problem with the idle control system.

Conditions for Setting the DTC

- No Tech 2 test is being run.
- None of these DTCs are set: TP sensor, VSS, ECT, EGR, fuel system, MAF, MAP, IAT, canister purge, injector control or ignition control.
- Barometric pressure is above 75 kPa.
- Engine coolant temperature is above 50˚C (120˚F).
- Engine speed is more than 100-200 RPM lower than desired idle, based upon coolant temperature.
- The engine has been running for at least 125 seconds.
- Vehicle speed is less than 1 mph.
- Canister purge duty cycle is above 10%.
- Ignition voltage is between 9.5 volts and 16.7 volts.
- Engine speed is lower than desired idle.
- All of the above conditions are met for 5 seconds.

Action Taken When the DTC Sets

- The PCM will illuminate the malfunction indicator lamp (MIL) after the second consecutive trip in which the fault is detected.
- The PCM will store conditions which were present when the DTC was set as Freeze Frame and in the Failure Records data.

Conditions for Clearing the MIL/DTC

- DTC P1509 can be cleared by using the Tech 2 “Clear Info” function or by disconnecting the PCM battery feed.

Diagnostic Aids

Check for the following conditions:

- Poor connection at PCM or IAC motor – Inspect harness connectors for backed-out terminals, improper mating, broken locks, improperly formed or damaged terminals, and poor terminal-to-wire connection.
- Damaged harness – Inspect the wiring for damage.
- Vacuum leak – Check for a condition that causes a vacuum leak, such as disconnected or damaged hoses, leaks at the EGR valve and the EGR pipe to the intake manifold, leaks at the throttle body, faulty or incorrectly installed PCV valve, leaks at the intake manifold, etc.

- Throttle body – Check for sticking throttle plate. Also inspect the IAC passage for deposits or objects which keep the IAC pintle from fully extending.

Reviewing the Failure Records vehicle mileage since the diagnostic test last failed may help determine how often the condition that caused the DTC to be set occurs. This may assist in diagnosing the condition.

DTC P1509 – IAC System High RPM

Step	Action	Value(s)	Yes	No
1	Was the "On-Board Diagnostic (OBD) System Check" performed?	—	Go to *Step 2*	Go to *OBD System Check*
2	1. Start the engine. 2. Turn all accessories "OFF" (A/C, rear defroster, etc.). 3. Using a Tech 2, command RPM up to 1500, down to 500, and then up to 1500 while monitoring "Engine Speed" on the Tech 2. NOTE: This Tech 2 command may cause the engine to "cut out" when RPM goes above 1500. If this occurs, the "cutting out" will stop when the Tech 2 command for the test is discontinued, or if the Tech 2 command is changed to less than 1500 RPM. Does the "Engine Speed" remain within the specified value of "Desired Idle" for each RPM command?	± 50 RPM	No trouble found. Go to *Diagnostic Aids*	Go to *Step 3*
3	1. Disconnect the IAC. 2. Install IAC Node Light 5-8840-2312-0 or equivalent. 3. With the engine running, command RPM up to 1500, down to 500, and then up to 1500 while observing the node light. NOTE: This Tech 2 command may cause the engine to "cut out" when RPM goes above 1500. If this occurs, the "cutting out" will stop when the Tech 2 command for the test is discontinued, or if the Tech 2 command is changed to less than 1500 RPM. Does each node light cycle red and green (never "OFF")?	—	Go to *Step 5*	Go to *Step 4*
4	1. Check the following circuits for an open, short to voltage, short ground, or poor connections at the PCM: • IAC "A" Low • IAC "A" High • IAC "B" Low • IAC "B" High 2. If a problem is found, repair as necessary. Was a problem found?	—	Verify repair	Go to *Step 8*
5	Visually/physically inspect for following conditions: • Vacuum leaks. • Throttle plate or throttle shaft for binding. • Accelerator and cruise control cables for being misadjusted or for binding. • Faulty, missing, or incorrectly installed PCV valve. Do any of the above require a repair?	—	Refer to appropriate section for on-vehicle service	Go to *Step 6*

DTC P1509 – IAC System High RPM (Cont'd)

Step	Action	Value(s)	Yes	No
6	1. Check for a poor connection at the IAC harness connector. 2. If a problem is found, replace faulty terminals as necessary. Was a problem found?	—	Verify repair	Go to *Step 7*
7	Replace the IAC valve. Is the action complete?	—	Verify repair	—
8	Replace the PCM. **IMPORTANT:** The replacement PCM must be programmed, Refer to *UBS 98model year Immobilizer Workshop Manual.* Is the action complete?	—	Verify repair	—

Diagnostic Trouble Code (DTC) P1618 Serial Peripheral Interface (SPI) PCM Interprocessor Communication Error

Circuit Description

The serial peripheral interface (SPI) communication is used internally by the PCM to send messages between the engine processor and the automatic transmission processor. Included in each message sent between the two-processors is a checksum of the message. Both the engine processor and automatic transmission processor will compare this check sum value with the calculated value. If the checksums don't match, the processor will view the new data as being corrupted and ignore the values. The processor will then use the previous message. The receiving processor will then send a message to the sending processor informing it that it's last message was corrupted.

Conditions for Setting the DTC

- Battery voltage is above 9.0 V for 2 seconds.
- The PCM detects an internal program fault (check sum of data communications error).
- Check sum fault present for 3 out 6 seconds.
- No TCM resets for 2 seconds.

Action Taken When the DTC Sets

- The PCM will flash the "Check Trans" lamp the first time the fault is detected.
- The PCM will store conditions which were present when the DTC was set as Freeze Frame and in the Failure Records data.
- The automatic transmission will operate in the "safety mode" to protect the mechanical parts of the transmission. Shift quality and/or gear changes may not be normal.

Conditions for Clearing the MIL/DTC

- DTC P1618 can be cleared by using the Tech 2 "Clear Info" function or by disconnecting the PCM battery feed.

DTC P1618 – Serial Peripheral Interface (SPI) PCM Interprocessor Communication Error

Step	Action	Value(s)	Yes	No
1	Was the "On-Board Diagnostic (OBD) System Check" performed?	—	Go to Step 2	Go to *OBD System Check*
2	Is the EEPROM calibration the latest version available?	—	Go to *Step 4*	Go to *Step 3*
3	Reprogram the PCM with the latest available calibrations. Does DTC 1618 re-appear when the *OBD System Check* is repeated?	—	Go to *Step 4*	Repair completed
4	Replace the PCM. **IMPORTANT:** The replacement PCM must be programmed. Refer to *UBS 98model year Immobilizer Workshop Manual.* Is the action complete?	—	Verify repair	—

Diagnostic Trouble Code (DTC) P1625 PCM Unexpected Reset

Circuit Description

The powertrain control module (PCM) monitors unexpected PCM reset. This will not turn on MIL light on, only records code DTC P1625.

Conditions for Setting the DTC

- Clock or COP reset.

Action Taken When the DTC Sets

- The PCM will not illuminate the malfunction indicator lamp (MIL).
- The PCM will store conditions which were present when the DTC was set as Failure Records only. This information will not be stored as Freeze Frame data.

Conditions for Clearing the MIL/DTC

- DTC P1625 can be cleared by using the Tech 2 “Clear Info” function or by disconnecting the PCM battery feed.

Diagnostic Aids

Check for the following conditions:

- P1625 alone stored does not need diagnosis. Clear DTC code.

Diagnostic Trouble Code (DTC) P1640 Driver-1-Input High Voltage

Circuit Description

Output driver modules (ODMs) are used by the powertrain control module (PCM) to turn “ON” many of the current-driven devices that are needed to control various engine and transmission functions. Each ODM is capable of controlling up to 7 separate outputs by applying ground to the device which the PCM is commanding “ON.”

Unlike the Quad Driver Modules (QDMs) used in prior model years, ODMs have the capability of diagnosing each output circuit individually. DTC P1640 set indicates an improper voltage level has been detected on an ODM output.

Since A/C is an option, No A/C will cause the air conditioning clutch relay output to always fault. If a fault is seen on the air conditioning clutch relay output, it will not be logged as a fault until the A/C request input interrupts a high voltage, indicating that A/C has been installed.

Conditions for Setting the DTC

- Ignition “ON.”
- Engine running.
- No DTC 1618.
- Ignition voltage is above 13.2 volts for 4 seconds.
- Output voltage does not equal ignition voltage when output is “OFF” or output voltage is not less than 1 volt when output is “ON.”
- Above conditions occur for at least 1 second.

Action Taken When the DTC Sets

- The PCM will not illuminate the malfunction indicator lamp (MIL).
- The PCM will store conditions which were present when the DTC was set as Failure Records only. This information will not be stored as Freeze Frame data.

Conditions for Clearing the MIL/DTC

- DTC P1640 can be cleared by using the Tech 2 “Clear Info” function or by disconnecting the PCM battery feed.

Diagnostic Aids

Check for the following conditions:

- Poor connection at PCM – Inspect harness connectors for backed-out terminals, improper mating, broken locks, improperly formed or damaged terminals, and poor terminal-to-wire connection.
- Damaged harness – Inspect the wiring harness for damage, If the harness appears to be OK, disconnect the PCM, turn the ignition “ON” and observe a voltmeter connected to the suspect driver circuit at the PCM harness connector while moving connectors and wiring harnesses relates to the MIL. A change in voltage will indicate the location of the fault.
- Poor connection at component – Examine for damaged connectors, unplugged connector, or damaged terminals at the following locations: Instrument cluster harness, canister purge solenoid, A/C clutch relay. An open ignition feed circuit at any of these components will cause DTC P1640 to be set.

Reviewing the Failure Records vehicle mileage since the diagnostic test last failed may help determine how often the condition that caused the DTC to be set occurs. This may assist in diagnosing the condition.

The following PCM pins are controlled by output driver modules (ODMs):

- A13 – “Check Engine Lamp”
- A14 – SVS (”Check Trans”)
- B14 – A/C Clutch

Test Description

Number(s) below refer to the step number(s) on the Diagnostic Chart.

6. The Tech 2 Driver Module Status indicates the PCM pin that is affected.

11. The Tech 2 may indicate “short circuit” even when the problem is an open circuit. The cause of an open circuit may be in the component itself-lamp, purge, solenoid, or A/C compressor relay.

13. A short to ground on the ignition side of the component will blow the fuse. Since the fuse was checked in Step 4, a short to ground would be between the affected component and the PCM.

DTC P1640 – Driver-1-Input High Voltage

Step	Action	Value(s)	Yes	No
1	Was the “On-Board Diagnostic (OBD) System Check” performed?	—	Go to *Step 2*	Go to *OBD System Check*
2	1. Ignition “ON,”engine “OFF.” 2. Install the Tech 2. 3. Review and record Tech 2 Failure Records data. 4. Operate the vehicle within Failure Records conditions as noted. 5. Use the Tech 2 to indicate DTC P1640. Does the Tech 2 indicate DTC P1640?	—	Go to *Step 3*	—
3	Check the fuse for the driver circuit that was shown as faulty. Was the fuse blown?	—	Go to *Step 4*	Go to *Step 5*
4	1. Check for a short to ground between the fuse and the affected component. 2. Replace the fuse after making any necessary repairs. Is the action complete?	—	Verify repair	—
5	Disconnect the PCM connector for the affected driver circuit. Is there any damage to the PCM pin or connector?	—	Go to *Step 6*	Go to *Step 7*
6	Repair the damaged pin or terminal. Is the action complete?	—	Verify repair	—
7	Were either of the lamp circuits for “Check Engine” or “Check Trans.” indicated as faulty by the Tech 2?	—	Go to *Step 8*	Go to *Step 14*
8	1. Leave the PCM connector for the lamp driver circuit disconnected. 2. Ignition “ON.” 3. Using a DVM, check the voltage at the PCM connector for the affected lamp driver circuit. Was the voltage equal to the specified value?	B+	Go to *Step 16*	Go to *Step 9*
9	1. Ignition “ON.” 2. Check for battery voltage at the fuse for the affected lamp circuit. Was battery voltage available at the fuse?	—	Go to *Step 11*	Go to *Step 10*
10	Repair the open circuit between the ignition switch and the fuse. Is the action complete?	—	Verify repair	—
11	1. Ignition “OFF.” 2. Disconnect the PCM connector for the affected driver terminal. 3. Connect an ohmmeter between a good ground and the PCM connector for the affected driver. Did the ohmmeter indicate continuity?	—	Go to *Step 12*	Go to *Step 13*
12	Repair the short to ground between the affected component and is PCM driver terminal. Is the action complete?	—	Verify repair	—

DTC P1640 – Driver-1-Input High Voltage (Cont'd)

Step	Action	Value(s)	Yes	No
13	Repair the open circuit between the fuse and the PCM driver terminal for the affected circuit. Is the action complete?	—	Verify repair	—
14	1. Connect the PCM. 2. Start the engine and let it idle. 3. Backprobe the affected terminal at the PCM with a DVM. Was the voltage equal to the specified value?	+B	Go to *Step 16*	Go to *Step 15*
15	1. Run the engine at idle. 2. Check for battery voltage at the fuse for the affected circuit. Was battery voltage available at the fuse?	—	Go to *Step 11*	Go to *Step 10*
16	Replace the PCM. **IMPORTANT:** The replacement PCM must be programmed. Refer to *UBS 98model year Immobilizer Workshop Manual.* Is the action complete?	—	Verify repair	—

Symptom Diagnosis

Preliminary Checks

Before using this section, perform the "On-Board Diagnostic (OBD) System Check" and verify all of the following items:

- The powertrain control module (PCM) and malfunction indicator lamp (MIL) (Service Engine Soon lamp) are operating correctly.
- There are no DTC(s) stored.
- Tech 2 data is within normal operating range. Refer to *Typical Scan Data Values*.
- Verify the customer complaint and locate the correct symptom in the table of contents. Perform the procedure included in the symptom chart.

Visual/Physical Check

Several of the symptom procedures call for a careful visual/physical check. This can lead to correcting a problem without further checks and can save valuable time.

This check should include the following items:

- PCM grounds for cleanliness, tightness and proper location.
- Vacuum hoses for splits, kinks, and proper connections, as shown on the "Vehicle Emission Control Information" label. Check thoroughly for any type of leak or restriction.
- Air intake ducts for collapsed or damaged areas.
- Air leaks at throttle body mounting area, mass air flow (MAF) sensor and intake manifold sealing surfaces.
- Ignition wires for cracking, hardness, and carbon tracking.
- Wiring for proper connections, pinches and cuts.

Intermittents

IMPORTANT: An intermittent problem may or may not turn on the malfunction indicator lamp (MIL) or store a DTC. DO NOT use the Diagnostic Trouble Code (DTC) charts for intermittent problems. The fault must be present to locate the problem.

Most intermittent problems are caused by faulty electrical connections or wiring. Perform a careful visual/physical check for the following conditions:

- Poor mating of the connector halves or a terminal not fully seated in the connector (backed out).
- Improperly formed or damaged terminal.
- All connector terminals in the problem circuit should be carefully checked for proper contact tension.
- Poor terminal-to-wire connection. This requires removing the terminal from the connector body to check.

Road test the vehicle with a J 39200 Digital Multimeter connected to a suspected circuit. An abnormal voltage when the malfunction occurs is a good indication that there is a fault in the circuit being monitored.

Use Tech 2 to help detect intermittent conditions. Tech 2s have several features that can be used to locate an intermittent condition. Use the following feature to find intermittent faults:

- Using Tech 2's "Freeze Frame" buffer or "Failure Records" buffer can aid in locating an intermittent condition. Review and record the information in the freeze frame or failure record associated with the intermittent DTC being diagnosed. The vehicle can be driven within the conditions that were present when the DTC originally set.

To check for loss of diagnostic code memory, disconnect the MAP sensor and idle the engine until the MIL (Service Engine Soon lamp) comes on. DTC P0107 should be stored and kept in memory when the ignition is turned "OFF." If not, the PCM is faulty. When this test is completed, make sure that you clear the DTC P0107 from memory.

An intermittent MIL (Service Engine Soon lamp) with no stored DTC may be caused by the following:

- Ignition coil shorted to ground and arcing at ignition wires or plugs.
- MIL (Service Engine Soon lamp) wire to PCM shorted to ground.
- Poor PCM grounds. Refer to the PCM wiring diagrams.

Check for improper installation of electrical options such as lights, cellular phones, etc. Route ignition coil wiring away from the ignition coils. Check all wires from the PCM to the ignition coil for poor connections.

Check for an open diode across the A/C compressor clutch and check for other open diodes (refer to wiring diagrams in *Electrical Diagnosis*).

If problem has not been found, refer to *PCM Connector Symptom* tables.

Hard Start Symptom

Step	Action	Value(s)	Yes	No
1	**DEFINITION:** Engine cranks, but does not start for a long time. Does eventually run, or may start but immediately stalls. Was the "On-Board Diagnostic (OBD) System Check" performed?	—	Go to *Step 2*	Go to *OBD System Check*
2	1. Perform a bulletin search. 2. If a bulletin that addresses the symptom is found, correct the condition as instructed in the bulletin. Was a bulletin found that addresses the symptom?	—	Verify repair	Go to *Step 3*
3	Was a visual/physical check performed?	—	Go to *Step 4*	Go to *Visual/Physical Check*
4	Check engine coolant temperature (ECT) sensor for shift in value. After 8 hours with the hood up and the engine not running, connect Tech 2. With the ignition "ON" and the engine not running, compare engine coolant temperature to intake air temperature. Are ECT and IAT within the specified value of each other?	± 5˚C (± 9˚F)	Go to *Step 8*	Go to *Step 5*
5	1. Using Tech 2, display the engine coolant temperature and note the value. 2. Check the resistance of the engine coolant temperature sensor. 3. Refer to *Engine Coolant Temperature Sensor Temperature vs. Resistance* chart on *DTC P0118 Diagnostic Support* for resistance specifications. Is the resistance value near the resistance for the temperature noted?	—	Go to *Step 7*	Go to *Step 6*
6	Replace the ECT sensor. Is the action complete?	—	Verify repair	—
7	Locate and repair high resistance or poor connection in the ECT signal circuit or the ECT sensor ground. Is the action complete?	—	Verify repair	—
8	1. Check for a faulty, plugged, or incorrectly installed PCV valve. 2. If a problem is found, repair as necessary. Was a problem found?	—	Verify repair	Go to *Step 9*
9	1. Check for water- or alcohol-contaminated fuel. 2. If a problem is found, repair as necessary. Was a problem found?	—	Verify repair	Go to *Step 10*
10	1. Perform the procedure in *Fuel System Pressure Test*. 2. If a problem is found, repair as necessary. Was a problem found?	—	Verify repair	Go to *Step 11*
11	1. Check for proper ignition voltage output with spark tester J 26792 (ST-125). Refer to *Electric Ignition System* for procedure. 2. If a problem is found, repair as necessary. Was a problem found?	—	Verify repair	Go to *Step 12*

Hard Start Symptom (Cont'd)

Step	Action	Value(s)	Yes	No
12	1. Remove spark plugs. Check for wet plugs, cracks, wear, improper gap, burned electrodes, or heavy deposits. Refer to *Electronic Ignition System*. NOTE: If spark plugs are gas or oil fouled, the cause of the fouling must be determined before replacing the spark plugs. 2. If a problem is found, repair as necessary. Was a problem found?	—	Verify repair	Go to *Step 13*
13	1. Check for a loose ignition coil ground. Refer to *Electronic Ignition System*. 2. If a problem is found, repair as necessary. Was a problem found?	—	Verify repair	Go to *Step 14*
14	1. Remove the ignition coils and check the ignition coils for cracks or carbon tracking. 2. If a problem is found, replace affected coil(s) as necessary. Was a problem found?	—	Verify repair	Go to *Step 15*
15	1. Check IAC operation. Perform the procedure in the *DTC P0506, Step 6* diagnostic table. 2. If a problem is found, repair as necessary. Was a problem found?	—	Verify repair	Go to *Step 16*
16	1. Check for the following engine mechanical problems (refer to *Engine Mechanical*): ● Low compression ● Leaking cylinder head gaskets ● Worn or incorrect camshaft ● Camshaft drive belt slipped or stripped 2. If a problem is found, repair as necessary. Was a problem found?	—	Verify repair	Go to *Step 17*
17	1. Review all diagnostic procedures within this table. 2. If all procedures have been completed and no malfunctions have been found, review/inspect the following: ● Visual/physical inspection ● Tech 2 data ● Freeze Frame data/Failure Records buffer ● All electrical connections within a suspected circuit and/or system. 3. If a problem is found, repair as necessary. Was a problem found?	—	Verify repair	Contact Technical Assistance

Surges and/or Chuggles Symptom

Step	Action	Value(s)	Yes	No
1	**DEFINITION:** Engine power variation under steady throttle or cruise. Feels like the vehicle speeds up and slows down with no change in the accelerator pedal. Was the “On-Board Diagnostic (OBD) System Check” performed?	—	Go to *Step 2*	Go to *OBD System Check*
2	1. Perform a bulletin search. 2. If a bulletin that addresses the symptom is found, correct the condition as instructed in the bulletin. Was a bulletin found that addresses the symptom?	—	Verify repair	Go to *Step 3*
3	Was a visual/physical check performed?	—	Go to *Step 4*	Go to *Visual/Physical Check*
4	Be sure that the driver understands transmission torque converter clutch and A/C compressor operation as explained in the owner’s manual. Inform the customer how the TCC and the A/C clutch operate. Is the customer experiencing a normal condition?	—	System OK	Go to *Step 5*
5	1. Check the the fuel control heated oxygen sensors (HO2S, B1S1 and B2S1). The fuel control heated oxygen sensors (HO2S) should respond quickly to different throttle positions. If they don’t, check them for silicon or other contaminants from fuel or use of improper RTV sealant. The sensors may have a white powdery coating. Silicon contamination causes a high but false HO2S signal voltage (rich exhaust indication). The PCM will then reduce the amount of fuel delivered to the engine, causing a severe driveability problem. For more information, refer to *Powertrain Control Module (PCM) and Sensors*. 2. If a problem is found, repair as necessary. Was a problem found?	—	Verify repair	Go to *Step 6*
6	1. Check the fuel pressure. Refer to *Fuel System Pressure Test*. 2. If a problem is found, repair as necessary. Was a problem found?	—	Verify repair	Go to *Step 7*
7	Monitor the long term fuel trim on Tech 2. Is the long term fuel trim significantly in the negative range (rich condition)?	—	Go to *Step 8*	Go to *Step 9*
8	1. Check items that can cause the engine to run rich. Refer to *Diagnostic Aids* in *DTC P0172 Diagnostic Support*. 2. If a problem is found, repair as necessary. Was a problem found?	—	Go to *Step 10*	Verify repair
9	1. Check items that can cause the engine to run lean. Refer to *Diagnostic Aids* in *DTC P0171*. 2. If a problem is found, repair as necessary. Was a problem found?	—	Go to *Step 10*	Verify repair

Surges and/or Chuggles Symptom (Cont'd)

Step	Action	Value(s)	Yes	No
10	1. Check for proper ignition voltage output with spark tester J 26792 (ST-125). Refer to *Electric Ignition System* for procedure. 2. If a problem is found, repair as necessary. Was a problem found?	—	Verify repair	Go to *Step 11*
11	1. Check for a loose ignition coil ground. Refer to *Electric Ignition System*. 2. If a problem is found, repair as necessary. Was a problem found?	—	Verify repair	Go to *Step 12*
12	1. Check the ignition coils for cracks or carbon tracking. 2. If a problem is found, repair as necessary. Was a problem found?	—	Verify repair	Go to *Step 13*
13	1. Remove the spark plugs and check for wet plugs, cracks, wear, improper gap, burned electrodes, or heavy deposits. Refer to *Electronic Ignition System*. NOTE: If spark plugs are gas or oil fouled, the cause of the fouling must be determined before replacing the spark plugs. 2. If a problem is found, repair as necessary. Was a problem found?	—	Verify repair	Go to *Step 14*
14	1. Check the injector connections. 2. If any of the injector connectors are connected to an incorrect cylinder, correct as necessary. Was a problem found?	—	Verify repair	Go to *Step 15*
15	1. Check PCM grounds for the cleanliness, tightness and proper locations. Refer to the PCM wiring diagrams in *Electrical Diagnosis*. 2. If a problem is found, repair as necessary. Was a problem found?	—	Verify repair	Go to *Step 16*
16	1. Check MAF sensor connections. 2. If a problem is found, replace the faulty terminals as necessary. Refer to *Electrical Diagnosis* for wiring repair procedures. Was a problem found?	—	Verify repair	Go to *Step 17*
17	1. Visually/physically check vacuum hoses for splits, kinks, and proper connections and routing as shown on the "Vehicle Emission Control Information" label. 2. If a problem is found, repair as necessary. Was a problem found?	—	Verify repair	Go to *Step 18*

Surges and/or Chuggles Symptom (Cont'd)

Step	Action	Value(s)	Yes	No
18	1. Check the exhaust system for possible restriction: ● Inspect the exhaust system for damaged or collapsed pipes. ● Inspect the muffler for heat distress or possible internal failure. ● Check for a possible plugged three-way catalytic converter by checking the exhaust system back pressure. Refer to *Restricted Exhaust System Check*. 2. If a problem is found, repair as necessary. Was a problem found?	—	Verify repair	Go to *Step 19*
19	1. Review all diagnostic procedures within this table. 2. If all procedures have been completed and no malfunctions have been found, review/inspect the following: ● Visual/physical inspection ● Tech 2 data ● Freeze Frame data/Failure Records buffer ● All electrical connections within a suspected circuit and/or system. 3. If a problem is found, repair as necessary. Was a problem found?	—	Verify repair	Contact Technical Assistance

Lack of Power, Sluggish or Spongy Symptom

Step	Action	Value(s)	Yes	No
1	**DEFINITION:** Engine delivers less than expected power. Little or no increase in speed when accelerator pedal is pushed down part-way. Was the "On-Board Diagnostic (OBD) System Check" performed?	—	Go to *Step 2*	Go to *OBD System Check*
2	1. Perform a bulletin search. 2. If a bulletin that addresses the symptom is found, correct the condition as instructed in the bulletin. Was a bulletin found that addresses the symptom?	—	Verify repair	Go to *Step 3*
3	Was a visual/physical check performed?	—	Go to *Step 4*	Go to *Visual/Physical Check*
4	1. Remove and check the air filter element for dirt or restrictions. Refer to *Air Intake System* in *ON-Vehicle Service*. 2. Replace the air filter element if necessary. Was a repair required?	—	Verify repair	Go to *Step 5*
5	1. Check for low fuel pressure. Refer to *Fuel System Pressure Test*. 2. If a problem is found, repair as necessary. Was a problem found?	—	Verify repair	Go to *Step 6*
6	1. Check for water- or alcohol-contaminated fuel. 2. If a problem is found, repair as necessary. Was a problem found?	—	Verify repair	Go to *Step 7*
7	1. Using Tech 2, monitor the knock sensor (KS) system for excessive spark retard activity. Refer to *Knock Sensor (KS) System*. 2. If a problem is found, repair as necessary. Was a problem found?	—	Verify repair	Go to *Step 8*
8	1. Check for proper ignition voltage output with spark tester J 26792 (ST-125). Refer to *Electronic Ignition System* for procedure. 2. If a problem is found, repair as necessary. Was a problem found?	—	Verify repair	Go to *Step 9*
9	1. Remove the spark plugs and check for wet plugs, cracks, wear, improper gap, burned electrodes, or heavy deposits. Refer to *Electronic Ignition System*. NOTE: If spark plugs are gas or oil fouled, the cause of the fouling must be determined before replacing the spark plugs. 2. If a problem is found, repair as necessary. Was a problem found?	—	Verify repair	Go to *Step 10*
10	1. Check the ignition coils for cracks or carbon tracking. 2. If a problem is found, repair as necessary. Was a problem found?	—	Verify repair	Go to *Step 11*

Lack of Power, Sluggish or Spongy Symptom (Cont'd)

Step	Action	Value(s)	Yes	No
11	1. Check the PCM grounds for the cleanliness, tightness and proper locations. Refer to the PCM wiring diagrams in *Electrical Diagnosis*. 2. If a problem is found, repair as necessary. Was a problem found?	—	Verify repair	Go to *Step 12*
12	1. Check the exhaust system for possible restriction: ● Inspect the exhaust system for damaged or collapsed pipes. ● Inspect the muffler for heat distress or possible internal failure. ● Check for a possible plugged three-way catalytic converter by checking the exhaust system back pressure. Refer to *Restricted Exhaust System Check*. 2. If a problem is found, repair as necessary. Was a problem found?	—	Verify repair	Go to *Step 13*
13	1. Check the torque converter clutch (TCC) for proper operation. Refer to *4L30-E Transmission Diagnosis*. 2. If a problem is found, repair as necessary. Was a problem found?	—	Verify repair	Go to *Step 14*
14	1. Check for an engine mechanical problem. Check for low compression, incorrect or worn camshaft, loose timing belt, etc. Refer to *Engine Mechanical*. 2. If a problem is found, repair as necessary. Was a problem found?	—	Verify repair	Go to *Step 15*
15	1. Review all diagnostic procedures within this table. 2. If all procedures have been completed and no malfunctions have been found, review/inspect the following: ● Visual/physical inspection ● Tech 2 data ● Freeze Frame data/Failure Records buffer ● All electrical connections within a suspected circuit and/or system. 3. If a problem is found, repair as necessary. Was a problem found?	—	Verify repair	Contact Technical Assistance

Detonation/Spark Knock Symptom

Step	Action	Value(s)	Yes	No
1	**DEFINITION:** A mild to severe ping, usually worse under acceleration. The engine makes sharp metallic knocks that change with throttle opening. Was the “On-Board Diagnostic (OBD) System Check” performed?	—	Go to *Step 2*	Go to *OBD System Check*
2	1. Perform a bulletin search. 2. If a bulletin that addresses the symptom is found, correct the condition as instructed in the bulletin. Was a bulletin found that addresses the symptom?	—	Verify repair	Go to *Step 3*
3	Was a visual/physical check performed?	—	Go to *Step 4*	Go to *Visual/Physical Check*
4	If Tech 2 readings are normal (refer to *Typical Scan Values*) and there are no engine mechanical faults, fill the fuel tank with a known quality gasoline that has a minimum octane rating of 87 and re-evaluate the vehicle performance. Is detonation present?	—	Go to *Step 5*	Verify repair
5	1. Check the transmission range switch circuit. Use Tech 2 and be sure Tech 2 indicates that the vehicle is in drive with the gear selector in drive or overdrive. 2. If a problem is found, diagnose and repair the transmission range switch as necessary (refer to *4L30-E Automatic Transmission Diagnosis*). Was a problem found?	—	Verify repair	Go to *Step 6*
6	1. Check TCC operation. Refer to *4L30-E Transmission Diagnosis*. 2. If a problem is found, repair as necessary. Was a problem found?	—	Verify repair	Go to *Step 7*
7	1. Check for obvious overheating problems: • Low engine coolant. • Restricted air flow to radiator, or restricted water flow through radiator. • Correct coolant solution should be a 50/50 mix of approved antifreeze/coolant and water. Refer to *Engine Cooling*. 2. If a problem is found, repair as necessary. Was a problem found?	—	Verify repair	Go to *Step 8*
8	1. Check fuel pressure. Refer to Chart Fuel System Pressure Test. 2. If a problem is found, repair as necessary. Was a problem found?	—	Verify repair	Go to *Step 9*
9	1. Check items that can cause an engine to run lean (long term fuel trim significantly in the positive range). For a lean condition, refer to *Diagnostic Aids* in *DTC P0171 Diagnostic Support*. 2. If a problem is found, repair as necessary. Was a problem found?	—	Verify repair	Go to *Step 10*

Detonation/Spark Knock Symptom (Cont'd)

Step	Action	Value(s)	Yes	No
10	1. Spark plugs for proper heat range. Refer to *General Information*. 2. If incorrect spark plugs are installed, replace spark plugs as necessary. Did any spark plugs require replacement?	—	Verify repair	Go to *Step 11*
11	1. Remove excessive carbon buildup with a top engine cleaner. Refer to instructions on the top engine cleaner can. 2. Re-evaluate vehicle performance. Is detonation still present?	—	Go to *Step 12*	Verify repair
12	1. Check for an engine mechanical problem. Perform a cylinder compression check. Refer to *Engine Mechanical*. 2. If a problem is found, repair as necessary. Was a problem found?	—	Verify repair	Go to *Step 13*
13	1. Review all diagnostic procedures within this table. 2. If all procedures have been completed and no malfunctions have been found, review/inspect the following: • Visual/physical inspection • Tech 2 data • Freeze Frame data/Failure Records buffer • All electrical connections within a suspected circuit and/or system. 3. If a problem is found, repair as necessary. Was a problem found?	—	Verify repair	Contact Technical Assistance

Rough, Unstable, or Incorrect Idle, Stalling Symptom

Step	Action	Value(s)	Yes	No
1	**DEFINITION:** Engine runs unevenly at idle. If severe, the engine or vehicle may shake. Engine idle speed may vary in RPM. Either condition may be severe enough to stall the engine. Was the “On-Board Diagnostic (OBD) System Check” performed?	—	Go to *Step 2*	Go to *OBD System Check*
2	1. Perform a bulletin search. 2. If a bulletin that addresses the symptom is found, correct the condition as instructed in the bulletin. Was a bulletin found that addresses the symptom?	—	Go to *Step 13*	Go to *Step 3*
3	Was a visual/physical check performed?	—	Go to *Step 4*	Go to *Visual/Physical Check*
4	1. Check the PCM grounds for cleanliness, tightness and proper routing. Refer to the PCM wiring diagrams in *Electrical Diagnosis*. 2. If a problem is found, repair as necessary. Was a problem found?	—	Verify repair	Go to *Step 5*
5	Observe the long term fuel trim on Tech 2. Is the long term fuel trim significantly in the negative range (rich condition)?	—	Go to *Step 6*	Go to *Step 7*
6	1. Check items that can cause the engine to run rich. Refer to *Diagnostic Aids* in *DTC P0172 Diagnostic Support*. 2. If a problem is found, repair as necessary. Was a problem found?	—	Verify repair	Go to *Step 9*
7	Is the long term fuel trim significantly in the positive range (lean condition)?	—	Go to *Step 8*	Go to *Step 9*
8	1. Check items that can cause the engine to run lean. Refer to *Diagnostic Aids* in *DTC P0171 Diagnostic Support*. 2. If a problem is found, repair as necessary. Was a problem found?	—	Verify repair	Go to *Step 9*
9	1. Check for incorrect idle speed. Ensure that the following conditions are present: ● The engine is fully warm. ● The accessories are “OFF.” 2. Using Tech 2, monitor the IAC position. Is the IAC position within the specified values?	Between 10 and 50 counts	Go to *Step 11*	Go to *Step 10*

Rough, Unstable, or Incorrect Idle, Stalling Symptom (Cont'd)

Step	Action	Value(s)	Yes	No
10	1. Visually/physically inspect for the following conditions: ● Restricted air intake system. Check for a possible collapsed air intake duct, restricted air filter element, or foreign objects blocking the air intake system. ● Throttle body. Check for objects blocking the IAC passage or throttle bore, excessive deposits in the IAC passage and on the IAC pintle, and excessive deposits in the throttle bore and on the throttle plate. ● Large vacuum leak. Check for a condition that causes a large vacuum leak, such as an incorrectly installed or faulty crankcase ventilation valve or a disconnected brake booster hose. 2. If a problem is found, repair as necessary. Was a problem found?	—	Verify repair	Go to *Step 8*
11	Check the injector connections. If any of the injectors are connected to an incorrect cylinder, correct as necessary. Was a problem found?	—	Verify repair	Go to *Step 12*
12	1. Perform the "Injector Coil/Balance Test" in *Fuel Metering System*. 2. If a problem is found, repair as necessary. Was a problem found?	—	Verify repair	Go to *Step 13*
13	1. Check for fuel in the pressure regulator vacuum hose. 2. If fuel is present, replace the fuel pressure regulator assembly. Refer to *Fuel Metering System*. 3. If a problem is found, repair as necessary. Was a problem found?	—	Verify repair	Go to *Step 14*
14	1. Check for proper ignition voltage output with spark tester J 26792 (ST-125). Refer to *Electronic Ignition System* for the procedure. 2. If a problem is found, repair as necessary. Was a problem found?	—	Verify repair	Go to *Step 15*
15	1. Remove spark plugs. Check for wet plugs, cracks, wear, improper gap, burned electrodes, or heavy deposits. Refer to *Electronic Ignition System*. NOTE: If spark plugs are gas or oil fouled, the cause of the fouling must be determined before replacing the spark plugs. 2. If a problem is found, repair as necessary. Was a problem found?	—	Verify repair	Go to *Step 16*
16	1. Check for a loose ignition coil ground. Refer to *Electrical Ignition System*. 2. If a problem is found, repair as necessary. Was a problem found?	—	Verify repair	Go to *Step 17*

Rough, Unstable, or Incorrect Idle, Stalling Symptom (Cont'd)

Step	Action	Value(s)	Yes	No
17	1. Check ignition coils for cracks or carbon tracking. 2. If a problem is found, repair as necessary. Was a problem found?	—	Verify repair	Go to *Step 18*
18	Using Tech 2, monitor the throttle position (TP) angle with the engine idling. Is the TP angle at the specified value and steady?	0%	Go to *Step 19*	Refer to *DTC P0123* for further diagnosis
19	1. Check the positive crankcase ventilation (PCV) valve for proper operation. Refer to *Crankcase Ventilation System*. 2. If a problem is found, repair as necessary. Was a problem found?	—	Verify repair	Go to *Step 20*
20	1. Check the transmission range switch circuit. Use Tech 2 and be sure Tech 2 indicates that the vehicle is in drive with the gear selector in drive or overdrive. 2. If a problem is found, diagnose and repair the transmission range switch as necessary (refer to *4L30-E Automatic Transmission Diagnosis*). Was a problem found?	—	Verify repair	Go to *Step 21*
21	1. Check for the following engine mechanical items. Refer to *Engine Mechanical* for diagnosis procedures: • EGR valve mounted backward. Compare with a known-good vehicle. • Low compression • Sticking or leaking valves • Worn camshaft lobe(s) • Camshaft drive belt slipped or stripped • Incorrect valve timing • Worn rocker arms • Broken valve springs 2. If a problem is found, repair as necessary. Was a problem found?	—	Verify repair	Go to *Step 22*
22	1. Check for faulty motor mounts. Refer to *Engine Mechanical* for inspection of mounts. 2. If a problem is found, repair as necessary. Was a problem found?	—	Verify repair	Go to *Step 23*
23	1. Review all diagnostic procedures within this table. 2. If all procedures have been completed and no malfunctions have been found, review/inspect the following: • Visual/physical inspection • Tech 2 data • Freeze Frame data/Failure Records buffer • All electrical connections within a suspected circuit and/or system. 3. If a problem is found, repair as necessary. Was a problem found?	—	Verify repair	Contact Technical Assistance

Poor Fuel Economy Symptom

Step	Action	Value(s)	Yes	No
1	**DEFINITION:** Fuel economy, as measured by an actual road test, is noticeably lower than expected. Also, economy is noticeably lower than it was on this vehicle at one time, as previously shown by an actual road test. (Non-standard tires will cause odometer readings to be incorrect, and that may cause fuel economy to appear poor when it is actually normal.) Was the "On-Board Diagnostic (OBD) System Check" performed?	—	Go to *Step 2*	Go to *OBD System Check*
2	1. Perform a bulletin search. 2. If a bulletin that addresses the symptom is found, correct the condition as instructed in the bulletin. Was a bulletin found that addresses the symptom?	—	Verify repair	Go to *Step 3*
3	Was a visual/physical check performed?	—	Go to *Step 4*	Go to *Visual/Physical Check*
4	Check owner's driving habits. ● Is the A/C "ON" full time (defroster mode "ON")? ● Are tires at the correct pressure? ● Are excessively heavy loads being carried? ● Is acceleration too much, too often? Was a problem found?	—	Go to *Step 5*	Go to *Step 6*
5	Review the items in Step 4 with the customer and advise as necessary. Is the action complete?	—	System OK	—
6	1. Visually/physically check: Vacuum hoses for splits, kinks, and improper connections and routing as shown on the "Vehicle Emission Control Information" label. 2. If a problem is found, repair as necessary. Was a problem found?	—	Verify repair	Go to *Step 7*
7	1. Remove and check the air filter element for dirt or for restrictions. Refer to *Air Intake System*. 2. Replace the air filter element if necessary. Was a repair required?	—	Verify repair	Go to *Step 8*
8	1. Remove spark plugs and check for wet plugs, cracks, wear, improper gap, burned electrodes, or heavy deposits. Refer to *Spark Plug Replacement*. NOTE: If spark plugs are gas or oil fouled, the cause of the fouling must be determined before replacing the spark plugs. 2. If a problem is found, repair as necessary. Was a problem found?	—	Verify repair	Go to *Step 9*
9	1. Check for low engine coolant level. Refer to *Engine Cooling*. 2. If a problem is found, repair as necessary. Was a problem found?	—	Verify repair	Go to *Step 10*

Poor Fuel Economy Symptom (Cont'd)

Step	Action	Value(s)	Yes	No
10	1. Check for an incorrect or faulty engine thermostat. Refer to *Engine Cooling*. 2. If a problem is found, repair as necessary. Was a problem found?	—	Verify repair	Go to *Step 11*
11	1. Check for low engine compression. Refer to *Engine Mechanical*. 2. If a problem is found, repair as necessary. Was a problem found?	—	Verify repair	Go to *Step 12*
12	1. Check the TCC operation. Refer to *4L30-E Transmission Diagnosis*. 2. If a problem is found, repair as necessary. Was a problem found?	—	Verify repair	Go to *Step 13*
13	1. Check the exhaust system for possible restriction: ● Inspect the exhaust system for damaged or collapsed pipes. ● Inspect the muffler for heat distress or possible internal failure. ● Check for a possible plugged three-way catalytic converter by checking the exhaust system back pressure. Refer to *Restricted Exhaust System Check*. 2. If a problem is found, repair as necessary. Was a problem found?	—	Verify repair	Go to *Step 14*
14	Check for proper calibration of the speedometer. Does the speed indicated on the speedometer closely match the vehicle speed displayed on Tech 2?	—	Go to *Step 16*	Go to *Step 15*
15	Diagnose and repair an inaccurate speedometer condition as necessary. Refer to *Vehicle Speed Sensor* in *Electrical Diagnosis*. Was a problem found?	—	Verify repair	—
16	1. Check the air intake system and the crankcase for air leaks. Refer to *Air Intake System* and *Crankcase Ventilation System*. 2. If a problem is found, repair as necessary. Was a problem found?	—	Verify repair	Go to *Step 17*
17	1. Review all diagnostic procedures within this table. 2. When all procedures have been completed and no malfunctions have been found, review/inspect the following: ● Visual/physical inspection ● Tech 2 data ● Freeze Frame data/Failure Records buffer ● All connections within a suspected circuit and/or system. 3. If a problem is found, repair as necessary. Was a problem found?	—	Verify repair	Go to *Step 18*
18	Perform the procedure in *Fuel System Pressure Test*. Was the fuel pressure normal?	—	Contact Technical Assistance	Verify repair

Excessive Exhaust Emissions or Odors Symptom

Step	Action	Value(s)	Yes	No
1	**DEFINITION:** Vehicle fails an emission test. Vehicle has excessive "rotten egg" smell. (Excessive odors do not necessarily indicate excessive emissions.) Was the "On-Board Diagnostic (OBD) System Check" performed?	—	Go to *Step 2*	Go to *OBD System Check*
2	1. Perform a bulletin search. 2. If a bulletin that addresses the symptom is found, correct the condition as instructed in the bulletin. Was a bulletin found that addresses the symptom?	—	Go to *Step 12*	Go to *Step 3*
3	Was a thorough visual/physical check performed?	—	Go to *Step 4*	Go to *Visual/Physical Check*
4	1. Check for vacuum leaks. Check vacuum lines, intake manifold, throttle body, etc. 2. If a problem is found, repair as necessary. Were any vacuum leaks located?	—	Go to *Step 12*	Go to *Step 5*
5	1. Check the fuel cap for proper installation. 2. Secure the fuel cap if necessary. Was the fuel cap installed properly?	—	Go to *Step 6*	Go to *Step 12*
6	1. Check the fuel pressure. Perform the procedure in *Fuel System Pressure Test*. 2. If a problem is found, repair as necessary. Was a problem found?	—	Go to *Step 12*	Go to *Step 7*
7	1. Check for a faulty, plugged, or incorrectly installed crankcase ventilation valve; also check the crankcase ventilation system for plugging. 2. If a problem is found, repair as necessary. Was a problem found?	—	Go to *Step 12*	Go to *Step 8*
8	1. Check the injector connections. 2. If any of the injectors are connected to an incorrect cylinder, correct as necessary. Was a problem found?	—	Go to *Step 12*	Go to *Step 9*
9	1. Perform the "Injector Coil/Balance Test" in *Fuel Metering System*. 2. If a problem is found, repair as necessary. Was a problem found?	—	Go to *Step 12*	Go to *Step 10*
10	1. Refer to *Engine Cooling* for cooling system diagnosis. 2. If a problem is found, repair as necessary. Was a problem found?	—	Go to *Step 12*	Go to *Step 11*
11	1. Remove excessive carbon buildup with a top engine cleaner. Refer to the instructions on the top engine cleaner can. 2. Perform the exhaust emission test. Does the vehicle pass the test?	—	System OK	Go to *Step 13*
12	Perform the exhaust emission test. Does the vehicle pass the test?	—	System OK	Go to *Step 13*

Excessive Exhaust Emissions or Odors Symptom (Cont'd)

Step	Action	Value(s)	Yes	No
13	Does the exhaust emission test indicate excessive CO and HC levels or is long term fuel trim significantly in the negative range (rich condition)?	—	Go to *Step 14*	Go to *Step 15*
14	1. Check items that can cause the engine to run rich. Refer to *Diagnostic Aids* in *DTC P0172 Diagnostic Support*. Make any necessary repairs. 2. Perform the exhaust emission test. Does the vehicle pass the test?	—	System OK	Go to *Step 16*
15	1. Check items that can cause the engine to run lean. Refer to *Diagnostic Aids* in *DTC P0171 Diagnostic Support*. Make any necessary repairs. 2. Perform the exhaust emission test. Does the vehicle pass the test?	—	System OK	Go to *Step 16*
16	1. Check the EGR system. 2. If a problem is found, repair as necessary. Was a problem found?	—	Go to *Step 12*	Go to *Step 17*
17	1. Check for an engine mechanical problem. Perform a cylinder compression check (refer to *Engine Mechanical*). 2. If a problem is found, repair as necessary. Was a problem found?	—	Go to *Step 12*	Go to *Step 18*
18	1. Review all diagnostic procedures within this table. 2. If all procedures have been completed and no malfunctions have been found, review/inspect the following: ● Visual/physical inspection ● Tech 2 data ● Freeze Frame data/Failure Records butter ● All electrical connections within a suspected circuit and/or system. 3. If a problem is found, repair as necessary. Was a problem found?	—	Verify repair	Contact Technical Assistance

Dieseling, Run-On Symptom

Step	Action	Value(s)	Yes	No
1	**DEFINITION:** Engine continues to run after key is turned “OFF,” but runs very rough. If engine runs smooth, check ignition switch and adjustment. Was the “On-Board Diagnostic (OBD) System Check” performed?	—	Go to *Step 2*	Go to *OBD System Check*
2	1. Perform a bulletin search. 2. If a bulletin that addresses the symptom is found, correct the condition as instructed in the bulletin. Was a bulletin found that addresses the symptom?	—	Verify repair	Go to *Step 3*
3	Was a visual/physical check performed?	—	Go to *Step 4*	Go to *Visual/Physical Check*
4	1. Check for a short between B+ and any of the ignition feed circuits. 2. If a problem is found, repair as necessary. Was a problem found?	—	Verify repair	Go to *Step 5*
5	1. Review all diagnostic procedures within this table. 2. If all procedures have been completed and no malfunctions have been found, review/inspect the following: ● Visual/physical inspection ● Tech 2 data ● Freeze Frame data/Failure Records butter ● All electrical connections within a suspected circuit and/or system 3. If a problem is found, repair as necessary. Was a problem found?	—	Verify repair	Contact Technical Assistance

Backfire Symptom

Step	Action	Value(s)	Yes	No
1	**DEFINITION:** Fuel ignites in the intake manifold, or in the exhaust system, making a loud popping noise. Was the “On-Board Diagnostic (OBD) System Check” performed?	—	Go to *Step 2*	Go to *OBD System Check*
2	1. Perform a bulletin search. 2. If a bulletin that addresses the symptom is found, correct the condition as instructed in the bulletin. Was a bulletin found that addresses the symptom?	—	Verify repair	Go to *Step 3*
3	Was a visual/physical check performed?	—	Go to *Step 4*	Go to *Visual/Physical Check*
4	1. Check for proper ignition voltage coil output with spark tester 5-8840-0383-0. Refer to *Electric Ignition System* for procedure. 2. If a problem is found, repair as necessary. Was a problem found?	—	Verify repair	Go to *Step 5*
5	1. Remove spark plugs and check for wet plugs, cracks, wear, improper gap, burned electrodes, or heavy deposits. Refer to *Electronic Ignition System*. NOTE: If spark plugs are gas or oil fouled, the cause of the fouling must be determined before replacing the spark plugs. Refer to *DTC P0172* to determine the cause of a rich condition or *Engine Mechanical* for an oil fouling condition. 2. If a problem is found, repair as necessary. Was a problem found?	—	Verify repair	Go to *Step 6*
6	1. Visually/physically inspect the ignition coils for cracks. 2. If a problem is found, repair as necessary. Was a problem found?	—	Verify repair	Go to *Step 7*
7	1. Check for an intermittent ignition system malfunction: • Intermittent CKP 58X signal. • Intermittent ignition feed circuit or sensor ground circuit to the crankshaft position sensor. 2. If a problem is found, repair as necessary. Was a problem found?	—	Verify repair	Go to *Step 8*
8	1. Check the fuel pressure. Refer to *Fuel System Pressure Test*. 2. If a problem is found, repair as necessary. Was a problem found?	—	Verify repair	Go to *Step 9*

Backfire Symptom (Cont'd)

Step	Action	Value(s)	Yes	No
9	1. Check for the following engine mechanical conditions. Refer to *Engine Mechanical* for diagnosis procedures: ● Low compression ● Sticking or leaking valves ● Worn camshaft lobe(s) ● Camshaft drive belt slipped or stripped ● Incorrect valve timing 2. If a problem is found, repair as necessary. Was a problem found?	—	Verify repair	Go to *Step 10*
10	1. Check the intake and exhaust manifold(s) for casting flash. Refer to *Engine Mechanical*. 2. If a problem is found, repair as necessary. Was a problem found?	—	Verify repair	Go to *Step 11*
11	1. Review all diagnostic procedures within this table. 2. If all procedures have been completed and no malfunctions have been found, review/inspect the following: ● Visual/physical inspection ● Tech 2 data ● Freeze Frame data/Failure Records butter ● All electrical connections within a suspected circuit and/or system. 3. If a problem is found, repair as necessary. Was a problem found?	—	Verify repair	Contact Technical Assistance

Cuts Out, Misses Symptom

Step	Action	Value(s)	Yes	No
1	**DEFINITION:** Steady pulsation or jerking that follows engine speed; usually more pronounced as engine load increases. Was the “On-Board Diagnostic (OBD) System Check” performed?	—	Go to *Step 2*	Go to *OBD System Check*
2	1. Perform a bulletin search. 2. If a bulletin that addresses the symptom is found, correct the condition as instructed in the bulletin. Was a bulletin found that addresses the symptom?	—	Go to *Step 13*	Go to *Step 3*
3	Was a visual/physical check performed?	—	Go to *Step 4*	Go to *Visual/Physical Check*
4	1. Check the PCM grounds for clearness, tightness and proper routing. Refer to the PCM wiring diagrams in *Electrical Diagnosis*. 2. If a problem is found, repair as necessary. Was a problem found?	—	Verify repair	Go to *Step 5*
5	Observe the long term fuel trim on Tech 2. Is the long term fuel trim significantly in the negative range (rich condition)?	—	Go to *Step 6*	Go to *Step 7*
6	1. Check items that can cause the engine to run rich. Refer to *Diagnostic Aids* in *DTC P0172 Diagnostic Support*. 2. If a problem is found, repair as necessary. Was a problem found?	—	Verify repair	Go to *Step 9*
7	Is the long term fuel trim significantly in the positive range (lean condition)?	—	Go to *Step 8*	Go to *Step 9*
8	1. Check items that can cause the engine to run lean. Refer to *Diagnostic Aids* in *DTC P0171 Diagnostic Support*. 2. If a problem is found, repair as necessary. Was a problem found?	—	Verify repair	Go to *Step 9*
9	1. Check for incorrect idle speed. Ensure that the following conditions are present: ● The engine is fully warm. ● The accessories are “off.” 2. Using Tech 2, monitor the IAC position. Is the IAC position within the specified values?	Between 5 and 50 counts	Go to *Step 11*	Go to *Step 10*

Cuts Out, Misses Symptom (Cont'd)

Step	Action	Value(s)	Yes	No
10	1. Visually/physically inspect for the following conditions: ● Restricted air intake system. Check for a possible collapsed air intake duct, restricted air filter element, or foreign objects blocking the air intake system. ● Throttle body. Check for objects blocking the IAC passage or throttle bore, excessive deposits in the IAC passage and on the IAC pintle, and excessive deposits in the throttle bore and on the throttle plate. ● Large vacuum leak. Check for a condition that causes a large vacuum leak, such as an incorrectly installed or faulty PCV valve or brake booster hose disconnected . 2. If a problem is found, repair as necessary. Was a problem found?	—	Verify repair	Go to *Step 8*
11	Check the injector connections. If any of the injectors are connected to an incorrect cylinder, correct as necessary. Was a problem found?	—	Verify repair	Go to *Step 12*
12	1. Perform the "Injector Coil/Balance Test" in *Fuel Metering System*. 2. If a problem is found, repair as necessary. Was a problem found?	—	Verify repair	Go to *Step 13*
13	1. Check for fuel in the pressure regulator vacuum hose. 2. If fuel is present, replace the fuel pressure regulator assembly. Refer to *Fuel Metering System*. 3. If a problem is found, repair as necessary. Was a problem found?	—	Verify repair	Go to *Step 14*
14	1. Check for proper ignition voltage output with spark tester J 26792 (ST-125). Refer to *Electronic Ignition System* for the procedure. 2. If a problem is found, repair as necessary. Was a problem found?	—	Verify repair	Go to *Step 15*
15	1. Remove spark plugs. Check for wet plugs, cracks, wear, improper gap, burned electrodes, or heavy deposits. Refer to *Electronic Ignition System*. NOTE: If spark plugs are gas or oil fouled, the cause of the fouling must be determined before replacing the spark plugs. 2. If a problem is found, repair as necessary. Was a problem found?	—	Verify repair	Go to *Step 16*
16	1. Check for a loose ignition coil ground. Refer to *Electronic Ignition System*. 2. If a problem is found, repair as necessary. Was a problem found?	—	Verify repair	Go to *Step 17*

Cuts Out, Misses Symptom (Cont'd)

Step	Action	Value(s)	Yes	No
17	1. Check ignition coils for cracks or carbon tracking. 2. If a problem is found, repair as necessary. Was a problem found?	—	Verify repair	Go to *Step 18*
18	Using Tech 2, monitor the TP angle with the engine idling. Is the TP angle at the specified value and steady?	0%	Go to *Step 19*	Refer to *DTC P0123* for further diagnosis
19	1. Check the PCV valve for proper operation. Refer to *Crankcase Ventilation System*. 2. If a problem is found, repair as necessary. Was a problem found?	—	Verify repair	Go to *Step 20*
20	1. Check the transmission range switch circuit. Use Tech 2 and be sure Tech 2 indicates that the vehicle is in drive with the gear selector in drive or overdrive. 2. If a problem is found, diagnose and repair the transmission range switch as necessary (refer to *4L30-E Automatic Transmission Diagnosis*). Was a problem found?	—	Verify repair	Go to *Step 21*
21	1. Check the following engine mechanical items. Refer to *Engine Mechanical* for diagnosis procedures: • Low compression • Sticking or leaking valves • Worn camshaft lobe(s) • Camshaft drive belt slipped or stripped • Incorrect valve timing • Worn rocker arms • Broken valve springs 2. If a problem is found, repair as necessary. Was a problem found?	—	Verify repair	Go to *Step 22*
22	1. Check for faulty motor mounts. Refer to *Engine Mechanical* for inspection of mounts. 2. If a problem is found, repair as necessary. Was a problem found?	—	Verify repair	Go to *Step 23*
23	1. Review all diagnostic procedures within this table. 2. If all procedures have been completed and no malfunctions have been found, review/inspect the following: • Visual/physical inspection • Tech 2 data • Freeze Frame data/Failure Records butter • All electrical connections within a suspected circuit and/or system 3. If a problem is found, repair as necessary. Was a problem found?	—	Verify repair	Contact Technical Assistance

Hesitation, Sag, Stumble Symptom

Step	Action	Value(s)	Yes	No
1	**DEFINITION:** Momentary lack of response as the accelerator is pushed down. Can occur at any vehicle speed. Usually most pronounced when first trying to make the vehicle move, as from a stop sign. May cause the engine to stall if severe enough. Was the "On-Board Diagnostic (OBD) System Check" performed?	—	Go to *Step 2*	Go to *OBD System Check*
2	1. Perform a bulletin search. 2. If a bulletin that addresses the symptom is found, correct the condition as instructed in the bulletin. Was a bulletin found that addresses the symptom?	—	Verify repair	Go to *Step 3*
3	Was a visual/physical check performed?	—	Go to *Step 4*	Go to *Visual/Physical Check*
4	1. Check the fuel control heated oxygen sensors (HO2S, B1S1 and B2S1). The fuel control heated oxygen sensors (HO2S) should respond quickly to different throttle positions. If they don't, check them for silicon or other contaminants from fuel or use of improper RTV sealant. The sensors may have a white powdery coating. Silicon contamination causes a high but false HO2S signal voltage (rich exhaust indication). The PCM will then reduce the amount of fuel delivered to the engine, causing a severe driveability problem. For more information, refer to *Powertrain Control Module (PCM) and Sensors*. 2. If a problem is found, repair as necessary. Was a problem found?	—	Verify repair	Go to *Step 5*
5	1. Check the fuel pressure. Refer to *Fuel System Pressure Test.* 2. If a problem is found, repair as necessary. Was a problem found?	—	Verify repair	Go to *Step 6*
6	Observe the TP angle display on Tech 2 while slowly increasing throttle pedal. Does the TP angle display steadily increase from 0% at closed throttle to 100% at WOT?	—	Go to *Step 7*	Go to *Step 18*
7	Monitor the long term fuel trim on Tech 2. Is the long term fuel trim significantly in the negative range (rich condition)?	—	Go to *Step 8*	Go to *Step 9*
8	1. Check items that can cause the engine to run rich. Refer to *Diagnostic Aids* in *DTC P0172 Diagnostic Support*. 2. If a problem is found, repair as necessary. Was a problem found?	—	Verify repair	Go to *Step 10*
9	1. Check items that can cause the engine to run lean. Refer to *Diagnostic Aids* in *DTC P0171 Diagnostic Support*. 2. If a problem is found, repair as necessary. Was a problem found?	—	Verify repair	Go to *Step 10*

Hesitation, Sag, Stumble Symptom (Cont'd)

Step	Action	Value(s)	Yes	No
10	1. Check for proper ignition voltage output with spark tester J 26792 (ST-125). Refer to *Electronic Ignition System* for the procedure. 2. If a problem is found, repair as necessary. Was a problem found?	—	Verify repair	Go to *Step 11*
11	1. Check for a loose ignition coil ground. Refer to *Electronic Ignition System*. 2. If a problem is found, repair as necessary. Was a problem found?	—	Verify repair	Go to *Step 12*
12	1. Check the ignition coils for cracks or carbon tracking. 2. If a problem is found, repair as necessary. Was a problem found?	—	Verify repair	Go to *Step 13*
13	1. Remove spark plugs and check for wet plugs, cracks, wear, improper gap, burned electrodes, or heavy deposits. Refer to *Electronic Ignition System*. NOTE: If spark plugs are gas or oil fouled, the cause of the fouling must be determined before replacing the spark plugs. 2. If a problem is found, repair as necessary. Was a problem found?	—	Verify repair	Go to *Step 14*
14	1. Check the PCM grounds for clearness, tightness and proper routing. Refer to the PCM wiring diagrams in Electrical Diagnosis. 2. If a problem is found, repair as necessary. Was a problem found?	—	Verify repair	Go to *Step 15*
15	1. Check the MAF sensor connections. 2. If a problem is found, replace the faulty terminals as necessary. Refer to *Electrical Diagnosis* for wiring repair procedures. Was a problem found?	—	Verify repair	Go to *Step 16*
16	1. Visually/physically check vacuum hoses for splits, kinks, and proper connections and routing as shown on the "Vehicle Emission Control Information" label. 2. If a problem is found, repair as necessary. Was a problem found?	—	Verify repair	Go to *Step 17*

Hesitation, Sag, Stumble Symptom (Cont'd)

Step	Action	Value(s)	Yes	No
17	1. Review all diagnostic procedures within this table. 2. If all procedures have been completed and no malfunctions have been found, review/inspect the following: ● Visual/physical inspection ● Tech 2 data ● Freeze Frame data/Failure Records butter ● All electrical connections within a suspected circuit and/or system 3. If a problem is found, repair as necessary. Was a problem found?	—	Verify repair	Contact Technical Assistance
18	Replace the TP sensor. Is the action complete?	—	Verify repair	—

Default Matrix Table

Service Procedure Default Strategy

A referral strategy has been established to assist the technician with additional information when the cause of the failure cannot be determined. If no problem is found after performing diagnostics, then refer to the default matrix table for further diagnostic information.

Default Matrix Table

Strategy Based Diagnostic Charts	Initial Diagnosis	Default Section(s)
On-Board Diagnostic (OBD) System Check	Vehicle does not enter diagnostics.	Chassis Electrical
On-Board Diagnostic (OBD) System Check	Vehicle enters diagnostics and communicates with Tech 2. MIL is “ON” in diagnostics. Engine does not start and run.	Ignition System Check
On-Board Diagnostic (OBD) System Check	Engine starts and runs, no PCM codes set. Customer complains of vibration.	—
On-Board Diagnostic (OBD) System Check	Engine starts and runs, no PCM codes set. Customer complains of harsh or soft shift, poor performance, delayed or no engagement into drive or reverse, transmission fluid leak, transmission noise or vibration, or improper TCC operation.	Automatic Transmission
PCM Power and Ground Check	On-Board Diagnostic (OBD) System Check.	Chassis Electrical
PCM Power and Ground Check	On-Board Diagnostic (OBD) System Check. PCM power and ground circuits OK. Data link voltage incorrect.	Chassis Electrical
On-Board Diagnostic (OBD) System Check	Engine starts and runs, no PCM codes set. Customer complains of harsh or soft shift, poor performance, delayed or no engagement into drive or reverse, transmission fluid leak, transmission noise or vibration, or improper TCC operation.	Automatic Transmission

Symptoms	Initial Diagnosis	Default Section(s)
Intermittents	1. On-board Diagnostic (OBD) system check. 2. Careful visual/physical inspections.	Chassis Electrical
Hard Starts	1. OBD system check. 2. Sensors (ECT, MAP, MAF, TP) ; MAP output chart. 3. Fuel system electrical test, fuel system diagnosis. 4. Ignition system. 5. IAC system check.	Engine Mechanical, Ignition System Check, Exhaust System Diagnosis
Surges and/or Chuggles	1. OBD system check. 2. Heated oxygen sensors. 3. Fuel system diagnosis. 4. Ignition system.	Calibration ID “Broadcast Code”/Service Bulletins, Ignition System Check, Generator Output, Exhaust System Diagnosis, 4L30-E System Test

Symptoms	Initial Diagnosis	Default Section(s)
Lack of Power, Sluggish or Spongy	1. OBD system check. 2. Fuel system diagnosis. 3. Ignition system. 4. Knock sensor. 5. EGR operation. 6. EGR system check.	Refer to *Exhaust System* in *Engine Exhaust*, TCC Operation, Calibration ID/Service Bulletins
Detonation/Spark Knock	1. OBD system check. 2. Transmission range switch. 3. EGR operation. 4. EGR system check. 5. TCC operation. 6. Fuel system diagnosis. 7. Ignition system. 8. Knock sensor.	TCC operation, Cooling System, Ignition System Check, Calibration ID/Service Bulletins
Hesitation, Sag, Stumble	1. OBD system check. 2. TP. 3. MAP output check. 4. Fuel system diagnosis. 5. Fuel injector and fuel injector balance test. 6. Ignition system.	EGR Operation, EGR System Check, Generator Output Voltage (refer to *Chassis Electrical*), Calibration ID/Service Bulletins, Ignition System Check
Cuts Out, Misses	1. OBD system check. 2. Cylinder balance test.	Ignition System Check
Rough, Unstable, or Incorrect Idle, Stalling	1. OBD system check. 2. Fuel injector and fuel injector balance test. 3. Ignition system. 4. IAC operation. 5. EGR operation.	MAP Output Check, Throttle Linkage, IAC System Check, EGR System Check, A/C Clutch Control Circuit Diagnosis, Crankcase Ventilation System, Calibration ID/Service Bulletins, Generator Output Voltage (refer to *Chassis Electrical*), Exhaust Diagnosis
Poor Fuel Economy	1. OBD system check. 2. Careful visual/physical inspection. 3. Ignition system. 4. Cooling system.	TCC Operation, Exhaust System (refer to *Engine Exhaust*)
Engine Cranks But Will Not Run	1. OBD system check.	Fuel System Electrical Diagnosis, Fuel System Diagnosis, Fuel Injector and Fuel Injector Balance Test.
Excessive Exhaust Emissions or Odors	1. OBD system check. 2. Emission test. 3. Cooling system. 4. Fuel system diagnosis. 5. Fuel injector and fuel injector balance test. 6. Crankcase ventilation system. 7. Ignition system. 8. MAP output check.	EGR System Check, Exhaust Diagnosis, Calibration ID/Service Bulletins
Dieseling, Run-On	1. OBD system check. 2. Careful visual/physical inspection. 3. Fuel system diagnosis.	—

Symptoms	Initial Diagnosis	Default Section(s)
Backfire	1. OBD system check. 2. Ignition system. 3. Fuel system diagnosis. 4. Fuel injector and fuel injector balance test. 5. EGR operation, EGR system check.	Exhaust System Diagnosis, Intake Casting Flash, Ignition System Check
Catalyst Monitor	1. OBD system check. 2. Careful visual/physical inspection. 3. Heated oxygen sensors.	Exhaust System
Fuel Trim	1. OBD system check. 2. Careful visual/physical inspection. 3. Fuel system diagnosis. 4. Heated oxygen sensors, MAF sensors.	Exhaust System Intake Air System
Evaporative Emissions	1. OBD system check. 2. Careful visual/physical inspection. 3. Fuel system diagnosis.	—
Heated Oxygen Sensors	1. OBD system check. 2. Careful visual/physical inspection.	Exhaust System

Camshaft Position (CMP) Sensor

Removal Procedure

1. Disconnect the negative battery cable.
2. Remove the engine cover.
3. Remove the common chamber assembly.
   Refer to Common Chamber in Engine Mechanical.

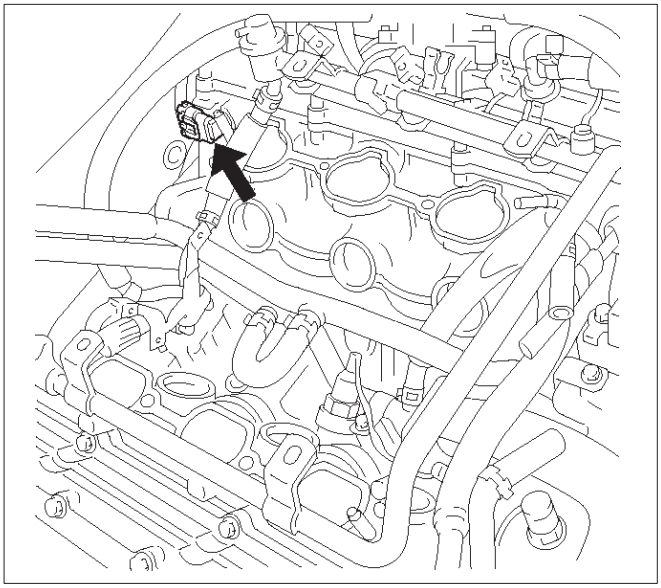

014RW120

4. Disconnect the electrical connector to the CMP sensor.

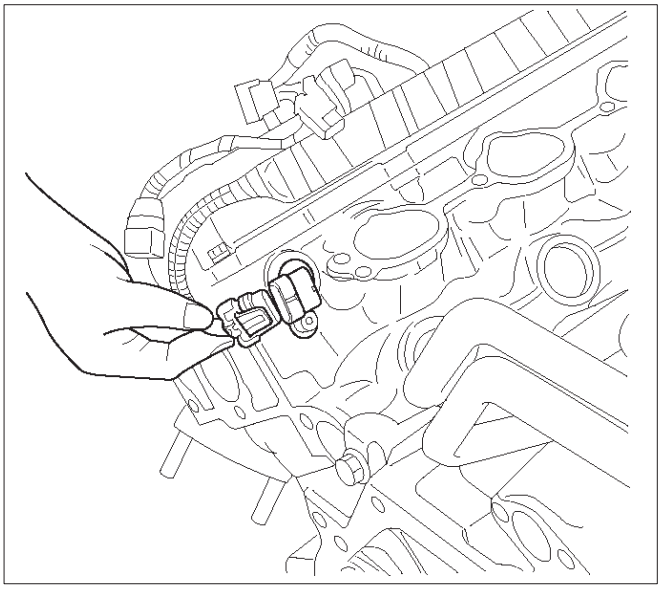

014RV053

5. Remove the CMP retaining bolt from the side of left cylinder head.
6. Remove the CMP sensor from the cylinder head.

Inspection Procedure

1. Inspect the sensor O-ring for cracks or leaks.
2. Replace the O-ring if it is worn or damaged.
3. Lubricate the new O-ring with engine oil.
4. Install the lubricated O-ring.

Installation Procedure

1. Install the CMP sensor in the cylinder head.
2. Install the CMP sensor retaining bolt.

Tighten

- Tighten the retaining screw to 9 N·m (78 lb in.).

3. Connect the electrical connector to the CMP sensor.

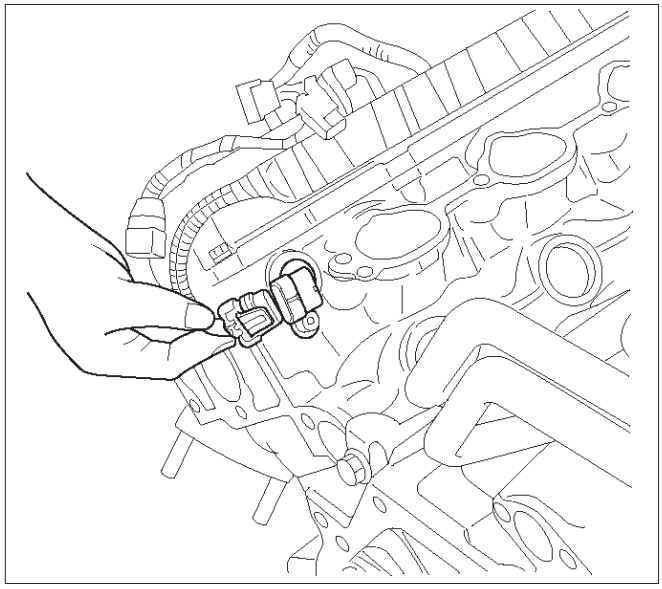

014RV053

4. Install the common chamber assembly.
   Refer to Common Chamber in Engine Mechanical.

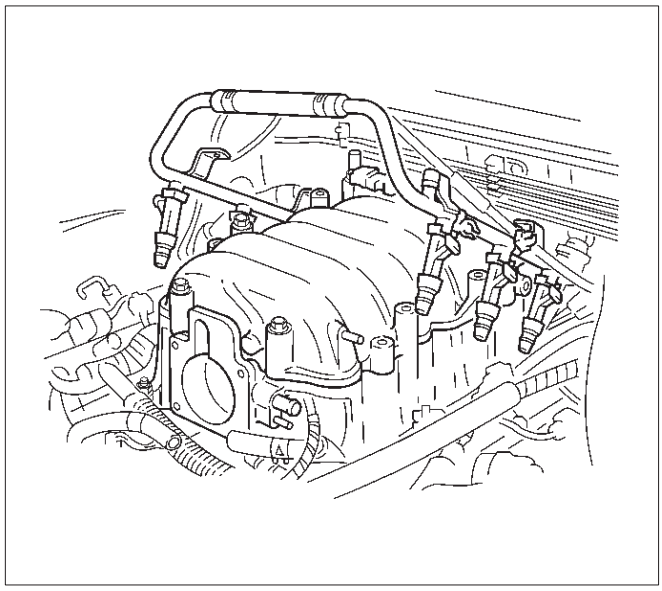

014RW106

5. Install the engine cover.
6. Connect the negative battery cable.

Crankshaft Position (CKP) Sensor

Removal Procedure

1. Disconnect the negative battery cable.
2. Disconnect the electrical connector to the CKP sensor.
3. Remove one bolt and the CKP sensor from the right side of the engine block, just behind the mount.

NOTE: Use caution to avoid any hot oil that might drip out.

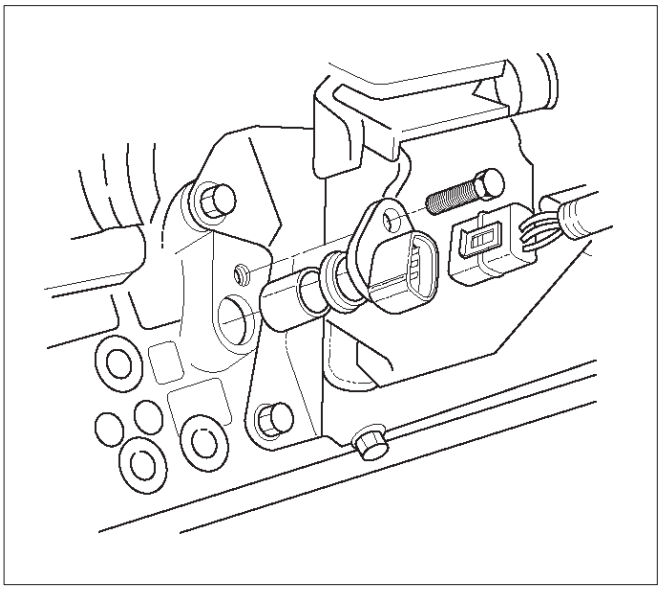

TS22909

Inspection Procedure

1. Inspect the sensor O-ring for cracks or leaks.
2. Replace the O-ring if it is worn or damaged.
3. Lubricate the new O-ring with engine oil.
4. Install the lubricated O-ring.

Installation Procedure

1. Install the CKP sensor in the engine block.
2. Install the CKP sensor mounting bolt.

Tighten

- Tighten the mounting bolt to 9 N·m (78 lb in.).

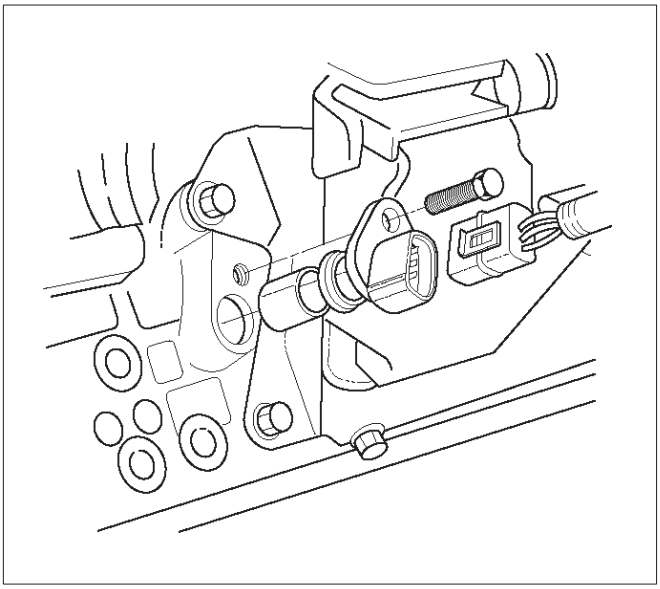

TS22909

3. Connect the electrical connector to the CKP sensor.
4. Connect the negative battery cable.

Engine Coolant Temperature (ECT) Sensor

Removal Procedure

NOTE: Care must be taken when handling the engine coolant temperature (ECT) sensor. Damage to the ECT sensor will affect proper operation of the fuel injection system.

1. Disconnect the negative battery cable.
2. Drain the radiator coolant. Refer to *Draining and Refilling Cooling System* in *Engine Cooling*.
3. Disconnect the electrical connector.

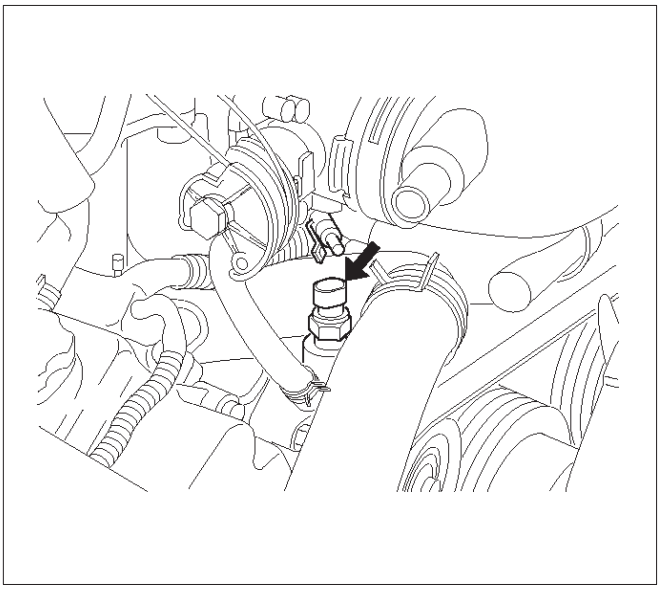

014RW127

4. Remove the ECT sensor from the coolant crossover.

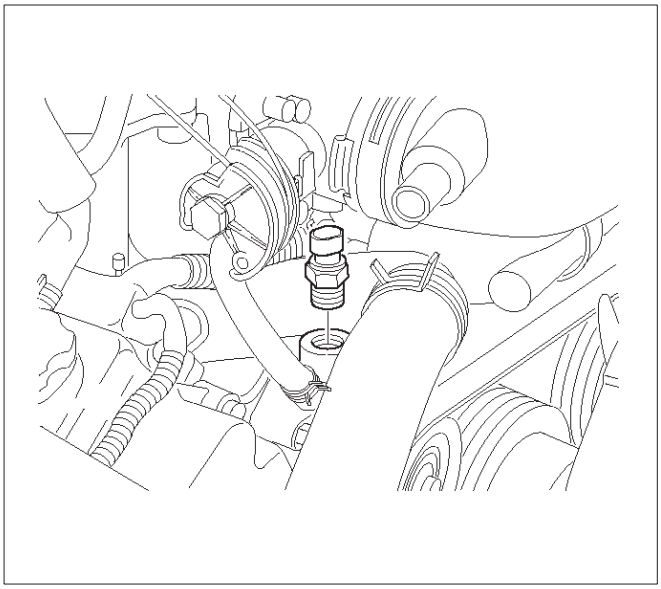

014RW086

Installation Procedure

1. Apply sealer or the equivalent to the threads of the ECT sensor.
2. Install the ECT sensor in the coolant crossover.

Tighten

- Tighten the ECT sensor to 30 N·m (22 lb ft.).

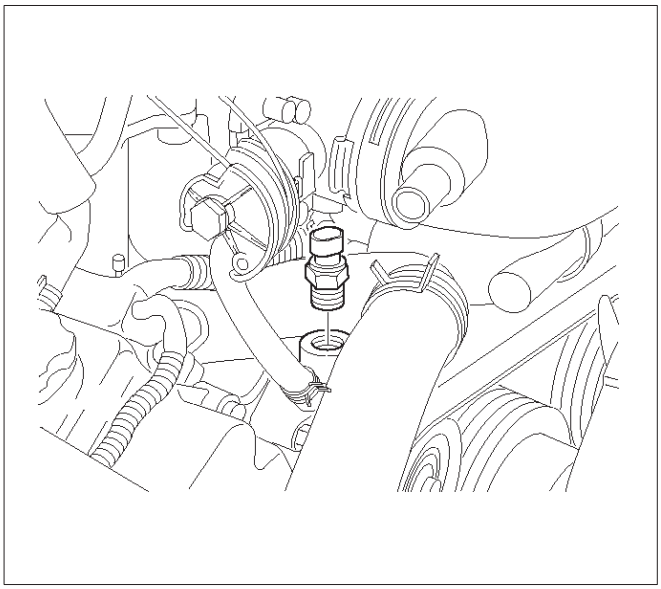

014RW086

3. Connect the electrical connector.

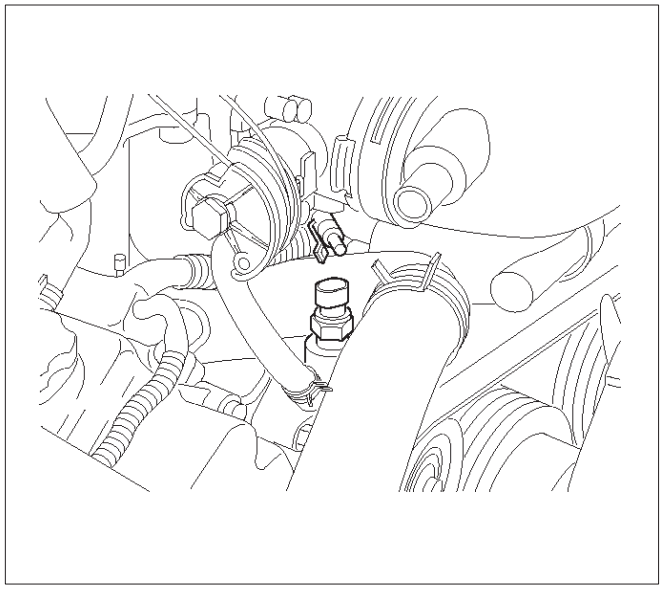

014RW085

4. Fill the radiator with coolant. Refer to *Draining and Refilling Cooling System* in *Engine Cooling*.
5. Connect the negative battery cable.

Heated Oxygen Sensor (HO2S)

Removal Procedure

1. Disconnect the negative battery cable.
2. Locate the oxygen sensors.
   - Bank 1 sensor 1 is mounted on the right-hand front exhaust pipe.

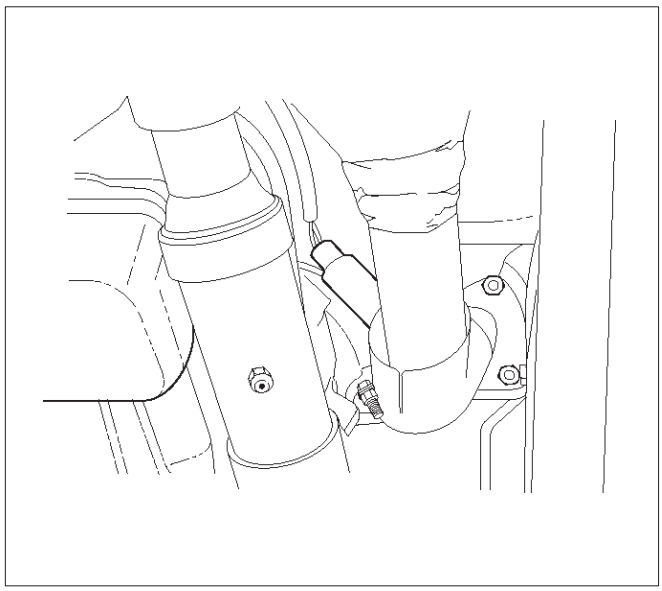

TS22912

- Bank 2 sensor 1 is mounted on the exhaust pipe ahead of the catalytic converter.

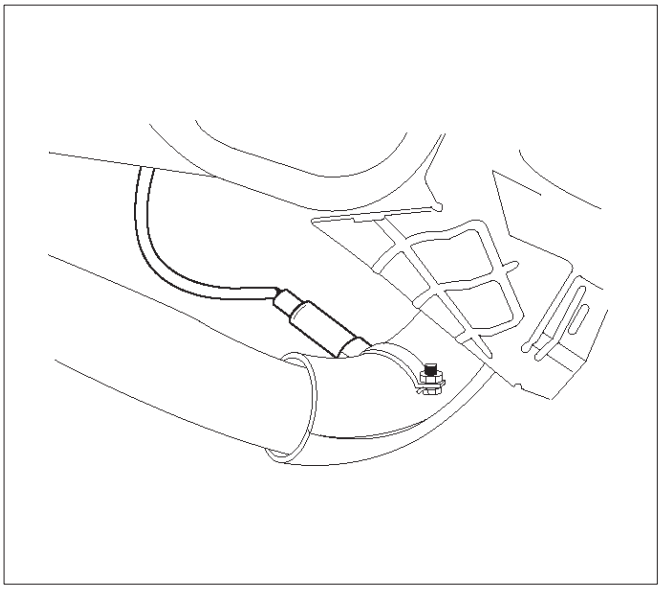

TS22914

3. Disconnect the pigtail from the wiring harness.

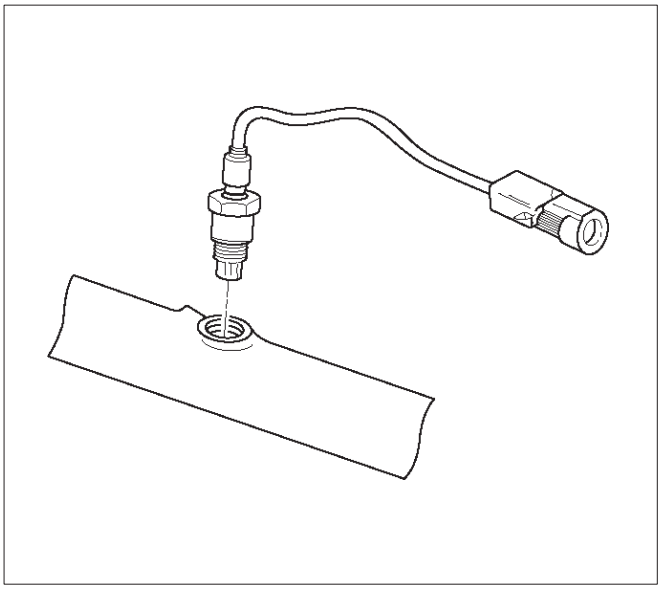

TS23739

IMPORTANT: The pigtail is permanently attached to the sensor. Be careful not to pull the wires out.

NOTE: Do not use a torch to remove an HO2S unless the sensor is being replaced. Using a torch could damage the sensor.

4. Remove the sensor from the exhaust pipe.
   - Because of the expansion and contraction of the metal in the exhaust system over time, this may be difficult if the engine temperature is below 48˚C (120˚F).

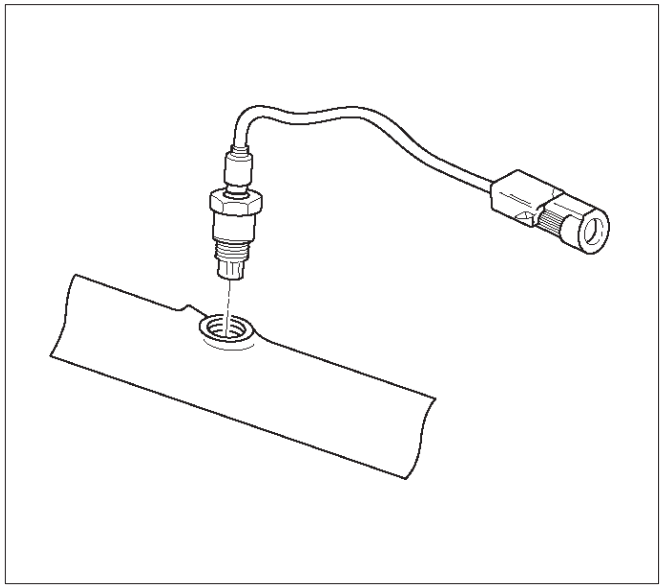

TS23739

Inspection Procedure

All two sensors are identical. Inspect each in the same way.

1. Inspect the pigtail and the electrical connector for grease, dirt, corrosion, and bare wires or worn insulation.
2. Inspect the louvered end of the sensor for grease, dirt, or other contaminations.

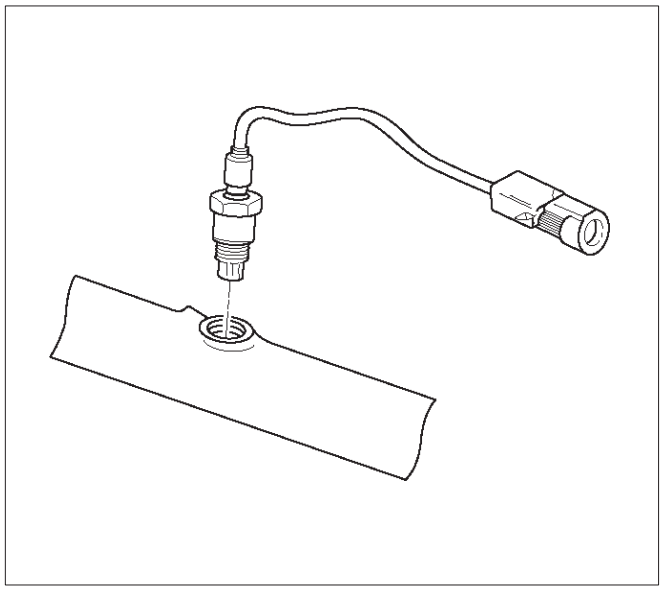

TS23739

Installation Procedure

IMPORTANT:

- A special anti-seize compound, P/N 5613695, is used on the HO2S threads. This compound consists of glass beads suspended in a liquid graphite solution. The graphite burns away with engine heat, but the glass beads will remain, making the sensor easier to remove.
- New or service sensors will already have the compound applied to the threads. If a sensor is removed and is to be reinstalled for any reason, the threads must have anti-seize compound applied.

1. Apply anti-seize compound or the equivalent to the threads of the oxygen sensor, if necessary.
2. Install the oxygen sensor on the exhaust pipe in its original position.

Tighten

- Tighten the oxygen sensor to 55 N·m (40 lb in.).

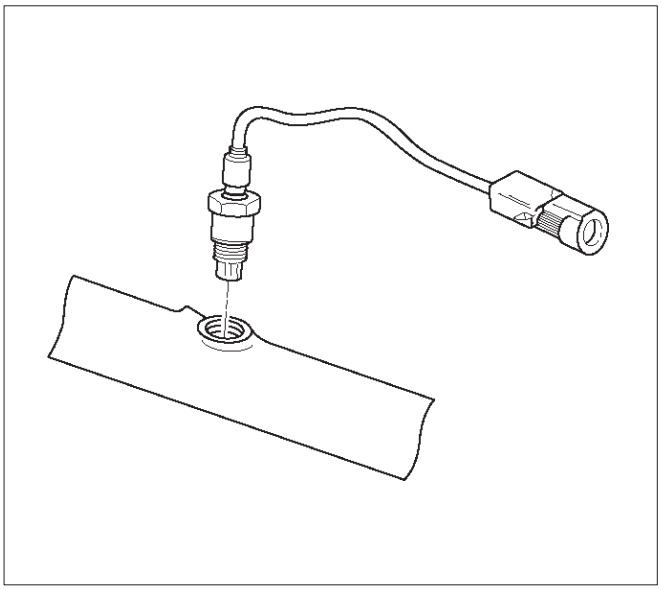

TS23739

3. Connect the pigtail to the wiring harness.
4. Connect the negative battery cable.

Intake Air Temperature (IAT) Sensor

Removal Procedure

1. Disconnect the negative battery cable.
2. Remove the engine cover
3. The IAT sensor is located in the intake air duct, behind the throttle body.
4. Disconnect the electrical connector from the IAT sensor.

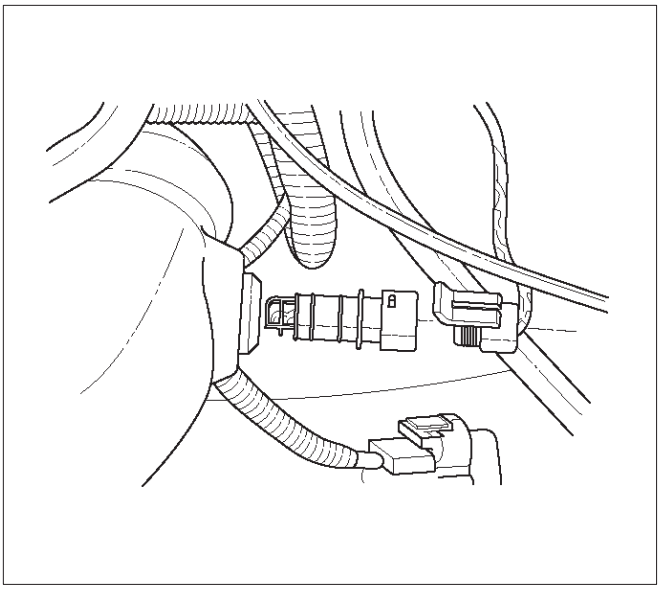

TS23741

5. Remove the IAT sensor from the intake air duct by using a rocking motion while pulling the sensor.

Installation Procedure

1. Install the IAT sensor into the grommet in the intake air duct.
2. Correct the IAT electrical connector.

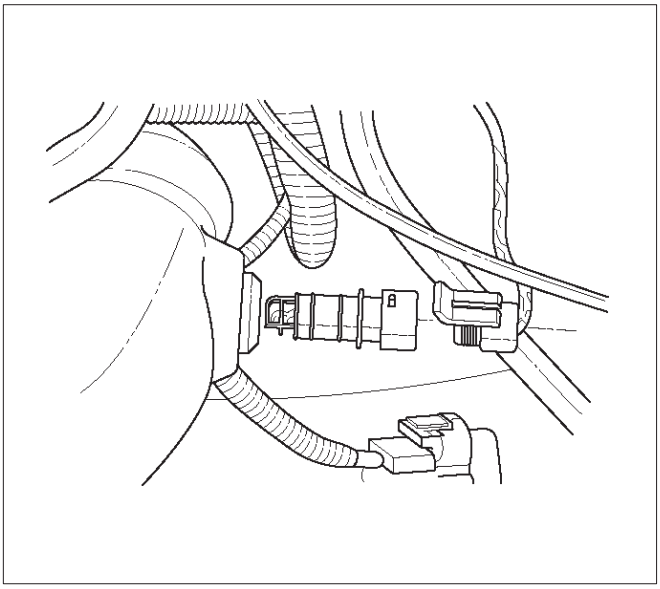

TS23741

3. Install the engine cover.
4. Connect the negative battery cable.

Knock Sensor (KS)

Removal Procedure

1. Disconnect the negative battery cable.
2. Drain the cooling system. Refer to *Draining and Filling the Cooling System* in *Engine Cooling*.
3. Remove the engine cover.
4. Remove the common chamber assembly.

   Refer to Common Chamber in Engine Mechanical.

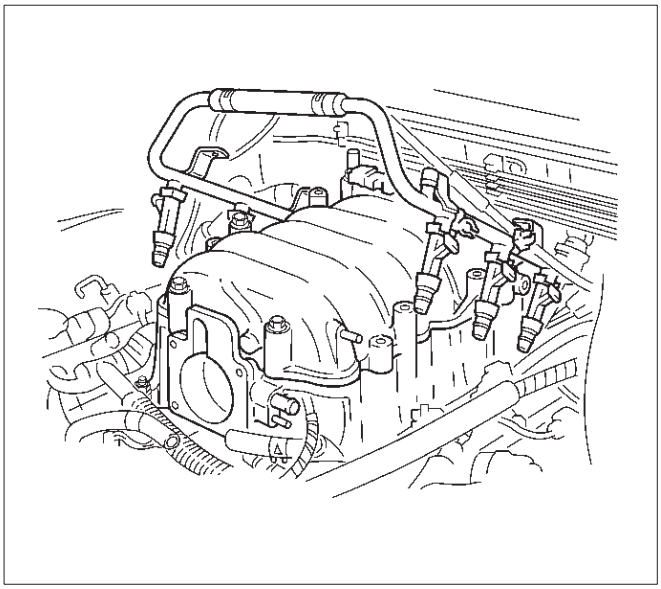

014RW106

5. Disconnect the electrical connector from the knock sensor.

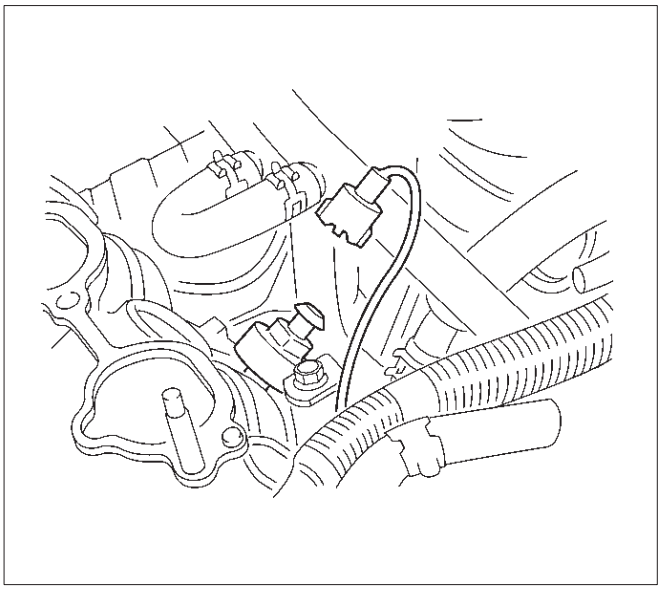

014RW103

6. Unscrew the knock sensor from the engine block.

Installation Procedure

NOTE: Do not apply thread sealant to the sensor threads. The sensor is coated at the factory and applying additional sealant will affect the sensor's ability to detect detonation.

1. Screw the knock sensor into the engine block.

Tighten

- Tighten the knock sensor to 20 N·m (177 lb in.).

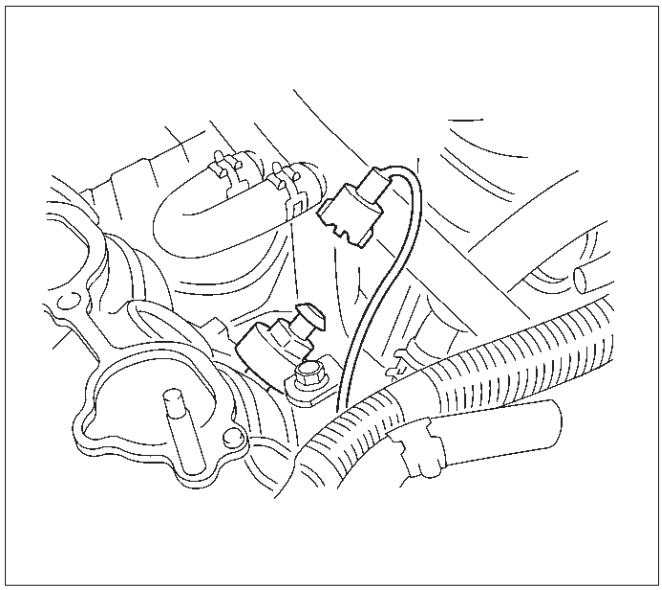

014RW103

2. Connect the electrical connector to the knock sensor.
3. Install the common chamber assembly.

   Refer to Common Chamber in Engine Mechanical.

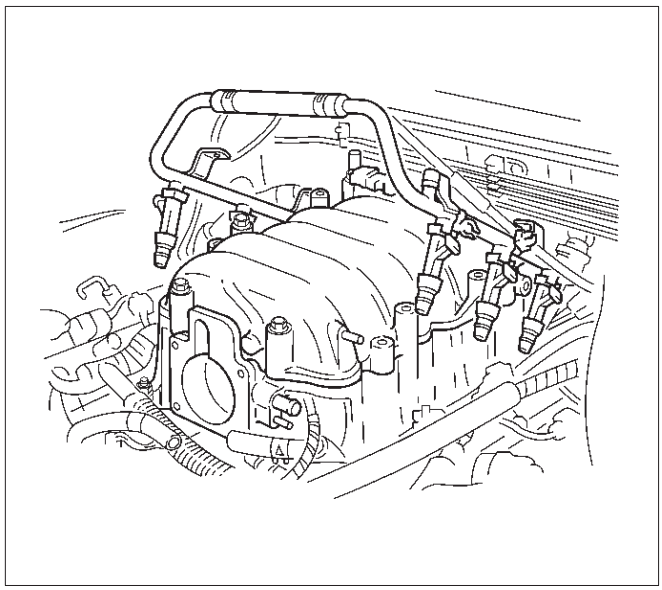

014RW106

4. Install the engine cover.
5. Fill the cooling system.

   Refer to Draining and Filling the Cooling System in Engine Cooling.
6. Connect the negative battery cable.

Mass Air Flow (MAF) Sensor

Removal Procedure

1. Disconnect the negative battery cable.
2. Disconnect the electrical connector from the MAF sensor.

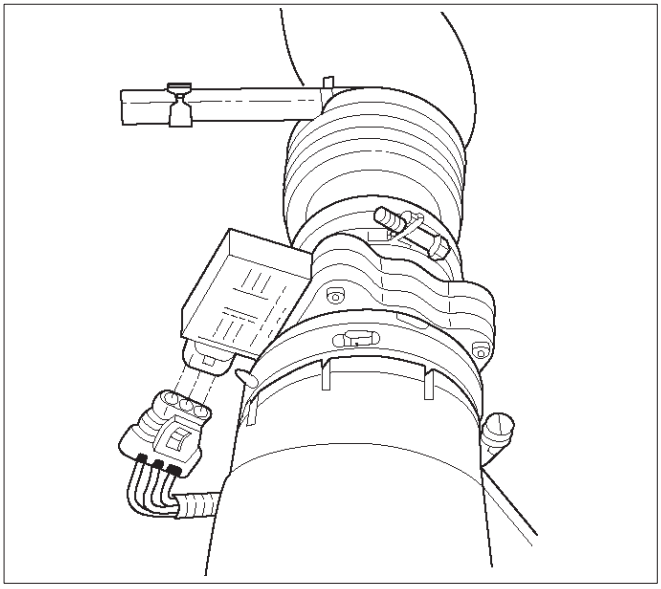

TS23740

3. Loosen the clamps which secure the intake air duct and the air cleaner to the MAF sensor.
4. Remove the intake air duct from the MAF sensor.
5. Remove the MAF sensor from the air cleaner.

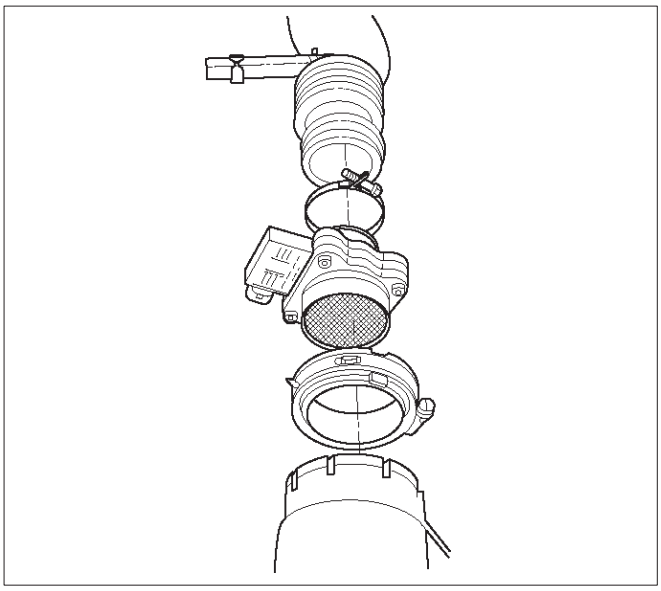

TS23781

Installation Procedure

1. Install the MAF sensor on the air cleaner with the clamp.
2. Install the intake air duct and the clamp on the MAF sensor.

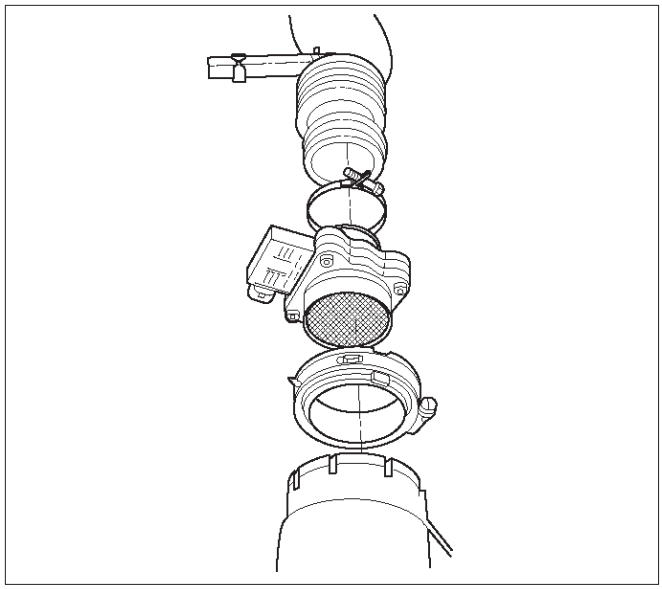

TS23781

3. Tighten the clamps to secure the MAF sensor to the intake air duct and the air cleaner.
4. Connect the MAF electrical connector.
5. Connect the negative battery cable.

Manifold Absolute Pressure (MAP) Sensor

Removal Procedure

1. Disconnect the negative battery cable.
2. Disconnect the electrical connector from the MAP sensor.

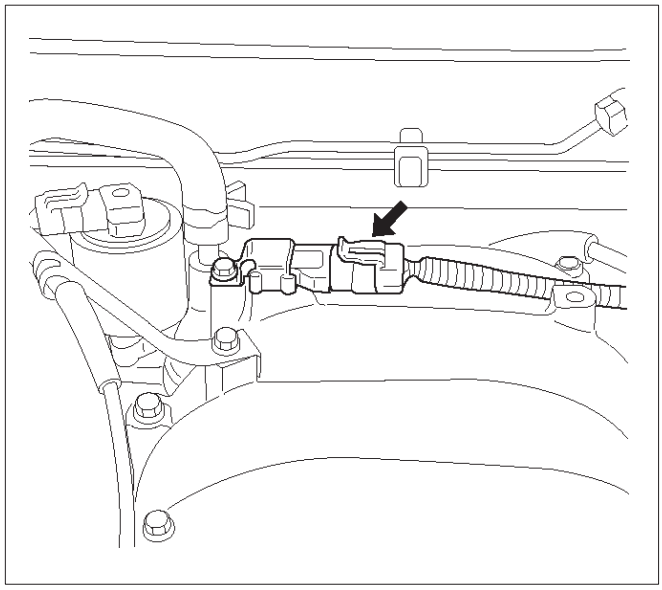

055RW005

3. Remove the bolt securing the MAP sensor to the mounting bracket on the common chamber.

4. Remove the MAP sensor from the mounting bracket.

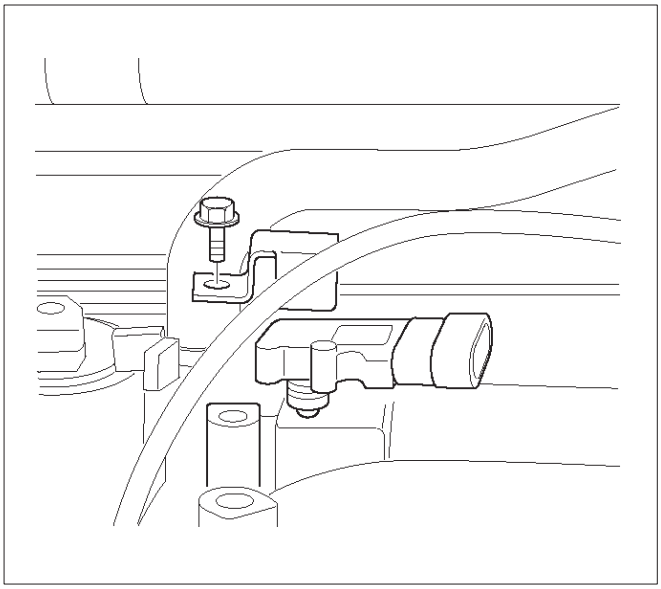

055RW002

Installation Procedure

1. Install the MAP sensor in the mounting bracket.

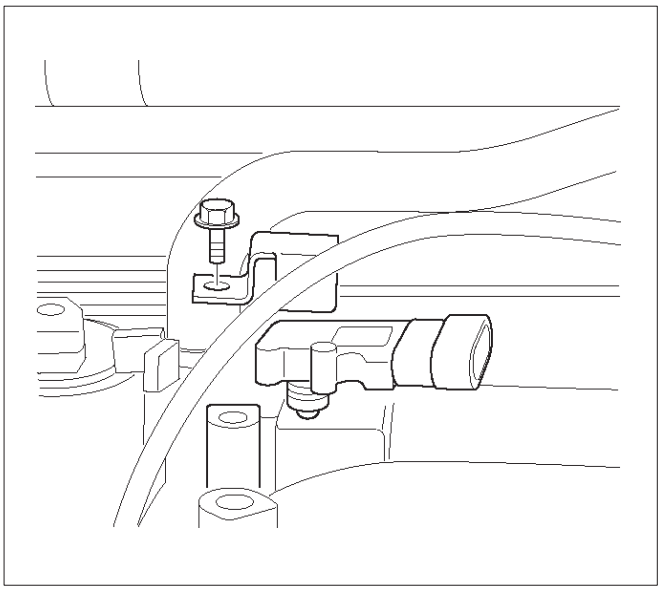

055RW002

2. Install the mounting bracket retaining bolt on the common chamber.
3. Connect the MAP electrical connector.

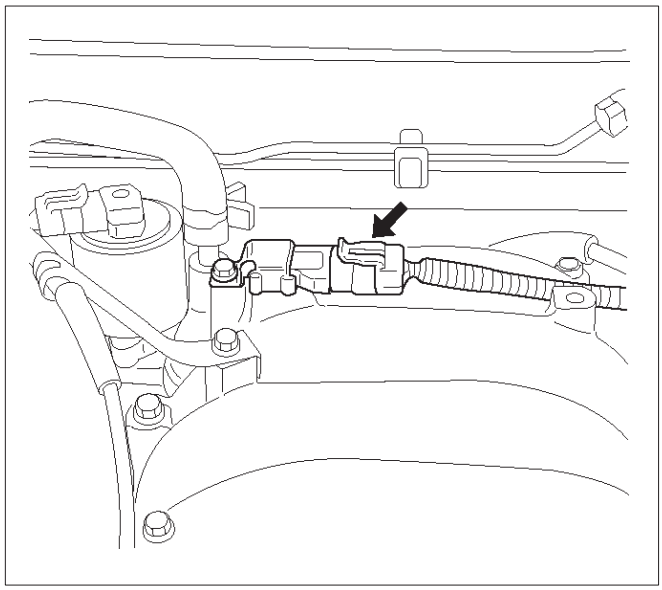

055RW005

4. Connect the negative battery cable.

Malfunction Indicator Lamp (MIL)

Removal and Installation Procedure

Refer to Warning light bulb, indicator light valve, illumination light bulb, A/T indicator light bulb in Meter and Gauge.

Powertrain Control Module (PCM)

Service Precaution

NOTE: To prevent possible electrostatic discharge damage to the PCM, do not touch the connector pins or soldered components on the circuit board.

Electrostatic Discharge (ESD) Damage

Electronic components used in the control systems are often designed to carry very low voltage. Electronic components are susceptible to damage caused by electrostatic discharge. Less than 100 volts of static electricity can cause damage to some electronic components. By comparison, it takes as much as 4,000 volts for a person to even feel the zap of a static discharge.

There are several ways for a person to become statically charged. The most common methods of charging are by friction and by induction. An example of charging by friction is a person sliding across a car seat.

Charging by induction occurs when a person with well insulated shoes stands near a highly charged object and momentarily touches ground. Charges of the same polarity are drained off leaving the person highly charged with the opposite polarity. Static charges can cause

damage, therefore, it is important to use care when handling and testing electronic components.

NOTE: To prevent possible Electrostatic Discharge damage, follow these guidelines:

- Do not touch the control module connector pins or soldered components on the control module circuit board.
- Do not open the replacement part package until the part is ready to be installed.
- Before removing the part from the package, ground the package to a known good ground on the vehicle.
- If the part has been handled while sliding across the seat, or while sitting down from a standing position, or while walking a distance, touch a known good ground before installing the part.

NOTE: To prevent internal PCM damage, the ignition must be in the “OFF” position in order to disconnect or reconnect power to the PCM (for example: battery cable, PCM pigtail, PCM fuse, jumper cables, etc.).

IMPORTANT: When replacing the production PCM with a service PCM, it is important to transfer the broadcast code and production PCM number to the service PCM label. This will allow positive identification of PCM parts throughout the service life of the vehicle. Do not record this information on the metal PCM cover.

IMPORTANT: The ignition should always be in the “OFF” position in order to install or remove the PCM connectors.

Service of the PCM should normally consist of either replacement of the PCM or EEPROM programming. If the diagnostic procedures call for the PCM to be replaced, the PCM should be checked first to ensure it is the correct part. If it is, remove the faulty PCM and install the new service PCM.

The service PCM EEPROM will not be programmed. DTC P0601 indicates the check sum error.

Removal Procedure

1. Disconnect the negative battery cable.
2. Block the wheels.
3. Remove the front console assembly.
   1. Remove the four screws.

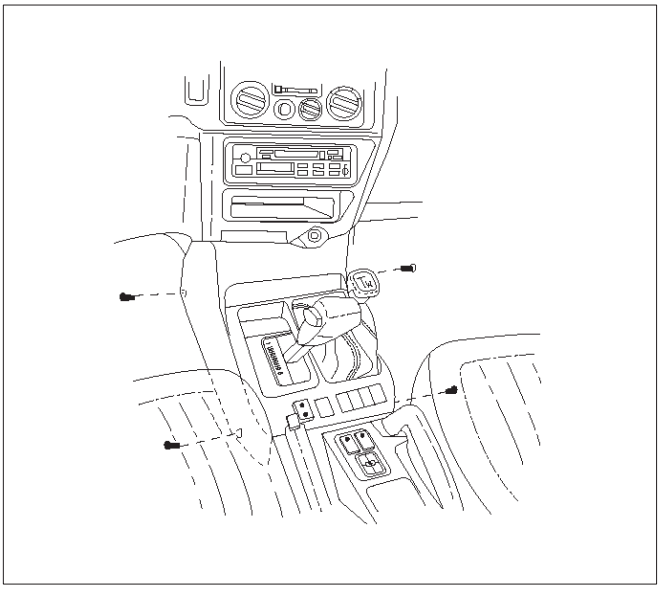

TS23755

   2. Remove the transfer shift lever knob by unscrewing the knob.
   3. Move the transmission gear selector out of the park position.
   4. Lift up sharply on the back edge of the assembly.
   5. Disconnect the seat heater switch connectors (if equipped).
   6. Disconnect the POWER and WINTER switch connectors.
   7. Lift out the front console assembly.

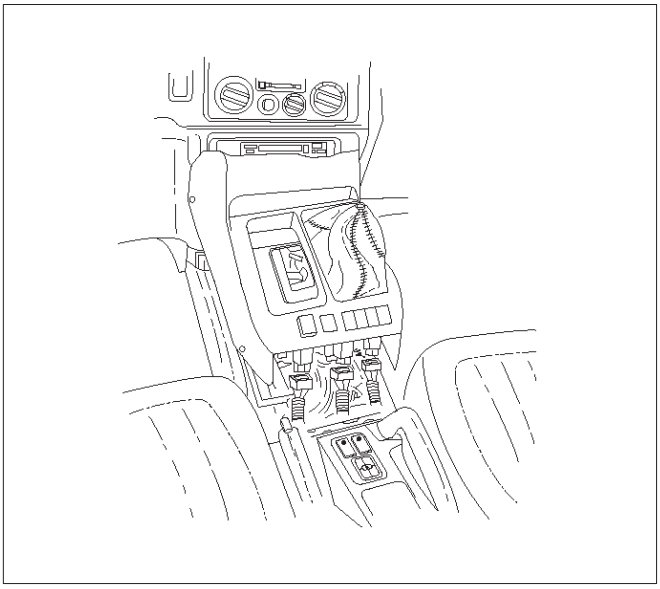

TS23756

4. Disconnect the red, white, and blue electrical connectors at the PCM.
5. Remove the two screws in the front of the PCM.
6. Remove the one screw at the left rear of the PCM.
7. Pull the PCM straight out from the dashboard.

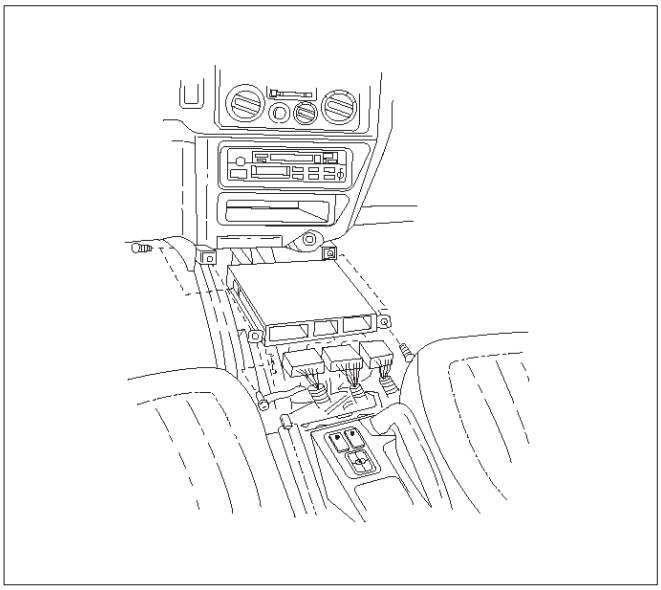

TS23757

Installation Procedure

1. Insert the PCM into the dashboard.
   - Line up the holes in front for the mounting screws.
2. Install the PCM with two screws in the front and one screw at the left rear.
3. Plug the red, white, and blue connectors into the appropriate sockets.

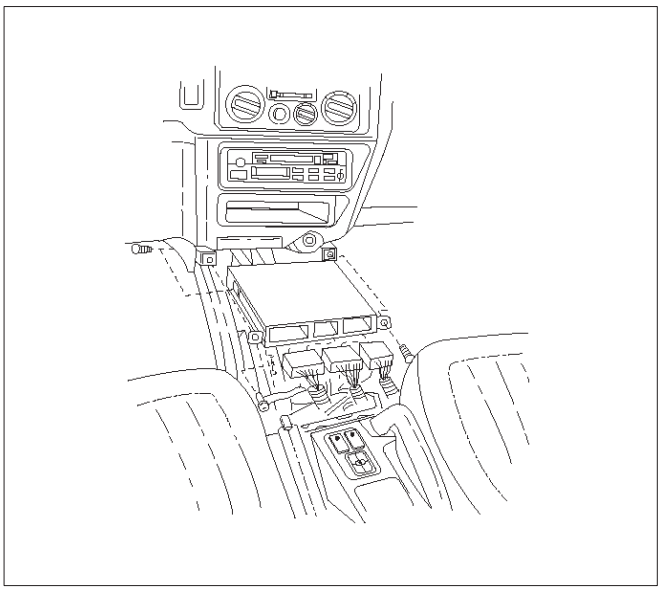

TS23757

EEPROM

General Description

The Electronically Erasable Programmable Read Only Memory (EEPROM) is a permanent memory that is physically soldered within the PCM. The EEPROM contains program and calibration information that the PCM needs to control powertrain operation.

EEPROM Programming

1. Step-up – Ensure that the following conditions have been met:
   - The battery is fully charged.
   - The ignition is “ON.”
   - The Vehicle Interface Module cable connection at the DLC is secure.
2. Program the PCM using the latest software matching the vehicle. Refer to up-to-date Techline equipment user’s instructions.
3. If the PCM fails to program, Refer to *UBS 98 model year Immobilizer Workshop Manual.*

Functional Check

1. Perform the On-Board Diagnostic System Check.
2. Start the engine and run for one minute.
3. Scan for DTCs using the Tech 2.

Power Steering Pressure (PSP) Switch

General Description

The Power Steering Pressure (PSP) switch closes when the hydraulic pressure reaches 3920 ± 690 kPa (570 ± 100 psi). This causes the PCM to actuate the idle air control valve in order to prevent the additional load from slowing down the engine. The switch opens when the hydraulic pressure drops to 2970 ± 560 kPa (430 ± 80 psi).

Removal Procedure

1. Disconnect the PSP switch pigtail from the wiring harness.
   - The pigtail is permanently attached to the switch. Do not attempt to remove the wires from the sensor.
   - Have a container ready to catch the power steering fluid that leaks out of the line when the switch is removed.

2. Remove the PSP switch from the power steering line.
   - Plug the line to prevent excessive loss of fluid and possible contamination of the power steering system.

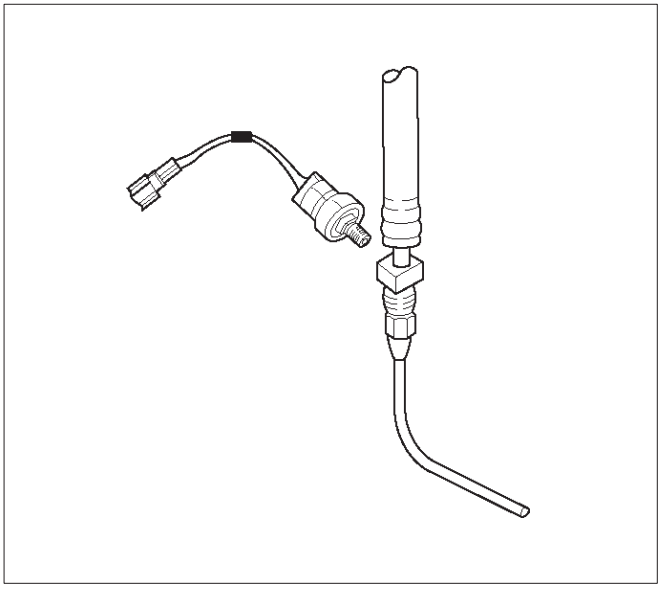

TS23760

Installation Procedure

1. Install the PSP switch in the power steering line.

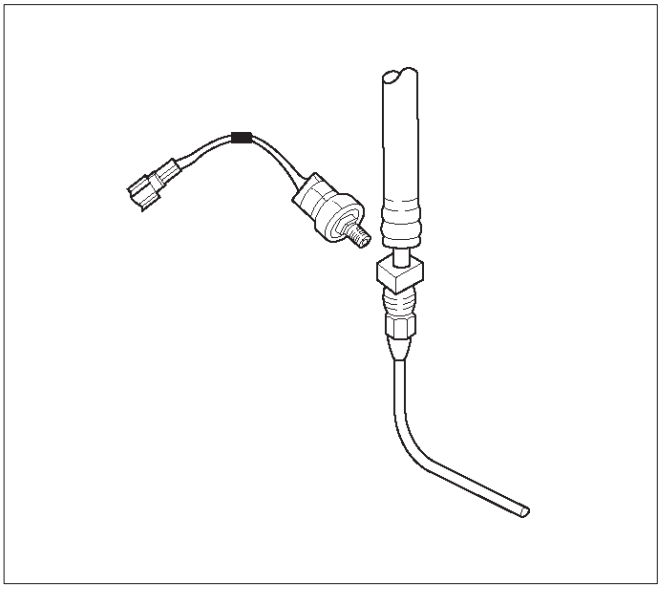

TS23760

2. Connect the PSP switch pigtail to the wiring harness.
3. Check the power steering fluid level. Refer to *Power Steering*.
4. Start the engine. Watch the PSP switch for signs of fluid leakage.

Throttle Position (TP) Sensor

Removal Procedure

1. Disconnect the negative battery cable.
2. Disconnect the TPS electrical connector.
3. Remove the bolts and the TP sensor from the throttle body.

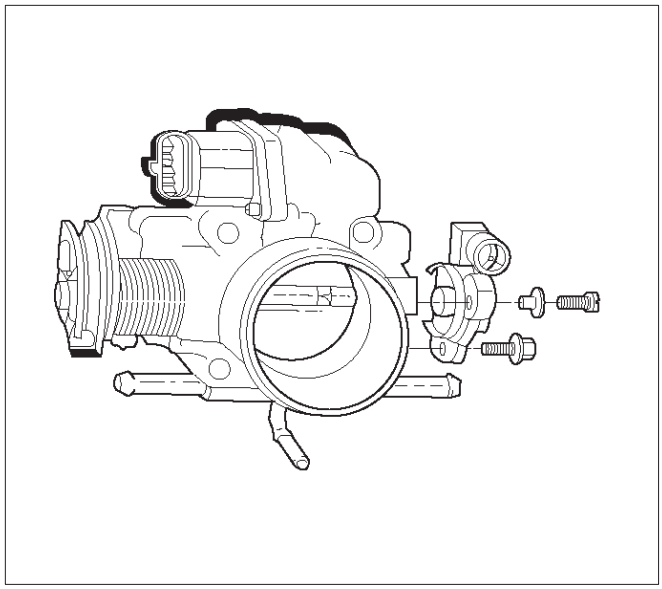

TS23747

NOTE: Do not clean the TP sensor by soaking it in solvent. The sensor will be damaged as a result.

Function Check

Use a Tech 2 to check the TP sensor output voltage at closed throttle.

- The voltage should be under 0.85 volt.
- If the reading is greater than 0.85 volt, check the throttle shaft to see if it is binding. Check that the throttle cable is properly adjusted, also. Refer to *Throttle Cable Adjustment*.
- If the throttle shaft is not binding and the throttle cable is properly adjusted, install a new TP sensor.

Installation Procedure

1. Install the TP sensor on the throttle body with the bolts.

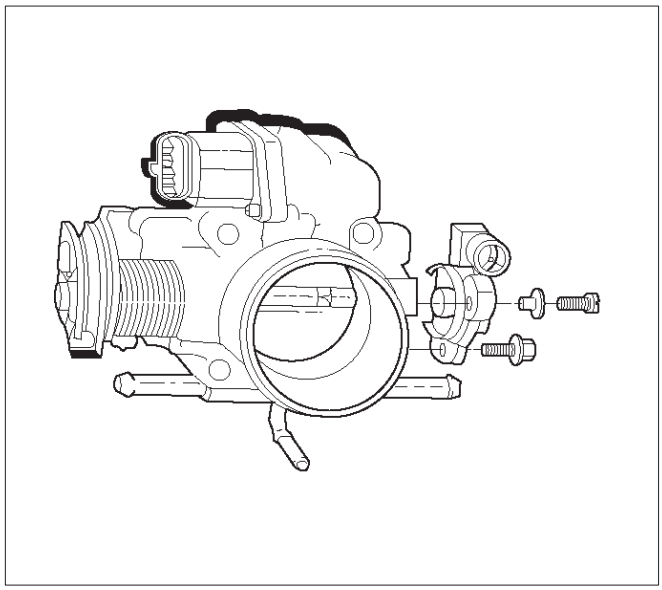

TS23747

2. Connect the TP electrical connector.
3. Install the negative battery cable.

Vehicle Speed Sensor (VSS)

Removal Procedure

CAUTION: The VSS is located on the right side of the transfer case just ahead of the rear propeller shaft and very close to the exhaust pipes. Be sure that the exhaust pipes are cool enough to touch before trying to remove the VSS. If the pipes are hot, you could be burned.

1. Disconnect the negative battery cable.
2. Disconnect the VSS electrical connector.

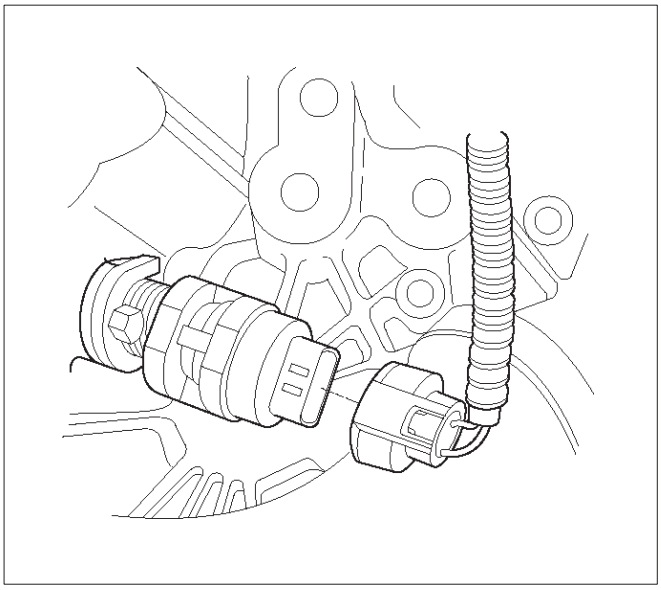

TS23748

3. Remove the bolt and the clamp securing the VSS in place.

IMPORTANT: Have a container ready to catch any fluid that leaks out when the VSS is removed from the transfer case.

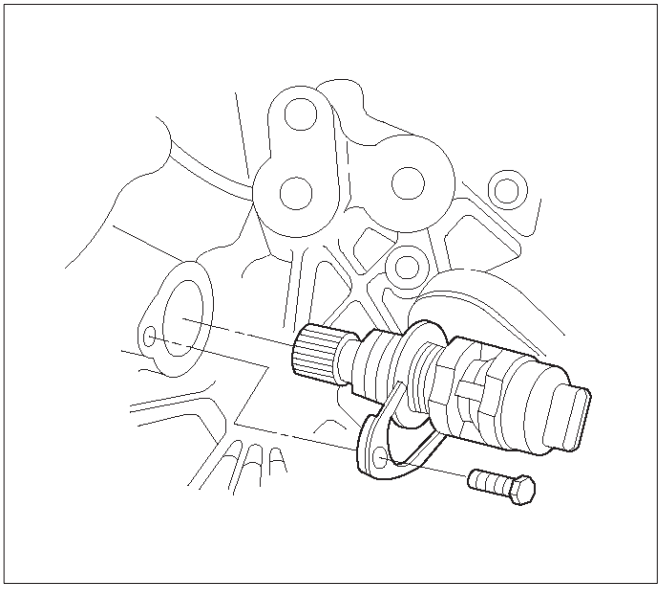

TS23780

4. Remove the VSS from the transfer case by wiggling it slightly and pulling it straight out.

Inspection Procedure

1. Inspect the electrical connector for signs of corrosion or warping. Replace the VSS if the electrical connector is corroded or warped.
2. Inspect the VSS driven gear for chips, breaks, or worn condition. Replace the VSS if the driven gear is chipped, broken or worn.
3. Inspect the O-ring for wear, nicks, tears, or looseness. Replace the O-ring if necessary.

Installation Procedure

1. Install the VSS in the transfer case with the notch for the connector facing the rear.
2. Secure the VSS in place with the clamp and the bolt.

Tighten

- Tighten the bolt to 16 N·m (12 lb ft.).

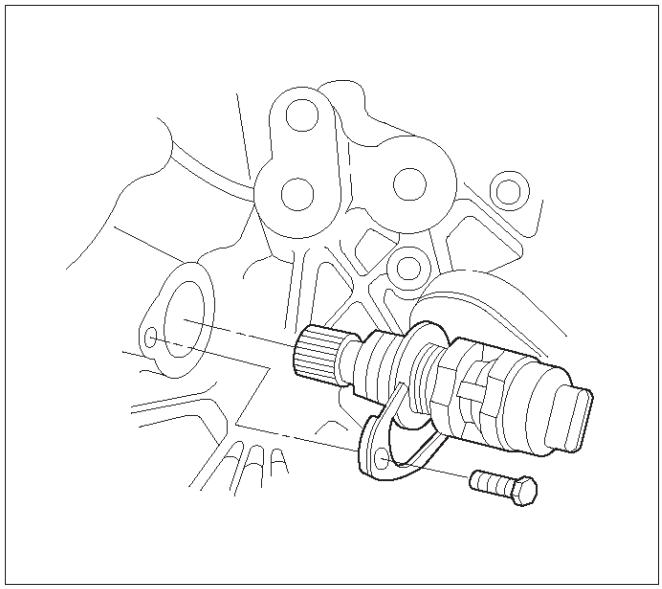

TS23780

3. Connect the VSS electrical connector.

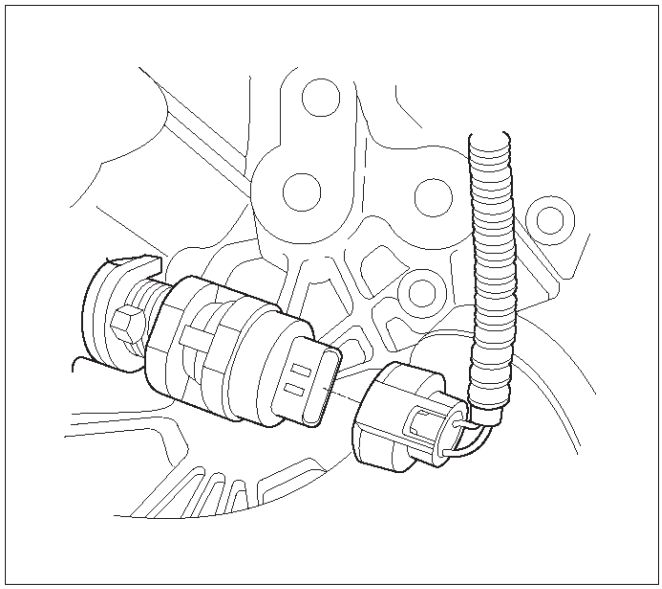

TS23748

4. Check the transfer case oil level. Add fluid if necessary.
5. Connect the negative battery cable.

Air Cleaner/Air Filter

Removal Procedure

1. Loosen the clamp between the air cleaner lid and the mass air flow sensor.
2. Release the four latches securing the lid to the air cleaner housing.
3. Remove the air cleaner lid.

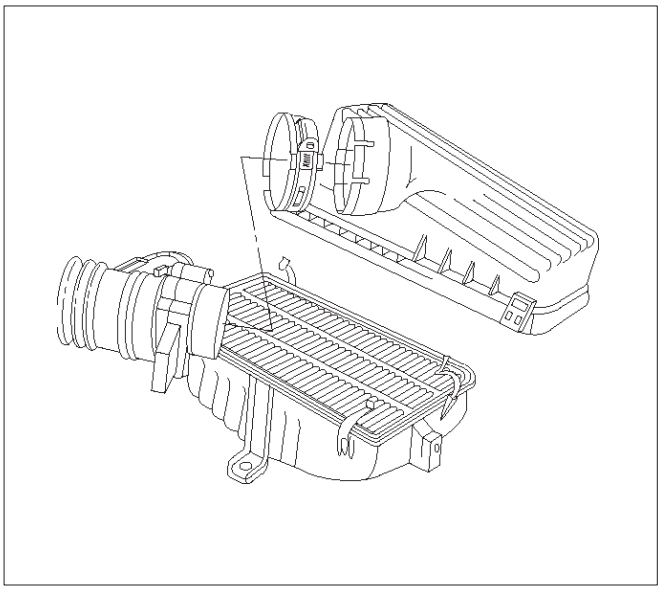

TS23973

4. Remove the air filter element.

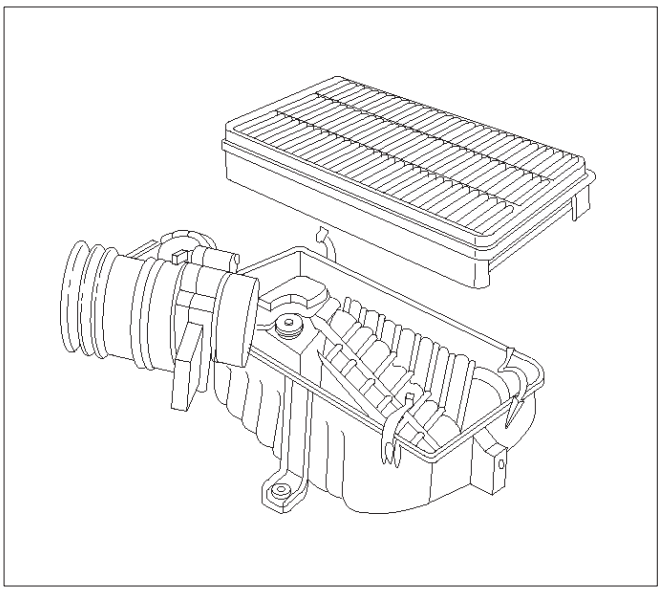

TS23794

5. Remove the retaining bolts and the air cleaner housing from the vehicle.

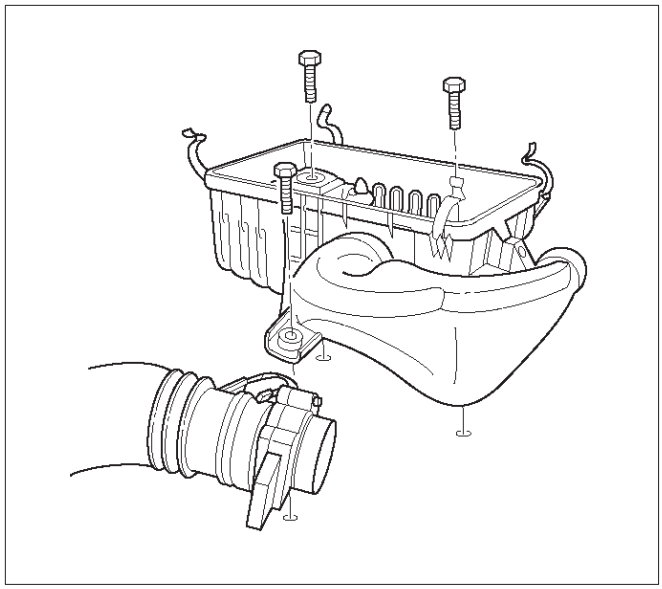

130RT002

Installation Procedure

1. Install the air cleaner housing in the vehicle with the retaining bolts.

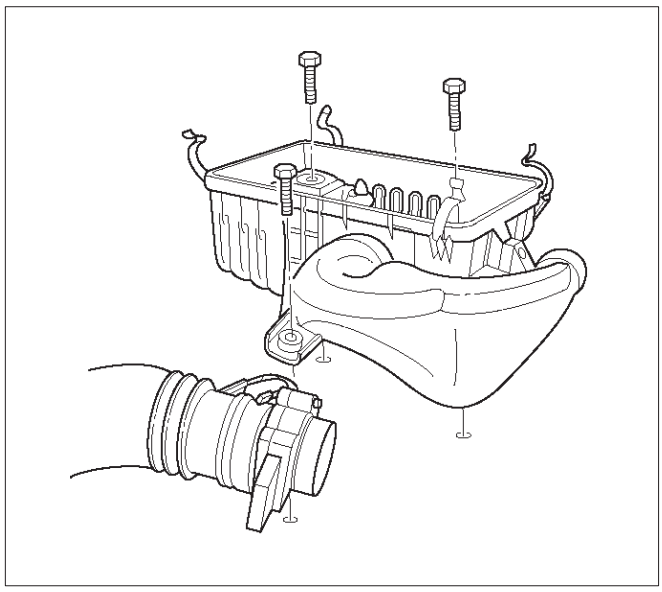

130RT002

2. Install the air filter element in the air cleaner housing.

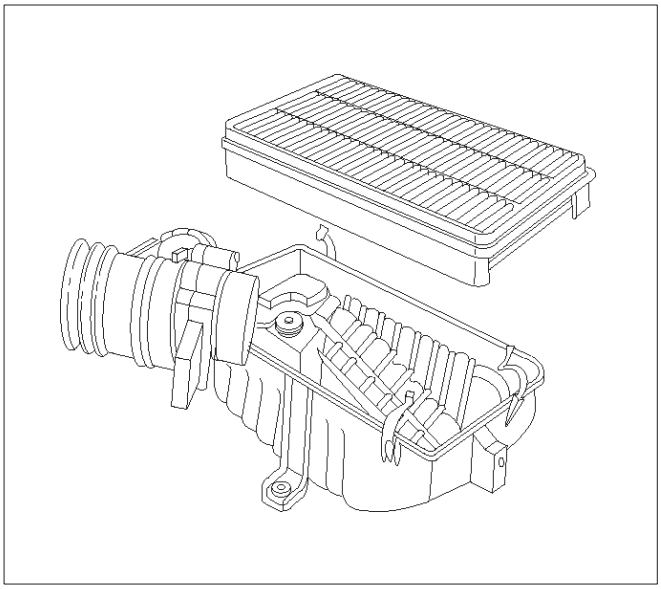

TS23794

3. Install the air cleaner lid on the MAF sensor and the air cleaner housing.

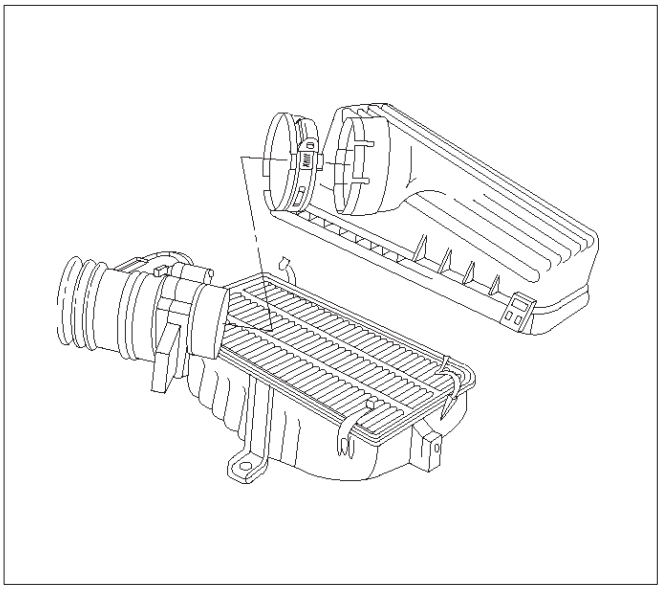

TS23973

4. Tighten the clamp and secure the four latches between the lid and the air cleaner housing.

Idle Air Control (IAC) Valve

Removal Procedure

1. Disconnect the negative battery cable.
2. Disconnect the IAC electrical connector.
3. Remove the bolts and the IAC valve from the throttle body.

NOTE: Do not clean the IAC valve by soaking it in solvent. The valve will be damaged as a result.

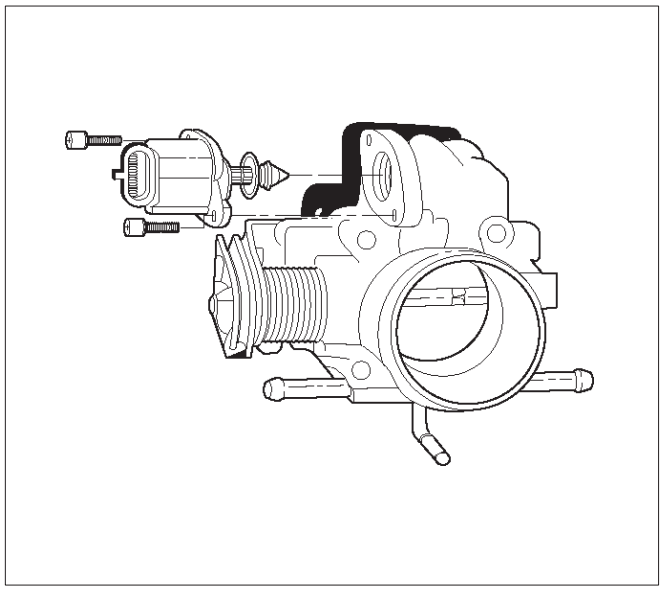

TS23745

Cleaning, Inspection, and Measurement Procedure

- Clean the IAC valve O-ring sealing surface, pintle valve seat and air passage.
  - Use carburetor cleaner and a parts cleaning brush to remove carbon deposits. Do not use a cleaner that contains methyl ethyl ketone. This is an extremely strong solvent and not necessary for this type of deposit.
  - Shiny spots on the pintle are normal and do not indicate misalignment or a bent pintle shaft.
  - If the air passage has heavy deposits, remove the throttle body for complete cleaning.

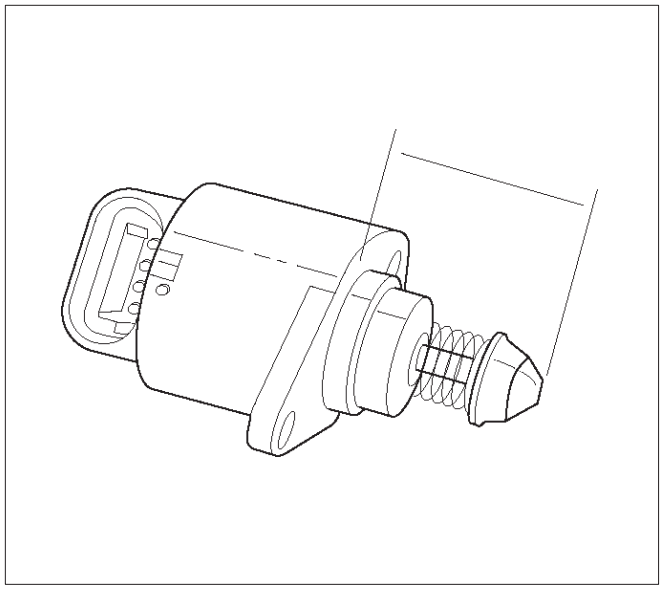

TS23746

- Inspect the IAC valve O-ring for cuts, cracks, or distortion. Replace the O-ring if damaged.

- In order to install a new IAC valve, measure the distance between the tip of the pintle and the mounting flange. If that measurement is 28 mm (1.1 in.) or less, the valve needs no adjustment. If the measurement is greater than 28 mm (1.1 in.), apply finger pressure and retract the valve. The force required to retract the pintle on a new valve will not damage the valve, shaft, or pintle.

NOTE: Do not push or pull on the IAC valve pintle on IAC valves that have been in service. The force required to move the pintle may damage it.

IMPORTANT: Use an identical replacement part in order to replace a valve. IAC valve pintle shape and diameter are designed for the specific application.

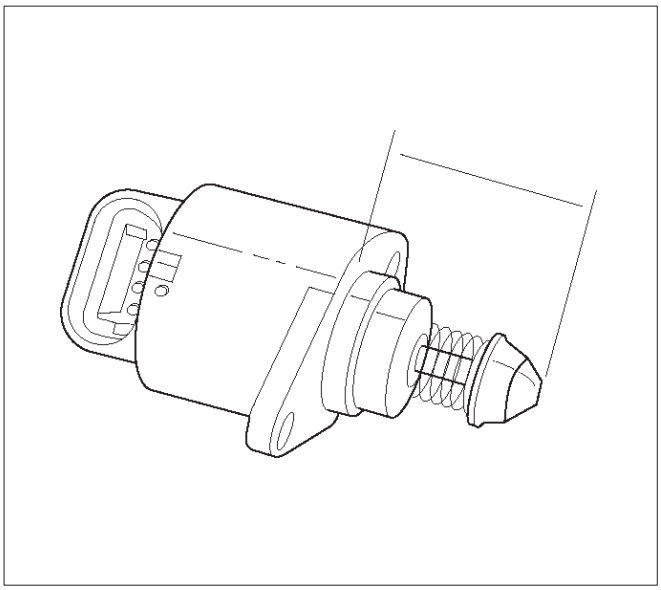

TS23746

Installation Procedure

1. Install the IAC valve on the throttle body with the bolts.

Tighten

- Tighten the bolts to 1 N·m (9 lb in.).

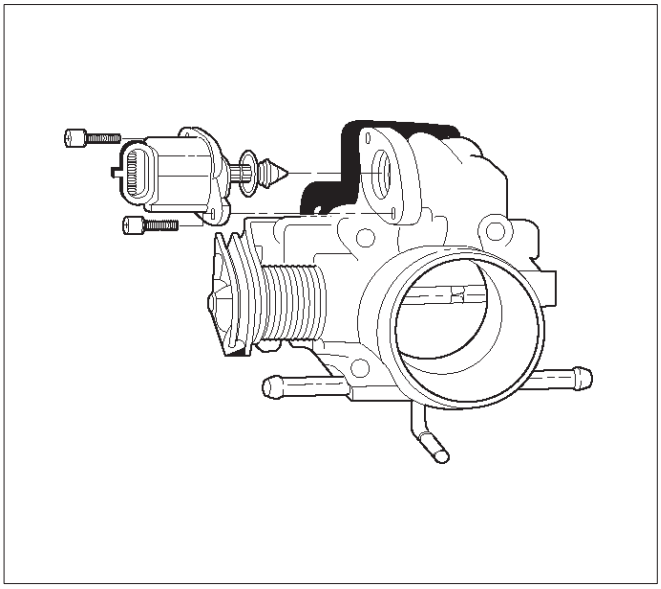

TS23745

2. Connect the IAC valve electrical connector.
3. Install the negative battery cable.

Common Chamber

Removal and Installation Procedure

Refer to Common Chamber in Engine Mechanical.

Accelerator Cable Assembly

Removal Procedure

1. Remove the engine cover.
2. Loosen the adjusting nut on the cable bracket mounting on the common chamber.

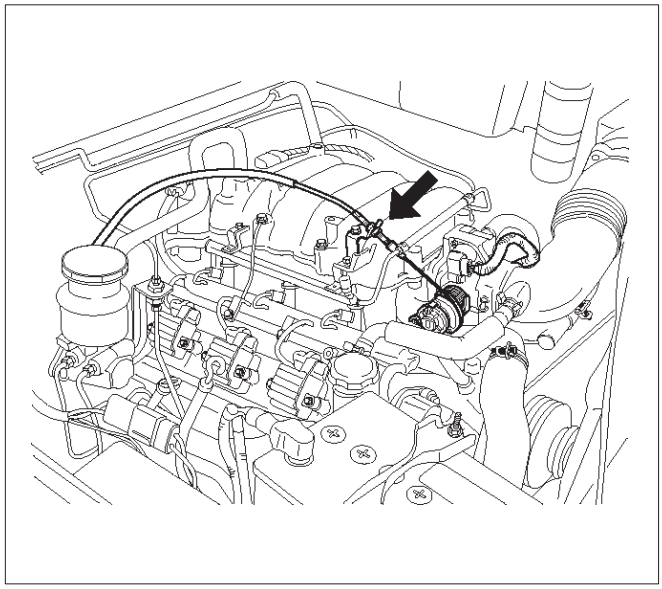

101RW005

3. Remove the accelerator control cable (on the throttle valve end).

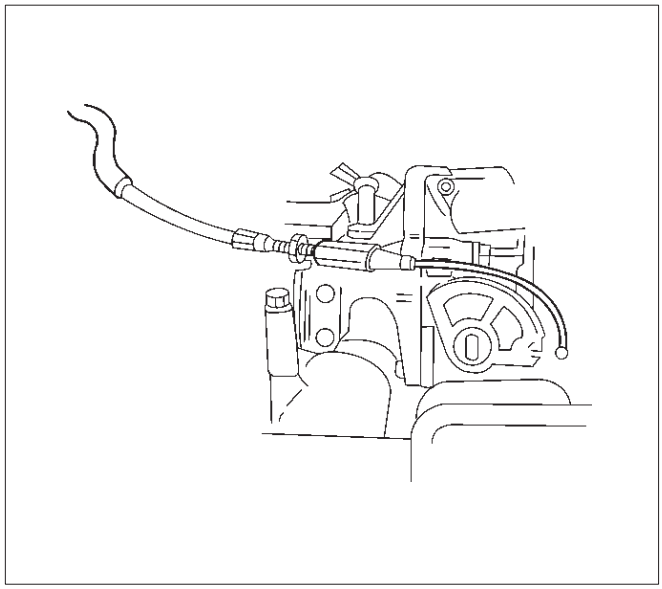

101RW006

4. Remove the accelerator control cable (on the accelerator pedal end).

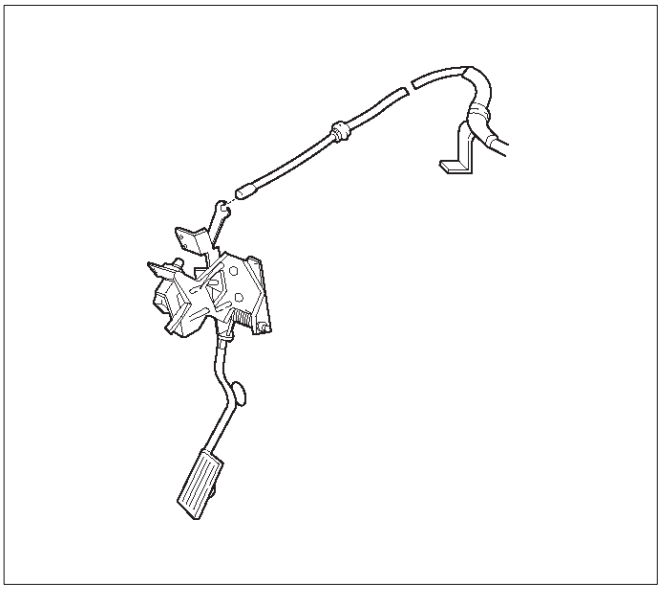

TS23982

5. Remove the grommet.
6. Remove the accelerator control cable.

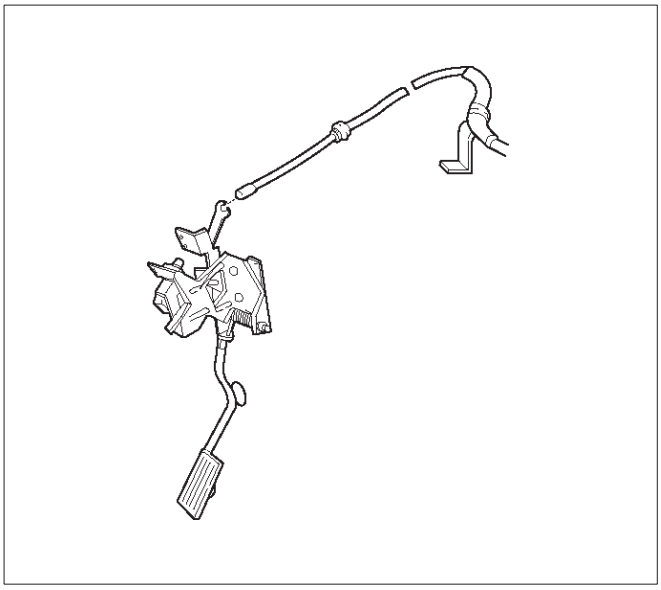

TS23983

Inspection Procedure

Check the following items, and replace the control cable if any abnormality is found:

- The control cable should move smoothly.
- The control cable should not be bent or kinked.
- The control cable should be free of damage and corrosion.

Installation Procedure

1. Install the accelerator control cable.

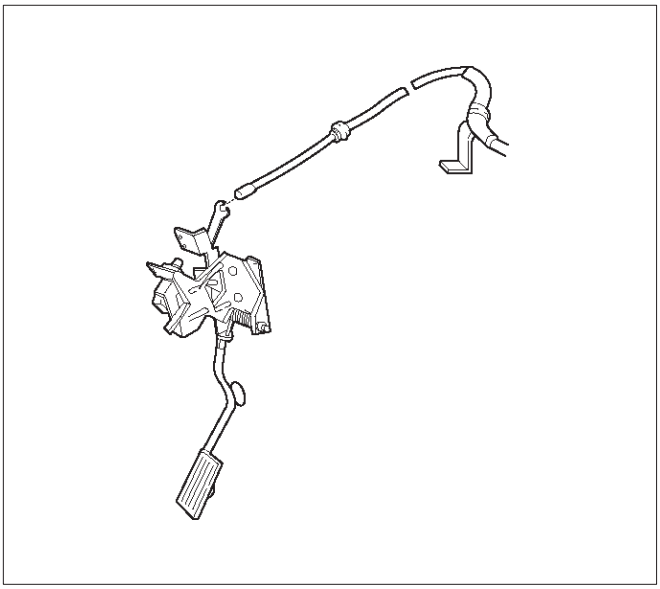

TS23983

2. Install the grommet.
3. Install the accelerator control cable (on the accelerator pedal end).

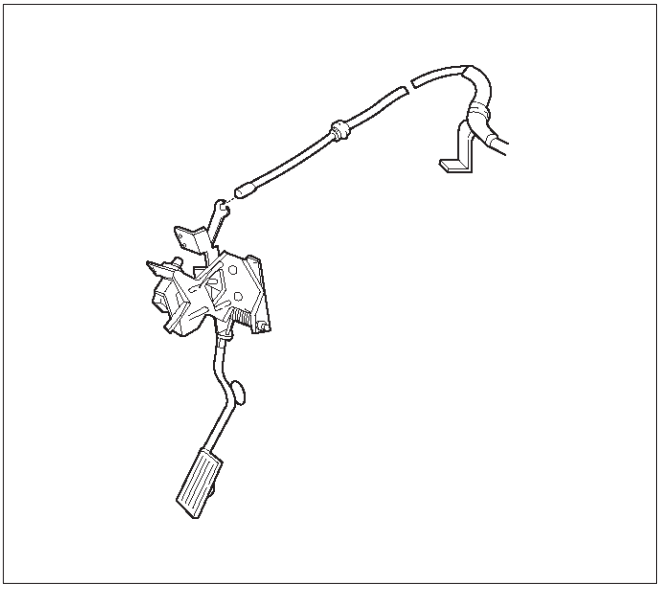

TS23982

4. Install the accelerator control cable (on the throttle valve end).

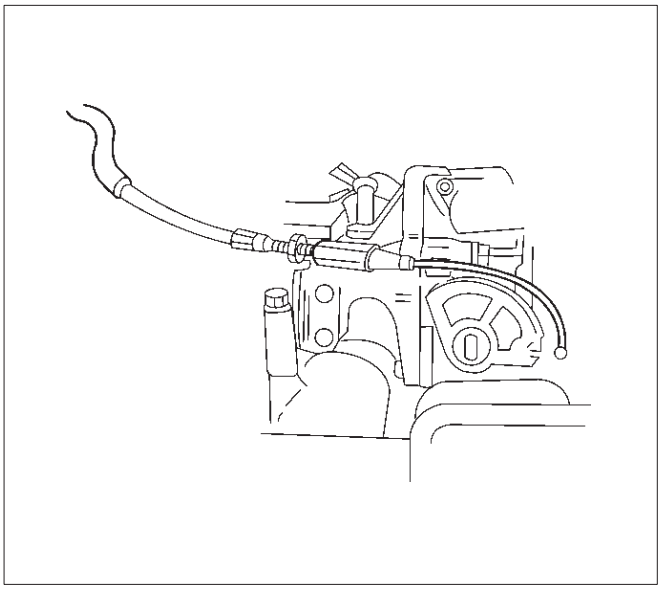

101RW006

5. Install the adjusting nut.

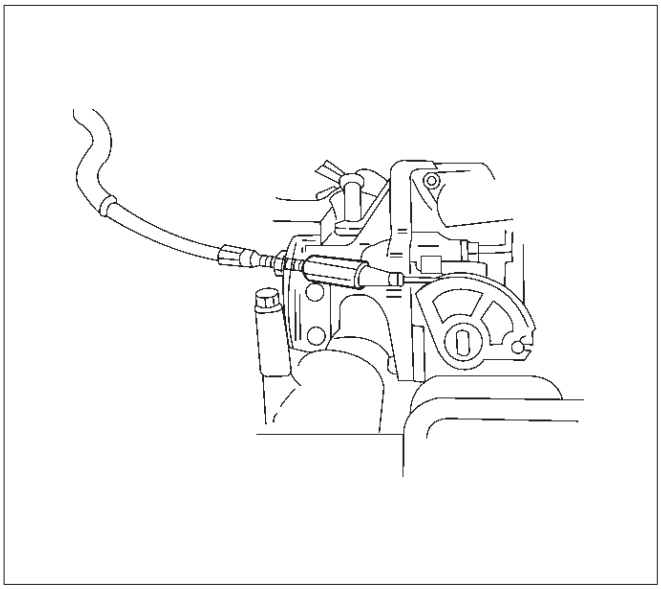

101RW007

6. Adjust the accelerator cable at the throttle body. Refer to *Accelerator Cable Adjustment*.
7. Install the engine cover.

Adjustment Procedure

1. Loosen the adjusting nut and lock nut.
2. Pull outer cable closing fully the throttle valve.
3. Tighten adjusting nut and lock nut temporarily.

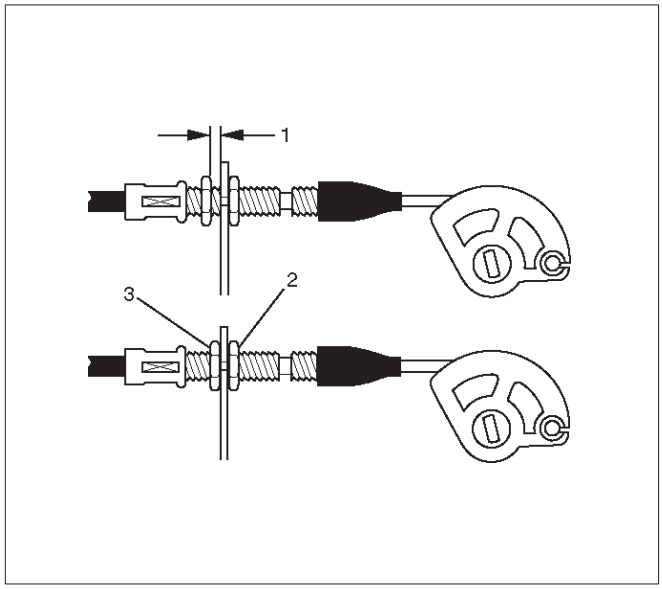

035RW004

4. Loosen adjusting nut by three turns and tighten lock nut. Then, manually operating the throttle valve, make sure that the valve lever returns up to the stopper screw.

IMPORTANT: The valve lever must return up to the stopper screw. If the valve lever does not reach the stopper screw, repeat the procedure again from step 1.

5. It does not reach the stopper screw, repeat from step 1.

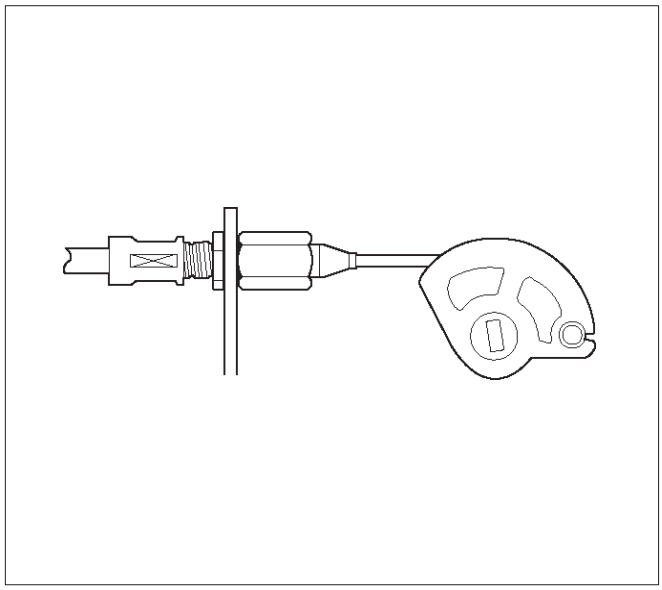

TS23782

Accelerator Pedal Replacement

Removal Procedure

1. Disconnect the cruise control cable from the accelerator pedal assembly.

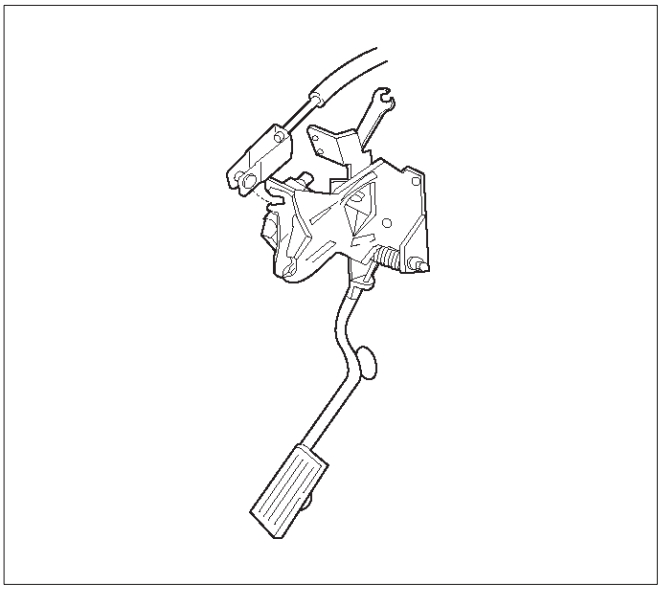

TS24053

2. Disconnect the accelerator pedal control cable from the accelerator pedal assembly.

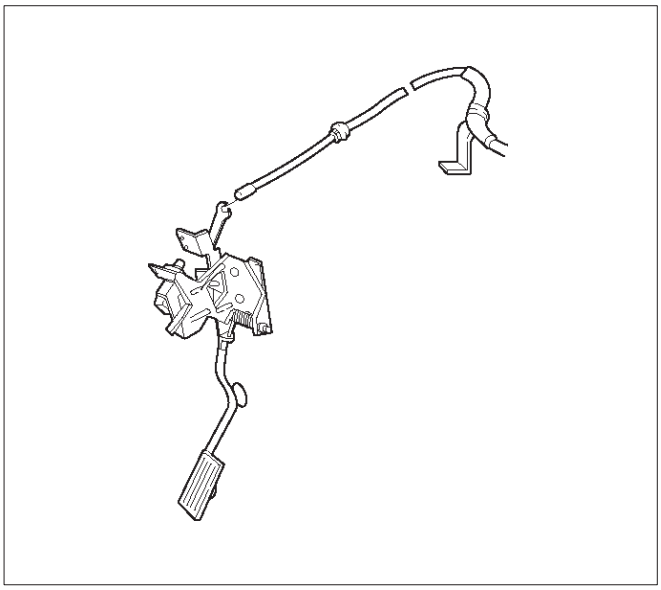

TS24054

3. Disconnect the wiring harness from the kick-down switch.

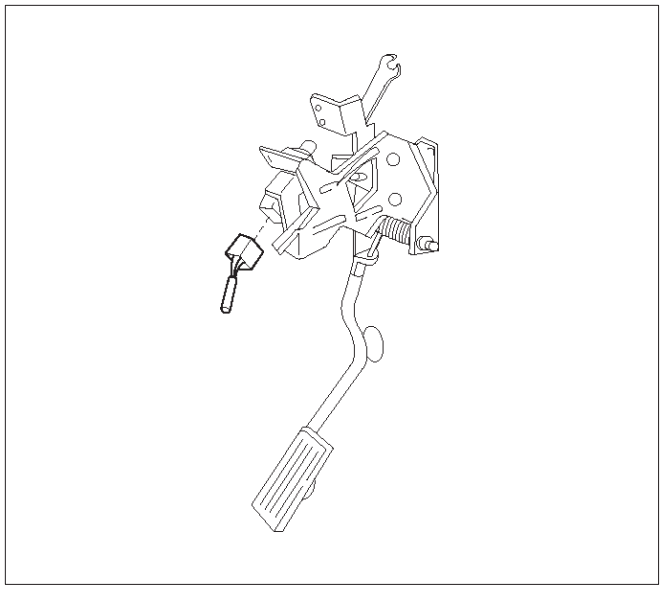

TS24038

4. Remove the two screws from the accelerator pedal assembly.

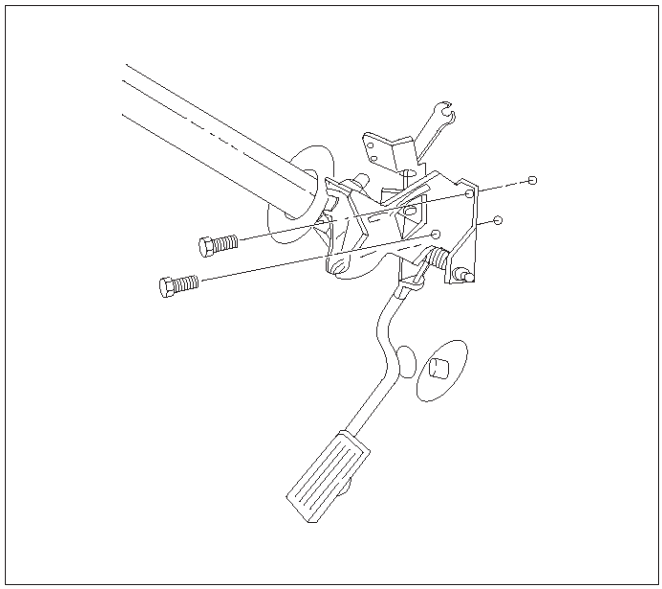

TS24055

5. Remove the accelerator pedal assembly from the bulkhead.

Installation Procedure

1. Install the accelerator pedal assembly on the bulkhead.
2. Install the two screws to the accelerator pedal assembly.

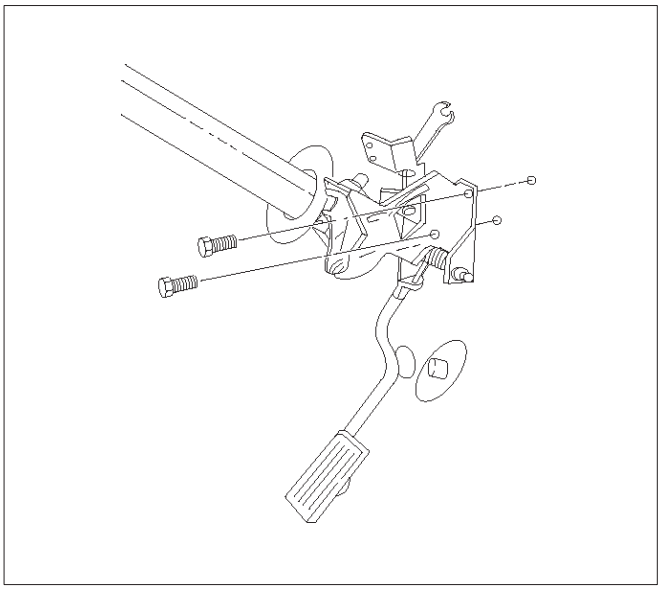

TS24055

3. Connect the wiring harness to the kick-down switch.

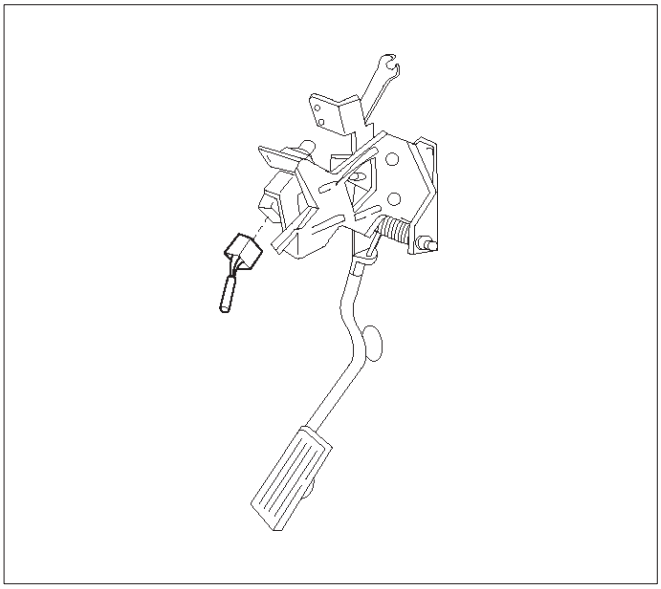

TS24038

4. Connect the accelerator pedal control cable to the accelerator pedal assembly.

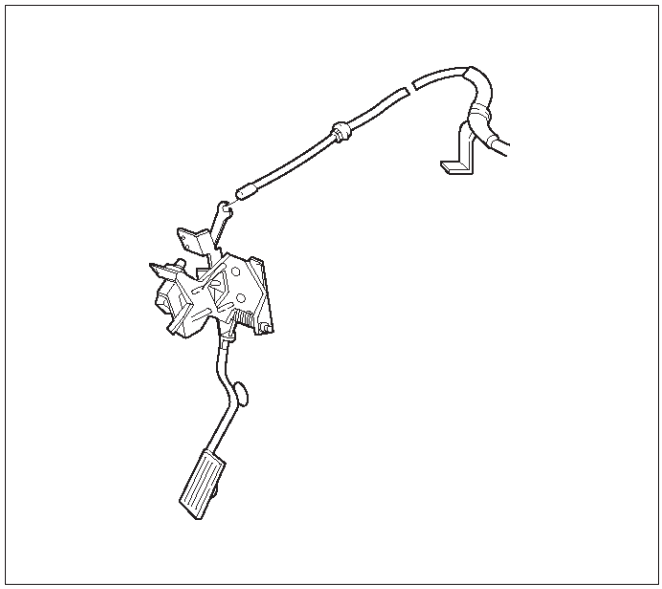

TS24054

5. Connect the cruise control cable to the accelerator pedal assembly.

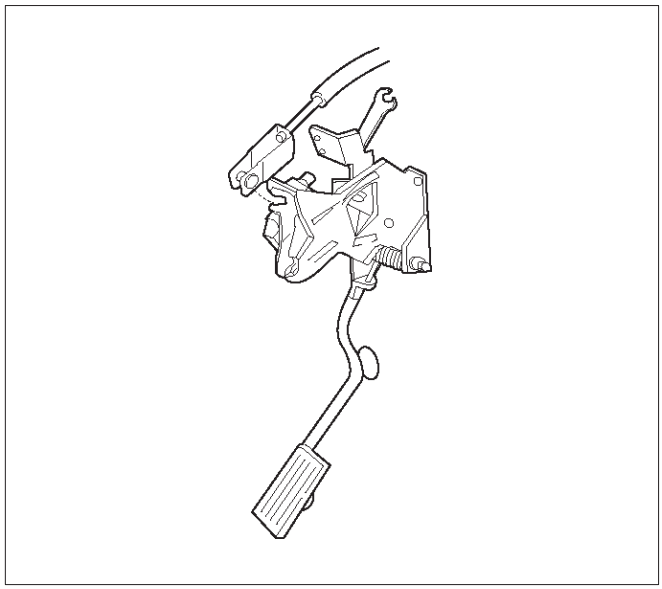

TS24053

Pedal Stroke Adjustment Procedure

1. Loosen the jam nut and rotate the kick-down switch counterclockwise.

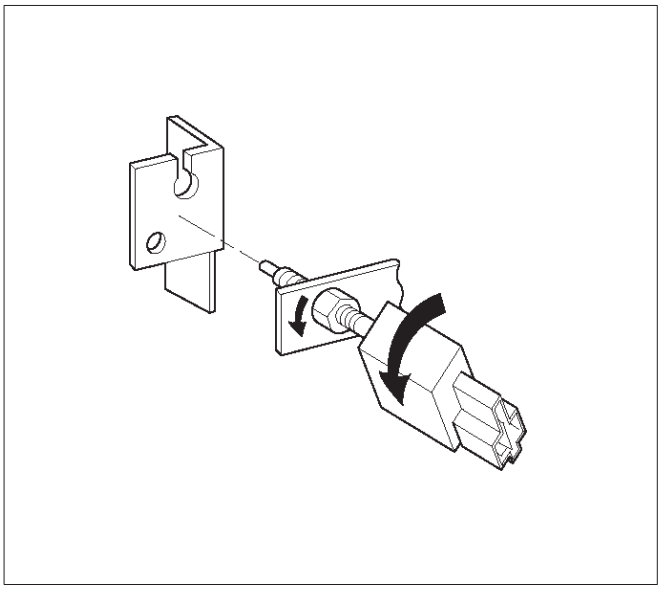

TS24039

2. Fully depress the pedal and hold it by hand. Rotate the switch clockwise until the switch clicks.
3. Rotate the switch 1/2 turn further and lock it in this position by tightening the jam nut.

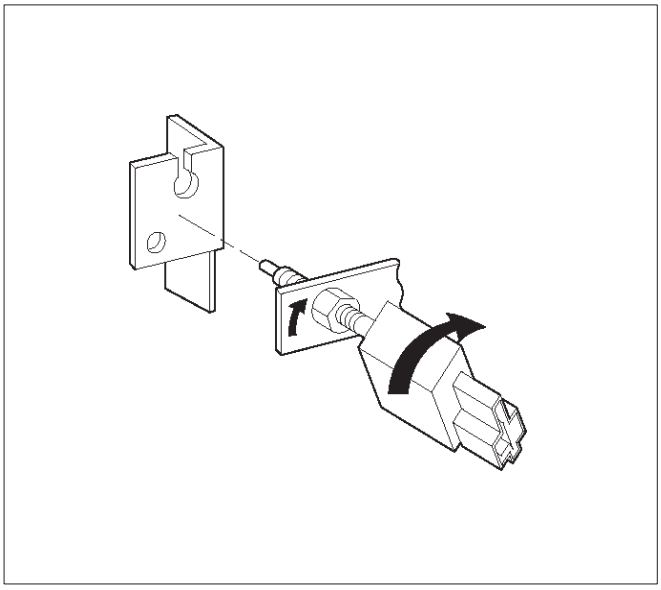

TS24040

4. Step on the accelerator pedal and make sure there is a clicking sound at the full-stroke position.

Fuel Filter Cap

General Description

The fuel filler cap includes a vacuum valve and a pressure valve.

If high vacuum or high pressure occurs in the fuel tank, each valve works to adjust the pressure in order to prevent damage to the tank at the EGR valve.

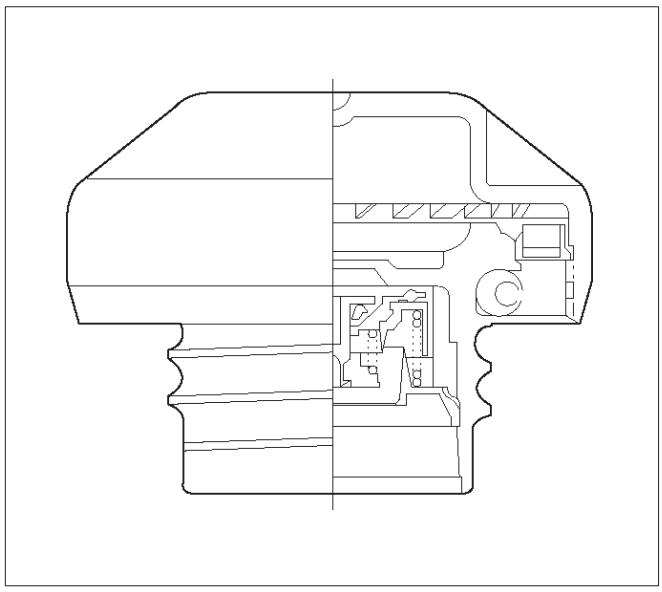

TS23767

Inspection Procedure

NOTE: Replace the fuel filler cap with the same type of filler cap that was originally installed on the vehicle.

- Check the seal ring in the filler cap for any abnormality and for seal condition.
- Replace the filler cap if any abnormality is found.

Fuel Filter

Removal Procedure

1. Disconnect the negative battery cable.
2. Remove the fuel filler cap.

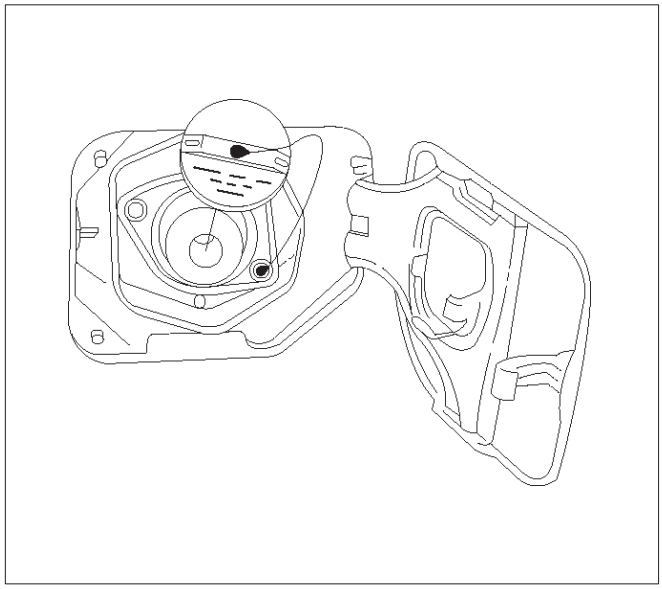

041RW005

3. Disconnect the fuel line from the fuel filter on the engine side.
4. Disconnect the fuel line from the fuel filter on the fuel tank side.

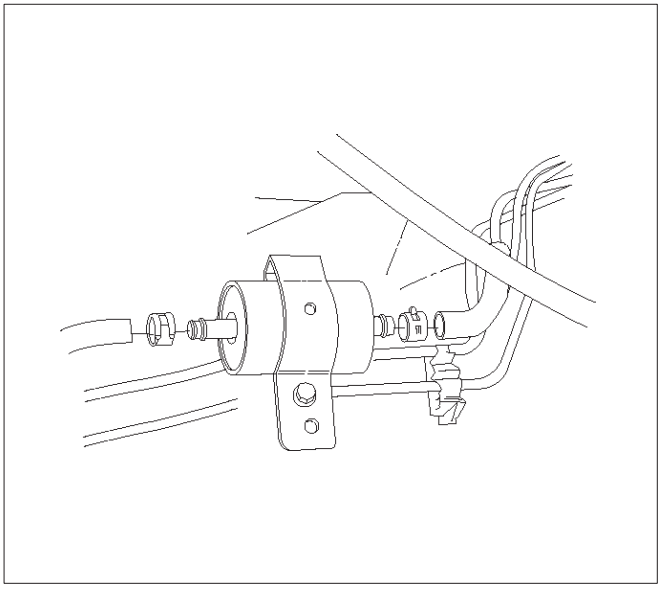

041RW006

5. Remove the bolt on the fuel filter holder.

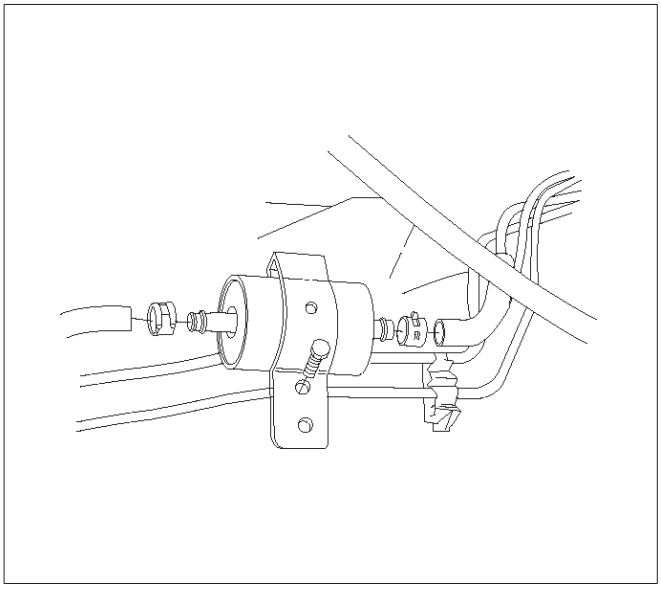

041RW007

6. Remove the fuel filter.

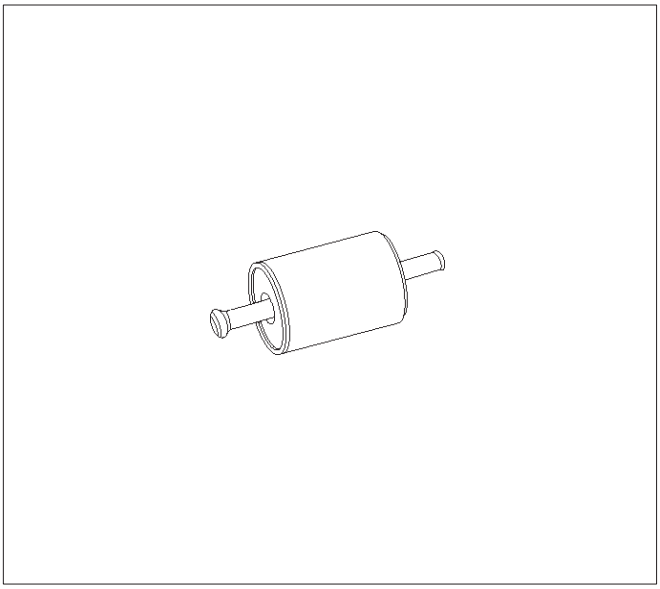

041RW008

Inspection Procedure

1. Replace the fuel filter when the following occur:
   - Fuel leaks from the fuel filter body.
   - The fuel filter body is damaged.
   - The fuel filter is clogged with dirt or sediment.
2. If the drain hole is clogged, clean the drain.

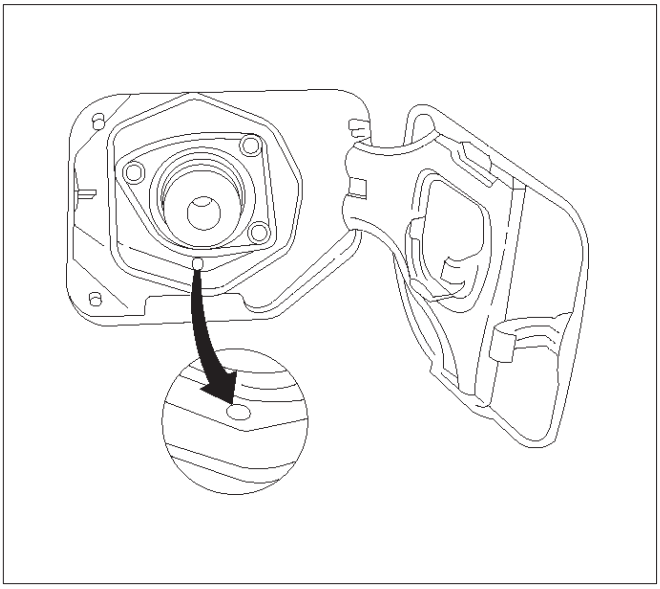

041RW009

Installation Procedure

1. Install the fuel filter in the correct direction.

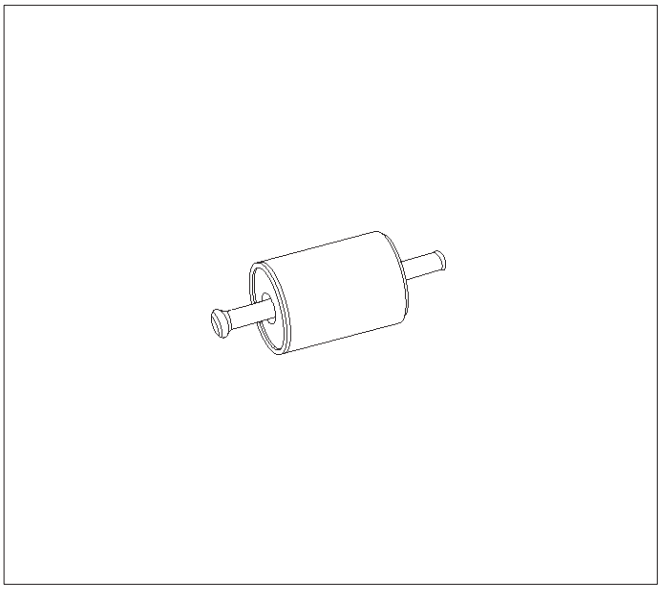

041RW008

2. Install the bolt on the fuel filter holder.

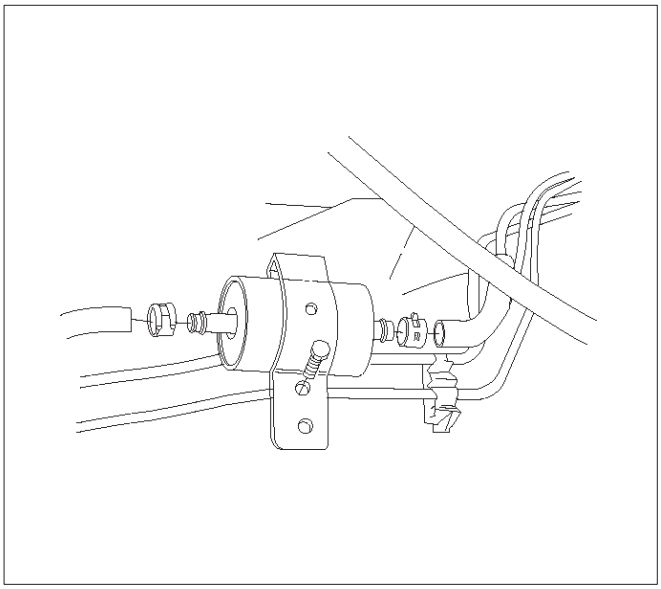

041RW007

3. Connect the fuel line on the engine side.
4. Connect the fuel line on the fuel tank side.

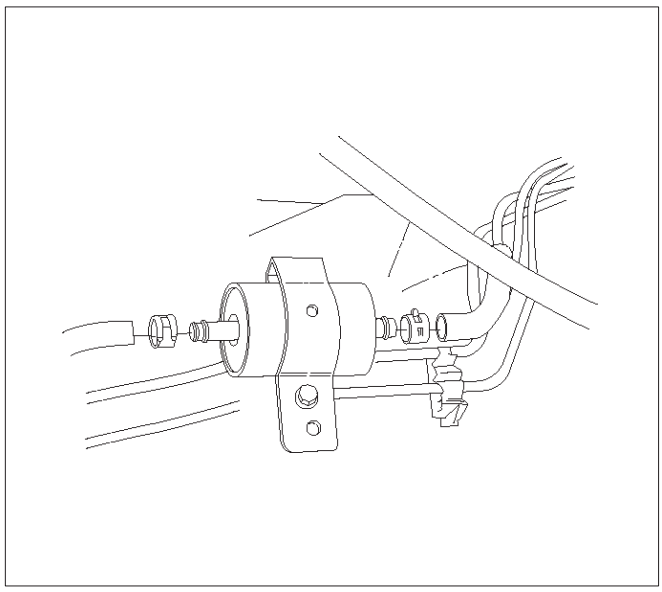

041RW006

5. Install the fuel filler cap.

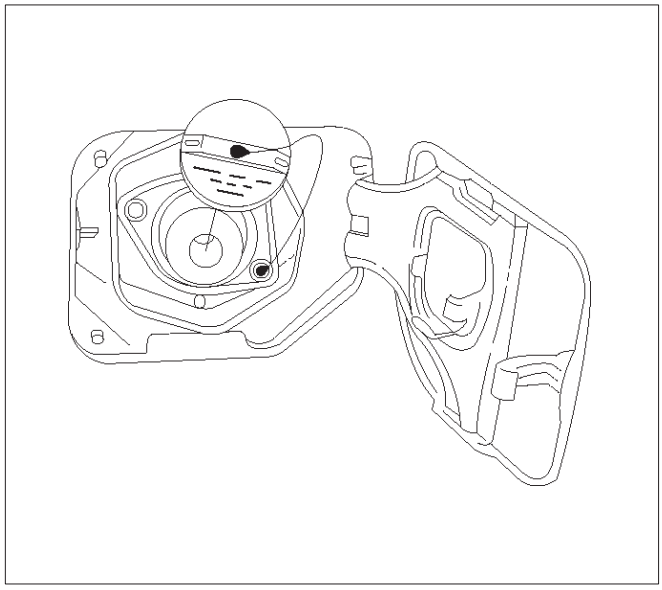

041RW005

6. Connect the negative battery cable.

Fuel Gauge Unit

Removal Procedure

1. Disconnect the negative battery cable.
2. Loosen the fuel filler cap.
3. Drain the fuel from the tank.

Tighten

- Tighten the drain plug to 20 N·m (14 lb ft.).

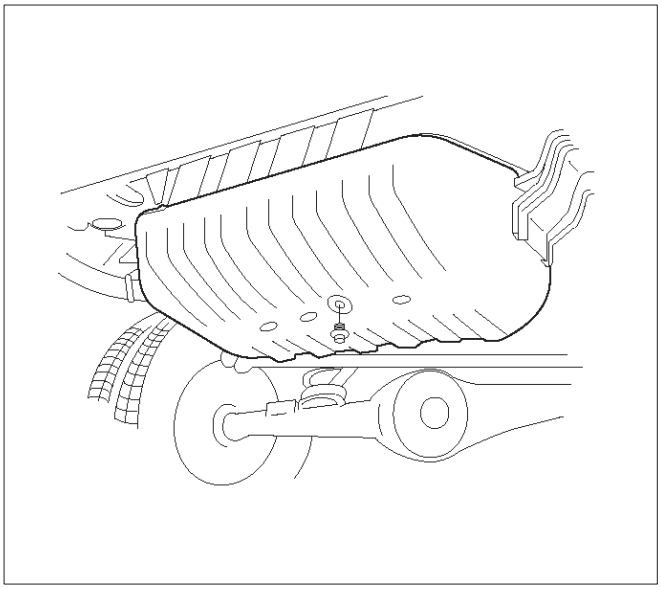

TS22907

4. Disconnect the wiring connector from the fuel gauge unit.

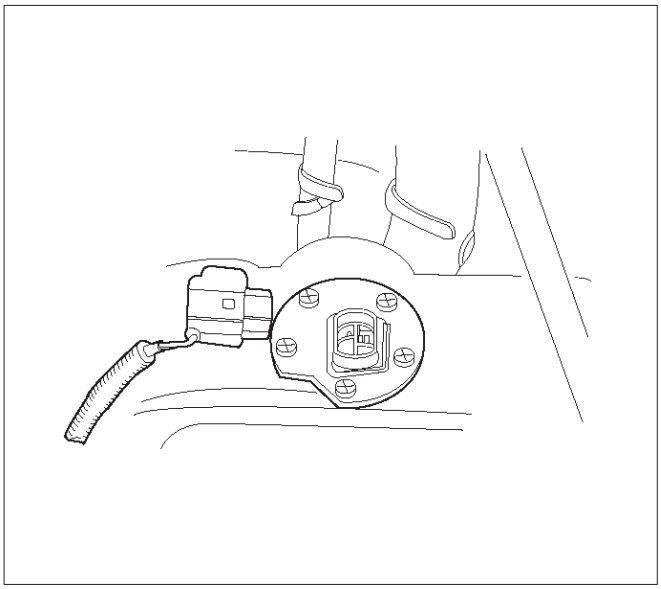

TS23771

5. Remove the fuel gauge unit retaining screws.
6. Remove the fuel gauge unit.
   - Cover or plug the fuel tank to prevent dust, dirt, or debris from entering the tank.

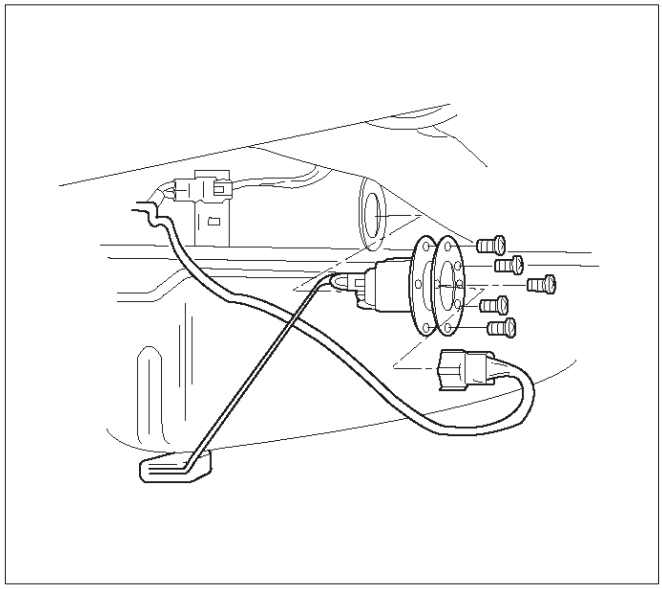

TS22911

Installation Procedure

1. Install the fuel gauge unit.
2. Install the fuel gauge unit retaining screws.

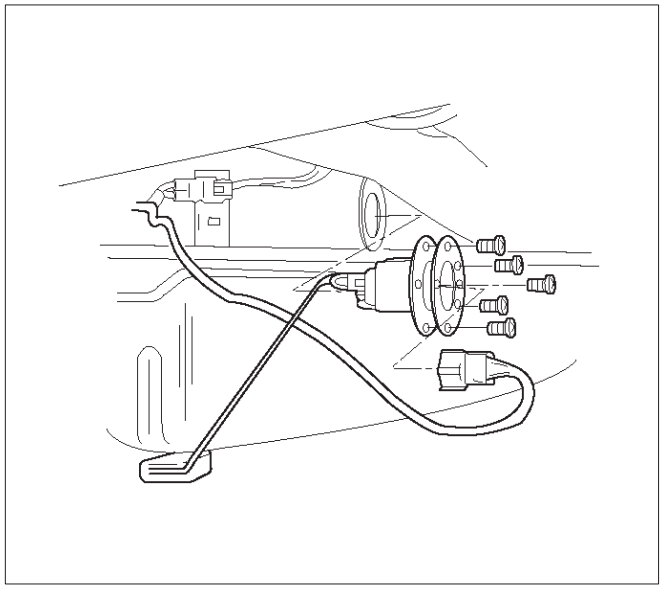

TS22911

3. Connect the wiring connector to the fuel gauge unit.

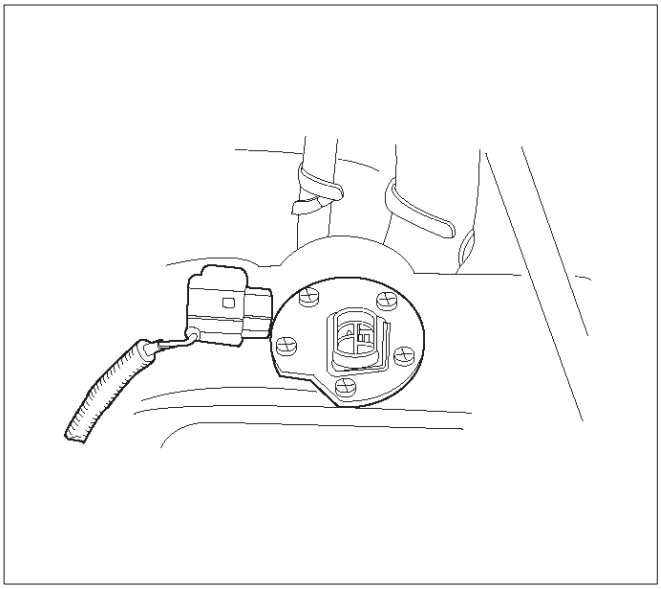

TS23771

4. Fill the fuel tank with fuel.
   - Tighten the fuel filler cap.
   - Check for leaks at the fuel gauge unit gasket.
5. Connect the negative battery cable.

Fuel Injectors

Removal Procedure

NOTE: If the fuel injectors are leaking, the engine oil may be contaminated with fuel. Check the oil for signs of contamination and change the oil and the filter if necessary.

NOTE: Use care in removing the fuel injectors in order to prevent damage to the fuel injector electrical connector pins or the fuel injector nozzles. The fuel injector is an electrical component and should not be immersed in any type of cleaner as this may damage the fuel injector.

IMPORTANT: Fuel injectors are serviced as a complete assembly only.

1. Disconnect the negative battery cable.
2. Remove the upper intake manifold. Refer to *Common Chamber in Engine Mechanical.*.
3. Remove the fuel rail. Refer to *Fuel Rail*.

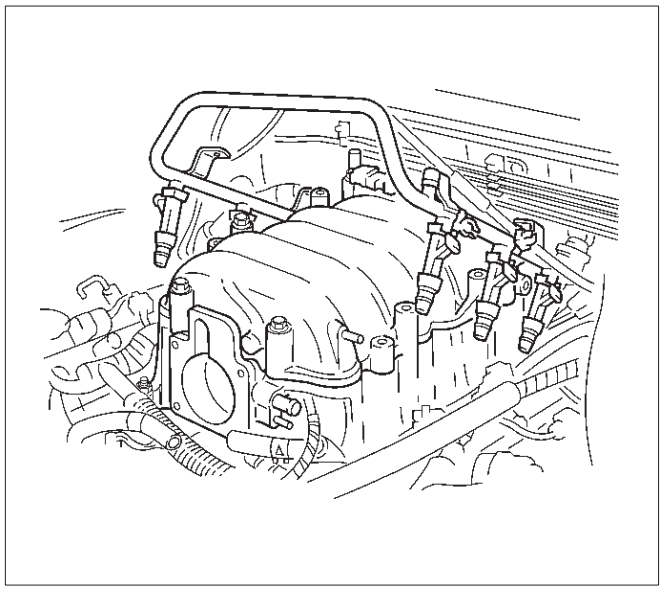

014RW164

4. Remove the injector retainer clip.

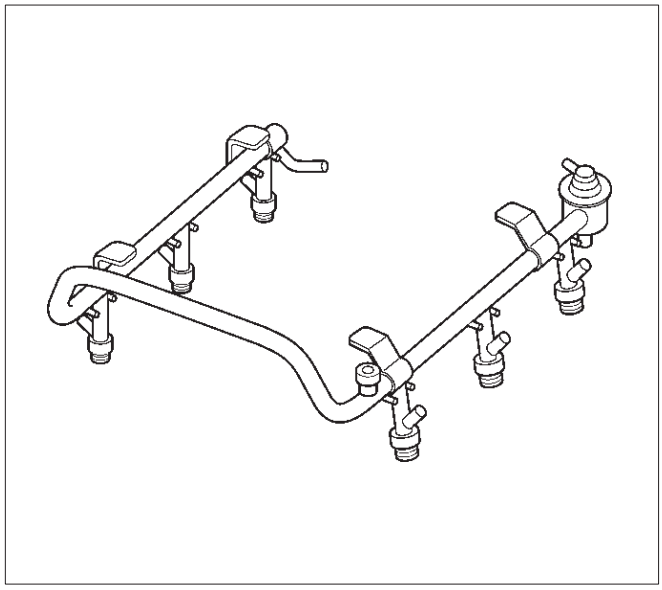

055RW009

5. Remove the fuel injector assembly.
6. Remove the O-ring from the fuel injector.
7. Remove the O-ring backup from the fuel injector .

Inspection Procedure

1. Inspect the O-rings for cracks or leaks.
2. Replace worn or damaged O-rings.
3. Lubricate the new O-rings with engine oil before installation.

Installation Procedure

1. Install the O-ring backup on the fuel injector.
2. Install the new O-ring on the fuel injector.
3. Install the fuel injector on the fuel rail.

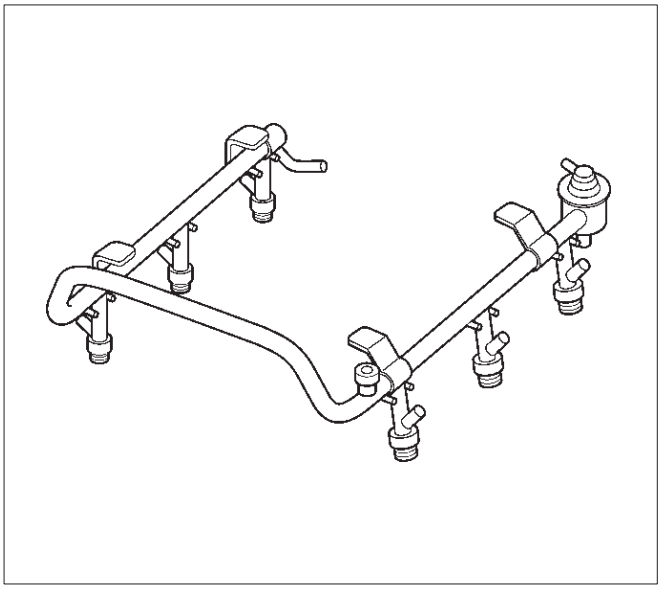

055RW009

4. Use new fuel injector retainer clips to retain the fuel injector to the fuel rail.
5. Coat the end of the fuel injector with engine oil.
6. Install the fuel rail. Refer to *Fuel Rail*.

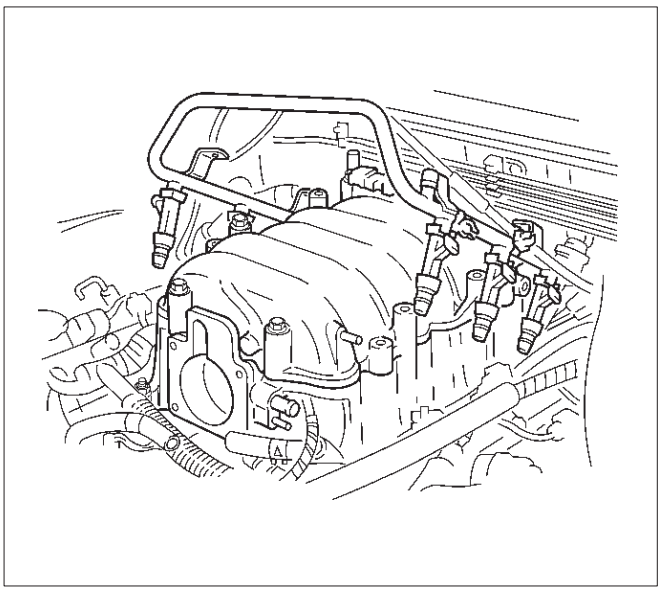

014RW164

7. Install the upper intake manifold. Refer to *Common Chamber in Engine Mechanical.*
8. Install the engine cover.
9. Connect the negative battery cable.

Fuel Pressure Regulator

Removal Procedure

CAUTION: To reduce the risk of fire and personal injury, it is necessary to relieve the fuel system pressure before servicing the fuel system components.

CAUTION: After relieving the system pressure, a small amount of fuel may be released when servicing fuel lines or connections. Reduce the chance of personal injury by covering the fuel line fittings with a shop towel before disconnecting the fittings. The towels will absorb any fuel that may leak out. When the disconnect is completed, place the towel in an approved container.

NOTE: Compressed air must never be used to test or clean a fuel pressure regulator, as damage to the fuel pressure regulator may result.

NOTE: To prevent damage to the fuel pressure regulator, do not immerse the pressure regulator in solvent.

1. Depressurize the fuel system. Refer to *Fuel Pressure Relief Procedure*.
2. Disconnect the negative battery cable.
3. Remove the fuel pump relay. Refer to *Fuel Pump Relay*.
4. Remove the pressure regulator hose from the fuel pressure regulator.

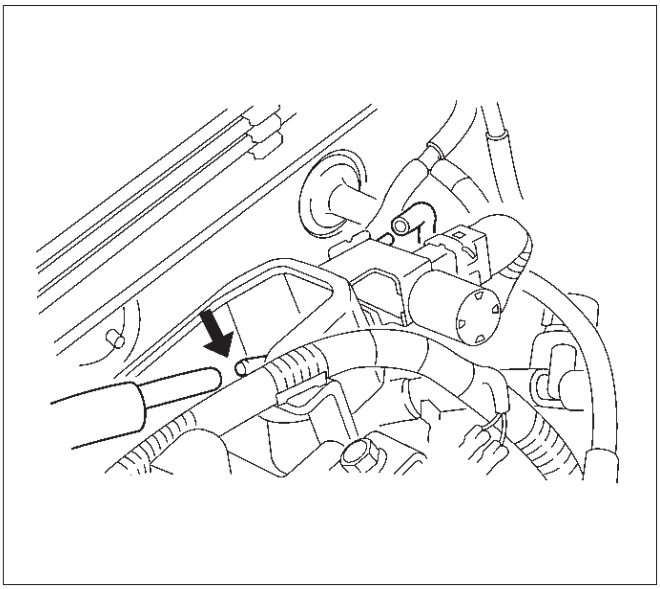

014RW110

5. Remove the two bolts from the protector that secures the common chamber.

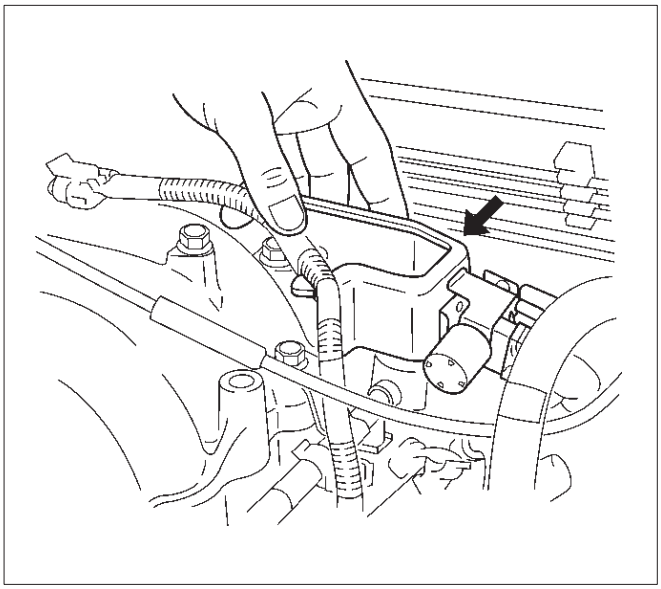

014RW109

6. Remove the fuel pressure regulator attaching screw.

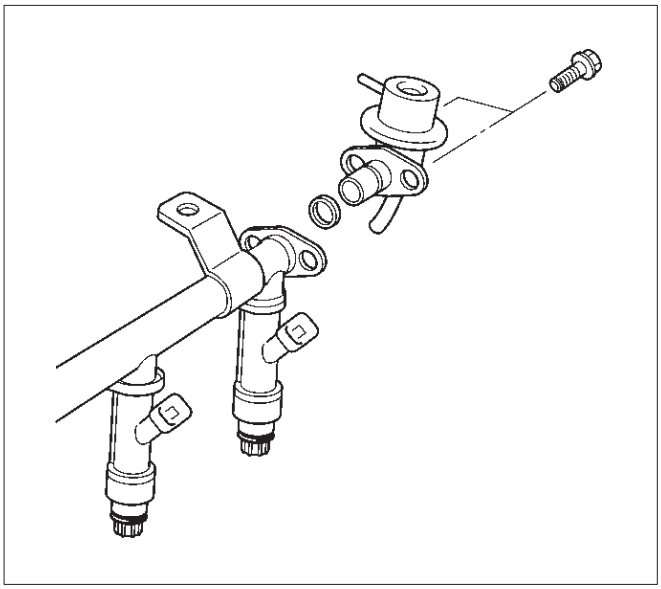

F06RW043

7. Remove the fuel pressure regulator from the fuel rail.

Disassembly Procedure

1. Remove the O-ring from the fuel pressure regulator.
2. Loosen the swivel nut.
3. Remove the fuel return line from the fuel pressure regulator.
4. Remove the O-ring from the fuel return line.
   - The O-ring may be left inside the fuel pressure regulator instead of on the fuel return line.

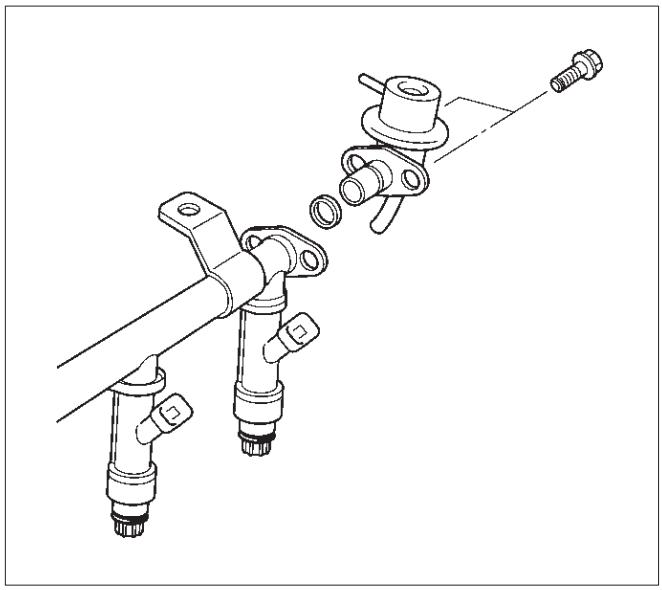

F06RW043

Assembly Procedure

1. Install a new O-ring on the fuel return line.
2. Install the fuel return line on the fuel pressure regulator.

NOTE: Do not over-tighten the swivel nut on the fuel pressure regulator. The fuel pressure regulator can be damaged and fuel may leak if the swivel nut is over-tightened.

3. Tighten the swivel nut.
4. Install a new O-ring on the fuel pressure regulator.

Installation Procedure

1. Install the fuel pressure regulator attaching screw.

Tighten

- Tighten the fuel pressure regulator attaching screw to 3 N·m (26 lb in.).

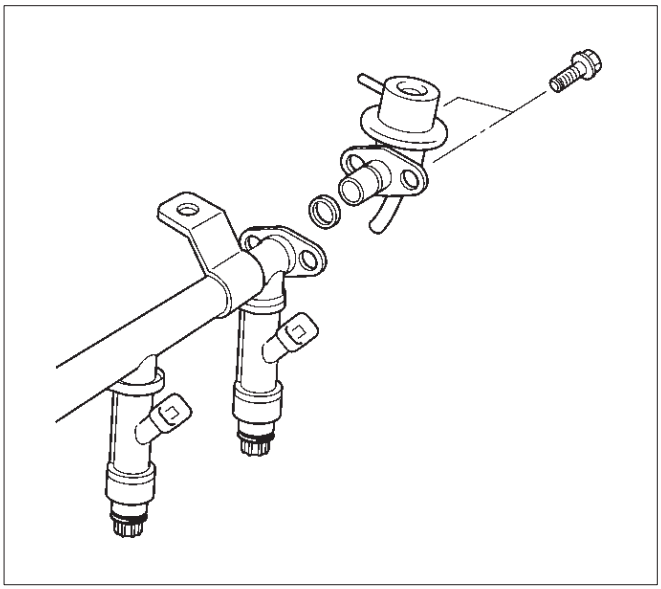

F06RW043

2. Install the fuel pressure regulator on the fuel rail.
3. Install the two bolts to the protector that secures the common chamber.

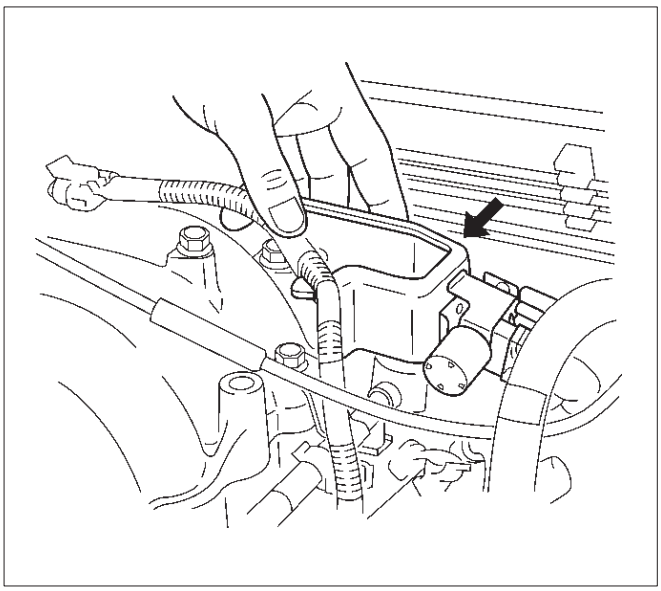

014RW109

4. Install the pressure regulator hose to the fuel pressure regulator.

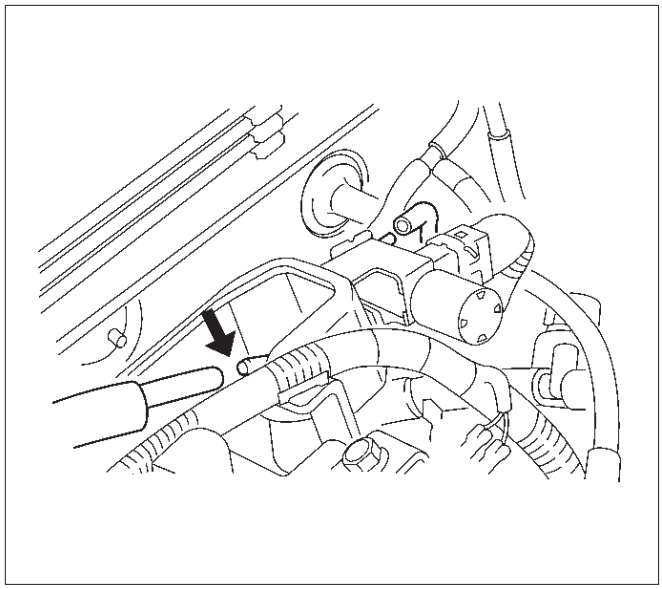

014RW110

5. Install the fuel pump relay. Refer to *Fuel Pump Relay*.
6. Connect the negative battery cable.
7. Crank the engine until it starts. Cranking the engine may take longer than usual due to trapped air in the fuel lines.

Fuel Metering System

Fuel Pressure Relief Procedure

CAUTION: To reduce the risk of fire and personal injury, it is necessary to relieve the fuel system pressure before servicing the fuel system components.

CAUTION: After relieving the system pressure, a small amount of fuel may be released when servicing fuel lines or connections. Reduce the chance of personal injury by covering the fuel line fittings with a shop towel before you disconnect the fittings. The towels will absorb any fuel that may leak out. When the disconnect is completed, place the towel in an approved container.

1. Remove the fuel cap.

2. Remove the fuel pump relay from the underhood relay box. Refer to *Fuel Pump Relay*.

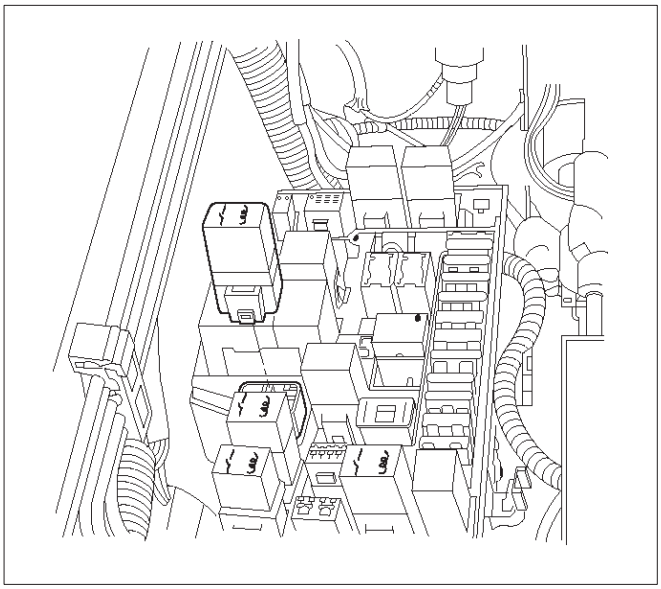

TS23976R

3. Start the engine and allow it to stall.
4. Crank the engine for 30 seconds.
5. Disconnect the negative battery cable.

Fuel Pump Assembly

Removal Procedure

1. Disconnect the negative battery cable.
2. Drain all the fuel from the tank.
3. Install and tighten the drain plug.

Tighten

- Tighten the drain plug to 20 N·m (14 lb ft.).

4. Remove the fuel tank. Refer to *Fuel Tank*.
5. Remove the retaining screws from the fuel tank.
6. Remove the fuel pump assembly from the fuel tank.
   - Cover the fuel pump opening in order to prevent dust, dirt, or debris from entering the fuel tank.

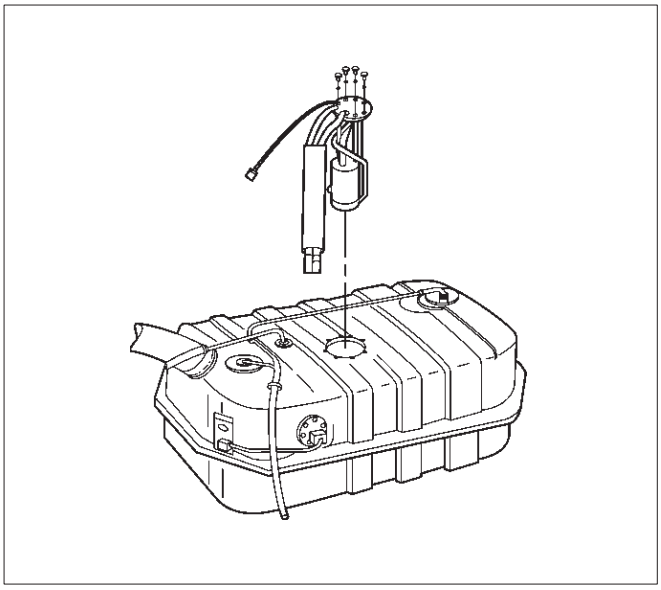

TS23795

Inspection Procedure

1. Inspect the fuel pump gasket for tears, cracks, stretching, or rotting. If any of these conditions are found, replace the fuel pump gasket.
2. Inspect the in-tank fuel filter for tears or evidence of dirt, debris, or water in the fuel. If any of these conditions are found, replace the in-tank fuel filter.

Installation Procedure

1. Install the fuel pump assembly.
2. Install the fuel pump assembly retaining screws.
3. Install the fuel tank assembly. Refer to *Fuel Tank*.
4. Fill the tank with fuel.
5. Tighten the fuel filler cap.
6. Connect the negative battery cable.

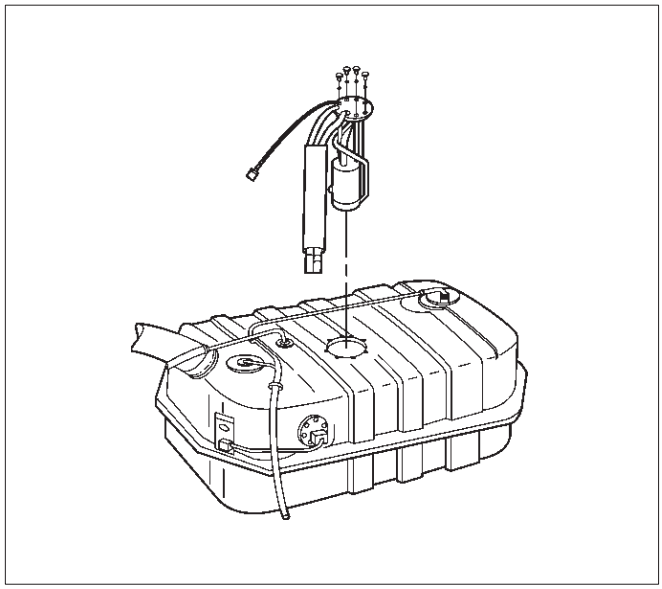

TS23795

Fuel Pump Relay

Removal Procedure

1. Remove the fuse and relay box cover from under the hood.
2. Consult the diagram on the cover to determine which is the correct relay.
3. Insert a small screwdriver into the catch slot on the forward side of the fuel pump relay.
   - The screwdriver blade will release the catch inside.

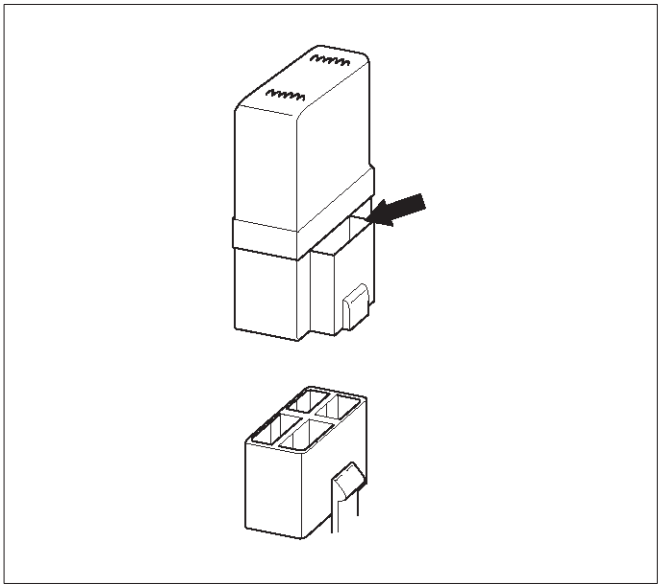

T321092

4. Pull the relay straight up and out of the fuse and relay box.

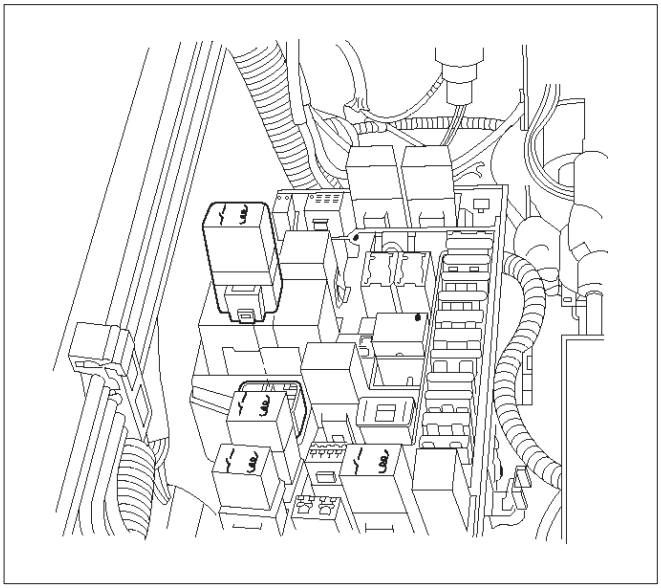

TS23976R

Installation Procedure

1. Insert the relay into the correct place in the fuse and relay box with the catch slot facing forward.
2. Press down until the catch engages.
   - An audible “click” will be heard.

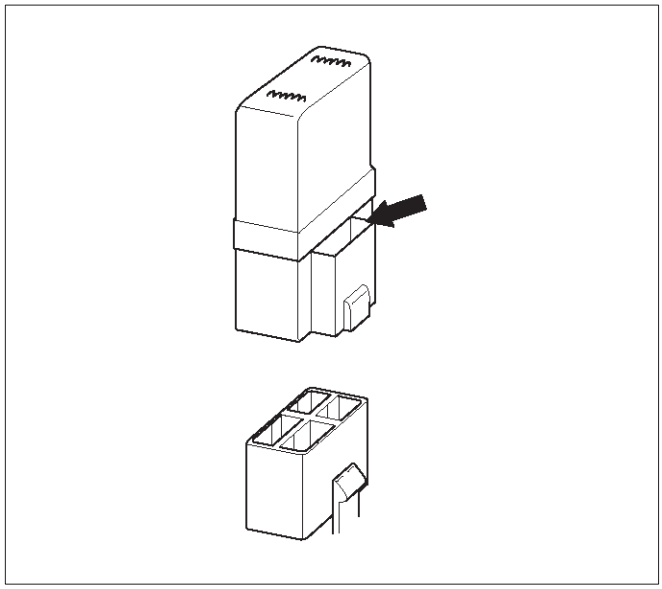

T321092

3. Install the fuse and relay box cover.

Fuel Rail Assembly

Removal Procedure

NOTE:

- Do not attempt to remove the fuel inlet fitting on the fuel rail. It is staked in place. Removing the fuel inlet fitting will result in damage to the fuel rail or the internal O-ring seal.
- Use care when removing the fuel rail assembly in order to prevent damage to the injector electrical connector terminals and the injector spray tips.
- Fittings should be capped and holes plugged during servicing to prevent dirt and other contaminants from entering open lines and passages.

IMPORTANT: An eight-digit identification number is stamped on the side of the fuel rail. Refer to this number when you service the fuel rail or when a replacement part is required.

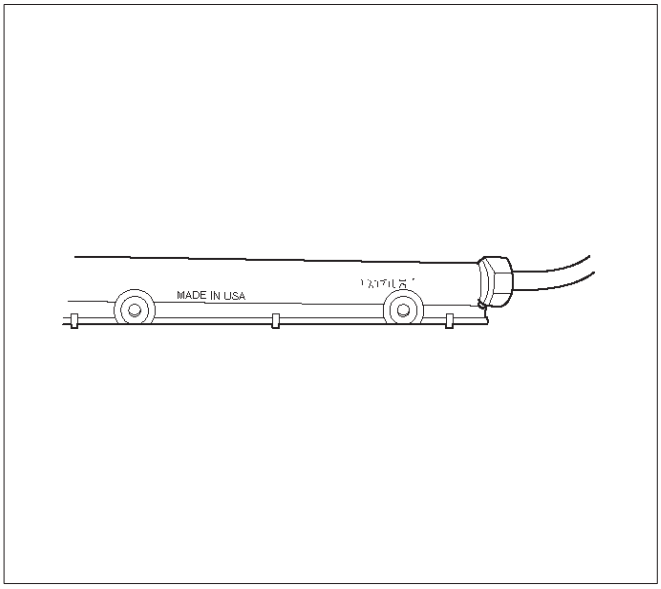

TS24022

Before removal, the fuel rail assembly may be cleaned with a spray type engine cleaner. Follow the spray package instructions. Do not immerse the fuel rails in liquid cleaning solvent.

1. Depressurize the fuel system. Refer to Fuel Pressure Relief Procedure in this Section.
2. Disconnect the negative battery cable.
3. Remove the engine cover.
4. Disconnect the accelerator pedal cable from throttle body and cable bracket.
5. Disconnect the connectors from manifold absolute pressure sensor, solenoid valve, electric vacuum sensing valve.
6. Disconnect the vacuum hose on canister VSV and positive crankcase ventilation hose.
7. Remove the common chamber. Refer to the common chamber in Engine Mechanical.
   1. Lift up carefully on the fuel injectors. Do not separate the fuel injectors from the fuel rail.
   2. If an injector becomes separated from the fuel rail, the infector O-ring seals and the retainer clip must be replaced.
   3. Drain residual fuel into an approved container.

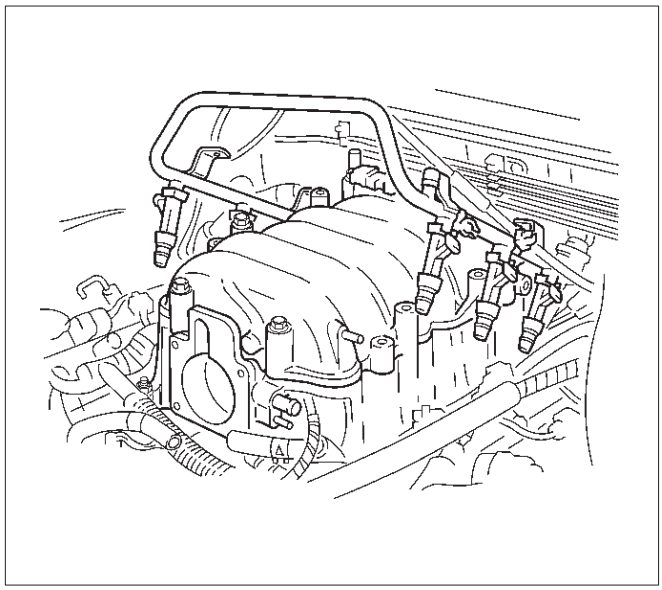

014RW164

8. If removal of the fuel pressure regulator is necessary, refer to *Fuel Pressure Regulator*.
9. If removal of the fuel injectors is necessary, refer to *Fuel Injectors*.

Installation Procedure

1. If the fuel injectors were removed, install them. Refer to *Fuel Injectors*.
2. If the fuel pressure regulator was removed, install it. Refer to *Fuel Pressure Regulator*.
3. Install the common chamber. Refer to common chamber in engine Mechanical.

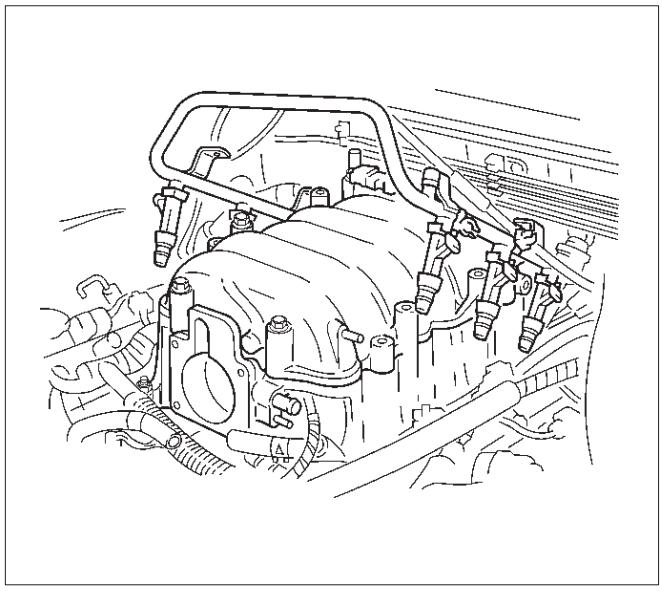

014RW164

4. Connect the vacuum hose on Canister VSV and positive crankcase ventilation hose.
5. Connect the connectors to manifold absolute pressure sensor, solenoid valve, electric vacuum sensing valve.
6. Connect the accelerator pedal cable to throttle body and cable bracket.
7. Install the engine cover.
8. Connect the negative battery cable.
9. Crank the engine until it starts. Cranking the engine may take longer than usual due to trapped air in the fuel rail and in the injectors.

Fuel Tank

Removal Procedure

1. Disconnect the negative battery cable.
2. Loosen the fuel filler cap.
3. Drain the fuel from the tank into an approved container.
4. Install and tighten the drain plug.

Tighten

- Tighten the drain plug to 20 N·m (14 lb ft.).

5. Disconnect the fuel filler hose at the fuel tank.
6. Disconnect the air breather hose at the fuel tank.

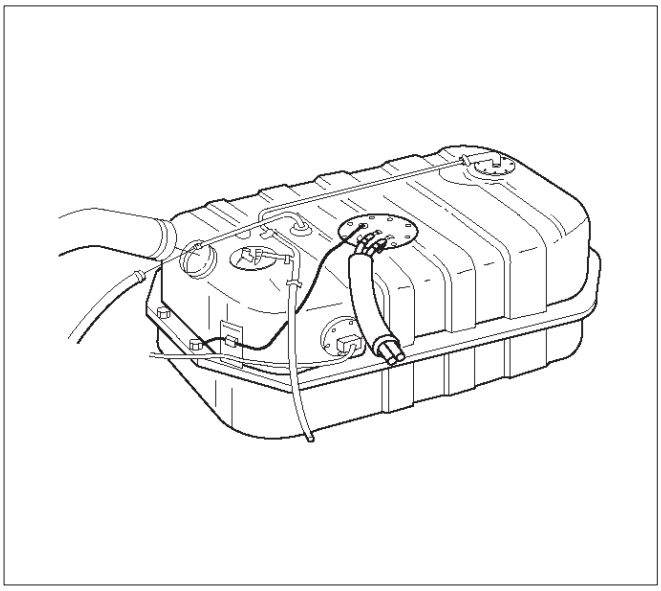

TS23796

7. Remove the undercover retaining bolts.
8. Remove the undercover.

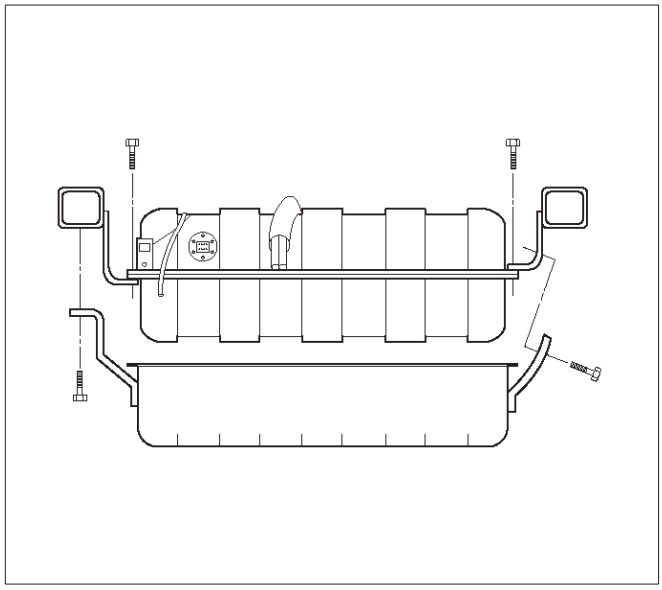

TS23797

9. Disconnect the wiring connector to the fuel pump.
10. Disconnect the wiring connector to the fuel gauge unit.
11. Remove the fuel gauge unit connector from the bracket.
12. Disconnect the EVAP vapor hose.
13. Disconnect the fuel supply hose.
14. Disconnect the fuel return hose.
    - Plug the hoses to prevent dust from entering the hoses.

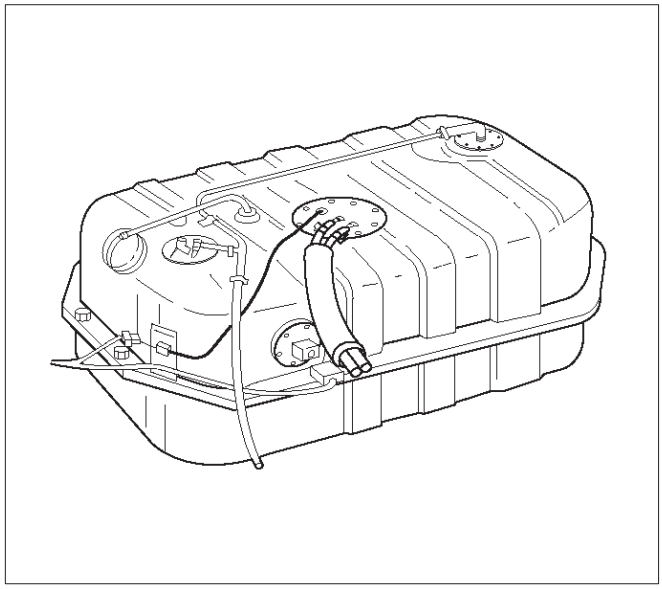

TS23769

15. Remove the fuel tank retaining bolts on both sides.
16. Remove the fuel tank.

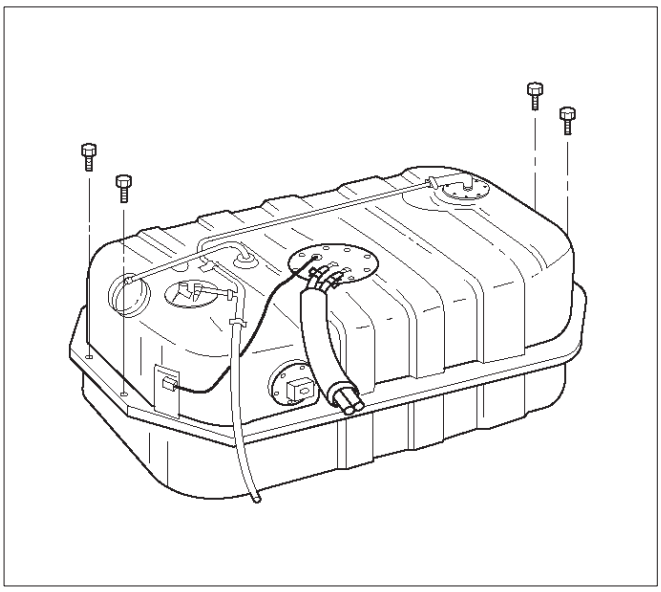

TS23770

Installation Procedure

1. Install the fuel tank.
   - Place the flanges on the left and right side of the tank on the bracket.
2. Install the fuel tank retaining bolts.

Tighten

- Tighten the fuel tank retaining bolts to 36 N·m (27 lb ft.).

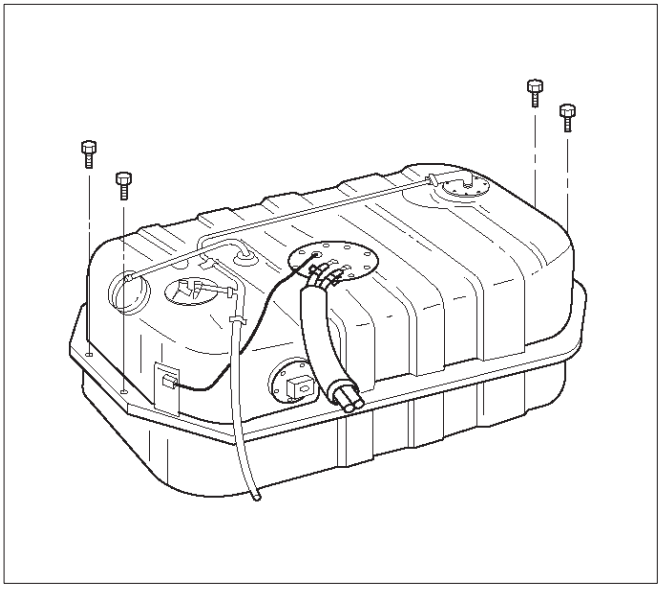

TS23770

3. Connect the fuel return hose.
4. Connect the fuel supply hose.
5. Connect the EVAP vapor hose.
6. Connect the wiring connector for the fuel gauge unit.
7. Connect the fuel gauge wiring connector to the bracket.
8. Connect the wiring connector for the fuel pump.

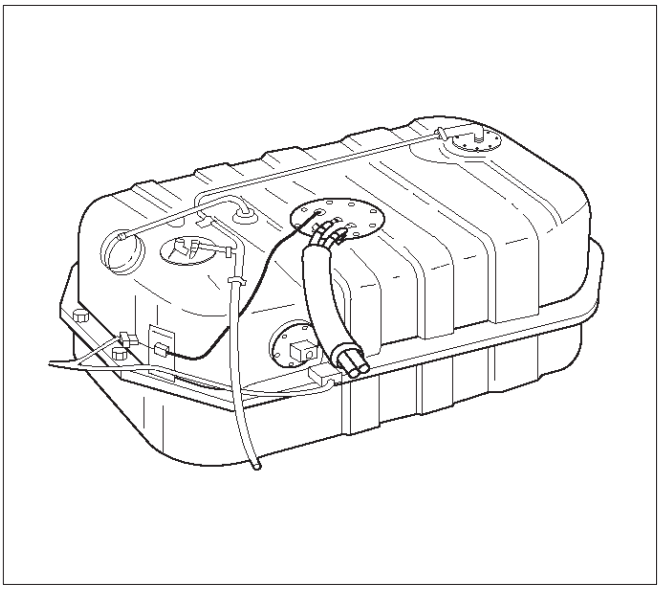

TS23769

9. Install the undercover.
10. Secure the undercover with the retaining bolts.

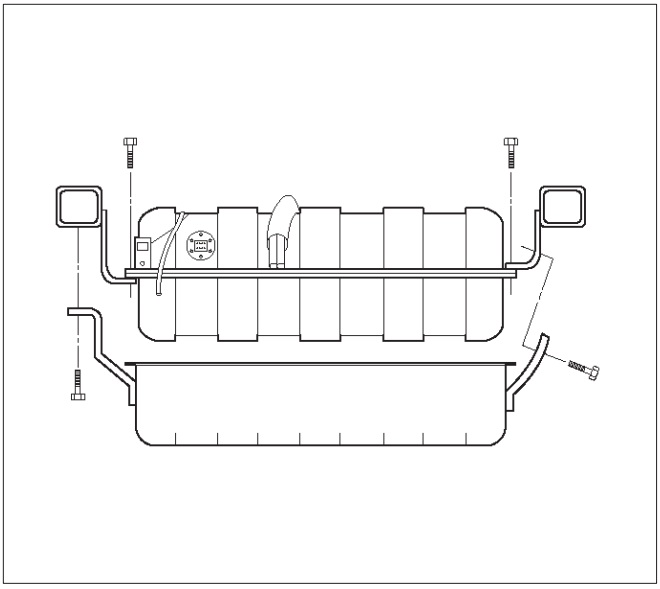

TS23797

11. Connect the fuel filler fuse at the tank.
12. Connect the air breather hose at the tank.

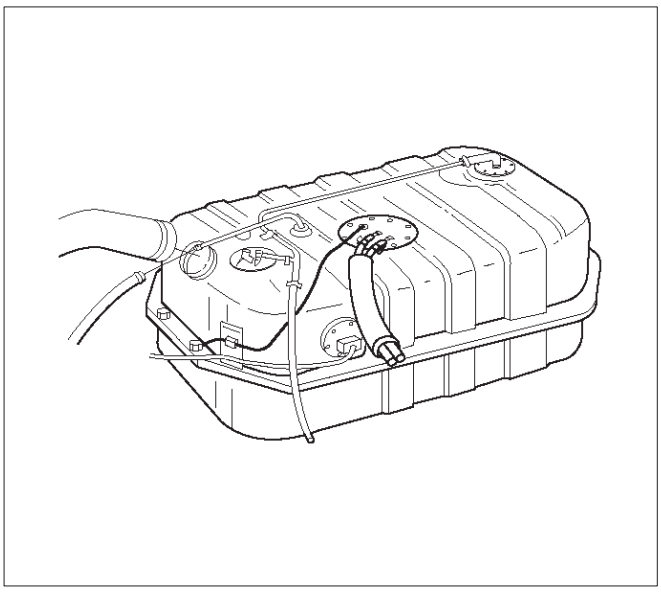

TS23796

13. Fill the fuel tank with fuel.
14. Tighten the fuel filler cap.
15. Connect the negative battery cable.

Throttle Body (TB)

Removal Procedure

1. Disconnect the negative battery cable.
2. Drain the cooling system. Refer to *Cooling System*.
3. Remove the accelerator cable assembly. Refer to *Accelerator Cable in Engine Speed Control System.*.
4. Disconnect the electrical connectors:
   - Throttle position (TP) sensor.
   - Idle air control (IAC) solenoid.
   - Intake air temperature (IAT) sensor. Refer to *Intake Air Temperature Sensor*.

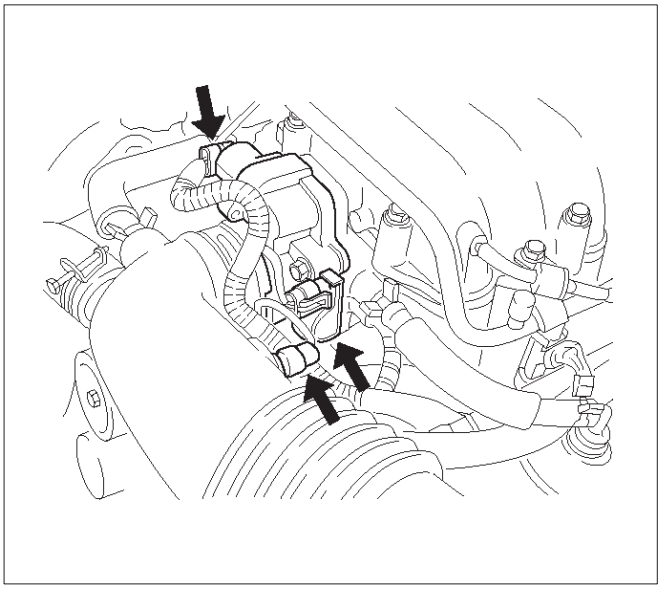

035RW023

5. Disconnect the vacuum hose below the air horn.
6. Remove the intake air duct clamp.
7. Disconnect the intake air duct.
8. Disconnect the coolant lines from the throttle body.
9. Remove the bolts from the common chamber.
10. Remove the throttle body from the common chamber.
11. Remove the gasket from the upper intake manifold.

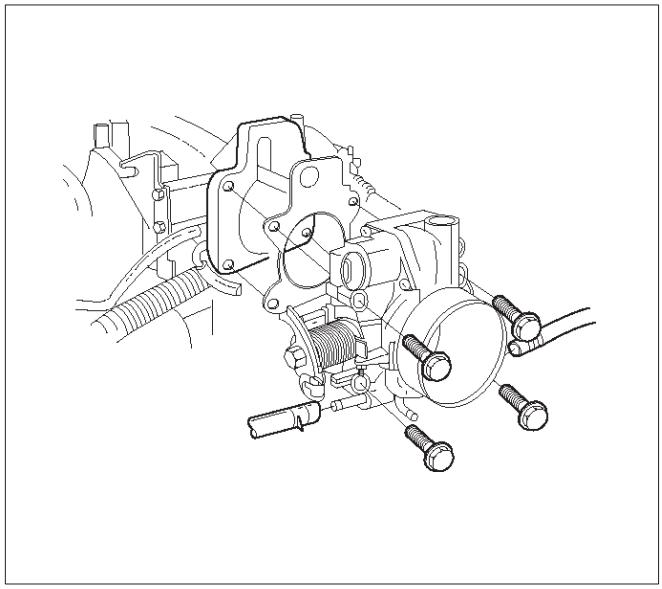

035RW024

12. Remove the IAC. Refer to *Idle Air Control (IAC) Solenoid*.
13. Remove the TP sensor. Refer to *Throttle Position (TP) Sensor*.

Inspection Procedure

NOTE: Do not use solvent of any type when you clean the gasket surfaces on the intake manifold and the throttle body assembly. The gasket surfaces and the throttle body assembly may be damaged as a result.

- If the throttle body gasket needs to be replaced, remove any gasket material that may be stuck to the mating surfaces of the manifold.
- Do not leave any scratches in the aluminum casting.

Installation Procedure

1. Install the TP sensor. Refer to *Throttle Position (TP) Sensor*.
2. Install the IAC. Refer to *Idle Air Control (IAC) Solenoid*.
3. Install the gasket on the common chamber.
4. Install the throttle body on the common chamber.

5. Secure the gasket and the throttle body with the four bolts.
   - The vacuum lines must be properly routed under the throttle body before tightening the mounting bolts.

Tighten

- Tighten the throttle body mounting bolts to 24 N·m (17 lb ft.).

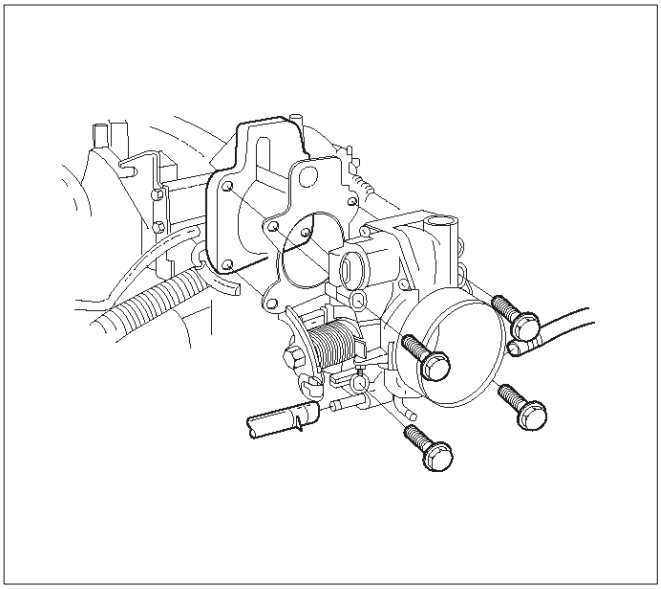

035RW024

6. Install the coolant lines.
7. Connect all the vacuum lines.
8. Install the intake air duct.
9. Tighten the intake air duct clamp.
10. Connect all the electrical connectors:
    - Throttle position (TP) sensor.
    - Idle air control (IAC) solenoid.
    - Intake air temperature (IAT) sensor. Refer to *Intake Air Temperature Sensor*.

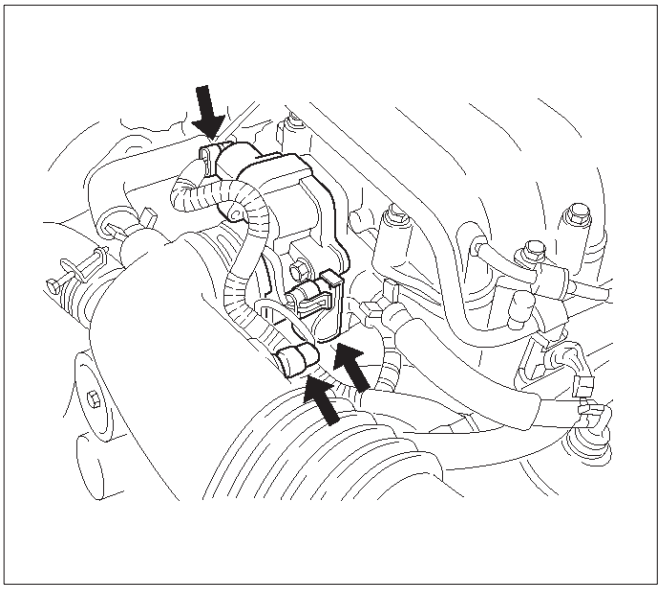

035RW023

11. Install the accelerator cable assembly. Refer to *Accelerator Cable in Engine Speed Control System.*.
12. Fill the cooling system. Refer to *Cooling System*.
13. Install the negative battery cable.

Electronic Ignition System

Removal Procedure

1. Disconnect the negative battery cable.
2. Disconnect the electrical connector at the ignition coil.
3. Remove the two screws that secure the ignition coil to the rocker cover.

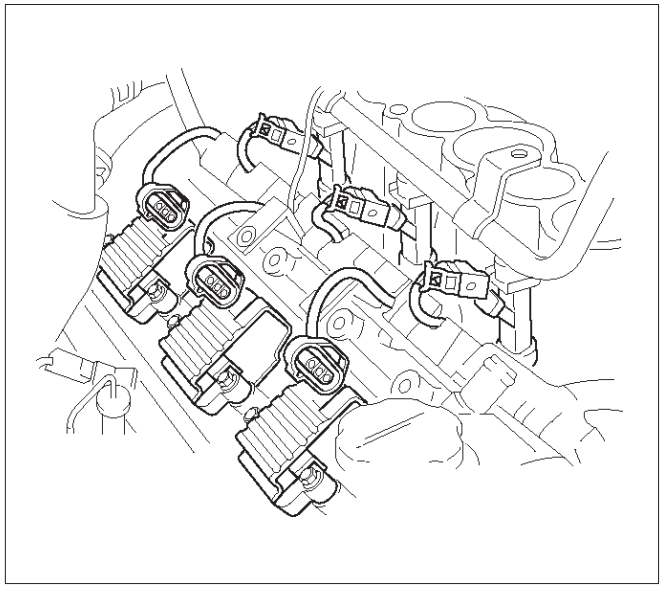

014RW108

4. Remove the ignition coil and the spark plug boot from the spark plug.
   - Twist the ignition coil while pulling it straight up.

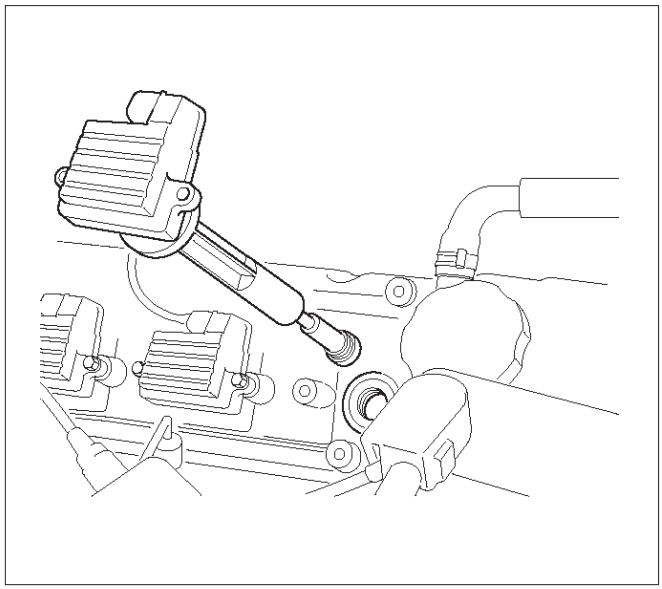

014RW091

5. Use the spark plug socket in order to remove the spark plug from the engine.

Spark Plug Gap Check

- Check the gap of all spark plugs before installation.
- Use a round wire feeler gauge to ensure an accurate check.
- Plugs installed with the wrong gap can cause poor engine performance and excessive emissions.

Installation Procedure

NOTE: The plug must thread smoothly into the cylinder head and be fully seated. Use a thread chaser if necessary to clean the threads in the cylinder head. Cross-threading or failure to fully seat the spark plug can cause plug overheating, exhaust blow-by gas, or thread damage. Do not overtighten the spark plugs. Over tightening can cause aluminum threads to strip.

1. Install the spark plug in the engine. Use the appropriate spark plug socket.

Tighten

- Tighten the spark plug to 18 N·m (13 lb ft.).

2. Install the ignition coil and spark plug boot over the spark plug.

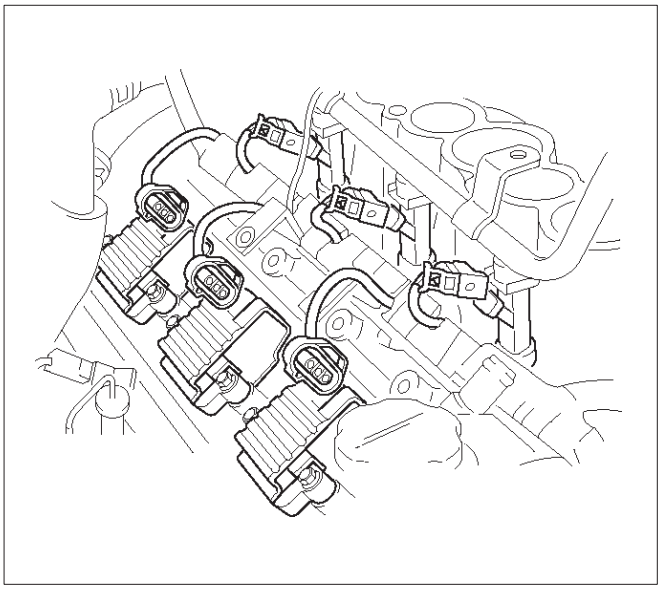

014RW108

3. Secure the ignition coil to the rocker cover with two screws.

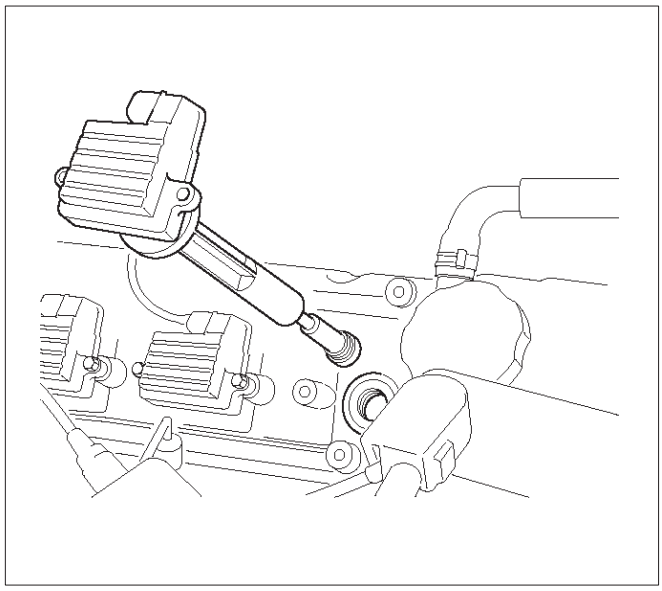

014RW091

4. Connect the electrical connector at the ignition coil.
5. Connect the negative battery cable.

Catalytic Converter

Removal and Installation Procedure

Refer to *Engine Exhaust in Engine*.

Air Conditioning Relay

Removal Procedure

1. Remove the fuse and relay box cover from under the hood.
2. Consult the diagram on the cover to determine which is the correct relay.
3. Insert a small screwdriver into the catch slot on the forward side of the fuel pump relay.
   - The screwdriver blade will release the catch inside.

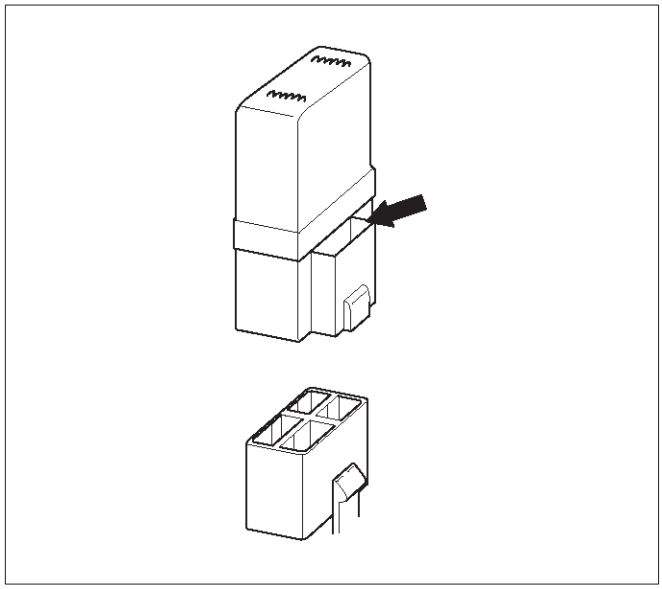

T321092

4. Pull the relay straight up and out of the fuse and relay box.

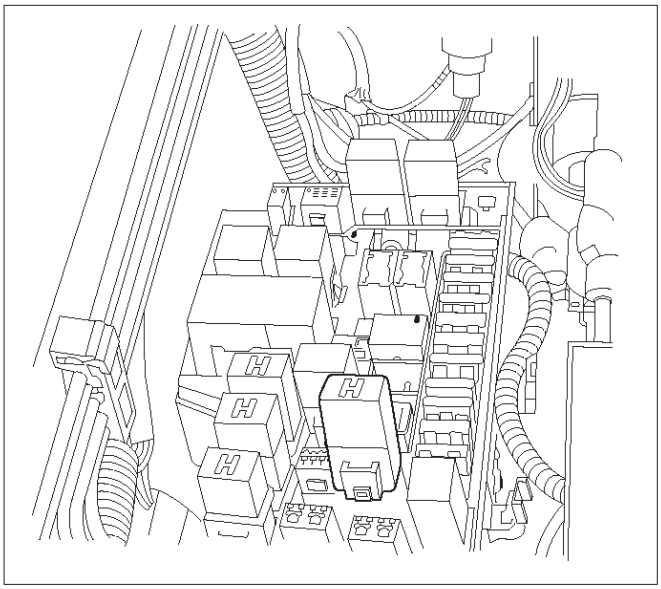

TS23986

Installation Procedure

1. Insert the relay into the correct place in the fuse and relay box with the catch slot facing forward.
2. Press down until the catch engages.
   - An audible “click” will be heard.
3. Install the fuse and relay box cover.

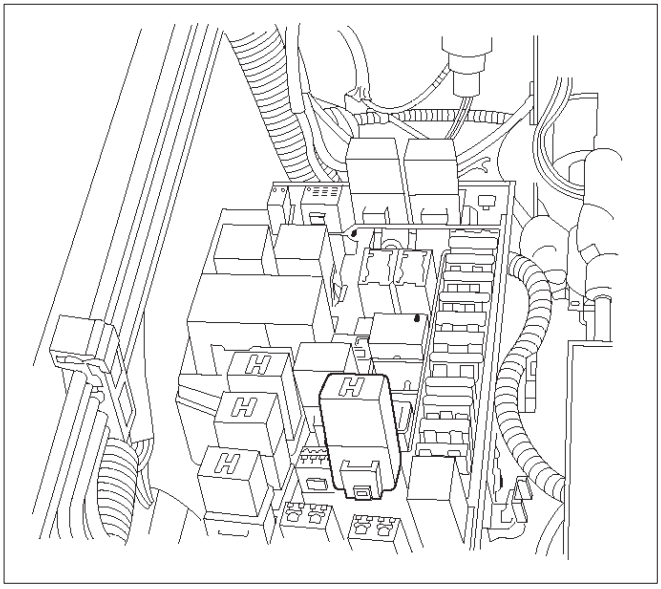

TS23986

EVAP Canister Hoses

Service Information

To view the routing of the EVAP canister hoses, refer to *Vehicle Emission Control Information* in *Diagnosis*. Use 6148M or equivalent when you replace the EVAP canister hoses.

EVAP Canister

Removal Procedure

1. Disconnect the negative battery cable.
2. Disconnect the three hoses from the EVAP canister.

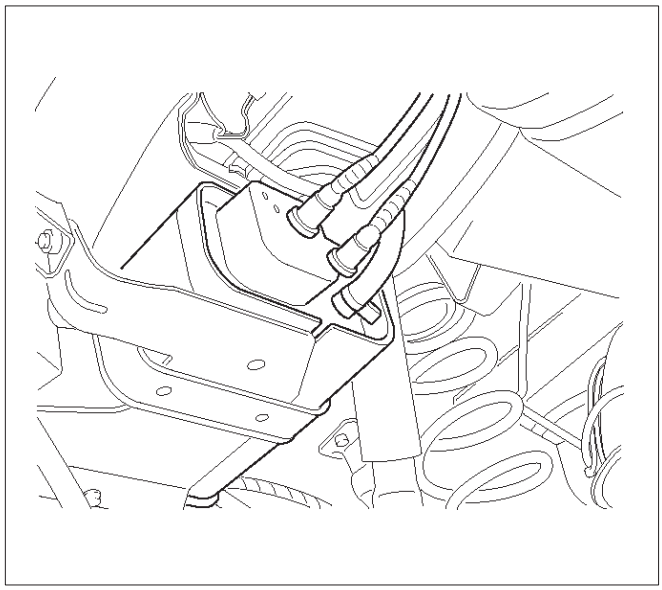

014RW145

3. Remove the retaining two bolts on the mounting bracket and slide the canister out of mounting bracket.

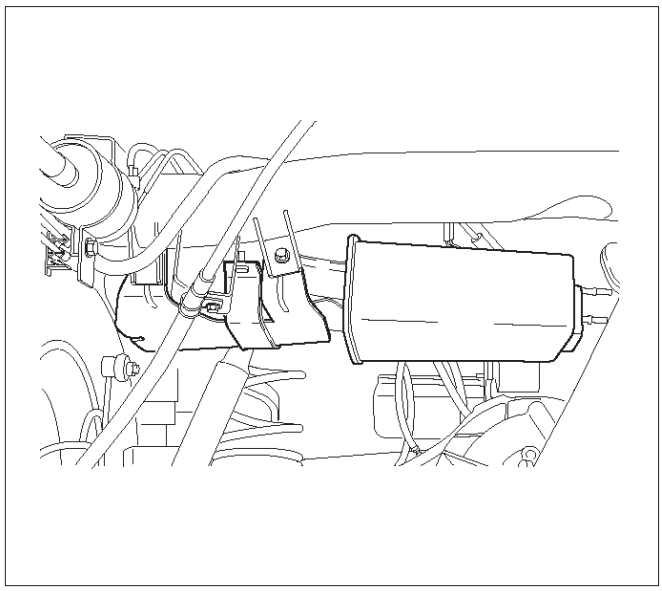

014RW146

Inspection Procedure

1. Inspect the hoses for cracks and leaks.
2. Inspect the canister for a damaged case.

Installation Procedure

1. Slide the canister into mounting bracket and install the mounting bracket two bolts.

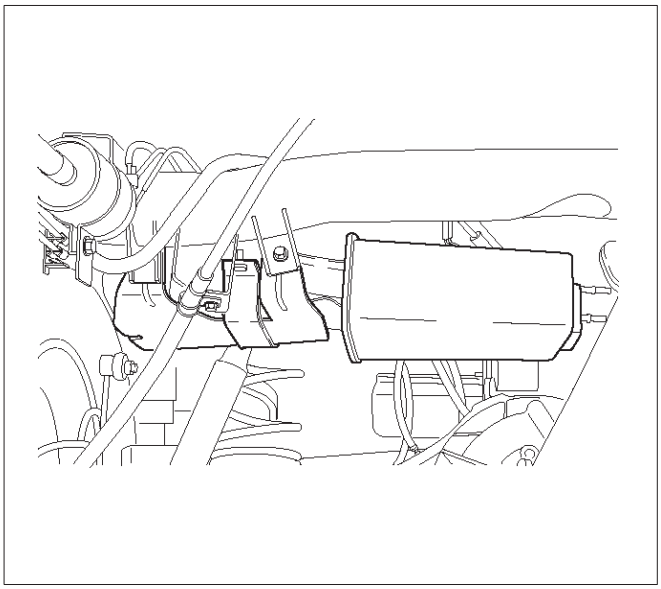

014RW146

2. Connect the three hoses to the EVAP canister.

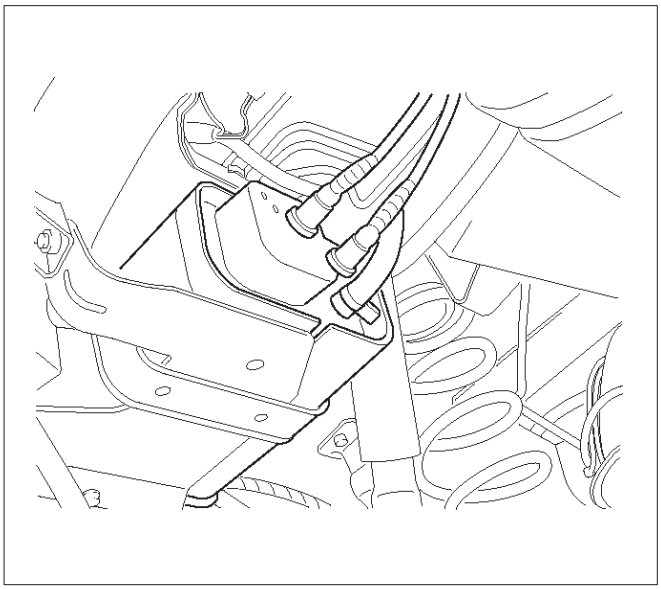

014RW145

3. Disconnect the negative battery cable.

EVAP Canister Purge Solenoid

Removal Procedure

1. Disconnect the electrical connector from the EVAP canister purge solenoid.
2. Disconnect the vacuum hoses from the EVAP canister purge solenoid.

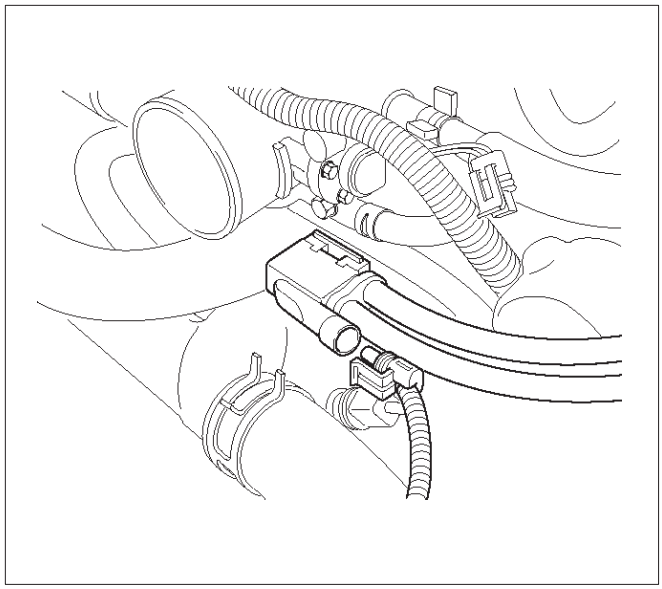

014RW136

3. Remove the EVAP canister purge solenoid retaining bolt from the upper intake manifold.
4. Remove the EVAP canister purge solenoid.

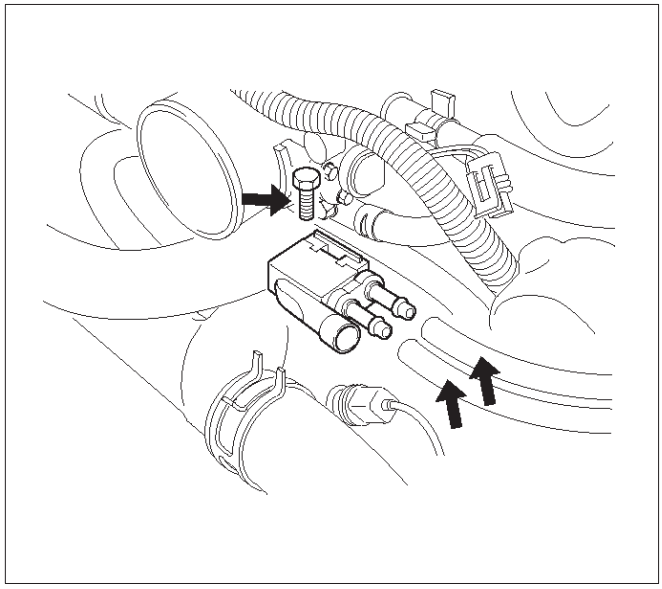

014RW137

Installation Procedure

1. Install the EVAP canister purge solenoid on the upper intake manifold.
2. Install the EVAP canister purge solenoid retaining bolt.

3. Connect the vacuum hoses to the EVAP canister purge solenoid.

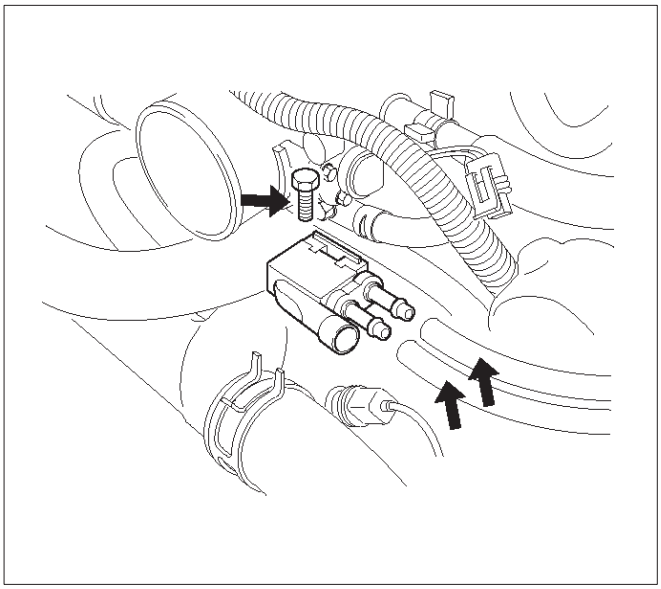

014RW137

4. Connect the electrical connector to the EVAP canister purge solenoid.

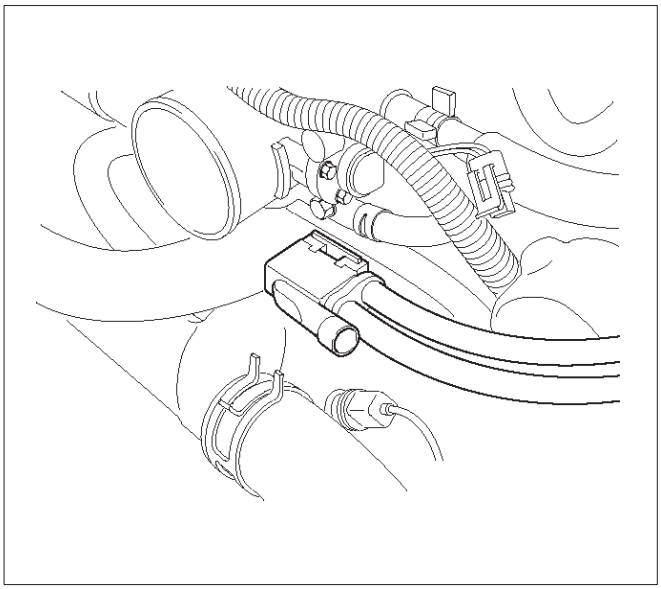

014RW138

Fuel Tank Vent Valve

Removal and Installation Procedure

Refer to *Fuel Pump*

Linear Exhaust Gas Recirculation (EGR) Valve

Removal Procedure

1. Disconnect the negative battery cable.
2. Disconnect the electrical connector at the EGR valve.

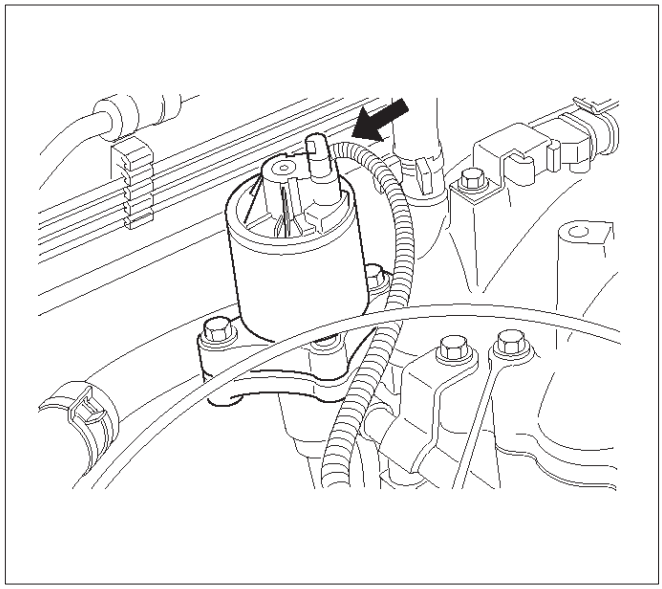

014RW139

3. Remove the bolt and the nut from the upper intake manifold.

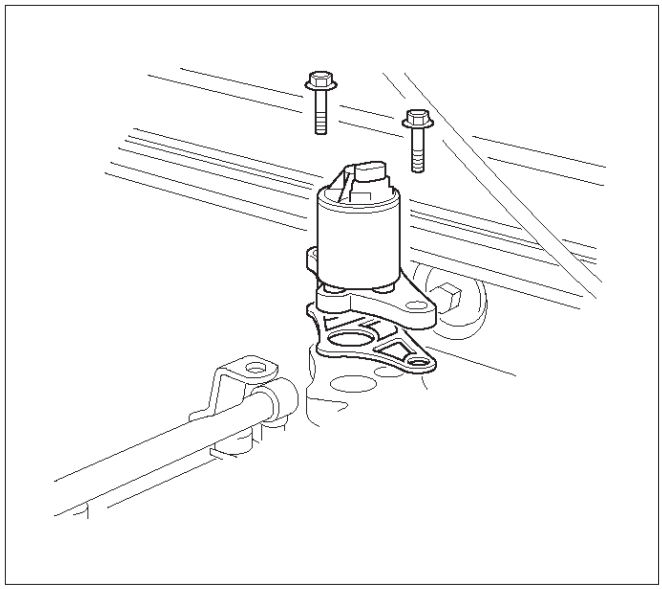

014RW098

4. Remove the EGR valve from the upper intake manifold.
5. Remove the gasket from the upper intake manifold.

Installation Procedure

1. Install the gasket on the upper intake manifold.
2. Install the EGR valve on the upper intake manifold.
3. Secure the EGR valve and the gasket with the bolt and the nut.

NOTE: It is possible to install the EGR valve rotated 180˚ from the correct position. Make sure that the base of the valve is placed so that it aligns with the mounting flange.

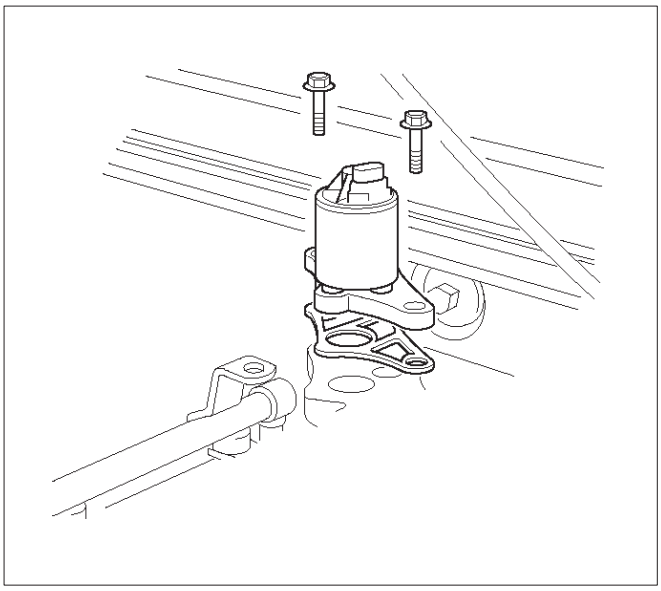

014RW098

4. Connect the electrical connector at the EGR valve.

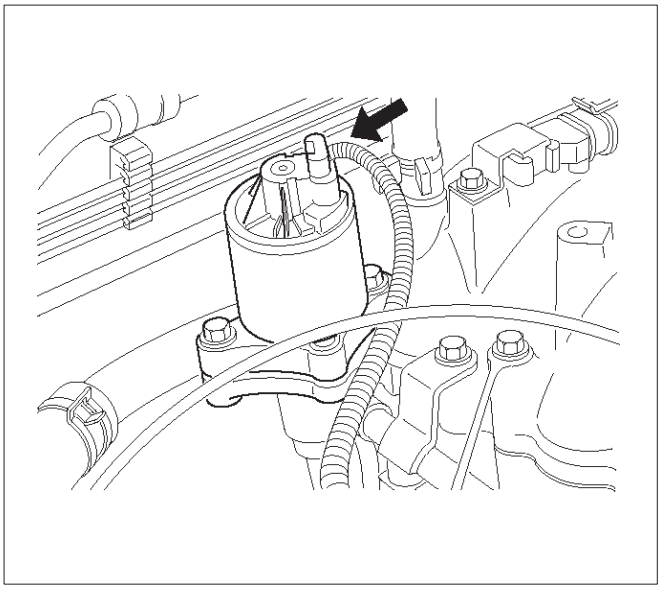

014RW139

5. Connect the negative battery cable.

Positive Crankcase Ventilation (PCV) Valve

Removal Procedure

1. Remove the vacuum hose at the PCV valve.
   - Slide the clamp back to release the hose.
2. Pull the PCV valve from the rubber grommet in the right valve cover.

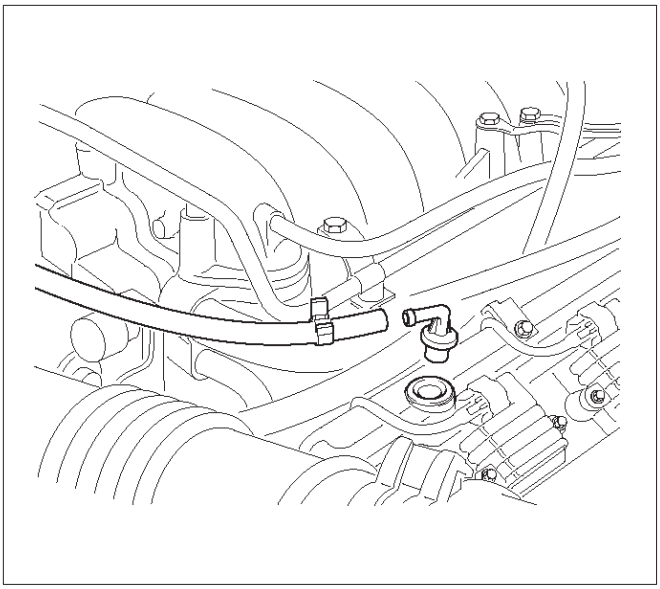

014RW097

Inspection Procedure

1. Shake the valve and listen for the rattle of the needle inside the valve.
2. If the valve does not rattle, replace the valve.

Installation Procedure

1. Push the PCV valve into the rubber grommet in the left valve cover.
2. Install the vacuum hose on the PCV valve and secure the vacuum hose with the clamp.

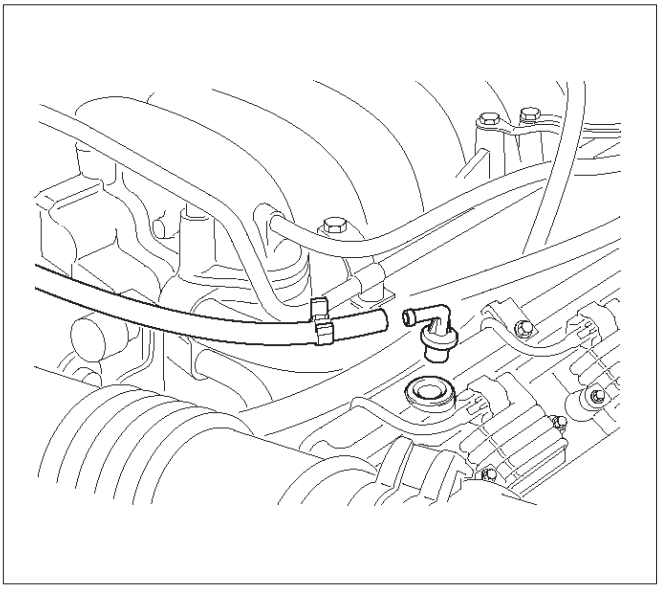

014RW097

Wiring and Connectors

Wiring Harness Service

The control module harness electrically connects the control module to the various solenoids, switches and sensors in the vehicle engine compartment and passenger compartment.
Replace wire harnesses with the proper part number replacement.
Because of the low amperage and voltage levels utilized in powertrain control systems, it is essential that all wiring in environmentally exposed areas be repaired with crimp and seal splice sleeves.
The following wire harness repair information is intended as a general guideline only. Refer to *Chassis Electrical* for all wire harness repair procedures.

Connectors and Terminals

Use care when probing a connector and when replacing terminals. It is possible to short between opposite terminals. Damage to components could result. Always use jumper wires between connectors for circuit checking. NEVER probe through Weather-Pack seals. Use an appropriate connector test adapter kit which contains an assortment of flexible connectors used to probe terminals during diagnosis. Use an appropriate fuse remover and test tool for removing a fuse and to adapt the fuse holder to a meter for diagnosis.
Open circuits are often difficult to locate by sight because oxidation or terminal misalignment are hidden by the connectors. Merely wiggling a connector on a sensor, or in the wiring harness, may temporarily correct the open circuit. Intermittent problems may also be caused by oxidized or loose connections.
Be certain of the type of connector/terminal before making any connector or terminal repair. Weather-Pack and Com-Pack III terminals look similar, but are serviced differently.

PCM Connectors and Terminals

Removal Procedure

1. Remove the connector terminal retainer.
2. Push the wire connected to the affected terminal through the connector face so that the terminal is exposed.
3. Service the terminal as necessary.

Installation Procedure

1. Bend the tab on the connector to allow the terminal to be pulled into position within the connector.
2. Pull carefully on the wire to install the connector terminal retainer.

Wire Harness Repair: Twisted Shielded Cable

Removal Procedure

1. Remove the outer jacket.
2. Unwrap the aluminum/mylar tape. Do not remove the mylar.

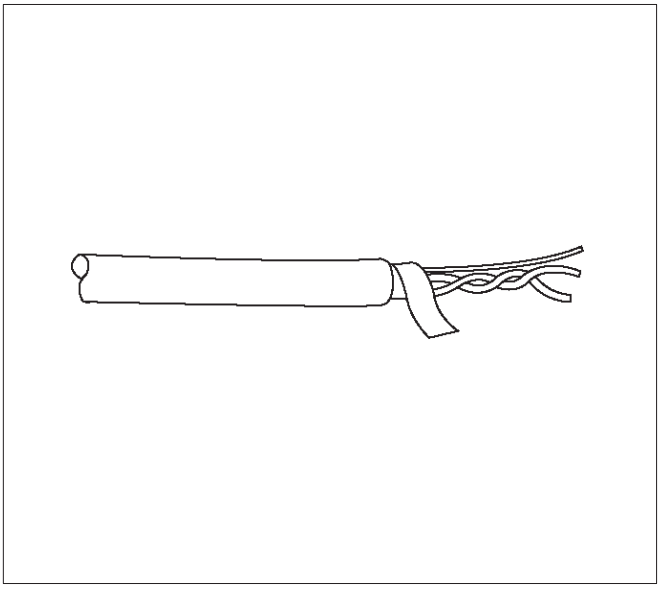

047

3. Untwist the conductors.
4. Strip the insulation as necessary.

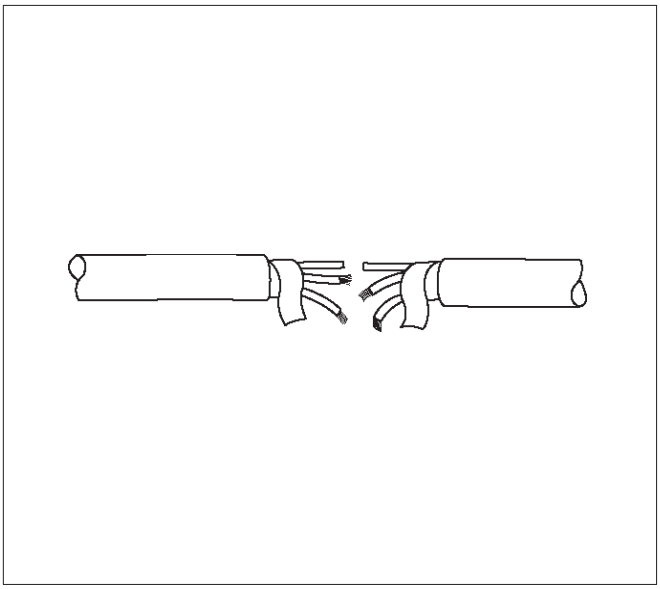

048

Installation Procedure

1. Splice the wires using splice clips and rosin core solder.
2. Wrap each splice to insulate.
3. Wrap the splice with mylar and with the drain (uninsulated) wire.

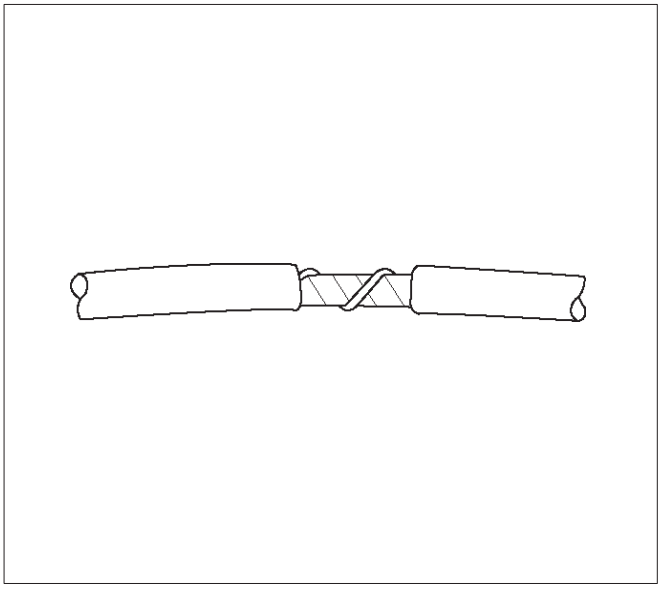

049

4. Tape over the whole bundle to secure.

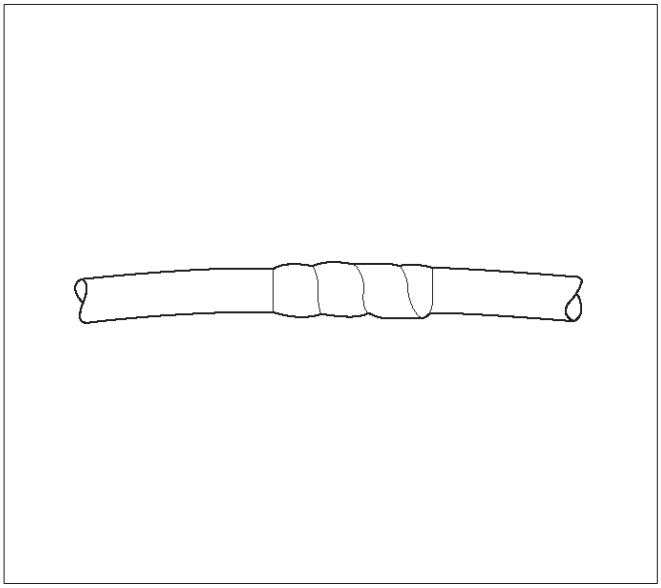

050

Twisted Leads

Removal Procedure

1. Locate the damaged wire.
2. Remove the insulation as required.

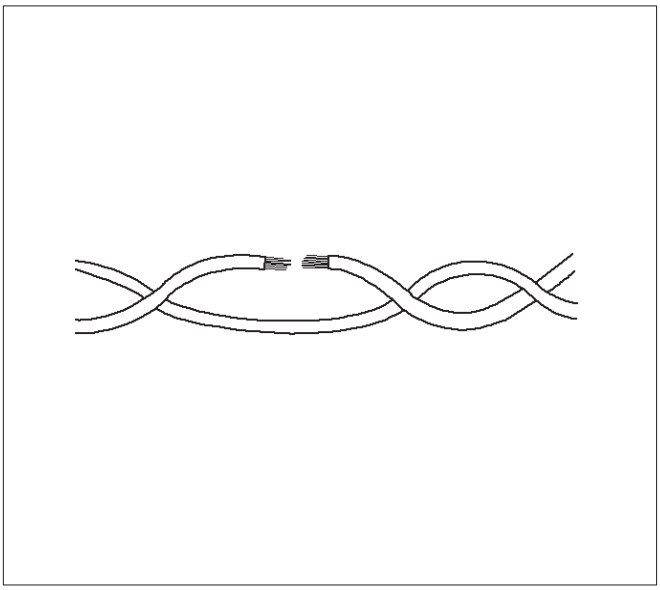

051

Installation Procedure

1. Use splice clips and rosin core solder in order to splice the two wires together.

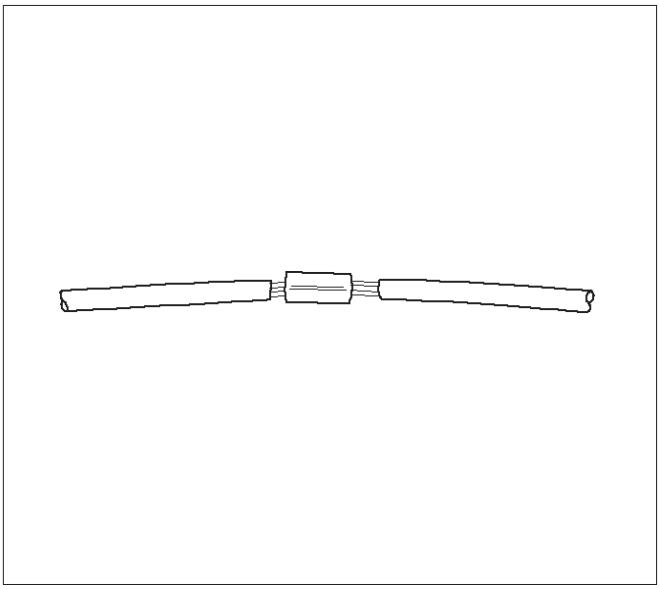

052

2. Cover the splice with tape in order to insulate it from the other wires.

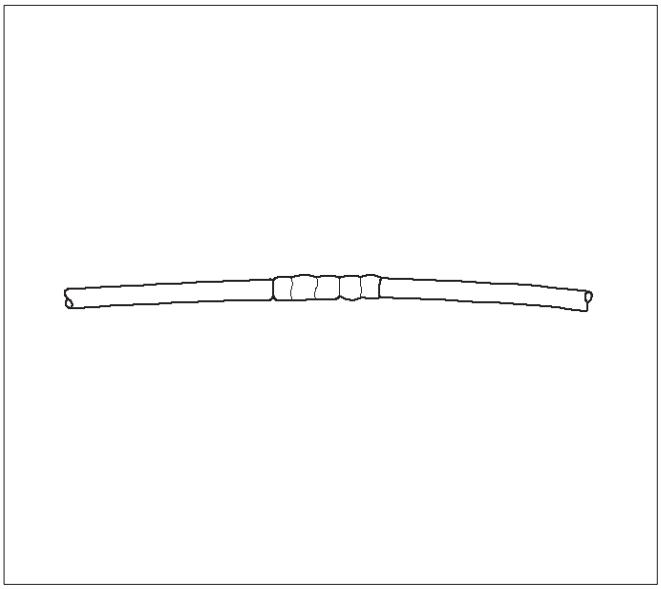

053

3. Twist the wires as they were before starting this procedure.

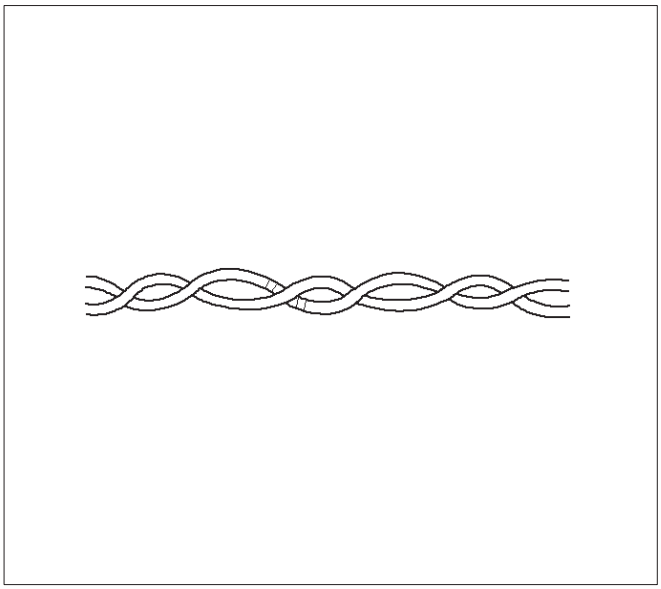

054

4. Tape the wires with electrical tape. Hold in place.

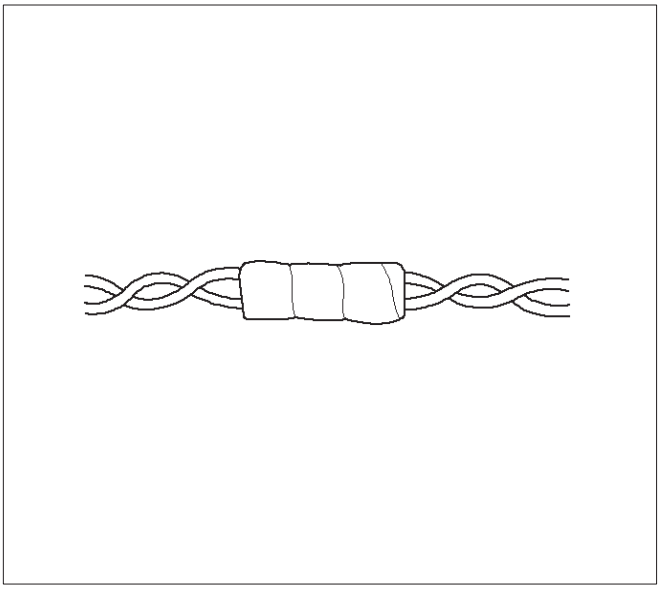

055

Weather-Pack Connector

Tools Required

J 28742-A Weather-Pack II Terminal Remover

Removal Procedure

A Weather-Pack connector can be identified by a rubber seal at the rear of the connector. This engine room connector protects against moisture and dirt, which could from oxidation and deposits on the terminals. This protection is important, because of the low voltage and the low amperage found in the electronic systems.

1. Open the secondary lock hinge on the connector.

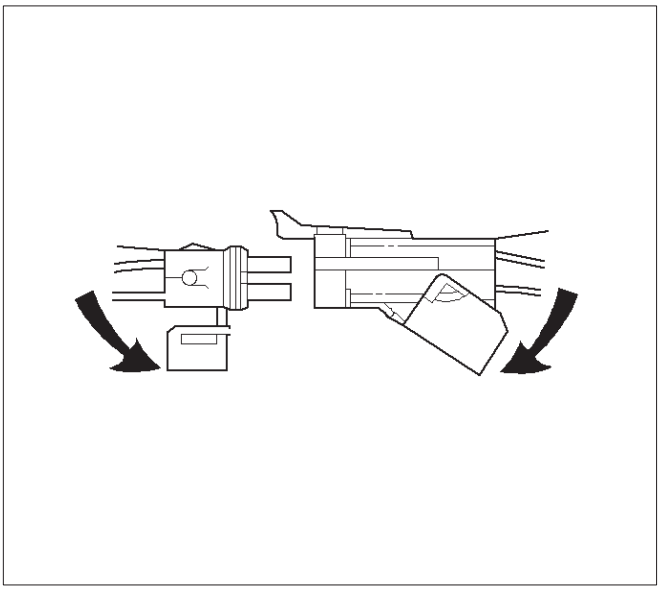

070

2. Use tool J 28742-A or the equivalent to remove the pin and the sleeve terminals. Push on J 28742-A to release.

NOTE: Do the use an ordinary pick or the terminal may be bent or deformed. Unlike standard blade terminals, these terminals cannot be straightened after they have been improperly bent.

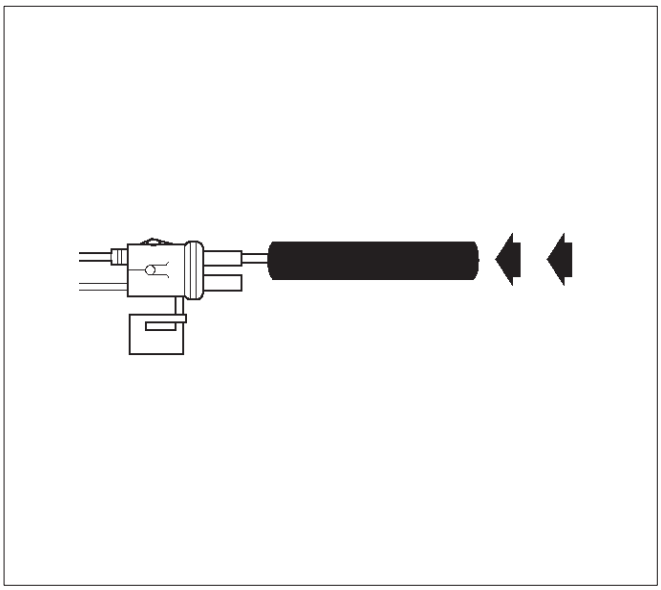

071

3. Cut the wire immediately behind the cable seal.

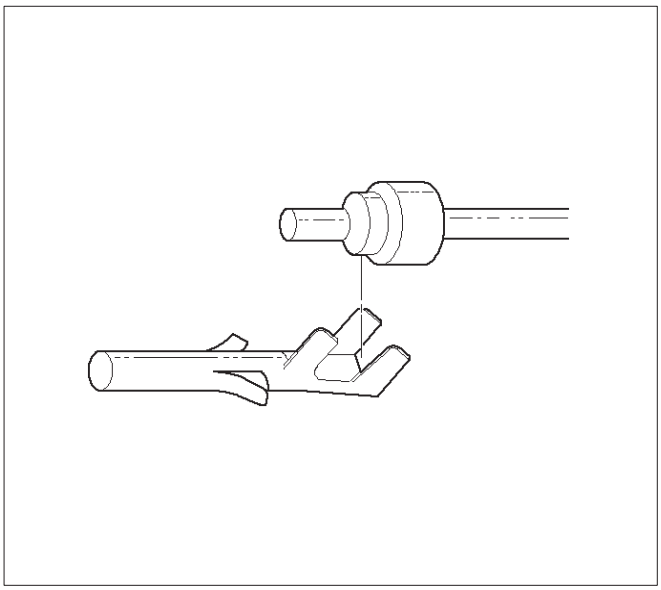

072

Installation Procedure

Make certain the connectors are properly seated and all of the sealing rings are in place when you reconnect the leads. The secondary lock hinge provides a backup locking feature for the connector. The secondary lock hinge is used for added reliability. This flap should retain the terminals even if the small terminal lock tangs are not positioned properly.

Do not replace the Weather-Pack connections with standard connections. Read the instructions provided with the Weather-Pack connector and terminal packages.

1. Replace the terminal.
2. Slip the new seal onto the wire.
3. Strip 5 mm (0.2”) of insulation from the wire.
4. Crimp the terminal over the wire and the seal.

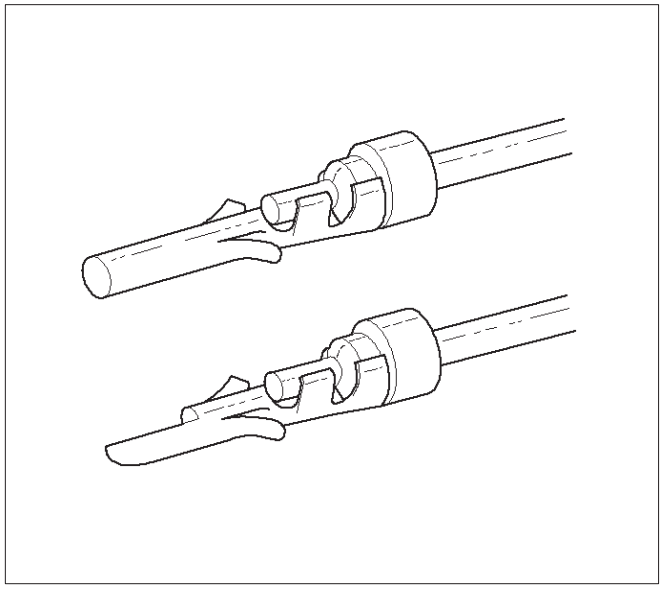

073

5. Push the terminal and the connector to engage the locking tangs.

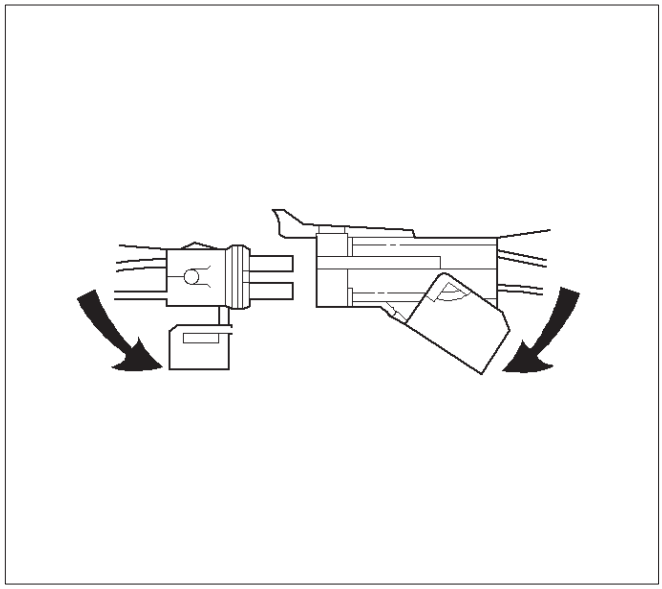

070

6. Close the secondary locking hinge.

Com-Pack III

General Information

The Com-Pack III terminal looks similar to some Weather-Pack terminals. This terminal is not sealed and is used where resistance to the environment is not required. Use the standard method when repairing a terminal. Do not use the Weather-Pack terminal tool J 28742-A or equivalent. These will damage the terminals.

Metri-Pack

Tools Required

J 35689 Terminal Remover

Removal Procedure

Some connectors use terminals called Metri-Pack Series 150. These may be used at the engine coolant temperature (ECT) sensor.

1. Slide the seal (1) back on the wire.
2. Insert the J 35689 tool or equivalent (3) in order to release the terminal locking tang (2).

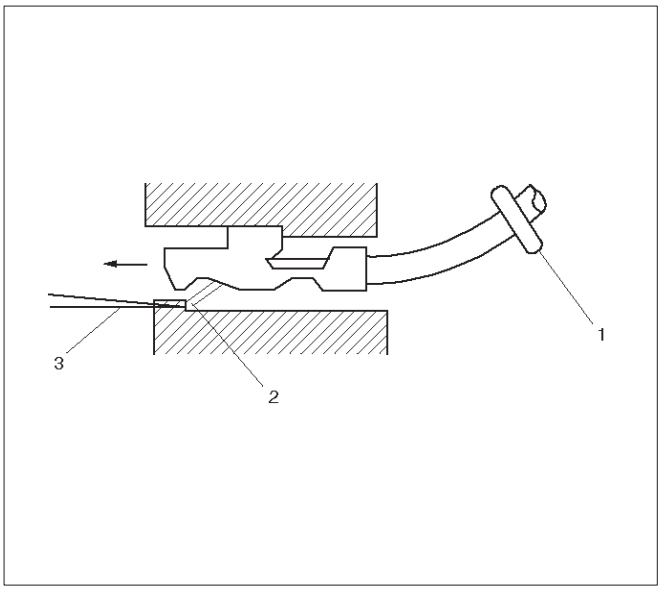

060

3. Push the wire and the terminal out through the connector. If you reuse the terminal, reshape the locking tang.

Installation Procedure

Metri-Pack terminals are also referred to as “pull-to-seat” terminals.

1. In order to install a terminal on a wire, the wire must be inserted through the seal (2) and through the connector (3).
2. The terminal (1) is then crimped onto the wire.

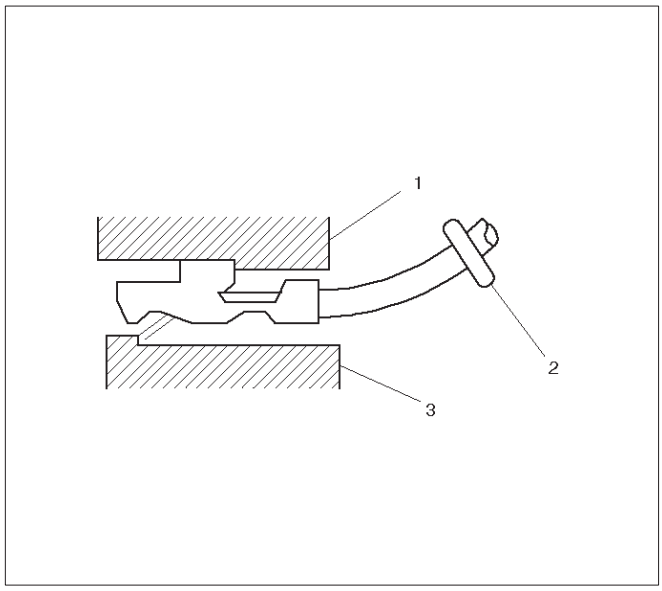

061

3. Then the terminal is pulled back into the connector to seat it in place.

General Description

General Description (PCM and Sensors)

58X Reference PCM Input

The powertrain control module (PCM) uses this signal from the crankshaft position (CKP) sensor to calculate engine RPM and crankshaft position at all engine speeds. The PCM also uses the pulses on this circuit to initiate injector pulses. If the PCM receives no pulses on this circuit, DTC P0337 will set. The engine will not start and run without using the 58X reference signal.

A/C Request Signal

This signal tells the PCM when the A/C mode is selected at the A/C control head. The PCM uses this to adjust the idle speed before turning “ON” the A/C clutch. The A/C compressor will be inoperative if this signal is not available to the PCM.
Refer to *A/C Clutch Circuit Diagnosis* for A/C wiring diagrams and diagnosis for the A/C electrical system.

Crankshaft Position (CKP) Sensor

The crankshaft position (CKP) sensor provides a signal used by the powertrain control module (PCM) to calculate the ignition sequence. The CKP sensor initiates the 58X reference pulses which the PCM uses to calculate RPM and crankshaft position.
Refer to *Electronic Ignition System* for additional information.

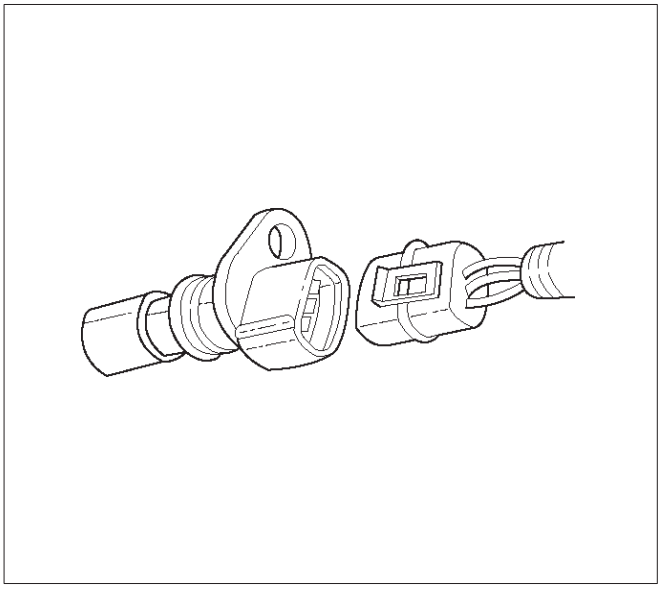

0013

Camshaft Position (CMP) Sensor and Signal

The camshaft position (CMP) sensor sends a CMP signal to the PCM. The PCM uses this signal as a “sync pulse” to trigger the injectors in the proper sequence. The PCM uses the CMP signal to indicate the position of the #1 piston during its power stroke. This allows the PCM to calculate true sequential fuel injection (SFI) mode of operation. If the PCM detects an incorrect CMP signal while the engine is running, DTC P0341 will set. If the CMP signal is lost while the engine is running, the fuel injection system will shift to a calculated sequential fuel injection mode based on the last fuel injection pulse, and the engine will continue to run. As long as the fault is present, the engine can be restarted. It will run in the calculated sequential mode with a 1-in-6 chance of the injector sequence being correct.
Refer to *DTC P0341* for further information.

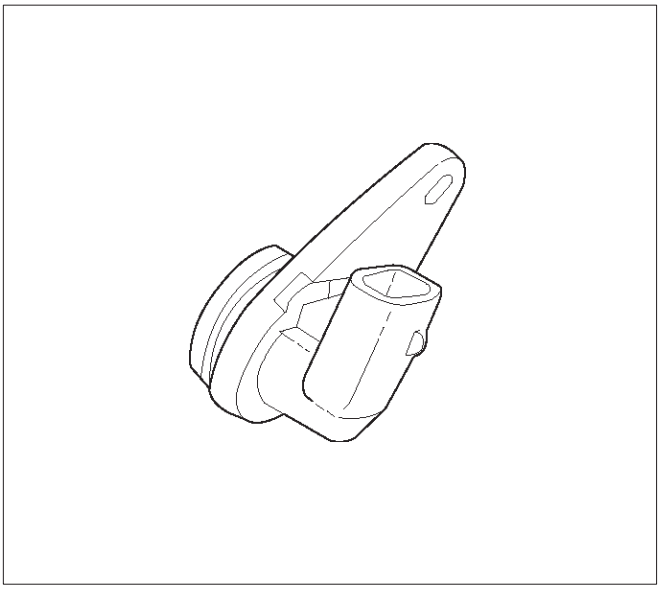

0014

Engine Coolant Temperature (ECT) Sensor

The engine coolant temperature (ECT) sensor is a thermistor (a resistor which changes value based on temperature) mounted in the engine coolant stream. Low coolant temperature produces a high resistance of 100,000 ohms at –40˚C (–40˚F). High temperature causes a low resistance of 70 ohms at 130˚C (266˚F). The PCM supplies a 5-volt signal to the ECT sensor through resistors in the PCM and measures the voltage. The signal voltage will be high when the engine is cold and low when the engine is hot. By measuring the voltage, the PCM calculates the engine coolant temperature. Engine coolant temperature affects most of the systems that the PCM controls.
Tech 2 displays engine coolant temperature in degrees. After engine start-up, the temperature should rise steadily to about 85˚C (185˚F). It then stabilizes when the thermostat opens. If the engine has not been run for several hours (overnight), the engine coolant temperature and intake air temperature displays should be close to each other. A hard fault in the engine coolant sensor circuit will set DTC P0177 or DTC P0118. An intermittent fault will set a DTC P1114 or P1115.

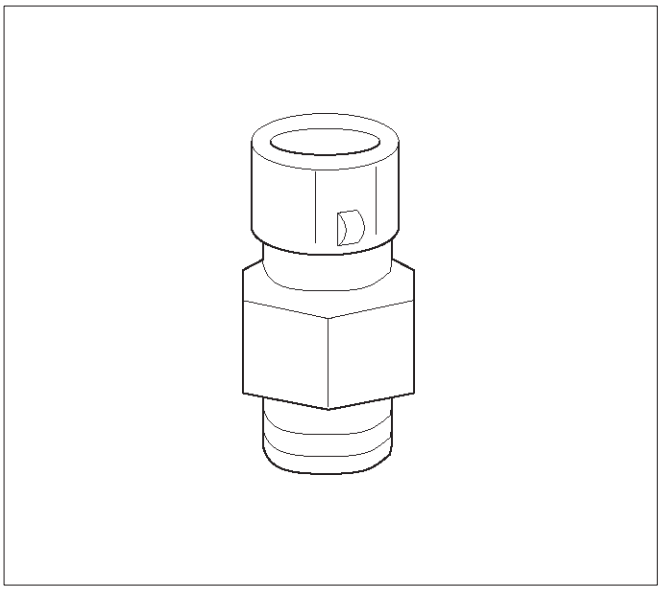

0016

Electrically Erasable Programmable Read Only Memory (EEPROM)

The electrically erasable programmable read only memory (EEPROM) is a permanent memory chip that is physically soldered within the PCM. The EEPROM contains the program and the calibration information that the PCM needs to control powertrain operation.

Unlike the PROM used in past applications, the EEPROM is not replaceable. If the PCM is replaced, the new PCM will need to be programmed. Equipment containing the correct program and calibration for the vehicle is required to program the PCM.

Fuel Control Heated Oxygen Sensors

The fuel control heated oxygen sensors (Bank 1 HO2S 1 and Bank 2 HO2S 1) are mounted in the exhaust stream where they can monitor the oxygen content of the exhaust gas. The oxygen present in the exhaust gas reacts with the sensor to produce a voltage output. This voltage should constantly fluctuate from approximately 100 mV to 900 mV. The heated oxygen sensor voltage can be monitored with Tech 2. By monitoring the voltage output of the oxygen sensor, the PCM calculates the pulse width command for the injectors to produce the proper combustion chamber mixture.

- Low HO2S voltage is a lean mixture which will result in a rich command to compensate.
- High HO2S voltage is a rich mixture which will result in a lean command to compensate.

An open Bank 1 HO2S 1 signal circuit will set a DTC P0134 and Tech 2 will display a constant voltage between 400-500 mV. A constant voltage below 300 mV in the sensor circuit (circuit grounded) will set DTC P0131. A constant voltage above 800 mV in the circuit will set DTC P0132. Faults in the Bank 2 HO2S 1 signal circuit will cause DTC 0154 (open circuit), DTC P0151 (grounded circuit), or DTC P0152 (signal voltage high) to set.

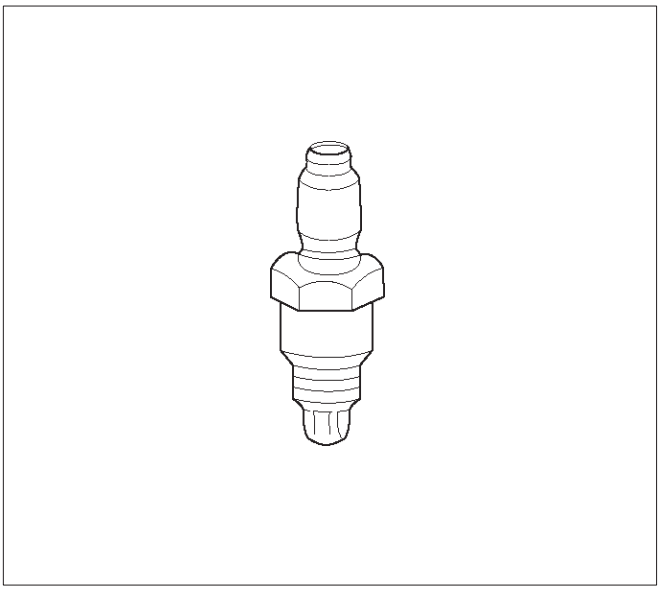

0012

Intake Air Temperature (IAT) Sensor

The intake air temperature (IAT) sensor is a thermistor which changes its resistance based on the temperature of air entering the engine. Low temperature produces a high resistance of 100,000 ohms at –40˚C (–40˚F). High temperature causes low resistance of 70 ohms at 130˚C (266˚F) . The PCM supplies a 5-volt signal to the sensor through a resistor in the PCM and monitors the signal voltage. The voltage will be high when the incoming air is cold. The voltage will be low when the incoming air is hot. By measuring the voltage, the PCM calculates the incoming air temperature. The IAT sensor signal is used to adjust spark timing according to the incoming air density.

Tech 2 displays the temperature of the air entering the engine. The temperature should read close to the ambient air temperature when the engine is cold and rise as underhood temperature increases. If the engine has not been run for several hours (overnight), the IAT sensor temperature and engine coolant temperature should read close to each other. A fault in the IAT sensor circuit will set DTC P0112 or DTC P0113.

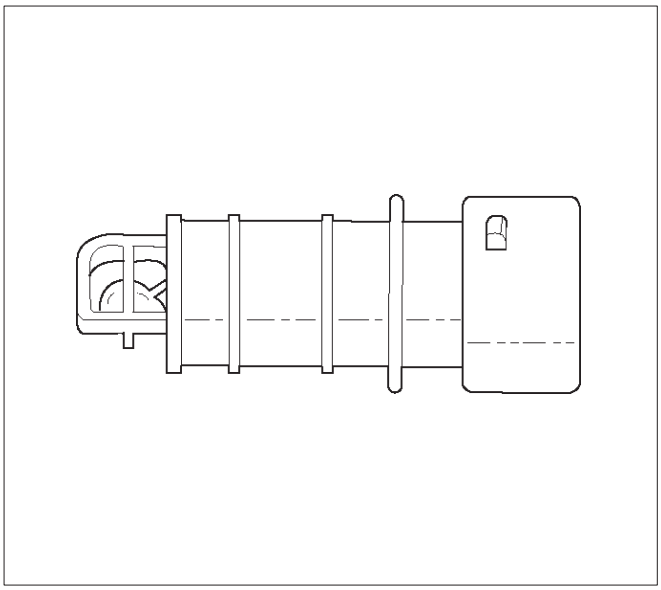

0018

Knock Sensor

Insufficient gasoline octane levels may cause detonation in some engines. Detonation is an uncontrolled explosion (burn) in the combustion chamber. This uncontrolled explosion results from a flame front opposite that of the normal flame front produced by the spark plug. The rattling sound normally associated with detonation is the result of two or more opposing pressures (flame fronts) colliding within the combustion chamber. Light detonation is sometimes considered normal, but heavy detonation could result in engine damage.

A knock sensor system is used to control detonation. This system is designed to retard spark timing up to 20 degrees to reduce detonation in the engine. This allows the engine to use maximum spark advance to improve driveability and fuel economy.

The knock sensor system has two major components:

- The knock sensor (KS) module.
- The knock sensor.

The knock sensor, mounted in the engine block near the cylinders, detects abnormal vibration in the engine. The sensor produces an AC output signal of about 10 millivolts. The signal amplitude and frequency are dependent on the amount of knock being experienced. The signal voltage increases with the severity of the knock. This signal voltage is input to the PCM. The PCM then retards the ignition control (IC) spark timing based on the KS signal being received.

The PCM determines whether knock is occurring by comparing the signal level on the KS circuit with the voltage level on the noise channel. The noise channel allows the PCM to reject any false knock signal by indicating the amount of normal engine mechanical noise present. Normal engine noise varies depending on the engine speed and load. If the voltage level on the KS noise channel circuit is below the range considered normal, DTC P0327 will set, indicating a fault in the KS circuit or the knock sensor. If the PCM determines that an abnormal minimum or maximum noise level is being experienced, DTC P0325 will set.

The PCM contains a knock sensor (KS) module. The KS module contains the circuitry which allows the PCM to utilize the KS signal and diagnose the KS sensor and the KS circuitry. If the KS module is missing or faulty, a continuous knock condition will be indicated, and the PCM will set DTC P0325.

Although it is a plug-in device, the KS module is not replaceable. If the KS module is faulty, the entire PCM must be replaced.

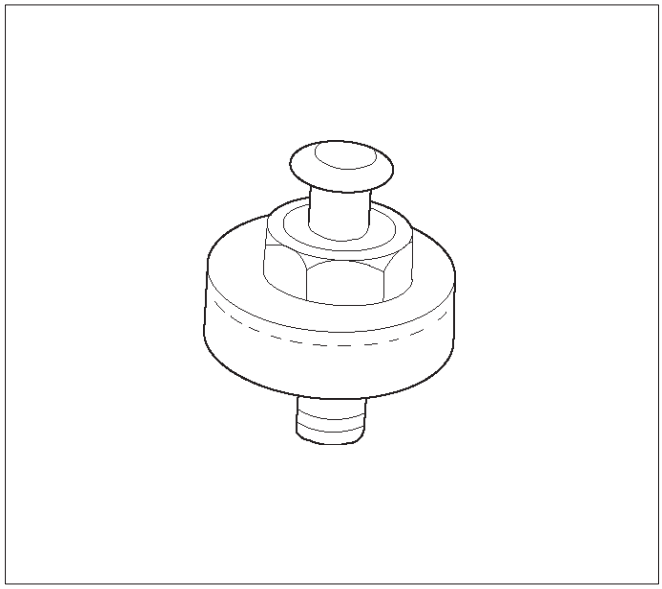

0009

Linear Exhaust Gas Recirculation (EGR) Control

The PCM monitors the exhaust gas recirculation (EGR) actual position and adjusts the pintle position accordingly. The PCM uses information from the following sensors to control the pintle position:

- Engine coolant temperature (ECT) sensor.
- Throttle position (TP) sensor.
- Mass air flow (MAF) sensor.

Mass Air Flow (MAF) Sensor

The mass air flow (MAF) sensor measures the difference between the volume and the quantity of air that enters the engine. “Volume” means the size of the space to be filled. “Quantity” means the number of air molecules that will fit into the space. This information is important to the PCM because heavier, denser air will hold more fuel than lighter, thinner air. The PCM adjusts the air/fuel ratio as needed depending on the MAF value. Tech 2 reads the MAF value and displays it in terms of grams per second (gm/s). At idle, Tech 2 should read between 4-7 gm/s on a fully warmed up engine. Values should change quickly on acceleration. Values should remain stable at any given

RPM. A failure in the MAF sensor or circuit will set DTC P0101, DTC P0102, or DTC P0103.

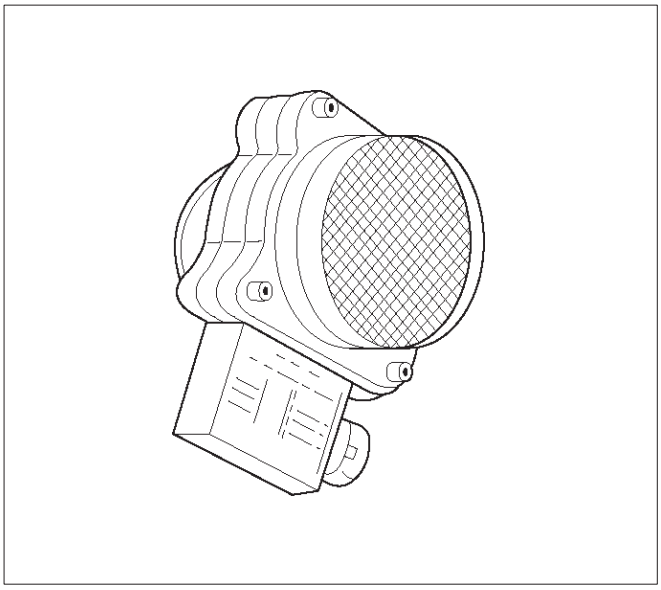

0007

Manifold Absolute Pressure (MAP) Sensor

The manifold absolute pressure (MAP) sensor responds to changes in intake manifold pressure (vacuum). The MAP sensor signal voltage to the PCM varies from below 2 volts at idle (high vacuum) to above 4 volts with the ignition ON, engine not running or at wide-open throttle (low vacuum).

The MAP sensor is used to determine the following:

- Manifold pressure changes while the linear EGR flow test diagnostic is being run. Refer to *DTC P0401*.
- Engine vacuum level for other diagnostics.
- Barometric pressure (BARO).

If the PCM detects a voltage that is lower than the possible range of the MAP sensor, DTC P0107 will be set. A signal voltage higher than the possible range of the sensor will set DTC P0108. An intermittent low or high voltage will set DTC P1107 or DTC P1106, respectively. The PCM can detect a shifted MAP sensor. The PCM compares the MAP sensor signal to a calculated MAP based on throttle position and various engine load factors. If the PCM detects a MAP signal that varies excessively above or below the calculated value, DTC P0106 will set.

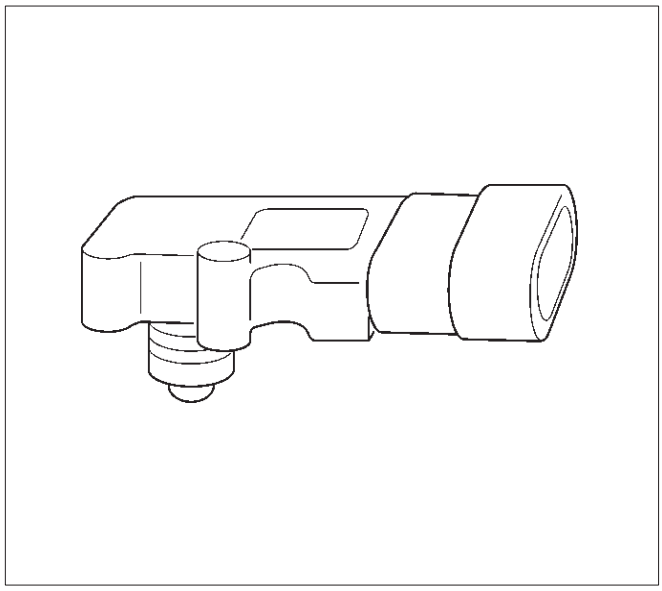

055RW004

Powertrain Control Module (PCM)

The powertrain control module (PCM) is located in the passenger compartment below the center console. The PCM controls the following:

- Fuel metering system.
- Transmission shifting (automatic transmission only).
- Ignition timing.
- On-board diagnostics for powertrain functions.

The PCM constantly observes the information from various sensors. The PCM controls the systems that affect vehicle performance. The PCM performs the diagnostic function of the system. It can recognize operational problems, alert the driver through the MIL (Service Engine Soon lamp), and store diagnostic trouble codes (DTCs). DTCs identify the problem areas to aid the technician in making repairs.

This engine uses 2 different control modules:

- IPCM-6KT for automatic transmission-equipped vehicles.
- ISFI-6 for manual transmission-equipped vehicles.

PCM Function

The PCM supplies either 5 or 12 volts to power various sensors or switches. The power is supplied through resistances in the PCM which are so high in value that a test light will not light when connected to the circuit. In some cases, even an ordinary shop voltmeter will not give an accurate reading because its resistance is too low. Therefore, a digital voltmeter with at least 10 megohms input impedance is required to ensure accurate voltage readings. Tool J 39200 meets this requirement. The PCM controls output circuits such as the injectors, IAC, cooling fan relays, etc., by controlling the ground or the power feed circuit through transistors of following device.

- Output Driver Module (ODM)

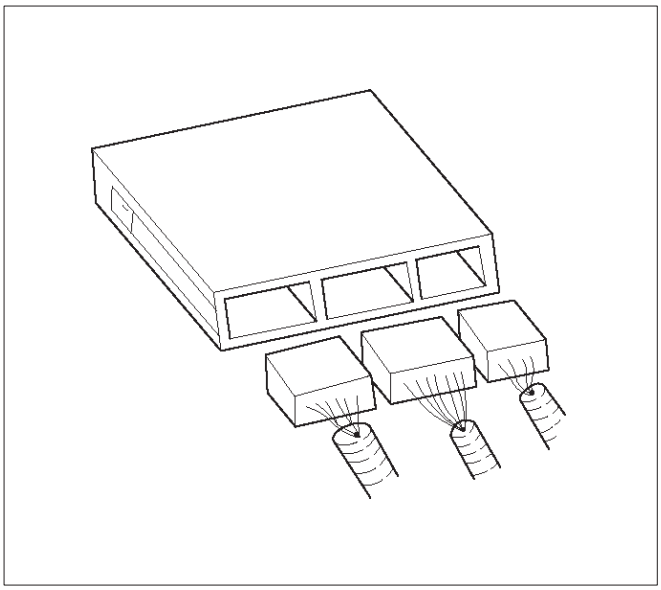

0005

PCM Components

The PCM is designed to maintain exhaust emission levels to government mandated standards while providing excellent driveability and fuel efficiency. The PCM monitors numerous engine and vehicle functions via electronic sensors such as the throttle position (TP) sensor, heated oxygen sensor (HO2S), and vehicle speed sensor (VSS). The PCM also controls certain engine operations through the following:

- Fuel injector control
- Ignition control module
- Knock sensor
- Automatic transmission shift functions
- Cruise control
- A/C clutch control

PCM Voltage Description

The PCM supplies a buffered voltage to various switches and sensors. It can do this because resistance in the PCM is so high in value that a test light may not illuminate when connected to the circuit. An ordinary shop voltmeter may not give an accurate reading because the voltmeter input impedance is too low. Use a 10-megohm input impedance digital voltmeter (such as J 39200) to assure accurate voltage readings.

The input/output devices in the PCM include analog-to-digital converters, signal buffers, counters, and special drivers. The PCM controls most components with electronic switches which complete a ground circuit when turned “ON.” These switches are arranged in groups of 4 and 7, called either a surface-mounted quad driver module (QDM), which can independently control up to 4 output terminals, or QDMs which can independently control up to 7 outputs. Not all outputs are always used.

PCM Input/Outputs

Inputs – Operating Conditions Read

- Air Conditioning “ON” or “OFF”
- Engine Coolant Temperature
- Crankshaft Position
- Exhaust Oxygen Content
- Electronic Ignition
- Manifold Absolute Pressure
- Battery Voltage
- Throttle Position
- Vehicle Speed
- Fuel Pump Voltage
- Power Steering Pressure
- Intake Air Temperature
- Mass Air Flow
- Engine Knock
- Camshaft Position

Outputs – Systems Controlled

- Exhaust Gas Recirculation (EGR)
- Ignition Control
- Fuel Control
- Idle Air Control
- Electric Fuel Pump
- Air Conditioning
- Diagnostics
  - Malfunction Indicator Lamp (Service Engine Soon lamp)
  - Data Link Connector (DLC)
  - Data Output
- Transmission Control Module
- Alternator Gain Control

PCM Service Precautions

The PCM is designed to withstand normal current draws associated with vehicle operation. Avoid overloading any circuit. When testing for opens and shorts, do not ground or apply voltage to any of the PCM’s circuits unless instructed to do so. These circuits should only be tested Tech-2. The PCM should remain connected to the PCM or to a recommended breakout box.

Reprogramming The PCM

The Trooper allow reprogramming of the PCM without removing it from the vehicle . This provides a flexible and cost-effective method of making changes in software calibrations.

The service programming system (SPS) will not allow incorrect software programming or incorrect calibration changes.

Refer to the UBS 98model year Immobilizer Workshop Manual.

Throttle Position (TP) Sensor

The throttle position (TP) sensor is a potentiometer connected to the throttle shaft on the throttle body. The PCM monitors the voltage on the signal line and calculates throttle position. As the throttle valve angle is changed (accelerator pedal moved), the TP sensor signal also changes. At a closed throttle position, the output of

the TP sensor is low. As the throttle valve opens, the output increases so that at wide open throttle (WOT), the output voltage should be above 4 volts.

The PCM calculates fuel delivery based on throttle valve angle (driver demand). A broken or loose TP sensor may cause intermittent bursts of fuel from an injector and unstable idle because the PCM thinks the throttle is moving. A hard failure in the TP sensor 5-volt reference or signal circuits will set a DTC P0123. A hard failure with the TP sensor ground circuit may set DTC P0123. Once a DTC is set, the PCM will use an artificial default value based on engine RPM and mass air flow for the throttle position, and some vehicle performance will return. A high idle may result when DTC P0123 is set. The PCM can also detect a shifted TP sensor. The PCM monitors throttle position and compares the actual TP sensor reading to a predicted TP value calculated from engine speed. If the PCM detects an out-of-range condition, DTC P0121 will be set.

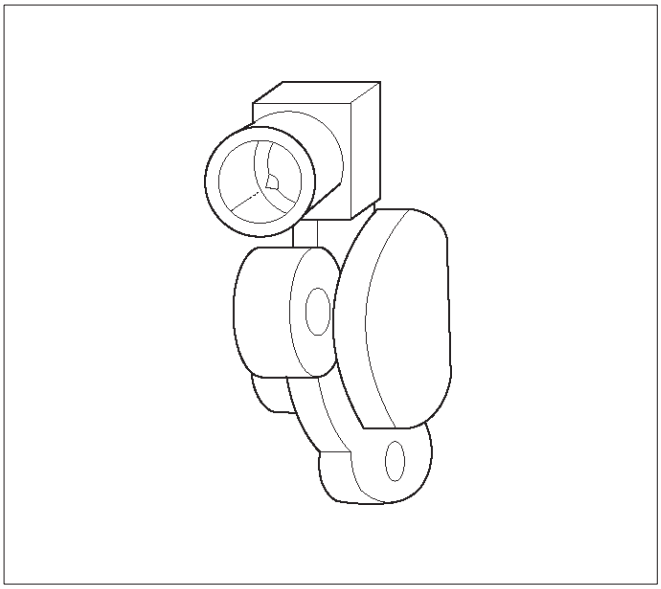

0021

Transmission Fluid Temperature (TFT) Sensor

The transmission fluid temperature sensor is a thermistor which changes its resistance based on the temperature of the transmission fluid. For a complete description of the TFT sensor, refer to *4L30-E Automatic Transmission Diagnosis*.

A failure in the TFT sensor or associated wiring will cause DTC P0712 or DTC P0713 to set. In this case, engine coolant temperature will be substituted for the TFT sensor value and the transmission will operate normally.

Transmission Range Switch

IMPORTANT: The vehicle should not be driven with the transmission range switch disconnected; idle quality will be affected.

The four inputs from the transmission range switch indicate to the PCM which position is selected by the transmission selector lever. This information is used for ignition timing, EVAP canister purge, EGR and IAC valve operation.

For more information on the transmission on the transmission range switch, refer to *4L30-E Automatic Transmission*.

Vehicle Speed Sensor (VSS)

The PCM determines the speed of the vehicle by converting a plusing voltage signal from the vehicle speed sensor (VSS) into miles per hour. The PCM uses this signal to operate the cruise control, speedometer, and the TCC and shift solenoids in the transmission. For more information on the TCC and shift solenoids, refer to *4L30-E Automatic Transmission.*

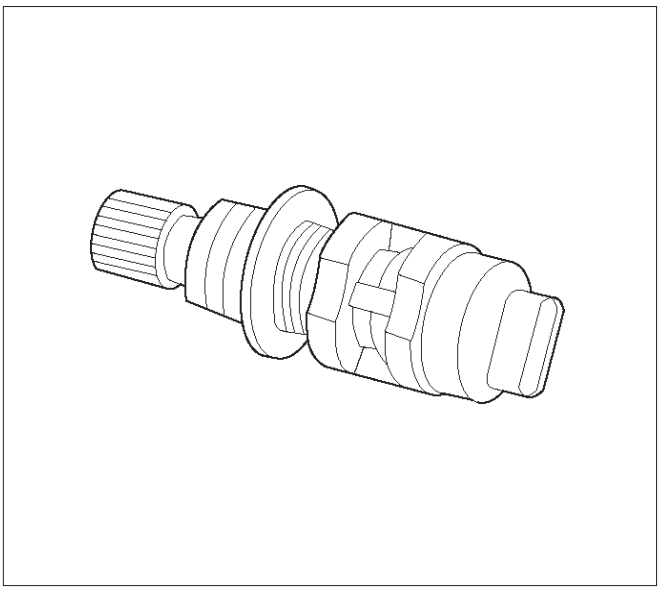

0008

Use of Circuit Testing Tools

Do not use a test light to diagnose the powertrain electrical systems unless specifically instructed by the diagnostic procedures. Use Connector Test Adapter Kit J 35616 whenever diagnostic procedures call for probing connectors.

Aftermarket Electrical and Vacuum Equipment

Aftermarket (add-on) electrical and vacuum equipment is defined as any equipment which connects to the vehicle's electrical or vacuum systems that is installed on a vehicle after it leaves the factory. No allowances have been made in the vehicle design for this type of equipment.

NOTE: No add-on vacuum equipment should be added to this vehicle.

NOTE: Add-on electrical equipment must only be connected to the vehicle's electrical system at the battery (power and ground).

Add-on electrical equipment, even when installed to these guidelines, may still cause the powertrain system to malfunction. This may also include equipment not connected to the vehicle electrical system such as portable telephones and radios. Therefore, the first step in diagnosing any powertrain problem is to eliminate all aftermarket electrical equipment from the vehicle. After

this is done, if the problem still exists, it may be diagnosed in the normal manner.

Electrostatic Discharge Damage

Electronic components used in the PCM are often designed to carry very low voltage. Electronic components are susceptible to damage caused by electrostatic discharge. Less than 100 volts of static electricity can cause damage to some electronic components. By comparison, it takes as much as 4000 volts for a person to feel even the zap of a static discharge.

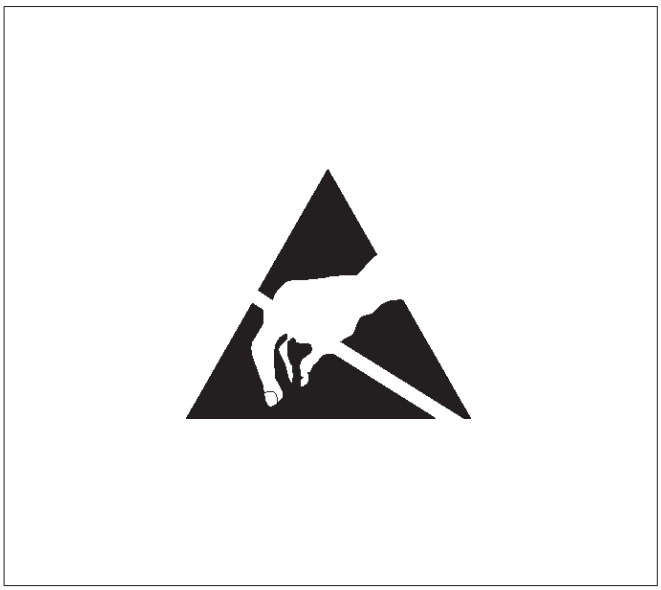

TS23793

There are several ways for a person to become statically charged. The most common methods of charging are by friction and induction.

- An example of charging by friction is a person sliding across a vehicle seat.
- Charge by induction occurs when a person with well insulated shoes stands near a highly charged object and momentary touches ground. Charges of the same polarity are drained off leaving the person highly charged with the opposite polarity. Static charges can cause damage, therefore it is important to use care when handling and testing electronic components.

NOTE: To prevent possible electrostatic discharge damage, follow these guidelines:

- Do not touch the PCM connector pins or soldered components on the PCM circuit board.
- Do not touch the knock sensor module component leads.
- Do not open the replacement part package until the part is ready to be installed.
- Before removing the part from the package, ground the package to a known good ground on the vehicle.
- If the part has been handled while sliding across the seat, while sitting down from a standing position, or while walking a distance, touch a known good ground before installing the part.

Upshift Lamp

Refer to *Manual Transmission*.

General Description (Air Induction)

Air Induction System

The air induction system filters contaminants from the outside air, and directs the progress of the air as it is drawn into the engine. A remote-mounted air cleaner prevents dirt and debris in the air from entering the engine. The air duct assembly routes filtered air to the throttle body. Air enters the engine by to following steps:

1. Through the throttle body.
2. Into the common chamber.
3. Through the cylinder head intake ports.
4. Into the cylinders.

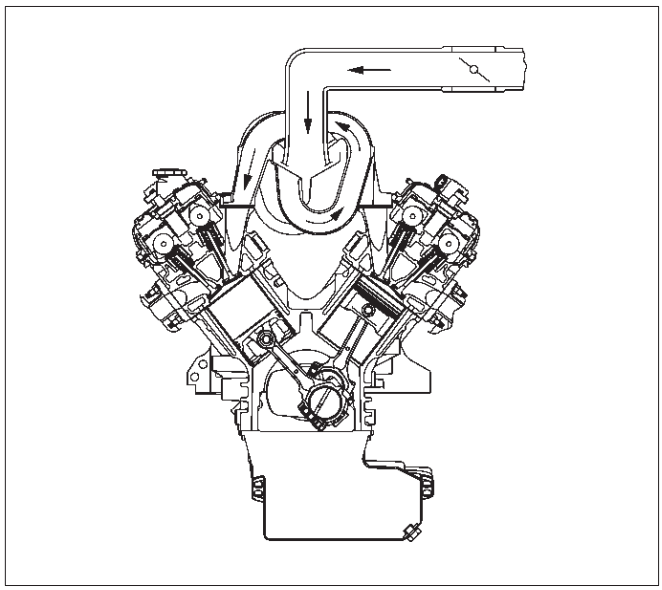

055RV010

General Description (Fuel Metering)

Acceleration Mode

The PCM provides extra fuel when it detects a rapid increase in the throttle position and the air flow.

Accelerator Controls

The accelerator control system is a cable-type system with specific linkage adjustments.
Refer to *Cable Adjustment*.

Battery Voltage Correction Mode

When battery voltage is low, the PCM will compensate for the weak spark by increasing the following:

- The amount of fuel delivered.
- The idle RPM.
- Ignition dwell time.

CMP Signal

The PCM uses this signal to determine the position of the number 1 piston during its power stroke, allowing the

PCM to calculate true sequential multiport fuel injection (SFI). Loss of this signal will set a DTC P0341. If the CMP signal is lost while the engine is running, the fuel injection system will shift to a calculated sequential fuel injection based on the last fuel injection pulse, and the engine will continue to run. The engine can be restarted and will run in the calculated sequential mode as long as the fault is present, with a 1-in-6 chance of being correct.

Clear Flood Mode

Clear a flooded engine by pushing the accelerator pedal down all the way. The PCM then de-energizes the fuel injectors. The PCM holds the fuel injectors de-energized as long as the throttle remains above 80% and the engine speed is below 800 RPM. If the throttle position becomes less than 80%, the PCM again begins to pulse the injectors “ON” and “OFF,” allowing fuel into the cylinders.

Deceleration Mode

The PCM reduces the amount of fuel injected when it detects a decrease in the throttle position and the air flow. When deceleration is very fast, the PCM may cut off fuel completely for short periods.

Engine Speed/Vehicle Speed/Fuel Disable Mode

The PCM monitors engine speed. It turns off the fuel injectors when the engine speed increase above 6400 RPM. The fuel injectors are turned back on when engine speed decreases below 6150 RPM.

Fuel Cutoff Mode

No fuel is delivered by the fuel injectors when the ignition is “OFF.” This prevents engine run-on. In addition, the PCM suspends fuel delivery if no reference pulses are detected (engine not running) to prevent engine flooding.

Fuel Injector

The sequential multiport fuel injection (SFI) fuel injector is a solenoid-operated device controlled by the PCM. The PCM energizes the solenoid, which opens a valve to allow fuel delivery.

The fuel is injected under pressure in a conical spray pattern at the opening of the intake valve. Excess fuel not used by the injectors passes through the fuel pressure regulator before being returned to the fuel tank.

A fuel injector which is stuck partly open will cause a loss of fuel pressure after engine shut down, causing long crank times.

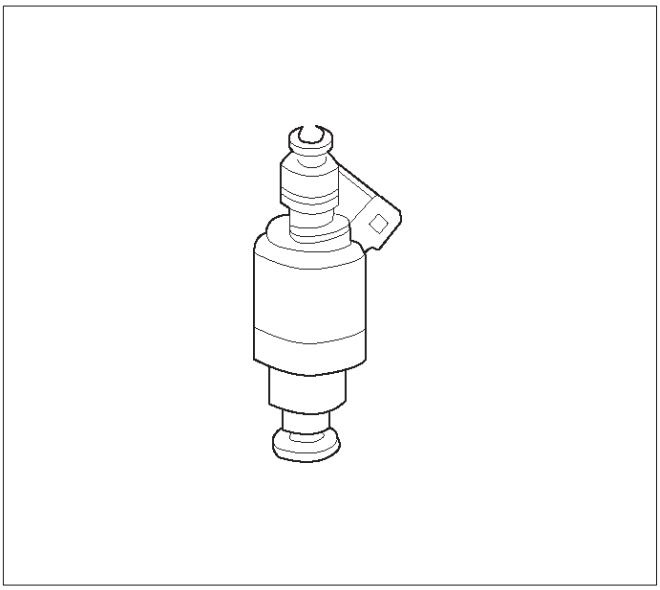

0003

Fuel Metering System Components

The fuel metering system is made up of the following parts:

- The fuel injectors.
- The throttle body.
- The fuel rail.
- The fuel pressure regulator.
- The PCM.
- The crankshaft position (CKP) sensor.
- The camshaft position (CMP) sensor.
- The idle air control (IAC) valve.
- The fuel pump.
- The fuel pump relay.

Basic System Operation

The fuel metering system starts with the fuel in the fuel tank. An electric fuel pump, located in the fuel tank, pumps fuel to the fuel rail through an in-line fuel filter. The pump is designed to provide fuel at a pressure above the pressure needed by the injectors. A fuel pressure regulator in the fuel rail keeps fuel available to the fuel injectors at a constant pressure. A return line delivers unused fuel back to the fuel tank. Refer to *Section 6C* for further information on the fuel tank, line filter, and fuel pipes.

Fuel Metering System Purpose

The basic function of the air/fuel metering system is to control the air/fuel delivery to the engine. Fuel is delivered to the engine by individual fuel injectors mounted in the intake manifold near each intake valve.

The main control sensor is the heated oxygen sensor (HO2S) located in the exhaust system. The HO2S tells the PCM how much oxygen is in the exhaust gas. The PCM changes the air/fuel ratio to the engine by controlling the amount of time that fuel injector is “ON.” The best mixture to minimize exhaust emissions is 14.7 parts of air to 1 part of gasoline by weight, which allows the catalytic converter to operate most efficiently. Because of the

constant measuring and adjusting of the air/fuel ratio, the fuel injection system is called a “closed loop” system.
The PCM monitors signals from several sensors in order to determine the fuel needs of the engine. Fuel is delivered under one of several conditions called “modes.” All modes are controlled by the PCM.

Fuel Pressure Regulator

The fuel pressure regulator is a diaphragm-operated relief valve mounted on the fuel rail with fuel pump pressure on one side and manifold pressure on the other side. The fuel pressure regulator maintains the fuel pressure available to the injector at three times barometric pressure adjusted for engine load. It may be serviced separate.
If the pressure is too low, poor performance and a DTC P0131, DTC P0151,DTC P0171 or DTC P1171 will be the result. If the pressure is too high, excessive odor and/or a DTC P0132, DTC P0152,DTC P0172 or DTC P0175 will be the result. Refer to *Fuel System Diagnosis* for information on diagnosing fuel pressure conditions.

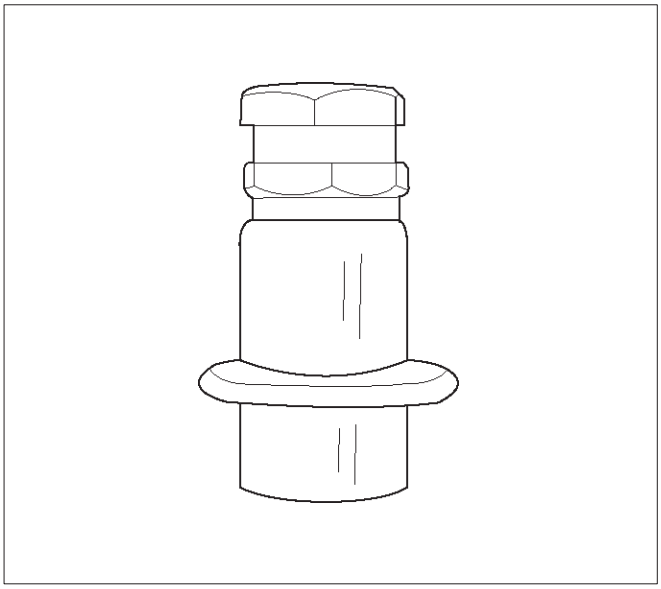

0011

Fuel Pump Electrical Circuit

When the key is first turned “ON,” the PCM energizes the fuel pump relay for two seconds to build up the fuel pressure quickly. If the engine is not started within two seconds, the PCM shuts the fuel pump off and waits until the engine is cranked. When the engine is cranked and the 58 X crankshaft position signal has been detected by the PCM, the PCM supplies 12 volts to the fuel pump relay to energize the electric in-tank fuel pump.
An inoperative fuel pump will cause a “no-start” condition. A fuel pump which does not provide enough pressure will result in poor performance.

Fuel Rail

The fuel rail is mounted to the top of the engine and distributes fuel to the individual injectors. Fuel is delivered to the fuel inlet tube of the fuel rail by the fuel lines. The fuel goes through the fuel rail to the fuel pressure regulator. The fuel pressure regulator maintains a constant fuel pressure at the injectors. Remaining fuel is then returned to the fuel tank.

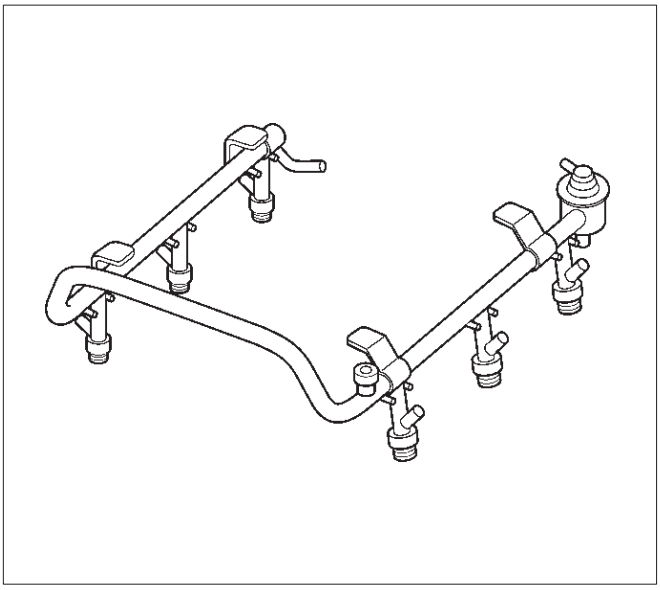

055RW009

Idle Air Control (IAC) Valve

The purpose of the idle air control (IAC) valve is to control engine idle speed, while preventing stalls due to changes in engine load. The IAC valve, mounted in the throttle body, controls bypass air around the throttle plate. By moving the conical valve (pintle) in (to decrease air flow) or out (to increase air flow), a controlled amount of air can move around the throttle plate. If the RPM is too low, the PCM will retract the IAC pintle, resulting in more air moving past the throttle plate to increase the RPM. If the RPM is too high, the PCM will extend the IAC pintle, allowing less air to move past the throttle plate, decreasing the RPM.
The IAC pintle valve moves in small steps called counts. During idle, the proper position of the IAC pintle is calculated by the PCM based on battery voltage, coolant temperature, engine load, and engine RPM. If the RPM drops below a specified value, and the throttle plate is closed, the PCM senses a near-stall condition. The PCM will then calculate a new IAC pintle valve position to prevent stalls.
If the IAC valve is disconnected and reconnected with the engine running, the idle RPM will be wrong. In this case, the IAC must be reset. The IAC resets when the key is cycled “ON” then “OFF.” When servicing the IAC, it should only be disconnected or connected with the ignition “OFF.”
The position of the IAC pintle valve affects engine start-up and the idle characteristics of the vehicle. If the IAC pintle is fully open, too much air will be allowed into the manifold. This results in high idle speed, along with possible hard starting and a lean air/fuel ratio. DTC P0507 or DTC P1509 may set. If the IAC pintle is stuck closed, too little air will be allowed in the manifold. This results in a low idle speed, along with possible hard starting and a rich air/fuel ratio. DTC P0506 or DTC P1508 may set. If the IAC pintle is stuck part-way open, the idle may be high or low and will not respond to changes in the engine load.

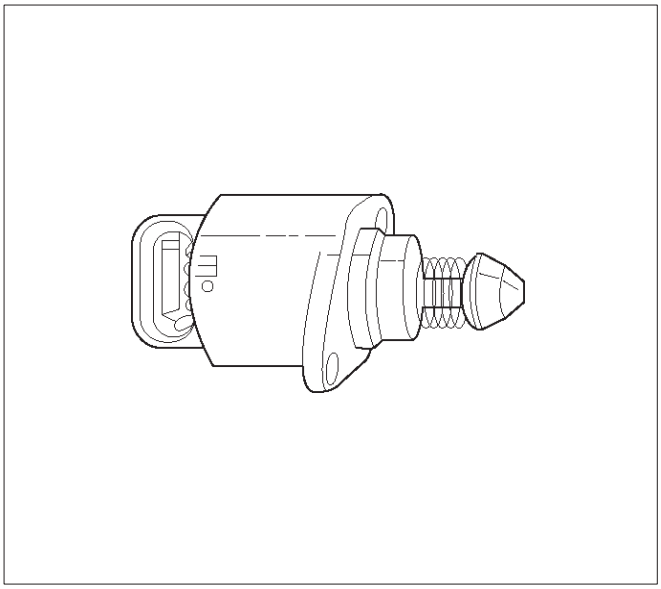

0006

Run Mode

The run mode has the following two conditions:

- Open loop
- Closed loop

When the engine is first started the system is in “open loop” operation. In “open loop,” the PCM ignores the signal from the heated oxygen sensor (HO2S). It calculates the air/fuel ratio based on inputs from the TP, ECT, and MAF sensors.

The system remains in “open loop” until the following conditions are met:

- The HO2S has a varying voltage output showing that it is hot enough to operate properly (this depends on temperature).
- The ECT has reached a specified temperature.
- A specific amount of time has elapsed since starting the engine.
- Engine speed has been greater than a specified RPM since start-up.

The specific values for the above conditions vary with different engines and are stored in the programmable read only memory (PROM). When these conditions are met, the system enters “closed loop” operation. In “closed loop,” the PCM calculates the air/fuel ratio (injector on-time) based on the signal from the HO2S. This allows the air/fuel ratio to stay very close to 14.7:1.

Starting Mode

When the ignition is first turned “ON,” the PCM energizes the fuel pump relay for two seconds to allow the fuel pump to build up pressure. The PCM then checks the engine coolant temperature (ECT) sensor and the throttle position (TP) sensor to determine the proper air/fuel ratio for starting.

The PCM controls the amount of fuel delivered in the starting mode by adjusting how long the fuel injectors are energized by pulsing the injectors for very short times.

Throttle Body Unit

The throttle body has a throttle plate to control the amount of air delivered to the engine. The TP sensor and IAC valve are also mounted on the throttle body. Vacuum ports located behind the throttle plate provide the vacuum signals needed by various components.

Engine coolant is directed through a coolant cavity in the throttle body to warm the throttle valve and to prevent icing.

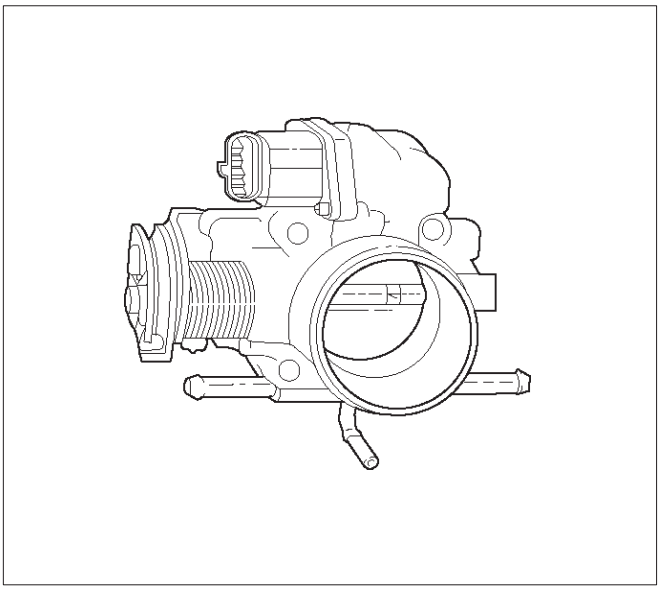

0019

General Description (Electronic Ignition System)

Camshaft Position (CMP) Sensor

As the camshaft sprocket turns, a magnet in the sprocket activates the Hall-effect switch in the CMP sensor. When the Hall-effect switch is activated, it grounds the signal line to the PCM, pulling the camshaft position sensor signal circuit’s applied voltage low. This is a CMP signal. The CMP signals is created as piston #1 is approximately 25˚ after top dead counter on the power stroke. If the correct CMP signal is not received by the PCM, DTC P0341 will be set.

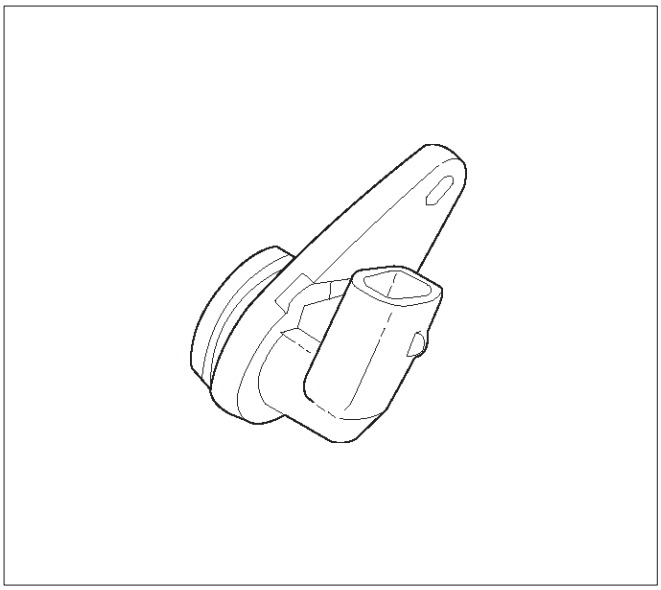

0014

Crankshaft Position (CKP) Sensor

The crankshaft position (CKP) sensor provides a signal used by the powertrain control module (PCM) to calculate the ignition sequence. The sensor initiates the 58X reference pulses which the PCM uses to calculate RPM and crankshaft position. Refer to *Electronic Ignition System* for additional information.

Electronic Ignition

The electronic ignition system controls fuel combustion by providing a spark to ignite the compressed air/fuel mixture at the correct time. To provide optimum engine performance, fuel economy, and control of exhaust emissions, the PCM controls the spark advance of the ignition system. Electronic ignition has the following advantages over a mechanical distributor system:

- No moving parts.
- Less maintenance.
- Remote mounting capability.
- No mechanical load on the engine.
- More coil cooldown time between firing events.
- Elimination of mechanical timing adjustments.
- Increased available ignition coil saturation time.

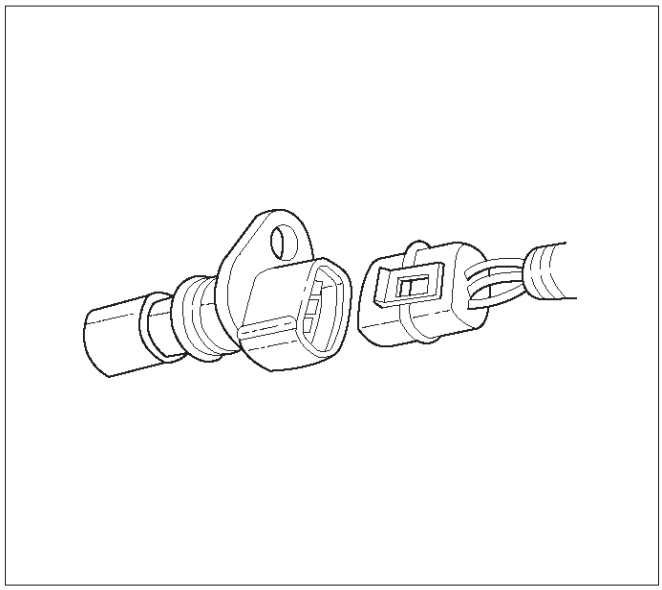

0013

Ignition Coils

A separate coil-at-plug module is located at each spark plug. The coil-at-plug module is attached to the engine with two screws. It is installed directly to the spark plug by an electrical contact inside a rubber boot. A three-way connector provides 12-volt primary supply from the 15-amp ignition fuse, a ground-switching trigger line from the PCM, and a ground.

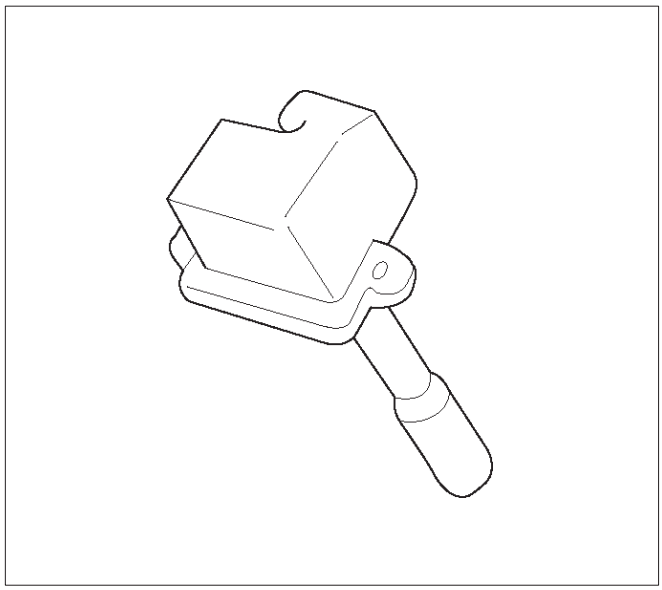

0001

Ignition Control

The ignition control (IC) spark timing is the PCM's method of controlling the spark advance and the ignition dwell. The IC spark advance and the ignition dwell are calculated by the PCM using the following inputs:

- Engine speed.

- Crankshaft position (58X reference).
- Camshaft position (CMP) sensor.
- Engine coolant temperature (ECT) sensor.
- Throttle position (TP) sensor.
- Knock signal (knock sensor).
- Park/Neutral position (PRNDL input).
- Vehicle speed (vehicle speed sensor).
- PCM and ignition system supply voltage.
- The crankshaft positron (CKP) sensor sends the PCM a 58X signal related to the exact position of the crankshaft.

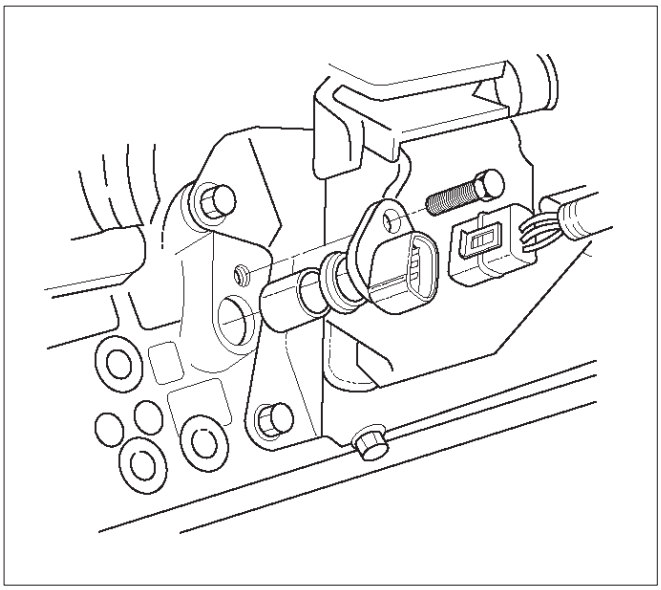

TS22909

- The camshaft position (CMP) sensor sends a signal related to the position of the camshaft.

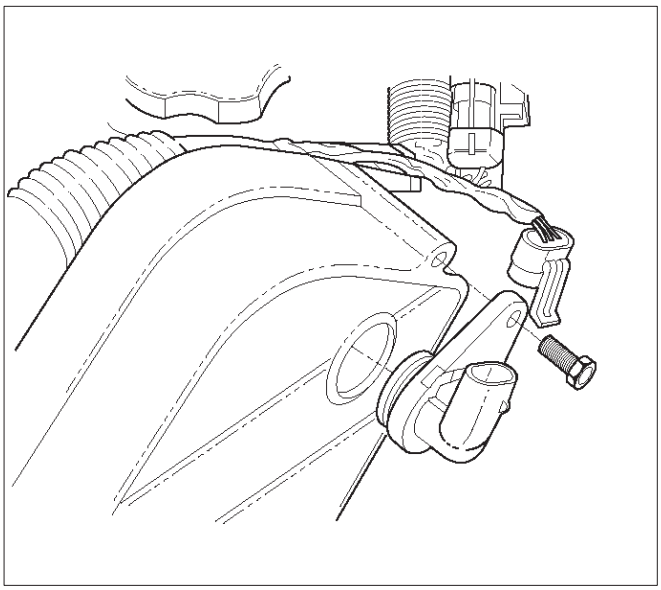

TS22910

- The knock sensor tells the PCM if there is any problem with pre-ignition or detonation. This information allows the PCM to retard timing, if necessary.

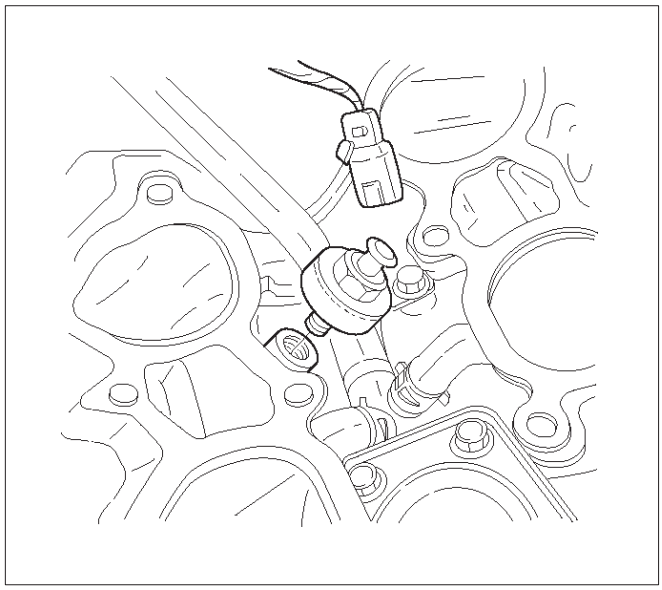

TS24037

Based on these sensor signals and engine load information, the PCM sends 5V to each ignition coil.

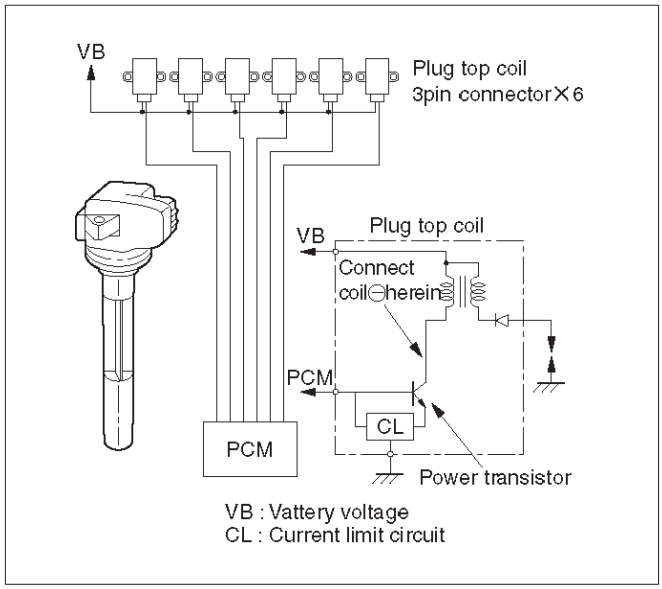

060RW015

The PCM applies 5V signal voltage to the ignition coil requiring ignition. This signal sets on the power transistor of the ignition coil to establish a grounding circuit for the primary coil, applying battery voltage to the primary coil. At the ignition timing, the PCM stops sending the 5V signal voltage. Under this condition the power transistor of the ignition coil is set off to cut the battery voltage to the primary coil, thereby causing a magnetic field generated in the primary coil to collapse. On this moment a line of magnetic force flows to the secondary coil, and when this magnetic line crosses the coil, high voltage induced by

the secondary ignition circuit to flow through the spark plug to the ground.

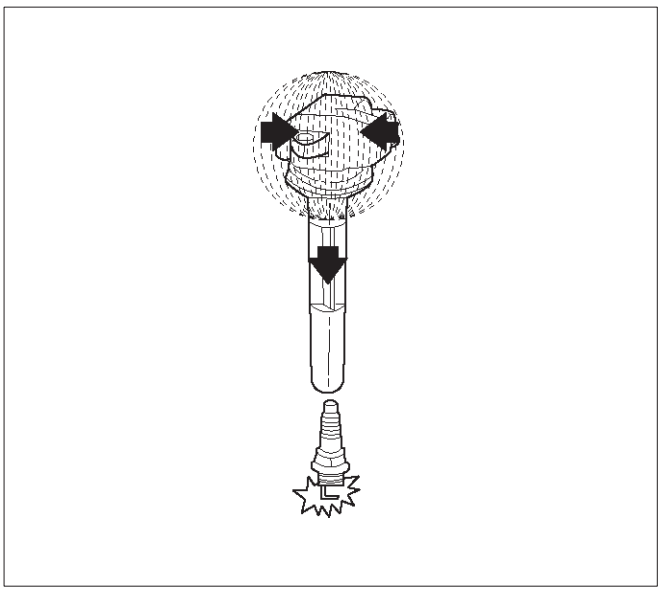

TS24047

Ignition Control PCM Output

The PCM provides a zero volt (actually about 100 mV to 200 mV) or a 5-volt output signal to the ignition control (IC) module. Each spark plug has its own primary and secondary coil module (”coil-at-plug”) located at the spark plug itself. When the ignition coil receives the 5-volt signal from the PCM, it provides a ground path for the B+ supply to the primary side of the coil-at -plug module. This energizes the primary coil and creates a magnetic field in the coil-at-plug module. When the PCM shuts off the 5-volt signal to the ignition control module, the ground path for the primary coil is broken. The magnetic field collapses and induces a high voltage secondary impulse which fires the spark plug and ignites the air/fuel mixture. The circuit between the PCM and the ignition coil is monitored for open circuits, shorts to voltage, and shorts to ground. If the PCM detects one of these events, it will set one of the following DTCs:

- P0351: Ignition coil Fault on Cylinder #1
- P0352: Ignition coil Fault on Cylinder #2
- P0353: Ignition coil Fault on Cylinder #3
- P0354: Ignition coil Fault on Cylinder #4
- P0355: Ignition coil Fault on Cylinder #5
- P0356: Ignition coil Fault on Cylinder #6

Knock Sensor (KS) PCM Input

The knock sensor (KS) system is comprised of a knock sensor and the PCM. The PCM monitors the KS signals to determine when engine detonation occurs. When a knock sensor detects detonation, the PCM retards the spark timing to reduce detonation. Timing may also be retarded because of excessive mechanical engine or transmission noise.

Powertrain Control Module (PCM)

The PCM is responsible for maintaining proper spark and fuel injection timing for all driving conditions. To provide optimum driveability and emissions, the PCM monitors the input signals from the following components in order to calculate spark timing:

- Engine coolant temperature (ECT) sensor.
- Intake air temperature (IAT) sensor.
- Mass air flow (MAF) sensor.
- PRNDL input from transmission range switch.
- Throttle position (TP) sensor.
- Vehicle speed sensor (VSS) .
- Crankshaft position (CKP) sensor.

Spark Plug

Although worn or dirty spark plugs may give satisfactory operation at idling speed, they frequency fail at higher engine speeds. Faulty spark plugs may cause poor fuel economy, power loss, loss of speed, hard starting and generally poor engine performance. Follow the scheduled maintenance service recommendations to ensure satisfactory spark plug performance. Refer to *Maintenance and Lubrication*.

Normal spark plug operation will result in brown to grayish-tan deposits appearing on the insulator portion of the spark plug. A small amount of red-brown, yellow, and white powdery material may also be present on the insulator tip around the center electrode. These deposits are normal combustion by-products of fuels and lubricating oils with additives. Some electrode wear will also occur. Engines which are not running properly are often referred to as “misfiring.” This means the ignition spark is not igniting the air/fuel mixture at the proper time. While other ignition and fuel system causes must also be considered, possible causes include ignition system conditions which allow the spark voltage to reach ground in some other manner than by jumping across the air gap at the tip of the spark plug, leaving the air/fuel mixture unburned. Misfiring may also occur when the tip of the spark plug becomes overheated and ignites the mixture before the spark jumps. This is referred to as “pre-ignition.”

Spark plugs may also misfire due to fouling, excessive gap, or a cracked or broken insulator. If misfiring occurs before the recommended replacement interval, locate and correct the cause.

Carbon fouling of the spark plug is indicated by dry, black carbon (soot) deposits on the portion of the spark plug in the cylinder. Excessive idling and slow speeds under light engine loads can keep the spark plug temperatures so low that these deposits are not burned off. Very rich fuel mixtures or poor ignition system output may also be the cause. Refer to DTC P0172.

Oil fouling of the spark plug is indicated by wet oily deposits on the portion of the spark plug in the cylinder, usually with little electrode wear. This may be caused by oil during break-in of new or newly overhauled engines. Deposit fouling of the spark plug occurs when the normal red-brown, yellow or white deposits of combustion by products become sufficient to cause misfiring. In some cases, these deposits may melt and form a shiny glaze on the insulator around the center electrode. If the fouling is found in only one or two cylinders, valve stem clearances or intake valve seals may be allowing excess lubricating

oil to enter the cylinder, particularly if the deposits are heavier on the side of the spark plug facing the intake valve.

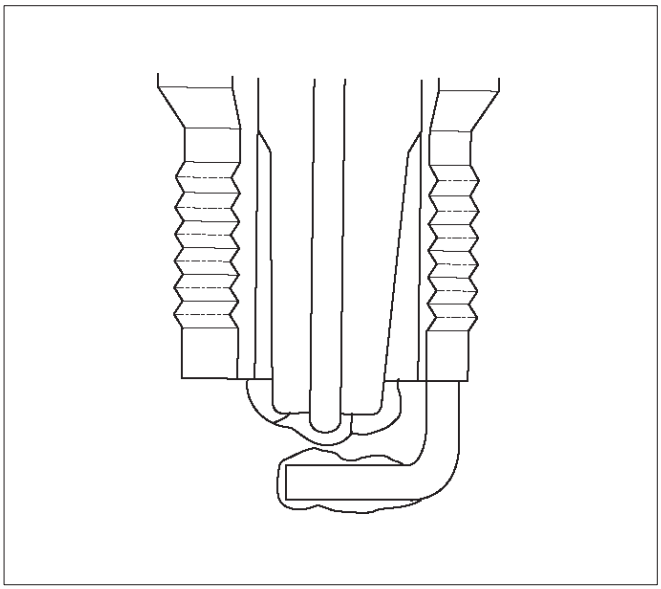

TS23995

Excessive gap means that the air space between the center and the side electrodes at the bottom of the spark plug is too wide for consistent firing. This may be due to improper gap adjustment or to excessive wear of the electrode during use. A check of the gap size and comparison to the gap specified for the vehicle in *Maintenance and Lubrication* will tell if the gap is too wide. A spark plug gap that is too small may cause an unstable idle condition. Excessive gap wear can be an indication of continuous operation at high speeds or with engine loads, causing the spark to run too hot. Another possible cause is an excessively lean fuel mixture.

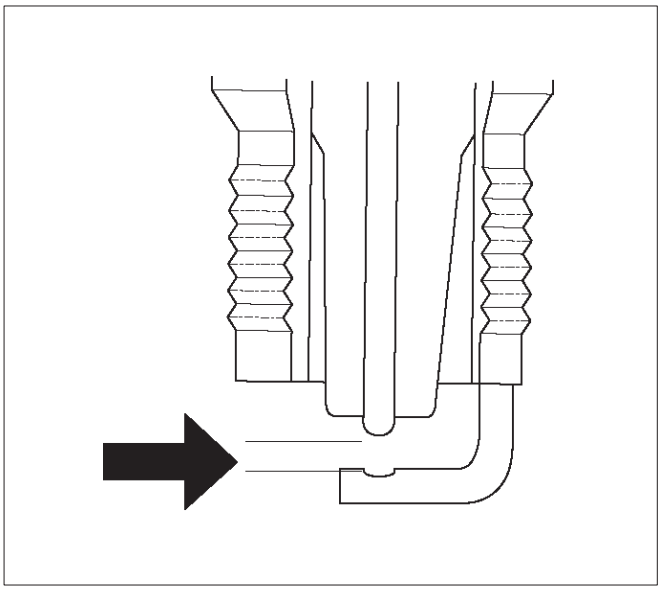

TS23992

Low or high spark plug installation torque or improper seating can result in the spark plug running too hot and can cause excessive center electrode wear. The plug and the cylinder head seats must be in good contact for proper heat transfer and spark plug cooling. Dirty or damaged threads in the head or on the spark plug can keep it from seating even though the proper torque is applied. Once spark plugs are properly seated, tighten them to the torque shown in the Specifications Table. Low torque may result in poor contact of the seats due to a loose spark plug. Overtightening may cause the spark plug shell to be stretched and will result in poor contact between the seats. In extreme cases, exhaust blow-by and damage beyond simple gap wear may occur.

Cracked or broken insulators may be the result of improper installation, damage during spark plug re-gapping, or heat shock to the insulator material. Upper insulators can be broken when a poorly fitting tool is used during installation or removal, when the spark plug is hit from the outside, or is dropped on a hard surface. Cracks in the upper insulator may be inside the shell and not visible. Also, the breakage may not cause problems until oil or moisture penetrates the crack later.

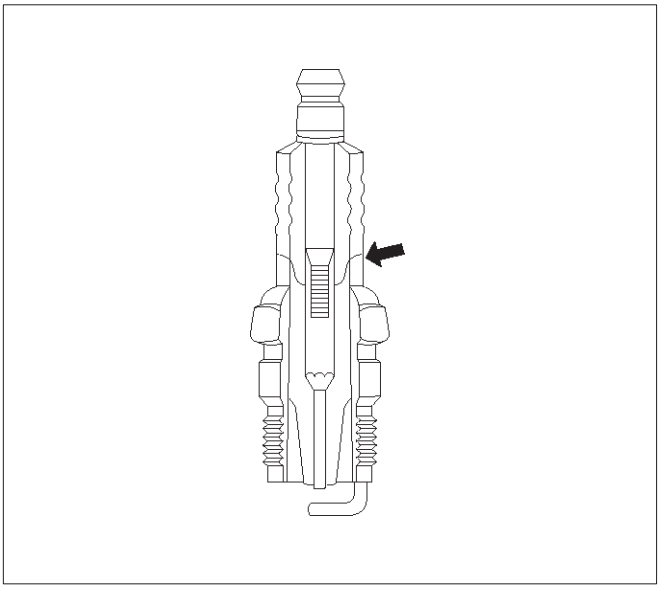

TS23994

A broken or cracked lower insulator tip (around the center electrode) may result from damage during re-gapping or from “heat shock” (spark plug suddenly operating too hot).

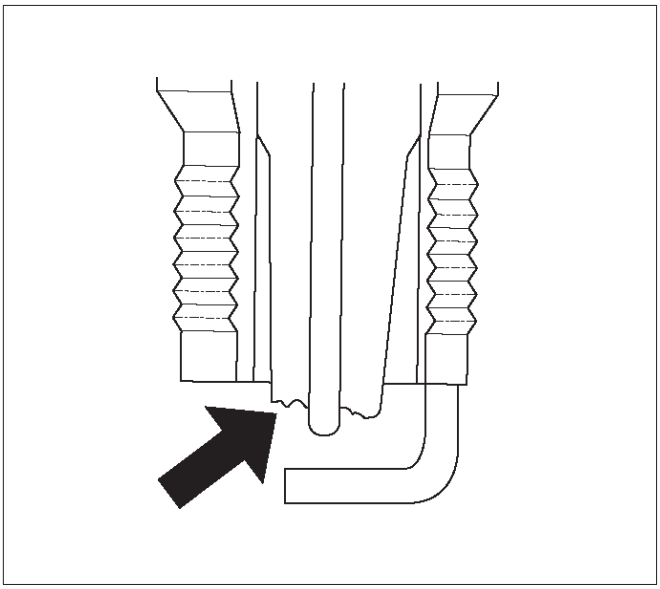

TS23993

- Damage during re-gapping can happen if the gapping tool is pushed against the center electrode or the insulator around it, causing the insulator to crack. When re-gapping a spark plug, make the adjustment by bending only the ground side terminal, keeping the tool clear of other parts.
- ”Heat shock” breakage in the lower insulator tip generally occurs during several engine operating conditions (high speeds or heavy loading) and may be caused by over-advanced timing or low grade fuels. Heat shock refers to a rapid increase in the tip temperature that causes the insulator material to crack.

Spark plugs with less than the recommended amount of service can sometimes be cleaned and re-gapped , then returned to service. However, if there is any doubt about the serviceability of a spark plug, replace it. Spark plugs with cracked or broken insulators should always be replaced.

A/C Clutch Diagnosis

A/C Clutch Circuit Operation

A 12-volt signal is supplied to the A/C request input of the PCM when the A/C is selected through the A/C control switch.

The A/C compressor clutch relay is controlled through the PCM. This allows the PCM to modify the idle air control position prior to the A/C clutch engagement for better idle quality. If the engine operating conditions are within their specified calibrated acceptable ranges, the PCM will enable the A/C compressor relay. This is done by providing a ground path for the A/C relay coil within the PCM. When the A/C compressor relay is enabled, battery voltage is supplied to the compressor clutch coil. The PCM will enable the A/C compressor clutch whenever the engine is running and the A/C has been requested. The PCM will not enable the A/C compressor clutch if any of the following conditions are met:

- The throttle is greater than 90%.
- The engine speed is greater than 6315 RPM.
- The ECT is greater than 119˚C (246˚F).
- The IAT is less than 5˚C (41˚F).
- The throttle is more than 80% open.

A/C Clutch Circuit Purpose

The A/C compressor operation is controlled by the powertrain control module (PCM) for the following reasons:

- It improvises idle quality during compressor clutch engagement.
- It improvises wide open throttle (WOT) performance.
- It provides A/C compressor protection from operation with incorrect refrigerant pressures.

The A/C electrical system consists of the following components:

- The A/C control head.
- The A/C refrigerant pressure switches.
- The A/C compressor clutch.
- The A/C compressor clutch relay.
- The PCM.

A/C Request Signal

This signal tells the PCM when the A/C mode is selected at the A/C control head. The PCM uses this to adjust the idle speed before turning on the A/C clutch. The A/C compressor will be inoperative if this signal is not available to the PCM.

Refer to *A/C Clutch Circuit Diagnosis* for A/C wiring diagrams and diagnosis for A/C electrical system.

General Description (Exhaust Gas Recirculation (EGR) System)

EGR Purpose

The exhaust gas recirculation (EGR) system is use to reduce emission levels of oxides of nitrogen (NOx). NOx emission levels are caused by a high combustion temperature. The EGR system lowers the NOx emission levels by decreasing the combustion temperature.

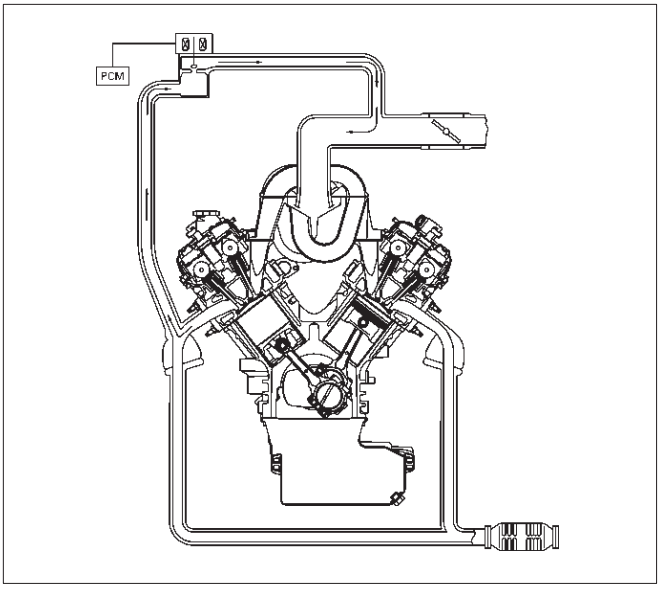

057RW002

Linear EGR Valve

The main element of the system is the linear EGR valve. The EGR valve feeds small amounts of exhaust gas back into the combustion chamber. The fuel/air mixture will be diluted and combustion temperatures reduced.

Linear EGR Control

The PCM monitors the EGR actual positron and adjusts the pintle position accordingly. The uses information from the following sensors to control the pintle position:

- Engine coolant temperature (ECT) sensor.
- Throttle position (TP) sensor.
- Mass air flow (MAF) sensor.

Linear EGR Valve Operation and Results of Incorrect Operation

The linear EGR valve is designed to accurately supply EGR to the engine independent of intake manifold vacuum. The valve controls EGR flow from the exhaust

to the intake manifold through an orifice with a PCM controlled pintle. During operation, the PCM controls pintle position by monitoring the pintle position feedback signal. The feedback signal can be monitored with Tech 2 as “Actual EGR Pos.” “Actual EGR Pos.” should always be near the commanded EGR position (”Desired EGR Pos.”). If a problem with the EGR system will not allow the PCM to control the pintle position properly, DTC P1406 will set. The PCM also tests for EGR flow. If incorrect flow is detected, DTC P0401 will set. If DTCs P0401 and/or P1406 are set, refer to the DTC charts.

The linear EGR valve is usually activated under the following conditions:

- Warm engine operation.
- Above-idle speed.

Too much EGR flow at idle, cruise or cold operation may cause any of the following conditions to occur:

- Engine stalls after a cold start.
- Engine stalls at idle after deceleration.
- Vehicle surges during cruise.
- Rough idle.

Too little or no EGR flow may allow combustion temperatures to get too high. This could cause:

- Spark knock (detonation).
- Engine overheating.
- Emission test failure.
- DTC P0401 (EGR flow test).
- Poor fuel economy.

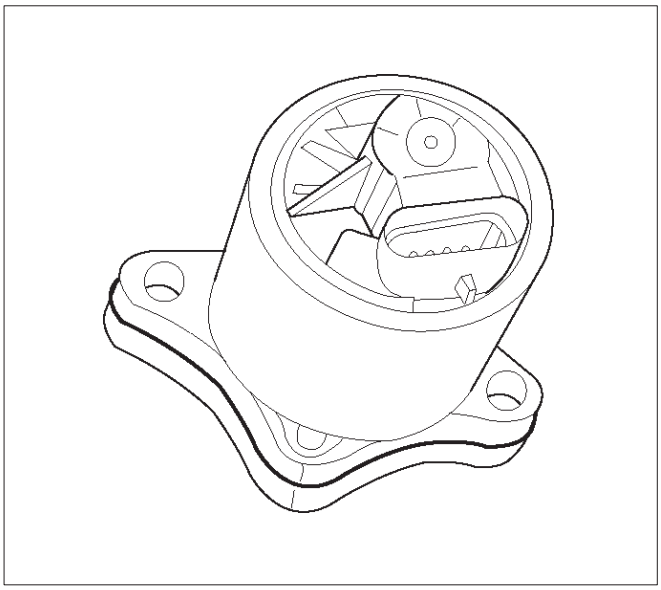

0017

EGR Pintle Position Sensor

The PCM monitors the EGR valve pintle position input to endure that the valve responds properly to commands from the PCM and to detect a fault if the pintle position sensor and control circuits are open or shorted. If the PCM detects a pintle position signal voltage outside the normal range of the pintle position sensor, or a signal voltage that is not within a tolerance considered acceptable for proper EGR system operation, the PCM will set DTC P1406.

General Description (Positive Crankcase Ventilation (PCV) System)

Crankcase Ventilation System Purpose

The crankcase ventilation system is use to consume crankcase vapors in the combustion process instead of venting them to the atmosphere. Fresh air from the throttle body is supplied to the crankcase and mixed with blow-by gases. This mixture is then passed through the positive crankcase ventilation (PCV) valve into the common chamber.

Crankcase Ventilation System Operation

The primary control is through the positive crankcase ventilation (PCV) valve. The PCV valve meters the flow at a rate that depends on the intake vacuum. The PCV valve restricts the flow when the inlet vacuum is highest. In addition, the PCV valve can seal the common chamber off in case of sudden high pressure in the crankcase.

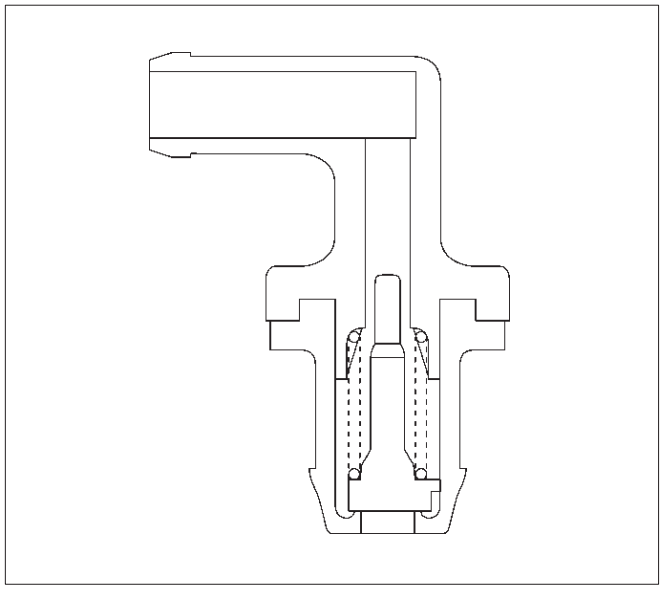

028RV002

While the engine is running, exhaust fuses and small amounts of the fuel/air mixture escape past the piston

rings and enter the crankcase. These gases are mixed with clean air entering through a tube from the air intake duct.

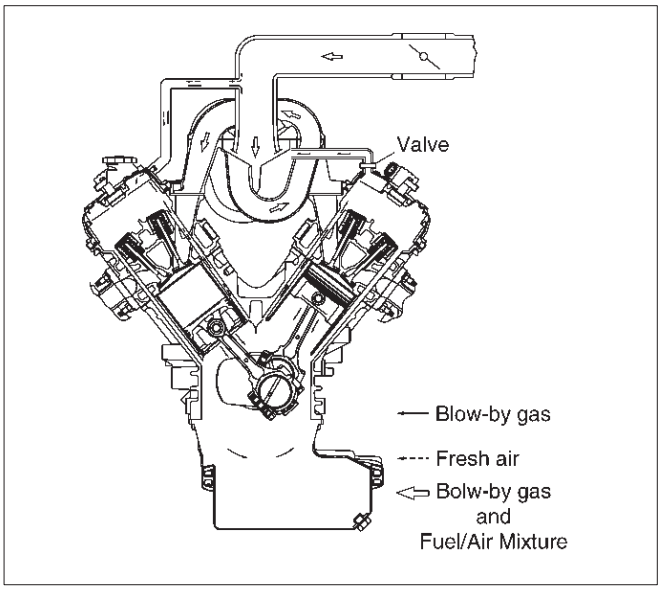

028RW002

During normal, part-throttle operation, the system is designed to allow crankcase gases to flow through the PCV valve into the throttle body to be consumed by normal combustion.

A plugged valve or PCV hose may cause the following conditions:

- Rough idle.
- Stalling of slow idle speed.
- Oil leaks.
- Sludge in the engine.

A leaking PCV hose would cause:

- Rough idle.
- Stalling.
- High idle speed.

Special Tools

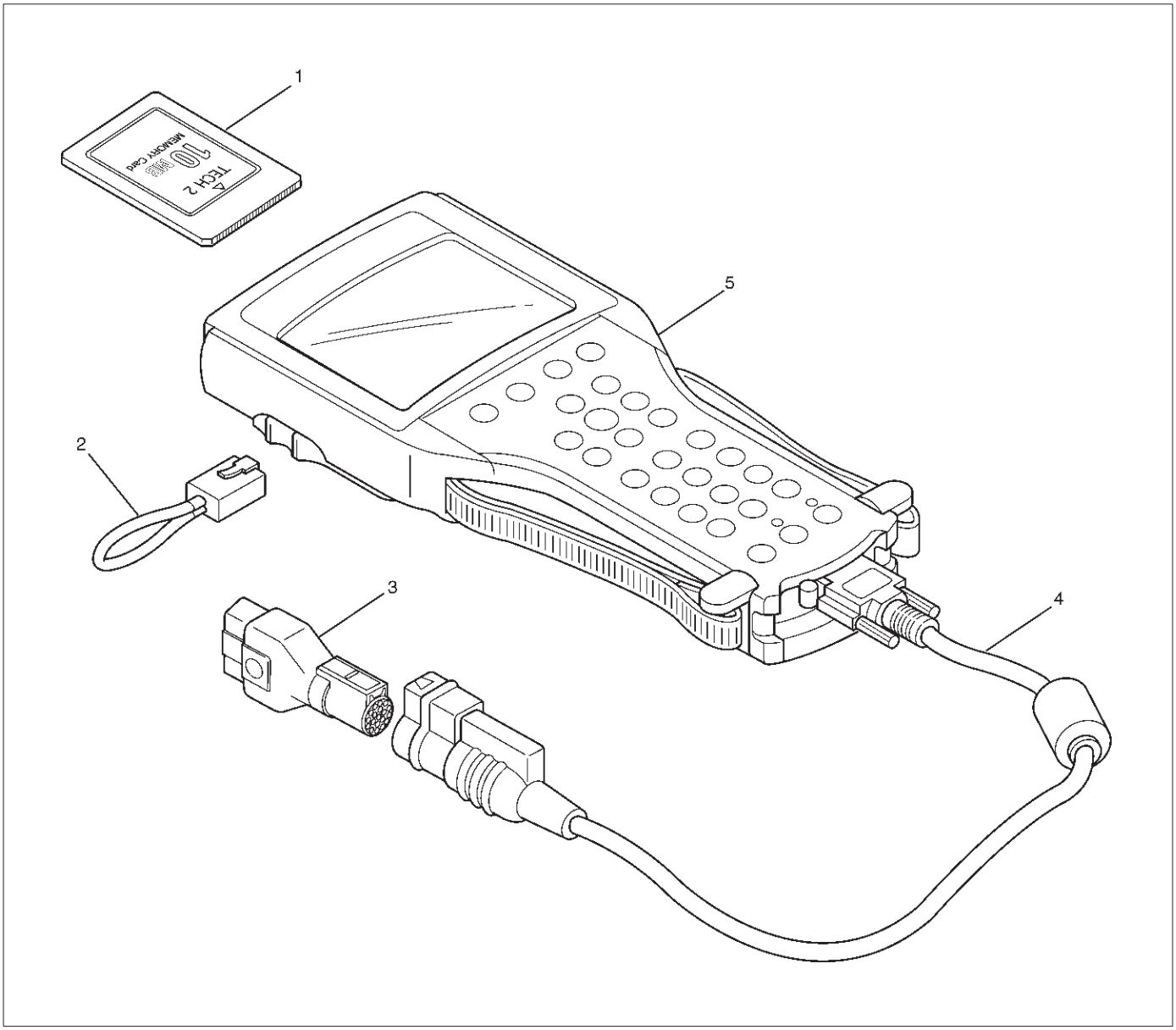

901RW180

Legend

(1) PCMCIA Card
(2) RS232 Loop Back Connector
(3) SAE 16/19 Adapter
(4) DLC Cable
(5) TECH–2

ILLUSTRATION	**TOOL NO.** TOOL NAME
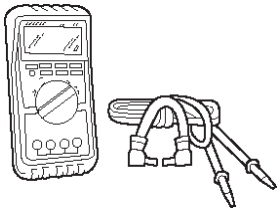	5-8840-0285-0 **(J 39200)** High Impedance Multimeter (Digital Voltmeter – DVM)
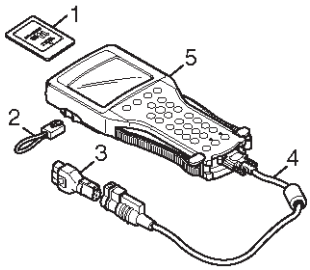	(1) PCMCIA Card (2) RS232 Loop Back Connector (3) SAE 16/19 Adapter (4) DLC Cable (5) TECH–2
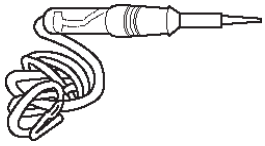	5-8840-0607-0 **(J 34142-B)** Unpowered Test Light
	5-8840-0385-0 **(J 35616-A/BT-8637)** Connector Test Adapter Kit
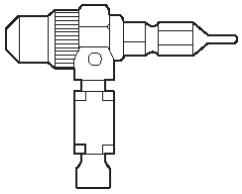	5-8840-0383-0 **(J 26792/BT-7220-1)** Spark Tester
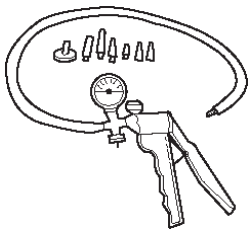	5-8840-0279-0 **(J 23738-A)** Vacuum Pump with Gauge common tool

ILLUSTRATION	**TOOL NO.** TOOL NAME
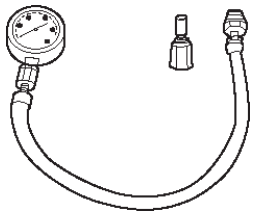	**BT-8515** Exhaust Back Pressure Tester or common tool
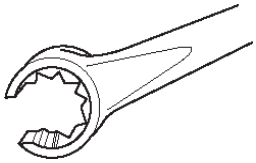	5-8840-2640-0 **(J 39194-B)** Heated Oxygen Sensor Wrench
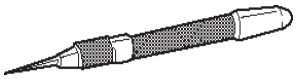	5-8840-0632-0 **(J 35689-A)** Terminal Remover
	5-8840-0388-0 **(J 28742-A)** Weather Pack II Terminal Remover
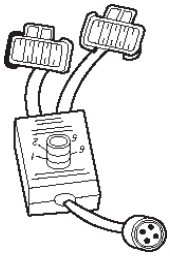	5-8840-2635-0 **(J 39021-90)** Injector Switch Box
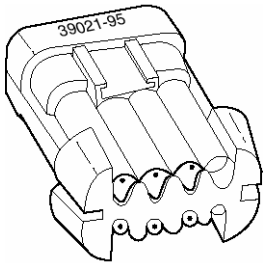	5-8840-2636-0 **(J 39021-65)** Injector Test Light

ILLUSTRATION	**TOOL NO.** TOOL NAME
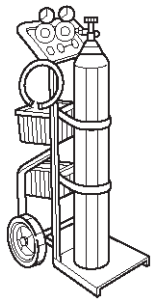	5-8840-2607-0 **(J 41413)** EVAP Pressure/Purge Diagnostic Station
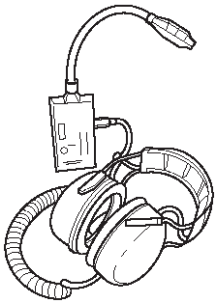	5-8840-2608-0 **(J 41416)** Ultrasonic Leak Detector

1. 5-8840-2607-0 (J-41413)EVAP Pressure/Purge Diagnostic Station is a multipurpose tool which is used to perform several diagnostic procedures for enhanced emission testing. The station will accommodate a nitrogen gas filled cylinder which is used to pressurize the vehicle EVAP system for a leakdown test and leak location test when a vehicle is repaired for leakage in the enhanced evaporative emission control system. It also has two additional gauges (inches of mercury and inches of water) which are used to measure both source vacuum and EVAP canister purge vacuum to verify correct operation and vapor flow within the canister purge circuit.
2. 5-8840-2608-0 (J-41416) Ultrasonic Leak Detector is a microprocessor-based device used to detect leaks in the enhanced evaporative emission control system. The evaporative system is pressurized to 30 inches of water using the 5-8840-2607-0 (J-41413) EVAP Pressure/Purge Diagnostic System. Small leaks in the EVAP system will emit sound at a high frequency undetectable by a human ear but detectable with the 5-8840-2608-0 (J-41416). The technician traces along the evaporative system and can pinpoint leaks due to corroded lines, cracked hoses, or a damaged EVAP component. The detector includes a high quality set of headphones to block out surrounding shop noise and the LED sensitivity meter allows a visual reference for locating leaks in conjunction with the audio output heard through the headphones. Powered by (1) nine volt battery.

ENGINE

ENGINE EXHAUST

CONTENTS

Service Precaution 6F–1
General Description 6F–2
Front Exhaust Pipe 6F–4
Front Exhaust Pipe and Associated Parts . 6F–4
Removal 6F–4
Installation 6F–4
Three Way Catalytic Converter 6F–5
Removal 6F–5
Installation 6F–5
Exhaust Silencer 6F–6
Exhaust Silencer and Associated Parts . . . 6F–6
Removal 6F–6
Installation 6F–6
Rear Exhaust pipe 6F–7
Rear Exhaust pipe and Associated Parts . 6F–7
Removal 6F–7
Installation 6F–7
Main Data and Specifications 6F–8

Service Precaution

WARNING: IF SO EQUIPPED WITH A SUPPLEMENTAL RESTRAINT SYSTEM (SRS), REFER TO THE SRS COMPONENT AND WIRING LOCATION VIEW IN ORDER TO DETERMINE WHETHER YOU ARE PERFORMING SERVICE ON OR NEAR THE SRS COMPONENTS OR THE SRS WIRING. WHEN YOU ARE PERFORMING SERVICE ON OR NEAR THE SRS COMPONENTS OR THE SRS WIRING, REFER TO THE SRS SERVICE INFORMATION. FAILURE TO FOLLOW WARNINGS COULD RESULT IN POSSIBLE AIR BAG DEPLOYMENT, PERSONAL INJURY, OR OTHERWISE UNNEEDED SRS SYSTEM REPAIRS.

CAUTION: Always use the correct fastener in the proper location. When you replace a fastener, use ONLY the exact part number for that application. ISUZU will call out those fasteners that require a replacement after removal. ISUZU will also call out the fasteners that require thread lockers or thread sealant. UNLESS OTHERWISE SPECIFIED, do not use supplemental coatings (Paints, greases, or other corrosion inhibitors) on threaded fasteners or fastener joint interfaces. Generally, such coatings adversely affect the fastener torque and the joint clamping force, and may damage the fastener. When you install fasteners, use the correct tightening sequence and specifications. Following these instructions can help you avoid damage to parts and systems.

General Description

General export with three way catalytic converter model

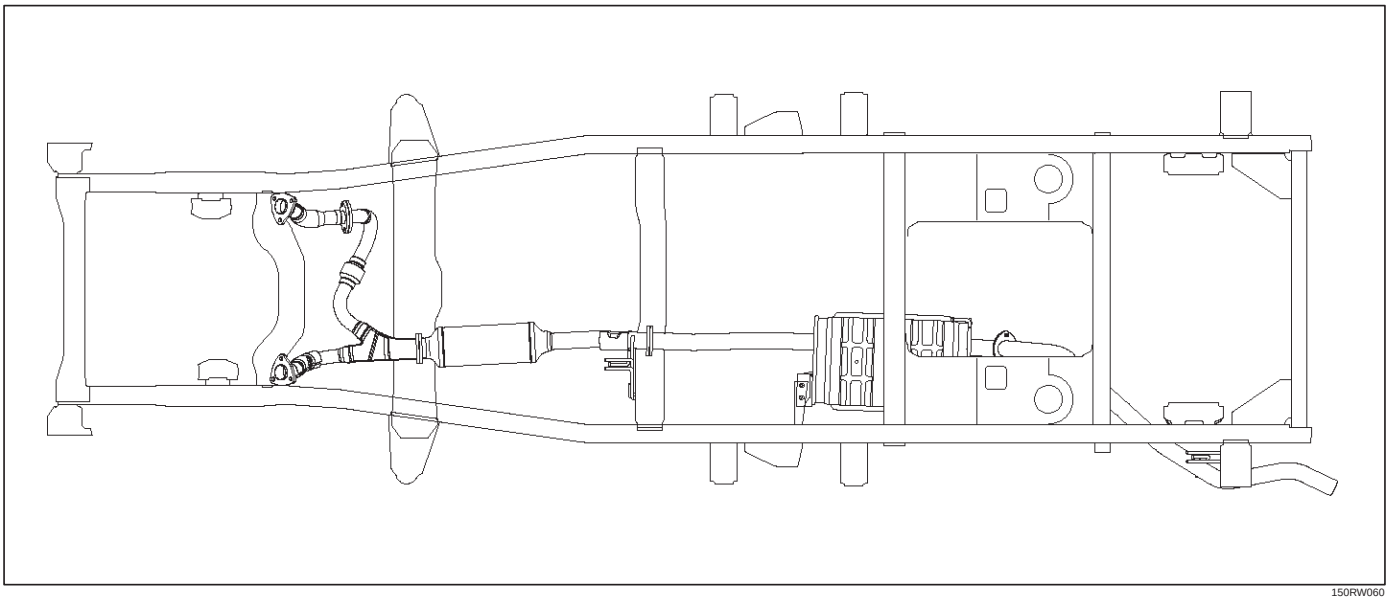

150RW060

General export with out three way catalytic converter model

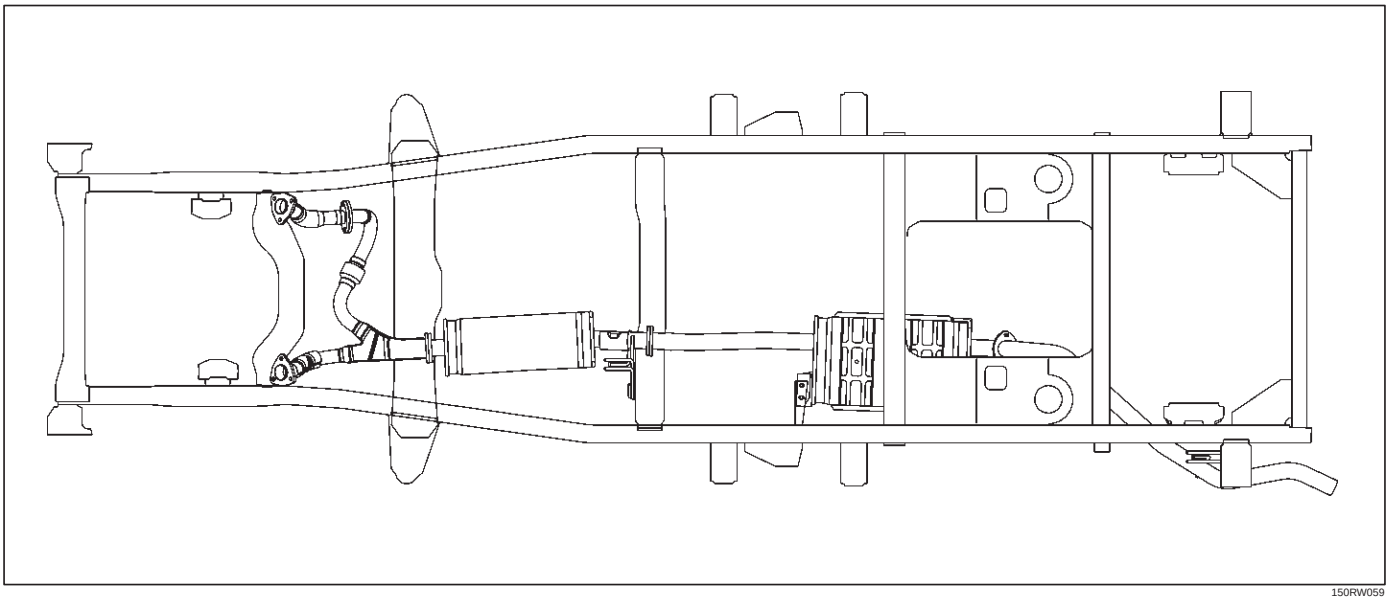

150RW059

For Isuzu General Motors (IGM)

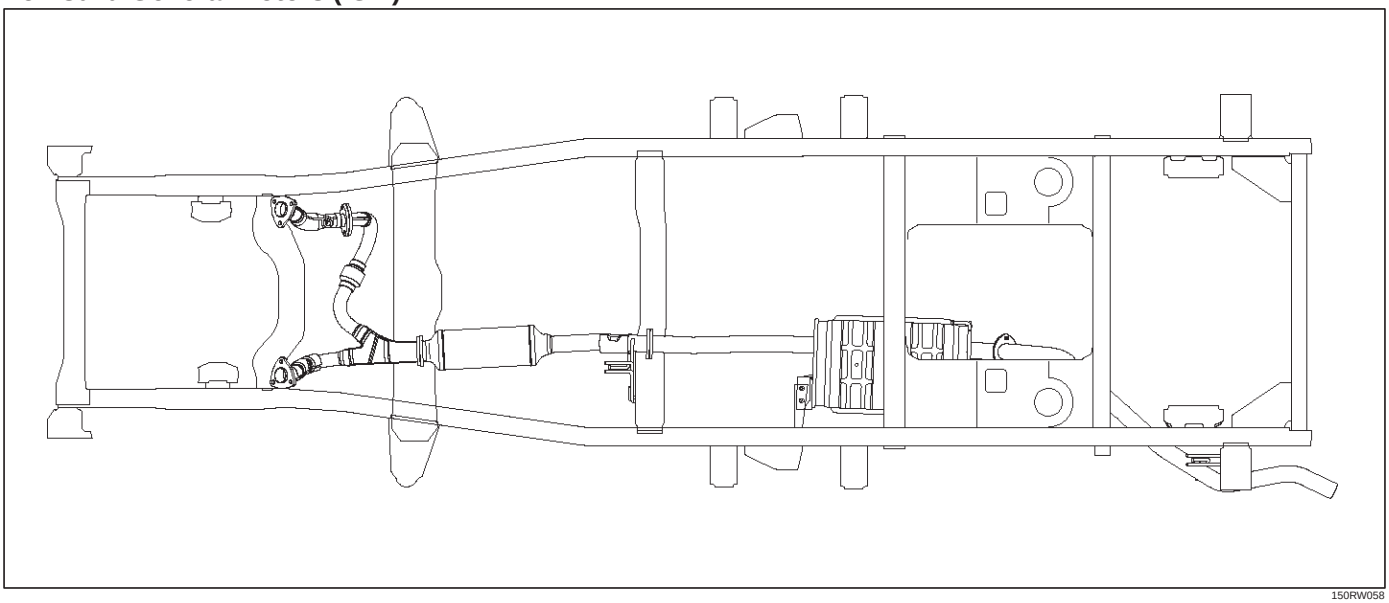

150RW058

When inspecting or replacing exhaust system components, make sure there is adequate clearance from all points on the underbody to prevent overheating the floor pan and possible damage to the passenger compartment insulation and trim materials.

Check complete exhaust system and nearby body areas and rear compartment lid for broken, damaged, missing or mispositioned parts, open seams, holes, loose connections or other deterioration which could permit exhaust fumes to seep into the rear compartment or passenger compartment. Dust or water in the rear compartment may be an indication of a problem in one of these areas. Any faulty areas should be corrected immediately.

Hangers

Various types of hangers are used to support exhaust system(s). These include conventional rubber straps, rubber rings, and rubber blocks.

The installation of exhaust system supports is very important, as improperly installed supports can cause annoying vibrations which can be difficult to diagnose.

Three Way Catalytic Converter

The three way catalytic converter is an emission control device added to the exhaust system to reduce pollutants from the exhaust gas stream.

CAUTION: The catalytic converter requires the use of unleaded fuel only.

Periodic maintenance of the exhaust system is not required. If the vehicle is raised for other service, it is advisable to check the condition of the complete exhaust system.

A dual bed monolith catalytic converter is used in combination with three way catalytic converter.

Catalytic Types:

Three way (Reduction/Oxidation) catalyst

The catalyst coating on the three way (reduction) converter contains platinum and rhodium which lowers the levels of nitrous oxide (NOx) as well as hydrocarbons (HC) and carbon monoxide (Co).

Gasket

The gasket must be replaced whenever a new exhaust pipe, muffler or catalytic converter is installed.

Front Exhaust Pipe

Front Exhaust Pipe and Associated Parts

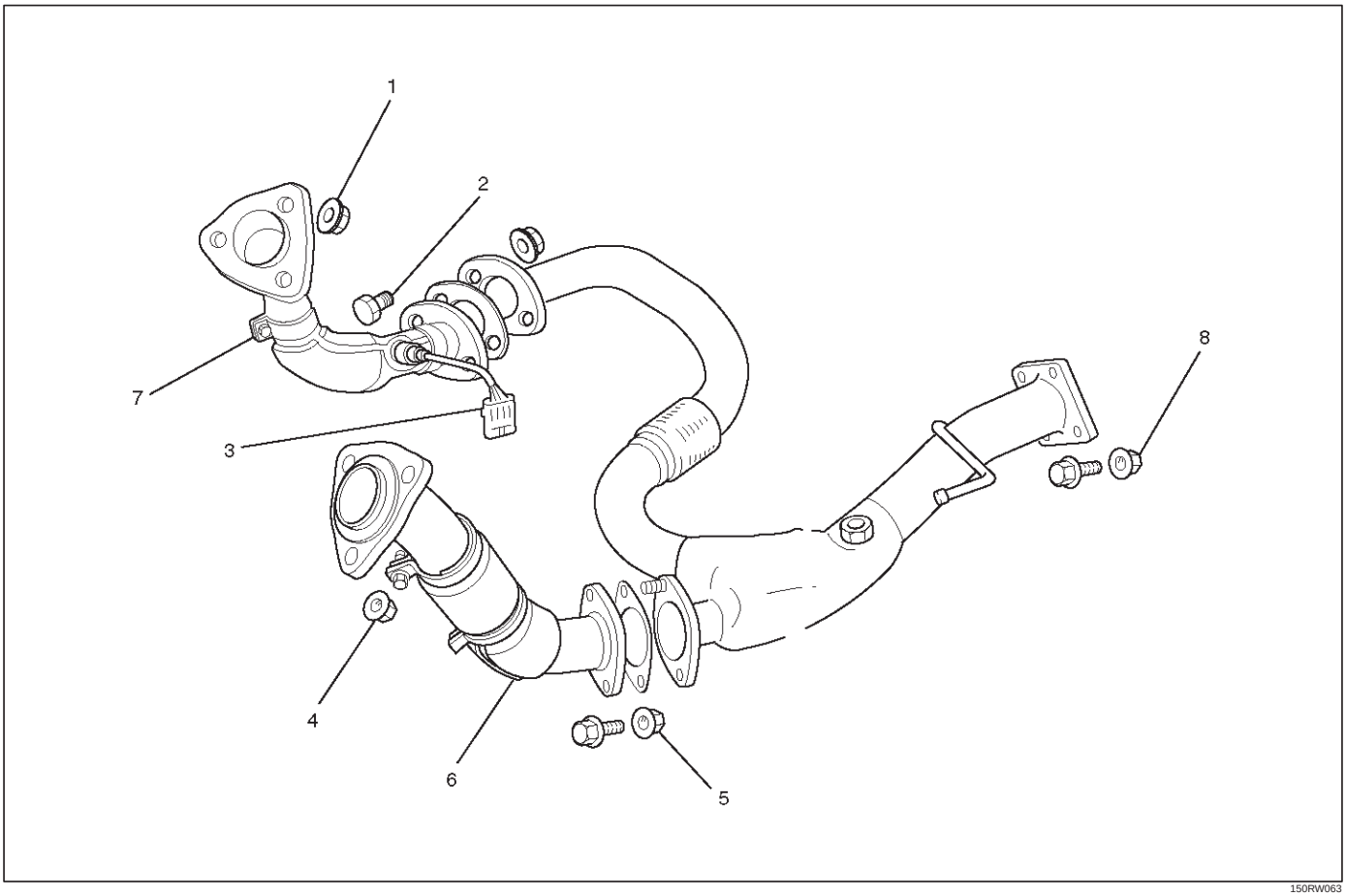

Legend

(1) Front Exhaust Pipe RH Fixing Nuts
(2) Front Exhaust Pipe RH Fixing Bolts and Nuts
(3) O_2 Sensor Terminal Connector (for IGM)
(4) Front Exhaust Pipe LH Fixing Nuts
(5) Front Exhaust Pipe LH Fixing Bolts and Nuts
(6) Front Exhaust Pipe LH
(7) Front Exhaust Pipe RH
(8) Three way Exhaust Pipe Fixing Bolts and Nuts

Removal

1. Disconnect battery ground cable.
2. Raise the vehicle and support with suitable safety stands.
3. Disconnect O_2 sensor harness connector (3).
4. Remove front exhaust pipe fixing nuts and three way Exhaust Pipe Fixing Bolts and Nuts (2)(5)(8).
5. Remove front exhaust pipe fixing three stud nuts from exhaust manifold (1)(4).
6. Remove front exhaust pipe (6)(7).

Installation

1. Install front exhaust pipe (6)(7) and tighten three stud nuts (1)(4) and nuts (2)(5)(8) to the specified torque.

   Torque

   Stud Nuts : 67 N·m (6.8 Kg·m/49 lb ft)

   Nuts : 43 N·m (4.3 Kg·m/32 lb ft)
2. Reconnect O_2 sensor harness connector (3).

Three Way Catalytic Converter

Removal

1. Disconnect battery ground cable.
2. Raise the vehicle and support with suitable safety stands.
3. Remove three way exhaust pipe fixing bolts and nuts.

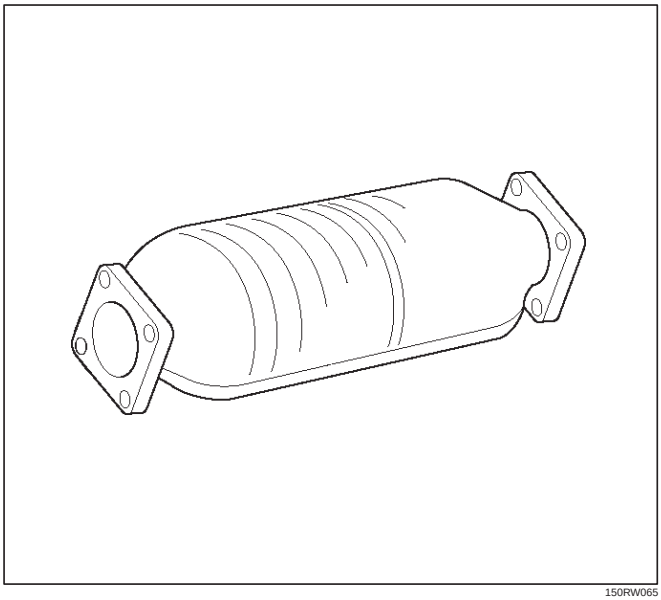

150RW065

Installation

1. Install three way catalytic converter between three way exhaust pipe and silencer.
2. Tighten nuts to the specified torque.

Torque

Nuts : 43 N·m (4.4 Kg·m/32 lb ft)

Exhaust Silencer

Exhaust Silencer and Associated Parts

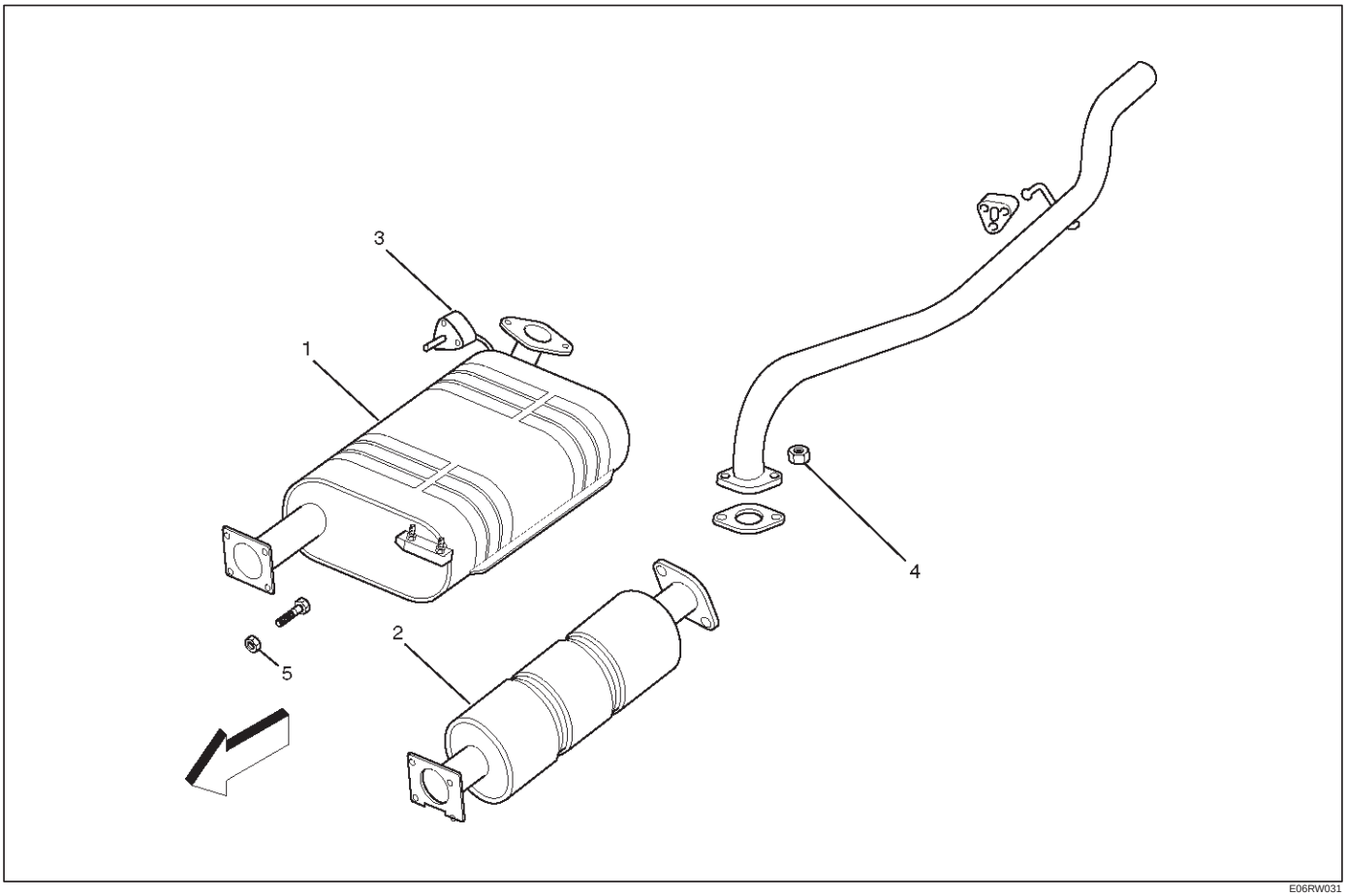

E06RW031

Legend

(1) Exhaust Silencer
(2) Exhaust Silencer
(3) Mounting Rubber
(4) Exhaust Silencer Fixing Nuts
(5) Exhaust Silencer Fixing Bolts

Removal

1. Disconnect battery ground cable.
2. Raise the vehicle and support with suitable safety stands.
3. Remove exhaust silencer fixing nuts (4) then disconnect rear exhaust pipe from exhaust silencer.
4. Remove exhaust silencer fixing nuts (5) then disconnect exhaust silencer from three way exhaust pipe.
5. Remove exhaust silencer mounting nuts from chassis side then remove exhaust silencer (1)(2).

Installation

1. Install the exhaust silencer (1)(2) chassis side and tighten nuts to the specified torque.

   Nuts: 16 N·m (1.6 Kg·m/12 lb ft)

2. Install the exhaust silencer and tighten nuts (5) on front exhaust pipe to specified torque.

   Nuts: 43 N·m (4.4 Kg·m/32 lb ft)

3. Install the rear exhaust pipe and tighten fixing nuts on exhaust silencer to specified torque.

   Nuts: 43 N·m (4.4 Kg·m/32 lb ft)

Rear Exhaust pipe

Rear Exhaust pipe and Associated Parts

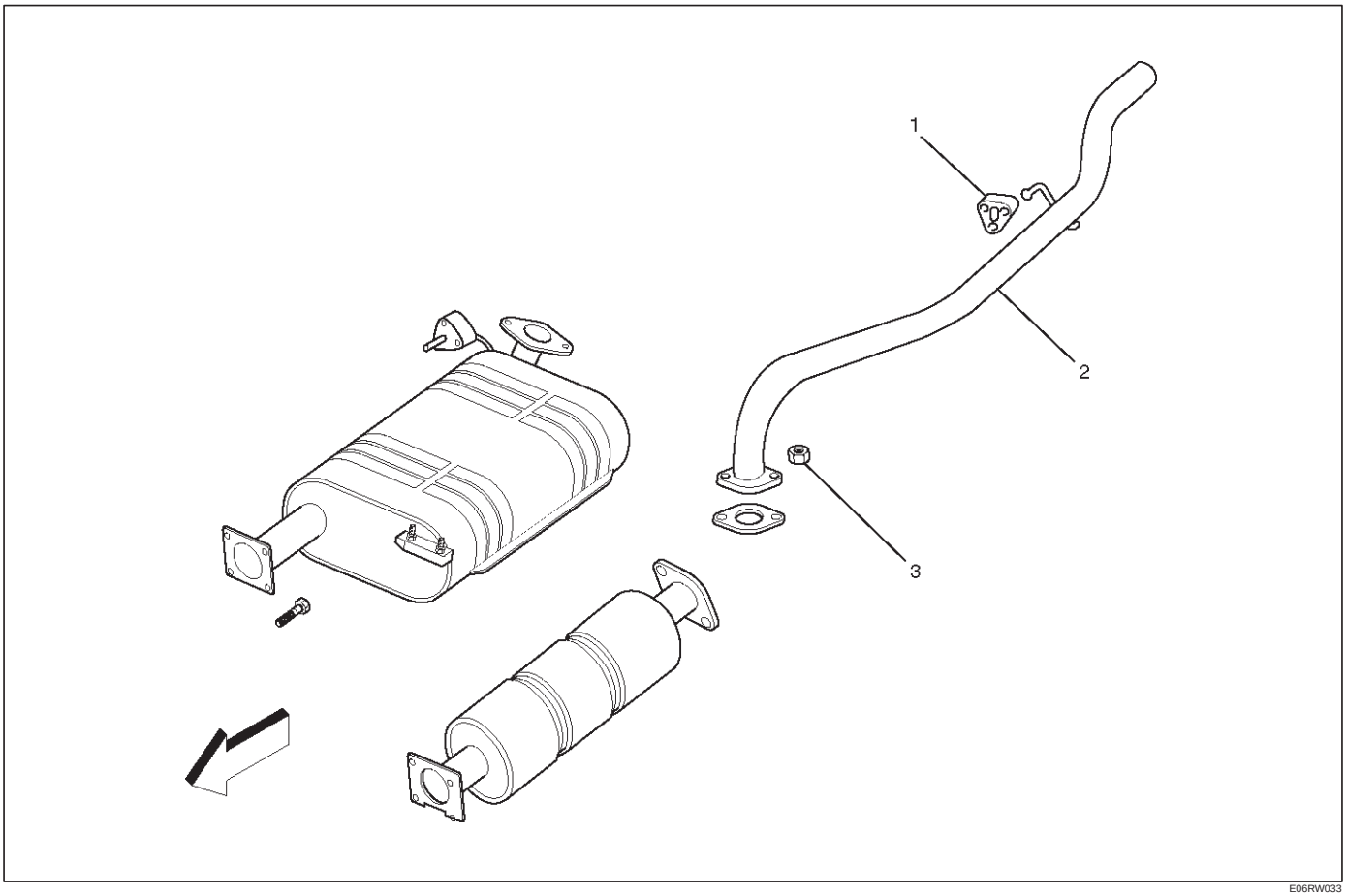

E06RW033

Legend

(1) Mounting Rubber
(2) Rear Exhaust Pipe
(3) Rear Exhaust Pipe Fixing Nuts

Removal

1. Disconnect battery ground cable.
2. Raise the vehicle and support with suitable safety stands.
3. Remove rear exhaust pipe fixing nuts (3), then disconnect rear exhaust pipe from exhaust silencer.
4. Remove mounting rubber (1).
5. Remove rear exhaust pipe (2).

Installation

1. Install the mounting rubber (1).
2. Install the exhaust pipe (2) and tighten two nuts (3) on exhaust silencer to specified torque.

   Nuts: 43 N·m (4.4 Kg·m/32 lb ft)

Main Data and Specifications

Torque Specifications

N·m (Kg·m/lb ft)

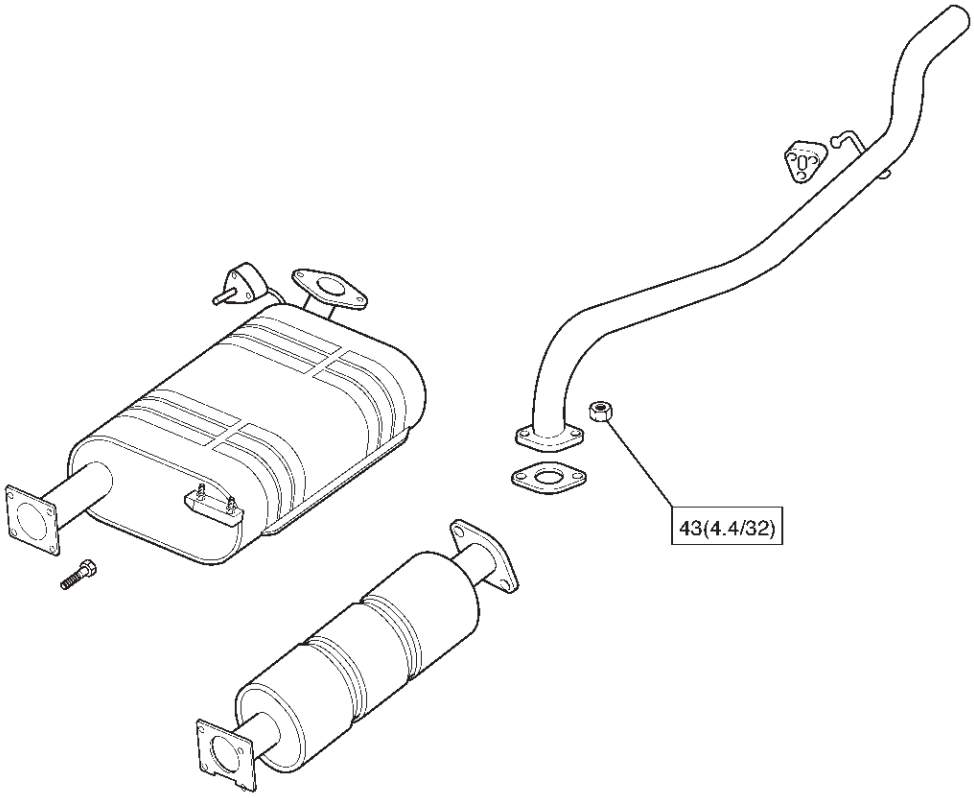

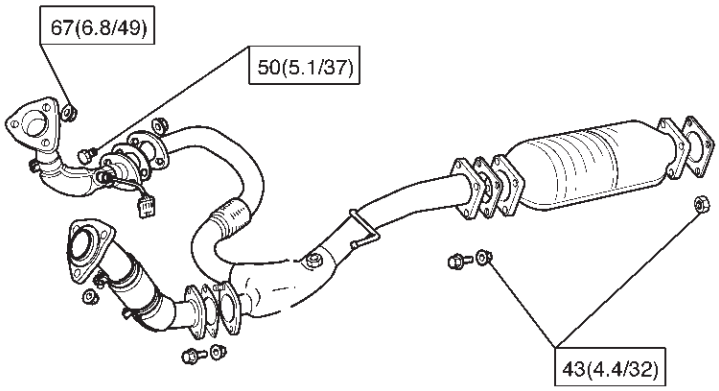

E06RW047

ENGINE

ENGINE LUBRICATION

CONTENTS

Service Precaution 6G–1
General Description 6G–2
Oil Pump 6G–3
Oil Pump and Associated Parts 6G–3
Oil Pump and Associated Parts 6G–3
Inspection and Repair 6G–4
Reassembly 6G–5
Oil Pan and Crankcase 6G–7
Removal 6G–7
Installation 6G–7
Oil Pump 6G–10
Removal 6G–10
Installation 6G–10
Oil Pump Oil Seal 6G–12
Removal 6G–12
Installation 6G–12
Oil Filter 6G–13
Removal 6G–13
Installation 6G–13
Main Data and Specification 6G–14
Special Tool 6G–15

Service Precaution

WARNING: IF SO EQUIPPED WITH A SUPPLEMENTAL RESTRAINT SYSTEM (SRS), REFER TO THE SRS COMPONENT AND WIRING LOCATION VIEW IN ORDER TO DETERMINE WHETHER YOU ARE PERFORMING SERVICE ON OR NEAR THE SRS COMPONENTS OR THE SRS WIRING. WHEN YOU ARE PERFORMING SERVICE ON OR NEAR THE SRS COMPONENTS OR THE SRS WIRING, REFER TO THE SRS SERVICE INFORMATION. FAILURE TO FOLLOW WARNINGS COULD RESULT IN POSSIBLE AIR BAG DEPLOYMENT, PERSONAL INJURY, OR OTHERWISE UNNEEDED SRS SYSTEM REPAIRS.

CAUTION: Always use the correct fastener in the proper location. When you replace a fastener, use ONLY the exact part number for that application. ISUZU will call out those fasteners that require a replacement after removal. ISUZU will also call out the fasteners that require thread lockers or thread sealant. UNLESS OTHERWISE SPECIFIED, do not use supplemental coatings (Paints, greases, or other corrosion inhibitors) on threaded fasteners or fastener joint interfaces. Generally, such coatings adversely affect the fastener torque and the joint clamping force, and may damage the fastener. When you install fasteners, use the correct tightening sequence and specifications. Following these instructions can help you avoid damage to parts and systems.

General Description

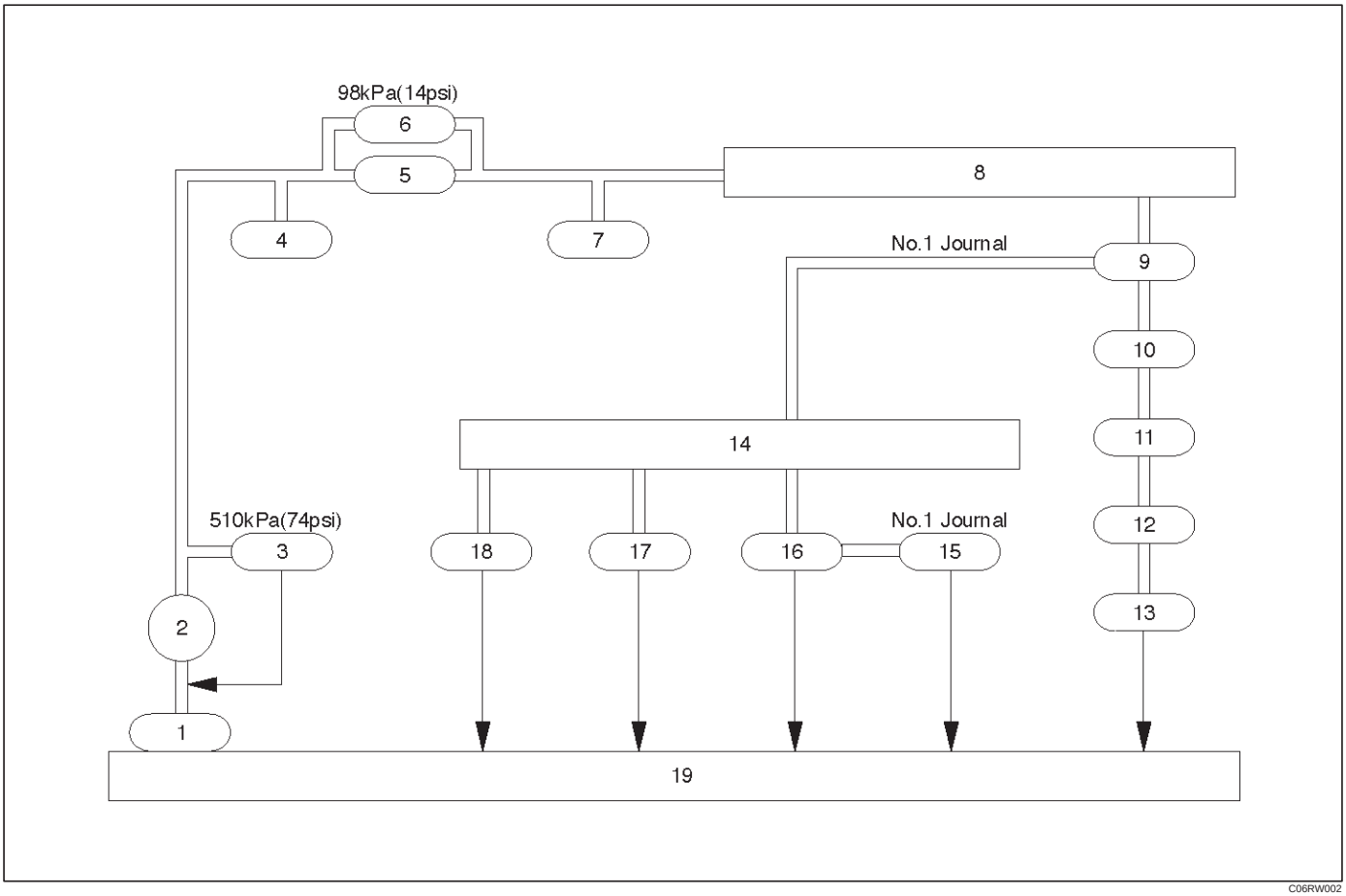

Legend

(1) Oil Strainer
(2) Oil Pump
(3) Relief Valve
(4) Oil Pressure Switch
(5) Oil Filter
(6) Safety Valve
(7) Oil Pressure Unit
(8) Oil Gallery
(9) Crankshaft Bearing
(10) Crankshaft
(11) Connecting Rod Bearing
(12) Connecting Rod
(13) Piston
(14) Oil Gallery; Cylinder Head
(15) Camshaft
(16) Camshaft Journal
(17) Front Journal; Camshaft Drive Gear
(18) Rear Journal; Camshaft Drive Gear
(19) Oil Pan

Oil Pump

Oil Pump and Associated Parts

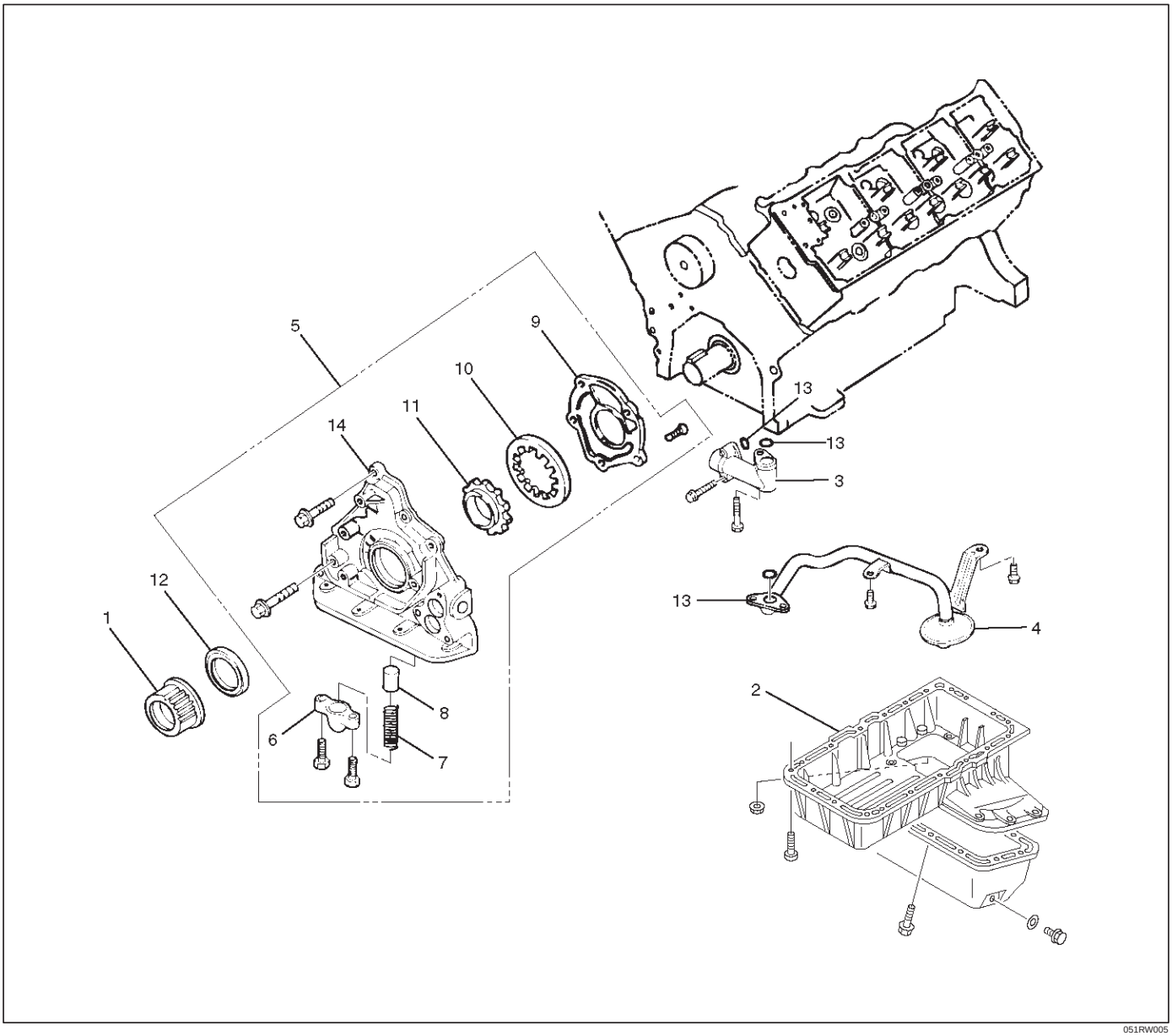

051RW005

Legend

(1) Crankshaft Timing Pulley
(2) Crankcase with Oil Pan
(3) Oil Pipe
(4) Oil Strainer
(5) Oil Pump Assembly
(6) Plug
(7) Spring
(8) Relief Valve
(9) Oil Pump Cover
(10) Driven Gear
(11) Drive Gear
(12) Oil Seal
(13) O-ring
(14) Oil Pump Body

Oil Pump and Associated Parts

1. Remove crankshaft timing pulley.
2. Remove crankcase with oil pan.
3. Remove oil pipe.
4. Remove oil strainer.
5. Remove oil pump assembly.
6. Remove plug.
7. Remove spring.
8. Remove relief valve.
9. Remove oil pump cover.
10. Remove driven gear.

11. Remove drive gear.
12. Remove oil seal.
13. Remove O-ring.

Inspection and Repair

CAUTION: Make necessary correction or parts replacement if wear, damage or any other abnormal conditions are found during inspection.

Relief Valve (8)

- Check to see that the relief valve slides freely.
- The oil pump must be replaced if the relief valve does not slide freely.
- Replace the spring and/or the oil pump assembly (5) if the spring is damaged or badly worn.

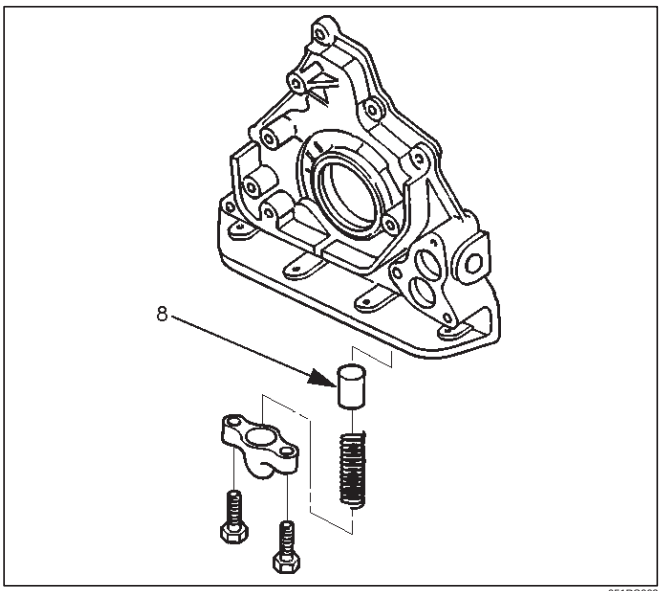

051RS002

Body (14) and Gears (10, 11)

The pump assembly must be replaced if one or more of the conditions below is discovered during inspection.

- Badly worn or damaged driven gear (10).
- Badly worn drive gear (11) driving face.
- Badly scratched or scored body sliding face (14) or driven gear (10).
- Badly worn or damaged gear teeth.

Measure the clearance between the body and the driven gear with a feeler gauge.

Standard : 0.10 mm–0.18 mm (0.0039 in.–0.0070 in)

Limit : 0.20mm (0.0079 in)

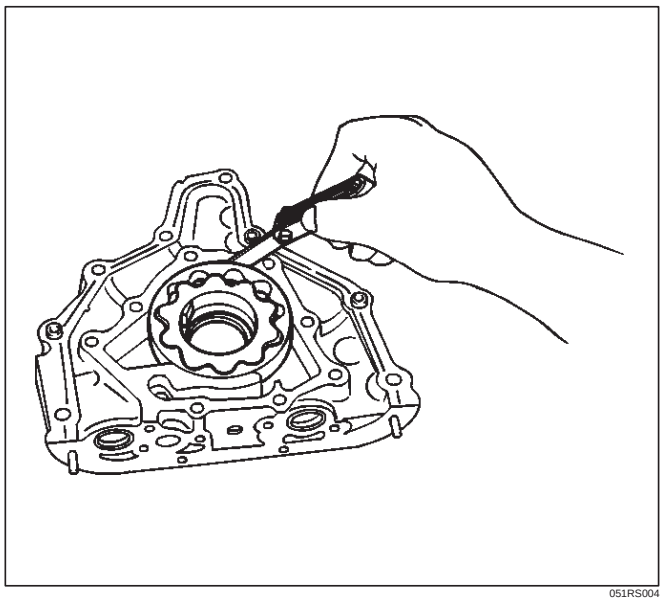

051RS004

- Measure the clearance between the drive gear and driven gear with a feeler gauge.

Standard : 0.11 mm–0.24 mm (0.0043 in–0.0094 in)

Limit : 0.35mm (0.0138 in)

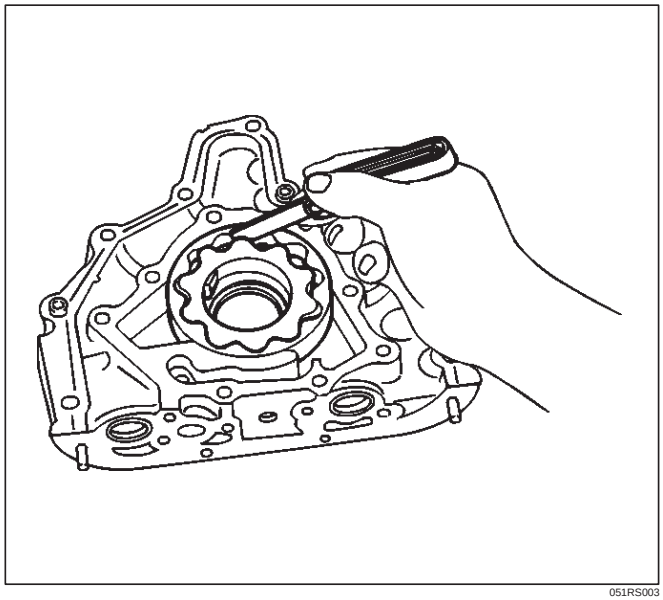

051RS003

- Measure the side clearance with a precision straight edge and a feeler gauge.

Clearance

Standard : 0.03 mm–0.09 mm (0.0011 in–0.0035 in)

Limit : 0.15mm (0.0059 in)

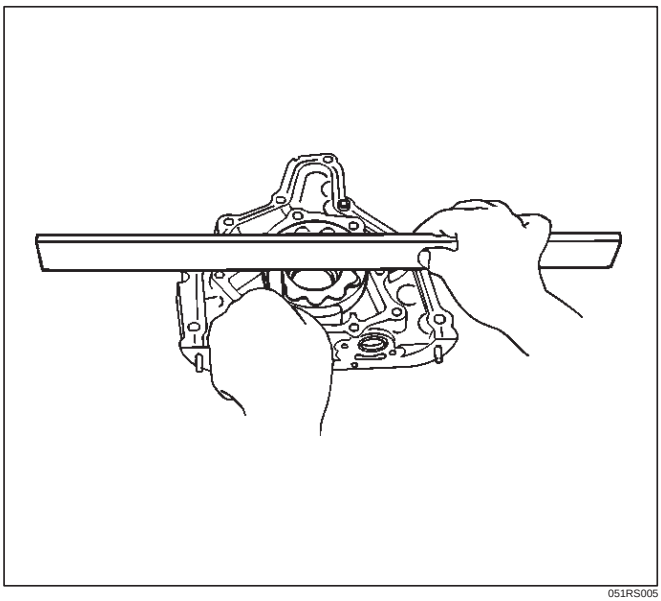

051RS005

Oil Strainer

Check the oil strainer for cracking and scoring. If cracking and scoring are found, the oil strainer must be replaced.

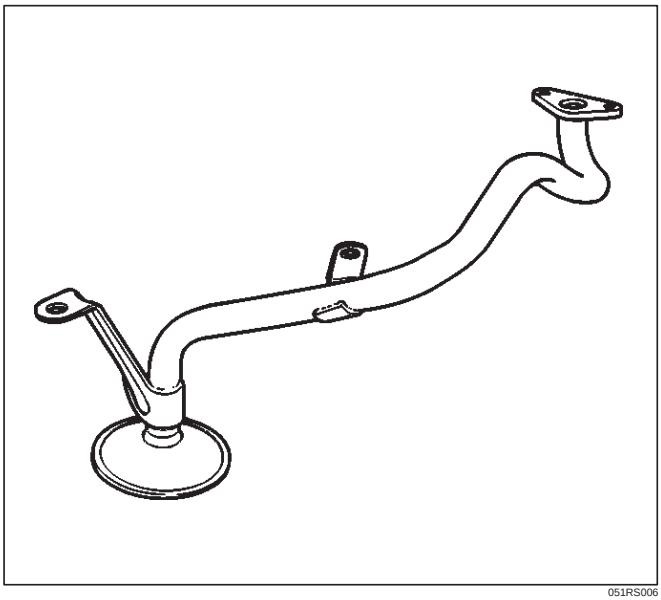

051RS006

Reassembly

1. Install drive gear (11).
2. Install driven gear (10).
3. Install oil pump cover (9) and first, loosely tighten all of the attaching screws. Next, tighten the attaching screws to the specified torque.

   Torque : 10 N·m (1.0 Kg·m/89 lb in)

   After installation, check that the gear rotates smoothly.
4. Install relief valve (8) and apply engine oil to the relief valve and spring (7).
5. Install spring (7).
6. Install the plug (6).

   Torque : 8 N·m (0.8 Kg·m/69 lb in)

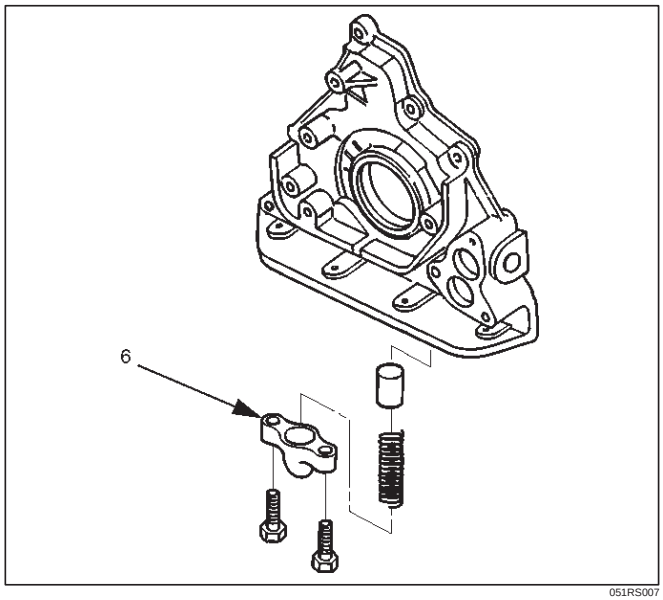

051RS007

7. Install oil pump assembly (5).
   - Carefully remove any oil from the cylinder body and the pump. Apply sealant (TB–1207B or equivalent) to the pump fitting face as shown in illustration. Take care that sealant is not applied to oil port surfaces. The oil pump assembly must be installed within 5 minutes after sealant application before the sealant hardens.

CAUTION: Do not apply an excessive amount of sealant to the contact surface. Applying too much sealant will overflow the contact surfaces. This could cause serious damage to the engine.

- **Attach oil pump assembly to cylinder body.**
- **Tighten the oil pump fixing bolts.**

  Torque : 25 N·m (2.5 Kg·m/18 lb·ft)

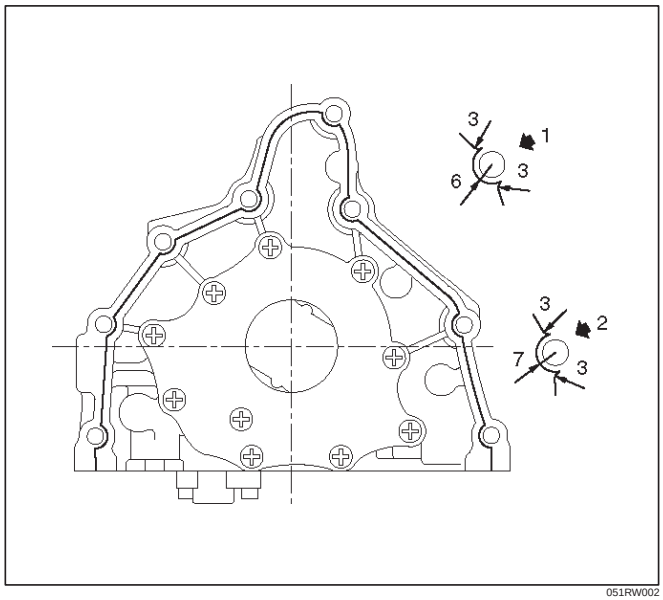

051RW002

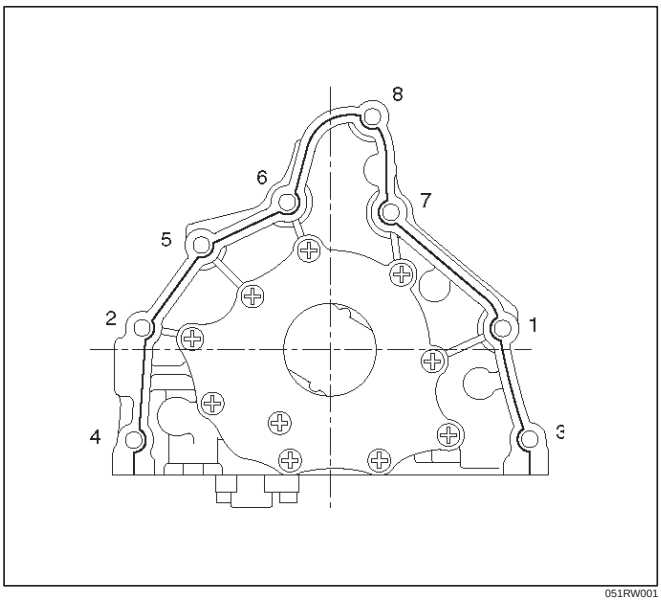

051RW001

Legend

(1) Around Bolt Holes
(2) Around Dowel Pin

8. Install the new oil seal (12). Apply engine oil to the oil seal lip before installation then use 5–8840–2287–0 oil seal Installer, install oil seal.

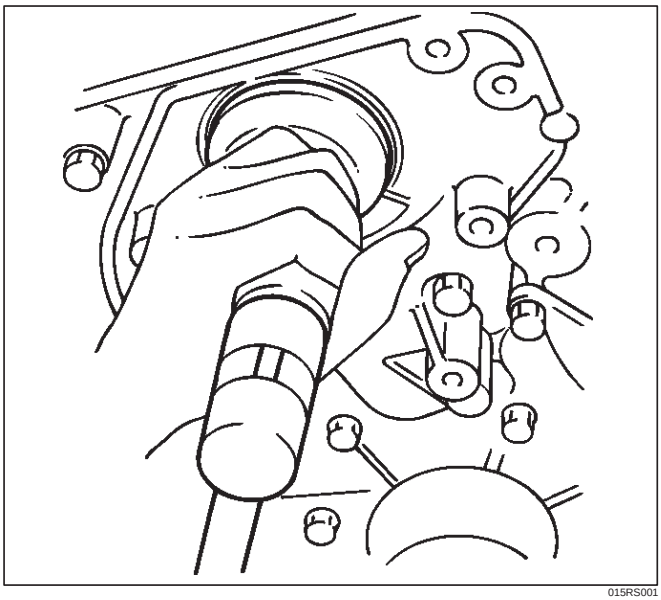

015RS001

9. Install oil strainer (4) with O-ring (13).

   Torque: 25 N·m (2.5 Kg·m/18 lb ft)

10. Install oil pipe (3) with O-ring (13).

    Torque: 25 N·m (2.5 Kg·m/18 lb ft)

11. Install crankcase with oil pan (2).
    - Remove oil on crankcase mounting surface and dry the surface.
    - Apply a proper 4.5 mm (0.7 in) wide bead of sealant (TB1207C or equivalent) to the crankcase mounting surface. The bead must be continuous.
    - The crankcase must be installed within 5 minutes after sealant application before the sealant hardens.
    - Tighten fixing bolts to the specified torque.

    Torque : 10 N·m (1.0 Kg·m/89 lb in)

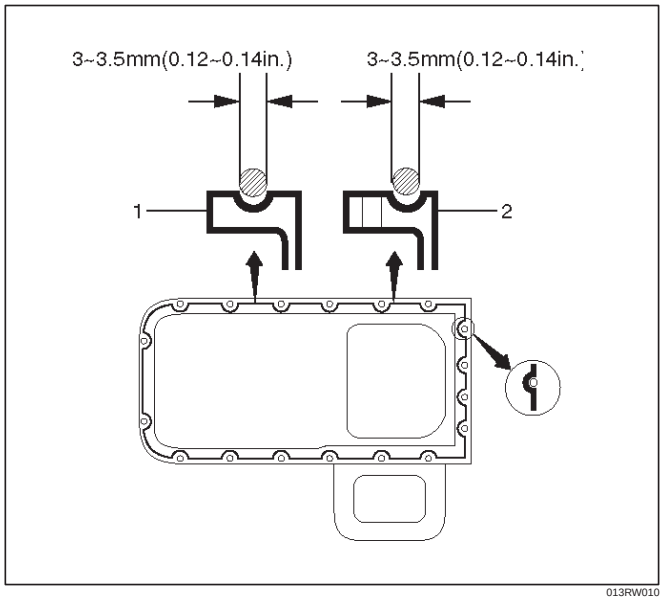

013RW010

12. Install crankshaft timing pulley.

Oil Pan and Crankcase

Removal

1. Disconnect battery ground cable.
2. Drain engine oil.
3. Lift vehicle by supporting the frame.
4. Remove front wheels.
5. Remove oil level dipstick from level gauge tube.
6. Remove stone guard.
7. Remove radiator under fan shroud.
8. Remove suspension cross member fixing bolts, 2 pcs each per side and remove suspension cross member.
9. Remove pitman arm and relay lever assembly, using the 5–8840–2005–0 remover, remove pitman arm from the steering unit and remove four fixing bolts for relay lever assembly.
10. Remove axle housing assembly four fixing bolts from housing isolator side and mounting bolts from wheel side. At this time support the axle with a garage jack and remove axle housing assembly.
11. Remove oil pan fixing bolts.
12. Remove oil pan, using 5–8840–2153–0 sealer cutter, remove oil pan.

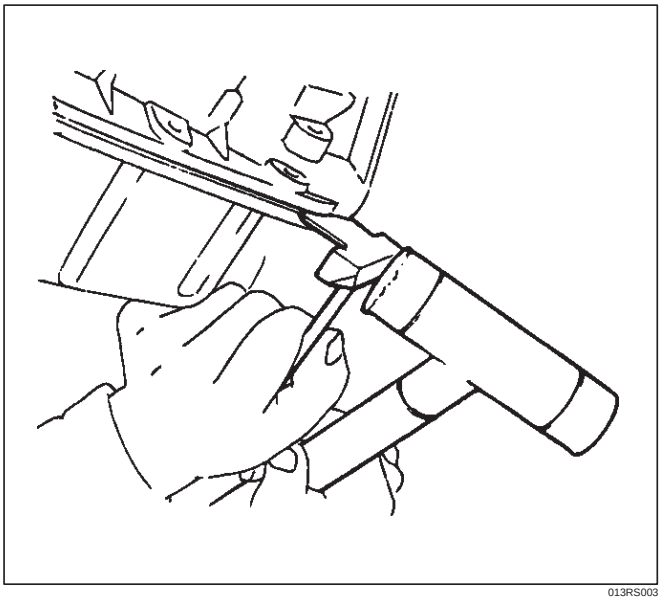

013RS003

13. Remove crankcase fixing bolts.
14. Remove crankcase, using 5–8840–2153–0 sealer cutter, remove crankcase.

NOTE: Do not deform or damage the flange of oil pan and crankcase.

Replace the oil pan and/or crankcase if deformed or damaged.

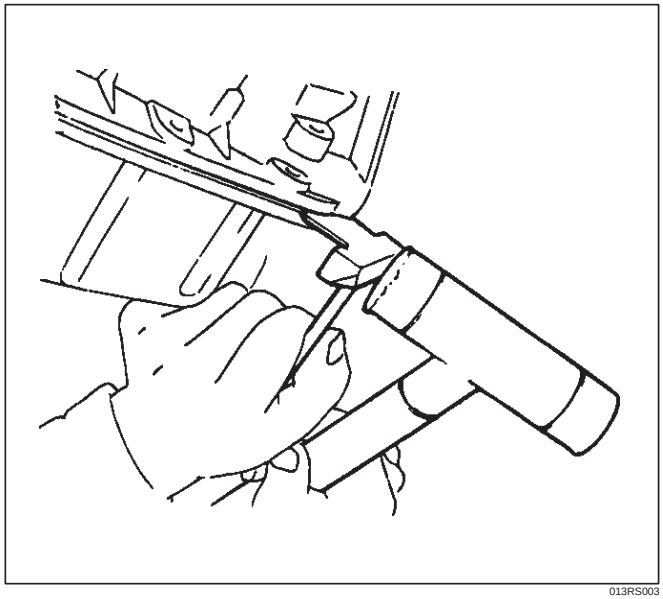

013RS003

Installation

1. Install crankcase.
   1. Remove residual sealant, lubricant and moisture from mounting surface, then dry thoroughly.
   2. Properly apply a 4.5 mm (0.7 in) wide bead of sealant (TB-1207C or equivalent) to mounting surface of crankcase.

      Sealant beat must be continuous.
      - The crankcase must be installed within 5 minutes after sealant application before the sealant hardens.

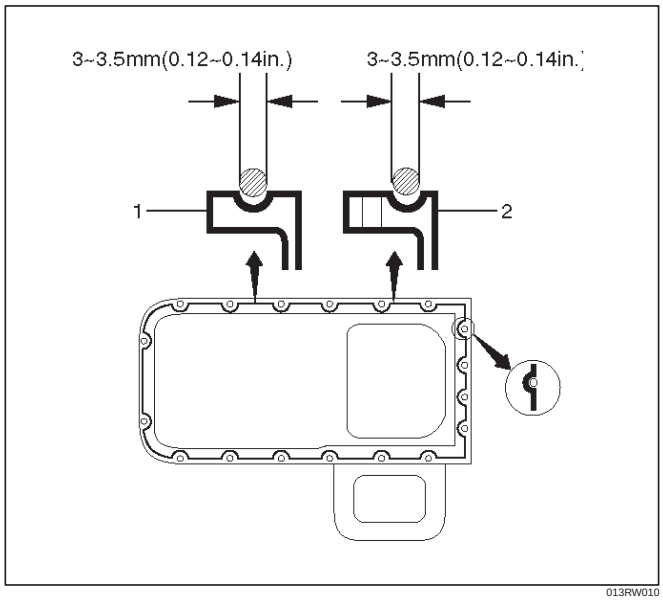

013RW010

3. Install crankcase, tighten crankcase fixing bolts to the specified torque.

Torque : 10 N·m (1.0 Kg·m/89 lb in)

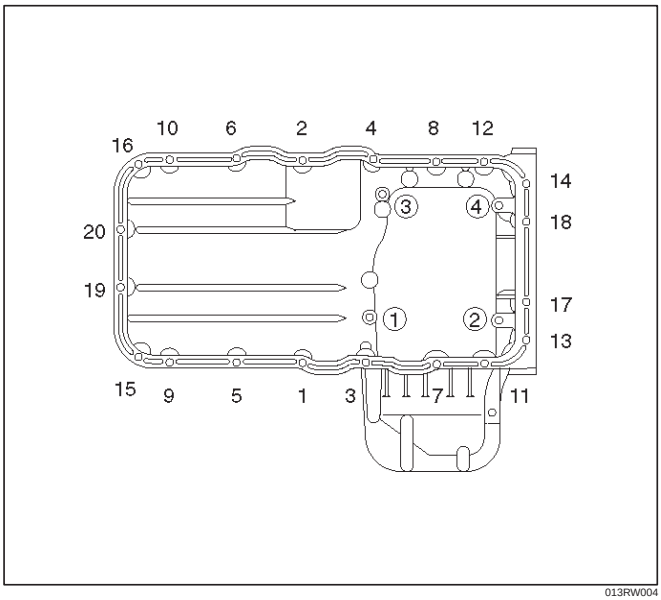

013RW004

2. Install oil pan
   1. Remove residual sealant, lubricant and moisture from mounting surface, then dry thoroughly.
   2. Properly apply a 4.5 mm (07 in) wide bead of sealant (TB-1207C or equivalent) to mounting surface of oil pan.

      Sealant beat must be continuous.
      - The crankcase must be installed within 5 minutes after sealant application befor the sealant hardens.

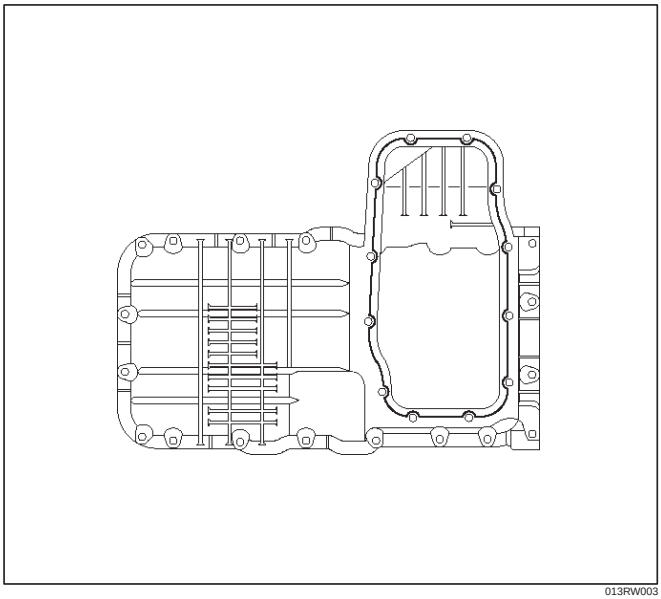

013RW003

3. Install oil pan, tighten oil pan fixing bolts to the specified torque.

Torque : 25 N·m (2.5 Kg·m/18 lb ft)

3. Install axle housing assembly and tighten fixing bolts to the specified torque.

Axle case bolts

Torque : 82 N·m (8.4 Kg·m/60 lb ft)

Mounting bolts

Torque : 152 N·m (15.5 Kg·m/112 lb ft)

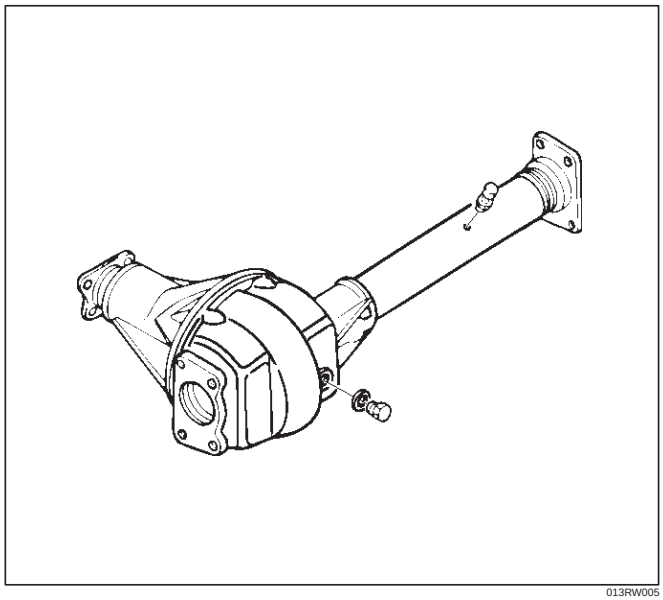

013RW005

4. Install relay lever assembly and tighten fixing bolts.

Torque: 44 N·m (4.5 Kg·m/32 lb ft)

5. Engage teeth of pitman arm and steering unit, and tighten nut to the specified torque.

Torque : 216 N·m (22.0 Kg·m/159 lb ft)

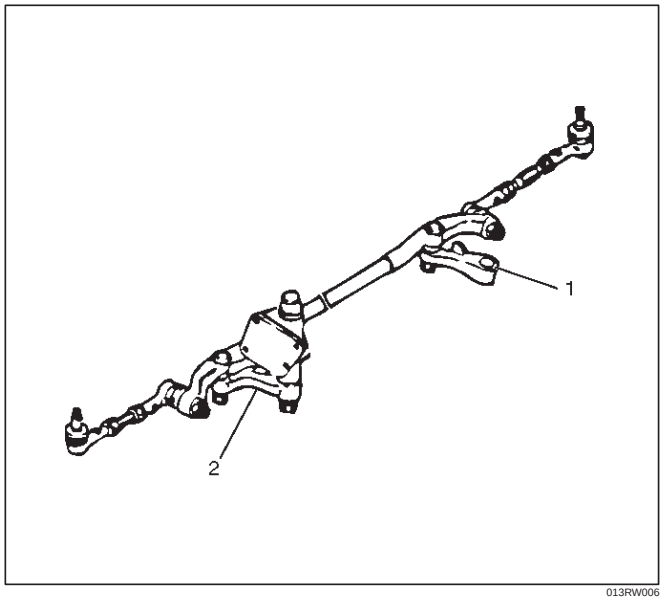

013RW006

Legend

(1) Pitman Arm
(2) Relay Lever

6. Install suspension cross member and tighten fixing bolts to the specified torque.

Torque : 78 N·m (8.0 Kg·m/58 lb ft)

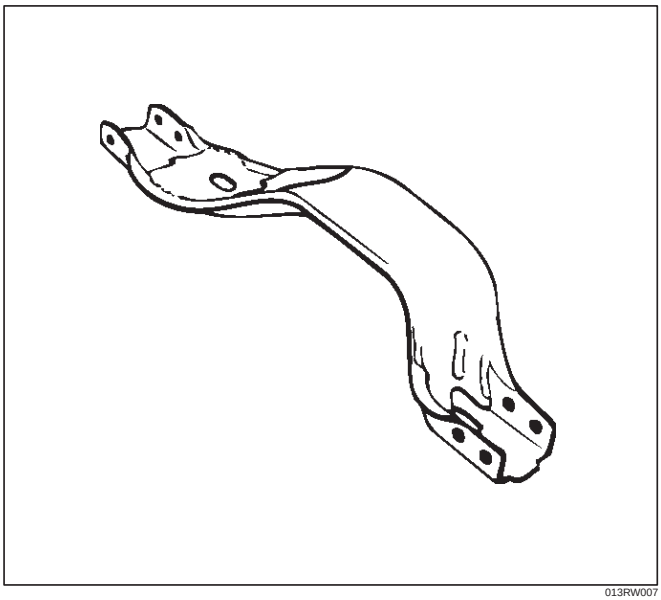

013RW007

7. Install radiator under fan shroud.
8. Install stone guard.
9. Install engine oil level dipstick.
10. Fill engine oil until full level on engine oil gauge dipstick.

Oil Pump

Removal

1. Disconnect battery ground cable.
2. Drain engine oil.
3. Remove crankcase assembly.
   - Refer to removal procedure for Oil Pan and Crankcase in this manual.
4. Remove crankshaft pulley.
   - Refer to removal procedure for Crankshaft Pulley in this manual.
5. Remove timing belt.
   - Refer to removal procedure for Timing Belt in this manual.
6. Remove timing pulley from crankshaft.
7. Remove four fixing bolts from oil filter assembly.
8. Remove oil strainer fixing bolts, remove oil strainer assembly with O-ring.
9. Remove three bolts from oil pipe and O-ring.
10. Remove eight oil pump fixing bolts, then oil pump assembly.
11. Remove sealant from mounting surface of oil pump assembly, cylinder block and take care not to damage mounting surfaces of oil pump and cylinder block.

Installation

1. Install oil pump assembly
   - Apply sealant (TB-1207B or equivalent) to the oil pump mounting surfaces as shown in the illustration.
   - The oil pump assembly must be installed within 5 minutes after sealant application before the sealant hardens.

NOTE: Do not apply sealant to the oil ports.

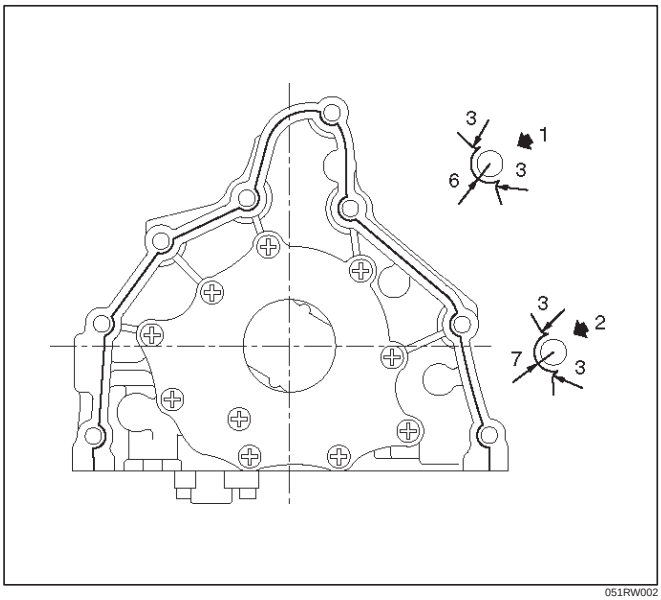

051RW002

- Use 5–8840–2287–0 installer when installing new oil seal.
- Apply engine oil to oil seal lip.
- Install oil pump assembly to the cylinder block.

NOTE: Do not damage oil seal during installation of oil pump assembly.

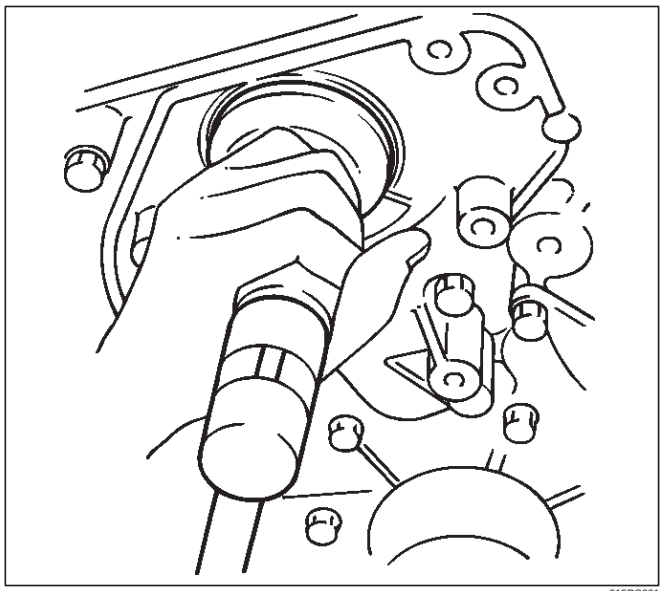

015RS001

- Tighten fixing bolts to the specified torque.

Torque : 25 N·m (2.5 Kg·m/18 lb ft)

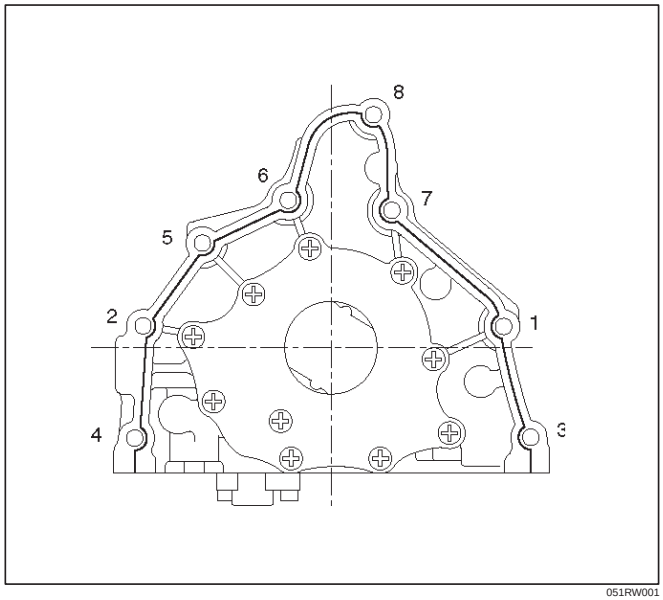

051RW001

2. Install oil pipe with O-ring, tighten fixing bolt to the specified torque.

   Torque : 10 N·m (1.0 Kg·m/89 lb in)

3. Install oil strainer with O-ring, tighten fixing bolt to the specified torque.

   Torque : 25 N·m (2.5 Kg·m/18 lb ft)

4. Install oil filter assembly and tighten bolts to the specified torque.

Torque : 25 N·m (2.5 Kg·m/18 lb ft)

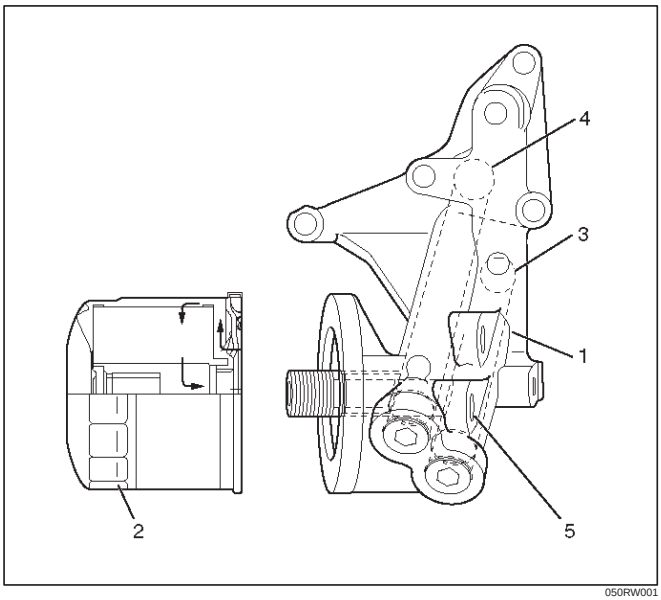

050RW001

Legend

(1) Oil Pump
(2) Oil Filter
(3) Oil Gallery
(4) From Oil Filter
(5) To Oil Filter

5. Install timing pulley on crankshaft.
   Install timing belt.
   - Refer to installation procedure for Timing Belt in this manual.
6. Install crankshaft pulley.
   - Refer to install procedure for Crankshaft Pulley in this manual.
7. Install crankcase assembly.
   - Refer to installation procedure for Oil Pan and Crankcase in this manual.
8. Refill engine oil until full level on engine oil dipstick.

Oil Pump Oil Seal

Removal

1. Disconnect battery ground cable.
2. Drain engine oil.
3. Remove crankshaft pulley.
   - Refer to removal procedure for Crankshaft Pulley in this manual.
4. Remove timing belt.
   - Refer to removal procedure for Timing Belt in this manual.
5. Remove timing pulley from crankshaft.
6. Remove oil pump oil seal using a sealer puller.

NOTE: Take care not to damage sealing surfaces of oil pump and crankshaft when removing oil seal.

Installation

1. Install oil pump oil seal, apply engine oil to oil seal lip, then install oil seal using 5–8840–2287–0 installer.

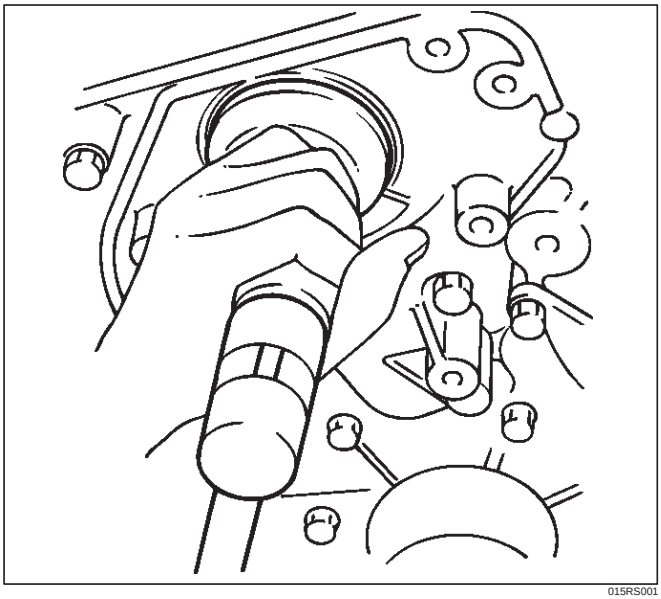

015RS001

2. Install timing pulley to crankshaft.
3. Install timing belt.
   - Refer to installation procedure for Timing Belt in this manual.
4. Install crankshaft pulley.
   - Refer to installation procedure for Crankshaft Pulley in this manual.
5. Refill engine oil until full level.

Oil Filter

Removal

1. Disconnect battery ground cable.
2. Drain engine oil.
3. Remove oil filter using 5-8840-0203-0 filter wrench.

Installation

1. Clean filter fitting surface and apply small amount of engine oil to sealing surface.
2. Install oil filter cartridge by hand until it comes in contact with sealing surface then rotate additional 2/3 turn to tighten using 5-8840-0203-0 filter wrench.

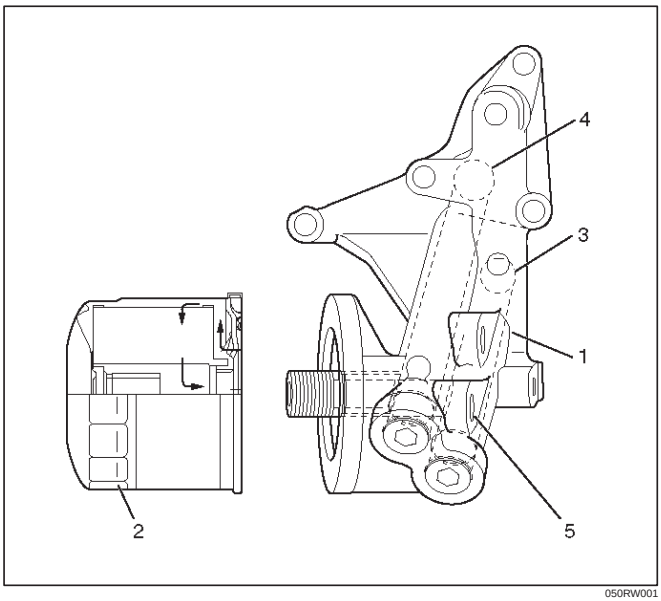

050RW001

Legend

(1) Oil Pump
(2) Oil Filter
(3) Oil Gallery
(4) From Filter
(5) To Filter

3. Fill engine oil until full level on dipstick.
4. Reconnect battery ground cable.

Main Data and Specification

General Specification

Item	Specifications	
	6VD1	6VE1
Oil capacity	5.3 liters	

Torque Specifications

Crankcase, Oil pan, Timing belt tensioner, Timing pulley, timing belt cover, Oil pump, Oil gallery, Oil strainer N·m (Kg·m/lb ft)

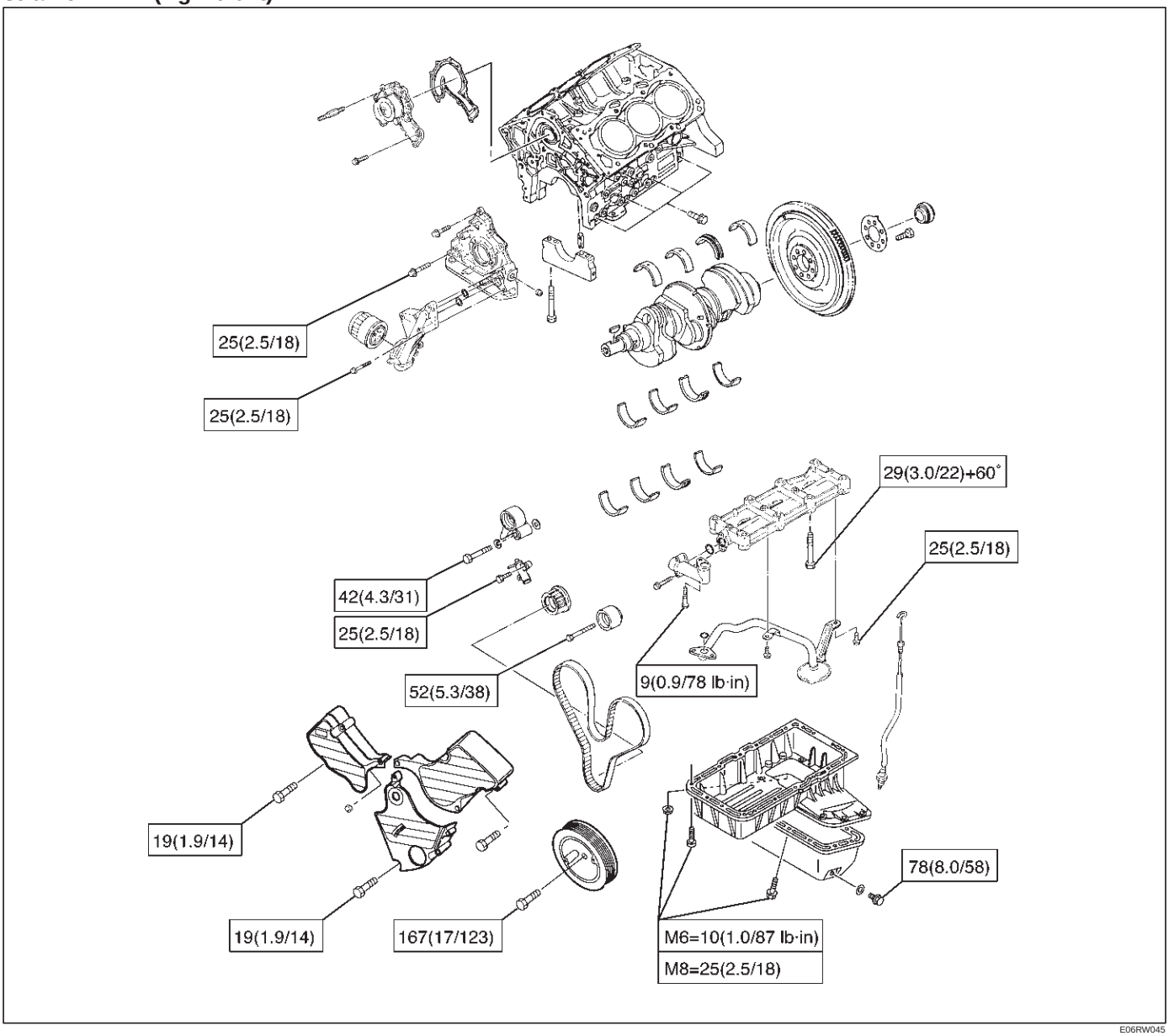

E06RW045

Special Tool

ILLUSTRATION	**TOOL NO.** TOOL NAME
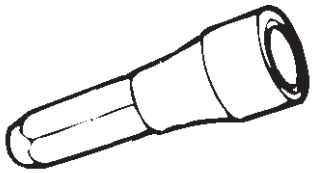 901RT044	**5–8840–2287–0** **(J–39202)** Installer; Oil pump oil seal
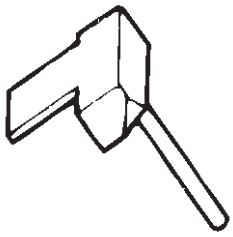 901RT042	**5–8840–2153–0** **(J–37228)** Seal cutter
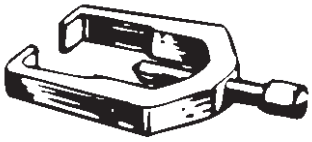 901RT038	**5–8840–2005–0** **(J–29107)** Universal pitman arm puller
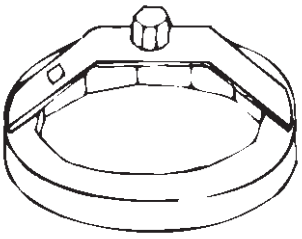 901RT034	**5–8840–0203–0** **(J–36390)** Wrench; Oil filter

ENGINE

ENGINE SPEED CONTROL SYSTEM

CONTENTS

Service Precaution 6H–1
Accelerator Pedal Control Cable 6H–2
Removal 6H–2
Inspection 6H–2
Installation 6H–2
Adjustment 6H–2
Accelerator Pedal 6H–3
Accelerator Pedal and Associated Parts . . 6H–3
Removal 6H–3
Installation 6H–3
Adjustment 6H–3

Service Precaution

WARNING: IF SO EQUIPPED WITH A SUPPLEMENTAL RESTRAINT SYSTEM (SRS), REFER TO THE SRS COMPONENT AND WIRING LOCATION VIEW IN ORDER TO DETERMINE WHETHER YOU ARE PERFORMING SERVICE ON OR NEAR THE SRS COMPONENTS OR THE SRS WIRING. WHEN YOU ARE PERFORMING SERVICE ON OR NEAR THE SRS COMPONENTS OR THE SRS WIRING, REFER TO THE SRS SERVICE INFORMATION. FAILURE TO FOLLOW WARNINGS COULD RESULT IN POSSIBLE AIR BAG DEPLOYMENT, PERSONAL INJURY, OR OTHERWISE UNNEEDED SRS SYSTEM REPAIRS.

CAUTION: Always use the correct fastener in the proper location. When you replace a fastener, use ONLY the exact part number for that application. ISUZU will call out those fasteners that require a replacement after removal. ISUZU will also call out the fasteners that require thread lockers or thread sealant. UNLESS OTHERWISE SPECIFIED, do not use supplemental coatings (Paints, greases, or other corrosion inhibitors) on threaded fasteners or fastener joint interfaces. Generally, such coatings adversely affect the fastener torque and the joint clamping force, and may damage the fastener. When you install fasteners, use the correct tightening sequence and specifications. Following these instructions can help you avoid damage to parts and systems.

Accelerator Pedal Control Cable

Removal

1. Loosen the adjusting nut(5) on the cable bracket mounted on the common chamber.
2. Remove cable clip(3).
3. Disconnect accelerator pedal (AP) control cable(6). (on throttle valve side)
4. Disconnect AP control cable(1). (on AP pedal(7) side)
5. Remove molding cap(2).
6. Remove AP control cable(4).

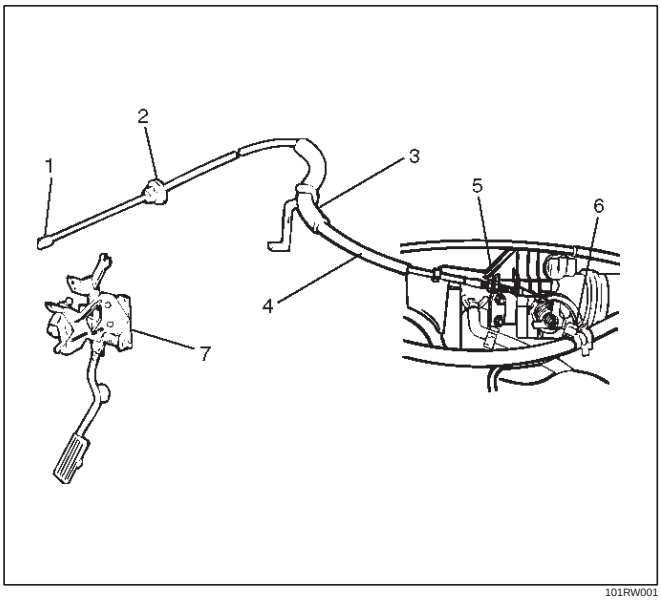

101RW001

Inspection

Check the following items, and replace the control cable if any abnormality is found:

- The control cable should move smoothly.
- The control cable should not be bent or kinked.
- The control cable should be free of damage and corrosion.

Installation

1. Install AP control cable(4).
2. Install molding cap(2).
3. Connect AP control cable(1). (on AP side)
4. Connect AP control cable(6). (on throttle valve side)
5. Install cable clip(3).
6. Install adjusting nut(5).

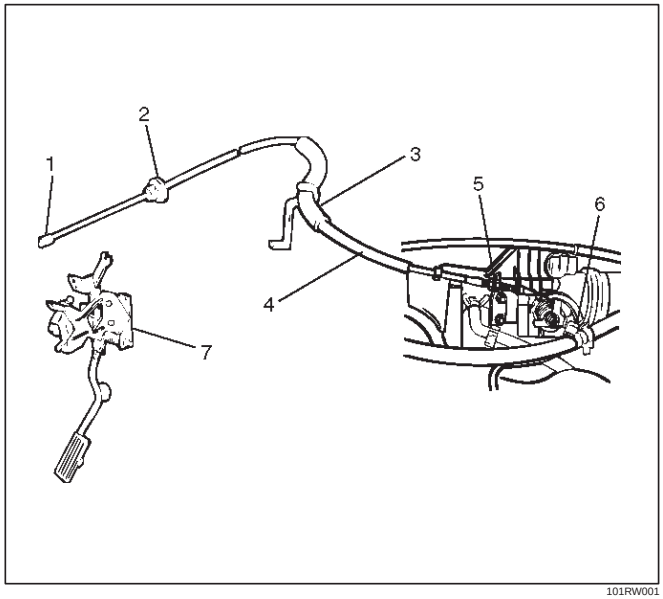

101RW001

Adjustment

1. Loosen adjusting nut and lock nut.
2. Pull outer cable while closing fully the throttle valve.
3. Tighten adjusting nut and lock nut temporarily.
4. Loosen adjusting nut by three turns and tighten lock nut.

   Then, manually operating the throttle valve, make sure that the valve lever returns up to the stopper screw.

   If it does not reach the stopper screw, repeat from step 1.

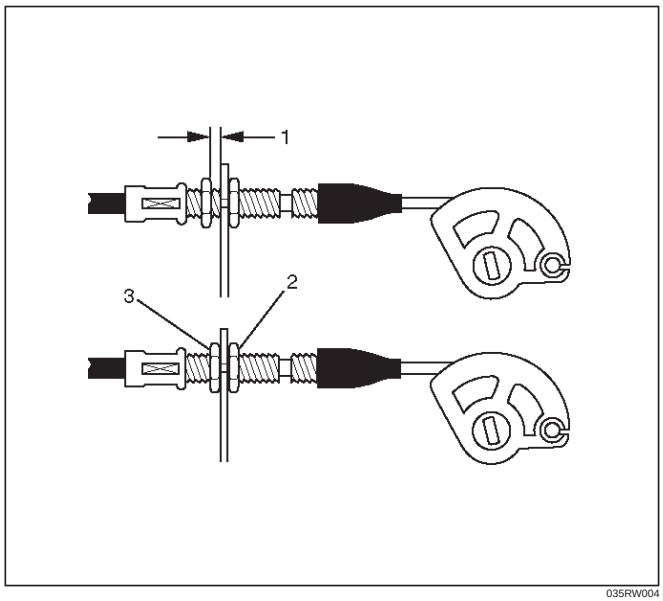

035RW004

Legend

(1) Clearance
(2) Lock Nut
(3) Adjusting Nut

Accelerator Pedal

Accelerator Pedal and Associated Parts

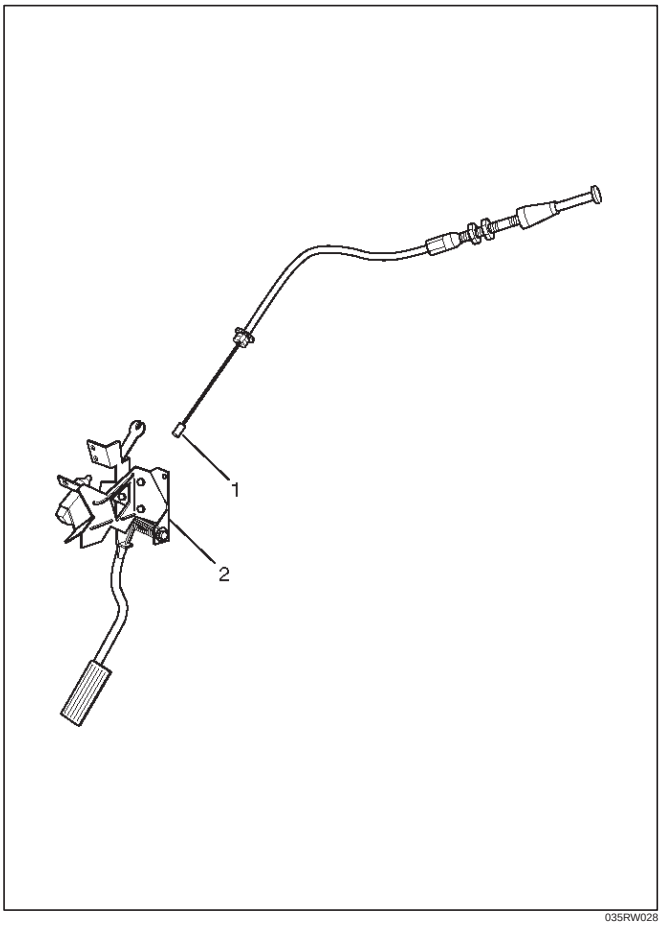

Legend

(1) Accelerator Pedal Control Cable
(2) Accelerator Pedal Assembly

Removal

1. Accelerator Pedal control cable(1).
2. Accelerator Pedal assembly(2).

Installation

1. Accelerator pedal assembly(2).
2. Accelerator pedal control cable(1).

Adjustment

Manual Transmission:

- Rotate counterclockwise to loosen the lock nut and screw the stopper bolt in sufficiently.
- Fully depress the pedal and hold it there with your hand. Next, rotate the stopper bolt until it hits the stopper of pedal bracket. Then, lock the stopper bolt there.

Automatic Transmission:

- Rotate counterclockwise to loosen the kickdown switch sufficiently.
- Fully depress the pedal and hold it there with your hand. Rotate the switch clockwise and then rotate further by 1/2 turn from the position where the switch clicks. Lock the switch there.
- Step on the accelerator pedal and make sure that you can hear a clicking sound at the full stroke position.

MEMO

ENGINE

INDUCTION

CONTENTS

Service Precaution 6J–1
Air Cleaner Element 6J–2
Removal 6J–2
Inspection 6J–2
Installation 6J–2

Service Precaution

WARNING: IF SO EQUIPPED WITH A SUPPLEMENTAL RESTRAINT SYSTEM (SRS),REFER TO THE SRS COMPONENT AND WIRING LOCATION VIEW IN ORDER TO DETERMINE WHETHER YOU ARE PERFORMING SERVICE ON OR NEAR THE SRS COMPONENTS OR THE SRS WIRING. WHEN YOU ARE PERFORMING SERVICE ON OR NEAR THE SRS COMPONENTS OR THE SRS WIRING, REFER TO THE SRS SERVICE INFORMATION. FAILURE TO FOLLOW WARNINGS COULD RESULT IN POSSIBLE AIR BAG DEPLOYMENT, PERSONAL INJURY, OR OTHERWISE UNNEEDED SRS SYSTEM REPAIRS.

CAUTION: Always use the correct fastener in the proper location. When you replace a fastener, use ONLY the exact part number for that application. ISUZU will call out those fasteners that require a replacement after removal. ISUZU will also call out the fasteners that require thread lockers or thread sealant. UNLESS OTHERWISE SPECIFIED, do not use supplemental coatings (Paints, greases, or other corrosion inhibitors) on threaded fasteners or fastener joint interfaces. Generally, such coatings adversely affect the fastener torque and the joint clamping force, and may damage the fastener. When you install fasteners, use the correct tightening sequence and specifications. Following these instructions can help you avoid damage to parts and systems.

Air Cleaner Element

Removal

1. Remove positive ventilation hose from connector(1).
2. Remove intake air temperature sensor(2).
3. Remove air flow sensor(3).
4. Remove air cleaner duct cover(4).
5. Remove air cleaner element(5).

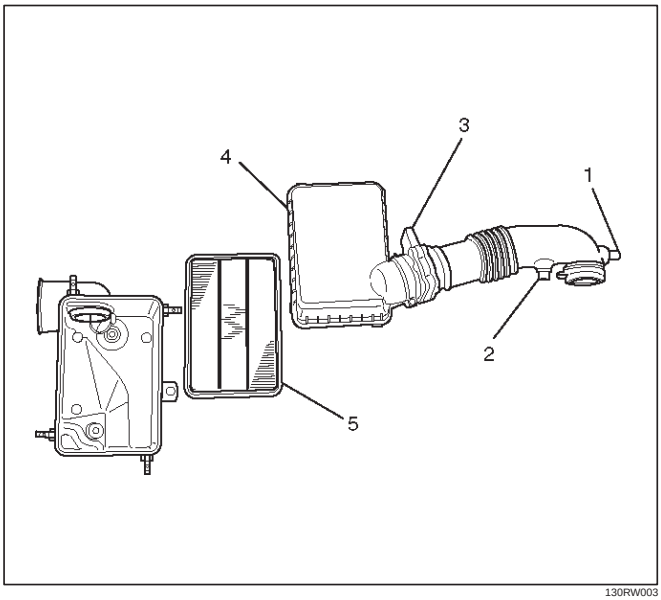

130RW003

Inspection

Check the air cleaner element for damage or dust clogging. Replace if it is damaged, or clean if it is clogged.

Cleaning Method

Tap the air cleaner element gently so as not to damage the paper element, or clean the element by blowing with compressed air of about 490 kPa (71 psi) from the clean side if it is extremely dirty.

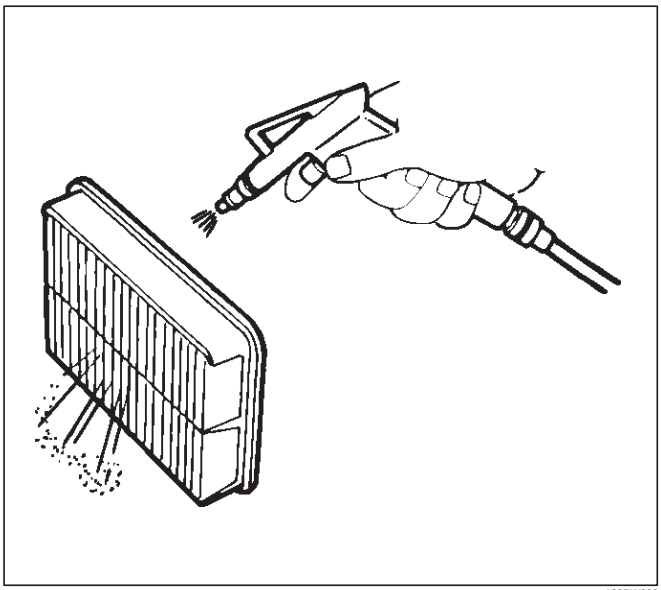

130RW002

Installation

1. Install air cleaner element(5).
2. Attach the air cleaner duct cover (4) to the body completely, then clamp it with the clip.
3. Install mass air flow sensor(3).
4. Install air temperature sensor(2).
5. Connect positive crankcase ventilation hose to connector(1).

For General Export Model

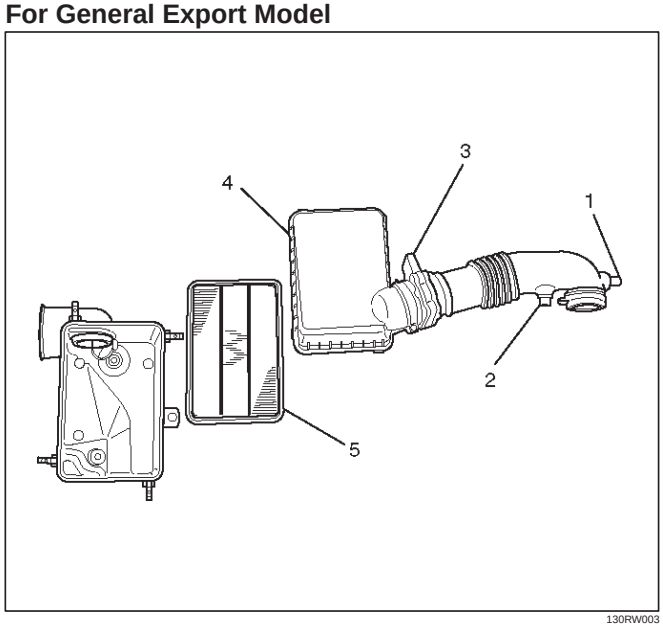

130RW003

For Isuzu General Motors (IGM) Model

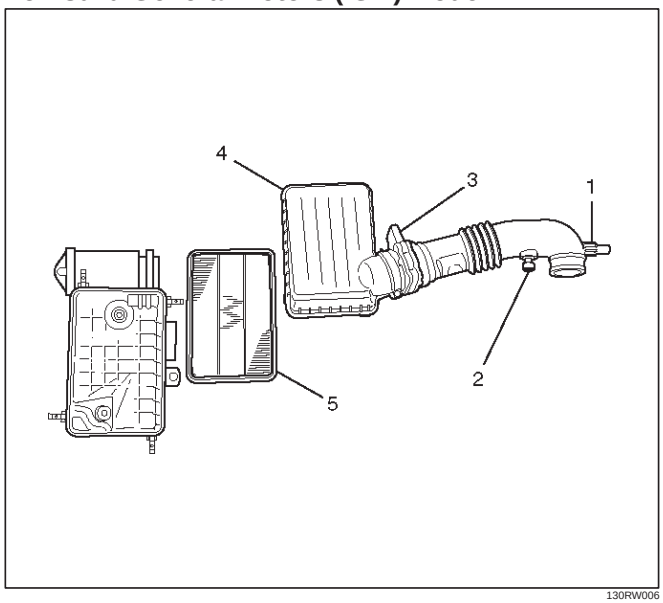

130RW006

SECTION 00

SERVICE INFORMATION

CONTENTS

	PAGE
Troubleshooting	00- 2
Main Data and Specifications	00-20
Service Standard	00-23
Servicing	00-27
Fixing Torque	00-38
Special Tools	00-47

TROUBLESHOOTING

CONTENTS

PAGE

Hard Starting 00- 3
Starter Motor Inoperative 00- 3
Starter Motor Operates but Engine does not turn over 00- 3
Engine turns over but does not start 00- 4
Quick-on Start System (QOS III) 00- 5
Unstable Idling 00- 5
Insufficient Power 00- 7
Excessive Fuel Consumption 00- 9
Excessive Oil Consumption 00- 9
Overheating 00-10
White Exhaust Smoke 00-10
Dark Exhaust Smoke 00-11
Oil Pressure Does Not Rise 00-11
Abnormal Engine Noise 00-12
Engine Knocking 00-12
Gas Leakage noise 00-12
Continuous noise 00-12
Slapping noise 00-13
Engine Cooling Trouble 00-14
Engine Electrical 00-15
Starter does not run 00-15
Faulty Meshing or Pinion and Ring Gear 00-16
Magnetic Switch does not operate though starter switch is turned to “Start (ST)” ... 00-17
Pinion Meshes with ring gear but engine does not run 00-18
Starter does not stop though starter switch is returned to “ON” 00-19

1. HARD STARTING

1. STARTER MOTOR INOPERATIVE		
Checkpoint	**Possible cause**	**Correction**
Battery	Loose battery cable terminal Poor connections due to rusting	Clean and/or retighten the battery cable terminal
	Battery discharged or weak	Recharge or replace the battery
	Fan belt loose or broken	Adjust or replace the fan belt
Fusible link	Fusible link shorted	Replace the fusible link
Starter switch	Defective starter switch or starter relay	Replace the starter switch or the starter relay
Starter motor	Defective magnetic switch or starter relay	Repair or replace the magnetic switch
	Defective starter motor	Repair or replace the starter motor
2. STARTER MOTOR OPERATES BUT ENGINE DOES NOT TURN OVER		
Battery	Loose battery cable terminal Poor connections due to rusting	Clean and/or retighten the battery cable terminal
	Battery discharged or weak	Recharge or replace the battery
	Fan belt loose or broken	Adjust or replace the fan belt
Starter motor	Defective pinion gear	Replace the pinion gear
	Defective magnetic switch	Repair or replace the magnetic switch
	Brush wear, Weak brush spring	Replace the brush and/or the brush spring
Engine	Piston, crank bearing seizuer, or other damage	Repair or replace the related parrts

3. ENGINE TURNS OVER BUT DOES NOT START		
Checkpoint	**Possible cause**	**Correction**
Engine stop mechanism	Defective fuel cut solenoid valve	Replace the fuel cut solenoid valve
FUEL IS NOT BEING DELIVERED TO THE INJECTION PUMP		
Fuel	Fuel tank is empty	Fill the fuel tank
Fuel piping	Clogged or damaged fuel lines. Loose fuel line connection	Repair or replace the fuel lines Retighten the fuel line connection
Fuel filter	Fuel filter overflow valve does not close	Repair or replace the fuel filter overflow valve
	Clogged fuel filter element	Replace the fuel filter element or the filter cartridge
Fuel system	Air in the fuel system	Bleed the air from the fuel system
Fuel feed pump	Defective feed pump	Repair or replace the feed pump
FUEL IS BEING DELIVERED TO THE INJECTION PUMP		
Fuel	Use of the wrong fuel	Use the correct fuel
	Water particles in the fuel	Carge the fuel
Fuel system	Air in the injection pump	Bleed the air from the fuel system
Injection nozzle	Injection nozzle sticking	Replace the injection nozzle
	Injection nozzle injection starting pressure too low Improper spray condition	Adjust or replace the injection nozzle
Injection pump	Defective fuel injection nozzle resulting in the fuel drippage after fuel injection	Replace the delivery valve
	Defective injection pump control rack operation	Repair or replace the injection pump control rack
	Injection pump plunger worn or stuck	Replace the injection pump plunger assembley
	Injection pump drive shaft seizure or other damage	Replace the injection drive shaft
	Injection pump governor spring seizure	Replace the injection pump governor spring

4. QUICK-ON START SYSTEM (QOS III)

PREPARATION
1. Disconnect the thermoswitch connector.
2. Determine whether or not the glow plugs are receiving power.
   a) Make sure that the starter switch is "OFF"
   b) Connect a voltmeter between one of the glow plugs and the cylinder wall.
   c) Move the starter switch to the "ON" position.
      The voltmeter needle will show the souse voltage (12V) if the glow plugs are receiving power.
      If the voltmeter needle does not move, the glow plugs are not receiving power.
3. Perform the troubleshooting procedure.

Glow plug indicator light does not turn on.	1. Defective Fusible link wire 2. Broken indicator light fuse 3. Defective indicator light bulb	Replace the fusible link wire Replace the indicator light fuse Replace the indicator light bulb
Preheating system does not work	1. Defective Fusible link wire shorted 2. Defective glow plug relay connector 3. Defective glow plug connector 4. Defective quick-on start timer connector	Replace the fusible link wire Replace or Repair glow plug relay connector Replace or Repair glow plug connector Replace or Repair quick-on start timer connector
Preheating time to long or to short	1. Defective thermo sensor include defective wiring harness 2. Defective glow plug 3. Defective timer unit	Replace thermo sensor or repair wiring harness. Replace glow plug Replace timer unit

2. UNSTABLE IDLING

Checkpoint	Possible cause	Correction
Idling system	Idling improperly adjusted	Adjust the idling
Fast idling speed control device	Defective fast idling speed control device	Repair or replace the fast idling speed control device
Accelerator control system	Accelerator control system improperly adjusted	Adjust the accelerator control system

Checkpoint	Possible cause	Correction
Fuel system	Fuel system leakage or blockage	Repair or replace the fuel system
	Air in the fuel system	Bleed the air from the fuel system
	Water particles in the fuel system	Change the fuel
Fuel filter	Clogged fuel filter element	Replace the fuel filter element or the fuel filter cartridge
Fuel feed pump	Defective fuel feed pump	Repair or replace the fuel feed pump
Injection nozzle	Injection nozzle sticking	Replace the injection nozzle
	Injection nozzle injection starting pressure too low Improper spray condition	Adjust or replace the injection nozzle
Injection pump	Defective delivery valve resulting in fuel drippage after fuel injection	Replace the delivery valve
	Injection timing improperly adjusted	Adjust the injection timing
	Insufficient injection volume	Adjust the injection volume
	Defective idle spring	Replace the idle spring
	Defective governor lever operation	Repair or replace the governor lever
	Regulator valve improperly adjustment	Adjust or replace the regulator valve
	Broken plunger spring	Replace the plunger spring
	Worn plunger	Replace the plunger assembly
	Worn cam disc	Replace the cam disc
Valve clearance	Valve clearance improperly adjusted	Adjust the valve clearance
Compression pressure	Blown out cylinder head gasket. Worn cylinder liner. Piston ring sticking between the valve and the valve seat	Replace the related parts

3. INSUFFICIENT POWER

Checkpoint	Possible cause	Correction
Air cleaner	Clogged air cleaner element	Clean or replace the air cleaner element
Fuel	Water particle in the fuel	Replace fuel
Fuel filter	Clogged fuel filter element	Replace the fuel filter element or the fuel filter cartridge
Fuel feed pump	Defective fuel feed pump	Repair or replace the fuel feed pump
Injection nozzle	Injection nozzle sticking	Replace the injection nozzle
	Injection nozzle injection starting pressure too low Improper spray condition	Adjust or replace the injectionn nozzle
Fuel injection pipes	Fuel injection pipes damaged or obstructed	Replace the fuel injection pipes
Injection pump	Defective regulating valve	Repair or replace the regulating valve
	Defective delivery valve	Replace the delivery valve
	Defective timer	Repair or replace the timer
	Worn cam disk	Replace the cam disk
	Improper control lever operation	Adjust or replace the control lever
	Defective injection timing	Adjust the injection timing Repair or replace the injection pump timer
	Weak governor spring	Replace the governor spring
	Worn plunger	Replace the plunger saaembly
	Worn cam disk	Replace the cam disk

Checkpoint	Possible cause	Correction
Turbocharger	Booster compensator pipe broken or cracked	Replace the booster compensator pipe
	Exhaust gas leakage from the exhaust system Air leakage from the intake system	Repair or replace the related parts
	Defective waste gate	Repair or replace the waste gare
	Defective turbocharger assembly	Replace the turbocharger assembly
Compression pressure	Blown out cylinder head gasket. Worn cylinder liner. Piston ring sticking between the valve and valve seat	Replace the related parts
Valve clearance	Valve clearance improperly adjusted	Adjust the valve clearance
Valve spring	Valve spring weak or broken	Replace the valve spring
Exhaust system	Exhaust pipe clogged	Clean the exhaust pipe
Full load adjusting screw seal	Open and improperly set adjusting screw seal	Adjust and reseal the adjusting screw

4. EXCESSIVE FUEL CONSUMPTION

Checkpoint	Possible cause	Correction
Fuel system	Fuel leakage	Repair or replace the fuel system related parts
Air cleaner	Clogged air cleaner element	Clean or replace the air cleaner element
Idling speed	Poorly adjusted idling speed	Adjust the idling speed
Injection nozzle	Injection nozzle injection starting pressure too low Improper spray condition	Adjust or replace the injection nozzle
Fuel injection timing	Fuel injection timing improperly	Adjust the fuel injection timing
Injection pump	Defective Delivery valve resulting is fuel drippage after fuel injection	Replace the delivery valve
Turbocharger	Air leakage from the turbocharger intake side	Repair the turbocharger intake side
	Defective turbocharger assembly	Replace the turbocharger assembly
Valve clearance	Valve clearance improperly adjusted	Adjust the valve clearance
Compression pressure	Blown out cylinder head gasket. Worn cylinder liner. Piston ring sticking between the valve and valve seat	Replace the related parts
Valve spring	Valve spring weak or broken	Replace the valve spring

5. EXCESSIVE OIL CONSUMPTION

Checkpoint	Possible cause	Correction
Engine oil	Engine oil unsuitable Too mauch engine oil	Replace the engine oil Correct the engine oil level
Oil seal and gasket	Oil leakage from the oilseal and/or the gasket	Replace the oil seal and/or the gasket
Air breather	Clogged air breather	Clean the air breather
Intake and exhaust valve	Worn valve stems and valve guides	Replace the intake and exhaust valves and the valve springs

6. OVERHEATING

Checkpoint	Possible cause	Correction
Cooling water	Insufficient cooling water	Replace the cooling water
Fan clutch	Oil leakage from the fan clutch	Replace the fan clutch
Fan belt	Fan belt loose or cracked causing slippage	Replace the fan belt
Radiator	Defective radiator cap or clogged radiator core	Replace the radiator cap or clean the radiator core
Water pump	Defective water pump	Repair or replace the water pump
Cylinder head and cylinder body sealing cap	Defective searing cap resulting in water leakage	Replace the sealing cap
Thermostat	Defective thermostat	Replace the thermostat
Cooling system	Cooling system clogged by foreign material	Clean the foreign material from the cooling system
Fuel injection timing	Fuel injection timing improperly adjusted	Adjust the fuel injection timing

7. WHITE EXHAUST SMOKE

Checkpoint	Possible cause	Correction
Fuel	Water particles in the fuel	Replace the fuel
Fuel injection timing	Delayed fuel injection timing	Adjust the fuel injection timing
Compression pressure	Blown out cylinder head gasket. Worn cylinder liner. Piston ring sticking between the valve and valve seat	Replace the related parts
Turbocharger	Defective turbocharger	Replace the turbocharger
Inlet and exhaust valves Valves seals	Defective valve seales. Worn valves stems and valve guides	Replace the valve seales, the valves, and the valve guides

8. DARK EXHAUST SMOKE

Checkpoint	Possible cause	Correction
Air cleaner	Clogged air cleaner element	Clean or replace the air cleaner element
Injection nozzle	Injection nozzle injection starting pressure too low Improper spray condition	Adjust or replace the injection nozzle
Fuel injection timing	Fuel injection timing improperly adjusted	Adjust the fuel injection timing
Injection pump	Defective Delivery valve resulting is fuel drippage after fuel injection	Replace the delivery valve
	Excessive injection volume	Adjust the injection volume

9. OIL PRESSURE DOES NOT RISE

Checkpoint	Possible cause	Correction
Engine oil	Improper viscosity engine oil. Insufficient engine oil	Replace the engine oil Correct the engine oil volume
Oil pressure gauge or unit Oil pressure indicator light	Defective oil pressure gauge or unit Defective indicator light	Repair or replace the oil pressure gauge or unit Replace the indicator light
Oil filter	Clogged oil filter element	Replace the oil filter element or the oil filter cartridge
Relief valve and by-pass valve	Relief valve sticking and/or weak by-pass valve spring	Replace the relief valve and/or the by-pass valve spring
Oil pump	Clogged oil pump strainer	Clean the oil pump strainer
	Worn oil pump related parts	Replace the oil pump related parts
Rocker arm shaft	Worn rocker arm bushing	Replace the rocker arm bushing
Camshaft	Worn camshaft and camshaft bearing	Replace the camshaft and the camshaft bearing
Crankshaft and bearings	Worn crankshaft and bearings	Replace the crankshaft and/or the bearings

10. ABNORMAL ENGINE NOISE

1. ENGINE KNOCKING

Check to see that the engine has been thoroughly warmed up before begining the troubleshooting procedure.

Checkpoint	Possible cause	Correction
Fuel	Fuel unsuitable	Replace the fuel
Fuel injection timing	Fuel injection timing improperly adjusted	Adjust the fuel injection timing
Injection nozzle	Improper injection nozzle starting pressure and spray condition	Adjust or replace the injection nozzle
Compression pressure	Blown out head gasket Broken piston ring	Replace the head gasket or the piston ring
2. GAS LEAKAGE NOISE		
Exhaust pipes	Loosely connected exhaust pipes. Broken exhaust pipes	Tighten the exhaust pipe connections Replace the exhaust pipes
Injection nozzles and/or glow plugs	Loose injection nozzles and/or glow plugs	Replace the washers Tighten the injection nozzles and/or the glow plugs
Exhaust manifold	Loosely connected exhaust manifold and/or glow plugs	Tighten the exhaust manifold connections
Cylinder head gasket	Damaged cylinder head gasket	Replace the cylinder head gasket
3. CONTINUOUS NOISE		
Fan belt	Loose fan belt	Readjust the fan belt tension
Cooling fan	Loose coling fan	Retighten the cooling fan
Water pump bearing	Worn or damaged water pump bearing	Replace the water pump bearing
Alternator or vacuum pump	Defective alternator or vacuum pump	Repair or replace the alternator or the vacuum pump
Valve clearance	Clearance improperly adjust	Adjust the valve clearance

4. SLAPPING NOISE

Checkpoint	Possible cause	Correction
Valve clearance	Valve clearance improperly adjusted	Adjust the valve clearance
Rocker arm	Damaged rocker arm	Replace the rocker arm
Flywheel	Loose flywheel bolts	Retighten the flywheel bolts
Crankshaft and thrust bearings	Worn or damaged crankshaft and/or thrust bearings	Replace the crankshaft and/or the thrust bearings
Crankshaft and connecting rod bearings	Worn or damaged crankshaft and/or connecting rod bearings	Replace the crankshaft and/or the connecting rod bearings
Connecting rod bushing and piston pin	Worn or damaged connecting rod bushing and piston pin	Replace the connecting rod bushing and/or the piston pin
Piston and cylinder liner	Worn or damaged piston and cylinder liner. Foreign material in the cylinder.	Replace the piston and the cylinder liner.

ENGINE COOLING TROUBLE

Condition	Possible cause	Correction
Engine overheating	Low coolant level	Replenish
	Thermo unit faulty	Replace
	Faulty thermostat	Replace
	Faulty coolant unit	Repair or replace
	Clogged radiator	Clean or replace
	Faulty radiator cap	Replace
	Low engine oil level or use of improper engine oil	Replenish or change oil Replenish
	Damaged cylinder head gasket	Replace
	Clogged exhaust system	Clean exhaust system or replace faulty parts
	Loose fan belt	Adjust
	Excessive fuel injected	Adjust
	Improper injection timing	Adjust
	Injection timing improper	Adjust
Engine overcooling	Faulty thermostat	Replace
Too long engine warm-up time	Faulty thermostat	Replace
	Thermo unit faulty	Replace

ENGINE ELECTRICAL

Check if the battery is normal, then perform the following diagnosis.

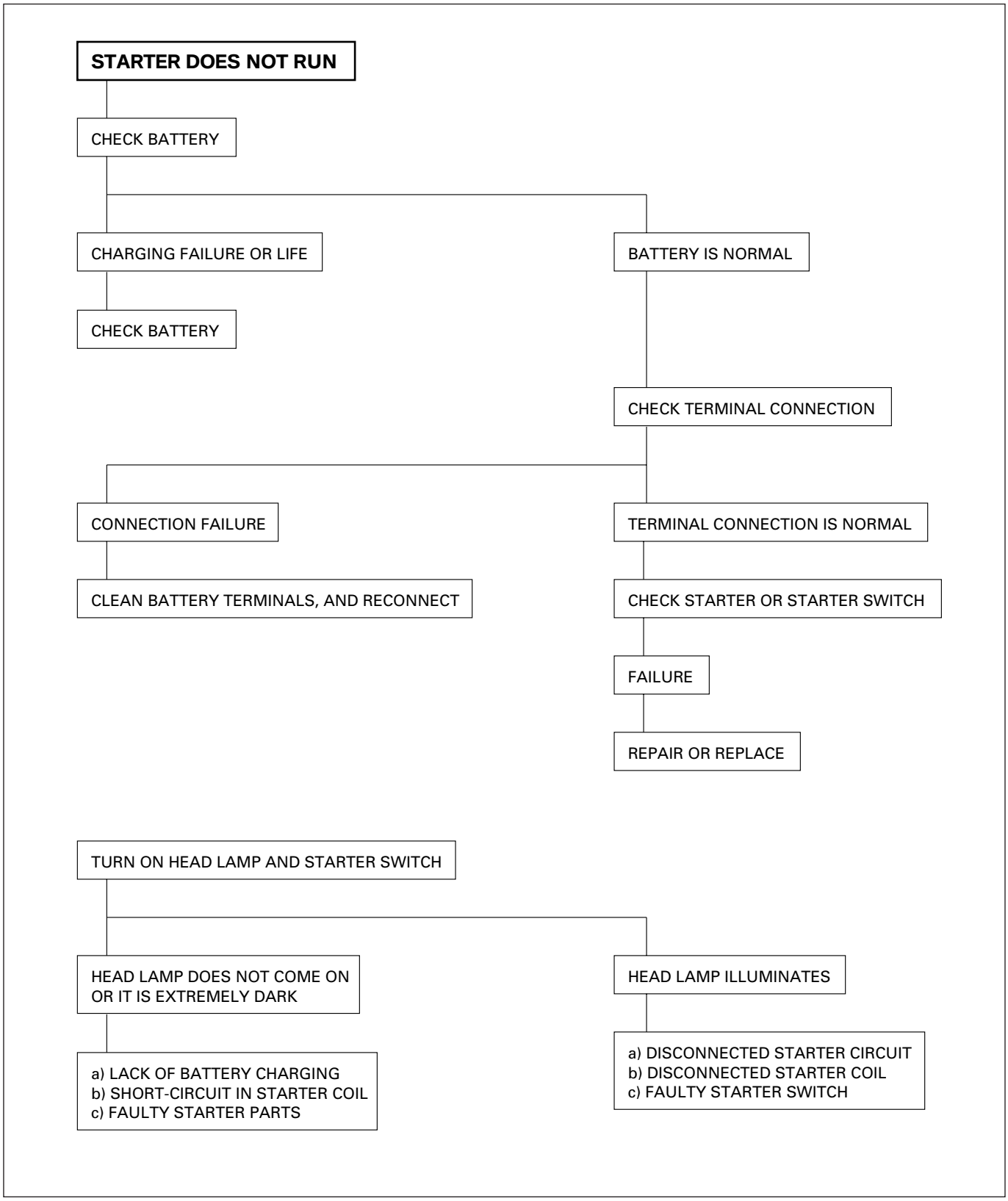

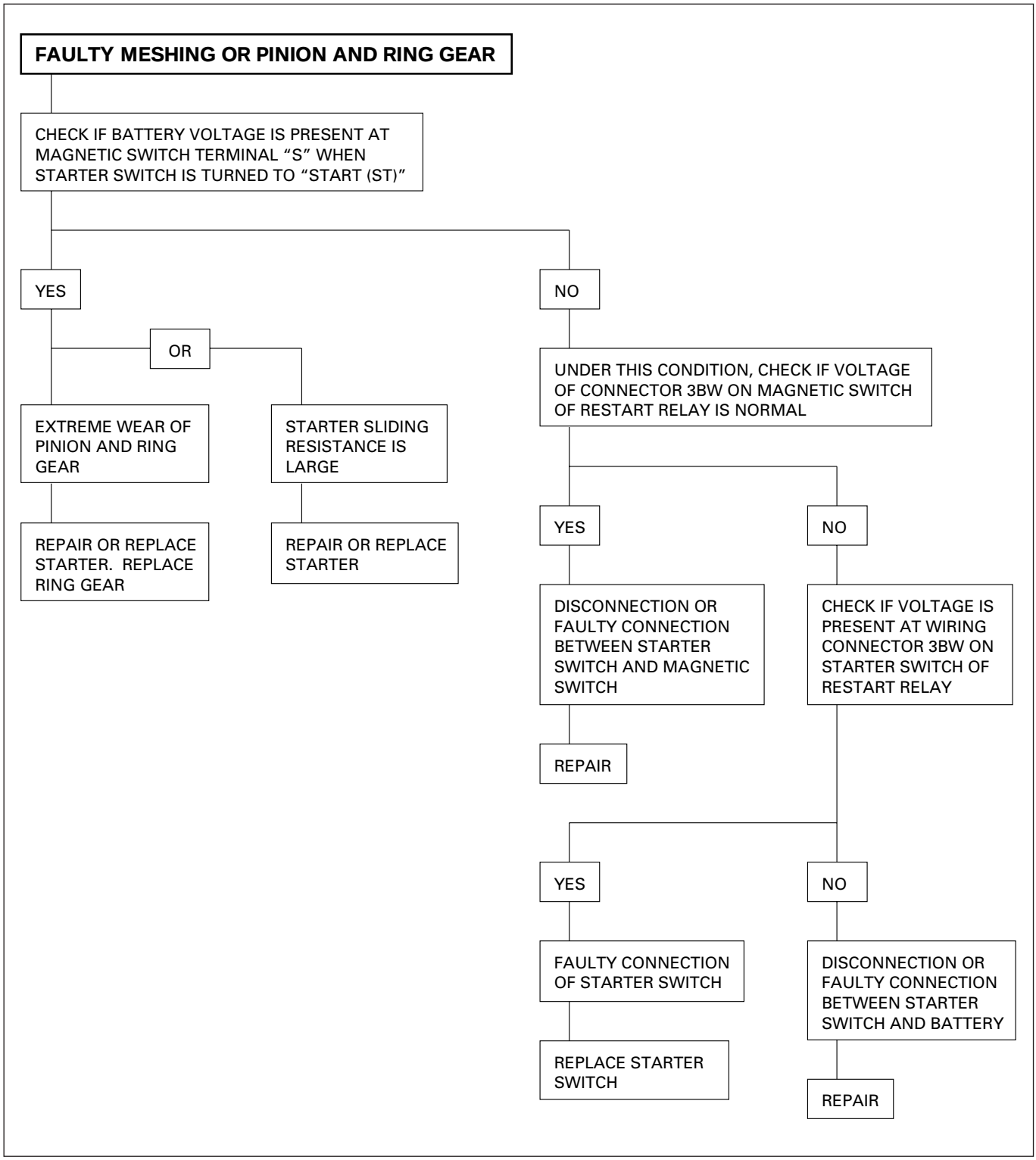
FAULTY MESHING OR PINION AND RING GEAR
CHECK IF BATTERY VOLTAGE IS PRESENT AT MAGNETIC SWITCH TERMINAL "S" WHEN STARTER SWITCH IS TURNED TO "START (ST)"
YES
NO
OR
EXTREME WEAR OF PINION AND RING GEAR
STARTER SLIDING RESISTANCE IS LARGE
REPAIR OR REPLACE STARTER. REPLACE RING GEAR
REPAIR OR REPLACE STARTER
UNDER THIS CONDITION, CHECK IF VOLTAGE OF CONNECTOR 3BW ON MAGNETIC SWITCH OF RESTART RELAY IS NORMAL
YES
NO
DISCONNECTION OR FAULTY CONNECTION BETWEEN STARTER SWITCH AND MAGNETIC SWITCH
CHECK IF VOLTAGE IS PRESENT AT WIRING CONNECTOR 3BW ON STARTER SWITCH OF RESTART RELAY
REPAIR
YES
NO
FAULTY CONNECTION OF STARTER SWITCH
DISCONNECTION OR FAULTY CONNECTION BETWEEN STARTER SWITCH AND BATTERY
REPLACE STARTER SWITCH
REPAIR

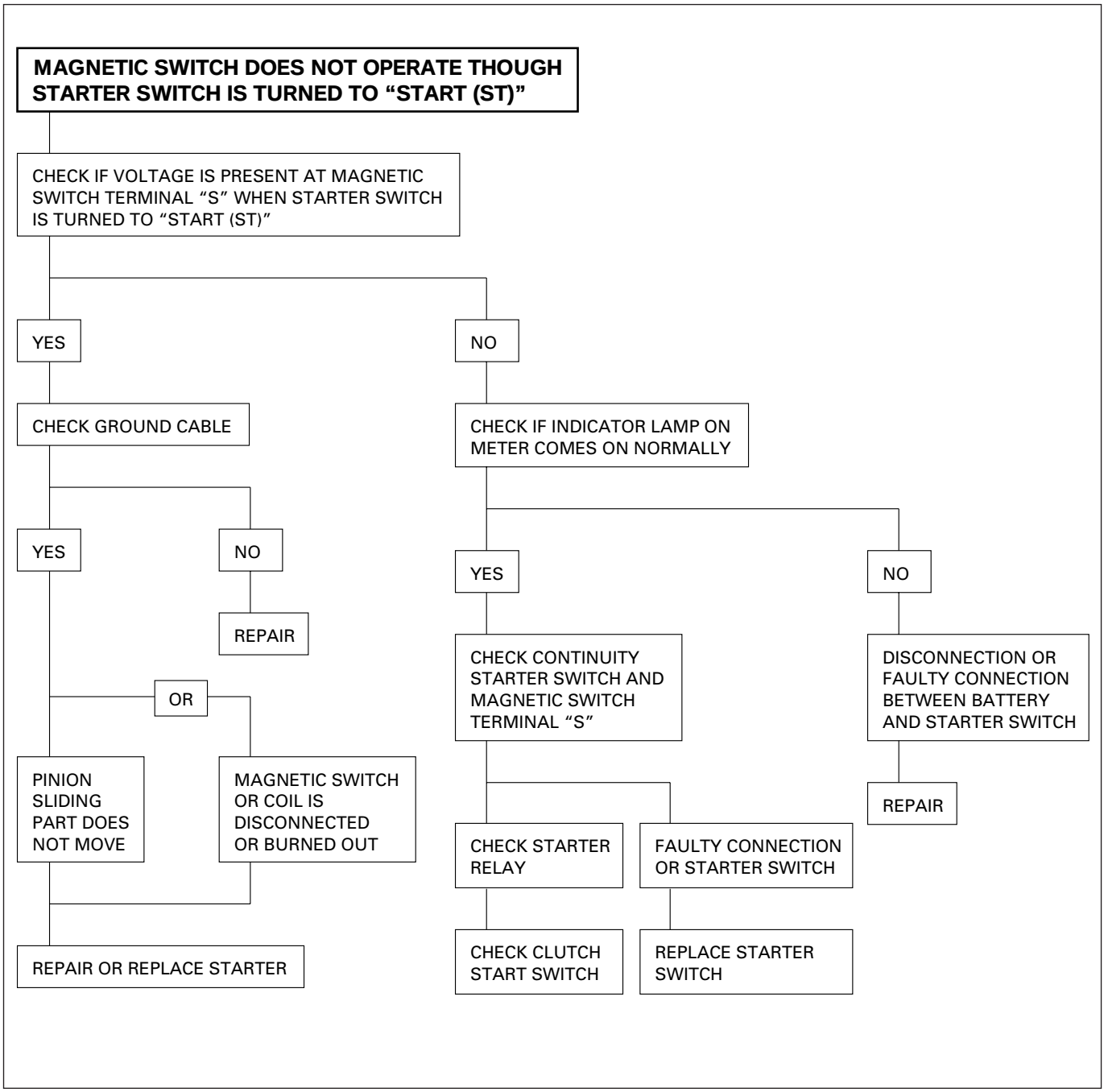
MAGNETIC SWITCH DOES NOT OPERATE THOUGH STARTER SWITCH IS TURNED TO “START (ST)”
CHECK IF VOLTAGE IS PRESENT AT MAGNETIC SWITCH TERMINAL “S” WHEN STARTER SWITCH IS TURNED TO “START (ST)”
YES
NO
CHECK GROUND CABLE
CHECK IF INDICATOR LAMP ON METER COMES ON NORMALLY
YES
NO
REPAIR
OR
PINION SLIDING PART DOES NOT MOVE
MAGNETIC SWITCH OR COIL IS DISCONNECTED OR BURNED OUT
REPAIR OR REPLACE STARTER
YES
NO
CHECK CONTINUITY STARTER SWITCH AND MAGNETIC SWITCH TERMINAL “S”
DISCONNECTION OR FAULTY CONNECTION BETWEEN BATTERY AND STARTER SWITCH
REPAIR
CHECK STARTER RELAY
FAULTY CONNECTION OR STARTER SWITCH
CHECK CLUTCH START SWITCH
REPLACE STARTER SWITCH

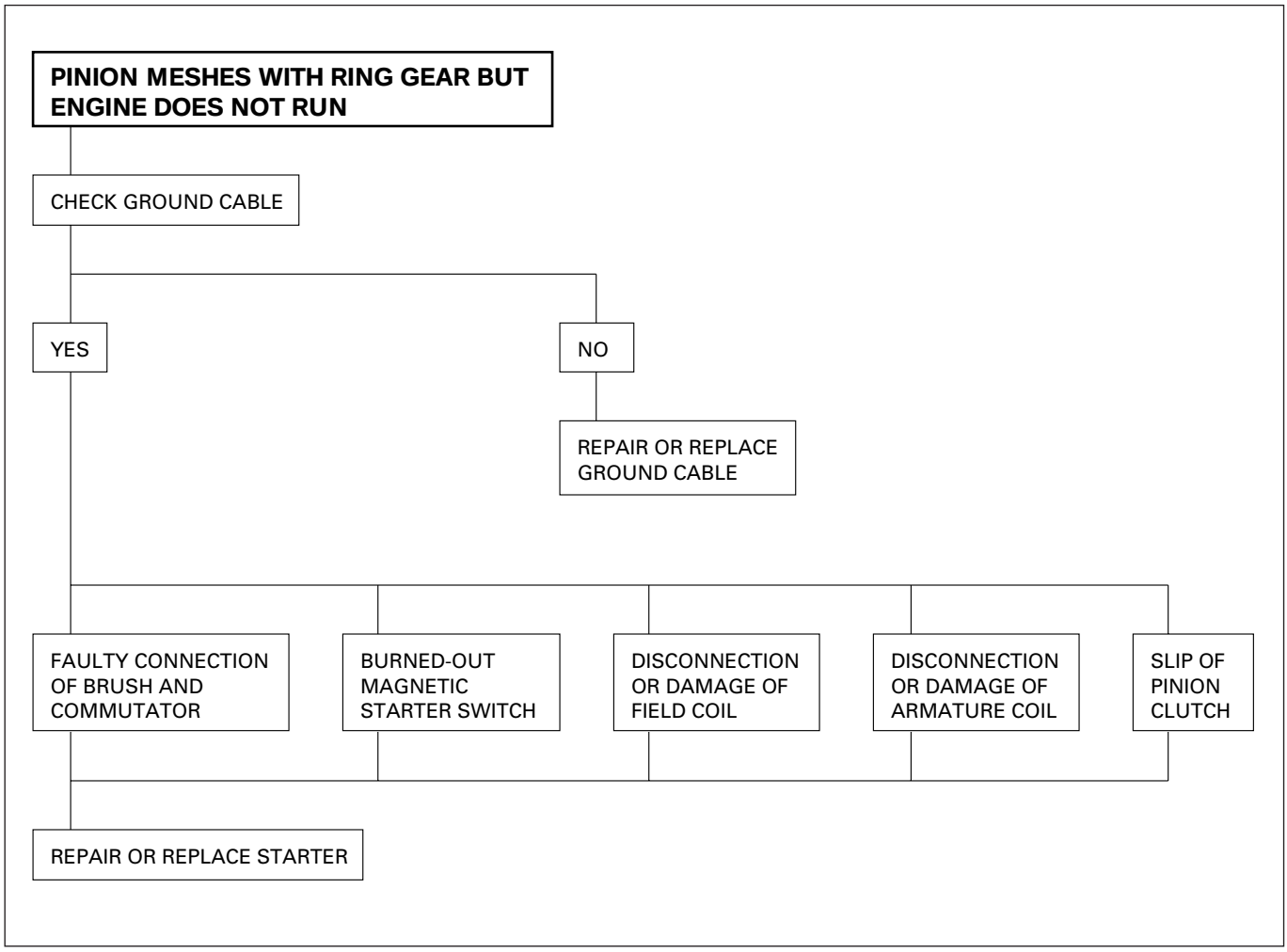
PINION MESHES WITH RING GEAR BUT ENGINE DOES NOT RUN
CHECK GROUND CABLE
YES
NO
REPAIR OR REPLACE GROUND CABLE
FAULTY CONNECTION OF BRUSH AND COMMUTATOR
BURNED-OUT MAGNETIC STARTER SWITCH
DISCONNECTION OR DAMAGE OF FIELD COIL
DISCONNECTION OR DAMAGE OF ARMATURE COIL
SLIP OF PINION CLUTCH
REPAIR OR REPLACE STARTER

STARTER DOES NOT STOP THOUGH STARTER SWITCH IS RETURNED TO “ON”

DISCONNECTED STARTER SWITCH WIRING CONNECTOR, AND CHECK STARTER SWITCH OPERATION.

KEY POSITION	BATTERY B1	IGNITION IG1	BATTERY B2	ACCESSORIES ACC	IGNITION IG2	STARTER ST
LOCK						
OFF						
ACC			●	●		
ON	●	●	●	●	●	
START	●	●	●		●	●

THERE MUST BE NO CONTINUITY EXCEPT ABOVE LINES

YES

MAGNETIC SWITCH CONTACTS ARE FUSED AND NOT MOVED, OR A RETURN SPRING IS BROKEN OR DETERIORATED

REPLACE MAGNETIC SWITCH

NO

REPLACE STARTER SWITCH

MAIN DATA AND SPECIFICATIONS

GENERAL SPECIFICATIONS

Engine type		Diesel, four cycle water cooled inline
Camshaft type		Overhead valve
Cylinder line-type		Dry type
Number of cylinders		4
Bore x stroke	(mm)	95.4 x 107
Total piston displacement	(cc)	3,059
Compression ratio	(to 1)	20.0
Engine weight (dry)	N (kg/lb)	2353 (240/529)(4JG2-NA)
		2597 (265/584)(4JG2-T)
Engine idling speed (Reference)	RPM	750 (4JG2-NA)
		720 (4JG2-T)
Compression pressure	kpa (kg/cm^2/psi)-rpm	2940 (30/426)-200
Firing order		1–3–4–2
Injection timing		1°A.T.D.C (4JG2-NA)
		T.D.C. (4JG2-T)
VALVE SYSTEM		
Intake valves	open at:	B.T.D.C. 24°
	close at:	A.B.D.C. 55°
Exhaust valve	open at:	B.B.D.C. 54°
	close at:	A.T.D.C. 26°
Valve clearance at	cold mm (in)	
	intake:	0.40 (0.016)
	exhaust:	0.40 (0.016)
Oil filter		Full flow and bypass combined type
Oil capacity (Original factory fill or rebuilt engine)		7.1 liters (6.3 US quarts)
Oil capacity (Service change)		
with filter change		6.0 liters (6.3 US quarts)
without filter change		5.0 liters (5.3 US quarts)
Oil cooler		Water cooled type
Inter cooler		Air cooled type
Turbocharger		
Control method		Wastegate control
Lubrication method		Pressurized control
Cooling method		Coolant cooled

Engine Cooling

Cooling system	Coolant forced circulation
Radiator	(2 tube in row) Tube type corrugated
Heat radiation capacity J/h (kcal/h)	318 x 10^6 (76000)
Heat radiation area m^2 (ft^2)	15.63 (1.454)
Front area m^2 (ft^2)	0.309 (2.029)
Dry weight N(Kg/lb)	83 (8.5/18.7)
Radiator cap	
Valve opening pressure kPa(Kg/cm^2 psi)	88.2~117.6 (0.899~1.199/12.78~17.05)
Coolant capacity lit (Imp.qt./US qt.)	2.8 (2.46/2.96)
Coolant pump	Centrifugal impeller type
Pulley ratio	1.2
Coolant total capacity lit (Imp.qt./US qt.)	8.6 (7.57/9.09)

Starting System

Model	HITACHI S14-03	DENSO ADR4G1
Rating		
Voltage V	12	
Output kw	2.8	2.2
Time sec	30	
Number of tooth of pinion	9	
Rotating direction (as viewed from pinion)	Clockwise	
Weight (approx.) N (kg/lb)	59 (6.0/13.2)	
No-load characteristics		
Voltage/current V/A	11/160 or less	11.5/120 or less
Speed rpm	3900 or more	4000 or more
Load characteristics		
Voltage/current V/A	10.85/300	7.5/500
Torque N•m (kg•m/lb•ft)	7.4 (0.75/5.4) or more	13 (1.3/9) or less
Speed rpm	2000 or more	1400 or more
Locking characteristics		
Voltage/current V/A	3/1300 or less	2/850 or less
Torque N•m (kg•m/lb•ft)	26 (2.7/20) or more	16 (1.6/12) or more

Charging System

Model (HITACHI)		LR150 – 446	LR180 – 501B
Rated voltage	V	12	12
Rated output	A	50	80
Rotating direction (As viewed from pulled)		Clockwise	Clockwise
Pulley effective diameter	mm(in)	80 (3.15)	80 (3.15)
Weight (with pump)	N(Kg/lb)	65(6.6 /14.6)	76(7.8 /17.2)

SERVICE STANDARD

Engine Mechanical

mm (in)

Parts	Items	Service standard	Service limit	Remarks
Cylinder Head	Cylinder head deck, and exhaust manifold mating surface for flatness	0.05 (0.0020) or less	0.2 (0.0079)	
	Cylinder head height	92.0 (3.6220)	—	Cannot be reground
	Hot plug depression	—	0.02 (0.0008)	
	Hot plug installation pressure	44000-54000N (4500–5500 kg/9923–12128 lbs)	—	
Valve Spring	Free height	48.0 (1.8898)	47.10 (1.8543)	
	Squareness	—	1.7 (0.0669)	
	Spring tension N (lb)	294 (30/66.1)	257.9 (26.3/57.9)	At installed height 38.9 (1.5)
Valve and Valve Guide	Diameter of Valve stem IN	7.946–7.961 (0.3128–0.3134)	7.880 (0.3102)	
	EX	7.921–7.936 (0.3118–0.3124)	7.850 (0.3091)	
	Valve and valve guide clearance IN	0.039–0.071 (0.0015–0.0028)	0.200 (0.0079)	
	EX	0.064–0.096 (0.0025–0.0038)	0.250 (0.0098)	
	Valve guide upper end height (Measured from the Cylinder head upper face)	13.0 (0.5118)	—	
	Valve guide margin	1.1 (0.0433)	1.6 (0.0630)	
	Valve thickness IN	1.34 (0.0528)	1.1 (0.0433)	
	EX	1.38 (0.0543)	1.1 (0.0433)	
	Valve seat contact surface angle	45°	—	
	Valve seat contact width IN	1.7 (0.0669)	2.2 (0.0866)	
	EX	2.0 (0.0787)	2.5 (0.0984)	
Push rod	Curvature	—	0.3 (0.0118)	

mm (in)

Parts	Items	Service standard	Service limit	Remarks
Camshaft	End play	0.08 (0.0031)	0.2 (0.0079)	
	Cam height	42.02 (1.6543)	41.65 (1.6398)	
	Journal diameter	49.945-49.975 (1.9663-1.9675)	49.60 (1.9528)	
	Run-out	0.02 (0.0008) or less	0.10 (0.0039)	
	Camshaft bearing inside diameter	50.000–50.030 (1.9685–1.9697)	50.08 (1.9716)	
	Camshaft bearing clearance	0.025-0.085 (0.0010-0.0033)	0.12 (0.0047)	
Tappet	Outside diameter	12.97-12.99 (0.5106-0.5114)	12.95 (0.5098)	
	Clearance between tappet and cylinder body	0.03 (0.0012)	0.10 (0.0039)	
Rocker arm Assembly	Rocker arm shaft outside diameter	18.98-19.00 (0.7472-0.7480)	18.90 (0.7441)	
	Rocker arm inside diameter	19.01-19.03 (0.7484-0.7492)	19.10 (0.7520)	
	Clearance between rocker arm and rocker arm shaft	0.01-0.05 (0.00039-0.00197)	0.20 (0.00787)	
	Rocker arm shaft runout	—	0.30 (0.0118)	
Oil pump	Oil clearance			
	Body and gear	0.14 (0.0055)	0.20 (0.0079)	
	Body cover and gear	0.06 (0.0024)	0.15 (0.0059)	
Crankshaft	Thrust clearance	0.10 (0.0039)	0.30 (0.0118)	
	Main bearing clearance (Between main bearing and Crankshaft)	0.031-0.063 (0.0012-0.0025)	0.11 (0.0043)	Cannot be reground
	Crankshaft runout	0.05 (0.0020) or less	0.08 (0.0031)	
	Main journal diameter	69.917-69.932 (2.7526-2.7532)	69.91 (2.7524)	Uneven wear limit 0.05 (0.002)
	Crank pin diameter	52.915-52.930 (2.0833-2.0839)	52.90 (2.0827)	Uneven wear limit 0.08 (0.0031)

mm (in)

Parts	Items	Service standard	Service limit	Remarks
Piston, Piston pin, Piston ring and Connecting rod	Piston diameter	95.365-95.404 (3.7545-3.7561)	—	
	Piston Clearance (Between piston and Cylinder liner)	0.047-0.065 (0.0019-0.0026)	—	
	Piston ring gap 1st/2nd	0.20-0.35 (0.0079-0.0138)	1.5 (0.0591)	
	Oil	0.10-0.30 (0.0039-0.0118)	1.5 (0.0591)	
	Piston ring clearance 1st/2nd	0.05-0.09 (0.0020-0.0035)	0.15 (0.0059)	
	Oil	0.03-0.07 (0.0012-0.0028)	0.15 (0.0059)	
	Piston pin outside diameter	33.995-34.000 (1.3384-1.3386)	33.970 (1.3374)	
	Clearance between connecting rod and piston pin	0.008-0.020 (0.0003-0.0008)	0.05 (0.0020)	
	Clearance between piston and piston pin	0.002-0.015 (0.00008-0.0006)	0.04 (0.0016)	
	Connecting rod alignment Bend	0.08(0.0031) or less	0.20 (0.0079)	Per 100 (3.937)
	Twist	0.05(0.0020) or less	0.15 (0.0059)	Per 100 (3.937)
	Connecting rod thrust clearance	0.230 (0.0091)	0.35 (0.0138)	
	Clearance between crank pin and connecting rod	0.029-0.083 (0.0011-0.0033)	0.100 (0.0039)	
Cylinder Block	Warpage (Upper surface of the cylinder block)	—	0.20 (0.0079)	
	Cylinder bore diameter	97.001-97.040 (3.8189-3.8205)		

mm (in)

Parts	Items	Service standard	Service limit	Remarks
Cylinder Block (cont' d)	Cylinder liner projection Cylinder liner outside diameter	0.0-0.1 (0.00-0.0039) 97.011-97.050 (3.8193-3.8209)		

Engine Cooling

mm (in)

Parts	Items	Service standard	Service limit	Remarks
Thermostat	Valve opening temperature Valve full open temperature and lift	82°C (180°F) More than 10 (0.39) at 95°C (203°F)		
Radiator cap	Valve opening pressure	88.2 ~ 117.6kpa (0.899 ~ 1.199kg/cm^2/ 12.8 ~ 17.0psi)		
Drive belt	Tension (Slackness) AC generator & fan pulley drive belt A/C Compressor drive belt P/S pump drive belt	New belt 8-12 (0.31-0.47) Used belt 8-12 (0.31-0.47) New belt 7-10 (0.28-0.39) Used belt 5-8 (0.2-0.31) New belt 13-16 (0.51-0.63) Used belt 13-16 (0.51-0.63)		

SERVICING

Servicing refers to general maintenance procedures to be performed by qualified service personnel.

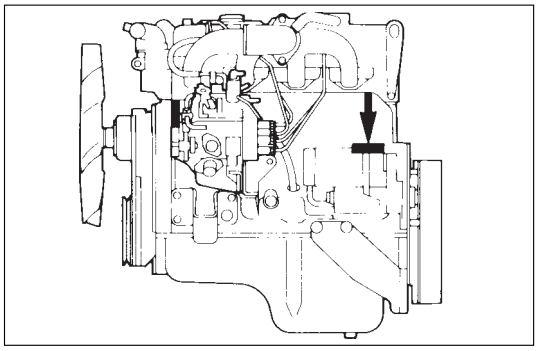

MODEL IDENTIFICATION

Engine Serial Number

The engine number is stamped on the front left hand side of the cylinder body.

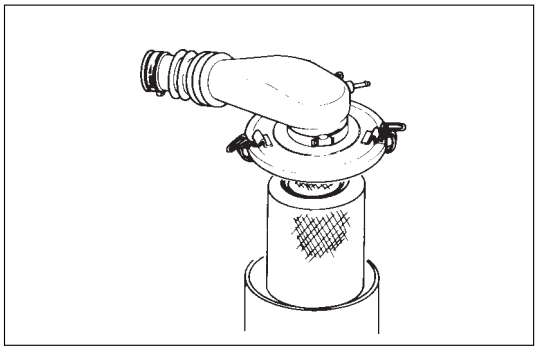

AIR CLEANER

Oil Wetted (Viscous) Type Paper Element (Australia only)

The air cleaner has an oil wetted paper element. No servicing is required until the replacement interval is reached. Never attempt to clean the element, no matter how dirty it may appear. The element is designed to provide normal filtering efficiency until it becomes due for replacement. Refer to the Item "Service and Maintenance" in the Owner's and Driver's Manual for general service information.

Dry Type Paper Element

Element cleaning procedures will vary according to the condition of the element.

Dust Fouled Elemant

Rotate the element with your hand while applying compressed air to the inside of the element. This will blow the dust free.

Compressed air pressure	Kpa (Kg/cm^2 / Psi)
392 - 490 (4-5/57-71)	

CAUTION

Do not bang the element against another object in an attempt to clean it. Damage to the element will result.

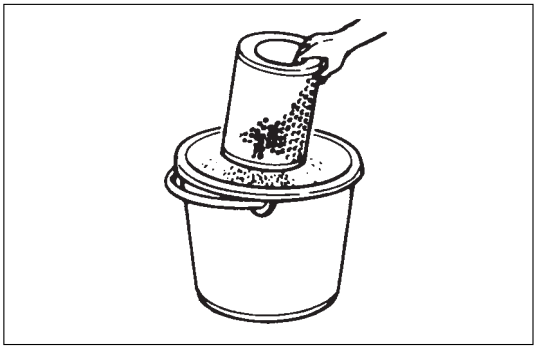

Carbon and Dust Fouled Element

1. Prepare a cleaning solution of Isuzu Genuine Element Cleaner (Donaldson D1400) diluted with water.
2. Submerge the element in the solution for twenty minutes.

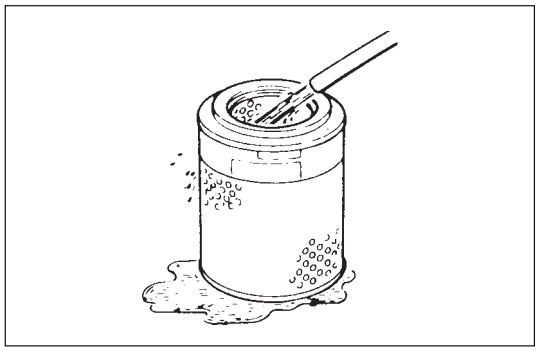

3. Remove the element from the solution and rinse it well with running water.
   Water pressure must not exceed 274 Kpa (2.8 kg/cm²/40 Psi)

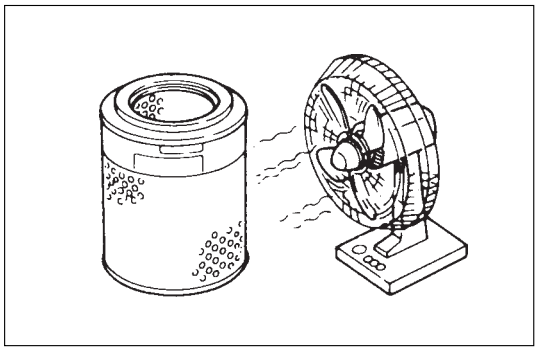

4. Dry the element in a well ventilated area.
   An electric fan will hasten drying.

NOTE:

Do not use compressed air or an open flame to dry the element quickly. Damage to the element will result.
It will usually take two or three days for the element to dry completely. Therefore, it is a good idea to have a spare on hand to use in the interim.

LUBRICATING SYSTEM

Main Oil Filter (Cartridge Type Paper Element)

Replacement Procedure

1. Loosen the drain plug to drain the engine oil.
2. Wait a few minutes and then retighten the drain plug.
3. Loosen the used oil filter by turning it counterclockwise with the filter wrench.
4. Clean the oil cooler fitting face.
   This will allow the new oil filter to seat properly.
5. Apply a light coat of engine oil to the O-ring.
6. Turn in the new oil filter until the filter O-ring is fitted against the sealing face.
7. Use the filter wrench to turn in the filter an additional 1 and 1/4 turns.
   Filter Wrench: 5-8840-0200-0

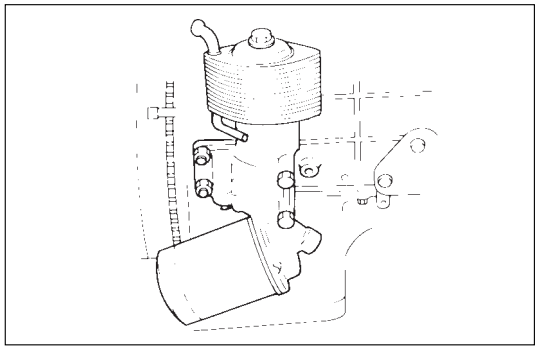

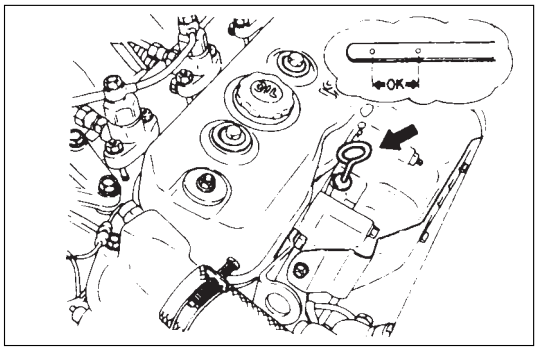

8. Check the engine oil level and replenish to the specified level if required.

Replenishment Engine Oil	lit(Imp qt / US qt)
0.7 (0.62/0.74)	

9. Start the engine and check for oil leakage from the main oil filter.

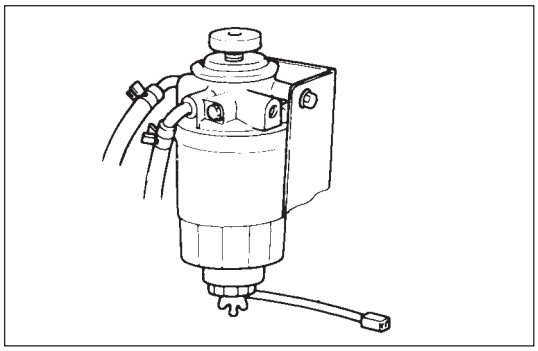

FUEL SYSTEM

Fuel Filter

Replacement Procedure

1. Loosen the used fuel filter by turning it counterclockwise with the filter wrench.
   Filter Wrench: 5-8840-0253-0 (J-22700)
2. Remove the level sensor from the filter by turning it counterclockwise with a wrench.

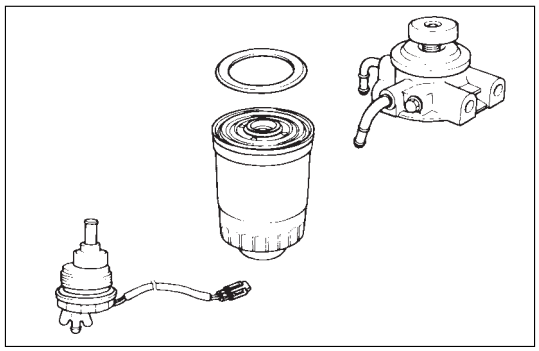

3. Install the level sensor to the new fuel filter with a wrench.

Level Sensor Torque	N·m (Kg·m/lb·ft)
	13 (1.3/9)

4. Clean the filter cover fitting faces.
   This will allow the new fuel filter to seat properly.

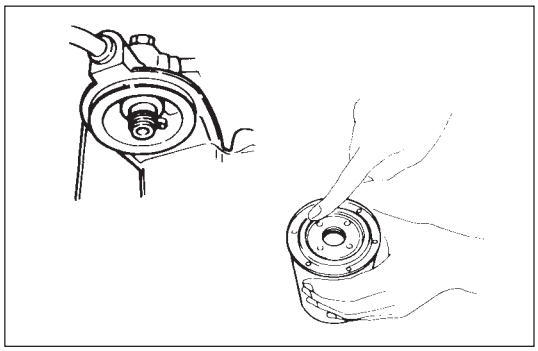

5. Apply a light coat of engine oil to the O-ring.
6. Turn in the fuel filter until the sealing face comes in contact with the O-ring.
7. Turn in the fuel filter an additional 2/3 of a turn with a filter wrench.
   Filter Wrench: 5-8840-0253-0 (J-22700)

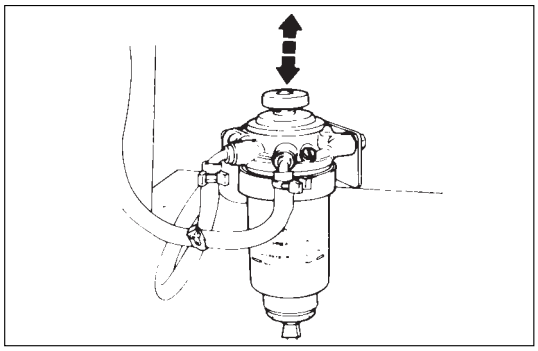

8. Loosen the bleeder plug on the injection pump overflow valve.
9. Operate the priming pump until fuel begins to flow from the fuel filter.
10. Retighten the bleeder plug.
11. Operate the priming pump several times and check for fuel leakage.

NOTE:

The use of an ISUZU genuine fuel filter is strongly recommended.

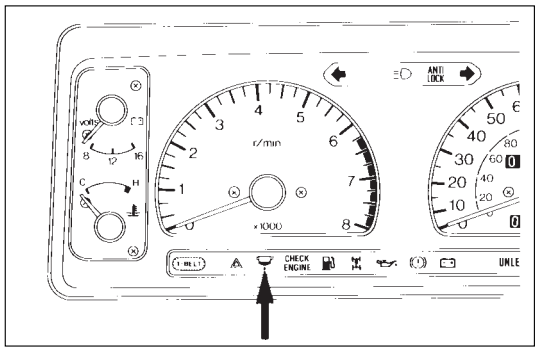

Fuel Filter Water Draining Procedure

The indicator light will come on when the water level in the water separator exceeds the specified level.
Drain the water and foreign material from the water separator with the following procedure.

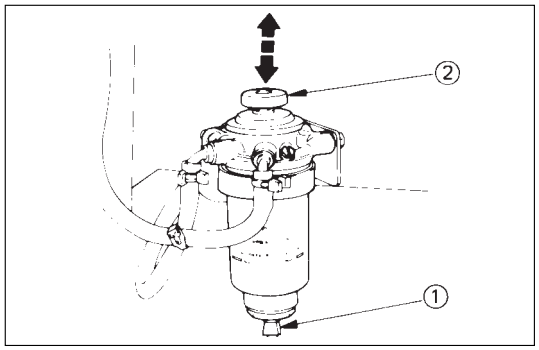

1. Find a safe place to park the vehicle.
2. Open the engine hood and place a container (Approximately 0.2 liter capacity) at the end of the vinyl hose beneath the drain plug on the separator.
3. Loosen the drain plug by turning it counterclockwise (Approximately 5 turns) and operate the priming pump up and down about 10 times until water is drained approximately 0.1 liter.
4. After draining, securely tighten the drain plug by turning it clockwise and operate the priming pump manually up and down several times.
5. After starting the engine, check to see that there is no fuel leak from the drain plug.
   Also check to see that the fuel filter water indicator light has turned off.
   If water separator requires frequent draining, have the fuel tank drained for removal of water at your Isuzu Dealer.

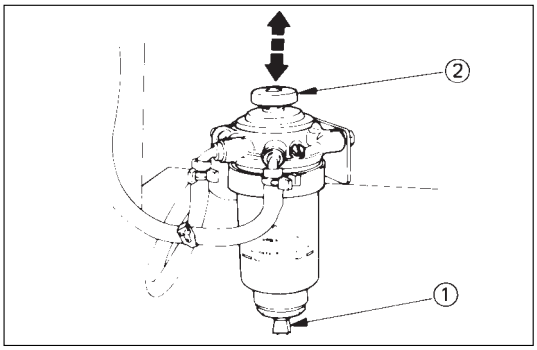

Air Bleeding

1. Loosen the bleeder screw on the injection pump overflow valve.
2. Operate the priming pump until fuel mixed with foam flows from the bleeder screw.
3. Tighten the bleeder screw.
4. Operate the priming pump several times and check for fuel leakage.

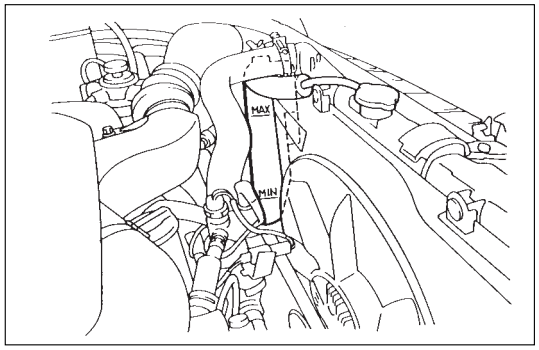

COOLING SYSTEM

Coolant Level

Check the coolant level and replenish the radiator reserve tank as necessary.
If the coolant level falls below the “MIN” line, carefully check the cooling system for leakage. Then add enough coolant to bring the level up to the “MAX” line.

NOTE:

Do not overfill the reserve tank.

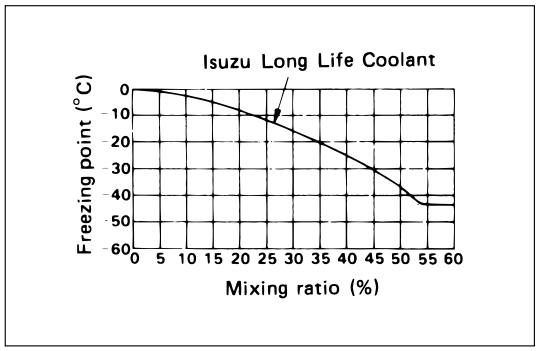

Remove the radiator filler cap only when absolutely necessary.
Always check the coolant level when the engine is cold.
Always refer to the chart at the left to determine the correct cooling water to antifreeze solution mixing ratio.

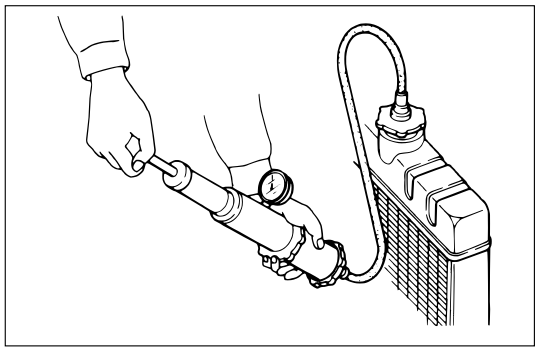

Cooling System Inspection

Install a radiator filler cap tester to the radiator. Apply testing pressure to the cooling system to check for leakage. The testing pressure must not exceed the specified pressure.

Testing Pressure	Kpa (Kg/cm^2 / Psi)
196 (2/28.45)	

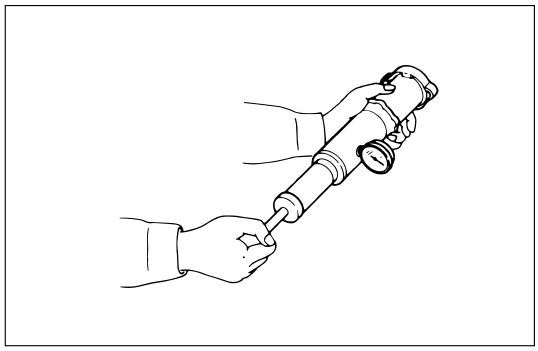

Radiator Cap Inspection

The radiator filler cap is designed to maintain coolant pressure in the cooling system at 1.05 kg/cm^2 (15 psi/103 kPa).
Check the radiator filler cap with a radiator filler cap tester.
The radiator filler cap must be replaced if it fails to hold the specified pressure during the test procedure.
Radiator Filler Cap Pressure

Pressure Valve	Kpa (Kg/cm^2 / Psi)
93.3 – 122.7 (0.95 – 1.25/13.5 –17.8)	

Negative Valve (Reference)	Kpa (Kg/cm^2 / Psi)
1.0 – 3.9 (0.01 – 0.04/0.14 – 0.57)	

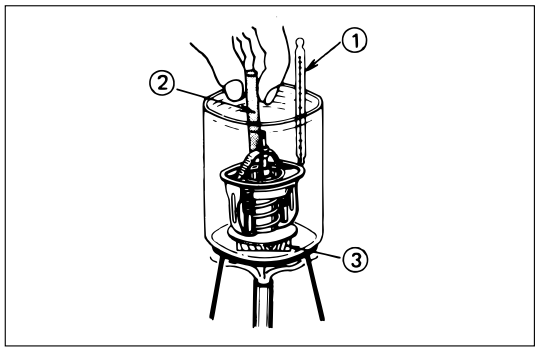

Thermostat Operating Test

1. Completely submerge the thermostat in water.
2. Heat the water.
   Stir the water constantly to avoid direct heat being applied to the thermostat.
3. Check the thermostat initial opening temperature.

Thermostat Initial Opening Temperature	°C(°F)
82 (180)	

4. Check the thermostat full opening temperature.

Thermostat Full Opening Temperature	°C(°F)
90 (194)	
Valve Lift at Fully Open Position	**mm(in)**
10 (0.39)	

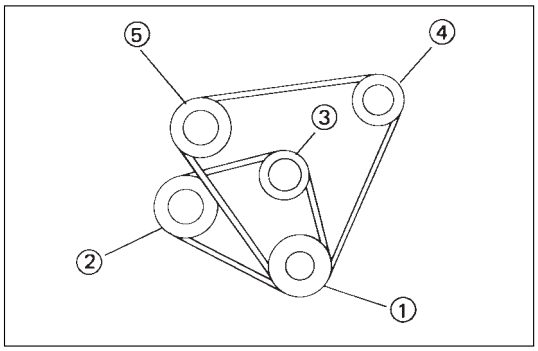

Drive Belt Adjustment

Check the drive belt tension.
Depress the drive belt mid-portion with a 98N (10kg/22 lb) force.

Drive Belt Deflection	mm(in)
10 (0.39)	

Check the drive belt for cracking and other damage.
① Crankshaft damper pulley.
② Alternator pulley
③ Cooling fan pulley
④ Oil pump pulley or idler pulley
⑤ Compressor pulley or idler pulley

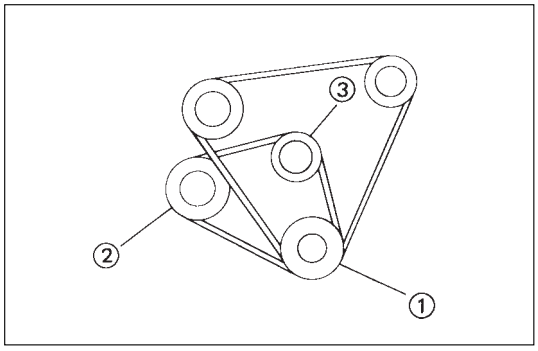

Cooling Fan Pulley Drive Belt

Fan belt tension is adjusted by moving the alternator.
Depress the drive belt mid-portion with a 98N (10Kg/22lb) force.
① Crankshaft damper pulley
② Alternator pulley
③ Cooling fan pulley

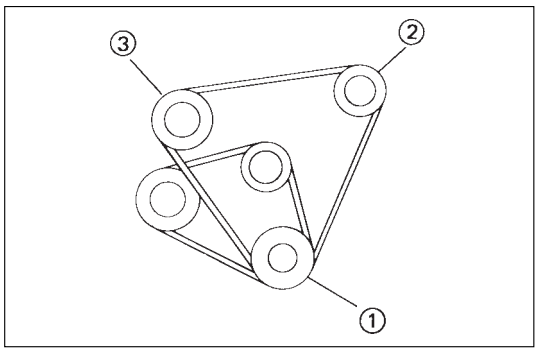

Compressor Pulley Drive Belt

Move the idler pulley as required to adjust the compressor drive belt tension.
If the vehicle is equipped with power steering, move the oil pump as required.
Depress the drive belt mid-portion with a 98N (10Kg/22lb) force.
① Crankshaft damper pulley
② Oil pump pulley or idler pulley
③ Compressor pulley

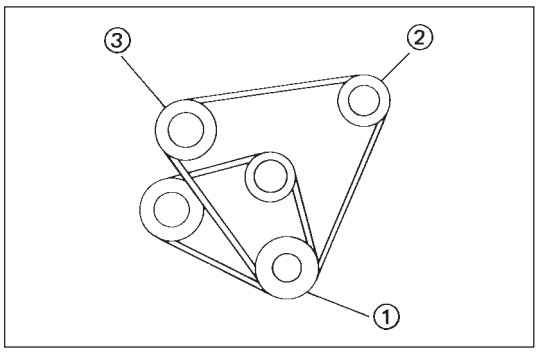

Power Steering Oil Pump Pulley Drive Belt

Move the oil pump as required to adjust the oil pump drive belt tension.
On air conditioner equipped models, both drive belts pulley must always be replaced as a set.
Depress the drive mid-portion with a 98N (10kg/22 lb) force.
① Crankshaft damper pulley
② Oil pump pulley
③ Compressor pulley or idler pulley

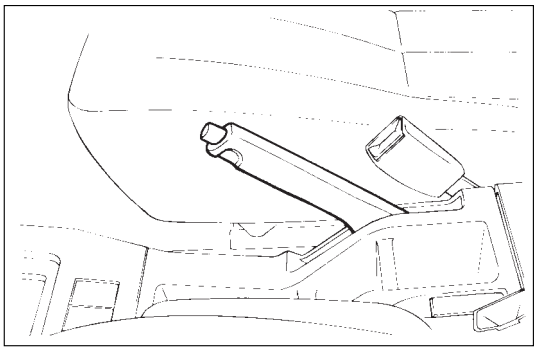

ENGINE CONTROL

Idling Speed Adjustment

1. Set the vehicle parking brake and choke the drive wheels.
2. Place the transmission in neutral.
3. Start the engine and allow it to warm up.
4. Disconnect the engine control cable from the control lever.
5. Set a tachometer to the engine.
6. Check the engine idling speed.
   If the engine idling speed is outside the specified range, it must be adjusted.

Engine Idling Speed	rpm
750 (4JG2-NA)/720 (4JG2-T)	

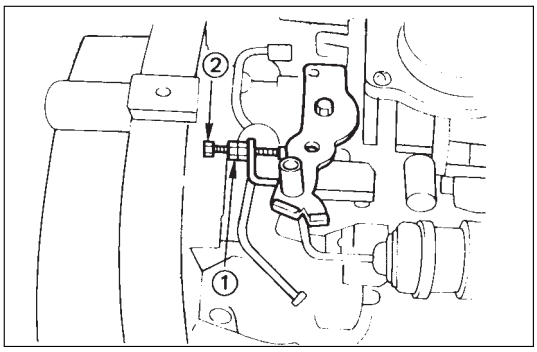

Idling Speed Adjustment

1. Loosen the idling set screw lock nut ① on the injection pump idling set bolt.
2. Adjust the idling speed to the specified range by turning the idling set bolt ②.
3. Lock the idling set bolt with the idling set screw lock nut.
4. Check that the idling control cable is tight (free of slack). If required, remove the slack from the cable.

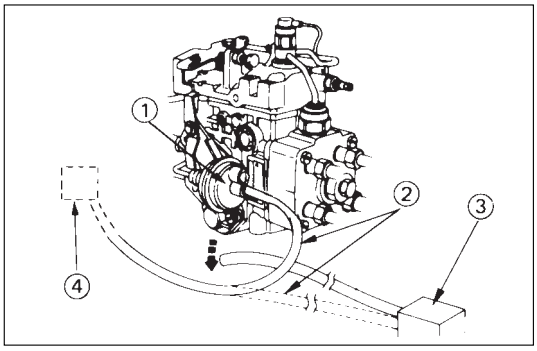

Fast Idling Speed Inspection

1. Set tachometer to the engine.
2. Disconnect the vacuum hose from the fast idle actuator ① on the injection pump.
3. Disconnect the other vacuum hose ② from the vacuum switching valve ③ and connect it to the fast idle actuator ① .
   The vacuum line will now be connected directly from the vacuum pump ④ to the fast idle actuator.
4. Check the engine fast idling speed.
   If the engine idling speed is outside the specified range, it must be adjusted.

Fast Idling Speed	rpm
850 – 950	

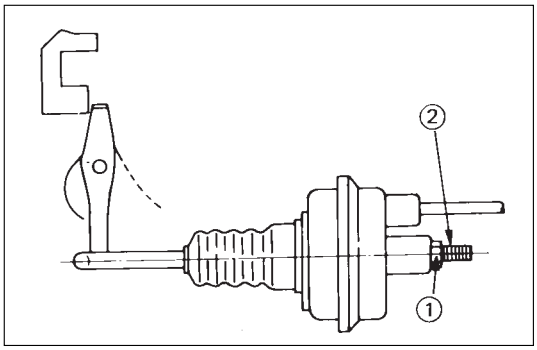

Fast Idling Speed Adjustment

1. Loosen the fast idle actuator lock nut ① .
2. Adjust the fast idling speed by turning the adjusting screw ② .
3. Tighten the lock nut ① .
4. Connect the vacuum hose to the fast idle actuator.
5. Connect the other vacuum hose to the vacuum switching valve.

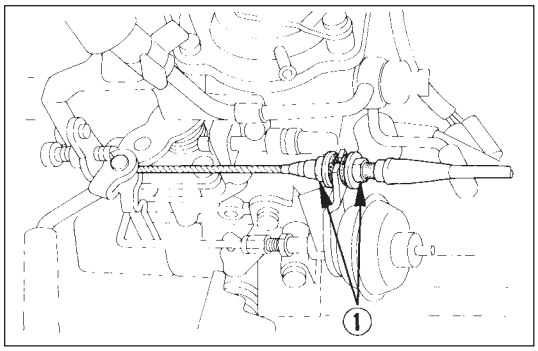

Accelerator Control

Accelerator Control Cable Adjustment

1. Loosen the accelerator cable clamp bolt ① .
2. Check that the idling control knob on the instrument panel is in the engine idling position.
3. Hold the accelerator lever ② in the fully closed position and stretch the control cable ③ in the direction indicated by the arrow to remove any slack.

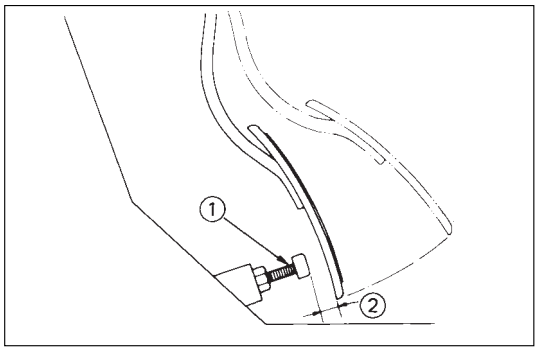

Accelerator Pedal Adjustment

1. Depress the accelerator pedal and hold it.
2. Use the stopper bolt ① to adjust the clearance between the stopper bolt end and the accelerator pedal lower face ② .

Accelerator and Stopper Bolt Clearance	mm(in)
2 – 5 (0.08 – 0.20)	

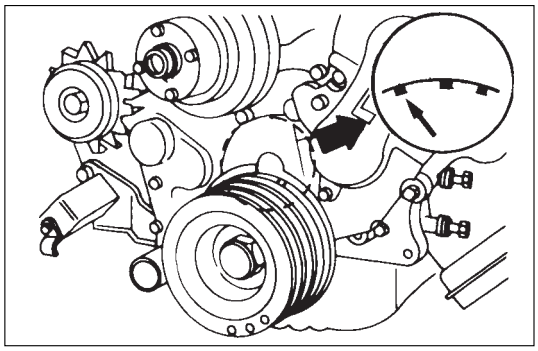

VALVE CLEARANCE ADJUSTMENT

1. Bring the piston in either the No. 1 cylinder or the No. 4 cylinder to TDC on the compression stroke by turning the crankshaft until the crankshaft damper pulley TDC line is aligned with the timing pointer.

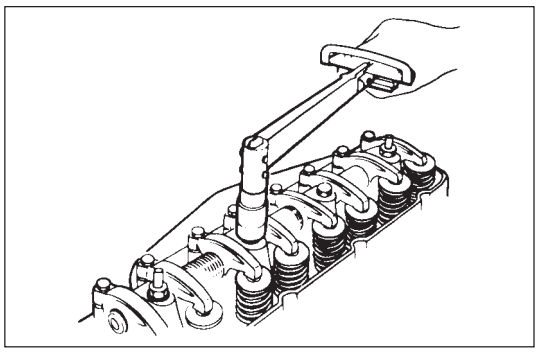

2. Check the rocker arm shaft bracket nuts for looseness. Tighten any loose rocker arm shaft bracket nuts before adjusting the valve clearance.

Rocker Arm Shaft Bracket Nut Torque	N·m(Kg·m/lb·ft)
54 (5.5/40)	

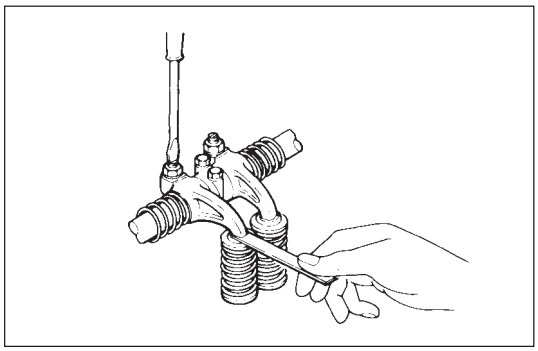

3. Check for play in the No. 1 intake and exhaust valve push rods.
   If the No. 1 cylinder intake and exhaust valve push rods have play, the No. 1 piston is at TDC on the compression stroke.
   If the No.1 cylinder intake and exhaust valve push rods are depressed, the No. 4 piston is at TDC on the compression stroke.

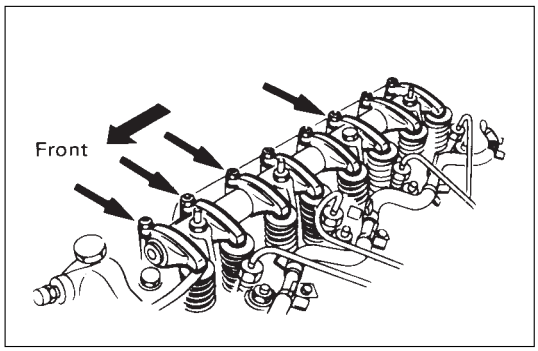

Adjust the No. 1 or the No. 4 cylinder valve clearances while their respective cylinders are at TDC on the compression stroke.

Valve Clearance (At Cold)	mm(in)
0.4 (0.016)	

4. Loosen each valve clearance adjusting screw as shown in the ilustration.
5. Insert a feeler gauge of the appropriate thickness between the rocker arm and the valve stem end.

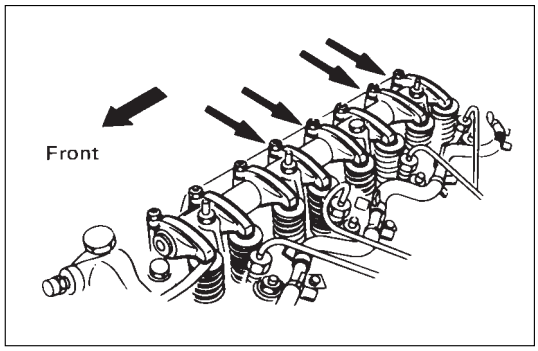

6. Turn the valve clearance adjusting screw until a slight drag can be felt on the feeler gauge.
7. Tighten the lock nut securely.
8. Rotate the crankshaft 360°.
9. Realign the crankshaft damper pulley TDC notched line with the timing pointer.
10. Adjust the clearances for the remaining valves as shown in the illustration.

INJECTION TIMING ADJUSTMENT

1. Set the No. 1 cylinder to Top Dead Center.
2. Remove injector pump distributor head plug.
3. Cancel Wax CSD with the handle of a screw driver.
4. Fit a dial gauge and set lift to 1 mm.
5. Set crankshaft damper pulley Top Dead Center mark about 45° before Top Dead Center from the pointer.
6. Set dial gauge in the “O” position.

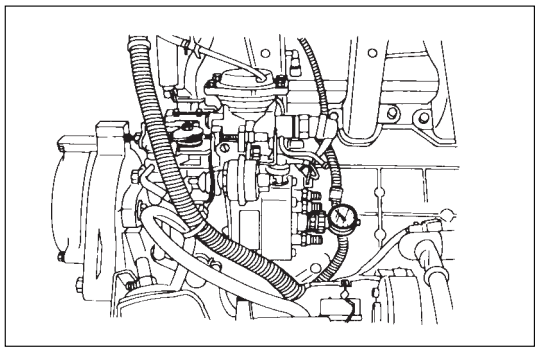

Measuring device : 5-8840-0145-0

7. Turn the crankshaft a little rightwise and leftwise and see it the pointer is stable in the “O” position.
8. Turn the crankshaft in the normal direction and read the measuring device’s indication at TDC (4JG2-T) or 1° ATDC (4JG2-NA).

Starting Timing	mm(in)
0.5 (0.02)	

9. If the injection timing is outside the specified range, continue with the following steps.
10. Loosen the injection pump fixing nuts and bracket bolts.
11. Adjust the injection pump setting angle.
    - If injection timing will be advanced, move the injection pump toward the engine.
    - If injection timing will be retarded, move the injection pump away from the engine.

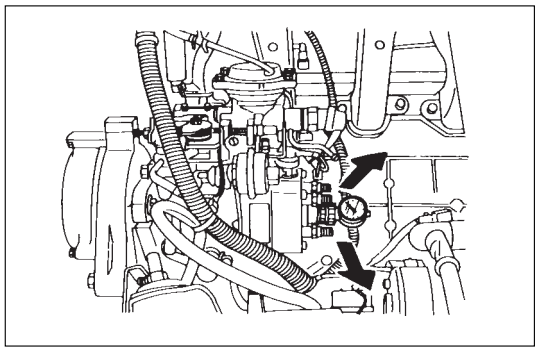

Tighten the pump fixing nut, adjust bolt and pump distributor head plug to the specified torque.

Pump Fixing Bolt	N·m(Kg·m/lb·ft)
19(1.9/13)	

Adjust Bolt	N·m(Kg.m/lb·ft)
40(4.1/30)	

Injection Pump Distributor Head Plug	N·m(Kg·m/lb·ft)
17 (1.7/12)	

CAUTION

- When installing the distributor head plug, be sure to use new copper washer.

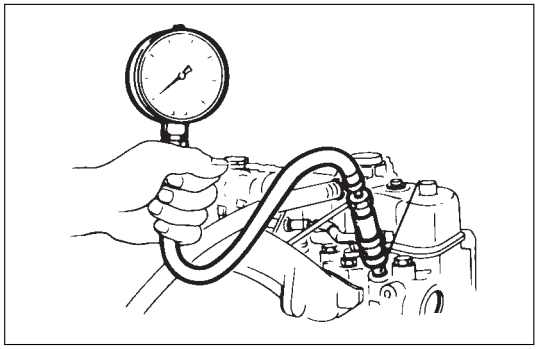

COMPRESSION PRESSURE MEASUREMENT

1. Start the engine and allow it to idle until the coolant temperature reaches 70 – 80°C (158 – 176°F).
2. Remove the following parts.
   * Glow plugs
   * Fuel cut solenoid connector
   * QOS (Quick-On Start System) fusible link wire at the connector.
3. Set the adapter and compression gauge to the No. 1 cylinder glow plug hole.
   Compression Gauge
   (with Adapter): 5-8840-2675-0
   Adapter: 5-8531-7002-0

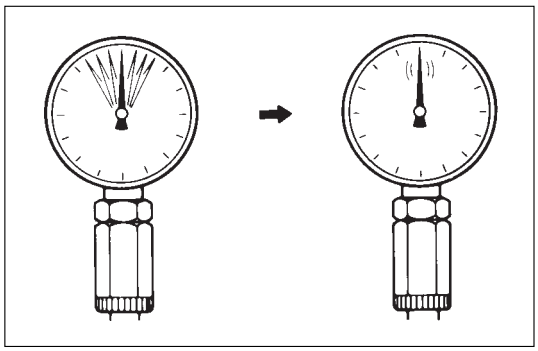

4. Turn the engine over with the starter motor and take the compression gauge reading.

Compression Pressure at 200 rpm	Kpa (Kg/cm^2 / Psi)
Standard	Limit
2940 (30/426)	2157 (22/313)

5. Repeat the procedure (Steps 3 and 4) for the remaining cylinders.
   If the measured value is less than the specified limit, refer to “Troubleshooting” in this Manual.

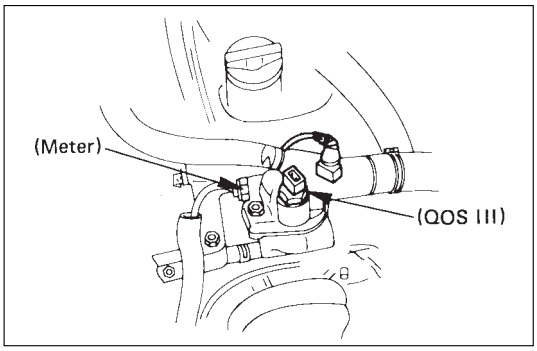

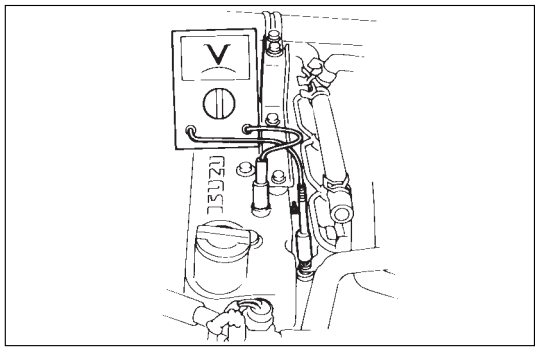

QUICK-ON START III SYSTEM

Quick-On Start System Inspection Procedure

1. Disconnect the thermo-sensor connection on the thermostat outlet pipe.
2. Turn the starter switch to the "ON" position.
   If the Quick-On Start III System is operating properly, the glow relay will make a clicking sound within seven seconds after the starter switch is turned on.
3. Measure the glow plug terminal voltage with a circuit tester immediately after turning the starter switch to the "ON" position.

Glow Plug Terminal Voltage	V
8 – 9	

NOTE:

Electrical power to the quick-on start system will be cut after the starter has remained in the "ON" position for ten seconds.
Turn the starter switch to the "OFF" position and back to the "ON" position.
This will reset the Quick-On Start III System.

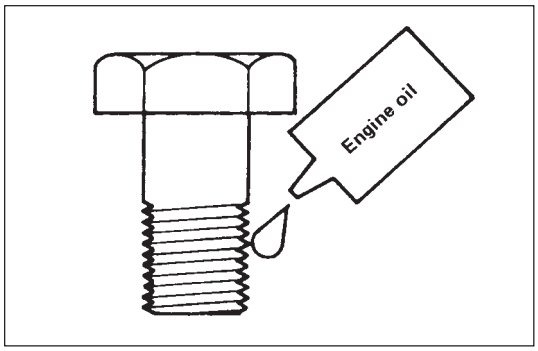

Nut and Bolt Angular Tightening Method (Using The Special Tool)

1. Carefully wash the nuts and bolts to remove all oil and grease.
2. Apply engine oil to the threads and setting faces of the nuts and bolts.
3. Use a torque wrench to tighten the nuts and bolts to the specified torque (snug torque).

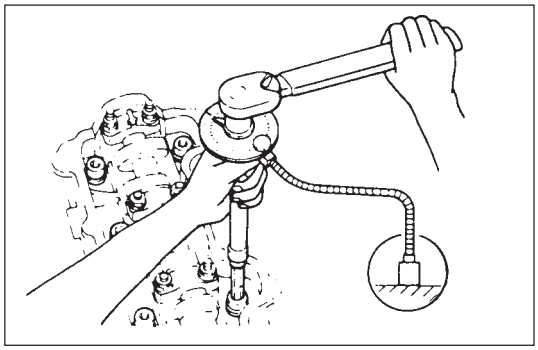

4. Attach the angle gauge to the socket wrench.
   Angle Gauge: 5-88400-266-0
5. Attach a magnet to some part to hold the angle gauge stationary.
6. Tighten the nuts and bolts to the specified angle, noting the angle gauge indication.

FIXING TORQUE

CYLINDER HEAD COVER, CYLINDER HEAD ROCKER, SHAFT BRAKER

N·m (Kg·m/lb·ft)

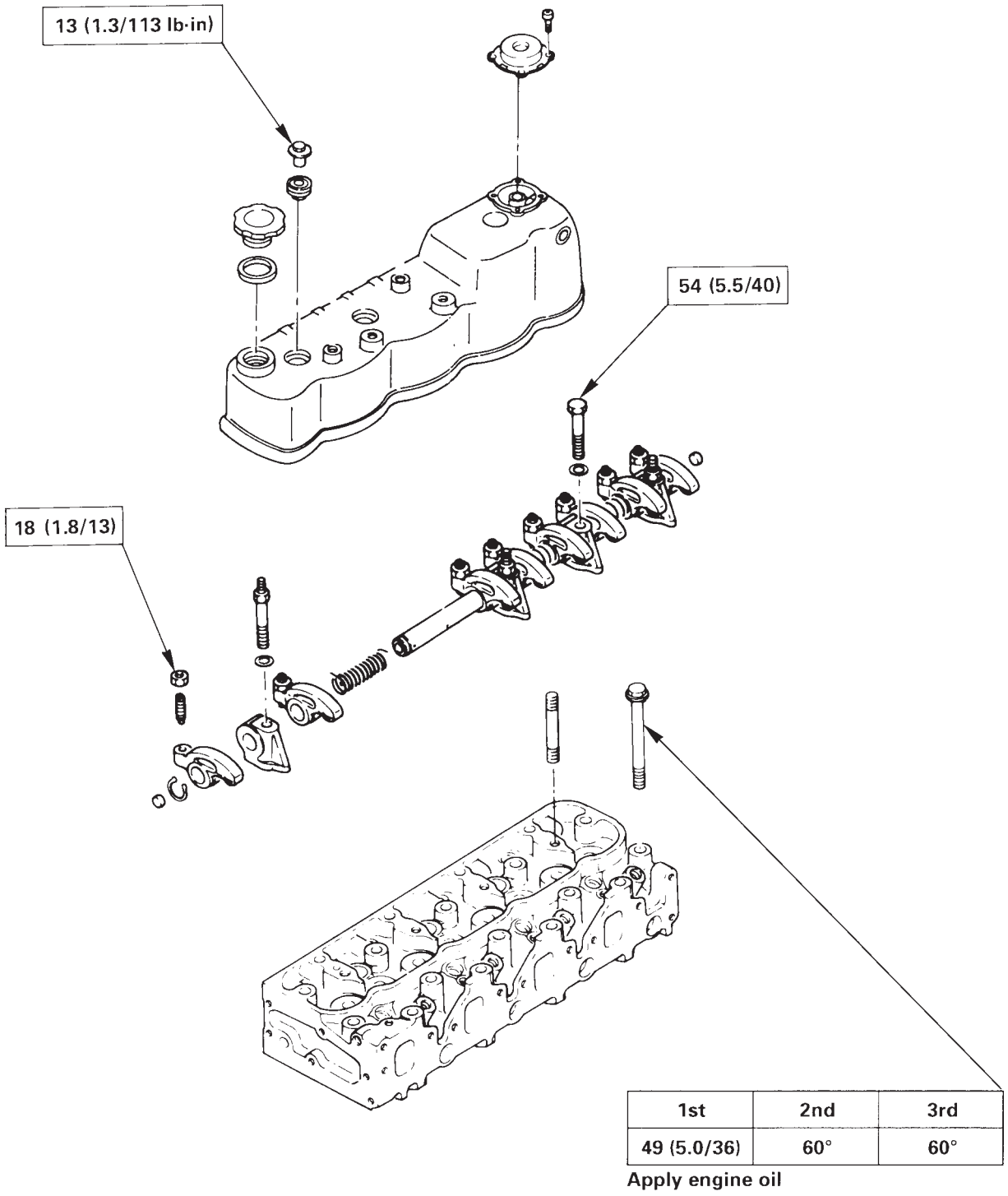

1st	2nd	3rd
49 (5.0/36)	60°	60°

Apply engine oil

Crankshaft Bearing Cap, Connecting Rod Bearing Cap, Crankshaft Damper Pulley, Flywheel, Crank Case

N·m (Kg·m/lb·ft)

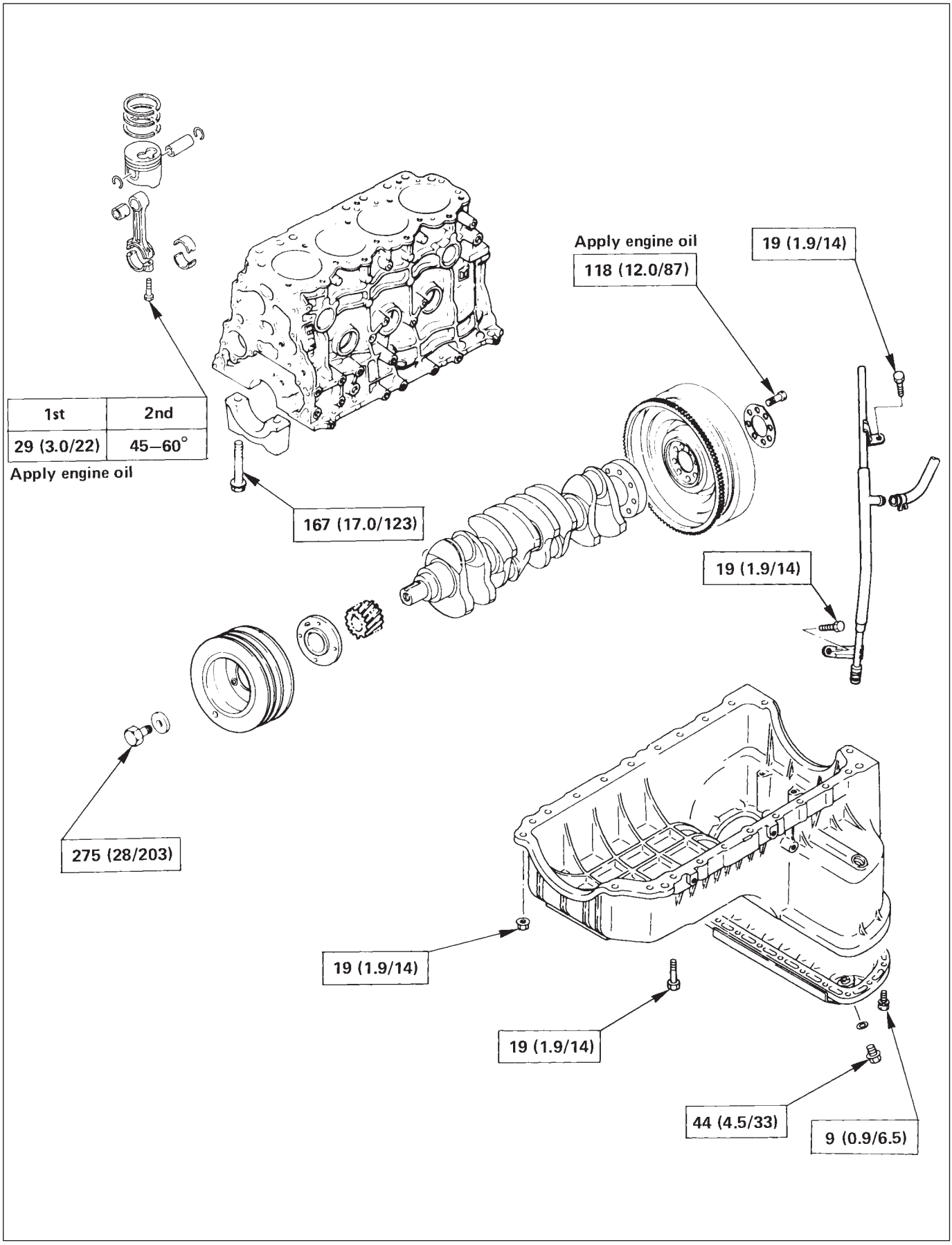

Gear Case, Timing Gear, Camshaft

N·m (Kg·m/lb·ft)

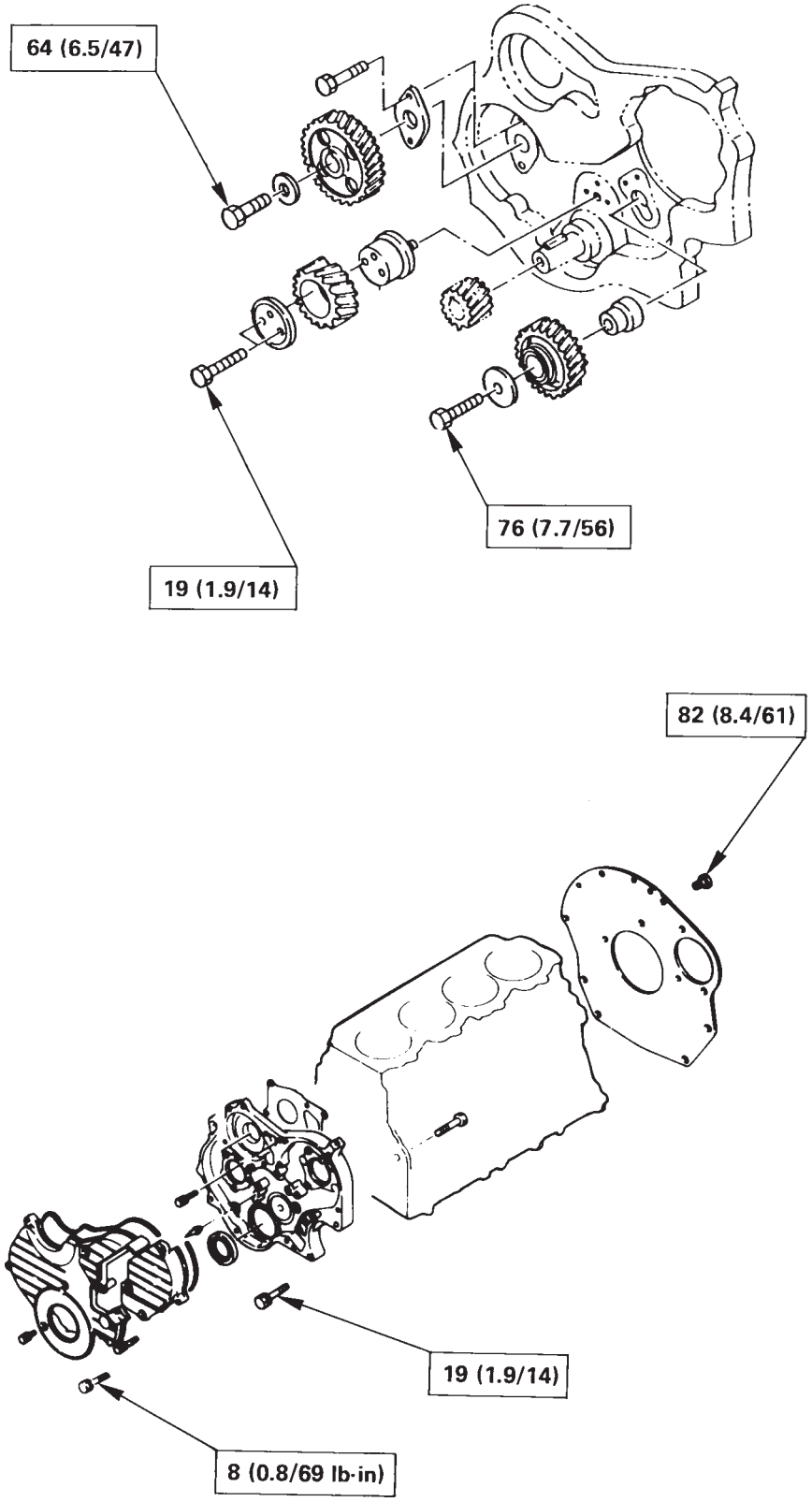

Cooling System and Lubrication System

N·m (Kg·m/lb·ft)

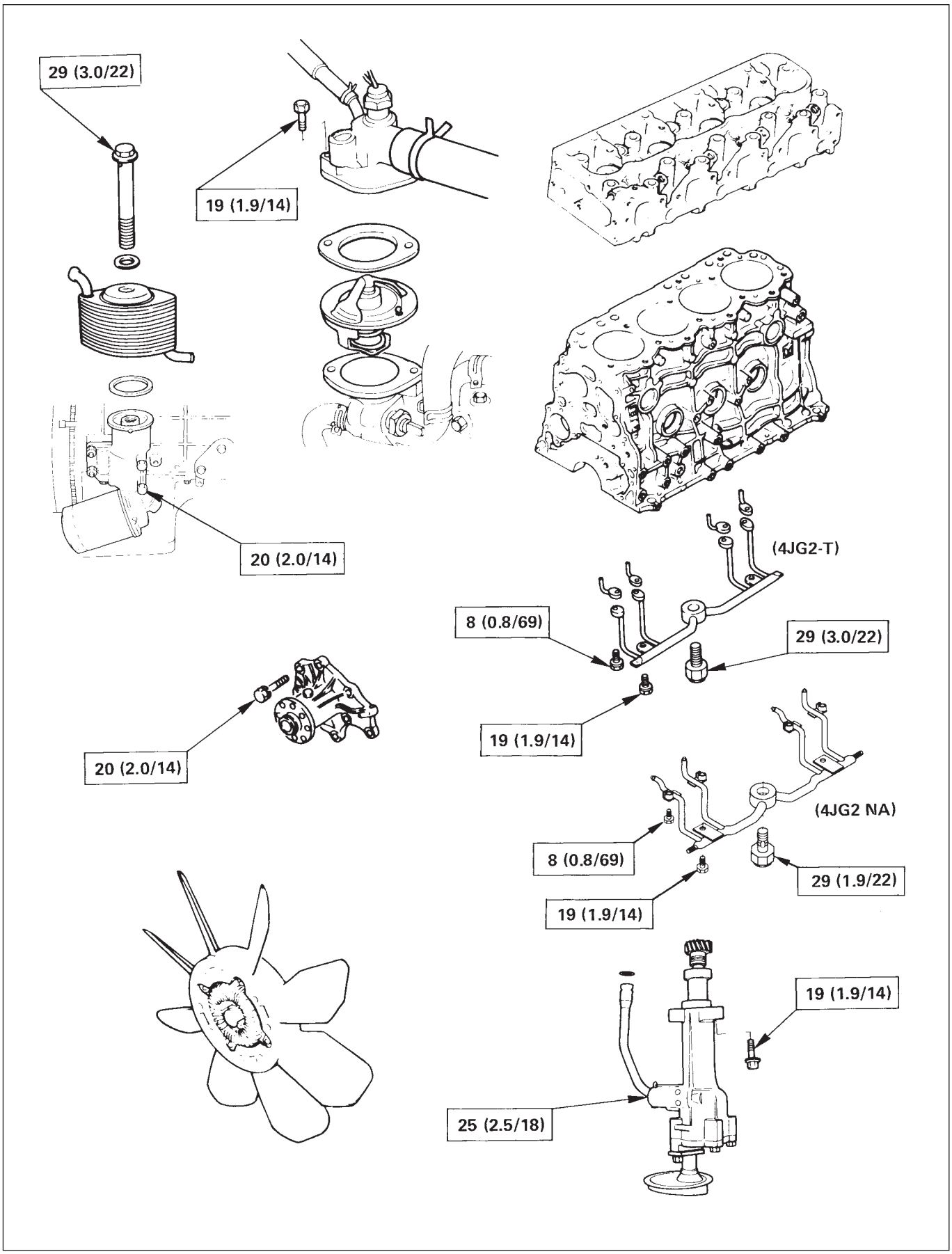

Intake Manifold, Exhaust Manifold, Turbo Charger

N·m (Kg·m/lb·ft)

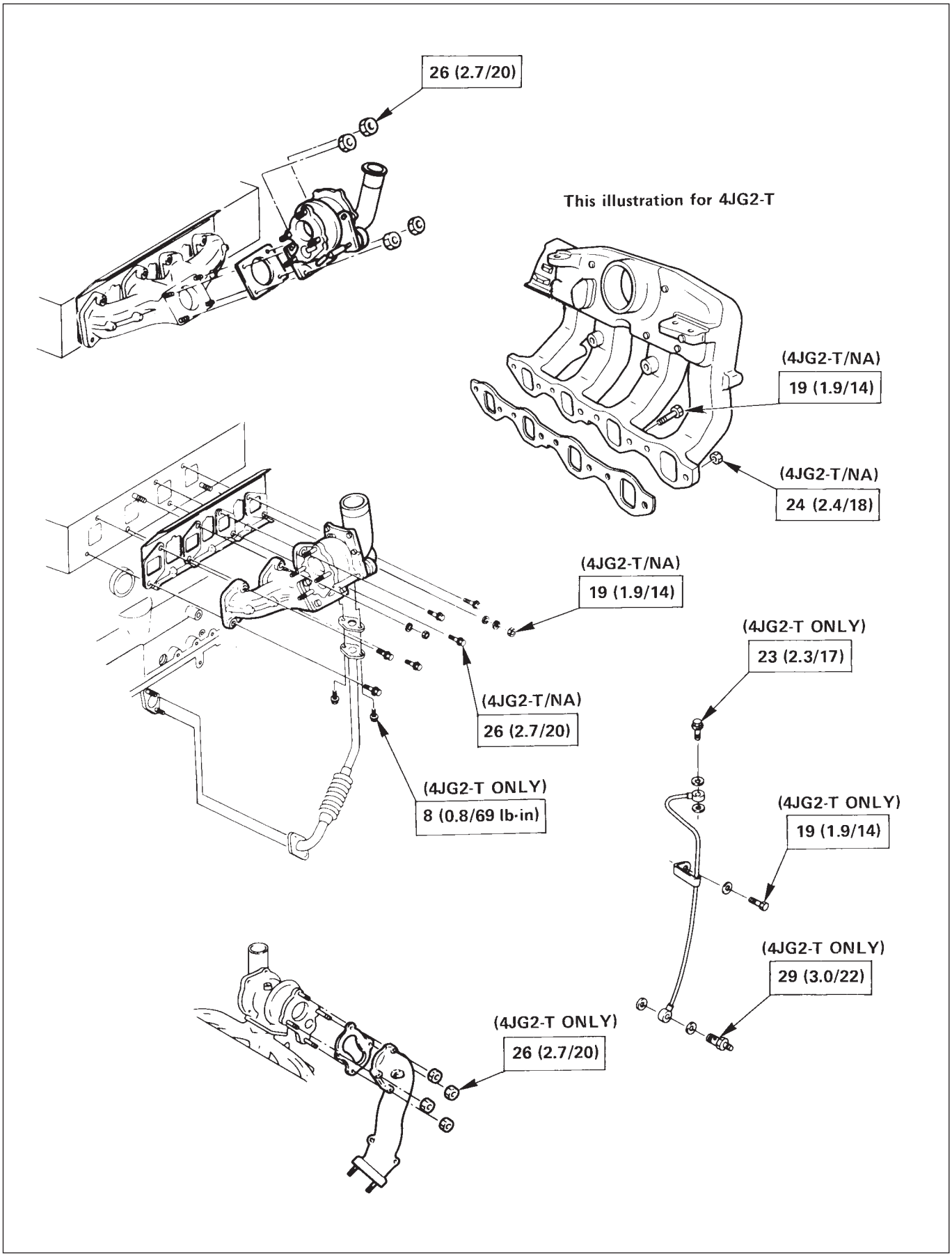

Engine Electricals

N·m (Kg·m/lb·ft)

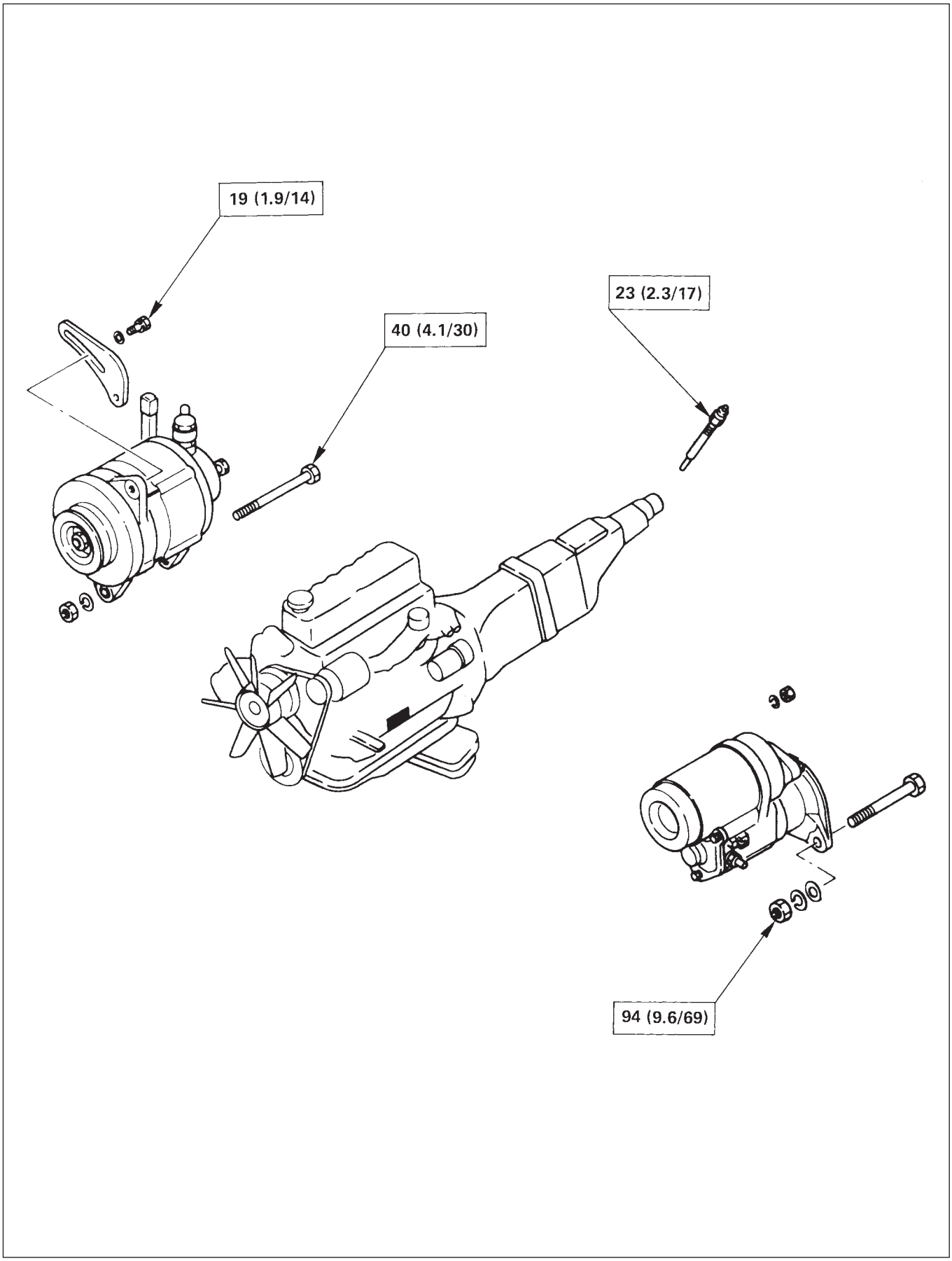

Engine Fuel

N·m (Kg·m/lb·ft)

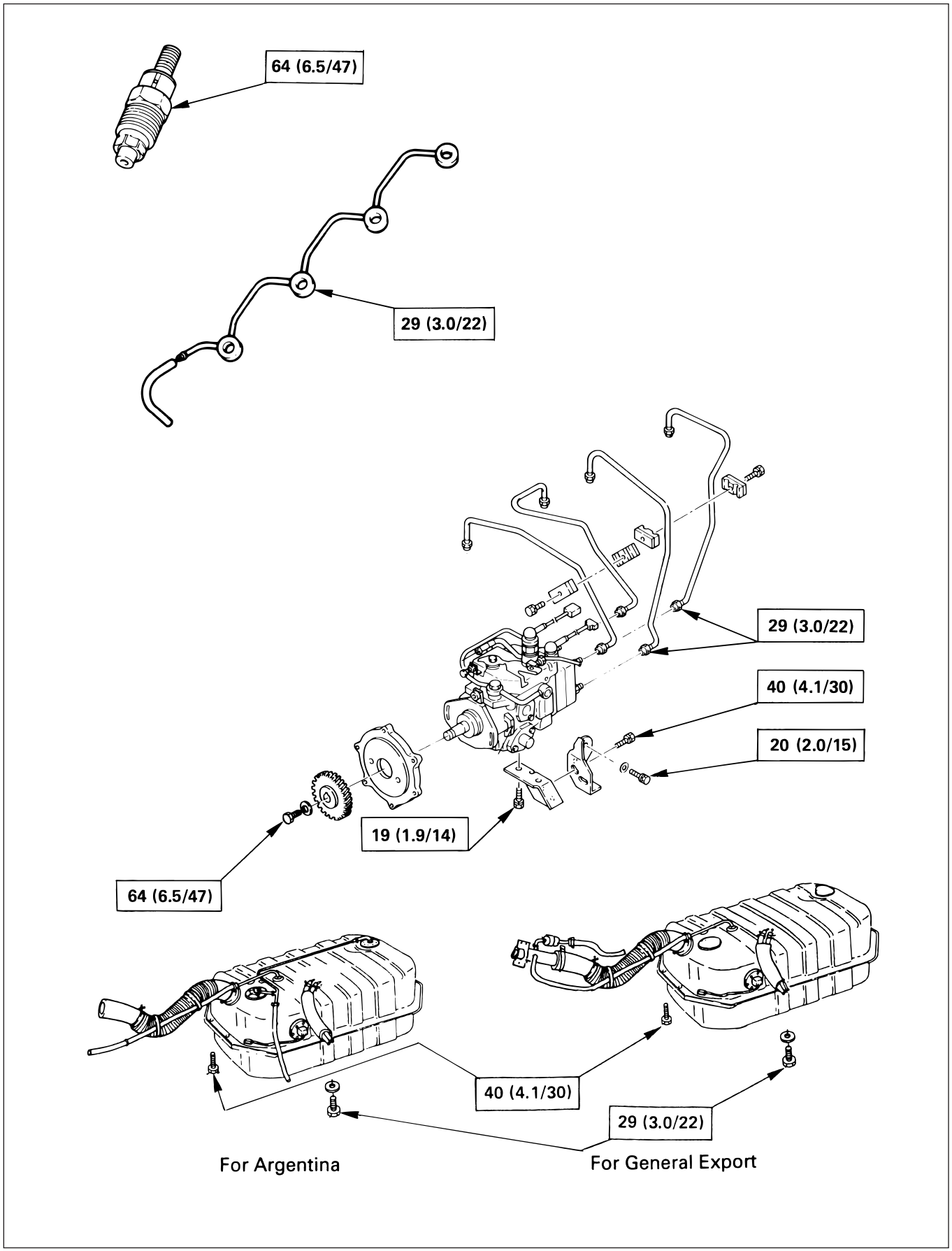

Engine Mount Bracket

N·m (Kg·m/lb·ft)

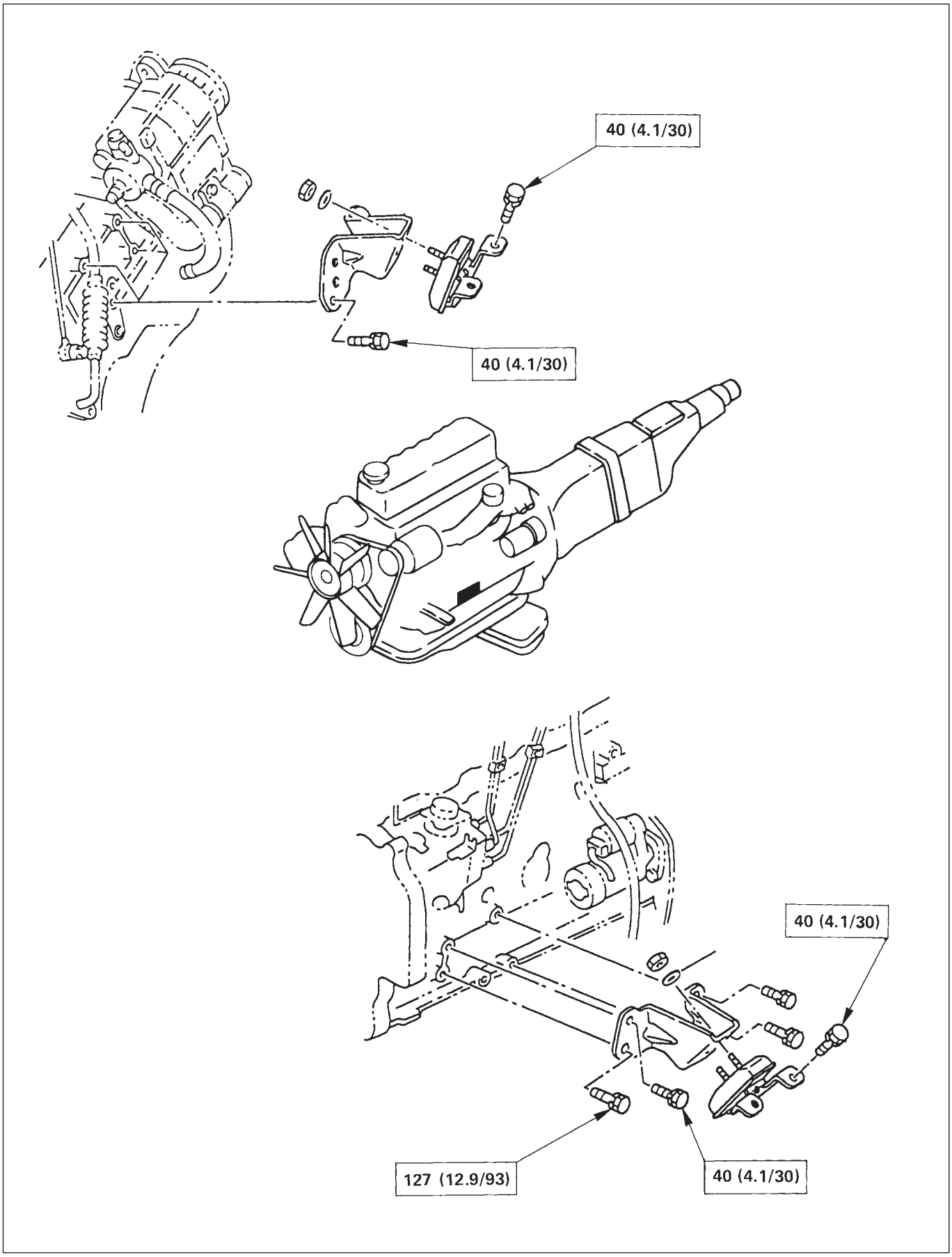

Exhaust System

N·m (Kg·m/lb·ft)

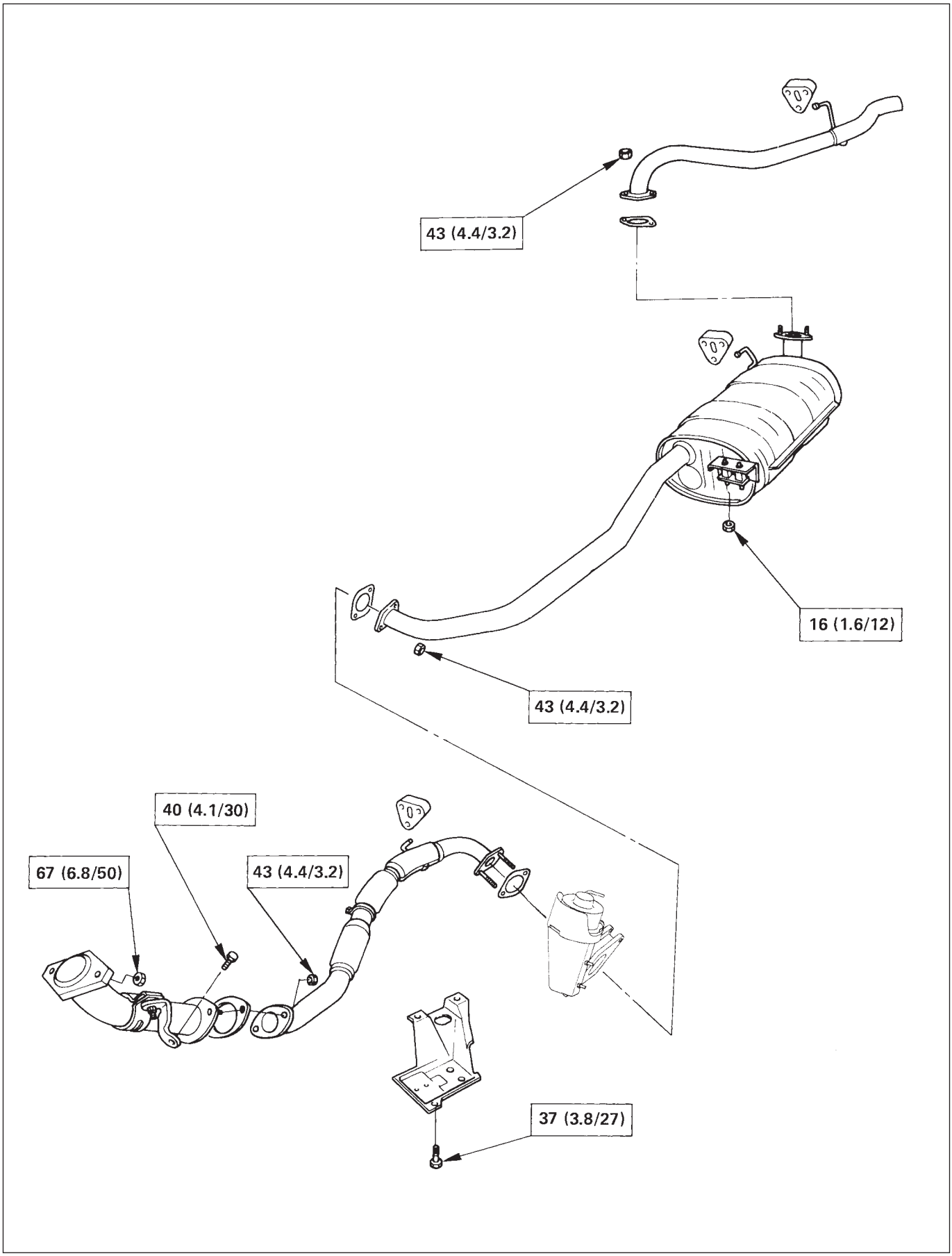

SPECIAL TOOLS

ILLUSTRATION	TOOL NO.	TOOL NAME
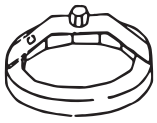	5-8840-0200-0	Oil Filter Wrench
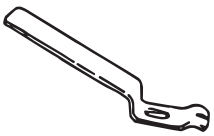	9-8523-1423-0 (J-29760)	Valve Spring Compressor
	5-8840-2033-0	Valve Stem Oil Seal Installer
	5-8840-9018-0	Piston Ring Compressor
	9-8523-1212-0	Valve Guide Replacer
	5-8840-2313-0	Cylinder Liner Installer
	5-8840-2304-0	Cylinder Liner Remover Ankle
	9-8523-1169-0	Cylinder Liner Remover
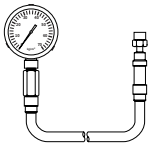	5-8840-2675-0	Compression Gauge
	5-8840-2153-0	Seal Cutter
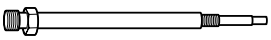	5-8531-7002-0	Gauge Adapter

SPECIAL TOOLS (CONT.1)

ILLUSTRATION	TOOL NO.	TOOL NAME
	5-8840-0145-0	Measuring Device
	5-8522-0024-0	Crankshaft Timing Gear Installer
	5-8840-0266-0	Angle Gauge
	5-8840-9016-0	Injection Nozzle Tester
	5-8840-2038-0	Bearing Replacer
	5-8840-2061-0	Crankshaft Front Oil Seal Installer
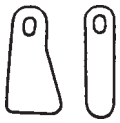	5-8840-2032-0	Engine Hanger
	5-8840-0259-0	Nozzle Holder Wrench
	5-8840-0253-0 (J-22700)	Fuel Filter Wrench
	5-8840-2360-0	Crankshaft Rear Oil Seal Remover
	5-8840-2359-0	Crankshaft Rear Oil Seal Installer

SPECIAL TOOLS (CONT.2)

ILLUSTRATION	TOOL NO.	TOOL NAME
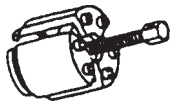	5-8840-2362-0	Crankshaft Front Oil Seal Remover
	5-8840-0133-0	Holder

MEMO

SECTION 6A

ENGINE MECHANICAL

CONTENTS

	PAGE
Cylinder Head	6A- 2
Valve Springs, Valve Stem Oil Seal, Valve, Valve Guide, Push rod	6A- 7
Camshaft, Tappet	6A-14
Rocker Arm Assembly	6A-19
Oil pump	6A-21
Crankshaft	6A-25
Piston and Connecting Rod	6A-34
Cylinder Block	6A-42

CYLINDER HEAD

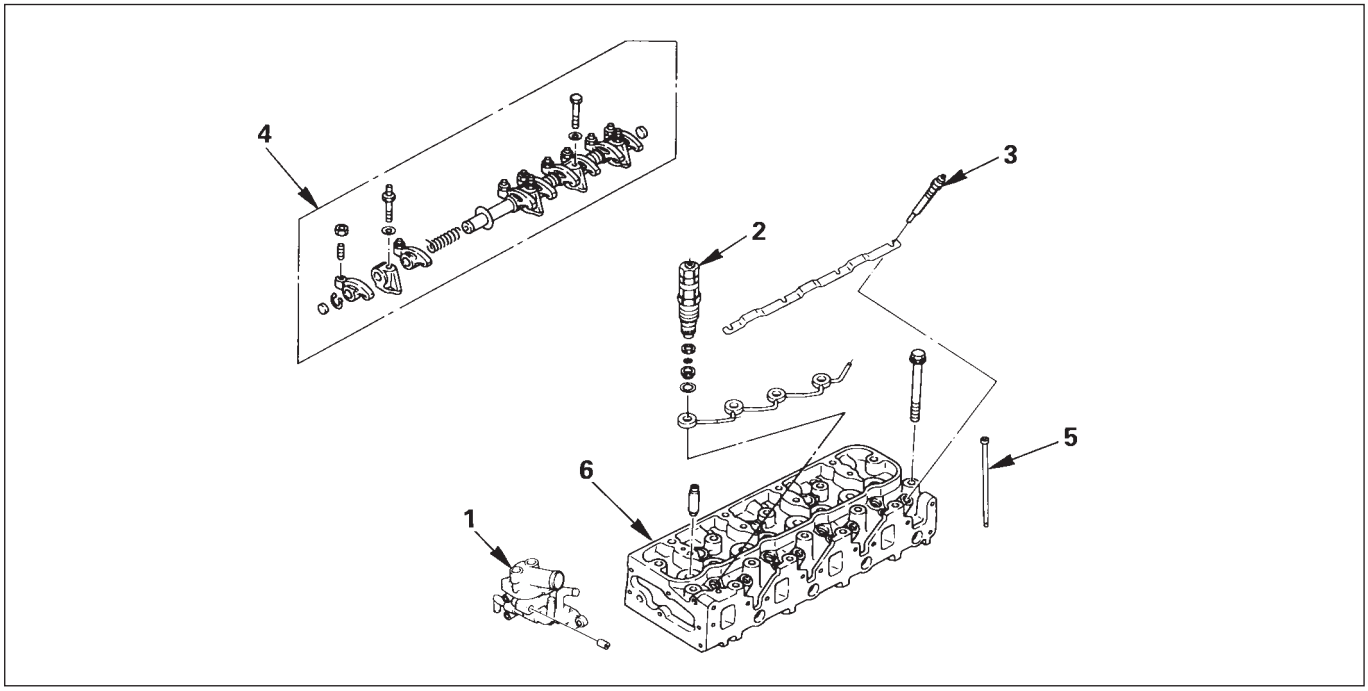

NOTE:

- **During disassembly, be sure that the valve train components are kept together and identified so that they can be re-installed in their original locations.**
- **Before removing the cylinder head from the engine and before disassembling the valve mechanism, make a compression test and note the results.**

DISASSEMBLY

1. **Thermostat Housing Assembly**
2. **Injection Nozzle Holder**
3. **Glow Plug and Glow Plug Connector**
4. **Rocker Arm Shaft and Rocker Arm**
5. **Push Rod**
6. **Cylinder Head**
   - Refer to Section 6A2 “Cylinder Head”

CLEAN

- Cylinder head bolts
- Cylinder head
  Carefully remove all varnish, soot and carbon to the bare metal. Do not use a motorized wire brush on any gasket sealing surface.

INSPECTION AND REPAIR

Make the necessary adjustments, repairs, and part replacements if excessive wear or damage is discovered during inspection.

- Cylinder head gasket and mating surfaces for leaks, corrosion and blow-by. If the gasket has failed, determine the cause;
  – Improper installation
    Loose or warped cylinder head
  – Insufficient torque on head bolts
  – Warped case surface

1. Cylinder head bolts for damaged threads or stretching and damaged heads caused by improper use of tools.

CAUTION:

Suspected bolts must be replaced.

2. Cylinder head for cracks, especially between valve seats and in the exhaust ports.
3. Cylinder head deck for corrosion, sand particles in head and porosity.

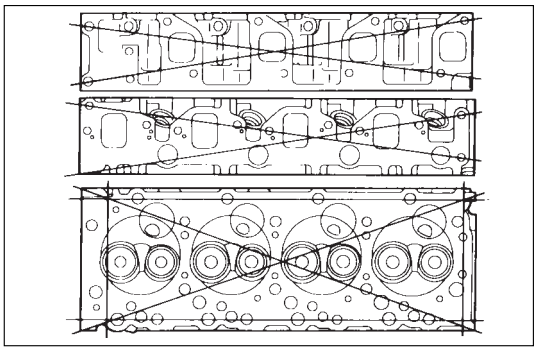

CAUTION:

Do not attempt to weld the cylinder head. Replace it.

4. Cylinder head deck, intake and exhaust manifold mating surfaces for flatness.

   These surfaces may be re-conditioned by milling. If the surfaces are "out of flat" by more than specification, the surface should be grinded to within specifications. If more than limit of specification, it should be replaced.

mm (in)

	Standard	Limit
Cylinder Head Lower Face Warpage	0.05 (0.0020) or less	0.20 (0.0079)
Cylinder Head Height	92 (3.6220)	–

5. Water jacket sealing plugs seating surfaces.

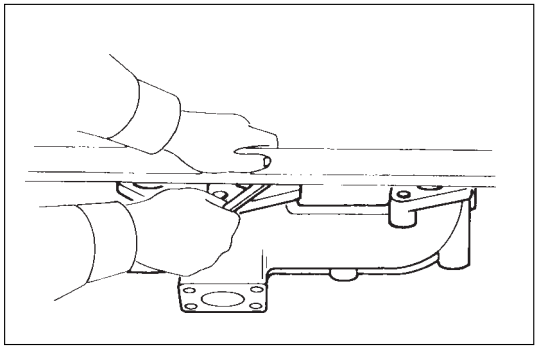

6. Use a straight edge and a feeler gauge to measure the manifold cylinder head fifting face warpage. Regrind the exhaust manifold cylinder head fifting surfaces if the measured values are between the specified limit and the standard.
   If the measured values exceed the specified limit, the manifold must be replaced.

Exhaust Manifold Warpage mm(in)

Standard	Limit
0.05 (0.0020) or less	0.20 (0.0079)

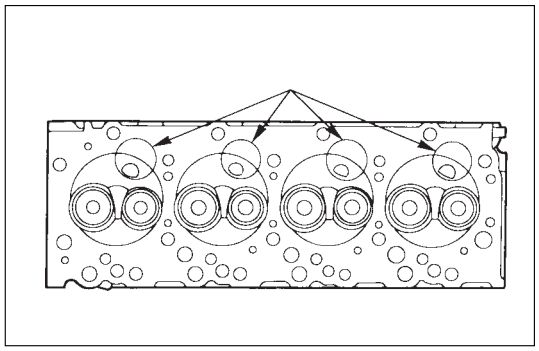

Hot plug depression

1. Clean the cylinder head lower side, taking care not to damage the hot plug surfaces.
2. Use a straight edge and feeler gauge to measure hot plug depression in a straight line from the No.1 hot plug to the No.4 hot plug.

   If the measured value exceeds the limit, the hot plugs must be replaced.

Depression Limit	mm(in)
0.02 (0.0008)	

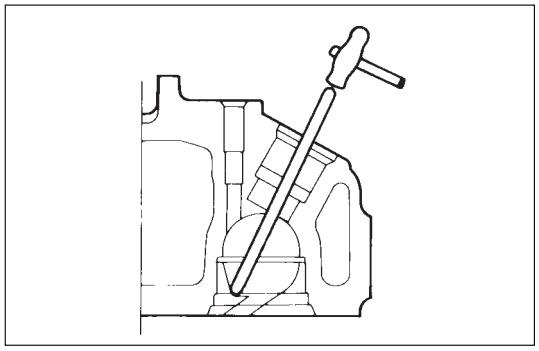

Hot plug removal

1. Insert a 3.0 – 5.0 (0.12 – 0.20 in.) diameter bar into the nozzle holder fitting hole unit it makes contact with the hot plug.
2. Lightly tap the bar with a hammer to drive the hot plug free.

   If the measured value exceeds the limit, the hot plugs must be replaced.

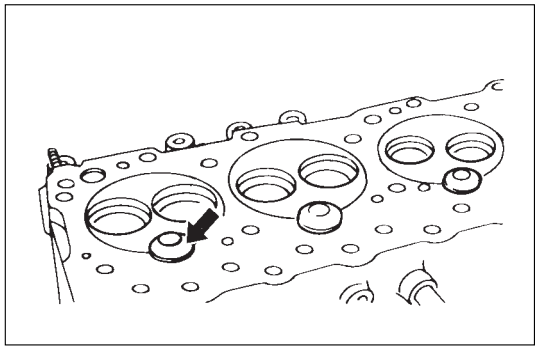

Combustion chamber inspection

1. Remove the carbon adhering to the inside of the combustion chamber. Take care not to damage the hot plug fitting positions.
2. Inspect the inside of the combustion chamber, the hot plug hole, and the hot plug machined faces for cracking and other damage.
   If cracking or damage is present, the cylinder head must be replaced.

Note:

Be absolutely certain that there are no scratches or protuberance on the combustion chamber surfaces which will be in contact with the hot plug after it is installed. There flaws will prevent the hot plug from seating correctly.

Hot plug inspection

Inspection the hot plugs for excessive wear and other damage. Replace the hot plugs if either of these conditions are discovered.

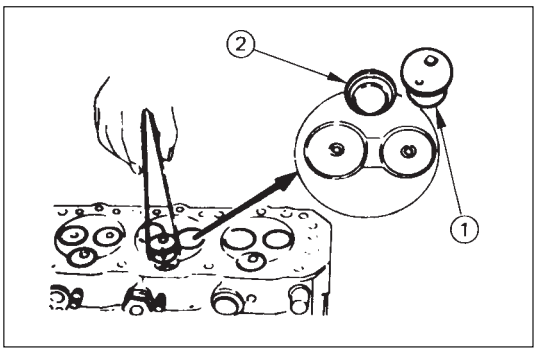

Hot plug installation

1. Align the hot plug knock ball ① with the cylinder head groove ② and tap it temporarily into position with a plastic hammer.

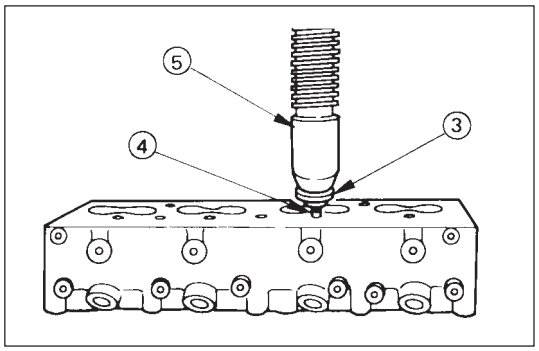

2. Place an appropriate metal plate ③ thick over the hot plug upper surface ④ .
3. Use a press ⑤ to exert a pressure of 44000-54000N(4500 – 5500 kg) (9923 – 12128 lbs.) on the metal plate covering the hot plug upper surface. This will drive the hot plug into position.
4. Lightly tap the hot plug heads to make sure that they are firmly seated.
5. Repeat the procedure Steps 1-4 for the remaining hot plugs.

CAUTION:

Do not apply pressure greater than that specified. Damage to the cylinder head will result.

6. Use a surface grinder to grind off any hot plug surface protuberances.
   The hot plug surfaces must be perfectly flush with the cylinder head.
7. After grinding, make sure that the hot plug surfaces are completely free of protuberances.
   The hot plug surfaces must also be free of depressions.

Once again, lightly tap the hot plug heads to make sure that they are firmly seated.

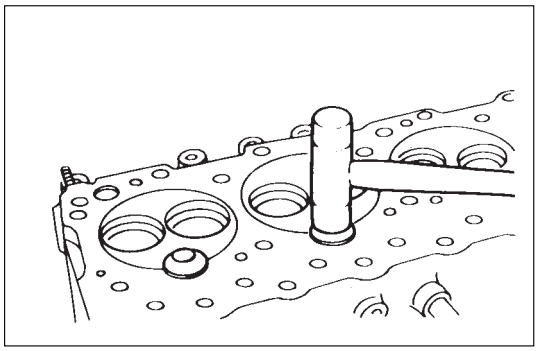

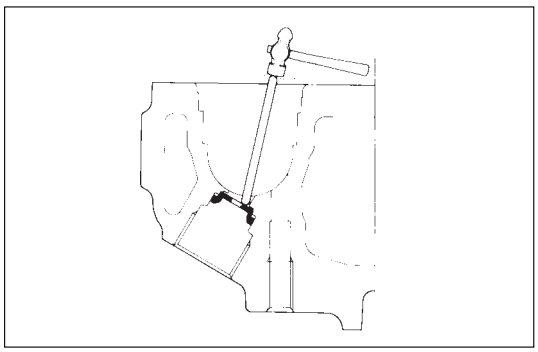

Heat shield removal

After removing the hot plugs, use a hammer ① and a brass bar ② to lightly tap the lower side of the heat shiled ③ and drive it free.

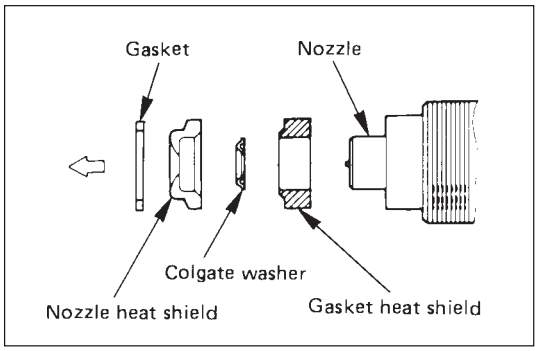

Heat shield installation

Install the heat shield washer and the heat shield to the cylinder head from the nozzle holder installation hole side. Lightly tap the flange into place with a brass bar.

The heat shield flange side must be facing up.

NOTE:

Always install a new heat shield. Never reuse the old heat shield.

REASSEMBLY

6. Cylinder Head

- Refer to Section 6A2 “Cylinder head”

5. Push Rod

4. Rocker Arm Shaft and Rocker Arm

- Tighten rocker arm shaft fixing bolts

N·m (Kg·m/lb·ft)
54 (5.5/40)

3. Glow Plug and Glow Plug Connector

- Tighten glow plugs.

N·m (Kg·m/lb·ft)
23 (2.3/17)

2. Injection Nozzle Holder

- Refer to Section 6C2 “Injection nozzle”.

1. Thermostat Housing Assembly

- Tighten thermostat housing assembly fixing bolt

N·m (Kg·m/lb·ft)
19 (1.9/14)

VALVE SPRING, VALVE STEM OIL SEAL, VALVE, VALVE GUIDE, PUSH ROD

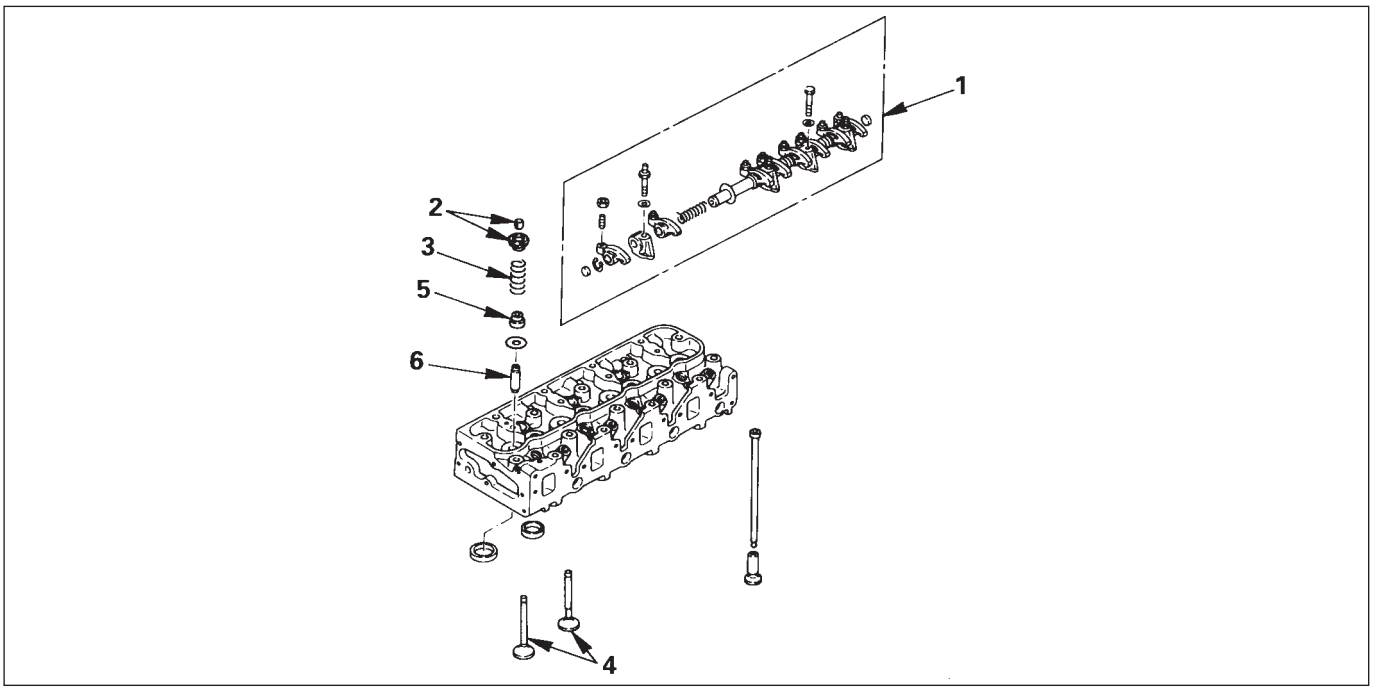

DISASSEMBLY

1 **Rocker Arm Asembly**

2 **Split Collar**
Using special Tool, compress valve spring
Valve spring compressor: 9-8523-1423-0(J-29760)

3. **Valve Spring**
4. **Valve**
5. **Valve Stem Oil Seal**

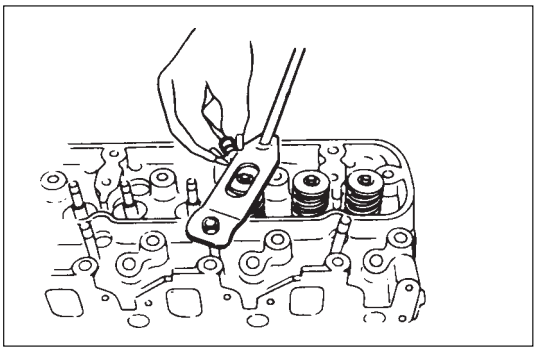

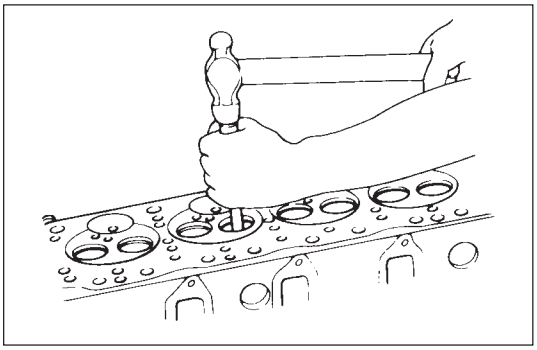

6. **Valve Guide**
Valve Guide Replacer: 9-8523-1212-0

INSPECTION AND REPAIR

Make the necessary adjustments, repairs, and part replacements if excessive wear or damage is discovered during inspection.

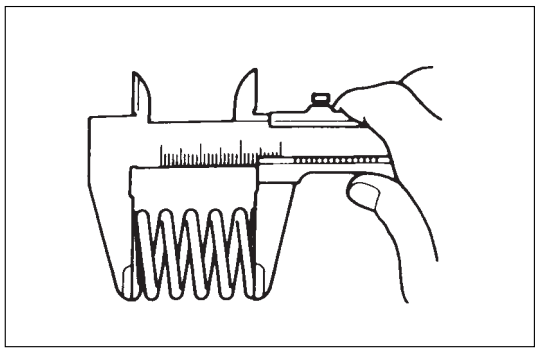

Valve spring

CAUTION:

Visually inspect the valve springs and replace them if damage or abnormal wear is evident.

1. **Free height**
   - Measure the free height of the springs. The springs must be replaced if the height is below the specified limit.

mm(in)

Standard	Limit
48.0 (1.8898)	47.100 (1.8543)

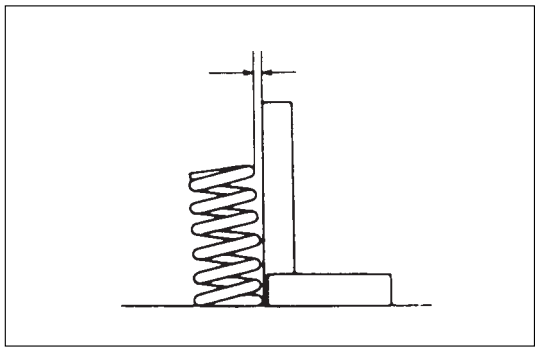

2. **Squareness**
   - Measure the valve spring squareness with a steel square.
   - Replace the valve springs if the measured value exceeds the specified limit.

Limit	mm(in)
1.7 (0.0669)	

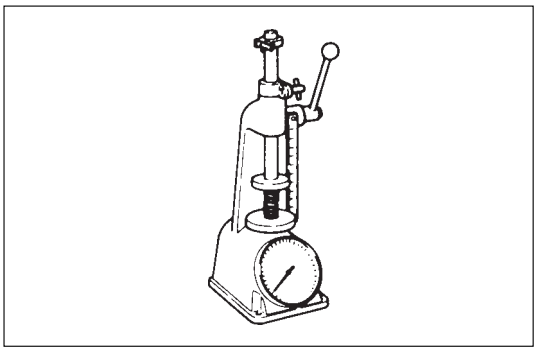

3. **Spring tension**
   - Use a spring tester to compress the springs to the installed height. Measure the compressed spring tension.

     Replace the springs if the measured tension is below the specified limit.

N(Kg/lb)

At installed height 38.9mm (1.5in)	Standard	Limit
	294.0 (30/66.1)	257.9 (26.3/57.9)

Valve Guide

CAUTION:

Taking care not to damage the valve seat contact surface, when removing carbon adhering to the valve head.

Carefully inspect the valve stem for scratching or abnormal wear. If these conditions are present, the valve and the valve guide must be replaced as a set.

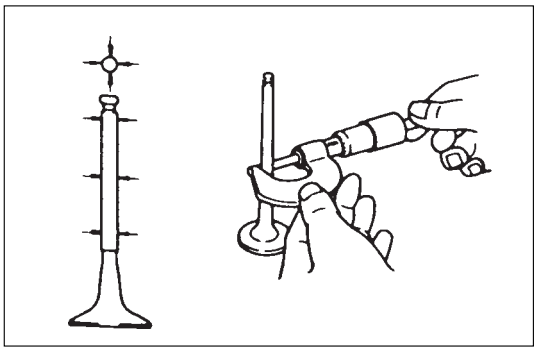

1. Valve Guide Clearance

- Measure the valve stem diameter with a micrometer.
  If the valve stem diameter is less than the specified limit, the valve and the valve guide must be replaced as a set.

mm(in)

		Standard	Limit
Diameter of Valve stem	Inlet	7.946 – 7.961 (0.3128 – 0.3134)	7.880 (0.3102)
	Exhaust	7.921 – 7.936 (0.3118 – 0.3124)	7.850 (0.3091)

- Measure the inside diameter of the valve guide with a micrometer.
- Subtract the measured outer diameter of the valve stem from the measured inner diameter of the valve guide. If the valve exceeds of the valve guide. If the valve exceeds the specified limit, the valve and the valve guide must be replaced as a set.

mm(in)

	Standard	Limit
Inlet clearance	0.039 – 0.071 (0.0015 – 0.0028)	0.200 (0.0079)
Exhaust clearance	0.064 – 0.096 (0.0025 – 0.0038)	0.250 (0.0098)

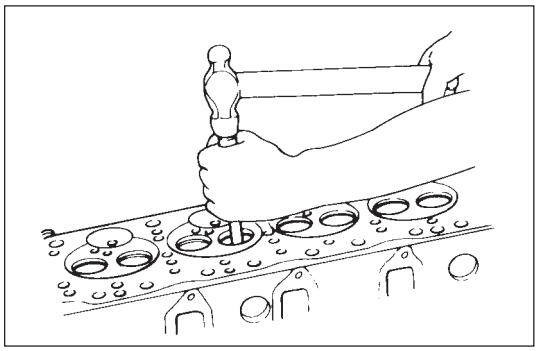

Valve Guide Replacement

1. Using special tool, drive out the valve guide from the combustion chamber side.
   Valve guide replacer: 9-8523-1212-0

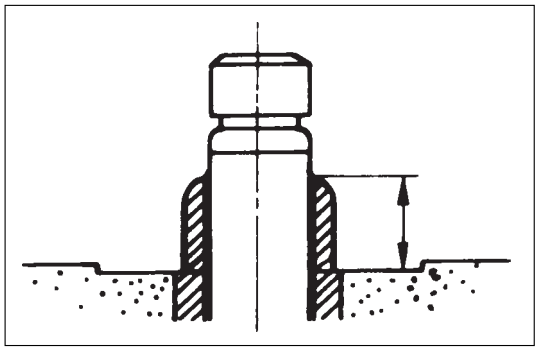

2. Apply engine oil to the outside of the valve guide. Using special tool, drive in a new valve guide from cylinder head upper face side, and check the valve guide height.
   Valve guide replacer: 9-8523-1212-0

Height	mm(in)
13 (0.5118)	

NOTE:

If the valve guide has been removed, both the valve and the valve guide must be replaced as a set.

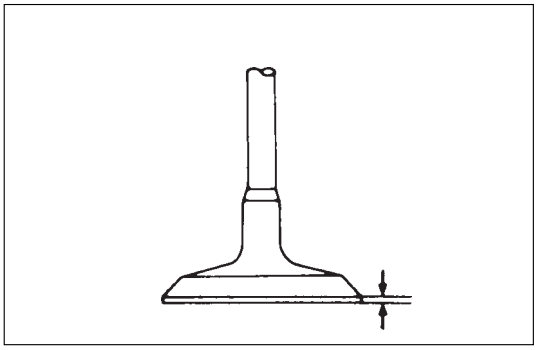

Valve Thickness

1. Measure the valve thickness.
2. If the measured value is less than the specified limit, the valve and the valve guide must be replaced as a set.

mm(in)

	Standard	Limit
Inlet	1.34 (0.0528)	1.1 (0.0433)
Exhaust	1.38 (0.0543)	1.1 (0.0433)

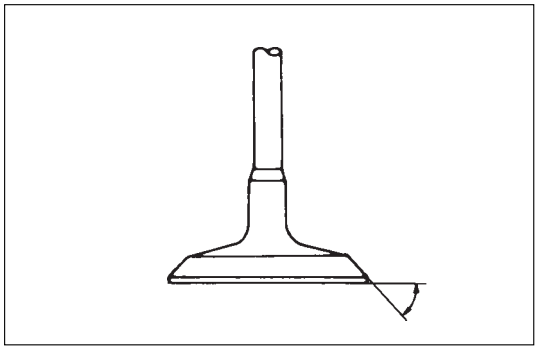

Contact surface angle on valve seat on valve

1. Measure contact surface angle on valve seat.
2. If the measured value exceeds the limit, replace valve, valve guide and valve seat as a set.

Standard	Degree
45	

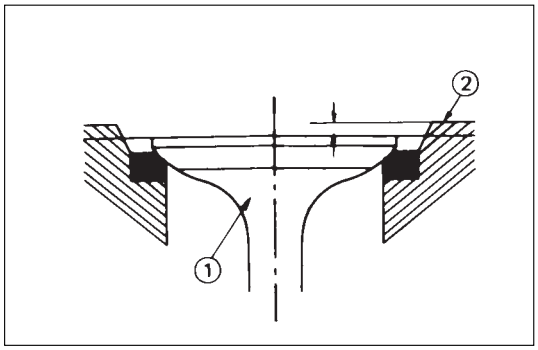

Valve Depression

1. Install the valve ① to the cylinder head ②.
2. Use a depth gauge or a straight edge with steel rule to measure the valve depression from the cylinder head lower surface.
   If the measured value exceeds the specified limit, the valve seat insert must be replaced.

Valve Depression mm(in)

Standard	Limit
1.1 (0.0433)	1.6 (0.0630)

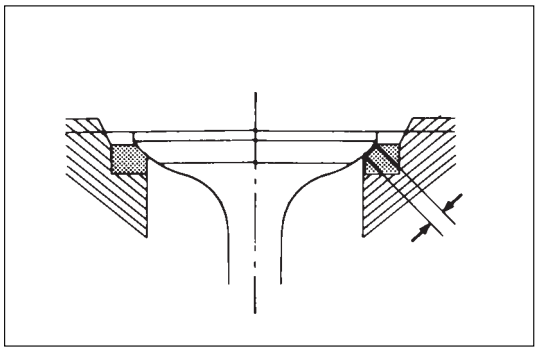

Valve Contact Width

1. Check the valve contact faces for roughness and unevenness. Make smooth the valve contact surfaces.
2. Measure the valve contact width.
   If the measured value exceeds the specified limit, the valve seat insert must be replaced.

mm(in)

	Standard	Limit
Inlet	1.7 (0.0669)	2.2 (0.0866)
Exhaust	2.0 (0.0787)	2.5 (0.0984)

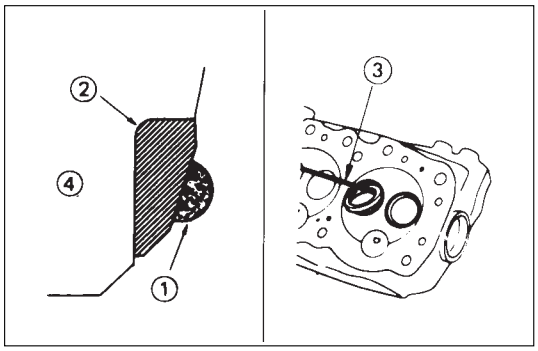

Valve Seat Insert Replacement

Valve Seat Insert Removal

1. Arc weld the entire inside circumference ① of the valve seat insert ②.
2. Allow the valve seat insert to cool for a few minutes. This will invite contraction and make removal of the valve seat insert easier.
3. Use a screwdriver ③ to pry the valve seat insert free. Take care not to damage the cylinder head √ .
4. Carefully remove carbon and other foreign material from the cylinder head insert bore.

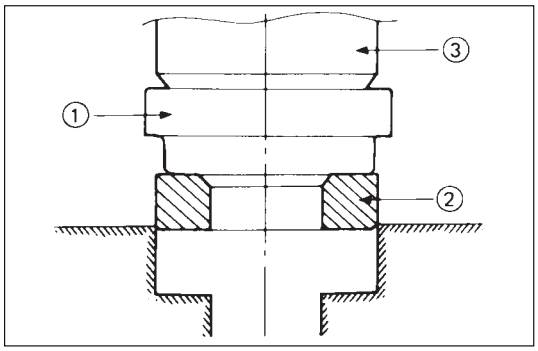

Valve Seat Insert Installation

1. Carefully place the attachment ① (having a smaller outside diameter than the valve seat insert) on the valve seat insert ② .

Note:

The smooth side of the attachment must contact the valve seat insert.

2. Use a bench press ③ to gradually apply pressure to the attachment and press the valve seat insert into place.

Note:

Do not apply an excessive amount of pressure with the bench press. Damage to the valve seat insert will result.

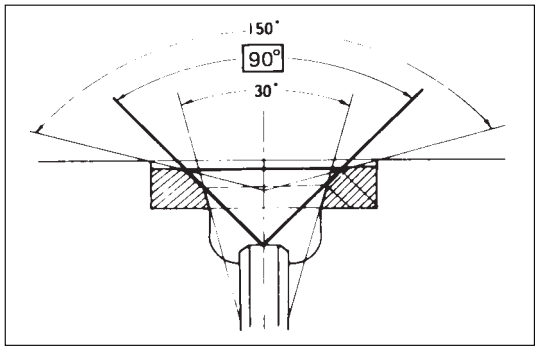

Valve Seat Insert Correction

1. Remove the carbon from the valve seat insert surface.
2. Use a valve cutter (15°, 45°, and 75° blades) to minimize scratches and other rough areas. this will bring the contact width back to the standard value.

   Remove only the scratches and rough areas. Do not cut away too much. Take care not to cut away unblemished areas of the valve seat surface.

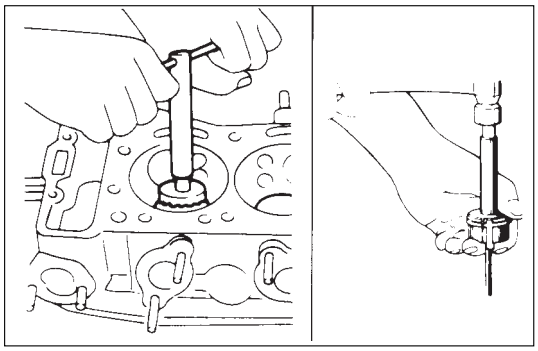

Valve Seat Angle	degree
45	

NOTE:

Use an adjustable valve cutter pilot.
Do not allow the valve cutter pilot to wobble inside the valve guide.

3. Apply abrasive compound to the valve seat insert surface.
4. Insert the valve into the valve guide.
5. Turn the valve while tapping it to fit the valve seat insert.
6. Check that the valve contract width is correct.
7. Check that the valve seat insert surface is in contact with the entire circumference of the valve.

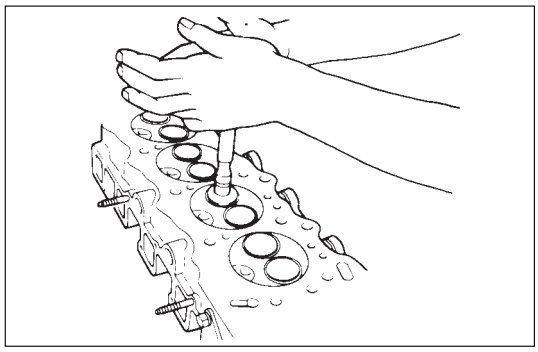

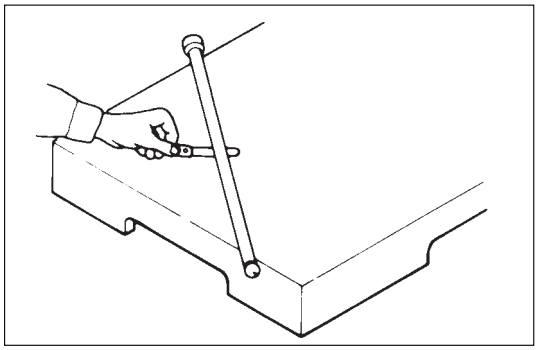

Push Rod Curvature

1. Lay the push rod on a surface plate.
2. Roll the push rod along the surface plate and measure the push rod cuvature with a thickness gauge.

   If the mesure value exceeds the specified limit, the push rod must be replaced.

Push Rod Curvature Limit	mm(in)
0.3 (0.0118)	

3. Visually inspect both ends of the push rod for excessive wear and damage. The push rod must be replaced if these conditions are discovered during inspection.

REASSEMBLY

6. Valve Guide

- Apply engine oil to the outside of the valve guide.

  Using special tool, drive in a new valve guide from the cmashft side.

Valve guide replacer: 9-8523-1212-0

5. Valve Stem Oil Seal

- Using special tool, drive in a new oil seal

Oil special tool, drive in anew oil seal

Oil seal installer: 5-8840-2033-0

4. Valve

- Apply engine oil to the outside of the valve stem.

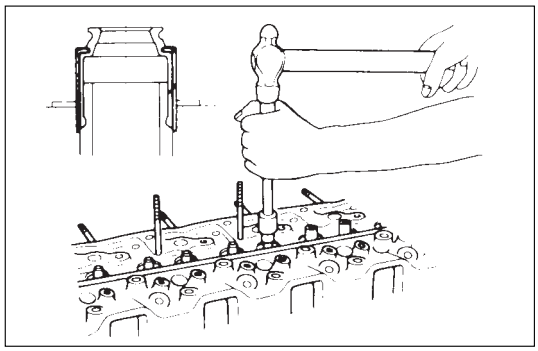

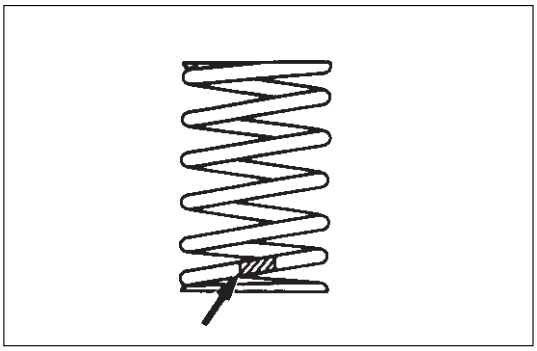

3. Valve Spring

- Attach the valve seat to the upper spring seat. The painted area of the valve spring should be facing downward.

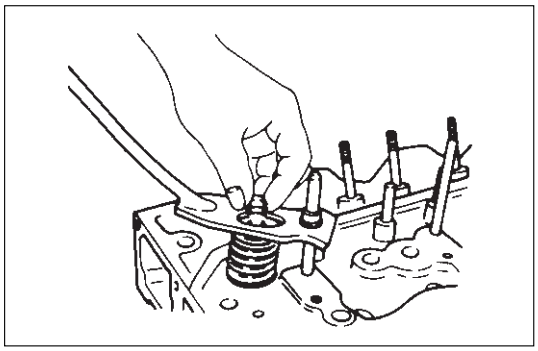

2. Split Collar

- Use a spring compressor to push the valve spirng into position.
- Install the spring seat split collar.
- Set the split collar by tapping lightly around the head of the colar with a rubber hammer.

Valve spring compressor: 9-8523-1423-0 (J-29760)

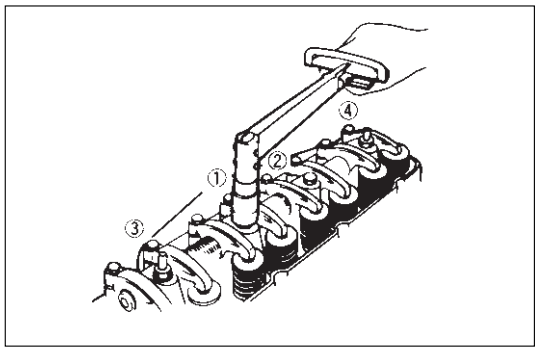

1. Rocker Arm Assembly

N·m(Kg·m/lb·ft)
54 (5.5/40)

CAMSHAFT, TAPPET

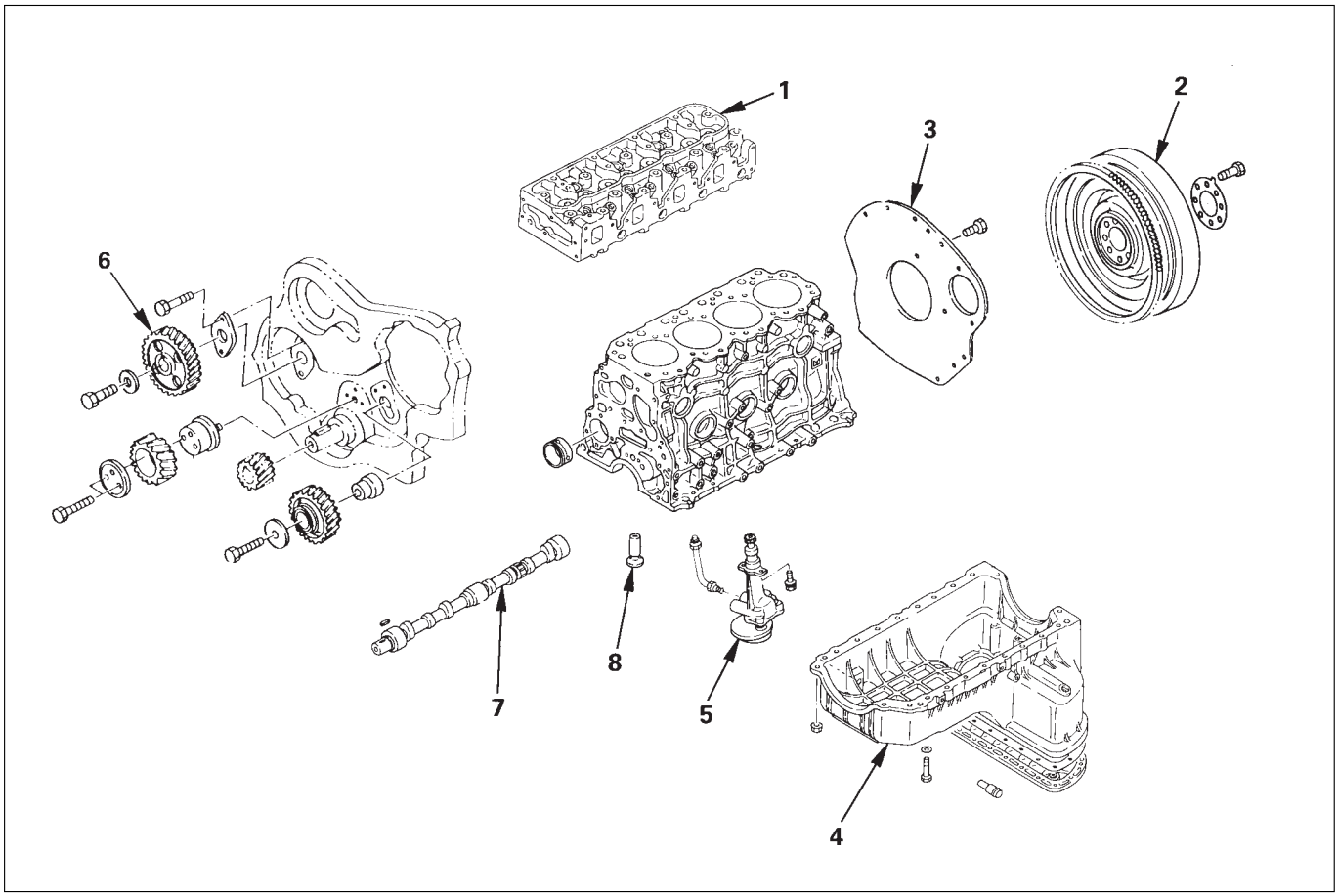

DISASSEMBLY

1. **Cylinder Head Assembly**
2. **Flywheel**
3. **Cylinder Block rear Plate**
4. **Crankcase Assembly**
5. **Oil Pump Assembly**

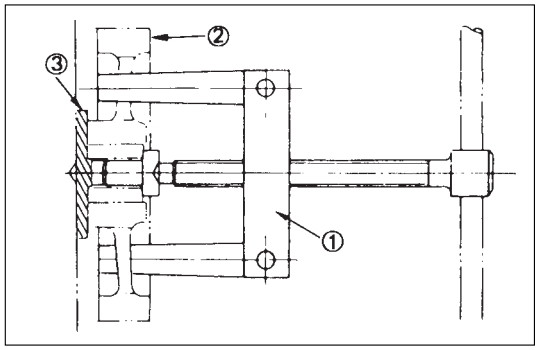

6. **Camshaft Timing Gear**
   - Install the stopper bolt ① to the timing pulley to prevent it from turning.
   - Use the timing pulley puller ② to remove the pulley.

     Camshaft Timing Pulley Puller: 5-8840-0086-0
7. **Camshaft Thrust Plate**

8. **Camshaft**
9. **Tappet**

INSPECTION AND REPAIR

Make the necessary adjustments, repairs, and part replacements if excessive wear or damage is discovered during inspection.

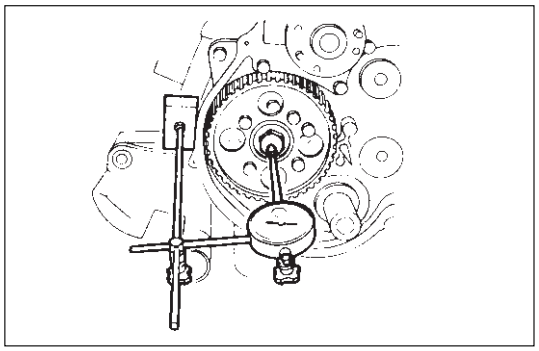

1. Measure the Camshaft Thrust Clearance.

- Use a dial indicator to measure the camshaft end play.
  This must be done before removing the camshaft gear.
  If the camshaft end play exceeds the specified limit, the thrust plate must be replaced.

Camshaft End Play — mm(in)

Standard	Limit
0.08 (0.0031)	0.2 (0.0079)

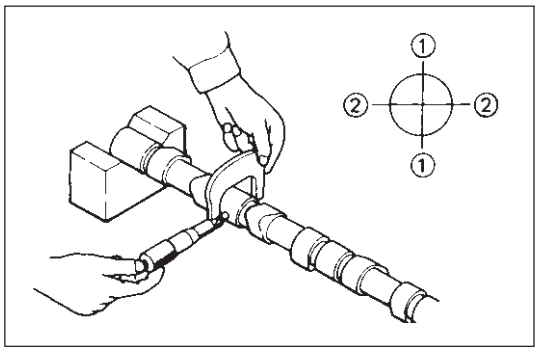

2. Camshaft Journal Diameter

- Use a micrometer to measure each camshaft journal diameter in two directions (① and ②). If the measured value is less than the specified limit, the camshaft must be replaced.

Journal Diameter — mm(in)

Standard	Limit
49.945-49.975 (1.9663-1.9675)	49.60 (1.9528)

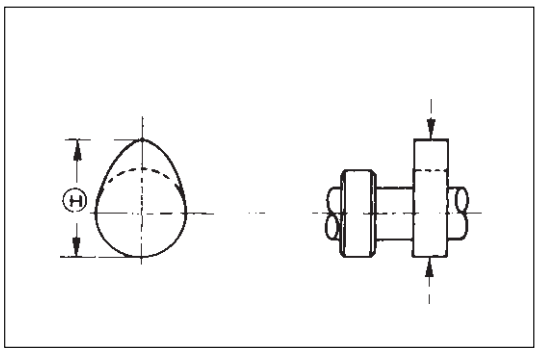

3. Cam Height

- Measure the cam height Ⓗ with a micrometer. If the measured value is less than the specified limit, the camshaft must be replaced.

Cam Height — mm(in)

Standard	Limit
42.02 (1.6543)	41.65 (1.6398)

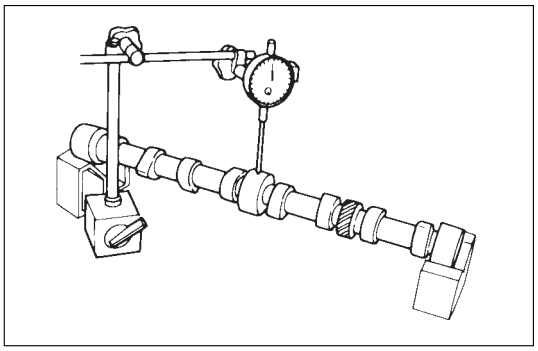

4. Camshaft Run-Out

- Mount the camshaft on V-blocks.
- Measure the run-out with a dial indicator.
  If the measured value exceeds the specified limit, the camshaft must be replaced.

Run-Out mm(in)

Standard	Limit
0.02 (0.0008) or less	0.10 (0.0039)

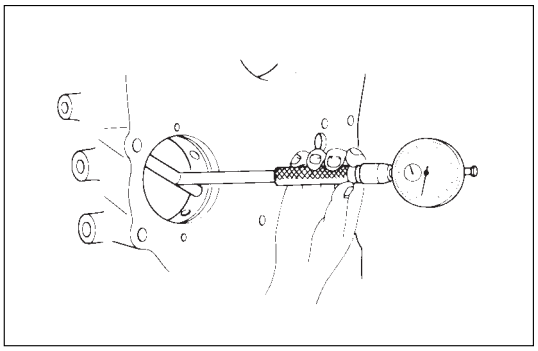

5. Camshaft and Camshaft Bearing Clearance

- Use an inside dial indicator to measure the camshaft bearing inside diameter.

Camshaft Bearing Inside Diameter mm(in)

Standard	Limit
50.00 – 50.03 (1.9685 – 1.9697)	50.08 (1.9716)

Camshaft Bearing Clearance mm(in)

Standard	Limit
0.025 – 0.085 (0.0010 – 0.0033)	0.12 (0.0047)

- If the clearance between the camshaft bearing inside diameter and the journal exceeds the specified limit, the camshaft bearing must be replaced.

Camshaft Bearing Replacement

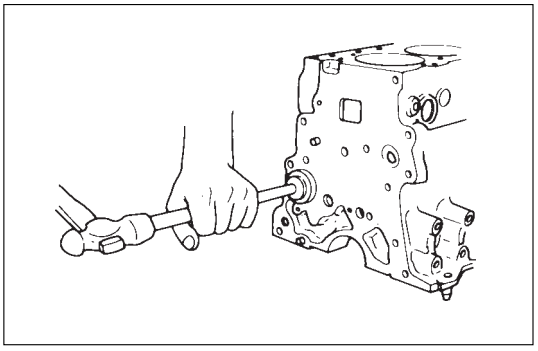

Camshaft Bearing Removal

1. Remove the cylinder body plug plate.
2. Use the bearing replacer to remove the camshaft bearing.
   Bearing Replacer: 5-8840-2038-0

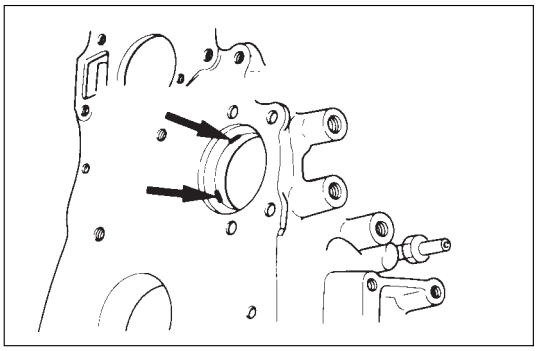

Camshaft Bearing Installation

1. Align the bearing oil holes with the cylinder body oil holes.
2. Use the replacer to install the camshaft bearing.
   Bearing Replacer: 5-8840-2038-0

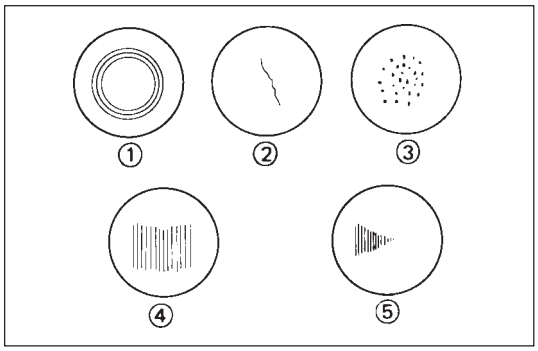

TAPPET

Visually inspect the tappet camshaft contact surfaces for pitting, cracking, and other abnormal conditions. The tappet must be replaced if any of these conditions are present.
Refer to the illustration at the left.

① Normal contact
② Cracking
③ Pitting
④ Irregular contact
⑤ Irregular contact

NOTE:

The tappet surfaces are spherical. Do not attempt to grind them with an oil stone or similar tool in an effort to repair the tappet. If the tappet is damaged, it must be replaced.

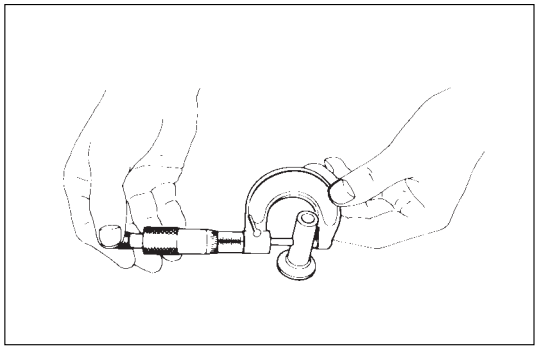

Tappet Outside Diameter

1. Measure the tappet outside diameter with a micrometer. If the measured value is less than the specified limit, the tappet must be replaced.

Tappet Outside Diameter mm(in)

Standard	Limit
12.97 – 12.99 (0.5106 – 0.5114)	12.95 (0.5098)

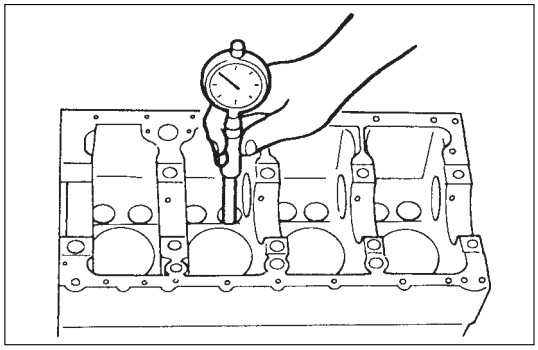

2. Measure the inside diameter tappet on the cylinder block and calculate the clearance.
   If the clearance exceeds the limit, replace tappet or/and cylinder block.

Clearance Between Tappet and Cylinder Body mm(in)

Standard	Limit
0.03 (0.0012)	0.10 (0.0039)

REASSEMBLY

9. Tappet

1) Apply a coat of engine oil to the tappet and the cylinder body tappet insert holes.
2) Locate the position mark applied at disassembly (if the tappet is to be reused).

NOTE:

The tappet must be installed before the camshaft.

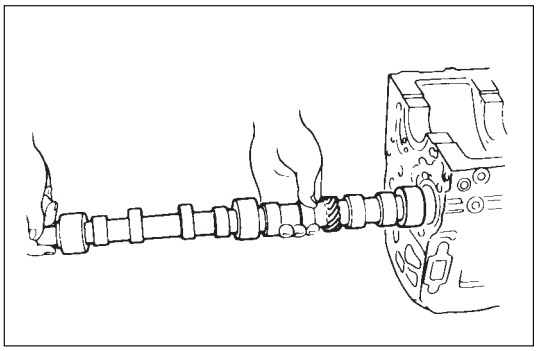

8. Camshaft

1) Apply a coat of engine oil to the camshaft and the camshaft bearings.
   Install the camshaft to the cylinder body.
   Take care not to damage the camshaft bearings.

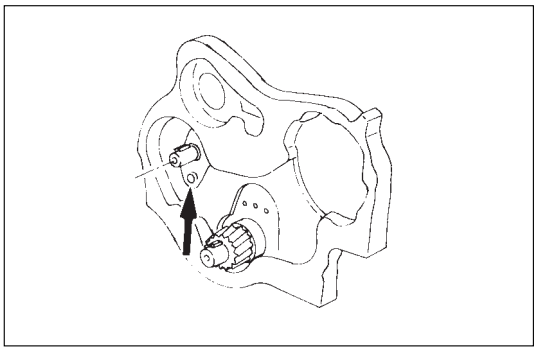

7. Camshaft Thrust Plate

Install the thrust plate to the cylinder body and tighten the thrust plate bolts to specified torque.

N·m(Kg·m/lb·ft)
18 (1.8/13)

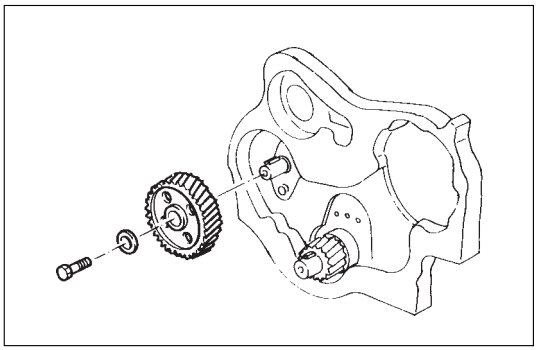

6. Camshaft Timing Gear

1) Install the camshaft timing gear to the camshaft.
   The timing gear mark ("Y - Y") must be facing outward.
2) Tighten the timing gear to the specified torque.

N·m(Kg·m/lb·ft)
64 (6.5/47)

5. Oil Pump Assembly

- Refer to Section 6A2 “Oil Pump Installation”.

4. Crankcase Assembly

- Refer to Section 6A2 “Crankcase”.

3. Cylinder Block Rear Plate

- Tighten cylinder block rear plate fixing bolts to the specified torque.

N·m(kg·m/lb·ft)
82 (8.4/61)

2. Flywheel

- Refer to Section 6A2 “Crankshaft Installation”.

1. Cylinder Head Assembly

- Refer to Section 6A2 “Cylinder Head Installation”.

ROCKER ARM ASSEMBLY

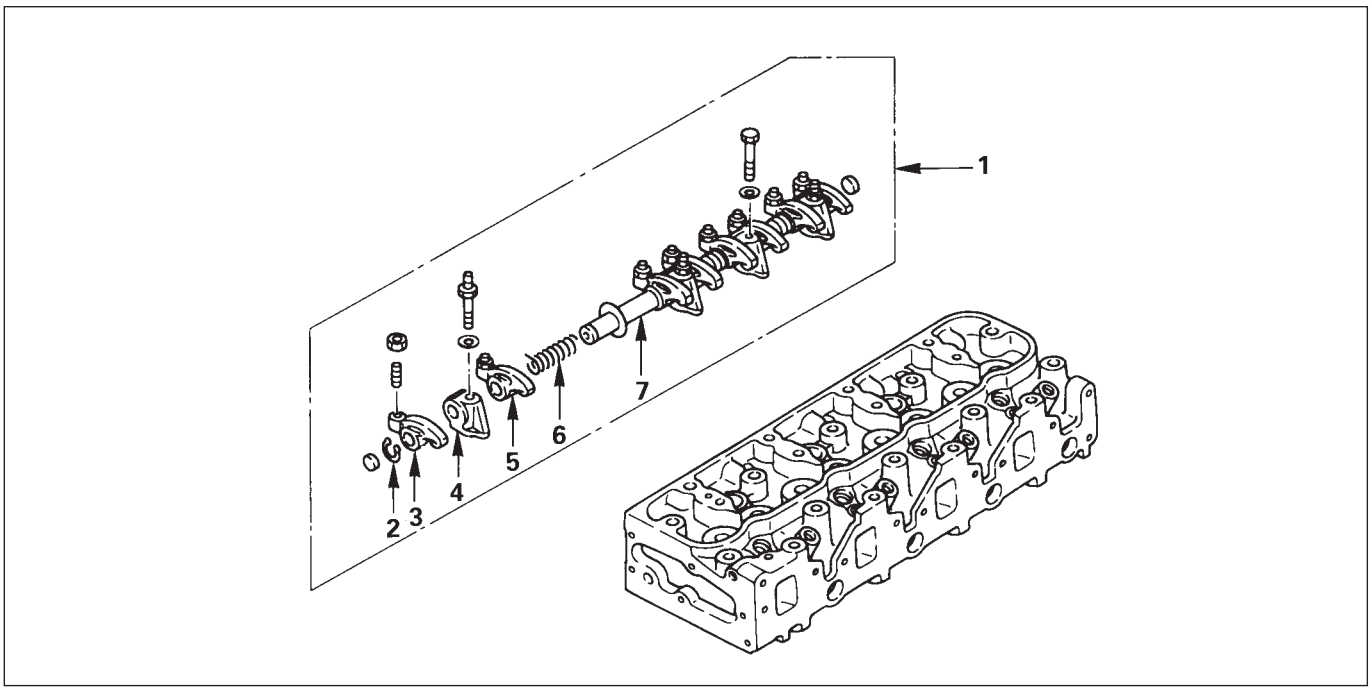

DISASSEMBLY

1. **Rocker Arm Shaft Assembly**
2. **Rocker Arm Shaft Snap Ring**
3. **Rocker Arm**
4. **Rocker Arm Shaft Bracket**
5. **Rocker Arm**
6. **Rocker Arm Shaft Spring**
7. **Rocker Arm Shaft**

INSPECTION AND REPAIR

Make the necessary adjustments, repairs, and part replacements if excessive wear or damage is discovered during inspection.

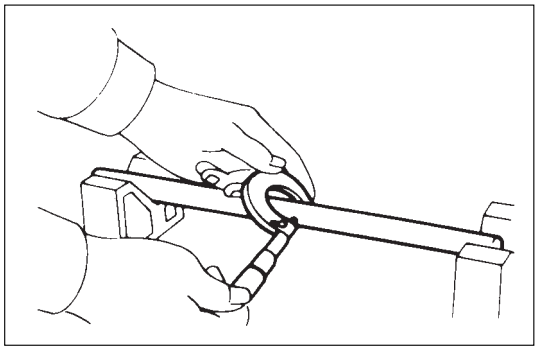

Use a micrometer to measure the rocker shaft outside diameter at the point where the rocker arm moves on the rocker shaft.
Replace the rocker shaft if the diameter exceeds the specified limit.

Rocker Arm Shaft Outside Diameter mm(in)

Standard	Limit
18.98 – 19.00 (0.7472 – 0.7480)	18.9 (0.7441)

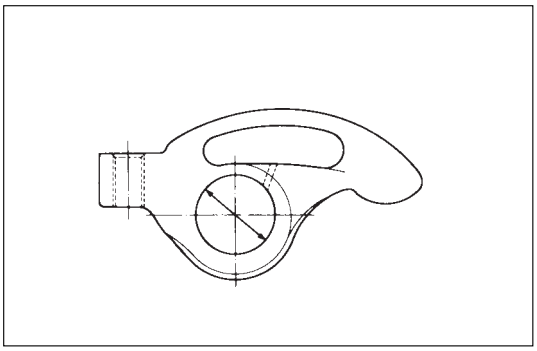

Oil Clearance

1. Use either a vernier caliper or a dial indicator to measure the rocker arm inside diameter.

Rocker Arm Inside Diameter mm(in)

Standard	Limit
19.01 – 19.03 (0.7484 – 0.7492)	19.100 (0.7520)

2. Measure the rocker arm shaft outside diameter.
   If the measured value exceeds the specified limit, replace either the rocker arm or the rocker arm shaft.

Clearance Between Rocker Arm and Rocker Arm Shaft mm(in)

Standard	Limit
0.01 – 0.05 (0.0004 – 0.0019)	0.20 (0.0079)

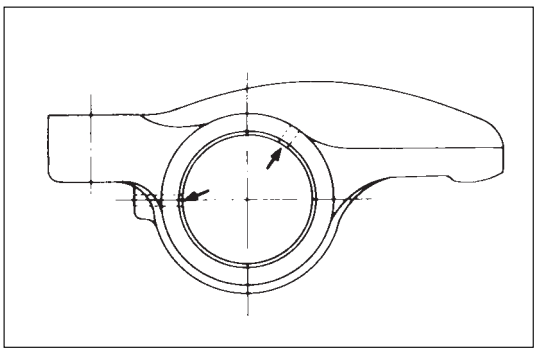

3. Check that the rocker arm oil port is free of obstructions.
   If necessary, use compressed air to clean the rocker arm oil port.

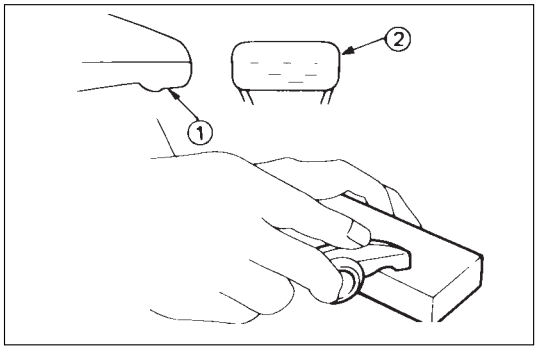

Rocker Arm Correction

Inspection the rocker arm valve stem contact surface for step wear ① and scoring ②.
If the contact surfaces have light step wear or scoring, they may be honed with an oil stone.
If the step wear or scoring is severe, the rocker arm must be replaced.

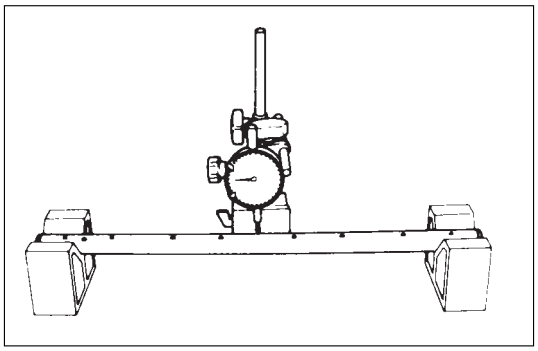

Rocker Arm Shaft Run-Out

1. Place the rocker arm shaft on a V-block.
2. Use a dial indicator to measure the rocker arm shaft central portion run-out.
   If the run-out is very slight, correct the rocker arm shaft run-out with a bench press. The rocker arm must be at cold condition.
   If the measured rocker arm shaft run-out exceeds the specified limit, the rocker arm shaft must be replaced.

Rocker Arm Shaft Run-Out mm(in)

Limit	0.3 (0.0118)

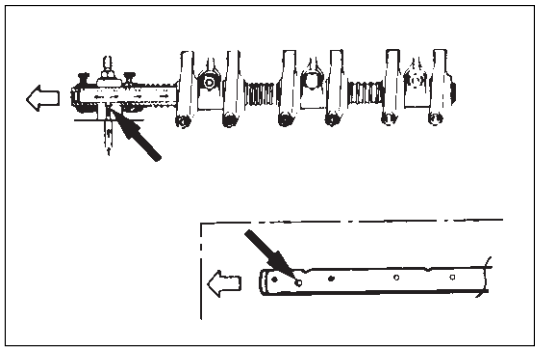

REASSEMBLY

7. **Rocker Arm Shaft**
   - Apply a light coat of engine oil to the rocker arm shafts.
   - Position the rocker arm shaft with the large oil hole (4ϕ) facing the front of the engine.
   - Install the rocker shaft together with the rocker arm, the rocker arm shaft bracket, and the spring.
6. **Rocker Arm Shaft Spring**
5. **Rocker Arm**
4. **Rocker Arm Shaft Bracket**
3. **Rocker Arm**
2. **Rocker Arm Shaft Snap Ring**

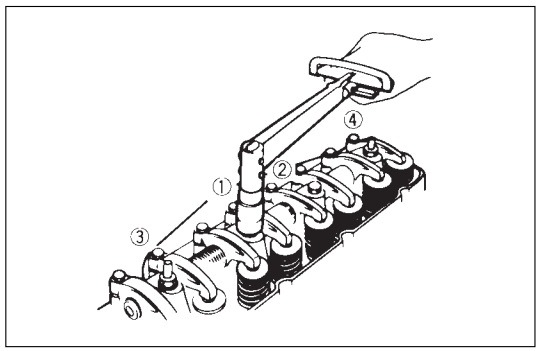

1. **Rocker Arm Shaft Assembly**
   - Install the rocker arm shaft assembly in cylinder head.
   - Tighten the rocker arm shaft fixing bolts to the specified torque.

OIL PUMP

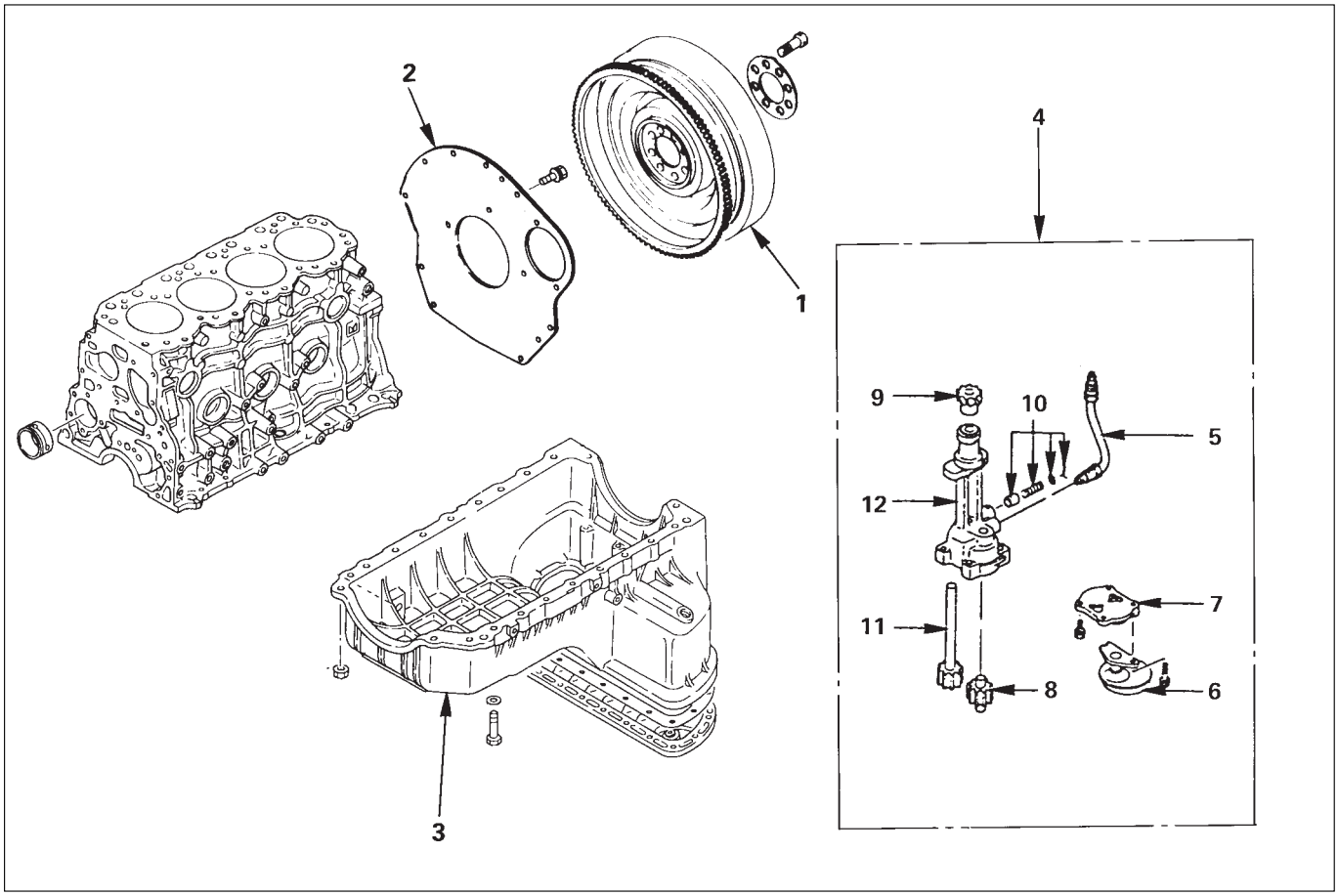

DISASSEMBLY

1. **Flywheel**
2. **Cylinder Block Rear Plate**
3. **Crankcase Assembly**
   - Refer to section 6A2 “Crankcase”.
4. **Oil Pump Assembly**
5. **Oil Pipe**
6. **Strainer Assembly**
7. **Pump Cover**
8. **Driven Gear**
9. **Pinion Gear**
10. **Relief Valve**
11. **Drive Shaft**
12. **Oil Pump Body**

INSPECTION AND REPAIR

Make the necessary adjustments, repairs, and part placements if excessive wear or damage is discovered during inspection.

Body and gears

The pump assembly must be replaced if one or more of the conditions below is discovered during inspection.

- Badly worn or damaged driven gear guide.
- Badly worn or damaged gear teeth.

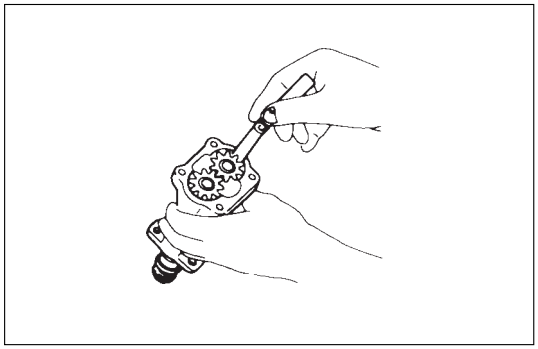

Gear Teeth and Body Inner Wall Clearance

- Use a feeler gauge to measure the clearance between the gear teeth and the body inner wall.
- If the clearance between the gear teeth and the body inner wall exceeds the specified limit, either the gear or the body must be replaced.

Gear Teeth and Body
Internal Wall Clearance — mm(in)

Standard	Limit
0.14 (0.0055)	0.20 (0.0079)

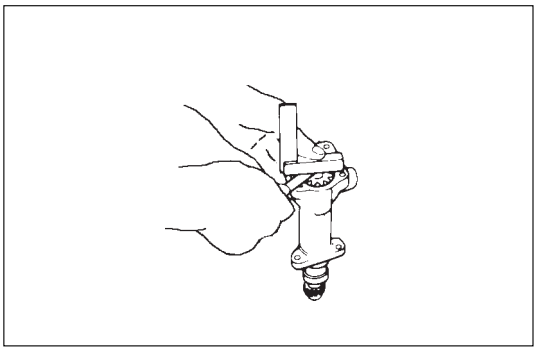

Gear and Body Clearance

- Use a feeler gauge to measure the clearance between the body and the gear.
- If the clearance between the gear and the body exceeds the specified limit, the body must be replaced.

Gear and Body Clearance mm(in)

Standard	Limit
0.06 (0.0024)	0.15 (0.0059)

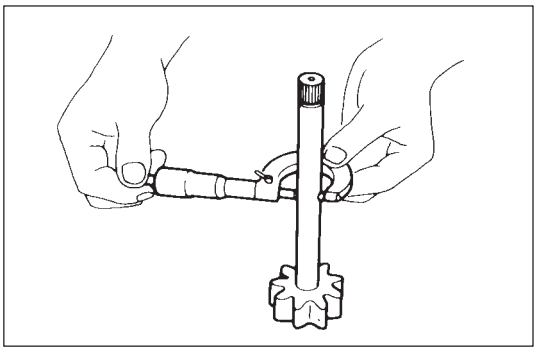

Drive Shaft and Oil Pump Body Clearance

- Use a micrometer to measure the drive shaft outside diameter.
- Use an inside dial indicator to measure the pump body inside diameter.
- If the clearance between the drive shaft and the oil pump body exceeds the specified limit, the oil pump assembly must be replaced.

Drive Shaft and Oil Pump Body Clearance mm(in)

Standard	Limit
0.04 (0.0016)	0.20 (0.0079)

REASSEMBLY

12. Oil Pump Body

11. Drive Shaft

10. Relief Valve

9. Pinion Gear

8. Driven Gear

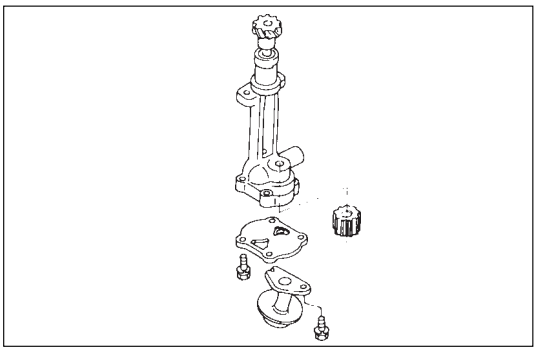

7. Pump Cover

6. Strainer Assembly

- Install the strainer assembly and tighten the strainer assembly fixing bolts.

N·m(kg·m/lb·ft)

16 (1.6/12)

5. Oil Pipe

4. Oil Pump Assembly

- Apply molybdenum mixed engine oil to drive gear of camshaft and driven gear of oil pump.
- Tighten the oil pump fixing bolt to the specified torque

N·m(kg·m/lb·ft)

☡	19 (1.9/14)

3. Crankcase Assembly

- Refer to Section 6A2 “Crankcase”.

2. Cylinder Block Rear Plate

- Align the rear plate with the cylinder body knock pins. Tighten the rear plate to the specified torque.

N·m(kg·m/lb·ft)

☡	82 (8.4/61)

1. Flywheel

- Refer to Section 6A2 “Crankshaft and Main Bearing”.

CRANKSHAFT

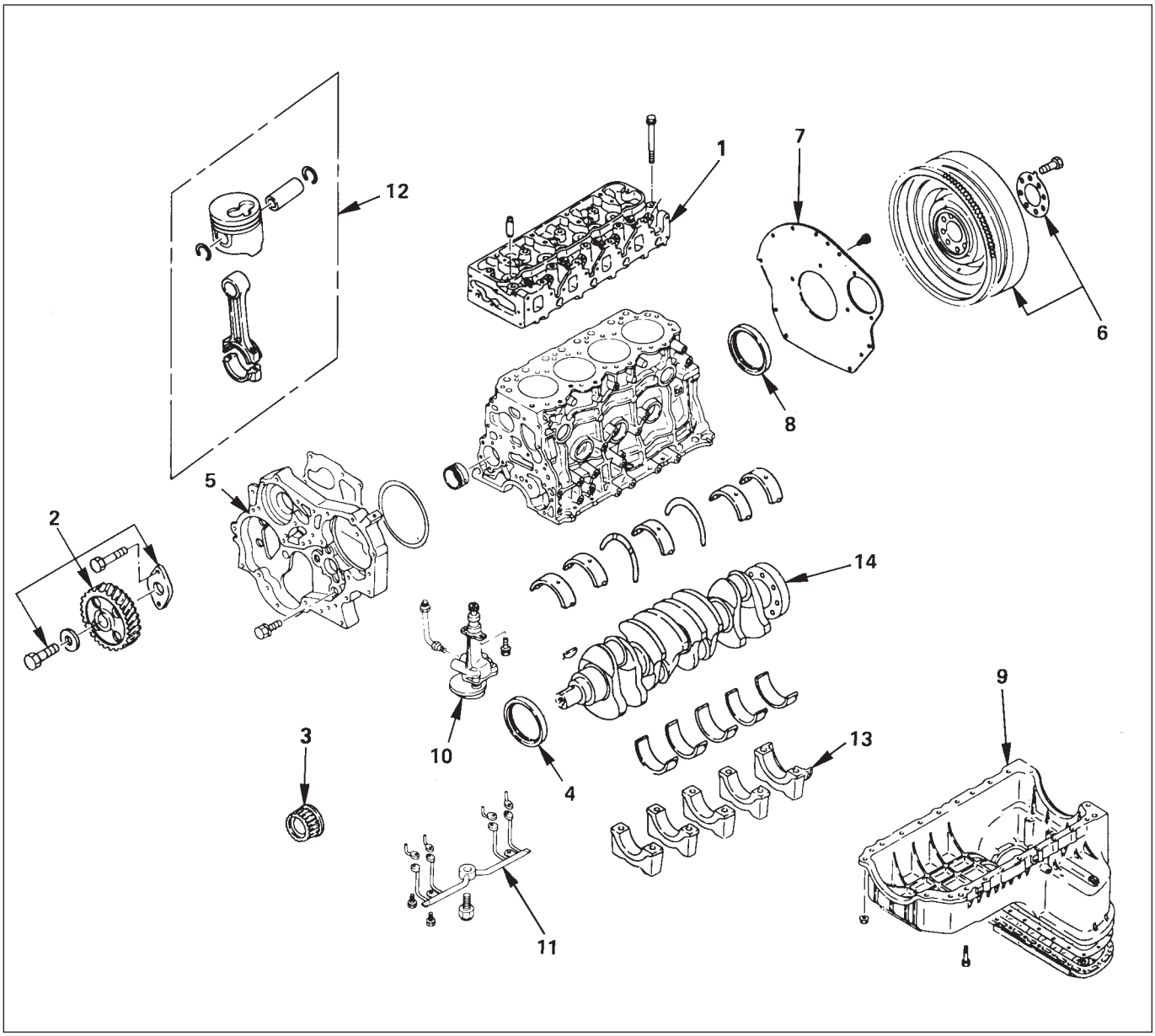

DISASSEMBLY

1. **Cylinder Head**
   - Refer to “Cylinder head” in Section 6A2.
2. **Camshaft Timing Gear**
   - Refer to “Camshaft” in Section 6A2.
3. **Crankshaft Timing Gear**
4. **Crankshaft Front Oil Seal**
5. **Timing Gear Case**
6. **Flywheel**
7. **Cylinder Block Rear Plate**

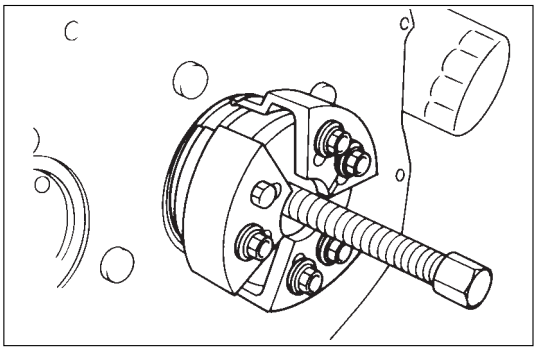

8. Crankshaft Rear Oil Seal

- With the oil seal pushed in deep, install the special tool as shown in the illustration and remove the oil seal.

  Oil Seal Remover : 5-8840-2362-0

9. Crankcase Assembly

- Refer to “Crankcase” in Section 6A2.

10. Oil Pump Assembly

11. Piston Cooling Oil Pipe

12. Piston and Connecting Rod Assembly

13. Main Bearing Cap

14. Crankshaft

INSPECTION AND REPAIR

Make the necessary adjustments, repairs, and part replacements if excessive wear or damage is discovered during inspection.

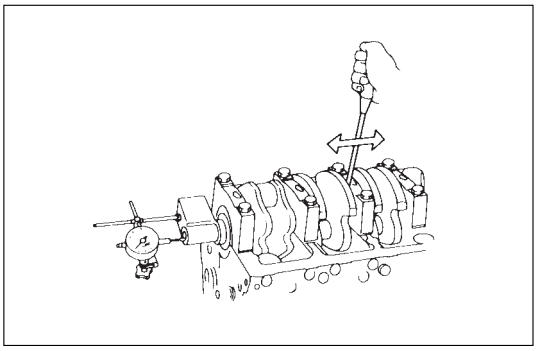

1. Crankshaft

Thrust clearance

Set the dial indicator as shown in the illustration and measure the crankshaft thrust clearance.

If the thrust clearance exceeds the specified limit, replace the thrust bearing as a set.

mm(in)

Standard	Limit
0.10 (0.0039)	0.30 (0.0118)

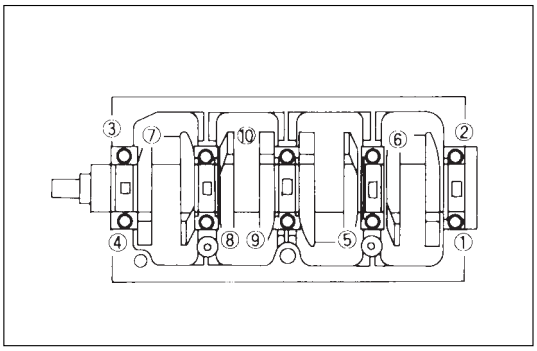

2. Main bearing clearance

1) Remove the main bearing caps in the sequence shown in the illustration
   Arrange the removed main bearing caps in the cylinder number order.
2) Remove the crankshaft. Remove the main bearings.
3) Clean the upper and lower bearings as well as the crankshaft main journal.
4) Check the bearings for damage or excessive wear. The bearings must be replaced as a set if damage or excessive wear is discovered during inspection.
5) Set the upper bearings and the thrust washers to their original positions. Carefully install the crankshaft.
6) Set the lower bearings to the bearing cap original position.
7) Apply plastigage to the crankshaft journal unit as shown in the illustration.
8) Install the main bearing caps. Apply engine oil to the bolt threads and the seats. Tighten the bolts to the specified torque.

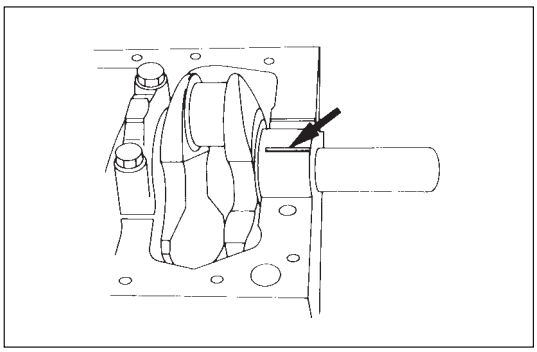

N·m(kg·m/lb·ft)

167 (17/123)

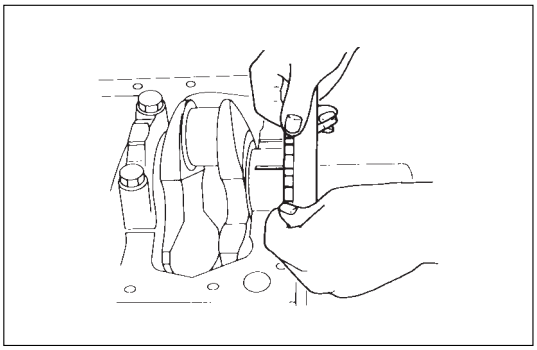

NOTE:

Do not allow the crankshaft to rotate.

9) Remove the main bearing caps.
10) Measure the plastigage width and determine the oil clearance. If the oil clearance exceeds the specified limit, replace the main bearings as a set and/or replace the crankshaft.
11) Clean the plastigage from the bearings and the crankshaft.
Remove the crankshaft and the bearings.

mm(in.)

Standard	Limit
0.031 – 0.063 (0.0012 – 0.0025)	0.11 (0.0043)

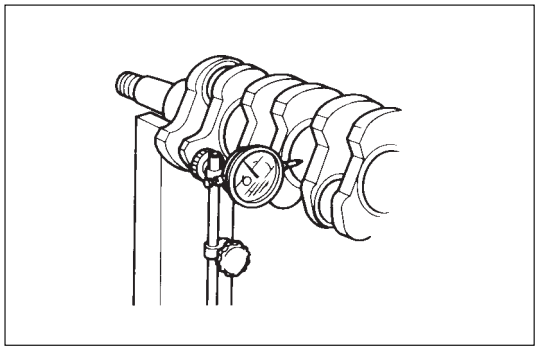

3. Run-out

1) Carefully set the crankshaft on the V-blocks. Slowly rotate the crankshaft and measure the runout. If the crankshaft runout exceeds the specified limit, the crankshaft must be replaced.

Run-Out mm(in)

Standard	Limit
0.05 (0.0020) or less	0.08 (0.0031)

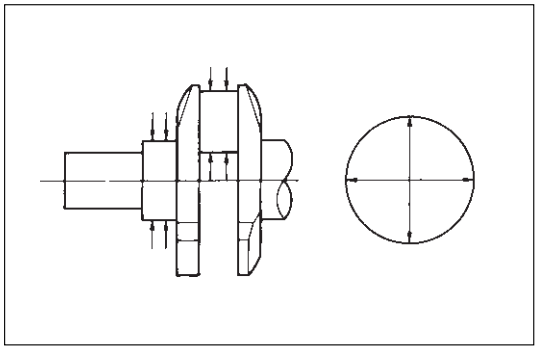

Measure the diameter and the uneven wear of main journal and crank pin.
If the crankshaft wear exceeds the specified limit, crankshaft must be replaced.

mm(in)

	Standard	Limit	Uneven wear limit
Main journal diameter	69.917-69.932 (2.7526-2.7532)	69.91 (2.7524)	0.05 (0.0020) or less
Crank pin diameter	52.915-52.930 (2.0833-2.0839)	52.90 (2.0843)	0.08 (0.0031)

Crankshaft inspection

Inspect the surface of the crankshaft journals and crank pins for excessive wear and damage.
Inspect the oil seal fitting surfaces for excessive wear and damage.
Inspect the oil ports for obstructions.

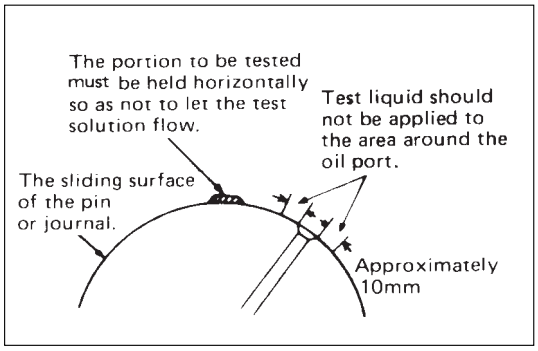

Crankshaft tufftriding inspection

The portion to be tested must be held horizontally so as not to let the test solution flow.
Test liquid should not be applied to the area around the oil port.
The sliding surface of the pin or journal.
Approximately 10mm

NOTE:

To increase crankshaft strength,Tufftride Method (Soft nitriding) has been applied. Because of this, it is not possible to regrind the crankshaft surfaces.

1. Use an organic cleaner to thoroughly clean the crankshaft. There must be no traces of oil the surfaces to be inspected.
2. Prepare a 5 - 10% solution of ammonium cupric chloride (dissolved in distilled water).
3. Use a syringe to apply the solution to the surface to be inspected.
   Hold the surface to be inspected perfectly horizontal to prevent the solution from running.

NOTE:

Do not allow the solution to come in contact with the oil ports and their surrounding area.

Testing

1. Wait for thirty to forty seconds.
   If there is no discoloration after thirty or forty seconds, the crankshaft is usable.
   If discoloration appears (the surface being tested will become the color copper), the crankshaft must be replaced.
2. Steam clean the crankshaft surface immediately after completing the test.

NOTE:

The ammonium cupric chloride solution is highly corrosive. Because of this, it is imperative that the surfaces being tested be cleaned immediately after completing the test.

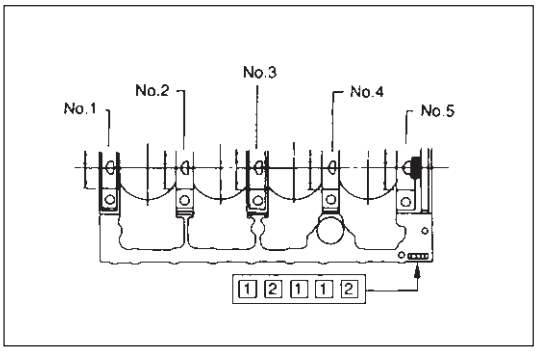

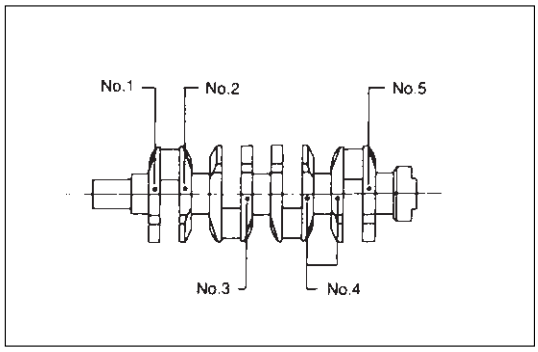

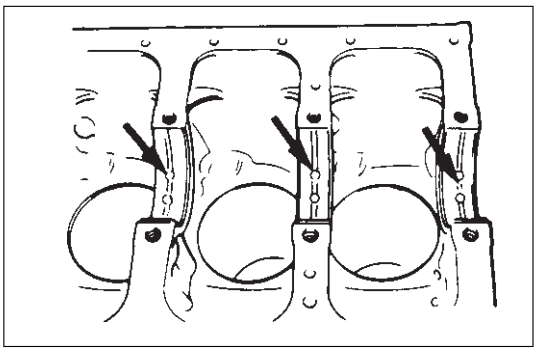

Crankshaft Bearing Selection

When installing new crankshaft bearings or replacing old bearings, refer to the selection table below.
Select and install the new crankshaft bearings, paying close attention to the cylinder body journal hole 1 diameter size mark and the crankshaft journal 2 diameter size mark.

Crankshaft Bearing Housing Grade Mark Position

Crankshaft bearing housing grade marks 1 or 2 are stamped on the rear right hand side of the cylinder body.

Example:

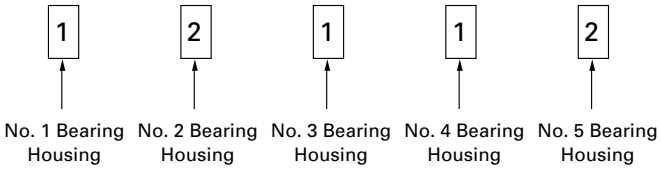

Crankshaft Journal Grade Mark Position

The crankshaft journal grade marks (1 or –) are stamped on each crankshaft journal web.
The crankshaft journal and bearing clearance must be the same for each position after installation of the crankshaft and the crankshaft bearings.

Note:

The crankshaft journal mark No. 4 is stamped on crankshaft No. 4 journal web front side or rear side.

NOTE:

Although all upper journal bearings (cylinder body side) have oil grooves and holes, all lower bearings (bearing cap side) have no groove and hole.
Play close attention to the distinction during the installation procedure.

Main Bearing Bore Diameter mm(in.)		Crankshaft Main Journal Diameter mm(in.)		Crankshaft Bearing Grade Mark	Oil Clearance mm (in.)
Size Mark	Inside Diameter	Grade Mark	Outside Diameter		
1	73.987 ~ 74.000 (2.9129 ~ 2.9134)	1 or -	69.927 ~ 69.932 (2.7530 ~ 2.7532)	Black	0.035 ~ 0.061 (0.0014 ~ 0.0024)
		2 or - -	69.922 ~ 69.927 (2.7528 ~ 2.7530)	Blue	0.032 ~ 0.058 (0.0013 ~ 0.0023)
		3 or - - -	69.917 ~ 69.922 (2.7526 ~ 2.7528)		0.037 ~ 0.063 (0.0015 ~ 0.0025)
2	73.975 ~ 73.987 (2.9124 ~ 2.9129)	1 or -	69.927 ~ 69.932 (2.7530 ~ 2.7532)	Green	0.031 ~ 0.056 (0.0012 ~ 0.0022)
		2 or - -	69.922 ~ 69.927 (2.7528 ~ 2.7530)		0.036 ~ 0.048 (0.0014 ~ 0.0019)
		3 or - - -	69.917 ~ 69.922 (2.7526 ~ 2.7528)	Black	0.033 ~ 0.058 (0.0013 ~ 0.0023)

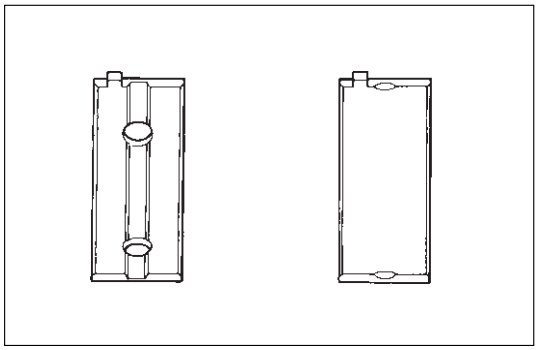

REASSEMBLY

14. Crankshaft

- Install the main bearings to the cylinder body and the main bearing caps.
- Be sure that they are positioned correctly.
- Apply new engine oil to the upper and lower main bearing faces.
- Carefully mount the crankshaft.
- Apply engine oil to the thrust washer.

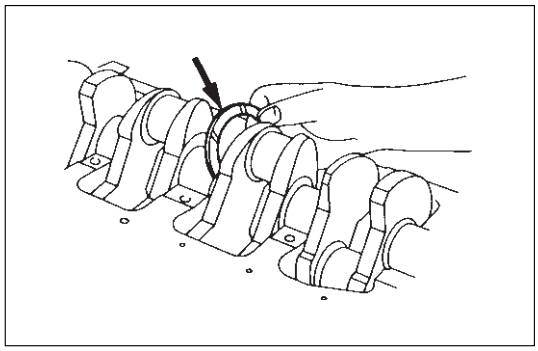

- Assemble the thrust washer to the No. 3 bearing journal. The oil grooves must face the crankshaft.

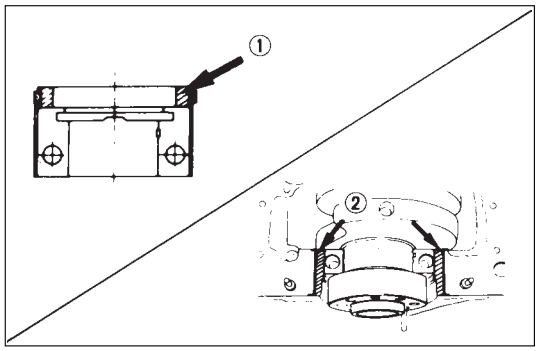

13. Main Bearing Cap

- Apply the recommended liquid gasket or its equivalent to the No. 5 crankshaft bearing cap ① as shown in the illustration.
- Install the arch gasket ② to the No. 5 bearing cap. Use your fingers to push the arch gasket into the bearing cap groove.

NOTE

Take care not to scratch the arch gasket outer surface.

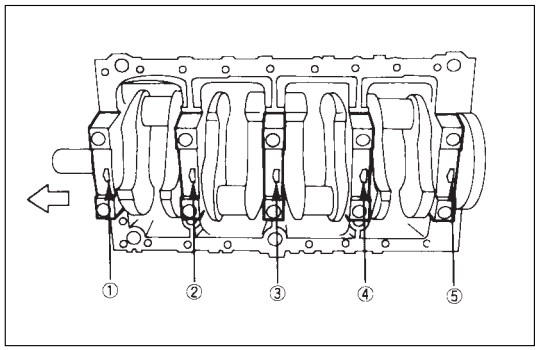

- Apply the recommended liquid gasket or its equivalent to the No. 5 crankshaft bearing cap cylinder body fitting surfaces at points ③ and ④ shown in the illustration.

NOTE:

Be sure that the bearing cap fitting surface is completely free of oil before applying the liquid gasket.
Do not allow the liquid gasket to obstruct the cylinder thread holes and bearings.

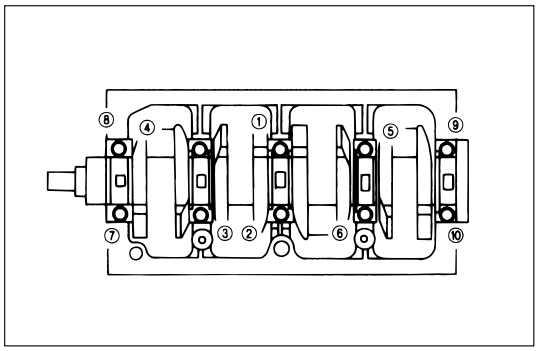

- Install the bearing caps with the bearing cap head arrow mark facing the front of the engine.
- Apply engine oil to the crankshaft bearing cap bolts.
- Tighten the crankshaft bearing cap bolts to the specified torque a little at a time in the sequence shown in the illustration.

N·m(kg·m/lb·ft)

167 (17.0/123)

NOTE:

Check to see that the crankshaft turns smoothly by rotating it manually.

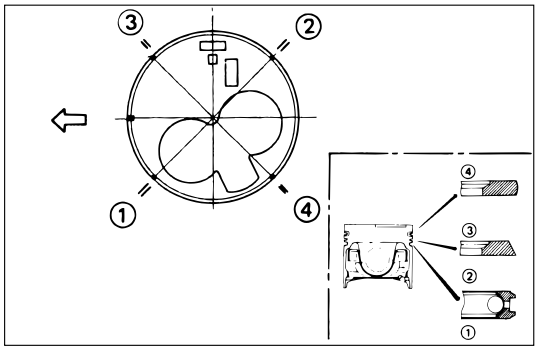

12. Piston and Connecting Rod Assembly

- Apply engine oil to the cylinder bores, the connecting rod bearings and the crankshaft pins and each piston ring and piston.
  Check to see that the piston ring end gaps are correctly positioned.

- Insert the piston/connecting rod assemblies into each cylinder with the piston ring compressor.
  Piston ring compressor: 5-8840-9018-0
  The front marks must be facing the front of the engine.
- Match the numbered caps with the numbers on the connecting rods. Align the punched marks on the connecting rods and caps.
- Apply engine oil to the threads and seating faces of the nuts.
- Tighten the cap nuts in 2 steps, using angular tightening method as shown in the following specifications.

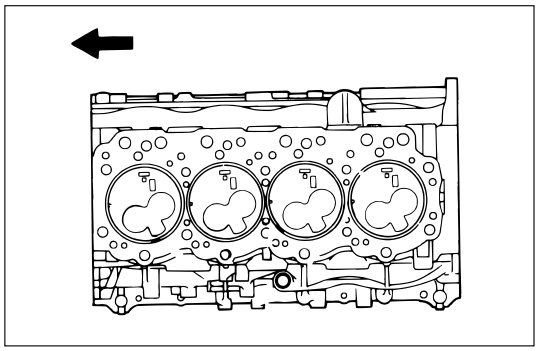

N·m (kg·m/lb·ft)

1st step	2nd step
29 (3.0/22)	45° ~ 60°

After tightening the cap nuts, check to see that the crankshaft rotates smoothly.

11. Piston Cooling Oil Pipe

- Tighten the bolt and oiling jet plug to the specified torque

N·m (kg·m/lb·ft)

M6	8 (0.8/6)
M8	19 (1.9/14)

Oiling Jet Plug N·m(kg·m/lb.ft)

29 (3.0/22)

10. Oil Pump Assembly

1) Prepare a solution of 80% engine oil and 20% molybdenum disulfide.
2) Apply an ample coat of the solution to the teeth of the oil pump pinion.
3) Install the oil pump and tighten the bolts to the specified torque.

N·m(kg·m/lb·ft)

19 (1.9/14)

NOTE:

Take care not to damage the O-rings when tightening the oil pipe bolts.

9. Crankcase Assembly

- Refer to "Crankcase" Section 6A2

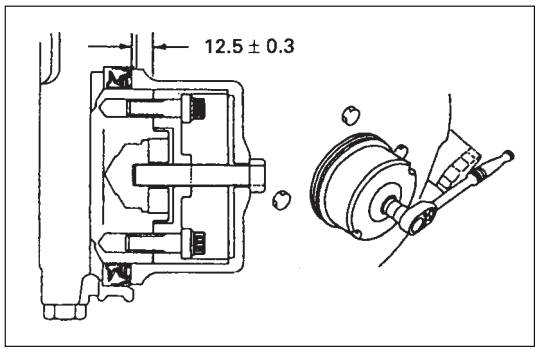

8. Crankshaft Rear Oil Seal

1) Tighten the adapter to the crankshaft rear and section with 2 bolts.
2) Insert the oil seal into the peripheral section of the adapter,
3) Insert the sleeve into the adapter section, and 1) tighten it with a bolt (M12 x 1.75L = 70) until the adapter section hits the sleeve.
4) Remove the adapter and the sleeve.
5) With the seal pressed in, check the dimension of the oil seal section.

Standard Dimension = 12.5 ± 0.3 mm

Oil Seal Installer: 5-8840-2359-0

7. Cylinder Block Rear Plate

Align the rear plate with the cylinder body knock pins. Tighten the rear plate to the specified torque.

N·m(kg·m/lb·ft)

82 (8.4/61)

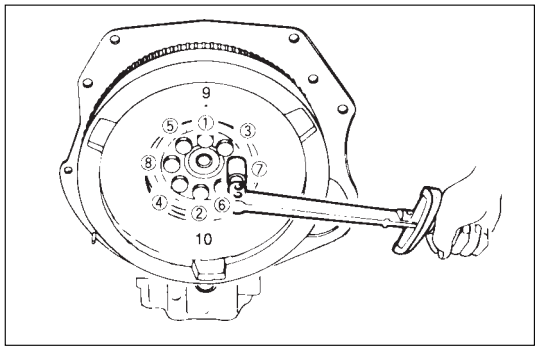

6. Flywheel

1) Thoroughly clean and remove the oil from the threads of crankshaft.
2) Mount the flywheel on the crankshaft and then install the washer.
3) Align the flywheel with the crankshaft dowel pin.
4) Tighten the flywheel bolts to the specified torque in the numerical order shown in the illustration.

N·m(kg·m/lb·ft)

118 (12.0/87)

5. Timing Gear Case

1) Install the timing gear case to the cylinder body.

NOTE:

Take care not to twist the front oil seal.

2) Tighten the timing gear case bolt together with the timing gear case gasket to the specified torque.

N·m(kg·m/lb·ft)
19 (1.9/14)

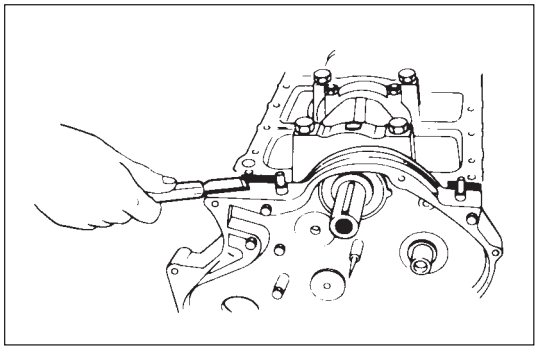

3) Cut away the gasket protruding above the fitting surfaces (as shown in the illustration).

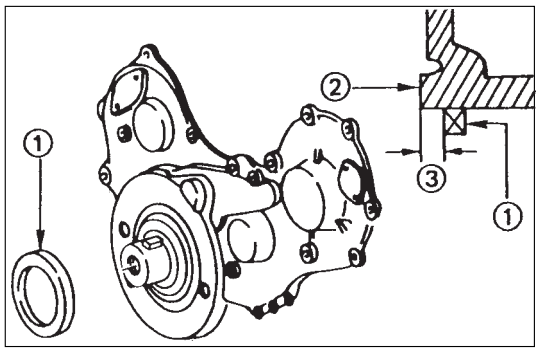

4. Crankshaft Front Oil Seal

- Use the installer to install the front oil seal ① to the gear case cover ②.

  Oil Seal Installer: 5-8840-2061-0

  Note the oil seal installation depth ③ shown in the illustration.

  Depth ③ = 1 mm (0.0394 in.)

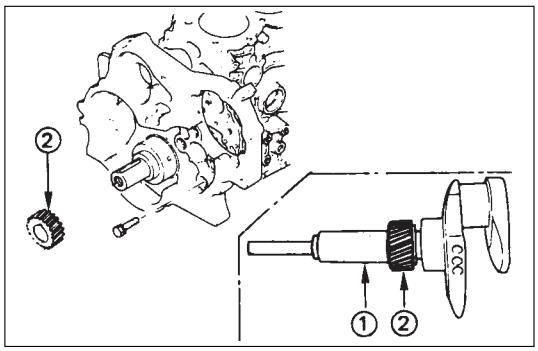

3. Crankshaft Timing Gear

Use the crankshaft timing gear installer ① to install the timing gear ②.
The crankshaft timing mark ("X – X") must be facing outward.
Crankshaft Timing Gear Installer: 5-8522-0024-0

2. Camshaft Timing Gear

- Tighten the fixing bolt to the specified torque.

N·m(kg·m/lb·ft)
64 (6.5/47)

1. Cylinder Head

- Refer to "Cylinder head" in Section 6A2.

PISTON AND CONNECTING ROD

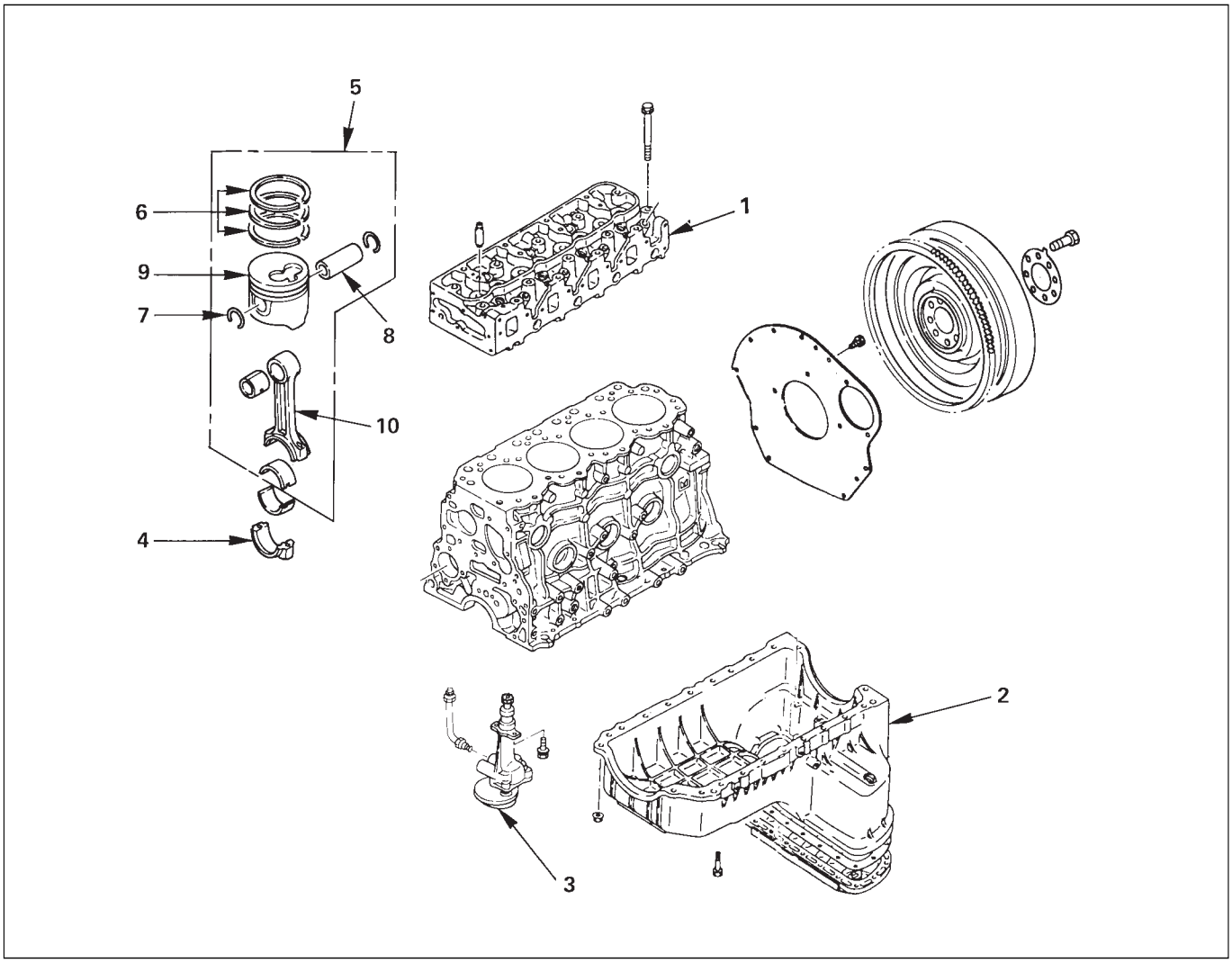

DISASSEMBLY

1. **Cylinder Head Assembly**
   - Refer to “Cylinder head” in Section 6A2.
2. **Crankcase Assembly**
   - Refer to “Crankcase” in Section 6A2
3. **Oil Pump Assembly**
4. **Connecting Rod Bearing Cap**
5. **Piston and Connecting Rod**
   - Remove carbon deposits from the upper portion of the cylinder wall with a scraper before removing the piston and connecting rod

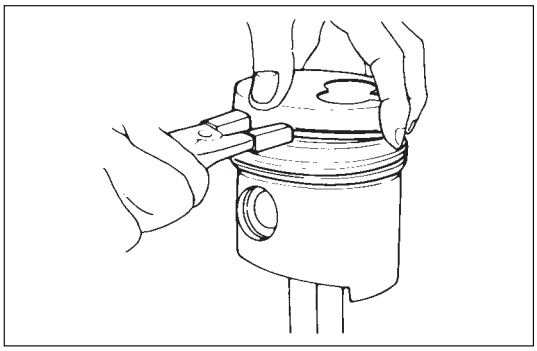

6. Piston Ring

Remove the piston rings with a piston ring expander. Arrange the removed piston rings in the cylinder number order.

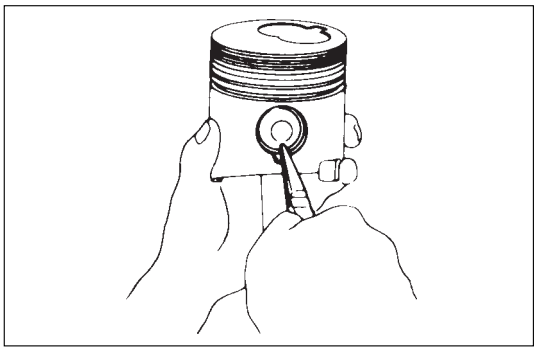

7. Piston Pin Snap Ring

- Use a pair of pliers to remove the piston pin snap rings

8. Piston Pin

NOTE:

Keep the parts removed from each cylinder separate. All parts must be reinstalled in their original positions.

9. Piston

10. Connecting Rod

INSPECTION AND REPAIR

PISTON AND PISTON RING

Pistons

Carefully clean away all the carbon adhering to the piston head and the piston ring grooves.

NOTE:

Never use a wire brush to clean the pistons. Damage will result.

Visually check each piston for cracking, scoring, and other signs of excessive wear.

If any of the above conditions are present, the piston must be replaced.

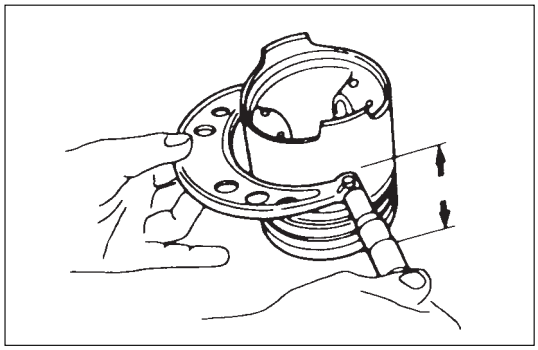

Piston Diameter

1. Measure the piston outside diameter with micrometer at the piston grading position.

Piston Grading Position	mm(in)
71.00 (2.7974)	

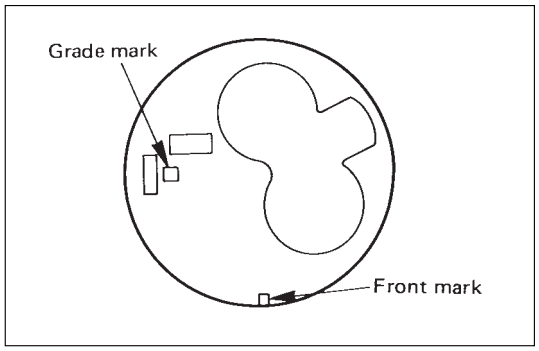

Piston Outside Diameter
Following are installed piston grade from factory.

mm (in)

Grade Mark	Outside Diameter
A	95.365 – 95.374 (3.7545 – 3.7549)
B	95.375 – 95.384 (3.7549 – 3.7553)
C	95.385 – 95.394 (3.7553 – 3.7557)
D	95.395 – 95.404 (3.7557 – 3.7561)

Method of selection grade for piston service part.

mm (in)

Factory Grade	Service Part Grade	Outside Diameter
A and B	AX	95.369 – 95.384 (3.7547 – 3.7553)
C and D	CX	95.385 – 95.400 (3.7553 – 3.7559)

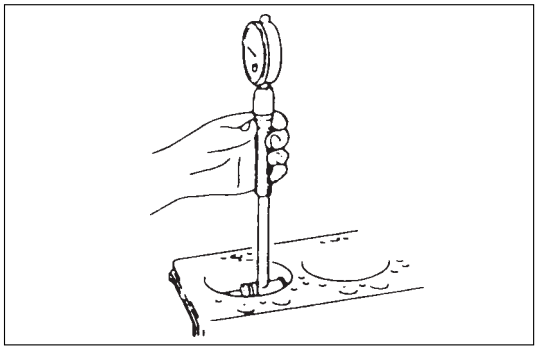

Cylinder Liner Bore Diameter
Following are installed cylinder liner bore grade from factory.

mm (in)

Grade Mark	Inside Diameter
A	95.425 – 95.440 (3.7569 – 3.7575)
B	95.441 – 95.450 (3.7575 – 3.7579)
C	95.451 – 95.460 (3.7579 – 3.7583)
D	95.461 – 95.475 (3.7583 – 3.7589)

Method of selection grade for cylinder liner service part.

mm (in)

Factory Grade	Service Part Grade	Outside Diameter
A and B	AX	95.435 – 95.450 (3.7573 – 3.7579)
C and D	CX	95.451 – 95.466 (3.7579 – 3.7585)

The grading position for piston outside diameter is represented by the Grade mark as shown in Figure.
Measure the cylinder bore inside diameter (refer to "Inspection of the Cylinder Block" in this Section).
If the piston clearance does not conform to the specified valve, the pistons and/or cylinder liners most be replaced.

Piston Clearance	mm(in)
0.051 – 0.066 (0.0020 – 0.0026)	

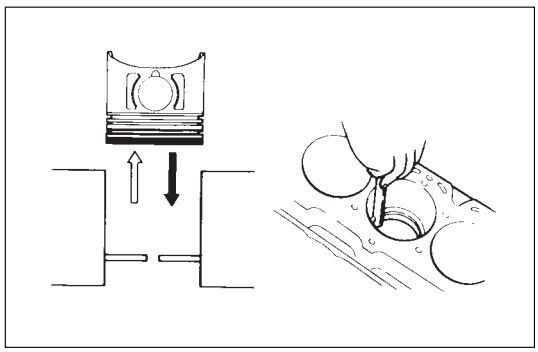

Piston rings

Any worn or damaged part discovered during engine overhaul must replaced with a new one.

1. Ring end gap measurement
   - Insert the piston ring into the bore.

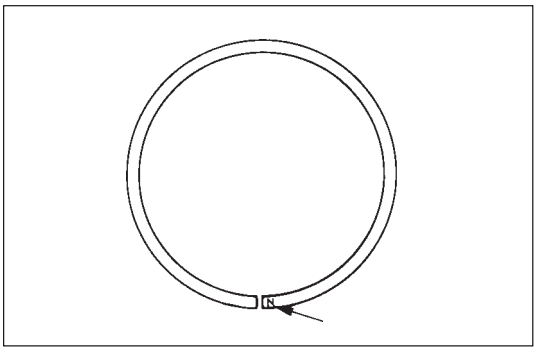

- Push the ring by the piston, at a right angle to the wall, into the point at which the cylinder bore diameter is the smallest.
- Measure the ring end gap.

mm(in)

		Standard	Limit
Compression ring	1st/2nd	0.20-0.35 (0.0079-0.0138)	1.5 (0.0591)
Oil ring		0.10-0.30 (0.0039-0.0118)	

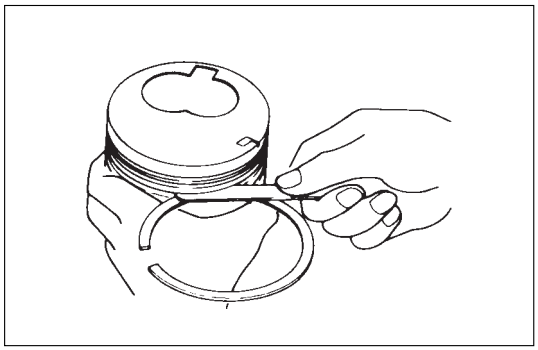

2. Measure the clearance between the piston ring groove and the piston ring with a feeler gauge. If the piston ring groove/piston ring clearance exceeds the specified limit, the piston must be replaced.

mm(in)

		Standard	Limit
Compression ring	Top	0.05-0.09 (0.0020-0.0035)	0.15 (0.0059)
	2nd	0.05-0.09 (0.0020-0.0035)	
Oil ring		0.03-0.07 (0.0012-0.0028)	

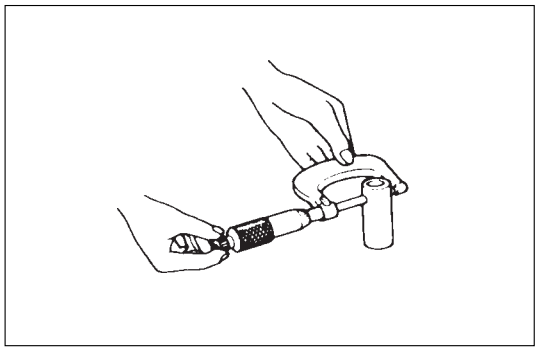

Piston pin

Visually inspect the piston pin for cracks, flaws, and other damage and replace if necessary.

1. Use a micrometer to measure the piston pin outside diameter in both directions at three different positions. If the measurement exceed the specified limit, the piston pin must be replaced.

mm (in)

	Standard	Limit
Piston pin outside diameter	33.995-34.000 (1.3384-1.3386)	33.970 (1.3374)

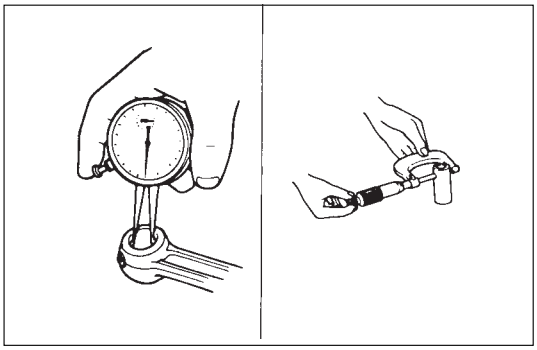

2. Measure the inside diameter of the connecting rod small end. If the clearance between the small end and pin does not conform to the specified value, the connecting rod or bushing and pin must be replaced.

mm (in)

	Standard	Limit
Clearance	0.008 ~ 0.020 (0.0003 ~ 0.0008)	0.05 (0.0020)

3. Insert the piston pin into the piston and rotate it. If the pin rotates smoothly with no backlash, the clearance is normal. If there is backlash or roughness, measure the clearance. If the clearance exceeds the specified limit, the piston and the piston pin must be replaced.

mm (in)

	Standard	Limit
Clearance	0.002 ~ 0.015 (0.00008 ~ 0.0006)	0.04 (0.0016)

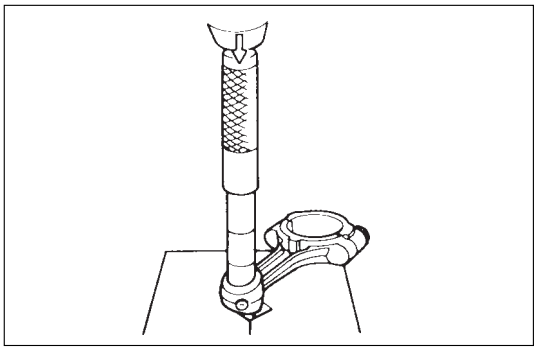

Bushing replacement

Removal: Use a suitable bar and bench press or hammer.
Installation: Use a suitable bar and bench press.

NOTE:

Align the bushing with the connecting rod oil port. After installing a new bushing, finish the bushing bore with a pin hole grinder.

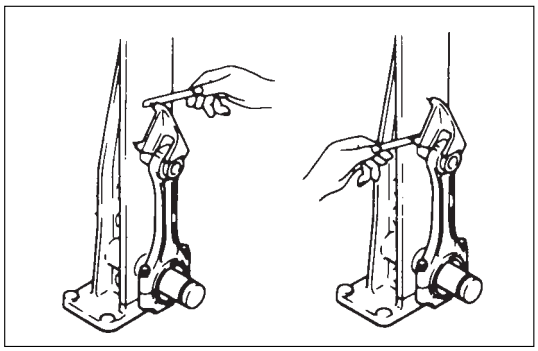

Connecting rods

1. Check the connecting rod alignment with a connecting rod aligner.
   If either the bend or the twist exceeds the specified limit, the connecting rod must be replaced.

mm (in)

	Standard	Limit
Bend per 100 (3.937)	0.08 (0.0031) or less	0.20 (0.0079)
Twist per 100 (3.937)	0.05 (0.0020) or less	0.15 (0.0059)

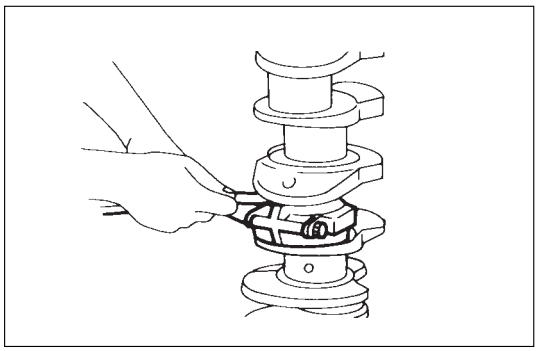

2. Measure the connecting rod thrust clearance.
   Use a feeler gauge to measure the thrust clearance at the big end of the connecting rod.
   If the clearance exceeds the specified limit, the connecting rod must be replaced.

mm (in)

Standard	Limit
0.230 (0.0091)	0.350 (0.0138)

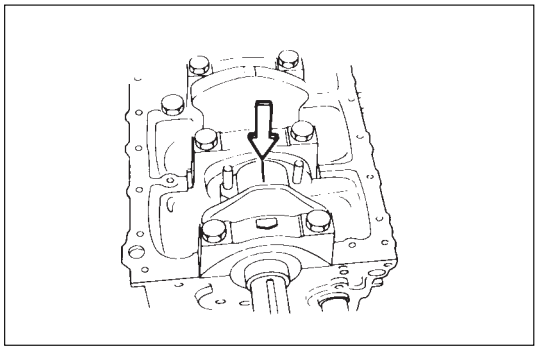

3. Measure the oil clearance between the connecting rod and the crankshaft by:
   1) Remove the connecting rod cap nuts and the rod caps.
      Arrange the removed rod caps in the cylinder number order.
   2) Clean the rod bearings and the crankshaft pins.
   3) Carefully check the rod bearings.
      If even one bearing is found to be damaged or badly worn, the entire bearing assembly must be replaced as a set. Reinstall the bearings in their original positions.
      Apply plastigage to the crank pin.
   4) Reinstall the rod caps to their original positions.
   5) Tighten the cap nuts in 2 steps, using angular tightening method as shown in the following specifications.

N·m (kg·m/lb·ft)

1st step	2nd step
29 (3.0/22)	45° ~ 60°

NOTE:

Do not allow the crankshaft to rotate.

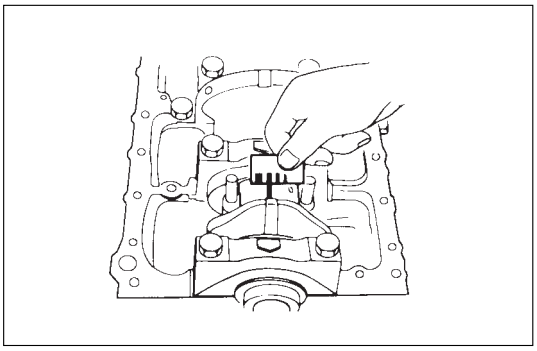

   6) Remove the rod caps.
   7) Measure the width of the plastigage and determine the oil clearance. If the oil clearance exceeds the limit, replace the rod bearings as a set.
   8) Clean the plastigage from the bearings and the crankshaft pins.

mm (in)

Standard	Limit
0.029 (0.0011) – 0.083 (0.0033)	0.100 (0.0039)

REASSEMBLY

10. Connecting Rod

9. Piston

8. Piston Pin

- Apply a coat of engine oil to the piston pin and the piston pin hole.

7. Piston Pin Snap Ring

- Apply a thin coat of engine oil to the piston pin.
  Try to insert the piston pin into the piston pin hole with normal finger pressure.
  Weigh each piston and connecting rod assembly. Select piston and connecting rod combinations so that the weight variation of the different assemblies is held within the specified limits.

g (oz)

Variance in weight after assembly	Less than 3 (0.1058)

NOTE:

When changing piston/connecting rod combinations, do not change the piston/piston pin combination.

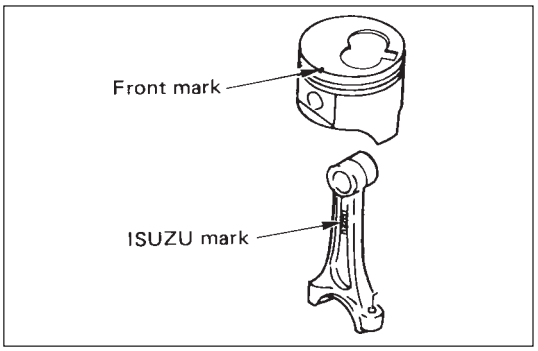

- Attach the piston to the connecting rod with the piston front mark and the connecting rod ISUZU mark on the same side.

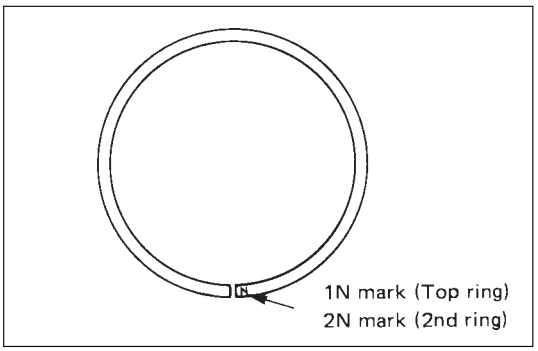

6. Piston Ring

- Install the piston rings with the piston ring expander. The compression ring must be set with the 1N, 2N mark facing up.
- Discrimination mark is painted as shown in the illustration.

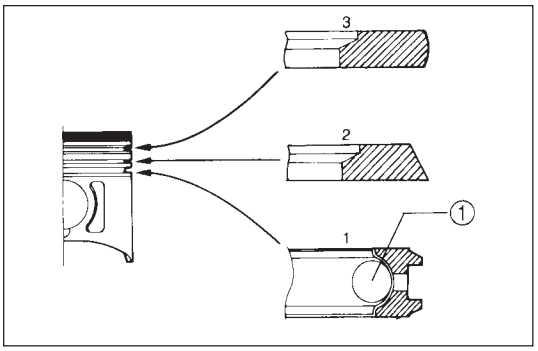

- Install piston rings in the following sequence.

1) Oil ring

① Expander ring

2) 2nd compression ring

3) 1st compression ring

- The compression ring must be set with the 1N or 2N mark facing up.
- 1st compression ring: N
- 2nd compression ring: 2N
- After installation, apply engine oil to the entire circumference of the piston rings.
  Check to see that all the rings rotate smoothly.
- Insert the bearings into the connecting rods and caps.
  Apply new engine oil to the bearing faces.
  Cap side bearings have no oil hole.
  Conn rod side bearing's oil hole should be aligned with oil hole on the conn rod.

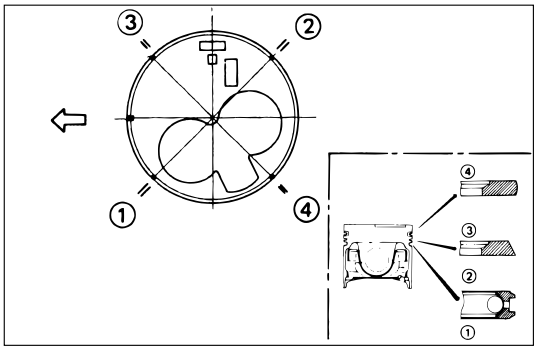

5. Piston and Connecting Rod

- Apply engine oil to the cylinder bores, the connecting rod bearings and the crankshaft pins.
- Check to see that the piston ring end gaps are correctly positioned.
- Insert the piston/connecting rod assemblies into each cylinder with the piston ring compressor.
- The front marks must be facing the front of the engine.

4. Connecting Rod Bearing Cap

- Apply engine oil to screw and seat of bearing cap bolts and nuts.
- Tighten the cap nuts in 2 steps, using angular tightening method as shown in the following specifications.

N·m (kg·m/lb·ft)

1st step	2nd step
29 (3.0/22)	45° ~ 60°

After tightening the cap nuts, check to see that the crankshaft rotates smoothly.

3. Oil Pump Assembly

2. Crankcase Assembly

- Refer to “Crankcase” in Section 6A2.

1. Cylinder Head Assembly

- Refer to “Cylinder head” in Section 6A2.

CYLINDER BLOCK

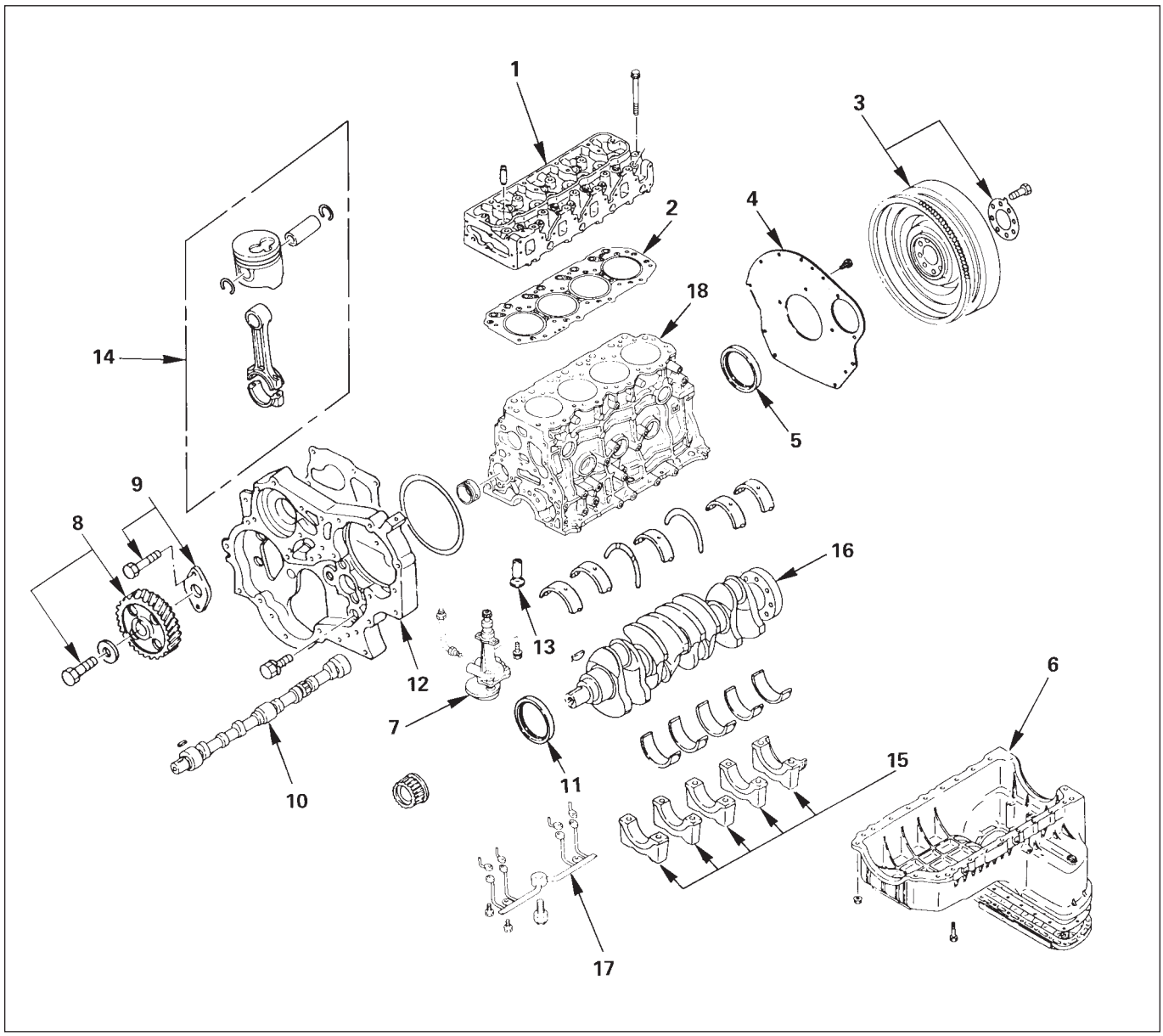

DISASSEMBLY

1. **Cylinder Head Assembly**
   - Refer to “Cylinder head” in Section 6A2.
2. **Cylinder Head Gasket**
3. **Flywheel**
4. **Cylinder Block Rear Plate**
5. **Crankshaft Rear Oil Seal**
   - With the oil seal pushed in deep, install the special tool as shown in the illustration and remove the oil seal.

     Oil Seal Remover : 5-8840-2362-0

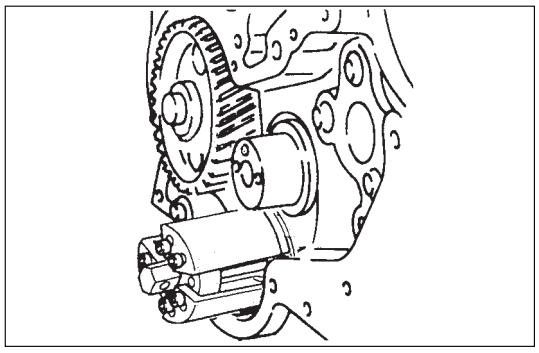

6. **Crankcase Assembly**
   - Refer to “Crankcase” in Section 6A2
7. **Oil Pump Assembly**

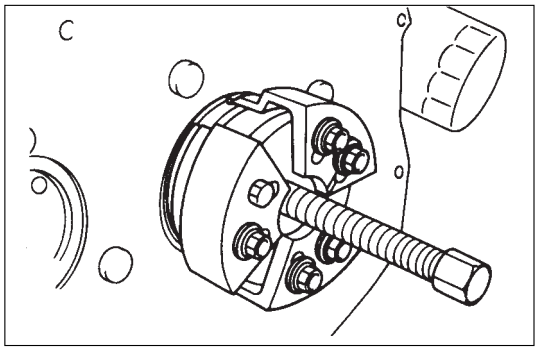

8. **Camshaft Timing Gear**
9. **Camshaft Thrust Plate**
10. **Camshaft**
11. **Crankshaft Front Oil Seal**
    - With the oil seal pushed in deep, install the special tool as shown in the illustration and remove the oil seal.

      Oil Seal Remover : 5-8840-2362-0
12. **Timing Gear Case**
13. **Tappet**
14. **Piston Assembly**
15. **Main Bearing Cap Assembly**
16. **Crankshaft**
17. **Piston Cooling Oil Pipe**
18. **Cylinder Block**

INSPECTION REPAIR

Make the necessary adjustments, repairs, and part replacements if excessive wear or damage is discovered during inspection.

1. Remove the gasket and any other material adhering to the upper surface of the cylinder block.
   Be very careful not to allow any material to accidentally drop into the cylinder block.
   Be very careful not to scratch the cylinder block.
2. Carefully remove the oil pump, Rear Oil Seal retainer, and oil pan installation surface seal.
3. Wipe the cylinder block clean.

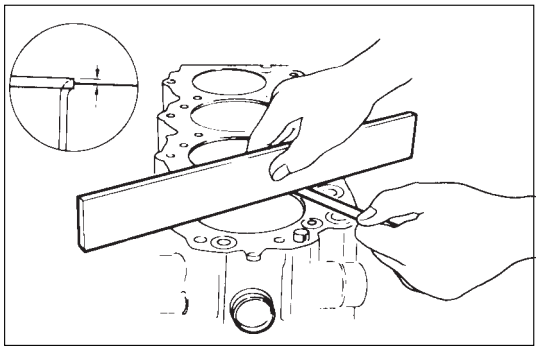

Cylinder Liner Projection Inspection

1. Hold a straight edge ① along the top edge of the cylinder liner to be measured.
2. Use a feeler gauge ② to measure each cylinder liner projection.
   The difference in the cylinder liner projection height between any two adjacent cylinders must not exceed 0.03 mm (0.0012 in).

Standard	mm(in.)
0.0 – 0.1 (0.0000 – 0.0039)	

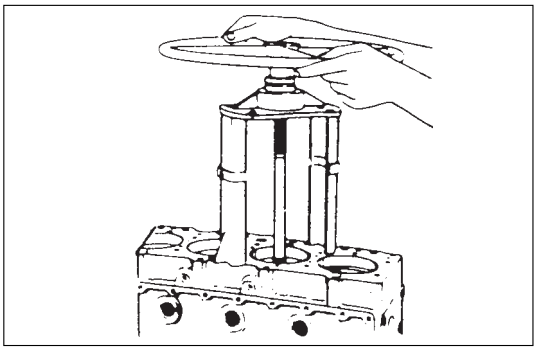

Flatness

1. Remove the cylinder body dowel.
2. Set the cylinder liner remover to the cylinder liner.
3. Check that the remover shaft ankle is firmly gripping the cylinder liner bottom edge.
4. Slowly turn the remover shaft handle counterclockwise to pull the cylinder liner free.

   Cylinder Liner Remover Ankle: 5-8840-2304-0

   Cylinder Liner Remover: 9-8523-1169-0

NOTE:

Take care not to damage the cylinder body upper during the cylinder liner removal procedure.

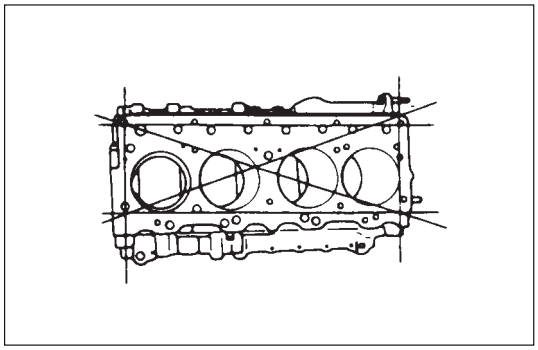

5. Use a straight edge ① and a feeler gauge ② to measure the four sides and the two diagonals of the cylinder body upper face.
   If the measured values exceed the limit, the cylinder body must be replaced.

Limit	mm(in.)
0.20 (0.0079)	

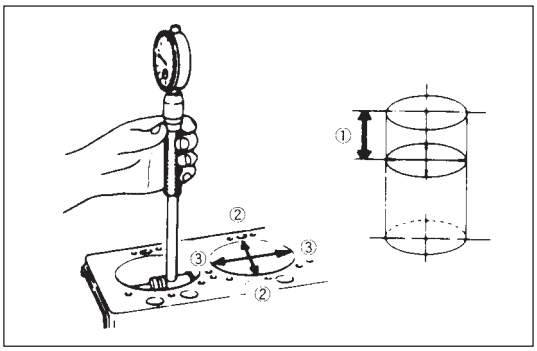

Cylinder Liner Bore Measurement

Use a cylinder indicator to measure the cylinder liner bore at measuring point ① in the thrust ② – ② and axial ③–③ directions of the crankshaft.
Measuring Point ① 20mm (0.79 in)
If the measured value exceeds the specified limit, the cylinder liner must be replaced.

NOTE:

The inside of the dry type cylinder liner is chrome plated. It cannot be rebored or honed.
If the inside of the cylinder liner is scored or scorched, the cylinder liner must be replaced.

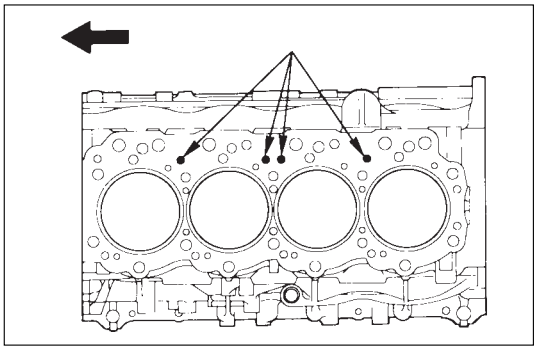

Cylinder Liner Grade Selection

Measure the cylinder body inside diameter and select the appropriate cylinder liner grade.

Standard Fifting Interference	mm (in.)
0.001 – 0.019 (0.0004 – 0.0007)	

If the cylinder liner fitting interference is too small, engine cooling efficiency will be adversely effected.
If the cylinder liner fitting interference is too large, it will be difficult to insert the cylinder liner into the cylinder body.

NOTE:

There are two methods by which liners can be selected.

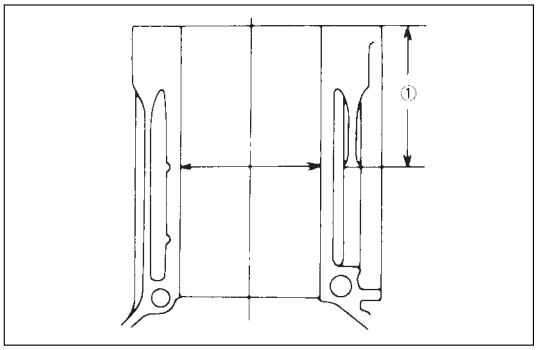

Method I

The cylinder block deck has been marked during production to indicate the correct liner sizes. The liner grade (i.e. 1, 2, 3, 4) is indicated in permanent ink.
In the case of a questionable liner marking use the next method for correct liner selection.

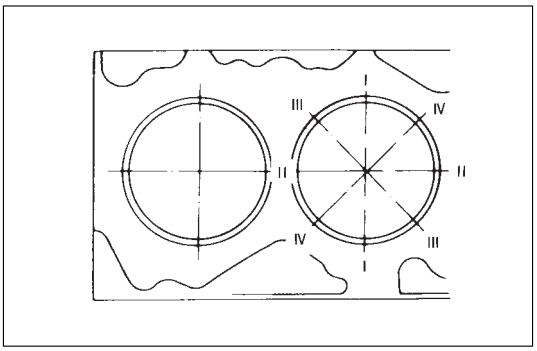

Method II

Cylinder Body Bore Measurement

1) Take measurements at measuring point (A) across positions ① – ① , ② – ② ,③ –③ , and ④ –④ .

Measuring Point (A) 98 mm (3.86 in).

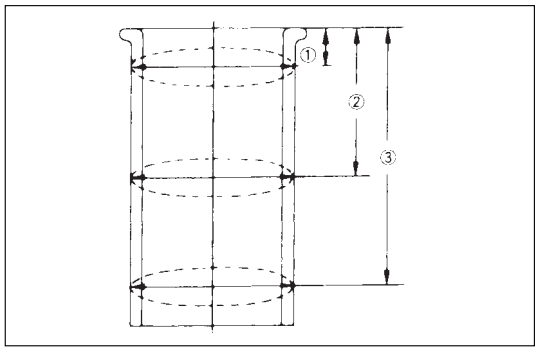

2) Calculate the average value of the four measurements to determine the correct cylinder grade.
3) Consult the following table with the resultant diameter for the correct liner application.

mm (in.)

Liner Grade	Cylinder bore diameter average	Liner outside diameter
1	97.001-97.010 (3.8189-3.8193)	97.011-97.020 (3.8193-3.8197)
2	97.011-97.020 (3.8193-3.8197)	97.021-97.030 (3.8197-3.8201)
3	97.021-97.030 (3.8197-3.8201)	97.031-97.040 (3.8201-3.8205)
4	97.031-97.040 (3.8201-3.8205)	97.041-97.050 (3.8205-3.8209)

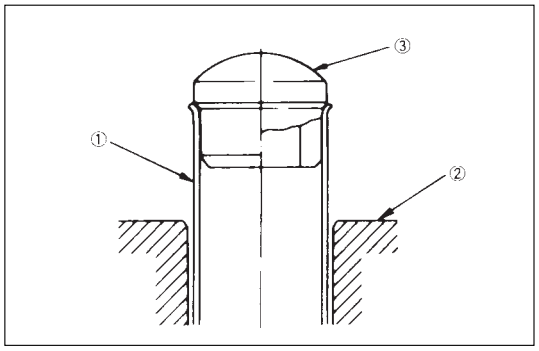

Cylinder Liner Installation

1. Cylinder Liner Installation Using The Special Tool.
   1) Use new kerosene or diesel oil to thoroughly clean the cylinder liners and horse.
   2) Use compressed air to blow-dry the cylinder liner and bore surfaces.

   Cylinder Liner Installer : 5-8840-2313-0

NOTE:

All foreign material must be carefully removed from the cylinder liner and the cylinder bore before installation.

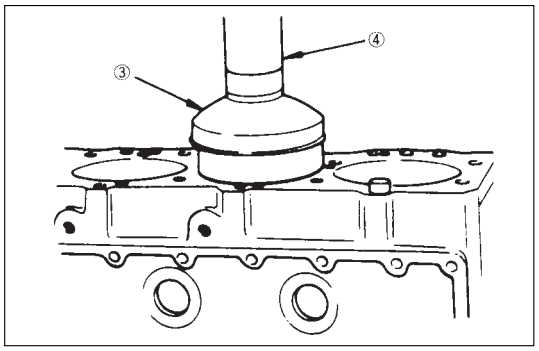

3) Insert the cylinder liner ① into the cylinder body ② from the top of the cylinder body.

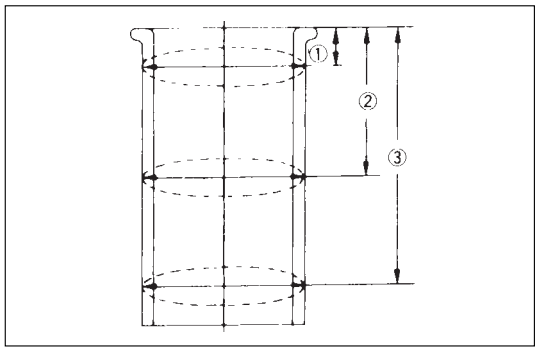

4) Set the cylinder liner installer ③ to the top of the cylinder liner.
   Position the cylinder body so that the installer center is directly beneath the bench press shaft center ④.

Cylinder Liner Installer: 5-8840-2313-0

NOTE:

Check that the cylinder liner is set perpendicular to the bench press and that there is no wobble.

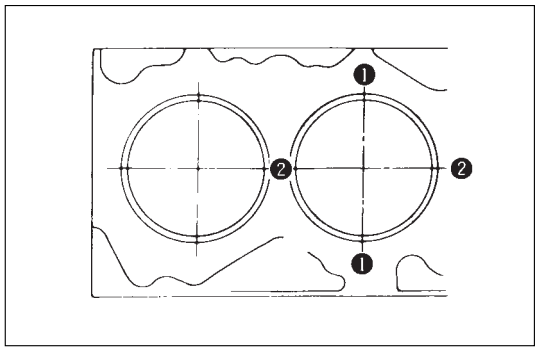

5) Use the bench press to apply a seating force of 4,900 N (500kg/1,102.5 lb) to the cylinder liner.
6) Apply a force of 24,500 N (2,500 kg /5,512.5 lb) to fully seat the cylinder liner.
7) After installing the cylinder liner, measure the cylinder liner projection.
8) After installing the cylinder liner, measure the cylinder liner projection.
   Refer to "Cylinder Liner Projection Inspection" in this Section
   Measure the cylinder liner bore inside diameter and select the appropriate piston grade.

REASSEMBLY

18. Cylinder Block

17. Piston Cooling Oil Pipe

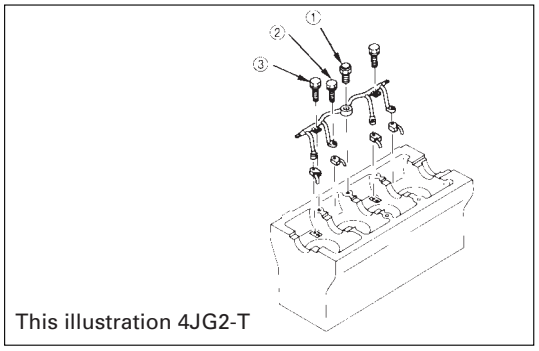

This illustration 4JG2-T

1) Fix the oil jet pipes with knock pins on the cylinder block.
2) Install the oil pipe for piston cooling in the cylinder block, tightening a relief valve ① and four joint bolts ② to the specified torque.

Oil pipe fixing bolts	N·m (kg·m/lb·ft)
M8	19 (1.9/14)
M6	8 (0.8/69 lb·in.)

Relief valve fixing bolt	N·m (kg·m/lb·ft)
29 (3.0/22)	

CAUTION:

After installed the piston assembly. Check and see that there is appropriate clearance between pistons and oil jet pipes by rotating crankshaft slowly.

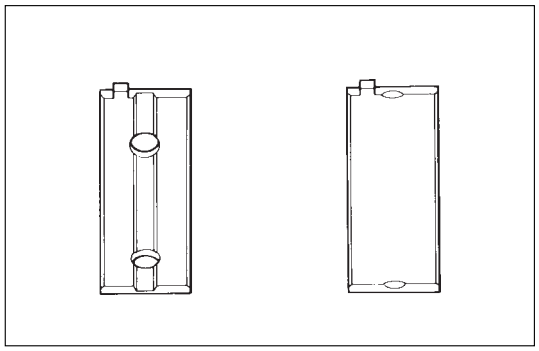

16. Crankshaft

- Install the main bearings to the cylinder body and the main bearing caps.
- Be sure that they are positioned correctly.
- Apply new engine oil to the upper and lower main bearing faces
- Carefully mount the crankshaft.

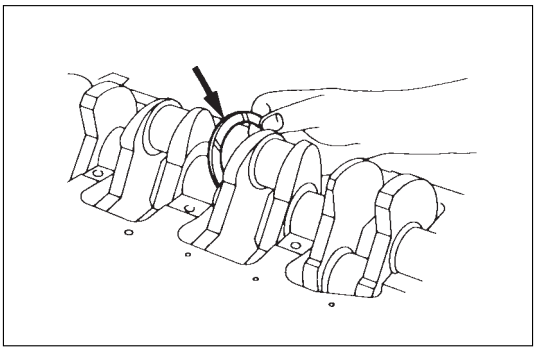

- Apply engine oil to the thrust washer.
- Assemble the thrust washer to the No. 3 bearing journal. The oil grooves must face the crankshaft.

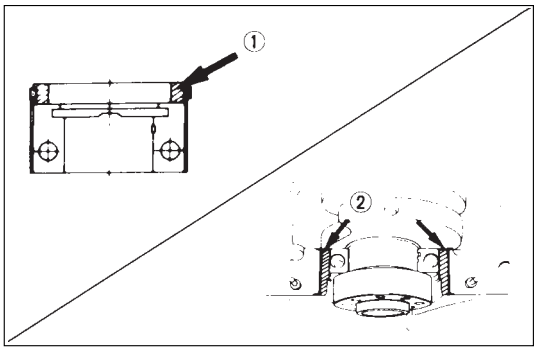

15. Main Bearing Cap Assembly

- Apply the recommended liquid gasket or its equivalent to the No. 5 crankshaft bearing cap cylinder body fiting surfaces at points ① and ② shown in the illustration.

NOTE:

Be sure that the bearing cap fitting surface is completely free of oil before applying the liquid gasket.
Do not allow the liquid gasket to obstruct the cylinder thread holes and bearings.

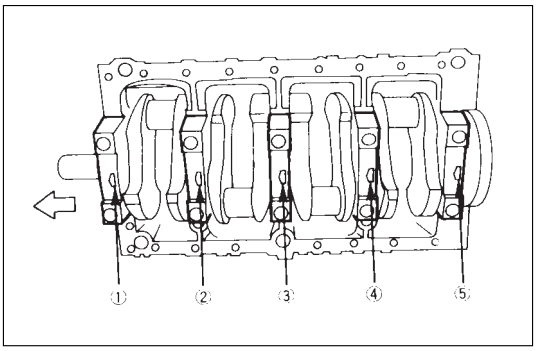

- Install the bearing caps with the bearing cap head arrow mark facing the front of the engine.
- Apply engine oil to the crankshaft bearing cap bolts.

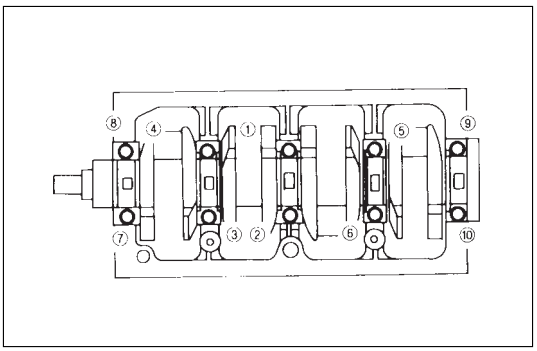

- Tighten the crankshaft bearing cap bolts to the specified torque a little at a time in the sequence shown in the illustration.

N·m (kg·m/lb·ft)
167 (17.0/123)

NOTE:

Check to see that the crankshaft turns smoothly by rotating it manually.

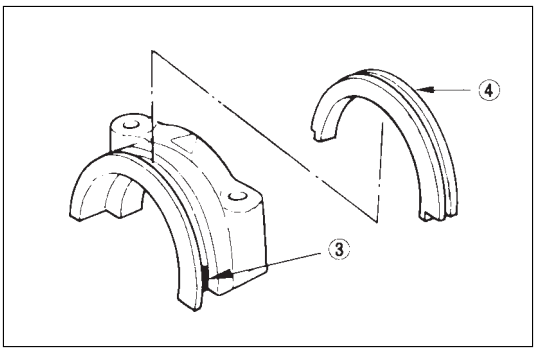

- Apply the recommended liquid packing or its equivalent to the No. 5 crankshaft bearing cap ③ as shown in the illustration.
  Install the arch packing ④ to the No. 5 bearing cap.

NOTE:

Take care to install the arch packing in the groove of bearing cap correctly.
Take care not to scratch the arch packing outer surface.

14. Piston Assembly

- Refer to "Piston and connecting rod" in this Section.

13. Tappet

12. Timing Gear Case

1) Install the timing gear case to the cylinder body.

NOTE:

Take care not to twist the front oil seal.

2) Tighten the timing gear case bolt together with the timing gear case gasket to the specified torque.

	N·m (kg·m/lb·ft)
☡	19 (1.9/14)

3) Cut away the gasket protruding above the fitting surfaces (as shown in the illustration).

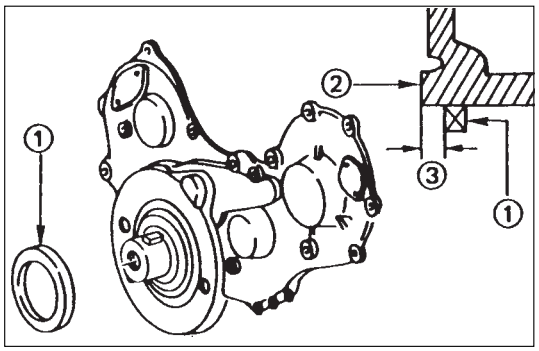

11. Crankshaft Front Oil Seal

- Use the installer to install the front oil seal ① to the gear case cover ②.

  Oil Seal Installer: 5-8840-2061-0

  Note the oil seal installation depth ③ shown in the illustration.

  Depth ③ = 1 mm (0.039 in.)

10. Camshaft

- Refer to 'Camshaft, Tappet' in Section 6A.

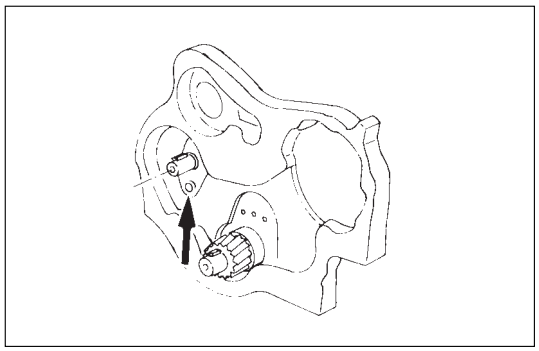

9. Camshaft Thrust Plate

- Install the thrust plate to the cylinder body and tighten the thrust plate bolts to specified torque.

	N·m (kg·m/lb·ft)
☡	18 (1.8/13)

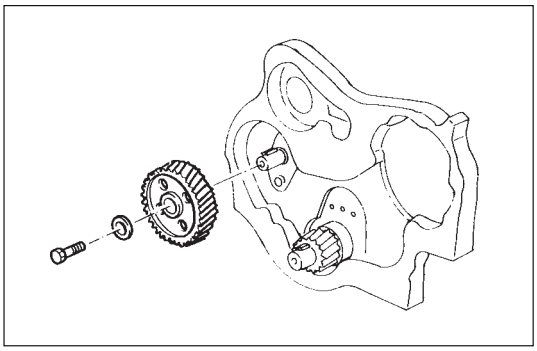

8. Camshaft Timing Gear

1) Install the camshaft timing gear to the camshaft. The timing gear mark ("Y - Y") must be facing outword.
2) Tighten the timing gear to the specified torque.

N·m (kg·m/lb·ft)

64 (6.5/47)

7. Oil Pump Assembly

- Refer to 'Oil pump' in Section 6A2.

6. Crankcase Assembly

- Refer to 'Crankcase' in Section 6A2.

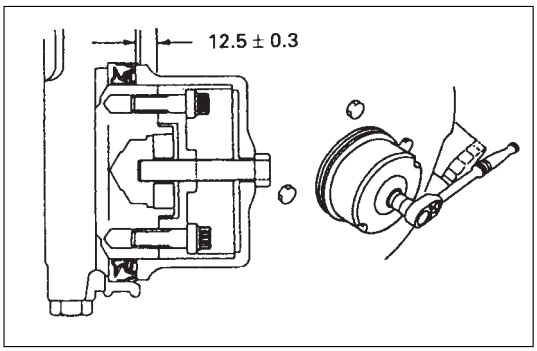

5. Crankshaft Rear Oil Seal

1) Tighten the adapter to the crankshaft rear and section with 2 bolts.
2) Insert the oil seal into the peripheral section of the adapter,
3) Insert the sleeve into the adapter section, and 1) tighten it with a bolt (M12 x 1.75L = 70) until the adapter section hits the sleeve.
4) Remove the adapter and the sleeve.
5) With the seal pressed in, check the dimension of the oil seal section.

Standard Dimension = 12.5 ± 0.3 mm
Oil Seal Installer: 5-8840-2359-0

4. Cylinder Block Rear Plate

- Tighten the cylinder block rear plate fixing bolt to the specified torque

N·m (kg·m/lb·ft)

82 (8.4/61)

3. Flywheel

- Refer to 'Crankshaft' in Section 6A.

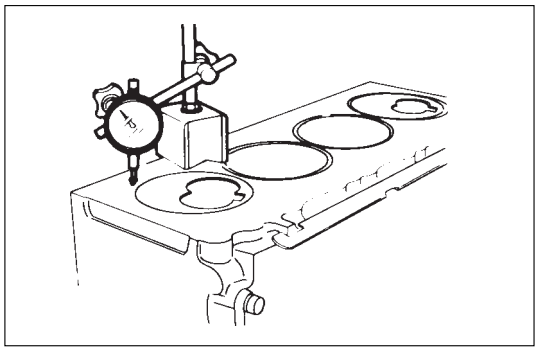

2. Cylinder Head Gasket

1. Carefully remove carbon deposits and gasket residue from the piston top face and the cylinder body upper surface.

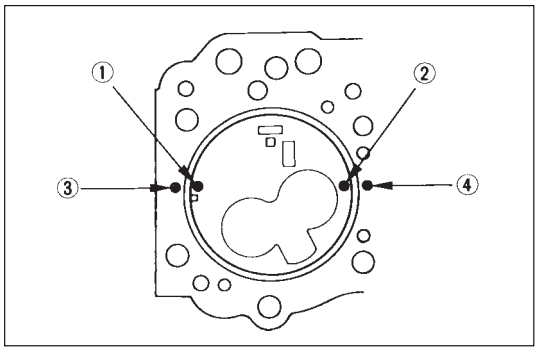

2. Use a dial indicator to measure the piston head projection at measuring points ① and ③ on the piston head and measuring points ② and ④ on the cylinder body.
   Do this for each cylinder.
3. Note the highest measured value.
   This will determine the cylinder head gasket thickness.

Piston Head Projection	mm (in)
0.658 ~ 0.814 (0.0259 ~ 0.0320)	

Piston head projection must be within the range shown in the above table.

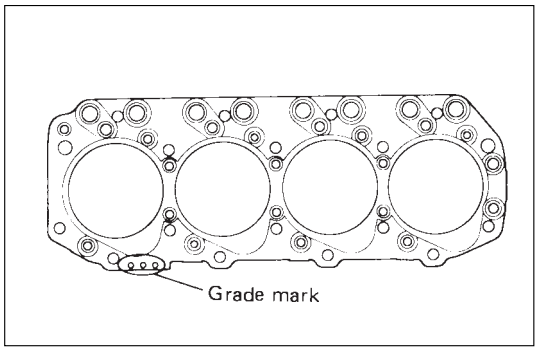

4. Select a cylinder head gasket of the appropriate thickness.
   The difference between the highest measured piston head projection and the lowest measured piston head projection must not exceed mm (in).

mm (in)

Grade mark		Average piston projection	Gasket thickness (Reference)
A		0.658-0.712 (0.0259-0.0281)	1.60 (0.0630)
B		0.713-0.758 (0.0281-0.0299)	1.65 (0.0650)
C		0.759-0.813 (0.0299-0.0320)	1.70 (0.0670)

1. Cylinder Head Assembly

- Refer to Section 6A2 ‘Cylinder head’

MEMO

SECTION 6A2

4JG2-NA/4JG2-TURBO ENGINE

CONTENTS

	PAGE
General Description	6A2- 1
Engine Mount (RH)	6A2- 3
Engine Mount (LH)	6A2- 4
Intercooler (4JG2-T only)	6A2- 5
Cylinder Head Cover	6A2- 6
Inlet Manifold	6A2- 8
Exhaust Manifold	6A2-10
Turbo Charger (4JG2-T only)	6A2-11
Timing Gear	6A2-15
Valve Stem Oil Seal and Valve Spring	6A2-21
Rocker Arm Shaft Assembly	6A2-24
Cylinder Head	6A2-26
Crankcase	6A2-31
Oil Cooler	6A2-34
Oil Pump Assembly	6A2-36
Piston, Piston Ring and Connecting Rod	6A2-37
Crankshaft and Main Bearing	6A2-39
Front Oil Seal	6A2-45
Rear Oil Seal	6A2-46
Engine Assembly	6A2-48

GENERAL DESCRIPTION

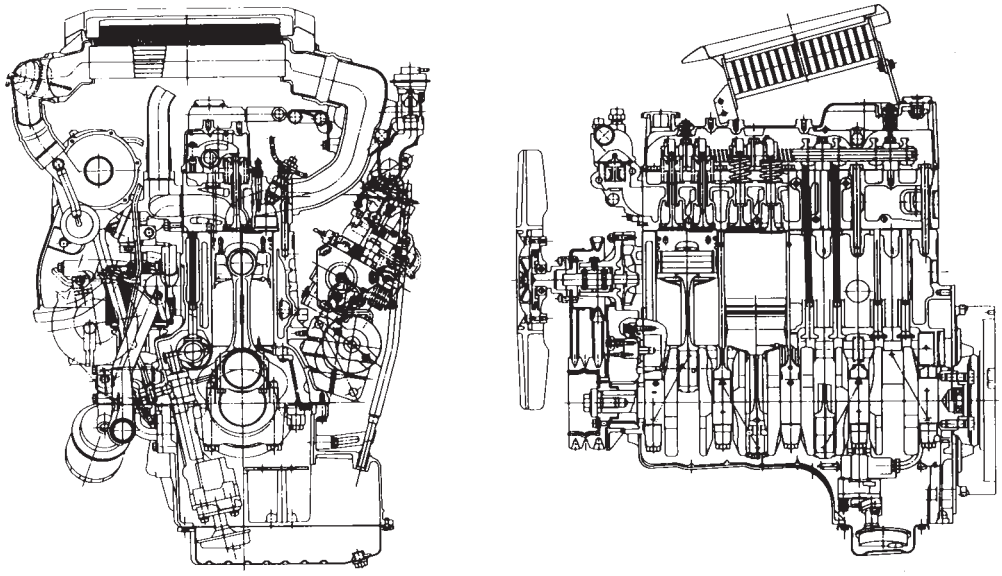

This illustration for 4JG2-T

RECARD Comet V Type swirl combustion chamber which provides superior driving performance, fuel economy and silent combustion over a wide range of driving conditions, is applied.

The cylinder head gasket is of laminated steel sheets.

Three grades of the gasket according to the measured piston head projection from the cylinder block are provided to give the engine a minimum compression ration fluctuation.

The cylinder head fixing blots, flywheel bolts and connecting rod fixing bolts are tightened by the angular Tightening Method.

The chrome plated steel dry type (Chromard) cylinder liners provide the highest durability.

Auto-thermatic pistons having steel struts with 0.7 mm offset from the piston pin center line, ate applied to reduce thermal expansion and resulting engine noise when the engine is cold.

The crankshaft bearings and connecting rod bearings are of aluminum having a high bearing surface.

These bearing are especially sensitive to foreign material such as metal scraps. So, it is very important that the oil ports and other related surfaces are kept clean and free of foreign material.

Crank shaft bearing selection for optimum bearing and journal clearance is applied to reduce vibration and noise.

As tufftriding (Nitrizing treatment) is applied to increase crankshaft strength, crankpins and journals should not be reground.

An oiling jet device for piston cooling is provided in the lubricating oil circuit from cylinder block oil gallery via a check valve.

Take care not to damage any oiling jet when removing and installing piston and connecting assembly.

The DFI (Double Formation Injection) Pintaux Type injection nozzle having a sub-injection hole is applied. This nozzle contributes to substantially minimize the diesel knocking sound noticeable in the cold engine idling operation.
Install the injection nozzle, directing the sub-injection hole to the specified direction.
QOS III preheating system which features a quick-on glow plug with thermometer control of the glowing time and the afterglow time function, is applied.

ENGINE MOUNT (RH)

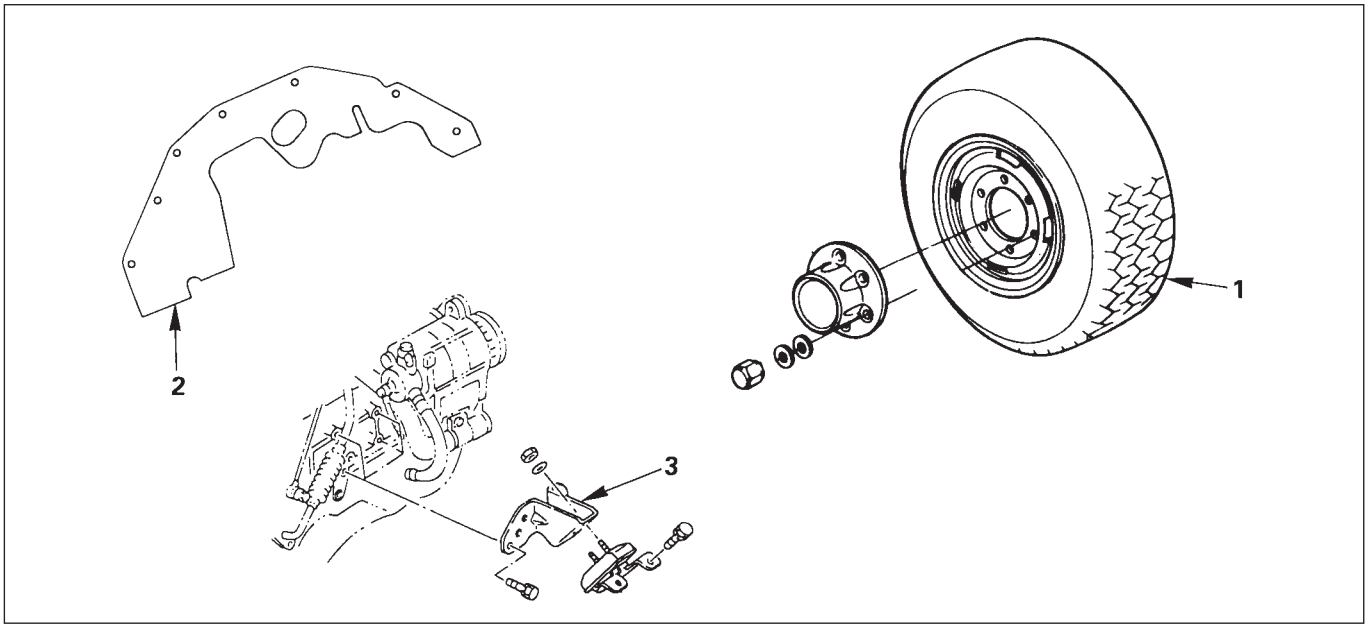

REMOVAL

Preparation:

- Battery ground cable
- Support engine
- Support vehicle

1. **Front Tire**
2. **Dust Cover**
3. **Engine Mount**
   - Remove fixing be its from cylinder body and chassis frame.

INSTALLATION

3. **Engine Mount**

Cylinder body side	N·m(kg·m/lb·ft)
	40 (4.1/30)

Chassis frame side	N·m(kg·m/lb·ft)
	40 (4.1/30)

- Tighten the fixing bolts to the specified torque

2. **Dust Cover**
1. **Front Tire**

	N·m(kg·m/lb·ft)
	118 (12.0/87)

ENGINE MOUNT (LH)

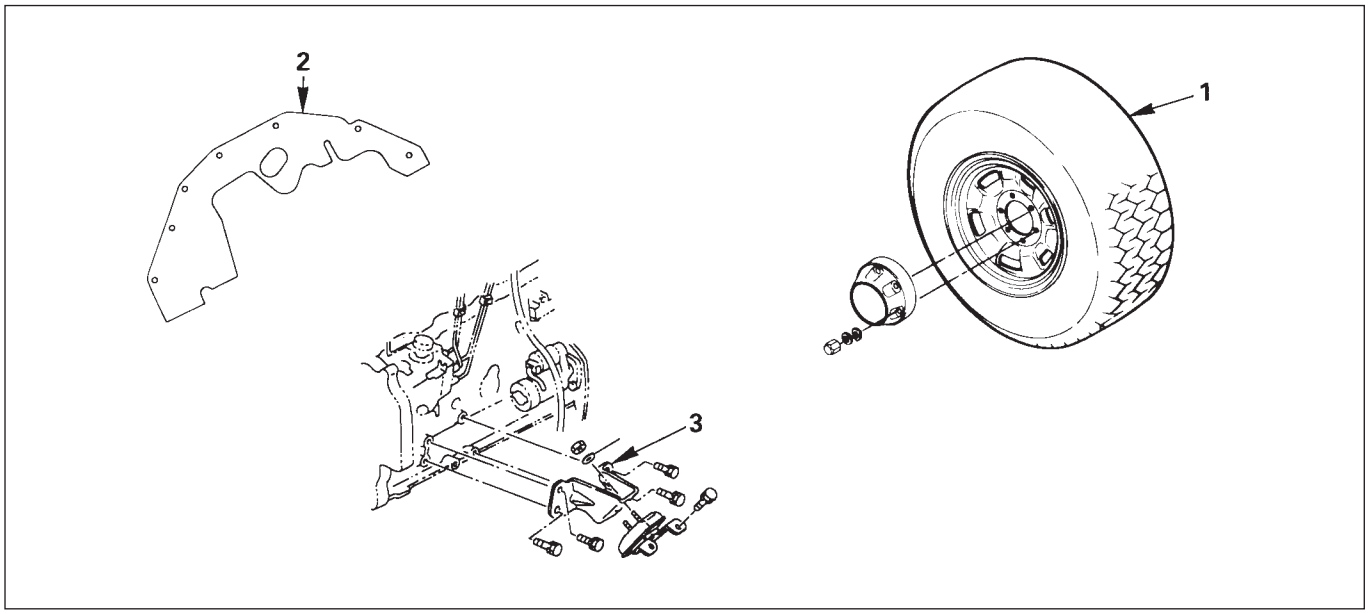

REMOVAL

Preparation:

- Disconnect battery ground cable
- Support engine
- Support vehicle

1. **Front Tire**
2. **Dust Cover**
3. **Engine Mount**
   - Remove fixing bolts from cylinder body and chassis frame.

INSTALLATION

3. **Engine Mount**
   - Tighten the fixing bolts to the specified torque

Cylinder body side	N·m(kg·m/lb·ft)
	40 (4.1/30)

Chassis frame side	N·m(kg·m/lb·ft)
	40 (4.1/30)

Chassis frame side	N·m(kg·m/lb·ft)
	41 (4.2/30)

2. **Dust Cover**
1. **Front Tire**
   - Tighten the fire fixing nuts to specified torque

N·m(kg·m/lb·ft)
118 (12.0/87)

INTERCOOLER (4JG2-T only)

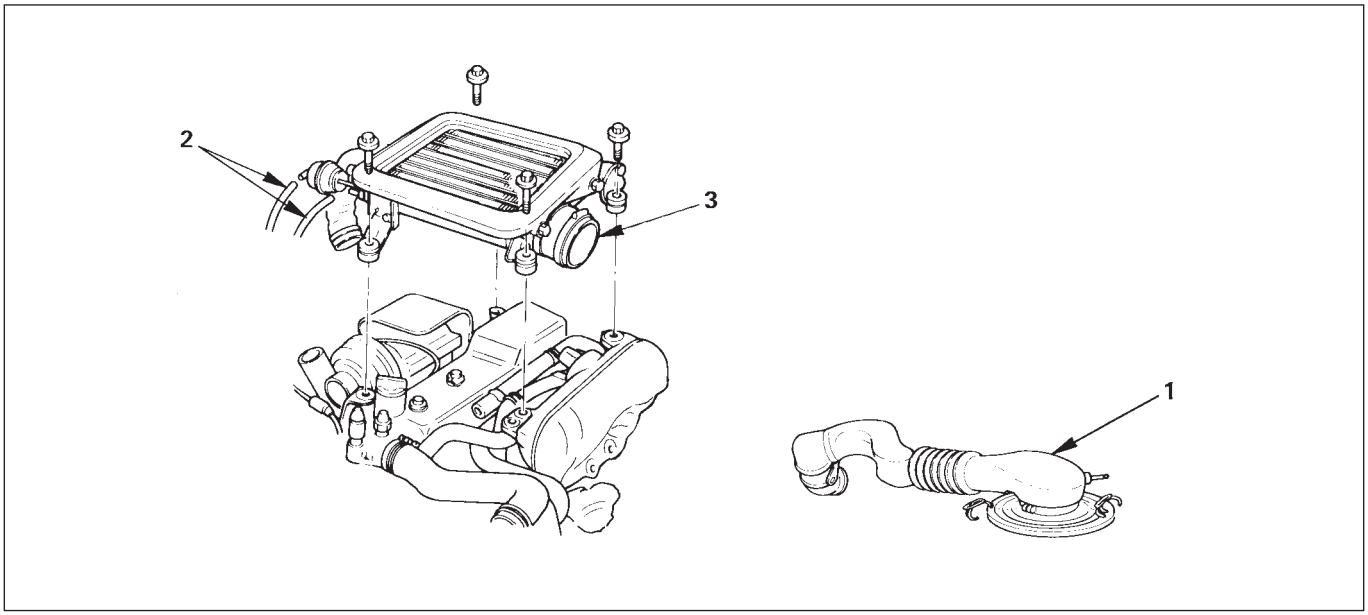

REMOVAL

Preparation:

- Disconnect battery ground cable

1. Air Cleaner Cover & Air Duct

- Remove bolts from intercooler.

2. Vacuum Hose

3. Intercooler Assembly

- Disconnect outlet hose from intake manifold.
- Remove bolts from engine side brakets.

INSTALLATION

3. Intercooler

- Connect outlet hose to intake manifold.
- Install intercooler and tighten fixing bolts to the specified torque.

	N·m (Kg·m/lb·ft)
	19 (2.0/14)

2. Vacuum Hose

1. Air Cleaner Cover & Air Duct

CYLINDER HEAD COVER

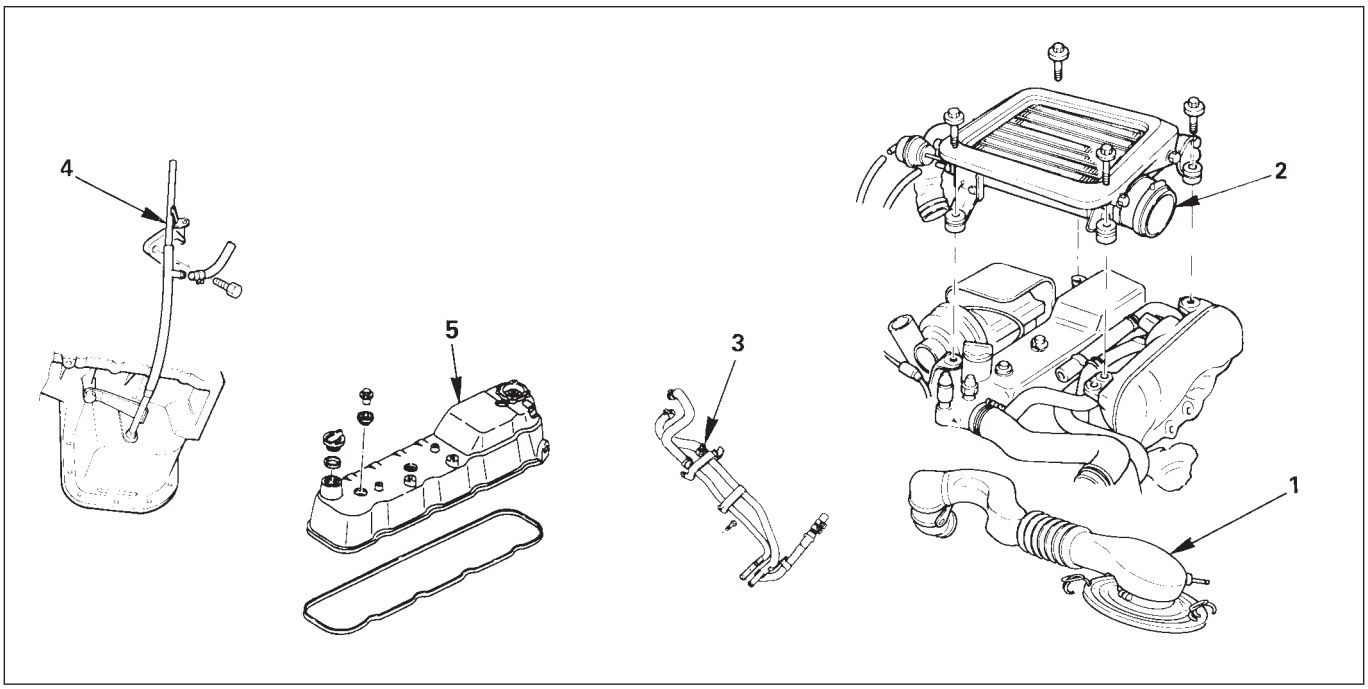

REMOVAL

Preparation:

- Disconnect battery ground cable.

1. **Air Cleaner Cover & Air Duct (4JG2-T only)**
   - Disconnect two air hose.
   - Release clips and bands and remove air cleaner cover.
2. **Intercooler Assembly (4JG2-Tonly)**
   - (Refer to intercooler removal steps in this section)
3. **Heater and Oil Cooler Pipe Fixing Bolts**
   - Remove fixing bolts from.
4. **Oil Level Gauge Tube**
5. **Cylinder head cover**

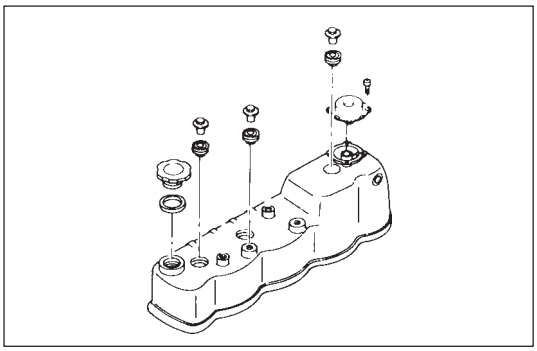

INSTALLATION

5. Cylinder Head Cover

- Apply engine oil to the rocker arms and the valve springs.
- Install the cylinder head cover gasket to the cylinder head cover.
- The gasket must be perfectly smooth with no loose areas.
- Tighten the cylinder head cover nuts to the specified torque in the numerical order.

N·m(Kg·m/lb·in)
13 (1.3/113 lb·in)

4. Oil Level Gauge Tube

Bolt	N·m(Kg·m/lb·ft)
	19 (1.9/14)

3. Heater and Oil Cooler Pipe Fixing Bolts

2. Intercooler Assembly (4JG2-T Only)

- (Refer to intercooler installation steps in this section.)

1. Air Cleaner Cover & Air Duct

INLET MANIFOLD

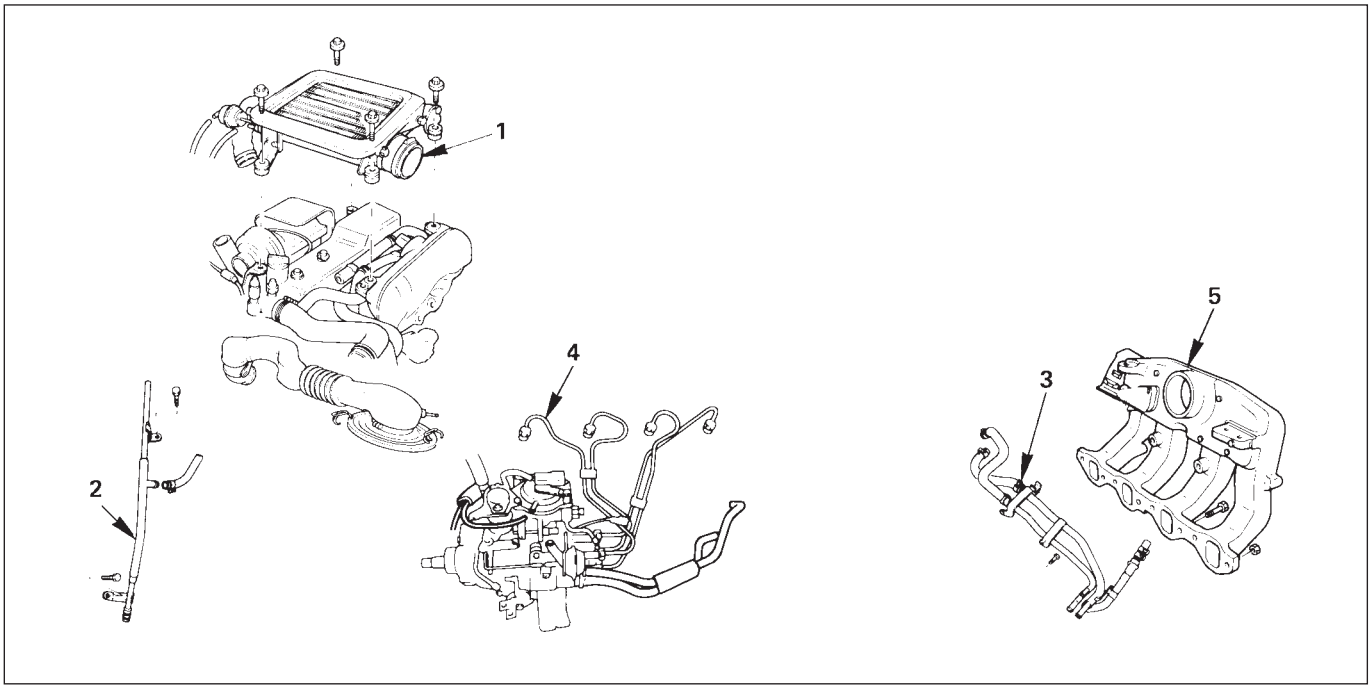

REMOVAL

1. **Intercooler (4JG2-T only)**
2. **Oil Level Gauge Tube (4JG2-T only)**
3. **Heater and Oil Cooler Pipe Fixing Bolts.**
   - Remove fixing bolts from inlet manifold.
4. **Injection Pipes**
5. **Inlet Manifold**

INSTALLATION

5. **Inlet Manifold**
   - Tighten the fixing bolts and nuts to the specified

Bolt	N·m(Kg·m/lb·ft)
	19 (1.9/14)

Nut	N·m(Kg·m/lb·ft)
	24(2.4/18)

4. Injection Pipes

- Tighten the sleeve nut to the specified torque

N·m(Kg·m/lb·ft)
29 (3.0/22)

3. Heater and Oil Cooler Pipe Fixing Bolts

- Tighten fixing bolts to the specified torque

N·m(Kg·m/lb·ft)
19 (1.9/14)

2. Oil Level Gauge Tube (4JG2-T only)

1. Inter Cooler (4JG2-T only)

- Refer to “Inter cooler installation”steps in this section.

EXHAUST MANIFOLD

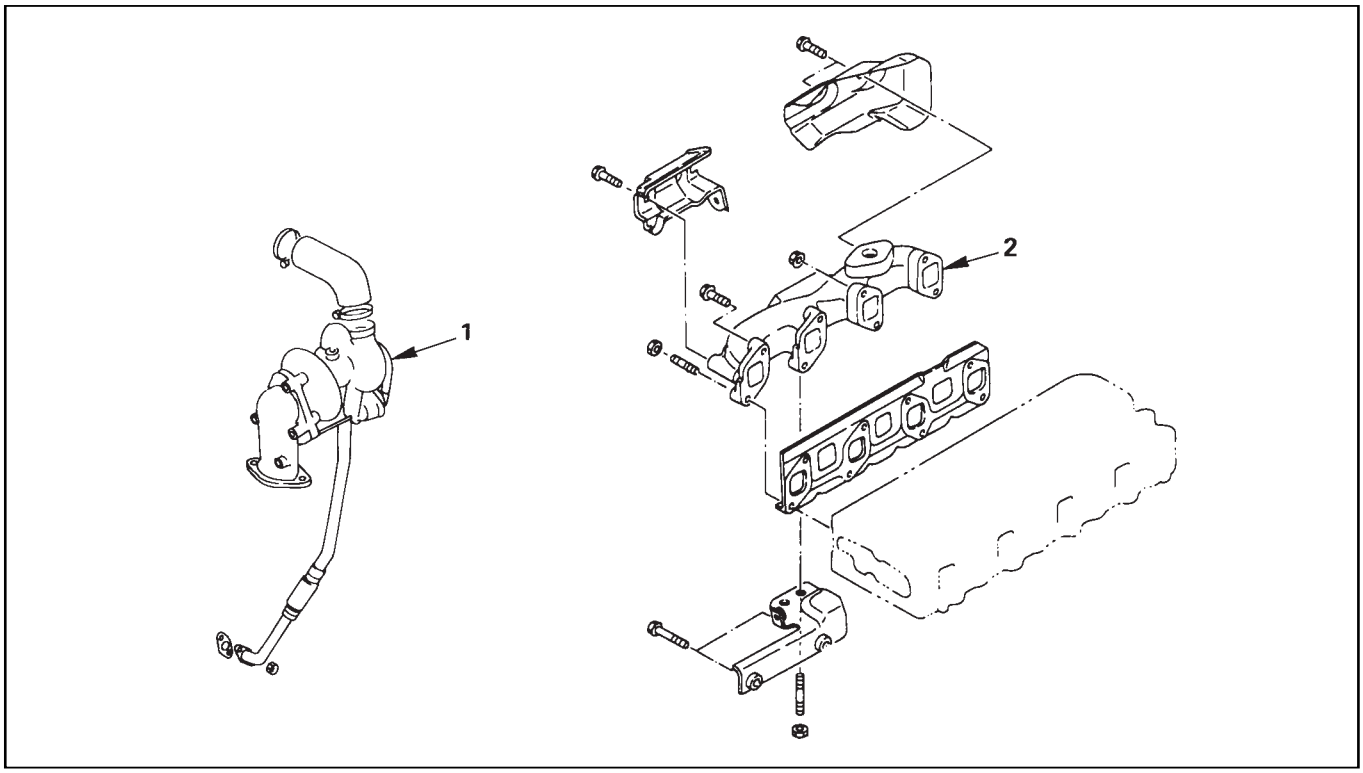

REMOVAL

1. **Turbocharger (4JG2-T only)**
   - Refer to the “Turbocharger” removal in this section.
2. **Exhaust Manifold**

INSTALLATION

2. **Exhaust Manifold**
   - Tighten the fixing nuts and bolts to the specified torque.

Nut	N·m(Kg·m/lb·ft)
	19 (1.9/14)

Bolt	N·m(Kg·m/lb·ft)
	26 (2.7/20)

1. **Turbocharger (4JG2-T only)**
   - Refer to the “Turbocharger” installation in this section.

TURBOCHARGER (4JG2-T only)

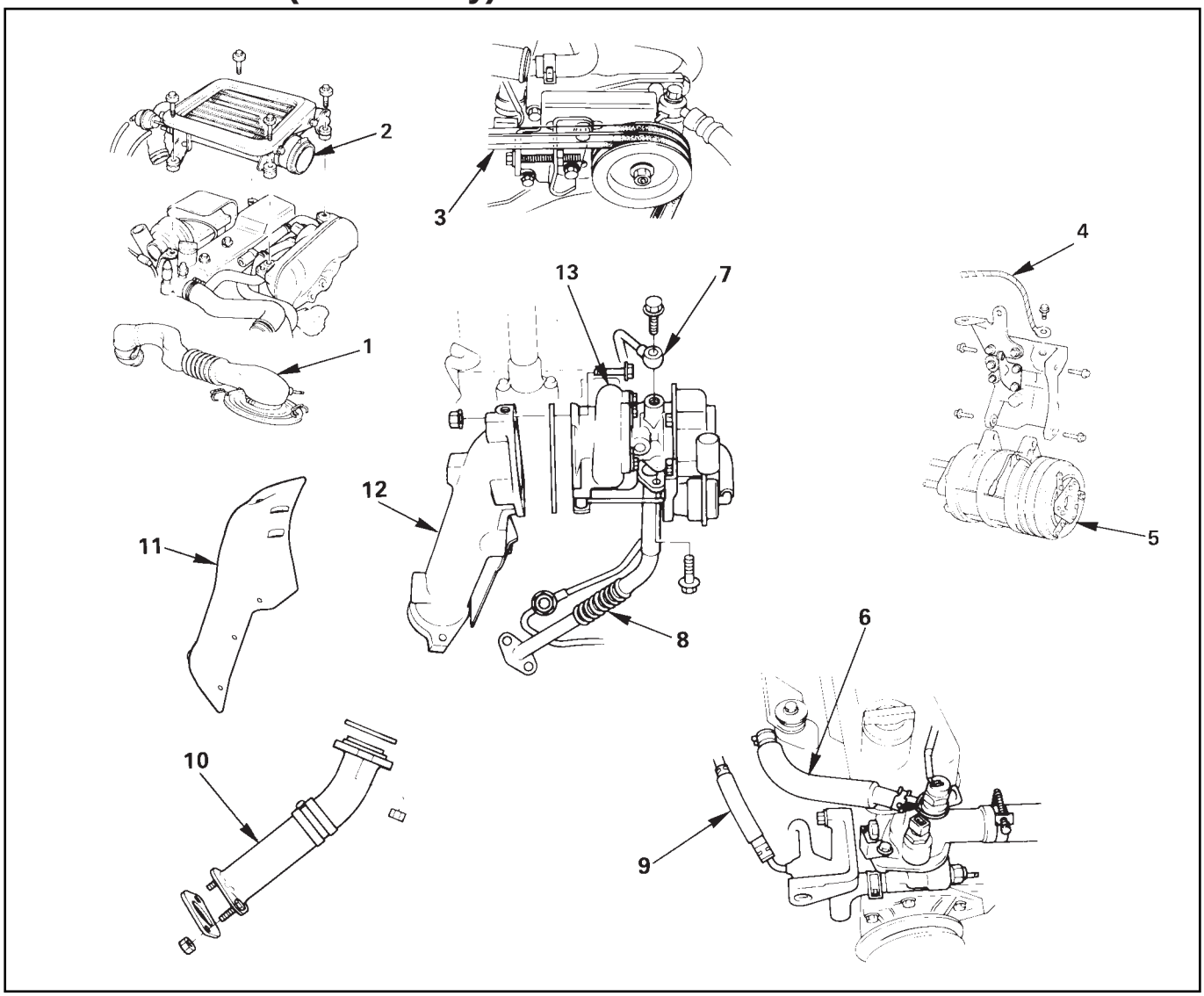

REMOVAL

Preparation

- Space stand and remove right front tire
- Remove battery
- Drain coolant

1. **Air Cleaner Cover & Air Duct**
   - Disconnect connecting rubbers and stay fixing bolts.
2. **Intercooler Assembly (4JG2-T Only)**
   - Refer to intercooler removal steps in this section.
3. **Power Steering (P/S) Pump Drive Belts**
   - Loosen P/S pump fixing bolts and adjusting bolt and remove two drive belt.
4. **Engine Ground Cable**

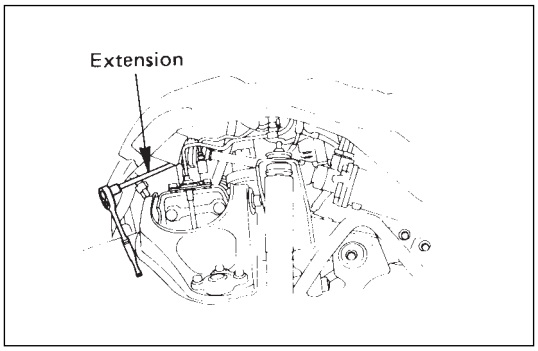

5. **Air Conditioner (A/C) Compressor Assembly**
   - Remove A/C compressor fixng bolt (rear under side of compressor) by using a long extension bar at under side of wheel arch.
   - Disconnect magnetic clutch harness connector.
   - Removal fixing bolts (upper and front lower sides of compressor) and set A/C compressor asm with pipelines on battery cable.
6. **Water Inlet Pipe: Turbo (4JG2-T Only)**
7. **Oil Feed Pipe: Turbo (4JG2-T Only)**
   - Remove joint bolt from turbo charger.
   - Plug up oil port of turbocharger to prevent entrance of foreign material.
8. **Oil Return Pipe: Turbo (4JG2-T Only)**
   - Disconnect oil return pipe flange from turbocharger.
9. **Water Outlet Pipe: Turbo (4JG2-T Only)**
10. **Exh. Pipe: Ft (4JG2-T Only)**
11. **Heat Protector (4JG2-T Only)**
12. **Exh. Adapter (4JG2-T Only)**
13. **Turbocharger Assembly (4JG2-T Only)**
    - Remove turbocharger asm from exhaust manifold.

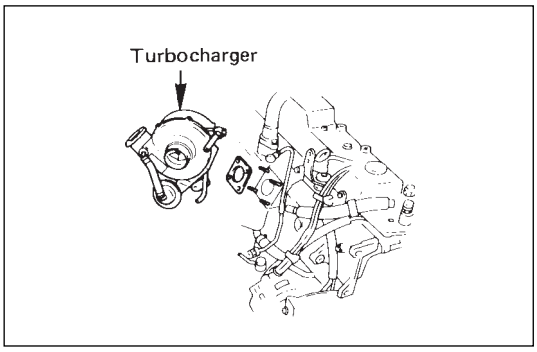

INSTALLATION

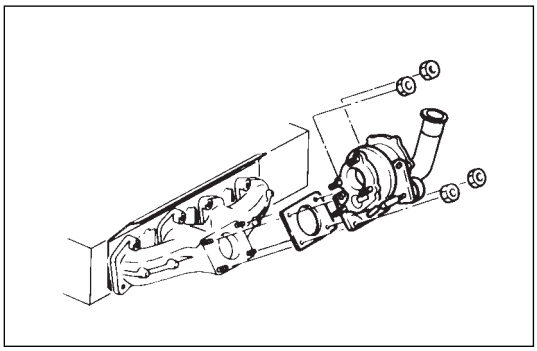

13. Turbocharger Assembly (4JG2-T Only)

- Install the turbocharger asm with gasket in exh. manifold and tighten fixing nuts to the specified torque.

N·m(Kg·m/lb·ft)
26 (2.7/20)

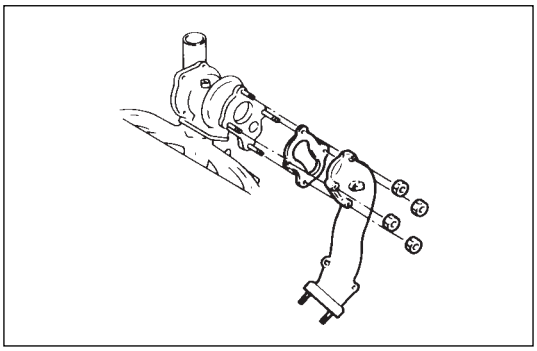

12. Exh. Adapter (4JG2-T Only)

- Install exh. adapter and tighten bolts to the specified torque.

N·m(Kg·m/lb·ft)
26 (2.7/20)

11. Heat Protector (4JG2-T Only)

10. Exh. Pipe: Ft

- Install exh. pipe and tighten bolts to the specified torque.

N·m(Kg·m/lb·ft)
67 (6.8/49)

9. Water Outlet Pipe: Turbo (4JG2-T Only)

- Install water outlet pipe with new gasket to the specified torque.

N·m(Kg·m/lb·ft)
8(0.8/6)

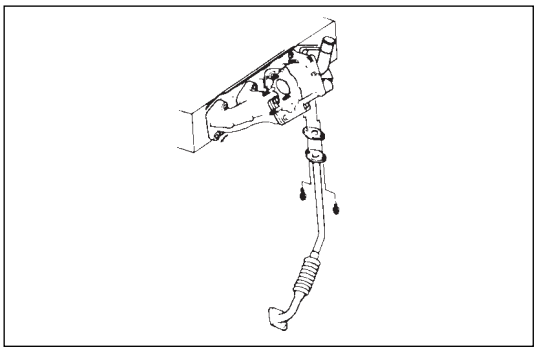

8. Oil Return Pipe: Turbo (4JG2-T Only)

- Install oil return pipe with new gasket in turbocharger and tighten joint bolt to the specified torque.

N·m(Kg·m/lb·ft)

8(0.8/6)

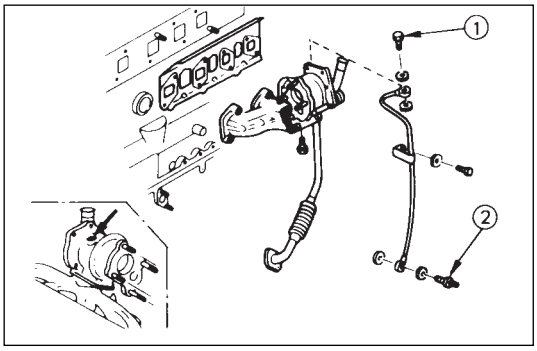

7. Oil Feed Pipe: Turbo (4JG2-T Only)

- Apply about 100 cc engine oil to oil feed hose of turbocharger housing before installing oil feed pipe.
- Lubricate turbocharger securely by rotating turbine shaft by hand.
- Install oil feed pipe with new gasket and tighten joint bolt to the specified torque.

N·m(Kg·m/lb·ft)

① 23 (2.3/17) ② 29 (3.0/22)

6. Water Inlet Pipe: Turbo (4JG2-T Only)

- Install water inlet pipe with new gasket and tighten joint bolt to the specified torque.

N·m(Kg·m/lb·ft)

8(0.8/6)

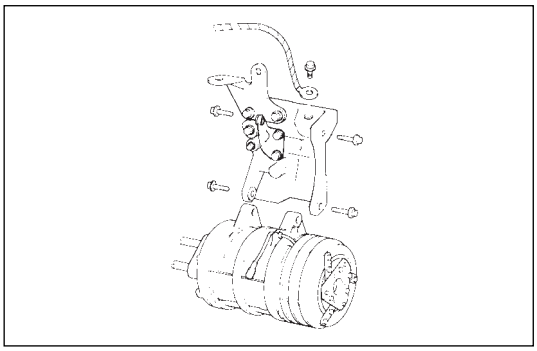

5. A/C Compressor Assembly

- Tighten temporarily fixing bolts (front upper and lower sides of compressor)
- Tighten fixing bolt (rear under side of compressor) to the specified torque by using along extension bar and torque wrench at under side of wheel arch.
- Tighten fixing bolts (front upper and lower side of compressor) to the specified torque.

N·m(Kg·m/lb·ft)

37 (3.8/27)

4. Engine Ground Cable

3. P/S Pump Drive Belts

- Install drive belts, adjust belt tension by adjusting bolt and tighten locking bolt to the specified torque.
- Refer to drive belt adjustment steps in section 6B.

2. Intercooler Assembly (4JG2-T Only)

- Refer to intercooler installation steps in this section.

1. Air Cleaner Cover & Air Duct (4JG2-T Only)

- Connect inlet and outlet connecting hoses and tighten stay fixing bolts.
- Install right front tire.
- Fill coolant
- Install battery and connect battery cables.

TIMING GEAR

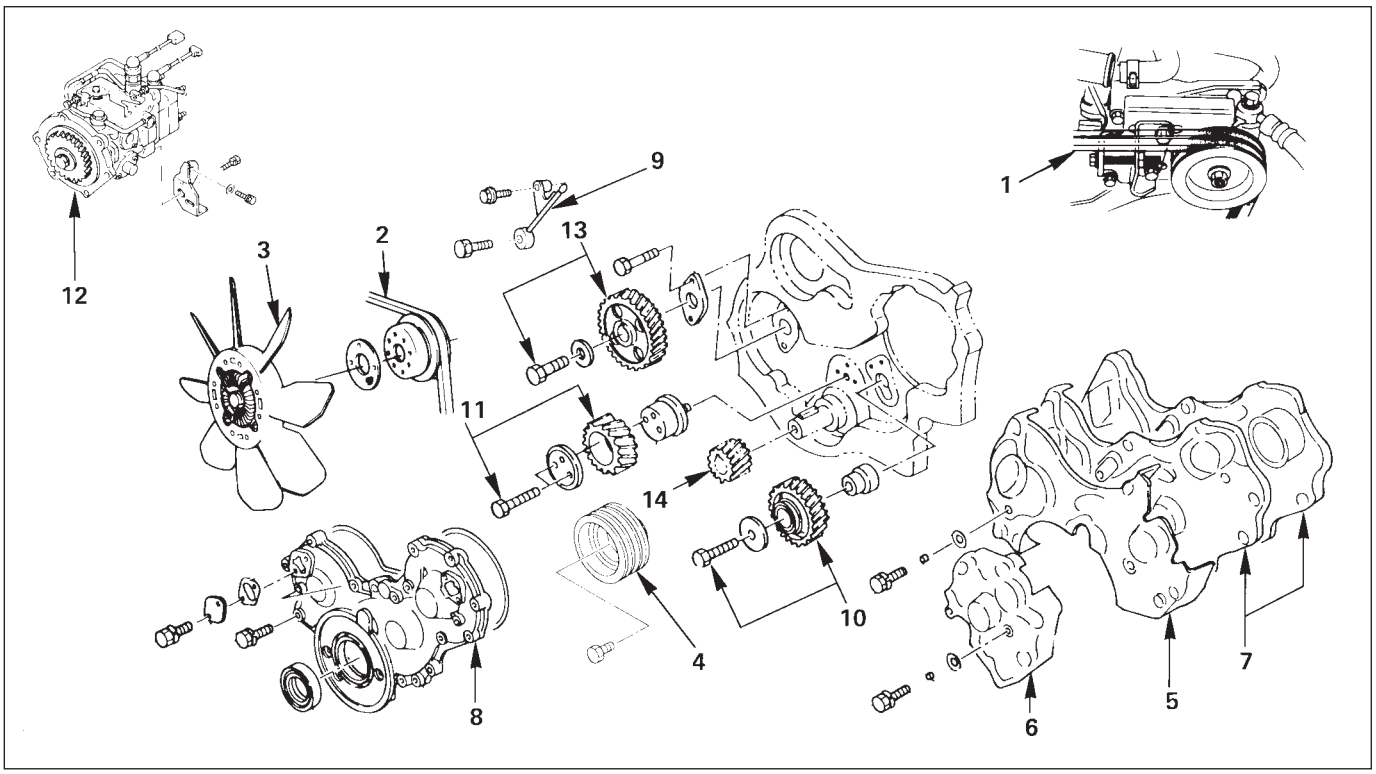

REMOVAL

Preparation:

- Disconnect battery ground cable.
- Drain coolant.

1. P/S Pump Drive Belt

- Loosen P/S pump mounting bolt and adjust bolt, and remove the drive belt.

2. AC Generator Drive Belt

- Loosen AC Generator mounting bolt (under side) and adjust plate lock bolt, and remove the drive belt.

3. Cooling Fan Assembly

- Remove clamp nut, and remove cooling fan asm, distant pipe, and fan pulley.

4. Crankshaft Damper Pulley

5. Upper Noise Shield Cover

6. Lower Noise Shield Cover

7. Noise Cover Spacer.

8. Timing Gear Case Cover

9. Oil Pipe

10. Idler Gear “B” and Shaft

1) Measure the camshaft timing gear backlash and the crenkshaft timing gear backlash before removing the idler gear.

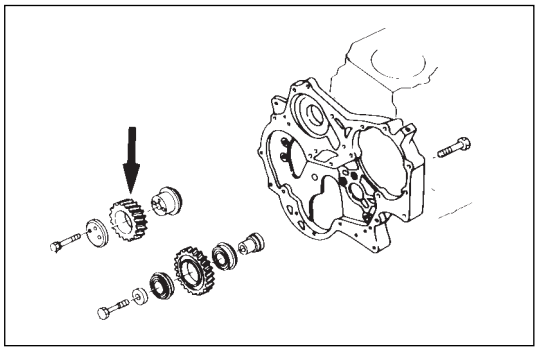

2) Measure the idler gear end play before removing the idler gear.

NOTE:

Refer to the following items for details on the backlash and end play measurement procedures.

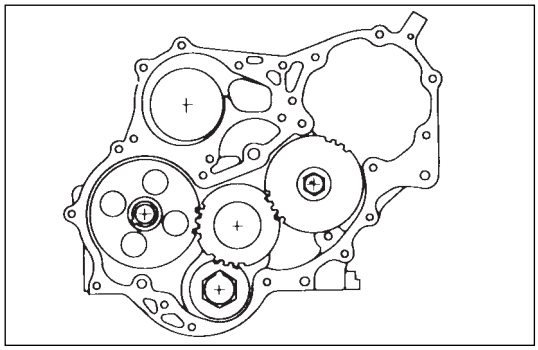

Timing Gear Backlash Measurement

1) Set a dial indicator to the timing gear to measured. Hold both the gear to be checked and the adjoining gear stationary.
2) Move the gear to be checked as far as possible to both the right and the left.
   Take the dial indicator reading.
   It the measured value exceeds the specified limit, the timing gear must be replaced.

Timing Gear Backlash — mm (in)

Standard	Limit
0.10-0.17 (0.0039-0.0067)	0.30 (0.012)

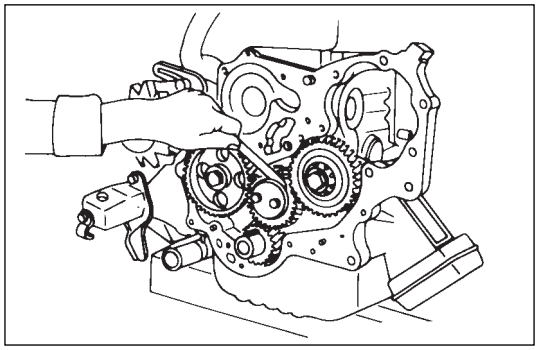

Idler Gear "A" End Play Measurement

Insert a feeler gauge between the idler gear and the thrust collar to measure the gap and determine the idler gear end play.
If the measued value exceeds the specified limit, the the thrust collar must be replaced.

Idler Gear End Play — mm (in)

Standard	Limit
0.07 (0.0028)	0.2 (0.0079)

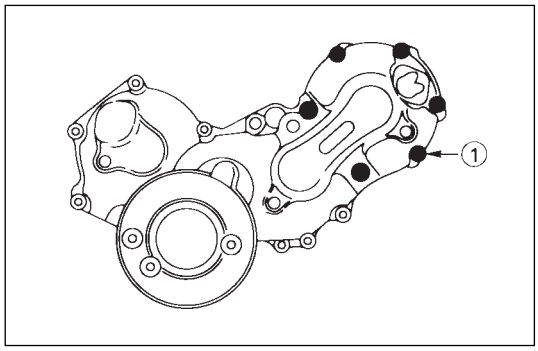

11. Idle Gear

12. Injection Pump

1) Remove the six injection pump bracket bolts ① from the timing gear case.

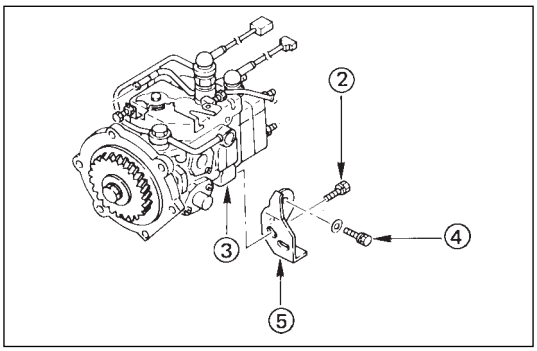

2) Remove the injection pump rear bracket bolts ② from the injection pump bracket ③.
3) Remove the injection pump rear bracket bolts ④ and the bracket ⑤ from the cylinder body.
4) Pull the injection pump along with the injection pump timing gear free toward the rear of the engine.

NOTE:

Plug the injection pump delivery holder ports with the shipping caps (or the equivalent) to prevent the entry of foreign material.

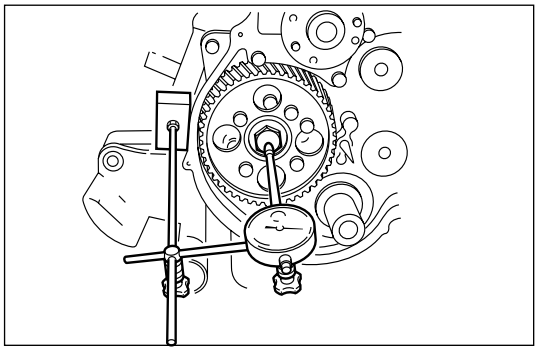

13. Camshaft Timing Gear

1) Use a dial indicator to measure the camshaft end play.
   This must be done before removing the camshaft gear.
   If the camshaft end play exceeds the specified limit, the thrust plate must be replaced.

Camshaft End Play — mm (in)

Standard	Limit
0.050-0.114 (0.0020-0.0044)	0.2 (0.008)

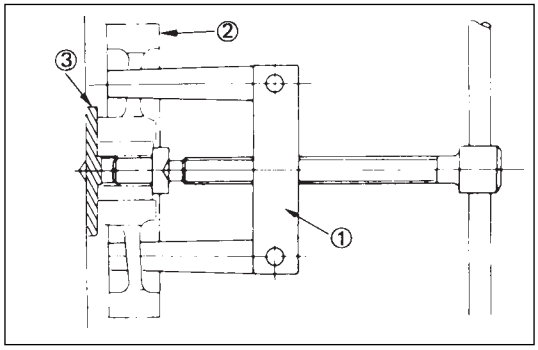

2) Remove the camshaft timing gear bolt from the camshaft.

NOTE:

Hold the camshaft stationaly to prevent the camshaft from turning.

3) Use the universal puller ① to pull out the camshaft timing gear ②.
4) Remove the thrust plate ③.

14. Crank Shaft Gear

INSTALLATION

14. Crank Shaft Gear

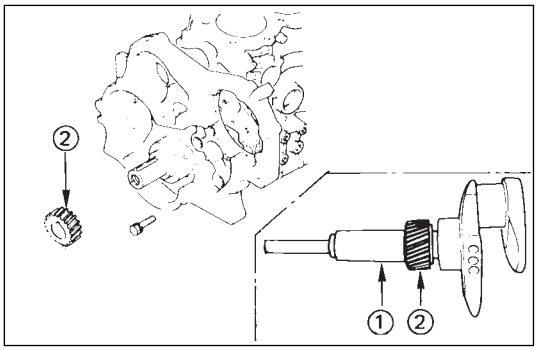

1) Install the crankshaft gear.
2) Use the crankshaft gear installer ① to install the crankshaft gear ②.
   The crankshaft gear timing mark ("X - X") must be facing outward.
   Crankshaft Gear Installer : 9-8522-0020-0

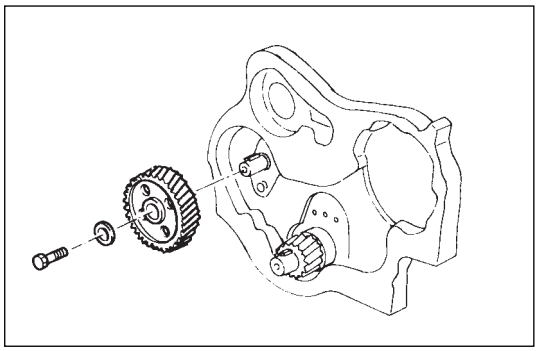

13. Crankshaft Timing Gear

1) Install the camshaft timing gear to the camshaft. The timing gear mark ("Y - Y") must be facing outward.
2) Tighten the timing gear to the specified toeque.

N·m(Kg·m/lb·ft)
64 (6.5/47)

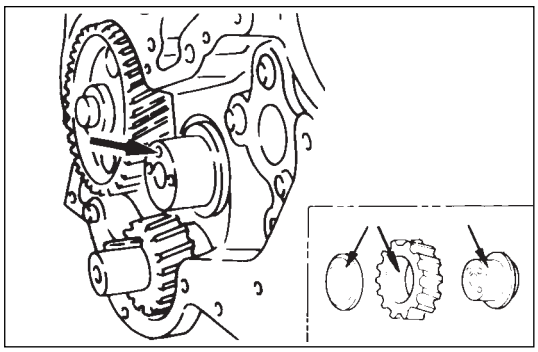

11. Idle Gear

1) Apply engine oil to the idler gear and the idler gear shaft.
   The idler gear shaft oil hole must be facing up.
2) Position the idler gear setting marks "X" and "Y" so that they are facing the front of the engine.

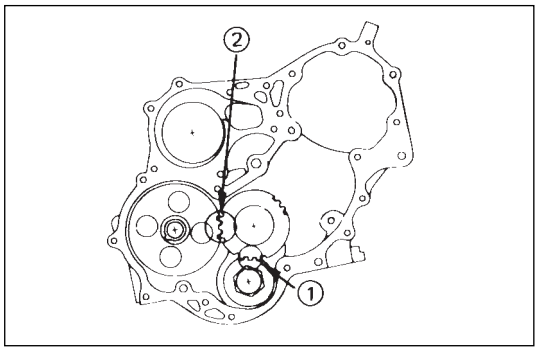

3) Align the idler gear "X" setting mark with the crankshaft timing gear ① "X - X" setting mark.
4) Align the idler gear "Y" setting mark with the camshaft timing gear ② "Y - Y" setting mark.
5) Install the thrust collar and bolts to the cylinder body through the shaft.
   The thrust collar oil hole must be facing up, and the thrust collar chamfered must be outward.
6) Tighten the idler gear bilt to the specified torque.

N·m(Kg·m/lb·ft)
19 (1.9/14)

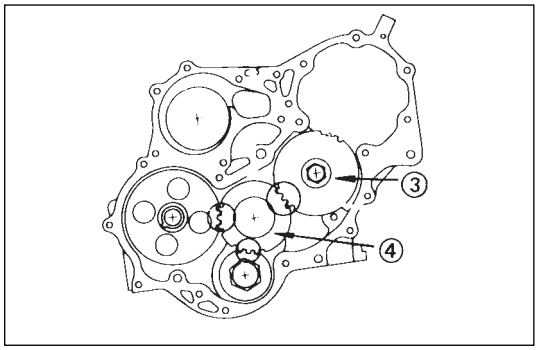

10. Idler Gear "B" and Shaft

1) Apply engine oil to the idler gear and the idler gear shaft.
2) Align the idler gear "B" ③ "Z" setting mark with the idler gear "A" ④ "Z - Z" setting mark.
3) Tighten the idler gear bolt to the specified torque.

N·m(Kg·m/lb·ft)
76 (7.7/56)

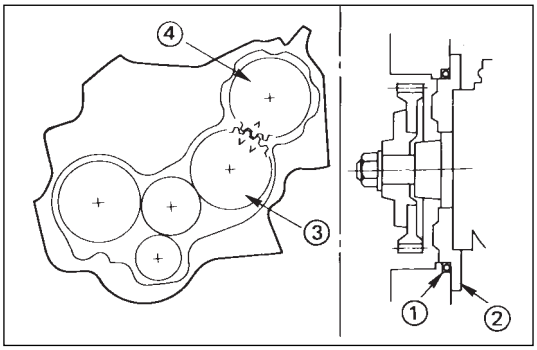

12. Injection Pump

1) Install the O-ring ① to the injection pump flange ②.
2) Install the injection pump to the timing gear case. Align the idler gear "B" ③ "V - V" mark with the injection pump timing gear ④ "V" mark.

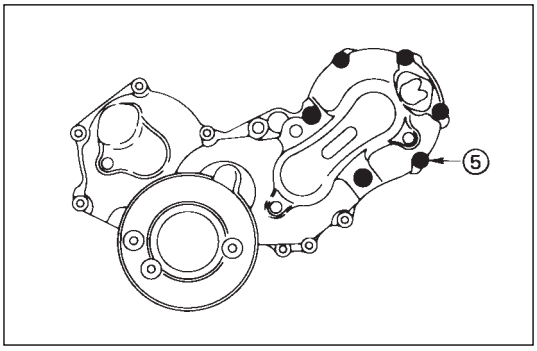

3) Temporarily tighten the six injection pump nuts ⑤.
The injection pump nuts will be finally tightened after the injection pump rear bracket bolts.

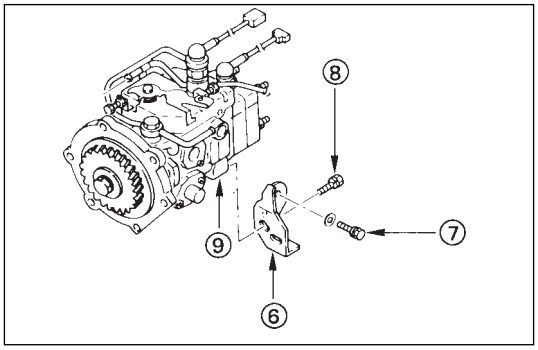

4) Install the injection pump rear bracket ⑥ and the rear bracket bolts ⑦ to the cylinder body.
5) Install the rear bracket bolts ⑧ to the injection pump bracket⑨.
Do not tighten the bolts.
The rear bracket bolts ⑦ and ⑧ will be finally tightened to the specified torque after the injection pump nuts.

6) Tighten the injection pump bracket bolts ⑦ to the specified torque.

N·m(Kg·m/lb·ft)
206(21/152)

7) Tighten the injection pump bracket bolts ⑧ to the specified torque.

N·m(Kg·m/lb·ft)
206(21/152)

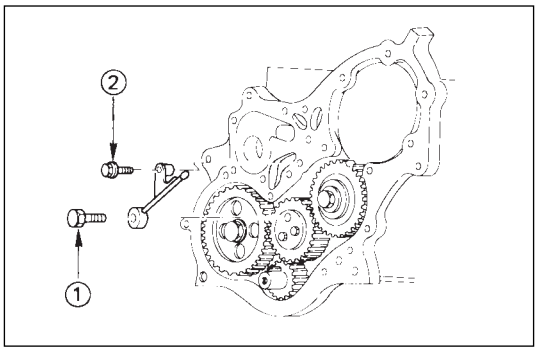

9. Timing Gear Oil Pipe

1) Install the oil pipe to the timing gear case and idler gear "A".
2) Tighten the oil pipe eye bolt ① and bolt ② to the specified torque.

N·m(Kg·m/lb·ft)
13 (1.3/9)

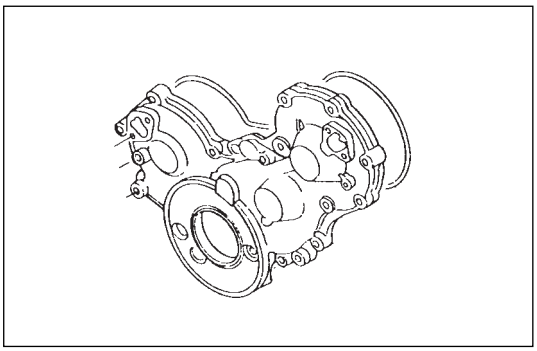

8. Timing Gear Case Cover

1) Align the gear case with the timing gear case knock pin and then install the timing gear case cover.
2) Tighten the gear case cover bolts to the specified torque.

7. Noise Cover Spacer

6. Lower Noise Shield Cover

5. Upper Noise Shield Cover

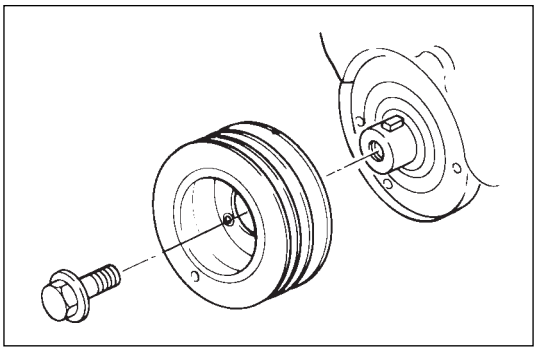

4. Cranshaft Damper Pulley

Tighten the crankshaft damper pulley bolt to the specified torque.

NOTE:

Hold the flywheel ring gear stationary to prevent the crankshaft from turning when tightening the damper pulley.

	N·m(Kg·m/lb·ft)
	206(21/152)

3. Cooling Fan Assembly

- Mount fan pulley, distance piece, and cooling fan asm (in this order) on the water pump, and tighten to the specified torque.

	N·m(Kg·m/lb·ft)
	206(21/152)

2. AC Generator Drive Belt

- Install AC Generator drive belt and adjust belt tension.
- Refer to Drive Belt Adjustment in section 6B.

1. P/S Pump Drive Belt

- Install P.S pump drive belt and adjust belt tension.
- Refer to Drive Belt Adjustment in section 6B.

VALVE STEM OIL SEAL & VALVE SPRING

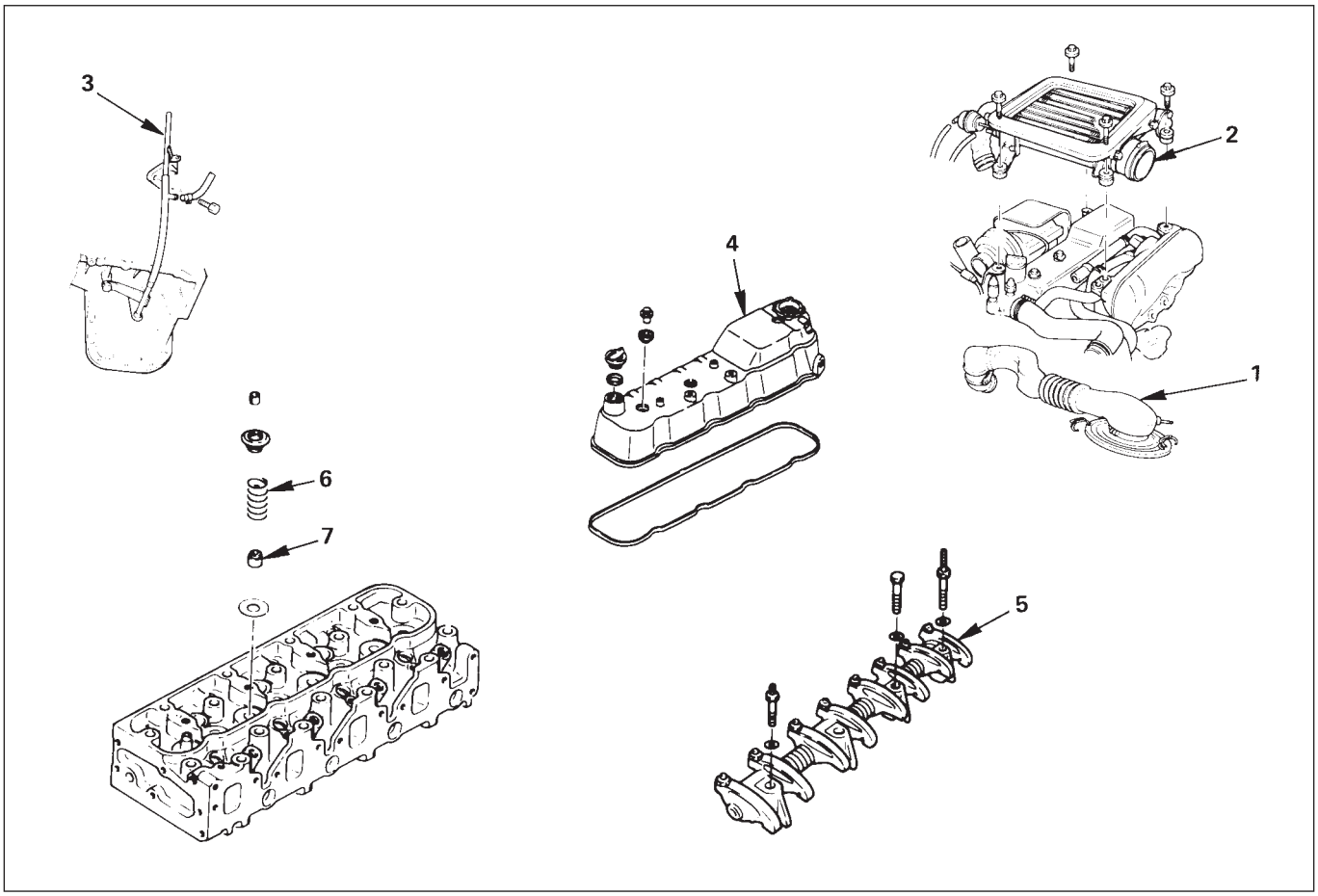

REMOVAL

Preparation

- Disconnect battery ground cable.

1. **Air cleaner Cover & Air Duct (4JG2-T Only)**
   - Disconnect air hoses.
   - Release clips and bands and remove air cleaner cover.
2. **Intercooler Assembly (4JG2-T Only)**
   - (Refer to intercooler removal steps in this section)
3. **Oil Level Gauge Tube**
4. **Cylinder Head Cover**
5. **Rocker Arm Shaft Assembly**
   - Loosen bolts and nuts of rocker arm shaft
   - Bracket by turns and removal rocker
   - Shaft asm.
6. **Valve Spring**
   - Apply compressed air to cylinder from the glow plug hole hold the valve in place.
   - Using special tool, compress valve spring and removal split collar.

Valve spring compressor: 9-8523-1423-0 (J-29760)

CAUTION

- Put removed valve springs in the order of cylinder number.

7. Valve Stem Oil Seal

- Removal oil seal by pliers.

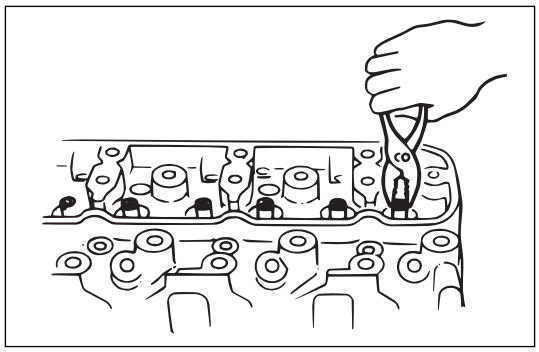

CAUTION

- Removed oil controller should not be reused.

INSTALLATION

7. Valve Stem Oil Seal

- Install new oil seal to valve guide.
- Guide using special tool.

  Special tool: 5-8840-2033-0

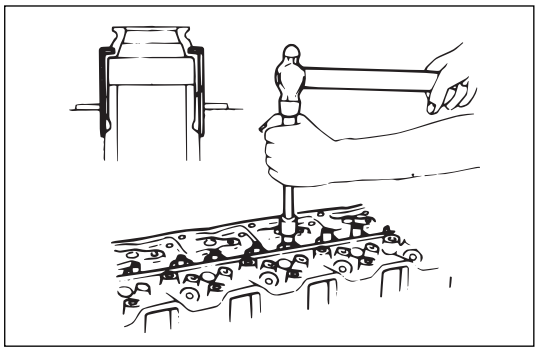

6. Valve Spring

- Attach the valve spring to the upper spring seat.

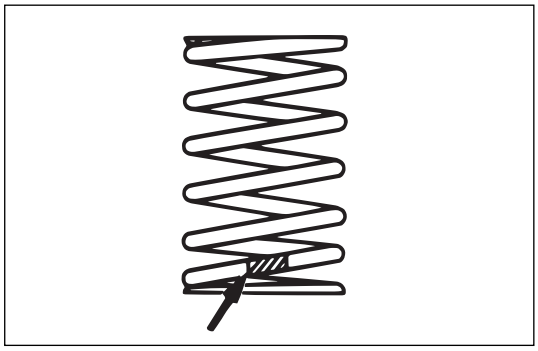

CAUTION

- The painted area of the valve spring should be facing toward.
- Apply compressed air to cylinder from the glow plug hole to hold the valve in place.
- Install split collar by special tool.

  Valve spring compressor: 9-8523-1423-0 (J-29760)

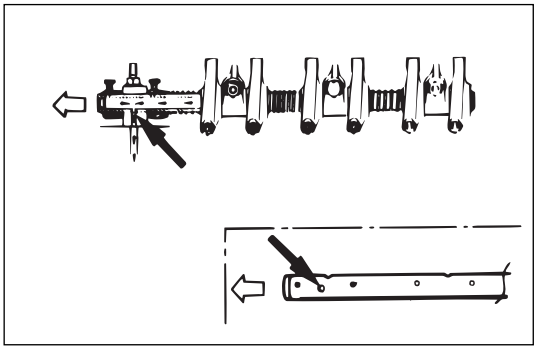

5. Rocker Arm Shaft Assembly

- Install rocker arm shaft with a larger oil hole (ø4) to the front of engine.
- Align fixing bolt with not of rocker arm shaft and tighten fixing bolt to the specified torque.

N·m(Kg·m/lb·ft)
54 (5.5/40)

4. Cylinder Head Cover

- Install cylinder head cover and tighten bolt to the specified torque.

N·m(Kg·m/lb·in)
13 (1.3/113)

3. **Oil Level Gauge Guide Tube**
   - Tighten guide tube to the specified torque.

	N·m(Kg·m/lb·ft)
2	19 (1.9/14)

2. **Intercooler Assembly (4JG2-T Only)**
   - Refer to intercooler installation steps in this section.
1. **Air Cleaner Cover & Air Duct (4JG2-T Only)**

ROCKER ARM SHAFT ASSEMBLY

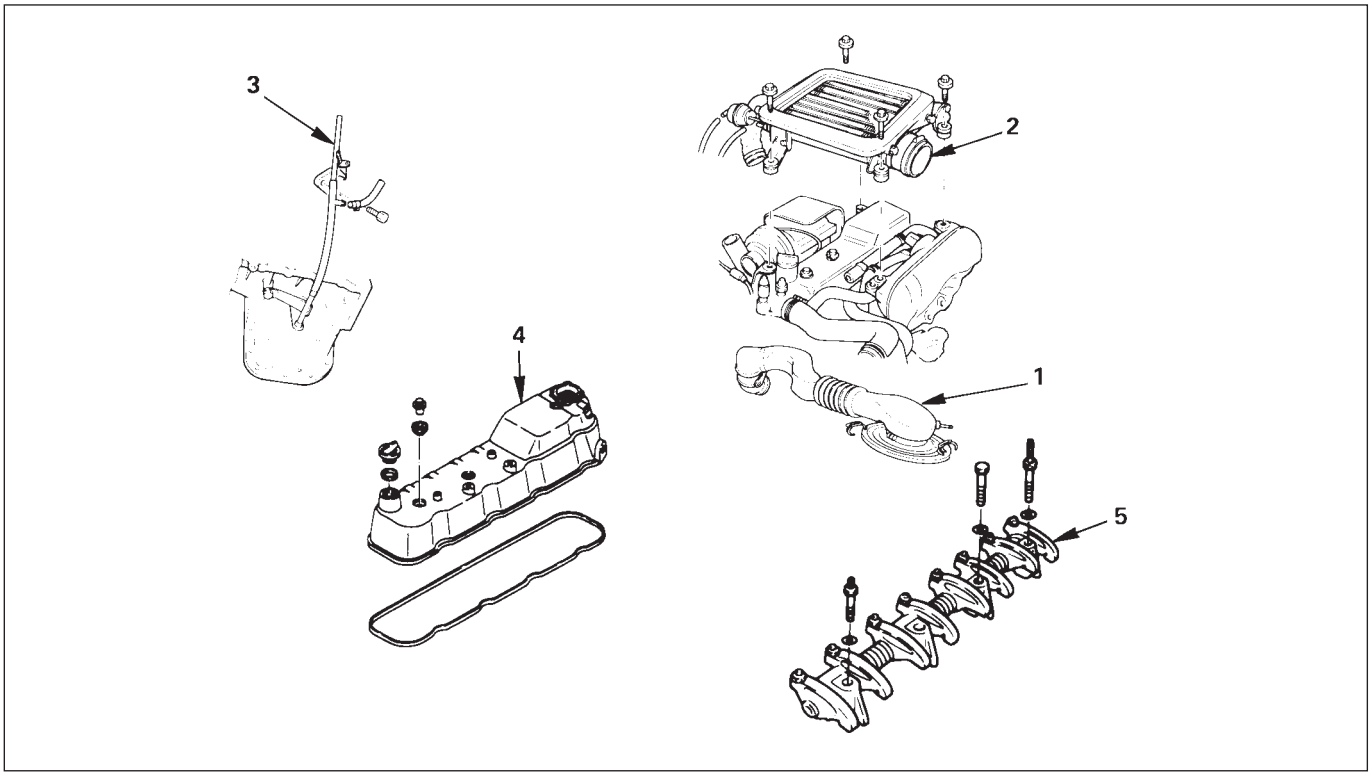

REMOVAL

Preparation

- Disconnect battery ground cable.

1. **Air Cleaner Cover & Air Duct (4JG2-T Only)**
   - Disconnect air hoses.
   - Release clips and bands and remove air cleaner cover.
2. **Intercooler Assembly (4JG2-T Only)**
   - Refer to intercooler removal steps in this section.
3. **Oil Level Gauge Tube**
4. **Cylinder Head Cover**
5. **Rocker Arm Shaft Assembly**
   - Loosen bolts and nuts of rocker arm shaft bracket by turns and remove rocker shaft asm.

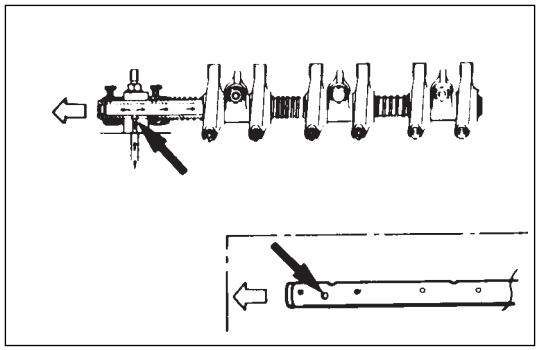

INSTALLATION

5. Rocker Arm Shaft Assembly

- Install rocker arm shaft with larger oil hole (ø4) to the front of engine.
- Align fixing bolt with not of rocker arm shaft and tighten fixing bolts to the specified torque.

N·m (kg·m/lb·ft)
54 (5.5/40)

- Adjust valve clearance refreshing to section valve clearance adjustment.

4. Cylinder Head Cover

- Install cylinder head cover and tighten bolts to the specified torque.

N·m (kg·m/lb·in)
13 (1.3/113)

3. Oil Level Gauge Guide Tube

- Tighten guide tube to the specified torque.

N·m (kg·m/lb·ft)
19 (1.9/14)

2. Intercooler Assembly (4JG2-T Only)

- Refer to intercooler installation steps in this section.

1. Air Cleaner Cover & Air Duct (4JG2-T Only)

CYLINDER HEAD

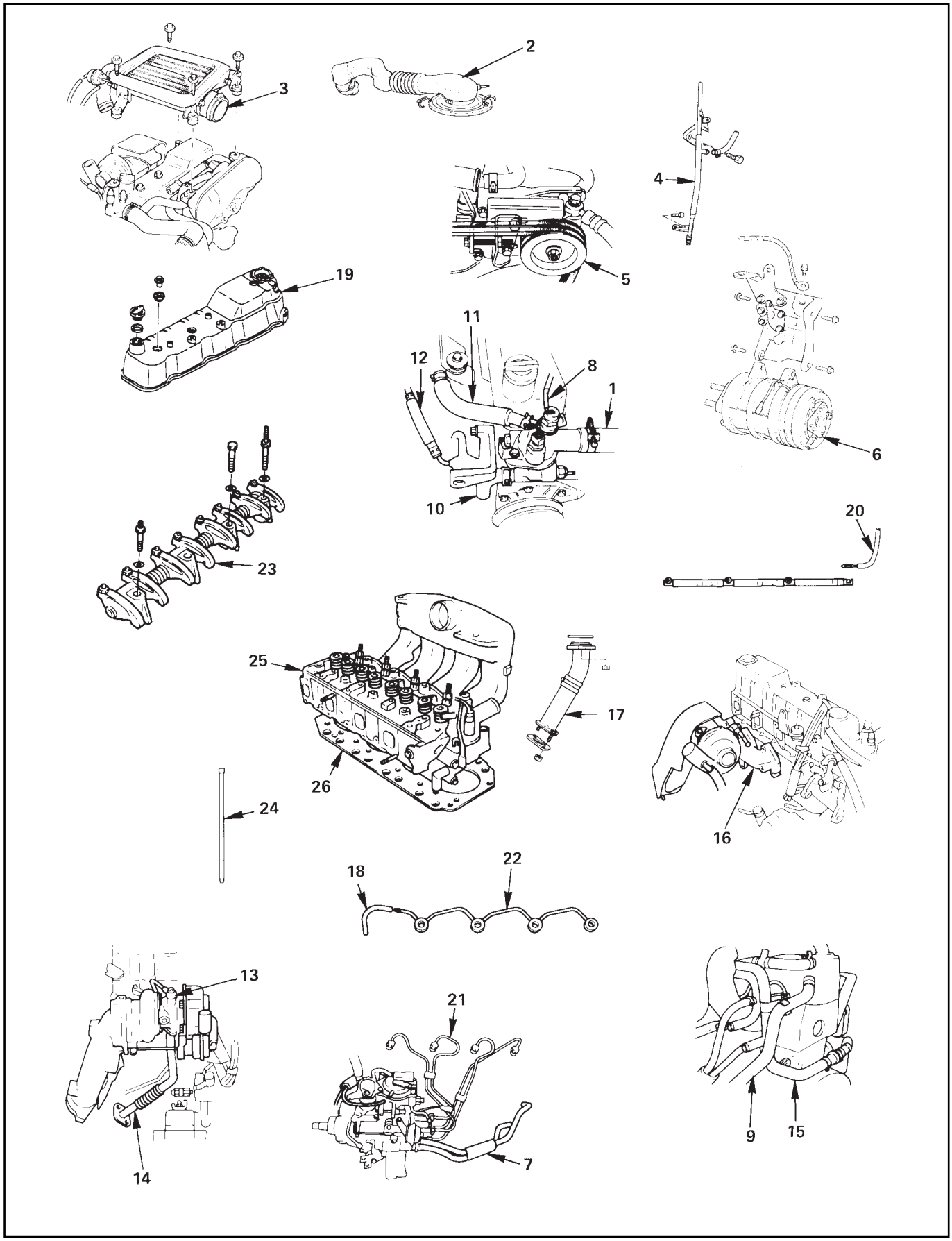

REMOVAL

Preparation

- Remove battery. (two batteries for cold area)
- Disconnect window washer hose, and remove engine hood.
- Drain coolant.
- Space stand and front right tire.

1. **Radiator Hose : Upper**
   - Disconnect upper radiator hose from engine side.
2. **Air Cleaner Cover & Air Duct**
3. **Intercooler Assembly (4JG2-T Only)**
   - (Refer to intercooler removal steps in this section)
4. **Oil Level Gauge Guide Tube**
5. **P/S Pump**
   - Loosen P/S pump fixing bolts and adjusting bolt and remove two drive belts.
   - Remove two fixing bolts (front side). A fixing nut (rear side) and support P/S pump asm with oil hoses by tying to body side.
6. **A/C Compressor Assembly**
   - Remove A/C compressor fixing bolt (rear under side of compressor) by using a long extension bar at under side of wheel arch.
   - Disconnect magnetic clutch harness connector.
   - Remove fixing bolts (upper and front lower side of compressor) and set A/C compressor asm with pipe line on battery carrier.

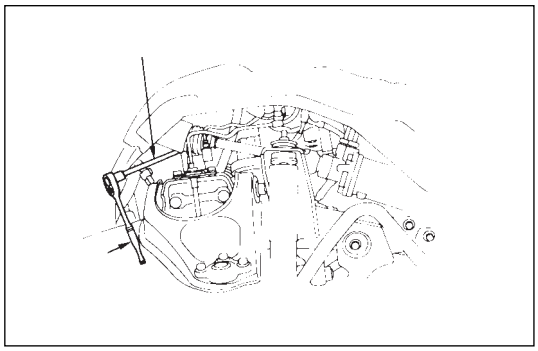

7. **Water Hose; CSD**
   - Disconnect CSD water hoses from heater hose side.
8. **Engine Harness**
   - Disconnect five harness connectors from units on thermostat housing.
9. **Heater Hose: Rear Side**
   - Disconnect heater hose from heater pipe.
10. **Water Bypass Hose**
    - Disconnect water bypass hose from water pump.
11. **Water Inlet Hose: Turbo (4JG2-T Only)**
    - Disconnect from water outlet pipe of engine.

12 **Water Outlet Hose: Turbo (4JG2-T Only)**
   - Disconnect from water inlet pipe of engine.

13 **Oil Feed Pipe: Turbo (4JG2-T Only)**
   - Remove two joint bolts (from turbocharger and cylinder block) and oil feed pipe.

14. **Oil Return Pipe Fixing Nut (4JG2-T Only)**
    - Remove oil return pipe fixing nut from cylinder block.
15. **Oil Cooler Hose**

16. Exh. Manifold; W/turbo (4JG2-T Only)
- Remove exh. manifold bracket fixing bolt from exh. manifold.
- Remove exh. manifold fixing bolts and nuts from cylinder head.
- After pulling out exh. manifold a little, remove oil return pipe flange from stud bolt and remove exh. manifold w/turbo.

17. Front Exhaust Pipe
18. Fuel Leak Off Hose
19. Cylinder Head Cover
20. Glow Plug Harness
21. Injection Pipe
- Loosen sleeve nuts on injection pump side.
- Disconnect sleeve nuts on injection pipe.

22. Fuel Leak Off Pipe
23. Rocker Arm Shaft Assembly
24. Push Rod
25. Cylinder Head W/inlet Manifold
- Disconnect cylinder head bolts in sequence shown in Figure.

26. Cylinder Head Gasket

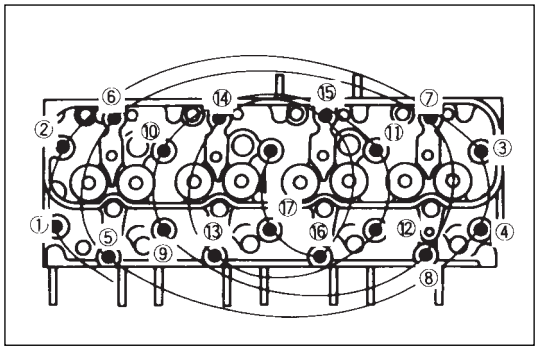

INSTALLATION

26. Cylinder Head Gasket
- Determine cylinder head gasket grade by measuring projection of piston head.
- Install dowel in cylinder block.
- Install cylinder head gasket with top mark up.

25. Cylinder Head W/intake Manifold
- Clean up cylinder head lower surface and cylinder body upper surface.
- Install cylinder head as softly.
- Apply engine oil to screw and seat of cylinder head bolts.
- Tighten cylinder head bolts in following sequence.

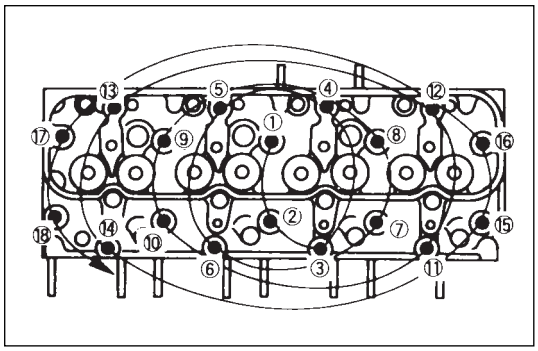

N·m (kg·m/lb·ft)

1st Step	2nd Step	3rd Step
49 (5.0/36)	60°	60°

24. Push Rod
- Inspect curvature, excessive wear and damage. (Refer to push rod inspection)

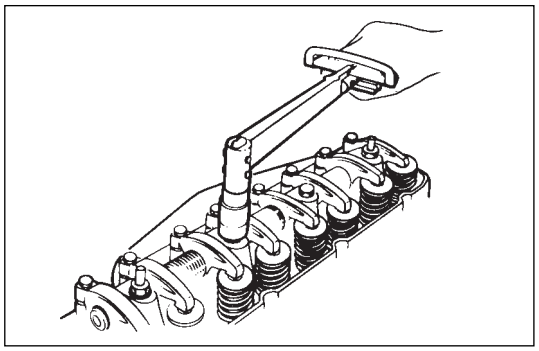

23. Rocker Arm Shaft Assembly

- Loosen all adjusting screws.
- Align fixing bolts to not of rocker arm shaft and tighten them to the specified torque.

N·m (kg·m/lb·ft)

54 (5.5/40)

- Valve clearance adjustment.
- Refer to valve clearance adjustment steps in section 00.

22. Fuel Leak Off Pipe

- Install fuel leak off pipe with new copper gasket and tighten joint bolts to the specified torque.

N·m (kg·m/lb·ft)

29 (3.0/22)

21. Injection Pipe

- Install injection pipes and sleeve nuts securely and tighten them to the specified torque.

N·m (kg·m/lb·ft)

29 (3.0/22)

20. Glow Plug Harness

19. Cylinder Head Cover

- Apply engine oil to the rocker arms and the valve spring.
- Install the cylinder head cover gasket to the cylinder head cover.
- Tighten the cylinder head cover nuts to the specified torque in the numerical order shown in the illustration.

N·m (kg·m/lb·in)

13 (1.3/113)

18. Fuel Leak Off Hose

17. Front Exh. Pipe

- Install front exhaust pipe and tighten fixing bolts to the specified torque.

N·m (kg·m/lb·ft)

19 (1.9/14)

16. Exh. Manifold W/turbo (4JG2-T Only)

- Install manifold gasket in cylinder head.
- Insert exh. manifold into studs on cylinder head a little.
- Under this condition, insert oil return pipe frange into studs on crankcase.
- Tighten exh. manifold fixing bolts and nut to specified torque.

N·m (kg·m/lb·ft)

26 (2.7/20)

15. Oil Cooler Hose

14. Oil Return Pipe: Turbo (4JG2-T Only)

- Tighten joint bolt to the specified torque.

N·m (kg·m/lb·in)

8 (0.8/69)

13. Oil Feed Pipe: Turbo (4JG2-T Only)
- Tighten joint bolts (cylinder block and turbo charger side) to the specified torque.

N·m (kg·m/lb·ft)

23 (23/17)

12. Water Outlet Hose: Turbo (4JG2-T Only)
- Connect to water inlet pipe of engine.

11. Water Inlet Hose: Turbo (4JG2-T Only)
- Connect to water outlet pipe.

10. Water Bypass Hose
- Water bypass hose connect to water inlet pipe.

9. Heater Hose
- Connect to heater pipe.

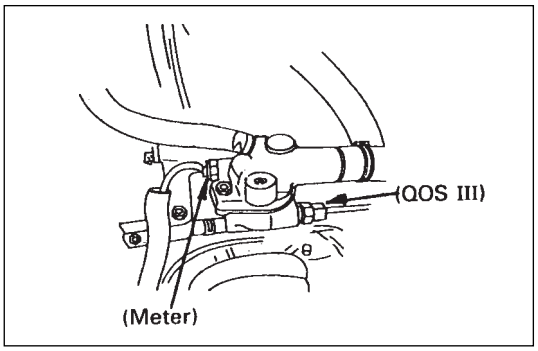

8. Engine Harness
- Connect five harness connecters to units on thermostat housing.

7. Water Hose: CSD

6. A/C Compressor
- Tighten temporarily fixing bolts (upper and front lower sides of compressor.)
- Tighten fixing bolt (rear under side of compressor) to the specified torque by using a long extension bar and torque wrench at under side of wheel arch.
- Tighten fixing bolts (front upper and lower sides of compressor) to the specified torque.

N·m (kg·m/lb·ft)

37 (3.8/27)

5. P/S Pump Drive Belt
- Install drive belts adjust belt tension by adjusting bolt and tighten locking bolt to the specified torque.

N·m (kg·m/lb·ft)

40 (4.1/30)

- Refer to “Drive Belt Adjustment” in section 6B.

4. Oil Level Gauge Guide Tube
- Tighten guide tube to the specified torque.

N·m (kg·m/lb·ft)

19 (1.9/14)

3. Intercooler Assembly (4JG2-T Only)
- Refer to “Drive Belt Adjustment” in section 6B.

2. Intake Air Duct (4JG2-T Only)

1. Radiator Hose Upper
- Connect to water outlet pipe.

CRANKCASE

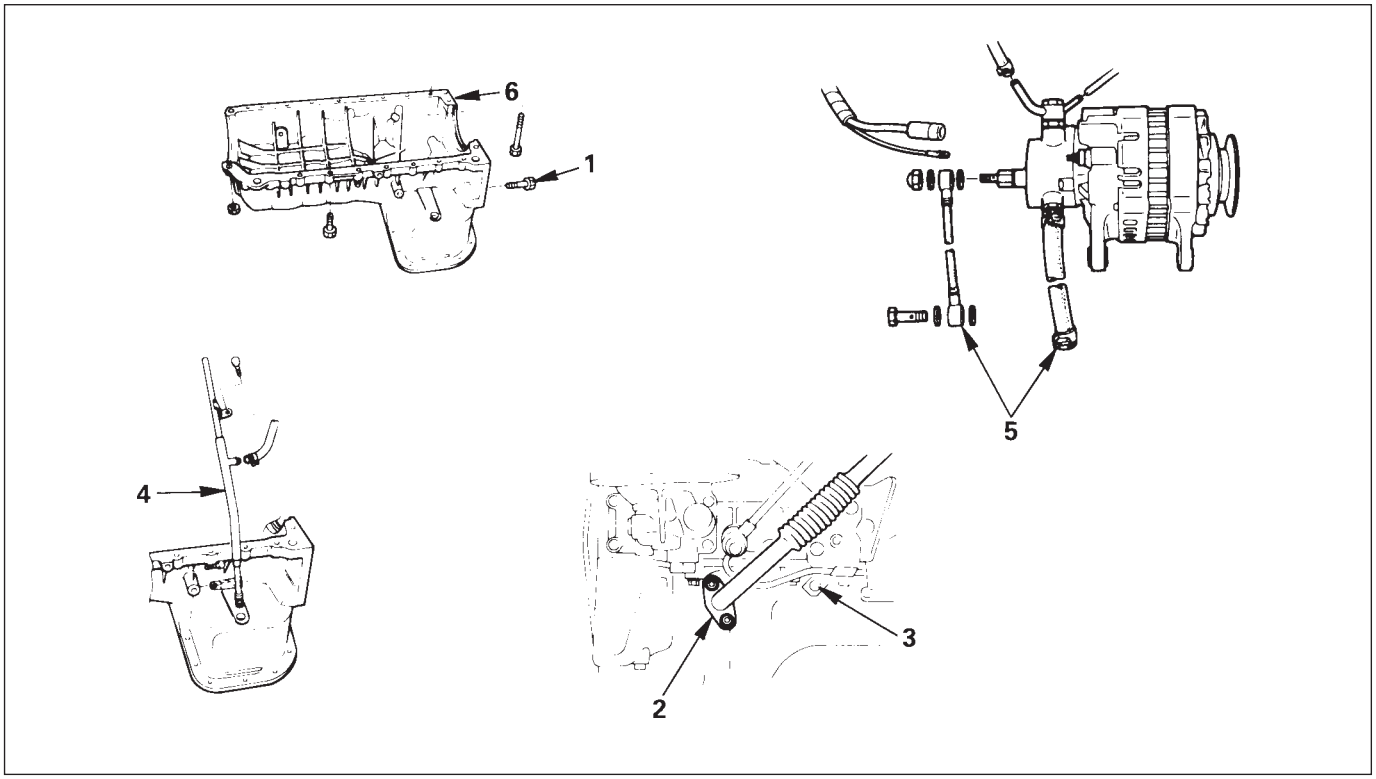

REMOVAL

Preparation

- Disconnect battery ground cable.
- Lift up car.
- Drain engine oil.

NOTE

- Install drain plug with new gasket.

1. **Transmission Housing Bolt**
   - Remove six fixing bolts from under side of housing.
2. **Oil Return Pipe: Turbo (4JG2 -T only)**
   - Remove return pipe fixing nuts and set return pipe frange from stud on crankcase.
3. **Oil Pipe Clip Bolt: Vaccum Pump**
4. **Oil Level Gauge Guide Tube**
   - Remove two guide tube stay fixing bolts.
   - Disconnect blow by hose and remove oil level gauge guide tube.

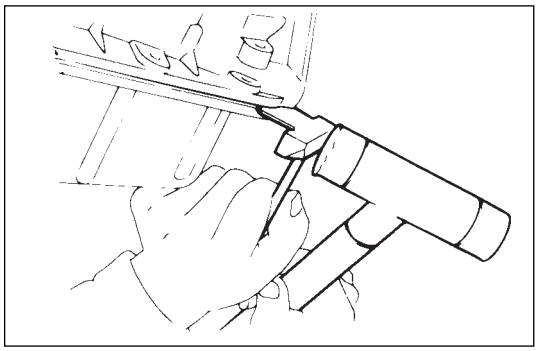

5. **Vacuum Hose**
6. **Crankcase**
   - Remove crankcase fixing bolts two fixing bolts for rear oil seal arch parts on crankcase could be removed extention universal joint box wrench.
   - Remove crankcase by using crankcase seal cutter to shear sealant off and remove crankcase.
     Oil seal cutter: 5-8840-2153-0

NOTE

- Don't ply crankcase or you may distort sealing surface.
- Distorted or damaged crankcase should not by used.

INSTALLATION

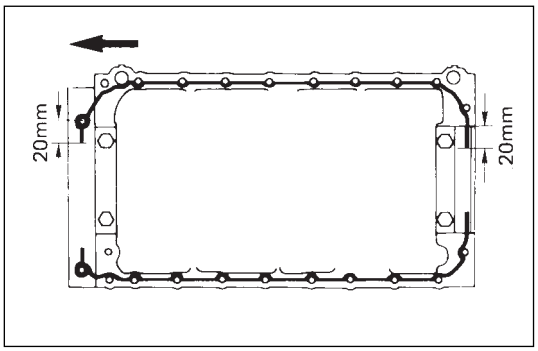

6. **Crankcase**
   - Completely remove all sesidual sealant, lubricant and moisture from the sealing surface of crankcase and cylinder block.
   - Apply a correct width bead of sealant (TB-1207C or its equivalent) to contact surface of crankcase there must be no gaps in the bead.
   - Install crankcase with cylinder-block, and tighten fixing bolts to the specified torque.

N·m (kg·m/lb·ft)
19 (1.9/14)

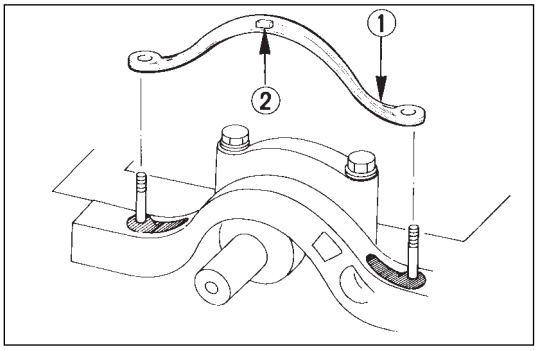

5. **Vacuum Hose**
4. **Oil Level Gauge Guide Tube**
   - Install guide tube to the specified torque.

N·m (kg·m/lb·ft)
19 (1.9/14)

   - Connect blow by hose to guide tube.
3. **Oil Pipe Clip Bolts: Vacuum Pump**
   - Tighten oil pipe clip fixing bolts to the specified torque.

N·m (kg·m/lb·ft)
19 (1.9/14)

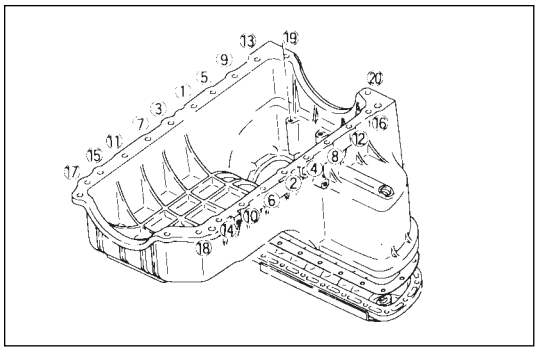

2. **Oil Return Pipe: Turbo.**
   - Tighten fixing nuts to crankcase to the specified torque.

N·m (kg·m/lb·in)
8 (0.8/69)

1. **Transmission Housing Bolts**
   - Pour engine oil into engine.
   - Install battery ground cable.
   - Start the engine and check for oil leakage from crankcase.

OIL FILTER CARTRIDGE

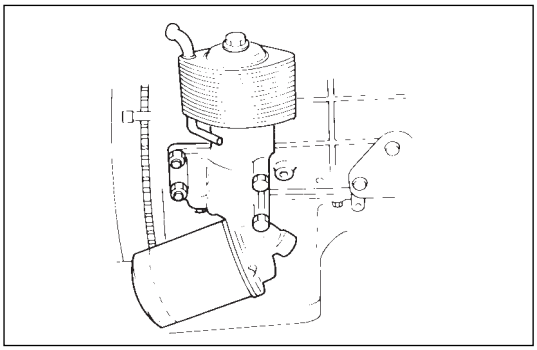

REMOVAL

- Place a receptacle beneath the oil filter to contain the drained oil.
- Remove the oil filter cartridge using filter wrench.
  Filter wrench: 5-8840-0200-0

INSTALLATION

- Lightly oil the o-ring of oil filter cartridge.
- Turn in the new oil filter cartridge by hand until the sealing face is fiffted again the o-ring.
- Use the filter wrench to turn in the oil filter and additional one and 1·1/8 turns.
- Start the engine and check for oil leakage from oil filter.

OIL COOLER

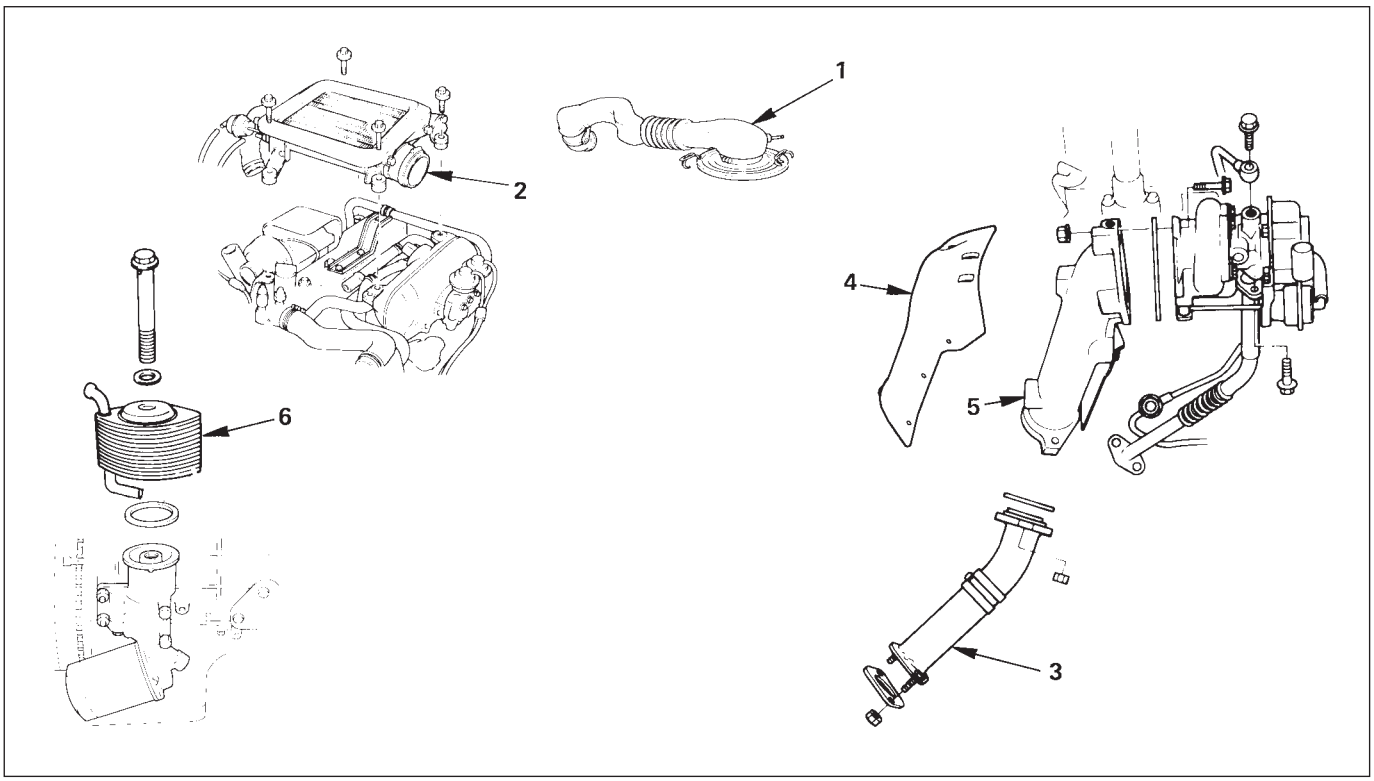

REMOVAL

Preparation

- Disconnect battery ground cable
- Drain coolant

1. **Air Cleaner Cover & Air Duct**
2. **Intercooler Assembly (4JG2-T Only)**
   - Refer to intercooler removal steps in this section
3. **Front Exh. Pipe**
   - Disconnect front exhaust pipe from engine side and intermediate pipe.
4. **Heat Protector (4JG2-T Only)**
5. **Exh. Adapter (4JG2-T Only)**
6. **Oil Cooler**
   - Disconnect water inlet and outlet hose.
   - Remove fixing bolts and oil cooler.
   - Put rag to beneath side of oil cooler to prevent oil leaking.

INSTALLATION

6. Oil Cooler

- Tighten oil cooler fixing bolt to the specified torque and connect water hose.

N·m(Kg·m/lb·ft)
29 (3.0/22)

5. Exh. Adapter (4JG2-T Only)

- Install exhaust duct with gasket and tighten fixing bolts to the specified torque.

N·m(Kg·m/lb·ft)
26 (2.7/20)

4. Heat Protector (4JG2-T Only)

3. Front Exh. Pipe

- Install front exhaust pipe and tighten fixing bolts to the specified torque.

Exh Dust Side	N·m(Kg·m/lb·ft)
67 (6.8/49)	

Intermediate pipe side	N·m(Kg·m/lb·ft)
43 (4.4/32)	

2. Intercooler Assembly (4JG2-T Only)

- Refer to intercooler installation steps in section.
- Pour coolant into radiator.
- Install battery ground cable.
- Start engine and check for oil and water leakage carefully.

1. Air Cleaner Cover & Air Duct

OIL PUMP ASSEMBLY

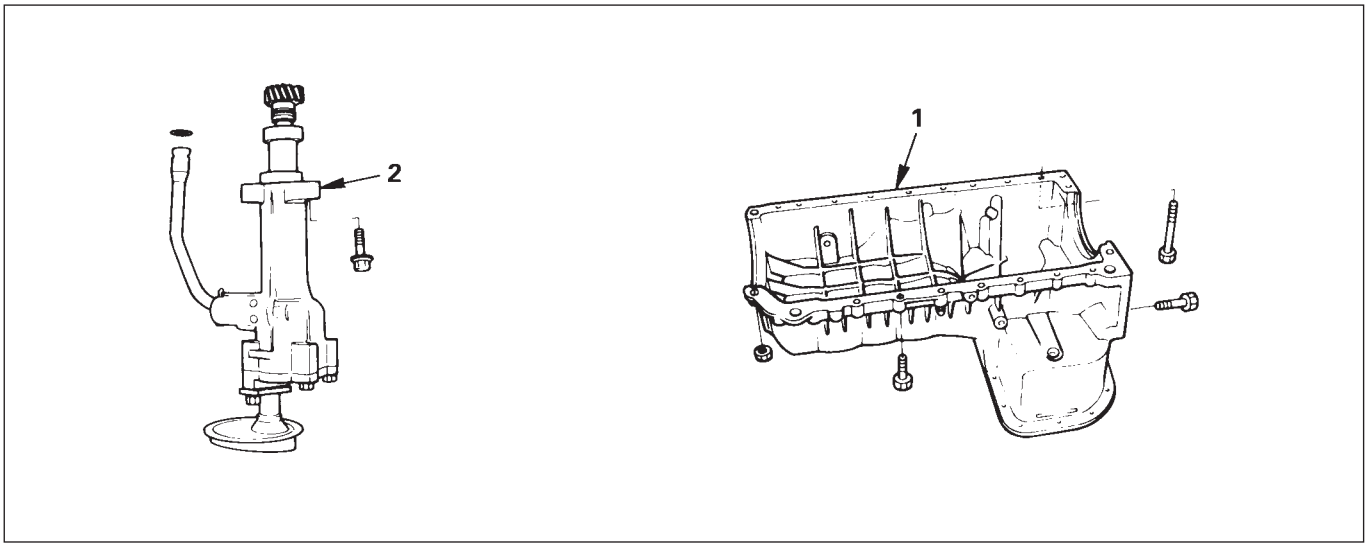

REMOVAL

Preparation

- Disconnect battery ground cable.
- Lift up car.
- Drain engine oil.

NOTE

- **Install drain plug with new washer.**

1. **Crankcase**
   - Refer to crankcase removal steps in this section
2. **Oil Pump Assembly**
   - Remove oil pump asm from cylinder block.

INSTALLATION

- Prepare a solution of 80% engine oil and 20% molybdenum disulfide.
- Apply and ample coat of the solution to the teeth of the oil pump pinion.

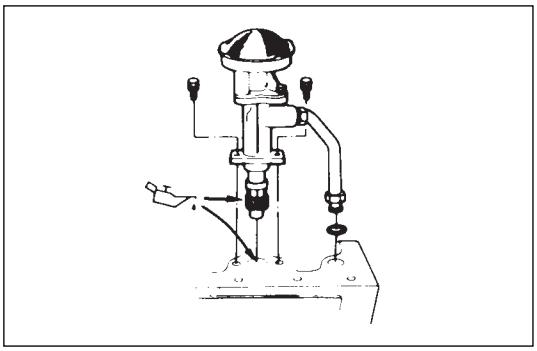

2. **Oil Pump Assembly**
   - Apply engine oil to oil pipe o-ring and insert the o-ring in o-ring hold on cylinder block.
   - Install oil pump asm with oil pipe in cylinder block and tighten fixing bolts to the specified torque.

N·m(Kg·m/lb·ft)
19 (1.9/14)

   - Tighten sleeve nut to the specified torque.

N·m(Kg·m/lb·ft)
25 (2.5/18)

1. **Crankcase**
   - Refer to crankcase installation steps in this section

PISTON, PISTON RING AND CONNECTING ROD

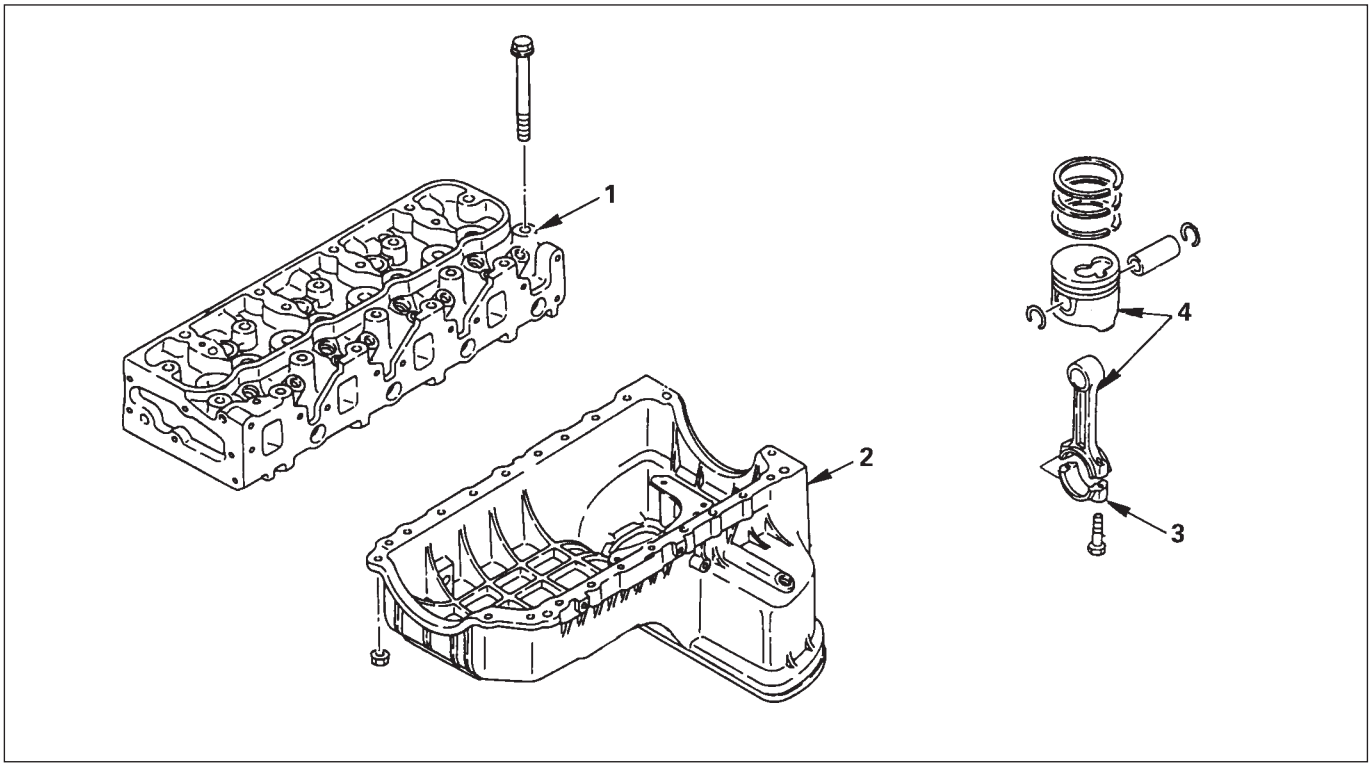

REMOVAL

1. **Cylinder Head**
   - Refer to “Cylinder Head” removal in this section.
2. **Crankcase**
   - Refer to “Crankcase” in this section.
3. **Connecting Rod Bearing Cap**
   - Before removing the bearing cap, remove carbon on the top of cylinder bore.
4. **Piston, Piston Rings and Connecting Rod**
   - Push piston and connecting rod out from the top of cylinder bore.

INSTALLATION

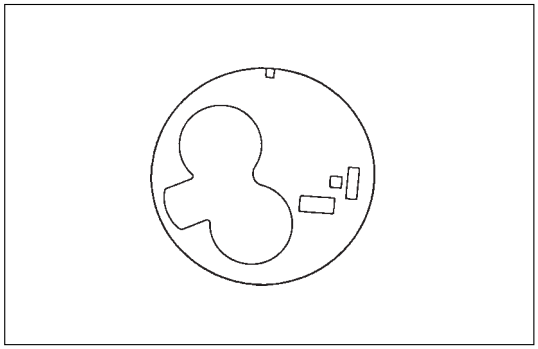

4. **Piston, Piston Rings and Connecting Rod**
   - Apply engine oil to cylinder bore, connecting rod bearings and crank pins.
   - In installing the piston, its front mark must face the engine front side.
3. **Connecting Rod Bearing Cap**
   - The bearing cap number must be same as connecting rod number.
   - Apply engine oil to the thread and sealing surface of each nuts.
   - Tighten nuts to the specified torque.

N·m(Kg·m/lb·ft)

☡	1st step 29 (3.0/22)	2nd step 45° – 60°

- After tightening the nuts, make sure that the crankshaft rotates smoothly.

2. Crankcase

- Refer to “Crankcase” in this section.

1. Cylinder Head

- Refer to “Cylinder Head” installation in this section.

CRANKSHAFT AND MAIN BEARING

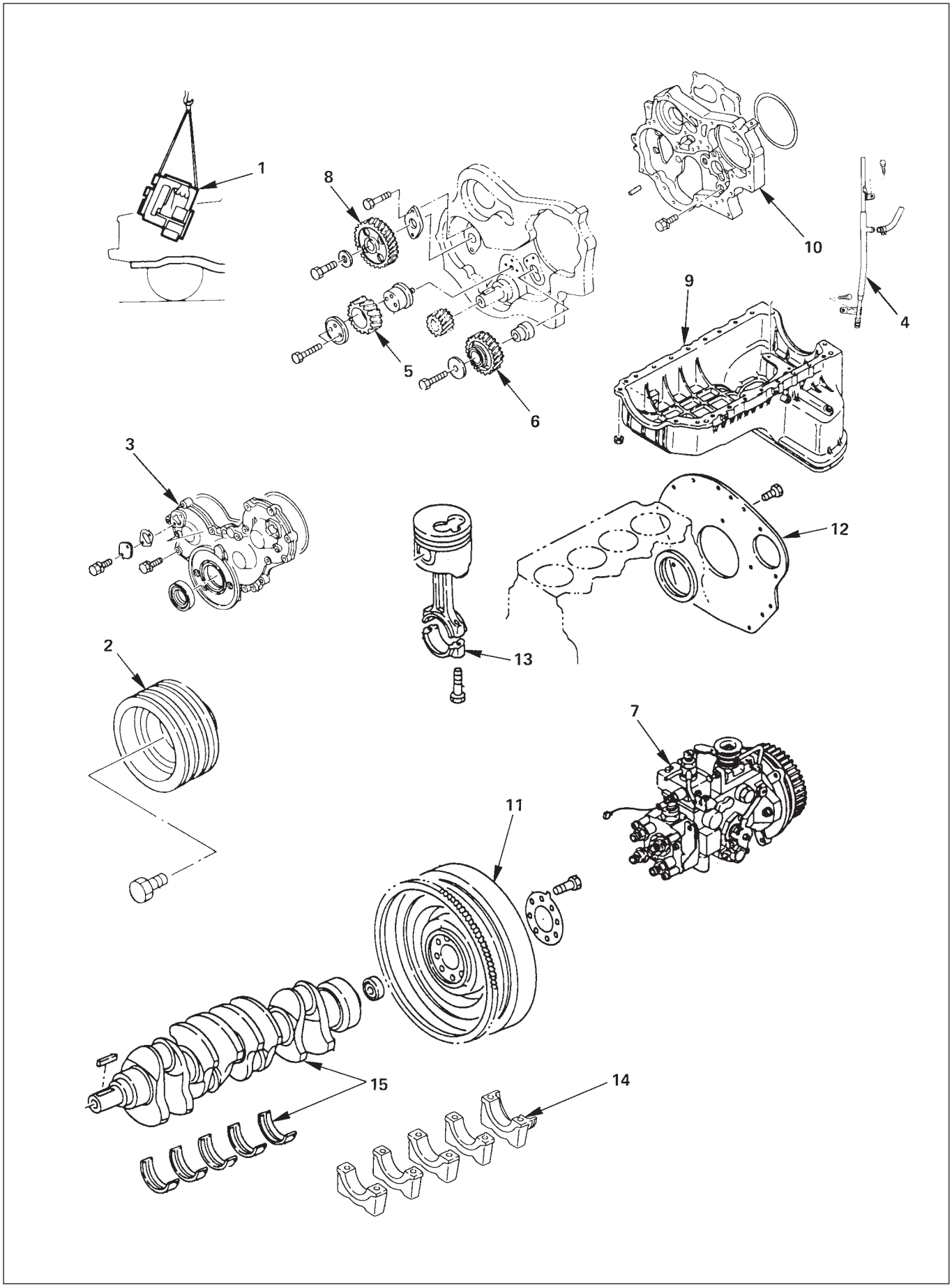

REMOVAL

1. **Engine Assembly**
   - Refer to “Engine Assembly” removal in this section.
2. **Crankshaft Damper Pulley**
3. **Timing Gear Case Cover**
4. **Oil Level Gauge and Guide Tube**
5. **Idler Gear “B” and Shaft**
6. **Idler Gear**
7. **Injection Pump**
8. **Camshaft Timing Gear**
9. **Crankcase**
10. **Gear Case**
11. **Flywheel**
12. **Rear Plate**
13. **Connecting Rod Caps**
14. **Crankshaft Main Bearing Caps**
15. **Crankshaft and Main Bearings**

INSTALLATION

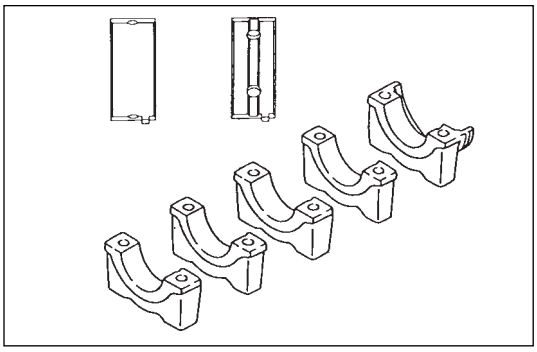

15. Crankshaft and Main Bearings

- Install main bearings in the cylinder body and main bearing cap respectively.
- Apply new engine oil to upper and lower main bearings.
- Make sure that main bearing are in correct position.
- Install crankshaft with care.
- Apply engine oil to the thrust washer.
- Install thrust washer on No. 3 journal.
  Oil grooves in thrust washer must face the crankshaft.

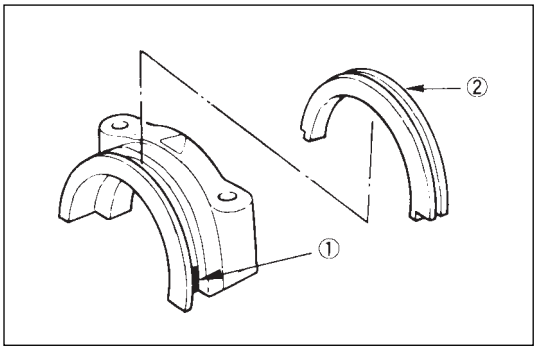

14. Crankshaft Main Bearing Caps

- Apply engine oil to the thread and seating surface of each bearing cap fixing bolt.
- Install bearing caps in the order of numbers, starting with cylinder body front side.
- Tighten main bearing fixing bolts to the specified torque.

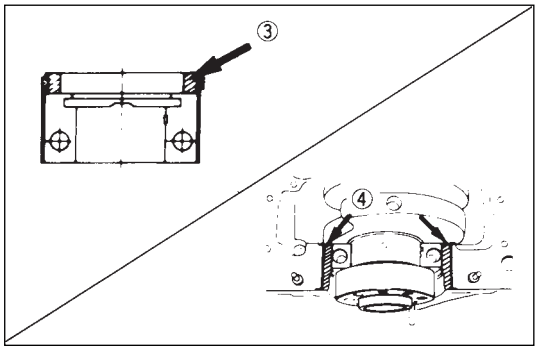

N·m(Kg·m/lb·ft)

167 (17.0/123)

- After tightening the bolts, make sure that the crankshaft rotates smoothly.

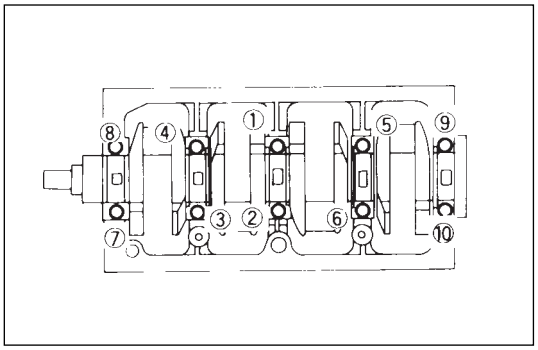

13. Connecting Rod Caps

- The cap number must be same as connecting rod number.
- Apply engine oil to the thread and sealing surface of each nut.
- Tighten nuts to the specified torque.

N·m(Kg·m/lb·ft)

1st step 29 (3.0/22)	2nd step 45° – 60°

- After tightening the nuts, make sure that the crankshaft rotates smoothly.

12. Rear Plate

- Tighten bolts to the specified torque.

N·m(Kg·m/lb·ft)

82 (80/61)

11. Flywheel

- Tighten bolts to the specified torque.

N·m(Kg·m/lb·ft)

118 (12.0/87)

10. Gear Case

- Tighten fixing bolts to the specified torque.

N·m(Kg·m/lb·ft)

19 (1.9/14)

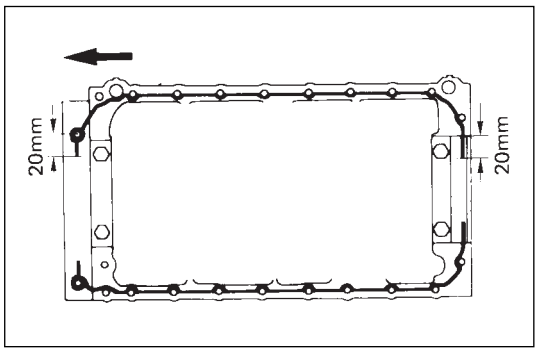

9. Crankcase

- Remove oil from oil pan mounting surface, and dry the surface.
- Apply a proper wide bead of sealant (TB1207C or equivalent) to the crankcase mounting surface. The bead must be continuous.
- Crankcase must be installed within 5 minutes after sealant application.
- Tighten fixing bolts and nuts to the specified torque.

Bolts N·m(Kg·m/lb·ft)

19 (1.9/14)

Nuts	N·m(Kg·m/lb·ft)
	24 (2.4/18)

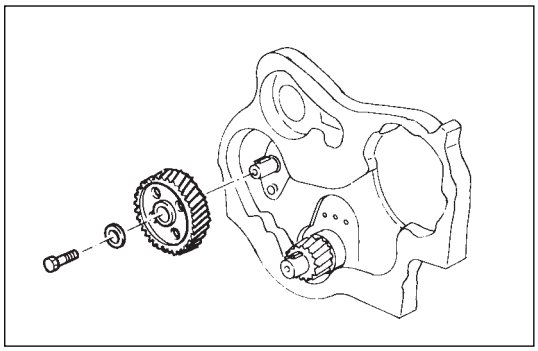

8. Camshaft Timing Gear

1) Install the camshaft timing gear to the camshaft. The timing gear mark ("Y - Y") must be facing outward.
2) Tighten the timing gear to the specified torque.

	N·m(Kg·m/lb·ft)
	64 (6.5/47)

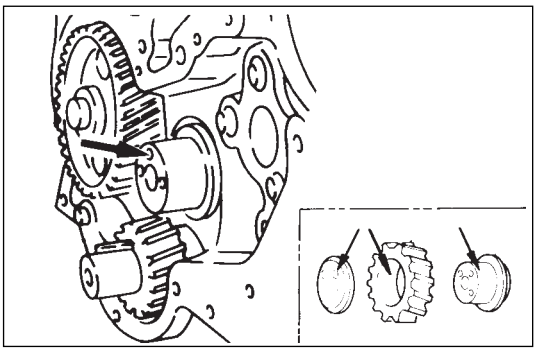

6. Idler Gear

1) Apply engine oil to the idler gear and the idler gear shaft.
   The idler gear shaft oil hole must be facing up.
2) Position the idler gear setting marks "X" and "Y" so that they are facing the front of the engine.

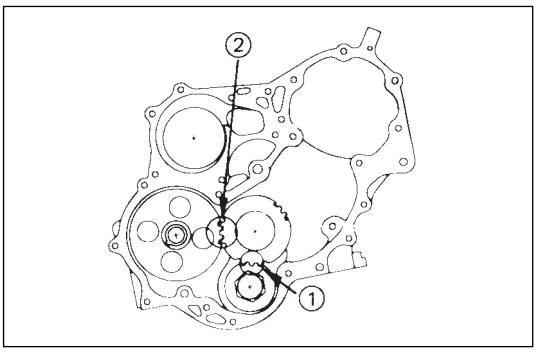

3) Align the idler gear "X" setting mark with the crankshaft timing gear ① "X - X" setting mark.
4) Align the idler gear "Y" setting mark with the camshaft timing gear ② "Y - Y" setting mark.
5) Install the thrust collar and bolts to the cylinder body through the shaft.
   The thrust collar oil hole must be facing up, and the thrust collar chamfered must be outward.
6) Tighten the idler gear bolt to the specified torque.

	N·m(Kg·m/lb·ft)
	19 (1.9/14)

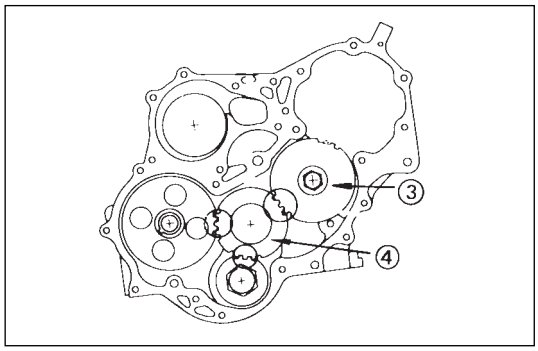

5. Idler Gear "B" and Shaft

1) Apply engine oil to the idler gear and the idler gear shaft.
2) Align the idler gear "B" ③ "Z" setting mark with the idler gear "A" ④ "Z - Z" setting mark.
3) Tighten the idler gear bolt to the specified torque.

	N·m(Kg·m/lb·ft)
	76 (7.7/56)

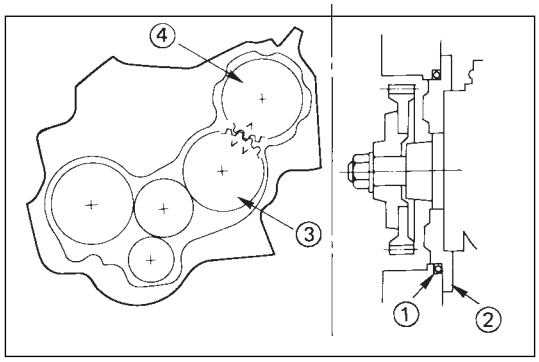

7. Injection Pump

1) Install the O-ring ① to the injection pump flange ②.
2) Install the injection pump to the timing gear case. Align the idler gear "B" ③ "V - V" mark with the injection pump timing gear ④ "V" mark.

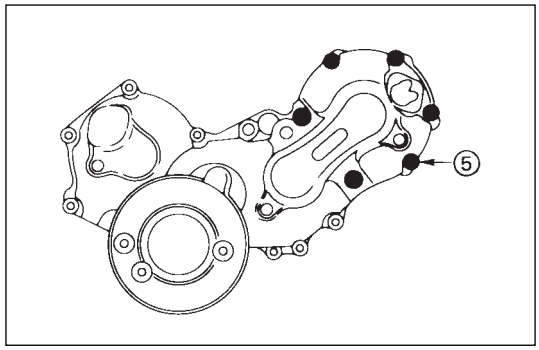

3) Temporarily tighten the six injection pump nuts ⑤. The injection pump nuts will be finally tightened after the injection pump rear bracket bolts.

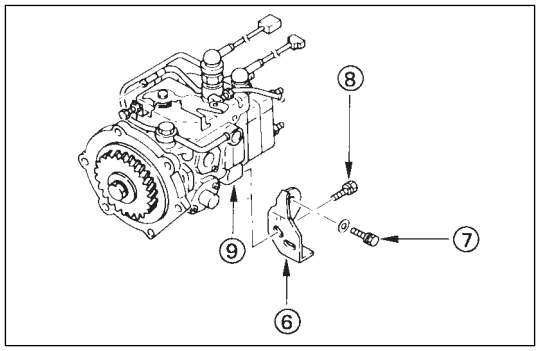

4) Install the injection pump rear bracket ⑥ and the rear bracket bolts ⑦ to the cylinder body.
5) Install the rear bracket bolts ⑧ to the injection pump bracket ⑨.
   Do not tighten the bolts.
   The rear bracket bolts ⑦ and ⑧ will be finally tightened to the specified torque after the injection pump nuts.

6) Tighten the infection pump bracket bolts ⑦ to the specified torque.

N·m(Kg·m/lb·ft)
20 (2.0/15)

7) Tighten the injection pump bracket bolts ⑧ to the specified torque.

N·m(Kg·m/lb·ft)
40 (4.1/30)

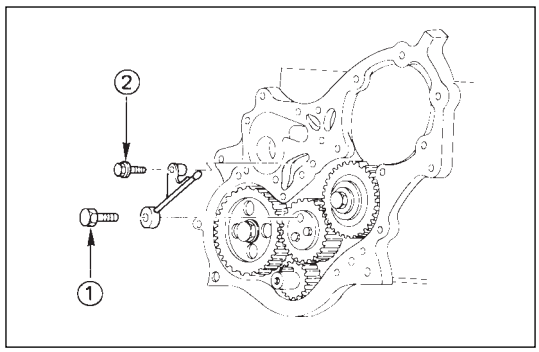

4. Timing Gear Oil Pipe

1) Install the oil pipe to the timing gear case and idler gear "A".
2) Tighten the oil pipe eye bolt ① and bolt ② to the specified torque.

N·m(Kg·m/lb·ft)
13 (1.3/9)

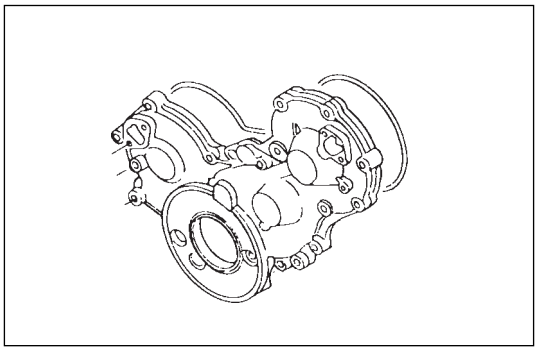

3. Timing Gear Case Cover

1) Align the gear case with the timing gear case knock pin and then install the timing gear case cover.
2) Tighten the gear case cover bolts to the specified torque.

N·m(Kg·m/lb·in)
8 (0.8/69)

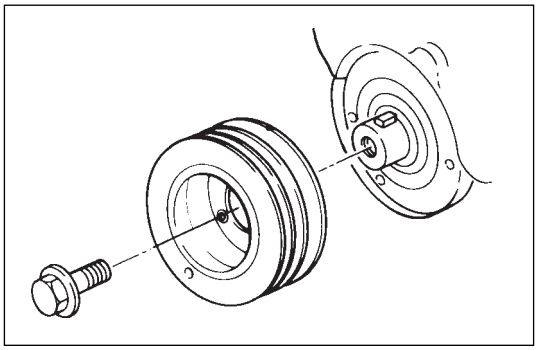

2. Crankshaft Damper Pulley

Tighten the crankshaft damper pulley bolt to the specified torque.

NOTE:

Hold the flywheel ring gear stationary to prevent the crankshaft from turning when tightening the damper pulley.

N·m(Kg·m/lb·ft)
206 (21.0/152)

1. Engine Assembly

FRONT OIL SEAL

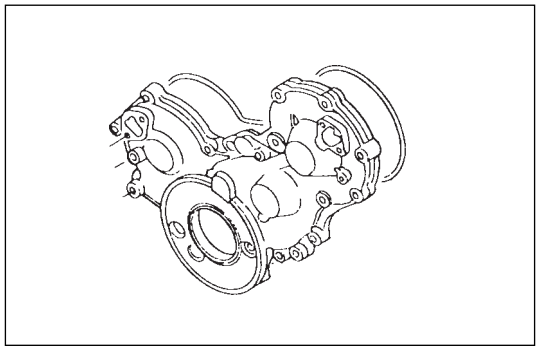

REMOVAL

1. **Crankshaft Damper Pulley**
2. **Timing Gear Case Cover Assembly**
3. **Front Oil Seal**
   - Remove crankshaft front oil seal using suitable size box wrench for push the oil seal from inside of timing gear case cover.

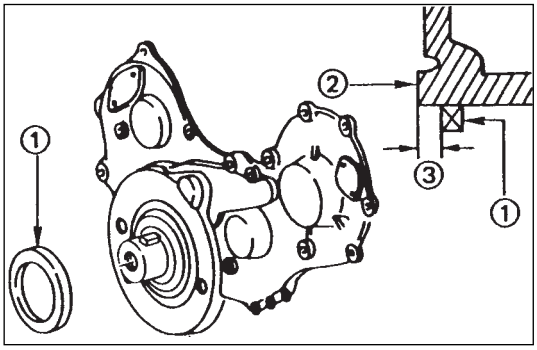

INSTALLATION

3. **Front Oil Seal**
   - Use the installer to install the front oil seal ① to the gear case cover ②.

     Oil Seal Installer: 5-8840-2061-0

     Note the oil seal installation depth ③ shown in the illustration.

     Depth ③ = 1 mm (0.039 in).
2. **Timing Gear Case Cover Assembly**
   1) Align the timing gear case cover with the timing gear case dowel pin then install the timing gear case cover.
   2) Tighten the timing gear case cover bolts to the specified torque.

N·m(Kg·m/lb·in)
8 (0.8/69)

1. **Crankshaft Damper Pulley**

REAR OIL SEAL

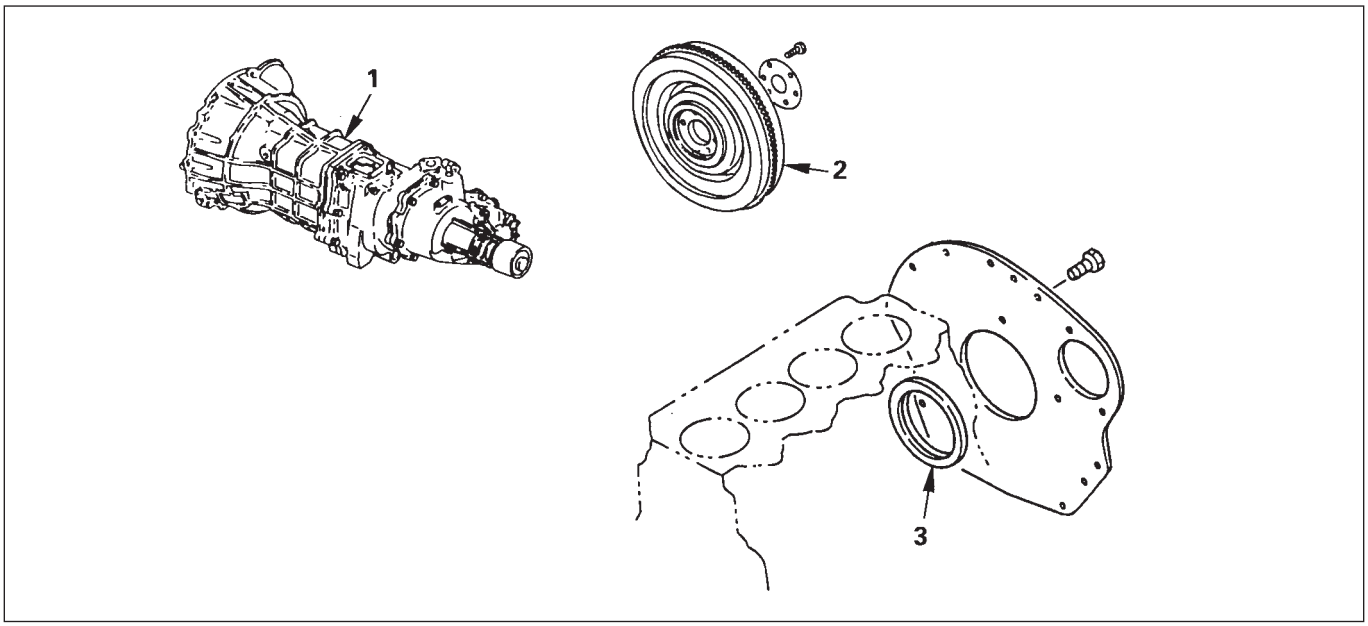

REMOVAL

1. **Transmission Assembly**
   - Refer to “Transmission” removal in section 7.
2. **Flywheel**
3. **Rear Oil Seal**
   - With the oil seal pushed in deep, install the special tool as shown in the illustration and remove the oil seal.

     Oil Seal Remover : 5-8840-2362-0

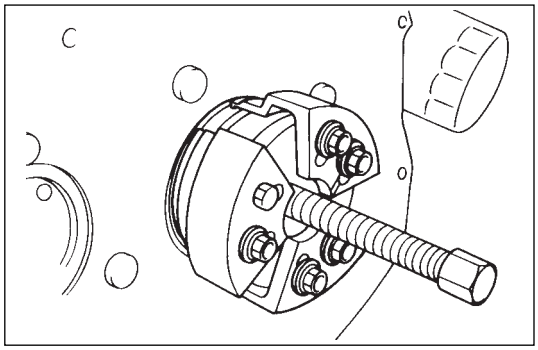

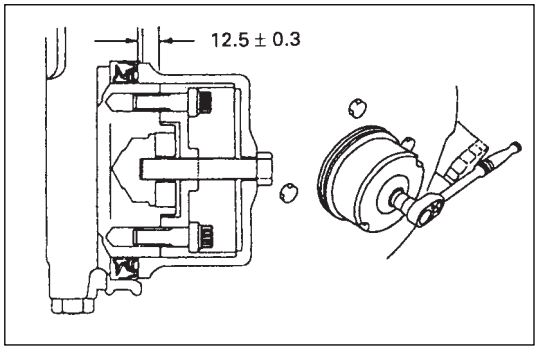

INSTALLATION

3. **Rear Oil Seal**
8. **Crankshaft Rear Oil Seal**
   1) Tighten the adapter to the crankshaft rear and section with 2 bolts.
   2) Insert the oil seal into the peripheral section of the adapter,
   3) Insert the sleeve into the adapter section, and 1) tighten it with a bolt (M12 x 1.75L = 70) until the adapter section hits the sleeve.
   4) Remove the adapter and the sleeve.
   5) With the seal pressed in, check the dimension of the oil seal section.

   Standard Dimension = 12.5 ± 0.3 mm

Oil Seal Installer: 5-8840-2359-0

2. **Flywheel**
   - Tighten bolts to the specified torque.

N·m(Kg·m/lb·ft)
118 (12.0/87)

1. **Transmission Assembly**
   - Refer to “Transmission” installation in section 7.

ENGINE ASSEMBLY

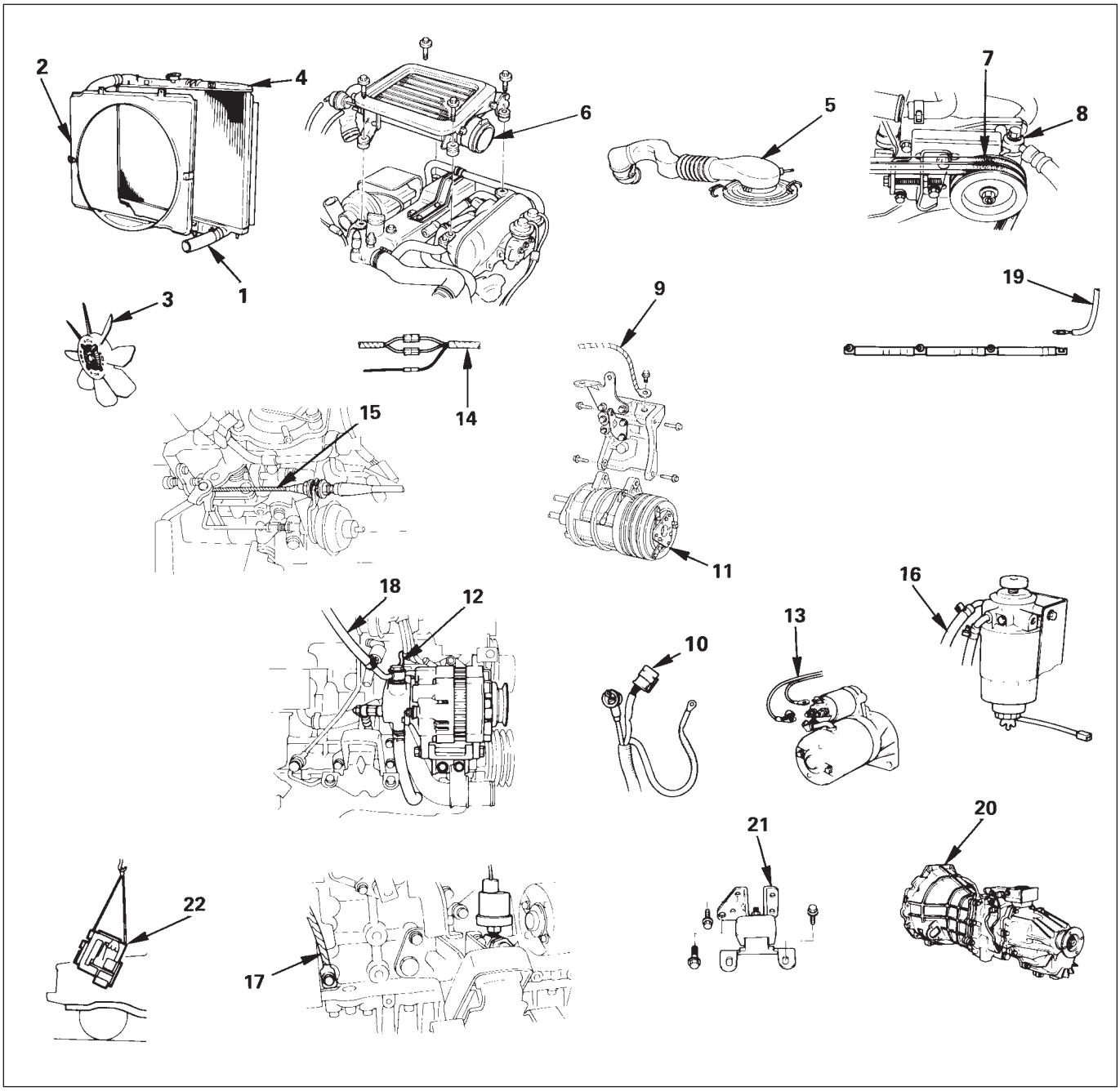

REMOVAL

Preparation

- Space stands and removal front tires.
- Removal battery. (two batteries for cold area)
- Drain coolant.
- Disconnect window washer hose and remove engine hood.

1. Radiator Hose

- Disconnect upper and lower hoses from engine side.

2. Fan Shroud

- Disengage clips and remove upper and lower fan shrouds.

3. **Cooling Fan Assembly**
   - Remove cooling fan asm fixing nuts, cooling fan asm, fan pulley and center.
4. **Radiator Assembly**
   - Remove bracket and radiator asm.
5. **Air Cleaner Cover & Air Duct**
6. **Intercooler Assembly (4JG2 -T only)**
   - (Refer to Intercooler removal steps in this section)

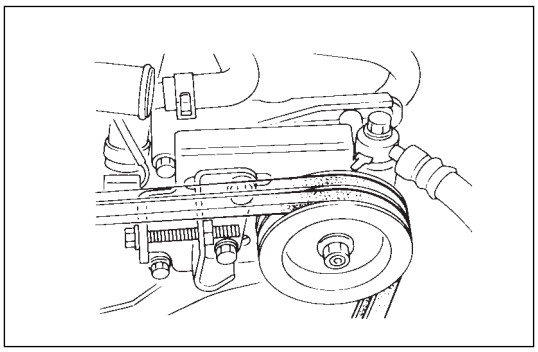

7. **P/S Pump Drive Belts**
   - Loosen P/S pump fixing bolts and adjusting bolt and remove two drive belts.
8. **P/S Pump Assembly**
   - Remove two fixing bolts (front side), a fixing nut (rear side) and support P/S pump asm with oil hoses by tying to body side.
9. **Engine Ground Cable**
   - Disconnect ground cable from A/C compressor bracket.
10. **AC Generator Harness**
    - Disconnect B terminal and harness connector from AC generator.

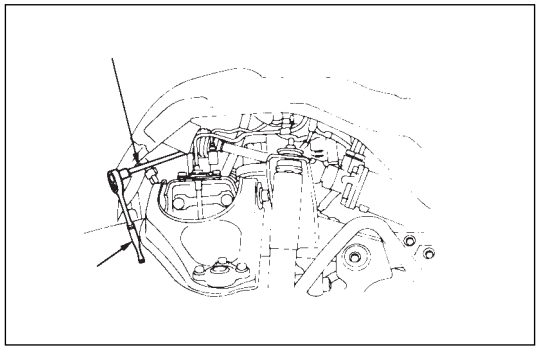

11. **A/C Compressor Assembly**
    - Remove A/C compressor fixing bolt (rear under side of compressor) by using a long extension bar at under side of wheel arch.
    - Disconnect magnetic clutch harness connector.
    - Remove fixing bolts (upper and front lower side of compressor) and set A/C compressor asm with pipe lines on battery carrier.

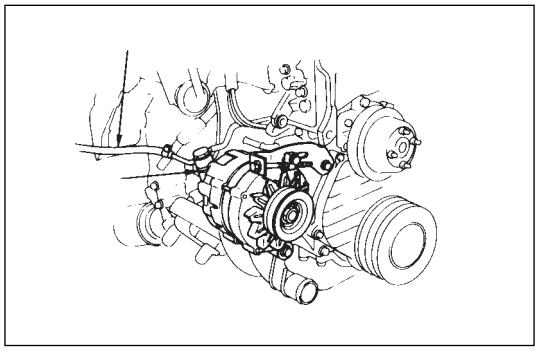

12. **Vacuum Hose: Vacuum Pump**
    - Disconnect vacuum hose from vacuum pump.
13. **Starter Harness**
    - Disconnect B terminal and put cable harness close to chassis side.
    - Disconnect S terminal connector.
14. **Engine Harness.**
    - Disconnect engine harness close to engine side.

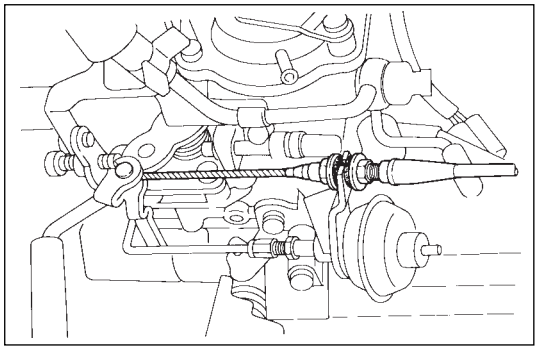

15. **Accelerater Cable**
    - Loosen locking nut at bracket and disconnect accelerater cable from injection pump control lever.
16. **Fuel Hoses**
    - Disconnect fuel hoses from injection pump side and take care not to spill fuel and enter dust.
17. **Engine Ground Cable**
    - Disconnect ground cable from left rear side of timing gear case.

18. Vacuum Hose : Vacuum Tank

- Disconnect vacuum hose from vacuum pump side.

19. Glow Plug Harness

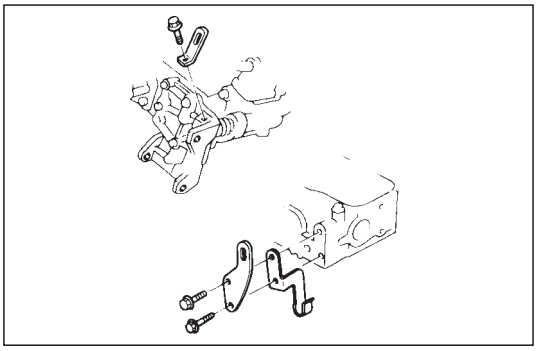

20. Transmission Assembly

- Install special tools (engine hangers) in front right and left rear sides of cylinder head.
- Front right side; use the ground cable fixing bolt on A/C compressor bracket.
- Left rear side; fix hanger together with oil cooler hose clip.
  Engine hanger: 5-8840-2032-0
- Left engine carefully by using hoist.

21. Engine Mounting

- Remove fixing bolts (both left and right side) using extension bar and box wrench at under side of wheel arches.

22. Engine Assembly

- Install special tools (engine hangers) in left rear and front right sides of cylinder head.
- Lift engine carefully by using hoist.
- Lift front part of engine higher than rear part of it.
- Take out engine asm taking care not to damage full pipes, brake pipes and etc.

INSTALLATION

22. Engine Assembly

- Position engine mountings by using hoist.

21. Engine Mounting

- After all fixing bolts (left: two bolts, rights: two bolts) were inserted to every holes, and engine asm and tighten fixing bolts to the specified torque.

N·m(Kg·m/lb·ft)
40 (4.1/30)

20. Transmission Assembly

- Refer to transmission installation steps in section 7.

19. Glow Plug Harness

18 Vacuum Hose: Vacuum Tank

17. Engine Ground Cable

16. Fuel Hose

15. Accelerator Cable

- Refer to accelerater cable installation steps in section 6C.

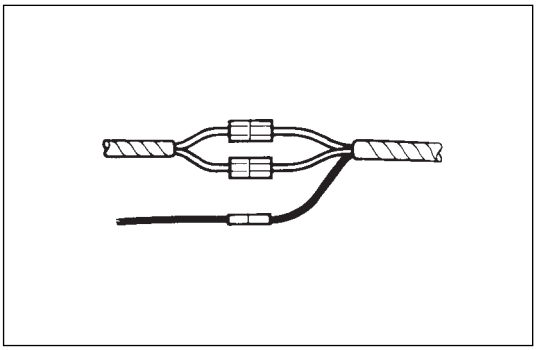

14. Engine Harness.

13. Starter Harness

12. Vacuum Hose: Vacuum Pump

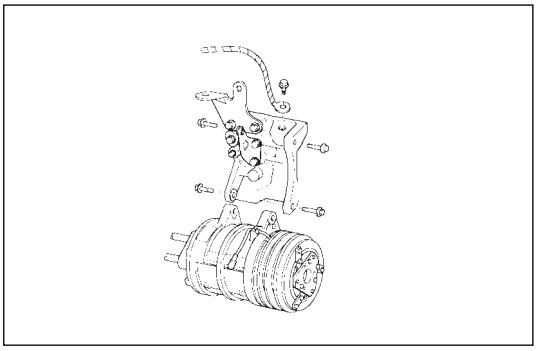

11. A/C Compressor Assembly

- Tighten temporarily fixing bolts (upper and front lower sides of compressor).
- Tighten fixing bolt (rear under side of compressor) to the specified torque by using along extension bar and torque wrench at under side of wheel arch.
- Tighten fixing bolts (front upper and lower sides of compressor) to the specified torque.

N·m(Kg·m/lb·ft)
40 (4.1/30)

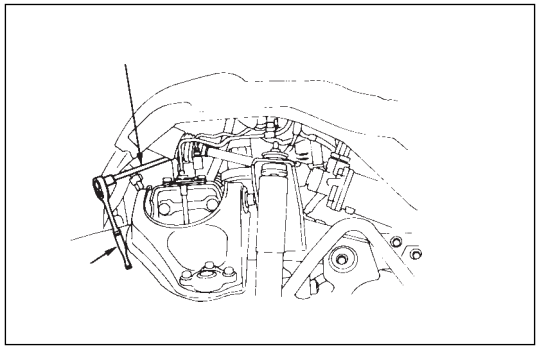

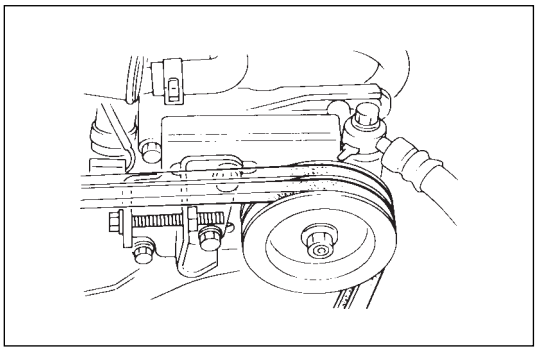

10. A.C. Generator Harness

9. Engine Ground Cable

- Attached ground cable to A/C compressor bracket.

8. P/S Pump Assembly

- Install P/S pump asm in engine and tighten temporarily fixing nut.

7. P/S Pump Drive Belt

- Install drive belts adjust belt tension by adjusting bolt and tighten locking bolt to the specified torque.
- Refer to “Drive Belt Adjustment” in section 6B.

	N·m(Kg·m/lb·ft)
	40 (4.1/30)

6. Intercooler Assembly (4JG2-T Only)

- Refer to intercooler installation steps in this section.

5. Air Cleaner Cover & Duct

4. Radiator Assembly

- Install cushion rubber in under left and right part of radiator and position radiator.
- Fix radiator by bracket.

3. Cooling Fan Assembly

- Install cooling fan asm and tighten fixing bolts to the specified torque.

	N·m(Kg·m/lb·in)
	8 (0.8/69)

2. Fan Shroud

1. Radiator Hose

- Connect upper and lower hose to engine side.
- Pour coolant in to radiator.
- Install battery.
- Connect window washer hose.

SECTION 6B

ENGINE COOLING

CONTENTS

	PAGE
General Description	6B- 1
On-Vehicle Service	6B- 5
Water Pump	6B- 5
Thermostat	6B- 7
Radiator	6B- 9
Drive Belt Adjustment	6B-15

GENERAL DESCRIPTION

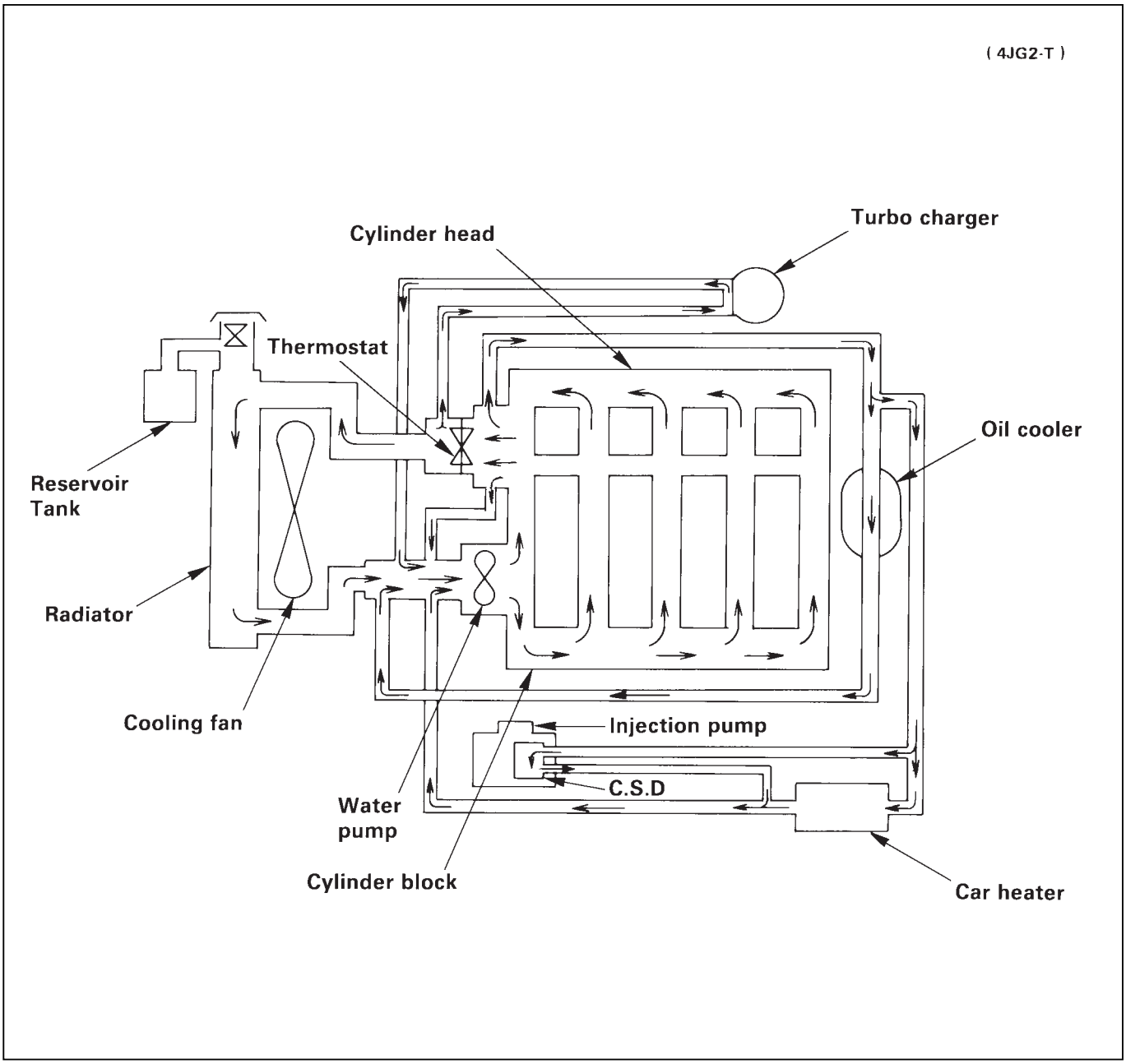

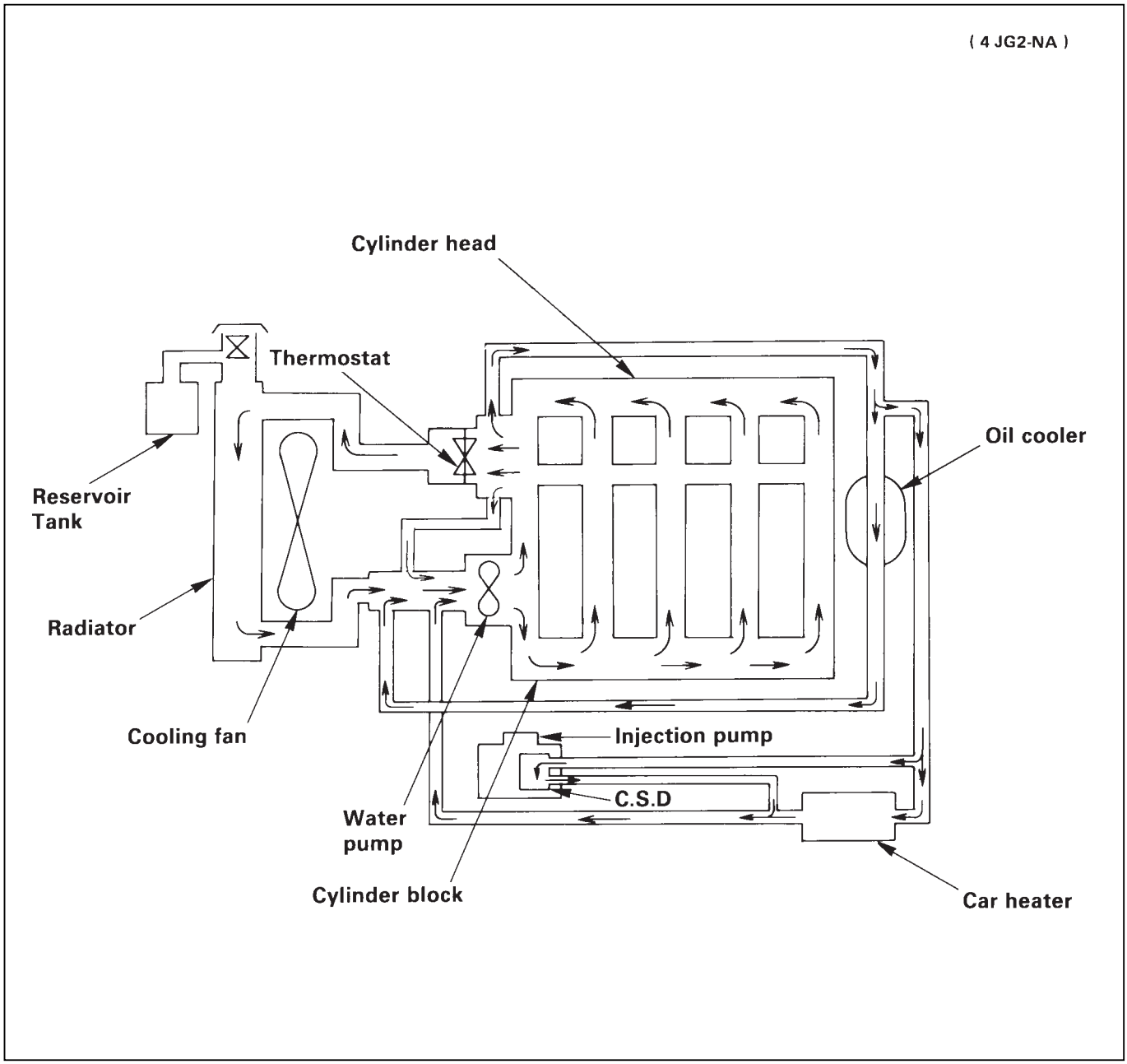
(4 JG2-NA)
Cylinder head
Thermostat
Oil cooler
Reservoir Tank
Radiator
Cooling fan
Injection pump
C.S.D
Water pump
Cylinder block
Car heater

The cooling system is a pressurized coolant forced circulation type which consists of water pump, thermostat cooling fan, radiator and other components. The circulating coolant cools the lubricating oil in the oil filter and turbocharger.

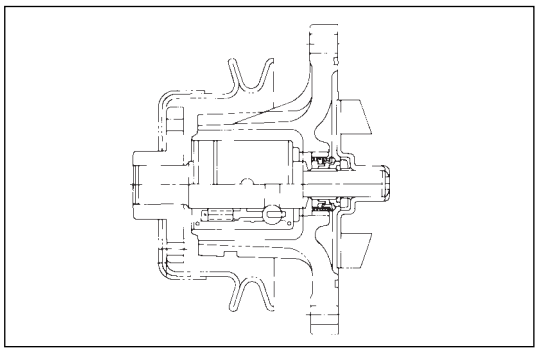

WATER PUMP

The coolant pump is a centrifugal impeller type and is driven by V type drive belt.

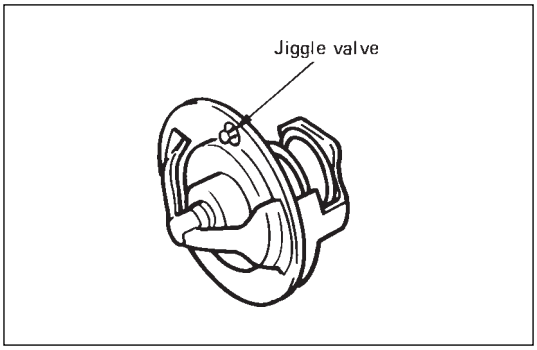

THERMOSTAT

The thermostat is a wax pellet type with a jiggle valve and is installed in the thermostat housing.

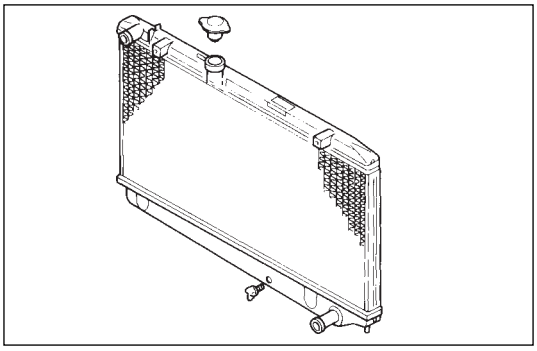

RADIATOR

The radiator is a tube type with corrugated fins. In order to raise the boiling point of coolant, the radiator is fitted with a cap in which the valve is operated under the pressure.

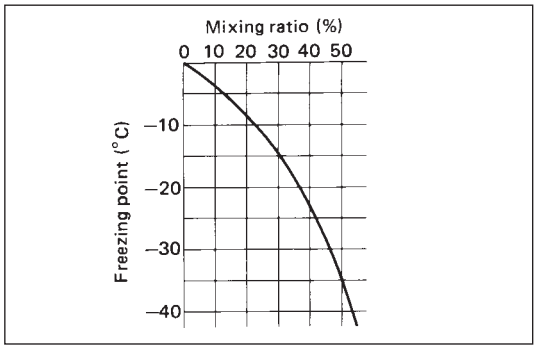

ANTI-FREEZE SOLUTION

- Relation between Mixing ratio and Freezing point

  Freezing temperature of the engine coolant varies with the ratio of anti-freeze solution in water. Proper mixing ratio can be determined by refering to the chart. Supplemental inhibitors or additives claiming to increase cooling capability that have not been specifically approved by Isuzu are not recommended for addition to the cooling system.

- Calculation of mixing ratio

  Mixing ratio

$$= \frac{\text{Anti-freeze solution (Lit/qt.)}}{\text{Anti-freeze solution (Lit/qt.) + Water (Lit/qt.)}}$$

Note: Anti-freeze solution + Water = 8.6 lit
Total cooling system capacity.

In case of 6.8 lit total cooling system capacity

Mixing ratio (%)	Anti-freeze solution: lit. (imp. qt./U.S. qt)	Water: lit. (imp.qt/U.S. qt)
0	0 0	6.8 (5.98/7.19)
5	0.3 (0.26/0.32)	6.5 (5.71/6.87)
10	0.7 (0.62/0.74)	6.0 (5.28/6.34)
15	1.0 (0.88/0.93)	5.8 (5.1/6.13)
20	1.4 (1.23/1.48)	5.4 (4.75/5.7)
25	1.7 (1.50/1.80)	5.1 (4.49/5.39)
30	2.0 (1.76/1.86)	4.8 (4.22/5.04)
35	2.4 (2.11/2.23)	4.4 (3.87/4.65)
40	2.7 (2.38/2.85)	4.1 (3.6/4.33)
45	3.1 (2.72/2.87)	3.7 (3.26/3.91)
50	3.4 (2.99/3.60)	3.4 (2.99/3.59)

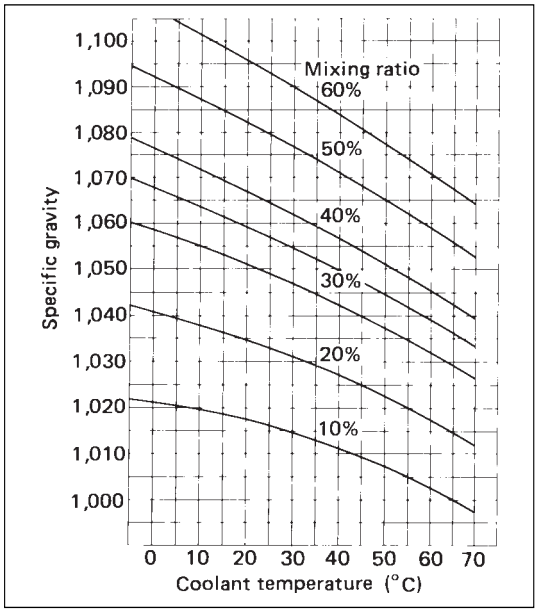

- Mixing ratio

  Check the specific gravity of engine coolant in the cooling system in temperature ranges from 0° C to 50° C using a suction type hydrometer, then determine the density of the coolant by refering to the table at left.

ON-VEHICLE SERVICE

WATER PUMP

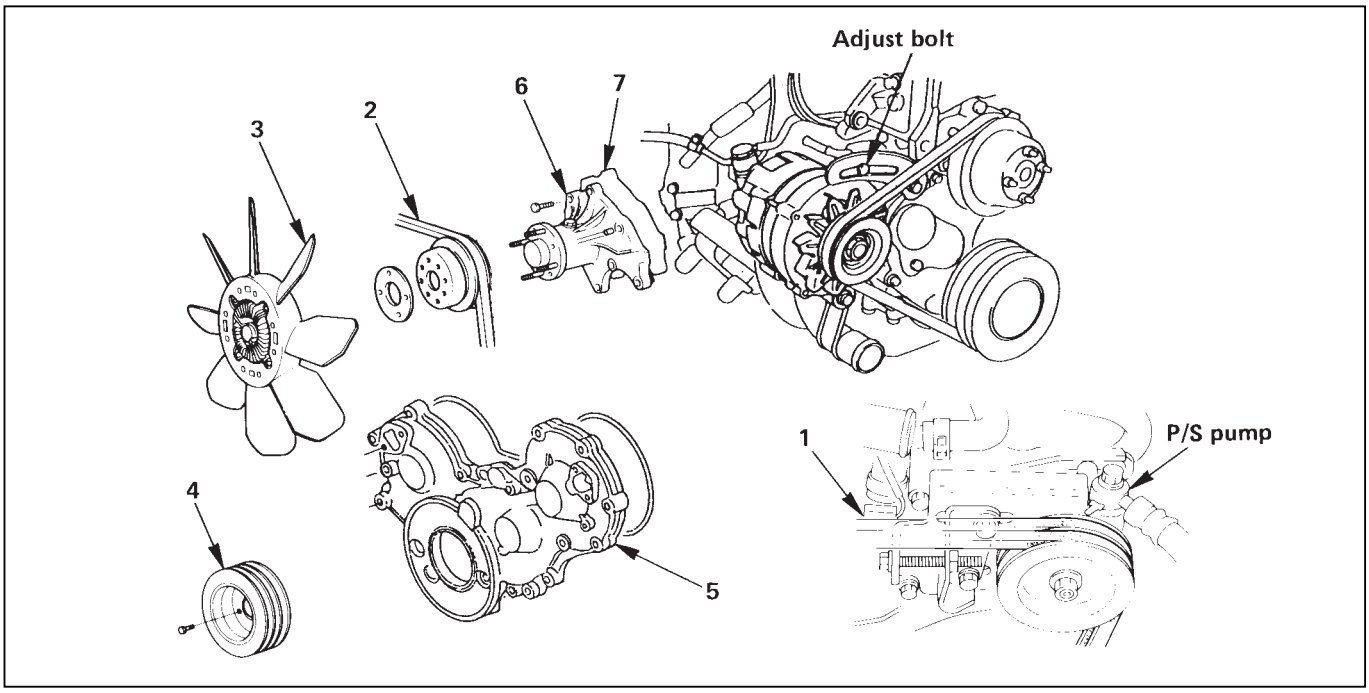

REMOVAL

Preparation

- Drain coolant.

1. **P/S pump Drive Belts**
   - Loosen P/S pump mounting bolt, loosen adjust bolts and remove the drive belts.
2. **AC Generator Drive Belt**
   - Loosen AC Generator mounting bolt (bottom side), adjust plate lock bolt, and remove the drive belt.
3. **Cooling Fan Assembly**
   - Remove lock nut and take out cooling fan assembly, distance piece, and fan pulley.
4. **Crankshaft Damper Pulley.**
5. **Gear Case Cover.**
6. **Water Pump Assembly**
7. **O-ring**

INSPECTION

Make necessary repair and parts replacement if extreme wear or damage is found during inspection. Should any of the following problems occur, the entire water pump assembly must be replaced.

- Cracks in the coolant pump body
- Coolant leakage from the seal unit
- Play or abnormal noise in the bearing
- Cracks or corrosion in the impeller

INSTALLATION

7. O-ring

- Set O-ring in water pump body groove.

6. Water Pump Assembly

- Install water pump assembly, and tighten to specified torque.

	N·m (Kg·m/lb.ft)
	20(2.0/14)

5. Gear Case Cover

- Install gear case cover, and tighten to specified torque.

	N·m (Kg·m/lb·in)
	8(0.8/69)

4. Crankshaft Damper Pulley

- Install crankshaft damper pulley, and tighten to specified torque.

	N·m (Kg·m/lb·ft)
	19(1.9/14)

3. Cooling Fan Assembly

- Install fan pulley, distance piece, and cooling fan assembly in this order on water pump, and tighten to specified torque.

	N·m (Kg·m/lb·in)
	8(0.8/69)

2. AC Generator Drive Belt

- Install AC Generator drive belt and adjust belt tension.
- (Refer to Drive Belt Adjustment in this Section).

1. P/S Pump Drive Belts

- Install P/S pump drive belts and adjust belt tension.
- (Refer to Drive Belt Adjustment in this Section).

THERMOSTAT

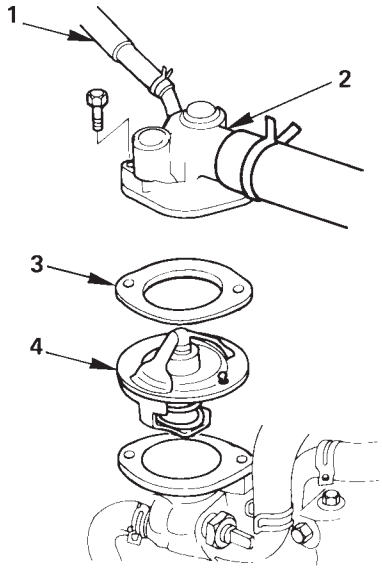

REMOVAL

Preparation

- Disconnect battery ground cable.
- Drain coolant from the radiator and engine.

1. **Water Hose; Turbocharger (4JG2-T Only)**
2. **Outlet Pipe**
   - Remove mounting bolt and remove outlet pipe together with radiator hose.
3. **Gasket**
4. **Thermostat**

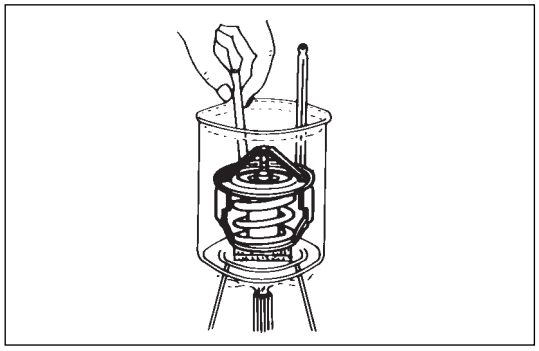

INSPECTION

Submerge the thermostat assembly in the water.
Place wooden blocks on the bottom of the water container.
Not to directly heat the thermostat.
Gradually increase the water temperature. Stir the water so that the entire water is same temperature.

- Make sure that primary valve begins to open at the specified temperature.

Valve Opening Temperature	°C (°F)
82 (180)	

- Make sure that secondary valve opens fully at the specified temperature.

Valve Full Open Temperature	°C (°F)
95 (203)	

Make necessary repair and parts replacement if extreme wear or damage is found during inspection.

INSTALLATION

4. Thermostat
3. Gasket
2. Outlet Pipe

- Connect outlet pipe and tighten bolts to the specified torque.

	N·m (Kgm/lb·ft)
	19(1.9/14)

1. Water Hose: Turbocharger (4JG2-T Only)

- Install battery ground cable.
- Pour coolant,
- Start the engine and check coolant leakage.

RADIATOR

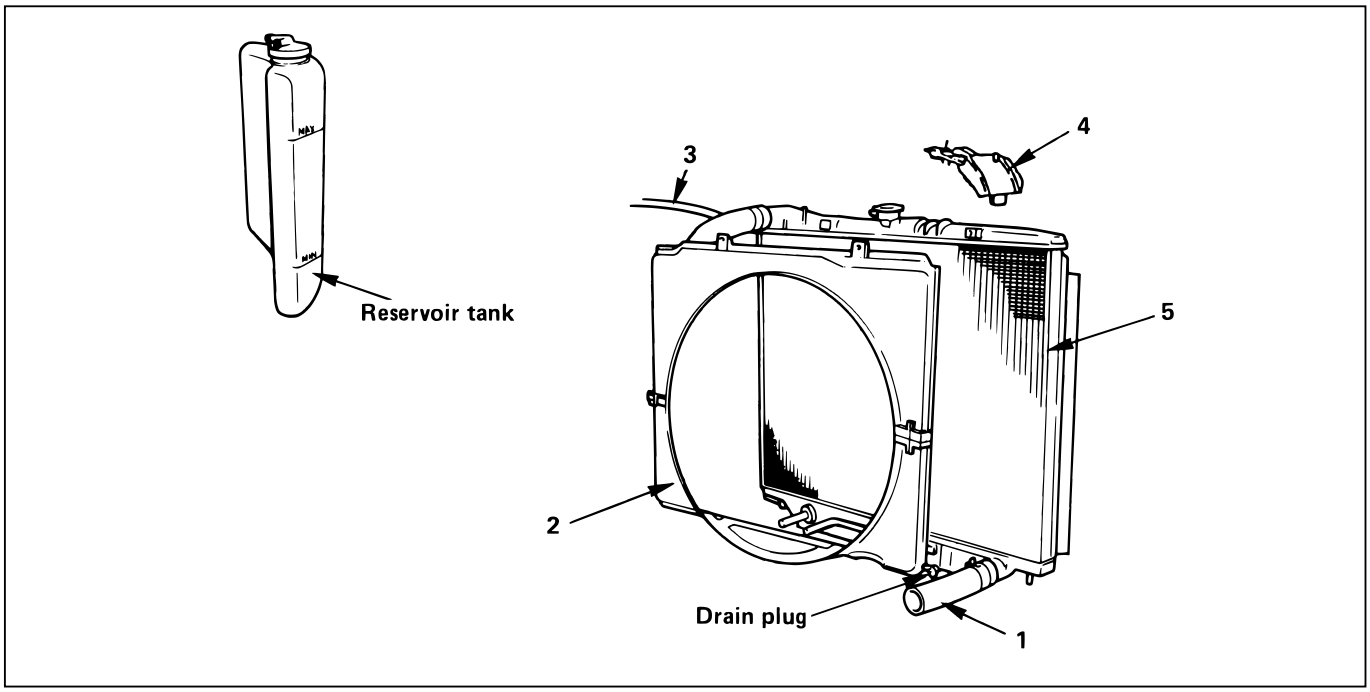

REMOVAL

Preparation

- Disconnect battery ground cable.
- Loosen drain plug to drain coolant.

1. Radiator Hose

- Disconnect lower hose and upper hose from the engine.

2. Fan Guide Lower

- Remove clips on both sides and the bottom lock.

3. Reservoir Tank Hose

- Disconnect the hose from radiator.

4. Bracket

5. Radiator Assembly

- Remove upward the radiator assembly with hose, taking care not to damage the radiator core by fan blade.
- Remove cushion rubbers on both sides of the bottom.

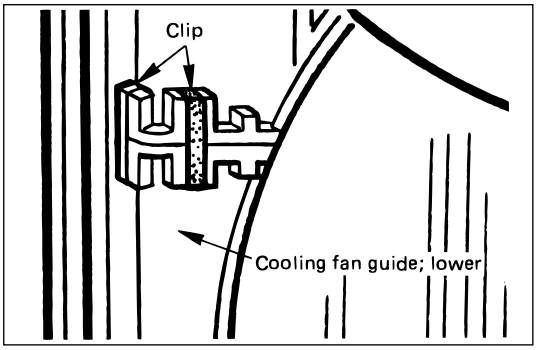

INSPECTION

Radiator Cap

- Measure the valve opening pressure with the radiator cap tester. Replace the radiator cap if it exceeds the standard.

Valve opening pressure	kPa(Kg/cm^2 / psi)
93.3 – 122.7 (0.95 – 1.25/13.5 – 17.8)	

Check the condition of negative pressure valve in the center of valve seat side of the cap. If the valve seat does not move smoothly due to rust or dust, clean or replace the radiator cap.

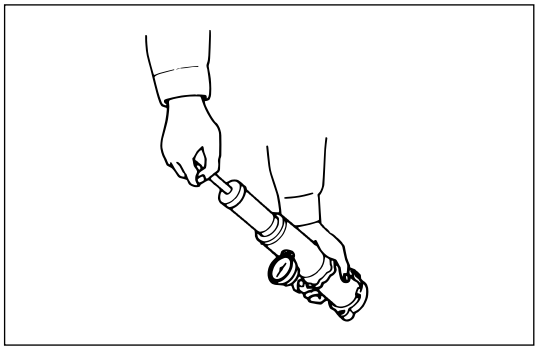

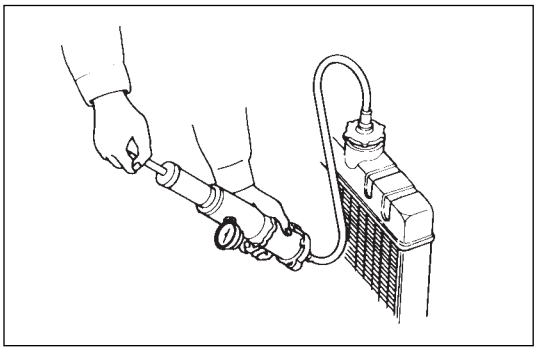

Radiator Core

- Deformed radiator fins could reduce radiation effects, resulting in overheat. Straighten the fins. In such a case, take care not to damage the fin roots.
- Remove dust and other foreign materials.

Flushing the Radiator

- Wash the inside of radiator and the coolant passage with water and neutral detergent. Remove all scales and rust.

Checking for Coolant Leakage

- Check the cooling system for leakage with the radiator cap tester by applying 196.0kPa (28.4 psi) air pressure from filler neck to inside the radiator.

INSTALLATION

5. Radiator Assembly

- Install cushion rubbers on both sides of radiator bottom.
- Install radiator assembly with hose, taking care not to damage the radiator core by a fan blade.

4. Bracket

- Support the radiator upper tank with the bracket and fix the radiator.

3. Reserve Tank Hose

2. Fan Guide, Lower

1. Radiator Hose

- Connect inlet hose and outlet hose to the engine.
- Connect battery ground cable.
- Pour coolant
- Pour coolant up to filler neck of radiator, and up to MAX mark of reserve tank.
- Start engine to warm up, and check for coolant level. Replenish coolant if it does not reach the radiator filler neck, and tighten the cap completely.

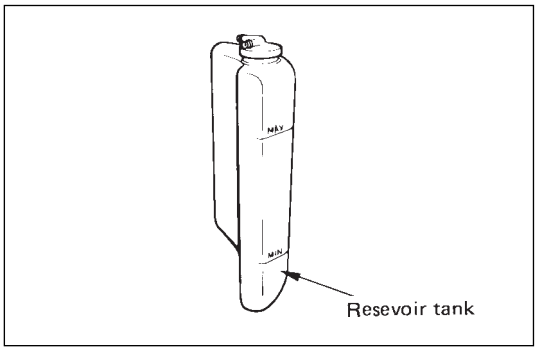

DRIVE BELT ADJUSTMENT

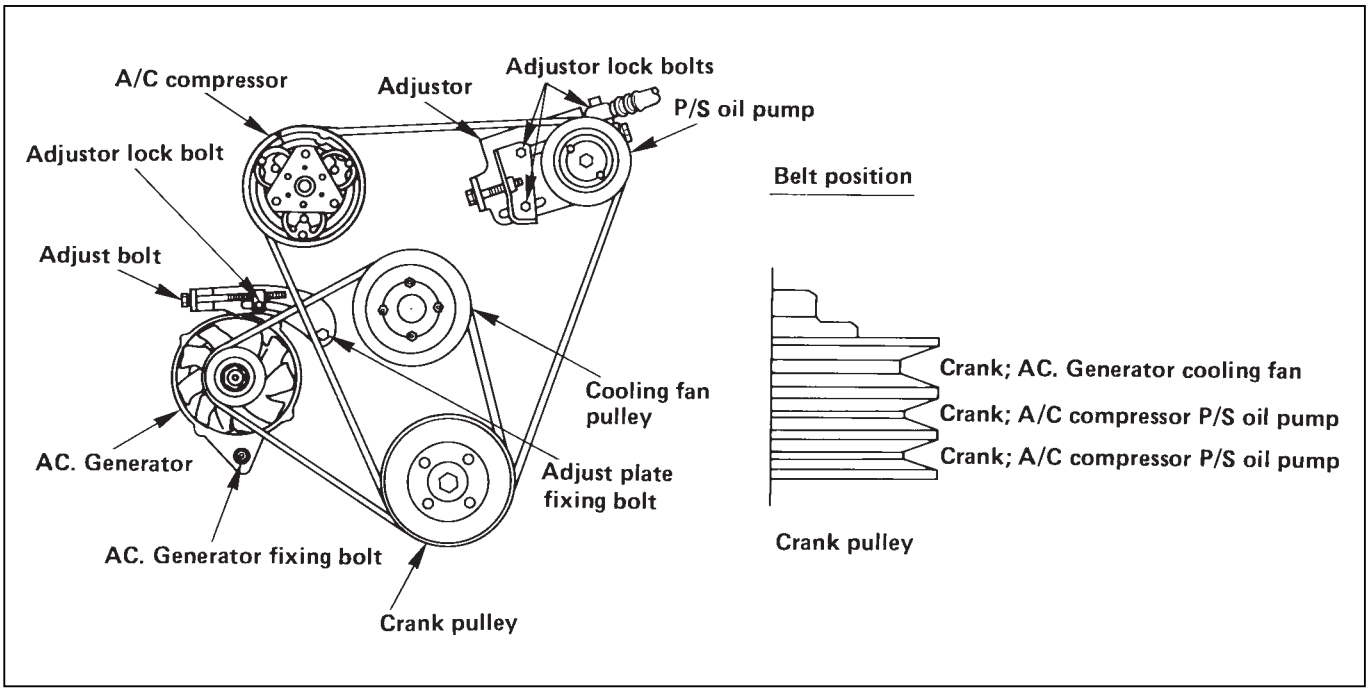

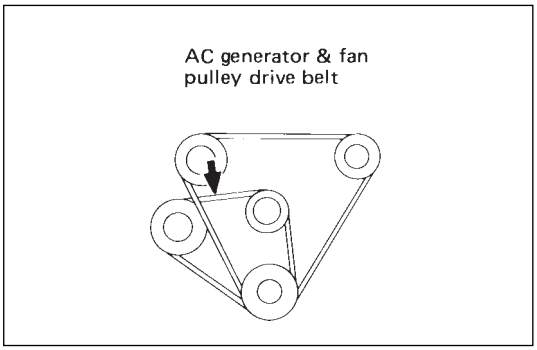

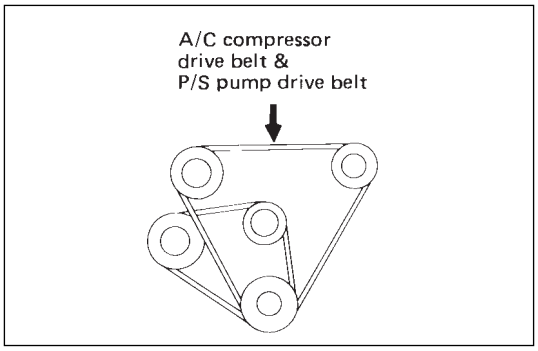

INSPECTION

Check drive belts for wear or damage, and replace with new ones as necessary. Check belts for tension, and adjust as necessary.

- Check drive belts tension
- Push the middle of belts with a force of 98 N (10 kg/22 lb) and check each bolt for deflection.
- Standard deflection

mm (in)

	Initial tension	Tension at readjustment
AC generator & fan pulley drive belt	8~12 (0.31~0.47)	
A/C compressor drive belt	7~12 (0.28~0.39)	5~8 (0.20~0.31)
P/S pump drive belt	13~16 (0.51~0.63)	

TENSION ADJUSTMENT

P/S oil pump and A/C compressor pulley belt.

- With P/S pump lock bolt loose, adjust belt tension with adjust belt.

Cooling fan pulley belt

- With AC Generator mounting and lock bolts loose, adjust belt tension with adjuster's adjust bolt.

Torque Standard N·m(Kg·m/lb·ft)

AC generator fixing bolt	40 (4.1/30)
Adjust plate fixing bolt	24 (2.4/17)
Adjust plate lock bolt	19 (1.9/14)
P/S oil pump adjustor lock bolt	37 (3.8/27)

SECTION 6C

FUEL SYSTEM

CONTENTS

	PAGE
General Description	6C- 1
On-Vehicle Service	6C- 7
Fuel Filter Assembly	6C- 7
Fuel Filter Cartrige	6C- 8
Injection nozzle	6C- 9
Injection Pump Assembly	6C-14
Fuel Tank	6C-18
Fuel Gauge Unit	6C-19
Fuel Filler Cap	6C-20
Accelerator Control	6C-21
Accelerator Control Cable	6C-21
Accelerator Pedal	6C-23
Air Cleaner	6C-24

GENERAL DESCRIPTION

When working on the fuel system, there are several things to keep in mind:

- Any time the fuel system is being worked on, disconnect the negative battery cable except for those tests where battery voltage is required.
- Always keep a dry chemical (Class B) fire extinguisher near the work area.
- Replace all pipes with the same pipe and fittings that were removed.
  Clean and inspect “O” rings. Replace where required.
- Always relieve the line pressure before servicing any fuel system components.
- Do not attempt repairs on the fuel system until you have read the instructions and checked the pictures relating to that repair.

General Export

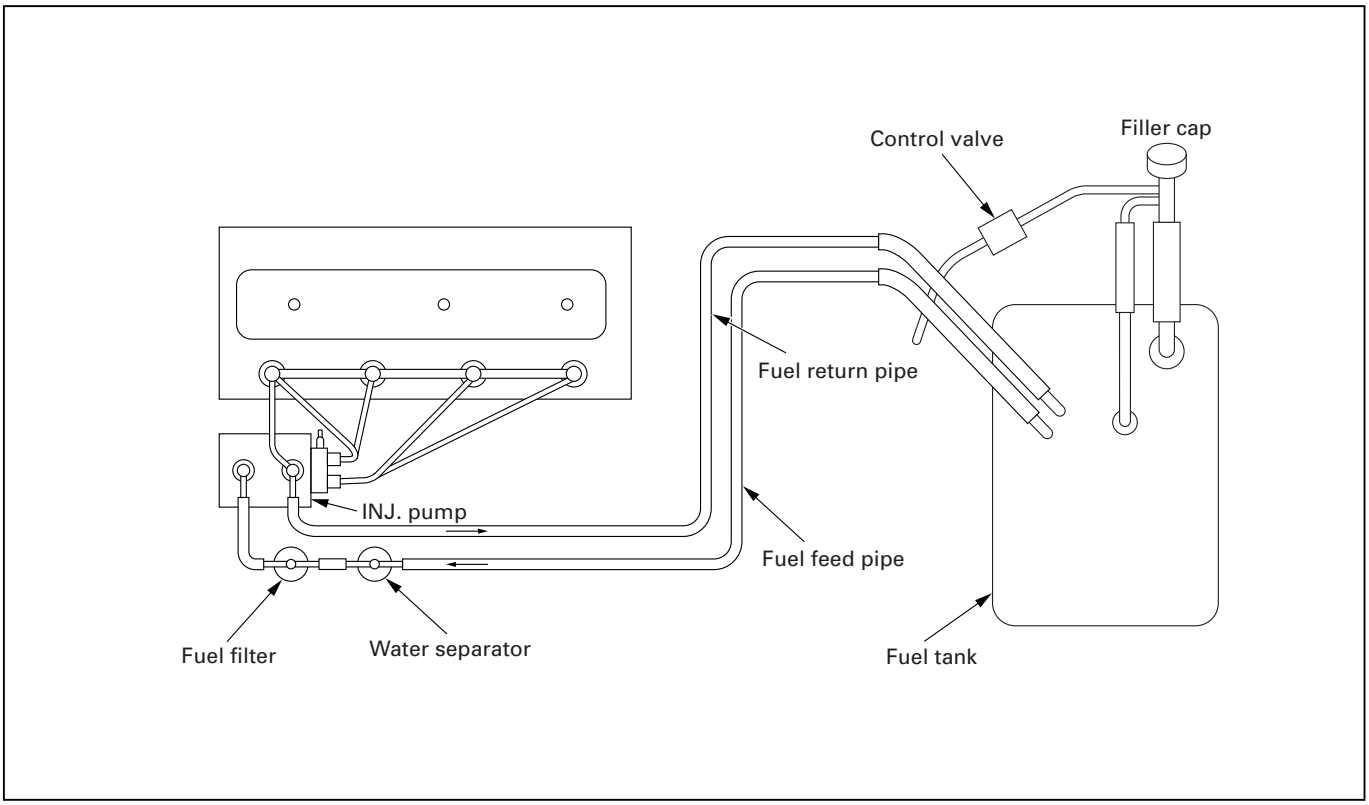

140RX024

Argentina

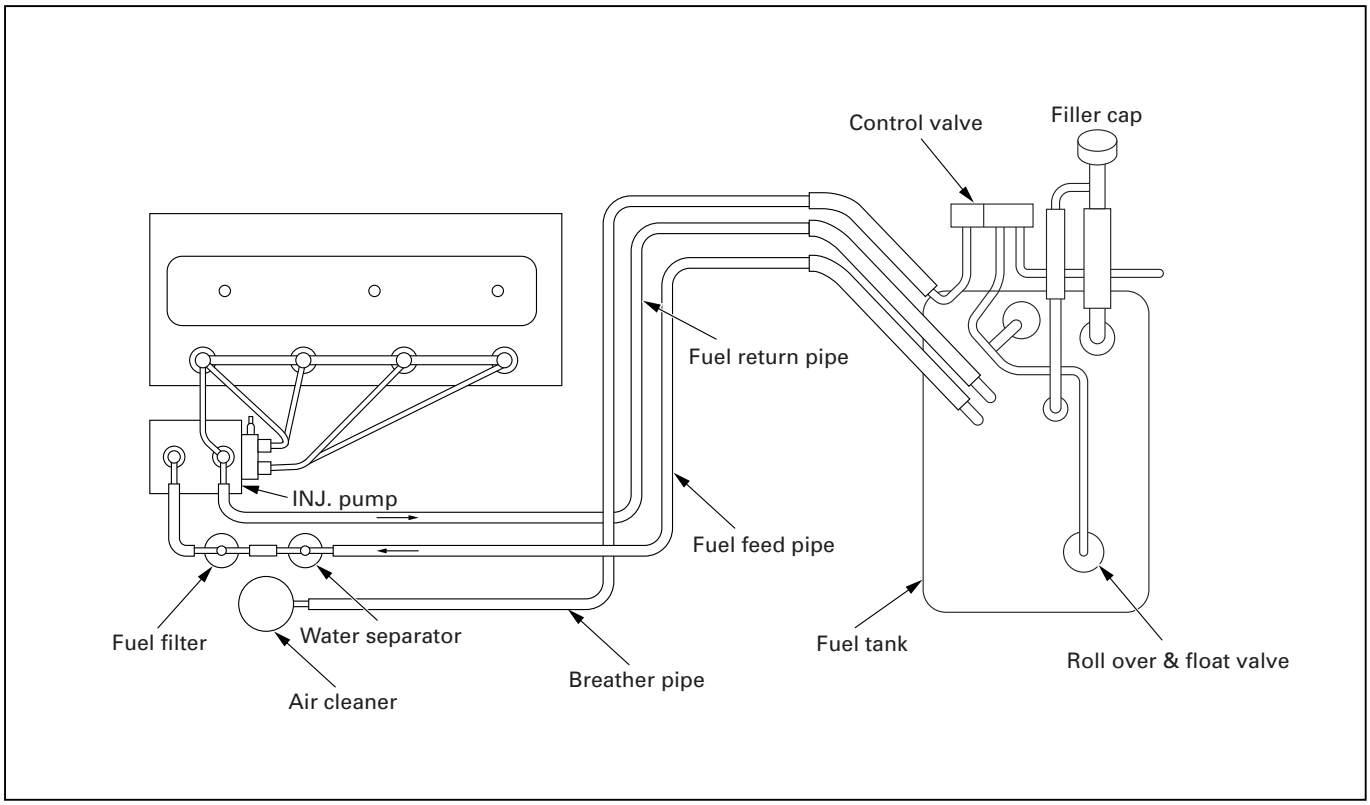

140RX025

Fuel Flow Chart

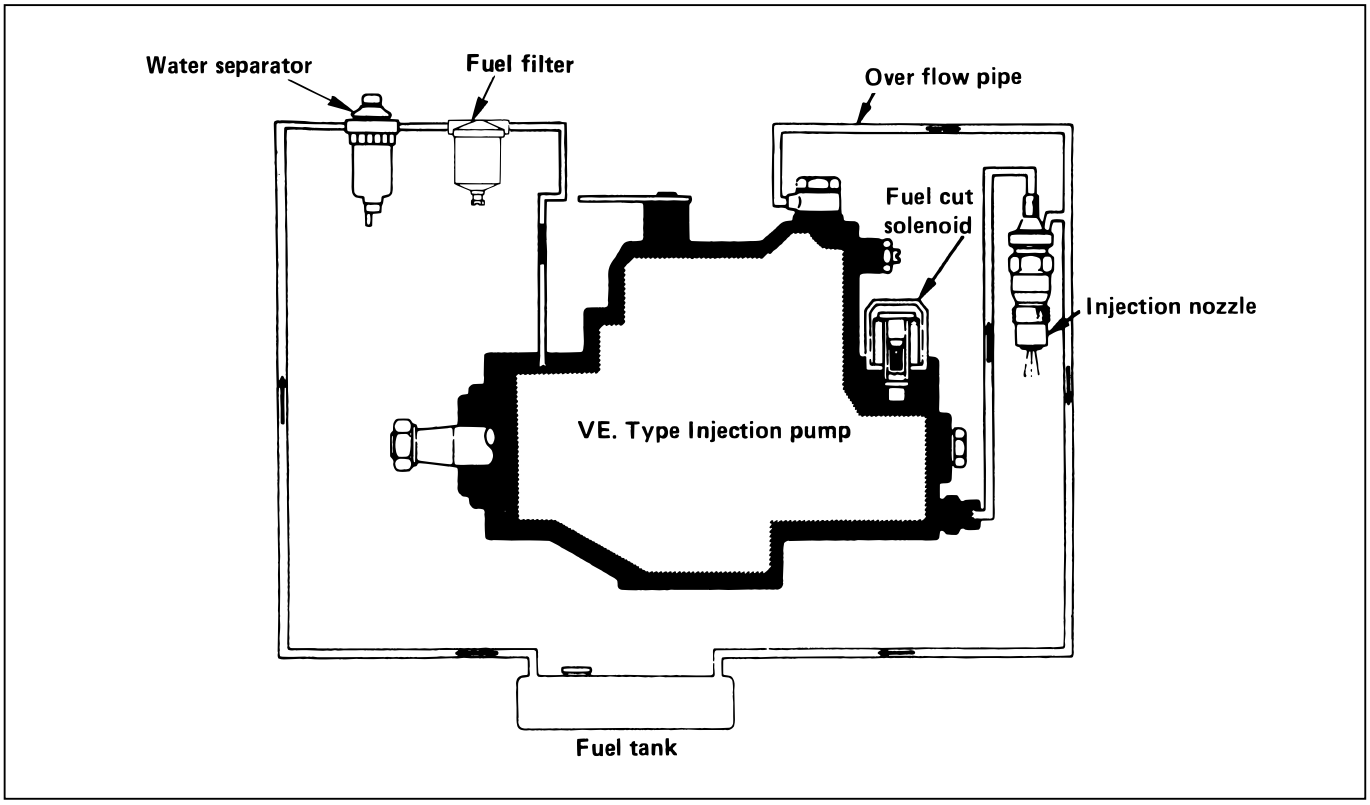

INJECTION PUMP

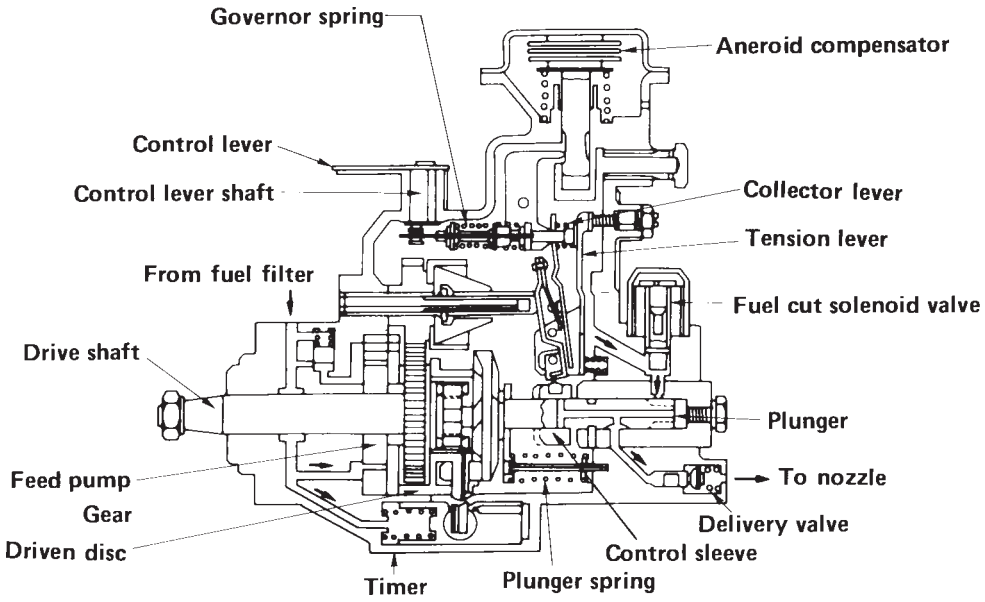

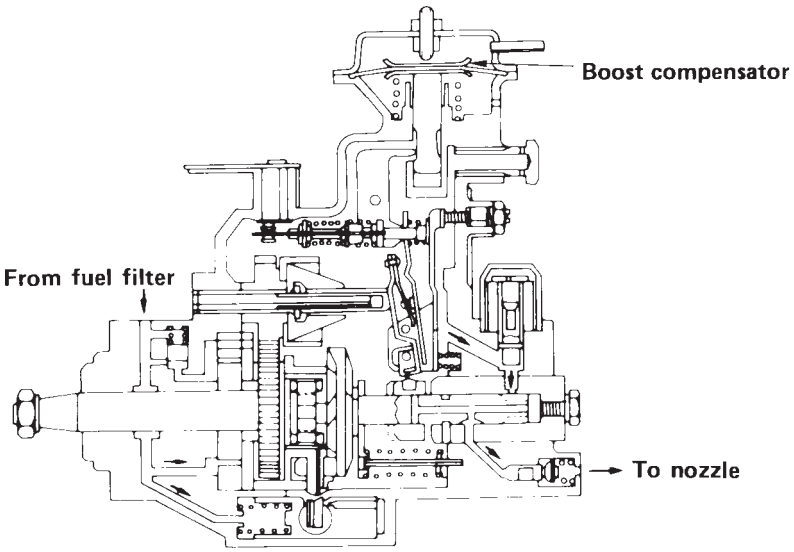

A Bosch Distributor Type Injection Pump is used. A single reciprocating/revolving plunger delivers the fuel uniformly to the injection nozzles, regardless of the number of cylinders.
The governor, the injection timer, and the feed pump are all contained in the injection pump housing. The injection pump is compact, light weight, and provides reliable high-speed operation.
An aneroid compensator is available as an option for vehicles to be operated at high altitudes. It adjusts the fuel and air mixing ratio.
A boost compensator is installed on turbocharger equipped vehicles.

FUEL FILTER AND WATER SEPARATOR

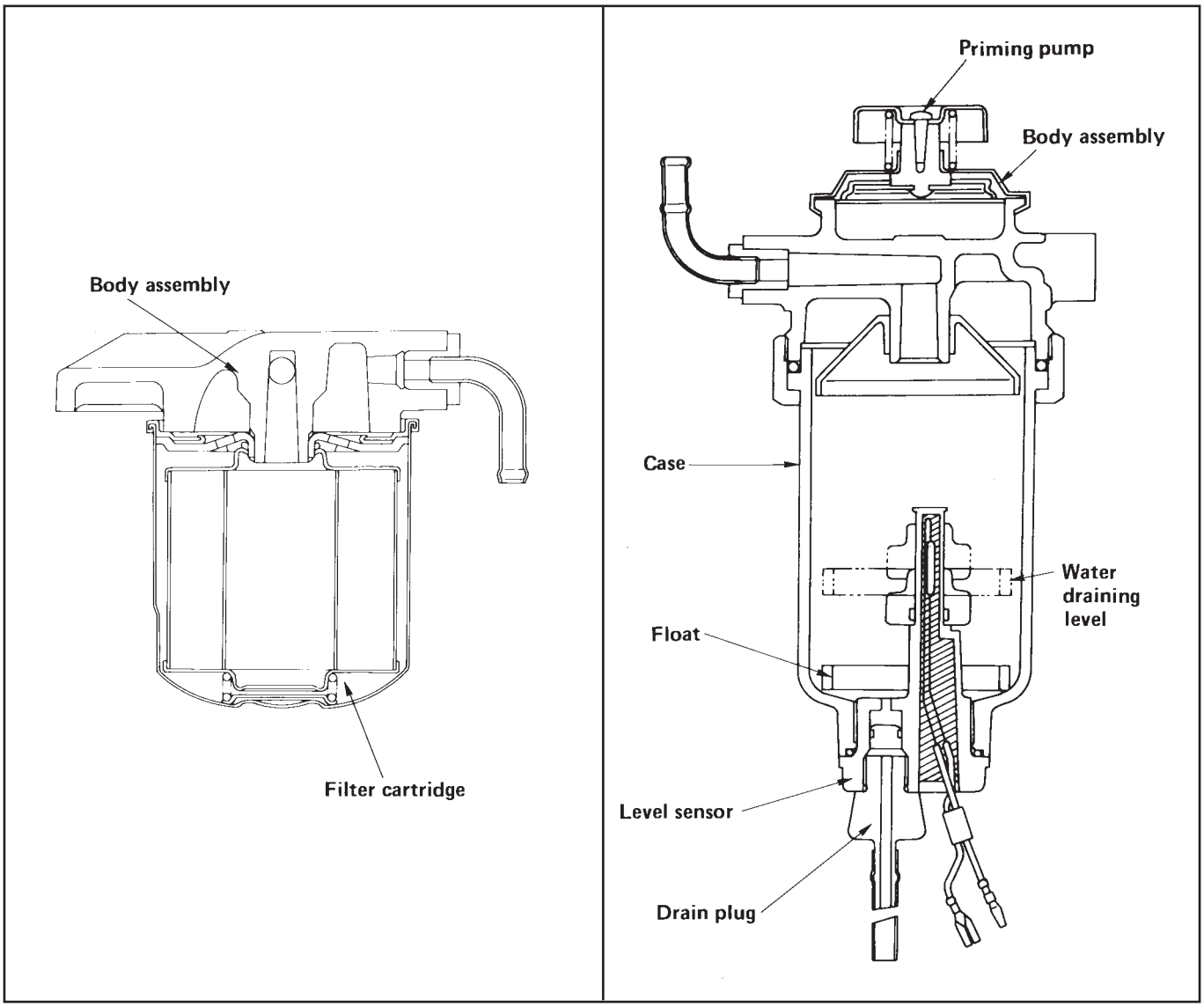

A cartridge type fuel filter and a water separator are used along with the VE type injection pump.
As the inside of the injection pump is lubricated by the fuel which it is pumping, the fuel must be perfectly clean. The fuel filter and the water separator remove water particles and other foreign material from the fuel before it reaches the injection pump.
The water separator has an internal float. When the float reaches the specified level, a warning light comes on to remind you to drain the water from the water separator.
A diaphragm type priming pump is installed at the top of the water separator. It is used during the water draining and the air bleeding procedures.

INJECTION NOZZLE

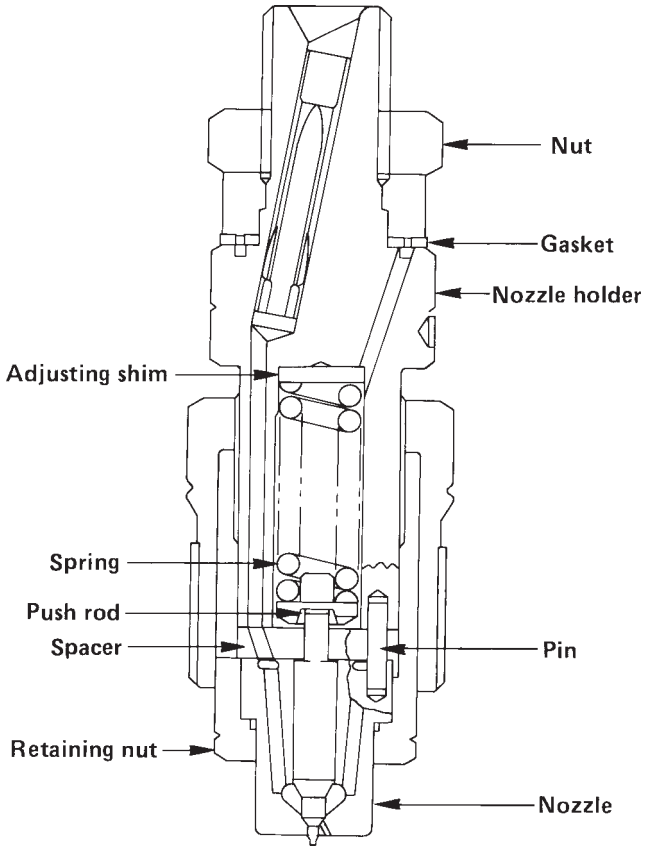

The injection nozzle sprays pressurized fuel from the injection pump through the injection nozzle orifices and into the combustion chamber.
4J series engines with the DFI (Double Formation Injection) Pintaux Type fuel injection nozzle having a sub-injection hole is used. This injection nozzle contibutes to substantially minimize the diesel nocking sound noticeable in the cold engine idling operation.

ON-VEHICLE SERVICE

FUEL FILTER ASSEMBLY

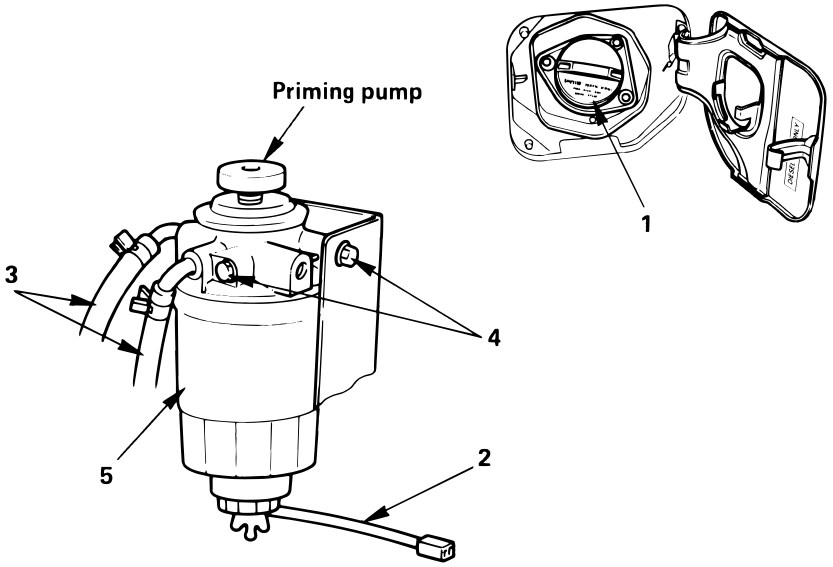

REMOVAL

Preparation: Disconnect battery ground cable.

1. **Fuel Filler Cap**
2. **Lead Switch Harness Connecter**
3. **Fuel Hose**
   - Disconnect fuel hose from filter body.
     Plug the hose ends to prevent fuel spillage.
4. **Remove the Bolt on Fuel Filter Bracket.**
5. **Fuel Filter Assembly**

INSTALLATION

5. **Fuel Filter Assembly**
   - Install the filter
4. **Tighten the Fuel Filter Bracket Fixing Bolt.**
3. **Fuel Hose**
   - Connect hoses to filter body.
2. **Lead Switch Harness Connecter**
1. **Fuel Filler Cap**
   - Connect the battery ground cable.
   - Feed fuel to the injection pump by weans of the priming, and bleed the fuel system.

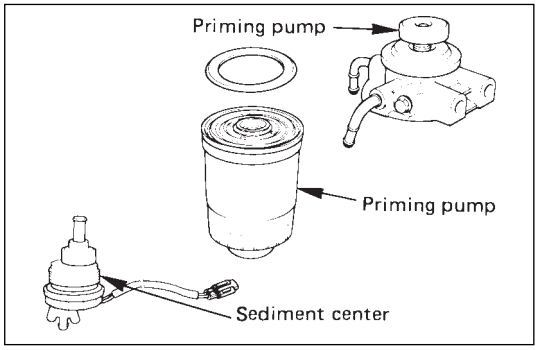

FUEL FILTER CARTRIGE

DISASSEMBLY

- Drain fuel completely from the fuel filter.
- Protect the filter body with cloth and lightly grip with a vise.
- Remove sedimentor center.
- Remove the cartridge using a filter wrench.
  Filter wrench: 5-8840-0253-0(J-22700)

REASSEMBLY

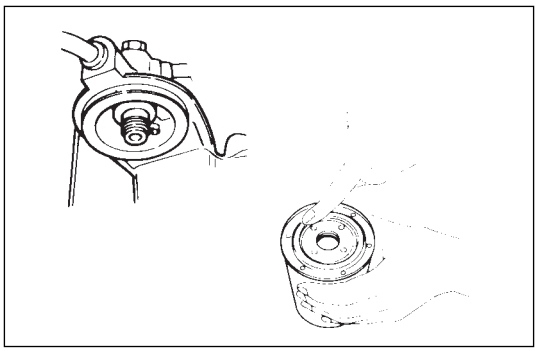

- Install the sedimentor center.
  Clean the cartridge mounting surface of filter body so that the cartridge can be securely.
  Apply engine oil thinly to new cartridge o-ring.
- To facilitate bleeding, fill the new cartridge with light oil.
- Tighten the cartridge until o-ring comes in contact with the sealing, taking care not to spill the light oil.
- Retighten 1/3~2/3 using a filter wrench.
  Filter wrench: 5-8840-0253-0(J-22700)

Bleeding

- Operate priming pump to send the air in the fuel system to the injection pump.
- Loosen injection pump bleeding plug, and operate the priming pump until no bubble is made.
- Tighten the bleeding plug.
- Start the engine, and if it is not started in 10 seconds or less, repeat the bleeding steps.
- Make sure of no fuel leakage, and tighten the priming pump.

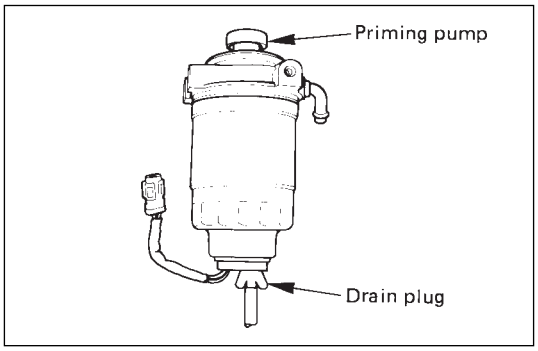

Draining

- When the water in the sedimentor reaches the specified volume, warning light is actuated.
  In this case, follow the draining steps below.
- Set a vinyl hose over the drain plug.
- Loosen the drain plug.
- To drain the water, operate the priming pump several times.
- After draining, tighten the drain plug.
- Operate the priming pump several times to check for fuel leakage.
- Check and see the warning light is off.

INJECTION NOZZLE

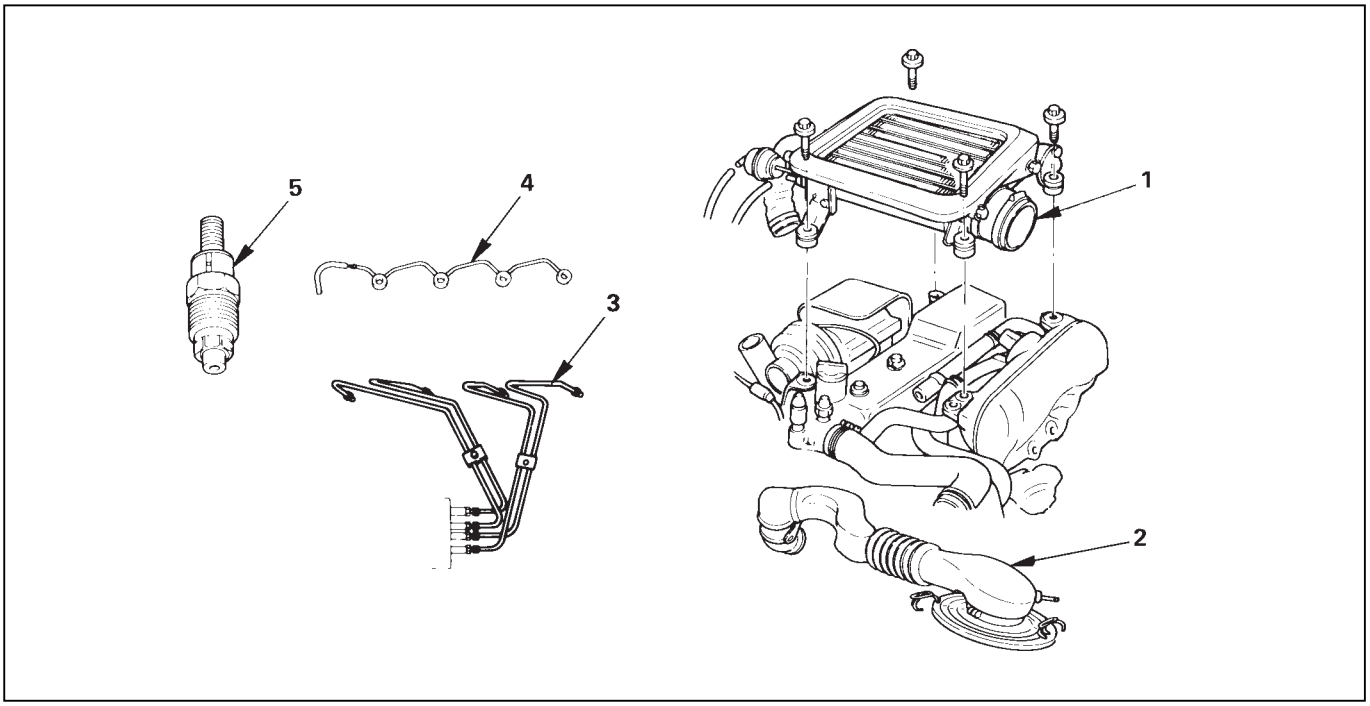

REMOVAL

Preparation:

- Disconnect battery ground cable.

1. **Intercooler Assembly (4JG2-T Only)**
   - (Refer to intercooler removal steps in section 6A2)
2. **Air Cleaner Cover & Air Duct**
3. **Injection Pipe**
   - Release injection pipe clip.
   - Loosen the flare nut on the injection pump side.
   - Loosen the flare nut on the injection nozzle side, disconnect and put aside the pipe.
4. **Leak Off Pipe**
5. **Injection Nozzle**

INSPECTION

- Set the nozzle in a nozzle tester.
  Check there is no fuel leak in the nozzle seal when a fuel pressure of 14710 kpa (150kg/cm^2/2133 psi) is applied.
  If there is leak, replace.

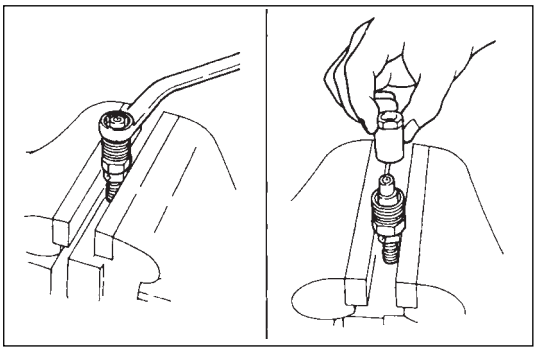

DISASSEMBLY

- Grip nozzle holder with a vise, loosen retaining nut and disassemble.
- Loosen holder nut and remove the nozzle.

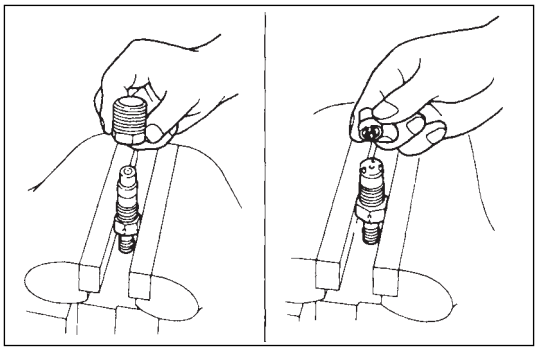

CAUTION

- Be careful not to damage the needle valve.
- Remove spacer, positioning pin, and push rod.
- Remove spring and adjusting shim.

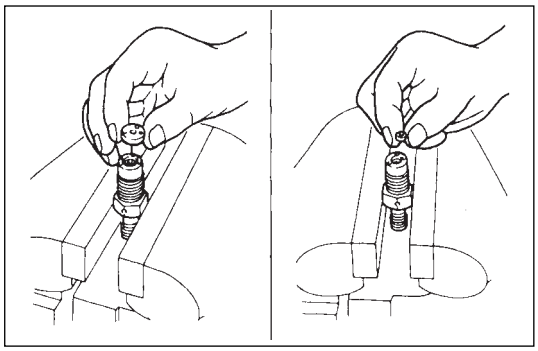

CAUTION

- Wash all the parts removed and arrange them on a cylinder basis, care should be taken not to miss any parts.
- Soak the nozzle assembly in a parts receptacle filled with light oil.
- Care should be taken not to miss shim, if used.

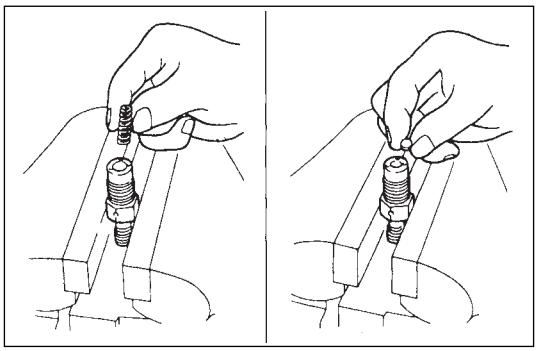

INSPECTION

Nozzle

- Soak the nozzle removed in clean light oil, wash nozzle body and needle valve separately, and check and see that the needle valve slide smoothly in the nozzle body.

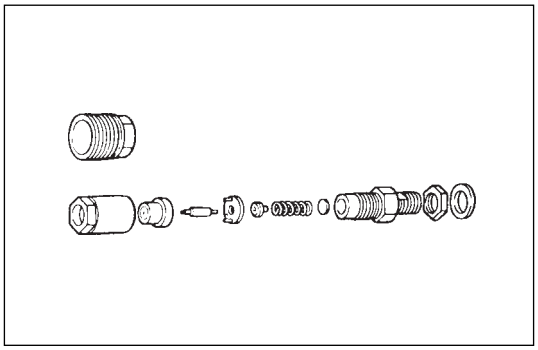

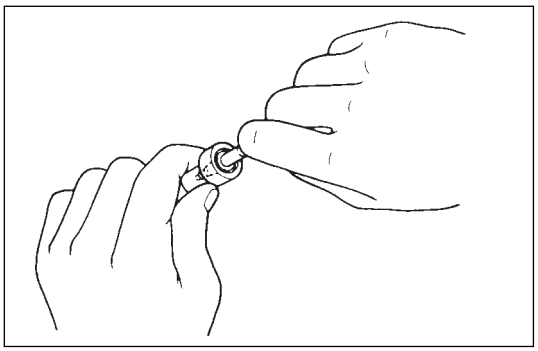

CAUTION

- If the needle valve does not slide smoothly repair or replace with a new nozzle assembly.

Nozzle lapping procedure

- Apply thinly a compound (Chrome oxide kneaded with an animal oil) to the seat of needle valve and lap.

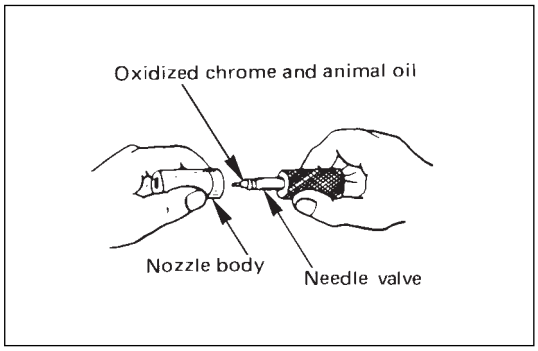

CAUTION

- Excess compound may cause worn needle valve, and be sure to wash out the compound after lapping.

Nozzle body & needle

- Check nozzle body end for seizure.
  If significantly seized, replace as a nozzle assembly basis. Also replace as a nozzle assembly basis, if needle valve end is deformed or seized.

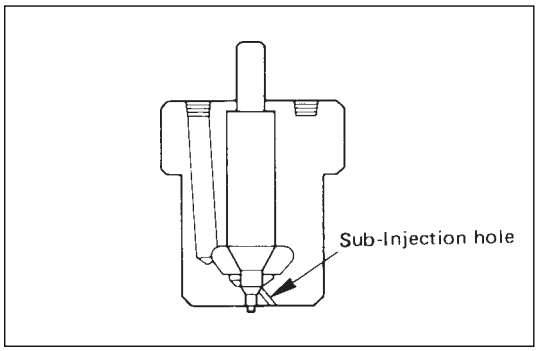

CAUTION

- If either nozzle body or needle valve is faulty, replace with a new nozzle assembly.
- DFI's sub hole is very small, care should be taken not to allow foreign matter to get in.

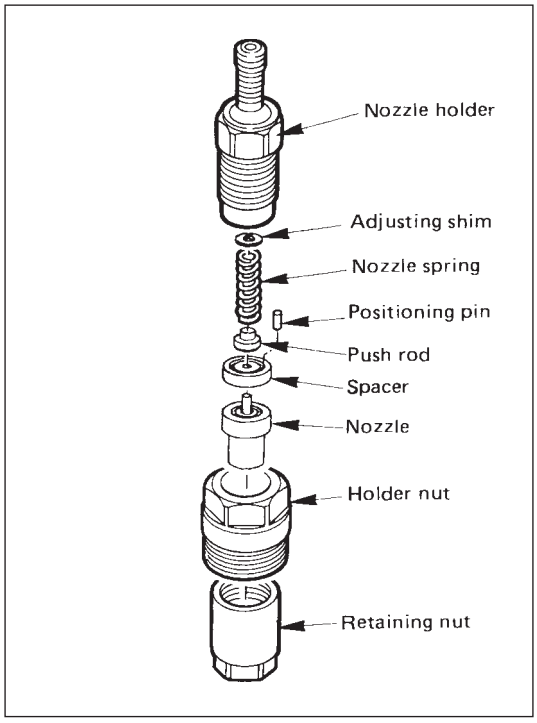

REASSEMBLY

To reassemble, follow the removal steps in the reverse order, noting the following point.

CAUTION

- Be careful to fit spacer because positioning pins are set off.

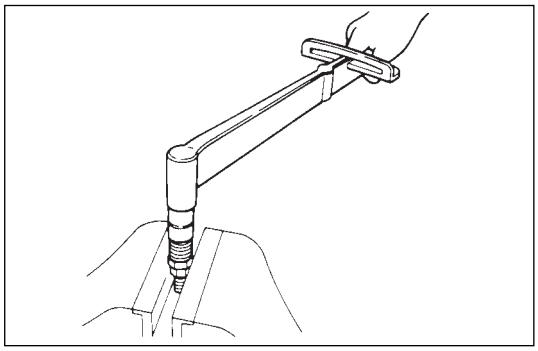

- Install retaining nut and tighten nut to the specified torque.

N·m (Kg·m/lb·ff)

39 (4/35)

ADJUSTMENT OF INJECTION STARTING PRESSURE

- Set nozzle holder asm on a nozzle tester.
- Apply hydraulic pressure by operating tester handle, and make sure fuel cam be injected under the following pressure.

Kpa (Kg/cm^2/Psi)

14710 (150/2133)

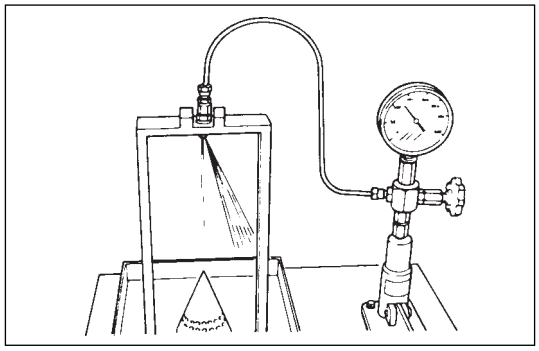

CAUTION

- If not injected under the specified pressure, adjust with adjusting shim.

Ref. Types are available in the 1.0 – 1.75 mm (0.039 – 0.069 in) thickness range (on a 0.01 mm (0.0004 in) basis).

- Unless extremely deformed spray in seen, there is no problem.

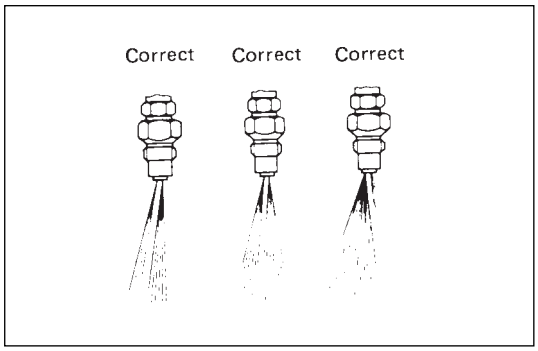

CAUTION

- In case of DFI test results are O.K. if the sub-hole inject fuel in spray.

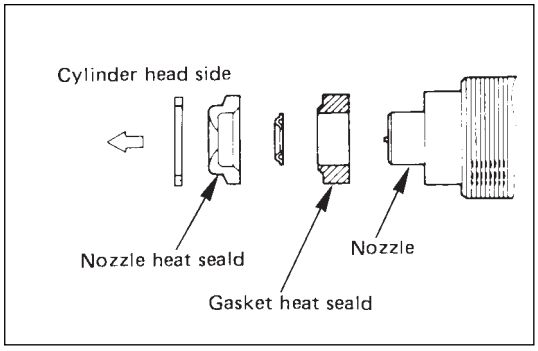

INSTALLATION

DFI should be positioned correctly and then installed in the cylinder head, because the sub-hole must be set in the specified direction.

CAUTION

- Nozzle and assembling should be as illustrated.
- Use new heat shield and new corrugated washer.

5. Injection Nozzle

- Lightly tighten the holder nut to suck extent that the nozzle holder can turn one word and one word.
- Set positioning confirmation drilled hole (ø2) within a nozzle turning angle of ± 5° against the cylinder head-side positioning boss.

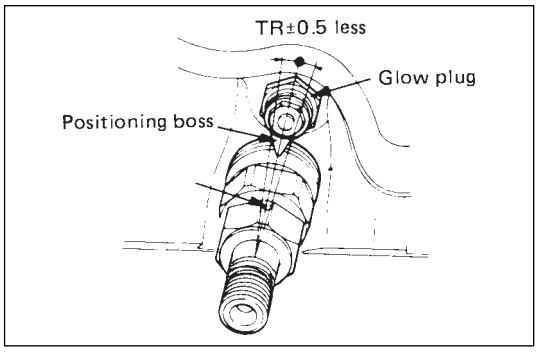

- Apply a wrench as illustrated, and tighten the holder nut to the specified torque using a special tool.

	N·m (Kg·m/lb.ft)
	64 (6.5/47)

wrench: nozzle holder 5-8840-0259-0

CAUTION

- After tightening the holder nut, make sure that the drilled hole makes ± 5° or smaller with the cylinder head-side positioning boss.
- When mounting leak off pipe, injection nozzle and pipe, clean then with air so that dust may not enter.

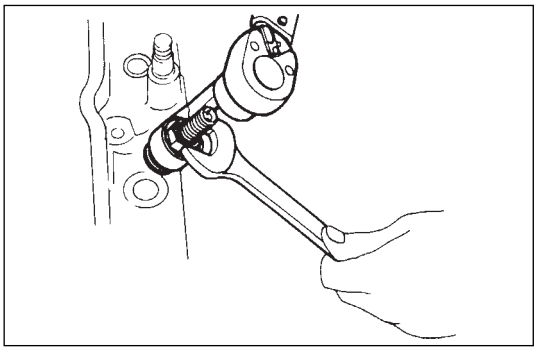

4. Leak Off Pipe
- Mount using a new copper waker

3. Injection Pipe
- Connect injection pipe to nozzle holder.
- Tighten the injection pump side.
- Fit pipe clip in specified position.

2. Air Cleaner Cover & Air duct

1. Intercooler Assembly
- Refer to “Intercooler” installation in section 6A2.

INJECTION PUMP ASSEMBLY

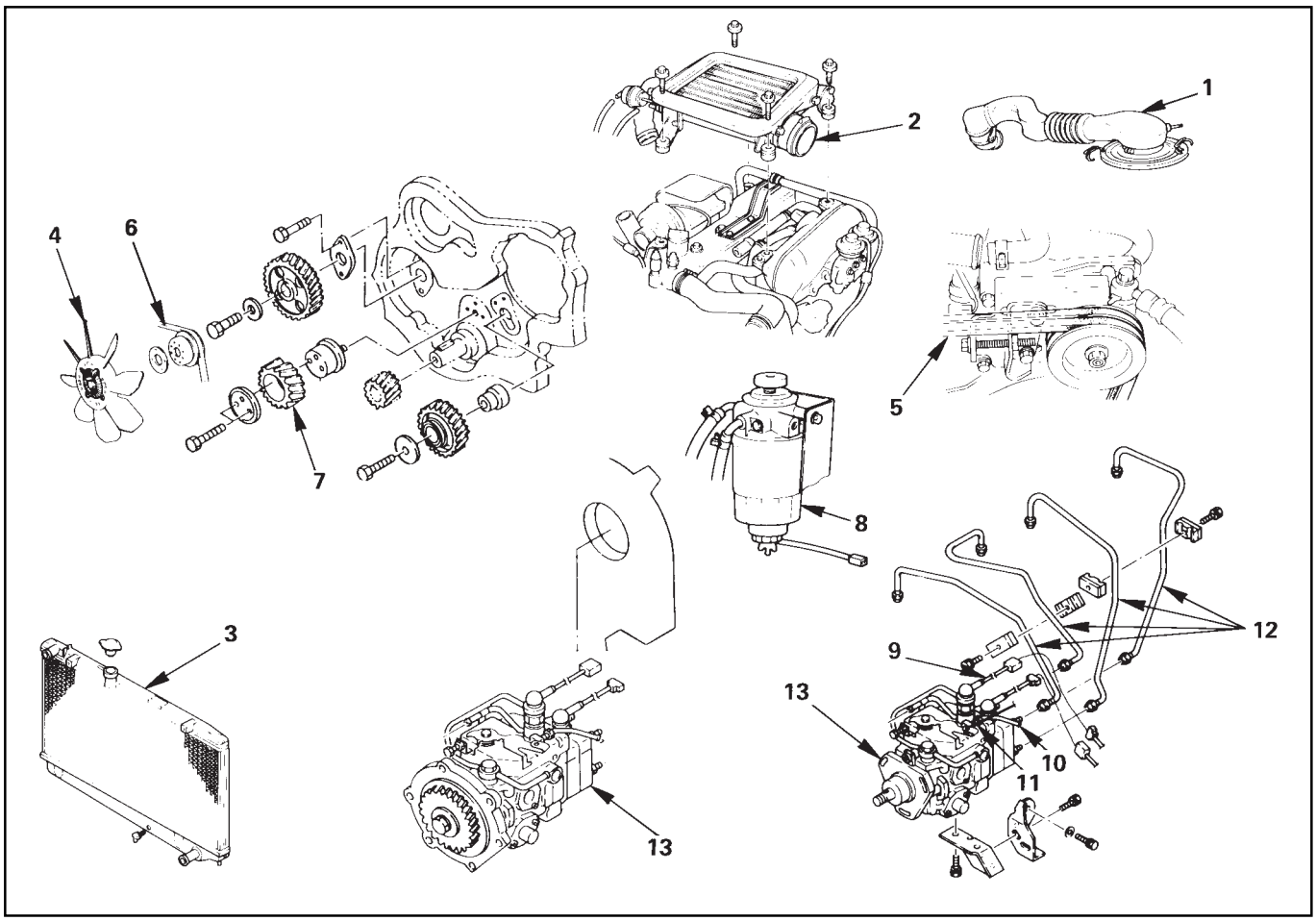

Removal Steps

1. Air cleaner cover & air duct
2. Intercooler assembly
3. Radiator assembly
4. Cooling fan assembly
5. P/S pump drive belt
6. AC generator drive belt
7. Timing gear
8. Fuel filter assembly
9. Injection pump harness
10. Fuel hose and CSD hose
11. Injection pump Control cable
12. Injection pipe
13. Injection pump assembly

Installation Steps

To install, follow the removal steps in the reverse order.

REMOVAL

Preparation:

- Disconnect battery ground cable.
- Drain coolant.

1. **Air Cleaner Cover & Air Duct**
2. **Intercooler Assembly (4JG2-T ONLY)**
   - Refer to Intercooler Assembly removal.
3. **Radiator Assembly**
   - Disconnect upper and lower hoses on the engine side.
4. **Cooling Fan Assembly**
   - Remove cooling fan asm and remove fan pulley and spacer.
5. **P/S Pump Drive Belt**
   - Loosen P/S pump lock bolt and adjust bolt remove two drive belts.
6. **AC Generator Drive Belt**
   - Loosen AC generator mounting bolt (under side) and adjust, bolt and remove drive belt.
7. **Timing Gear**
   - Refer to Timing Gear Removal
   - Remove the loosened nut and fixing bolt and remove the timing gear.
8. **Fuel Filter Assembly**
9. **Injection Pump Harness**
   - Remove tachometer sensor, throttle sensor, and fuel cut solenoid, harness.
10. **Fuel Hose & CSD Hose**
    - Disconnect inlet hose and outlet hose and keep hose end up to prevent fuel from coming out.
    - Disconnect CSD hose.
11. **Injection Pump Control Cable**
12. **Injection Pipe**
    - Release pipe clip.
    - Remove the flare nut on the pump side.
    - Remove the flare nut on the injection nozzle side, and remove the injection pipe.

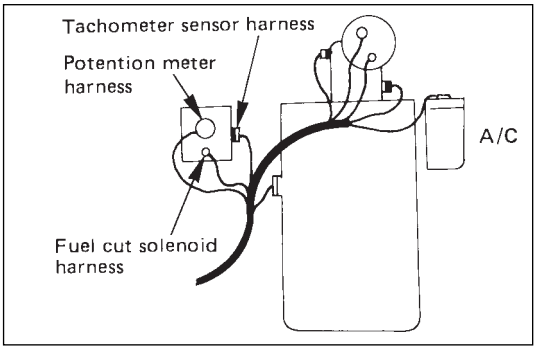

CAUTION

- Be sure to plug the injection nozzle holder and delivery holder to prevent the entry of foreign matter.

13. **Injection Pump Assembly**
    - Remove pump mounting nut
    - Loosen injection pump rear bracket adjuster lock bolt.
    - Remove the mounting bolt on the engine side, and pull out the pump behind the engine.

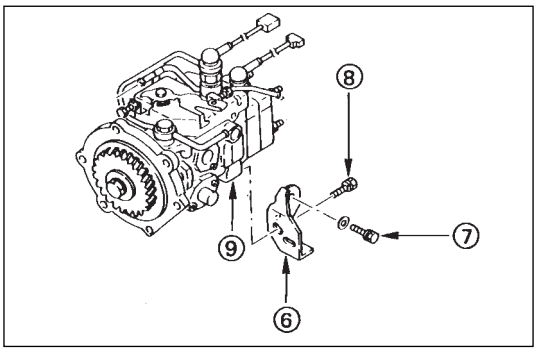

INSTALLATION

13. Injection Pump Assembly

- Tighten the injection pump bracket bolts ⑦ to the specified torque..

N·m (Kg·m/lb·ft)
20 (2.0/15)

- Tighten the injection pump bracket bolts ⑧ to the specified torque..

N·m (Kg·m/lb·ft)
40 (4.1/30)

12. Injection Pipe

- Connect the pump side and nozzle side of the pipe, and tighten securely.
- Install clip where it was.

11. Injection Pump Control Cable

- See adjustment of accelerator control cable.

10. Fuel Hose & CSD Hose

9. Injection Pump Harness

- Mount engine harness and connect it to switches.

8. Fuel Filter Assembly

7. Timing Gear

- Refer to Timing Gear in Section 6A2.

6. AC Generator Drive Belt

- Mount AC Generator drive belt and adjust belt tension.
- See drive belt adjustment in section 6B.

5. P/S Pump Drive Belt

- Mount P/S pump drive belt and adjust belt tension.
- See drive belt adjustment in section 6B.

4. Cooling Fan Assembly

- Mount fan pulley, distance piece, and cooling fan asm (in this order) on the water pump, and tighten to the specified torque.

N·m (Kg·m/lb·in)
8 (0.8/69)

3. Radiator Assembly

2. Intercooler Assembly (4JG2-T ONLY)

- See installation of intercooler.
- Pour coolant.
- Connect battery ground cable.

1. Air Cleaner Cover & Air Duct

INJECTION TIMING ADJUSTMENT

- Set No.1 cylinder to top dead center.
- Remove injection pump distributor head plug.
- Cancel wax CSD with the handle of a driver.
- Fit a dial gauge and set lift to 2 mm(0.0787 in).

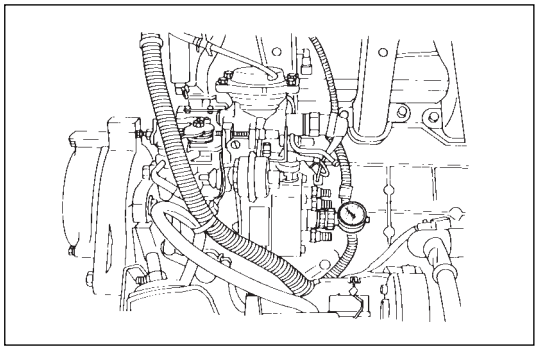

Measuring device: 5-8840-0145-0

- Set crankshaft damper pully top dead center mark about 45° before top dead center from the pointer.
- Set dial gauge in the “0” position.
- Turn the crankshaft a little rightwise and leftwise and see if the pointer is stable in the “0” position.
- Turn the crankshaft in the normal direction and read the measuring divice’s indication at TDC (4JG2-T) and ATDC 1° (4JG2-NA)

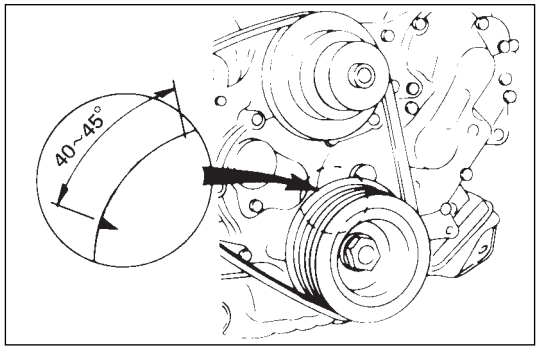

mm(in)

Standard	0.5 (0.0197)

- If it reads abnormal, loosen injection pump fixing nut and pump bracket adjust bolt, make adjustment by changing the pump mounting angle, and tighten the nut and bolt to the specified torque where the dial indicates the specified valve.

Pump fixing nut — N·m (Kg·m/lb·ft)

19 (1.9/13)

Adjust bolt — N·m (Kg·m/lb·ft)

40 (4.1/30)

- Remove the measuring device and tighten the distributor head plug to the specified torque.

N·m (Kg·m/lb·ft)

17 (1.7/12)

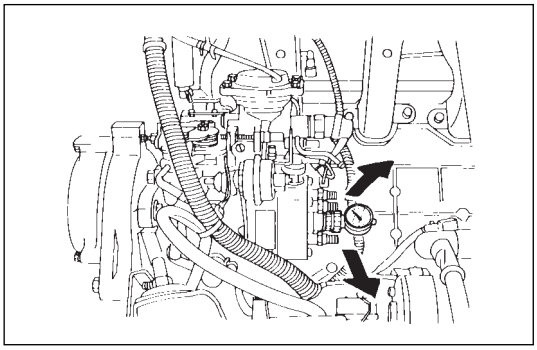

CAUTION

- When installing the distributor head plug, be sure to use new copper washer.
- Connect injection pipe.
- Fit pipe clip where specified.

FUEL TANK

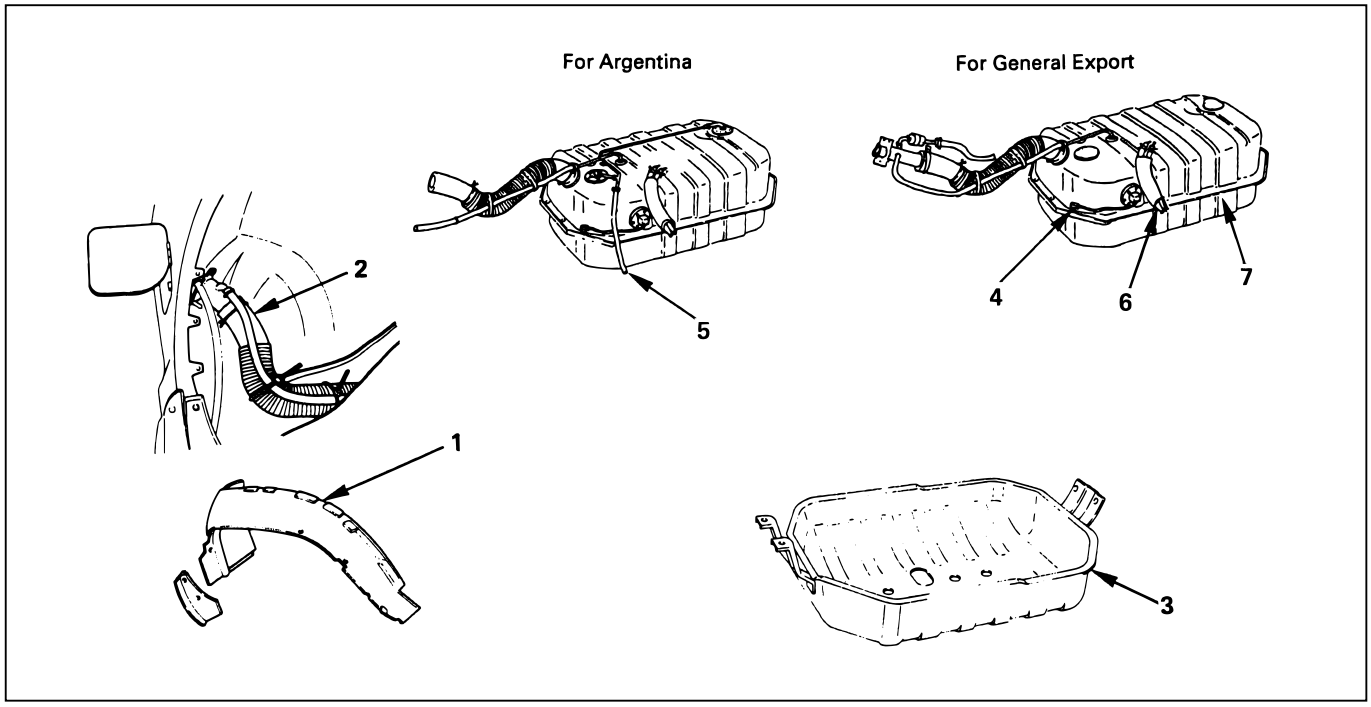

Removal Steps

1. Inner liner
2. Fuel filler hose and breather hose
3. Under cover
4. Fuel tank wiring connector
5. Evapo fuel hose
6. Fuel hose and fuel return hose
7. Fuel tank

Installation Steps

To install, follow the removal steps in the reverse order.

REMOVAL

Preparation:

- Disconnect battery ground cable.
- Loosen fuel filler cap.
- Drain fuel.
- Tighten drain plug to the specified torque after draining fuel.

N·m (Kg·m/lb·ft)
20 (2.0/14)

1. **Inner Liner**
   - Remove inner liner of wheel arch on rear right side.
2. **Fuel Filler Hose and Air Breather Hose**
3. **Under Cover**
   - Remove undercover fixing bolts on both sides.
4. **Fuel Tank Wiring Connector**
   - Disconnect two connectors on front right side of tank.
5. **Evapo Fuel Hose**
6. **Fuel Hose and Fuel Return Hose**
7. **Fuel Tank**
   - Remove fuel tank fixing bolts on both sides.

INSTALLATION

7. Fuel Tank

- Place a flange on right side of tank on the bracket.
- Install a flange on left side on the bracket from the bottom, and tighten bolts to the specified torque.

	N·m (Kg·m/lb·ft)
	36 (3.7/27)

6. Fuel Hose and Fuel Return Hose
5. Evapo Fuel Hose
4. Fuel Tank Wiring Connector
3. Under Cover
2. Fuel Filler Hose and Air Breather Hose
1. Inner Liner

- Mount inner liner on the wheel arch.
- Fill the tank with fuel and tighten fuel filler cap.
- Connect battery ground cable.

FUEL GAUGE UNIT

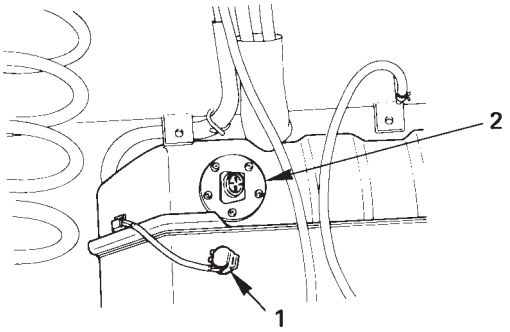

Removal Steps

1. Wiring connector
2. Fuel gauge unit

Installation Steps

To install, follow the removal steps in the reverse order.

REMOVAL

Preparation:

- Disconnect battery ground cable.
- Loosen fuel filler cap.
- Drain fuel.
- Tighten drain plug to the specified torque after draining fuel.

N·m (Kg·m/lb·ft)
20 (2.0/14)

1. **Wiring Connector**
   - Drain fuel
2. **Fuel Gauge Unit**
   - Remove the fixing screws, then the fuel gauge unit.

INSTALLATION

2. **Fuel Gauge Unit**
1. **Wiring Connector**
   - Connect the wiring connector to the fuel gage unit.
   - Fill the tank with fuel and tighten fuel filler cap.
   - Connect battery ground cable.

FUEL FILLER CAP

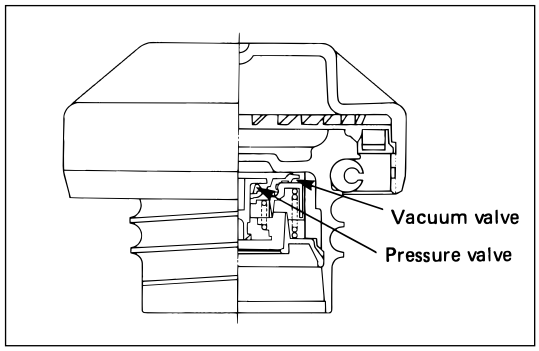

The fuel filler cap contains a vacuum valve. If a negative pressure develops in the fuel tank, the external valve of fuel filler cap opens to allow the fresh air to flow into the fuel tank through the vacuum valve.

INSPECTION

Check the seal ring in the filler cap for presence of any abnormality and for seal condition.
Replace the filler cap, if abnormal.

ACCELERATOR CONTROL

ACCELERATOR CONTROL CABLE

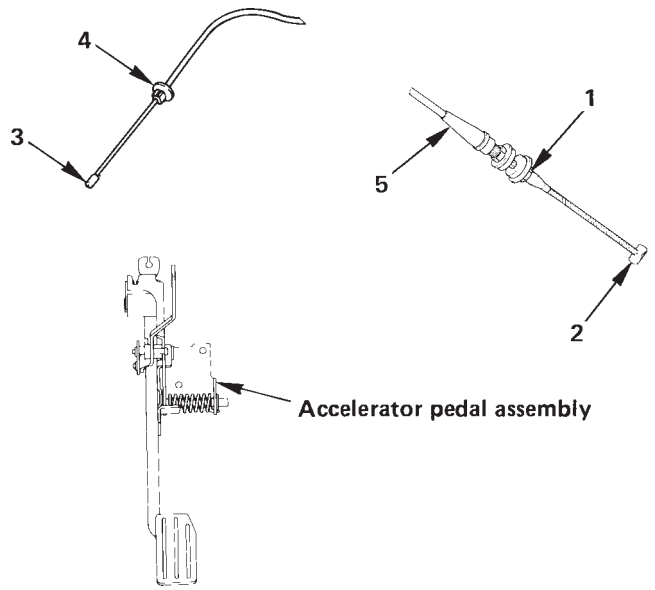

Removal Steps

1. Adjusting nut
2. Accelerator control cable (Injection pump side)
3. Accelerator control cable (Accelerator pedal side)
4. Grommet
5. Accelerator control cable

Installation Steps

To install, follow the removal steps in the reverse order.

REMOVAL

1. **Adjusting Nut**
   - Loosen the adjust nut on the cable bracket mounted on the injection pump.
2. **Accelerator Control Cable (on injection pump side)**
3. **Accelerator Control Cable (on accelerator pedal side)**
4. **Grommet**
5. **Accelerator Control Cable**

INSPECTION

Check the following items, and replace the control cable if any abnormality is found.

- The control cable should move smoothly.
- The control cable should not be bent or kinked.
- The control cable should be free of damage and corrosion.

INSTALLATION

5. **Adjusting Nut**
4. **Accelerator Control Cable (on injection pump side)**
3. **Accelerator Control Cable (on accelerator pedal side)**
2. **Grommet**
1. **Accelerator Control Cable**

Adjustment of Accelerator Control Cable

1. Loosen the lock nut.
2. Lock the throttle valve fully closed, and pull the outer cable. Then, adjust the nut B so that the clearance between nut B and bracket is as shown in figure.
3. Push the nut B against the bracket and tighten nut A to lock the cable.

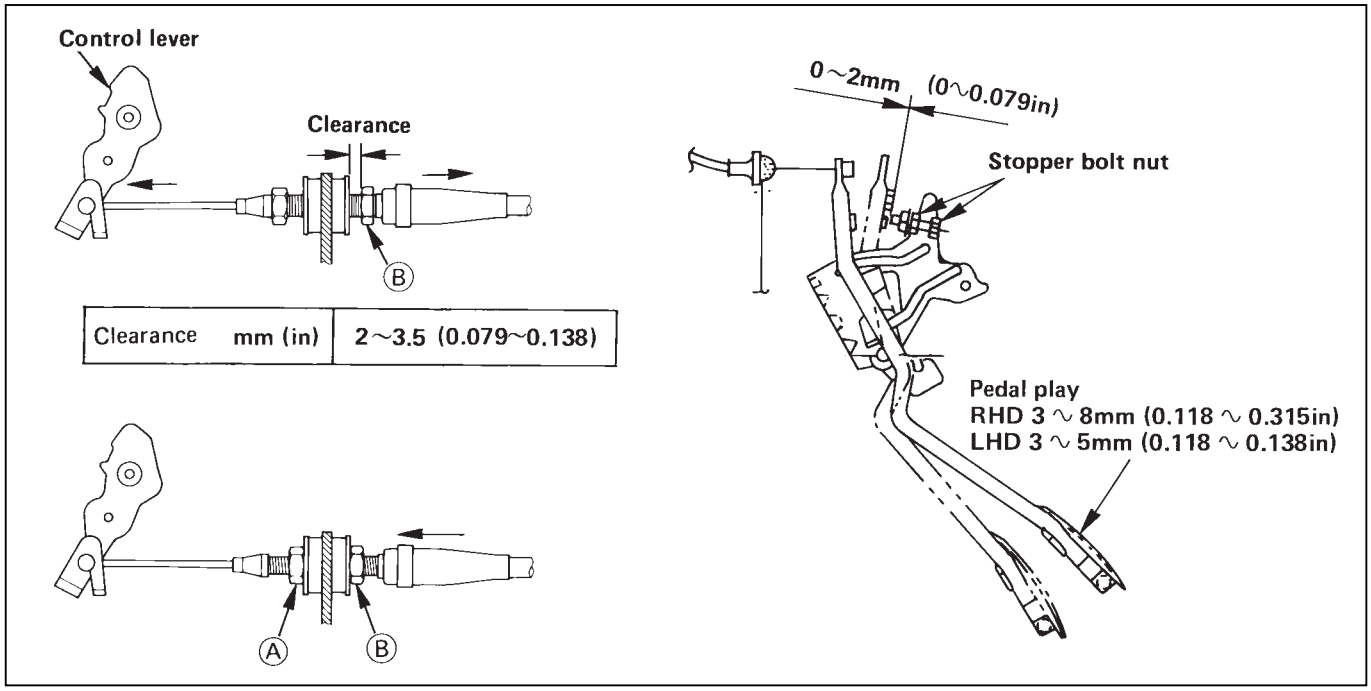

ACCELERATOR PEDAL

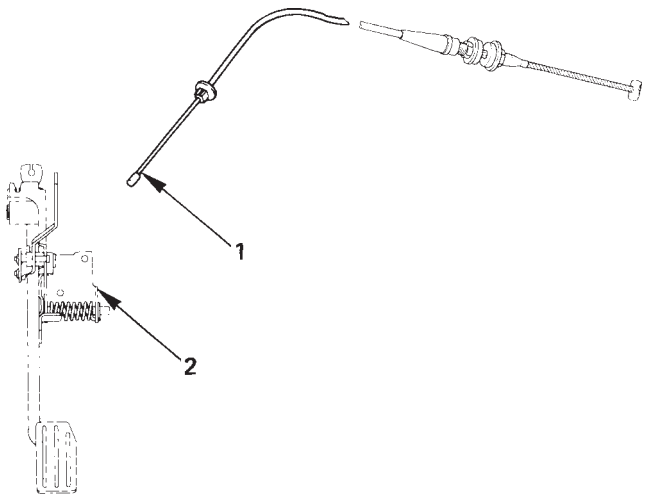

Removal Steps

1. Accelerator control cable
2. Accelerator pedal assembly

Installation Steps

To install, follow the removal steps in the reverse order.

REMOVAL

1. **Accelerator Control Cable**
2. **Accelerator Pedal Assembly**

INSTALLATION

2. **Accelerator Pedal Assembly**
1. **Accelerator Control Cable**

Adjustment of Pedal Stroke Manual Transmission

- Turn counterclockwise and loosen the stopper bolts sufficiently.
- Step on the pedal fully and hold it with your hand. Next turn the stopper bolt until it comes into contact with the stopper of pedal bracket. Then, lock the stopper bolt in that position.

AIR CLEANER

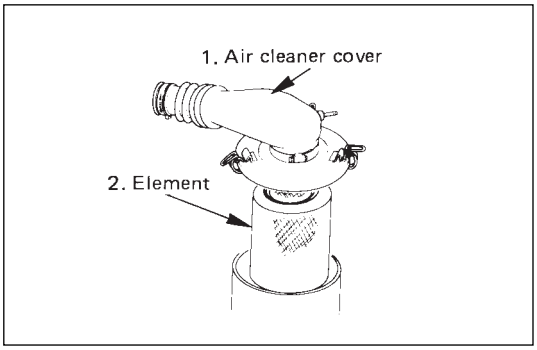

REMOVAL

- Disconnect the hose coming.

1. Air Cleaner Cover

- Disconnect air hose.

2. Element

INSPECTION

Check the element for damage or clogging by dust. Replace if it is damaged, or clean if it is clogged.

Cleaning Method

Top the element carefully not to damage the paper filter, or clean the element by blowing with compressed air of about 49kPa (0.5 kg/cm^2/71 psi) from the clean side if it is extremely dirty.

INSTALLATION

2. Element

1. Air Cleaner Cover

- Set the cover to the body completely, then clamp it with the clip.

SECTION 6D

ENGINE ELECTRICAL

CONTENTS

Battery ..... Section 6D1
Starting System ..... Section 6D2
Charging System ..... Section 6D3
QOS-III Preheating System ..... Section 6D6

SECTION 6D1

BATTERY

CONTENTS

General Description 6D1–1
Diagnosis 6D1–1
On-Vehicle Service 6D1–3
Battery Charging 6D1–3
Jump Starting 6D1–3
Removal and Installation of Battery 6D1–4

GENERAL DESCRIPTION

There are six battery fluid caps at the top of the battery. These are covered by a paper label.
The battery is completely sealed except for the six small vent holes at the side. These vent holes permit the escape of small amounts of gas generated by the battery.
This type of battery has the following advantages over conventional batteries:

1. There is no need to add water during the entire service life of the battery.
2. The battery protects itself against overcharging. The battery will refuse to accept an excessive charge.
   (A conventional battery will accept an excessive charge, resulting in gassing and loss of battery fluid.)
3. The battery is much less vulnerable to self-discharge than a conventional type battery.

DIAGNOSIS

1. VISUAL INSPECTION

Inspect the battery for obvious physical damage, such as a cracked or broken case, which would permit electrolyte loss.
Replace the battery if obvious physical damage is discovered during inspection.
Check for any other physical damage and correct it as necessary. If not, proceed to Step 2.

2. HYDROMETER CHECK

There is a built-in hydrometer (Charge test indicator) at the top of the battery. It is designed to be used during diagnostic procedures.

Before trying to read the hydrometer, carefully clean the upper battery surface.
If your work area is poorly lit, additional light may be necessary to read the hydrometer.

a. BLUE RING OR DOT VISIBLE – Go to Step 4.
b. BLUE RING OR DOT NOT VISIBLE – Go to Step 3.

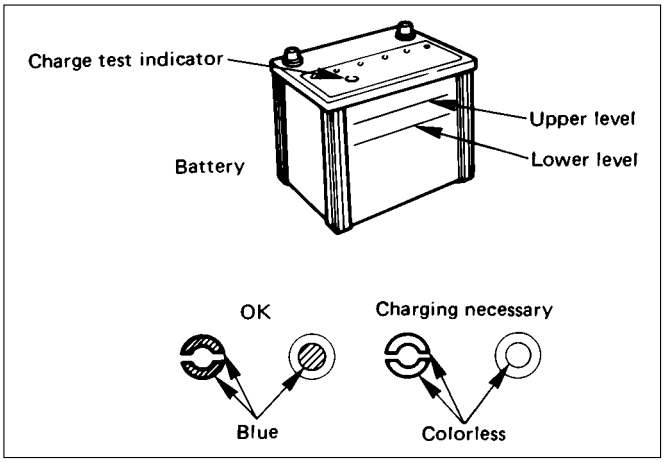

3. FLUID LEVEL CHECK

The fluid level should be between the upper level line and lower level line on side of the battery.

a. CORRECT FLUID LEVEL – Charge the battery.
b. BELOW LOWER LEVEL – Replace battery.

4. VOLTAGE CHECK

(1) Put voltmeter test leads to battery terminals.
   a. VOLTAGE IS 12.4V OR ABOVE – Go to Step 5.
   b. VOLTAGE IS UNDER 12.4V – Go to procedure (2) below.
(2) Determine fast charge amperage from specification. (See Main Data and Specifications in this section).
   Fast charge battery for 30 minutes at amperage rate no higher than specified value.
   Take voltage and amperage readings after charge.
   a. VOLTAGE IS ABOVE 16V AT BELOW 1/3 OF AMPERAGE RATE – Replace battery.
   b. VOLTAGE IS ABOVE 16V AT ABOVE 1/3 OF AMPERAGE RATE – Drop charging voltage to 15V and charge for 10 - 15 hours.
   Then go to Step 5.
   c. VOLTAGE IS BETWEEN 12V AND 16V – Continue charging at the same rate for an additional 3-1/2 hours. Then go to Step 5.
   d. VOLTAGE IS BELOW 12V – Replace battery.

5. LOAD TEST

(1) Connect a voltmeter and a battery load tester across the battery terminals.
(2) Apply 300 ampere load for 15 seconds to remove surface charge from the battery.
   Remove load.
(3) Wait 15 seconds to let battery recover. Then apply specified load from specifications (See Main Data and Specifications in this section).
   Read voltage after 15 seconds, then remove load.
   a. VOLTAGE DOES NOT DROP BELOW THE MINIMUM LISTED IS FOLLOWING TABLE – The battery is good and should be returned to service.
   b. VOLTAGE IS LESS THAN MINIMUM LISTED – Replace battery.

ESTIMATED TEMPERATURE		MINIMUM VOLTAGE
°F	°C	
70	21	9.6
60	16	9.5
50	10	9.4
40	4	9.3
30	–1	9.1
20	–7	8.9
10	–12	8.7
0	–18	8.5

The battery temperature must be estimated by feel and by the temperature the battery has been exposed to for the preceding few hours.

ON-VEHICLE SERVICE

BATTERY CHARGING

Observe the following safety precautions when charging the battery:

1. Never attempt to charge the battery when the fluid level is below the lower level line on the side of the battery. In this case, the battery must be replaced.
2. Pay close attention to the battery during the charging procedure.
   Battery charging should be discontinued or the rate of charge reduced if the battery feels hot to the touch.
   Battery charging should be discontinued or the rate of charge reduced if the battery begins to gas or spew electrolyte from the vent holes.
3. In order to more easily view the hydrometer blue dot or ring, it may be necessary to jiggle or tilt the battery.
4. Battery temperature can have a great effect on battery charging capacity.
5. The sealed battery used on this vehicle may be either quick-charged or slow-charged in the same manner as other batteries.
   Whichever method you decide to use, be sure that you completely charge the battery. Never partially charge the battery.

JUMP STARTING

JUMP STARTING WITH AN AUXILIARY (BOOSTER) BATTERY

CAUTION:

Never push or tow the vehicle in an attempt to start it. Serious damage to the emission system as well as other vehicle parts will result.

Treat both the discharged battery and the booster battery with great care when using jumper cables. Carefully follow the jump starting procedure, being careful at all times to avoid sparking.

WARNING:

Failure to carefully follow the jump starting procedure could result in the following:

1. Serious personal injury, particulaly to your eyes.
2. Property damage from a battery explosion, battery acid, or an electrical fire.
3. Damage to the electronic components of one or both vehicles particularly.

Never expose the battery to an open flame or electrical spark. Gas generated by the battery may catch fire or explode.

Remove any rings, watches, or other jewelry before working around the battery. Protect your eyes by wearing an approved set of goggles.

Never allow battery fluid to come in contact with your eyes or skin.

Never allow battery fluid to come in contact with fabrics or painted surfaces.

Battery fluid is a highly corrosive acid.

Should battery fluid come in contact with your eyes, skin, fabric, or a painted surface, immediately and thoroughly rinse the affected area with clean tap water.

Never allow metal tools or jumper cables to come in contact with the positive battery terminal, or any other metal surface of the vehicle. This will protect against a short circuit.

Always keep batteries out of the reach of young children.

JUMP STARTING PROCEDURE

1. Set the vehicle parking brake.
   If the vehicle is equipped with an automatic transmission, place the selector lever in the “PARK” position.
   If the vehicle is equipped with a manual transmission place the shift lever in the “NEUTRAL” position.
   Turn “OFF” the ignition.
   Turn “OFF” all lights and any other accessory requiring electrical power.
2. Look at the built-in hydrometer.
   If the indication area of the built-in hydrometer is completely clear, do not try to jump start.
3. Attach the end of one jumper cable to the positive terminal of the booster battery.
   Attach the other end of the same cable to the positive terminal of the discharged battery.
   Do not allow the vehicles to touch each other. This will cause a ground connection, effectively neutralizing the charging procedure.
   Be sure that the booster battery has a 12 volt rating.
4. Attach one end of the remaining cable to the negative terminal of the booster battery.
   Attach the other end of the same cable to a solid engine ground (such as the A/C compressor bracket or the generator mounting bracket) of the vehicle with the discharged battery.
   This ground connection must be at least 450 mm (18 in) from the battery of the vehicle whose battery is being charged.

WARNING:
Never attach the end of the jumper cable directly to the negative terminal of the dead battery.

5. Start the engine of the vehicle with the good battery.
   Make sure that all unnecessary electrical accessories have been turned "OFF".
6. Start the engine of the vehicle with the dead battery.
7. To remove the jumper cables, follow the above directions in the reverse order.
   Be sure to first disconnect the negative cable from the vehicle with the discharged battery.

REMOVAL AND INSTALLATION OF THE BATTERY

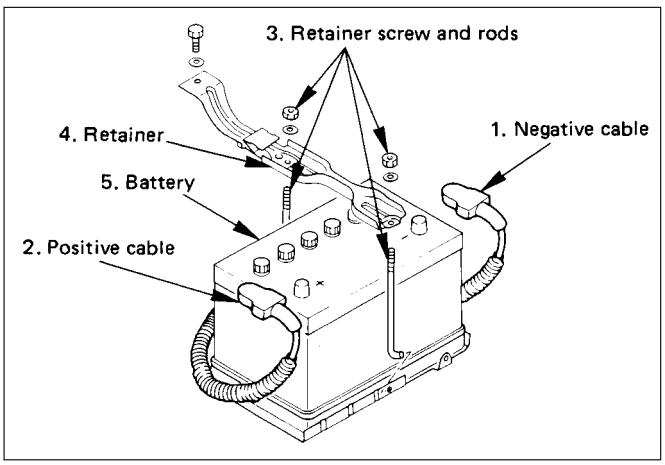

REMOVAL

1. **Negative cable**
2. **Positive cable**
3. **Retainer screw and rods**
4. **Retainer**
5. **Battery**

INSTALLATION

To install the battery, follow the removal procedure in the reverse order, noting the following points:

1. Make sure that the rod is hooked on the body side.

SECTION 6D2

STARTING SYSTEM

CONTENTS

	PAGE
General Description	6D2- 1
On-Vehicle Service	6D2- 3
Unit Repair	6D2- 5

GENERAL DESCRIPTION

STARTING CIRCUIT

The cranking system consists of a battery, starter, starter switch, starter relay, etc. and these main components are connected as shown in Figure. For details of the starting circuit.

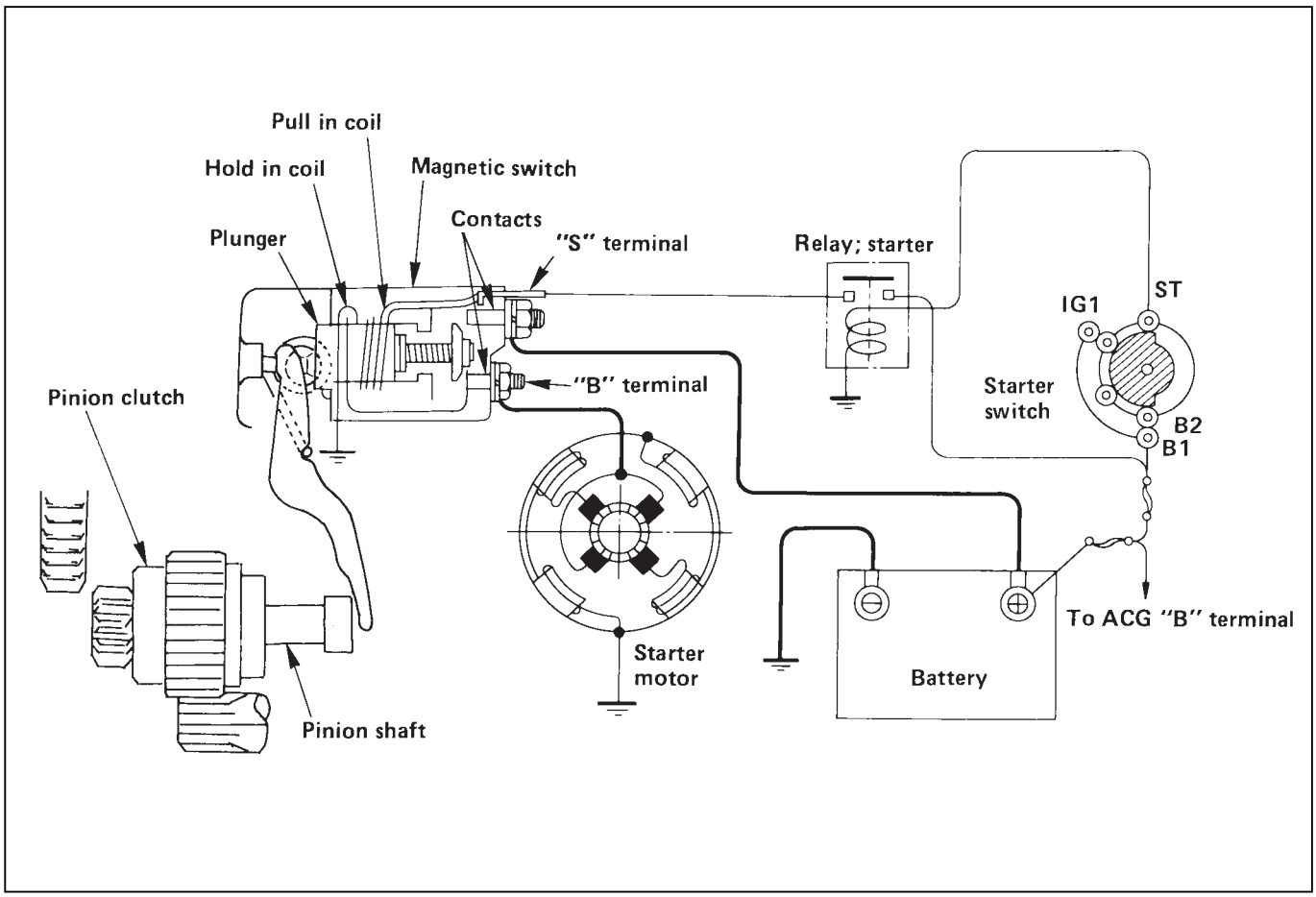

STARTER

The starting system employs a magnetic type reduction starter in which the motor shaft is also used as a pinion shaft. When the starter switch is turned on, the contacts of magnetic switch are closed, and the armature rotates. At the same time, the plunger is attracted, and the pinion is pushed forward by the shift lever to mesh with ring gear. Then, the ring gear runs to start the engine. When the engine starts and the starter switch is turned off,

the plunger returns, the pinion is disengaged from ring gear, and the armature stops rotation. When the engine speed is higher than the pinion, the pinion idles, so that the armature is not driven.

STARTING CIRCUIT

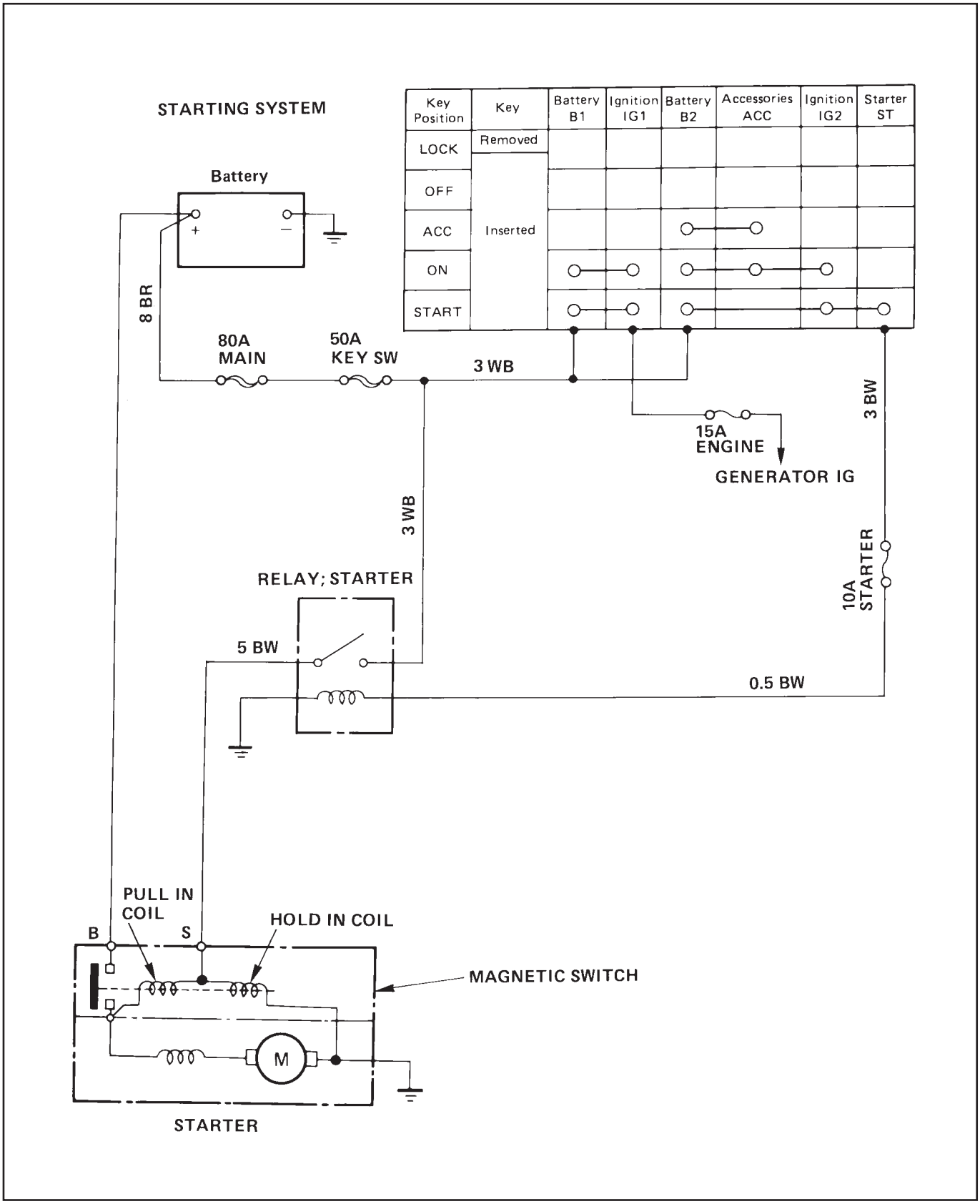

ON-VEHICLE SERVICE

STARTER

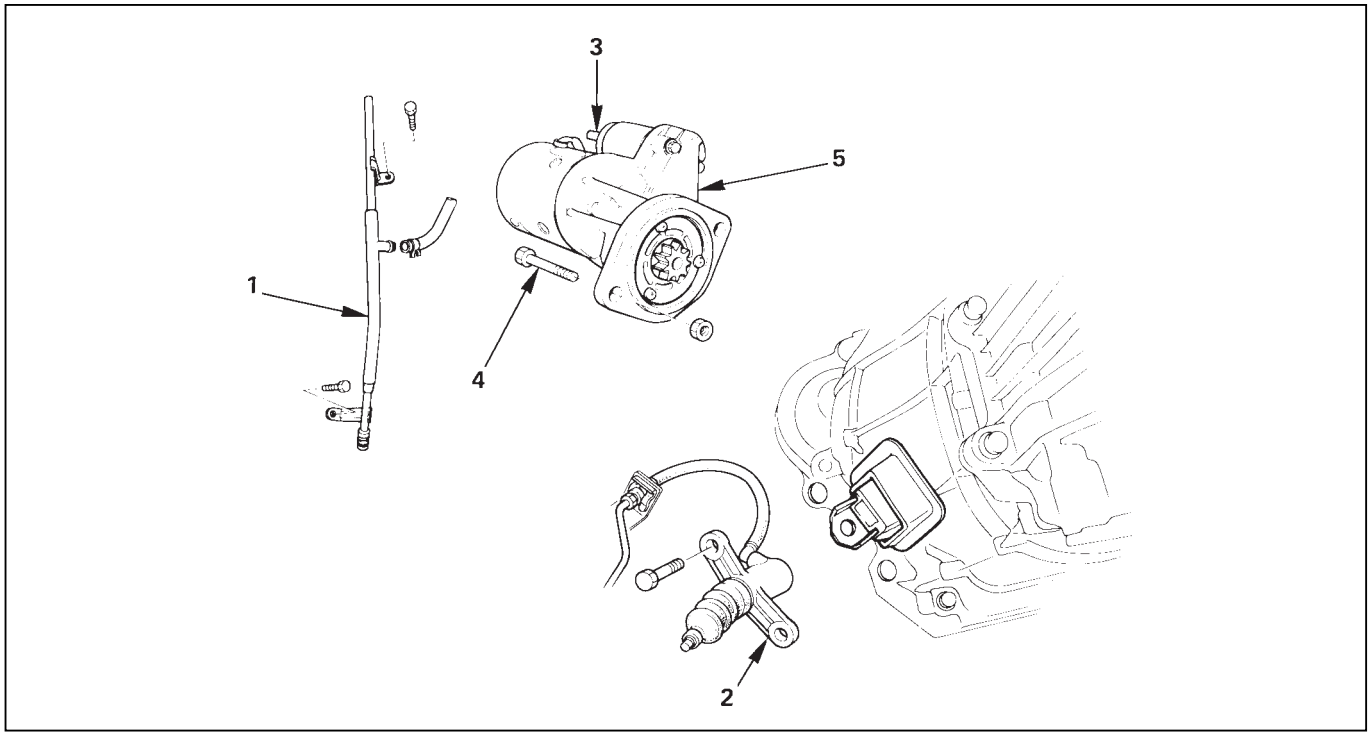

REMOVAL

Preparation

- Battery ground cable (both batteries)

1. **Oil Level Gauge and Guide**
   - Remove the guide and plug the hole on the oil pan.
2. **Clutch Slave Cylinder**
   - Remove the slave cylinder and wire it to the frame.
3. **Starter Wiring Connector**
   - Disconnect the connector from terminals “B” and “S”.
4. **Mounting**
5. **Starter Assembly**

INSTALLATION

To install, follow the removal steps in the reverse order.

5. Starter Assembly

- Tighten the fixing bolt and nut to the specified torque

N·m (Kg·m/lb·ft)
94 (9.6/69)

4. Mounting

3. Starter Wiring Connector

- Reconnect the connectors to terminals “B” and “S”.

2. Clutch Slave Cylinder

- Tighten the fixing bolt and nut to the specified torque

N·m (Kg·m/lb·ft)
78 (8.0/58)

1. Oil Level Gauge and Guide

- Connect the battery ground cable.

UNIT REPAIR

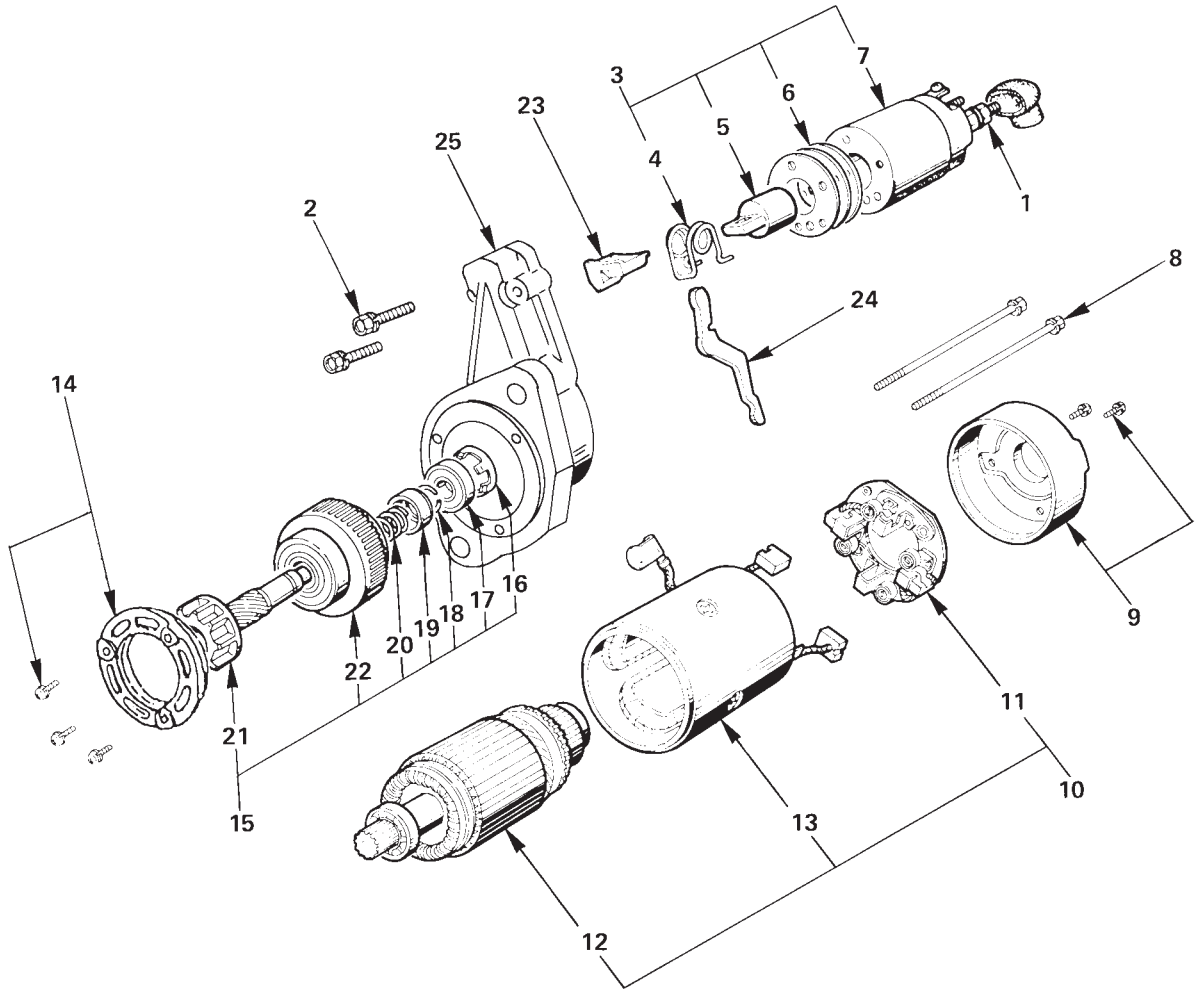

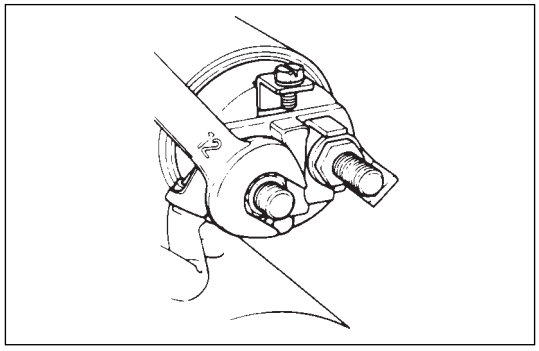

DISASSEMBLY

1. **Lead Wire Nut**
   - Loosen the nut on terminal "M" of magnetic switch and disconnect the connector cable.
2. **Bolt (2 pcs)**
3. **Magnetic Switch Assembly**

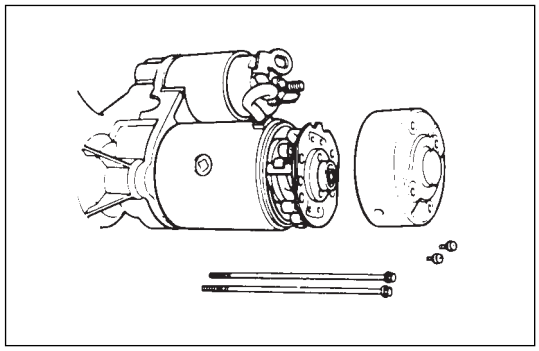

4. **Torsion Spring**
   - Remove torsion spring from magnetic switch assembly.
5. **Plunger**
6. **Shim**
7. **Magnetic Switch**
8. **Through Bolt**
9. **Rear Cover**
   - Remove the through bolts, then remove the rear cover.
10. **Motor Assembly**

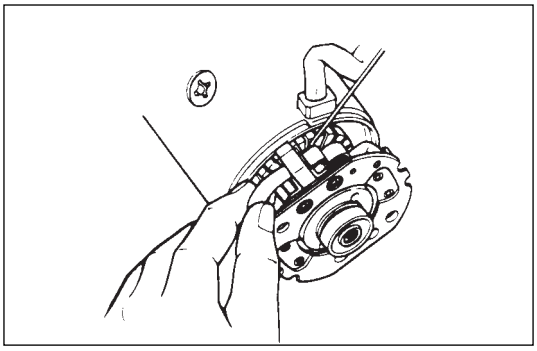

11. **Brush Holder**
    - Raise a brush spring to detach the negative side of the brushes (2 pcs) from the commutator face and remove the positive side of brushes (2pcs) from the positive side of brushes (2pcs) from the brush holder.

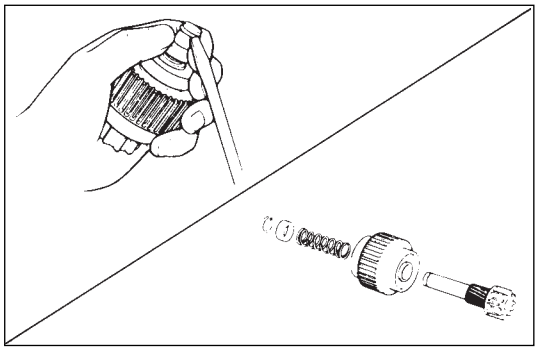

12. **Armature**
13. **Yoke Assembly**
14. **Bearing Retainer**
15. **Pinion Assembly**
16. **Bearing Holder**
17. **Bearing**
18. **Pinion Stopper Clip**
    - Remove the stopper clip using a screw driver o equivalent.
19. **Pinion Stopper**
20. **Return Spring**
21. **Pinion Shaft**
22. **Clutch**
23. **Dust Cover**
24. **Shift Lever**
25. **Gear Case**

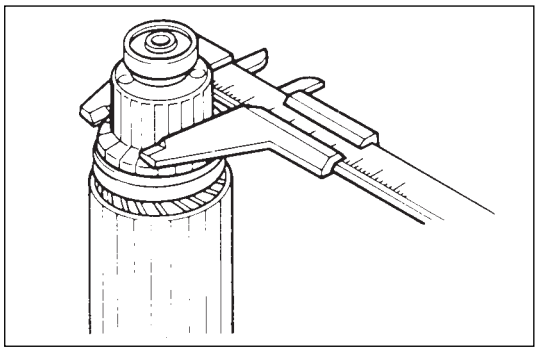

INSPECTION AND REPAIR

Repair or replace necessary parts if extreme wear or damage is found during inspection.

Armature

- Measure the outer diameter of commutator, and replace with a new one if it is out of the limit.

mm (in)

Standard	Limit
38.0(1.50)	36.5(1.44)

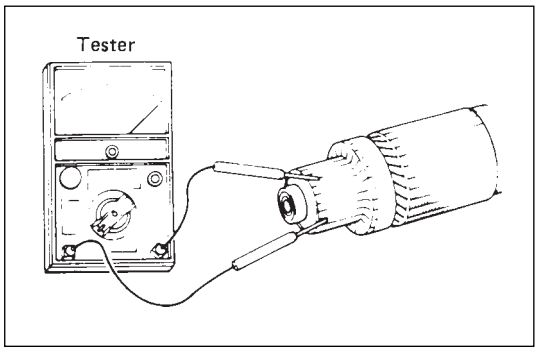

- Check for continuity between commutator and segments. Replace commutator if there is no continuity (i.e., disconnected).

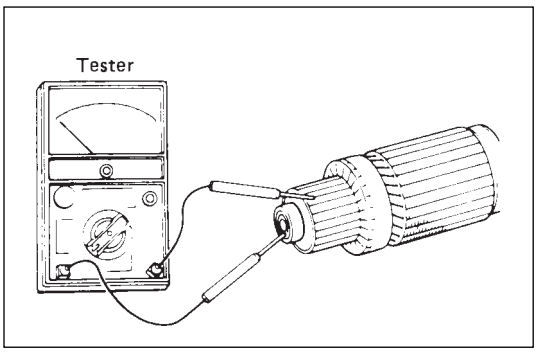

- Check for continuity between commutator and shaft. Also, check for continuity between commutator and armature core,armature core and shaft. Replace commutator if there is continuity (i.e., internally grounded).

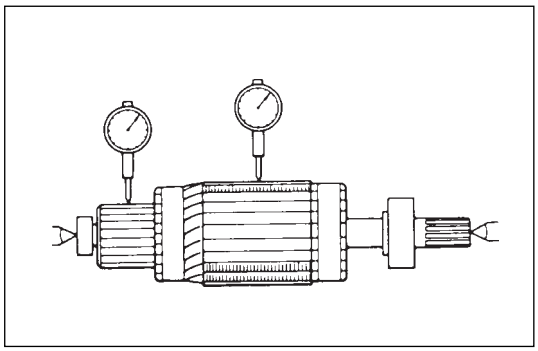

- Measure runout of armature core and commutator with a dial gage. Repair or replace, if it exceeds the limit.

mm(in)

Name	Standard	Limit
Armature	0.05 (0.002) Max.	0.1 (0.004)
Conmutator	0.05 (0.002) Max.	0.1 (0.004)

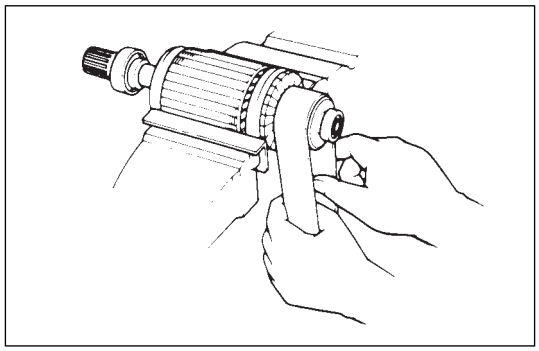

- Polish the commutator surface with sand paper #500 to #600 if it is rough.

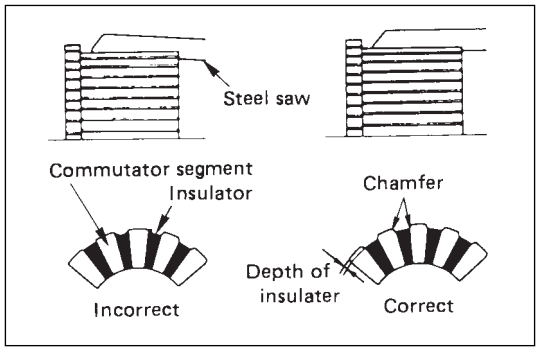

- Measure the depth of insulator in commutator. Repair, if it is below the limit.

mm(in)

Standard	Limit
0.5 ~ 0.8 (0.02 ~ 0.03)	0.2 (0.008)

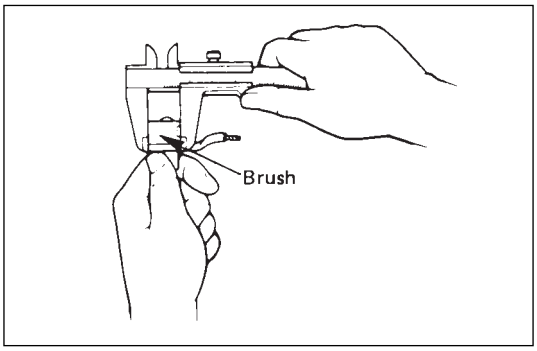

Brush

- Measure the length of brush.
  Replace with a new one, if it is below the limit.

mm(in)

Standard	Limit
18.0 (0.71)	11.0 (0.43)

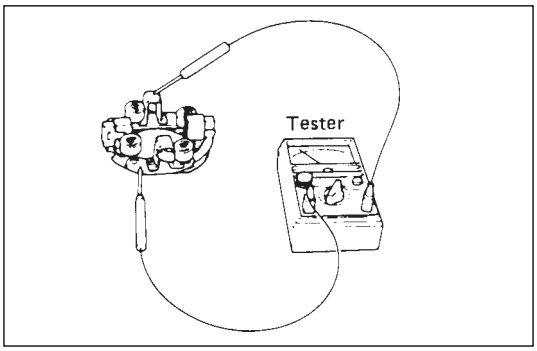

Brush holder

- Check for continuity between brush holder (+) and base (-). Replace, if there is continuity (i.e., insulation is broken).

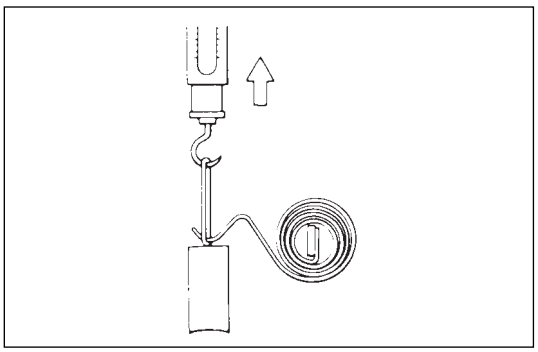

- Inspect the brush springs for wear, damage or other abnormal conditions.

N (Kg/lb)

Standard
28-35 (2.9-3.6/6.4-7.9)

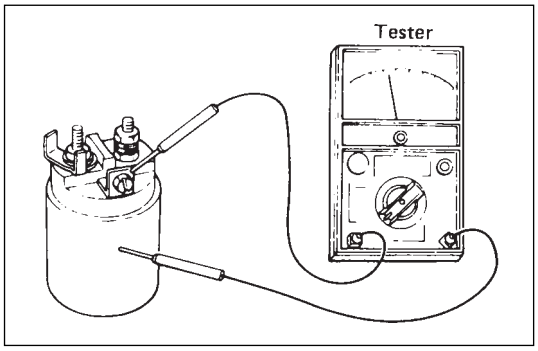

Magnetic switch

- Continuity of shunt coil
  Check for continuity between terminals S and coil case.
  Replace, if there is no continuity (i.e., coil is disconnected).

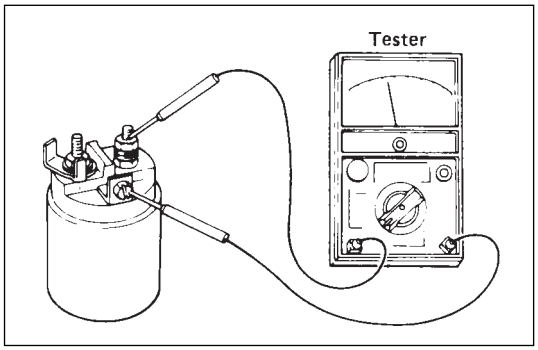

- Continuity of series coil
  Check for continuity between terminals S and M.
  Replace, if there is no continuity (i.e., coil is disconnected).

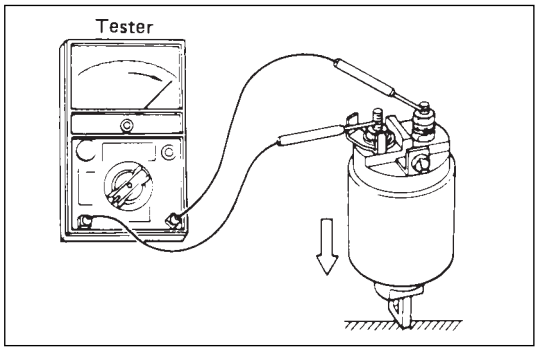

- Continuity of contacts
  With the plunger faced downward, push down the magnetic switch. In this state, check for continuity between terminals B and M. Replace, if there is no continuity (i.e., contacts are faulty).

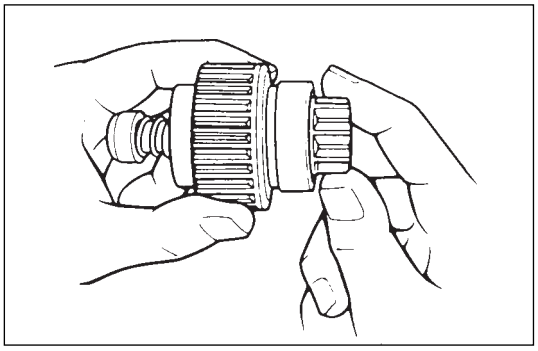

Pinion

- Check if the pinion rotates smoothly in drive direction by hand, or if it is locked when it is rotated reversely. If not, replace the pinion.

Yoke assembly

- Check a magnet inside the yoke.
  Replace the yoke assembly if it is broken.

REASSEMBLY

To install, follow the removal steps in the reverse order, noting the following points:

Grease application places

- Gears in reduction gear
- Shift lever operating portion
- Sliding portion of pinion
- Plunger sliding portion of magnetic switch

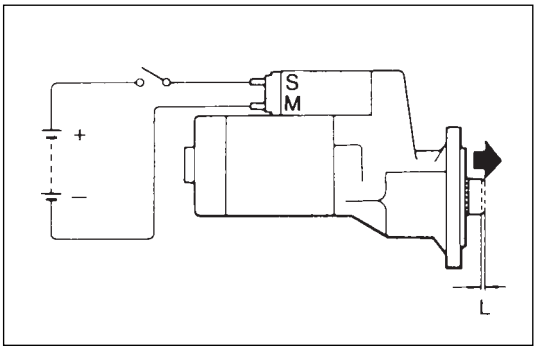

Pinion jump-out dimension

- Connect the (+) cable of battery to terminal S and the (–) cable to terminal M. Turn the switch on, and measure pinion travel dimension “L” in thrust direction from the jump-out position.

In measuring the dimension, pull the pinion out a little in the arrow direction.

mm (in)

Dimension	Standard
L	0.3 - 1.5 (0.01 - 0.06)

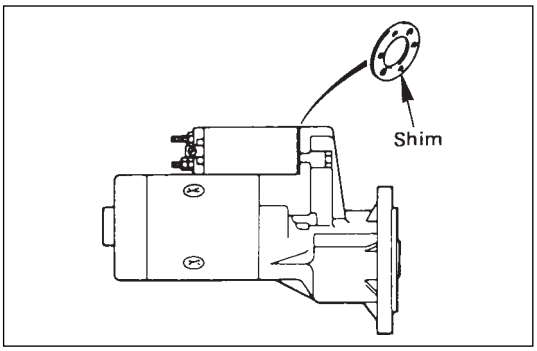

If the measured value is out of standard, adjust the of shims.

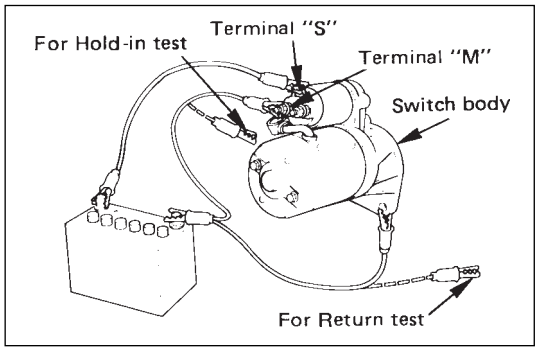

MAGNETIC SWITCH

Pull-out test

Connect the magnetic switch to the battery as shown. The negative side to the “M” terminal and the magnetic switch body (housing); the positive side to the “S” terminal. If the pinion has been ejected, the pull-in coil is satisfactory

Hold-in test

1. Next disconnect the “M” terminal.
2. The pinion should remain the ejected position

Return test

When the switch body is disconnected, the pinion should return quickly

MEMO

SECTION 6D3

CHARGING SYSTEM

CONTENTS

	PAGE
General Description	6D3-1
Diagnosis	6D3-4
Unit Repair	6D3-5

GENERAL DESCRIPTION

The charging system is the IC integral regulator charging system and its main components are connected as shown in Figure.
The regulator is a solid state type and it is mounted along with the brush holder assembly inside the generator installed on the rear end cover.

The generator does not require particular maintenance such as voltage adjustment. The rectifier connected to the stator coil has nine diodes to transform A.C. voltage into D.C. voltage. This D.C. voltage is connected to the output terminal of generator.

Generator

50A

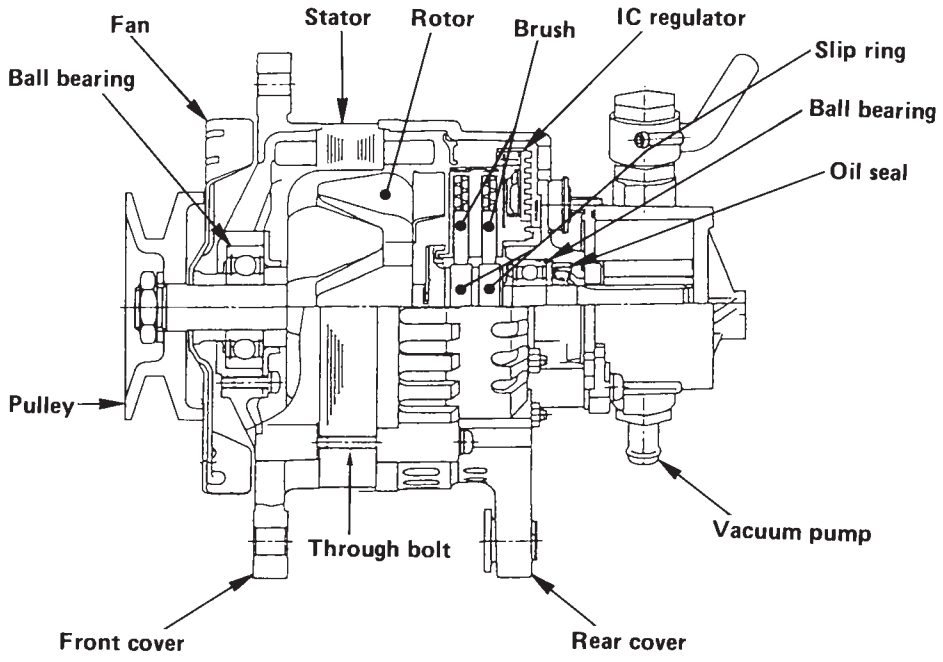

80A

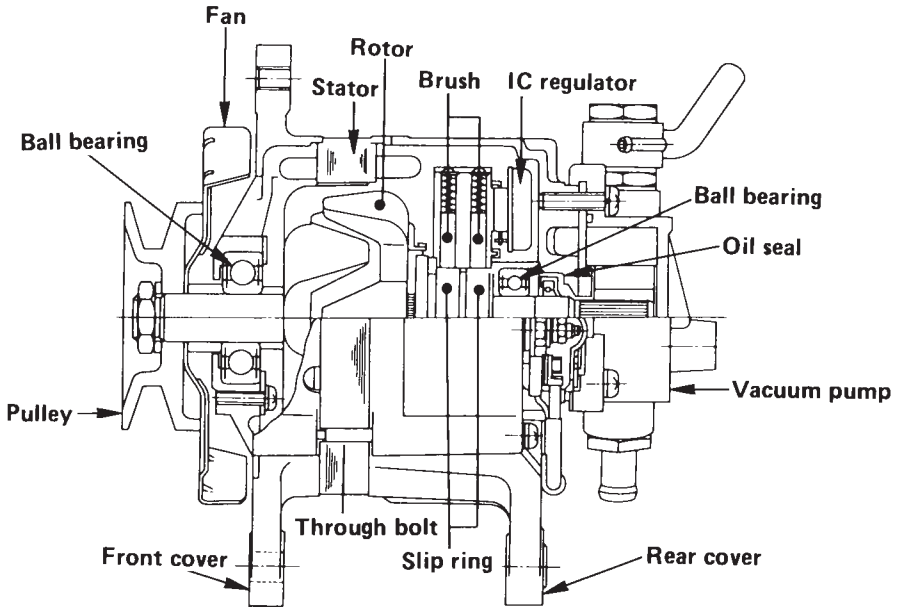

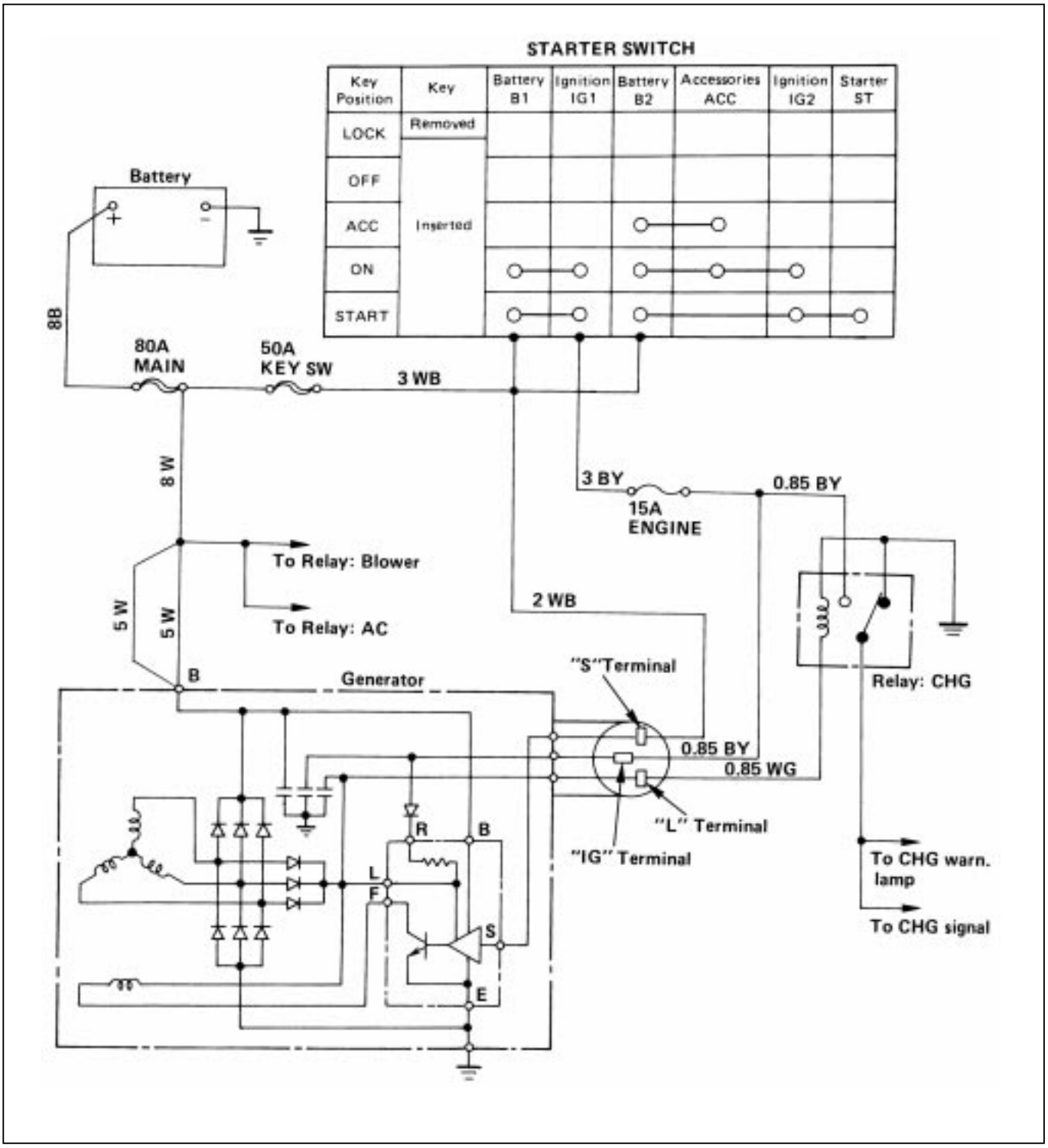
STARTER SWITCH
Key Position
Key
Battery B1
Ignition IG1
Battery B2
Accessories ACC
Ignition IG2
Starter ST
LOCK
Removed
OFF
ACC
Inserted
ON
START
Battery
8B
80A MAIN
50A KEY SW
3 WB
8 W
3 BY
15A ENGINE
0.85 BY
To Relay: Blower
To Relay: AC
5 W
5 W
2 WB
B
Generator
"S" Terminal
Relay: CHG
0.85 BY
0.85 WG
"L" Terminal
"IG" Terminal
R
B
L
F
S
E
To CHG warn. lamp
To CHG signal

DIAGNOSIS

GENERAL ON-VEHICLE INSPECTION

The operating condition of charging system is indicated by the charge warning lamp. The warning lamp comes on when the starter switch is turned to “ON” position. The charging system operates normally if the lamp goes off when the engine starts. If the warning lamp shows abnormality or if undercharged or overcharged battery condition is suspected, perform diagnosis by checking the charging system as follows:

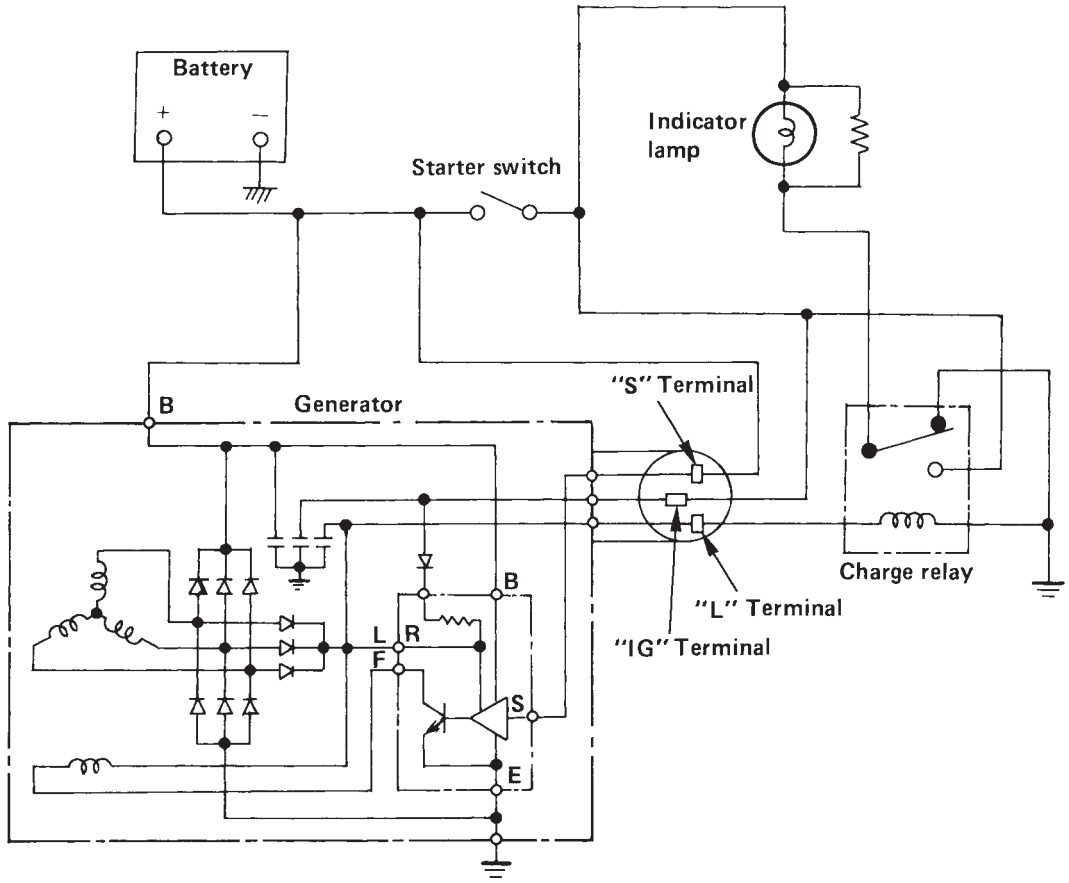

1. Check visually the belt and wiring connector.
2. With the engine in stop status, turn the starter switch to “ON” position and observe the warning lamp.
   - If lamp does not come on:
     Disconnect wiring connector from generator, an ground the terminal “L” on connector side.
   - If lamp comes on:
     Repair or replace the generator.

UNIT REPAIR

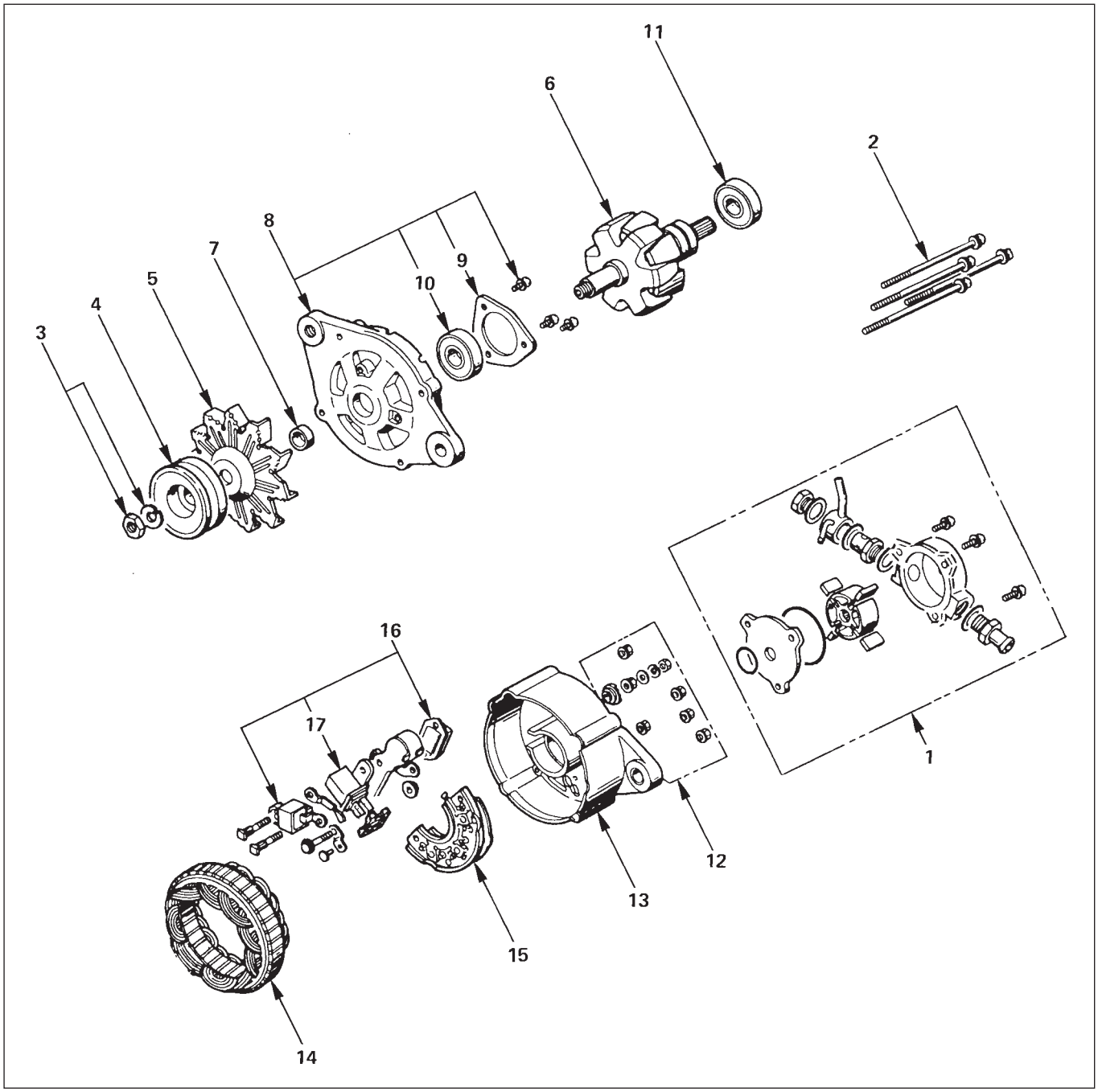

Disassembly Steps

1. Vacuum pump
2. Through bolt
3. Pulley nut
4. Pulley
5. Fan
6. Rotor
7. Spacer
8. Front cover assembly
9. Bearing retainer
10. Front bearing
11. Rear bearing
12. Terminal bolt and nut
13. Rear cover
14. Stator
15. Diode
16. IC regulator assembly
17. Brush holder

Reassembly Steps

To reassemble, follow the disassembly steps in the reverse order.

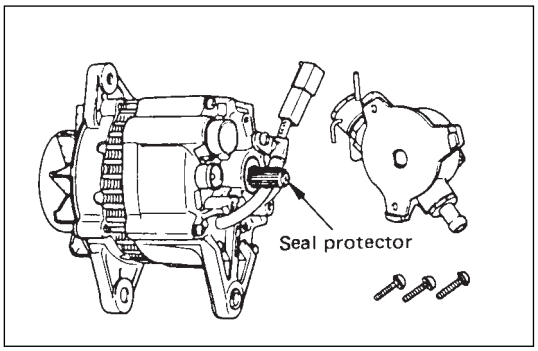

DISASSEMBLY

1. **Vaccum Pump**
   - Dram fluid from discharged port.
   - Remove the vacuum pump fixing bolts. Hold the center plate and remove the vacuum pump horizontally in direction in line with the rotor shaft.
2. **Through Bolt**
3. **Pulley Nut**
   - Cover the vice with copper plates, clamp the rotor with vice, and remove the nut.
4. **Pulley**
5. **Fan**
6. **Rotor**
7. **Spacer**
8. **Front Cover Assembly**
9. **Bearing Retainer**
10. **Front Bearing**
11. **Rear Bearing**
12. **Terminal Bolt and Nut**
13. **Rear Cover**
    - Remove the nuts fixing the B terminal and diode holder.

      Separate the stator and rear cover.

      Note the position of insulation washers to ensure reassembly into original position.
14. **Stator**
15. **Diode**
    - Separate the diodes from the stator by melting away solder on stator coil and diode.

      When melting solder, hold the lead wire with longnose pliers to prevent heat from being transferred to the diodes.
16. **IC Regulator**
    - Separate the IC regulator from the diode by melting away solder on IC regulator holder plate and removing the nut.

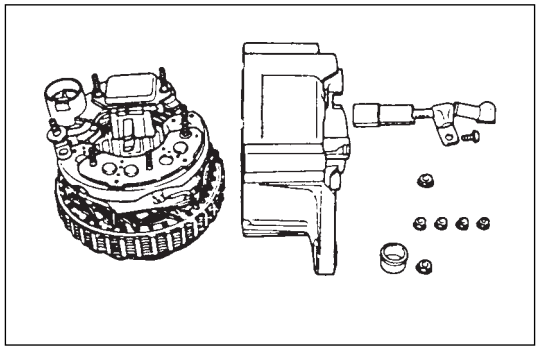

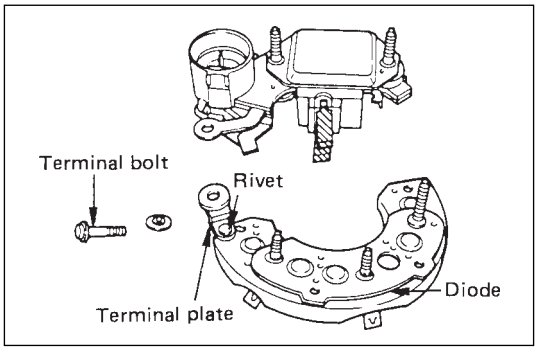

17. Brush Holder Assembly

- Remove the serrated bolts and melt away solder on IC regulator.
- Do not remove the serrated bolts unless the replacement of brush or condenser.

  To install, follow the removal steps in the reverse order.

INSPECTION AND REPAIR

Repair or replace necessary parts if extreme wear or damage is found during inspection.

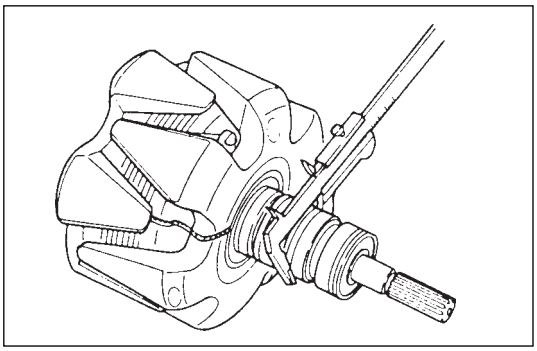

ROTOR ASSEMBLY

1. Check the rotor slip ring surfaces for contamination and roughness. If rough, polish with #500-600 sandpaper.
2. Measure the slip ring diameter, and replace if it exceeds the limit.

mm (in)

Standard	Limit
34.6(1.36)	33.6(1.32)

3. Check for continuity between slip reings, and replace if there is no continuity.
4. Check for continuity between slip ring and rotor core or slip ring and rotor shaft.
   In case of continuity, replace the rotor assembly.

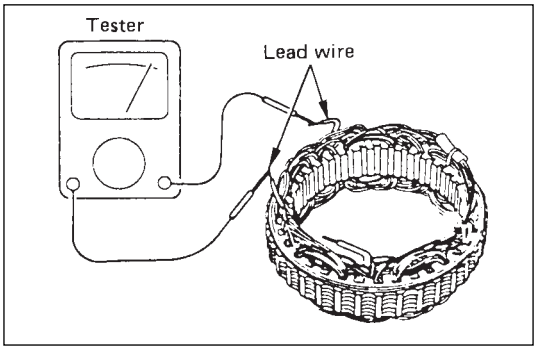

STATOR COIL

1. Check for continuity between respective phases.
   In case of no continuity, replace the stator.

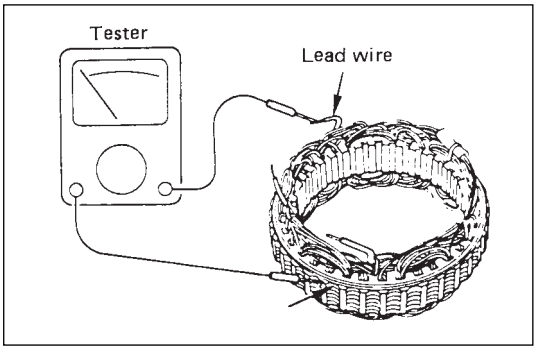

2. Check for continuity across one of the stator coils and stator core. If a continuity exists, replace the coil.

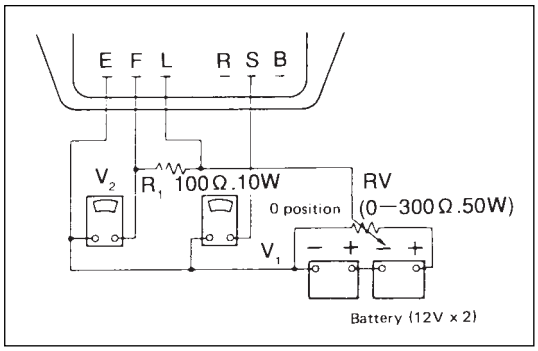

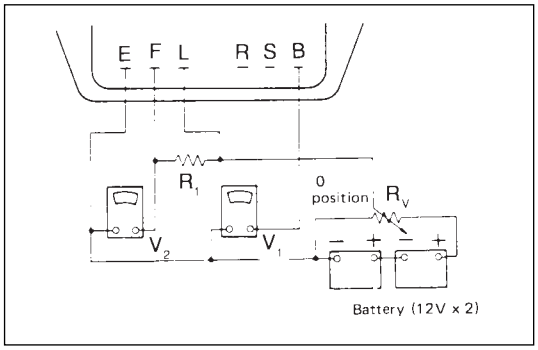

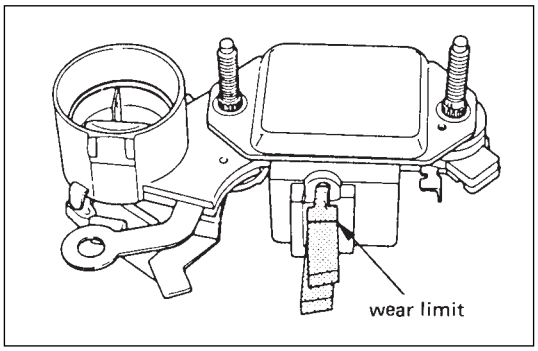

DIODE

1. Check for continuity across the terminal (example: across BAT and U). If a continuity exists, the diode is in satisfactory condition. If no continuity exists the diode is defective.
2. Make a test with the polarities reversed. If no continuity exists, the diode is in satisfactory condition. If a continuity exists at any point, the diode is defective and should be replaced.
   Auxiliary diodes are not provided with the terminal and continuity test should be made across the terminals of the conventional diodes.

Across terminals		BAT (Positive side (+) diodes)	
	Tester pin	Positive side	Negative side
U.V.W.	Positive side		No continuity
	Negative side	Continuity	

Across terminals		BAT (Positive side (+) diodes)	
	Tester pin	Positive side	Negative side
U.V.W.	Positive side		No continuity
	Negative side	Continuity	

BRUSH

Measure length of brushes.
Brush length (L)

mm(in)

Standard	Limit
20(0.7)	6 (0.24)

Brushes are provided with a line which indicates the limit of usage.

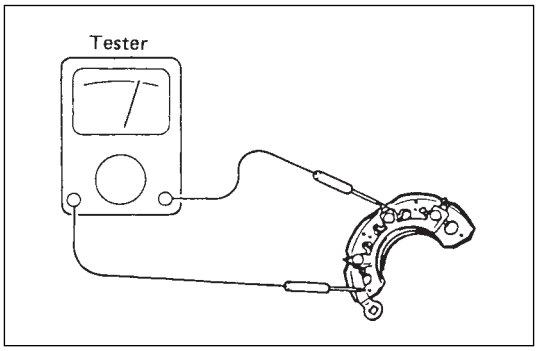

IC REGULATOR

Measureing instruments is necessary.
Take the following measurements with the instruments connected as shown in the illustration.

- (V1) Voltage at BAT1 V

Standard	10 – 13

- (V2) Voltage across F–E V

Standard	Limit
2 or less	2 or more

- Take measurement with 'S' terminal disconnected.
- (V3) Measure the voltage at BAT1 – BAT2. V

Standard	20 – 26

- Measurement the voltage across the E–F while varying resistance gradually from zero using variable resistor.
  Then check that voltage increases from 2V to 10 – 13.
  If increase in voltage is interrupted at any point, replace the regulator.
- (V4) Measure the voltage across the intermediate tap on variable resistor and 'E' terminal without actuating the variable resistor.

V

Standard voltage at 20°C (68°F)	14.0 – 14.6

If measured value deviates from the standard, replace the regualator.

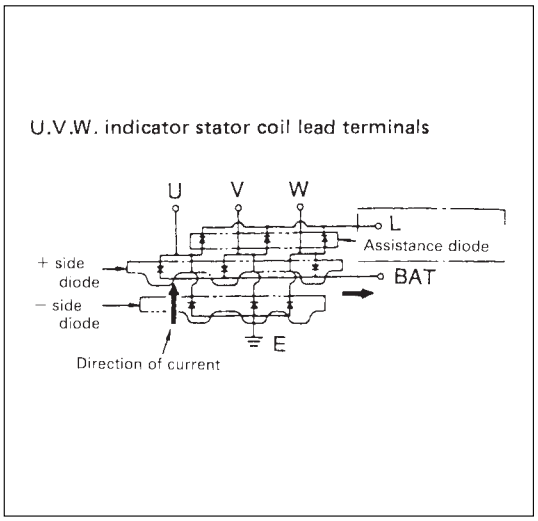

Check the following with the instrument connected as illustrated.
Measure the voltage across the teminals B and E by gradually increasing voltage with variable resistor RV.
Check to see if voltage increases from lower than 2V to range from 10 to 13 volts.
If the voltage does not vary, the regulator is defective and should be replaced.
Check the voltage across the intermediate tap of the variable resistor and terminal E without actuating the variable resistor. V

Standard voltage at 20°C (68°F)	14.5 – 16.6

If measured voltage deviates from the standard value, replace the regulator.

VACUUM PUMP

Visual check

- Inspect the following parts for wear, damage or other abnormal conditions.

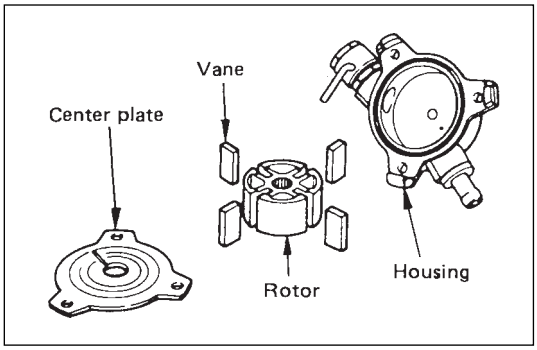

Disassembly of Vacuum pump

- For the center plate, rotor and vane in the mentioned.

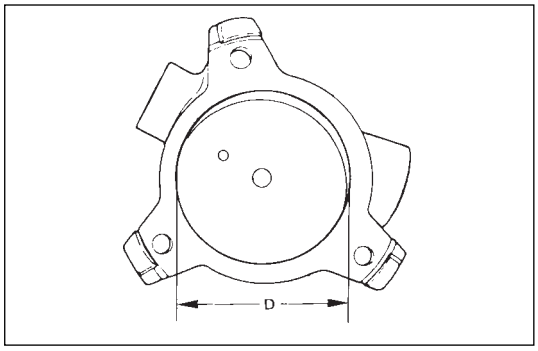

Housing

- Measure the inside diameter of housing and place if it exceed the standard.

mm (in)

Standard	60.0 – 60.1 (2.362 – 2.366)

Vane

Measure the length of vanes

mm (in)

Standard	14.2– 15.2(0.559–0.598)

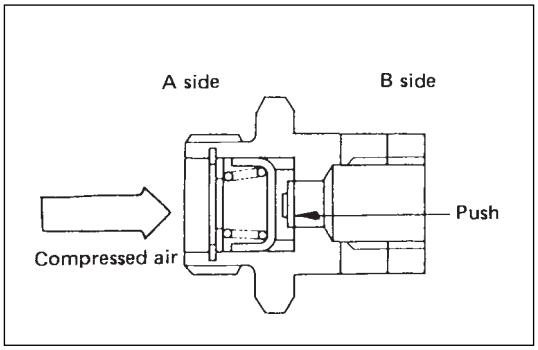

Check valve

1. Apply a light pressure onto the ”B” side of valve with a screw driver and check that valve operates smoothly.
2. Apply compressed air onto ”A” side of valve and check if there is air leak.

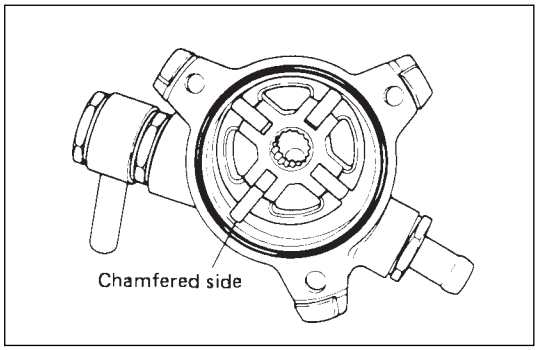

Reassembly of vacuum pump

1. Position the rotor, with the serrated boss turned up, on the center plate and housing.

   Align the holes in center plate and rotor.
2. Install vanes into slits in rotor.

   The vanes should be installed with chamfered side turned outward.
3. Install the O-ring and center plate

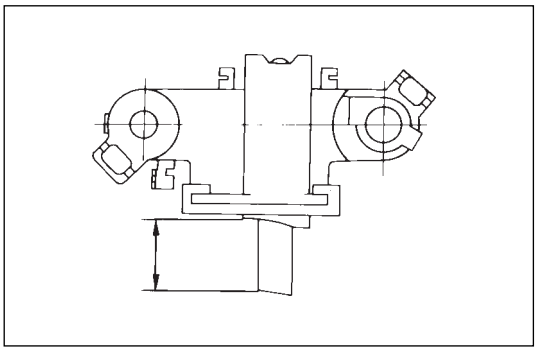

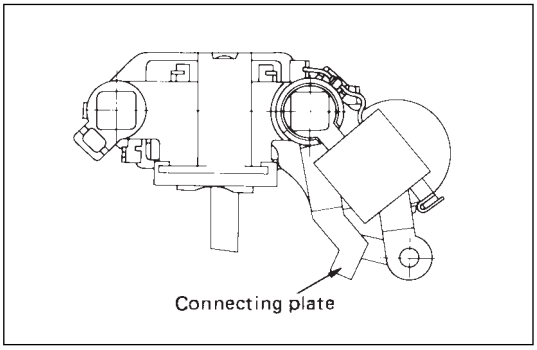

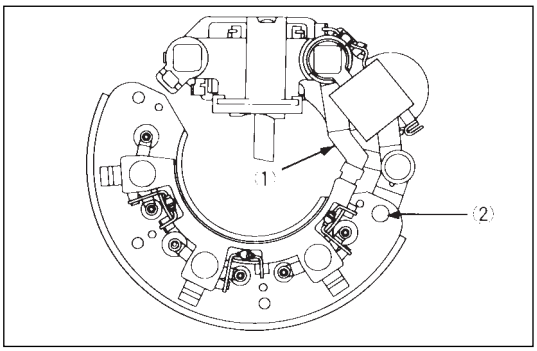

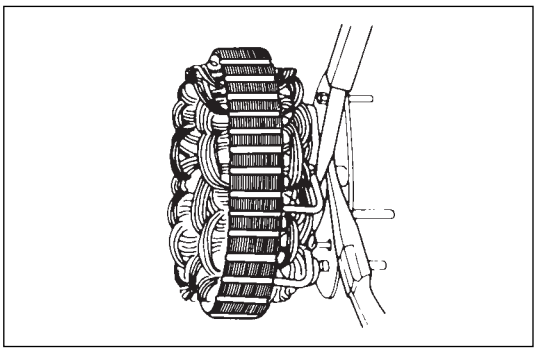

REASSEMBLY

17. Brush Holder

16. IC Regulator Assembly

- Hold the brush in the holder as shown in the illustration and solder the lead wire.
- Put the IC regulator on the brush holder and press the bolt.
  Bushing and connecting plate must be installed when pressing the bolt.

15. Diode

- Connect the terminals by fixing the rivet at ① and soldering the terminal at ② .

14. Stator

- When connecting stator coil leads and diode leads using solder, use long-nose pliers and finish the work as quickly as possible to prevent the heat from being transferred to the diodes.

13. Rear Cover

12. Terminal Bolt and Nut

11. Rear Bearing

10. Front Bearing

9. Bearing Retainer

8. Front Cover Assembly

7. Spacer

6. Rotor

5. Fan

4. Pulley

3. Pulley Nut

- Cover vice with copper plates, clamp the rotor with the vice, and tighten nut to the specified torque.

2. Through Bolt

- Place guide bar through the holes in front cover and rear cover flange for alignment, then install the through bolts.

1. Vacuum Pump

- Install and mount the housing to the generator using 3 bolts.
- Pour engine oil (5 cc or so) in through the filler port, then check that generator pulley can be turned smoothly with hand.

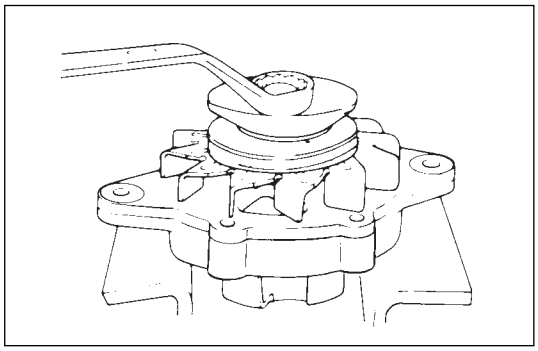

	N·m (Kg·m/lb·ft)
☡	52 (5.3 / 38)

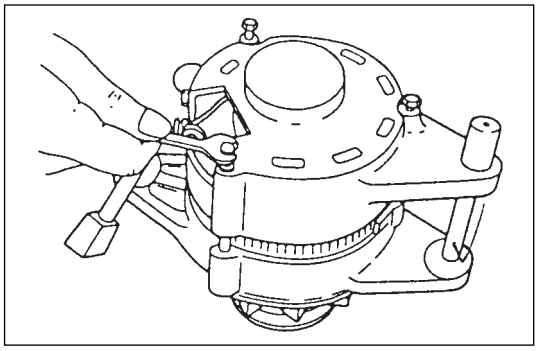

	N·m (Kg·m/lb·in)
☡	7 (0.7 / 61)

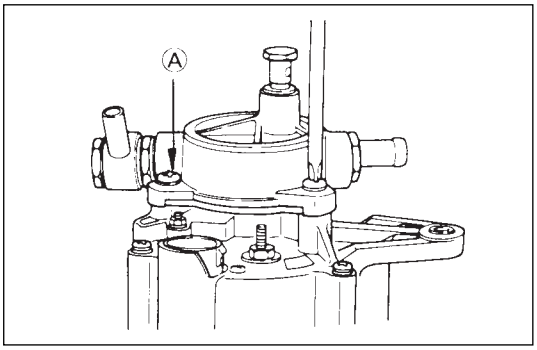

	N·m (Kg·m/lb·in)
☡	7 (0.7 / 61)

SECTION 6D6

QOSIII PREHEATING SYSTEM

CONTENTS

PAGE
General Description 6D6- 1
System Diagram 6D6- 2

GENERAL DESCRIPTION

QOS III preheating system features a quick-on glow plug with thermometer control of the glowing time and the afterglow time function.

The system consists of a controller, indicator lamp, thermosensor, vehicle speedsensor, dropping resistor, relay (2 pcs), and temperature self-control type glow plug (4 pcs).

With the employment of the thermosensor, the glow time changes according to the engine coolant temperature, thus allowing optimum starting conditions to be obtained.

The afterglow time function is controlled by thermosensor, vehicle speed sensor, and the engine runstall sensor (charge relay).

SYSTEM DIAGRAM

WIRING DIAGRAM

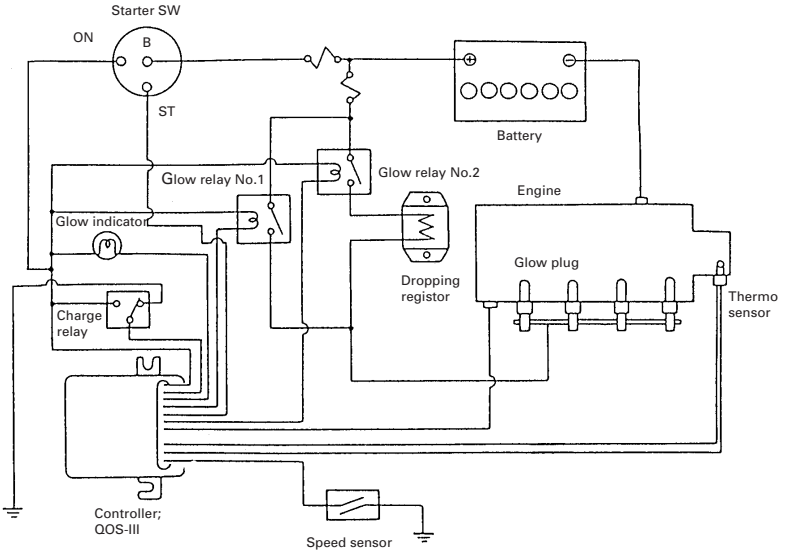

QOS III Timing Chart

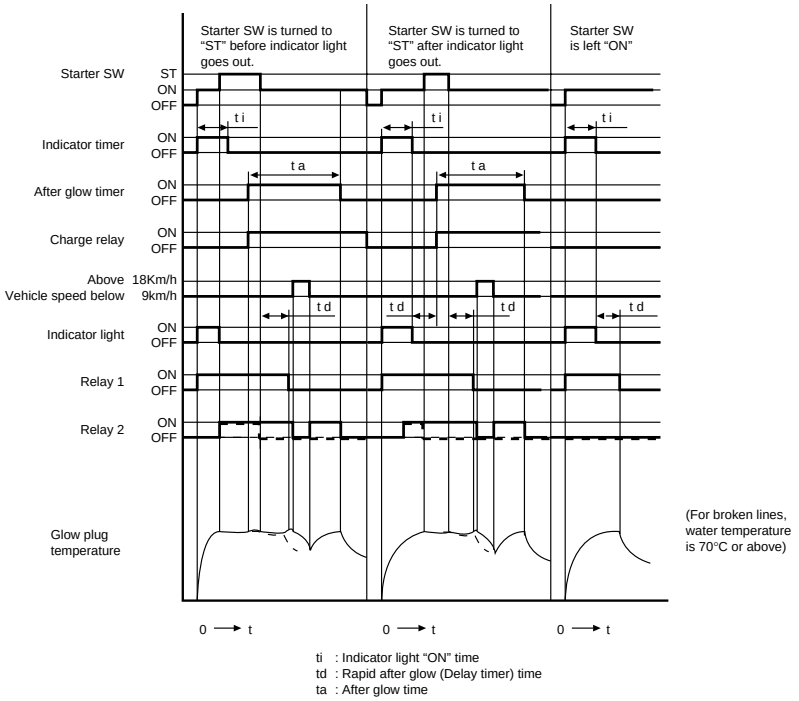

ti : Indicator light "ON" time
td : Rapid after glow (Delay timer) time
ta : After glow time

QOS III FLOW CHART

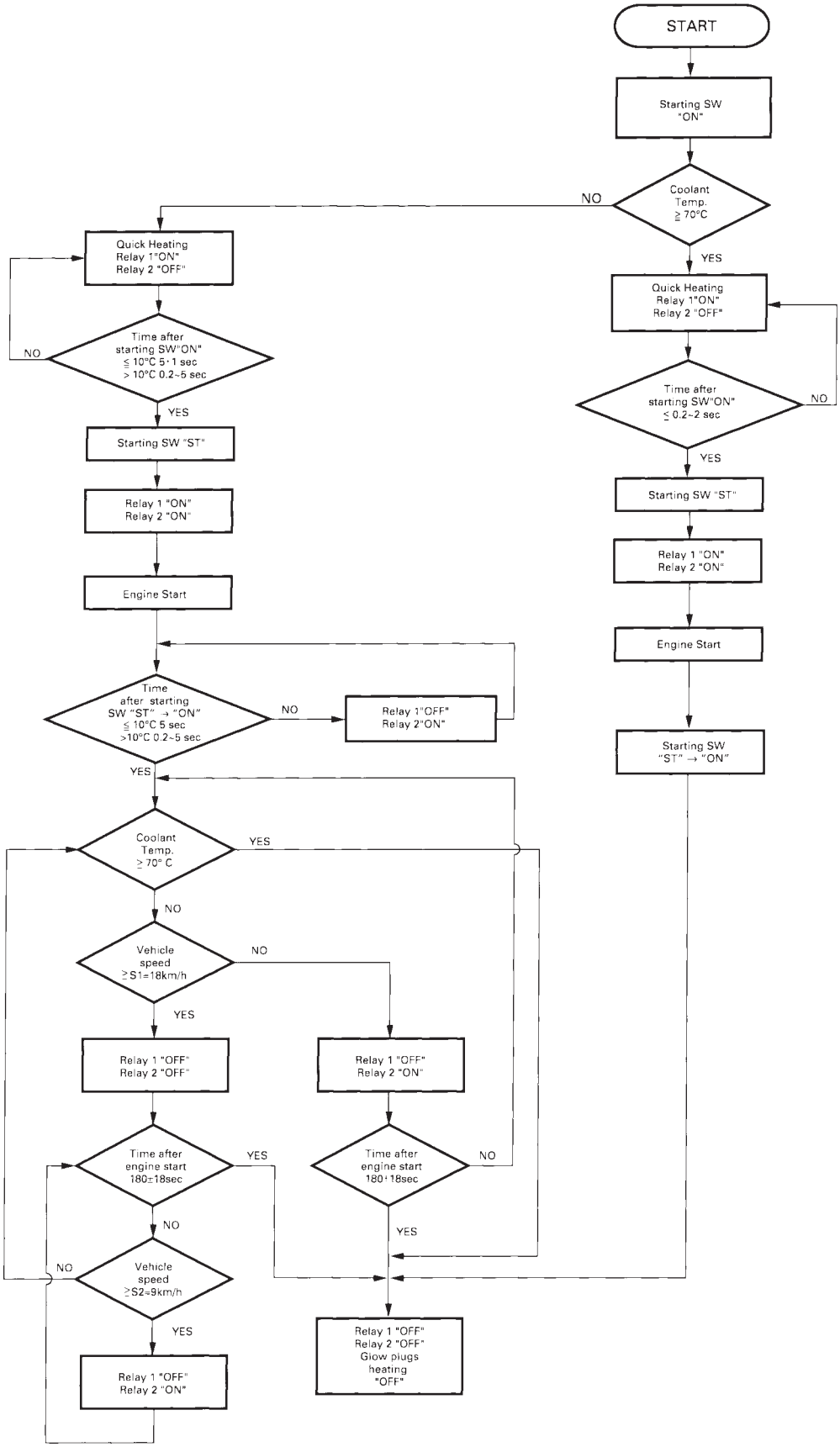

QOS III BLOCK CHART

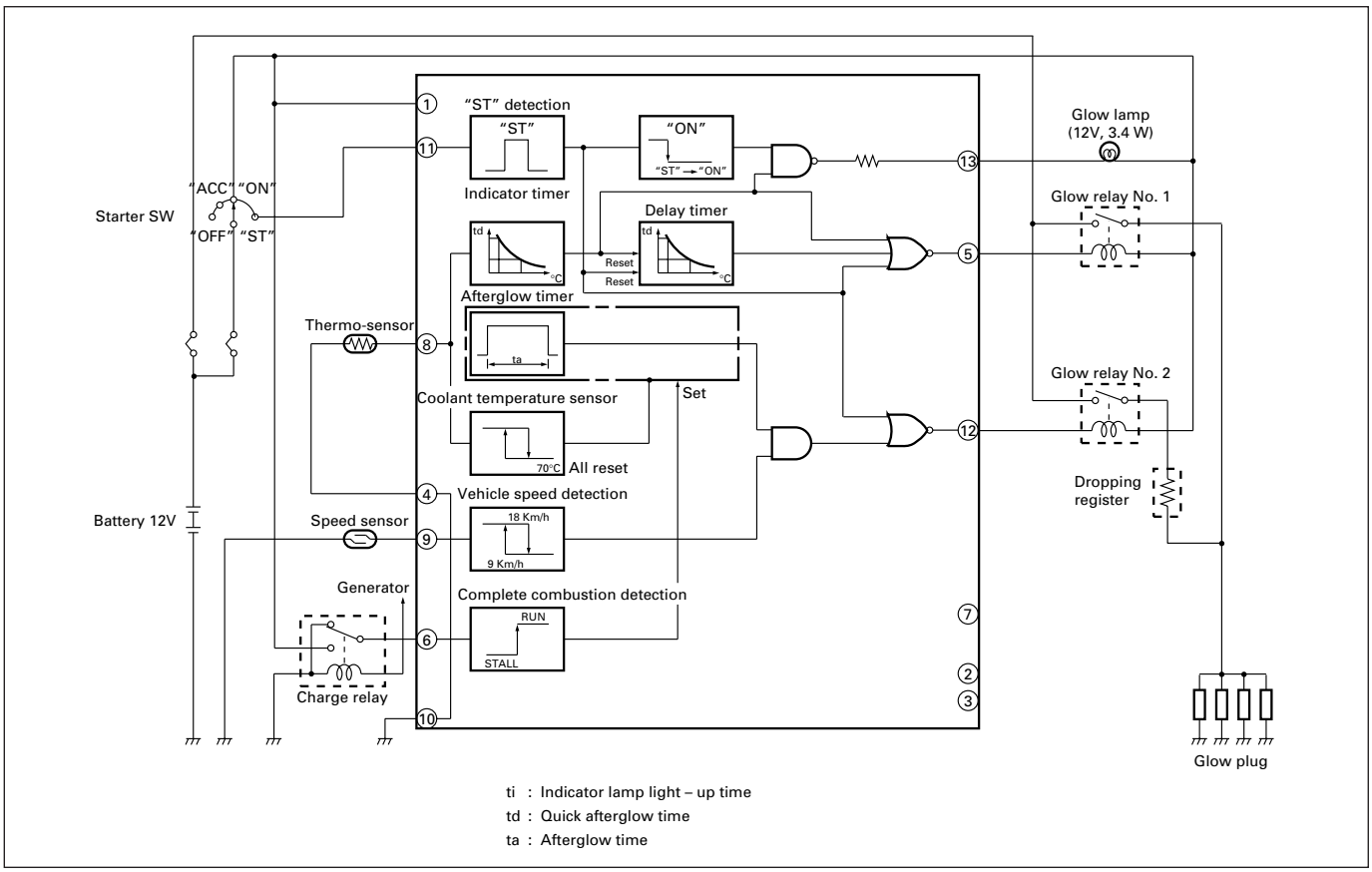

ti : Indicator lamp light – up time
td : Quick afterglow time
ta : Afterglow time

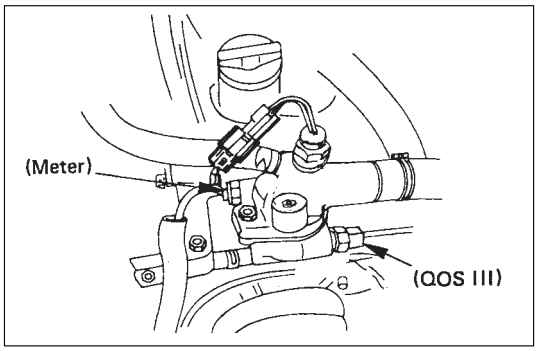

Inspection on QOSIII System Operation

I Inspection on Quick Heating Operation

1. Disconnect thermo-sensor connection on the thermostat housing.

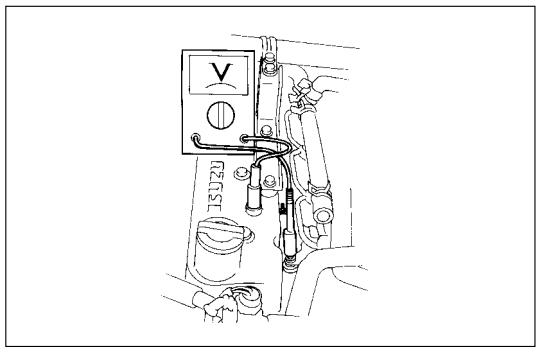

2. Connect the circuit tester between glow plug and engine earth.
3. Inspect the following items with starter switch set to ON position (but do not start the engine).
   1) The glow indicator shall light for about 5 sec.
   2) The circuit tester shall indicate power supply voltage for 9 ~ 13 sec.
      If above specifications are not satisfied, inspect wire harness, glow relay and thermo-sensor. If satisfied, inspect glow plug.

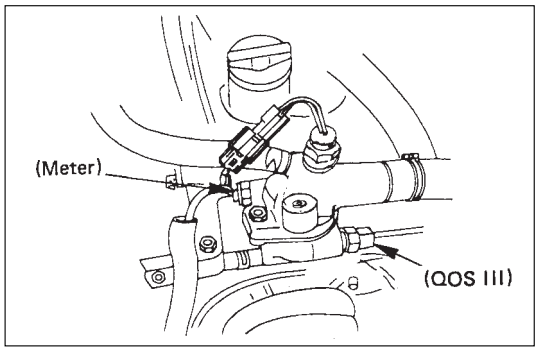

II Inspection on Afterglow Operation

1. Disconnect thermo-sensor connection on the thermostat housing.

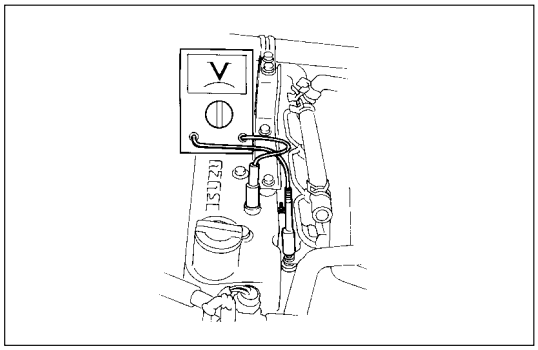

2. Connect the circuit tester between glow plug and engine earth.
3. Inspect the following item with start the engine.
   1) The circuit tester shall indicate about 7 volts after 360 seconds of engine start.
   - If above specifications are not satisfied, inspect battery voltage, engine earth, wiring harness, glow plug, dropping resistor, relay No. 2 read switch and charge relay.

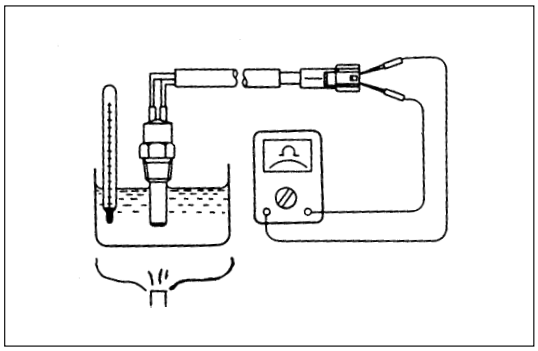

THERMO SENSOR

Measure the resistance depending on the water temperature as shown in the left figure. (Measuring range: -10°C ~ 50°C)

Temperature	Current (mA)	Resistance (KΩ)
20 ± 1	1.0	2.0 ~ 3.0
50 ± 1	1.0	0.6 ~ 1.0

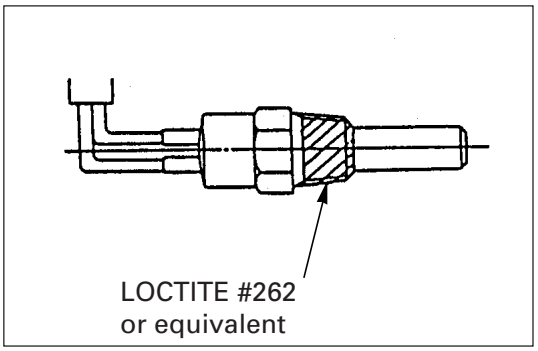

When installing the thermo sensor, apply sealant (Loctite #262 or equivalent) to arrowed portion in the left figure to prevent water leakage.

Torque	N·m (Kg·m/lb·in)
8 (0.8/69)	

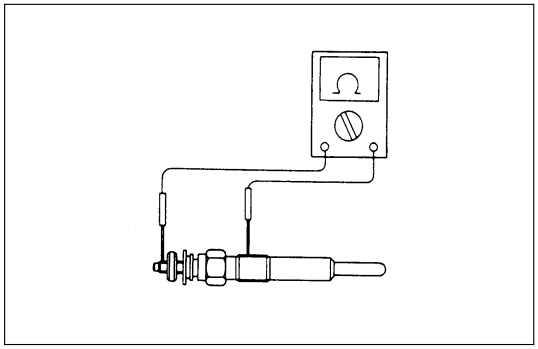

GLOW PLUG

Inspect the resistance

Resistance at normal temperature	Ω
0.8 ~ 1.0	

Torque	N·m (Kg·m/lb·ft)
23 (2.3/17)	

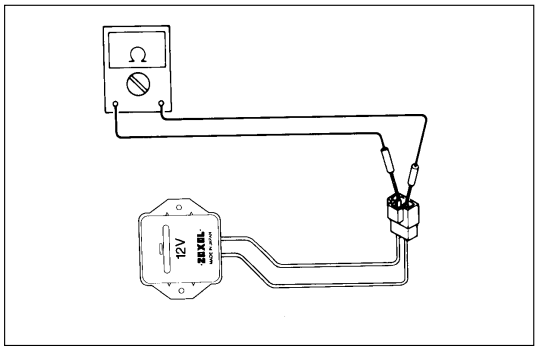

DROPPING RESISTOR

Inspect the resistance

Resistance of normal ambient temperature	mΩ
224 ~ 236	

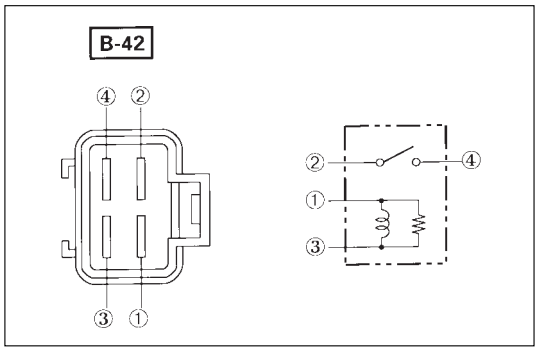

GLOW PLUG RELAY

Inspect the continuity

② – ④	No Continuity
① – ③	Continuity

If apply the battery voltage to terminal between ① - ③

② – ④	Continuity

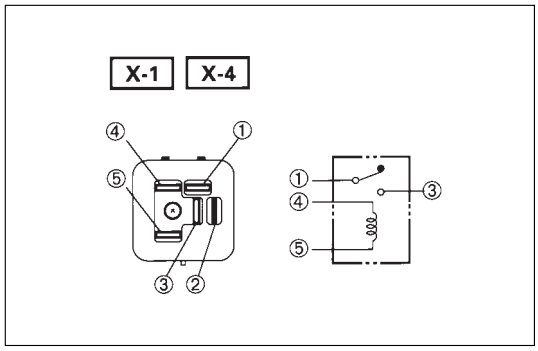

CHARGE RELAY

Inspect the continuity

① – ②	Continuity
① – ③	No Continuity
④ – ⑤	Continuity

If apply the battery voltage to terminal between ④ - ⑤

① – ②	No Continuity
① – ③	Continuity

SECTION 6F

ENGINE EXHAUST

CAUTION:

Exhaust system components must have enough clearance from the underbody to prevent overheating of the floor pan and possible damage to the passenger compartment, insulation and trim materials.

CONTENTS

	PAGE
General Description	**6F-2**
Hangers	**6F-2**
Gasket	**6F-2**
On-Vehicle Service	**6F-3**
Front Exhaust Pipe	**6F-3**
Center Exhaust Pipe	**6F-5**
Exhaust Silencer	**6F-7**
Rear Exhaust Pipe	**6F-9**

GENERAL DESCRIPTION

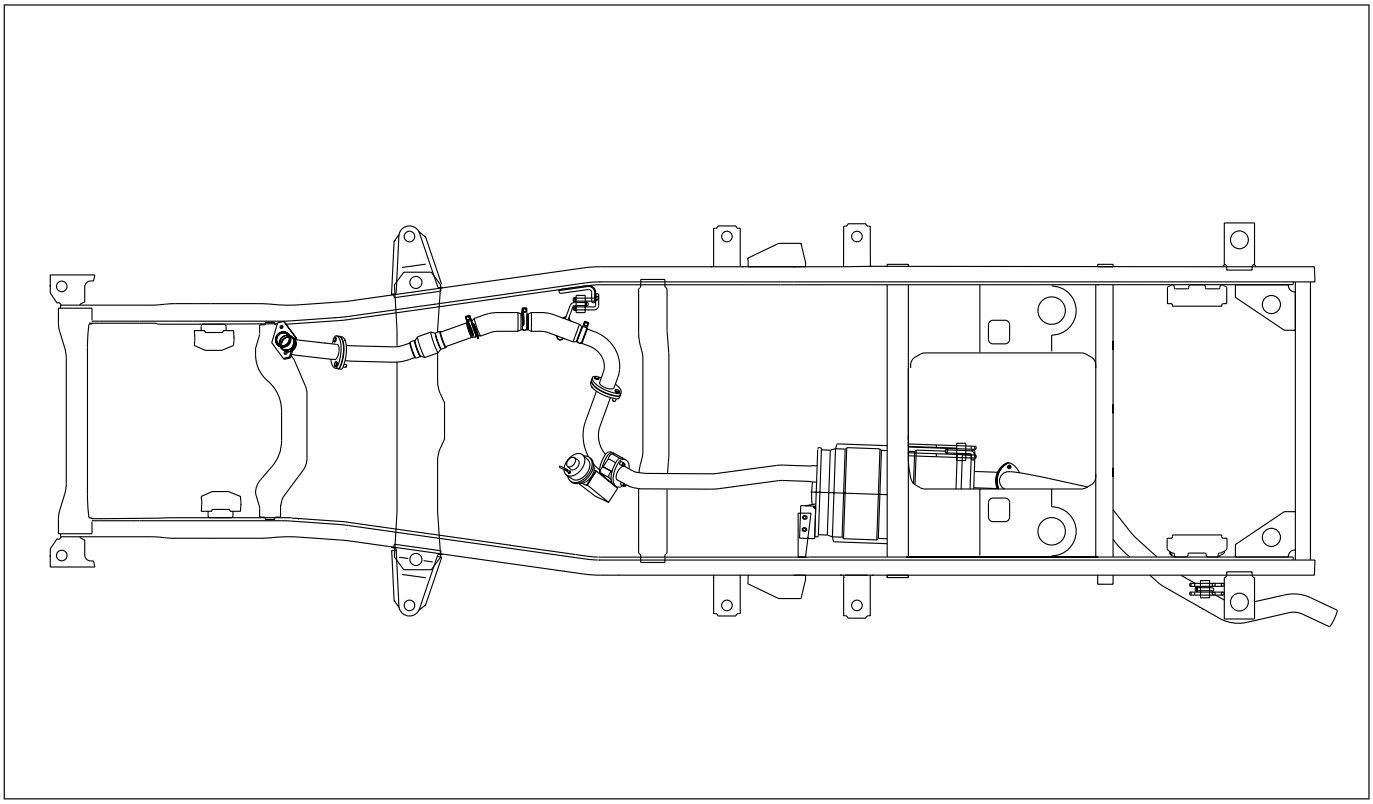

150RV013

When inspecting or replacing exhaust system components, make sure there is adequate clearance from all points on the underbody to prevent overheating of the floor pan and possible damage to the passenger compartment insulation and trim materials.

Check complete exhaust system and nearby body areas and rear compartment lid for broken, damaged, missing or mispositioned parts, open seams, holes, loose connections or other deterioration which could permit exhaust fumes to seep into the rear compartment or passenger compartment. Dust or water in the rear compartment may be an indication of a problem in one of these areas. Any faulty areas should be corrected immediately.

HANGERS

Various types of hangers are used to support exhaust system(s). These include conventional rubber straps, rubber rings, and rubber blocks.

The installation of exhaust system supports is very important, as improperly installed supports can cause annoying vibrations which can be difficult to diagnose.

GASKET

The gasket must be replaced whenever a new exhaust pipe, muffler or exhaust throttle is installed.

ON-VEHICLE SERVICE

Rattles and noise vibrations in the exhaust system are usually caused by misalignment of parts. When aligning the system, leave all bolts or nuts loose until all parts are properly aligned; then tighten, working from front to rear.

1. Check connections for looseness or damage, especially for exhaust gas leakage.
2. Check clamps and rubbers for weakness, cracks or damage.
3. If any part of the converter heat shield is damaged or dented to the extent that it contacts the catalyst, repair or replace.
4. Check for dents or damage and for any holes or cracks caused by corrosion.

FRONT EXHAUST PIPE

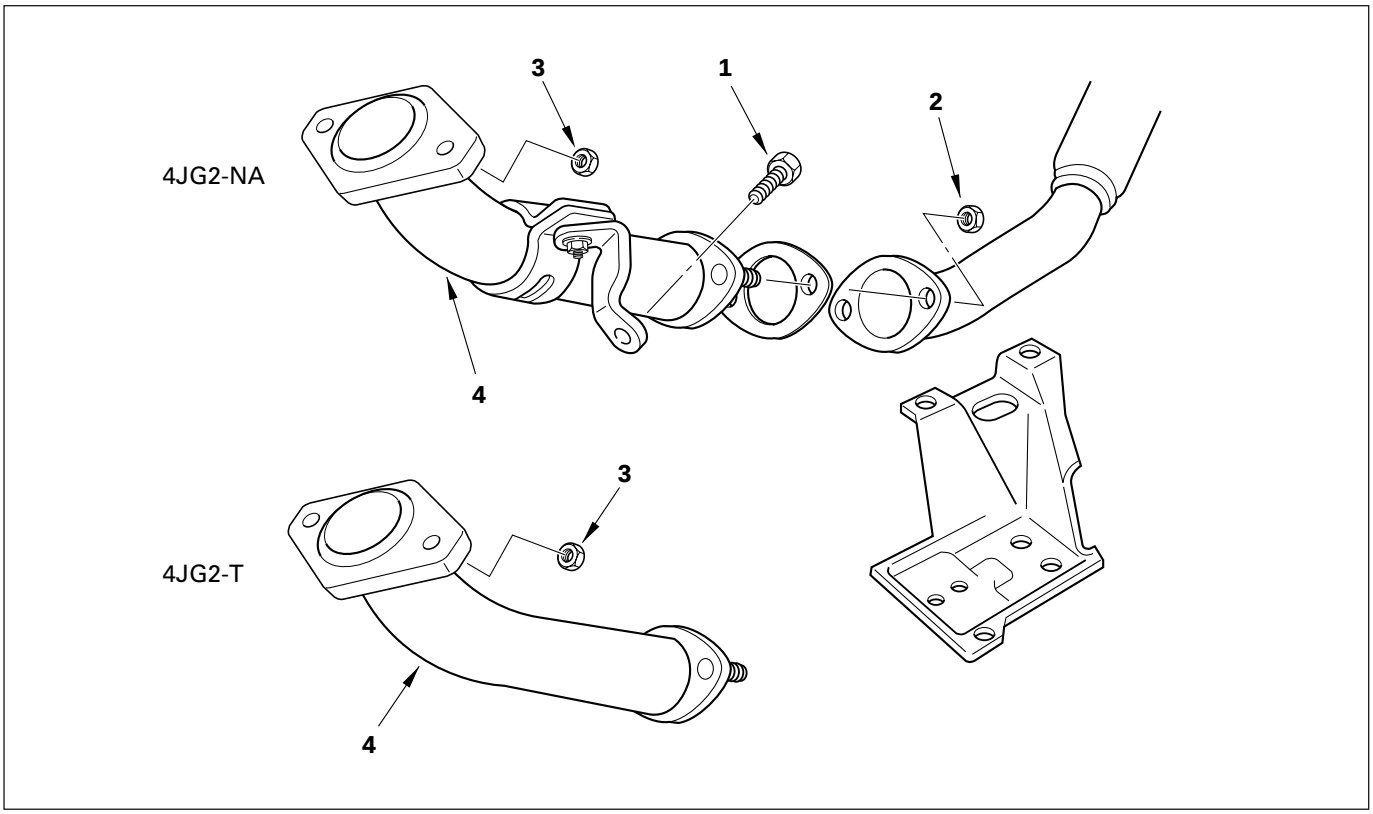

150RV009

REMOVAL

Preparation:

- Disconnect battery negative cable.
- Raise the vehicle and support with suitable safety stands.

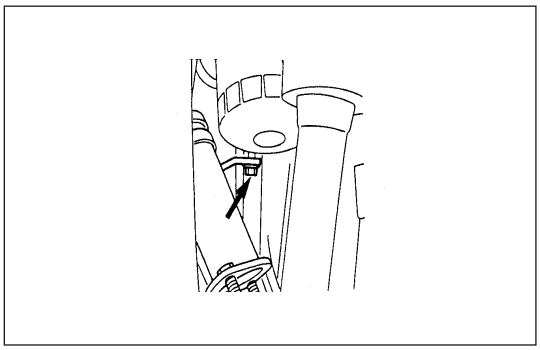

1. Front exhaust pipe mounting bracket fixing bolt

2. Front exhaust pipe fixing nuts

- Remove two bolts fixed from front pipe and center pipe A.

3. Exhaust manifold fixing nuts

- Remove two fixing nuts from exhaust manifold and front pipe.

4. Front exhaust pipe

INSTALLATION

4. Front exhaust pipe

3. Exhaust manifold fixing nuts

- Tighten the fixing nuts to the specified torque.

N·m (Kg·m/lb·ft)
67 (6.8/49)

2. Front exhaust pipe fixing nuts

- Tighten the fixing nuts to the specified torque

N·m (Kg·m/lb·ft)
43 (4.4/32)

1. Front exhaust pipe mounting bracket fixing bolt

- Tighten the fixing nuts to the specified torque

N·m (Kg·m/lb·ft)
40 (4.1/30)

CENTER EXHAUST PIPE

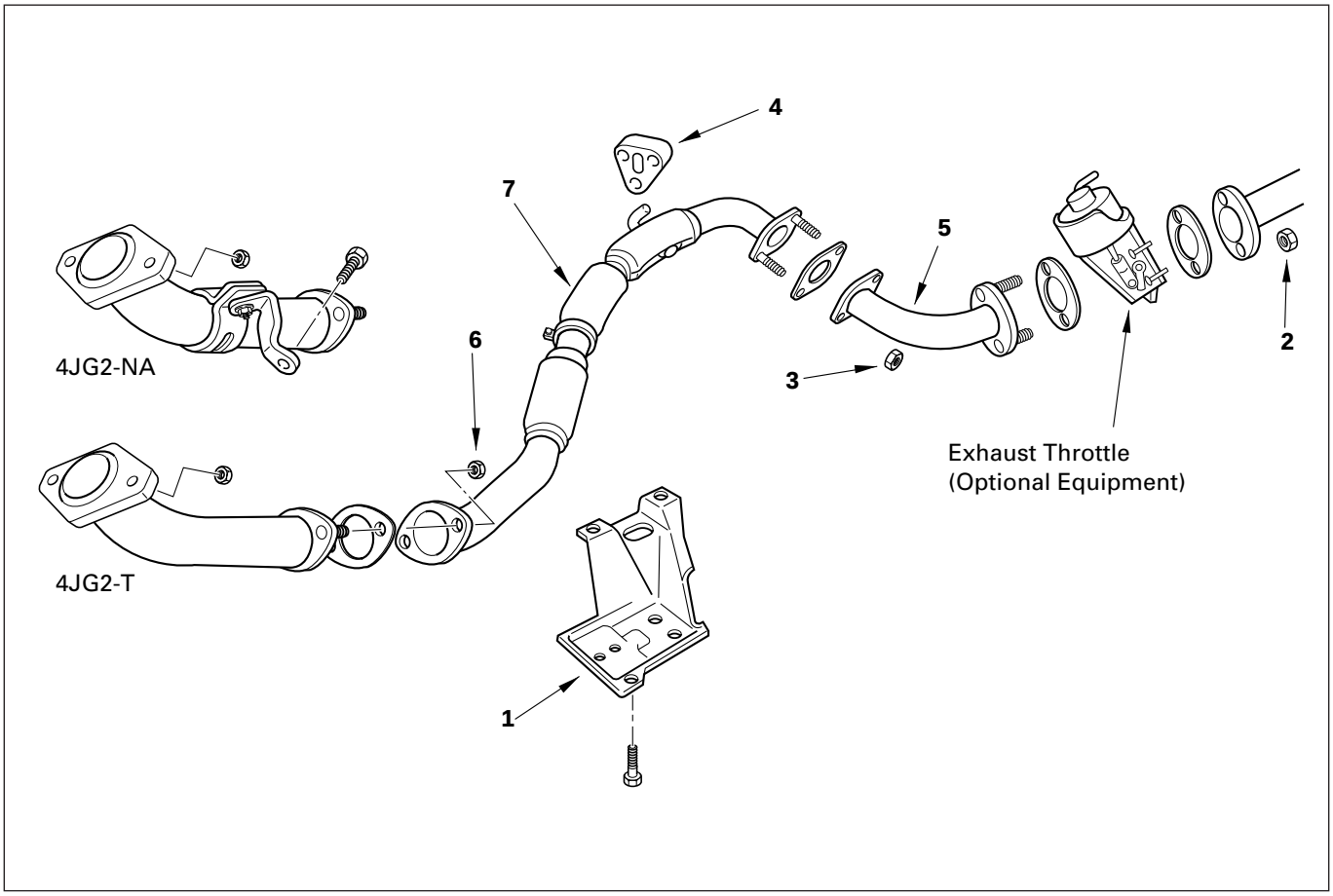

150RV011

REMOVAL

Preparation:

- Disconnect battery negative cable.
- Raise the vehicle and support with suitable safety stands.

1. **Exhaust pipe protector**
2. **Exhaust silencer fixing nuts**
3. **Center exhaust pipe fixing nuts**
   - Remove two fixing nuts from center pipe A and B.
4. **Mounting rubber**
   - Pull out a mounting rod clamped to the center pipe from mounting rubber.
5. **Center exhaust pipe B**
6. **Front exhaust pipe fixing nuts**
   - Remove two fixing nuts from front pipe and center pipe A.
7. **Center exhaust pipe A**

INSTALLATION

7. **Center exhaust pipe A**
6. **Front exhaust pipe fixing nuts**
   - Tighten the fixing nuts to the specified torque

	N·m (Kg·m/lb·ft)
	43 (4.4/32)

5. **Center exhaust pipe B**
4. **Mounting rubber**
3. **Center exhaust pipe fixing nuts**
   - Tighten the fixing nuts to the specified torque.

	N·m (Kg·m/lb·ft)
	43 (4.4/32)

2. **Exhaust silencer fixing nuts**
   - Tighten the fixing bolts to the specified torque.

	N·m (Kg·m/lb·ft)
	40 (4.1/30)

1. **Exhaust pipe protector**
   - Tighten the fixing bolts to the specified torque.

	N·m (Kg·m/lb·ft)
	37 (3.8/27)

EXHAUST SILENCER

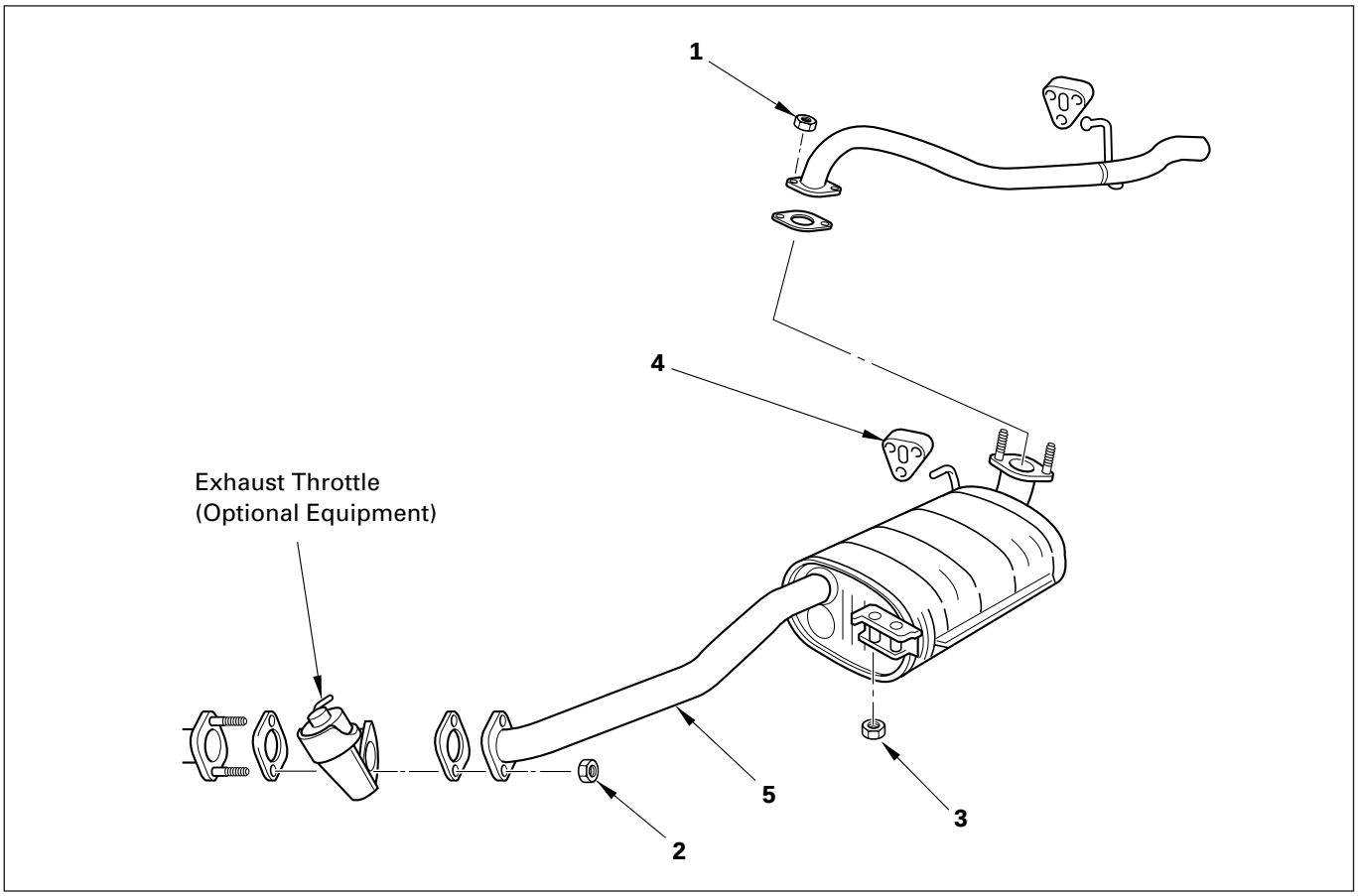

150RV010

REMOVAL

Preparation:

- Disconnect battery negative cable.
- Raise the vehicle and support with suitable safety stands.

1. **Rear exhaust pipe fixing nuts**
2. **Exhaust silencer fixing nuts**
3. **Exhaust silencer fixing nuts**
4. **Mounting rubber**
5. **Exhaust silencer**

INSTALLATION

5. **Exhaust silencer**
4. **Mounting rubber**
3. **Exhaust silencer fixing nuts**
   - Tighten the fixing nuts to the specified torque.

N·m (Kg·m/lb·ft)
16 (1.6/12)

2. **Exhaust silencer fixing nuts**
   - Tighten the fixing nuts to the specified torque.

N·m (Kg·m/lb·ft)
43 (4.4/32)

1. **Rear exhaust pipe fixing nuts**
   - Tighten the fixing nuts to the specified torque.

N·m (Kg·m/lb·ft)
43 (4.4/32)

REAR EXHAUST PIPE

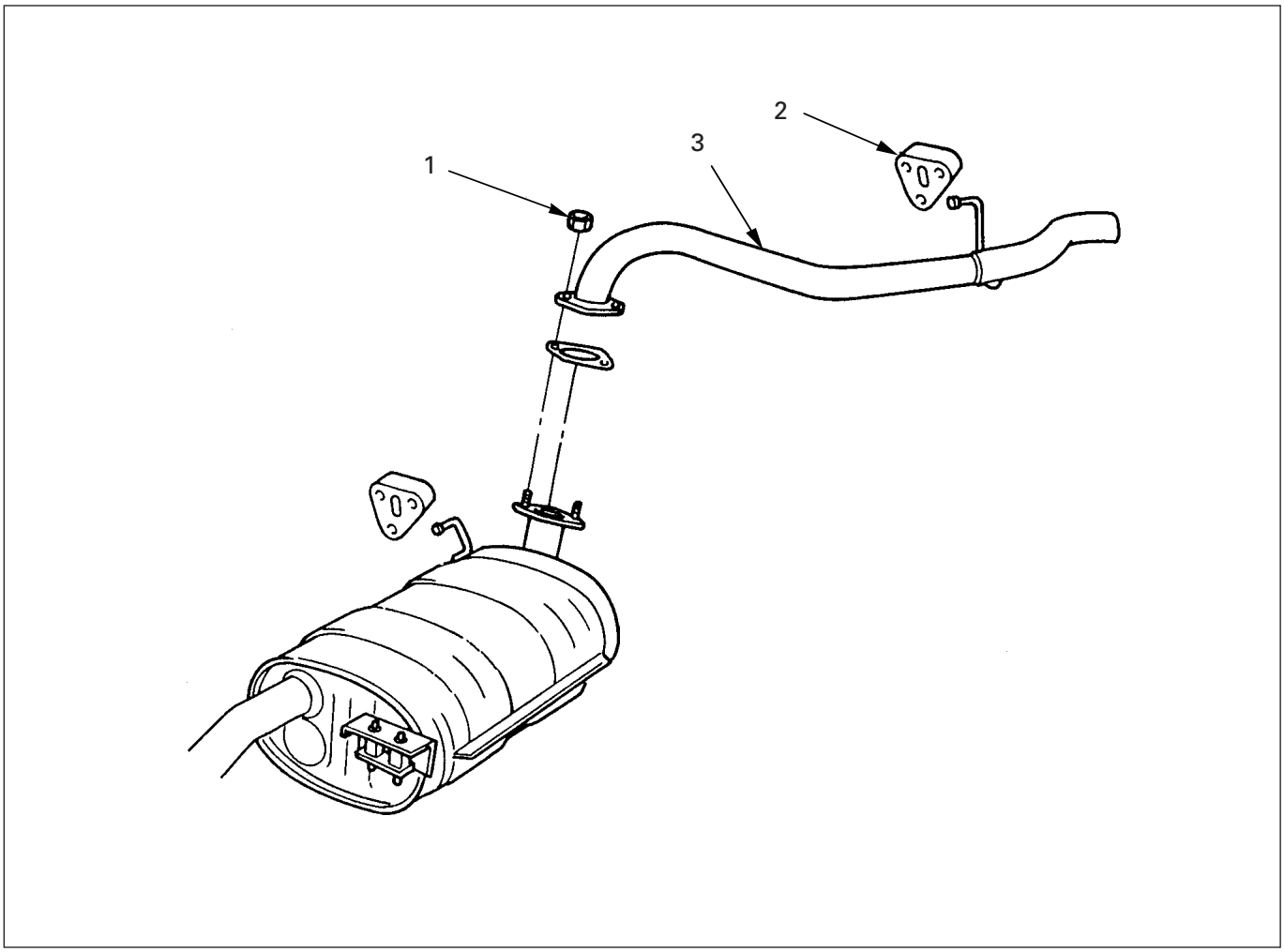

REMOVAL

Preparation:

- Disconnect battery negative cable.
- Raise the vehicle and support with suitable safety stands.

1. Rear exhaust pipe fixing nuts

- Remove two nuts from muffler and rear exhaust pipe.

2. Mounting rubber

- Disconnect front side mounting rubber of rear pipe.

3. Rear exhaust pipe

INSTALLATION

3. Rear Exhaust pipe

2. Mounting rubber

1. Rear exhaust pipe fixing nuts

- Tighten the fixing nuts to the specified torque.

	N·m (Kg·m/lb·ft)
	43 (4.4/32)

ENGINE

ENGINE MECHANICAL

CONTENTS

General Description 6A–2
Service Information 6A–3
Service Standard 6A–6
Servicing 6A–9
Tightening Torque 6A–14
Special Tools 6A–23
Engine Assembly 6A–26
Engine Mount (RH) 6A–28
Engine Mount (LH). 6A–29
Intercooler 6A–30
Cylinder Head Cover 6A–31
Intake Manifold 6A–33
Exhaust Manifold 6A–34
Turbocharger 6A–35
Cylinder Head 6A–37
Cylinder Head Gasket 6A–39
Camshaft. 6A–43
Timing Gear. 6A–48
Valve Stem Seal, Valve Spring and Adjuster. . 6A–56
Valve Clearance Adjustment. 6A–63
Oil Rail and Injector 6A–65
Crank Case 6A–68
Crankshaft. 6A–70
Piston and Connecting Rod 6A–80
Cylinder Block 6A–88
Oil Pump Assembly 6A–94
Oil Filter Cartridge 6A–95
Oil Cooler 6A–95

GENERAL DESCRIPTION

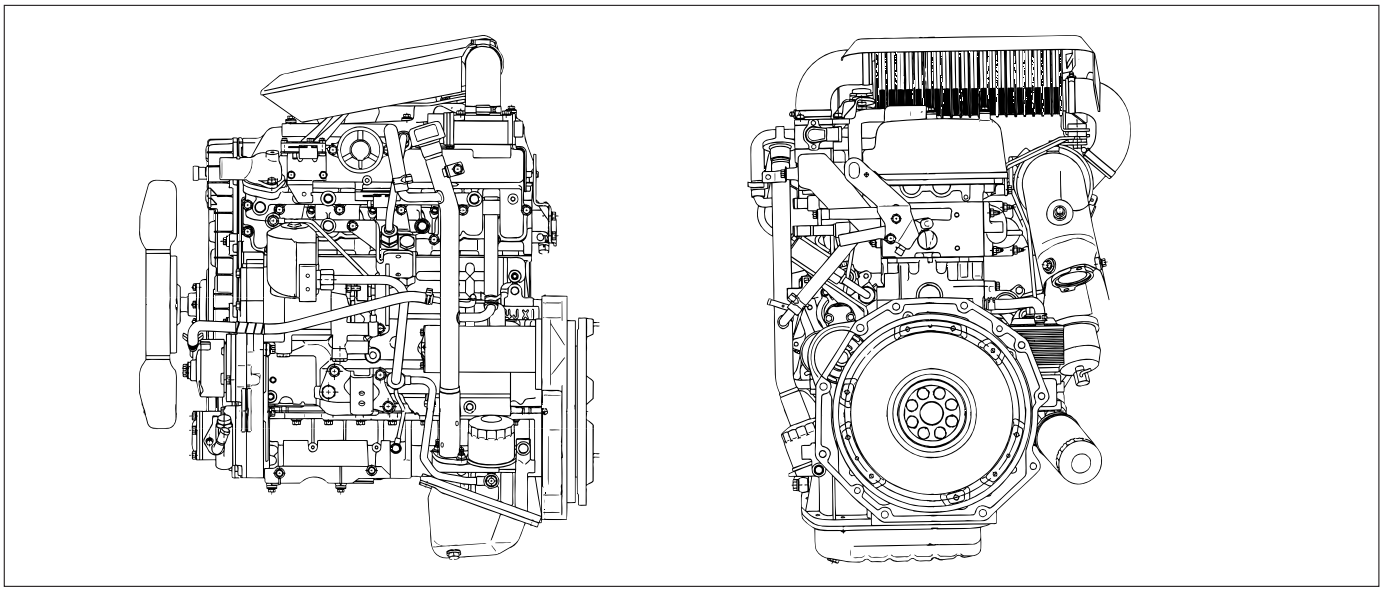

F06RW048

Cylinder Head Gasket

The cylinder head gasket is laminated steel sheets.
Three grades of the gasket according to the measured piston head projection from the cylinder block are provided to give the engine a minimum compression ratio fluctuation.

Tightening Method for Special Bolt

The cylinder head fixing bolts, flywheel bolts and connecting rod cap fixing bolts are tightened by the angular Tightening Method.

Piston

Auto-thermatic pistons having steel struts with a 0.4 mm offset from the piston pin center line, are applied to reduce thermal expansion and resulting engine noise when the engine is cold.

Bearings

The crankshaft bearings and connecting rod bearings are of aluminum having a high bearing surface.
These bearings are especially sensitive to foreign material such as metal scraps. So, it is very important that the oil ports and other related surfaces are kept clean and free of foreign material.
Crankshaft bearings are selected for optimum bearing and journal clearance which reduces vebration and noise.

Crankshaft

As tufftriding (Nitrizing treatment) is applied to increase crankshaft strength, crankpins and journals should not be reground.

Piston Cooling

An oiling jet device for piston cooling is provided in the lubricating oil circuit from the cylinder block oil gallery via a check valve.
Take care not to damage any oiling jet when removing and installing piston and connecting assembly.

Fuel Injection System

The injection system is oil rail type.

Quick On Start 4 System

QOS4 preheating system which features a quick-on glow plug with thermometer control of the glowing time and the afterglow time function, is applied.

SERVICE INFORMATION

MAIN DATA AND SPECIFICATION

Engine type			Diesel, four cycle water cooled inline
Camshaft type			DOHC
Number of cylinders			4
Bore x stroke		(mm)	95.4 x 104.9
Total piston displacement		(cc)	2999
Compression ratio		(to 1)	19.0
Engine weight (dry)		N (kg/lb)	2492 (254/560) (A/T)
			2649 (270/593) (M/T)
Engine idling speed (Reference)		RPM	720
Compression pressure		kpa (kg/cm^2/psi)-rpm	3000 (31/440)-200
Firing order			1–3–4–2
VALVE SYSTEM			
Intake valves	open at:		B.T.D.C. 3°
	close at:		A.B.D.C. 57.6°
Exhaust valves	open at:		B.B.D.C. 56.5°
	close at:		A.T.D.C. 5°
Valve clearance at	cold	mm (in)	
	intake:		0.15 (0.006)
	exhaust:		0.25 (0.01)
Oil filter			Full flow and bypass combined type
Oil capacity (Original factory fill or rebuilt engine)			9.0 liters (7.9 US quarts)
Oil capacity (Service change)			
with filter change			6.0 liters (6.3 US quarts)
without filter change			5.0 liters (5.3 US quarts)
Oil cooler			Water cooled type
Inter cooler			Air cooled type
Turbocharger method			
Control method			Wastegate control
Lubrication			Pressurized control
Cooling method			Coolant cooled

Engine Cooling

Cooling system		Coolant forced circulation
Radiator		(2 tube in row) Tube type corrugated
Heat radiation capacity	J/h (kcal/h)	318 x 10^6 (76000)
Heat radiation area	m^2 (ft^2)	15.63 (1.454)
Front area	m^2 (ft^2)	0.309 (2.029)
Dry weight	N (kg/lb)	83 (8.5/18.7)
Radiator cap		
Valve opening pressure	kPa (kg/cm^2 psi)	93.3 – 122.7 (0.95 – 1.25/13.5 – 17.8)
Coolant capacity	lit (Imp.qt./US qt.)	M/T 2.5 (2.2/2.6) A/T 2.4 (2.1/2.5)
Coolant pump		Centrifugal impeller type
Pulley ratio		1.2
Coolant total capacity	lit (Imp.qt./US qt.)	9.3 (8.2/9.8)

Starting System

Model		HITACHI S14-0
Rating		
Voltage	V	12
Output	kW	2.8
Time	sec	30
Number of teeth of pinion		9
Rotating direction (as viewed from pinion)		Clockwise
Weight (approx.)	N(kg/lb)	49 (5.0/11)
No-load characteristics		
Voltage/current	V/A	11/160 or less
Speed	rpm	4000 or more
Load characteristics		
Voltage/current	V/A	8.76/300
Torque	N·m(kg·m/lb·ft)	7.4 (0.75/5.4) or more
Speed	rpm	1700 or more
Locking characteristics		
Voltage/current	V/A	2.5/1100 or less
Torque	N·m(kg·m/lb·ft)	18.6 (1.9/14) or more

Charging System

Model (HITACHI)		LR160-734B	LR170 – 760	LR190 – 750B
Rated voltage	V	12		
Rated output	A	60	70	90
Rotation direction (As viewed from pulled)		Clockwise		
Pulley effective diameter	mm (in)	60 (2.36)		69 (2.72)
Weight	N (kg/lb)	41 (4.2/9.3)		52 (5.3/11.7)

SERVICE STANDARD

Engine

mm (in)

Parts	Items		Service standard	Service limit	Remarks
Cylinder Head	Cylinder head lower surface for flatness		0.075 (0.0030) or less	0.50 (0.0197)	
	Cylinder head height		95.0 (3.740)	—	Cannot be reground
Valve Spring	Free height		45.7 (1.8)	44.8 (1.765)	
	Squareness		—	1.6 (0.063)	
	Spring tension (when assembled)	N(lb)	241 (54.2)	210 (47.22)	
Valve and Valve guide	Diameter of Valve stem	IN	6.959 – 6.977 (0.27 – 0.272)	6.92 (0.270)	
		EX	6.692 – 6.970 (0.271 – 0.272)	6.90 (0.269)	
	Valve and valve guide clearance	IN	0.023 – 0.056 (0.0009 – 0.0022)	0.19 (0.0074)	
		EX	0.03 – 0.063 (0.0011 – 0.0024)	0.20 (0.0079)	
	Valve guide upper end height (Measured from the Cylinder head upper face)		8.0 (0.312)	—	
	Valve guide margin		1.1 (0.0433)	1.6 (0.0630)	
	Valve thickness	IN	1.2 (0.0472)	1.1 (0.0433)	
		EX	1.2 (0.0472)	1.1 (0.0433)	
	Valve seat contact surface angle		45°	—	
	Valve seat contact width	IN	2.1 (0.0827)	2.6 (0.1024)	
		EX	2.1 (0.0827)	2.6 (0.1024)	
Camshaft	End play		0.08 (0.00314)	2.0 (0.00797)	
	Cam lobe height	IN	46.67 (1.8374)	46.57 (1.8335)	
		EX	46.77 (1.8413)	46.67 (1.8374)	
	Journal diameter		29.939 – 29.960 (1.167 – 1.168)	29.84 (1.1748)	
	Runout		0.02 (0.0008) or less	0.10 (0.0039)	
	Camshaft oil clearance		0.40 – 0.082 (0.0016 – 0.0032)	0.12 (0.0047)	

mm (in)

Parts	Items	Service standard	Service limit	Remarks
Tappet	Outside diameter	32.977 – 32.990 (1.2983 – 1.2988)	32.950 (1.2972)	
	Oil clearance	0.01 – 0.039 (0.0004 – 0.0015)	0.10 (0.0039)	
Crankshaft	Thrust clearance	0.04 – 0.20 (0.0016 – 0.0079)	0.30 (0.00118)	
	Main bearing oil clearance	0.037 – 0.068 (0.0015 – 0.0027)	0.11 (0.0043)	
	Crankshaft runout	0.05 (0.0020) or less	0.08 (0.0031)	
	Main journal diameter	69.917 – 69.932 (2.7526 – 2.7532)	69.91 (2.7524)	Uneven wear limit 0.05 (0.002)
	Crank pin diameter	52.915 – 52.930 (2.0933 – 2.0839)	52.90 (2.0827)	Uneven wear limit 0.08 (0.0031)
Piston, Piston pin, Piston ring and Connecting rod	Piston diameter	95.32 – 95.349 (3.7527 – 3.7539)	—	
	Piston clearance	0.11 – 0.92 (0.0043 – 0.0362)	—	
	Piston ring gap 1st	0.25 – 0.40 (0.0098 – 0.0157)	1.5 (0.0590)	
	2nd	0.20 – 0.35 (0.0079 – 0.0138)	1.5 (0.0590)	
	Oil	0.10 – 0.30 (0.0039 – 0.0118)	1.5 (0.0590)	
	Piston ring clearance 1st/2nd	0.05 – 0.09 (0.0020 – 0.0035)	0.15 (0.0059)	
	Oil	0.03 – 0.07 (0.00118 – 0.00276)	0.15 (0.0059)	
	Piston pin diameter	30.995 – 31.000 (1.203 – 1.205)	30.97 (1.2078)	
	Piston pin clearance (Between connecting rod and piston pin)	0.008 – 0.020 (0.0003 – 0.00079)	0.05 (0.0020)	
	Piston pin clearance (Between piston and piston pin)	0.005 – 0.018 (0.0002 – 0.0007)	0.04 (0.0016)	
	Connecting rod alignment Bend	0.08 (0.031) or less	0.20 (0.00787)	Per 100 (3.94)
	Twist	0.05 (0.0020) or less	0.15 (0.0059)	Per 100 (3.94)
	Connecting rod thrust clearance	0.230 (0.0091)	0.35 (0.0138)	
	Oil clearance (Between crank pin and Connecting rod)	0.022 – 0.042 (0.0009 – 0.0017)	0.0060 (0.0024)	

mm (in)

Parts	Items	Service standard	Service limit	Remarks
Cylinder Block	Warpage (Upper surface of the cylinder block)	—	0.20 (0.0079)	
	Cylinder bore diameter	95.421 – 95.450 (3.7567 – 3.7579)		

Engine Cooling

mm (in)

Parts	Items	Service standard	Service limit	Remarks
Thermostat	Valve opening temperature	83 – 87°C (181 – 189°F)		
	Valve full open temperature and lift	More than 9.5 (0.374) at 100°C (212°F)		
Radiator cap	Valve opening pressure	88.2 – 117.6 kPa (12.8 –17.0 psi)		

SERVICING

Servicing refers to general maintenance procedures to be performed by qualified service personnel.

MODEL IDENTIFICATION

Engine Serial Number

The engine number is stamped on the rear left hand side of the cylinder body.

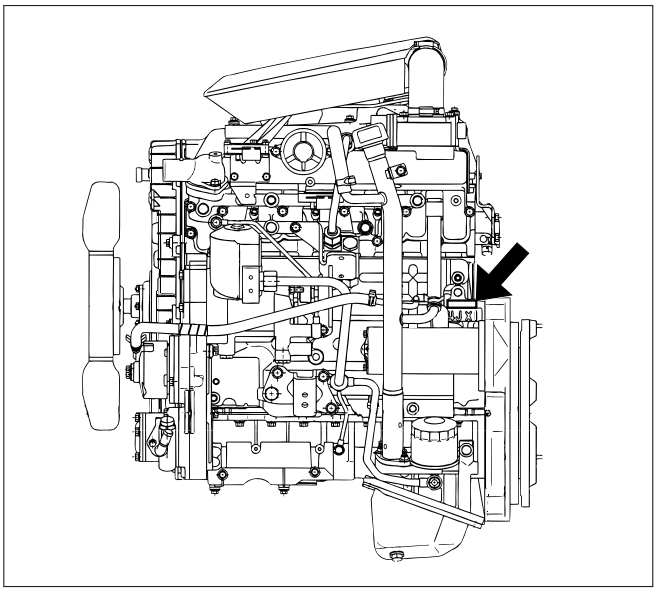

012RW115

AIR CLEANER

Oil Wetted (Viscous) Type Paper Element.

The air cleaner has an oil wetted paper element. No servicing is required until the replacement interval is reached.
Never attempt to clean the element, no matter how dirty it may appear. The element is designed to provide normal filtering efficiency until it becomes due for replacement.
Refer to the Item “Service and Maintenance” in the Owner’s and Driver’s Manual for general service information.

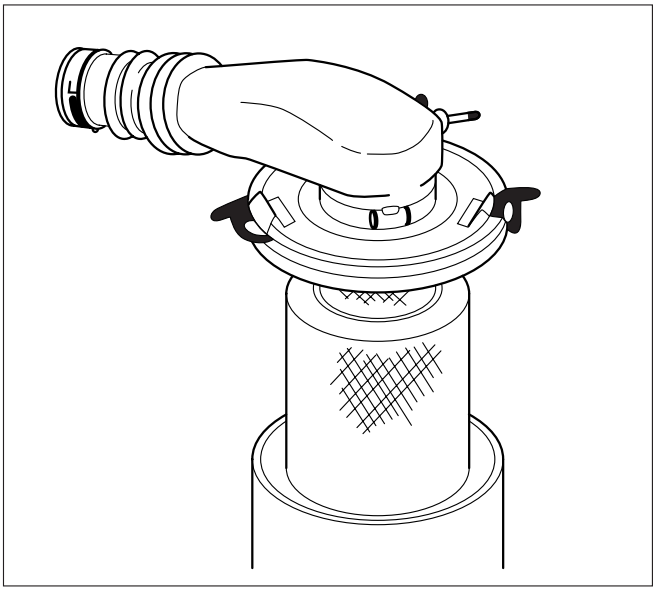

012RW062

LUBRICATING SYSTEM

Main Oil Filter (Cartridge Type Paper Element)

Replacement Procedure

1. Loosen the drain plug to drain the engine oil.
2. Wait a few minutes and then retighten the drain plug.
3. Loosen the used oil filter by turning it counter-clockwise with the filter wrench.
4. Clean the oil cooler fitting face.
   This will allow the new oil filter to seat properly.
5. Apply a light coat of engine oil to the O-ring.
6. Turn the new oil filter until the filter O-ring is fitted against the sealing face.
7. Use the filter wrench to turn the filter additional one and 1/4 turns.
   Filter Wrench: 5-5540-0203-0

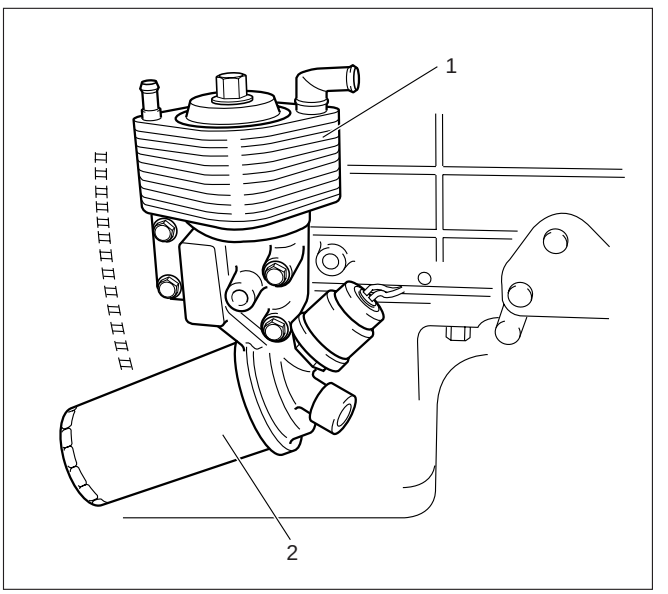

050RW009

8. Check the engine oil level and replenish to the specified level if required.
9. Start the engine and check for oil leakage from the main oil filter.

FUEL SYSTEM

Fuel filter

Replacement Procedure

1. Loosen the used fuel filter by turning it counterclockwise with the filter wrench.
   Filter Wrench : 5-8840-0203-0

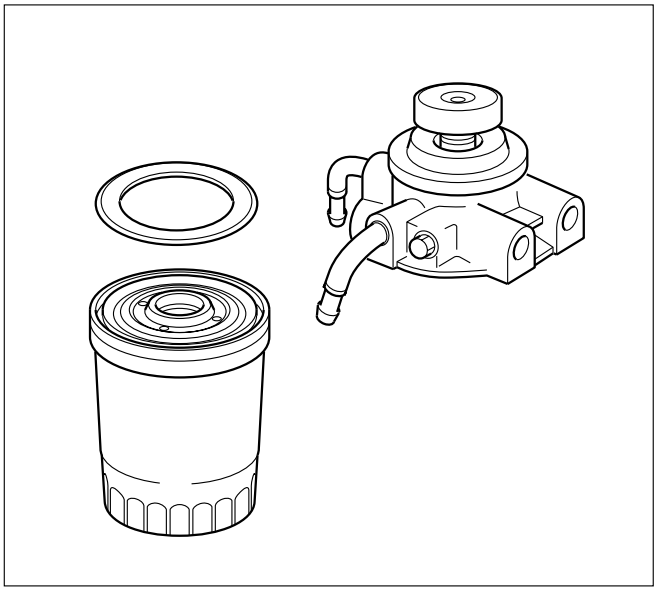

012RW112

2. Clean the filter cover fitting faces.
   This will allow the new fuel filter to seat properly.

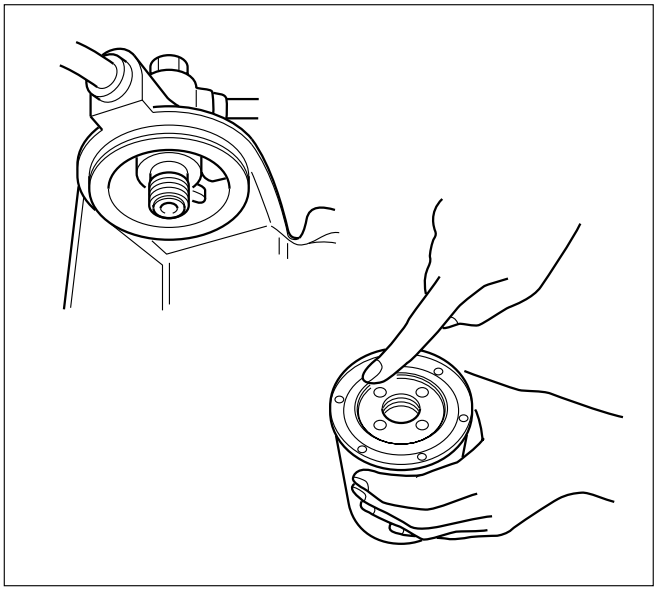

012RW078

3. Apply a light coat of engine oil to the O-ring.
4. Turn the fuel filter until the sealing face comes in contact with the O-ring.
5. Turn the fuel filter with a filter wrench 2/3 of a turn until sealed.
   Filter Wrench: 5-8840-0203-0

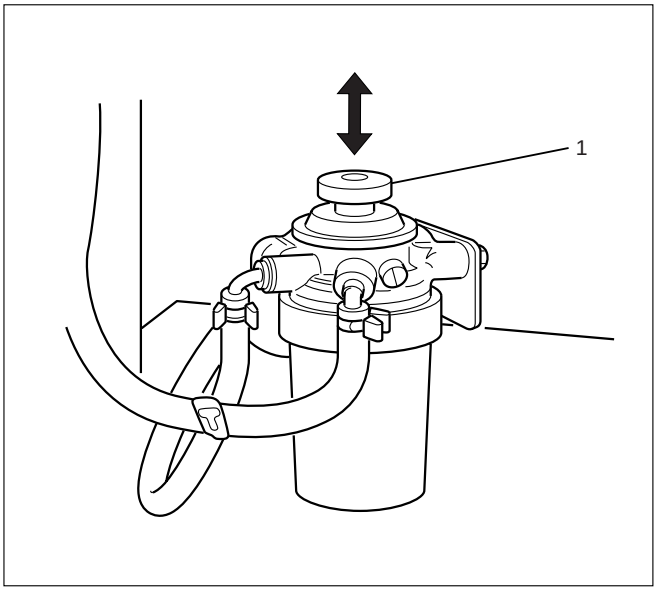

012RW111

Legend
(1) Priming pump

6. Operate the priming pump until the air is discharged completely from fuel system.

NOTE: The use of an Isuzu genuine fuel filter is strongly recommended.

COOLING SYSTEM

Coolant Level

Check the coolant level and replenish the radiator reserve tank as necessary.
If the coolant level falls below the "'MIN" line, carefully check the cooling system for leakage. Then add enough coolant to bring the level up to the "MAX" line.

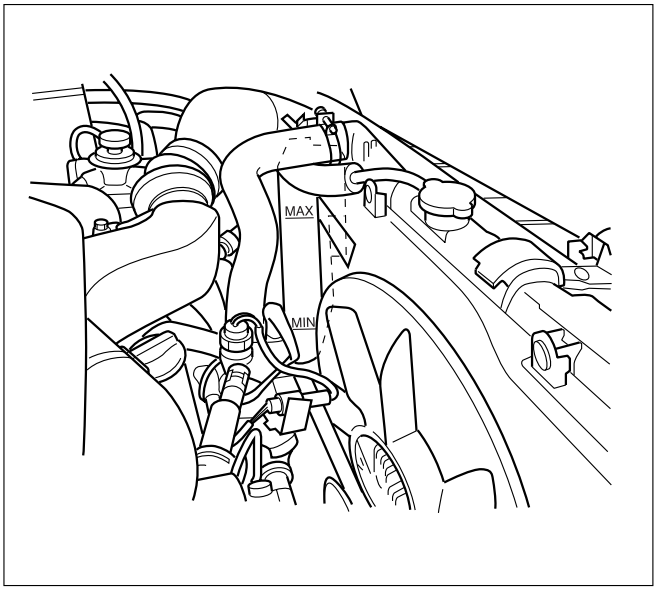

012RW080

NOTE: Do not overfill the reserve tank.

Remove the radiator filler cap only when absolutely necessary.
Always check the coolant level when the engine is cold.
Always refer to the chart at the left to determine the correct cooling water to antifreeze solution mixing ratio.

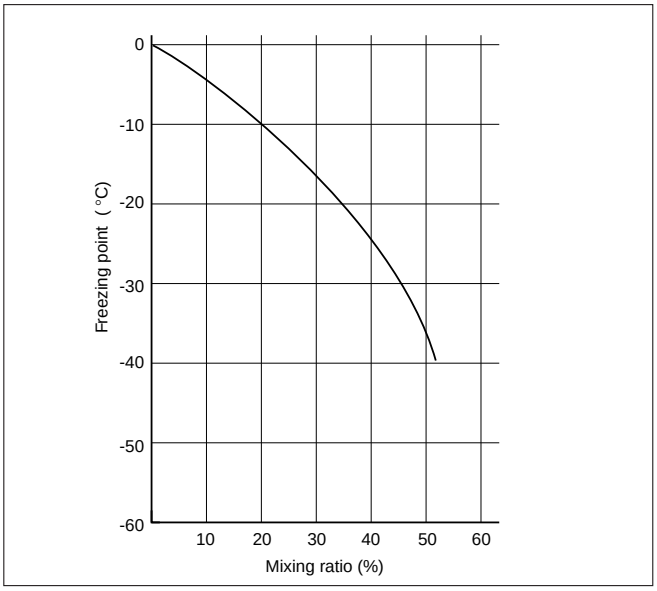

111RW002

Cooling System Inspection

Install a radiator filler cap tester to the radiator. Apply testing pressure to the cooling system to check for leakage.
The testing pressure must not exceed the specified pressure.

Testing Pressure: 196 kPa (2 kg/cm^2/28.45 psi)

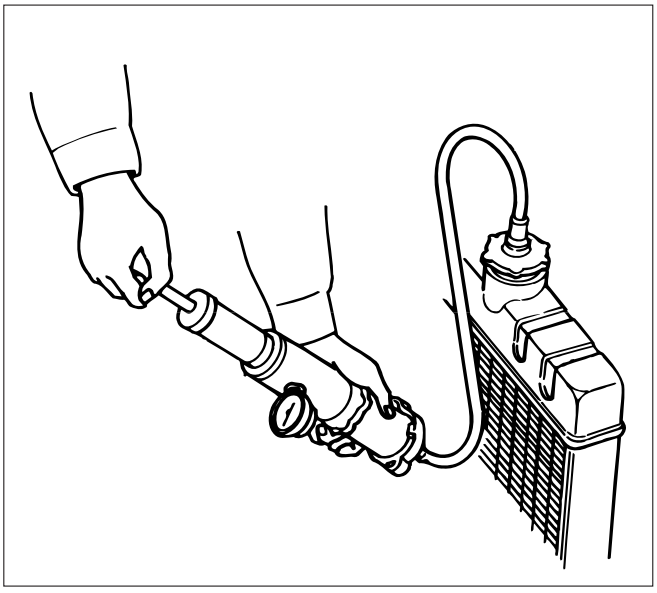

110RS005

Radiator Cap Inspection

The radiator filler cap is designed to maintain coolant pressure in the cooling system at 103 kPa (1.05 kg/cm^2/15 psi).
Check the radiator filler cap with a radiator filler cap tester.

The radiator filler cap must be replaced if it fails to hold the specified pressure during the test procedure.

Radiator Filler Cap Pressure Valve: 88.2 – 117.6 kPa (0.899 – 1.199 kg/cm^2/12.8 – 17.1 psi)

Negative Valve (Reference): 1.0 – 3.9 kPa (0.01 – 0.04 kg/cm^2/0.14 – 0.57 psi)

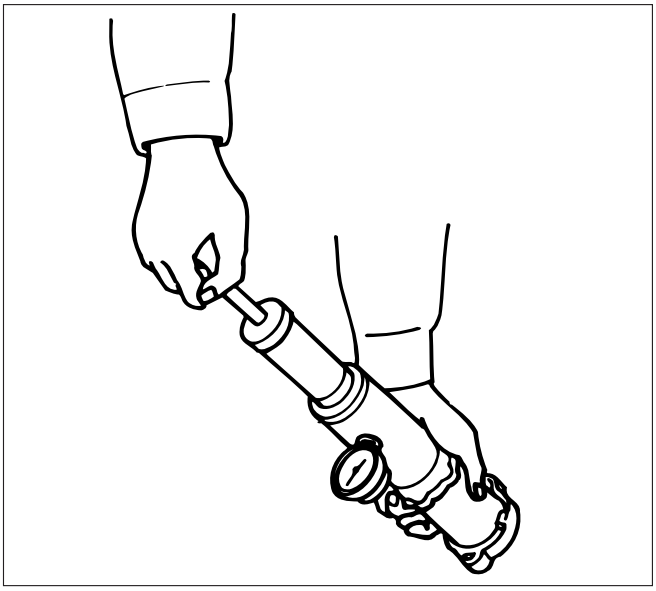

110RS006

Thermostat Operating Test

1. Completely submerge the thermostat in water.
2. Heat the water.
   Stir the water constantly to avoid direct heat being applied to the thermostat.
3. Check the thermostat initial opening temperature.
   Thermostat Initial Opening Temperature: 83 – 87°C (181 – 189°F)
4. Check the thermostat full opening temperature.
   Thermostat Full Opening Temperature: 100°C (212°F)

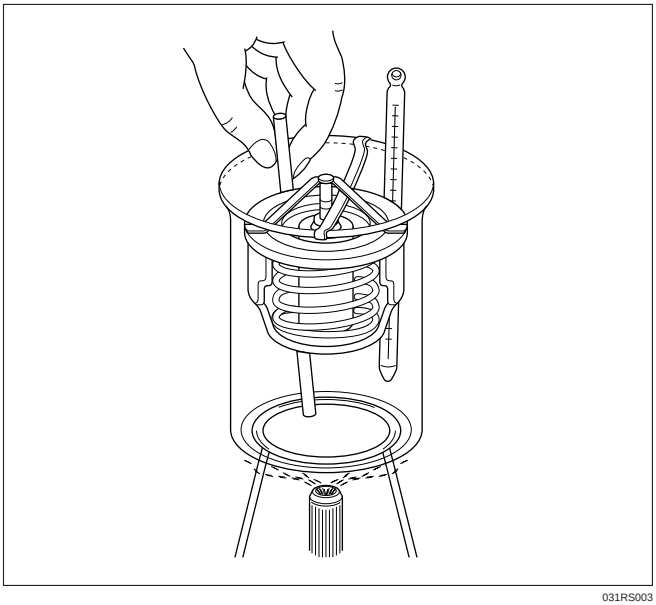

031RS003

Valve Lift at Fully Open Position: 9.5 mm (0.374 in)

Drive Belt Adjustment

Check the drive belt tension
Depress the drive belt mid-portion with a 98 N (10 kg/ 22 lb) force.

Drive Belt Deflection: 10 mm (0.39 in)

Check the drive belt for cracking and other damage.

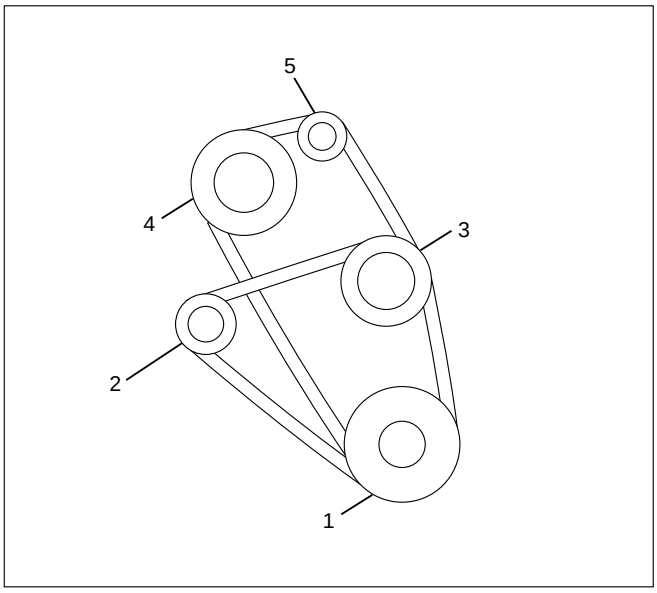

012RW110

Legend
(1) Crankshaft pulley
(2) Generator pulley
(3) Cooling fan pulley
(4) A/C compressor pulley
(5) Belt tensioner pulley

Cooling Fan Pulley Drive Belt

Fan belt tension is adjusted by moving the generator.
Depress the drive belt mid-portion with a 98 N (10 kg/ 22 lb) force.

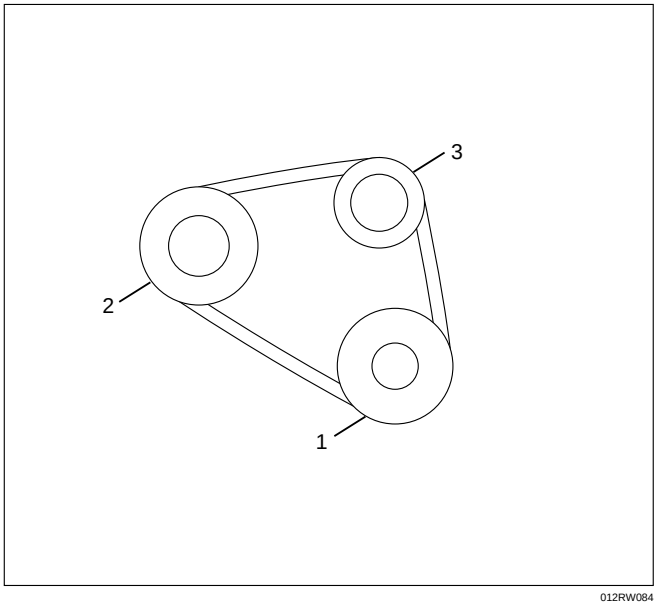

012RW084

Legend
(1) Crankshaft pulley
(2) Generator pulley
(3) Cooling fan pulley

Compressor Pulley Drive Belt

Move the tensioner pulley as required to adjust the compressor drive belt tension.
Depress the drive belt mid-portion with a 98 N (10 kg/ 22 lb) force.

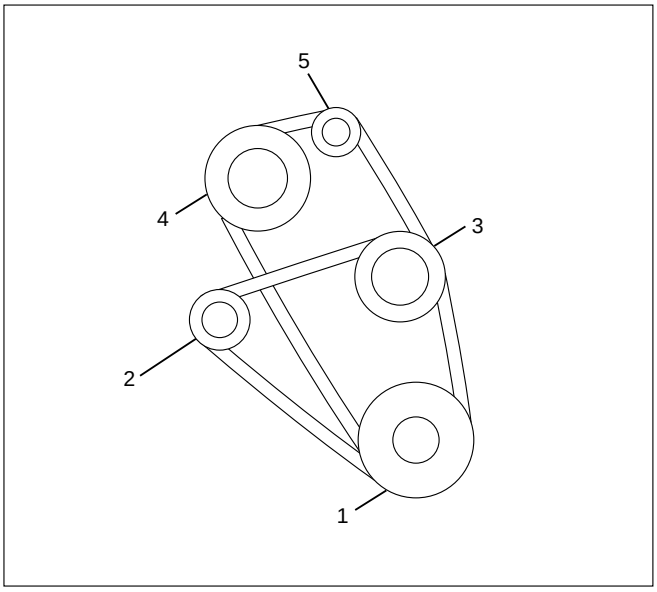

012RW110

Legend
(1) Crankshaft pulley
(2) Generator pulley
(3) Cooling fan pulley
(4) A/C compressor pulley
(5) Belt tensioner pulley

VALVE CLEARANCE ADJUSTMENT

1. Install 2.80 mm valve adjuster (shim) first when reassembling the engine.
   Thickness mark faces down.
2. Measure the valve clearance after installing cam carrier assy with camshafts.
3. Change the adjuster using a special tool when the clearance is out of tolerance.
   Valve Clearance Adjusting Tool: 5-8840-2590-0

VALVE CLEARANCE (When cold condition)

Inlet	0.15 ± 0.05 mm
Exh	0.25 ± 0.05 mm

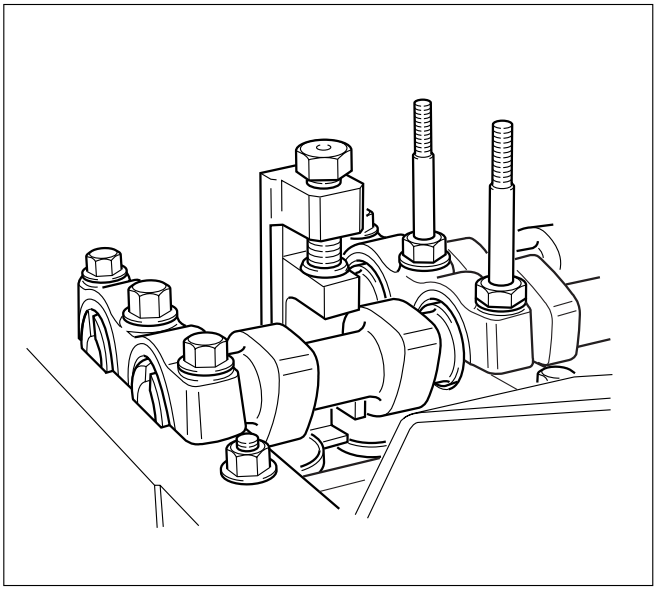

014RW150

COMPRESSION PRESSURE MEASUREMENT

1. Start the engine and allow it to idle until the coolant temperature reaches 70 – 80°C (158 – 176°F).
2. Remove the following parts.
   - Glow plugs
   - Fuel cut solenoid connector
   - QOS (Quick-On Start System) fuse in the fuse box.
3. Set the adapter and compression gauge to the No. 1 cylinder glow plug hole.
   Compression Gauge
   (with Adapter): 5-8840-2008-0
4. Turn the engine over with the starter motor and take the compression gauge reading.

   Compression Pressure at 200 rpm

   Standard: 3038 kPa (31 kg/cm^2/441 psi)

   Limit: 2157 kPa (22 kg/cm^2/313 psi)
5. Repeat the procedure (Steps 3 and 4) for the remaining cylinders.

QUICK-ON START 4 SYSTEM

Quick-On Start System Inspection Procedure

1. Disconnect the ECT-sensor connection around the thermostat outlet pipe.
2. Turn the starter switch to the “ON” position.
   If the Quick-On Start 4 System is operating properly, the glow relay will make a clicking sound within seven seconds after the starter switch is turned on.
3. Measure the glow plug terminal voltage with a circuit tester immediately after turning the starter switch to the “ON” position.

   Glow Plug Terminal Voltage: 8 – 9V

NOTE: Electrical power to the quick-on start system will be cut after the starter has remained in the “ON” position for twenty seconds.
Turn the starter switch to the “OFF” position and back to the “ON” position.
This will reset the Quick-On Start 4 System.

TIGHTENING TORQUE

Timing Gear Case, Timing Gear

N·m (kg·m/lb·ft)

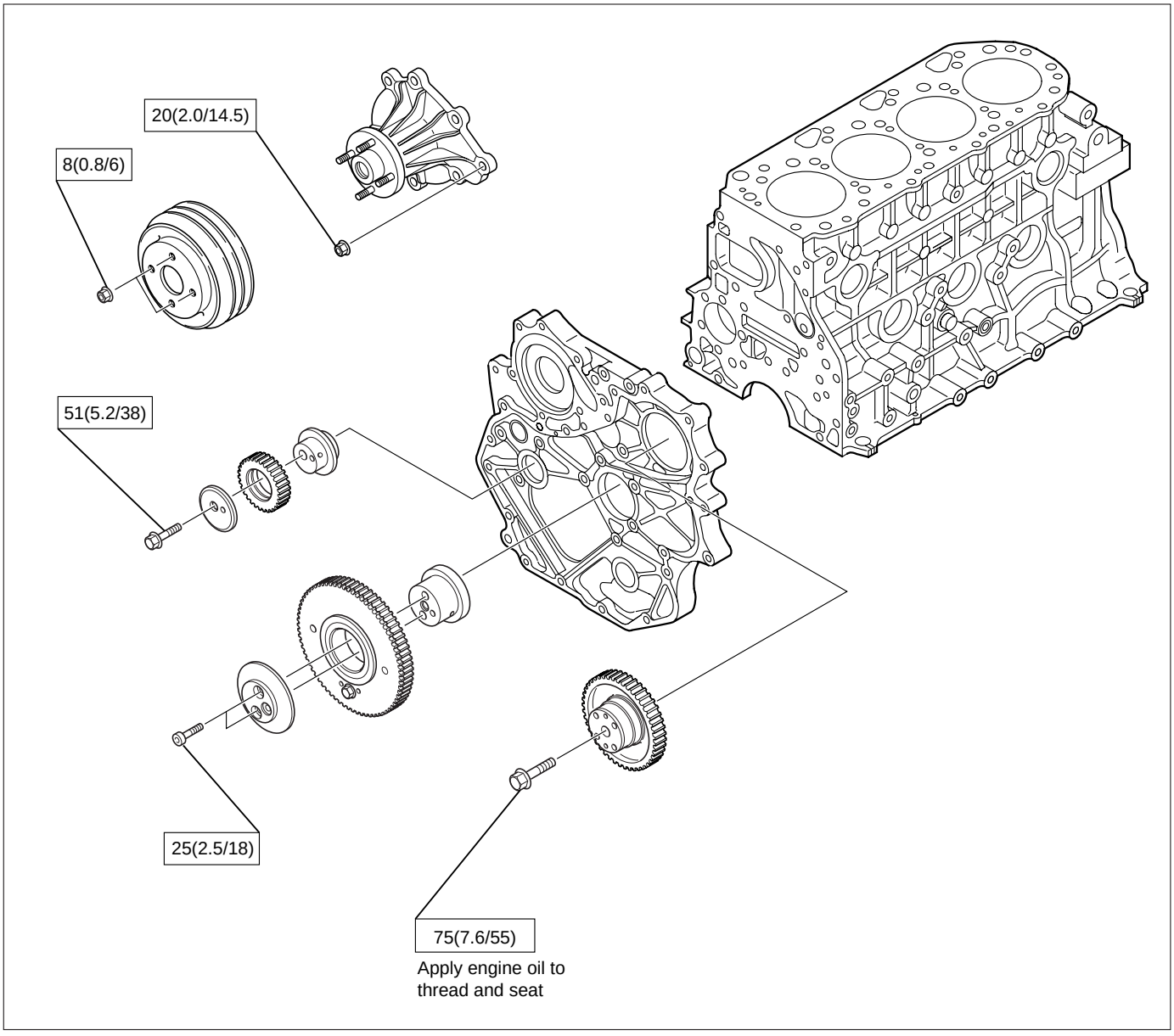

020RW00001

Cylinder Head, Flywheel, Crank Case, Oil Pan

N·m (kg·m/lb·ft)

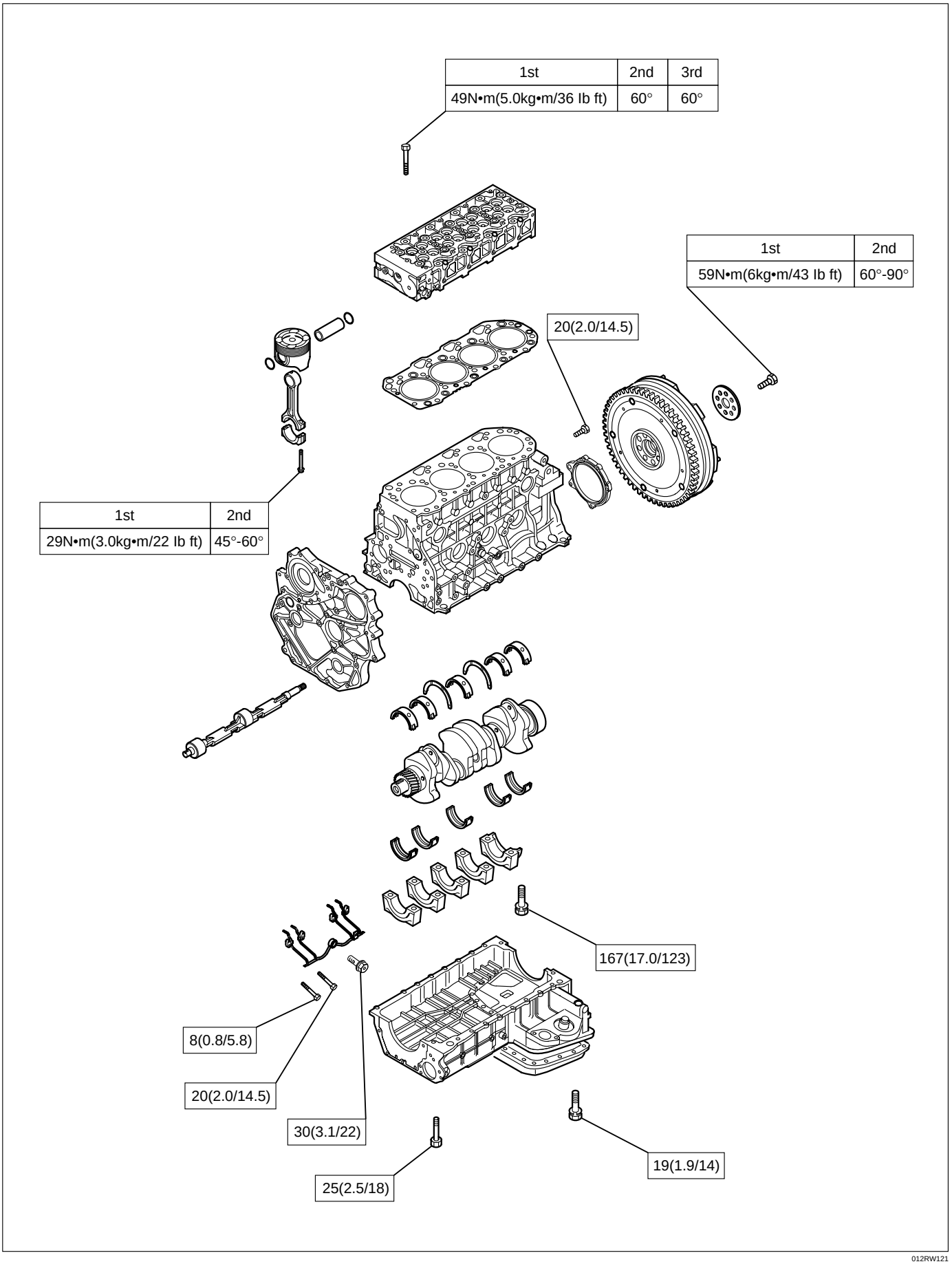

012RW121

Timing Pulley

N·m (kg·m/lb·ft)

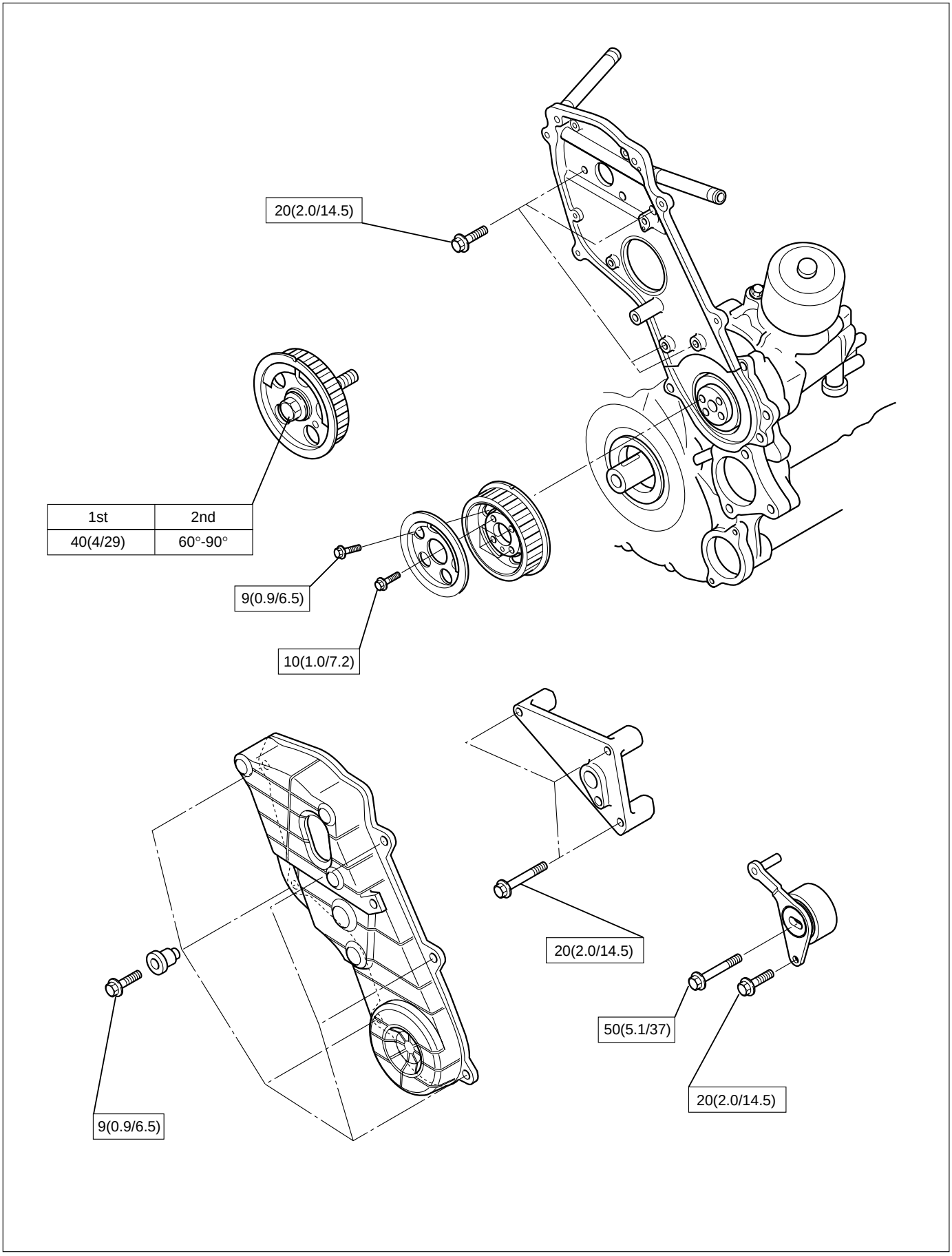

020RW024

Engine Electricals

N·m (kg·m/lb·ft)

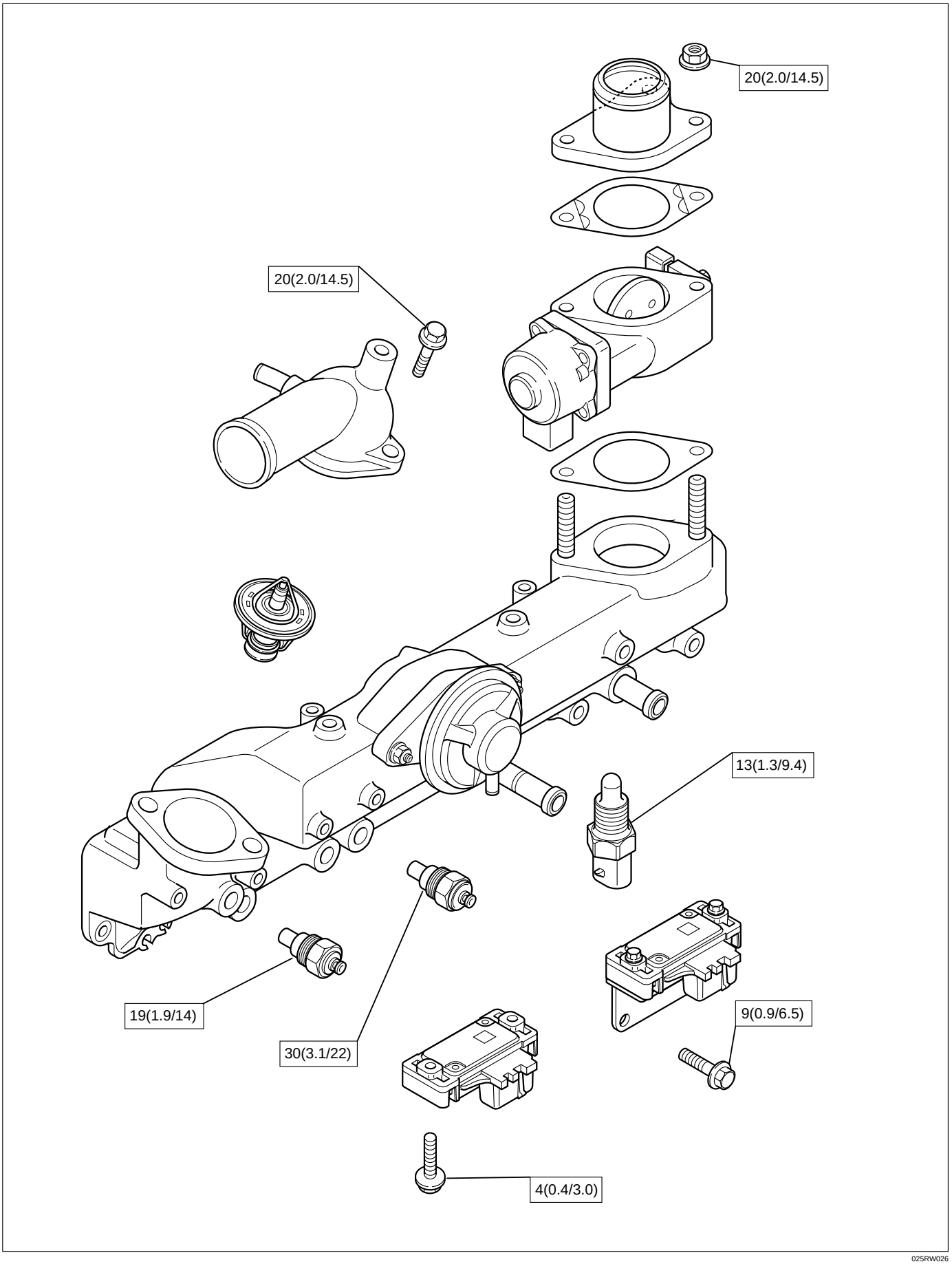

025RW026

Injector

N·m (kg·m/lb·ft)

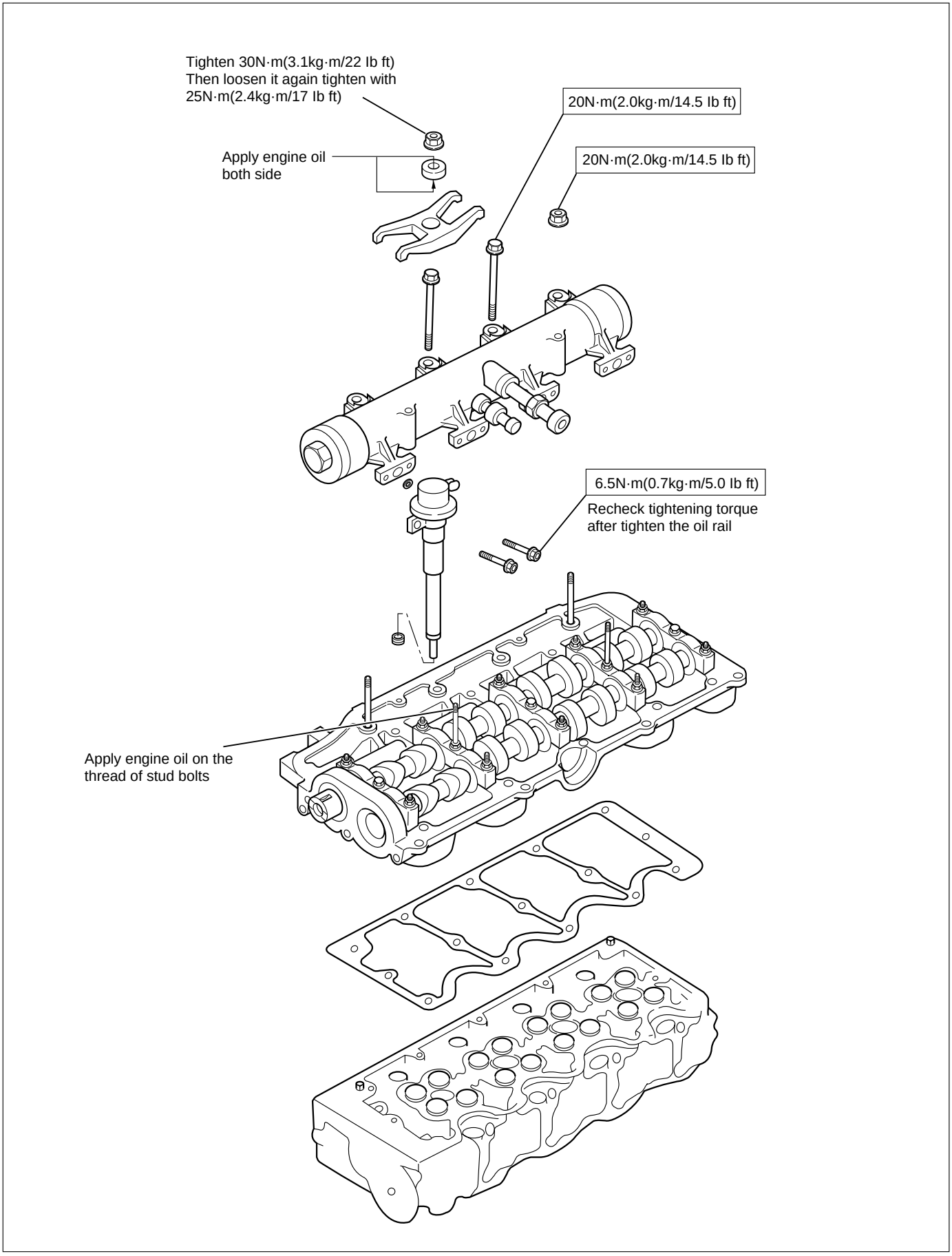

011RX003

High Pressure Oil Pipe

N·m (kg·m/lb·ft)

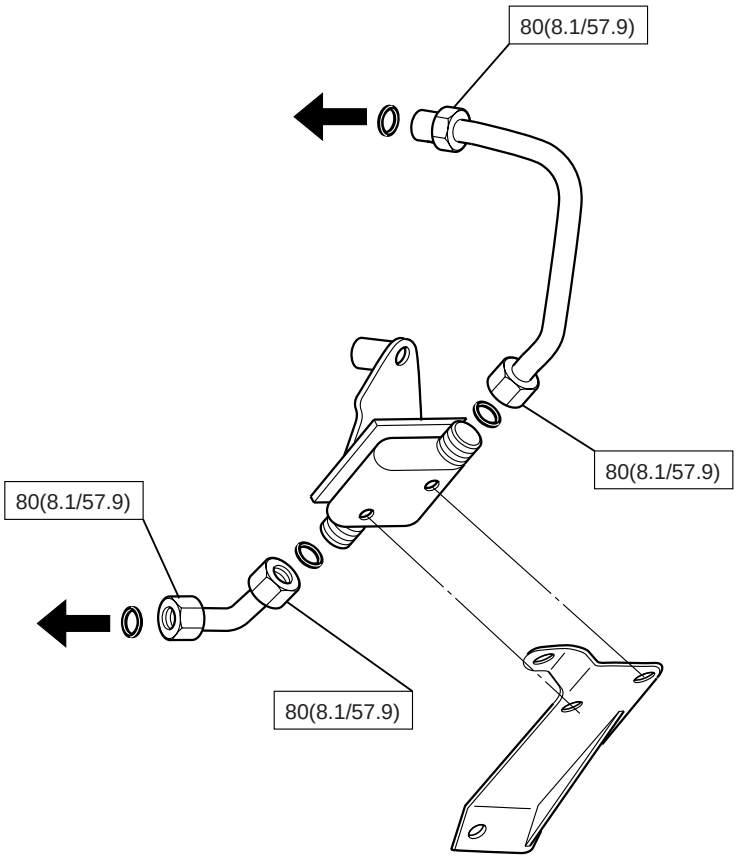

040RW016

Air Duct and Intercooler

N·m (kg·m/lb·ft)

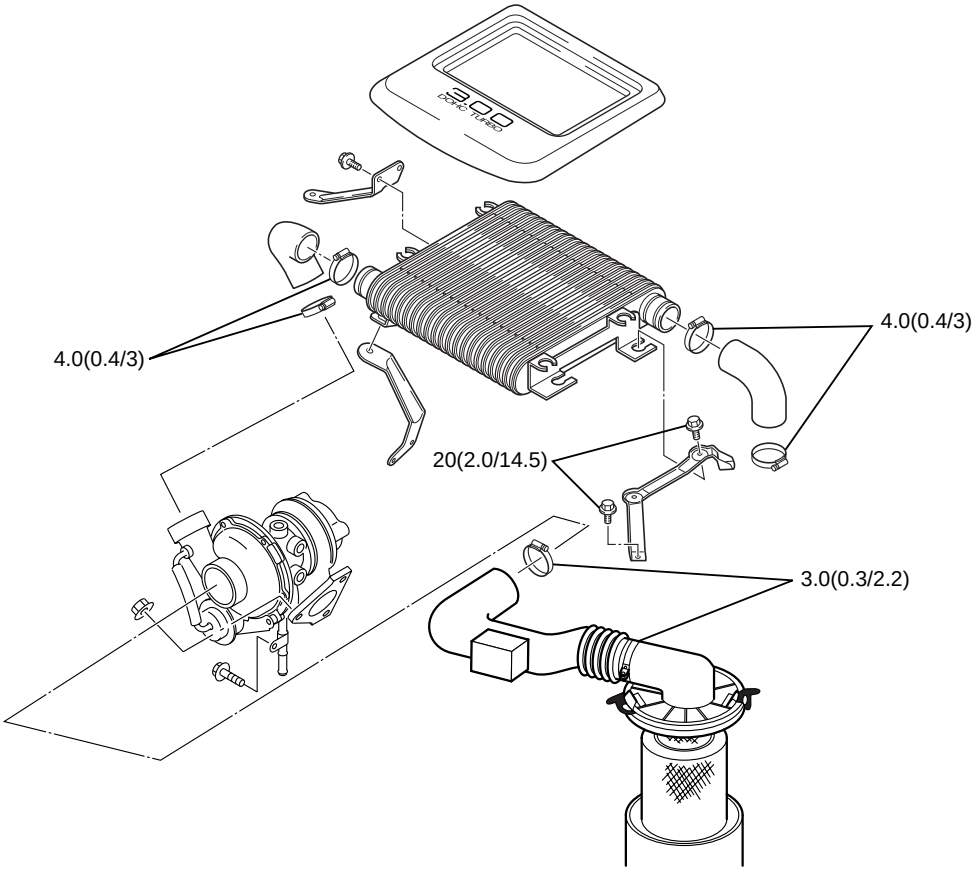

036RW013

Engine Mount Bracket

N·m (kg·m/lb·ft)

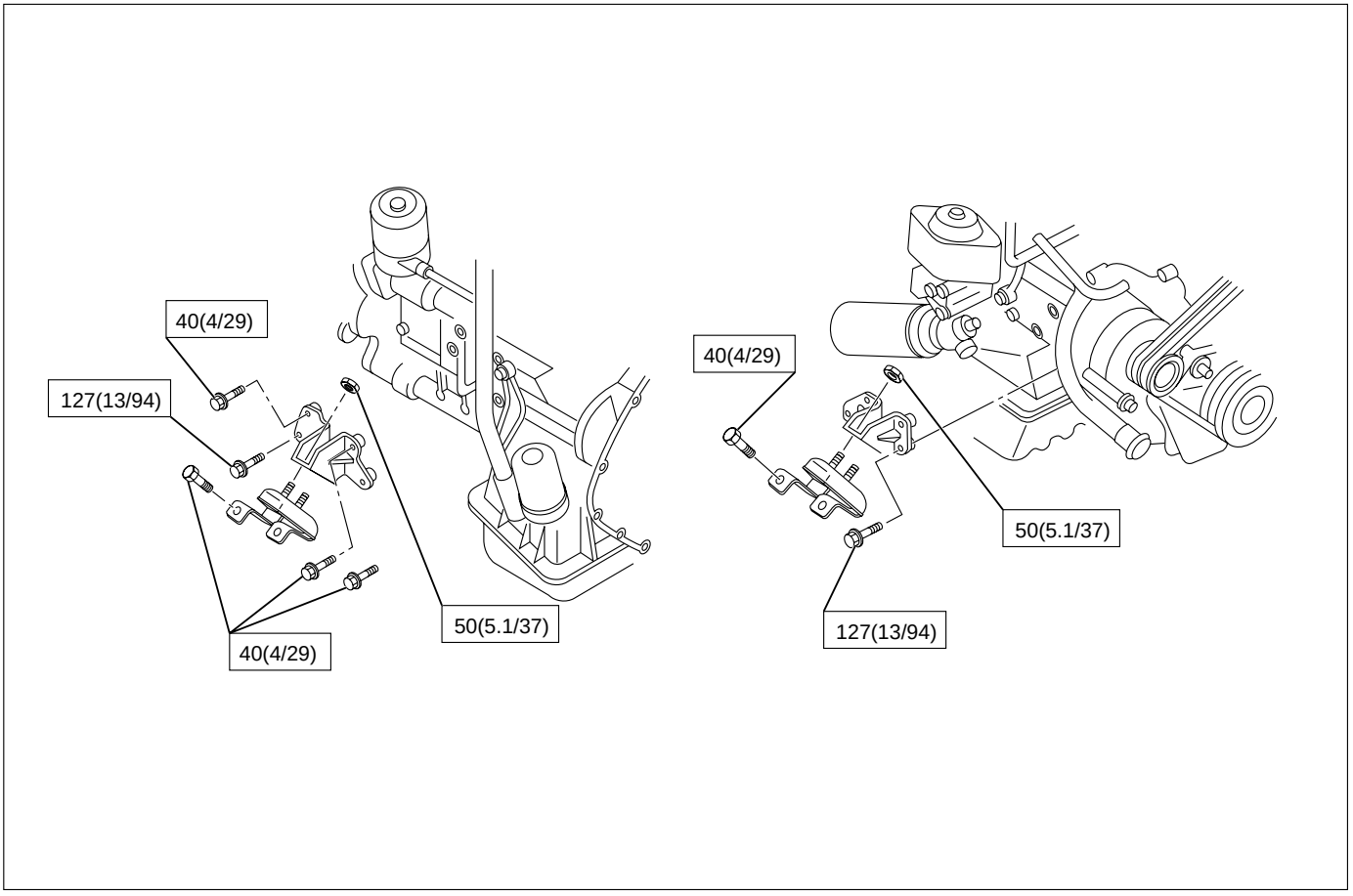

022RW019

Exhaust System

N·m (kg·m/lb·ft)

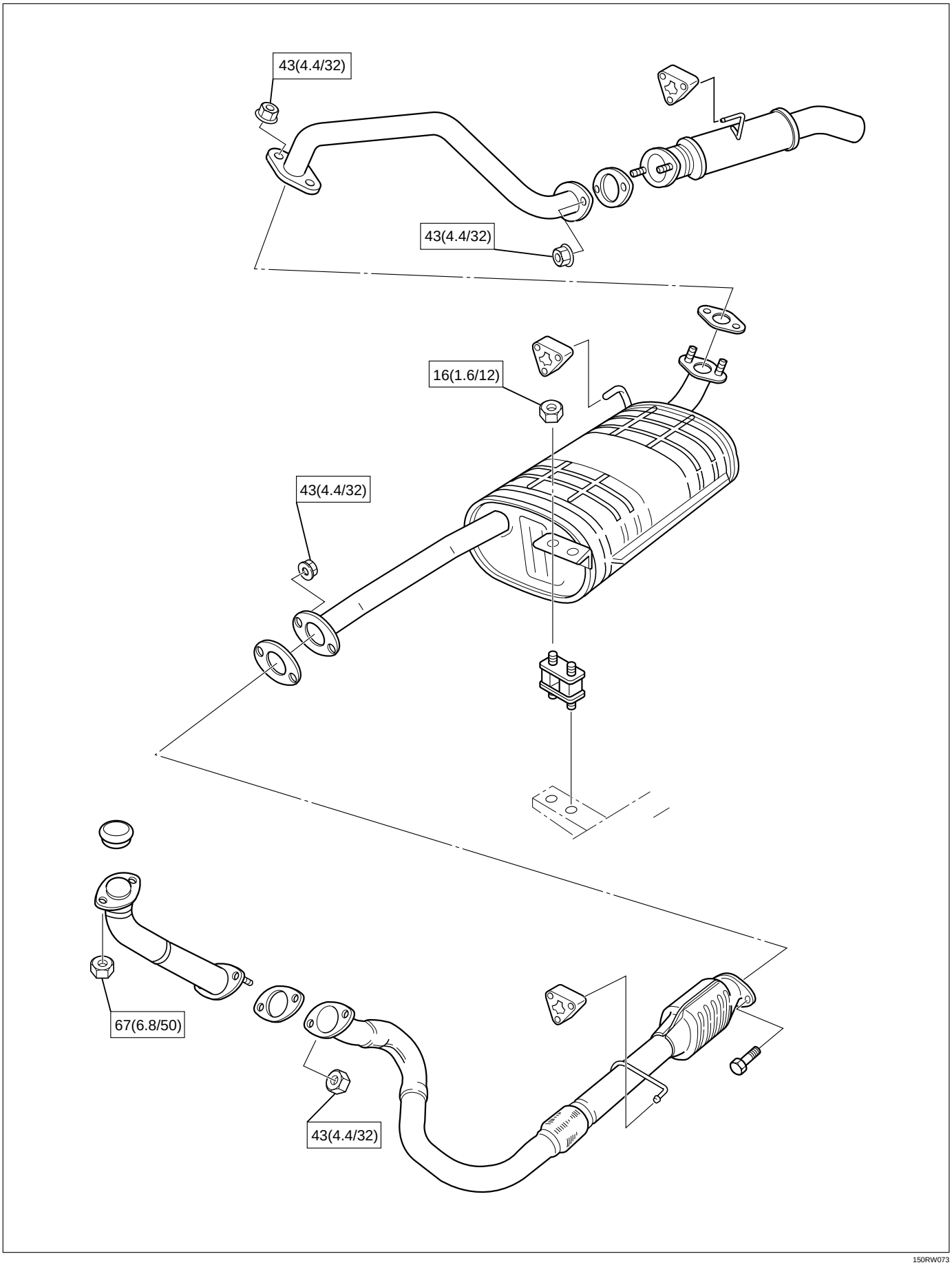

150RW073

SPECIAL TOOLS

Illustration	Tool No.	Tool Name
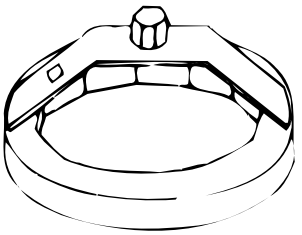 901RT034	5-8840-0203-0	Filter Wrench
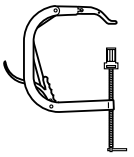 F06RV038	5-8840-2441-0	Valve Spring Compressor
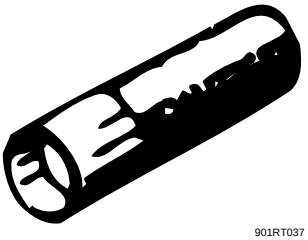 901RT037	5-8840-2033-0	Stem Seal Installer
901LX017	5-8840-9018-0	Piston Ring Compressor
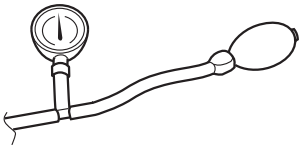 901RX00001	5-8840-0075-0	Turbocharger Pressure Gauge
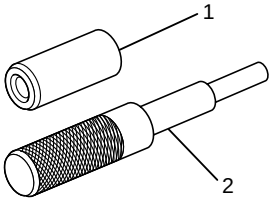 901RW182	9-8523-1212-0	Valve Guide Replacer

SPECIAL TOOLS

Illustration	Tool No.	Tool Name
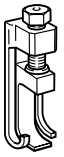 F06RW057	5-8840-2590-0	Valve Clearance Adjusting Tool
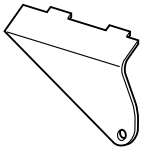 F06RW056	5-8840-2592-0	Camshaft Stopper
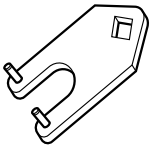 F06RV037	5-8840-2591-0	Camshaft Gear Tool
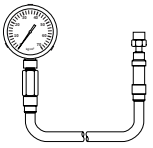 901LX057	5-8840-2675-0	Compression Gauge
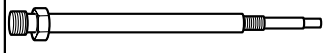 901LX056	5-8531-7002-0	Adapter: Compression Gauge
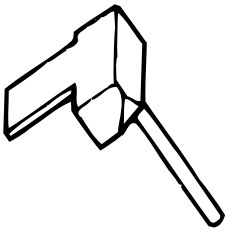 901RT042	5-8840-2153-0	Seal Cutter

SPECIAL TOOLS

Illustration	Tool No.	Tool Name
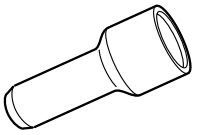 901RV061	9-8522-0021-0	Crankshaft Gear Installer
901LX030	5-8840-0266-0	Angle Gauge
901LX040	5-8840-2360-0	Rear Oil Seal Remover
901LX025	5-8840-2359-0	Rear Oil Seal Installer
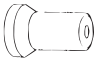 901LX039	5-8840-2061-0	Front Oil Seal Installer

ENGINE ASSEMBLY

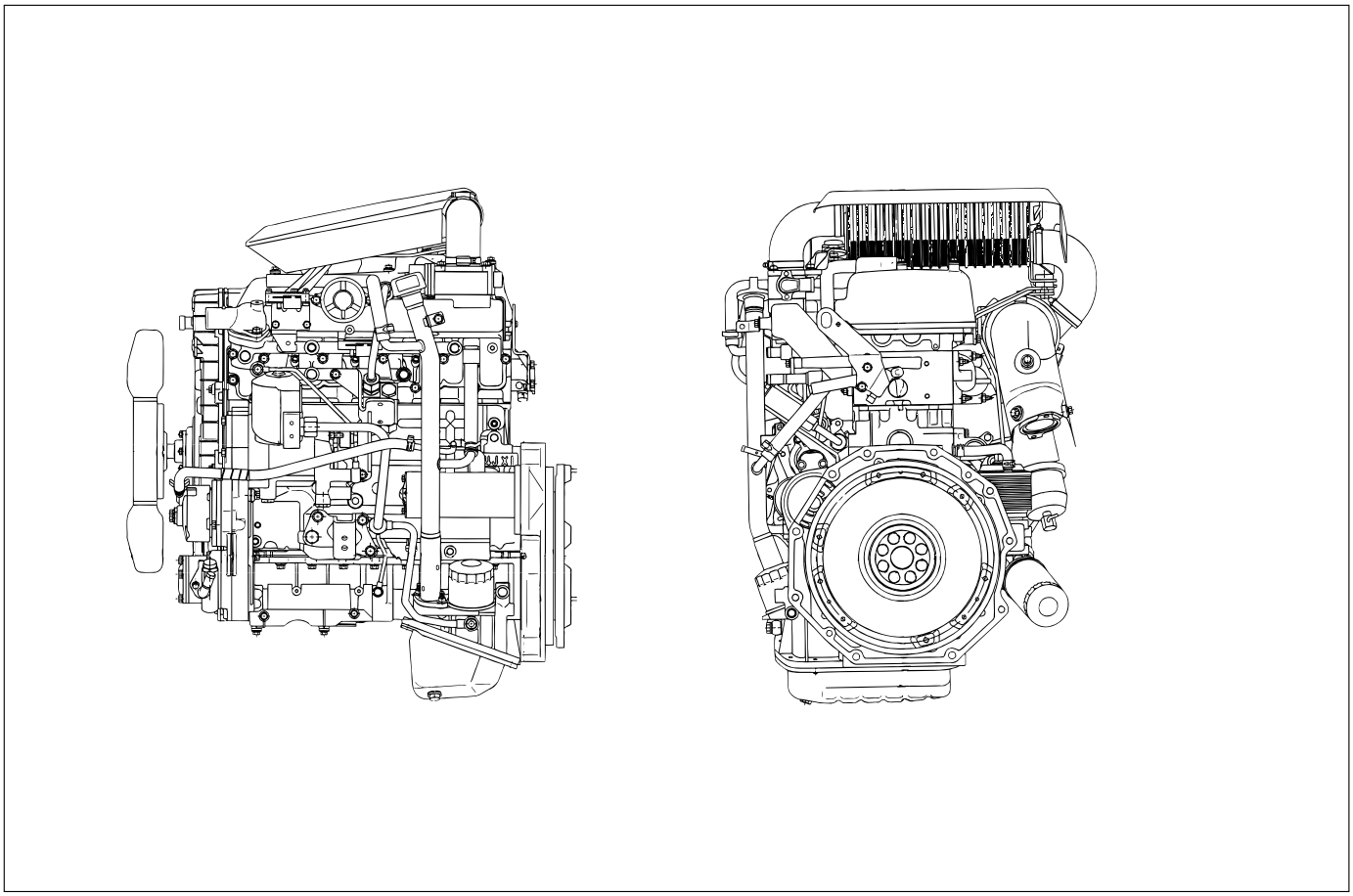

F06RW048

REMOVAL

1. Remove battery.
2. Drain engine coolant
3. Disconnect window washer hose and remove engine hood.
4. Radiator Hose
   1) Disconnect upper and lower hoses from engine side.
5. Fan Shroud
   1) Disengage clips and remove upper and lower fan shrouds.
6. Cooling Fan Assembly
   1) Remove cooling fan assembly fixing nuts, cooling fan assembly.
7. Radiator Assembly
   1) Remove bracket and radiator assembly.
8. Air Cleaner Cover & Air Duct
9. Intercooler Assembly
   1) Refer to “Intercooler” in this manual.
10. Engine Ground Cable
    1) Disconnect ground cable from A/C compressor bracket.
11. AC Generator Harness
    1) Disconnect B terminal and harness connector from AC generator.
12. A/C Compressor Assembly
    1) Disconnect magnetic clutch harness connector.
    2) Remove A/C compressor fixing bolt (rear under side of compressor).
    3) Remove fixing bolts (upper and front lower side of compressor) and set A/C compressor assembly with pipe lines on battery carrier.

13 Vacuum Hose
   1) Disconnect vacuum hose from vacuum pump.

14. Starter Harness
    1) Disconnect B terminal and put cable harness close to chassis side.
    2) Disconnect S terminal connector.
15. Engine Harness
    1) Disconnect engine harness close to engine side.
16. Fuel Pipe
    1) Remove fuel pipe from fuel pump and take care not to spill fuel and let dust enter.
17. Engine Ground Cable
    1) Disconnect ground cable from left rear side of timing gear case.
18. Vacuum Hose: Vacuum Tank
    Disconnect vacuum hose from vacuum pump side.
19. Glow Plug Harness
20. Transmission Assembly
    1) Set transmission support tool under the transmission.

2) Remove transmission rear mount.
3) Remove transmission fixing bolt from rear of engine assembly except two bolts.
4) Carefully hang up engine assembly with a hoist.
5) Remove remaining two transmission fixing bolts.
6) Remove transmission assembly.
7) Remove heater hose.
8) Disconnect wire harness connector for shift on the fly.
9) Remove vacuum hose.

21. Prepare Engine Stand
22. Engine Assembly
    1) Remove engine mount fixing bolts.
    2) Carefully hang up the engine assembly.
    3) Take out the engine assembly making sure not to damage the brake oil pipe and other pipe etc.

INSTALLATION

1. Engine assembly
    1) Install engine in mounting position by using hoist.
2. Transmission Assembly
    1) Refer to transmission installation steps in section 7.
3. Engine Mounting
    1) After all fixing bolts (left: two bolts, rights: two bolts) were inserted in every hole, tighten fixing bolts to the specified torque.

    Torque: 40 N·m (4 kg·m/29 lb·ft)
4. Glow Plug Harness
5. Vacuum Hose
    1) Connect Vacuum Hose to Vacuum Pump
6. Engine Ground Cable
7. Fuel Pipe
    1) Install fuel pipe to fuel pump.
8. Engine Harness
9. Starter Harness
10. A/C Compressor Assembly
    1) Tighten temporarily the fixing bolts (upper and front lower sides of compressor.)
    2) Tighten fixing bolt (rear under side of compressor) to the specified torque.
    3) Tighten fixing bolts (front upper and lower sides of compressor) to the specified torque.

    Torque: 40 N·m (4 kg·m/29 lb·ft)

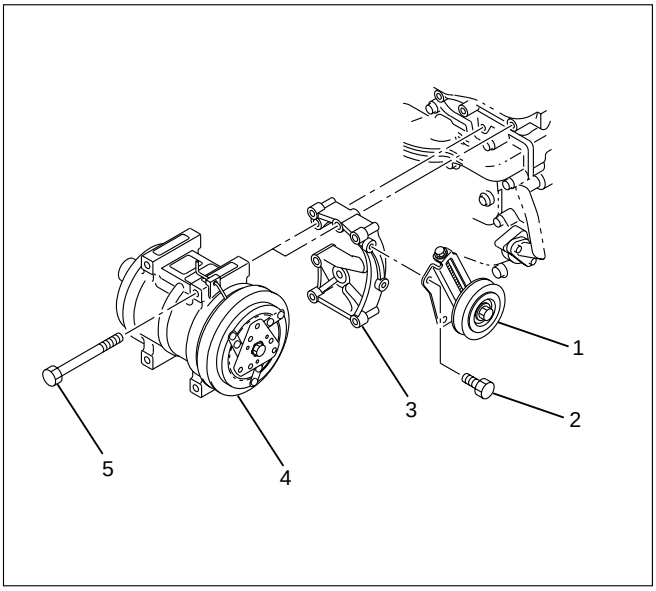

F06RW054

Legend
(1) Tensioner
(2) Bolt
(3) Bracket
(4) A/C compressor
(5) Bolt

11. A.C Generator Harness
12. Engine Ground Cable
    1) Tighten ground cable to A/C compressor bracket.
13. Air Cleaner cover & Duct
14. Intercooler Assembly
    1) Refer to “Intercooler” in this manual.
15. Radiator Assembly
    1) Install rubber cushion in under left and right part of radiator and position radiator.
    2) Fix radiator with bracket.
16. Cooling Fan Assembly
    1) Install cooling fan assembly and tighten fixing bolts to the specified torque.

    Torque: 8 N·m (0.8 kg·m/5.8 lb ft)
17. Fan Shroud
18. Radiator Hose
    1) Connect upper and lower hose to engine side.
    2) Pour coolant into radiator.
19. Install battery.
20. Connect window washer hose and install engine hood.

ENGINE MOUNT (RH)

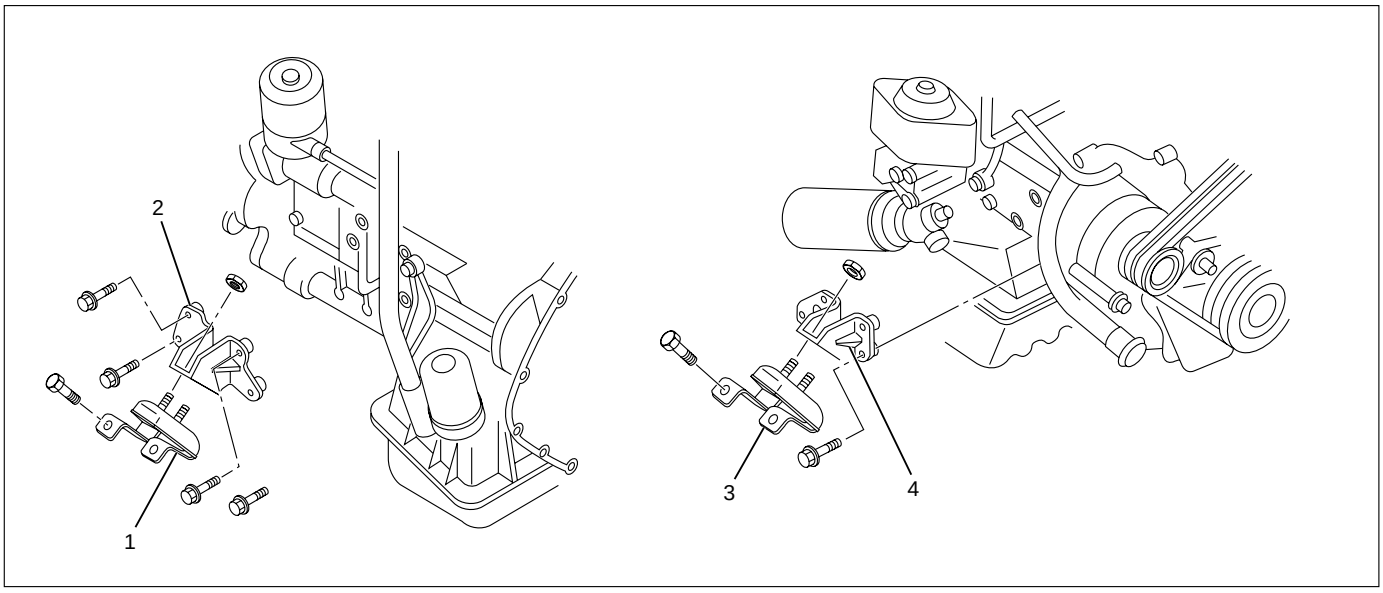

022RW018

Legend

(1) Rubber Engine Mount (LH)
(2) Engine Mounting Bracket (LH)
(3) Rubber Engine Mount (RH)
(4) Engine Mounting Bracket (RH)

REMOVAL

1. Disconnect battery ground cable
2. Hang the engine assembly.
3. Rubber engine mount.
   1) Remove bolts from chassis frame bracket.
   2) Remove nuts from rubber engine mount and engine mounting bracket.
4. Remove bolt which is fixed between engine and mounting bracket then remove the engine mounting bracket.

INSTALLATION

- Tighten the fixing bolts to the specified torque.

1. Engine mounting bracket to cylinder block.

Torque : 40 N·m (4 kg·m/29 lb ft) (for M10)
127 N·m (13 kg·m/94 lb ft) (for M14)

2. Rubber engine mount to chassis frame and engine mounting bracket.

Torque :40 N·m (4 kg·m/29 lb ft)

ENGINE MOUNT (LH)

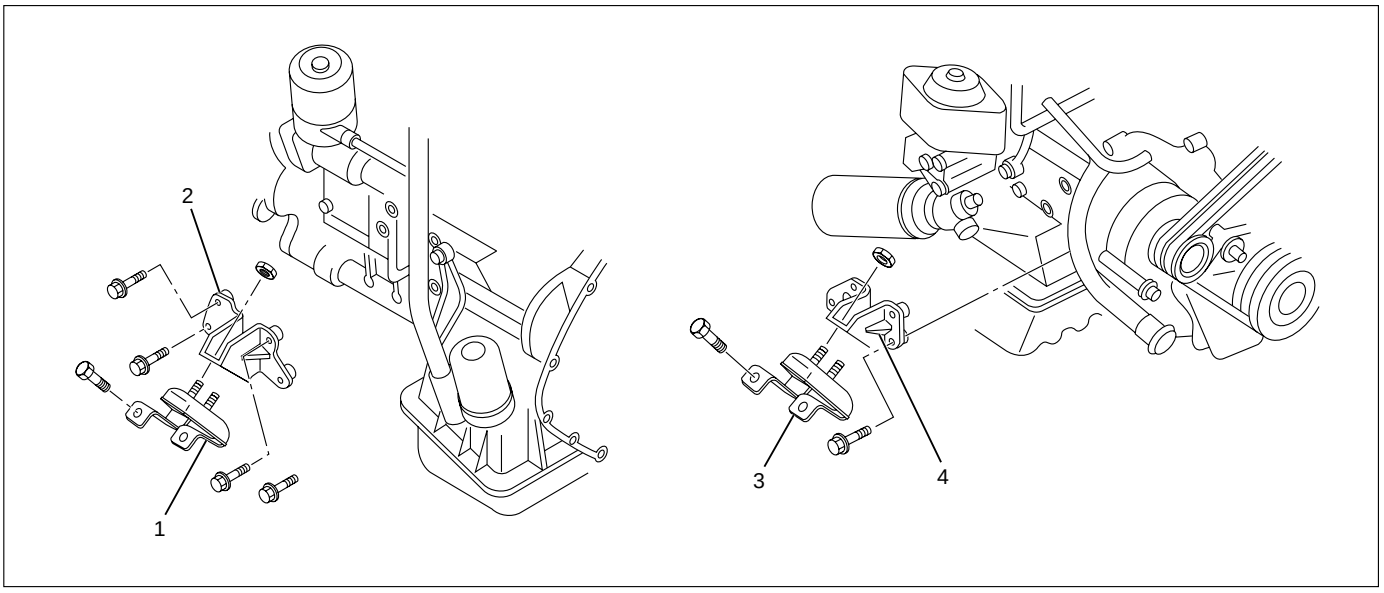

022RW018

Legend

(1) Rubber Engine Mount (LH)
(2) Engine Mounting Bracket (LH)
(3) Rubber Engine Mount (RH)
(4) Engine Mounting Bracket (RH)

REMOVAL

1. Disconnect battery ground cable
2. Hang the engine assembly.
3. Rubber engine mount.
   1) Remove bolts from chassis frame bracket.
   2) Remove nuts from rubber engine mount and engine mounting bracket.
4. Remove bolt which is fixed between engine and mounting bracket then remove the engine mounting bracket.

INSTALLATION

- Tighten the fixing bolts to the specified torque.

1. Engine mounting bracket to cylinder block.

Torque : 40 N·m (4 kg·m/29 lb ft) (for M10)
127 N·m (13 kg·m/94 lb ft) (for M14)

2. Rubber engine mount to chassis frame and engine mounting bracket.

Torque :40 N·m (4 kg·m/29 lb ft)

INTERCOOLER

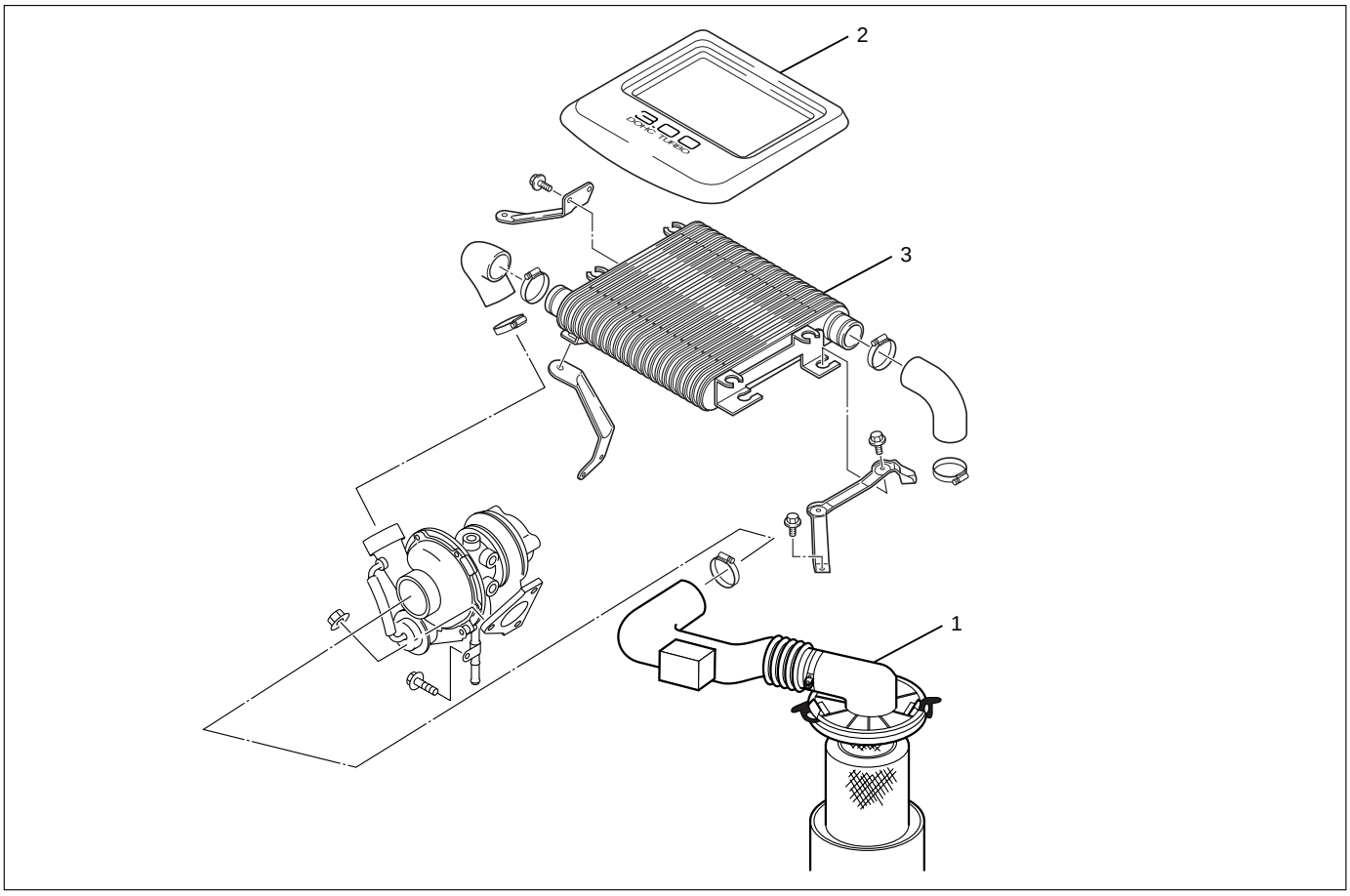

036RW012

Legend

(1) Air Cleaner Cover & Air Duct
(2) Intercooler Cover
(3) Intercooler Assembly

REMOVAL

1. Disconnect the battery ground cable.
2. Remove air cleaner cover and air duct.
3. Remove intercooler cover.
4. Remove intercooler assembly.
   1) Remove rubber hose from between intercooler outlet and intake manifold inlet.
   2) Remove rubber hose from between turbocharger outlet and intercooler inlet.
   3) Remove intercooler assembly fixing bolts from the bracket, remove intercooler assembly.

INSTALLATION

1. Intercooler assembly
   1) Connect outlet hose to intake manifold.

Torque : 4 N·m (0.4 kg·m/3 lb ft)

   2) Connect inlet hose from turbocharger to intercooler.

Torque : 4 N·m (0.4 kg·m/3 lb ft)

   3) Install intercooler and tighten fixing bolts to the specified torque.

Torque : 20 N·m (2.0 kg·m/14.5 lb ft)

2. Install intercooler cover.
3. Install air cleaner cover and air duct.
4. Connect the battery ground cable.

CYLINDER HEAD COVER

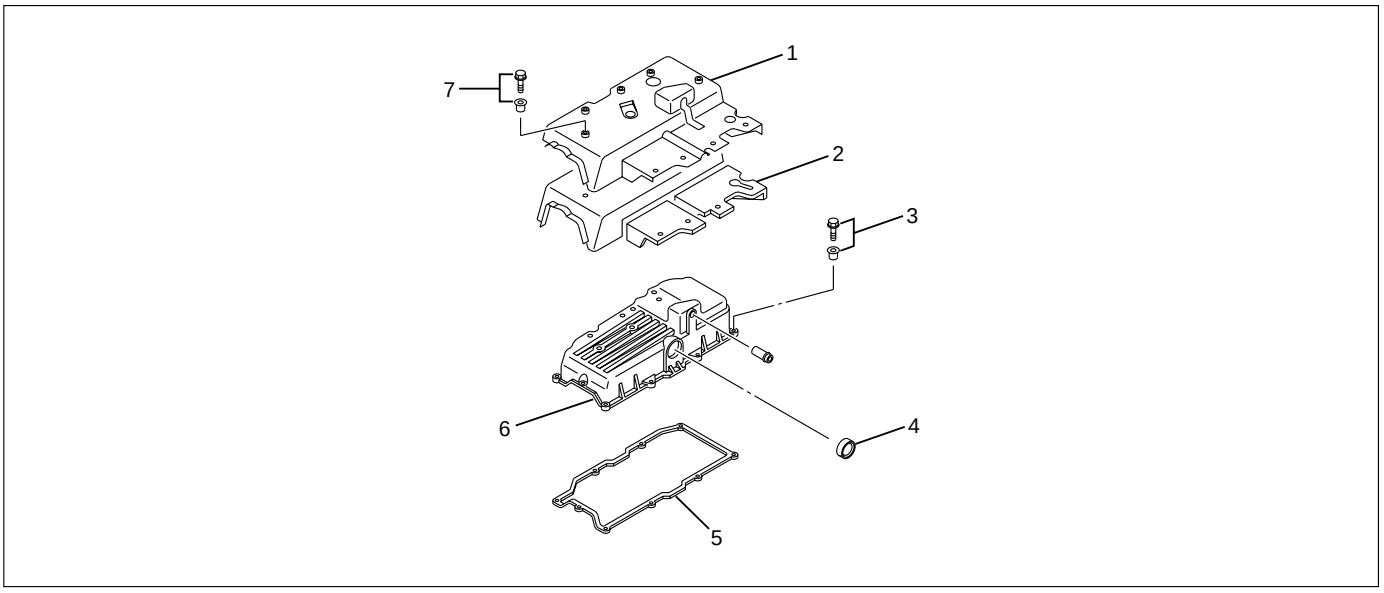

010RW010

Legend

(1) Noise Insulator Cover
(2) Insulator
(3) Bolt
(4) Oil Seal
(5) Gasket
(6) Cylinder Head Cover
(7) Bolt

REMOVAL

1. Disconnect battery ground cable.
2. Remove clip, remove air cleaner cover and air duct.
3. Remove intercooler assembly.
   Refer to “Intercooler” in this manual.
4. Remove PCV hose.
5. Remove bolts which fix noise insulator cover then remove noise insulator cover and insulator.
6. Remove high pressure oil pipe at cylinder head side.
   Take care when removing the injector oil pipe, because sometimes, during removal, your hand can be injured by the remaining high pressure oil.

INSTALLATION

1. Cylinder head cover.
   1) Install the cylinder head cover gasket to cylinder head cover.
   2) The gasket must be set perfectly with no loose areas.
   3) Apply liquid gasket (TB1207B or equivalent) to the rubber seal of the camshaft end, injector harness gasket area and No. 1 camshaft bracket.

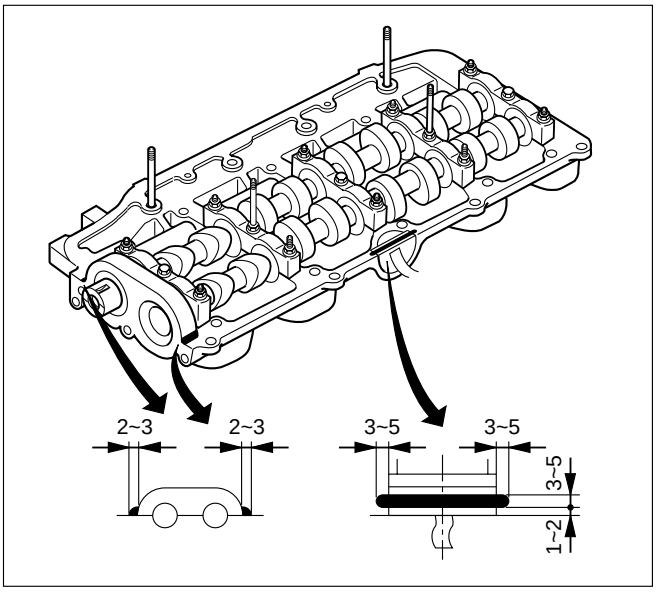

012RW119

   4) Tighten cylinder head cover fixing bolts to the specified torque.

Torque : 9 N·m (0.9 kg·m/6.5 lb ft)

2. Fill with about 300 cc of engine oil from the high pressure oil pipe installation port of the oil rail using an oil rail filler. If assembled without filling the oil rail with oil, the time for starting the engine will be longer.
3. Install the high pressure oil pipe immediately and tighten the sleeve nut to the specified torque.

Torque : 80 N·m (8.1 kg·m/57.9 lb ft)

NOTE: Do not scratch the oil seal on the cylinder head during installation of the high pressure oil pipe.

4. Install the noise insulator and its cover on the cylinder head cover.

NOTE: Do not catch the injector harness with the noise insulator cover.

5. Connect the PCV hose.
6. Install the intercooler assembly.
   Refer to “Intercooler” in this manual.
7. Install air cleaner cover and air duct.
8. Connect battery ground cable.

INTAKE MANIFOLD

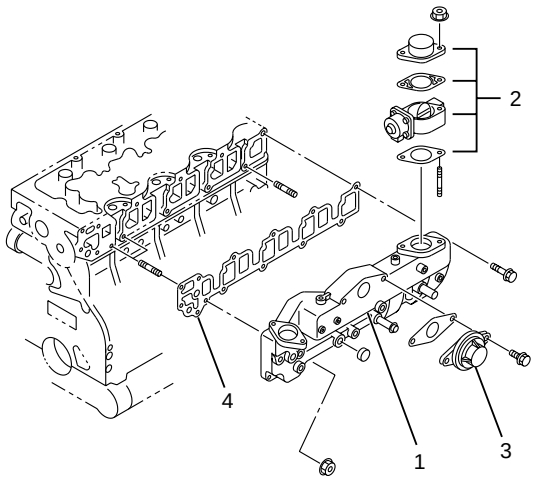

025RX001

Legend

(1) Intake Manifold
(2) Throttle Valve Assembly
(3) EGR Valve
(4) Gasket

REMOVAL

1. Drain engine coolant and disconnect water hose from thermostat hosing.
2. Remove intercooler assembly
   Refer to “Intercooler” in this manual.
3. Remove bracket bolt of oil level gauge guide tube.
4. Remove PCV Hose.
5. Remove hoses from EGR, EGR vacuum sensor and inlet/outlet of heater.
6. Disconnect harness connector form MAP sensor, EGR vacuum sensor, ETC sensor, water temperature unit, IAT sensor and EVRV.
7. Remove high pressure oil pipe.
8. Remove the two way valve.
9. Remove fuel pipe from between intake manifold and high pressure oil pump.
10. Remove fixing bolts and nuts on the intake manifold, then remove the intake manifold assembly.

INSTALLATION

1. Install the intake manifold, tighten bolts and nuts to the specified torque.

Torque : 20 N·m (2.0 kg·m/14.5 lb ft) for bolt and nut

2. Install the fuel pipe and tighten to the specified torque.

Torque :
M16 bolt (apply engine oil) 4 N·m (0.4 kg·m/2.9 lb ft)
Cap nut (M10) 13N·m (1.3 kg·m/9.4 lb ft)
Fuel pipe (M10 apply engine oil) 14 N·m (1.4 kg·m/10 lb ft)

3. Install two way valve.

Torque : 20 N·m (2.0 kg·m/14.5 lb ft)

4. Fill with about 300 cc of engine oil from the high pressure oil pipe installation port of the oil rail using an oil filler. If assembled without filling the oil rail with oil, the time for starting the engine will be longer.
5. Install the high pressure oil pipe immediately and tighten the sleeve nut to the specified torque.

Torque : 80 N·m (8 kg·m/57.9 lb ft)

6. Reconnect harness connector to MAP sensor, EGR vacuum sensor, ETC sensor, Water temperature unit, IAT sensor and EVRV.
7. Connect the hoses to EGR valve, EGR vacuum sensor, and water inlet/outlet pipe for heater.
8. Connect PCV hose.
9. Install the oil level gauge guide tube and tighten bracket bolt.
10. Install the intercooler assembly.
    Refer to “Intercooler” in this manual.
11. Connect the hose to the thermostat housing and fill with engine coolant.

EXHAUST MANIFOLD

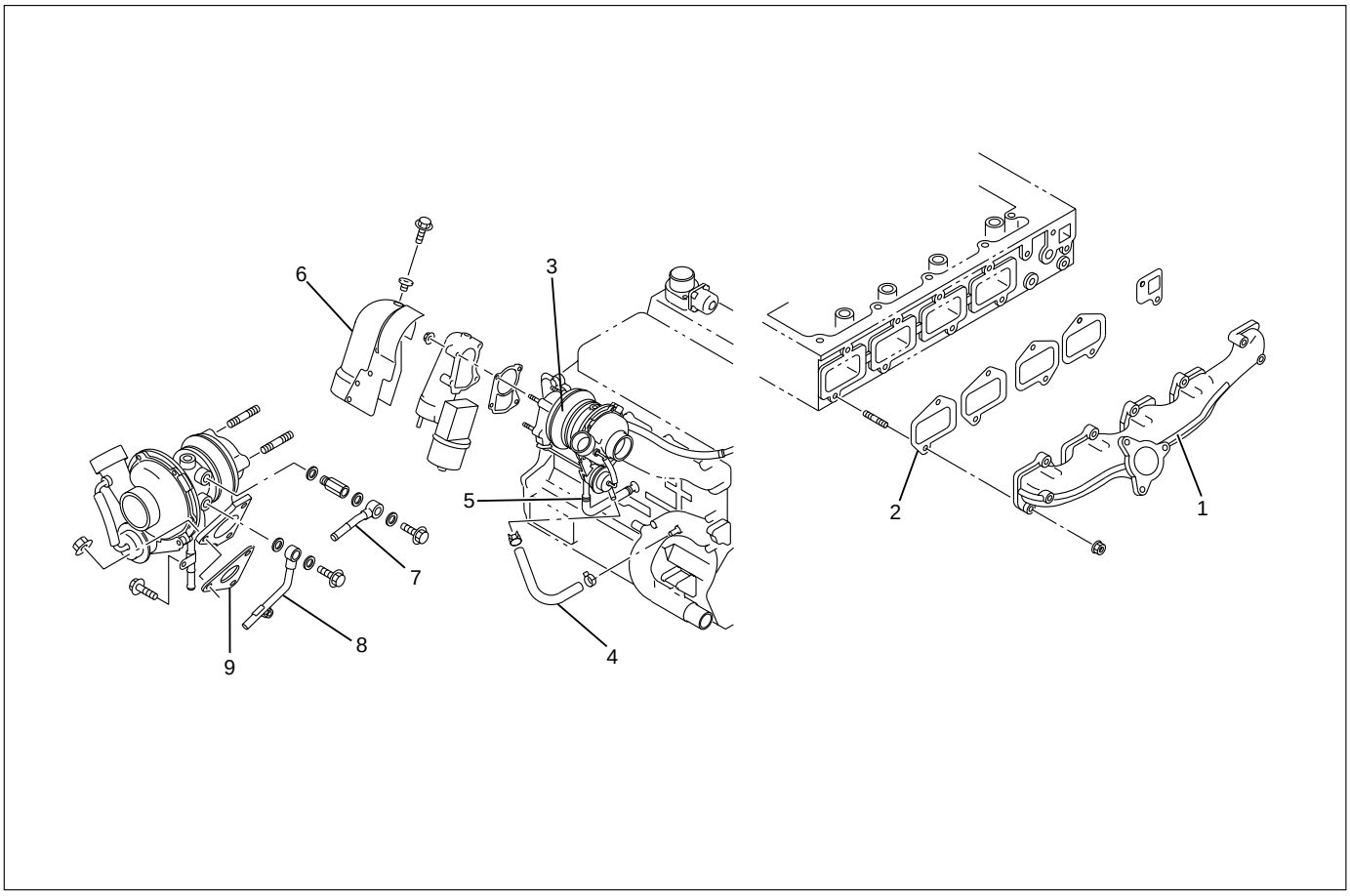

025RW023

Legend

(1) Exhaust Manifold
(2) Gasket
(3) Turbocharger Assembly
(4) Water Hose
(5) Water Hose
(6) Heat Protector
(7) Oil Pipe
(8) Oil Pipe
(9) Gasket

REMOVAL

1. Remove the hose from both turbocharger outlet and intake manifold inlet side, then remove intercooler assembly.
2. Loosen belt tensioner, remove A/C compressor assembly.
3. Remove heat protector from turbocharger.
4. Remove water hoses and oil pipes from turbocharger.
5. Remove turbocharger assembly from exhaust manifold.
6. Remove exhaust manifold fixing nuts, then remove exhaust manifold.

INSTALLATION

1. Install gasket on the exhaust manifold and tighten to the specified torque.

Torque : 30 N·m (3.1 kg·m/22 lb ft)

2. Install turbocharger on the exhaust manifold.

Torque : 27 N·m (2.8 kg·m/20.2 lb ft)

3. Install water hoses and oil pipes.
4. Install heat protector to turbocharger.

Torque : 9 N·m (0.9 kg·m/6.5 lb ft)

5. Install A/C compressor assembly and readjust belt tensioner.
6. Install the intercooler assembly in the normal position.

   Connect both hoses to turbocharger and intake manifold.

TURBOCHARGER

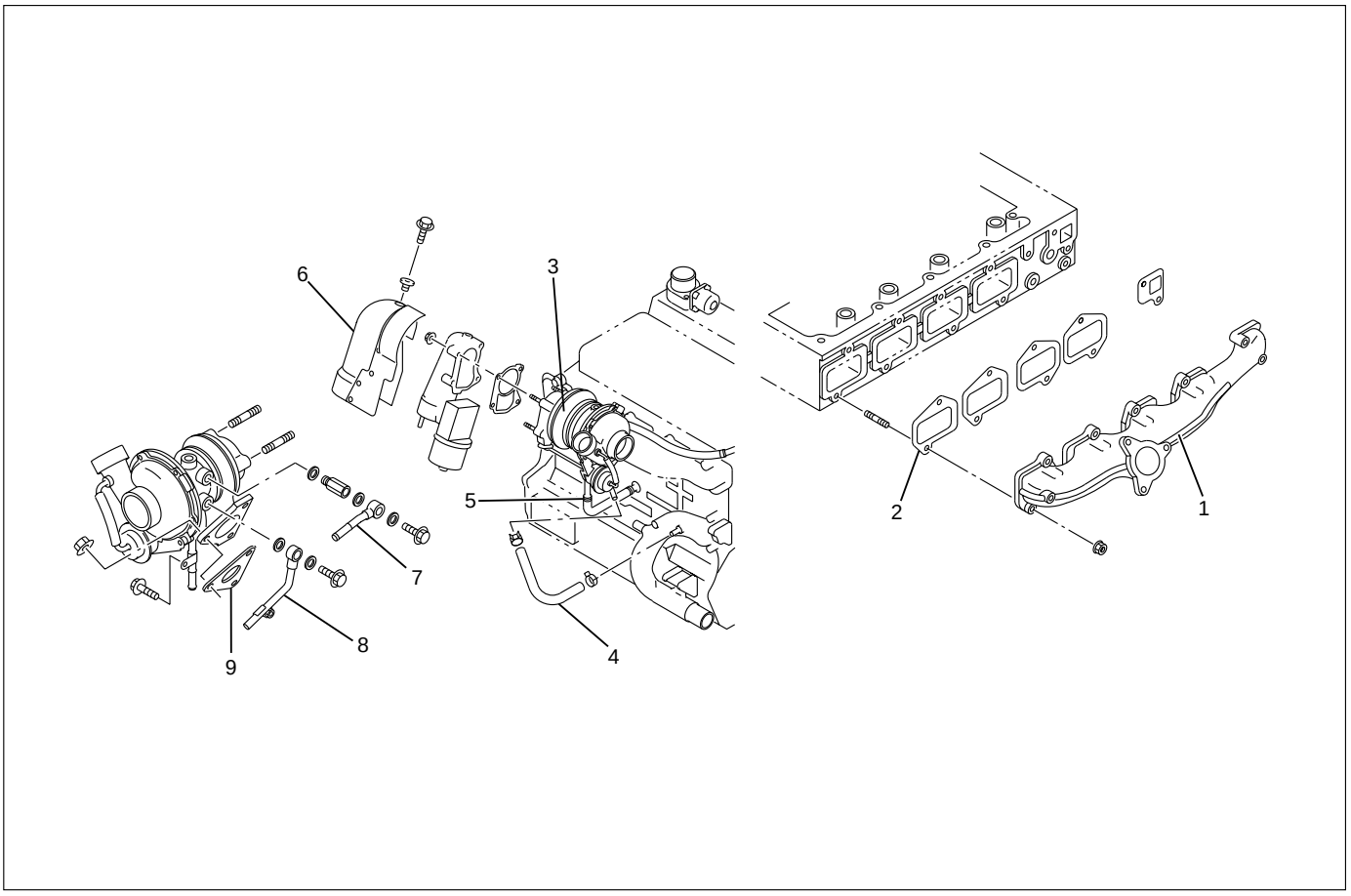

025RW023

Legend

(1) Exhaust Manifold
(2) Gasket
(3) Turbocharger Assembly
(4) Water Hose
(5) Water Hose
(6) Heat Protector
(7) Oil Pipe
(8) Oil Pipe
(9) Gasket

REMOVAL

1. Remove battery.
2. Drain engine coolant.
3. Remove air cleaner cover with air duct.
4. Remove intercooler assembly.
   Refer to “Intercooler” in this manual.
5. Remove water pipe for turbocharger inlet.
6. Remove oil pipe for turbocharger.
   1) Remove eye bolt from turbocharger.
   2) Plug oil port on the turbocharger to prevent entry of foreign materials.
7. Remove oil drain pipe from turbocharger.
8. Remove water outlet pipe.
9. Remove heat protector.
10. Remove exhaust adaptor.
11. Remove turbocharger assembly from exhaust manifold.

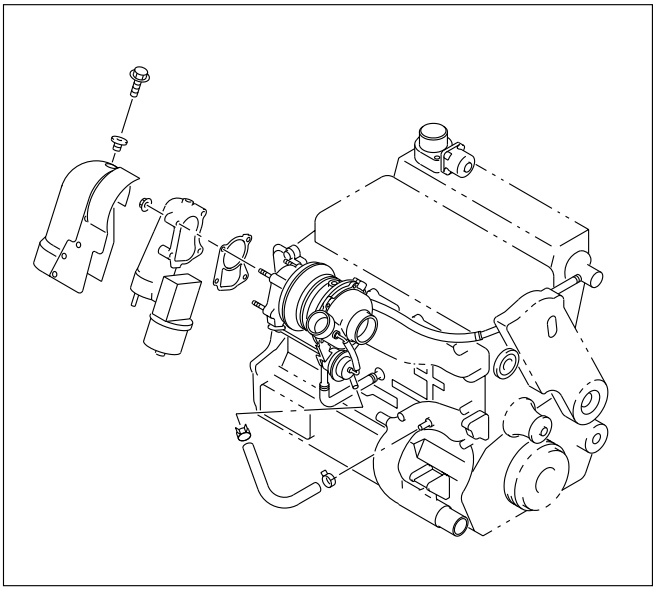

036RW006

INSTALLATION

1. Install turbocharger assembly to exhaust manifold, tighten to the specified torque.

Torque : 27 N·m (2.8 kg·m/20.2 lb ft)

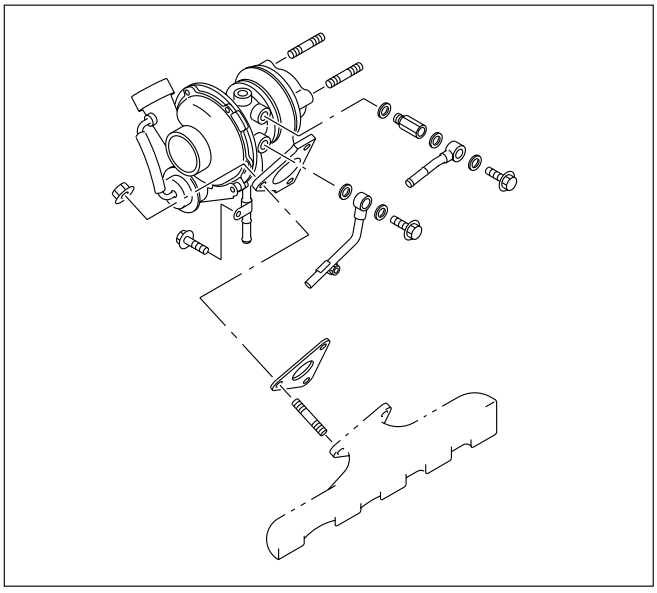

036RW005

2. Install exhaust adaptor.

Torque : 27 N·m (2.8 kg·m/20.2 lb ft)

3. Install heat protector.
4. Install water outlet pipe with gasket.

Torque : 9 N·m (0.9 kg·m/6.5 lb ft)

5. Install turbocharger oil drain pipe.

Torque : 9 N·m (0.9 kg·m/6.5 lb ft)

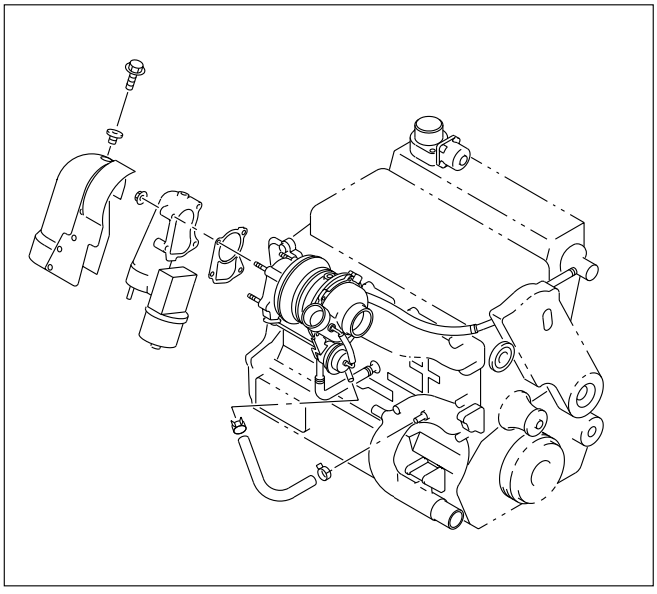

036RW006

6. Install oil supply pipe to turbocharger.
   1) Fill with 100 cc engine oil at the turbocharger oil supply hole before installing the oil pipe.
   2) Turn the turbocharger by hand to lubricate turbocharger shaft.
   3) Install oil supply pipe with new gasket to the turbocharger and tighten oil supply pipe bolts to the specified torque.

Torque : 22 N·m (2.2 kg·m/15.9 lb ft) for M10
54 N·m (5.5 kg·m/39.8 lb ft) for M14

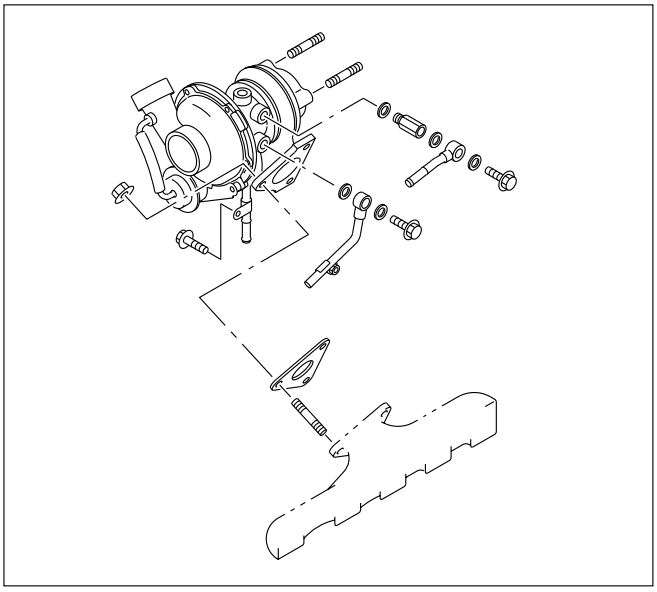

036RW005

7. Install water inlet pipe with new gasket, tighten to the specified torque.

Torque : 9 N·m (0.9 kg·m/6.5 lb ft)

8. Install intercooler assembly.
   Refer to “Intercooler” in this manual.
9. Install air cleaner cover with air duct, connect both side hoses.
10. Fill with engine coolant.
11. Install the battery and connect battery cables.

CYLINDER HEAD

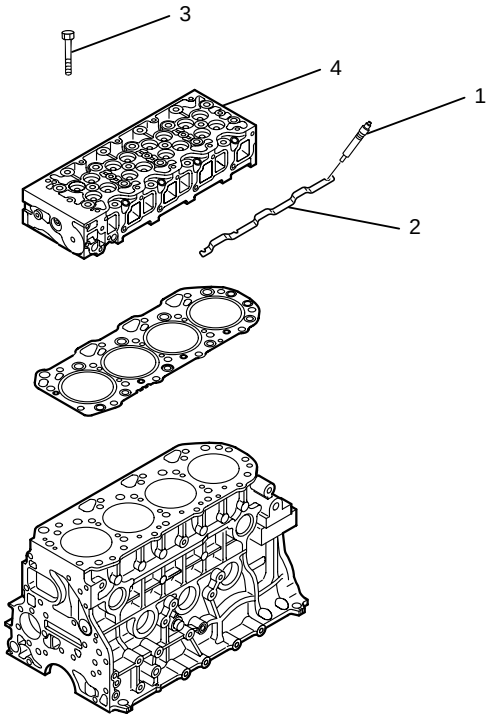

012RW096

Legend

(1) Glow Plug
(2) Plate
(3) Cylinder Head Bolt
(4) Cylinder Head

NOTE:

- During disassembly, be sure that the valve train components are kept together and identified so that they can be re-installed in their original locations.
- Before removing the cylinder head from the engine and before disassembling the valve mechanism, do a compression test and note the results.

DISASSEMBLY

1. Injector Assy
2. Glow Plug and Glow Plug Connector
3. Cylinder Head Assembly
   - Refer to “Cylinder Head Gasket”

CLEAN

- Cylinder head bolts
- Cylinder head
  Carefully remove all varnish, soot and carbon on the bare metal. Do not use a motorized wire brush on any gasket sealing surface.

INSPECTION AND REPAIR

Make the necessary adjustments, repairs, and part replacements if excessive wear or damage is discovered during inspection.

- Cylinder head gasket and mating surfaces for leaks, corrosion and blow-by. If the gasket has failed, determine the cause;
  - Improper installation
  - Loosen or warped cylinder head
  - Insufficient torque on head bolts
  - Warped cylinder block surface

1. Cylinder head bolts for damaged threads or stretching and damaged heads caused by improper use of tools.

CAUTION: Suspected bolts must be replaced.

2. Cylinder head for cracks, especially between valve seats and in the exhaust ports.
3. Cylinder head deck for corrosion, sand particles in head and porosity.

CAUTION: Do not attempt to weld the cylinder head. Replace it.

4. Cylinder head lower surface for flatness.

   Use a straight edge and a feeler gauge to measure the cylinder head lower surface warpage.

   If the measured values exceed the specified limit, the cylinder head must be replaced.

   Cylinder Head Lower Face Warpage:
   Standard: 0.075 mm (0.0029 in) or less
   Limit: 0.50 mm (0.0197 in)

   Cylinder Head Height:
   Standard: 95 mm (3.740 in)

5. Water jacket sealing plugs seating surfaces.
6. Use a straight edge and a feeler gauge to measure the manifold cylinder head fitting face warpage.

   If the measured values exceed the specified limit, the manifold must be replaced.

   Exhaust Manifold Warpage:
   Standard: 0.05 mm (0.0020 in) or less
   Limit: 0.20 mm (0.0079 in)

CAUTION: Do not attempt to weld the cylinder head. Replace it.

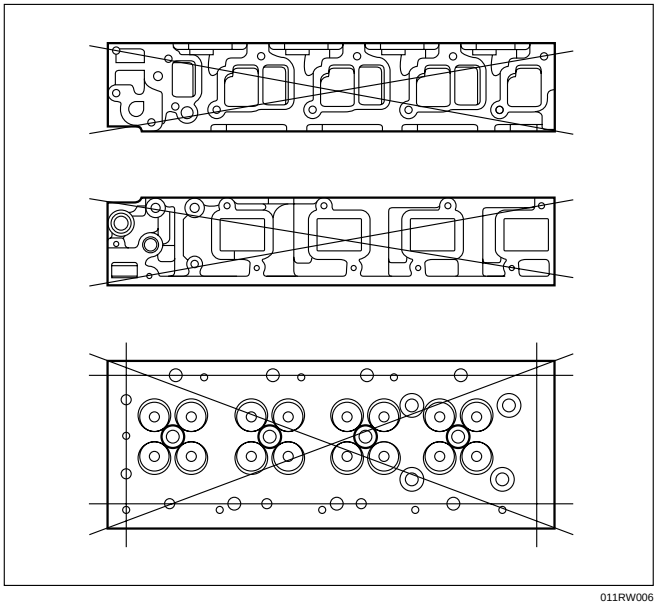

011RW006

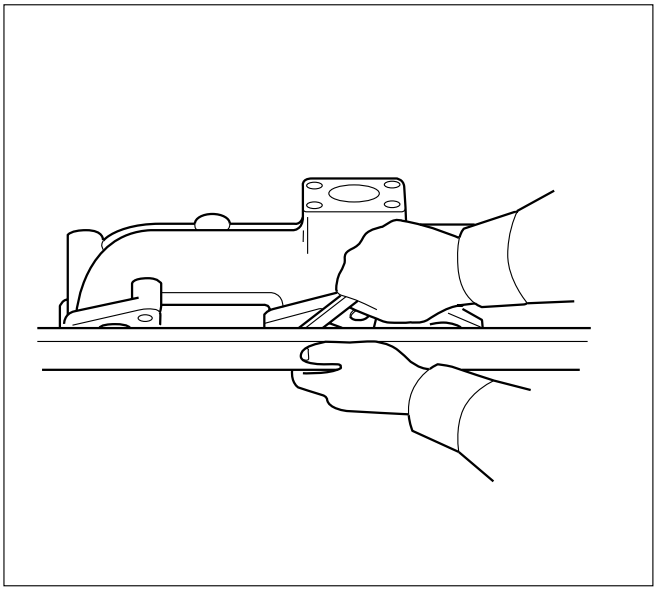

012RW053

REASSEMBLY

1. Cylinder Head
   - Refer to “Cylinder head”.
2. Glow Plug and Glow Plug Connector
   - Tighten glow plugs.

   Torque: 15 N·m (1.5 kg·m/11 lb ft)

CYLINDER HEAD GASKET

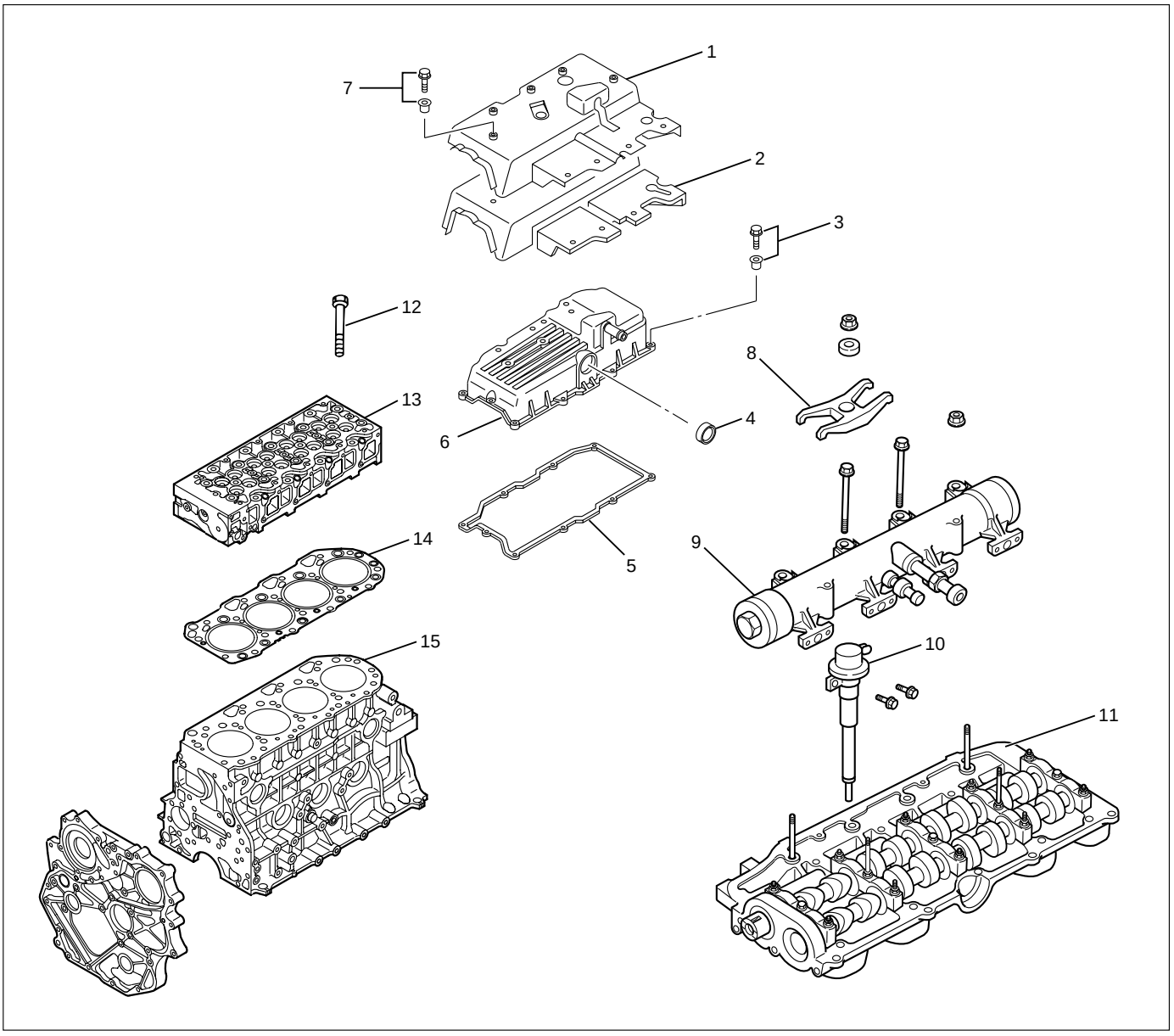

011RW047-1

Legend

(1) Cylinder Head Noise Insulator Cover
(2) Insulator
(3) Bolt and Gasket
(4) Oil Seal
(5) Gasket
(6) Cylinder Head Cover
(7) Bolt and Gasket
(8) Injector Clamp
(9) Oil Rail
(10) Injector Assembly
(11) Camshaft Carrier
(12) Cylinder Head Bolt
(13) Cylinder Head Assembly
(14) Cylinder Head Gasket
(15) Cylinder Block

REMOVAL

1. Disconnect battery ground cable.
2. Drain engine coolant.
3. Remove air cleaner and air duct.
4. Remove intercooler assembly.
   Refer to “Intercooler” in this manual.
5. Remove oil level gauge guide assembly.
6. Remove PCV hose.
7. Remove EGR vacuum hose.
8. Disconnect harness connector around the cylinder head.
9. Remove A/C compressor assembly.
10. Remove A/C compressor bracket.
11. Remove generator assembly and take out fan belt.
12. Remove heat protector and remove valve assembly.
13. Remove water hose and oil pipe from turbocharger.
14. Remove turbocharger assembly.
15. Remove water hose between thermostat and radiator.
16. Remove cylinder head noise insulator cover.

NOTE: Do not make damage to the harness.

17. Remove high pressure pipe.
18. Remove timing belt cover.
19. Remove CMP sensor bracket.
20. Remove timing belt tensioner and remove timing belt.
21. Remove camshaft pulley.
22. Remove front plate.
23. Remove water pipe between cylinder head and water pump.
24. Remove fuel pipe between fuel pump and intake manifold.
25. Remove fuel return pipe.
26. Remove intake manifold assembly.
27. Disconnect glow plug wiring and remove glow plug.
28. Remove cylinder head cover.
29. Drain oil from oil rail.
30. Disconnect injector harness connector.
31. Disconnect harness connector from oil pressure sensor and oil temperature sensor on the oil rail.
32. Disconnect injector harness assembly.
33. Remove injector clamp.
34. Remove injector spacer.
35. Remove injector assembly.
36. Remove oil rail assembly.
37. Remove camshaft carrier.
38. Remove cylinder head assembly.
39. Remove cylinder gasket.

INSTALLATION

1. Install cylinder head gasket with top mark up.

NOTE: Determine cylinder head gasket grade by measuring projection of piston head.

2. Selection cylinder head gasket.
   1) Measure the piston head projection by injector gauge.

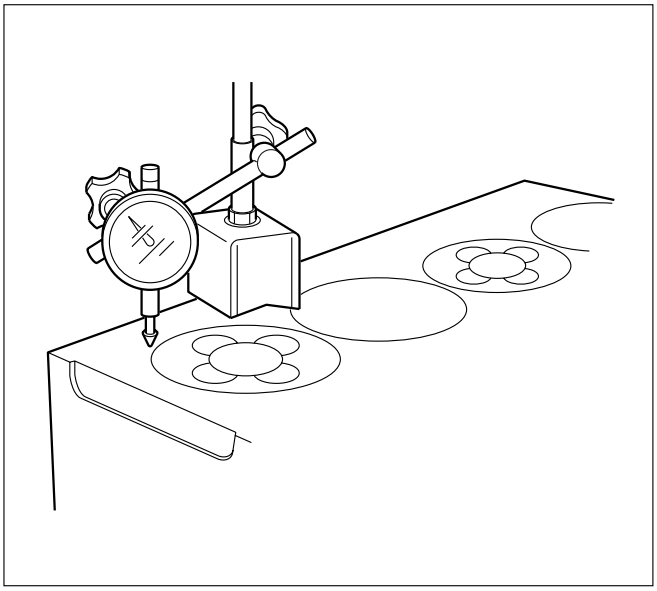

012RW073

   2) Measure the projection of piston head at the nearest possible point to the cylinder bore.
   3) Obtain the largest measurement from among all cylinders.
   4) Determine cylinder head gasket grade by maximum value of measuring projection of piston head.

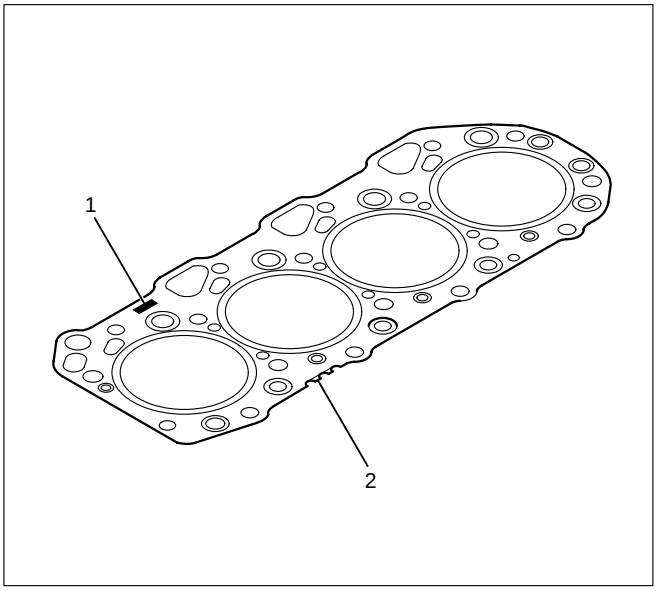

011RW043

Legend
(1) Top Mark
(2) Grade Mark

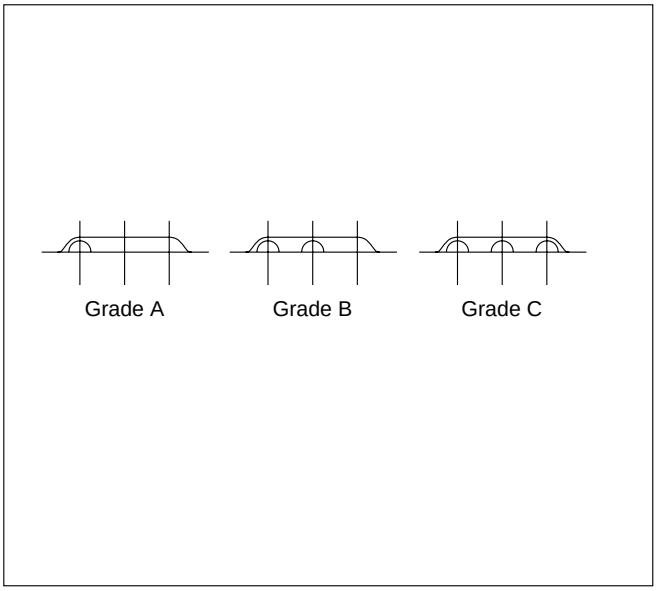

Cylinder head gasket and piston projection mm

Grade	Piston projection	Gasket thickness
A	more 0.333 to less 0.383	1.35
B	more 0.383 to less 0.433	1.40
C	more 0.433 to less 0.483	1.45

CAUTION:

- **The projection of each piston should be 0.333 mm or more and less than 0.483 mm.**
- **Maximum difference in projection between pistons should be less than 0.1 mm.**
- **If the piston projection is without standard, reassemble the engine all over again.**

3. Install cylinder head assembly, tighten bolts by angular tightening method.

Torque:

1st step; 49 N·m (4.9 kg·m/35.4 lb ft)
2nd step; 60°
3rd step; 60°

4. Install camshaft carrier assembly.
   Refer to “Camshaft” in this manual.
5. Install oil rail and injector assembly.
   Refer to “Oil rail and injector” in this manual.
6. Install injector harness to connect harness connector.

Note: Apply liquid gasket (TB 1207B or equivalent) to the rubber seal of the camshaft end, injector harness gasket area and No. 1 camshaft bracket. Refer to the Cylinder head cover.

7. Install cylinder head cover.

Torque: 9 N·m (0.9 kg·m/6.5 lb ft)

8. Install glow plug to tighten specified torque.

Torque: 15 N·m (1.5 kg·m/11 lb ft) and connect glow plug harness.

9. Install intake manifold.

Torque: 20 N·m (2.0 kg·m/14.5 lb ft)

10. Install fuel return pipe.
11. Install fuel pipe in between fuel pump and intake manifold.
12. Install water pipe in between cylinder head and water pump.
    Tighten flange bolt to the specified torque.

Torque: 20 N·m (2.0 kg·m/14.5 lb ft)

13. Install front plate.

Torque: 20 N·m (2.0 kg·m/14.5 lb ft)

14. Install camshaft pulley, tighten with angular tightening method.

    1st step 40 N·m (4.0 kg·m/29 lb ft)
    2nd step 60°

NOTE: Apply engine oil to camshaft pulley bolt.

15. Align timing mark oil pump pulley and camshaft pulley to front plate then put the timing belt and tighten tensioner bolt.

Torque: 20 N·m (2.0 kg·m/14.5 lb ft) for M8
50 N·m (5.1 kg·m/37 lb ft)

16. Install CMP sensor bracket.
17. Install timing belt cover.

Torque: 9 N·m (0.9 kg·m/6.5 lb ft)

18. Fill with about 300 cc of engine oil from the high pressure oil pipe installing port of oil rail using an oil filler.
    If assembled without filling the oil rail with oil, the time for engine start will be longer.
19. Immediately install high pressure oil pipe to tighten with specified torque.

Torque: 80 N·m (8 kg·m/57.9 lb ft)

20. Install cylinder head noise insulator cover.

Torque: 9 N·m (0.9 kg·m/6.5 lb ft)

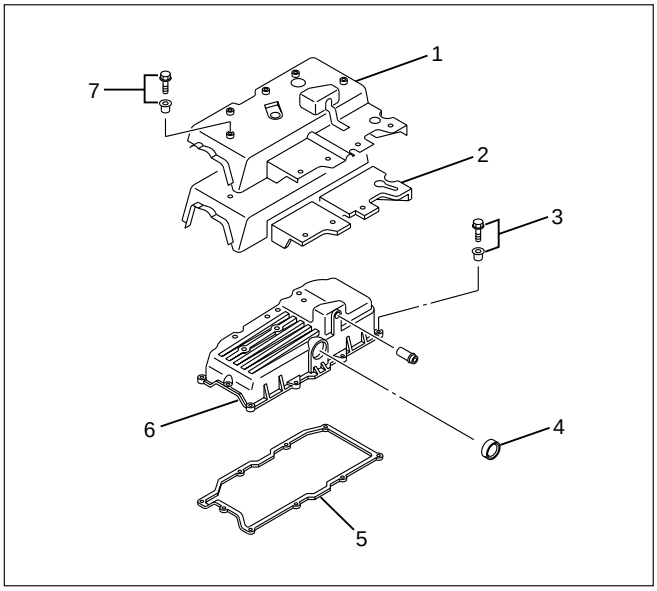

010RW010

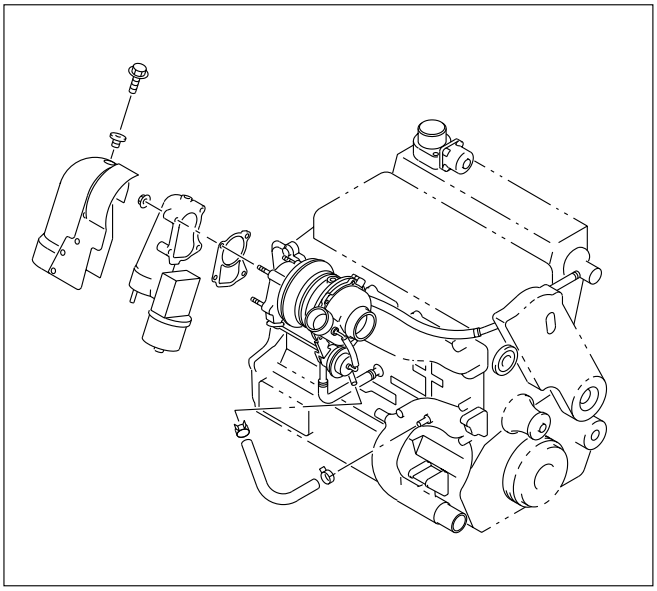

036RW006

Legend

(1) Cylinder Head Noise Insulator Cover
(2) Insulator
(3) Bolt
(4) Oil Seal
(5) Gasket
(6) Cylinder Head Cover
(7) Bolt

21. Install water hose between thermostat and radiator.
22. Install turbocharger assembly to exhaust manifold.

Torque: 27 N·m (2.8 kg·m/20.2 lb ft)

23. Install water hose and oil pipe for turbocharger.

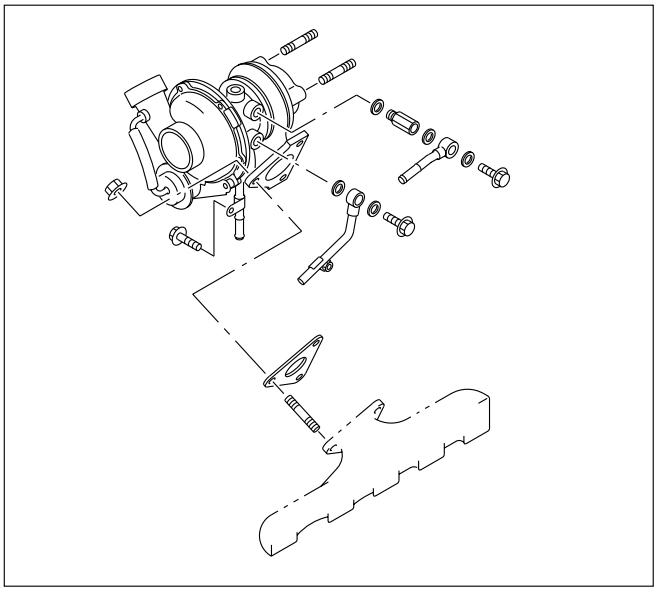

036RW005

24. Install exhaust valve assembly and heat protector.

Torque: 27 N·m (2.8 kg·m/20.2 lb ft) for valve

Torque: 9 N·m (0.9 kg·m/6.5 lb ft) for heat protector

25. Install generator assembly.

Torque: 40 N·m (4.0 kg·m/29 lb ft) for ACG bracket

Torque: 40 N·m (4.0 kg·m/29 lb ft) between ACG and bracket

Torque: 20 N·m (2.0 kg·m/14.5 lb ft) between ACG and adjuster plate

26. Fix the A/C compressor bracket and install A/C compressor.

Torque: 47 N·m (4.7 kg·m/34 lb ft) for A/C bracket

Torque: 20 N·m (2.0 kg·m/14.5 lb ft) for belt tensioner

27. Reconnect harness connector around cylinder head.
28. Connect EGR vacuum hose.
29. Install oil level gauge guide assembly.
    Tighten nuts lower portion and tighten bolt.

Torque: 20 N·m (2.0 kg·m/14.5 lb ft)

30. Install intercooler assembly.
    Refer to “Intercooler” in this manual.
31. Install air duct between air cleaner and turbocharger.
32. Fill engine coolant.
33. Reconnect battery.

CAMSHAFT

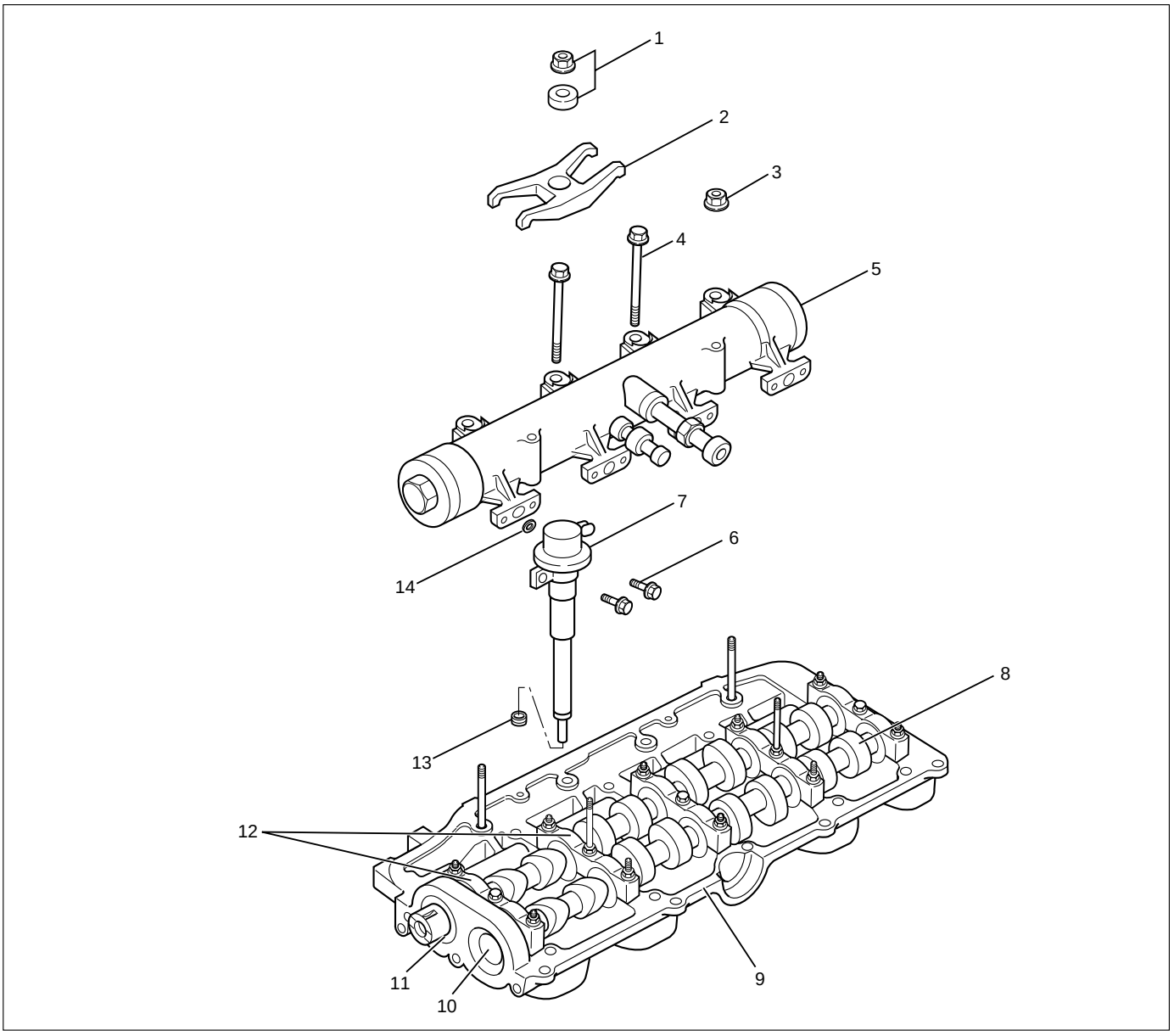

012RW022-1

Legend

(1) Nut and Washer
(2) Injector Clamp
(3) Nut
(4) Bolt
(5) Oil Rail Assembly
(6) Bolt
(7) Injector Assembly
(8) Camshaft
(9) Camshaft Carrier
(10) Plug
(11) Oil Seal
(12) Camshaft Bracket
(13) Gasket
(14) Gasket

DISASSEMBLY

1. Injector clamp and spacer.
2. Injector assembly
3. Oil rail assembly
4. Camshaft bracket
5. Camshaft
6. Oil seal
7. Plug

NOTE: Before starting disassembly above, drain oil from oil rail to prevent oil from entering the cylinder.

REASSEMBLY

1. Camshaft
   1) Before reassembling the camshaft to the camshaft carrier, align the holes between the main gear and the sub gear on the intake side of the camshaft gear with a special tool.
   2) Set lock pin to gear holes from sub gear side.

   Camshaft Gear Tool: 5-8840-2591-0

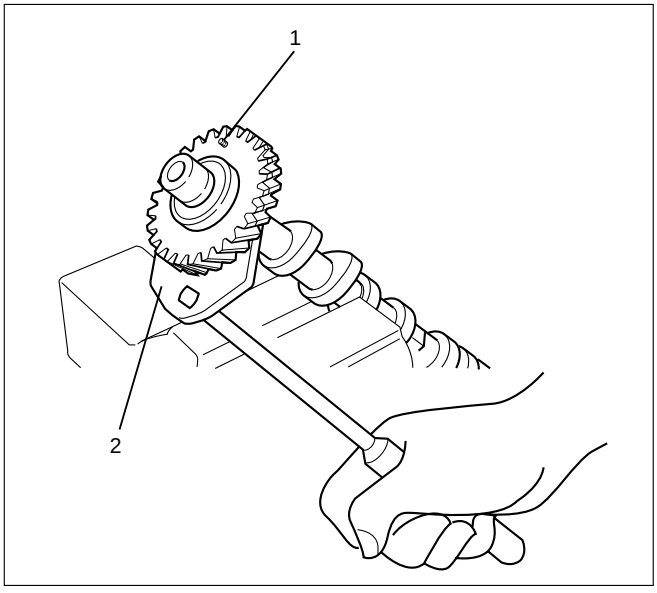

014RW183

Legend
(1) Locking pin
(2) Special tool

   3) Apply engine oil to the camshaft gear tooth.
   4) Apply engine oil to the journal on the camshaft carrier.
   5) Align the timing mark on the intake and exhaust camshaft gear and put on the camshaft carrier.

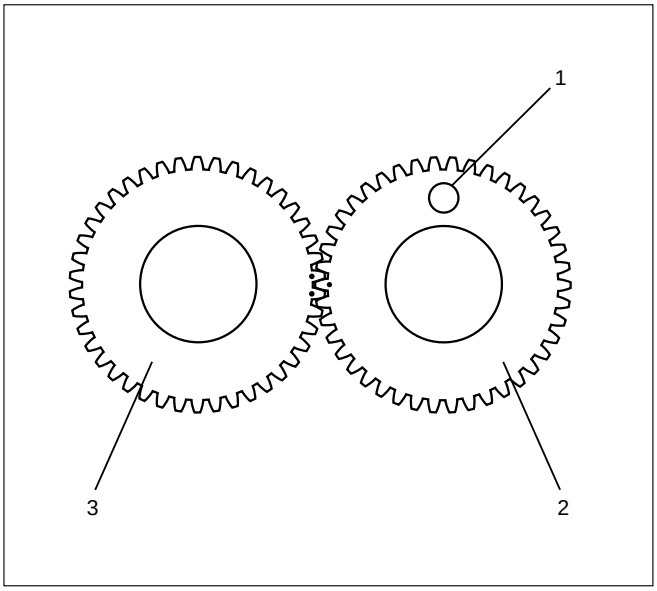

014RW184

Legend
(1) Locking pin
(2) Intake side camshaft gear
(3) Exhaust side camshaft gear

   6) Apply liquid gasket (TB1207B or equivalent) to No. 1 camshaft bracket matching surface.
   7) Set No. 1 to No. 5 camshaft bracket on camshaft carrier.
   8) Temporarily tighten bracket bolts B and C.

Temporal Torque: 20 N·m (2.0 kg·m/14.5 lb ft)

   9) Put gasket on the cylinder head.
   10) Install camshaft carrier onto the cylinder head and tighten bolts to specified torque.

Torque: A; 21.6 N·m (2.2 kg·m/15.9 lb ft)
B; 38.0 N·m (3.9 kg·m/28.2 lb ft)
C; 21.6 N·m (2.2 kg·m/15.9 lb ft)
D; 38.0 N·m (3.9 kg·m/28.2 lb ft)

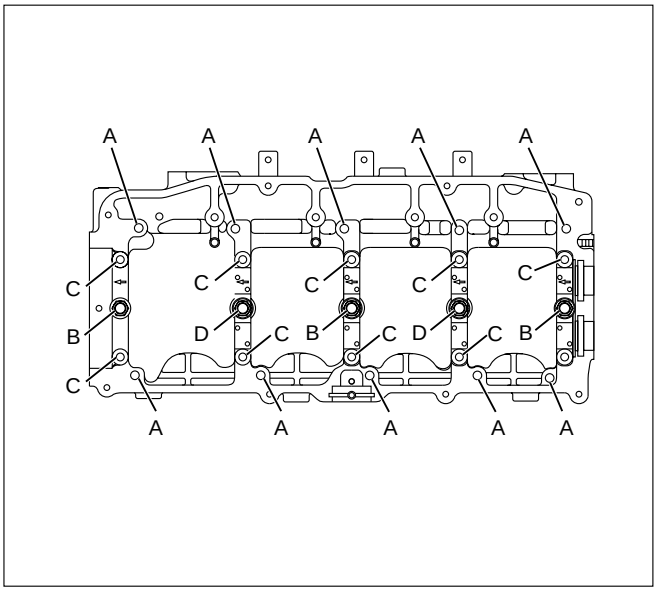

011RW035

- Remove locking pin.

INSPECTION AND REPAIR

Make the necessary adjustments, repairs, and part replacements if excessive wear or damage is discovered during inspection.

1. Camshaft Journal diameter
   1) Use a micrometer to measure each camshaft journal diameter in two directions (1) and (2). If the measured value is less than the specified limit, the camshaft must be replaced.

Standard: 29.939 – 29.96 mm (1.1787 – 1.1795 in)
Limit: 29.84 mm (1.17 in)

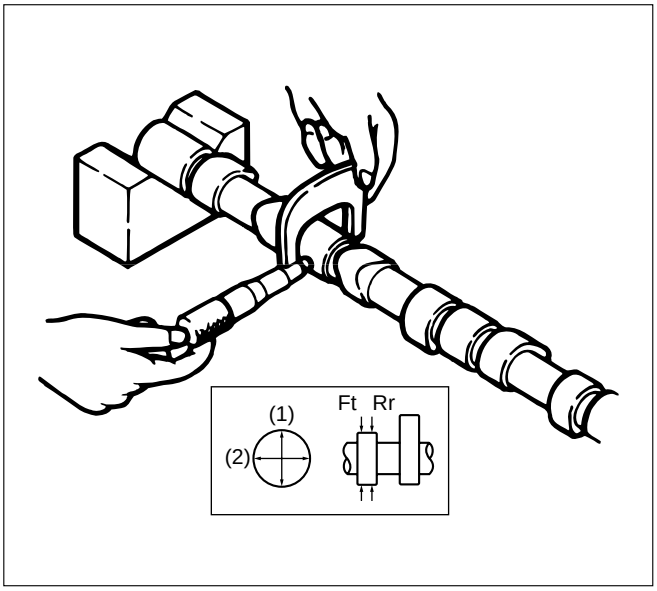

014RW179

2. Cam Height
   1) Measure the cam height (H) with a micrometer. If the measured value is less than the specified limit, the camshaft must be replaced.

Standard: IN 46.62 mm (1.8354 in)
EX 46.72 mm (1.8394 in)

Limit: IN 46.57 mm (1.8335 in)
EX 46.67 mm (1.8374 in)

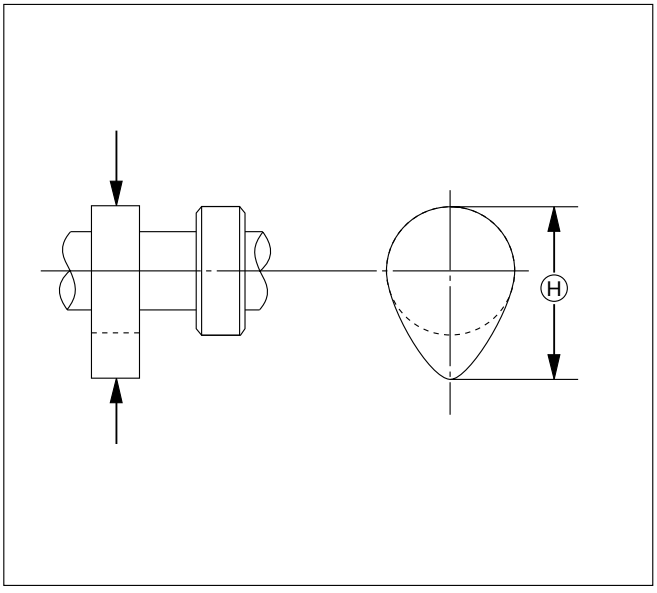

012RW059

3. Cam Run-Out
   1) Mount the camshaft on V-blocks.
   2) Measure the cam height (H) with a micrometer. If the measured value is less than the specified limit, the camshaft must be replaced.

Standard: 0.02 mm (0.0008 in) or less
Limit: 0.10 mm (0.0039 in)

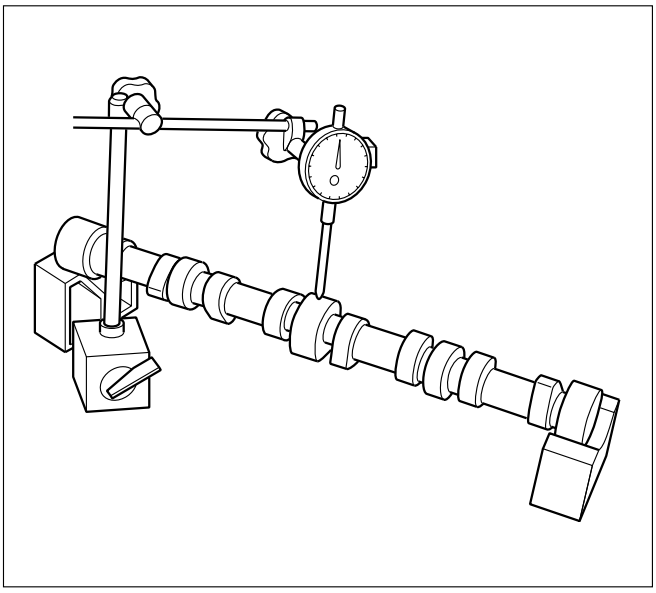

014RW171

4. Camshaft oil clearance
   1) Clean the camshaft, camshaft bracket and camshaft carrier.
   2) Put camshaft carrier on the cylinder head.
   3) Put camshaft on the camshaft carrier.
   4) Put plastigauge on the camshaft journal.
   5) Install camshaft bracket to original position and tighten bolts to specified torque in the numerical order shown in the illustration.

Torque: A; 21.6 N·m (2.2 kg·m/15.9 lb ft)
B; 38.0 N·m (3.9 kg·m/28.2 lb ft)
C; 21.6 N·m (2.2 kg·m/15.9 lb ft)
D; 38.0 N·m (3.9 kg·m/28.2 lb ft)

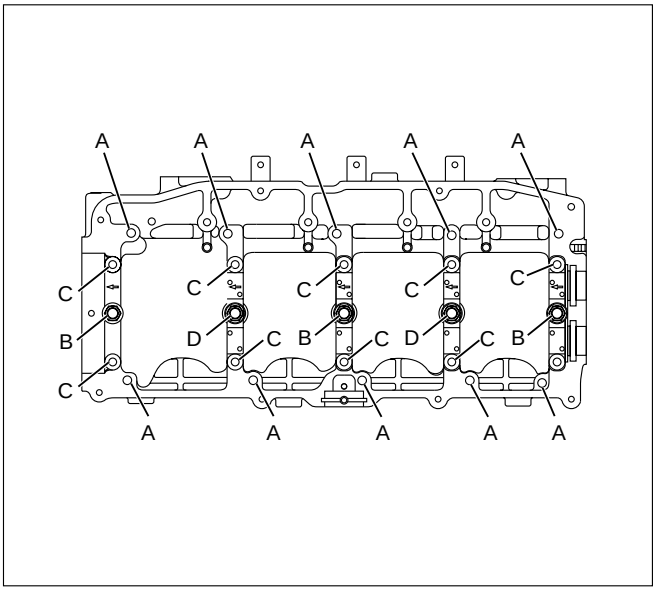

110RW035

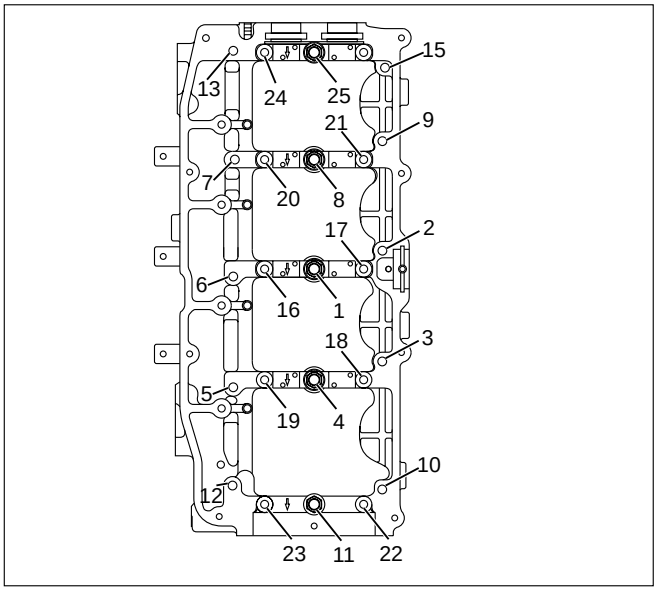

011RW041

NOTE: Do not allow the camshaft to rotate.

6) Remove the camshaft bracket and measure the plastigauge width and determine the oil clearance. If the oil clearance exceeds the specified limit, replace the camshaft carrier and/or camshaft.

Oil clearance.

Standard: 0.040 – 0.082 mm (0.0016 – 0.0032 in)
Limit: 0.12 mm (0.0047 in)

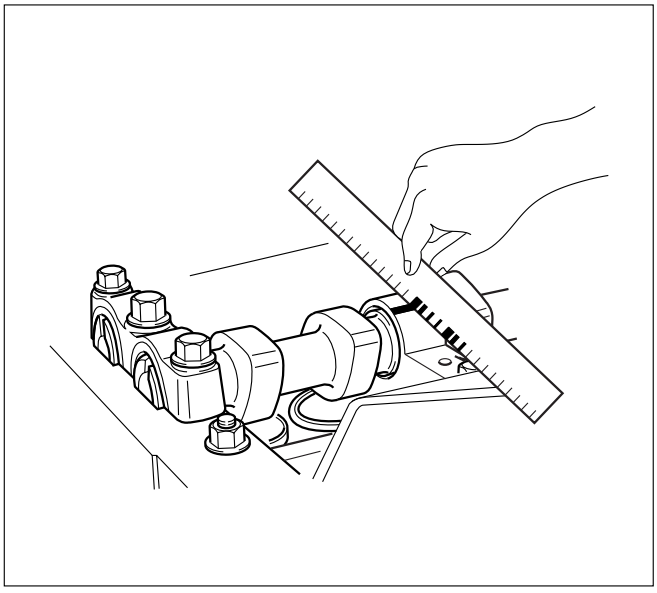

014RW185

7) Clean the plastigauge from the camshaft bracket and camshaft carrier.

5. Camshaft thrust clearance.
   1) Clean the camshaft, camshaft bracket and camshaft carrier.
   2) Put camshaft carrier on the cylinder head.
   3) Put camshaft on the camshaft carrier.
   4) Put plastigauge on the camshaft journal.
   5) Install camshaft bracket to original position and tighten bolts to specified torque in the numerical order shown in the illustration.

Torque: A; 21.6 N·m (2.2 kg·m/15.9 lb ft)
B; 38.0 N·m (3.9 kg·m/28.2 lb ft)
C; 21.6 N·m (2.2 kg·m/15.9 lb ft)
D; 38.0 N·m (3.9 kg·m/28.2 lb ft)

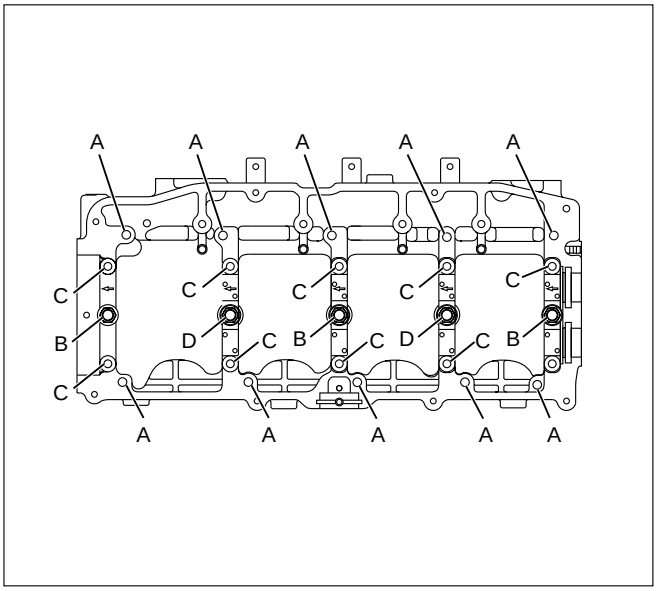

011RW035

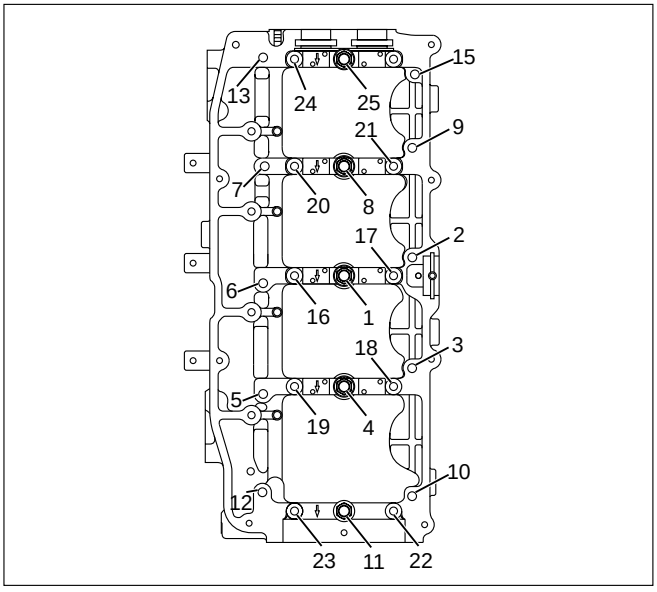

011RW041

6) Use a dial indicator to measure the camshaft thrust clearance. If the camshaft thrust clearance exceeds the specified limit, replace the camshaft carrier and/or camshaft.

Camshaft thrust clearance

Standard: 0.1 mm (0.0002 in)
Limit: 0.2 mm (0.0078 in)

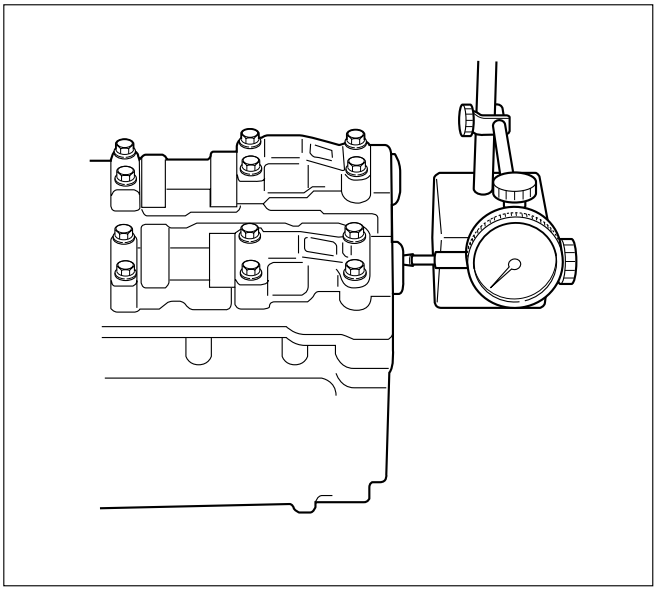

014RW001

TIMING GEAR

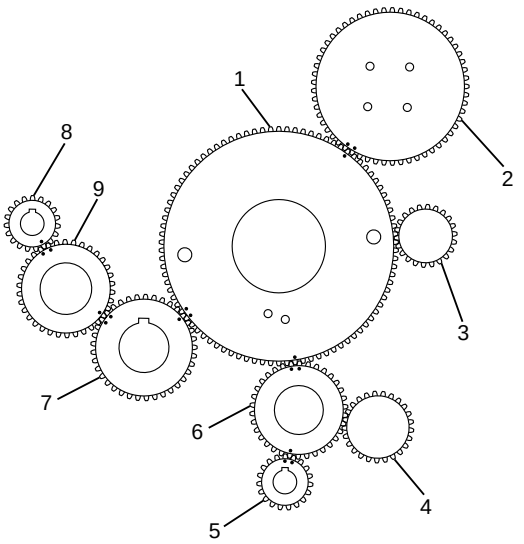

020RW028

Legend
(1) Idle Gear A
(2) High Pressure Oil Pump Gear
(3) Vacuum Pump Gear
(4) Power Steering Pump Gear
(5) Balance Gear LH
(6) Idle Gear C
(7) Crankshaft Gear
(8) Balance Gear RH
(9) Idle Gear B

REMOVAL

1. Loosen fixing bolt for generator and remove generator assembly.
2. Remove fixing nuts, then remove cooling fan assembly and fan pulley.
3. Remove crankshaft damper pulley.
4. Belt cover
   1) Disconnect harness connector of CMP (camshaft position) sensor.
   2) Remove CMP sensor.
   3) Remove belt cover.
5. Loosen belt tensioner to remove timing belt.
6. Remove camshaft pulley.
7. Remove high pressure oil pump pulley.
8. Remove front plate.
9. Remove vacuum pump.
10. Remove power steering pump.
11. Remove gear cover assembly.
12. Idle gear A.
    1) Set two bolts to sub gear of idle gear A and turn it to align the tooth of idle gear A then lock them by bolt as show in the illustration.
    2) Remove idle gear A fixing bolts.
    3) Remove idle gear A.

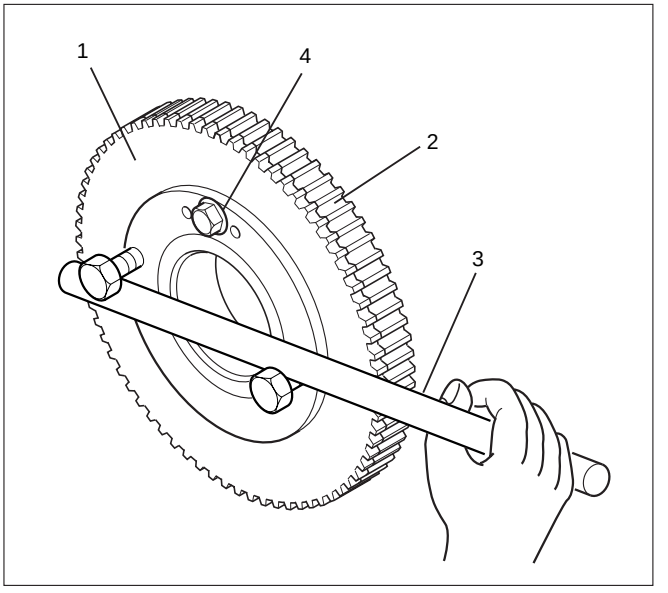

014RW177

Legend
(1) Sub-Gear
(2) Main Gear
(3) Bar
(4) Locking Bolt

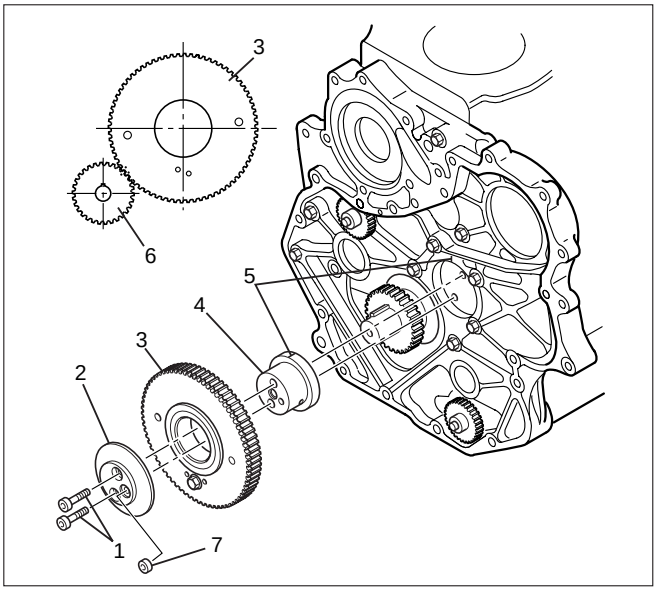

014RW176

Legend
(1) Bolt
(2) Retainer
(3) Idle Gear A
(4) Idle Gear A Shaft
(5) Align Mark
(6) Crankshaft Gear
(7) O-Ring

13. Idle gear C
    1) Use the special tool on idle gear C, turning the sub gear to align the teeth, then set lock pin.
    2) Remove idle gear C fixing bolt then remove the idle gear C with flange.

    Camshaft Gear Tool : 5-8840-2591-0

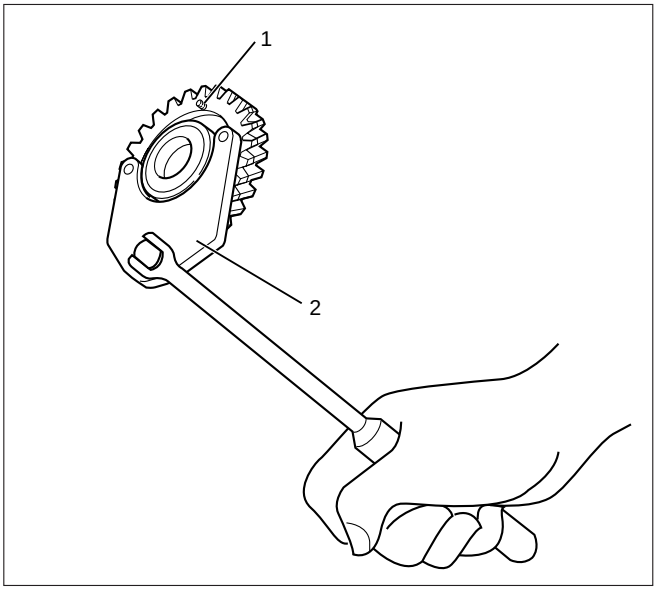

014RW181

Legend
(1) Lock pin
(2) Camshaft Gear Tool

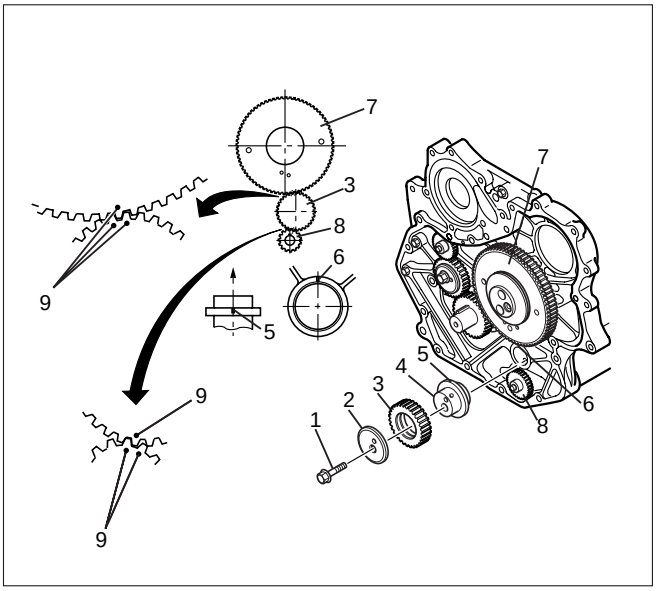

014RW175

Legend
(1) Bolt
(2) Retainer
(3) Idle Gear C
(4) Idle Gear C Shaft
(5) Align Mark
(6) Align Mark
(7) Idle Gear A
(8) Balance Shaft Gear LH
(9) Timing Mark

14. Idle gear B
    1) Loosen idle gear B fixing bolt to remove idle gear B with flange.

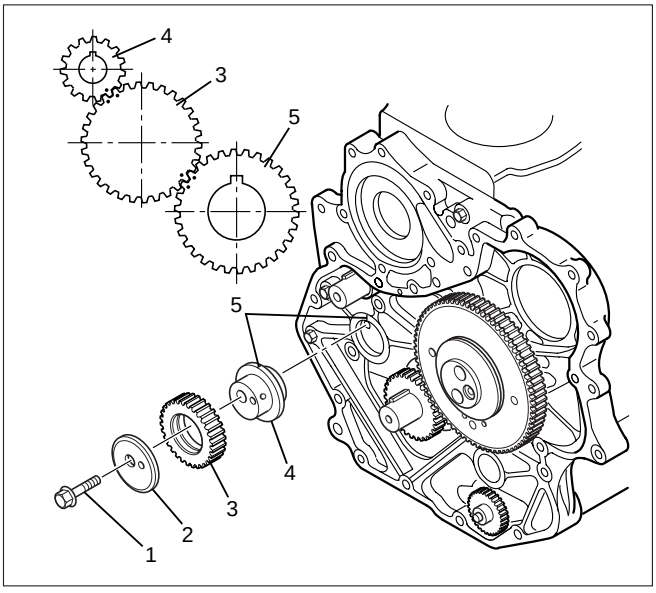

014RW174

Legend
(1) Bolt
(2) Retainer
(3) Idle Gear B
(4) Idle Gear B Shaft
(5) Align Mark

15. High pressure oil pump
    1) Remove oil pump gear fixing bolt then remove oil pump.

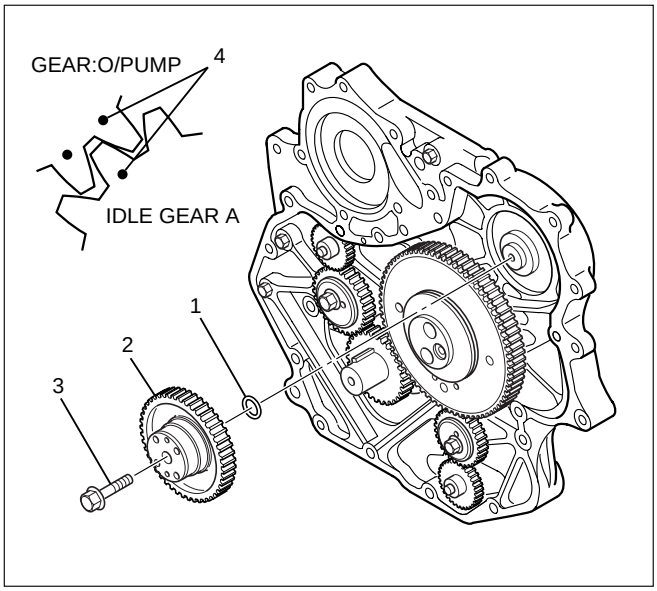

040RW005

Legend
(1) O-Ring
(2) High Pressure Oil Pump
(3) Bolt
(4) Timing Mark

16. Remove balance shaft gear LH. and RH.
17. Remove crankshaft gear.

INSTALLATION

1. Crankshaft gear
    1) Force key into the crankshaft and insert crankshaft gear with the crankshaft gear key groove set on the key.

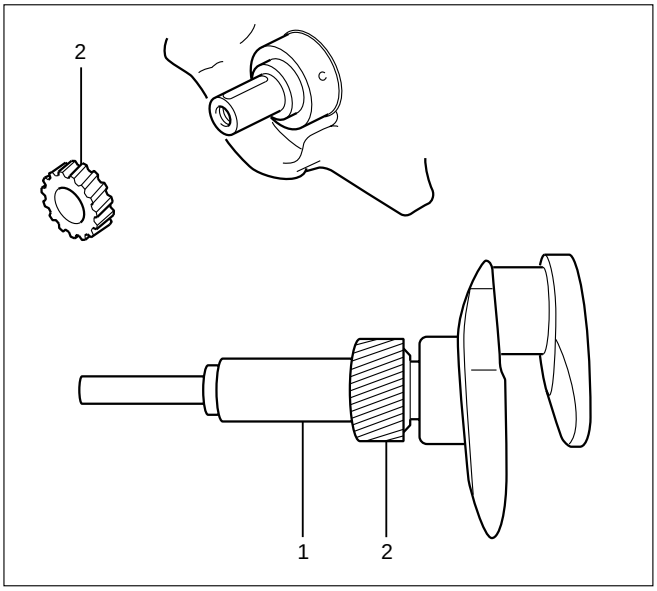

012RW066

Legend
(1) Crankshaft Gear Installer
(2) Crankshaft Gear

2. Balance shaft gear
    1) Install the balance shaft gear RH to balance shaft, tighten center bolt to the specified torque.

Torque : 32 N·m (3.2 kg·m/23 lb ft)

    2) Install thrust plate for balance shaft LH before installing the balance shaft gear LH.

Torque : 25 N·m (2.5 kg·m/18 lb ft)

    3) Install balance shaft gear LH to balance shaft, tighten center bolt to the specified torque.

Torque : 32 N·m (3.2 kg·m/23 lb ft)

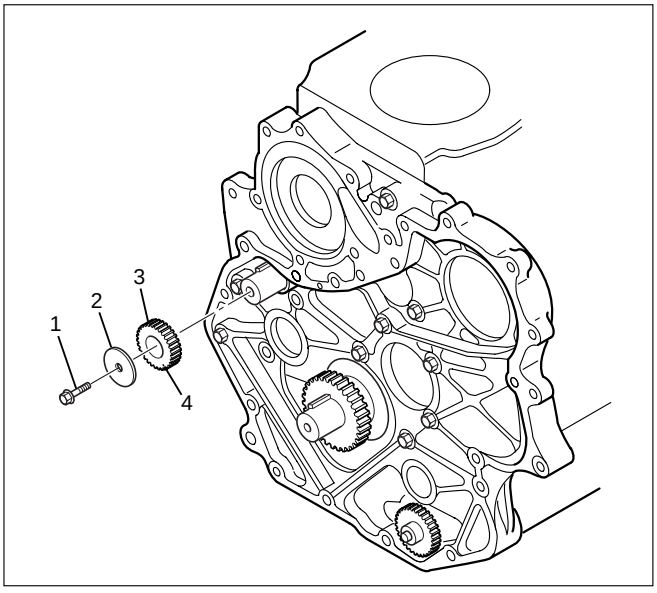

014RW173

Legend
(1) Center Bolt
(2) Plate
(3) Balance Shaft Gear RH
(4) Timing Mark

3. Idle gear A
   1) Insert idle gear A shaft to align alignment mark between idle gear A shaft and timing gear case.
   2) Apply engine oil to the shaft surface.
   3) Install the idle gear A to align the timing mark with the crankshaft gear.
   4) Install the flange, tighten bolts to the specified torque.

Torque: 25 N·m (2.5 kg·m/18 lb ft)

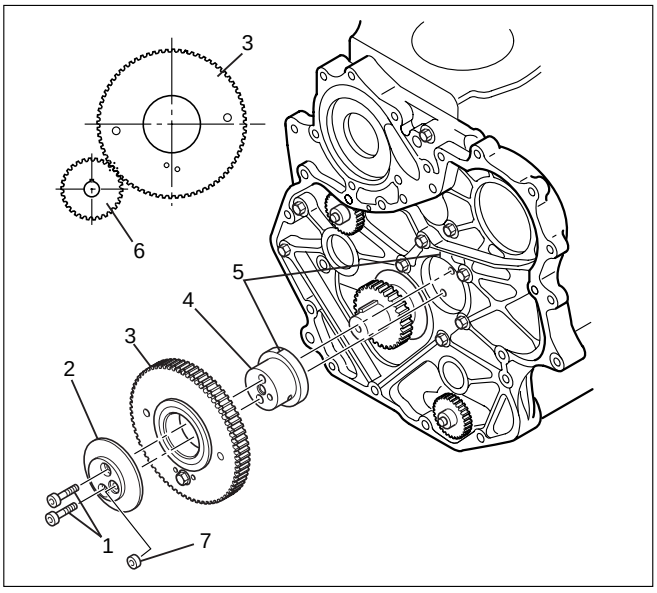

014RW176

Legend
(1) Bolt
(2) Retainer
(3) Idle Gear A
(4) Idle Gear A Shaft
(5) Align Mark
(6) Crankshaft Gear
(7) O-Ring

NOTE: Conform not difference timing marks between each others.

4. Idle gear C
   1) Insert idle gear C shaft to align alignment mark between idle gear C shaft and timing gear case.
   2) Apply engine oil to the shaft surface.
   3) Align timing mark on idle gear C with balance shaft gear LH and idle gear A timing marks, then insert idle gear C.
   4) Set position of idle gear C flange with a dowel pin, tighten bolt to the specified torque.

Torque: 25 N·m (2.5 kg·m/18 lb ft)

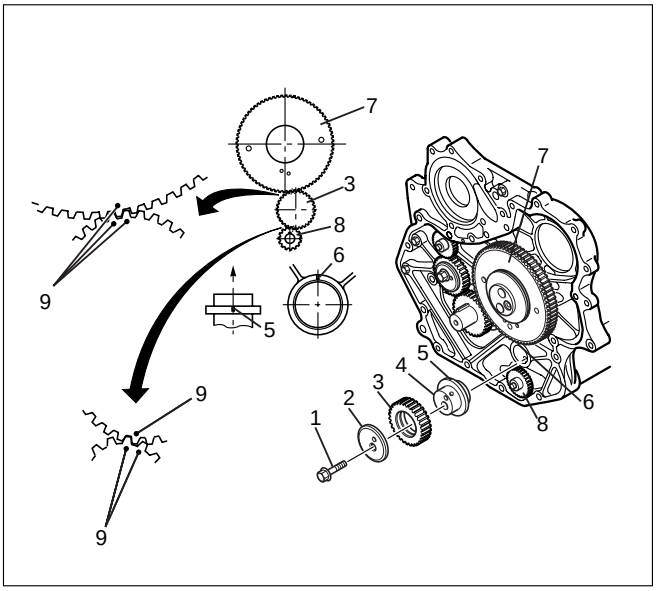

014RW175

Legend
(1) Bolt
(2) Retainer
(3) Idle Gear C
(4) Idle Gear C Shaft
(5) Align Mark
(6) Align Mark
(7) Idle Gear A
(8) Balance Shaft Gear LH
(9) Timing Mark

5. Idle gear B
   1) Insert idle gear B shaft to align alignment mark between idle gear B shaft and timing gear case.
   2) Apply engine oil to the shaft surface.
   3) Align timing mark on idle gear B with balance shaft gear RH and crankshaft gear timing marks, then insert idle gear B.
   4) Install flange and tighten the bolt to the specified torque.

Torque: 51 N·m (5.2 kg·m/38 lb ft)

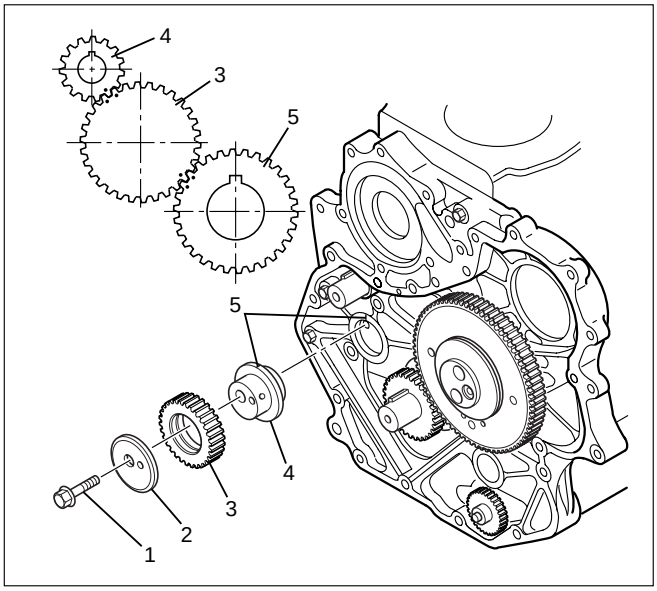

014RW174

Legend
(1) Bolt
(2) Retainer
(3) Idle Gear B
(4) Idle Gear B Shaft
(5) Align Mark

6. High pressure oil pump
   1) Install O-ring on the high pressure oil pump.
   2) Install the high pressure oil pump to the timing gear case, tighten the nut to the specified torque.

Torque: 20 N·m (2.0 kg·m/14.5 lb ft)

NOTE: Be sure to set O-ring completely.

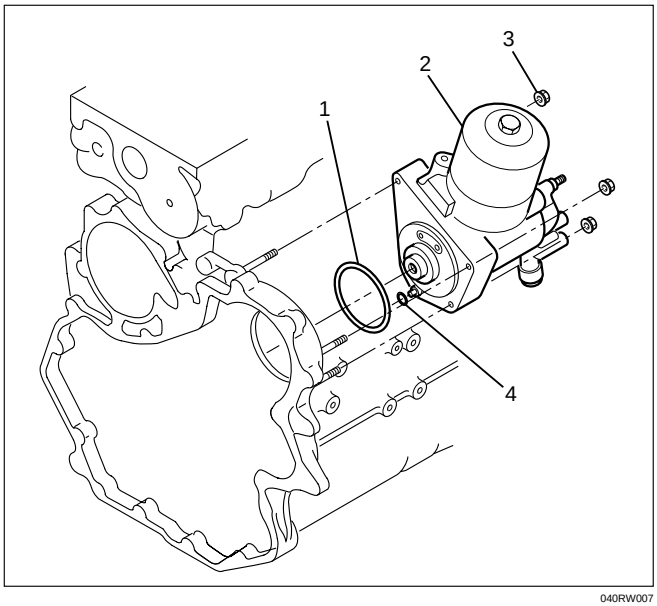

040RW007

Legend
(1) O-ring (large)
(2) High pressure oil pump
(3) Nut
(4) O-ring (small)

7. High pressure oil pump
   1) Install O-ring on the oil pump shaft with grease and install the gear with the idle gear A timing mark set at the oil pump gear timing mark.
   2) Tighten center bolt to the specified torque.

Torque: 75 N·m (7.6 kg·m / 55 lb ft)

NOTE: Be sure to align timing marks with each other.

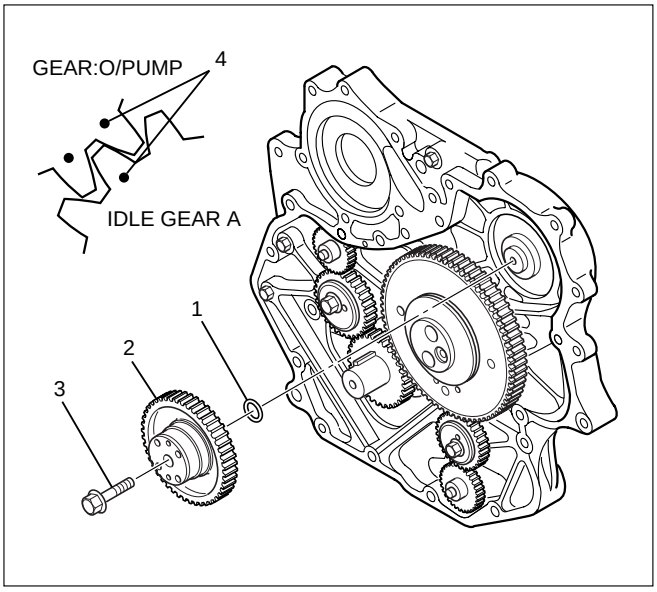

040RW005

Legend
(1) O-ring
(2) High Pressure Oil Pump Gear
(3) Center Bolt

8. Remove lock from idle gear.
   1) Remove lock bolt from idle gear A and remove lock pin from idle gear C.
9. Timing gear case assembly
   1) Clean fixing surface of timing gear case.
   2) Install the gasket on the idle gear rear side end.
   3) Apply liquid gasket to the timing gear case fitting surface.

NOTE: Be sure to apply liquid gasket evenly.

   4) Install timing gear case and tighten bolts to the specified torque.

Torque: 20 N·m (2.0 kg·m / 14.5 lb ft)

NOTE: Must install within 5 minutes after applying liquid gasket.

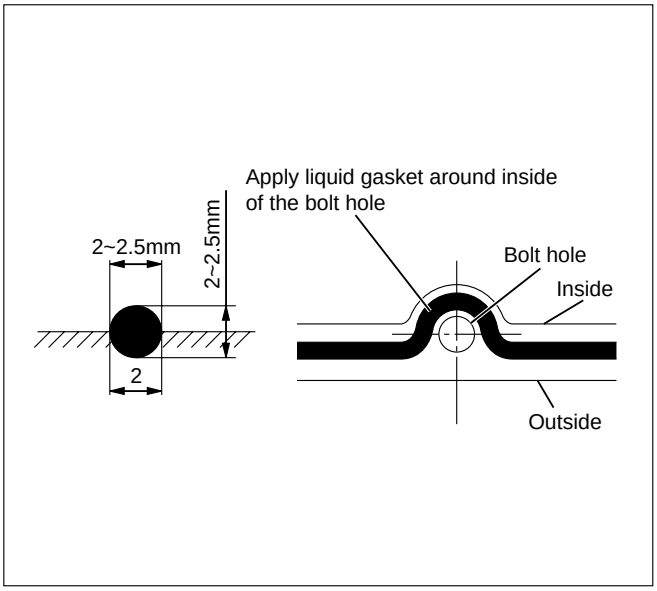

F06HX00001

10. Vacuum pump
    1) Install vacuum pump and tighten bolts to specified torque.

Torque: 25 N·m (2.5 kg·m / 18 lb ft)

    2) Install noise insulator cover.

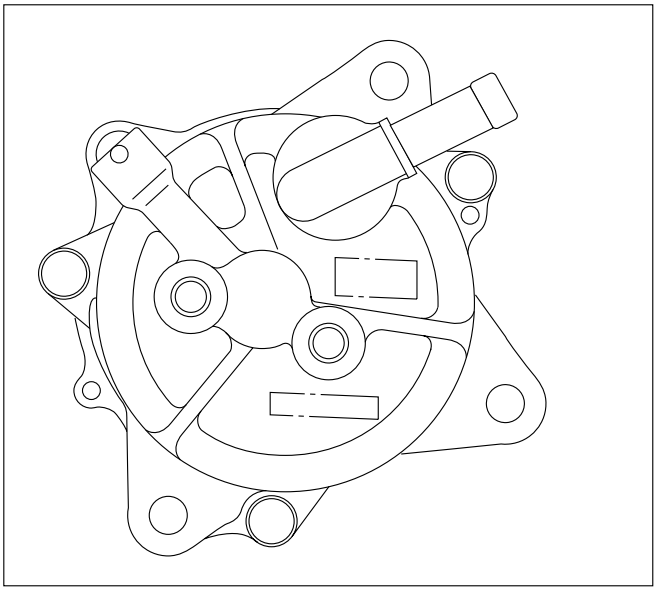

052RW001

11. Power steering pump (P/S)
    1) Install P/S pump.

Torque: 25 N·m (2.5 kg·m / 18 lb ft)

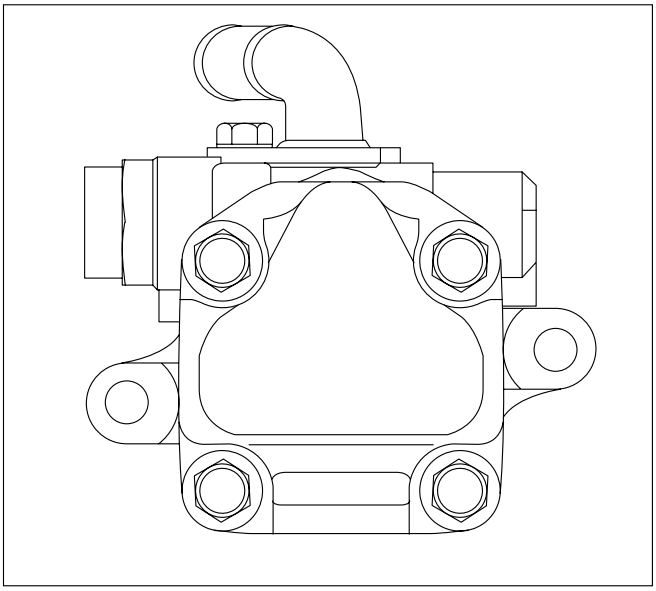

430RW017

12. Install front plate.

Torque: 20 N·m (2.0 kg·m / 14.5 lb ft)

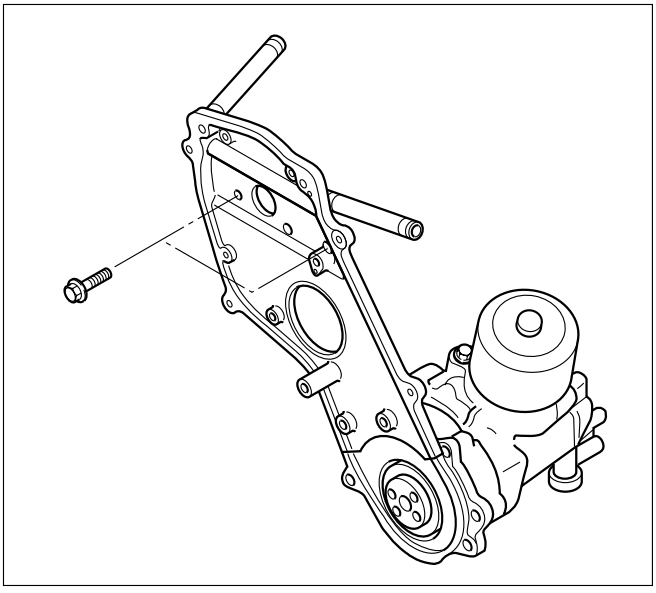

012RW035

13. High pressure oil pump pulley.
    1) Install oil pump pulley and tighten to specified torque.

Torque:10 N·m (1.0 kg·m / 7.2 lb ft)

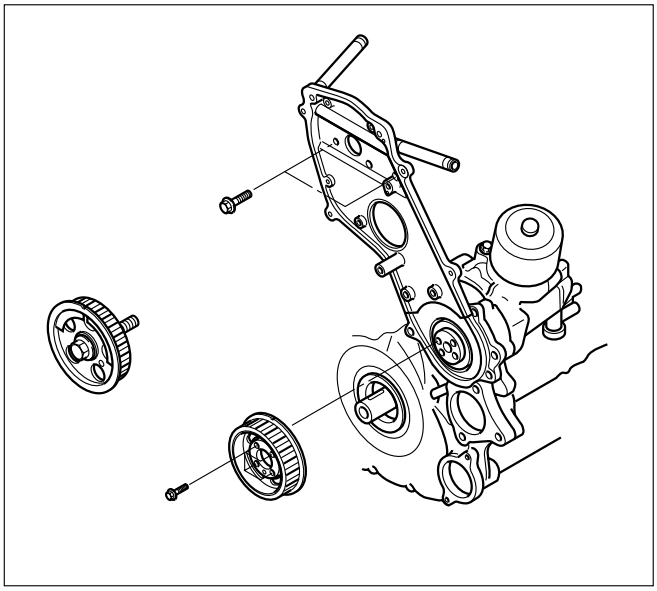

012RW036

14. Camshaft pulley
    1) Align TDC mark with crankshaft pulley and gear case cover.
    2) Set camshaft stopper on the end of intake and exhaust camshaft.

    Camshaft Stopper: 5-8840-2592-0

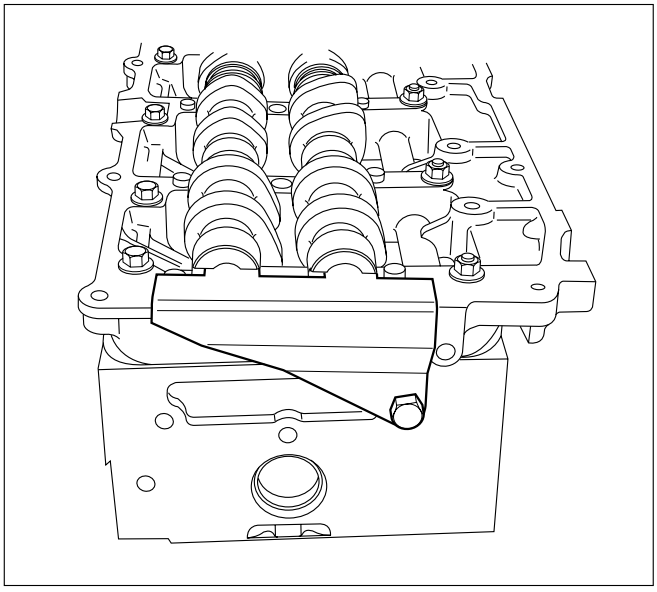

012RW099

    3) Install key to camshaft and install camshaft pulley.
    4) Apply engine oil to camshaft pulley fixing bolt and tighten bolt with angular tightening method.

First step: 40 N·m (4.0 kg·m / 29 lb ft)
Second step: 60° to 90°

15. Timing belt
    1) Install tensioner and tighten the bolt temporarily.
    2) Align timing mark with camshaft pulley timing mark and timing gear case timing mark.
    3) Set No.1 cylinder TDC position.
    4) Install the timing belt in the following order camshaft pulley, oil pump pulley, tensioner.

NOTE:

1) It is recommended for easy installation that the belt be secured with a double clip after it is installed to each pulley.
2) The “ISUZU” mark should be read from the front of the engine when installing the timing belt.

    5) Install the belt tensioner.
    6) Conform not phase difference each pulley.
    7) Tension the timing belt with two turns of the crankshaft.
    8) Tighten the tensioner bolt in order A to B to the specified torque.

Torque: Bolt A 5 N·m (0.5 kg·m/3.6 lb ft)
Bolt B 2 N·m (0.2 kg·m/1.4 lb ft)

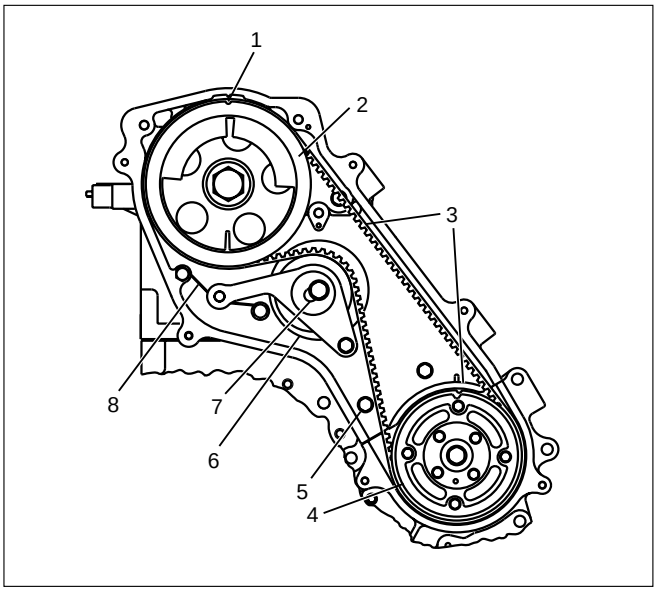

F06RW055

Legend
(1) Align Mark
(2) Camshaft Pulley
(3) Timing Belt
(4) Oil Pump Pulley
(5) Bolt B
(6) Tensioner Assy
(7) Tensioner Bolt A
(8) Tensioner Spring

16. CMP sensor bracket
    1) Install CMP sensor bracket and tighten bolt to the specified torque.

Torque: 20 N·m (2.0 kg·m / 14.5 lb ft)

17. Timing belt cover
    1) Install timing belt cover and tighten bolt to the specified torque.

Torque: 9 N·m (0.9 kg·m / 6.5 lb ft)

    2) Tighten CMP sensor to the specified torque.

Torque: 9 N·m (0.9 kg·m / 6.5 lb ft)

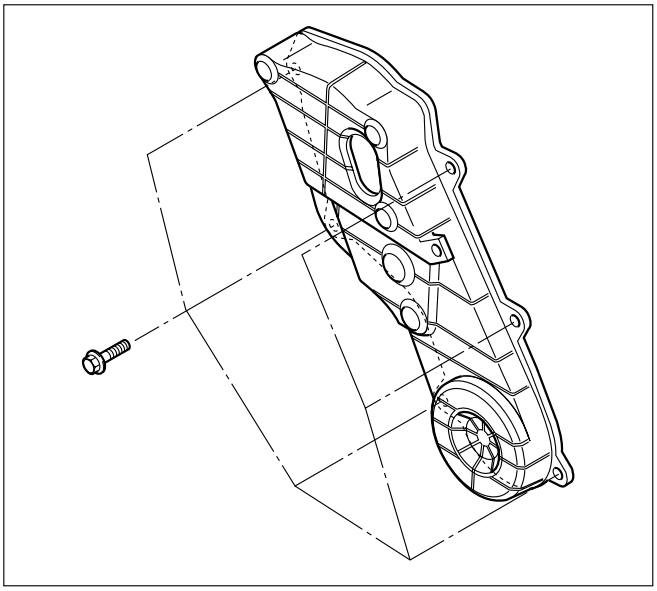

012RW039

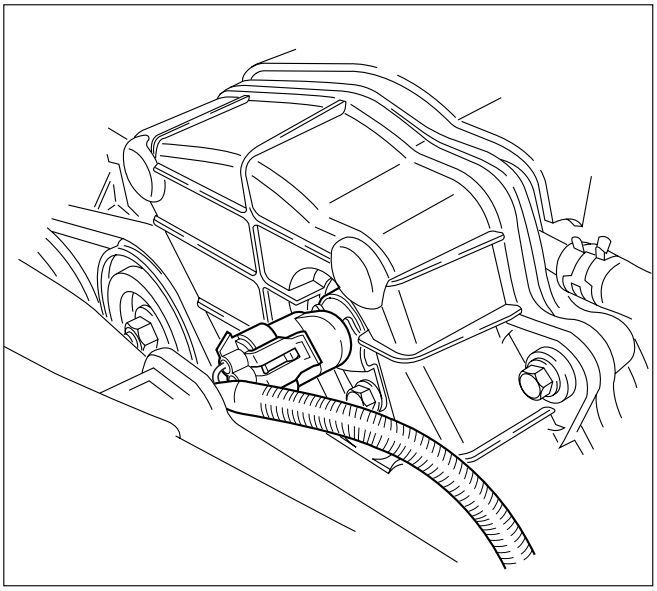

014RW163

18. Crankshaft damper pulley
    1) Insert damper pulley with the crankshaft key groove set on the key.
    2) Tighten damper pulley bolt to the specified torque.

Torque: 220 N·m (22 kg·m / 159 lb ft)

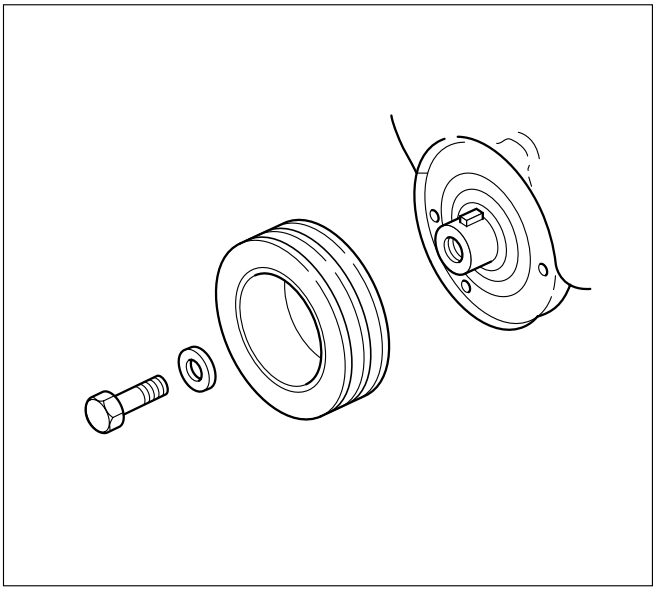

012RW032

19. Cooling fan Assembly
    1) Install the cooling fan assembly to the fan pulley, tighten the nuts to the specified torque.

Torque: 8 N·m (0.8 kg·m / 5.8 lb ft)

20. AC generator drive belt.
    1) Temporarily tighten generator fixing bolts and belt tensioner adjustment plate.
    2) Tension the generator drive belt then tighten the generator fixing bolt.

Torque: 40 N·m (4.0 kg·m / 29 lb ft)

    3) Tighten the belt tensioner adjustment plate bolt.

Torque: 20 N·m (2.0 kg·m / 14.5 lb ft)

VALVE STEM SEAL, VALVE SPRING AND ADJUSTER

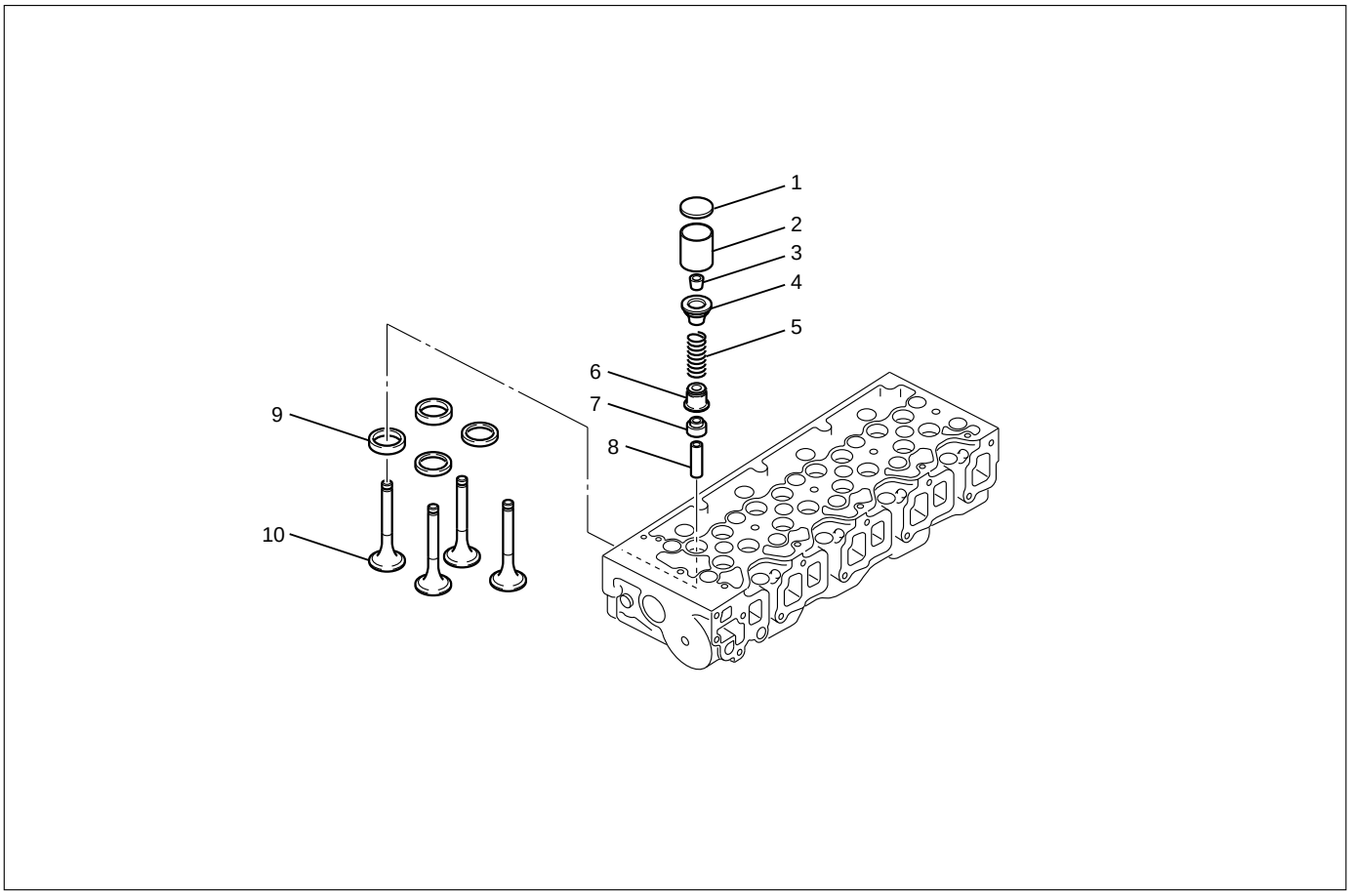

011RW031

Legend

(1) Adjuster
(2) Tappet
(3) Split Collar
(4) Spring Seat Upper
(5) Valve Spring
(6) Spring Seat Lower
(7) Valve Stem Seal
(8) Valve Guide
(9) Valve Seat
(10) Valve

REMOVAL

1. Disconnect battery ground cable.
2. Drain engine coolant.
3. Remove the air duct from between air cleaner and turbocharger.
4. Remove intercooler assembly.
   Refer to “Intercooler” in this manual.
5. Remove oil level gauge guide assembly.
6. Disconnect PCV hose.
7. Disconnect EGR vacuum hose.
8. Disconnect harness connectors around the cylinder head such as the injector, CMP sensor, MAP sensor, EGR sensor, EVRV, IAT sensor, A/C compressor, TP stepping motor, TP sensor and fuel temperature sensor etc.
9. Remove A/C compressor assembly.
10. Remove A/C compressor bracket.
11. Remove generator assembly and take out drive belt.
12. Remove heat protector, remove exhaust valve assembly.
13. Remove water cooling hose and lubrication pipe for turbocharger.
14. Remove turbocharger assembly.
15. Remove hose between thermostat and radiator.
16. Remove noise insulator cover of cylinder head.

NOTE: Do not damage injector harness.

17. Remove high pressure oil pipe.
18. Remove timing belt cover.
19. Remove CMP sensor bracket.
20. Remove timing belt tensioner then remove timing belt.
21. Remove camshaft pulley.
22. Remove front plate.
23. Remove engine coolant pipe between cylinder head and water pump.

24. Remove fuel pipe between fuel pump and intake manifold.
25. Remove fuel return pipe from rear of cylinder head.
26. Remove intake manifold assembly.
27. Disconnect glow plug harness and remove glow plug.
28. Remove cylinder head cover.
29. Remove injector harness connector.
30. Disconnect harness connector from oil pressure sensor and oil temperature sensor on the oil rail.
31. Remove injector harness assembly.
32. Remove injector clamp.
33. Remove injector is fixed bolts.
34. Remove injector assembly.
35. Remove oil rail.
36. Remove camshaft carrier assembly with camshaft.
37. Remove cylinder head assembly.
38. Disassemble valve spring according to the following method.
    1) Use valve spring compressor then remove split collars.
    2) Valve spring compressor: 5-8840-2441-0

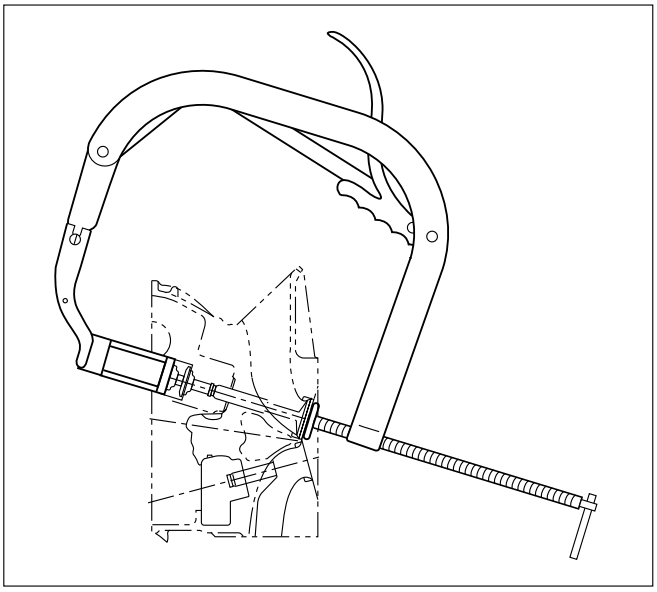

014rw042

NOTE: Put removed valve spring in order of cylinder number.

39. Valve stem seal.
    1) Use a screwdriver or pliers to remove valve stem seal.

NOTE: Do not reuse removed valve stem seal.

INSPECTION AND REPAIR

Make the necessary adjustments, repairs and part replacements if excessive wear or damage is discovered during inspection.

Valve spring

CAUTION: Visually inspect the valve springs and replace them if damage or abnormal wear is evident.

1. Free height
    1) Measure the free height of the springs. The springs must be replaced if the height is below the specified limit.

Standard: 45.85 mm (1.8051in)
Limit: 43.9 mm (1.7283 in)

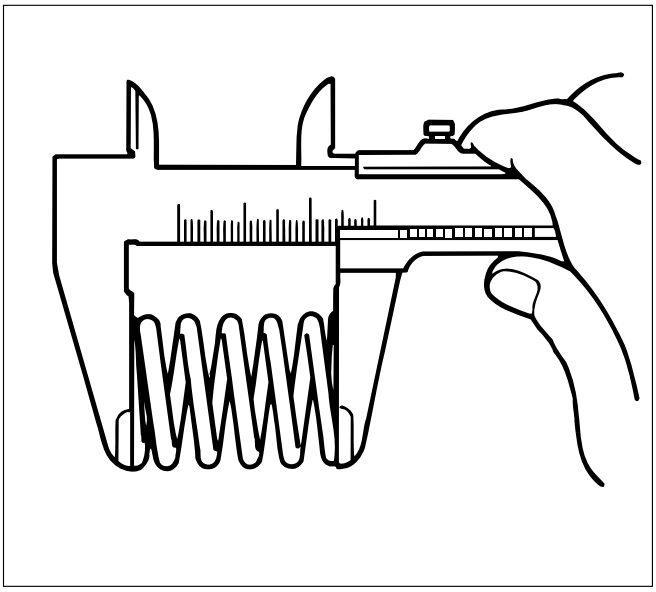

014rs004

2. Squareness
    1) Measure the valve spring squareness with a steel square.
    2) Replace the valve springs if the measured value exceeds the specified limit.

Limit: 1.6 mm (0.063 in)

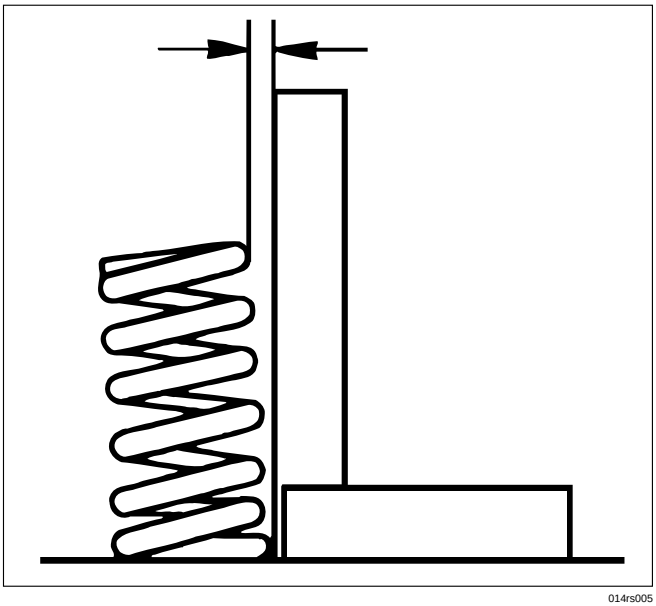

014rs005

3. Spring tension
   1) Use a spring tester to compress the springs to the installed height. Measure the compressed spring tension.
   2) Replace the springs if the measured tension is below the specified limit.

Standard: 236.0 N (24 kg/53 lb)
Limit: 205.0 N (21 kg/46 lb)

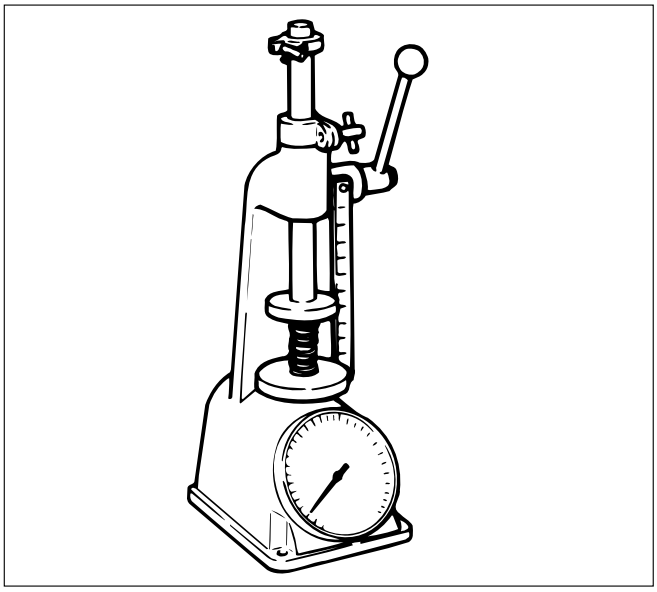

014RS006

Valve Guide

CAUTION: Taking care not to damage the valve seat contact surface, when removing carbon adhering to the valve head.
Carefully inspect the valve stem for scratching or abnormal wear. If these conditions are present, the valve and the valve guide must be replaced as a set.

1. Valve Guide Clearance
   1) Measure the valve stem diameter with a micrometer.

      If the valve stem diameter is less than the specified limit, the valve and the valve guide must be replaced as a set.

Diameter of Valve stem:Inlet

Standard: 6.959 – 6.977 mm (0.2740 – 0.2747 in)
Limit: 6.92 mm (0.2724 in)

Diameter of Valve stem:Exhaust

Standard: 6.952 – 6.97 mm (0.2737 – 0.2744 in)
Limit: 6.90 mm (0.2717 in)

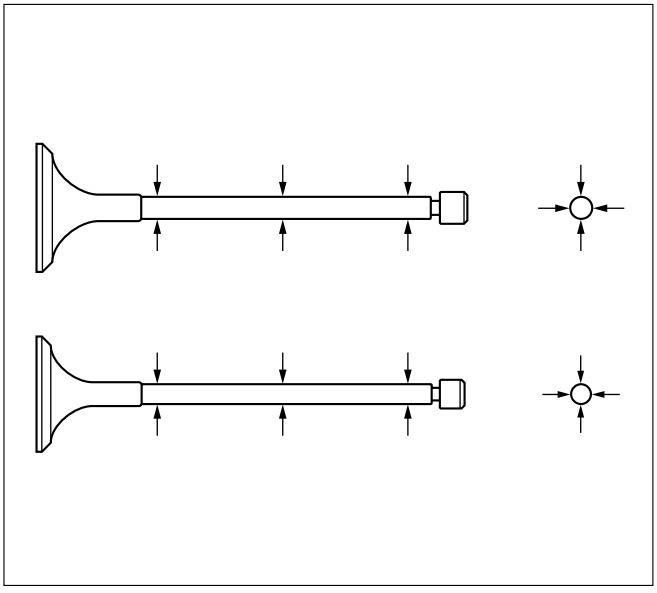

014RS007

   2) Measure the inside diameter of the valve guide with a micrometer.
   3) Subtract the measured outer diameter of the valve stem from the measured inner diameter of the valve guide.

      If the valve exceeds the specified limit, the valve and the valve guide must be replaced as a set.

Inlet clearance

Standard: 0.023 – 0.053 mm (0.0009 – 0.0021 in)
Limit: 0.19 mm (0.0075 in)

Exhaust clearance

Standard: 0.03 – 0.063 mm (0.0012 – 0.0025 in)
Limit: 0.20 mm (0.0079 in)

Valve Guide Replacement

1. Using the special tool, drive out the valve guide from the combustion chamber side.
   Valve guide replacer: 9-8523-1212-0

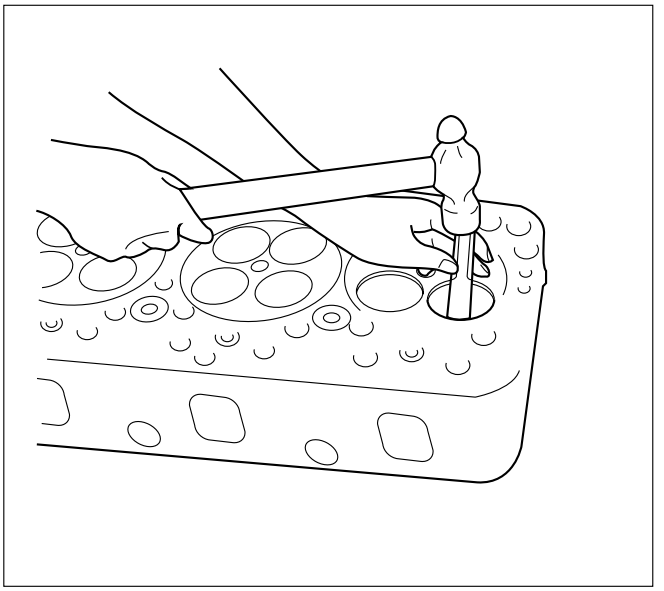

011RW001

2. Apply engine oil to the outside of the valve guide.
   Using the special tool, drive in a new valve guide from cylinder head upper face side, and check the valve guide height.
   Valve guide replacer: 9-8523-1212-0
   Height: 8.0 mm (0.315 in)

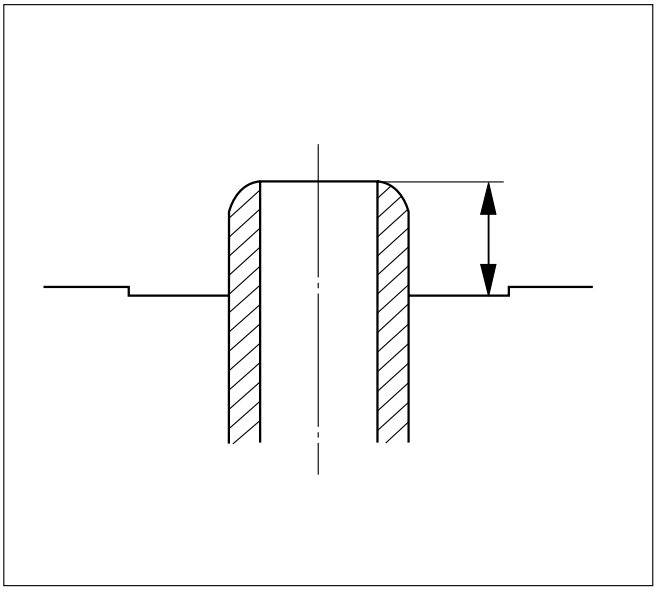

012RW052

NOTE: If the valve guide has been removed, both the valve and the valve guide must be replaced as a set.

Valve Thickness

1. Measure the valve thickness.
2. If the measured value is less than the specified limit, the valve and the valve guide must be replaced as a set.

Inlet

Standard: 1.2 mm (0.0472 in)
Limit: 1.1 mm (0.0433 in)

Exhaust

Standard: 1.2 mm (0.0472 in)
Limit: 1.1 mm (0.0433 in)

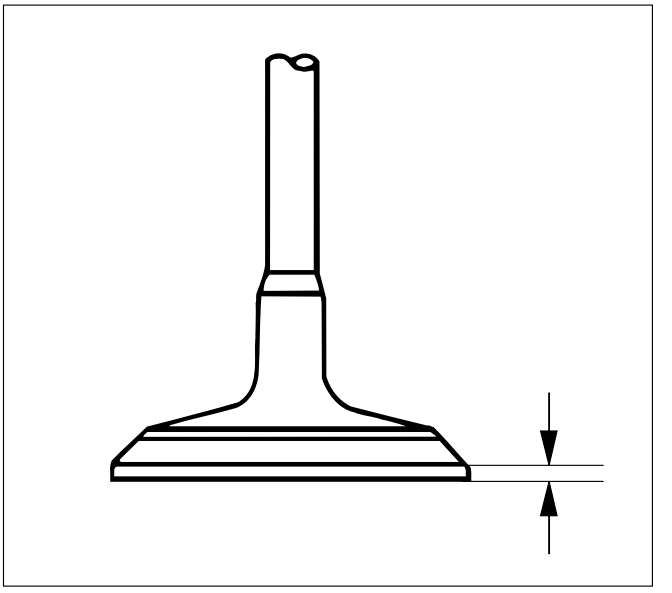

012RW060

Contact surface angle on valve seat on valve

1. Measure contact surface angle on valve seat.
2. If the measured value exceeds the limit, replace valve, valve guide and valve seat as a set.
   Standard: 68°

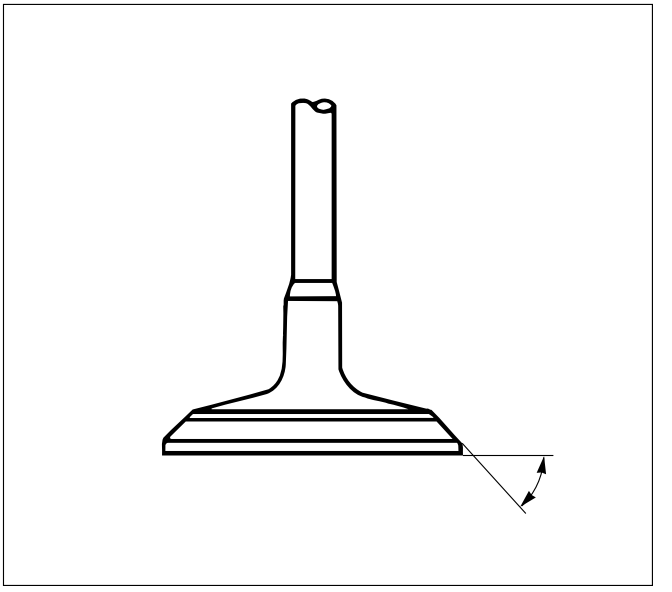

014RW018

Valve Depression

1. Measure the valve stem height from the upper surface of the cylinder head as shown in the illustration.

Standard:
Intake side 35.59 mm (1.4012 in)
Exhaust side 35.49 mm (1.3972 in)

Limit:
Intake side 35.74 mm (1.4071 in)
Exhaust side 35.64 mm (1.4031 in)

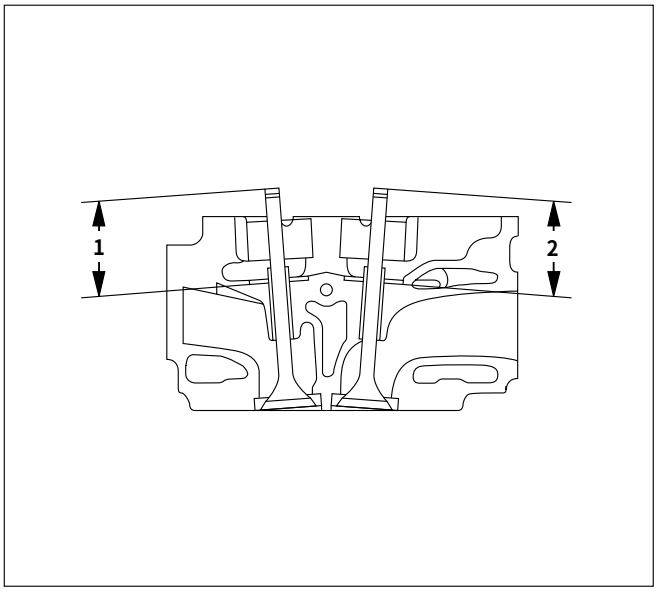

011RW044

Legend
(1) Intake Side
(2) Exhaust Side

Valve Contact Width

1. Check the valve contact faces for roughness and unevenness. Make the valve contact surfaces smooth.
2. Measure the valve contact width.
   If the measured value exceeds the specified limit, the valve seat insert must be replaced.

Inlet
Standard: 2.1 mm (0.0827 in)
Limit: 2.6 mm (0.1024 in)

Exhaust
Standard: 2.0 mm (0.0787 in)
Limit: 2.5 mm (0.0984 in)

Valve Seat Insert Replacement

Valve Seat Insert Removal

1. Arc weld the entire inside circumference of the valve seat insert.

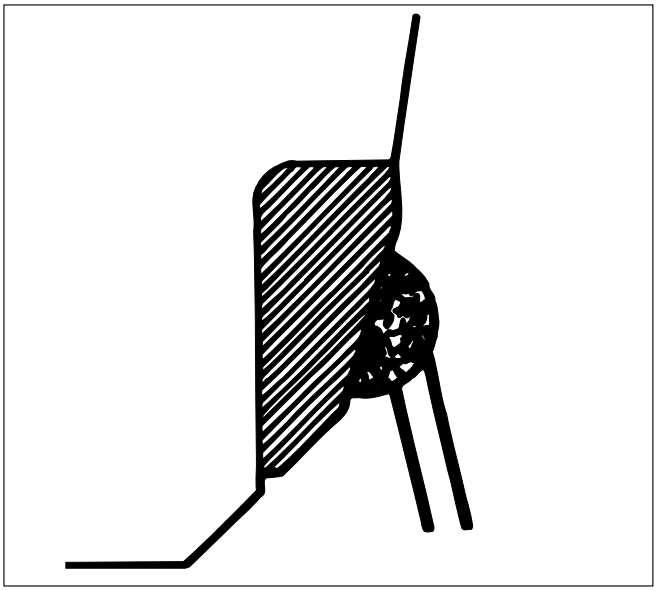

014RS015

2. Allow the valve seat insert to cool for a few minutes. This will invite contraction and make removal of the valve seat insert easier.
3. Use a screwdriver to pry the valve seat insert free. Take care not to damage the cylinder head.
4. Carefully remove carbon and other foreign material from the cylinder head insert bore.

Valve Seat Insert Installation

1. Carefully place the attachment (1) (having a smaller outside diameter than the valve seat insert) on the valve seat insert (2).

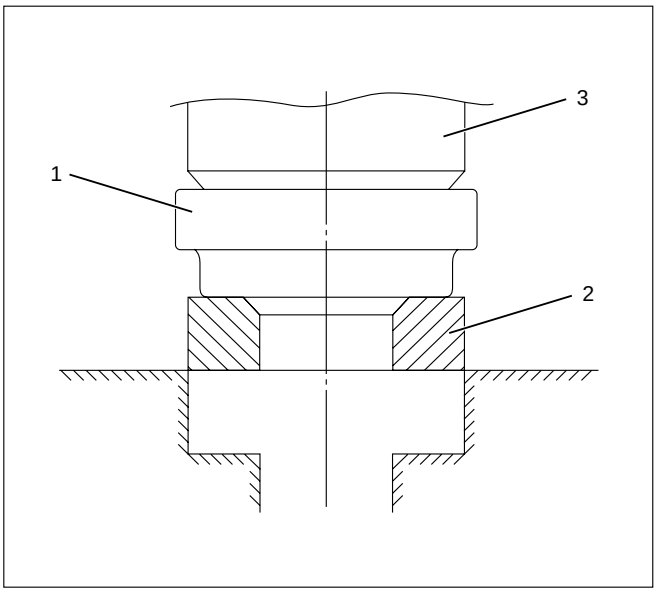

012RW055

Legend
(1) Attachment
(2) Valve Seat Insert
(3) Bench Press

NOTE: The smooth side of the attachment must contact the valve seat insert.

2. Use a bench press (3) to gradually apply pressure to the attachment and press the valve seat insert into place.

Note: Do not apply an excessive amount of pressure with the bench press. Damage to the valve seat insert will result.

Valve Seat Insert Correction

1. Remove the carbon from the valve seat insert surface.
2. Use a valve cutter (15°, 45° and 75° blades) to minimize scratches and other rough areas. This will bring the contact width back to the standard value. Remove only the scratches and rough areas. Do not cut away too much. Take care not to cut away unblemished areas of the valve seat surface.

   Valve Seat Angle: 45°

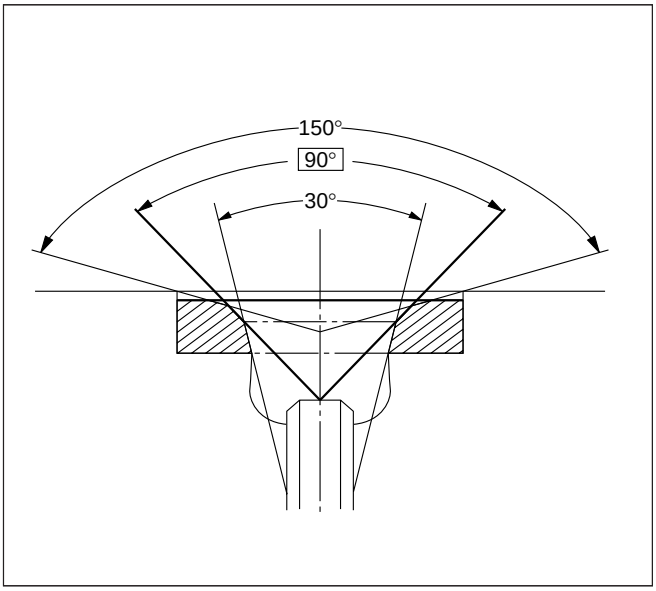

012RW056

NOTE: Use an adjustable valve cutter pilot.
Do not allow the valve cutter pilot to wobble inside the valve guide.

3. Apply abrasive compound to the valve seat insert surface.
4. Insert the valve into the valve guide.
5. Turn the valve while tapping it to fit the valve seat insert.
6. Check that the valve contract width is correct.
7. Check that the valve seat insert surface is in contact with the entire circumference of the valve.

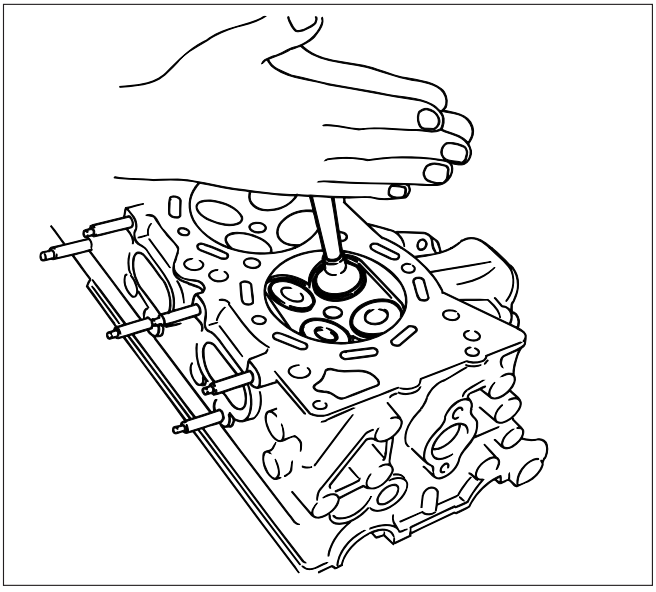

014RS014

INSTALLATION

1. Valve stem seal
   1) Use the special tool to install the stem seal to the valve guide.

   Stem Seal Installer: 5-8840-2033-0
2. Valve spring.
   1) Install the lower valve seat spring, valve spring, then the upper valve spring seat.
   2) Use valve spring compressor to compress the spring then install the split collar.

   Valve spring compressor: 5-8840-2441-0

NOTE: Make sure the split collar installs completely.

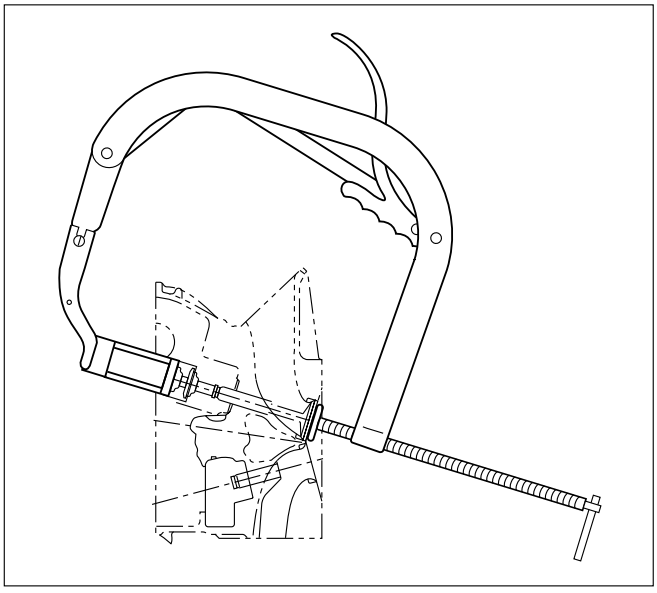

014RW042

3. Install cylinder head assembly.
   Refer to “Cylinder Head” in this manual.
4. Install the camshaft carrier with camshaft.
   Refer to “Camshaft” in this manual.
5. Install oil rail assembly.
   Refer to “Oil rail and injector” in this manual.
6. Install injector assembly.
   Refer to “Oil rail and injector” in this manual.
7. Install the injector harness assembly.
   Refer to “Injector” in this manual.
8. Reconnect harness connecter to oil pressure sensor and oil temperature sensor on the oil rail.
9. Reconnect Injector harness connecter to injector.
   Refer to “Injector” in this manual.
10. Install cylinder head cover with gasket.
    Refer to “Cylinder Head Cover” in this manual.
11. Install glow plug with specified torque.

Torque: 15 N·m (1.5 kg·m / 10.8 lb ft)

12. Install the intake manifold assembly.
    Refer to “Intake Manifold” in this manual.
13. Install the fuel pipe.
14. Install the water pipe between the cylinder head and water pump.

Torque: 20 N·m (2.0 k·m / 14.5 lb ft)

15. Install the front plate.
16. Install the camshaft pulley.
    Refer to “Timing Gear” in this manual.
17. Install timing belt and set the tensioner.
    Refer to “Timing Belt” in this manual.
18. Install CMP sensor bracket.

Torque: 20 N·m (2.0 kg·m / 14.5 lb ft)

19. Install timing belt cover.

Torque: 9 N·m (0.9 kg·m / 6.5 lb ft)

20. Fill the oil rail with engine oil then immediately install the high pressure oil pipe with the specified torque.

Torque: 80 N·m (8.1 kg·m / 57.9 lb ft)

21. Install the noise insulator cover.
22. Reconnect hose between thermostat and radiator.
23. Install turbocharger assembly.
    Refer to “Turbocharger” in this manual.
24. Install water hose and oil pipe for turbocharger.
    Refer to “Turbocharger” in this manual.
25. Install the valve assembly and install heat protector.
26. Install generator and set the fan belts.
27. Install A/C compressor bracket, compressor assembly and set drive belt.
28. Reconnect harness connector around cylinder head.
29. Reconnect vacuum hose to EGR valve.
30. Reconnect PCV hose.
31. Install oil level gauge guide assembly.
32. Install intercooler assembly.
    Refer to “Intercooler” in this manual.
33. Install the air duct assembly.
34. Fill engine coolant.
35. Connect battery ground cable.

VALVE CLEARANCE ADJUSTMENT

NOTE:

1. Valve clearance should be inspected and adjusted while the engine is cool.
2. The tightening of the camshaft bearing cap and camshaft carrier assembly should be checked before inspecting and adjusting valve clearance.

INSPECTION

1. Remove cylinder head noise insulator cover and cylinder head cover.
   Refer to “Cylinder Head” in this manual.
2. Disconnect all harness connecters of the injector and remove harness assembly.
3. Drain oil from oil rail assembly.
4. Remove injector clamp nuts and fixing bolts to take out injector assembly.
5. Loosen oil rail bolts, remove oil rail assembly.
6. Set cylinder No.1 to the TDC at the compression stroke. Make sure that there is play in cylinder No.1 tappets on inlet and exhaust sides and that there is no play in cylinder No.4 tappets.
7. Measure valve clearance at No.1 TDC (Refer to the black circles indicated in the illustration).

Standard Valve clearance:

Intake valve: 0.15 mm (0.0059 in) ± 0.05 mm (0.0020 in)
Exhaust valve: 0.25 mm (0.0098 in) ± 0.05 mm (0.0020 in)

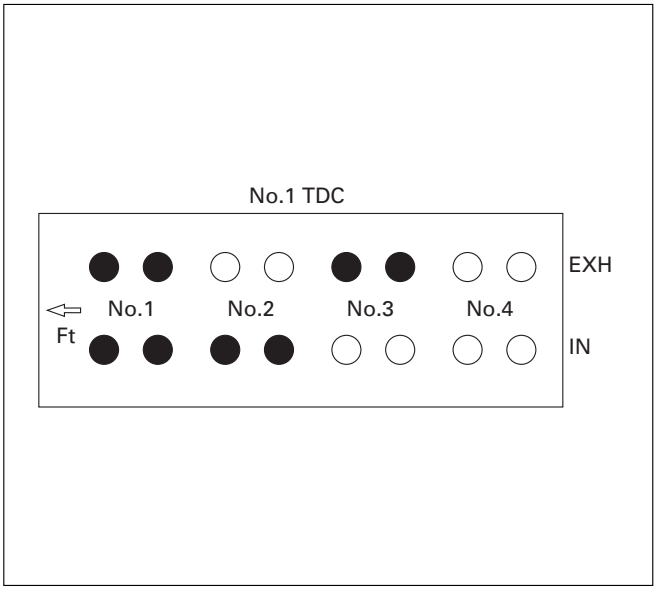

011RW045

8. Turn the crankshaft one turn to set No.4 cylinder TDC at the compression stroke.
9. Measure valve clearance at No.4 TDC (Refer to the black circles indicated in the illustration).

Standard Valve clearance:

Intake valve: 0.15 mm (0.0059 in) ± 0.05 mm (0.0020 in)
Exhaust valve: 0.25 mm (0.0098 in) ± 0.05 mm (0.0020 in)

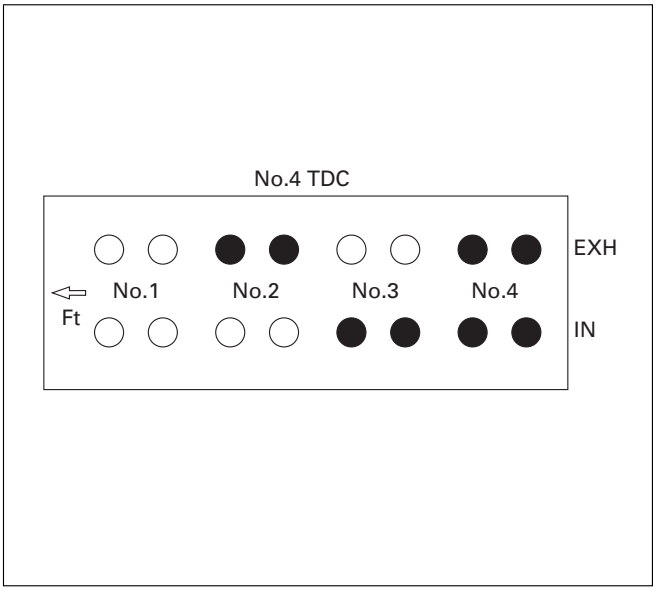

011RW046

10. If measured value is outside standard value, readjust the valve clearance.

ADJUSTMENT

For valve clearance adjustment, follow the procedure given below.

1. Set cylinder No.1 or No.4 to the TDC at the compression stroke.
   Set the valve clearance adjusting tool on the tappet requiring adjustment.
   After making sure of the correct setting of the special tool, depress the tappet by turning the bolt.
   Valve Clearance Adjusting Tool: 5-8840-2590-0

NOTE: Before depressing the tappet, set the tappet notch in the direction where adjuster can be easily taken out.

2. Take out the adjuster using a small screw driver and finger magnet.

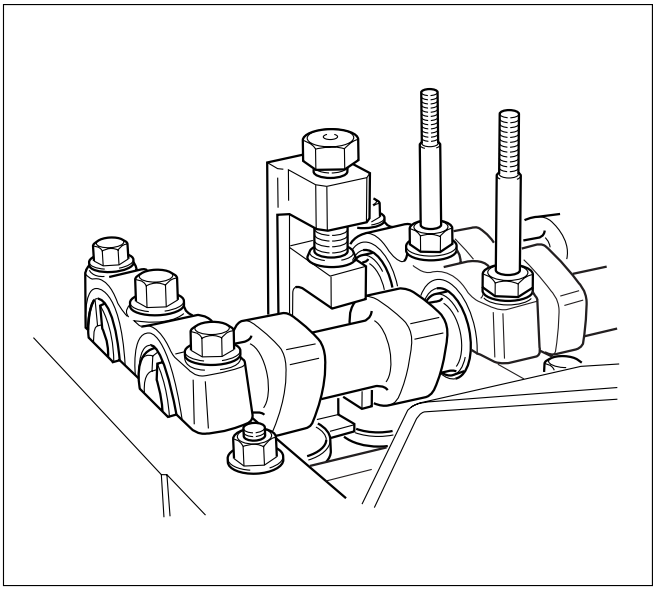

014RW150

3. Determine the thickness of the adjuster as follows.
   1) Measure the thickness of the removed adjuster with a micrometer.
   2) Calculate the thickness of a new adjuster.

   Calculation
   TA: Thickness of new adjuster
   M: Valve clearance measurement.
   TO: Thickness of the removed adjuster
   For intake side: TA=TO+(M–0.15) mm
   For exhaust side: TA=TO+(M–0.25) mm

   Select a new adjuster whose thickness is as close to the estimated value as possible.
4. Install oil rail and tighten it temporarily.
5. Install injector assembly.

NOTE:

1) Do not forget to insert the O-ring between injector and oil rail.
2) Install the injector to the same position as before removal.

6. Install the injector fixing bolts and temporarily tighten.
7. Install the injector clamp and tighten temporarily.
8. Tighten injector fixing bolts to the specified torque.

Torque: 6.5 N·m (0.7 kg·m / 5.1 lb ft)

9. Tighten injector clamp nut to the specified torque with special method.

Torque: loosen one turn and tighten again to specified torque.

Torque: 25 N·m (2.4 kg·m / 17.4 lb ft)

10. Tighten oil rail to the specified torque.

Torque: 20 N·m (2.0 kg·m / 14.5 lb ft)

11. Install injector harness and reconnect connector.
12. Install cylinder head cover.
    Refer to”Cylinder Head” in this manual.
13. Fill with about 300cc of engine oil at the high pressure oil pipe installation port on the oil rail using an oil filler.
    If assembled without filling the oil rail with oil, the time for engine starting will be longer.
14. Immediately install high pressure oil pipe to tighten with specified torque.

Torque: 80 N·m (8.1 kg·m / 57.9 lb ft)

15. Install cylinder head noise insulator cover.
    Refer to “Cylinder Head” in this manual.

OIL RAIL AND INJECTOR

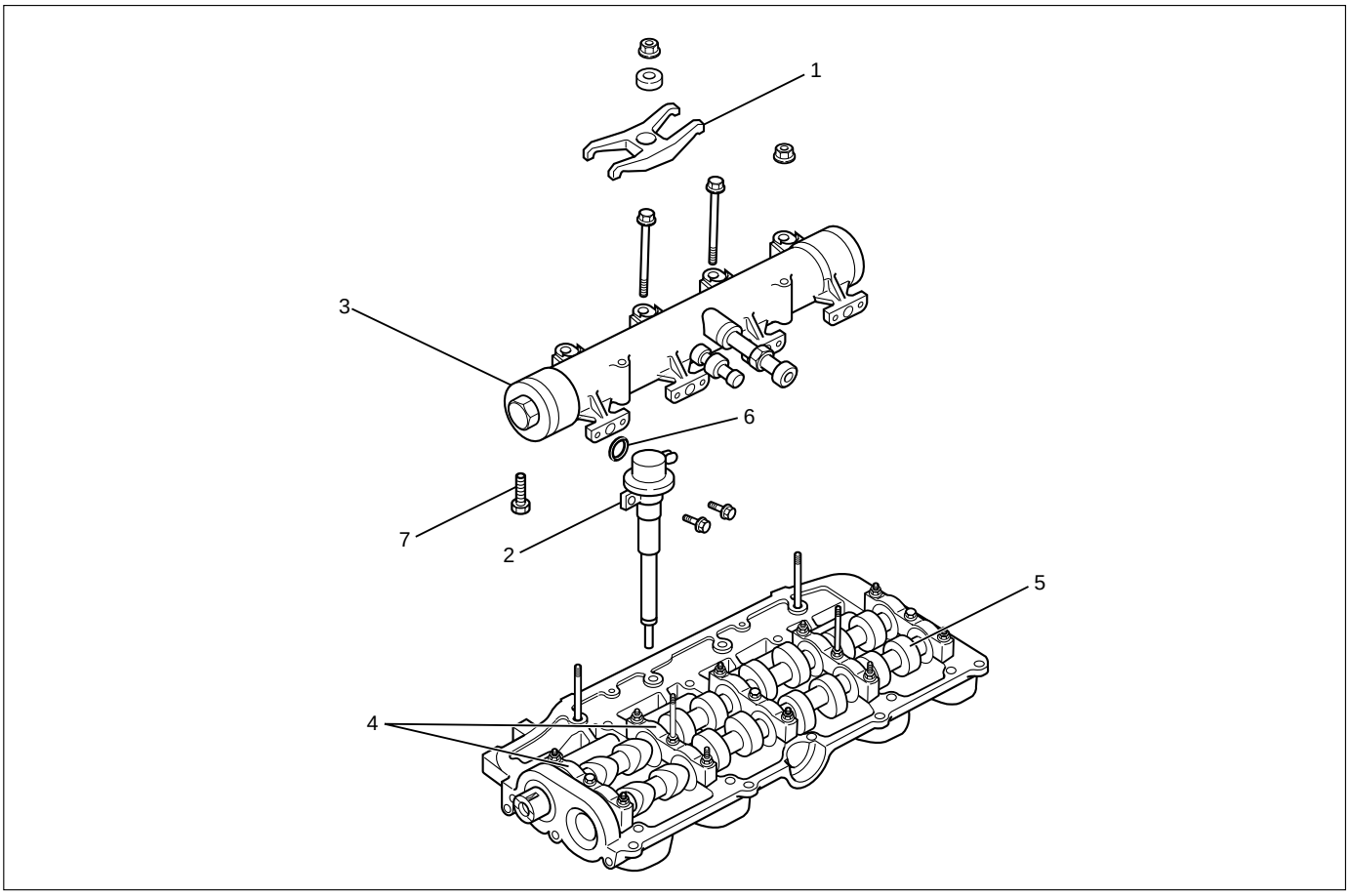

012RW102-1

Legend

(1) Injector Clamp
(2) Injector Assembly
(3) Oil Rail Assembly
(4) Camshaft Bracket
(5) Camshaft
(6) O-Ring
7) Drain Plug

REMOVAL

Prior to removal, be sure to confirm and record the group code of the injector installed using Tech2.

1. Disconnect battery ground cable.
2. Remove air cleaner cover and air duct.
3. Remove intercooler.
   Refer to “Intercooler” in this manual.
4. Remove PCV hose and pipe.
5. Remove cylinder head noise insulator cover.
6. Remove high pressure oil pipe.

CAUTION:

1) Sleeve nut should be loosened with cloth tied around it to prevent oil from spurting due to the remaining pressure.

2) The high pressure pipe should be disconnected with a cloth tied around the intake manifold glow plug to prevent oil from flowing out of the oil rail.

7. Loosen eye bolt of fuel pipe at fuel pump side.

NOTE: Cloth should be put around the loosened eye bolt to prevent fuel from flowing out.

8. Remove fuel return hose at chassis side.
9. Remove PCV hose to cylinder head cover.
10. Remove cylinder head cover.
11. Drain the oil from oil rail assembly.
12. Record the identification marking of injector for each cylinder which is indicated on the upper portion of injector.
    There are nine kinds of identification marking available, one alphabet letter and one numeral letter.
    In case three kinds of markings are given, one alphabet letter (sometimes printed) and one numeral letter, top priority is given to the one alphabet letter and one numeral letter.

(For example)
If you find identification marking “A”, “RA” and “2” on the injector, you can use injector grade “A”. (The “RA” is sometimes printed, but can be ignored)

Grade \ Identification Marking	One Alphabet Letter	One Numeral Letter
A	A	1
	A	2
	A	3
B	B	1
	B	2
	B	3
C	C	1
	C	2
	C	3

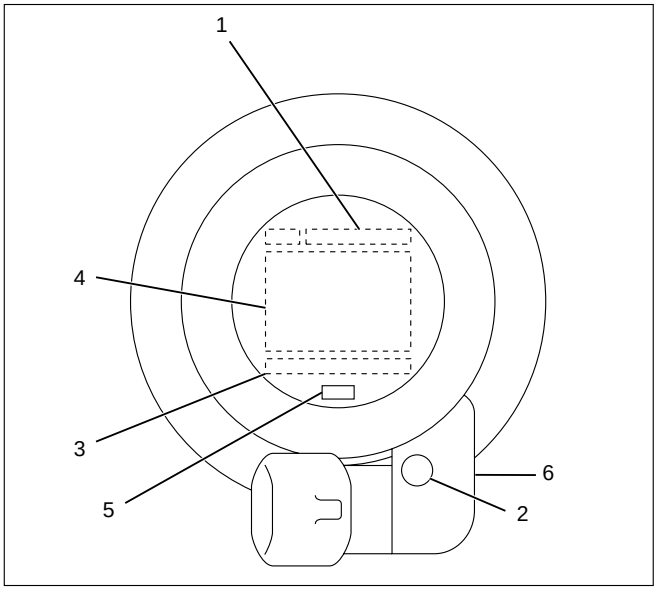

055RW021-1

Legend
(1) Part Number
(2) Two Alphabet Letter
(3) Serial Number
(4) Bar Code
(5) One Alphabet Letter
(6) One Numeral Letter

13. Remove harness connector from each injector.
14. Loosen nuts and bolts for oil rail.
15. Remove injector fixing bolts.
16. Remove injector clamp.
17. Remove injector assembly.

NOTE: Do not drop O-ring

INSTALLATION

1. Install oil rail, tighten temporarily
2. Install injector assembly.

NOTE: Do not forget to install between injector and oil rail.

3. Install injector fixing bolts, tighten temporarily.
4. Install injector clamp, tighten nut temporarily.
5. Tighten injector bolts to the specified torque.

Torque: 6.5 N·m (0.7 kg·m / 5.1 lb ft)

6. Tighten injector clamp nut to the specified torque with special method.

Torque: 30 N·m (3.1 kg·m / 22 lb ft) then loose a time again tighten as following torque.

Torque: 25 N·m (2.4 kg·m / 17.4 lb ft)

7. Tighten oil rail to the specified torque.

Torque: 20 N·m (2.0 kg·m / 14.5 lb ft)

8. Install injector harness assembly, reconnect harness connecter to injector.
9. Record the identification marking of injector for each cylinder that is indicated on the upper portion of injector.

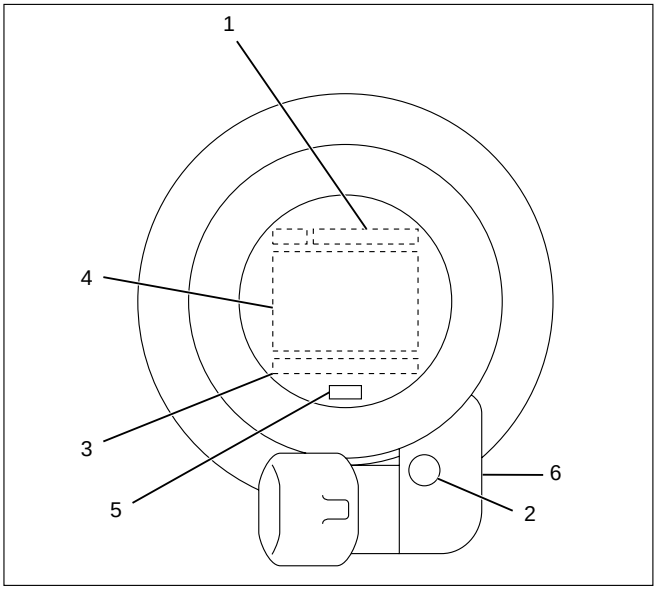

055RW021-1

Legend
(1) Part Number
(2) Two Alphabet Letter
(3) Serial Number
(4) Bar Code
(5) One Alphabet Letter
(6) One Numeral Letter

10. Install cylinder head assembly.
    Refer to “Cylinder Head” in this manual.
11. Fill with about 300cc of engine oil from the high pressure oil pipe at the high pressure oil pipe installation port on the oil rail using an oil filler.
    If assembled without filling the oil rail with oil, the time for engine starting will be longer.

12. Immediately install high pressure oil pipe and tighten to specified torque.

Torque: 80 N·m (8.1 kg·m / 57.9 lb ft)

13. Install cylinder head noise insulator cover.
    Refer to “Cylinder Head” in this manual.
14. Install intercooler assembly.
    Refer to “Intercooler” in this manual.
15. Install air cleaner cover and air duct.
16. Use TECH2 to rewrite injector data to ECM.
    For rewriting method refer to section “Data Programming in Case of ECM Change” of 6E 4JX1 engine driveability and emissions in this manual.

NOTE:

1) On completion of servicing, bleed air from the engine inside fuel passage by means of the priming pump. (The priming pump should be operated more times than in the case of conventional engines.)
2) As air is in the oil rail, it takes more time to start the engine. Rough idling may occur while the air is being bled completely after starting the engine, but it does not indicate trouble.

   The air will be bled and normal engine status will be reached while the vehicle is driven for about 5 km or engine is operated for about 5 minutes at 1500 to 2000 rpm.
3) The injector spare part will be provided for group number B1, B2 and B3 only.

CRANK CASE

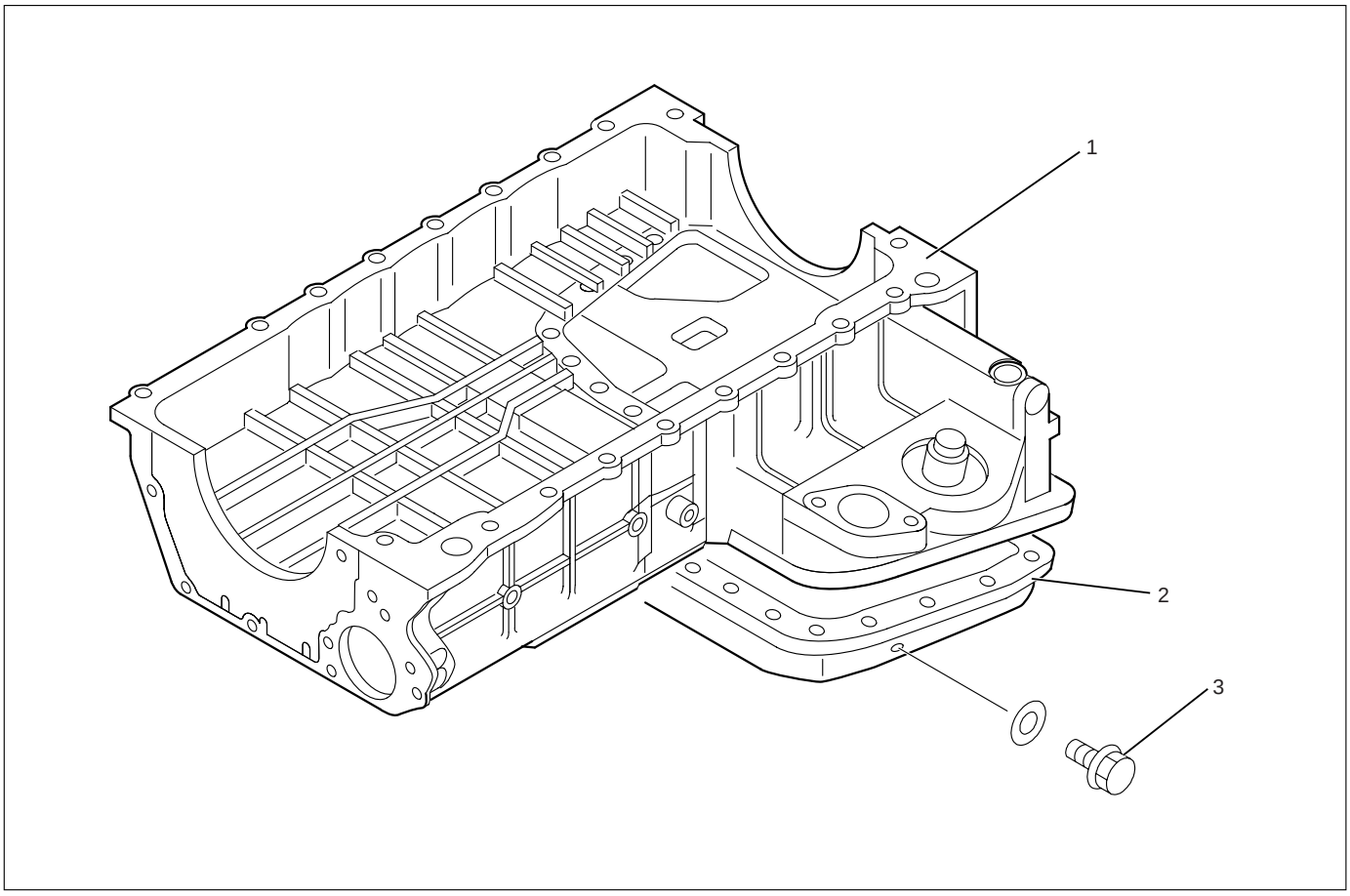

012RW029

Legend
(1) Crank Case
(2) Oil Pan
(3) Drain Plug

REMOVAL

1. Drain engine oil.
2. Remove transmission assembly.
3. Remove crankshaft damper pulley.
4. Remove timing belt cover, timing belt, pulley and front plate.
5. Remove timing gear case cover.
6. Remove timing gears.

NOTE: Do not forget to set lock bolt for idle gear A and lock pin for idle gear C.

7. Remove timing gear case.
8. Remove oil level gauge guide assembly.
9. Remove flywheel assembly.

CAUTION:

1) The flywheel heavy; be careful not to drop it.

2) Be careful no to let it slip because the hexagon of the bolt is thin.

10. Remove rear plate (for A/T) or flywheel housing (for MT).
11. Remove retainer.

NOTE:
1) Be careful not to damage the oil seal; it can be reused.
2) Inspect installation portion for distortion and flow on the slinger; also inspect for flow on the oil seal lip.
3) If there is some flow oil seal/slinger, replace a set.

12. Remove bolts from thrust plate of balance shaft LH then remove balance shaft.
13. Loosen crank case fixing bolts.
14. Use seal cutter to take off the liquid gasket.
    Seal cutter: 5-8840-2153-0
15. Remove crank case assembly.

CAUTION:
Do not give shock to crank case for prevention take off applied vibration insulation material on the crank case.

INSTALLATION

1. Install relief valve (if it was removed).

Torque: 30 N·m (3.1 kg·m / 22 lb ft)

2. Insert O-ring to strainer, install strainer and tighten to specified torque.

Torque: 20 N·m (2.0 kg·m / 14.5 lb ft)

3. Apply liquid gasket (TB1207B or equivalent) to surface of oil pan and tighten bolt to the specified torque.

Torque: 19 N·m (1.9 kg·m / 13.7 lb ft)

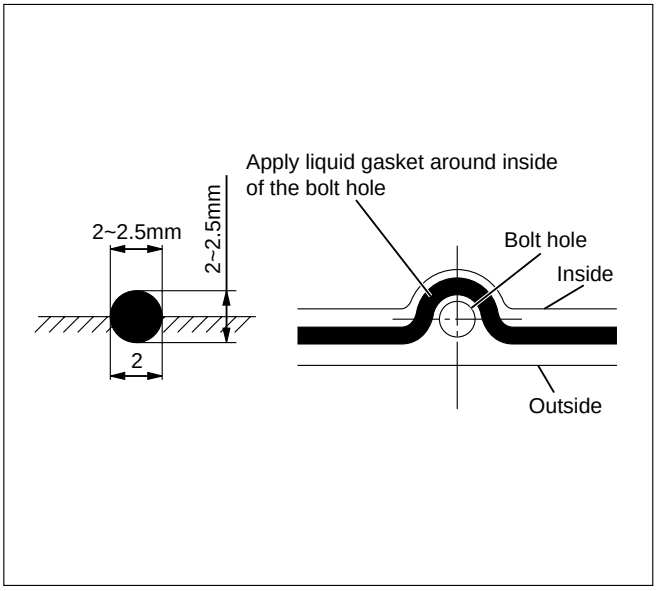

F06HX00001

4. Apply engine oil to the balance shaft and insert it into crank case.

NOTE:
- Do not damage bearing when inserting the balance shaft.
- Make sure it rotates smoothly.

5. Tighten thrust plate of balance shaft LH.

Torque: 25 N·m (2.5 kg·m / 18 lb ft)

6. Set O-ring port of oil gallery on the cylinder block.
7. Apply liquid gasket (TB1207C or equivalent) to crankcase fixing surface then tighten bolts to the specified torque.

Torque: 25 N·m (2.5 kg·m / 18 lb ft)

NOTE: Make sure there is no oil, dust or scratches on the surface coated with liquid gasket and mount within five minutes of gasket application.

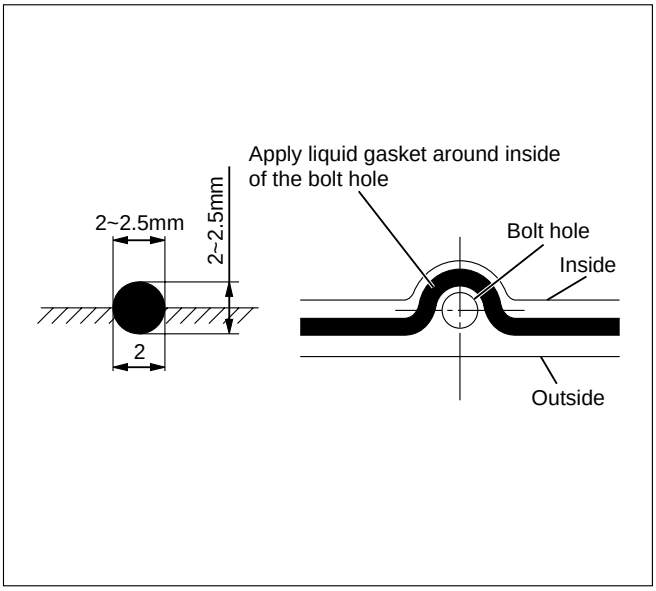

F06HX00001

8. Install retainer with oil seal.
9. Install rear plate (A/T) or flywheel housing (MT), tighten bolt to the specified torque.

Torque: 97 N·m 9.9 kg·m / 72 lb ft)

10. Install flywheel assembly with applied engine oil to the bolt, tighten the bolt using angular tightening method.

1st step: 59 N·m (6.0 kg·m / 43 lb ft)
2nd step: 60° to 90°

11. Install oil level gauge guide assembly.
12. Install timing gear case.

Torque: 20 N·m (2.5 kg·m / 14.5 lb ft)

13. Install timing gears
    Refer to “Timing Gear” in this manual.
14. Remove lock bolt from idle gear A and remove lock pin from idle gear C.
15. Install timing gear case cover.

Torque: 20 N·m (2.5 kg·m / 14.5 lb ft)

16. Install oil pump pulley.

Torque: 10 N·m (1.0 kg·m / 7.2 lb ft)

17. Install camshaft pulley tighten bolt with angular tightening method.

Torque:|
1st step: 40 N·m (4.0 kg·m / 29 lb ft)
2nd step: 75°

18. Install timing belt and belt tensioner.
    Refer to “Cylinder Head” in this manual.
19. Install crankshaft damper pulley.

Torque: 220 N·m (22 kg·m / 159 lb ft)

20. Fill engine oil.

CRANKSHAFT

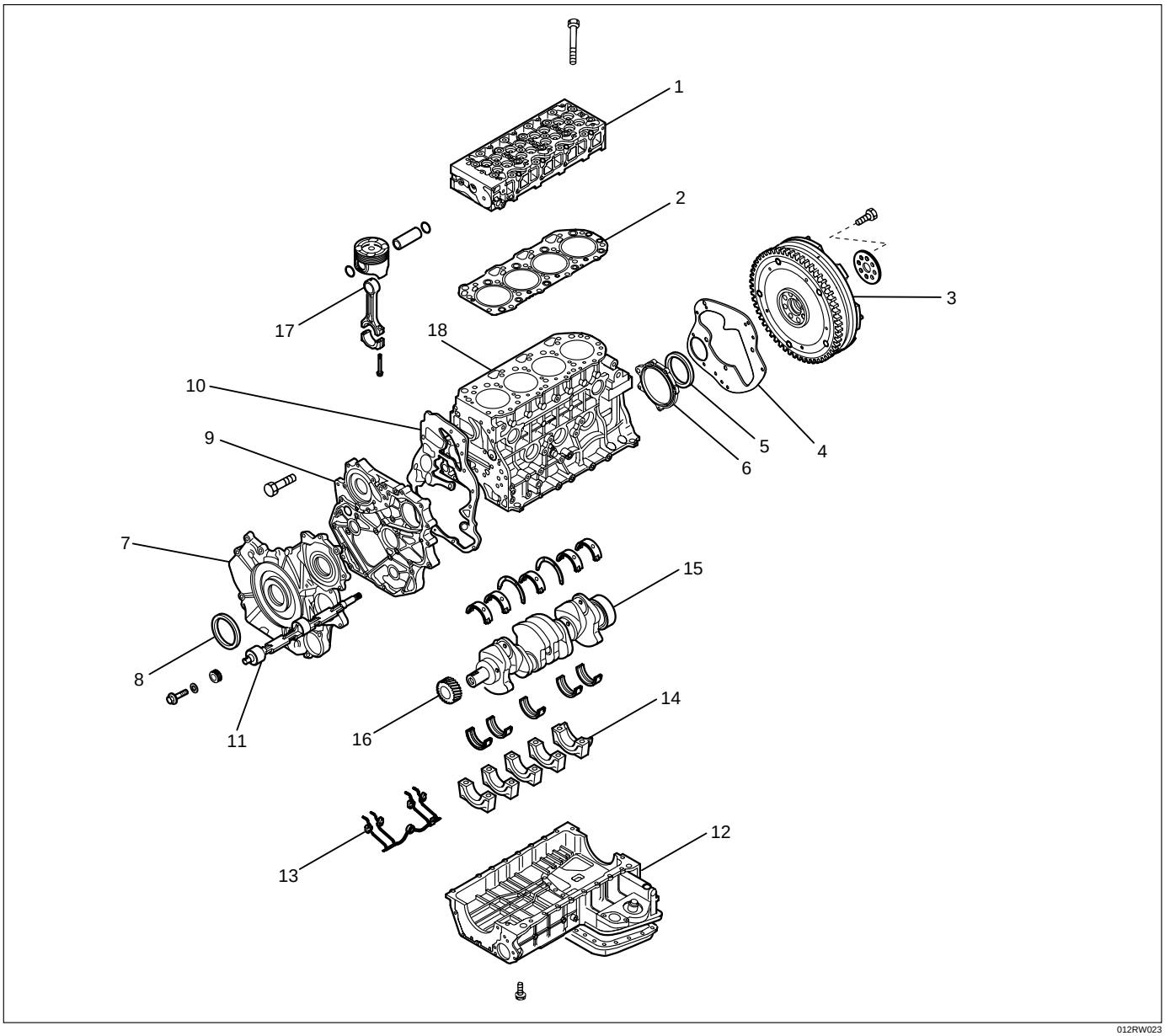

Legend

(1) Cylinder Head
(2) Cylinder Head Gasket
(3) Flywheel'
(4) Cylinder Block Rear Plate (for A/T) or Flywheel Housing (for M/T)
(5) Crankshaft Rear Oil Seal
(6) Retainer
(7) Timing Gear Case
(8) Crankshaft Front Oil Seal
(9) Timing Gear Case
(10) Gasket
(11) Balance Shaft
(12) Crank Case
(13) Piston Cooling Oil Pipe
(14) Main Bearing Cap
(15) Crankshaft
(16) Crankshaft Timing Gear
(17) Piston and Connecting Rod Assembly
(18) Cylinder Block

DISASSEMBLY

1. Cylinder Head
   1) Refer to “Cylinder head” in this manual.
2. Crankshaft Front Oil Seal
   1) Use a plastic hammer and a screwdriver to tap around the oil seal to free it from the gear case cover.

      Take care not to damage the oil seal fitting surfaces.
3. Crankshaft Timing Gear
4. Timing Gear Case
5. Flywheel
6. Cylinder Block Rear Plate
7. Crankshaft Rear Oil Seal
   1) Use special tool to remove the crankshaft rear oil seal.

      Oil Seal Remover: 5-8840-2360-0

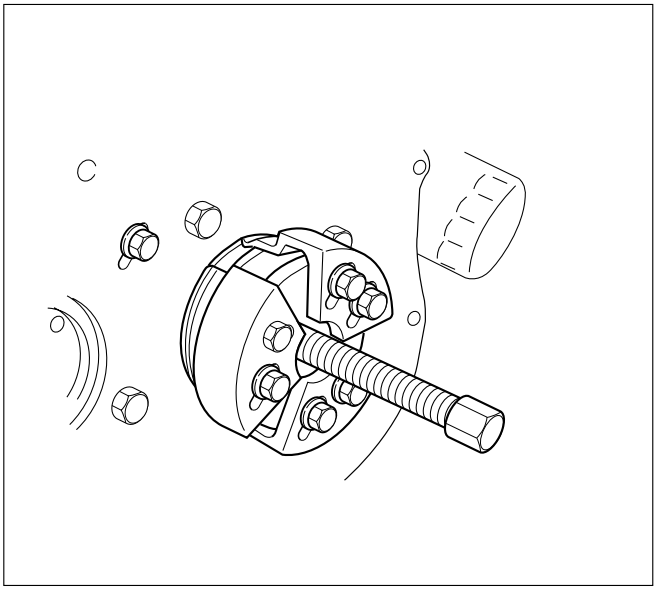

015LV002

8. Crank Case
9. Piston Cooling Oil Pipe
10. Piston and Connecting Rod Assembly
11. Main Bearing Cap Assembly
12. Crankshaft

INSPECTION AND REPAIR

Make the necessary adjustments, repairs, and part replacements if excessive wear or damage is discovered during inspection.

1. Crankshaft Thrust clearance

   Set the dial indicator as shown in the illustration and measure the crankshaft thrust clearance.
   If the thrust clearance exceeds the specified limit, replace the thrust bearing as a set.

Standard : 0.04 – 0.20 mm (0.0016 – 0.0079 in)
Limit: 0.30 mm (0.0118 in)

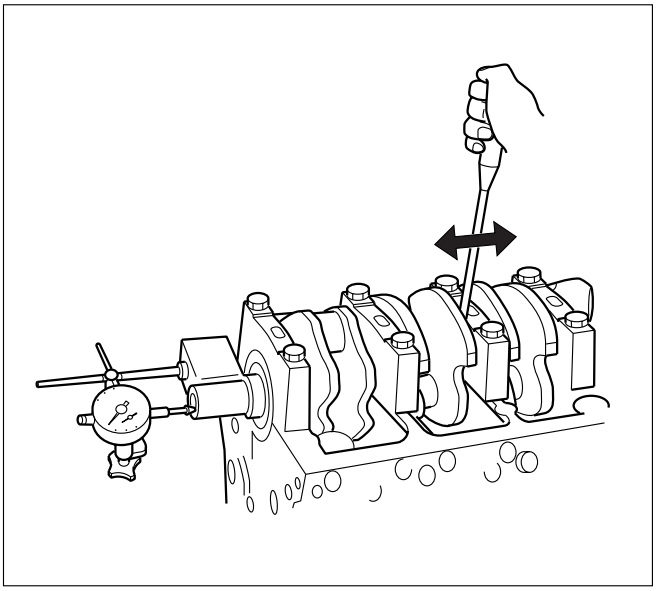

012RW063

2. Main bearing clearance
   1) Remove the main bearing caps in the sequence shown in the illustration.

      Arrange the removed main bearing caps in the cylinder number order.

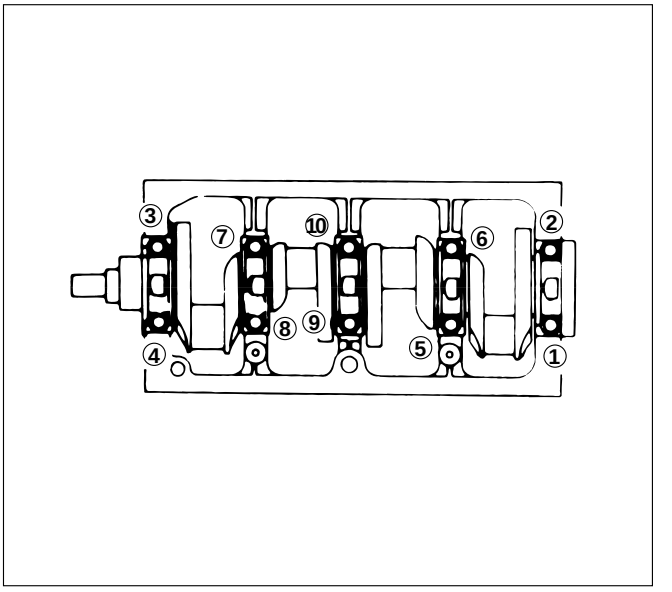

012RW026

   2) Remove the crankshaft. Remove the main bearings.
   3) Clean the upper and lower bearings as well as the crankshaft main journal.
   4) Check the bearings for damage or excessive wear.

      The bearings must be replaced as a set if damage or excessive wear is discovered during inspection.
   5) Set the upper bearings and the thrust washers to their original positions. Carefully install the crankshaft.
   6) Set the lower bearings to the bearing cap original position.

7) Apply plastigage to the crankshaft journal unit as shown in the illustration.

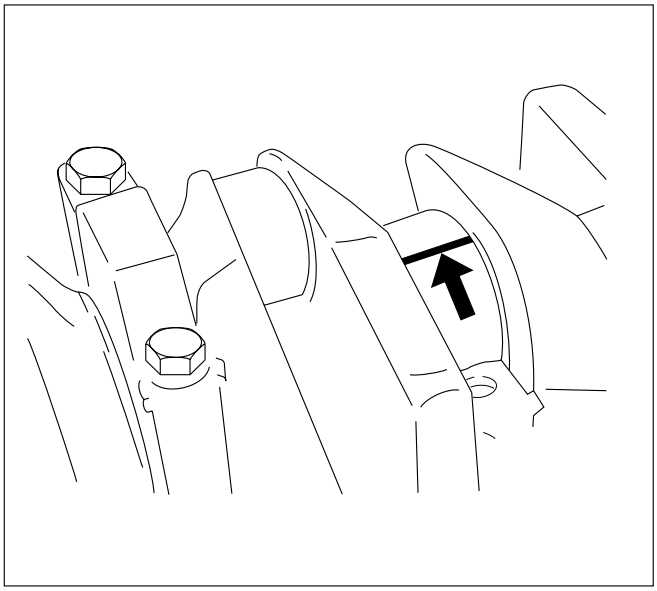

014RW055

8) Install the main bearing caps. Apply engine oil to the bolt threads and the seats. Tighten the bolts to the specified torque.

Torque: 167 N·m (17 kg·m/123 lb ft)

NOTE: Do not allow the crankshaft to rotate.

9) Remove the main bearing caps.
10) Measure the plastigage width and determine the oil clearance. If the oil clearance exceeds the specified limit, replace the main bearings as a set and/or replace the crankshaft.

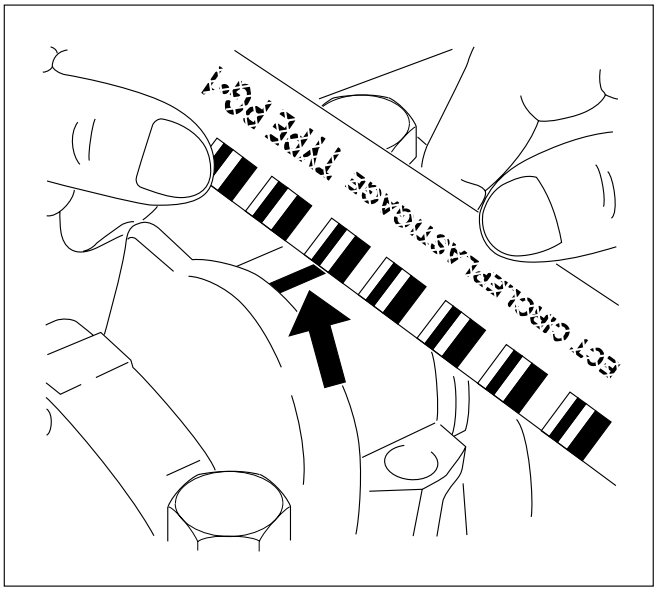

014RW077

11) Clean the plastigage from the bearings and the crankshaft.

    Remove the crankshaft and the bearings.

Standard: 0.031 – 0.063 mm (0.0012 – 0.0025 in)
Limit: 0.11 mm (0.0043 in)

3. Run-out
   1) Carefully set the crankshaft on the V-blocks.

      Slowly rotate the crankshaft and measure the runout. If the crankshaft runout exceeds the specified limit, the crankshaft must be replaced.

Standard: 0.05 mm (0.0020 in) or less
Limit: 0.08 mm (0.0031 in)

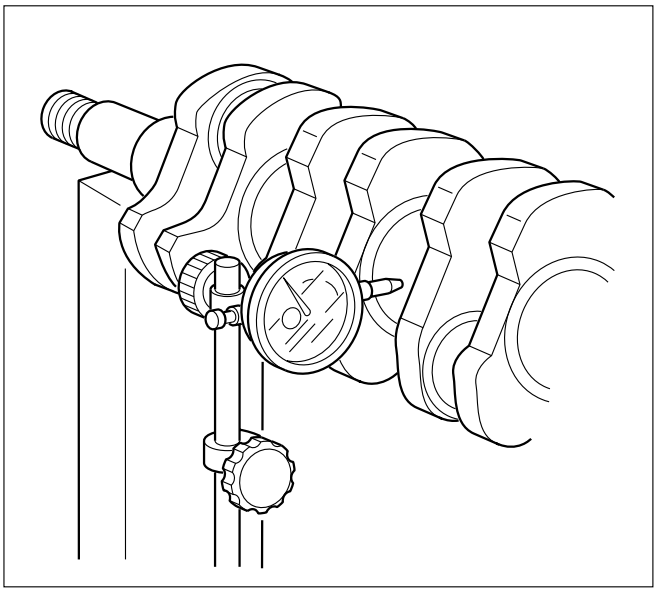

012RW068

Measure the diameter and the uneven wear of main journal and crank pin.

If the crankshaft wear exceeds the specified limit, crankshaft must be replaced.

Main journal diameter

Standard: 69.917 – 69.932 mm (2.7526 – 2.7532 in)
Limit: 69.91 mm (2.7524 in)

Crank pin diameter

Standard: 52.915 – 52.930 mm (2.0833 – 2.0839 in)
Limit: 52.90 mm (2.0827 in)

Uneven wear limit

Standard: 0.05 mm (0.0020 in) or less
Limit: 0.08 mm (0.0031 in)

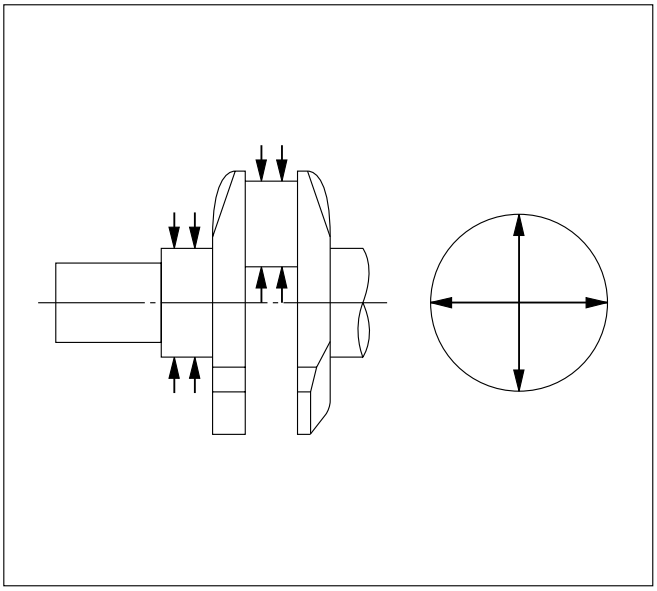

012RW045

Crankshaft inspection

Inspect the surface of the crankshaft journals and crank pins for excessive wear and damage.
Inspect the oil seal fitting surfaces for excessive wear and damage.
Inspect the oil ports for obstructions.

Crankshaft tufftriding inspection

1. Use an organic cleaner to thoroughly clean the crankshaft. There must be no traces of on the surfaces to be inspected.
2. Prepare a 5 – 10% solution of ammonium cupric chloride (dissolved in distilled water).
3. Use a syringe to apply the solution to the surface to be inspected.

   Hold the surface to be inspected perfectly horizontal to prevent the solution from running.

NOTE: Do not allow the solution to come in contact with the oil ports and their surrounding area (Approximately 10 mm).

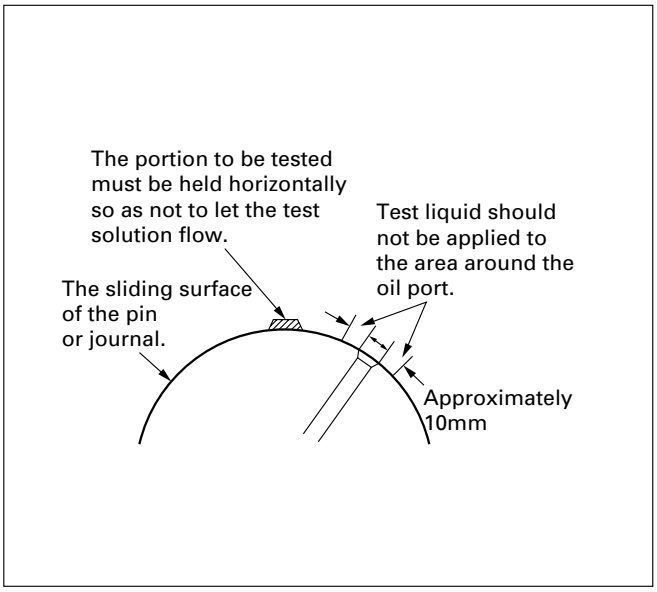

F06MV020

Judgment

1. Wait for thirty or forty seconds.

   If there is no discoloration after thirty or forty seconds, the crankshaft is usable.

   If discoloration appears (the surface being tested will become the color of copper), the crankshaft must be replaced.
2. Steam clean the crankshaft surface immediately after completing the test.

NOTE: The ammonium cupric chloride solution is highly corrosive. Because of this, it is imperative that the surfaces being tested be cleaned immediately after completing the test.

CRANKSHAFT BEARING SECTION

When installing new crankshaft bearings, refer to the selection table below.
Select and install the new crankshaft bearings, paying close attention to the cylinder body journal hole diameter grade mark and the crankshaft journal diameter grade mark.

NOTE: Although all upper journal bearings (cylinder body side) have oil grooves and holes, all lower bearings (bearing cap side) have no groove and hole. Play close attention to the distinction during the installation procedure.

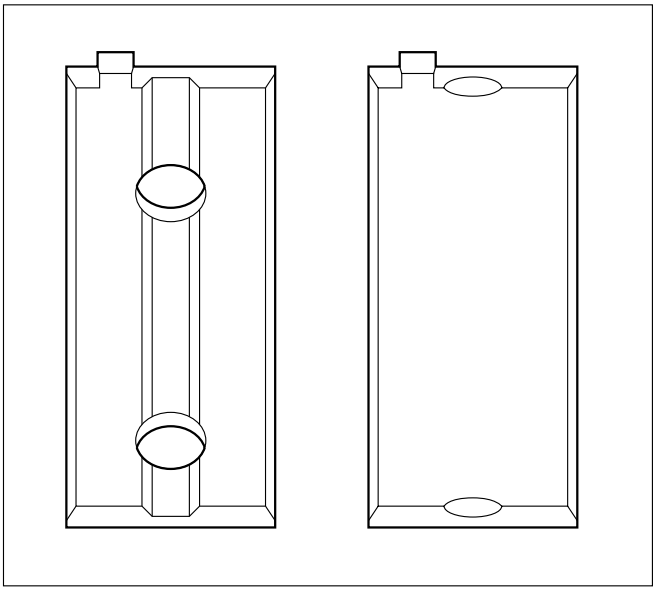

012RW038

Crankshaft Bearing Bore Grade Mark Position

Crankshaft bearing bore grade marks 1 or 2 are stamped on the rear right hand side of the cylinder body.

Example:

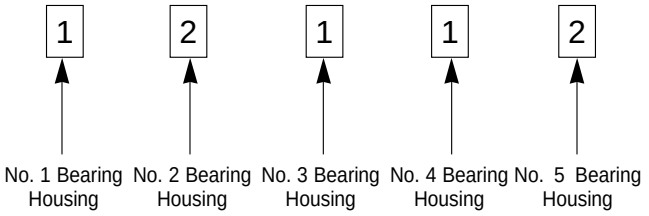

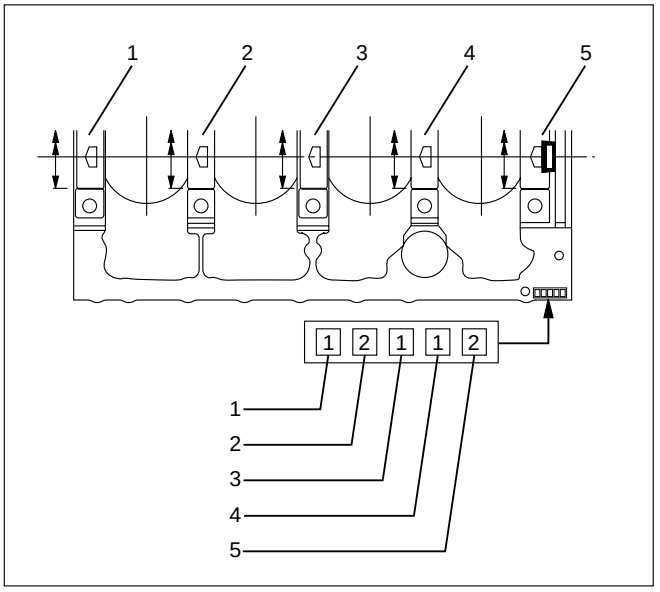

012RW114

Legend

(1) No. 1 Main bearing bore grade
(2) No. 2 Main bearing bore grade
(3) No. 3 Main bearing bore grade
(4) No. 4 Main bearing bore grade
(5) No. 5 Main bearing bore grade

Crankshaft Journal Grade Mark Position

The crankshaft journal grade marks (1 or –) are stamped on each crankshaft journal wave.
The crankshaft journal and bearing clearance must be the same for each position after installation of the crankshaft and the crankshaft bearings.

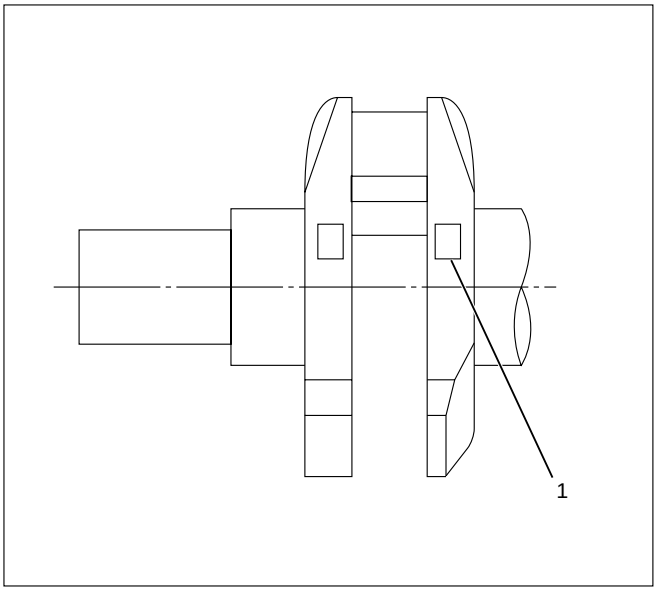

015RW078

Legend

(1) Crankshaft journal outside diameter grade

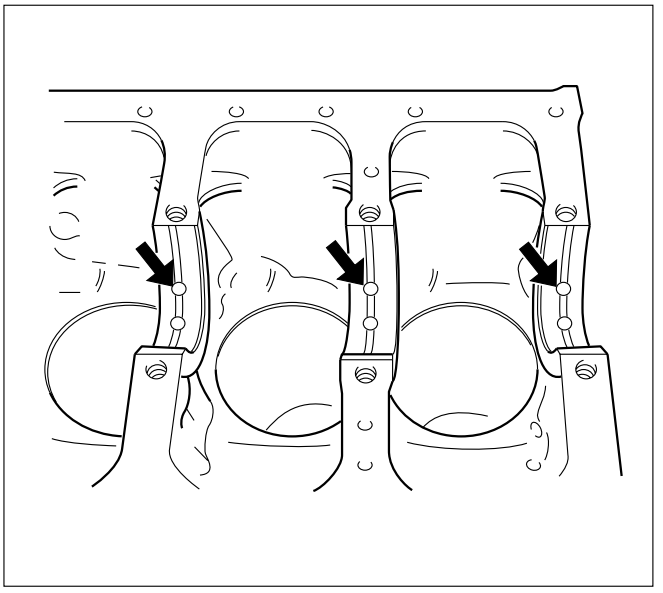

012RW069

Main Bearing Bore Diameter mm(in)		Crankshaft Main Journal Diameter mm(in)		Crankshaft Bearing	Oil Clearance mm(in)
Grade	Inside Diameter	Grade	Outside Diameter		
1	73.992 – 74.000 (2.9131 – 2.9134)	1 or -	69.927 – 69.932 (2.7530 – 2.7532)	4	0.045 – 0.061 (0.0018 – 0.0024)
		2 or - -	69.922 – 69.927 (2.7528 – 2.7530)	4	0.050 – 0.066 (0.0020 – 0.0026)
		3 or - - -	69.917 – 69.922 (2.7526 – 2.7528)	5	0.052 – 0.068 (0.0020 – 0.0027)
2	73.983 – 73.992 (2.9127 – 2.9131)	1 or -	69.927 – 69.932 (2.7530 – 2.7532)	2	0.042 – 0.059 (0.0017 – 0.0023)
		2 or - -	69.922 – 69.927 (2.7528 – 2.7530)	3	0.044 – 0.061 (0.0017 – 0.0024)
		3 or - - -	69.917 – 69.922 (2.7526 – 2.7528)	4	0.046 – 0.063 (0.0018 – 0.0025)
3	73.975 – 73.983 (2.9124 – 2.9127)	1 or -	69.927 – 69.932 (2.7530 – 2.7532)	1	0.037 – 0.053 (0.0015 – 0.0021)
		2 or - -	69.922 – 69.927 (2.7528 – 2.7530)	2	0.039 – 0.055 (0.0015 – 0.0022)
		3 or - - -	69.917 – 69.922 (2.7526 – 2.7528)	2	0.044 – 0.060 (0.0017 – 0.0024)

REASSEMBLY

1. Crankshaft
   1) Install the main bearings to the cylinder body and the main bearing caps.
   2) Be sure that they are positioned correctly.
   3) Apply new engine oil to the upper and lower main bearing faces.
   4) Carefully mount the crankshaft.
   5) Apply engine oil to the thrust washer.
   6) Assemble the thrust washer to the No. 3 bearing journal. The oil grooves must face the crankshaft.

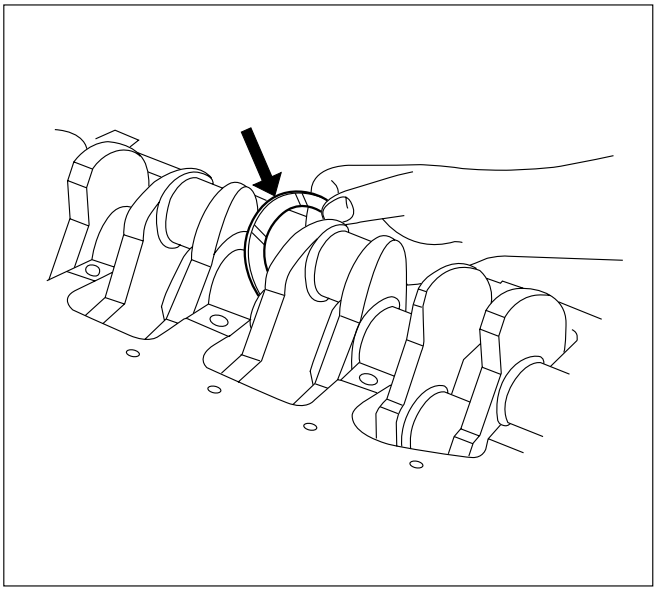

012RW047

   7) Install the bearing caps with the bearing cap head arrow mark facing the front of the engine.
   8) Apply engine oil to the crankshaft bearing cap bolts.
   9) Tighten the crankshaft bearing cap bolts to the specified torque a little at a time in the sequence shown in the illustration.

Torque: 167 N·m (17.0 kg·m/123 lb ft)

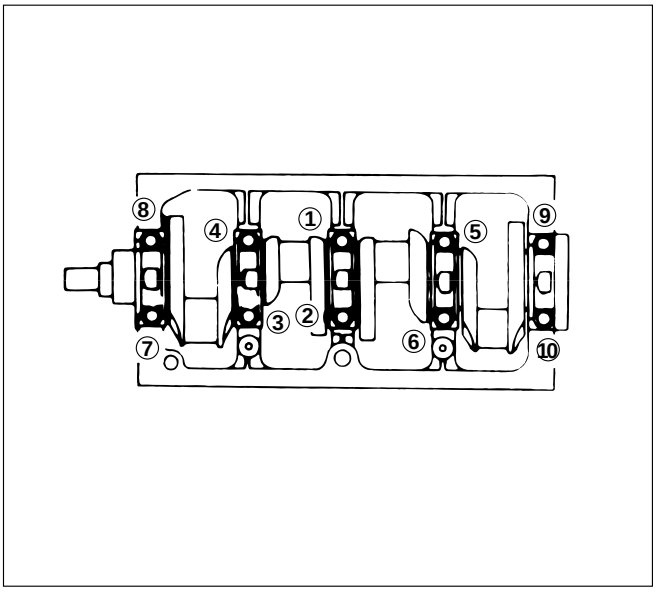

012RW027

NOTE: Check to see that the crankshaft turns smoothly by rotating it manually.

3. Piston and Connecting Rod Assembly
   1) Apply engine oil to the cylinder bores, the connecting rod bearings and the crankshaft pins and each piston ring and piston.
   2) Align the front mark (2) of piston and front mark (3) of connecting rod then assemble them.

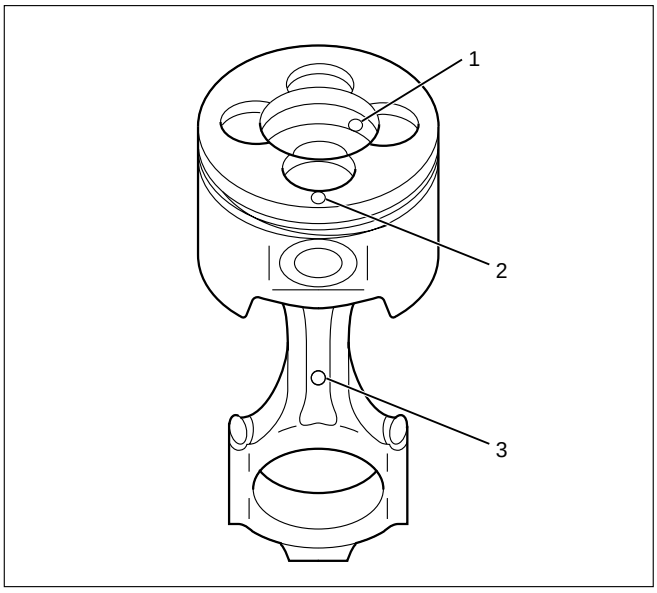

015RW051

   3) The N mark of the piston ring is faced toward the top, check to see that the piston ring end gap is correctly positioned.

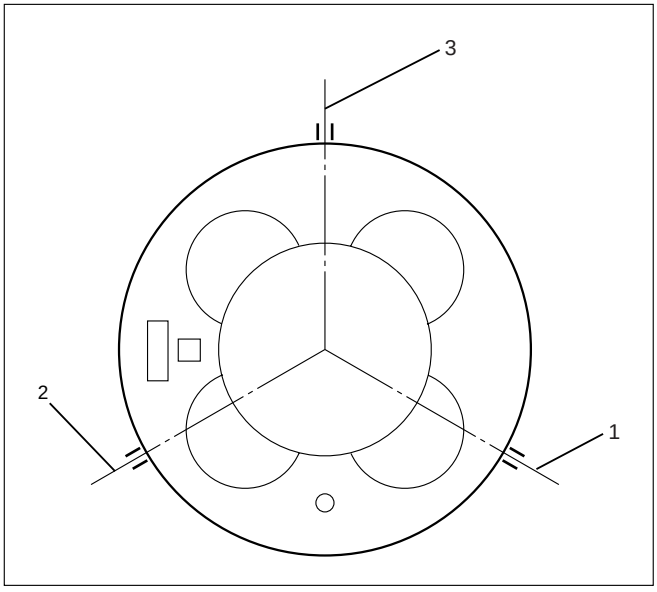

015RW083

Legend
(1) 1st piston ring end gap
(2) 2nd piston ring end gap
(3) Oil ring end gap

   4) Insert the piston/connecting rod assemblies into each cylinder with the piston ring compressor.

      The front marks must be facing the front of the engine.

      Piston Ring Compressor: 5-8840-9018-0
   5) Match the numbered caps with the numbers on the connecting rods. Align the punched marks on the connecting rods and caps.
   6) Apply engine oil to the threads and seating faces of the nuts.
   7) Tighten the cap nuts in 2 steps, using angular tightening method as shown in the following specifications.

1st step: 29 N·m (3.0 kg·m/22 lb ft)
2nd step: 45°– 60°

After tightening the cap nuts, check to see that the crankshaft rotates smoothly

4. Piston Cooling Oil Pipe

   If the piston cooling oil pipe is forcibly assembled, the end of the oil jet may bend. It could make it impossible to supply oil to the piston cooling holes, which will sometimes cause piston seizure.

   Sufficient care should be taken to pipe assembly work.

   1) Tighten the bolt and oil jet plug to the specified torque.

Torque:

M6: 8 N·m (0.8 kg·m/6 lb ft)
M8: 20 N·m (2.0 kg·m/14.5 lb ft)

Oiling Jet Plug: 30 N·m (3.1 kg·m/22 lb ft)

5. Crank case
   1) Refer to “Crank case” in this manual.
6. Apply liquid gasket (TB-1207C or equivalent) to retainer then install it to rear end of cylinder block within 5 minutes.
7. Crankshaft Rear Oil Seal
   1) Tighten the adapter to the crankshaft rear and section with 2 bolts.
   2) Insert the oil seal into the peripheral section of the adapter.
   3) Insert the sleeve into the adapter and tighten it with a bolt (M12 x 1.75L = 70) until the adapter hits the sleeve.
   4) Remove the adapter and the sleeve.
   5) Check the dimension of the oil seal setting from rear end of crankshaft.

Standard Dimension = 12.5 ± 0.3 mm

Oil Seal Installer: 5-8840-2359-0

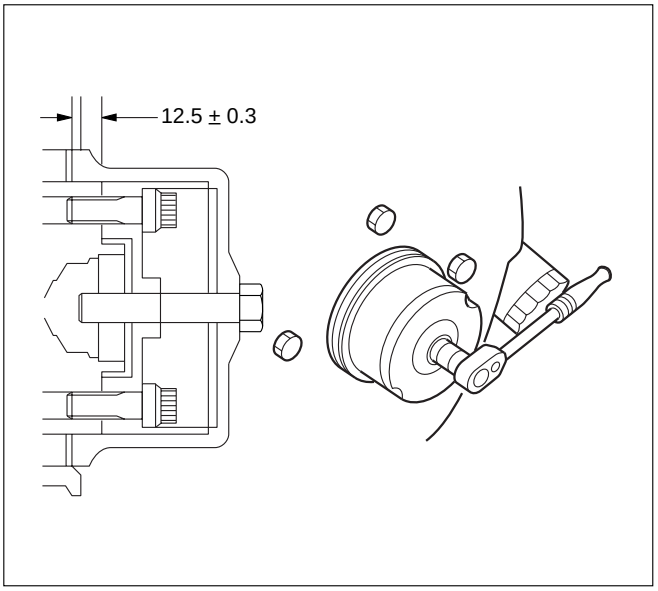

012RW067

8. Cylinder Block Rear Plate (A/T)
   Align the rear plate with the cylinder block dowel pins.
   Tighten the rear plate to the specified torque.

Torque: 97 N·m (9.9 kg·m/72 lb ft)

9. Flywheel housing (M/T)
   Align the flywheel housing with the cylinder block dowel pins.
   Tighten the bolt to the specified torque.

Torque: 97 N·m (9.9 kg·m/72 lb ft)

10. Flywheel
    1) Thoroughly clean and remove the oil from the threads of crankshaft and flywheel fixing surface.
    2) Mount the flywheel on the crankshaft and then install the washer.
    3) Align the timing mark, cut out on the flywheel is at lowest position for M/T model and identification hole on the boss is highest position for A/T model when cylinder No. 1 is at the TDC.

For M/T Model

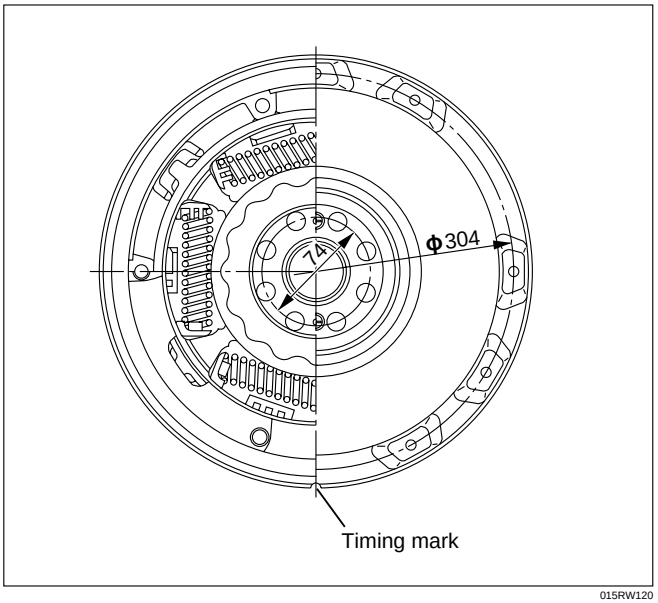

015RW120

For A/T model

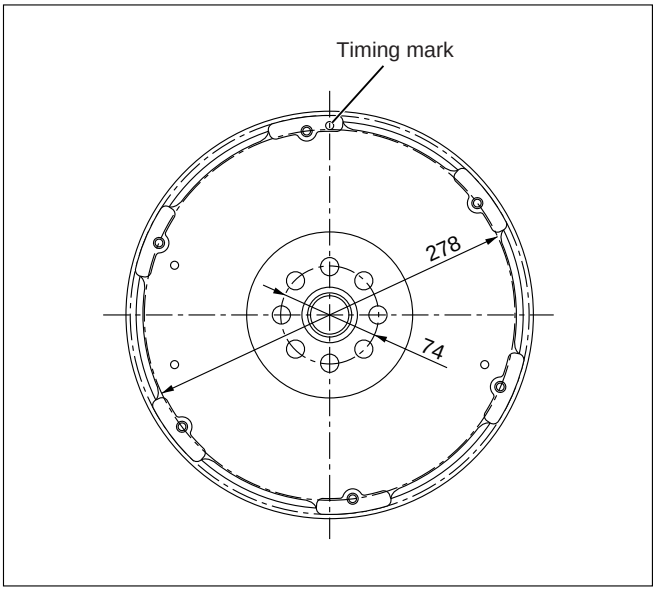

015RW121

4) Tighten the flywheel bolts in 2 steps using angular tightening method.

Torque: 1st step 60 N·m (6.1 kg·m/44 lb ft)
Torque: 2nd step 60° – 90°

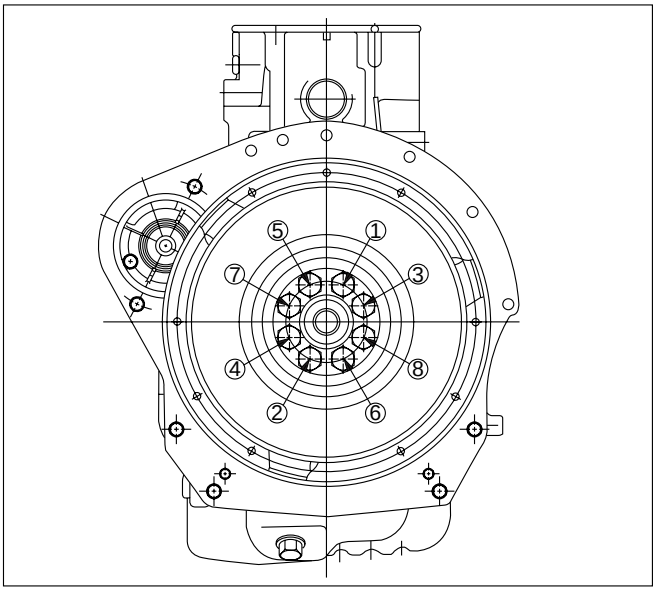

201RW021

11. Timing Gear Case
    1) Cut away the gasket protruding between the cylinder block and the crank case fitting surfaces (as shown in the illustration).

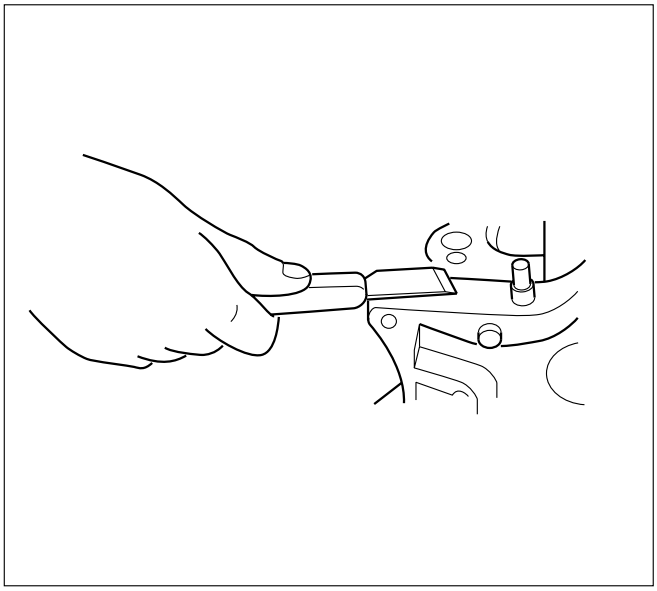

012RW064

2) Apply liquid gasket (TB1207B or equivalent) between the cylinder block and the crankcase fitting surfaces.
3) Install the timing gear case to the cylinder body.
4) Tighten the timing gear case bolt together with the timing gear case gasket to the specified torque.

Torque: 20 N·m (2.0 kg·m/14.5 lb·ft)

12. Crankshaft Gear
    1) Set key to crankshaft key groove.
    2) The timing mark on the crankshaft gear must be facing outward.
    3) Use the crankshaft gear installer to install the crankshaft gear.

       Crankshaft installer: 9-8522-0021-0

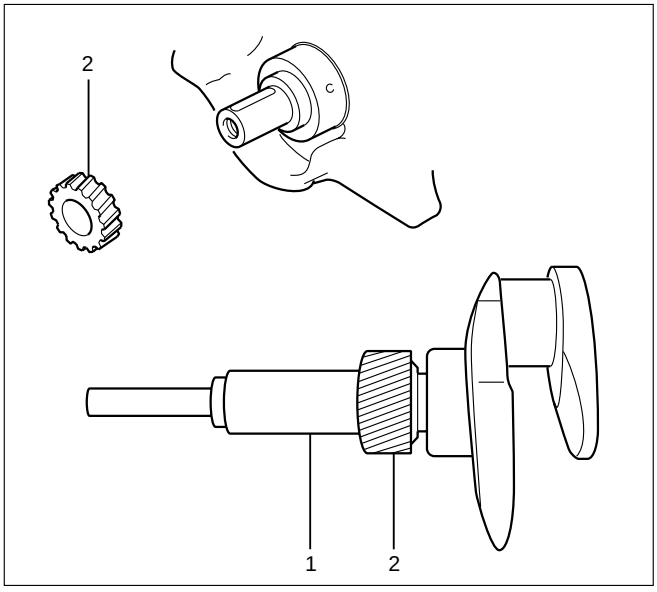

012RW066

Legend
(1) Crankshaft Gear Installer
(2) Crankshaft Gear

13. Installation of the Timing Gear
    1) Align teeth on the scissors gear and lock them before install timing gear.
    2) Align timing marks on each timing gear and assemble them.
    3) Refer to timing gear detail in this manual.

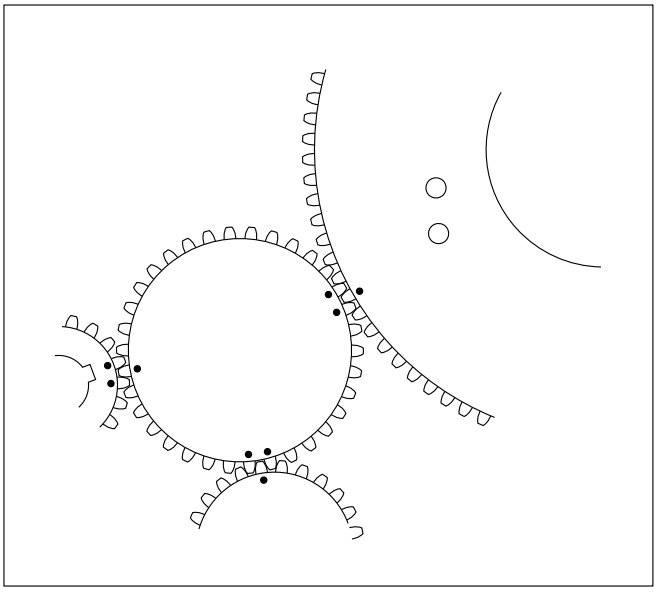

012RW024

14. Timing Gear Case Cover
    1) Remove lock bolt from idle gear A and remove lock pin from idle gear C.
    2) Install oil pump gear oil seal before assembling timing gear case cover.
    3) Clean fitting surface and apply liquid gasket (TB1207C or equivalent) to fitting surface.

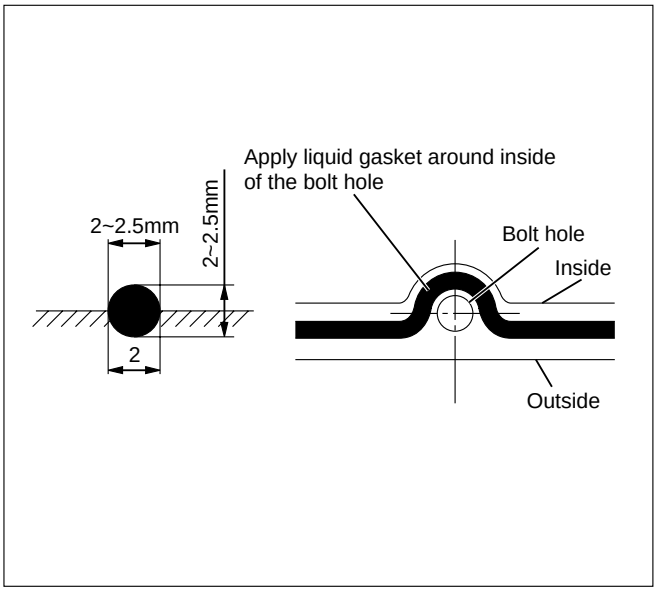

F06HX00001

4) Tighten bolts to specified torque.

Torque: 20 N·m (2.0 kg·m/14.5 lb ft)

15. Crankshaft Front Oil Seal
    1) Set oil seal with special tool.
    2) Install front oil seal to timing gear case cover.

    Crankshaft Front Oil Seal Installer: 5-8840-2061-0

    3) Remove special tool and check oil seal position from front surface of timing gear case.

Oil Seal Position: 0.5 – 2.5 mm (0.0197 – 0.0984 in)

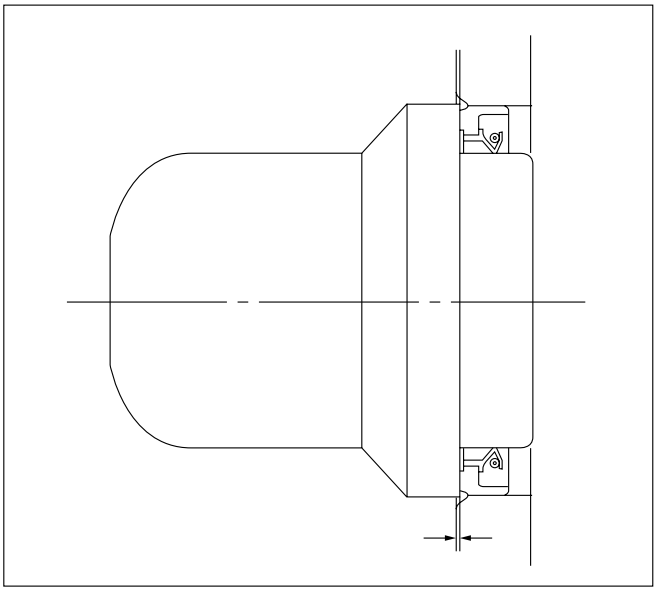

015RW074

16. Cylinder Head
    1) Refer to “Cylinder head” in this manual.

PISTON AND CONNECTING ROD

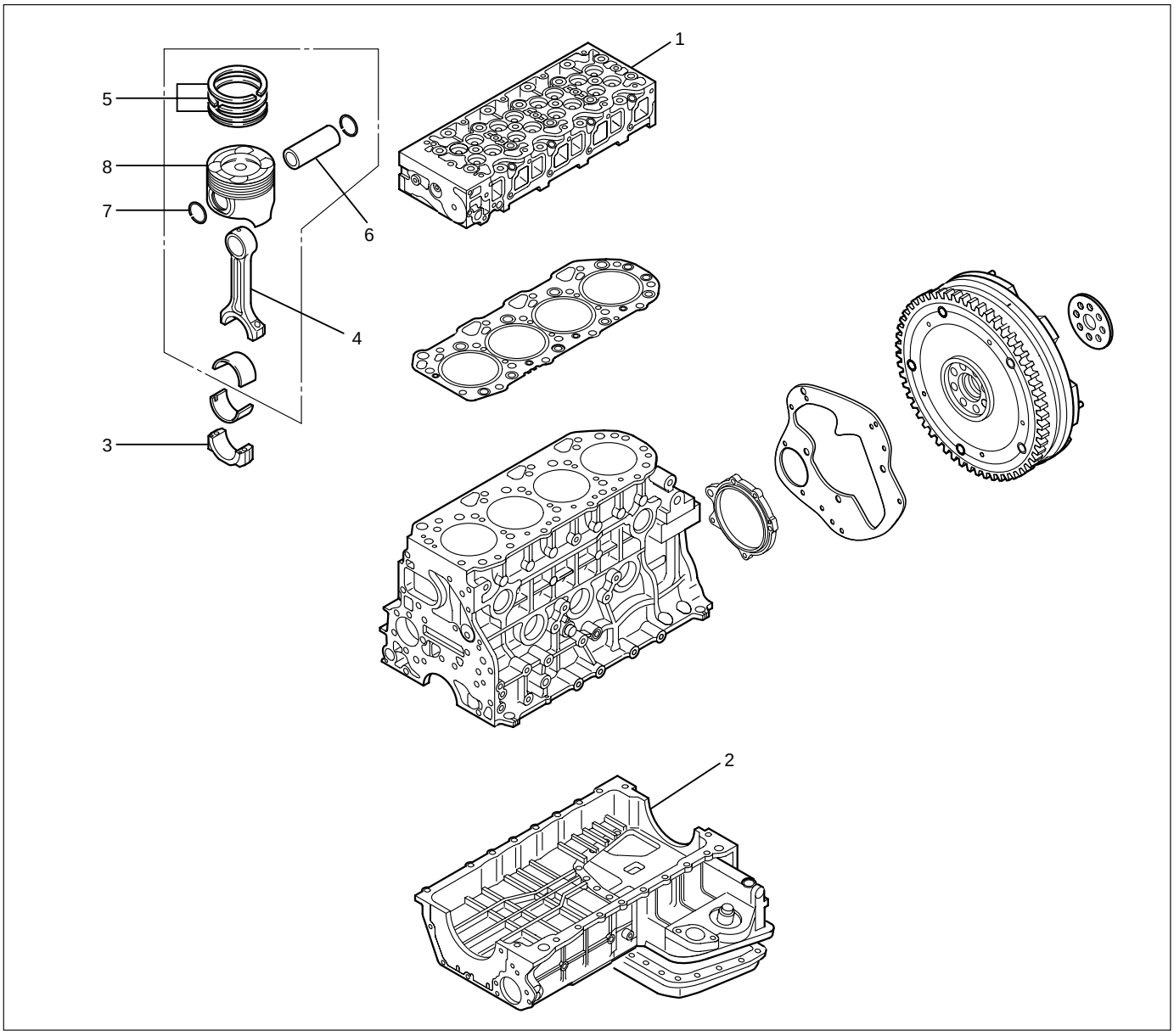

012RW061

Legend

(1) Cylinder Head Assembly
(2) Crank Case
(3) Connecting Rod Bearing Cap
(4) Connecting Rod
(5) Piston Ring
(6) Piston Pin
(7) Piston Pin Snap Ring
(8) Piston

DISASSEMBLY

1. Cylinder Head Assembly
   1) Refer to “Cylinder head” in this manual.
2. Crank Case Assembly
   1) Refer to “Crank Case” in this manual.
3. Connecting Rod Bearing Cap
4. Piston and Connecting Rod
   1) Remove carbon deposits from the upper portion of the cylinder wall with a scraper before removing the piston and connecting rod.
5. Piston Ring
   Remove the piston rings with a piston ring expander.
   Arrange the removed piston rings in the cylinder number order.

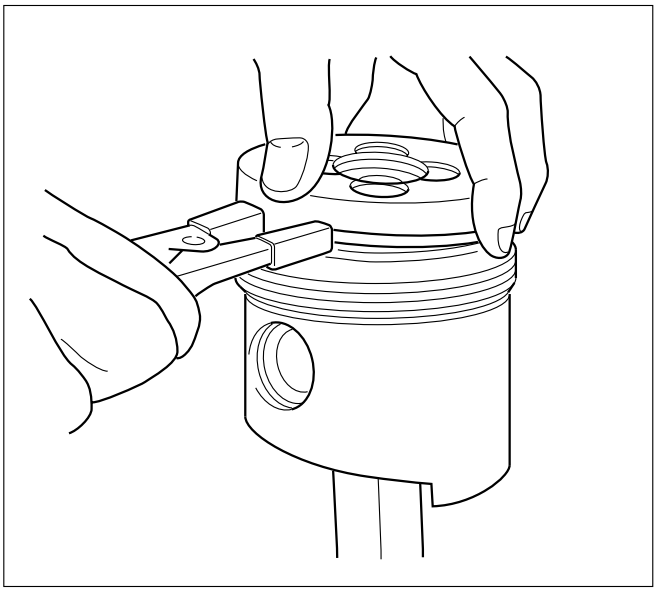

015RW082

6. Piston Pin Snap Ring
   1) Use a pair of pliers to remove the piston pin snap rings.

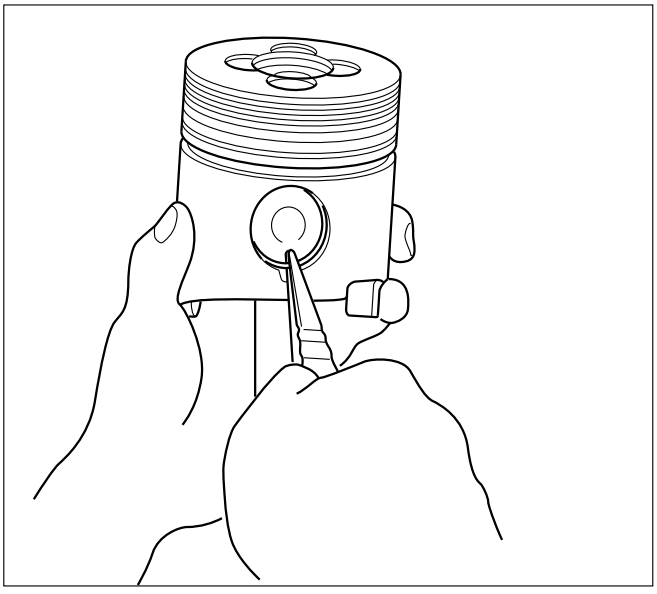

015RW077

7. Piston Pin
   1) Remove piston pin from piston assembly.

NOTE: Keep the parts removed from each cylinder separate. All parts must be reinstalled in their original positions.

8. Piston
9. Connecting Rod

INSPECTION AND REPAIR

PISTON AND PISTON RING

Pistons

Carefully clean away all the carbon adhering to the piston head and the piston ring grooves.

NOTE: Never use a wire brush to clean the pistons. Damage will result. Visually check each piston for cracking, scoring, and other signs of excessive wear. If any of the above conditions are present, the piston must be replaced.

Piston Diameter

1. Measure the piston outside diameter with micrometer at the piston grading position.
   Piston Grading Position: 69.75 mm (2.7461 in) from piston head

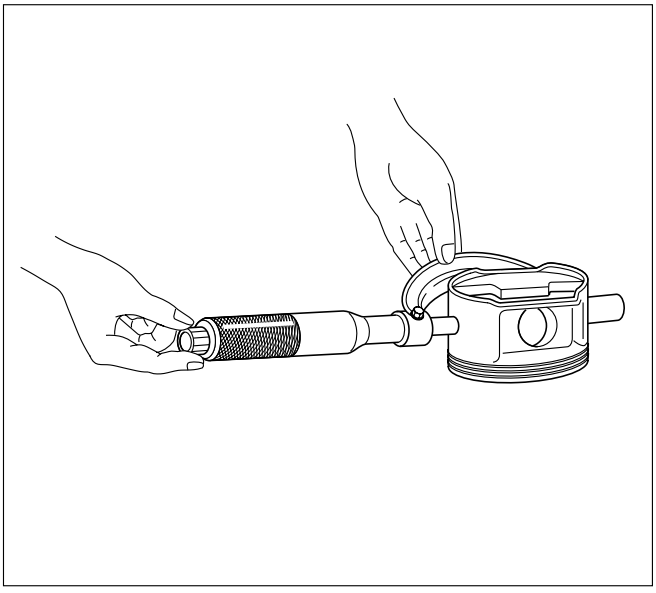

015LV014

Piston Outside Diameter mm(in)

Grade Mark	Outside Diameter
A	95.320 – 95.329 (3.7527 – 3.7531)
B	95.330 – 95.339 (3.7531 – 3.7535)
C	95.340 – 95.349 (3.7535 – 3.7539)

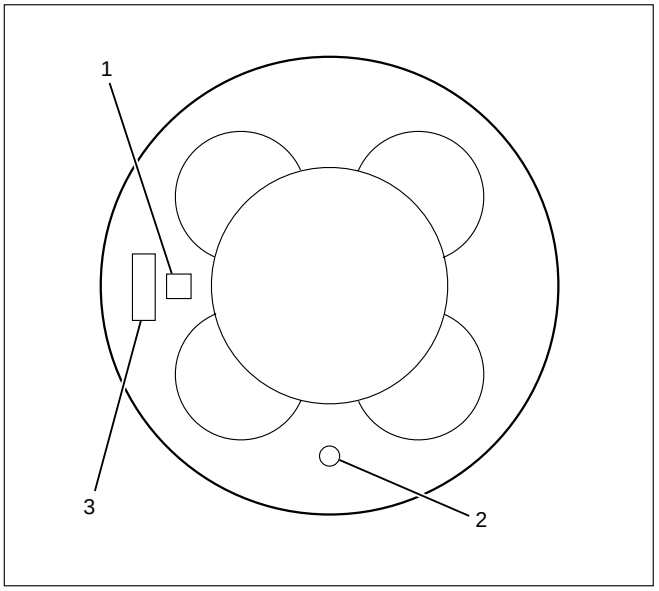

015RW080

Legend
(1) Piston Grade
(2) Piston Front Mark
(3) Part Number

The grade for piston outside diameter is stamped on the piston head.

Measure the cylinder bore diameter at measuring points.

If the piston clearance does not conform to the specified value, the pistons most be replaced.

Piston Clearance:
0.092 – 0.110 mm (0.0036 – 0.0043 in)

Cylinder Bore Diameter mm(in)

Grade Mark	Cylinder Bore Diameter
A	95.421 – 95.430 (3.7567 – 3.7571)
B	95.431 – 95.440 (3.7571 – 3.7575)
C	95.441 – 95.450 (3.7575 – 3.7579)

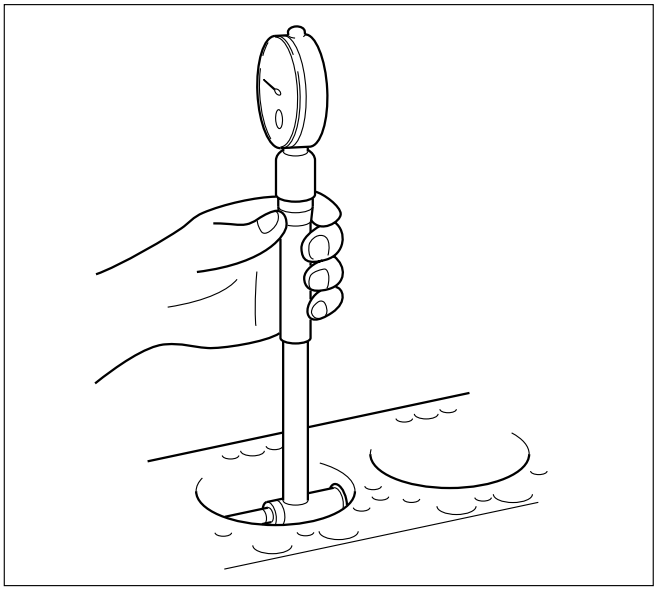

012RW071

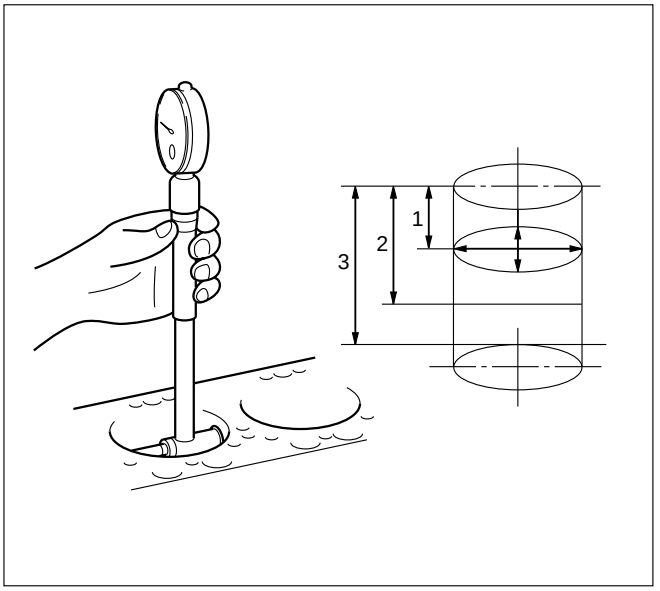

012RW117

Legend
Measuring point 1 = 20 mm
2 = 90 mm
3 = 160 mm

Piston rings

Any worn or damaged part discovered during engine overhaul must be replaced with a new one.

1. Ring end gap measurement
   1) Insert the piston ring into the cylinder bore.

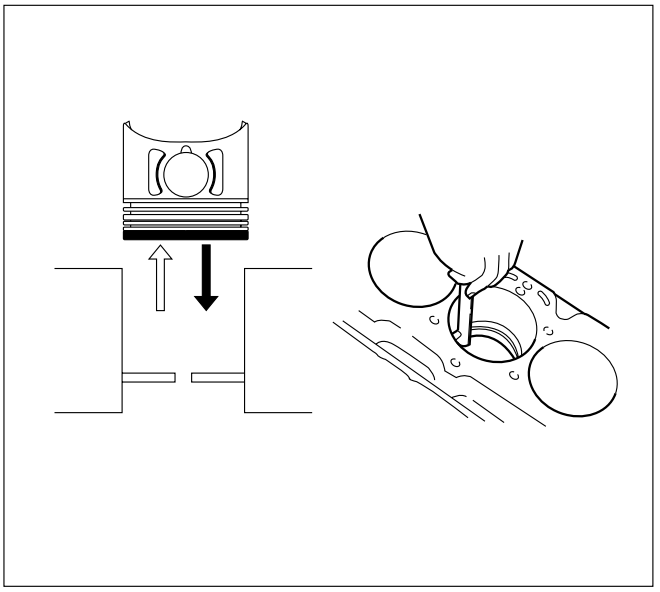

012RW051

   2) Push the ring by the piston, at the right angle to the wall, into the point at which the cylinder bore diameter is the smallest.
   3) Measure the ring end gap.

NOTE: The piston ring is stamped with a discerning mark on the upper face of piston ring.

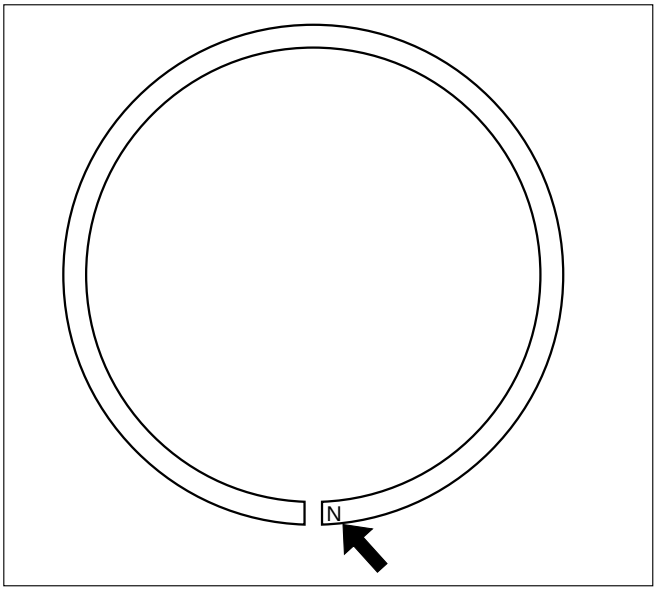

012RW037

Discerning Mark

Piston Ring	Discerning Mark
1st compression ring	1N
2nd compression ring	2N

Ring End Gap mm(in)

Piston Ring	Standard Gap	Limit
1st compression ring	0.25 – 0.40 (0.0098 – 0.0157)	1.5 (0.0590)
2nd compression ring	0.20 – 0.35 (0.0079 – 0.0138)	
Oil ring	0.10 – 0.30 (0.0039 – 0.0118)	

2. Measure the clearance between the piston ring groove and the piston ring with a feeler gauge. If the piston ring groove/piston ring clearance exceeds the specified limit, the piston and/or piston rings must be replaced.

mm(in)

		Standard	Limit
Compression ring	1st	0.05 – 0.09 (0.0020 – 0.0035)	0.15 (0.0059)
	2nd	0.05 – 0.09 (0.0020 – 0.0035)	
Oil ring		0.03 – 0.07 (0.0012 – 0.0028)	

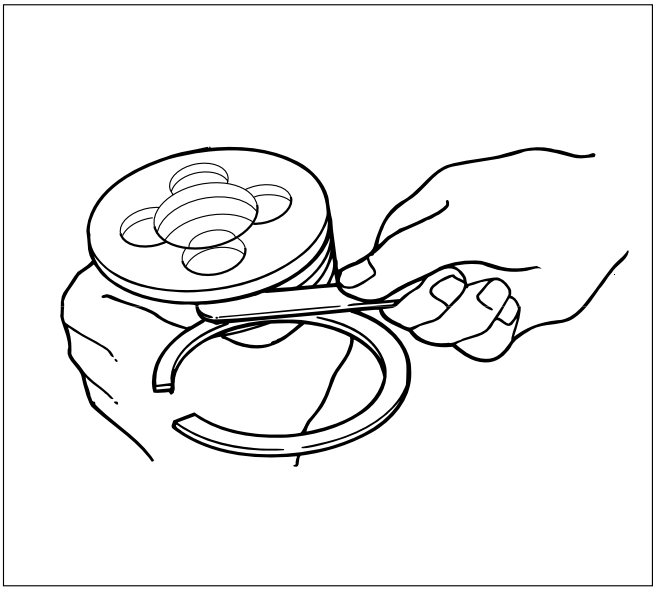

015RW076

Piston pin

Visually inspect the piston pin for cracks, flaws, and other damage and replace if necessary.

1. Use a micrometer to measure the piston pin outside diameter in both directions at three different positions. If the measurement exceeds the specified limit, the piston pin must be replaced.

Standard: 30.995 – 31.000 mm (1.2212 – 1.2214 in)
Limit: 30.97 mm (1.2202 in)

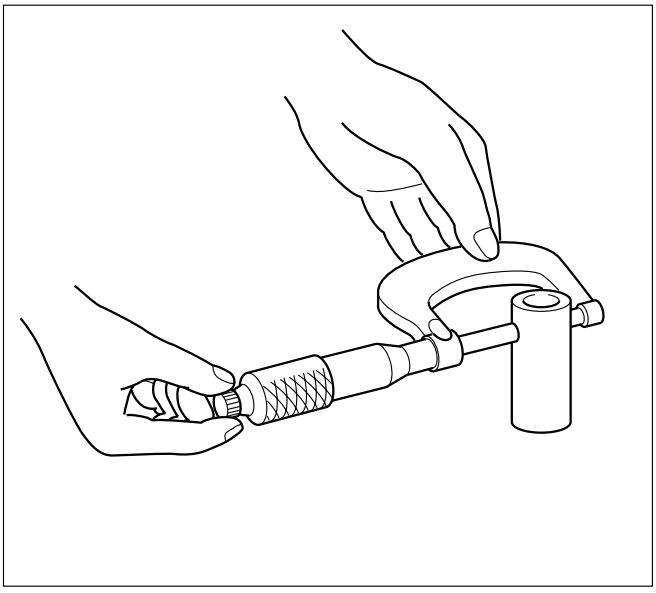

012RW082

2. Measure the inside diameter of the connecting rod small end. If the clearance between the small end and pin does not conform to the specified value, the connecting rod or bushing and pin must be replaced.

Standard: 0.008 – 0.020 mm (0.0003 – 0.0008 in)
Limit: 0.05 mm (0.0020 in)

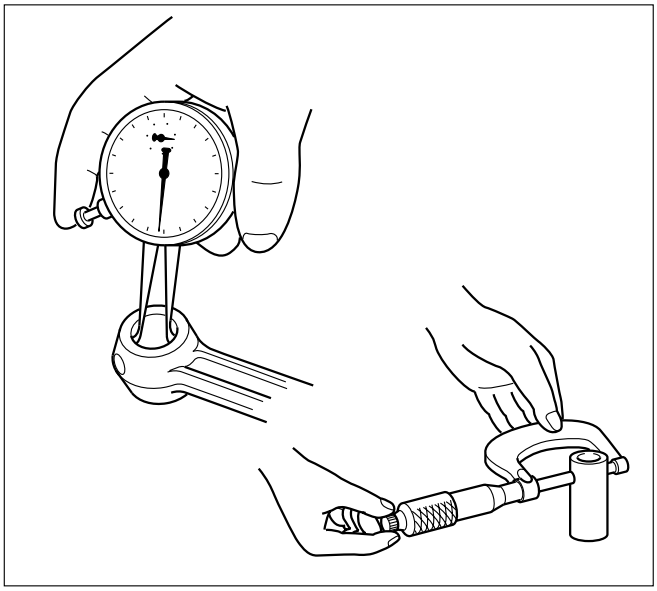

012RW074

3. Insert the piston pin into the piston and rotate it. If the pin rotates smoothly with no backlash, the clearance is normal. If there is backlash or roughness, measure the clearance. If the clearance exceeds the specified limit, the piston and the piston pin must be replaced.

Standard: 0.005 – 0.018 mm (0.0002 – 0.0007 in)
Limit: 0.04 mm (0.0016 in)

Bushing replacement

Removal: Use a suitable bar and bench press or hammer

Installation: Align the bushing with a connecting rod oil port. After installing a new bushing, finish the bushing bore with a pin hole grinder.

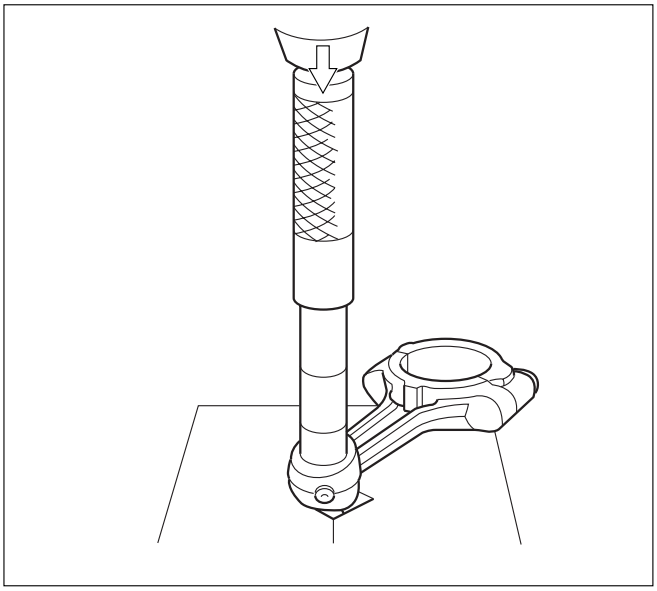

012RW123

Connecting rods

1. Check the connecting rod alignment with a connecting rod aligner.

   If either the bend or the twist exceeds the specified limit, the connecting rod must be replaced.

   Bend per 100 mm (3.937 in)
   Standard: 0.08 mm (0.0031 in) or less
   Limit: 0.20 mm (0.0079 in)

   Twist per 100 mm (3.937 in)
   Standard: 0.05 mm (0.0020 in) or less
   Limit: 0.15 mm (0.0059 in)

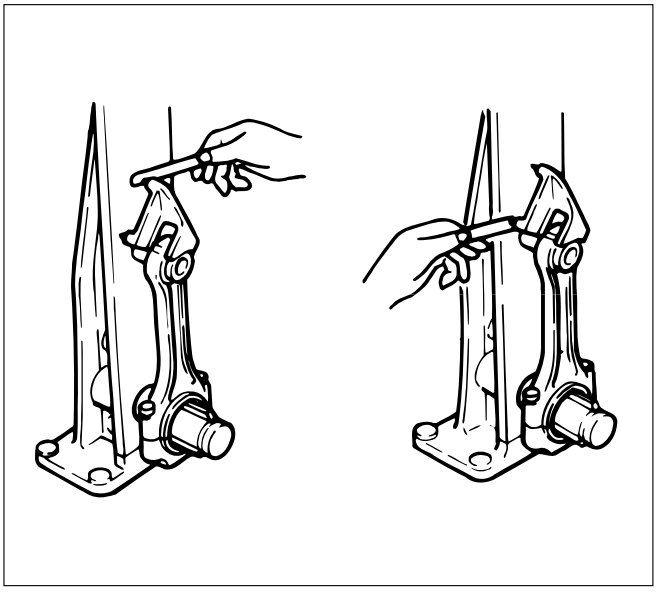

012RW001

2. Measure the connecting rod thrust clearance.

   Use a feeler gauge to measure the thrust clearance at the big end of the connecting rod.

   If the clearance exceeds the specified limit, the connecting rod must be replaced.

   Standard: 0.230 mm (0.0091 in)
   Limit: 0.350 mm (0.0138 in)

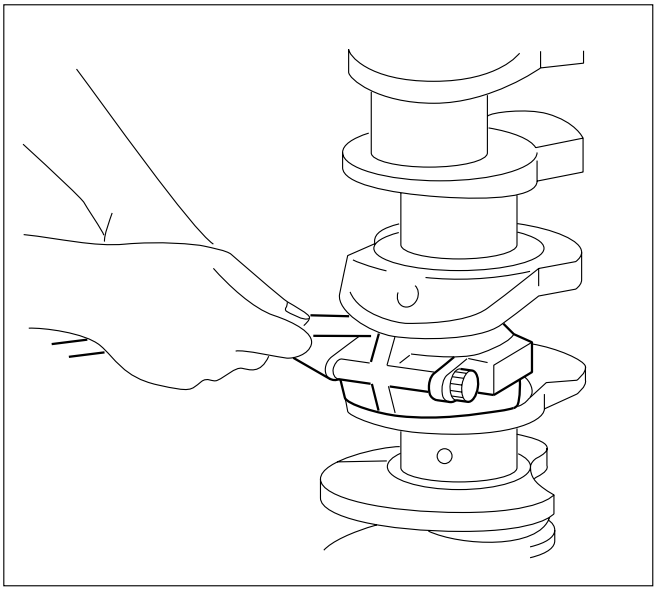

012RW075

3. Measure the oil clearance between the connecting rod and the crankshaft.
   1) Remove the connecting rod cap nuts and the rod caps.

      Arrange the removed rod caps in the cylinder number order.
   2) Clean the rod bearings and the crankshaft pins.
   3) Carefully check the rod bearings.

      If even one bearing is found to be damaged or badly worn, the entire bearing assembly must be replaced as a set. Reinstall the bearings in their original positions.

      Apply plastigage to the crank pin.

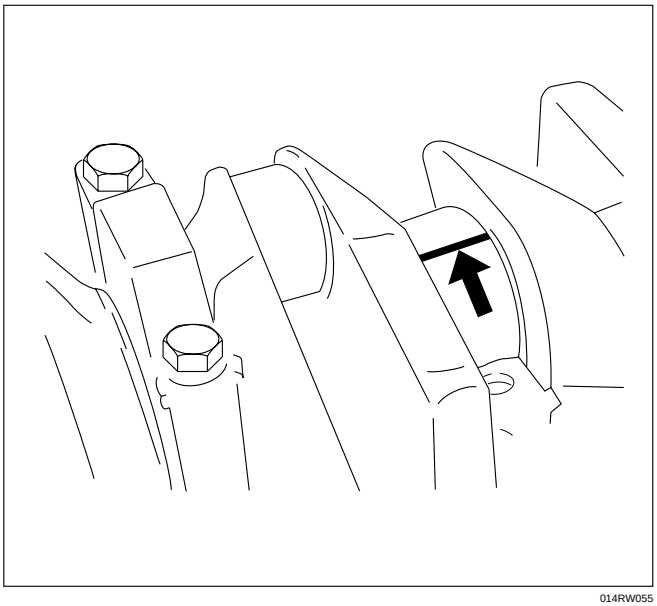

014RW055

   4) Reinstall the rod caps to their original positions.
   5) Tighten the cap nuts in 2 steps, using angular tightening method as shown in the following specifications.

1st step: 29 N·m (3.0 kg·m/22 lb ft)
2nd step: 45°– 60°

NOTE: Do not allow the crankshaft to rotate

   6) Remove the rod caps.
   7) Measure the smallest width of the plastigage and determine the oil clearance. If the oil clearance exceeds the limit, replace the rod bearings as a set.
   8) Clean the plastigage from the bearings and the crankshaft pins

Standard: 0.022 – 0.042 mm (0.0009 – 0.0017 in)
Limit: 0.100 mm (0.0039 in)

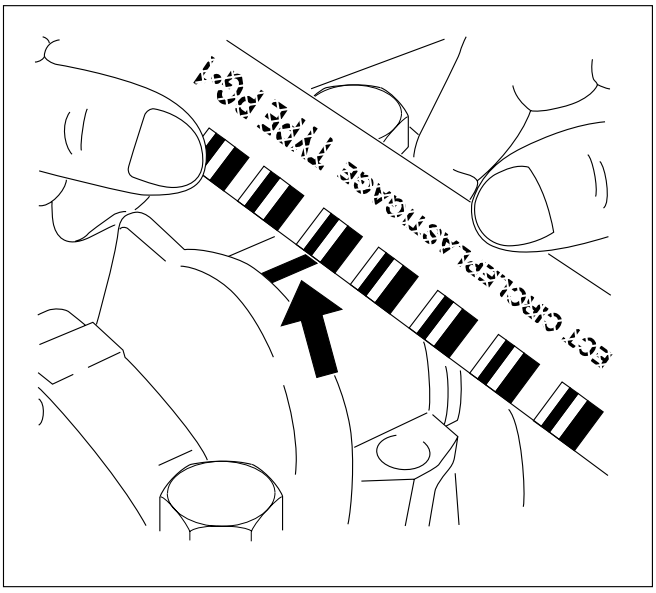

014RW077

REASSEMBLY

1. Connecting Rod
2. Piston
3. Piston Pin
   1) Apply a coat of engine oil to the piston pin and the piston pin hole.
4. Piston Pin Snap Ring
   1) Try to insert the piston pin into the piston pin hole with normal finger pressure.
   2) Weight each piston and connecting rod assembly.
   3) Select piston and connecting rod combinations so that the weight variation of the different four assemblies is held within the specified limits.

Variance in weight after assembly: Less than 3g (0.1058 oz)

NOTE: When changing piston/connecting rod combinations, do not change the piston/piston pin combination.

   4) Attach the piston to the connecting rod with the piston front mark (2) and the connecting rod front mark (3) on the same side.

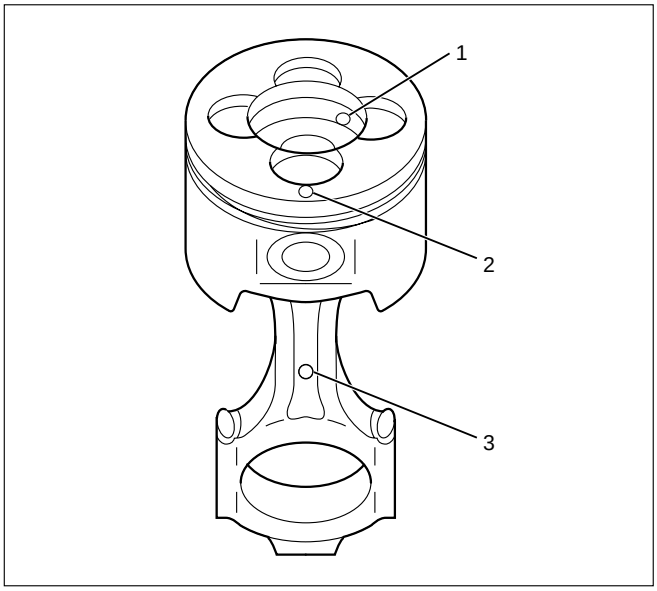

015RW051

5. Piston Ring
   1) Install the piston rings with the piston ring expander.
      The compression ring must be set with the 1N, 2N mark facing up.
   2) Discerning mark is stamped as shown in the illustration (1).

Marked 1N: 1st compression ring

Marked 2N: 2nd compression ring

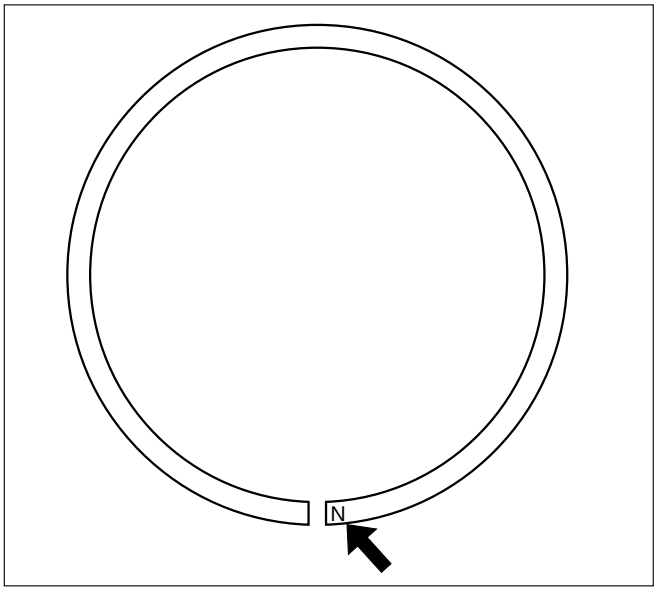

012RW037

   3) Install piston rings in the following sequence.

1) Oil ring
   (1) After installing the expander ring then assemble the oil ring.
2) 2nd compression ring
3) 1st compression ring
   1) The compression ring must be set with the 1N or 2N mark facing up.
   2) 1st compression ring:1N
   3) 2nd compression ring: 2N
   4) After installation, apply engine oil to the entire circumference of the piston rings.
      Check to see that all the rings rotate smoothly.

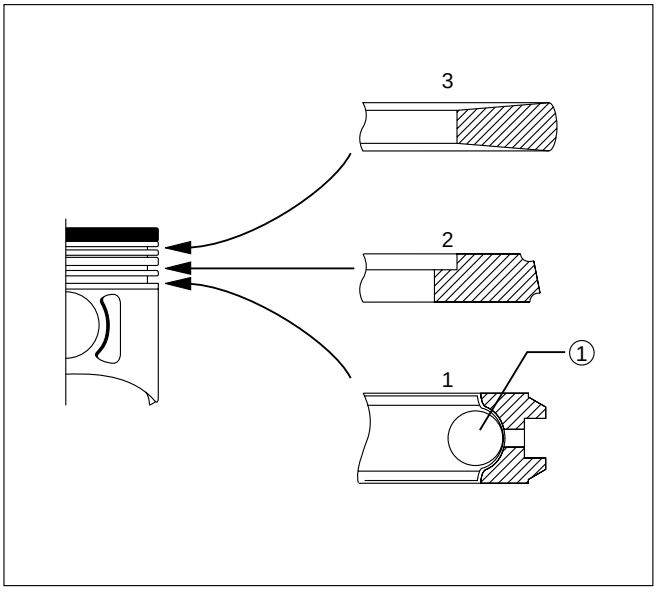

012RW058

   5) Insert the bearings into the connecting rods and caps.
      Apply new engine oil to the bearing faces.
      Cap side bearings have no oil hole.
      Connecting rod side bearing's oil hole should be aligned with oil hole on the connecting rod.

6. Piston and Connecting Rod
   1) Apply engine oil to the cylinder bores, the connecting rod bearings and the crankshaft pins.
   2) Check to see that the piston ring end gaps are correctly positioned.

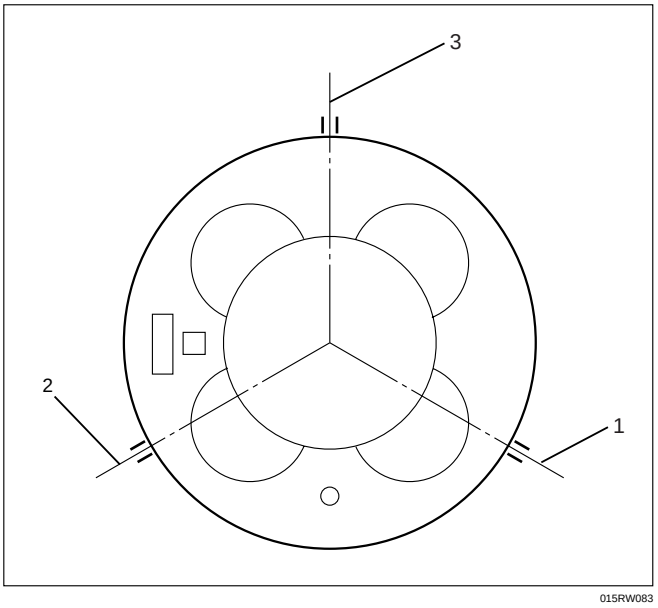

Legend
(1) 1st compressor ring gap
(2) 2nd compressor ring gap
(3) Oil ring gap

3) Insert the piston/connecting rod assemblies into each cylinder with the piston ring compressor.
4) The front marks must be facing the front of the engine.

Piston Ring Compressor : 5-8840-9018-0

7. Connecting Rod Bearing Cap
   1) Apply engine oil to thread and seat of bearing cap bolts.
   2) Tighten the cap bolts in 2 steps, using angular tightening method as shown in the following specifications.

1st step: 29 N·m (3.0 kg·m/22 lb ft)
2nd step: 45°– 60°

After tightening the cap bolts, check to see that the crankshaft rotates smoothly.

8. Crank Case Assembly
   1) Refer to “Crank Case” in this manual.
9. Cylinder Head Assembly
   1) Refer to “Cylinder head” in this manual.

CYLINDER BLOCK

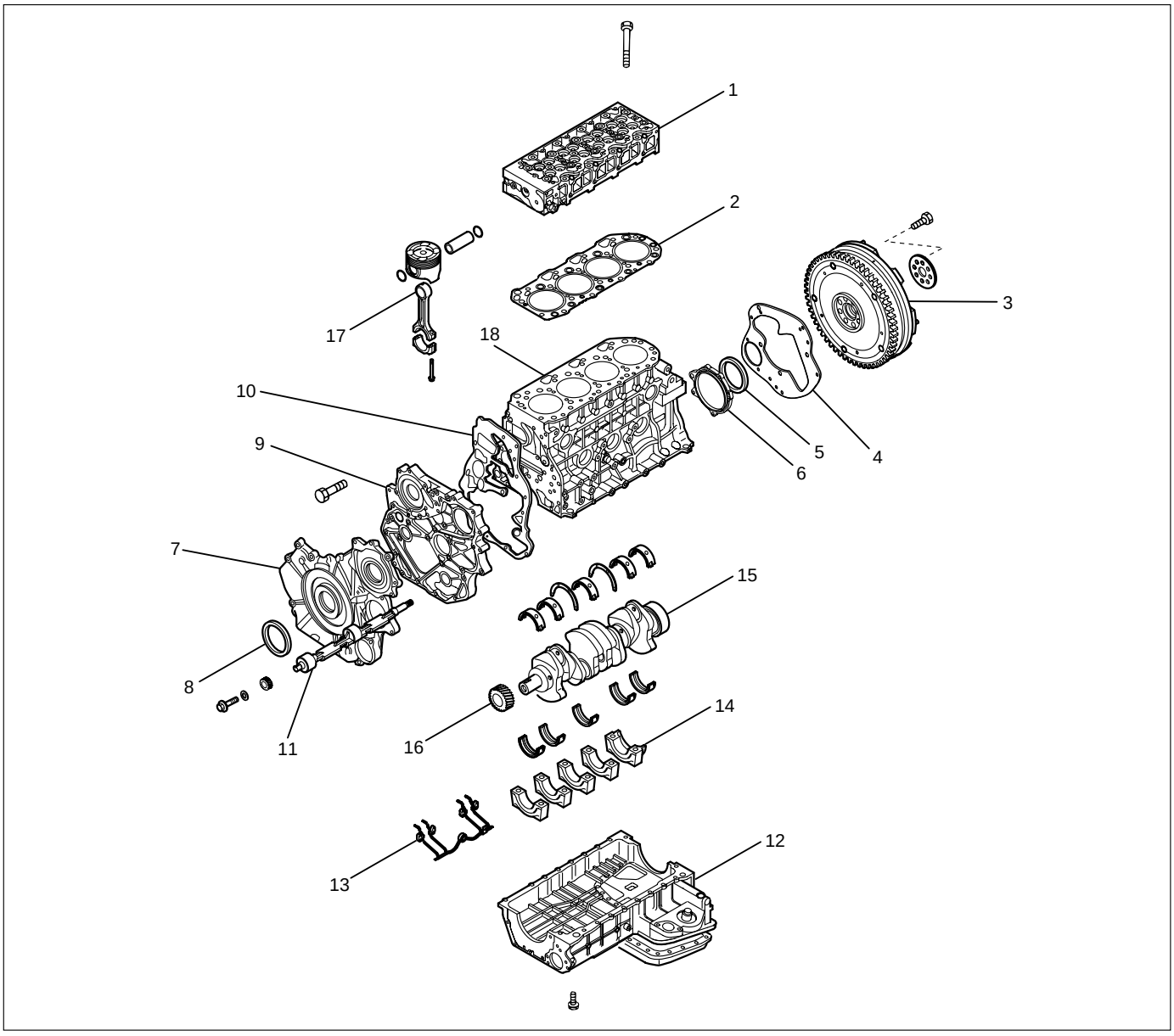

012RW023

Legend

(1) Cylinder Head
(2) Cylinder Head Gasket
(3) Flywheel
(4) Cylinder Block Rear Plate (A/T)
Flywheel Housing (M/T)
(5) Crankshaft Rear Oil Seal
(6) Retainer
(7) Timing Gear Case Cover
(8) Crankshaft Front Oil Seal
(9) Timing Gear Case
(10) Gasket
(11) Balance Shaft
(12) Crank Case
(13) Piston Cooling Oil Pipe
(14) Main Bearing Cap
(15) Crankshaft
(16) Crankshaft Timing Gear
(17) Piston and Connecting Rod Assembly
(18) Cylinder Block

DISASSEMBLY

1. Cylinder Head Assembly
   Refer to “Cylinder Head” in this manual.
2. Cylinder Head Gasket.
3. Flywheel
4. Cylinder Block Rear Plate (A/T), or Flywheel housing (M/T).
5. Crankshaft Rear Oil Seal.
   Install the special tool as shown in the illustration and remove the oil seal.
   Oil Seal Remover: 5-8840-2360-0

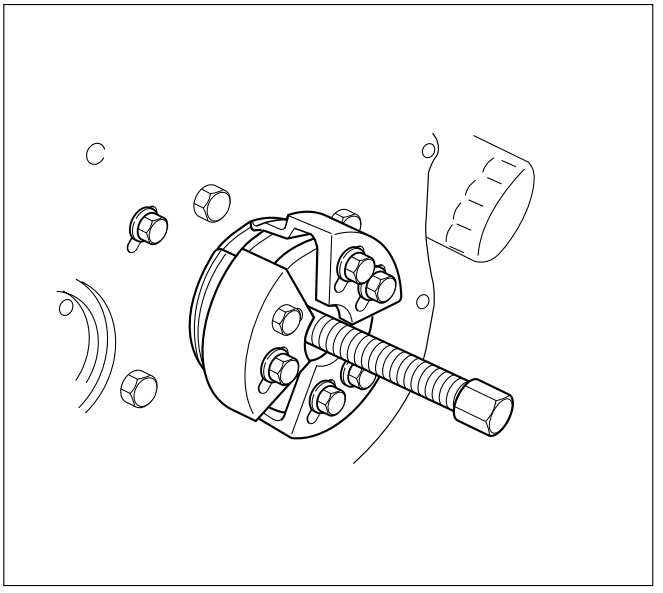

015RV002

6. Retainer
7. Timing Gear Case Cover
8. Crankshaft Front Oil Seal
   1) Use a plastic hammer and a screwdriver to tap around the oil seal to free it from the gear case cover.
9. Timing Gears
   Refer to “Timing Gear” in this manual.
10. Timing gear case
11. Gasket
12. Balance shaft right
13. Crank case assembly
14. Piston cooling oil pipe
15. Piston assembly
16. Main bearing cap
17. Crankshaft assembly
18. Cylinder block side cover right and left
19. Cylinder block

INSPECTION AND REPAIR

Make the necessary adjustments, repairs, and part replacements if excessive wear or damage is discovered during inspection.

1. Remove the cylinder head gasket and any other material adhering to the upper surface of the cylinder block.
   Be very careful not to allow any material to accidentally drop into the cylinder block.
   Be very careful not to scratch the cylinder block.
2. Carefully remove liquid gasket, which was used when assembled, from gear case, rear oil seal retainer and crank case.
3. Wipe the cylinder block clean and visually check it.
4. Use a straight edge and a feeler gauge to measure the four sides and the two diagonals of the cylinder block upper face.
   If the measured values exceed the limit, the cylinder block must be replaced.

Limit: 0.20 mm (0.0079 in)

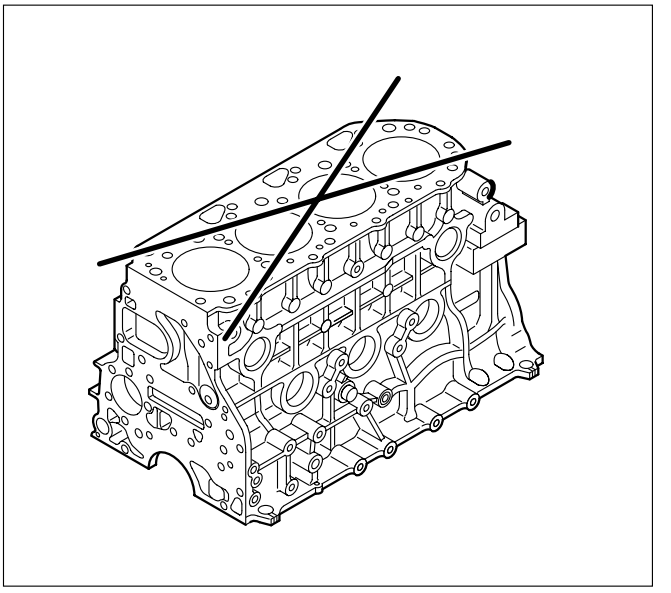

012RW122

Cylinder Bore Measurement

1. Use a cylinder gauge to measure the cylinder bore measuring direction for thrust and radial at measuring points.

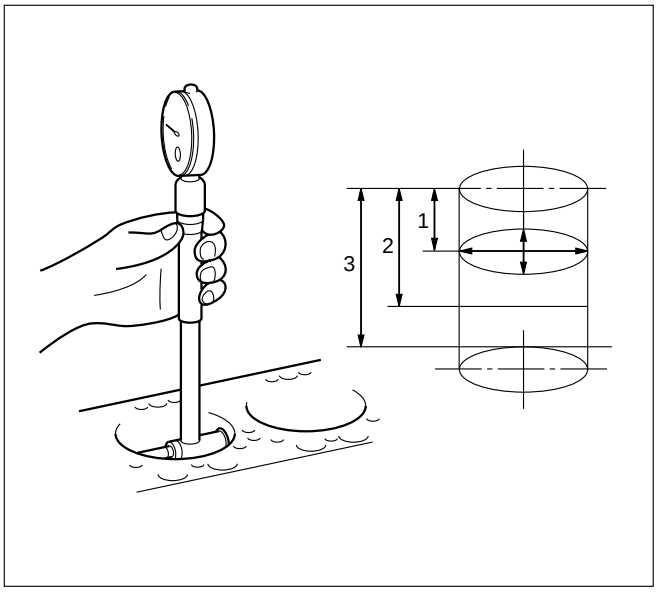

012RW117

Legend

Measuring Point 1; 20 mm
2; 90 mm
3; 160 mm

2. Select the right piston grade by the averaged cylinder bore measurement (maximum and minimum value eliminated).

Cylinder bore diameter mm(in)

Grade mark	Standard
A	95.421 – 95.430 (3.7567 – 3.7571)
B	95.431 – 95.440 (3.7571 – 3.7575)
C	95.441 – 95.450 (3.7575 – 3.7579)

3. If measured values exceed the limit, replace or adjust the cylinder block honing or boring.

Limit 95.950 mm (3.7776 in)

4. Boring of the cylinder bore is allowed until it is 0.5 mm (0.0197 in) diameter and oversized piston is available as a service part.

Boring Cylinder Block

1. Use an oversized piston on the basis of above mentioned cylinder using the largest inside diameter.
2. Measure the piston outside diameter at right angles with piston pin at a piston grade measuring point 69.75 mm (2.7461 in) from piston top surface and calculate a inside diameter for cylinder boring.
3. Calculation of cylinder bore boring.
   D + C – H (mm)
   D; Outside diameter piston (mm)
   C; Clearance between Cylinder bore and piston
   0.092 – 0.110 mm (0.0036 – 0.0043 in)
   H; Honing allowance
   Less than 0.03 mm (0.0012 in)
   The oversize pistons are available three grades.
4. Honing the cylinder bore after boring.
5. Measure cylinder bore after honing.
   Difference between each cylinder bore

Less than 0.02 mm (0.0008 in)

Cylinder bore and piston grade (After boring) mm(in)

Grade Mark	Oversize Piston	Bore
	Outside Diameter	Diameter
A	95.820 – 95.829 (3.7724 – 3.7728)	95.921 – 95.930 (3.7764 – 3.7768)
B	95.830 – 95.839 (3.7728 – 3.7732)	95.931 – 95.940 (3.7768 – 3.7772)
C	95.840 – 95.849 (3.7732 – 3.7736)	95.941 – 95.950 (3.7772 – 3.7776)

REASSEMBLY

1. Cylinder Block
2. Piston Cooling Oil Pipe
   1) Fix the cooling jet pipes with knock pins on the cylinder block.
   2) Install the oil pipe for piston cooling in the cylinder block, tightening a relief valve (1) and four joint bolts (2) to the specified torque.

      If oil jet pipe is forcibly assembled, the end of oil jet may bend. It could make it impossible to supply oil to the piston cooling hole, sometimes causing piston seizure.

      Sufficient care should be taken to pipe assembly work.

Oil pipe fixing bolts

M8: 20 N·m (2.0 kg·m/14 lb ft)
M6: 8 N·m (0.8 kg·m/69 lb in)

Relief valve fixing bolts : 30 N·m (3.1 kg·m/22 lb ft)

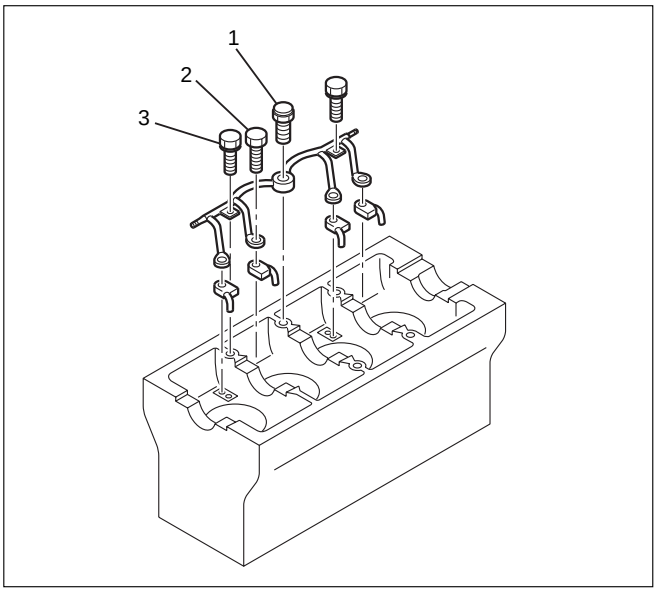

012RW076

CAUTION: After installing the piston assembly, check and see that there is appropriate clearance between pistons and oil jet pipes by rotating crankshaft slowly.

3. Crankshaft
   1) Install the main bearings to the cylinder body and the main bearing caps.
   2) Be sure that they are positioned correctly.
   3) Apply new engine oil to the upper and lower main bearing faces.
   4) Carefully mount the crankshaft.

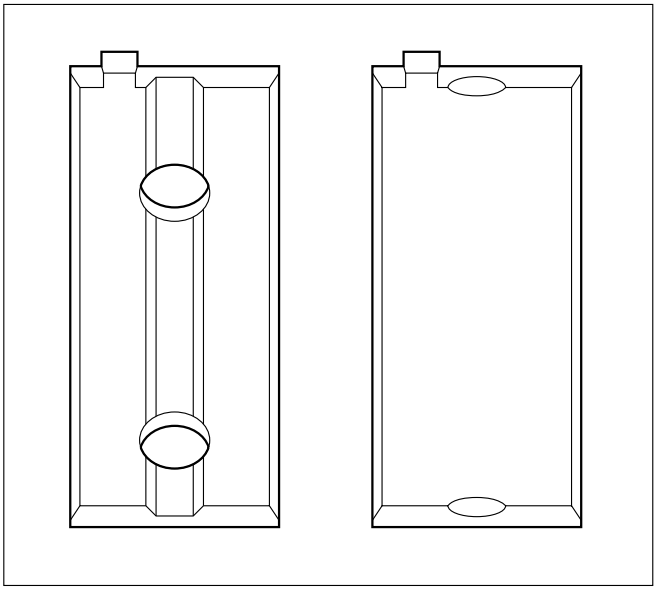

012RW038

   5) Apply engine oil to the thrust washer.
   6) Assemble the thrust washer to the No. 3 bearing journal. The oil grooves must face the crankshaft.

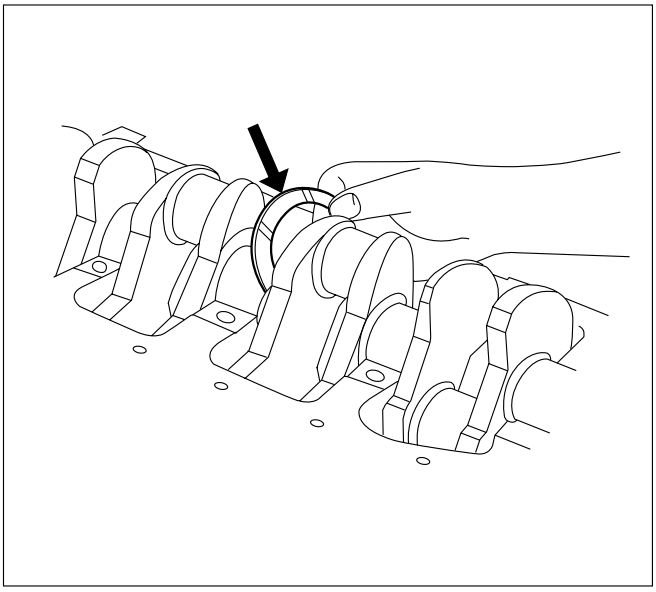

012RW047

4. Main Bearing Cap Assembly
   1) Install the bearing caps with the bearing cap head arrow mark facing the front of the engine.

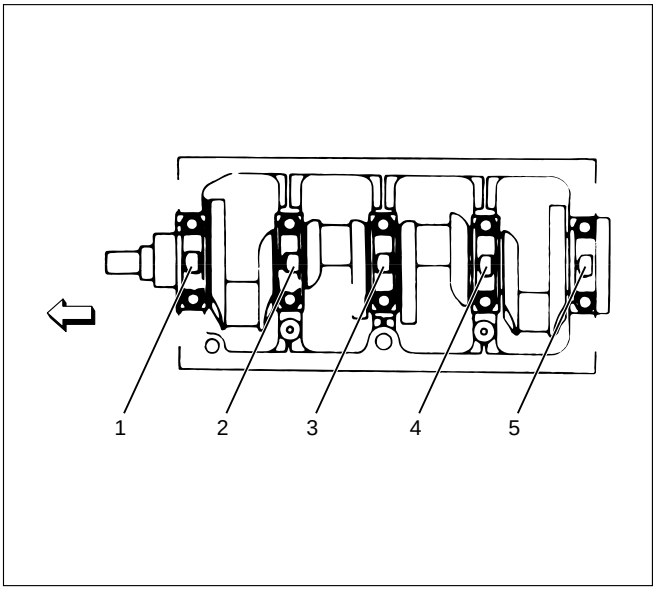

012RW025

   2) Apply engine oil to the crankshaft bearing cap bolts.
   3) Tighten the crankshaft bearing cap bolts to the specified torque a little at a time in the sequence shown in the illustration.

Torque: 167 N·m (17.0 kg·m/123 lb ft)

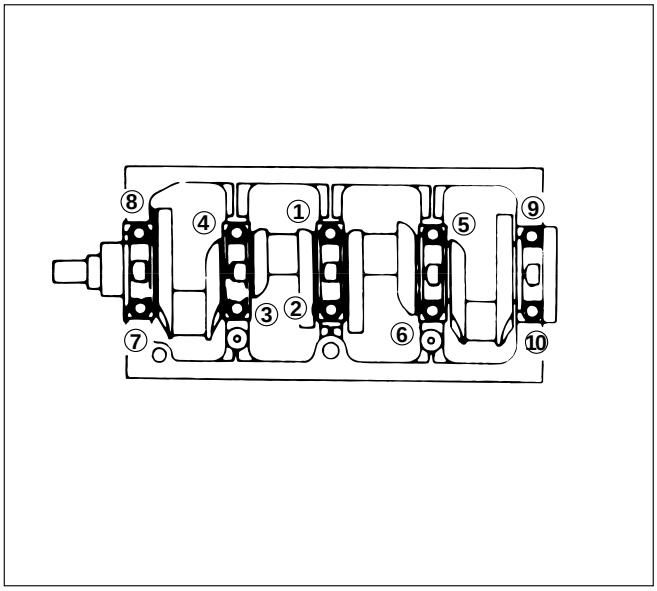

012RW027

NOTE: Check to see that the crankshaft turns smoothly by rotating it manually.

4. Piston Assembly
   1) Refer to “Piston and connecting rod” in this manual.
5. Cylinder Block Side Cover Right and Left
6. Balance Shaft Right.
7. Timing Gear Case
   1) Cut out the liquid gasket forced out from between the contact surface of cylinder block and crankshaft.

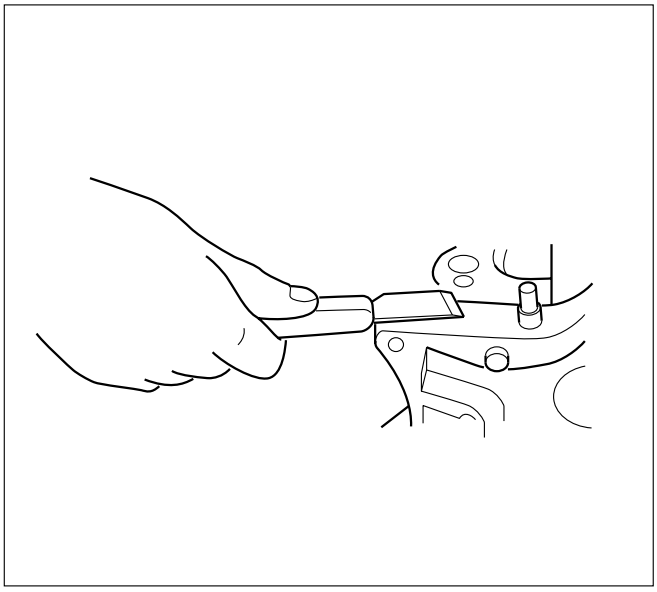

012RW064

   2) Apply liquid gasket (TB1207B or equivalent) to the fitting surface of the cylinder block and crankcase.
   3) Install timing gear case with gasket to cylinder block and tighten to specified torque.

Torque: 20 N·m (2.0 kg·m/14.5 lb ft)

8. Crankshaft Gear
   Force key into crankshaft and force in crankshaft gear along the key groove using a special tool (1) with the crank gear (2) timing mark facing outside.

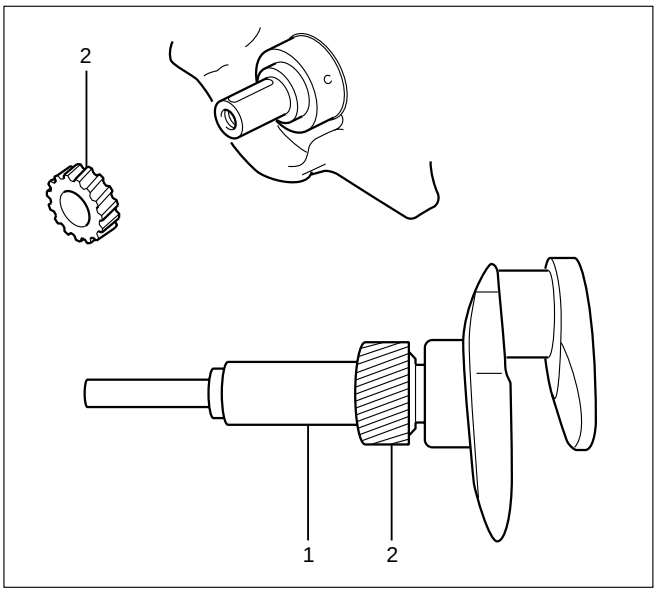

012RW066

9. Install timing gear align the timing mark on each timing gear.
   For alignment of timing marks refer to “Timing Gear” in this manual.

NOTE: Remove the locking bolt or pin from idle gear A and idle gear C.

10. Assembling the gear case cover.
    1) Install the oil seal on the oil pump assembly before installing the gear case cover.
    2) Apply liquid gasket to timing gear case.

NOTE: Be sure to apply liquid gasket evenly.

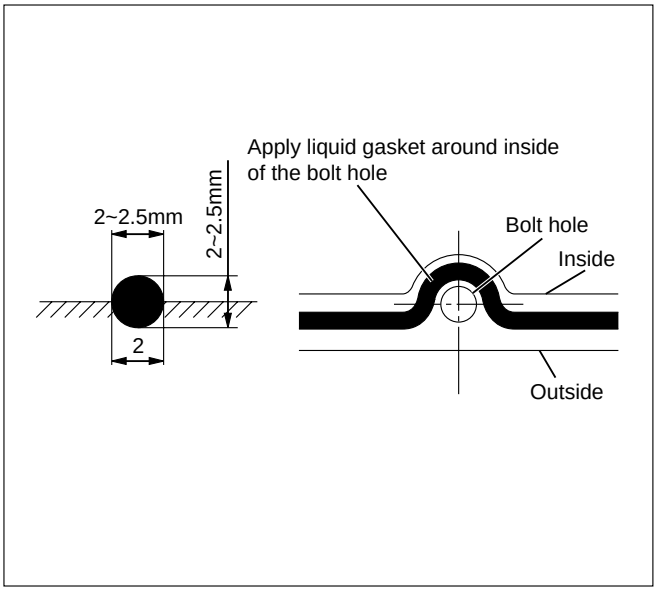

F06HX00001

11. Use the special tool to install the crankshaft front oil seal to timing gear case.
    Front Oil Seal Installer: 5-8840-2061-0

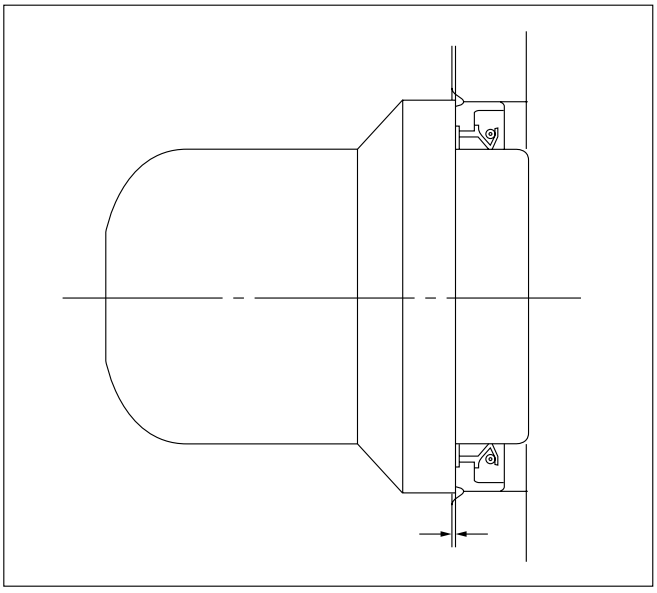

015RW074

    1) Check fit-of the oil seal and gear case cover at the front end.

Standard: 0.5 – 2.5 mm (0.0197 – 0.0984 in)

NOTE: Apply engine oil to oil seal lip before installation of the seal.

12. Install the oil pan assembly to original position and tighten to specified torque.

Torque: 22 N·m (2.2 kg·m/15.9 lb ft)

13. Crankshaft Rear Oil Seal
    1) Tighten the adapter to the crankshaft rear end with 2 bolts.
    2) Insert the oil seal into the adapter.
    3) Insert the sleeve into the adapter and tighten it with a bolt (M12 x 1.75L = 70) until the adapter hits the sleeve.
    4) Remove the adapter and the sleeve.
    5) With the seal pressed in, check the dimension of the oil seal outside end and crankshaft end.

Standard Dimension = 12.5 ± 0.3 mm

Oil Seal Installer: 5-8840-2359-0

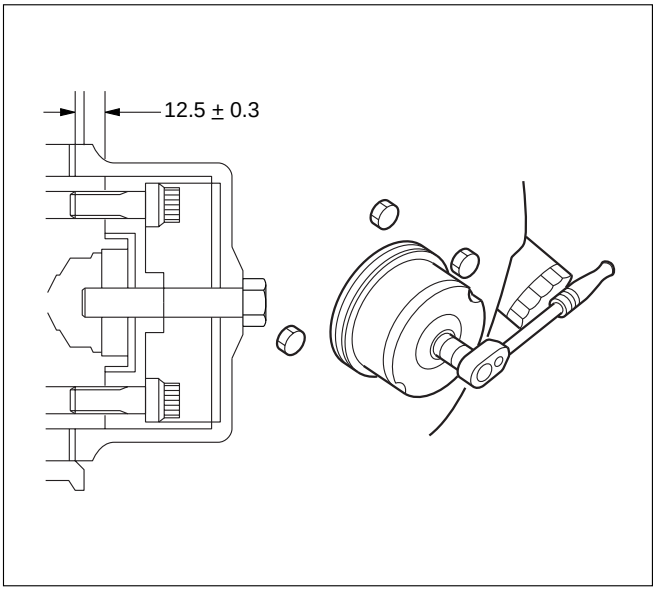

012RW067

14. Cylinder Block Rear Plate (A/T Model)
    1) Tighten the cylinder block rear plate fixing bolts to the specified torque.

Torque: 97 N·m (9.9 kg·m/72 lb ft)

15. Flywheel Housing (M/T Model)
    1) Install flywheel housing aligned with the dowel pin on the cylinder block.
    2) Tighten the flywheel housing fixing bolts to the specified torque.

Torque: 97 N·m (9.9 kg·m/72 lb ft)

16. Flywheel
    1) Refer to “Crankshaft” in this manual.
17. Cylinder Head Assembly
    1) Refer to “Cylinder Head” in this manual.

OIL PUMP ASSEMBLY

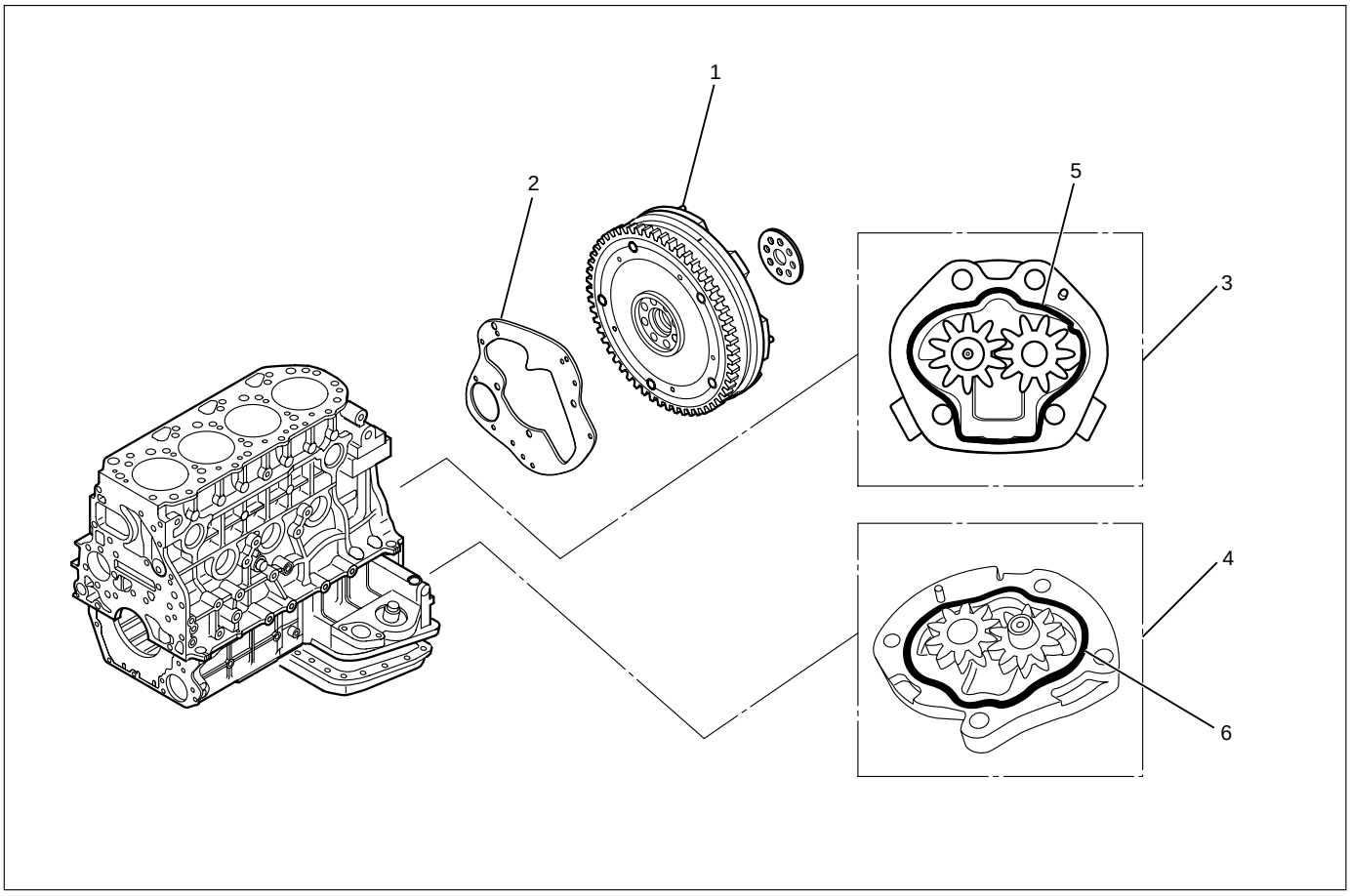

012RW097

Legend

(1) Flywheel
(2) Rear Plate (A/T)
(3) First Oil Pump Assembly
(4) Second Oil Pump Assembly
(5) O-Ring (For first oil pump)
(6) O-Ring (For second oil pump)

REMOVAL

1. Disconnect battery ground cable
2. Lift up car
3. Drain engine oil

NOTE: Install drain plug with new gasket.

4. Flywheel
5. Rear Plate (A/T) or Flywheel Housing (M/T)
6. First Oil Pump Assembly and Second Oil Pump Assembly
   1) Remove oil pump assembly from cylinder block and crankcase.

INSTALLATION

1. First oil pump assembly
   1) Set O-ring to oil pump.
   2) Install oil pump drive gear to the rear end of the balance shaft RH.
   3) Apply engine oil to pump gear, install pump gear to rear end of cylinder block with specified torque.

Torque: 20 N·m (2.0 kg·m/14.5 lb ft)

2. Second oil pump assembly
   1) Set O-ring to oil pump.
   2) Install oil pump drive gear to the rear end of the balance shaft LH.
   3) Apply engine oil to pump gear, install pump gear to rear end of crank case with specified torque.

Torque: 20 N·m (2.0 kg·m/14.5 lb ft)

3. Install rear plate (A/T) or flywheel housing (M/T)

Torque: 97 N·m (9.9 kg·m/72 lb ft)

4. Install flywheel
   1) Apply engine oil to bolt and tighten with angular tightening method.

First step: 59 N·m (6.0 kg·m/43 lb ft)
Second step: 60° to 90°

OIL FILTER CARTRIDGE

REMOVAL

1. Place a receptacle beneath the oil filter to contain the drained oil.
2. Remove the oil filter cartridge using filter wrench.
   Filter wrench : 5-8840-0203-0

INSTALLATION

1, Lightly apply oil to the O-ring of oil filter cartridge.
2. Turn the new oil filter cartridge by hand until the sealing face is fitted against the O-ring.
3. Use the filter wrench to turn the oil filter an additional one and 1/8 turns.
4. Start the engine and check for oil leakage from oil filter.

OIL COOLER

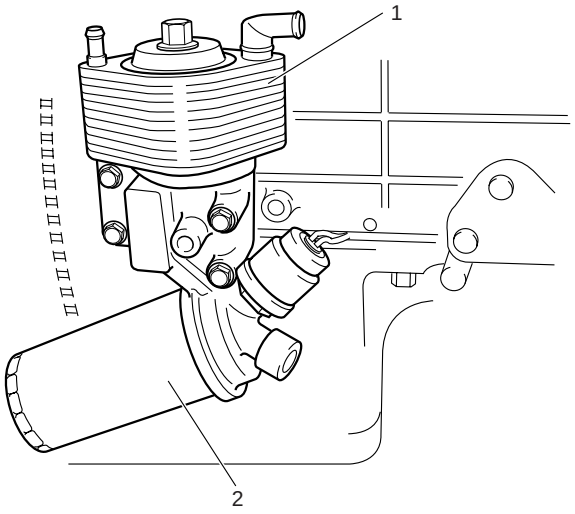

050RW009

Legend
(1) Oil Cooler Assembly
(2) Oil Filter Cartridge

REMOVAL

1. Disconnect battery ground cable
2. Drain engine coolant
3. Remove front exhaust pipe
4. Remove heat protector
5. Remove exhaust valve assembly
6. Oil cooler assembly
   1) Remove water hoses from inlet and outlet pipe.
   2) Put rag beneath side of oil cooler to prevent oil leaking.
   3) Remove fixing bolts and oil cooler assembly.

INSTALLATION

1. Oil Cooler
   1) Tighten oil cooler fixing bolt to the specified torque and connect water hose.

Torque: 29 N·m (3.0 kg·m/22 lb ft)

2. Exh. Valve Assembly
   1) Install exhaust valve assembly with gasket and tighten fixing bolts to the specified torque.

Torque: 27 N·m (2.7 kg·m/20 lb ft)

3. Heat Protector
4. Front Exhaust Pipe
   1) Install front exhaust pipe and tighten fixing bolts to the specified torque.

Exh. Valve Side: 67 N·m (6.8 kg·m/50 lb ft)
Intermediate Pipe Side: 43 N·m (4.4 kg·m/32 lb ft)

5. Fill engine coolant.
6. Connect battery ground cable.
7. Start engine and check for oil and water leakage carefully.

ENGINE COOLING

CONTENTS

General Description 6B–2
On-Vehicle Service 6B–6
Water Pump 6B–6
Thermostat 6B–7
Radiator 6B–9
Drive Belt Adjustment 6B–11

GENERAL DESCRIPTION

COOLANT FLOW

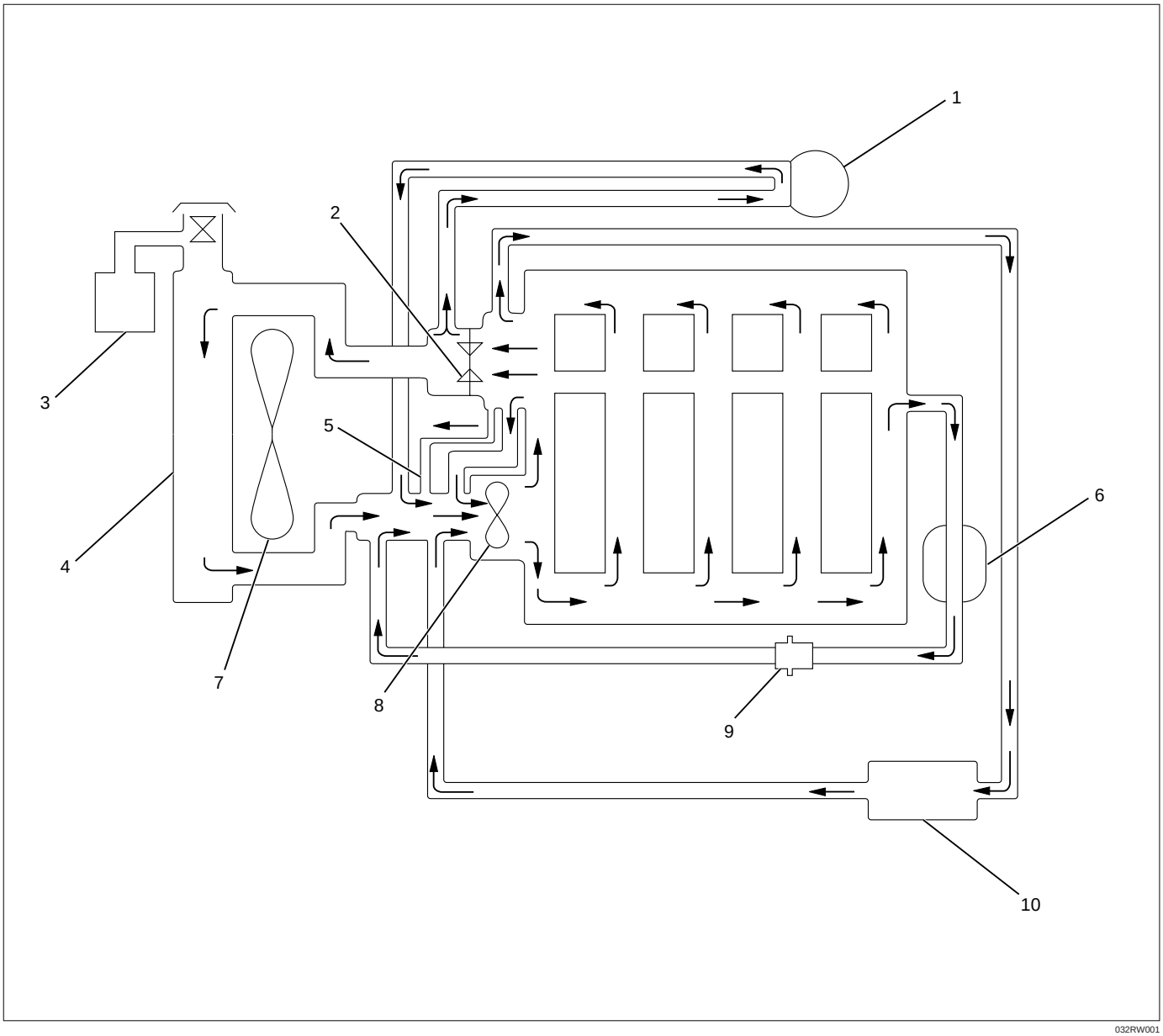

032RW001

Legend

(1) Turbocharger
(2) Thermostat
(3) Reservoir Tank
(4) Radiator
(5) Bypass
(6) Oil Cooler
(7) Cooling fan
(8) Water Pump
(9) Thermo Valve
(10) Car Heater

The cooling system is a pressurized coolant forced circulation type which consists of water pump, thermostat, cooling fan, radiator and other components.

The circulating coolant cools the lubricating oil in the oil cooler and turbocharger.

WATER PUMP

The coolant pump is a centrifugal impeller type and is driven by V type drive belt.

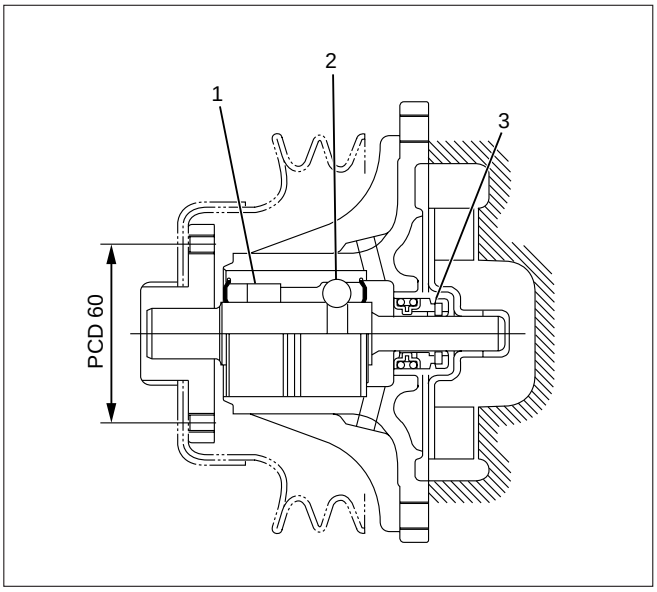

A06RW024

Legend
(1) Roller Bearing
(2) Ball Bearing
(3) Seal Unit

THERMOSTAT

The thermostat is a wax pellet type with a jiggle valve and is installed in the thermostat housing.

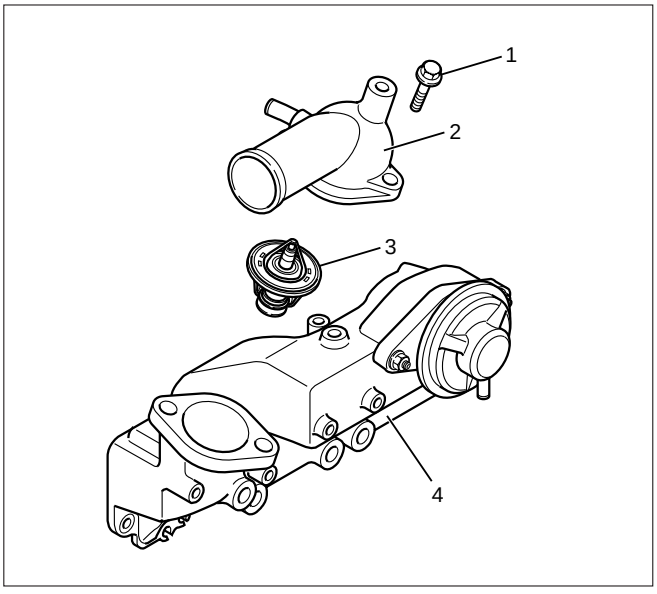

032RW002

Legend
(1) Bolt
(2) Thermostat Housing
(3) Thermostat
(4) Intake Manifold

RADIATOR

The radiator is a tube type with corrugated fins. In order to raise the boiling point of coolant, the radiator is fitted with a cap in which the valve is operated under the pressure.

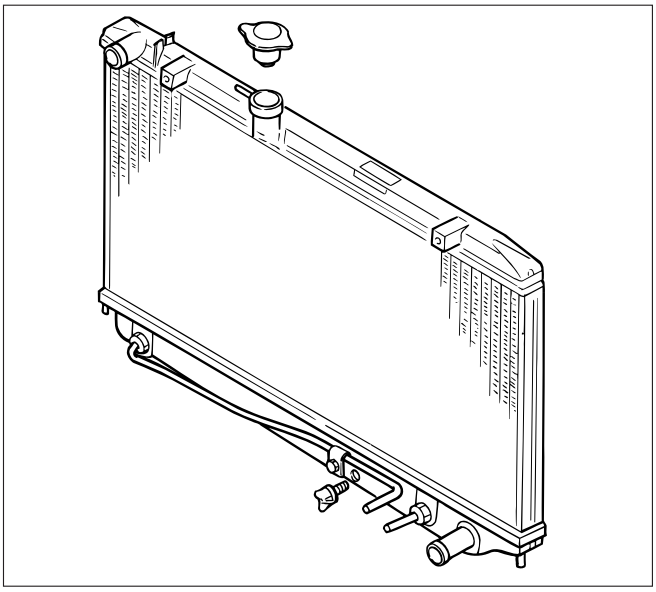

110RS001

ANTI-FREEZE SOLUTION

- Relation between Mixing ratio and Freezing point

  Freezing temperature of the engine coolant varies with the ratio of anti-freeze solution in water.

  Proper mixing ratio can be determined by refering to the chart. Supplemental inhibitors or additives claiming to increase cooling capability that have not been specifically approved by Isuzu are not recommended for addition to the cooling system.

- Calculation of mixing ratio

  Mixing ratio (%)

$$= \frac{\text{Anti-freeze solution (Lit/qt.)}}{\text{Anti-freeze solution (Lit/qt.) + Water (Lit/qt.)}} \times 100$$

  For example

  In case total coolant capacity = 10 ℓ

  It is necessary to mix about 35% anti-freeze solution at ambient temperature minus 20°C.

  Capacity of anti-freeze solution:

$$\frac{35}{100} \times 10 = 3.5\ \ell$$

  Water capacity: 10 ℓ – 3.5 ℓ = 6.5 ℓ

  Therefore, you prepare the water 6.5 ℓ and anti-freeze solution 3.5 ℓ, then mix them to get total 10 ℓ coolant.

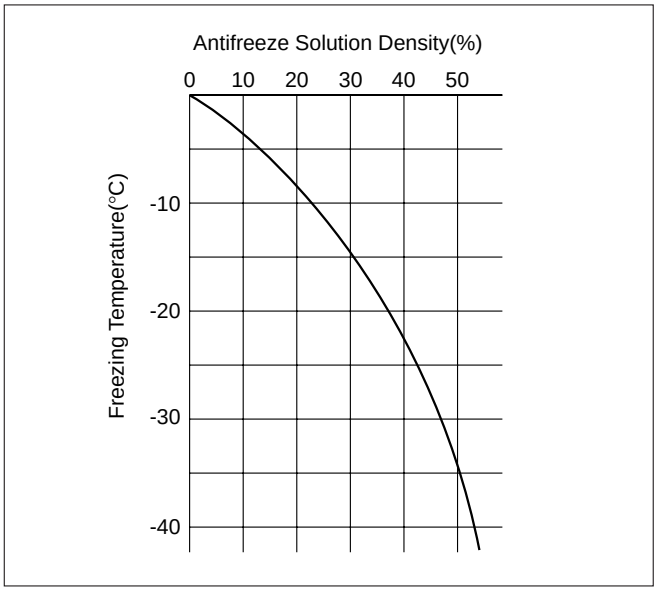

B06RW018

- Mixing ratio

  Check the specific gravity of engine coolant in the cooling system in temperature ranges from 0° C to 50° C using a suction type hydrometer, then determine the density of the coolant by referring to the table at below.

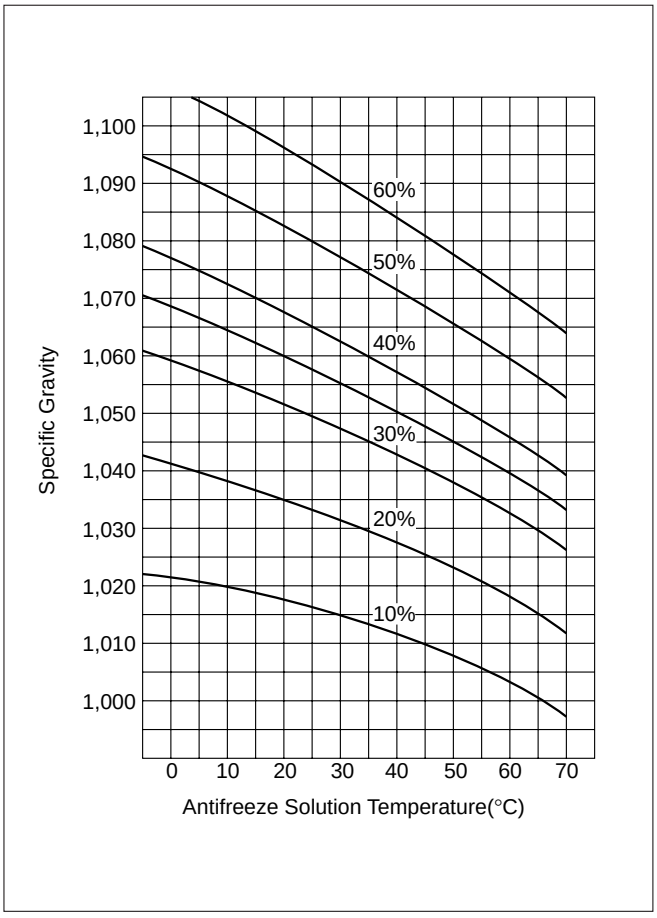

B06RW017

ENGINE COOLANT CHANGE PROCEDURE

1. To change engine coolant, make sure that the engine is cool.

WARNING:
When the coolant is heated to a high temperature, be sure not to loosen or remove the radiator cap. Otherwise you might get scalded by hot vapor or boiling water. To open the radiator cap, put a piece of thick cloth on the cap and loosen the cap slowly to reduce the pressure once the coolant has become cooler.

2. Open radiator cap and drain the cooling system by loosening the drain valve on the radiator and on the cylinder body.

NOTE: For best results it is suggested that the engine cooling system be flushed at least once a year. It is advisable to flush the interior of the cooling system including the radiator before using anti-freeze (ethylene-glycol based).
Replace damaged rubber hoses as the engine anti-freeze coolant is liable to leak out even minor cracks.
Isuzu recommends using Isuzu genuine anti-freeze (ethylene-glycol based) or equivalent, for the cooling system and not add any inhibitors or additives.

CAUTION:
A failure to correctly fill the engine cooling system in changing or topping off coolant may sometimes cause the coolant to overflow from the filler neck even before the engine and radiator are completely full.
If the engine runs under this condition, shortage of coolant may possibly result in engine overheating. To avoid such trouble, the following precautions should be taken in filling the system.

3. To refill engine coolant, pour coolant up to filler neck using a filling hose which is smaller in outside diameter than the filler neck. Otherwise air between the filler neck and the filling hose will block entry, preventing the system from completely filling up.
4. Keep a filling rate of 9 liter/min. or less. Filling over this maximum rate may force air inside the engine and radiator.

   And also, the coolant overflow will increase, making it difficult to determine whether or not the system is completely full.
5. After filling the system full, pull out the filling hose and check to see if air trapped in the system is dislodged and the coolant level goes down. Should the coolant level go down, repeat topping-off until there is no more drop in the coolant level.
6. Directly after filling the radiator, fill the reservoir to the maximum level.
7. Install and tighten radiator cap and start the engine. After idling for 2 to 3 minutes, stop the engine and reopen radiator cap. If the water level is lower, replenish.

WARNING:
When the coolant is heated to a high temperature, be sure not to loosen or remove the radiator cap. Otherwise you might get scalded by hot vapor or boiling water. To open the radiator cap, put a piece of thick cloth on the cap and loosen the cap slowly to reduce the pressure once the coolant has become cooler.

8. After tightening radiator cap, warm up the engine at about 2,000 rpm.

   Set heater adjustment to the highest temperature position, and let the coolant circulate also into heater water system.
9. Check to see the thermostat has opened by the needle position of a water thermometer, conduct a 5-minute idle again and stop the engine.
10. When the engine has been cooled, check filler neck for water level and replenish if required. Should extreme shortage of coolant be found, check the coolant system and reservoir tank hose for leakage.
11. Fill the coolant into the reservoir tank up to “MAX” line.

ON-VEHICLE SERVICE

WATER PUMP

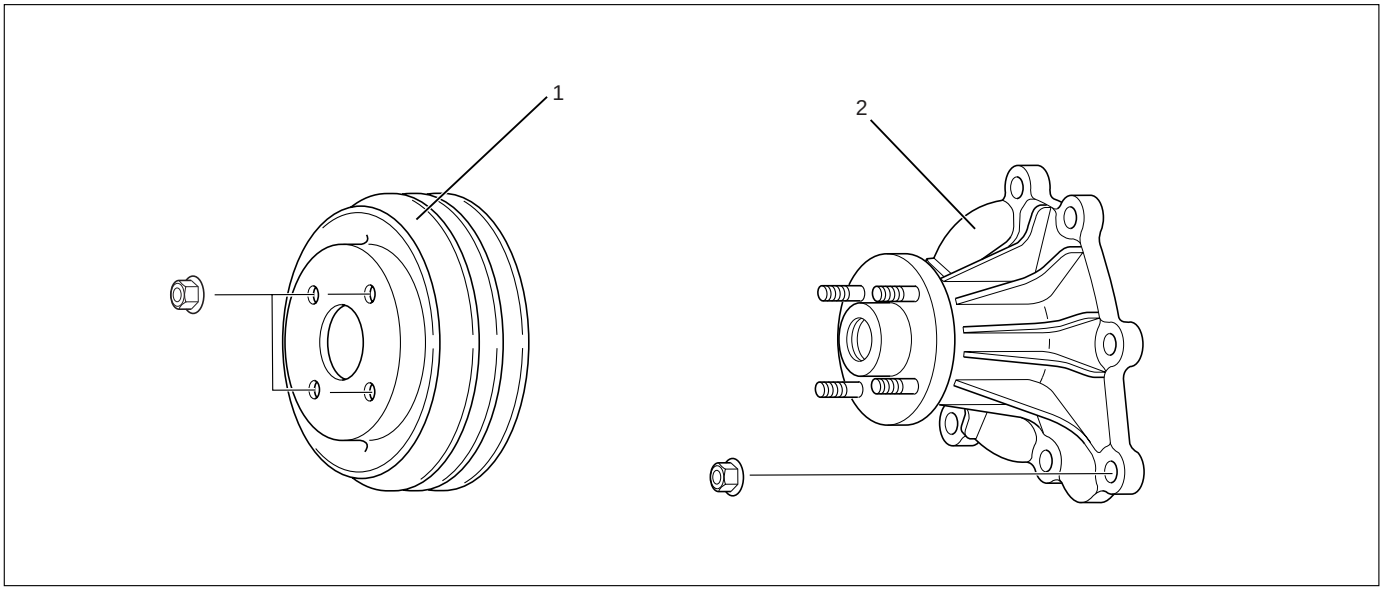

030RW009

Legend
(1) Fan Pulley
(2) Water Pump Assembly

REMOVAL

1. Drain coolant.
2. AC Generator Drive Belt
   1) Loosen AC Generator mounting bolt, adjust plate lock bolt, and remove the drive belt.
3. Cooling Fan Assembly
   1) Remove lock nut and take out cooling fan assembly with cooling fan clutch.
4. Water Pump Assembly

INSPECTION

Make necessary repair and parts replacement if excessive wear or damage is found during inspection. Should any of the following problems occur, the entire water pump assembly must be replaced.

1) Cracks in the water pump body
2) Coolant leakage from the seal unit
3) Play or abnormal noise in the bearing
4) Cracks or corrosion in the impeller

INSTALLATION

1. Gasket
   1) Set gasket to gear case.
2. Water Pump Assembly
   1) Install water pump assembly, and tighten to specified torque.

Torque: 20 N·m (2.0 kg·m/14.5 lb ft)

3. Cooling Fan Assembly
   1) Install cooling fan assembly, and tighten to specified torque.

Torque: 8 N·m (0.8 kg·m/5.8 lb ft)

4. AC Generator Drive Belt
   1) Install AC Generator drive belt and adjust belt tension.

Torque: 40 N·m (4.1 kg·m/29.7 lb ft)
For ACG to bracket

20 N·m (2.0 kg·m/14.5 lb ft)
For ACG to adjust plate

5. Fill coolant to specified capacity.

THERMOSTAT

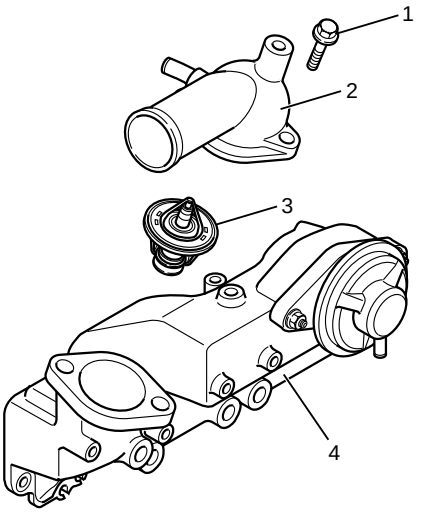

035RW002

Legend

(1) Bolt
(2) Thermostat Housing
(3) Thermostat
(4) Intake Manifold

REMOVAL

1. Disconnect battery ground cable.
2. Drain coolant from the radiator and engine.
3. Thermostat housing
   1) Remove mounting bolt and remove thermostat housing together with radiator hose.
4. Gasket
5. Thermostat

INSPECTION

Make necessary repair and parts replacement if excessive wear or damage is found during inspection.
Submerge the thermostat assembly in the water.
Place wooden blocks on the bottom of the water container.
Do not heat the thermostat directly.
Gradually increase the water temperature. Stir the water so that the entire water is the same temperature.

1) Make sure that valve begins to open at the specified temperature.

Valve Opening Temperature: 85°C (185°F)

2) Make sure that valve opens fully at the specified temperature.

Valve Full Open Temperature: 100°C (212°F)

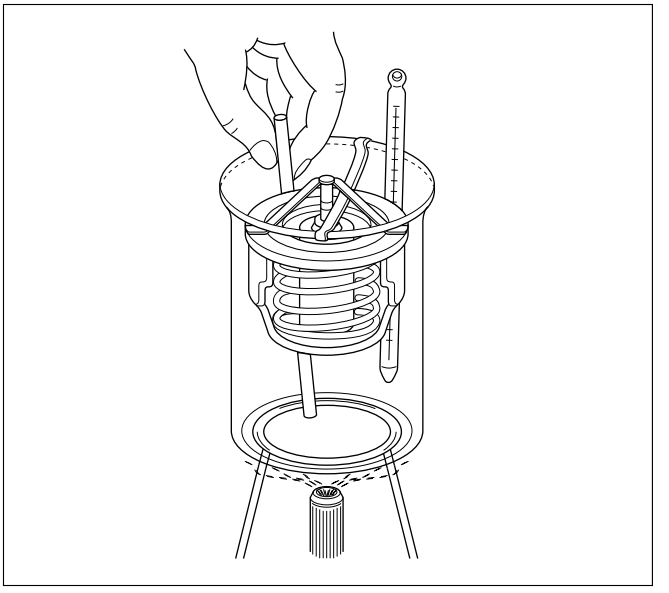

031RS003

INSTALLATION

1. Thermostat
   1) The jiggle valve of the thermostat must face the cylinder head side.
2. Gasket
3. Install thermostat housing and tighten bolt to the specified torque.

Torque: 20 N·m (2.0 kg·m/14.5 lb ft)

4. Reconnect water hose
   1) Fill coolant to full level.
   2) Reconnect battery ground cable.
5. Start the engine check for coolant leakage.

RADIATOR

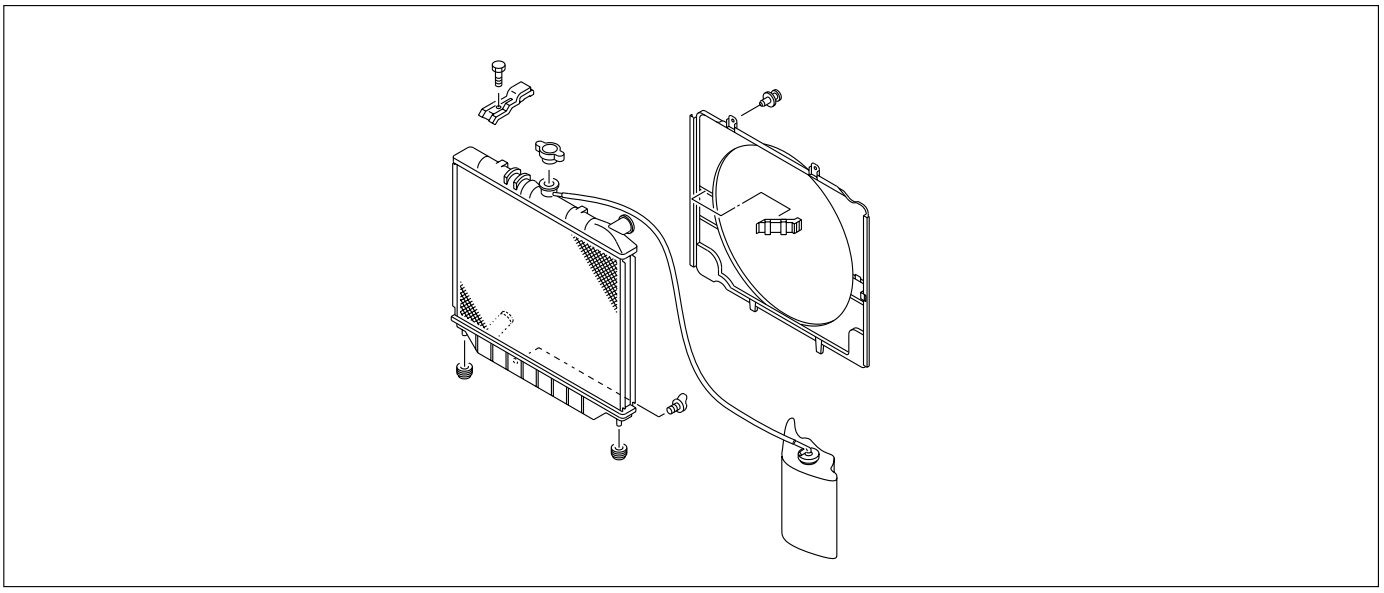

110RW017

REMOVAL

1. Disconnect battery ground cable
2. Loosen drain plug to drain coolant.
3. Radiator Hose
   1) Disconnect lower hose and upper hose from the engine.
4. Fan Guide
   1) Remove clips on both sides and the bottom lock.
5. Reservoir Tank Hose
   1) Disconnect the hose from radiator.
6. Bracket
7. Radiator Assembly
   1) Remove the radiator assembly upward by the hoses taking care not to damage the radiator core by the fan blade.
   2) Remove rubber cushions on both sides of the bottom.

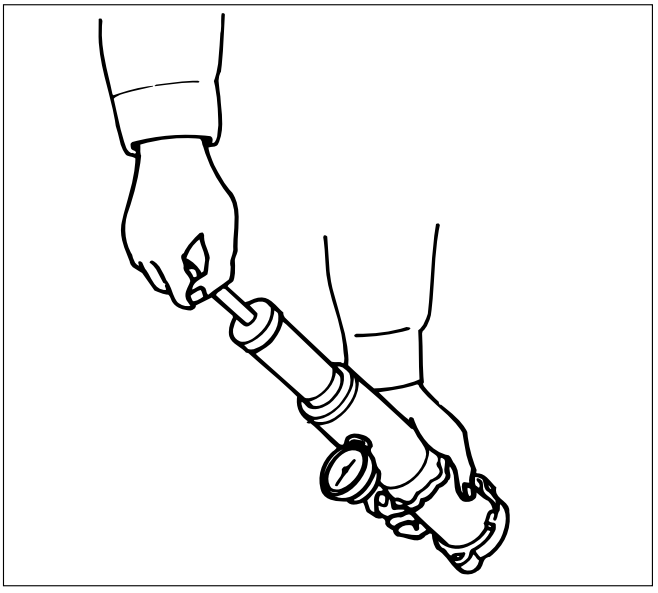

110RS006

INSPECTION

Radiator Cap

1) Measure the valve opening pressure with the radiator cap tester. Replace the radiator cap if it exceeds the standard.

Valve opening pressure: 93.2 – 122.7 kPa (0.95 – 1.25 kg/cm^2 / 13.5 – 17.8 psi)

Check the condition of the negative pressure valve in the center of the valve seat side of the cap. If the valve seat does not move smoothly due to rust or dust, clean and replace the radiator cap.

Radiator Core

1) Deformed radiator fins could reduce radiation effects, resulting in overheating. Straighten the fins. In such a case, take care not to damage the fin roots.
2) Remove dust and other foreign materials.

Flushing the Radiator

1) Wash the inside of radiator and the coolant passage with water and a neutral detergent. Remove all scales and rust.

Checking for Coolant Leakage

1) Check the cooling system for leakage with the radiator cap tester by applying 196.0 kPa (28.4 psi) air pressure from filler neck to inside the radiator.

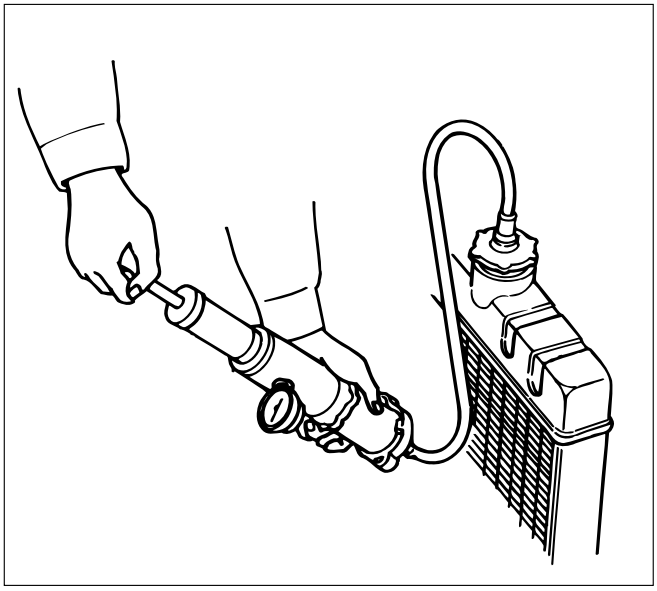

110RS005

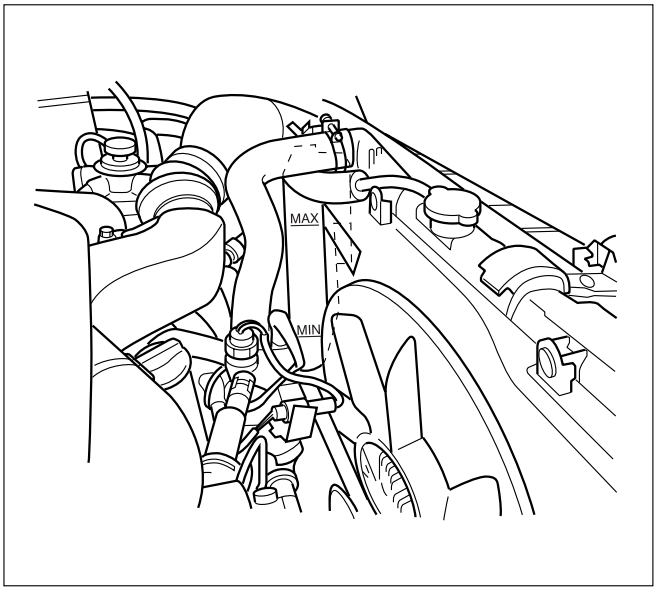

012RW080

INSTALLATION

1. Radiator Assembly
   1) Install rubber cushions on both sides of radiator bottom.
   2) Install radiator assembly with hose, taking care not to damage the radiator core by a fan blade.
2. Bracket
   1) Support the radiator upper tank with the bracket and fix the radiator.
3. Reserve Tank Hose
4. Fan Guide, Lower
5. Radiator Hose
   1) Connect inlet hose and outlet hose to the engine.
   2) Connect battery ground cable.
   3) Pour coolant up to filler neck of radiator, and up to MAX mark of reserve tank.
   4) Start engine to warm up, and check for coolant level. Replenish coolant if it does not reach the radiator filler neck, and tighten the cap completely.

DRIVE BELT ADJUSTMENT

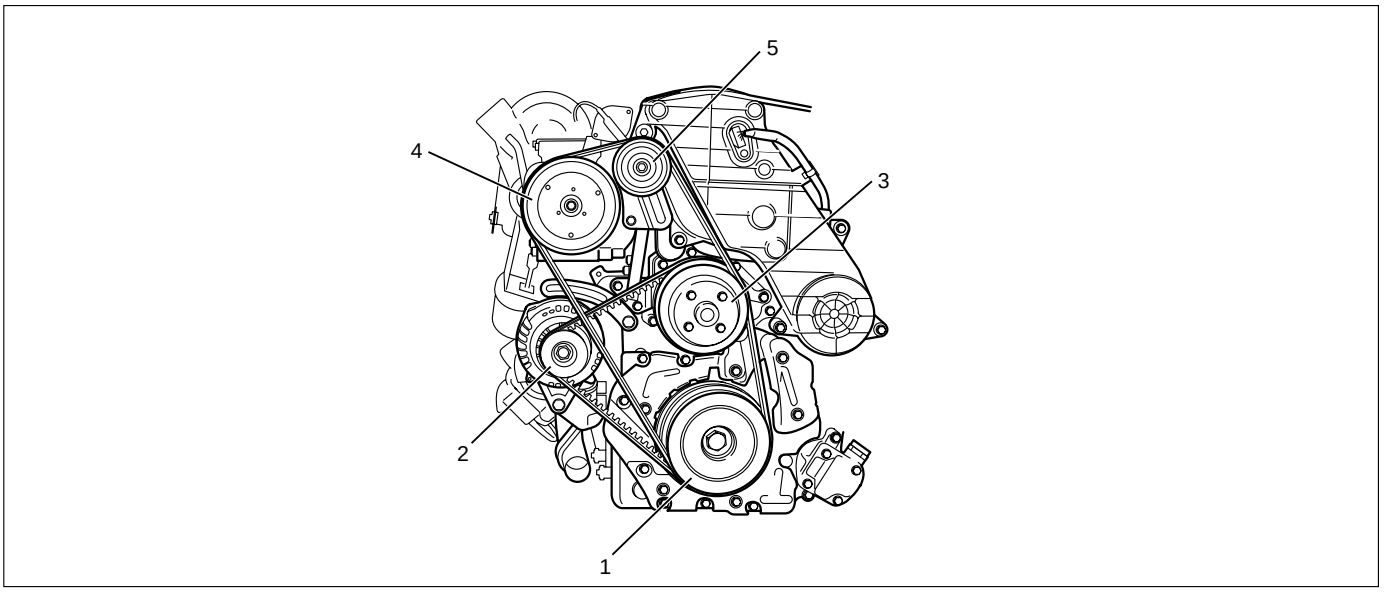

012RW085

Legend
(1) Crankshaft Pulley
(2) A.C. Generator
(3) Cooling Fan Pulley
(4) A/C Compressor
(5) Belt Tensioner Pulley

INSPECTION

Check drive belts for wear or damage, and replace with new ones as necessary. Check belts for tension, and adjust as necessary.

1) Check drive belt tension.
2) Push the middle of belt with a force of 98 N (10 kg/22 lb) and check each belt for deflection.

Standard deflection:

For A.C. generator & fan pulley drive belt
Initial tension : 8 – 12 mm (0.31 – 0.47 in)
Tension at readjustment : Same as above.

For A/C compressor drive belt
Initial tension : 7 – 10 mm (0.28 – 0.38 in)
Tension at readjustment : 5 – 8 mm (0.20 – 0.31 in)

TENSION ADJUSTMENT

1) Loosen AC generator mounting bolt to move AC generator, adjust belt tension and tighten to the specified torque.

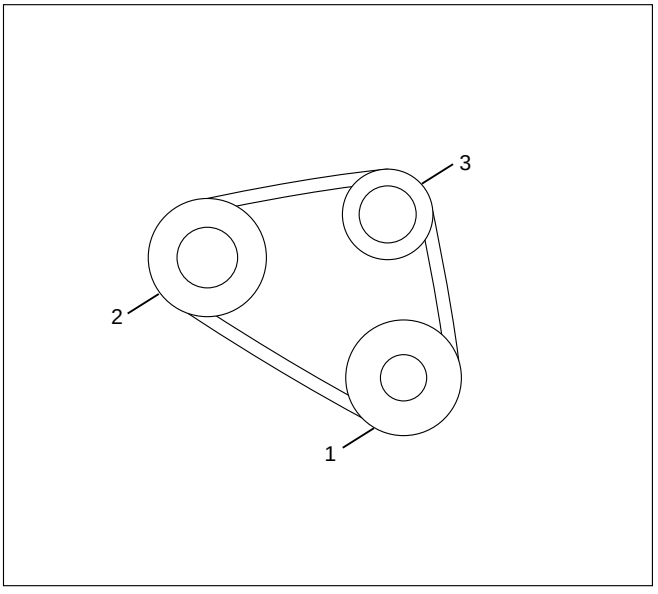

012RW084

Legend
(1) Crankshaft Pulley
(2) A.C. Generator Pulley
(3) Cooling Fan Pulley

Torque:

For A.C. Generator fixing bolt
40 N·m (4.1 kg·m/29.7 lb ft)

For Adjusting plate fixing bolt
24 N·m (2.4 kg·m/17.4 lb ft)

For Adjusting plate lock bolt
19 N·m (1.9 kg·m/13.7 lb ft)

2) Adjust the A/C compressor drive belt by tightening the belt tensioner bolt.

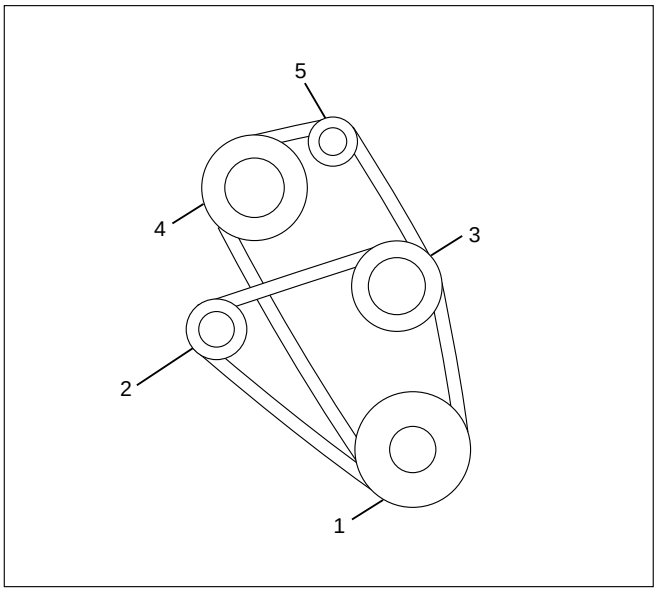

012RW110

Legend

(1) Crankshaft Pulley
(2) A.C. Generator Pulley
(3) Cooling Fan Pulley
(4) A/C Compressor Pulley
(5) Belt Tensioner Pulley

ENGINE FUEL

CONTENTS

General Description 6C–1
On-Vehicle Service 6C–8
Fuel Filter Assembly 6C–8
Fuel Filter Cartridge 6C–8
Injector 6C–10
High Pressure Oil Pump 6C–14
Fuel Tank 6C–20
Fuel Gauge Unit 6C–21
Fuel Filler Cap 6C–21

GENERAL DESCRIPTION

To realize the compatibility between low exhaust emission and high engine output, an HEUI (Hydraulically actuated Electronically controlled Unit Injector) system, has been introduced. This system is comprised of a hydraulic system, fuel system, and electronic control system, using a high-pressure oil pump in place of the conventional fuel injection pump. The oil pressurized by means of this pump and by signals from the ECM (Electronic Control Module) actuates the fuel injector provided for each cylinder. Inside of the fuel injector, fuel pressure is increased due to the high-pressure oil. The ECM detects the driving state of the vehicle, forms, signals sent by engine and other part sensors, which determines the optimum fuel injection amount and timing, thus controlling the fuel injectors. Thus high engine output, good fuel economy, and low exhaust emission are realized.

When working on the fuel system, there are several things to keep in mind:

1) Any time the fuel system is being worked on, disconnect the negative battery cable except for those tests where battery voltage is required.
2) Always keep a dry chemical (Class B) fire extinguisher near the work area.
3) Replace all pipes with the same pipe and fittings that were removed.

   Clean and inspect “O” rings. Replace where required.
4) Always relieve the line pressure before servicing any fuel system components.
5) Do not attempt repairs on the fuel system until you have read the instructions and checked the pictures relating to that repair.
6) After maintenance work, push priming pump and send enough fuel to the fuel system before starting the engine.

NOTE: In comparison with the conventional engine, the capacity of fuel passage in the 4JX1 engine is larger. It takes the priming pump more time to fill the engine with fuel.

FUEL FLOW

For EC

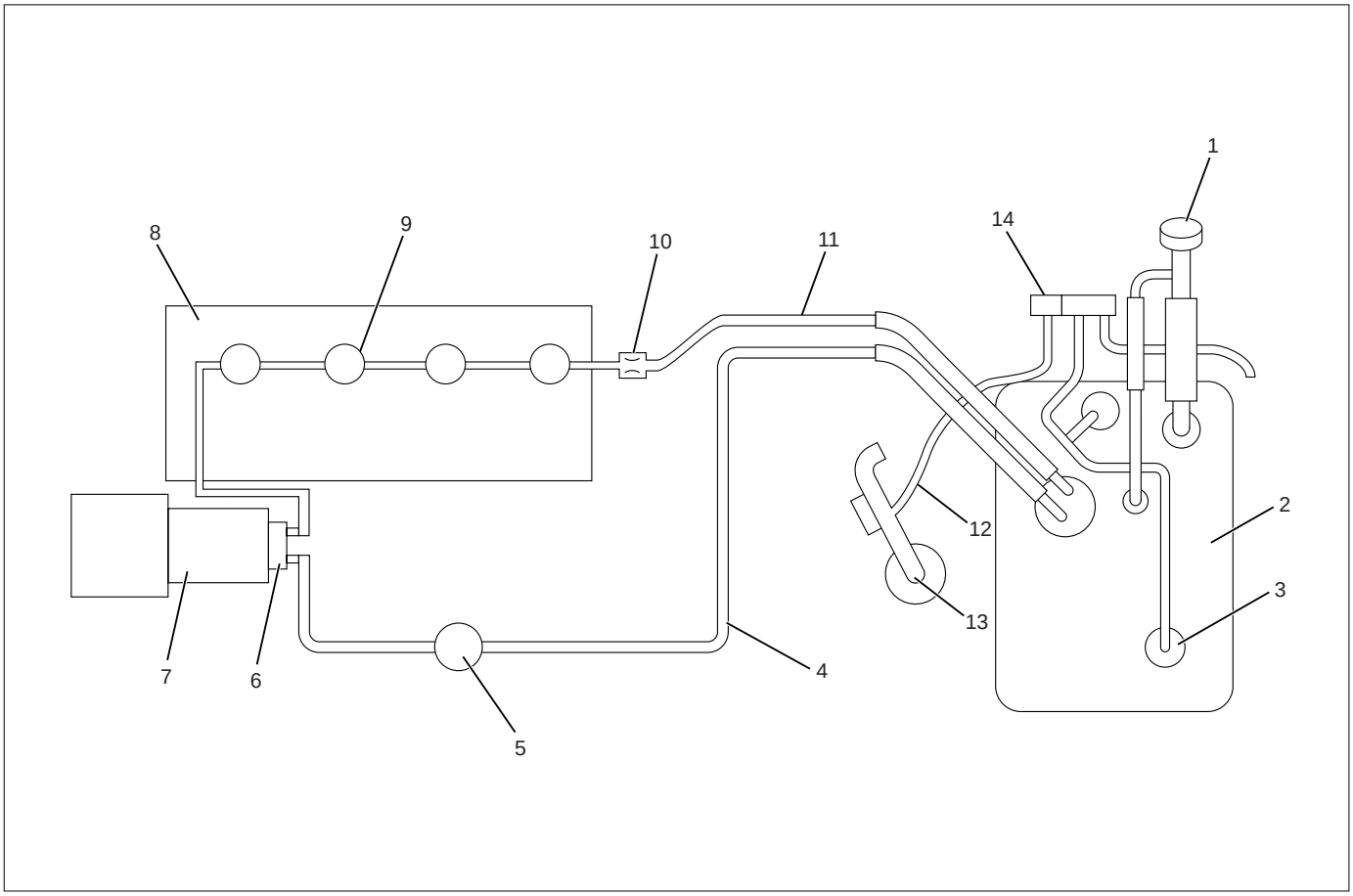

040RX001

Legend

(1) Fuel Filler Cap
(2) Fuel Tank
(3) Rollover Valve
(4) Fuel Supply Pipe
(5) Fuel Filter with Priming Pump
(6) Fuel Pump
(7) High Pressure Oil Pump
(8) Cylinder Head
(9) Injector
(10) Orifice
(11) Fuel Return Pipe
(12) Fuel Tank Pressure Release Hose
(13) Intake Air Duct
(14) Fuel Tank Pressure Control Valve

For except EC

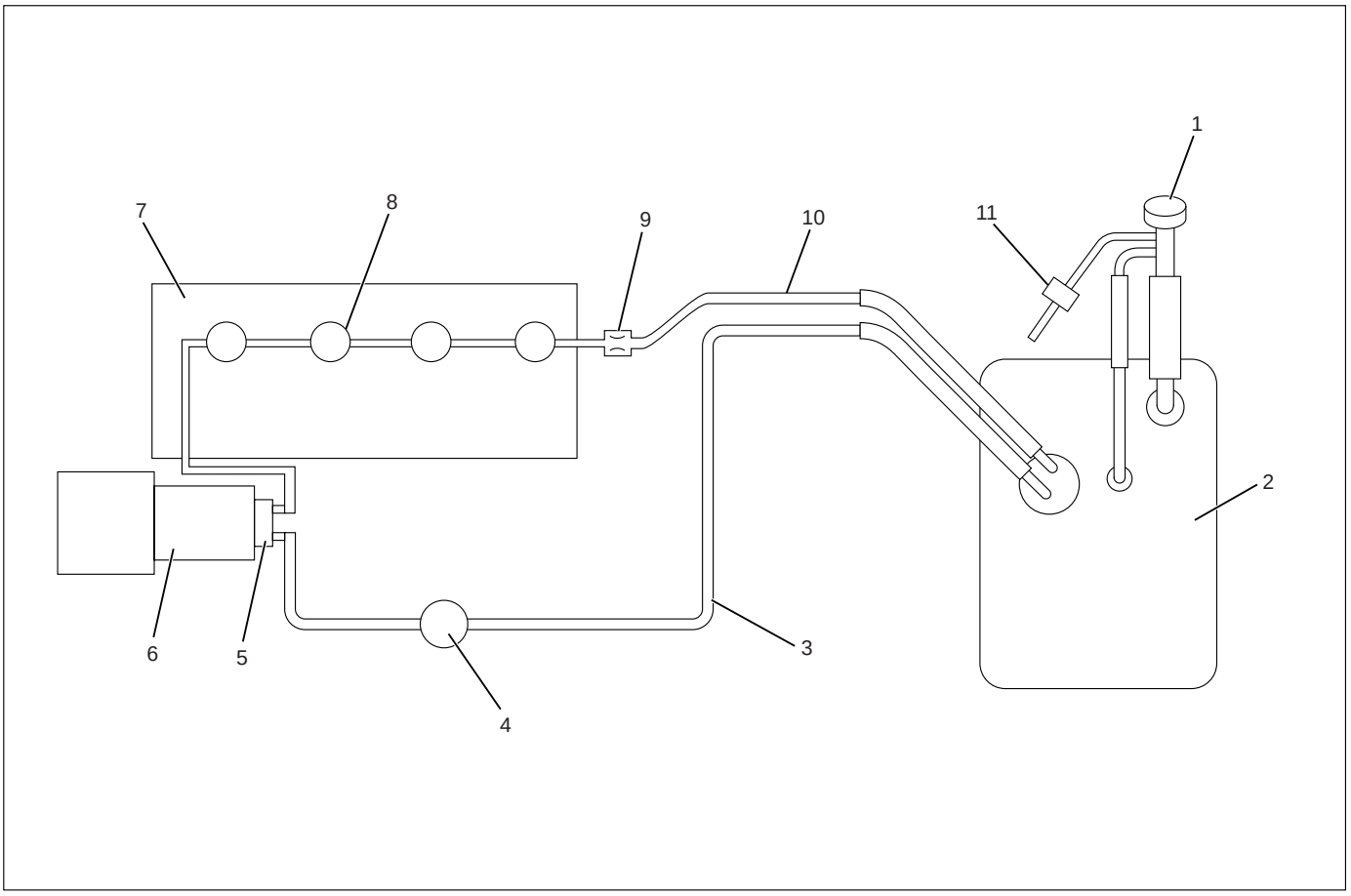

040RX002

Legend

(1) Fuel Filler Cap
(2) Fuel Tank
(3) Fuel Supply Pipe
(4) Fuel Filter with Priming Pump
(5) Fuel Pump
(6) High Pressure Oil Pump
(7) Cylinder Head
(8) Injector
(9) Orifice
(10) Fuel Return Pipe
(11) Fuel Tank Pressure Control Valve

FUEL PUMP

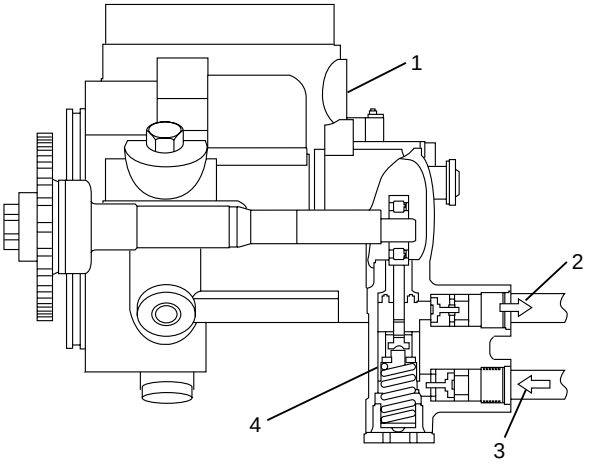

140RW041

Legend

(1) High Pressure Oil Pump
(2) To Injector
(3) From Fuel Tank
(4) Fuel Pump

HIGH PRESSURE OIL PUMP, OIL FLOW

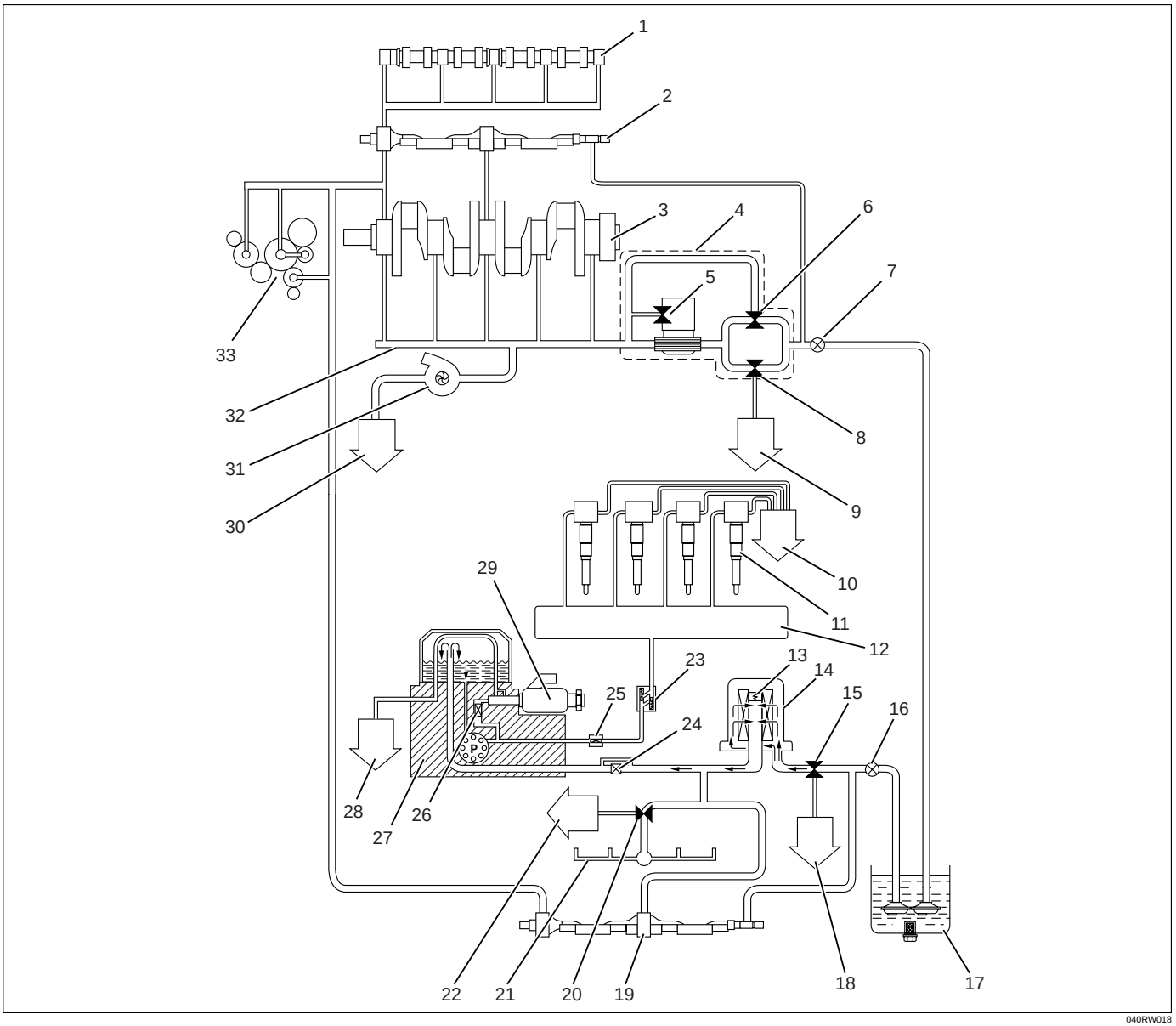

Legend

(1) Camshaft
(2) Balance Shaft
(3) Crankshaft
(4) Oil Cooler and Oil Filter Assembly
(5) Oil Filter Relief Valve 98 Kpa (1 kg/cm^2/14.2 Psi)
(6) Oil Cooler Relief Valve 245 Kpa (2.5 kg/cm^2/ 36 Psi)
(7) First Oil Pump
(8) Main Oil Relief Valve 588 Kpa (6 kg/cm^2/ 85 Psi)
(9) To Oil Pan
(10) To Oil Pan
(11) Injector
(12) Oil Rail
(13) Sub Oil Filter Relief Valve 98 Kpa (1 kg/cm^2/ 14.2 Psi)
(14) Sub Oil Filter
(15) Relief Valve 588 Kpa (6 kg/cm^2/ 85 Psi)
(16) Second Oil Pump
(17) Oil Pan
(18) To Oil Pan
(19) Balance Shaft
(20) Cooling Jet Relief Valve 245 Kpa (2.5 kg/cm^2/ 36 Psi)
(21) Cooling Jet
(22) To Oil Pan
(23) Two Way Check Valve
(24) Nipple Filter
(25) Edge Filter
(26) Edge Filter
(27) High Pressure Oil Pump Assembly
(28) To Oil Pan
(29) Pressure Control Valve
(30) To Oil Pan
(31) Turbocharger
(32) Oil Gallery
(33) Timing Gear Train

FUEL FILTER

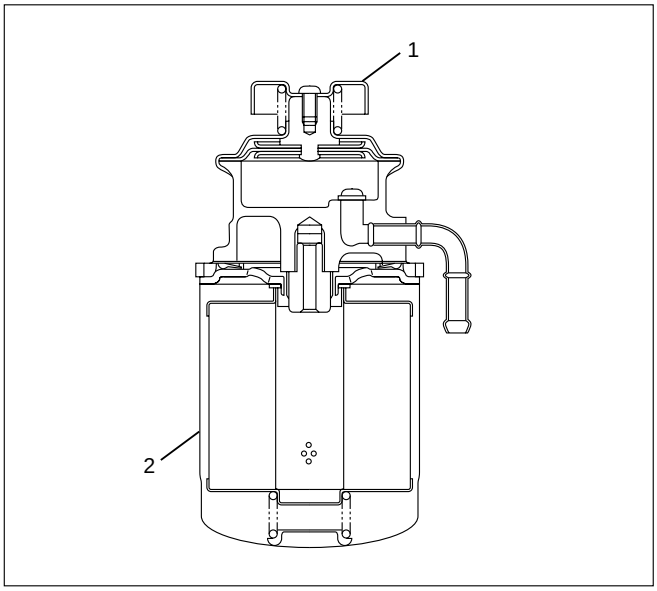

041RW017

Legend
(1) Priming Pump
(2) Fuel Filter Cartridge

A cartridge type fuel filter is used along with the piston type fuel pump on the high pressure oil pump.
The fuel filter removes foreign material from the fuel before it reaches the fuel pump.
A diaphragm type priming pump is installed at the top of the fuel filter. It is used during the air bleeding procedures.

INJECTOR ASSEMBLY

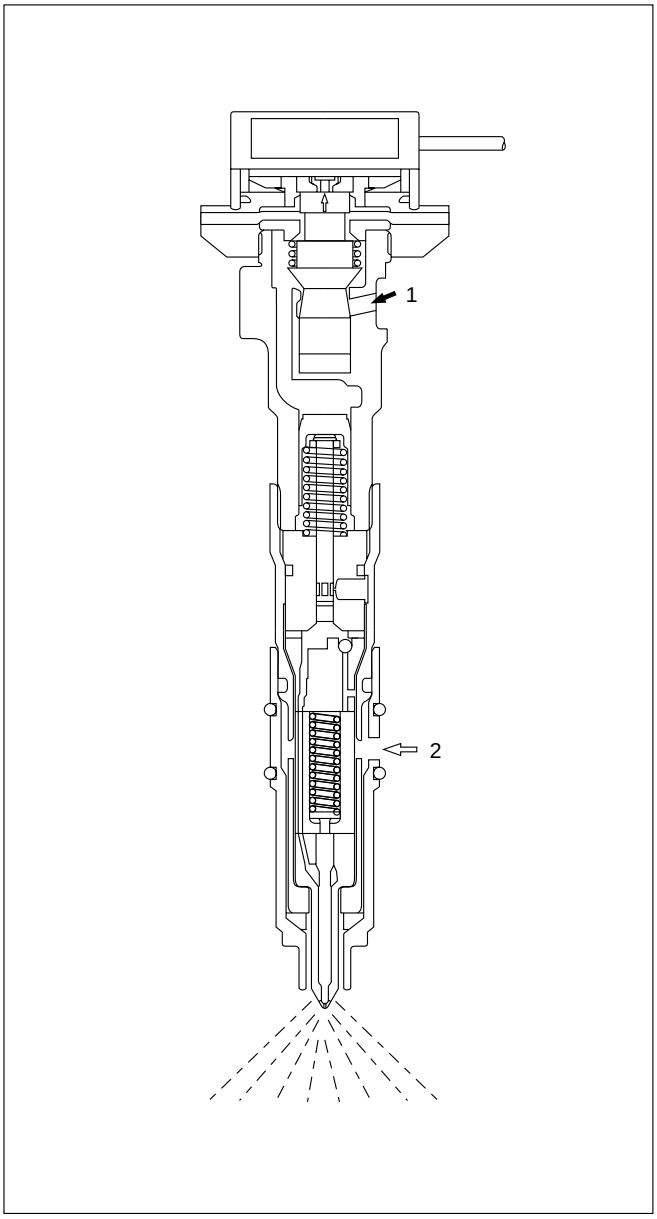

055RW018

Legend
(1) Oil Passage
(2) Fuel Passage

1. Construction of Fuel Injector

   The fuel injector is comprised of the solenoid section, hydraulic line, and fuel line. Fuel injection is controlled by the continuity time signal and continuity start timing signal sent by the ECM (Electronic Control Module) to the solenoid.

2. Working of Fuel Injector

   1) The ECM detects the working of the engine from its input signals, such as engine speed accelerator throttle opening, and engine coolant temperature, sending the optimal signals to the solenoid.

2) With the current carried to the solenoid, a poppet valve is opened by means of an armature to let high-pressure engine oil into the injector.
3) Under the oil pressure, the piston and plunger are depressed to compress the fuel. The pressure of the compressed fuel is increased over the pressure of high-pressure engine oil by the ratio (about 7 : 1) of piston top to plunger bottom.
4) The injection nozzle end needle is lifted under the increased pressure of the fuel for fuel injection.
5) With current stopped from the ECM, the poppet valve is closed which holds up the high-pressure engine oil and lets the oil used to compress fuel out of the injector through its drain hole.

ON-VEHICLE SERVICE

FUEL FILTER ASSEMBLY

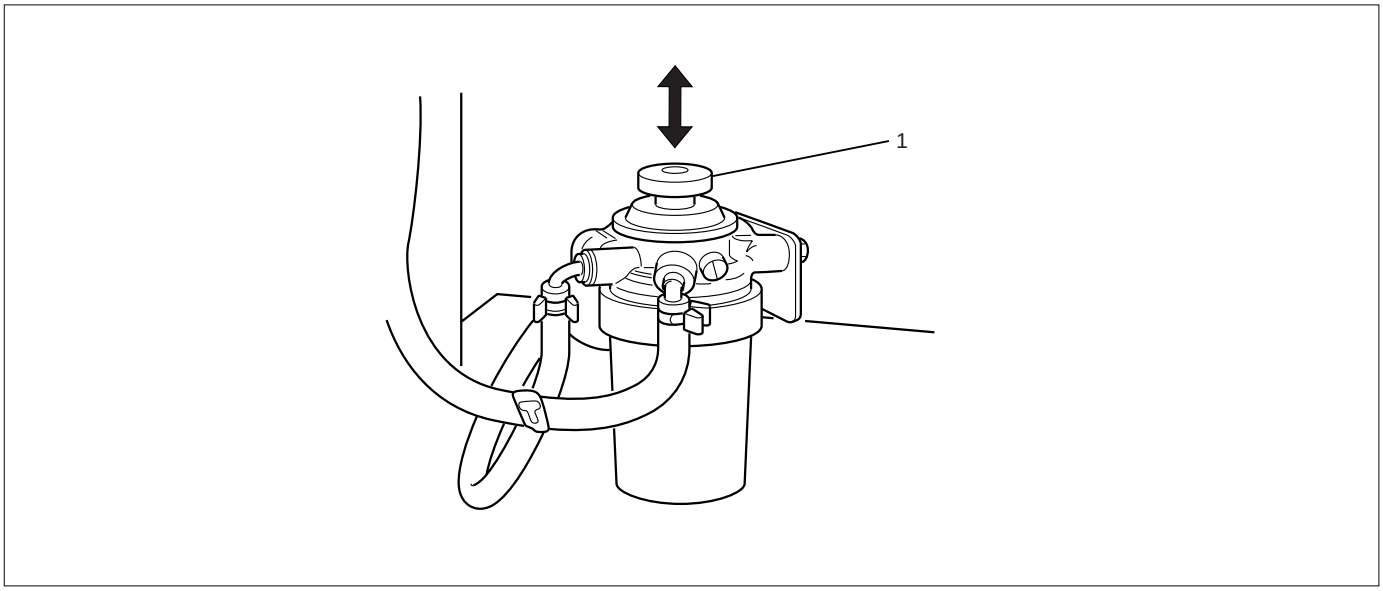

012RW111

Legend
(1) Priming Pump

REMOVAL

1. Disconnect battery ground cable.
2. Fuel Filler cap
3. Fuel Hose
   1) Disconnect fuel hose from filter body.
      Plug the hose ends to prevent fuel spillage.
4. Remove the Bolt on Fuel Filter Bracket
5. Remove Fuel Filter Assembly

INSTALLATION

1. Install the fuel filter assembly
2. Tighten the Fuel Filter Bracket Fixing Bolt
3. Fuel Hose
   1) Connect hoses to filter body.
4. Fuel Filler Cap
   1) Connect the battery ground cable.
   2) Feed fuel to the fuel pump by priming, and bleed the air from fuel system.

FUEL FILTER CARTRIDGE

DISASSEMBLY

1. Drain fuel completely from the fuel filter.
2. Protect the filter body with cloth and lightly grip with a vise.
3. Remove the cartridge using a filter wrench.
   Filter wrench: 5-8840-0203-0

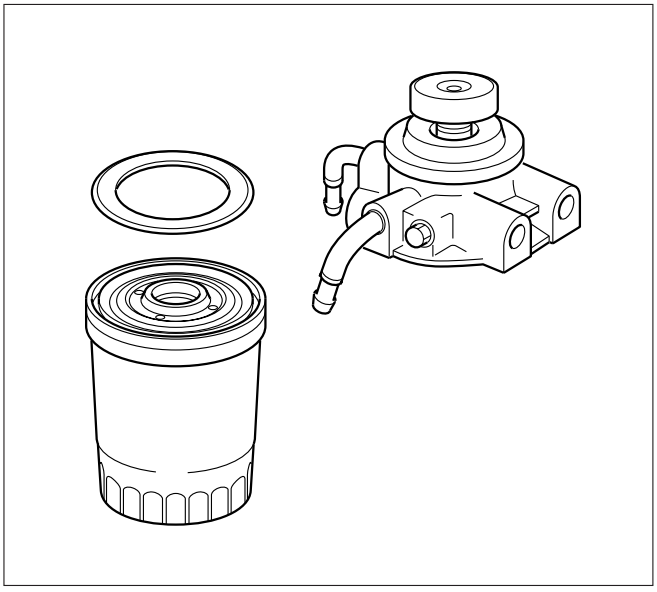

012RW112

REASSEMBLY

1. Clean the cartridge mounting surface of the filter body so that the cartridge can be secured.
   Apply engine oil thinly to new cartridge O-ring.
2. To facilitate bleeding, fill the new cartridge with light oil.
3. Tighten the cartridge until O-ring comes in contact with the seal, taking care not to spill the light oil.
4. Retighten 1/3 – 2/3 using a filter wrench.
   Filter wrench: 5-8840-0203-0

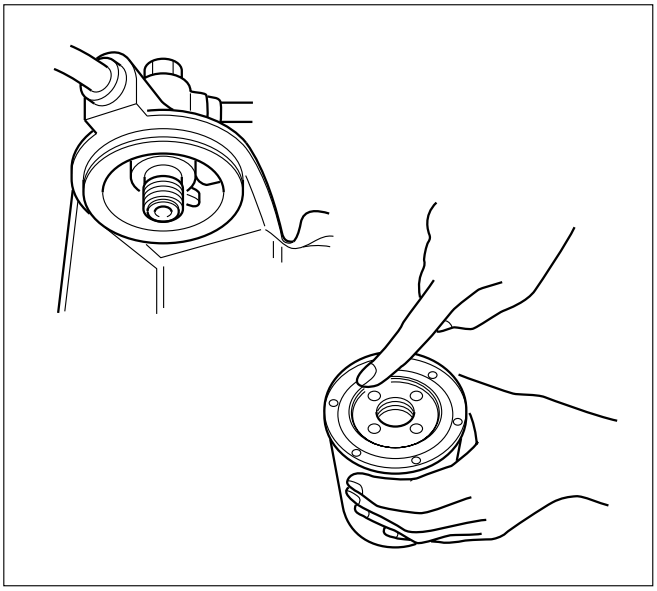

012RW078

Bleeding

1. Loosen air bleeding plug.
2. Operate priming pump to bleed the air in the fuel line.
3. Operate the priming pump until the fuel is overflow from air bleeding plug.
4. Tighten the air bleeding plug.
5. Start the engine, and if it is not started in 10 seconds or less, repeat the bleeding steps.
6. Make sure of no fuel leakage, and tighten the priming pump.

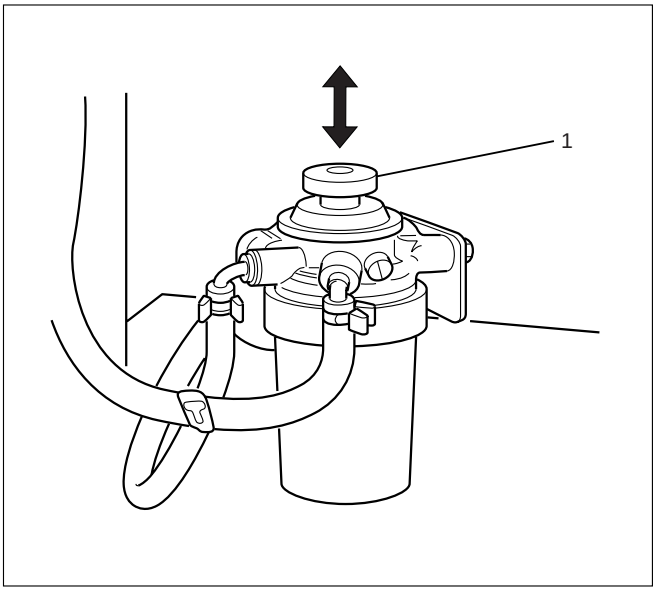

012RW111

Legend
(1) Priming Pump

NOTE: In comparison with the conventional engine, the capacity of fuel passage in the 4JX1 engine is larger. It takes the priming pump more time to fill the engine with fuel.

INJECTOR

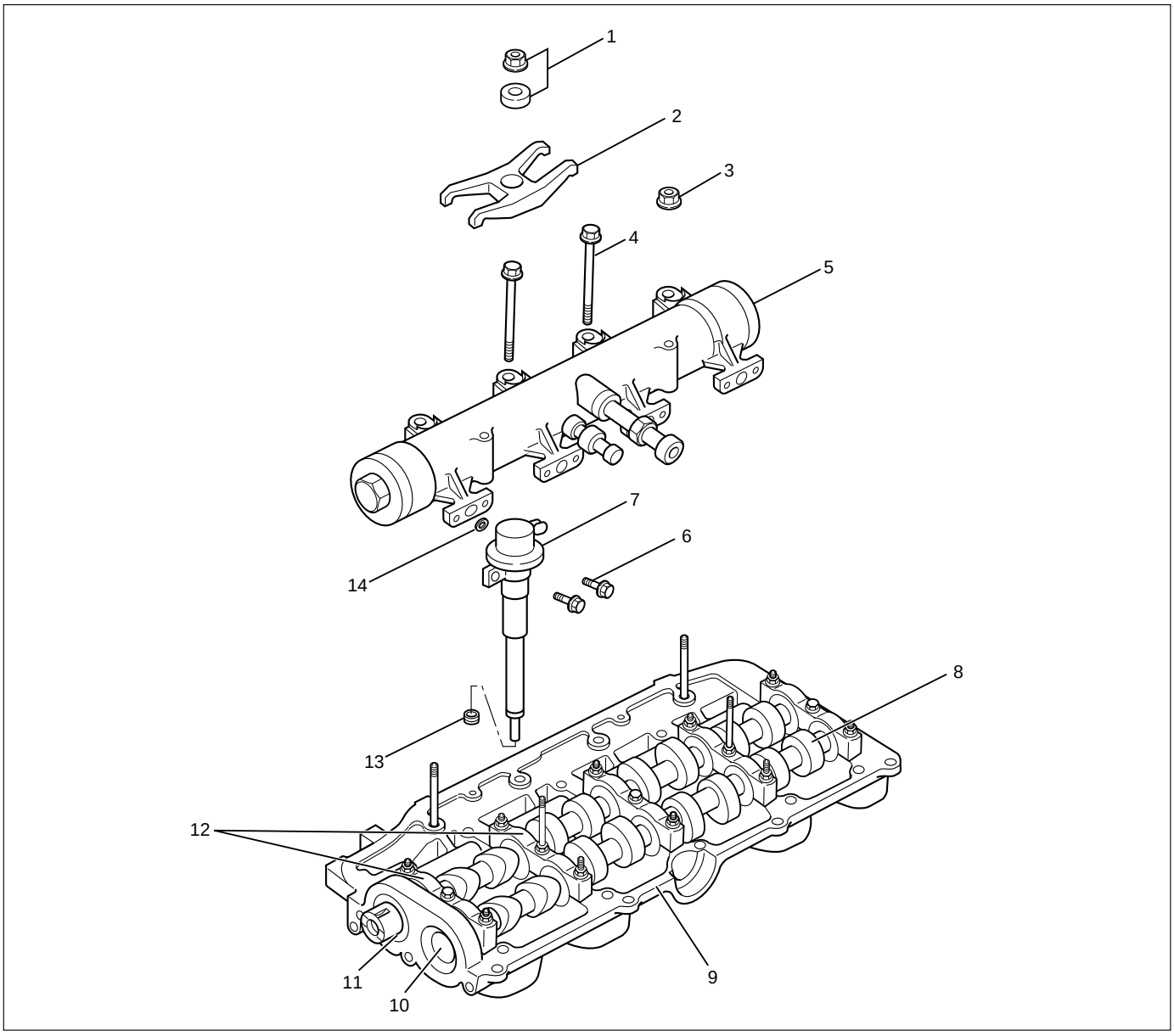

012RW022-1

Legend

(1) Nut and Washer
(2) Injector Clamp
(3) Nut
(4) Bolt
(5) Oil Rail Assembly
(6) Bolt
(7) Injector Assembly
(8) Camshaft
(9) Camshaft Carrier
(10) End Plug
(11) Camshaft Oil Seal
(12) Camshaft Bracket
(13) Gasket
(14) O-Ring

REMOVAL

Prior to removal, be sure to confirm and record the group code of the injector installed using Tech2.

1. Disconnect battery ground cable.
2. Remove air cleaner cover and air duct.
3. Remove intercooler.
   Refer to “Intercooler” in this manual.
4. Remove PCV hose and pipe.
5. Remove cylinder head noise insulator cover.
6. Remove high pressure oil pipe.

CAUTION:

1) Sleeve nut should be loosened with cloth tied around to prevent oil from spurting due to the remaining pressure.

2) High oil pressure pipe should be disconnected with cloth tied around the intake manifold glow plug to prevent oil from flowing out of the oil rail.

7. Loosen eye bolt of fuel pipe at fuel pump side.

NOTE: Cloth should be put around the loosened eye bolt to prevent fuel from flowing out.

8. Remove fuel return hose at chassis side.
9. Remove PCV hose to cylinder head cover.
10. Remove cylinder head cover.
11. Drain the oil from oil rail assembly.

NOTE: Do not drop O-ring

12. Record the grade code of injector for each cylinder that is indicated on the upper portion of injector.
    There are nine kinds of grade code available, one alphabet letter and one numeral letter.

Grade code

Category number
A – 1
A – 2
A – 3
B – 1
B – 2
B – 3
C – 1
C – 2
C – 3

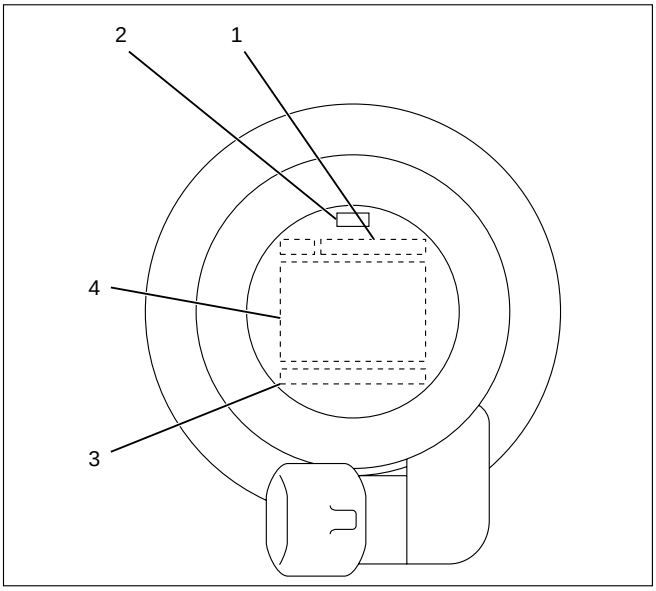

055RW00001

Legend
(1) Part Number
(2) Category Number (Grade code)
(3) Serial Number
(4) Bar Code

13. Remove harness connector from each injector.
14. Loosen nuts and bolts for oil rail.
15. Remove injector fixing bolts.
16. Remove injector clamp.
17. Remove injector assembly.

INSTALLATION

1. Install oil rail, tighten temporarily
2. Install injector assembly.

NOTE:

1) Do not forget to install O-ring between injector and oil rail.
2) Use new O-ring
3) Clean O-ring groove and fitting surface of parts.
4) Apply engine oil to O-ring.

3. Install injector fixing bolts, tighten temporarily.
4. Install injector clamp, tighten nut temporarily.
5. Tighten injector fixing bolts to the specified torque.

Torque: 6.5 N·m (0.7 kg·m / 5.1 lb ft)

6. Tighten injector clamp nut to the specified torque with special method.

Torque: 30 N·m (3.1 kg·m / 22.4 lb ft) then loosen a time again tighten as following torque.

Torque: 25 N·m (2.4 kg·m / 17.4 lb ft)

7. Tighten oil rail to the specified torque.

Torque: 20 N·m (2.0 kg·m / 14.5 lb ft)

8. Install injector harness assembly, reconnect harness connecter to injector.
9. Record the identification marking of injector for each cylinder that is indicated on the upper portion of injector.

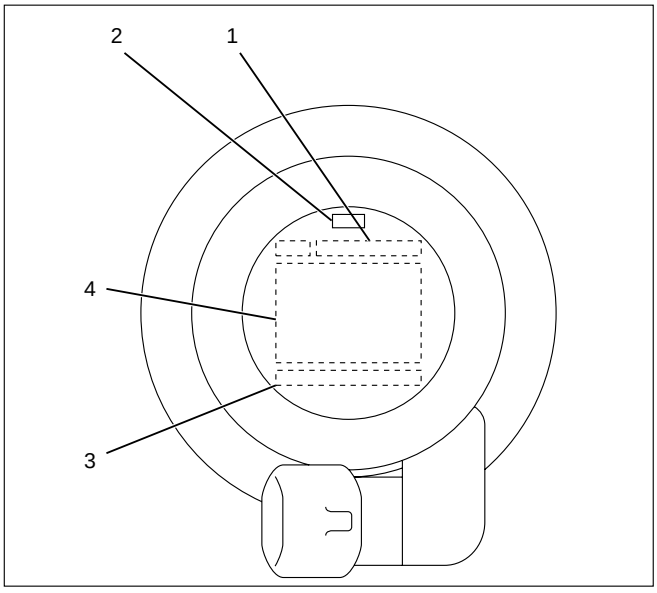

055RW00001

Legend
(1) Part Number
(2) Category Number (Grade code)
(3) Serial Number
(4) Bar Code

10. Install cylinder head assembly.
    Refer to “Cylinder Head” in this manual.
11. Fill with about 300cc of engine oil from the high pressure oil pipe installation port of the oil rail using an oil filler.
    If assembled without filling the oil rail with oil, the time for engine starting will be longer.
12. Immediately install high pressure oil pipe and tighten to specified torque.

Torque: 80 N·m (8.1 kg·m / 57.9 lb ft)

13. Install cylinder head noise insulator cover.
    Refer to “Cylinder Head” in this manual.
14. Install intercooler assembly.
    Refer to “Intercooler” in this manual.
15. Install air cleaner cover and air duct.
16. Use TECH2 to rewrite injector data to ECM.
    For rewriting method refer to section “Data Programming in Case of ECM Change” of section 6E 4JX1 engine driveability and emissions in this manual.

NOTE:
1) On completion of servicing, bleed air from the engine inside fuel passage by means of the priming pump. (The priming pump should be operated more times than in the case of conventional engines.)
2) As air is in the oil rail, it takes more time to start the engine. Rough idling may occur while the air is being bled completely after engine start, but it does not indicate trouble.
   The air will be bled and normal engine status will be reached while the vehicle is driven for about 5 km or engine is operated for about 5 minutes at 1500 to 2000 rpm.
3) The injector spare part will be provided for group number B1, B2 and B3 only.

Injector Grade code Programming (Injector Change)

In case of an injector change, the injector grade code (category number) must be programmed by Tech-2.

Programming Procedure

1. Connect the Tech-2 to the vehicle DLC.
2. Turn the starter switch to the “ON” position.
3. Select the “Diagnosis” from the Main menu.
4. Select the “Programming” from the Application menu.

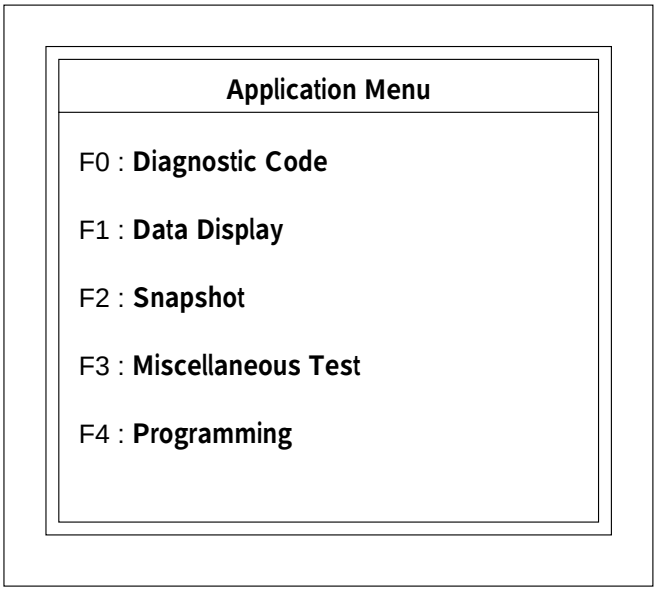

035RW00002

5. Select “Programming Trim Date” from Programming menu.
6. Select the injector change from Programming Trim Date menu.
7. Select the cylinder number which changed injector.

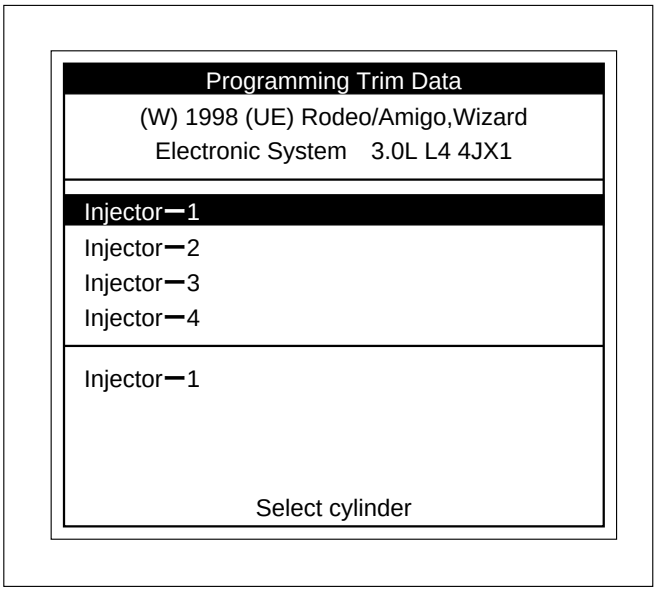

035RW00003

8. Appoint and select the grade code (Category number) of injector.

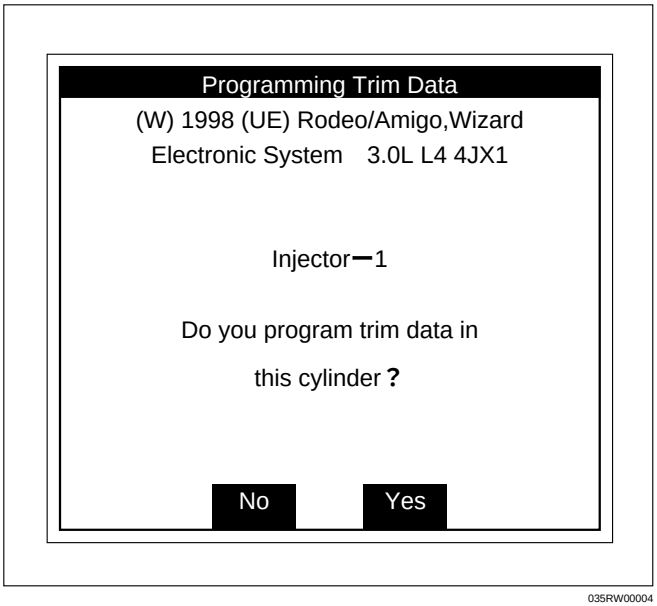

035RW00004

9. Confirm the completion of injector programming.

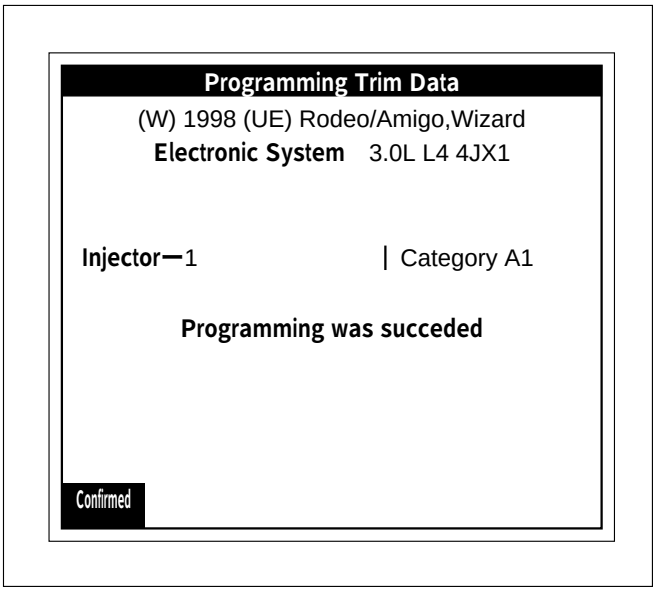

035RW00005

Note; The injector grade code (category number) is indicated on the new (service part) injector.

HIGH PRESSURE OIL PUMP

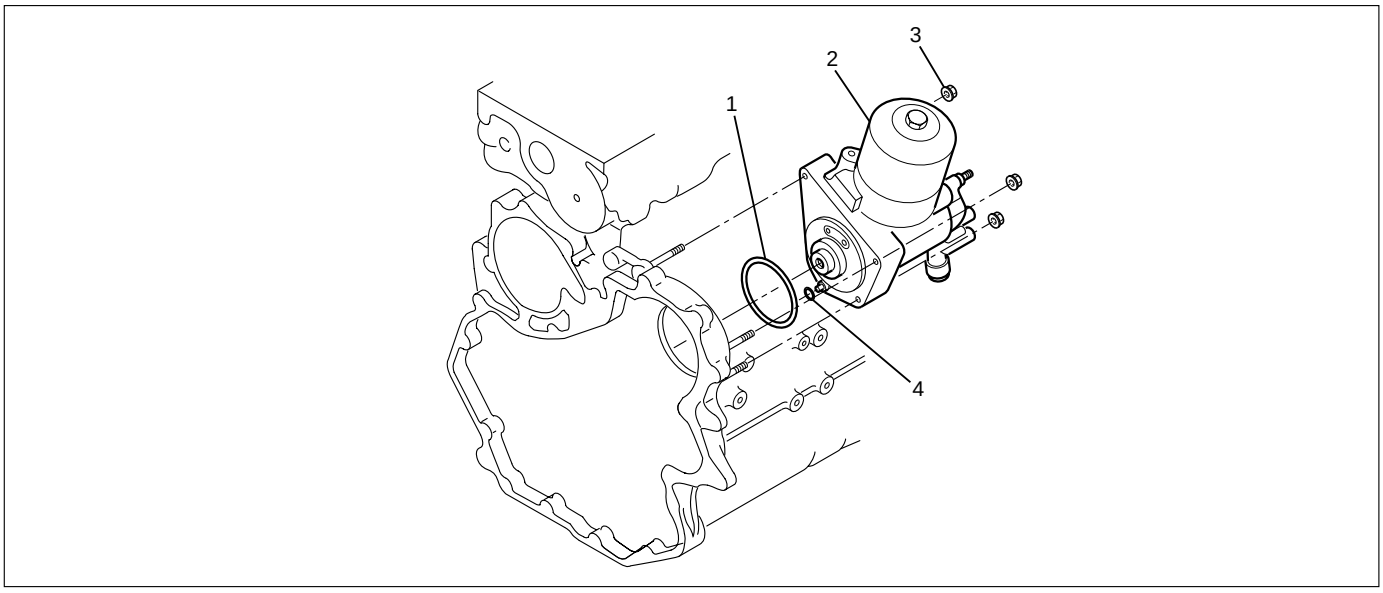

040RW007

Legend
(1) O-Ring
(2) High Pressure Oil Pump Assembly
(3) Nut
(4) O-Ring

REMOVAL

1. Disconnect battery ground cable.
2. Remove air cleaner cover and air duct
3. Intercooler assembly
   Refer to “Intercooler” in this manual.
4. Remove high pressure oil pipe
5. Timing belt cover
   Disconnect CMP sensor cable.
   Remove CMP sensor bracket.
6. Tensioner
7. Timing Belt
8. Remove high pressure oil pump timing pulley
9. Remove crankshaft damper pulley
10. Remove timing gear case cover
11. Remove idle gear A
    Before removing idle gear A, set two bolts to the sub gear of idle gear A and turn it to align the teeth of idle gear A main gear.
    Then lock them by bolts as shown in the illustration.

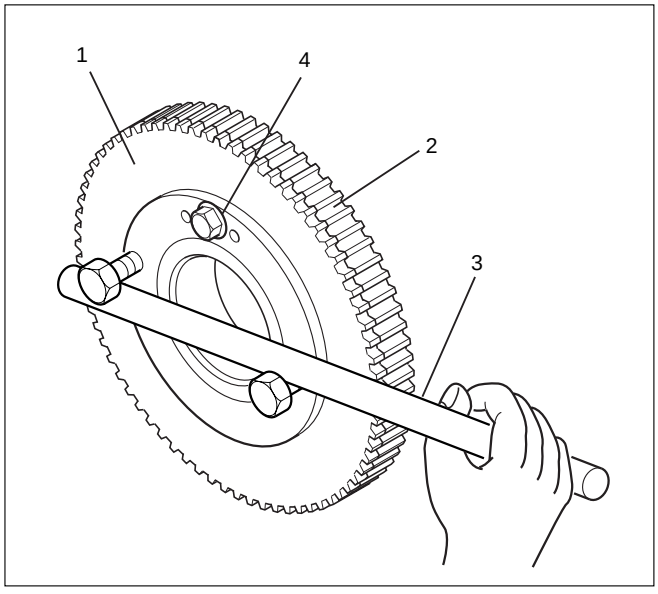

014RW177

Legend
(1) Idle gear A sub gear
(2) Idle gear A main gear
(3) Bar
(4) Lock bolt

12. Remove high pressure oil pump
13. Remove high pressure oil pump assembly

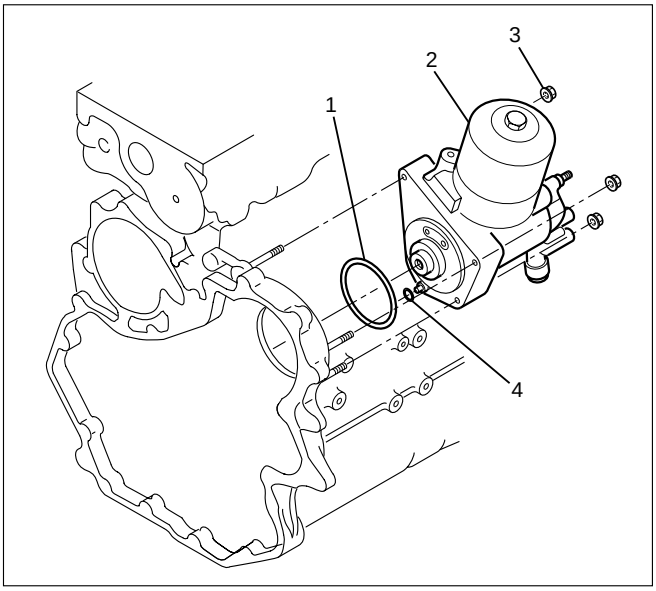

040RW007

Legend
(1) O-ring
(2) High pressure oil pump
(3) Nut
(4) O-ring

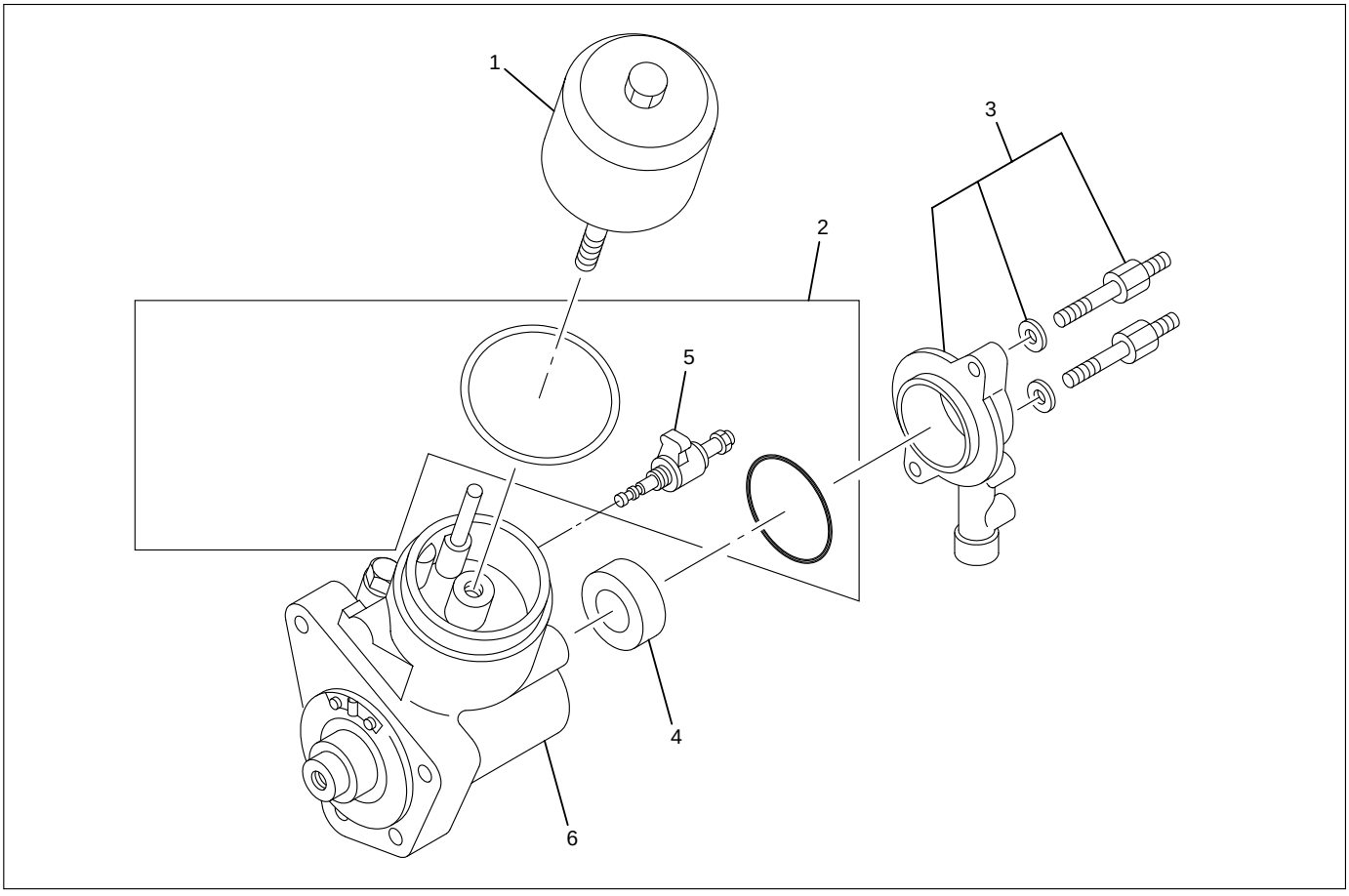

051RW020

Legend
(1) Reservoir
(2) Repair Kit
(3) Fuel Pump and Bolt
(4) Bearing
(5) Oil Rail Pressure Control Valve
(6) High Pressure Oil Pump Body

INSPECTION AND REPAIR

The high pressure oil pump is made precisely, therefore, disassembly is not recommended to repair, only replace special parts.

Special parts

1. Reservoir
2. Fuel pump assembly
3. Bearing
4. Oil Rail Pressure Control Valve
5. High pressure oil pump
6. Repair kit

INSTALLATION

1. Set O-ring to high pressure oil pump assembly.
   Install the pump assembly into the rear of timing gear case.
   Tighten nut to specified torque.

Torque: 20 N·m (2.0 kg·m/14.5 lb ft)

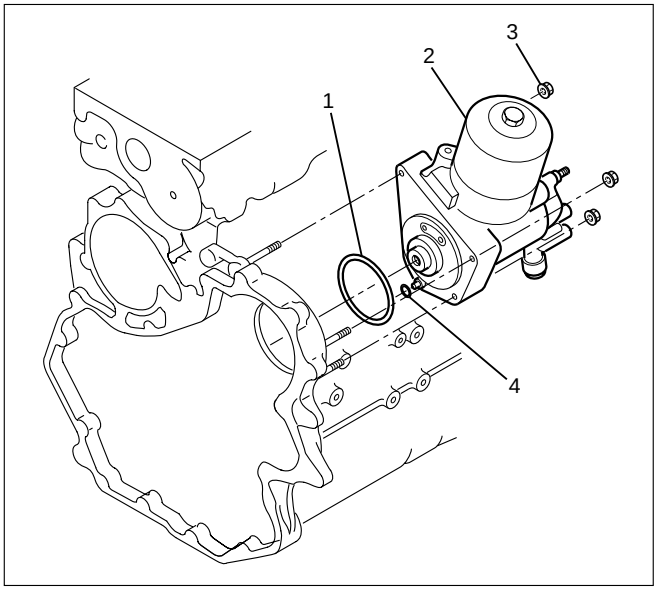

040RW007

Legend
(1) O-ring
(2) High Pressure Oil Pump Assembly
(3) Nuts
(4) O-ring

2. Tighten high pressure oil pump assembly bracket together with two way valve bracket.

Torque: 27 N·m (2.8 kg·m/20.2 lb ft)

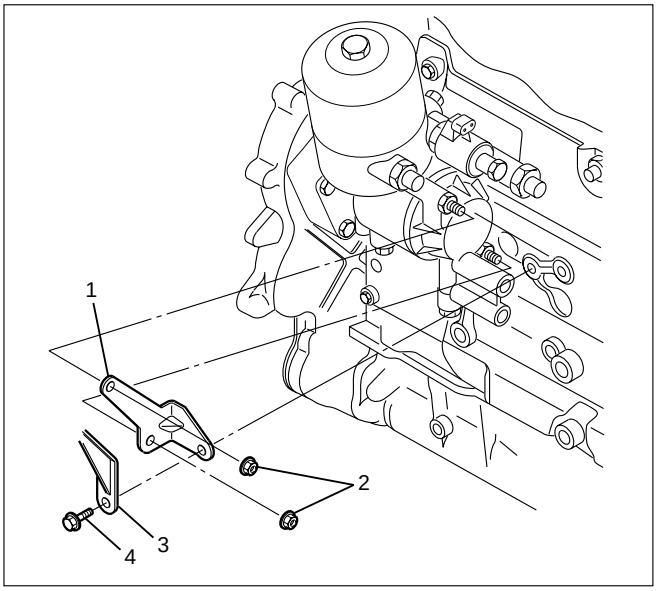

040RW006

Legend
(1) High Pressure Oil Pump Assembly
(2) Nut
(3) Two Way Valve Bracket
(4) Bolt

3. Install the pump gear to align timing mark with idle gear A.
   Tighten high pressure pump gear fixing bolt to the specified torque.
   Apply engine oil to thread and seat of bolt.

Torque: 75 N·m (7.6 kg·m/55 lb ft)

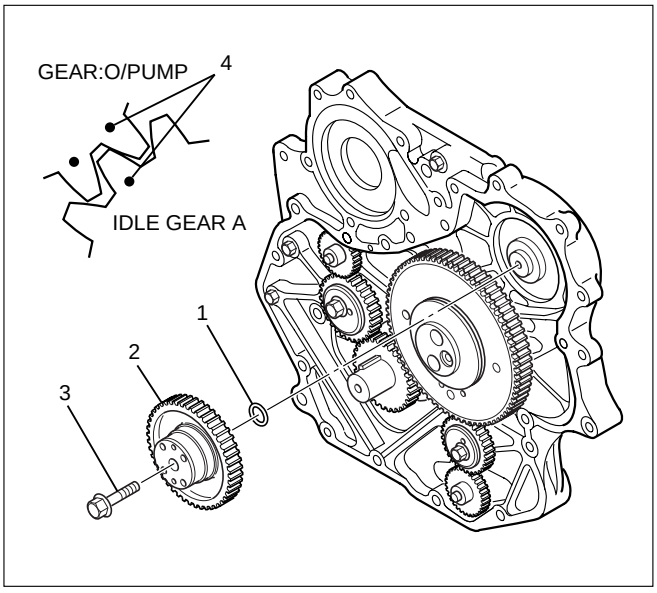

040RW005

Legend
(1) O-ring
(2) Pump Gear
(3) Bolt
(4) Timing Mark

4. Remove lock bolt of idle gear A.
5. Install timing gear case cover.
   Refer to “Timing gear” in this manual.
6. Install front plate.

Torque: 20 N·m (2.0 kg·m/14.5 lb ft)

7. Install timing pulley of high pressure oil pump.

Torque: 10 N·m (1.0 kg·m/7.2 lb ft)

8. Install timing belt and tighten timing belt tensioner assembly.
   Refer to “Cylinder head” in this manual.

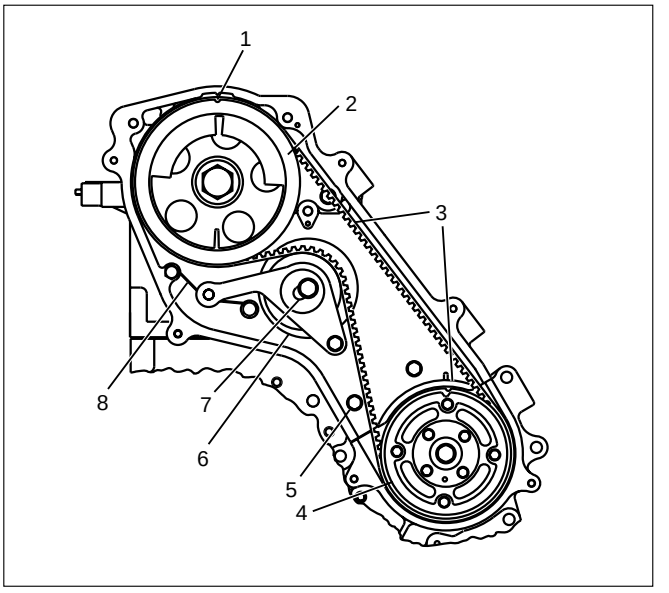

F06RW055

Legend

(1) Align Mark
(2) Camshaft Pulley
(3) Timing Belt
(4) High Pressure Oil Pump Pulley
(5) Bolt
(6) Tensioner Assembly
(7) Tensioner Bolt
(8) Tensioner Spring

9. Install CMP sensor bracket.

Torque: 20 N·m (2.0 kg·m/14.5 lb ft)

10. Connect CMP sensor cable.
11. Install timing belt cover.

Torque: 9 N·m (0.9 kg·m/6.5 lb ft)

12. Fill with about 300 cc of engine oil from the high pressure oil pipe installation port of the oil rail using an oil filler.
    If assembled without filling the oil rail with oil, the time for engine starting will be longer.
13. Immediately install high pressure oil pipe and tighten to specified torque.

NOTE:

1) Use new O-ring.
2) Clean O-ring groove and fitting surface of parts.
3) Apply engine oil to O-ring.

Torque: 80 N·m (8.1 kg·m/57.9 lb ft)

14. Install the crankshaft damper pulley with specified torque.

Torque: 220 N·m (22 kg·m/159 lb ft)

15. Install the intercooler assembly.
    Refer to “Intercooler” in this manual.
16. Install air cleaner cover and air duct.

HIGH PRESSURE OIL PIPE INSTALLATION

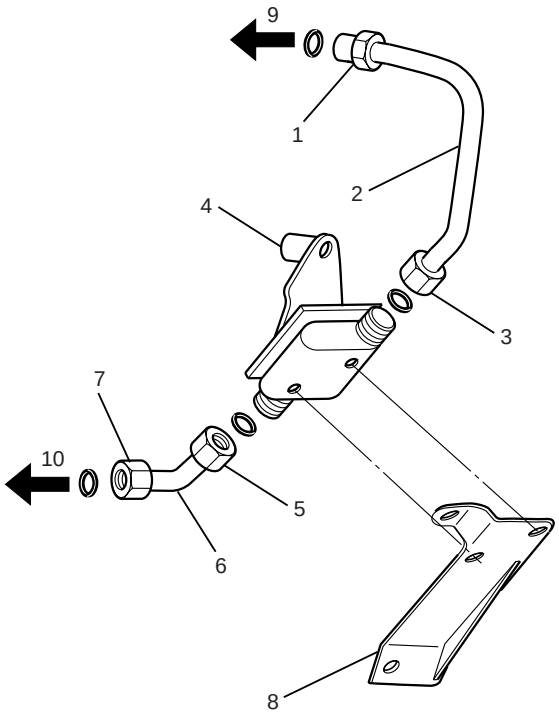

040RW015

Legend

(1) Union Nut F
(2) Pipe B
(3) Union Nut E
(4) Upper Bracket
(5) Union Nut D
(6) Pipe A
(7) Union Nut C
(8) Lower Bracket
(9) To Oil Rail
(10) To High Pressure Oil Pump through Edge Filter

1. Install the nipple filter
   1) Wash thread of the nipple filter, remove engine oil and foreign material and air blow it.
   2) Install nipple filter to high pressure oil pump inlet port, tighten to the specified torque.

Torque : 90 N·m (9.2 kg·m/66.5 lb ft)

2. Install the edge filter.
   1) Wash thread, O-ring groove and fitting surface of edge filter, remove engine oil and foreign materials.
   2) Install edge filter to high pressure oil pump, tighten edge filter to the specified torque.

Torque : 90 N·m (9.2 kg·m/66.5 lb ft)

3. Install upper bracket to two way valve, tighten them temporarily.
4. Install pipe A to two way valve, tighten pipe A temporarily with union nut D.
5. Install two way valve assembly to cylinder block, tighgten with union nut C temporarily.
6. Install pipe B to two way valve, tighten union nut E and union nut F temporarily.
7. Tighten upper bracket to specified torque.

Torque : 20 N·m (2.0 kg·m/14.5 lb ft)

8. Tighten union nut in the following order, union nut C, D, F, and E to the specified torque.

Torque : 80 N·m (8.1 kg·m/57.9 lb ft)

9. Tighten lower bracket to the specified torque.

Torque : 20 N·m (2.0 kg·m/14.5 lb ft)

NOTE:

1) Wash inside pipe, inside union nut and O-ring seal surface to remove engine oil and foreign materials.
2) It is recommended to check and replace the edge filter when overhauling the engine, or if it is broken inside the engine.

Nipple Filter and Edge Filter Installation

The nipple filter is provided at the front of the inlet port side. The edge filter is provided at the rear of the outlet port on the high pressure oil pump assembly.

1. Install the nipple filter
   1) Wash threads and filter to remove engine oil and foreign materials before installing the nipple filter.
   2) Install the nipple filter to the inlet port of high pressure oil pump, tighten to the specified torque.

Torque : 90 N·m (9.2 kg·m/66.5 lb ft)
(Tighten dry condition)

2. Install the edge filter.
   1) Wash threads and O-ring groove and part fitting surface to remove engine oil and foreign materials before installing the nipple filter.
   2) Install edge filter to outlet port of high pressure oil pump, tighten to the specified torque.

Torque : 90 N·m (9.2 kg·m/66.5 lb ft)
(Tighten dry condition)

NOTE: It is recommended to check and replace the edge filter when overhauling the engine, or if it is broken inside the engine.

FUEL TANK

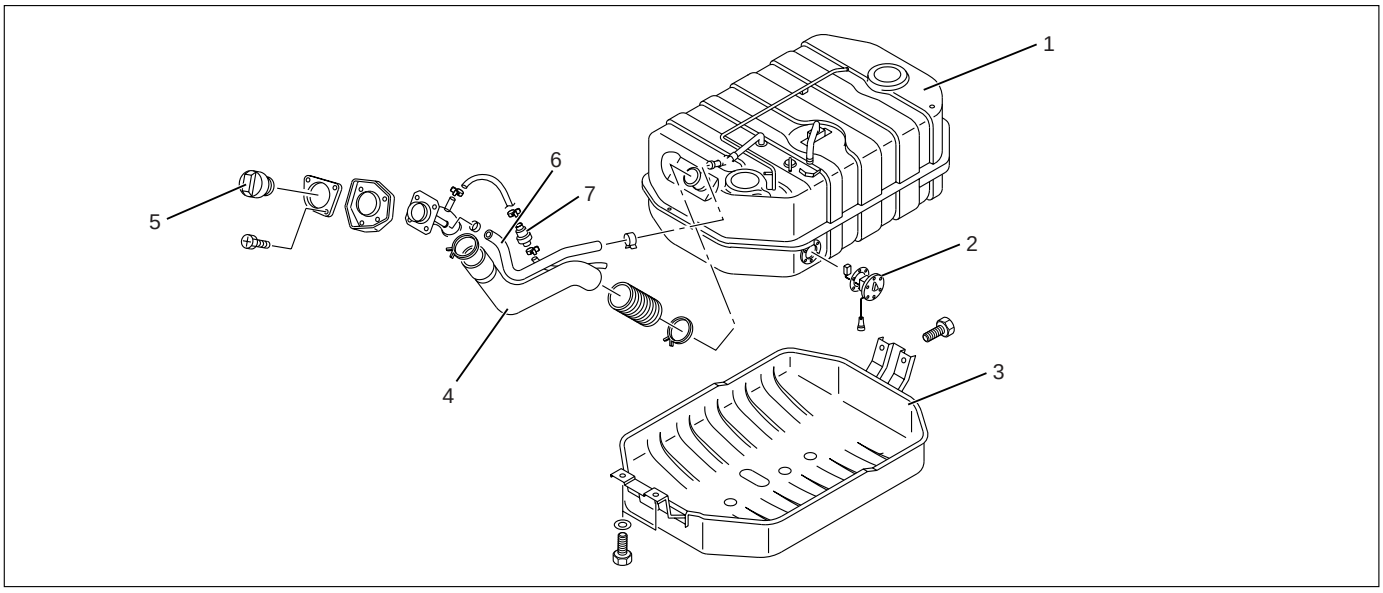

140RX023

Legend

(1) Fuel Tank Assembly
(2) Gauge Unit
(3) Under Cover
(4) Fuel Filler Hose
(5) Fuel Filler Cap
(6) Breather Hose
(7) Control Valve (Except EC)

REMOVAL

1. Disconnect battery ground cable.
2. Remove fuel filler cap.
3. Drain fuel.
   After drain the fuel tighten the drain plug with specified torque.

Torque : 20 N·m (2.0 kg·m/14 lb ft)

4. Remove fuel filler hose and let air pull off hose.
5. Remove breather hose.
6. Remove fuel feed hose and fuel return hose.
7. Disconnect harness connector from fuel gauge unit.
8. Remove under cover.
9. Remove fuel tank assembly.

INSTALLATION

1. Fuel tank assembly.
   1) Place a flange on right side of tank on the bracket.
   2) Install a flange to left side of the bracket from the bottom, and tighten bolts to the specified torque.

Torque : 36 N·m (3.7 kg·m/26.8 lb ft)

2. Install fuel hose and fuel return hose.
3. Install the breather hose.
4. Reconnect harness connector to fuel gauge unit.
5. Install under cover.
6. Install fuel filler hose and let air pull off hose.
7. Fill fuel tank with fuel and tighten filler cap.
8. Reconnect battery ground cable.

FUEL GAUGE UNIT

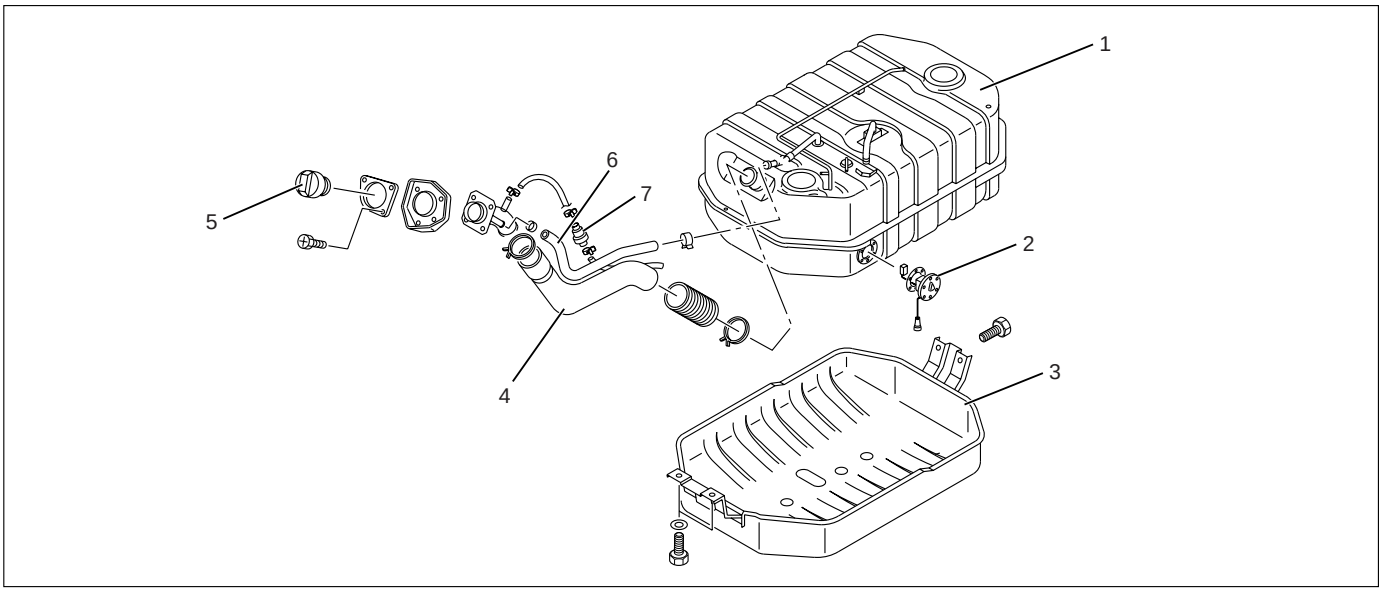

140RX023

Legend
(1) Fuel Tank Assembly
(2) Fuel Gauge Unit
(3) Under Cover
(4) Filler Hose
(5) Filler Cap
(6) Breather Hose
(7) Control Valve (Except EC)

REMOVAL

1 Disconnect battery ground cable.
2 Loosen fuel filler cap.
3 Drain fuel.
After drain the fuel tighten the drain plug with specified torque.

Torque : 20 N·m (2.0 kg·m/14 lb ft)

4. Disconnect harness connector from fuel gauge unit.
5. Fuel Gauge Unit
   1) Remove the fixing screws, then the fuel gauge unit.

INSTALLATION

1. Fuel Gauge Unit
2 Connect the harness connector to the fuel gage unit.
3 Fill the tank with fuel and tighten fuel filler cap.
4 Connect battery ground cable.

FUEL FILLER CAP

The fuel filler cap contains a vacuum valve. If a negative pressure develops in the fuel tank, the external valve of the fuel filler cap opens to allow the fresh air to flow into the fuel tank through the vacuum valve.

INSPECTION

Check the seal ring in the filler cap for presence of any abnormality and for seal condition.
Replace the filler cap, if abnormal.

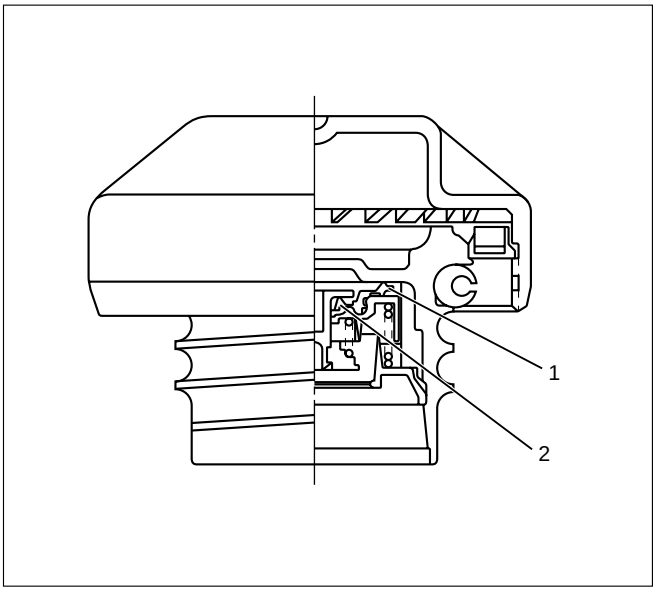

060RW098

Legend
(1) Vacuum Valve
(2) Pressure Valve

MEMO

ENGINE ELECTRICAL

CONTENTS

Battery 6D–1
General Description 6D–1
Diagnosis 6D–1
On Vehicle Service 6D–3
Main Data and Specification 6D–4
Starting System 6D–5
General Description 6D–5
On Vehicle Service 6D–7
Starter 6D–7
Unit Repair 6D–8
Charging System 6D–15
General Description 6D–15
Diagnosis 6D–16
Unit Repair 6D–17
Main Data and Specification 6D–22
QOS4 Preheating System 6D–23
General Description 6D–23
System Diagram 6D–23
Inspection of QOS4 System Operation . . 6D–24

BATTERY
GENERAL DESCRIPTION

There are six battery fluid caps at the top of the battery. These are covered by a paper label.
The battery is completely sealed except for the six small vent holes at the side. These vent holes permit the escape of small amounts of gas generated by the battery.
This type of battery has the following advantages over conventional batteries:

1. There is no need to add water during the entire service life of the battery.
2. The battery protects itself against overcharging.
   The battery will refuse to accept an excessive charge.
   (A conventional battery will accept an excessive charge, resulting in gassing and loss of battery fluid.)
3. The battery is much less vulnerable to self-discharge than a conventional type battery.

DIAGNOSIS

1. VISUAL INSPECTION (Step 1)

Inspect the battery for obvious physical damage, such as a cracked or broken case, which would permit electrolyte loss.
Replace the battery if obvious physical damage is discovered during inspection.
Check for any other physical damage and correct it as necessary. If not, proceed to Step 2.

2. HYDROMETER CHECK (Step 2)

There is a built-in hydrometer (Charge test indicator) at the top of the battery. It is designed to be used during diagnostic procedures.
Before trying to read the hydrometer, carefully clean the upper battery surface.
If your work area is poorly lit, additional light may be necessary to read the hydrometer.

a. BLUE RING OR DOT VISIBLE – Go to Step 4.
b. BLUE RING OR DOT NOT VISIBLE – Go to Step 3.

3. FLUID LEVEL CHECK (Step 3)

The fluid level should be between the upper level line and lower level line on side of the battery.

a. CORRECT FLUID LEVEL – Charge the battery.
b. BELOW LOWER LEVEL – Replace battery.

4. VOLTAGE CHECK (Step 4)

(1) Put voltmeter test leads to battery terminals.
   a. VOLTAGE IS 12.4V OR ABOVE – Go to Step 5.
   b. VOLTAGE IS UNDER 12.4V – Go to procedure (2) below.
(2) Determine fast charge amperage from specification. (See Main Data and Specifications in this section.)
   Fast charge battery for 30 minutes at amperage rate no higher than specified value.
   Take voltage and amperage readings after charge.
   a. VOLTAGE IS ABOVE 16V AT BELOW 1/3 OF AMPERAGE RATE – Replace battery.

b. VOLTAGE IS ABOVE 16V AT ABOVE 1/3 OF AMPERAGE RATE – Drop charging voltage to 15V and charge for 10 – 15 hours.

Then go to Step 5.

c. VOLTAGE IS BETWEEN 12V AND 16V – Continue charging at the same rate for an additional 3-1/2 hours. Then go to Step 5.

d. VOLTAGE IS BELOW 12V – Replace battery.

5. LOAD TEST (Step 5)

(1) Connect a voltmeter and a battery load tester across the battery terminals.

(2) Apply 300 ampere load for 15 seconds to remove surface charge from the battery.

Remove load.

(3) Wait 15 seconds to let battery recover. Then apply specified load from specifications (See Main Data and Specifications in this section).

Read voltage after 15 seconds, then remove load.

a. VOLTAGE DOES NOT DROP BELOW THE MINIMUM LISTED IN FOLLOWING TABLE – The battery is good and should be returned to service.

b. VOLTAGE IS LESS THAN MINIMUM LISTED – Replace battery.

ESTIMATED TEMPERATURE		MINIMUM VOLTAGE
°F	°C	
70	21	9.6
60	16	9.5
50	10	9.4
40	4	9.3
30	–1	9.1
20	–7	8.9
10	–12	8.7
0	–18	8.5
The battery temperature must be estimated by feel and by the temperature the battery has been exposed to for the preceding few hours.		

ON-VEHICLE SERVICE

BATTERY CHARGING

Observe the following safety precautions when charging the battery:

1. Never attempt to charge the battery when the fluid level is below the lower level line on the side of the battery. In this case, the battery must be replaced.
2. Pay close attention to the battery during the charging procedure.

   Battery charging should be discontinued or the rate of charge reduced if the battery feels hot to the touch.

   Battery charging should be discontinued or the rate of charge reduced if the battery begins to gas or spew electrolyte from the vent holes.
3. In order to more easily view the hydrometer blue dot or ring, it may be necessary to jiggle or tilt the battery.
4. Battery temperature can have a great effect on battery charging capacity.
5. The sealed battery used on this vehicle may be either quick-charged or slow-charged in the same manner as other batteries.

   Whichever method you decide to use, be sure that you completely charge the battery. Never partially charge the battery.

JUMP STARTING

JUMP STARTING WITH AN AUXILIARY (BOOSTER) BATTERY

CAUTION: Never push or tow the vehicle in an attempt to start it. Serious damage to the emission system as well as other vehicle parts will result.

Treat both the discharged battery and the booster battery with great care when using jumper cables. Carefully follow the jump starting procedure, being careful at all times to avoid sparking.

WARNING: Failure to carefully follow the jump starting procedure could result in the following:

1. **Serious personal injury, particularly to your eyes.**
2. **Property damage from a battery explosion, battery acid, or an electrical fire.**
3. **Damage to the electronic components of one or both vehicles.**

Never expose the battery to an open flame or electrical spark. Gas generated by the battery may catch fire or explode. Remove any rings, watches, or other jewelry before working around the battery. Protect your eyes by wearing an approved set of goggles.
Never allow battery fluid to come in contact with your eyes or skin.
Never allow battery fluid to come in contact with fabrics or painted surfaces.
Battery fluid is a highly corrosive acid.
Should battery fluid come in contact with your eyes, skin, fabric, or a painted surface, immediately and thoroughly rinse the affected area with clean tap water.
Never allow metal tools or jumper cables to come in contact with the positive battery terminal, or any other metal surface of the vehicle. This will protect against a short circuit.
Always keep batteries out of the reach of young children.

JUMP STARTING PROCEDURE

1. Set the vehicle parking brake.

   If the vehicle is equipped with an automatic transmission, place the selector lever in the “PARK” position.

   If the vehicle is equipped with a manual transmission place the shift lever in the “NEUTRAL” position.

   Turn “OFF” the ignition.

   Turn “OFF” all lights and any other accessory requiring electrical power.
2. Look at the built-in hydrometer.

   If the indication area of the built-in hydrometer is completely clear, do not try to jump start.
3. Attach the end of one jumper cable to the positive terminal of the booster battery.

   Attach the other end of the same cable to the positive terminal of the discharged battery.

   Do not allow the vehicles to touch each other.

   This will cause a ground connection, effectively neutralizing the charging procedure.

   Be sure that the booster battery has a 12 volt rating.
4. Attach one end of the remaining cable to the negative terminal of the booster battery.

   Attach the other end of the same cable to a solid engine ground (such as the A/C compressor bracket or the generator mounting bracket) of the vehicle with the discharged battery.

   This ground connection must be at least 450 mm (18 in) from the battery of the vehicle whose battery is being charged.

WARNING: Never attach the end of the jumper cable directly to the negative terminal of the dead battery.

5. Start the engine of the vehicle with the good battery.

   Make sure that all unnecessary electrical accessories have been turned “OFF”.
6. Start the engine of the vehicle with the dead battery.
7. To remove the jumper cables, follow the above directions in the reverse order.

   Be sure to first disconnect the negative cable from the vehicle with the discharged battery.

REMOVAL AND INSTALLATION OF THE BATTERY

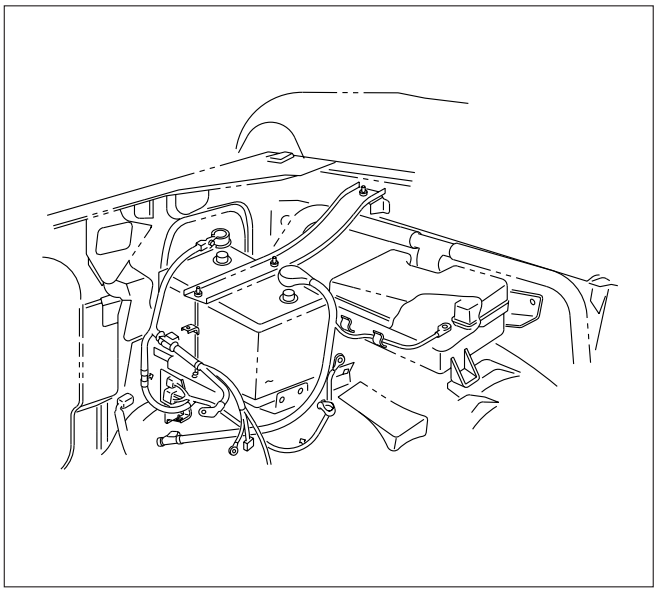

065RW029

REMOVAL

1. Negative cable
2. Positive cable
3. Retainer screw and rods
4. Retainer
5. Battery

INSTALLATION

To install the battery, follow the removal procedure in the reverse order, noting the following points:

1. Make sure that the rod is hooked on the body side.

MAIN DATA AND SPECIFICATIONS

Model (JIS)	80D26R–MF	75D26R–MF
Voltage (V)	12	12
Cold-Cranking Performance (Amp)	582	490
Reserve Capacity (Min)	133	123
Load Test (Amp)	300	300
Fast Charge Maximum Amperage (Amp)	6.5	6.5

STARTING SYTEM

GENERAL DESCRIPTION

STARTING CIRCUIT

The cranking system consists of a battery, starter, starter switch, starter relay, etc. and these main components are connected as shown in the illustration.

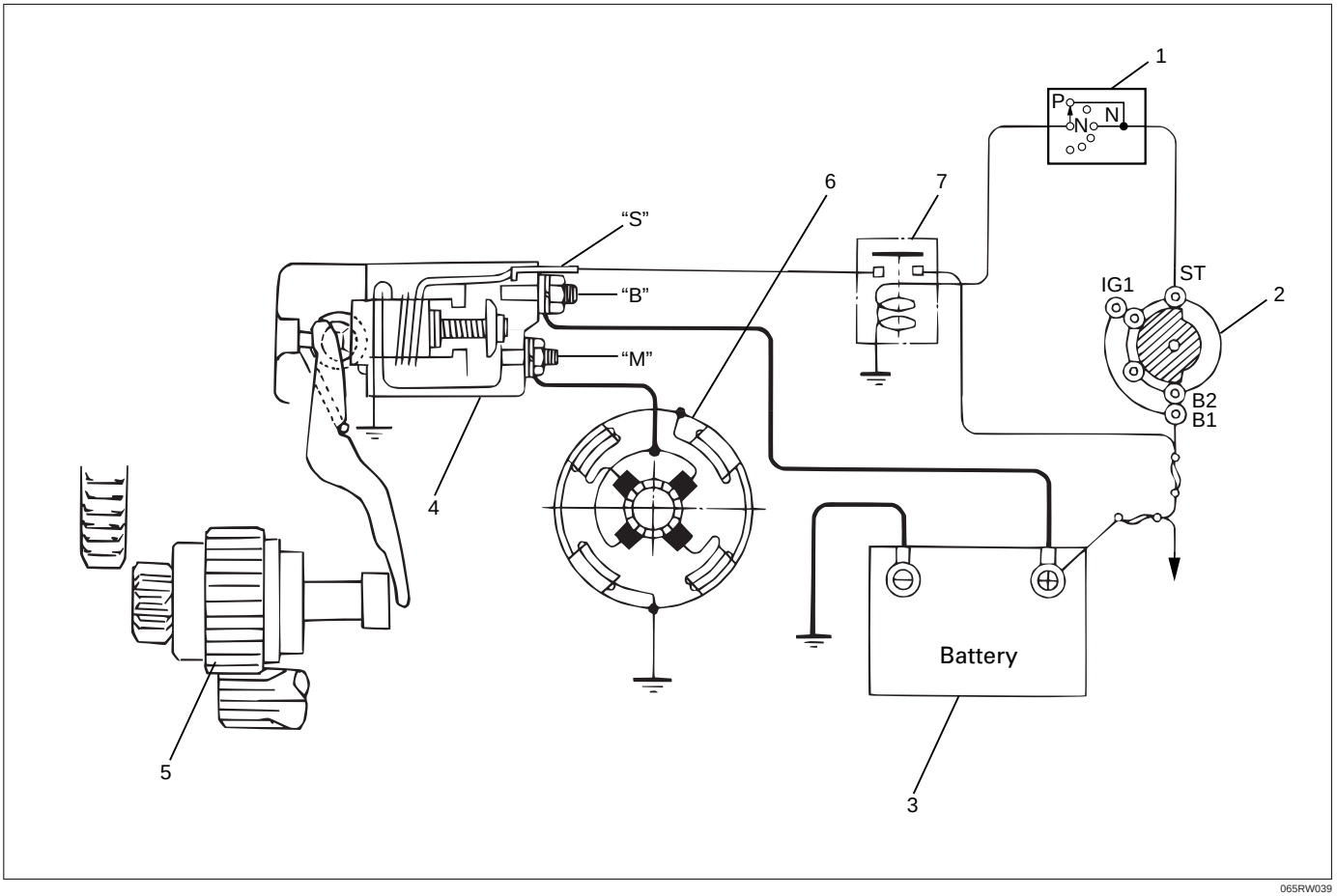

065RW039

Legend

(1) Inhibitor Switch
(2) Starter Switch
(3) Battery
(4) Magnetic Switch
(5) Pinion Clutch
(6) Starter Motor
(7) Starter Relay

STARTER

The starting system employs a magnetic type reduction starter in which the motor shaft is also used as a pinion shaft. When the starter switch is turned on, the contacts of the magnetic switch are closed, and the armature rotates. At the same time, the plunger is activated, and the pinion is pushed forward by the shift lever to mesh with ring gear.

Then, the ring gear runs to start the engine. When the engine starts and the starter switch is turned off, the plunger returns, the pinion is disengaged from the ring gear, and the armature stops rotation. When the engine speed is higher than the pinion, the pinion idles, so that the armature is not driven.

RELATION BETWEEN STARTER SWITCH AND STARTER

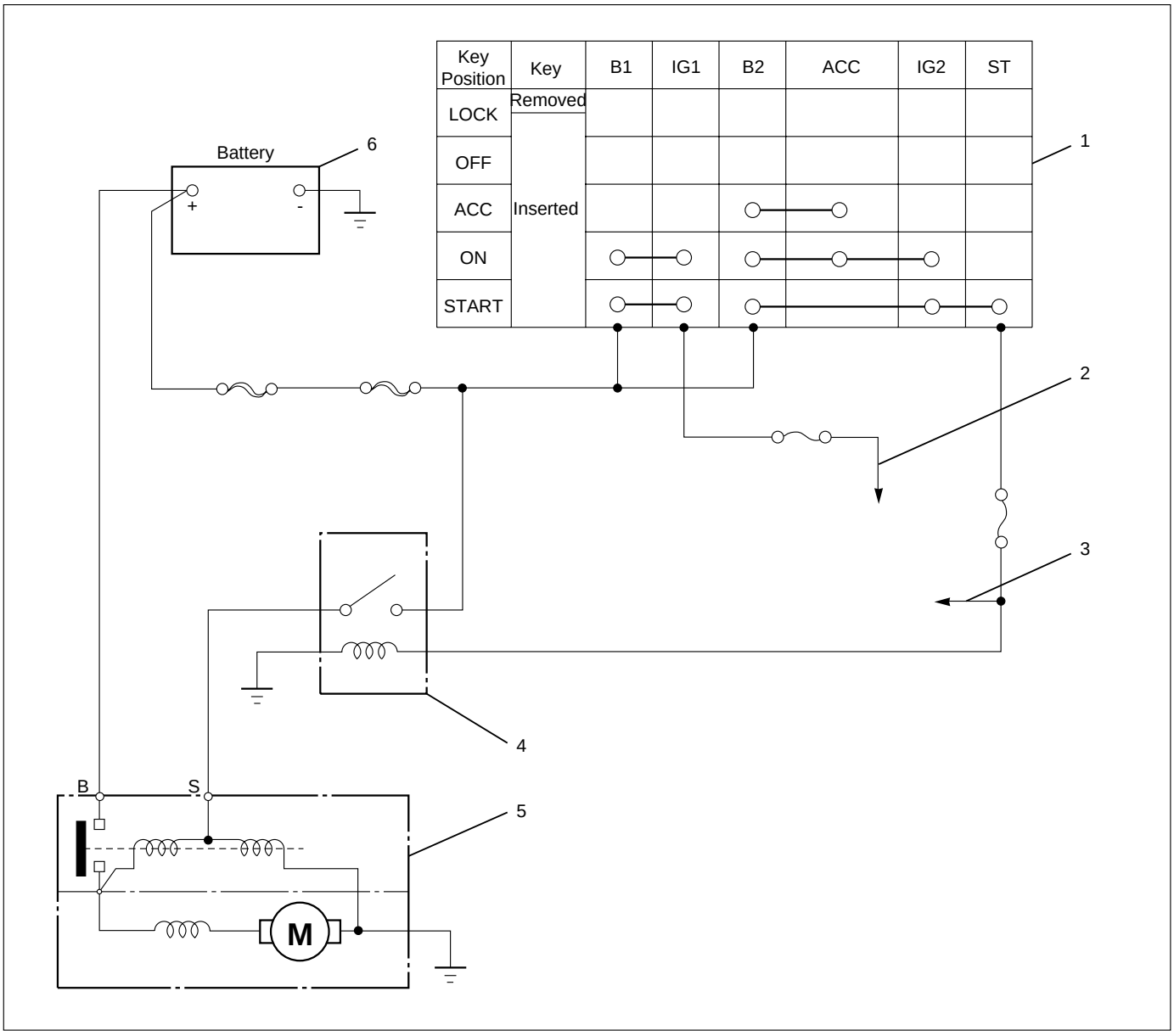

Legend

(1) Starter Switch
(2) To Generator
(3) To QOS4 Control
(4) Starter Relay
(5) Magnetic Switch
(6) Battery

ON-VEHICLE SERVICE

STARTER

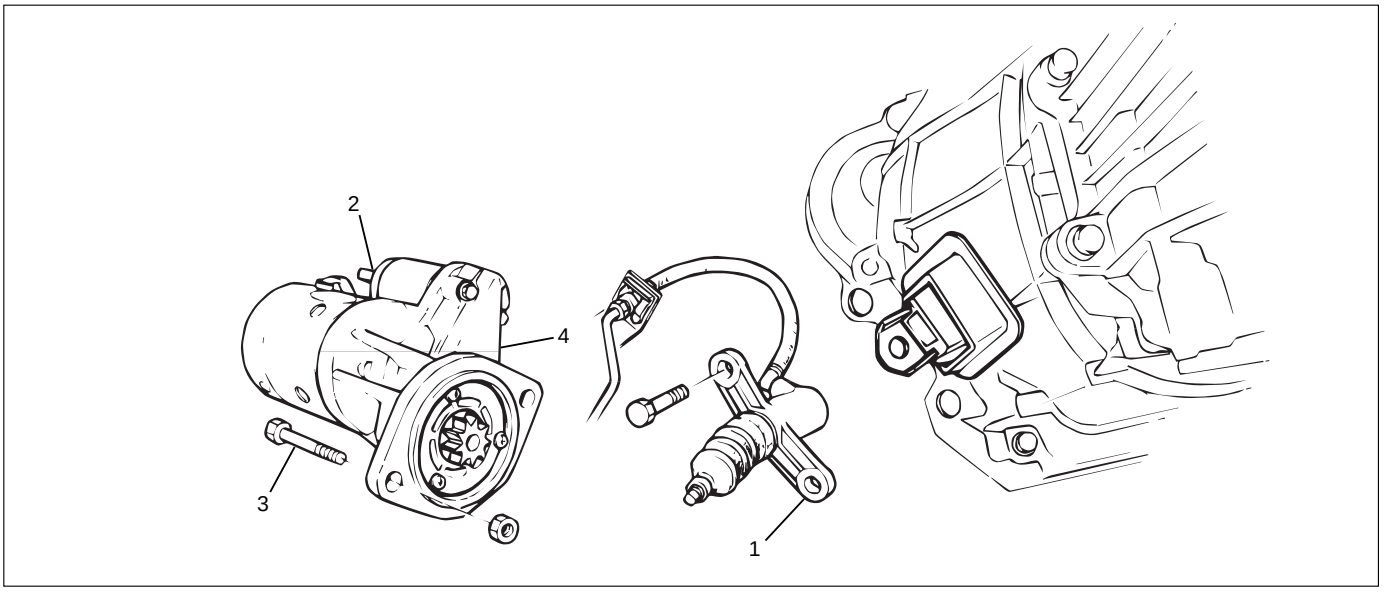

065RW00003

Legend
(1) Clutch Slave Cylinder
(2) Magnetic Switch
(3) Bolt
(4) Starter Assembly

REMOVAL

1 Battery ground cable
2 Remove the slave cylinder and bind with wire it to the frame.
3 Disconnect the connector from terminals “B” and “S”.
4. Remove mounting bolts
5. Remove starter assembly

INSTALLATION

1. Install starter assembly, tighten the fixing bolt and nut to the specified torque.

Torque: 94 N·m (9.6 kg·m/69 lb ft)

2. Reconnect the starter terminals.

CAUTION: When installing the starter motor wiring, do not allow the S-circuit wiring to obstruct the B-circuit terminal.

Install the wiring exactly as shown on the attached illustration.

If S-circuit wiring obstructs the B-circuit terminal, harness cover breakage and short circuiting may occur.

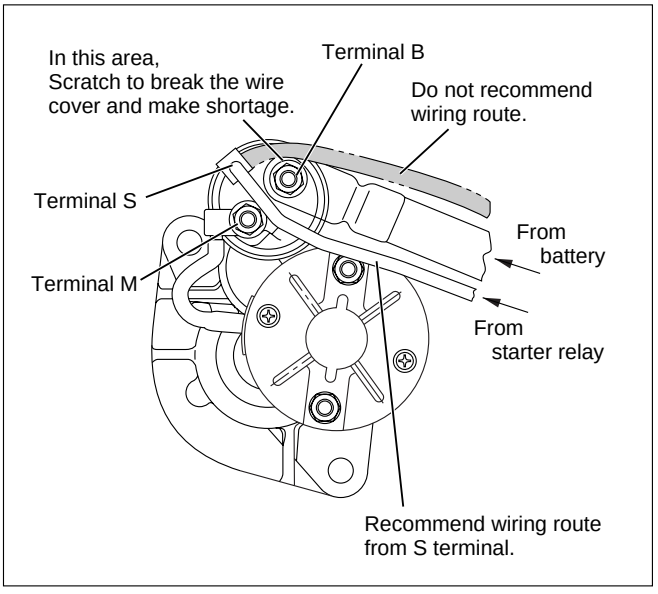

065RW00002

2-1. Install the wire harness from the battery to the terminal “B” with tightening torque 8.6 N·m (0.88 kg·m/6.4 lb·ft).
2-2. Cover the terminal “B” together with wire harness.
2-3. Connect the wire harness from starter relay to the terminal “S”.

3. Install the clutch slave cylinder, tighten the fixing bolt and nut to the specified torque.

Torque: 78 N·m (8.0 kg·m/58 lb·ft)

UNIT REPAIR

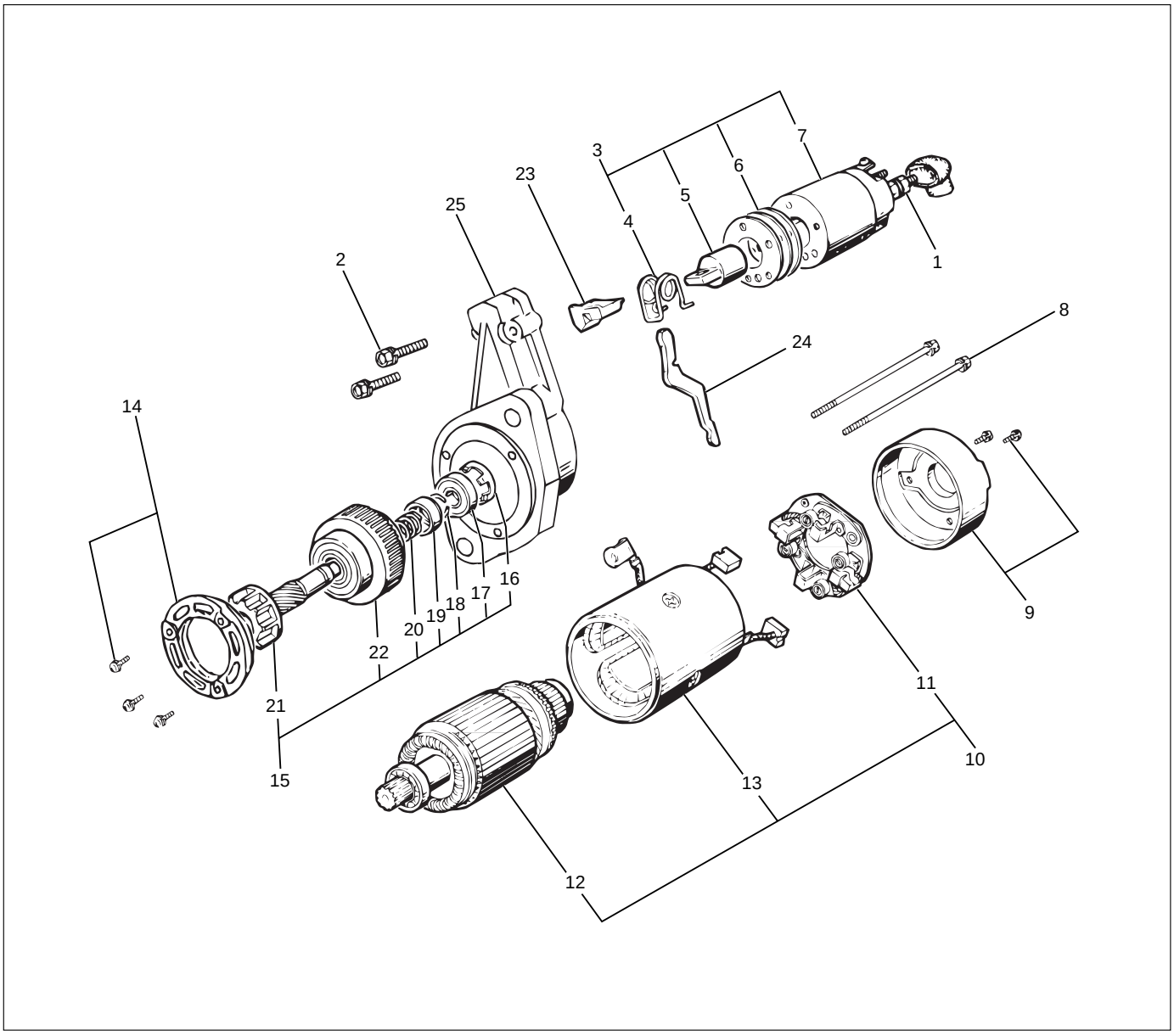

065RW040

Legend

(1) Terminal
(2) Bolt
(3) Magnetic Switch
(4) Torsion Spring
(5) Plunger
(6) Shim
(7) Magnetic Switch
(8) Through Bolt
(9) Rear Cover
(10) Motor Assembly
(11) Brush Holder
(12) Armature
(13) Yoke Assembly
(14) Bearing Retainer
(15) Pinion Assembly
(16) Bearing Holder
(17) Bearing
(18) Clip
(19) Stopper
(20) Spring
(21) Pinion Shaft
(22) Clutch
(23) Dust Cover
(24) Shift Lever
(25) Gear Case

DISASSEMBLY

1. Terminal Nut
   1) Loosen the nut on terminal “M” of magnetic switch and disconnect the connector cable.

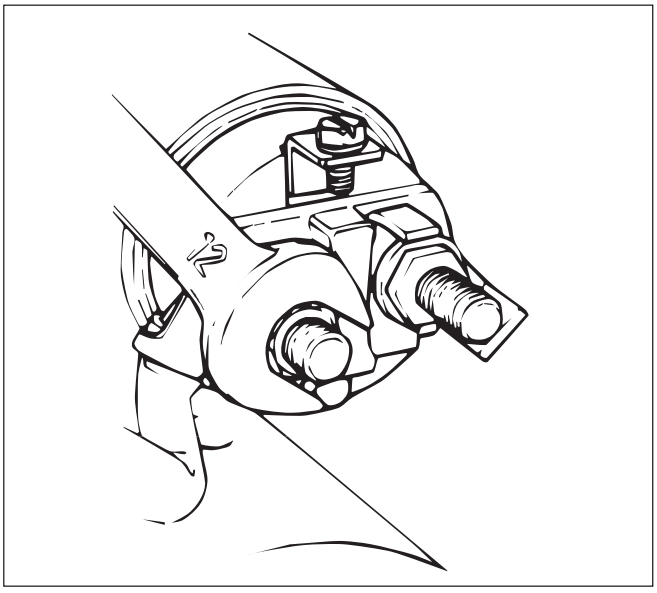

065RW044

2. Bolt (2 pcs)
3. Magnetic Switch Assembly
4. Torsion Spring
   1) Remove torsion spring from magnetic switch assembly.
5. Plunger
6. Shim
7. Magnetic Switch
8. Through Bolt
9. Rear Cover
   1) Remove the through bolts, then remove the rear cover.

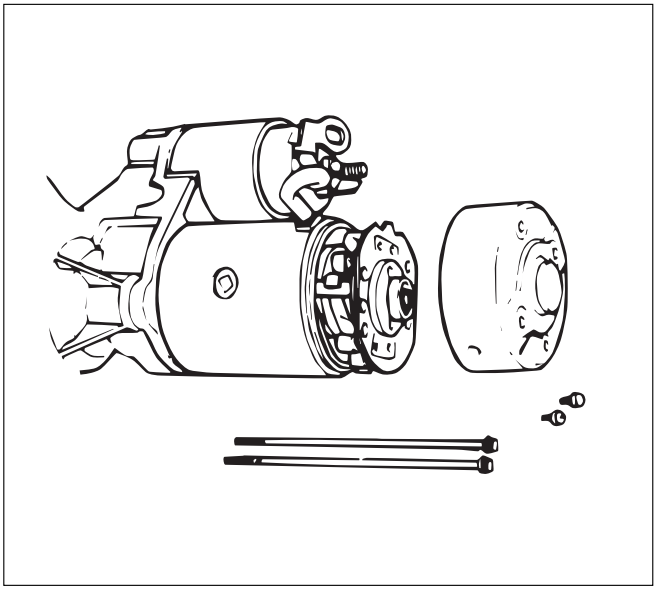

065RW043

10. Motor Assembly
11. Brush Holder
    1) Raise a brush spring to detach the negative side of the brushes (2 pcs) from the commutator face and remove the positive side of brushes (2 pcs) from the positive side of brushes (2 pcs) from the brush holder.

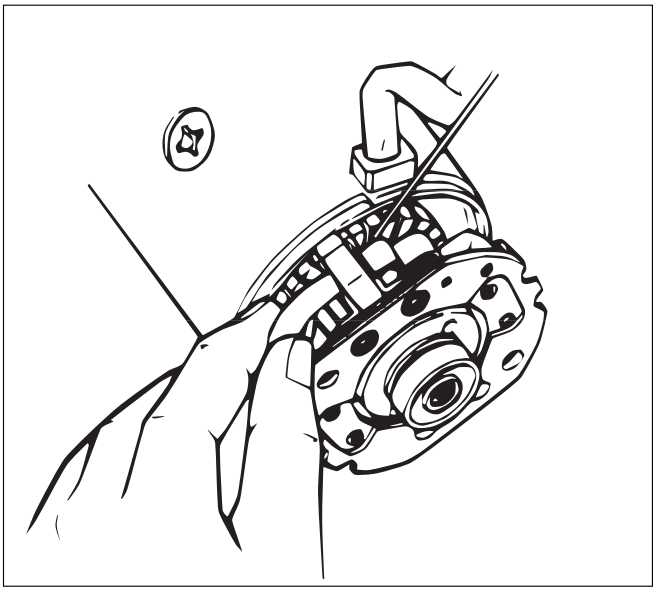

065RW042

12. Armature
13. Yoke Assembly
14. Bearing Retainer
15. Pinion Assembly
16. Bearing Holder
17. Bearing
18. Pinion Stopper Clip
    1) Remove the stopper clip using a screw driver of equivalent size.
19. Pinion Stopper
20. Return Spring
21. Pinion Shaft
22. Clutch
23. Dust Cover
24. Shift Lever
25. Gear Case

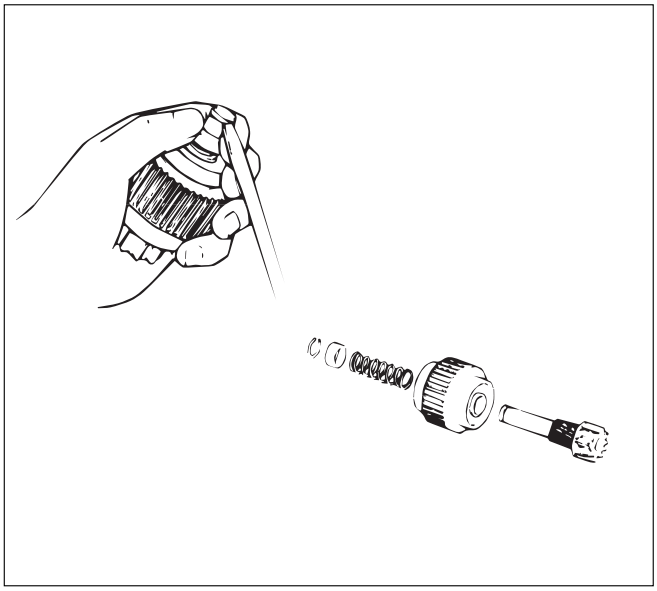

065RW041

INSPECTION AND REPAIR

Repair or replace necessary parts if extreme wear or damage is found during inspection.

Armature

1) Measure the outer diameter of commutator, and replace with a new one if it is out of the limit.

Standard: 38.0 mm (1.50 in)
Limit: 36.5 mm (1.44 in)

2) Check for continuity between commutator and segments. Replace commutator if there is no continuity (i.e., disconnected).

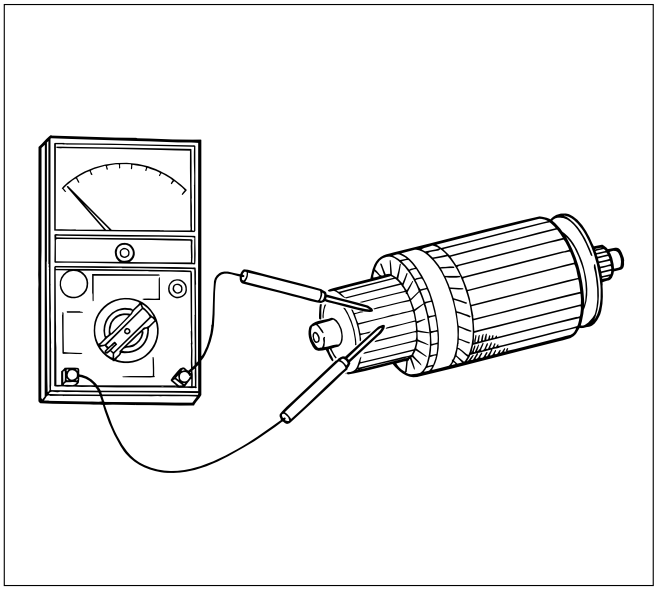

065RS015

3) Check for continuity between commutator and shaft. Also, check for continuity between commutator and armature core, armature core and shaft. Replace commutator if there is continuity (i.e., internally grounded).

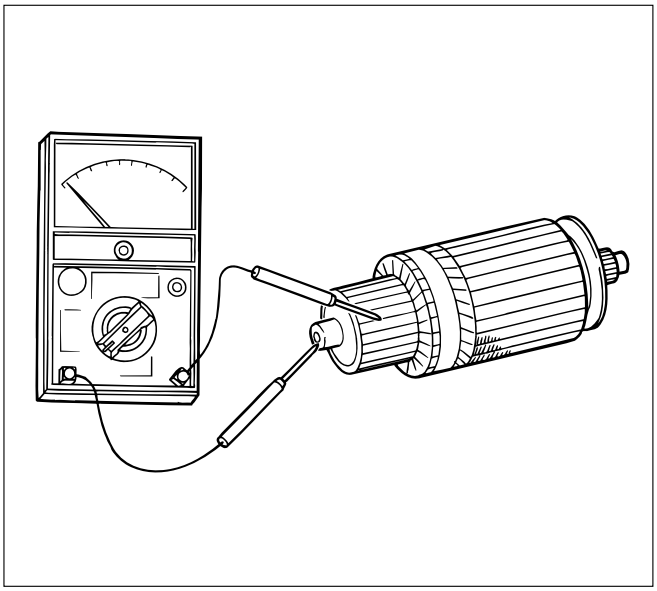

065RS016

4) Measure runout of armature core and commutator with a dial gage. Repair or replace, if it exceeds the limit.

Armature

Standard: 0.05 mm (0.002 in) Max.
Limit: 0.1 mm (0.004 in)

Commutator

Standard: 0.05 mm (0.002 in) Max.
Limit: 0.1 mm (0.004 in)

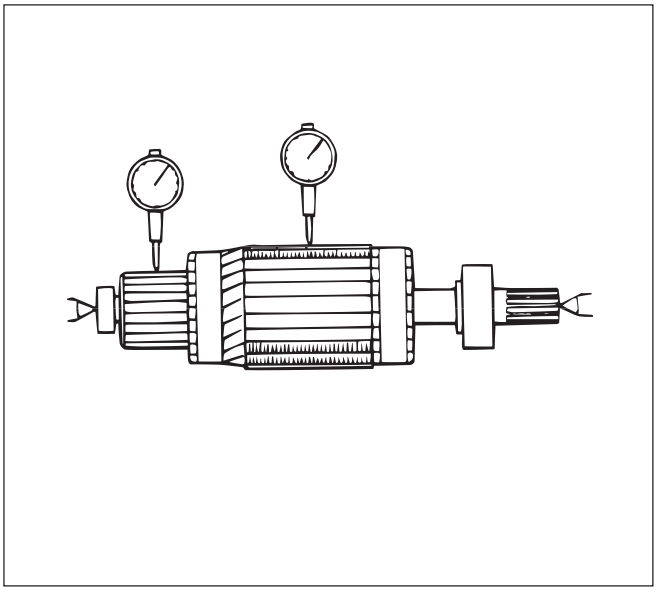

045RW045

5) Polish the commutator surface with sand paper #500 to #600 if it is rough.

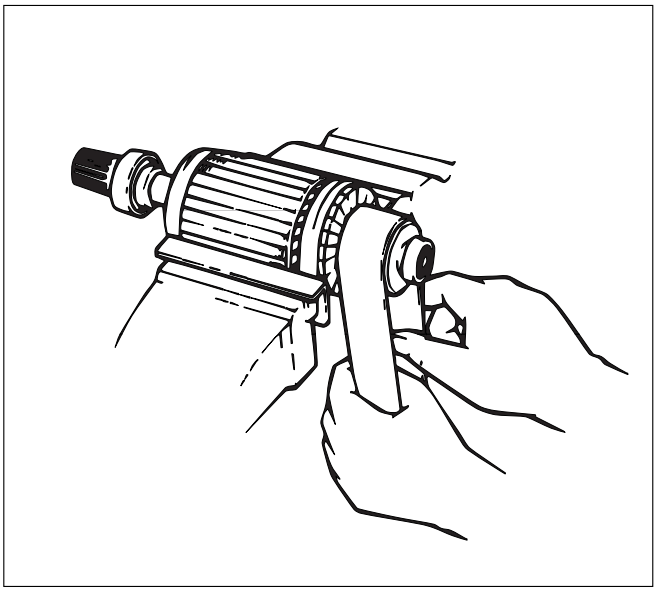

065RW105

6) Measure the depth of insulator in commutator. Repair, if it is below the limit.

Standard: 0.5 – 0.8 mm (0.02 – 0.03 in)

Limit: 0.2 mm (0.008 in)

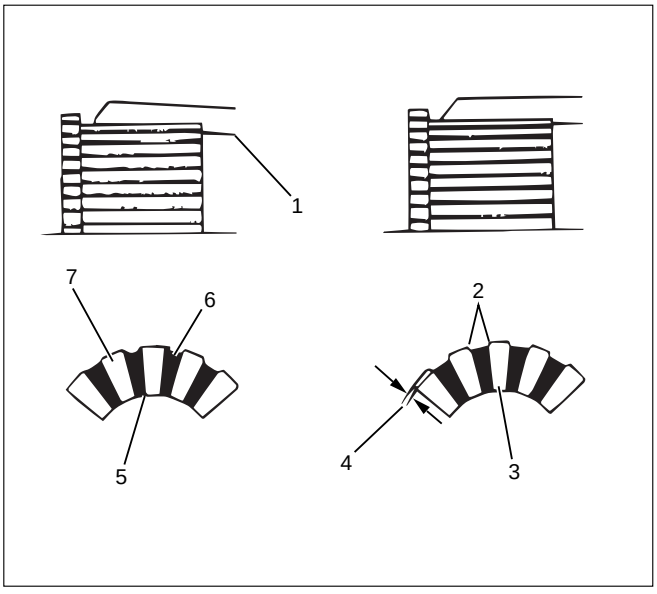

065RW102

Legend

(1) Steel Saw
(2) Chamfer
(3) Correct Condition
(4) Depth of Insulator
(5) Incorrect Condition
(6) Insulator
(7) Commutator Segment

Brush

1) Measure the length of brush.
   Replace with a new one, if it is below the limit.

Standard: 18.0 mm (0.71 in)

Limit: 11.0 mm (0.43 in)

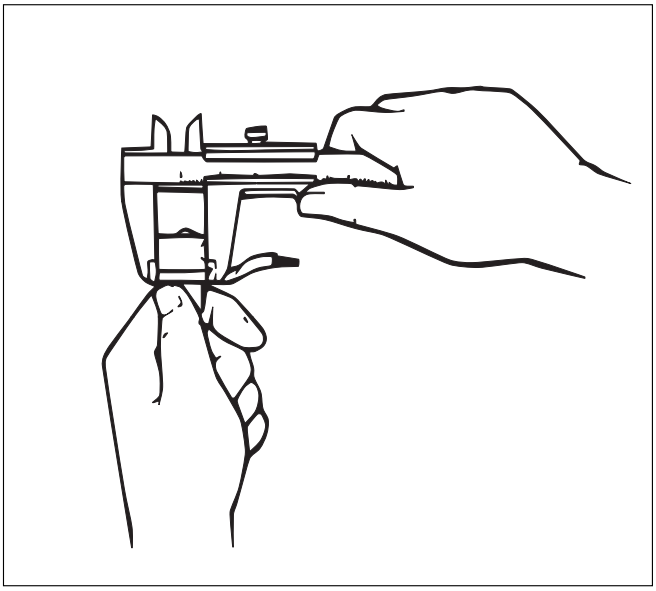

065RW103

Brush holder

1) Check for continuity between brush holder (+) and base (–). Replace, if there is continuity (i.e., insulation is broken).

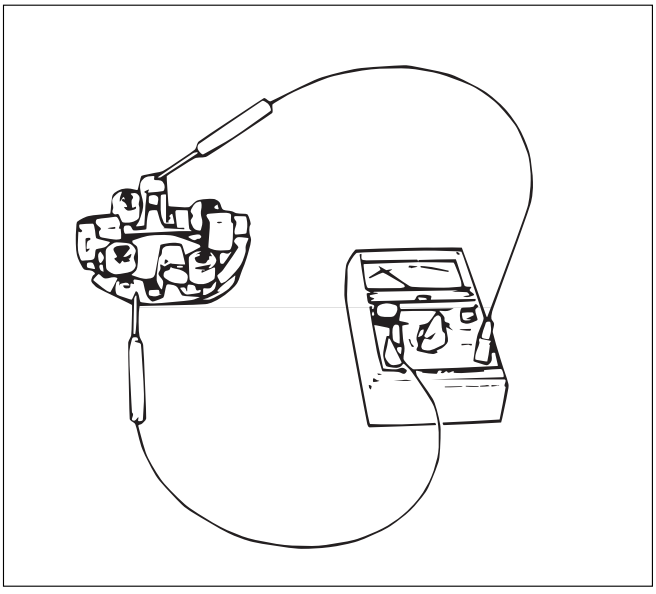

065RW104

2) Inspect the brush springs for wear, damage or other abnormal conditions.

Standard: 28 – 35 N (2.9 – 3.6 kg/6.4 – 7.9 lb)

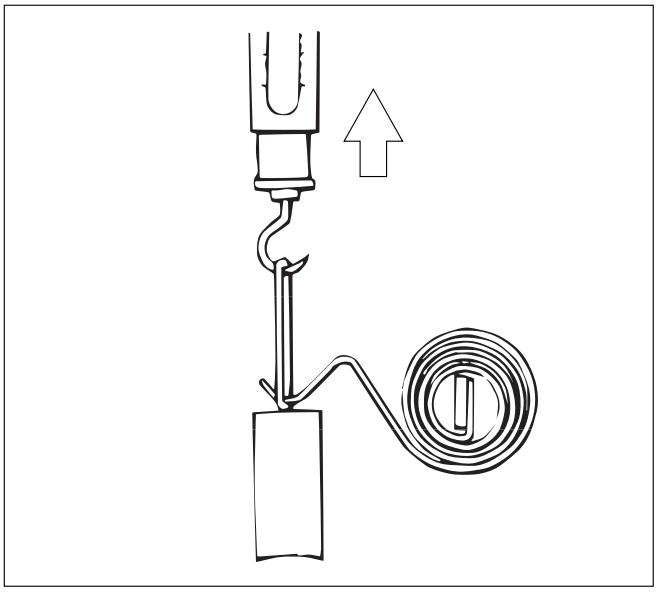

065RW052

Magnetic switch

1) Continuity of shunt coil

   Check for continuity between terminals S and coil case.

   Replace, if there is not continuity (i.e., coil is disconnected.)

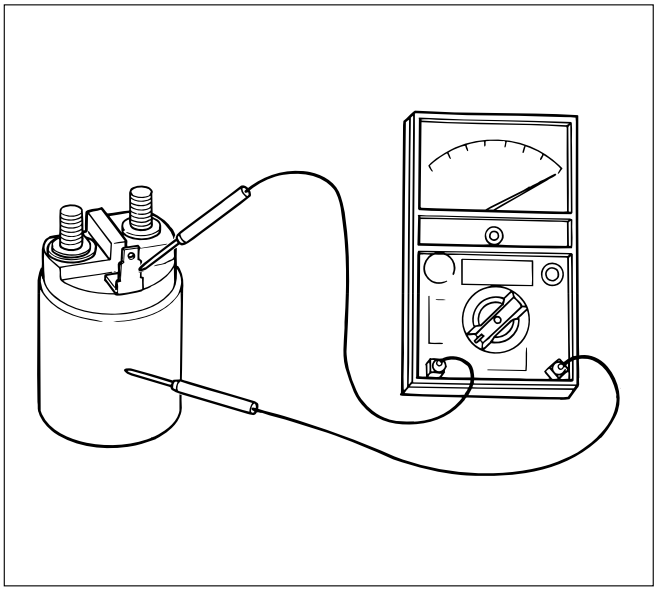

065RW016

2) Continuity of series coil

   Check for continuity between terminals S and M.

   Replace, if there is no continuity (i.e., coil is disconnected).

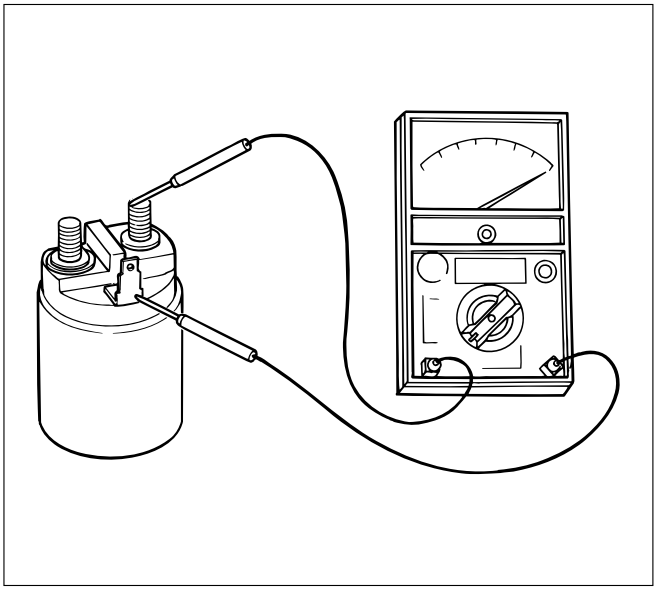

065RW017

3) Continuity of contacts

   With the plunger faced downward, push down the magnetic switch. In this state, check for continuity between terminals B and M. Replace, if there is no continuity (i.e., contacts are faulty).

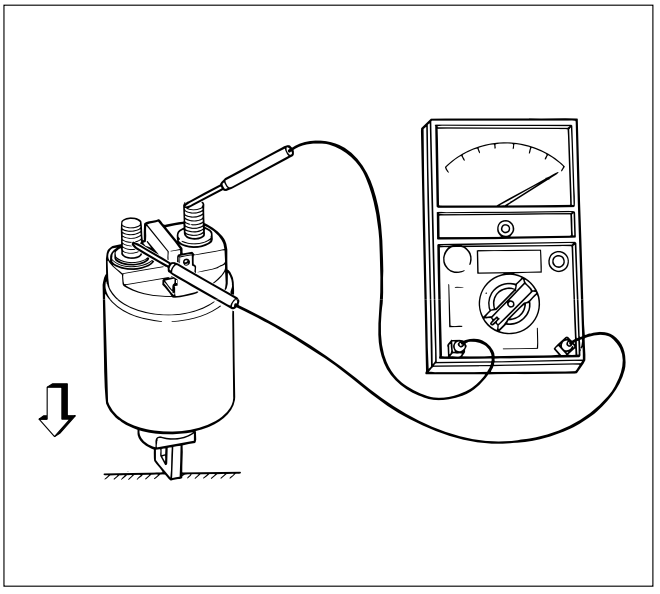

065RW018

Pinion

1) Check by hand to see if the pinion rotates smoothly in the dirve direction, or if it is locked when it is rotated reversely.
   If not, replace the pinion.

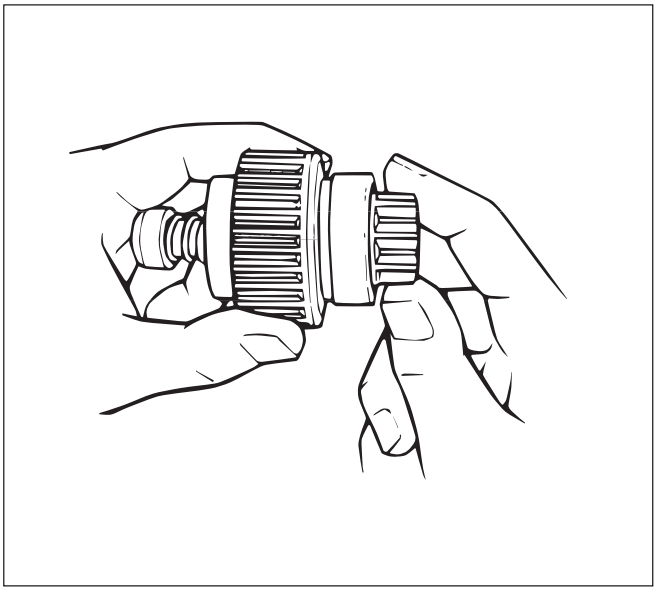

065RW048

Yoke assembly

1) Check the magnet inside the yoke.
   Replace the yoke assembly if it is broken.

REASSEMBLY

To install, follow the removal steps in the reverse order, noting the following points:

Grease application places

1) Gears in reduction gear
2) Shift lever operating portion
3) Sliding potion of pinion
4) Plunger sliding portion of magnetic switch

Pinion jump-out dimension

1) Connect the (+) cable of battery to terminal S and the (–) cable to terminal M. Turn the switch on, and measure pinion travel dimension “L” in thrust direction from the jump-out position.

In measuring the dimension, pull the pinion out a little in the arrow direction.

Dimension L: 0.3 – 1.5 mm (0.01 – 0.06 in)

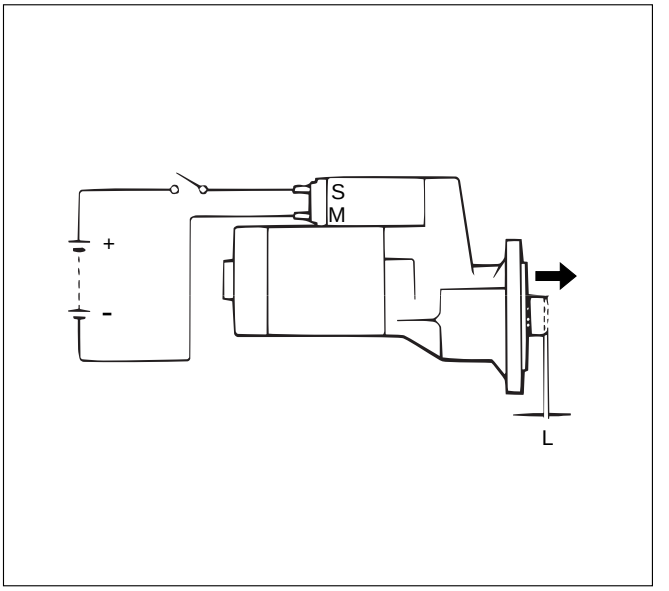

065RW054

If the measured value is out of standard, adjust the of shims.

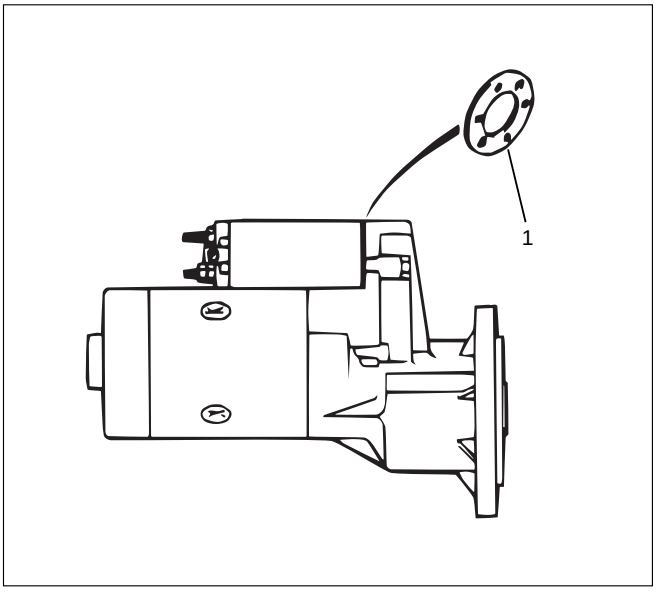

065RW053

Legend
(1) Shim

MAGNETIC SWITCH

Pull-out test

Connect the magnetic switch to the battery as shown. The negative side to the “M” terminal and the magnetic switch body (housing); the positive side to the “S” terminal. If the pinion has been ejected, the pull-in coil is satisfactory.

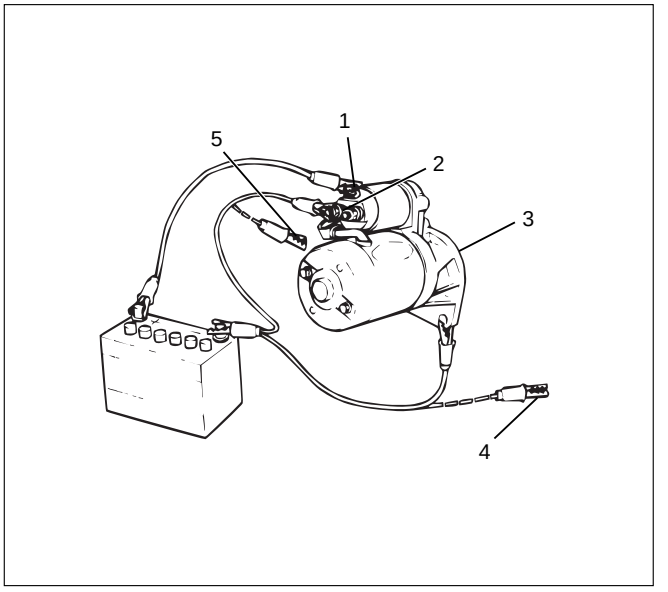

065RW055

Legend
(1) Terminal “S”
(2) Terminal “M”
(3) Starter
(4) For Return Test
(5) For Hold-In Test

Hold-in test

1. Next disconnect the “M” terminal.
2. The pinion should remain in the ejected position.

Return test

When the switch body is disconnected, the pinion should return quickly.

CHARGING SYSTEM

GENERAL DESCRIPTION

The charging system is the IC integral regulator charging system and its main components are connected as shown in Figure.
The regulator is a solid state type and it is mounted along with the brush holder assembly inside the generator installed on the rear end cover.

The generator does not require particular maintenance such as voltage adjustment. The rectifier connected to the stator coil has nine diodes to transform A.C. voltage into D.C. voltage. This D.C. voltage is connected to the output terminal of generator.

GENERATOR

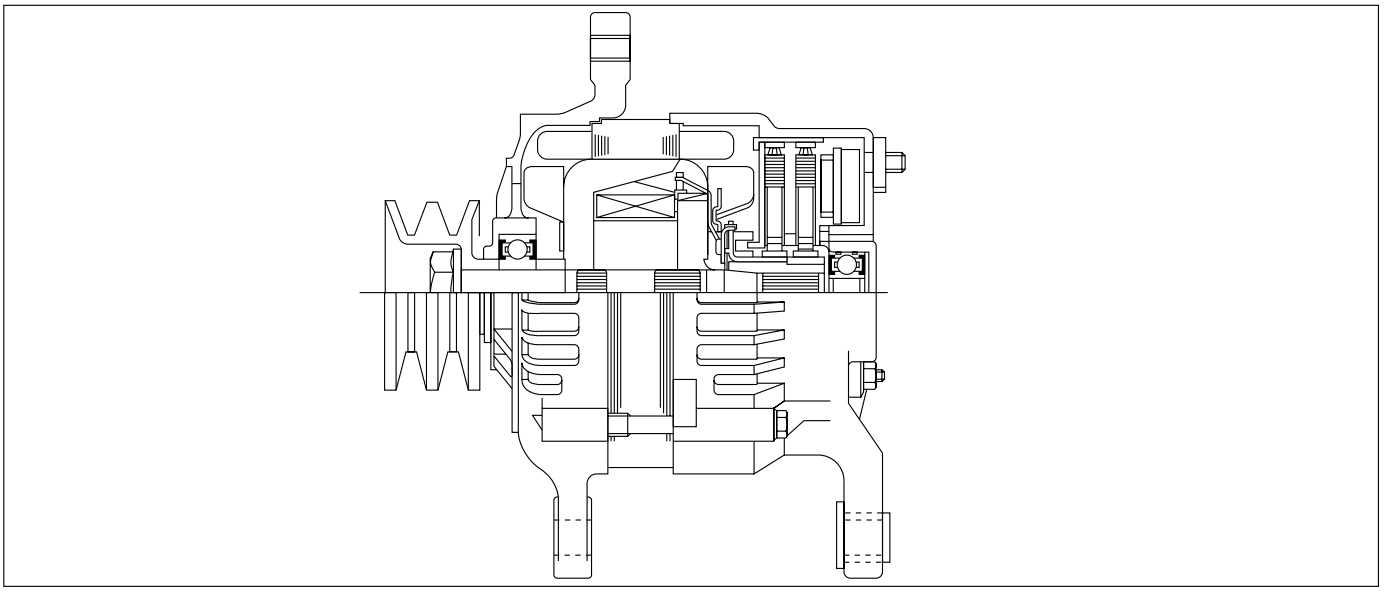

A06RW001

CHARGING CIRCUIT

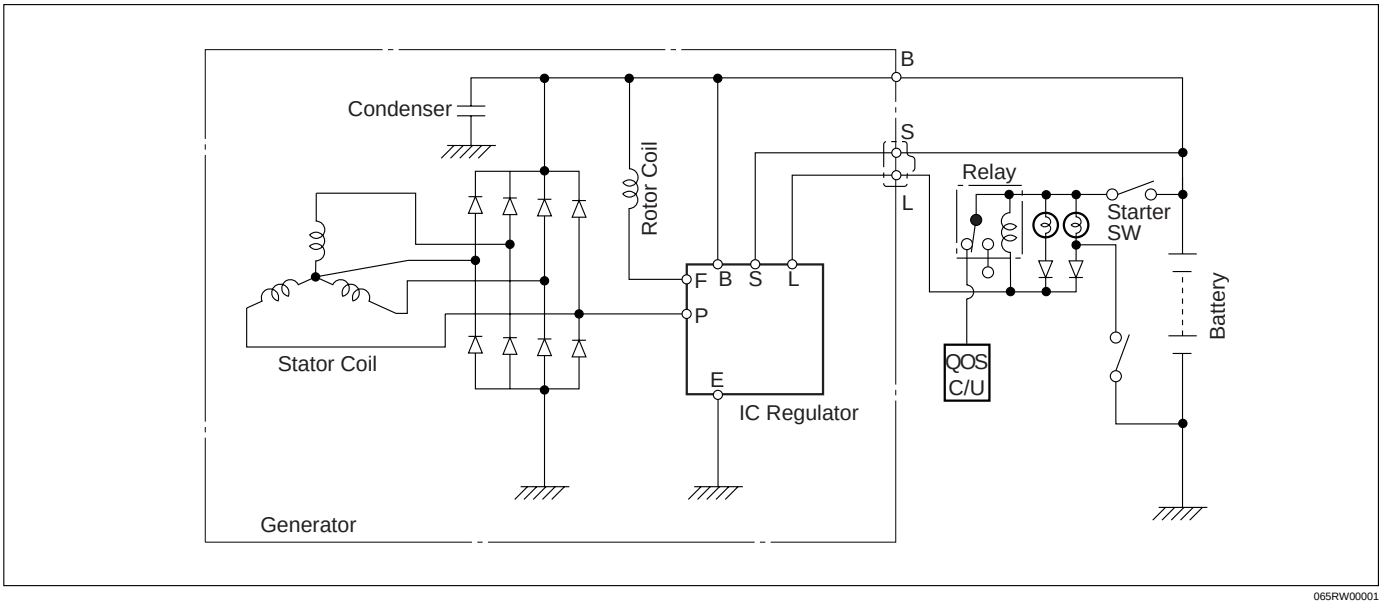

065RW00001

DIAGNOSIS

GENERAL ON-VEHICLE INSPECTION

The operating condition of the charging system is indicated by the charge warning lamp. The warning lamp comes on when the starter swtich is turned to “ON” position. The charging system operates normally if the lamp goes off when the engine starts. If the warning lamp shows abnormality or if undercharged or overcharged battery condition is suspected, perform diagnosis by checking the charging system as follows:

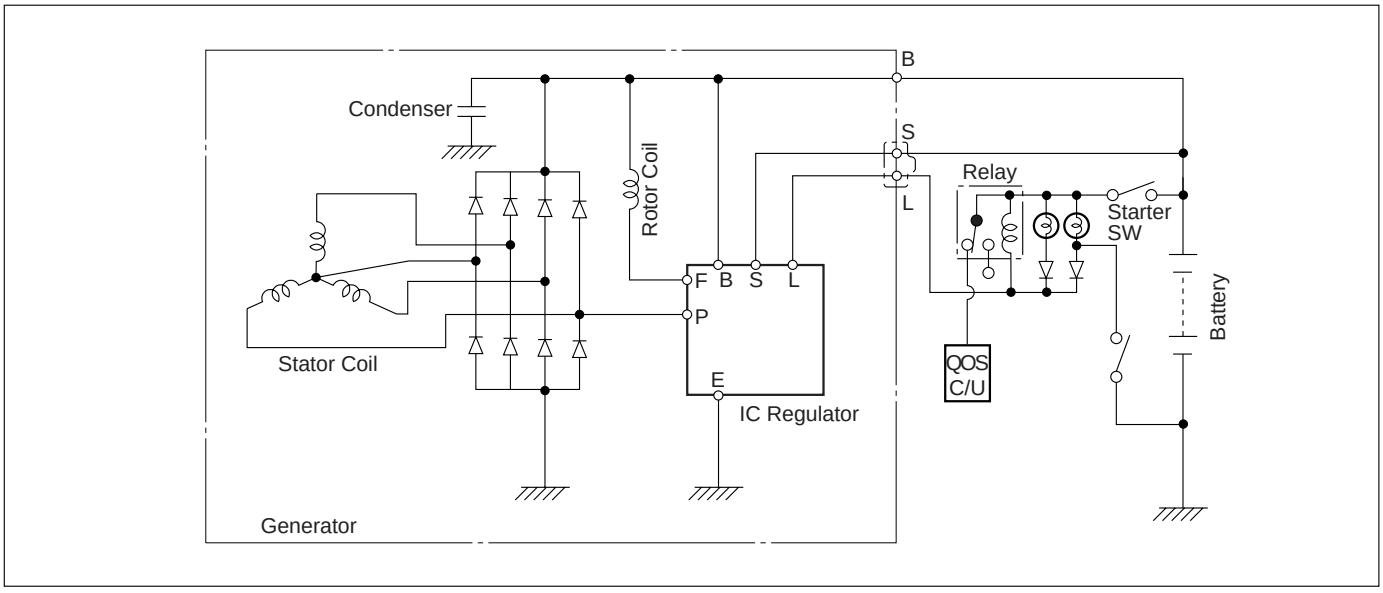

065RW00001

1. Check visually the belt and wiring connector.
2. With the engine in stop status, turn the starter switch to “ON” position and observe the warning lamp.
   1) If lamp does not come on:
      Disconnect wiring connector from generator, and ground terminal “L” on connector side.
   2) If lamp comes on:
      Repair or replace the generator.

UNIT REPAIR

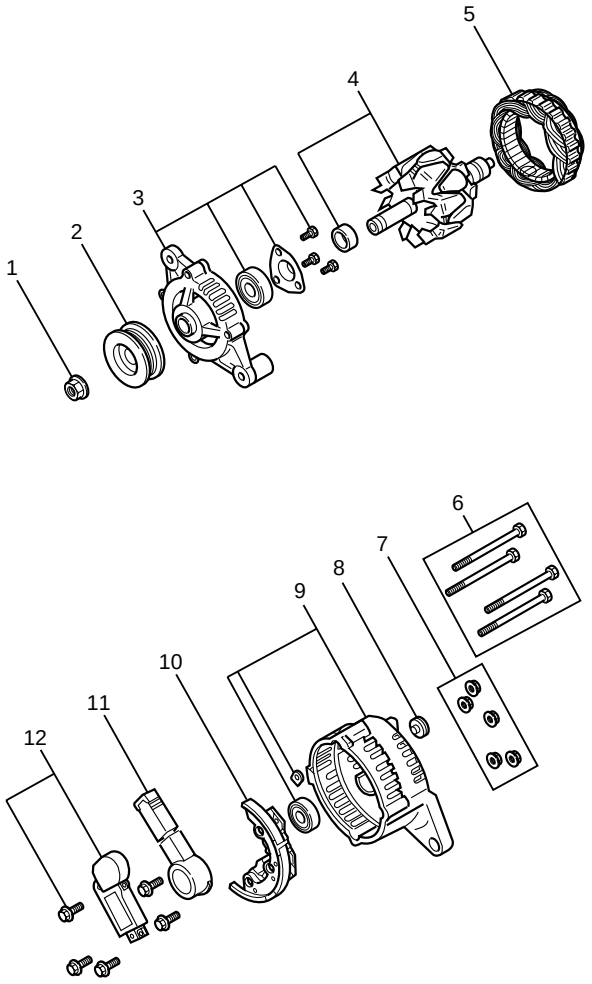

066RW022

Legend

(1) Pulley Nut
(2) Pulley
(3) Front Cover Assembly
(4) Rotor Assembly
(5) Stator Assembly
(6) Through Bolt
(7) Nut
(8) Terminal Insulator Plate
(9) Rear Cover Assembly
(10) Diode
(11) Brush Holder
(12) Regulator Assembly

DISASSEMBLY

1. Remove the through bolt.

   Insert the tip of a pry bar into the gaps between the front cover and the stator core.

   Pry apart and separate the front cover, rotor, the rear cover and stator.

NOTE: Take care not to scratch or otherwise damage the stator coil with pry bar.

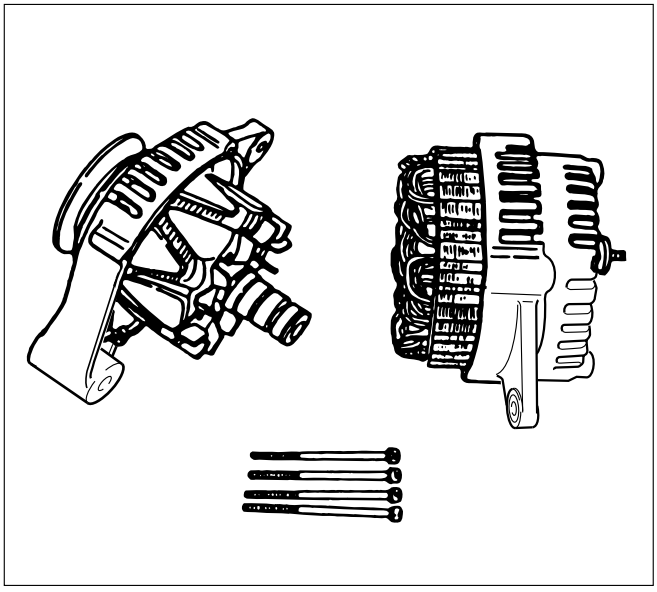

F06RT021

2. Clamp the rotor in a vise and then remove the nut and pulley.
3. Remove the rotor assembly from front cover.

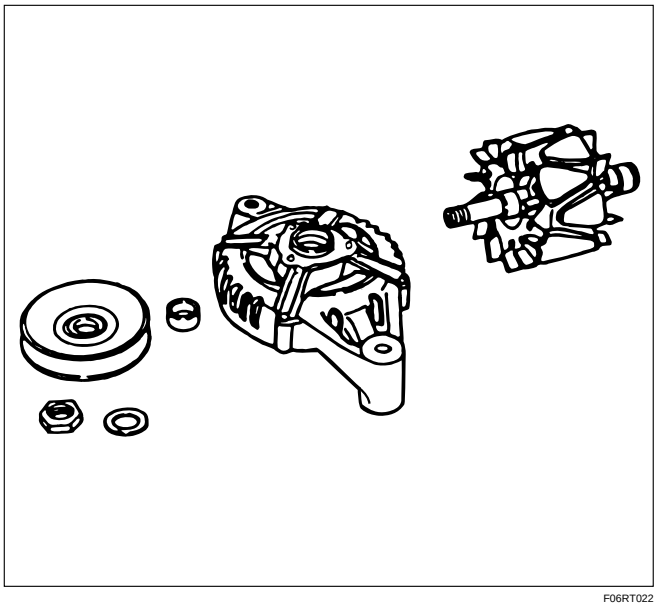

F06RT022

4. Remove screws with bearing retainer from front cover and remove bearing.

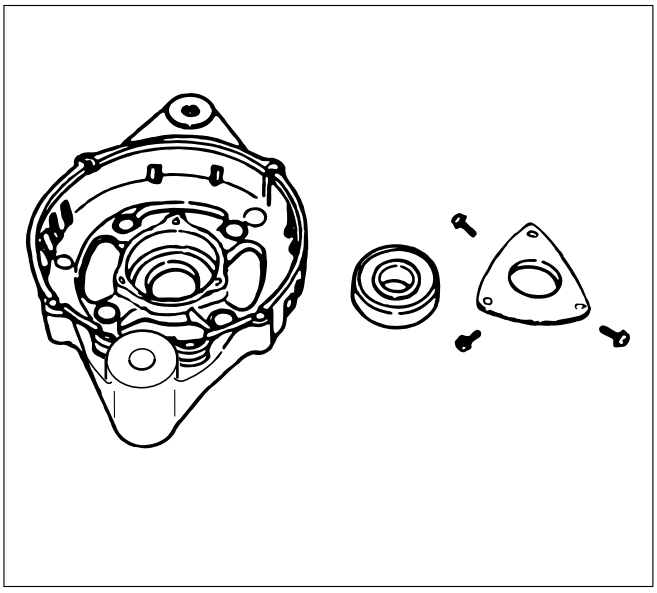

F06RT023

5. Remove the mounting nuts holding the “B ” terminal, the diode, and the brush holder.
6. Separate the rear cover from the stator.

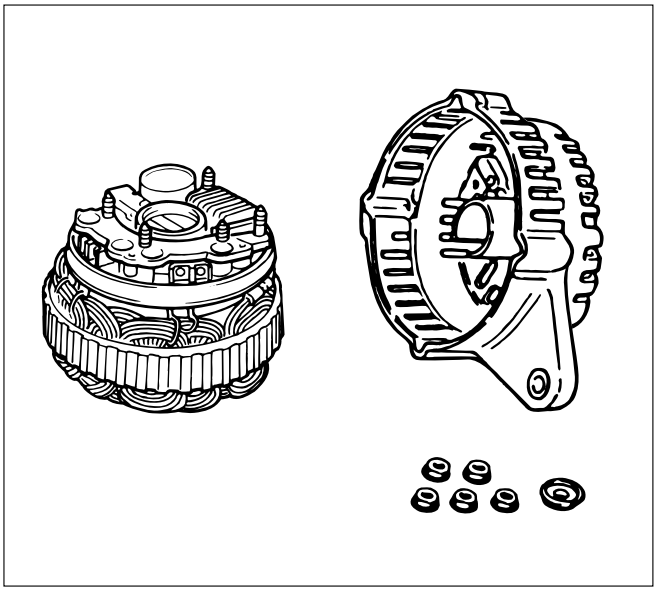

F06RT024

7. Remove bolts which secure stator terminal to rectifier terminal, and remove stator.

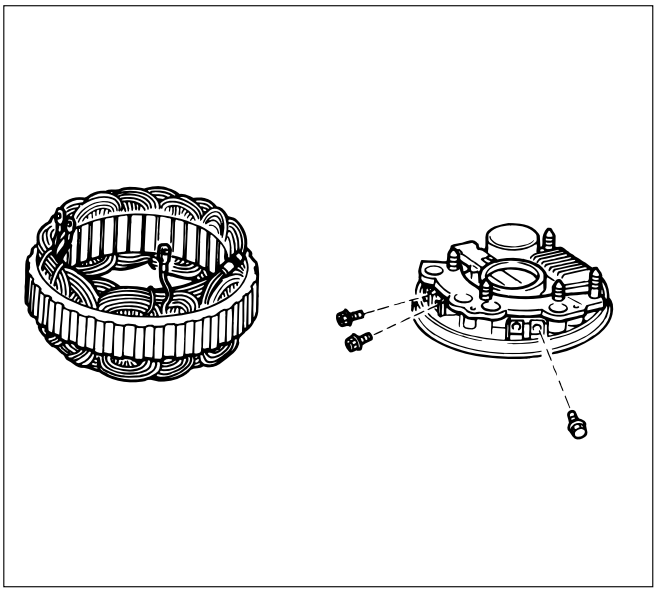

066RS030

8. Remove Bolts which secure regulator, rectifier and brush-holder, and separate these parts.

NOTE: Do not apply a shock or load to regulator, rectifier and brush holder.

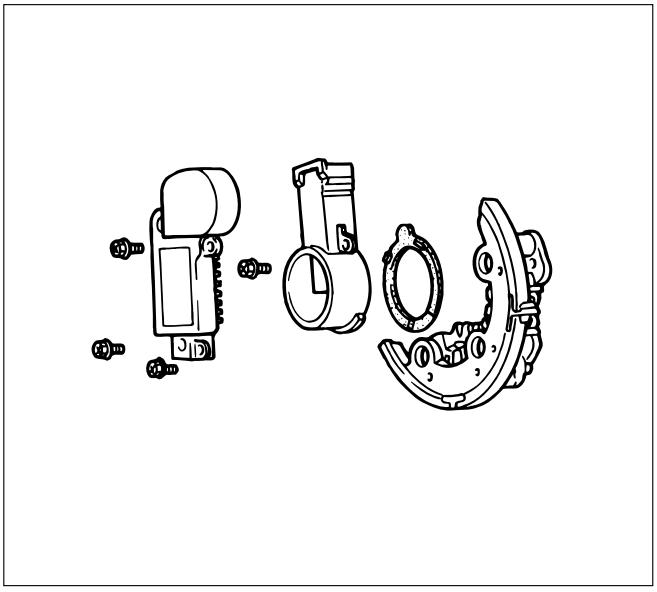

066RW025

INSPECTION AND REPAIR

Repair or replace necessary parts if extreme wear or damage is found during inspection.

Rotor Assembly

1. Check the face of the slip rings for contamination and roughness. If found to be scored, dress with a fine sandpaper (#500 – 600). If found to be contaminated, clean with a cloth saturated with alcohol.
2. Measure the outside diameter of the slip rings.

Standard: 27 mm (1.06 in)
Limit: 26 mm (1.02 in)

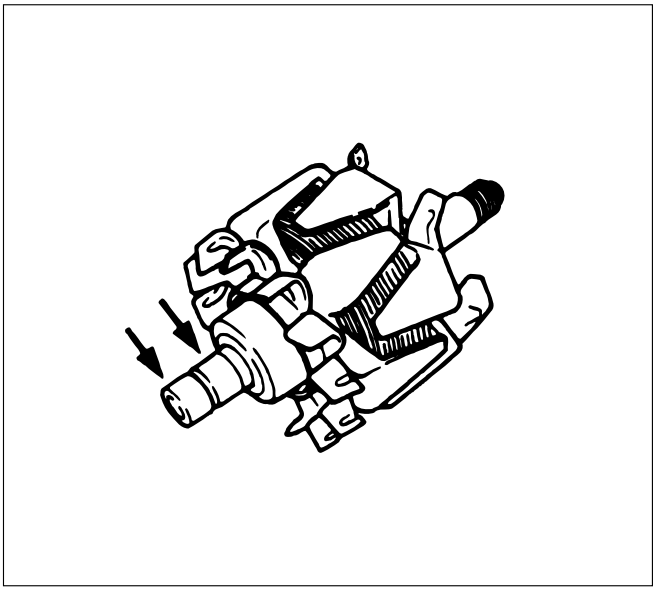

066RS032

3. Check resistance between slip rings, and replace if there is no continuity.

Standard: 3.75 Ω or less

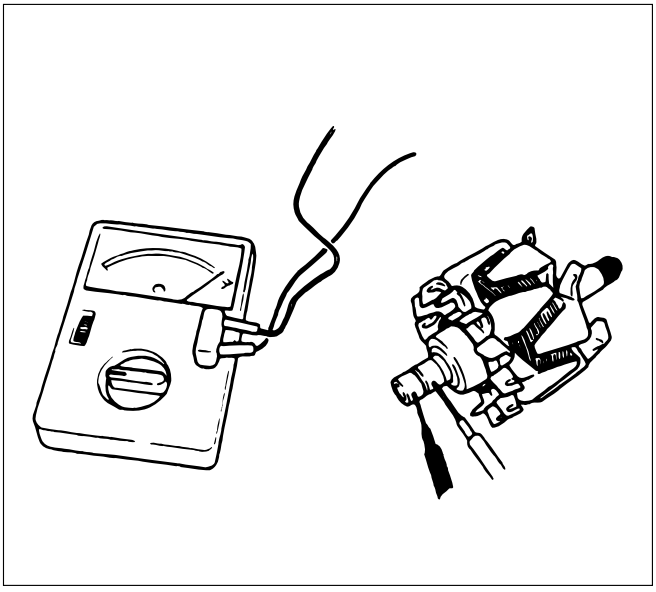

066RS033

4. Check for continuity between slip ring and rotor core.
   In case of continuity, replace the rotor assembly.

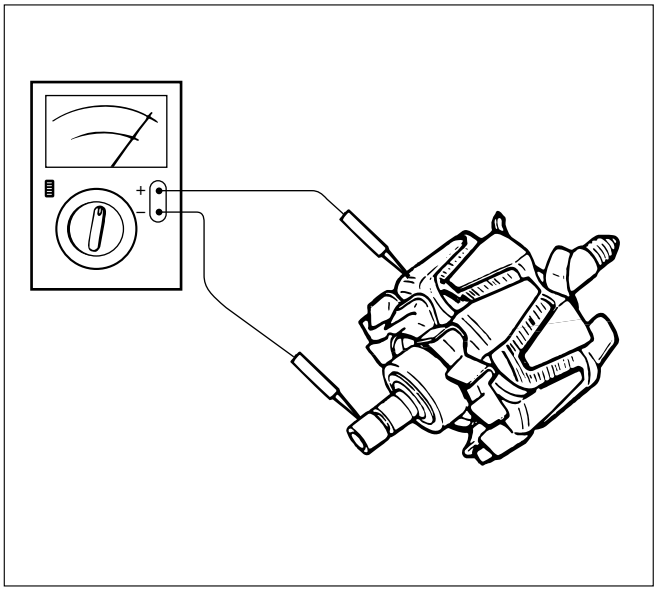

066RS017

Stator Coil

1. Check for continuity across the stator coils. If no continuity exists, replace the coils.
   Resistance value at 20°C

Standard: Approx 0.07Ω

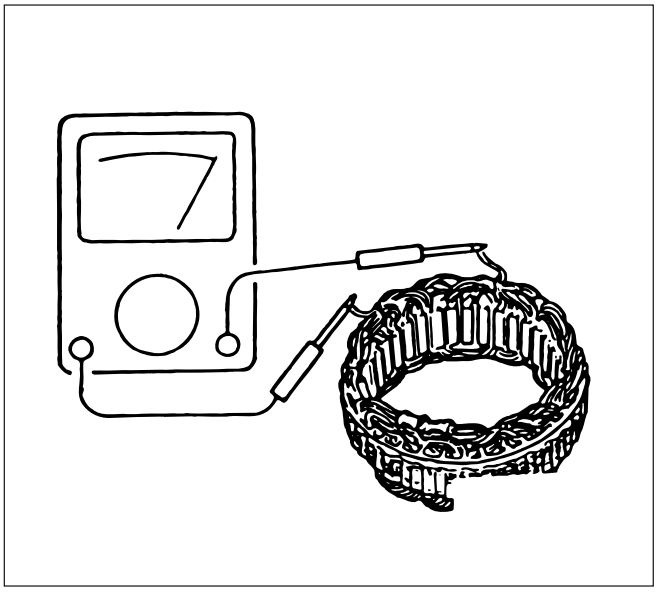

066RS034

2. Check for continuity across one of the stator coils and stator core. If a continuity exists, replace the coil.

Standard: More than 1MΩ

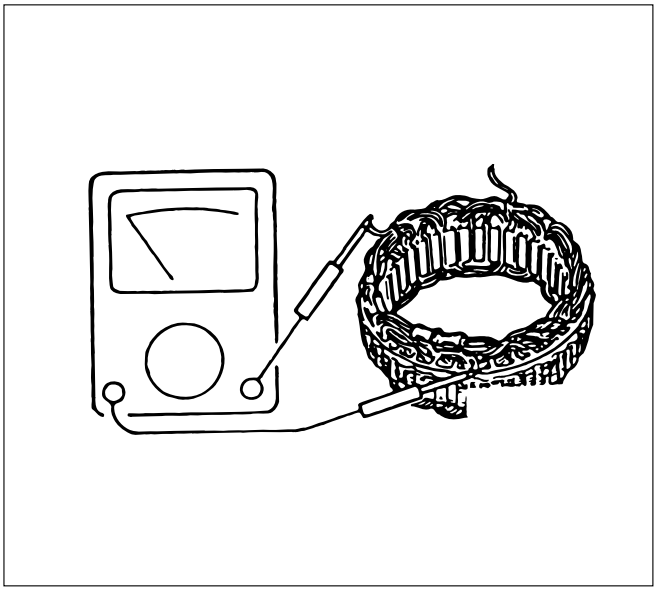

066RS035

Brush

Measure the brush length.
If more than limit, replace the brush.

Standard: 18.0 mm (0.709 in)
Limit: 5.5 mm (0.217 in)

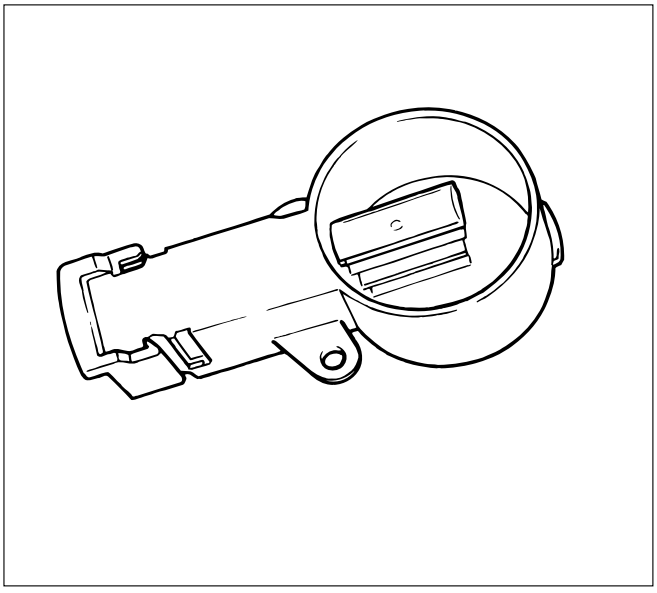

066RW024

Rectifier Assembly

1. Measure the resistance between each diode terminal and aluminum diode fin in forward and reverse directions with the connection of the tester leads switched. The diodes are normal if resistance is nearly zero ohms in one direction and is infinitely high in the other direction.
2. If a diode has no resistance or equal resistance in both directions, it is defective and should be replaced together with the holder.

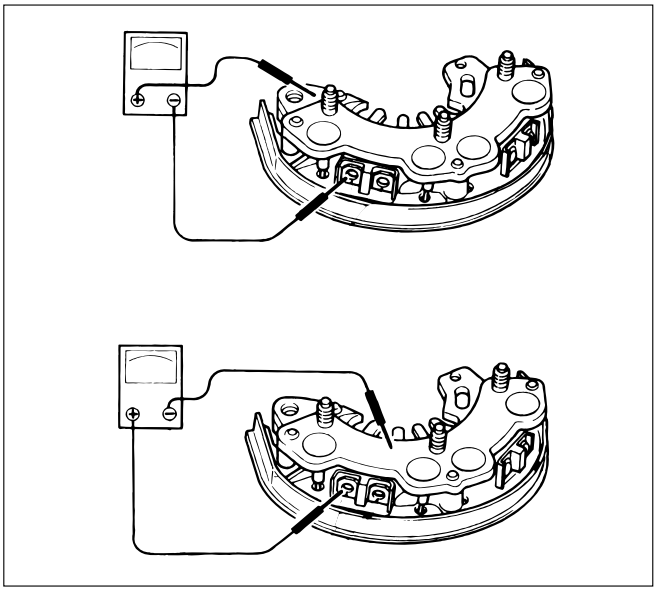

066RS036

IC Regulator Assembly

Connect a variable resistor, two 12V batteries, a fixed resistor, and a voltmeter to the IC regulator as shown in illustration.

a. Measuring equipment specifications
1. Fixed resistor (R1) : 10 Ohms / 3W
2. Variable resistor (Rv) : 0 – 300 Ohms / 12W
3. Batteries (BAT1, BAT2) : 12V (2 Batteries)
4. DC voltmeter : 0 – 50V / 0.5 steps (4 Check points)

b. Measuring procedure
1. Measure the voltage “V1” across the first battery (BAT1). If the reading is between 10 and 13 volts, the battery is normal.
2. Measure the voltage “V3” across both the batteries (BAT1, BAT2). If the reading is between 20 and 26 bolts, the batteries are normal.
3. Gradually increase the resistance of the variable resistor from zero. Measure the voltage “V2” (the voltage across the F and E terminals).

   Check to see that the voltage across “V1” changes at this time. If there is no change, the voltage regulator is faulty and must be replaced.
4. Measure the voltage at “V4” (the voltage across the variable resistor center tap and terminal E with the variable resistor resistance held constant). The measure voltage should be within the specified (14.4 ± 0.3 volts) limits. If it is not, the regulator must be replaced.

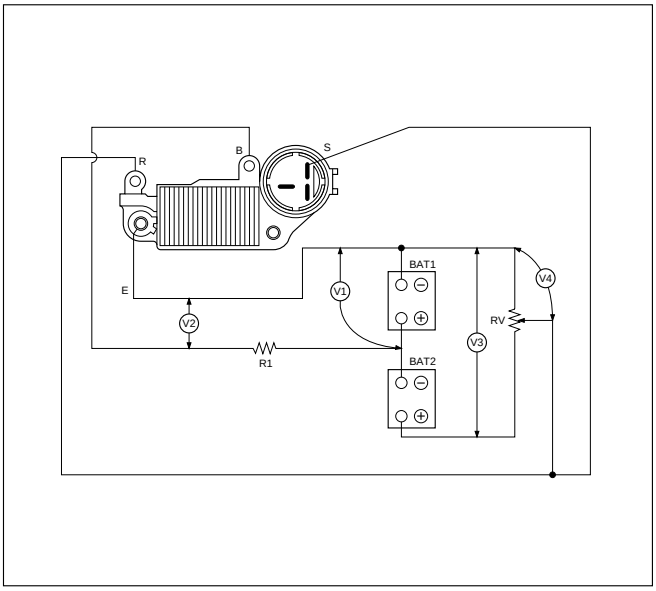

066RW029

Reassembly

To reassemble, follow the disassembly steps in the reverse order, noting the following points:

NOTE:

1) Never make battery connections with polarities reversed, or battery will be shorted via the diodes. This will cause damage to the diodes.
2) Do not connect generator B terminal to ground; it is connected directly to the battery.

   This cable will burn if it is connected to ground.
3) Make sure to disconnect the positive (+) terminal of the battery when quick-charging battery.

   Diodes may be damaged due to abnormal pulse voltage generated by the quick charger.
4) When reassembling the front section to rear section, insert a stiff wire into hole in the rear face of the rear cover from the outboard side to support the brush in raised position, then insert the front section to which rotor is assembled.
5) Reassemble parts carefully to be sure they fit into their original position, paying attention to the insulated portions.
6) Wipe insulating tubes, washers and plates clean and install them in position carefully to avoid getting oil or grease on them.

1. Using a press with a socket wrench attached, reassemble rotor and rear end cover assembly in the front cover.

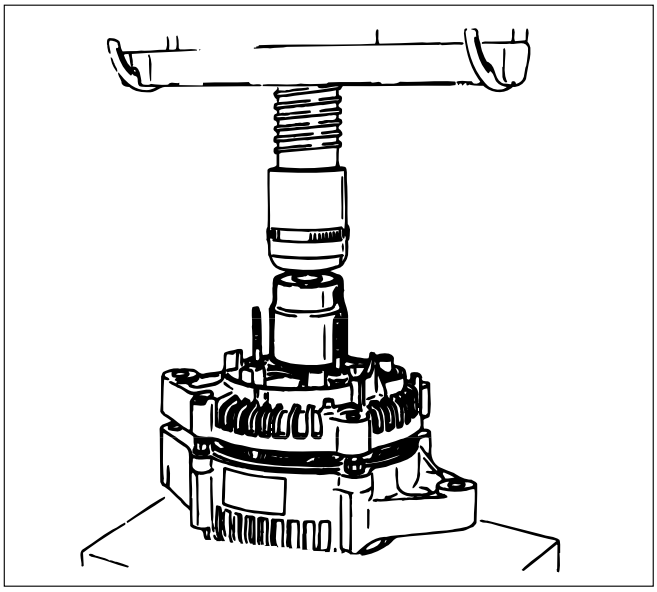

066RS022

2. Install pulley on the rotor.
   Secure the pulley directly in the vise between two copper plates, and tighten nut to the specified torque.

Torque: 111 N·m (82 lb ft)

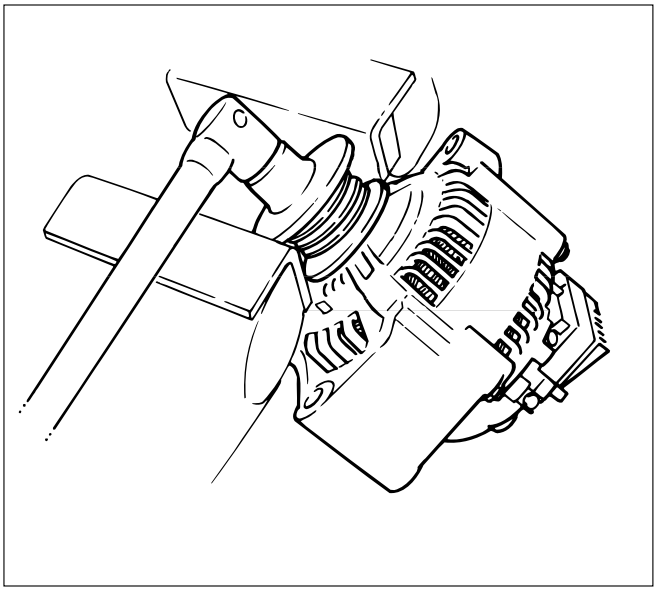

066RS010

MAIN DATA AND SPECIFICATIONS

General Specifications

Model		LR160-734B	LR-170-760
Battery voltage	V	12	
Rated output	A	60	70
Direction of rotation (as viewed from pulley side)		Clockwise	
Rated rotation speed	rpm	5,000	
Maximum speed	rpm	18,000	

QOS4 PREHEATING SYSTEM

GENERAL DESCRIPTION

QOS4 preheating system features a quick-on glow plug with thermometer control of the glowing time and the afterglow time function.

The system consists of the ECM, indicator lamp, ECT sensor, vehicle speed sensor, relay and temperature self-control type glow plugs.

With the employment of the ECT sensor, the glow time changes according to the engine coolant temperature, thus allowing optimum starting conditions to be obtained.

The after glow time function is controlled by ECM.

NOTE:
Refer to DTC P0380 and P0381 of 6E section.

SYSTEM DIAGRAM

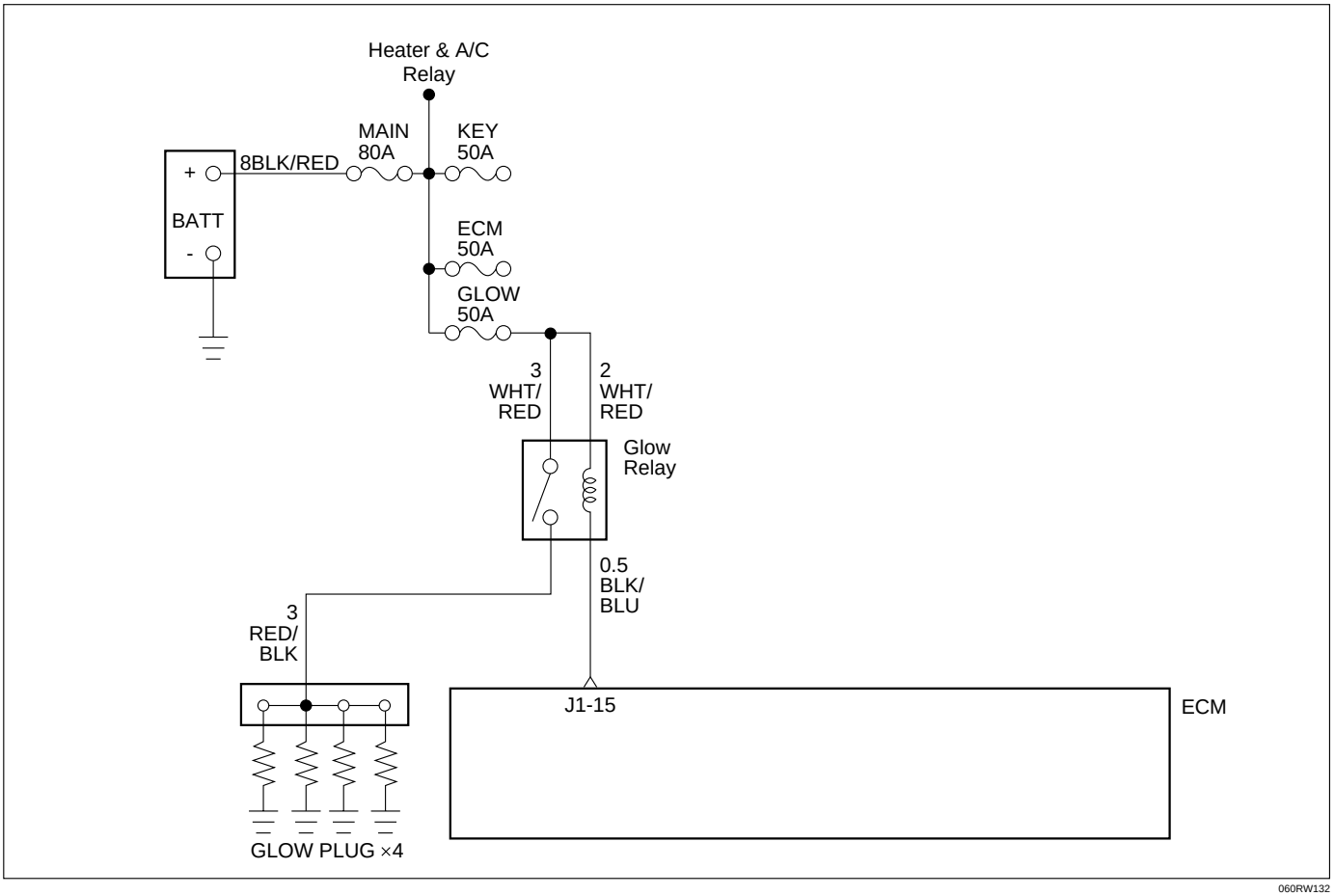

060RW132

INSPECTION ON QOS4 SYSTEM OPERATION

1 Inspection on Quick Heating Operation

1. Disconnect ECT-sensor connection on the thermostat housing

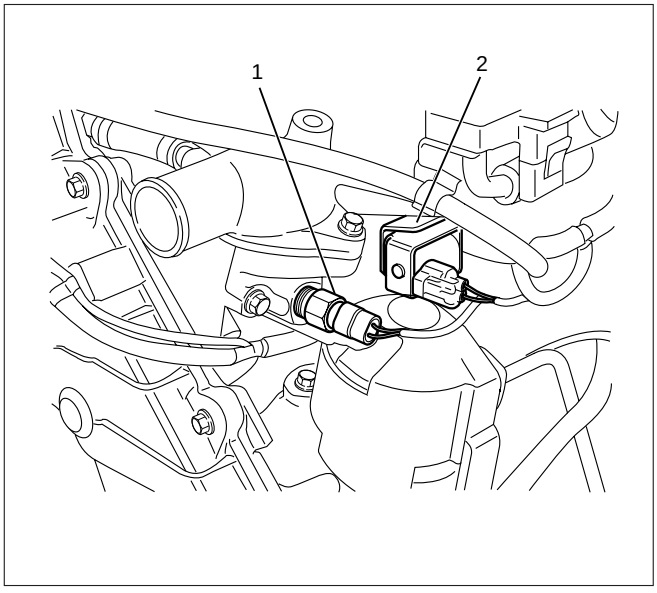

060RW166

Legend
(1) ECT Sensor
(2) EVRV

2. Connect the circuit tester between glow plug and engine earth.
3. Inspect the following items with starter switch set to ON position (but do not start the engine).
   1) The glow indicator shall light for about 5 sec.
   2) The circuit tester shall indicate power supply voltage for 9 – 13 sec.
      If above specifications are not satisfied, inspect wire harness, glow relay and ECT-sensor. If satisfied, inspect glow plug.

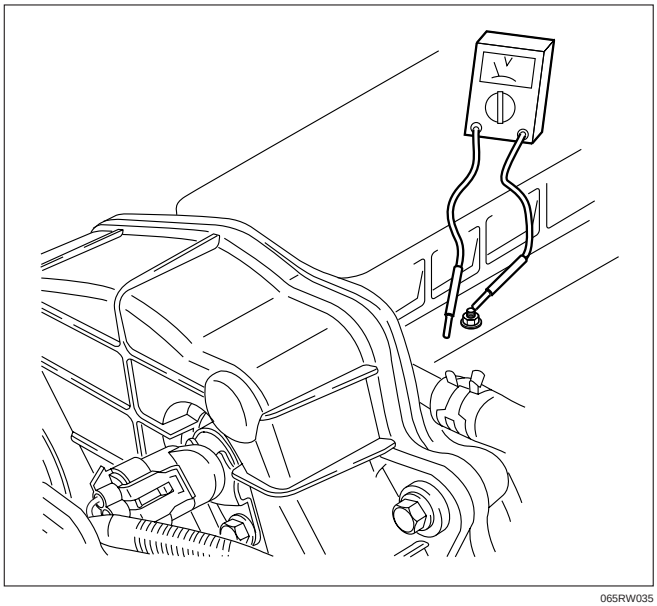

065RW035

2 Inspection on Afterglow Operation

1. Disconnect ECT-sensor connection on the thermostat housing

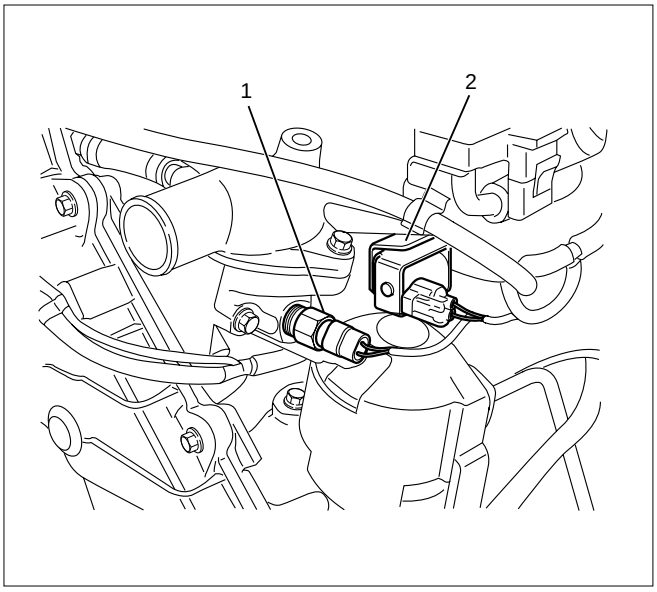

060RW166

Legend
(1) ECT Sensor
(2) EVRV

2. Connect the circuit tester between glow plug and engine earth.
3. Inspect the following item with the engine started.
   1) The circuit tester shall indicate about 7 volts after 360 seconds of engine start.
   - If above specifications are not satisfied, inspect battery voltage, engine earth, wiring harness, glow plug, and ECM.

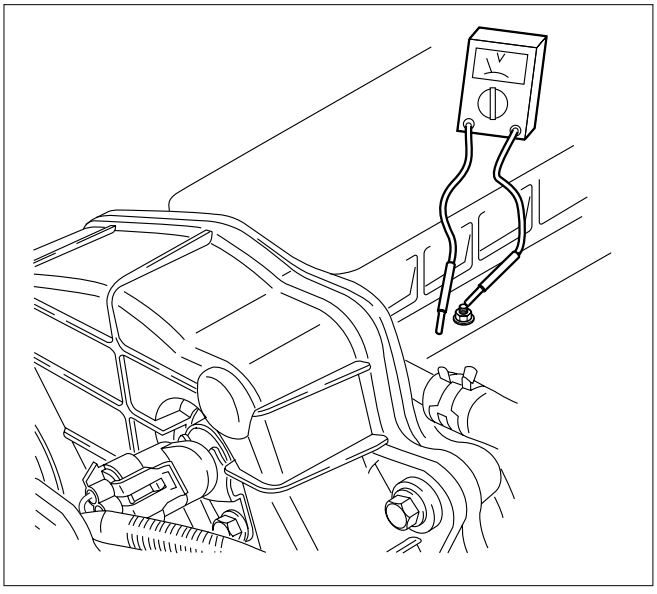

065RW035

ECT SENSOR

Measure the resistance depending on the water temperature.

Temperature (°C)	Current (mA)	Resistance (kΩ)
20 ± 1	1.0	2.0 – 3.0
50 ± 1	1.0	0.6 – 1.0

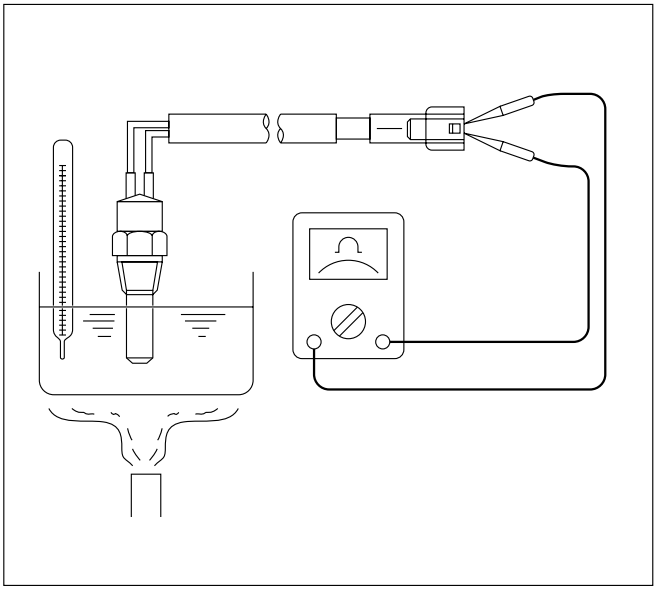

065RW058

When installing the ECT sensor, apply sealant (Loctite #262 or equivalent) to prevent water leakage.

Torque: 8 N·m (0.8 kg·m/69 lb in)

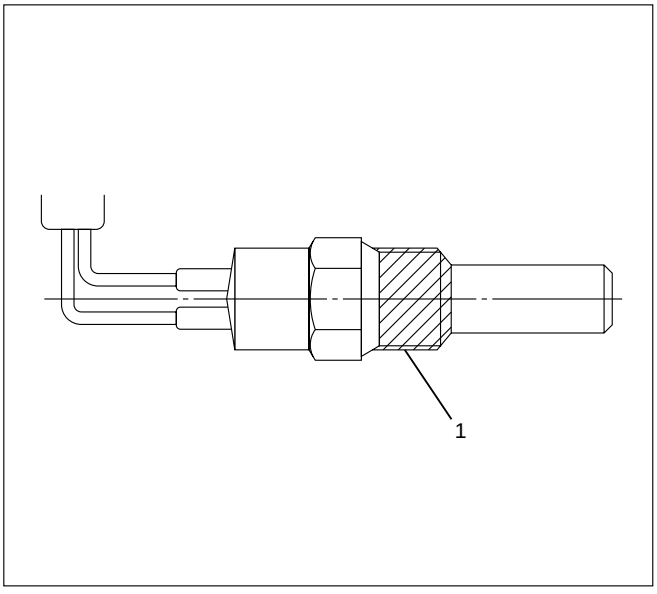

065RW060

Legend
(1) Sealing Material

GLOW PLUG

Inspect the resistance

Resistance at normal temperature: 0.8 – 1.0 Ω

Torque: 23 N·m (2.3 kg·m/17 lb·ft)

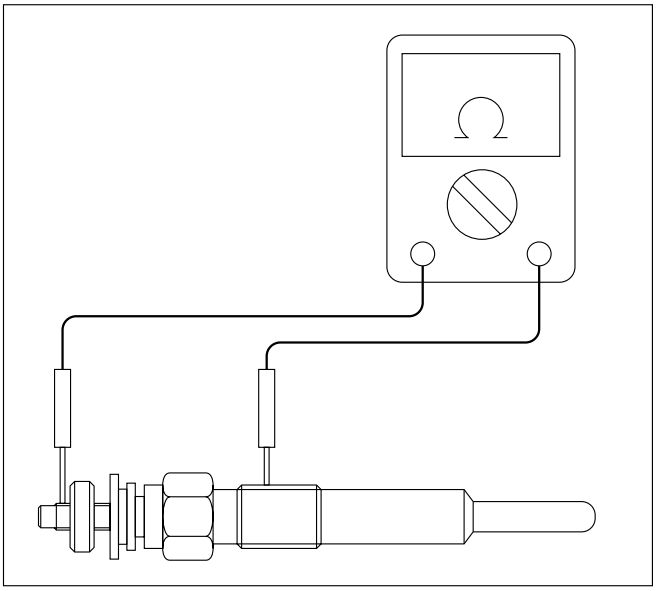

065RW061

GLOW PLUG RELAY

Inspect the continuity

(2) – (4)	No Continuity
(1) – (3)	Continuity

If battery voltage is applied to the terminal between (1) – (3)

(2) – (4)	Continuity

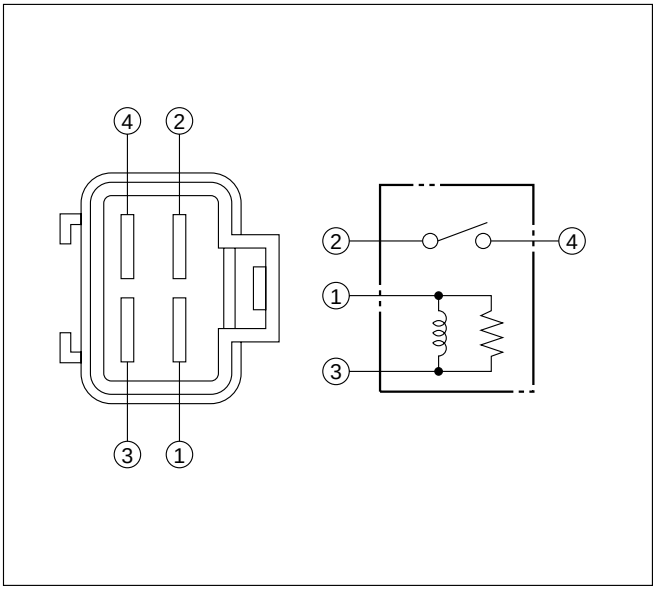

065RW037

MEMO

4JX1–TC 3.0L ENGINE DRIVEABILITY AND EMISSIONS

CONTENTS

Specification 6E–7
Tightening Specifications 6E–7
Diagrams and Schematics 6E–8
ECM Wiring Diagram (1 of 6) 6E–8
ECM Wiring Diagram (2 of 6) 6E–9
ECM Wiring Diagram (3 of 6) 6E–10
ECM Wiring Diagram (4 of 6) 6E–11
ECM Wiring Diagram (5 of 6) 6E–12
ECM Wiring Diagram (6 of 6) 6E–13
ECM Pinouts 6E–14
ECM Pinout Table, 32-Way Connector – J1 RED – Upper 6E–14
ECM Pinout Table, 32-Way Connector – J1 RED – Lower 6E–15
ECM Pinout Table, 32-Way Connector – J2 BLUE – Upper 6E–16
ECM Pinout Table, 32-Way Connector – J2 BLUE – Lower 6E–17
ECM Pinout Table, 5-Way Connector – J3 6E–18
Component Locator 6E–19
Sensors and Miscellaneous Component Locators 6E–21
Abbreviations Charts 6E–23
Diagnosis 6E–24
Strategy-Based Diagnostics 6E–24
Strategy-Based Diagnostics 6E–24
DTC Stored 6E–24
No DTC 6E–24
No Matching Symptom 6E–24
Intermittents 6E–24
No Trouble Found 6E–24
Verifying Vehicle Repair 6E–24
General Service Information 6E–25
Serviceability Issues 6E–25
Visual/Physical Engine Compartment Inspection 6E–25
Basic Knowledge of Tools Required 6E–25
Serial Data Communications 6E–25
Class II Serial Data Communications 6E–25
On-Board Diagnostic (OBD) 6E–25
On-Board Diagnostic Tests 6E–25
Comprehensive Component Monitor Diagnostic Operation 6E–25
Common OBD Terms 6E–26
The Diagnostic Executive 6E–26
DTC Types 6E–26
Verifying Vehicle Repair 6E–27
Reading Flash Diagnostic Trouble Codes . 6E–27
Reading Diagnostic Trouble Codes Using a TECH 2 . . . . . 6E–28
Tech 2 Scan Tool 6E–29
Getting Started 6E–30
DTC Modes 6E–32
DTC Information Mode 6E–32
Injector Test 6E–32
EGR Valve Test 6E–32
Rail Pressure Control Valve Test 6E–32
Injector Balance Test 6E–32
Data Programming in Case of ECM Change 6E–32
Rail Pressure Sensor Programming 6E–33
Injector Group Sign Programming (Injector Change) 6E–33
On-Board Diagnostic (OBD) System Check . 6E–35
Circuit Description 6E–37
Diagnostic Aids 6E–37
Engine Control Module ECM Diagnosis 6E–39
Multiple ECM Information Sensor DTCS Set 6E–39
Circuit Description 6E–39
Diagnostic Aids 6E–39
EGR (Exhaust Gas Recirculation) Diagnosis 6E–41
Tech 2 Data Definitions and Ranges 6E–41
Typical Scan Data Values 6E–41
Test Conditions 6E–41
4JX1-TC Engine (Automatic and Manual Transmission) 6E–42
No Malfunction Indicator Lamp (MIL) 6E–44
Circuit Description 6E–44
Diagnostic Aids 6E–44
Malfunction Indicator Lamp (MIL) “ON” Steady 6E–47
Circuit description 6E–47
Diagnostic Aids 6E–47
Engine Cranks But Will Not Run 6E–49
Circuit Description 6E–49
Diagnostic Aids 6E–49
Exhaust Gas Recirculation (EGR) System Check 6E–52
Circuit Description 6E–52
ECM Diagnostic Trouble Codes 6E–54
ECM Diagnostic Trouble Codes 6E–54
Diagnostic Trouble Code (DTC) P0107 (Flash DTC 34)
MAP Sensor Circuit Low Voltage 6E–56

Circuit Description 6E–56
Action Taken When the DTC Sets 6E–56
Conditions for Clearing the MIL/DTC 6E–56
Diagnostic Aids 6E–56
Diagnostic Trouble Code (DTC) P0108 (Flash DTC 34) MAP Sensor Circuit High Voltage 6E–58
Circuit Description 6E–58
Action Taken When the DTC Sets 6E–58
Conditions for Clearing the MIL/DTC 6E–58
Diagnostic Aids 6E–58
Diagnostic Trouble Code (DTC) P0112 (Flash DTC 23) IAT Sensor Circuit Low Voltage 6E–60
Circuit Description 6E–60
Action Taken When the DTC Sets 6E–60
Conditions for Clearing the MIL/DTC 6E–60
Diagnostic Aids 6E–60
Test Description 6E–61
Intake Air Temperature Sensor 6E–61
Diagnostic Trouble Code (DTC) P0113 (Flash DTC 23) IAT Sensor Circuit High Voltage 6E–62
Circuit Description 6E–62
Action Taken When the DTC Sets 6E–62
Conditions for Clearing the MIL/DTC 6E–62
Diagnostic Aids 6E–62
Test Description 6E–63
Manifold Air Temperature Sensor 6E–63
Diagnostic Trouble Code (DTC) P0117 (Flash DTC 14) ECT Sensor Low Voltage . 6E–65
Circuit Description 6E–65
Action Taken When the DTC Sets 6E–65
Conditions for Clearing the MIL/DTC 6E–65
Diagnostic Aids 6E–65
Test Description 6E–65
Engine Coolant Temperature Sensor 6E–66
Diagnostic Trouble Code (DTC) P0118 (Flash DTC 14) ECT Sensor High Voltage . 6E–67
Circuit Description 6E–67
Action Taken When the DTC Sets 6E–67
Conditions for Clearing the MIL/DTC 6E–67
Diagnostic Aids 6E–67
Test Description 6E–68
Engine Coolant Temperature Sensor 6E–68
Diagnostic Trouble Code (DTC) P0121 (Flash DTC 33) AP Sensor Rationality 6E–70
Circuit Description 6E–70
Action Taken When the DTC Sets 6E–70
Conditions for Clearing the MIL/DTC 6E–70
Diagnostic Aids 6E–70
Diagnostic Trouble Code (DTC) P0122 (Flash DTC 21) AP Sensor Low Voltage . . . 6E–72
Circuit Description 6E–72
Action Taken When the DTC Sets 6E–72
Conditions for Clearing the MIL/DTC 6E–72
Diagnostic Aids 6E–72
Diagnostic Trouble Code (DTC) P0123 (Flash DTC 21) AP Sensor High Voltage . . . 6E–75
Circuit Description 6E–75
Action Taken When the DTC Sets 6E–75
Conditions for Clearing the MIL/DTC 6E–75
Diagnostic Aids 6E–75
Test Description 6E–75
Diagnostic Trouble Code (DTC) P0182 (Flash DTC 15) FT Sensor Low Voltage . . . 6E–78
Circuit Description 6E–78
Action Taken When the DTC Sets 6E–78
Conditions for Clearing the MIL/DTC 6E–78
Diagnostic Aids 6E–78
Test Description 6E–78
Diagnostic Trouble Code (DTC) P0183 (Flash DTC 15) FT Sensor High Voltage . . . 6E–80
Circuit Description 6E–80
Action Taken When the DTC Sets 6E–80
Conditions for Clearing the MIL/DTC 6E–80
Diagnostic Aids 6E–80
Test Description 6E–80
Diagnostic Trouble Code (DTC) P0192 (Flash DTC 63) Rail Pressure Sensor Low Voltage 6E–82
Circuit Description 6E–82
Action Taken When the DTC Sets 6E–82
Conditions for Clearing the MIL/DTC 6E–82
Diagnostic Aids 6E–82
Diagnostic Trouble Code (DTC) P0193 (Flash DTC 63) Rail Pressure Sensor High Voltage 6E–84
Circuit Description 6E–84
Action Taken When the DTC Sets 6E–84
Conditions for Clearing the MIL/DTC 6E–84
Diagnostic Aids 6E–84
Diagnostic Trouble Code (DTC) P1193 (Flash DTC 64) RPCV Circuit Open/Short . . 6E–86
Circuit Description 6E–86
Action Taken When the DTC Sets 6E–86
Conditions for Clearing the MIL/DTC 6E–86
Diagnostic Aids 6E–86
Diagnostic Trouble Code (DTC) P1194 (Flash DTC 61) Rail Pressure System Low Voltage 6E–88
Circuit Description 6E–88
Action Taken When the DTC Sets 6E–88
Conditions for Clearing the MIL/DTC 6E–88
Diagnostic Aids 6E–88
Diagnostic Trouble Code (DTC) P1195 (Flash DTC 61) Rail Pressure System High Voltage 6E–90
Circuit Description 6E–90

Action Taken When the DTC Sets 6E–90
Conditions for Clearing the MIL/DTC 6E–90
Diagnostic Aids 6E–90
Diagnostic Trouble Code (DTC) P1196 (Flash DTC 62) Rail Pressure System High Warning 6E–92
Circuit Description 6E–93
Action Taken When the DTC Sets 6E–93
Conditions for Clearing the MIL/DTC 6E–93
Diagnostic Aids 6E–93
Test Description 6E–93
Diagnostic Trouble Code (DTC) P0197 (Flash DTC 16) Oil Temp Sensor Low Voltage 6E–94
Circuit Description 6E–94
Action Taken When the DTC Sets 6E–94
Conditions for Clearing the MIL/DTC 6E–94
Diagnostic Aids 6E–94
Test Description 6E–95
Engine Oil Temperature Sensor 6E–95
Diagnostic Trouble Code (DTC) P0198 (Flash DTC 16) Oil Temp Sensor High Voltage 6E–96
Circuit Description 6E–96
Action Taken When the DTC Sets 6E–96
Conditions for Clearing the MIL/DTC 6E–96
Diagnostic Aids 6E–96
Test Description 6E–97
Engine Oil Temperature Sensor 6E–97
Diagnostic Trouble Code (DTC) P0201 (Flash DTC 51) Injector # 1 Circuit Fault ... 6E–99
Circuit Description 6E–99
Action Taken When the DTC Sets 6E–99
Conditions for Clearing the MIL/DTC 6E–99
Diagnostic Aids 6E–99
Test Description 6E–99
Injector Test 6E–99
Diagnostic Trouble Code (DTC) P0202 (Flash DTC 52) Injector # 2 Circuit Fault ... 6E–101
Circuit Description 6E–101
Action Taken When the DTC Sets 6E–101
Conditions for Clearing the MIL/DTC 6E–101
Diagnostic Aids 6E–101
Test Description 6E–101
Injector Test 6E–101
Diagnostic Trouble Code (DTC) P0203 (Flash DTC 52) Injector # 3 Circuit Fault ... 6E–103
Circuit Description 6E–103
Action Taken When the DTC Sets 6E–103
Conditions for Clearing the MIL/DTC 6E–103
Diagnostic Aids 6E–103
Test Description 6E–103
Injector Test 6E–103
Diagnostic Trouble Code (DTC) P0204 (Flash DTC 54) Injector # 4 Circuit Fault ... 6E–105
Circuit Description 6E–105
Action Taken When the DTC Sets 6E–105
Conditions for Clearing the MIL/DTC 6E–105
Diagnostic Aids 6E–105
Test Description 6E–105
Injector Test 6E–105
Diagnostic Trouble Code (DTC) P0217 (Flash DTC 22) High Coolant Temp Waring 6E–107
Circuit Description 6E–107
Action Taken When the DTC Sets 6E–107
Conditions for Clearing the MIL/DTC 6E–107
Diagnostic Aids 6E–107
Test Description 6E–107
Diagnostic Trouble Code (DTC) P1217 (Flash DTC 36) High Oil Temp Warning 6E–109
Circuit Description 6E–109
Action Taken When the DTC Sets 6E–109
Conditions for Clearing the MIL/DTC 6E–109
Diagnostic Aids 6E–109
Diagnostic Trouble Code (DTC) P0219 (Flash DTC 11) Engine Over Speed Warning 6E–111
Circuit Description 6E–111
Action Taken When the DTC Sets 6E–111
Conditions for Clearing the MIL/DTC 6E–111
Diagnostic Aids 6E–111
Diagnostic Trouble Code (DTC) P0336 (Flash DTC 43) CKP (Crank Position) Sensor Out of Synchro 6E–114
Circuit Description 6E–114
Action Taken When the DTC Sets 6E–114
Conditions for Clearing the MIL/DTC 6E–114
Diagnostic Aids 6E–114
Diagnostic Trouble Code (DTC) P0337 (Flash DTC 43) CKP (Crank Position) Sensor No Signal 6E–116
Circuit Description 6E–116
Action Taken When the DTC Sets 6E–116
Conditions for Clearing the MIL/DTC 6E–116
Diagnostic Aids 6E–116
Diagnostic Trouble Code (DTC) P0341 (Flash DTC 41) CMP (Cam Position) Sensor Out of Synchro 6E–119
Circuit Description 6E–119
Action Taken When the DTC Sets 6E–119
Conditions for Clearing the MIL/DTC 6E–119
Diagnostic Aids 6E–119
Test Description 6E–119
Diagnostic Trouble Code (DTC) P0342 (Flash DTC 41) CMP (Cam Position) Sensor No Signal 6E–122
Circuit Description 6E–122
Action Taken When the DTC Sets 6E–122
Conditions for Clearing the MIL/DTC 6E–122

Diagnostic Aids 6E–122
Test Description 6E–122
Diagnostic Trouble Code (DTC) P0380 (Flash DTC 66) Glow Relay Circuit Open/Short 6E–126
Circuit Description 6E–126
Action Taken When the DTC Sets 6E–126
Conditions for Clearing the MIL/DTC 6E–126
Diagnostic Aids 6E–126
Diagnostic Trouble Code (DTC) P0381 (Flash DTC 67) Glow Lamp Circuit Open/Short 6E–128
Circuit Description 6E–128
Action Taken When the DTC Sets 6E–128
Conditions for Clearing the MIL/DTC 6E–128
Diagnostic Aids 6E–128
Diagnostic Trouble Code (DTC) P1403 (Flash DTC 32) EGR EVRV Fault 6E–130
Circuit Description 6E–130
Diagnostic Aids 6E–130
Test Description 6E–130
Diagnostic Trouble Code (DTC) P1404 (Flash DTC 31) EGR VSV Circuit 6E–132
Circuit Description 6E–132
Diagnostic Aids 6E–132
Diagnostic Trouble Code (DTC) P0405 (Flash DTC 26) EGR Pressure Sensor Low Voltage 6E–134
Action Taken When the DTC Sets 6E–134
Conditions for Clearing the MIL/DTC 6E–134
Diagnostic Aids 6E–134
Diagnostic Trouble Code (DTC) P1405 (Flash DTC 37) EGR EVRV Circuit Open/Short 6E–136
Circuit Description 6E–136
Action Taken When the DTC Sets 6E–136
Conditions for Clearing the MIL/DTC 6E–136
Diagnostic Aids 6E–136
Diagnostic Trouble Code (DTC) P0406 (Flash DTC 26) EGR Pressure Sensor High Voltage 6E–138
Action Taken When the DTC Sets 6E–138
Conditions for Clearing the MIL/DTC 6E–138
Diagnostic Aids 6E–138
Diagnostic Trouble Code (DTC) P0475 (Flash DTC 71) EXH #1 VSV Circuit 6E–140
Circuit Description 6E–140
Action Taken When the DTC Sets 6E–140
Conditions for Clearing the MIL/DTC 6E–140
Diagnostic Aids 6E–140
Diagnostic Trouble Code (DTC) P1475 (Flash DTC 71) EXH #2 VSV Circuit Open/Short 6E–142
Circuit Description 6E–142
Action Taken When the DTC Sets 6E–142
Conditions for Clearing the MIL/DTC 6E–142
Diagnostic Aids 6E–142
Diagnostic Trouble Code (DTC) P1485 (Flash DTC 74) ITP (Intake Thorottle Position) Sensor Low Voltage 6E–144
Circuit Description 6E–144
Action Taken When the DTC Sets 6E–144
Conditions for Clearing the MIL/DTC 6E–144
Diagnostic Aids 6E–144
Diagnostic Trouble Code (DTC) P1486 (Flash DTC 74) ITP (Intake Throttle Position) Sensor High Voltage 6E–146
Circuit Description 6E–146
Action Taken When the DTC Sets 6E–146
Conditions for Clearing the MIL/DTC 6E–146
Diagnostic Aids 6E–146
Diagnostic Trouble Code (DTC) P1487 (Flash DTC 73) Intake Throttle System Circuit Open/Start 6E–148
Circuit Description 6E–148
Action Taken When the DTC Sets 6E–148
Conditions for Clearing the MIL/DTC 6E–148
Diagnostic Aids 6E–148
Diagnostic Trouble Code (DTC) P1488 (Flash DTC 72) Intake Throttle Motor Control Circuit Signal Gap 6E–150
Circuit Description 6E–150
Action Taken When the DTC Sets 6E–150
Conditions for Clearing the MIL/DTC 6E–150
Diagnostic Aids 6E–150
Diagnostic Trouble Code (DTC) P0502 (Flash DTC 24) VSS (Vehicle Speed Sensor) No Signal 6E–152
Circuit Description 6E–152
Action Taken When the DTC Sets 6E–152
Conditions for Clearing the MIL/DTC 6E–152
Test Description 6E–153
Diagnostic Trouble Code (DTC) P0510 (Flash DTC 75) Idle SW Malfunction, Open Circuit 6E–155
Circuit Description 6E–155
Action Taken When the DTC Sets 6E–155
Conditions for Clearing the MIL/DTC 6E–155
Diagnostic Aids 6E–155
Diagnostic Trouble Code (DTC) P1510 (Flash DTC 75) Idle SW Malfunction Short Circuit 6E–157
Circuit Description 6E–157
Action Taken When the DTC Sets 6E–157
Conditions for Clearing the MIL/DTC 6E–157
Diagnostic Aids 6E–157
Diagnostic Trouble Code (DTC) P0562 (Flash DTC 35) System Voltage Too Low . . 6E–159
Circuit Description 6E–159
Action Taken When the DTC Sets 6E–159

Conditions for Clearing the MIL/DTC 6E–159
Diagnostic Aids 6E–159
Diagnostic Trouble Code (DTC) P1562 (Flash DTC 35) System Voltage Too Low at Cranking 6E–160
Circuit Description 6E–160
Action Taken When the DTC Sets 6E–160
Conditions for Clearing the MIL/DTC 6E–160
Diagnostic Aids 6E–160
Diagnostic Trouble Code (DTC) P1587 (Flash DTC 25) Brake SW Malfunction 6E–161
Circuit Description 6E–161
Action Taken When the DTC Sets 6E–161
Conditions for Clearing the MIL/DTC 6E–161
Diagnostic Aids 6E–161
Diagnostic Trouble Code (DTC) P1588 (Flash DTC 25) Brake SW Malfunction 6E–163
Circuit Description 6E–163
Action Taken When the DTC Sets 6E–163
Conditions for Clearing the MIL/DTC 6E–163
Diagnostic Aids 6E–163
Diagnostic Trouble Code (DTC) P0601 (Flash DTC 55) ECM Checksum Error 6E–165
Action Taken When the DTC Sets 6E–165
Conditions for Clearing the MIL/DTC 6E–165
Diagnostic Aids 6E–165
Diagnostic Trouble Code (DTC) P0650 (Flash DTC 77) Check Engine Lam Circuit Open/Short 6E–166
Circuit Description 6E–166
Action Taken When the DTC Sets 6E–166
Conditions for Clearing the MIL/DTC 6E–166
Diagnostic Aids 6E–166
Diagnostic Trouble Code (DTC) P0654 (Flash DTC 27) Tachometer Circuit Open/Short 6E–168
Circuit Description 6E–168
Action Taken When the DTC Sets 6E–168
Conditions for Clearing the MIL/DTC 6E–168
Diagnostic Aids 6E–168
Diagnostic Trouble Code (DTC) P1655 (Flash DTC 17) Thermo Relay Circuit Open/Short 6E–170
Circuit Description 6E–170
Action Taken When the DTC Sets 6E–170
Conditions for Clearing the MIL/DTC 6E–170
Diagnostic Aids 6E–170
Diagnostic Trouble Code (DTC) P1657 (Flash DTC 76) ECM Main Relay Circuit Open/Short 6E–172
Circuit Description 6E–172
Action Taken When the DTC Sets 6E–172
Conditions for Clearing the MIL/DTC 6E–172
Diagnostic Aids 6E–172
Diagnostic Trouble Code (DTC) P1589 (Flash DTC 47) Transmission SW Circuit Open/Short 6E–174
Circuit Description 6E–174
Action Taken When the DTC Sets 6E–174
Conditions for Clearing the MIL/DTC 6E–174
Diagnostic Aids 6E–174
Symptom Diagnosis 6E–176
Default Matrix Table 6E–199
On–Vehicle Service Camshaft Position (CMP) Sensor 6E–201
Removal Procedure 6E–201
Inspection Procedure 6E–201
Installation Procedure 6E–201
Crankshaft Position (CKP) Sensor 6E–202
Removal Procedure 6E–202
Installation Procedure 6E–202
Engine Coolant Temperature (ECT) Sensor . 6E–203
Removal Procedure 6E–203
Installation Procedure 6E–203
Intake Air Temperature (IAT) Sensor 6E–203
Removal Procedure 6E–203
Installation Procedure 6E–204
Manifold Absolute Pressure (MAP) Sensor . 6E–204
Removal Procedure 6E–204
Installation Procedure 6E–205
Oil Temperature (OT) Sensor 6E–205
Removal Procedure 6E–205
Installation Procedure 6E–206
Malfunction Indicator Lamp (MIL) 6E–206
Removal and Installation Procedure 6E–206
Engine Control Module (ECM) 6E–206
Service Precaution 6E–206
Electrostatic Discharge (ESD) Damage ... 6E–206
Removal Procedure 6E–207
Installation Procedure 6E–208
EEPROM 6E–208
General Description 6E–208
Functional Check 6E–208
Intake Throttle Position (ITP) Sensor 6E–208
Removal Procedure 6E–208
Function Check 6E–209
Installation Procedure 6E–209
Vehicle Speed Sensor (VSS) 6E–210
Removal Procedure 6E–210
Inspection Procedure 6E–210
Installation Procedure 6E–210
Air Cleaner/Air Filter 6E–211
Removal Procedure 6E–211
Installation Procedure 6E–211
Accel Position (AP) Sensor 6E–211
Removal Procedure 6E–211
Installation Procedure 6E–212
Accelerator Pedal Replacement 6E–212

Removal Procedure 6E–212
Installation Procedure 6E–212
Fuel Filter Cap 6E–213
General Description 6E–213
Inspection Procedure 6E–213
Fuel Filter 6E–213
Removal and Installation Procedure 6E–213
Fuel Gauge Unit 6E–213
Removal Procedure 6E–213
Installation Procedure 6E–214
Fuel Injectors 6E–214
Removal and Installation Procedure 6E–214
Fuel Temperature Sensor 6E–214
Removal Procedure 6E–214
Installation Procedure 6E–215
Rail Pressure (RP) Sensor 6E–216
Removal Procedure 6E–216
Installation Procedure 6E–216
Fuel Tank 6E–216
Removal Procedure 6E–216
Throttle Body (TB) 6E–217
Removal Procedure 6E–217
Installation Procedure 6E–217
Air Conditioning (A/C) Relay 6E–217
Removal Procedure 6E–217
Installation Procedure 6E–217
Exhaust Gas Recirculation (EGR) Vacuum Switch Valve (VSV) 6E–217
Removal Procedure 6E–217
Installation Procedure 6E–218
Electronic Vacuum Regurating Valve (EVRV) 6E–219
Removal Procedure 6E–219
Installation Procedure 6E–220
Wiring and Connectors 6E–220
Wiring Harness Service 6E–220
Connectors and Terminals 6E–220
Wire Harness Repair: Twisted Shielded Cable 6E–220
Removal Procedure 6E–220
Installation Procedure 6E–221
Twisted Leads 6E–221
Removal Procedure 6E–221
Installation Procedure 6E–222
Weather-Pack Connector 6E–223
Tools Required 6E–223
Removal Procedure 6E–223
Installation Procedure 6E–223
Com-Pack III 6E–224
General Information 6E–224
Metri-Pack 6E–224
Tools Required 6E–224
Removal Procedure 6E–224
Installation Procedure 6E–224
General Description (ECM and Sensors) 6E–225
57X Reference ECM Input 6E–225
A/C Request Signal 6E–225
Crankshaft Position (CKP) Sensor 6E–225
Camshaft Position (CMP) Sensor and Signal 6E–225
Engine Coolant Temperature (ECT) Sensor 6E–225
Electrically Erasable Programmable Read Only Memory (EEPROM) 6E–225
Intake Air Temperature (IAT) Sensor 6E–225
Manifold Absolute Pressure (MAP) Sensor 6E–226
Engine Control Module (ECM) 6E–226
ECM Function 6E–226
ECM Components 6E–226
ECM Voltage Description 6E–226
ECM Input/Outputs 6E–226
ECM Service Precautions 6E–227
Intake Throttle Position (ITP) Sensor 6E–227
Transmission Range Switch 6E–227
Accelerator Position Sensor (AP) 6E–227
Aftermarket Electrical and Vacuum Equipment 6E–227
Electrostatic Discharge Damage 6E–227
General Description (Air Induction) 6E–228
Air Induction System 6E–228
General Description (Fuel Metering) 6E–228
Deceleration Mode 6E–228
Fuel Injector 6E–228
Fuel Metering System Components 6E–228
A/C Clutch Diagnosis 6E–228
A/C Request Signal 6E–228
General Description Exhaust Gas Recirculation (EGR) System 6E–228
EGR Purpose 6E–228
Fuse and Relay Panel (Underhood Electrical Center) RHD 6E–229
Fuse and Relay Panel (Underhood Electrical Center) LHD 6E–230

Specification

Tightening Specifications

Application	N·m	Kg·m	Lb Ft.	Lb In.
Camshaft Position Sensor Retaining Screw	9	0.9	—	78
Crankshaft Position Sensor Mounting Bolt	9	0.9	—	78
Engine Coolant Temperature Sensor	19	1.9	14	—
Throttle Body Mounting Nuts	20	2.0	14	—
VSS Retaining Bolt	16	1.6	12	—
MAP Sensor Screw	4	0.4	—	35
EGR VSV Bolts	8	0.8	—	69
Fuel Temp Sensor	19	1.9	14	—
Oil Temp Sensor Bolt	19	1.9	14	—
Rail Pressure Sensor Bolt	20	2.0	14	—

Diagrams and Schematics

ECM Wiring Diagram (1 of 6)

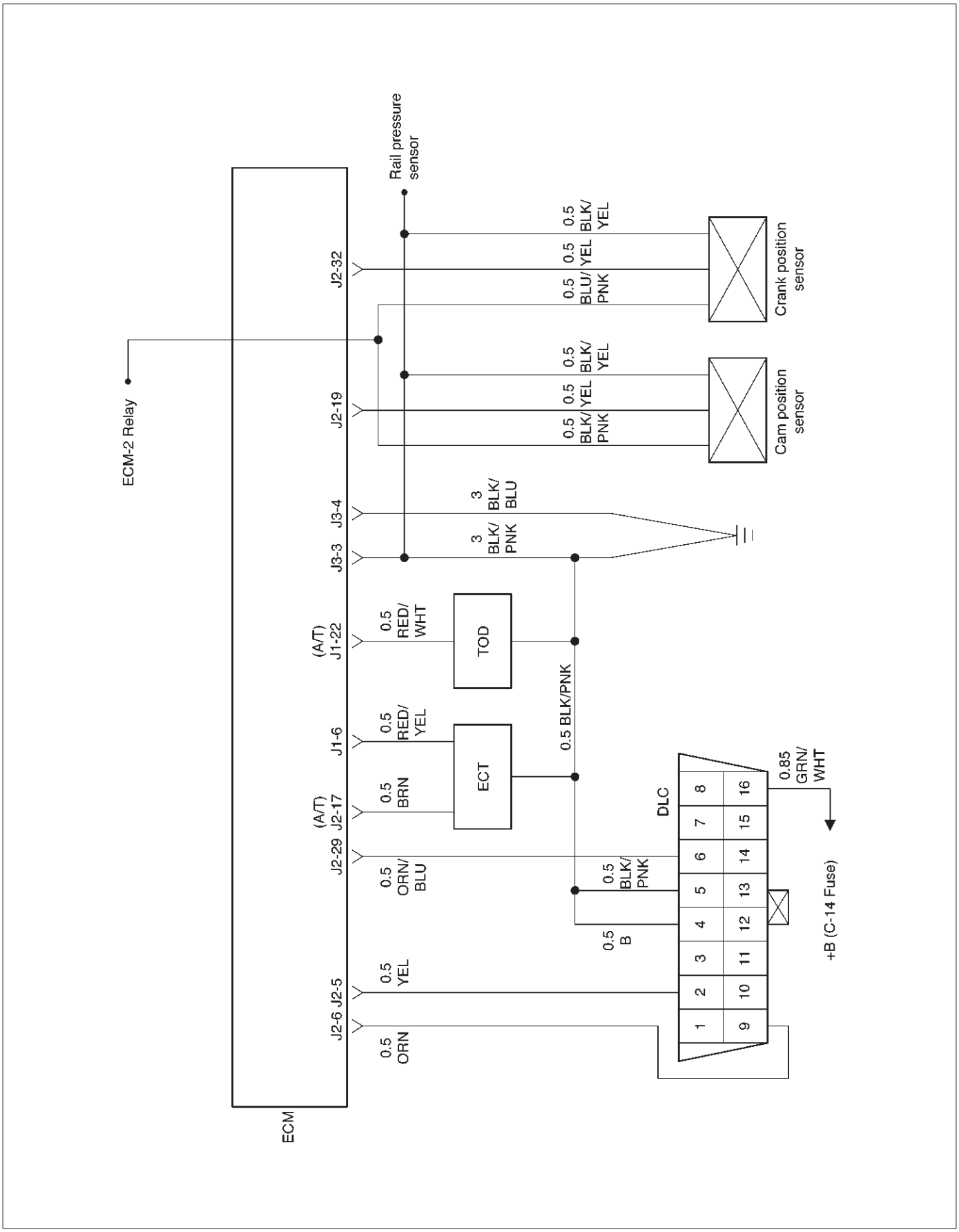

060RW127

ECM Wiring Diagram (2 of 6)

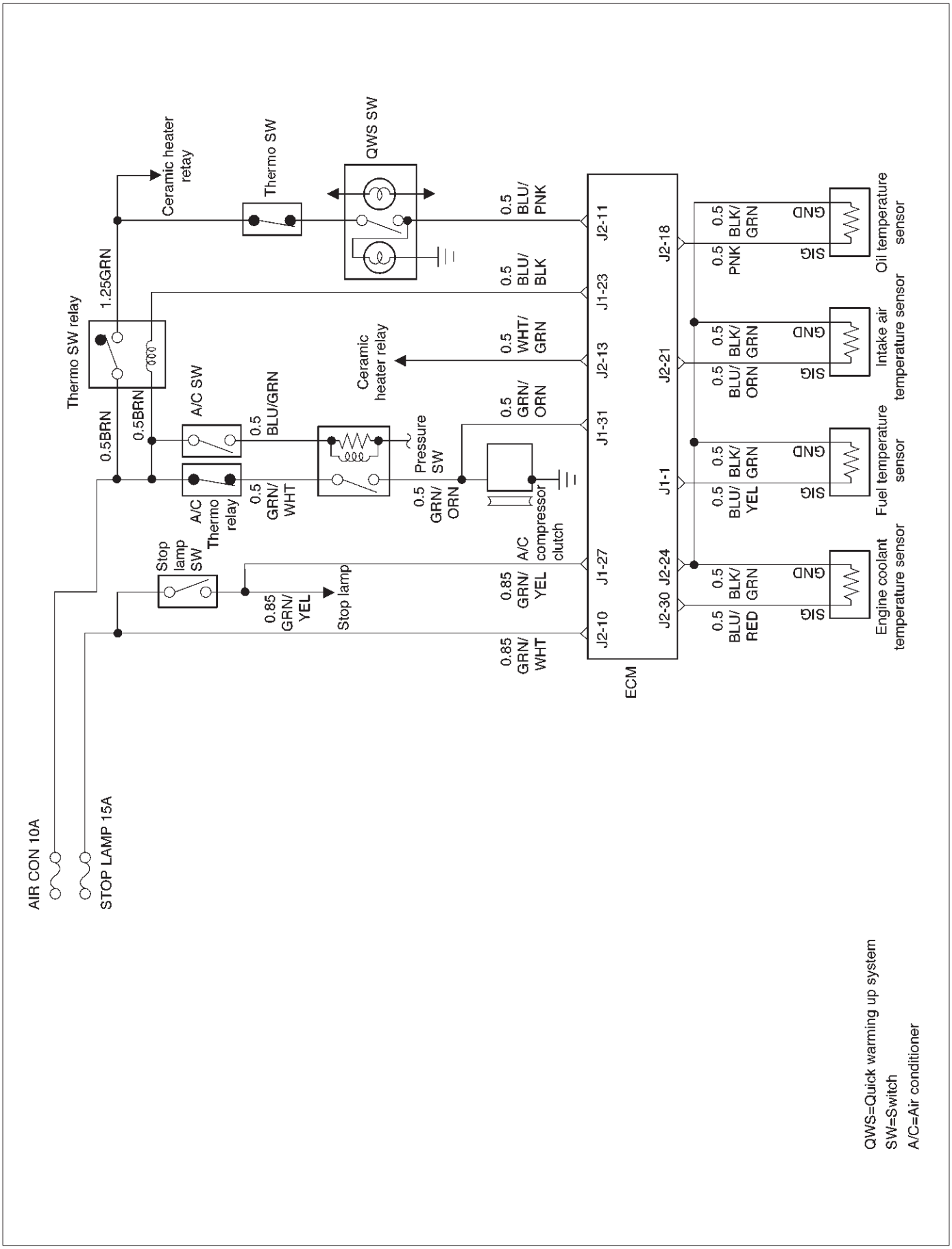

060RW125

ECM Wiring Diagram (3 of 6)

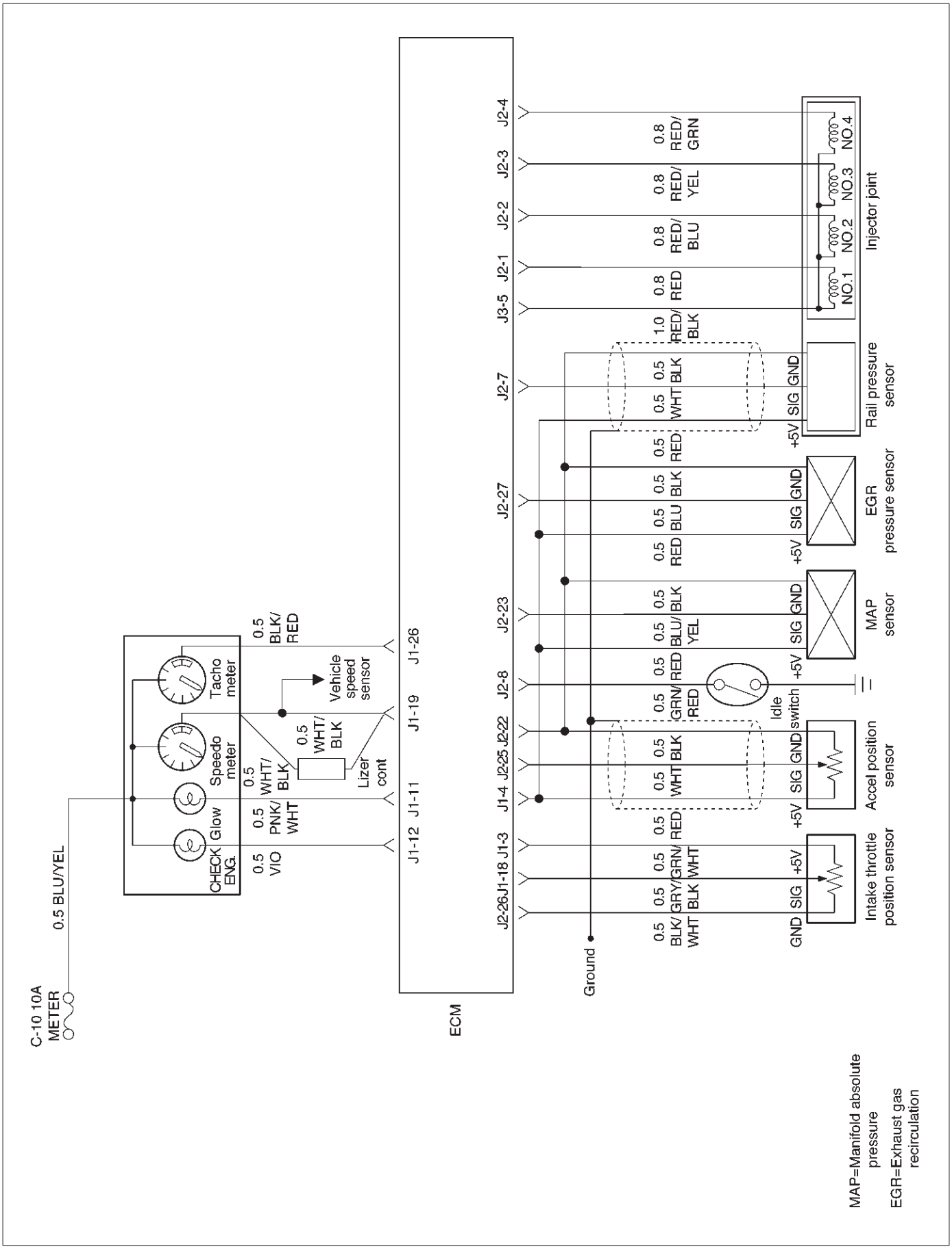

060RW126

ECM Wiring Diagram (4 of 6)

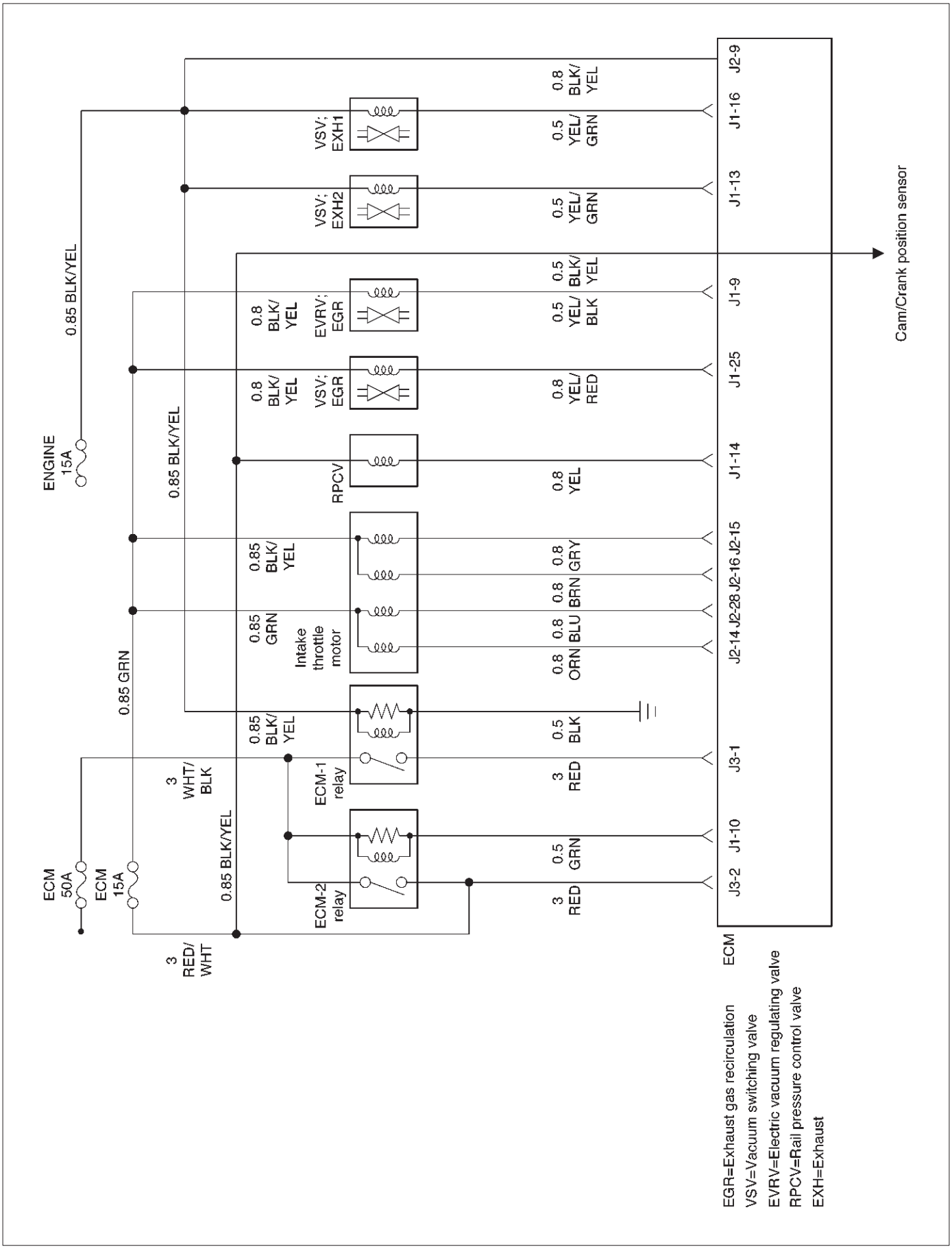

060RW128

ECM Wiring Diagram (5 of 6)

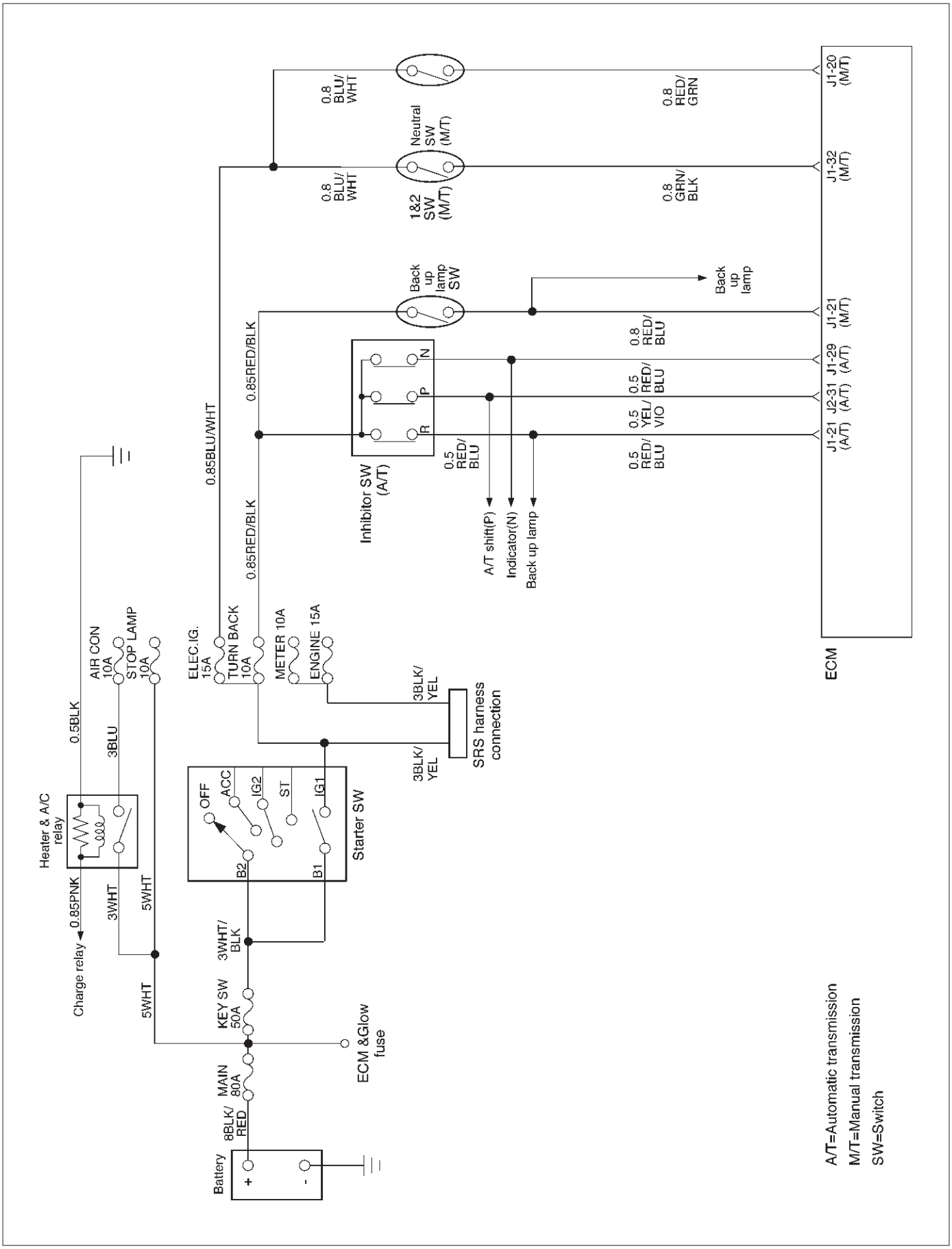

060RW123

ECM Wiring Diagram (6 of 6)

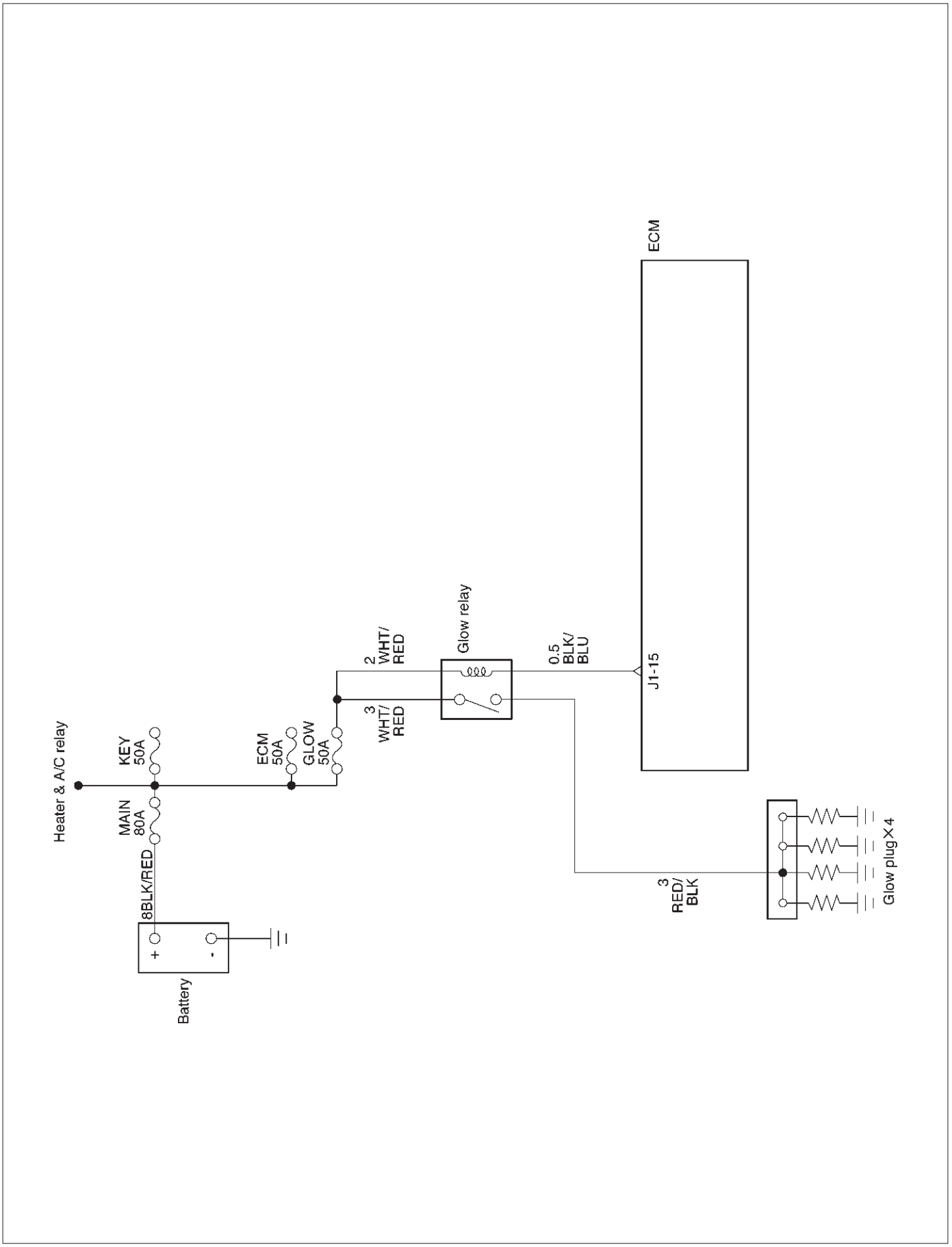

060RW124

ECM Pinouts

ECM Pinout Table, 32-Way Connector – J1 RED – Upper

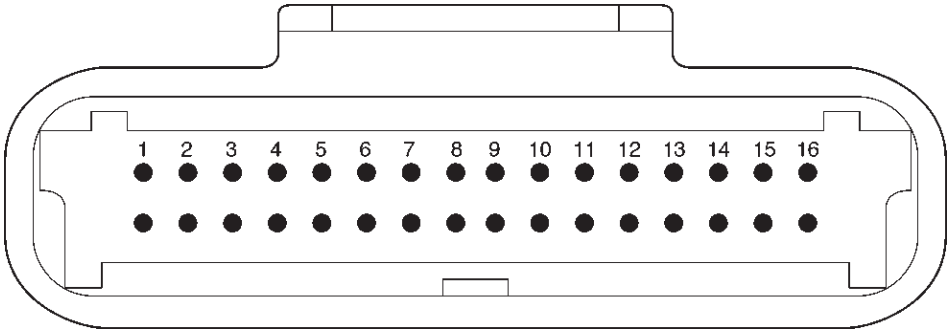

060RW138

J1 – RED	
PIN	SIGNAL
1	FUEL TEMPERATURE
2	SPARE ANALOG 1
3	+5VB1
4	+5VB2
5	SPARE ANALOG 3
6	ACCEL POS OUT 1
7	NOT USED
8	SPARE OUT 2 (TCC)
9	EVRV (EGR)
10	IGN RELAY
11	GLOW PLUG LAMP
12	DIAGNOSTIC LAMP
13	VSV (EXHAUST #2)
14	RAIL PRESS CNTRL VALVE
15	GLOW PLUG RELAY
16	VSV (EXHAUST #1)

ECM Pinout Table, 32-Way Connector – J1 RED – Lower

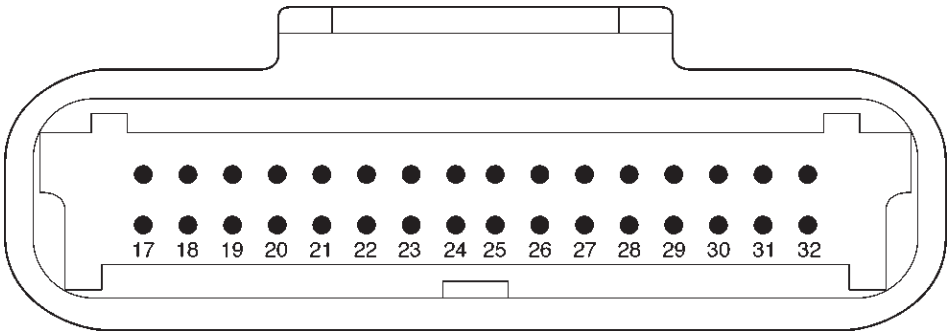

060RW137

J1 – RED	
PIN	SIGNAL
17	SPARE ANALOG 4
18	INTAKE SM POSITION
19	VEHICLE SPEED
20	MT NEUTRAL
21	REVERSE SW
22	ACCEL POS OUT 2
23	THERMO SW RELAY
24	SPARE OUT 3 (TURBO)
25	VSV (EGR)
26	TACHOMETER 1
27	BRAKE SW 1
28	NOT USED (BRAKE 2)
29	A/T NEUTRAL SW
30	NO CONNECTION
31	AC REQUEST SW
32	AT SOLENOID

ECM Pinout Table, 32-Way Connector – J2 BLUE – Upper

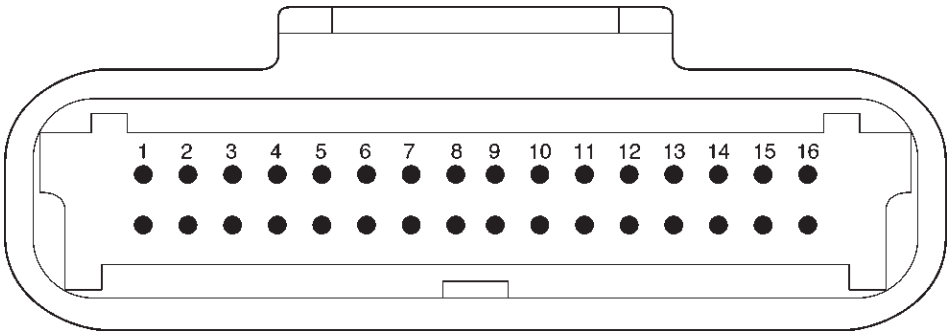

060RW138

J2 – BLUE	
PIN	SIGNAL
1	INJECTOR A RTN
2	INJECTOR B RTN
3	INJECTOR C RTN
4	INJECTOR D RTN
5	CLASS 2
6	SDATA
7	RAIL OIL PRESSURE
8	IDLE SW
9	IGN SW
10	BATTERY
11	QUICK WARM REQ. SW
12	PARTIAL IDLE SW
13	CERAMIC HTR REQUEST SW
14	INTAKE SW S2B
15	INTAKE SW S1T
16	INTAKE SW S1B

ECM Pinout Table, 32-Way Connector – J2 BLUE – Lower

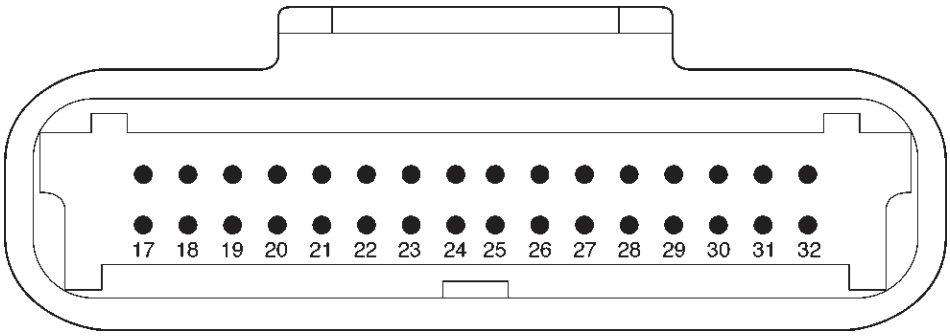

060RW137

J2 – BLUE	
PIN	SIGNAL
17	COOLANT TEMP OUT
18	OIL TEMPERATURE
19	TDC/CAM
20	SPARE ANALOG 2
21	INTAKE AIR TEMPERATURE
22	+5VRTN2
23	BOOST/INLET PRESSURE
24	+5VRTN3
25	ACCELERATOR POSITION
26	+5VRTN1
27	EGR VACUUM PRESSURE
28	INTAKE SM S2T
29	DIAGNOSTIC REQUEST SW
30	COOLANT TEMPERATURE
31	A/T PARK SW
32	CRANKSHAFT

ECM Pinout Table, 5-Way Connector – J3

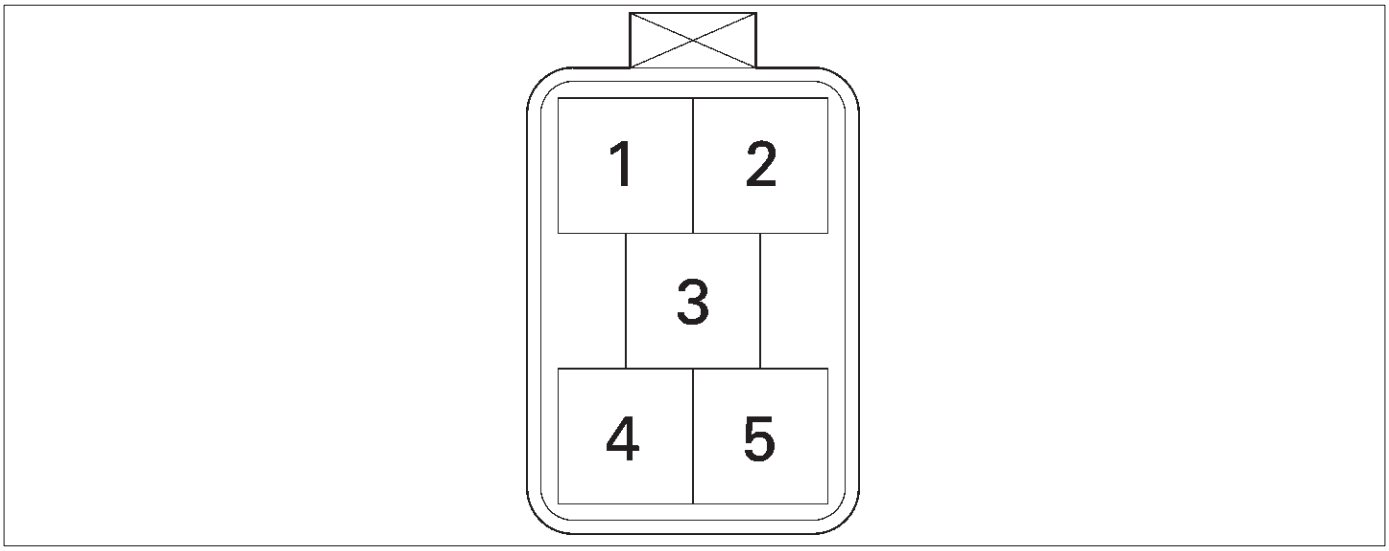

060RW139

J3	
PIN	SIGNAL
1	IGNITION
2	IGNITION
3	PWR GND
4	PWR GND
5	INJECTOR H1

Component Locator

Engine Component Locator Table

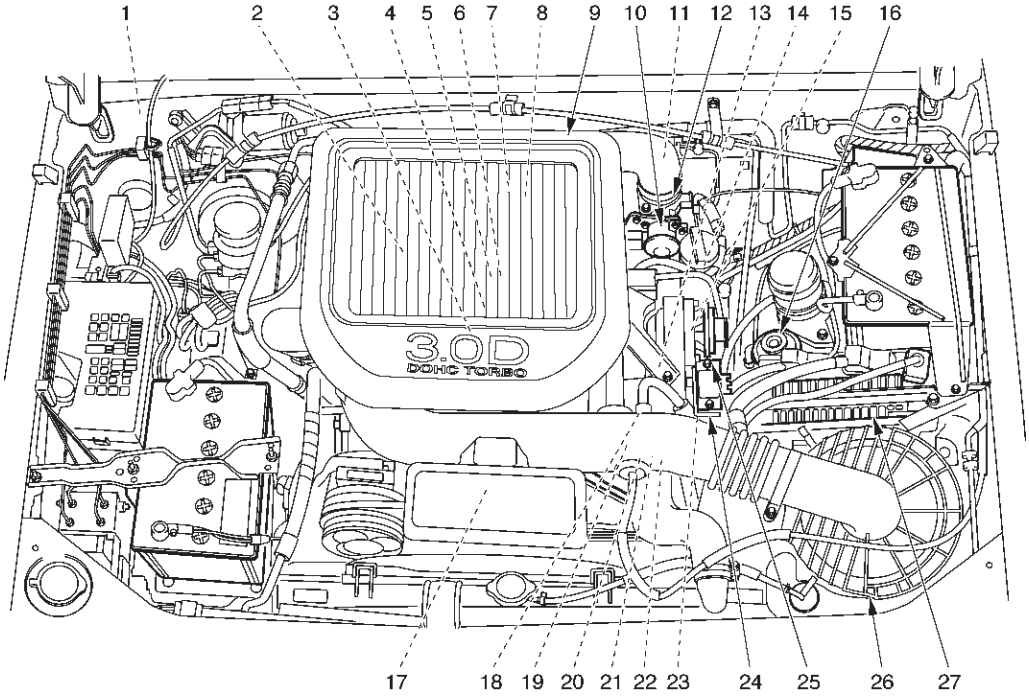

F06RW051

Number	Name	Location
1	AP (Accelerator Pedal Position) Sensor	AP Bracket
2	CKP (Crankshaft Position) Sensor	Inside the right front flywheel Housing
3	Oil Rail	Mounted on the camshaft carrier
4	Oil (Rail) Pressure Sensor	Mounted on the Oil Rail
5	OT (Oil Temperature) Sensor	Mounted on the Oil Rail
6	Fuel Injector	In the Cylinder Head Cover
7	Fuel Return Orifice	Inside the Cylinder Head
8	FT (Fuel Temperature) Sensor	Fuel Return Adaptor
9	Intercooler	On the Cylinder Head Cover
10	Intake Throttle Motor	Behind the Intake Manifold
11	Intake Throttle	Behind the Intake Manifold
12	2 Way Check Valve	Below the Intake Manifold
13	VSV (Vacuum Switching Valve)	At the left Cylinder Body
14	EGR Pressure Sensor	Below the Intake Manifold
15	Fuel Filter	At the left Engine Room
16	CMP (Camshaft Position) Sensor	On the forward of Timing Gear Case
17	IAT (Intake Air Temperature) Sensor	Below the Intake Manifold
18	ECT (Engine Coolant Temperature)	Thermostat Housing
19	High Pressure Oil Pump	On the back Timing Gear Case

Number	Name	Location
20	Rail Pressure Control Valve	In the High Pressure Oil Pump
21	Fuel Pump	In the High Pressure Oil Pump
22	EVRV	On the Intake Manifold
23	MAP (Manifold Absolute Pressure) Sensor	On the Intake Manifold
24	EGR Valve	On the Intake Manifold
25	Air Cleaner	At the left Engine Room
26	ECM	Behind the Air Cleaner

Sensors and Miscellaneous Component Locators

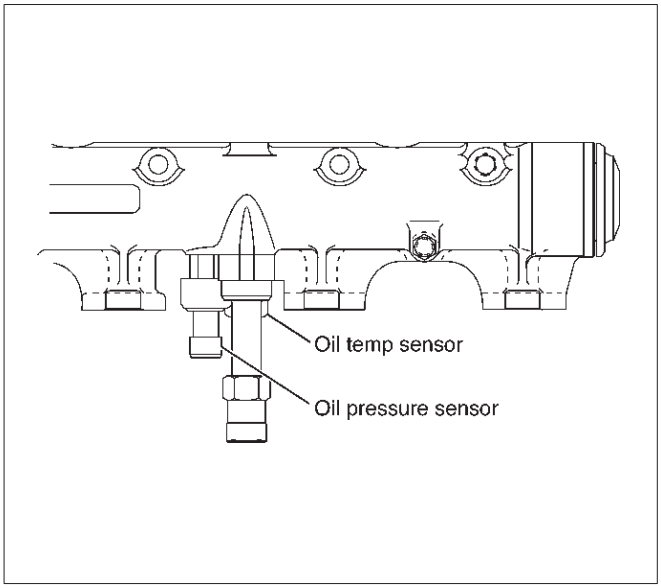

035RW115

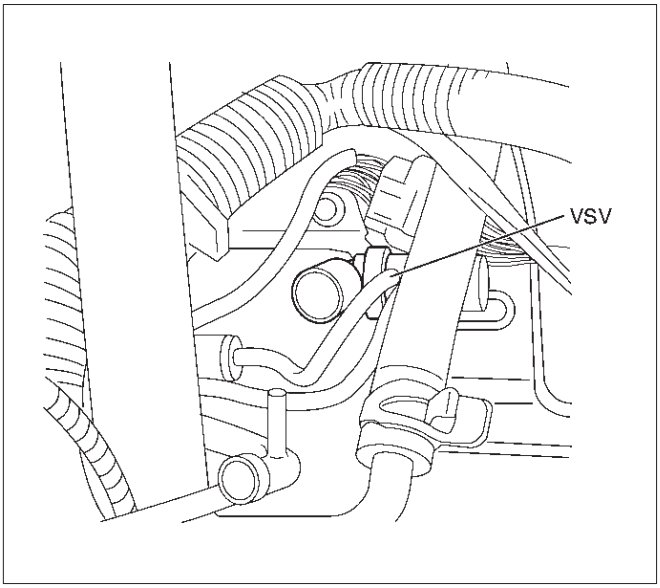

035RW118

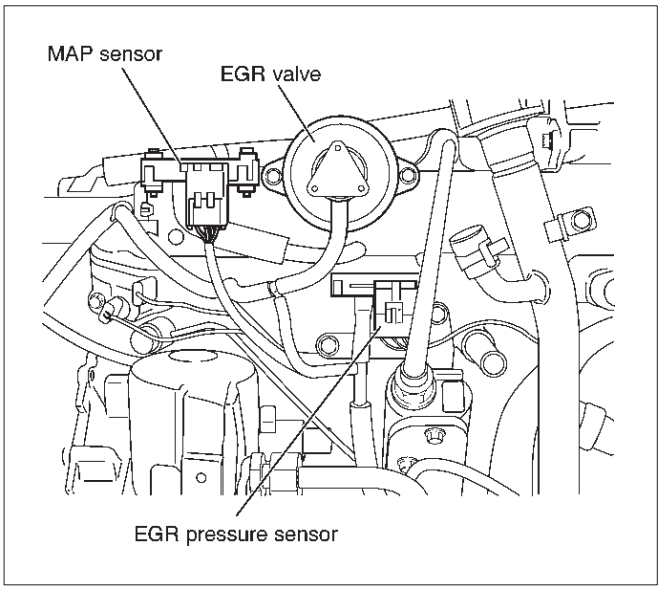

035RW117

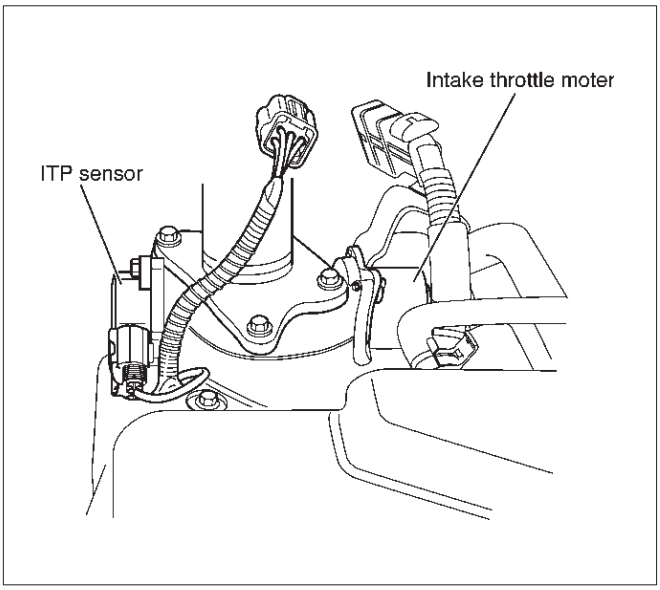

035RW119

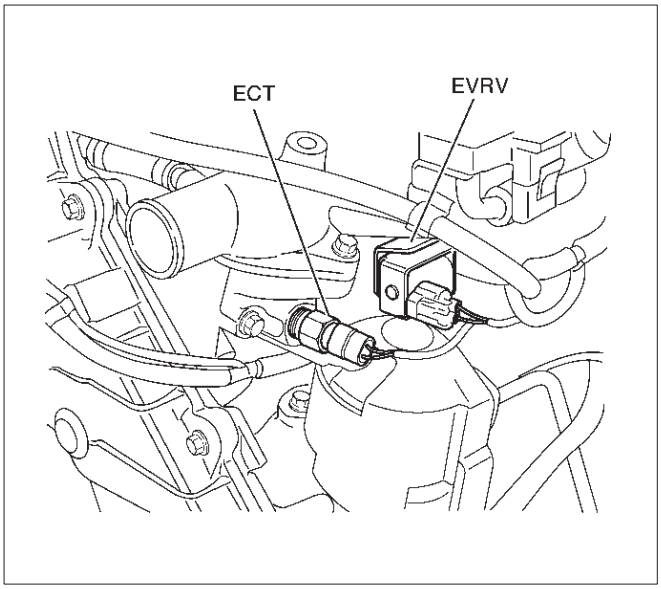

060RW179

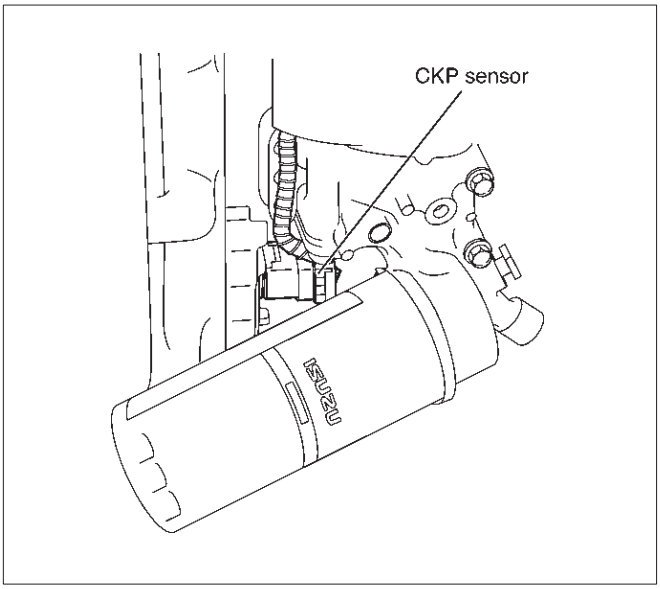

035RW120

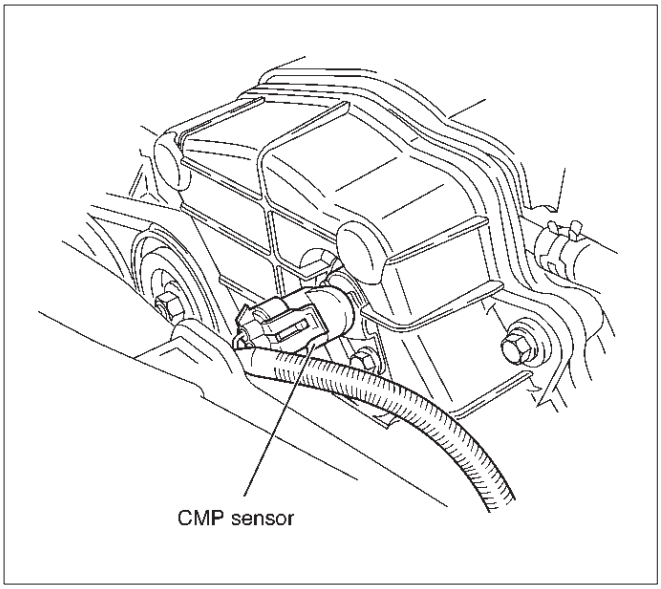

035RW121

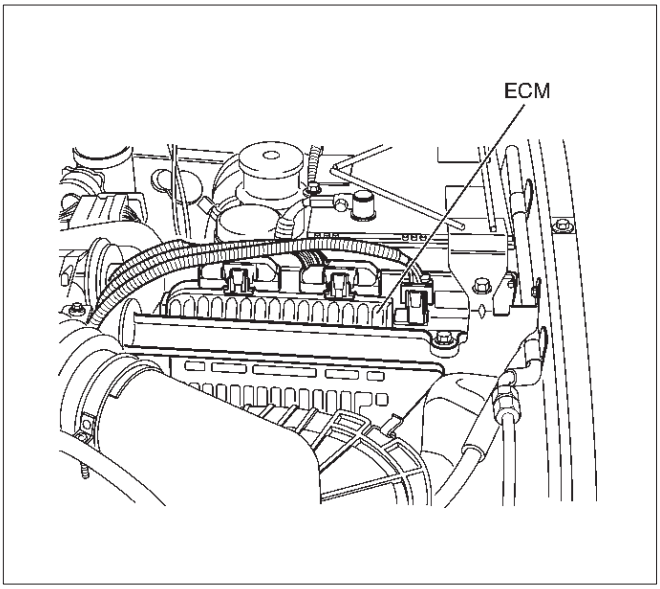

035RW107

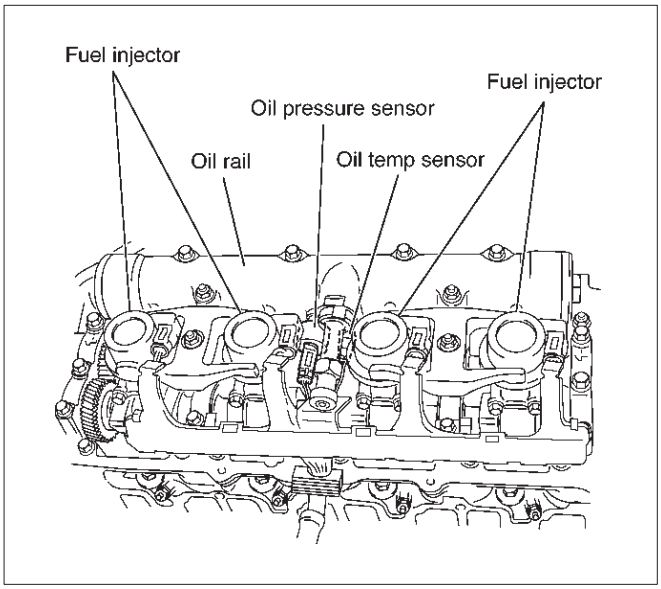

035RW122

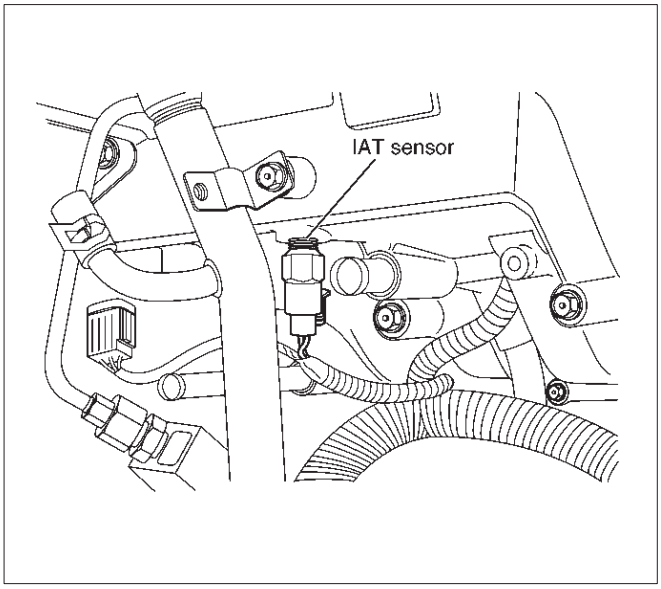

035RW116

Abbreviations Charts

List of abbreviations which may be used in this section.

Abbreviations	Term	Abbreviations	Term
A/C	Air Conditioner	BLK	Black
A/T	Automatic Transmission	BLU	Blue
ACC	Accessory	BRN	Brown
AP	Accel Position	GRN	Green
ASM	Assembly	GRY	Gray
CKP	Crank Position	LT BLU	Light Blue
CMP	Cam Position	LT GRN	Light Green
DLC	Data Link Connector	ORN	Orange
DTC	Diagnosis Trouble Code	PNK	Pink
DVM	Digital Volt Meter	RED	Red
ECM	Engine Control Module	VIO	Violet
ECT	Engine Coolant Temperature	WHT	White
EGR	Exhaust Gas Recircuration	YEL	Yellow
EVRV	Electric Vacuum Regulating Valve		
EXH	Exhaust		
FT	Fuel Temperature		
IAT	Intake Air Temperature		
IG	Ignition		
ITP	Intake Throttle Position		
M/T	Manual Transmission		
MAP	Manifold Absolute Pressure		
MIL	Mulfunction Indicator Lamp		
OBD	On-Board Diagnostic		
OT	Oil Temperature		
QOS	Quick on Start System		
QWS	Quick Warming-Up System		
RP	Rail Pressure		
RPCV	Rail Pressure Control Valve		
SRS	Supplemental Restraint System		
ST	Start		
SW	Switch		
TEMP	Temperature		
TOD	Torque on Demand		
VSS	Vehicle Speed Sensor		
VSV	Vacuum Switching Valve		
HEUI	Hydraulically Actuated Electronically Controlled Unit Injector		

Diagnosis

Strategy-Based Diagnostics

Strategy-Based Diagnostics

The strategy-based diagnostic is a uniform approach to repair all Electrical/Electronic (E/E) systems. The diagnostic flow can always be used to resolve an E/E system problem and is a starting point when repairs are necessary. The following steps will instruct the technician how to proceed with a diagnosis:

1. Verify the customer complaint.
   - To verify the customer complaint, the technician should know the normal operation of the system.
2. Perform preliminary checks.
   - Conduct a thorough visual inspection.
   - Review the service history.
   - Detect unusual sounds or odors.
   - Gather diagnostic trouble code information to achieve an effective repair.
3. Check bulletins and other service information.
   - This includes videos, newsletters, etc.
4. Refer to service information (manual) system check(s).
   - “System checks” contain information on a system that may not be supported by one or more DTCs. System checks verify proper operation of the system. This will lead the technician in an organized approach to diagnostics.
5. Refer to service diagnostics.

DTC Stored

Follow the designated DTC chart exactly to make an effective repair.

No DTC

Select the symptom from the symptom tables. Follow the diagnostic paths or suggestions to complete the repair. You may refer to the applicable component/system check in the system checks.

No Matching Symptom

1. Analyze the complaint.
2. Develop a plan for diagnostics.
3. Utilize the wiring diagrams and the theory of operation.

Call technical assistance for similar cases where repair history may be available. Combine technician knowledge with efficient use of the available service information.

Intermittents

Conditions that are not always present are called intermittents. To resolve intermittents, perform the following steps:

1. Observe history DTCs, DTC modes, and freezeframe data.
2. Evaluate the symptoms and the conditions described by the customer.
3. Use a check sheet or other method to identify the circuit or electrical system component.
4. Follow the suggestions for intermittent diagnosis found in the service documentation.

Most scan tools, such as the Tech 2 and the DVM, have data-capturing capabilities that can assist in detecting intermittents.

No Trouble Found

This condition exists when the vehicle is found to operate normally. The condition described by the customer may be normal. Verify the customer complaint against another vehicle that is operating normally. The condition may be intermittent. Verify the complaint under the conditions described by the customer before releasing the vehicle.

1. Re-examine the complaint.
   When the complaint cannot be successfully found or isolated, a re-evaluation is necessary. The complaint should be re-verified and could be intermittent as defined in *Intermittents*, or could be normal.
2. Repair and verify.
   After isolating the cause, the repairs should be made. Validate for proper operation and verify that the symptom has been corrected. This may involve road testing or other methods to verify that the complaint has been resolved under the following conditions:
   - Conditions noted by the customer.
   - If a DTC was diagnosed, verify a repair by duplicating conditions present when the DTC was set as noted in the Failure Records or Freeze Frame data.

Verifying Vehicle Repair

Verification of the vehicle repair will be more comprehensive for vehicles with OBD system diagnostics. Following a repair, the technician should perform the following steps:

IMPORTANT: Follow the steps below when you verify repairs on OBD systems. Failure to follow these steps could result in unnecessary repairs.

1. Review and record the Failure Records and the Freeze Frame data for the DTC which has been diagnosed (Freeze Frame data will only be stored for the MIL (“Check Engine” lamp) has been requested).
2. Clear the DTC(s).
3. Operate the vehicle within conditions noted in the Failure Records and Freeze Frame data.
4. Monitor the DTC status information for the specific DTC which has been diagnosed until the diagnostic test associated with that DTC runs.

General Service Information

Serviceability Issues

Non-OEM Parts

All of the OBD diagnostics have been calibrated to run with OEM parts. Accordingly, if commercially sold sensor or switch is installed, it makes a wrong diagnosis and turn on the MIL (“Check Engine” lamp).

Aftermarket electronics, such as cellular phones, stereos, and anti-theft devices, may radiate EMI into the control system if they are improperly installed. This may cause a false sensor reading and turn on the MIL (“Check Engine” lamp).

Poor Vehicle Maintenance

The sensitivity of OBD diagnostics will cause the MIL (“Check Engine” lamp) to turn on if the vehicle is not maintained properly. Restricted oil filters, fuel filters, and crankcase deposits due to lack of oil changes or improper oil viscosity can trigger actual vehicle faults that were not previously monitored prior to OBD. Poor vehicle maintenance can not be classified as a “non-vehicle fault”, but with the sensitivity of OBD diagnostics, vehicle maintenance schedules must be more closely followed.

Related System Faults

Many of the OBD system diagnostics will not run if the ECM detects a fault on a related system or component.

Visual/Physical Engine Compartment Inspection

Perform a careful visual and physical engine compartment inspection when performing any diagnostic procedure or diagnosing the cause of an emission test failure. This can often lead to repairing a problem without further steps. Use the following guidelines when performing a visual/physical inspection:

- Inspect all vacuum hoses for punches, cuts, disconnects, and correct routing.
- Inspect hoses that are difficult to see behind other components.
- Inspect all wires in the engine compartment for proper connections, burned or chafed spots, pinched wires, contact with sharp edges or contact with hot exhaust manifolds or pipes.

Basic Knowledge of Tools Required

NOTE: Lack of basic knowledge of this powertrain when performing diagnostic procedures could result in an incorrect diagnosis or damage to powertrain components. Do not attempt to diagnose a powertrain problem without this basic knowledge.

A basic understanding of hand tools is necessary to effectively use this section of the Service Manual.

Serial Data Communications

Class II Serial Data Communications

This vehicle utilizes the “Class II” communication system. Each bit of information can have one of two lengths: long or short. This allows vehicle wiring to be reduced by transmitting and receiving multiple signals over a single wire. The messages carried on Class II data streams are also prioritized. If two messages attempt to establish communications on the data line at the same time, only the message with higher priority will continue. The device with the lower priority message must wait.

On this vehicle the Tech 2 displays the actual values for vehicle parameters. It will not be necessary to perform any conversions from coded values to actual values.

On-Board Diagnostic (OBD)

On-Board Diagnostic Tests

A diagnostic test is a series of steps, the result of which is a pass or fail reported to the diagnostic executive. When a diagnostic test reports a pass result, the diagnostic executive records the following data:

- The diagnostic test has been completed since the last ignition cycle.
- The diagnostic test has passed during the current ignition cycle.
- The fault identified by the diagnostic test is not currently active.

When a diagnostic test reports a fail result, the diagnostic executive records the following data:

- The diagnostic test has been completed since the last ignition cycle.
- The fault identified by the diagnostic test is currently active.
- The fault has been active during this ignition cycle.
- The operating conditions at the time of the failure.

Comprehensive Component Monitor Diagnostic Operation

Comprehensive component monitoring diagnostics are required to operate engine properly.

Input Components:

Input components are monitored for circuit continuity and out-of-range values. This includes rationality checking. Rationality checking refers to indicating a fault when the signal from a sensor does not seem reasonable. Accel Position (AP) sensor that indicates high throttle position at low engine loads or MAP voltage. Input components may include, but are not limited to the following sensors:

- Intake Air Temperature (IAT) Sensor
- Crankshaft Position (CKP) Sensor
- Intake throttle Position (ITP) Sensor
- Engine Coolant Temperature (ECT) Sensor
- Camshaft Position (CMP) Sensor
- Manifold absolute Pressure (MAP) Sensor
- Accel Position Sensor
- Fuel Temp Sensor
- Rail Pressure Sensor
- Oil Temp Sensor
- EGR Pressure Sensor
- Vehicle Speed Sensor

Output Components:

Output components are diagnosed for proper response to control module commands. Components where functional monitoring is not feasible will be monitored for circuit continuity and out-of-range values if applicable.
Output components to be monitored include, but are not limited to, the following circuit:

- EGR VSV
- EGR EVRV
- Electronic Transmission controls
- Injector
- Intake throttle
- Glow plug
- MIL control

Refer to ECM and Sensors in General Descriptions.

Passive and Active Diagnostic Tests

A passive test is a diagnostic test which simply monitors a vehicle system or component. Conversely, an active test, actually takes some sort of action when performing diagnostic functions, often in response to a failed passive test.

Intrusive Diagnostic Tests

This is any on-board test run by the Diagnostic Management System which may have an effect on vehicle performance or emission levels.

Warm-Up Cycle

A warm-up cycle means that engine at temperature must reach a minimum of 70˚C (160˚F) *and* rise at least 22˚C (40˚F) over the course of a trip.

Freeze Frame

Freeze Frame is an element of the Diagnostic Management System which stores various vehicle information at the moment an emissions-related fault is stored in memory and when the MIL is commanded on. These data can help to identify the cause of a fault. Refer to *Storing And Erasing Freeze Fame Data* for more detailed information.

Failure Records

Failure Records data is an enhancement of the OBD Freeze Frame feature. Failure Records store the same vehicle information as does Freeze Frame, but it will store that information for any fault which is stored in on-board memory, while Freeze Frame stores information only for emission-related faults that command the MIL on.

Common OBD Terms

Diagnostic

When used as a noun, the word diagnostic refers to any on-board test run by the vehicle's Diagnostic Management System. A diagnostic is simply a test run on a system or component to determine if the system or component is operating according to specification. There are many diagnostics, shown in the following list:

- EGR
- engine speed
- vehicle speed
- ECT
- MAP
- VSV
- IAT
- ITP
- AP
- FT (Fuel Temp)
- RP (Rail Pressure)
- OT (Oil Temp)
- EGR EVRV
- Idle SW
- Brake SW

The Diagnostic Executive

The Diagnostic Executive is a unique segment of software which is designed to coordinate and prioritize the diagnostic procedures as well as define the protocol for recording and displaying their results. The main responsibilities of the Diagnostic Executive are listed as follows:

- Commanding the MIL ("Check Engine" lamp) on and off
- DTC logging and clearing
- Freeze Frame data for the first emission related DTC recorded
- Current status information on each diagnostic

Diagnostic Information

The diagnostic charts and functional checks are designed to locate a faulty circuit or component through a process of logical decisions. The charts are prepared with the requirement that the vehicle functioned correctly at the time of assembly and that there are not multiple faults present.
There is a continuous self-diagnosis on certain control functions. This diagnostic capability is complemented by the diagnostic procedures contained in this manual. The language of communicating the source of the malfunction is a system of diagnostic trouble codes. When a malfunction is detected by the control module, a diagnostic trouble code is set and the Malfunction Indicator Lamp (MIL) ("Check Engine" lamp) is illuminated.

Malfunction Indicator Lamp (MIL)

The Malfunction Indicator Lamp (MIL) looks the same as the MIL you are already familiar with "Check Engine" lamp.
Basically, the MIL is turned on when the ECM detects a DTC that will impact the vehicle emissions.

- When the MIL remains "ON" while the engine is running, or when a malfunction is suspected due to a driveability or emissions problem, a Powertrain On-Board Diagnostic (OBD) System Check must be performed. The procedures for these checks are given in On-Board Diagnostic (OBD) System Check. These checks will expose faults which may not be detected if other diagnostics are performed first.

DTC Types

Characteristic of Code

- Non-Emissions related
- Dose not request illumination of any lamp
- Stores a History DTC on the *first trip* with a fail
- Stores Fail Record when test fails
- Updates the Fail Record each time the diagnostic test fails

Storing and Erasing Freeze Frame Data and Failure Records

The data captured is called Freeze Frame data. The Freeze Frame data is very similar to a single record of operating conditions. Whenever the MIL is illuminated, the corresponding record of operating conditions is recorded to the Freeze Frame buffer.

Data from these faults take precedence over data associated with any other fault. The Freeze Frame data will not be erased unless the associated history DTC is cleared.

Each time a diagnostic test reports a failure, the current engine operating conditions are recorded in the *Failure Records* buffer. A subsequent failure will update the recorded operating conditions. The following operating conditions for the diagnostic test which failed *typically* include the following parameters:

- Engine Speed
- Engine Load
- Engine Coolant Temperature
- Vehicle Speed
- Intake Throttle Position
- MAP
- Injector Base Pulse Width
- Loop Status

Data Link Connector (DLC)

The provision for communication with the contorl module is the Data Link Connector (DLC). It is located at behind the lower front instrument panel. The DLC is used to connect to a Tech 2. Some common uses of the Tech 2 are listed below:

- Identifying stored Diagnostic Trouble Codes (DTCs).
- Clearing DTCs.
- Performing out put control tests.
- Reading serial data.

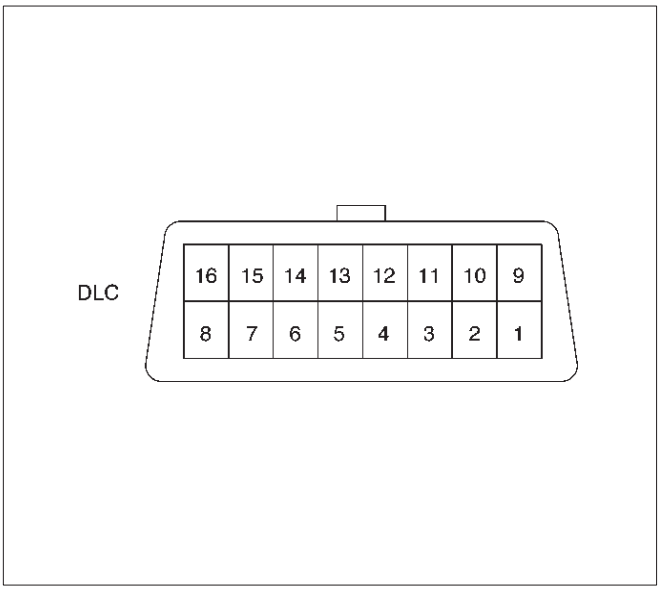

060RW046

Verifying Vehicle Repair

Verification of vehicle repair will be more comprehensive for vehicles with OBD system diagnostic. Following a repair, the technician should perform the following steps:

1. Review and record the Fail Records and/or Freeze Frame data for the DTC which has been diagnosed.
2. Clear DTC(s).
3. Operate the vehicle within conditions noted in the Fail Records and/or Freeze Frame data.
4. Monitor the DTC status information for the specific DTC which has been diagnosed until the diagnostic test associated with that DTC runs.

Following these steps are very important in verifying repairs on OBD systems. Failure to follow these steps could result in unnecessary repairs.

Reading Flash Diagnostic Trouble Codes

The provision for communicating with the Engine Control Module (ECM) is the Data Link Connector (DLC). The DLC is located in the front console box. It is used in the assembly plant to receive information in checking that the engine is operating properly before it leaves the plant.

The diagnostic trouble code(s) (DTCs) stored in the ECM's memory can be read either through a hand-held diagnostic scanner plugged into the DLC or by counting the number of flashes of the "Check Engine" Malfunction Indicator Lamp (MIL) when the diagnostic test terminal of the DLC is grounded. The DLC terminal "6" (diagnostic request) is pulled "Low" (grounded) by jumpering to DLC terminal "4", which is a ground wire.

This will signal the ECM that you want to "flash" DTC(s), if any are present. Once terminals "4" and "6" have been connected, the ignition switch must be moved to the "ON" position, with the engine not running.

The "Check Engine"MIL will indicate a DTC three times if a DTC is present. If more than one DTC has been stored

in the ECM's memory, the DTC(s) will be output from the lowest to the highest, with each DTC being displayed three times.
The DTC display will continue as long as the DLC is shorted.

Reading Diagnostic Trouble Codes Using a TECH 2

The procedure for reading diagnostic trouble code(s) is to used a diagnostic Tech 2. When reading DTC(s), follow instructions supplied by Tech 2 manufacturer.
For the 1998 model year, Isuzu dealer service departments will continue to use Tech 2.

Clearing Diagnostic Trouble Codes

IMPORTANT: Do not clear DTCs unless directed to do so by the service information provided for each diagnostic procedure. When DTCs are cleared, the Freeze Frame and Failure Record data which may help diagnose an intermittent fault will also be erased from memory.

If the fault that caused the DTC to be stored into memory has been corrected, the Diagnostic Executive will begin to count the "warm-up" cycles with no further faults detected, the DTC will automatically be cleared from the ECM memory.

To clear Diagnostic Trouble Codes (DTCs), use the Tech 2 "clear DTCs" or "clear information" function. When clearing DTCs follow instructions supplied by the Tech 2 manufacturer.
When a Tech 2 is not available, DTCs can also be cleared by disconnecting *one* of the following sources for at least thirty (30) seconds.

NOTE: To prevent system damage, the ignition key must be "OFF" when disconnecting or reconnecting battery power.

- The power source to the control module. Examples: fuse, pigtail at battery ECM connectors etc.
- The negative battery cable. (Disconnecting the negative battery cable will result in the loss of other on-board memory data, such as preset radio tuning).

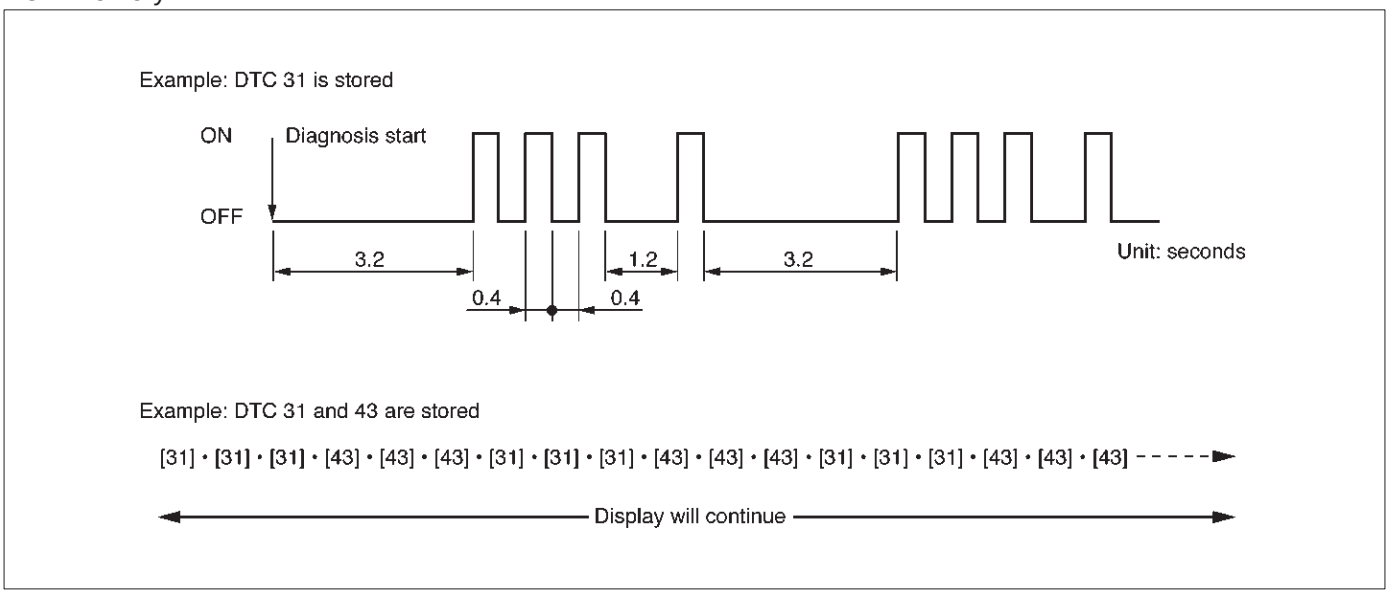

060RW169

Tech 2 Scan Tool

From 98 MY, Isuzu dealer service departments are recommended to use Tech 2. Please refer to Tech 2 user guide.

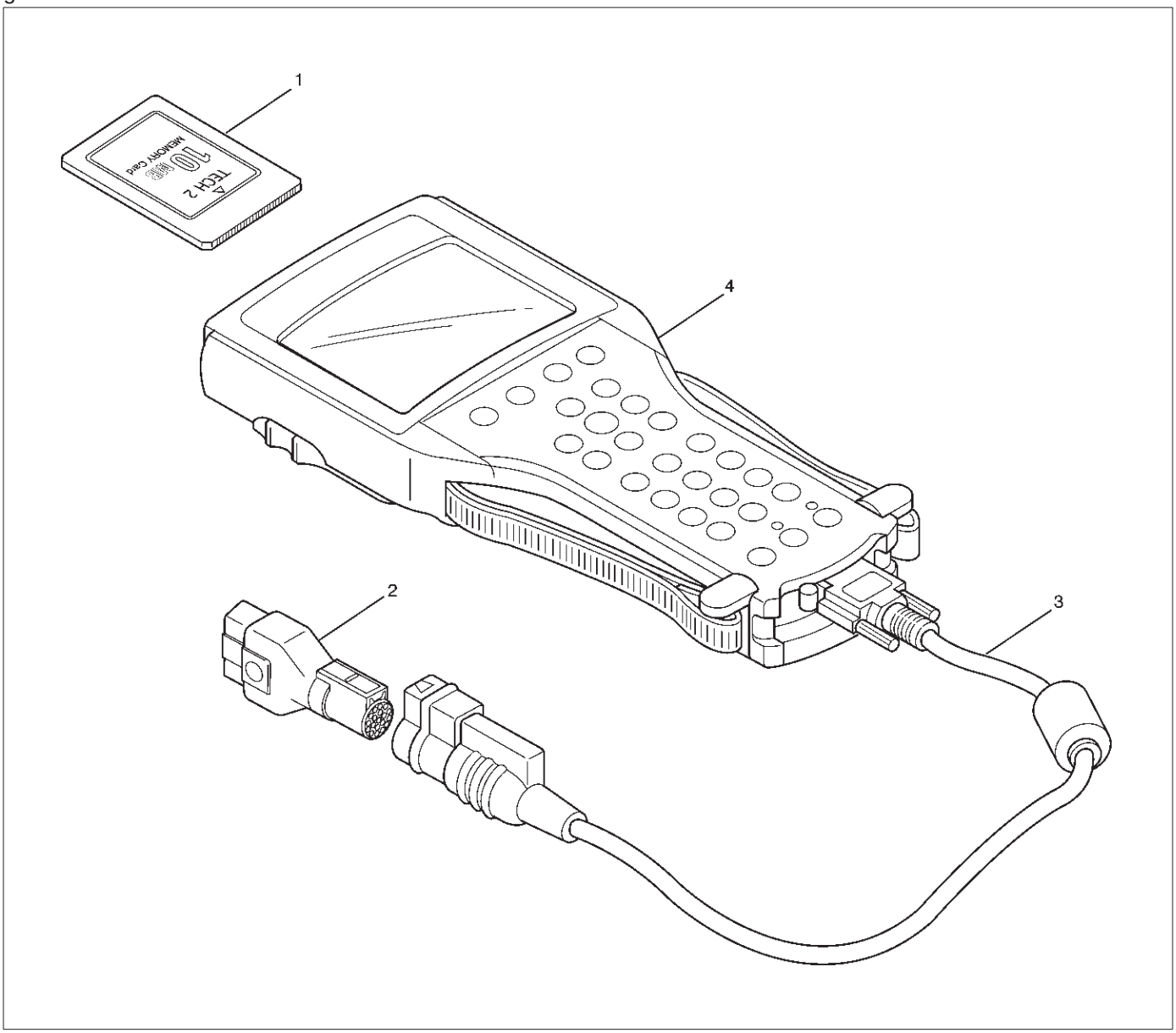

901RW257

Legend

(1) PCMCIA Card
(2) SAE 16/19 Adaptor
(3) DLC Cable
(4) Tech–2

Getting Started

- Before operating the Isuzu PCMCIA card with the Tech 2, the following steps must be performed:

1. The Isuzu 98 System PCMCIA card (1) inserts into the Tech 2 (5).
2. Connect the SAE 16/19 adapter (3) to the DLC cable (4).
3. Connect the DLC cable to the Tech 2 (5)
4. Make sure the vehicle ignition is off.
5. Connect the Tech 2 SAE 16/19 adapter to the vehicle DLC.
6. The vehicle ignition turns on.
7. Verify the Tech 2 power up display.

012RW105

NOTE: The RS232 Loop back connector is only to use for diagnosis of Tech 2 and refer to user guide of the Tech 2.

Operating Procedure

The power up screen is displayed when you power up the tester with the Isuzu systems PCMCIA card. Follow the operating procedure below.

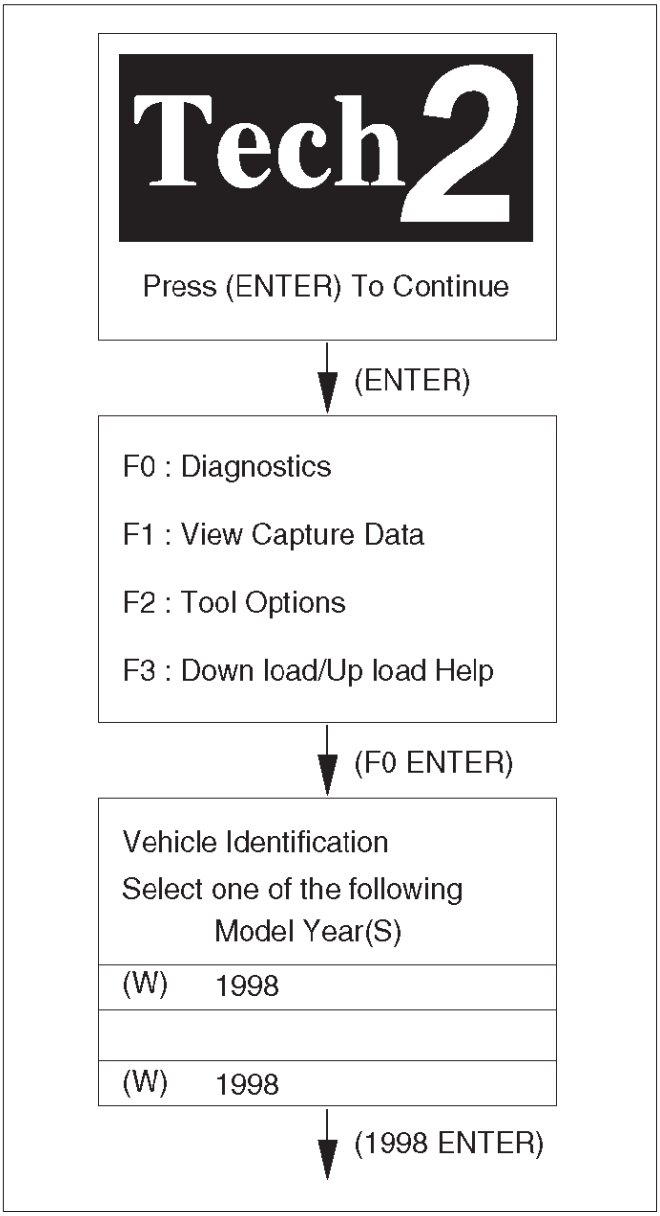

060RW014

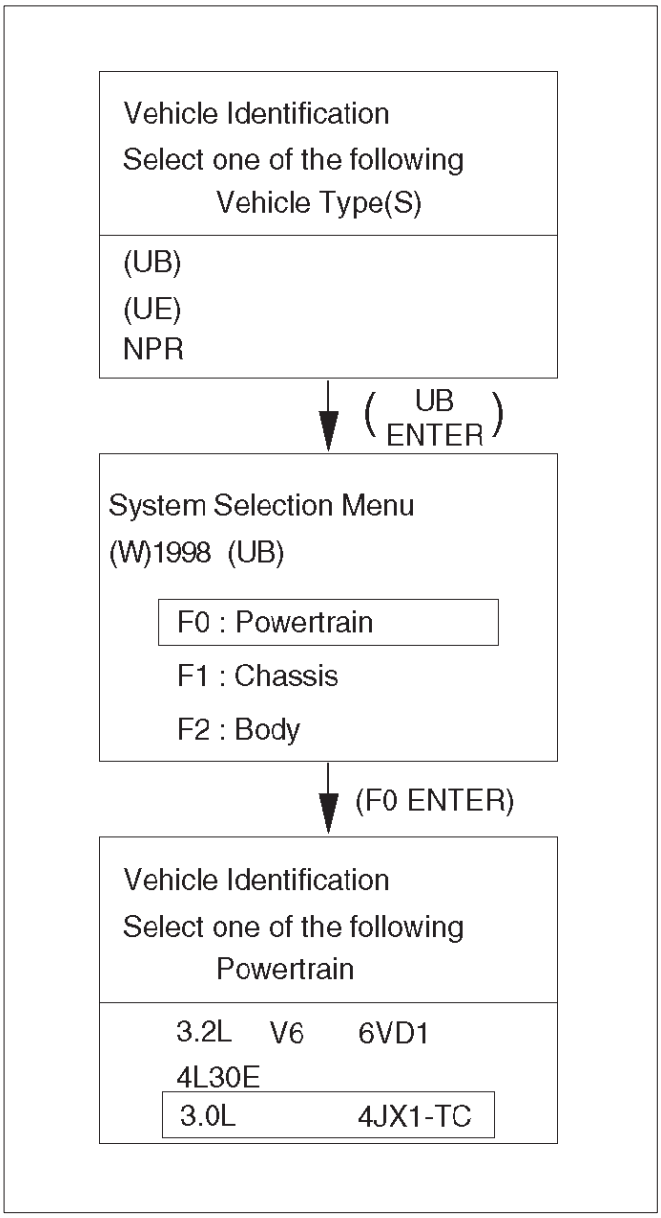

060RW120

Menu

- The following table shows, which functions are used the available equipment versions.

F0: Diagnostic Trouble Codes	
	F0: Read DTC Info Ordered By Priority
	F1: Read DTC Info As Stored By ECU
	F2: Clear DTC Information
	F3: Freeze Frame / Failure Records
F1: Data Display	
F2: Snapshot	
F3: Actuator Tests	
	F0: Checklight
	F1: Glow Time Lamp
	F2: EGR Switching Valve
	F3: Exhaust Switching Valve 1
	F4: Exhaust Switching Valve 2
F4: Miscellaneous Tests	
	F0: Throttle Motor Control
	F1: Rail Pressure Control
	F2: EGR Regulating Valve Control
	F3: Rail Pressure Control Valve
	F4: Injector Balance Test
F5: Programming	
	F0: Injector Calibration
	(F1: Rail Pressure Calibration)

DTC Modes

There are three options available in the Tech 2 DTC mode to display the enhanced information available. A description of the new modes, DTC Info, follows. After selecting DTC, the following menu appears:

- DTC Info
- Clear Info
- Read DTC Info Ordered By Priority

The following is a brief description of each of the sub menus in DTC Info. The order in which they appear here is alphabetical and not necessarily the way they will appear on the Tech 2.

DTC Information Mode

Use the DTC info mode to search for a specific type of stored DTC information.The service manual may instruct the technician to test for DTCs in a certain manner. Always follow published service procedures.

Fail This Ignition

This selection will display all DTCs that have failed during the present ignition cycle.

History

This selection will display only DTCs that are stored in the ECM's history memory. It will not display Type B DTCs that have not requested the MIL ("Check Engine" lamp). It will display all type A and B DTCs that have requested the MIL and have failed within the last 40 warm-up cycles. In addition, it will display all type C and type D DTCs that have failed within the last 40 warm-up cycles.

MIL SVC or Message Requested

This selection will display only DTCs that are requesting the MIL. Type C and type D DTCs cannot be displayed using this option. This selection will report type B DTCs only after the MIL has been requested.

Test Failed Since Code Cleared

This selection will display all active and history DTCs that have reported a test failure since the last time DTCs were cleared.

Injector Test

This test is conducted to make it sure that appropriate electric signals are being sent to injectors Nos. 1 – 4. Tech–2 must be used for this test.

Test Procedure:

1. Connect Tech–2 to the vehicle DLC.
2. Set Ignition Switch to the "ON" position.
3. Select Control Test.
4. Select Injector Test.
5. Send instructions to each injector(Switch on), making sure of injector working noise.

NOTE: If injector working noise (Clink) can hardly be confirmed, remove the engine head cover noise insulation.

Refer to Section 6A.

6. In the injector whose working noise has been confirmed, its electric circuit can be regarded as normal.
   As for the injector whose working noise has not been confirmed, its electric circuit or the injector proper is faulty.

EGR Valve Test

This test is conducted to check EGR valve for its working. This test needs Tech–2.

Test Procedure

1. Connect Tech–2 to vehicle DLC.
2. Switch on the engine.
3. Select "DIAGNOSIS" from the main menu.
4. Select Miscellaneous Test.
5. Select EGR Valve.
6. Instruct EGR Valve to check a data list.
7. If change in the data list shows a normal valve, the working of EGR Valve can be judged to be normal.

Rail Pressure Control Valve Test

This test is conducted to check RPC valve for its working. This test needs Tech–2.

Test Procedure

1. Connect Tech–2 to vehicle DLC.
2. Switch on the engine.
3. Select "DIAGNOSIS" from the main menu.
4. Select Miscellaneous Test.
5. Select Rail Pressure Control Valve.
6. Instruct RPC Valve to check a data list.
7. If change in the data list shows a normal valve, the working of RPC Valve can be judged to be normal.

Injector Balance Test

This test is conducted to make it sure that appropriate electric signals are being sent to injectors Nos. 1-4, when the engine is idling.
This test needs Tech–2.

Test Procedure

1. Connect Tech–2 to vehicle DLC.
2. The engine is running at idling condition.
3. Select "DIAGNOSIS" from the main menu.
4. Select Miscellaneous Test.
5. Select the injector Balance Test.
6. Send instructions to each injector(Switch On), making sure change of the engine vibration.
7. In the injector whose change of the vibration has been confirmed, it's electric circuit can be regarded as normal.

Data Programming in Case of ECM Change

When replacing ECM, it is necessary to confirm and record the group sign of injector beforehand. For this confirmation.

Tech–2 must be used. After ECM change, the recorded group sign should be programmed. Oil pressure sensor data also should be programmed.

- Group Sign Confirmation Procedure
  1 Connect Tech–2 to vehicle DLC.
  2 Turn Ignition Switch to the “ON” position.
  3 Select “DIAGNOSIS” from the main menu.
  4 Select programming.
  5 Select Read/store Trim Data.
  6 Confirm and record the group sign of injector.
- ECM Change
- Programming Procedure for Injector Group Sign
  1 Connect Tech–2 to vehicle DLC.
  2 Turn Ignition Switch to the “ON” position.
  3 Select “DIAGNOSIS” from the main menu.
  4 Select programming.
  5 Select ECM change.
  6 Select cylinder.
  7 Program Injector Group Sign.
  8 Confirm the completion of Injector programming.
- Programming Procedure for Oil Pressure Sensor
  1 Connect Tech–2 to vehicle DLC.
  2 Turn Ignition Switch to the “ON” position.
  3 Select “DIAGNOSIS” from the main menu.
  4 Select programming.

Rail Pressure Sensor Programming

Rail pressure sensor replacement must be programmed. This programming needs Tech–2.

Programing Procedure

1. Connect Tech–2 to vehicle DLC.
2. Turn Ignition Switch to the “ON” position.
3. Select “DIAGNOSIS” from the main menu.
4. Select Programming.
5. Select Oil Pressure Sensor change.
6. Execute Oil Pressure Sensor Program.
7. Confirm the completion of Oil Pressure Sensor Program.

Injector Group Sign Programming (Injector Change)

In case of Injector change, injector group sign must be programmed.
This programming needs Tech–2.

Programing Procedure

1. Connect Tech–2 to vehicle DLC.
2. Turn Ignition Switch to the “ON” position.
3. Select “DIAGNOSIS” from the main menu.
4. Select Programming.
5. Select Injector change.
6. Select the cylinder changed.
7. Appoint and select Injector Group Sign.
8. Confirm the completion of Injector programming.

Fuel Injection System

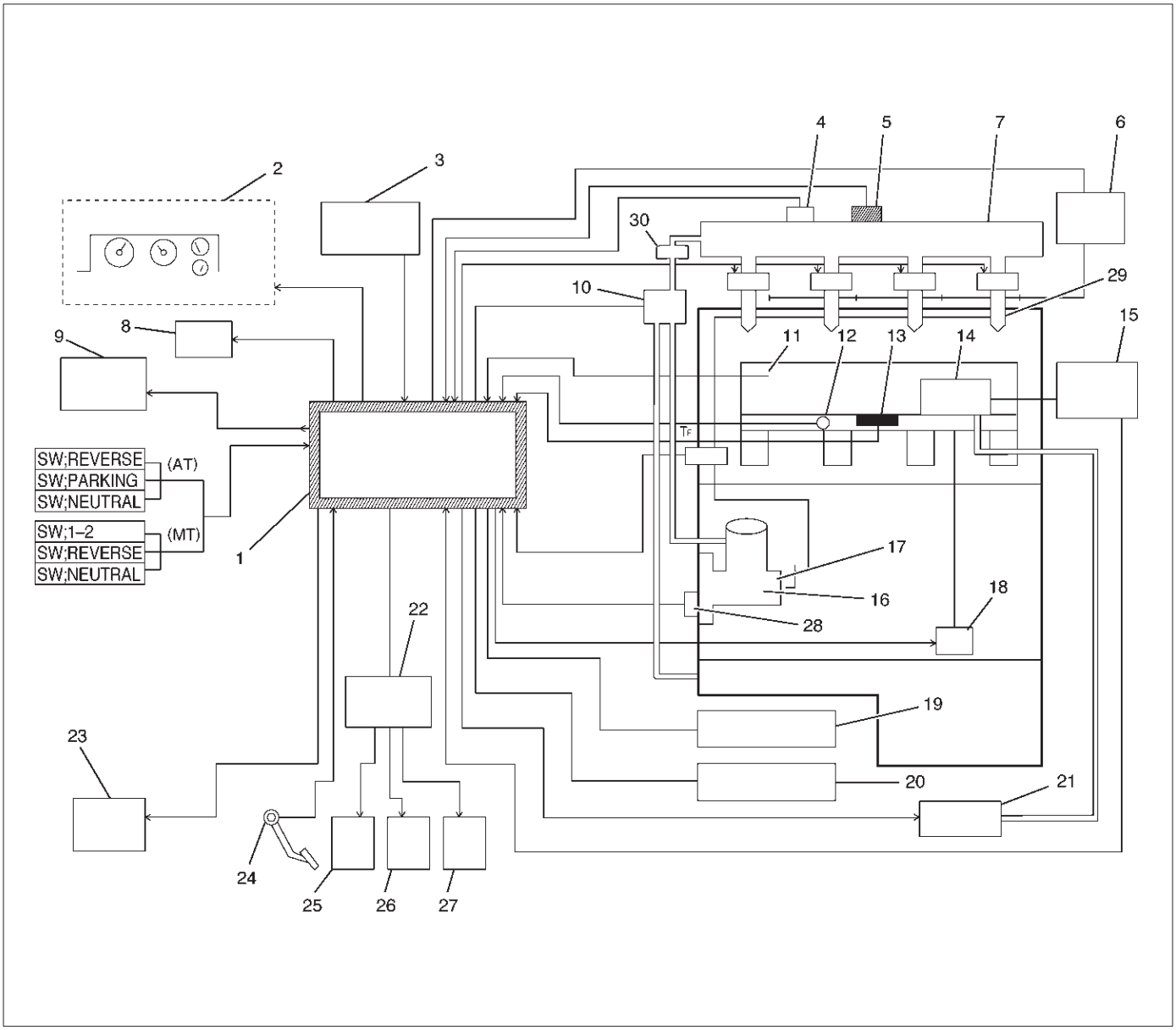

060RW178

Legend

(1) ECM
(2) Meter Panel
(3) Battery
(4) Oil Temp Sensor
(5) Rail Pressure Sensor
(6) Glow Relay
(7) Oil Rail
(8) Tech–2
(9) A/C Comp Relay
(10) RPCV
(11) Intake Air Temp Sensor
(12) Engine Coolant Temp Sensor
(13) MAP Sensor
(14) EGR Valve
(15) EGR Pressure Sensor
(16) High Pressure Oil Pump
(17) Fuel Pump
(18) VSV
(19) EXH Throttle VSV1
(20) EXH Throttle VSV2
(21) EVRV
(22) Engine Harness Connector
(23) QWS Relay
(24) APS
(25) T.O.D
(26) ECT
(27) OBD
(28) TDC
(29) Injector
(30) Edge Filter

Guid to the System

- Fuel Injection system is an HEUI (Hydraulically Actuated, Electronically Controlled, Unit, Injector) type. In this type of injector system, the oil pressurized by means of High Pressure Oil Pump (16) is fed through Rail Pressure Control Valve (10) and Oil Rail (7) to Injector (29) from which fuel is injected under this oil pressure.
  For diagnosis, therefore, the Rail Pressure as well as the Electric Circuit must be inspected.

On-Board Diagnostic (OBD) System Check

A Group

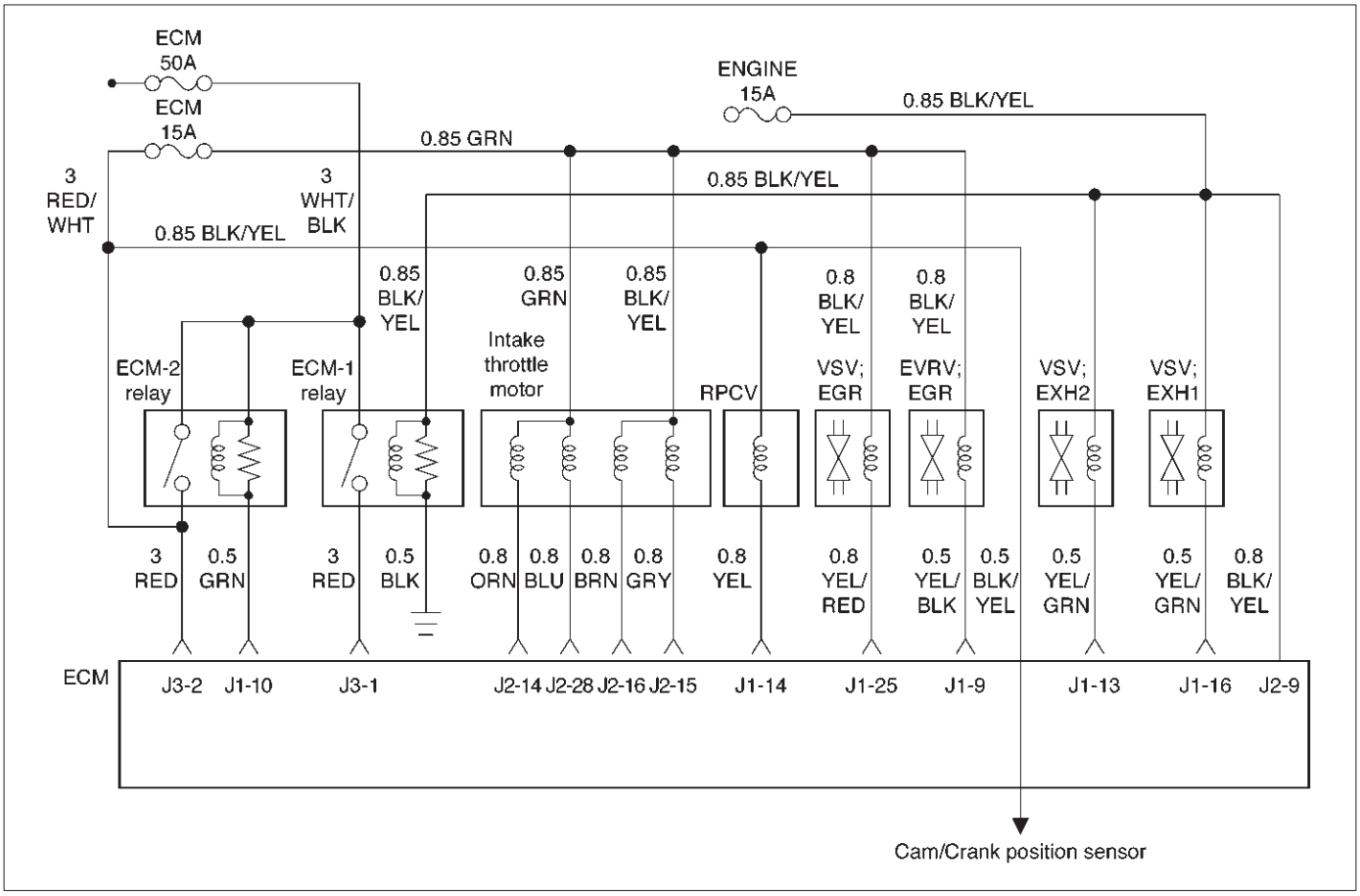

060RW135

B Group

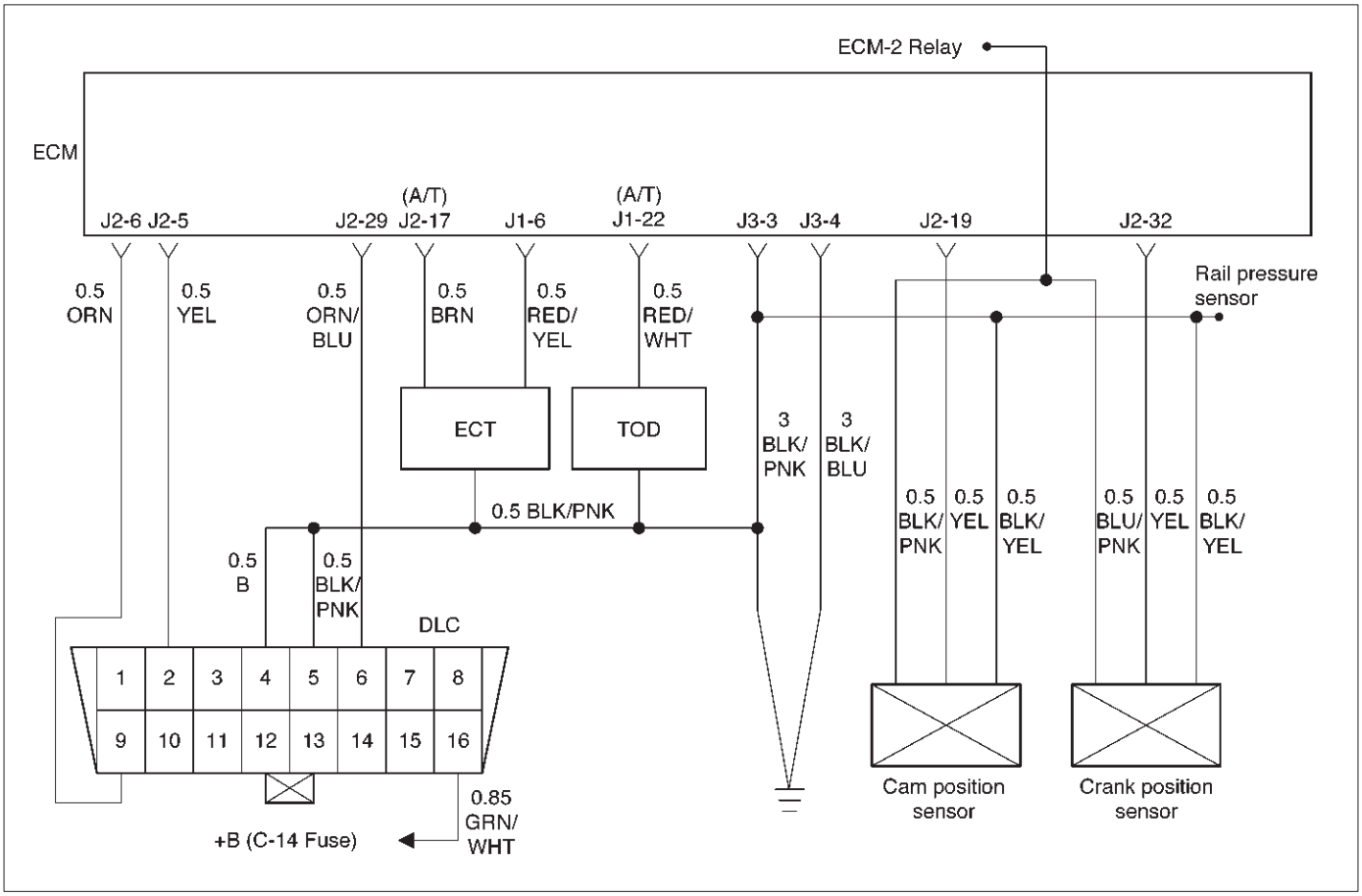

060RW133

C Group

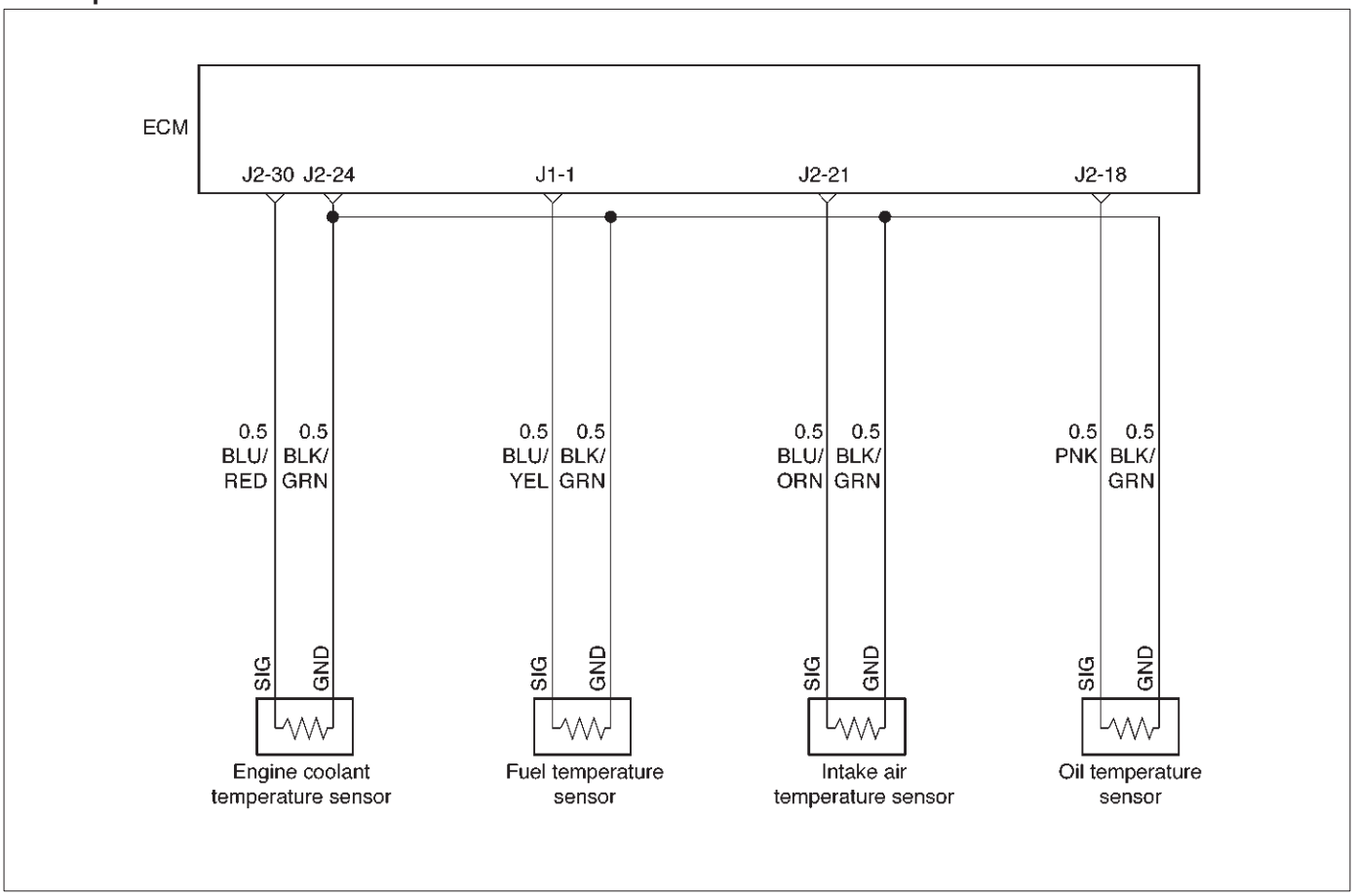

060RW129

D Group

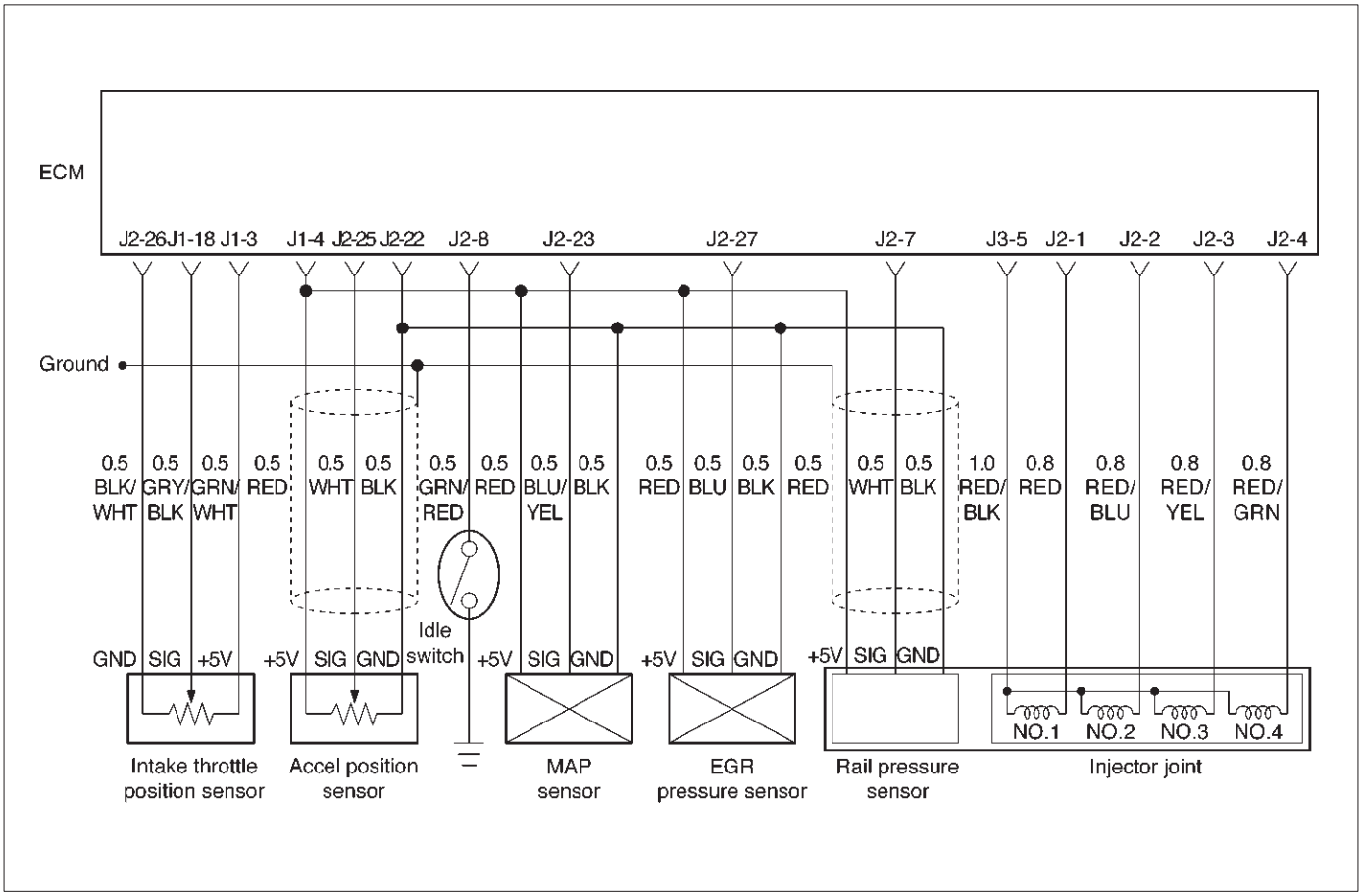

060RW134

Circuit Description

The on-board diagnostic system check is the starting point for any driveability complaint diagnosis. Before using this procedure, perform a careful visual/physical check of the ECM and engine grounds for cleanliness and tightness.

The on-board diagnostic system check is an organized approach to identifying a problem created by an electronic engine control system malfunction.

Diagnostic Aids

An intermittent may be caused by a poor connection, rubbed-through wire insulation or a wire broken inside the insulation. Check for poor connections or a damaged harness. Inspect the ECM harness and connector for improper mating, broken locks, improperly formed or damaged terminals, poor terminal-to-wire connection, and damaged harness.

Test Description

Number(s) below refer to the step number(s) on the Diagnostic Chart:

1. The MIL (“Check Engine” lamp) should be “ON” steady with the ignition “ON”/engine “OFF.” If not, Chart A-1 should be used to isolate the malfunction.
2. Checks the Class 2 data circuit and ensures that the ECM is able to transmit serial data.
3. This test ensures that the ECM is capable of controlling the MIL (“Check Engine” lamp) and the MIL (“Check Engine” lamp) driver circuit is not shorted to ground.
4. If the engine will not start, the *Cranks But Will Not Run* chart should be used to diagnose the condition.
7. A Tech 2 parameter which is not within the typical range may help to isolate the area which is causing the problem.
9. When the ECM is replaced, the characteristic data of injector and rail pressure sensor should be inputted.

On- Board Diagnostic (OBD) System Check

Step	Action	Value(s)	Yes	No
1	1. Ignition “ON,” engine “OFF.” 2. Observe the malfunction indicator lamp (MIL or “Check Engine” lamp). Is the MIL (“Check Engine” lamp)“ON?”	—	Go to *Step 2*	Go to *No MIL (“Check Engine” lamp)*
2	1. Ignition “OFF.” 2. Install a Tech 2. 3. Ignition “ON.” 4. Attempt to display ECM engine data with the Tech 2. Does the Tech 2 display ECM data?	—	Go to *Step 3*	Go to *Step 8*
3	1. Using the Tech 2 output tests function, select MIL (“Check Engine” lamp) dash lamp control and command the MIL (“Check Engine” lamp) “OFF.” 2. Observe the MIL (“Check Engine” lamp). Did the MIL (“Check Engine” lamp) turn “OFF?”	—	Go to *Step 4*	Go to *MIL (“Check Engine” lamp) On Steady*
4	Attempt to start the engine. Did the engine start and continue to run?	—	Go to *Step 5*	Go to *Cranks But Will Not Run*
5	Select “Display DTCs” with the Tech 2. Are any DTCs stored?	—	Go to *Step 6*	Go to *Step 7*
6	Are two or more of the following DTCs stored? A Group; P0337, P0342, P1193, P1404, P1405, P1488 B Group; P0337, P0342 C Group; P0112, P0117, P0182, P0197 D Group; P0107, P0405, P1194, P1485	—	Go to *Chart*, “Multiple ECM Information Sensor DTCs Set”	Go to applicable DTC table
7	Compare ECM data values displayed on the Tech 2 to the typical engine scan data values. Are the displayed values normal or close to the typical values?	—	Go to *Step 8*	Refer to indicated *Component System Checks*
8	1. Ignition “OFF,” disconnect the ECM. 2. Ignition “ON,” engine “OFF.” 3. Check the Class 2 data circuit for an open, short to ground, or short to voltage. Also, check the DLC ignition feed circuit for an open or short to ground and the DLC ground circuit for an open. 4. If a problem is found, repair as necessary. Was a problem found?	—	Go to *Step 2*	Go to *Step 9*
9	Check the Tech 2 on other vehicle. Was Tech 2 abnormal?	—	Go to *Step 11*	Go to *Step 10*
10	Replace the ECM (Refer to the Data Programming in Case of ECM change). Is the action complete?	—	Go to *Step 2*	—
11	Repair the Tech 2 or prepare another Tech 2. Is the action complete?	—	Go to *Step 2*	—

Engine Control Module ECM Diagnosis

To read and clear diagnostic trouble codes, use a Tech 2.

IMPORTANT: Use of a Tech 2 is recommended to clear diagnostic trouble codes from the ECM memory. Diagnostic trouble codes can also be cleared by turning the ignition "OFF" and disconnecting the battery power from the ECM for 30 seconds. Turning off the ignition and disconnecting the battery power from the ECM will cause all diagnostic information in the ECM memory to be cleared. Therefore, all the diagnostic tests will have to be re-run.

Since the ECM can have a failure which may affect only one circuit, following the diagnostic procedures in this section will determine which circuit has a problem and where it is.

If a diagnostic chart indicates that the ECM connections or the ECM is the cause of a problem, and the ECM is replaced, but this does not correct the problem, one of the following may be the reason:

- There is a problem with the ECM terminal connections. The terminals may have to be removed from the connector in order to check them properly.
- The problem is intermittent. This means that the problem is not present at the time the system is being checked. In this case, refer to the *Symptoms* portion of the manual and make a careful physical inspection of all components and wiring associated with the affected system.
- There is a shorted solenoid, relay coil, or harness. Solenoids and relays are turned "ON" and "OFF" by the ECM using internal electronic switches called drivers. A shorted solenoid, relay coil, or harness will not damage the ECM but will cause the solenoid or relay to be inoperative.

Multiple ECM Information Sensor DTCS Set

Circuit Description

The Engine Control Module ECM monitors various sensors to determine the engine operating conditions. The ECM controls fuel delivery, spark advance, transmission operation, and emission control device operation based on the sensor inputs.

The ECM provides a sensor ground to all of the sensors. The ECM applies 5 volts through a pull-up resistor, and determines the status of the following sensors by monitoring the voltage present between the 5-volt supply and the resistor:

- The fuel temperature (FT) sensor
- The engine coolant temperature (ECT) sensor
- The Intake air temperature (IAT) sensor

The ECM provides the following sensors with a 5-volt reference and a sensor ground signal:

- The Intake throttle position sensor
- The manifold absolute pressure sensor
- The rail pressure sensor
- The accelerator position sensor
- The oil temperature sensor
- The camshaft position sensor
- The crankshaft position sensor
- The EGR pressure sensor

The ECM monitors the signals from these sensors in order to determine their operating status.

Diagnostic Aids

IMPORTANT: Be sure to inspect ECM and engine grounds for being secure and clean.

A short to voltage in one of the sensor input circuits may cause one or more of the following DTCs to be set:

- P0337
- P0342
- P1193
- P1404
- P1405
- P1488

IMPORTANT: If a sensor input circuit has been shorted to voltage, ensure that the sensor is not damaged. A damaged sensor will continue to indicate a high or low voltage after the affected circuit has been repaired. If the sensor has been damaged, replace it.

An open in the sensor ground circuit between the ECM and the splice will cause one or more of the following DTCs to be set:

- P0337
- P0342
- P0117

A short to ground in the 5-volt reference A or B circuit will cause one or more of the following DTCs to be set:

- P0112
- P0117
- P0182
- P0197

An open in the 5-volt reference circuit A, between the ECM and the splice will cause one or more of the following DTCs to be set:

- P0107
- P0405
- P1194
- P0122

An open in the 5-volt reference circuit B, between the ECM and the splice will cause one or more of the following DTCs to be set:

- P1485

Check for the following conditions:

- **Poor connection at ECM.** Inspect the harness connectors for backed-out terminals, improper mating, broken locks, improperly formed or damage terminals, and a poor terminal-to-wire connection.
- **Damaged harness.** Inspect the wiring harness for damage. If the harness is not damaged, observe an affected sensor's displayed value on the Tech 2 with the ignition "ON" and the engine "OFF" while you move the connectors and the wiring harnesses related to the following sensors:
  - ECT Sensor

- MAP Sensor
- CMP Sensor
- CKP Sensor
- EGR Pressure Sensor
- EGR VSV
- RPCV
- IAT Sensor
- Intake Throttle Motor
- Fuel Temperature Sensor
- Oil Temperature Sensor
- Rail Pressure Sensor

Multiple ECM Information Sensor DTCs Set

Step	Action	Value(s)	Yes	No
1	Was the “On-Board Diagnostic (OBD) System Check” performed?	—	Go to *Step 2*	Go to *OBD System Check*
2	1. Turn the ignition “OFF,” disconnect the ECM. 2. Turn the ignition “ON,” check the 5 volt reference D circuit for the following conditions: ● D poor connection at the ECM. ● An open between the ECM connector and the splice. ● D short to ground. ● D short to voltage. Is there an open or short?	—	Go to *Step 3*	Go to *Step 4*
3	Repair the open or short. Is the action complete?	—	Verify repair	—
4	Check the sensor ground circuit for the following conditions: ● A poor connection at the ECM or the affected sensors. ● An open between the ECM connector and the affected sensors. Is there an open or a poor connection?	—	Go to *Step 5*	Go to *Step 6*
5	Repair the open or the poor connection. Is the action complete?	—	Verify repair	Go to *Step 6*
6	Replace the ECM (Refer to the Data Programming in Case of ECM change). Is the action complete?	—	Go to *OBD System Check*	—

EGR (Exhaust Gas Recirculation) Diagnosis

- A diagnosis of the EGR system is covered by DTC P1403.
- EGR VSV circuit diagnosis is covered by DTC P1404.
- EGR pressure sensor diagnosis is covered by DTC P405 and/or P406.
- EGR EVRV circuit diagnosis is covered by DTC P1405. Refer to the DTC charts.

Tech 2 Data Definitions and Ranges

A/C CLUTCH–Tech 2 Displays ON or OFF–
Indicates whether the A/C has commanded the A/C clutch ON.

MAP kPa — Tech 2 Range 10-105 kPa/0.00-5.00 Volts —
The manifold absolute pressure reading is determined from the MAP sensor signal monitored during key up and wide open throttle (WOT) conditions. The manifold absolute pressure is used to compensate for altitude differences and is normally displayed around “61-104” depending on altitude and manifold absolute pressure.

CMP ACT. COUNTER –Cam Position

DESIRED IDLE — Tech 2 Range 0-3187 RPM —
The idle speed that the ECM is commanding. The ECM will compensate for various engine loads based on engine coolant temperature, to keep the engine at the desired speed.

ECT — (Engine Coolant Temperature) Tech 2 Range –40˚C to 151˚C (–40˚F to 304˚F) —
The engine coolant temperature (ECT) is mounted in the coolant stream and sends engine temperature information to the ECM. The ECM applies 5 volts to the ECT sensor circuit. The sensor is a thermistor which changes internal resistance as temperature changes. When the sensor is cold (high resistance), the ECM monitors a high signal voltage and interprets that as a cold engine. As the sensor warms (decreasing resistance), the voltage signal will decrease and the ECM will interpret the lower voltage as a warm engine.

ENGINE RUN TIME — Tech 2 Range 00:00:00-99:99:99 Hrs:Min:Sec —
Indicates the time elapsed since the engine was started. If the engine is stopped, engine run time will be reset to 00:00:00.

ENGINE SPEED — Range 0-9999 RPM —
Engine speed is computed by the ECM from the 57X reference input. It should remain close to desired idle under various engine loads with engine idling.

Air Intake Valve meter POSITION — Tech 2 Range 0-100 % —

IAT (INTAKE AIR TEMPERATURE)— Tech 2 Range –40˚C to 151˚C (–40˚F to 304˚F) —
The ECM converts the resistance of the intake air temperature sensor to degrees. Intake air temperature (IAT) is used by the ECM to adjust fuel delivery and spark timing according to incoming air density.

MAP — Tech 2 Range 10-105 kPa (0.00-4.97 Volts)—
The manifold absolute pressure (MAP) sensor measures the change in the boost pressure.

MIL — Tech 2 Displays ON or OFF —
Indicates the ECM commanded state of the malfunction indicator lamp.

AP — Tech 2 Range 0%-100% —
AP (Accelerator position) angle is computed by the ECM from the AP sensor voltage. AP angle should display “0%” at idle and “100%” at wide open throttle.

AP SENSOR — Tech 2 Range 0.00-5.00 Volts —
The voltage being monitored by the ECM on the AP sensor signal circuit.

VEHICLE SPEED—Tech 2 Range 0-255 km/h (0-155 mph)–
The vehicle speed sensor signal is converted into km/h and mph for display.

Typical Scan Data Values

Use the Typical Scan Data Values Table only after the On-Board Diagnostic System Check has been completed, no DTC(s) were noted, and you have determined that the on-board diagnostics are functioning properly. Tech 2 values from a properly-running engine may be used for comparison with the engine you are diagnosing. The typical scan data values represent values that would be seen on a normally-running engine.

NOTE: A Tech 2 that displays faulty data should not be used, and the problem should be reported to the Tech 2 manufacturer. Use of a faulty Tech 2 can result in misdiagnosis and unnecessary replacement of parts.

Only the parameters listed below are referred to in this service manual for use in diagnosis. For further information on using the Tech 2 to diagnose the ECM and related sensors, refer to the applicable reference section listed below. If all values are within the typical range described below, refer to the *Symptoms* section for diagnosis.

Test Conditions

Engine running, lower radiator hose hot, transmission in park or neutral, accessaries off, brake not applied and air conditioning off.

4JX1-TC Engine (Automatic and Manual Transmission)

Tech 2 Parameter	Data List	Units Displayed	Typical Data Values (IDLE)	Typical Data Values (2500 RPM)	Refer To
Battery Voltage	Engine	Volts	12.5 ~ 14.5	13 ~ 15	General Description
Ignition Status	Engine	On/Off	On	On	General Description
Ignition Relay[2]	Engine	On/Off	On	On	General Description
Idle Switch	Engine	Inactive/ Active	—	—	DTC P0510, P1510
Manifold Absolute Pressure	Engine	KPa	96 ~ 106	110 ~ 150	General Description DTC P0107, P0108
Rail Oil Pressure	Engine	MPa	3.5 ~ 5	4.5 ~ 10	General Description DTC P0192, P0193
Desired Rail Oil Pressure	Engine	MPa	4 ~ 5	5 ~ 9	General Description DTC P0192, P0193
Fuel Temperature	Engine	˚C (˚F)	75 ~ 85	75 ~ 85	DTC P0182, P0183
Quick Warming Switch	Engine	On/Off	Off	Off	DTC P0380
Thermo Relay	Engine	On/Off	—	—	DTC P1655
Actual EGR Pressure	Engine	KPa	58 ~ 60	M/T 63 ~ 66 A/T 95 ~ 105	DTC P0405, P0406
Barometric Pressure	Engine	KPa	98 ~ 102	98 ~ 102	General Description
Relative EGR Pressure	Engine	KPa	–38 ~ –45	M/T –34 ~ –37 A/T 0	General Description
Desired EGR Pressure	Engine	KPa	–43 ~ –40	M/T 36 A/T 0	General Description
Brake Switch	Engine	Inactive/ Active	—	—	DTC P1588
Gear	Engine	—	—	—	—
Vehicle Speed	Engine	Km/h	0	0	Transmission Diagnosis
Rail Pressure Control Valve	Engine	%	17 ~ 22	18 ~ 27	DTC P1193
EGR Status	Engine	Disable/ Enable	Enable	M/T Enable A/T Disable	General Description
EGR Switching Valve	Engine	On/Off	—	—	General Description
Throttle Motor Position Sensor	Engine	Volts	3.1 ~ 3.9	0.2 ~ 0.9	DTC P1485, P1486, P1487
Throttle Motor Position	Engine	Steps	0 ~ 1.0	0 ~ 1.0	DTC P1488
Delirered Fuel Quantity	Engine	mm 3/st	6 ~ 10	6 ~ 12	General Description
Injector Status	Engine	Disable/ Enable	Enable	Enable	DTC P0201, P0202, P0203, P0204, General Description
Injector Pulse Width	Engine	ms	0.9 ~ 1.25	0.7 ~ 1.1	General Description
Injector Start Offset	Engine	˚CA	—	—	General Description

Tech 2 Parameter	Data List	Units Displayed	Typical Data Values (IDLE)	Typical Data Values (2500 RPM)	Refer To
Exhaust VSV1	Engine	On/Off	Off	Off	DTC P0475
Exhaust VSV2	Engine	On/Off	Off	Off	DTC P1475
Decelevation Fuel Cut Off	Engine	Inactive/ Active	—	—	General Description
Glow Time Lamp	Engine	On/Off	Off	Off	DTC P0381
Glow Time Relay	Engine	On/Off	Off	Off	DTC P0380
Diagnostic Request	Engine	Inactive 12V/ Active 0V	—	—	General Description
A/C Clutch	Engine	On/Off	Off	Off	General Description
Desired Idle	Engine	RPM	720	—	General Description
ECT (Engine Coolant Temp)	Engine	˚C (˚F)	80 ~ 90	80 ~ 90	General Description ECT
Engine Speed	Engine	RPM	720	2500	DTC P0219
MAT (Intake Air Temp)	Engine	˚C (˚F)	65 ~ 80	65 ~ 80	DTC P0112, P0113
MAP KPa (Manifold Absolute Pressure)	Engine	Kilopascals	—	—	General Description DTC P0107, P0108
MIL	Engine	On/Off	Off	Off	General Description
AP (Accel Position)	Engine	Percent	0	8 ~14	DTC P0121, P0122, P0123
AP (Accel Position)	Engine	Volts	0.25 ~ 0.45	0.8 ~ 1.0	DTC P0121, P0122, P0123
Rail Oil Temperature	Engine	˚C (˚F)	—	—	DTC P0197, P0198
Desired Throttle Motor Position	Engine	Steps	—	—	—
Learned Idle Fuel Quantity	Engine	mm 3/st	—	—	—

No Malfunction Indicator Lamp (MIL)

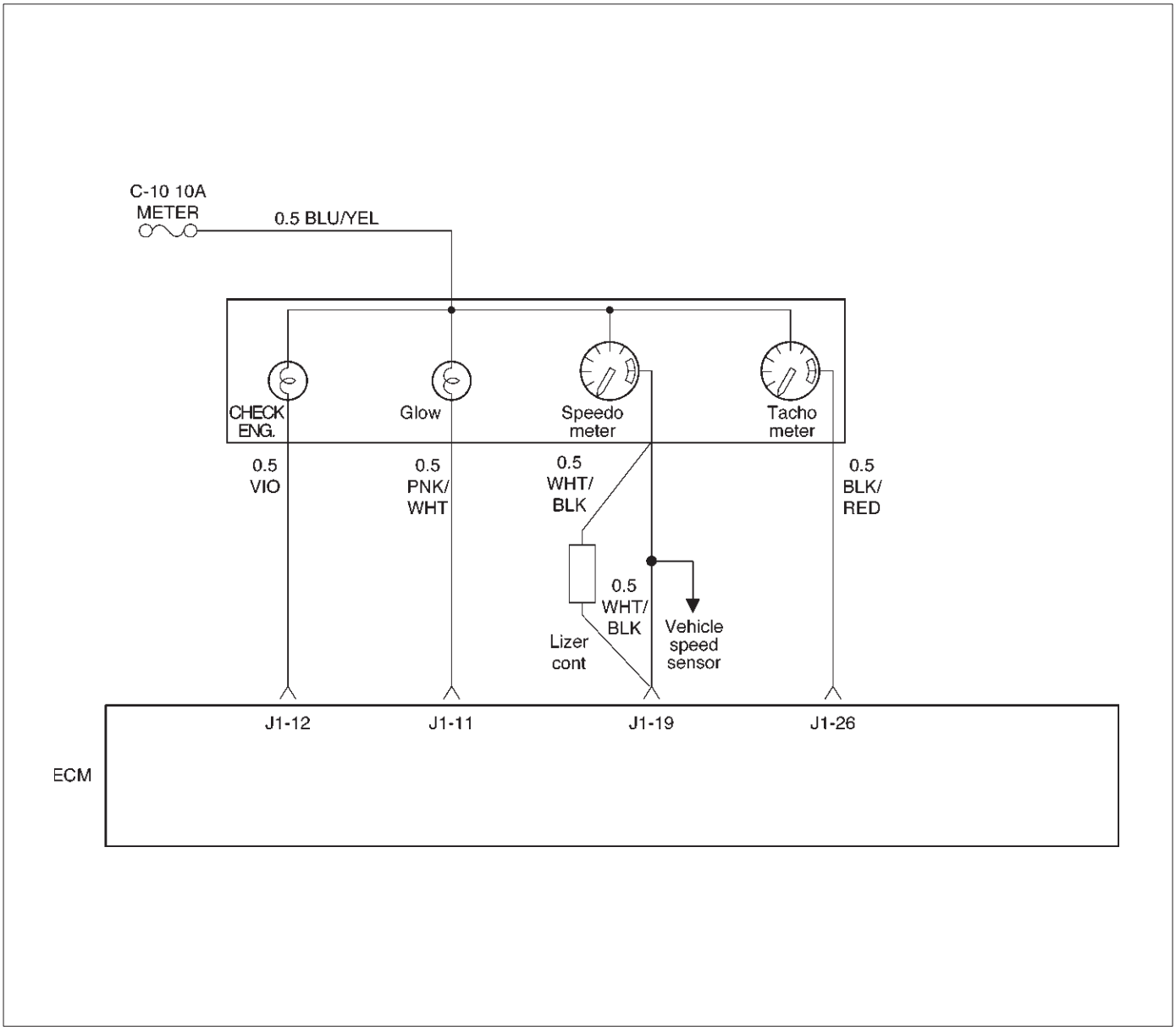

060RW136

Circuit Description

The “Check Engine” lamp (MIL) should always be illuminated and steady with the ignition “ON” and the engine stopped. Ignition feed voltage is supplied to the MIL bulb through the meter fuse. The Engine Control Module ECM turns the MIL “ON” by grounding the MIL driver circuit.

Diagnostic Aids

An intermittent MIL may be cause by a poor connection, rubbed-through wire insulation, or a wire broken inside the insulation. Check for the following items:

- Inspect the ECM harness and connections for improper mating, broken locks, improperly formed or damaged terminals, poor terminal-to-wire connection, and damaged harness.
- If the engine runs OK, check for a faulty light bulb, an open in the MIL driver circuit, or an open in the instrument cluster ignition feed.
- If the engine cranks but will not run, check for an open ECM ignition or battery feed, or a poor ECM to engine ground.

Test Description

Number(s) below refer to the step number(s) on the Diagnostic Chart.

2. A “No MIL” condition accompanied by a no-start condition suggests a faulty ECM ignition feed or battery feed circuit.

9. Using a test light connected to B+, probe each of the ECM ground terminals to ensure that a good ground is present. Refer to *ECM Terminal End View* for terminal locations of the ECM ground circuits.

12. In this step, temporarily substitute a known good relay for the ECM relay. The horn relay is nearby, and it can be verified as “good” simply by honking the horn. Replace the horn relay after completing this step.

No Malfunction Indicator Lamp (MIL)

Step	Action	Value(s)	Yes	No
1	Was the “On-Board Diagnostic (OBD) System Check” performed?	—	Go to *Step 2*	Go to *OBD System Check*
2	Attempt to start the engine. Does the engine start?	—	Go to *Step 3*	Go to *Step 6*
3	Check the meter fuse for the instrument cluster ignition feed circuit. Is the fuse OK?	—	Go to *Step 4*	Go to *Step 16*
4	Ignition “ON,” probe the ignition feed circuit at the cluster connector with a test light to ground. Is the test light “ON?”	—	Go to *Step 5*	Go to *Step 13*
5	1. Ignition “OFF.” 2. Disconnect the ECM. 3. Jumper the MIL driver circuit at the ECM connector to ground. 4. Ignition “ON.” Is the MIL “ON?”	—	Go to *Step 10*	Go to *Step 11*
6	Check the ECM ignition feed and battery feed fuses (15 A engine fuse and 15 A ECM fuse). Are both fuses OK?	—	Go to *Step 7*	Go to *Step 15*
7	1. Ignition “OFF.” 2. Disconnect the ECM. 3. Ignition “ON.” 4. Probe the ignition feed circuit at the ECM harness connector with a test light to ground. Is the test light “ON?”	—	Go to *Step 8*	Go to *Step 12*
8	Probe the battery feed circuit at the ECM harness connector with a test light to ground. Is the test light “ON?”	—	Go to *Step 9*	Go to *Step 14*
9	Check for a faulty ECM ground connection. Was a problem found?	—	Verify repair	Go to *Step 10*
10	Check for damaged terminals at the ECM. Was a problem found?	—	Verify repair	Go to *Step 17*
11	Check for an open MIL driver circuit between the ECM and the MIL. Was a problem found?	—	Verify repair	Go to *Step 18*
12	Substitute a known “good” relay for the ECM main relay. Was the malfunction fixed?	—	Verify repair	Go to *Step 13*
13	Repair the open in the ignition feed circuit. Is the action complete?	—	Verify repair	—
14	Locate and repair the open ECM battery feed circuit. Is the action complete?	—	Verify repair	—

No Malfunction Indicator Lamp (MIL) (Cont'd)

Step	Action	Value(s)	Yes	No
15	Locate and repair the short to ground in the ECM ignition feed circuit or ECM battery feed circuit. Is the action complete?	—	Verify repair	—
16	Locate and repair the short to ground in the ignition feed circuit to the instrument cluster, and replace the fuse. Is the action complete?	—	Verify repair	—
17	Replace the ECM (Refer to the Data Programming in Case of ECM change). Is the action complete?	—	Verify repair	—
18	Check the MIL driver circuit for a poor connection at the instrument panel connector. Was a problem found?	—	Verify repair	Go to *Instrument Panel* in *Electrical Diagnosis*

Malfunction Indicator Lamp (MIL) “ON” Steady

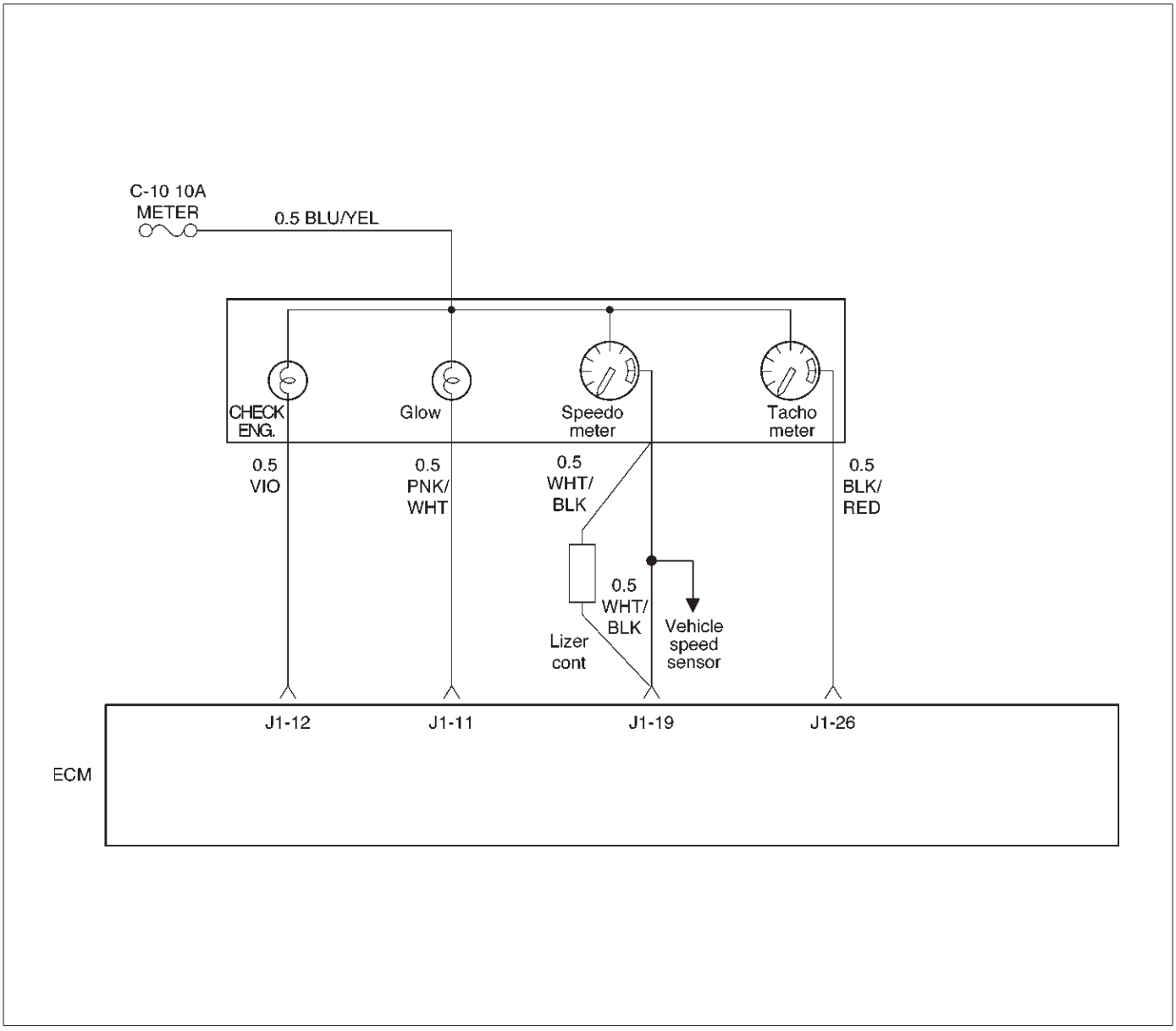

060RW136

Circuit description

The “Check Engine” lamp (MIL) should always be illuminated and steady with ignition “ON” and the engine stopped. Ignition feed voltage is supplied directly to the MIL indicator. The Engine Control Module ECM turns the MIL “ON” by grounding the MIL driver circuit.
The MIL should not remain “ON” with the engine running and no DTC(s) set. A steady MIL with the engine running and no DTC(s) suggests a short to ground in the MIL driver circuit.

Diagnostic Aids

An intermittent may be caused by a poor connection, rubbed–through wire insulation, or a wire broken inside the insulation. Check for the following items:

- Poor connection or damaged harness – Inspect the ECM harness and connectors for improper mating, broken locks, improperly formed or damaged terminals, poor terminal-to-wire connection, and damaged harness.

Test Description

Number(s) below refer to the step number(s) on the Diagnostic Chart.

2. If the MIL does not remain “ON” when the ECM is disconnected, the MIL driver wiring is not faulty.
3. If the MIL driver circuit is OK, the instrument panel cluster is faulty.

Malfunction Indicator Lamp (MIL) “ON” Steady

Step	Action	Value(s)	Yes	No
1	Was the “On-Board diagnostic (OBD) System Check” performed?	—	Go to *Step 2*	Go to *OBD System Check*
2	1. Ignition “OFF,” disconnect ECM. 2. Ignition “ON,” observe the MIL (CHECK ENGINE lamp). Is the MIL “ON?”	—	Go to *Step 3*	Go to *Step 5*
3	1. Ignition “OFF,” disconnect the instrument panel cluster. 2. Check the MIL driver circuit between the ECM and the instrument panel cluster for a short to ground. 3. If a problem is found, repair as necessary. Was the MIL driver circuit shorted to ground?	—	Go to *OBD System Check*	Go to *Step 4*
4	Replace the instrument panel cluster. Is the action complete?	—	Go to *OBD System Check*	—
5	1. Ignition “OFF,” reconnect the ECM. 2. Ignition “ON,” reprogram the ECM. Refer to *On-Vehicle Service* in *Engine Control Module and Sensor* for procedures. 3. Using the Tech 2 output controls function, select MIL dash lamp control and command the MIL “OFF.” Did the MIL turn “OFF?”	—	Go to *OBD System Check*	Go to *Step 6*
6	Replace the ECM (Refer to the Data Programming in Case of ECM change). Is the action complete?	—	Go to *OBD System Check*	—

Engine Cranks But Will Not Run

Circuit Description

In this type of injector system, the Engine Control Module (ECM) triggers the correct driver inside the injector, which then triggers the correct injector based on the 57X signal received from the crankshaft position sensor (CKP).
During crank, the ECM monitors the CKP 57X signal. The CKP signal is used to determine which cylinder will fire first. After the CKP 57X signal has been processed by the ECM, it will command all four injectors to allow a priming shot of fuel for all the cylinders. After the priming, the injectors are left "OFF" during the next four 57X reference pulses from the CKP. This allows each cylinder a chance to use the fuel from the priming shot. During this waiting period, a camshaft position (CMP) signal pulse will have been received by the ECM. The CMP signal allows the ECM to operate the injectors sequentially based on camshaft position. If the camshaft position signal is not present at start-up, the ECM will begin sequential fuel delivery with a 1-in-4 chance that fuel delivery is correct. The engine will run without a CMP signal, but will set a DTC code.

Diagnostic Aids

An intermittent problem may be caused by a poor connection, rubbed-through wire insulation or a wire broken inside the insulation. Check for the following items:

- Poor connection or damaged harness – Inspect the ECM harness and connectors for improper mating, broken locks, improperly formed or damaged terminals, poor terminal-to-wore connection, and damaged harness.
- Faulty engine coolant temperature sensor – Using a Tech 2, compare engine coolant temperature with manifold air temperature on a completely cool engine.

Test Description

Number(s) below refer to the step number(s) on the Diagnostic Chart.

4. An obvious cause of low fuel pressure would be an empty fuel tank.
5. The engine will easily start and run if a few injectors are disabled. It is not necessary to test all injectors at this time since this step is only a test to verify that all of the injectors have not been disabled by fuel contamination.
8. If there is an open or shorted driver circuit, DTCs 0201-0204 should be set.

Engine Cranks But Will Not Run

Step	Action	Value(s)	Yes	No
1	Was the "On-Board Diagnostic (OBD) System Check" performed?	—	Go to *Step 2*	Go to *OBD System Check*
2	Check the 15 A injector fuse, the 15 A engine device fuse, and the 15A ECM fuse. Was a fuse blown?	—	Go to *Step 3*	Go to *Step 4*
3	Check for a short to ground and replace the fuse. Is the action complete?	—	Verify repair	—
4	Is fuel tank empty?	—	Fill the fuel tank	Go to *Step 5*
5	Is the right fuel using?	—	Go to *Step 6*	Replace the fuel
6	Is the right engine oil using?	—	Go to *Step 7*	Replace the engine oil
7	Using the Tech–2. Is DTC P0192 or P0193 set? (Check rail pressure system)	—	Go to *DTC P0192 or DTC P0193*	Go to *Step 8*
8	Using the Tech–2. Is DTC P0201 – P0204 set? (Check inject circuit fault)	—	Go to *DTC P0201 – P0204*	Go to *Step 9*
9	Using the Tech–2. Is DTC P1657 set? (Check ECM Main relay)	—	Go to *DTC P1657*	Go to *Step 10*

Engine Cranks But Will Not Run (Cont'd)

Step	Action	Value(s)	Yes	No
10	Refer to *Engine Mechanical Diagnosis* to diagnose the following conditions: ● Faulty camshaft drive belts ● Leaking or sticky valves or rings ● Excessive valve deposits ● Weak valve springs ● Incorrect valve timing ● Leaking head gasket Is the action complete?	—	Verify repair	Go to *Step 11*
11	Observe the "Engine Speed" data display on the Tech 2 while cranking the engine. Is the engine RPM indicated? (If the Tech 2 is normally powered from the cigarette lighter socket, and if the Tech 2 display goes blank while cranking the engine, it will be necessary to power the Tech 2 directly from the vehicle battery.)	—	Go to *Step 12*	Go to *Step 17*
12	1. At the ECM (female) side of the connector mentioned in step, connect a test light between the ignition + terminal and one of the injector driver circuits at the same connector. 2. Ignition "ON." 3. Observe the test light, and repeat the test for each injector driver circuit by oscilloscope. Did the test light stay on when checking any of the 4 injector driver circuits?	—	Go to *Step 13*	Go to *Step 15*
13	1. Ignition "OFF," disconnect the ECM. 2. Ignition "ON," observe the test light. Is the test light "ON?"	—	Go to *Step 14*	Go to *Step 16*
14	Locate and repair the short to ground in the injector driver circuit. Is the action complete?	—	Verify repair	—
15	Check for an open injector driver circuit. Was a problem found?	—	Verify repair	Go to *Step 16*
16	Replace the ECM (Refer to the Data Programming in Case of ECM change). Is the action complete?	—	Verify repair	—
17	1. Raise the vehicle and disconnect the CKP sensor harness. 2. Ignition "ON." 3. With a test light to ground, probe the harness ignition feed terminal. Did the light illuminate?	—	Go to *Step 19*	Go to *Step 18*
18	Check the ignition feed wire between the sensor and the ECM for a short to ground or open circuit. Is the action complete?	—	Verify repair	—

Engine Cranks But Will Not Run (Cont'd)

Step	Action	Value(s)	Yes	No
19	1. Ignition "ON." 2. At the CKP harness connector, connect a test light between the ignition and ground terminals. Did the light illuminate?	—	Go to *Step 21*	Go to *Step 20*
20	Check the sensor ground circuit for an open or short to voltage. Is the action complete?	—	Verify repair	—
21	Check the signal circuit between the sensor and the ECM for a short to ground, short to voltage, or an open. Was a problem found?	—	Verify repair	Go to *Step 22*
22	Replace the CKP sensor. Is the action complete?	—	Verify repair	Go to *Step 16*

Exhaust Gas Recirculation (EGR) System Check

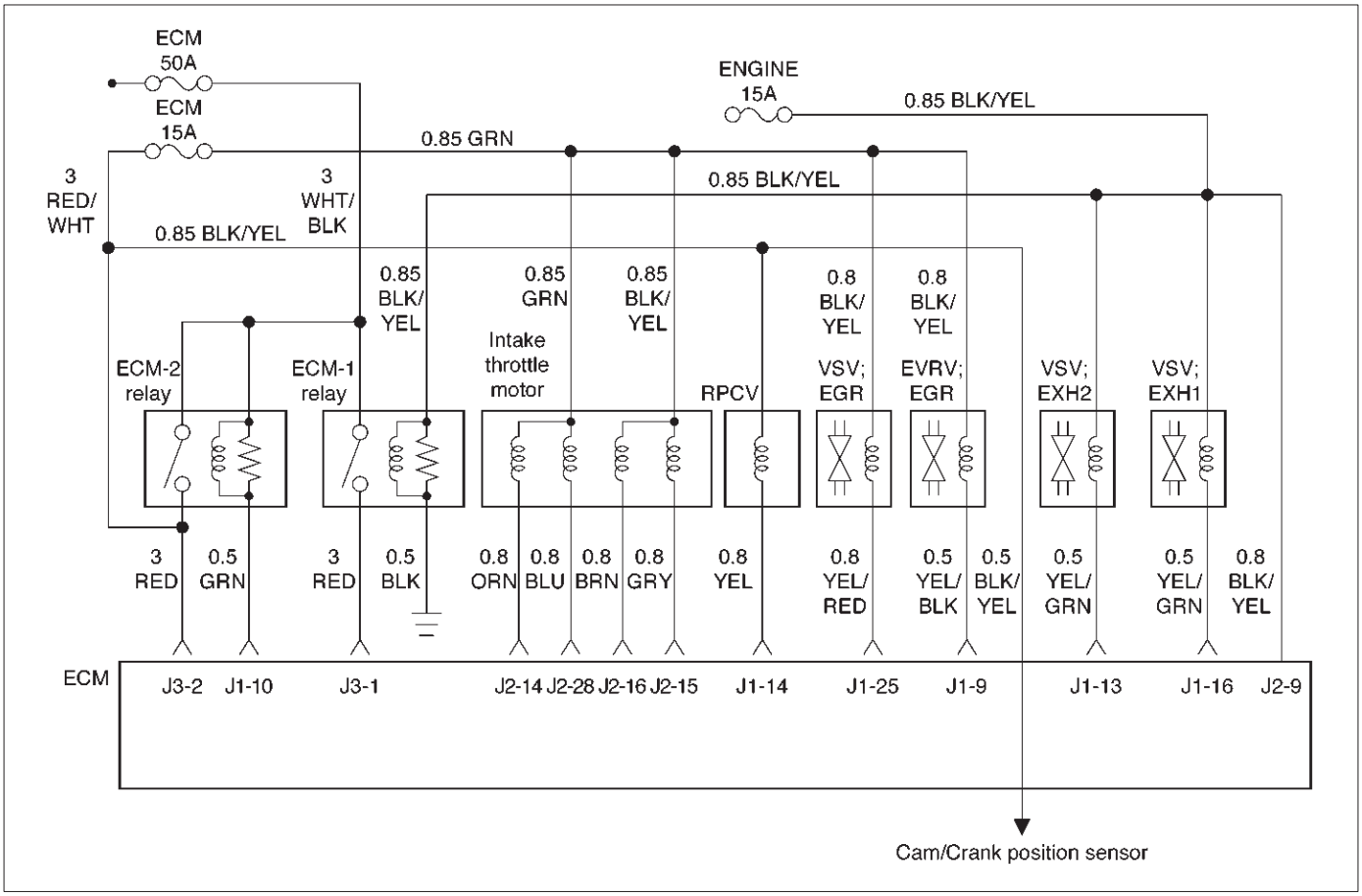

060RW135

Circuit Description

Introducing exhaust gas into the combustion chamber lowers combustion temperatures and reduces the formation of oxides of nitrogen (NOx) in the exhaust gas. Lower combustion temperatures also prevent detonation.

Diagnostic Aids

The EGR valve chart is a check of the EGR system. An EGR pintle constantly in the closed position could cause detonation and high emissions of NOx. An EGR pintle constantly in the open position would cause a rough idle.

System Check

Step	Action	Value(s)	Yes	No
1	Move the valve up and down to check the slide resistance. Is the slide resistance large?	—	Go to *Step 8*	Go to *Step 2*
2	1. Set the transmission at “Park” or “Neutral”. 2. Put the engine in warming-up operation by idling. (The engine temperature should be 80˚C or more) 3. Disconnect the vacuum hose from the EGR valve. 4. Apply a vacuum of 250 mmHg to the EGR valve by the vacuum pump (mighty pack). Does the vibration due to engine operation become larger?	—	Go to *Step 3*	Go to *Step 9*
3	1. Check if there is not any damage on the vacuum hose from the vacuum pump to the EGR valve. 2. Install the vacuum pump (mighty pack) to the EGR valve. Does the vacuum became 250 mmHg or more at that time?	250 mmHg or more	Go to *Step 4*	Go to *Step 8*
4	Install the EGR valve and the vacuum hose formally and increase the engine revolution speed to 3000 rpm. Can both EGR valve 1 and EGR valve 2 be opened and closed?	—	The system is normal	Go to *Step 5*
5	Measure the resistance of the VSV: EGR coil. Is the resistance value in the range of 30 Ω to 50 Ω?	30 ~ 50 Ω	Go to *Step 6*	Go to *Step 10*
6	Measure the resistance of the EVRV: EGR coil. Is the resistance value in the range of 10 Ω to 13 Ω?	10 ~ 13 Ω	Go to *Step 7*	Go to *Step 11*
7	Was the harness open or poor connection?	—	Go to *Step 12*	Go to *Step 13*
8	Replace the EGR valve ASM. Is the action complete?	—	Verify repair	—
9	Clean or replace the EGR valve ASM. Is the action complete?	—	Verify repair	—
10	Replace the EGR VSV. Is the action complete?	—	Verify repair	—
11	Replace the EGR EVSV. Is the action complete?	—	Verify repair	—
12	Repair the harness. Is the action complete?	—	Verify repair	—
13	Replace the ECM (Refer to the Data Programming in Case of ECM change). Is the action complete?	—	Verify repair	—

ECM Diagnostic Trouble Codes

The following table lists the diagnostic trouble codes supported a Tech 2 and to flash.If any DTCs not listed here are displayed by a Tech 2, the Tech 2 data may be faulty; notify the Tech 2 manufacturer of any DTCs displayed that are not included in the following table.

ECM Diagnostic Trouble Codes

DTC using a Tech 2	Flash DTC	Description	MIL
P0107	34	MAP Sensor Low Voltage	ON
P0108	34	MAP Sensor High Voltage	ON
P0112	23	Intake Air temp Sensor Low Voltage	ON
P0113	23	Intake Air temp Sensor High Voltage	ON
P0117	14	Engine Coolant Temp Sensor Low Voltage	ON
P0118	14	Engine Coolant Temp Sensor High Voltage	ON
P0121	33	Accel Position Sensor Rationality	ON
P0122	21	Accel Position Sensor Low Voltage	ON
P0123	21	Accel Position Sensor High Voltage	ON
P0182	15	Fuel Temp Sensor Low Voltage	ON
P0183	15	Fuel Temp Sensor High Voltage	ON
P0192	63	Rail Pressure Sensor Low Voltage	ON
P0193	63	Rail Pressure Sensor High Voltage	ON
P1193	64	RPCV Circuit Open/Short	—
P1194	61	Rail Pressure System Low Voltage	ON
P1195	61	Rail Pressure System High Voltage	ON
P1196	62	Rail Pressure System High Warning	ON
P0197	16	Oil Temp sensor Low Voltage	ON
P0198	16	Oil Temp sensor High Voltage	ON
P0201	51	Injector #1 Circuit Fault	ON
P0202	52	Injector #2 Circuit Fault	ON
P0203	53	Injector #3 Circuit Fault	ON
P0204	54	Injector #4 Circuit Fault	ON
P0217	22	High Coolant Temp Warning	ON
P1217	36	High Oil Temp Warning	ON
P0219	11	Engine Over Speed Warning	ON
P0336	43	Crank Position Sensor Out of Syncro	ON
P0337	43	Crank Position Sensor No Signal	ON
P0341	41	Cam Position Sensor Out of Syncro	ON
P0342	41	Cam Position Sensor No Signal	ON
P0380	66	Glow Relay Circuit Open/Short	—
P0381	67	Glow Lamp Circuit Open/Short	—
P1403	32	EGR EVRV Fault	—
P1404	31	EGR VSV Circuit	—
P0405	26	EGR Pressure Sensor Low Voltage	ON
P1405	37	EGR EVRV Circuit Open/Short	—
P0406	26	EGR Pressure Sensor High Voltage	ON

DTC using a Tech 2	Flash DTC	Description	MIL
P0475	71	EXH #1 VSV Circuit Open/Short	—
P1475	71	EXH #2 VSV Circuit Open/Short	—
P1485	74	Intake Throttle Position Sensor Low Voltage	ON
P1486	74	Intake Throttle Position Sensor High Voltage	ON
P1487	73	Intake Throttle System Circuit Open/Short	ON
P1488	72	Intake Throttle Motor Control Circuit Signal Gap	—
P0502	24	Vehicle Speed Sensor No Signal	ON
P0510	75	Idle SW Malfunction, Open Circuit	ON
P1510	75	Idle SW Malfunction, Short Circuit	ON
P0562	35	System Voltage Too Low	ON
P1562	35	System Voltage Too Low at Cranking	ON
P1587	25	Brake SW Malfunction [B]	—
P1588	25	Brake SW Malfunction [A]	ON
P0601	55	ECM Checksum Error	ON
P1626	56	Immobilizer No Signal	ON
P1631	56	Immobilizer Wrong Signal	ON
P1648	56	No Security Code Entered	ON
P1649	56	Immobilizer Function not Programmed	ON
P0650	77	Check Engine Lamp Circuit Open/Short	—
P0654	27	Techometer Circuit Open/Short	—
P1655	17	Thermo Relay Circuit Open/Short	—
P1657	76	ECM Main Relay Circuit Open/Short	—
P1589	47	TransMission SW Circuit Open/Short	—

Diagnostic Trouble Code (DTC) P0107 (Flash DTC 34) MAP Sensor Circuit Low Voltage

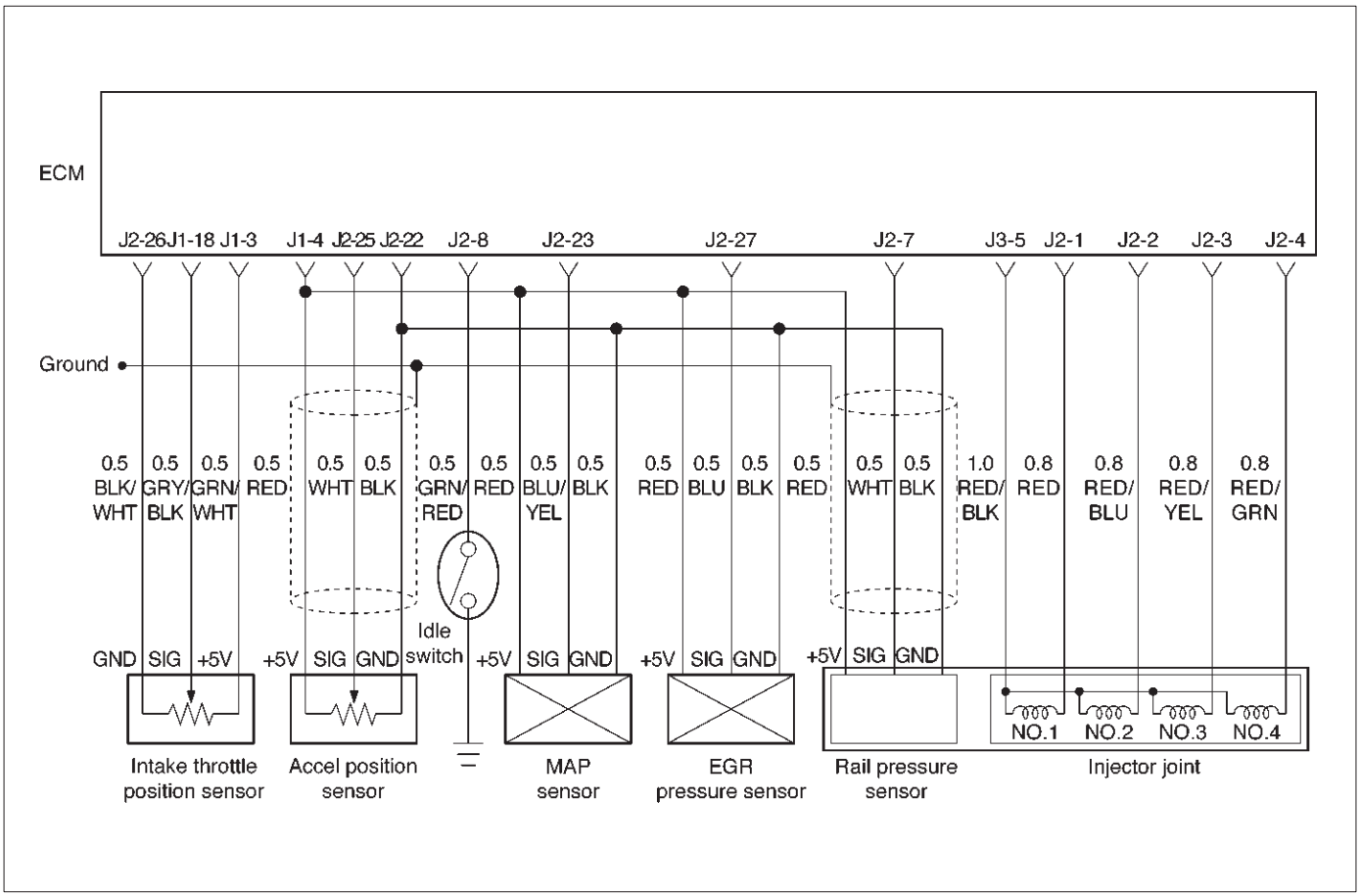

060RW134

Circuit Description

The manifold absolute pressure (MAP) sensor responds to changes in intake manifold pressure (vacuum).
The ECM monitors the MAP signals for voltages outside the normal range of the MAP sensor. If the ECM detects a MAP signal voltage that is excessively low, DTC P0107 will be set.

Action Taken When the DTC Sets

- The ECM will illuminate the malfunction indicator lamp (MIL) the first time the fault is detected.
- The ECM will store conditions which were present when the DTC was set as Freeze Frame and in the Failure Records data.

Conditions for Clearing the MIL/DTC

- DTC P0107 can be cleared by using the Tech 2 “Clear Info” function or by disconnecting the ECM battery feed.

Diagnostic Aids

Check for the following conditions:

- Turn on the ignition switch and stop the engine. At this time, the boost pressure will be equal to the atmospheric pressure and the signal voltage will increase.
- Check for intermittent codes.
- The MAP sensor shares a ground with the ECT sensor, and the Transmission Fluid Temperature sensor.
- Poor connection at ECM – Inspect harness connectors for backed-out terminals, improper mating, broken locks, improperly formed or damaged terminals, and poor terminal-to-wire connection.
- Damaged harness – Inspect the wiring harness for damage. If the harness appears to be OK, observe the MAP display on the Tech 2 while moving connectors and wiring harnesses related to the sensor. A change in the display will indicate the location of the fault.

If DTC P0107 cannot be duplicated, the information included in the Failure Records data can be useful in determining vehicle mileage since the DTC was last set. If it is determined that the DTC occurs intermittently, performing the DTC P0107 Diagnostic Chart may isolate the cause of the fault.

DTC P0107 – MAP Sensor Circuit Low Voltage

Step	Action	Value(s)	Yes	No
1	Was the “On-Board Diagnostic (OBD) System Check” performed?	—	Go to *Step 2*	Go to *OBD System Check*
2	Put the engine into an idling status. Is the MAP voltage value displayed on the Tech 2 below the specified value?	0.25 V	Go to *Step 3*	Refer to *Diagnostic Aids* and *Symptom Diagnosis*
3	1. Turn off the ignition switch. 2. Remove the sensor connector connection. 3. Jumper between harness pins “red” and “blue” wires. 4. Turn on the ignition switch “ON”. Is the MAP voltage reading above the specified value?	4 V	Go to *Step 5*	Go to *Step 4*
4	1. Turn off the ignition switch. 2. Remove the jumper wire. 3. Connect the relay & solenoid checker (5-8840-0386-0) to the battery voltage, then check the MAP signal circuit (blue wire). 4. Turn on the ignition switch. Is the value displayed on the Tech 2 above the specified value?	4 V	Go to *Step 6*	Go to *Step 7*
5	Check the terminal connection at the MAP sensor and repair or replace terminal if necessary. Is the action complete?	—	Verify repair	—
6	Repair the 5V power circuit (red) harness or Replace the ECM (Refer to the Data Programming in Case of ECM change). Is the action complete?	—	Verify repair	—
7	Repair the signal circuit (blue) harness or Replace the ECM (Refer to the Data Programming in Case of ECM change). Is the action complete?	—	Verify repair	—

Diagnostic Trouble Code (DTC) P0108 (Flash DTC 34) MAP Sensor Circuit High Voltage

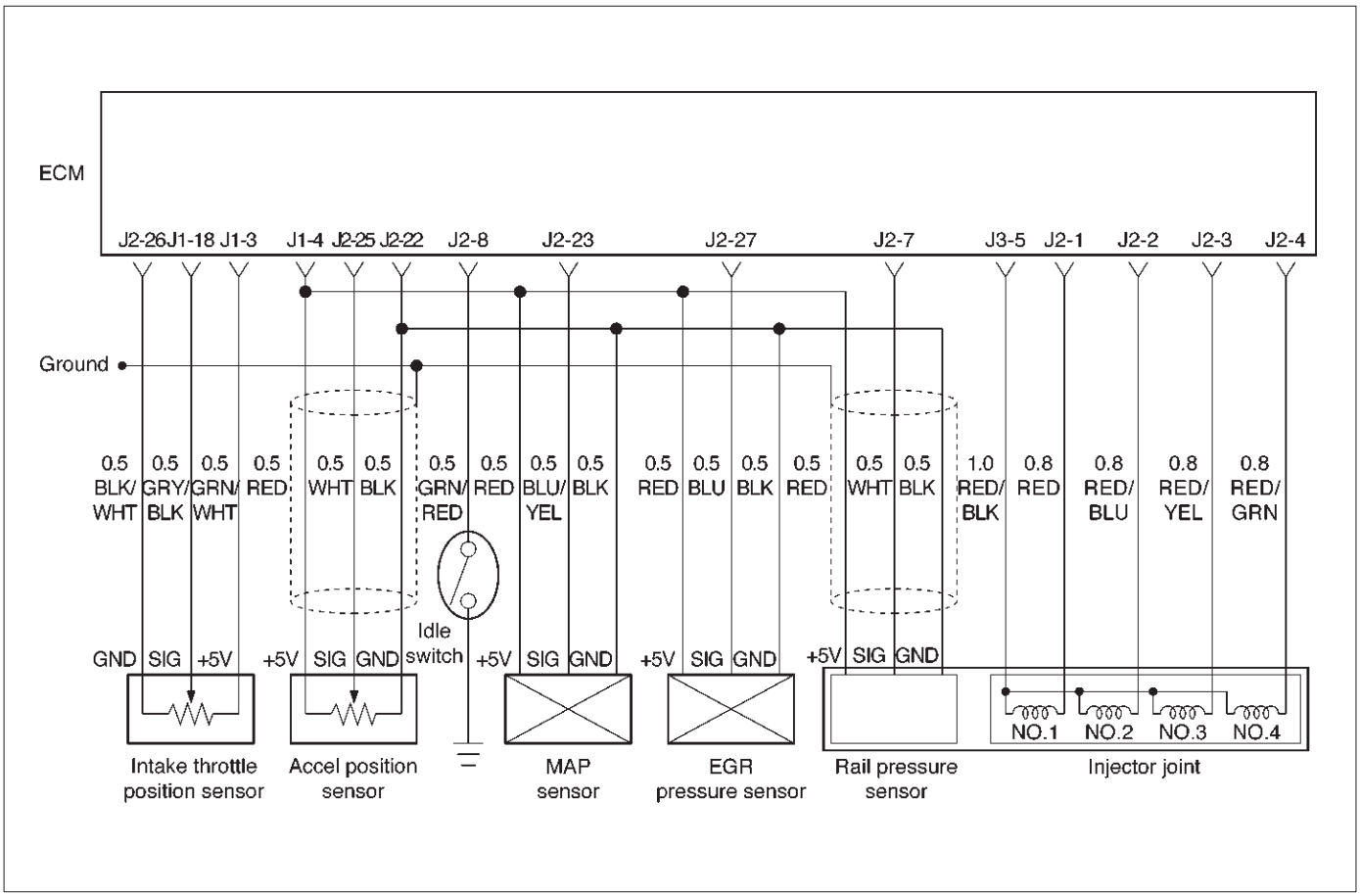

060RW134

Circuit Description

The manifold absolute pressure (MAP) sensor responds to changes in intake manifold pressure (vacuum).
The ECM monitors the MAP signals for voltages outside the normal range of the MAP sensor. If the ECM detects a MAP signal voltage that is excessively high, DTC P0108 will be set.

Action Taken When the DTC Sets

- The ECM will illuminate the malfunction indicator lamp (MIL) the first time the fault is detected.
- The ECM will store conditions which were present when the DTC was set as Freeze Frame and in the Failure Records data.

Conditions for Clearing the MIL/DTC

- DTC P0108 can be cleared by using the Tech 2 “Clear Info” function or by disconnecting the ECM battery feed.

Diagnostic Aids

Check for the following conditions:

- Turn on the ignition switch and stop the engine. At this time, the boost pressure will be equal to the atmospheric pressure and the signal voltage will increase.
- Poor connection at ECM – Inspect harness connectors for backed-out terminals, improper mating, broken locks, improperly formed or damaged terminals, and poor terminal-to-wire connection.
- Damaged harness – Inspect the wiring harness for damage. If the harness appears to be OK, observe the MAP display on the Tech 2 while moving connectors and wiring harnesses related to the sensor. A change in the display will indicate the location of the fault.

If DTC P0108 cannot be duplicated, the information included in the Failure Records data can be useful in determining vehicle mileage since the DTC was last set. If it is determined that the DTC occurs intermittently.

Sensor Circuit High Voltage

Step	Action	Value(s)	Yes	No
1	Was the “On-Board Diagnostic (OBD) System Check” performed?	—	Go to *Step 2*	Go to *OBD System Check*
2	Put the engine into an idling status. Is the MAP voltage value displayed on the Tech 2 above the specified value?	4 V	Go to *Step 3*	Go to *Step 4*
3	1. Turn off the ignition switch. 2. Remove the sensor connector connection. 3. Turn on the ignition switch “ON”. Is the MAP voltage value displayed on the Tech 2 below the specified value?	1 V	Go to *Step 5*	Go to *Step 6*
4	Is the MAP voltage value displayed on the Tech 2 below the specified value?	1 V	Refer to *Chart P0107*	Refer to *Diagnostic Aids* and *Symptom Diagnosis*
5	Connect the relay and solenoid checker (5-8840-0386-0) to the battery voltage, then check the sensor grounding circuit. Does the checker lamp come on?	—	Go to *Step 7*	Go to *Step 8*
6	A voltage short circuit occurs in the MAP signal circuit or this circuit is shorted with the 5V power circuit. Repair the harness or Replace the ECM (Refer to the Data Programming in Case of ECM change). Is the action complete?	—	Verify repair	—
7	Replace the MAP sensor hose or the MAP sensor. Is the action complete?	—	Verify repair	—
8	Repair the harness for open ground circuit. Is the action complete?	—	Verify repair	—

Diagnostic Trouble Code (DTC) P0112 (Flash DTC 23) IAT Sensor Circuit Low Voltage

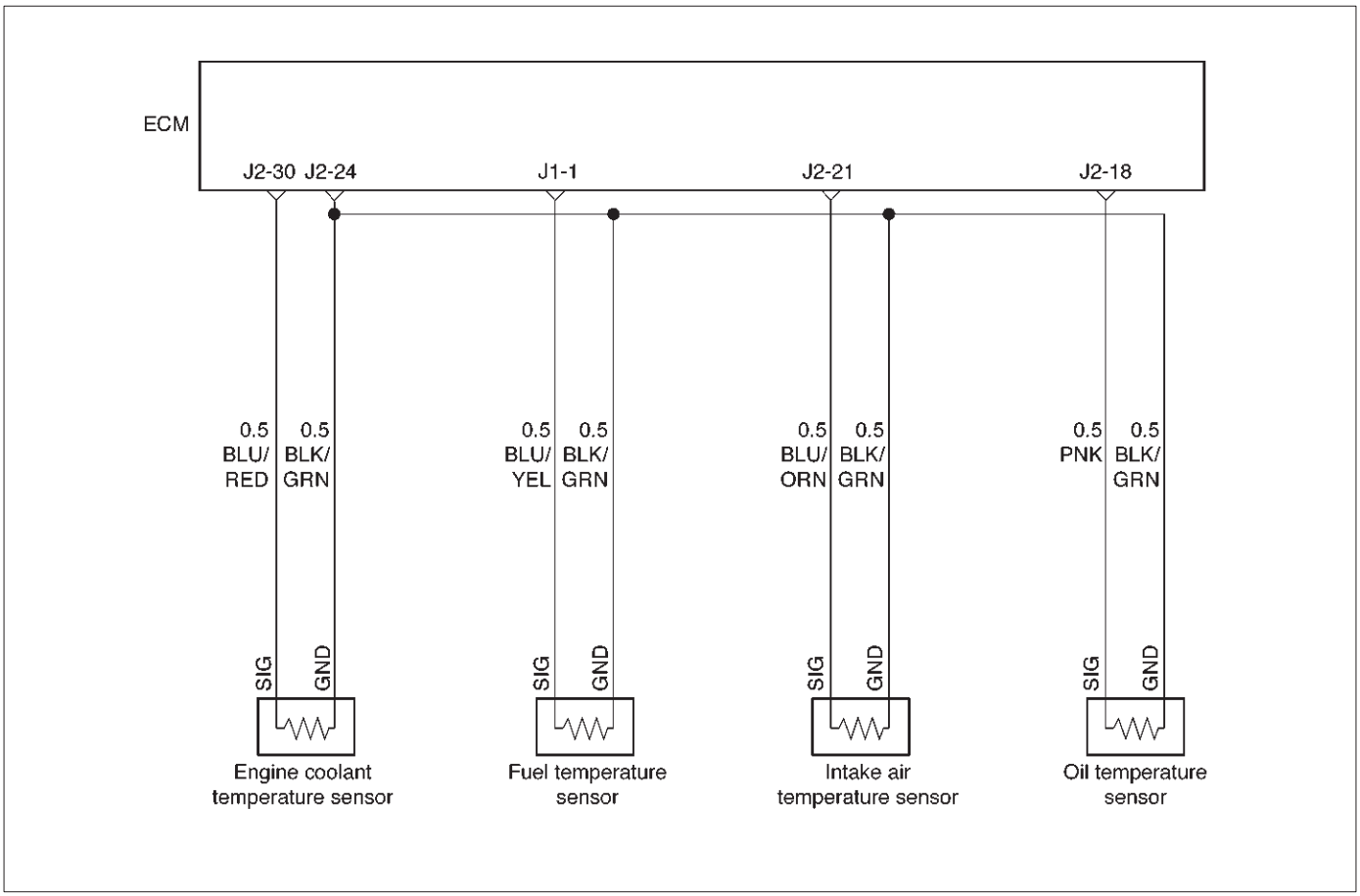

060RW129

Circuit Description

The Intake air temperature (IAT) sensor is a thermistor which measures the temperature of the air entering the engine. The Engine Control Module ECM applies 5 volts through a pull-up resistor to the IAT sensor. When the intake air is cold, the sensor resistance is high and the ECM will monitor a high signal voltage on the IAT signal circuit. If the intake air is warm, the sensor resistance is lower, causing the ECM to monitor a lower voltage. DTC P0112 will set when the ECM detects an excessively low signal voltage on the Intake air temperature sensor signal circuit.

Action Taken When the DTC Sets

- The ECM will illuminate the malfunction indicator lamp (MIL) the first time the fault is detected.
- The ECM will store conditions which were present when the DTC was set as Freeze Frame and in the Failure Records data.

Conditions for Clearing the MIL/DTC

- DTC P0112 can be cleared by using the Tech 2 “Clear Info” function or by disconnecting the ECM battery feed.

Diagnostic Aids

Check for the following conditions:

- Poor connection at ECM – Inspect harness connectors for backed-out terminals, improper mating, broken locks, improperly formed or damaged terminals, and poor terminal-to-wire connection.
- Damaged harness – Inspect the wiring harness for damage. If the harness appears to be OK, observe the IAT display on the Tech 2 while moving connectors and wiring harnesses related to the IAT sensor. A change in the IAT display will indicate the location of the fault.

If DTC P0112 cannot be duplicated, the information included in the Failure Records data can be useful in determining vehicle mileage since the DTC was last set.

Test Description

Number(s) below refer to the step number(s) on the Diagnostic Chart:

2. Verifies that the fault is present.
3. If DTC P0112 can be repeated only by duplicating the Failure Records condition, refer to the *Temperature vs. Resistance Value* table. The table may be used to test the IAT sensor at various temperatures to evaluate the possibility of a "shifted" sensor that may be stored above or below a certain temperature. If this is the case, replace the IAT sensor. If the IAT sensor appears to be OK, the fault is intermittent; refer to *Diagnostic Aids*.

Intake Air Temperature Sensor

˚C	˚F	Ohms
Temperature vs. Resistance Values (approximate)		
25	77	2796
15	59	4450
5	41	7280

DTC P0112 – IAT Sensor Low Voltage

Step	Action	Value(s)	Yes	No
1	Was the "On-Board Diagnostic (OBD) System Check" performed?	—	Go to *Step 2*	Go to *OBD System Check*
2	1. Ignition "ON," engine "OFF." 2. Using a Tech 2, monitor the intake air temperature (IAT). Is the intake air temperature greater than the specified value?	148˚C (283˚F)	Go to *Step 4*	Go to *Step 3*
3	1. Ignition "ON," engine "OFF." Review and record Tech 2 Failure Records data. 2. Operate the vehicle within Failure Records conditions as noted. 3. Using a Tech 2, monitor the " DTC" info for DTC P0112. Does the Tech 2 indicate DTC P0112 failed this ignition?	—	Refer to *Test Description*	Refer to *Diagnostic Aids*
4	1. Ignition "OFF." 2. Disconnect the IAT sensor electrical connector. 3. Ignition "ON." 4. Observe the manifold air temperature on the Tech 2. Is the manifold air temperature below the specified value?	–38˚C (–36˚F)	Go to *Step 6*	Go to *Step 5*
5	1. Ignition "OFF." 2. Disconnect the ECM electrical connectors. 3. Check the IAT sensor signal circuit for a short to ground. Is the IAT sensor signal circuit shorted to ground?	—	Verify repair	Go to *Step 7*
6	Replace the IAT sensor. Is the action complete?	—	Verify repair	—
7	Replace the ECM (Refer to the Data Programming in Case of ECM change). Is the action complete?	—	Verify repair	—

Diagnostic Trouble Code (DTC) P0113 (Flash DTC 23) IAT Sensor Circuit High Voltage

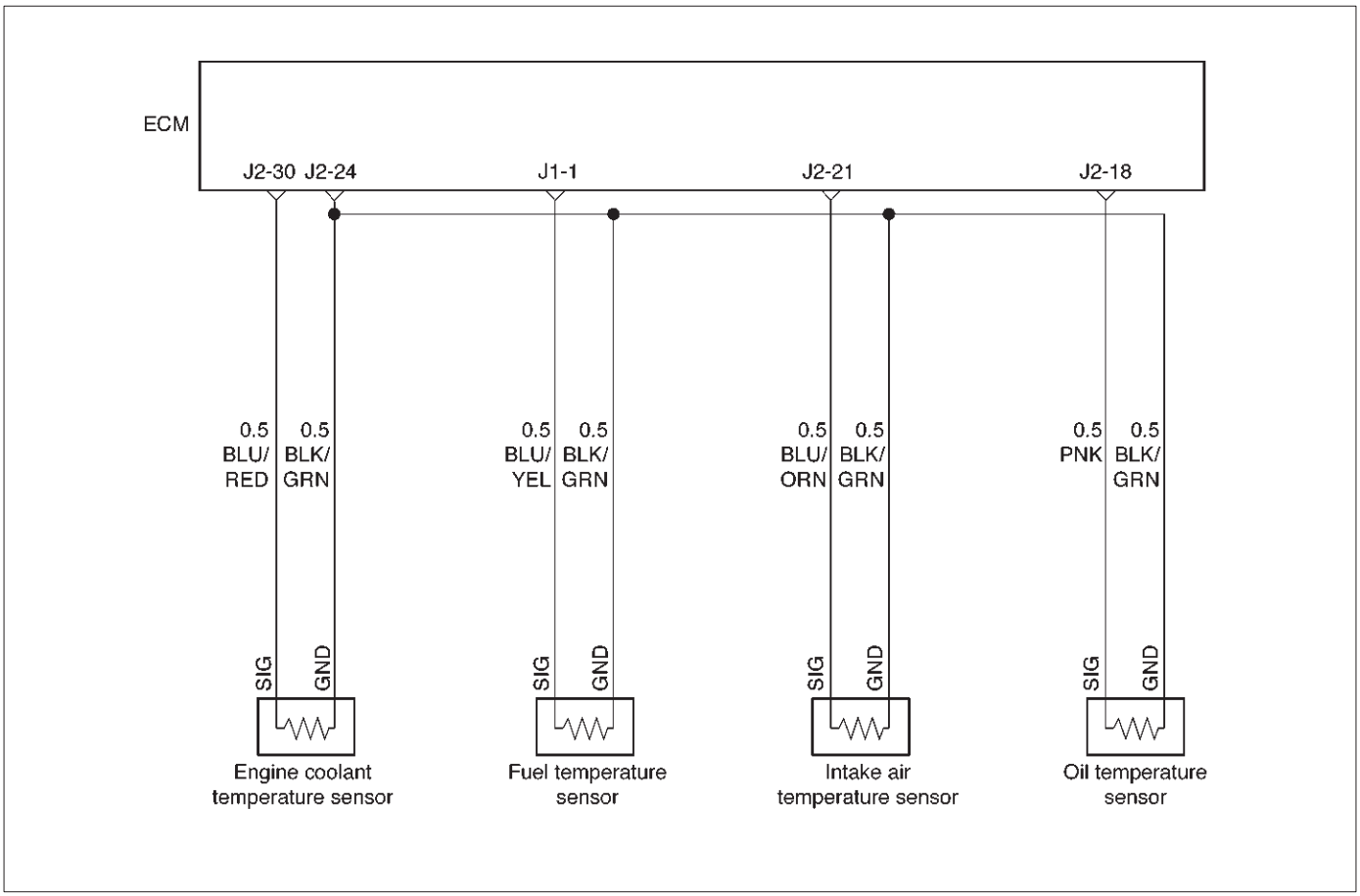

060RW129

Circuit Description

The intake air temperature (IAT) sensor is a thermistor which measures the temperature of the air entering the engine. The Engine Control Module ECM applies 5 volts through a pull-up resistor to the IAT sensor. When the intake air is cold, the sensor resistance is high and the ECM will monitor a high signal voltage on the IAT signal circuit. If the intake air is warm, the sensor resistance is lower causing the ECM to monitor a lower voltage. DTC P0113 will set when the ECM detects an excessively high signal voltage on the intake air temperature sensor signal circuit.

Action Taken When the DTC Sets

- The ECM will illuminate the malfunction indicator lamp (MIL) the first time the fault is detected.
- The ECM will store conditions which were present when the DTC was set as Freeze Frame and in the Failure Records data.

Conditions for Clearing the MIL/DTC

- DTC P0113 can be cleared by using the Tech 2 “Clear Info” function or by disconnecting the ECM battery feed.

Diagnostic Aids

Check for the following conditions:

- Poor connection at ECM – Inspect harness connectors for backed-out terminals, improper mating, broken locks, improperly formed or damaged terminals, and poor terminal-to-wire connection.
- Damaged harness – Inspect the wiring harness for damage. If the harness appears to be OK, observe the IAT display on the Tech 2 while moving connectors and wiring harnesses related to the IAT sensor. A change in the IAT display will indicate the location of the fault.

If DTC P0113 cannot be duplicated, the information included in the Failure Records data can be useful in determining vehicle mileage since the DTC was last set.

Test Description

Number(s) below refer to the step number(s) on the Diagnostic Chart:

2. Verifies that the fault is present.
3. If DTC P0113 can be repeated only by duplicating the Failure Records conditions, refer to the "Temperature vs. Resistance Values" table. The table may be used to test the MAT sensor at various temperatures to evaluate the possibility of a "shifted" sensor that may be open above or below a certain temperature. If this is the case, replace the MAT sensor. If the MAT sensor appears to be OK, the fault is intermittent; refer to *Diagnostic Aids*.

Manifold Air Temperature Sensor

˚C	˚F	Ohms
Temperature vs. Resistance Values (approximate)		
25	77	2796
15	59	4450
5	41	7280

DTC P0113 –IAT Sensor Circuit High Voltage

Step	Action	Value(s)	Yes	No
1	Was the "On-Board Diagnostic (OBD) System Check" performed?	—	Go to *Step 2*	Go to *OBD System Check*
2	Ignition "ON," engine "OFF." Observe the "Intake Air Temp" display on the Tech 2. Is the "Intake Air Temp" below the specified value?	–38˚C (–36˚F)	Go to *Step 4*	Go to *Step 3*
3	1. Ignition "ON," engine "OFF." 2. Review and record Tech 2 Failure Records data parameters. 3. Operate the vehicle within Failure Records conditions as noted. 4. Using a Tech 2, monitor " DTC" info for DTC P0113. Does the Tech 2 indicate DTC P0113 failed?	—	Refer to *Test Description*	Refer to *Diagnostic Aids*
4	1. Ignition "OFF." 2. Disconnect the IAT sensor electrical connector. 3. Jumper the IAT signal circuit and the sensor ground circuit together at the IAT sensor harness connector. 4. Ignition "ON." 5. Observe the "Intake Air Temp" display on the Tech 2. Is the "Intake Air Temp" at the specified value?	140˚C (284˚F)	Go to *Step 6*	Go to *Step 5*
5	1. Jumper the IAT signal circuit at the IAT sensor harness connector to chassis ground. 2. Observe the "Intake Air Temp" display on the Tech 2. Is the "Intake Air Temp" at the specified value?	140˚C (284˚F)	Go to *Step 7*	Go to *Step 8*
6	Check for poor connections at the IAT sensor and replace terminals if necessary. Did any terminals require replacement?	—	Verify repair	Go to *Step 10*
7	1. Ignition "OFF." 2. Disconnect the ECM, and check the IAT sensor ground circuit for an open. 3. If the IAT sensor ground circuit is open, repair it as necessary. Was the IAT sensor ground circuit open?	—	Verify repair	Go to *Step 9*

DTC P0113 –IAT Sensor Circuit High Voltage (Cont'd)

Step	Action	Value(s)	Yes	No
8	1. Ignition "OFF." 2. Disconnect the ECM, and check the IAT signal circuit for an open. 3. If the IAT sensor signal circuit is open, repair it as necessary. Was the IAT signal circuit open?	—	Verify repair	Go to *Step 9*
9	Check for a poor sensor ground or IAT signal circuit terminal connection at the ECM and replace terminal(s) if necessary. Did any of the terminals need to be replaced?	—	Verify repair	Go to *Step 11*
10	Replace the IAT sensor. Is the action complete?	—	Verify repair	—
11	Replace the ECM (Refer to the Data Programming in Case of ECM change). Is the action complete?	—	Verify repair	—

Diagnostic Trouble Code (DTC) P0117 (Flash DTC 14) ECT Sensor Low Voltage

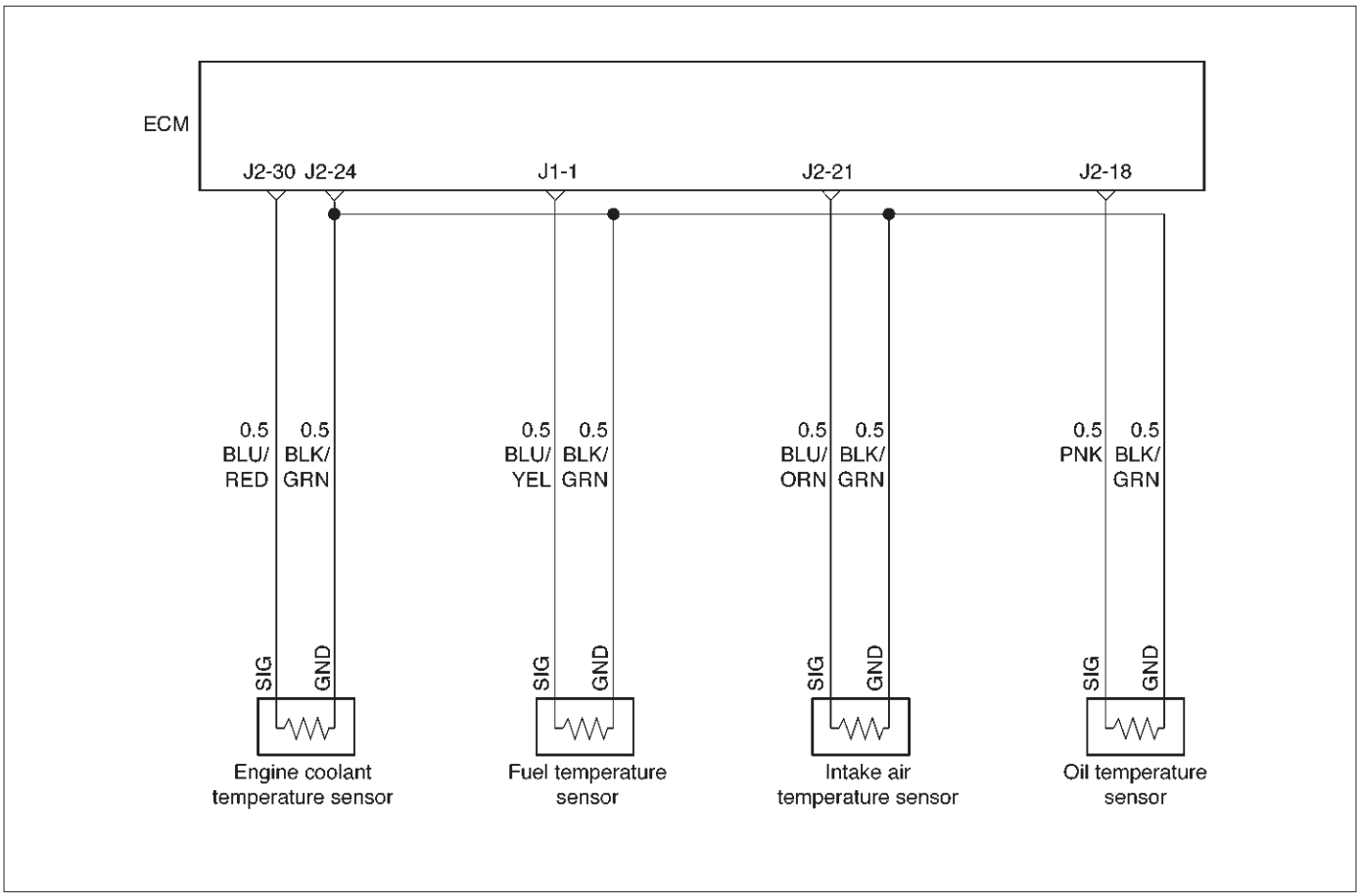

060RW129

Circuit Description

The engine coolant temperature (ECT) sensor is a thermistor mounted on a coolant crossover pipe at the rear of the engine. The Engine Control Module ECM applies a voltage (about 5 volts) through a pull-up resistor to the ECT signal circuit. When the engine coolant is cold, the sensor (thermistor) resistance is high, therefore the ECM will measure a high signal voltage. As the engine coolant warms, the sensor resistance becomes lower, and the ECT signal voltage measured at the ECM drops.

Action Taken When the DTC Sets

- The ECM will store conditions which were present when the DTC was set as Freeze Frame and in the Failure Records data.

Conditions for Clearing the MIL/DTC

- DTC P0117 can be cleared by using the Tech 2 “Clear Info” function or by disconnecting the ECM battery feed.

Diagnostic Aids

Check for the following conditions:

- Poor connection at ECM – Inspect harness connectors for backed-out terminals, improper mating, broken locks, improperly formed or damaged terminals, and poor terminal-to-wire connection.
- Damaged harness – Inspect the wiring harness for damage. If the harness appears to be OK, observe the ECT display on the Tech 2 while moving connectors and wiring harnesses related to the ECT sensor. A change in the ECT display will indicate the location of the fault.

If DTC P0117 cannot be duplicated, the information included in the Failure Records data can be useful in determining vehicle mileage since the DTC was last set. If it is determined that the DTC occurs intermittently.

Test Description

Number(s) below refer to the step number(s) on the Diagnostic Chart.

2. Verifies that the fault is present.
3. If DTC P0117 can be repeated only by duplicating the Failure Records conditions, refer to the “Temperature vs. Resistance Values” table. The table may be used to test the ECT sensor at various temperatures to evaluate the possibility of a “shifted” sensor that may be shorted above or below a certain temperature. If this is the case, replace the ECT sensor. If the ECT sensor appears to be OK, the fault is intermittent; refer to *Diagnostic Aids*.

Engine Coolant Temperature Sensor

˚C	˚F	Ohms
Temperature vs. Resistance Values (approximate)		
25	77	2796
15	59	4450

DTC P0117 – ECT Sensor Low Voltage

Step	Action	Value(s)	Yes	No
1	Was the “On-Board Diagnostic (OBD) System Check” performed?	—	Go to *Step 2*	Go to *OBD System Check*
2	1. Ignition “ON,” engine “OFF.” 2. Observe the “Eng Cool Temp” display on the Tech 2. Is the “Eng Cool Temp” below the specified value?	139˚C (282˚F)	Go to *Step 4*	Go to *Step 3*
3	1. Ignition “ON,” engine “OFF.” 2. Review and record Tech 2 Failure Records data. 3. Operate the vehicle within Failure Records conditions as noted. 4. Using a Tech 2, monitor “ DTC” info for DTC P0117. Does the Tech 2 indicate DTC P0117 failed this ignition?	—	Go to *Step 4*	Refer to *Diagnostic Aids*
4	1. Disconnect the ECT sensor electrical connector. 2. Observe the “Eng Cool Temp” display on the Tech 2. Is the “Eng Cool Temp” at the specified value?	–39˚C (–38˚F)	Go to *Step 6*	Go to *Step 5*
5	1. Ignition “OFF.” 2. Disconnect the ECM and check the ECT signal circuit for a short to ground or a short to the sensor ground circuit. 3. If the ECT signal circuit is shorted. repair it as necessary. Was the ECT signal circuit shorted to ground?	—	Verify repair	Go to *Step 7*
6	Replace the ECT sensor. Is the action complete?	—	Verify repair	—
7	Replace the ECM (Refer to the Data Programming in Case of ECM change). Is the action complete?	—	Verify repair	—

Diagnostic Trouble Code (DTC) P0118 (Flash DTC 14) ECT Sensor High Voltage

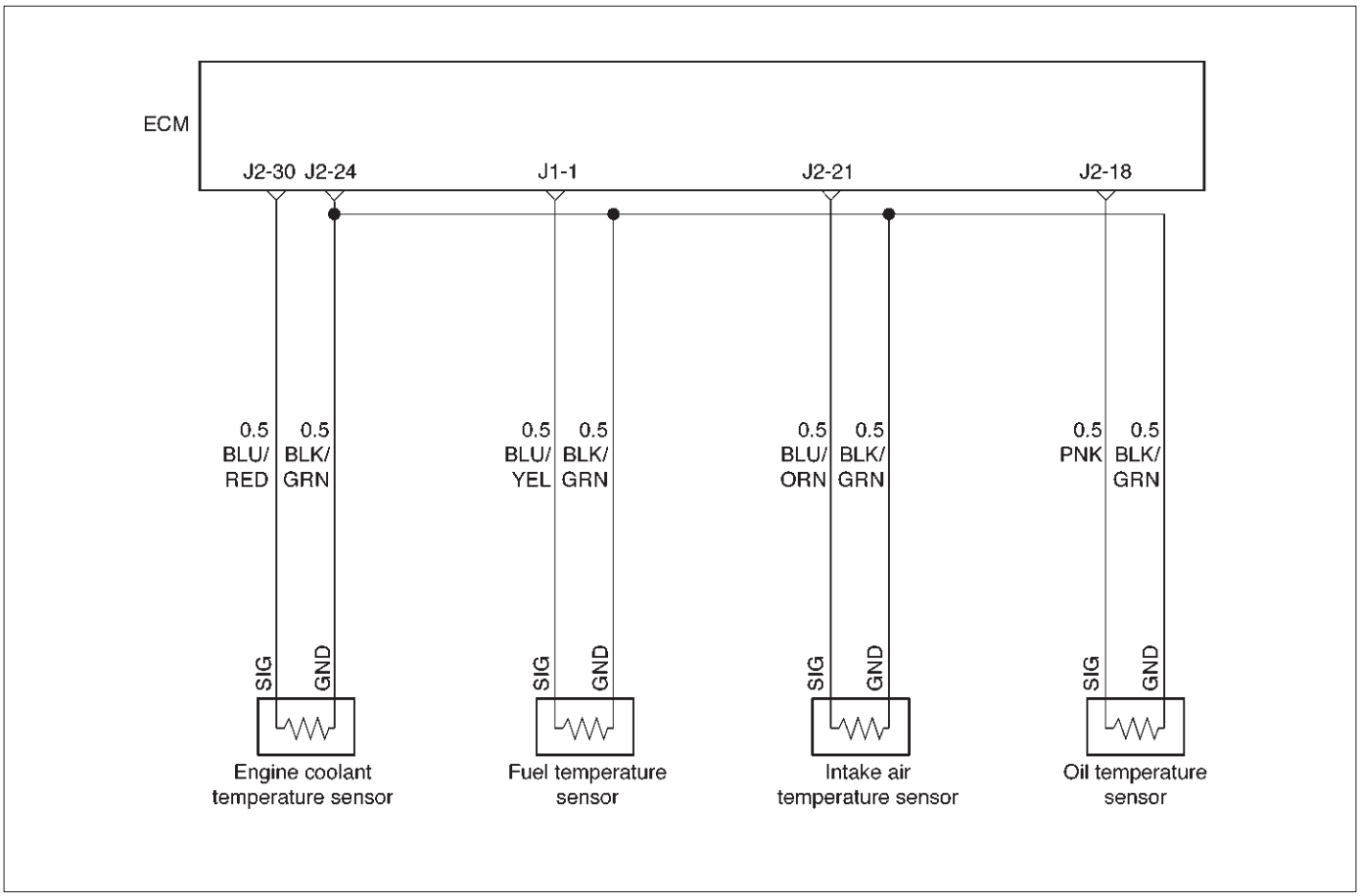

060RW129

Circuit Description

The engine coolant temperature (ECT) sensor is a thermistor mounted in on a coolant crossover pipe at the rear of the engine. The Engine Control Module ECM applies a voltage (about 5 volts) through a pull-up resistor to the ECT signal circuit. When the engine coolant is cold, the sensor (thermistor) resistance is high, therefore the ECM will measure a high signal voltage. As the engine coolant warms, the sensor resistance becomes less, and the ECT signal voltage measured at the ECM drops.

Action Taken When the DTC Sets

- The ECM will store conditions which were present when the DTC was set as Freeze Frame and in the Failure Records data.

Conditions for Clearing the MIL/DTC

- DTC P0118 can be cleared by using the Tech 2 “Clear Info” function or by disconnecting the ECM battery feed.

Diagnostic Aids

Check for the following conditions:

- Poor connection at ECM – Inspect harness connectors for backed-out terminals, improper mating, broken locks, improperly formed or damaged terminals, and poor terminal-to-wire connection.
- Damaged harness – Inspect the wiring harness for damage. If the harness appears to be OK, observe the ECT display on the Tech 2 while moving connectors and wiring harnesses related to the ECT sensor. A change in the ECT display will indicate the location of the fault.

If DTC P0118 cannot be duplicated, the information included in the Failure Records data can be useful in determining vehicle mileage since the DTC was last set.

Test Description

Number(s) below refer to the step number(s) on the Diagnostic Chart.

2. Verifies that the fault is present.

3. If DTC P0118 can be repeated only by duplicating the Failure Records conditions, refer to the "Temperature vs. Resistance Value" table. The table may be used to test the ECT sensor at various temperatures to evaluate the possibility of a "shifted" sensor that may be shorted above or below a certain temperature. If this is the case, replace the ECT sensor. If the ECT sensor appears to be OK, the fault is intermittent; refer to *Diagnostic Aids*.

Engine Coolant Temperature Sensor

˚C	˚F	Ohms
Temperature vs. Resistance Values (approximate)		
80	176	332
25	77	2796
15	59	4450

DTC P0118 – ECT Sensor High Voltage

Step	Action	Value(s)	Yes	No
1	Was the "On-Board Diagnostic (OBD) System Check" performed?	—	Go to *Step 2*	Go to *OBD System Check*
2	1. Ignition "ON," engine "OFF." 2. Observe the "Eng Cool Temp" display on the Tech 2. Is the "Eng Cool Temp" below the specified value?	–39˚C (–38˚F)	Go to *Step 4*	Go to *Step 3*
3	1. Ignition "ON," engine "OFF." 2. Review and record Tech 2 Failure Records data. 3. Operate the vehicle within Failure Records conditions as noted. 4. Using a Tech 2, monitor the " DTC" info for DTC P0118. Does the Tech 2 indicate DTC P0118 failed?	—	Refer to *Test Description*	Refer to *Diagnostic Aids*
4	1. Disconnect the ECT sensor electrical connector. 2. Jumper the ECT signal circuit and the sensor ground circuit together at the ECT sensor harness connector. 3. Observe the "Eng Cool Temp" display on the Tech 2. Is the "Eng Cool Temp" at the specified value?	140˚C (284˚F)	Go to *Step 6*	Go to *Step 5*
5	1. Jumper the ECT signal circuit at the ECT sensor harness connector to chassis ground. 2. Observe the "Eng Cool Temp" display on the Tech 2. Is the "Eng Cool Temp" at the specified value?	140˚C (284˚F)	Go to *Step 7*	Go to *Step 8*
6	Check for poor connections at the ECT sensor and replace terminals if necessary. Did any terminals require replacement?	—	Verify repair	Go to *Step 10*
7	1. Ignition "OFF." 2. Disconnect the ECM, and check the ECT sensor ground circuit for an open. 3. If the ECT sensor ground circuit is open, repair it as necessary. Was the ECT sensor ground circuit open?	—	Verify repair	Go to *Step 9*

DTC P0118 – ECT Sensor High Voltage (Cont'd)

Step	Action	Value(s)	Yes	No
8	1. Ignition "OFF." 2. Disconnect the ECM, and check the ECT signal circuit for an open. 3. If the ECT sensor signal circuit is open, repair it as necessary. Was the ECT signal circuit open?	—	Verify repair	Go to *Step 9*
9	Check for a poor sensor ground or ECT signal circuit terminal connection at the ECM and replace terminal(s) if necessary. Did any of the terminals need to be replaced?	—	Verify repair	Go to *Step 11*
10	Replace the ECT sensor. Is the action complete?	—	Verify repair	—
11	Replace the ECM (Refer to the Data Programming in Case of ECM change). Is the action complete?	—	Verify repair	—

Diagnostic Trouble Code (DTC) P0121 (Flash DTC 33) AP Sensor Rationality

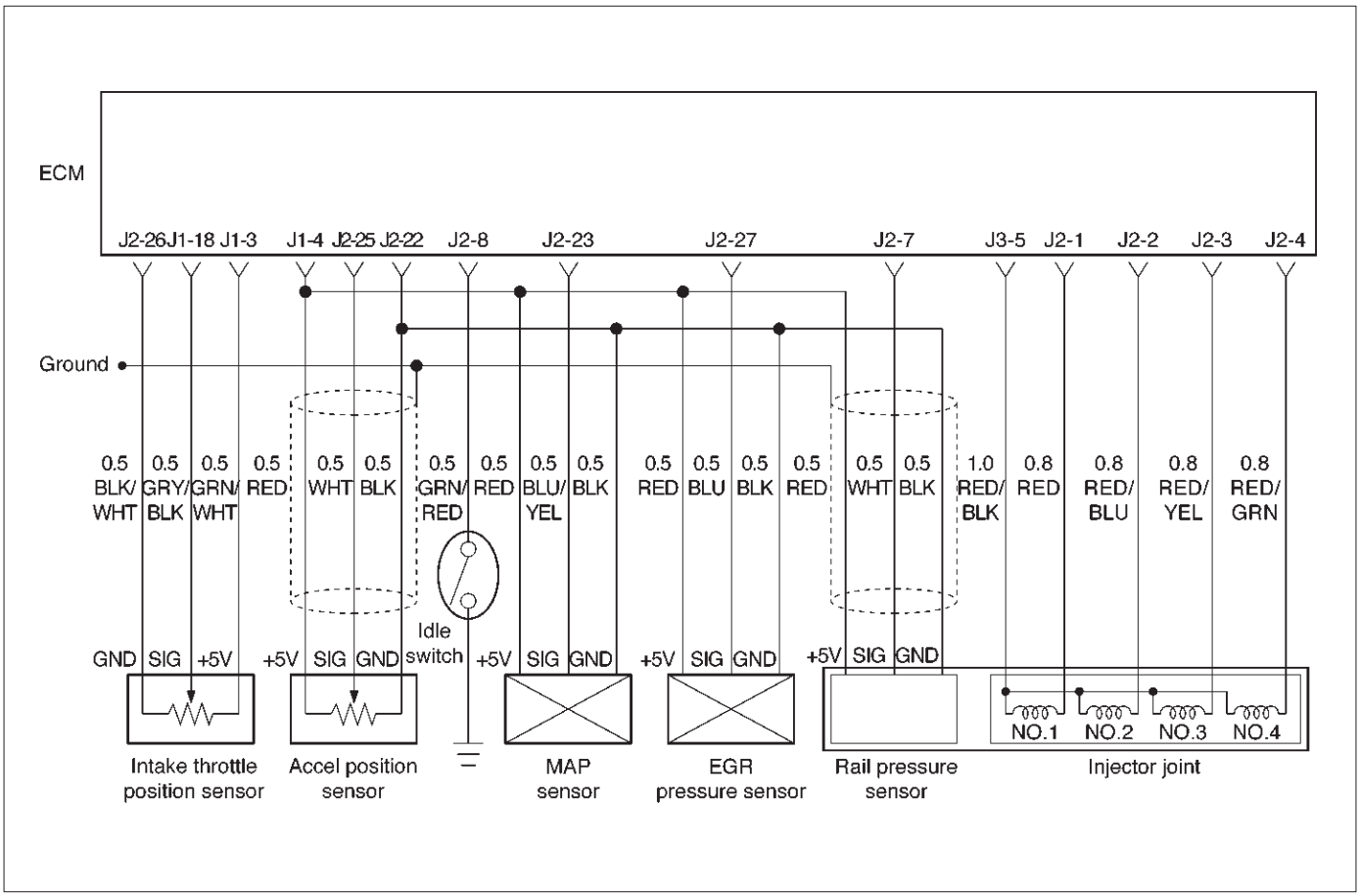

060RW134

Circuit Description

The accel position (AP) sensor circuit provides a voltage signal that changes relative to throttle blade angle.
The AP signal is one of the most important inputs used by the Engine Control Module ECM for fuel volume control and many of the ECM-controlled outputs. If the ECM detects an out-of-range condition, DTC P0121 will set.

Action Taken When the DTC Sets

- The ECM will illuminate the malfunction indicator lamp (MIL) after fault is detected.
- The ECM will store conditions which were present when the DTC was set as Freeze Frame and in the Failure Records data.

Conditions for Clearing the MIL/DTC

- DTC P0121 can be cleared by using the Tech 2 “Clear info ” function or by disconnecting the ECM battery feed.

Diagnostic Aids

Check for the following conditions:

- Poor connection at ECM – Inspect harness connectors for backed-out terminals, improper mating, broken locks improperly formed or damaged terminals, and poor terminal-to-wire connection.
- Damaged harness – Inspect the wiring harness for damage. If the harness appears to be OK, observe the ECT display on the Tech 2 while moving connectors and wiring harnesses related to the sensor. A change in the display will indicate the location of the fault.

If DTC P0121 cannot be duplicated, the information included in the Failure Records data can be useful in determining vehicle mileage since the DTC was last set.

DTC P0121 –AP Sensor Rationality

Step	Action	Value(s)	Yes	No
1	Was the “On-Board Diagnostic (OBD) System Check” performed?	—	Go to *Step 2*	Go to *OBD System Check*
2	Check the Idle SW. Was the Idle SW circuit open or darmage?	—	Replace the Idle SW circuit	Go to *Step 3*
3	Observe the AP angle reading on the Tech 2 while slowly opening the throttle. Does the AP angle increase steadily and evenly from the closed throttle value to the wide open throttle value?	Closed throttle = 0% Wide open throttle = 100%	Refer to *Diagnostic Aids*	Go to *Step 4*
4	1. Disconnect the AP sensor. 2. Observe the AP sensor reading on the Tech 2. Is the AP sensor reading near the specified value?	0 V	Go to *Step 5*	Go to *Step 6*
5	1. Connect a test light between the 5 volt reference “J2” circuit and the AP sensor signal circuit at the AP sensor harness connector. 2. Observe the AP sensor reading on the Tech 2. Is the AP sensor reading at the specified value?	5 V	Go to *Step 8*	Go to *Step 7*
6	Check the following items: 1. AP signal circuit for a short to voltage. 2. AP sensor ground circuit for high resistance between the ECM and the AP sensor. 3. AP sensor ground circuit for a poor connection. 4. If a problem is found, repair wiring harness as necessary. Was a problem found?	—	Verify repair	Go to *Step 9*
7	Check the following items: 1. AP signal circuit or 5 volt reference “J2” circuit for a poor connection. 2. AP signal circuit or 5 volt reference “J2” circuit for high resistance between the ECM and the AP sensor. 3. If a problem is found, repair wiring harness as necessary. Was a problem found?	—	Verify repair	Go to *Step 9*
8	Replace the AP sensor. Is the action complete?	—	Verify repair	—
9	Replace the ECM (Refer to the Data Programming in Case of ECM change). Is the action complete?	—	Verify repair	—

Diagnostic Trouble Code (DTC) P0122 (Flash DTC 21)
AP Sensor Low Voltage

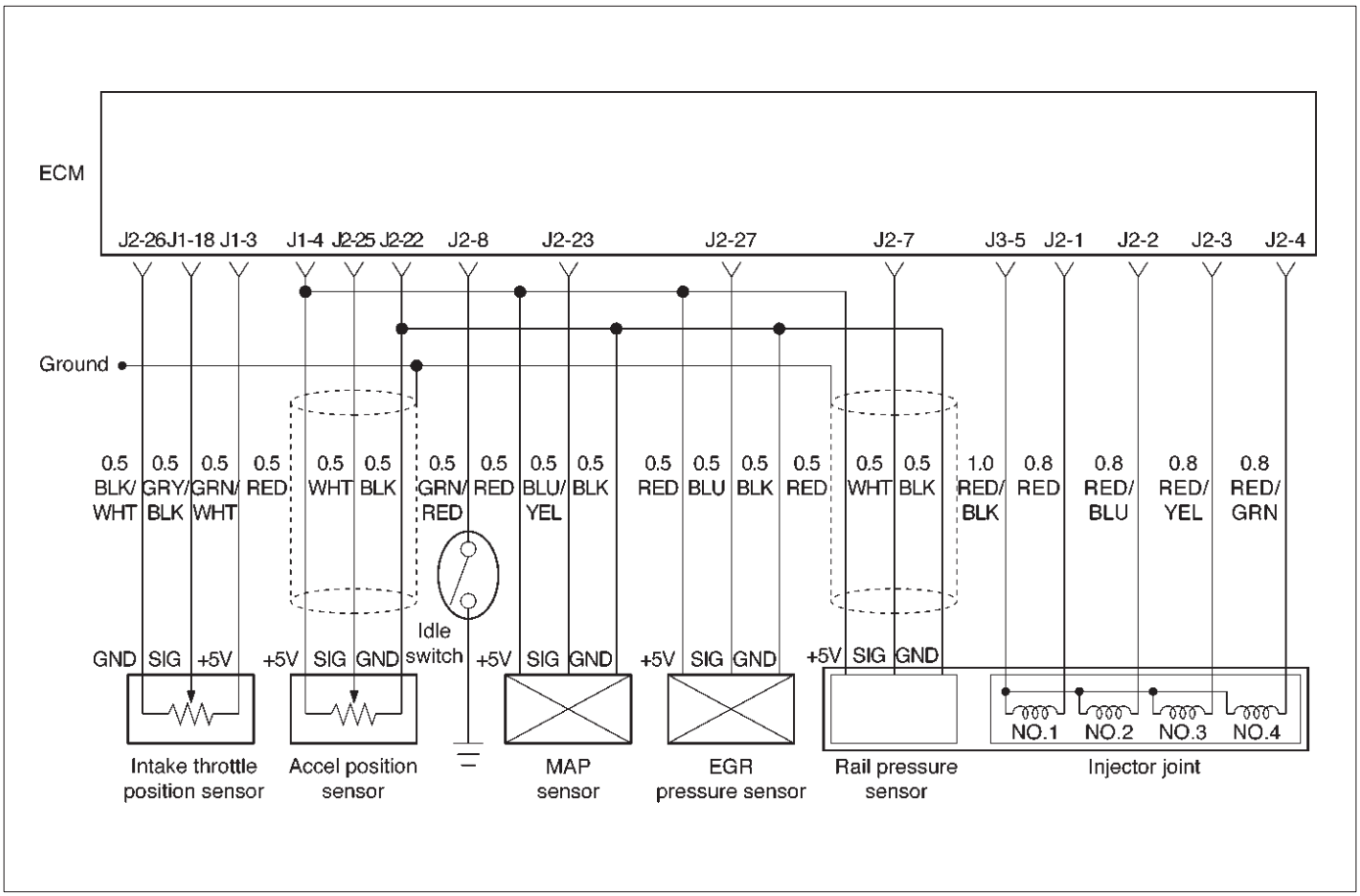

060RW134

Circuit Description

The accelerator position (AP) sensor circuit provides a voltage signal that changes relative to throttle blade angle.

The AP signal is used by the Engine Control Module ECM for fuel volume control and many of the ECM-controlled outputs.

Action Taken When the DTC Sets

- The ECM will store conditions which were present when the DTC was set as Freeze Frame and in the Failure Records data.

Conditions for Clearing the MIL/DTC

- DTC P0122 can be cleared by using the Tech 2 “Clear Info” function or by disconnecting the ECM battery feed.

Diagnostic Aids

Check for the following conditions:

- Poor connection at ECM – Inspect harness connectors for backed-out terminals, improper mating, broken locks, improperly formed or damaged terminals, and poor terminal-to-wire connection.
- Damaged harness – Inspect the wiring harness for damage. If the harness appears to be OK, observe the throttle position display on the Tech 2 while moving connectors and wiring harnesses related to the TP sensor. A change in the display will indicate the location of the fault.

If DTC P0122 cannot be duplicated, the information included in the Failure Records data can be useful in determining vehicle mileage since the DTC was last set.

DTC P0122 –AP Sensor Low Voltage

Step	Action	Value(s)	Yes	No
1	Was the “On-Board Diagnostic (OBD) System Check” performed?	—	Go to *Step 2*	Go to *OBD System Check*
2	Check the AP sensor signal circuit. Was the AP sensor signal circuit open or darmage?	—	Replace the APS circuit	Go to *Step 3*

DTC P0122 –AP Sensor Low Voltage (Cont'd)

Step	Action	Value(s)	Yes	No
3	1. Ignition "ON," engine "OFF." 2. With the throttle closed, observe the "AP Sensor" display on the Tech 2. Is the "AP Sensor" below the specified value?	0.1 V	Go to *Step 5*	Go to *Step 4*
4	1. Ignition "ON," engine "OFF." 2. Review and record Tech 2 Failure Records data. 3. Operate the vehicle within Failure Records conditions as noted. 4. Using a Tech 2, monitor the "DTC" info for DTC P0122. Does the Tech 2 indicate DTC P0122 failed?	—	Go to *Step 5*	Refer to *Diagnostic Aids*
5	1. Ignition "OFF." 2. Disconnect the AP sensor electrical connector. 3. Jumper the 5 volt reference "J2" circuit and the AP signal together at the AP sensor harness connector. 4. Ignition "ON." Observe the "AP Sensor" display on the Tech 2. Is the "AP Sensor" at the specified value?	5 V	Go to *Step 11*	Go to *Step 6*
6	1. Disconnect jumper. 2. Connect a test light between B+ and the AP sensor signal circuit at the AP sensor harness connector. Observe the "AP Sensor" display on the Tech 2. Is the "AP Sensor" at the specified value?	5 V	Go to *Step 7*	Go to *Step 9*
7	1. Ignition "OFF." 2. Disconnect the ECM and check the 5 volt reference "A" circuit for an open or short to ground. 3. If the 5 volt reference "J2" circuit is open or shorted to ground, repair it as necessary. Was the 5 volt reference "J2" circuit open or shorted to ground?	—	Verify repair	Go to *Step 8*
8	Check the 5 volt reference "J2" circuit for a poor connection at the ECM and replace the terminal if necessary. Did the terminal require replacement?	—	Verify repair	Go to *Step 13*
9	1. Ignition "OFF." 2. Disconnect the ECM, and check the AP signal circuit for an open, short to ground, or short to the sensor ground circuit. 3. If the AP sensor signal circuit is open or shorted to ground, repair it as necessary. Was the AP signal circuit open or shorted to ground?	—	Verify repair	Go to *Step 10*
10	Check the AP sensor signal circuit for a poor connection at the ECM and replace the terminal if necessary. Did the terminal require replacement?	—	Verify repair	Go to *Step 13*
11	Check the AP sensor signal circuit for a poor connection at the AP sensor and replace the terminal if necessary. Did the terminal require replacement?	—	Verify repair	Go to *Step 12*

DTC P0122 –AP Sensor Low Voltage (Cont'd)

Step	Action	Value(s)	Yes	No
12	Replace the AP sensor. Is the action complete?	—	Verify repair	—
13	Replace the ECM (Refer to the Data Programming in Case of ECM change). Is the action complete?	—	Verify repair	—

Diagnostic Trouble Code (DTC) P0123 (Flash DTC 21) AP Sensor High Voltage

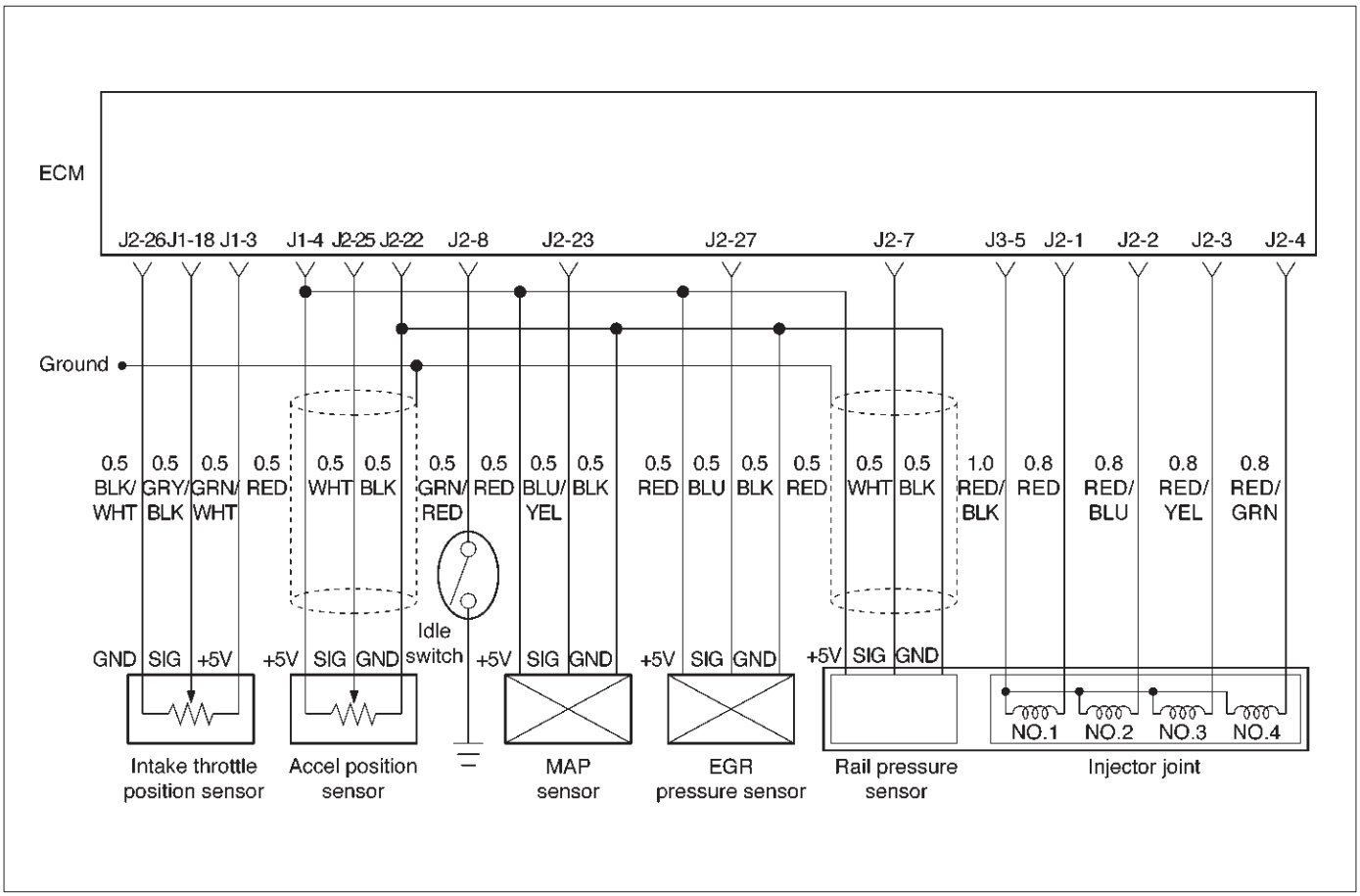

060RW134

Circuit Description

The accelerator position (AP) sensor circuit provides a voltage signal that changes relative to throttle blade angle.

The TP signal is one of the most important inputs used by the Engine Control Module ECM for fuel volume control and many of the ECM-controlled outputs.

Action Taken When the DTC Sets

- The ECM will store conditions which were present when the DTC was set as Freeze Frame and in the Failure Records data.

Conditions for Clearing the MIL/DTC

- DTC P0123 can be cleared by using the Tech 2 “Clear Info” function or by disconnecting the ECM battery feed.

Diagnostic Aids

Check for the following conditions:

- Poor connection at ECM – Inspect harness connectors for backed-out terminals, improper mating, broken locks, improperly formed or damaged terminals, and poor terminal-to-wire connection.
- Damaged harness – Inspect the wiring harness for damage. If the harness appears to be OK, observe the AP sensor display on the Tech 2 while moving connectors and wiring harnesses related to the TP sensor. A change in the display will indicate the location of the fault.
- Faulty AP sensor – With the ignition key “ON,” engine “OFF,” observe the AP sensor display on the Tech 2 while slowly depressing the accelerator to wide open throttle. If a voltage over 4.88 volts is seen at any point in normal accelerator travel, replace the AP sensor.

If DTC P0123 cannot be duplicated, the information included in the Failure Records data can be useful in determining vehicle mileage since the DTC was last set.

Test Description

Number (s) below refer to the step number(s) on the Diagnostic Chart.

8. Components that share the AP sensor 5 volt reference “A” circuit include the following device:

DTC P0123 – AP Sensor High Voltage

Step	Action	Value(s)	Yes	No
1	Was the “On-Board Diagnostic (OBD) System Check” performed?	—	Go to *Step 2*	Go to *OBD System Check*
2	Check the AP sensor signal circuit. Was the AP sensor signal circuit open or darmage?	—	Replace the APS circuit	Go to *Step 3*
3	1. Ignition “ON,” engine “OFF.” 2. With the throttle closed, observe the “AP Sensor” display on the Tech 2. Is the “AP Sensor” above the specified value?	4.5 V	Go to *Step 5*	Go to *Step 4*
4	1. Ignition “ON,” engine “OFF.” 2. Review and record Tech 2 Failure Records data. 3. Operate the vehicle within Failure Records conditions as noted. 4. Using a Tech 2, monitor “DTC” info for DTC P0123. Does the Tech 2 indicate DTC P0123 failed.	—	Go to *Step 5*	Refer to *Diagnostic Aids*
5	1. Disconnect the AP sensor electrical connector. 2. Observe the “AP Sensor” display on the Tech 2. Is the “AP Sensor” near the specified value?	0 V	Go to *Step 6*	Go to *Step 7*
6	Probe the sensor ground circuit at the AP sensor harness connector with a test light connected to B+. Is the test light “ON?”	—	Go to *Step 8*	Go to *Step 11*
7	1. Ignition “OFF,” disconnect the ECM. 2. Ignition “ON,” engine “OFF.” 3. Check for a short to voltage on the AP sensor signal circuit. 4. If the AP sensor signal circuit is shorted, repair it as necessary. Was the AP sensor signal circuit shorted?	—	Verify repair	Go to *Step 13*
8	1. Ignition “ON.” 2. Monitor the “AP Sensor” Tech 2 display while disconnecting each of the components that share the 5 volt reference “J2” circuit (one at a time). 3. If the “AP Sensor” Tech 2 display changes, replace the component that caused the display to change when disconnected. Does disconnecting any of these components cause the “AP Sensor” display to change?	—	Verify repair	Go to *Step 9*
9	1. Ignition “OFF,” disconnect the ECM. 2. Ignition “ON,” engine “OFF.” 3. Check for a short to B+ on the 5 volt reference “A” circuit. 4. If the 5 volt reference “J2” circuit is shorted, repair it as necessary. Was the 5 volt reference “J2” circuit shorted?	—	Verify repair	Go to *Step 10*
10	Check for poor electrical connections at the AP sensor and replace terminals if necessary. Did any terminals require replacement?	—	Verify repair	Go to *Step 12*

DTC P0123 – AP Sensor High Voltage (Cont'd)

Step	Action	Value(s)	Yes	No
11	1. Ignition "OFF." 2. Disconnect the ECM, and check for an open sensor ground circuit to the AP sensor. 3. If a problem is found, repair it as necessary. Was the sensor ground circuit to the AP sensor open?	—	Verify repair	Go to *Step 13*
12	Replace the AP sensor. Is the action complete?	—	Verify repair	—
13	Replace the ECM (Refer to the Data Programming in Case of ECM change). Is the action complete?	—	Verify repair	—

Diagnostic Trouble Code (DTC) P0182 (Flash DTC 15) FT Sensor Low Voltage

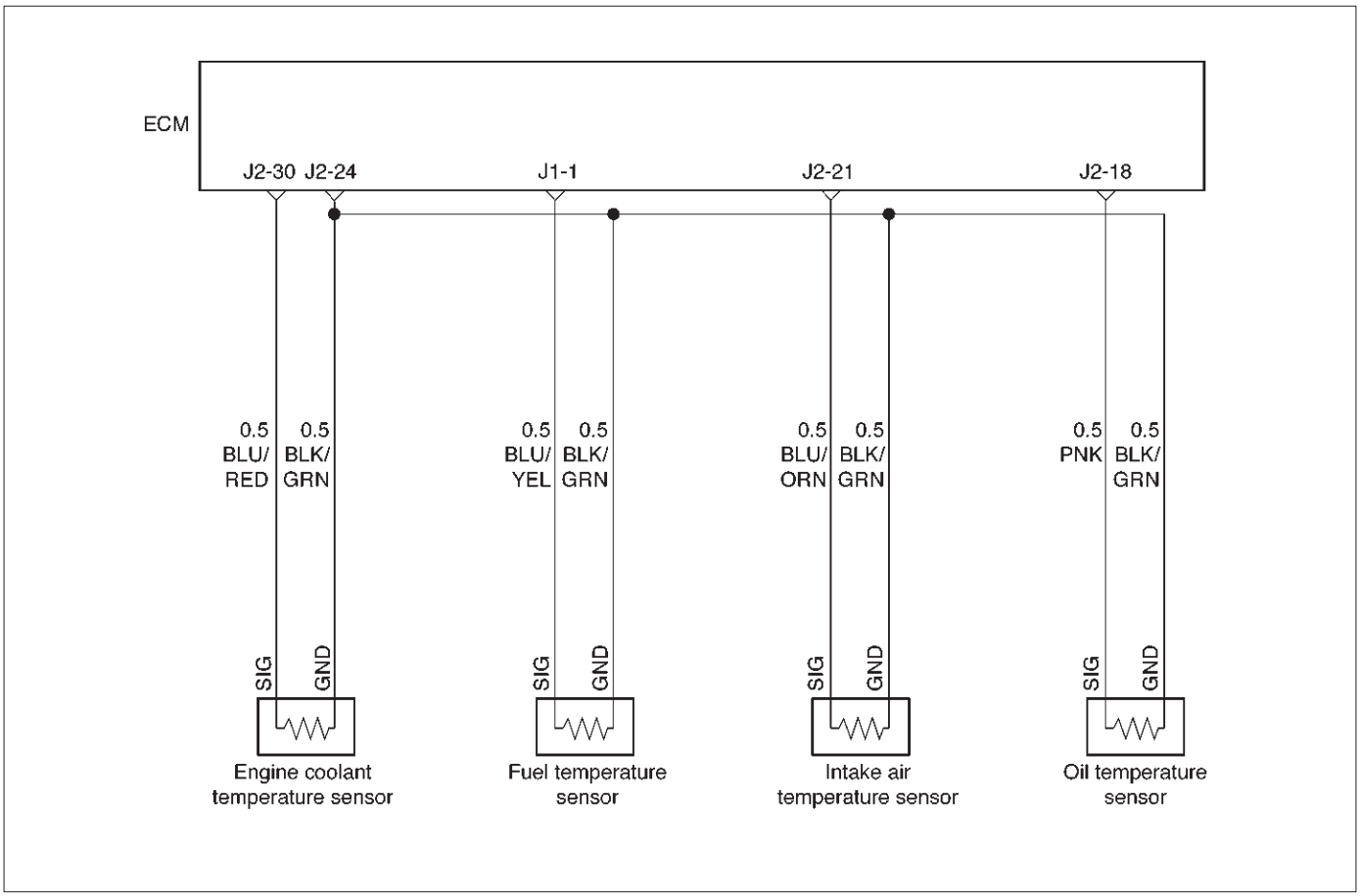

060RW129

Circuit Description

The fuel temperature (FT) sensor is a thermistor mounted on a coolant crossover pipe at the rear of the engine. The Engine Control Module ECM applies a voltage (about 5 volts) through a pull-up resistor to the FT signal circuit. When the fuel is cold, the sensor (thermistor) resistance is high, therefore the ECM will measure a high signal voltage. As the fuel warms, the sensor resistance becomes lower, and the FT signal voltage measured at the ECM drops.

Action Taken When the DTC Sets

- The ECM will store conditions which were present when the DTC was set as Freeze Frame and in the Failure Records data.

Conditions for Clearing the MIL/DTC

- DTC P0182 can be cleared by using the Tech 2 “Clear Info” function or by disconnecting the ECM battery feed.

Diagnostic Aids

Check for the following conditions:

- Poor connection at ECM – Inspect harness connectors for backed-out terminals, improper mating, broken locks, improperly formed or damaged terminals, and poor terminal-to-wire connection.
- Damaged harness – Inspect the wiring harness for damage. If the harness appears to be OK, observe the FT display on the Tech 2 while moving connectors and wiring harnesses related to the FT sensor. A change in the FT display will indicate the location of the fault.

If DTC P0182 cannot be duplicated, the information included in the Failure Records data can be useful in determining vehicle mileage since the DTC was last set. If it is determined that the DTC occurs intermittently.

Test Description

Number(s) below refer to the step number(s) on the Diagnostic Chart.

2. Verifies that the fault is present.

DTC P0182 – FT Sensor Low Voltage

Step	Action	Value(s)	Yes	No
1	Was the “On-Board Diagnostic (OBD) System Check” performed?	—	Go to *Step 2*	Go to *OBD System Check*
2	1. Ignition “ON,” engine “OFF.” 2. Observe the “Fuel Temp” display on the Tech 2. Is the “Fuel Temp” below the specified value?	139˚C (282˚F)	Go to *Step 4*	Go to *Step 3*
3	1. Ignition “ON,” engine “OFF.” 2. Review and record Tech 2 Failure Records data. 3. Operate the vehicle within Failure Records conditions as noted. 4. Using a Tech 2, monitor “ DTC” info for DTC P0182. Does the Tech 2 indicate DTC P0182 failed this ignition?	—	Go to *Step 4*	Refer to *Diagnostic Aids*
4	1. Disconnect the FT sensor electrical connector. 2. Observe the “Fuel Temp” display on the Tech 2. Is the “Fuel Temp” at the specified value?	–39˚C (–38˚F)	Go to *Step 6*	Go to *Step 5*
5	1. Ignition “OFF.” 2. Disconnect the ECM and check the FT signal circuit for a short to ground or a short to the sensor ground circuit. 3. If the FT signal circuit is shorted. repair it as necessary. Was the FT signal circuit shorted to ground?	—	Verify repair	Go to *Step 7*
6	Replace the FT sensor. Is the action complete?	—	Verify repair	—
7	Replace the ECM (Refer to the Data Programming in Case of ECM change). Is the action complete?	—	Verify repair	—

Diagnostic Trouble Code (DTC) P0183 (Flash DTC 15) FT Sensor High Voltage

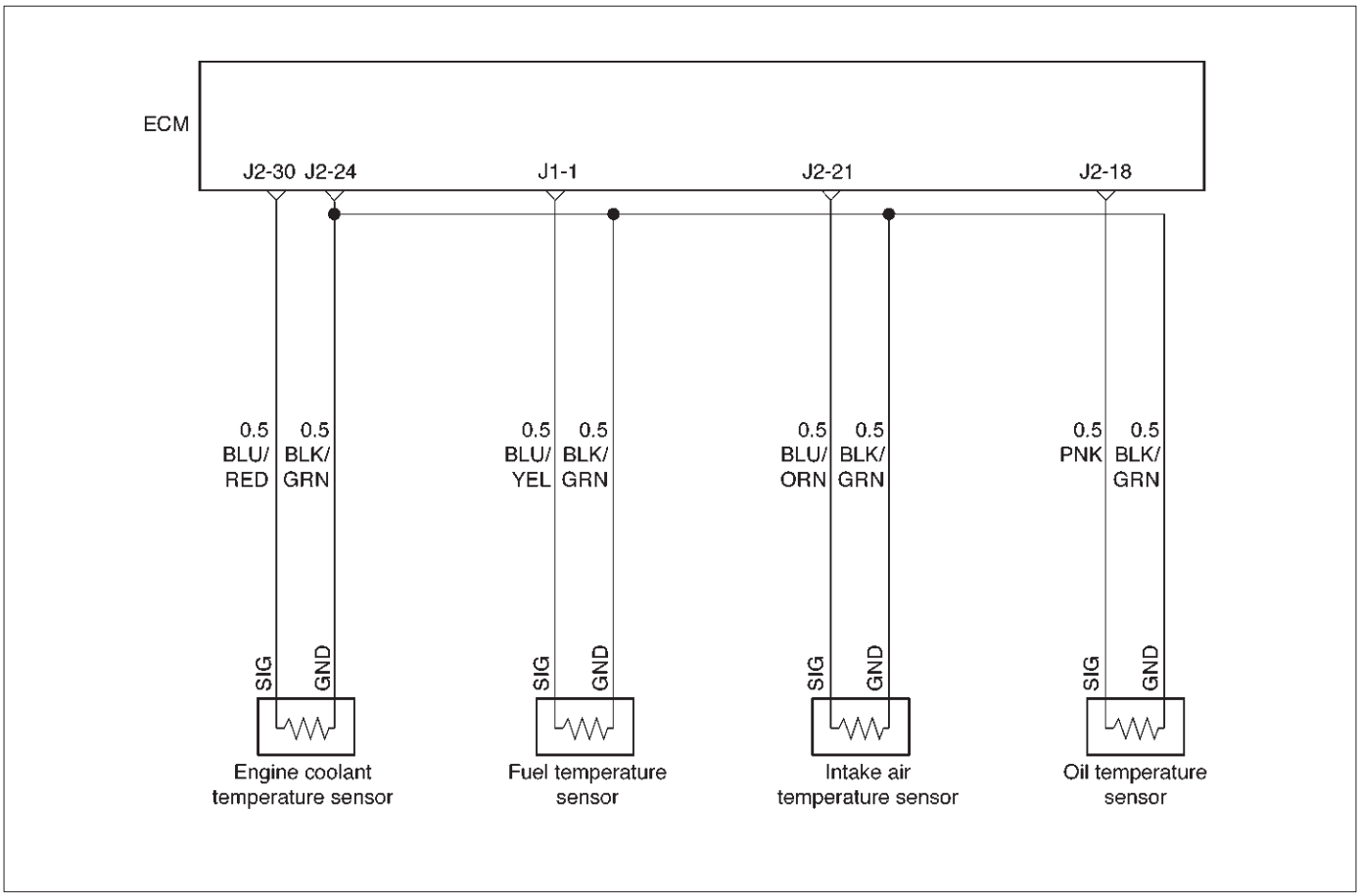

060RW129

Circuit Description

The fuel temperature (FT) sensor is a thermistor mounted in on a coolant crossover pipe at the rear of the engine. The Engine Control Module ECM applies a voltage (about 5 volts) through a pull-up resistor to the FT signal circuit. When the fuel is cold, the sensor (thermistor) resistance is high, therefore the ECM will measure a high signal voltage. As the fuel warms, the sensor resistance becomes less, and the FT signal voltage measured at the ECM drops.

Action Taken When the DTC Sets

- The ECM will store conditions which were present when the DTC was set as Freeze Frame and in the Failure Records data.

Conditions for Clearing the MIL/DTC

- DTC P0183 can be cleared by using the Tech 2 “Clear Info” function or by disconnecting the ECM battery feed.

Diagnostic Aids

Check for the following conditions:

- Poor connection at ECM – Inspect harness connectors for backed-out terminals, improper mating, broken locks, improperly formed or damaged terminals, and poor terminal-to-wire connection.
- Damaged harness – Inspect the wiring harness for damage. If the harness appears to be OK, observe the FT display on the Tech 2 while moving connectors and wiring harnesses related to the FT sensor. A change in the FT display will indicate the location of the fault.

If DTC P0182 cannot be duplicated, the information included in the Failure Records data can be useful in determining vehicle mileage since the DTC was last set.

Test Description

Number(s) below refer to the step number(s) on the Diagnostic Chart.

2. Verifies that the fault is present.

DTC P0183 – FT Sensor High Voltage

Step	Action	Value(s)	Yes	No
1	Was the “On-Board Diagnostic (OBD) System Check” performed?	—	Go to *Step 2*	Go to *OBD System Check*
2	1. Ignition “ON,” engine “OFF.” 2. Observe the “Fuel Temp” display on the Tech 2. Is the “Fuel Temp” below the specified value?	–39˚C (–38˚F)	Go to *Step 4*	Go to *Step 3*
3	1. Ignition “ON,” engine “OFF.” 2. Review and record Tech 2 Failure Records data. 3. Operate the vehicle within Failure Records conditions as noted. 4. Using a Tech 2, monitor the “ DTC” info for DTC P0183. Does the Tech 2 indicate DTC P0183 failed?	—	Refer to *Test Description*	Refer to *Diagnostic Aids*
4	1. Disconnect the FT sensor electrical connector. 2. Jumper the FT signal circuit and the sensor ground circuit together at the FT sensor harness connector. 3. Observe the “Fuel Temp” display on the Tech 2. Is the “Fuel Temp” at the specified value?	140˚C (284˚F)	Go to *Step 6*	Go to *Step 5*
5	1. Jumper the FT signal circuit at the FT sensor harness connector to chassis ground. 2. Observe the “Fuel Temp” display on the Tech 2. Is the “Fuel Temp” at the specified value?	140˚C (284˚F)	Go to *Step 7*	Go to *Step 8*
6	Check for poor connections at the FT sensor and replace terminals if necessary. Did any terminals require replacement?	—	Verify repair	Go to *Step 10*
7	1. Ignition “OFF.” 2. Disconnect the ECM, and check the FT sensor ground circuit for an open. 3. If the FT sensor ground circuit is open, repair it as necessary. Was the FT sensor ground circuit open?	—	Verify repair	Go to *Step 9*
8	1. Ignition “OFF.” 2. Disconnect the ECM, and check the FT signal circuit for an open. 3. If the FT sensor signal circuit is open, repair it as necessary. Was the FT signal circuit open?	—	Verify repair	Go to *Step 9*
9	Check for a poor sensor ground or FT signal circuit terminal connection at the ECM and replace terminal(s) if necessary. Did any of the terminals need to be replaced?	—	Verify repair	Go to *Step 11*
10	Replace the FT sensor. Is the action complete?	—	Verify repair	—
11	Replace the ECM (Refer to the Data Programming in Case of ECM change). Is the action complete?	—	Verify repair	—

Diagnostic Trouble Code (DTC) P0192 (Flash DTC 63) Rail Pressure Sensor Low Voltage

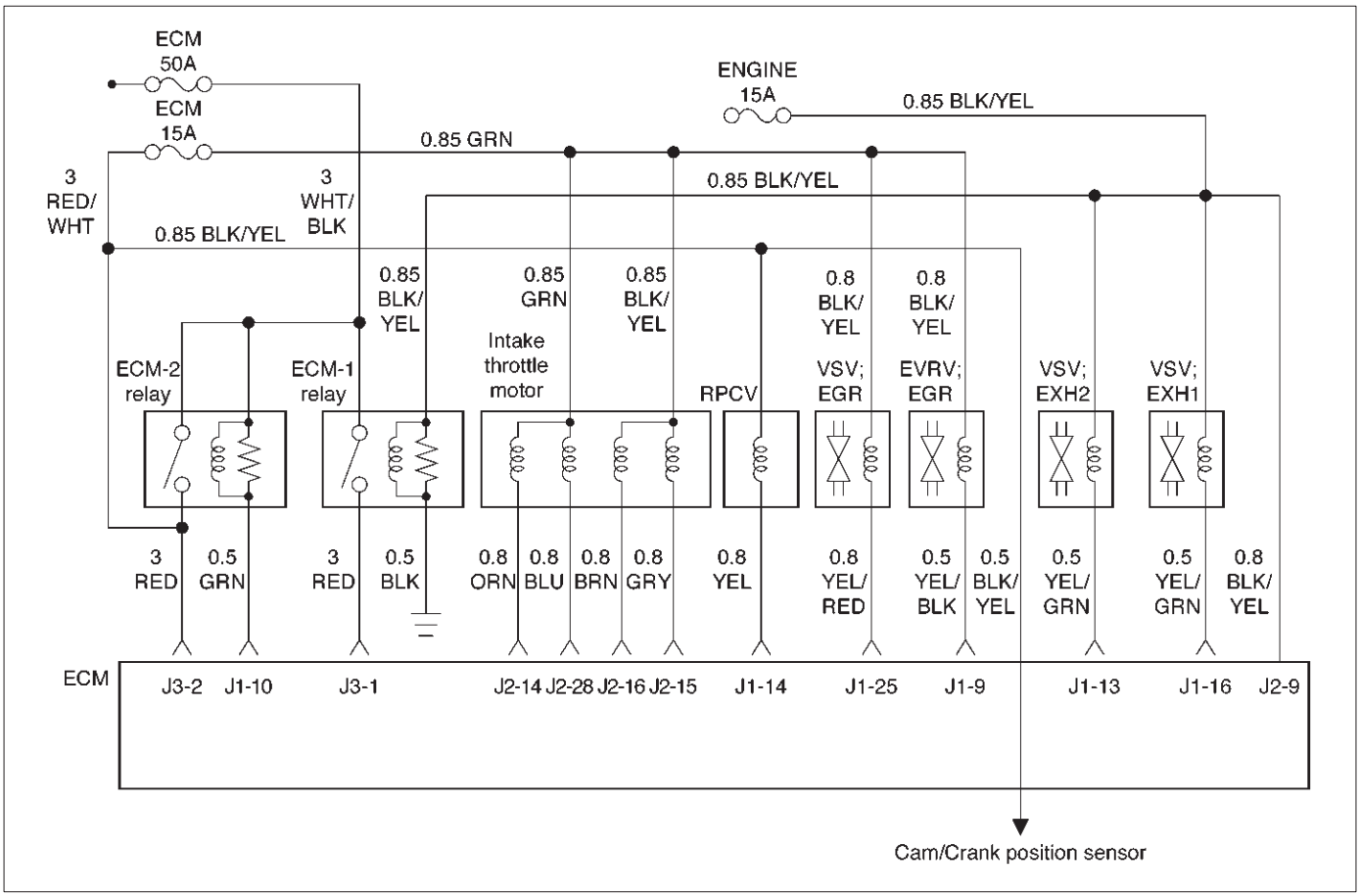

060RW135

Circuit Description

The rail pressure (RP) sensor responds to changes in oil manifold pressure.

The ECM monitors the RP signals for voltages outside the normal range of the RP sensor. If the ECM detects a RP signal voltage that is excessively low, DTC P0192 will be set.

Action Taken When the DTC Sets

- The ECM will store conditions which were present when the DTC was set as Freeze Frame and in the Failure Records data.

Conditions for Clearing the MIL/DTC

- DTC P0192 can be cleared by using the Tech 2 “Clear Info” function or by disconnecting the ECM battery feed.

Diagnostic Aids

Check for the following conditions:

- Poor connection at ECM – Inspect harness connectors for backed-out terminals, improper mating, broken locks, improperly formed or damaged terminals, and poor terminal-to-wire connection.
- Damaged harness – Inspect the wiring harness for damage. If the harness appears to be OK, observe the RP display on the Tech 2 while moving connectors and wiring harnesses related to the sensor. A change in the display will indicate the location of the fault.

If DTC P0192 cannot be duplicated, the information included in the Failure Records data can be useful in determining vehicle mileage since the DTC was last set. If it is determined that the DTC occurs intermittently, performing the DTC P0192 Diagnostic Chart may isolate the cause of the fault.

DTC P0192 – RP Sensor Low Voltage

Step	Action	Value(s)	Yes	No
1	Was the “On-Board Diagnostic (OBD) System Check” performed?	—	Go to *Step 2*	Go to *OBD System Check*
2	1. Ignition “ON,” engine “OFF.” 2. Review and record Tech 2 Failure Records data. 3. Operate the vehicle within Failure Records conditions as noted. 4. Using a Tech 2, monitor “DTC” info for DTC P0192. Does the Tech 2 indicate DTC P0192 failed?	—	Go to *Step 3*	Refer to *Diagnostic Aids*
3	Check the RP sensor signal circuit. Was the RP sensor signal circuit open or darmage?	—	Replace the RP circuit.	Go to *Step 4*
4	1. Ignition “OFF.” 2. Disconnect the ECM and check the 5 volt reference “J1” circuit for an open or short to ground. 3. If the 5 volt reference “J1” circuit is open or shorted to ground, repair it as necessary. Was the 5 volt reference “J1” circuit open or shorted to ground?	—	Verify repair	Go to *Step 5*
5	Check the 5 volt reference “J1” circuit for a poor connection at the ECM and replace the terminal if necessary. Did the terminal require replacement?	—	Verify repair	Go to *Step 6*
6	1. Ignition “OFF.” 2. Disconnect the ECM, and check the RP signal circuit for an open, short to ground, or short to the sensor ground circuit. 3. If the RP sensor signal circuit is open or shorted to ground, repair it as necessary. Was the RP signal circuit open or shorted to ground?	—	Verify repair	Go to *Step 7*
7	Check the RP sensor signal circuit for a poor connection at the ECM and the RP sensor; replace the terminal if necessary. Did the terminal require replacement?	—	Verify repair	Go to *Step 8*
8	Replace the RP sensor (Refer to the RP sensor programming). Is the action complete?	—	Verify repair	Go to *Step 9*
9	Replace the ECM (Refer to the Data Programming in Case of ECM change). Is the action complete?	—	Verify repair	—

Diagnostic Trouble Code (DTC) P0193 (Flash DTC 63) Rail Pressure Sensor High Voltage

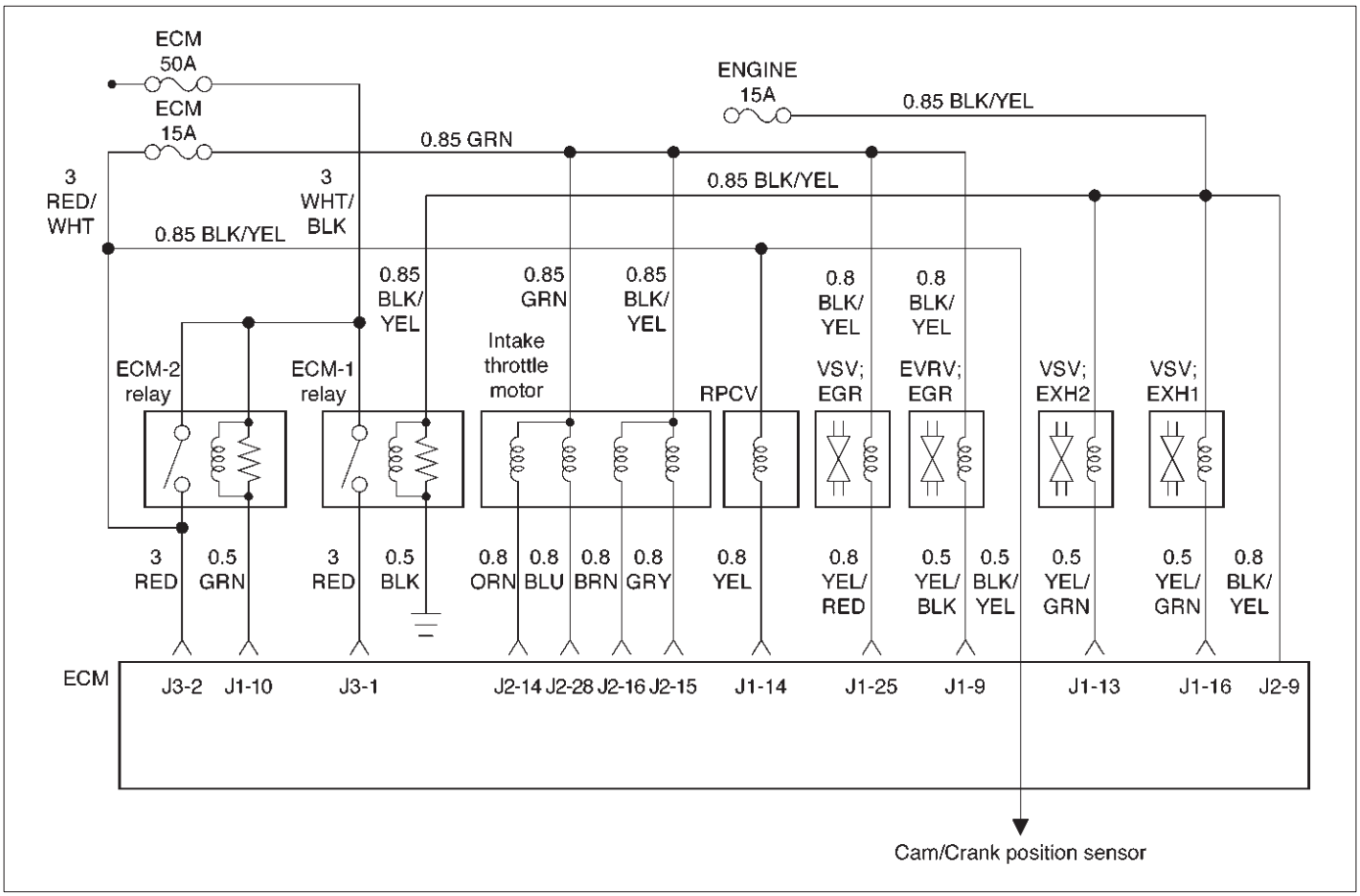

060RW135

Circuit Description

The rail pressure (RP) sensor responds to changes in oil manifold pressure.

The ECM monitors the RP signals for voltages outside the normal range of the RP sensor. If the ECM detects a RP signal voltage that is excessively high, DTC P0193 will be set.

Action Taken When the DTC Sets

- The ECM will store conditions which were present when the DTC was set as Freeze Frame and in the Failure Records data.

Conditions for Clearing the MIL/DTC

- DTC P0193 can be cleared by using the Tech 2 “Clear Info” function or by disconnecting the ECM battery feed.

Diagnostic Aids

Check for the following conditions:

- Poor connection at ECM – Inspect harness connectors for backed-out terminals, improper mating, broken locks, improperly formed or damaged terminals, and poor terminal-to-wire connection.
- Damaged harness – Inspect the wiring harness for damage. If the harness appears to be OK, observe the RP display on the Tech 2 while moving connectors and wiring harnesses related to the sensor. A change in the display will indicate the location of the fault.

If DTC P0193 cannot be duplicated, the information included in the Failure Records data can be useful in determining vehicle mileage since the DTC was last set. If it is determined that the DTC occurs intermittently, performing the DTC P0193 Diagnostic Chart may isolate the cause of the fault.

DTC P0193 – RP Sensor High Voltage

Step	Action	Value(s)	Yes	No
1	Was the “On-Board Diagnostic (OBD) System Check” performed?	—	Go to *Step 2*	Go to *OBD System Check*
2	1. Ignition “ON,” engine “OFF.” 2. Review and record Tech 2 Failure Records data. 3. Operate the vehicle within Failure Records conditions as noted. 4. Using a Tech 2, monitor “ DTC” info for DTC P0108. Does the Tech 2 indicate DTC P0108 failed this ignition?	—	Go to *Step 3*	Refer to *Diagnostic Aids*
3	Check the RP sensor signal circuit. Was the RP sensor signal circuit open or darmage?	—	Replace the RP circuit	Go to *Step 4*
4	Probe the sensor ground circuit with a test light to B+. Is the test light “ON?”	—	Go to *Step 5*	Go to *Step 7*
5	1. Check the RP signal circuit for a short to voltage or a short to the 5 volt reference “J1” circuit. 2. If the RP sensor signal circuit is shorted, repair circuit as necessary. Was the RP sensor signal circuit shorted?	—	Verify repair	Go to *Step 6*
6	1. Check for a poor sensor ground terminal connection at the RP sensor electrical connector. 2. If a problem if found, replace the faulty terminal. Did the terminal require replacement?	—	Verify repair	Go to *Step 7*
7	1. Check for a poor sensor ground terminal connection at the ECM. 2. If a problem is found, replace the faulty terminal. Did the terminal require replacement?	—	Verify repair	Go to *Step 8*
8	1. Check the continuity of the RP sensor ground circuit. 2. If the RP sensor ground circuit measures over 5 ohms, repair open or poor connection. Was a condition found and corrected?	—	Verify repair	Go to *Step 9*
9	Replace the ECM (Refer to the Data Programming in Case of ECM change). Is the action complete?	—	Verify Repair	—

Diagnostic Trouble Code (DTC) P1193 (Flash DTC 64) RPCV Circuit Open/Short

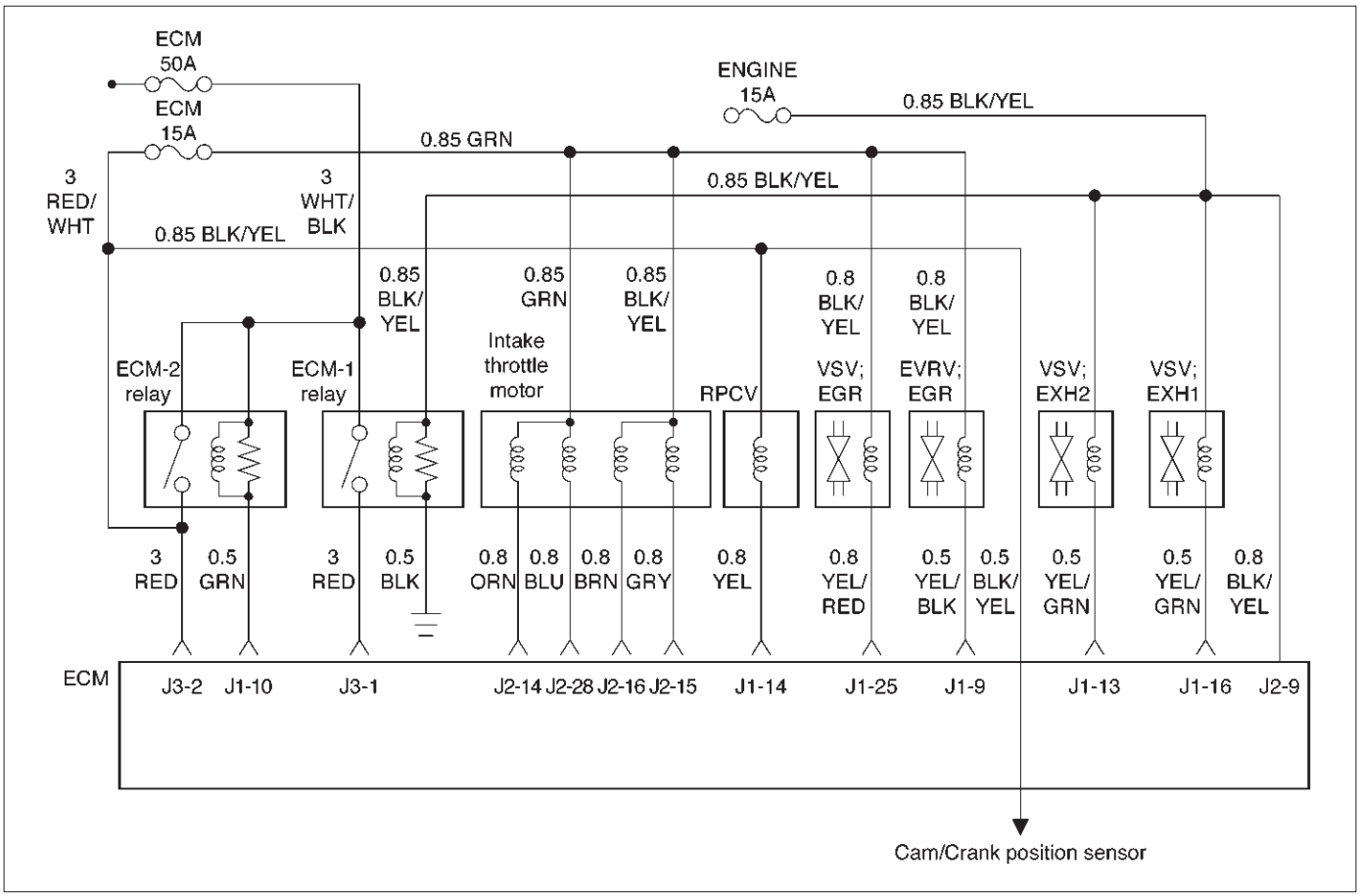

060RW135

Circuit Description

The rail pressure control valve (RPCV) is built in the high pressure oil circuit.
RPCV is an important device which is used to control oil pressure in the HEUI system.
The circuit receives current through Engine 15A fuse from the battery, current flowing in the order of RPCV.

Action Taken When the DTC Sets

- The ECM will store conditions which were present when the DTC was set as Freeze Frame and in the Failure Records data.

Conditions for Clearing the MIL/DTC

- DTC P1193 can be cleared by using the Tech 2 “Clear Info” function or by disconnecting the ECM battery feed.

Diagnostic Aids

Check for the following conditions:

- Poor connection at ECM – Inspect harness connectors for backed-out terminals, improper mating, broken locks, improperly formed or damaged terminals, and poor terminal-to-wire connection.
- Damaged harness – Inspect the wiring harness for damage. If the harness appears to be OK, observe the RPCV display on the Tech 2 while moving connectors and wiring harnesses related to the RPCV. A change in the RPCV display will indicate the location of the fault.

If DTC P1193 cannot be duplicated, the information included in the Failure Records data can be useful in determining vehicle mileage since the DTC was last set. If it is determined that the DTC occurs intermittently.

DTC P1193 – RPCV Circuit Open/Short

Step	Action	Value(s)	Yes	No
1	Was the “On-Board Diagnostic (OBD) System Check” performed?	—	Go to *Step 2*	Go to *OBD System Check*
2	1. Ignition “ON,” engine “ON.” 2. Observe the “Rail Oil Pressure” display on the Tech 2. Is the “Rail Oil Pressure” below the specified value?	3.5 ~ 5 Mpa	Go to *Step 4*	Go to *Step 3*
3	Replace the RPCV. Is the action complete?	—	Go to *Step 2*	—
4	1. Engine “On”. 2. Using the Tech 2, operate “RPCV”. 3. Check the combustion noise. Was the combustion noise change?	—	—	Go to *Step 5*
5	Check the RPCV circuit. (Fuse 15A to J1-14) Was the RPCV circuit damaged?	—	Go to *Step 6*	Go to *Step 7*
6	Repair the RPCV circuit. Is the action complete?	—	Verify repair	—
7	Replace the ECM (Refer to the Data Programming in Case of ECM change). Is the action complete?	—	Verify repair	Go to *Step 8*
8	Replace the high pressure oil pump. Is the action complete?	—	Verify repair	—

Diagnostic Trouble Code (DTC) P1194 (Flash DTC 61) Rail Pressure System Low Voltage

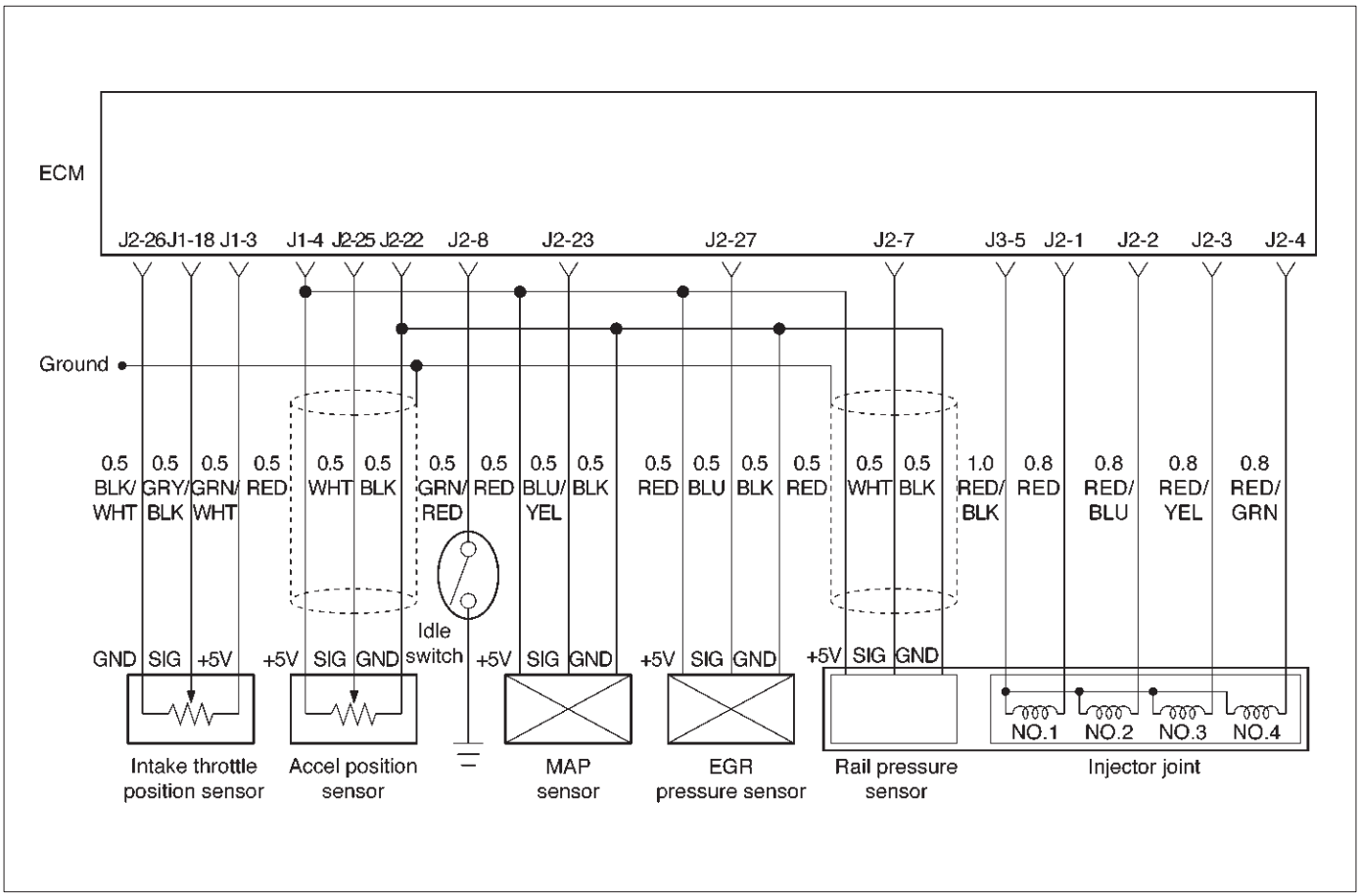

060RW134

Circuit Description

The rail pressure (RP) sensor responds to changes in oil rail pressure.

The ECM monitors the RP signals for voltages outside the normal range of the RP sensor. If the ECM detects a RP signal voltage that is excessively low, DTC P1194 will be set.

Action Taken When the DTC Sets

- The ECM will store conditions which were present when the DTC was set as Freeze Frame and in the Failure Records data.

Conditions for Clearing the MIL/DTC

- DTC P1194 can be cleared by using the Tech 2 “Clear Info” function or by disconnecting the ECM battery feed.

Diagnostic Aids

Check for the following conditions:

- Check for intermittent codes.
- Poor connection at ECM – Inspect harness connectors for backed-out terminals, improper mating, broken locks, improperly formed or damaged terminals, and poor terminal-to-wire connection.
- Damaged harness – Inspect the wiring harness for damage. If the harness appears to be OK, observe the MAP display on the Tech 2 while moving connectors and wiring harnesses related to the sensor. A change in the display will indicate the location of the fault.

If DTC P1194 cannot be duplicated, the information included in the Failure Records data can be useful in determining vehicle mileage since the DTC was last set. If it is determined that the DTC occurs intermittently, performing the DTC P1194 Diagnostic Chart may isolate the cause of the fault.

DTC P1194 – RP System Low Voltage

Step	Action	Value(s)	Yes	No
1	Was the “On-Board Diagnostic (OBD) System Check” performed?	—	Go to *Step 2*	Go to *OBD System Check*
2	1. Engine is running. 2. Review and record Tech 2 Failure Records data. 3. Operate the vehicle within Failure Records conditions as noted. 4. Using a Tech 2, monitor “DTC” info for DTC P1194. Does the Tech 2 indicate DTC P1194 failed?	—	Go to *Step 3*	Refer to *Diagnostic Aids*
3	Connect a test light between B+ and the RP sensor signal circuit at the RP sensor harness connector. Is the RP value near the specified value.	5 V	Go to *Step 4*	Go to *Step 6*
4	1. Ignition “OFF.” 2. Disconnect the ECM and check the 5 volt reference “J2” circuit for an open or short to ground. 3. If the 5 volt reference “J2” circuit is open or shorted to ground, repair it as necessary. Was the 5 volt reference “J2” circuit open or shorted to ground?	—	Verify repair	Go to *Step 5*
5	Check the 5 volt reference “J2” circuit for a poor connection at the ECM and replace the terminal if necessary. Did the terminal require replacement?	—	Verify repair	Go to *Step 6*
6	1. Ignition “OFF.” 2. Disconnect the ECM, and check the RP signal circuit for an open, short to ground, or short to the sensor ground circuit. 3. If the RP sensor signal circuit is open or shorted to ground, repair it as necessary. Was the RP signal circuit open or shorted to ground?	—	Verify repair	Go to *Step 7*
7	Check the RP sensor signal circuit for a poor connection at the ECM and the RP sensor; replace the terminal if necessary. Did the terminal require replacement?	—	Verify repair	Go to *Step 8*
8	Replace the ECM (Refer to the Data Programming in Case of ECM change). Is the action complete?	—	Verify repair	Go to *Step 9*
9	Check the 2 way valve. Was the 2 way valve darmage?	—	Replace the 2 way valve	Go to *Step 10*
10	Replace the RPCV. Is the action complete?	—	Verify repair	Go to *Step 11*
11	Replace the RP sensor. Is the action complete?	—	Verify repair	—

Diagnostic Trouble Code (DTC) P1195 (Flash DTC 61) Rail Pressure System High Voltage

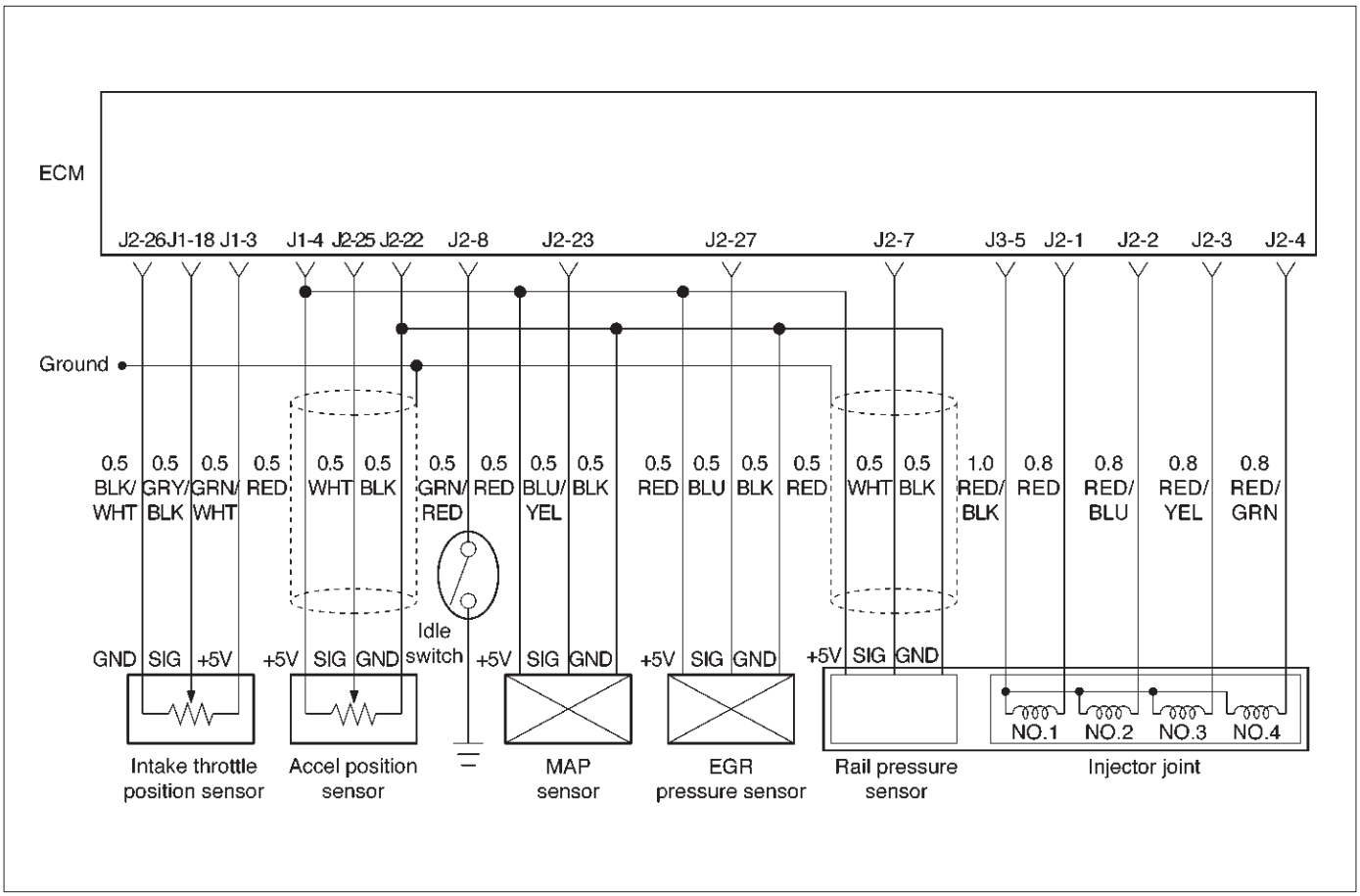

060RW134

Circuit Description

The rail pressure (RP) sensor responds to changes in oil rail pressure.

The ECM monitors the RP signals for voltages outside the normal range of the RP sensor. If the ECM detects a RP signal voltage that is excessively low, DTC P1195 will be set.

Action Taken When the DTC Sets

- The ECM will store conditions which were present when the DTC was set as Freeze Frame and in the Failure Records data.

Conditions for Clearing the MIL/DTC

- DTC P1195 can be cleared by using the Tech 2 “Clear Info” function or by disconnecting the ECM battery feed.

Diagnostic Aids

Check for the following conditions:

- Check for intermittent codes.
- Poor connection at ECM – Inspect harness connectors for backed-out terminals, improper mating, broken locks, improperly formed or damaged terminals, and poor terminal-to-wire connection.
- Damaged harness – Inspect the wiring harness for damage. If the harness appears to be OK, observe the MAP display on the Tech 2 while moving connectors and wiring harnesses related to the sensor. A change in the display will indicate the location of the fault.

If DTC P1195 cannot be duplicated, the information included in the Failure Records data can be useful in determining vehicle mileage since the DTC was last set. If it is determined that the DTC occurs intermittently, performing the DTC P1195 Diagnostic Chart may isolate the cause of the fault.

DTC P1195 – RP System High Voltage

Step	Action	Value(s)	Yes	No
1	Was the “On-Board Diagnostic (OBD) System Check” performed?	—	Go to *Step 2*	Go to *OBD System Check*
2	1. Engine is running. 2. Review and record Tech 2 Failure Records data. 3. Operate the vehicle within Failure Records conditions as noted. 4. Using a Tech 2, monitor “DTC” info for DTC P1195. Does the Tech 2 indicate DTC P1195 failed?	—	Go to *Step 3*	Refer to *Diagnostic Aids*
3	Connect a test light between B+ and the RP sensor signal circuit at the RP sensor harness connector. Is the RP value near the specified value.	0 V	Go to *Step 4*	Go to *Step 6*
4	1. Ignition “OFF.” 2. Disconnect the ECM and check the ground circuit for an open. Was the ground circuit open?	—	Verify repair	Go to *Step 5*
5	Check the ground circuit for a poor connection at the ECM and replace the terminal if necessary. Did the terminal require replacement?	—	Verify repair	Go to *Step 6*
6	Check the RP sensor signal circuit for a poor connection at the ECM and the RP sensor; replace the terminal if necessary. Did the terminal require replacement?	—	Verify repair	Go to *Step 7*
7	Replace the ECM (Refer to the Data Programming in Case of ECM change). Is the action complete?	—	Verify repair	Go to *Step 8*
8	Check the 2 way valve. Was the 2 way valve darmage?	—	Replace the 2 way valve	Go to *Step 9*
9	Replace the RPCV. Is the action complete?	—	Verify repair	Go to *Step 10*
10	Replace the RP sensor. Is the action complete?	—	Verify repair	—

Diagnostic Trouble Code (DTC) P1196 (Flash DTC 62) Rail Pressure System High Warning

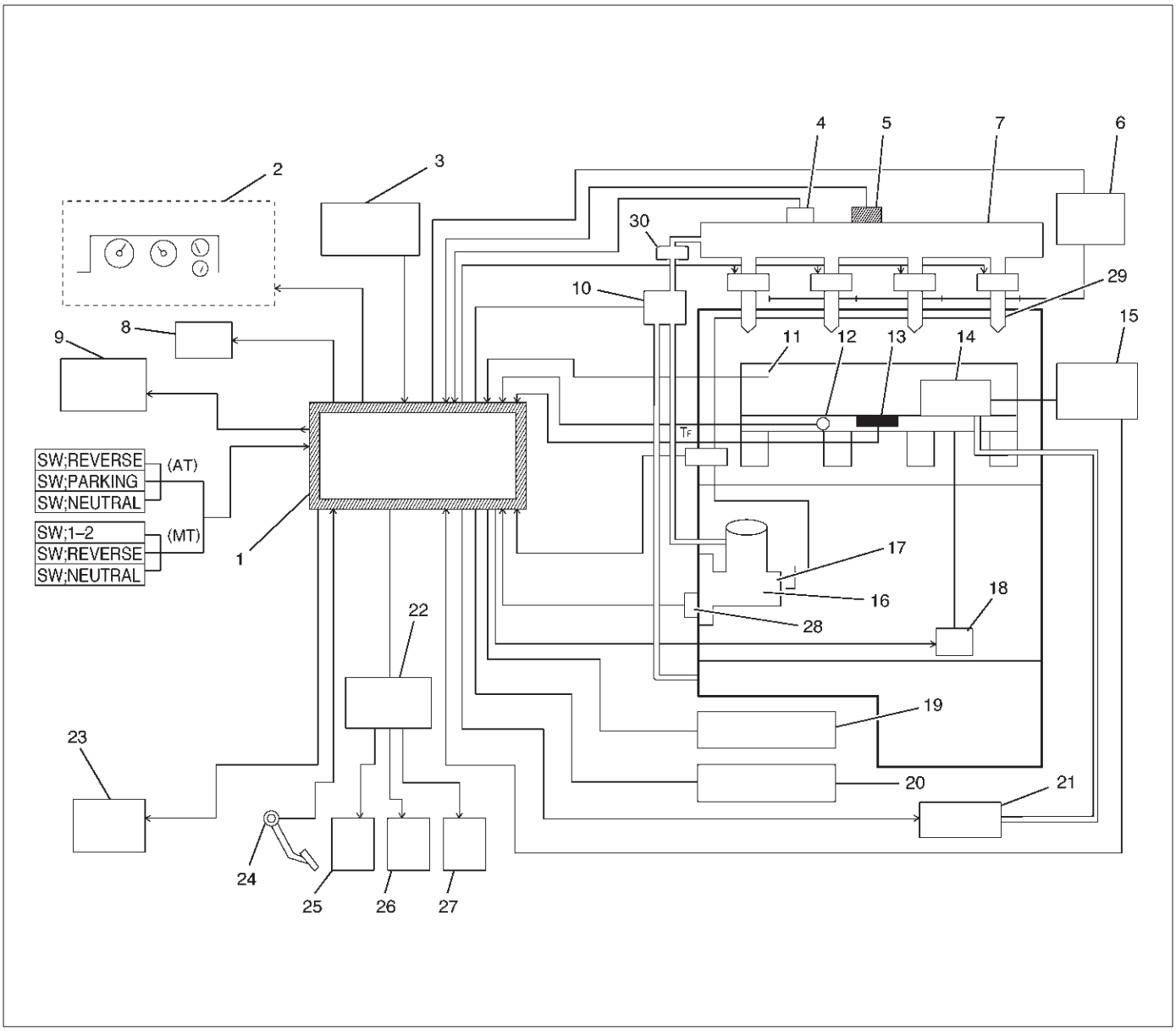

060RW178

Legend

(1) ECM
(2) Meter Panel
(3) Battery
(4) Oil Temp Sensor
(5) Rail Pressure Sensor
(6) Glow Relay
(7) Oil Rail
(8) Tech–2
(9) A/C Comp Relay
(10) RPCV
(11) Intake Air Temp Sensor
(12) Engine Coolant Temp Sensor
(13) MAP Sensor
(14) EGR Valve
(15) EGR Pressure Sensor
(16) High Pressure Oil Pump
(17) Fuel Pump
(18) VSV
(19) EXH Throttle VSV1
(20) EXH Throttle VSV2
(21) EVRV
(22) Engine Harness Connector
(23) QWS Relay
(24) AP Sensor
(25) T.O.D
(26) ECT
(27) OBD
(28) TDC
(29) Injector
(30) Edge Filter

Circuit Description

The rail pressure control valve (RPCV) is built in the high pressure oil circuit.
RPCV is an important device which is used to control oil pressure in the HEUI system.
The circuit receives current through Engine 15A fuse from the battery, current flowing in the order of RPCV.

Action Taken When the DTC Sets

- The ECM will store conditions which were present when the DTC was set as Freeze Frame and in the Failure Records data.

Conditions for Clearing the MIL/DTC

- DTC P1196 can be cleared by using the Tech 2 “Clear Info” function or by disconnecting the ECM battery feed.

Diagnostic Aids

Check for the following conditions:

- Poor connection at ECM – Inspect harness connectors for backed-out terminals, improper mating, broken locks, improperly formed or damaged terminals, and poor terminal-to-wire connection.
- Damaged harness – Inspect the wiring harness for damage. If the harness appears to be OK, observe the Rail Pressure Control display on the Tech 2 while moving connectors and wiring harnesses related to the Rail Pressure Control. A change in the Rail Pressure Control display will indicate the location of the fault.

If DTC P1196 cannot be duplicated, the information included in the Failure Records data can be useful in determining vehicle mileage since the DTC was last set. If it is determined that the DTC occurs intermittently.

Test Description

Number(s) below refer to the step number(s) on the Diagnostic Chart.

2. Verifies that the fault is present.

DTC P1196 – RP System High Warning

Step	Action	Value(s)	Yes	No
1	Was the “On-Board Diagnostic (OBD) System Check” performed?	—	Go to *Step 2*	Go to *OBD System Check*
2	1. Engine is running. 2. Observe the “Rail Pressure Control” display on the Tech 2. Is the action correct?	—	Go to *Step 4*	Go to *Step 3*
3	Replace the RPCV. Is the action complete?	—	Verify repair	Go to *Step 4*
4	1. Engine is running. 2. Review and record Tech 2 Failure Records data. 3. Operate the vehicle within Failure Records conditions as noted. 4. Using a Tech 2, monitor “ DTC” info for DTC P1196. Does the Tech 2 indicate DTC P1196 failed this ignition?	—	Go to *Step 5*	—
5	1. Check the 2 way valve. 2. Observe the “RP Control” display on the Tech 2. Is the action correct?	—	Go to *Step 4*	Go to *Step 6*
6	Replace the 2 way valve. Is the action complete?	—	Verify repair	—

Diagnostic Trouble Code (DTC) P0197 (Flash DTC 16) Oil Temp Sensor Low Voltage

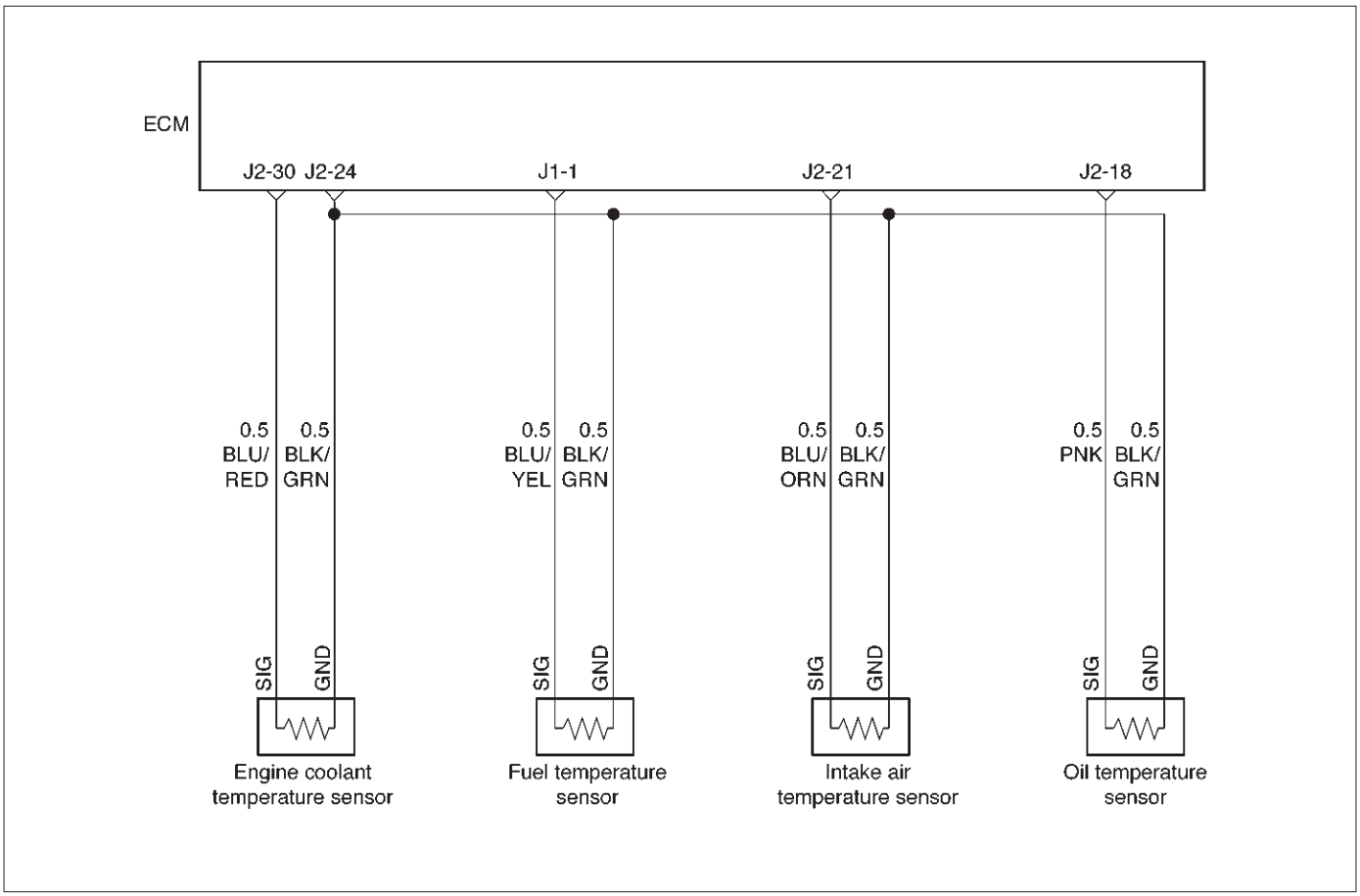

060RW129

Circuit Description

The engine oil temperature (OT) sensor is a thermistor mounted in the oil rail. The Engine Control Module ECM applies a voltage (about 5 volts) through a pull-up resistor to the ECT signal circuit. When the engine oil is cold, the sensor (thermistor) resistance is high, therefore the ECM will measure a high signal voltage. As the engine oil warms, the sensor resistance becomes lower, and the OT signal voltage measured at the ECM drops.

Action Taken When the DTC Sets

- The ECM will store conditions which were present when the DTC was set as Freeze Frame and in the Failure Records data.

Conditions for Clearing the MIL/DTC

- DTC P0197 can be cleared by using the Tech 2 “Clear Info” function or by disconnecting the ECM battery feed.

Diagnostic Aids

Check for the following conditions:

- Poor connection at ECM – Inspect harness connectors for backed-out terminals, improper mating, broken locks, improperly formed or damaged terminals, and poor terminal-to-wire connection.
- Damaged harness – Inspect the wiring harness for damage. If the harness appears to be OK, observe the OT display on the Tech 2 while moving connectors and wiring harnesses related to the OT sensor. A change in the OT display will indicate the location of the fault.

If DTC P0197 cannot be duplicated, the information included in the Failure Records data can be useful in determining vehicle mileage since the DTC was last set. If it is determined that the DTC occurs intermittently.

Test Description

Number(s) below refer to the step number(s) on the Diagnostic Chart.

2. Verifies that the fault is present.

3. If DTC P0197 can be repeated only by duplicating the Failure Records conditions, refer to the "Temperature vs. Resistance Values" table. The table may be used to test the OT sensor at various temperatures to evaluate the possibility of a "shifted" sensor that may be shorted above or below a certain temperature. If this is the case, replace the OT sensor. If the OT sensor appears to be OK, the fault is intermittent; refer to *Diagnostic Aids*.

Engine Oil Temperature Sensor

˚C	˚F	Ohms
Temperature vs. Resistance Values (approximate)		
80	176	332
25	77	2796
15	59	4450

DTC P0197 – OT Sensor Low Voltage

Step	Action	Value(s)	Yes	No
1	Was the "On-Board Diagnostic (OBD) System Check" performed?	—	Go to *Step 2*	Go to *OBD System Check*
2	1. Ignition "ON," engine "OFF." 2. Observe the "Eng Oil Temp" display on the Tech 2. Is the "Eng Oil Temp" below the specified value?	139˚C (282˚F)	Go to *Step 4*	Go to *Step 3*
3	1. Ignition "ON," engine "OFF." 2. Review and record Tech 2 Failure Records data. 3. Operate the vehicle within Failure Records conditions as noted. 4. Using a Tech 2, monitor " DTC" info for DTC P0197. Does the Tech 2 indicate DTC P0197 failed this ignition?	—	Go to *Step 4*	Refer to *Diagnostic Aids*
4	1. Disconnect the OT sensor electrical connector. 2. Observe the "Eng Oil Temp" display on the Tech 2. Is the "Eng Oil Temp" at the specified value?	–39˚C (–38˚F)	Go to *Step 6*	Go to *Step 5*
5	1. Ignition "OFF." 2. Disconnect the ECM and check the OT signal circuit for a short to ground or a short to the sensor ground circuit. 3. If the OT signal circuit is shorted. repair it as necessary. Was the OT signal circuit shorted to ground?	—	Verify repair	Go to *Step 7*
6	Replace the OT sensor. Is the action complete?	—	Verify repair	—
7	Replace the ECM (Refer to the Data Programming in Case of ECM change). Is the action complete?	—	Verify repair	—

Diagnostic Trouble Code (DTC) P0198 (Flash DTC 16) Oil Temp Sensor High Voltage

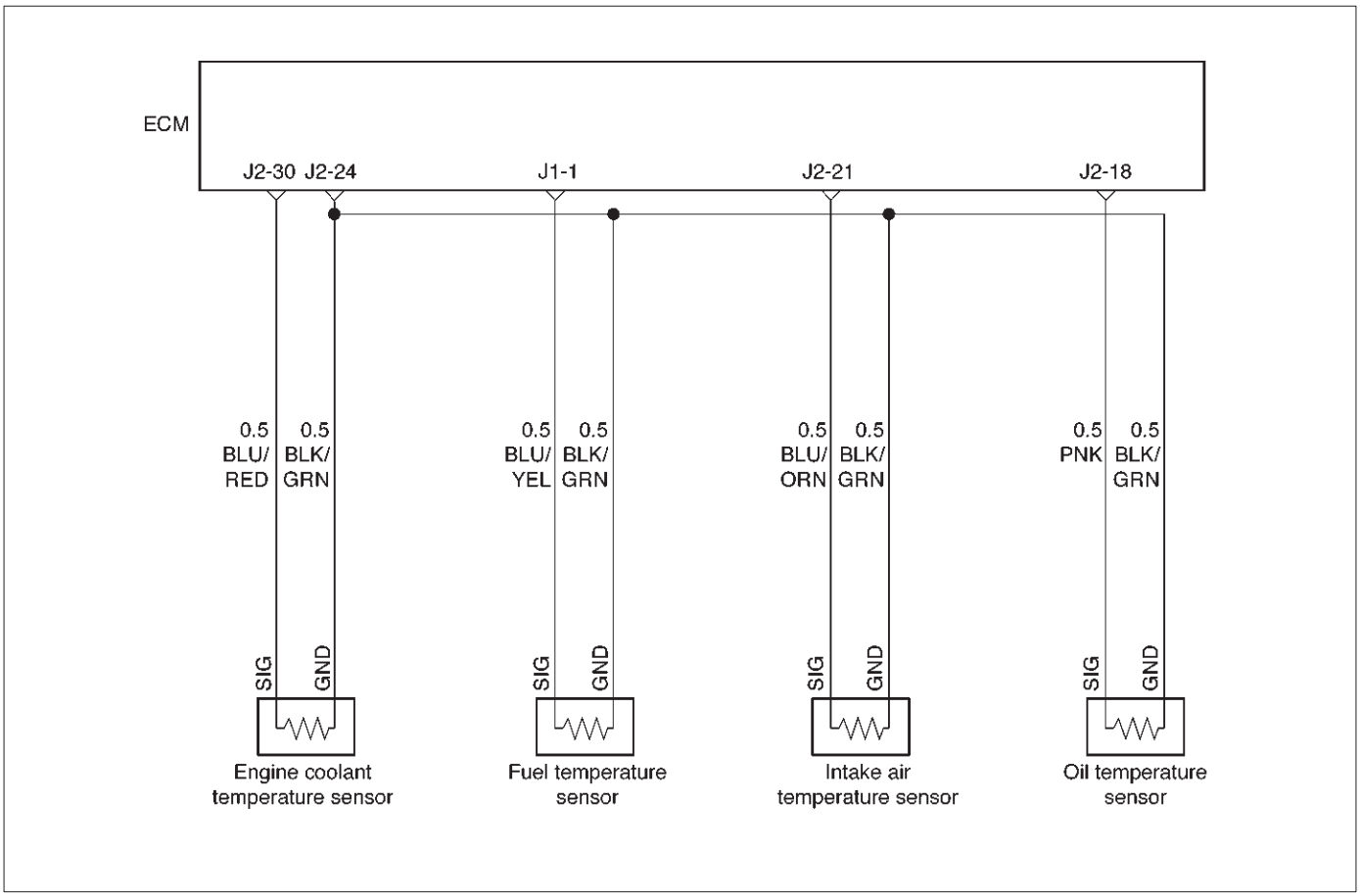

060RW129

Circuit Description

The engine oil temperature (OT) sensor is a thermistor mounted in the oil rail. The Engine Control Module ECM applies a voltage (about 5 volts) through a pull-up resistor to the ECT signal circuit. When the engine oil is cold, the sensor (thermistor) resistance is high, therefore the ECM will measure a high signal voltage. As the engine oil warms, the sensor resistance becomes lower, and the OT signal voltage measured at the ECM drops.

Action Taken When the DTC Sets

- The ECM will store conditions which were present when the DTC was set as Freeze Frame and in the Failure Records data.

Conditions for Clearing the MIL/DTC

- DTC P0198 can be cleared by using the Tech 2 “Clear Info” function or by disconnecting the ECM battery feed.

Diagnostic Aids

Check for the following conditions:

- Poor connection at ECM – Inspect harness connectors for backed-out terminals, improper mating, broken locks, improperly formed or damaged terminals, and poor terminal-to-wire connection.
- Damaged harness – Inspect the wiring harness for damage. If the harness appears to be OK, observe the OT display on the Tech 2 while moving connectors and wiring harnesses related to the OT sensor. A change in the OT display will indicate the location of the fault.

If DTC P0198 cannot be duplicated, the information included in the Failure Records data can be useful in determining vehicle mileage since the DTC was last set. If it is determined that the DTC occurs intermittently.

Test Description

Number(s) below refer to the step number(s) on the Diagnostic Chart.

2. Verifies that the fault is present.

3. If DTC P0198 can be repeated only by duplicating the Failure Records conditions, refer to the "Temperature vs. Resistance Value" table. The table may be used to test the OT sensor at various temperatures to evaluate the possibility of a "shifted" sensor that may be shorted above or below a certain temperature. If this is the case, replace the OT sensor. If the OT sensor appears to be OK, the fault is intermittent; refer to *Diagnostic Aids*.

Engine Oil Temperature Sensor

˚C	˚F	Ohms
Temperature vs. Resistance Values (approximate)		
80	176	332
25	77	2796
15	59	4450

DTC P0198 – OT Sensor High Voltage

Step	Action	Value(s)	Yes	No
1	Was the "On-Board Diagnostic (OBD) System Check" performed?	—	Go to *Step 2*	Go to *OBD System Check*
2	1. Ignition "ON," engine "OFF." 2. Observe the "Eng Oil Temp" display on the Tech 2. Is the "Eng Oil Temp" below the specified value?	–39˚C (–38˚F)	Go to *Step 4*	Go to *Step 3*
3	1. Ignition "ON," engine "OFF." 2. Review and record Tech 2 Failure Records data. 3. Operate the vehicle within Failure Records conditions as noted. 4. Using a Tech 2, monitor the " DTC" info for DTC P0198. Does the Tech 2 indicate DTC P0198 failed?	—	Refer to *Test Description*	Refer to *Diagnostic Aids*
4	1. Disconnect the OT sensor electrical connector. 2. Jumper the OT signal circuit and the sensor ground circuit together at the OT sensor harness connector. 3. Observe the "Eng Oil Temp" display on the Tech 2. Is the "Eng Oil Temp" at the specified value?	140˚C (284˚F)	Go to *Step 6*	Go to *Step 5*
5	1. Jumper the OT signal circuit at the OT sensor harness connector to chassis ground. 2. Observe the "Eng Oil Temp" display on the Tech 2. Is the "Eng Oil Temp" at the specified value?	140˚C (284˚F)	Go to *Step 7*	Go to *Step 8*
6	Check for poor connections at the OT sensor and replace terminals if necessary. Did any terminals require replacement?	—	Verify repair	Go to *Step 10*
7	1. Ignition "OFF." 2. Disconnect the ECM, and check the OT sensor ground circuit for an open. 3. If the OT sensor ground circuit is open, repair it as necessary. Was the OT sensor ground circuit open?	—	Verify repair	Go to *Step 9*

DTC P0198 – OT Sensor High Voltage (Cont'd)

Step	Action	Value(s)	Yes	No
8	1. Ignition "OFF." 2. Disconnect the OT, and check the OT signal circuit for an open. 3. If the OT sensor signal circuit is open, repair it as necessary. Was the OT signal circuit open?	—	Verify repair	Go to *Step 9*
9	Check for a poor sensor ground or OT signal circuit terminal connection at the ECM and replace terminal(s) if necessary. Did any of the terminals need to be replaced?	—	Verify repair	Go to *Step 11*
10	Replace the ECT sensor. Is the action complete?	—	Verify repair	—
11	Replace the ECM (Refer to the Data Programming in Case of ECM change). Is the action complete?	—	Verify repair	—

Diagnostic Trouble Code (DTC) P0201 (Flash DTC 51) Injector # 1 Circuit Fault

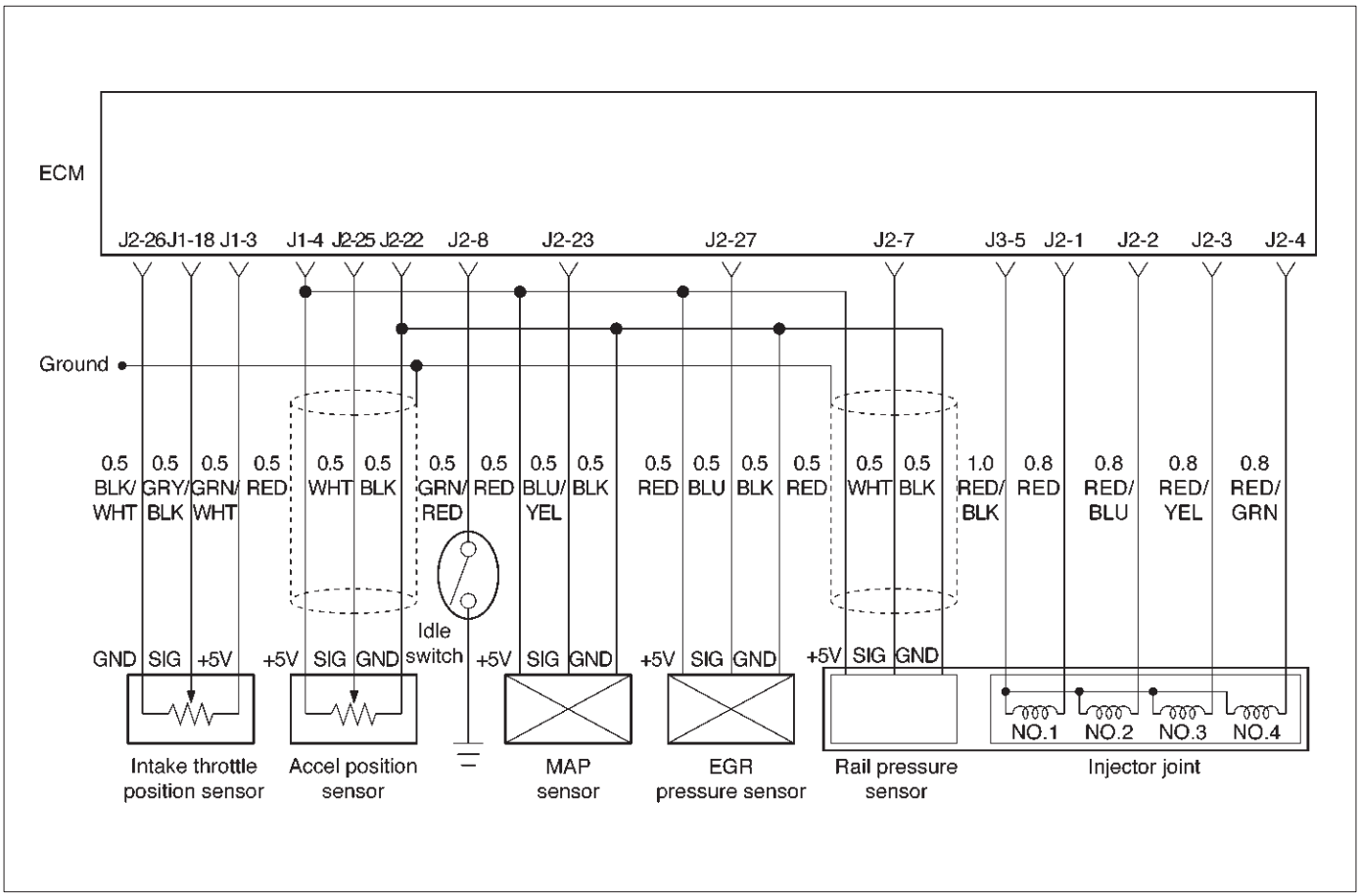

060RW134

Circuit Description

The Engine Control Module ECM has four individual injector driver circuits. Each controls an injector. When a driver circuit is grounded by the ECM, the injector is activated. The ECM monitors the current in each driver circuit. The voltage on each driver is monitored to detect a fault. If the voltage is not what the ECM expects to monitor on the circuit, a DTC is set. This DTC is also set if an injector driver is shorted to voltage or if there is an open circuit.

Action Taken When the DTC Sets

- The ECM will store conditions which were present when the DTC was set as Freeze Frame and in the Failure Records data.

Conditions for Clearing the MIL/DTC

- DTC P0201 can be cleared by using the Tech 2 “Clear Info” function or by disconnecting the ECM battery feed.

Diagnostic Aids

An injector driver circuit that is open or shorted to voltage will cause a DTC P0201 to set.

Test Description

The number(s) below refer to the step number(s) on the Diagnostic Chart.

3. This step determines if DTC P0201 is the result of a hard failure or an intermittent condition.

Injector Test

This test is conducted to make it sure that appropriate electric signals are being sent to injectors Nos. 1–4. Tech–2 must be used for this test.

Test Procedure:

1. Connect Tech–2 to the vehicle DLC.
2. Set Ignition Switch to the “ON” position.
3. Select Control Test.
4. Select Injector Test.
5. Send instructions to each injector (Switch on), making sure of injector working noise.

NOTE: If injector working noise (Clink) can hardly be confirmed, remove the engine head cover noise insulation.

Refer to Section 6A.

6. In the injector whose working noise has been confirmed, its electric circuit can be regarded as normal.

   As for the injector whose working noise has not been confirmed, its electric circuit or the injector proper is faulty.

DTC P0201 – Injector # 1 Circuit Fault

Step	Action	Value(s)	Yes	No
1	Was the “On-Board Diagnostic (OBD) System Check” performed?	—	Go to *Step 2*	Go to *OBD System Check*
2	Will the engine start?	—	Go to *Step 3*	Go to *Engine Cranks But Will Not Run* chart
3	1. Install the Tech 2. Clear the DTC. 2. Idle the engine for one minute. Does DTC P0201 reset?	—	Go to *Step 5*	Go to *Step 4*
4	1. Review the Freeze Frame data with the ignition “ON” and the engine “OFF” and note the parameters. 2. Operate the vehicle within the Freeze Frame conditions as noted. Does P0201 reset?	—	Go to *Step 5*	—
5	Check the Injector test. Does the working noise confirm?	—	Go to *Step 6*	Go to *Step 7*
6	1. Install the Tech 2. Clear the DTC. 2. Idle the engine for one minute. Dose DTC P0201 reset?	—	Verify repair	Go to *Step 7*
7	Check for an open circuit between the injector connector and the ECM. Was there an open circuit?	—	Go to *Step 8*	Go to *Step 9*
8	Repair the open circuit. Is the action complete?	—	Verify repair	—
9	Replace the ECM (Refer to the Data Programming in Case of ECM change). Is the action complete?	—	Verify repair	Go to *Step 10*
10	Replace the Injector (Refer to the Injector Group Sign Programming). Is the action complete?	—	Verify repair	—

Diagnostic Trouble Code (DTC) P0202 (Flash DTC 52) Injector # 2 Circuit Fault

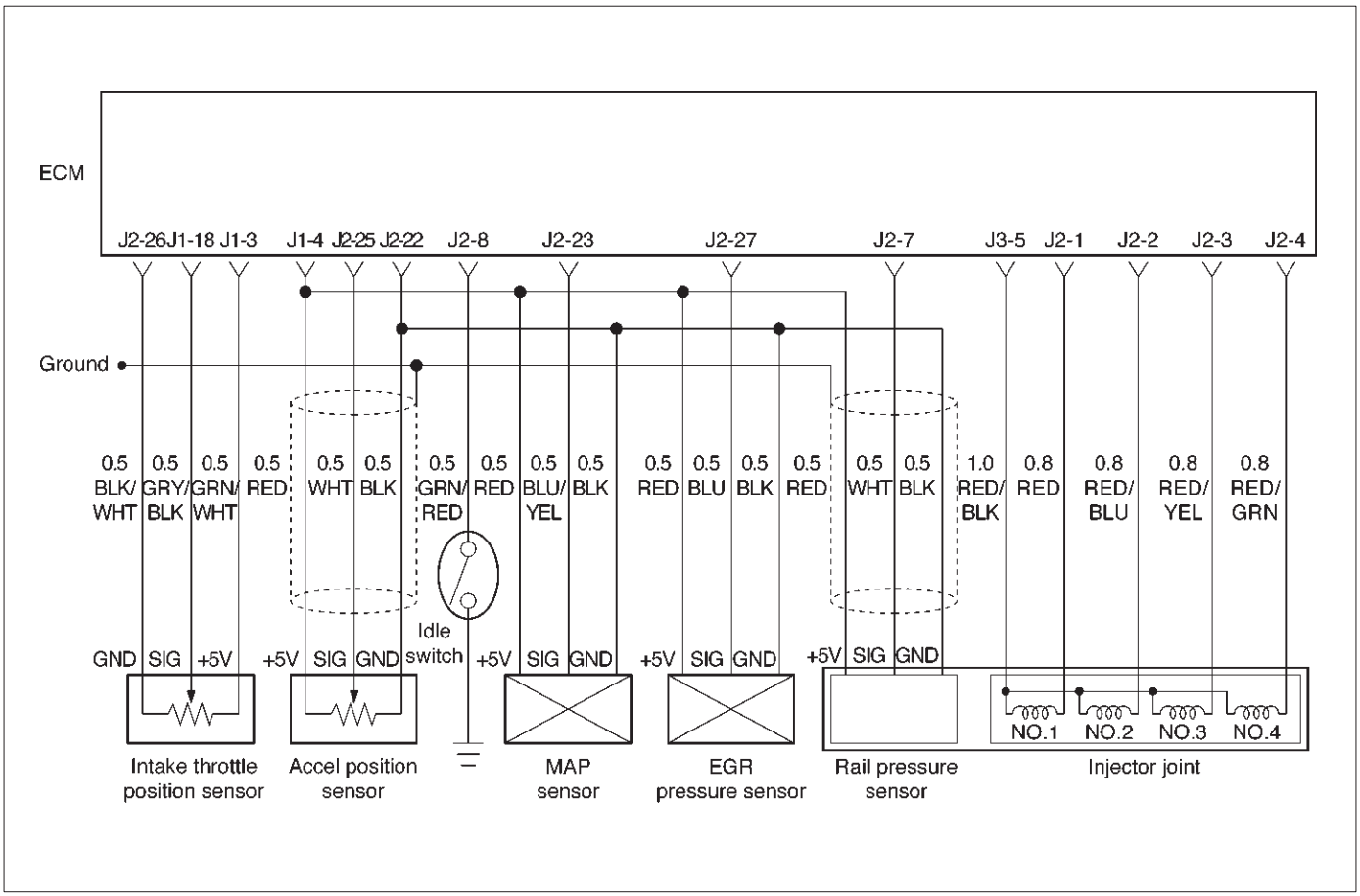

060RW134

Circuit Description

The Engine Control Module ECM has four individual injector driver circuits. Each controls an injector. When a driver circuit is grounded by the ECM, the injector is activated. The ECM monitors the current in each driver circuit. The voltage on each driver is monitored to detect a fault. If the voltage is not what the ECM expects to monitor on the circuit, a DTC is set. This DTC is also set if an injector driver is shorted to voltage or if there is an open circuit.

Action Taken When the DTC Sets

- The ECM will store conditions which were present when the DTC was set as Freeze Frame and in the Failure Records data.

Conditions for Clearing the MIL/DTC

- DTC P0202 can be cleared by using the Tech 2 “Clear Info” function or by disconnecting the ECM battery feed.

Diagnostic Aids

An injector driver circuit that is open or shorted to voltage will cause a DTC P0202 to set.

Test Description

The number(s) below refer to the step number(s) on the Diagnostic Chart.

3. This step determines if DTC P0202 is the result of a hard failure or an intermittent condition.

Injector Test

This test is conducted to make it sure that appropriate electric signals are being sent to injectors Nos. 1–4. Tech–2 must be used for this test.

Test Procedure:

1. Connect Tech–2 to the vehicle DLC.
2. Set Ignition Switch to the “ON” position.
3. Select Control Test.
4. Select Injector Test.
5. Send instructions to each injector (Switch on), making sure of injector working noise.

NOTE: If injector working noise (Clink) can hardly be confirmed, remove the engine head cover noise insulation.

Refer to Section 6A.

6. In the injector whose working noise has been confirmed, its electric circuit can be regarded as normal.

   As for the injector whose working noise has not been confirmed, its electric circuit or the injector proper is faulty.

DTC P0202 – Injector # 2 Circuit Fault

Step	Action	Value(s)	Yes	No
1	Was the “On-Board Diagnostic (OBD) System Check” performed?	—	Go to *Step 2*	Go to *OBD System Check*
2	Will the engine start?	—	Go to *Step 3*	Go to *Engine Cranks But Will Not Run* chart
3	1. Install the Tech 2. Clear the DTC. 2. Idle the engine for one minute. Does DTC P0202 reset?	—	Go to *Step 5*	Go to *Step 4*
4	1. Review the Freeze Frame data with the ignition “ON” and the engine “OFF” and note the parameters. 2. Operate the vehicle within the Freeze Frame conditions as noted. Does P0202 reset?	—	Go to *Step 5*	—
5	Check the Injector test. Does the working noise confirm?	—	Go to *Step 6*	Go to *Step 7*
6	1. Install the Tech 2. Clear the DTC. 2. Idle the engine for one minute. Dose DTC P0202 reset?	—	Verify repair	Go to *Step 7*
7	Check for an open circuit between the injector connector and the ECM. Was there an open circuit?	—	Go to *Step 8*	Go to *Step 9*
8	Repair the open circuit. Is the action complete?	—	Verify repair	—
9	Replace the ECM (Refer to the Data Programming in Case of ECM change). Is the action complete?	—	Verify repair	Go to *Step 10*
10	Replace the Injector (Refer to the Injector Group Sign Programming). Is the action complete?	—	Verify repair	—

Diagnostic Trouble Code (DTC) P0203 (Flash DTC 52) Injector # 3 Circuit Fault

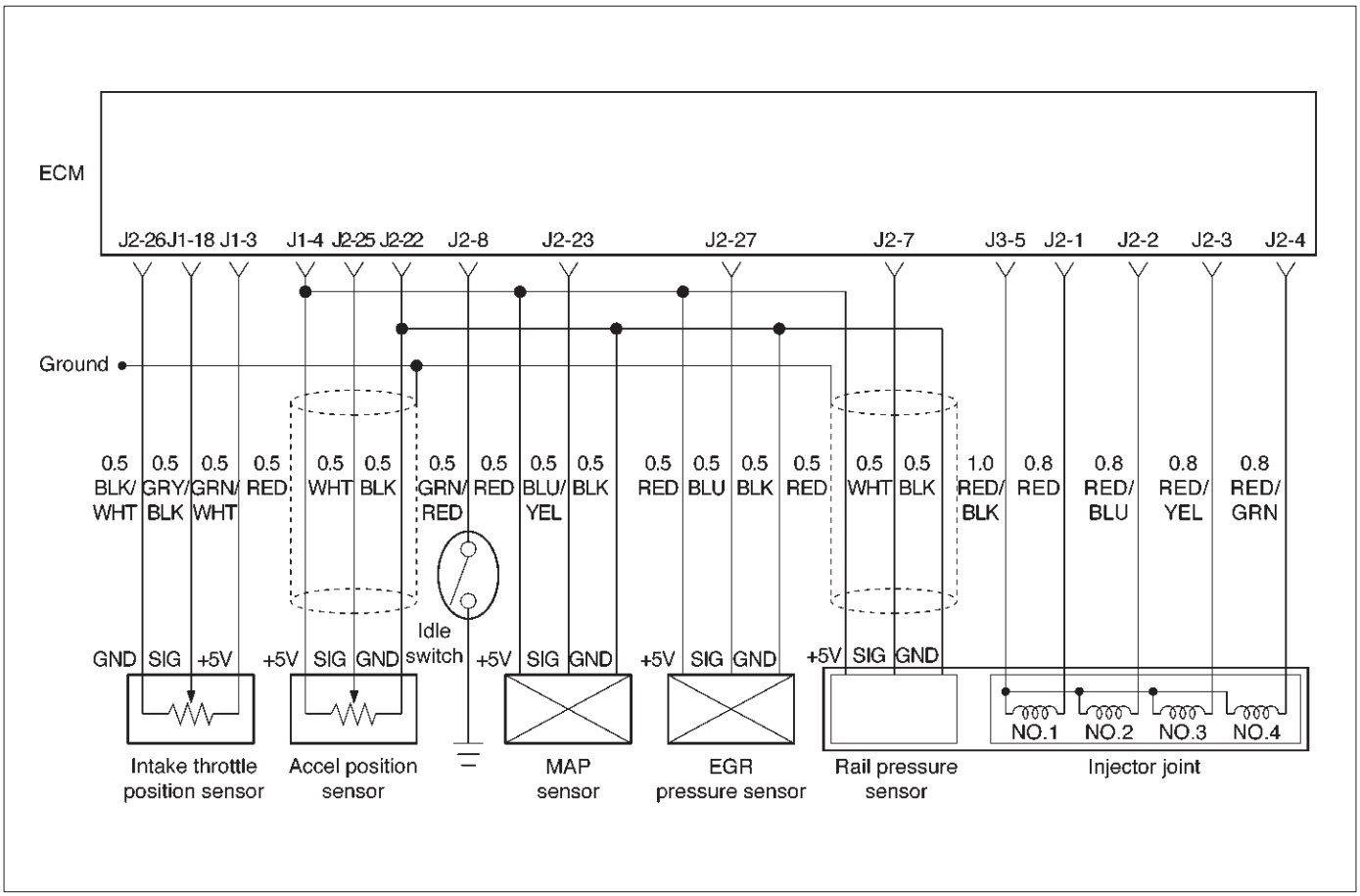

060RW134

Circuit Description

The Engine Control Module ECM has four individual injector driver circuits. Each controls an injector. When the driver circuit is grounded by the ECM, the injector is activated. The ECM monitors the current in each driver circuit. The voltage on each driver is monitored to detect a fault. If the voltage is not what the ECM expects to monitor on the circuit, a DTC is set. This DTC is also set if an injector driver is shorted to voltage or if there is an open circuit.

Action Taken When the DTC Sets

- The ECM will store conditions which were present when the DTC was set as Freeze Frame and in the Failure Records data.

Conditions for Clearing the MIL/DTC

- DTC P0203 can be cleared by using the Tech 2 “Clear Info” function or by disconnecting the ECM battery feed.

Diagnostic Aids

An injector driver circuit that is open or shorted to voltage will cause a DTC P0203 to set.

Test Description

The number(s) below refer to the step number(s) on the Diagnostic Chart.

3. This step determines if DTC P0203 is the result of a hard failure or an intermittent condition.

Injector Test

This test is conducted to make it sure that appropriate electric signals are being sent to injectors Nos. 1–4. Tech–2 must be used for this test.

Test Procedure:

1. Connect Tech–2 to the vehicle DLC.
2. Set Ignition Switch to the “ON” position.
3. Select Control Test.
4. Select Injector Test.
5. Send instructions to each injector (Switch on), making sure of injector working noise.

NOTE: If injector working noise (Clink) can hardly be confirmed, remove the engine head cover noise insulation.

Refer to Section 6A.

6. In the injector whose working noise has been confirmed, its electric circuit can be regarded as normal.

   As for the injector whose working noise has not been confirmed, its electric circuit or the injector proper is faulty.

DTC P0203 – Injector # 3 Circuit Fault

Step	Action	Value(s)	Yes	No
1	Was the “On-Board Diagnostic (OBD) System Check” performed?	—	Go to *Step 2*	Go to *OBD System Check*
2	Will the engine start?	—	Go to *Step 3*	Go to *Engine Cranks But Will Not Run* chart
3	1. Install the Tech 2. Clear the DTC. 2. Idle the engine for one minute. Does DTC P0203 reset?	—	Go to *Step 5*	Go to *Step 4*
4	1. Review the Freeze Frame data with the ignition “ON” and the engine “OFF” and note the parameters. 2. Operate the vehicle within the Freeze Frame conditions as noted. Does P0203 reset?	—	Go to *Step 5*	—
5	Check the Injector test. Does the working noise confirm?	—	Go to *Step 6*	Go to *Step 7*
6	1. Install the Tech 2. Clear the DTC. 2. Idle the engine for one minute. Dose DTC P0203 reset?	—	Verify repair	Go to *Step 7*
7	Check for an open circuit between the injector connector and the ECM. Was there an open circuit?	—	Go to *Step 8*	Go to *Step 9*
8	Repair the open circuit. Is the action complete?	—	Verify repair	—
9	Replace the ECM (Refer to the Data Programming in Case of ECM change). Is the action complete?	—	Verify repair	Go to *Step 10*
10	Replace the Injector (Refer to the Injector Group Sign Programming). Is the action complete?	—	Verify repair	—

Diagnostic Trouble Code (DTC) P0204 (Flash DTC 54) Injector # 4 Circuit Fault

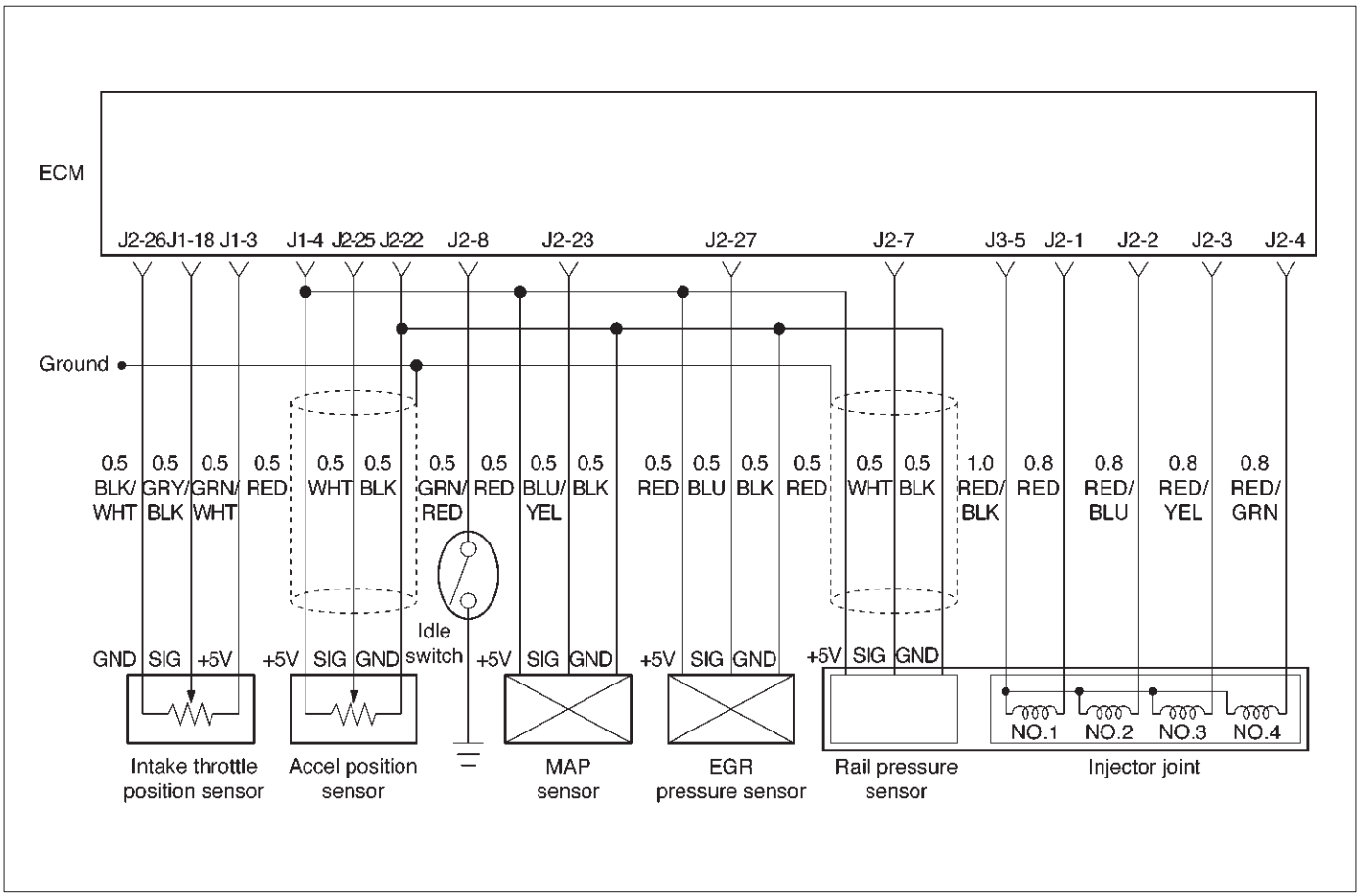

060RW134

Circuit Description

The Engine Control Module ECM has four individual injector driver circuits. Each controls an injector. When the driver circuit is grounded by the ECM, the injector is activated. The ECM monitors the current in each driver circuit. The voltage on each driver is monitored to detect a fault. If the voltage is not what the ECM expects to monitor on the circuit, a DTC is set. This DTC is also set if an injector driver is shorted to voltage or if there is an open circuit.

Action Taken When the DTC Sets

- The ECM will store conditions which were present when the DTC was set as Freeze Frame and in the Failure Records data.

Conditions for Clearing the MIL/DTC

- DTC P0204 can be cleared by using the Tech 2 “Clear Info” function or by disconnecting the ECM battery feed.

Diagnostic Aids

An injector driver circuit that is open or shorted to voltage will cause a DTC P0204 to set.

Test Description

The number(s) below refer to the step number(s) on the Diagnostic Chart.

3. This step determines if DTC P0204 is the result of a hard failure or an intermittent condition.

Injector Test

This test is conducted to make it sure that appropriate electric signals are being sent to injectors Nos. 1–4. Tech–2 must be used for this test.

Test Procedure:

1. Connect Tech–2 to the vehicle DLC.
2. Set Ignition Switch to the “ON” position.
3. Select Control Test.
4. Select Injector Test.
5. Send instructions to each injector (Switch on), making sure of injector working noise.

NOTE: If injector working noise (Clink) can hardly be confirmed, remove the engine head cover noise insulation.

Refer to Section 6A.

6. In the injector whose working noise has been confirmed, its electric circuit can be regarded as normal.

   As for the injector whose working noise has not been confirmed, its electric circuit or the injector proper is faulty.

DTC P0204 – Injector #4 Circuit Fault

Step	Action	Value(s)	Yes	No
1	Was the “On-Board Diagnostic (OBD) System Check” performed?	—	Go to *Step 2*	Go to *OBD System Check*
2	Will the engine start?	—	Go to *Step 3*	Go to *Engine Cranks But Will Not Run* chart
3	1. Install the Tech 2. Clear the DTC. 2. Idle the engine for one minute. Does DTC P0204 reset?	—	Go to *Step 5*	Go to *Step 4*
4	1. Review the Freeze Frame data with the ignition “ON” and the engine “OFF” and note the parameters. 2. Operate the vehicle within the Freeze Frame conditions as noted. Does P0204 reset?	—	Go to *Step 5*	—
5	Check the Injector test. Does the working noise confirm?	—	Go to *Step 6*	Go to *Step 7*
6	1. Install the Tech 2. Clear the DTC. 2. Idle the engine for one minute. Dose DTC P0204 reset?	—	Verify repair	Go to *Step 7*
7	Check for an open circuit between the injector connector and the ECM. Was there an open circuit?	—	Go to *Step 8*	Go to *Step 9*
8	Repair the open circuit. Is the action complete?	—	Verify repair	—
9	Is the action complete?	—	Verify repair	Go to *Step 10*
10	Replace the Injector (Refer to the Injector Group Sign Programming). Is the action complete?	—	Verify repair	—

Diagnostic Trouble Code (DTC) P0217 (Flash DTC 22) High Coolant Temp Waring

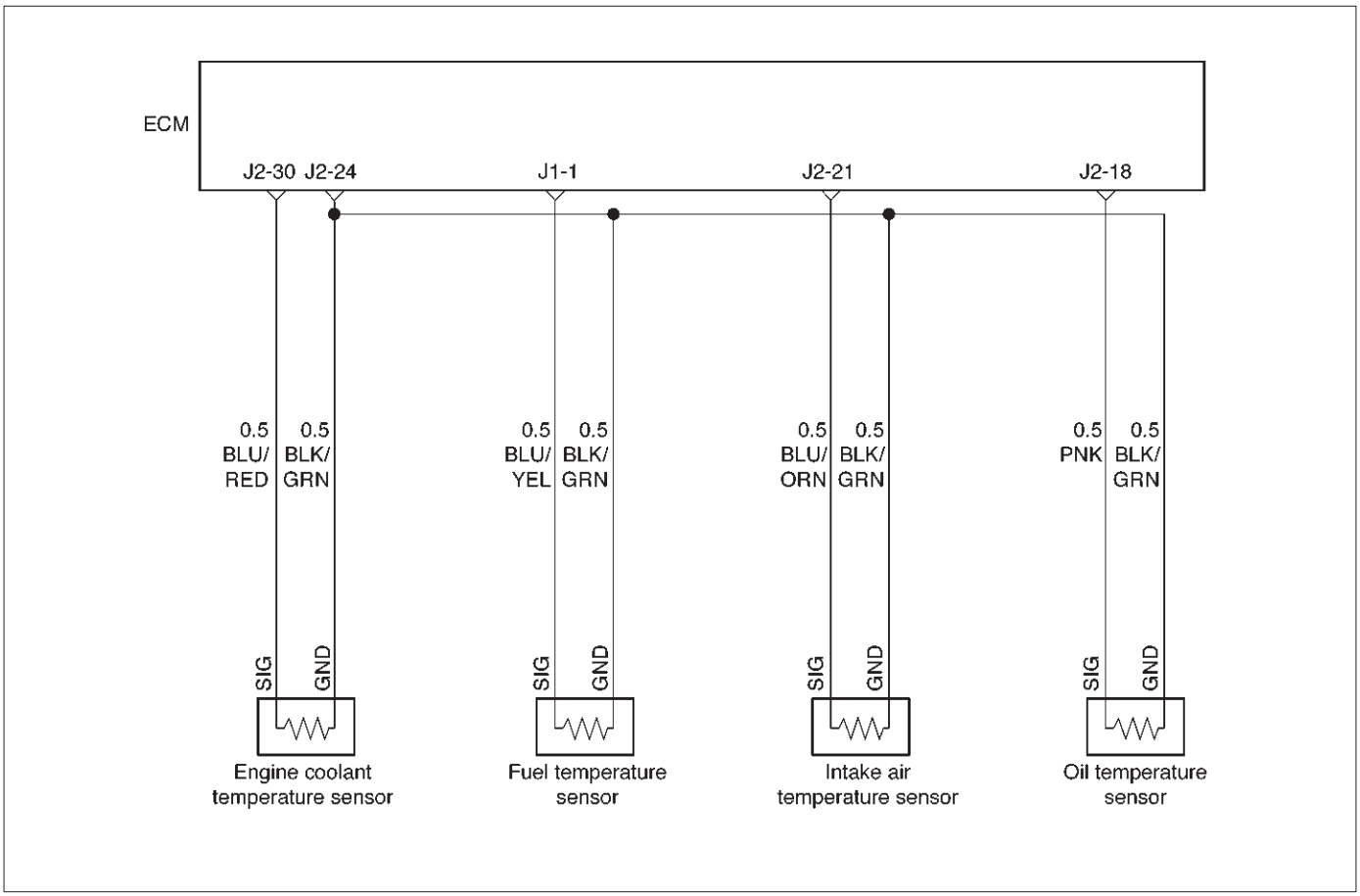

060RW129

Circuit Description

The engine coolant temperature (ECT) sensor is a thermistor mounted on a coolant crossover pipe at the rear of the engine. The Engine Control Module ECM applies a voltage (about 5 volts) through a pull-up resistor to the ECT signal circuit. When the engine coolant is cold, the sensor (thermistor) resistance is high, therefore the ECM will measure a high signal voltage. As the engine coolant warms, the sensor resistance becomes lower, and the ECT signal voltage measured at the ECM drops.

Action Taken When the DTC Sets

- The ECM will store conditions which were present when the DTC was set as Freeze Frame and in the Failure Records data.

Conditions for Clearing the MIL/DTC

- DTC P0217 can be cleared by using the Tech 2 “Clear Info” function or by disconnecting the ECM battery feed.

Diagnostic Aids

Check for the following conditions:

- Poor connection at ECM – Inspect harness connectors for backed-out terminals, improper mating, broken locks, improperly formed or damaged terminals, and poor terminal-to-wire connection.
- Damaged harness – Inspect the wiring harness for damage. If the harness appears to be OK, observe the ECT display on the Tech 2 while moving connectors and wiring harnesses related to the ECT sensor. A change in the ECT display will indicate the location of the fault.

If DTC P0217 cannot be duplicated, the information included in the Failure Records data can be useful in determining vehicle mileage since the DTC was last set. If it is determined that the DTC occurs intermittently.

Test Description

Number(s) below refer to the step number(s) on the Diagnostic Chart.

2. Verifies that the fault is present.
3. If DTC P0117 can be repeated only by duplicating the Failure Records conditions, refer to the “Temperature vs. Resistance Values” table. The table may be used to test the ECT sensor at various temperatures to evaluate the possibility of a “shifted” sensor that may be shorted above or below a certain temperature. If this is the case, replace the ECT sensor. If the ECT sensor appears to be OK, the fault is intermittent; refer to *Diagnostic Aids*.

DTC P0217 – High Coolant Temp Waring

Step	Action	Value(s)	Yes	No
1	Was the “On-Board Diagnostic (OBD) System Check” performed?	—	Go to *Step 2*	Go to *OBD System Check*
2	1. Ignition “ON,” engine “OFF.” 2. Observe the “Eng Cool Temp” display on the Tech 2. Is the “Eng Cool Temp” below the specified value?	110˚C	Go to *Step 6*	Go to *Step 3*
3	Check the engine coolant quantity Was the engine coolant appropriate quantity?	—	Go to *Step 6*	Go to *Step 4*
4	Check a leak from EC circuit. Was the EC leaked from EC circuit?	—	Go to *Step 5*	Go to *Step 6*
5	Repair the EC circuit. Is the action complete?	—	Verify repair	—
6	1. Ignition “ON,” engine “OFF.” 2. Review and record Tech 2 Failure Records data. 3. Operate the vehicle within Failure Records conditions as noted. 4. Using a Tech 2, monitor “ DTC” info for DTC P0217. Does the Tech 2 indicate DTC P0217 failed this ignition?	—	Go to *Step 7*	—
7	1. Ignition “OFF”. 2. Check the Thermostat. 3. If the Thermostat is damaged, repair it as necessary. Was the Thermostat damaged?	—	Go to *Step 8*	Go to *Step 9*
8	Replace the Thermostat. Is the action complete?	—	Verify repair	—
9	1. Check the Radiator. 2. If the Radiator is damaged, repair it as necessary. Was the Radiator damaged?	—	Go to *Step 10*	Go to *Step 11*
10	Repair the Radiator. Is the action complete?	—	Verify repair	—
11	1. Check the EC circuit in the Engine. 2. Observe the “Eng Data List” display on the Tech 2. 3. If the EC circuit in the Engine is damaged, repair it as necessary. Was the EC circuit damaged?	Refer to Data List	Go to *Step 12*	Go to *Step 6*
12	Repair the EC circuit. Is the action complete?	—	Verify repair	—

Diagnostic Trouble Code (DTC) P1217 (Flash DTC 36) High Oil Temp Warning

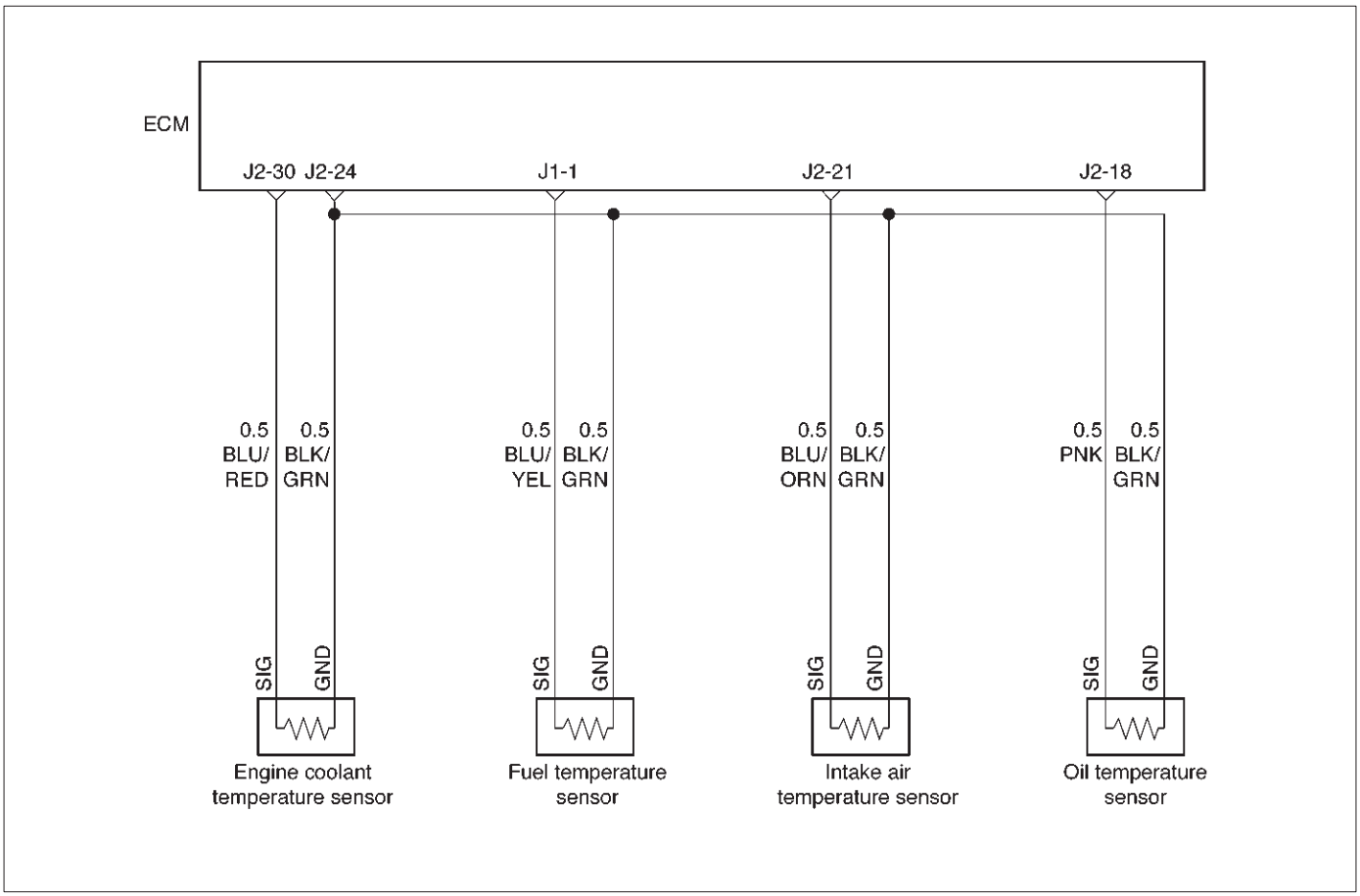

060RW129

Circuit Description

The engine oil temperature (OT) sensor is a thermistor mounted on a oil manifold. The Engine Control Module ECM applies a voltage (about 5 volts) through a pull-up resistor to the OT signal circuit. When the engine oil is cold, the sensor (thermistor) resistance is high, therefore the ECM will measure a high signal voltage. As the engine oil warms, the sensor resistance becomes lower, and the OT signal voltage measured at the ECM drops.

Action Taken When the DTC Sets

- The ECM will store conditions which were present when the DTC was set as Freeze Frame and in the Failure Records data.

Conditions for Clearing the MIL/DTC

- DTC P1217 can be cleared by using the Tech 2 “Clear Info” function or by disconnecting the ECM battery feed.

Diagnostic Aids

Check for the following conditions:

- Poor connection at ECM – Inspect harness connectors for backed-out terminals, improper mating, broken locks, improperly formed or damaged terminals, and poor terminal-to-wire connection.
- Damaged harness – Inspect the wiring harness for damage.
- High Oil Temperature Warning may sometimes be given due to High Coolant Temp Warning. On this occasion, recognize DTC P0217 and give priority to High Coolant Temp Warning.

DTC P1217 – High Oil Temp Warning

Step	Action	Value(s)	Yes	No
1	Was the “On-Board Diagnostic (OBD) System Check” performed?	—	Go to *Step 2*	Go to *OBD System Check*
2	1. Ignition “ON,” engine “OFF.” 2. Observe the “Eng Cool Temp” display on the Tech 2. Is the “Eng Cool Temp” below the specified value?	139˚C (282˚F)	Go to *Step 4*	Go to *Step 3*
3	1. Ignition “ON,” engine “OFF.” 2. Review and record Tech 2 Failure Records data. 3. Using a Tech 2, monitor “ DTC” info for DTC P0217. Does the Tech 2 indicate DTC P0217 failed this ignition?	—	Go to *Step 4*	Refer to *Diagnostic Aids*
4	1. Ignition “ON,” engine “OFF.” 2. Review and record Tech 2 Failure Records data. 3. Operate the vehicle within Failure Records conditions as noted. 4. Using a Tech 2, monitor “ DTC” info for DTC P1217. Does the Tech 2 indicate DTC P1217 failed this ignition?	—	Go to *Step 5*	Refer to *Diagnostic Aids*
5	1. Measure the engine oil quantity by oil level gage. 2. If the engine oil is shortage, fill up it as necessary. Was the engine oil is shortaged?	—	Verify repair	Go to *Step 6*
6	Replace the oil temp sensor. Is the action complete?	—	Verify repair	Go to *Step 7*
7	Replace the oil cooler. Is the action complete?	—	Verify repair	—

Diagnostic Trouble Code (DTC) P0219 (Flash DTC 11) Engine Over Speed Warning

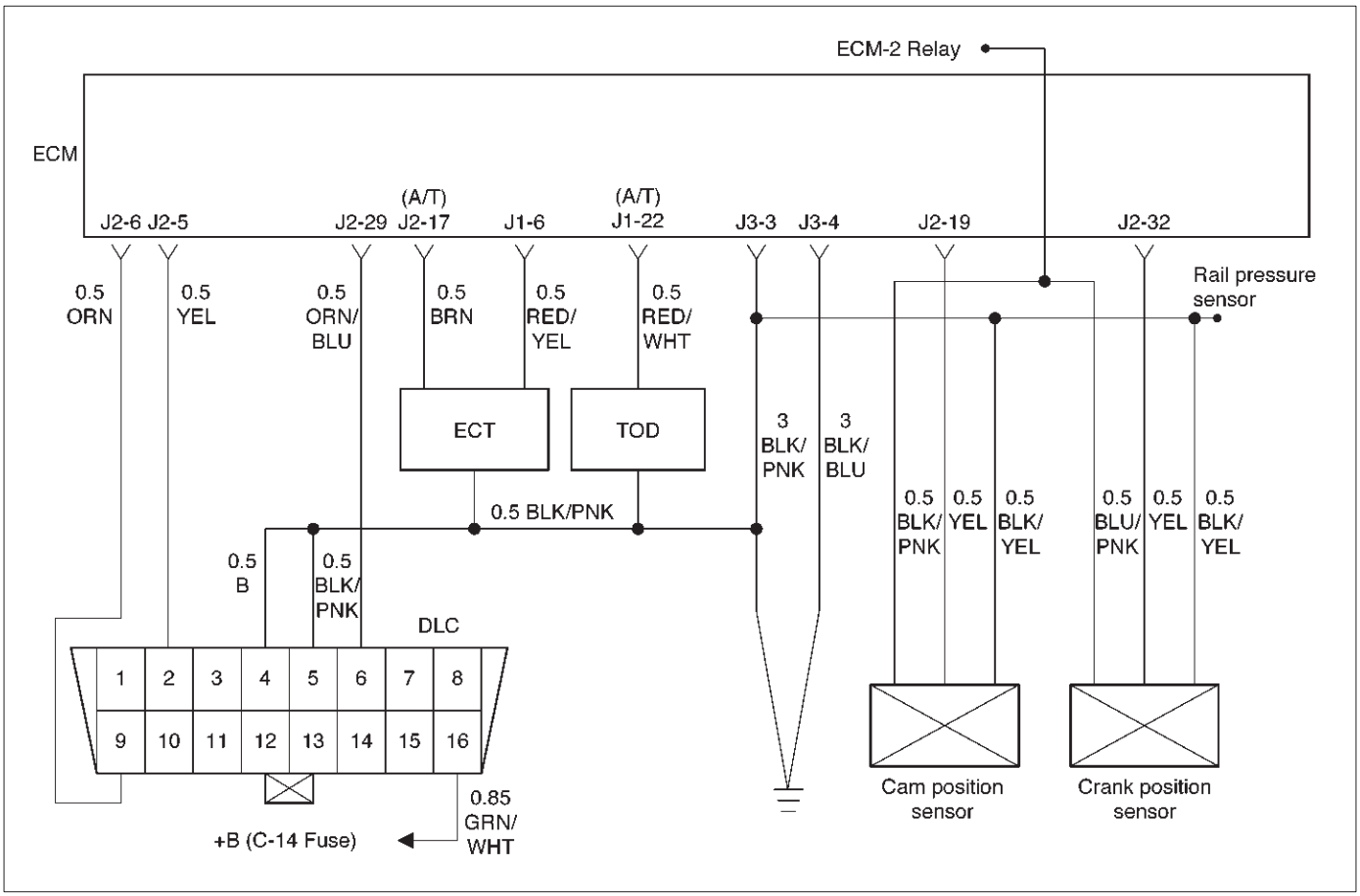

060RW133

Circuit Description

The CKP reference signal is produced by the crankshaft position (CKP) sensor. During one crankshaft revolution, CKP crankshaft reference pulses will be produced. The Engine Control Module ECM uses the CKP reference signal to calculate engine RPM and crankshaft position.

Action Taken When the DTC Sets

- The ECM will store conditions which were present when the DTC was set as Freeze Frame and in the Failure Records data.

Conditions for Clearing the MIL/DTC

- DTC P0219 can be cleared by using the Tech 2 “Clear Info” function or by disconnecting the ECM battery feed.

Diagnostic Aids

Check for:

- Poor connection – Inspect the CKP harness and connectors for improper mating, broken locks, improperly formed or damaged terminals, and poor terminal-to-wire connection.
- Damaged X57 – Inspect the X57 for damage.

DTC P0219 – Engine Over Speed Warning

Step	Action	Value(s)	Yes	No
1	Was the “On-Board Diagnostic (OBD) System Check” performed?	—	Go to *Step 2*	Go to *OBD System Check*
2	Check the responsibility. Was the driver responsibility?	—	Go to *Step 3*	Go to *Chart 4*

DTC P0219 – Engine Over Speed Warning (Cont'd)

Step	Action	Value(s)	Yes	No
3	1. Review and record Failure Records information. 2. Clear DTC P0219. 3. Start the engine and idle for 1 minute. 4. Observe DTCs. Is DTC P0219 set?	—	Go to *Step 4*	—
4	Observe the AP value displayed on the Tech 2. Is the AP value near the specified value?	(Idling 720 r.p .m) 0 %	Go to *Step 3*	Go to *Step 5*
5	Observe the Engine speed displayed on the Tech 2. Is the Engine speed near the specified value?	(Idling) 720 r. p.m	Go to *Step 7*	Go to *Step 6*
6	1. Check the CKP sensor. 2. Ignition "ON." 3. Using a DVM, verify that 5 V reference and ground are being supplied at the sensor connector (ECM side). Are 4-6 volts and ground available at the sensor?	—	Go to *Step 9*	Go to *Step 7*
7	1. Ignition "ON." 2. With a DVM, backprobe the ECM connector 5 V reference and ground connections. Are 5 V reference and ground available at the ECM?	—	Go to *Step 8*	Go to *Step 13*
8	Check 5 V reference or ground between the CKP sensor and ECM and repair the open circuit, short to ground or short to voltage. Is the action complete?	—	Verify repair	—
9	1. Ignition "OFF." 2. Disconnect the ECM and CKP sensor. 3. Check for an open or a short to ground in the CKP reference circuit between the CKP sensor connector and the ECM harness connector. 4. If a problem is found, repair as necessary. Was a problem found?	—	Verify repair	Go to *Step 10*
10	1. Reconnect the ECM and CKP sensor. 2. Connect a DVM to measure voltage on the CKP reference circuit at the ECM connector. 3. Observe the voltage while cranking the engine. Is the voltage near the specified value?	2.5 V	Go to *Step 13*	Go to *Step 11*
11	Check the connections at the CKP sensor and replace the terminals if necessary. Did any terminals require replacement?	—	Verify repair	Go to *Step 12*
12	Replace the CKP sensor. Is the action complete?	—	Verify repair	—
13	Check the connections at the ECM and replace the terminals if necessary. Did any terminals require replacement?	—	Verify repair	Go to *Step 14*

DTC P0219 – Engine Over Speed Warning (Cont'd)

Step	Action	Value(s)	Yes	No
14	Check the X57 signal plate. Is the X57 signal plate damage?	—	Go to *Step 15*	Go to *Step 3*
15	Replace the X57 signal plate. Is the action complete?	—	Verify repair	Go to *Step 2*

Diagnostic Trouble Code (DTC) P0336 (Flash DTC 43) CKP (Crank Position) Sensor Out of Synchro

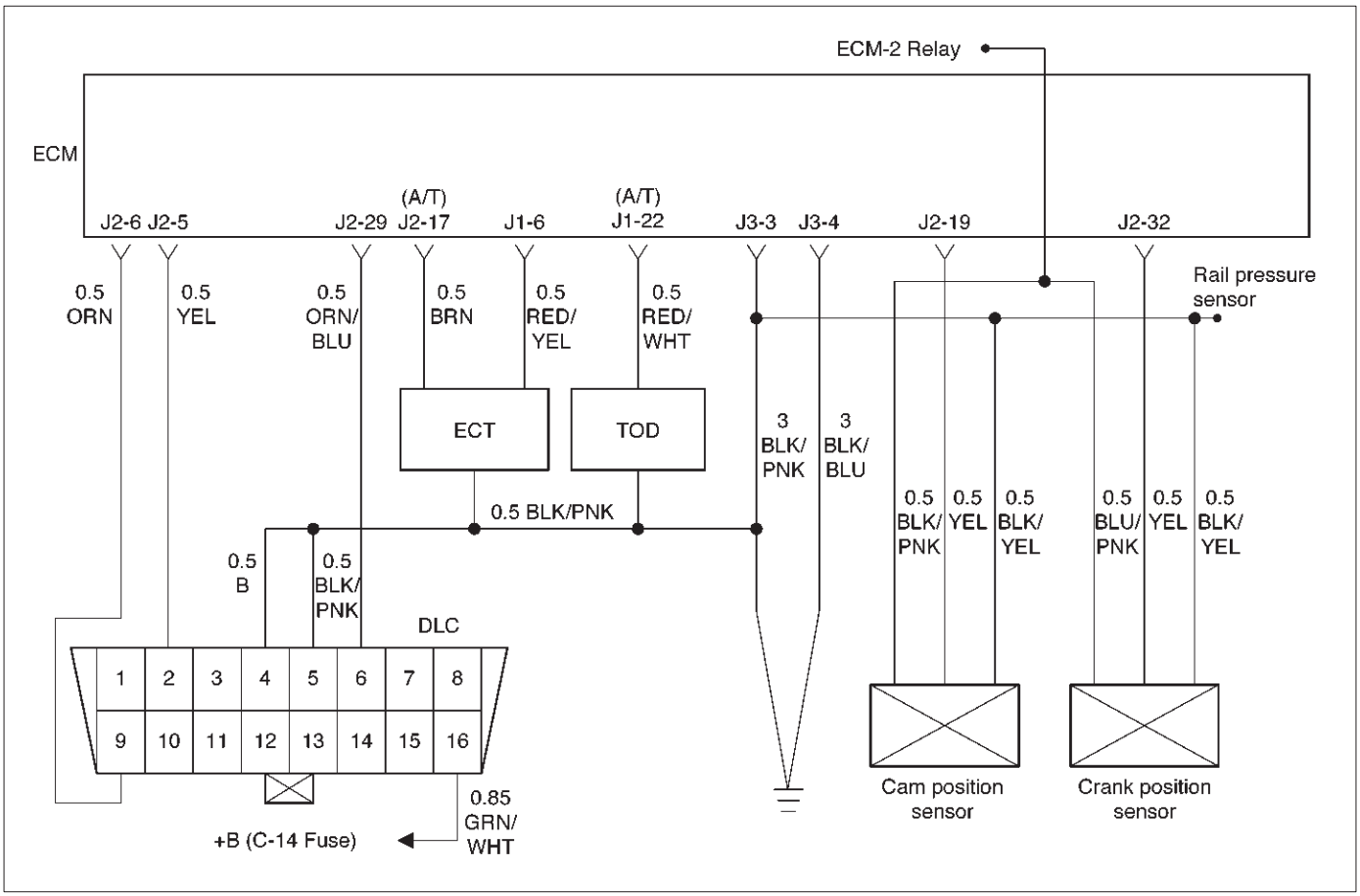

Circuit Description

The CKP reference signal is produced by the crankshaft position (CKP) sensor. During one crankshaft revolution, crankshaft pulses will be produced. The Engine Control Module ECM uses the CKP reference signal to calculate engine RPM and crankshaft position. If the ECM receives an incorrect number of pulses on the CKP reference circuit, DTC P0336 will set.

Action Taken When the DTC Sets

- The ECM will store conditions which were present when the DTC was set as Freeze Frame and in the Failure Records data.

Conditions for Clearing the MIL/DTC

- DTC P0336 can be cleared by using the Tech 2 “Clear Info” function or by disconnecting the ECM battery feed.

Diagnostic Aids

An intermittent may be caused by a poor connection, rubbed–through wire insulation or a wire broken inside the insulation. Check for:

- Poor connection – Inspect the ECM harness and connectors for improper mating, broken locks, improperly formed or damaged terminals, and poor terminal-to-wire connection.
- Damaged harness – Inspect the wiring harness for damage. If the harness appears to be OK, disconnect the ECM, turn the ignition on and observe a voltmeter connected to the CKP reference circuit at the ECM harness connector while moving connectors and wiring harnesses related to the ECM. A change in voltage will indicate the location of the fault.

Reviewing the Failure Records vehicle mileage since the diagnostic test last failed may help determine how often the condition that caused the DTC to be set occurs. This may assist in diagnosing the condition.

DTC P0336 – CKP Sensor Out of Synchro

Step	Action	Value(s)	Yes	No
1	Was the “On-Board Diagnostic (OBD) System Check” performed?	—	Go to *Step 2*	Go to *OBD System Check*
2	Attempt to start the engine. Does the engine start?	—	Go to *Step 3*	Go to *“Engine Cranks But Will Not Run”* chart
3	1. Review and record Failure Records information. 2. Clear DTC P0336. 3. Start the engine and idle for 1 minute. 4. Observe DTCs. Is DTC P0336 set?	—	Go to *Step 4*	Refer to Diagnostic Aids
4	1. Disconnect the ECM and CKP sensor. 2. Check for an open or a short to ground in the CKP reference circuit between the CKP sensor connector and the ECM harness connector. 3. If a problem is found, repair as necessary. Was a problem found?	—	Verify repair	Go to *Step 5*
5	1. Reconnect the ECM and CKP sensor. 2. Connect a DVM to measure voltage on the CKP reference circuit at the ECM connector. 3. Observe the voltage while cranking the engine. Is the voltage near the specified value?	2.5 V	Go to *Step 8*	Go to *Step 6*
6	Check the connections at the CKP sensor and replace the terminals if necessary. Did any terminals require replacement?	—	Verify repair	Go to *Step 7*
7	Replace the CKP sensor. Is the action complete?	—	Verify repair	Go to *Step 8*
8	Check connections at the ECM and replace the terminals if necessary. Did any terminals require replacement?	—	Verify repair	Go to *Step 9*
9	Replace the ECM (Refer to the Data Programming in Case of ECM change). Is the action complete?	—	Verify repair	—

Diagnostic Trouble Code (DTC) P0337 (Flash DTC 43) CKP (Crank Position) Sensor No Signal

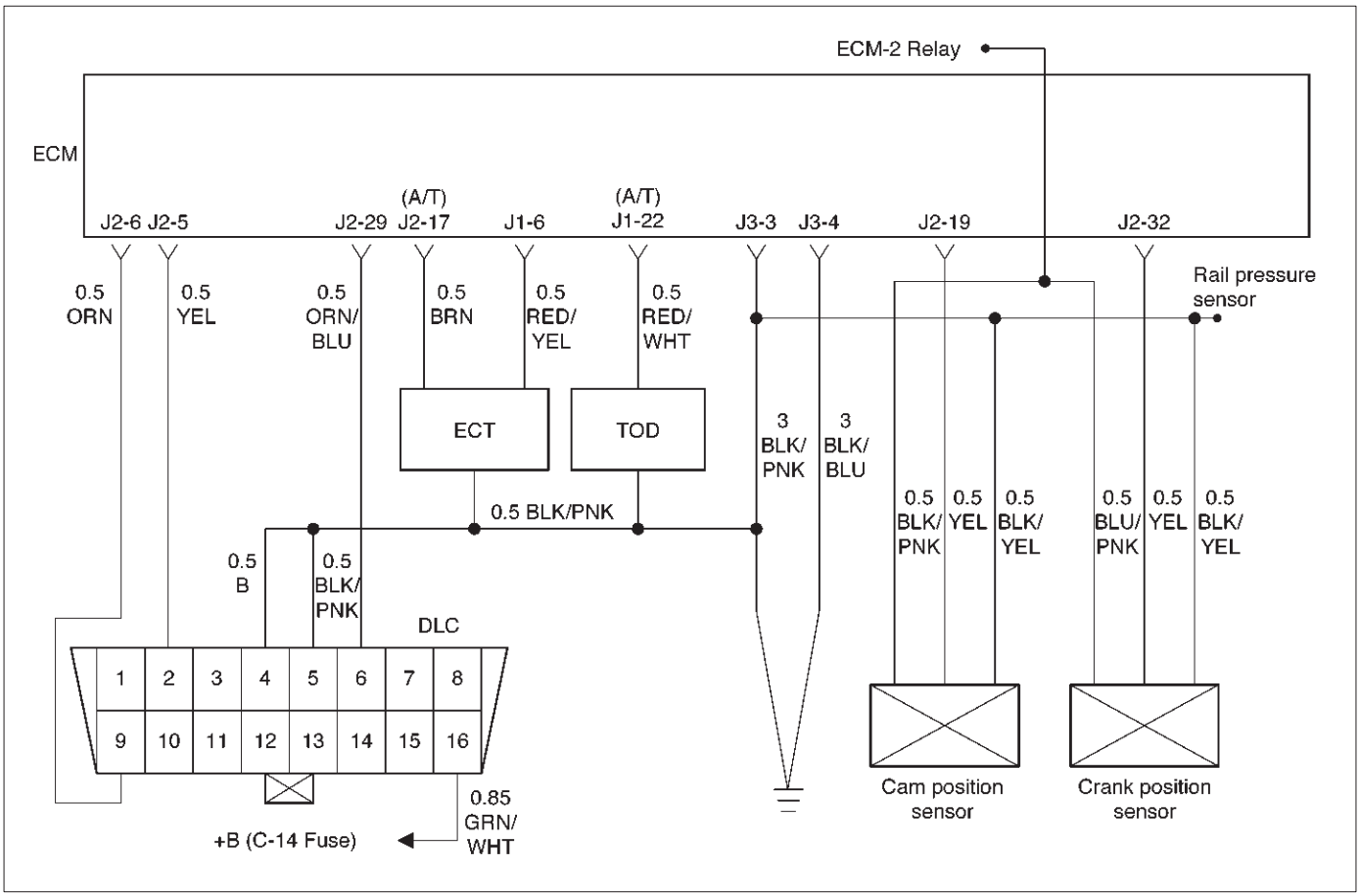

Circuit Description

The CKP reference signal is produced by the crankshaft position (CKP) sensor. During one crankshaft revolution, CKP crankshaft reference pulses will be produced. The Engine Control Module ECM uses the CKP reference signal to calculate engine RPM and crankshaft position. If the ECM does not receive pulses on the CKP reference circuit, DTC P0337 will set.

Action Taken When the DTC Sets

- The ECM will store conditions which were present when the DTC was set as Freeze Frame and in the Failure Records data.

Conditions for Clearing the MIL/DTC

- DTC P0337 can be cleared by using the Tech 2 “Clear Info” function or by disconnecting the ECM battery feed.

Diagnostic Aids

An intermittent may be caused by a poor connection, rubbed-through wire insulation or a wire broken inside the insulation. Check for:

- Poor connection – Inspect the ECM harness and connectors for improper mating, broken locks, improperly formed or damaged terminals, and poor terminal-to-wire connection.
- Damaged harness – Inspect the wiring harness for damage. If the harness appears to be OK, disconnect the ECM, turn the ignition on and observe a voltmeter connected to the CKP reference circuit at the ECM harness connector while moving connectors and wiring harnesses related to the ICM. A change in voltage will indicate the location of the fault.

Reviewing the Failure Records vehicle mileage since the diagnostic test last failed may help determine how often the condition that caused the DTC to be set occurs. This may assist in diagnosing the condition.

DTC P0337 – CKP Sensor No Signal

Step	Action	Value(s)	Yes	No
1	Was the “On-Board Diagnostic (OBD) System Check” performed?	—	Go to *Step 2*	Go to *OBD System Check*
2	Attempt to start the engine. Does the engine start?	—	Go to *Step 3*	Go to *Chart 3*
3	1. Review and record Failure Records information. 2. Clear DTC P0337. 3. Start the engine and idle for 1 minute. 4. Observe DTCs. Is DTC P0337 set?	—	Go to *Step 4*	Refer to *Diagnostic Aid*
4	1. Disconnect the CKP sensor. 2. Ignition “ON.” 3. Using a DVM, verify that 5 V reference and ground are being supplied at the sensor connector (ECM side). Are 4-6 volts and ground available at the sensor?	—	Go to *Step 7*	Go to *Step 5*
5	1. Ignition “ON.” 2. With a DVM, backprobe the ECM connector 5 V reference and ground connections. Are 5 V reference and ground available at the ECM?	—	Go to *Step 6*	Go to *Step 11*
6	Check 5 V reference or ground between the CKP sensor and ECM and repair the open circuit, short to ground or short to voltage. Is the action complete?	—	Verify repair	—
7	1. Ignition “OFF.” 2. Disconnect the ECM and CKP sensor. 3. Check for an open or a short to ground in the CKP reference circuit between the CKP sensor connector and the ECM harness connector. 4. If a problem is found, repair as necessary. Was a problem found?	—	Verify repair	Go to *Step 8*
8	1. Reconnect the ECM and CKP sensor. 2. Connect a DVM to measure voltage on the CKP reference circuit at the ECM connector. 3. Observe the voltage while cranking the engine. Is the voltage near the specified value?	2.5 V	Go to *Step 11*	Go to *Step 9*
9	Check the connections at the CKP sensor and replace the terminals if necessary. Did any terminals require replacement?	—	Verify repair	Go to *Step 10*
10	Replace the CKP sensor. Use caution and avoid hot oil that may drip out. Is the action complete?	—	Verify repair	—

DTC P0337 – CKP Sensor No Signal (Cont'd)

Step	Action	Value(s)	Yes	No
11	Check the connections at the ECM and replace the terminals if necessary. Did any terminals require replacement?	—	Verify repair	Go to *Step 12*
12	Replace the ECM (Refer to the Data Programming in Case of ECM change). Is the action complete?	—	Verify repair	—

Diagnostic Trouble Code (DTC) P0341 (Flash DTC 41) CMP (Cam Position) Sensor Out of Synchro

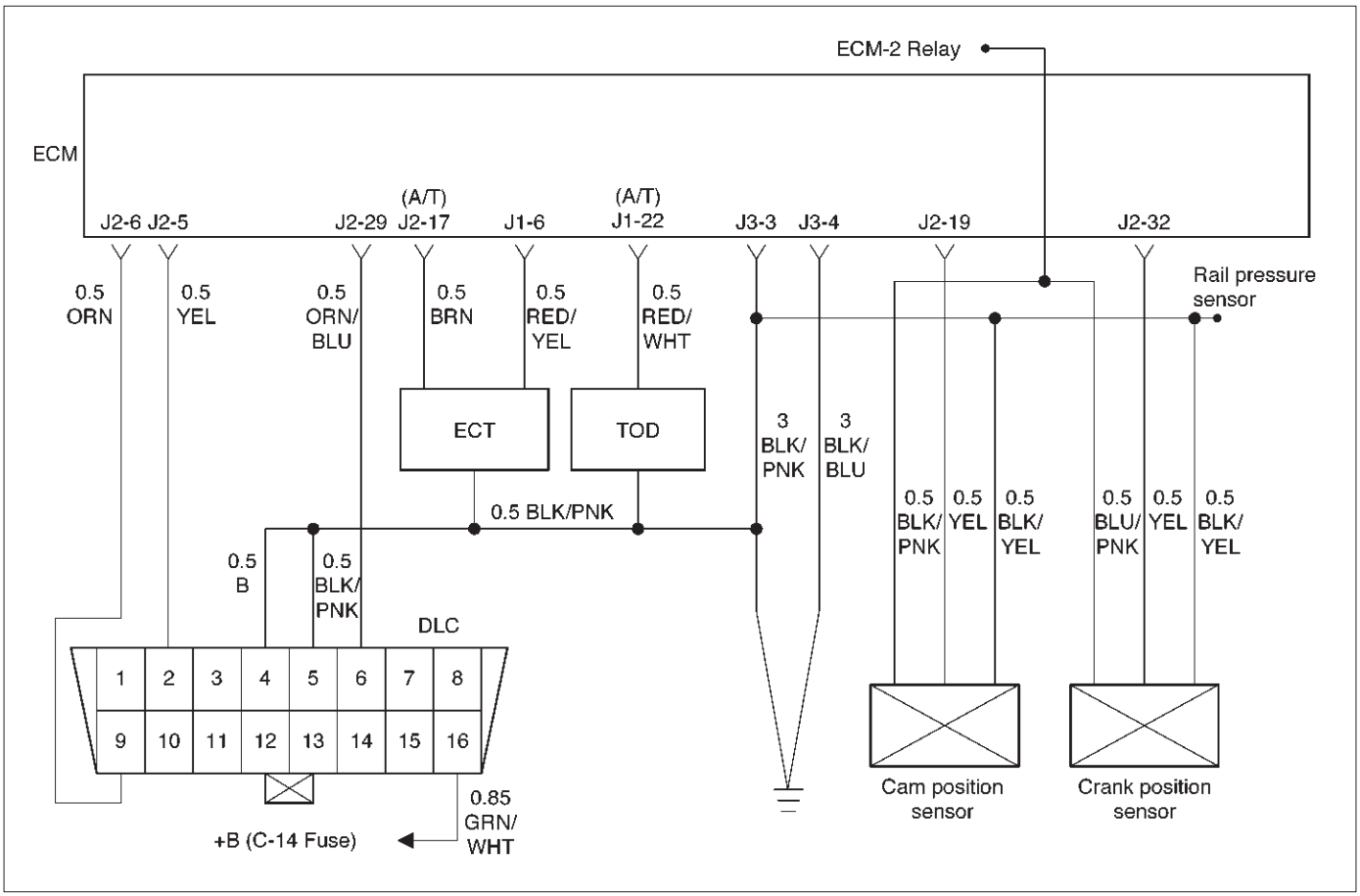

060RW133

Circuit Description

The CMP signal is produced by the camshaft position (CMP) sensor pulses when the engine is running and crankshaft position (CKP) sync pulses are also being received. The Engine Control Module ECM uses the CMP signal pulses to initiate sequential fuel injection. If the ECM receives an incorrect number of pulses on the CMP reference circuit, DTC P0341 will set.

Action Taken When the DTC Sets

- The ECM will store conditions which were present when the DTC was set as Freeze Frame and in the Failure Records data.

Conditions for Clearing the MIL/DTC

- DTC P0341 can be cleared by using the Tech 2 “Clear Info” function or by disconnecting the ECM battery feed.

Diagnostic Aids

An intermittent may be caused by a poor connection, rubbed–through wire insulation or a wire broken inside the insulation. Check for:

- Poor connection — Inspect the ECM harness and connectors for improper mating, broken locks, improperly formed or damaged terminals, and poor terminal-to-wire connection.
- Damaged harness — Inspect the wiring harness for damage. If the harness appears to be OK, disconnect the ECM, turn the ignition on and observe a voltmeter connected to the CMP signal circuit at the ECM harness connector while moving connectors and wiring harnesses related to the ICM and the CMP sensor. A change in voltage will indicate the location of the fault.

Reviewing the Failure Records vehicle mileage since the diagnostic test last failed may help determine how often the condition that caused the DTC to be set occurs. This may assist in diagnosing the condition.

Test Description

Number(s) below refer to the step number(s) on the Diagnostic Chart.

2. Ensures that the fault is present.

12. Determines whether the fault is being caused by a missing camshaft magnet or a faulty sensor. The voltage measured in this step should read around 4 volts, toggling to near 0 volts when the CMP sensor interfaces with the camshaft magnet.

DTC P0341 —CMP Sensor Out of Synchro

Step	Action	Value(s)	Yes	No
1	Was the “On-Board Diagnostic (OBD) System Check” performed?	—	Go to *Step 2*	Go to *OBD System Check*
2	1. Ignition “ON.” 2. Review and record Tech 2 Failure Records data. 3. Operate the vehicle within Failure Records conditions as noted. 4. Using a Tech 2, monitor “DTC” info for DTC P0341 until the DTC P0341 test runs. 5. Note the test result. Does the Tech 2 indicate DTC P0341 failed this ignition?	—	Go to *Step 3*	Refer to *Diagnostic Aids*
3	1. Disconnect the CMP sensor. 2. Measure the voltage between the sensor feed circuit and the sensor ground circuit at the CMP sensor harness connector. Does the voltage measure near the specified value?	4-6 V	Go to *Step 4*	Go to *Step 5*
4	Measure the voltage between the CMP sensor signal circuit and the sensor ground circuit at the CMP sensor harness connector. Does the voltage measure near the specified value?	4-6 V	Go to *Step 11*	Go to *Step 8*
5	If the voltage measured in step 3 was less than 4-6 volts, proceed directly to step 6 without completing this step. If the voltage in step 3 was greater than 4-6 V, repair the short to voltage in the CMP feed circuit. Is the action complete?	—	Verify repair	—
6	1. Check for poor connections at the camshaft position sensor. 2. If a problem is found, repair it as necessary. Was a problem found?	—	Verify repair	Go to *Step 7*
7	1. Ignition “OFF,” disconnect the ECM and the CMP sensor. 2. Check the following circuits for an open between the ignition control module and the CMP sensor: ● The sensor feed circuit. 3. If a problem is found, repair as necessary. Was a problem found?	—	Verify repair	Go to *Step 9*
8	1. Ignition “OFF,” disconnect the ECM (leave the CMP sensor disconnected). 2. Ignition “ON,” check the following circuits: ● The CMP sensor signal circuit for an open or a short to voltage. ● The CMP sensor input signal circuit for a short to ground. 3. If a problem is found, repair it as necessary. Was a problem found?	—	Verify repair	Go to *Step 9*
9	Check for a short or open in the sensor ground circuit. Was a problem found?	—	Verify repair	Go to *Step 10*

DTC P0341 —CMP Sensor Out of Synchro (Cont'd)

Step	Action	Value(s)	Yes	No
10	1. Check for poor connections at the ECM. 2. If a problem is found, repair it as necessary. Was a problem found?	—	Verify repair	Go to *Step 11*
11	Backprobe the ECM connector with a DVM to monitor voltage on the camshaft position input signal circuit while cranking the engine with the sensor connected. (Use rubber band, tape, or an assistant to keep the DVM lead in contact with the sensor terminal during this test.) Does the voltage toggle between the specified values?	4-0 V	Go to *Step 15*	Go to *Step 12*
12	1. Remove the CMP sensor from the engine front cover (leave the sensor wiring connected). 2. Place a magnet on the CMP sensor. (If you use a magnet that is too small to cover the face of the sensor, test on every part of the sensor face because only a small area will respond to this test.) Does the DVM display a voltage near the specified value?	0 V	Go to *Step 13*	Go to *Step 14*
13	Replace the faulty or missing camshaft position sensor magnet. Is the action complete?	—	Verify repair	—
14	Replace the camshaft position sensor. Is the action complete?	—	Verify repair	—
15	Replace the ECM (Refer to the Data Programming in Case of ECM change). Is the action complete?	—	Verify repair	—

Diagnostic Trouble Code (DTC) P0342 (Flash DTC 41) CMP (Cam Position) Sensor No Signal

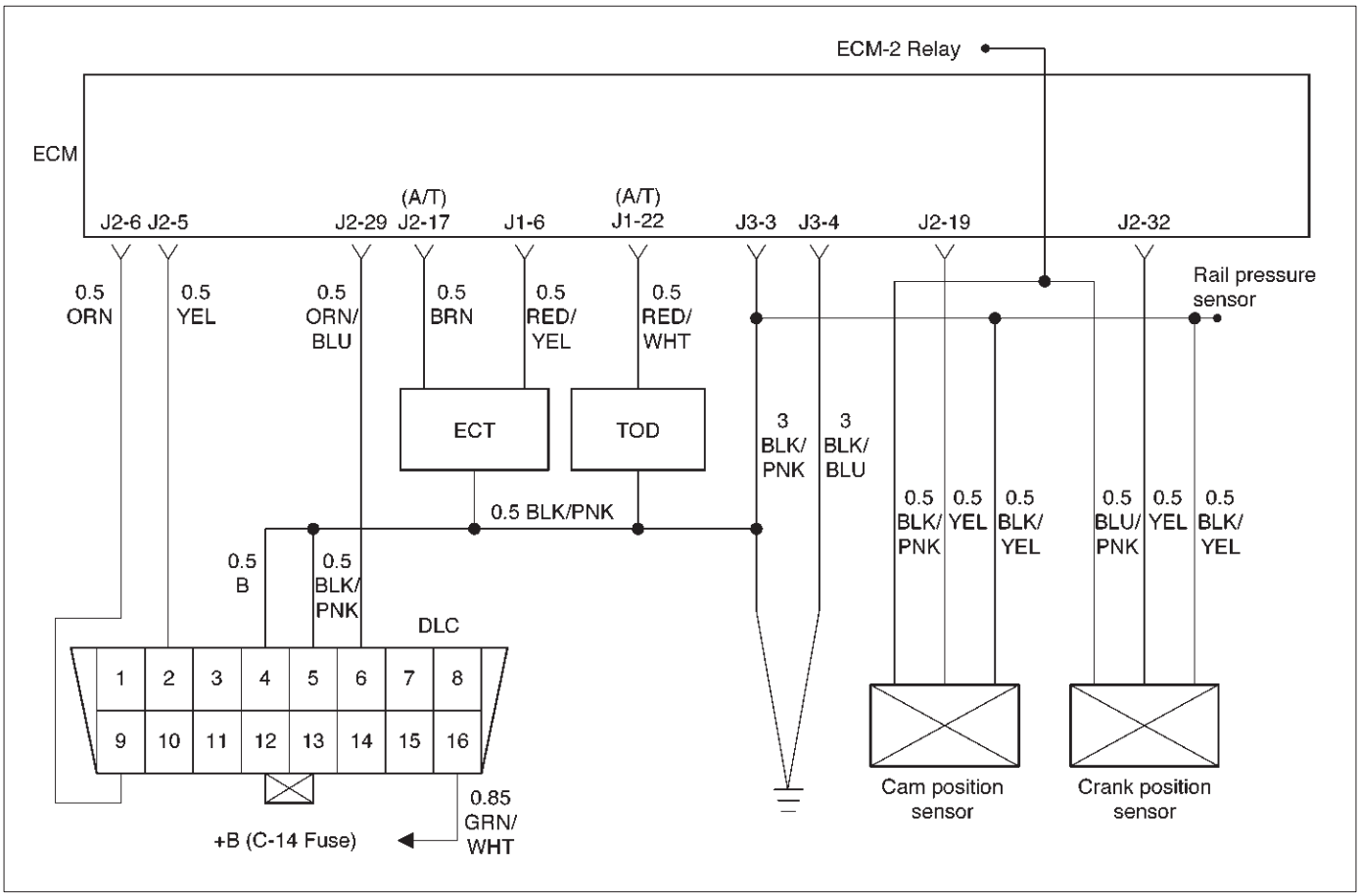

060RW133

Circuit Description

The CMP signal produced by the camshaft position (CMP) sensor pulses when the engine is running and crankshaft position (CKP) synchro pulses are also being received. The hall type CMP sensor and the CKP sensor share 5 V and ground connections at the Engine Control Module ECM. The third wire at the sensor is a signal circuit to the ECM. The ECM uses the CMP signal pulses to initiate sequential fuel injection. If the ECM does not receive pulses on the CMP reference circuit, DTC P0342 will set.

Action Taken When the DTC Sets

- The ECM will store conditions which were present when the DTC was set as Freeze Frame and in the Failure Records data.

Conditions for Clearing the MIL/DTC

- DTC P0342 can be cleared by using the Tech 2 “Clear Info” function or by disconnecting the ECM battery feed.

Diagnostic Aids

An intermittent may be caused by a poor connection, rubbed-through wire insulation or a wire broken inside the insulation. Check for:

- Poor connection – Inspect the ECM harness and connectors for improper mating, broken locks, improperly formed or damaged terminals, and poor terminal to wire connection.
- Damaged harness – Inspect the wiring harness for damage. If the harness appears to be OK, disconnect the ECM, turn the ignition on and observe a voltmeter connected to the CMP signal circuit at the ECM harness connector while moving connectors and wiring harnesses related to the ICM and the CMP sensor. A change in voltage will indicate the location of the fault.

Test Description

Number(s) below refer to the step number(s) on the Diagnostic Chart.

2. Ensures that the fault is present.

14. Determines whether the fault is being caused by a missing camshaft magnet or a faulty ECM. The voltage measured in this step should read around 4 volts, toggling to near 0 volts when the CMP sensor interfaces with the camshaft magnet.

DTC P0342 —CMP Sensor No Signal

Step	Action	Value(s)	Yes	No
1	Was the “On-Board Diagnostic (OBD) System Check” performed?	—	Go to *Step 2*	Go to *OBD System Check*
2	1. Ignition “ON.” 2. Review and record Tech 2 Failure Records data. 3. Operate the vehicle within Failure Records conditions as noted. 4. Using a Tech 2, monitor “Specific DTC” information for DTC P0342 until the DTC P0342 test runs. 5. Note test result. Does the Tech 2 indicate DTC P0342 failed this ignition?	—	Go to *Step 3*	Refer to *Diagnostic Aids*
3	1. Ignition “ON.” 2. Disconnect the CMP sensor. 3. Measure the voltage between the sensor feed circuit and the sensor ground circuit at the CMP sensor harness connector. Does the voltage measure near the specified value?	4-6 V	Go to *Step 7*	Go to *Step 4*
4	1. Ignition “OFF,” disconnect the ECM and the CMP sensor. 2. Check for poor connections at the camshaft position sensor. 3. If a problem is found, repair it as necessary. Was a problem found?	—	Verify repair	Go to *Step 5*
5	1. Check for poor connections at the ECM. 2. If a problem is found, repair it as necessary. Was a problem found?	—	Verify repair	Go to *Step 6*
6	1. Check the following circuits between the ECM and the CMP sensor: ● The sensor feed circuit. Open or short to ground? ● The sensor ground circuit. Open or short to voltage? 2. If a problem is found, repair as necessary. Was a problem found?	—	Verify repair	—
7	1. Ignition “ON,” engine “OFF.” 2. Measure the voltage between the CMP sensor signal circuit and the sensor ground circuit at the CMP sensor harness connector. Does the voltage measure near the specified value?	4-6 V	Go to *Step 8*	Go to *Step 9*

DTC P0342 —CMP Sensor No Signal (Cont'd)

Step	Action	Value(s)	Yes	No
8	1. Turn the ignition "OFF." 2. Disconnect the ECM and connect a DVM to monitor voltage on the camshaft position signal circuit at the ECM connector. 3. Ignition "ON." 4. Monitor the voltage display on the DVM while repeatedly touching the CMP sensor signal circuit at the CMP sensor connector with a test light to ground. Does the DVM voltage display switch between 0 and approximately 5 volts when the test light is touched to the CMP sensor signal circuit?	—	Go to *Step 12*	Go to *Step 9*
9	1. Ignition "OFF." 2. Leave the ECM disconnected. 3. Ignition "ON." 4. Probe the camshaft position signal circuit at the ECM connector with a test light to B+. 5. If the test light is "ON," locate and repair the short to ground in the camshaft position input signal circuit. Was either circuit shorted to ground?	—	Verify repair	Go to *Step 10*
10	1. Ignition "OFF." 2. Leave the ECM disconnected. 3. Ignition "ON." 4. Probe the camshaft position signal circuit with a test light to ground. 5. If the test light is "ON," locate and repair the short to voltage in the camshaft position input signal circuit. Was the test light "ON"?	—	Verify repair	Go to *Step 11*
11	1. Ignition "OFF," disconnect the ECM (leave the CMP sensor disconnected). 2. Ignition "ON," check the following circuit: ● The CMP sensor signal circuit for an open. 3. If a problem is found, repair it as necessary. Was a problem found?	—	Verify repair	—
12	1. Ignition "ON." 2. Remove the CMP sensor from the engine front cover (leave the sensor wiring connected). 3. Place a magnet on the CMP sensor. If you use a magnet that is too small to cover the face of the sensor, test on every part of the sensor face because only a small area will respond to this test. Does the DVM display a voltage near the specified value?	0 V	Go to *Step 14*	Go to *Step 13*
13	Replace the camshaft position sensor. Is the action complete?	—	Verify repair	—
14	1. Reinstall the CMP sensor to the engine front cover. 2. Observe the DVM connected to monitor voltage on the camshaft position signal circuit while cranking the engine. Does the voltage toggle between the specified values?	4-0 V	Go to *Step 15*	Go to *Step 16*

DTC P0342 —CMP Sensor No Signal (Cont'd)

Step	Action	Value(s)	Yes	No
15	Replace the ECM (Refer to the Data Programming in Case of ECM change). Is the action complete?	—	Verify repair	—
16	Replace faulty or missing camshaft magnet. Is the action complete?	—	Verify repair	—

Diagnostic Trouble Code (DTC) P0380 (Flash DTC 66) Glow Relay Circuit Open/Short

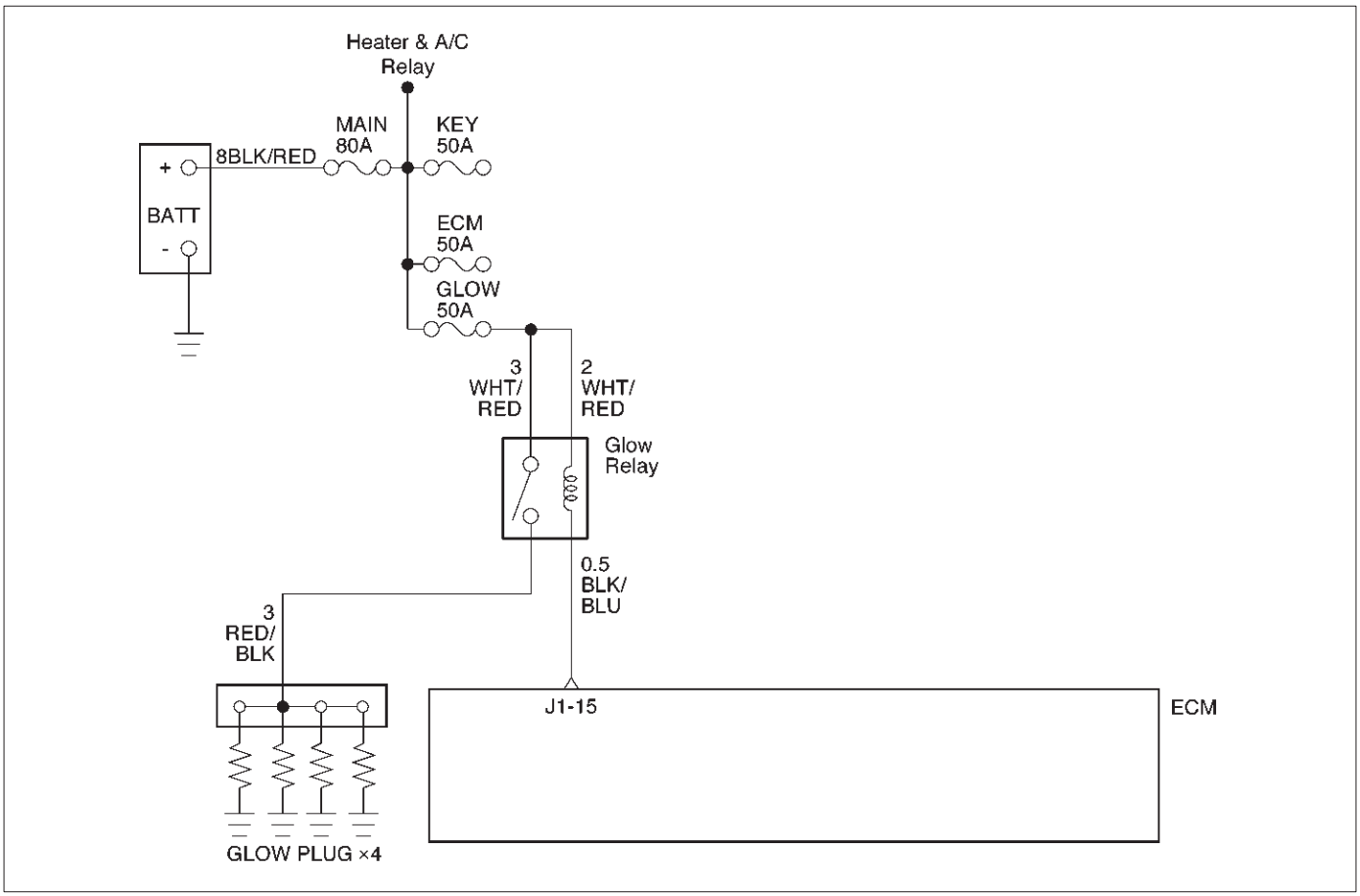

060RW132

Circuit Description

Glow relay circuit receives current through Glow 50A fuse from the battery. Glow relay is circuited to Glow plug.

Action Taken When the DTC Sets

- The ECM will store conditions which were present when the DTC was set as Freeze Frame and in the Failure Records data.

Conditions for Clearing the MIL/DTC

- DTC P0380 can be cleared by using the Tech 2 “Clear Info” function or by disconnecting the ECM battery feed.

Diagnostic Aids

An intermittent may be caused by a poor connection, rubbed-through wire insulation or a wire broken inside the insulation. Check for:

- Poor connection – Inspect the ECM harness and connectors for improper mating, broken locks, improperly formed or damaged terminals, and poor terminal-to-wire connection.
- Damaged harness – Inspect the wiring harness for damage.

DTC P0380 – Glow Relay Circuit Open/Short

Step	Action	Value(s)	Yes	No
1	Was the “On-Board Diagnostic (OBD) System Check” performed?	—	Go to *Step 2*	Go to *OBD System Check*
2	Attempt to start the engine. Does the engine start?	—	Go to *Step 3*	Go to *Chart 3*
3	1. Review and record Failure Records information. 2. Clear DTC P0380. 3. Start the engine and idle for 1 minute. 4. Observe DTCs. Is DTC P0380 set?	—	Go to *Step 4*	Refer to *Diagnostic Aid*
4	Check the glow fuse 50A. Is the glow fuse 50A damage?	—	Go to *Step 5*	Go to *Step 6*
5	Replace the glow fuse 50A. Is the action complete?	—	Verify repair	Go to *Step 6*
6	1. Ignition “OFF.” 2. Check for an open or a short to ground in the Glow relay circuit between the Glow relay connector and the ECM harness connector. 3. If a problem is found, repair as necessary. Was a problem found?	—	Verify repair	Go to *Step 7*
7	Check the connections at the Glow relay and replace the terminals if necessary. Did any terminals require replacement?	—	Verify repair	Go to *Step 8*
8	Replace the Glow relay. Is the action complete?	—	Verify repair	Go to *Step 9*
9	Check the connections at the ECM and replace the terminals if necessary. Did any terminals require replacement?	—	Verify repair	Go to *Step 10*
10	Replace the ECM (Refer to the Data Programming in Case of ECM change). Is the action complete?	—	Verify repair	—

Diagnostic Trouble Code (DTC) P0381 (Flash DTC 67) Glow Lamp Circuit Open/Short

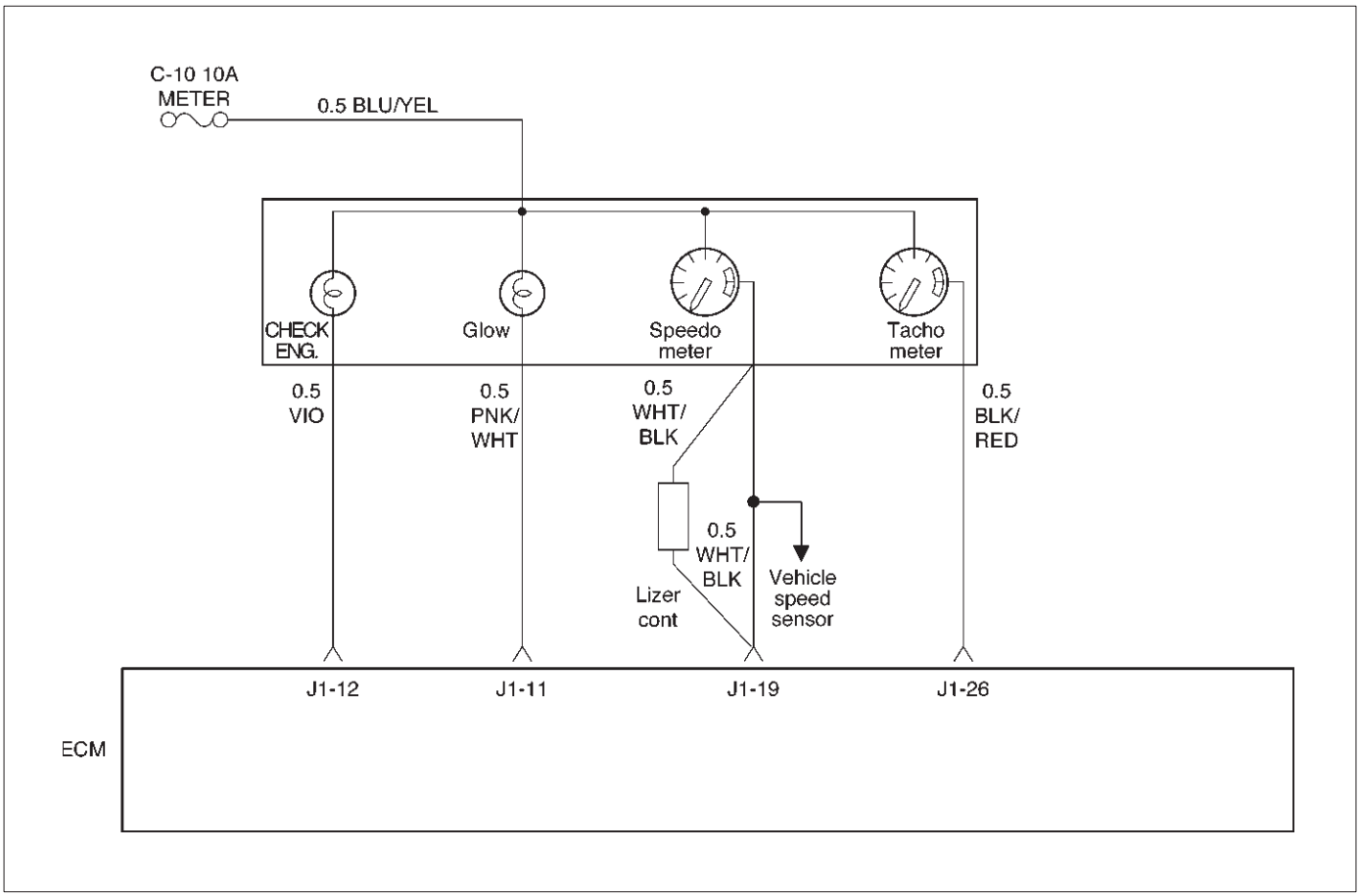

060RW136

Circuit Description

Glow Lamp Circuit receives current through Meter 10A fuse, Glow lamp being circuited to ECM.

Action Taken When the DTC Sets

- The ECM will store conditions which were present when the DTC was set as Freeze Frame and in the Failure Records data.

Conditions for Clearing the MIL/DTC

- DTC P0381 can be cleared by using the Tech 2 “Clear Info” function or by disconnecting the ECM battery feed.

Diagnostic Aids

An intermittent may be caused by a poor connection, rubbed-through wire insulation or a wire broken inside the insulation. Check for:

- Poor connection – Inspect the ECM harness and connectors for improper mating, broken locks, improperly formed or damaged terminals, and poor terminal-to-wire connection.
- Damaged harness – Inspect the wiring harness for damage.

DTC P0381 – Glow Lamp Circuit Open/Short

Step	Action	Value(s)	Yes	No
1	Was the “On-Board Diagnostic (OBD) System Check” performed?	—	Go to *Step 2*	Go to *OBD System Check*
2	1. Review and record Failure Records information. 2. Clear DTC P0381. 3. Observe DTCs. Is DTC P0381 set?	—	Go to *Step 3*	Refer to *Diagnostic Aid*
3	1. Ignition “OFF.” 2. Remove the Meter assembly. 3. Check for an open or a short to ground in the Glow Lamp circuit. 4. If a problem is found, repair as necessary. (On electric bulb of the Glow Lamp, The Glow Lamp harness circuit) Was a problem found?	—	Refer to the Meter in Electric section 8	Go to *Step 4*
4	Check the connections at the ECM and replace the terminals if necessary. Did any terminals require replacement?	—	Verify repair	Go to *Step 5*
5	Replace the ECM (Refer to the Data Programming in Case of ECM change). Is the action complete?	—	Verify repair	—

Diagnostic Trouble Code (DTC) P1403 (Flash DTC 32) EGR EVRV Fault

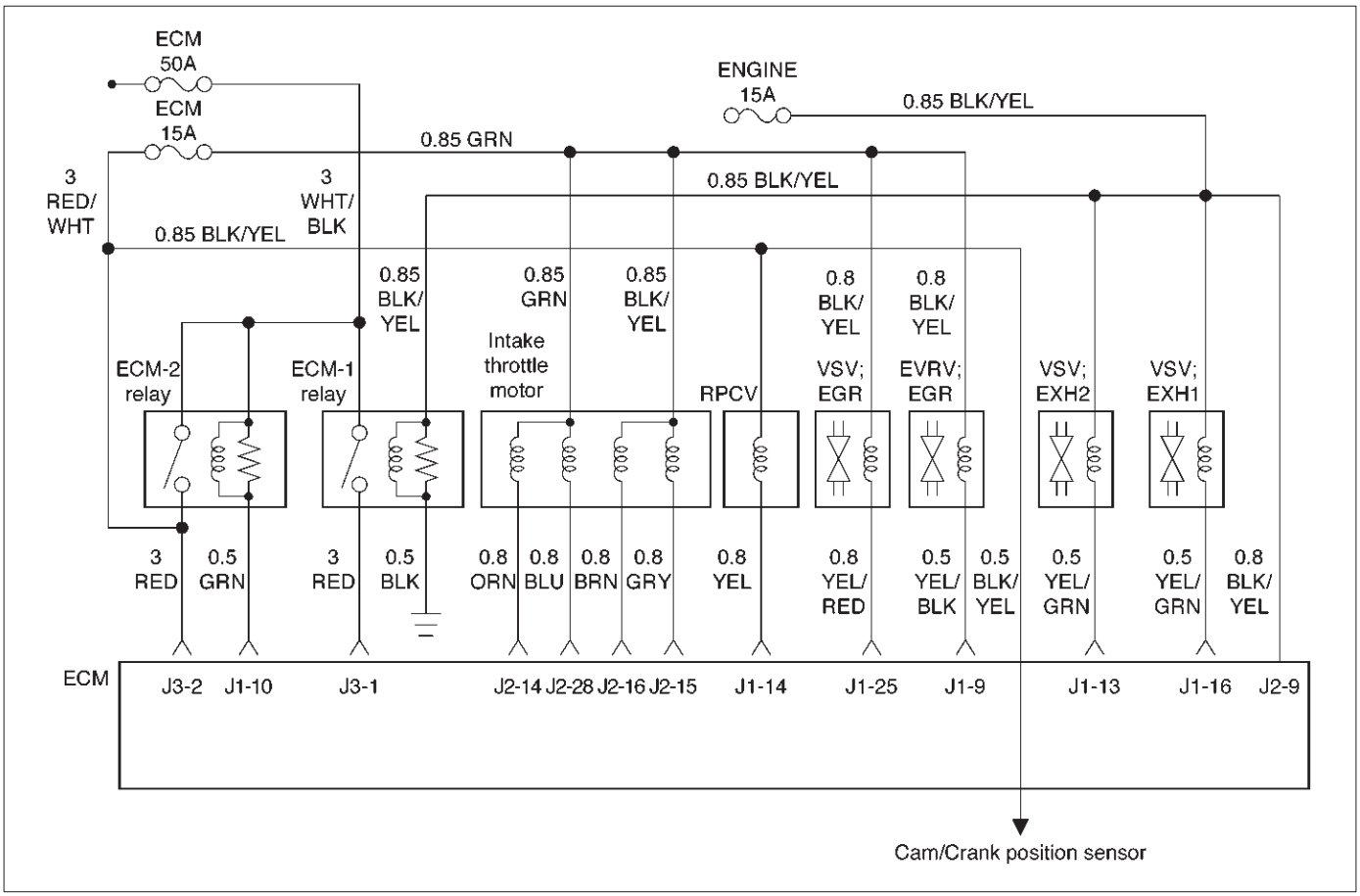

060RW135

Circuit Description

EGR EVRV Circuit has a common power source in parallel with EGR, VSV, RPCV, and Intake Throttle Motor. This may cause multiple DTCs. On such occasion, refer to “Multiple ECM Information sensor DTCs Set”.

Diagnostic Aids

Check for the following conditions:

- Poor connection or damaged EVRV – Inspect the wiring harness for damage.
- Ensure EVRV is correctly mounted. See *On-Vehicle Service*.

Reviewing the Failure Records vehicle mileage since the diagnostic test last failed may help determine how often the condition that caused the DTC to be set occurs. This may assist in diagnosing the condition.

Test Description

Number(s) below refer to the step number(s) on the Diagnostic Chart

3. A malfunctioning MAP sensor can set an EGR DTC. The MAP sensor could send a constant signal which is not low enough to set a low MAP DTC. The constant signal from the MAP sensor also may not be high enough to set a high MAP DTC. This step verifies that the MAP sensor is responding.

DTC P1403 – EGR EVRV Fault

Step	Action	Value(s)	Yes	No
1	Was the “On-Board Diagnostic (OBD) System Check” performed?	—	Go to *Step 2*	Go to *OBD System Check*
2	Check the EVRV circuit. Was the EVRV circuit darmage?	—	Replace the EVRV circuit	Go to *Step 3*
3	1. Start the engine. 2. Monitor the MAP signal with a scan tool while idling. 3. While idling, jab the accelerator pedal about halfway down and immediately let the engine return to idle. Did the MAP value on the scan tool show an immediate large change?	—	Go to *Step 5*	Go to *Step 4*
4	Replace the MAP sensor. Is the action complete?	—	Verify repair	—
5	1. Inspect the exhaust system for modification of original installed parts or leaks. 2. If a problem was found, repair exhaust system as necessary. Was a condition present that required repair?	—	Go to *Step 8*	Go to *Step 6*
6	1. Remove the EGR valve. 2. Visually and physically inspect the pintle, valve passages and the adapter for excessive deposits or any kind of a restriction. 3. If a problem is found, clean or replace EGR system components as necessary. Was a condition present that required repair?	—	Go to *Step 8*	Go to *Step 7*
7	1. Inspect the EGR passages for a blockage caused by excessive deposits or other damage. 2. If a problem is found, correct the condition as necessary. Was a condition present that required repair?	—	Go to *Step 8*	Refer to *Diagnostic Aids*
8	1. Review and record the scan tool Failure Records data. 2. Clear DTC and monitor the scan tool System Info Screen while operating the vehicle as specified in “Diagnostic Aids.” 3. Using a scan tool, monitor “DTC” info for DTC P1403 until the DTC P1403 test runs. 4. Note the test result. Does the scan tool indicate DTC P1403 failed this ignition?	—	Go to the last step completed in this diagnostic chart	Repair complete

Diagnostic Trouble Code (DTC) P1404 (Flash DTC 31)
EGR VSV Circuit

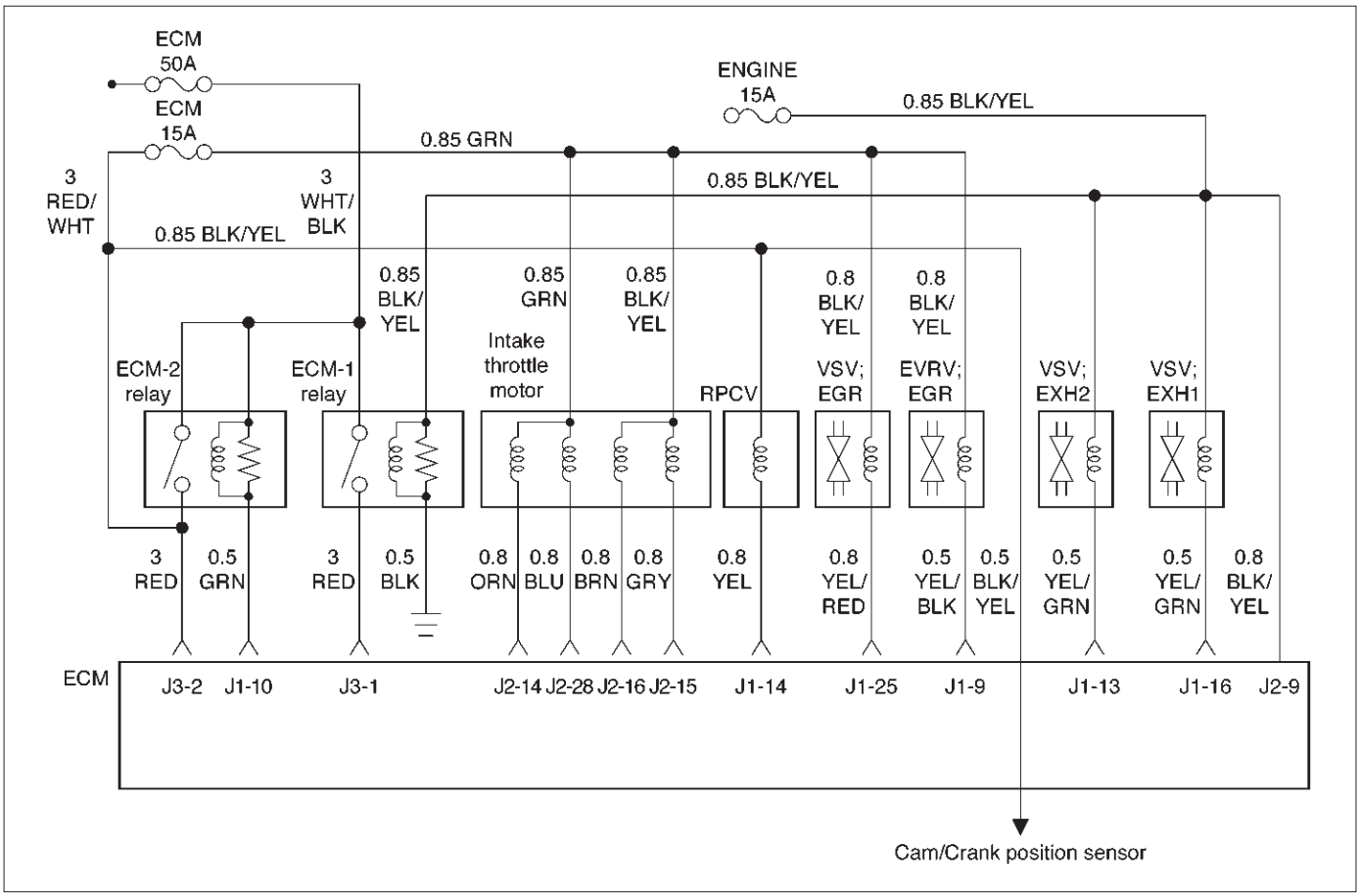

060RW135

Circuit Description

The Engine control module (ECM) monitors the EGR valve input to ensure that the valve responds properly to commands from the ECM, and to detect a fault if VSV is stuck open. When the VSV is fixing at closed and opening the ECM will set DTC P1404.

Diagnostic Aids

Check for the following conditions:

- Poor connection or damaged VSV–inspect the wiring harness for damage.

DTC P1404 – EGR VSV Circuit

Step	Action	Value(s)	Yes	No
1	Was the “On-Board Diagnostic (OBD) System Check” performed?	—	Go to *Step 2*	Go to *OBD System Check*
2	1. Ignition “ON”, engine “OFF”, review and record scan tool Failure Records data. 2. Operate the vehicle within Failure Records conditions as noted. 3. Using a scan tool, monitor “Specific DTC” info for DTC P1404 until the DTC P1404 test runs. Note the result. Does the scan tool indicates DTC P1404 failed this ignition?	—	Go to *Step 3*	Refer to *Diagnostic Aids*

DTC P1404 – EGR VSV Circuit (Cont'd)

Step	Action	Value(s)	Yes	No
3	Check the VSV circuit. Was the VSV circuit open or darmage?	—	Go to *Step 4*	Go to *Step 5*
4	Repair the opened VSV circuit or VSV. Is the action complete?	—	Verify repair	—

Diagnostic Trouble Code (DTC) P0405 (Flash DTC 26) EGR Pressure Sensor Low Voltage

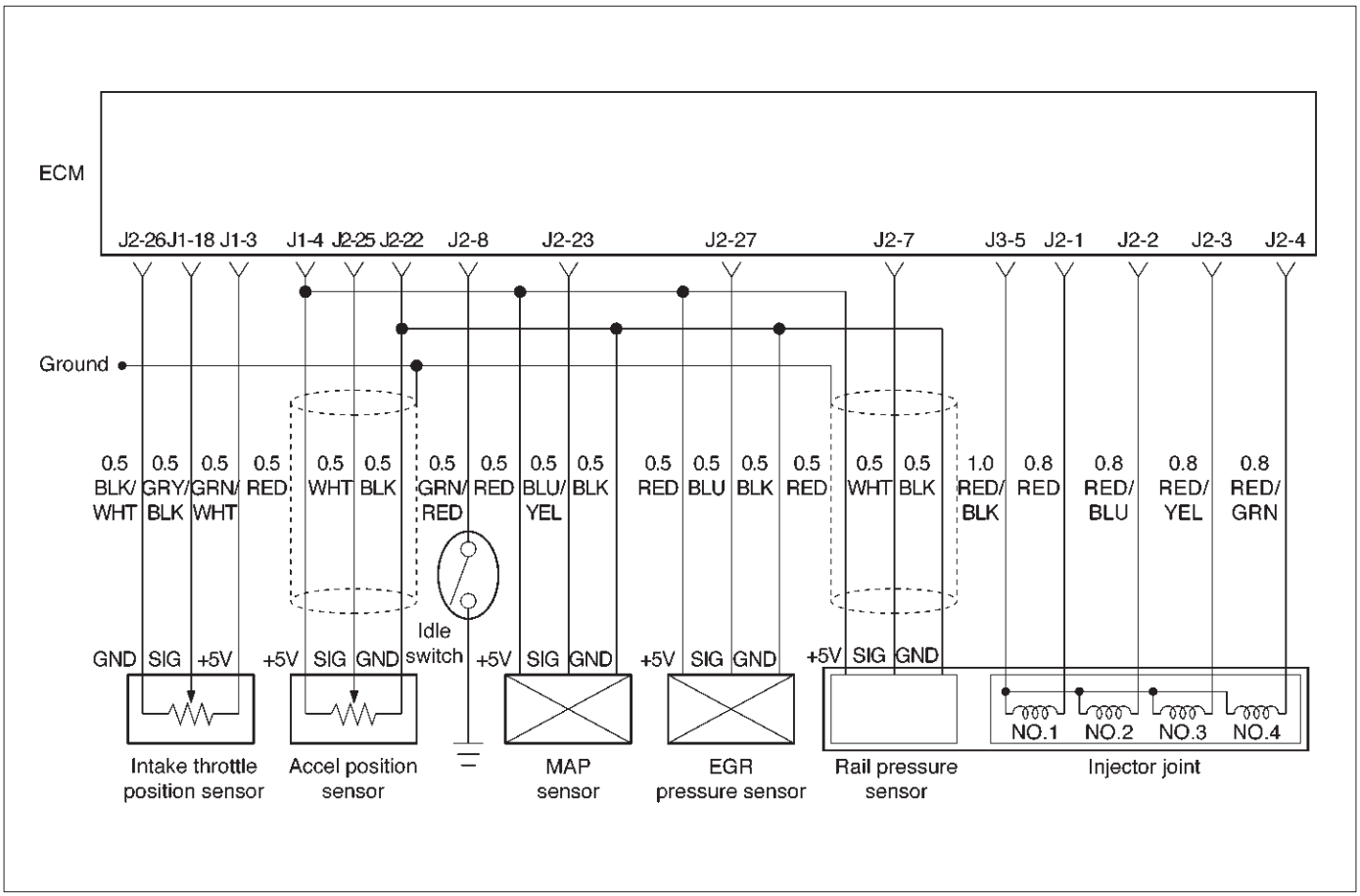

060RW134

Action Taken When the DTC Sets

- The ECM will illuminate the malfunction indicator lamp (MIL) as soon as failure detected.
- The ECM will store conditions which were present when the DTC was set as Freeze Frame and in Failure Records data.

Conditions for Clearing the MIL/DTC

- DTC P0405 can be cleared by using the scan tool “Clear Info” function or by disconnecting the ECM battery feed.

Diagnostic Aids

Check for the following conditions:

- Poor connection or damaged harness – Inspect the wiring harness for damage.

DTC P0405 – EGR Pressure Sensor Low Voltage

Step	Action	Value(s)	Yes	No
1	Was the “On-Board Diagnostic (OBD) System Check” performed?	—	Go to *Step 2*	Go to *OBD System Check*
2	Put the engine into an idling status. Is the EGR pressure sensor voltage value displayed on the Tech 2 below the specified value?	0.25 V	Go to *Step 3*	Refer to *Diagnostic Aids* and *Symptom Diagnosis*

DTC P0405 – EGR Pressure Sensor Low Voltage (Cont'd)

Step	Action	Value(s)	Yes	No
3	1. Turn off the ignition switch. 2. Remove the sensor connector connection. 3. Jumper between harness pins "red" and "blue" wires. 4. Turn on the ignition switch "ON". Is the EGR pressure sensor voltage reading above the specified value?	4 V	Go to *Step 5*	Go to *Step 4*
4	1. Turn off the ignition switch. 2. Remove the jumper wire. 3. Connect the relay & solenoid checker (5-8840-0386-0) to the battery voltage, then check the EGR pressure sensor signal circuit (blue wire). 4. Turn on the ignition switch. Is the value displayed on the Tech 2 above the specified value?	4 V	Go to *Step 6*	Go to *Step 7*
5	Check the terminal connection at the EGR pressure sensor and repair or replace terminal if necessary. Is the action complete?	—	Verify repair	—
6	Repair the 5V power circuit (red) harness or Replace the ECM (Refer to the Data Programming in Case of ECM change). Is the action complete?	—	Verify repair	—
7	Repair the signal circuit (blue) harness or Replace the ECM (Refer to the Data Programming in Case of ECM change). Is the action complete?	—	Verify repair	—

Diagnostic Trouble Code (DTC) P1405 (Flash DTC 37) EGR EVRV Circuit Open/Short

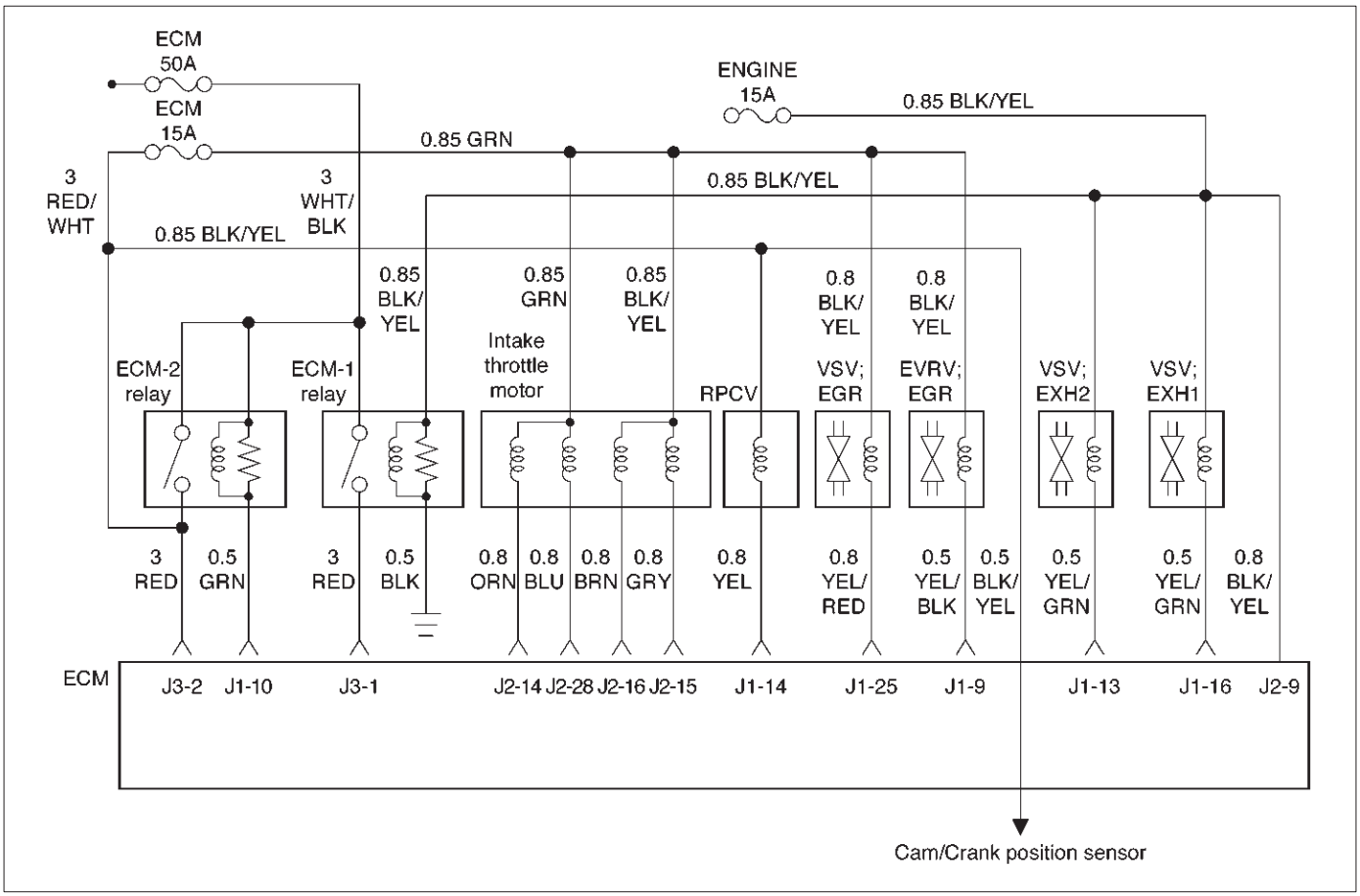

060RW135

Circuit Description

EGR EVRV Circuit has a common power source in parallel with EGR, VSV, RPCV, and Intake Throttle Motor. This may cause multiple DTCs. On such occasion, refer to “Multiple ECM Information Sensor DTCs Set”.

Action Taken When the DTC Sets

- The ECM will store conditions which were present when the DTC was set as Freeze Frame and in the Failure Records data.

Conditions for Clearing the MIL/DTC

- DTC P1405 can be cleared by using the Tech 2 “Clear Info” function or by disconnecting the ECM battery feed.

Diagnostic Aids

An intermittent may be caused by a poor connection, rubbed-through wire insulation or a wire broken inside the insulation. Check for:

- Poor connection – Inspect the ECM harness and connectors for improper mating, broken locks, improperly formed or damaged terminals, and poor terminal-to-wire connection.
- Damaged harness – Inspect the wiring harness for damage.

DTC P1405 – EGR EVRV Circuit Open/Short

Step	Action	Value(s)	Yes	No
1	Was the “On-Board Diagnostic (OBD) System Check” performed?	—	Go to *Step 2*	Go to *OBD System Check*
2	1. Review and record Failure Records information. 2. Clear DTC P1405. 3. Start the engine and idle for 1 minute. 4. Observe DTCs. Is DTC P1405 set?	—	Go to *Step 3*	Refer to *Diagnostic Aid*
3	1. Ignition “OFF.” 2. Disconnect the EVRV. 3. Check for an open or a short to ground in the EVRV circuit between the EVRV connector and the ECM harness connector. 4. If a problem is found, repair as necessary. Was a problem found?	—	Verify repair	Go to *Step 4*
4	Check the connections at the EVRV and replace the terminals if necessary. Did any terminals require replacement?	—	Verify repair	Go to *Step 5*
5	Check the connections at the ECM and replace the terminals if necessary. Did any terminals require replacement?	—	Verify repair	Go to *Step 6*
6	Replace the EVRV. Is the action complete?	—	Verify repair	Go to *Step 7*
7	Replace the ECM (Refer to the Data Programming in Case of ECM change). Is the action complete?	—	Verify repair	—

Diagnostic Trouble Code (DTC) P0406 (Flash DTC 26) EGR Pressure Sensor High Voltage

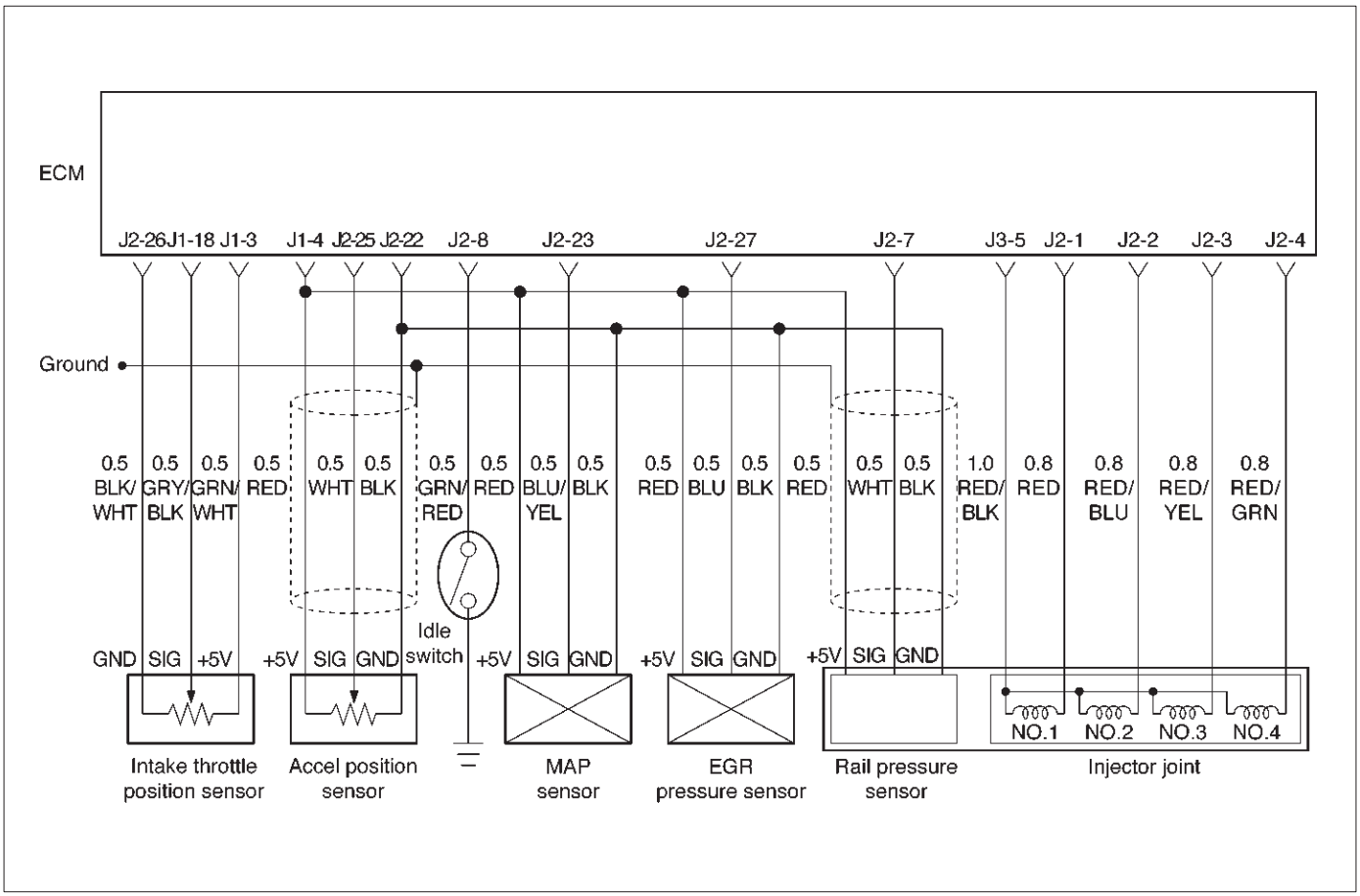

060RW134

Action Taken When the DTC Sets

- The ECM will illuminate the malfunction indicator lamp (MIL) as soon as failure detected.
- The ECM will store conditions which were present when the DTC was set as Freeze Frame and in Failure Records data.

Conditions for Clearing the MIL/DTC

- DTC P0404 can be cleared by using the scan tool “Clear Info” function or by disconnecting the ECM battery feed.

Diagnostic Aids

Check for the following conditions:

- Poor connection or damaged harness – Inspect the wiring harness for damage.

DTC P0406 – EGR Pressure Sensor High Voltage

Step	Action	Value(s)	Yes	No
1	Was the “On-Board Diagnostic (OBD) System Check” performed?	—	Go to *Step 2*	Go to *OBD System Check*
2	Put the engine into an idling status. Is the EGR pressure sensor voltage value displayed on the Tech 2 above the specified value?	4 V	Go to *Step 3*	Go to *Step 4*
3	1. Turn off the ignition switch. 2. Remove the sensor connector connection. 3. Turn on the ignition switch “ON”. Is the EGR pressure sensor voltage value displayed on the Tech 2 below the specified value?	1 V	Go to *Step 5*	Go to *Step 6*

DTC P0406 – EGR Pressure Sensor High Voltage (Cont'd)

Step	Action	Value(s)	Yes	No
4	Is the EGR pressure sensor voltage value displayed on the Tech 2 below the specified value?	1 V	Refer to *Chart P0107*	Refer to *Diagnostic Aids* and *Symptom Diagnosis*
5	Connect the relay and solenoid checker (5-8840-0386-0) to the battery voltage, then check the sensor grounding circuit. Does the checker lamp come on?	—	Go to *Step 7*	Go to *Step 8*
6	A voltage short circuit occurs in the MAP signal circuit or this circuit is shorted with the 5V power circuit. Repair the harness or Replace the ECM (Refer to the Data Programming in Case of ECM change). Is the action complete?	—	Verify repair	—
7	Replace the EGR pressure sensor hose or the EGR pressure sensor. Is the action complete?	—	Verify repair	—
8	Repair the harness for open ground circuit. Is the action complete?	—	Verify repair	—

Diagnostic Trouble Code (DTC) P0475 (Flash DTC 71) EXH #1 VSV Circuit

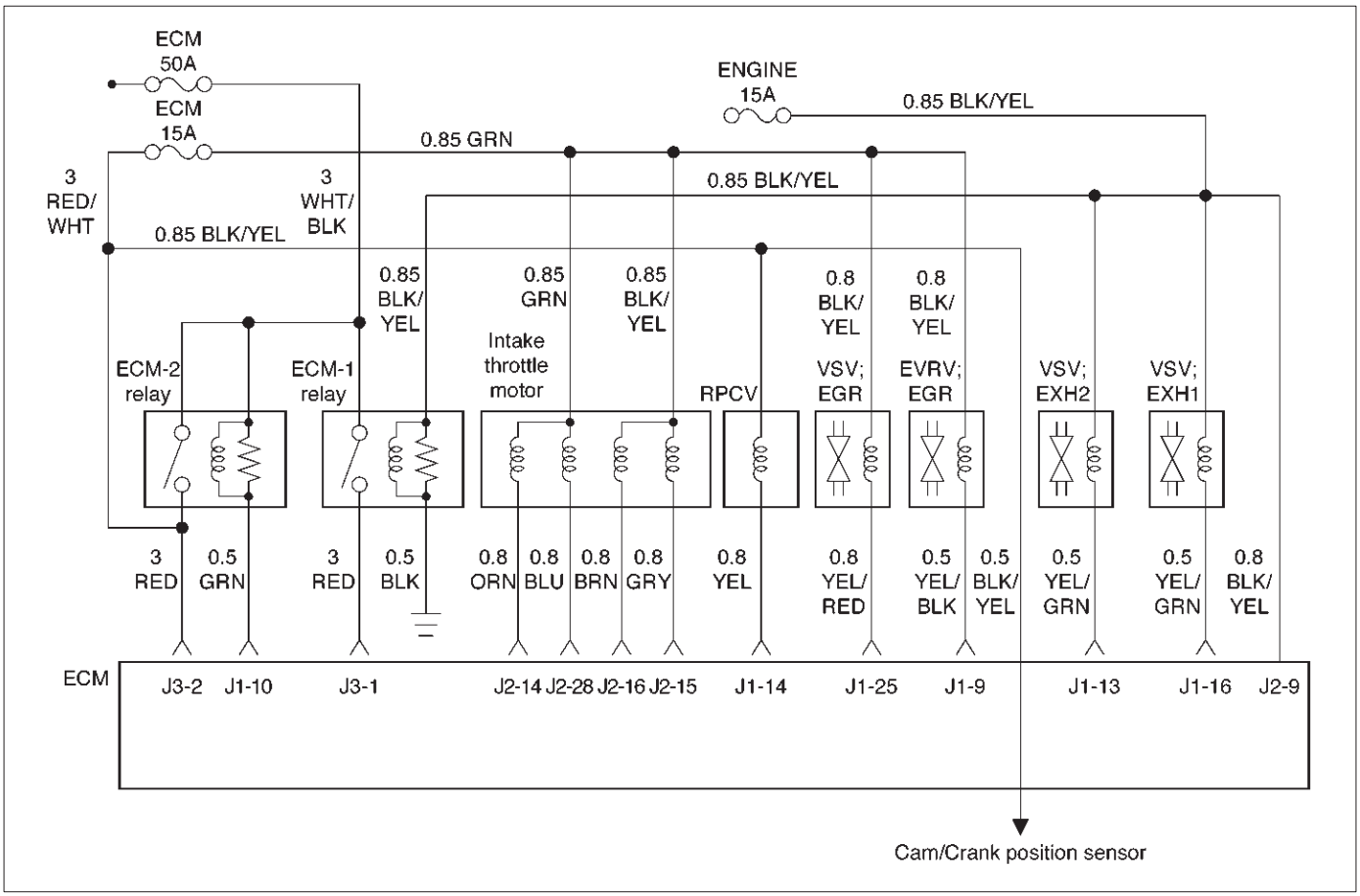

060RW135

Circuit Description

EXH. #1, #2 VSV Circuit receives current through Engine 15A fuse, #1 and #2 being connected in parallel.

Action Taken When the DTC Sets

- The ECM will illuminate the malfunction indicator lamp (MIL) the first time the fault is detected.
- The ECM will store conditions which were present when the DTC was set as Freeze Frame and in the Failure Records data.

Conditions for Clearing the MIL/DTC

- DTC P0475 can be cleared by using the Tech 2 “Clear Info” function or by disconnecting the ECM battery feed.

Diagnostic Aids

Check for the following conditions:

- Poor connection at ECM – Inspect harness connectors for backed-out terminals, improper mating, broken locks, improperly formed or damaged terminals, and poor terminal-to-wire connection.
- Damaged harness – Inspect the wiring harness for damage.

DTC P0475 – EXH #1 VSV Circuit Open/Short

Step	Action	Value(s)	Yes	No
1	Was the “On-Board Diagnostic (OBD) System Check” performed?	—	Go to *Step 2*	Go to *OBD System Check*
2	1. Ignition “ON,” engine “OFF.” Review and record Tech 2 Failure Records data. 2. Operate the vehicle within Failure Records conditions as noted. 3. Using a Tech 2, monitor the “ DTC” info for DTC P0475. Does the Tech 2 indicate DTC P0475 failed this ignition?	—	Go to *Step 3*	Refer to *Diagnostic Aids*
3	1. Ignition “OFF.” 2. Disconnect the EXH #1 VSV connectors. 3. Check the EXH #1 VSV circuit for a short to ground. Is the EXH #1 VSV circuit shorted to ground?	—	Verify repair	Go to *Step 4*
4	Replace the EXH #1 VSV. Is the action complete?	—	Verify repair	Go to *Step 5*
5	1. Ignition “ON,” engine “OFF.” Review and record Tech 2 Failure Records data. 2. Operate the vehicle within Failure Records conditions as noted. 3. Using a Tech 2, monitor the “ DTC” info for DTC P0475. Does the Tech 2 indicate DTC P0475 failed this ignition?	—	Go to *Step 6*	—
6	Replace the ECM (Refer to the Data Programming in Case of ECM change). Is the action complete?	—	Verify repair	—

Diagnostic Trouble Code (DTC) P1475 (Flash DTC 71) EXH #2 VSV Circuit Open/Short

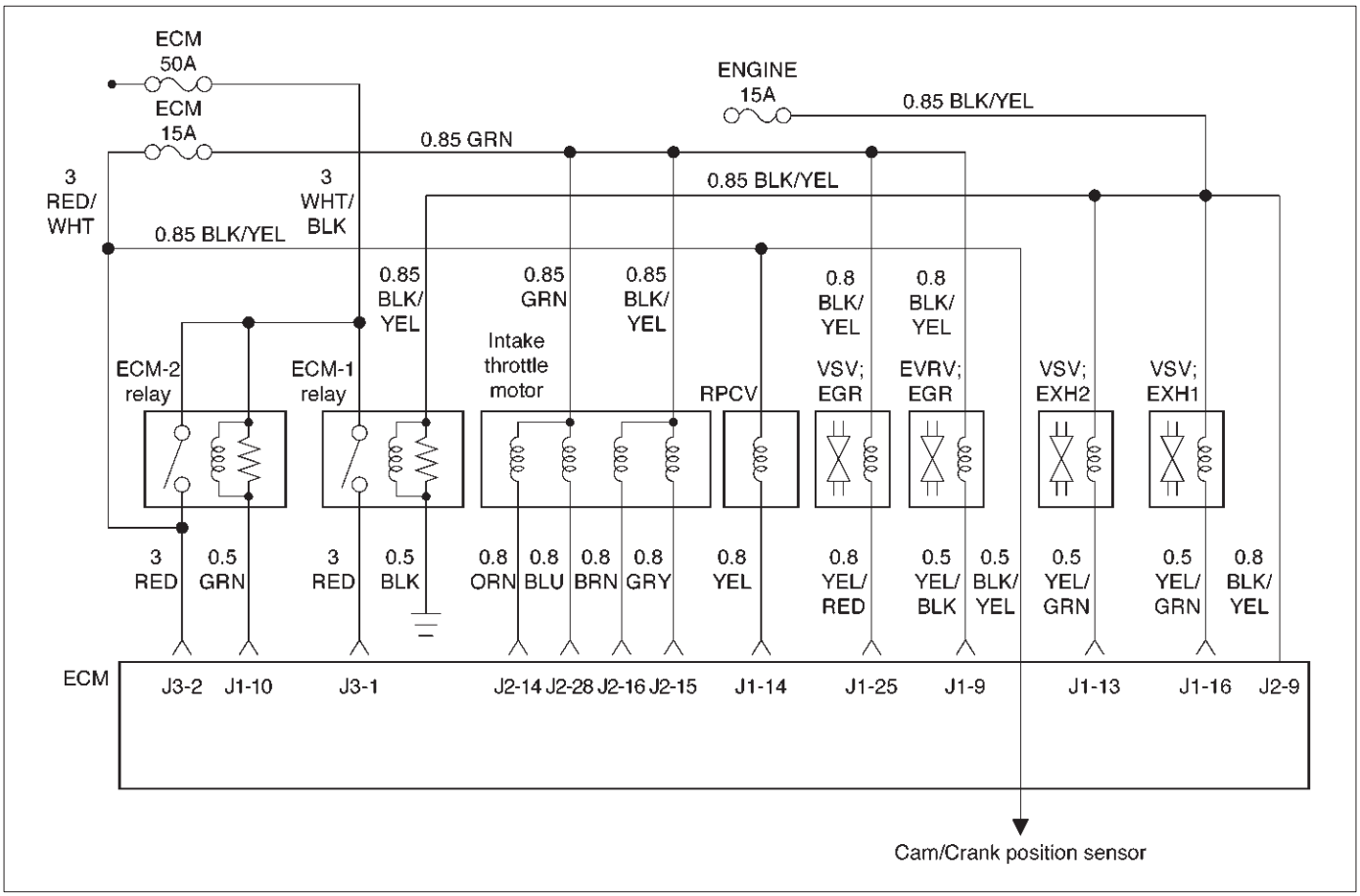

060RW135

Circuit Description

EXH. #1, #2 VSV Circuit receives current through Engine 15A fuse, #1 and #2 being connected in parallel.

Action Taken When the DTC Sets

- The ECM will illuminate the malfunction indicator lamp (MIL) the first time the fault is detected.
- The ECM will store conditions which were present when the DTC was set as Freeze Frame and in the Failure Records data.

Conditions for Clearing the MIL/DTC

- DTC P1475 can be cleared by using the Tech 2 “Clear Info” function or by disconnecting the ECM battery feed.

Diagnostic Aids

Check for the following conditions:

- Poor connection at ECM – Inspect harness connectors for backed-out terminals, improper mating, broken locks, improperly formed or damaged terminals, and poor terminal-to-wire connection.
- Damaged harness – Inspect the wiring harness for damage.

DTC P1475 – EXH #2 VSV Circuit Open/Short

Step	Action	Value(s)	Yes	No
1	Was the “On-Board Diagnostic (OBD) System Check” performed?	—	Go to *Step 2*	Go to *OBD System Check*
2	1. Ignition “ON,” engine “OFF.” Review and record Tech 2 Failure Records data. 2. Operate the vehicle within Failure Records conditions as noted. 3. Using a Tech 2, monitor the “ DTC” info for DTC P1475. Does the Tech 2 indicate DTC P1475 failed this ignition?	—	Go to *Step 3*	Refer to *Diagnostic Aids*
3	1. Ignition “OFF.” 2. Disconnect the EXH #2 connectors. 3. Check the EXH #2 circuit for a short to ground. Is the EXH #2 circuit shorted to ground?	—	Verify repair	Go to *Step 4*
4	Replace the EXH #2 VSV. Is the action complete?	—	Verify repair	Go to *Step 5*
5	1. Ignition “ON,” engine “OFF.” Review and record Tech 2 Failure Records data. 2. Operate the vehicle within Failure Records conditions as noted. 3. Using a Tech 2, monitor the “ DTC” info for DTC P1475. Does the Tech 2 indicate DTC P1475 failed this ignition?	—	Go to *Step 6*	—
6	Replace the ECM (Refer to the Data Programming in Case of ECM change). Is the action complete?	—	Verify repair	—

Diagnostic Trouble Code (DTC) P1485 (Flash DTC 74) ITP (Intake Thorottle Position) Sensor Low Voltage

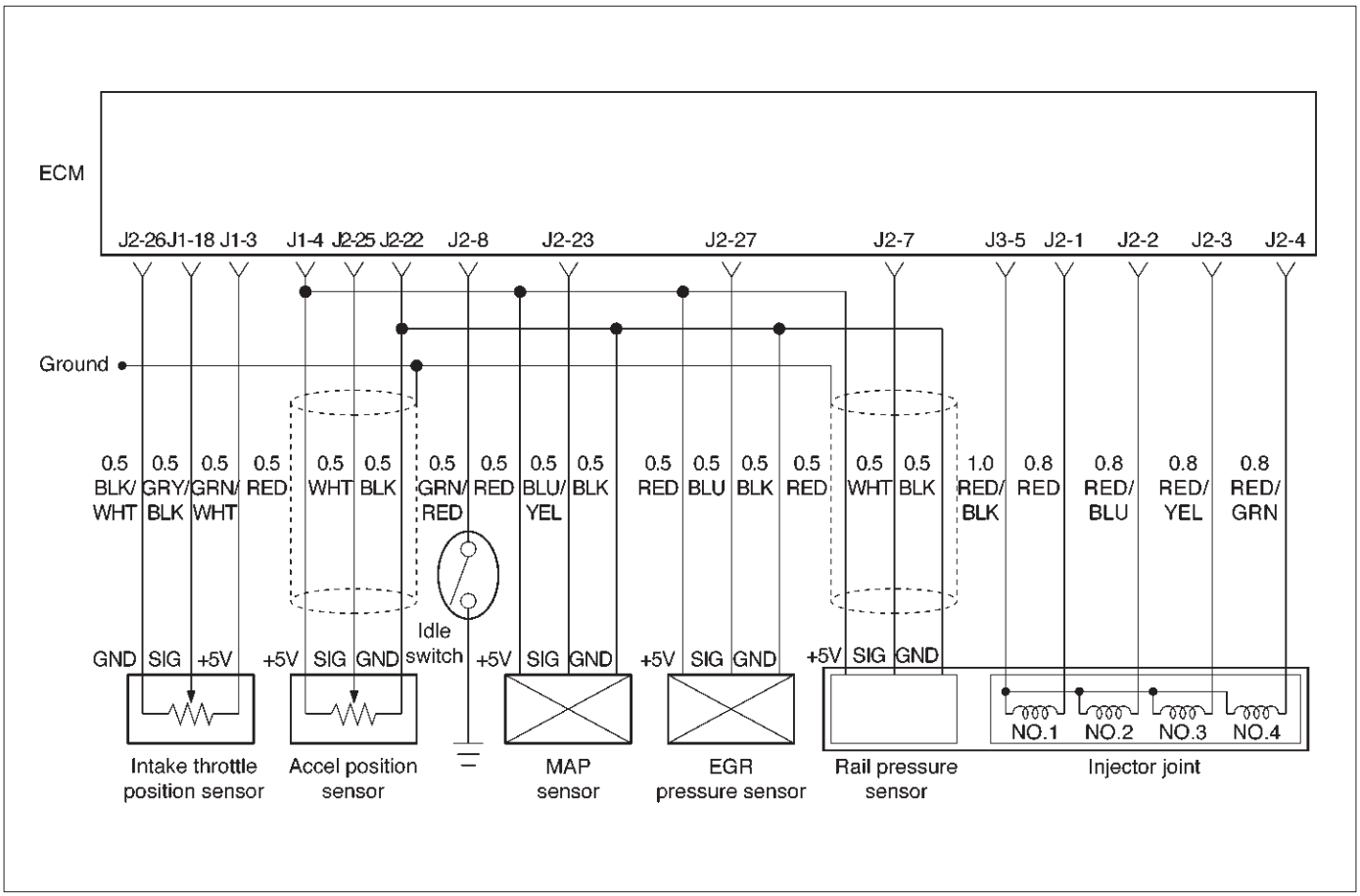

060RW134

Circuit Description

The intake throttle position (ITP) sensor circuit provides a voltage signal that changes relative to throttle blade angle.

Action Taken When the DTC Sets

- The ECM will illuminate the malfunction indicator lamp (MIL) the first time the fault is detected.
- The ECM will store conditions which were present when the DTC was set as Freeze Frame and in the Failure Records data.

Conditions for Clearing the MIL/DTC

- DTC P1485 can be cleared by using the Tech 2 “Clear Info” function or by disconnecting the ECM battery feed.

Diagnostic Aids

Check for the following conditions:

- Poor connection at ECM – Inspect harness connectors for backed-out terminals, improper mating, broken locks, improperly formed or damaged terminals, and poor terminal-to-wire connection.
- Damaged harness – Inspect the wiring harness for damage.

  If the harness appears to be OK, observe the throttle position display on the Tech 2 while moving connectors and wiring harnesses related to the ITP sensor. A change in the display will indicate the location of the fault.

If DTC P1485 cannot be duplicated, the information included in the Failure Records data can be useful in determining vehicle mileage since the DTC was last set.

DTC P1485 –ITP Sensor Low Voltage

Step	Action	Value(s)	Yes	No
1	Was the “On-Board Diagnostic (OBD) System Check” performed?	—	Go to *Step 2*	Go to *OBD System Check*
2	1. Ignition “ON,” engine “OFF.” 2. With the throttle closed by the hand, observe the “ITP Sensor” display on the Tech 2. Is the “ITP Sensor” below the specified value?	0.22 V	Go to *Step 4*	Go to *Step 3*

DTC P1485 –ITP Sensor Low Voltage (Cont'd)

Step	Action	Value(s)	Yes	No
3	1. Ignition "ON," engine "OFF." 2. Review and record Tech 2 Failure Records data. 3. Operate the vehicle within Failure Records conditions as noted. 4. Using a Tech 2, monitor the "DTC" info for DTC P1485. Does the Tech 2 indicate DTC P1485 failed?	—	Go to *Step 4*	Refer to *Diagnostic Aids*
4	Check the ITP sensor signal circuit for a poor connection at the ECM and replace the terminal if necessary. Did the terminal require replacement?	—	Verify repair	Go to *Step 5*
5	1. Ignition "ON," engine "OFF." 2. Review and record Tech 2 Failure Records data. 3. Operate the vehicle within Failure Records conditions as noted. 4. Using a Tech 2 monitor the "Specific DTC" info for DTC P1485. Dose the Tech 2 indicate DTC P1485 failed?	—	Go to *Step 6*	Refer to *Diagnostic Aids*
6	Replace the intake throttle. Is the action complete?	—	Verify repair	Go to *Step 7*
7	Replace the ECM (Refer to the Data Programming in Case of ECM change). Is the action complete?	—	Verify repair	—

Diagnostic Trouble Code (DTC) P1486 (Flash DTC 74) ITP (Intake Throttle Position) Sensor High Voltage

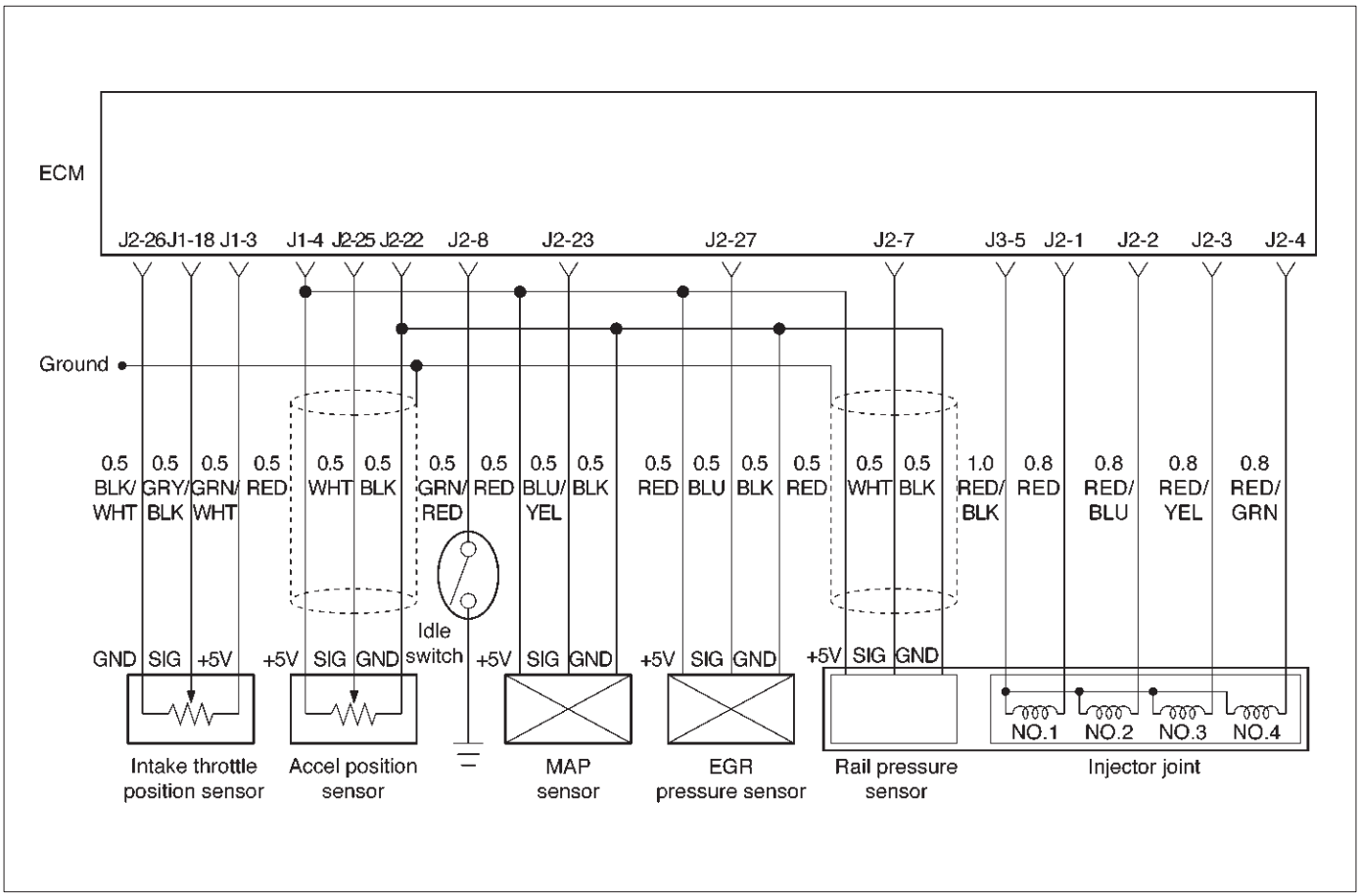

060RW134

Circuit Description

The intake throttle position (ITP) sensor circuit provides a voltage signal that changes relative to throttle blade angle.

Action Taken When the DTC Sets

- The ECM will illuminate the malfunction indicator lamp (MIL) the first time the fault is detected.
- The ECM will store conditions which were present when the DTC was set as Freeze Frame and in the Failure Records data.

Conditions for Clearing the MIL/DTC

- DTC P1486 can be cleared by using the Tech 2 “Clear Info” function or by disconnecting the ECM battery feed.

Diagnostic Aids

Check for the following conditions:

- Poor connection at ECM – Inspect harness connectors for backed-out terminals, improper mating, broken locks, improperly formed or damaged terminals, and poor terminal-to-wire connection.
- Damaged harness – Inspect the wiring harness for damage. If the harness appears to be OK, observe the ITP sensor display on the Tech 2 while moving connectors and wiring harnesses related to the TP sensor. A change in the display will indicate the location of the fault.
- Faulty TP sensor – With the ignition key “ON,” engine “OFF,” observe the TP sensor display on the Tech 2 while slowly depressing the accelerator to wide open throttle.

If DTC P1486 cannot be duplicated, the information included in the Failure Records data can be useful in determining vehicle mileage since the DTC was last set.

DTC P1486 – ITP Sensor High Voltage

Step	Action	Value(s)	Yes	No
1	Was the “On-Board Diagnostic (OBD) System Check” performed?	—	Go to *Step 2*	Go to *OBD System Check*
2	1. Ignition “ON,” engine “OFF.” 2. With the throttle closed by the hand, observe the “ITP Sensor” display on the Tech 2. Is the “ITP Sensor” above the specified value?	4.88 V	Go to *Step 4*	Go to *Step 3*
3	1. Ignition “ON,” engine “OFF.” 2. Review and record Tech 2 Failure Records data. 3. Operate the vehicle within Failure Records conditions as noted. 4. Using a Tech 2, monitor “DTC” info for DTC P1486. Does the Tech 2 indicate DTC P1486 failed.	—	Go to *Step 4*	Refer to *Diagnostic Aids*
4	Check for poor electrical connections at the ITP sensor and replace terminals if necessary. Did any terminals require replacement?	—	Verify repair	Go to *Step 5*
5	1. Ignition “ON,” engine “OFF.” 2. Review and record Tech 2 Failure Records data. 3. Operate the vehicle within Failure Records conditions as noted. 4. Using a Tech 2 monitor the “DTC” info for DTC P1486. Dose the Tech 2 indicate DTC P1486 failed.	—	Go to *Step 6*	Refer to *Diagnostic Aids*
6	Replace the intake throttle. Is the action complete?	—	Verify repair	Go to *Step 7*
7	Replace the ECM (Refer to the Data Programming in Case of ECM change). Is the action complete?	—	Verify repair	—

Diagnostic Trouble Code (DTC) P1487 (Flash DTC 73) Intake Throttle System Circuit Open/Start

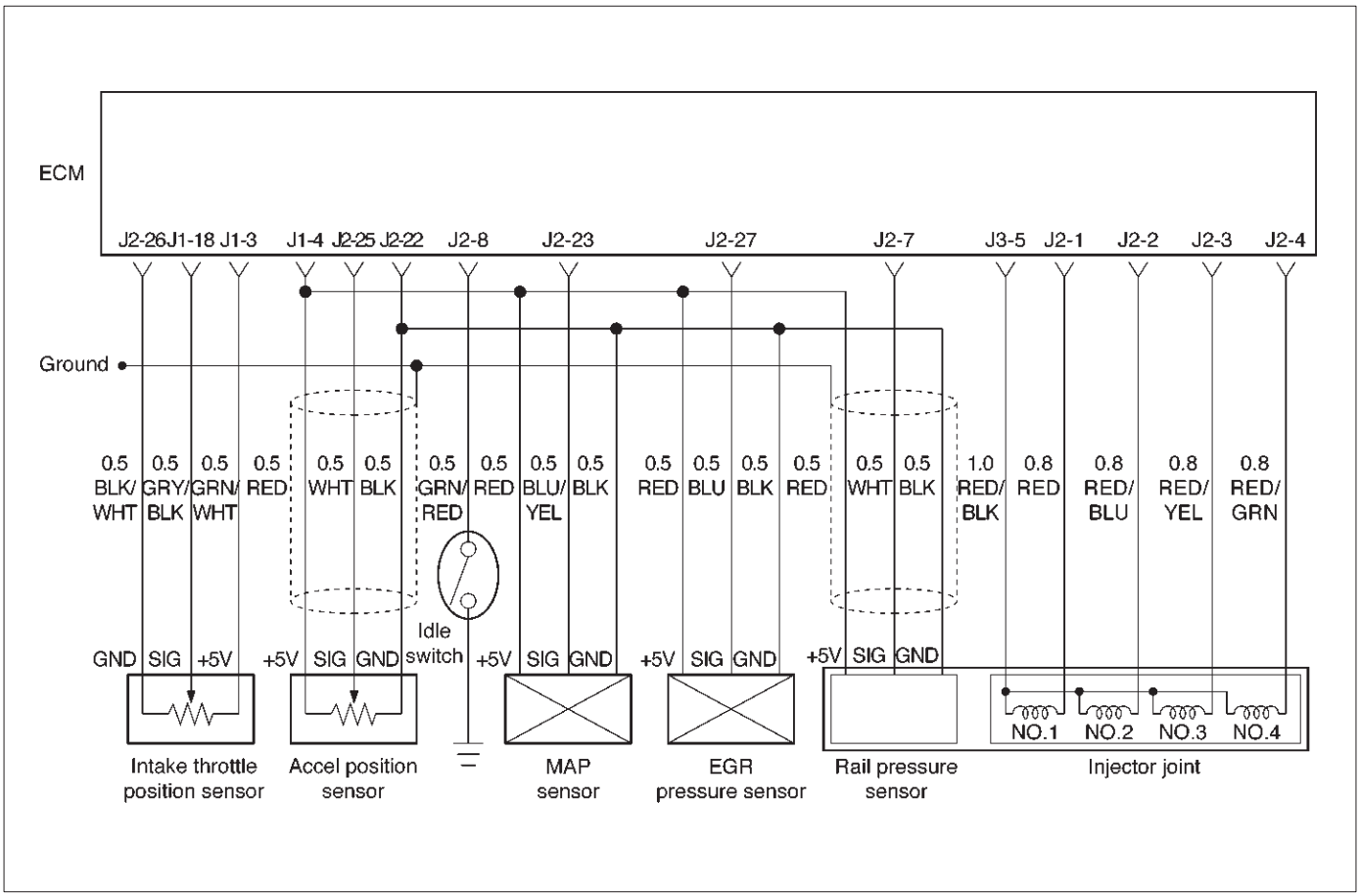

060RW134

Circuit Description

The intake throttle position (ITP) sensor circuit provides a voltage signal that changes relative to throttle blade angle.

Action Taken When the DTC Sets

- The ECM will illuminate the malfunction indicator lamp (MIL) the first time the fault is detected.
- The ECM will store conditions which were present when the DTC was set as Freeze Frame and in the Failure Records data.

Conditions for Clearing the MIL/DTC

- DTC P1487 can be cleared by using the Tech 2 “Clear Info” function or by disconnecting the ECM battery feed.

Diagnostic Aids

Check for the following conditions:

- Poor connection at ECM – Inspect harness connectors for backed-out terminals, improper mating, broken locks, improperly formed or damaged terminals, and poor terminal-to-wire connection.
- Damaged harness – Inspect the wiring harness for damage. If the harness appears to be OK, observe the throttle position display on the Tech 2 while moving connectors and wiring harnesses related to the ITP sensor. A change in the display will indicate the location of the fault.

If DTC P1487 cannot be duplicated, the information included in the Failure Records data can be useful in determining vehicle mileage since the DTC was last set.

DTC P1487 – Intake Throttle System Circuit Open/Short

Step	Action	Value(s)	Yes	No
1	Was the “On-Board Diagnostic (OBD) System Check” performed?	—	Go to *Step 2*	Go to *OBD System Check*
2	1. Ignition “ON,” engine “OFF.” 2. Review and record Tech 2 Failure Records data. 3. Operate the vehicle within Failure Records conditions as noted. 4. Using a Tech 2, monitor the “DTC” info for DTC P1487. Does the Tech 2 indicate DTC P1487 failed?	—	Go to *Step 3*	Refer to *Diagnostic Aids*
3	Check the ITP circuit for a poor connection at the ECM and ITP and replace the terminal if necessary. Did the terminal require replacement?	—	Verify repair	Go to *Step 4*
4	1. Ignition “ON,” engine “OFF.” 2. Operate the throttle by the hand. Is the action complete?	—	Verify repair	Go to *Step 5*
5	Replace the ITP Assembly. Is the action complete?	—	Verify repair	Go to *Step 6*
6	Replace the ECM (Refer to the Data Programming in Case of ECM change). Is the action complete?	—	Verify repair	—

Diagnostic Trouble Code (DTC) P1488 (Flash DTC 72) Intake Throttle Motor Control Circuit Signal Gap

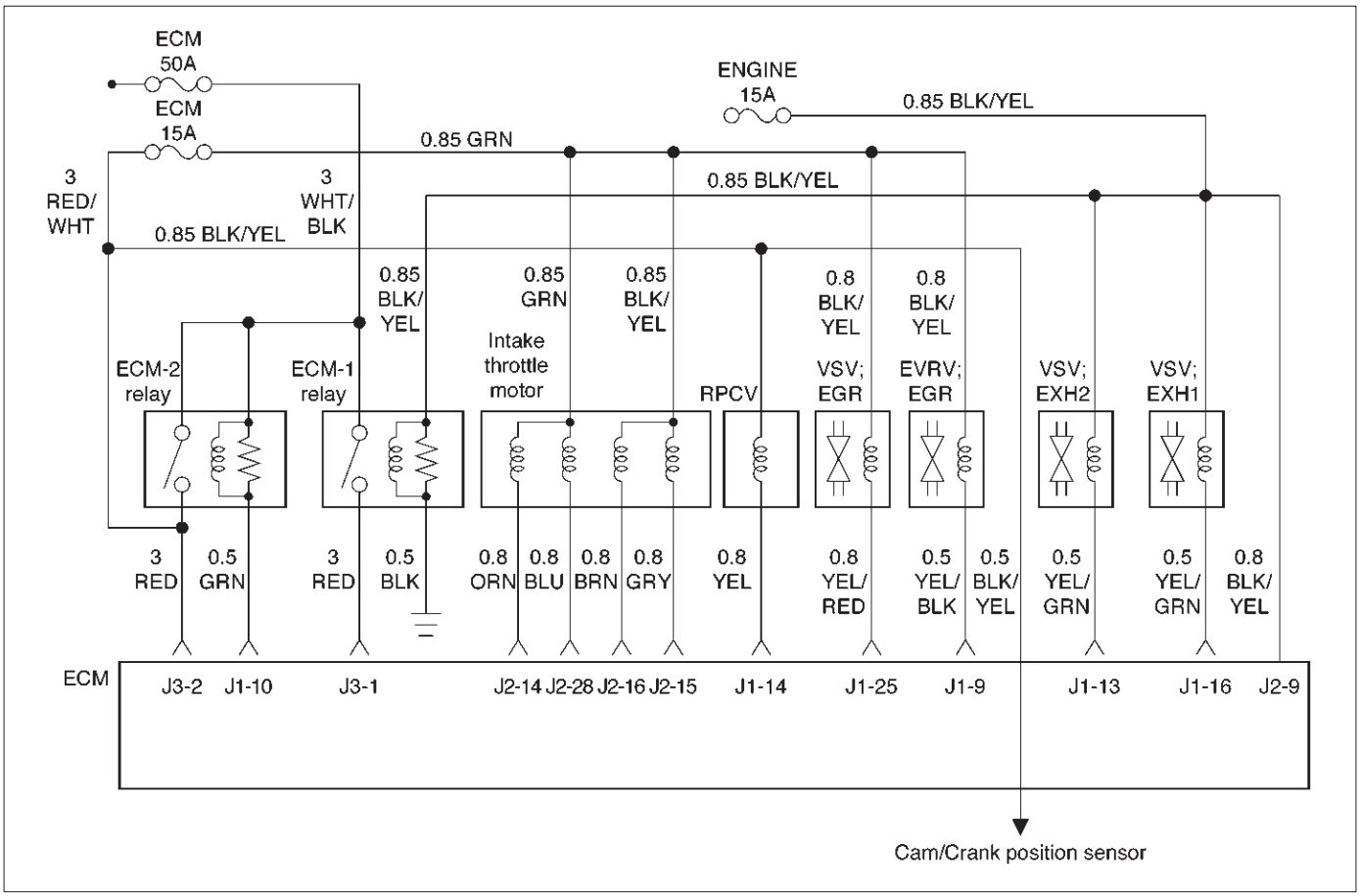

060RW135

Circuit Description

The Intake throttle position (ITP) sensor circuit provides a voltage signal that changes relative to throttle blade angle.

Action Taken When the DTC Sets

- The ECM will store conditions which were present when the DTC was set as Freeze Frame and in the Failure Records data.

Conditions for Clearing the MIL/DTC

- DTC P1488 can be cleared by using the Tech 2 “Clear Info” function or by disconnecting the ECM battery feed.

Diagnostic Aids

Check for the following conditions:

- Poor connection at ECM – Inspect harness connectors for backed-out terminals, improper mating, broken locks, improperly formed or damaged terminals, and poor terminal-to-wire connection.
- Damaged harness – Inspect the wiring harness for damage. If the harness appears to be OK, observe the throttle position display on the Tech 2 while moving connectors and wiring harnesses related to the ITP sensor. A change in the display will indicate the location of the fault.

If DTC P1488 cannot be duplicated, the information included in the Failure Records data can be useful in determining vehicle mileage since the DTC was last set.

DTC P1488 – Intake Throttle Motor Control Circuit Signal Gap

Step	Action	Value(s)	Yes	No
1	Was the “On-Board Diagnostic (OBD) System Check” performed?	—	Go to *Step 2*	Go to *OBD System Check*
2	1. Ignition “ON,” engine “OFF.” 2. With the throttle closed, observe the “ITP Sensor” display on the Tech 2. Is the “ITP Sensor” below the specified value?	0.22 V	Go to *Step 4*	Go to *Step 3*
3	1. Ignition “ON,” engine “OFF.” 2. Review and record Tech 2 Failure Records data. 3. Operate the vehicle within Failure Records conditions as noted. 4. Using a Tech 2, monitor the “Specific DTC” info for DTC P1488. Does the Tech 2 indicate DTC P1488 failed?	—	Go to *Step 4*	Refer to *Diagnostic Aids*
4	Check the ITP circuit for a poor connection at the ECM and replace the terminal if necessary. Did the terminal require replacement?	—	Verify repair	Go to *Step 5*
5	Check the Intake throttle motor circuit for a poor connection and replace the terminal if necessary. Did the terminal require replacement?	—	Verify repair	Go to *Step 6*
6	Check the ITP Assembly for a poor connection at the TP sensor and fasten the ITP Assembly if necessary. Did the ITP Assembly require repair?	—	Verify repair	Go to *Step 7*
7	Replace the ECM (Refer to the Data Programming in Case of ECM change). Is the action complete?	—	Verify repair	—

Diagnostic Trouble Code (DTC) P0502 (Flash DTC 24) VSS (Vehicle Speed Sensor) No Signal

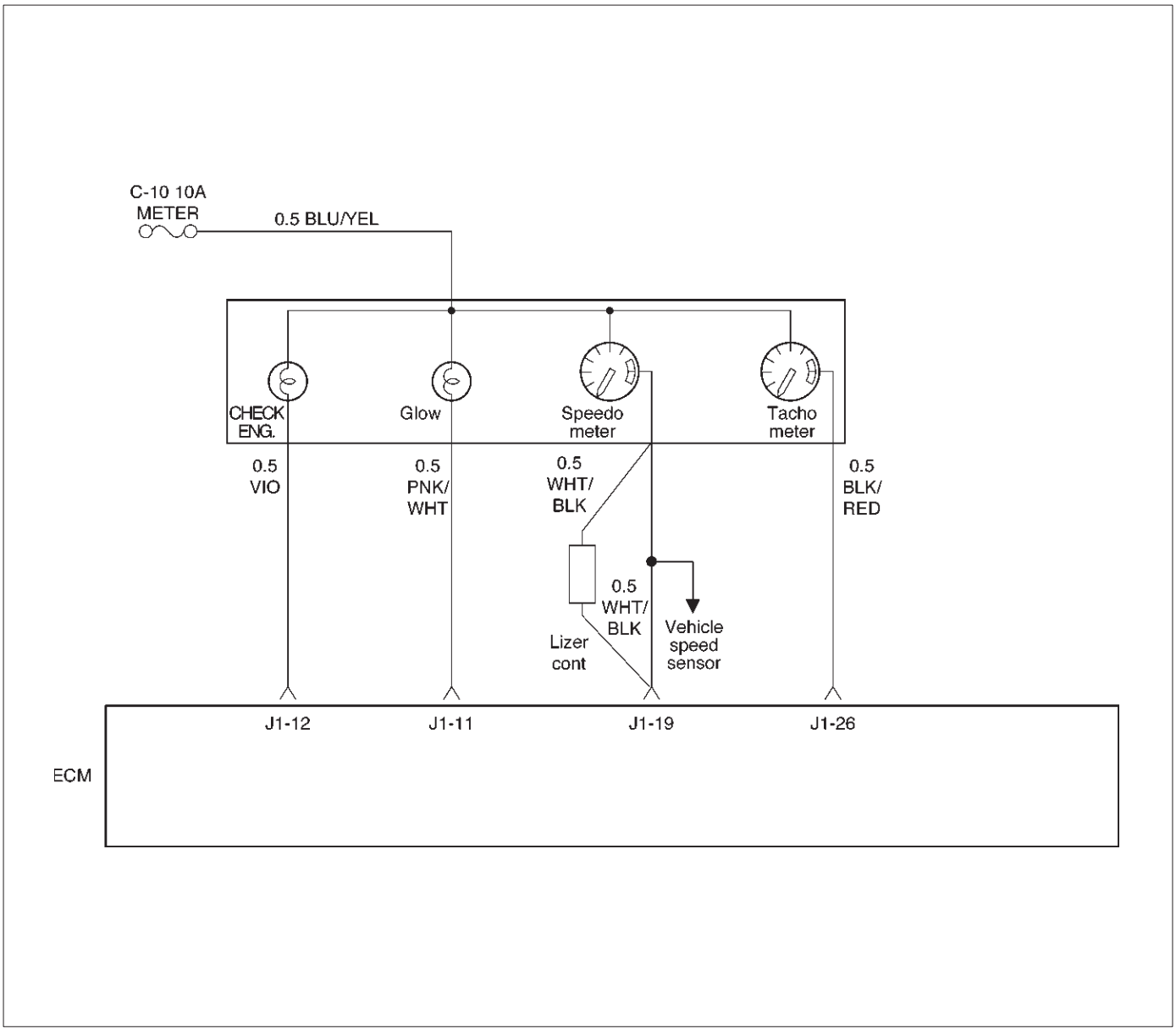

060RW136

Circuit Description

The vehicle speed sensor has a magnet rotated by the transmission output shaft. Attached to the sensor is a hall effect circuit the interacts with the magnetic field treated by the rotating magnet. A 12-volt operating supply for the speed sensor hall circuit is supplied from the meter fuse. The VSS pulses to ground the 9-volt signal sent from the engine control module (ECM) on the reference circuit. The ECM interprets vehicle speed by the number of pulses to ground per second on the reference circuit.

Action Taken When the DTC Sets

- The ECM will illuminate the malfunction indicator lamp (MIL) the first time the fault is detected.
- The ECM will store conditions which were present when the DTC was set as Freeze Frame and in the Failure Records data.

Conditions for Clearing the MIL/DTC

- DTC P0502 can be cleared by using the Tech 2 “Clear Info” function or by disconnecting the ECM battery feed.

Test Description

Number(s) below refer to the step number(s) on the Diagnostic Chart.

10. To avoid backprobing the VSS and possibly damaging a seal or terminal, the VSS output can be tested at the point where the transmission harness connected to the engine harness. The green 16-way connector is adjacent to a blue 16-way connector, and it can be easily accessed by removing the air cleaner assembly. The green 16-way connector is separated, and battery voltage is applied to the VSS through the yellow wire at one corner of the connector. The VSS output can be monitored with a DVM connected to the blue wire with a black tracer. The two wires are next to each other in the 16-way connector . The test connections are made on the transmission side of the connector, the side that is not clipped to the body sheetmetal.
11. The speedometer-to-ECM VSS signal wire is spliced to a wire leading to the cruise control module. If a short to ground or voltage is found between the ECM and speedometer, it could be located between the splice and the cruise control module.

DTC P0502 –VSS No Signal

Step	Action	Value(s)	Yes	No
1	Was the “On-Board Diagnostic (OBD) System Check” performed?	—	Go to *Step 2*	Go to *OBD System Check*
2	Does the speedometer work?	—	Go to *Step 10*	Go to *Step 3*
3	1. Disconnect the VSS connector. 2. Ignition “ON.” 3. Using a test light to battery +, probe the connector ground wire. Did the light illuminate?	—	Go to *Step 5*	Go to *Step 4*
4	Repair the sensor ground. Is the action complete?	—	Verify repair	—
5	1. Ignition “ON,” sensor disconnected. 2. Using a DVM, measure at the VSS connector between ground and voltage supply. Was the measurement near the specified value?	Battery voltage	Go to *Step 7*	Go to *Step 6*
6	Repair the open or short to ground which may have blown the meter fuse. Is the action complete?	—	Verify repair	—
7	1. Ignition “ON,” VSS disconnected. 2. Using a DVM, measure at the VSS connector between ground and the blue/black wire from the speedometer. Was the measurement near the specified value?	7.5-8 V	Go to *Step 9*	Go to *Step 8*
8	Check for an open or short circuit between the speedometer and the VSS. Was an open or short circuit located?	—	Verify repair	Go to *Step 9*
9	Replace the VSS. Is the action complete?	—	Verify repair	Go to *Step 10*
10	Replace the speedometer. Is the action complete?	—	Verify repair	Go to *Step 11*

DTC P0502 –VSS No Signal (Cont'd)

Step	Action	Value(s)	Yes	No
11	Check for an open or short between the ECM and the speedometer. Was a problem found?	—	Verify repair	Go to *Step 12*
12	Replace the ECM (Refer to the Data Programming in Case of ECM change). Is the action complete?	—	Verify repair	—

Diagnostic Trouble Code (DTC) P0510 (Flash DTC 75) Idle SW Malfunction, Open Circuit

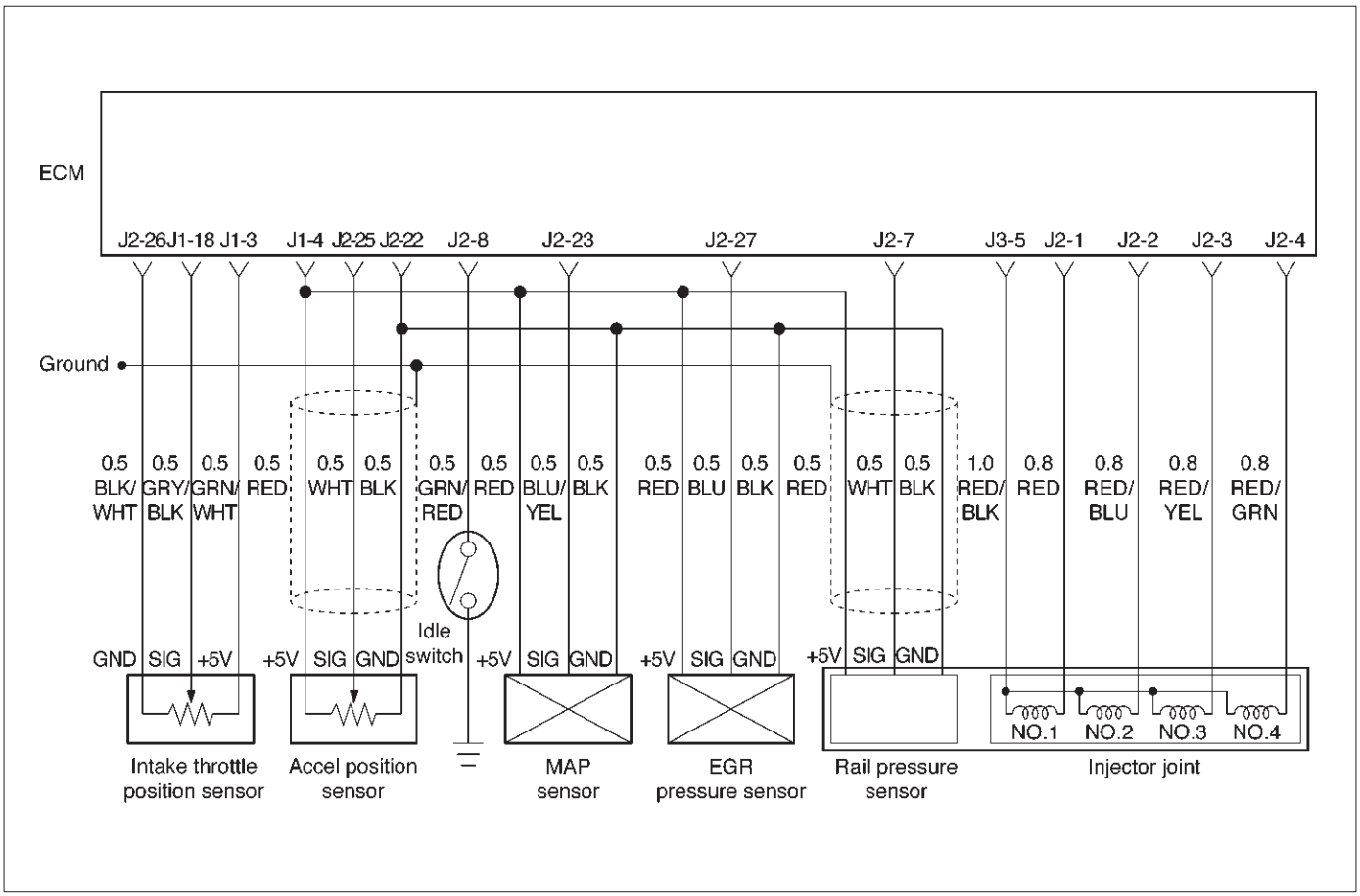

060RW134

Circuit Description

The idle switch signal is used by the Engine Control Module ECM for fuel control.

Action Taken When the DTC Sets

- The ECM will illuminate the malfunction indicator lamp (MIL) the first time the fault is detected.
- The ECM will store conditions which were present when the DTC was set as Freeze Frame and in the Failure Records data.

Conditions for Clearing the MIL/DTC

- DTC P0510 can be cleared by using the Tech 2 “Clear Info” function or by disconnecting the ECM battery feed.

Diagnostic Aids

Check for the following conditions:

- Poor connection at ECM – Inspect harness connectors for backed-out terminals, improper mating, broken locks, improperly formed or damaged terminals, and poor terminal-to-wire connection.
- Damaged harness – Inspect the wiring harness for damage. If the harness appears to be OK, observe the Idle SW display on the Tech 2 while moving connectors and wiring harnesses related to the Idle SW.

If DTC P0510 cannot be duplicated, the information included in the Failure Records data can be useful in determining vehicle mileage since the DTC was last set.

DTC P0510 – Idle SW Malfunction, Open Circuit

Step	Action	Value(s)	Yes	No
1	Was the “On-Board Diagnostic (OBD) System Check” performed?	—	Go to *Step 2*	Go to *OBD System Check*
2	1. Ignition “ON,” engine “OFF.” 2. Review and record Tech 2 Failure Records data. 3. Operate the vehicle within Failure Records conditions as noted. 4. Using a Tech 2, monitor the “DTC” info for DTC P0510. Does the Tech 2 indicate DTC P0510 failed?	—	Go to *Step 4*	Refer to *Diagnostic Aids*
3	Check the Idle SW circuit for a poor connection and repair the terminal if necessary. Did the terminal require repair?	—	Verify repair	Go to *Step 4*
4	1. Ignition “ON.” 2. Operate the accel pedal, and check the data list “ON OFF” on the Tech 2. Is the data list correct?	—	Verify repair	Go to *Step 5*
5	Replace the Idle SW. Is the action complete?	—	Verify repair	—

Diagnostic Trouble Code (DTC) P1510 (Flash DTC 75) Idle SW Malfunction Short Circuit

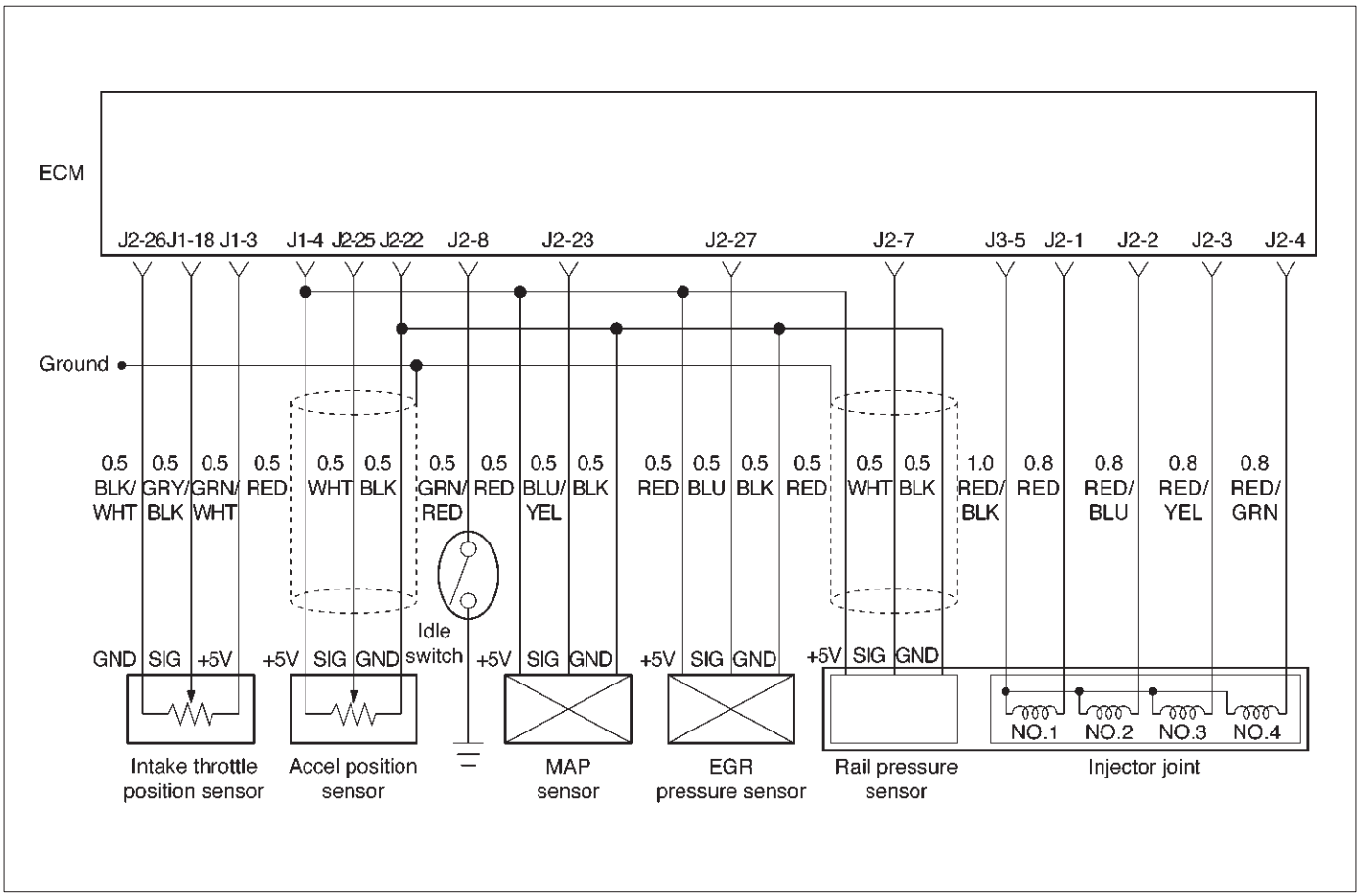

060RW134

Circuit Description

The idle switch signal is used by the Engine Control Module ECM for fuel control.

Action Taken When the DTC Sets

- The ECM will illuminate the malfunction indicator lamp (MIL) the first time the fault is detected.
- The ECM will store conditions which were present when the DTC was set as Freeze Frame and in the Failure Records data.

Conditions for Clearing the MIL/DTC

- DTC P1510 can be cleared by using the Tech 2 “Clear Info” function or by disconnecting the ECM battery feed.

Diagnostic Aids

Check for the following conditions:

- Poor connection at ECM – Inspect harness connectors for backed-out terminals, improper mating, broken locks, improperly formed or damaged terminals, and poor terminal-to-wire connection.
- Damaged harness – Inspect the wiring harness for damage. If the harness appears to be OK, observe the Idle SW display on the Tech 2 while moving connectors and wiring harnesses related to the Idle SW.

If DTC P0122 cannot be duplicated, the information included in the Failure Records data can be useful in determining vehicle mileage since the DTC was last set.

DTC P1510 – Idle SW Malfunction, Short Circuit

Step	Action	Value(s)	Yes	No
1	Was the “On-Board Diagnostic (OBD) System Check” performed?	—	Go to *Step 2*	Go to *OBD System Check*
2	1. Ignition “ON,” engine “OFF.” 2. Review and record Tech 2 Failure Records data. 3. Operate the vehicle within Failure Records conditions as noted. 4. Using a Tech 2, monitor the “DTC” info for DTC P1510. Does the Tech 2 indicate DTC P1510 failed?	—	Go to *Step 4*	Refer to *Diagnostic Aids*
3	Check the Idle SW circuit for a poor connection and repair the terminal if necessary. Did the terminal require repair?	—	Verify repair	Go to *Step 4*
4	1. Ignition “ON.” 2. Operate the accel pedal, and check the data list “ON OFF” on the Tech 2. Is the data list correct?	—	Verify repair	Go to *Step 5*
5	Replace the Idle SW. Is the action complete?	—	Verify repair	—

Diagnostic Trouble Code (DTC) P0562 (Flash DTC 35) System Voltage Too Low

Circuit Description

The engine control module (ECM) monitors the system voltage on the ignition feed terminals to the ECM. A system voltage DTC will set whenever the voltage is above a calibrated value.

Action Taken When the DTC Sets

- The ECM will not illuminate the malfunction indicator lamp (MIL).
- The ECM will store as Failure Records only conditions which were present when the DTC was set. This information will not be stored as Freeze Frame data.

Conditions for Clearing the MIL/DTC

- DTC P0563 can be cleared by using the Tech 2 “Clear Info” function or by disconnecting the ECM battery feed.

Diagnostic Aids

If the DTC sets when an accessory is operated, check for a poor connection or defective accessory.

DTC P0562 – System Voltage Too Low

Step	Action	Value(s)	Yes	No
1	Was the “On-Board Diagnostic (OBD) System Check” performed?	—	Go to *Step 2*	Go to *OBD System Check*
2	Using a DVM, measure the battery voltage at the battery. Is the battery voltage greater than the specified value?	11.5 V	Go to *Step 3*	Charge battery, then go to *Step 3*
3	1. Install a Tech 2. 2. Select “Ignition Volts” on the Tech 2. 3. Start the engine and raise the engine speed to the specified value. 4. Load the electrical system by turning on the headlights, high blower, etc. Is the ignition voltage approximately equal to the specified value?	2000 RPM 12.8-14.1 V	Go to *Step 4*	Go to *Starting/ Charging*
4	1. Ignition “OFF.” 2. Disconnect the ECM connector at the ECM. 3. Using a DVM, measure the battery voltage at the ECM connector. Is it approximately equal to battery voltage?	—	Check for excessive current draw with ignition “OFF,” engine “OFF.”	Go to *Step 5*
5	1. Check for faulty connections at the ECM harness terminals. 2. Repair as necessary. Was a repair necessary?	—	Verify repair	Go to *Step 6*
6	Check for an open battery feed circuit to the ECM. Is the action complete?	—	Verify repair	Go to *Step 7*
7	Replace the ECM (Refer to the Data Programming in Case of ECM change). Is the action complete?	—	Verify repair	—

Diagnostic Trouble Code (DTC) P1562 (Flash DTC 35) System Voltage Too Low at Cranking

Circuit Description

The engine control module (ECM) monitors the system voltage on the ignition feed terminals to the ECM. A system voltage DTC will set whenever the voltage is above a calibrated value.

Action Taken When the DTC Sets

- The ECM will illuminate the malfunction indicator lamp (MIL) at the first time of the fault is detected.

Conditions for Clearing the MIL/DTC

- DTC P0563 can be cleared by using the Tech 2 “Clear Info” function or by disconnecting the ECM battery feed.

Diagnostic Aids

If the DTC sets when an accessory is operated, check for a poor connection or defective accessory.

DTC P1562 – System Voltage Too Low at Cranking

Step	Action	Value(s)	Yes	No
1	Was the “On-Board Diagnostic (OBD) System Check” performed?	—	Go to *Step 2*	Go to *OBD System Check*
2	Using a DVM, measure the battery voltage at the battery. Is the battery voltage less than the specified value?	11.5 V	Go to *Step 3*	Go to *Step 4*
3	1. Charge the battery and clean the battery terminals. 2. Clean the battery ground cable connection if corrosion is indicated. Is the battery voltage less than the specified value?	11.5 V	Replace battery	Go to *Step 4*
4	1. Turn “OFF” all the accessories. 2. Install a Tech 2. 3. Select the ignition voltage parameter on the Tech 2. 4. Start the engine and raise the engine RPM to the specified value. Is the voltage more than 2.5 volts greater than the measurement taken in step 2 or 3?	2000 RPM	Go to *Starting/Charging*	Go to *Step 5*
5	Replace the ECM (Refer to the Data Programming in Case of ECM change). Is the action complete?	—	Verify repair	—

Diagnostic Trouble Code (DTC) P1587 (Flash DTC 25) Brake SW Malfunction

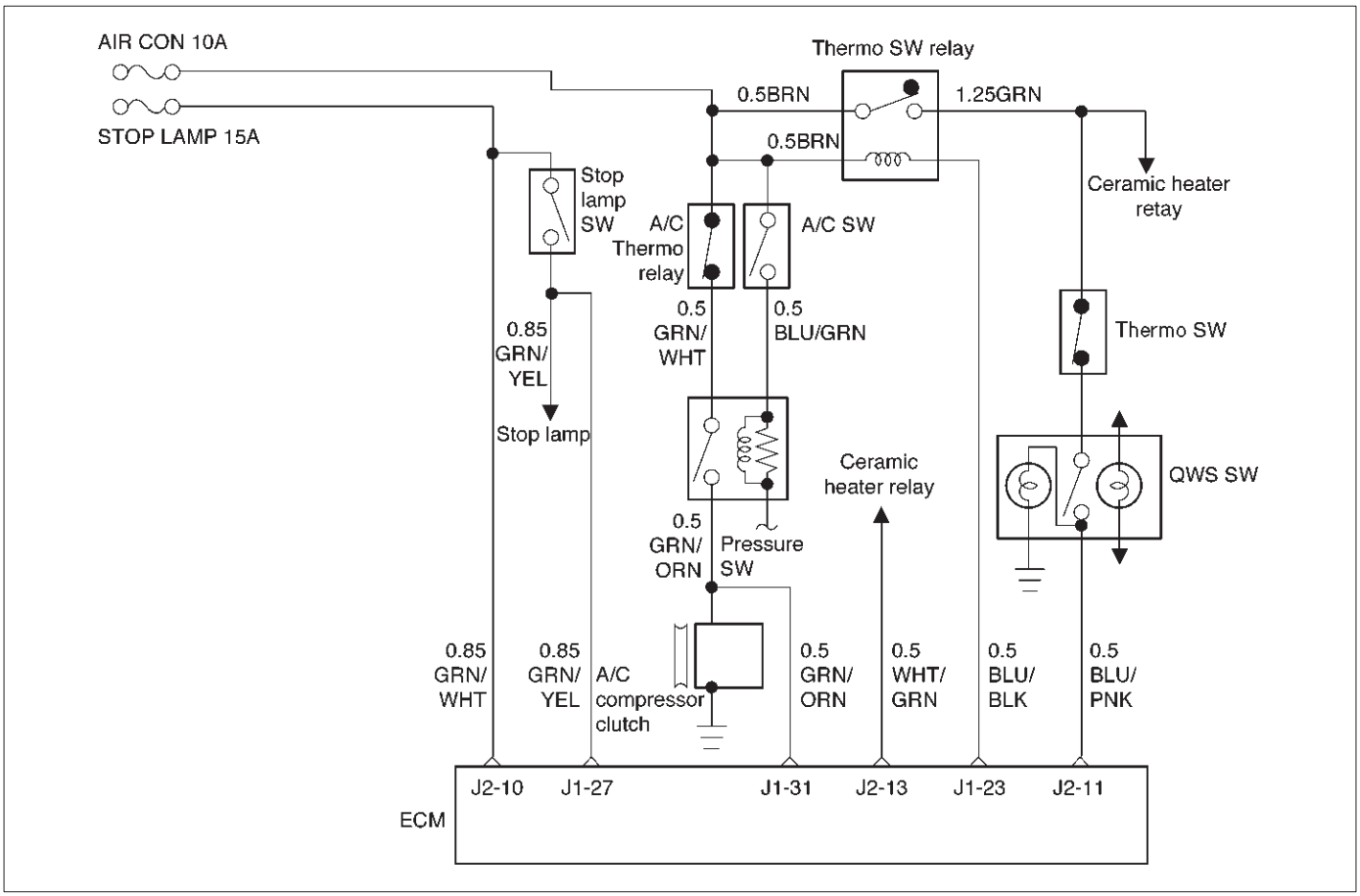

060RW130

Circuit Description

Brake Stop Lamp SW Circuit receives through Stop Lamp 10A fuse from the battery.

Action Taken When the DTC Sets

- The ECM will store conditions which were present when the DTC was set as Freeze Frame and in the Failure Records data.

Conditions for Clearing the MIL/DTC

- DTC P1587 can be cleared by using the Tech 2 “Clear Info” function or by disconnecting the ECM battery feed.

Diagnostic Aids

Check for the following conditions:

- Poor connection at ECM – Inspect harness connectors for backed-out terminals, improper mating, broken locks, improperly formed or damaged terminals, and poor terminal-to-wire connection.
- Damaged harness – Inspect the wiring harness for damage. If the harness appears to be OK, observe the Brake SW display on the Tech 2 while moving connectors and wiring harnesses related to the Brake SW. A change in the display will indicate the location of the fault.

If DTC P1587 cannot be duplicated, the information included in the Failure Records data can be useful in determining vehicle mileage since the DTC was last set.

DTC P1587 – Brake SW Malfunction

Step	Action	Value(s)	Yes	No
1	Was the “On-Board Diagnostic (OBD) System Check” performed?	—	Go to *Step 2*	Go to *OBD System Check*
2	1. Ignition “ON,” engine “OFF.” 2. Review and record Tech 2 Failure Records data. 3. Operate the vehicle within Failure Records conditions as noted. 4. Using a Tech 2, monitor the “DTC” info for DTC P1587. Does the Tech 2 indicate DTC P1587 failed?	—	Go to *Step 3*	Refer to *Diagnostic Aids*
3	Check the Brake SW circuit for a poor connection and replace the terminal if necessary. Did the terminal require replacement?	—	Verify repair	Go to *Step 4*
4	Replace the Brake SW. Is the action complete?	—	Verify repair	—

Diagnostic Trouble Code (DTC) P1588 (Flash DTC 25) Brake SW Malfunction

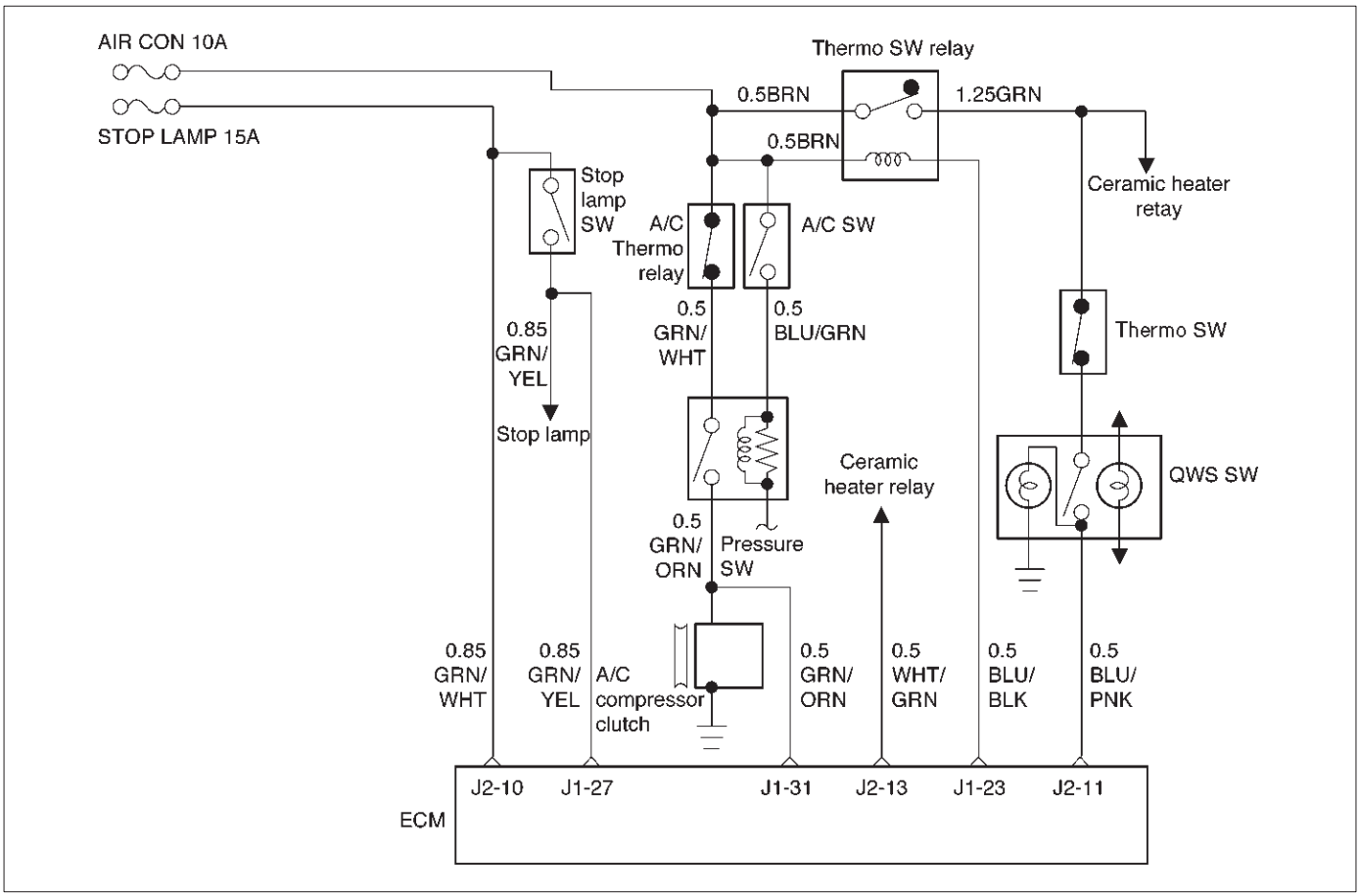

060RW130

Circuit Description

Brake Stop Lamp SW Circuit receives through Stop Lamp 10A fuse from the battery.

Action Taken When the DTC Sets

- The ECM will illuminate the malfunction indicator lamp (MIL) the first time the fault is detected.
- The ECM will store conditions which were present when the DTC was set as Freeze Frame and in the Failure Records data.

Conditions for Clearing the MIL/DTC

- DTC P1588 can be cleared by using the Tech 2 “Clear Info” function or by disconnecting the ECM battery feed.

Diagnostic Aids

Check for the following conditions:

- Poor connection at ECM – Inspect harness connectors for backed-out terminals, improper mating, broken locks, improperly formed or damaged terminals, and poor terminal-to-wire connection.
- Damaged harness – Inspect the wiring harness for damage. If the harness appears to be OK, observe the Brake SW display on the Tech 2 while moving connectors and wiring harnesses related to the Brake SW. A change in the display will indicate the location of the fault.

If DTC P1588 cannot be duplicated, the information included in the Failure Records data can be useful in determining vehicle mileage since the DTC was last set.

DTC P1588 – Brake SW Malfunction

Step	Action	Value(s)	Yes	No
1	Was the “On-Board Diagnostic (OBD) System Check” performed?	—	Go to *Step 2*	Go to *OBD System Check*
2	1. Ignition “ON,” engine “OFF.” 2. Review and record Tech 2 Failure Records data. 3. Operate the vehicle within Failure Records conditions as noted. 4. Using a Tech 2, monitor the “DTC” info for DTC P1588. Does the Tech 2 indicate DTC P1588 failed?	—	Go to *Step 3*	Refer to *Diagnostic Aids*
3	Check the Brake SW circuit for a poor connection and replace the terminal if necessary. Did the terminal require replacement?	—	Verify repair	Go to *Step 4*
4	Replace the Brake SW. Is the action complete?	—	Verify repair	—

Diagnostic Trouble Code (DTC) P0601 (Flash DTC 55) ECM Checksum Error

Action Taken When the DTC Sets

- The ECM will not illuminate the malfunction indicator lamp (MIL).
- The ECM will store conditions which were present when the DTC was set in the Failure Records data only.

Conditions for Clearing the MIL/DTC

- DTC P0601 can be cleared by using the Tech 2 “Clear Info” function or by disconnecting the ECM battery feed.

Diagnostic Aids

- DTC P0601 indicates that the contents of the EEPROM have changed since the ECM was programmed. The only possible repair is ECM replacement. Remember to program the replacement ECM with the correct software and calibration for the vehicle.

DTC P0601 – ECM Checksum Error

Step	Action	Value(s)	Yes	No
1	Was the “On-Board Diagnostic (OBD) System Check” performed?	—	Go to *Step 2*	Go to *OBD System Check*
2	Replace the ECM (Refer to the Data Programming in Case of ECM change). Is the action complete?	—	Verify repair	—

Diagnostic Trouble Code (DTC) P0650 (Flash DTC 77) Check Engine Lamp Circuit Open/Short

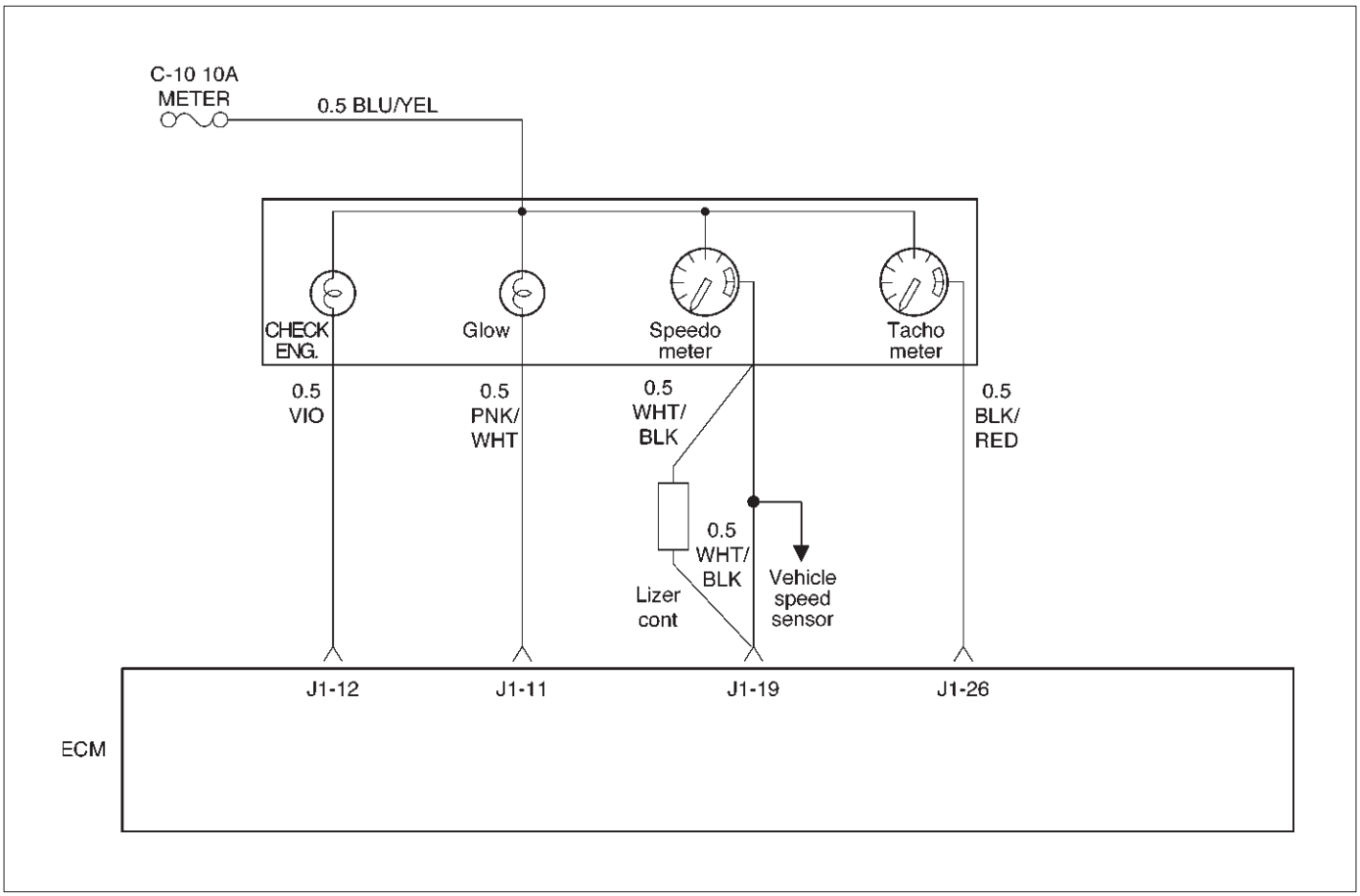

060RW136

Circuit Description

The check engine lamp circuit receives through Meter 10A fuse the battery, current flowing in the order of Meter and check engine lamp.

Action Taken When the DTC Sets

- The ECM will illuminate the malfunction indicator lamp (MIL) the first time the fault is detected.
- The ECM will store conditions which were present when the DTC was set as Freeze Frame and in the Failure Records data.

Conditions for Clearing the MIL/DTC

- DTC P0650 can be cleared by using the Tech 2 “Clear Info” function or by disconnecting the ECM battery feed.

Diagnostic Aids

Check for the following conditions:

- Poor connection at ECM – Inspect harness connectors for backed-out terminals, improper mating, broken locks, improperly formed or damaged terminals, and poor terminal-to-wire connection.
- Damaged harness – Inspect the wiring harness for damage. If the harness appears to be OK, observe the lamp test display on the Tech 2 while moving connectors and wiring harnesses related to the check engine lamp. A change in the display will indicate the location of the fault.

If the Tech 2 indicate DTCs P0650 and P0381, check the meter circuit necessarily.

DTC P0650 – Check Engine Lamp Open/Short

Step	Action	Value(s)	Yes	No
1	Was the “On-Board Diagnostic (OBD) System Check” performed?	—	Go to *Step 2*	Go to *OBD System Check*
2	1. Ignition “ON,” engine “OFF.” 2. Observe the “Lamp Test” display on the Tech 2. Is the “Lamp Test” operating?	—	Refer to *Diagnostic Aids*	Go to *Step 3*
3	1. Ignition “ON,” engine “OFF.” 2. Review and record Tech 2 Failure Records data. 3. Operate the vehicle within Failure Records conditions as noted. 4. Using a Tech 2, monitor the “DTC” info for DTC P0650. 5. If the Tech 2 indicate DTCs P0650 and P0381, check the meter circuit necessarily. Does the Tech 2 indicate DTC P0650 failed?	—	Go to *Step 4*	Refer to *Diagnostic Aids*
4	Check the Check Engine Lamp circuit for a poor connection at the Meter and replace the bulb if necessary. Did the bulb require replacement?	—	Verify repair	Go to *Step 5*
5	Using the Tech 2. Does the Tech 2 indicate DTC P0650 failed?	—	Go to *Step 6*	—
6	Check the Meter circuit for a poor connection. Did the Meter require repair?	—	Verify repair	Go to *Step 7*
7	Replace the ECM (Refer to the Data Programming in Case of ECM change). Is the action complete?	—	Verify repair	—

Diagnostic Trouble Code (DTC) P0654 (Flash DTC 27) Tachometer Circuit Open/Short

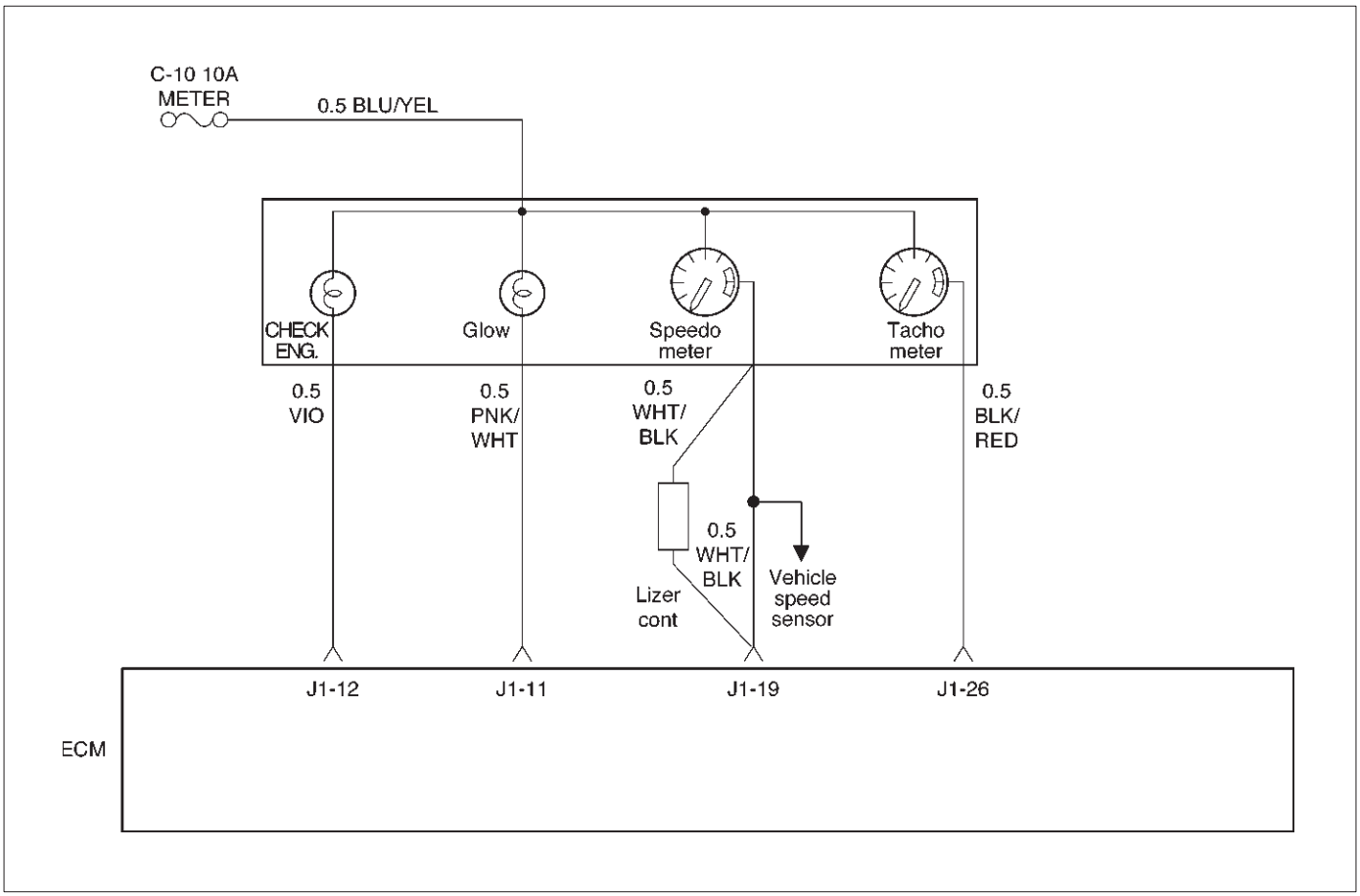

060RW136

Circuit Description

The Tach Meter circuit receives through Meter 10A fuse from the battery, current flowing in the order of Mater and the Tach Meter.

Action Taken When the DTC Sets

- The ECM will illuminate the malfunction indicator lamp (MIL) the first time the fault is detected.
- The ECM will store conditions which were present when the DTC was set as Freeze Frame and in the Failure Records data.

Conditions for Clearing the MIL/DTC

- DTC P0650 can be cleared by using the Tech 2 “Clear Info” function or by disconnecting the ECM battery feed.

Diagnostic Aids

Check for the following conditions:

- Poor connection at ECM – Inspect harness connectors for backed-out terminals, improper mating, broken locks, improperly formed or damaged terminals, and poor terminal-to-wire connection.
- Damaged harness – Inspect the wiring harness for damage.
- If the Tech 2 indicat DTCs 0654, P0650 and P0381, Check the meter circuit necessarily.

DTC P0654 – Tachometer Circuit Open/Short

Step	Action	Value(s)	Yes	No
1	Was the “On-Board Diagnostic (OBD) System Check” performed?	—	Go to *Step 2*	Go to *OBD System Check*
2	1. Ignition “ON,” engine “OFF.” 2. Review and record Tech 2 Failure Records data. 3. Operate the vehicle within Failure Records conditions as noted. 4. Using a Tech 2, monitor the “DTC” info for DTC P654. Does the Tech 2 indicate DTC P0654 failed?	—	Go to *Step 3*	Refer to *Diagnostic Aids*
3	Check the Tach meter circuit for a poor connection at the Meter and replace the terminal if necessary. Did the terminal require replacement?	—	Verify repair	Go to *Step 4*
4	Using the Tech 2. Does the Tech 2 indicate DTC P0654 failed?	—	Verify repair	Go to *Step 5*
5	Check the Tach Meter circuit for a poor connection. Did the terminal require replacement?	—	Verify repair	Go to *Step 6*
6	Replace the tachometer. Is the action complete?	—	Verify repair	Go to *Step 7*
7	Replace the ECM (Refer to the Data Programming in Case of ECM change). Is the action complete?	—	Verify repair	—

Diagnostic Trouble Code (DTC) P1655 (Flash DTC 17) Thermo Relay Circuit Open/Short

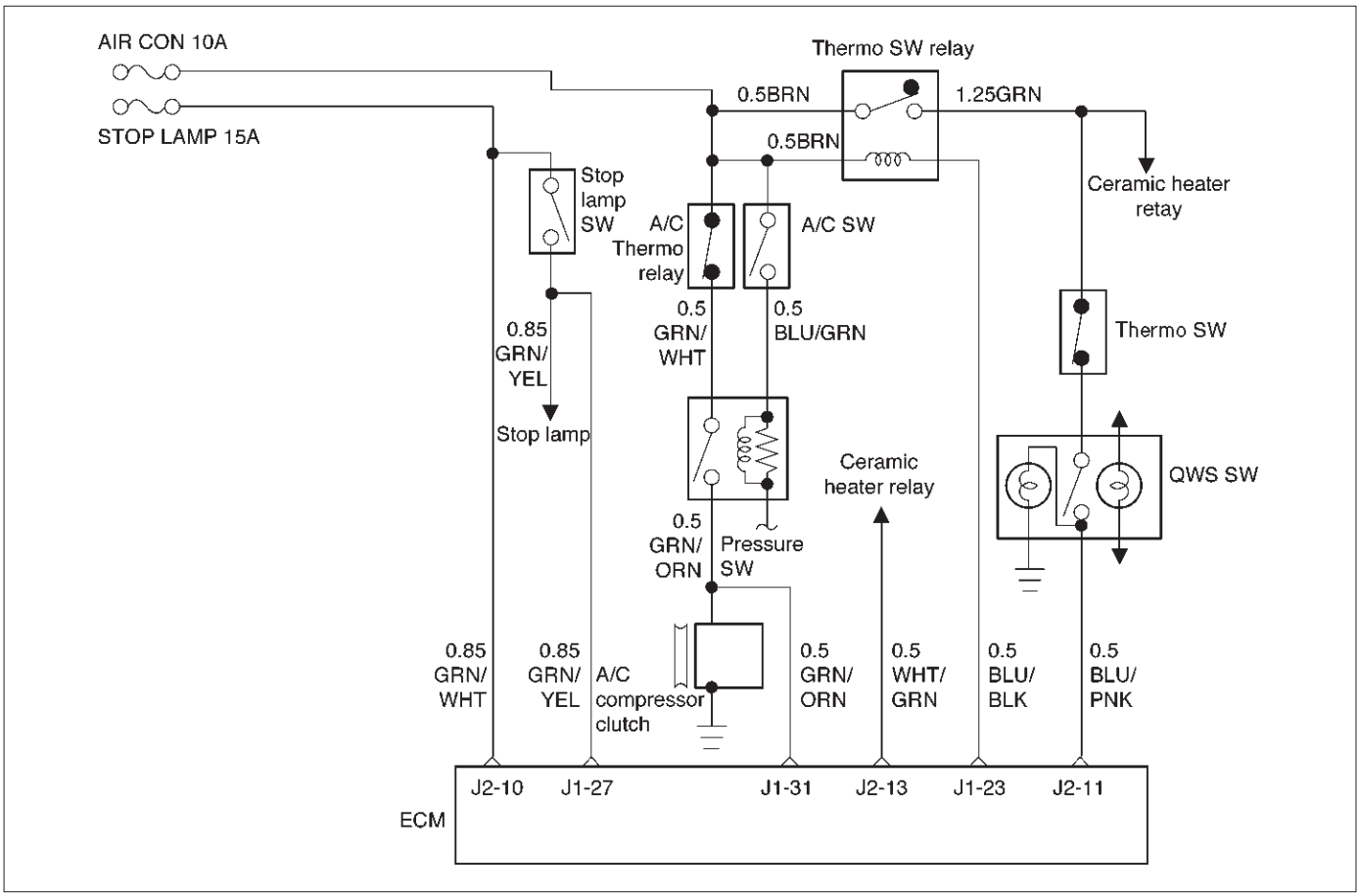

060RW130

Circuit Description

The thermo relay circuit receives current through air con 10A fuse from the battery, current flowing in the order of the thermo relay and thermo SW.

Action Taken When the DTC Sets

- The ECM will illuminate the malfunction indicator lamp (MIL) the first time the fault is detected.
- The ECM will store conditions which were present when the DTC was set as Freeze Frame and in the Failure Records data.

Conditions for Clearing the MIL/DTC

- DTC P1655 can be cleared by using the Tech 2 “Clear Info” function or by disconnecting the ECM battery feed.

Diagnostic Aids

Check for the following conditions:

- Poor connection at ECM – Inspect harness connectors for backed-out terminals, improper mating, broken locks, improperly formed or damaged terminals, and poor terminal-to-wire connection.
- Damaged harness – Inspect the wiring harness for damage.

DTC P1655 – Thermo Relay Circuit Open/Short

Step	Action	Value(s)	Yes	No
1	Was the “On-Board Diagnostic (OBD) System Check” performed?	—	Go to *Step 2*	Go to *OBD System Check*
2	1. Ignition “ON,” engine “OFF.” 2. Observe the “Batteri Voltage” display on the Tech 2. Is the “Batteri Voltage” below the specified value?	11 V	Go to *Step 4*	Go to *Step 3*
3	1. Ignition “ON,” engine “OFF.” 2. Review and record Tech 2 Failure Records data. 3. Operate the vehicle within Failure Records conditions as noted. 4. Using a Tech 2, monitor the “Specific DTC” info for DTC P1655. Does the Tech 2 indicate DTC P1655 failed?	—	Go to *Step 4*	Refer to *Diagnostic Aids*
4	Check the Thermo Relay circuit for a poor connection and replace the terminal if necessary. Did the terminal require replacement?	—	Verify repair	Go to *Step 5*
5	Check the Thermo Relay for damage. Did the Thermo Relay require replacement?	—	Verify repair	Go to *Step 6*
6	Check the Thermo Relay circuit for a poor connection at the ECM and replace the terminal if necessary. Did the terminal require replacement?	—	Verify repair	Go to *Step 7*
7	Replace the ECM (Refer to the Data Programming in Case of ECM change). Is the action complete?	—	Verify repair	—

Diagnostic Trouble Code (DTC) P1657 (Flash DTC 76) ECM Main Relay Circuit Open/Short

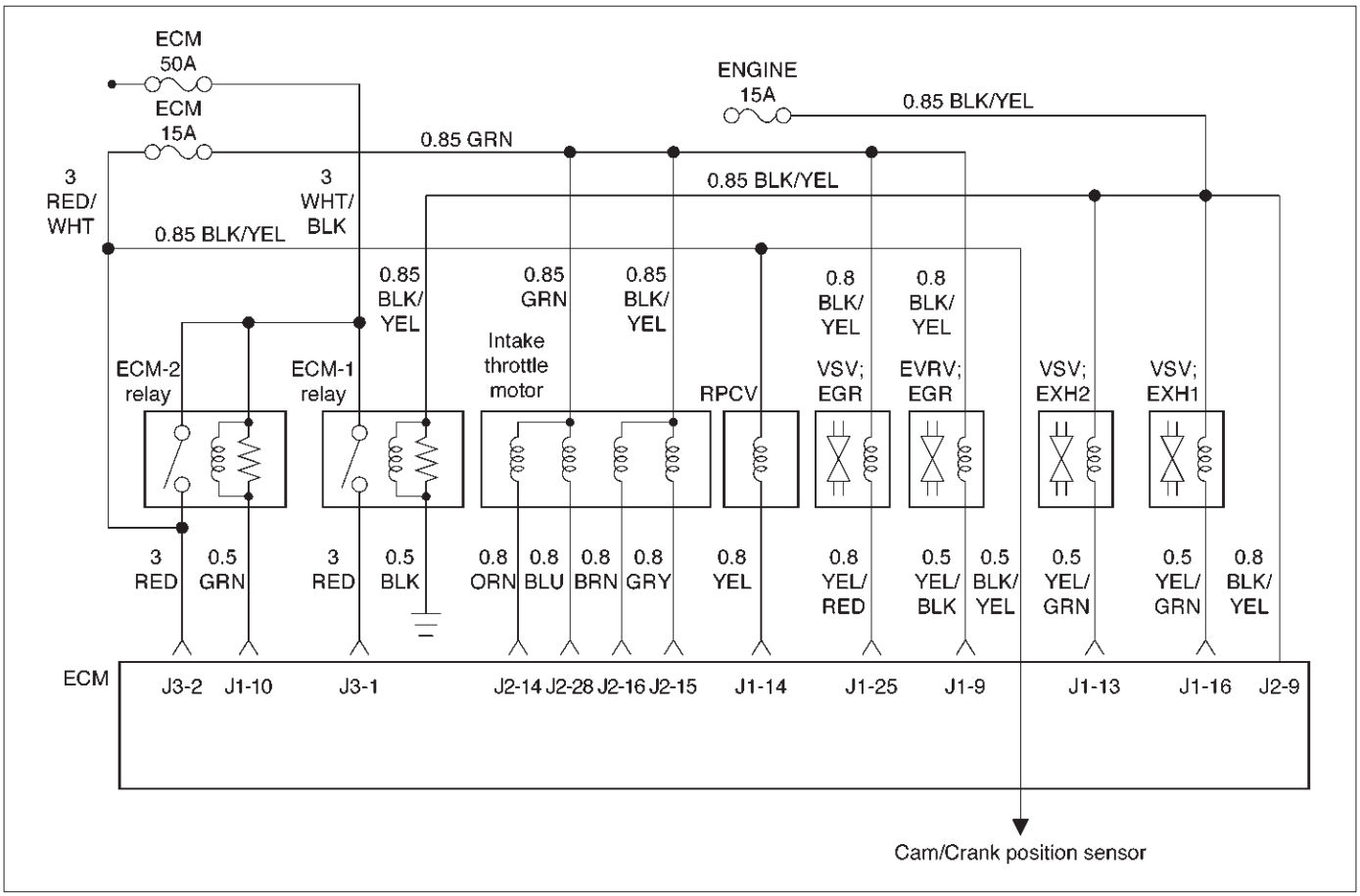

060RW135

Circuit Description

The ECM main relay circuit receives current through ECM 50A fuse from the battery, current flowing in the order of the ECM main relay and ECM.

Action Taken When the DTC Sets

- The ECM will illuminate the malfunction indicator lamp (MIL) the first time the fault is detected.
- The ECM will store conditions which were present when the DTC was set as Freeze Frame and in the Failure Records data.

Conditions for Clearing the MIL/DTC

- DTC P1657 can be cleared by using the Tech 2 “Clear Info” function or by disconnecting the ECM battery feed.

Diagnostic Aids

Check for the following conditions:

- Poor connection at ECM – Inspect harness connectors for backed-out terminals, improper mating, broken locks, improperly formed or damaged terminals, and poor terminal-to-wire connection.
- Damaged harness – Inspect the wiring harness for damage.

DTC P1657 – ECM Main Relay Circuit Open/Short

Step	Action	Value(s)	Yes	No
1	Was the “On-Board Diagnostic (OBD) System Check” performed?	—	Go to *Step 2*	Go to *OBD System Check*
2	1. Check the Fuse 50A·ECM and 15A·Eng. 2. If the Fuse is open, replace it as necessary. Was the Fuse open?	—	Verify repair	Go to *Step 3*
3	1. Ignition “ON,” engine “OFF.” 2. Review and record Tech 2 Failure Records data. 3. Operate the vehicle within Failure Records conditions as noted. 4. Using a Tech 2, monitor the “DTC” info for DTC P1657. Does the Tech 2 indicate DTC P1657 failed?	—	Go to *Step 4*	Refer to *Diagnostic Aids*
4	Check the ECM Main Relay circuit between the Fuse and the ECM Main Relay for a poor connection and repair the terminal if necessary. Did the terminal require repair?	—	Verify repair	Go to *Step 5*
5	Check the ECM Main Relay for a damage and Replace the ECM (Refer to the Data Programming in Case of ECM change) Main Relay if necessary. Did the ECM Main Relay require replacement?	—	Verify repair	Go to *Step 6*
6	Check the ECM Main Relay circuit for a poor connection at the ECM and replace the terminal if necessary. Did the terminal require replacement?	—	Verify repair	Go to *Step 7*
7	Check the ECM Main Relay Ground circuit for a poor connection and repair the terminal if necessary. Did the terminal require repair?	—	Verify repair	Go to *Step 8*
8	Check the ECM Main Relay power circuit for a poor connection and repair the terminal if necessary. Did the terminal require repair?	—	Verify repair	Go to *Step 9*
9	Replace the ECM (Refer to the Data Programming in Case of ECM change) Main Relay. Is the action complete?	—	Verify repair	Go to *Step 10*
10	Replace the ECM (Refer to the Data Programming in Case of ECM change). Is the action complete?	—	Verify repair	—

Diagnostic Trouble Code (DTC) P1589 (Flash DTC 47) Transmission SW Circuit Open/Short

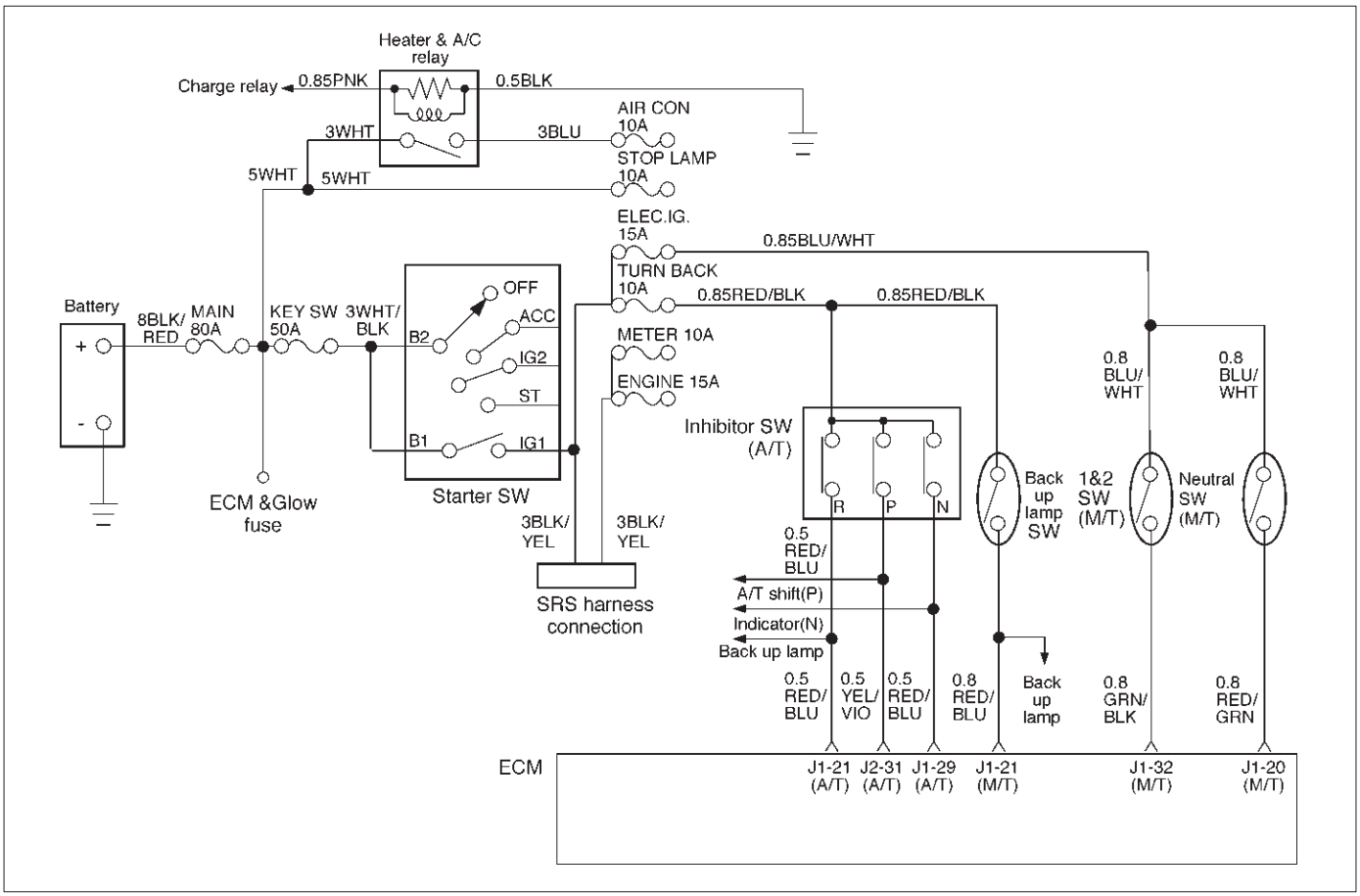

060RW131

Circuit Description

The trans mission SW circuit receives current through ELEC IG 10A fuse from the battery, current flowing in the order of the trans mission SW and ECM.

Action Taken When the DTC Sets

- The ECM will illuminate the malfunction indicator lamp (MIL) the first time the fault is detected.
- The ECM will store conditions which were present when the DTC was set as Freeze Frame and in the Failure Records data.

Conditions for Clearing the MIL/DTC

- DTC P1589 can be cleared by using the Tech 2 “Clear Info” function or by disconnecting the ECM battery feed.

Diagnostic Aids

Check for the following conditions:

- Poor connection at ECM – Inspect harness connectors for backed-out terminals, improper mating, broken locks, improperly formed or damaged terminals, and poor terminal-to-wire connection.
- Damaged harness – Inspect the wiring harness for damage. If the harness appears to be OK, observe the throttle position display on the Tech 2 while moving connectors and wiring harnesses related to the TP sensor. A change in the display will indicate the location of the fault.

If DTC P1589 cannot be duplicated, the information included in the Failure Records data can be useful in determining vehicle mileage since the DTC was last set.

DTC P1589 – Transmission Circuit Open/Short

Step	Action	Value(s)	Yes	No
1	Was the “On-Board Diagnostic (OBD) System Check” performed?	—	Go to *Step 2*	Go to *OBD System Check*
2	Check the Fuse 10A for a open circuit and replace the Fuse if necessary. Did the Fuse require replacement?	—	Verify repair	Go to *Step 3*

DTC P1589 – Transmission Circuit Open/Short (Cont'd)

Step	Action	Value(s)	Yes	No
3	1. Ignition "ON," engine "OFF." 2. Review and record Tech 2 Failure Records data. 3. Operate the vehicle within Failure Records conditions as noted. 4. Using a Tech 2, monitor the "DTC" info for DTC P1589. Does the Tech 2 indicate DTC P1589 failed?	—	Go to *Step 4 (A/T)* Go to *Step 6 (M/T)*	Refer to *Diagnostic Aids*
4	Check the Indicator Lamp correct indicated for a correct indication on the Meter. (A/T only) Did the Indicator Lamp correct indicated?	—	Go to *Step 5*	Go to *Step 8*
5	Check the Trans Mission SW signal circuit for a poor connection at the ECM and replace the terminal if necessary. Did the terminal require replacement?	—	Verify repair	Go to *Step 8*
6	Check the Trans Mission SW circuit for a poor connection at the Trans Mission SW and replace the terminal if necessary. Did the terminal require replacement?	—	Verify repair	Go to *Step 7*
7	Replace the Trans Mission SW. Is the action complete?	—	Verify repair	Go to *Step 8*
8	Replace the ECM (Refer to the Data Programming in Case of ECM change). Is the action complete?	—	Verify repair	—

Symptom Diagnosis

Preliminary Checks

Before using this section, perform the “On–Board Diagnostic (OBD) System Check” and verify all of the following items:

- The powertrain control module (ECM) and malfunction indicator lamp (MIL) (CHECK ENGINE lamp) are operating correctly.
- There are no DTC(s) stored.
- Tech–2 data is within normal operating range. Refer to *Typical Scan Data Values*.
- Verify the customer complaint and locate the correct symptom in the table of contents. Perform the procedure included in the symptom chart.

Visual/Physical Check

Several of the symptom procedures call for a careful visual/physical check. This can lead to correcting a problem without further checks and can save valuable time.

This check should include the following items:

- ECM grounds for cleanliness, tightness and proper location.
- Vacuum hoses for splits, kinks, and proper connections, as shown on the “Vehicle Emission Control Information” label. Check thoroughly for any type of leak or restriction.
- Air intake ducts for collapsed or damaged areas.
- Injector wires for cracking, hardness, and carbon tracking.
- Wiring for proper connections, pinches and cuts.

Intermittents

IMPORTANT: An intermittent problem may or may not turn on the malfunction indicator lamp (MIL) or store a DTC. DO NOT use the Diagnostic Trouble Code (DTC) charts for intermittent problems. The fault must be present to locate the problem.

Most intermittent problems are caused by faulty electrical connections or wiring. Perform a careful visual/physical check for the following conditions:

- Poor mating of the connector halves or a terminal not fully seated in the connector (backed out).
- Improperly formed or damaged terminal.
- All connector terminals in the problem circuit should be carefully checked for proper contact tension.
- Poor terminal–to–wire connection. This requires removing the terminal from the connector body to check.

Road test the vehicle with a Digital Multimeter (5-8840-0285-0) connected to a suspected circuit. An abnormal voltage when the malfunction occurs is a good indication that there is a fault in the circuit being monitored.

Use a scan tool to help detect intermittent conditions. The scan tools have several features that can be used to locate an intermittent condition. Use the following feature to find intermittent faults:

- Using a Tech–2 “Freeze Frame” buffer or “Failure Records” buffer can aid in locating an intermittent condition. Review and record the information in the freeze frame or failure record associated with the intermittent DTC being diagnosed. The vehicle can be driven within the conditions that were present when the DTC originally set.

To check for loss of diagnostic code memory, disconnect the MAP sensor and idle the engine until the MIL (CHECK ENGINE lamp) comes on. DTC P0107 should be stored and kept in memory when the ignition is turned “OFF.” If not, the ECM is faulty. When this test is completed, make sure that you clear the DTC P0107 from memory.

An intermittent MIL (CHECK ENGINE lamp) with no stored DTC may be caused by the following:

- MIL (CHECK ENGINE lamp) wire to ECM shorted to ground.
- Poor ECM grounds. Refer to the ECM wiring diagrams.

Check for improper installation of electrical options such as lights, cellular phones, etc.

Check for an open diode across the A/C compressor clutch and check for other open diodes (refer to wiring diagrams in *Electrical Diagnosis*).

If problem has not been found, refer to *ECM Connector Symptom* tables.

Hard Start Symptom

Step	Action	Value(s)	Yes	No
1	**DEFINITION:** Engine cranks, but does not start for a long time. Does eventually run, or may start but immediately stalls. Was the “On-Board Diagnostic (OBD) System Check” performed?	—	Go to *Step 2*	Go to *OBD System Check*
2	1. Perform a bulletin search. 2. If a bulletin that addresses the symptom is found, correct the condition as instructed in the bulletin. Was a bulletin found that addresses the symptom?	—	Verify repair	Go to *Step 3*
3	Was a visual/physical check performed?	—	Go to *Step 4*	Go to *Visual/Physical Check*
4	Check engine coolant temperature (ECT) sensor for shift in value. After 8 hours with the hood up and the engine not running, connect the scan tool. With the ignition “ON” and the engine not running, compare engine coolant temperature to manifold air temperature. Are ECT and MAT within the specified value of each other?	± 5˚C (± 9˚F)	Go to *Step 8*	Go to *Step 5*
5	1. Using Tech–2, display the engine coolant temperature and note the value. 2. Check the resistance of the engine coolant temperature sensor. 3. Refer to *Engine Coolant Temperature Sensor Temperature vs. Resistance* chart on *DTC P0118 Diagnostic Support* for resistance specifications. Is the resistance value near the resistance for the temperature noted?	—	Go to *Step 7*	Go to *Step 6*
6	Replace the ECT sensor. Is the action complete?	—	Verify repair	—
7	Locate and repair high resistance or poor connection in the ECT signal circuit or the ECT sensor ground. Is the action complete?	—	Verify repair	—
8	1. Injector Test Operate the each injector by Tech 2 with the ignition “ON” and check if the working noise confirm. 2. If a problem is found, check the harness or replace the injector. Is the action complete?	—	Verify repair	Go to *Step 9*
9	Check the oil rail pressure by Tech 2 at the cranking. Is the pressure near the specified value?	Less than 3 MPa	Go to *Step 10*	Go to *Step 11*
10	Check the oil leakage on the high oil pressure line. If the oil leakage is found, repair as necessary. Was the oil leakage found?	—	Verify repair	Go to *Step 11*
11	1. Check for water-or alcohol-contaminated fuel. 2. If a problem is found, repair as necessary. Was a problem found?	—	Verify repair	Go to *Step 12*

Hard Start Symptom (Cont'd)

Step	Action	Value(s)	Yes	No
12	1. Check the battery voltage. 2. If a problem is found, repair as necessary. Was a problem found?	—	Verify repair	Go to *Step 13*
13	1. Check for the following engine mechanical problems (Refer to *Engine Mechanical*): ● Low compression ● Leaking cylinder head gaskets ● Worn or incorrect camshaft ● Camshaft drive belt slipped or stripped 2. If a problem is found, repair as necessary. Was a problem found?	—	Verify repair	Go to *Step 14*
14	1. Review all diagnostic procedures within this table. 2. If all procedures have been completed and no malfunctions have been found, review/inspect the following: ● Visual/physical inspection ● Tech–2 data ● Freeze Frame data/Failure Records buffer ● All electrical connections within a suspected circuit and/or system. 3. If a problem is found, repair as necessary. Was a problem found?	—	Verify repair	Contact Technical Assistance

Surges and/or Chuggles Symptom

Step	Action	Value(s)	Yes	No
1	**DEFINITION:** Engine power variation under steady throttle or cruise. Feels like the vehicle speeds up and slows down with no change in the accelerator pedal. Was the “On-Board Diagnostic (OBD) System Check” performed?	—	Go to *Step 2*	Go to *OBD System Check*
2	1. Perform a bulletin search. 2. If a bulletin that addresses the symptom is found, correct the condition as instructed in the bulletin. Was a bulletin found that addresses the symptom?	—	Verify repair	Go to *Step 3*
3	Was a visual/physical check performed?	—	Go to *Step 4*	Go to *Visual/ Physical Check*
4	Be sure that the driver understands transmission torque converter clutch and A/C compressor operation as explained in the owner’s manual. Inform the customer how the TCC and the A/C clutch operate. Is the customer experiencing a normal condition?	—	System OK	Go to *Step 5*
5	1. Check the priming pump. Refer to *Fuel System*. 2. If a problem is found, operate the priming pump. Was a problem found?	—	Verify repair	Go to *Step 6*
6	1. Injector Test Operate the each injector by Tech 2 with the ignition “ON” and check if the working noise confirm. 2. If a problem is found, check the harness and repair as necessary. Is the action complete?	—	Verify repair	Go to *Step 7*
7	1. Check ECM grounds for the cleanliness, tightness and proper locations. Refer to the ECM wiring diagrams in *Electrical Diagnosis*. 2. If a problem is found, repair as necessary. Was a problem found?	—	Verify repair	Go to *Step 8*
8	1. Check AP sensor connections. 2. If a problem is found, replace the faulty terminals as necessary. Refer to *Electrical Diagnosis* for wiring repair procedures. Was a problem found?	—	Verify repair	Go to *Step 9*
9	1. Visually/physically check vacuum hoses for splits, kinks, and proper connections and routing as shown on the “Vehicle Emission Control Information” label. 2. If a problem is found, repair as necessary. Was a problem found?	—	Verify repair	Go to *Step 10*

Surges and/or Chuggles Symptom (Cont'd)

Step	Action	Value(s)	Yes	No
10	1. Check the exhaust system for possible restriction: ● Inspect the exhaust system for damaged or collapsed pipes. ● Inspect the muffler for heat distress or possible internal failure. ● Check for a possible plugged catalytic converter by checking the exhaust system back pressure. Refer to *Restricted Exhaust System Check*. 2. If a problem is found, repair as necessary. Was a problem found?	—	Verify repair	Go to *Step 11*
11	1. Review all diagnostic procedures within this table. 2. If all procedures have been completed and no malfunctions have been found, review/inspect the following: ● Visual/physical inspection ● Tech 2 data ● Freeze Frame data/Failure Records buffer ● All electrical connections within a suspected circuit and/or system. 3. If a problem is found, repair as necessary. Was a problem found?	—	Verify repair	Contact Technical Assistance

Lack of Power, Sluggish or Spongy Symptom

Step	Action	Value(s)	Yes	No
1	**DEFINITION:** Engine delivers less than expected power. Little or no increase in speed when accelerator pedal is pushed down part-way. Was the "On-Board Diagnostic (OBD) System Check" performed?	—	Go to *Step 2*	Go to *OBD System Check*
2	1. Perform a bulletin search. 2. If a bulletin that addresses the symptom is found, correct the condition as instructed in the bulletin. Was a bulletin found that addresses the symptom?	—	Verify repair	Go to *Step 3*
3	Was a visual/physical check performed?	—	Go to *Step 4*	Go to *Visual/ Physical Check*
4	1. Remove and check the air filter element for dirt or restrictions. Refer to *Air Intake System* in *On-Vehicle Service*. 2. Replace the air filter element if necessary. Was a repair required?	—	Verify repair	Go to *Step 5*
5	1. Check AP sensor system. Refer to *AP sensor diagnostic*. 2. If a problem is found, repair as necessary. Was a problem found?	—	Verify repair	Go to *Step 6*
6	1. Check for water-or alcohol-contaminated fuel. 2. If a problem is found, repair as necessary. Was a problem found?	—	Verify repair	Go to *Step 7*
7	1. Using a Tech 2, Injector test. 2. If a problem is found, repair as necessary. Was a problem found?	—	Verify repair	Go to *Step 8*
8	1. Check the ECM grounds for the cleanliness, tightness and proper locations. Refer to the ECM wiring diagrams in *Electrical Diagnosis*. 2. If a problem is found, repair as necessary. Was a problem found?	—	Verify repair	Go to *Step 9*
9	1. Check the exhaust system for possible restriction: • Inspect the exhaust system for damaged or collapsed pipes. • Inspect the muffler for heat distress or possible internal failure. • Check for a possible plugged catalytic converter by checking the exhaust system back pressure. Refer to *Restricted Exhaust System Check*. 2. If a problem is found, repair as necessary. Was a problem found?	—	Verify repair	Go to *Step 10*
10	1. Check the torque converter clutch (TCC) for proper operation. Refer to *Transmission Diagnosis*. 2. If a problem is found, repair as necessary. Was a problem found?	—	Verify repair	Go to *Step 11*

Lack of Power, Sluggish or Spongy Symptom (Cont'd)

Step	Action	Value(s)	Yes	No
11	1. Check for an engine mechanical problem. Check for low compression, incorrect or worn camshaft, loose timing belt, etc. Refer to *Engine Mechanical*. 2. If a problem is found, repair as necessary. Was a problem found?	—	Verify repair	Go to *Step 12*
12	1. Review all diagnostic procedures within this table. 2. If all procedures have been completed and no malfunctions have been found, review/inspect the following: ● Visual/physical inspection ● Tech 2 data ● Freeze Frame data/Failure Records buffer ● All electrical connections within a suspected circuit and/or system. 3. If a problem is found, repair as necessary. Was a problem found?	—	Verify repair	Contact Technical Assistance

Rough, Unstable, or Incorrect Idle, Stalling Symptom

Step	Action	Value(s)	Yes	No
1	**DEFINITION:** Engine runs unevenly at idle. If severe, the engine or vehicle may shake. Engine idle speed may vary in RPM. Either condition may be severe enough to stall the engine. Was the "On-Board Diagnostic (OBD) System Check" performed?	—	Go to *Step 2*	Go to *OBD System Check*
2	1. Perform a bulletin search. 2. If a bulletin that addresses the symptom is found, correct the condition as instructed in the bulletin. Was a bulletin found that addresses the symptom?	—	Go to *Step 6*	Go to *Step 3*
3	Was a visual/physical check performed?	—	Go to *Step 4*	Go to *Visual/ Physical Check*
4	1. Check the ECM grounds for cleanliness, tightness and proper routing. Refer to the ECM wiring diagrams in *Electrical Diagnosis*. 2. If a problem is found, repair as necessary. Was a problem found?	—	Verify repair	Go to *Step 5*
5	1. Check for incorrect idle speed. Ensure that the following conditions are present: ● The engine is fully warm. ● The accessories are "OFF." 2. Using a Tech 2, monitor the AP position. Is the AP position within the specified values?	0%	Go to *Step 10*	Go to *Step 9*
6	1. Visually/physically inspect for the following conditions: ● Restricted air intake system. Check for a possible collapsed air intake duct, restricted air filter element, or foreign objects blocking the air intake system. 2. If a problem is found, repair as necessary. Was a problem found?	—	Verify repair	Go to *Step 7*
7	1. Injector Test Operate the each injector by Tech 2 with the ignition "ON" and check if the working noise confirm. 2. If a problem is found, check the harness or replace the injector. Is the action complete?	—	Verify repair	Go to *Step 8*
8	1. Check the transmission range switch circuit. Use a Tech 2 and be sure the Tech 2 indicates that the vehicle is in drive with the gear selector in drive or overdrive. 2. If a problem is found, diagnose and repair the transmission range switch as necessary (Refer to *Automatic Transmission Diagnosis*). Was a problem found?	—	Verify repair	Go to *Step 9*

Rough, Unstable, or Incorrect Idle, Stalling Symptom (Cont'd)

Step	Action	Value(s)	Yes	No
9	1. Check for the following engine mechanical items. Refer to *Engine Mechanical* for diagnosis procedures: ● Low compression ● Sticking or leaking valves ● Worn camshaft lobe(s) ● Camshaft drive belt slipped or stripped ● Incorrect valve timing ● Valves clearance ● Broken valve springs 2. If a problem is found, repair as necessary. Was a problem found?	—	Verify repair	Go to *Step 10*
10	1. Check for faulty engine mounts. Refer to *Engine Mechanical* for inspection of mounts. 2. If a problem is found, repair as necessary. Was a problem found?	—	Verify repair	Go to *Step 11*
11	1. Review all diagnostic procedures within this table. 2. If all procedures have been completed and no malfunctions have been found, review/inspect the following: ● Visual/physical inspection ● Tech 2 data ● Freeze Frame data/Failure Records buffer ● All electrical connections within a suspected circuit and/or system. 3. If a problem is found, repair as necessary. Was a problem found?	—	Verify repair	Contact Technical Assistance

Poor Fuel Economy Symptom

Step	Action	Value(s)	Yes	No
1	**DEFINITION:** Fuel economy, as measured by an actual road test, is noticeably lower than expected. Also, economy is noticeably lower than it was on this vehicle at one time, as previously shown by an actual road test. (Larger than standard tires will cause odometer readings to be incorrect, and that may cause fuel economy to appear poor when it is actually normal.) Was the “On-Board Diagnostic (OBD) System Check” performed?	—	Go to *Step 2*	Go to *OBD System Check*
2	1. Perform a bulletin search. 2. If a bulletin that addresses the symptom is found, correct the condition as instructed in the bulletin. Was a bulletin found that addresses the symptom?	—	Verify repair	Go to *Step 3*
3	Was a visual/physical check performed?	—	Go to *Step 4*	Go to *Visual/ Physical Check*
4	Check owner’s driving habits. ● Is the A/C “ON” full time (defroster mode “ON”)? ● Are tires at the correct pressure? ● Are excessively heavy loads being carried? ● Is acceleration too much, too often? ● Is engine oil correct? Was a problem found?	—	Go to *Step 5*	Go to *Step 6*
5	Review the items in Step 4 with the customer and advise as necessary. Is the action complete?	—	System OK	—
6	1. Visually/physically check: Vacuum hoses for splits, kinks, and improper connections and routing as shown on the “Vehicle Emission Control Information” label. 2. If a problem is found, repair as necessary. Was a repair required?	—	Verify repair	Go to *Step 7*
7	1. Remove and check the air filter element for dirt or for restrictions. Refer to *Air Intake System*. 2. Replace the air filter element if necessary. Was a repair required?	—	Verify repair	Go to *Step 8*
8	1. Check for low engine coolant level. Refer to *Engine Cooling*. 2. If a problem is found, repair as necessary. Was a problem found?	—	Verify repair	Go to *Step 9*
9	1. Check for an incorrect or faulty engine thermostat. Refer to *Engine Cooling*. 2. If a problem is found, repair as necessary. Was a problem found?	—	Verify repair	Go to *Step 10*
10	1. Check for low engine compression. Refer to *Engine Mechanical*. 2. If a problem is found, repair as necessary. Was a problem found?	—	Verify repair	Go to *Step 11*

Poor Fuel Economy Symptom (Cont'd)

Step	Action	Value(s)	Yes	No
11	1. Check the TCC operation. Refer to *Transmission Diagnosis*. 2. If a problem is found, repair as necessary. Was a problem found?	—	Verify repair	Go to *Step 12*
12	1. Check the exhaust system for possible restriction: ● Inspect the exhaust system for damaged or collapsed pipes. ● Inspect the muffler for heat distress or possible internal failure. 2. If a problem is found, repair as necessary. Was a problem found?	—	Verify repair	Go to *Step 13*
13	Check for proper calibration of the speedometer. Does the speed indicated on the speedometer closely match the vehicle speed displayed on the Tech 2?	—	Go to *Step 15*	Go to *Step 14*
14	Diagnose and repair an inaccurate speedometer condition as necessary. Refer to *Vehicle Speed Sensor* in *Electrical Diagnosis*. Was a problem found?	—	Verify repair	—
15	1. Check the air intake system and the crankcase for air leaks. Refer to *Air Intake System* and *Crankcase Ventilation System*. 2. If a problem is found, repair as necessary. Was a problem found?	—	Verify repair	Go to *Step 16*
16	1. Review all diagnostic procedures within this table. 2. When all procedures have been completed and no malfunctions have been found, review/inspect the following: ● Visual/physical inspection ● Tech 2 data ● Freeze Frame data/Failure Records buffer ● All connections within a suspected circuit and/or system. 3. If a problem is found, repair as necessary. Was a problem found?	—	Verify repair	Go to *Step 17*
17	Perform the procedure in *Injector Test*. Was the fuel pressure normal?	—	Contact Technical Assistance	Verify repair

Excessive Exhaust Emissions or Odors Symptom

Step	Action	Value(s)	Yes	No
1	**DEFINITION:** Vehicle fails an emission test. Vehicle has excessive "rotten egg" smell. (Excessive odors do not necessarily indicate excessive emissions.) Was the "On-Board Diagnostic (OBD) System Check" performed?	—	Go to *Step 2*	Go to *OBD System Check*
2	1. Perform a bulletin search. 2. If a bulletin that addresses the symptom is found, correct the condition as instructed in the bulletin. Was a bulletin found that addresses the symptom?	—	Verify repair	Go to *Step 3*
3	Was a thorough visual/physical check performed?	—	Go to *Step 4*	Go to *Visual/ Physical Check*
4	1. Check for vacuum leaks. Check vacuum lines, intake manifold, throttle body, etc. 2. If a problem is found, repair as necessary. Were any vacuum leaks located?	—	Verify repair	Go to *Step 5*
5	1. Check the fuel cap for proper installation. 2. Secure the fuel cap if necessary. Was the fuel cap installed properly?	—	Go to *Step 6*	Verify repair
6	1. Injector Test Operate the each injector by Tech 2 with the ignition "ON" and check if the working noise confirm. 2. If a problem is found, check the harness or replace the injector. Is the action complete?	—	Verify repair	Go to *Step 7*
7	1. Refer to *Engine Cooling* for cooling system diagnosis. 2. If a problem is found, repair as necessary. Was a problem found?	—	Verify repair	Go to *Step 8*
8	1. Check for an engine mechanical problem. Perform a cylinder compression check (Refer to *Engine Mechanical*). 2. If a problem is found, repair as necessary. Was a problem found?	—	Verify repair	Go to *Step 9*
9	1. Review all diagnostic procedures within this table. 2. If all procedures have been completed and no malfunctions have been found, review/inspect the following: ● Visual/physical inspection ● Tech 2 data ● Freeze Frame data/Failure Records butter ● All electrical connections within a suspected circuit and/or system. 3. If a problem is found, repair as necessary. Was a problem found?	—	Verify repair	Contact Technical Assistance

Dieseling, Run-On Symptom

Step	Action	Value(s)	Yes	No
1	**DEFINITION:** Engine continues to run after key is turned “OFF,” but runs very rough. If engine runs smooth, check ignition switch and adjustment. Was the “On-Board Diagnostic (OBD) System Check” performed?	—	Go to *Step 2*	Go to *OBD System Check*
2	1. Perform a bulletin search. 2. If a bulletin that addresses the symptom is found, correct the condition as instructed in the bulletin. Was a bulletin found that addresses the symptom?	—	Verify repair	Go to *Step 3*
3	Was a visual/physical check performed?	—	Go to *Step 4*	Go to *Visual/ Physical Check*
4	1. Check for a short between B+ and any of the ignition feed circuits. 2. If a problem is found, repair as necessary. Was a problem found?	—	Verify repair	Go to *Step 5*
5	1. Review all diagnostic procedures within this table. 2. If all procedures have been completed and no malfunctions have been found, review/inspect the following: ● Visual/physical inspection ● Tech 2 data ● Freeze Frame data/Failure Records butter ● All electrical connections within a suspected circuit and/or system 3. If a problem is found, repair as necessary. Was a problem found?	—	Verify repair	Contact Technical Assistance

Cuts Out, Symptom

Step	Action	Value(s)	Yes	No
1	**DEFINITION:** Steady pulsation or jerking that follows engine speed; usually more pronounced as engine load increases. Was the “On-Board Diagnostic (OBD) System Check” performed?	—	Go to *Step 2*	Go to *OBD System Check*
2	1. Perform a bulletin search. 2. If a bulletin that addresses the symptom is found, correct the condition as instructed in the bulletin. Was a bulletin found that addresses the symptom?	—	Go to *Step 7*	Go to *Step 3*
3	Was a visual/physical check performed?	—	Go to *Step 4*	Go to *Visual/ Physical Check*
4	1. Check the ECM grounds for clearness, tightness and proper routing. Refer to the ECM wiring diagrams in *Electrical Diagnosis*. 2. If a problem is found, repair as necessary. Was a problem found?	—	Verify repair	Go to *Step 5*
5	1. Check for incorrect idle speed. Ensure that the following conditions are present: ● The engine is fully warm. ● The accessories are “off.” 2. Using a Tech 2, monitor the AP position. Is the AP position within the specified values?	0%	Go to *Step 6*	Go to *Step 7*
6	1. Visually/physically inspect for the following conditions: ● Restricted air intake system. Check for a possible collapsed air intake duct, restricted air filter element, or foreign objects blocking the air intake system. ● Check the Throttle body. ● Large vacuum leak. Check for a condition that causes a large vacuum leak, such as an incorrectly installed or faulty VSV or brake booster hose disconnected . 2. If a problem is found, repair as necessary. Was a problem found?	—	Verify repair	Go to *Step 7*
7	Using a Tech 2, monitor the AP angle with the engine idling. Is the AP angle at the specified value and steady?	0%	Go to *Step 8*	Refer to *DTC P0123* for further diagnosis
8	1. Check the transmission range switch circuit. Use a Tech 2 and be sure the Tech 2 indicates that the vehicle is in drive with the gear selector in drive or overdrive. 2. If a problem is found, diagnose and repair the transmission range switch as necessary. Was a problem found?	—	Verify repair	Go to *Step 9*

Cuts Out, Symptom (Cont'd)

Step	Action	Value(s)	Yes	No
9	1. Injector Test Operate the each injector by Tech 2 with the ignition "ON" and check if the working noise confirm. 2. If a problem is found, check the harness or replace the injector. Is the action complete?	—	Verify repair	Go to *Step 10*
10	1. Check the following engine mechanical items. Refer to *Engine Mechanical* for diagnosis procedures: ● Low compression ● Sticking or leaking valves ● Worn camshaft lobe(s) ● Camshaft drive belt slipped or stripped ● Incorrect valve timing ● Broken valve springs 2. If a problem is found, repair as necessary. Was a problem found?	—	Verify repair	Go to *Step 11*
11	1. Check for faulty motor mounts. Refer to *Engine Mechanical* for inspection of mounts. 2. If a problem is found, repair as necessary. Was a problem found?	—	Verify repair	Go to *Step 12*
12	1. Review all diagnostic procedures within this table. 2. If all procedures have been completed and no malfunctions have been found, review/inspect the following: ● Visual/physical inspection ● Tech 2 data ● Freeze Frame data/Failure Records butter ● All electrical connections within a suspected circuit and/or system 3. If a problem is found, repair as necessary. Was a problem found?	—	Verify repair	Contact Technical Assistance

Starter Motor Doesn't Rotate

Step	Action	Value(s)	Yes	No
1	**DEFINITION:** As starter motor doesn't rotate, engine is not cranked. 1. Perform a bulletin search. 2. If a bulletin that addresses the symptom is found, correct the condition as instructed in the bulletin. Was the bulletin found?	—	Verify repair	Go to *Step 2*
2	Was a visual/physical check performed?	—	Go to *Step 3*	Go to *Visual/ Physical Check*
3	1. Check battery cord terminal for looseness & poor contact due to corrosion. 2. Check battery voltage. 3. If a problem is found, repair as necessary. Was a problem found?	—	Verify repair	Go to *Step 4*
4	1. Check fan belt for looseness & damage. 2. If a problem is found, adjust or replace as necessary. Was a problem found?	—	Verify repair	Go to *Step 5*
5	1. Check fuse bull link for disconnection & short. 2. If a problem is found, repair as necessary. Was a problem found?	—	Verify repair	Go to *Step 6*
6	1. Check generator for mount & damage (Refer to Engine Mechanical). 2. If a problem is found, repair as necessary. Was a problem found?	—	Verify repair	Go to *Step 7*
7	1. Check starter SW and starter relay for looseness and damage. 2. If a problem is found, repair as necessary. Was a problem found?	—	Verify repair	Go to *Step 8*
8	1. Check starter motor for mount and damage. (Refer to *Engine Mechanical*) 2. If a problem is found, repair as necessary. Was a problem found?	—	Verify repair	Go to *Step 9*
9	1. Review all diagnostic procedures within this table. 2. If all procedures have been completed and no malfunctions have been found, review/inspect the following: • Visual/physical inspection • Tech 2 data • Freeze Frame data/Failure Records butter • All electrical connections within a suspected circuit and/or system 3. If a problem is found, repair as necessary. Was a problem found?	—	Verify repair	Contact Technical Assistance

Starting Difficulty In Case Fuel Doesn't Come to Injector

Step	Action	Value(s)	Yes	No
1	**DEFINITION:** Engine is cranked, but not started for a long time. Steps soon. Was OBD System check performed?	—	Go to *Step 2*	Go to *OBD System Check*
2	1. Perform a bulletin research. 2. If a bulletin that addresses the symptom is found, correct the condition as instructed in the bulletin. Was a bulletin found?	—	Verify repair	Go to *Step 3*
3	Was a visual/physical check performed?	—	Go to *Step 4*	Go to *Visual/ Physical Check*
4	Check fuel shortage. If short, replenish. Was fuel short?	—	Verify replenish	Go to *Step 5*
5	1. Check fuel pipeline for leak. 2. If a problem is found, repair as necessary. Was a problem found?	—	Verify repair	Go to *Step 6*
6	1. Check fuel pipeline & filter for deformation & clogging. 2. If a problem is found, repair as necessary. Was a problem found?	—	Verify repair	Go to *Step 7*
7	1. Check fuel pump for damage. 2. If a problem is found, repair as necessary. Was a problem found?	—	Verify repair	Go to *Step 8*
8	Check the Injector test by Tech 2. Does the working noise confirm?	—	Go to *Step 11*	Go to *Step 9*
9	1. Check the injector connector for damage. 2. Check the injector harness for damage. 3. If a problem is found, repair as necessary. Was a problem found?	—	Verify repair	Go to *Step 10*
10	Replace the injector. (Refer to the *injector group sign programming)* Is the action complete?	—	Verify repair	—
11	1. Indicate RPCV Data List by Tech 2 to check operation. Perform RPCV test. 2. If a problem is found, replace RP sensor or RPCV as necessary. Was a problem found?	—	Verify repair	Go to *Step 12*

Starting Difficulty In Case Fuel Doesn't Come to Injector (Cont'd)

Step	Action	Value(s)	Yes	No
12	1. Review all diagnostic procedures within this table. 2. If all procedures have been completed and no malfunctions have been found, review/inspect the following: ● Visual/physical inspection ● Tech 2 data ● Freeze Frame data/Failure Records butter ● All electrical connections within a suspected circuit and/or system 3. If a problem is found, repair as necessary. Was a problem found?	—	Verify repair	Contact Technical Assistance

Lubrication System Trouble

Step	Action	Value(s)	Yes	No
1	**DEFINITION:** In road tests oil pressure doesn't rise, or oil is foul to excess. Was OBD System check performed?	—	Go to *Step 2*	Go to *OBD System Check*
2	1. Perform a bulletin research. 2. If a bulletin that addresses the symptom is found, correct the condition as instructed in the bulletin. Was a bulletin found?	—	Verify repair	Go to *Step 3*
3	1. Check if a correct engine oil is used. 2. If a problem is found, change engine oil. Was a problem found?	—	Verify repair	Go to *Step 4*
4	1. Check the oil pressure meter for damage. 2. Check the oil unit harness and connector for damage. 3. If a problem is found, repair as necessary. Was a problem found?	—	Verify repair	Go to *Step 5*
5	1. Check oil pipe connections for leakage. 2. If a problem is found, repair as necessary. Was a problem found?	—	Verify repair	Go to *Step 6*
6	1. Check oil filter for clogging. 2. If a problem is found, repair as necessary. Was a problem found?	—	Verify repair	Go to *Step 7*
7	1. Check valve clearance. 2. If a problem is found, adjust as necessary. Was a problem found?	—	Verify repair	Go to *Step 8*
8	1. Check camshaft bearing for wear. 2. If a problem is found, repair as necessary. Was a problem found?	—	Verify repair	Go to *Step 9*
9	1. Check crankshaft & connecting rod bearings for wear. 2. If a problem is found, repair as necessary. Was a problem found?	—	Verify repair	Go to *Step 10*
10	1. Check oil pump for damage. 2. If a problem is found, repair as necessary. Was a problem found?	—	Verify repair	Go to *Step 11*

Lubrication System Trouble (Cont'd)

Step	Action	Value(s)	Yes	No
11	1. Check cylinder head & cam carrier gaskets for damage. 2. If a problem is found, repair or replace as necessary. Was a problem found?	—	Verify repair	Go to *Step 12*
12	1. Review all diagnostic procedures within this table. 2. If all procedures have been completed and no malfunctions have been found, review/inspect the following: ● Visual/physical inspection ● Tech 2 data ● Freeze Frame data/Failure Records butter ● All electrical connections within a suspected circuit and/or system 3. If a problem is found, repair as necessary. Was a problem found?	—	Verify repair	Contact Technical Assistance

QOS System Doesn't Work

Step	Action	Value(s)	Yes	No
1	Was OBD System check performed?	—	Go to *Step 2*	Go to *OBD System Check*
2	Check glawplug indicator light. If bulb is broken, replace. Was a problem found?	—	Verify repair	Go to *Step 3*
3	1. Connect a circuit tester between glawplug & engine ground. 2. With ignition on and engine off, check if the glaw indicator and circuit tester indicate power voltage for 9 to 13 sec. If not indicated, repair terminal & wire harness. Was repair needed?	—	Verify repair	Go to *Step 4*
4	1. Connect a circuit tester between glawplug and engine ground. 2. With engine on, check if voltage continues for 180 sec. If not, inspect and repair glaw relay. Was repair needed?	—	Verify repair	Go to *Step 5*
5	1. Remove the glawplug, and if damaged, replace. 2. Check glawplug resistance. Was resistance as specified?	0.8 – 1Ω	Go to *Step 7*	Go to *Step 6*
6	Replace glawplug. Was measure completed?	—	Verify repair	Go to *Step 7*
7	1. Review all diagnostic procedures within this table. 2. If all procedures have been completed and no malfunctions have been found, review/inspect the following: ● Visual/physical inspection ● Tech 2 data ● Freeze Frame data/Failure Records butter ● All electrical connections within a suspected circuit and/or system 3. If a problem is found, repair as necessary. Was a problem found?	—	Verify repair	Contact Technical Assistance

Much Black Smoke in Exhaust Gas

Step	Action	Value(s)	Yes	No
1	**DEFINITION:** In road tests, much black smoke is mixed. Was OBD System check performed?	—	Go to *Step 2*	Go to *OBD System Check*
2	1. Perform a bulletin research. 2. If a bulletin that addresses the symptom is found, correct the condition as instructed in the bulletin. Was a bulletin found?	—	Verify repair	Go to *Step 3*
3	1. Check if a correct fuel is used. 2. If a problem is found, change fuel. Was a problem found?	—	Verify repair	Go to *Step 4*
4	1. Check air cleaner element for clogging. 2. If a problem is found, repair or replace as necessary. Was a problem found?	—	Verify repair	Go to *Step 5*
5	1. Connect Tech 2 to the vehicle. 2. Monitor data list to check injector function. 3. If a problem is found, repair as necessary. Was a problem found?	—	Verify repair	Go to *Step 6*
6	1. Connect Tech 2 to the vehicle. 2. Monitor RPCV test to check rpcv function. 3. If a problem is found, repair as necessary. Was a problem found?	—	Verify repair	Go to *Step 7*
7	1. Check valve clearance. 2. If a problem is found, adjust as necessary. Was a problem found?	—	Verify repair	Go to *Step 8*
8	1. Review all diagnostic procedures in this table. 2. If all procedures have been completed and no malfunctions have been found, review/inspect the following: ● Visual/physical check ● Tech 2 data list ● Freeze Frame data ● All electrical connections in suspected circuits & systems 3. If a problem is found, repair as necessary. Was a problem found?	—	Verify repair	Contact Technical Assistance

Excess Engine Oil Consumption

Step	Action	Value(s)	Yes	No
1	**DEFINITION:** Oil consumption measured in road tests is higher than expected. Was OBD System check performed?	—	Go to *Step 2*	Go to *OBD System Check*
2	1. Perform a bulletin research. 2. If a bulletin that addresses the symptom is found, correct the condition as instructed in the bulletin. Was a bulletin found?	—	Verify repair	Go to *Step 3*
3	1. Check if a correct engine oil is used. 2. If a problem is found, change engine oil. Was a problem found?	—	Verify repair	Go to *Step 4*
4	1. Check oil pipe connections for leakage. 2. If a problem is found, repair as necessary. Was a problem found?	—	Verify repair	Go to *Step 5*
5	1. Check oil seals and gaskets for leakage. 2. If a problem is found, repair as necessary. Was a problem found?	—	Verify repair	Go to *Step 6*
6	1. Connect Tech 2 to the vehicle. 2. Perform RPCV test to check its function. 3. If a problem is found, repair as necessary. Was a problem found?	—	Verify repair	Go to *Step 7*
7	1. Check piston ring for damage & groove wear. 2. If a problem is found, repair as necessary. Was a problem found?	—	Verify repair	Go to *Step 8*
8	1. Check valve stem, valve guide and oil controller for wear. 2. If a problem is found, repair as necessary. Was a problem found?	—	Verify repair	Go to *Step 9*
9	1. Check camshaft carrier & cylinder head gaskets for blow-by. 2. If a problem is found, repair or replace as necessary. Was a problem found?	—	Verify repair	Go to *Step 10*
10	1. Review all the diagnostic procedures in this table. 2. If all procedures have been completed and no malfunctions have been found, review/inspect the following: ● Visual/physical check ● Tech 2 data list ● Freeze Frame data ● All electrical connections in suspected circuits & systems 3. If a problem is found, repair as necessary. Was a problem found?	—	Verify repair	Contact Technical Assistance

Default Matrix Table

Service Procedure Default Strategy

A referral strategy has been established to assist the technician with additional information when the cause of the failure cannot be determined. If no problem is found after performing diagnostics, then refer to the default matrix table for further diagnostic information.

Default Matrix Table

Strategy Based Diagnostic Charts	Initial Diagnosis	Default Section(s)
On-Board Diagnostic (OBD) System Check	Vehicle does not enter diagnostics.	Chassis Electrical
On-Board Diagnostic (OBD) System Check	Vehicle enters diagnostics and communicates with the Tech 2. MIL is “ON” in diagnostics. Engine does not start and run.	HEUI System Check
On-Board Diagnostic (OBD) System Check	Engine starts and runs, no ECM codes set. Customer complains of vibration.	—
On-Board Diagnostic (OBD) System Check	Engine starts and runs, no ECM codes set. Customer complains of harsh or soft shift, poor performance, delayed or no engagement into drive or reverse, transmission fluid leak, transmission noise or vibration, or improper TCC operation.	Automatic Transmission
ECM Power and Ground Check	On-Board Diagnostic (OBD) System Check.	Chassis Electrical
ECM Power and Ground Check	On-Board Diagnostic (OBD) System Check. ECM power and ground circuits OK. Data link voltage incorrect.	Chassis Electrical
On-Board Diagnostic (OBD) System Check	Engine starts and runs, no ECM codes set. Customer complains of harsh or soft shift, poor performance, delayed or no engagement into drive or reverse, transmission fluid leak, transmission noise or vibration, or improper TCC operation.	Automatic Transmission

Symptoms	Initial Diagnosis	Default Section(s)
Intermittents	1. On-board diagnostic (OBD) system check. 2. Careful visual/physical inspections.	Chassis Electrical
Hard Starts	1. OBD system check. 2. Sensors (ECT, MAP, EGR, AP) ; output chart. 3. Fuel system electrical test, fuel system diagnosis. 4. Injector system.	Engine Mechanical, Injector System Check, Exhaust System Diagnosis
Surges and/or Chuggles	1. OBD system check. 2. Fuel system diagnosis. 3. Injector system.	Calibration ID “Broadcast” /Service Bulletins, Ignition System Check, Generator Output, Exhaust System Diagnosis
Lack of Power, Sluggish or Spongy	1. OBD system check. 2. Fuel system diagnosis. 3. Injector system.	Refer to *Exhaust System* in *Engine Exhaust*, TCC Operation, Calibration ID/Service Bulletins

Symptoms	Initial Diagnosis	Default Section(s)
Hesitation, Sag, Stumble	1. OBD system check. 2. AP. 3. MAP output check. 4. Fuel system diagnosis. 5. Injector system.	Generator Output Voltage (refer to *Chassis Electrical*), Calibration ID/Service Bulletins, Ignition System Check
Rough, Unstable, or Incorrect Idle, Stalling	1. OBD system check. 2. Fuel injector test.	MAP Output Check, Throttle Linkage, A/C Clutch Control Circuit Diagnosis, Calibration ID/Service Bulletins, Generator Output Voltage (refer to *Chassis Electrical*), Exhaust Diagnosis
Poor Fuel Economy	1. OBD system check. 2. Careful visual/physical inspection. 3. Injector system. 4. Cooling system.	TCC Operation, Exhaust System (refer to *Engine Exhaust*)
Engine Cranks But Will Not Run	1. OBD system check.	Fuel System Electrical Diagnosis, Fuel System Diagnosis, Fuel Injector Test.
Excessive Exhaust Emissions or Odors	1. OBD system check. 2. Emission test. 3. Cooling system. 4. Fuel system diagnosis. 5. Fuel injector test. 6. Injector system. 7. MAP output check.	Exhaust Diagnosis, Calibration ID/Service Bulletins
Dieseling, Run-On	1. OBD system check. 2. Careful visual/physical inspection. 3. Fuel system diagnosis.	—

On–Vehicle Service Camshaft Position (CMP) Sensor

Removal Procedure

1. Disconnect the negative battery cable.
2. Disconnect the electrical connector to the CMP sensor.

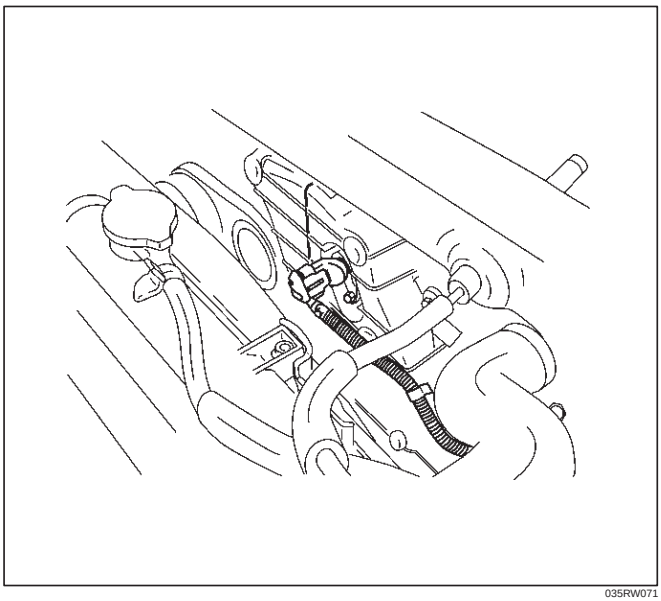

035RW071

3. Remove the CMP sensor retaining bolt from the cylinder head cover.

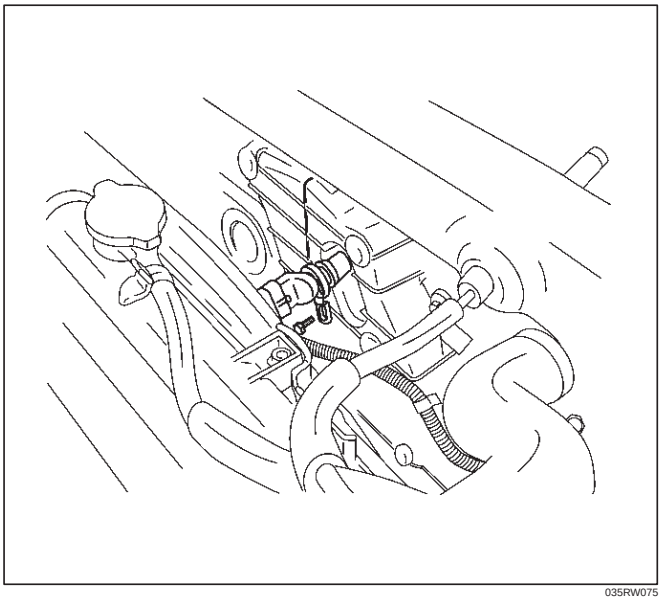

035RW075

Inspection Procedure

1. Inspect the sensor O-ring for cracks or leaks.
2. Replace the O-ring if it is worn or damaged.
3. Lubricate the new O-ring with engine oil.
4. Install the lubricated O-ring.

Installation Procedure

1. Install the CMP sensor in the cylinder head cover.
2. Install the CMP sensor retaining bolt.

Tighten

- **Tighten the retaining bolt to 9 N·m (78 lb in.).**

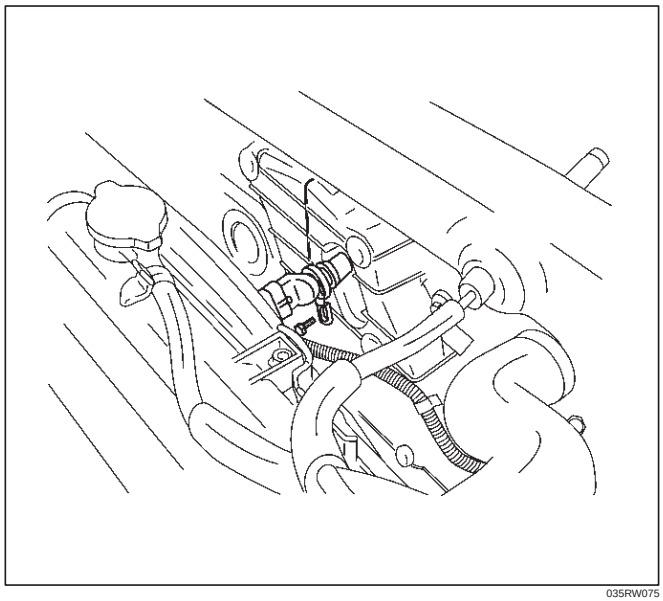

035RW075

3. Connect the electrical connector to the CMP sensor.

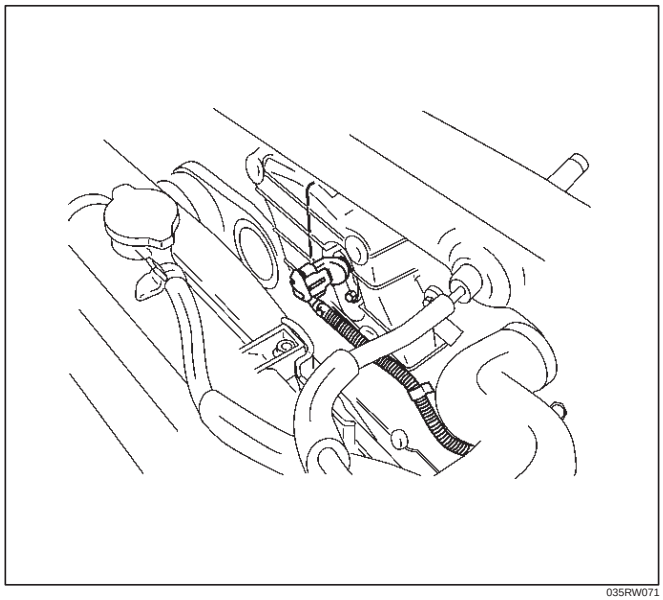

035RW071

4. Connect the negative battery cable.

Crankshaft Position (CKP) Sensor

Removal Procedure

1. Disconnect the negative battery cable.
2. Remove the under cover.

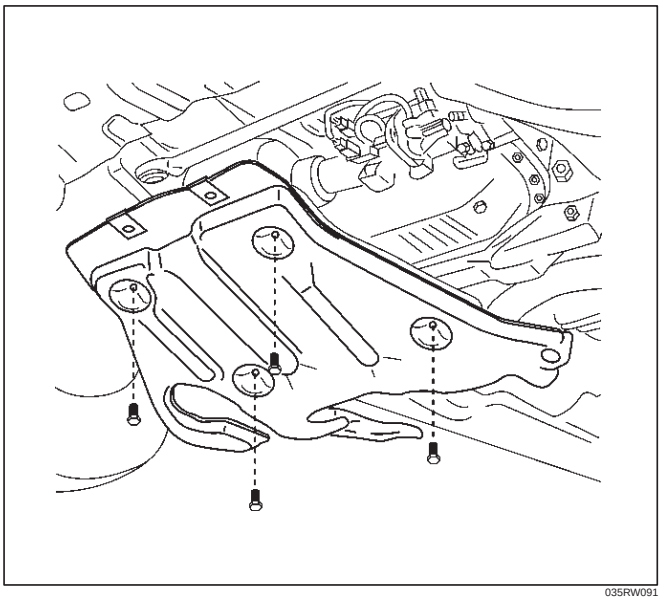

035RW091

3. Disconnect the electrical connector to the CKP sensor.
4. Remove one bolt and the CKP sensor from the left side of the engine block.

NOTE: Use caution to avoid any hot oil that might drip out.

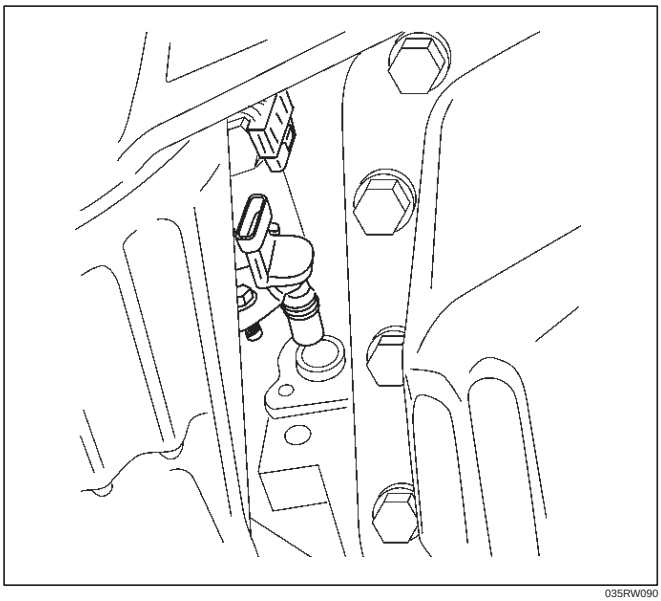

035RW090

Inspection Procedure

1. Inspect the sensor O-ring for cracks or leaks.
2. Replace the O-ring if it is worn or damaged.
3. Lubricate the new O-ring with engine oil.
4. Install the lubricated O-ring.

Installation Procedure

1. Install the CKP sensor in the engine block.
2. Install the CKP sensor mounting bolt.

Tighten

- **Tighten the mounting bolt to 9 N·m (78 lb in.).**

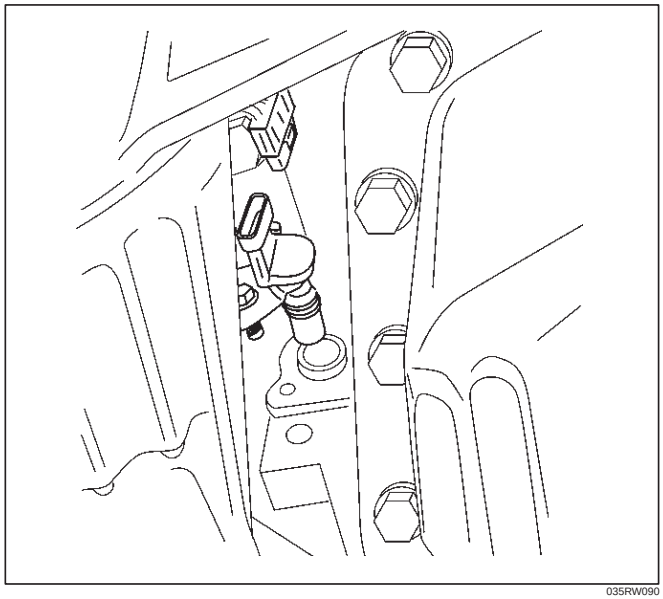

035RW090

3. Connect the electrical connector to the CKP sensor.
4. Install the under cover.

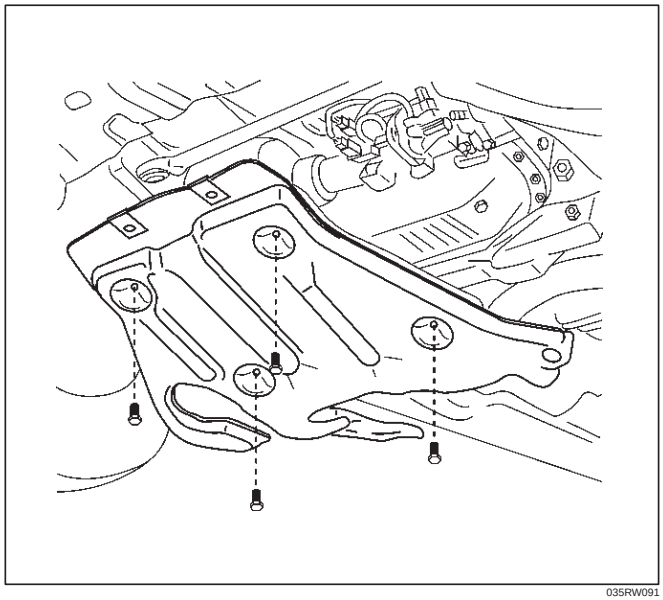

035RW091

5. Connect the negative battery cable.

Engine Coolant Temperature (ECT) Sensor

Removal Procedure

NOTE: Care must be taken when handling the engine coolant temperature (ECT) sensor. Damage to the ECT sensor will affect proper operation of the fuel injection system.

1. Disconnect the negative battery cable.
2. Drain the radiator coolant. Refer to *Draining and Refilling Cooling System* in *Engine Cooling*.
3. Disconnect the electrical connector.
4. Remove the ECT sensor from the front side of the intake manifold.

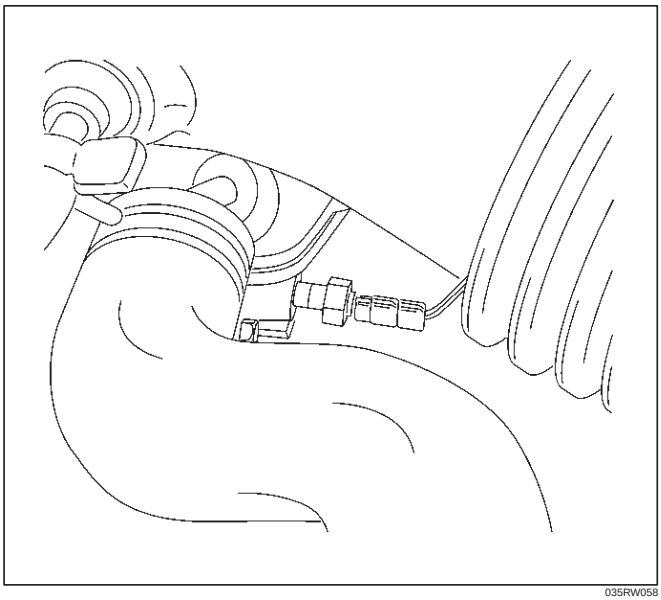

035RW058

Installation Procedure

1. Apply sealer (LOCTITE 262) or the equivalent to the threads of the ECT sensor.
2. Install the ECT sensor in the front side of the intake manifold.

Tighten

- **Tighten the ECT sensor to 19 N·m (14 lb ft.).**

3. Connect the electrical connector.

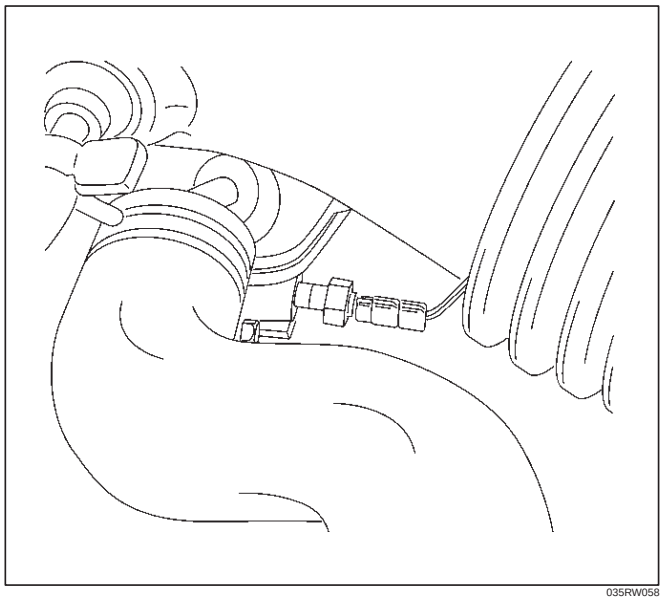

035RW058

4. Fill the radiator with coolant. Refer to *Draining and Refilling Cooling System* in *Engine Cooling*.
5. Connect the negative battery cable.

Intake Air Temperature (IAT) Sensor

Removal Procedure

1. Disconnect the negative battery cable.
2. Disconnect the electrical connector from the IAT sensor.
3. Remove the IAT sensor from the intake air duct by using a rocking motion while pulling the sensor.

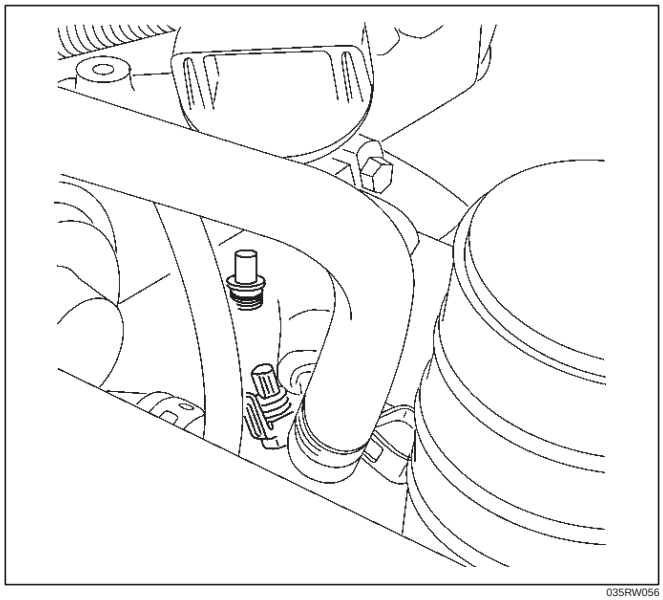

035RW056

Installation Procedure

1. Install the IAT sensor into the grommet in the intake air duct.

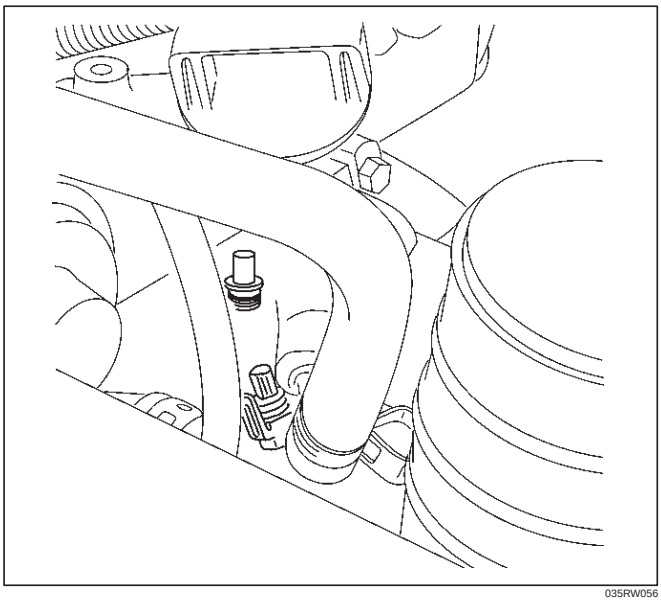

035RW056

2. Correct the IAT electrical connector.
3. Connect the negative battery cable.

Manifold Absolute Pressure (MAP) Sensor

Removal Procedure

1. Disconnect the negative battery cable.
2. Disconnect the EGR valve.

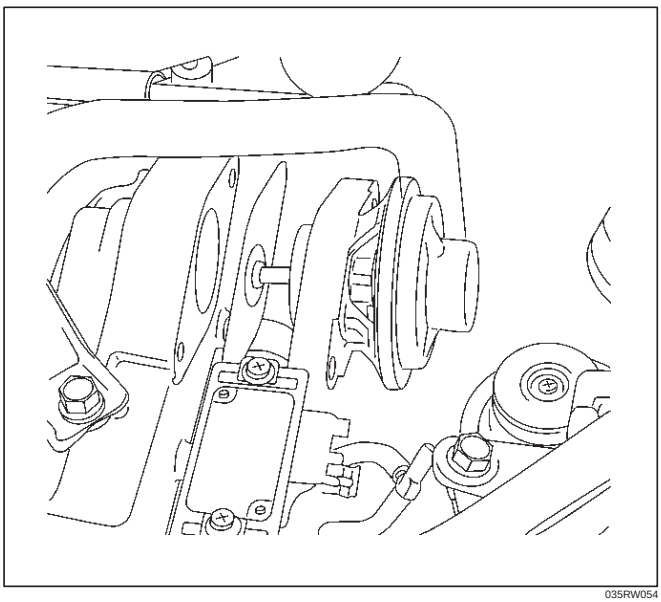

035RW054

3. Disconnect the MAP sensor connector from the MAP sensor.

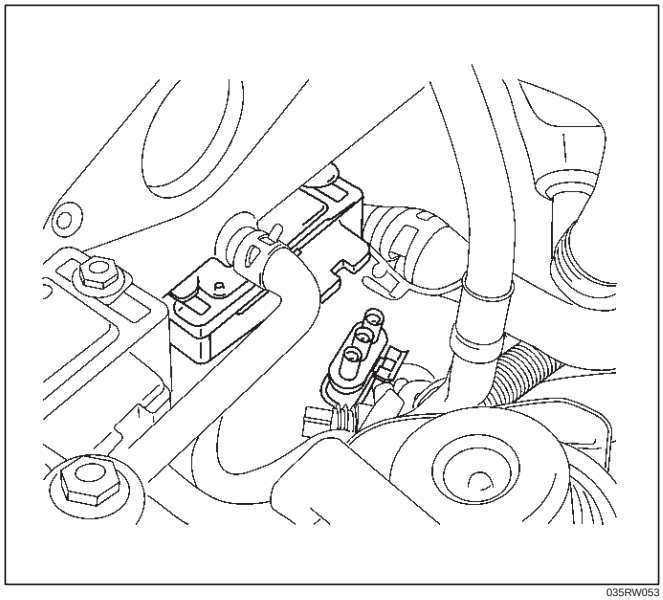

035RW053

4. Remove the bolts and the MAP sensor from the intake manifold.

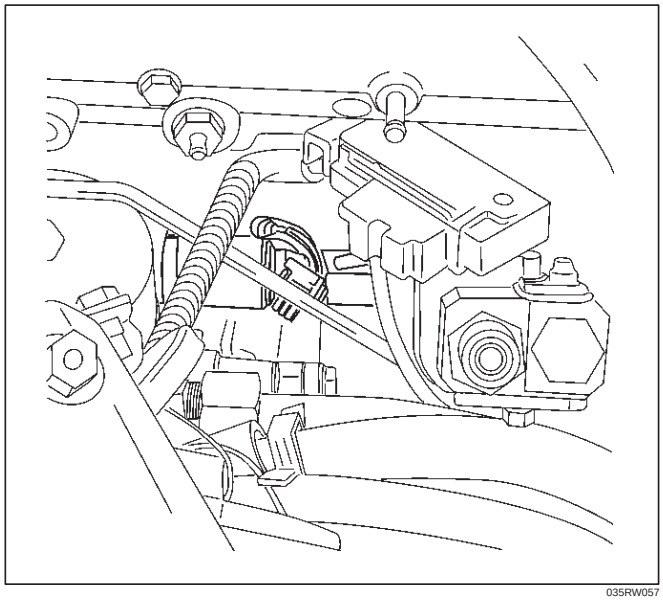

035RW057

Installation Procedure

1. Install the MAP sensor and bolts on the intake manifold.

Torque: 4 N·m (35 lb in)

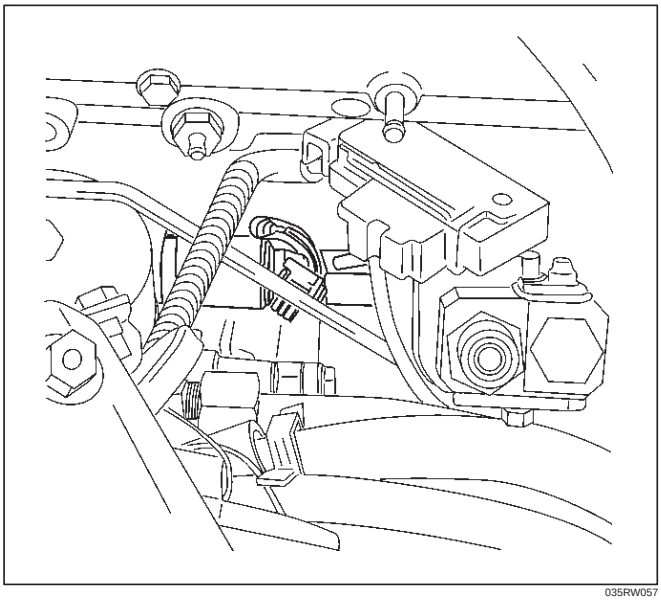

035RW057

2. Connect the MAP sensor connector.

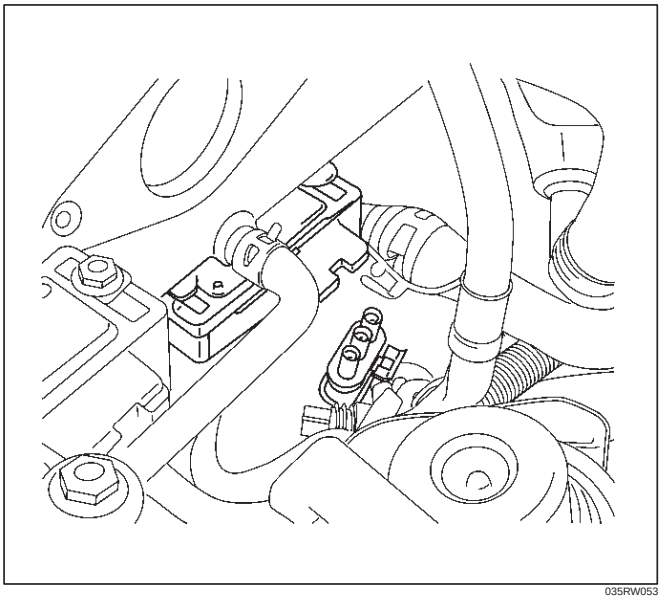

035RW053

3. Connect the EGR valve.

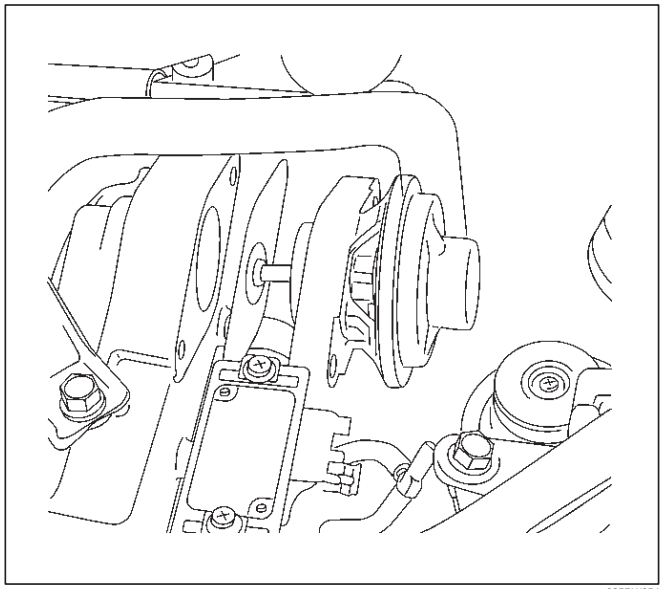

035RW054

4. Connect the negative battery cable.

Oil Temperature (OT) Sensor

Removal Procedure

1. Disconnect the negative battery cable.
2. Remove the battery.

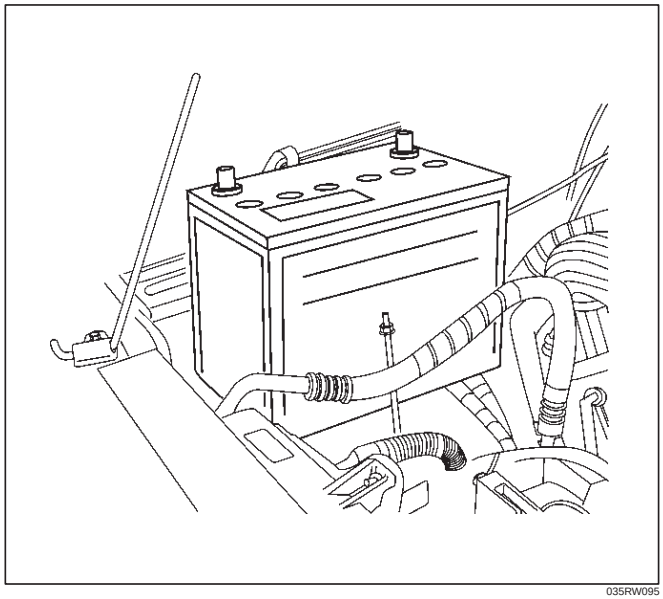

035RW095

3. Disconnect the electrical connector from the OT sensor.
4. Remove the OT sensor.

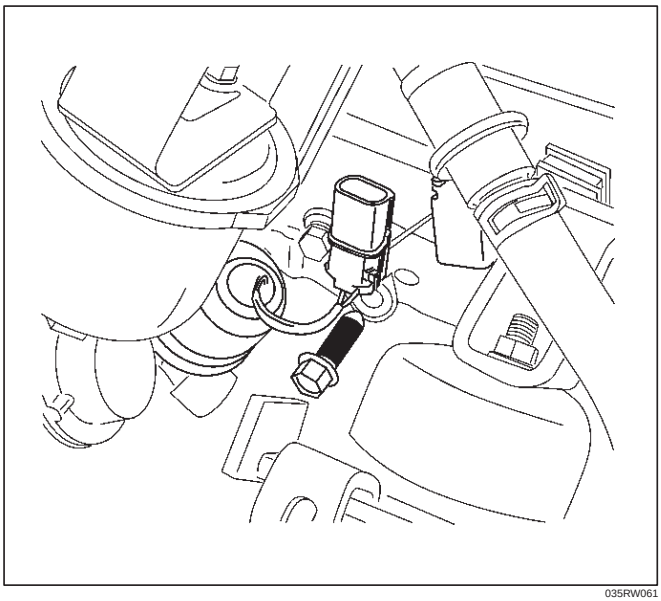

035RW061

Installation Procedure

1. Install the OT sensor.

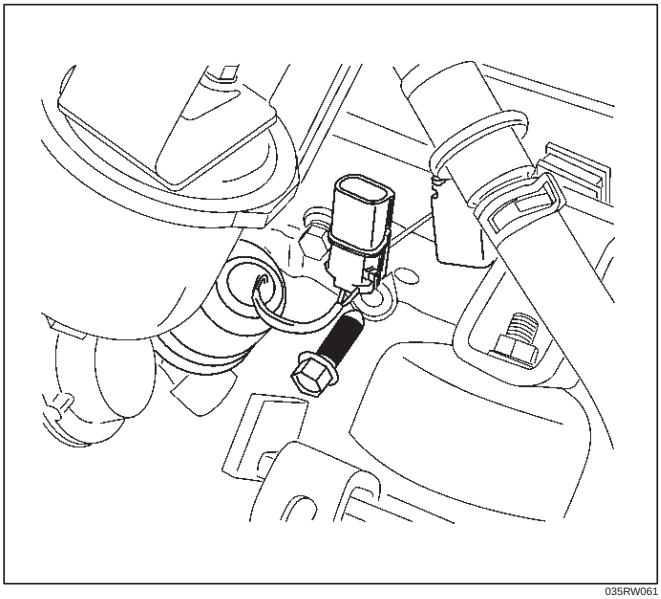

035RW061

2. Connect the OT sensor electrical connector.
3. Install the battery.

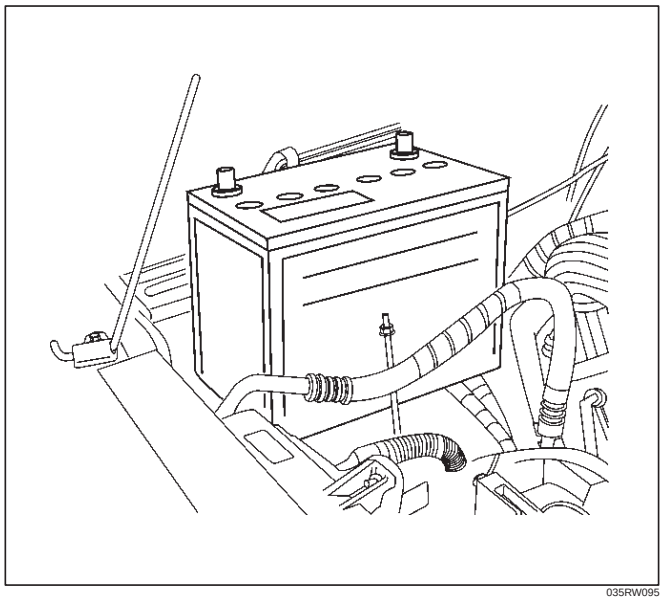

035RW095

4. Connect the negative battery cable.

Malfunction Indicator Lamp (MIL)

Removal and Installation Procedure

Refer to Meter in Electrical section.

Engine Control Module (ECM)

Service Precaution

NOTE: To prevent possible electrostatic discharge damage to the ECM, do not touch the connector pins or soldered components on the circuit board.

When replacing the ECM to prevent possible electro damage, follow these guidelines:
Before removing the ECM, disconnect the negative battery cable.
Before install the ECM, install the negative battery cable.

Electrostatic Discharge (ESD) Damage

Electronic components used in the control systems are often designed to carry very low voltage. Electronic components are susceptible to damage caused by electrostatic discharge. Less than 100 volts of static electricity can cause damage to some electronic components. By comparison, it takes as much as 4,000 volts for a person to even feel the zap of a static discharge.
There are several ways for a person to become statically charged. The most common methods of charging are by friction and by induction. An example of charging by friction is a person sliding across a car seat.
Charging by induction occurs when a person with well insulated shoes stands near a highly charged object and momentarily touches ground. Charges of the same polarity are drained off leaving the person highly charged with the opposite polarity. Static charges can cause

damage, therefore, it is important to use care when handling and testing electronic components.

NOTE: To prevent possible Electrostatic Discharge damage, follow these guidelines:

- Do not touch the control module connector pins or soldered components on the control module circuit board.
- Do not open the replacement part package until the part is ready to be installed.
- Before removing the part from the package, ground the package to a known good ground on the vehicle.
- If the part has been handled while sliding across the seat, or while sitting down from a standing position, or while walking a distance, touch a known good ground before installing the part.

NOTE: To prevent internal ECM damage, the ignition must be in the “OFF” position in order to disconnect or reconnect power to the ECM (for example: battery cable, ECM pigtail, ECM fuse, jumper cables, etc.).

IMPORTANT: When replacing the production ECM with a service ECM, it is important to transfer the broadcast code and production ECM number to the service ECM label. This will allow positive identification of ECM parts throughout the service life of the vehicle. Do not record this information on the metal ECM cover.

IMPORTANT: The ignition should always be in the “OFF” position in order to install or remove the ECM connectors.

Service of the ECM should normally consist of either replacement of the ECM. If the diagnostic procedures call for the ECM to be replaced, the ECM should be checked first to ensure it is the correct part. If it is, remove the faulty ECM and install the new service ECM.

DTC P0601 indicates the check sum error.

Removal Procedure

1. Disconnect the negative battery cable.
2. Disconnect the ECM connector.

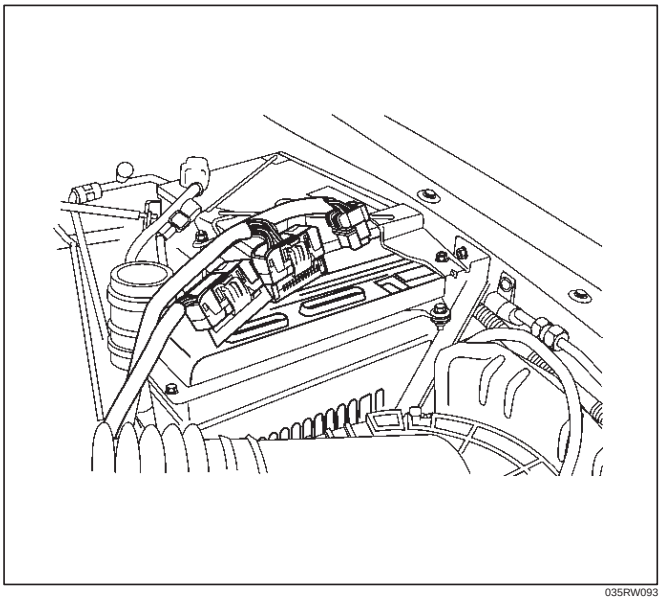

035RW093

3. Remove the bolts ECM bracket and battery bracket.

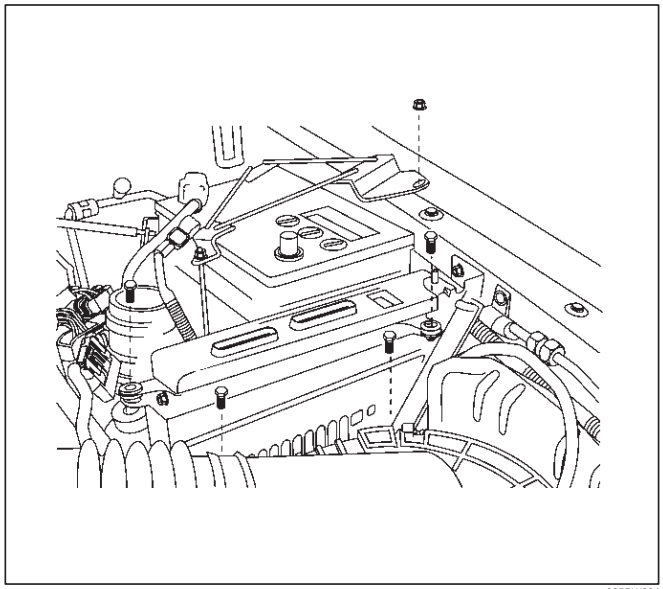

035RW094

4. Remove the ECM.

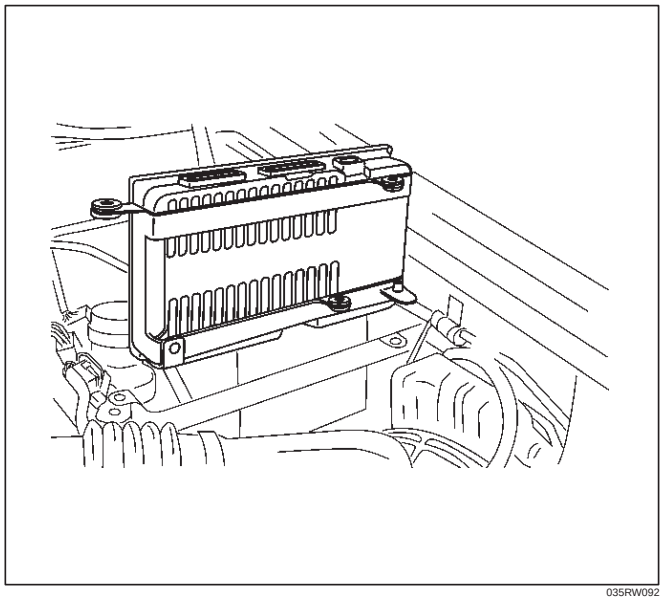

035RW092

Installation Procedure

1. Install the ECM.

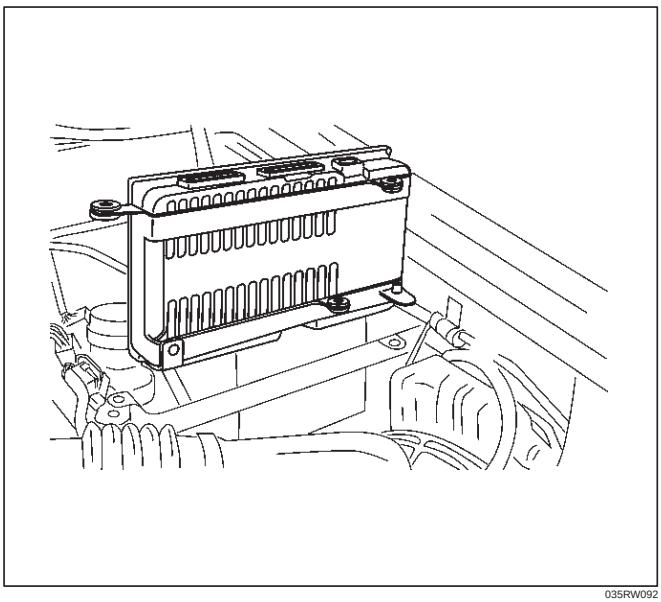

035RW092

2. Install the bolts, ECM bracket and battery bracket.

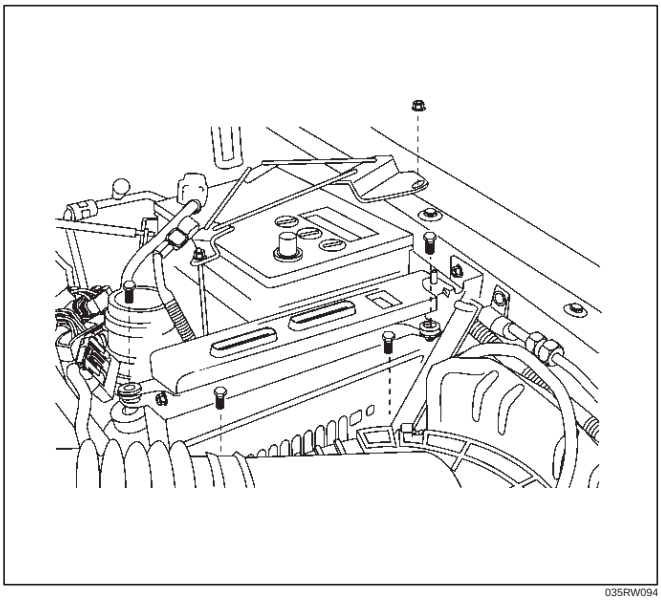

035RW094

3. Connect the ECM connector.

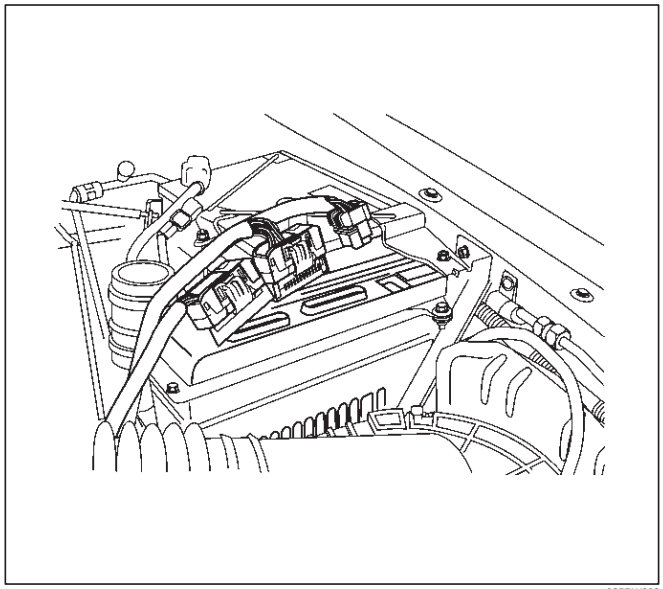

035RW093

4. Connect the negative battery cable.

If the ECM is replaced, the new ECM will need to be programmed.

EEPROM

General Description

The Electronically Erasable Programmable Read Only Memory (EEPROM) is a permanent memory that is physically soldered within the ECM. The EEPROM contains program and calibration information that the ECM needs to control powertrain operation.

Functional Check

1. Perform the On-Board Diagnostic System Check.
2. Start the engine and run for one minute.
3. Scan for DTCs using the Tech 2.

Intake Throttle Position (ITP) Sensor

Removal Procedure

1. Disconnect the negative battery cable.

2. Remove the cover of the intercooler.

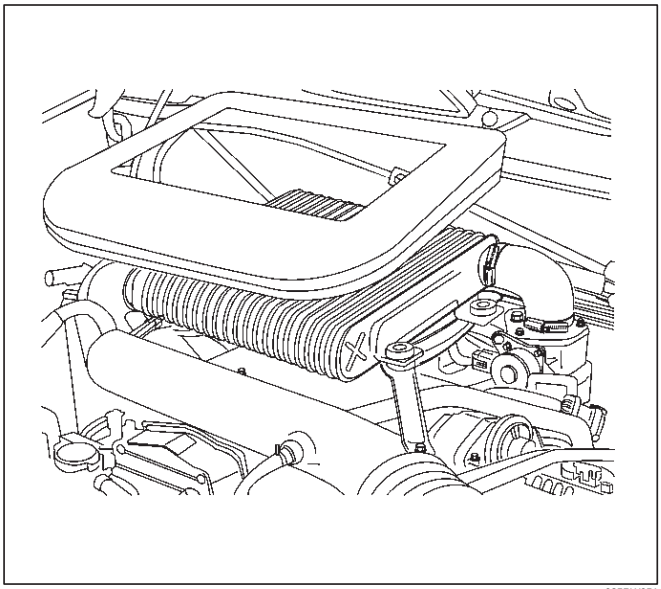

035RW051

3. Remove the bolts and the left side bracket to the intercooler.
4. Remove the air duct with bracket from the intercooler.
5. Remove the throttle body from the intake manifold.
6. Disconnect the ITP sensor electrical connector and throttle motor control connector.
7. Remove the bolts and the ITP sensor from the throttle body.

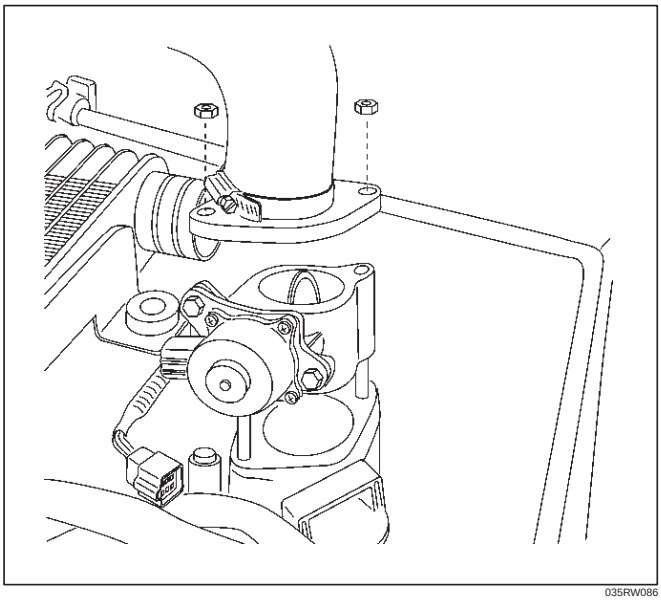

035RW086

NOTE: Do not clean the ITP sensor by soaking it in solvent. The sensor will be damaged as a result.

Function Check

Use a Tech 2 to check the ITP sensor output voltage at closed throttle.

- The voltage should be under 0.85 volt.
- If the reading is greater than 0.85 volt, check the throttle shaft to see if it is binding.
- If the throttle shaft is not binding and the throttle cable is properly adjusted, install a new ITP sensor.

Installation Procedure

1. Install the ITP sensor on the throttle body with the bolts.

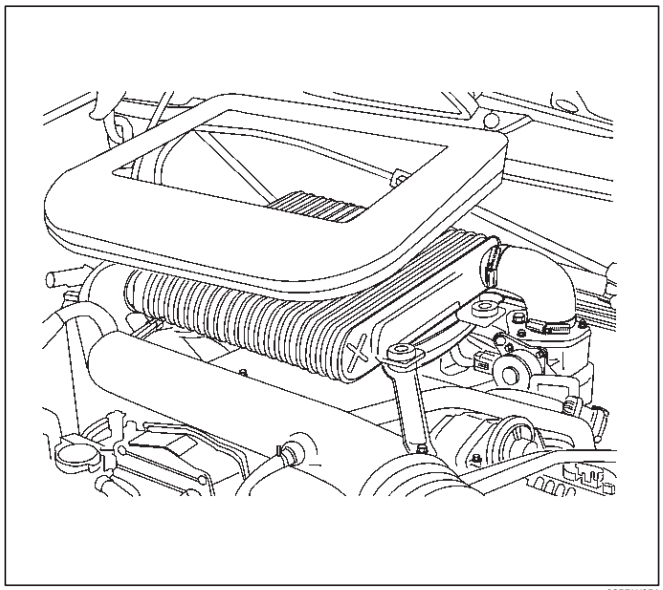

035RW051

2. Install the throttle body to the intake manifold and the air duct with bracket between throttle body and intercooler.

Torque: 20 N·m (14 lb ft)

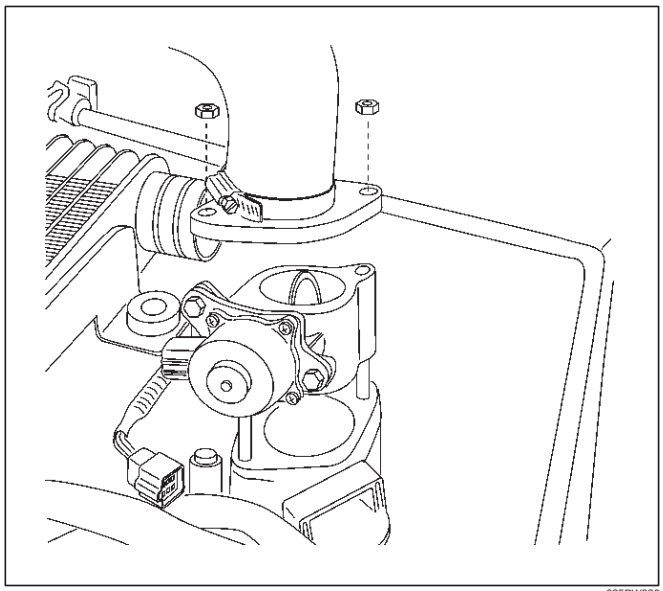

035RW086

3. Connect the ITP sensor electrical connector and throttle motor control connector.
4. Install the bracket to the intercooler.
5. Install the cover of intercooler.
6. Install the negative battery cable.

Vehicle Speed Sensor (VSS)

Removal Procedure

CAUTION: The VSS is located on the right side of the transfer case just ahead of the rear propeller shaft and very close to the exhaust pipes. Be sure that the exhaust pipes are cool enough to touch before trying to remove the VSS. If the pipes are hot, you could be burned.

1. Disconnect the negative battery cable.
2. Disconnect the VSS electrical connector.

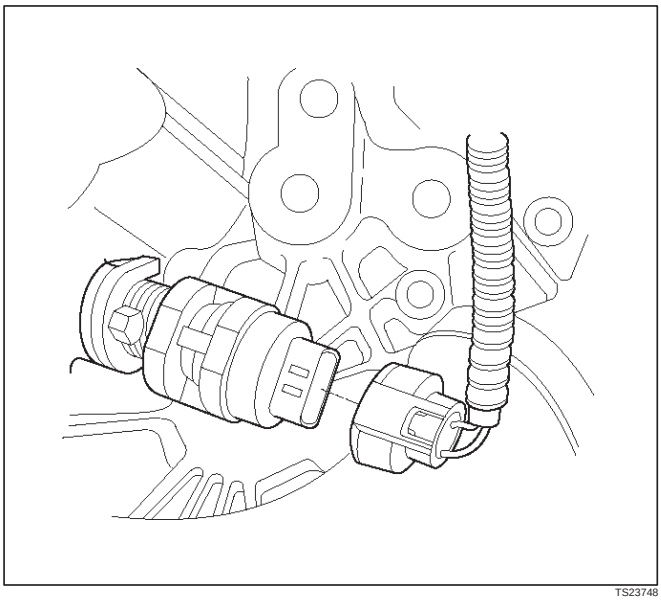

TS23748

3. Remove the bolt and the clamp securing the VSS in place.

IMPORTANT: Have a container ready to catch any fluid that leaks out when the VSS is removed from the transfer case.

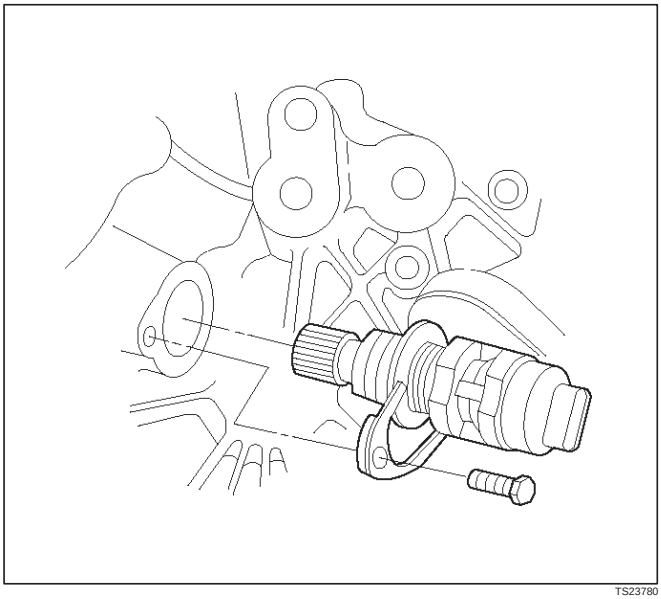

TS23780

4. Remove the VSS from the transfer case by wiggling it slightly and pulling it straight out.

Inspection Procedure

1. Inspect the electrical connector for signs of corrosion or warping. Replace the VSS if the electrical connector is corroded or warped.
2. Inspect the VSS driven gear for chips, breaks, or worn condition. Replace the VSS if the driven gear is chipped, broken or worn.
3. Inspect the O-ring for wear, nicks, tears, or looseness. Replace the O-ring if necessary.

Installation Procedure

1. Install the VSS in the transfer case with the notch for the connector facing the rear.
2. Secure the VSS in place with the clamp and the bolt.

Tighten

- **Tighten the bolt to 16 N·m (12 lb ft.).**

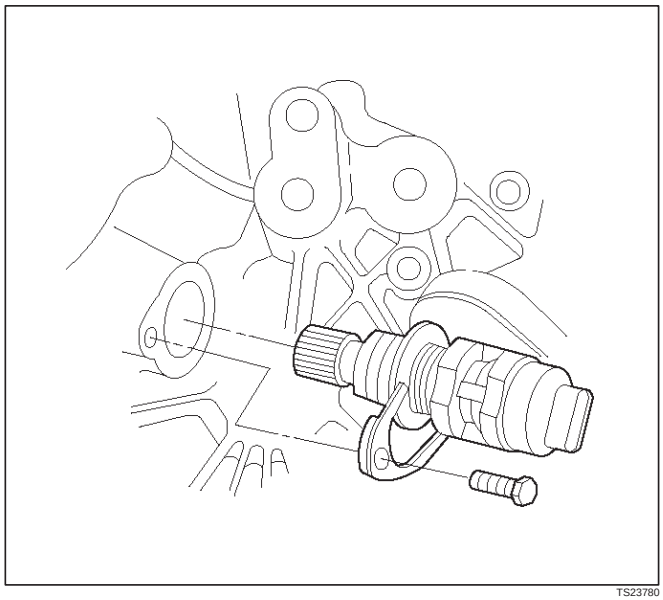

TS23780

3. Connect the VSS electrical connector.

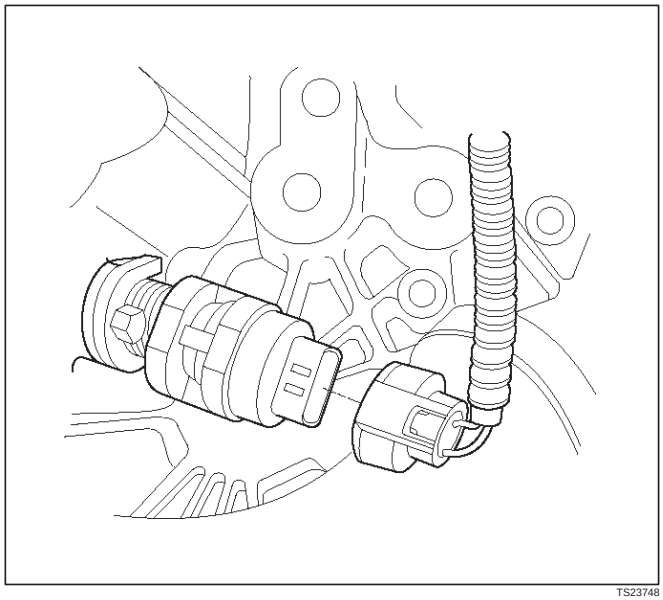

TS23748

4. Check the transfer case oil level. Add fluid if necessary.

5. Connect the negative battery cable.

Air Cleaner/Air Filter

Removal Procedure

1. Loosen the clamp between the air cleaner lid and the duct.
2. Release the four latches securing the lid to the air cleaner housing.
3. Remove the air cleaner lid.
4. Remove the air filter element.

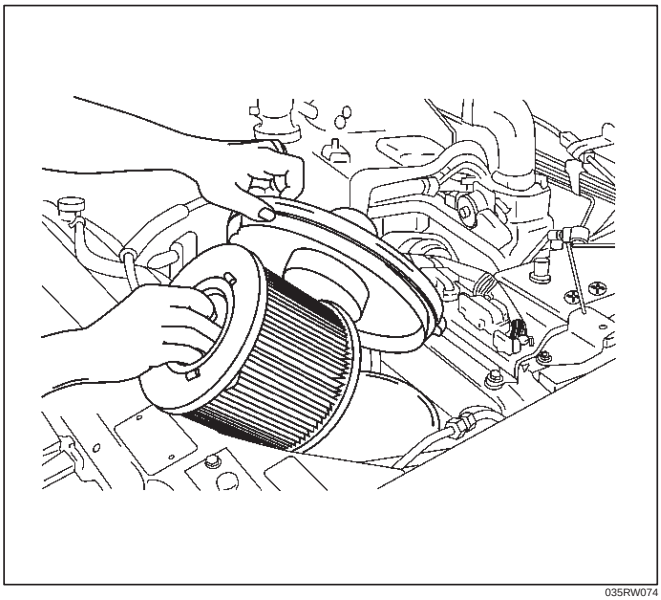

035RW074

5. Remove the retaining bolts and the air cleaner housing from the vehicle.

Installation Procedure

1. Install the air cleaner housing in the vehicle with the retaining bolts.
2. Install the air filter element in the air cleaner housing.

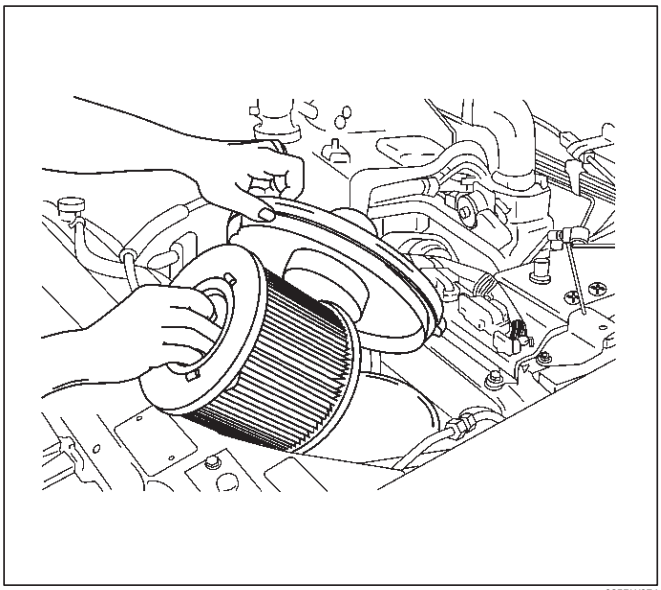

035RW074

3. Install the air cleaner lid on the air duct and the air cleaner housing.
4. Tighten the clamp and secure the four latches between the lid and the air cleaner housing.

Accel Position (AP) Sensor

Removal Procedure

1. Disconnect the negative battery cable.
2. Disconnect the electrical connector to the AP sensor.
3. Remove the bolts and the accelerator pedal assembly from the bulkhead.

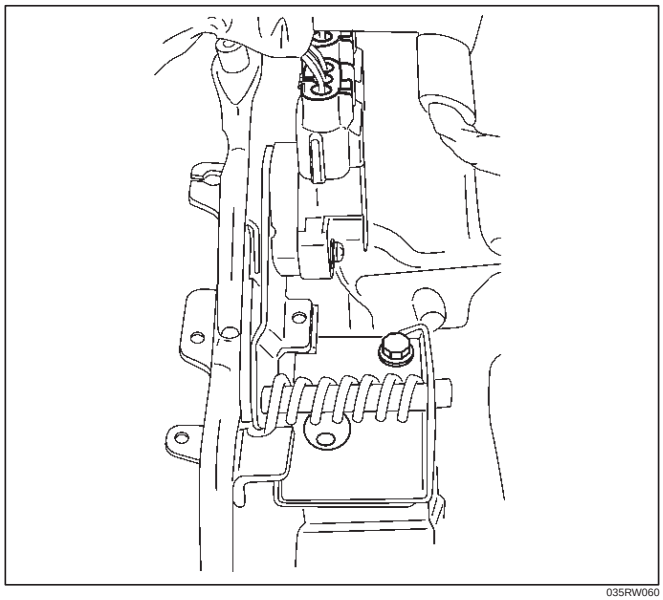

035RW060

4. Remove the bolts and AP sensor from the accelerator pedal assembly.

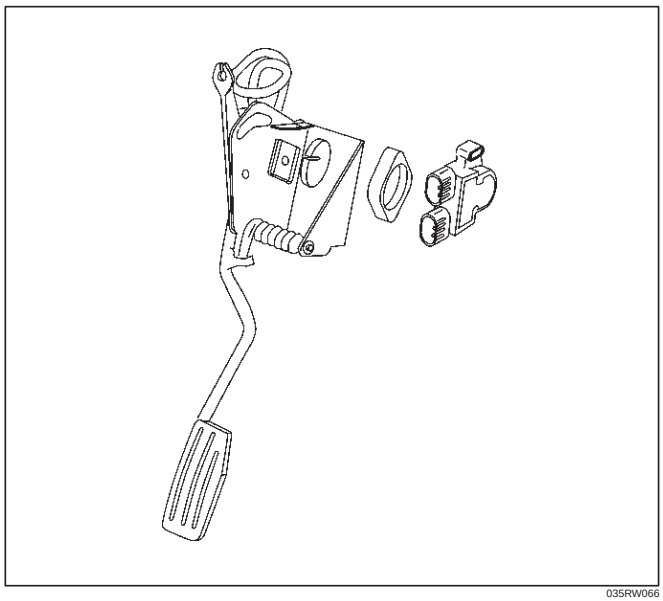

035RW066

Installation Procedure

1. Install the AP sensor to the accelerator pedal assembly.

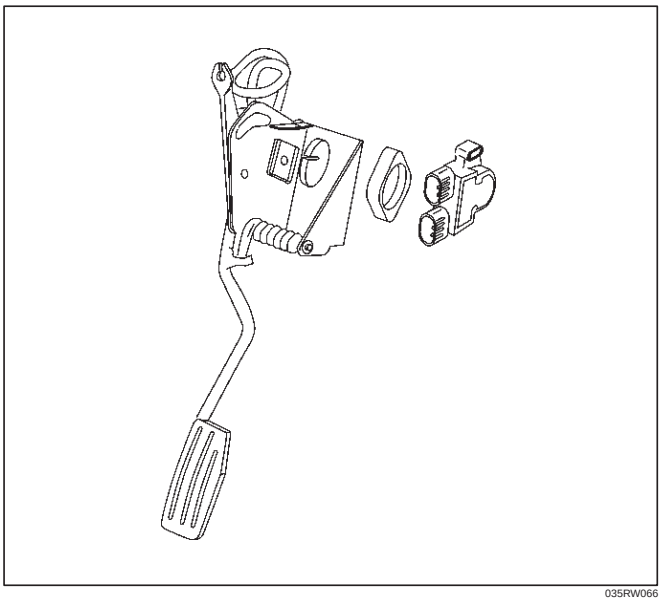

035RW066

2. Install the accelerator pedal assembly to the bulkhead.
3. Connect the electrical connector to the AP sensor.

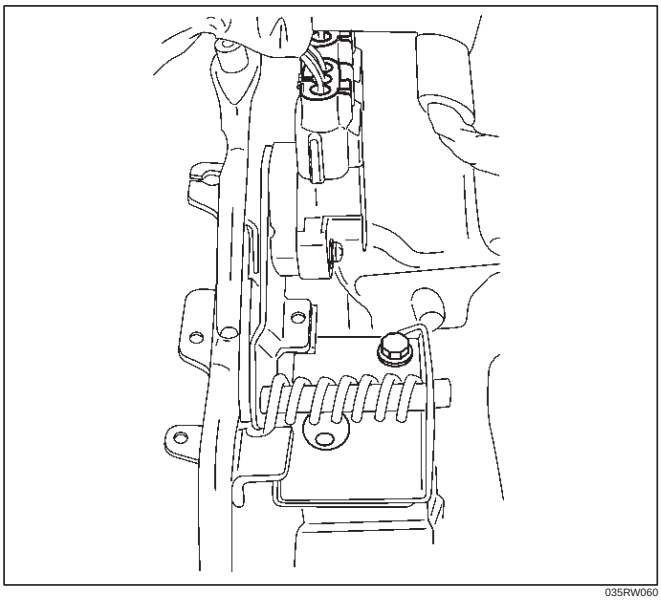

035RW060

4. Connect the negative battery cable.

Accelerator Pedal Replacement

Removal Procedure

1. Disconnect the negative battery cable.
2. Disconnect the electrical connector to the AP sensor.
3. Remove the bolts and the accelerator pedal assembly from the bulkhead.

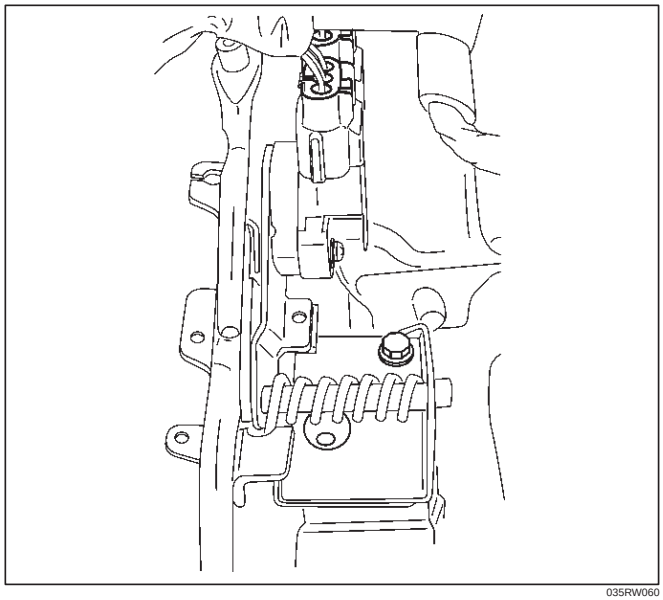

035RW060

4. Remove the bolts and AP sensor from the accelerator pedal assembly.

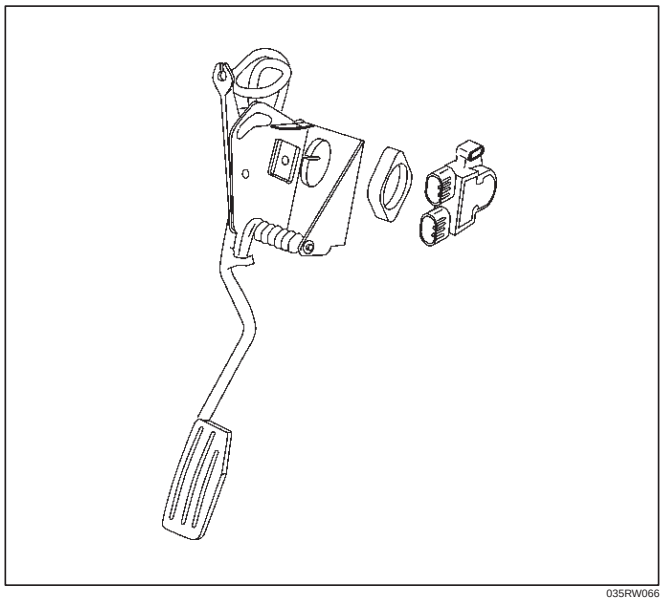

035RW066

Installation Procedure

1. Install the AP sensor to the accelerator pedal assembly.
2. Install the accelerator pedal assembly to the bulkhead.

3. Connect the electrical connector to the AP sensor.

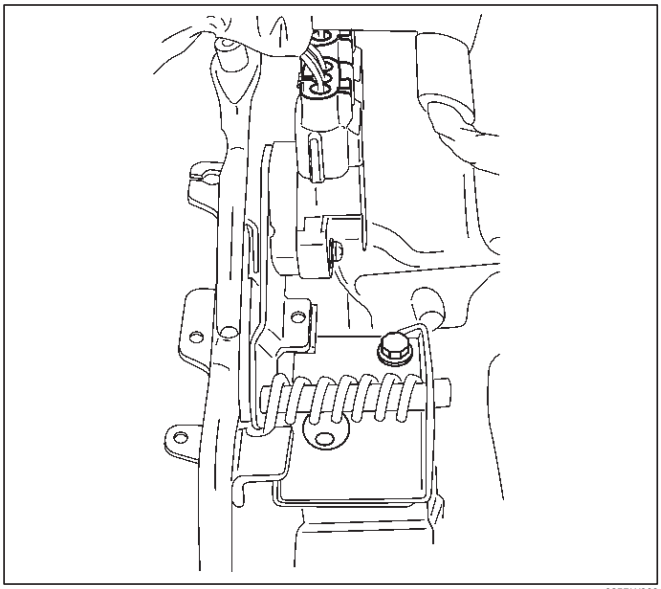

035RW060

4. Connect the negative battery cable.

Fuel Filter Cap

General Description

The fuel filler cap includes a vacuum valve and a pressure valve.
If high vacuum or high pressure occurs in the fuel tank, each valve works to adjust the pressure in order to prevent damage to the tank at the EGR valve.

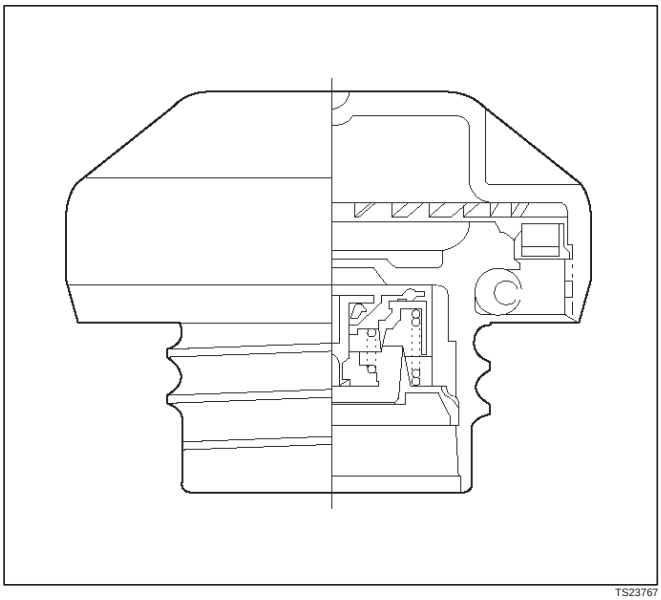

TS23767

Inspection Procedure

NOTE: Replace the fuel filler cap with the same type of filler cap that was originally installed on the vehicle.

- Check the seal ring in the filler cap for any abnormality and for seal condition.
- Replace the filler cap if any abnormality is found.

Fuel Filter

Removal and Installation Procedure

Refer to the Engine fuel in the 4JX1 Engine section.

Fuel Gauge Unit

Removal Procedure

1. Disconnect the negative battery cable.
2. Loosen the fuel filler cap.
3. Drain the fuel from the tank.

Tighten

- **Tighten the drain plug to 20 N·m (14 lb ft.).**

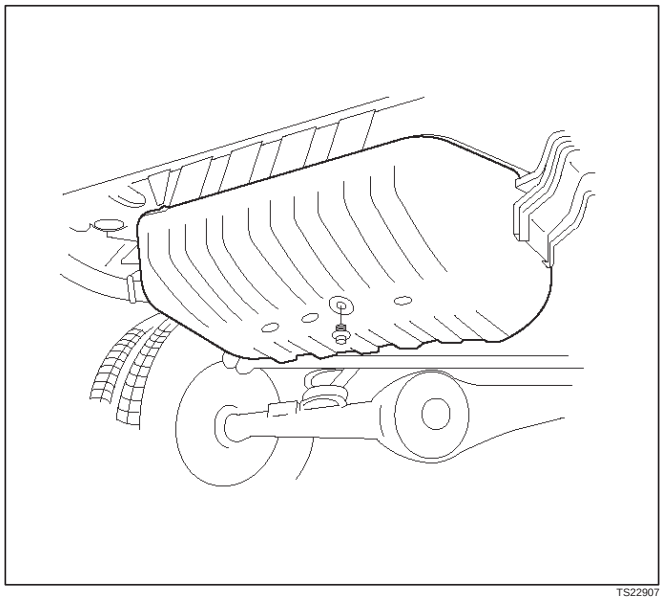

TS22907

4. Disconnect the wiring connector from the fuel gauge unit.

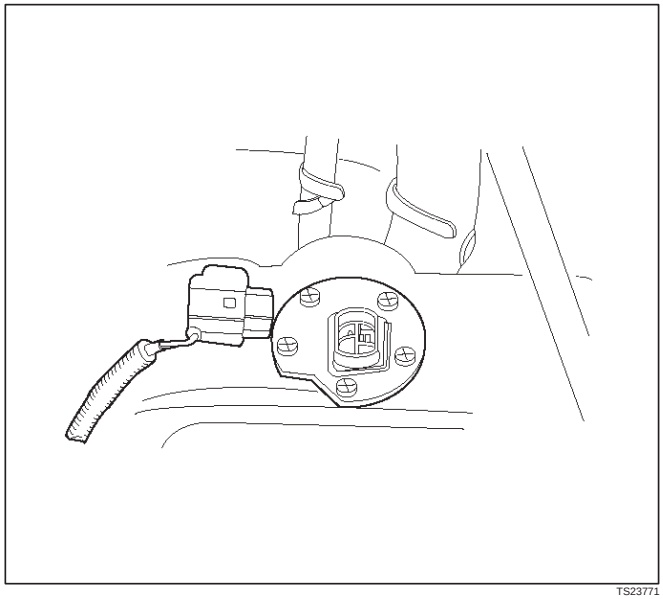

TS23771

5. Remove the fuel gauge unit retaining screws.

6. Remove the fuel gauge unit.
   - Cover or plug the fuel tank to prevent dust, dirt, or debris from entering the tank.

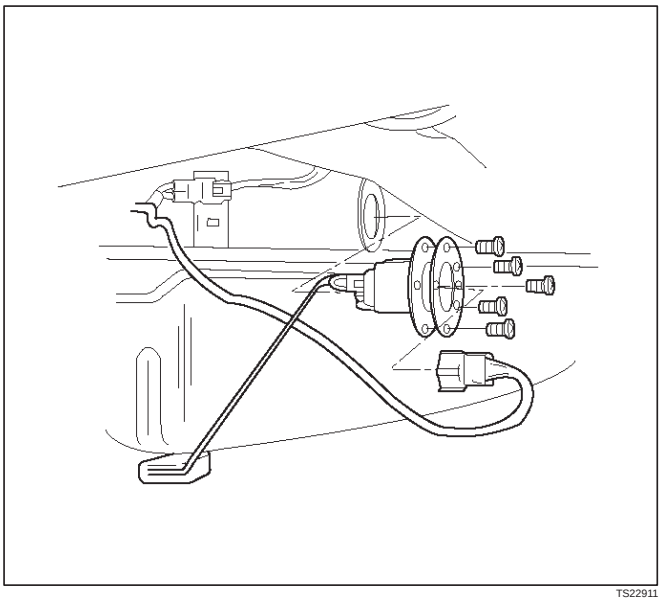

TS22911

Installation Procedure

1. Install the fuel gauge unit.
2. Install the fuel gauge unit retaining screws.

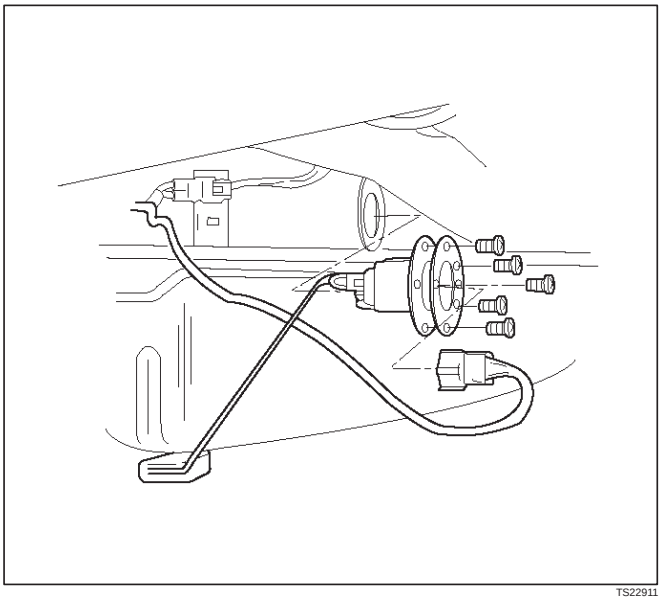

TS22911

3. Connect the wiring connector to the fuel gauge unit.

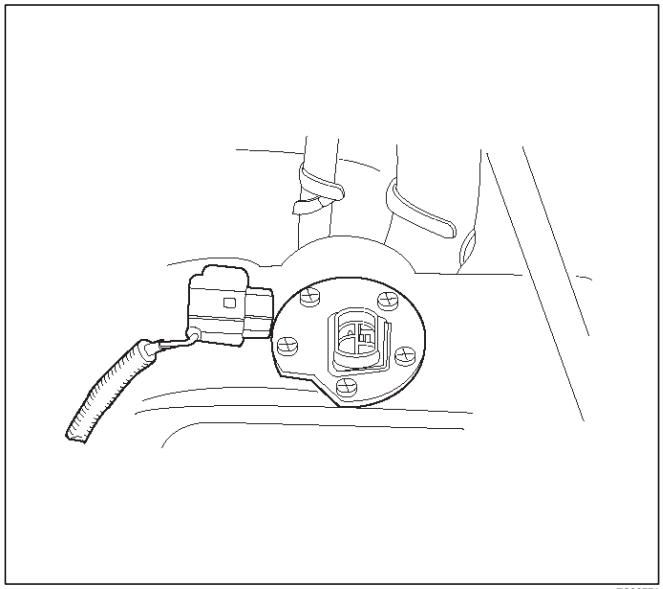

TS23771

4. Fill the fuel tank with fuel.
   - Tighten the fuel filler cap.
   - Check for leaks at the fuel gauge unit gasket.
5. Connect the negative battery cable.

Fuel Injectors

Removal and Installation Procedure

Refer to Engine Fuel in 4JX1 Engine Section.

Fuel Temperature Sensor

Removal Procedure

CAUTION: To reduce the risk of fire and personal injury, it is necessary to relieve the fuel system pressure before servicing the fuel system components.

CAUTION: After relieving the system pressure, a small amount of fuel may be released when servicing fuel lines or connections. Reduce the chance of personal injury by covering the fuel line fittings with a shop towel before disconnecting the fittings. The towels will absorb any fuel that may leak out. When the disconnect is completed, place the towel in an approved container.

1. Disconnect the negative battery cable.
2. Remove the intercooler assembly.
3. Remove the cylinder head. Refer to engine mechanical section.

4. Remove the rear side engine hanger.

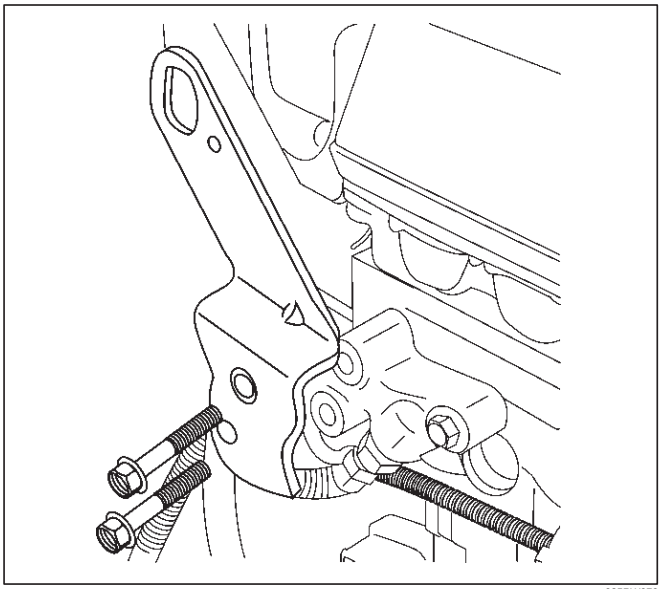

035RW070

5. Remove the fuel return adapter.

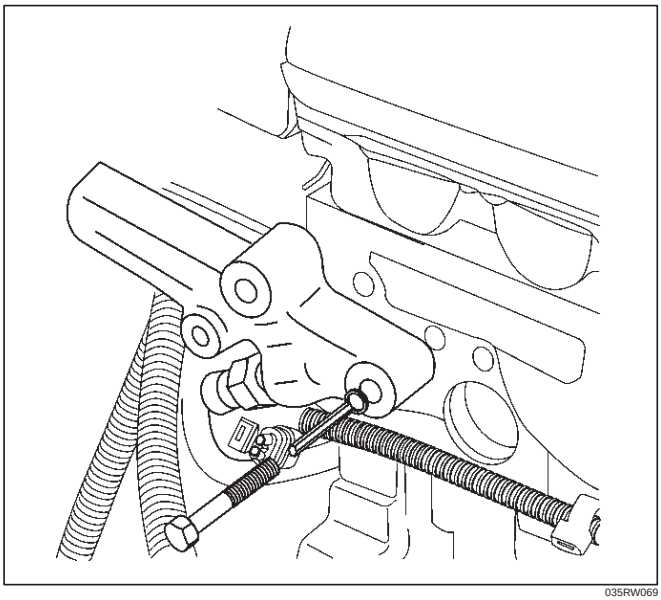

035RW069

6. Remove the fuel pressure sensor from the fuel return adapter.

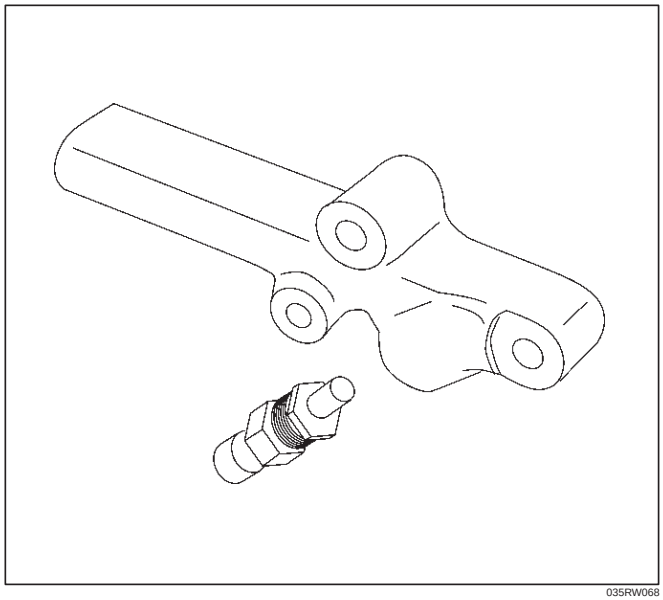

035RW068

Installation Procedure

1. Install the fuel pressure sensor in the fuel return adapter.

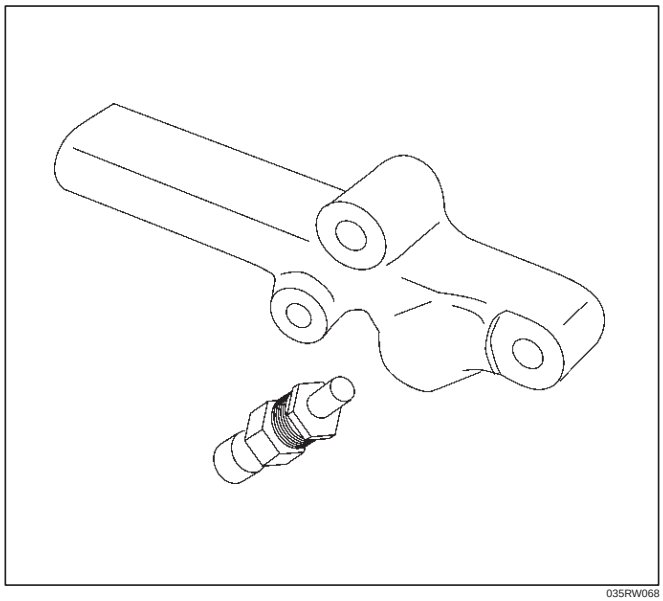

035RW068

2. Install the fuel return adapter.

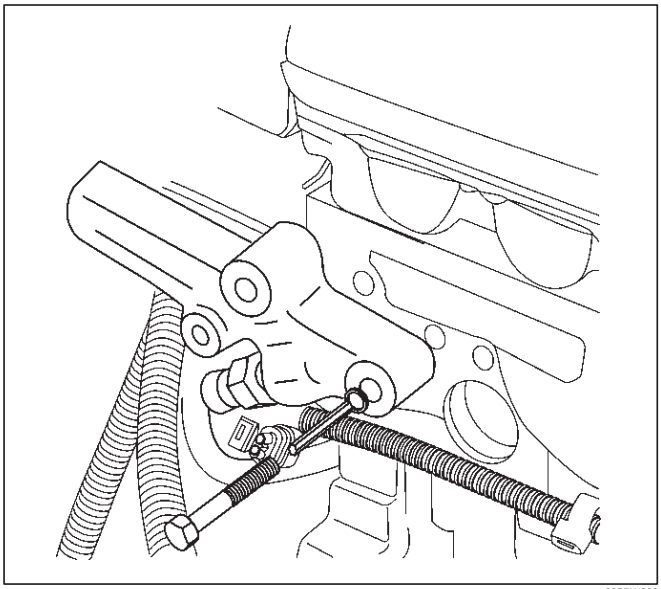

035RW069

3. Install the rear side engine hanger. Tighten the rear side engine hanger fixing bolts to specified torque.

Torque: 19 N·m (14 lb ft)

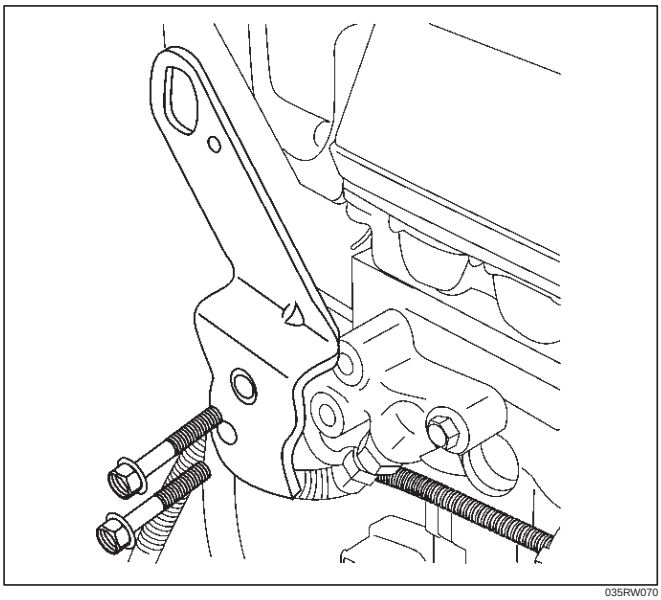

035RW070

4. Install the cylinder head. Refer to engine mechanical section.
5. Install the intercooler assembly.
6. Connect the negative battery cable.

Rail Pressure (RP) Sensor

Removal Procedure

1. Disconnect the negative battery cable.
2. Remove the air cleaner cover and air duct.
3. Remove the intercooler assembly.
4. Remove the injector oil pipe.
5. Remove the intake throttle valve.
6. Remove the cylinder head cover noise inselation.
7. Remove the cylinder head cover.
8. Remove the RP sensor.

Installation Procedure

- Refer to the *RP Sensor Programming*.

1. Install the RP sensor.
2. Install the cylinder head cover.
3. Install the cylinder head cover noise inselation.
4. Install the intake throttle valve.
5. Install the injector oil pipe.
6. Install the intercooler assembly and tighten intercooler assembly fixing bolts to specified torque.

Torque: 20 N·m (14 lb ft)

7. Install the air cleaner cover and air duct.
8. Connect the negative battery cable.

Fuel Tank

Removal Procedure

Refer to*Engine Fuel in 4JX1 Engine section.*

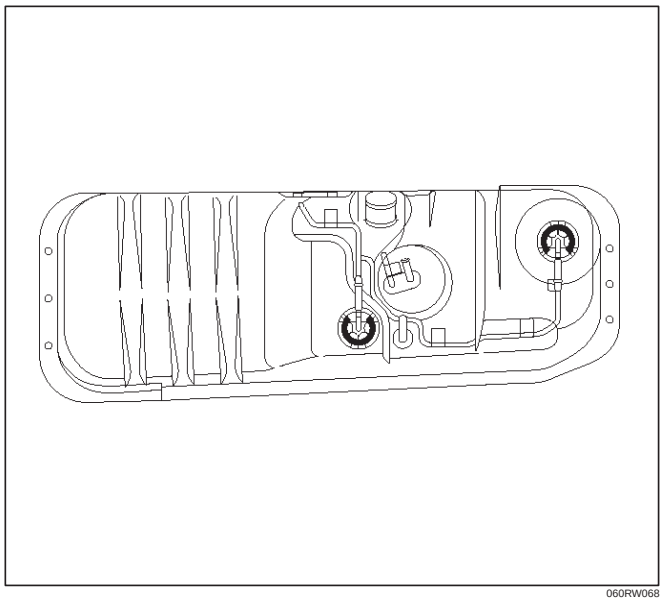

060RW068

Throttle Body (TB)

Removal Procedure

1. Disconnect the negative battery cable.
2. Remove the cover of the intercooler.

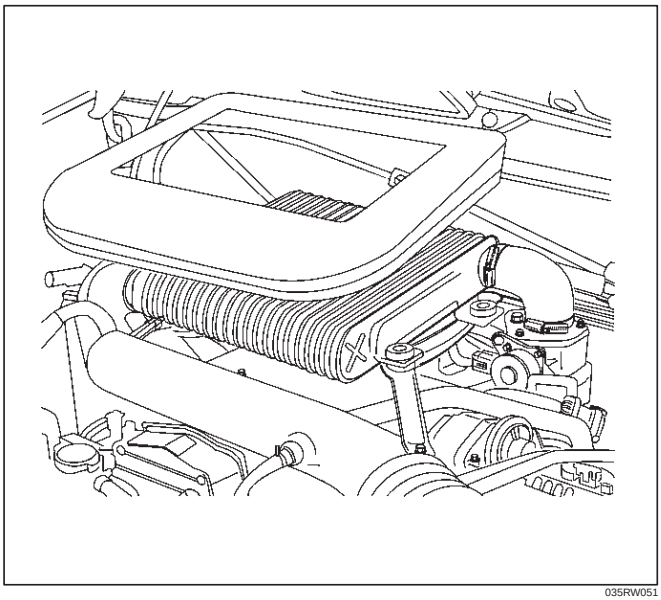

035RW051

3. Remove the bolts and the left side bracket to the intercooler.
4. Remove the air duct with bracket from the intercooler.

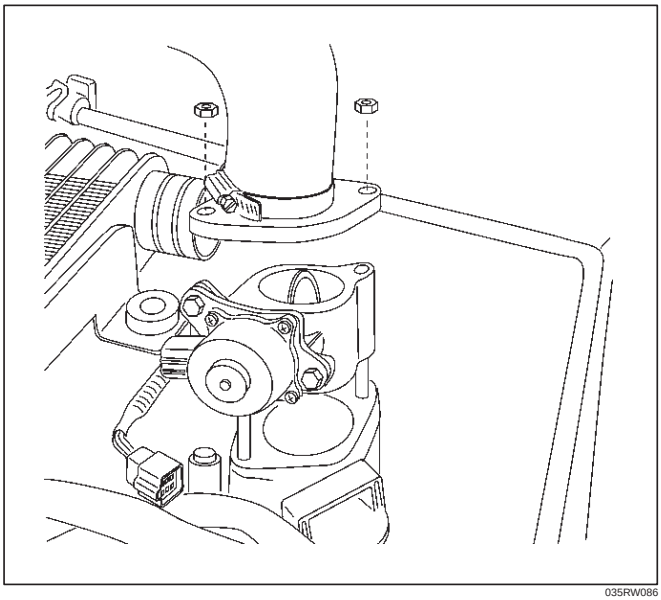

035RW086

5. Remove the throttle body assembly from the intake manifold.
6. Disconnect the ITP sensor electrical connector.

Installation Procedure

NOTE: Do not use solvent of any type when you clean the gasket surfaces on the intake manifold and the throttle body assembly. The gasket surfaces and the throttle body assembly may be damaged as a result.

- If the throttle body gasket needs to be replaced, remove any gasket material that may be stuck to the mating surfaces of the manifold.
- Do not leave any scratches in the aluminum casting.

1. Install the throttle body assembly to the intake manifold and the air duct with bracket between throttle body and intercooler.

Torque: 20 N·m (14 lb ft)

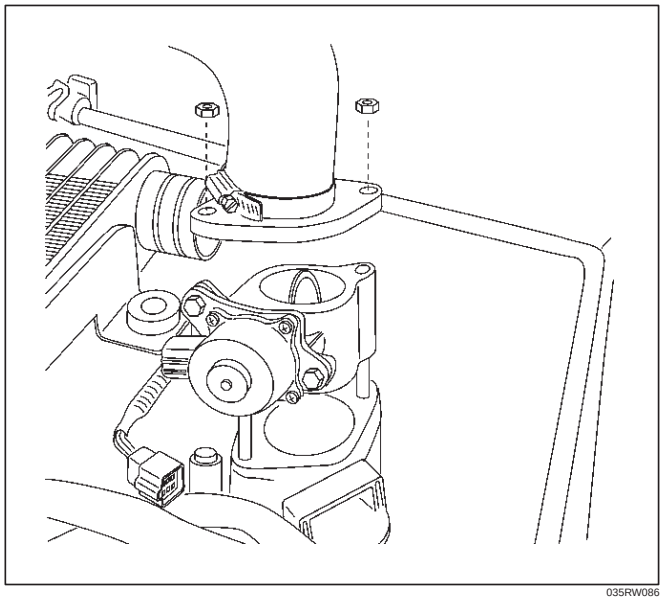

035RW086

2. Connect the ITP sensor electrical connector and throttle motor control connector.
3. Install the bracket to the intercooler.
4. Install the cover of intercooler.
5. Connect the negative battery cable.

Air Conditioning (A/C) Relay

Removal Procedure

1. Remove the fuse and relay box cover from under the hood.
2. Consult the diagram on the cover to determine which is the correct relay.
3. Pull the relay straight up and out of the fuse and relay box.

Installation Procedure

1. Insert the relay into the correct place in the fuse and relay box with the catch slot facing forward.
2. Press down until the catch engages.
   - An audible “click” will be heard.
3. Install the fuse and relay box cover.

Exhaust Gas Recirculation (EGR) Vacuum Switch Valve (VSV)

Removal Procedure

1. Disconnect the negative battery cable.

2. Disconnect the EGR VSV connector and vacuum hose from the EGR VSV.

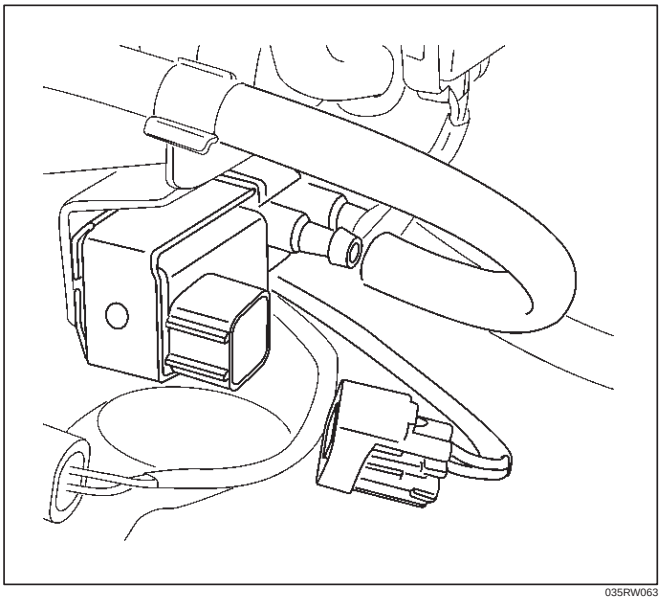

035RW063

3. Remove the MAP sensor assembly and EGR VSV.

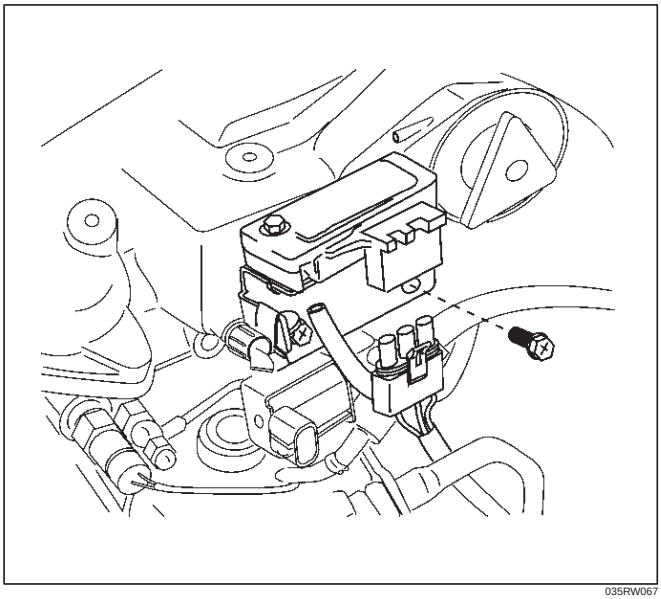

035RW067

4. Remove the EGR VSV from the MAP sensor bracket.

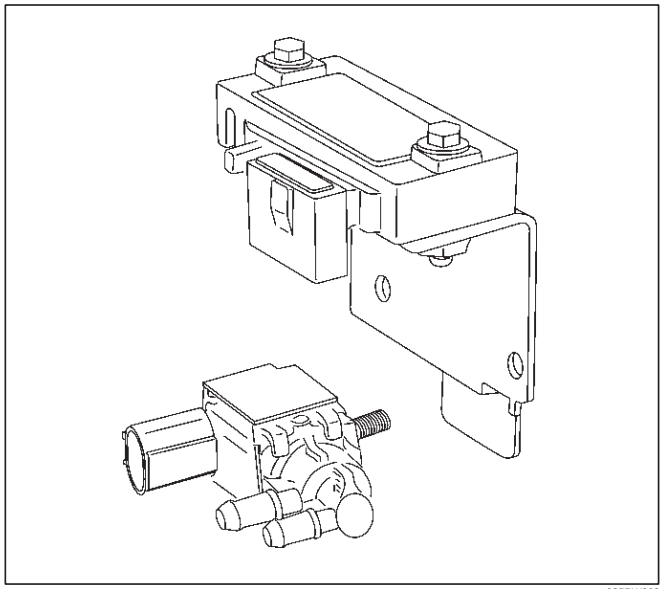

035RW062

Installation Procedure

1. Install the EGR VSV and tighten nut to specified torque.

Torque: 8 N·m (69 lb in)

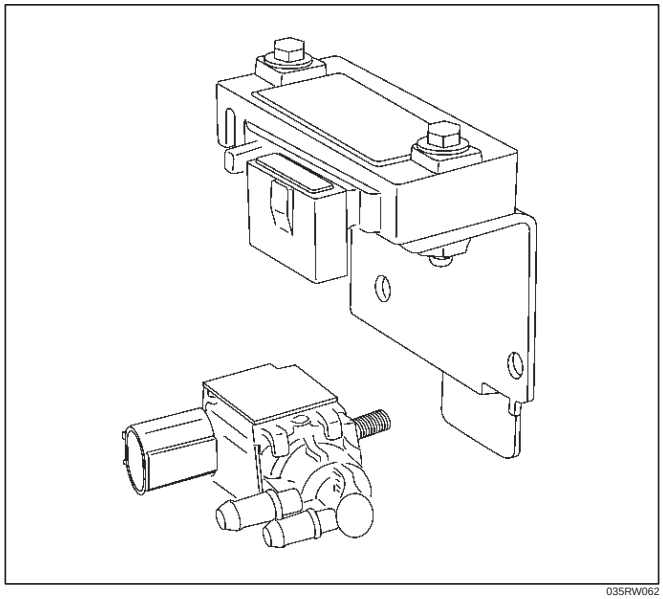

035RW062

2. Install the MAP sensor assembly and EGR VSV and tighten MAP sensor bracket fixing bolts specified torque.

Torque: 9 N·m (78 lb in)

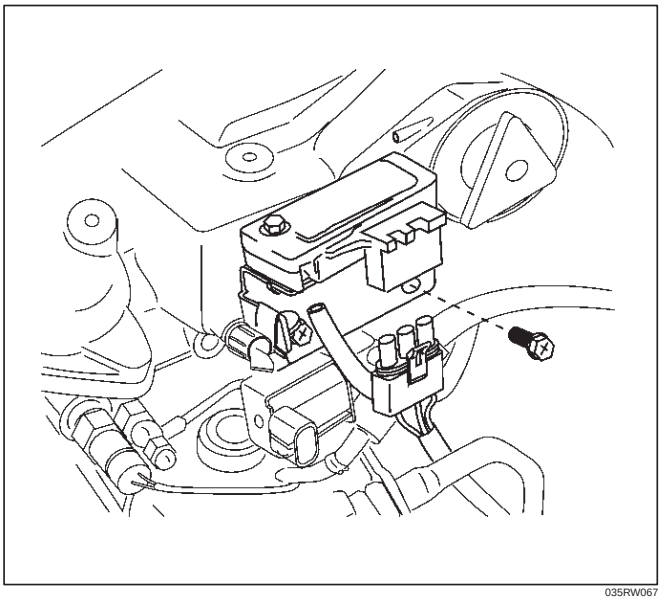

035RW067

3. Connect the EGR VSV connector and vacuum hose in the EGR VSV.

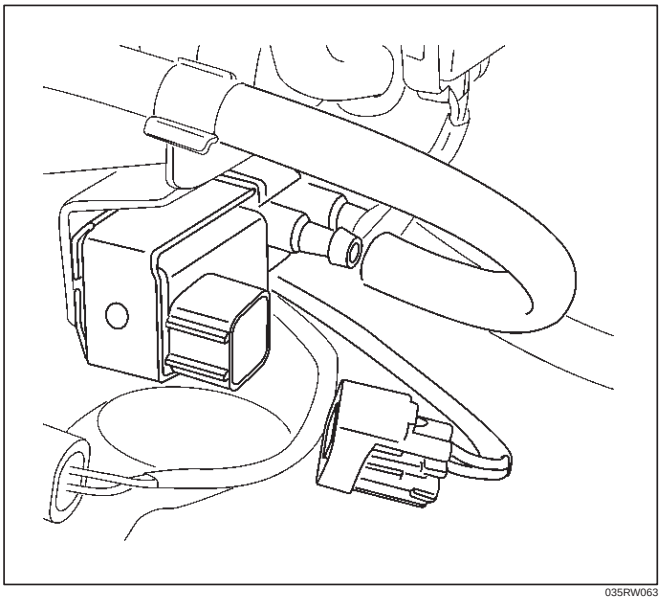

035RW063

4. Connect the negative battery cable.

Electronic Vacuum Regurating Valve (EVRV)

Removal Procedure

1. Disconnect the negative battery cable.
2. Disconnect the EVRV hose and the EVRV connector.

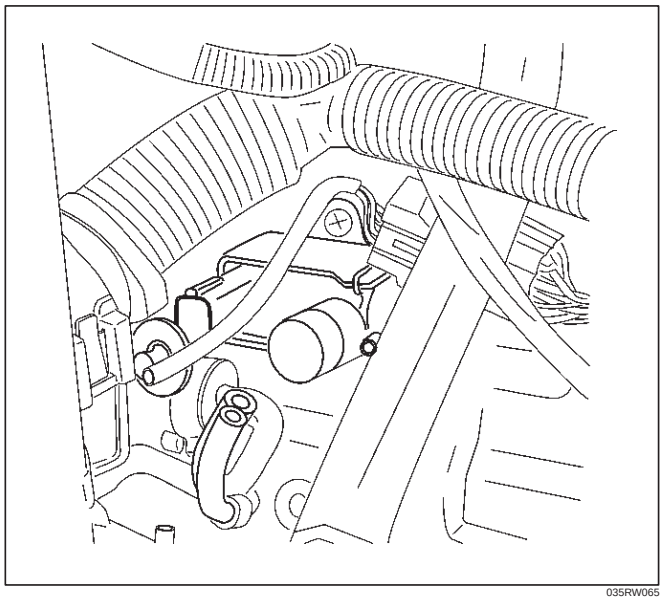

035RW065

3. Remove the EVRV.

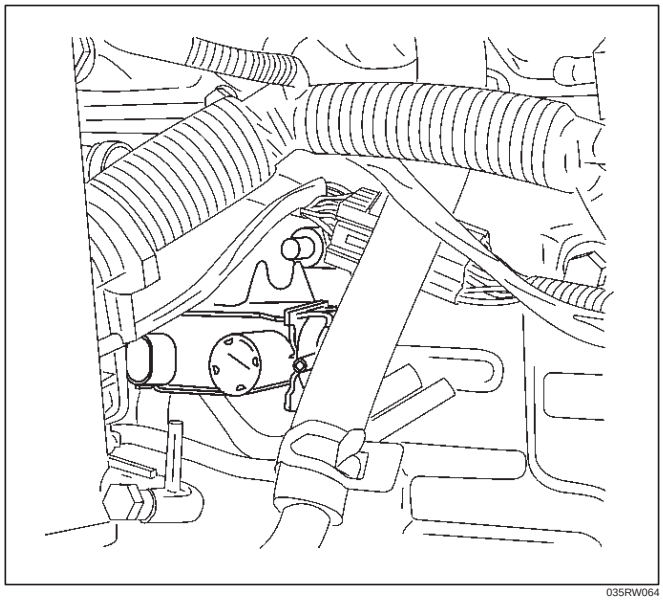

035RW064

Installation Procedure

1. Install the EVRV.

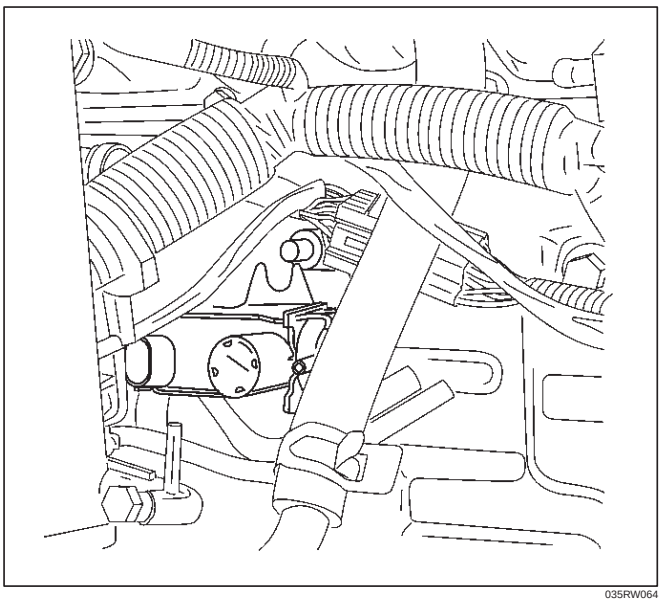

035RW064

2. Connect the EVRV hose and the EVRV connector.

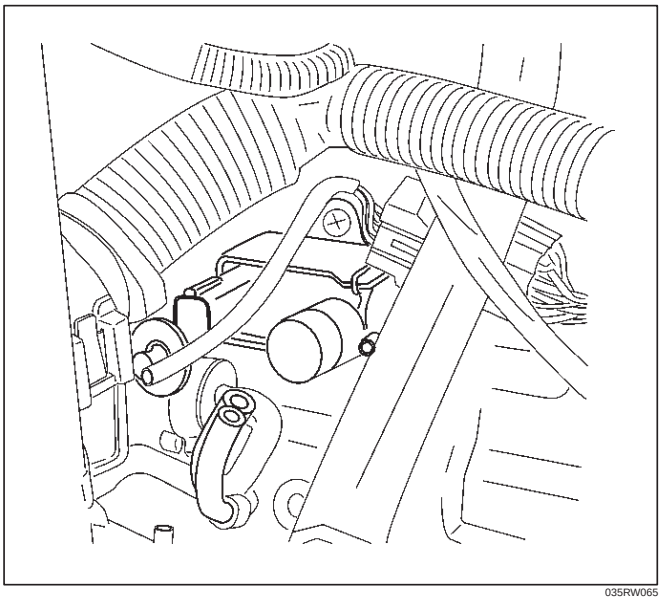

035RW065

3. Connect the negative battery cable.

Wiring and Connectors

Wiring Harness Service

The ECM harness electrically connects the ECM to the various solenoids, switches and sensors in the vehicle engine compartment and passenger compartment.
Replace wire harnesses with the proper part number replacement.
Because of the low amperage and voltage levels utilized in powertrain control systems, it is essential that all wiring in environmentally exposed areas be repaired with crimp and seal splice sleeves.

The following wire harness repair information is intended as a general guideline only. Refer to *Chassis Electrical* for all wire harness repair procedures.

Connectors and Terminals

Use care when probing a connector and when replacing terminals. It is possible to short between opposite terminals. Damage to components could result. Always use jumper wires between connectors for circuit checking. NEVER probe through Weather-Pack seals. Use an appropriate connector test adapter kit which contains an assortment of flexible connectors used to probe terminals during diagnosis. Use an appropriate fuse remover and test tool for removing a fuse and to adapt the fuse holder to a meter for diagnosis.
Open circuits are often difficult to locate by sight because oxidation or terminal misalignment are hidden by the connectors. Merely wiggling a connector on a sensor, or in the wiring harness, may temporarily correct the open circuit. Intermittent problems may also be caused by oxidized or loose connections.
Be certain of the type of connector/terminal before making any connector or terminal repair. Weather-Pack and Com-Pack III terminals look similar, but are serviced differently.

Wire Harness Repair: Twisted Shielded Cable

Removal Procedure

1. Remove the outer jacket.
2. Unwrap the aluminum/mylar tape. Do not remove the mylar.

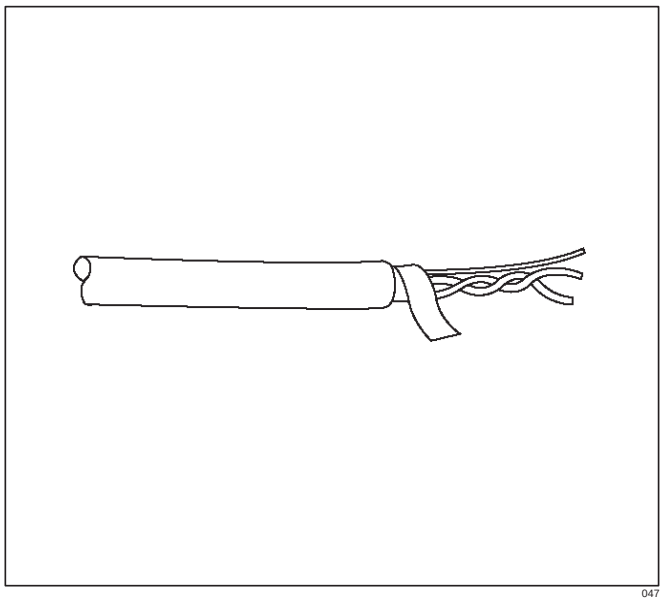

047

3. Untwist the conductors.
4. Strip the insulation as necessary.

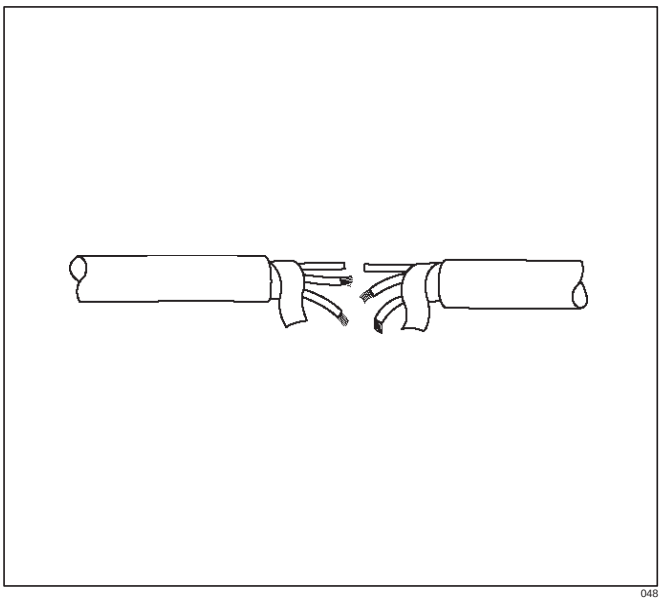

048

Installation Procedure

1. Splice the wires using splice clips and rosin core solder.
2. Wrap each splice to insulate.
3. Wrap the splice with mylar and with the drain (uninsulated) wire.

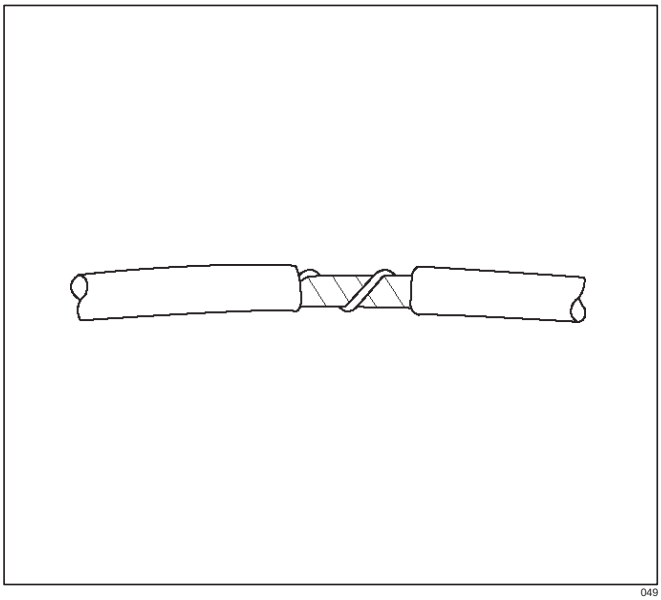

049

4. Tape over the whole bundle to secure.

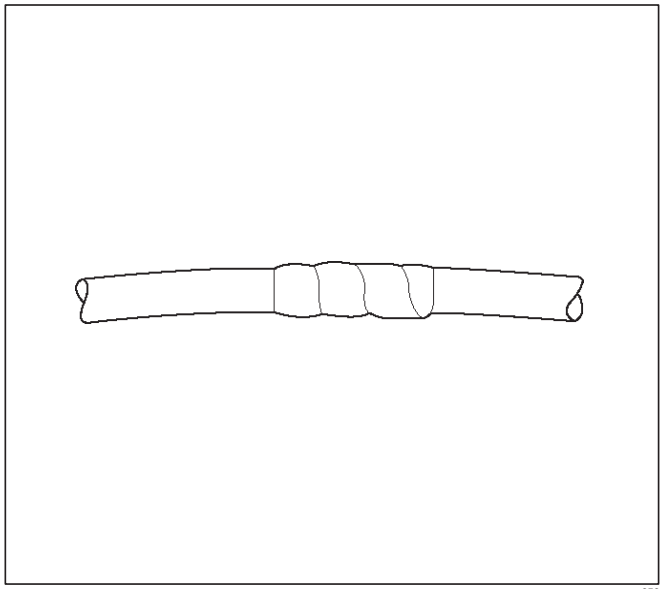

050

Twisted Leads

Removal Procedure

1. Locate the damaged wire.
2. Remove the insulation as required.

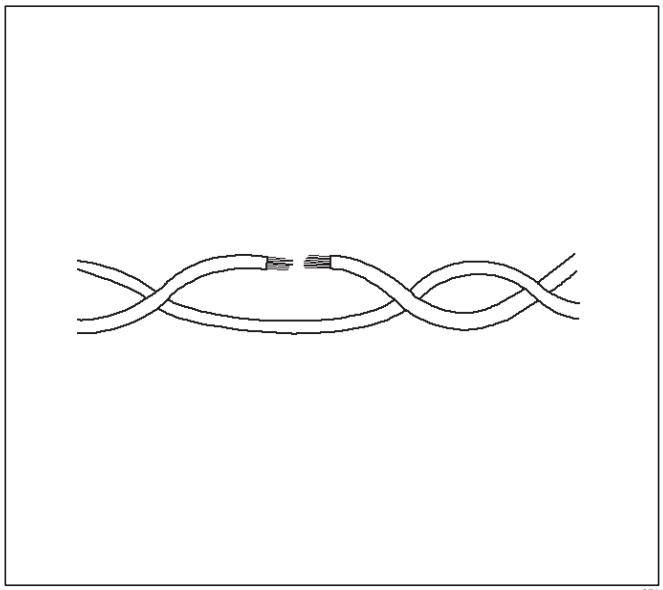

051

Installation Procedure

1. Use splice clips and rosin core solder in order to splice the two wires together.

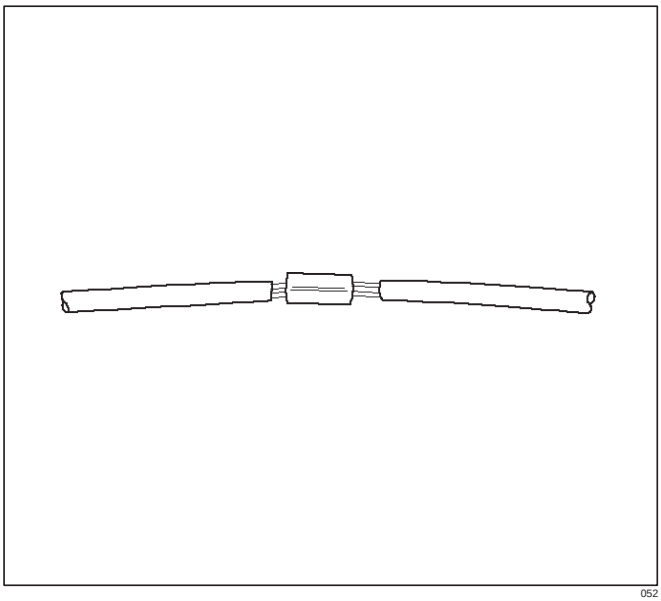

052

2. Cover the splice with tape in order to insulate it from the other wires.

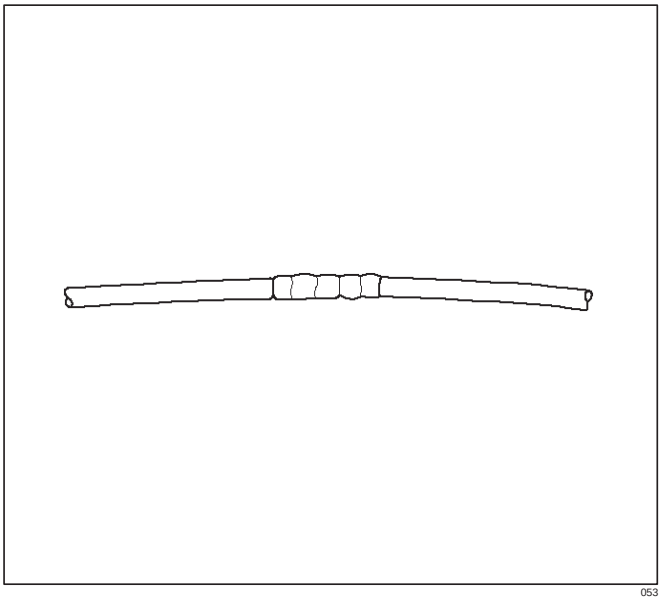

053

3. Twist the wires as they were before starting this procedure.

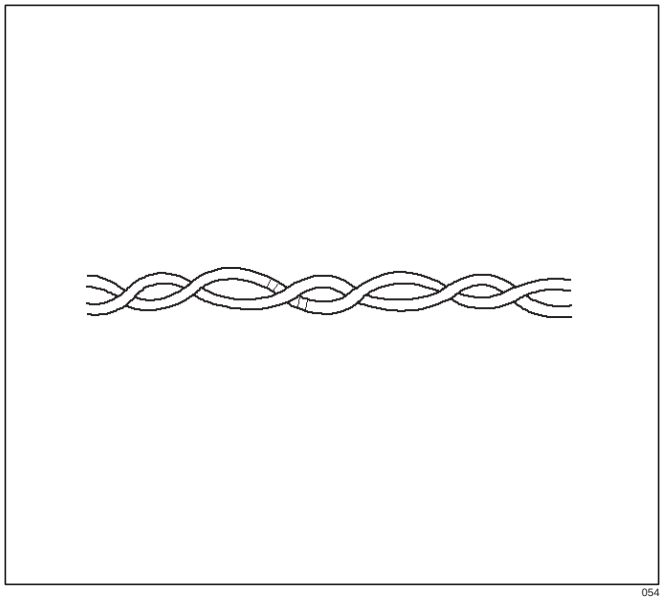

054

4. Tape the wires with electrical tape. Hold in place.

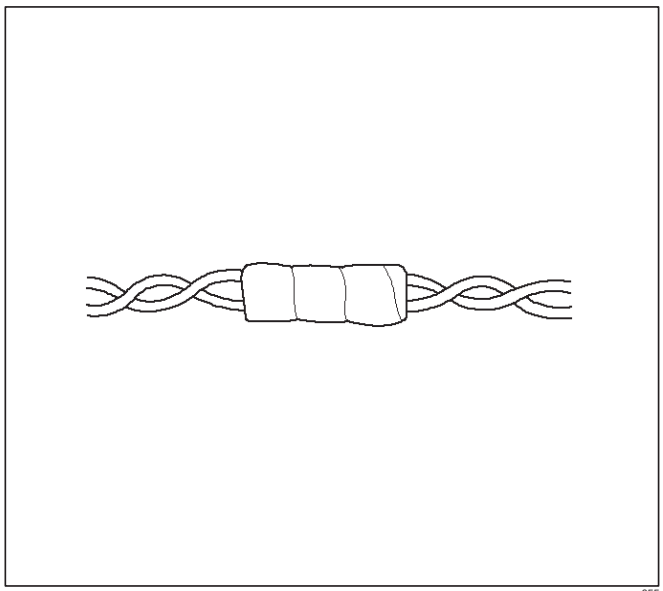

055

Weather-Pack Connector

Tools Required

5-8840-0388-0 Weather-Pack II Terminal Remover

Removal Procedure

A Weather-Pack connector can be identified by a rubber seal at the rear of the connector. This engine room connector protects against moisture and dirt, which could from oxidation and deposits on the terminals. This protection is important, because of the low voltage and the low amperage found in the electronic systems.

1. Open the secondary lock hinge on the connector.

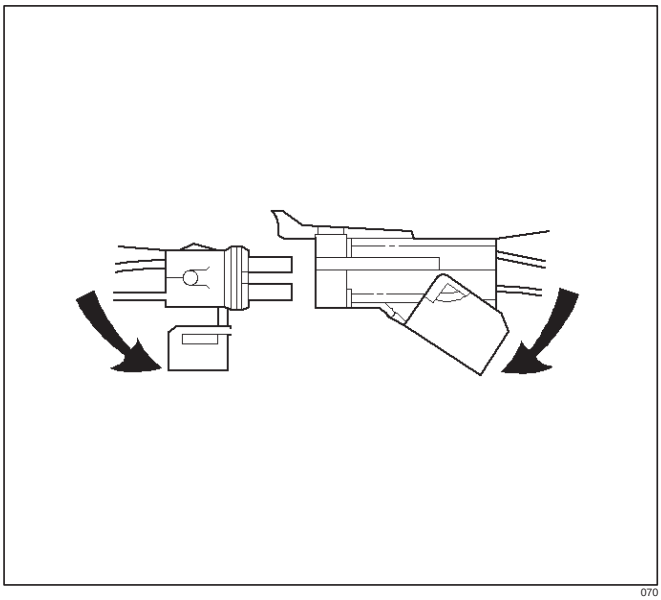

070

2. Use tool 5-8840-0388-0 or the equivalent to remove the pin and the sleeve terminals. Push on 5-8840-0388-0 to release.

NOTE: Do the use an ordinary pick or the terminal may be bent or deformed. Unlike standard blade terminals, these terminals cannot be straightened after they have been improperly bent.

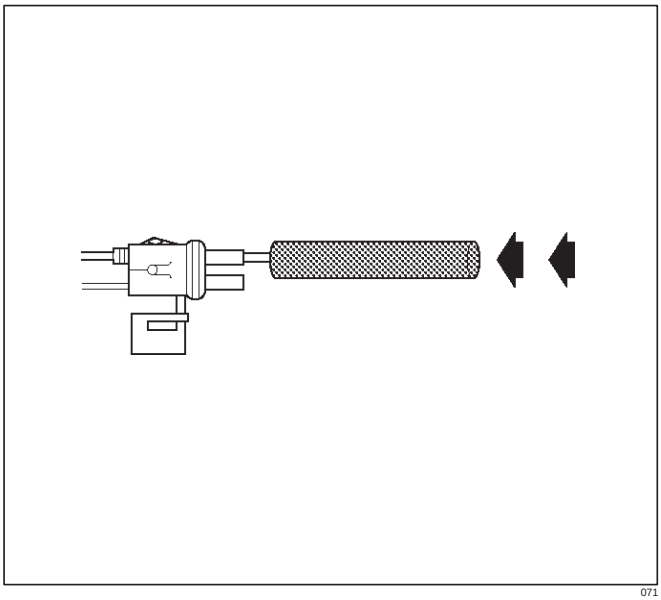

071

3. Cut the wire immediately behind the cable seal.

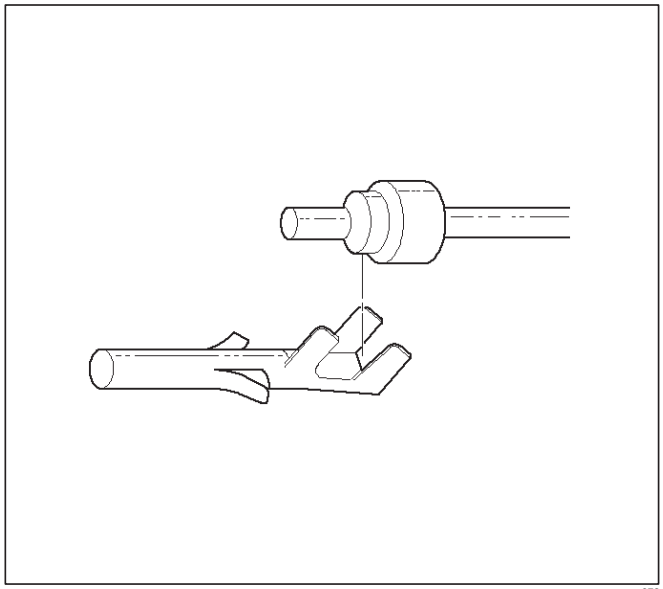

072

Installation Procedure

Make certain the connectors are properly seated and all of the sealing rings are in place when you reconnect the leads. The secondary lock hinge provides a backup locking feature for the connector. The secondary lock hinge is used for added reliability. This flap should retain the terminals even if the small terminal lock tangs are not positioned properly.

Do not replace the Weather-Pack connections with standard connections. Read the instructions provided with the Weather-Pack connector and terminal packages.

1. Replace the terminal.
2. Slip the new seal onto the wire.
3. Strip 5 mm (0.2”) of insulation from the wire.
4. Crimp the terminal over the wire and the seal.

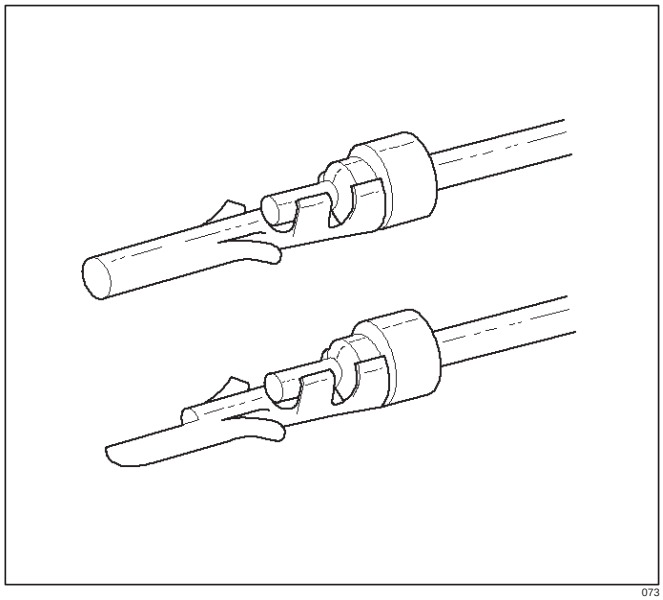

073

5. Push the terminal and the connector to engage the locking tangs.

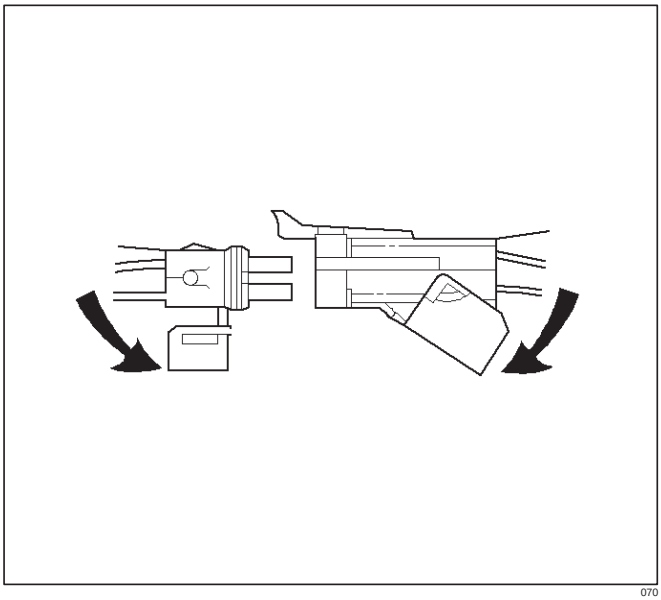

070

6. Close the secondary locking hinge.

Com-Pack III

General Information

The Com-Pack III terminal looks similar to some Weather-Pack terminals. This terminal is not sealed and is used where resistance to the environment is not required. Use the standard method when repairing a terminal. Do not use the Weather-Pack terminal tool 5-8840-0388-0 or equivalent. These will damage the terminals.

Metri-Pack

Tools Required

5-8840-0632-0 Terminal Remover

Removal Procedure

Some connectors use terminals called Metri-Pack Series 150. These may be used at the engine coolant temperature (ECT) sensor.

1. Slide the seal (1) back on the wire.
2. Insert the 5-8840-0632-0 tool or equivalent (3) in order to release the terminal locking tang (2).

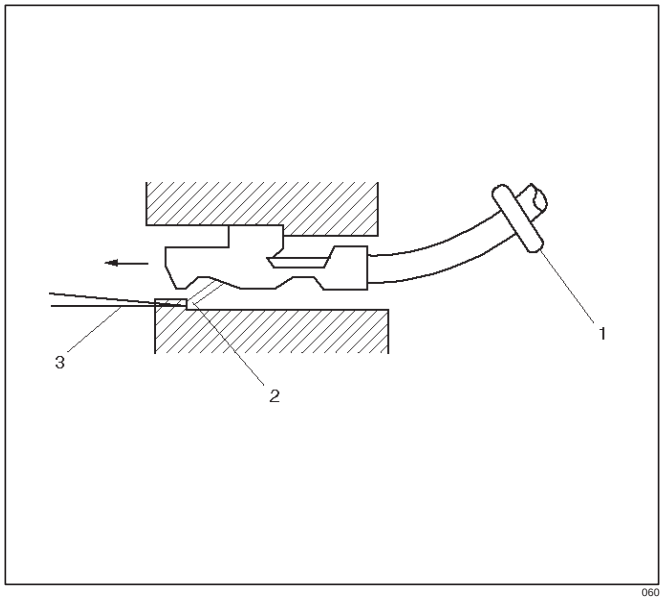

060

3. Push the wire and the terminal out through the connector. If you reuse the terminal, reshape the locking tang.

Installation Procedure

Metri-Pack terminals are also referred to as “pull-to-seat” terminals.

1. In order to install a terminal on a wire, the wire must be inserted through the seal (2) and through the connector (3).
2. The terminal (1) is then crimped onto the wire.

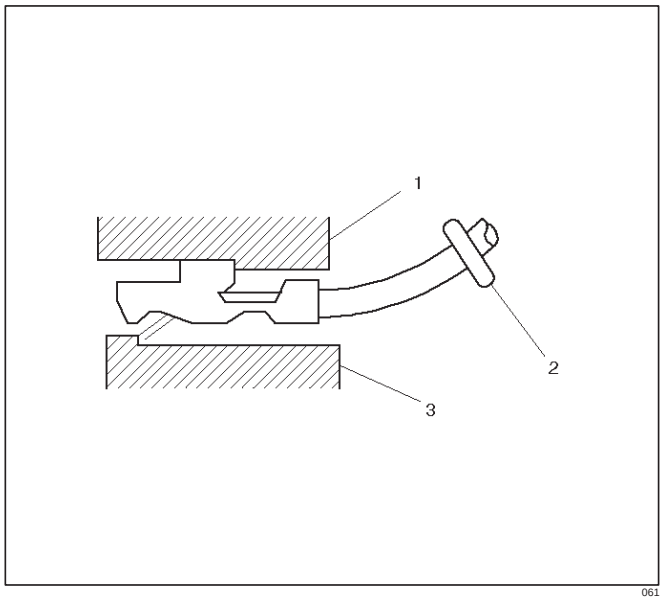

061

3. Then the terminal is pulled back into the connector to seat it in place.

General Description (ECM and Sensors)

57X Reference ECM Input

The engine control module (ECM) uses this signal from the crankshaft position (CKP) sensor to calculate engine RPM and crankshaft position at all engine speeds. The ECM also uses the pulses on this circuit to initiate injector pulses. If the ECM receives no pulses on this circuit, DTC P0337 will set. The engine will not start and run without using the 57X reference signal.

A/C Request Signal

This signal tells the ECM when the A/C mode is selected at the A/C control head.
Refer to *A/C Clutch Circuit Diagnosis* for A/C wiring diagrams and diagnosis for the A/C electrical system.

Crankshaft Position (CKP) Sensor

The crankshaft position (CKP) sensor provides a signal used by the engine control module (ECM) to calculate the ignition sequence. The CKP sensor initiates the 57X reference pulses which the ECM uses to calculate RPM and crankshaft position.
Refer to *Electronic Ignition System* for additional information.

Camshaft Position (CMP) Sensor and Signal

The camshaft position (CMP) sensor sends a CMP signal to the ECM. The ECM uses this signal as a “cylinder distinction” to trigger the injectors in the power order. If the ECM detects an incorrect CMP signal while the engine is running, DTC P0341 will set, and the ECM triggers the injectors in the power order.
Refer to *DTC P0341*.

Engine Coolant Temperature (ECT) Sensor

The engine coolant temperature (ECT) sensor is a thermistor (a resistor which changes value based on temperature) mounted in the engine coolant stream. Low coolant temperature produces a high resistance of 100,000 ohms at –40˚C (–40˚F). High temperature causes a low resistance of 70 ohms at 130˚C (266˚F). The ECM supplies a 5-volt signal to the ECT sensor through resistors in the ECM and measures the voltage. The signal voltage will be high when the engine is cold and low when the engine is hot. By measuring the voltage, the ECM calculates the engine coolant temperature. Engine coolant temperature affects most of the systems that the ECM controls.
The Tech 2 displays engine coolant temperature in degrees. After engine start-up, the temperature should rise steadily to about 85˚C (185˚F). It then stabilizes when the thermostat opens. If the engine has not been run for several hours (overnight), the engine coolant temperature and intake air temperature displays should be close to each other. A hard fault in the engine coolant sensor circuit will set DTC P0117 or DTC P0118.

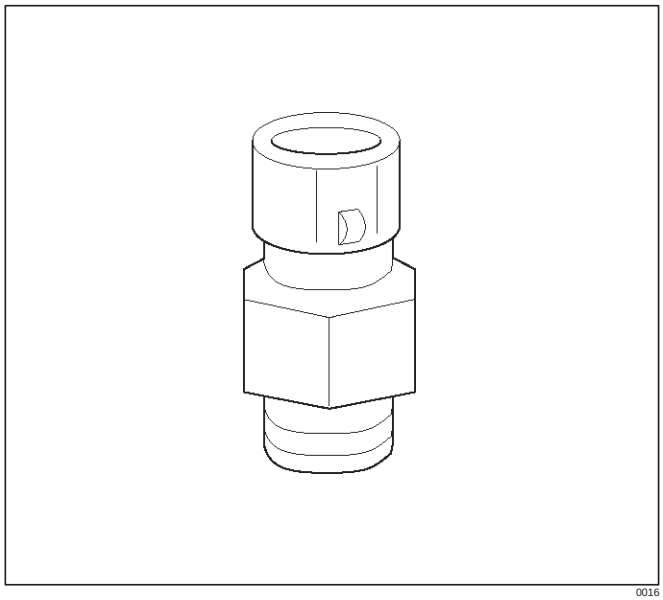

Electrically Erasable Programmable Read Only Memory (EEPROM)

The electrically erasable programmable read only memory (EEPROM) is a permanent memory chip that is physically soldered within the ECM. The EEPROM contains the program and the calibration information that the ECM needs to control powertrain operation.
Unlike the PROM used in past applications, the EEPROM is not replaceable. If the ECM is replaced, the new ECM will need to be programmed. Equipment containing the correct program and calibration for the vehicle is required to program the ECM.

Intake Air Temperature (IAT) Sensor

The intake air temperature (IAT) sensor is a thermistor which changes its resistance based on the temperature of air entering the engine. Low temperature produces a high resistance of 100,000 ohms at –40˚C (–40˚F). High temperature causes low resistance of 70 ohms at 130˚C (266˚F) . The ECM supplies a 5-volt signal to the sensor through a resistor in the ECM and monitors the signal voltage. The voltage will be high when the incoming air is cold. The voltage will be low when the incoming air is hot. By measuring the voltage, the ECM calculates the incoming air temperature.
The Tech 2 displays the temperature of the air entering the engine. The temperature should read close to the ambient air temperature when the engine is cold and rise as underhood temperature increases. If the engine has not been run for several hours (overnight), the IAT sensor temperature and engine coolant temperature should read close to each other. A fault in the IAT sensor circuit will set DTC P0112 or DTC P0113.

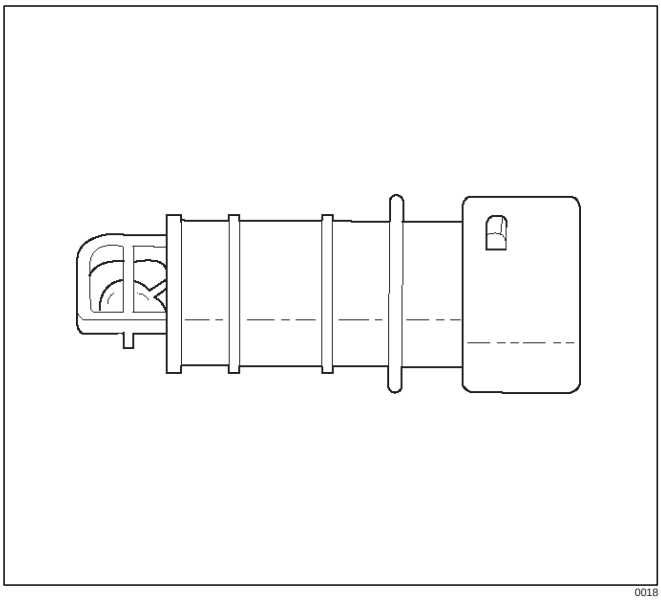

Manifold Absolute Pressure (MAP) Sensor

The manifold absolute pressure (MAP) sensor responds to changes in intake manifold pressure. The MAP sensor signal voltage to the ECM varies from below 2 volts at idle (high vacuum) to above 4 volts.

The MAP sensor is used to determine the following:

- Boost pressure for injector control.
- Barometric pressure (BARO).

If the ECM detects a voltage that is lower than the possible range of the MAP sensor, DTC P0107 will be set. A signal voltage higher than the possible range of the sensor will set DTC P0108. An intermittent low or high voltage will set DTC P1107 or DTC P1106, respectively. The ECM can detect a shifted MAP sensor. The ECM compares the MAP sensor signal to a calculated MAP based on throttle position and various engine load factors. If the ECM detects a MAP signal that varies excessively above or below the calculated value, DTC P0106 will set.

Engine Control Module (ECM)

The engine control module (ECM) is located in the engine room.

The ECM constantly observes the information from various sensors. The ECM controls the systems that affect vehicle performance. The ECM performs the diagnostic function of the system. It can recognize operational problems, alert the driver through the MIL (Service Engine Soon lamp), and store diagnostic trouble codes (DTCs). DTCs identify the problem areas to aid the technician in making repairs.

ECM Function

The ECM supplies 5, 12 and 110 volts to power various sensors or switches. The power is supplied through resistances in the ECM which are so high in value that a test light will not light when connected to the circuit. In some cases, even an ordinary shop voltmeter will not give an accurate reading because its resistance is too low. Therefore, a digital voltmeter with at least 10 megohms input impedance is required to ensure accurate voltage readings. The ECM controls output circuits such as the injectors, glow relays, etc., by controlling the ground or the power feed circuit through transistors or through either of the following two devices:

- Output Driver Module (ODM)
- Quad Driver Module (QDM)

ECM Components

The ECM is designed to maintain exhaust emission levels to government mandated standards while providing excellent driveability and fuel efficiency. The ECM monitors numerous engine and vehicle functions via electronic sensors such as the crankshaft position (CKP) sensor, and vehicle speed sensor (VSS). The ECM also controls certain engine operations through the following:

- Fuel injector control
- Rail pressure control

ECM Voltage Description

The ECM supplies a buffered voltage to various switches and sensors. It can do this because resistance in the ECM is so high in value that a test light may not illuminate when connected to the circuit. An ordinary shop voltmeter may not give an accurate reading because the voltmeter input impedance is too low. Use a 10-megohm input impedance digital voltmeter to assure accurate voltage readings.

The input/output devices in the ECM include analog-to-digital converters, signal buffers, counters, and special drivers. The ECM controls most components with electronic switches which complete a ground circuit when turned “ON.” These switches are arranged in groups of 4 and 7, called either a surface-mounted quad driver module (QDM), which can independently control up to 4 output terminals, or QDMs which can independently control up to 7 outputs. Not all outputs are always used.

ECM Input/Outputs

Inputs – Operating Conditions Read

- Air Conditioning “ON” or “OFF”
- Engine Coolant Temperature
- Crankshaft Position
- Electronic Ignition
- Manifold Absolute Pressure
- Battery Voltage
- Intake Throttle Position
- Vehicle Speed
- Fuel Temperature
- Oil Temperature
- Intake Air Temperature
- EGR boost pressure
- Oil rail pressure
- Camshaft Position
- Accelerator position

Outputs – Systems Controlled

- Exhaust Gas Recirculation (EGR)
- Injector Control
- QWS

- QOS
- Diagnostics
  - Malfunction Indicator Lamp (Service Engine Soon lamp)
  - Data Link Connector (DLC)
  - Data Output

ECM Service Precautions

The ECM is designed to withstand normal current draws associated with vehicle operation. Avoid overloading any circuit. When testing for opens and shorts, do not ground or apply voltage to any of the ECM's circuits unless instructed to do so. These circuits should only be tested using digital voltmeter. The ECM should remain connected to the ECM or to a recommended breakout box.

Intake Throttle Position (ITP) Sensor

ITP sensor is a potentiometer type and installed to the intake throttle valve body. A voltage of 5V is applied constantly from ECM to ITP sensor thereby to determine by change in voltage the opening of the intake throttle valve during warming up.

Transmission Range Switch

IMPORTANT: The vehicle should not be driven with the transmission range switch disconnected; idle quality will be affected.

The four inputs from the transmission range switch indicate to the ECM which position is selected by the transmission selector lever.
For more information on the transmission on the transmission range switch, refer to *Automatic Transmission*.

Accelerator Position Sensor (AP)

AP sensor is a potentiometer type and installed to accelerator pedal bracket. A voltage of 5V constantly applied from ECM to the sensor thereby to determine the accelerator pedaling angle by change in voltage. Further, this sensor is provided with an accelerator switch, which is set off only when the accelerator pedal is stepped on.

Aftermarket Electrical and Vacuum Equipment

Aftermarket (add-on) electrical and vacuum equipment is defined as any equipment which connects to the vehicle's electrical or vacuum systems that is installed on a vehicle after it leaves the factory. No allowances have been made in the vehicle design for this type of equipment.

NOTE: No add-on vacuum equipment should be added to this vehicle.

NOTE: Add-on electrical equipment must only be connected to the vehicle's electrical system at the battery (power and ground).

Add-on electrical equipment, even when installed to these guidelines, may still cause the powertrain system to malfunction. This may also include equipment not connected to the vehicle electrical system such as portable telephones and radios. Therefore, the first step in diagnosing any powertrain problem is to eliminate all aftermarket electrical equipment from the vehicle. After this is done, if the problem still exists, it may be diagnosed in the normal manner.

Electrostatic Discharge Damage

Electronic components used in the ECM are often designed to carry very low voltage. Electronic components are susceptible to damage caused by electrostatic discharge. Less than 100 volts of static electricity can cause damage to some electronic components. By comparison, it takes as much as 4000 volts for a person to feel even the zap of a static discharge.

TS23793

There are several ways for a person to become statically charged. The most common methods of charging are by friction and induction.

- An example of charging by friction is a person sliding across a vehicle seat.
- Charge by induction occurs when a person with well insulated shoes stands near a highly charged object and momentary touches ground. Charges of the same polarity are drained off leaving the person highly charged with the opposite polarity. Static charges can cause damage, therefore it is important to use care when handling and testing electronic components.

NOTE: To prevent possible electrostatic discharge damage, follow these guidelines:

- Do not touch the ECM connector pins or soldered components on the ECM circuit board.
- Do not open the replacement part package until the part is ready to be installed.
- Before removing the part from the package, ground the package to a known good ground on the vehicle.
- If the part has been handled while sliding across the seat, while sitting down from a standing position, or while walking a distance, touch a known good ground before installing the part.

General Description (Air Induction)

Air Induction System

The air induction system filters contaminants from the outside air, and directs the progress of the air as it is drawn into the engine. A remote-mounted air cleaner prevents dirt and debris in the air from entering the engine. The air duct assembly routes filtered air to the throttle body. Air enters the engine by to following steps:

1. Through the throttle body.
2. Into the intake manifold.
3. Through the cylinder head intake ports.
4. Into the cylinders.

General Description (Fuel Metering)

Deceleration Mode

The ECM reduces the amount of fuel injected when it detects a decrease in the Accelerator position.

Fuel Injector

Fuel injector comprises the solenoid, hydraulic line, and fuel line. Fuel injection is controlled by the continuity time signal and continuity start timing signal from ECM to the solenoid

ECM determines the running conditions of engine by input signals such as engine speed. Accelerator throttle valve opening, and engine coolant temperature, thereby to send the solenoid the best suited signal to the engine status. When current is carried to the solenoid, the armature opens the poppet valve to alow high pressure oil to run into the injector. Under the pressure of the oil, the piston and plunger are depressed to compress the fuel in the combustion chamber of the plunger. Specifically, the pressure of the fuel compressed is increased by a piston top/ plunger bottom area ratio over the pressure of high pressure oil, thereby lifting the fuel nozzle end needle for injecting fuel.

Fuel Metering System Components

The fuel metering system is made up of the following parts:

- The fuel injectors.
- The intake throttle body.
- The Accelerator position (AP) sensor
- The ECM.
- The crankshaft position (CKP) sensor.
- The camshaft position (CMP) sensor.

Basic System Operation

Fuel is supplied through fuel filter to the fuel pump.

The fuel pump is installed to the oil pump, and fuel is forced, through the fuel pump outlet, pipe and cylinder head inside, into the fuel injector.

An orifice is provided at the rear fuel outlet of cylinder head to control the pressure of oil.

The injector is controlled by ECM which gives opening/closing commands to the solenoid installed on the top of the injector. Opening/closing operation of the pressurized engine oil circuit of the injector controls fuel injection quantity, fuel injection timing, etc.

A/C Clutch Diagnosis

A/C Request Signal

This signal tells the ECM when the A/C mode is selected at the A/C control head. The ECM uses this to adjust the idle speed.

Refer to *A/C Clutch Circuit Diagnosis* for A/C wiring diagrams and diagnosis for A/C electrical system.

General Description Exhaust Gas Recirculation (EGR) System

EGR Purpose

The exhaust gas recirculation (EGR) system is use to reduce emission levels of oxides of nitrogen (NOx). NOx emission levels are caused by a high combustion temperature. The EGR system lowers the NOx emission levels by decreasing the combustion temperature.

The ECM uses information from the following sensors to control EGR valve boost pressure.

- ECT
- ITP
- Engine Speed
- AP sensor

Fuse and Relay Panel (Underhood Electrical Center) RHD

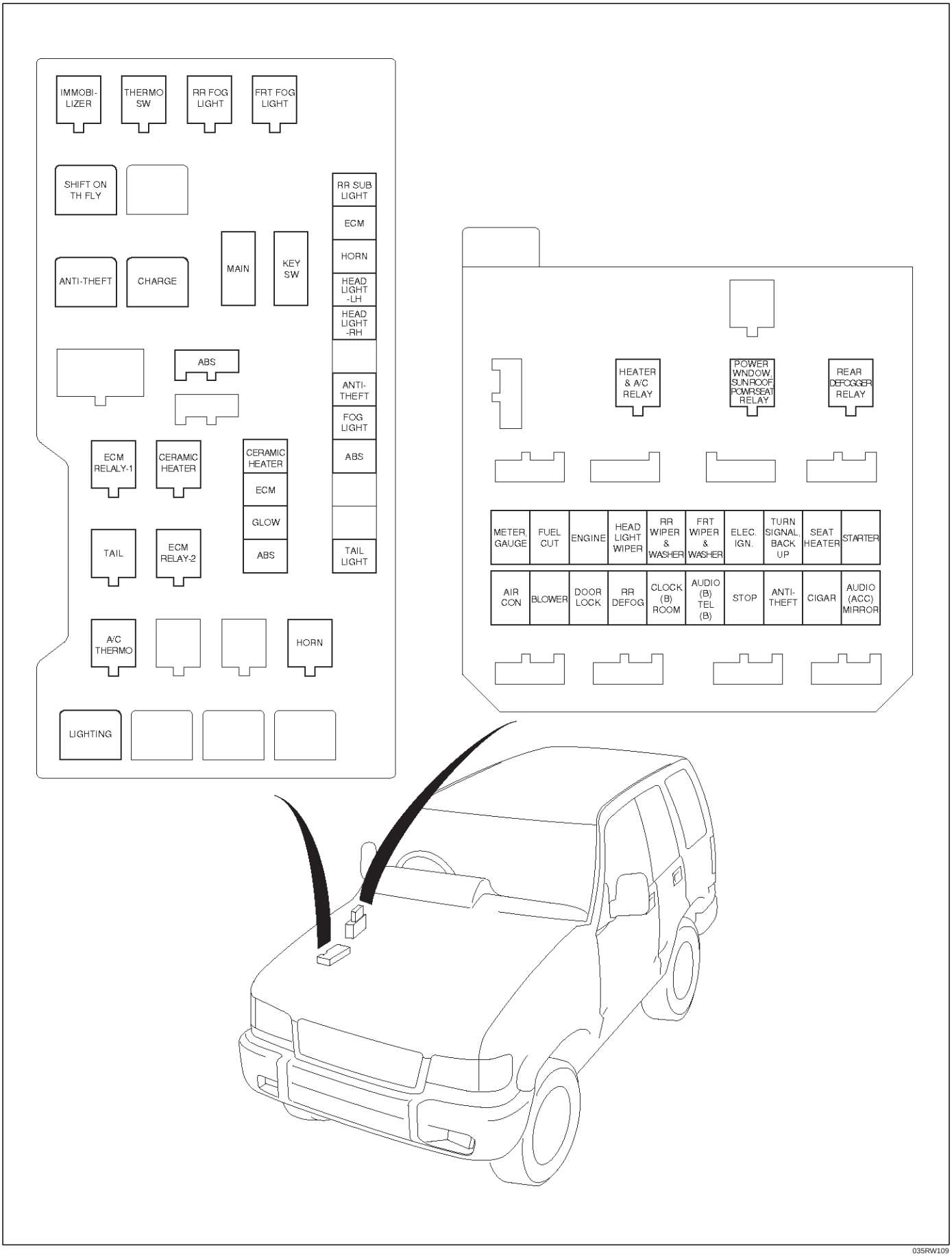

035RW109

Fuse and Relay Panel (Underhood Electrical Center) LHD

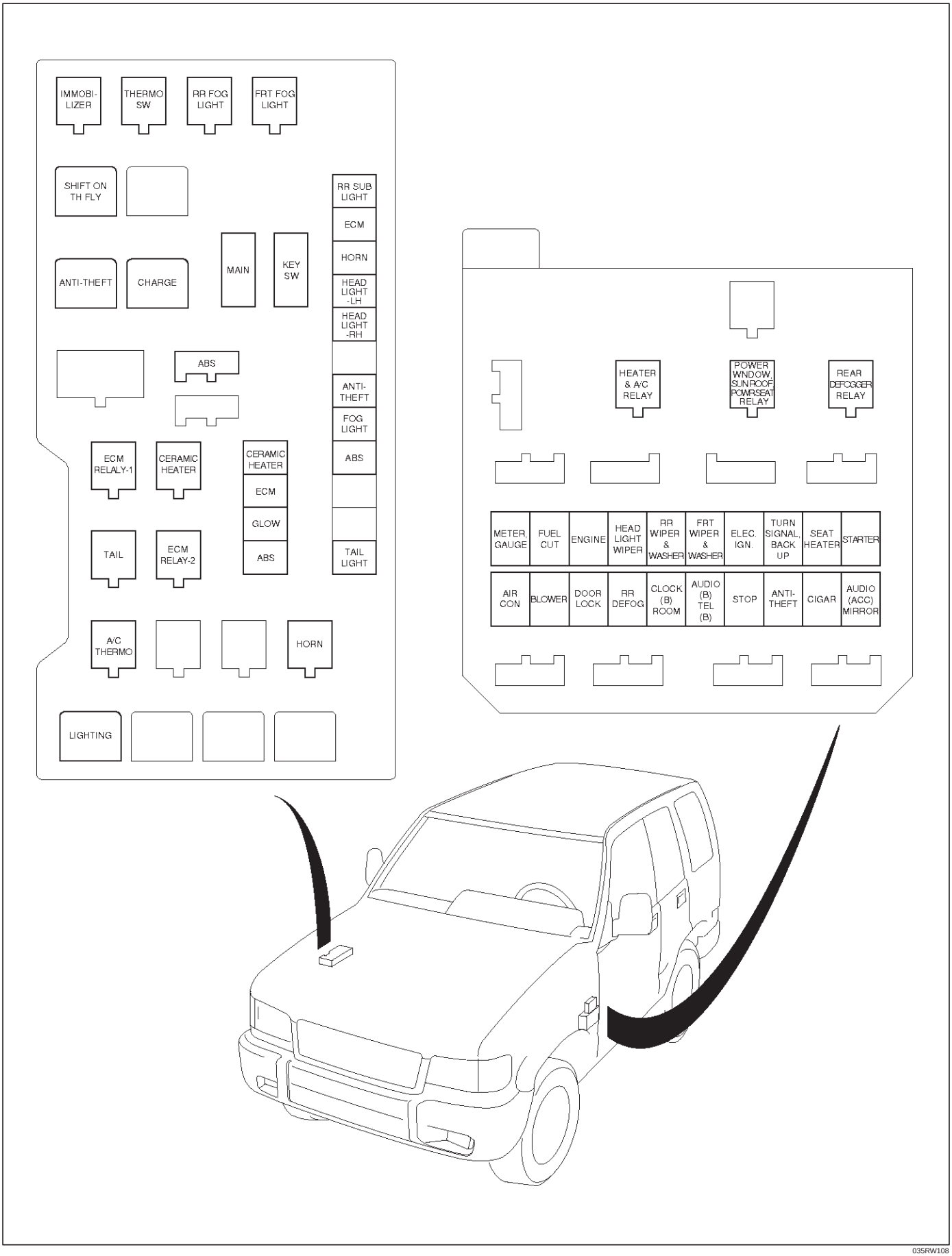

035RW108

ENGINE EXHAUST

CAUTION: Exhaust system components must have enough clearance from the underbody to prevent overheating of the floor pan and possible damage to the passenger compartment, insulation and trim materials.

CONTENTS

General Description 6F–2
Hangers 6F–2
Gasket 6F–2
On-Vehicle Service 6F–3
Front Exhaust Pipe 6F–3
Center Exhaust Pipe 6F–5
Exhaust Silencer 6F–6
Rear Exhaust Pipe 6F–7

GENERAL DESCRIPTION

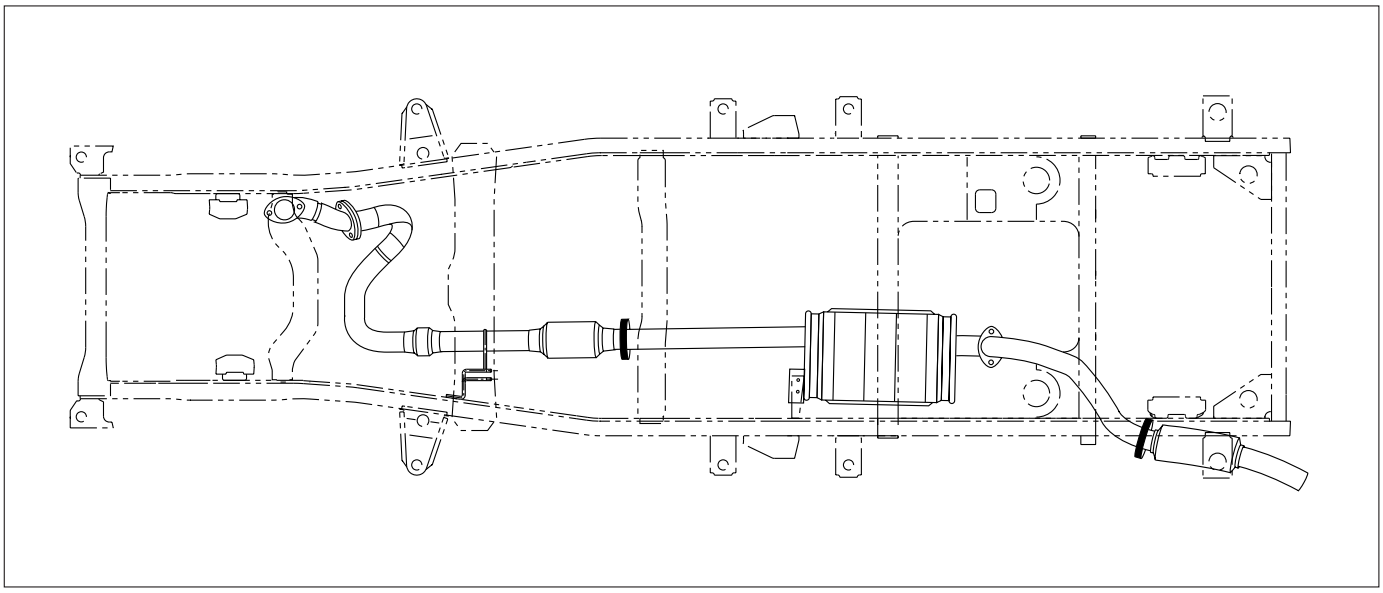

150RW070

When inspecting or replacing exhaust system components, make sure there is adequate clearance from all points on the underbody to prevent overheating of the floor pan and possible damage to the passenger compartment insulation and trim materials.

Check complete exhaust system and nearby body areas and rear compartment lid for broken, damaged, missing or mispositioned parts, open seams, holes loose connections or other deterioration which could permit exhaust fumes to seep into the rear compartment or passenger compartment. Dust or water in the rear compartment may be an indication of a problem in one of these areas. Any faulty areas should be corrected immediately.

HANGERS

Various types of hangers are used to support exhaust system(s). These include conventional rubber straps, rubber rings, and rubber blocks.

The installation of exhaust system supports is very important, as improperly installed supports can cause annoying vibrations which can be difficult to diagnose.

GASKET

The gasket must be replaced whenever a new exhaust pipe, muffler or exhaust throttle is installed.

ON-VEHICLE SERVICE

Rattles and noise vibrations in the exhaust system are usually caused by misalignment of parts. When aligning the system, leave all bolts or nuts loose until all parts are properly aligned; then tighten, working from front to rear.

1. Check connections for looseness or damage, especially for exhaust gas leakage.
2. Check clamps and rubbers for weakness, cracks or damage.
3. If any part of the converter heat shield is damaged or dented to the extent that it contacts the catalyst, repair or replace.
4. Check for dents or damage and for any holes or cracks caused by corrosion.

FRONT EXHAUST PIPE

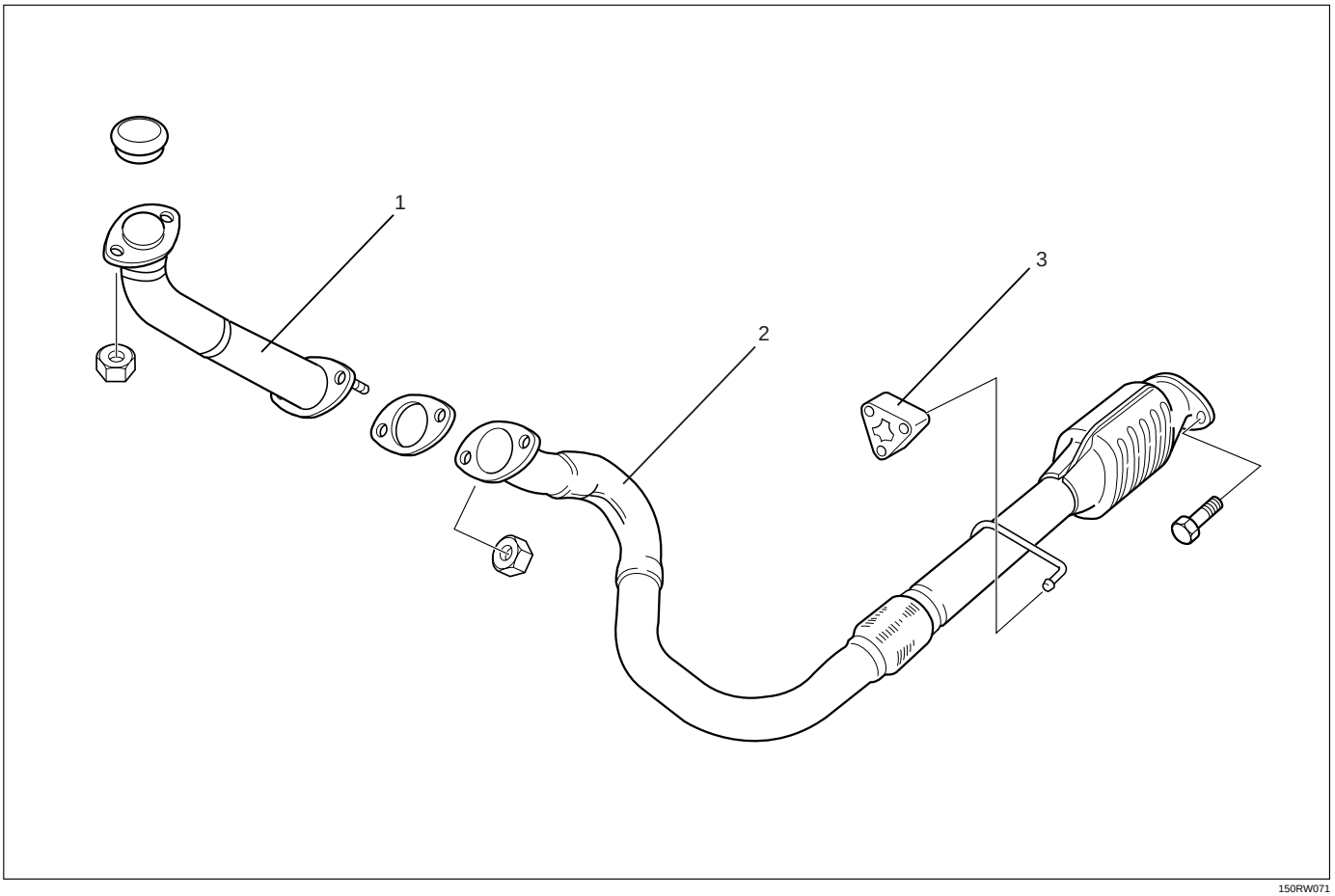

150RW071

Legend

(1) Front exhaust pipe
(2) Center exhaust pipe
(3) Mounting rubber

REMOVAL

1. Battery negative cable.
2. Raise the vehicle and support with suitable safety stands.
3. Remove front exhaust pipe fixing nuts from engine side.
4. Remove fixing nuts between front exhaust pipe and center exhaust pipe, remove front exhaust pipe.
5. Disconnect center exhaust pipe and silencer, remove center exhaust pipe.
6. Remove fixing nuts from connection part of tail pipe, remove mounting rubber and remove silencer bracket, silencer.
7. Remove mounting rubber for tail pipe, remove tail pipe.

INSTALLATION

1. Install front exhaust pipe and tighten it temporarily.
2. Tighten fixing nuts of front exhaust pipe to the specified torque. (for engine side)

Torque: 67 N·m (6.8 kg·m/50 lb ft)

3. Tighten fixing nuts of front exhaust pipe to the specified torque. (for center pipe side)

Torque: 43 N·m (4.4 kg·m/32 lb ft)

4. Install silencer and tighten silencer bracket nuts to the specified torque.

Torque: 16 N·m (1.6 kg·m/12 lb ft)

5. Install tail pipe and tighten it.

Torque: 43 N·m (4.4 kg·m/32 lb ft)

6. Install mounting rubbers.

CENTER EXHAUST PIPE

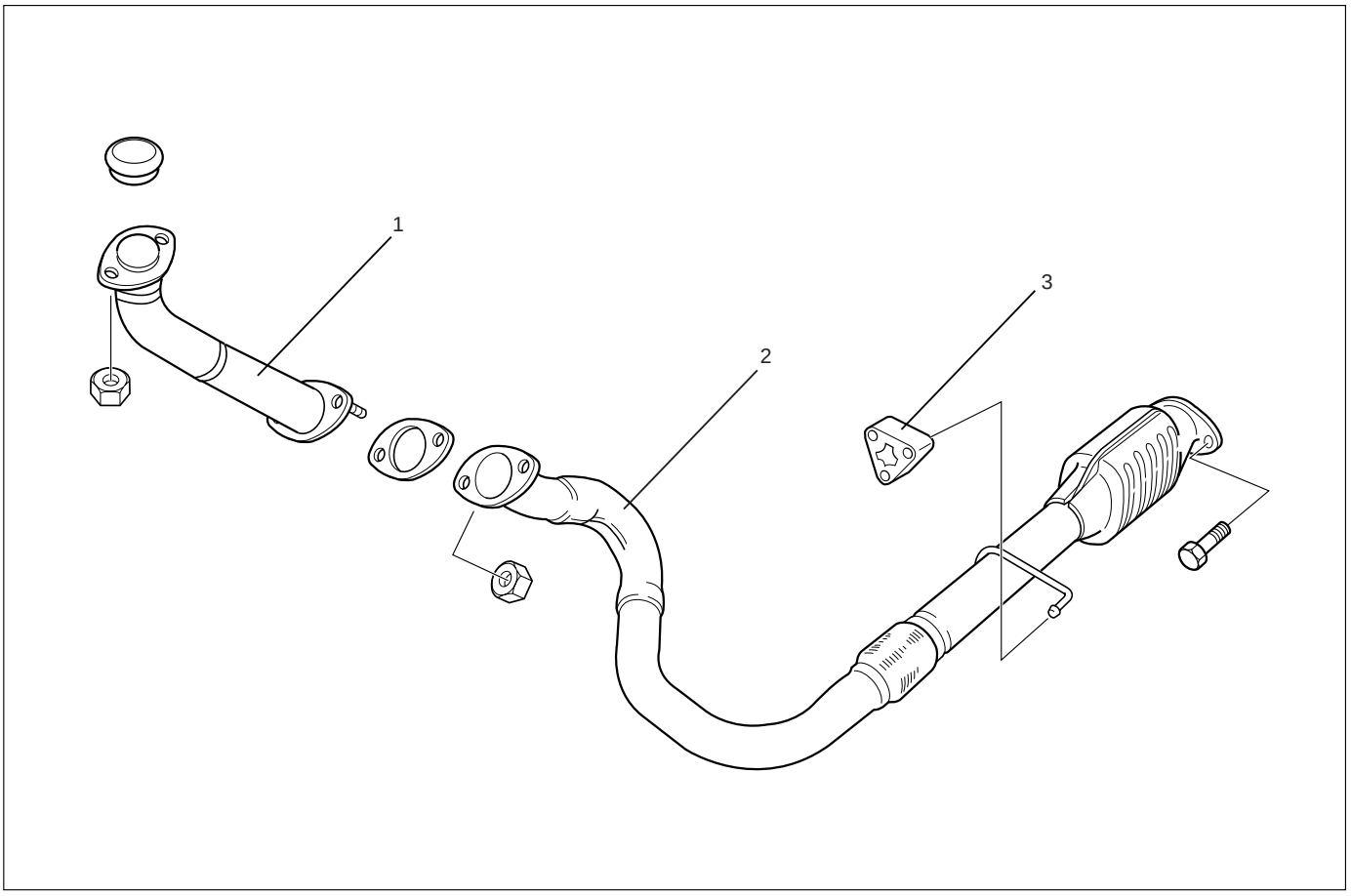

150RW071

Legend

(1) Front Exhaust Pipe
(2) Center Exhaust Pipe
(3) Mounting Rubber

REMOVAL

1. Battery negative cable.
2. Raise the vehicle and support with suitable safety stands.
3. Remove mounting rubber.
4. Remove fixing nuts from silencer side.
5. Remove fixing nuts from front exhaust pipe.
6. Remove center exhaust pipe assembly.

INSTALLATION

1. Place center exhaust pipe in the original position then tighten fixing nuts temporarily.
2. Install mounting rubber.
3. Tighten front exhaust pipe side nuts to the specified torque.

Torque : 43 N·m (4.4 kg·m/32 lb ft)

4. Tighten silencer side nuts to the specified torque.

Torque : 43 N·m (4.4 kg·m/32 lb ft)

EXHAUST SILENCER

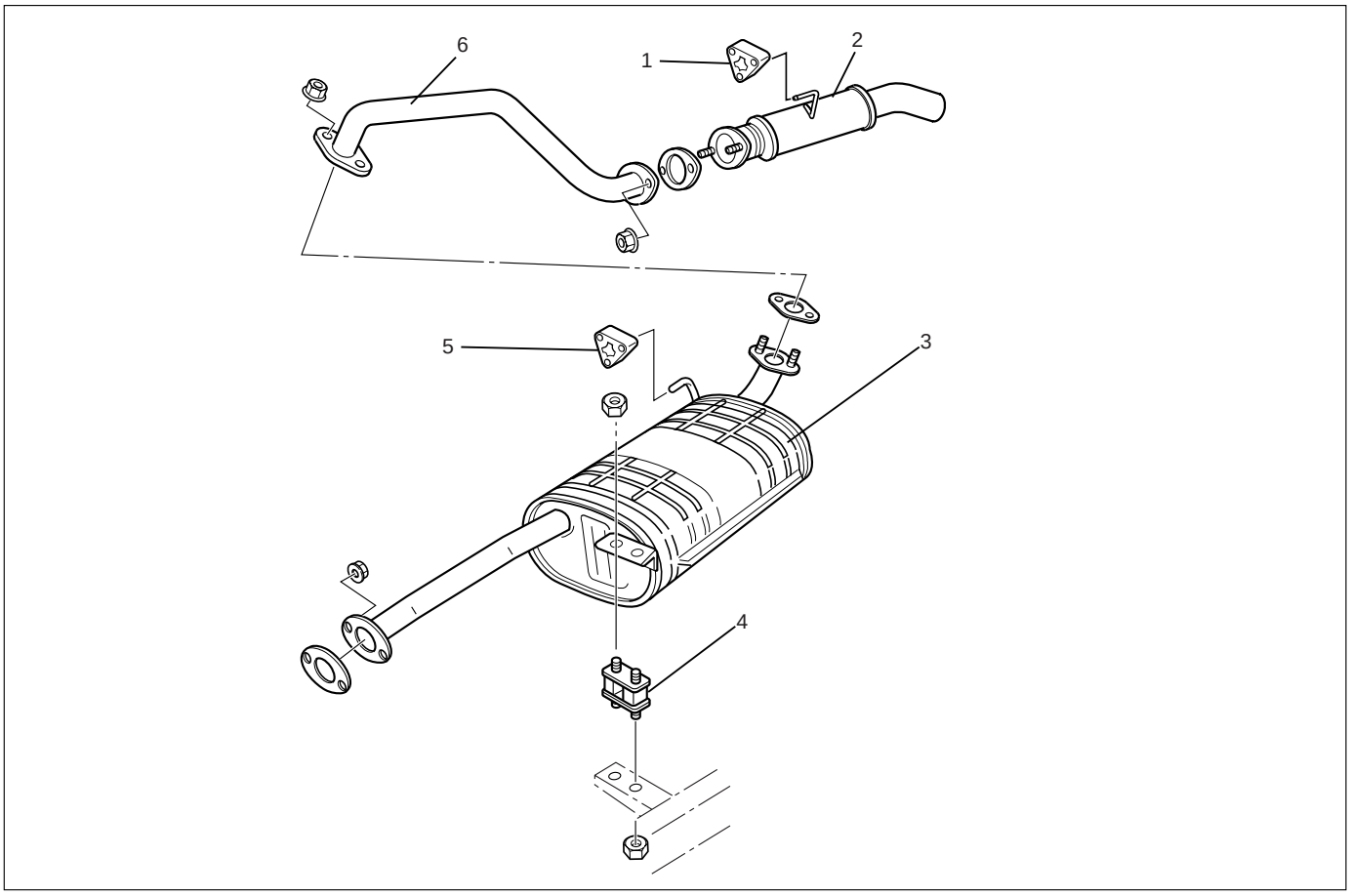

150RW072

Legend

(1) Mounting Rubber
(2) Post Silencer
(3) Silencer
(4) Mounting Bracket
(5) Mounting Rubber
(6) Tail Pipe

REMOVAL

1. Battery negative cable.
2. Raise the vehicle and support with suitable safety stands.
3. Remove mounting rubber from silencer.
4. Remove silencer mounting bracket.
5. Remove fixing nuts between center exhaust pipe and silencer.
6. Remove fixing nuts from tail pipe flange.
7. Remove silencer assembly.

INSTALLATION

1. Place silencer assembly in the original installation position, tighten both side (front and rear) nuts temporarily.
2. Tighten silencer mounting bracket to the specified torque.

Torque : 16 N·m (1.6 kg·m/12 lb ft)

3. Tighten center exhaust pipe side nuts to the specified torque.

Torque : 43 N·m (4.4 kg·m/32 lb ft)

4. Tighten tail pipe side nuts to the specified torque.

Torque : 43 N·m (4.4 kg·m/32 lb ft)

5. Install silencer mounting rubber.

REAR EXHAUST PIPE

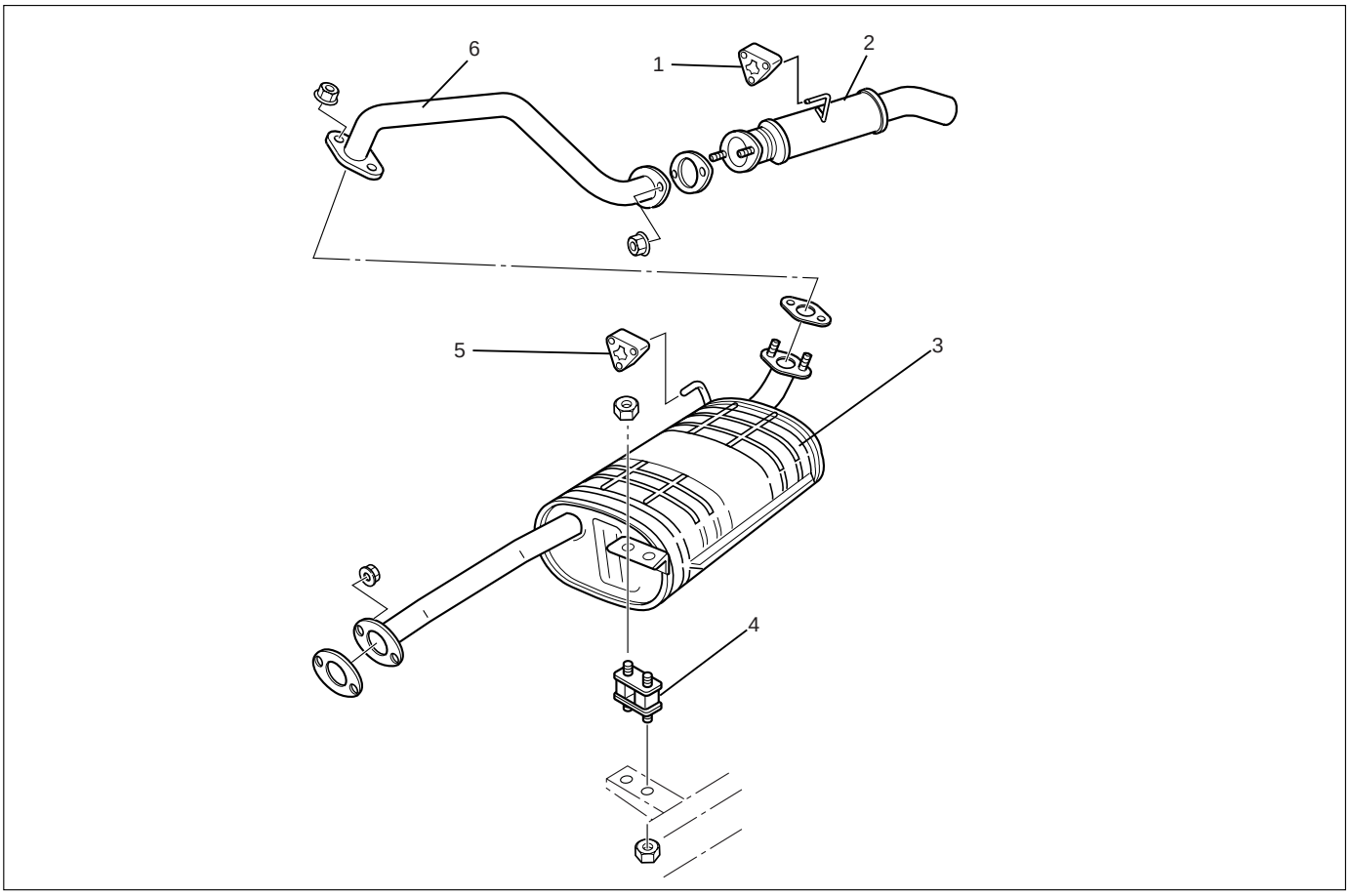

150RW072

Legend

(1) Mounting Rubber
(2) Post Silencer
(3) Silencer
(4) Mounting Bracket
(5) Mounting Rubber
(6) Tail Pipe

REMOVAL

1. Battery negative cable.
2. Raise the vehicle and support with suitable safety stands.
3. Remove mounting rubber from post silencer.
4. Remove fixing nuts at silencer side.
5. Remove tail pipe together with post silencer.
6. Remove fixing nuts between tail pipe and post silencer which separates them.

INSTALLATION

1. Install tail pipe and post silencer and tighten them to the specified torque.

Torque : 43 N·m (4.4 kg·m/32 lb ft)

2. Place tail pipe together with post silencer to original position and tighten fixing nuts at silencer side.

Torque : 43 N·m (4.4 kg·m/32 lb ft)

3. Install mounting rubber for post silencer.
4. Lower the vehicle.
5. Reconnect battery negative cable.

MEMO

ENGINE LUBRICATION

CONTENTS

General Description 6G–2
Lubrication Chart 6G–2
Oil Flow 6G–3
Oil Pump Specification 6G–3
Oil Filter Specification 6G–3
Sub Oil Filter Specification 6G–4
Oil Pump 6G–5
Oil Cooler Assembly 6G–6
Oil Cooler Specification. 6G–6
Oil Filter 6G–6
Sub Oil Filter 6G–6

GENERAL DESCRIPTION

LUBRICATION CHART

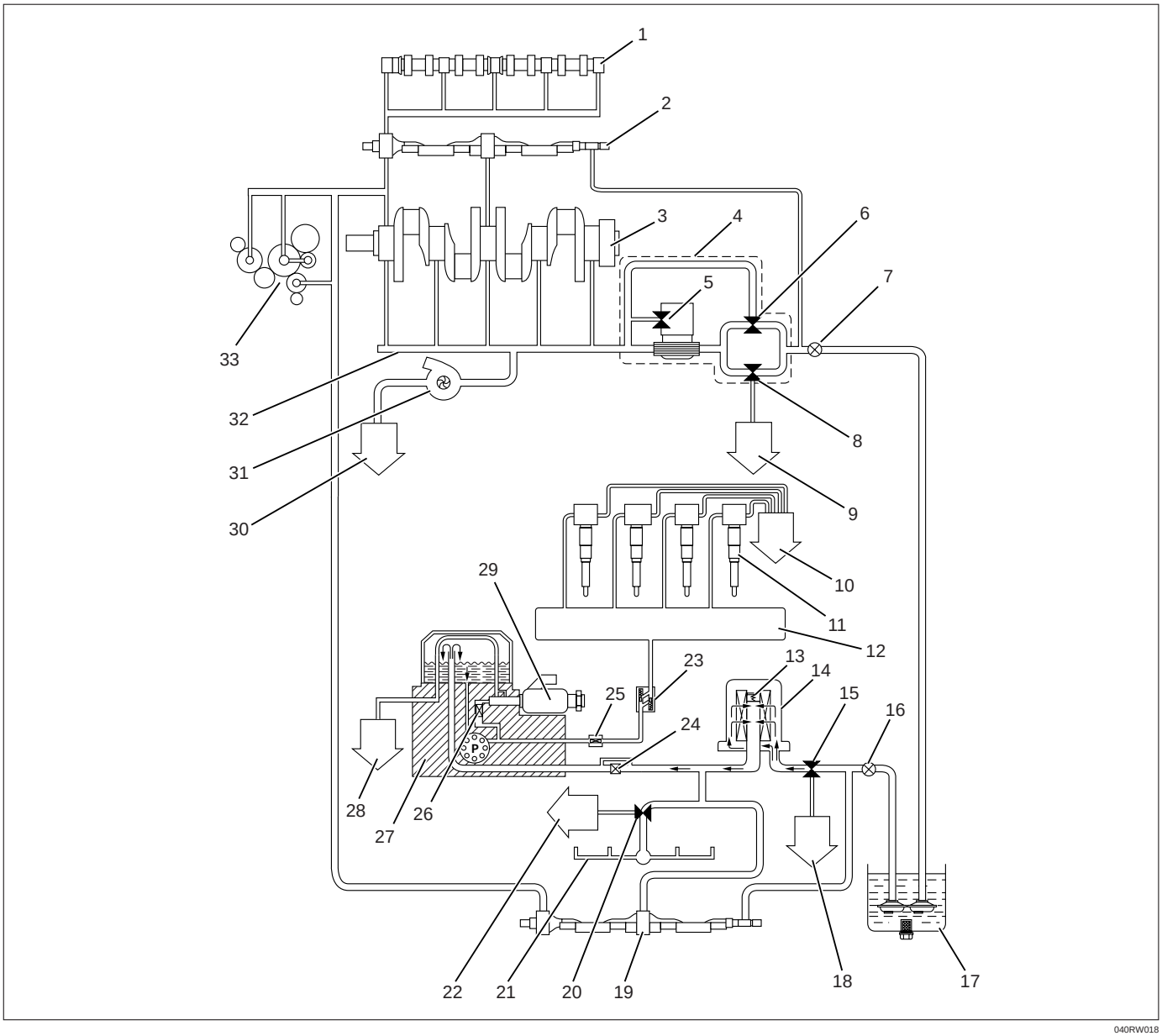

040RW018

Legend

(1) Camshaft
(2) Balance Shaft
(3) Crankshaft
(4) Oil Cooler and Oil Filter Assembly
(5) Oil Filter Relief Valve 98 Kpa (1 kg/cm^2/14.2 Psi)
(6) Oil Cooler Relief Valve 245 Kpa (2.5 kg/cm^2/ 36 Psi)
(7) First Oil Pump
(8) Main Oil Relief Valve 588 Kpa (6 kg/cm^2/ 85 Psi)
(9) To Oil Pan
(10) To Oil Pan
(11) Injector
(12) Oil Rail
(13) Sub Oil Filter Relief Valve 98 Kpa (1 kg/cm^2/ 14.2 Psi)
(14) Sub Oil Filter
(15) Relief Valve 588 Kpa (6 kg/cm^2/ 85 Psi)
(16) Second Oil Pump
(17) Oil Pan
(18) To Oil Pan
(19) Balance Shaft
(20) Cooling Jet Relief Valve 245 Kpa (2.5 kg/cm^2/ 36 Psi)
(21) Cooling Jet
(22) To Oil Pan
(23) Two Way Check Valve
(24) Nipple Filter

(25) Edge Filter
(26) Edge Filter
(27) High Pressure Oil Pump Assembly
(28) To Oil Pan
(29) Pressure Control Valve
(30) To Oil Pan
(31) Turbocharger
(32) Oil Gallery
(33) Timing Gear Train

To meet a newly adopted electronically controlled fuel injection system using engine oil two oil pumps have been provided to increase circulating oil capacity.
The first oil pump serves mainly to lubricate the engine parts, while the second mainly serves the fuel injectors and partially cools the pistons.
The oil cooler is provided on the first oil pump side and uses engine coolant.

OIL FLOW

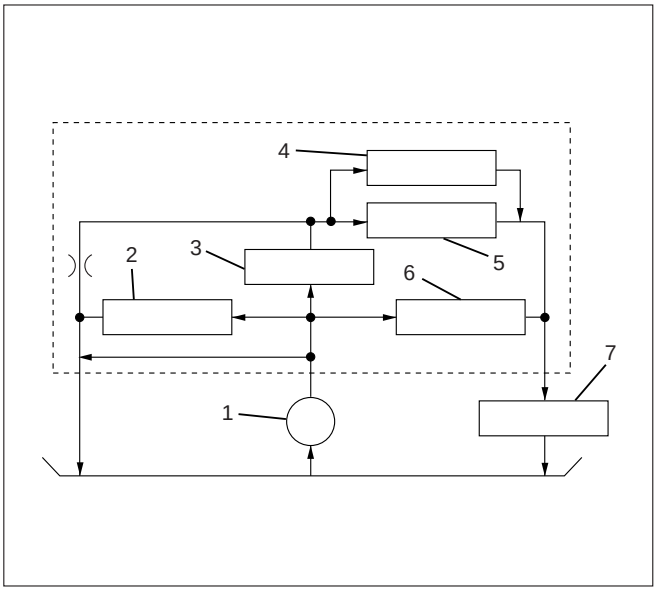

050RW010

Legend
(1) Oil Pump
(2) Regulator Valve
(3) Oil Cooler
(4) Oil Filter Relief Valve
(5) Full Flow Filter
(6) Oil Cooler Relief Valve
(7) Gallery

OIL PUMP SPECIFICATIONS

	First	Second
Pump Revolution	8800 rpm	
Delivery Pressure	392 Kpa (4.0 kg/cm^2/57 psi)	
Delivery Capacity	>48.8 ℓ/min	>37.1 ℓ/min

OIL FILTER SPECIFICATIONS

Filtration Method	Full flow Paper
Filtration Area	0.32 m^2
Relief Valve opening pressure	981 Kpa (10 kg/cm^2/142 psi)

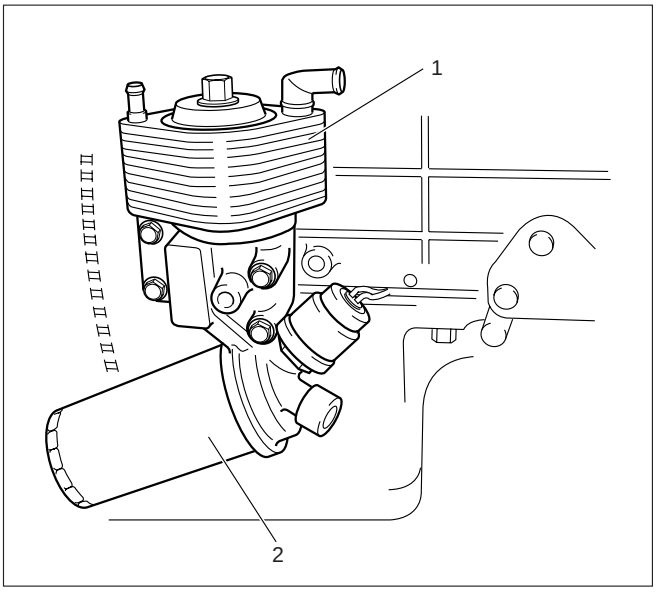

050RW009

Legend
(1) Oil cooler assembly
(2) Oil filter assembly

SUB OIL FILTER SPECIFICATIONS

Filtration Method	Full flow Paper
Filtration Area	0.12 m^2
Relief Valve opening pressure	981 Kpa (10 kg/cm^2/142 psi)

The sub oil filter requires no servicing until the replacement interval is reached.
The element is designed to provide special filtering efficiency until it becomes due for replacement.
It is recommended to check and replace the sub filter when the engine is being overhauled or if it is broken inside the engine.

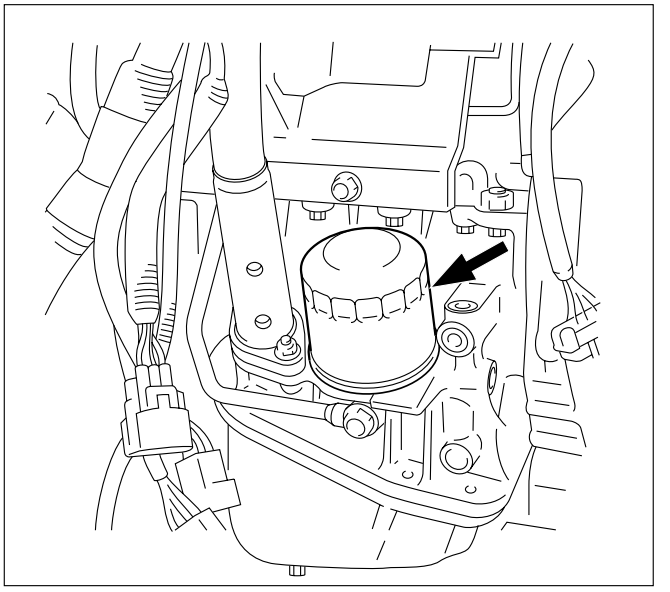

442RW004

OIL PUMP

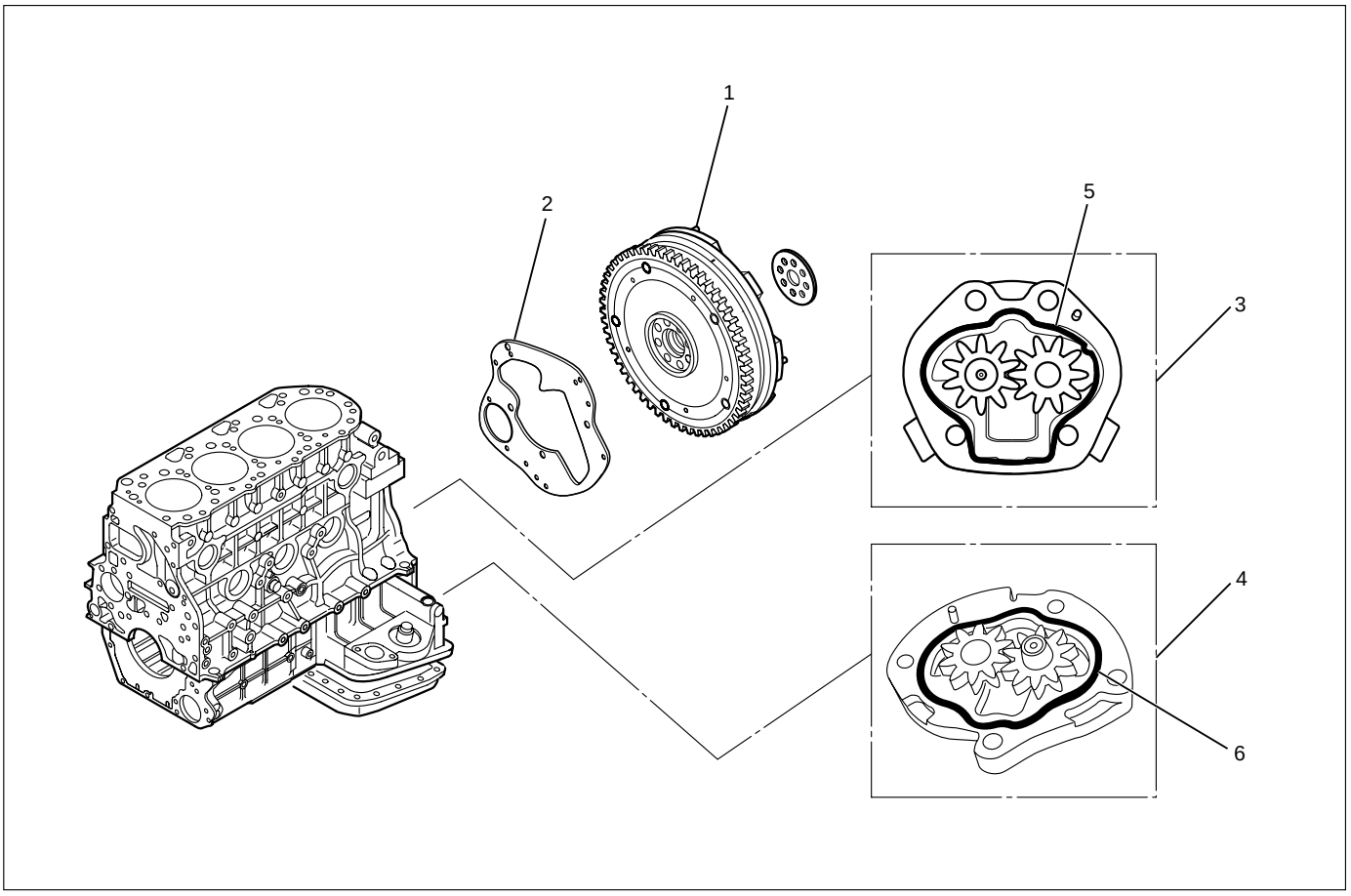

012RW097

Legend

(1) Flywheel
(2) Rear Plate
(3) First Oil Pump
(4) Second Oil Pump
(5) O-ring (For 1st oil pump)
(6) O-ring (For 2nd oil pump)

REMOVAL

1. Remove battery ground cable.
2 Raise the vehicle and support with suitable safety stand.
3. Drain engine oil.
4. Remove flywheel assembly.
5. Remove rear plate (For A/T) or flywheel housing (For MT).
6. Remove first oil pump assembly from cylinder block and second oil pump assembly from crank case.

INSPECTION AND REPAIR

1. Inspect flaws and/or wear on the teeth surface.
2. Inspect abnormal wear journal on the gear and in the drive spline.
3. If problem is found during inspection, the worn parts must be replaced.

INSTALLATION

1. Install first oil pump.
   1) Set O-ring to oil pump.
   2) Install oil pump drive gear to the end of balance shaft RH.
   3) Apply engine oil to oil pump gear and install gear to the end surface of cylinder block.

Torque: 20 N·m (2.0 kg·m / 14.5 lb ft)

2. Install second oil pump.
   1) Set O-ring to oil pump.
   2) Install oil pump drive gear to the end of balance shaft LH.
   3) Apply engine oil to oil pump gear and install gear to the end surface of crankcase.

Torque: 20 N·m (2·0 kg.m / 14.5 lb ft)

OIL COOLER ASSEMBLY

REMOVAL

1. Disconnect battery ground cable.
2. Drain engine coolant.
3. Remove front exhaust pipe.
4. Remove heat protector.
5. Remove exhaust valve assembly.
6. Oil cooler assembly.
   1) Remove water hose from water inlet and outlet side.
   2) Cloth should be put under the oil cooler to prevent oil from flowing out.
   3) Loosen fixing bolt then remove oil cooler assembly.

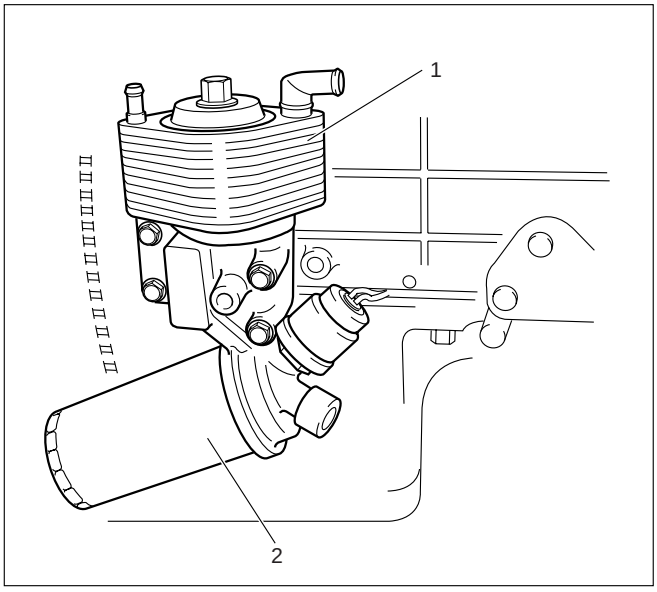

Legend
(1) Oil cooler assembly
(2) Oil filter assembly

INSPECTION AND REPAIR

1. Inspect for corrosion, wear, and breaks on the oil cooler core.
2. If a problem is found on the oil cooler core, the oil cooler assembly must be replaced.

INSTALLATION

1. Oil cooler assembly
   1) Tighten oil cooler fixing bolt to the specified torque and install water hoses.

Torque: 29 N·m (3.0 kg·m / 21.7 lb ft)

2. Install exhaust valve assembly to turbocharger assembly and tighten to the specified torque.

Torque: 27 N·m (2.7 kg·m / 19.5 lb ft)

3. Install front exhaust pipe to the exhaust valve.

Torque:

67 N·m (6.8 kg·.m / 49.2 lb ft)
(At exhaust valve side)

43 N·m (4.4 kg·m / 32 lb ft)
(At center exhaust pipe side)

4. Install heater protector.
5. Fill engine coolant.
6. Connect battery ground cable.
7. Start engine and carefully check for leakage of oil and coolant.

OIL COOLER SPECIFICATIONS

Cooling method	Water cooled Multi plate type
Heat exchange Area	0.323 m^2
Heat exchange capacity	>11,300 kcl/h
Relief Valve opening pressure	245 Kpa (2.5 kg/cm^2/36 psi)

OIL FILTER

REMOVAL

1. Put container under the oil filter to prevent oil from the oil filter from flowing out.
2. Use filter wrench to remove oil filter.
   Filter wrench: 5-8840-0203-0

INSTALLATION

1. Apply engine oil thinly to oil filter O-ring.
2. Tighten oil filter by hand until O-ring comes in contact with the sealing surface.
3. Use filter wrench to tighten oil filter one turn and 1/8 turn.
4. Start engine and carefully check for oil leakage from oil filter.

SUB OIL FILTER

The sub oil filter requires no servicing until the replacement interval is reached.
The element is designed to provide special filtering efficiency until it becomes due for replacement.
It is recommended to check and replace the sub oil filter when the engine is being overhauled or if it is broken inside the engine.

ENGINE SPEED CONTROL

CONTENTS

General Description 6H–2
Engine Speed Control. 6H–3

GENERAL DESCRIPTION

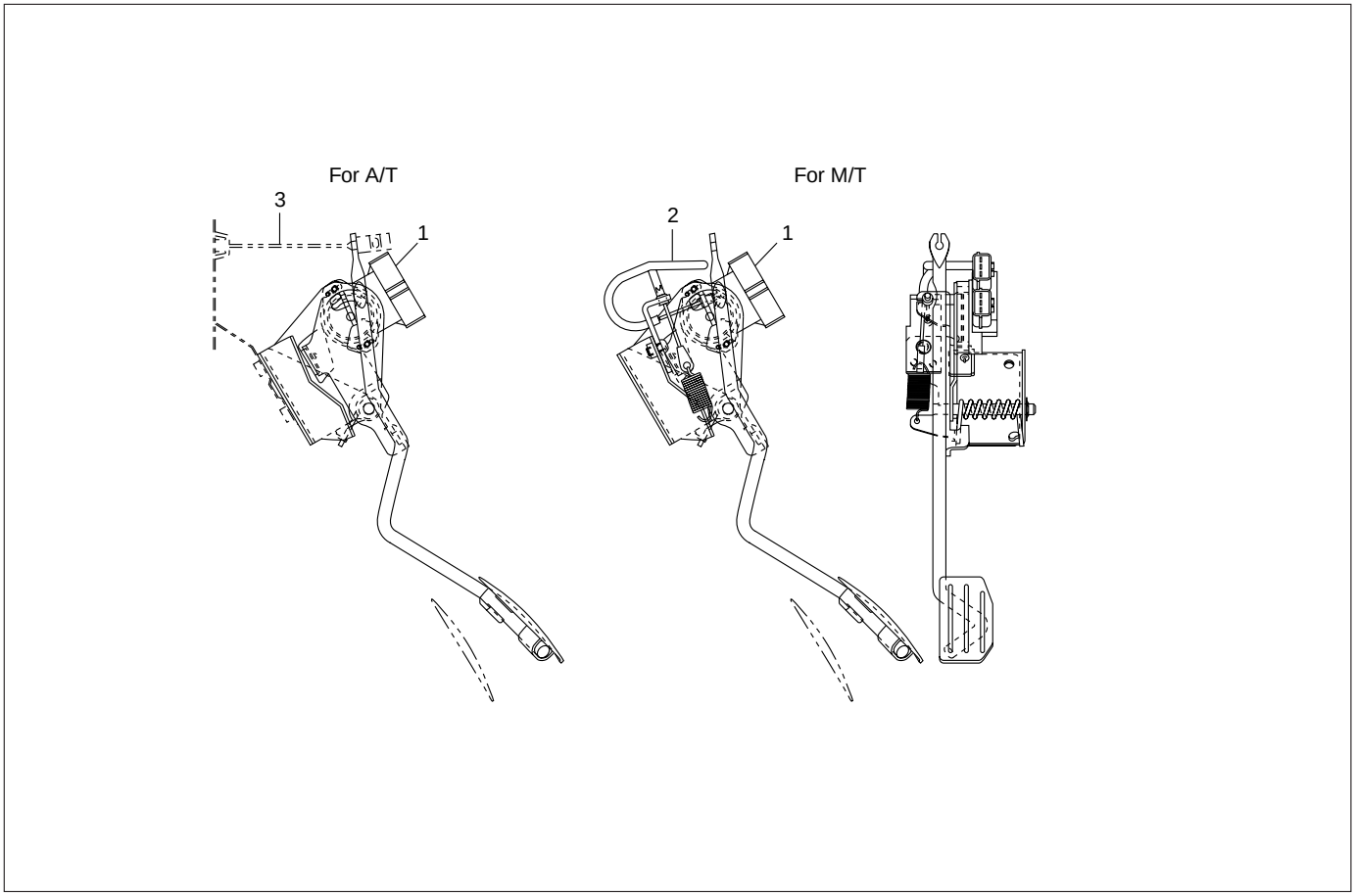

101RW012

Legend

(1) Accerator Position Sensor
(2) Return Cable
(3) A/T Throttle Cable

Engine control has been changed from the control cable system to an electronically controlled TP (Throttle Position) sensor.
The TP sensor is a potentiometer (Variable resistance) type and installed to the accelerator pedal bracket.
A voltage of 5 V is always applied from the ECM (Electronic Control Module) to the TP sensor so that the operating angle of the accelerator pedal can be detected from a change in voltage.
Further, this sensor is equipped with an accelerator switch which sends signals to the ECM when the accelerator pedal is stepped on.
This switch remains on and turns off only when the accelerator pedal is stepped on.

An A/T (Automatic Transmission) vehicle is equipped with a throttle cable for A/T use. There is a return spring provided on the throttle cable lever side. No change in the throttle cable lever. An MT (Manual Transmission) vehicle has no throttle cable, and therefore, a return spring is provided on the accelerator pedal and a return cable assembly having the sliding resistance of a cable is used to give the pedal a feeling.
To meet the newly adopted electronic control system, the idling control button has been dropped.

ENGINE SPEED CONTROL

REMOVAL

1. For vehicle with MT
   1) Remove harness connector from accelerator pedal sensor.
   2) Remove accelerator pedal assembly from chassis.
2. For vehicle with A/T
   1) Remove A/T control cable from accelerator pedal assembly.
   2) Remove harness connector from accelerator pedal sensor.
   3) Remove accelerator pedal assembly from chassis.

INSPECTION AND REPAIR

1. Check moving condition of accelerator pedal, if not smooth working, apply oil to the pivot etc.
2. Check tightening condition of accelerator sensor, if not completely tightened, it should be tightened additionally.

INSTALLATION

The installation for both MT and A/T vehicles follows the reverse manner of removal.

MEMO

INDUCTION

CONTENTS

General Description 6J–2
Air Cleaner 6J–3
Turbocharger 6J–4
Intercooler 6J–8
Intake Throttle Valve 6J–9
Intake Manifold 6J–10
Main Data and Specifications 6J–11

GENERAL DESCRIPTION

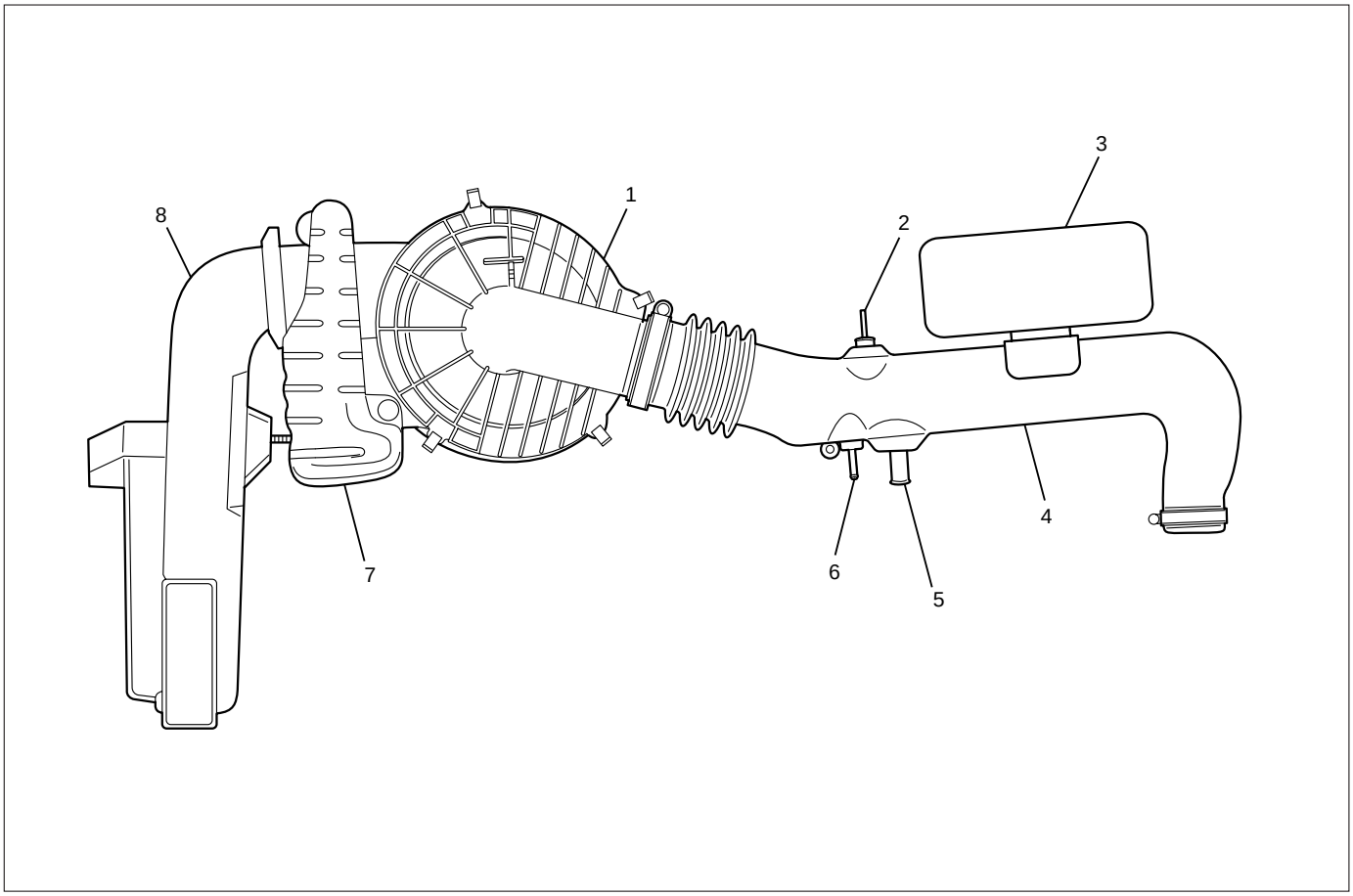

130RW015

Legend

(1) Air Cleaner
(2) Connector for Fuel Tank Breather Hose
(3) Resonator
(4) Air Duct
(5) Connector for PCV Hose
(6) Connector for EGR VSV Hose
(7) Air Duct
(8) Air Duct

There is a large intake silencer provided at the entrance of the air cleaner. Air cleaner element is a viscous type which features high filtration efficiency.
A resonator is used also in the air duct between the air cleaner and turbocharger to reduce air intake noise. The air taken in flows through the turbocharger to the intercooler where the air is cooled and then taken in the cylinder through the intake manifold.

AIR CLEANER

REMOVAL

1. Remove air cleaner cover with air duct.
2. Remove air cleaner element.

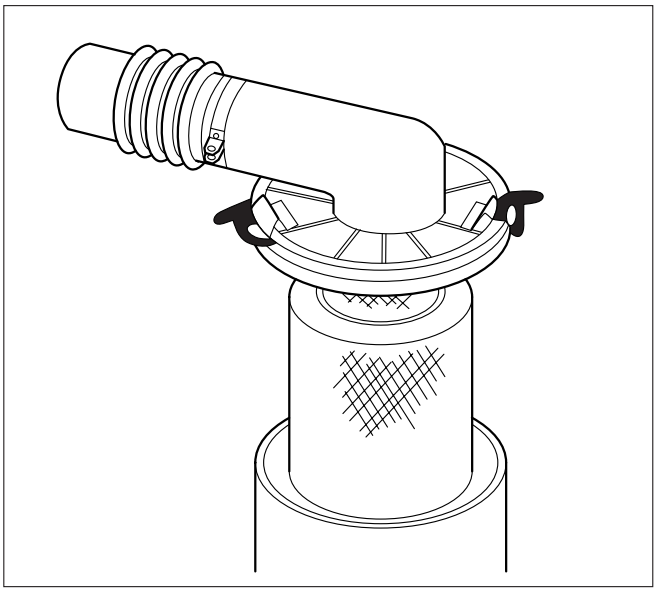

130RW010

INSPECTION

Check air cleaner element for clogs, chokes and breaks, and if any problem is found during inspection, the element must be replaced.

INSTALLATION

1. Air cleaner element
2. Air cleaner cover with air duct.
   1) Put air cleaner cover in original position and tighten it with the clip.

TURBOCHARGER

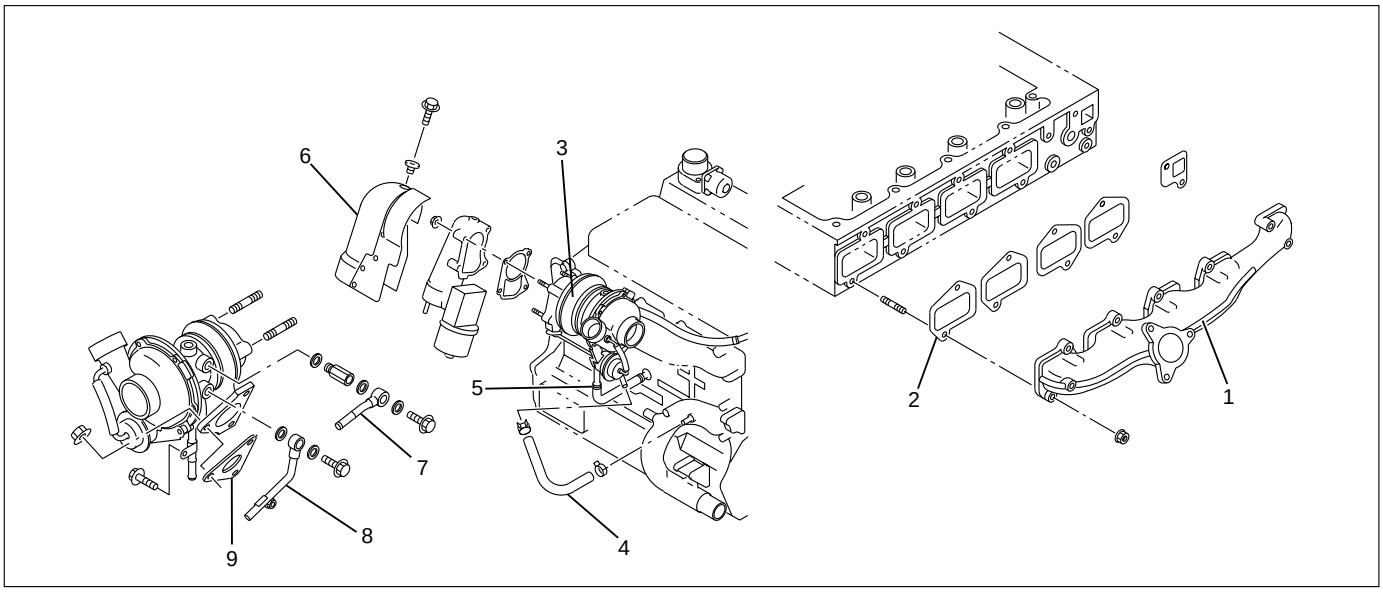

025RW023

Legend

(1) Exhaust Manifold
(2) Gasket
(3) Turbocharger Assembly
(4) Water Hose
(5) Water Hose
(6) Heat Protector
(7) Oil Pipe
(8) Oil Pipe
(9) Gasket

REMOVAL

1. Remove battery.
2. Drain engine coolant.
3. Remove air cleaner cover and air duct.
4. Remove intercooler assembly.
   Refer to “Intercooler” in this manual.
5. Remove water pipe from water inlet of turbocharger.
6. Remove oil pipe.
   1) Remove fixing bolts from oil inlet of turbocharger then remove oil pipe.
   2) Plug open port of turbocharger to prevent foreign materials from entering the turbocharger.
7. Remove oil drain pipe from turbocharger.
8. Remove water outlet pipe from turbocharger.
9. Remove heat protector.
10. Remove exhaust valve assembly.
11. Remove turbocharger fixing nuts from exhaust manifold then remove turbocharger assembly.

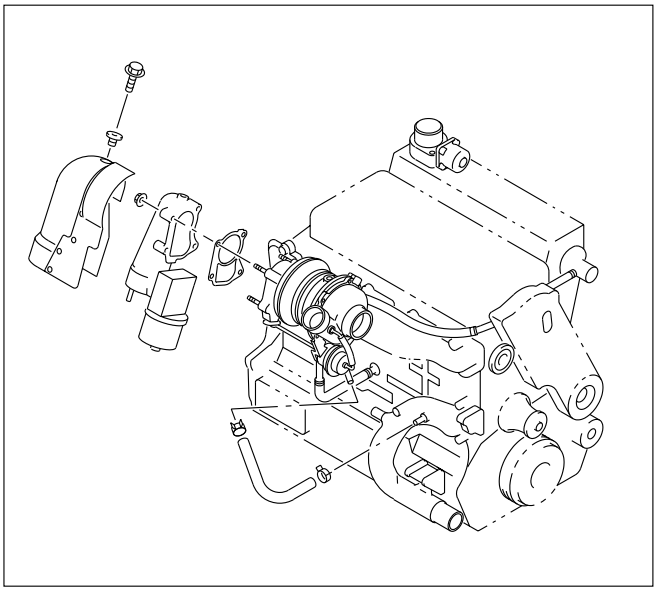

036RW006

INSPECTION AND REPAIR

Make the necessary adjustments, repairs and part replacements if excessive wear or damage is discovered during inspection.
Minor servicing operations are described in this section. Contact the nearest IHI SERVICE FACILITY for major repairs and maintenance.
Refer to IHI SERVICE NETWORK at the end of this section for the location of your area's IHI SERVICE FACILITY.
Turbine shaft end play.

1) Set a dial indicator to the turbine shaft end.
2) Apply a force of 11.8 N (1.2 kg / 2.6 lb) alternately to the compressor wheel and and the turbine wheel end.
3) Read the dial indicator.

Turbine End Play

Standard: 0.03 – 0.06 mm (0.0012 – 0.0024 in)
Limit: 0.09 mm (0.0035 in)

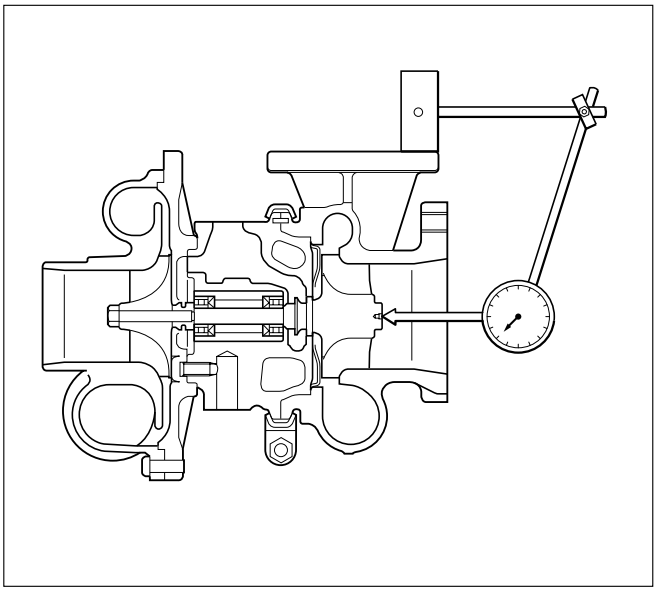

036RW008

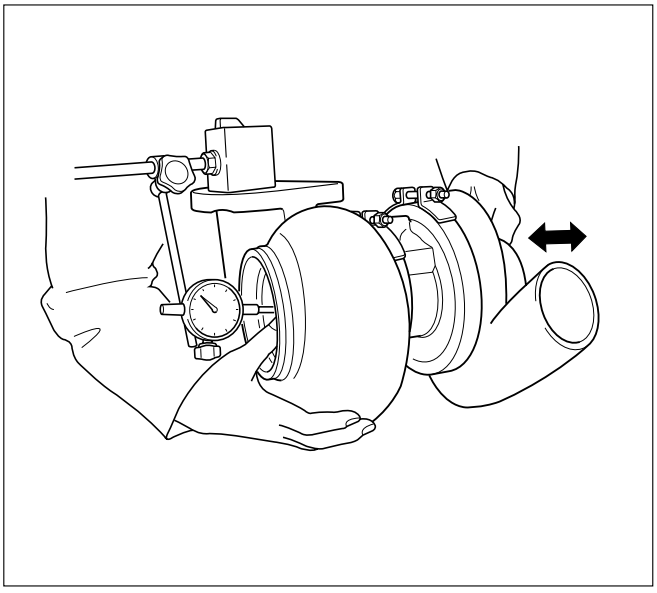

036RW010

Turbine shaft and bearing clearance

1) Set a dial indicator to the turbine shaft center through the center housing oil drain port.
2) Move the turbine shaft from side to side.
3 Read the dial indicator.

Turbine Shaft and Bearing Clearance

Standard: 0.056 - 0.127 mm (0.0022 - 0.0050 in)
Limit: 0.14 mm (0.0055 in)

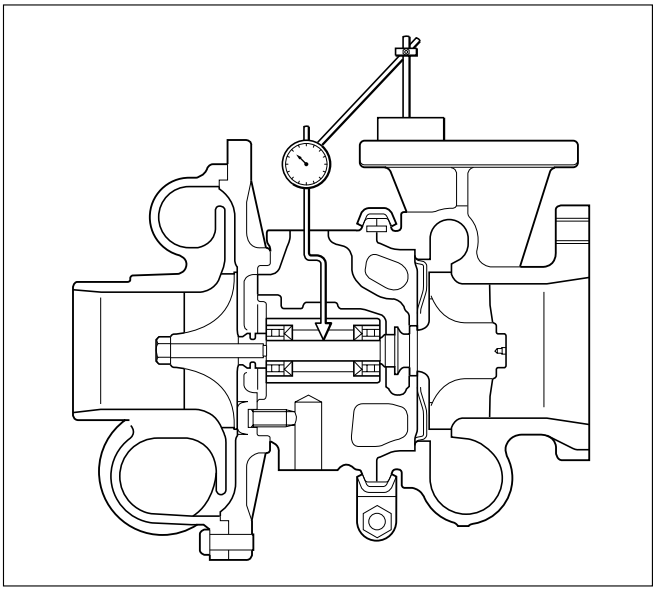

036RW009

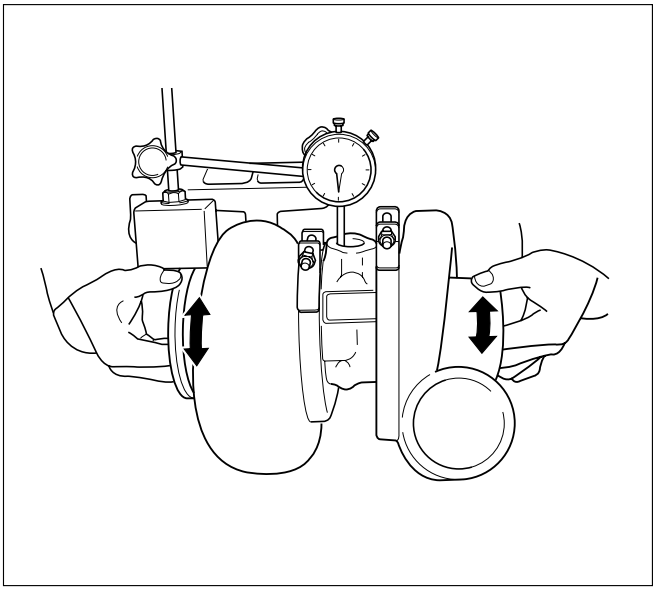

036RW007

Waste gate operation

1) Remove hose from waste gate actuator side and install pressure gauge (1) to the waste gate actuator.
2) Operate pump of pressure gauge while engine is stopped.
3) Read pressure at the control rod (2) move 2mm.

Pressure: 106 – 115 kPa
(796 – 862 mmHg/ 15.4 – 16.7 PSi)

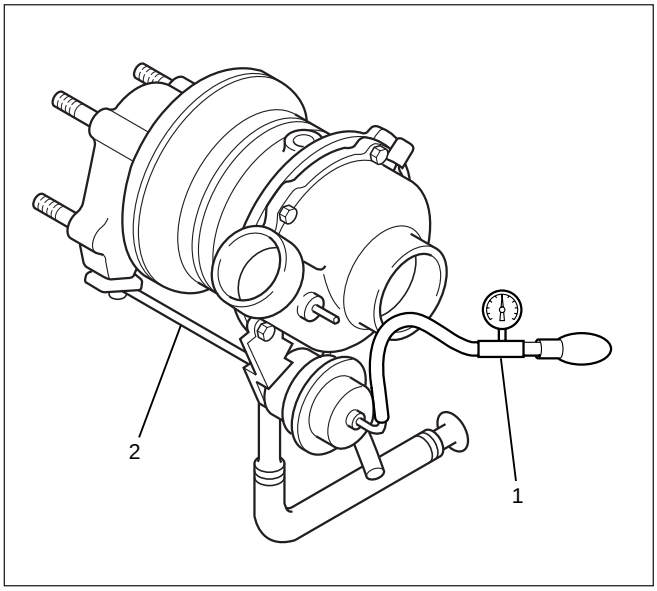

036RW011

Legend
(1) Pressure gauge
(2) Waste gate control rod

4) Check for cracks or breaks on the hose, if a problem is found, the hose must be replaced.

CAUTION: Do not apply more than 120 Kpa (900 mmHg / 18.7 PSi) to waste gate actuator.

INSTALLATION

1. Install turbocharger assembly to exhaust manifold, tighten to the specified torque.

Torque: 27 N·m (2.7 kg·m / 19.5 lb ft)

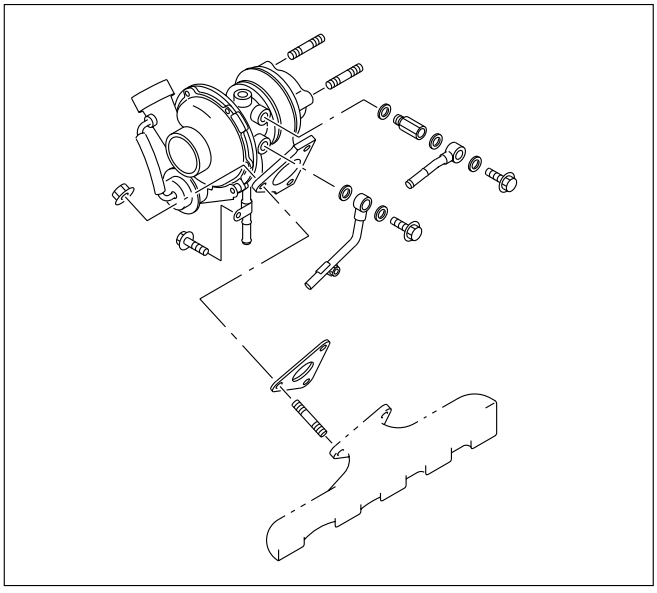

036RW005

2. Install exhaust valve assembly to outlet of turbocharger, tighten bolts to the specified torque.

Torque: 27 N·m (2.7 kg·m / 19.5 lb ft)

3. Install heat protector.
4. Water inlet pipe.
   1) Tighten water inlet pipe with new gasket.

Torque: 9 N·m (0.9 kg·m / 6.5 lb ft)

5. Oil drain pipe.
   1) Tighten oil drain pipe with new gasket.

Torque: 9 N·m (0.9 kg·m / 6.5 lb ft)

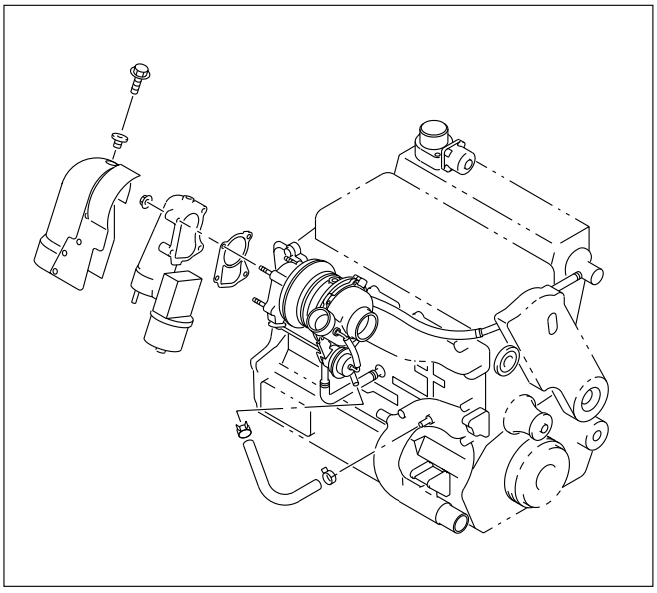

036RW006

6. Oil inlet pipe.
   1) Apply about 100 cc engine oil to turbocharger housing before installing the oil pipe.
   2) Turn the turbine shaft by hand to lubricate the bearing.
   3) Install the oil inlet pipe with a new gasket, tighten bolt to the specified torque.

Torque: 22 N·m (2.2 kg·m / 15.9 lb ft) For M10

Torque: 54 N·m (5.5 kg·m / 39.8 lb ft) For M14

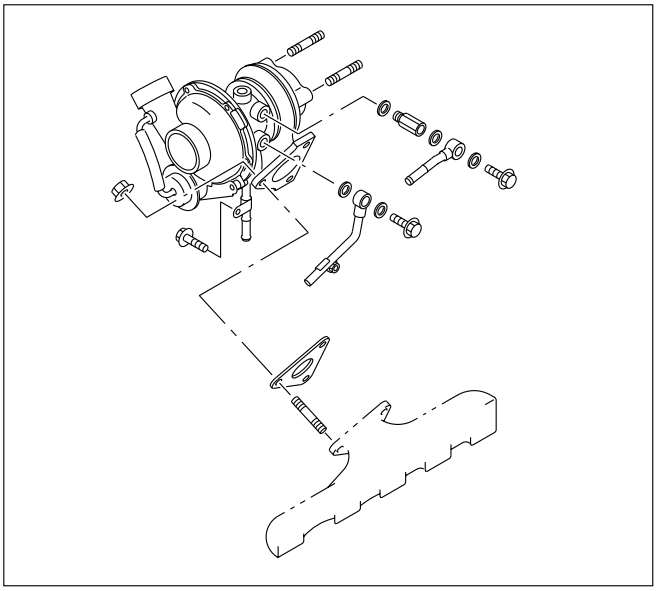

036RW005

7. Water inlet pipe.
   1) Install water inlet pipe with a new gasket, tighten bolts to the specified torque.

Torque: 9 N·m (0.9 kg·m / 6.5 lb ft)

8. Install intercooler assembly.
   Refer to “Intercooler” in this manual.
9. Install air cleaner cover with air duct.
10. Fill engine coolant to full level.
11. Install battery and connect battery cable.

INTERCOOLER

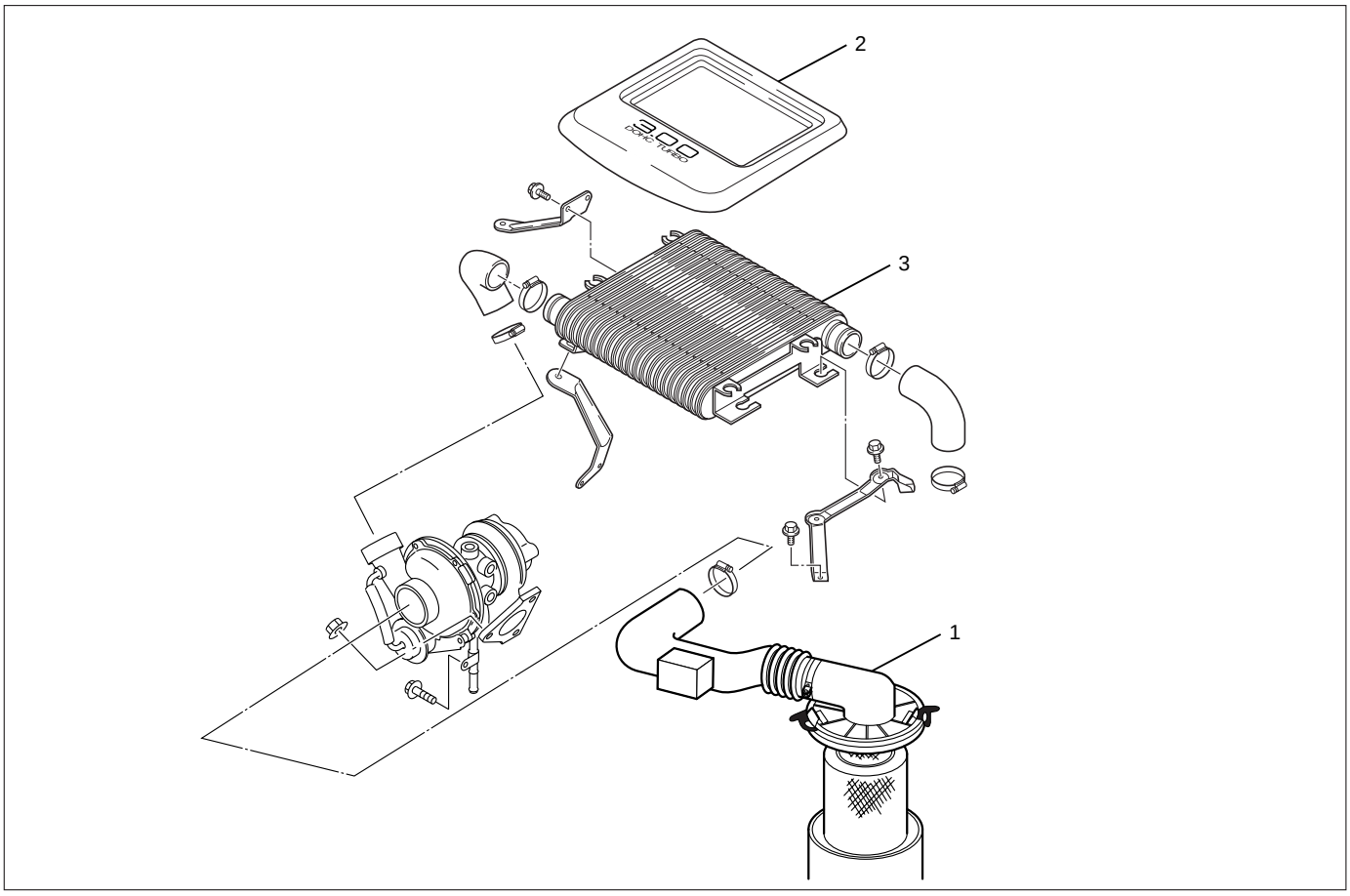

036RW012

Legend

(1) Air Cleaner Cover and Air Duct
(2) Intercooler Cover
(3) Intercooler Assembly

REMOVAL

1. Disconnect battery ground cable.
2. Remove air cleaner cover with air duct.
3. Remove intercooler cover.
4. Intercooler assembly.
   1) Remove rubber hose from intercooler outlet side.
   2) Remove rubber hose from intercooler inlet side.
   3) Remove four fixing bolts and remove intercooler assembly.

INSPECTION AND REPAIR

1. Visual check for clogs in the fins.
2. Check for brokens on the tube.
3. If any problem on the intercooler is observed during inspection, clean or replace the intercooler.

INSTALLATION

1. Intercooler assembly.
   1) Connect outlet hose to intake manifold.
      Tighten hose clamp to the specified torque.

Torque: 4 N·m (0.4 kg·m / 3 lb ft)

   2) Connect inlet hose to the turbocharger outlet side.
      Tighten hose clamp to the specified torque.

Torque: 4 N·m (0.4 kg·m / 3 lb ft)

   3) Install intercooler assembly, tighten fixing bolts to the specified torque.

Torque: 20 N·m (2.0 kg·m / 14.5 lb ft)

2. Install intercooler cover.
3. Install air cleaner cover and air duct.
4. Connect battery ground cable.

INTAKE THROTTLE VALVE

REMOVAL

1. Remove intercooler assembly.
   Refer to “Intercooler” in this manual.
2. Remove harness connector from motor and ITP sensor.
3. Loosen the two fixing nuts and remove the throttle valve assembly.

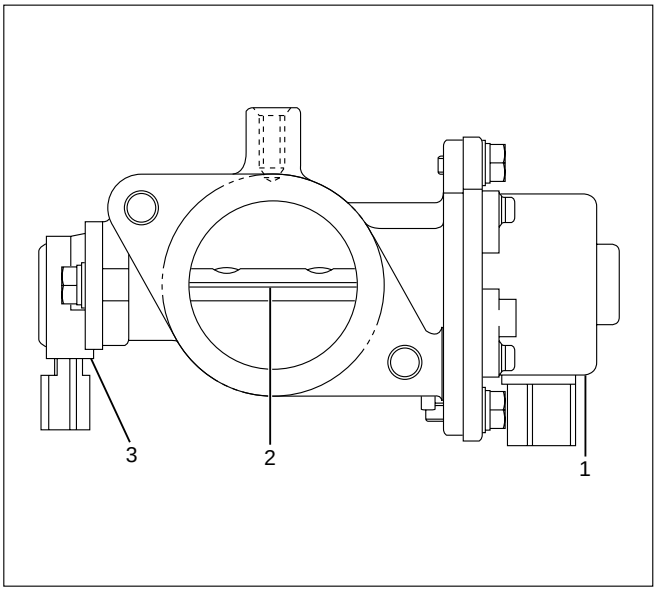

025RW032

Legend
(1) Motor
(2) Intake Throttle Valve
(3) ITP sensor

INSPECTION AND REPAIR

1. Check for catching somwhere on the throttle valve.
2. If some problem is discovered during inspection on the throttle valve, the throttle valve must replace.

INSTALLATION

1. Put gasket on the intake manifold and install throttle valve.
2. Tighten nuts to the specified torque.

Torque: 20 N·m (2.0 kg·m / 14.5 lb ft)

3. Reconnect harness connector to motor and ITPsensor.
4. Install intercooler assembly.

INTAKE MANIFOLD

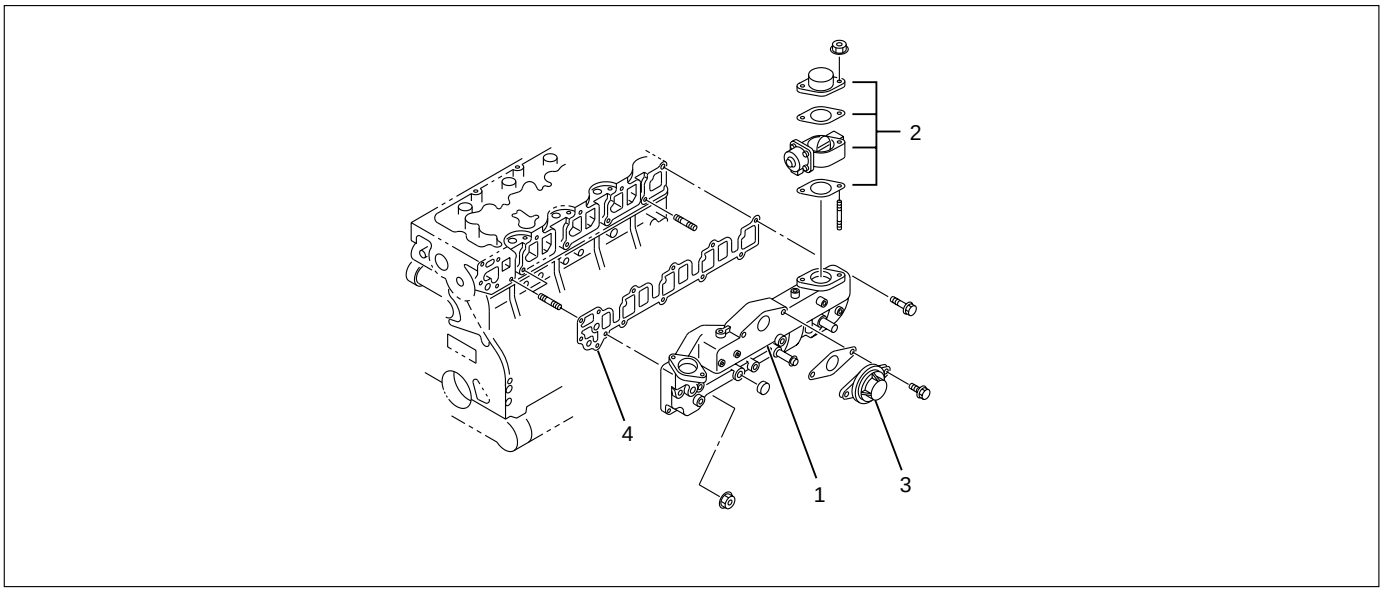

025RW022

Legend
(1) Intake Manifold
(2) Throttle Valve Assembly
(3) EGR Valve
(4) Gasket

REMOVAL

1. Drain engine coolant and remove water hose from thermostat housing
2. Remove intercooler assembly.
3. Remove bracket fixing bolt of oil level gauge guide tube.
4. Remove PCV hose.
5. Remove hoses from EGR valve, EGR vacuum sensor and outlet of heater unit.
6. Disconnect harness connector from MAP sensor, EGR vacuum sensor, ETC sensor, Water temperature unit, IAT sensor and EVRV.
7. Remove high pressure oil pipe.
8. Remove two way check valve.
9. Remove fuel pipe.
10. Remove fixing bolts and nuts of intake manifold, remove intake manifold assembly.

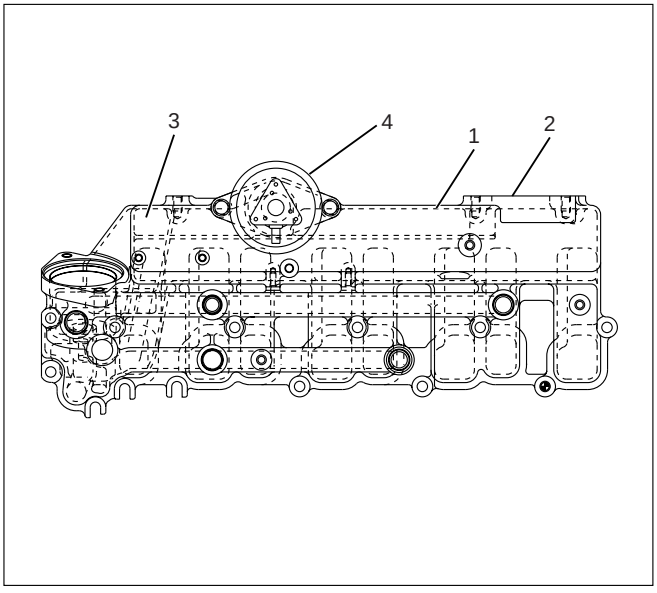

025RW031

Legend
(1) Intake manifold
(2) Fixing portion of throttle valve
(3) EGR passage
(4) EGR valve

INSPECTION AND RAPAIR

1. Visually check for cracks/clogs inside intake manifold.
2. If foreign material is observed, it should be taken out, and if there are some cracks on the intake manifold, it must be replaced.

INSTALLATION

1. Install the intake manifold assembly, tighten bolts and to the specified torque.

Torque: 20 N·m (2.0 kg·m / 14.5 lb ft) for bolt
Torque: 20 N·m (2.0 kg·m / 14.5 lb ft) for nut

2. Install fuel pipe.

Torque: 4 N·m (0.4 kg·m / 2.9 lb ft) for M16 nut (Apply engine oil)

Torque: 13 N·m (1.3 kg·m / 9.4 lb ft) for M10 cap nut

Torque: 14 N·m (1.4 kg·m / 10 lb ft) for M10 (Apply engine oil)

3. Install two way check valve.

Torque: 20 N·m (2.0 kg·m / 14.5 lb ft)

4. Fill with about 300 cc of engine oil from the high pressure oil pipe installation port of the oil rail using an oil filler.

   If assembled without filling the oil rail with oil, the time for engine starting will be longer.
5. Install high pressure oil pipe, then tighten sleeve nut to the specified torque.

Torque: 29 N·m (3.0 kg·m / 21.7 lb ft)

6. Reconnect harness connector to MAP sensor, EGR vacuum sensor, ETC sensor, Water thermo unit, IAT sensor and EVRV sensor.
7. Install hoses to EGR valve, EGR vacuum sensor and Water outlet of heater.
8. Connect PCV hose.
9. Install oil level gauge guide and fix it.
10. Install intercooler assembly.

    Refer to “Intercooler” in this manual.
11. Install water hose to thermostat housing and fill with engine coolant.

MAIN DATA AND SPECIFICATIONS

Model of Turbocharger	IHI RHF5
Turbine Maximum Speed	180,000 rpm
Maximum Inlet Gas Temperature	800 °C (1472 °F)
Vibration Peak (G) criteria	Maximum 4 (G) at Turbine Rotor Speed 140,000 rpm
Tolerance Limit of Compressor Blade Height	Less then 0.5 mm (0.0197 in)

IHI SERVICE NETWORK

For inquiries relating to turbochargers, please contact your ISUZU distributor or the nearest IHI Turbocharger Service Facility.

HEADQUARTERS

ISHIKAWAJIMA HARIMA HEAVY INDUSTRIES CO., LTD. (IHI)
General Machinery Division
Tokyo Chuo Building 1-6-2 Marunouchi Chiyoda-ku
Tokyo 100-0005 JAPAN
TEL: 81-(3)-3286-2405 to 2407 (3 lines)
FAX: 81-(3)-3286-2430

CHINA

IHI BEIJING OFFICE
Room 705, China World Trade Center, No. 1 Jian Guo Men Wai Avenue
Beijing, People's R epublic of CHINA
TEL: 86-(1)-505-4997, 0408
FAX: 86-(1)-505-4350
TLX: 210343 IHIPK CN

TAIWAN

IHI TAIPEI OFFICE
Room 1202, Chia Hsin Building, No. 96 Chung Shan
North Road, Section 2, Taipei, TAIWAN
TEL: 886-(2)-542-5520, 5521, 5523
FAX: 886-(2)-542-4362
TLX: 11320 IHICO

THAILAND

IHI BANGKOK OFFICE
8th Floor, Thaniya Building, 62 Silom Road, Bangkok, THAILAND
TEL: 66-(2)-236-3490, 7356, 9099
FAX: 66-(2)-236-7340
TLX: 82375 IHICO TH

MALAYSIA

IHI KUALA LUMPUR OFFICE
Letter Box No. 52, 22nd Floor, UBN Tower,
10 Jin. P. Ramlee 50250 Kuala Lumpur, MALAYSIA
TEL: 60-(3)-232-1255, 1271
FAX: 60-(3)-232-1418
TLX: IHI KLMA 20257

INDONESIA

IHI JAKARTA OFFICE
9th Floor, Skyline Building JI. M.H. Thamrin, No. 9, Jakarta, INDONESIA
TEL: 62-(21)-32-2147, 390-2211
FAX: 62-(21)-32-3273
TLX: 44175 IHIJKT

TRANSMISSION

AUTOMATIC TRANSMISSION (4L30–E)

CONTENTS

Service Precaution 7A–3
Construction 7A–3
Range Reference Chart 7A–4
Normal Operation Of 2000 4L30–E Transmission 7A–5
Diagnosis 7A–5
Driver Information 7A–5
General Diagnosis Procedure 7A–8
Preliminary Inspection Chart 7A–9
Checking Transmission Fluid Level and Condition 7A–10
Test Driving 7A–11
Mechanical / Hydraulic Diagnosis Check Trans Indicator Chart 7A–12
Mechanical / Hydraulic Diagnosis Symptoms Index 7A–13
Stall Test 7A–23
Line Pressure Test 7A–23
Shift Speed Chart (V6 3.2L 6VD1 Model) . . . 7A–24
Shift Speed Chart (V6 3.5L 6VE1 Model) . . 7A–26
Lockup Speed Chart (V6 3.2L 6VD1 Model) 7A–28
Lockup Speed Chart (V6 3.5L 6VE1 Model) 7A–28
Changing Transmission Fluid 7A–29
Selector Lever 7A–29
Inspection 7A–29
Removal 7A–30
Installation 7A–30
Mode Switch 7A–31
Removal 7A–31
Installation 7A–31
Transmission (With Transfer Case) 7A–33
Transmission And Associated Parts 7A–33
Removal 7A–33
Installation 7A–35
Solenoid (Main Case Valve Body) 7A–39
Removal 7A–39
Installation 7A–39
Solenoid (Adapter Case Valve Body) 7A–40
Removal 7A–40
Installation 7A–40
Valve Body Assembly (Main Case) 7A–41
Removal 7A–41
Installation 7A–41
Valve Body Assembly (Adapter Case) 7A–43
Removal 7A–43
Installation 7A–43
Powertrain Control Module (PCM) 7A–43
Removal 7A–43
Installation 7A–43
Speed Sensor (Extension Housing) 7A–44
Removal 7A–44
Installation 7A–44
Transmission Oil Temperature Sensor (Adapter Case) 7A–44
Removal 7A–44
Installation 7A–45
Front Oil Seal (Converter Housing) 7A–45
Removal 7A–45
Installation 7A–45
Rear Oil Seal (Extension Housing) 7A–46
Removal 7A–46
Installation 7A–46
Transmission (4L30–E) 7A–46
Disassembly 7A–46
Reassembly 7A–50
Converter Housing And Oil Pump Assembly 7A–60
Disassembled View 7A–60
Disassembly 7A–60
Inspection And Repair 7A–60
Reassembly 7A–60
Oil Pump 7A–61
Disassembled View 7A–61
Disassembly 7A–61
Inspection And Repair 7A–61
Reassembly 7A–61
Main Case Valve Body 7A–62
Disassembled View 7A–62
Disassembly 7A–62
Inspection And Repair 7A–63
Reassembly 7A–63
Adapter Case Valve Body 7A–64
Disassembled View 7A–64
Disassembly 7A–64
Inspection And Repair 7A–64
Reassembly 7A–64
Third Clutch And Sprag Unit 7A–65
Disassembled View 7A–65
Disassembly 7A–65
Inspection And Repair 7A–66

Reassembly 7A–66
Third Clutch 7A–67
Disassembled View 7A–67
Disassemble 7A–67
Inspection And Repair 7A–67
Reassembly 7A–67
Sprag Unit 7A–69
Disassembled View 7A–69
Disassembly 7A–69
Inspection And Repair 7A–69
Reassembly 7A–69
Second Clutch 7A–70
Disassembled View 7A–70
Disassembly 7A–70
Inspection And Repair 7A–71
Reassembly 7A–71
3–4 Accumulator Piston 7A–72
Disassembled View 7A–72
Disassembly 7A–72
Inspection And Repair 7A–73
Reassembly 7A–73
Reverse Clutch Piston And Center Support . 7A–74
Disassembled View 7A–74
Disassembly 7A–75
Inspection And Repair 7A–75
Reassembly 7A–75
Overrun Clutch And Turbine Shaft 7A–76
Disassembled View 7A–76
Disassembly 7A–77
Inspection And Repair 7A–77
Reassembly 7A–77
Main Data And Specification 7A–79
Special Tools 7A–83
4L30–E Parts List 7A–86

Service Precaution

WARNING: IF SO EQUIPPED WITH A SUPPLEMENTAL RESTRAINT SYSTEM (SRS), REFER TO THE SRS COMPONENT AND WIRING LOCATION VIEW IN ORDER TO DETERMINE WHETHER YOU ARE PERFORMING SERVICE ON OR NEAR THE SRS COMPONENTS OR THE SRS WIRING. WHEN YOU ARE PERFORMING SERVICE ON OR NEAR THE SRS COMPONENTS OR THE SRS WIRING, REFER TO THE SRS SERVICE INFORMATION. FAILURE TO FOLLOW WARNINGS COULD RESULT IN POSSIBLE AIR BAG DEPLOYMENT, PERSONAL INJURY, OR OTHERWISE UNNEEDED SRS SYSTEM REPAIRS.

CAUTION: Always use the correct fastener in the proper location. When you replace a fastener, use ONLY the exact part number for that application. ISUZU will call out those fasteners that require a replacement after removal. ISUZU will also call out the fasteners that require thread lockers or thread sealant. UNLESS OTHERWISE SPECIFIED, do not use supplemental coatings (Paints, greases, or other corrosion inhibitors) on threaded fasteners or fastener joint interfaces. Generally, such coatings adversely affect the fastener torque and the joint clamping force, and may damage the fastener. When you install fasteners, use the correct tightening sequence and specifications. Following these instructions can help you avoid damage to parts and systems.

Construction

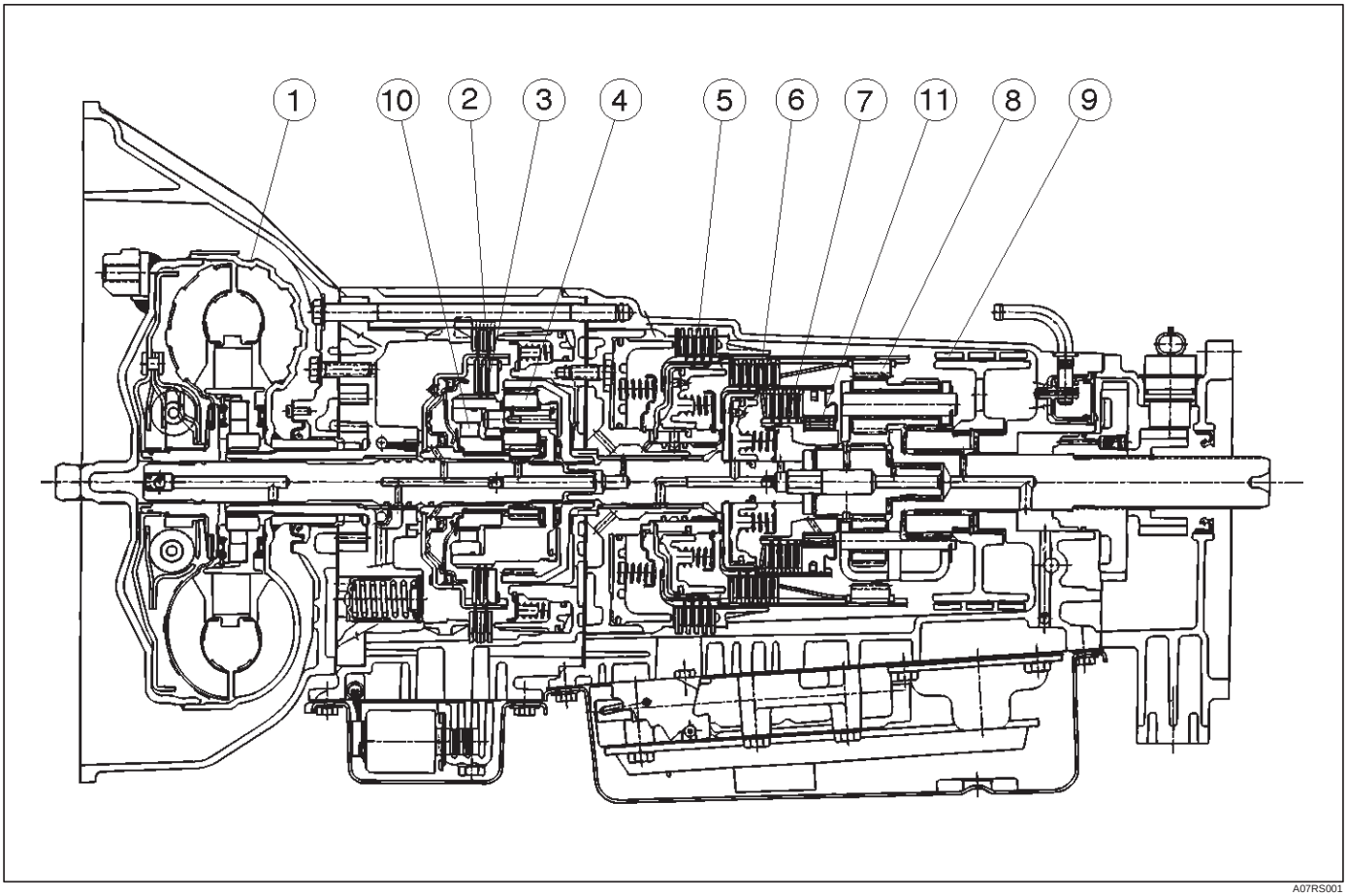

A07RS001

Legend

(1) Torque Converter Clutch (TCC)
(2) Fourth Clutch (C4)
(3) Overrun Clutch (OC)
(4) Overdrive Unit
(5) Reverse Clutch (RC)
(6) Second Clutch (C2)
(7) Third Clutch (C3)
(8) Ravigneaux Planetary Gear Set
(9) Brake Band (B)
(10) Overdrive Free Wheel (One Way Clutch) (OFW)
(11) Principle Sprag Assembly (One Way Clutch) (PFW)

Range Reference Chart

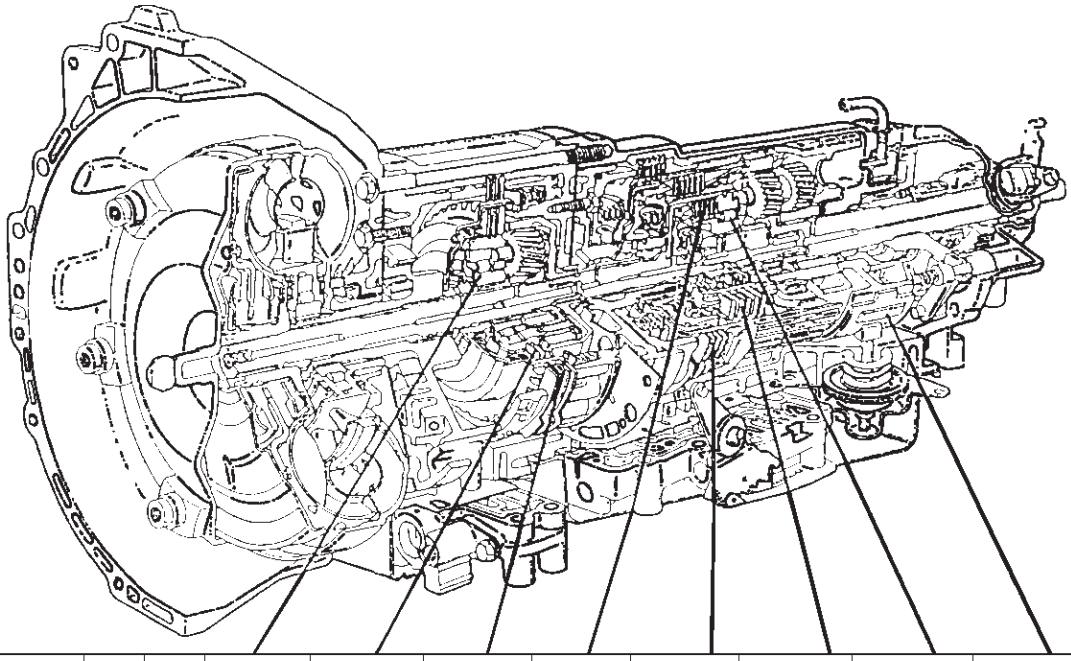

RANGE	GEAR	SOL A N.C.	SOL B N.O.	O/DRIVE ROLLER CLUTCH (OFW)	OVERRUN CLUTCH (OC)	FOURTH CLUTCH (C4)	THIRD CLUTCH (C3)	REVERSE CLUTCH (RC)	SECOND CLUTCH (C2)	PRINCIPLE SPRAG ASSEMBLY (PFW)	BAND ASSEMBLY (B)	ENGINE BRAKING
P-N		OFF	ON		APPLIED							NO
R	REVERSE	OFF	ON	LD	APPLIED			APPLIED		LD		NO
D	1ST	OFF	ON	LD	APPLIED					LD	APPLIED	NO
	2ND	ON	ON	LD	APPLIED				APPLIED	FW	APPLIED	YES
	3RD	ON	OFF	LD	APPLIED		APPLIED		APPLIED	NE		YES
	4TH	OFF	OFF	FW		APPLIED	APPLIED		APPLIED	NE		YES
3	1ST	OFF	ON	LD	APPLIED					LD	APPLIED	NO
	2ND	ON	ON	LD	APPLIED				APPLIED	FW	APPLIED	YES
	3RD	ON	OFF	LD	APPLIED		APPLIED		APPLIED	NE		YES
2	1ST	OFF	ON	LD	APPLIED		APPLIED			LD	APPLIED	YES
	2ND	ON	ON	LD	APPLIED				APPLIED	FW	APPLIED	YES
L	1ST	OFF	ON	LD	APPLIED		APPLIED			LD	APPLIED	YES

LD : LOCKED IN DRIVE FW : FREEWHEELING NE : NOT EFFECTIVE

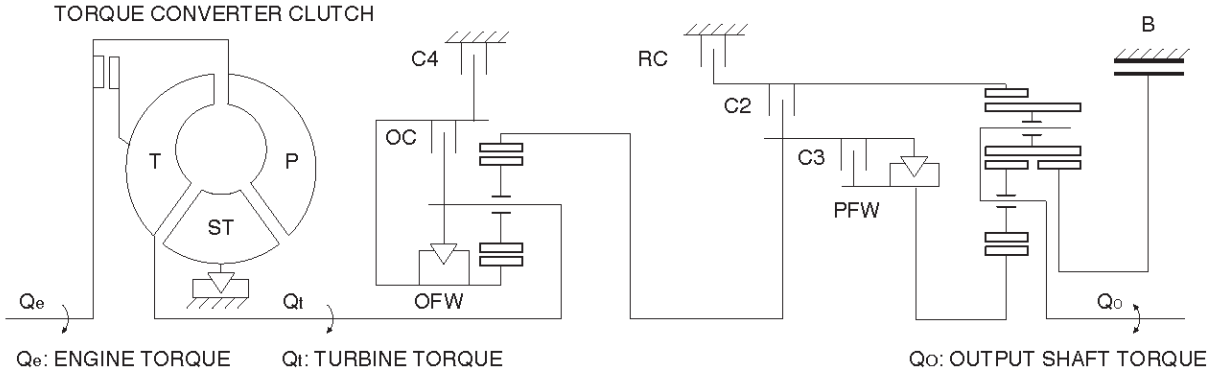

C07RT010

Normal Operation Of 2000 4L30–E Transmission

Torque Converter Clutch (TCC) Application Conditions:

The TCC is normally applied in 2nd, 3rd and 4th gears only when all of the following conditions exist:

— The engine coolant temperature is above 70˚C (158˚F).

— The brake pedal is released.

— The shift pattern requests TCC apply.

Moreover, TCC is always applied in 2nd, 3rd and 4th gears when the transmission oil temperature is above 135˚C (275˚F).

This mode should be canceled at 125˚C (257˚F).

ATF Warning Lamp

The ATF warning lamp will be constantly on (not flashing) if the transmission oil temperature is above 145˚C (293˚F).

The ATF warning lamp goes off again when the transmission oil temperature is below 125˚C (257˚F).

Special Shift Pattern When The Engine Is Cold:

A special shift pattern is activated when the engine coolant temperature is below 70˚C (158˚F). (3–4 shifts, for example, are delayed for small throttle openings and will occur a few MPH higher.)

Diagnosis

Introduction

The systematic troubleshooting information covered by this Section offers a practical and systematic approach to diagnosing 4L30–E transmission, using information that can be obtained from road tests, electrical diagnosis, oil pressure checks or noise evaluation.

The key to correcting a complaint is to make use of all of the available symptoms and logically letting them direct you to the cause.

When dealing with automatic transmission complaints, it is best to gather as many symptoms as possible before making the decision to remove the transmission from the vehicle.

Frequently, the correction of the complaint does not require removal of the transmission from the vehicle.

Driver Information

To analyze the problem fill out a complete description of the owner’s complaint.

Please draw a circle around the right information and complete the following form. (The next page is an example of a completed form). You can draw a circle around many numbers if you are not sure.

A - Today's date :	Month :	Day :	Year : .....
B - End User Name, Address :			
C - Date of Problem :	Month :	Day :	Year : .....
D - Mileage : ..... Miles / Km	**E - With Ignition ON is CHECK TRANS Indicator :** 1- Flashing 2- Not Flashing	**F - Car load when problem occured :** 1 - Towing a trailer 2- ..... people OR ..... Kg	
G - Weather conditions when problem : 1- Clear 2- Cloudy 3- Rain 4- Snow 5- Unstable 6-Any	**H - Weather Temperature when problem:** 1- Hot 2- Warm 3- Cool 4- Cold 5- Unstable 6- Any	**I - Road Conditions when problem :** 1- Any 2- Inter City 3- Outside City 4- Highway 5 - Uphill 6- Downhill 7- Unpaved 8- Snow 9 - Others :	**J - Frequency of the Problem :** 1- Always 2- Occasional : ..... times/day, ... times/month 3- Only Once 4- Others :
K - Engine Condition : 1- Always 2- At Cold 3- During Warming up 4- After Warming or Hot 5- Others	**L - Engine Speed when the problem occured :** 1- Idling 2- Starting 3- Stalling 4- High RPM 5- Low RPM	**M - Transmission Condition when it occured :** 1- Any 2- Idling 3- Starting 4- Driving 5- Accelerating 6-Coasting 7- In corner 8- Shifting	

N - If there is a Transmission driveability problem BEFORE THE CHECK TRANS INDICATOR WAS FLASHING :

1- No Power	in Range : All - P - R - N - D - 3 - 2 - L	during a : upshift : 1-2 / 2-3 / 3-4 or downshift : 4-3 / 3-2 / 2-1
2- No shift	in Range : All - P - R - N - D - 3 - 2 - L	during a : upshift : 1-2 / 2-3 / 3-4 or downshift : 4-3 / 3-2 / 2-1
3- Shift Shock	in Range : All - P - R - N - D - 3 - 2 - L	during a : upshift : 1-2 / 2-3 / 3-4 or downshift : 4-3 / 3-2 / 2-1
4- Shift Slip	in Range : All - P - R - N - D - 3 - 2 - L	during a : upshift : 1-2 / 2-3 / 3-4 or downshift : 4-3 / 3-2 / 2-1
5- Shift Delayed	in Range : All - P - R - N - D - 3 - 2 - L	during a : upshift : 1-2 / 2-3 / 3-4 or downshift : 4-3 / 3-2 / 2-1
6- Shift Point too high	in Range : All - P - R - N - D - 3 - 2 - L	during a : upshift : 1-2 / 2-3 / 3-4 or downshift : 4-3 / 3-2 / 2-1
7- Shift Point too low	in Range : All - P - R - N - D - 3 - 2 - L	during a : upshift : 1-2 / 2-3 / 3-4 or downshift : 4-3 / 3-2 / 2-1
8- TCC Shudder	in Range : All - P - R - N - D - 3 - 2 - L	during a : upshift : 1-2 / 2-3 / 3-4 or downshift : 4-3 / 3-2 / 2-1
9- Noise	in Range : All - P - R - N - D - 3 - 2 - L	during a : upshift : 1-2 / 2-3 / 3-4 or downshift : 4-3 / 3-2 / 2-1
Noise type : 1- Buzz 2- Whine 3- Clunk 4- Rattle 5- Whistle // 6- light 7-medium 8- heavy		
10- Other :	in Range : All - P - R - N - D - 3 - 2 - L	during a : upshift : 1-2 / 2-3 / 3-4 or downshift : 4-3 / 3-2 / 2-1

O - Other customer concern and comments

P - Isuzu Vehicle Code :	.....	**Q - VIN Number**	.....
R - Date of Vehicle Registration	Month :	Day :	Year : .....
S - Trans. model :	.....	**T - A/T Serial Number :**	.....
U - Your name :	.....		

V - Dealer Name, Address, Phone

F07RT036

Example of form completed.

A - Today's date :	Month : April.....	Day : .13.....	Year : .1994.....
B - End User Name, Address :	Dave Smith 6584, Arlington road Plymouth MI 48170 USA		
C - Date of Problem :	Month : April.....	Day : .8.....	Year : .1994.....
D - Mileage : 12230..Mile / Km	E - With Ignition ON is CHECK TRANS Indicator : (1-) Flashing 2- Not Flashing	F - Car load when problem occured : 1 - Towing a trailer 2- ..2..... people OR ..... Kg	
G - Weather conditions when problem : 1- Clear 2- Cloudy 3- Rain 4- Snow 5- Unstable (6-) Any	H - Weather Temperature when problem: 1- Hot 2- Warm 3- Cool 4- Cold 5- Unstable (6-) Any	I - Road Conditions when problem : 1- Any 2- Inter City 3- Outside City (4-) Highway 5 - Uphill 6- Downhill 7- Unpaved ~~8- Snow~~ 9 - Others	J - Frequency of the Problem : 1- Always (2-) Occasional : ..... times/day, ...3... times/month 3- Only Once 4- Others :
K - Engine Condition : 1- Always 2- At Cold 3- During Warming up (4-) After Warming or Hot 5- Others	L - Engine Speed when the problem occured : 1- Idling 2- Starting 3- Stalling (4-) High RPM 5- Low RPM	M - Transmission Condition when it occured : 1- Any 2- Idling 3- Starting 4- Driving (5-) Accelerating (6-) Coasting 7- In corner (8-) Shifting	this means do not take this into account

N - If there is a Transmission driveability problem BEFORE THE CHECK TRANS INDICATOR WAS FLASHING :

1- No Power	in Range : All - P - R - N - D - 3 - 2 - L	during a : upshift : 1-2 / 2-3 / 3-4 or downshift : 4-3 / 3-2 / 2-1
2- No shift	in Range : All - P - R - N - D - 3 - 2 - L	during a : upshift : 1-2 / 2-3 / 3-4 or downshift : 4-3 / 3-2 / 2-1
(3-) Shift Shock	in Range : All - P - R - N - (D-) 3 - 2 - L	during a (upshift :) 1-2 / 2-3 / (3-4) or (downshift :) (4-3) / 3-2 / 2-1
4- Shift Slip	in Range : All - P - R - N - D - 3 - 2 - L	during a : upshift : 1-2 / 2-3 / 3-4 or downshift : 4-3 / 3-2 / 2-1
5- Shift Delayed	in Range : All - P - R - N - D - 3 - 2 - L	during a : upshift : 1-2 / 2-3 / 3-4 or downshift : 4-3 / 3-2 / 2-1
6- Shift Point too high	in Range : All - P - R - N - D - 3 - 2 - L	during a : upshift : 1-2 / 2-3 / 3-4 or downshift : 4-3 / 3-2 / 2-1
7- Shift Point too low	in Range : All - P - R - N - D - 3 - 2 - L	during a : upshift : 1-2 / 2-3 / 3-4 or downshift : 4-3 / 3-2 / 2-1
8- TCC Shudder	in Range : All - P - R - N - D - 3 - 2 - L	during a : upshift : 1-2 / 2-3 / 3-4 or downshift : 4-3 / 3-2 / 2-1
9- Noise	in Range : All - P - R - N - D - 3 - 2 - L	during a : upshift : 1-2 / 2-3 / 3-4 or downshift : 4-3 / 3-2 / 2-1
Noise type : 1- Buzz 2- Whine 3- Clunk 4- Rattle 5- Whistle // 6- light 7-medium 8- heavy		
10- Other :	in Range : All - P - R - N - D - 3 - 2 - L	during a : upshift : 1-2 / 2-3 / 3-4 or downshift : 4-3 / 3-2 / 2-1

O - Other customer concern and comments :

(This is just an example). Shift shock very harsh overall during a downshift. Not sure if it's the 4-3 or 3-2.

P - Isuzu Vehicle Code :	94 UCR	Q - VIN Number	4S2CV58ZXM4324047
R - Date of Vehicle Registration	Month : November.	Day : ....18.....	Year : ..1993.....
S - Trans. model :	4L30-E	T - A/T Serial Number :	96 358 654
U - Your name :	Joe Spring		

V - Dealer Name, Address, Phone

Kent Helfrich

Home-town ISUZU

900 - 999 - 9999

F07RT037

General Diagnosis Procedure

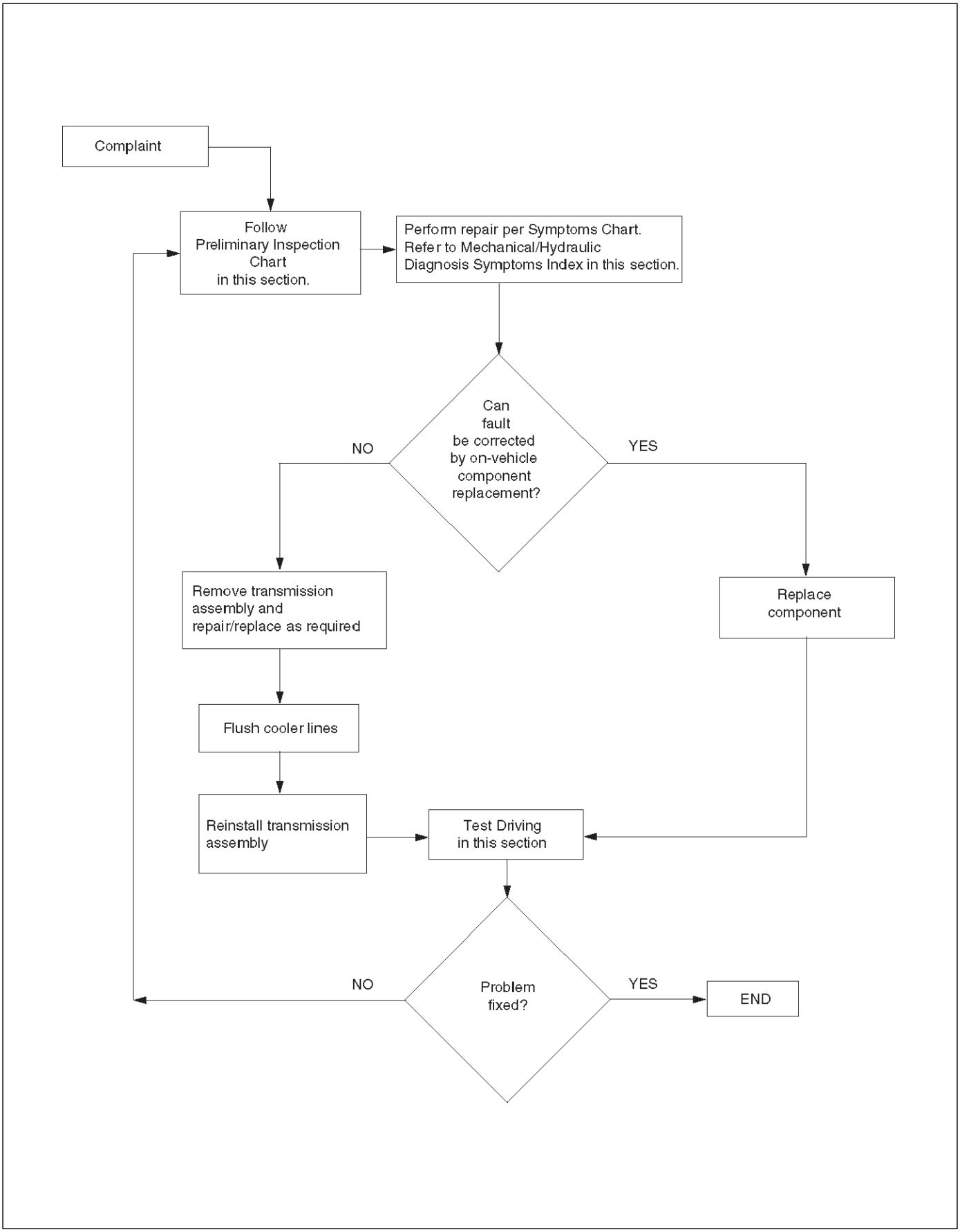

F07RT038

Preliminary Inspection Chart

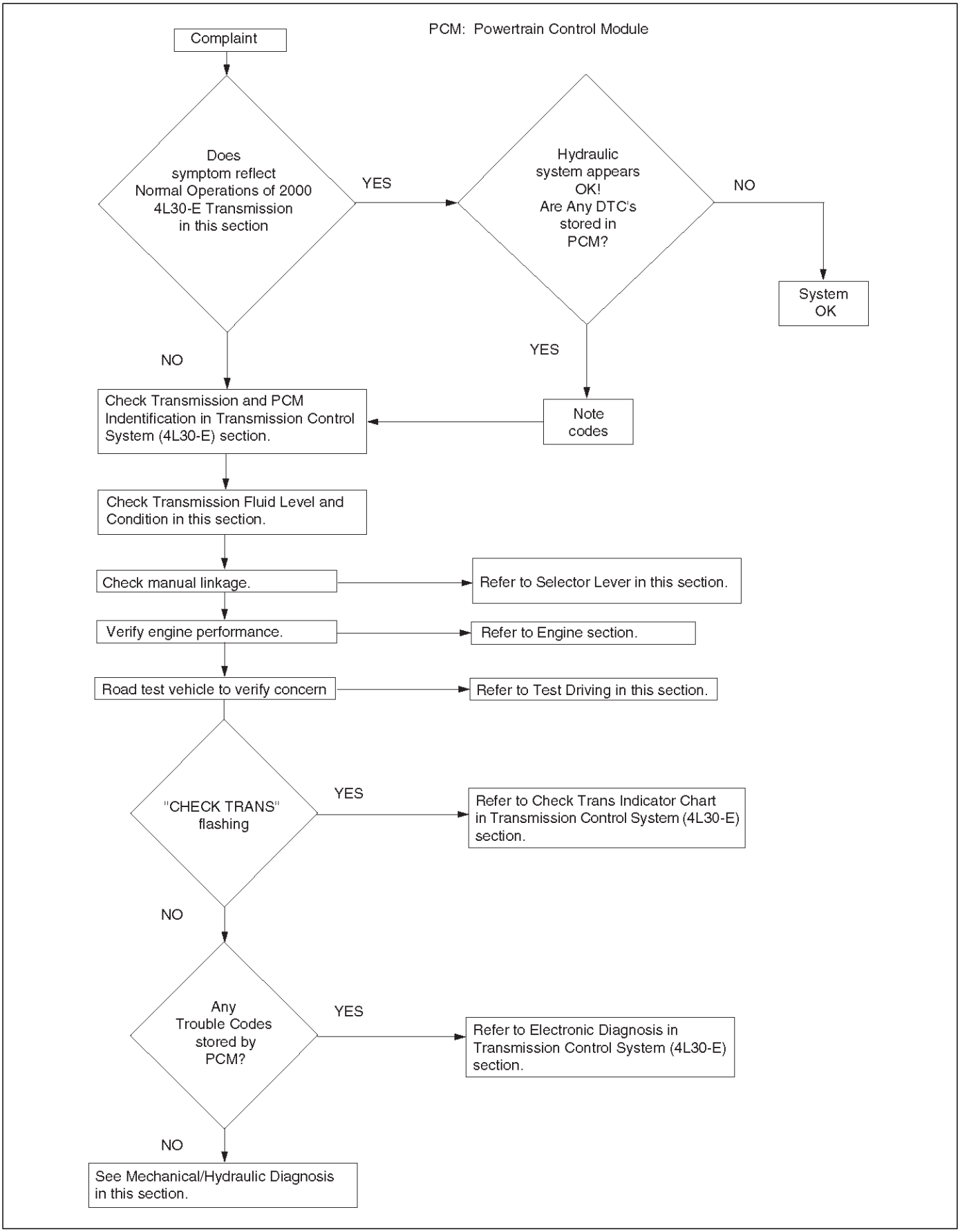

F07RY00023

Checking Transmission Fluid Level and Condition

Checking fluid level and condition (color and odor) at regular intervals will provide early diagnosis information about the transmission. This information may be used to correct a condition that, if not detected early, could result in major transmission repairs.

IMPORTANT: When new, automatic transmission fluid is red in color. As the vehicle is driven, the transmission fluid will begin to look darker in color. The color may eventually appear light brown.

A dark brown color with burnt odor may indicate excessive fluid deterioration and signal a need for fluid change.

Fluid Level

When adding or changing fluid, use only DEXRON ®–III. Refer to Maintenance and Lubrication in General Information section for maintenance information and servicing interval.

CAUTION: DO NOT OVERFILL.

Overfilling will cause foaming, loss of fluid, abnormal shifting and possible damage to the transmission.

1. Park the vehicle on level ground and apply the parking brake firmly.
2. Check fluid level with engine running at idle.

NOTE: Be sure that transmission fluid temperature is below 30˚C (86˚F).

3. Move the selector lever through all gear ranges.
4. Move the selector lever to “Park”.
5. Let engine idle for 3 minutes and open the overfill screw (1).
6. Add released transmission fluid until it flows out over the overfill screw opening.
7. Let engine idle until a fluid temperature between 32˚C (90˚F) and 57˚C (135˚F) is reached, then close the overfill screw (1).

Torque: 38 N•m (3.9 kg·m/28 lb ft)

NOTE: To prevent fluid leaks, the overfill screw and oil drain screws gasket must be replaced each time these screws are removed.

NOTE: Check transmission fluid temperature with scan tool.

Minimum fluid level → 57˚C (135˚F)

Maximum fluid level → 32˚C (90˚F)

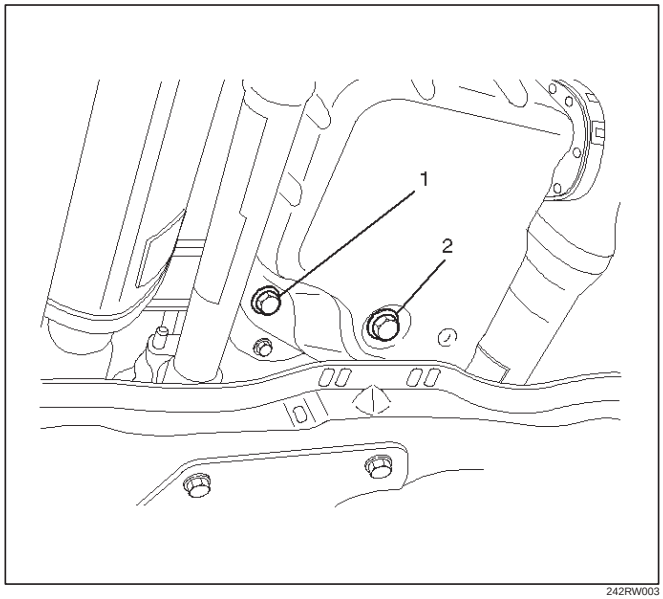

242RW003

CAUTION: Do not open overfill screw with engine stopped.

CAUTION: DO NOT CHECK FLUID LEVEL UNDER THESE CONDITIONS:

- Immediately after driving at sustained highway speeds.
- In heavy city traffic during hot weather.
- If vehicle is towing a trailer.

If the vehicle has been operated under these conditions, shut the engine off and allow the vehicle to “cool” for thirty (30) minutes. After the cool down period, restart the vehicle and continue from step 2 above.

Fluid Condition

	FLUID CONDITION			
	NORMAL*		CONTAMINATED	
COLOR	RED OR LIGHT BROWN	BROWN	NON–TRANSPARENT / PINK	BROWN
DRAIN REQUIRED?	NO	YES	YES	YES
CONTAMINA–TION	NONE	Very small amount of foreign material in bottom of pan	Contamination by coolant or other source	Large pieces of metal or other foreign material in bottom of pan
CORRECT LEVEL AND CONDITION	1. LOW LEVEL: A. Add fluid to obtain proper level & check for external leaks. B. Correct cause of leak. 2. HIGH LEVEL: – Remove excess fluid	– Remove both pans – Change filter – Flush cooler – Add new fluid – Check level	– Repair/replace radiator cooler – Transmission overhaul required – Check for: ● Damaged plates and seals ● Contaminated solenoids – Flush cooler – Add new fluid – Check level	– Transmission overhaul required – Flush cooler and cooler lines – Add new fluid – Check level

*Fluid should be changed according to maintenance schedule.

Test Driving

Some 4L30–E automatic transmission complaints will require a test drive as a part of the diagnostic procedure. Some codes will not set unless the vehicle is moving. The purpose of the test drive is to duplicate the customer's complaint condition and set a current Powertrain Control Module (PCM) trouble code. Perform this procedure before each 4L30–E automatic transmission repair, and again after repairs are made.

IMPORTANT:

- Duplicate the condition under which the customer's complaint was observed.
- Depending on the complaint, the line pressure gauge and the scan tool may be required during the test drive.
- During the test drive, it is important to record all necessary data from the areas being monitored, for use in diagnosis. Also listen for and note any unusual noises.

The following procedure should be used to test drive 4L30–E automatic transmission complaint vehicles:

1. Turn the ignition ON without starting the engine. Check that the "CHECK TRANS" lamp comes on for approximately 2 seconds and then goes out and remains out.
   - If the lamp is flashing, GOTO Check Trans Indicator in Transmission Control System (4L30–E) section.
   - If no serial data is present, GOTO OBD System Check. Refer to Driveability and Emissions in Engine section.
   - If the lamp stays ON or stays OFF, GOTO "Check Trans" Check in Transmission Control System (4L30–E) section.
2. Drive the vehicle. During the test drive, be sure that the transmission achieves normal operating temperature (approx. 20 minutes).
   Allow the transmission to go through all of its gear ranges, checking shift timing and firmness. Duplicate the owner's complaint condition as closely as possible during the test drive.
3. If, during the test drive, the "CHECK TRANS" lamp comes on, use the scan tool to check for trouble codes.
4. If, during the test drive, a problem is felt, but the "CHECK TRANS" lamp does not come on and no trouble codes are present, drive the vehicle with the PCM disconnected (manually shifting the vehicle).
   - In Manual L, the vehicle operates in first gear.
   - In Manual 2, the vehicle operates in third gear.
   - In Manual 3 or "D", the vehicle operates in fourth gear.

   If the problem still exists with the PCM disconnected, refer to Mechanical/Hydraulic Diagnosis in this section.
5. If no problem has been found at this point, check all underhood connections that supply power to the PCM and ignition fuses. Physically and visually inspect all the PCM harness connectors for loose or corroded terminals. Inspect the PCM ground points.

Mechanical / Hydraulic Diagnosis Check Trans Indicator Chart

Perform Preliminary Inspection First!

When the “CHECK TRANS” indicator is flashing, it indicates that a problem related to the transmission, the Powertrain Control Module (PCM), or the vehicle harness has occurred.

The system is now operating in a “BACKUP MODE” where the risk of further damaging the transmission has been reduced. The vehicle may be shifted manually.
If the initial problem is intermittent or seldom, switching the engine OFF/ON might allow normal operation again until the problem reoccurs.

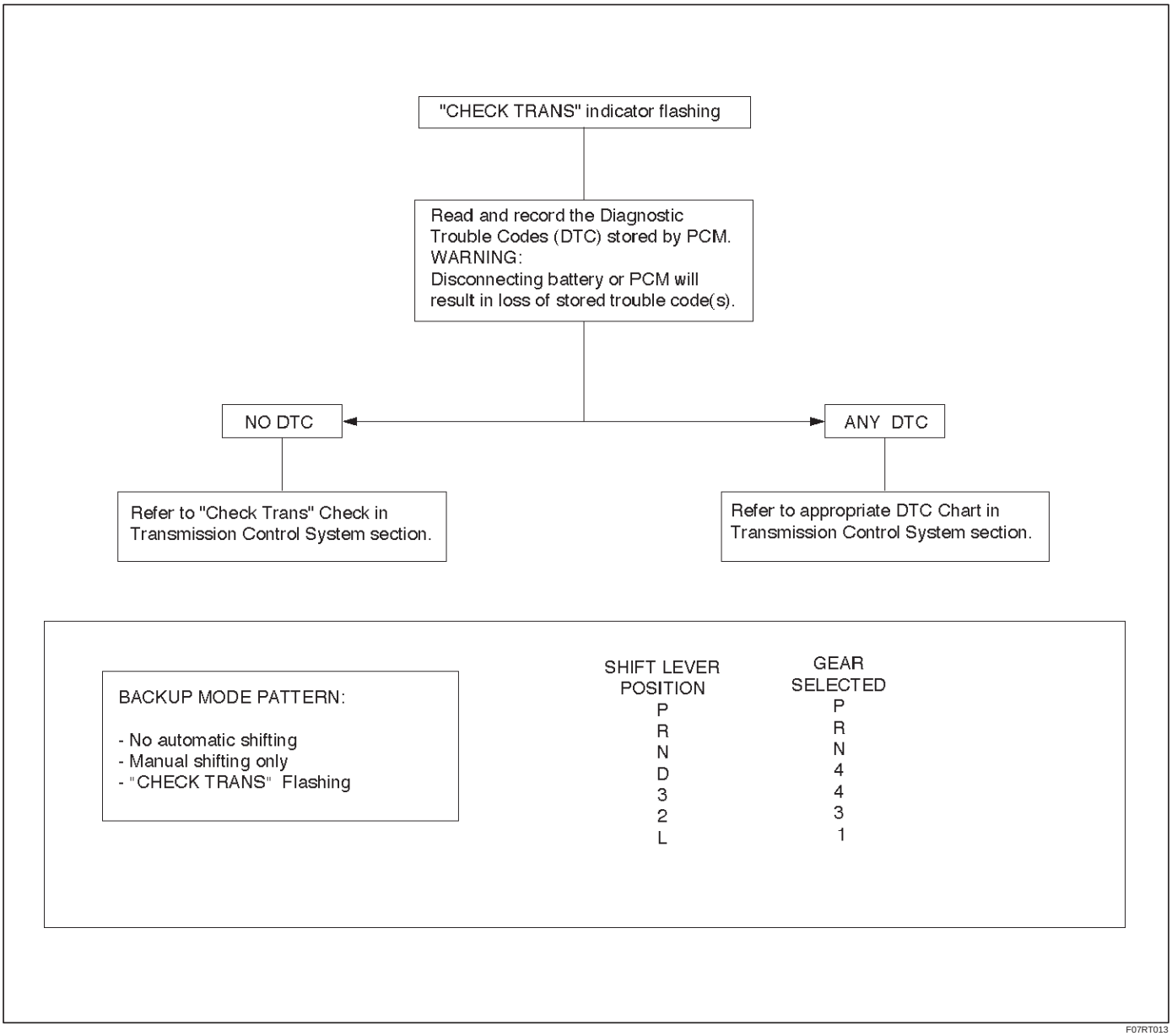

F07RT013

Mechanical / Hydraulic Diagnosis Symptoms Index

Perform Preliminary Inspection First!

CHART	SYMPTOMS
1	NO ENGINE START IN NEUTRAL OR PARK
2	NO FORWARD GEARS IN ANY RANGE/NO REVERSE
3	NO ENGINE BRAKE IN ANY RANGE
4	POOR SHIFTING IN ALL GEARS (ALL HARSH OR ALL SOFT)
5a	DELAYS IN DRIVE AND REVERSE
5b	DELAYS IN REVERSE ONLY
6	DIAGNOSTIC TROUBLE CODE (DTC) P0730
7	HARSH 1–2 SHIFT
8	HARSH 3–4 SHIFT
9a	3–2 DOWNSHIFT COMPLAINT
9b	HARSH SHIFT WHEN SHIFTING INTO “D” OR ACCELERATING FROM STOP
9c	COASTDOWN HARSH SHIFT OR CLUNK AT 3–2 DOWNSHIFT
10	INTERMITTENT 4TH TO 2ND GEAR DOWNSHIFT AT STEADY SPEED
11	ENGINE FLARE AT SHIFTING DURING TURNING ONLY (USUALLY WITH WARM ENGINE)
12	ENGINE FLARE DURING 1–2 OR 2–3 SHIFT
13	SHUDDER ONLY DURING TORQUE CONVERTER CLUTCH (TCC) APPLYING
14	POSSIBLE CAUSES OF TRANSMISSION NOISE
15a	POSSIBLE CAUSES OF LOW LINE PRESSURE
15b	POSSIBLE CAUSES OF HIGH LINE PRESSURE
16	POSSIBLE CAUSES OF TRANSMISSION FLUID LEAKS

NOTE: Numbers with parenthesis on the following charts refer to Parts List at end of this section.

Chart 1: No Engine Start In Neutral Or Park

Step	Action	Yes	No
1	Does engine start when shift lever moved from drive to neutral mostly in hot condition?	Go to Step 2	Go to Step 3
2	Does engine start in park at any condition?	Re–test vehicle	Go to Step 4
3	Does engine also not start in neutral when shift lever moved from park to neutral?	Go to Step 4	Go to Step 5
4	Check mode switch (63) setting. Readjust if necessary. Problems fixed?	Re–test vehicle	Go to Step 5
5	Check start circuit of mode switch (63) open in neutral. Was open found?	Locate and repair open(s)	Replace mode switch (63)

Chart 2: No Forward Gears In Any Range/No Reverse

Step	Action	Yes	No
1	Check line pressure. Refer to Line Pressure Test in this section. Was line pressure normal?	Go to Step 2	Use Chart 15a: Possible Causes of Low Line Pressure in this section
2	1. Check internal linkage: – Manual linkage (58) not moving manual valve (326). 2. Check for internal mechanical damage: – Turbine shaft (506) broken loose. – Overrun roller clutch (516) broken loose. Was the problem found?	Repair or replace	—

Chart 3: No Engine Brake In Any Range

Step	Action	Yes	No
1	Check line pressure. Refer to Line Pressure Test in this section. Was line pressure normal?	Go to Step 2	Use Chart 15a: Possible Causes of Low Line Pressure in this section
2	1. Check for overrun clutch leaks caused by: – Damaged piston lip (513) – Check ball defective (504) 2. Check for overrun lockout valve (705) stuck by foreign material. 3. Check for leaks at turbine shaft (506) caused by: – Teflon seal rings damaged (508) – Excessive wear of turbine shaft bearing surfaces. Was the problem found?	Repair or replace	—

Chart 4: Poor Shifting In All Gears (All Harsh Or All Soft)

Step	Action	Yes	No
1	Check line pressure. Refer to Line Pressure Test in this section. Was line pressure normal?	Go to Step 2	Go to Step 3
2	1. Check for these conditions which could affect clutch apply time: – Defective band apply solenoid (323). – Defective servo or/and accumulator piston. – Excessive clutch piston travel. 2. Check of possible causes of internal leaks: – Cut or damaged sealing ring(s) – Damaged sealing gasket(s) – Check ball missing or out of location in 2nd and 3rd clutch pistons. 3. Check for caused of burned clutch plates or band. Was the problem found?	Repair or replace	—
3	Was the line pressure high?	Go to Step 4	Use Chart 15a: Possible Causes of Low Line Pressure in this section
4	Were DTCs P0560 and P0705 set?	Diagnose those DTC(s) first	Use Chart 15b: Possible Causes of High Line Pressure in this section

Chart 5a: Delays In Drive And Reverse

NOTE: A short delay (less than 3 seconds) when first engaging drive or reverse after allowing vehicle to sit overnight is normal.

Step	Action	Yes	No
1	Check line pressure. Refer to Line Pressure Test in this section. Was line pressure normal?	More than 3 second delay in drive and reverse with engine off 1 hour or less. Teflon seals (508) on turbine shaft damaged. Repair	Use Chart 15a: Possible Causes of Low Line Pressure in this section.

Chart 5b: Delays In Reverse Only

Step	Action	Yes	No
1	Check line pressure. Refer to Line Pressure Test in this section. Was line pressure normal?	Go to Step 2	Use Chart 15a: Possible Causes of Low Line Pressure in this section.
2	Main case valve body gasket (88) damaged. – Reverse check ball (85) in valve body (84) missing or out of location. – Check for restrictions at valve body transfer plate orifice. Was the problem found?	Repair	—

Chart 6: Diagnostic Trouble Code (DTC) P0730

Step	Action	Yes	No
1	Check line pressure. Refer to Line Pressure Test in this section. Was line pressure normal?	Go to Step 2	Use Chart 15b: Possible Causes of High Line Pressure in this section
2	1. 1st and 2nd gear missing or 3rd and 4th gear missing. Check appropriate shift valve. If OK replace solenoid. 2. No engine brake in any range (All ranges in Drive and Reverse are OK). Check for suspected conditions modifying delays to clutch apply: – Overrun clutch seal damaged. – Excessive overrun clutch piston travel. – Defective 3–4 accumulator piston. – Causes of internal leaks. – Causes of burned clutch plates. 3. 1st and 4th gear missing or 2nd and 3rd gear missing. Shift solenoid A stuck. Replace shift solenoid A. 4. DTC P0730 is set in D range 1st gear above 3500 rpm. Go to Step 3. 5. DTC P0730 is set in D range 3rd gear between 55-80 mph. NOTE: Perform this test within safe and legal limits. Check for suspected conditions modifying delays to clutch apply: – 4th clutch seal damaged. – Excessive 4th clutch piston travel. – Defective 3–4 accumulator piston. – Causes of internal leaks. – Causes of burned clutch plates. Was the problem found?	Repair or replace	—
3	Check 3rd gear in “D” in winter mode. Does vehicle move?	Shift solenoid A stuck. Replace shift solenoid A.	Go to Step 4
4	Check for suspected conditions modifying delays to clutch apply: – 2nd clutch seal damaged. – Excessive 2nd clutch piston travel. – Defective accumulator piston. – Causes of internal leaks. – Check ball missing or out of location in 2nd clutch. – Seals cut, damaged or missing. – Gaskets defective. – Causes of burned clutch plates. Was the problem found?	Repair or replace	—

Chart 7: Harsh 1–2 Shift

Step	Action	Yes	No
1	Check line pressure. Refer to Line Pressure Test in this section. Was line pressure normal?	Check for 1–2 accumulator valve (320) stuck by foreign material in main case valve body.	Use Chart 15b: Possible Causes of High Line Pressure in this section.

Chart 8: Harsh 3–4 Shift

Step	Action	Yes	No
1	Check line pressure. Refer to Line Pressure Test in this section. Was line pressure normal?	Go to Step 2	Use Chart 15b: Possible Causes of High Line Pressure in this section
2	1. Check for 3–4 accumulator valve (407) stuck in adapter case valve body (401). 2. Check for 3–4 accumulator piston (18) stuck in adapter case (20). Was the problem found?	Repair or replace	—

Chart 9a: 3–2 Downshift Complaint

Step	Action	Yes	No
1	Check line pressure. Refer to Line Pressure Test in this section. Was line pressure normal?	Go to Step 2	Use Chart 15a: Possible Causes of Low Line Pressure in this section
2	Does DTC P1850 set?	Diagnose P1850 first	Replace band apply solenoid (PWM) (323)

Chart 9b: Harsh Shift When Shifting Into “D” Or Accelerating From Stop

Step	Action	Yes	No
1	Check line pressure. Refer to Line Pressure Test in this section. Was line pressure normal?	Go to Step 2	Use Chart 15b: Possible Causes of High Line Pressure in this section
2	Does DTC P1850 set?	Diagnose P1850 first	Replace band apply solenoid (PWM) (323)

Chart 9c: Coastdown Harsh Shift Or Clunk At 3–2 Downshift

Step	Action	Yes	No
1	Check line pressure. Refer to Line Pressure Test in this section. Was line pressure normal?	Go to Step 2	Use Chart 15b: Possible Causes of High Line Pressure in this section
2	Does DTC P1850 set?	Diagnose P1850 first	Replace band apply solenoid (PWM) (323)

Chart 10: Intermittent 4TH TO 2ND Gear Downshift At Steady Speed

Step	Action	Yes	No
1	Check for consistent speed sensor reading with scan tool. Was the reading correct?	Replace mode switch for intermittent contact.	Go to Step 2
2	1. Check for wiring harness damage or short to ground. If OK, go to (2). 2. Check transmission speed sensor connections. If OK, go to (3). 3. Replace transmission speed sensor. Was the replacement complete?	—	Replace speed sensor.

Chart 11: Engine Flare At Shifting During Turning Only (Usually With Warm Engine)

Step	Action	Yes	No
1	Check for oil leaks at transmission. Was the problem found?	Replace transmission oil filter and gasket	—

Chart 12: Engine Flare During 1–2 Or 2–3 Shift

Step	Action	Yes	No
1	Check line pressure. Refer to Line Pressure Test in this section. Was line pressure normal?	Go to Step 2	Use Chart 15a: Possible Causes of Low Line Pressure in this section
2	1. Check for a stuck 1–2 accumulator valve (320). 2. Check for servo piston (106) leaks. 3. Check for a stuck band apply solenoid (323). Was line pressure normal?	Repair or replace	—

Chart 13: Shudder Only During Torque Converter Clutch (TCC) Applying

Step	Action	Yes	No
1	1. TCC shudder is one of the most commonly misdiagnosed conditions in an automatic transmission. The key to diagnosing TCC shudder is to note when it happens and under what conditions. Once the TCC has been fully applied, it is nearly impossible to make it shudder. TCC shudder (short burst of noise normally less than 1 second) will only occur during clutch applying. It is not a steady state condition. 2. Drive until whole drivetrain is at normal operating temperature. – On 4WD vehicles, the test must be performed with transfer case selector lever in “2H” position. – Shudder is a short burst of noise normally less than 1 second in duration, and can be induced by the following maneuver: 3. From coast condition at 50 mph in “D” range (Normal mode), depress the throttle to 1/4-1/3 throttle. If present, shudder will occur within 5 seconds together with TCC application.(The scan tool may be used to determine the exact time of TCC applying) Was the problem found?	Replace transmission fluid and filter (remove both pans) and flush cooler lines. Replace converter assembly and O-ring on turbine shaft	Perform mechanical inspection of other drivetrain components.

Chart 14: Possible Causes Of Transmission Noise

CAUTION: Before checking transmission for what is believed to be transmission noise, ensure presence and positioning of insulating plugs, pads etc. Also make sure that noise does not come from other drivetrain components.

Condition	Possible cause	Correction
Whine or Buzz	Oil level low	Fill with ATF, check for external leaks.
	Plugged or restricted oil filter	Inspect oil filter. Replace oil filter or ATF as necessary.
	Damaged oil filter gasket	Replace oil filter gasket.
Knocking noise from front of transmission.	Loose bolts (Converter to flex plate)	Tighten to specifications.
	Cracked or broken flex plate	Replace flex plate.
	Converter damaged	Replace converter.
Knocking noise while driving, mostly on acceleration.	Transmission mount loose or broken	Tighten mount bolts or replace transmission mount.
	Cooler line mounts loose or broken	Tighten or replace cooler line mounts.
	Cooler lines touching body or frame	Repair or replace as necessary.
Knocking noise when vehicle is stationary.	Loose flex plate mounting bolts	Tighten to specifications.
	Cracked or broken flex plate	Replace flex plate.
	Damaged converter	Replace converter.

Chart 15a: Possible Causes of Low Line Pressure

Step	Action	Yes	No
1	Check oil level. Was the problem found?	Fill with ATF	Go to Step 2
2	Check for defective throttle position sensor. Was the problem found?	Replace throttle position sensor	Go to Step 3
3	Check for plugged, loose, or damaged oil filter (79). Was the problem found?	Inspect oil filter, tighten bolts or replace oil filter (79)	Go to Step 4
4	Check for a stuck force motor plunger (404). (Adapter case valve body) Was the problem found?	Replace force motor plunger (404)	Go to Step 5
5	Check for a stuck feed limit valve (412). (Adapter case valve body) Was the problem found?	Replace feed limit valve (412)	Go to Step 6
6	Check for loose converter bolts (4 & 5). Was the problem found?	Tighten converter bolts (4 & 5)	Go to Step 7
7	Check for a stuck pressure regulator valve (208). (Oil pump) Was the problem found?	Replace pressure regulator valve (208)	Go to Step 8
8	Check for a stuck boost valve (205).(Oil pump) Was the problem found?	Replace boost valve (205)	Go to Step 9
9	Check for blocked intermediate oil passages to pressure regulator valve. (Oil pump) Was the problem found?	Replace oil pump	Go to Step 10
10	Check for defective oil pump (9, 201, 202 & 209). Was the problem found?	Replace oil pump	Go to Step 11
11	Check for internal leaks. – Check balls missing or out of location in valve bodies – Seals cut or damaged – Gaskets defective, etc. Was the problem found?	Install balls, or correct ball location Replace seals Replace gaskets	—

Chart 15b: Possible Causes Of High Line Pressure

NOTE: If transmission is operating in backup mode, high line pressure will be present.

Step	Action	Yes	No
1	Check for defective throttle position sensor. Was the problem found?	Replace throttle position sensor.	Go to Step 2.
2	Check for a stuck force motor plunger (404). (Open circuit/intermittent) (Adapter case valve body) Was the problem found?	Replace force motor plunger (404)	Go to Step 3
3	Check for a stuck feed limit valve (412). (Adapter case valve body) Was the problem found?	Replace force motor plunger (412)	Go to Step 4
4	Check converter bolts (4 & 5). Was the problem found?	Tighten converter bolts (4 & 5)	Go to Step 5
5	Check for a stuck pressure regulator valve (208). (Oil pump) Was the problem found?	Replace pressure regulator valve (208)	Go to Step 6
6	Check for a stuck boost valve (205). (Oil pump) Was the problem found?	Replace boost valve (205)	Go to Step 7
7	Check for internal leaks. – Check balls missing or out of location in valve bodies – Seals cut or missing – Gaskets defective, etc. Was the problem found?	Install balls, or correct ball location Replace seals Replace gaskets	—

Chart 16: Possible Causes Of Transmission Fluid Leaks

Before attempting to correct an oil leak, the actual source of the leak must be determined. In many cases, the source of the leak may be difficult to determine due to “wind flow” around the engine and transmission.
The suspected area should be wiped clean before inspecting for the source of the leak.

Oil leaks around the engine and transmission are generally carried toward the rear of the vehicle by the air stream. In determining the source of an leak, the following two checks should be made:

1. With the engine running, check for external line pressure leaks.
2. With the engine off, check for oil leaks due to the raised oil level caused by drainback of converter oil into the transmission.

Possible Causes Of Fluid Leaks Due To Sealing Malfunction

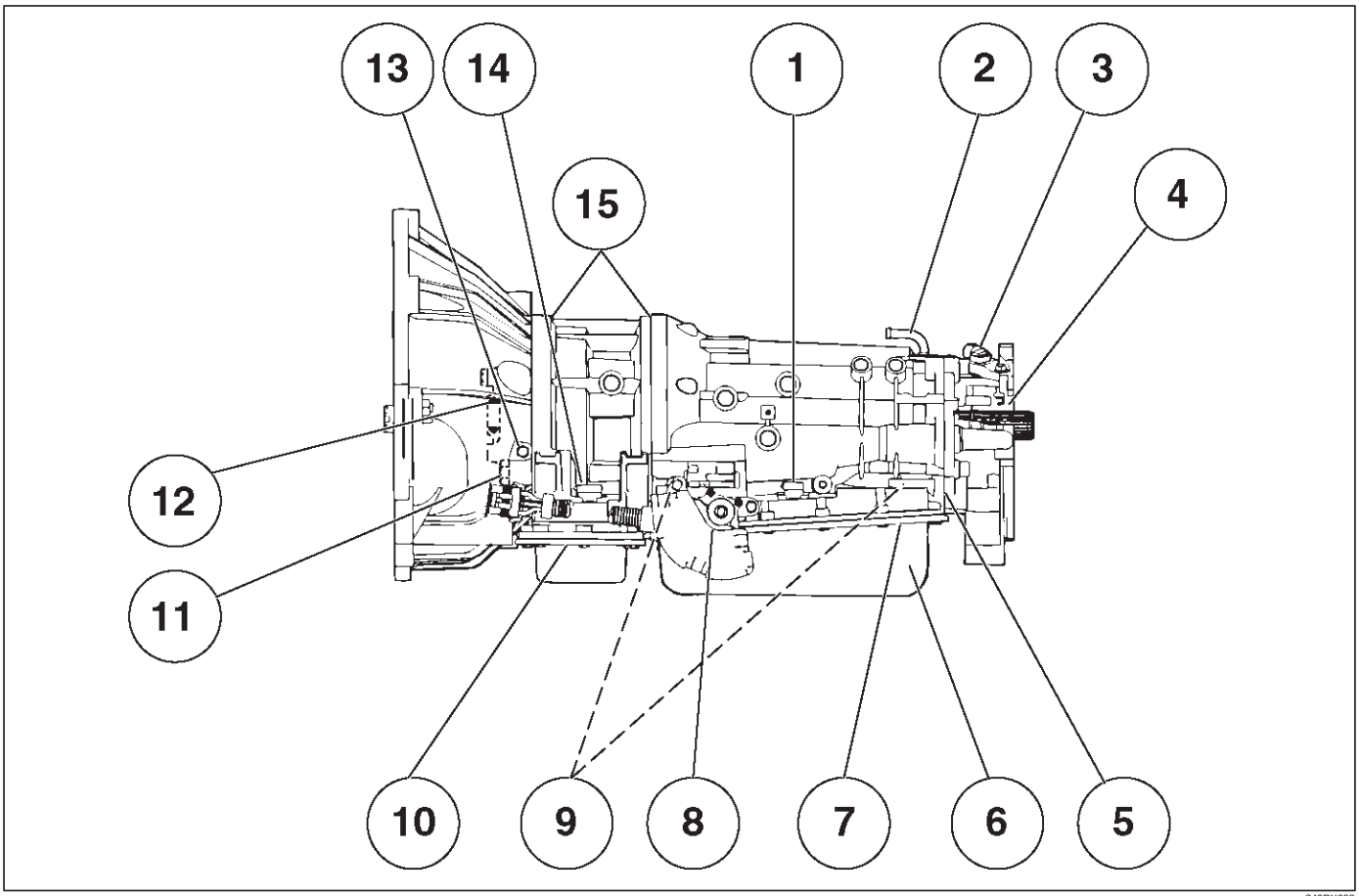

240RX008

Legend

(1) Electrical Connector (Main Case) Seal
(2) Transmission Vent (Breather)
(3) Speed Sensor O–Ring
(4) Extension (Adapter) Lip Seal
(5) Extension (Adapter) to Main Case Gasket
(6) Overfill and Oil Drain Screws Gasket
(7) Oil Pan Gasket (Main Case)
(8) Selector Shaft Seal
(9) Oil Cooler Connectors (2)
(10) Oil Pan Gasket (Adapter Case)
(11) Converter housing attaching bolts not correctly torqued
(12) Converter Housing Lip Seal
(13) Line Pressure Tap Plug
(14) Electrical Connector (Adapter Case) Seal
(15) Adapter Case Seal Rings (2)

Stall Test

The stall test allows you to check the transmission for internal abrasion and the one way clutch for slippage. Torque converter performance can also be evaluated.
The stall test results together with the road test results will identify transmission components requiring servicing or adjustment.

Stall Test Procedure:

1. Check the level of the engine coolant, the engine oil, and the automatic transmission fluid. Replenish if necessary.
2. Block the wheels and set the parking brake.
3. Connect a tachometer to the engine.
4. Start the engine and allow it to idle until the engine coolant temperature reaches 70 – 80˚C (158 – 176˚F).
5. Hold the brake pedal down as far as it will go.
6. Place the selector in the “D” range.
7. Gradually push the accelerator pedal to the floor.
   The throttle valve will be fully open.
   Note the engine speed at which the tachometer needle stabilizes.

Stall Speed : 2,100 ±150 rpm

NOTE: Do not continuously run this test longer than 5 seconds.

8. Release the accelerator pedal.
9. Place the selector in the “N” range.
10. Run the engine at 1,200 rpm for one minute.
    This will cool the transmission fluid.
11. Repeat Steps 7 – 10 for the “3”, “2”, “L” and “R” ranges.

Line Pressure Test

The line pressure test checks oil pump and control valve pressure regulator valve function. It will also detect oil leakage.

Line Pressure Test Procedure:

1. Check the level of the engine coolant, the engine oil, and the automatic transmission fluid.
   Replenish if required.
2. Block the wheels and set the parking brake.
3. Remove the pressure detection plug at the left side of the transmission case.
   Set 5–8840–0004–0 pressure gauge and adapter to the pressure detection plug hole.

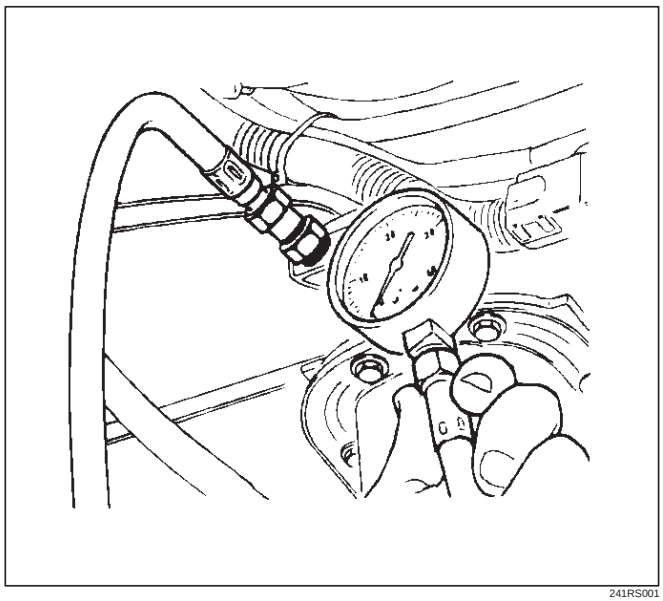

241RS001

4. Start the engine and allow it to idle until the engine coolant temperature reaches 70 – 80˚C (158 – 176˚F).
5. Hold the brake pedal down as far as it will go.
6. Place the selector in the “D” range.
7. Note the pressure gauge reading with the engine idling.
8. Gradually push the accelerator pedal to the floor. The throttle valve will be fully open.
   Note the pressure gauge reading with the accelerator pedal fully depressed.

NOTE: Do not continuously run this test longer than 5 seconds.

9. Release the accelerator pedal.
10. Place the selector in the “N” range.
11. Run the engine at 1,200 rpm for one minute.
    This will cool the transmission fluid.
12. Repeat Steps 7 – 11 for the “3”, “2”, “L”, and “R” ranges.
13. Install a pressure detection plug to the transmission case, applying recommended thread locking agent (LOCTITE 242) or its equivalent to thread of plug. Make sure that thread is cleaned before applying locking agents.
14. Tighten the pressure detection plug to the specified torque.

Torque: 9 – 14N·m (0.9 – 1.4 kg·m/7 – 10 lb ft)

MODE	LEVER POSITION	ENGINE SPEED	LINE PRESSURE		FORCE MOTOR CURRENT
			kPa	PSI	
NORMAL/POWER	D,3,2,L	IDLE	312–363	45.2–52.6	VARIABLE
WINTER	D	IDLE	312 – 363	45.2 – 52.6	0.9 – 1.0A
NORMAL/POWER WINTER	REVERSE	IDLE	419 – 486	60.7 – 70.5	0.9 – 1.0A
NORMAL/POWER	D, 3, 2, L	STALL SPEED	1,236 – 1,320	179.3 – 191.4	0.1 – 0.2A
WINTER	D	STALL SPEED	1,236 – 1,320	179.3 – 191.4	0.1 – 0.2A
NORMAL/POWER WINTER	REVERSE	STALL SPEED	1,634 – 1,743	236.9 – 252.8	0.1 – 0.2A

Shift Speed Chart (V6 3.2L 6VD1 Model)

Transfer gear ratio:	High: 1.000
Rear axle ratio:	4.555

“Normal mode”

Upshift

Range	Throttle opening	1 → 2 (First Gear) (Second Gear) Km/h (mph)	2 → 3 (Second Gear) (Third Gear) Km/h (mph)	3 → 4 (Third Gear) (Fourth Gear) Km/h (mph)
D (Drive)	Fully opened	37 ~ 43 (23 ~ 27)	76 ~ 82 (47 ~ 51)	125 ~ 131 (78 ~ 81)
	Half throttle	29 ~ 35 (18 ~ 22)	54 ~ 60 (34 ~ 37)	107 ~ 113 (66 ~ 70)
3 (Third)	Fully opened	37 ~ 43 (23 ~ 27)	76 ~ 82 (47 ~ 51)	—
	Half throttle	29 ~ 35 (18 ~ 22)	54 ~ 60 (34 ~ 37)	—
2 (Second)	Fully opened	37 ~ 43 (23 ~ 27)	—	—
	Half throttle	29 ~ 35 (18 ~ 22)	—	—

Downshift

Range	Throttle opening	1 ← 2 (First Gear) (Second Gear) Km/h (mph)	2 ← 3 (Second Gear) (Third Gear) Km/h (mph)	3 ← 4 (Third Gear) (Fourth Gear) Km/h (mph)
D (Drive)	Fully opened	14 ~ 20 (9 ~ 12)	69 ~ 75 (43 ~ 47)	107 ~ 113 (66 ~ 70)
	Half throttle	13 ~ 19 (8 ~ 12)	30 ~ 36 (19 ~ 22)	61 ~ 67 (38 ~ 42)
	Fully closed	12 ~ 18 (7 ~ 11)	20 ~ 26 (12 ~ 16)	27 ~ 33 (17 ~ 20)
3 (Third)	Fully opened	14 ~ 20 (9 ~ 12)	69 ~ 75 (43 ~ 47)	—
	Half throttle	13 ~ 19 (8 ~ 12)	30 ~ 36 (19 ~ 22)	—
	Fully closed	12 ~ 18 (7 ~ 11)	20 ~ 26 (12 ~ 16)	—
2 (Second)	Fully opened	14 ~ 20 (9 ~ 12)	82 ~ 88 (51 ~ 55)	—
	Half throttle	13 ~ 19 (8 ~ 12)	82 ~ 88 (51 ~ 55)	—
	Fully closed	12 ~ 18 (7 ~ 11)	82 ~ 88 (51 ~ 55)	—
L (First)	—	36 ~ 42 (22 ~ 26)	—	—

“Power mode”

Upshift

Range	Throttle opening	1 → 2 (First Gear) (Second Gear) Km/h (mph)	2 → 3 (Second Gear) (Third Gear) Km/h (mph)	3 → 4 (Third Gear) (Fourth Gear) Km/h (mph)
D (Drive)	Fully opened	41 ~ 47 (25 ~ 29)	79 ~ 85 (49 ~ 53)	125 ~ 131 (78 ~ 81)
	Half throttle	36 ~ 42 (22 ~ 26)	69 ~ 75 (43 ~ 47)	119 ~ 125 (74 ~ 78)
3 (Third)	Fully opened	41 ~ 47 (25 ~ 29)	79 ~ 85 (49 ~ 53)	—
	Half throttle	36 ~ 42 (22 ~ 26)	69 ~ 75 (43 ~ 47)	—
2 (Second)	Fully opened	41 ~ 47 (25 ~ 29)	—	—
	Half throttle	36 ~ 42 (22 ~ 26)	—	—

Downshift

Range	Throttle opening	1 ← 2 (First Gear) (Second Gear) Km/h (mph)	2 ← 3 (Second Gear) (Third Gear) Km/h (mph)	3 ← 4 (Third Gear) (Fourth Gear) Km/h (mph)
D (Drive)	Fully opened	28 ~ 34 (17 ~ 21)	70 ~ 76 (43 ~ 47)	115 ~ 121 (71 ~ 75)
	Half throttle	20 ~ 26 (12 ~ 16)	46 ~ 52 (29 ~ 32)	90 ~ 96 (56 ~ 60)
	Fully closed	12 ~ 18 (7 ~ 11)	22 ~ 28 (14 ~ 17)	43 ~ 50 (27 ~ 31)
3 (Third)	Fully opened	28 ~ 34 (17 ~ 21)	70 ~ 76 (43 ~ 47)	—
	Half throttle	20 ~ 26 (12 ~ 16)	46 ~ 52 (29 ~ 32)	—
	Fully closed	12 ~ 18 (7 ~ 11)	22 ~ 28 (14 ~ 17)	—
2 (Second)	Fully opened	28 ~ 34 (17 ~ 21)	82 ~ 88 (51 ~ 55)	—
	Half throttle	20 ~ 26 (12 ~ 16)	82 ~ 88 (51 ~ 55)	—
	Fully closed	12 ~ 18 (7 ~ 11)	82 ~ 88 (51 ~ 55)	—
L (First)	—	36 ~ 42 (22 ~ 26)	—	—

“Winter mode”

D range, winter mode ON → OFF	27 ~ 33 Km/h (17 ~ 20 mph)

Shift Speed Chart (V6 3.5L 6VE1 Model)

Transfer gear ratio:	High: 1.000
Rear axle ratio:	4.300

“Normal mode”

Upshift

Range	Throttle opening	1 → 2 (First Gear) (Second Gear) Km/h (mph)	2 → 3 (Second Gear) (Third Gear) Km/h (mph)	3 → 4 (Third Gear) (Fourth Gear) Km/h (mph)
D (Drive)	Fully opened	42 ~ 48 (26 ~ 30)	86 ~ 92 (54 ~ 58)	139 ~ 145 (87 ~ 91)
	Half throttle	29 ~ 35 (18 ~ 22)	58 ~ 64 (36 ~ 40)	113 ~ 118 (70 ~ 74)
3 (Third)	Fully opened	52 ~ 58 (33 ~ 36)	105 ~ 111 (66 ~ 69)	—
	Half throttle	32 ~ 38 (20 ~ 24)	58 ~ 64 (36 ~ 40)	—
2 (Second)	Fully opened	52 ~ 58 (33 ~ 36)	—	—
	Half throttle	32 ~ 38 (20 ~ 24)	—	—

Downshift

Range	Throttle opening	1 ← 2 (First Gear) (Second Gear) Km/h (mph)	2 ← 3 (Second Gear) (Third Gear) Km/h (mph)	3 ← 4 (Third Gear) (Fourth Gear) Km/h (mph)
D (Drive)	Fully opened	17 ~ 23 (11 ~ 14)	75 ~ 81 (47 ~ 51)	118 ~ 124 (74 ~ 78)
	Half throttle	23 ~ 29 (14 ~ 18)	32 ~ 38 (20 ~ 24)	65 ~ 71 (40 ~ 44)
	Fully closed	13 ~ 19 (8 ~ 12)	20 ~ 26 (12 ~ 16)	28 ~ 34 (17 ~ 21)
3 (Third)	Fully opened	42 ~ 48 (26 ~ 30)	92 ~ 98 (58 ~ 61)	—
	Half throttle	15 ~ 21 (9 ~ 13)	34 ~ 40 (21 ~ 25)	—
	Fully closed	13 ~ 19 (8 ~ 12)	15 ~ 21 (9 ~ 13)	—
2 (Second)	Fully opened	43 ~ 49 (27 ~ 31)	100 ~ 106 (63 ~ 66)	—
	Half throttle	15 ~ 21 (9 ~ 13)	94 ~ 100 (59 ~ 63)	—
	Fully closed	13 ~ 19 (8 ~ 12)	82 ~ 88 (51 ~ 55)	—
L (First)	—	50 ~ 56 (31 ~ 35)	—	—

“Power mode”

Upshift

Range	Throttle opening	1 → 2 (First Gear) (Second Gear) Km/h (mph)	2 → 3 (Second Gear) (Third Gear) Km/h (mph)	3 → 4 (Third Gear) (Fourth Gear) Km/h (mph)
D (Drive)	Fully opened	47 ~ 53 (29 ~ 33)	89 ~ 95 (56 ~ 59)	140 ~ 146 (88 ~ 91)
	Half throttle	37 ~ 43 (23 ~ 27)	73 ~ 79 (45 ~ 49)	126 ~ 132 (78 ~ 82)
3 (Third)	Fully opened	52 ~ 58 (33 ~ 36)	105 ~ 111 (66 ~ 69)	—
	Half throttle	37 ~ 43 (23 ~ 27)	74 ~ 80 (46 ~ 50)	—
2 (Second)	Fully opened	52 ~ 58 (33 ~ 36)	—	—
	Half throttle	37 ~ 43 (23 ~ 27)	—	—

Downshift

Range	Throttle opening	1 ← 2 (First Gear) (Second Gear) Km/h (mph)	2 ← 3 (Second Gear) (Third Gear) Km/h (mph)	3 ← 4 (Third Gear) (Fourth Gear) Km/h (mph)
D (Drive)	Fully opened	33 ~ 39 (21 ~ 24)	79 ~ 85 (49 ~ 52)	126 ~ 132 (79 ~ 82)
	Half throttle	21 ~ 27 (13 ~ 17)	50 ~ 56 (31 ~ 35)	94 ~ 100 (58 ~ 62)
	Fully closed	13 ~ 19 (8 ~ 12)	23 ~ 29 (14 ~ 18)	45 ~ 51 (28 ~ 32)
3 (Third)	Fully opened	43 ~ 49 (27 ~ 30)	96 ~ 102 (60 ~ 63)	—
	Half throttle	21 ~ 27 (13 ~ 17)	53 ~ 59 (33 ~ 37)	—
	Fully closed	13 ~ 19 (8 ~ 12)	24 ~ 30 (15 ~ 19)	—
2 (Second)	Fully opened	43 ~ 49 (27 ~ 30)	100 ~ 106 (63 ~ 66)	—
	Half throttle	21 ~ 27 (13 ~ 17)	94 ~ 100 (59 ~ 63)	—
	Fully closed	13 ~ 19 (8 ~ 12)	82 ~ 88 (51 ~ 55)	—
L (First)	—	53 ~ 59 (33 ~ 36)	—	—

“Winter mode”

D range, winter mode ON → OFF	31 ~ 37 Km/h (19 ~ 23 mph)

Lockup Speed Chart (V6 3.2L 6VD1 Model)

Transfer gear ratio:	High: 1.000
Rear axle ratio:	4.555

	Mode	Lockup ON			Lockup OFF		
		2nd Km/h (mph)	3rd Km/h (mph)	4th Km/h (mph)	2nd Km/h (mph)	3rd Km/h (mph)	4th Km/h (mph)
D range Throttle opening 6%	Normal	69 ~ 75 (43 ~ 47)	63 ~ 69 (39 ~ 43)	70 ~ 76 (43 ~ 47)	64 ~ 70 (40 ~ 43)	43 ~ 49 (27 ~ 30)	65 ~ 71 (40 ~ 44)
	Power	69 ~ 75 (43 ~ 47)	73 ~ 79 (45 ~ 49)	73 ~ 79 (45 ~ 49)	64 ~ 70 (40 ~ 43)	65 ~ 71 (40 ~ 44)	69 ~ 75 (43 ~ 47)

Lockup Speed Chart (V6 3.5L 6VE1 Model)

Transfer gear ratio:	High: 1.000
Rear axle ratio:	4.300

	Mode	Lockup ON			Lockup OFF		
		2nd Km/h (mph)	3rd Km/h (mph)	4th Km/h (mph)	2nd Km/h (mph)	3rd Km/h (mph)	4th Km/h (mph)
D range Throttle opening 6%	Normal	72 ~ 78 (45 ~ 48)	53 ~ 59 (33 ~ 37)	78 ~ 84 (48 ~ 52)	67 ~ 73 (42 ~ 45)	45 ~ 51 (28 ~ 32)	73 ~ 79 (45 ~ 49)
	Power	72 ~ 78 (45 ~ 48)	77 ~ 83 (48 ~ 52)	77 ~ 83 (48 ~ 52)	67 ~ 73 (42 ~ 45)	68 ~ 74 (42 ~ 46)	72 ~ 78 (45 ~ 48)

Changing Transmission Fluid

There is no need to change the transmission fluid unless the transmission is used under one or more of the following heavy duty conditions.

A. Repeated short trips

B. Driving on rough roads

C. Driving on dusty roads

D. Towing a trailer

If the vehicle is used under these conditions, change the fluid every 20,000 miles (32,000 km).
More over, the remaining life percentage of ATF can be estimated by using Tech 2 as an auxiliary tool to judge the right time for ATF replacement.
The remaining life percentage is calculated from ATF'S heat history. When it is close to 0%, ATF replacement is recommended.

1. Place a large drain pan under the oil pan.
2. Remove the transmission oil drain screw (2) and drain fluid.
3. Tighten drain screw (2).

   Torque: 38 N•m (3.9 kg·m/28 lb ft)

4. Remove the transmission overfill screw (1) and fill transmission through overfill screw opening, using DEXRON®–III ATF.

NOTE: Add transmission fluid until it flows out over the overfill screw opening.

5. Let engine idle until a fluid temperature between 32˚C (90˚F) and 57˚C (135˚F) is reached.
6. Add transmission fluid until it flows out over the overfill screw opening, then close the overfill screw (1).

   Torque: 38 N•m (3.9 kg·m/28 lb ft)

NOTE: To prevent fluid leaks, the overfill screw and oil drain screws gasket must be replaced each time these screws are removed.

NOTE: Check transmission fluid temperature with service scan tool.

7. Reset "Oil Life Monitor" data by using Tech 2.
   Refer to Tech 2 OBD II Connector in Transmission Control System (4L30-E) Section.

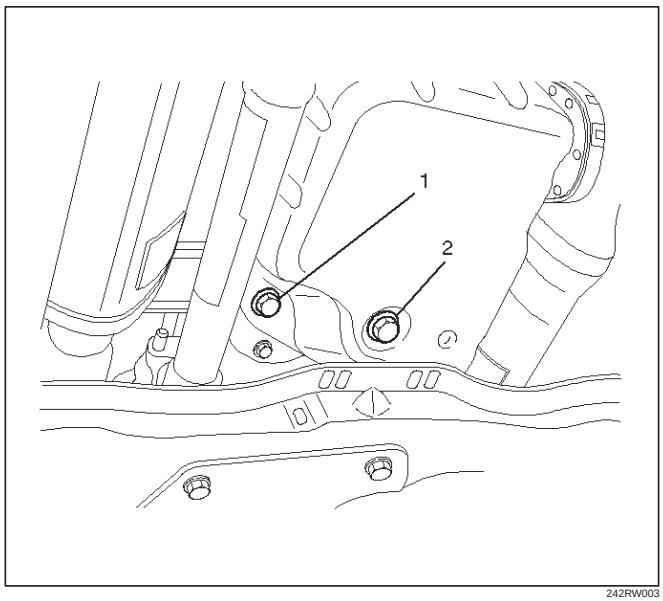

242RW003

Selector Lever

Inspection

1. Make sure that when the selector lever is shifted from "P" to "L", a "clicking" can be felt at each shift position. Make sure that the gear corresponds to that of the position plate indicator.
2. Check to see if the selector lever can be shifted as shown in illustration.

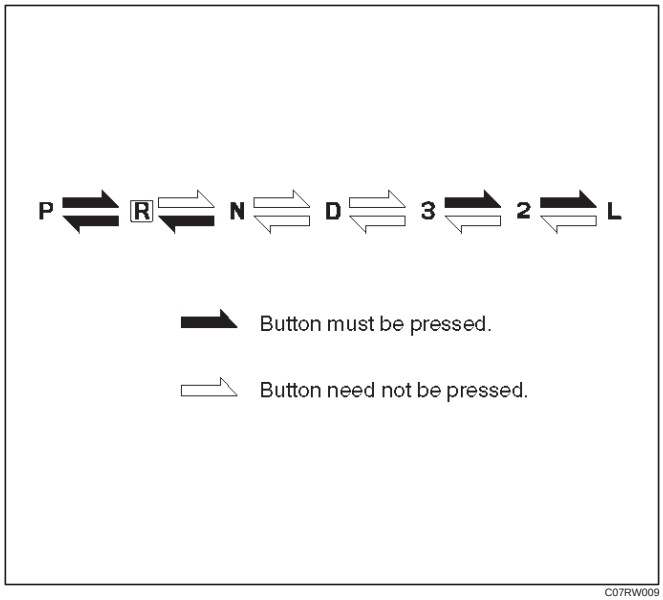

C07RW009

Removal

1. Disconnect battery ground cable.
2. Remove transfer control lever knob.
3. Remove front console.
   - Disconnect wiring harness connectors from front console.
4. Disconnect shift lock cable (1) from the selector lever assembly side.

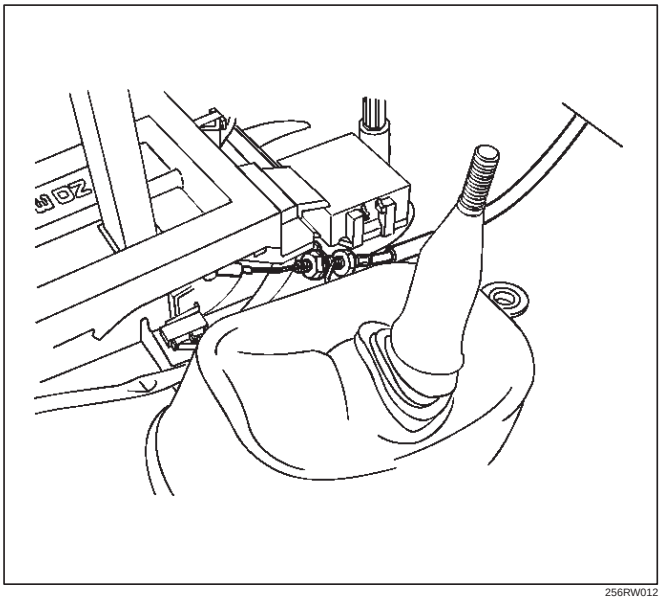

256RW012

5. Disconnect shift control rod (2) from the selector lever assembly side.

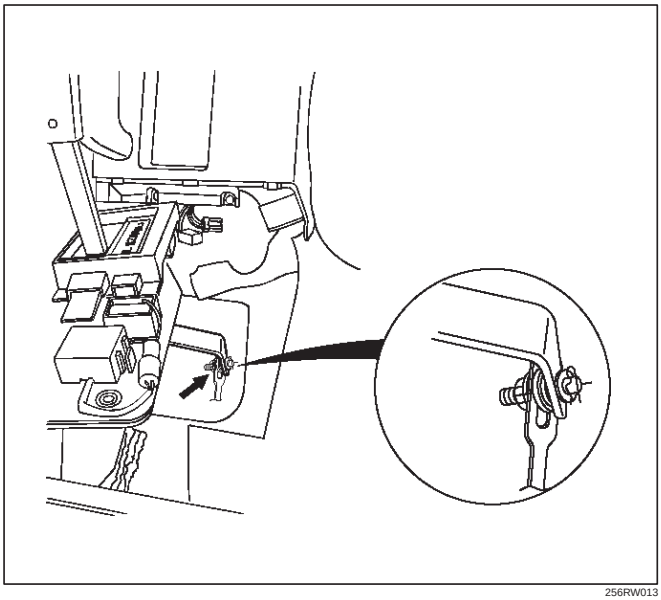

256RW013

6. Disconnect wiring harness connectors from the selector lever assembly.
7. Remove selector lever assembly.

Installation

To install, follow the removal steps in the reverse order, noting the following points:

Adjustment of select lever and control rod

1. Place the vehicle on a level surface.

NOTE: If the vehicle is not on level surface, the shift select cable set positions will vary with the movement of engine. To prevent possible misadjustment of the cable, the vehicle must be placed on a level surface.

2. Install the shift control rod (1) to the transmission select lever (2), and then place the lever in the “N” position.
3. Set select lever in the “N” position.
4. Push select lever forward (“R” position side) and secure it (using a rubber band (3), etc.) so that the pin comes into contact with the wall of the detent plate.
5. Install the shift control rod (1) to the selector lever arm (4).

   Torque: 32 N•m (3.3 kg·m/24 lb ft)

NOTE: Do not apply oil to the threaded portions.

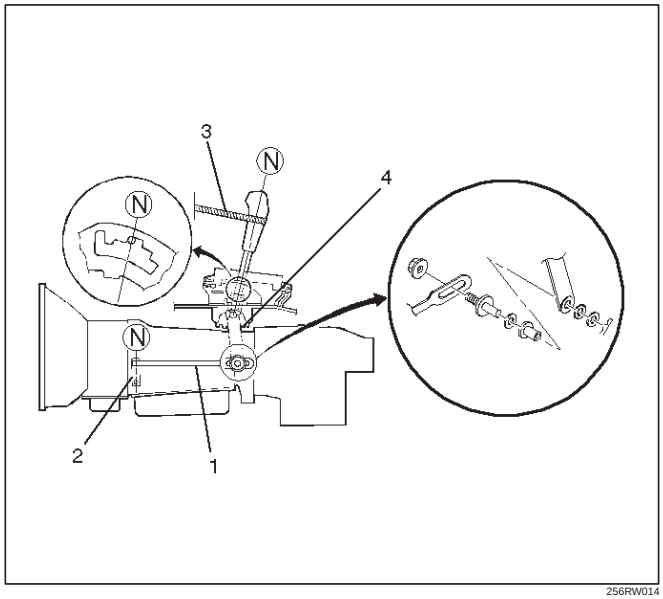

256RW014

6. After adjustment, make sure that the selector lever operates normally, and that each selector position is properly indicated. (The red mark shows through the window.)

Adjustment of shift lock cable

1. Set ignition key in “LOCK” position and selector lever in “P” position.
2. Adjust cable screw cap on selector lever side to provide a gap (slack for cable) of 1 – 2 mm between rod on steering lock side and stopper.

   Adjust cap as follows:

   a. Pull screw cap (1) in arrow direction to remove inner cable slack.
   b. With cable kept as (a), adjust gap between nut (2) and bracket to 5 mm (0.2 in).
   c. Lock inner cable by turning nut (3) while holding nut (2) in place.

   Torque : 3.7 N•m (38 kg·cm/33 lb in)

NOTE: Clean the cable threads, and do not apply oil to them.

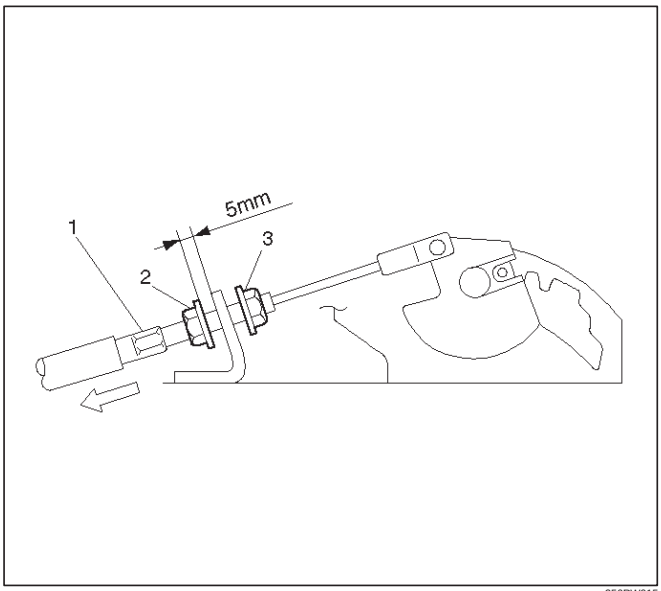

256RW015

3. Check the shift lock operation:
   a. Selector lever should not move out of “P” position with ignition key in “Lock” position.
   b. Selector lever can be moved out of “P” position with ignition key in “ON” position only when brake pedal is depressed.
   c. Ignition key can be turned to “LOCK” position only when selector lever is in “P” position (key can be pulled out).

   If (a) and (c) fail, readjust cable. If (b) fails, readjust connector wiring and brake pedal switch.

Mode Switch

Removal

1. Place selector lever in neutral.
2. Disconnect battery ground cable.
3. Remove mode switch cover (1).
4. Disconnect selector lever (2) from the mode switch.
5. Disconnect transmission harness from the mode switch connector (3).
6. Remove bracket with mode switch connector from the transmission case.
7. Remove mode switch connector (3) from the bracket (4).
8. Remove two mode switch bolts and nut then remove mode switch (5).

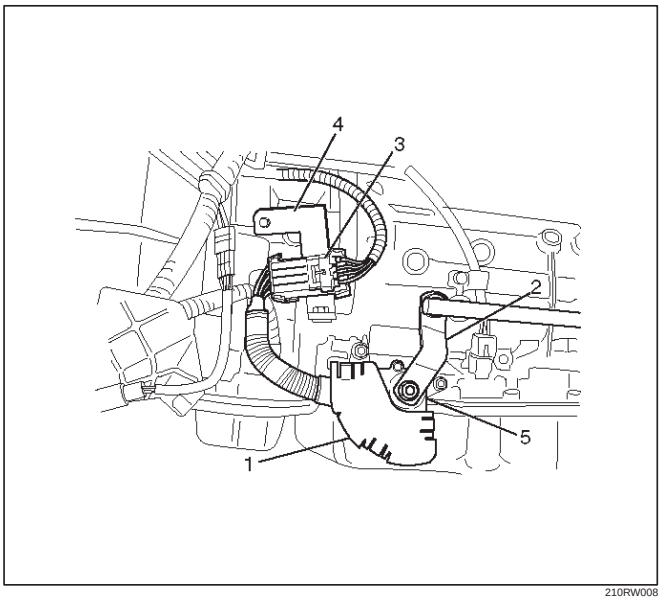

210RW008

Installation

To install, follow the removal steps in the reverse order, noting the following points;

1. Torque

   Mode switch bolt: 13 N•m (1.3 kg·m/113 lb in)

   Selector lever nut: 23 N•m (2.3 kg·m/17 lb ft)

2. Mode switch setting procedure

   Perform either of the following adjustment procedures:

   Procedure 1

   a. Place selector lever in neutral.
   b. Remove selector lever from the mode switch.
   c. Remove the mode switch cover.
   d. Loosen the two 10 mm screws.
   e. Rotate the mode switch until the slot in the mode switch housing aligns with the selector shaft bushing, and insert a 3/32 in. (2.4 mm) drill bit or punch (1) into the slot.
   f. Tighten the screws to 13 N·m (1.3 kg·m/113 lb in).
   g. After completing adjustment, snap the mode switch cover into place.

h. Reinstall the selector lever.

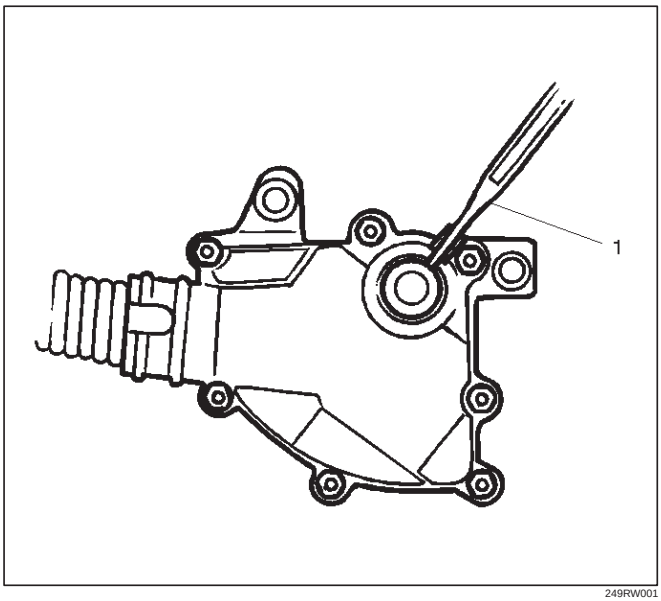

249RW001

Procedure 2

a. Place selector lever in neutral.
b. Disconnect transmission harness connector from mode switch connector.
c. Remove mode switch connector with bracket from the transmission case.
d. Connect multimeter (resistance mode) to terminals 1(E) and 4(H) on mode switch connector.
e. Loosen two mounting screws.
f. Rotate mode switch slightly in both directions to determine the range (approx. 5 degrees) of electrical contact.
g. Position mode switch in middle of contact range.
h. Tighten two mounting screws.
i. Remove multimeter and install mode switch harness connector with bracket to the transmission case.
j. Connect transmission harness connector to mode switch connector.

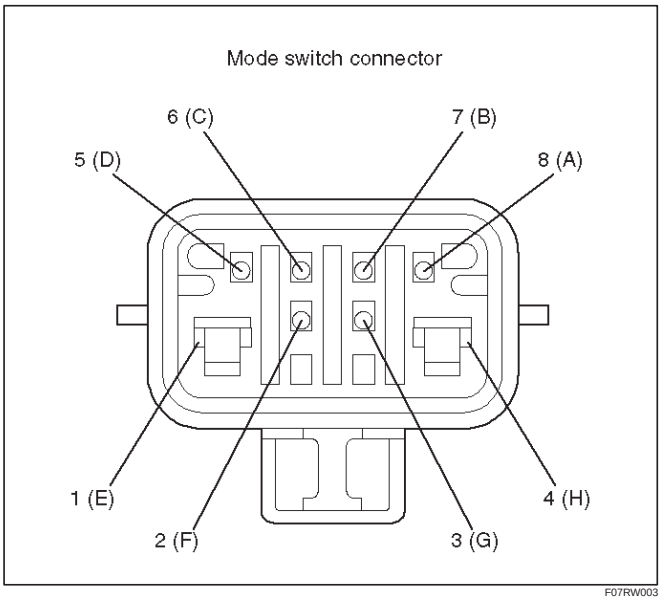

F07RW003

Transmission (With Transfer Case)

Transmission And Associated Parts

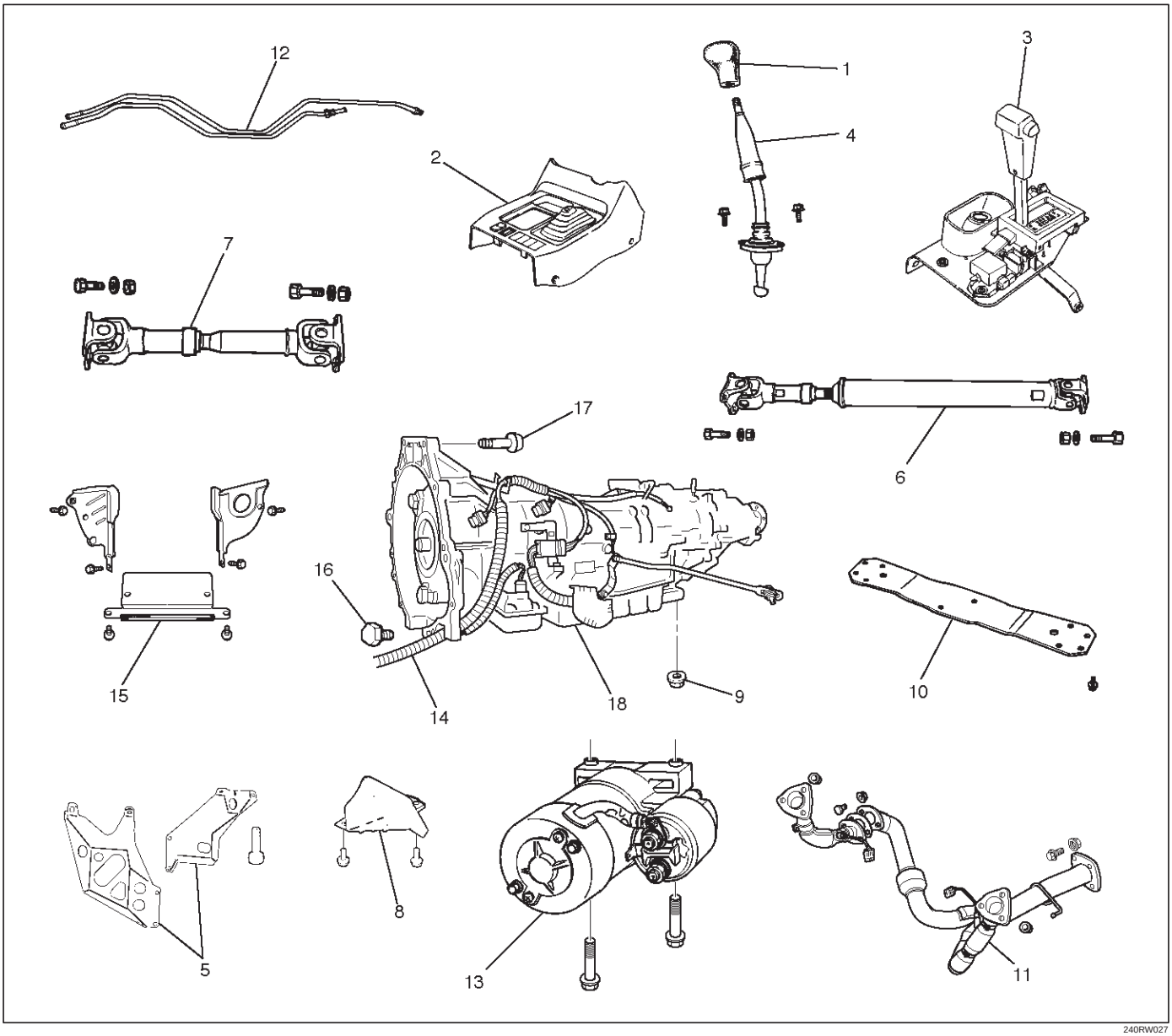

240RW027

Legend

(1) Transfer Control Lever Knob
(2) Front Console
(3) Selector Lever Assembly
(4) Transfer Control Lever
(5) Transfer and Exhaust Protector
(6) Rear Propeller Shaft
(7) Front Propeller Shaft
(8) Harness Protector
(9) Rear Mount Nut
(10) Third Crossmember
(11) Exhaust Pipe
(12) Transmission Oil Cooler Pipe
(13) Starter
(14) Transmission Harness Connector
(15) Under Cover
(16) Torque Converter Bolt
(17) Engine Transmission Bolt
(18) Transmission Assembly

Removal

NOTE: Before remove transmission and transfer assembly from vehicle, change the tansfer mode to 2WD using push button on dash panel.

1. Remove engine hood.
2. Disconnect battery ground cable.
3. Remove transfer control lever knob (1) and disconnect wiring harness connectors, then remove front console (2).

4. Disconnect shift lock cable from the selector lever assembly side.

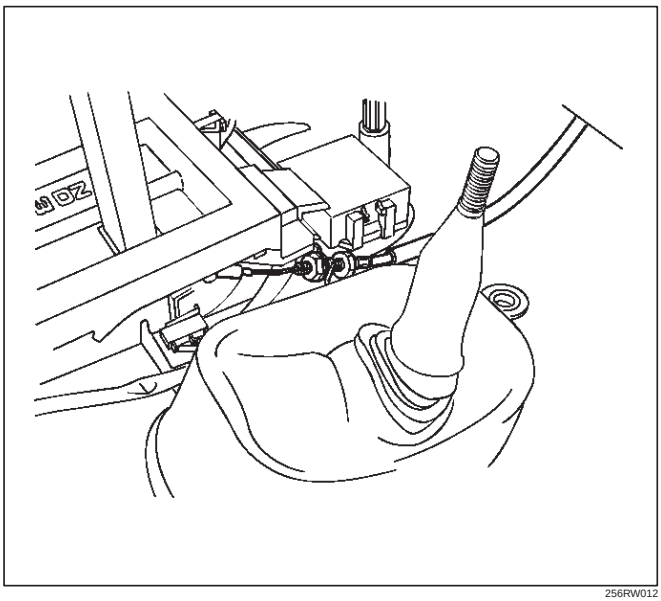

256RW012

5. Disconnect wiring harness connectors.
6. Disconnect shift control rod from the selector lever assembly side.

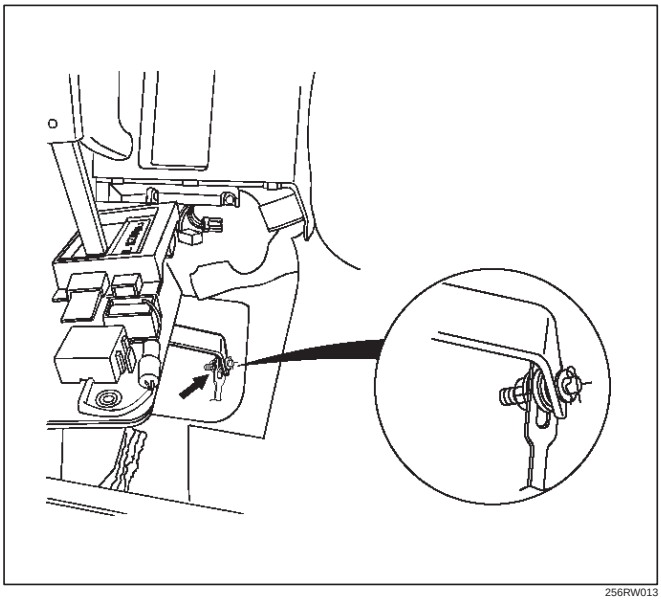

256RW013

7. Remove selector lever assembly (3).
8. Remove transfer control lever (4).
9. Remove transfer and exhaust protector (5).
10. Remove rear propeller shaft (6).
11. Remove front propeller shaft (7).
12. Remove harness protector (8).
13. Support transfer case with a jack and remove two rear mount nuts (9) from the 3rd crossmember side.
14. Remove eight third crossmember bolts and third crossmember (10).
15. Disconnect one oxygen sensor connector from the transmission harness.

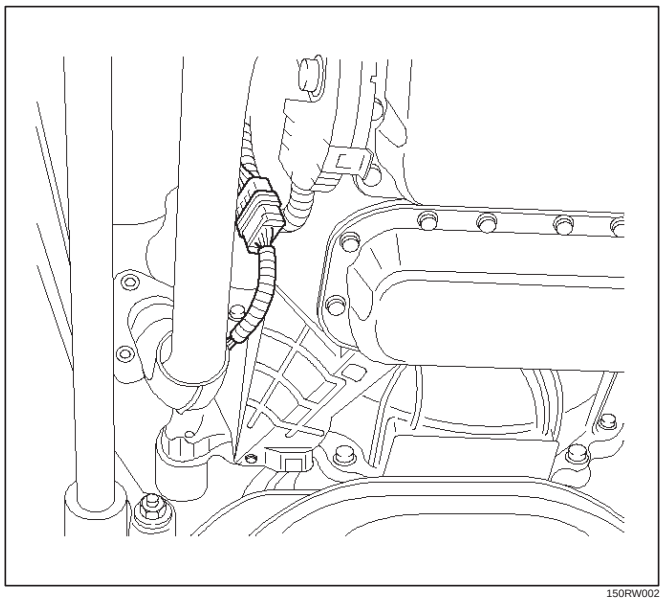

150RW002

16. Remove exhaust pipe (11).
17. Disconnect transmission oil cooler pipe (12) from A/T side.
18. Remove oil pipe clamp from torque converter housing bracket.

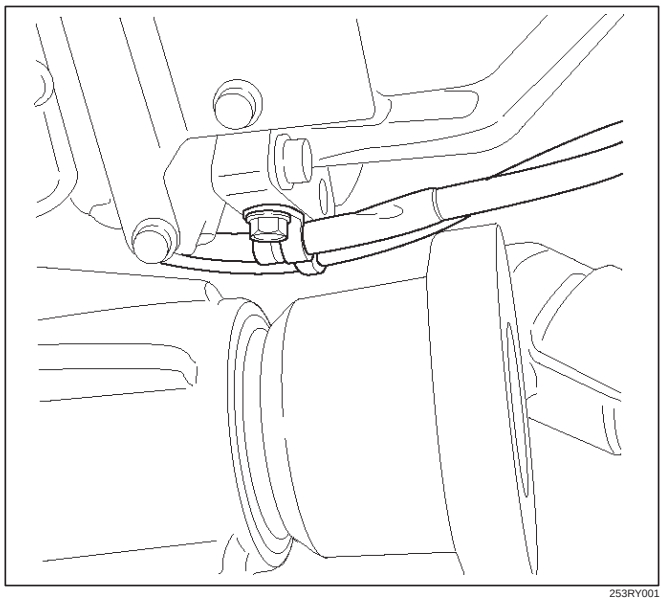

253RY001

19. Loosen oil pipe clamp bolt at the engine mount side.
20. Remove starter (13).
21. Disconnect fuel pipe clamp bracket from transmission side.
22. Disconnect transmission harness connectors (14) from transmission, and transfer.
23. Remove under covers (3 pieces) (15) from transmission case.
24. Lower the front of the transmission a little, then remove flex plate torque converter fixing bolts (6 pieces) (16) by turning crankshaft.
25. Support the transmission with a transmission jack, and hoist engine with a chain block.
26. Remove engine transmission fixing bolts (17).

27. Remove transmission assembly (18).

Installation

1. Slowly raise transmission jack until front of the transmission is aligned with rear of the engine, then install transmission assembly.
2. Tighten engine transmission bolts to the specified torque.

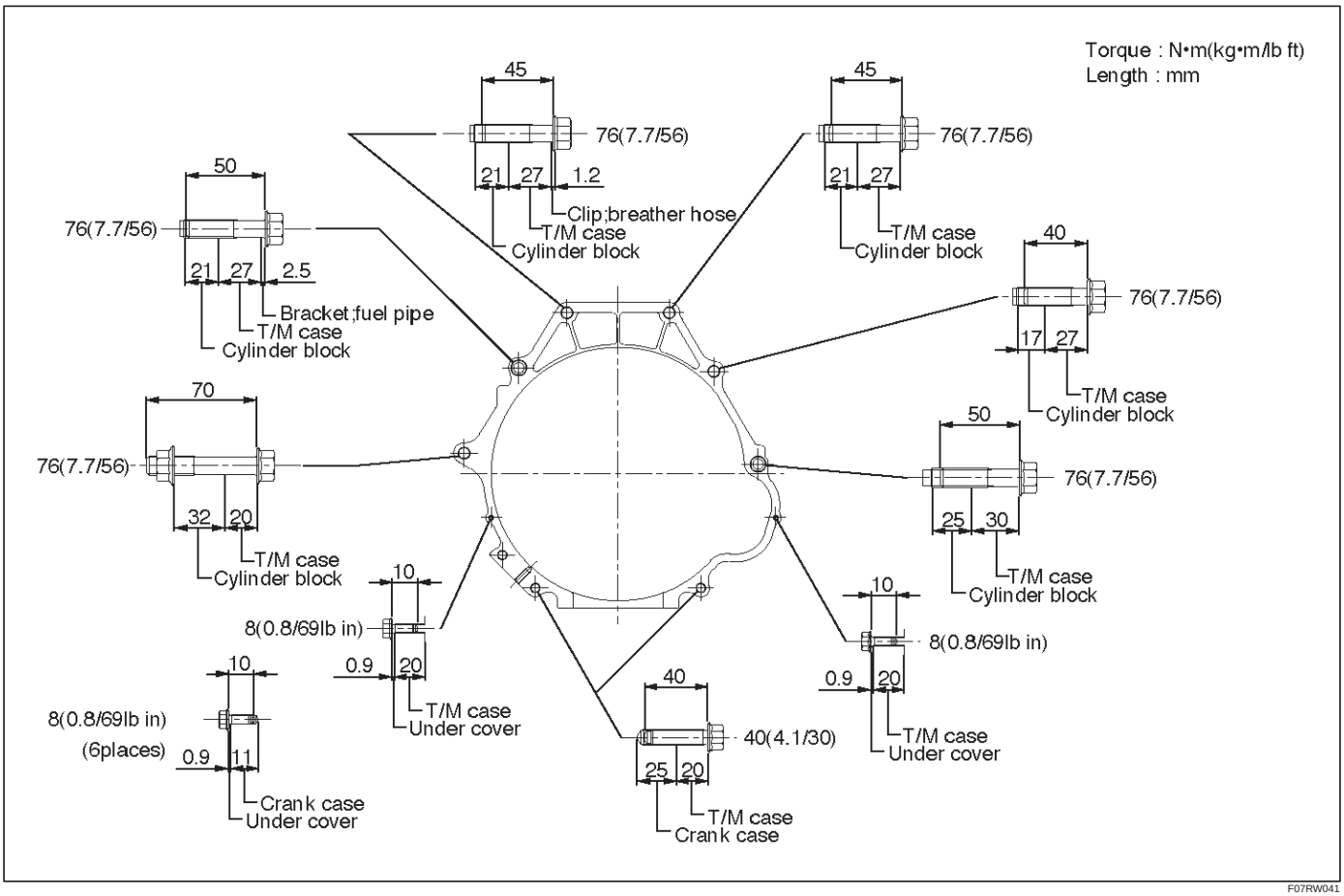

F07RW041

3. Support transfer case with a jack, and remove the transmission jack.
4. Install flex plate torque converter bolts (6 pieces) by turning crankshaft.

Torque: 54 N•m (5.5 kg·m/40 lb ft)

NOTE: Do not reuse the flex plate torque converter bolt.

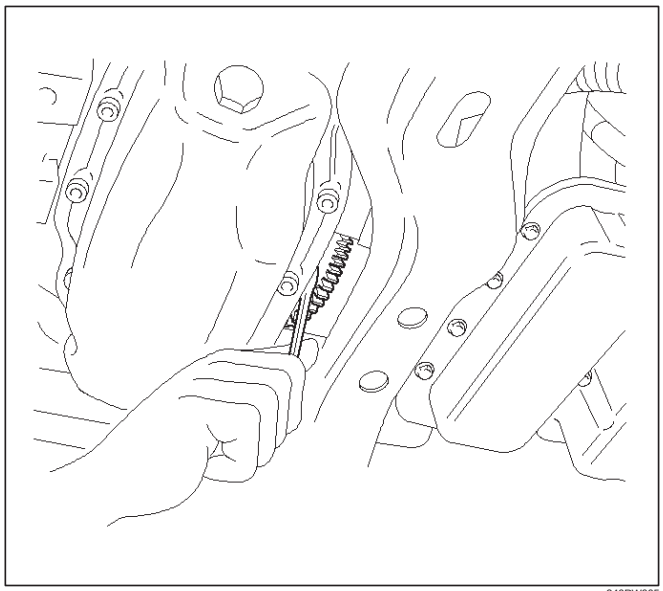

240RW005

5. Install the under cover (3 pieces), and tighten the bolts to the specified torque.

   Torque: 8 N•m (0.8 kg·m/69 lb in)

6. Install the starter, and tighten the bolts to the specified torque.

   Torque: 40 N•m (4.1 kg·m/30 lb ft)

7. Connect transmission harness connectors to transmission, and transfer.
8. Connect fuel pipe bracket to transmission side.

For 4×4

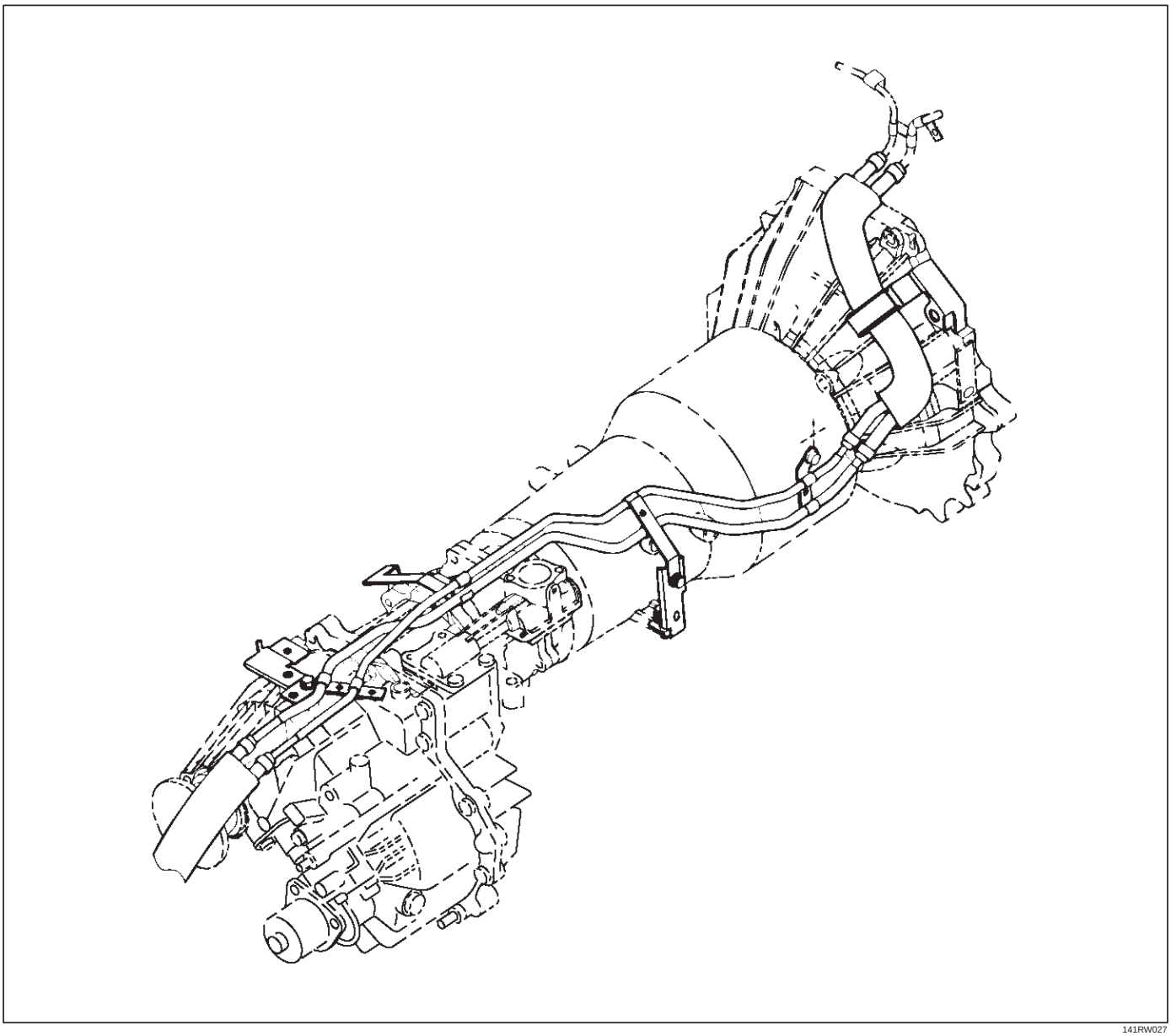

141RW027

For 4×4 (TOD)

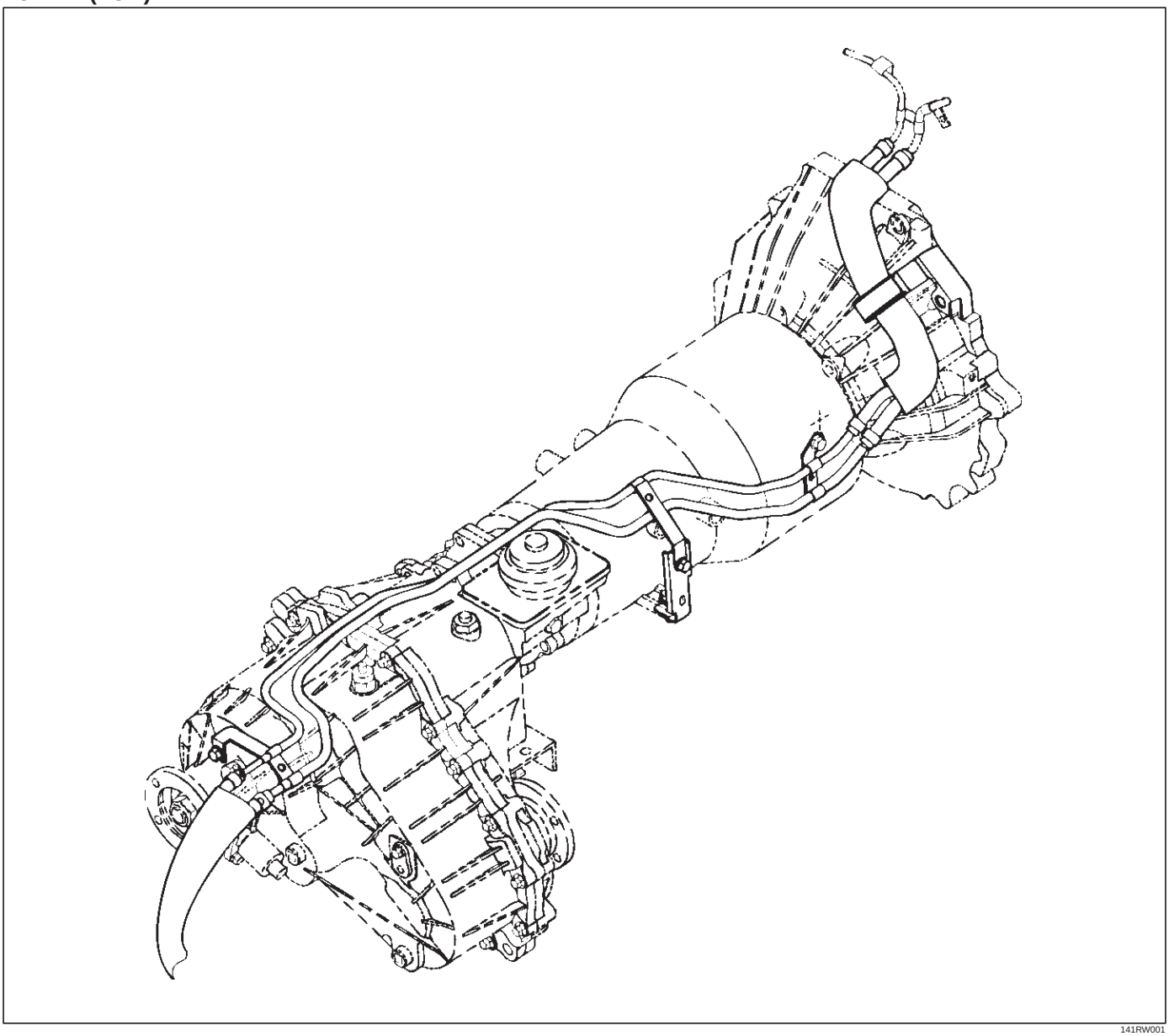

141RW001

9. Install transmission oil cooler pipe to transmission.

   Torque: 44 N•m (4.5 kg·m/33 lb ft)

10. Install oil pipe clamp to torque converter housing bracket.
11. Tighten oil pipe clamp bolt at engine mount side.
12. Install exhaust pipe, and tighten the bolts to the specified torque.

    Exh. pipe to exh. manifold 67 N•m (6.8 kg·m/49 lb ft)

    Exh. pipe flange bolt 43 N•m (4.4 kg·m/32 lb ft)

13. Connect one oxygen sensor connector to the transmission harness.
14. Install third crossmember, and tighten the bolts to the specified torque.

    Torque: 76 N•m (7.8 kg·m/56 lb ft)

15. Install rear mount nuts, and tighten the nuts to the specified torque.

    Torque: 50 N•m (5.1 kg·m/37 lb ft)

16. Remove the jack from the transfer case.

17. Install harness protector.

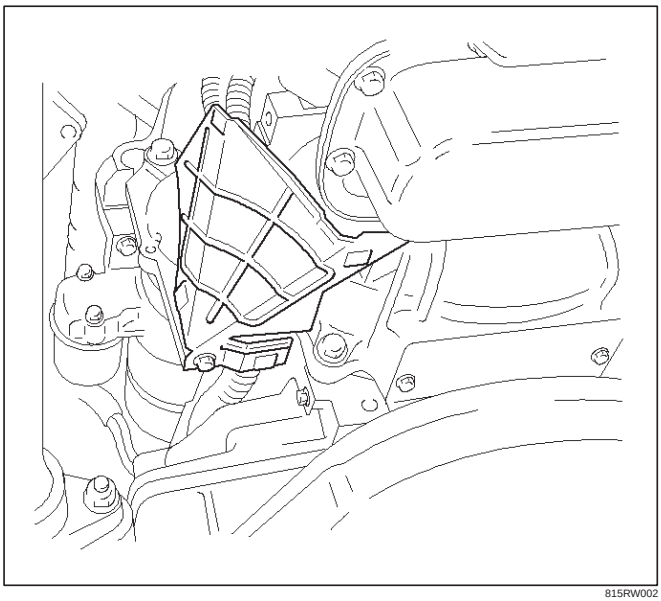

815RW002

18. Install the front propeller shaft, and tighten the bolts to the specified torque.

    Torque: 63 N•m (6.4 kg·m/46 lb ft)

19. Install the rear propeller shaft, and tighten the bolts to the specified torque.

    Torque: 63 N•m (6.4 kg·m/46 lb ft)

20. Install the transfer and exhaust protectors, and tighten the bolts to the specified torque.

    Torque: 37 N•m (3.8 kg·m/27 lb ft)

21. Install the transfer control lever.
22. Install the selector lever assembly.
23. Connect the shift control rod to selector lever assembly.
24. Connect the wiring harness connectors.
25. Connect the shift lock cable to selector lever assembly. Refer to Selector Lever in this section.
26. Connect the wiring harness connectors to front console.
27. Install the front console.
28. Install the transfer control lever knob.
29. Connect the battery ground cable.
30. Install the engine hood.

Solenoid (Main Case Valve Body)

Removal

1. Raise the vehicle and support it on jack stands.
2. Disconnect battery ground cable.
3. Remove transfer and exhaust protectors.
4. Drain fluid.
5. Remove exhaust pipe and disconnect oxygen sensor connector.
6. Support transfer case with a jack and remove third crossmember.
7. Remove sixteen 10 mm screws, main case oil pan, magnet, and gasket.
8. Remove three 13 mm screws, oil filter.
9. Disconnect wiring harness from band control solenoid and shift solenoids. Pull only on connectors, not on wiring harness.
10. Remove spring pin for shift solenoid A, shift solenoid B, and band control solenoid respectively, using suitable pliers taking care not to damage solenoids.

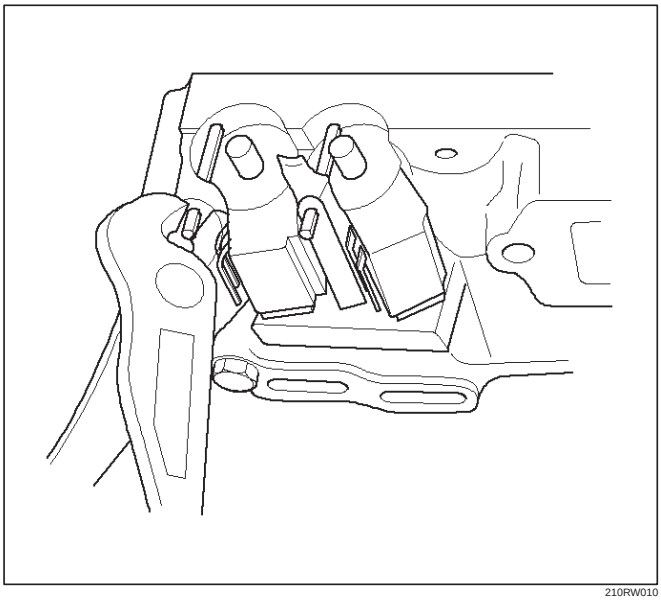

210RW010

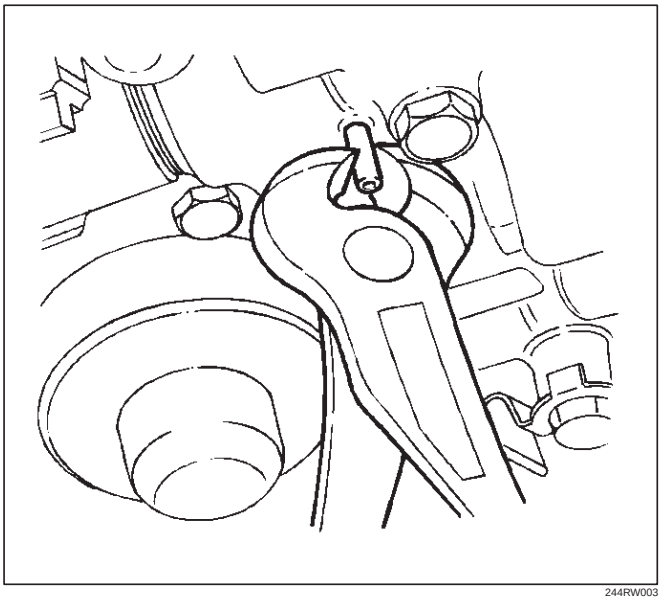

244RW003

11. Remove shift solenoid A, shift solenoid B, band control solenoid, and gaskets from main case valve body. Do not pull on wiring harness. Remove solenoids by grasping the metal tip.

Installation

1. Install shift solenoid A, shift solenoid B, band control solenoid with new gaskets to main case valve body respectively.
2. Carefully install spring pin with hammer to avoid damage to valve body, etc.

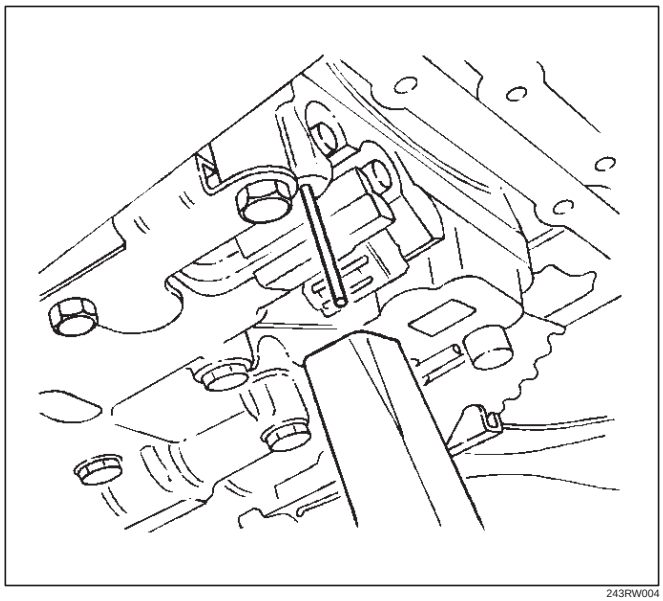

243RW004

3. Connect wiring harness to solenoids.
4. Install oil filter with a new gasket and the three 13 mm screws. Tighten the screws to the specified torque.

   Torque: 20 N•m (2.0 kg·m/15 lb ft)

5. Install magnet, main case oil pan with new gasket, sixteen 10 mm screws. Tighten the screws to the specified torque.

   Torque: 11 N•m (1.1 kg·m/96 lb in)

6. Install third crossmember and rear mount nuts. Tighten the nuts and bolts to the specified torque.

   Third crossmember bolt: 76 N•m (7.8 kg·m/56 lb ft)

   Rear mount nut: 50 N•m (5.1 kg·m/37 lb ft)

7. Install exhaust pipe and connect oxygen sensor connector. Tighten the bolts to the specified torque.

   Exhaust pipe flange bolt torque: 43 N•m (4.4 kg·m/32 lb ft)

8. Install the transfer and exhaust protectors. Tighten the bolts to the specified torque.

   Torque: 37 N•m (3.8 kg·m/27 lb ft)

9. Fill transmission through the overfill screw hole of oil pan, using ATF DEXRON®–III. Refer to Changing Transmission Fluid in this section.
10. Connect the battery ground cable.

Solenoid (Adapter Case Valve Body)

Removal

1. Raise the vehicle and support it on jack stands.
2. Disconnect battery ground cable.
3. Drain fluid.
4. Remove transfer and exhaust protectors.
5. Remove exhaust pipe and disconnect oxygen sesnor connector.
6. Remove adapter case oil pan twelve fixing 10 mm screws, adapter case oil pan, and gasket.

NOTE: Oil pan still contains transmission fluid. Place a large drain container under the oil pan and drain the fluid carefully.

7. Disconnect wiring harness from force motor solenoid and converter clutch solenoid. Pull only on connectors, not on wiring harness.
8. Remove 11 mm bolt and converter clutch solenoid with two O–rings.

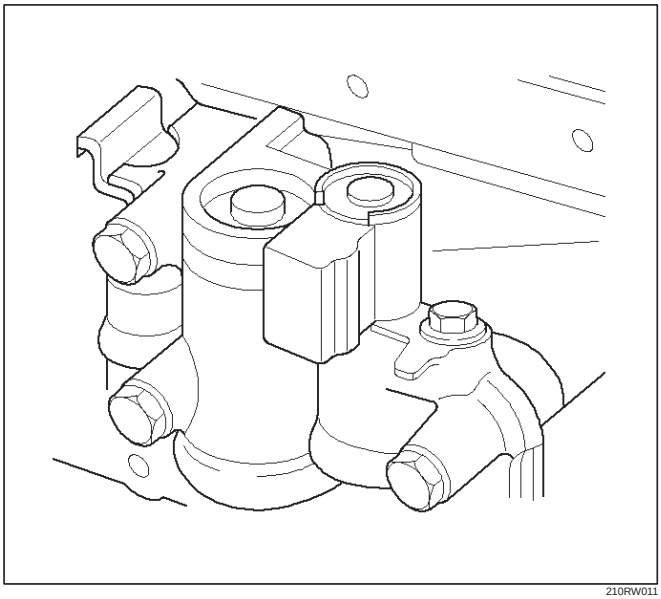

210RW011

9. Remove 11 mm bolt, retainer, and force motor solenoid.

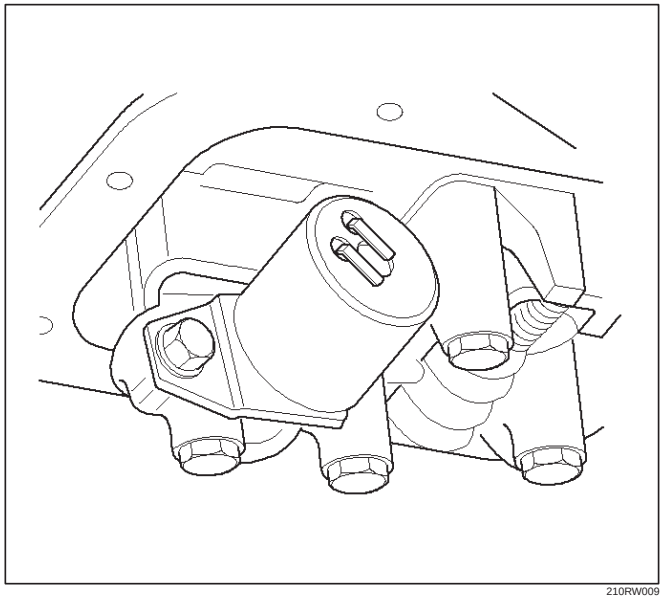

210RW009

Installation

1. Install force motor solenoid, retainer, and 11 mm bolt to adapter case valve body. Tighten the bolt to the specified torque.

   Torque: 10 N•m (1.0 kg·m/87 lb in)

2. Install converter clutch solenoid with two O– rings, and 11 mm bolt to adapter case valve body. Tighten the bolt to the specified torque.

   Torque : 10 N•m (1.0 kg·m/87 lb in)

3. Connect wiring harness assembly to solenoids.
4. Install adapter case oil pan, new gasket, and twelve 10 mm screws. Tighten the screws to the specified torque.

   Torque : 11 N•m (1.1 kg·m/96 lb in)

5. Install exhaust pipe and connect oxygen sensor connector. Tighten the bolt to the specified torque.

   Exhaust pipe flange bolt torque :
   43 N•m (4.4 kg·m/32 lb ft)

6. Install transfer and exhaust protectors. Tighten the bolt to the specified torque.

   Torque : 37 N•m (3.8 kg·m/27 lb ft)

7. Fill transmission through overfill screw hole oil pan, using ATF DEXRON®–III. Refer to Changing Transmission Fluid in this section.
8. Connect battery ground cable.

Valve Body Assembly (Main Case)

Removal

1. Raise the vehicle and support it on jack stands.
2. Disconnect battery ground cable.
3. Remove transfer and exhaust protectors.
4. Drain fluid.
5. Remove exhaust pipe and disconnect oxygen sensor connector.
6. Support transfer case with a jack and remove third crossmember.
7. Remove sixteen 10 mm screws, main case oil pan, magnet and gasket.
8. Remove three 13 mm oil filter fixing screws, then remove oil filter.
9. Remove two 13 mm manual detent fixing screws, then remove roller and spring assembly.
10. Disconnect wiring harness from band control solenoid and shift solenoids. Pull only on connectors, not on wiring harness.
11. Remove four 13 mm servo cover fixing screws, then remove servo cover and gasket.
12. Remove seven 13 mm valve body fixing screws.
    - Disconnect the ground wire from the main case valve body.
13. Remove main case valve body with manual valve link and transfer plate. Note the position of the link (long end into valve, short end into range selector lever).
14. Remove transfer plate gasket from main case.
15. Remove two check balls from main case.

Installation

1. Install two check balls to main case.

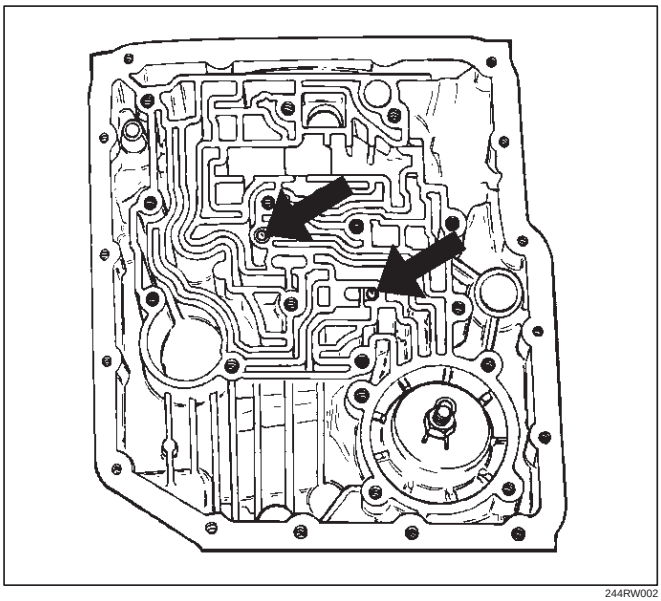

244RW002

2. Inspect electrical 4 pin connector and seal of main case. Replace if necessary.
3. Use two 5–8840–0022–0 (J–25025–B) guide pin to install main case.
   - Install valve body assembly and manual valve link.

NOTE: Valve must be extended as the short end of manual valve link is connected to the range selector lever. Long end of link goes into valve.

4. Install seven 13 mm screws, and tighten them to the specified torque.

   Torque: 20 N•m (2.0 kg·m/15 lb ft)

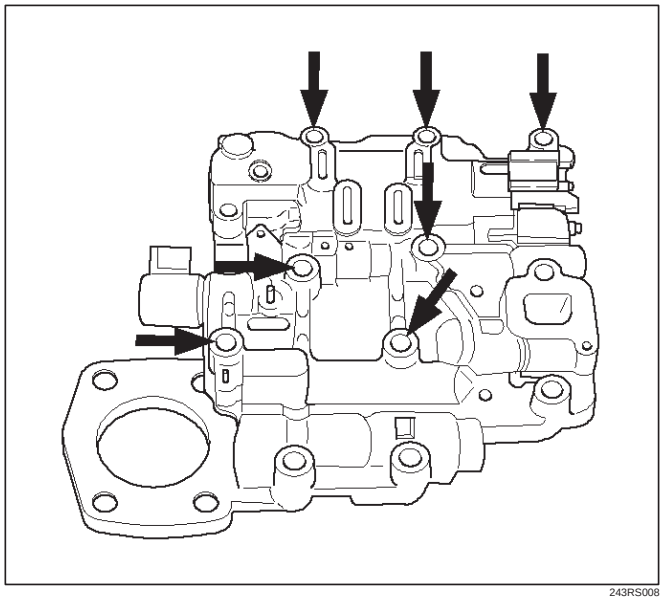

243RS008

5. Install 8.5 mm connector of ground wire the head of this valve body bolt and reinstall it. Tighten the bolt to the specified torque.

   Torque: 20 N•m (2.0 kg·m/15 lb ft)

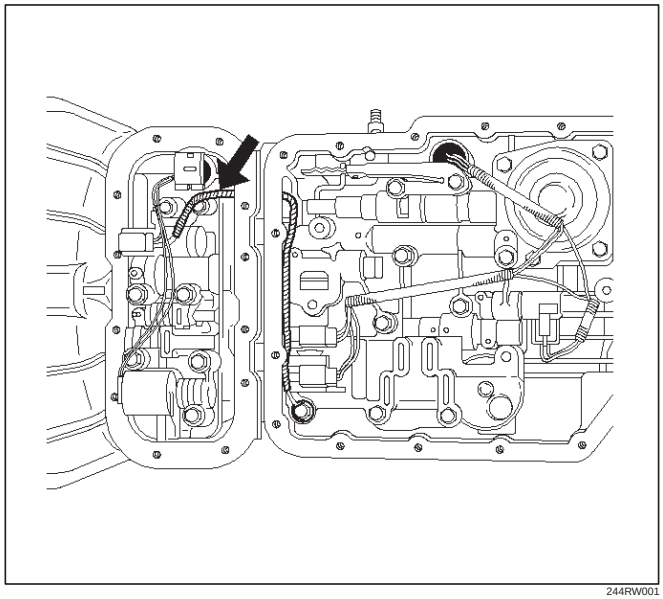

244RW001

6. Remove two guide pins from main case.
7. Install servo cover gasket, cover, and four 13 mm screws. Tighten the screws to the specified torque.

   Torque: 25 N•m (2.6 kg·m/18 lb ft)

8. Connect wiring harness to band control and shift solenoids.
9. Install roller and spring assembly to manual detent.
   - Install two 13 mm screws, and tighten them to the specified torque.

   Torque: 20 N•m (2.0 kg·m/15 lb ft)
10. Install oil filter and three 13 mm screws. Tighten the screws to the specified torque.

    Torque : 20 N•m (2.0 kg·m/15 lb ft)
11. Install oil pan gasket, magnet, oil pan and sixteen 10 mm screws. Tighten the screws to the specified torque.

    Torque: 11 N•m (1.1 kg·m/96 lb in)
12. Install third crossmember and rear mount. Tighten the bolts and nuts to the specified torque.

    Torque

    Third crossmember bolt:
    76 N•m (7.8 kg·m/56 lb ft)

    Rear mount nut: 50 N•m (5.1 kg·m/37 lb ft)
13. Install exhaust pipe and connect oxygen sensor connector. Tighten the bolts to the specified torque.

    Exhaust pipe flange bolt torque:
    43 N•m (4.4 kg·m/32 lb ft)
14. Install transfer and exhaust protectors. Tighten the bolts to the specified torque.

    Torque: 37 N•m (3.8 kg·m/27 lb ft)
15. Fill transmission through overfill screw hole of oil pan, using ATF DEXRON®–III, refer to Changing Transmission Fluid in this section.
16. Connect battery ground cable.

Valve Body Assembly (Adapter Case)

Removal

1. Raise the vehicle and support it on jack stands.
2. Disconnect battery ground cable.
3. Drain fluid.
4. Remove transfer and exhaust protectors.
5. Remove exhaust pipe and disconnect oxygen sensor connector.
6. Remove twelve 10 mm adapter case oil pan fixing screws, adapter case oil pan, and gasket.

NOTE: Oil pan still contains transmission fluid. Place a large drain container under the oil pan.

Drain the fluid carefully.

7. Disconnect wiring harness from force motor solenoid and converter clutch solenoid. Pull only on connectors, not on wiring harness.
8. Remove seven 13 mm screws from adapter case valve body assembly, then remove transfer plate, two gaskets, and adapter case valve body.

Installation

1. Inspect electrical 5 pin connector and seal of adapter case. Replace if necessary.
2. Install gasket, transfer plate, and gasket.
3. Install adapter case valve body and seven 13 mm screws. Tighten the screws to the specified torque.

   Torque: 20 N•m (2.0 kg·m/15 lb ft)
4. Connect wiring harness assembly to converter clutch solenoid and force motor.
5. Install oil pan gasket, oil pan, and twelve 10 mm screws. Tighten the screws to the specified torque.

   Torque: 11 N•m (1.1 kg·m/96 lb in)
6. Install exhaust pipe and connect oxygen sensor connector. Tighten the bolts to the specified torque.

   Exhaust pipe flange bolt torque:
   43 N•m (4.4 kg·m/32 lb ft)
7. Install transfer and exhaust protectors. Tighten the bolts to the specified torque.

   Torque: 37 N•m (3.8 kg·m/27 lb ft)
8. Fill transmission through the overfill screw hole of oil pan, using ATF DEXRON®–III. Refer to Changing Transmission Fluid in this section.
9. Connect battery ground cable.

Powertrain Control Module (PCM)

Removal

1. Disconnect battery ground cable.
2. Remove front console.
3. Disconnect PCM wiring harness connectors from PCM.
4. Remove three PCM retaining screws.
5. Remove two brackets from PCM.

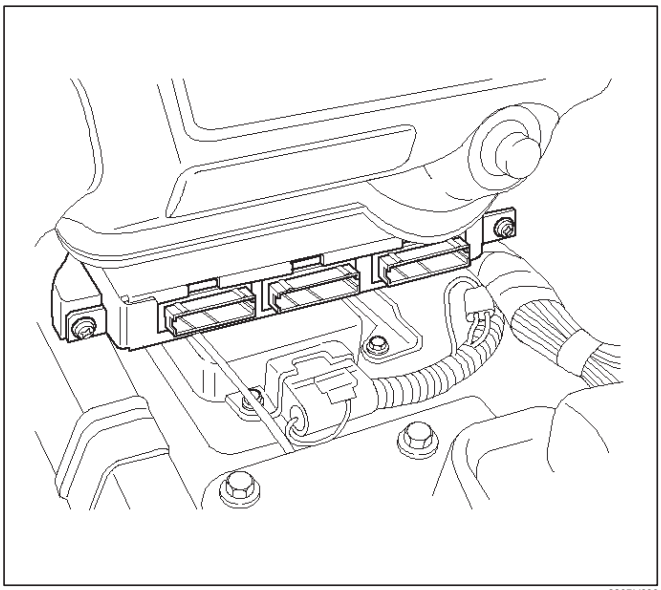

826RV006

Installation

1. Install two brackets to PCM.
2. Install three PCM retaining screws.
3. Connect PCM wiring harness connectors to PCM.
4. Install front console.
5. Connect battery ground cable.

Speed Sensor (Extension Housing)

Removal

1. Disconnect battery ground cable.
2. Remove front console.
3. Remove selector lever assembly.
4. Disconnect speed sensor harness connector from speed sensor.
5. Remove one 10 mm screw and speed sensor with O–ring.

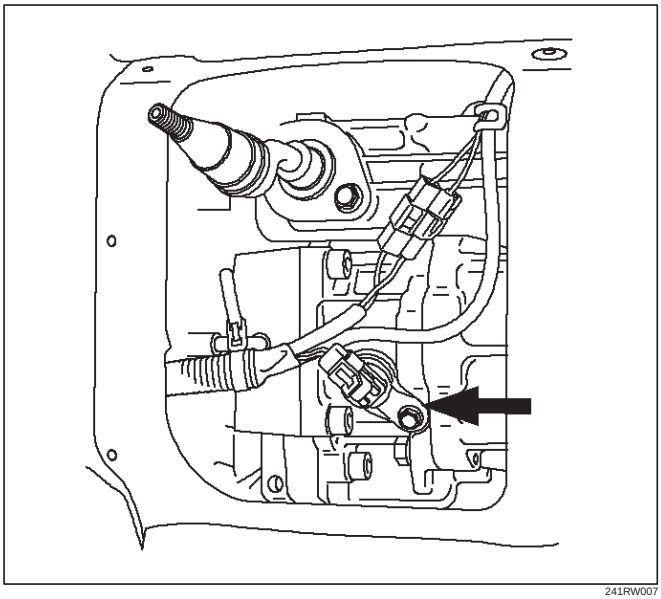

241RW007

Installation

1. Inspect the speed sensor O–ring, and replace it if necessary.
2. Install speed sensor assembly and 10 mm screw.

   Torque: 9 N•m (0.9 kg·m/78 lb in)
3. Connect speed sensor harness connector to speed sensor.
4. Install selector lever assembly.
   - Adjust shift lock cable. Refer to Selector Lever in this section.
5. Install front console.
6. Connect battery ground cable.

Transmission Oil Temperature Sensor (Adapter Case)

Removal

1. Raise the vehicle and support it on jack stands.
2. Disconnect battery ground cable.
3. Drain fluid.
4. Remove transfer and exhaust protectors.
5. Remove exhaust pipe and disconnect oxygen sensor connector.
6. Remove twelve 10 mm adapter case oil pan fixing screws, adapter case oil pan, and gasket.

NOTE: Oil pan still contains transmission fluid. Place a large drain container under the oil pan, and drain the fluid carefully.

7. Disconnect wiring harness from force motor solenoid, converter clutch solenoid, and 5 pin connector of adapter case. Pull only on connectors, not on wiring harness.
8. Disconnect ground wire from converter clutch solenoid wiring harness connector.
9. Remove wiring harness assembly (transmission oil temperature sensor).

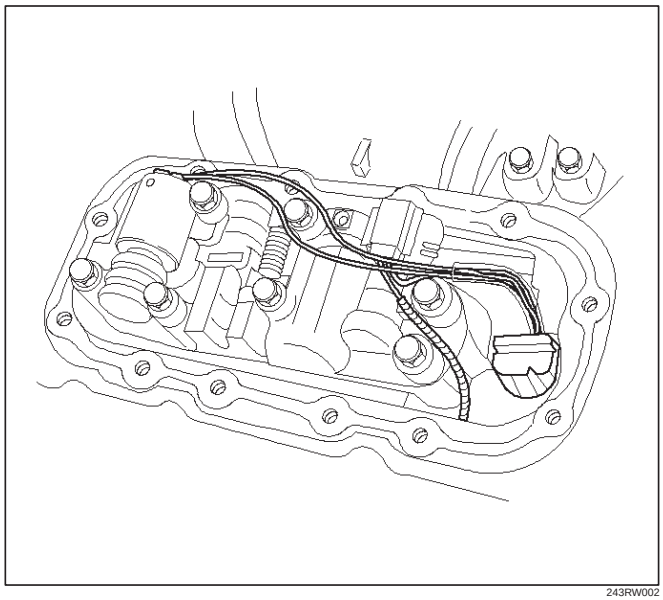

243RW002

Installation

1. Connect ground wire to converter clutch solenoid wiring harness connector of the wiring harness assembly.
2. Install wiring harness assembly to converter clutch solenoid, force motor, and 5 pin connector of adapter case.
3. Install oil pan gasket, oil pan, and twelve 10 mm fixing screws. Tighten the screws to the specified torque.

   Torque: 11 N•m (1.1 kg·m/96 lb in)
4. Install exhaust pipe and connect oxygen sensor connector. Tighten the bolts to the specified torque.

   Exhaust pipe flange bolt torque:
   43 N•m (4.4 kg·m/32 lb ft)
5. Install transfer and exhaust protectors. Tighten the bolts to the specified torque.

   Torque: 37 N•m (3.8 kg·m/27 lb ft)
6. Fill transmission through the overfill screw hole of oil pan, using ATF DEXRON®–III.
   Refer to Changing Transmission Fluid in this section.
7. Connect battery ground cable.

Front Oil Seal (Converter Housing)

Removal

1. Remove transmission assembly with transfer case from the vehicle. Refer to Transmission (with Transfer Case) in this section.
2. Remove torque converter from converter housing.
3. Remove three screws and oil seal ring from converter housing.

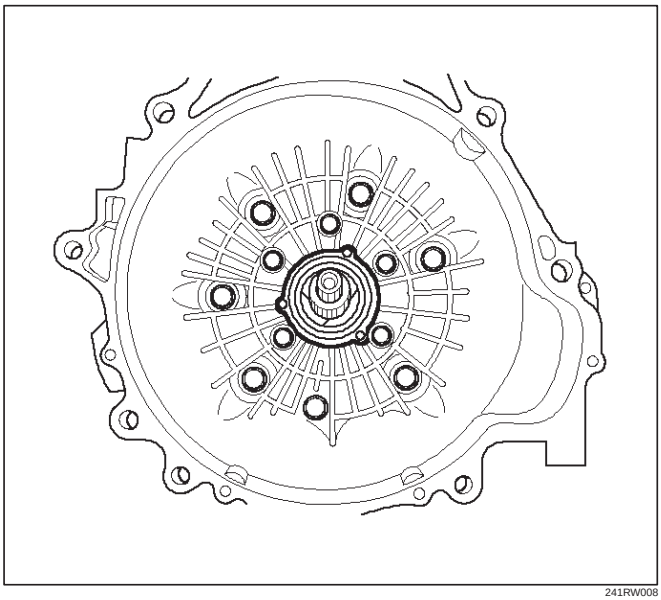

241RW008

Installation

1. Apply clean ATF to the new oil seal ring lip.
   - Install oil seal ring to converter housing. Tighten the screws to the specified torque.

   Torque: 3 N•m (0.3 kg·m/26 lb in)
2. Install torque converter to converter housing.
3. Install transmission assembly with transfer case to the vehicle. Refer to Transmission (with Transfer Case) in this section.

Rear Oil Seal (Extension Housing)

Removal

1. Remove transfer case assembly from the vehicle. Refer to Transfer Case in Drive Line/Axle section.
2. Remove rear oil seal from transmission extension housing.

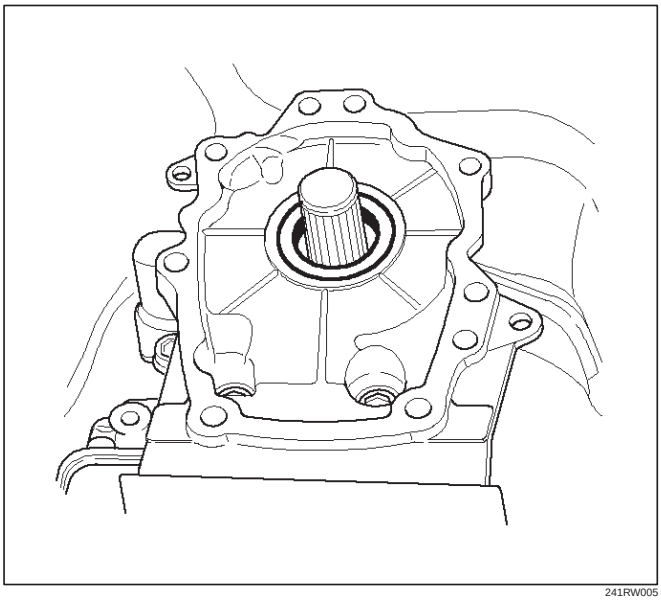

241RW005

Installation

1. Use 5–8840–2282–0 (J–36797) extension housing oil seal installer, and install the rear oil seal to the transmission extension housing.
2. Install the transfer case assembly to the vehicle. Refer to Transfer Case in Drive Line/Axle section.

Transmission (4L30–E)

Disassembly

NOTE: During the disassembly and reassembly, perform the following:

- Wash each part thoroughly, and blow air through each oil passage and groove to eliminate blockage.
- Seal rings, roll pins, and gaskets should be replaced.
- When assembling the components, apply DEXRON®–III Automatic Transmission Fluid (ATF) to each seal, rotating part, and sliding part.
- Do not dip part facings, such as clutch or brake drive plates, in cleaner when washing it.
  Also, always coat parts with new ATF two or three times after cleaning with solvent.

1. Remove torque converter (1).
   - Drain fluid from torque converter.
   - Attach 5–8840–2278–0 (J–8763–02) holding fixture to the transmission and set it on 5–8840–0003–0 (J–3289–20) holding fixture base.

NOTE: Do not overtighten the tool, as case damage may result.

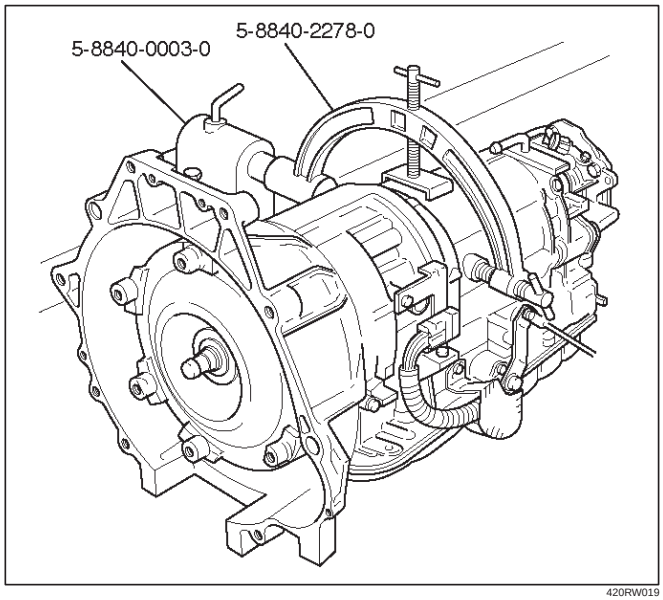

420RW019

2. Remove O–ring (2) from turbine shaft.
3. Remove two 10mm mode switch screws, selector lever nut, cover, and mode switch (3).
4. Remove twelve 10mm adapter case oil pan (4) fixing screws, adapter oil pan, and gasket.
5. Disconnect electrical wiring connections (5) from solenoids and 5 pin connector of adapter case. Pull on connectors only, not on wiring harness.

6. Remove seven 13mm adapter case valve body (6) fixing screws, adapter case valve body assembly, transfer plate, and two gaskets.
   - Remove wiring harness and 5 pin connector.
7. Remove sixteen 10mm main case oil pan (7) fixing screws, main oil pan, magnet, and gasket.
8. Remove three 13mm oil filter (8) fixing screws and oil filter.
9. Remove two 13mm manual detent (9) fixing screws, roller and spring, and manual detent.
10. Disconnect wiring harness assembly (10) from band apply solenoid, shift solenoids, and main case 4 pin connector.
    Pull on connectors only, not on wiring harness.
11. Remove four 13mm servo cover (11) fixing screws, servo cover, and gasket.
12. Remove seven 13mm valve body screws and ground wire from main case.
    - Remove wiring harness assembly (5) from the adapter case side.
    - Remove main valve body assembly (12) with manual valve link and transfer plate. Note the position of the link (long end into valve, short end into range selector lever).
    - Remove 4 pin connector.
    - Remove gasket transfer plate from main case.
13. Remove two check balls (13) from main case.

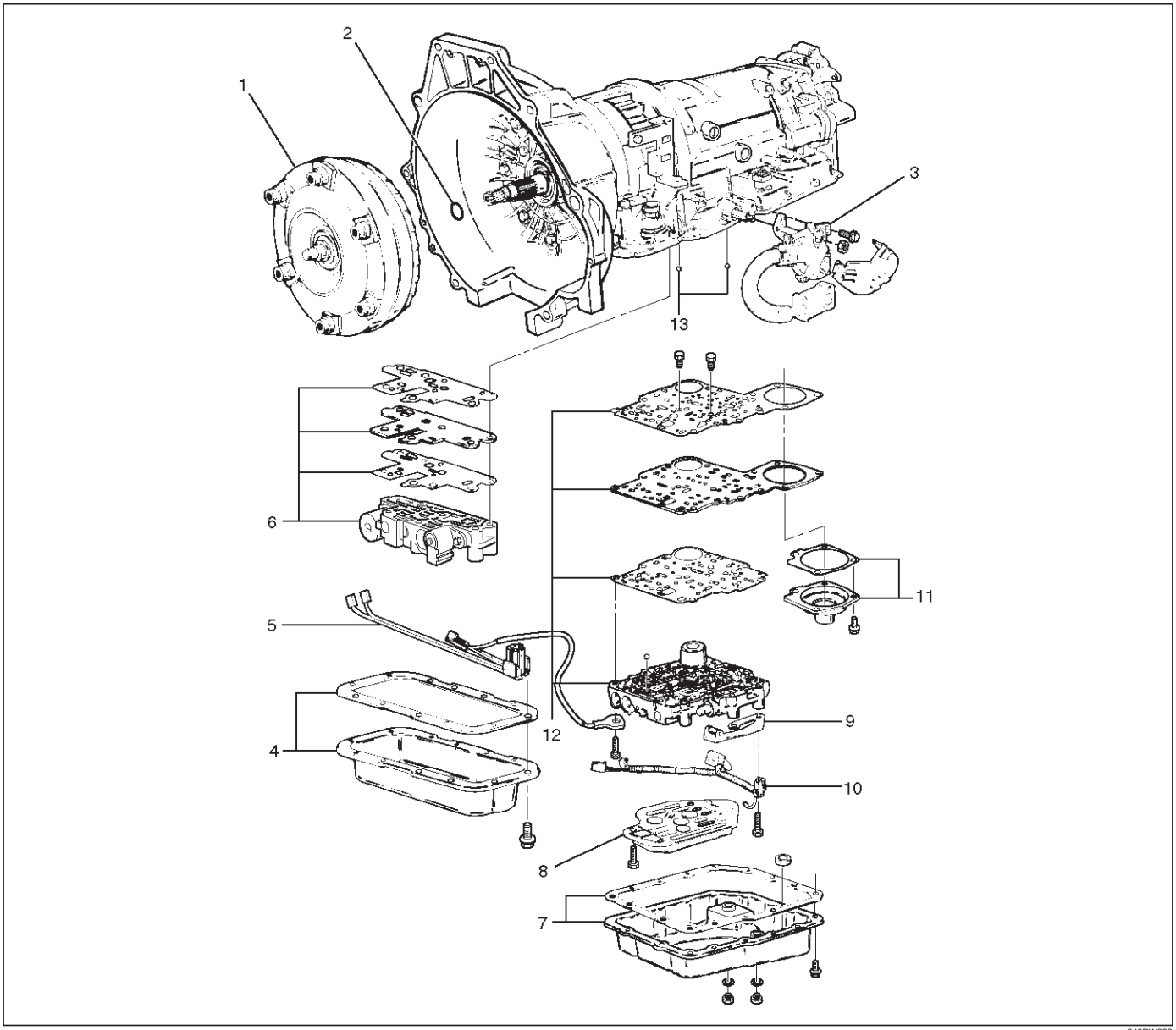

240RW022

14. Turn transmission to vertical position to drain fluid. Return back to horizontal position when drained.
    - Install 5–8840–0501–0 (J–23075) servo piston spring compressor with offset to the rear of case.
    - Compress servo piston assembly.
    - Remove servo piston retaining ring (14).
    - Slowly release servo piston assembly (15).
    - Remove tool.

15. Remove servo piston assembly (15), return spring (16), and servo apply rod (17).

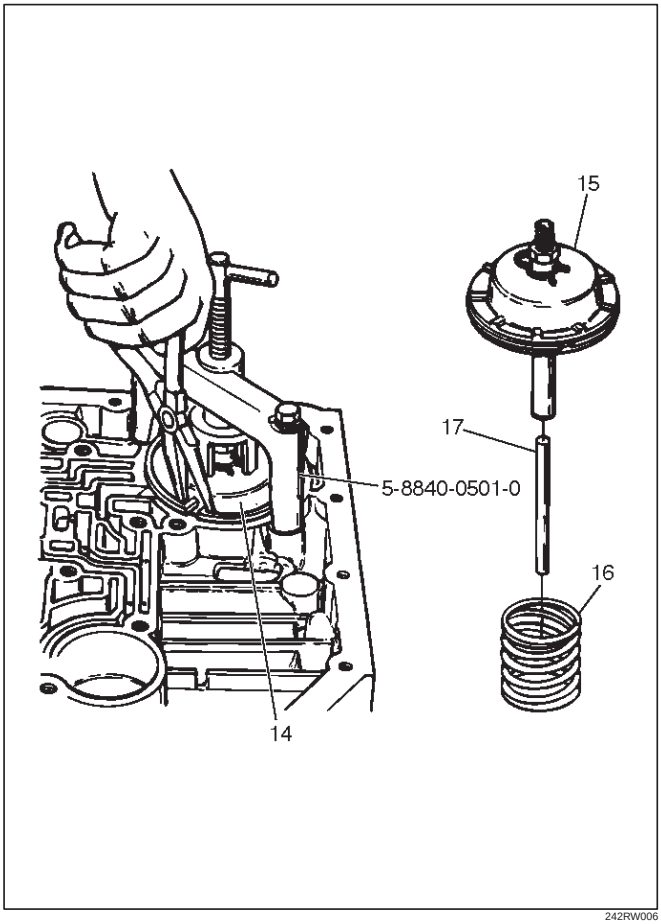

16. Rotate transmission to horizontal position, pan side down.
    - Remove one 10mm screw, and speed sensor (18) with “O” ring.
17. Remove seven 8mm extension housing hexagon socket head screws, extension housing assembly (19), and gasket.
18. Remove retaining ring (20).

NOTE: Use extra long, needle- nose pliers.

19. Remove speed wheel (21).
20. Remove wheel parking lock (with seal ring) (22).

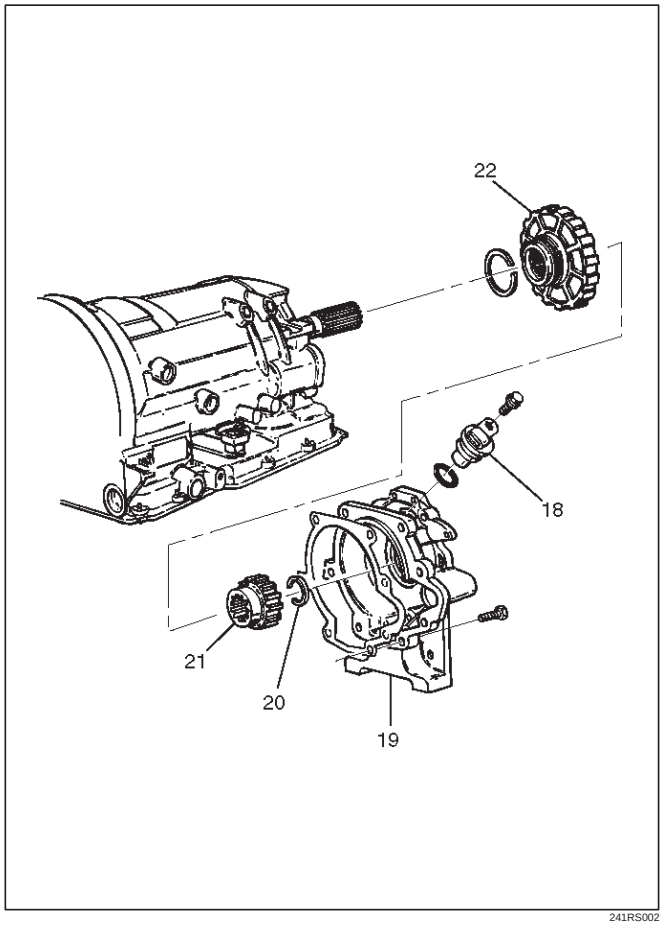

21. Rotate transmission to vertical position, converter housing up.
    - Loosen the converter housing and oil pump assembly fixing screws, but do not remove the five 13 mm inner screws if oil pump disassembly is required.
    - Remove seven outer screws.
    - Remove converter housing and oil pump assembly (23).
22. Remove gasket (24).

23. Remove selective thrust washer (25).

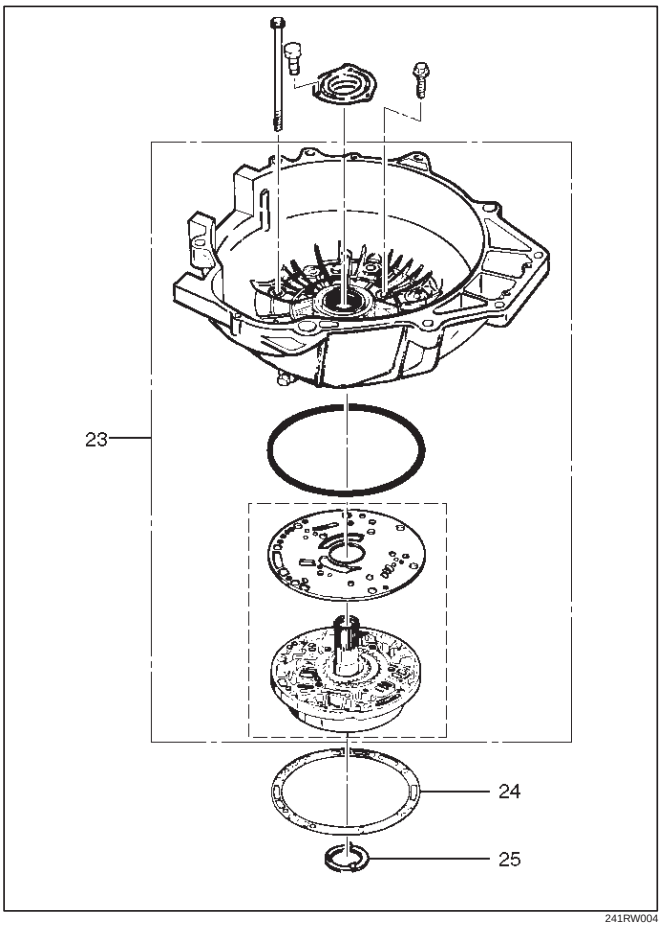

24. Remove fourth clutch retainer (26).
25. Grasp turbine shaft and lift out the overrun clutch housing assembly (27) and fourth clutch plates (28).
26. Remove thrust bearing assembly (29).
27. Remove overdrive internal gear (30).
28. Remove thrust washer (31).

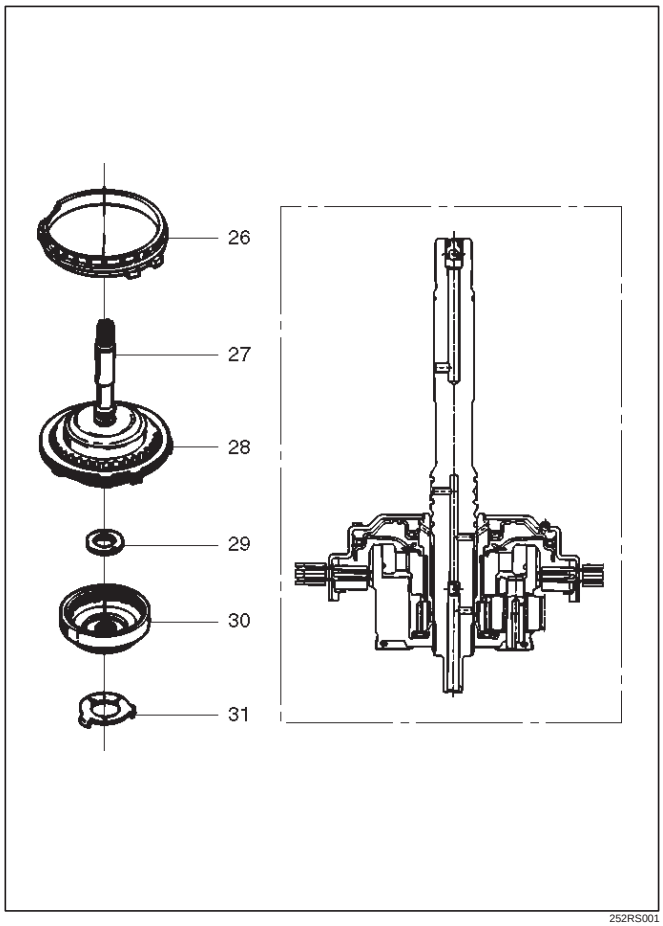

29. Remove adapter case and center support assembly (with fourth clutch piston) (32).
30. Remove seal ring (33).
31. Remove selective thrust washer (34) and two O–ring seals (35) from main case.
32. Use 5–8840–0195–0 (J–23327) and 5–8840–2263–0 (J–23327–90) compressor to compress the fourth clutch spring retainer and springs (37).
    - Release snap ring (36) from groove.
    - Remove clutch compressor and snap ring (36).
33. Remove retainer and spring assembly (37).
34. Insert two converter housing/main case screws to hold adapter case while pulling out fourth clutch piston (38).
    - Remove fourth clutch piston assembly (38) from the adapter case.
    - Remove converter housing/main case screws.
35. Grasp intermediate shaft, twist and pull out the second and third clutch drum assemblies with reverse clutch plates while holding onto output shaft (39).

36. Separate second (40) and third clutch (41) assemblies.
37. Remove thrust washer (42).
38. Remove reverse clutch plates (43 and 44) and reverse clutch pressure plate (45).
39. Remove bearing (46) and washer (47).
40. Remove planetary carrier assembly (48).
41. Remove thrust bearing (49).
42. Remove reaction sun gear (50)
43. Remove needle bearing (51).
44. Remove brake drum (52).
45. Remove brake band (53).
46. Remove thrust bearing (54).

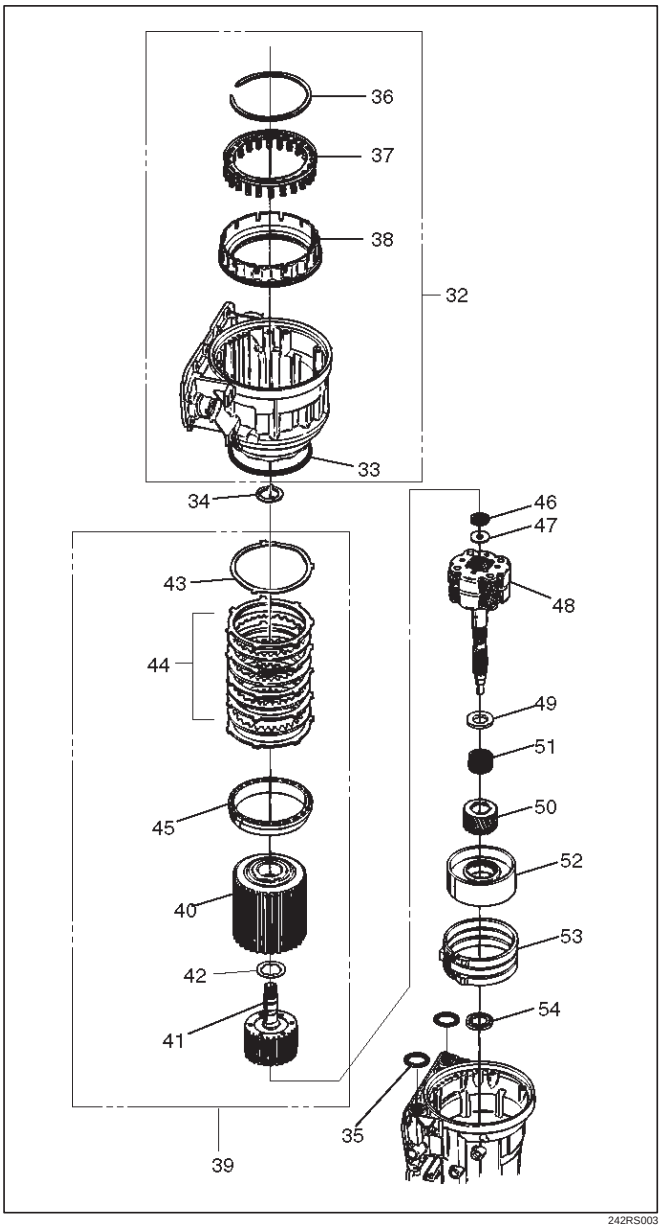

242RS003

47. Rotate case to horizontal position, valve body side facing up.
    - Remove spring pin (55), using cutting pliers, then remove parking lock and selector lever assembly (56).

NOTE: Insert wire in the center of the spring pin to prevent it from collapsing during removal. Be aware of pin height. Protect machined face of main case.

48. Remove parking lock and range selector lever 17 mm nut (57).
49. Remove parking lock and range selector lever (56), and actuator assembly.
50. Remove selector shaft (58).

NOTE: Inspect the shaft for burrs before removing to prevent damaging seal. If necessary, remove burrs by lightly sanding with an oilstone.

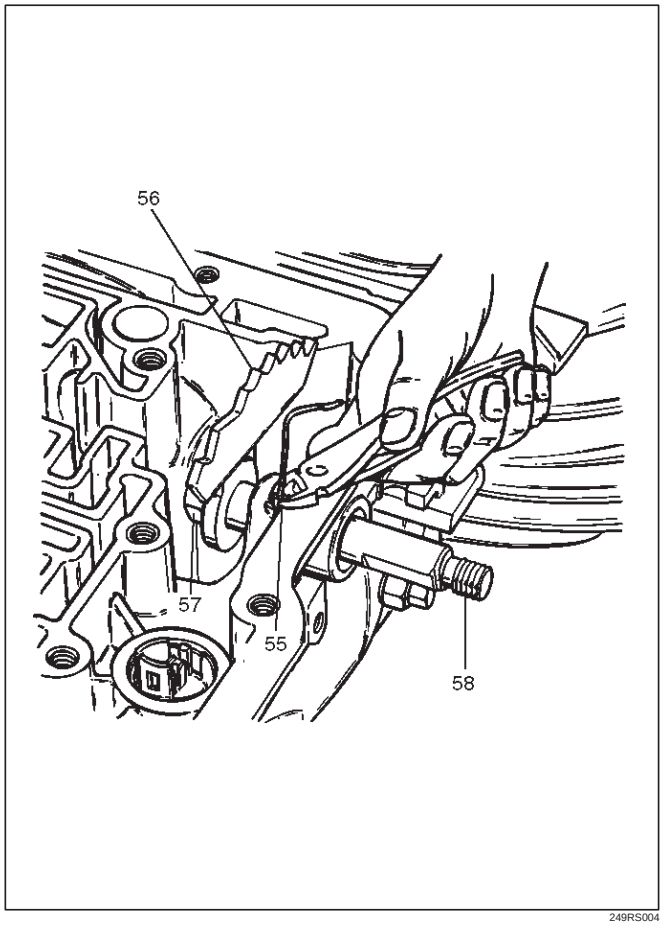

249RS004

Reassembly

1. Inspect selector shaft seal, and replace it if necessary.

NOTE: Use a seal installer when replacing the seal.

- Install selector shaft.

NOTE: Spring pin groove must be positioned inside the case.

2. Install spring pin. Be sure the selector shaft can move freely. Do not push the pin flush with the case surface. Leave enough height for removal.
3. Install actuator assembly (1).
4. Install parking lock and range selector lever (2) and new 17 mm nut. Tighten the nut to the specified torque.

Torque: 22 N•m (2.2 kg·m/16 lb ft)

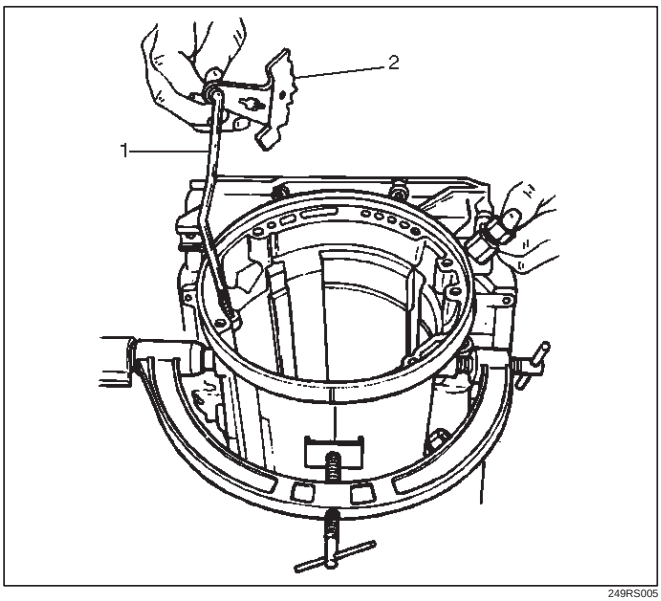

249RS005

5. Rotate main case to vertical position, extension end facing down.
   - Install brake band assembly (3).

NOTE: Be sure to align servo pin area with the servo hole.

6. Install thrust bearing (4).

NOTE: The case bushing acts as a guide for the thrust bearing.

7. Install brake drum (5).
8. Install reaction sun gear (6).
9. Install needle bearing (7).
10. Inspect planetary carrier assembly (8) for wear and damage. If necessary replace it.
    - Measure pinion end play clearance with a feeler gauge.

    Clearance: 0.13mm–0.89mm (0.005 in–0.035 in)

    If clearance is outside specified value, replace the planetary carrier assembly.

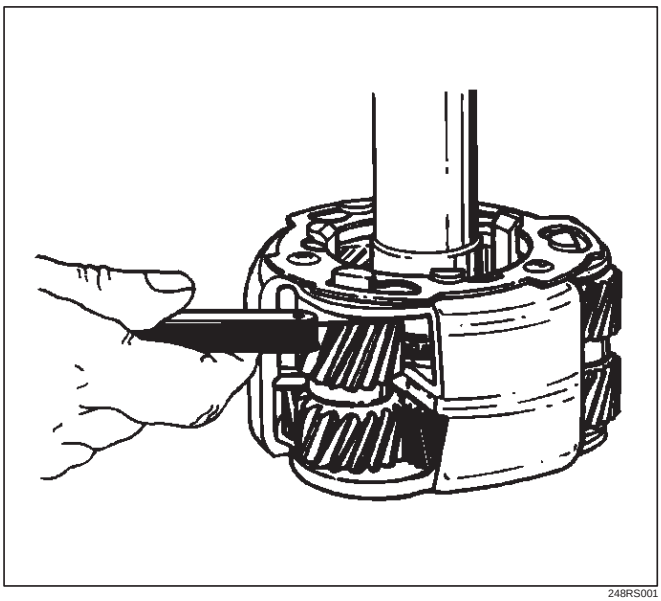

248RS001

11. Install the thrust bearing (9) on the output shaft.

NOTE: Use petroleum jelly to hold the thrust bearing in place.

12. Align planetary pinions. Each pinion is marked with double points to indicate the master tooth space and exactly opposite with a single point to indicate the master tooth. The markings on the planetary carrier consist of double lines which are to be lined up with the double points on two opposite pinions; the single lines are to be lined up with the single points on the other two pinions.
    - After all four pinions are lined up, slide on the third clutch assembly. Rotate third clutch and check mark alignment. Considering that the ring gear tooth between the double points of one planetary pinion is tooth number 1, count the teeth to check that the single points on the two adjacent pinions are between teeth 23 and 24 of the ring gear, and that the ring gear tooth between the double points of the opposite pinion is tooth number 46. If the ring gear and pinions are not lined up, remove, and realign them.
13. Install planetary carrier (8) with third clutch (12).

NOTE: Do not force. When properly aligned, the parts will fit together easily.

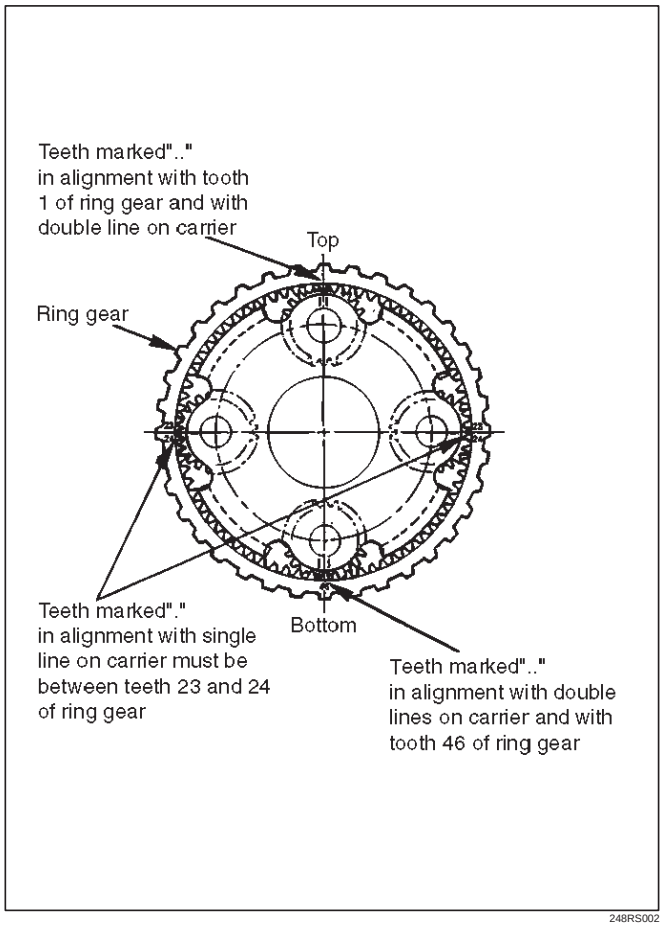

248RS002

14. Remove the third clutch (12).
15. Install bearing (11) and washer (10).

NOTE: Use petroleum jelly to hold the washer and bearing in place.

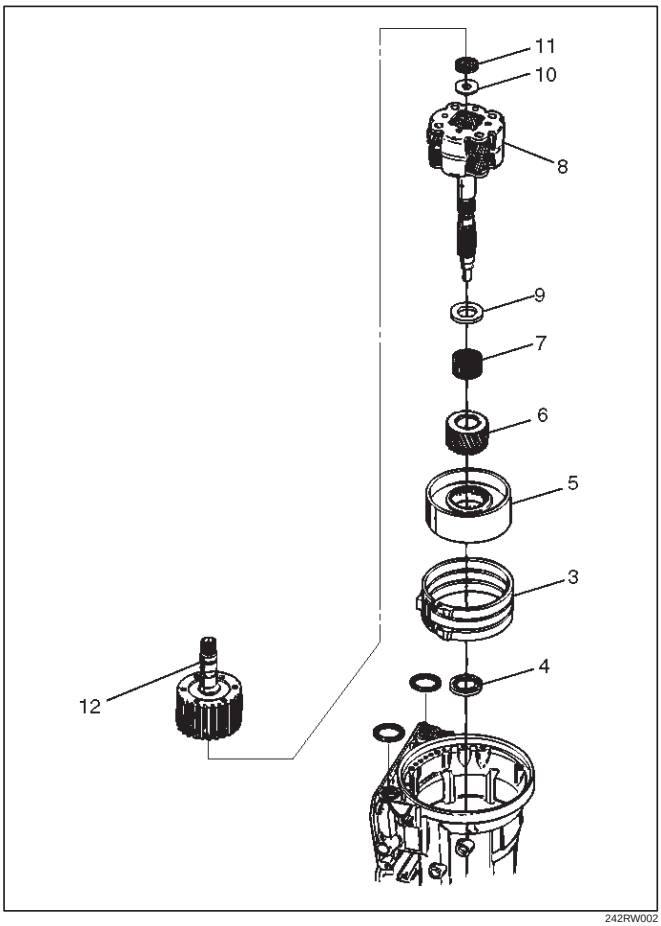

242RW002

16. Carefully align the second clutch plate inner tangs.
    - Install thrust washer, tangs pointing downward, and locating tang positioned in slot on second clutch hub.

NOTE: Use petroleum jelly to hold thrust washer in place.

17. Install third clutch and intermediate shaft assembly (13) into the second clutch drum (14).

18. Install second and third clutch assemblies into the main case. Twist output shaft and clutch assemblies to ensure proper fit.

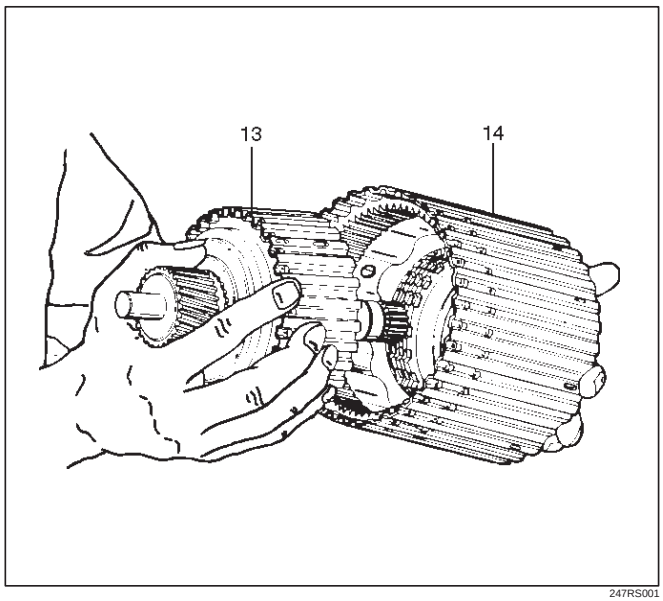

247RS001

19. Install pressure plate (15) with lip side up, tang facing valve body face.
20. Install reverse clutch plates. Start with a steel plate (17) and alternate with a lined plate (16).
21. Install waved clutch plate (18) with center tang facing valve body side.

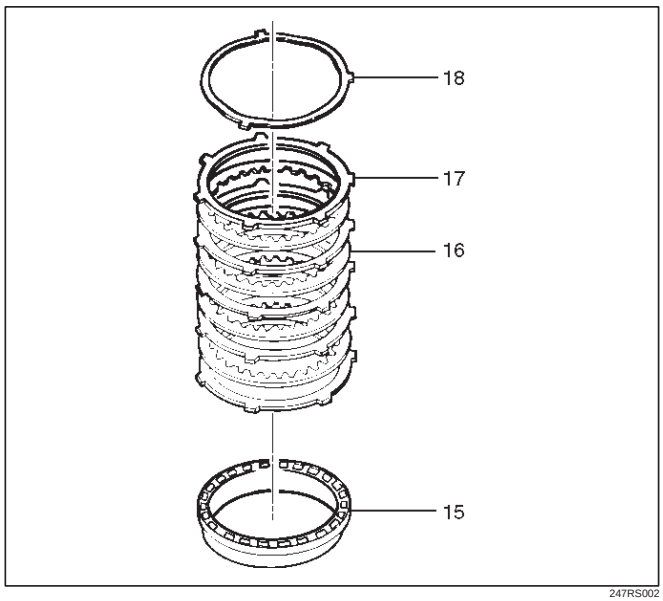

247RS002

22. Second clutch end play measurement
    1. Install the 5–8840–2262–0 (J–23085–A) Selective washer gauging tool (with spacer ring) on the case flange and against the intermediate shaft.
    2. Position the inner shaft of the gauging tool against the thrust surface of the second clutch hub.
    3. Tighten thumb screw. Remove the tool.
    4. Fit the spacer ring on the inner shaft of the tool.
    5. Measure the gap, and select the appropriate washer as shown in the chart.

Selective Thrust Washer	
Gap: mm(in)	**Color**
1.53 – 1.63 (0.060 – 0.064)	Yellow
1.72 – 1.82 (0.068 – 0.072)	Red
1.91 – 2.01 (0.075 – 0.079)	Black
2.10 – 2.20 (0.083 – 0.087)	Natural
2.29 – 2.39 (0.090 – 0.094)	Green
2.48 – 2.58 (0.098 – 0.102)	Blue
FOLLOWING THE PROCEDURE SHOULD RESULT IN FINAL END–PLAY FROM 0.36 mm TO 0.79 mm (0.014 in TO 0.031 in)	

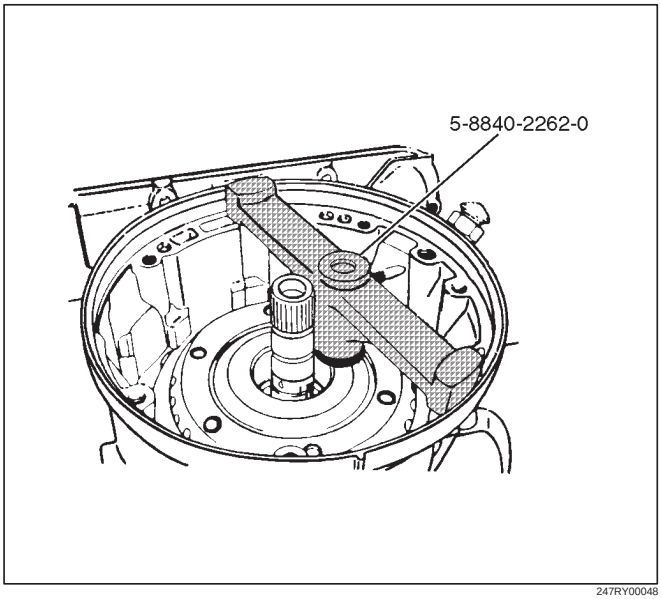

247RY00048

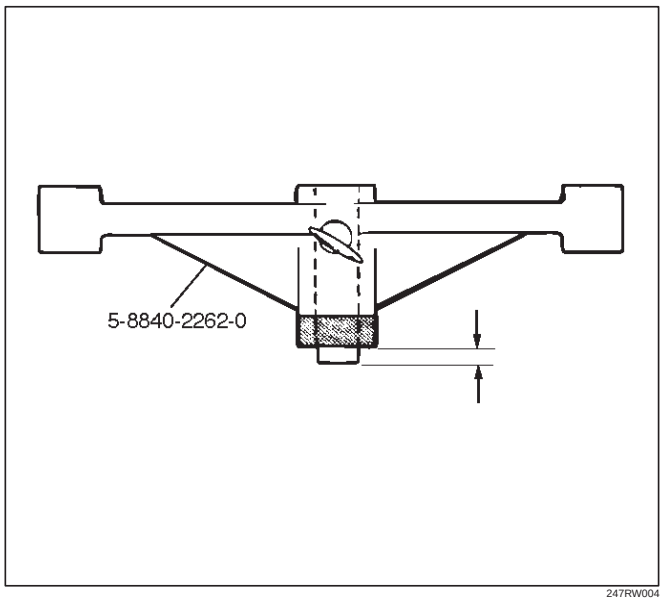

247RW004

23. Inspect fourth clutch piston seals and replace if necessary.
    - Lubricate 5–8840–2267–0 (J–38554) fourth clutch piston fitter and install it on fourth clutch piston (19).
    - Install fourth clutch piston (19) in adapter case (20).
    - Remove fitter.

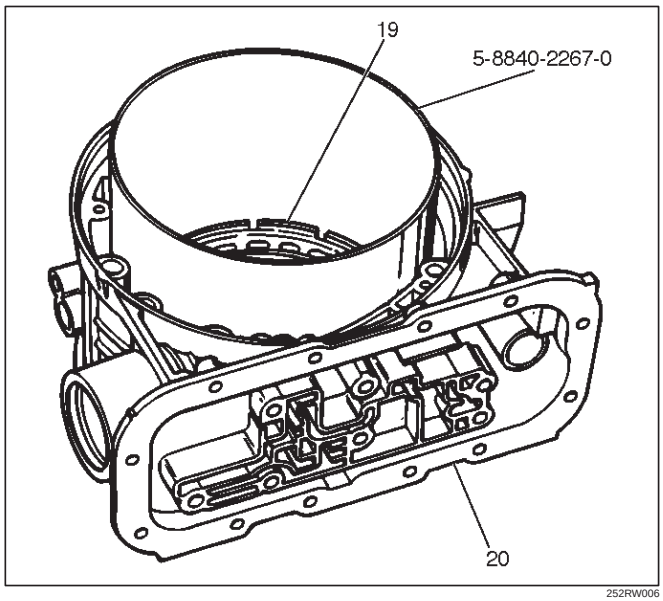

252RW006

24. Install retainer and spring assembly (22) into fourth clutch piston (21).
25. Install snap ring (23) in adapter case.
    - Install 5–8840–0195–0 (J–23327) and 5–8840–2263–0 (J–23327–90) fourth clutch spring compressor.
    - Seat snap ring in groove.
    - Remove compressor.

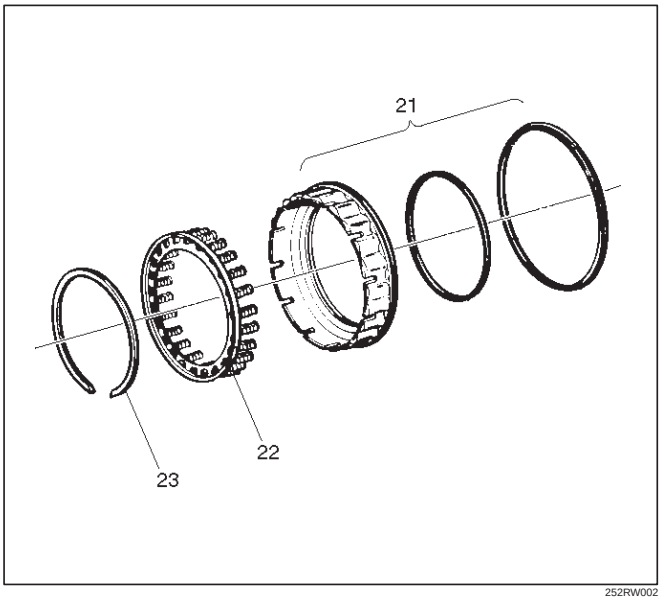

252RW002

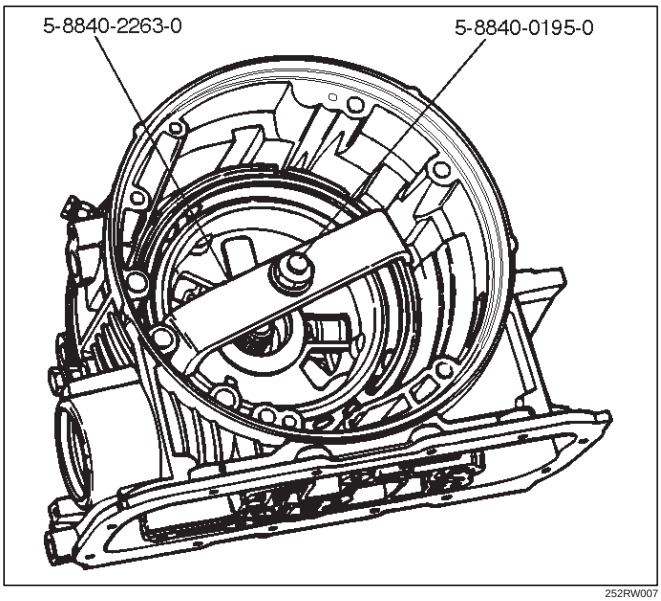

252RW007

26. Install selective washer using petroleum jelly.
27. Install two O–ring seals (24) in main case and adapter case/main case seal ring (25).
28. Install 5–8840–2268–0 (J–38588) guide pins.
    - Install adapter case and center support assembly to main case.

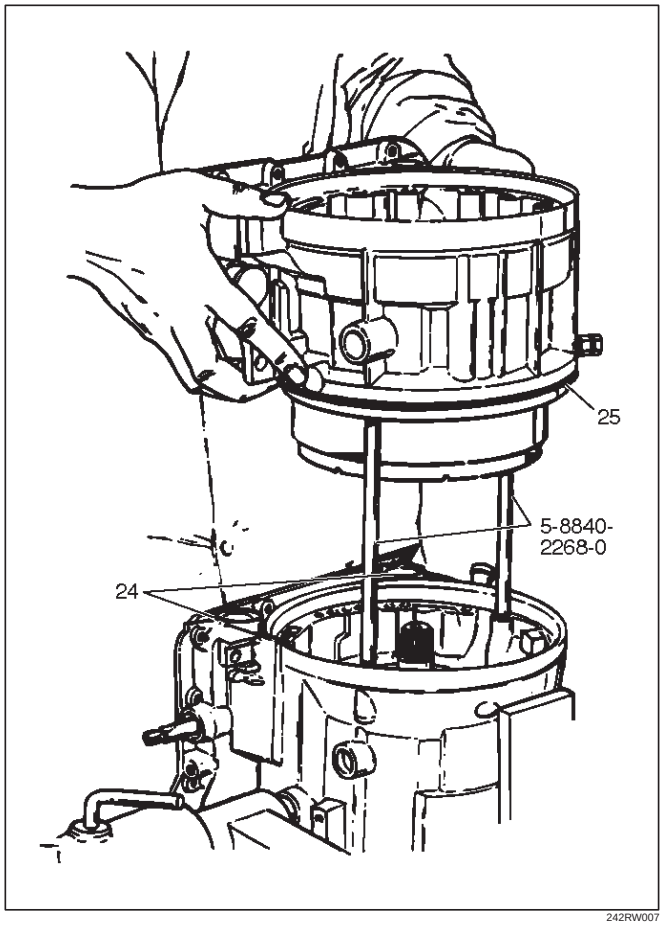

242RW007

29. Install thrust washer (26) into adapter case, with tangs pointing downwards.
30. Preassemble overdrive internal gear (27) and thrust bearing assembly (28) onto the turbine shaft and overrun clutch assembly.

NOTE: Install bearing assembly, black side up. Use petroleum jelly to keep assembly in place.

31. Install overdrive carrier (30) and internal gear assembly into adapter case.
32. Install fourth clutch plates (29) in the following order: Steel, Lined, Steel, Steel, Lined, Steel. Steel plates go in with short tang facing towards valve body surface.

33. Install fourth clutch retainer (31) with the notch facing up and positioned towards valve body surface.

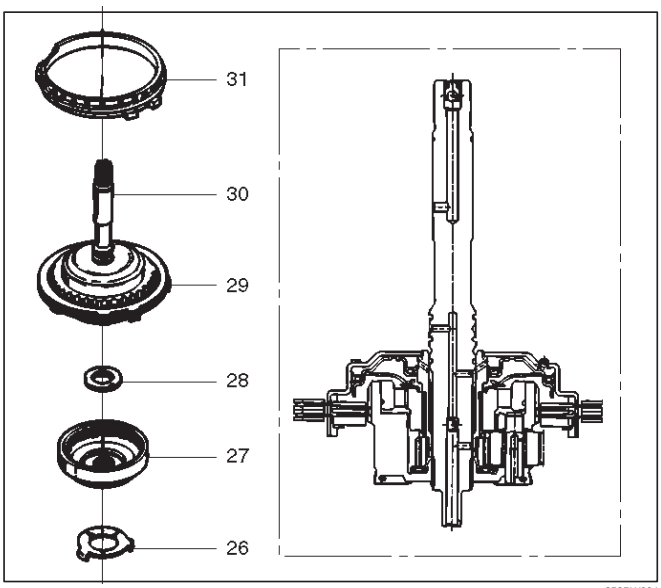

252RW004

34. Overdrive clutch end play measurement
    1. Install the 5–8840–2262–0 (J–23085–A) selective washer gauging tool on the adapter case flange and against the input shaft.
    2. Position the inner shaft of the tool against the thrust surface of the overrun clutch housing.
    3. Tighten thumb screw. Remove the tool.
    4. Measure gap. Select appropriate size washer as shown in the chart.
    5. Set selective thrust washer aside.

Selective Thrust Washer	
Gap: mm(in)	**Color**
1.53 – 1.63 (0.060 – 0.064)	Yellow
1.72 – 1.82 (0.068 – 0.072)	Red
1.91 – 2.01 (0.075 – 0.079)	Black
2.10 – 2.20 (0.083 – 0.087)	Natural
2.29 – 2.39 (0.090 – 0.094)	Green
2.48 – 2.58 (0.098 – 0.102)	Blue
FOLLOWING THE PROCEDURE SHOULD RESULT IN FINAL END–PLAY FROM 0.1 mm TO 0.8 mm (0.004 in TO 0.03 in)	

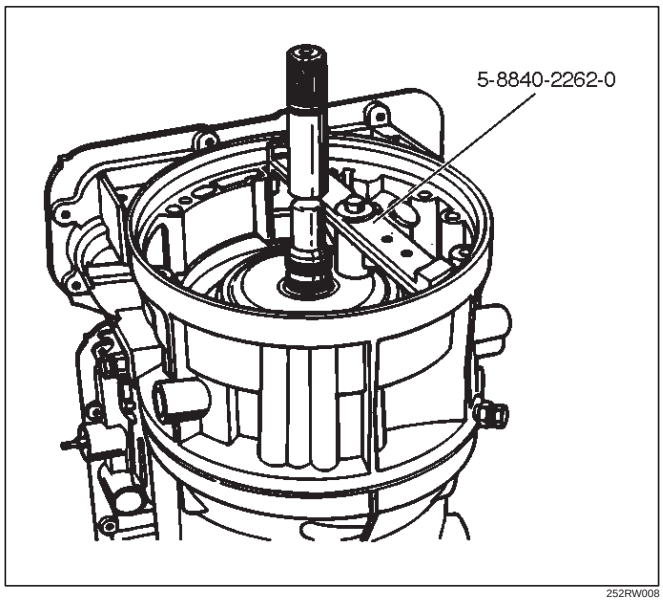

252RW008

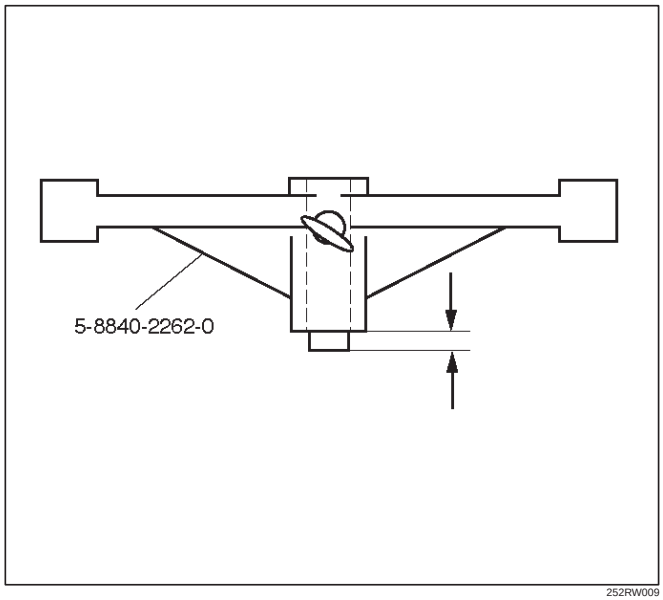

252RW009

35. Install selective washer (32).

NOTE: Use petroleum jelly to hold selective washer in place.

36. Install gasket (33).
37. Install converter housing and oil pump assembly (34) to adapter case.
    - Fit and tighten seven outer 13 mm screws.

    Torque: 39 N•m (4.0 kg·m/29 lb ft)

- Ensure free rotation of pump using 5–8840–2273–0 (J–23082–01) oil pump rotation tool.

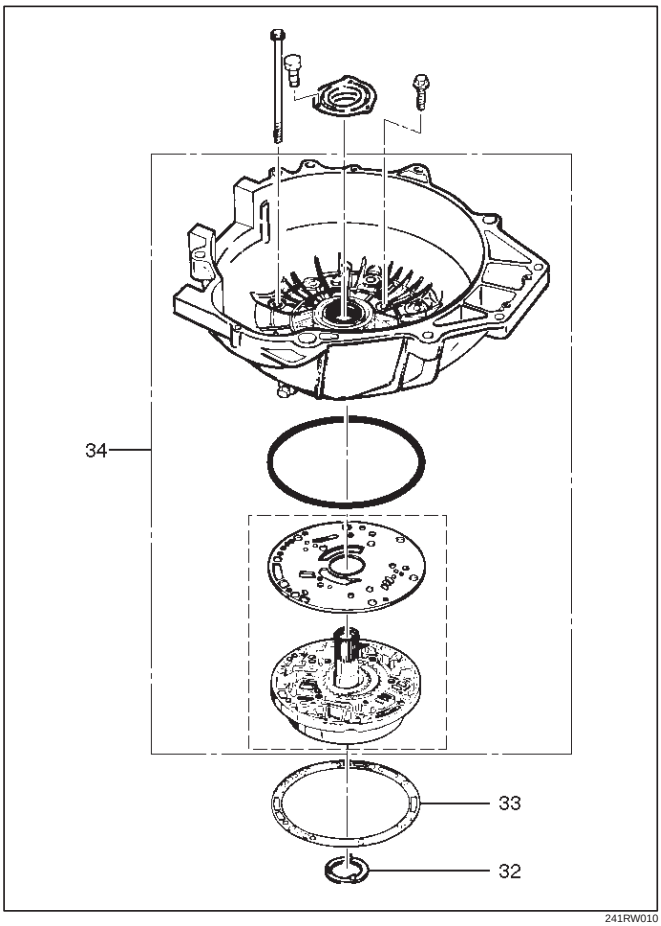

38. Overdrive clutch end play measurement.
    1. Fit 5–8840–2271–0 (J–25022) and 5–8840–0618–0 (J–24773–1) turbine shaft puller on turbine shaft.
    2. Position axial play checking tool on converter housing mating face.
    3. Pull turbine shaft upwards with puller until first resistance is met. (due to weight of overdrive assembly).
    4. Maintain shaft in this position and set indicator to zero.
    5. Pull turbine shaft further upwards with puller. Read end play shown on indicator.

End play: 0.1mm – 0.8mm (0.004 in – 0.031in)

6. Remove axial play checking tool and puller.

NOTE: If end play is not correct, repeat selective washer selection.

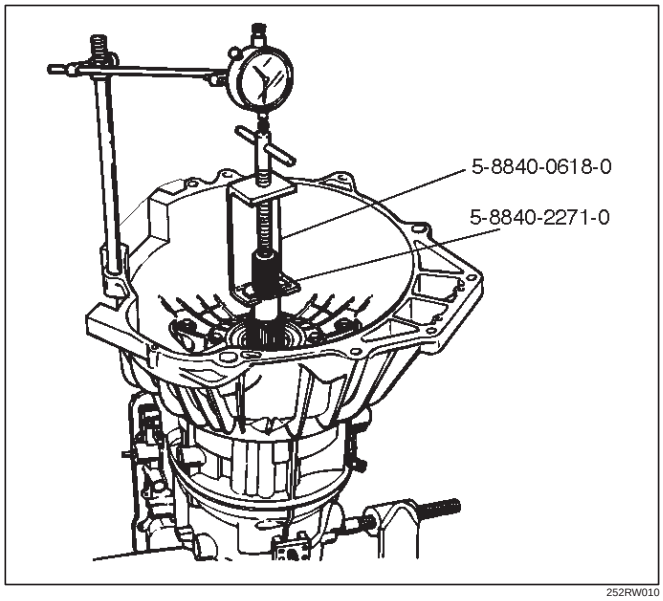

39. Inspect extension housing oil seal and replace if necessary, using 5–8840–2282–0 (J–36797) extension housing oil seal installer.
    - Rotate transmission to horizontal position, with valve body side down.
    - Inspect parking wheel seal ring. Replace if necessary.
    - Install wheel parking lock assembly (35).
40. Install speed wheel (36) and snap ring (37).

NOTE: Use extra long, needle-nose pliers.

41. Install gasket onto extension assembly with a thin coating of oil.
    - Install extension housing assembly (38), and align parking pawl shaft.
    - Install actuator assembly into extension assembly.
    - Install seven 8 mm hexagon socket head screws.

Torque: 32 N•m (3.3 kg·m/24 lb ft)

42. Inspect speed sensor O–ring. Replace if necessary.
    - Install speed sensor assembly (39) and 10 mm screw.

Torque: 9 N•m (0.9 kg·m/78 lb in)

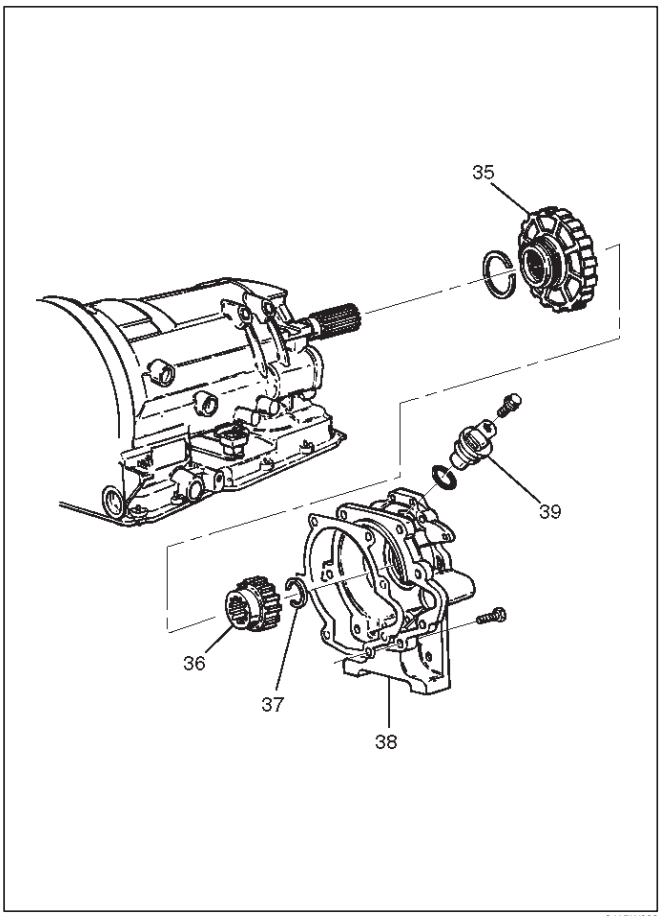

241RW009

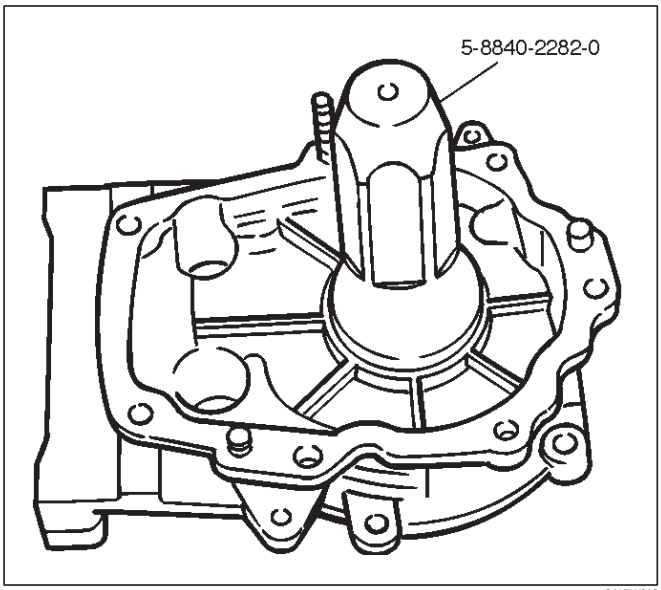

241RW019

43. Main case end play measurement.
    1. Attach axial play checking tool on the extension housing and set indicator to zero on output shaft.
    2. Manually push output shaft upwards.

    End play: 0.36mm – 0.80mm (0.014 in – 0.031in)

    3. Remove axial play checking tool.
    4. If end play is not correct, repeat selective washer selection.

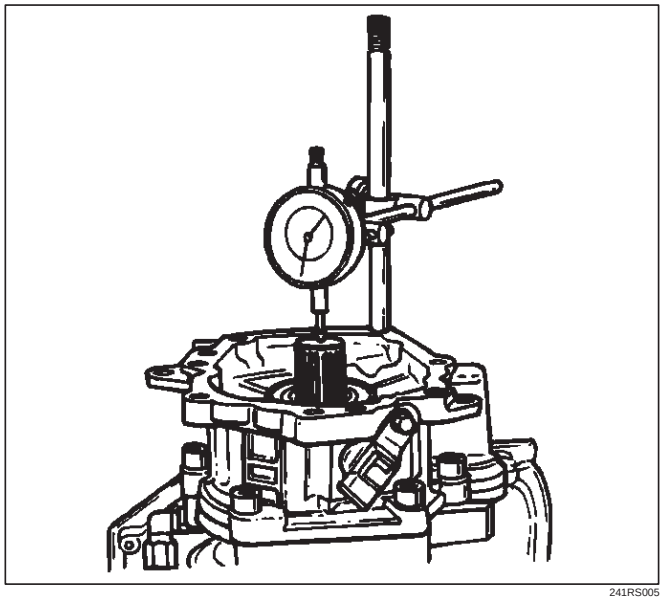

241RS005

44. Inspect servo piston seal ring. Replace if necessary.
    - Ensure brake band is correctly positioned. Rotate output shaft if necessary.
    - Install 5–8840–2274–0 (J–38428) servo piston fitter in servo bore.
    - Install apply rod (40), round end toward band, return spring (41) and piston assembly (42).
45. Install the 5–8840–0501–0 (J–23075) servo spring compressor with offset to rear of case.
    - Compress servo piston seal ring, using fitter while tightening the tool screw.
    - Install servo piston retaining ring (43).
    - Remove tool.
    - Adjust the brake band by tightening the servo adjusting screw to 4.5 N·m torque. Be certain the lock nut is loose, then back–off the screw five turns exactly. Hold piston sleeve with wrench and tighten lock nut to 18.5 N·m torque. Be certain the adjusting screw does not turn.

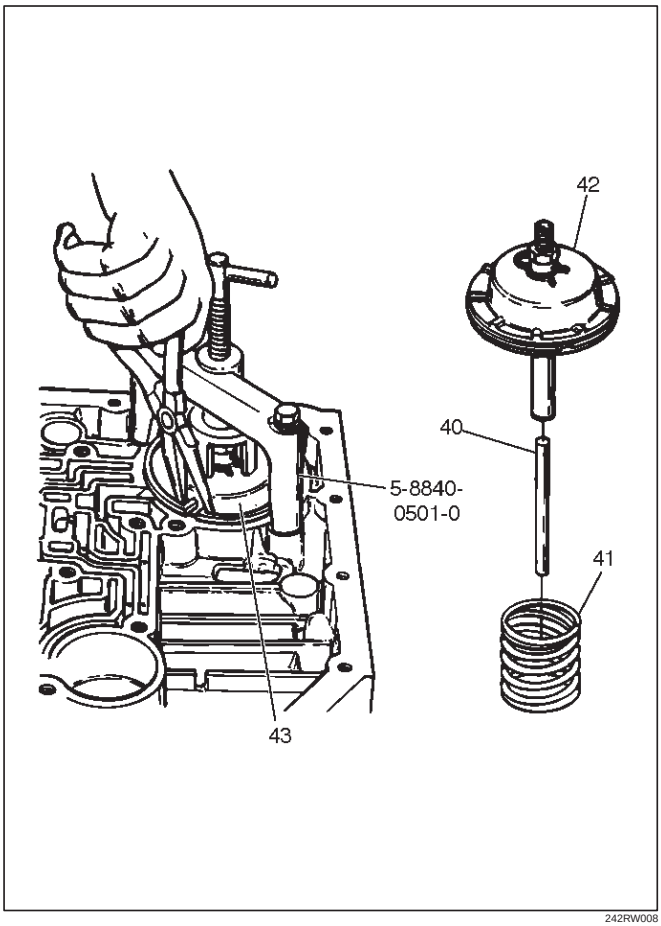

242RW008

46. Install two check balls (44).

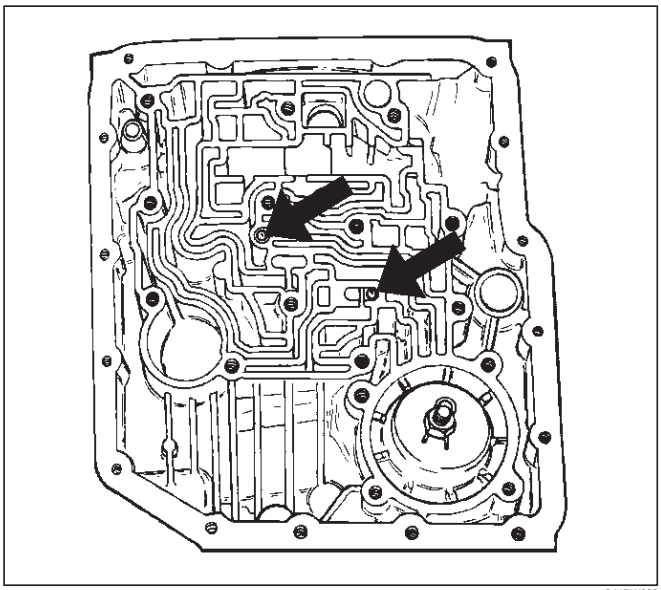

244RW002

47. Inspect main case electrical connector and seal, replace if necessary.
    - Install electrical 4 pin connector/main case and wiring harness.
48. Install two 5–8840–0022–0 (J–25025–B) guide pins into main case.
    - Install main case valve body complete assembly (45) and manual valve link.

NOTE: Valve must be extended as the short end of manual valve link is connected to the range selector lever. Long end of link goes into valve.

- Install seven 13 mm screws.

Torque: 20 N•m (2.0 kg·m/15 lb ft)

- Pass ground wire of adapter case wiring harness assembly through the hole joining adapter fluid area and main case fluid area.
- Assemble 8.5 mm connector of ground wire under the head of this valve body bolt and reinstall it.
- Remove two guide pins.

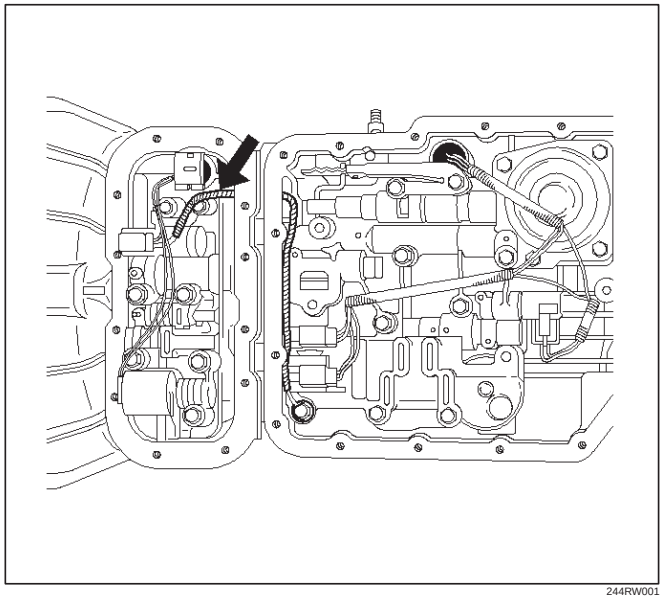

244RW001

49. Install servo cover gasket, cover (46) and four 13 mm screws.

    Torque: 25 N•m (2.6 kg·m/18 lb ft)
50. Connect wiring harness (47) to band control, shift solenoids, and main case 4 pin connector.
51. Install manual detent roller and spring assembly (48) with clip.
    - Install two 13 mm screws.

    Torque: 20 N•m (2.0 kg·m/15 lb ft)
52. Install oil filter (49), and three 13 mm screws.

    Torque: 20 N•m (2.0 kg·m/15 lb ft)
53. Install oil pan gasket, magnet, main oil pan (50), and sixteen 10 mm screws.

    Torque: 11 N•m (1.1 kg·m/96 lb in)
54. Inspect adapter case electrical connector and seal. Replace if necessary.
    - Install electrical five pin connector and harness assembly (52) in bottom of adapter case.
55. Install gasket, transfer plate, and gasket.
    - Install adapter case valve body (51) and seven 13 mm screws.

    Torque: 20 N•m (2.0 kg·m/15 lb ft)

56. Connect wiring harness harness assembly (52) to converter clutch solenoid, force motor, and 5 pin connector.
57. Install oil pan gasket, adapter case oil pan (53), and twelve 10 mm screws.

    Torque: 11 N•m (1.1 kg·m/96 lb in)

    - Rotate transmission, with bottom pan facing down.
58. Install mode switch (54), two 10 mm screws, selector lever nut, and cover.

    10 mm screw

    Torque: 13 N•m (1.3 kg·m/113 lb in)

    Nut

    Torque: 23 N•m (2.3 kg·m/17 lb ft)

    - Adjust using setting tool, refer to Mode Switch in this section.
59. Install O–ring (55) on turbine shaft.
60. Install torque converter (56)

    The converter assembly must be replaced under any of the following conditions:

    a. Evidence of damage to the pump assembly.
    b. Metal particles are found after flushing the cooler lines.
    c. External leaks in hub weld area.
    d. Converter pilot broken, damaged, or poor fit into crankshaft.
    e. Converter hub scored or damaged.
    f. Internal failure in stator.
    g. Contamination from engine coolant.
    h. Excess end play.

    - Rotate transmission, bell housing up. Spin converter to insure proper fit.
61. Fill transmission through the overfill screw hole of oil pan, using ATF DEXRON®–III. Refer to Changing Transmission Fluid in this section.

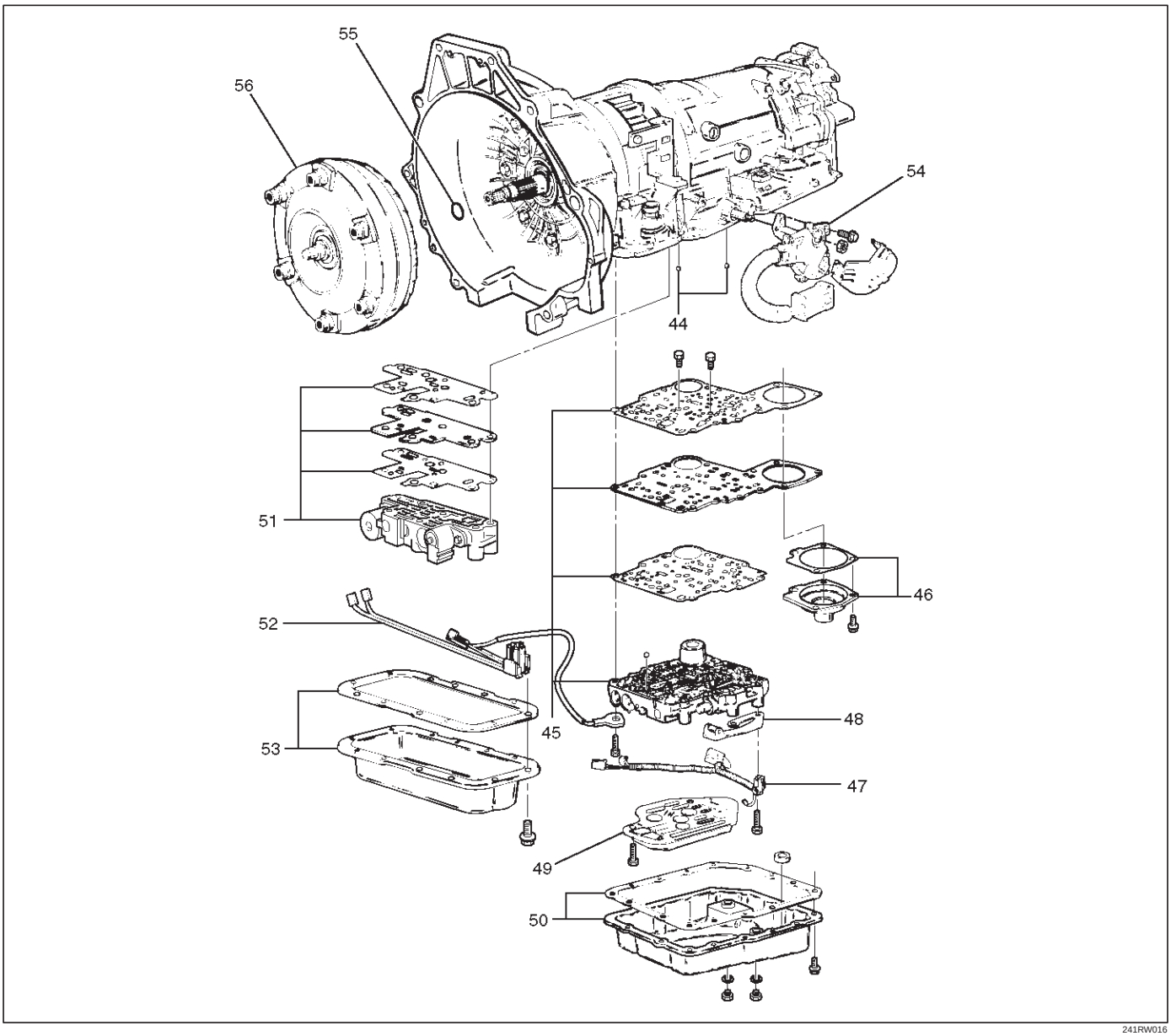

241RW016

Converter Housing And Oil Pump Assembly

Disassembled View

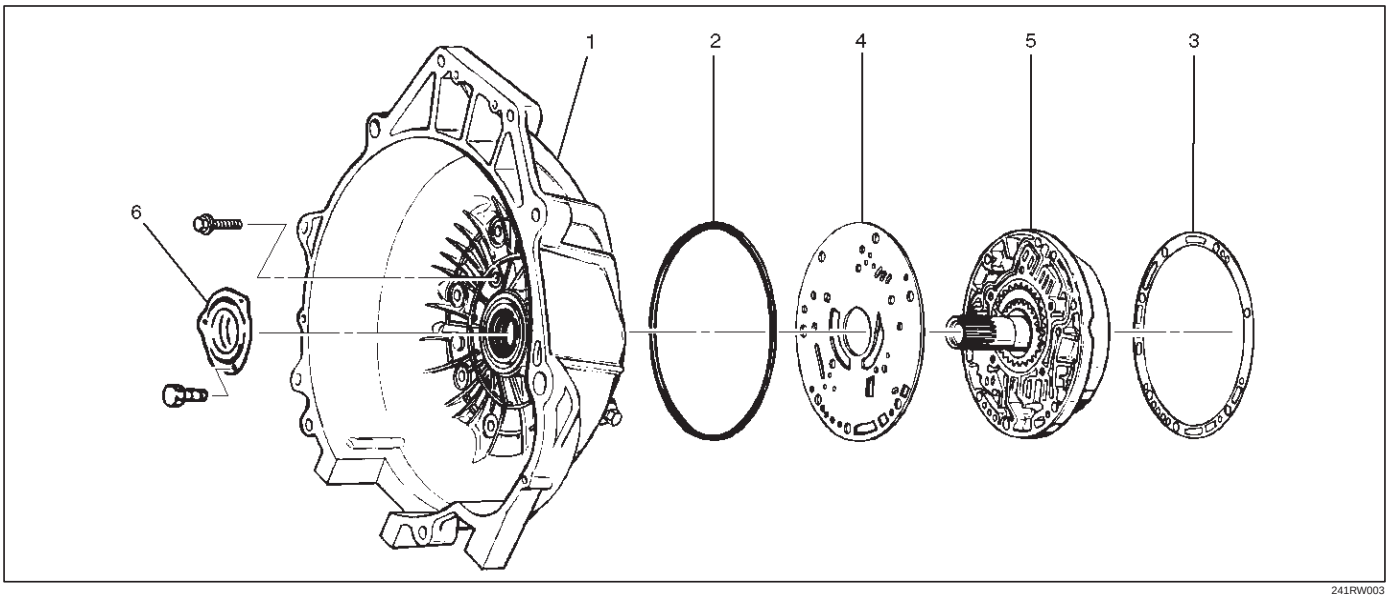

241RW003

Legend

(1) Converter Housing
(2) Outer Seal Ring
(3) Gasket
(4) Wear Plate
(5) Oil Pump Assembly
(6) Oil Seal Ring

Disassembly

1. Remove oil pump assembly from converter housing.
2. Remove outer seal ring.
3. Remove gasket.
4. Remove wear plate.
5. Remove oil seal ring.

Inspection And Repair

Visual Check:

If any damage, deformation, or local wear is found in a converter housing, outer seal ring, wear plate, or oil seal ring, replace it.

Reassembly

1. Install wear plate onto oil pump assembly.
2. Install converter housing onto complete oil pump assembly. Align with two short 5–8840–2268–0 (J–38588) guide pins on outer bolt holes.
   - Loosely install five 13mm bolts.
   - Center converter housing using 5–8840–2272–0 (J–38557) centering tool.
   - Tighten five inner 13mm bolts in an alternating pattern.

   Torque: 20 N•m (2.0 kg·m/15 lb ft)

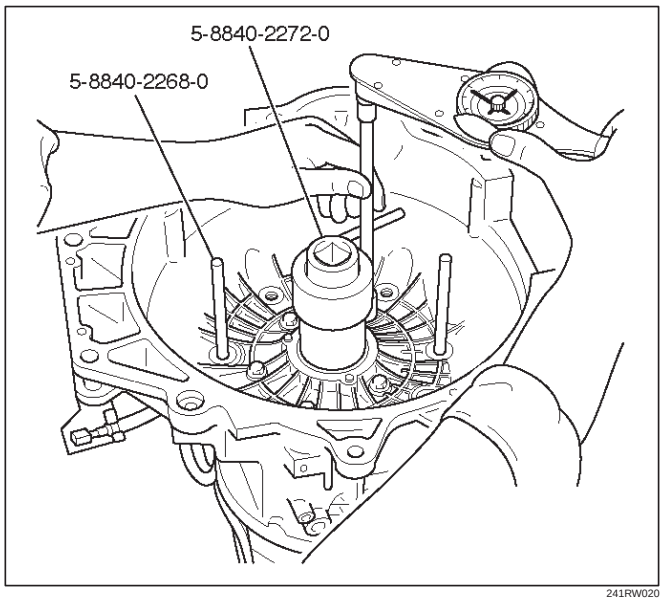

241RW020

3. Install oil seal ring (3 screws).

   Torque: 3 N•m (0.3 kg·m/26 lb in)
4. Install gasket.
5. Install outer seal ring.

Oil Pump

Disassembled View

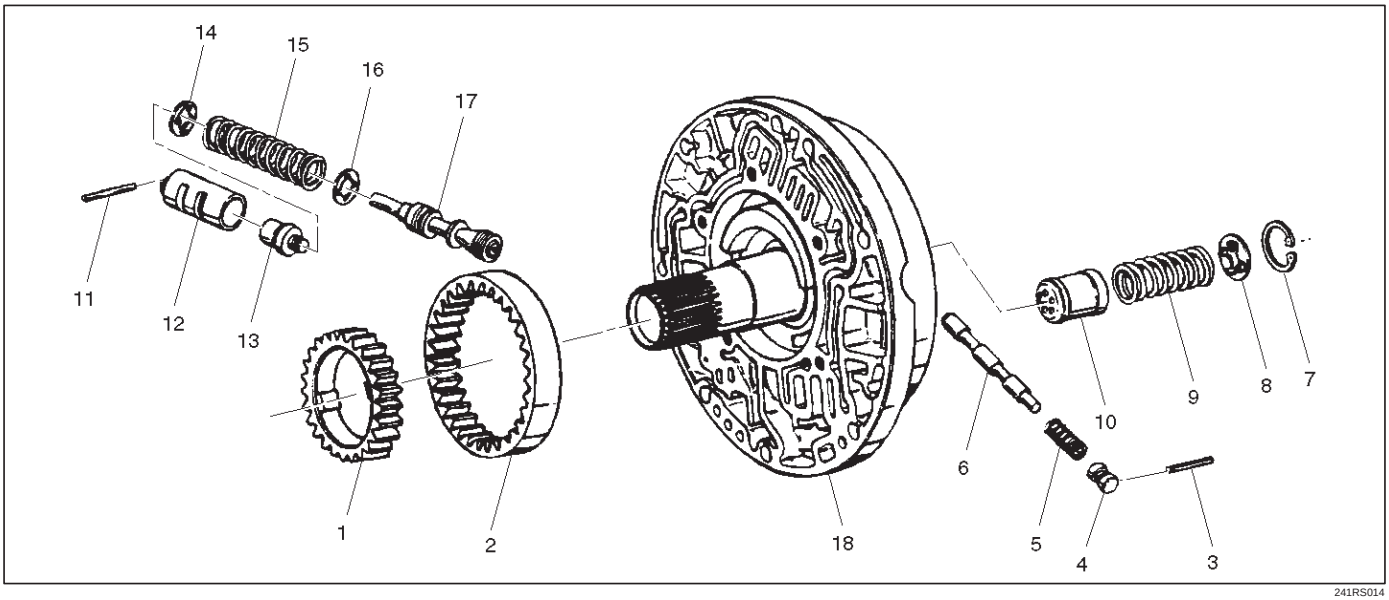

241RS014

Legend

(1) Oil Pump Drive Gear
(2) Oil Pump Driven Gear
(3) Pin
(4) Plug
(5) Spring
(6) Converter Clutch Control Valve
(7) Snap Ring
(8) Spring Seat
(9) Spring
(10) Throttle Signal Accumulator Piston
(11) Sleeve Pin
(12) Sleeve
(13) Boost Valve
(14) Spring Seat
(15) Valve Spring
(16) Spring Seat
(17) Pressure Regulator valve
(18) Oil Pump Assembly

Disassembly

1. Remove oil pump drive gear (1) and driven gear (2).
2. Remove pin (3) from oil pump assembly (18).
3. Remove plug (4), spring (5), and converter clutch control valve (6).
4. Remove snap ring (7) from oil pump assembly (18).
5. Remove spring seat (8), spring (9), and throttle signal accumulator piston (10).
6. Remove sleeve pin (11) from oil pump assembly (18).
7. Remove sleeve (12), boost valve (13), spring seat (14), valve spring (15), spring seat (16), and pressure regulator valve (17).

Inspection And Repair

Visual Check:

If any damage, deformation or wear is found, replace the damaged part.

Reassembly

1. Lubricate and preinstall pressure regulator spring seat (16) on valve (17), with the flat side against shoulder.
2. Install pressure regulator valve (17) and spring seat (16) assembly, valve spring (15), and spring seat (14) with the flat side away from spring to oil pump assembly (18).
3. Assemble boost valve (13) into sleeve (12).
4. Install boost valve and sleeve assembly, and sleeve pin (11) to oil pump assembly (18).
5. Install throttle signal accumulator piston (10), spring (9), and spring seat (8), with the flat side away from the spring, and snap ring (7) to oil pump assembly (18).
6. Install converter clutch control valve (6), spring (5), plug (4), and pin (3) to oil pump assembly (18).
7. Install oil pump driven gear (2) and drive gear (1).

Main Case Valve Body

Disassembled View

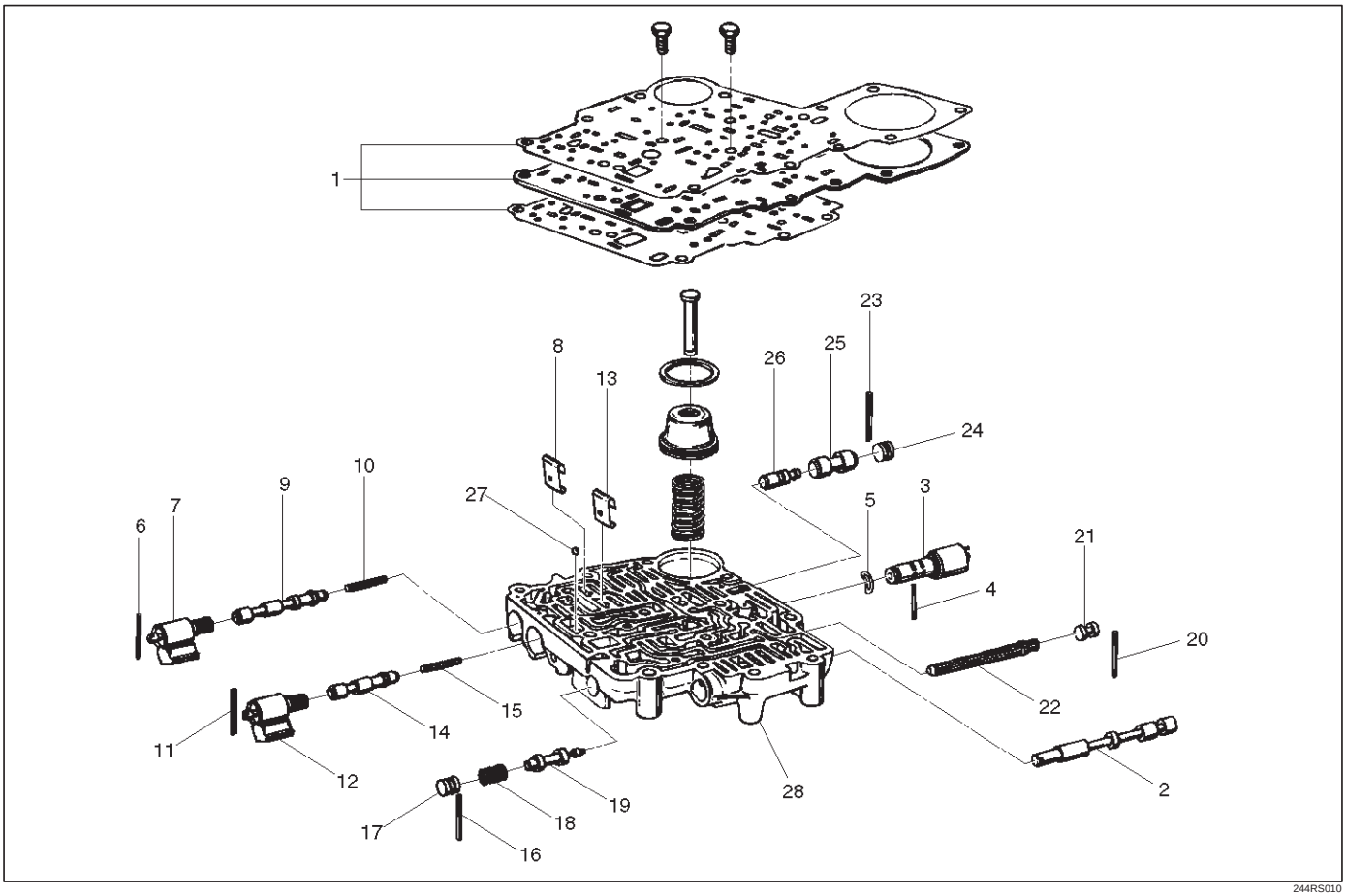

244RS010

Legend

(1) Gaskets and Transfer Plate
(2) Manual Valve
(3) Band Control Solenoid
(4) Pin
(5) Waved Washer
(6) Spring Pin
(7) Solenoid A
(8) Retainer
(9) 1–2/3–4 Shift Valve
(10) Spring
(11) Spring Pin
(12) Solenoid B
(13) Retainer
(14) 2–3 Shift Valve
(15) Spring
(16) Spring Pin
(17) Plug
(18) Spring
(19) Low Pressure Control Valve
(20) Spring Pin
(21) Plug
(22) Band Control Screen Assembly
(23) Spring Pin
(24) Plug
(25) 1–2 Accumulator Valve
(26) 1–2 Accumulator Control Valve
(27) Check Ball
(28) Main Case Valve Body

Disassembly

1. Remove two 11mm bolts from valve body (28), then remove gaskets and transfer plate (1).
2. Remove manual valve (2).
3. Push in band control solenoid (3) to compress waved washer (5), and remove pin (4).
4. Remove band control solenoid (3) and waved washer (5).
5. Remove spring pin (6) with a 3 mm dia punch.
6. Remove solenoid A (7) by grasping the metal tip. Do not grasp the connector housing.
7. Remove retainer (8), 1–2/3–4 shift valve (9), and spring (10).
8. Remove spring pin (11) with a 3 mm dia punch.
9. Remove solenoid B (12) by grasping the metal tip. Do not grasp the connector housing.

10. Remove retainer (13), 2–3 shift valve (14), and spring (15).
11. Remove spring pin (16), plug (17), spring (18), and low pressure control valve (19).
12. Remove spring pin (20), plug (21), and band control screen assembly (22).
13. Remove spring pin (23), plug (24), 1–2 accumulator valve (25), and 1–2 accumulator control valve (26).
14. Remove check ball (27) from valve body (28).

Inspection And Repair

Inspect for the following, and replace any damaged or worn parts:

1. Damage or wear to each valve.
2. Damage in oil passeges.
3. Cracks or damage to valve body.
4. Valve operations.
5. Spring fatigue.

Reassembly

1. Install 1–2 accumulator control valve (26), 1–2 accumulator valve (25), plug (24), and spring pin (23).
2. Install band control screen assembly (22), plug (21), and spring pin (20).
3. Install low pressure control valve (19), spring (18), plug (17), and spring pin (16).
4. Install spring (15), 2–3 shift valve (14), retainer (13), solenoid B (12), and spring pin (11).
5. Install spring (10), 1–2/3–4 shift valve (9), retainer (8), solenoid A (7), and spring pin (6).
6. Install waved washer (5), band control solenoid (3), and pin (4).
7. Install manual valve (2).
8. Install check ball (27) to valve body (28).
9. Install gasket (valve body/transfer plate) and transfer plate using two 5–8840–2270–0 (J–3387–2) guide pins.
   - Install two 11mm bolts.

   Torque: 13 N•m (1.3 kg·m/113 lb in)

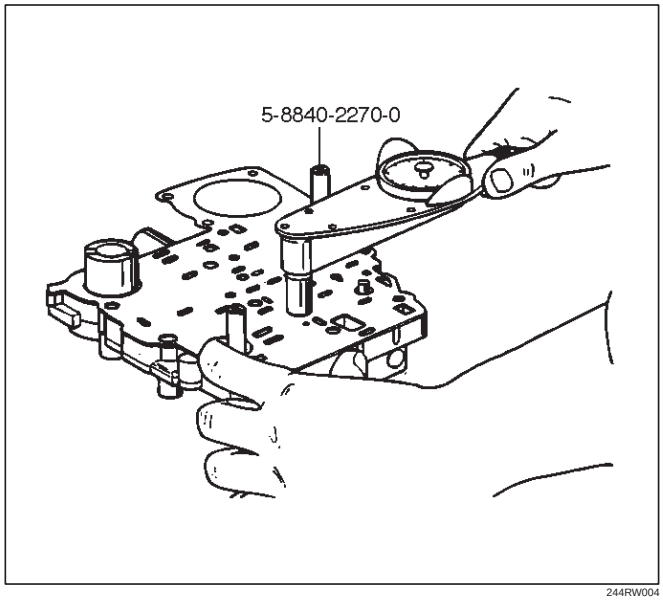

244RW004

   - Install gasket (transfer plate/main case).

Adapter Case Valve Body

Disassembled View

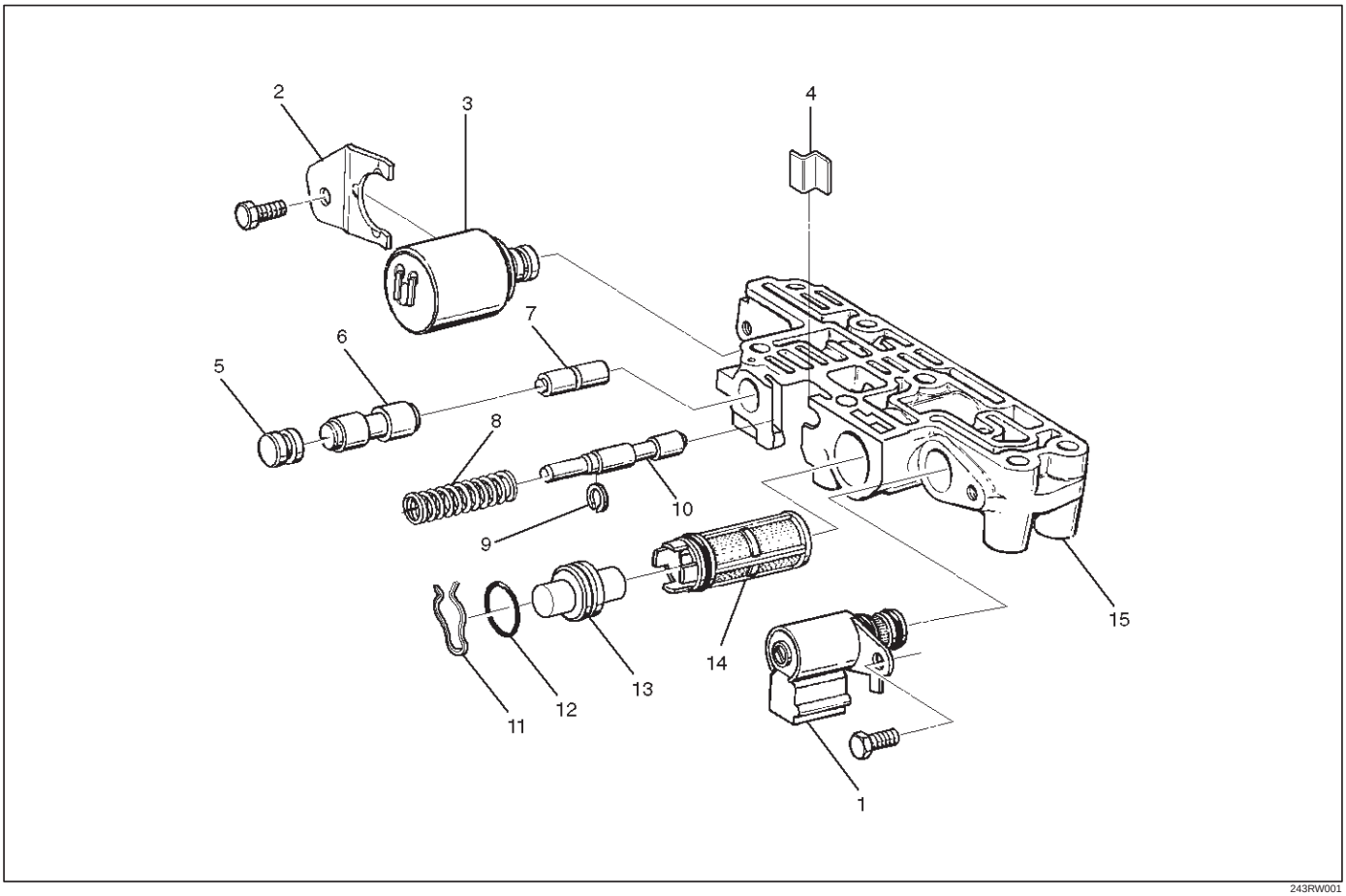

243RW001

Legend

(1) Converter Clutch Solenoid Assembly
(2) Retainer
(3) Force Motor Solenoid
(4) Retainer
(5) Plug
(6) 3/4 Accumulator Valve
(7) 3/4 Accumulator Control Valve
(8) Spring
(9) Retaining Ring
(10) Feed Limit Valve
(11) Plug Retainer
(12) O–Ring
(13) Plug
(14) Force Motor Screen Assembly
(15) Adapter Case Valve Body

Disassembly

1. Remove 11mm bolt from valve body.
   - Remove converter control solenoid assembly (1).
2. Remove 11mm bolt and retainer (2) from valve body.
   - Remove force motor solenoid (3).
3. Remove retainer (4), plug (5), 3/4 accumulator valve (6), and 3/4 accumulator control valve (7).
4. Remove spring (8), retaining ring (9), and feed limit valve (10).
5. Remove plug retainer (11), O–ring (12), plug (13), and force motor screen assembly (14).
   - Use 5 mm bolt to pull plug.

Inspection And Repair

Inspect for the following, and replace any damaged or worn parts:

1. Damage or wear to each valve.
2. Damage in oil passeges.
3. Cracks or damage to valve body.
4. Valve operations.
5. Spring fatigue.

Reassembly

1. Install force motor screen assembly (14), plug (13), O–ring (12), and plug retainer (11).
2. Install feed limit valve (10), retaining ring (9), and spring (8).

3. Install 3/4 accumulator control valve (7), 3/4 accumulator valve (6), plug (5), and retainer (4).
4. Install force motor solenoid (3).
   - Place solenoid terminals pointing towards mating face.
   - Install retainer (2) and bolt.

   Torque: 10 N•m (1.0 kg·m/87 lb in)
5. Install converter clutch solenoid assembly with two O–rings (1) to valve body.
   - Install bolt.

   Torque: 10 N•m (1.0 kg·m/87 lb in)

Third Clutch And Sprag Unit

Disassembled View

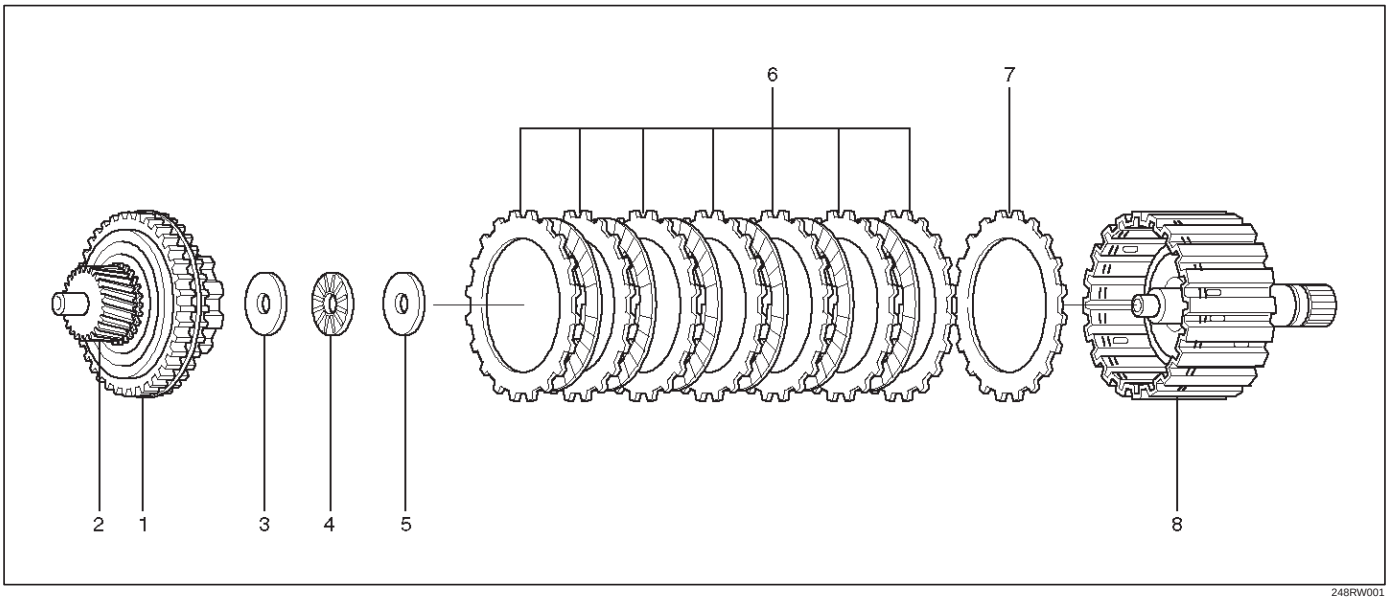

248RW001

Legend

(1) Retaining Ring
(2) Input Sun Gear and Sprag Unit Assembly
(3) Retaining Washer
(4) Bearing
(5) Thrust Washer
(6) Clutch Plates
(7) Third Clutch Spring Cushion Plate
(8) Third Clutch Drum Assembly

Disassembly

1. Place the third clutch drum and intermediate shaft assembly upright, using the overdrive internal gear as a support.
2. Locate the ends of the retaining ring. Depress one end of the ring using a small screwdriver instead of the depressor handle provided with the tool 5-8840-2258-0 (J-38450-A). Slide one blade down between the third clutch drum and the retaining ring.
3. Remove a screwdriver and repeat this step for the other end of retaining ring.
4. Install the remaining four blades approximately (five) notches apart using a screwdriver to depress the retaining ring.
5. Pull up on input sun gear and sprag unit assembly (1 and 2) to release the retaining ring from third clutch drum assembly (8).
6. Remove the tool blades.

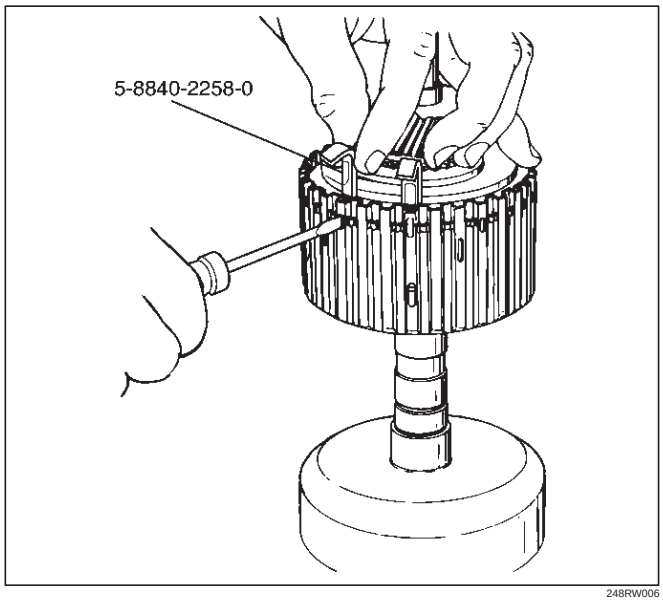

248RW006

7. Remove retaining washer (3), bearing (4), thrust washer (5), and clutch plates (6 and 7) form the third clutch drum assembly (8).

Inspection And Repair

Visual Check:

If any damage, deformation or wear is found, replace the damaged part.

Reassembly

1. Place third clutch drum and intermediate shaft assembly upright, using the overdrive internal gear as a support.
2. Install third clutch spring cushion plate (7), bevel face down.
3. Install third clutch plates (6) into third clutch drum assembly (8). Start with the steel clutch plate and alternate with lined plates.
4. Install thrust washer (5), bearing (4), and retaining washer (3).
5. Fully engage the hub splines of the input sun gear and sprag unit assembly (2) into the third clutch inner tangs.
   - Simultaneously rotate the outer sprag race to engage into the third clutch drum assembly (8).
6. Place 5-8840-2258-0 (J-38450-A) blades between the retaining ring and the third clutch drum approximately (five) notches apart, and one blade at each end of the retaining ring (1). Push down on sprag assembly until the assembly is seated into the third clutch drum assembly (8).
7. Remove the tool blades and engage retaining ring into groove of third clutch drum.

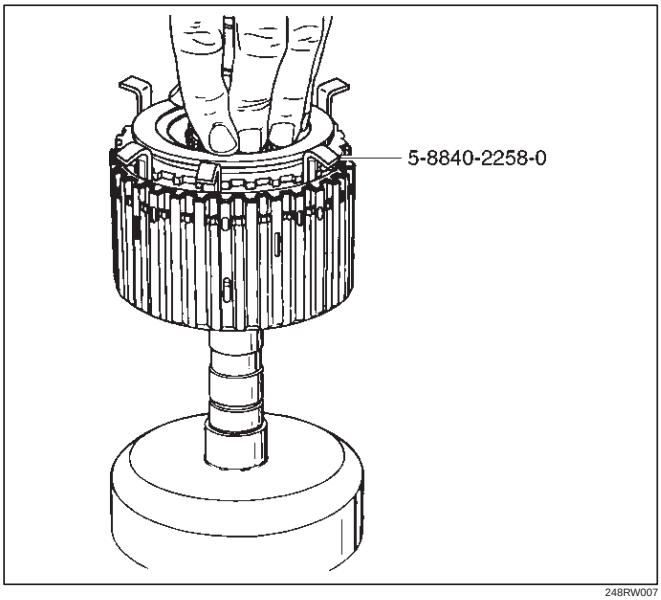

248RW007

Third Clutch

Disassembled View

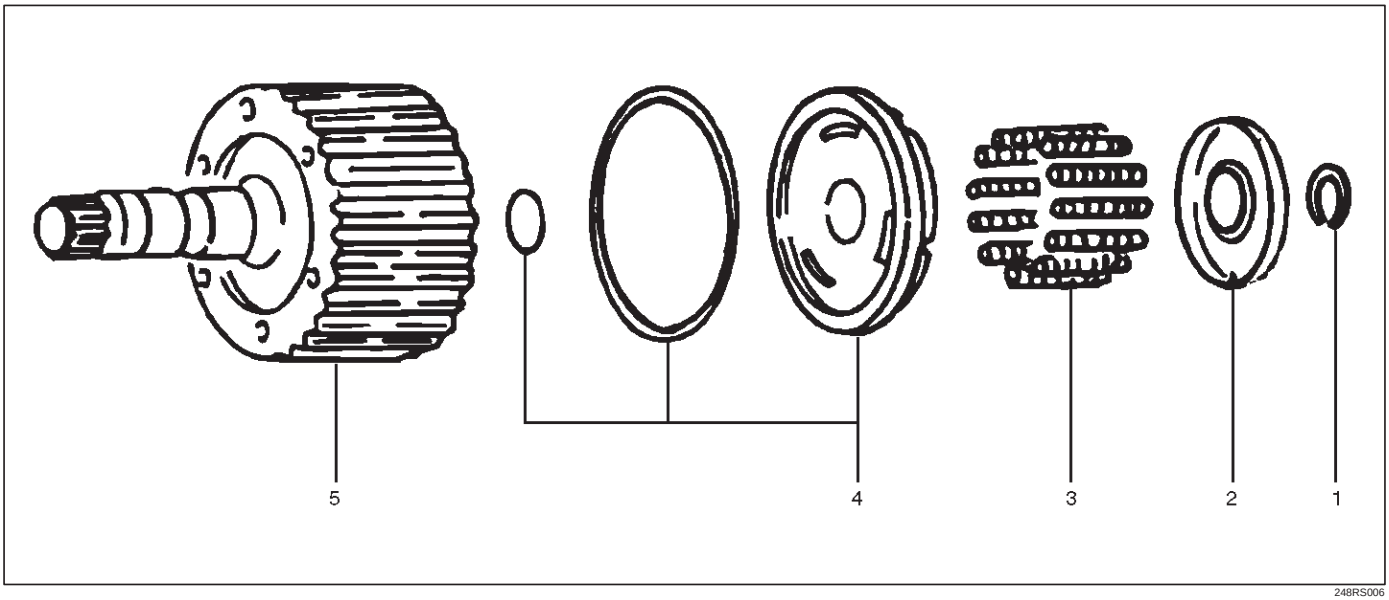

248RS006

Legend

(1) Retaining Ring
(2) Spring Seat
(3) Springs
(4) Piston Assembly
(5) Third Clutch Drum

Disassemble

1. Compress spring seat using the 5–8840–0501–0 (J–23075) spring compressor and 5–8840–2259–0 (J–23075–12) adapter tool.

NOTE: Do not over–stress the springs and seat. This will cause damage to the spring seat.

- Remove the tool.
- Remove retaining ring (1).

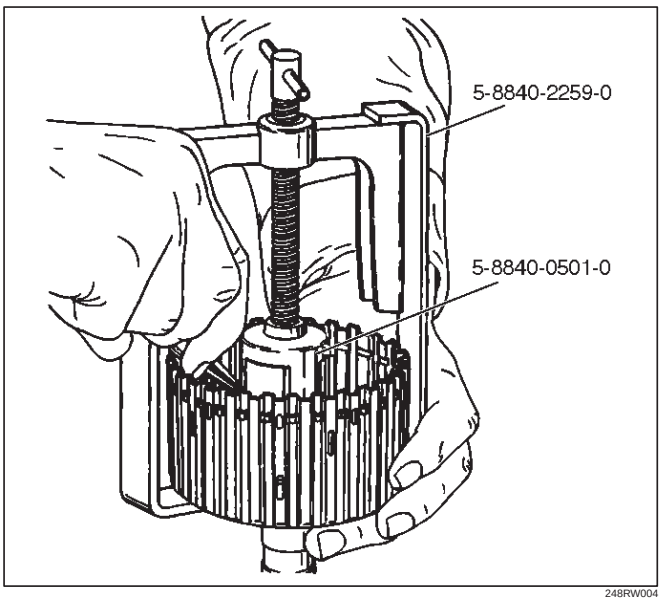

248RW004

2. Release the spring seat (2).

NOTE: Do not let the spring seat catch in the ring groove.

- Remove spring seat (2) and springs (3).

3. Remove piston assembly (4) from third clutch drum (5).

Inspection And Repair

Visual check:

If any damage, deformation or wear is found, replace the damaged part.

Operation check:

Shake the piston and listen for check ball movement indicates proper check ball operation. Replace the piston if the check ball is missing or falls out.

Reassembly

1. The lip of the piston seal must point toward the front of the transmission. Lubricate the seal lip with transmission fluid.
   - Install piston assembly (4) into the third clutch drum (5). Use the 5–8840–2260–0 (J–23084) third clutch piston installer to protect the outer seal during installation.

- Remove the seal installer.

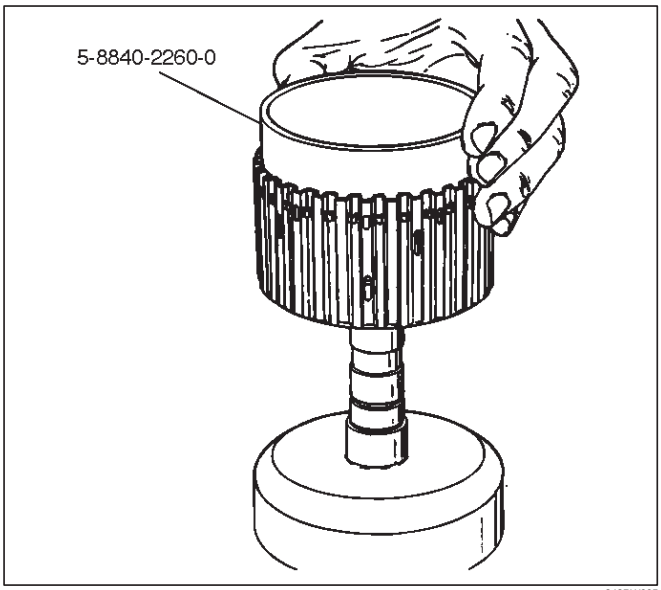

248RW005

2. Install twelve springs (3) and spring seat (2).
3. Place retaining ring (1) onto spring seat.
   - Compress the piston springs, using the 5–8840–0501–0 (J–23075) piston spring compressor and 5–8840–2259–0 (J–23075–12) adapter.

CAUTION: Do not over stress the springs and seat. Do not let the spring seat catch in the ring groove. This may cause damage to the spring seat.

- Install spring seat retaining ring (1).
- Remove the piston spring compressor and adapter.

Sprag Unit

Disassembled View

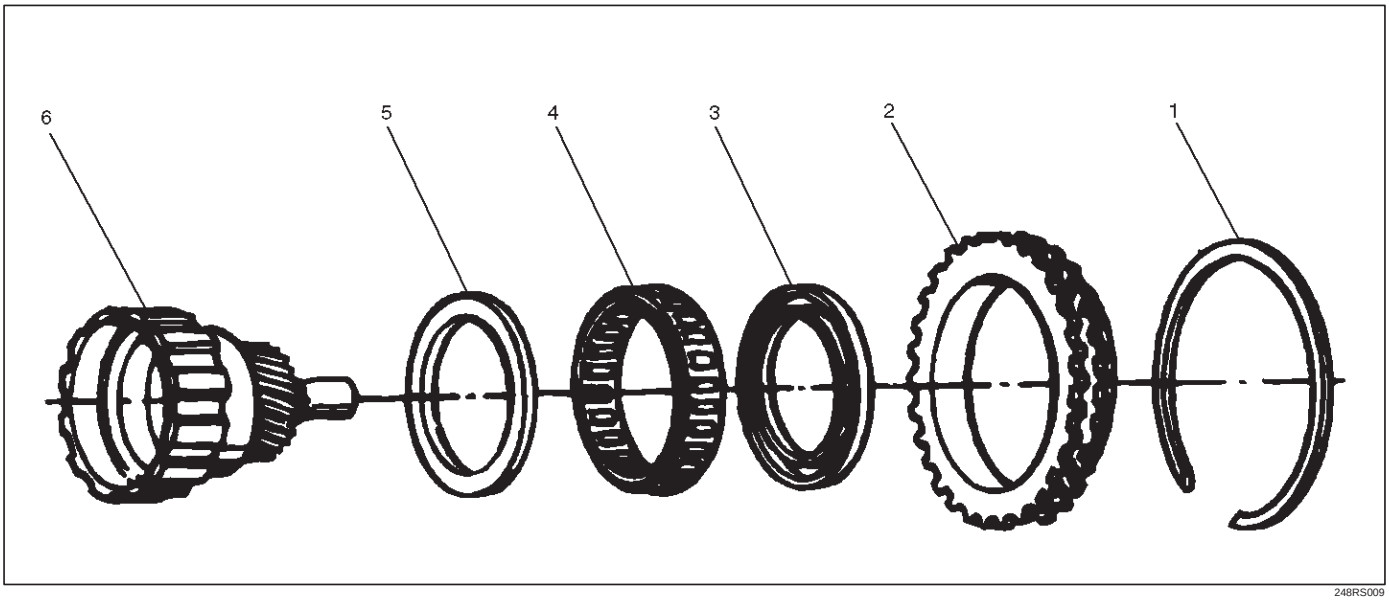

248RS009

Legend

(1) Retaining Ring
(2) Sprag Outer Race
(3) Ring
(4) Sprag Assembly
(5) Ring
(6) Third Clutch Hub and Sun Gear Assembly

Disassembly

1. Remove the sprag outer race, retaining ring, and sprag assembly from the third clutch hub and sun gear assembly.
2. Remove the rings and sprag assembly from the sprag outer race.

Inspection And Repair

Visual Check:

If any damage, deformation or wear is found, replace the damaged part.

Reassembly

NOTE: Flared shoulder of the sprag cage faces the sun gear. This procedure must be followed exactly to be sure that the sprag assembly is installed properly.

1. Install rings and sprag assembly onto the third clutch hub and sun gear.
2. Install sprag outer race and retaining ring assembly over the sprag cage assembly.
   - Place third clutch hub and sun gear assembly on a flat surface, sun gear facing up. Place sprag outer race and sprag assembly over the sun gear assembly, push down and turn the input sun counterclockwise at the same time.

NOTE: Check correct rotation by holding the sun gear in your left hand and turning the outer race. The outer sprag race should turn freely towards you and should lock turning away from you.

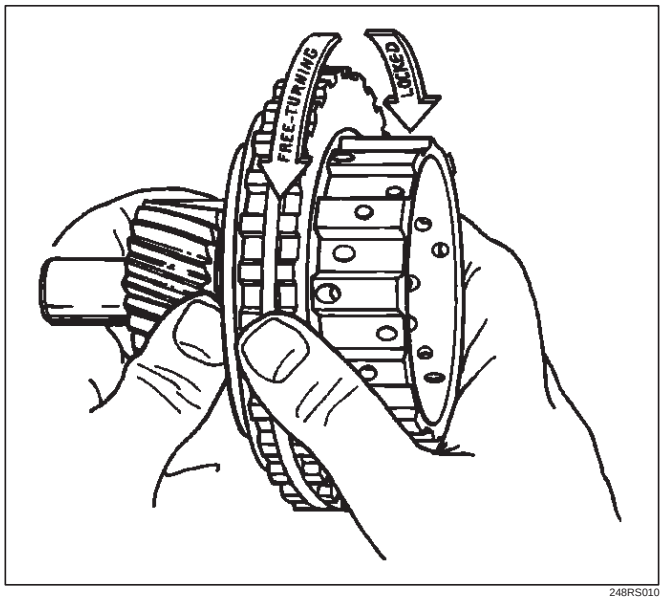

248RS010

Second Clutch

Disassembled View

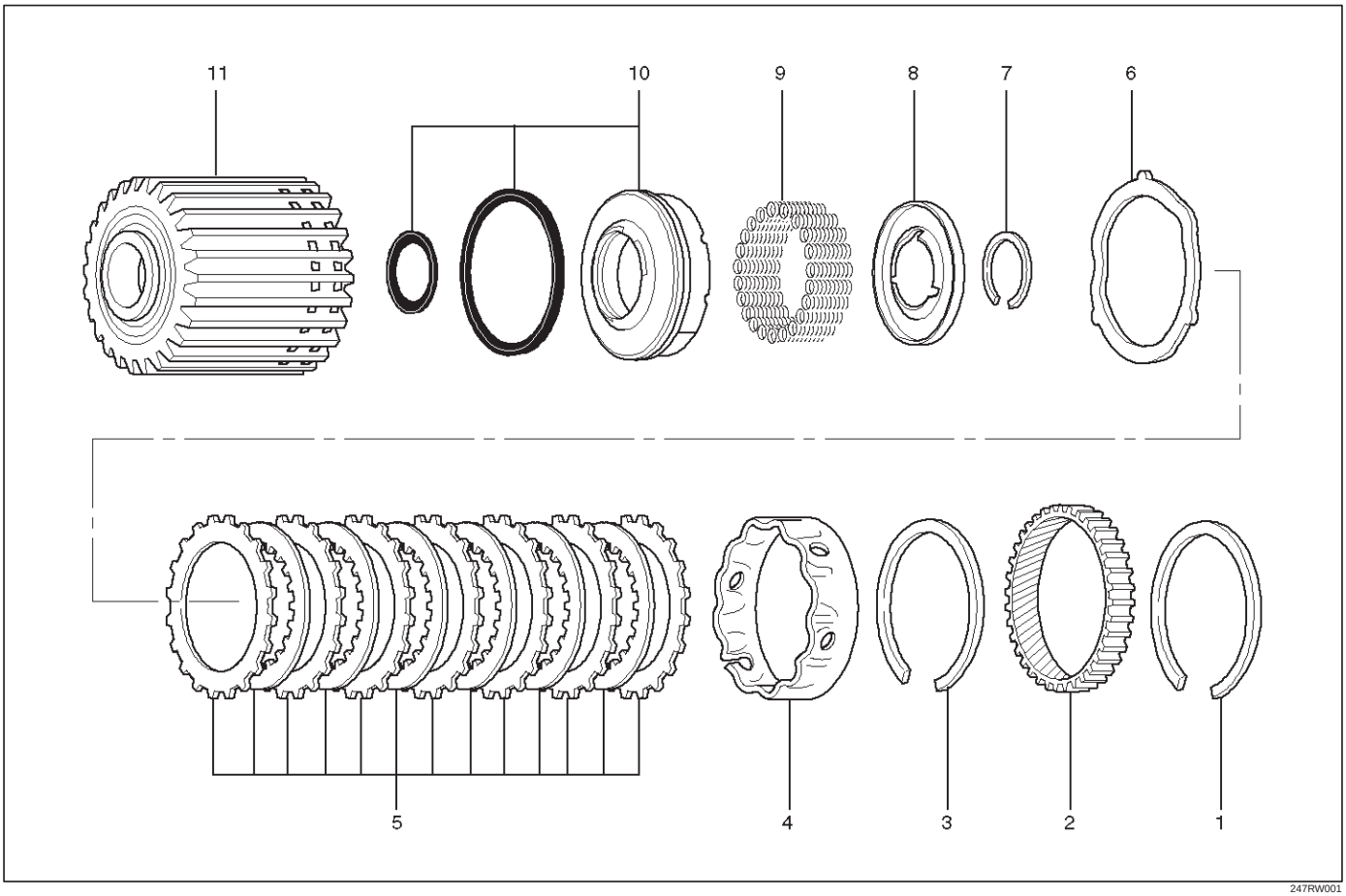

247RW001

Legend

(1) Retaining Ring
(2) Ring Gear
(3) Retaining Ring
(4) Spacer
(5) Clutch Plates
(6) Waved Washer
(7) Retaining Ring
(8) Spring Seat
(9) Springs
(10) Piston Assembly
(11) Second Clutch Drum

Disassembly

1. Remove retaining ring (1) from second clutch drum (11).
2. Remove ring gear (2), retaining ring (3), and spacer (4).
3. Remove clutch plates (5) and waved washer (6).
4. Remove retaining ring (7) using 5–8840–0195–0 (J–23327) compressor to compress the spring seat (8).
5. Remove spring seat (8), springs (9) and piston assembly (10) from second clutch drum (11).

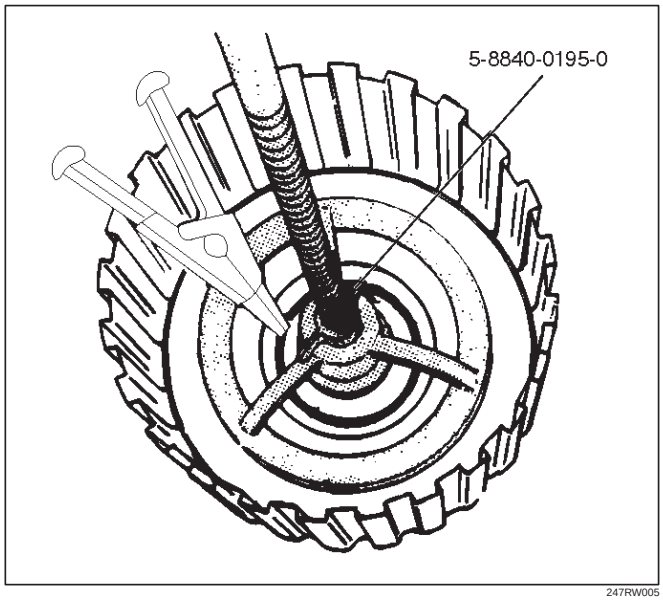

247RW005

Inspection And Repair

Visual Check:

If any damage, deformation or wear is found, replace the damaged part.

Operation Check:

Shake the piston and listen for check ball movement. Movement indicates proper check ball operation. Replace the piston if the check ball is missing or falls out.

Reassembly

1. Install piston assembly (10) into the second clutch drum (11).
   - Lubricate the lip seal with transmission fluid. Use the 5–8840–2261–0 (J–23080–A) second clutch piston installer to protect the outer piston lip seal.

NOTE: Lip of the seal should point toward front of transmission.

- Remove the installer.

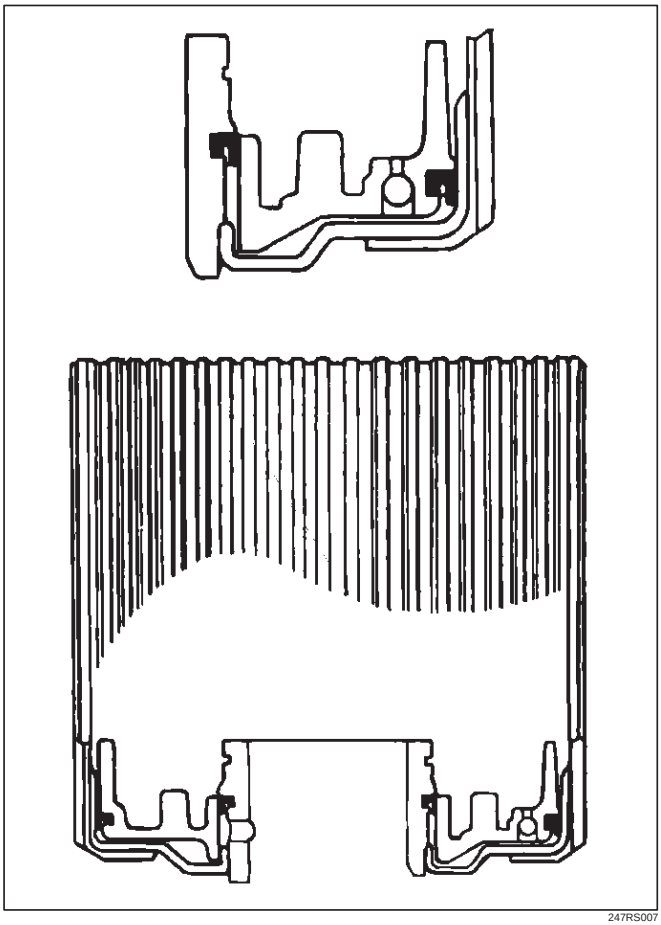

247RS007

2. Install twenty–two piston springs (9) and spring seat (8) on the second clutch piston (10). Place retaining ring (7) onto spring seat.
   - Use the 5–8840–0195–0 (J–23327) compressor to compress the piston springs.

NOTE: Do not let spring seat catch in ring groove.

- Remove the compressor.

3. Install waved plate (6) and clutch plates (5). Start with a steel plate and alternate with lined plates.
   - Align second clutch inner tangs.
4. Install spacer (4), with the fluted end toward clutch plates.
5. Install retaining ring (3), ring gear (2) and retaining ring (1).

3–4 Accumulator Piston

Disassembled View

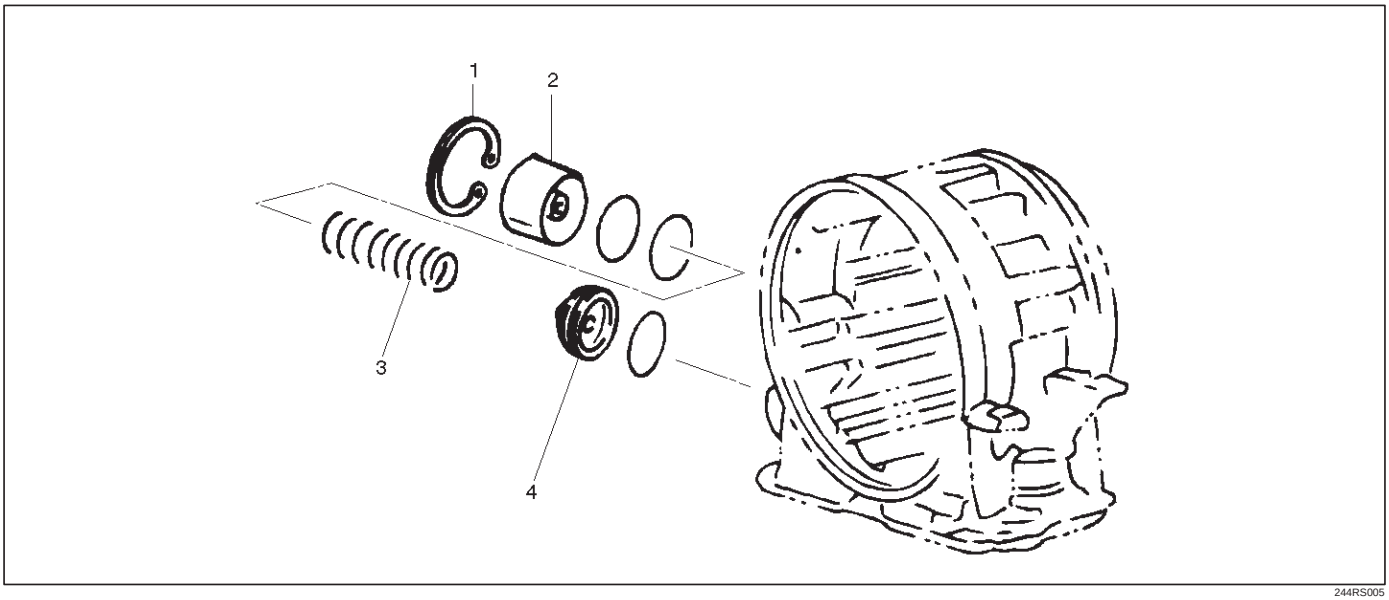

244RS005

Legend

(1) Snap Ring
(2) Cover
(3) Spring
(4) Piston Assembly

Disassembly

1. Install the 5–8840–2277–1 (J–38559–A) cover compressor on adapter case.
   - Compress piston cover then remove snap ring.

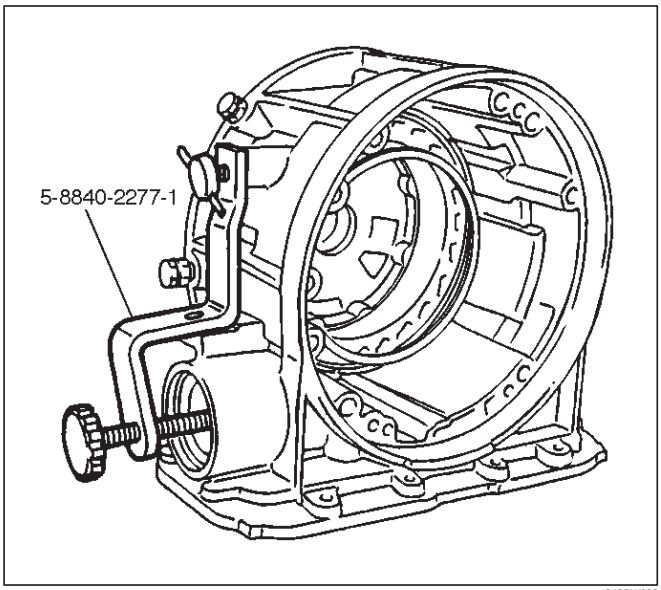

242RW009

2. Install the 5–8840–2403–0 (J–41096) cover remover and 5–8840–2266–0 (J–38584) adapter to center hole of cover.
   - Use the 5–8840–0019–0 and 5–8840–2000–0 (J–23907) slide hammer to remove cover.
3. Remove spring and piston assembly.

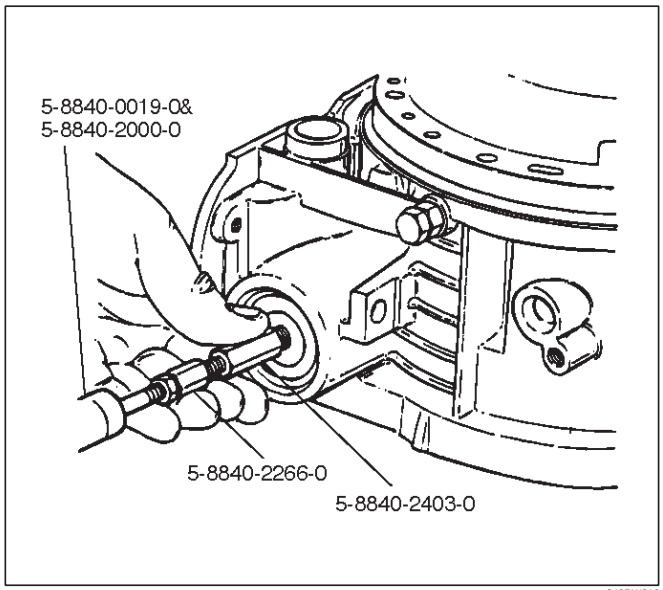

242RW010

Inspection And Repair

Visual Check:

If any damage, deformation or wear is found, replace the damaged part.

Reassembly

1. Place the 5–8840–2264–0 (J–38553) piston fitter into adaptor case and push the piston into position, using suitable diameter tube.
   - Remove the piston fitter.

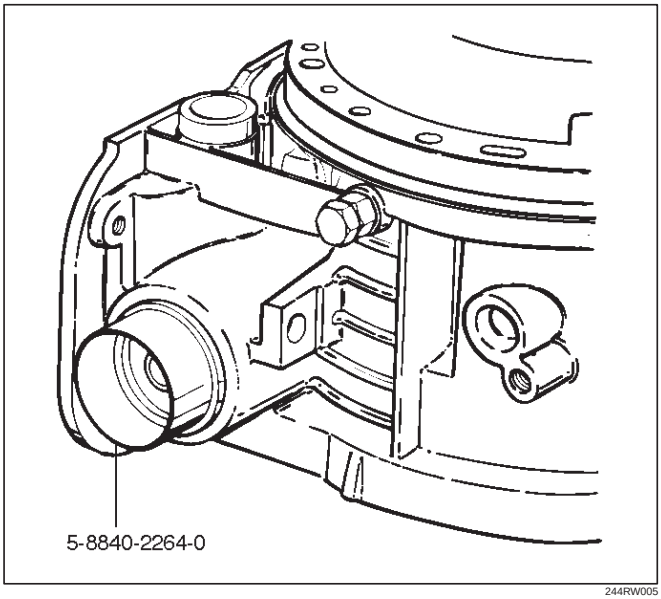

244RW005

2. Install spring and cover.
3. Install snap ring, using the 5–8840–2277–1 (J–38559–A) compressor tool.
   - Install snap ring in groove.
   - Remove the compressor tool.

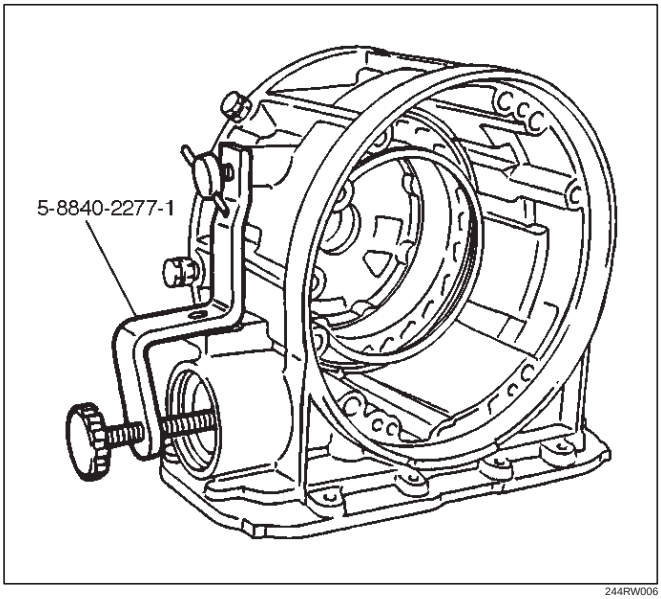

244RW006

Reverse Clutch Piston And Center Support

Disassembled View

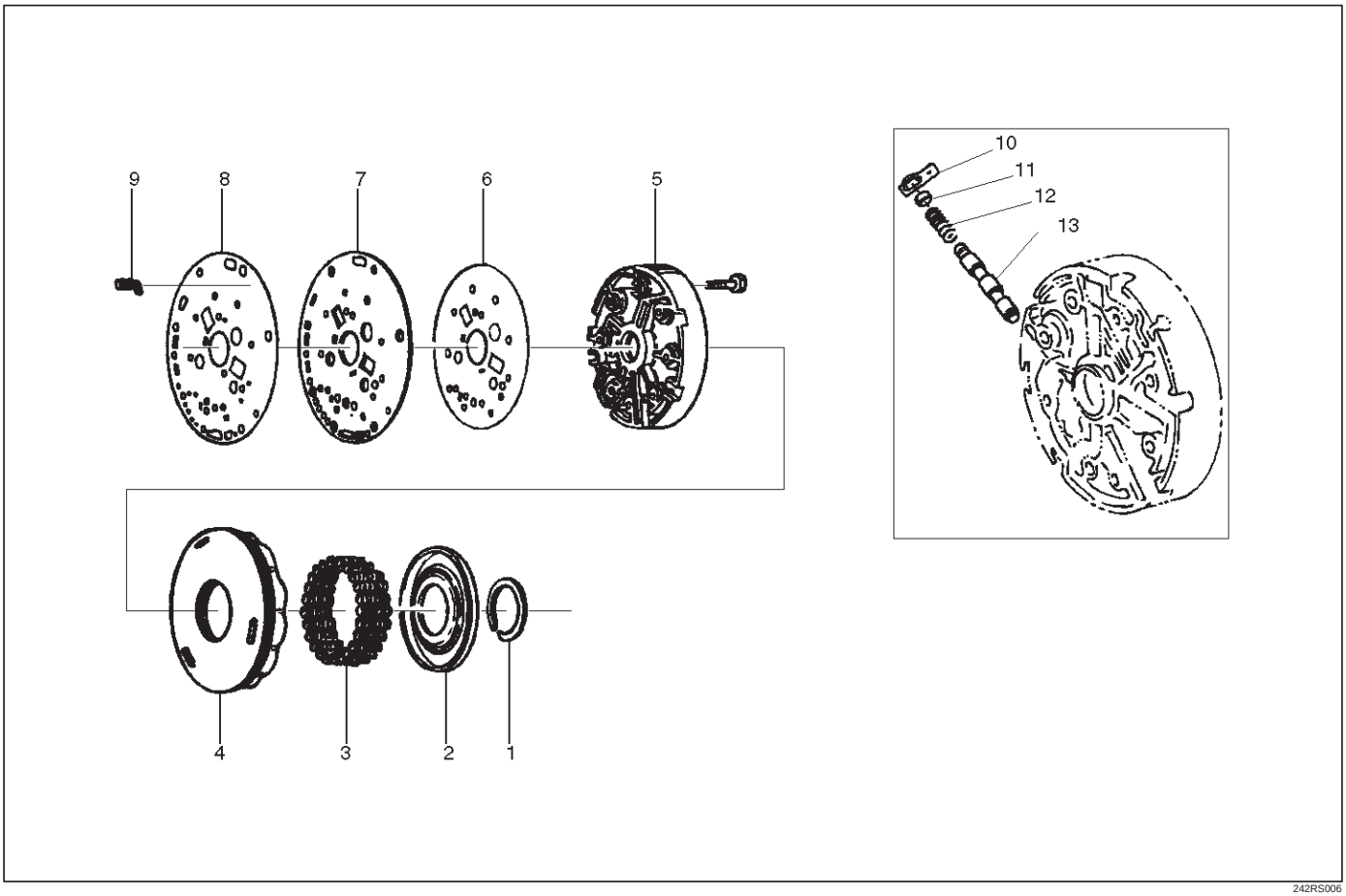

Legend

(1) Retaining Ring
(2) Spring Seat
(3) Springs
(4) Piston Assembly
(5) Center Support
(6) Gasket
(7) Transfer Plate
(8) Gasket
(9) Restrictor
(10) Retainer Plate
(11) Plug
(12) Spring
(13) Overrun Lock Out Valve

Disassembly

1. Install the 5–8840–0195–0 (J–23327) compressor tool on spring seat, then compress the spring seat.
   - Remove retaining ring (1).

NOTE: Do not over–stress the springs and seat, as this will cause damage to the spring seat.

   - Remove the compressor tool.

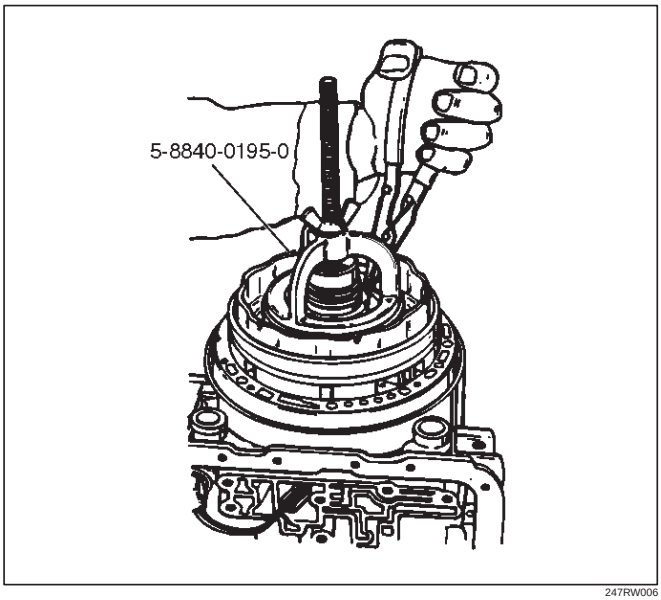

247RW006

2. Remove spring seat (2) and springs (3).
3. Remove piston assembly (4).
4. Remove 8 bolts from center support (5), then remove center support (5) from adapter case.
5. Remove gasket transfer plate/outer support (6), center support transfer plate (7), and gasket transfer plate/adapter case (8).
6. Remove restrictor (9) from adapter case housing.
7. Remove retainer plate (10), plug (11), spring (12), and overrun lock out valve (13) from center support (5).

Inspection And Repair

Visual Check:

If any damage, deformation or wear is found, replace the damaged part.

Reassembly

1. Install overrun lock out valve (13) and spring (12) to center support.

NOTE: Ensure correct assembly of valve. The spring should be located over the long small diameter end.

2. Install plug (11) and retainer plate (10).
3. Place restrictor (9) in the lube overdrive channel in the adapter case housing.

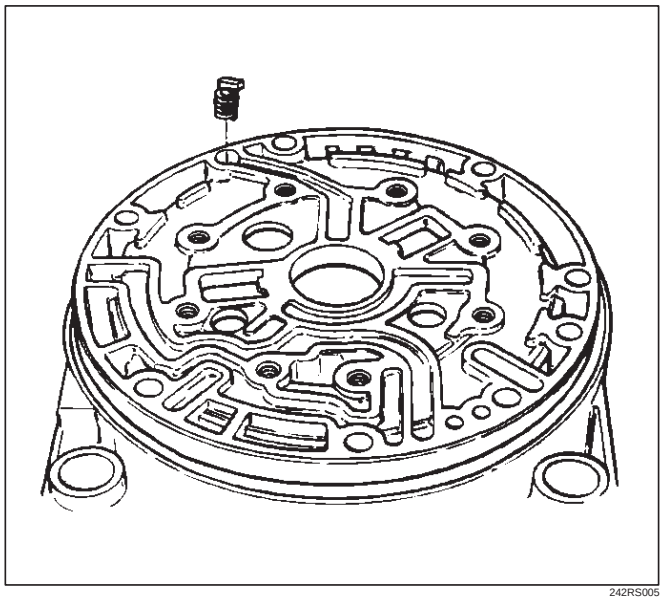

242RS005

4. Install gasket transfer plate/adapter case (8), center support transfer plate (7), and gasket transfer plate/center support (6).
5. Install center support (5) with 8 bolts.

   Torque : 25 N•m (2.5 kg·m/18 lb ft)

6. Install piston assembly (4) into center support (5).
7. Install twenty four springs (3), spring seat (2), and retaining ring (1).
   - Install the 5–8840–0195–0 (J–23327) compressor and compress spring seat (2) and springs (3), then seat snap ring (1) in groove.
   - Remove the tool.

Overrun Clutch And Turbine Shaft

Disassembled View

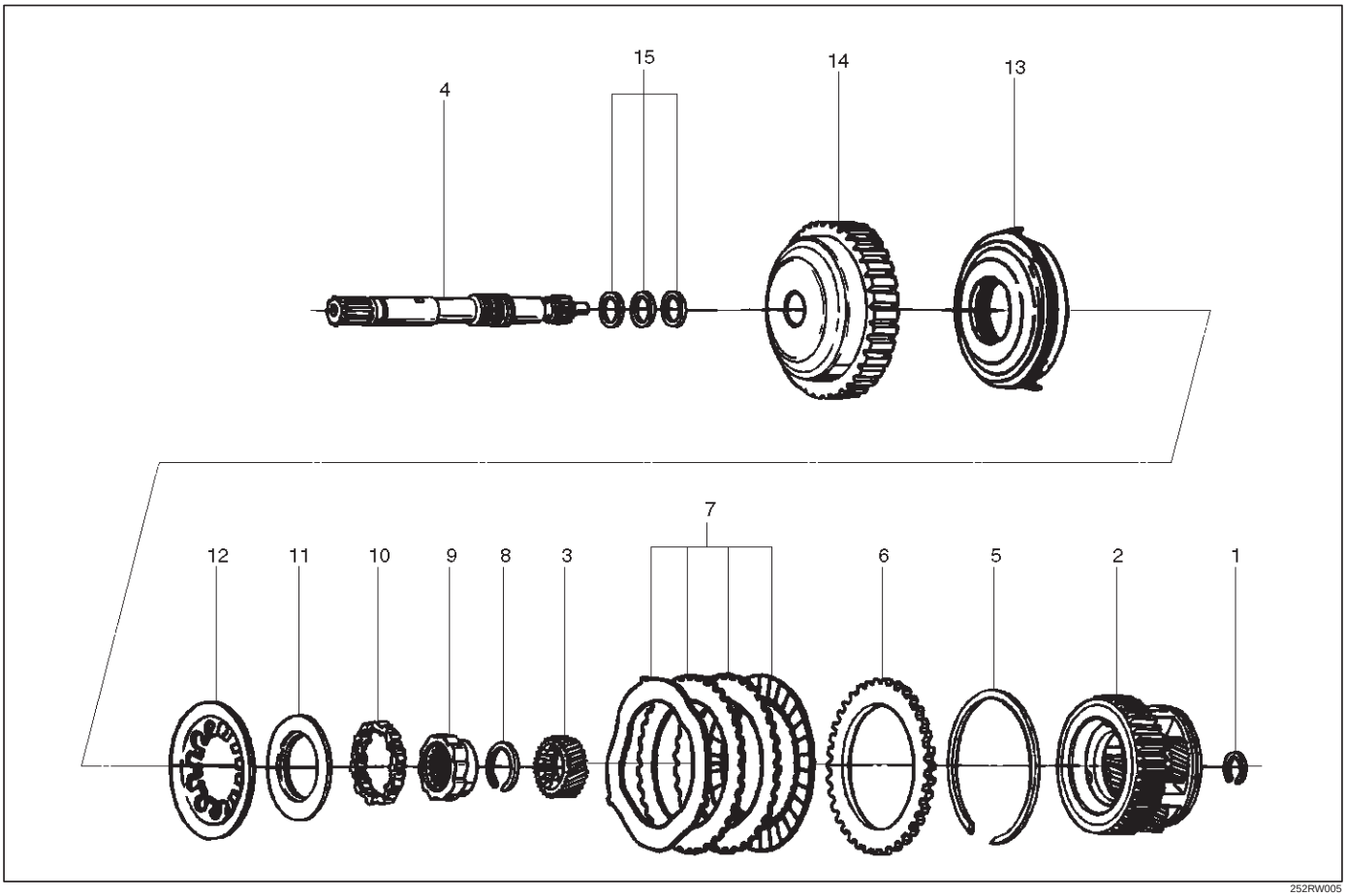

Legend

(1) Snap Ring
(2) Overdrive Carrier Assembly
(3) Sun Gear
(4) Turbine Shaft
(5) Snap Ring
(6) Backing Plate
(7) Clutch Plates
(8) Snap Ring
(9) Overrun Roller Clutch Cam
(10) Roller Clutch Assembly
(11) Overrun Clutch Release Spring Retainer
(12) Diaphragm Spring
(13) Piston Assembly
(14) Overrun Clutch Drum
(15) Turbine Shaft Seal Rings

Disassembly

1. Position overrun clutch assembly upright, using the overdrive internal gear as a support.
   - Remove snap ring (1).

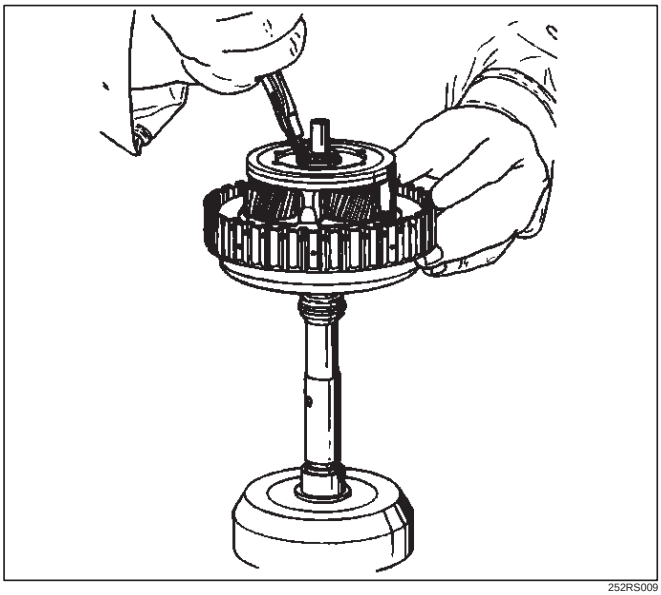

252RS009

2. Remove overdrive carrier assembly (2), sun gear (3) and turbine shaft (4).
3. Remove snap ring (5), backing plate (6), and clutch plates (7).
4. Compress diaphragm spring with the 5–8840–2275–0 (J–23327–91) compressor, then remove snap ring (8).

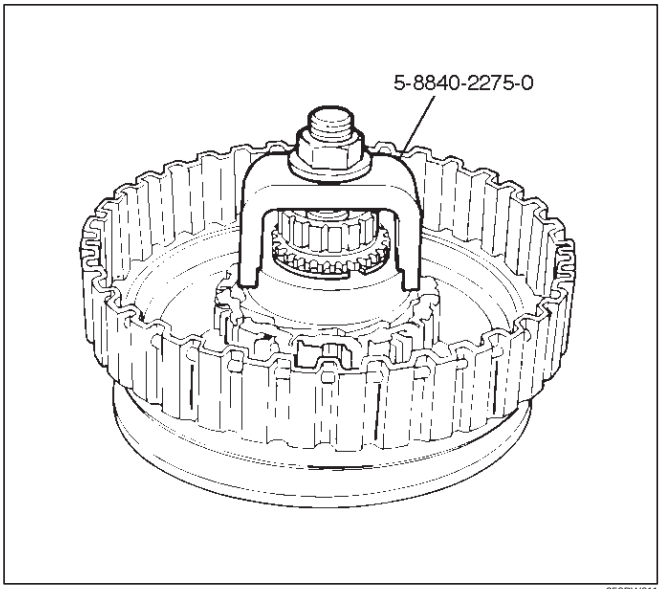

252RW011

5. Remove overrun roller clutch cam (9) and roller clutch assembly (10).
6. Remove overrun clutch release spring retainer (11) and diaphragm spring (12).
7. Remove piston assembly (13) from overrun clutch drum (14).
8. Remove turbine shaft seal rings (15).

Inspection And Repair

Overdrive Carrier Check

- Check pinion end play with a feeler gauge.

Clearance: 0.24mm–0.64mm (0.0094in–0.025in)

If clearance is outside specified value, replace overdrive carrier assembly.

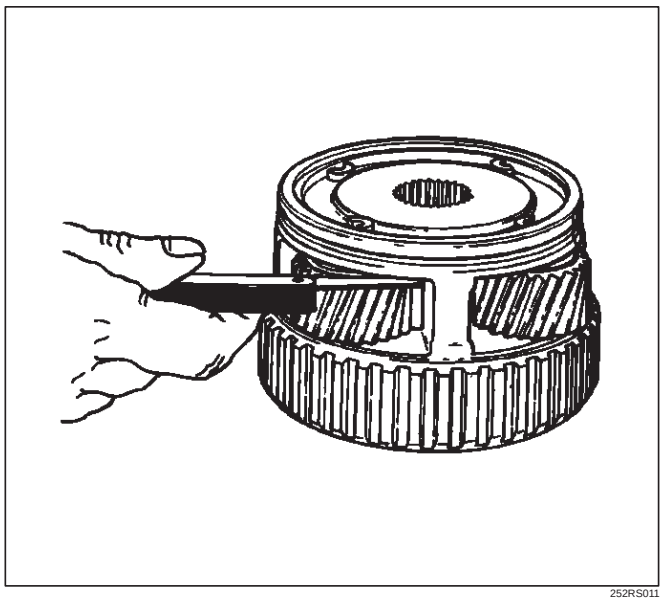

252RS011

Visual Check:

If any damage, deformation or local wear is found, replace the damaged part.

Reassembly

1. Install turbine shaft seal rings (15) with grease (petroleum jelly).

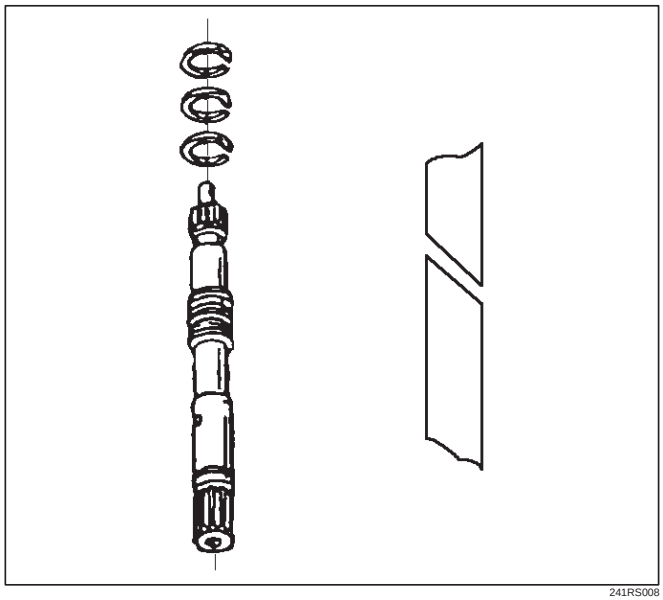

241RS008

2. Install the 5–8840–2269–0 (J–38555) inner installer on the drum (14).
   - Pre–install piston assembly into 5–8840–2269–0 (J–38555) outer installer.

- Install overrun clutch piston assembly (13). Use the outer installer while pushing piston into drum (14).
- Remove the installer.

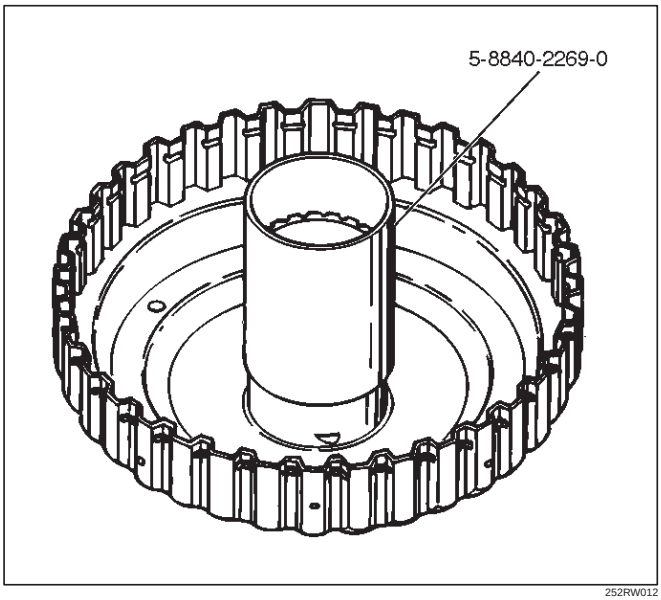

252RW012

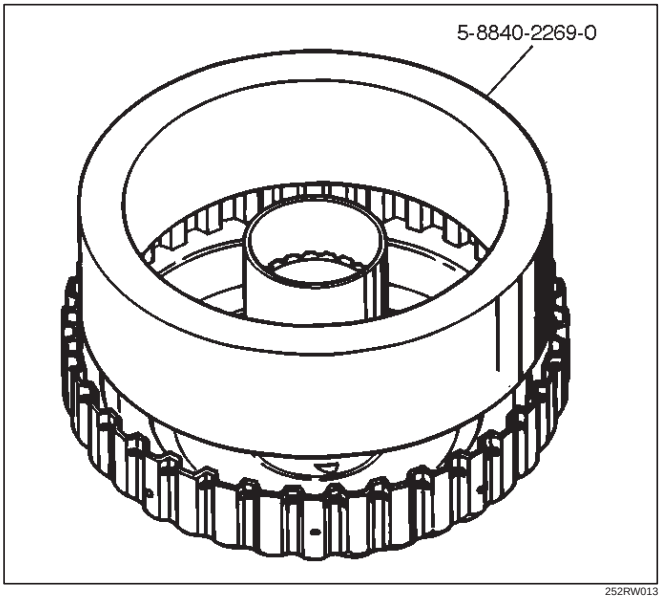

252RW013

3. Install diaphragm spring (12).
4. Install overrun clutch release spring retainer (11) (lip faces upwards), overrun roller clutch assembly (10), and cam (9).
5. Place snap ring loosely on spring retainer.
   - Hold the 5–8840–2275–0 (J–23327–91) compressor in a vise and compress piston return spring with compressor.
   - Set snap ring (8) in ring groove.
   - Remove the compressor.
6. Install clutch plates (7), start with steel plate and alternate with lined plates.
7. Install backing plate (6).
8. Install snap ring (5).
9. Install overdrive sun gear with countersink pointing downwards.
10. Install the overdrive carrier assembly (2).

NOTE: Turn the assembly in a counter–clockwise direction only until roller clutch enters the outer race. After installation, rotate the assembly and listen for loose rollers.

11. Install turbine shaft (4) and snap ring (1).

Main Data And Specification

General Specifications

				Remarks
Model			THM 4L30–E	
Engine			V6 3.2L 6VD1 or V6 3.5L 6VE1	DOHC
Type			Automatic four speed overdrive in 4th gear lock–up clutch torque converter	
Control systems	Shift control		Hydraulic	
	Shift pattern		Electronic	
	Shift quality		Electronic	
	Lock–up clutch		Electronic	
Gear ratio	1st		2.856	
	2nd		1.618	
	3rd		1.000	
	4th (O/D)		0.723	
	Reverse		2.000	
Gear set			Noiseless, high torque capability	
Oil used	Name		ATF DEXRON®–III	
	Q'ty liter (qt)		8.6 (9.1)	
Torque converter			2,100 ± 150	Stall speed (rpm)
	Reverse clutch	RC	4	Number of discs
	Second clutch	C2	6	
	Third clutch	C3	6	
	Brake band		Double wrap	
	Fourth clutch	C4	2	Number of discs
	Overrun clutch	OC	1	
	Overdrive	OFW	10	Number of rollers
	Principal	PFW	26	Number of sprags
	Ravigneaux planetary gear set	Input sun gear	30	Number of teeth
		Pinion gear	19	
		Long pinion	23	
		Ring gear	90	
		Long pinion	19	
		Output sun gear	46	
	Overdrive planetary gear set	Sun gear	31	
		Pinion gear	24	
		Ring gear	81	

Torque Specifications

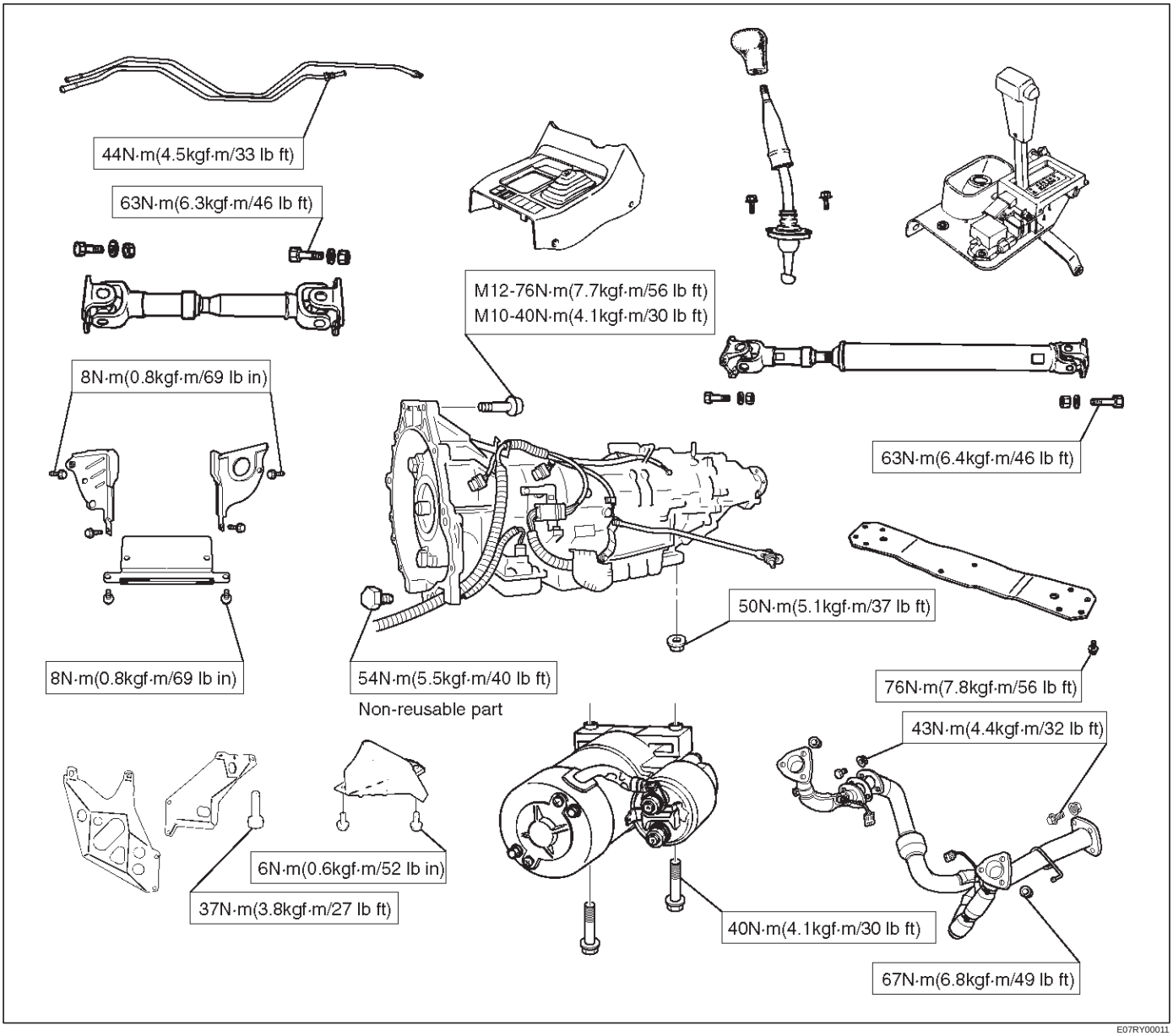

E07RY00011

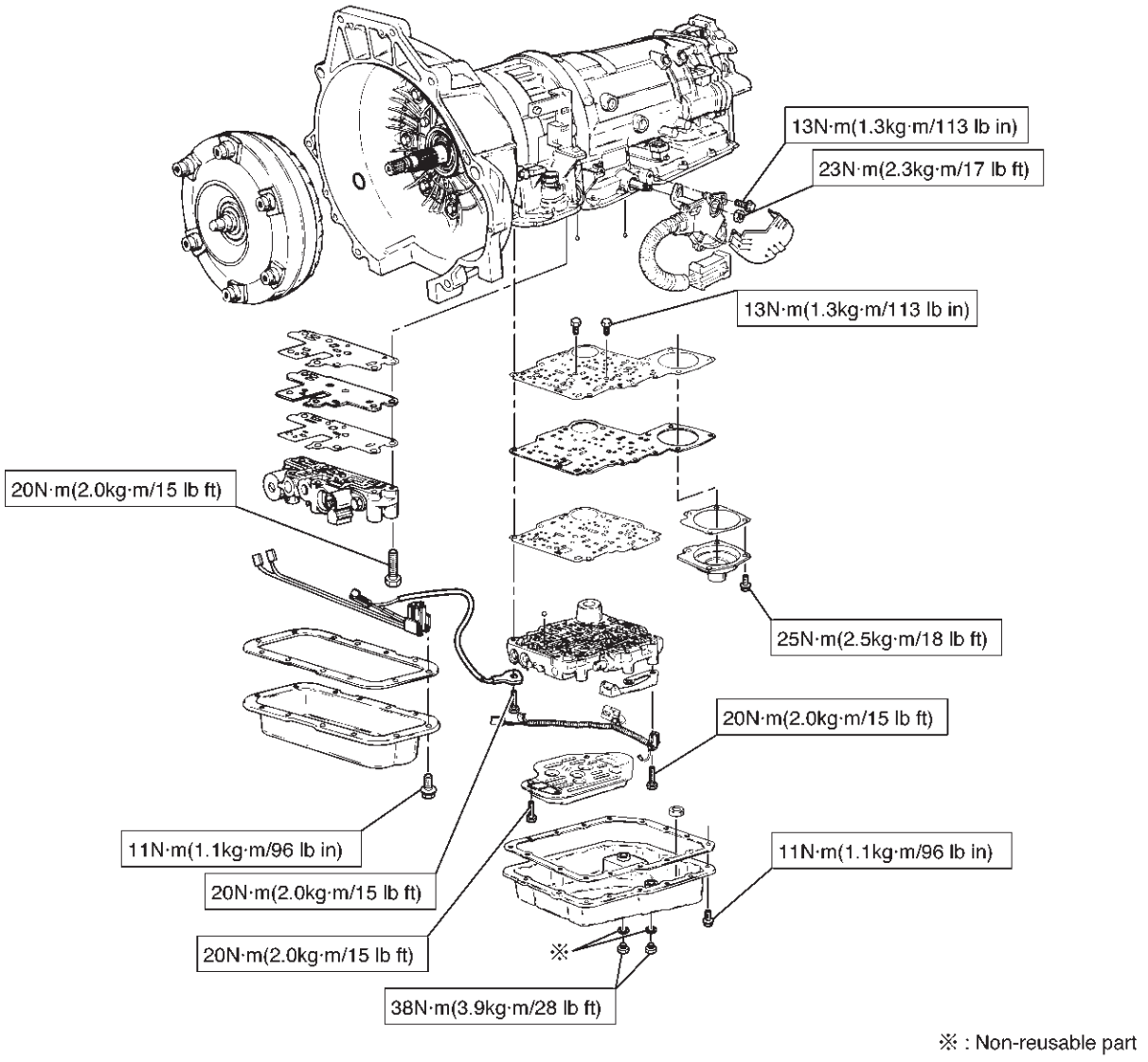
13N·m(1.3kg·m/113 lb in)
23N·m(2.3kg·m/17 lb ft)
13N·m(1.3kg·m/113 lb in)
20N·m(2.0kg·m/15 lb ft)
25N·m(2.5kg·m/18 lb ft)
20N·m(2.0kg·m/15 lb ft)
11N·m(1.1kg·m/96 lb in)
11N·m(1.1kg·m/96 lb in)
20N·m(2.0kg·m/15 lb ft)
20N·m(2.0kg·m/15 lb ft)
※
38N·m(3.9kg·m/28 lb ft)
※ : Non-reusable part

E07RW079

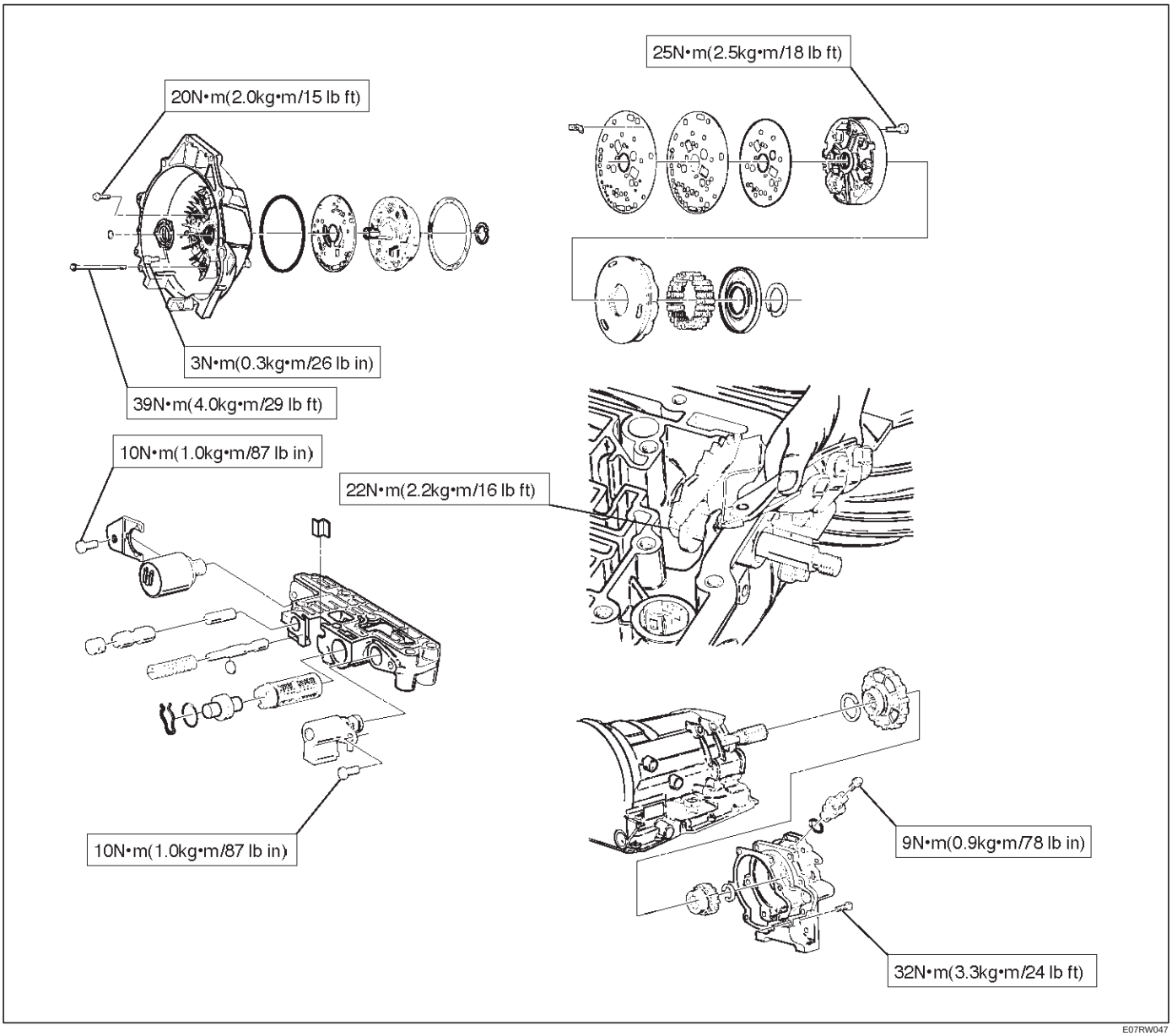
25N•m(2.5kg•m/18 lb ft)
20N•m(2.0kg•m/15 lb ft)
3N•m(0.3kg•m/26 lb in)
39N•m(4.0kg•m/29 lb ft)
10N•m(1.0kg•m/87 lb in)
22N•m(2.2kg•m/16 lb ft)
10N•m(1.0kg•m/87 lb in)
9N•m(0.9kg•m/78 lb in)
32N•m(3.3kg•m/24 lb ft)

E07RW047

Special Tools

ILLUSTRATION	TOOL NO. TOOL NAME
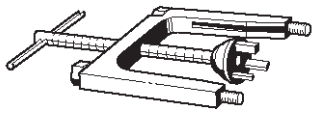 901RT071	5–8840–0501–0 **(J–23075)** Spring compressor (For servo piston)
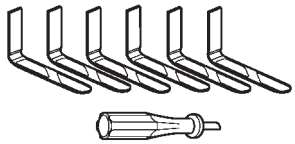 901RX007	5–8840–2258–0 **(J–38450–A)** Third clutch snap ring compressor
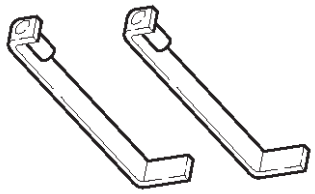 901RT073	5–8840–2259–0 **(J–23075–12)** Third clutch spring compressor adapter (Use with 5–8840–0501–0 (J–23075))
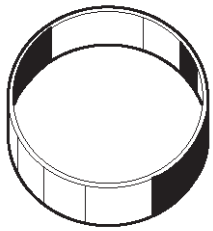 901RT074	5–8840–2260–0 **(J–23084)** Third clutch piston installer
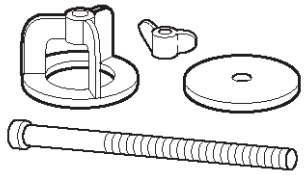 901RT075	5–8840–0195–0 **(J–23327)** Third clutch spring compressor
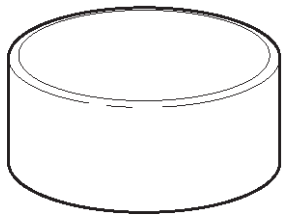 901RT076	5–8840–2261–0 **(J–23080–A)** Second clutch piston installer

ILLUSTRATION	TOOL NO. TOOL NAME
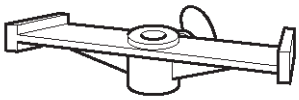 901RT077	5–8840–2262–0 **(J–23085–A)** Selective washer gauging tool
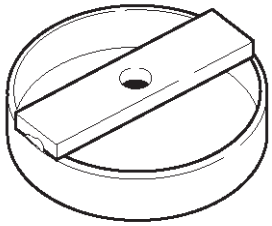 901RT078	5–8840–2263–0 **(J–23327–90)** Fourth clutch spring compressor (Use with 5–8840–0195–0 (J–23327))
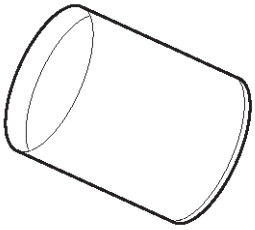 901RT079	5–8840–2264–0 **(J–38553)** 3/4 Accumulator piston fitter
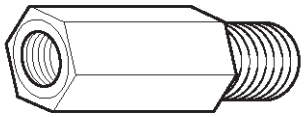 901RT080	5–8840–2403–0 **(J–41096)** Cover remover (Use with 5–8840–2266–0 (J–38584))
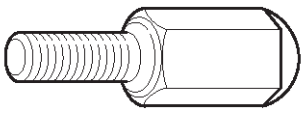 901RT081	5–8840–2266–0 **(J–38584)** Slide hammer adapter (Use with 5–8840–0019–0 (J–23907))
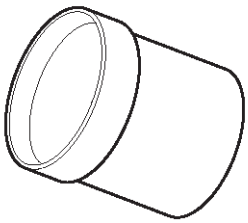 901RT082	5–8840–2267–0 **(J–38554)** Fourth clutch piston fitter

ILLUSTRATION	**TOOL NO.** TOOL NAME
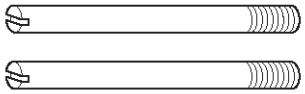 901RT083	5–8840–2268–0 **(J–38588)** Guide pins; adapter case to main case
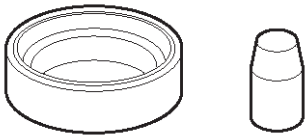 901RT084	5–8840–2269–0 **(J–38555)** Overrun clutch piston seal installer set
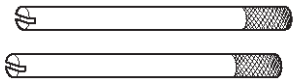 901RT085	5–8840–2270–0 **(J–3387–2)** Guide pins; gasket and transfer plate to valve body
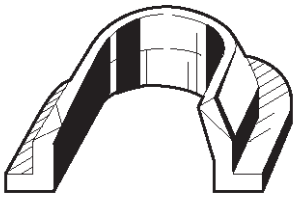 901RT086	5–8840–2271–0 **(J–25022)** Turbine shaft puller (Use with 5–8840–0618–0 (J–24773–1))
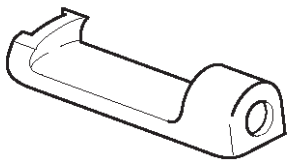 901RT087	5–8840–0196–0 **(J–23129)** Oil seal remover (Use with 5–8840–2266–0 (J–23907) and 5–8840–0019–0 (J–38584))
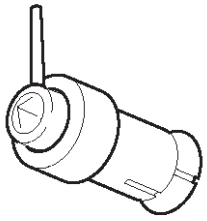 901RT088	5–8840–2272–0 **(J–38557)** Oil pump centering tool

ILLUSTRATION	**TOOL NO.** TOOL NAME
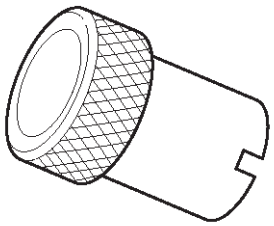 901RT089	5–8840–2273–0 **(J–23082–01)** Oil pump rotation tool
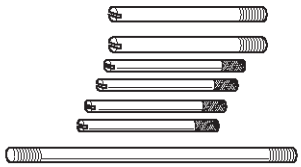 901RT090	5–8840–0022–0 **(J–25025–B)** Guide pins; valve body to main case
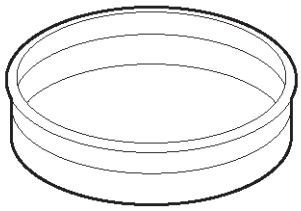 901RT091	5–8840–2274–0 **(J–38428)** Servo piston fitter
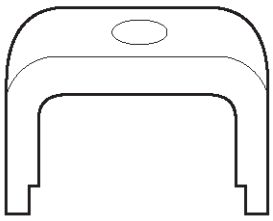 901RT092	5–8840–2275–0 **(J–23327–91)** Overrun clutch spring compressor
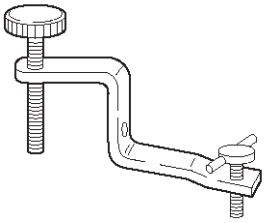 901RT093	5–8840–2277–1 **(J–38559–A)** 3/4 Accumulator piston cover compressor
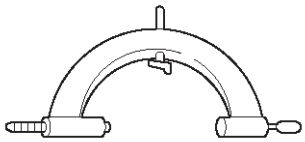 901RT094	5–8840–2278–0 **(J–8763–02)** Holding fixture

ILLUSTRATION	**TOOL NO.** TOOL NAME
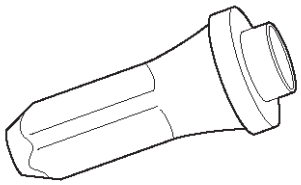 901RT095	5–8840–2282–0 **(J–36797)** A/T extension housing oil seal installer (Inside)
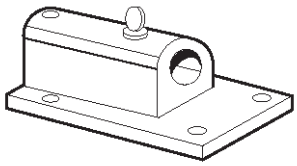 901RT096	5–8840–0003–0 **(J–3289–20)** Holding fixture base
 901RT097	5–8840–0004–0 Pressure gauge
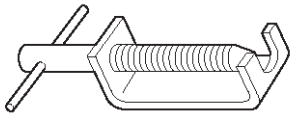 901RT098	5–8840–0618–0 **(J–24773–1)** End play fixture (Use with 5–8840–2271–0 (J–25022))
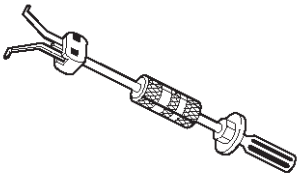 901RT099	5–8840–0019–0 & 5–8840–2000–0 **(J–23907)** Slide hammer

4L30–E Parts List

Case And Associated Parts

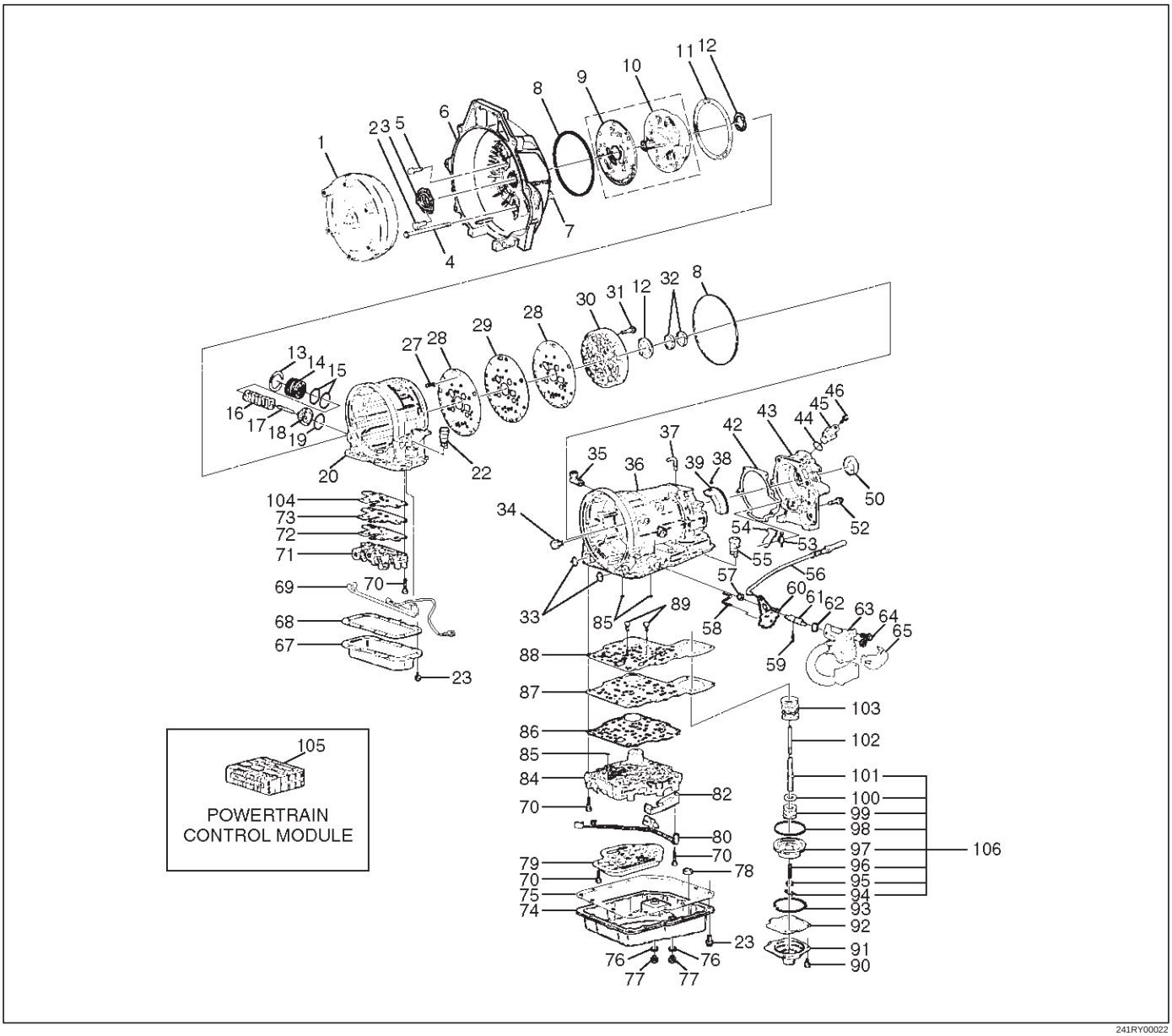

241RY00022

Legend

(1) Torque Converter
(2) Screw, Seal Ring Assembly
(3) Seal Ring Assembly, Converter Housing
(4) Screw, Converter Housing/Main Case
(5) Screw, Converter Housing/Oil Pump
(6) Housing, Converter
(7) Plug, Converter Housing
(8) Seal, O–Ring
(9) Wear Plate, Oil Pump Body
(10) Pump Assembly, Oil
(11) Gasket
(12) Washer, Thrust Selective
(13) Ring, Snap
(14) Cover, 3–4 Accumulator Piston
(15) Seal, O–Ring, 3–4 Accumulator
(16) Spring, 3–4 Accumulator Piston
(17) Pin, 3–4 Accumulator Piston
(18) Piston, 3–4 Accumulator
(19) Ring, 3–4, Accumulator Piston
(20) Case, Adapter
(22) Connector, Electrical/Adapter Case
(23) Screw, Pan
(27) Restrictor, Oil
(28) Gasket, Transfer Plate/Adapter
(29) Plate, Transfer Adapter/Center Support
(30) Support Assembly, Center
(31) Screw, Center Support
(32) Ring, Oil Seal
(33) Seal, O–Ring Main Case
(34) Fitting, Cooler
(35) Fitting Assembly, Cooler
(36) Case, Main
(37) Breather, Pipe

(38) Seal, O–Ring
(39) Reservoir
(42) Gasket, Extension Case
(43) Extension Assembly
(44) Seal, O–Ring/Speed Sensor
(45) Sensor Assembly, Speed
(46) Screw, Speed Sensor
(50) Seal, Extension Assembly
(52) Screw, Extension/Main Case
(53) Spring, Parking Pawl Lock
(54) Pawl, Parking Lock
(55) Connector, Electrical/Main Case
(56) Actuator Assembly, Parking Lock
(57) Nut, Parking Lock Lever
(58) Link, Manual Valve
(59) Pin, Spring
(60) Lever, Parking Lock and Range Selector
(61) Shaft, Selector
(62) Seal, Selector Shaft
(63) Mode Switch Assembly
(64) Screw and Conical Washer Assembly
(65) Shield, Mode Switch
(67) Pan, Bottom/Adapter Case
(68) Gasket, Bottom Pan/Adapter Case
(69) Harness Assembly, Adapter Case
(70) Screw, Valve Body
(71) Valve Body Assembly, Adapter Case
(72) Gasket, Adapter Valve Body
(73) Plate, Adapter Valve Body/Transfer
(74) Pan, Bottom/Main Case
(75) Gasket, Bottom Pan/Main Case
(76) Gasket, Oil Drain or Overfill Screw
(77) Screw, Oil Drain or Overfill
(78) Magnet, Chip Collector
(79) Filter Oil
(80) Harness Assembly, Main Case
(82) Roller and Spring Assembly, Manual Detent
(84) Valve Body Assembly, Main Case
(85) Ball, Check
(86) Gasket, Main V.B./Transfer Plate
(87) Plate, Main V.B./Transfer
(88) Gasket, Transfer/Main Case
(89) Screw, Transfer Plate on V.B.
(90) Screw, Servo Cover
(91) Cover, Servo Piston
(92) Gasket, Cover/Servo Piston
(93) Ring, Retaining Servo Piston
(94) Clip, Servo Piston
(95) Nut, Servo Screw
(96) Screw, Servo Piston
(97) Piston, Servo
(98) Seal, Ring/Servo Piston
(99) Spring, Cushion/Servo Piston
(100) Seat, Cushion Spring
(101) Sleeve, Servo Piston Adjust
(102) Rod, Apply/Servo Piston
(103) Spring, Return/Servo Piston
(104) Gasket, Adapter Case/Transfer Plate
(105) Powertrain Control Module
(106) Servo Piston Assembly

Pump Assembly

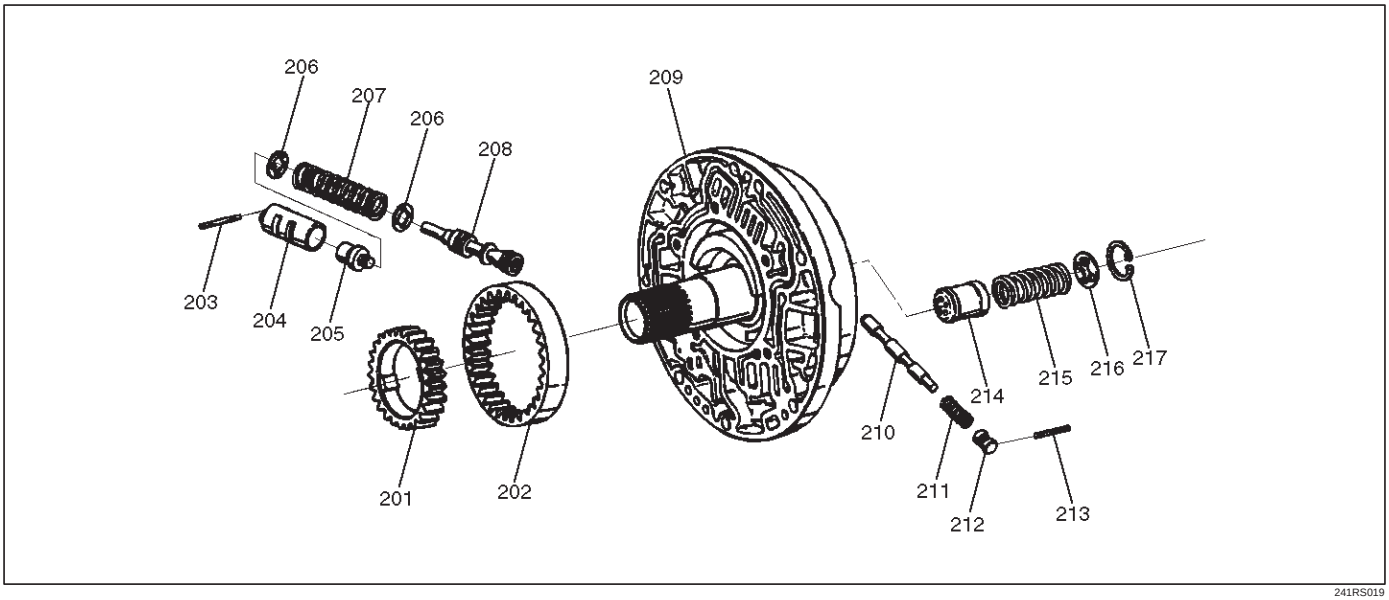

241RS019

Legend

(201) Gear, Oil Pump Drive
(202) Gear, Oil Pump Driven
(203) Pin, Boost Valve Sleeve
(204) Sleeve, Boost Valve
(205) Valve, Boost
(206) Seat, Spring/Pressure Regulator Valve
(207) Spring, Pressure Regulator Valve
(208) Valve, Pressure Regulator
(209) Pump Assembly, Oil

(210) Valve, Converter Clutch Control
(211) Spring, Converter Clutch Control Valve
(212) Plug, Converter Clutch Control Valve
(213) Pin, Spring
(214) Piston, Throttle Signal Accumulator
(215) Spring, Throttle Signal Accumulator
(216) Seat, Spring/Throttle Signal Accumulator
(217) Ring, Snap/Throttle Signal Accumulator

Valve Body Assemblies

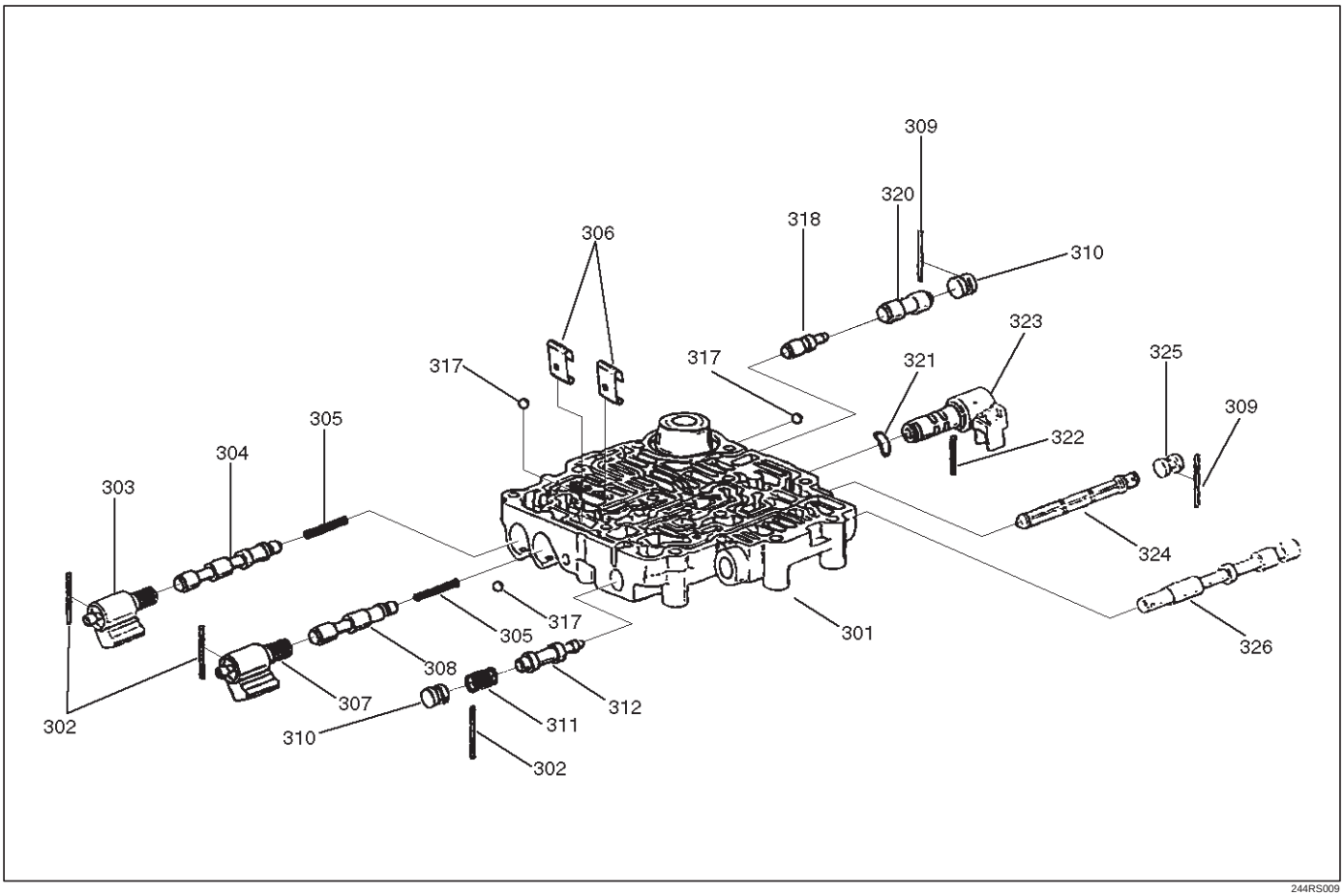

244RS009

Legend

(301) Body, Valve Main Case
(302) Pin, Spring
(303) Solenoid Assembly, ON/OFF N.C.
(304) Valve, 1–2 and 3–4 Shift
(305) Spring, 1–2 and 3–4 (2–3) Shift
(306) Retainer, Valve
(307) Solenoid Assembly, ON/OFF N.O.
(308) Valve, 2–3 Shift
(309) Pin, Spring
(310) Plug, Valve Bore
(311) Spring, Valve Low Pressure Control
(312) Valve, Low Pressure Control
(317) Ball, Check
(318) Valve, 1–2 Accumulator Control
(320) Valve, 1–2 Accumulator
(321) Washer, Waved PWM Solenoid
(322) Pin, Solenoid PWM
(323) Solenoid Assembly, Band Control PWM
(324) Screen Assembly, PWM Solenoid
(325) Plug, Screen
(326) Valve, Manual

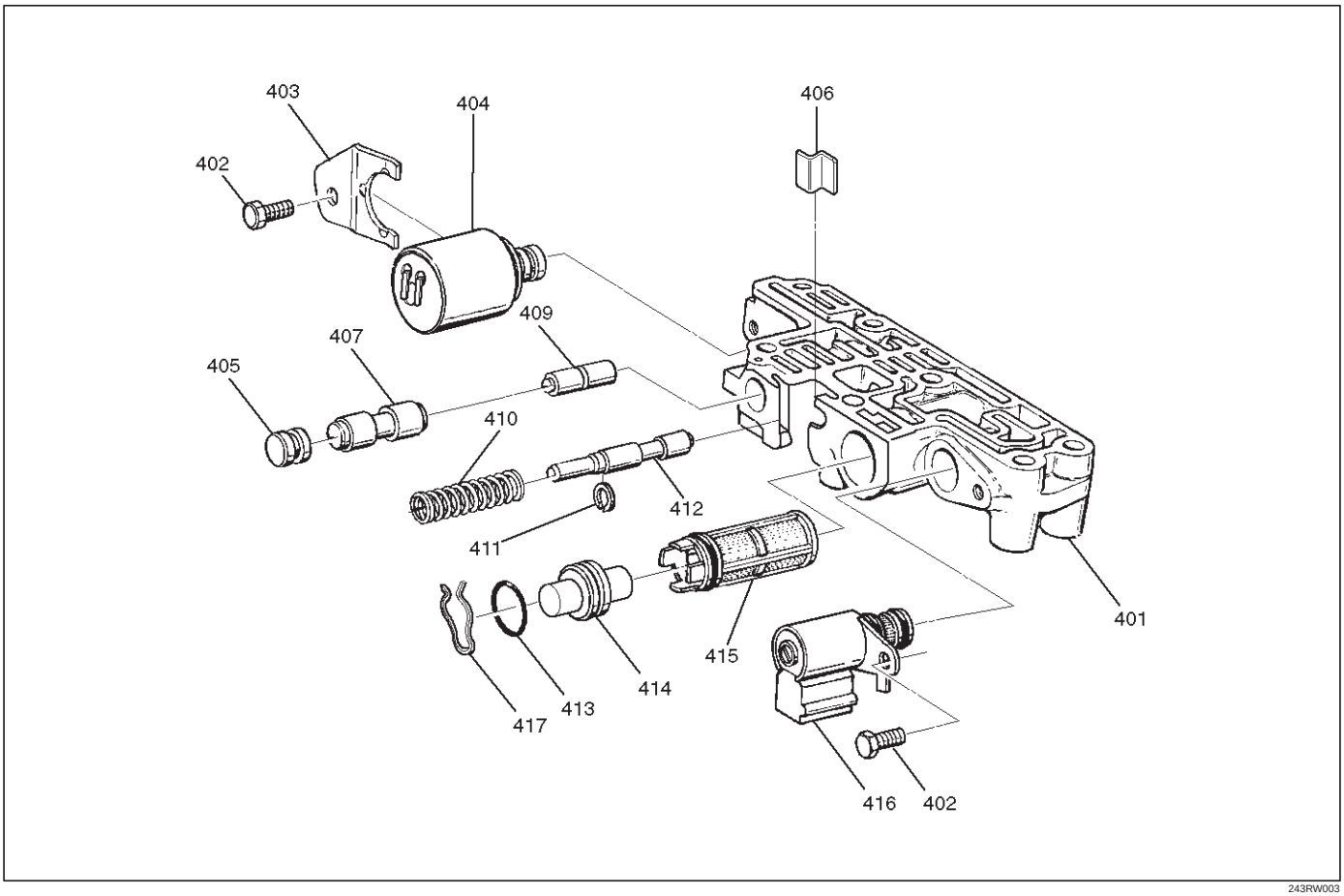

243RW003

Legend

(401) Body, Valve/Adapter Case
(402) Screw, Solenoid Force Motor
(403) Retainer, Force Motor
(404) Solenoid, Force Motor
(405) Plug, 3–4 Accumulator
(406) Plug and Spring Retainer
(407) Valve, 3–4 Accumulator
(409) Valve, 3–4 Accumulator Control
(410) Spring, Feed Limit Valve
(411) Ring, Retainer
(412) Valve, Feed Limit
(413) Seal, O–Ring Plug Filter
(414) Plug, Screen
(415) Screen Assembly, Force Motor
(416) Solenoid, Torque Conv. Clutch ON/OFF N.C.
(417) Plug Retainer

Overdrive Internal Components

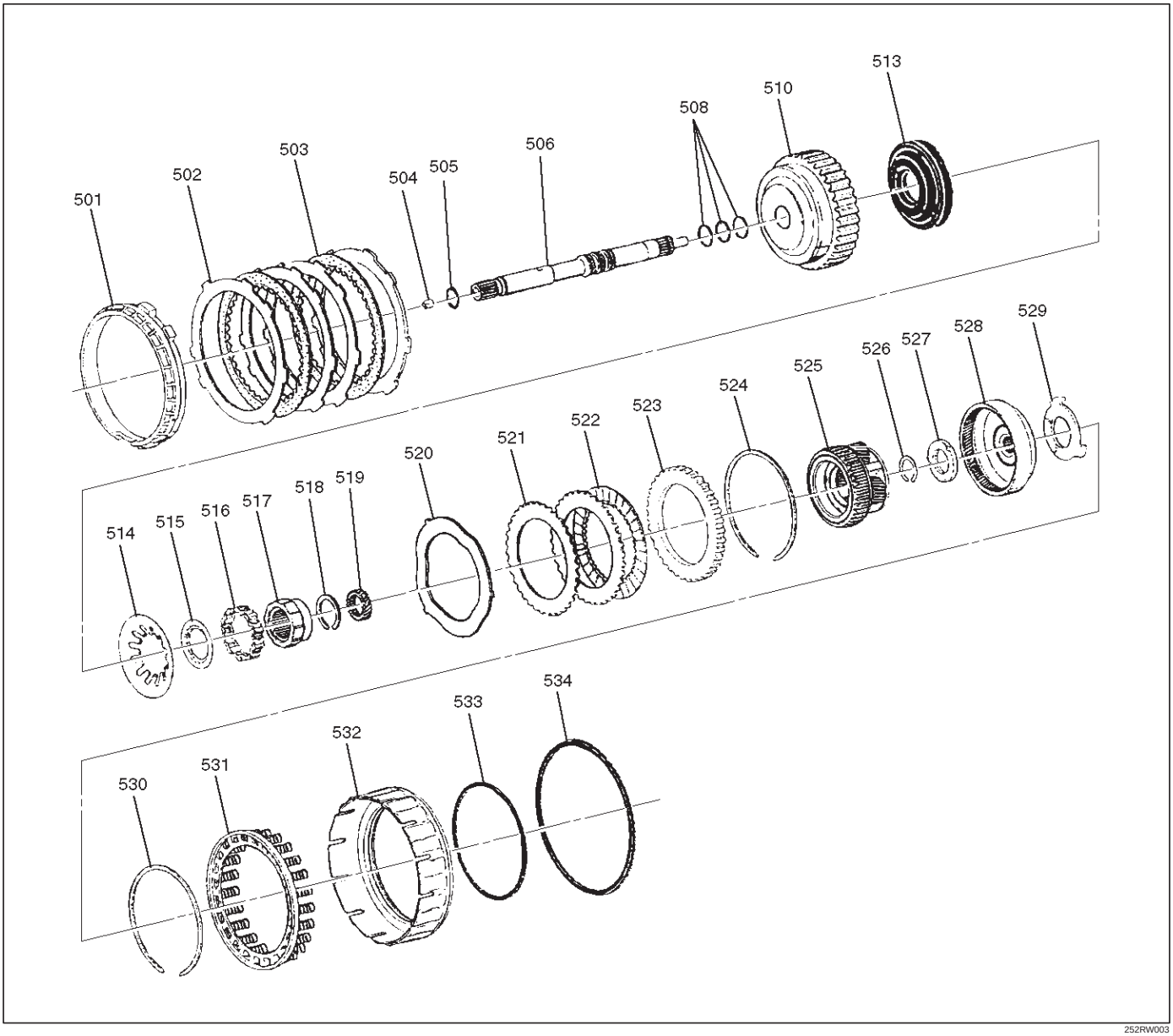

252RW003

Legend

(501) Retainer, 4th Clutch
(502) Plate, 4th Clutch (Steel)
(503) Plate Assembly, 4th Clutch (Lined)
(504) Retainer And Ball Assembly, Check Valve
(505) Seal, O–Ring/Turbine Shaft
(506) Shaft, Turbine
(508) Ring, Oil Seal/Turbine Shaft
(510) Housing, Overrun Clutch
(513) Piston, Overrun Clutch
(514) Spring, Overrun Clutch Release
(515) Retainer, Release Spring/Overrun Clutch
(516) Roller Assembly, Overdrive Clutch
(517) Cam, Overdrive Roller Clutch
(518) Ring, Snap/Overrun Clutch Hub
(519) Gear, Overdrive Sun
(520) Plate, Waved/Overrun Clutch
(521) Plate, Overrun Clutch (Steel)
(522) Plate Assembly, Overrun Clutch (Lined)
(523) Plate, Backing/Overrun Clutch
(524) Ring, Snap/Overrun Clutch Housing
(525) Carrier Assembly, Overdrive Complete
(526) Ring, Snap/Turbine Shaft/Carrier
(527) Bearing Assembly, Thrust
(528) Gear, Overdrive Internal
(529) Washer, Thrust/Internal Gear/Support
(530) Ring, Snap/Adapter/4th Clutch Spring
(531) Retainer and spring assembly, 4th clutch
(532) Piston, 4th Clutch
(533) Seal, 4th Clutch Piston (Inner)
(534) Seal, 4th Clutch Piston (outer)

Internal Components

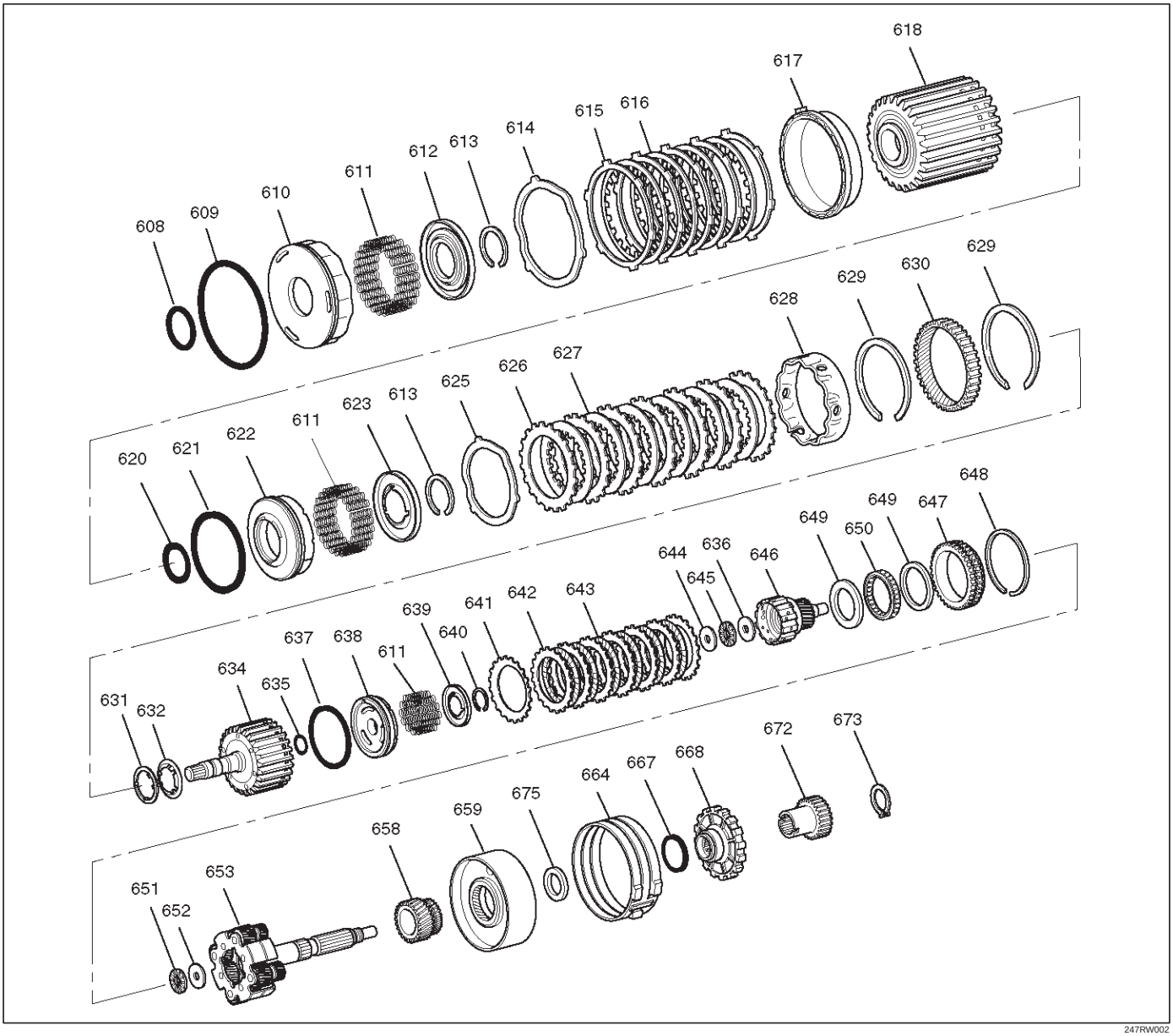

247RW002

Legend

(608) Seal, Reverse Clutch Piston (Inner)
(609) Seal, Reverse Clutch Piston (Outer)
(610) Piston, Reverse Clutch
(611) Spring, Piston Clutch
(612) Seat, Spring/Reverse Clutch
(613) Ring, Retaining
(614) Plate, Waved/Reverse Clutch
(615) Plate, Reverse Clutch (Steel)
(616) Plate Assembly, Reverse Clutch (Lined)
(617) Plate, Reverse Clutch Pressure/Selective
(618) Drum Assembly, 2nd Clutch
(620) Seal, 2nd Clutch Piston (Inner)
(621) Seal, 2nd Clutch Piston (Outer)
(622) Piston, 2nd Clutch
(623) Seat, Spring/2nd Clutch
(625) Plate, Waved/2nd Clutch
(626) Plate, 2nd Clutch (Steel)
(627) Plate Assembly, 2nd Clutch (Lined)
(628) Spacer, 2nd Clutch
(629) Ring, Retaining
(630) Gear, Ring
(631) Washer, Thrust/2nd Clutch/3rd Clutch
(632) Thrust Washer, Clutch Hub
(634) Drum Assembly, 3rd Clutch
(635) Seal, 3rd clutch piston (Inner)
(636) Washer, Retaining
(637) Seal, 3rd Clutch Piston (Outer)
(638) Piston 3rd Clutch
(639) Seat, Spring/3rd Clutch
(640) Ring, Retaining
(641) Plate, Spring Cushion/3rd Clutch
(642) Plate, 3rd Clutch (Steel)
(643) Plate Assembly, 3rd Clutch (Lined)
(644) Washer, Thrust/Input Sun
(645) Bearing, Input Shaft/Gear Assembly

(646) Gear Assembly, Input Sun
(647) Race Assembly, Sprag
(648) Ring, Retaining/Sprag
(649) Ring, Retaining
(650) Cage Assembly, Sprag
(651) Bearing, Output Shaft/Input Sun
(652) Washer, Output Shaft/Input Sun
(653) Carrier Assembly, Planetary
(658) Gear, Reaction Sun
(659) Drum, Reaction Sun
(664) Band Assembly, Brake
(667) Seal, Ring/Wheel Parking Lock
(668) Wheel, Parking Lock
(672) Wheel, Speed
(673) Ring, Retaining
(675) Bearing, Thrust Assembly

Center Support Assembly

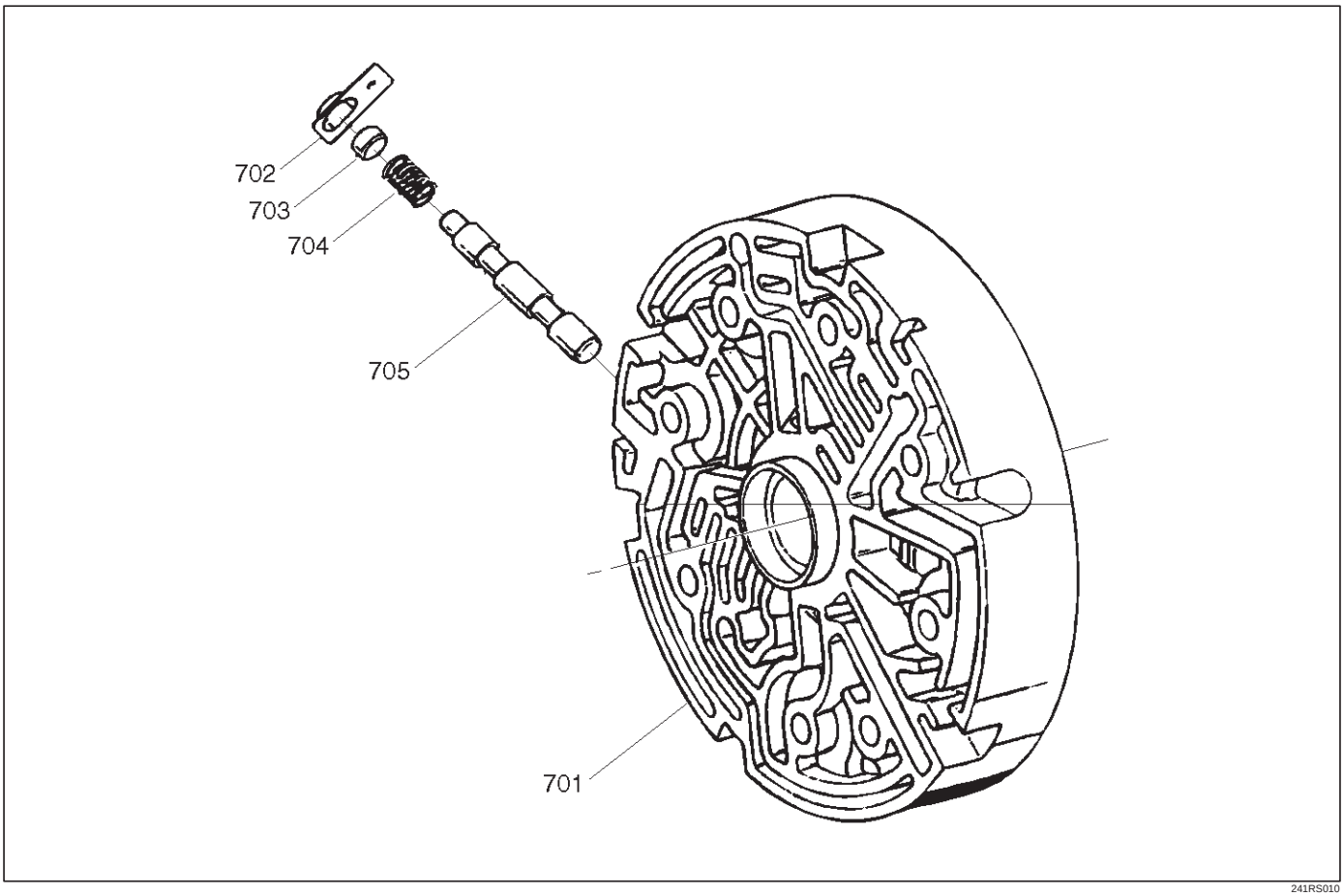

241RS010

Legend
(701) Center Support
(702) Retainer Plate
(703) Plug, Lockout
(704) Spring, Overrun Lockout
(705) Valve, Overrun Lockout

SECTION 7A

AUTOMATIC TRANSMISSION (AW30-40LE)

CONTENTS

GENERAL DESCRIPTION . . . 7A–3
CONSTRUCTION . . . 7A–3
ELECTRONIC CONTROL COMPONENTS . . . 7A–4
TRANSMISSION CONTROL MODULE (TCM) . . . 7A–5
CONTROL SYSTEM DIAGRAM . . . 7A–6
CONTROL AND FUNCTIONS . . . 7A–7
MAJOR INPUT/OUTPUT COMPONENTS . . . 7A–9
LOCATION OF CLUTCH, BRAKE ONE-WAY CLUTCH AND SOLENOID . . . 7A–10
OPERATION OF CLUTCH, BRAKE AND ONE-WAY CLUTCH . . . 7A–11
SPEED CHANGE AND LOCK-UP PATTERN . . . 7A–11
OVERDRIVE AND LOCK-UP OPERATING CONDITIONS . . . 7A–12
DIAGNOSIS . . . 7A–13
BASIC TROUBLESHOOTING . . . 7A–13
SELF-DIAGNOSIS . . . 7A–14
DIAGNOSIS WITH TECH2 . . . 7A–17
TECH2 CONNECTION . . . 7A–18
TECH2 OPERATING FLOW CHART (START UP) . . . 7A–19
TRANSMISSION DATA . . . 7A–21
TCC DATA . . . 7A–22
INTERMITTENT CONDITIONS . . . 7A–23
IDENTIFICATION OF TRANSMISSION CONTROL MODULE (TCM) . . . 7A–24
DIAGNOSTIC TROUBLE CODES (DTC) CHECK . . . 7A–25
WIRING DIAGRAM . . . 7A–52
CONNECTOR LIST . . . 7A–54
TROUBLESHOOTING CHART . . . 7A–56
MANUAL SHIFTING TEST . . . 7A–62
STALL TEST . . . 7A–63
TIME LAG TEST . . . 7A–64
HYDRAULIC TEST . . . 7A–65
ROAD TEST . . . 7A–66
SHIFT POINT CHART AND LOCK-UP POINT CHART . . . 7A–69
TCM VOLTAGE CHECK . . . 7A–71
TCM STANDARD VOLTAGE . . . 7A–72
ON-VEHICLE SERVICE . . . 7A–75
TRANSIMISSION FLUID LEVEL AND CONDITION . . . 7A–75
ATF REPLACEMENT . . . 7A–75
NEUTRAL START SWITCH INSPECTION . . . 7A–76
BRAKE SIGNAL INSPECTION . . . 7A–77
VEHICLE SPEED SENSOR INSPECTION . . . 7A–77
INPUT AND OUTPUT REVOLUTION SENSOR INSPECTION . . . 7A–77
PATTERN SELECT SWITCH INSPECTION . . . 7A–78
OVERDRIVE OFF SWITCH INSPECTION . . . 7A–78
SOLENOID INSPECTION . . . 7A–78
THROTTLE POSITION SENSOR INSPECTION . . . 7A–79
ATF TEMPERATURE SENSOR INSPECTION . . . 7A–79
SELECTOR LEVER . . . 7A–80
TRANSMISSION CONTROL MODULE (TCM) . . . 7A–81
SHIFT SOLENOID AND LOCK-UP SOLENOID . . . 7A–83

VALVE BODY ASSEMBLY AND PRESSERE CONTOROL SOLENOID 7A–84
TRANSMISSION REMOVAL AND INSTALLATION. 7A–86
UNIT REPAIR 7A–91
DISASSEMBLY OF MAJOR COMPONENTS 7A–91
DISASSEMBLY, INSPECTION AND REASSEMBLY OF MINOR COMPONENTS. 7A–107
OIL PUMP 7A–108
OD PLANETARY GEAR AND OD DIRECT CLUTCH ASSEMBLY (C-0) 7A–114
OD SUPPORT ASSEMBLY 7A–126
DIRECT CLUTCH ASSEMBLY (C-2) 7A–133
FORWARD CLUTCH ASSEMBLY (C-1) 7A–141
FRONT PLANETARY GEAR 7A–150
PLANETARY SUN GEAR AND NO.1 ONE–WAY CLUTCH 7A–153
SECOND BRAKE ASSEMBLY (B–2). 7A–158
REAR PLANETARY GEAR ASSEMBLY AND OUTPUT SHAFT. 7A–163
FIRST AND REVERSE BRAKE (B–3) 7A–171
TRANSMISSION CASE 7A–177
TORQUE CONVERTER. 7A–181
REASSEMBLY OF MAJOR COMPONENTS 7A–182
MAIN DATA AND SPECIFICATIONS 7A–207
GENERAL SPECIFICATIONS 7A–207
TORQUE SPECIFICATIONS 7A–208
SPECIAL TOOLS 7A–211

CAUTION: When fasteners are removed, always reinstall them at a the same location from which they were removed. If a fastener needs to be replaced, use the correct part number fastener for that application. If the correct part number fastener is not available, a fastener of equal size and strength (or stronger) may be used. Fasteners that are not reused, and those requiring thread locking compound, will be called out. The correct torque values must be used when installing fasteners that require torque. If the above conditions are not followed, parts or system damage could result.

GENERAL DESCRIPTION

CONSTRUCTION

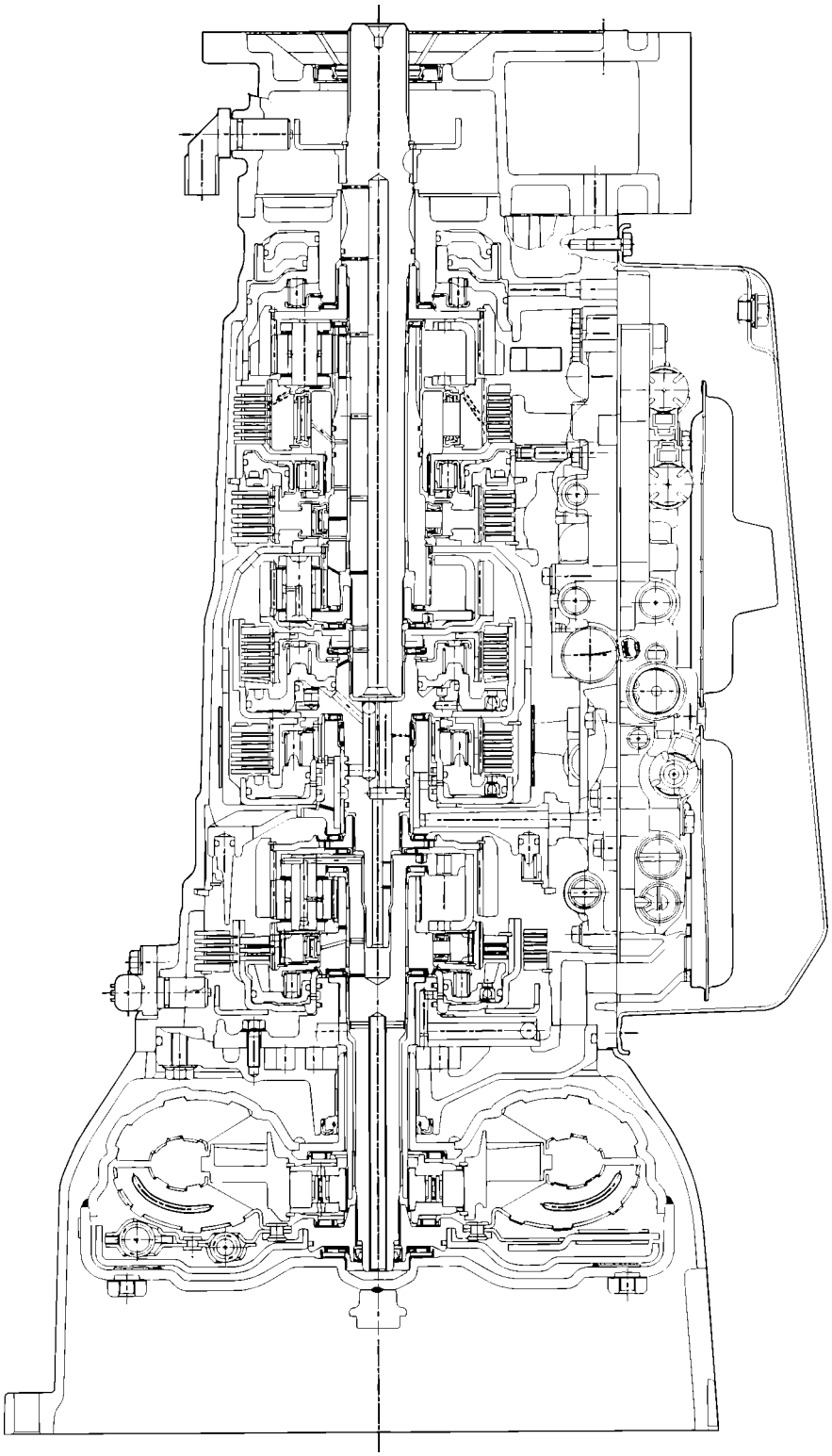

A07RY00001

ELECTRONIC CONTROL COMPONENTS

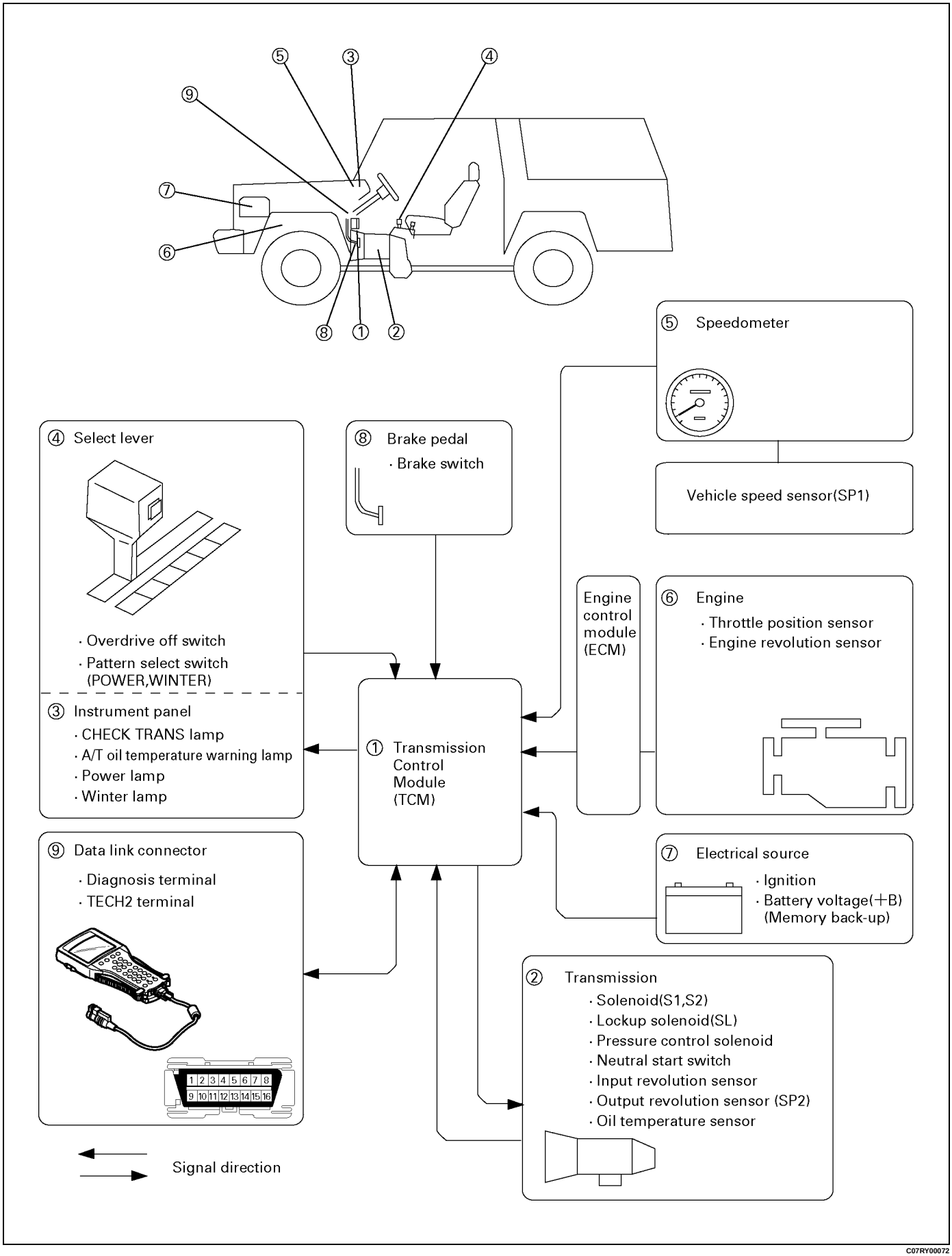

C07RY00072

TRANSMISSION CONTROL MODULE (TCM)

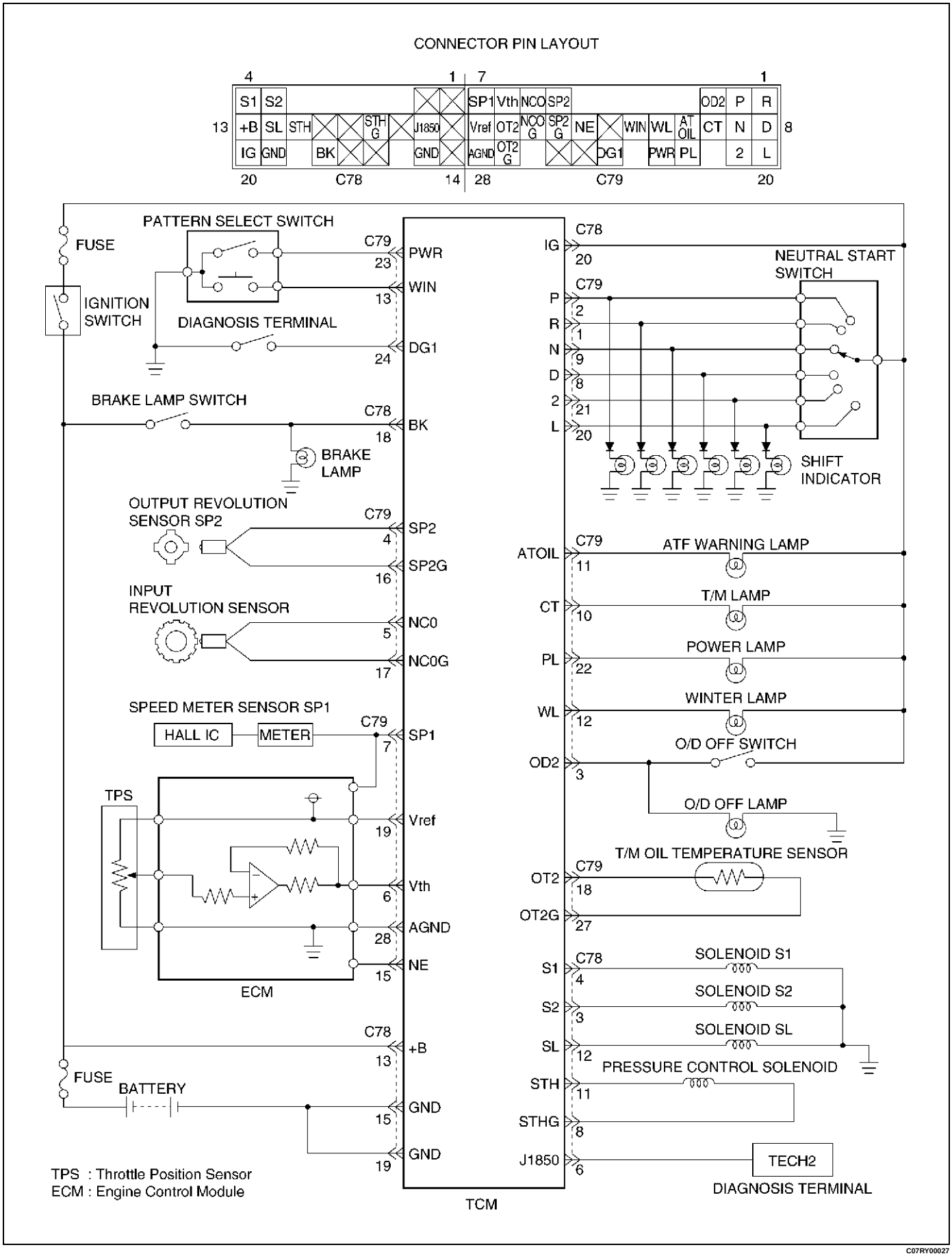

CONTROL SYSTEM DIAGRAM

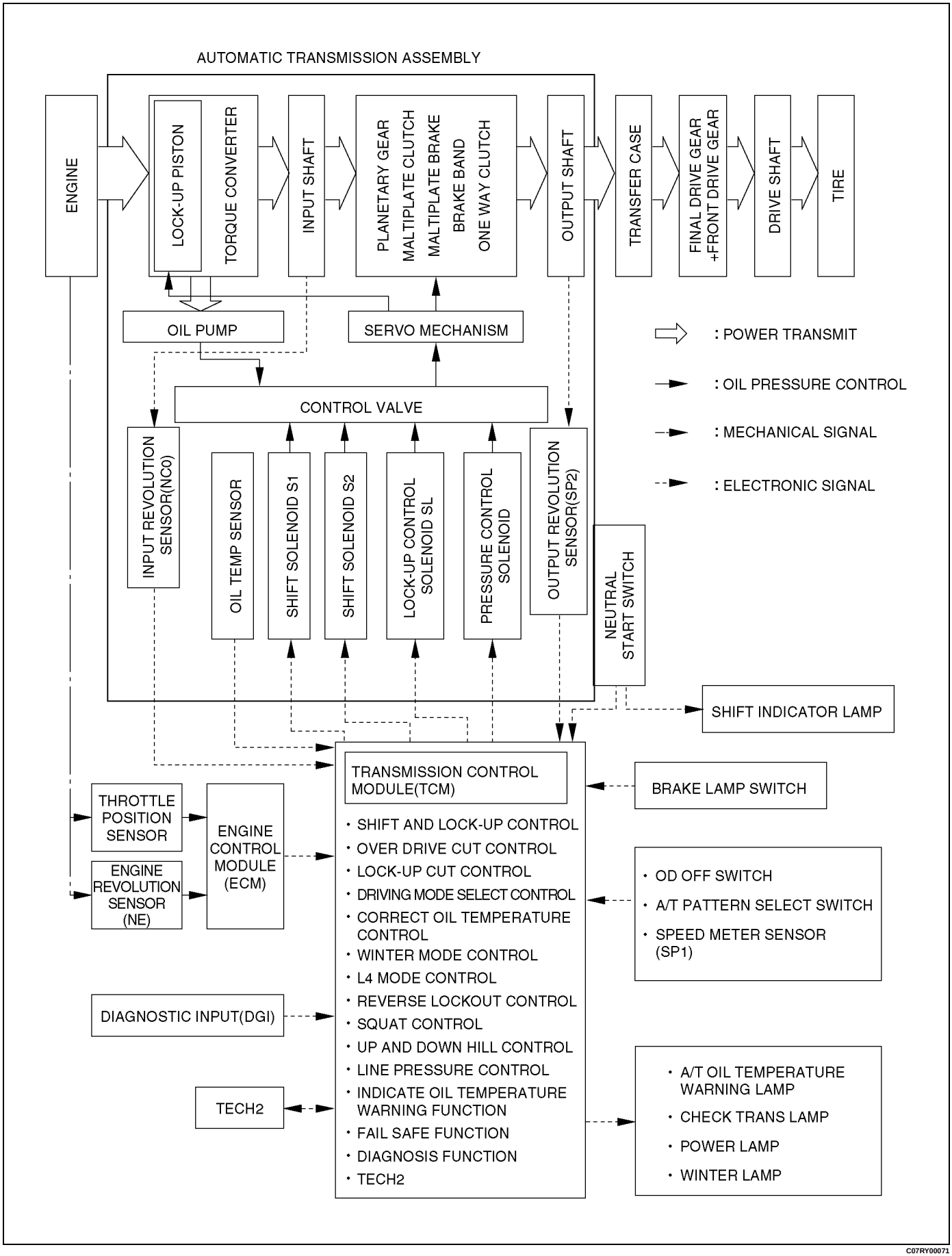

C07RY00071

CONTROL AND FUNCTIONS

Item	Description
Shift and lock-up control	• In D range, speed change point and Lock-up point can be changed by setting pattern selection switch to "POWER", "NORMAL" or "WINTER" mode. • Gear shift position in the conditions made up of transmission shift positions (D.2.L) combined with pattern selection switch (POWER, NORMAL, and WINTER) can be controlled in accordance with vehicle speed and the opening of throttle valve.

Overdrive cut control	• If O/D OFF switch is set on in D range (O/D OFF lamp ON), gear shift to O/D is not effected.
	• Overdrive is released at O/D OFF switch on and high transmission oil temperature (More than 130°C).
	However, to prevent engine over revolution
	  • 4→3 shifting at vehicle speed is less than 118 km/h.
	  • 3→4 shifting at vehicle speed is more than 131 km/h.

Lock-up cut control	• In D range, 3rd or O/D lock-up is conducted in "POWER" or "NORMAL" mode. • In 2, L range, lock-up is off in the whole area. • Lock-up timing is controlled to reduce gear shift shock using kind of gear shift (shift up, etc.) lock-up status at the time of gear shift judgement, gear step and throttle opening after gear shift. • Lock-up is released at brake on or high transmission oil temperature (More than 130°C). • Lock-up is prohibited when idling is defected by throttle position sensor.
Driving mode select control	• The TCM selects a suitable driving mode from the nine kinds for the variety driving condition. i) Economy mode ii) Power mode iii) Winter mode iv) HOT1 mode v) HOT2 mode vi) L4 mode vii) Slope mode (Up slope 1, Up slope 2 and Down slope mode) • The priority of driving mode: Economy < Power < Slope < L4 < Winter < HOT1 < HOT2
Squat control	• When the TCM detects D signal on, the TCM controls 1–3–1 shift by setting a timer, in order to improve the shift feel at N→D.
Line pressure control	• The TCM output current which corresponds to throttle oil pressure to pressure control solenoid based on throttle opening.
Indicate oil temperature warning function	• If the transmission oil temperature sensor senses that transmission oil temperature is greater than 146°C, the TCM turn on A/T OIL TEMP warning lamp. (The warning lamp is turned off, if oil temperature is less than 126°C.)
L4 mode control	• The TCM judges whether the transfer is engaged in high or low based on the ratio rpm data from output speed sensor in the transmission and the rpm data from speed meter sensor to select the shift map.
Up and down hill control	• The TCM judges up and down hill, and change shift pattern based on throttle opening and acceleration.
Correct oil temperature control	• If the temperature exceeds a predetermined value, the TCM selects the high oil temperature shift point for downshifting, thus preventing the oil temperature from rising. (More than 130°C, D range)

Winter mode control	• The TCM controls the vehicle start smoothly on low frictional road like snow road by executing this control. Activate condition: 1. Excluding "2", "L" range 2. Vehicle speed is less than 11 km/h 3. Transmission oil temperature is less than 115°C 4. Throttle opening is less than 8% 5. Excluding winter mode Cancel condition: 1. When winter mode switch is pushed again 2. When either "2" or "L" is detected 3. Ignition switch "OFF" 4. Vehicle speed is more than 34 km/h for 1 second or mode continuously 5. Transmission oil temperature is more than 130°C
Fail-safe function	• When trouble occurs to vehicle sensor and each solenoid, TCM automatically exerts fail-safe control not to spoil driveability. • This control is exerted when sensor or actuator is in trouble, while TCM works normally.
Diagnosis function	• If there is an abnormality in vehicle sensors, each solenoid (S1-S3, STH), or throttle position sensor, "CHECK TRANS" lamp is actuated to warn the drive. But when the abnormality items have been restored to normal, the light does not blink. • Faulty parts are memorized in TCM. If self-diagnosis start signal is inputted, "CHECK TRANS" lamp is blinked and results of diagnosis are indicated. A history of faults remains recorded even when IGN switch is off.
TECH 2	• Output of control data in the TCM • Actuator (Solenoid) operation check • Erasure of trouble code

MAJOR INPUT/OUTPUT COMPONENTS

	Component	Function
Input	Vehicle speed sensor (Speedometer)	Detects the vehicle speed (Back-up sensor of output revolution sensor).
	Output revolution sensor (Transmission)	Detects the vehicle speed.
	Input revolution sensor (Transmission)	Detects the input revolution (O/D direct clutch drum revolution).
	Engine revolution sensor	Detects the engine revolution.
	Throttle position sensor	Detects the throttle opening rate.
	Neutral start switch	Detects the select lever position.
	Pattern select switch	Detects whether the driver has selected "NORMAL", "POWER", or "WINTER" mode.
	Overdrive off switch	Detects whether the driver has selected O/D.
	Brake lamp switch	Detects whether the driver has pressed the brake pedal or not.
	Oil temperature sensor	Detects the oil temperature.
	Diagnostic start switch	Starts self-diagnosis and displays a code for faulty part if any.
Input/Output	Data link connector	When connected with Tech2 or tester, can communicate the data for function check, etc.
Output	Shift solenoid S1, S2	Selects shift point and gear position suited to the vehicle running condition on the basis of TCM output.
	Lock-up control solenoid SL	Control the lock-up clutch suited to the vehicle running condition on the basis of TCM output.
	Pressure control solenoid STH	Adjusts throttle pressure by energizing current of linear pressure control solenoid to prevent the shift shock and to obtain shift smoothly.
	"CHECK TRANS" lamp	When trouble has occurred to throttle position sensor, vehicle speed sensor, or solenoid, "CHECK TRANS" lamp is blinked to warn the driver. If also displays the trouble code.
	A/T OIL TEMP warning lamp	Lights when ATF oil temperature rises. (Turned on at greater than 146°C. Turned off at less than 126°C.
	Power mode lamp	Informs the driver whether the vehicle is in power mode or not.
	Winter mode lamp	Informs the driver whether the vehicle is in winter mode or not.
Computer	Transmission Control Module (TCM)	Based on the signal from each switch and sensors, judges necessary shift point and lock-up operation, and send signal to each solenoid.

LOCATION OF CLUTCH, BRAKE, ONE-WAY CLUTCH AND SOLENOID

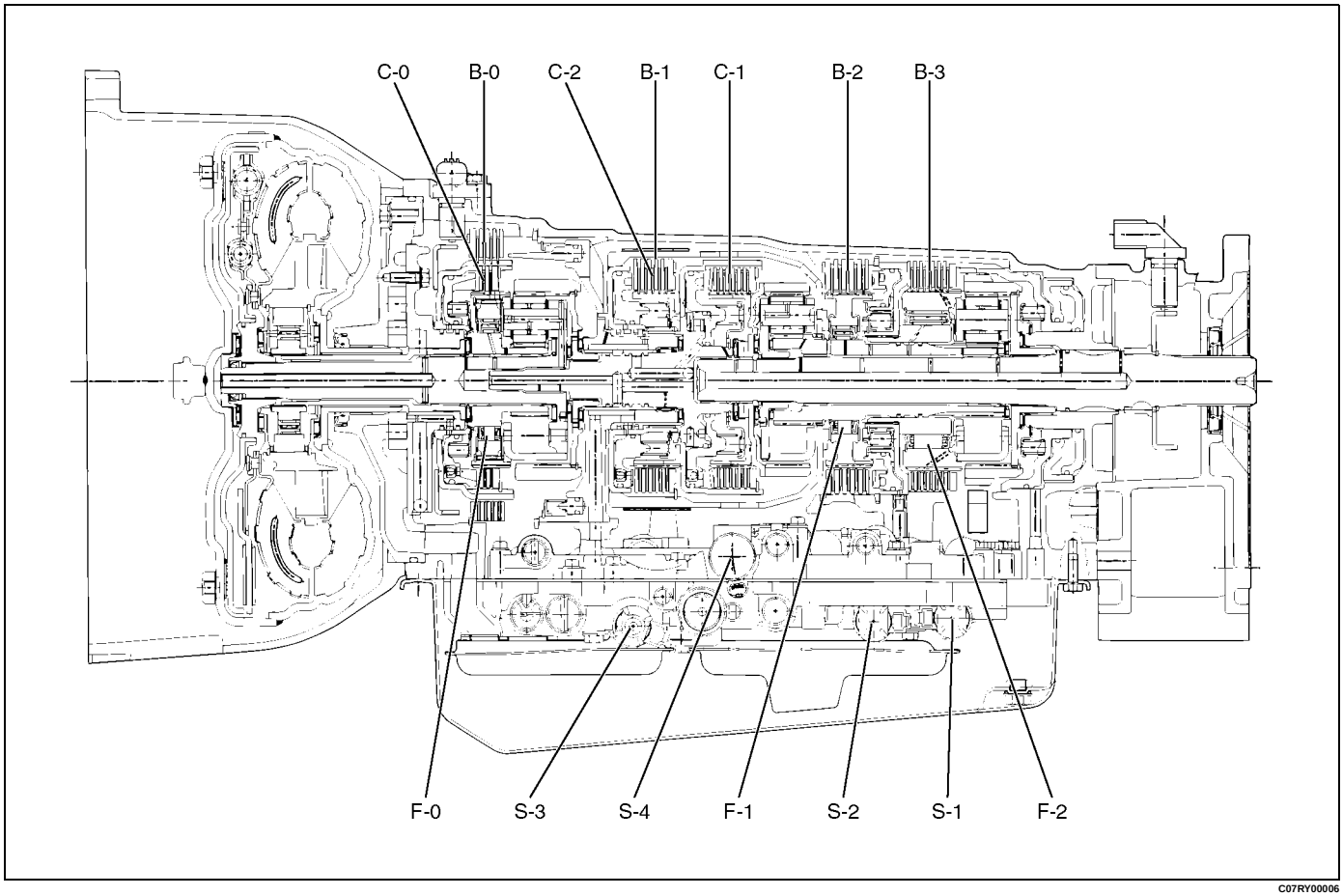

C07RY00006

Legend

C-0: Overdrive direct clutch
C-1: Forward clutch
C-2: Direct clutch
B-0: Overdrive brake
B-1: Second coast brake
B-2: Second brake
B-3: First and reverse brake
F-0: Overdrive one-way clutch
F-1: One-way clutch (No.1)
F-2: One-way clutch (No.2)
S-1: Shift solenoid S1
S-2: Shift solenoid S2
S-3: Lock-up solenoid SL
S-4: Pressure control solenoid STH

OPERATION OF CLUTCH, BRAKE AND ONE-WAY CLUTCH

❍ :Operating ⊗ :Free at coast down ◎ :Operating at Lock-up

Shift lever position	Gear position	C-0	C-1	C-2	B-0	B-1	B-2	B-3	F-0	F-1	F-2	S-1	S-2	S-3
P	Parking	❍										❍		
R	Reverse	❍		❍				❍	❍			❍		
N	Neutral	❍										❍		
D	1st	❍	❍						❍		⊗	❍		
	2nd	❍	❍				❍		❍	⊗		❍	❍	
	3rd	❍	❍	❍			❍		❍				❍	◎
	O/D		❍	❍	❍		❍							◎
2	1st	❍	❍						❍		⊗	❍		
	2nd	❍	❍			❍	❍		❍	❍		❍	❍	
	3rd	❍	❍	❍			❍		❍				❍	
L	1st	❍	❍					❍	❍		❍	❍		
	(1*) 2nd	❍	❍			❍	❍		❍	❍		❍	❍	
	(2*) 3rd	❍	❍	❍			❍		❍				❍	

(1*): Down-shift only in the L range and 2nd gear - no up-shift.
(2*): Down-shift only in the L range and 3rd gear - no up-shift.

SPEED CHANGE AND LOCK-UP PATTERN

If you select a speed range and a lock-up pattern as shown below by specifying respective positions of transmission shift lever, transfer shift lever and pattern select switch, the transmission control computer controls speed change and lock-up operations based on the specified pattern in accordance with the degree of throttle opening and vehicle speed.

Pattern select sw. position	Transmission shift position			
	D		2	L
	Overdrive OFF switch OFF (⊔)	Overdrive OFF switch ON (⊔)		
NORMAL POWER	1st ⇔ 2nd ⇔ [3rd] ⇔ [O/D]	1st ⇔ 2nd ⇔ [3rd] ⇐ [O/D]	1st⇔2nd⇔(3rd)	1st⇐(2nd)⇐(3rd)
WINTER	3rd fixed		—	—

☐: The lock-up operation is available.
( ): Transmission is shifted at high speed to prevent overrun.

OVERDRIVE AND LOCK-UP OPERATING CONDITIONS

The overdrive and lock-up clutch operate if the following conditions are satisfied.

	Overdrive	Lock-up clutch
Transmission shift position	D range	⇐ (1*)
O/D OFF switch	OFF (O/D OFF lamp OFF)	—
Stop lamp switch	—	OFF
Throttle opening	—	Except fully closed
Vehicle speed	About 49 km/h or more	3rd: About 50 km/h or more O/D: About 65 km/h or more

(1*): If transmission oil temperature is more than 130°C, lock-up is inhibit.

DIAGNOSIS

BASIC TROUBLESHOOTING

AW30-40LE transmission, called Electronic Controlled Transmission (ECT), differs from oil pressure control type transmissions in that it is controlled by a microcomputer. Accordingly, its troubleshooting procedure differs also.
Before troubleshooting an ECT, first determine whether the problem is electrical or mechanical. To do this, just refer to the basic troubleshooting flowchart provided below. If the cause is already known, using the basic troubleshooting chart below along with the general troubleshooting chart on the following page should speed the procedure.

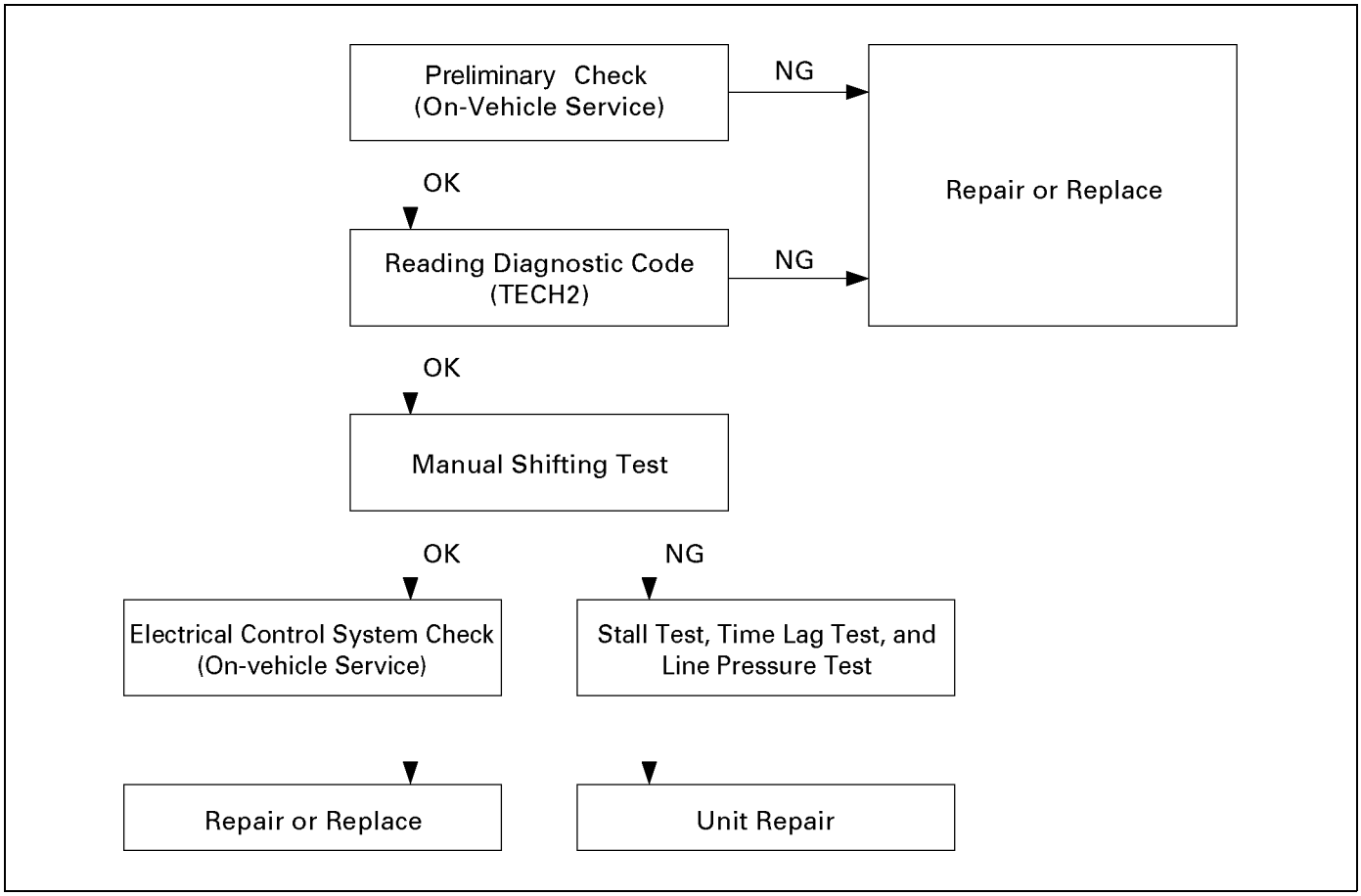

SELF-DIAGNOSIS

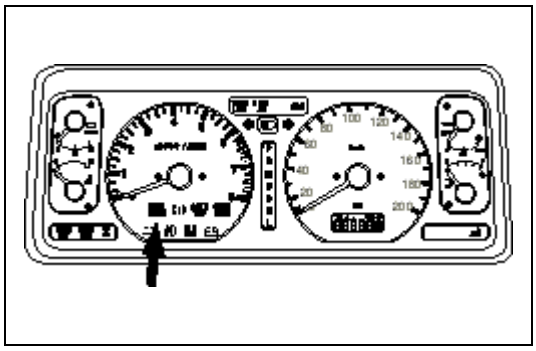

821RY00012

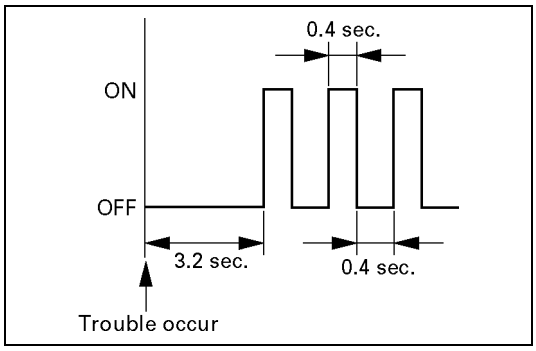

F07LV002

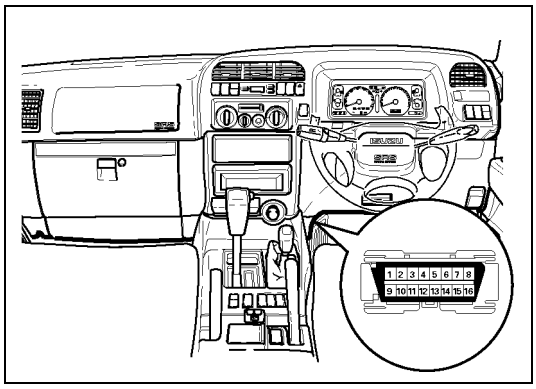

740RY00013

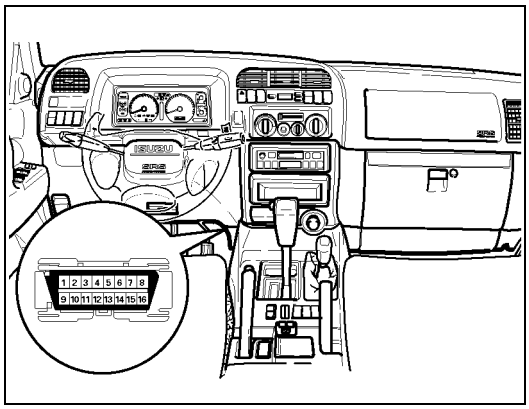

740RY00014

Warning to the driver

- When trouble has occurred to throttle position sensor, output revolution sensor, input revolution sensor, neutral start switch, engine revolution signal, speed meter signal, or solenoids, "CHECK TRANS" lamp is blinked (1.25 Hz) even during driving to warn the driver.
- The trouble is recorded by trouble code in TCM.
- When temporary trouble has been shooted, the "CHECK TRANS" lamp stops blinking. This blinking can be stopped by setting the ignition key off. But the trouble code remains memorized in TCM.

Self-diagnosis code (Flashing code) display

- For quick search for faulty parts, 12 different items of trouble code are indicated by "CHECK TRANS" lamp blinking.
- The storaged trouble codes can be identified by shorting the terminals No. 11 and No. 4 or 5 (ground) of data link connector with a lead wire.

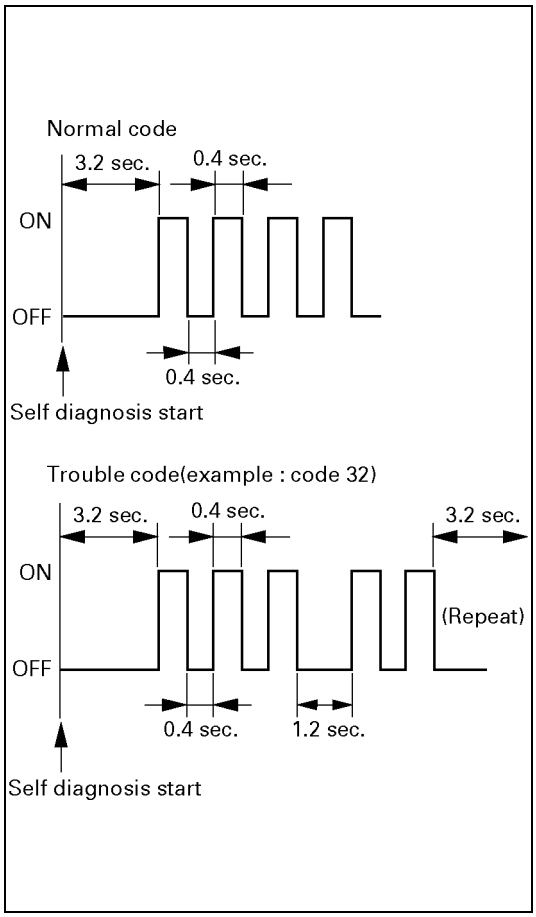

F07LV001

Indication Method:

1. Terminals No. 11 are No. 4 or 5 (ground) of data link connector are short circuited.
2. Turn the ignition key to the ON position.
3. In case there no trouble, normal code is indicated.
4. In case a plurality of trouble codes have occurred at a time, each code is indicated three times in numerical order.

NOTE:
Power line runs through data link connector.
Be careful shorting with a lead wire, etc.
(The vehicle side of control module may be damaged.) For identification of trouble code, connect Tech2 to data link connector.

Clear of trouble code memory

1. Clear the trouble code memory using F1: Clear DTC Information for Tech2.
2. After more than 1 second has elapsed after the ignition key has been turned ON, short between No. 11 and No. 4 or 5 (ground) of data link connector. Then, after 1 second, but within 6 seconds, discontinue shorting.

Flashing code

Flashing Code (P-Code)	Mode	Description
11 (P0722)	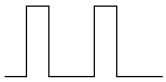	Output revolution sensor failure (SP2)
13 (P0727)	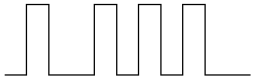	Engine revolution signal failure (NE)
14 (P0717)	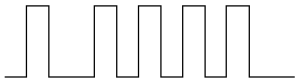	Input revolution sensor failure (NC0)
16 (P0710)	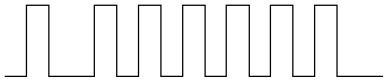	Oil temperature sensor failure (OT2)
17 (P0705)	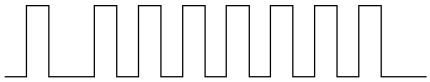	Gear selector failure (PRND2L)
21 (P0120)	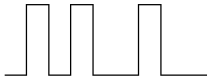	Analog throttle signal failure (VTH)
23 (P1121)	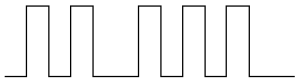	Analog throttle signal failure (VREF, VGND)
24 (P0502)	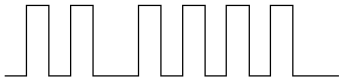	Speed meter sensor failure (SP1)
31 (P0753)		Solenoid 1 failure (S1)
32 (P0758)	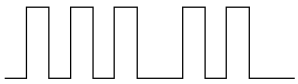	Solenoid 2 failure (S2)
33 (P0743)	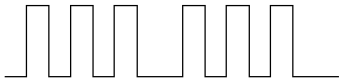	Torque converter clutch control lock-up (ON/OFF) solenoid failure (SL)
35 (P0748)	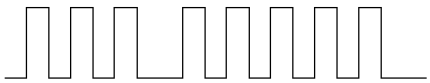	Pressure control solenoid failure (STH)

F07RY00016

DIAGNOSIS WITH TECH2

In this AW30-40LE transmission, troubleshooting can be performed for electrical faults using the Tech2 scan tool.
If the CHECK TRANS lamp blinks, or if an electrical fault in the transmission may probably exist, check trouble codes using the Tech2 scan tool.
In the diagnostic procedures described in this manual, first repair the faulty positions indicated by trouble code in the order of numbers and then perform troubleshooting for the faulty positions that are not indicated by trouble code. For correct troubleshooting, it is necessary to first repair the trouble codes of lower-order numbers, then to repair the trouble codes of higher-order numbers in sequence.

How to Use This Manual:
Check trouble codes using the Tech2 scan tool.

If no codes are set:

- Refer to *F1: Data Display* and identify the electrical faults that are not indicated by trouble code.

If codes are set:

- Record all the codes displayed by the Tech2 and check if the codes are intermittent (intermittent faults).
- Clear the codes.
- Drive the vehicle for a test to reproduce the faulty status.
- Check trouble codes again using the Tech2.
- If no code is displayed by test driving, the fault is intermittent. In this case, refer to the cautions on intermittent conditions.
- If a code is present, refer to "DIAGNOSTIC TROUBLE CODES (DTC) CHECK" for diagnosis.
- Because a code of high-order number may be set for the reason that a code of low-order number has been set after occurrence of a fault, perform repair work starting with a lower-order number is ascending order.

TECH2 CONNECTION

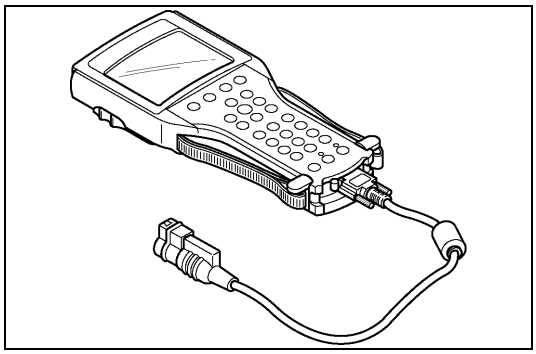

901RW176

The Tech2 scan tool is used to electrically diagnose the automatic transmission system and to check the system. The Tech2 enhances the diagnosis efficiency though all the troubleshooting can be done without the Tech2.
The Tech2 is a portable, compact, and light tester. When it is connected to the diagnosis connector of the vehicle, you can perform a variety of diagnoses and tests by communicating with the Transmission Control Module (TCM) of the vehicle.

1. Configuration of Tech2
   1. Tech2 scan tool kit (No. 7000086), Tech2 scan tool (No. 7000057) and DLC cable (No. 3000095)
   2. SAE16/19 adapter (No. 3000098) (1), RS232 loop back connector (No. 3000112) (2), and PCMCIA card (No. 3000117) (3)

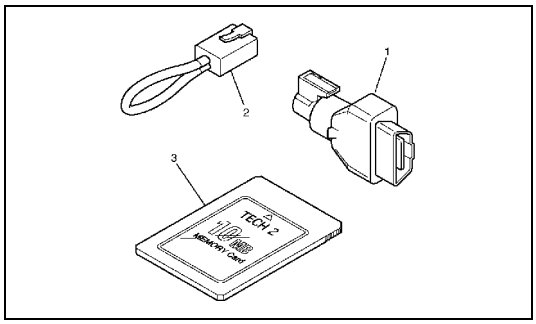

F07RW033

2. Tech2 Connection

•Observe the Tech2 User Guide.

1. Check the ignition is OFF.
2. Insert the ISUZU 2000 system PCMCIA card (1) into the Tech2 (4).
3. Connect the SAE16/19 adapter (2) to the DLC cable (3).
4. Connect the DLC cable (3) to the Tech2 (4).
5. Connect the SAE16/19 adapter (2) to the diagnosis connector of the vehicle.
6. Turn the ignition of the vehicle ON and press the "PWR" key of the Tech2.

•Check the display of the Tech2.

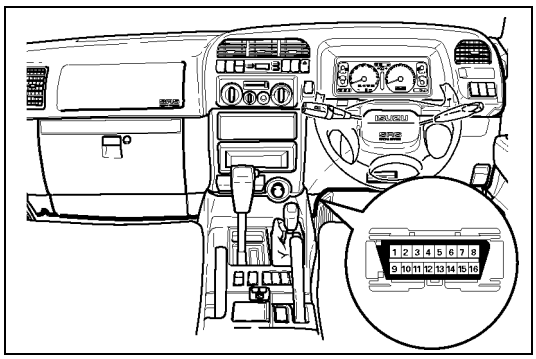

740RY00013

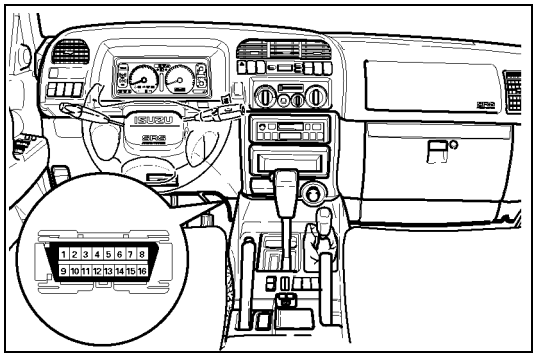

740RY00014

NOTE:
Be sure to check that the power is not supplied to the Tech2 when attaching or removing the PCMCIA card.

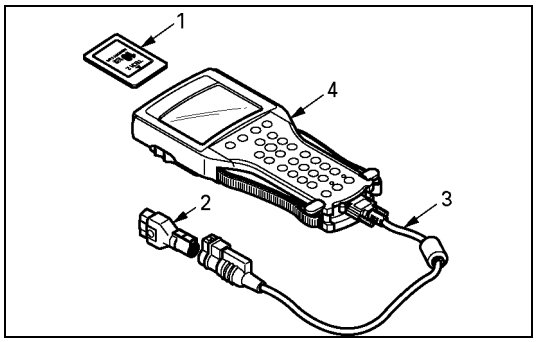

901RY00014

TECH2 OPERATING FLOW CHART (START UP)

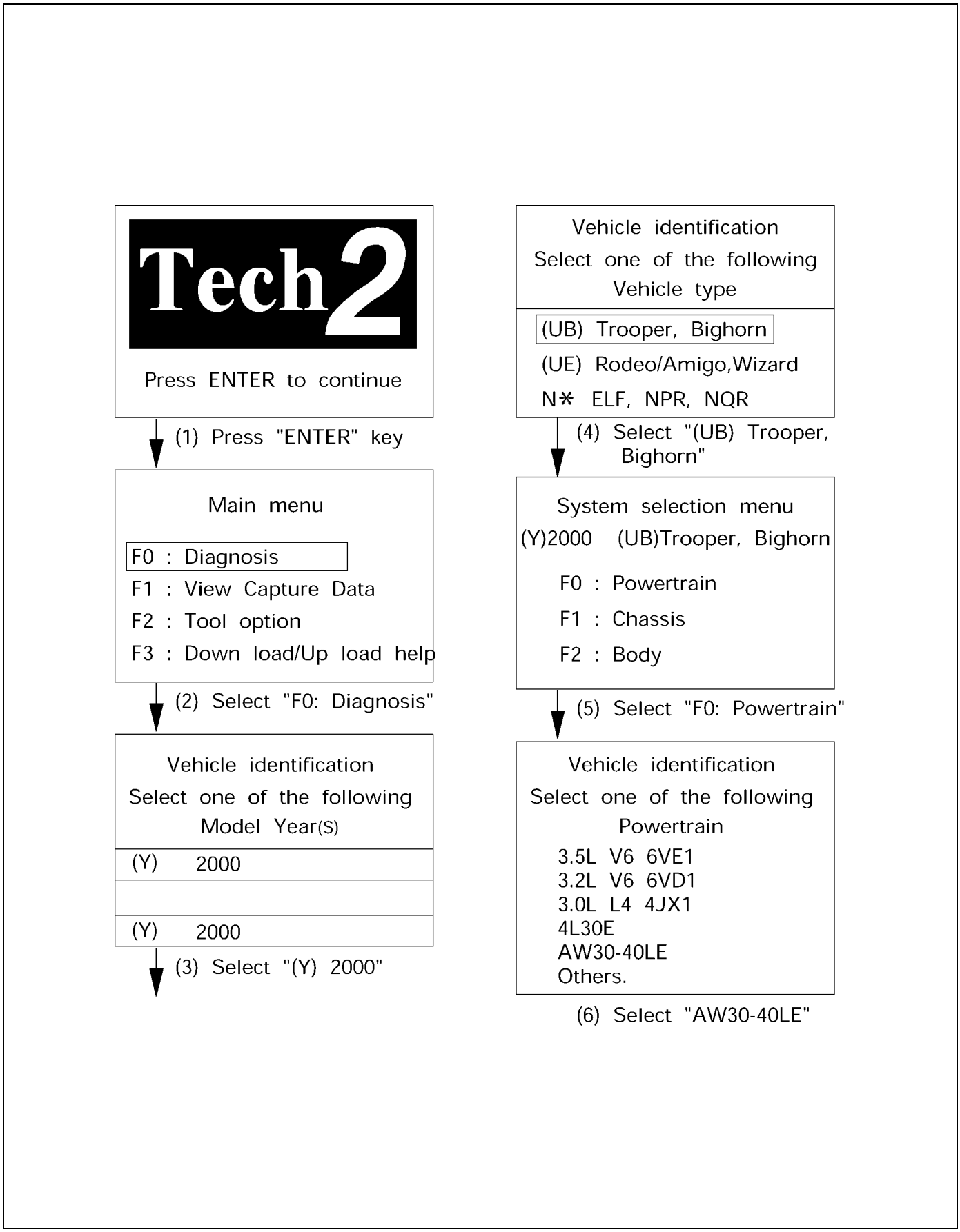

060RY00110

Once the test vehicle has been identified an “Application (Powertrain) Menu" screen appears. Please select the appropriate application.
The following table shows, which functions are used for the available equipment versions.

- F0: Diagnostic Trouble Codes
  - F0: Read DTC Info Ordered By Priority
  - F1: Clear DTC Information
  - F2: DTC Information
    - F0: History
    - F1: MIL SVS or Message Requested
    - F2: Last Test Failed
    - F3: Test Failed Since Code Cleared
    - F4: Not Ran Since Code Cleared
    - F5: Failed This Ignition
- F1: Data Display
  - F0: Transmission Data
  - F1: TCC Data
- F2: Snapshot
- F3: Actuator Tests
  - F0: Lamps
    - F0: Check Light Test
    - F1: Power Lamp Test
    - F2: Winter Lamp Test
    - F3: AT Oil Temperature Lamp Test
  - F1: Solenoids
    - F0: Solenoid 2-3 Test
    - F1: Solenoid 1-2/3-4 Test
    - F2: TCC Solenoid Test
    - F3: Pressure Control Solenoid (PCS)

Diagnostic Trouble Codes
The purpose of the “Diagnostic Trouble Codes" mode is to display stored TCM trouble codes.
When “Diagnostic Trouble Codes" is selected an “Application Menu" screen appears.

Clear DTC Information
The purpose of the “Clear DTC Information" mode is to command the clearing of stored TCM trouble codes.
When “Clear DTC Information" is selected, a “Clear DTC Information", warning screen appears. This screen informs you that by cleaning DTC's, “all stored DTC information in controller will be erased".
Do you want to clear DTC's (Yes/No).
Press either the Yes or No key when answering.
After clearing codes, confirm system operation by test driving the vehicle.
Allow the vehicle to shift through all four forward gears in a manner which attempts to repeat the failure condition.

NOTE: When the trouble has not been repaired and the trouble code cannot be erased, check the vehicle again.

DTC Information
When “DTC Information" is selected, an “Application Menu" appears with a list of DTC information function keys addressing DTC specifics and their origins.
Function key selections may vary for particular vehicle and/or system.

Data Display
The purpose of the “Data Display" mode is to continuously monitor data parameters.
The current actual values of all important sensors and signals in the system are display through F1 mode.
When “Data Display" is selected an “Application Menu" appears.
See “TRANSMISSION DATA" and “TCC DATA” on next page.

Snapshot
When “Snapshot" is selected an “Application Menu" appears.
When “Transmission Snapshot" application is selected from the “Application Menu", a “Snapshot Menu" appears, displaying several options. “Snapshot" options may vary from one system to another.
“Snapshot" allows a recording of all vehicle parameters. There parameters may then be replayed at a future point in time.
This action allows you to focus on making the condition occur, rather than trying to view all of the data in anticipation of the fault. The snapshot will collect parameter information around a trigger point that you select.
When a snapshot is taken. It is recorded onto the PCMCIA memory card. When the Tech2 is powered down. Snapshots are not lost.

Actuator Tests
The purpose of “Actuator Tests" mode is to check for correct operation of electronic system actuators.

Lamps
You can operate the lamps by pressing the ON and OFF buttons.
Preconditions: P or N position

Solenoid
Solenoid S1(1-2/3-4), S2(2-3) and TCC Solenoid (Torque Converter Clutch)
You can operate the solenoids by pressing the ON and OFF buttons.
Preconditions: P or N position, no vehicle speed, no engine speed
Pressure Control Solenoid (PCS)
You can operate the PC Solenoid by pressing the ON and OFF buttons. ON will command a maximum current of 1000 mA and OFF a minimum of 200 mA.
Preconditions: P or N position, no vehicle speed, engine running

TRANSMISSION DATA

Item	Unit	Enigne running at idle
Current Gear		1
Lock Up	Inactive, Active	Inactive
Selector Position		Park
AT Output Speed (Automatic Transmission)	RPM	0 RPM
Output Speed (Meter Signal Side)	RPM	0 RPM
AT Input Speed (Automatic Transmission)	RPM	0 RPM
Engine Speed	RPM	695 ~ 745 RPM
Vehicle Speed (Output Side)	km/h	0 km/h
Throttle Position	%	0 %
Throttle Position Sensor	V	0.25 ~ 0.45V
AT Oil Temperature (Automatic Transmission)	°C, °F	70 ~ 80°C (158 ~ 176°F)
Shift Pattern		
Desired PCS Pressure (Pressure Control Solenoid)	kPa	
PCS Desired Current (Pressure Control Solenoid)	mA	
PCS Actual Current (Pressure Control Solenoid)	mA	
Overdrive Off Switch	Off, On	
Brake Switch	Open 0V, Closed 12V	Closed 12V
Winter Switch	Open, Closed 0V	Open
Power Switch	Open, Closed 0V	Open
Diagnostic Request	Open, Closed	Open
Winter Lamp	Inactive 12V, Active 0V	Inactive 12V
Power Lamp	Inactive 12V, Active 0V	Inactive 12V
Check Light	Inactive 12V, Active 0V	Inactive 12V
AT Oil Temperature Lamp (Automatic Transmission)	Inactive 12V, Active 0V	Inactive 12V
Solenoid 2-3	Inactive 0V, Active 12V	Inactive 0V
Solenoid 1-2/3-4	Inactive 0V, Active 12V	Active 12V
TCC Solenoid (Torque Converter Clutch)	Inactive 0V, Active 12V	Inactive 0V

TCC DATA

Item	Unit	Enigne running at idle
Current Gear		1
Lock Up	Inactive, Active	Inactive
AT Output Speed (Automatic Transmission)	RPM	0 RPM
Output Speed (Meter Signal Side)	RPM	0 RPM
AT Input Speed (Automatic Transmission)	RPM	0 RPM
Engine Speed	RPM	695 ~ 745 RPM
Vehicle Speed (Output Side)	km/h	0 km/h
Throttle Position	%	0 %
Gear Ratio	:1	2.804
AT Oil Temperature (Automatic Transmission)	°C, °F	70 ~ 80°C (158 ~ 176°F)
TCC Slip Speed	RPM	695 ~ 745 RPM
TCC Solenoid Pressure Desired	kPa	0 kPa
Desired TCC Solenoid Current	mA	0 mA
Actual TCC Solenoid Current	mA	0 mA

INTERMITTENT CONDITIONS

If the Tech2 displays a code as intermittent, or if after a test drive a code does not reappear, the problem is most likely a faulty electrical connection or loose wiring.
Terminals should always be the prime suspect.
Intermittent rarely occur in sophisticated electronic components such as the Transmission Control Module (TCM).
When an intermittent problem is encountered, check suspect circuits for:

- Poor terminal to wire connection.
- Terminals not fully seated in the connector body (backed out).
- Improperly formed or damaged terminals.
- Loose, dirty, or corroded ground connections.
  HINT: Any time you have an intermittent in more than one circuit, check whether the circuits share a common ground connection.
- Pinched or damaged wires.
- Electro-Magnetic Interference (EMI)
  HINT: Check that all wires are properly routed away from spark plug wires, distributor wires, coil, and generator. Also check for improperly installed electrical options, such as lights, 2-way radios, etc.

Use the F2: SNAPSHOT mode of the Tech2 to help isolate the cause of an intermittent fault. The snapshot mode will record information before and after the problem occurs. Set the snapshot to "trigger" on the suspect code (or codes) or, if you notice the reported symptom during test drive, trigger the snapshot manually.
After the snapshot has been triggered, command the Tech2 to play back the flow of data recorded from each of the various sensors. Signs of an intermittent fault in a sensor circuit are a sudden unexplainable jump in data values out of the normal range.

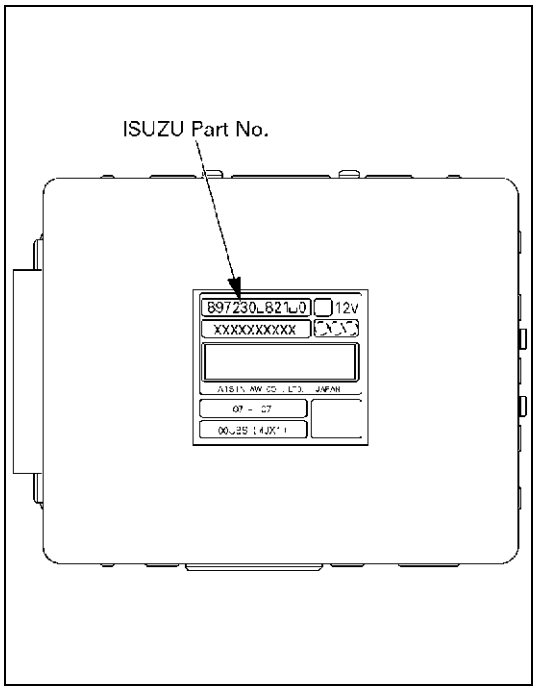

826RY00004

IDENTIFICATION OF TRANSMISSION CONTROL MODULE (TCM)

ISUZU Part No: 8-97230-821-0

DIAGNOSTIC TROUBLE CODES (DTC) CHECK

DTC NUMBER	FLASHING CODE	**DESCRIPTION**
P0120	21	ANALOG THROTTLE SIGNAL FAILURE (VTH)
P0502	24	SPEED METER SENSOR FAILURE (SP1)
P0705	17	GEAR SELECTOR FAILURE (PRND2L)
P0710	16	OIL TEMPERATURE SENSOR FAILURE (OT2)
P0717	14	INPUT REVOLUTION SENSOR FAILURE (NC0)
P0722	11	OUTPUT REVOLUTION SENSOR FAILURE (SP2)
P0727	13	ENGINE REVOLUTION SIGNAL FAILURE (NE)
P0743	33	TORQUE CONVERTER CLUTCH CONTROL LOCK-UP (ON/OFF) SOLENOID FAILURE (SL)
P0748	35	PRESSURE CONTROL SOLENOID FAILURE (STH)
P0753	31	SOLENOID 1 FAILURE (S1)
P0758	32	SOLENOID 2 FAILURE (S2)
P1121	23	ANALOG THROTTLE SIGNAL FAILURE (VREF, VGND)

DTC P0120 (FLASHING CODE 21) ANALOG THROTTLE SIGNAL FAILURE (VTH)

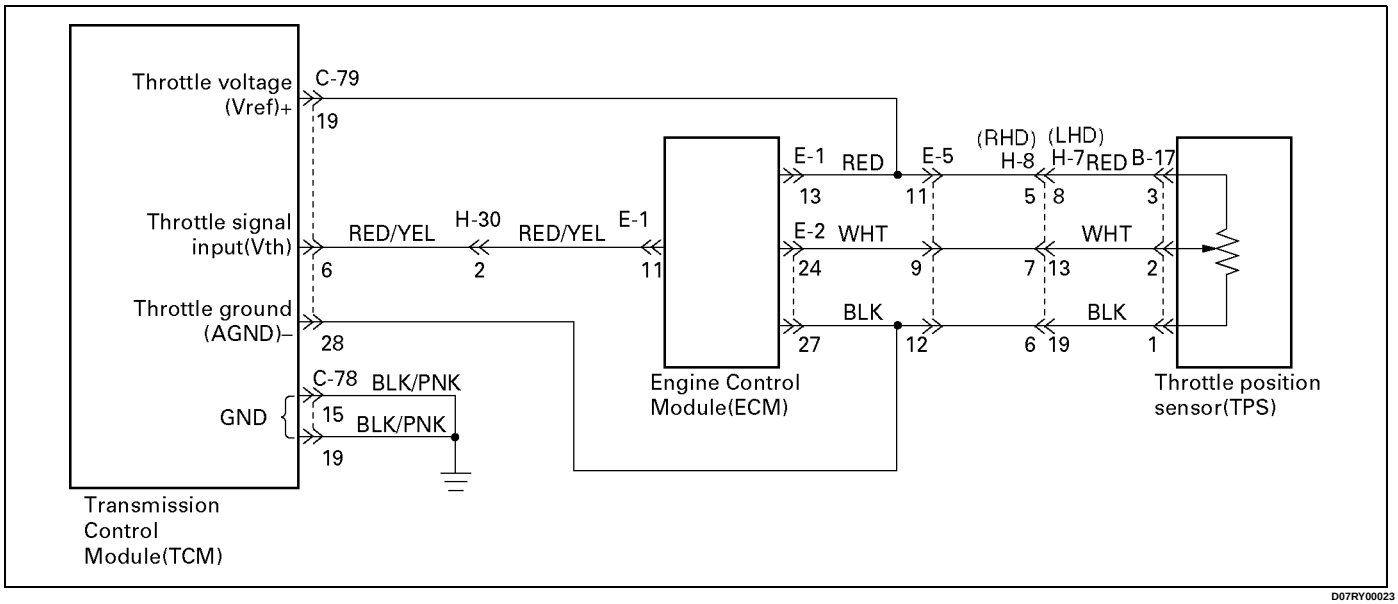

Circuit description:
When the signal of the engine throttle position sensor located on the accelerator pedal is supplied to the TCM, the TCM judges the opening condition of the throttle.
The shift point of the transmission is determined by this opening condition of the throttle.

Fail-safe control:
The TCM controls fail-safe by detecting analog throttle signal (VTH) failure.

Failure detection:

- When the throttle input voltage is detected less than 0.112V or more than 4.417V for 2.0 seconds.

Contents of control:
At failure detection

- Throttle opening for line pressure control ... Throttle opening 100%
- Throttle opening for shift control ... Throttle opening 0%
- Lock-up control inhibit
- Up hill and down hill control inhibit
- Squat control inhibit

At failure decision
Executes following items in addition to above control items at failure detection.

- Blinks "CHECK TRANS" lamp
- Stores the failure information in failure-memory

Conditions of turning "CHECK TRANS" lamp off:
Turns “CHECK TRANS” lamp off when judged 0km/h by output revolution sensor after throttle signal input voltage is detected more than 0.112V and less than 4.717V.
(however, uses 0 km/h judgment by back-up vehicle speed at output revolution failure)

Reversion conditions from fail-safe:
At failure detection
Immediately recovers when the throttle input voltage is detected more than 0.112V and less than 4.717V.
At failure decision
Recovers at the same time as the conditions of turning “CHECK TRANS” lamp off are satisfied.

Test description:
The following numbers correspond to circled numbers on the diagnostic chart.

(1) Check that the throttle input voltage is 0.25 to 0.45V.
(2) At this test, check that as the throttle opens, the voltage goes up and that the voltage reaches 3.74 to 4.56V at the full open status.
(3) Check the power supply voltage (4.75 – 5.25V) of the throttle position sensor.

Diagnostic aids:
An intermittent may be caused by a poor connection, rubbed through wire insulation or a wire broken inside the insulation. Inspect related harness connector for backed out terminals, improper mating, broken locks, improperly formed or damaged terminals, poor terminal to wire connection and damaged harness.

DTC P0120 (FLASHING CODE 21) ANALOG THROTTLE SIGNAL FAILURE (VTH)

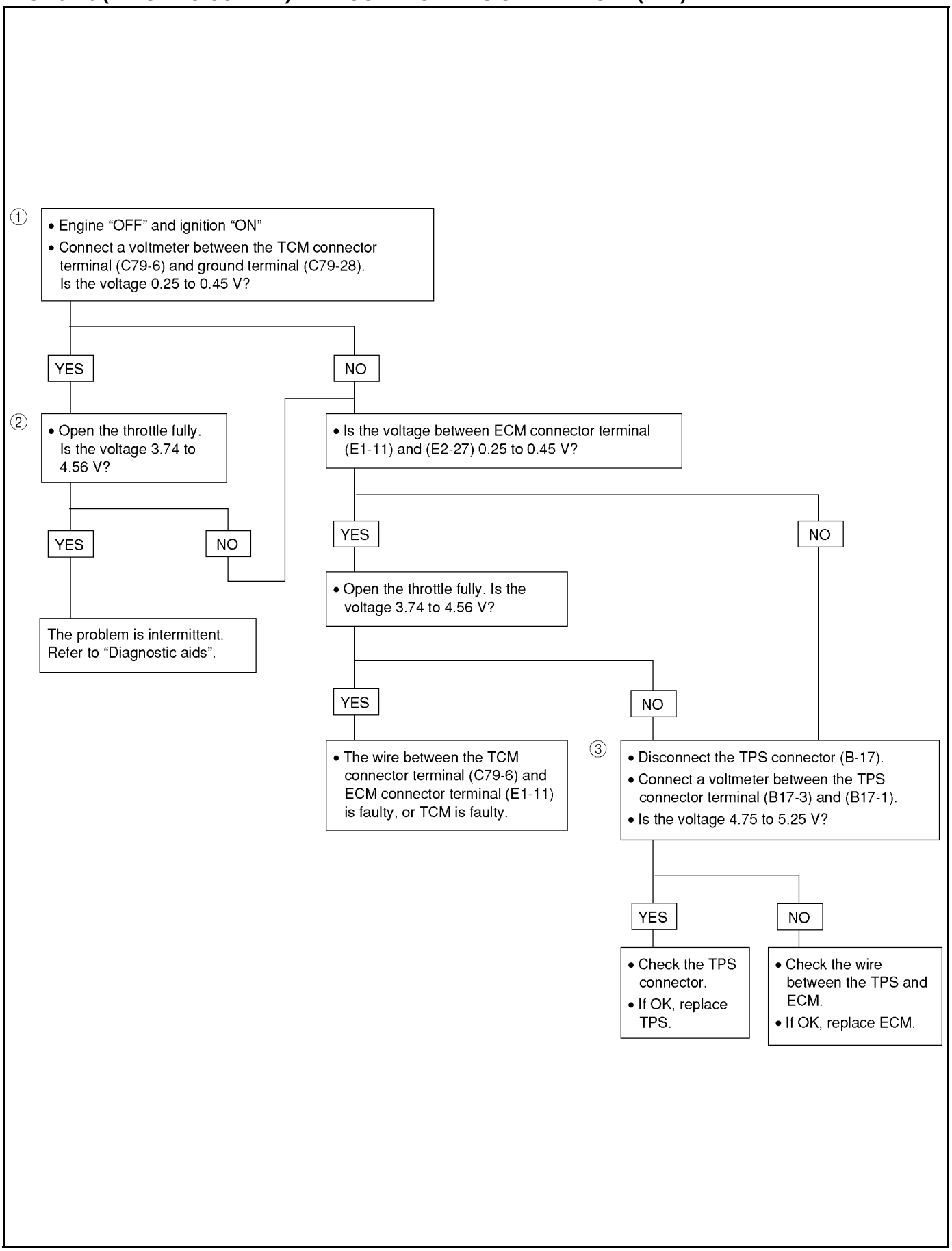

DTCP0120

DTC P0502 (FLASHING CODE 24) SPEED METER SENSOR FAILURE (SP1)

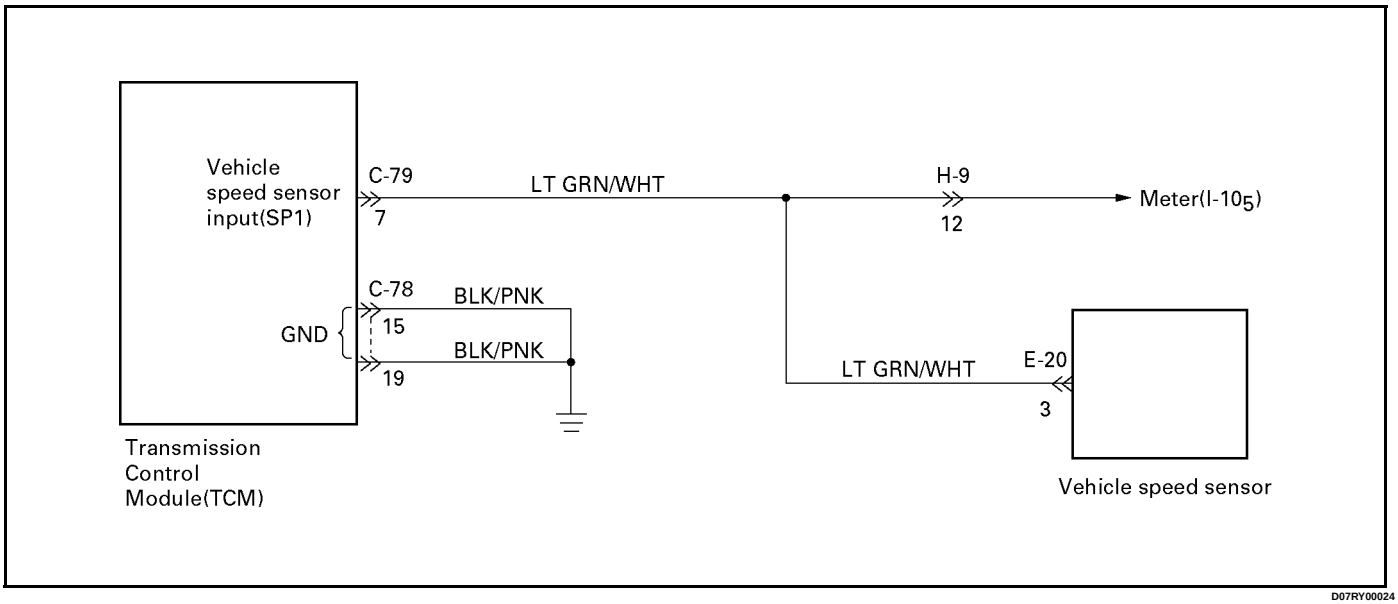

D07RY00024

Circuit description:
Speed information is provided by the speed meter sensor to the meter.
In the meter, the pulses of the speed meter sensor are converted to speed signals (pulses), and these signals are output to the TCM. The TCM converts these pulse voltages to km/h signals.

Fail-safe control:
The TCM controls fail-safe by detecting speed meter signal failure.

Failure detection:

- When not even 1 pulse is input in the speed meter signal during the time 100 pulses are input in the output revolution sensor signal.
- When not even 1 pulse is input in the speed meter signal during the time 27 pulses are input in the output revolution sensor signal.

Contents of control:
At failure detection

- Keeps the condition of transfer (High/Low judgment) just before detection until vehicle speed is 0km/h, and changes shift map to L4 map (3→4 UP None) at vehicle speed is 0km/h.
- Uses high oil temperature map according to shift map priority at correct oil temperature control.
- Up hill and down hill control inhibit.
- Stores the failure information in failure -memory.
- The failure detection of oil temperature sensor inhibit

At failure decision
Executes following items in adition to above control items at failure detection.

- Blinks "CHECK TRANS" lamp

Conditions of turning "CHECK TRANS" lamp off:
Turns "CHECK TRANS" lamp off when judged 0km/h by speed meter sensor after more than 1 pulse are input in the speed meter signal during the time 27 pulses are input in the output revolution sensor.

Reversion conditions from fail-safe:
At failure detection and decision
Recovers at the same time as the conditions of turning “CHECK TRANS” lamp off are satisfied.

Test description:
The following numbers correspond to circled numbers on the diagnostic chart.

(1) The cause of DTC P0502 setting is due to the operation fault of the speed meter.
(2) Speed signals are output from the meter. The sensor power supply is given from the TCM.

Diagnostic aids:
An intermittent may be caused by a poor connection, rubbed through wire insulation or a wire broken inside the insulation. Inspect related harness connector for backed out terminals, improper mating, broken locks, improperly formed or damaged terminals, poor terminal to wire connection and damaged harness.

DTC P0502 (FLASHING CODE 24) SPEED METER SENSOR FAILURE (SP1)

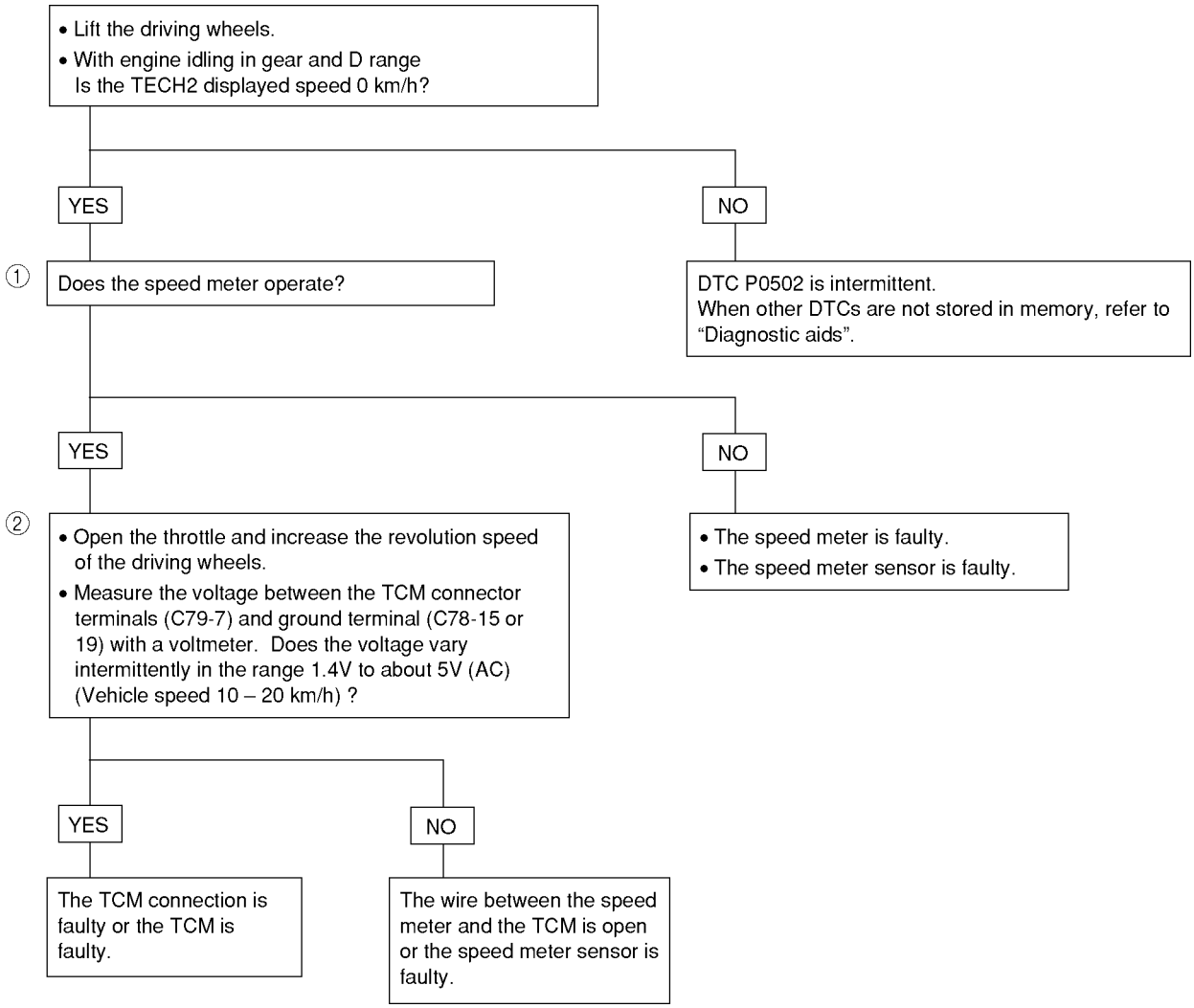

DTCP0502

DTC P0705 (FLASHING CODE 17) GEAR SELECTOR FAILURE (PRND2L)

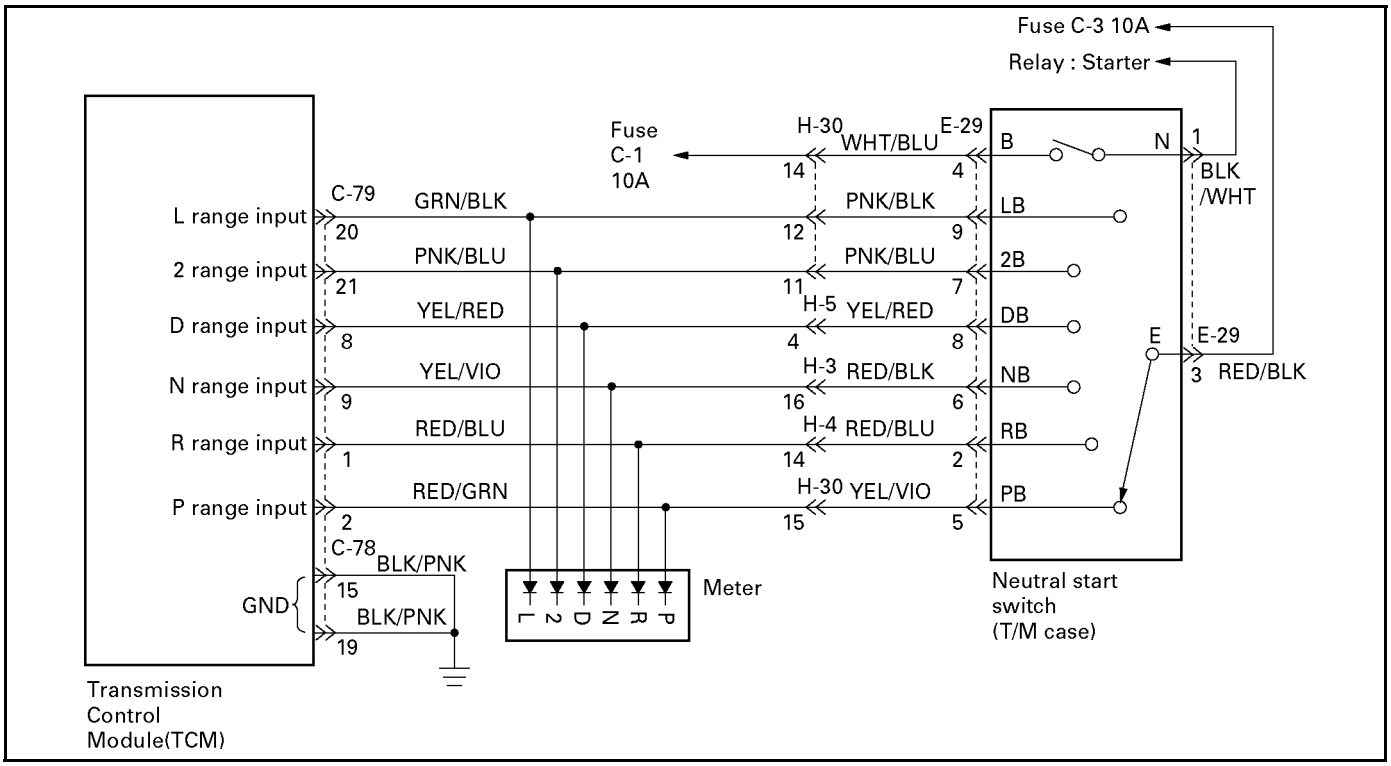

Circuit description:
The neutral start switch gives the signals related to the selector lever position (PRND2L) to the Transmission Control Module (TCM). The neutral start switch turns on when the select lever is shifted to the P, R, N, D, 2 or L range. The neutral start switch, which is connected to the starter switch circuit, is available only when the select lever is in the P or N range
The neutral start switch is connected to the transmission manual shaft and installed in the transmission case.

Fail-safe condition:
The TCM controls fail-safe by detecting selector position switch failure.

Failure detection:

(1) OPEN:
- When all switches are OFF
- When the failure criteria continues for 30 seconds if the vehicle speed which is calculated by output revolution sensor is more than 30 km/h and the engine revolution is more than 1500 rpm.

(2) SHORT:
- When more than two switches are ON at the same time.
- When the failure criteria condition for 10 seconds.

Contents of control:
At failure detection

(1) OPEN: D range judgment

(2) SHORT: Judged by priority D>2>L>R>N>P

•Up hill and down hill control inhibit

•Winter mode inhibit

At failure decision

Excutes following items in addition to above control items at failure detection.

•Blinks "CHECK TRANS" lamp

•Stores the failure information in failure-memory

•Reverse lockout control inhibit

Conditions of turning “CHECK TRANS” off:
Turns “CHECK TRANS” lamp off when only one of all switches is ON.

Reversion conditions from fail-safe:
Turns “CHECK TRANS” lamp off when only one of all switches is ON.

Test description:
The following numbers correspond to circled numbers on the diagnostic chart.

(1) It is judged whether the input signal received from the neutral start switch by the TCM is proper or not.

(2) The power status of the neutral start switch is checked.

(3) The continuity between neutral start switch terminals and the continuity of the wire connected to the neutral start switch are checked.

Diagnostic aids:
An intermittent may be caused by a poor connection, rubbed through wire insulation or a wire broken inside the insulation. Inspect related harness connector for backed out terminals, improper mating, broken locks, improperly formed or damaged terminals, poor terminal to wire connection and damaged harness.

DTC P0705 (FLASHING CODE 17) GEAR SELECTOR FAILURE (PRND2L)

①
- Engine “OFF” and key switch “ON”
- Connect a voltmeter to the each terminal of the TCM connectors (C-79) and grounding terminal (C78-15 or 19).
- Measure the voltage shifting the select lever to every position. (Comparison with Table 1)
- Is the displayed voltage at every position normal?

(Table 1)

⊖ Terminal	⊕ Terminal	Voltage (V)
C78-15 or C78-19	C79-2	8 - 16: P range 1 or less: Other than P range
	C79-1	8 - 16: R range 1 or less: Other than R range
	C79-9	8 - 16: N range 1 or less: Other than N range
	C79-8	8 - 16: D range 1 or less: Other than D range
	C79-21	8 - 16: 2 range 1 or less: Other than 2 range
	C79-20	8 - 16: L range 1 or less: Other than L range

YES

- Clear the TCM memory. Refer to “Clear of trouble code memory” of SELF-DIAGNOSIS.
- Make a running test. (greater than 30 sec.)

Is DTC P0705 displayed by self-diagnosis?

YES

The TCM is faulty or the continuity of wiring is temporarily faulty. Refer to “Diagnostic aids”.

NO

The continuity of wiring is temporarily faulty. Refer to “Diagnostic aids”.

NO

Is the displayed voltage at every position abnormal?

YES

②
- Check if there is any wire breaking in the fuse and wire connected to the connector terminal (E29-3) of the neutral start switch.
- Check the adjusted condition of the neutral start switch.
- If no fault is found, replace the neutral start switch.

NO

③
- Disconnect the connectors (E-29) of the neutral start switch.
- Make a continuity check between neutral start switch termnals with an ohmmeter. (Table 2) Is the result OK ?

(Table 2)

Range \ Terminal	E-29								
	1	4	3	5	2	6	8	7	9
P	○	○	○	○					
R			○		○				
N	○	○	○			○			
D			○				○		
2			○					○	
1			○						○

○—○ Continuity

YES

Wire breaking or a short circuit between the TCM connector and the neutral start switch connector.

NO

Replace the neutral start switch.

DTCP0705

DTC P0710 (FLASHING CODE 16) OIL TEMPERATURE SENSOR FAILURE (OT2)

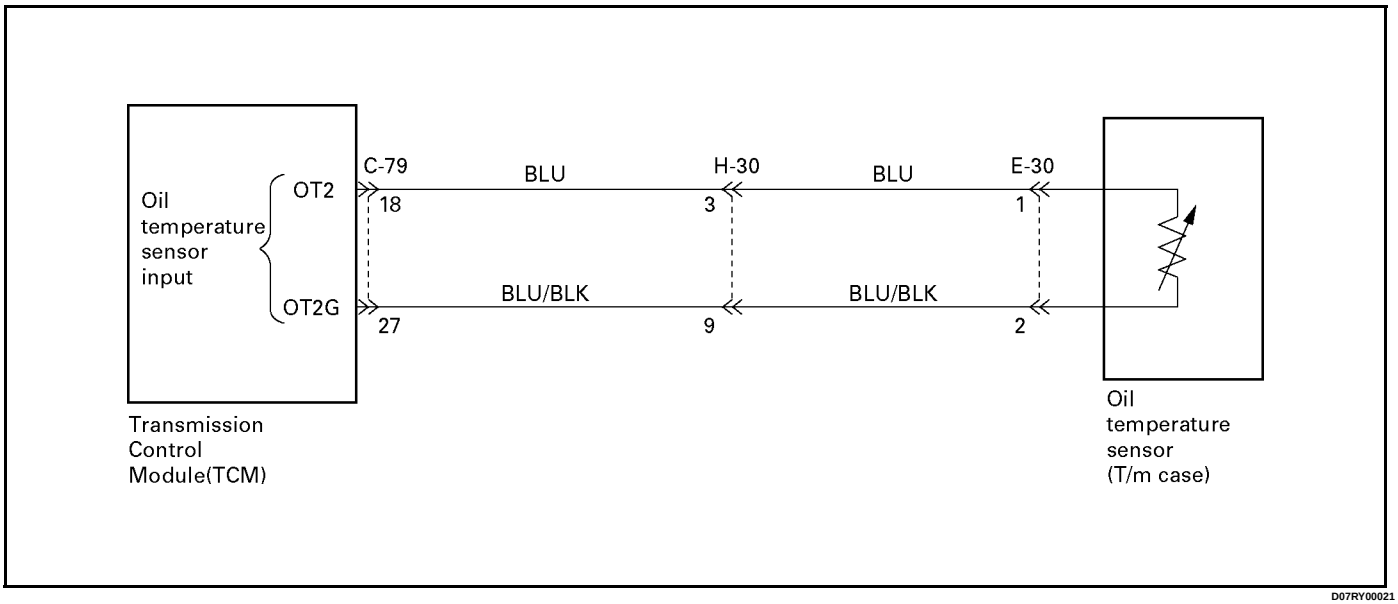

D07RY00021

Circuit description:
The oil temperature sensor is a thermistor sensor that is installed in the transmission case and converts temperature changes into continuous electric signals, then outputs them to the Transmission Control Module (TCM). When the ATF temperature is low, the resistance of the sensor (thermistor) goes up, so that the voltage of the TCM signal becomes high.
As the ATF is gradually warmed, the resistance of the sensor goes down and the voltage becomes low. At the normal operating ATF temperature (80°C/176°F) of the transmission, the voltage of the TCM is about 3.7V.

Fail-safe condition:
The TCM controls fail-safe by detecting oil temperature sensor failure.

Failure detection:
Short detection

- When the A/D value is detected less than 10 (220°C) for 5 minutes continuously while normal judgment is not satisfied from ignition on.

Open detection

- After 15 minites passed when the engine revolution is more than 400 rpm and the selector position switch is selected on R, D, 2, L range.
- When the change of the A/D value from engine start is less than 15 and the minnum A/D value is more than 1000 (-10°C) from engine start.

Contents of control:
At failure detection

- Changes shift map to HOT2 map
- Controls as A/T oil temperature 200°C
- Lock-up control inhibit
- Up hill and down hill control inhibit
- Blinks "CHECK TRANS" lamp
- Stores the failure information in failure-memory

At failure decision
Same as failure detection.

Conditions of turning "CHECK TRANS" off:
Turns "CHECK TRANS" lamp off when judged 0km/h by output revolution sensor after the normal area of oil temperature 40°C – 150°C is detected for 10 sec continuously.

Reversion conditions from fail-safe:
Recovers at the same time as the conditions of turning “CHECK TRANS” lamp off are satisfied.

Test description:
The following numbers correspond to circled numbers on the diagnostic chart.

(1) Check that the voltage of the oil temperature sensor varies with ATF temperatures.
(2) Check that the resistance of the oil temperature sensor varies with ATF temperatures.

Diagnostic aids:
An intermittent may be caused by a poor connection, rubbed through wire insulation or a wire broken inside the insulation. Inspect related harness connector for backed out terminals, improper mating, broken locks, improperly formed or damaged terminals, poor terminal to wire connection and damaged harness.

DTC P0710 (FLASHING CODE 16) OIL TEMPERATURE SENSOR FAILURE (OT2)

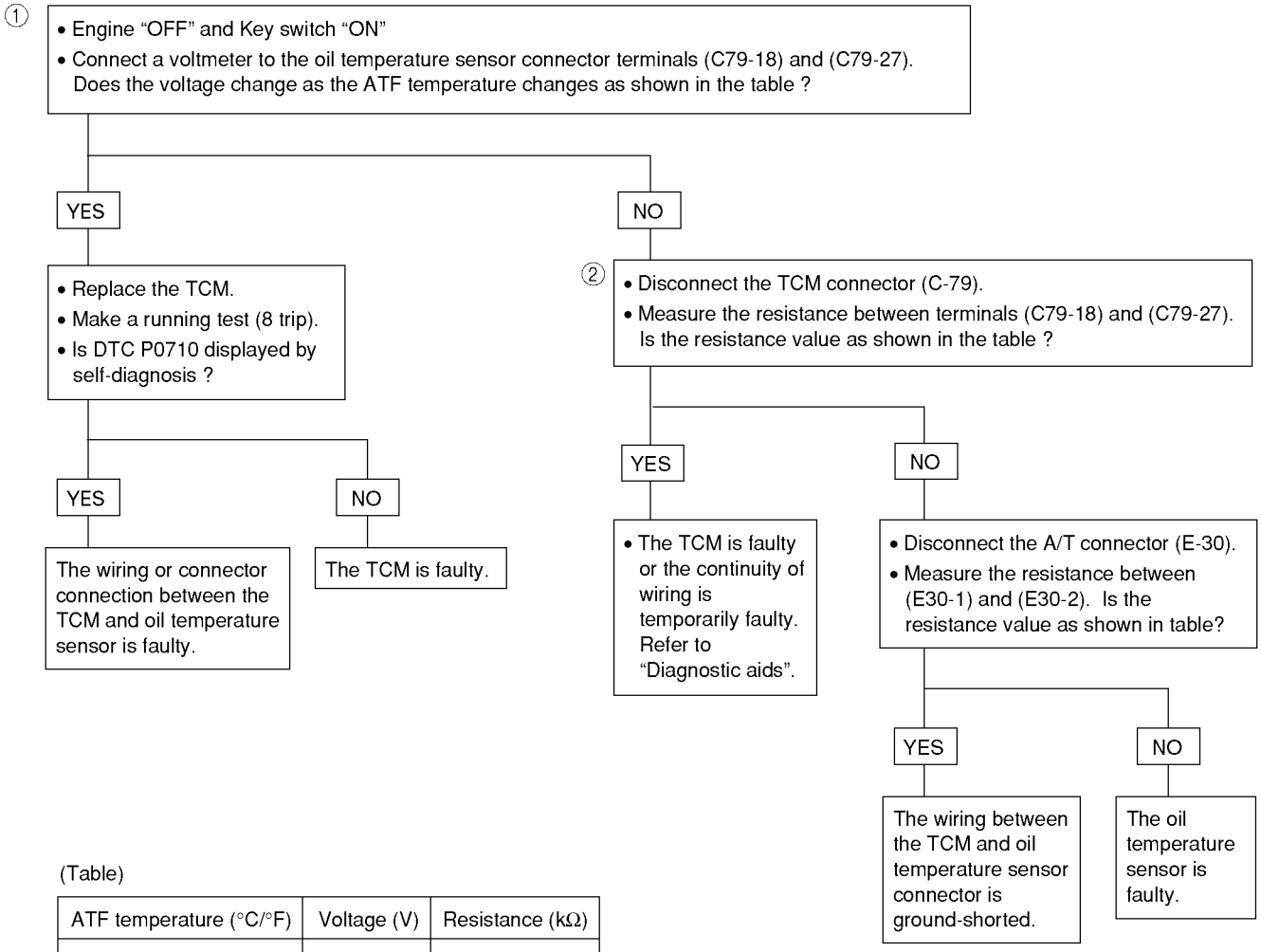

(Table)

ATF temperature (°C/°F)	Voltage (V)	Resistance (kΩ)
20/68	Approx. 4.7	0.5 – 30
80/176	Approx. 3.7	

DTC P0717 (FLASHING CODE 14) INPUT REVOLUTION SENSOR FAILURE (NC0)

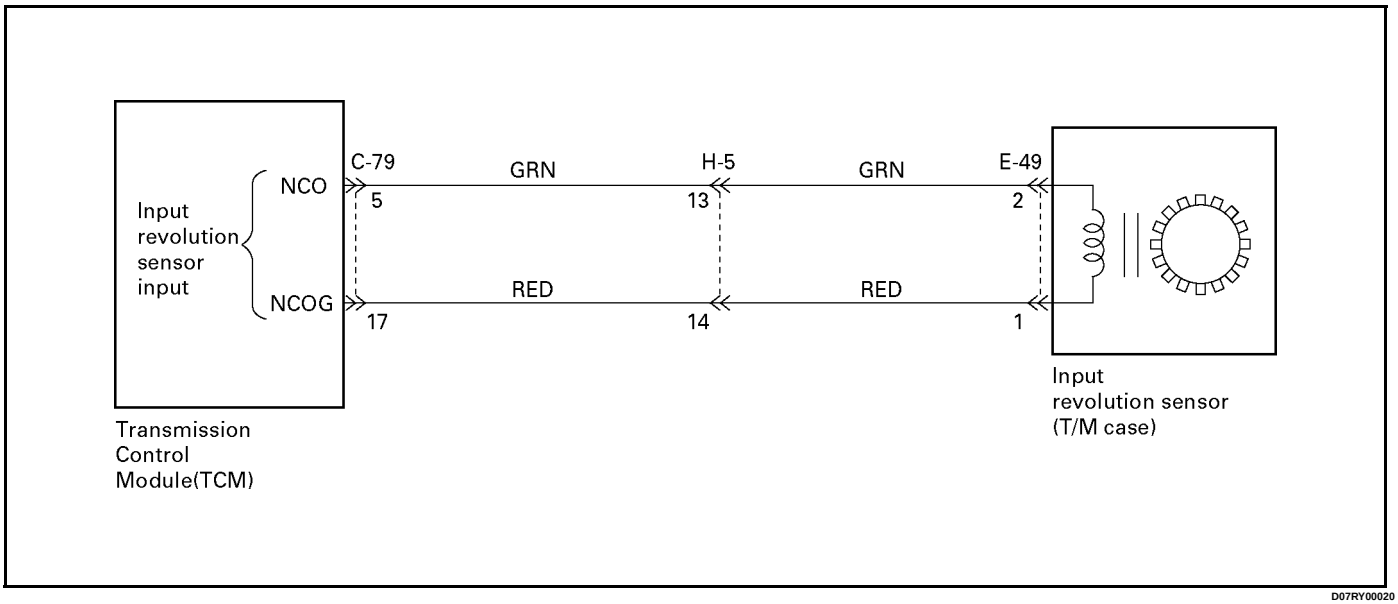

D07RY00020

Circuit description:
Input revolution information is provided to TCM by the input revolution sensor. This sensor is located in the transmission case.
The input revolution sensor is an electromagnetic pulse pickup type that generates a speed signal according to the revolution of the transmission OD direct clutch drum.
As a result, the sensor sends a sine wave signal (AC) to the TCM, which converts this sine wave signal (pulse voltage) to a RPM signal.

Fail-safe control:
The TCM controls fail-safe by detecting input revolution sensor failure.

Failure detection:

- When not even 1 pulse is input in the input revolution sensor during the time 4 pulses are input in the output revolution sensor.
- When the failure criteria is continuously 1000 times from the time ignition is turned ON until it is turned OFF.

Prohibits failure detection when at least one among the following conditions is satisfied.

- When D, 2 and L range signal is not fixed.
- When output revolution is less than 775 rpm.
- When the failure detection timer T1 (*1) is less than 25 seconds.
- Solenoid S1, S2, and selector position switch is on failure detection or decision.
- At 4th gear.
- When passed less than 10 seconds after shift command output.

*1: Failure detection inhibit timer T1
Timer starts when D, 2 or L range are detected (fixation signal).

Contents of control:
At failure detection

- Lock-up control inhibit
- Up hill and down hill control inhibit

At failure decision
Executes following items in addition to above control items at failure detection.

- Blinks "CHECK TRANS" lamp
- Stores the failure information in failure-memory

Conditions of turning "CHECK TRANS" off:
At D, 2 or L range and not shifting, turns "CHECK TRANS" lamp off when judged 0km/h by output revolution sensor after more than 1 pulse input in the input revolution sensor and finished vehicle speed calculation during the time 4 pulse are input in the output revolution sensor.

Reversion conditions from fail-safe:
Recovers at the same time as the conditions of turning “CHECK TRANS” lamp off are satisfied.

Test description:
The following numbers correspond to circled numbers on the diagnostic chart.

(1) When the engine is running, a revolution signal is input from the input revolution sensor to the TCM.
(2) At this test, the continuity of circuit wiring and the input revolution sensor is checked.
(3) At this test, the continuity of the input revolution sensor is checked.

Diagnostic aids:
An intermittent may be caused by a poor connection, rubbed through wire insulation or a wire broken inside the insulation. Inspect related harness connector for backed out terminals, improper mating, broken locks, improperly formed or damaged terminals, poor terminal to wire connection and damaged harness.

DTC P0717 (FLASHING CODE 14) INPUT REVOLUTION SENSOR FAILURE (NC0)

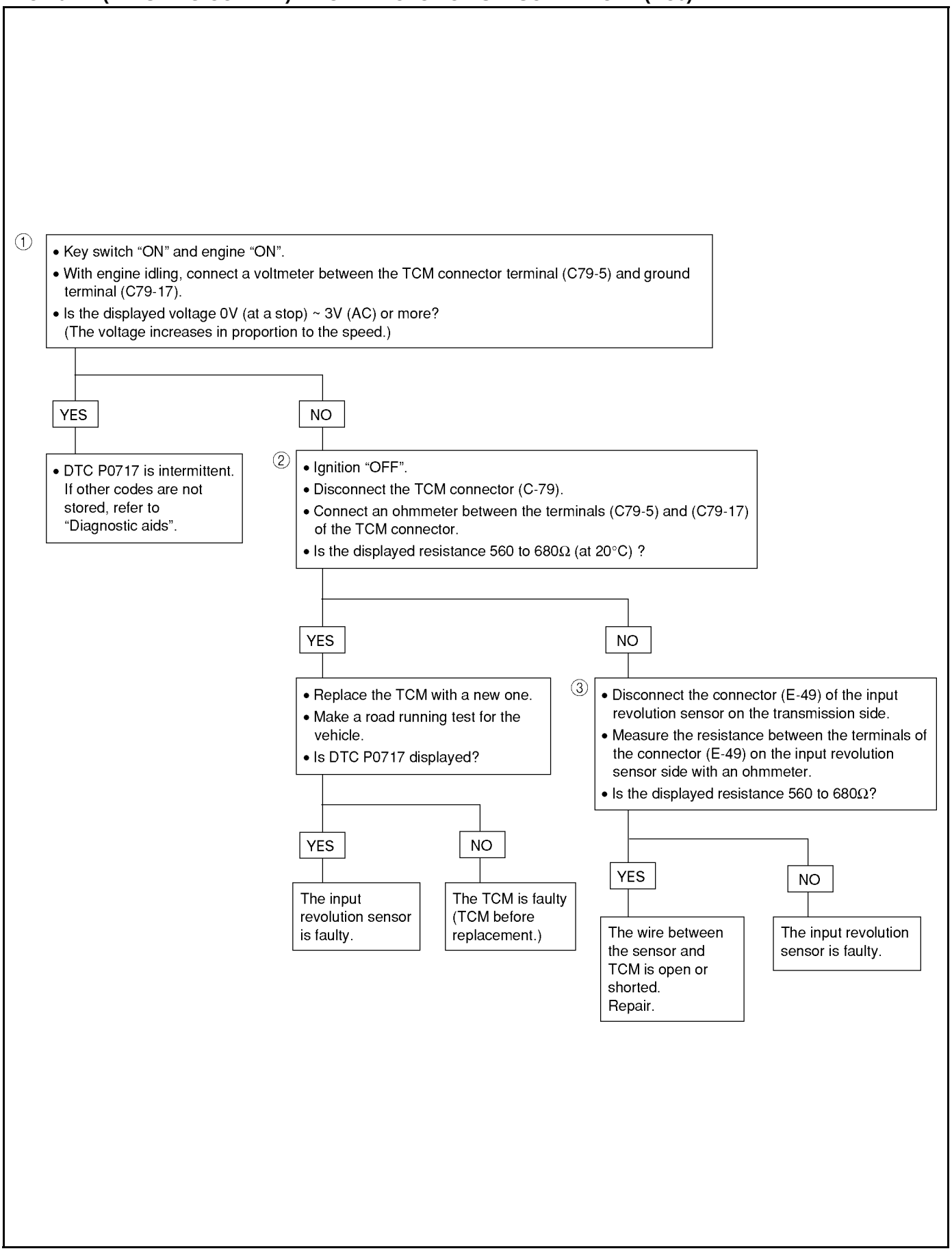

DTCP0717

DTC P0722 (FLASHING CODE 11) OUTPUT REVOLUTION SENSOR FAILURE (SP2)

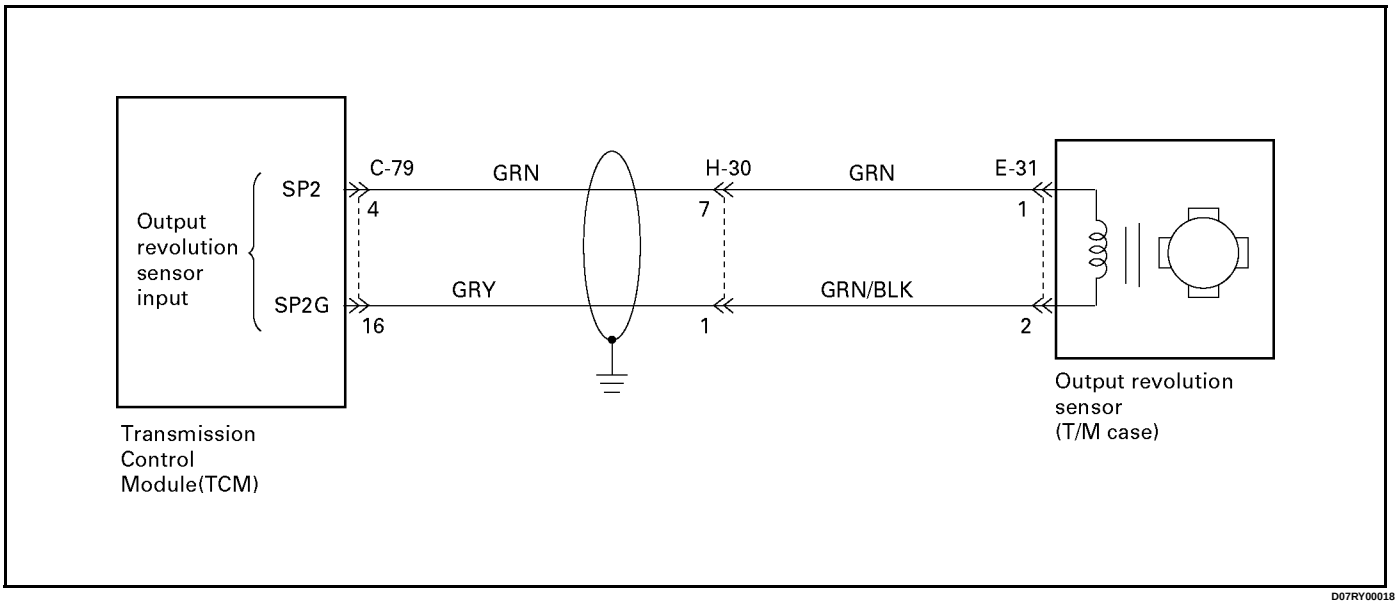

Circuit description:
Vehicle speed information is provided to the TCM by the output revolution sensor. This sensor is located in the transmission adapter housing. The output revolution sensor is an electromagnetic pulse pickup type that generates a speed signal according to the revolution of the transmission output shaft. As a result, the sensor sends a sine wave signal (AC) to the TCM, which converts this sine wave signal (pulse voltage) to a km/h signal.

Fail-safe control:
The TCM controls fail-safe by detecting output revolution sensor failure.

Failure detection:

- When not even 1 pulse is input in the output revolution sensor during the time 4 pulses are input in the speed meter sensor.
- When the failure criteria is continuously 500 times from the time ignition is turned ON until it is turned OFF.
- Detection inhibit condition:
  When speed meter sensor revolution is less than 80 rpm.

Contents of control:
At failure detection

- Uses the vehicle speed calculated by speed meter sensor for shift control
- Keeps the condition of transfer (High/Low judgment) just before detection until vehicle speed is 0km/h, and changes shift map to L4 map (3→4UP None) at vehicle speed 0km/h.
- Use high oil temperature map according to shift map priority at correct oil temperature control.
- Squat control inhibit
- Up hill and down hill control inhibit
- Reverse lockout control inhibit
- Stores the failure information in failure-memory

At failure decision
Executes following items in addition to above control items at failure detection.

- Blinks "CHECK TRANS" lamp

Conditions of turning "CHECK TRANS" off:

Turns "CHECK TRANS" lamp off when judged 0km/h by speed meter sensor after more than 1 pulse input in the output revolution sensor and finished vehicle speed calculation during the time 4 pulse are input in the speed meter sensor.

Reversion conditions from fail-safe:

Recovers at the same time as the conditions of turning “CHECK TRANS” lamp off are satisfied.

Test description:

The following numbers correspond to circled numbers on the diagnostic chart.

(1) When the vehicle is running, a speed signal is input from the output revolution sensor to the TCM.
(2) At this test, the continuity of circuit wiring and the output revolution sensor is checked.
(3) At this test, the continuity of the output revolution sensor is checked.

Diagnostic aids:
An intermittent may be caused by a poor connection, rubbed through wire insulation or a wire broken inside the insulation. Inspect related harness connector for backed out terminals, improper mating, broken locks, improperly formed or damaged terminals, poor terminal to wire connection and damaged harness.

DTC P0722 (FLASHING CODE 11) OUTPUT REVOLUTION SENSOR FAILURE (SP2)

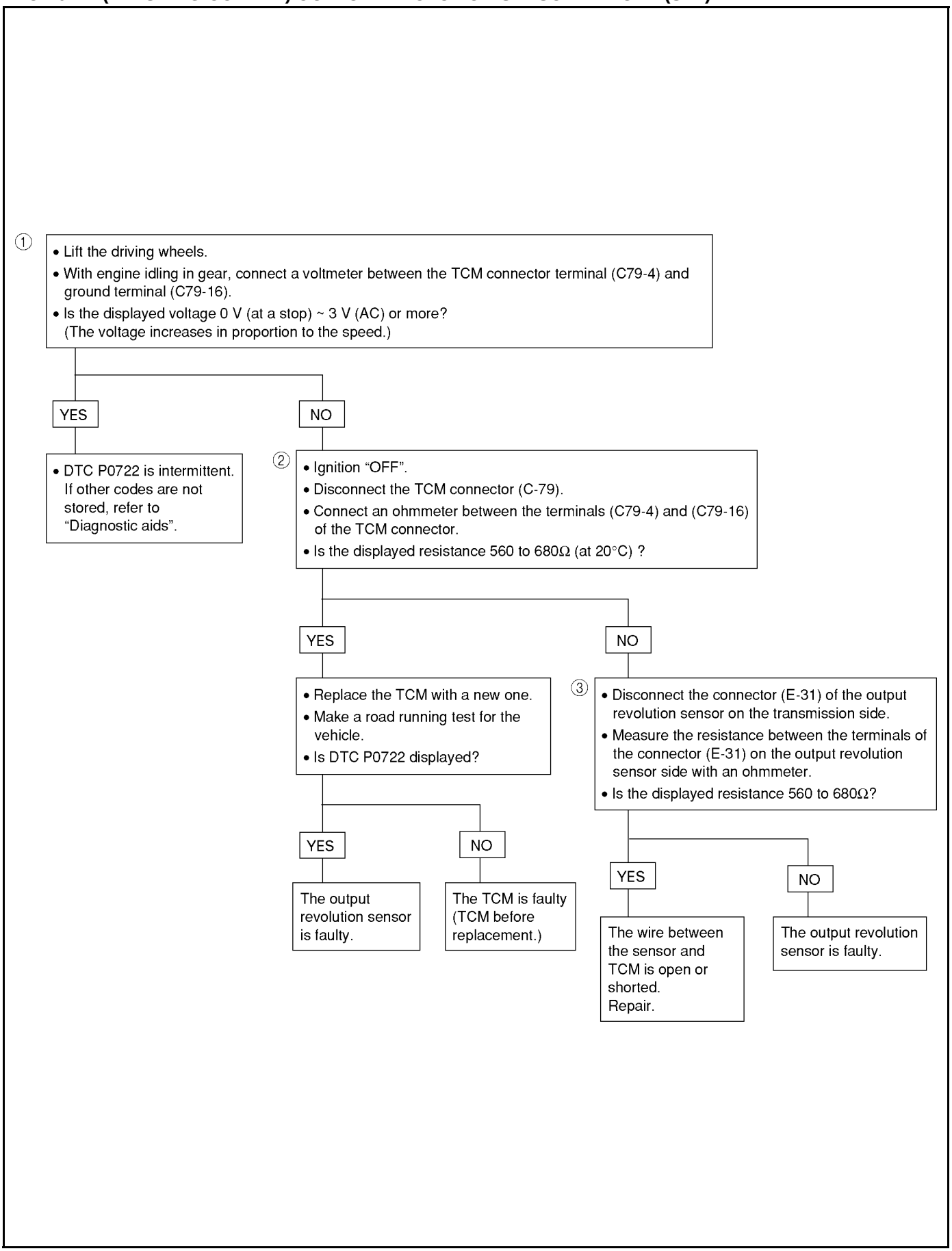

DTCP0722

DTC P0727 (FLASHING CODE 13) ENGINE REVOLUTION SIGNAL FAILURE (NE)

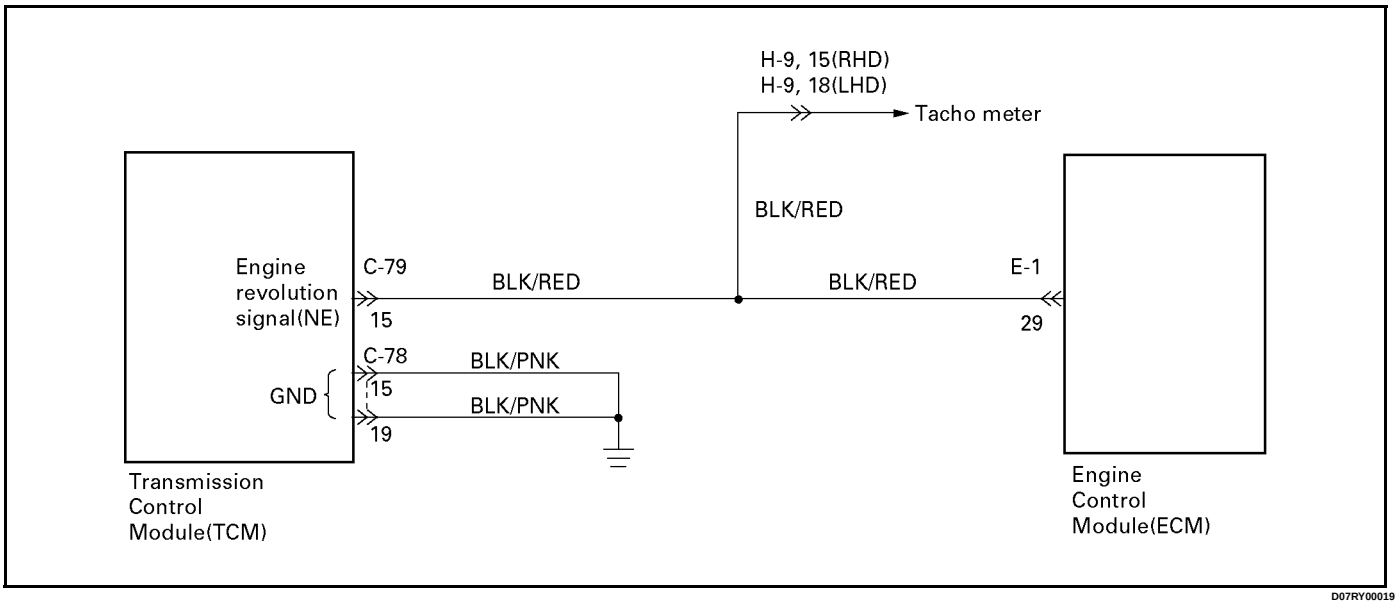

Circuit description:
Engine revolution (rpm) signals are sent from Engine Control Module (ECM) to the Transmission Control Module (TCM).
The engine speed sensor is an electromagnetic pulse pickup type that generates signals when the flywheel gear revolves (2 pulses at a single revolution of the flywheel gear).
The TCM converts these sine wave signals into engine revolution (RPM) signals.

Fail-safe control:
The TCM controls fail-safe by detecting engine revolution sensor failure.

Failure detection:

- When input revolution is more than 2000 rpm
- When not even 1 pulse is input in the engine revolution signal during 5 seconds
- Detection inhibit condition: At 4th gear

Contents of control:
At failure detection

- Up hill and down hill control inhibit
- Oil temperature sensor failure detection inhibit
- Blinks "CHECK TRANS" lamp
- Stores the failure information in failure memory.

At failure decision
Same as failure detection

Conditions of turning "CHECK TRANS" lamp off:
Turns "CHECK TRANS" lamp off when judged 0km/h by speed meter sensor after the engine revolution signal pulses are input 250 pulses normally.
(however, uses 0 km/h judgment by back-up vehicle speed at output revolution failure)

Reversion conditions from fail-safe:
Recovers at the same time as the conditions of turning “CHECK TRANS” lamp off are satisfied.

Test description:
The following numbers correspond to circled numbers on the diagnostic chart.

(1) Engine revolution signals are input from the ECM into the TCM.
(2) When the engine idling, voltage fluctuates with (AC intermittent) range of less than 1.4V ⇔ 9 ~ 16V.

Diagnostic aids:
An intermittent may be caused by a poor connection, rubbed through wire insulation or a wire broken inside the insulation. Inspect related harness connector for backed out terminals, improper mating, broken locks, improperly formed or damaged terminals, poor terminal to wire connection and damaged harness.

DTC P0727 (FLASHING CODE 13) ENGINE REVOLUTION SIGNAL FAILURE (NE)

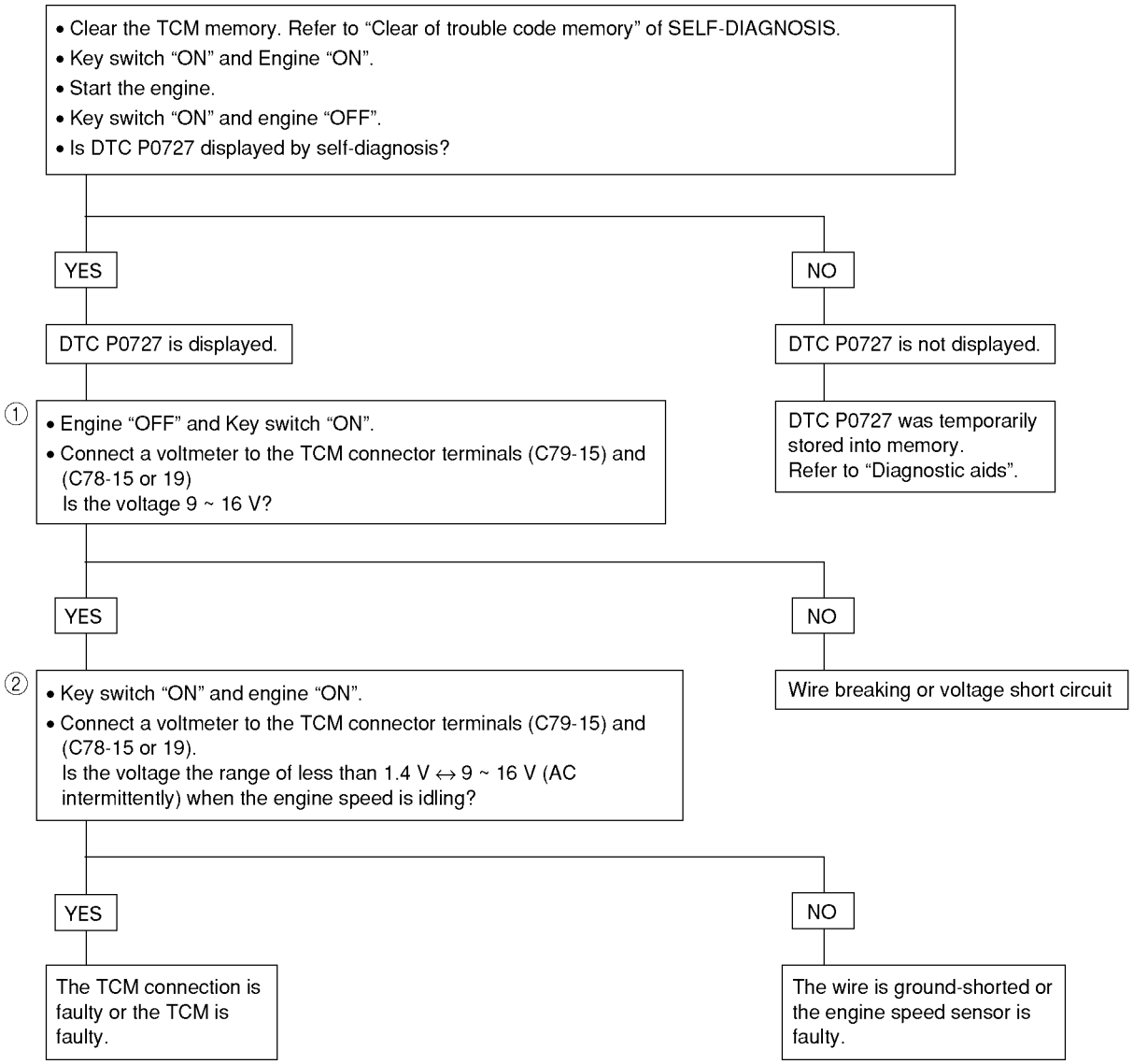

DTCP0727

DTC P0743 (FLASHING CODE 33) TORQUE CONVERTER CLUTCH CONTROL LOCK-UP (ON/OFF) SOLENOID FAILURE (SL)

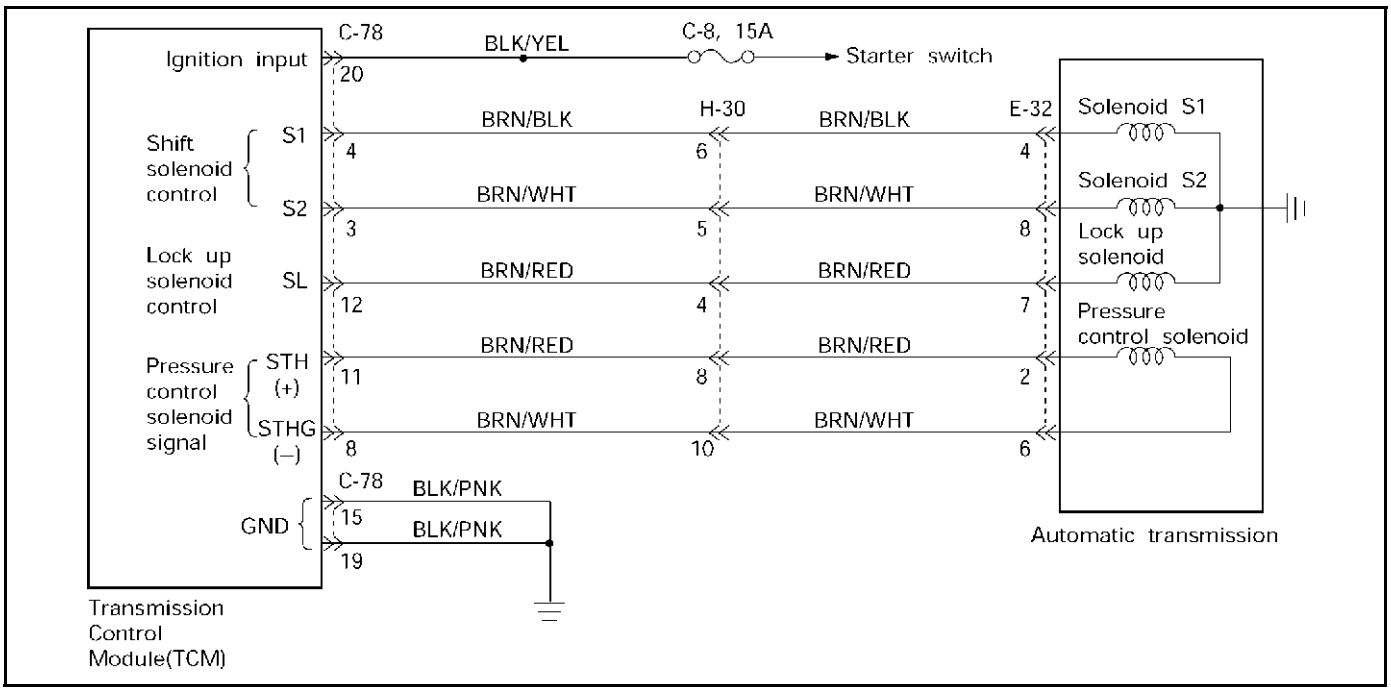

D07RY00047

Circuit description:
The lock-up solenoid SL of the torque converter clutch (TCC) controls the lock-up clutch by a signal according to the lock-up range judgement of the TCM when the vehicle runs.
This function can improve the fuel consumption to almost the same extent as the manual transmission. The lock-up solenoid SL is put into B+ by the TCM, so that the solenoid is actuated with the result of lock-up.

Fail-safe control:
The TCM controls fail-safe by detecting SL solenoid failure.

Failure detection:
GND SHORT detection
- •When SHORT detection continues for 0.3 sec.
- •When SHORT failure detection continues 8 times.

Open detection
- •When OPEN detection continues for 0.5 sec.
- •When OPEN failure detection continues 8 times.

Contents of control:
At failure detection
- Lock-up control inhibit
- If + B short failure is detected, keeps 1st gear when the vehicle speed calculated by output revolution sensor is less than 10km/h to prevent stall. (Canceled at more than 15km/h)

At failure decision
Executes following items in addition to above control items at failure detection.
- •Stores the failure information in failure-memory.

Conditions of turning “CHECK TRANS” lamp off:
None

Reversion conditions from fail-safe:
When a normal condition is judged by rechecking on the state of lock-up ON/OFF

Test description:
The following numbers correspond to circled numbers on the diagnostic chart.
(1) When the key is ON, the voltage between the TCM connector terminals (C78-12) and (C78-15 or 19) is 1.0 V or less.
(2) When the gear is of the 2nd speed in the D range and the throttle opening is about 50% at a higher speed than about 40km/h, the TCM supplies 8 to 16 V, so that the solenoid is actuated with the result of lock-up.
(3) The resistance range of the solenoid is 11 to 15Ω.

Diagnostic aids:
In case of faulty connection, open or shorted circuit. to the TCM terminal (C78-12), DTC P0743 is displayed. A intermittent failure may be caused by a poor connection, rubbed through wire insulation or a wire broke inside the insulation.

DTC P0743 (FLASHING CODE 33) TORQUE CONVERTER CLUTCH CONTROL LOCK-UP (ON/OFF) SOLENOID FAILURE (SL)

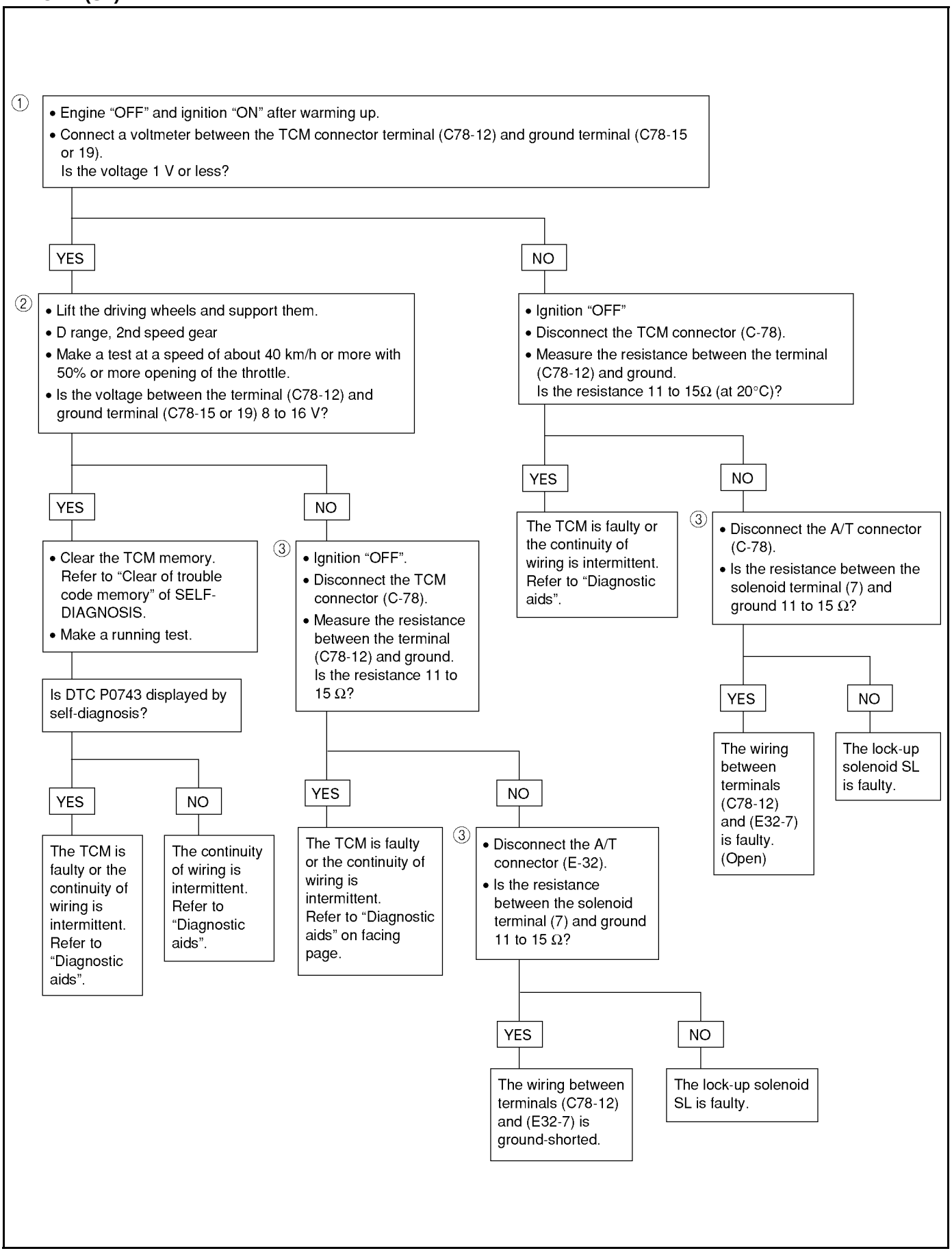

DTCP0743

DTC P0748 (FLASHING CODE 35) PRESSURE CONTROL SOLENOID FAILURE (STH)

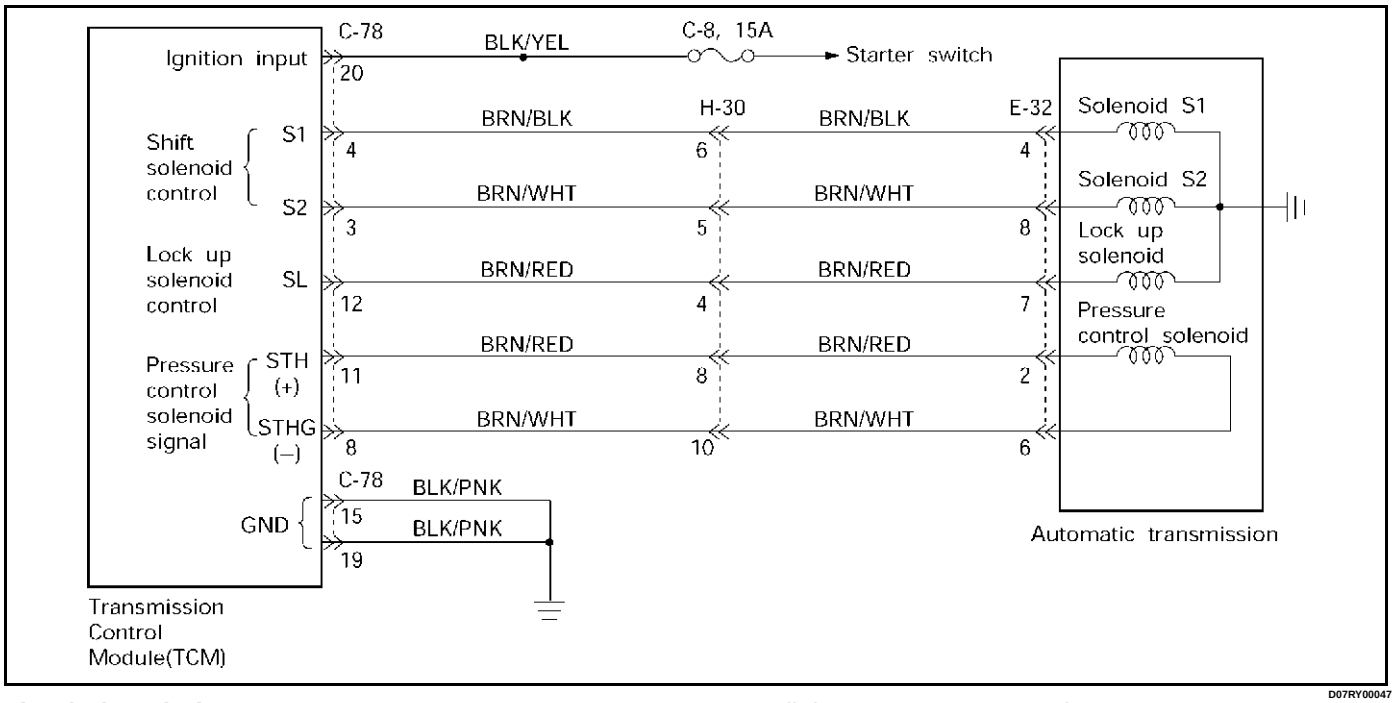

Circuit description:
The pressure control solenoid is a PWM duty control solenoid located in the valve body.
The pressure control solenoid is a TCM-controled device used to regulate transmission throttle pressure by energizing current from the TCM.

Fail-safe control:
The TCM controls fail-safe by detecting pressure control solenoid failure.

Failure detection:
IG short failure

- When the feedback A/D value is more than 1020 for 500 milli-second continuously.
- Detection inhibit condition: Prohibition during 1 second after reversion from open failure, because the possibility of the mis-detection is high.

Open failure (Including GND Short)

- When the feedback A/D value is less than 15 for more than 70 milli-second continuously, judges as faliure, and turns the current of target output off, after 1.5 second passed turns the current of target value to normal. The A/D value is checked, and this operation is repeated during 70 milli-second again.
- When it continues for 12.5 second in total.

Contents of control:
At failure detection

- Lock-up control inhibit
- Up hill and down hill control inhibit
- Squat control inhibit

At failure decision
Executes following items in addition to above control items at failure detection.

- Turns Solenoid power supply OFF
- Blinks "CHECK TRANS" lamp
- Stores the failure information in failure memory

* Prohibits failure detection of S1, S2, SL, STH, selector position switch, and oil temperature sensor.

Conditions of turning "CHECK TRANS" off:
Turns "CHECK TRANS" lamp off after ignition is turned ON→ OFF→ ON.

Reversion conditions from fail-safe:
At failure detection
When IG short failure…The feedback A/D value is less than 1020 for 1 second continuously.
When open failure…Detection criteria is not satisfied or the feedback A/D value is more than 15 for 1 second continuously.
At failure decision
Recovers at the same time as the conditions of turning “CHECK TRANS” lamp off are satisfied.

Test description:
The following numbers correspond to circled numbers on the diagnostic chart.

(1) The solenoid resistance is within the range of 5 to 5.6Ω.

(2) This test checks for shorted circuit at the TCM.

Diagnostic aids:
An intermittent may be caused by a poor connection, rubbed through wire insulation or a wire broken inside the insulation. Inspect related harness connector for backed out terminals, improper mating, broken locks, improperly formed or damaged terminals, poor terminal to wire connection and damaged harness.

DTC P0748 (FLASHING CODE 35) PRESSURE CONTROL SOLENOID FAILURE (STH)

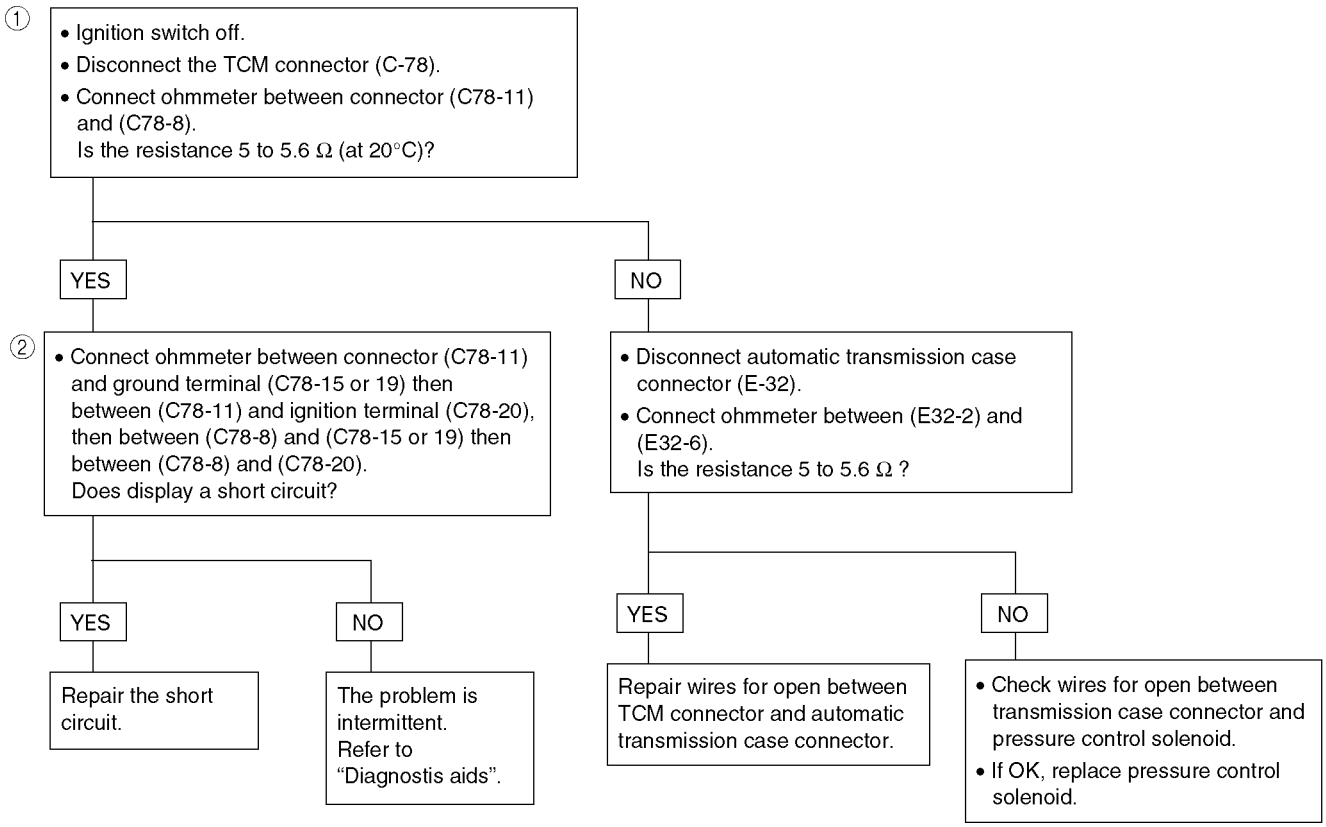

DTCP0748

DTC P0753 (FLASHING CODE 31) SOLENOID 1 FAILURE (S1)

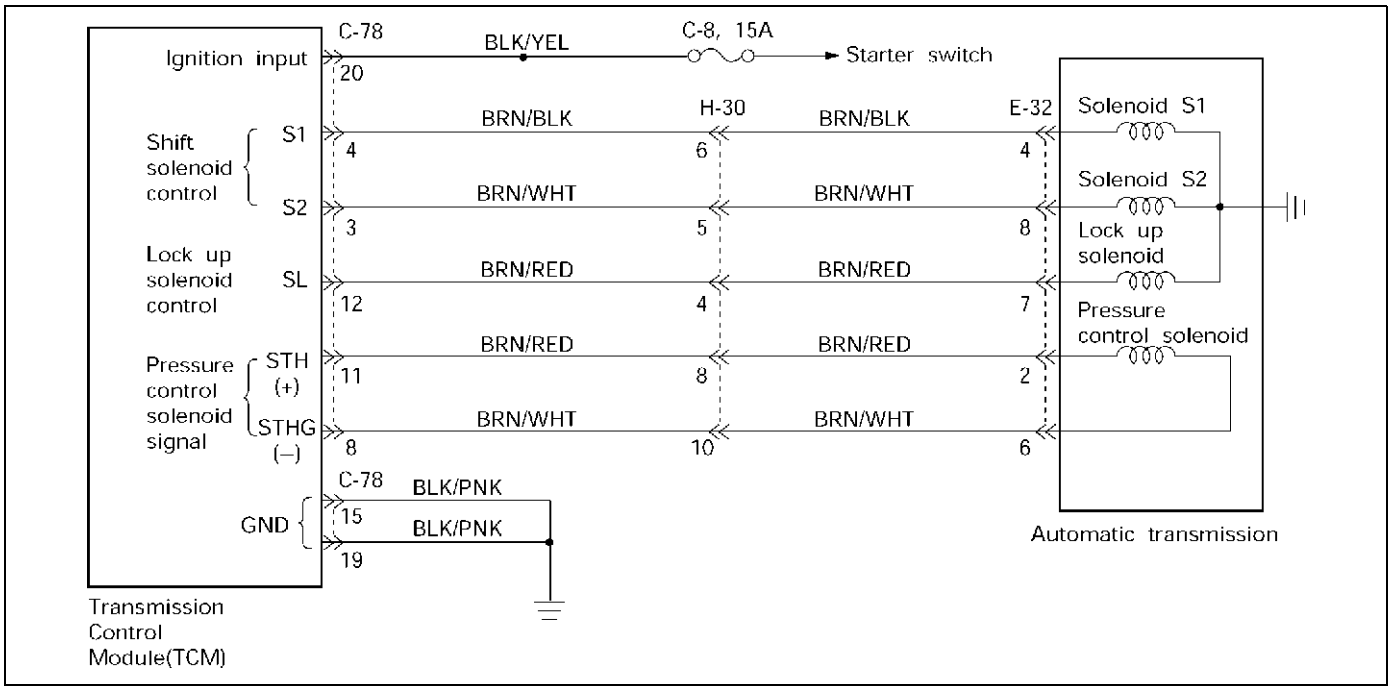

Circuit description:

The shift solenoid S1 changes the hydraulic route with the signals from the TCM according to the vehicle speed and the throttle opening to control shifting. When the solenoid S1 or S2 fails, the hydraulic circuit is mechanically operated as a backup.

Fail-safe control:

The TCM controls fail-safe by detecting S1, S2 shift solenoid failure.

Failure detection:

GND SHORT detection

- When SHORT detection continues for 0.3 sec.
- When SHORT failure detection continues 8 times.

Open detection

- When OPEN detection continues for 0.5 sec.
- When OPEN failure detection continues 8 times.

Contents of control:

At failure detection

- Lock-up control inhibit
- Up hill and down hill control inhibit
- Squat control inhibit

• Changes solenoid output pattern as following figure
The shift theory at shift solenoid failure

Shift lever Position	Normal			S1 failure			S2 filure			S1 and S2 failure		
	Gear	S1	S2	Gear	S1	S2	Gear	S1	S2	Gear	S1	S2
D	1	❍	×	3		×→❍	1	❍		O/D		
	2	❍	❍			❍	O/D	❍→×				
	3	×	❍			❍		×				
	O/D	×	×	O/D		×		×				
2	1	❍	×	3		×→❍	1	❍		3		
	2	❍	❍			❍	O/D	❍→×				
	3	×	❍			❍		×				
L	1	❍	×	3		×→❍	1	❍		3		
	2	❍	❍			❍	O/D	❍→×				

At failure decision
Executes following items in addition to above control items at failure detection.

•Turns Solenoid power supply OFF

•Blinks "CHECK TRANS" lamp

•Stores the failure information in failure-memory
*Prohibits failure detection of S1, S2, SL, STH, Selector position switch, and Oil temp. sensor.

Conditions of turning "CHECK TRANS" off:
Turns "CHECK TRANS" lamp off after ignition is turned ON→ OFF→ ON.

Reversion conditions from fail-safe:
At failure detection
When a normal judgment is obtained by rechecking during shifting.
At failure decision
Recovers at the same time as the conditions of turning “CHECK TRANS” lamp off are satisfied.

Test description:

The following numbers correspond to circled numbers on the diagnostic chart.

(1) With the key "ON", the voltage between the TCM terminals (C78-4) and (C78-15 or 19) is 8 to 16V.

(2) When the driving wheels revolve with the 3rd speed gear, the voltage is 1 V or less.

(3) The solenoid resistance is within the range of 11 to 15Ω.

Diagnostic aids:
In case of faulty connection, open or shorted circuit to the TCM terminal (C78-4), DTC P0753 is displayed. A intermittent failure may be caused by a poor connection, rubbed through wire insulation or a wire broke inside the insulation.

DTC P0753 (FLASHING CODE 31) SOLENOID 1 FAILURE (S1)

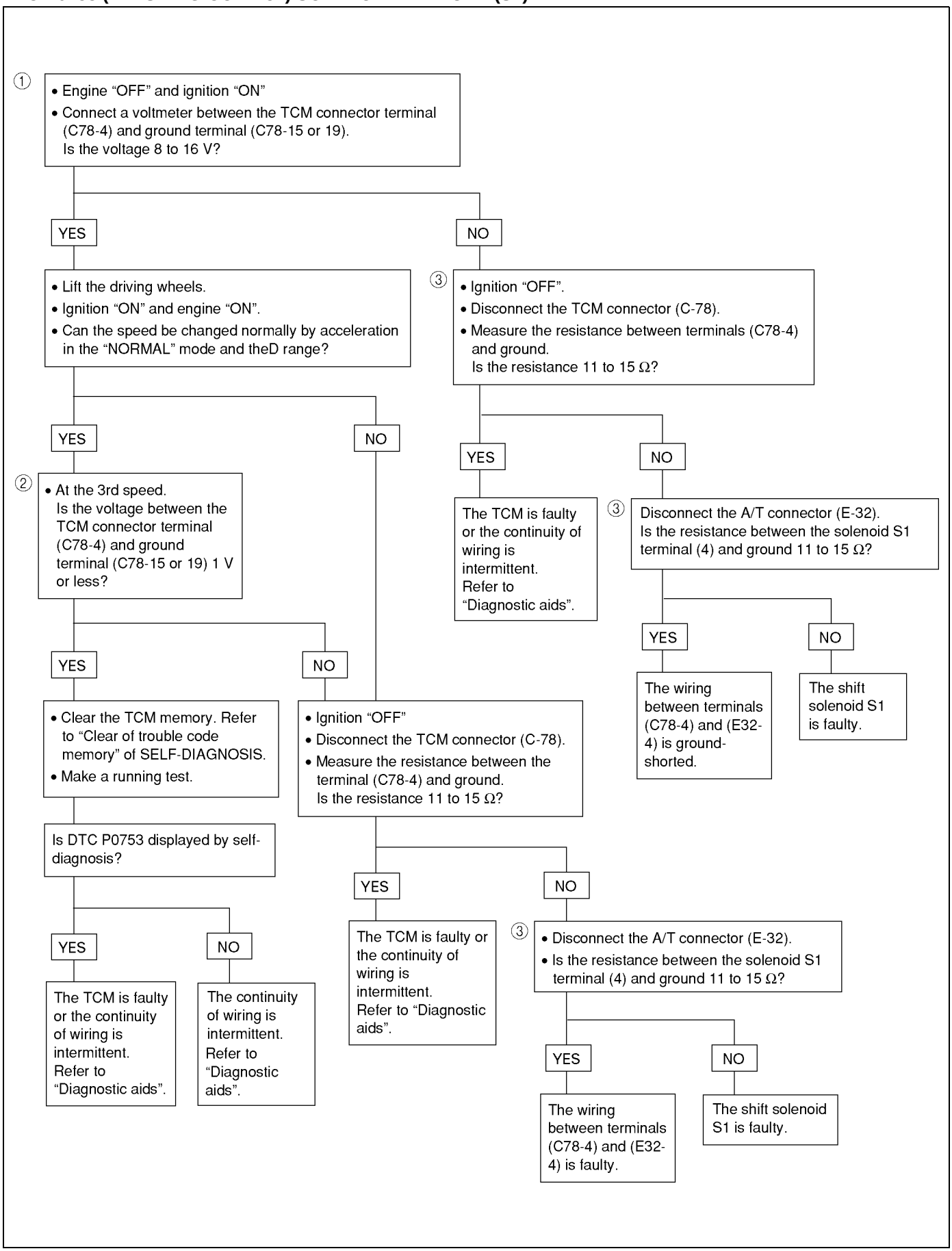

DTCP0753

MEMO

DTC P0758 (FLASHING CODE 32) SOLENOID 2 FAILURE (S2)

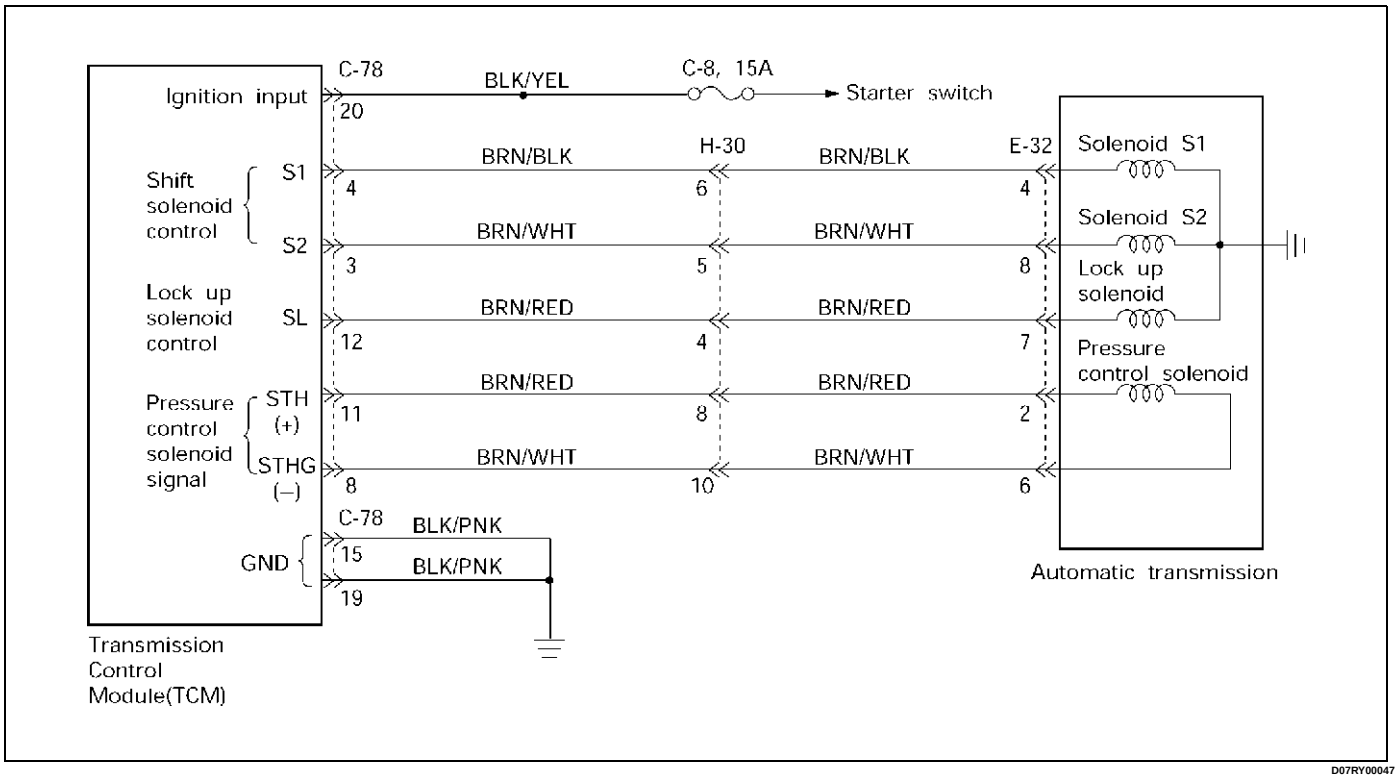

Circuit description:
The solenoid S2 changes the hydraulic route with the signals from the TCM according to the vehicle speed and the throttle opening to control shifting. When the solenoid S1 or S2 fails, the hydraulic circuit is mechanically operated as a backup.

Fail-safe control:
The TCM controls fail-safe by detecting S1, S2 shift solenoid failure.

Failure detection:
GND SHORT detection

- When SHORT detection continues for 0.3 sec.
- When SHORT failure detection continues 8 times.

Open detection

- When OPEN detection continues for 0.5 sec.
- When OPEN failure detection continues 8 times.

Contents of control:
At failure detection

- Lock-up control inhibit
- Up hill and down hill control inhibit
- Squat control inhibit
- Changes solenoid output pattern as "The shift theory at shift solenoid failure". (See DTC P0753)

At failure decision
Executes following items in addition to above control items at failure detection.

- Turns Solenoid power supply OFF
- Blinks "CHECK TRANS" lamp
- Stores the failure information in failure-memory
  *Prohibits failure detection of S1, S2, SL, STH, Selector position switch, and Oil temperature sensor.

Conditions of turning "CHECK TRANS" off:
Turns "CHECK TRANS" lamp off after ignition is turned ON→ OFF→ ON.

Reversion conditions from fail-safe:
At failure detection
When a normal judgment is obtained by rechecking during shifting.
At failure decision
Recovers at the same time as the conditions of turning “CHECK TRANS” lamp off are satisfied.

Test description:
The following numbers correspond to circled numbers on the diagnostic chart.

1 With the key "ON", the voltage between the TCM terminals (C78-3) or (C78-15 or 19) is 1V or less.

2 When the driving wheels revolve with the 2nd speed gear, the voltage is 8 to 16V.

3 The resistance of the solenoid is in the range of 11 to 15Ω.

Diagnostic aids:
In case of faulty connection, open or shorted circuit to the TCM terminal (C78-3), DTC P0758 is displayed. A intermittent failure may be caused by a poor connection, rubbed through wire insulation or a wire broken inside the insulation.

DTC P0758 (FLASHING CODE 32) SOLENOID 2 FAILURE (S2)

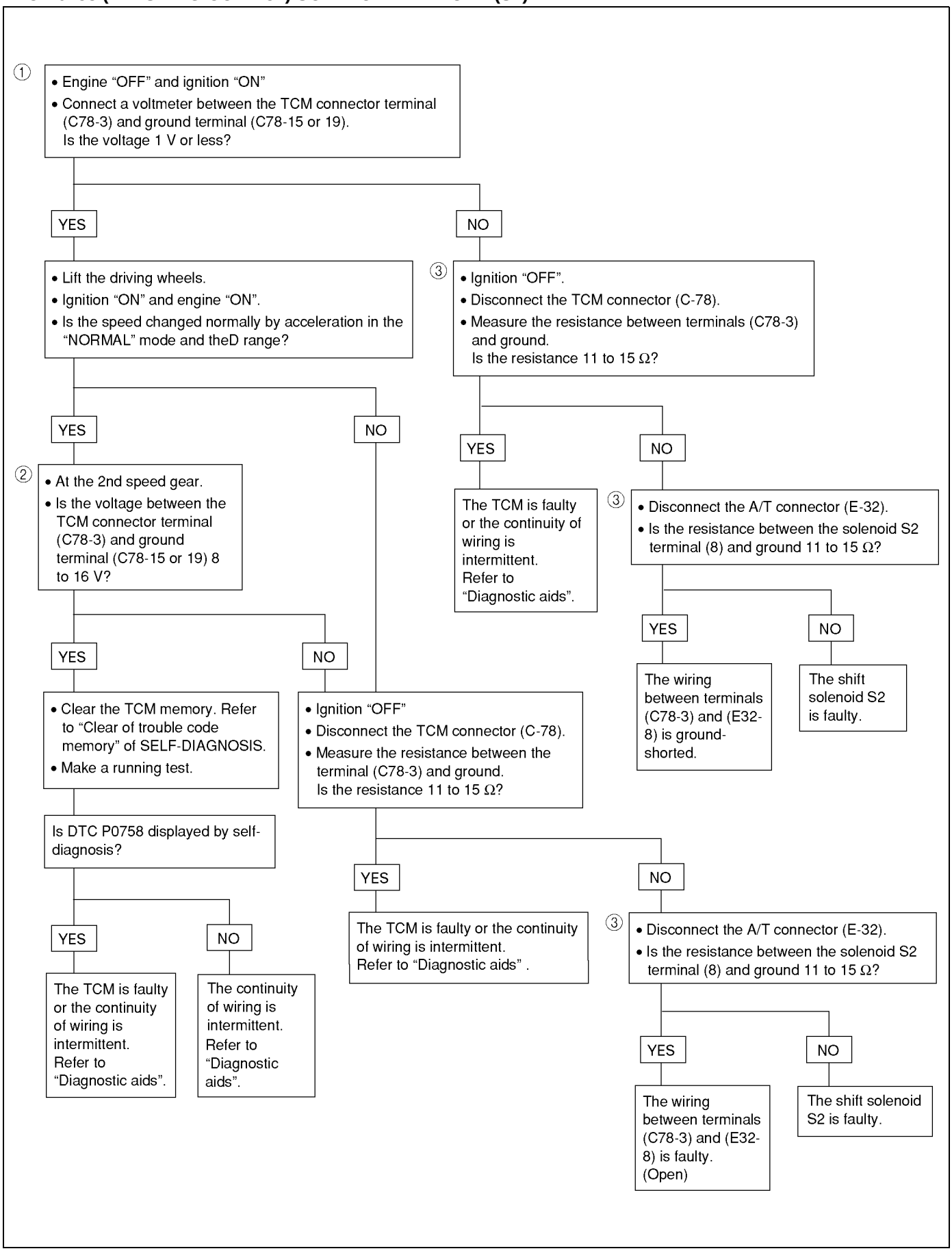

DTCP0758

DTC P1121 (FLASHING CODE 23) ANALOG THROTTLE SIGNAL FAILURE (VREF, VGND)

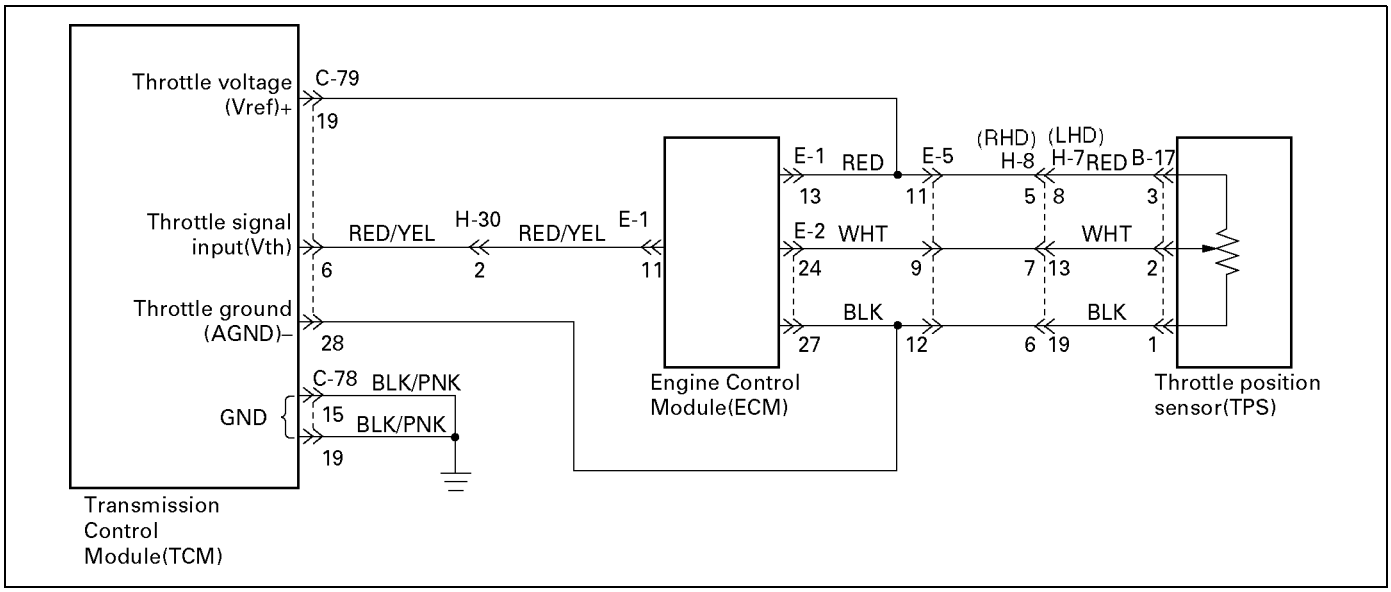

Circuit description:
When the signal of the engine throttle position sensor located on the accelerator pedal is supplied to the transmission TCM, the TCM judges the opening condition of the throttle.
The shift point of the transmission is determined by this opening condition of the throttle.

Fail-safe control:
The TCM controls fail-safe by detecting analog throttle signal (VREF, VGND) failure.

Failure detection:

- When the Vref input voltage is detected more than 5.55V or less than 4.45V.
- When the Vgnd input voltage is detected more than 0.40V or less than -0.40V.
- When the failure criteria is continuously for 1.0 sec.

Contents of control:
At failure detection

- Judges throttle opening of linear sensor (Vth) as Vref:5V, Vgnd:0V
- Throttle learning control inhibit
- Up hill and down hill control inhibit

At failure decision
Executes following items in addition to above control items at failure detection.

- Stores the failure information in failure-memory

Conditions of turning “CHECK TRANS” lamp off:
None

Reversion conditions from fail-safe:
At failure detection
When the Vref input voltage is detected less than 5.55 V and more than 4.45 V.
When the Vgnd input voltage is detected less than 0.40 V and more than -0.40 V.
At failure decision

- Recovers when judged 0km/h by output revolution sensor after the Vref input voltage is detected less than 5.55V and more than 4.45V.
  (however, uses 0 km/h judgment by back-up vehicle speed at output revolution failure)
- Recovers when judged 0km/h by output revolution sensor after the Vgnd input voltage is detected less than 0.40V and more than -0.40V.
  (however, uses 0 km/h judgment by back-up vehicle speed at output revolution failure)

Test description:
The following numbers correspond to circled numbers on the diagnostic chart.
(1) Check the power supply voltage (4.75-5.25V) of throttle position sensor.

Diagnostic aids:
An intermittent may be caused by a poor connection, rubbed through wire insulation or a wire broken inside the insulation. Inspect related harness connector for backed out terminals, improper mating, broken locks, improperly formed or damaged terminals, poor terminal to wire connection and damaged harness.

DTC P1121 (FLASHING CODE 23) ANALOG THROTTLE SIGNAL FAILURE (VREF, VGND)

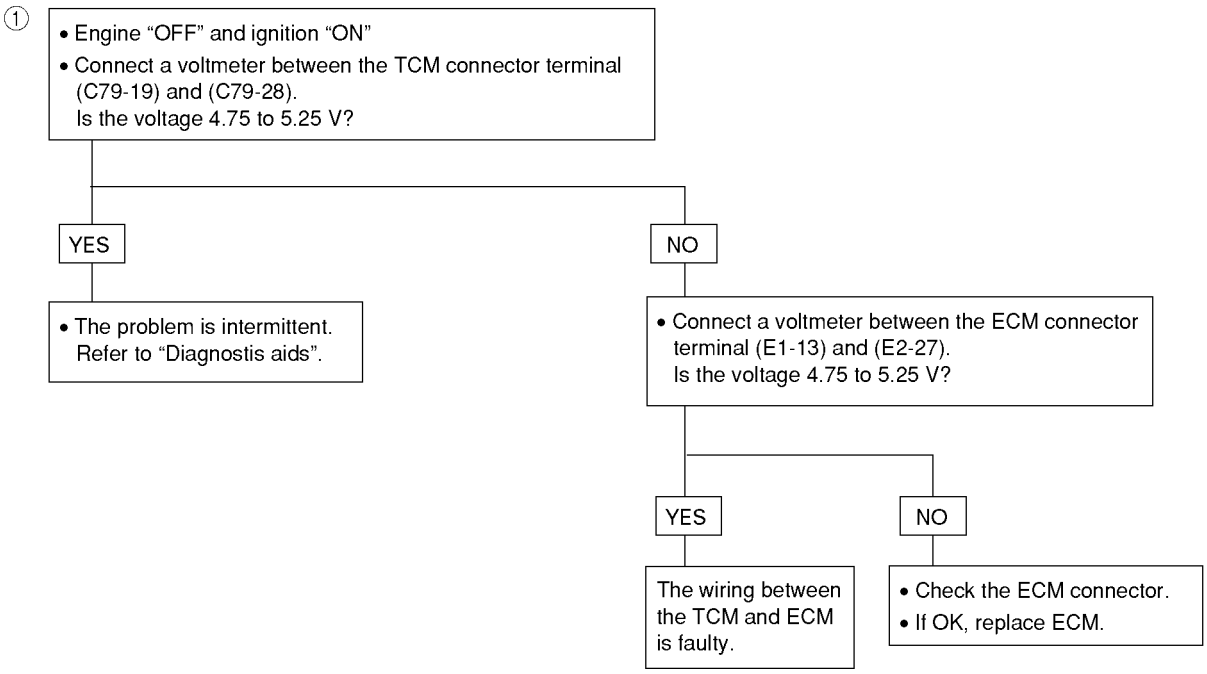

DTCP1121

WIRING DIAGRAM

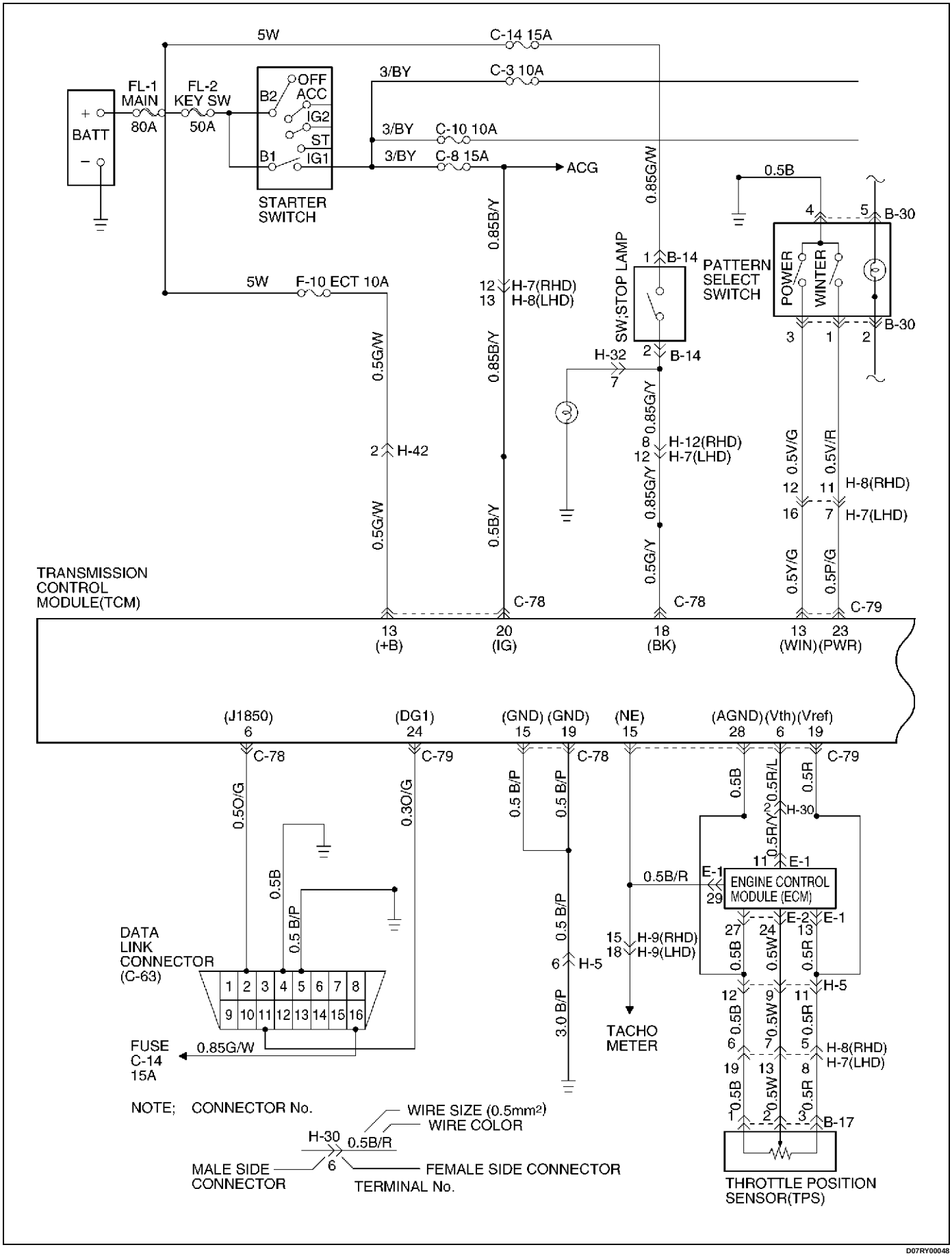

WIRING DIAGRAM

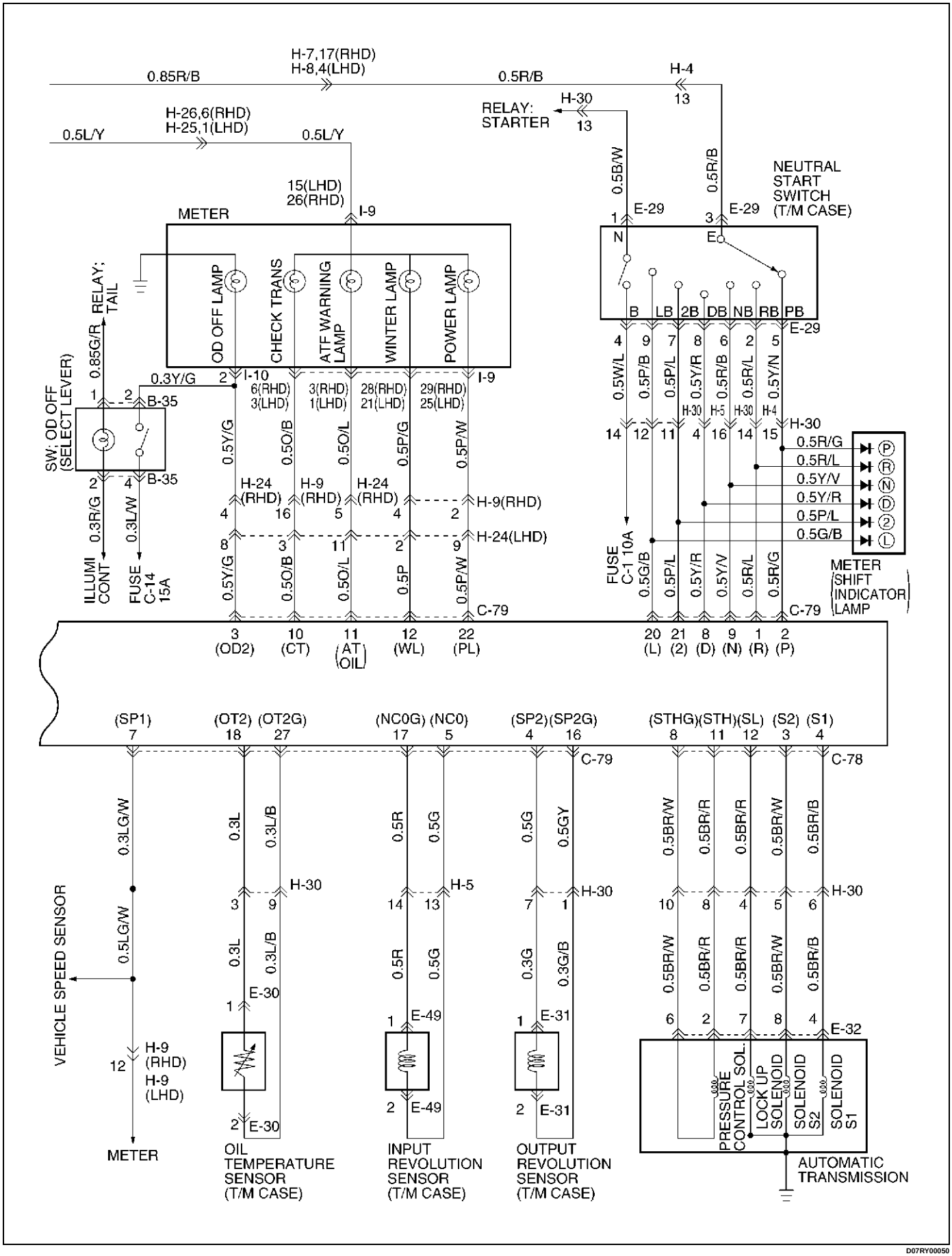

CONNECTOR LIST

No.	Connector face		No.	Connector face
B-14			E-30	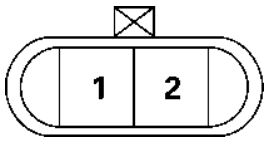
B-17	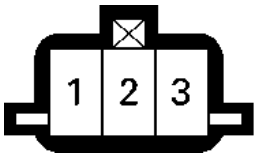		E-31	
B-30			E-32	
B-35	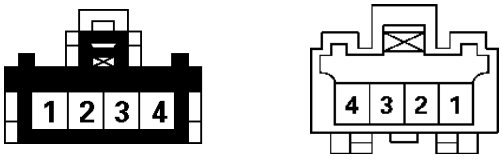		E-49	
C-63	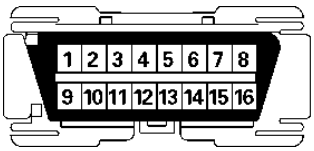		H-4	(BLACK)
C-78	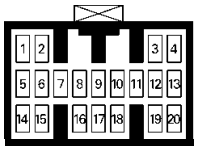		H-5	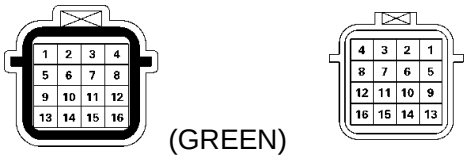 (GREEN)
C-79	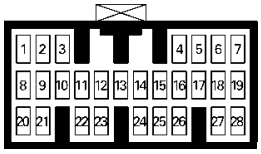		H-7 (RHD)	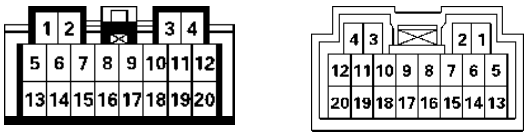
E-1	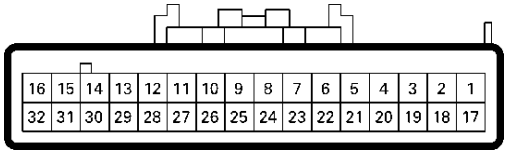		H-7 (LHD)	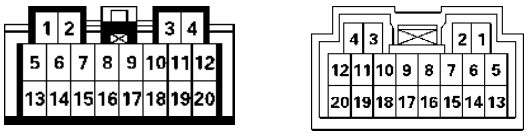
E-2	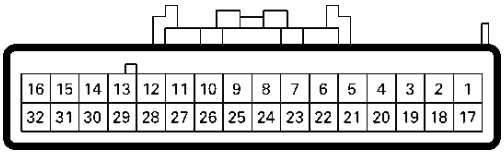		H-8 (RHD)	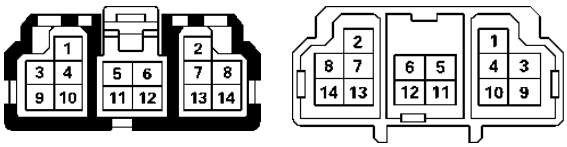
E-29	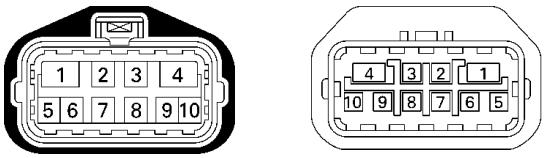		H-8 (LHD)	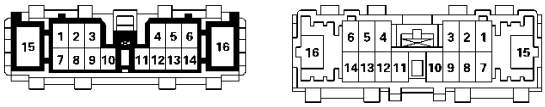

CONNECTOR LIST

No.	Connector face		No.	Connector face
H-9 (RHD)	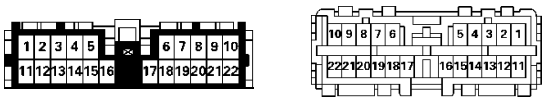		H-42	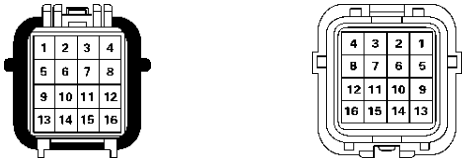
H-9 (LHD)	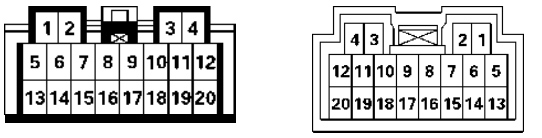		I-9	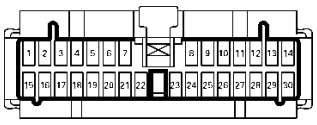
H-12 (RHD)	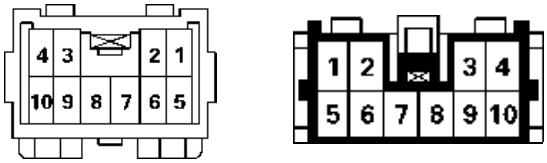		I-10	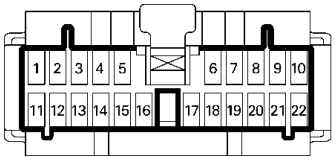
H-24 (RHD)	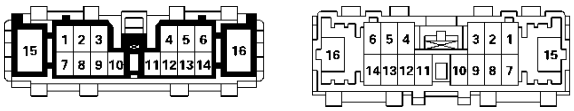			
H-24 (LHD)	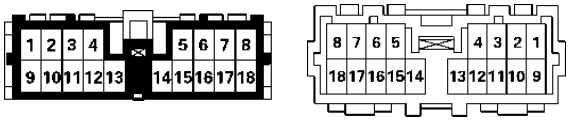			
H-25 (LHD)	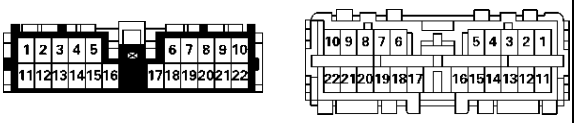			
H-26 (RHD)	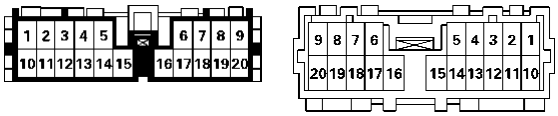			
H-30	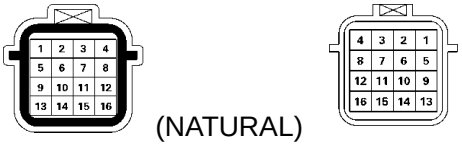 (NATURAL)			
H-32	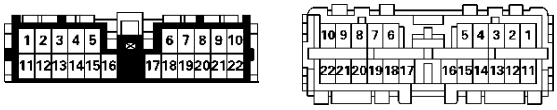			

TROUBLESHOOTING CHART

Number are arranged in order of probability.
Parform inspections starting with number one and working up.

ON-VEHICLE TROUBLESHOOTING

No	Symptom	Inspection item	No vehicle movement		Slippage		Long garage shift time lag		No engine start	Engine stop		No shift						
			No forward movement	No reverse movement	Slip to front	Slip to rear	N→D	N→R		N→D or N→R	Speed reduction	1→2, 2→1	2→3, 3→2	3→4, 4→3	Lock-up does not operate	Poor engine braking in 2nd gear	Poor engine braking in 1st gear	No kick-down
A/T		A/T interior * Refer to A/T internal troubleshooting	6	8	5	5	5	4		2	2	6	6	8	7	3	3	
		O-rings																
		Gaskets																
		Oil seals																
ATF		Water in fluid/Wrong fluid	2	2	2	2	2	2										
		Automatic transmission fluid level (Too much or too little)	1	1	1	1	1	1										
A/T (External)		Cooler pipe resonance																
		Cooler pipe installation																
		Cooler pipes (Bending and/or clogging)	4	6														
		Breather (Bending)																
		Select lever linkage (Operation and adjustment)	3	3												1	1	
Electrical system		TCM internal circuits										5	5	7	6			5
		ECM																
		Tachometer																
		Wire harness connectors																
		Brake switch circuit													5			
		Overdrive switch circuit												1				
		Pattern select switch circuit																
		Oil temperature sensor circuit					4											
		Neutral start switch circuit (Operation and adjustment)							2			2	2	5	2	2	2	
		SP1 sensor circuit (Speedometer sensor)												2				
		SP2 sensor circuit (Output revolution sensor)		5								3	3	4	3			2
		Input revolution sensor circuit																
		Pressure control solenoid circuit			4	4	3	3										
		Lock-up solenoid circuit													4			
		Shift solenoid S2 circuit		4								4		6				3
		Shift solenoid S1 circuit											4					4
		Throttle position sensor circuit			3	3						1	1	3	1			1
Chassis		Suspension looseness																
		Drive train and body interference																
ENG		Exhaust system resonance																
		Engine and automatic transmission mounting																
		Drive plate	5	7														
		Engine tuning								1	1							

ON-VEHICLE TROUBLESHOOTING

No	Symptom	Inspection item	ENG				Chassis		Electrical system																	A/T (External)					ATF		A/T			
			Engine tuning	Drive plate	Engine and automatic transmission mounting	Exhaust system resonance	Drive train and body interference	Suspension looseness	Throttle position sensor circuit	Shift solenoid S1 circuit	Shift solenoid S2 circuit	Lock-up solenoid circuit	Pressure control solenoid circuit	Input revolution sensor circuit	SP2 sensor circuit (Output revolution sensor)	SP1 sensor circuit (Speedometer sensor)	Neutral start switch circuit (Operation and adjustment)	Oil temperature sensor circuit	Pattern select switch circuit	Overdrive switch circuit	Brake switch circuit	Wire harness connectors	Tachometer	ECM	TCM internal circuits	Select lever linkage (Operation and adjustment)	Breather (Bending)	Cooler pipes (Bending and/or clogging)	Cooler pipe installation	Cooler pipe resonance	Automatic transmission fluid level (Too much or too little)	Water in fluid/Wrong fluid	Oil seals	Gaskets	O-rings	A/T interior * Refer to A/T internal troubleshooting
7	Shift point failure	Shift point too high							1						5	4	3	6	2						7											
		Shift point too low							1						5	4	3		2						6											
8	Shift lever too stiff or too loose																									1										2
9	Poor fuel economy											3						5	4	2												1				6
10	Pattern select switch not working																	2	1						3											
11	Oil leakage	Breather																									3	4			1	2				5
		Engine and transmission housing mating surfaces		1																													2		3	4
		Transmission case and engine housing mating																																1		
		Oil pan																																1		2
		Manual shift oil seal																															1			
		O-rings (Union elbow and transmission wires																																	1	
		Cooler pipe installation																										3	1	2						

ON-VEHICLE TROUBLESHOOTING

No	Symptom	Inspection item	ENG				Chassis		Electrical system																	A/T (External)					ATF		A/T			
			Engine tuning	Drive plate	Engine and automatic transmission mounting	Exhaust system resonance	Drive train and body interference	Suspension looseness	Throttle position sensor circuit	Shift solenoid S1 circuit	Shift solenoid S2 circuit	Lock-up solenoid circuit	Pressure control solenoid circuit	Input revolution sensor circuit	SP2 sensor circuit (Output revolution sensor)	SP1 sensor circuit (Speedometer sensor)	Neutral start switch circuit (Operation and adjustment)	Oil temperature sensor circuit	Pattern select switch circuit	Overdrive switch circuit	Brake switch circuit	Wire harness connectors	Tachometer	ECM	TCM internal circuits	Select lever linkage (Operation and adjustment)	Breather (Bending)	Cooler pipes (Bending and/or clogging)	Cooler pipe installation	Cooler pipe resonance	Automatic transmission fluid level (Too much or too little)	Water in fluid/Wrong fluid	Oil seals	Gaskets	O-rings	A/T interior * Refer to A/T internal troubleshooting
12	Jolt when gears are changed	N→D			3				5				6					7							8	4					1	2				9
		N→R			3				5				6												7	4					1	2				8
		1→2	9		3				4				5	6	7										8						1	2				10
		2→3	9		3				4				5	6	7										8						1	2				10
		3→4	9		3				4				5	6	7										8						1	2				10
		Coast-down (Including vehicle stop)			2		3	4	5				6	7	8										9							1				10
		Kick-down			2			3	4				5	6	7										8							1				9
		Lock-up (ON/OFF)			2				3				4												5							1				6
		Accelerator ON/OFF (No gear change)	5		1				2			3													4											
13	Excessive vibration	Running	3	7	6	4	5																								1	2				8
14	Abnormal noise	Idling	3																											2	1					4
		Garage shift			1																															
		Running	2		1	1	1																							1						3
		Gear change	2		1	1	1																													3
		Accelerator ON/OFF (No gear change)	2		1	1	1																													

ON–VEHICLE TROUBLESHOOTING

No	Symptom	Inspection item	P0753(31)	P0758(32)	P0748(35)	P0743(33)	P0502(24)	P0722(11)	P0717(14)	P0727(13)	P0120(21)	P1121(23)	P0705(17)
			DTC (FLASHING CODE)										
15	A/T	A/T interior * Refer to A/T internal troubleshooting											
		O-rings											
		Gaskets											
		Oil seals											
	ATF	Water in fluid/Wrong fluid											
		Automatic transmission fluid level (Too much or too little)											
	A/T (External)	Cooler pipe resonance											
		Cooler pipe installation											
		Cooler pipes (Bending and/or clogging)											
		Breather (Bending)											
		Select lever linkage (Operation and adjustment)											
	Electrical system	TCM internal circuits	2	2	2	2	2	2	2	2	3	3	2
		ECM								1	1		
		Tachometer								1			
		Wire harness connectors	1	1	1	1	1	1	1	1	2	2	1
		Brake switch circuit											
		Overdrive switch circuit											
		Pattern select switch circuit											
		Oil temperature sensor circuit											
		Neutral start switch circuit (Operation and adjustment)											1
		SP1 sensor circuit (Speedometer sensor)					1					1	
		SP2 sensor circuit (Output revolution sensor)						1					
		Input revolution sensor circuit							1				
		Pressure control solenoid circuit			1								
		Lock-up solenoid circuit				1							
		Shift solenoid S2 circuit		1									
		Shift solenoid S1 circuit	1										
		Throttle position sensor circuit									2	2	
	Chassis	Suspension looseness											
		Drive train and body interference											
	ENG	Exhaust system resonance											
		Engine and automatic transmission mounting											
		Drive plate											
		Engine tuning											

UNIT TROUBLESHOOTING

Symptom		Inspection item	T/C		Oil pump	Oil strainer	Transmission case	Shift solenoid S1 (Stick)	Shift solenoid S2 (Stick)	Lock-up solenoid (Stick)	Pressure controller solenoid (Stick)	Valve body (Internal)	Accumulator (C0, C2, B0, and B2)	Clutch			Brake				One-way clutch			Overdrive front and rear planetary gears	Bearing races	Detent spring
			Internal problem	External problem										Overdrive direct clutch (C0)	Forward clutch (C1)	Direct clutch (C2)	Overdrive brake (B0)	2nd coast brake (B1)	2nd brake (B2)	1st and reverse brake (B3)	Overdrive one-way clutch (F0)	One-way clutch No. 1 (F1)	One-way clutch No. 2			
1	No vehicle movement	No forward movement	7		3	1					2	8			4								5	6		
		No reverse movement	6		3	1					2	7				4				5						
2	Slippage	Slip to front	7		3	1					2	8			4								5	6		
		Slip to rear	6		3	1					2	7				4				5						
3	Long garage shift time lag	N→D			2						1	5			3								4			
		N→R			2						1	5				3				4						
4	Engine stop	N→D or N→R	2							1		3														
		Speed reduction								1		2														
5	No shift	1→2							1			4							2			3				
		2→3						1				3				2										
		3→4							1			3					2									
		4→3							1			4		2			3				2					
		3→2						1				4				2						3				
		2→1							1			5							2			3	4			
		Lock-up does not operate	2							1		3														
		Poor engine braking in 2nd gear										2						1								
		Poor engine braking in 1st gear										2							1							
6	Shift lever too stiff or too loose																									1

UNIT TROUBLESHOOTING

	Symptom	Inspection item	T/C											Clutch			Brake				One-way clutch					
			Internal problem	External problem	Oil pump	Oil strainer	Transmission case	Shift solenoid S1 (Stick)	Shift solenoid S2 (Stick)	Lock-up solenoid (Stick)	Pressure controller solenoid (Stick)	Valve body (Internal)	Accumulator (C0, C2, B0, and B2)	Overdrive direct clutch (C0)	Forward clutch (C1)	Direct clutch (C2)	Overdrive brake (B0)	2nd coast brake (B1)	2nd brake (B2)	1st and reverse brake (B3)	Overdrive one-way clutch (F0)	One-way clutch No. 1 (F1)	One-way clutch No. 2	Overdrive front and rear planetary gears	Bearing races	Detent spring
7	Poor fuel economy		2							1		3														
8	Oil leakage	Breather										1														
		Engine and transmission housing mating surfaces		1	2																					
		Oil pan					1																			
9	Jolt when gears are changed	N→D									1	3			2											
		N→R									1	4	2			3										
		1→2									1	4	2						3							
		2→3									1	4	2			3										
		3→4									1	4	2				3									
		Coast-down									1	3	2													
		Kick-down									1	3	2													
		Lock-up								1	1	2														
10	Excessive vibration	Running	2			1						3														
11	Abnormal noise	Idling	4		2	1																			3	
		Garage shift													2	1										
		Running	5		2	1						6												3	4	
		Gear change												1	5	3	2	4	6	7						

MANUAL SHIFTING TEST

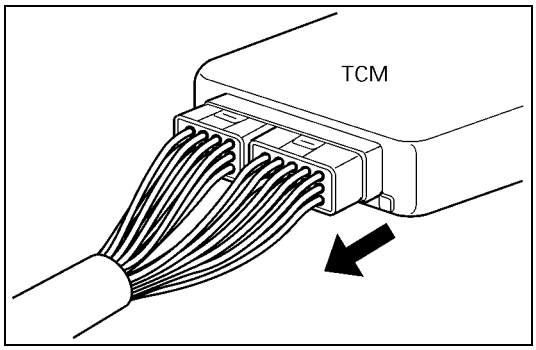

826RY00018

NOTE:
With this test, it can be determined whether the trouble lies within the electrical circuit or is a mechanical problem in the transmission.

1. Disconnect TCM connector

With the engine OFF, disconnect the TCM connector.

Position	Transmission		
Shift	"D" range	"2" range	"L" range
Gear	OD	3rd	3rd

Transmission	
"R" range	"P" range
Reverse	Pawl Lock

F07RY00024

2. Inspect manual driving operation

Check that the shift and gear positions correspond with the table below.
If the "L", "2" and "D" range gear positions are difficult to distinguish, do perform the following road test.
While driving, shift through the "L", "2" and "D" ranges. Check that the gear change corresponds to the gear position.
If any abnormality is found in the above test, do perform the stall, time lag or gear change tests.

3. Connect TCM connector

With the engine off, connect the TCM connector.

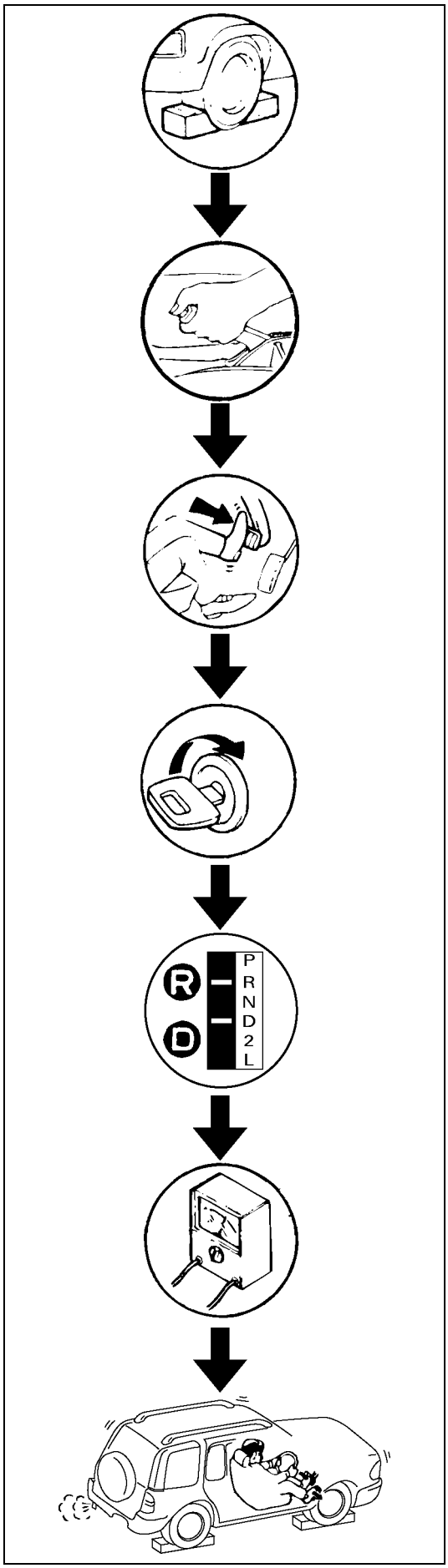

F07RY00002

STALL TEST

The object of this test is to check the overall performance of the transmission and engine by measuring the maximum engine speeds at the "D" and "R" ranges.

NOTE:

(1) Perform the test at normal operation fluid temperature (50 – 80°C or 122 – 176°F).

(2) Do not continuously run this test longer than 5 seconds.

MEASURE STALL SPEED

1) Chock the four wheels.
2) Mount an engine tachometer.
3) Fully apply the parking brake.
4) Step down strongly on the brake pedal with your left foot.
5) Start the engine.
6) Shift into the "D" range. Step all the way down on the accelerator pedal with your right foot. Quickly read the highest engine rpm.

Stall speed	2450 ± 150rpm

7) Perform the same test in the "R" range.

EVALUATION

1) If the engine speed is the same for both ranges but lower than the specified value:
   - Engine output is insufficient.
   - Stator one-way clutch is not operating properly.

NOTE:
If more than 600 rpm below the specified value, the torque converter could be faulty.

2) If the stall speed in only "D" range is higher than specified:
   - Line pressure too low
   - Forward clutch slipping
   - No. 2 one-way clutch not operating properly
3) If the stall speed in only "R" range is higher than specified:
   - Line pressure too low
   - Direct clutch slipping
   - No. 3 brake slipping
4) If the stall speed in the "R" and "D" ranges are higher than specified:
   - Line pressure too low
   - Improper fluid level

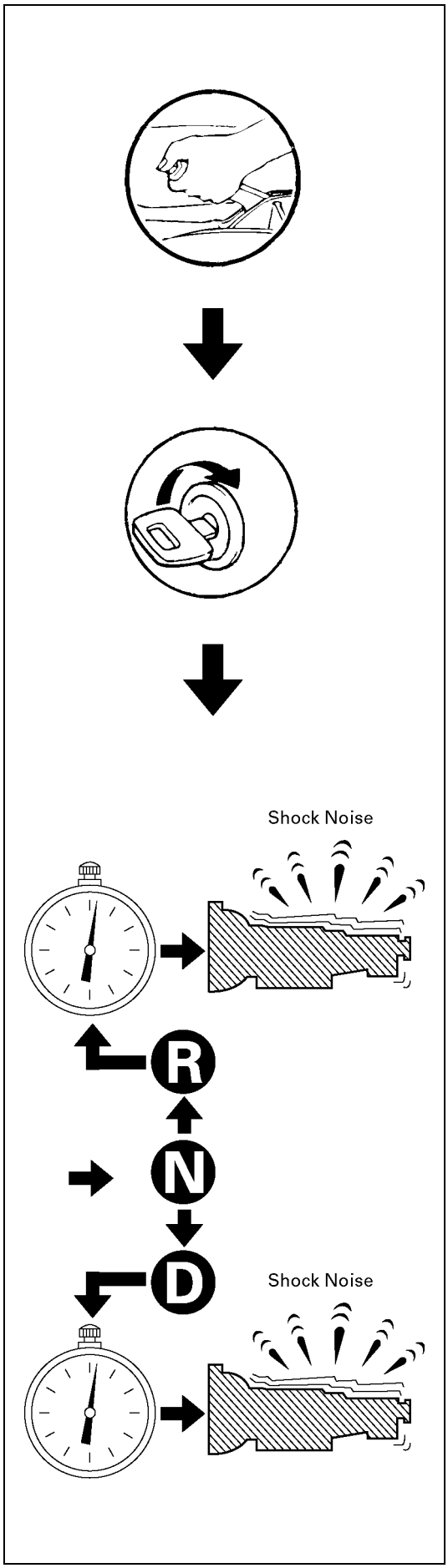

F07RY00003

TIME LAG TEST

If the shift lever is shifted while the engine is idling, there will be a certain time elapse or lag before the shock can be felt. This is used for checking the condition of the forward clutch, direct clutch, No. 3 brake, and No. 2 one-way clutch.

NOTE:

(1) Perform the test at normal operation fluid temperature (50 – 80°C or 122 – 176°F).

(2) Be sure to allow one minute interval between tests.

(3) Make three measurements and take the average value.

MEASURE TIME LAG

1) Fully apply the parking brake.
2) Start the engine.
   Check idling speed (A/C OFF)

"N" range	695 – 745 rpm

3) Shift the shift lever from "N" to "D" range. Using a stop watch, measure the time it takes from shifting the lever until the shock is felt.

Time lag	Less than 0.7 seconds

4) In same manner, measure the time lag for "N" → "R".

Time lag	Less than 1.2 seconds

EVALUATION

1) If "N" → "D" time lag is longer than specified:
   - Line pressure too low
   - Forward clutch malfunction
   - No. 2 one-way clutch not operating properly
2) If "N" → "R" time lag is longer than specified:
   - Line pressure too low
   - Direct clutch malfunction
   - No. 3 brake malfunction
3) If both time lag is longer than specified:
   - Line pressure too low

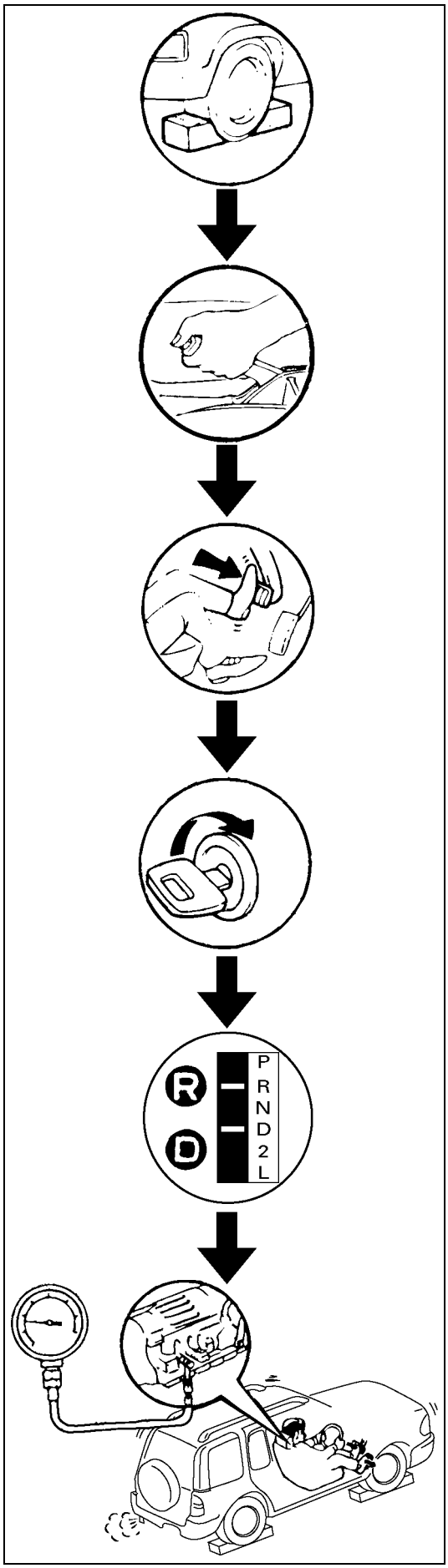

F07RY00004

HYDRAULIC TEST

PREPARATION

1) Warm up the transmission fluid.
2) Remove the transmission case test plug and mount the hydraulic pressure gauge.
   Oil pressure gauge: 5-8840-0093-0

NOTE:
Perform the test at normal operating fluid temperature (50 – 80°C or 122 – 176°F).

MEASURE LINE PRESSURE

1) Fully apply the parking brake and chock the four wheels.
2) Start the engine and check idling rpm.
3) Shift into "D" range, step down strongly on the brake pedal with your left foot and, while manipulating the accelerator pedal with the right foot, measure the line pressures at the engine speeds specified in the table.
4) In the same manner, perform the test in "R" range.

Engine speed	Line pressure kPa (kg/cm^2/psi)	
	"D" range	"R" range
Idling	358 – 417 (3.6–4.3 / 51–61)	588 – 686 (6.0–7.0 / 85–100)
Stall	1,176 – 1,323 (12.0–13.5 / 171–192)	1,607 – 1,940 (16.4–19.8 / 233–282)

EVALUATION

1) If the measured values at all ranges are higher than specified.
   - Pressure control solenoid defective.
   - Primary regulator valve defective.
2) If the measured values at all ranges are lower than specified.
   - Primary regulator valve defective.
   - Oil pump defective.
   - Pressure control solenoid defective.
3) If pressure is low in "D" range only:
   - "D" range circuit fluid leakage.
4) If pressure is low in "R" range only:
   - "R" range circuit fluid leakage.

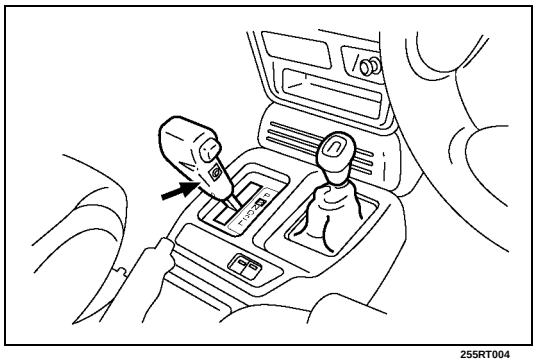

ROAD TEST

NOTE:

Perform the test at normal operation fluid temperature (50 – 80°C or 122 – 176°F).

"D" RANGE TEST IN "NORMAL", AND "POWER" PATTERN RANGES

Shift into the "D" range and hold the accelerator pedal constant at the 50% and 100% throttle valve opening positions.
Push in one of the pattern selector buttons and check the following:

1) 1-2, 2-3, 3-OD and lock-up, up-shifts should take place, and shift points should conform to those shown in the automatic shift diagram.

NOTE:

Drive the vehicle on level ground so as not to change to up and down hill control.

EVALUATION

(1) If there is no 1 → 2 up-shift:
- No. 2 solenoid is stuck
- 1-2 shift valve is stuck

(2) If there is no 2 → 3 up-shift:
- No. 1 solenoid is stuck
- 2-3 shift valve is stuck

(3) If there is no 3 → OD up-shift (throttle valve opening 1/2):
- No. 2 solenoid is stuck
- 3-4 shift valve is stuck

(4) If the shift point is defective:
Refer to *"TROUBLESHOOTING CHART" in this section.*

(5) If the lock-up is defective:
Refer to *"TROUBLESHOOTING CHART" in this section.*

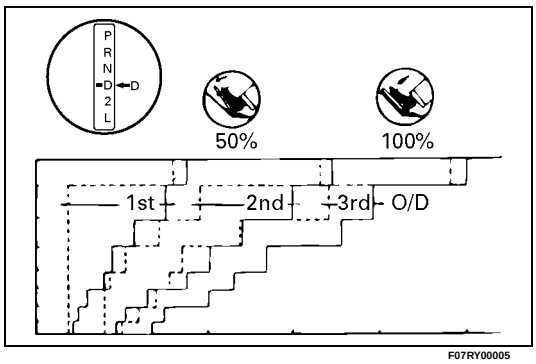

2) In the same manner, check the shock and slip at the 1 → 2, 2 → 3 and 3 → OD up-shifts.

EVALUATION

If the shock is excessive:
Refer to *"TROUBLESHOOTING CHART" in this section.*

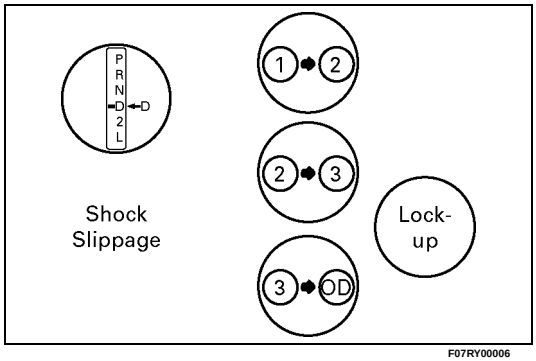

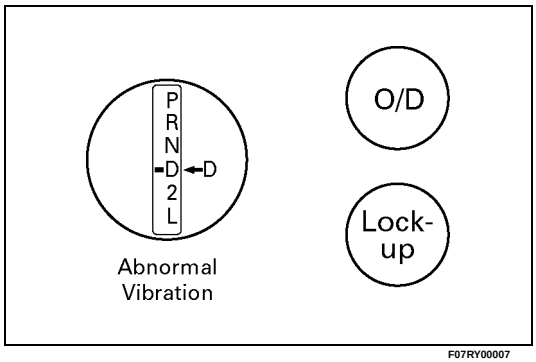

F07RY00007

3) Run at "D" range lock-up or OD gear and check for abnormal noise and vibration.

NOTE:
The check for the cause of abnormal noise and vibration must be made with extreme care as it could also be due to loss of balance in the propeller shaft, differential, the torque converter, etc. or insufficient bending, rigidity, etc. in the power train.

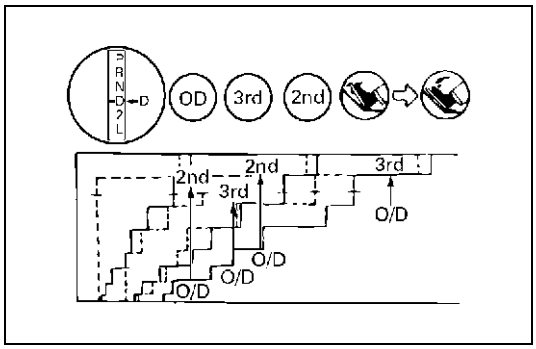

F07RY00008

4) While running in "D" range, 2nd, 3rd gears and OD, check to see that the possible kick-down vehicle speed limits for 2 → 1, 3 → 1, 3 → 2, OD → 3 and OD → 2 kick-downs conform to those indicated on the automatic shift diagram.

5) Check for abnormal shock and slip at kick-down.

6) While running in "D" range, OD gear or "lock-up", shift to "2" and "L" ranges and check the engine braking effect at each of these ranges.

7) Also check to see that downshift is made from 3 → 2 or from OD to 3 and then to 2 immediately and that 2 → 1 downshift point is within the limits shown in the diagram when tested by releasing the accelerator pedal and shifting into position of "L" while driving in the third gear or in overdrive.

EVALUATION

(1) If there is no engine braking effect in the "2" range:
- Second coast (No. 1) brake is defective.

(2) If there is no engine braking effect in the "L" range:
- First and reverse (No. 3) brake is defective

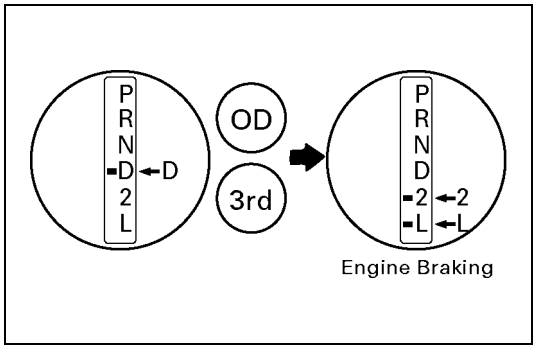

F07RY00009

(3) Also check to see that downshift is made from 3 → 2 or from OD to 3 and then to 2 immediately and that 2 → 1 downshift point is within the limits shown in the diagram when tested by releasing the accelerator pedal and shifting into "L" position while driving in the third gear or in overdrive.

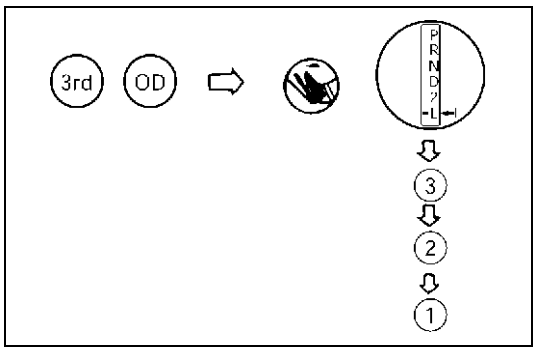

F07RY00010

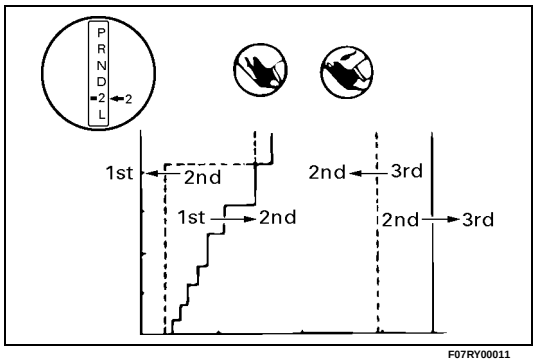

F07RY00011

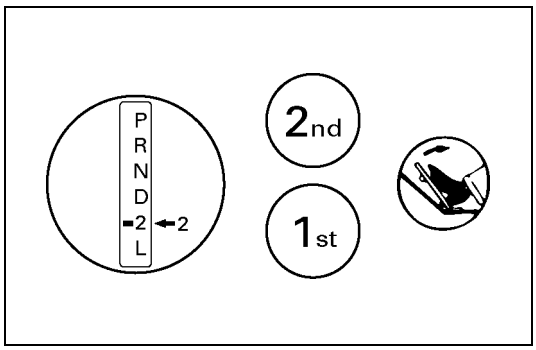

F07RY00012

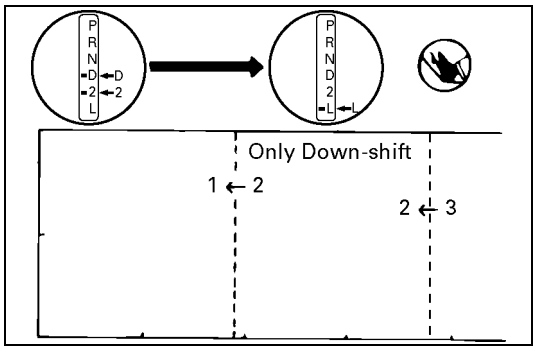

F07RY00020

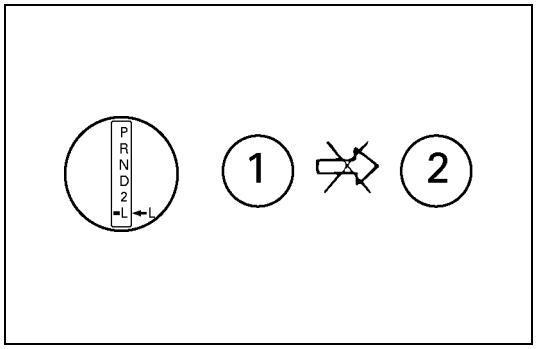

F07RY00014

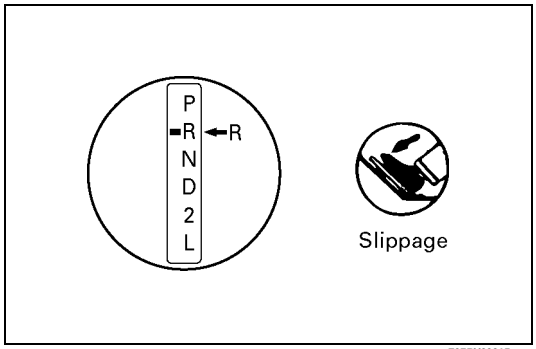

F07RY00015

"2" RANGE TEST

Shift into "2" range and, while driving with the accelerator pedal held constantly at the specified point (throttle valve opening 50% and 100%), push in one of the pattern selectors (only for 4x4) and check on the following points.

1) At each of the above throttle openings, check to see that the 1 → 2 up-shift takes place and that the shift points conform to those shown on the automatic shift diagram.

NOTE:
There is no OD and no lock-up in the "2" range.

2) While running in the "2" range and 2nd gear, release the accelerator pedal and check the engine's braking effect.
3) Check for 2 → 1 down-shift and abnormal noise at acceleration and deceleration, and for shock at upshift and down-shift.

"L" RANGE TEST

1) While running above 90 km/h (56 mph) in the "D" range, release your foot from the accelerator pedal and shift into the "L" range.
   Then check to see that the 2 → 1 and 3 → 2 down-shift occurs at the specified point shown on the automatic shift diagram.
2) While running in the "L" range, check to see that there is no up-shift to 2nd gear.
3) While running in the "L" range, release the accelerator pedal and check the engine braking effect.
4) Check for abnormal noise during acceleration and deceleration.

"R" RANGE TEST

Shift into the "R" range and, while starting at full throttle, check for slipping.

"P" RANGE TEST

Stop the vehicle on a grade (more than 9%) and after shifting into the "P" range, release the parking brake. Then check to see that the parking lock pawl holds the vehicle in place.

SHIFT POINT CHART AND LOCK-UP POINT CHART

SHIFT POINT CHART

(H2, H4)
(REAR AXLE RATIO: 4.300)
(RADIUS OF TIRE: 0.363m)

“NORMAL” mode

Up shift **km/h**

Range	Throttle Opening	1 ⇒ 2	2 ⇒ 3	3 ⇒ 4
D	Fully opened	39 - 45	78 - 84	128 - 134
	Half throttle	22 - 28	48 - 54	89 - 95
2	Fully opened	39 - 45	89 - 95	—
	Half throttle	22 - 28	89 - 95	—

Down shift **km/h**

Range	Throttle Opening	1 ⇐ 2	2 ⇐ 3	3 ⇐ 4
D	Fully opened	30 - 36	65 - 71	115 - 121
	Half throttle	9 - 15	27 - 33	64 - 70
	Fully closed	9 - 15	22 - 28	37 - 43
2	Fully opened	30 - 36	85 - 91	—
	Half throttle	9 - 15	85 - 91	—
	Fully closed	9 - 15	85 - 91	—
L	Fully opened	43 - 49	85 - 91	—
	Half throttle	43 - 49	85 - 91	—
	Fully closed	43 - 49	85 - 91	—

“POWER” mode

Up shift **km/h**

Range	Throttle Opening	1 ⇒ 2	2 ⇒ 3	3 ⇒ 4
D	Fully opened	39 - 45	78 - 84	128 - 134
	Half throttle	29 - 35	58 - 64	89 - 95
2	Fully opened	39 - 45	89 - 95	—
	Half throttle	22 - 28	89 - 95	—

Down shift **km/h**

Range	Throttle Opening	1 ⇐ 2	2 ⇐ 3	3 ⇐ 4
D	Fully opened	30 - 36	65 - 71	115 - 121
	Half throttle	11 - 17	45 - 51	74 - 80
	Fully closed	9 - 15	22 - 28	37 - 43
2	Fully opened	30 - 36	85 - 91	—
	Half throttle	9 - 15	85 - 91	—
	Fully closed	9 - 15	85 - 91	—
L	Fully opened	43 - 49	85 - 91	—
	Half throttle	43 - 49	85 - 91	—
	Fully closed	43 - 49	85 - 91	—

LOCK-UP POINT CHART

(H2, H4)
(REAR AXLE RATIO: 4.300)
(RADIUS OF TIRE: 0.363m)

km/h

Range	A/T Mode	Throttle Opening : 20%			
		Lock-up ON		Lock-up OFF	
		3rd	4th	3rd	4th
D	NORMAL	47 - 53	62 - 68	45 - 51	55 - 61
	POWER	47 - 53	66 - 72	45 - 51	55 - 61

TCM VOLTAGE CHECK

TCM voltage check is done to check for transmission and transmission control module (TCM) problems which cannot be detected by self-diagnosis.
Additionally, it serves as a back-up check for self-diagnosis.
Measure the voltage drop and make a continuity test for each of the sensors, solenoids, and switches.
If the voltage is within the specified range and continuity exists, that particular area of the TCM and automatic transmission assembly is normal.
If voltage deviation or lack of continuity is discovered, disconnect the applicable parts and check each of them individually.
This will allow you to determine the trouble location (TCM, automatic transmission unit, or another area of the vehicle).

Inspection Tool
Use a circuit tester to measure voltage and circuit continuity.
Insert the test probes from the connector wiring side. TCM terminals are extremely small.
Wrap a piece of thin wire around the probe of tester.
This will make measurement easier.

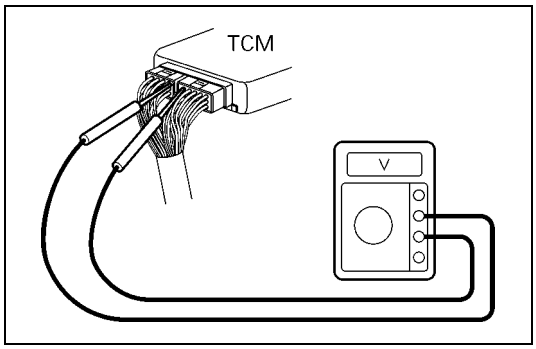

826RY00017

TCM Voltage Check Procedure

1. Remove the TCM.
2. Turn the ignition switch on. Do not start the engine.
3. Measure the voltage at the terminal. Refer to *the following table for the specified voltage ranges.*

TCM STANDARD VOLTAGE

Check circuit	Terminal		Measuring condition	Voltage (V)
	+	-		
Throttle position sensor	C79-6	C79-28	Throttle fully opened (WOT)	3.47 ~ 4.56
			Throttle fully closed (idling)	0.25 ~ 0.45
	C79-19	C79-18	Key switch ON	4.75 ~ 5.25
Output revolution sensor	C79-4	C79-16	Engine idling in gear	0 ~ 3
Input revolution sensor	C79-5	C79-17	Engine idling	0 ~ 3
Speed meter sensor	C79-7	C78-15 or -19	Vehicle speed 10 ~ 20 km/h	Less than 1.4 ⇔ about 5
Brake switch	C78-18	C78-15 or -19	Depress brake	7 ~ 16
			Release brake	Less than 1
O/D OFF switch	C79-3	C78-15 or -19	O/D OFF switch ON (O/D OFF)	7 ~ 16
			O/D OFF switch OFF (O/D ON)	Less than 1
Neutral start switch (P)	C79-2	C78-15 or -19	Selector “P” range	7 ~ 16
			Selector all ranges except “P”	Less than 1
Neutral start switch (R)	C79-1	C78-15 or -19	Selector “R” range	7 ~ 16
			Selector all ranges except “R”	Less than 1
Neutral start switch (N)	C79-9	C78-15 or -19	Selector “N” range	7 ~ 16
			Selector all ranges except “N”	Less than 1
Neutral start switch (D)	C79-8	C78-15 or -19	Selector “D” range	7 ~ 16
			Selector all ranges except “D”	Less than 1
Neutral start switch (2)	C79-21	C78-15 or -19	Selector “2” range	7 ~ 16
			Selector all ranges except “2”	Less than 1
Neutral start switch (L)	C79-20	C78-15 or -19	Selector “L” range	7 ~ 16
			Selector all ranges except “L”	Less than 1
Engine revolution signal	C79-15	C78-15 or -19	Engine idling	Less than 1.4 ⇔ 9 ~ 16
Diagnosis terminal	C79-24	C78-15 or -19	Self-diagnosis ON	0 ~ 1.5
Power pattern switch	C79-23	C78-15 or -19	Power pattern switch OFF (NORMAL)	8 ~ 16
			Power pattern switch ON (POWER)	Less than 1.4
Winter select switch	C79-13	C78-15 or -19	Switch OFF	8 ~ 16
			Switch ON	Less than 1.4
Electrical source (Battery)	C78-13	C78-15 or -19	—	9 ~ 16
Electrical source (Ignition)	C78-20	C78-15 or -19	Key switch ON	9 ~ 16
Oil temperature warning lamp	C79-11	C78-15 or -19	Oil temperature warning lamp ON	Less than 1
			Oil temperature warning lamp OFF	8 ~ 16
“CHECK TRANS lamp”	C79-10	C78-15 or -19	“CHECK TRANS” lamp ON	Less than 1
			“CHECK TRANS” lamp OFF	8 ~ 16
Power lamp	C79-22	C78-15 or -19	Power lamp ON	Less than 1
			Power lamp OFF	8 ~ 16

Check circuit	Terminal		Measuring condition	Voltage (V)
	+	-		
Winter lamp	C79-12	C78-15 or -19	Winter lamp ON	Less than 1
			Winter lamp OFF	8 ~ 16
Solenoid S1	C78-4	C78-15 or -19	OFF (3rd or O/D)	Less than 1
			ON (1st or 2nd)	8 ~ 16
Solenoid S2	C78-3	C78-15 or -19	OFF (1st or O/D)	Less than 1
			ON (2nd or 3rd)	8 ~ 16
Lock up solenoid SL	C78-12	C78-15 or -19	OFF (Lock up OFF)	Less than 1
			ON (Lock up ON)	8 ~ 16
Pressure control solenoid	C78-11	C78-8	At throttle pressure changing	Less than 1 ⇔ 8-16
Oil temperature sensor	C79-18	C79-27	ATF temperature 20°C	4.70
			ATF temperature 80°C	3.65
Tech 2 diagnosis terminal (J1850)	C78-6	C78-15 or -19	On diagnosis communication	0-1.5 ⇔ 6.25-8.0
Throttle position sensor (ground)	C79-19	C78-15 or -19	Key switch ON	-0.1 ~ 0.1

MEMO

ON-VEHICLE SERVICE

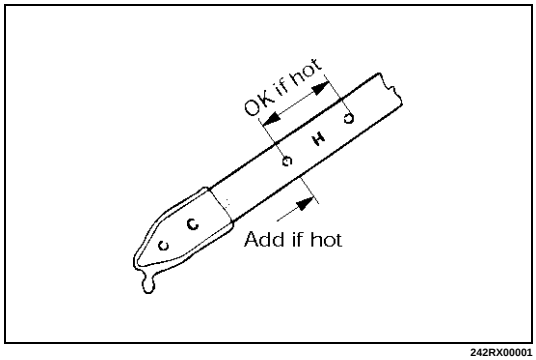

242RX00001

TRANSIMISSION FLUID LEVEL AND CONDITION

Park vehicle on level ground and set parking brake.
With the engine idling, move the shift lever through all positions from "P" to "L", then return to position "P".
Check to see If the level of fluid comes to "HOT" range of about 80°C (176°F) on the dipstick gauge.
If the level of fluid is too low, replenish to bring it to maximum level in "HOT" range.

Inspection of fluid condition
If the ATF is black or smells burnt, replace it.

ATF REPLACEMENT

NOTE:
Do not overfill.

1) Remove the drain plug from oil pan and drain the fluid.
2) Reinstall the drain plug securely.
3) With the engine OFF, add new fluid through the filler tube.

	Transmission
Drain and refill	5.2 L
Dry fill	8.7 L
Fluid	BESCO ATF III

4) Start the engine and shift the selector into all position from "P" through "L", and then shift into "P".
5) With the engine idling, check the fluid level. Add fluid up to the "COLD" level on the dipstick.
6) The ATF level must be checked again for correct level with the "HOT" level.

NOTE:
To prevent fluid leaks, the drain plug gasket must be replaced each time this plug is removed.

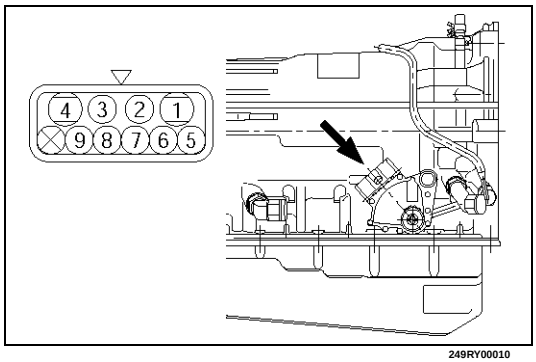

249RY00010

NEUTRAL START SWITCH INSPECTION

Inspection

With a circuit tester, make a continuity test on the neutral start switch with the moving piece set in each position.

Terminal Position	1	4	3	5	2	6	8	7	9
P	❍	❍	❍	❍					
R			❍		❍				
N	❍	❍	❍			❍			
D			❍				❍		
2			❍					❍	
L			❍						❍

❍—❍ Continuity

Removal

Preparation:

Disconnect negative (–) battery cable.

1. Remove rear sound cover.
2. Remove the rear side ATF cooler pipe from the transmission elbow.
3. Disconnect neutral start switch connector.
4. Unstake the lock washer, and then remove the shaft nut.
5. Remove the neutral start switch.

Installation

To install, follow the removal steps in the reverse order, noting the following points;

Adjustment

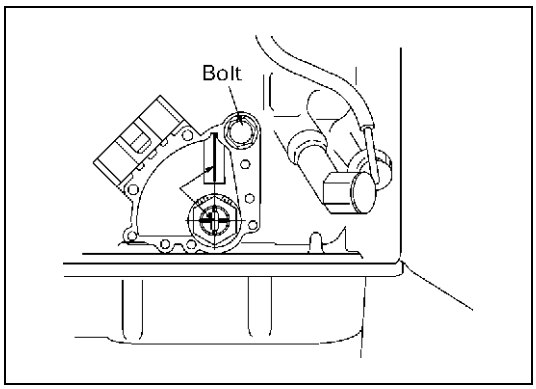

249RY00008

1) Loosen the neutral start switch bolt and set the shift selector to the "N" range.
2) Align the groove and neutral basic line.
3) Hold in position and tighten the bolt.

Torque	N·m (kg·cm/lb·in)
Nut	7 (70/61)
Bolt	13 (130/113)

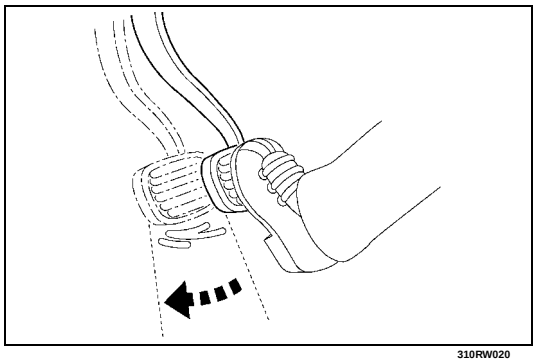

310RW020

BRAKE SIGNAL INSPECTION

Check that the brake light comes on when the brake pedal is depressed.

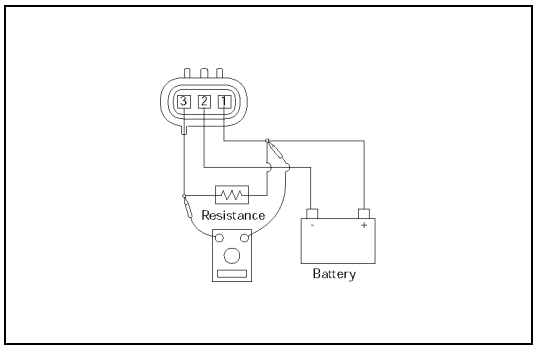

F07RY00017

VEHICLE SPEED SENSOR INSPECTION

1. Connect the Vehicle speed sensor connector terminal (1) to the battery (+) terminal and terminal (2) to the battery (-) terminal.
2. Connect a resistance of 1.3k ohm to 5k ohm (1.4W or more) between terminals (1) and (3).

NOTE:
Be extremely careful not to connect the battery (+) terminal to the terminal (3)
This may damage the vehicle speed sensor.

3. Rotate the shaft of the vehicle speed sensor slowly and measure the voltage at both ends with a digital tester.

   The voltage, with one rotation of shaft, fluctuates four times in the following range: 10 to 14V ⇔ 2V or less.

   Replace the sensor when the result of inspection is found abnormal.

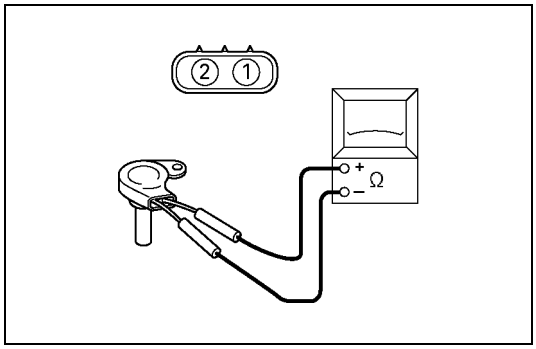

F07RY00018

INPUT AND OUTPUT REVOLUTION SENSOR INSPECTION

Use an ohmmeter to measure the resistance between terminals 1 and 2.

Standard resistance	560 – 680Ω (20°C) 610 – 740Ω (40°C)

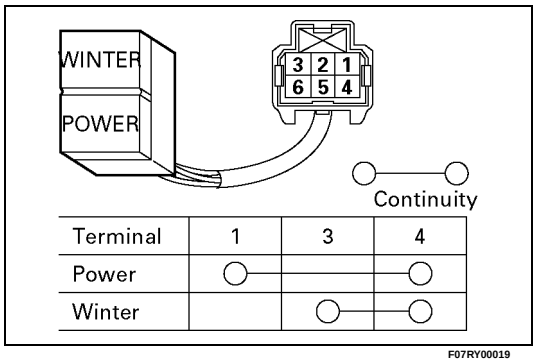

PATTERN SELECT SWITCH INSPECTION

Inspect that there is continuity between each terminals.

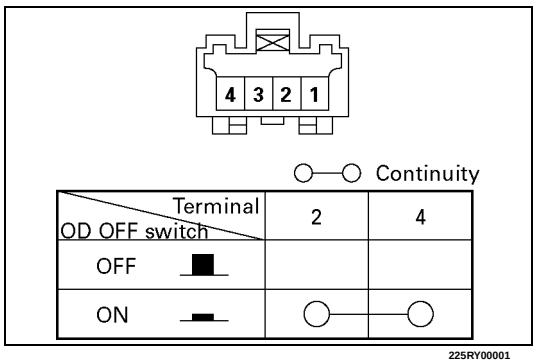

OVERDRIVE OFF SWITCH INSPECTION

Inspect that there is continuity between terminals 2 and 4.

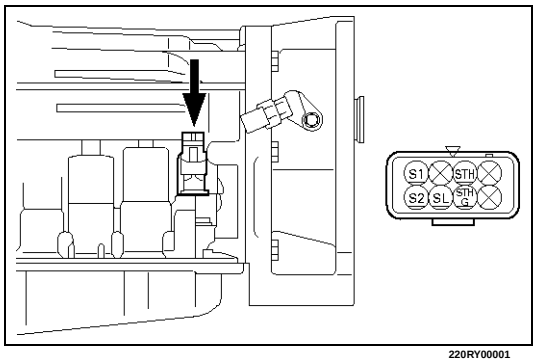

SOLENOID INSPECTION

1. Resistance check
   - Using an ohmmeter, check the resistance between each terminals (S1/S2/SL) and body.

Solenoid S1, S2 and Lock-up solenoid resistance	11 - 15 Ω (20°C) 12 - 16 Ω (40°C)

   - Using an ohmmeter, check the resistance between terminals (STH) and (STHG).

Pressure control solenoid resistance	5 - 5.6 Ω (20°C) 5.4 - 6.1 Ω (40°C)

NOTE:
If the pressure contorl solenoid resistance is not within specification, replace the valve body assembly.

2. Operation Check

   Check the solenoid operation by blowing into an oil hole as shown in the figure.

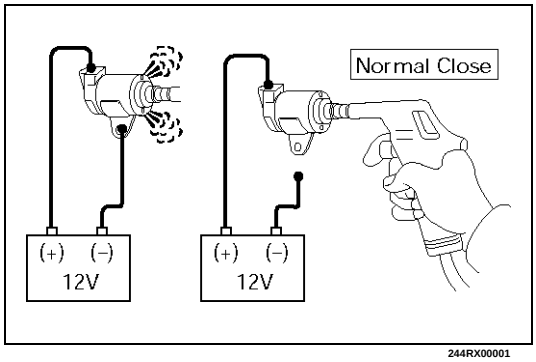

Solenoid S1 and S2 (Normal close type)

When battery terminal is disconnected	No air leaks
When battery terminal is connected	Air passes through

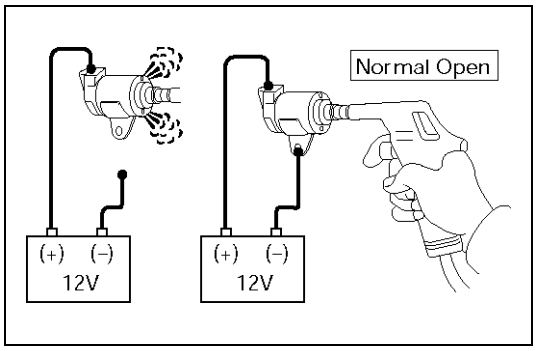

244RY00005

Look-up solenoid (Normal open type)

When battery terminal is disconnected	Air passes through
When battery terminal is connected	No air leaks

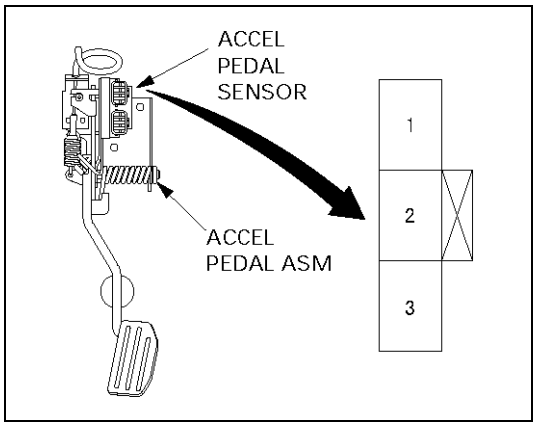

101RY00004

THROTTLE POSITION SENSOR INSPECTION

1. Turn the starter switch to the "ON" position.
2. Measure the voltage between throttle position sensor connector terminals 2 (output) and 3 (ground).

NOTE:

- **Do not remove the sensor connector.**
- **Make sure that power source (4.75-5.25V) is measured between terminals 1 and 3 before measurement at step 2).**

Throttle position	Voltage (V)
Idle	0.25-0.45
WOT	3.74-4.56

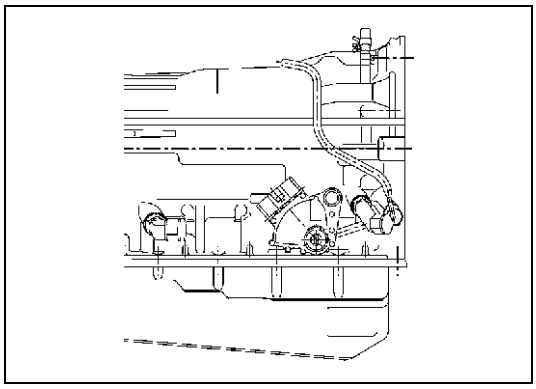

249RW003

ATF TEMPERATURE SENSOR INSPECTION

1. Disconnect the front side ATF cooler pipe from the elbow and remove the elbow.
2. Remove the ATF temperature sensor from the transmission case.
3. Place the ATF temperature sensor in a container of ATF.

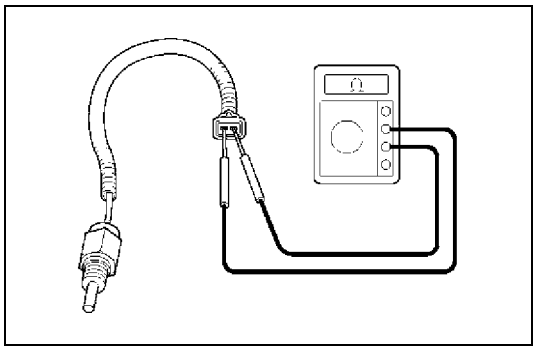

242RW013

4. Measure the resistance between each terminals.

Resistance	0.5 - 30 kΩ (0°C - 120°C)

5. If either of the measured values exceeds the specified, replace the ATF temperature sensor.

	N·m (kg·m/ lb·ft)
Torque	15 (1.5/11)

SELECTOR LEVER

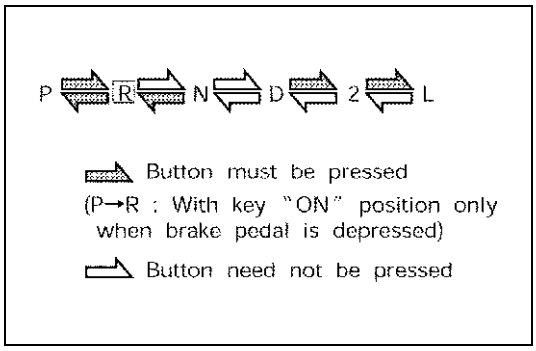

256RY00001

INSPECTION

1. Make sure that when the selector lever is shifted from "P" to "L", a "clicking" can be felt at each shift position. Make sure that the gear corresponds to that of the position plate indicator.
2. Check to see if the shifter lever can be shifted as shown.

REMOVAL

Preparation:

Diconnect negative (–) battery cable.

1. Transfer Control Lever Knob

2. Front Console

Disconnect wiring harness connectors.

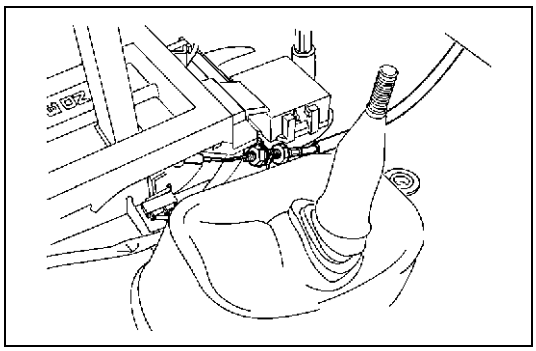

256RW012

3. Selector Lever Assembly

1) Disconnect shift lock cable from the selector lever assembly side.
2) Disconnect wiring harness connectors.

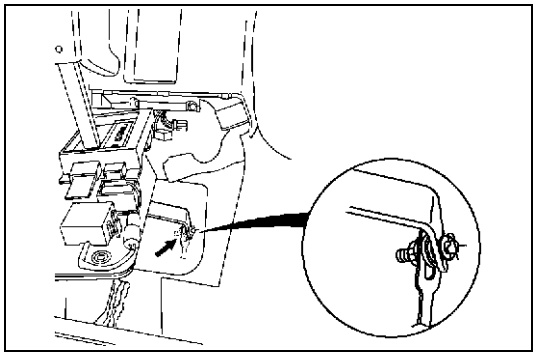

256RW013

3) Disconnect shift control rod from the selector lever assembly side.

INSTALLATION

To install, follow the removal steps in the reverse order, noting the following points;

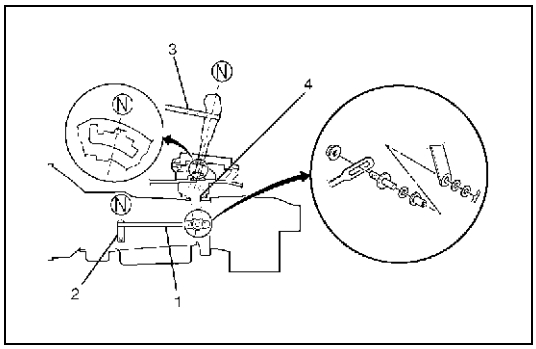

256RW014

Adjustment of select lever and control rod

1) Place the vehicle on a level surface.

NOTE:
If the vehicle is not on a level surface, the shift select cable set position will vary with the movement of the engine. To prevent possible misadjustment of the cable, the vehicle must be placed on a level surface.

2) Install the shift control rod (1) to the transfmission select lever (2), and then place the lever in the "N" position.
3) Set select lever in the "N" position.
4) Push select lever forward and secure it (using a rubber band (3), etc.) so that pin comes into contact with the wall of detent plate.
5) Install the shift control rod (1) to the selector lever arm (4).

	N·m(kg·m / lb·ft)
Nut torque	32 (3.3/24)

NOTE:
Do not apply to threaded portions.

6) After adjustment, operate select lever on a trial basis to makes sure of its smooth operation and no abnormal indication in each position.

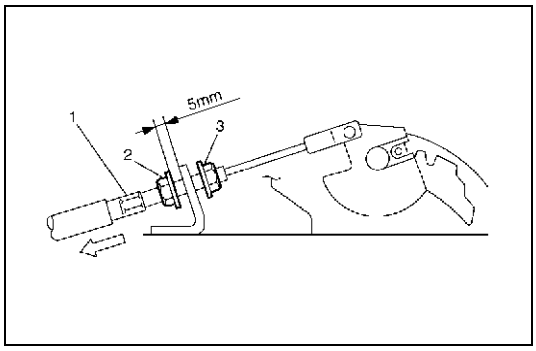

256RW015

Adjustment of shift lock cable

1) Set ignition key in "LOCK" position and selector lever in "P" position.
2) Adjust cable screw cap on selector lever side to provide a gap (slack for cable) of 1–2mm between rod on steering lock side and stopper.
   Adjust cap as follows:
   a. Pull screw cap (1) in arrow direction to put off slack of inner cable.
   b. With cable kept as (a), adjust gap between nut (2) and bracket to 5mm (0.2in).
   c. Lock inner cable by turning nut (3) while holding nut (2) in place.

	N·m(kg·cm / lb·in)
Lock nut torque	3.7 (38/33)

NOTE:
Clean the rod threads and do not apply oil to the threaded portions.

3) Make sure of proper operation of shift lock through checks as follows:
   a. Selector lever shall not be moved out of "P" position with ingition key in "Lock" position.
   b. Selector lever can be moved out of "P" position with ignition key in "ON" position only when brake pedal is depressed.
   c. Ignition key can be turned to "LOCK" position only when selector lever is in "P" position (key can be pulled out).
   If (a) and (c) fail, readjust cable. If (b) fails, readjust connector wiring and brake pedal switch.

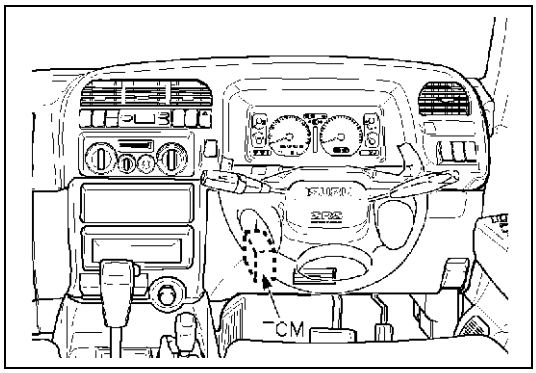

826RY00005

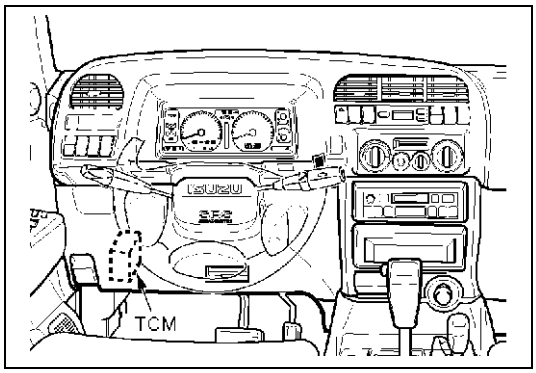

826RY00006

TRANSMISSION CONTROL MODULE (TCM)

REMOVAL

Preparation:

Disconnect negative (–) battery cable.

1. Disconnect the TCM harness connectors.
2. Remove fixing nuts (3 pieces) and TCM from the bracket.

INSTALLATION

To install, follow the removal steps in reverse order.

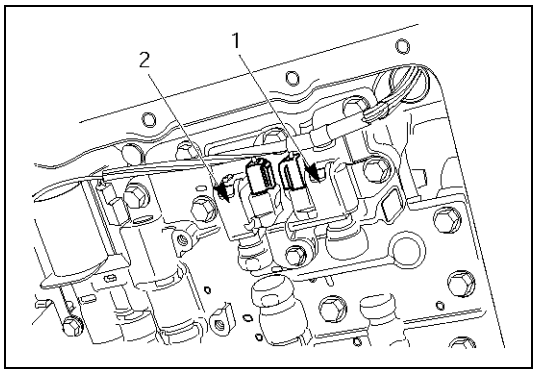

249RY00011

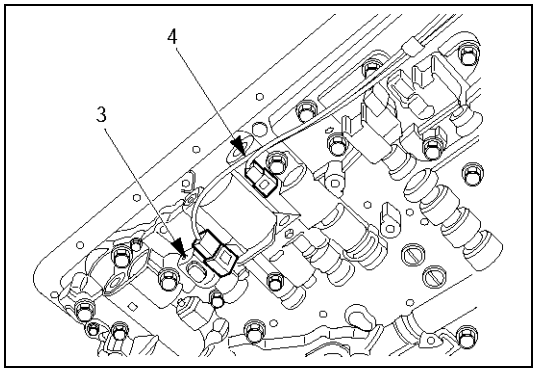

249RY00012

SHIFT SOLENOID AND LOCK-UP SOLENOID

REMOVAL

Preparation:

- Disconnect negative (–) battery cable.
- Remove the rear sound cover.
- Drain the fluid.
  Refer to *"ATF REPLACEMENT" in this section.*

1. Remove the nineteen bolts and oil pan.
2. Remove the oil strainer assembly.
3. Disconnect the solenoid wiring connectors from the shift solenoid S1(1), S2(2) and lock-up solenoid (3).
4. Remove each retaining bolts and solenoids.

INSTALLATION

To install, follow the removal steps in reverse order noting the following point;

Tprque	N·m (kg·cm/lb·in)
Solenoid S1, S2 bolt	7 (70/61)
Lock-up solenoid bolt	10 (100/87)

VALVE BODY ASSEMBLY AND PRESSERE CONTOROL SOLENOID

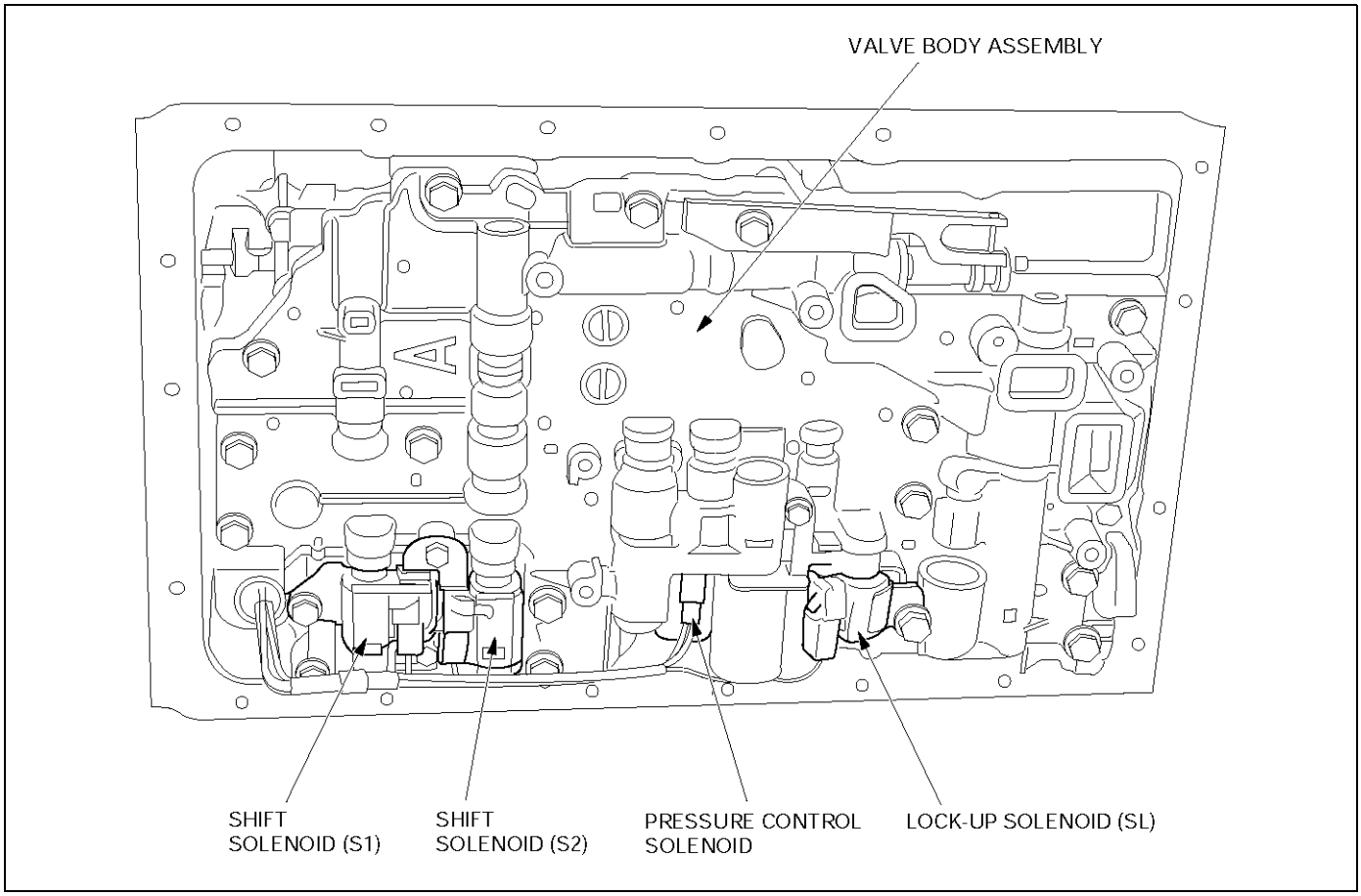

244RY00009

REMOVAL

Preparation:

- Disconnect negative (–) battery cable.
- Remove the rear sound cover.
- Drain the fluid.

Refer to *"ATF REPLACEMENT" in this section.*

1. Remove the nineteen bolts and oil pan.
2. Remove the oil strainer assembly.
3. Disconnect the soleniod wiring connectors from the solenoids.
4. Remove the twenty botls from the valve body.
5. Remove the valve body assembly and pressure control solenoid.
   - When removing valve body assembly from the transmission case, loosen the solenoid clamp bolt and remove the pressure control solenoid from the upper valve body assembly.
     Also disconnect the harness connector from the pressure control solenoid.

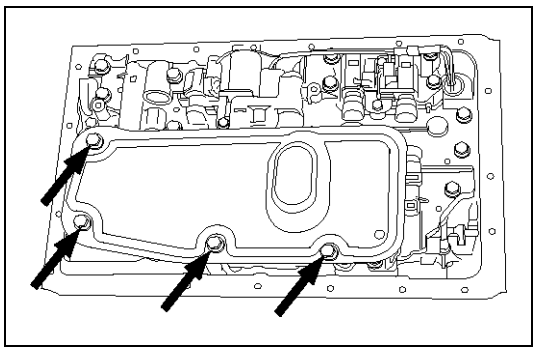

244RY00003

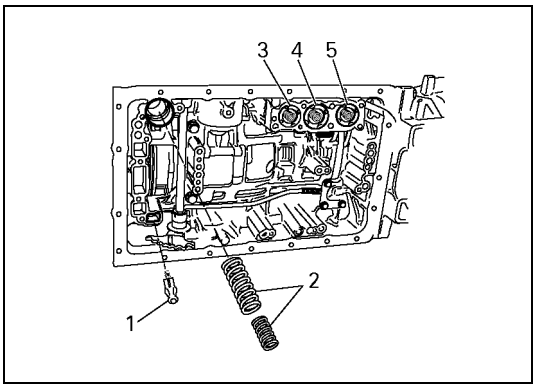

244RY00018

NOTE:

1. 2 or 3 people are reguired removal and installation of the valve body assembly and pressure control solenoid.
2. The check valve assembly (1) and the C0 accumulator piston springs (2) will fall from the transmission case during removal of valve body assembly.
   Protect these parts from damage.
   The B0 (3), C2 (4), and B2 (5) accumulator piston and springs may also fall free and must be protected.

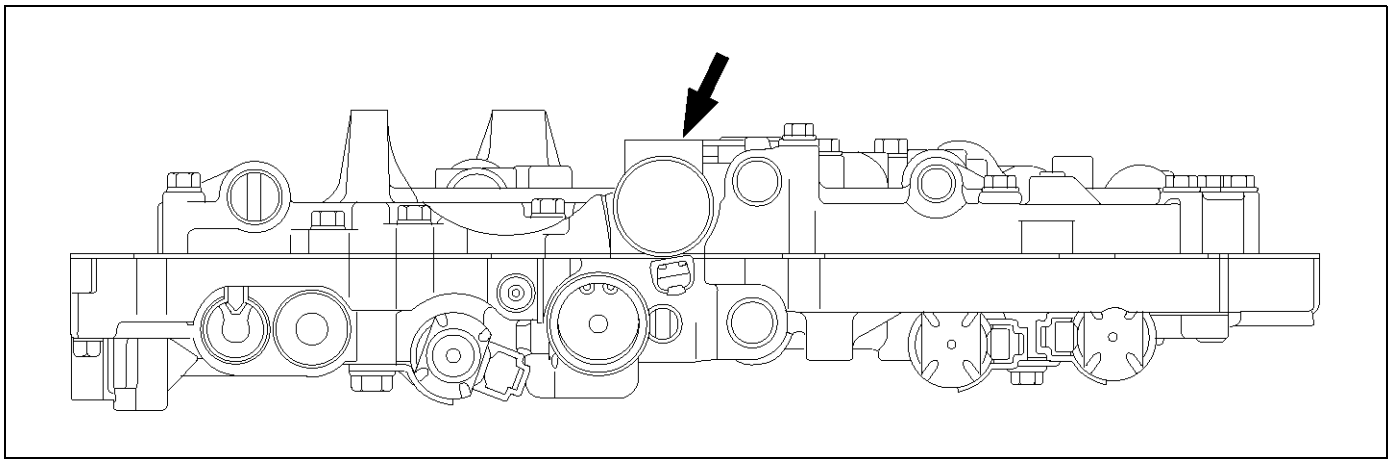
244RY00006

INSTALLATION

To install, follow the removal steps in reverse order, noting the following points;

1. Reinstall the parts removed with the valve body assembly to their assigned positions in the transmission case (check valve assembly, C0 accumulator pistons, etc). Install the valve body assembly to the transmission case.
   Refer to *“REASSEMBLY OF MAJOR COMPONENTS (2).”*
2. Solenoid clamp bolt

	N·m(kg·cm / lb·in)
Torque	7 (70/61)

3. Valve body fixing bots
   Each bolt location and length(mm) is indicated in the figure.

	N·m(kg·cm / lb·in)
Torque	10 (100/87)

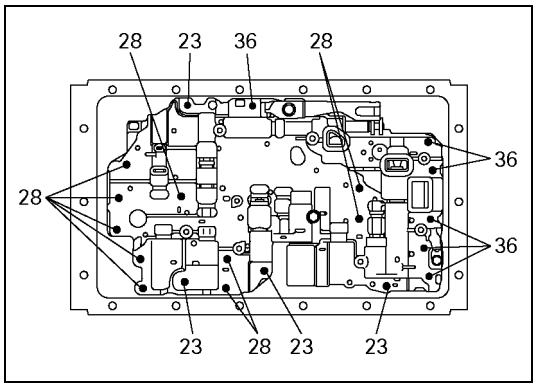

244RY00017

TRANSMISSION REMOVAL AND INSTALLATION

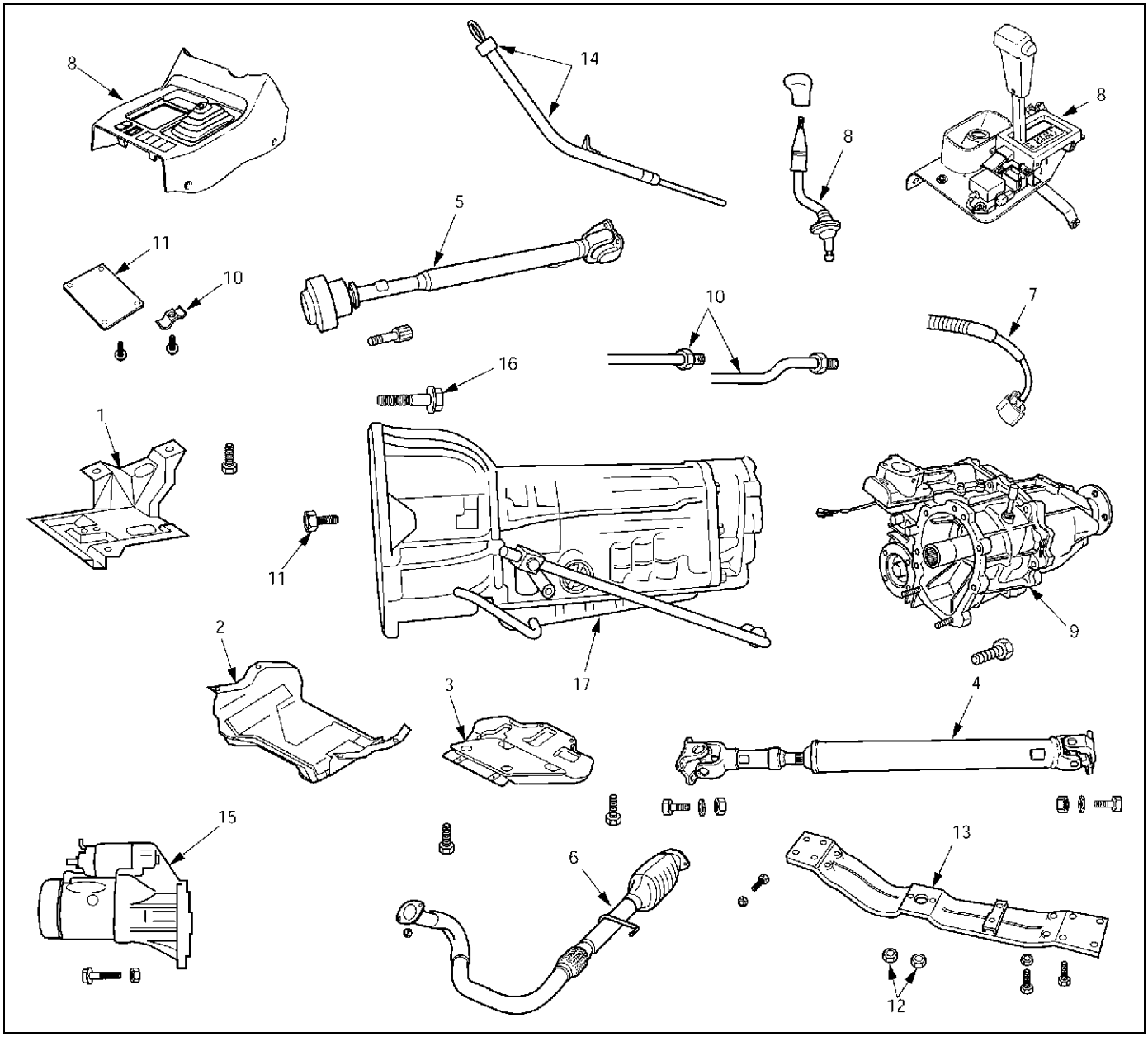

240RY00038

Removal Steps

1. Transfer protector
2. Rear sound cover
3. Front sound cover
4. Rear propeller shaft
5. Front propeller shaft
6. Exhaust pipe
7. Harness connector
8. Front console, selector lever assembly, and transfer control lever
9. Transfer case assembly
10. ATF cooler pipe and clamp
11. Under cover and flex plate-torque converter bolt
12. Rear mounting nut
13. 3rd crossmember
14. Oil level gauge and tube
15. Starter
16. Engine-transmission bolt
17. Transmission assembly

Installation steps

To install, follow the removal steps in reverse order.

REMOVAL

Preparation:

- Remove engine hood.
- Disconnect negative (–) battery cable.

1. Transfer protector

2. Rear sound cover

3. Front sound cover

4. Rear propeller shaft

5. Front propeller shaft

NOTE:
Apply alignment marks on the flange at both front and rear sides.

6. Exhaust pipe

- Remove the 2nd front exhaust pipe from the 1st front exhaust pipe and exhaust silencer.

7. Transmission harness connector

- Disconnect the harness connectors from the transmission.

8. Front console, selector lever assembly, and transfer control lever

- Disconnect the transfer control lever knob.
- Remove the front console.
- Disconnect the harness connector.
- Remove the selector lever assembly.
- Disconnect the shift control rod from the transmission.

9. Transfer case assembly

- Disconnect the breather hose from the transfer case.
- Remove the transfer case assembly from the transmission.

10. ATF cooler pipe and clamp

- Disconnect two ATF cooler pipes from A/T side.
- Remove oil pipe clamp from torque converter housing side.
- Loosen oil pipe clamp bolt at engine mount side.

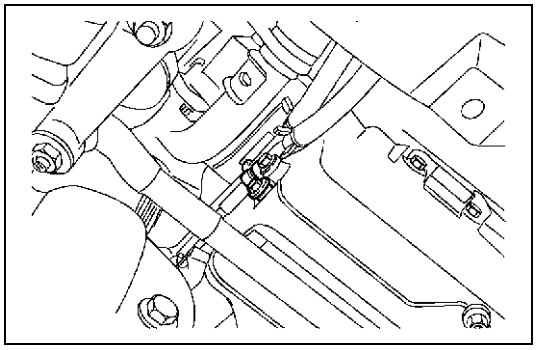

253RY00001

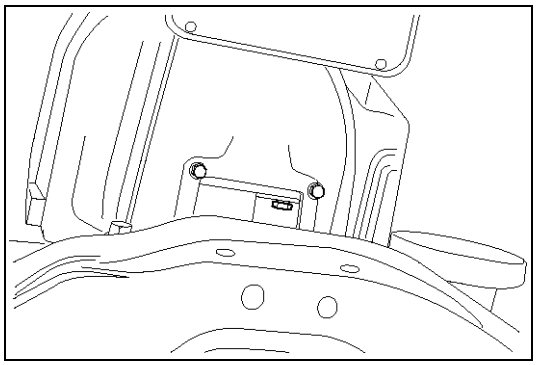

240RY00026

11. Under cover and flex plate-torque converter bolt

- Remove the under cover.
- Turn the crankshaft to gain access to each bolt.
  Remove the six torque coverter fixing bolts.

NOTE:
New fixing bolts should be replaced for reassembly.

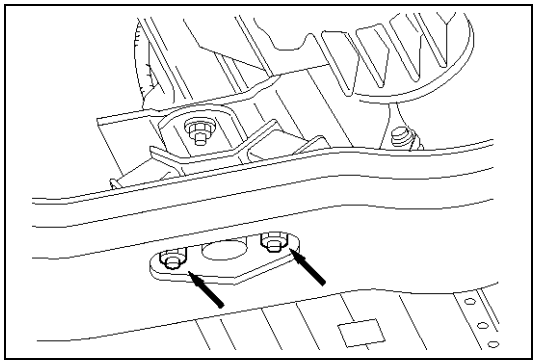

022RY00001

12. Rear mounting nut

- Support transmission with a jack.
- Remove two rear mounting nuts from the 3rd crossmember.

13. 3rd crossmember

14. Oil level gauge and tube

15. Starter

- Remove the mounting bolts, and pull the starter toward the front of the vehicle.
  Lay the starter alongside the engine.

16. Engine-transmission bolt

- Remove engine-transmission fixing bolts.
- Disconnect the breather hose from the breather hose 3 way (W/TOD) or 2 way (WO/TOD).

17. Transmission assembly

NOTE:
Keep the oil pan positioned down.
Be careful not to let the torque converter slide out.

INSTALLATION

To install, follow the removal steps in the reverse order, noting the following points;

1. Torque

N·m(kg·m / lb·ft)

Rear mounting to crossmember	50 (5.1/37)
Torque converter bolt	29 (3.0/22)
ATF cooler pipe to transmission	44 (4.5/33)
Exhaust pipe flange to flange	43 (4.4/32)
3rd crossmember to flame	76 (7.8/56)
Front propeller shaft bolt	63 (6.4/46)
Rear propeller shaft bolt	63 (6.4/46)

Engine-Transmission Bolt Torque

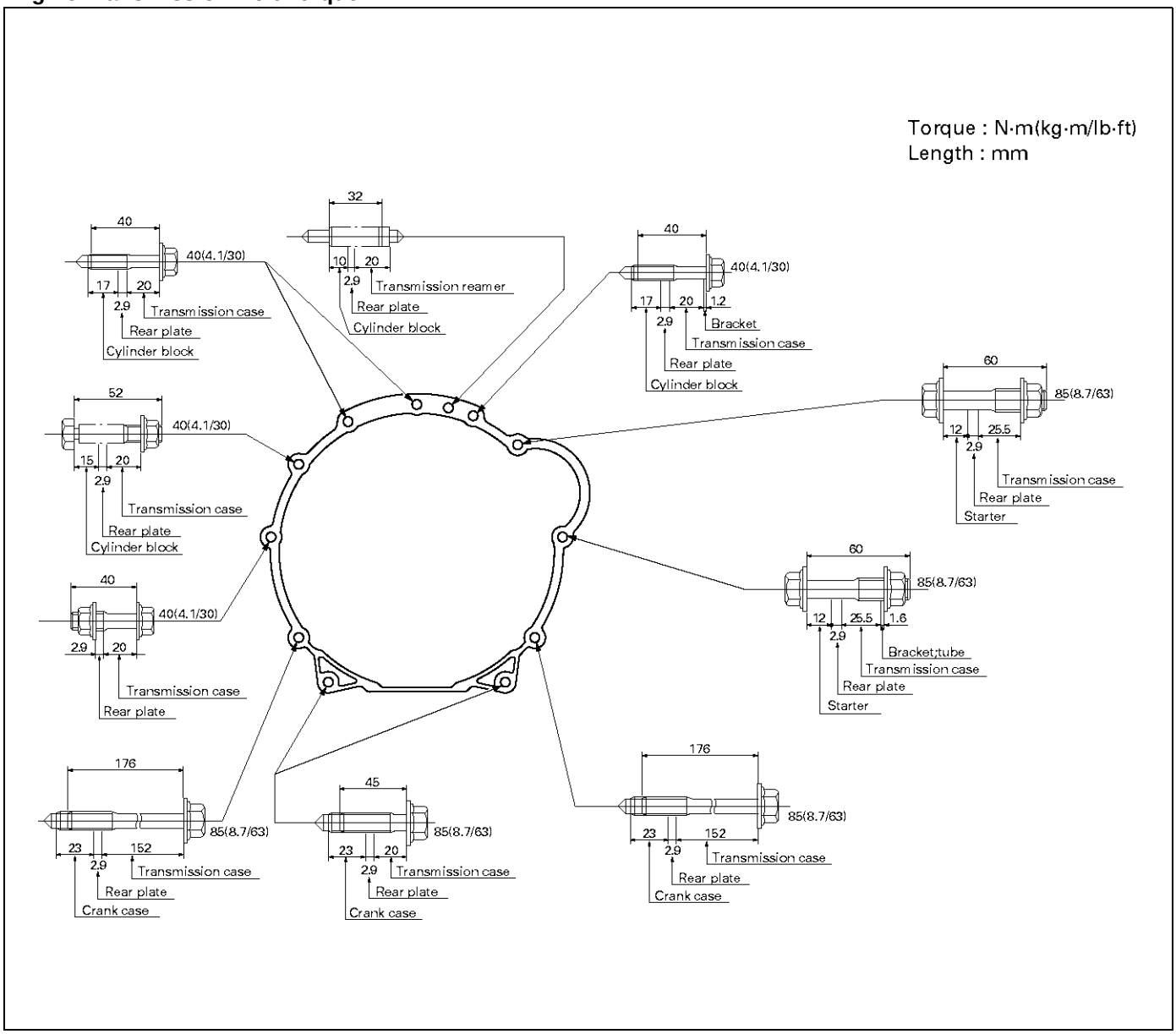

225RY00001

Transmission-Transfer Case Bolt Torque

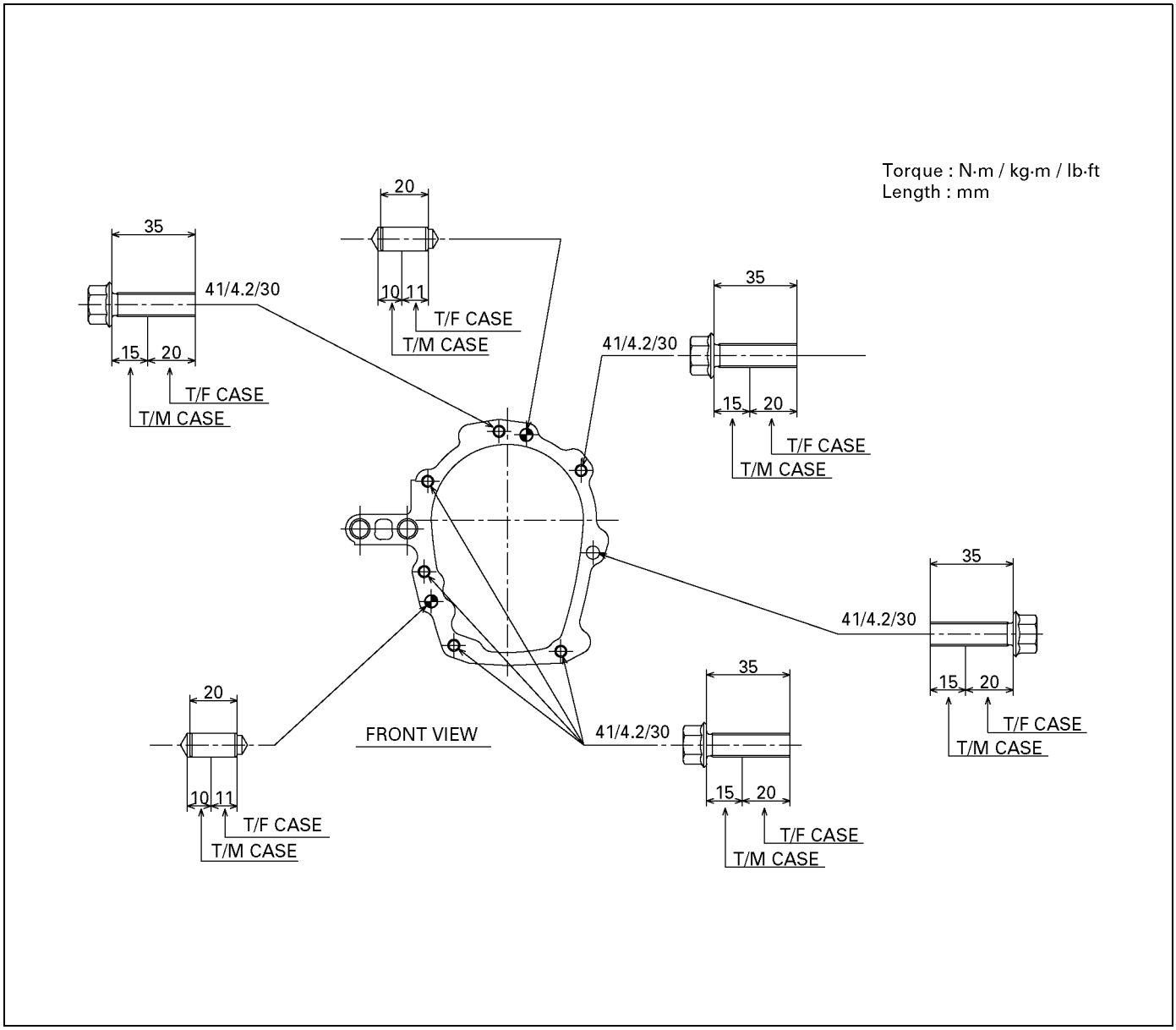

260RY00001

UNIT REPAIR

DISASSEMBLY OF MAJOR COMPONENTS (1)

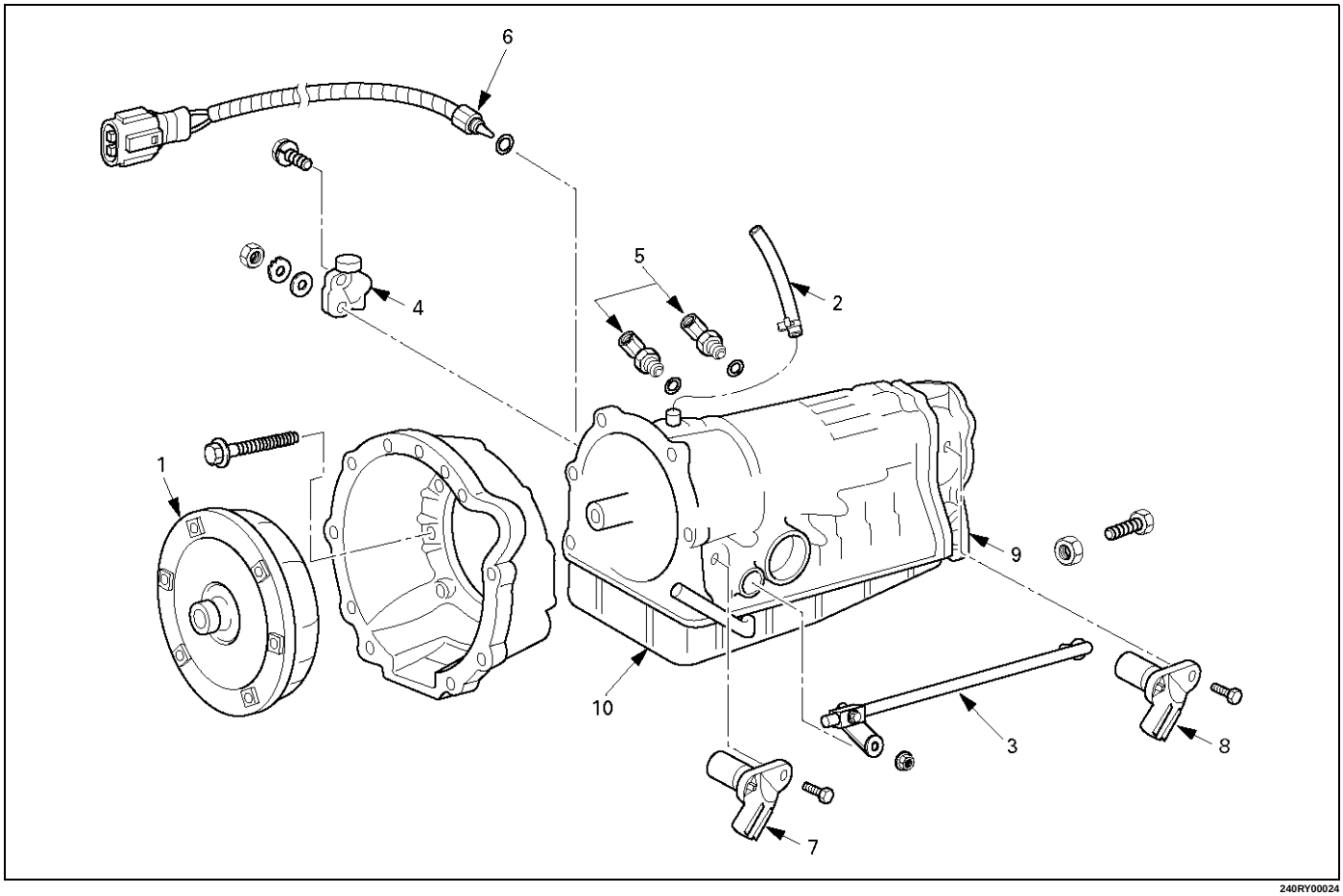

240RY00024

Disassembly steps

1. Torque converter
2. Breather hose
3. ▲ Transmission ocntrol rod and shift lever
4. ▲ Neutral start switch
5. ▲ Elbow
6. Oil temperature sensor
7. Input revolution sensor
8. Output revolution sensor
9. Adapter housing
10. Transmission assembly

NOTE:
Steps marked with a triangle (▲) are important operations. Detailed information appears in the text.

Important operations

3. Transmission control rod and shift lever

Remove the transmission control rod and shift lever.

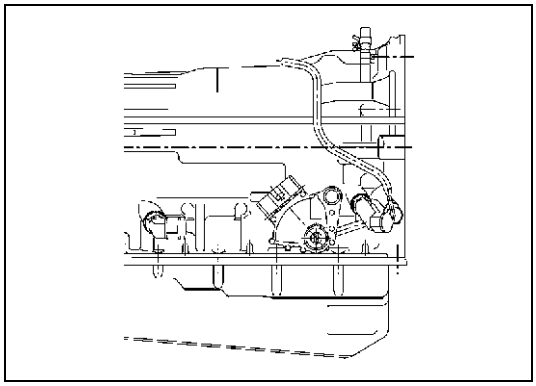

249RW003

4. Neutral start switch

Unstake the lock washer.

Remove the nut and bolts, and then remove the neutral start switch.

Remove the lock washer and grommet.

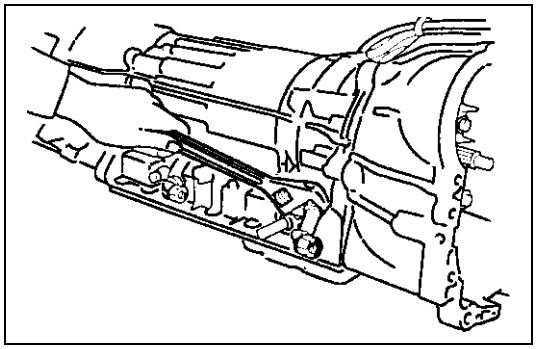

240RY00001

5. Elbow

Remove two elbows from transmission case.

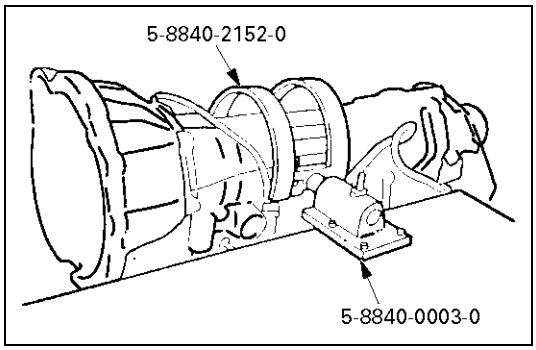

240RY00002

Install special tool to the transmission unit.

Holding fixture: 5-8840-2152-0 (J-37227)

Fixture base: 5-8840-0003-0 (J-3289-20)

DISASSEMBLY OF MAJOR COMPONENTS (2)

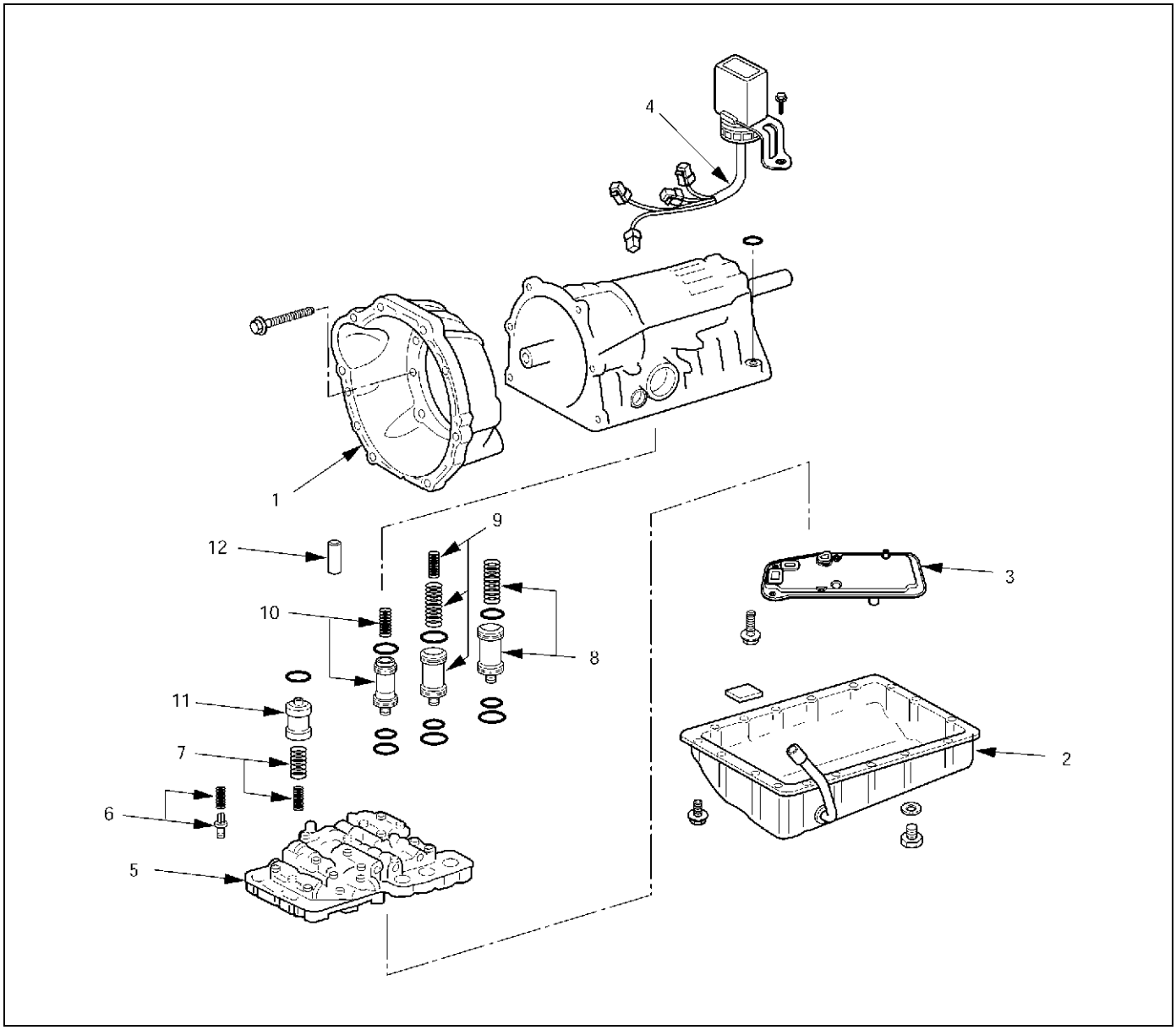

242RY00005

Disassembly steps

- ▲ 1. Converter housing
- ▲ 2. Oil pan
- ▲ 3. Oil strainer assembly
- ▲ 4. Solenoid wiring
- ▲ 5. Valve body
- ▲ 6. Check valve, spring
- ▲ 7. Spring
- ▲ 8. Accumulator piston (B-2)
- ▲ 9. Accumulator piston (C-2)
- ▲ 10. Accumulator piston (B-0)
- ▲ 11. Accumulator piston (C-0)
- 12. Second brake drum gasket

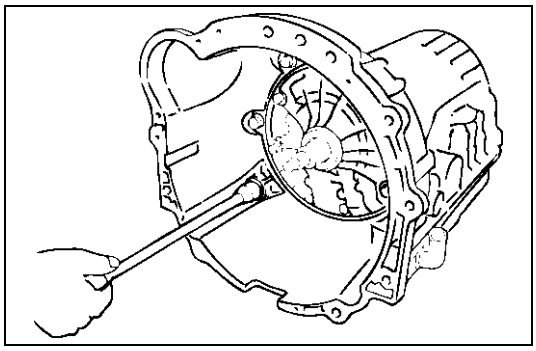

240RY00006

Important operations

1. Converter housing

Remove the six bolts.
Remove the transmission housing.

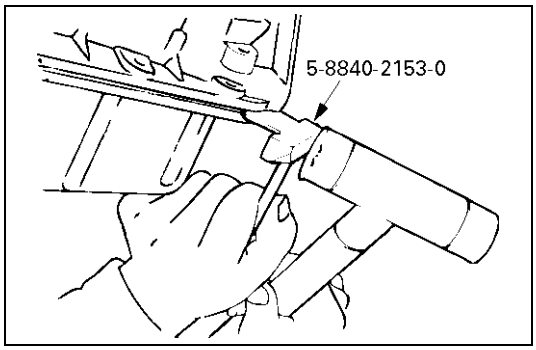

240RY00007

2. Oil pan

NOTE:
Do not turn over the transmission as this will contaminate the valve body with foreign materials in the bottom of the pan.

Remove the nineteen bolts.
Remove pan by lifting the transmission case.
Seal cutter: 5-8840-2153-0 (J-37228)

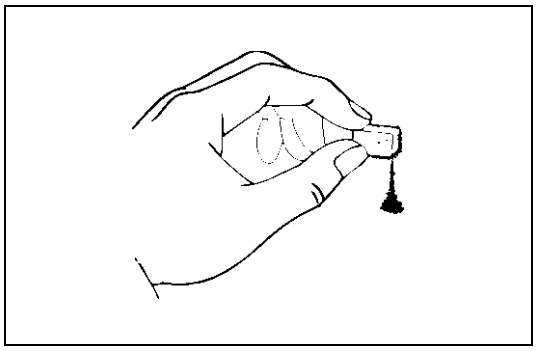

240RY00008

Examine particles in pan

Remove the magnet and use it to collect any steel chips. Look carefully at the chips and particles in the pan and on the magnet to anticipate what type of wear you will find in the transmission:
Steel (magnetic).....bearing, gear and clutch plate wear
Brass (non-magnetic)...bushing wear

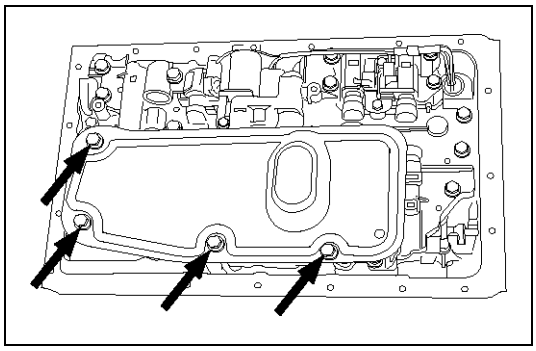

244RY00003

3. Oil strainer assembly

Remove four bolts holding the oil strainer.

NOTE:
When reassembling components, install a new oil strainer assembly.

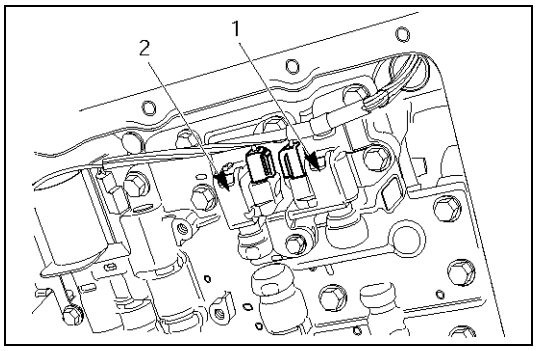

249RY00011

4. Solenoid wiring

Disconnect the connectors from the solenoid S1(1), S2(2), lock-up solenoid (3) and pressure control solenoid (4).
Turn over transmission, remove the solenoid wiring stopper plate from the case.
Pull the wiring out of the transmission case.

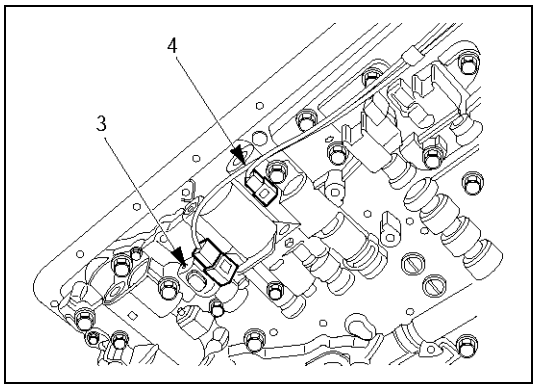

249RY00012

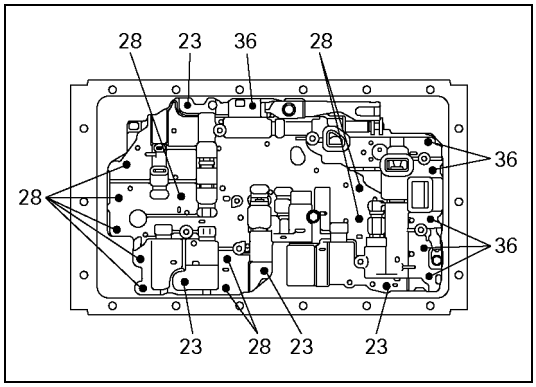

244RY00017

5. Valve body

Remove the twenty bolts from valve body.

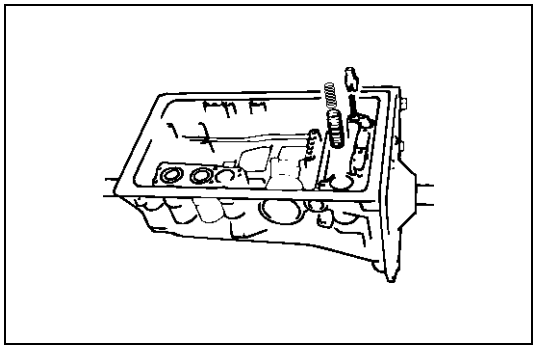

240RY00028

6. Check valve, spring
7. Spring

Remove the check valve and spring.
Remove two springs from C-0 accumulator piston.

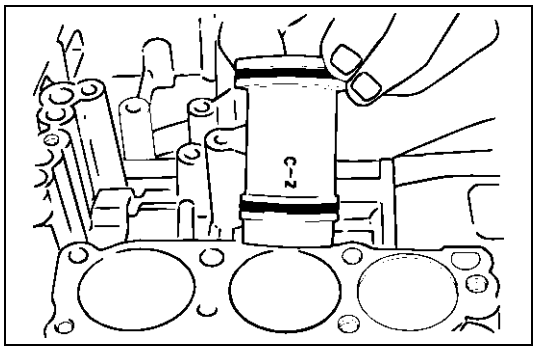

240RY00010

8. Accumulator piston (B-2)
9. Accumulator piston (C-2)
Remove accumulator pistons and springs from transmission case.

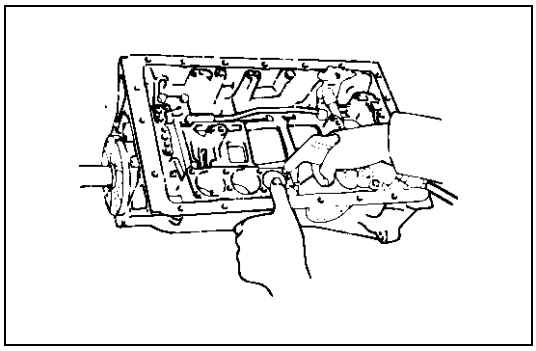

240RY00011

10. Accumulator piston (B-0)
Applying compressed air to the oil hole, remove the B-0 accumulator piston and spring.

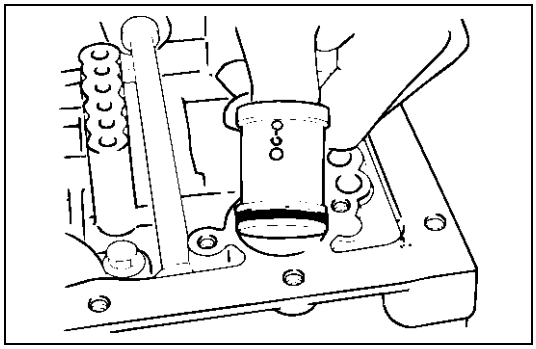

240RY00012

11. Accumulator piston (C-0)
Remove the C-0 accumulator piston.

DISASSEMBLY OF MAJOR COMPONENTS (3)

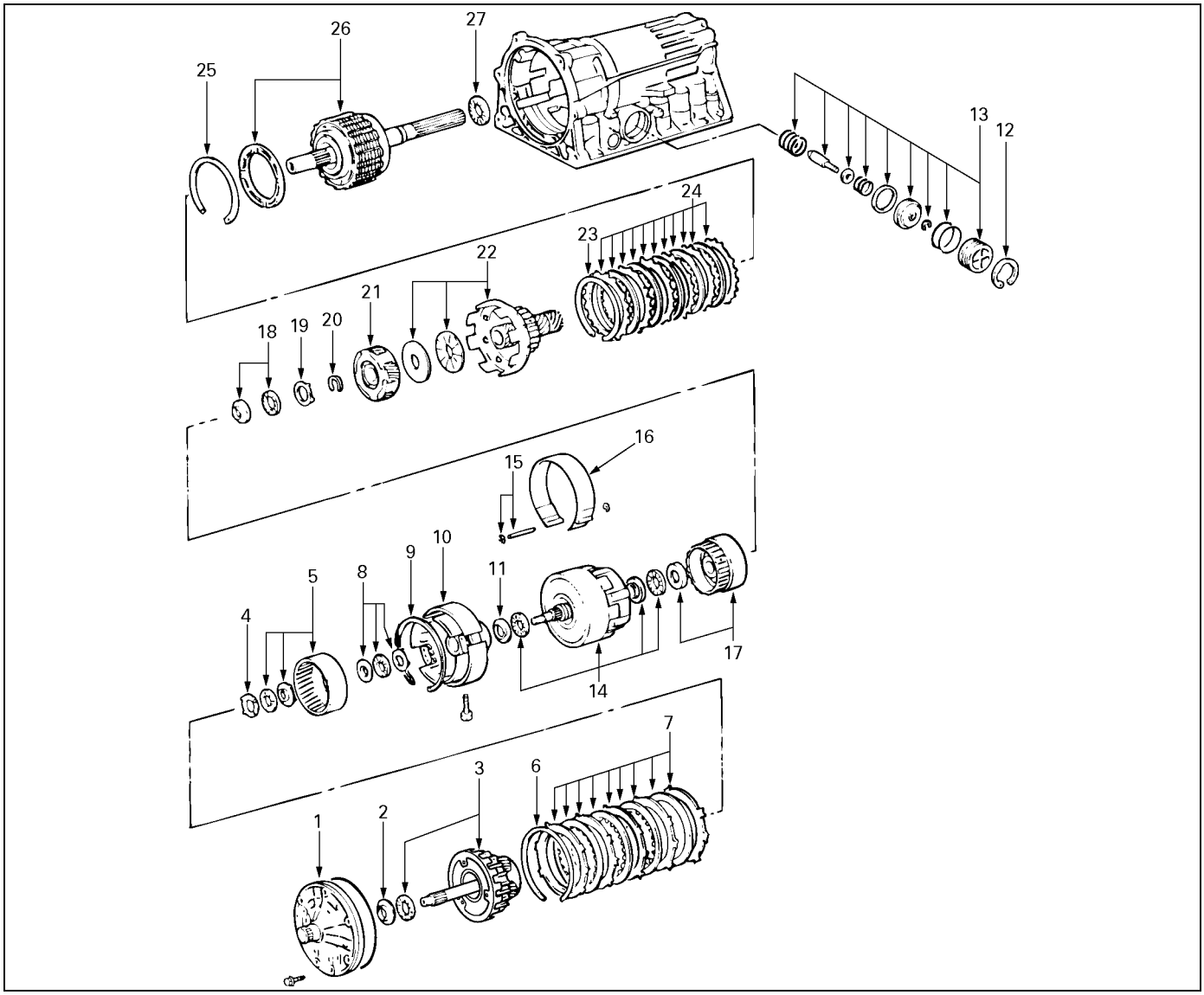

248L100001

Disassembly steps

- ▲ 1. Oil pump
- ▲ 2. Race
- ▲ 3. OD planetary gear and OD direct clutch
- ▲ 4. Race
- ▲ 5. OD planetary ring gear
- ▲ 6. Snap ring
- ▲ 7. Flange, plate and disc
- ▲ 8. Bearing and race
- ▲ 9. Snap ring
- ▲ 10. OD support
- ▲ 11. Race
- ▲ 12. Snap ring
- ▲ 13. Second coast brake piston assembly
- ▲ 14. Direct clutch and forward clutch
- ▲ 15. E-ring and pin
- ▲ 16. Second coast brake band
- ▲ 17. Front planetary ring gear
- ▲ 18. Bearing and race
- ▲ 19. Race
- ▲ 20. Snap ring
- ▲ 21. Front planetary gear
- ▲ 22. Drum and one-way clutch
- ▲ 23 Snap ring
- ▲ 24. Flange, plate and disc
- ▲ 25. Snap ring
- ▲ 26. Rear planetary gear, second brake drum and output shaft
- ▲ 27. Bearing

Important operations

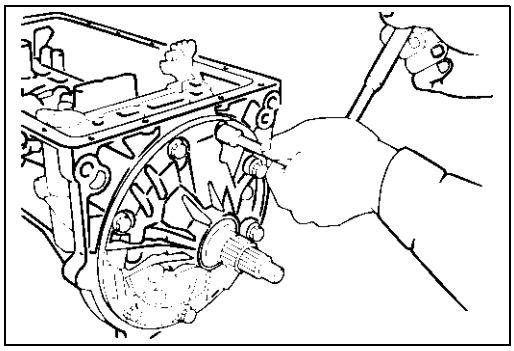

241RY00003

1. Oil pump

Remove seven bolts fixing the oil pump to the transmission case.

Remove the oil pump.

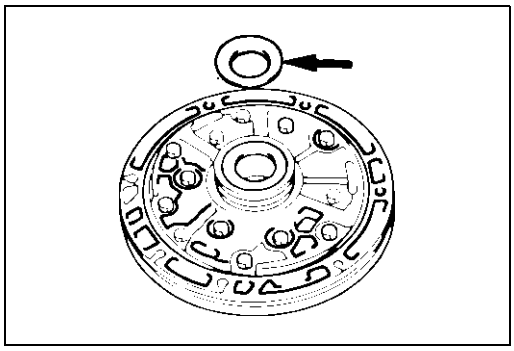

241RY00002

2. Race

Remove race from oil pump.

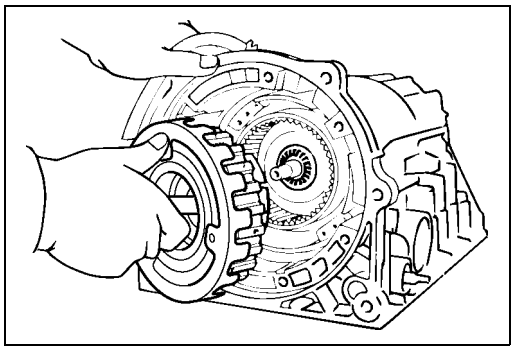

252L100001

3. OD planetary gear and OD direct clutch

Remove the overdrive planetary gear and overdrive direct clutch with thrust needle bearing from the transmission case.

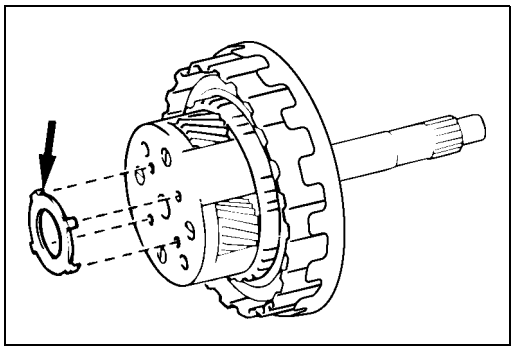

252L100017

4. Race

Remove the race from OD planetary gear.

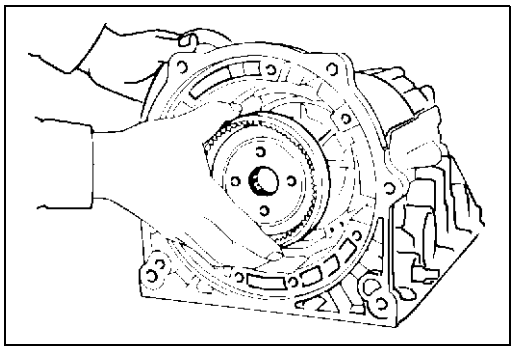

252RY00002

5. OD planetary ring gear

Remove the overdrive planetary ring gear from the transmission case.

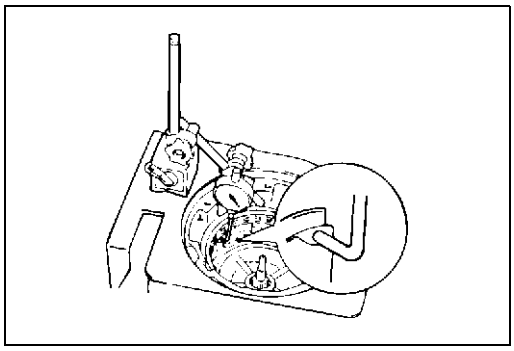

252RY00003

Check piston stroke of overdrive brake

Place a dial indicator onto the overdrive brake piston as shown in the figure.

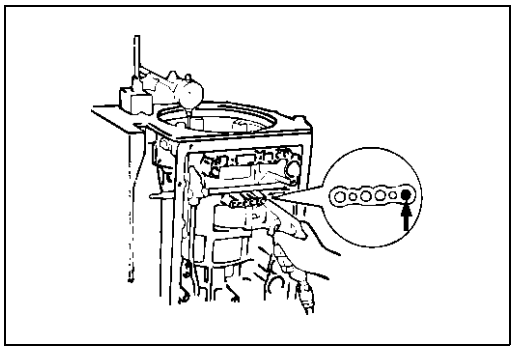

244RY00001

Measure the stroke applying and releasing the compressed air (4– 8kg/cm^2, 57– 114 psi or 392– 785kPa) as shown in the figure.

mm (in.)

Piston stroke	1.40–1.70 (0.0551–0.0669)

If the values are nonstandard, select another flange.

Available flange sizes	mm (in.)
3.3 (0.130)	3.8 (0.150)
3.5 (0.138)	3.9 (0.154)
3.6 (0.142)	4.0 (0.158)
3.7 (0.146)	

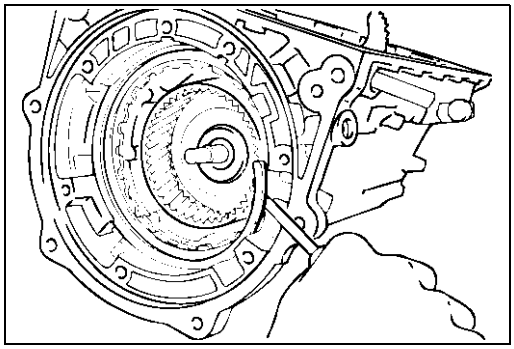

246RY00001

6. Snap ring

Remove the snap ring.

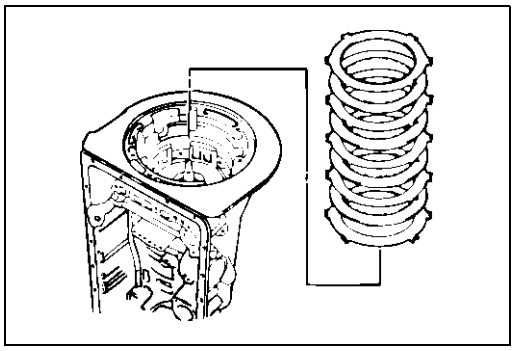

246RY00026

7. Flange, plate and disc
Remove two flanges, three plates and four discs.

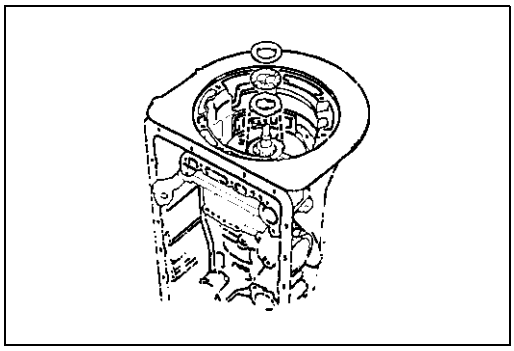

247RY00003

8. Bearing and race
Remove the thrust bearing and two races.

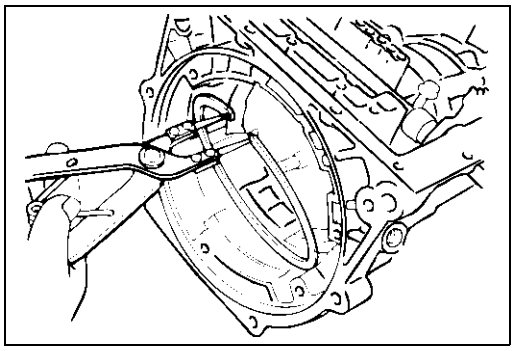

246RY00002

9. Snap ring
Using snap ring pliers, remove the snap ring.

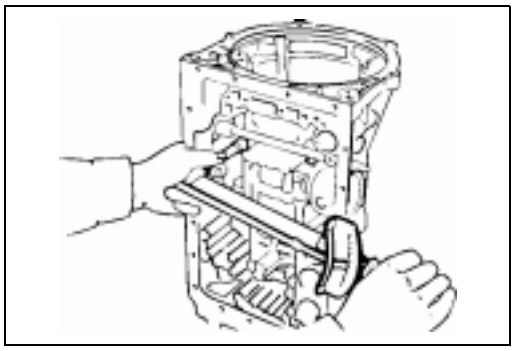

252RY00004

10. OD support
Remove two bolts fixing the overdrive support assembly to the case.

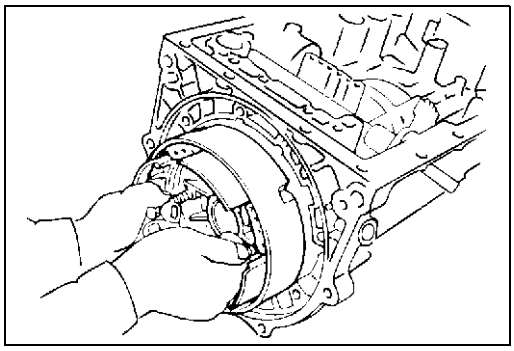

252RY00005

Install two removed bolts to the OD support, and pull out the OD support assembly.

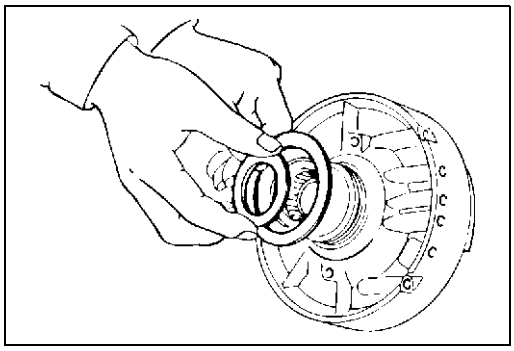

252RY00006

11. Race

Remove two races from OD support.

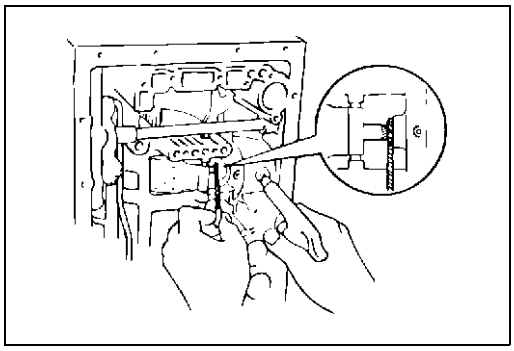

248RY00004

Check piston stroke of second coast brake

Place a mark on the second coast brake piston rod as shown in the figure.

Using feeler gauge, measure the stroke applying the compressed air (4 – 8kg/cm^2, 57 – 114psi or 392 – 785 kPa) as shown in the figure.

mm (in.)

Piston stroke	1.5–3.0 (0.059-0.118)

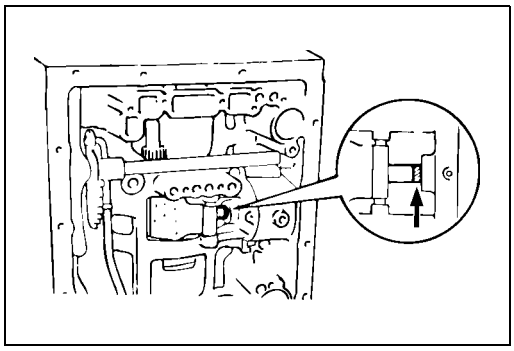

248RY00005

If the values are nonstandard, replace piston rod and recheck piston stroke. If piston stroke is nonstandard, replace brake band.

There are two piston rods.

Rod length	71.4mm (2.811 in.)
	72.9mm (2.870 in.)

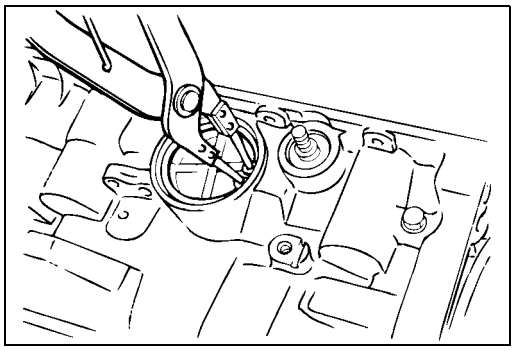

248RY00006

12. Snap ring

Using snap ring pliers, remove the snap ring.

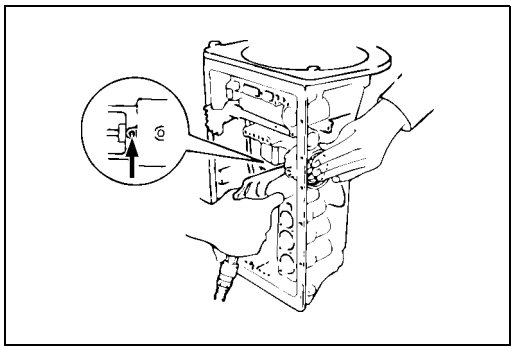

248RY00007

13. Second coast brake piston assembly

Applying compressed air to the oil hole, remove the second coast brake piston assembly.

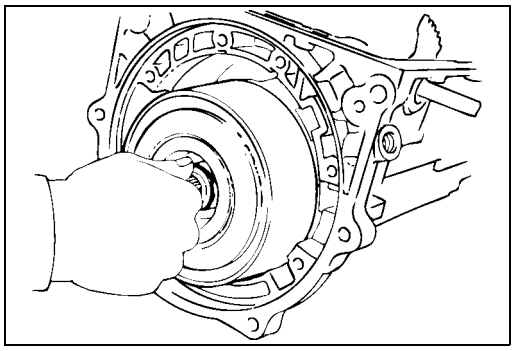

248RY00008

14. Direct clutch and forward clutch

Remove the direct clutch and forward clutch from the case.

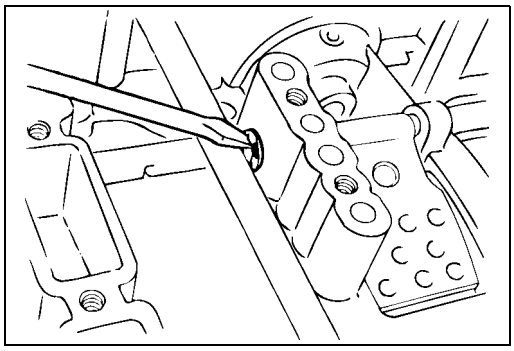

248RY00009

15. E-ring and pin

Remove the E-ring from the pin.

Remove the pin from the brake band.

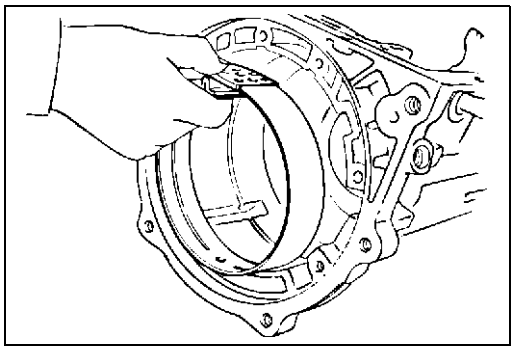

248RY00010

16. Second coast brake band

Remove the second coast brake band from the case.

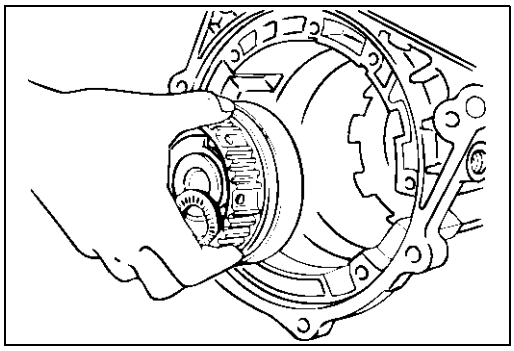

247RY00004

17. Front planetary ring gear

Remove the front planetary ring gear from the case.

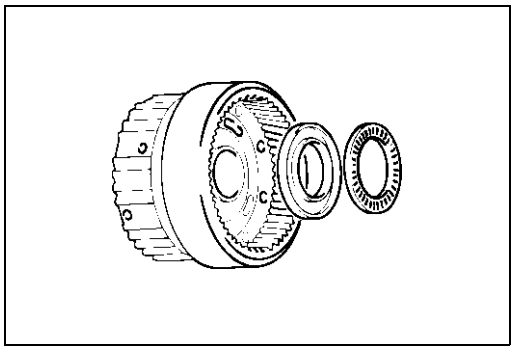

247RY00005

18. Bearing and race

Remove the bearing and race.

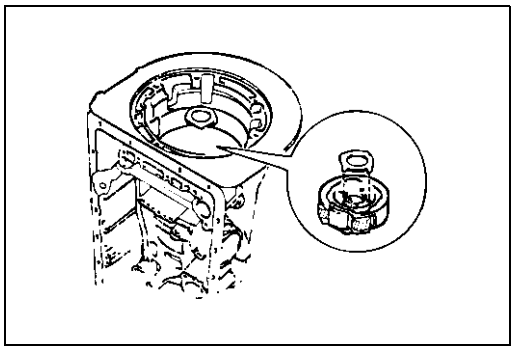

247RY00006

19. Race

Remove the race.

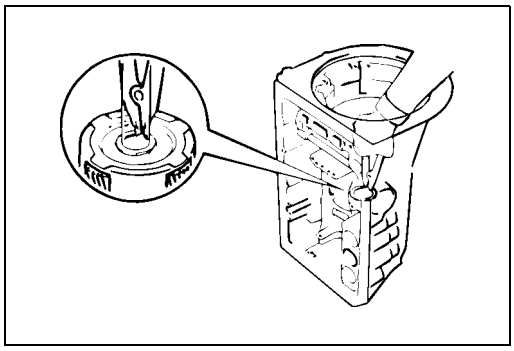

248RY00011

20. Snap ring

Using snap ring pliers, remove the snap ring.

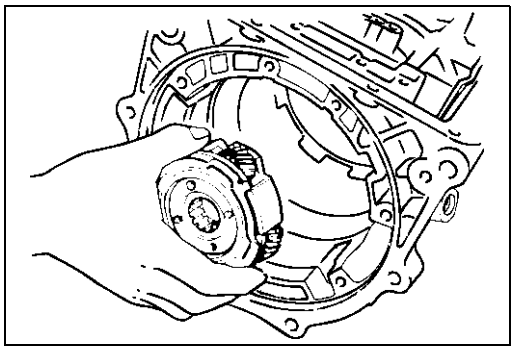

247RY00007

21. Front planetary gear

Remove the front planetary gear from the case.

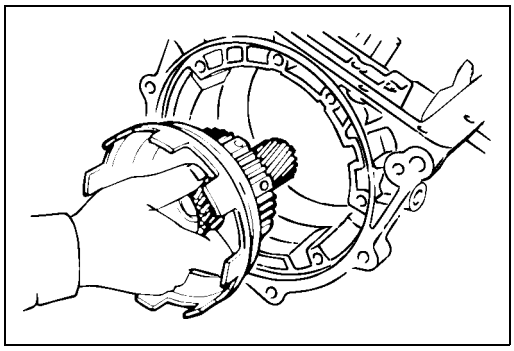

248RY00012

22. Drum and one-way clutch

Remove sun gear input drum and one-way clutch.

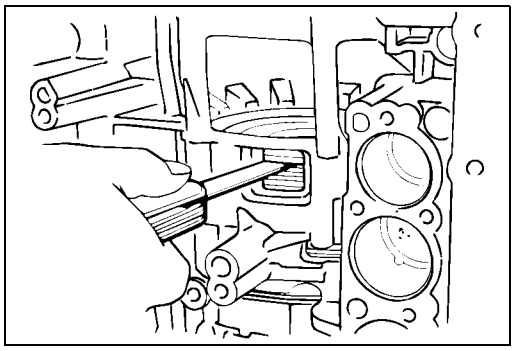

248RY00013

Check pack clearance of second brake

Using a feeler gauge, measure the clearance between the snap ring and flange as shown in the figure.

mm (in.)

Clearance	0.62–1.98 (0.0244–0.0780)

If the values are nonstandard, replace the discs.

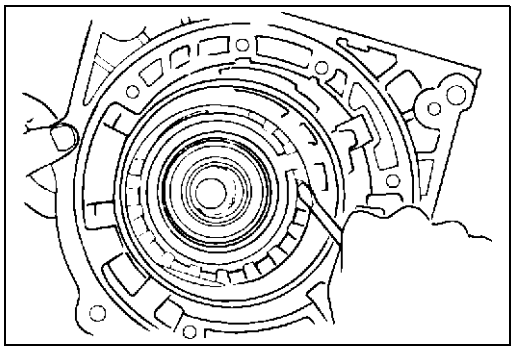

248RY00014

23. Snap ring

Using two screwdrivers, remove the snap ring.

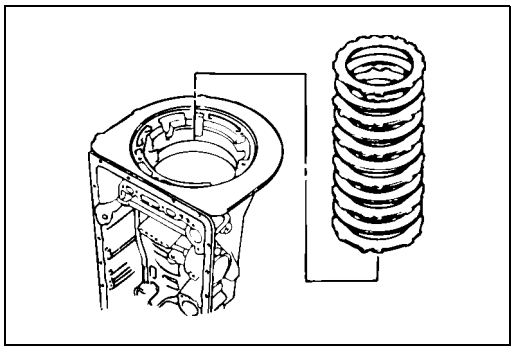

248RY00015

24. Flange, plate and disc

Remove the flange, five discs and five plates.

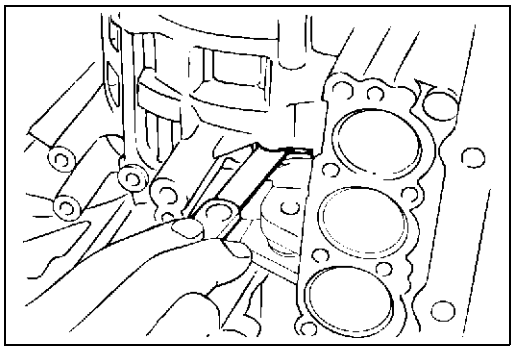

248RY00016

Check pack clearance of first and reverse brake

Using a feeler gauge, measure the clearance between the plate and second brake drum as shown in the figure.

	mm (in.)
Clearance	0.7–1.0 (0.0276–0.0394)

If the values are nonstandard, select another flange.

Available flange sizes	mm (in.)
4.0 (0.158)	4.8 (0.189)
4.2 (0.165)	5.0 (0.197)
4.4 (0.173)	5.2 (0.205)
4.6 (0.181)	5.4 (0.213)

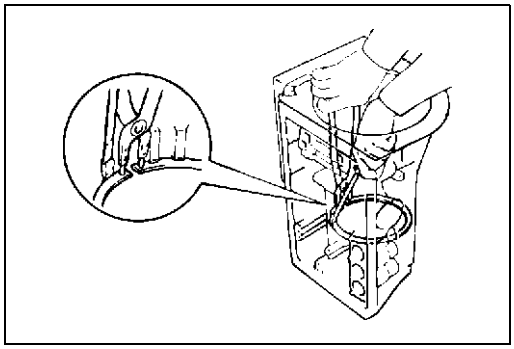

248RY00017

25. Snap ring

Using snap ring pliers, remove the snap ring.

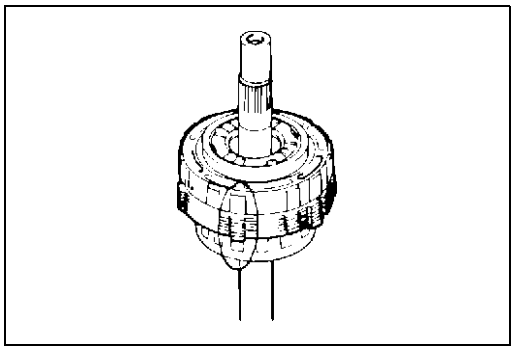

247RY00009

26. Rear planetary gear, second brake drum and output shaft

Remove the rear planetary gear, second brake drum and output shaft as an assembly.

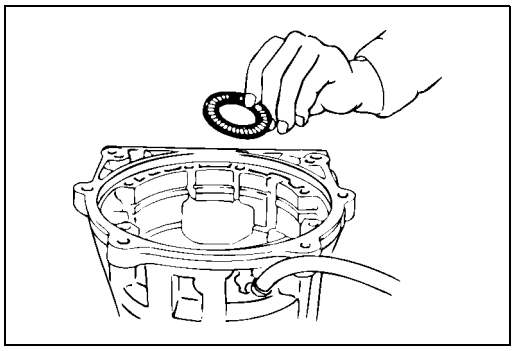

248RY00018

27. Bearing

Remove the assembled thrust bearing and race from the case.

DISASSEMBLY, INSPECTION AND REASSEMBLY OF MINOR COMPONENTS

The instructions here are organized so that you work on only one component group at a time.
This will help avoid confusion from similar-looking parts of different subassemblies being on your workbench at the same time.
The component groups are inspected and repaired from the converter housing side.
As much as possible, complete the inspection, repair and reassembly before proceeding to the next component group. If a component group cannot be reassembled because parts are being ordered, be sure to keep all parts of that group in a separate container while proceeding with disassembly, inspection, repair and reassembly of other component groups.
Recommended ATF type BESCO ATF II or III.

GENERAL CLEANING NOTES:

1. All disassembled parts should be washed clean and any fluid passages and holes blown through with compressed air.
2. When using compressed air to dry parts, always aim away from yourself to prevent accidentally spraying automatic transmission fluid in your face.
3. The recommended automatic transmission fluid should be used for cleaning.

PARTS ARRANGEMENT:

1. After cleaning, the parts should be arranged in proper order to allow performing inspection, repairs, and reassembly with efficiency.
2. When disassembling a valve body, be sure to keep each valve together with the corresponding spring.
3. New brakes and clutches that are to be used for replacement must be soaked in transmission fluid for at least thirty before assembly.

GENERAL ASSEMBLY:

1. All oil seal rings, clutch discs, clutch plates, rotating parts, and sliding surfaces should be coated with transmission fluid prior to reassembly.
2. All gaskets and rubber O-rings should be replaced.
3. Make sure that ends of a snap ring are not aligned with one of the cutouts and are installed in the groove correctly.
4. If a worn bushing is to be replaced, the subassembly containing that bushing must be replaced.
5. Check thrust bearings and races for wear or damage. Replace if necessary.
6. Use petroleum jelly or vaseline to keep parts in place.

OIL PUMP

DISASSEMBLY

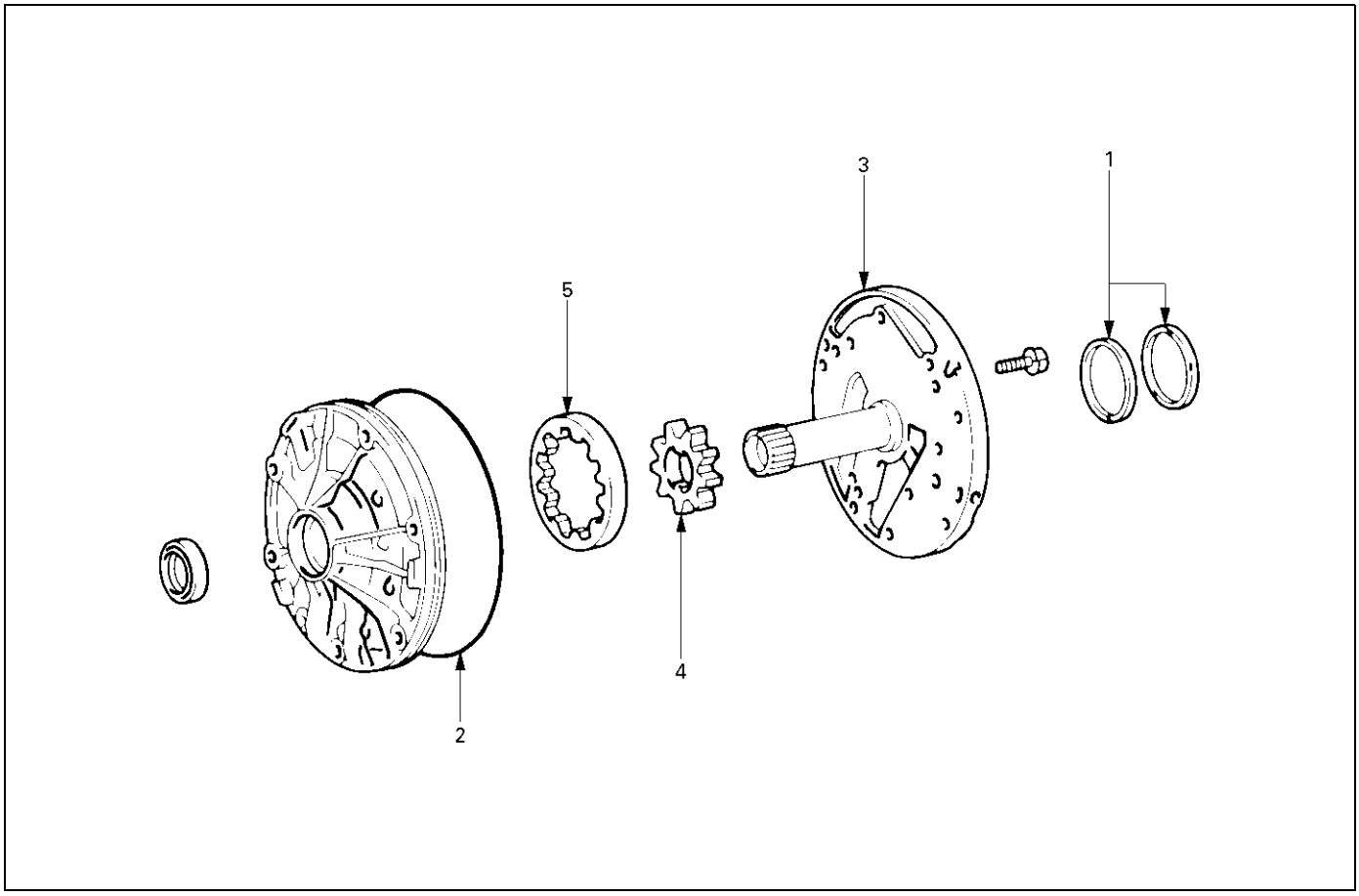

241RY00004

Disassembly steps

▲ 1. Oil seal ring
▲ 2. O-ring
▲ 3. Stator shaft
4. Oil pump drive gear
5. Oil pump driven gear

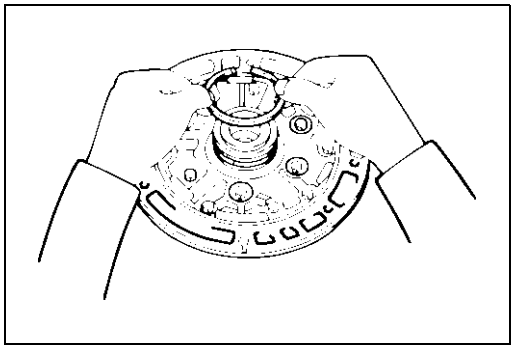

241RY00005

Important operations

1. Oil seal ring
Use torque converter as work stand.
Remove 2 oil seal rings from stator shaft.

2. O-ring
Remove O-ring.

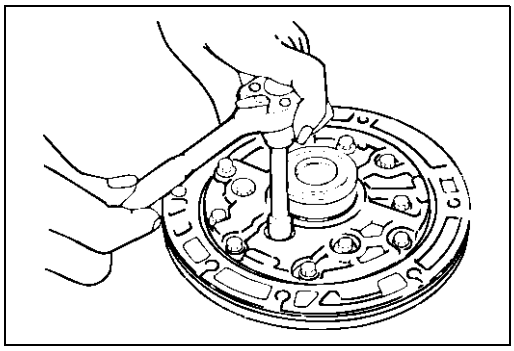

241RY00006

3. Stator shaft

Remove 13 bolts, and then remove the stator shaft from oil pump body.
Then remove drive and driven gear.

INSPECTION AND REPAIR

Make necessary correction or parts replacement if wear, damage or any abnormal conditions are found through inspection.

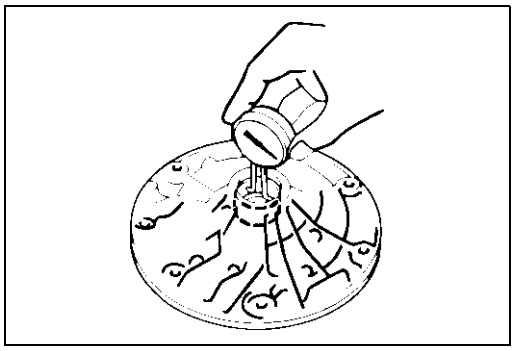

241RY00007

Check oil pump body bushing

Using a dial indicator, measure the inside diameter of the oil pump body bushing.

mm (in.)

Maximum inside diameter	38.19 (1.5035)

If the inside diameter is greater than the maximum, replace the oil pump body.

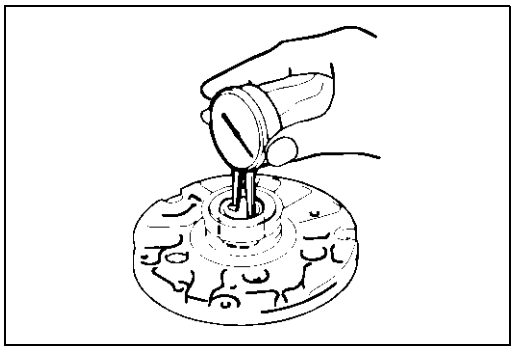

241RY00008

Check stator shaft bushing

Using a dial indicator, measure the inside diameter of the stator shaft bushing.

mm (in.)

Maximum inside diameter	Front side	21.58 (0.8496)
	Rear side	27.08 (1.0661)

If the inside diameter is greater than maximum, replace the stator shaft.

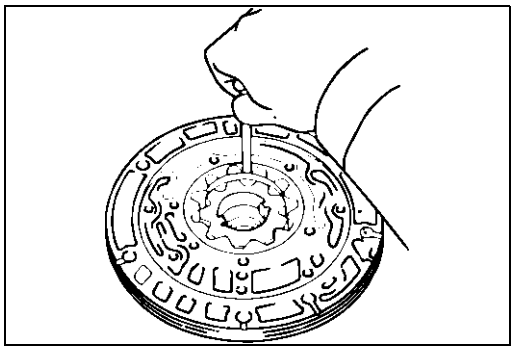

241RY00009

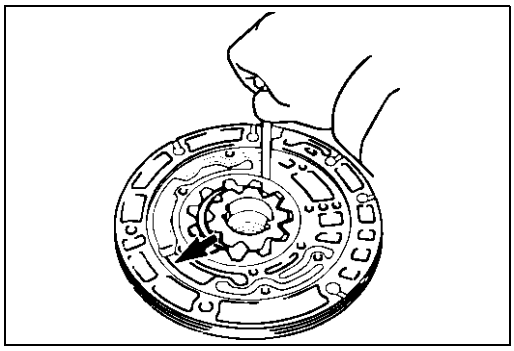

241RY00010

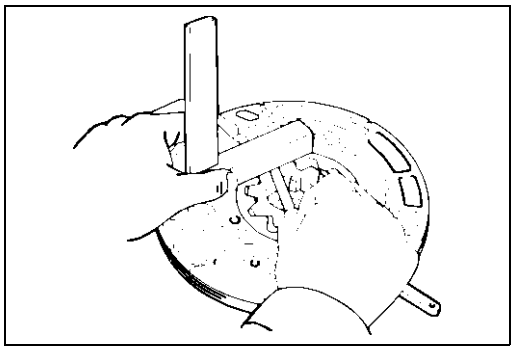

241RY00011

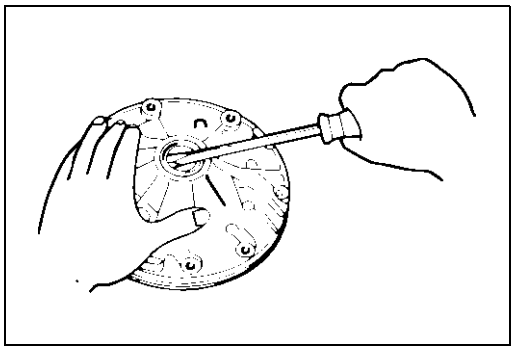

241RY00012

Check tip clearance of both gears

Measure between the gear teeth and the cresent-shaped part of the pump body.

mm (in.)

Standard tip clearance	0.11–0.14 (0.0043–0.0055)
Maximum tip clearance	0.3 (0.012)

If the tip clearance is greater than the maximum, replace the drive gear, driven gear or pump body.

Check body clearance of driven gear

Push the driven gear to one side of the body.
Use a feeler gauge, measure the clearance.

mm (in.)

Standard body clearance	0.07–0.15 (0.0028–0.0059)
Maximum body clearance	0.3 (0.012)

If the body clearance is greater than the maximum, replace the drive gear, driven gear or pump body.

Check side clearance of both gears

Using a steel straightedge and a feeler gauge, measure the side clearance of both gears.

mm (in.)

Standard side clearance	0.02–0.05 (0.0008–0.0020)
Maximum side clearance	0.1 (0.004)

If the side clearance is greater than the maximum, replace the drive gear, driven gear or pump body.

Check oil seal

Check for wear, damage or cracks.
If necessary, replace oil seal.
Pry off the oil seal with a screwdriver.

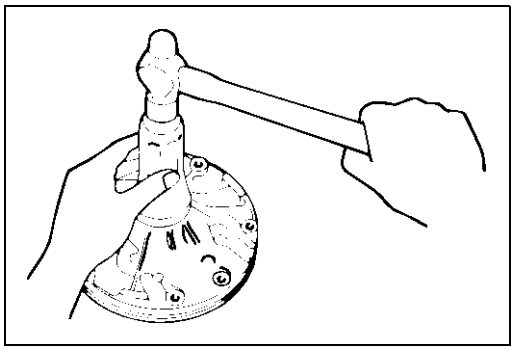

241RY00013

Using special tool, install a new oil seal.
The oil seal end should be flush with the outer edge of the pump body.
Oil seal installer: 5-8840-2256-0 (J-9617)
Coat the oil seal lip with multi purpose grease.

REASSEMBLY

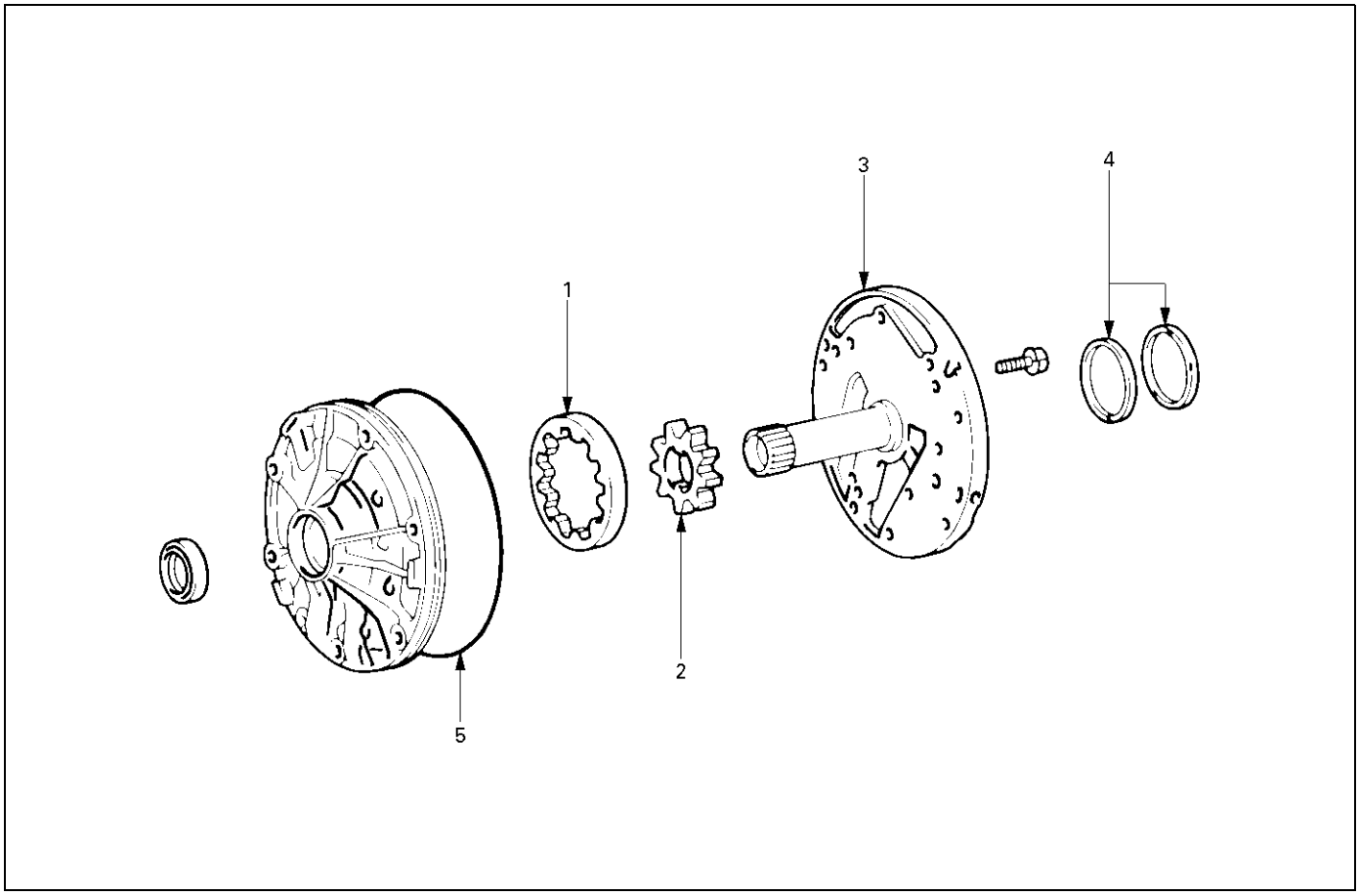

241RY00019

Reassembly steps

- ▲ 1. Oil pump driven gear
- 2. Oil pump drive gear
- ▲ 3. Stator shaft
- ▲ 4. Oil seal ring
- ▲ 5. O-ring

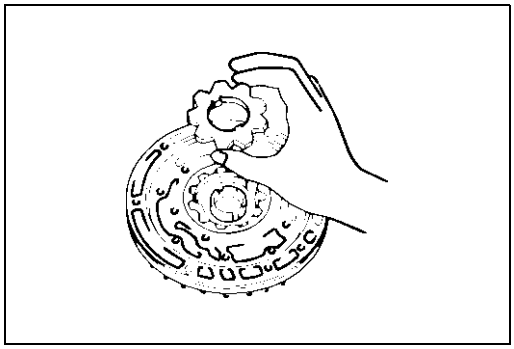

241RY00014

Important operations

1. Oil pump driven gear

Place the oil pump body on the torque converter.
Coat the driven gear and drive gear with ATF.
Install the driven gear and drive gear.

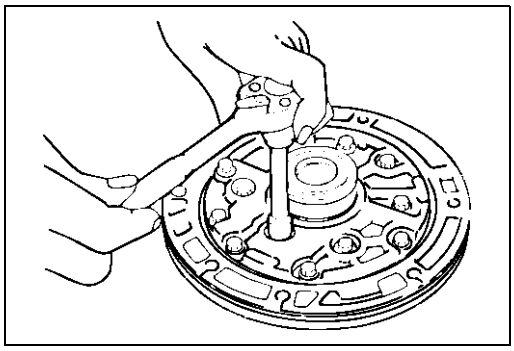

241RY00006

3. Stator shaft

Align the stator shaft with the bolt holes.
Tighten the thirteen bolts.

	N·m (kg·m/Ib in)
Torque	11 (1.1/95)

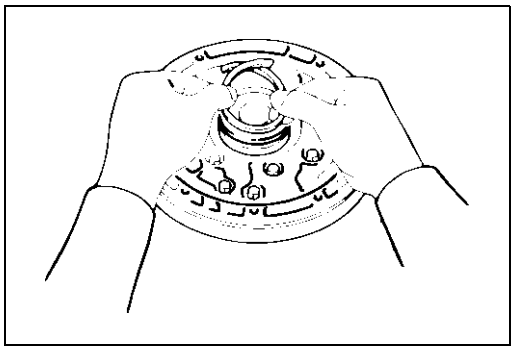

241RY00015

4. Oil seal ring

Coat the oil seal rings with ATF.
Contract the oil seal rings as shown, and install them onto the stator shaft.

NOTE:
Do not spread the ring ends too much.

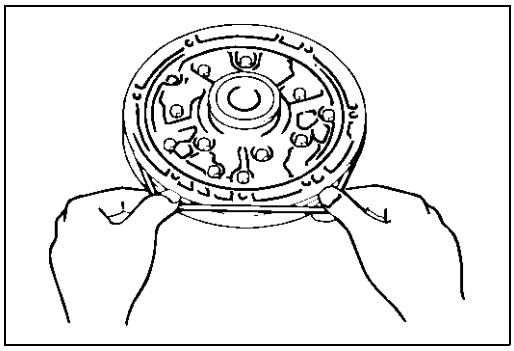

241RY00016

5. O-ring

Coat a new O-ring with ATF and install it to the oil pump body.

O-ring size (Reference)	mm (in.)
Inside diameter	204.9 (8.067)
Thickness	3.5 (0.138)

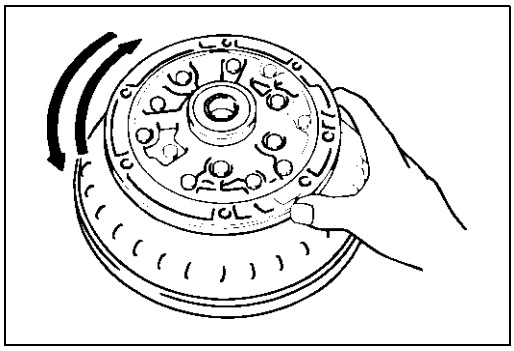

241RY00017

Check oil pump drive gear rotation

Make sure the drive gear rotates smoothly when installed to the torque converter.

OD PLANETARY GEAR AND OD DIRECT CLUTCH ASSEMBLY (C-0)

DISASSEMBLY

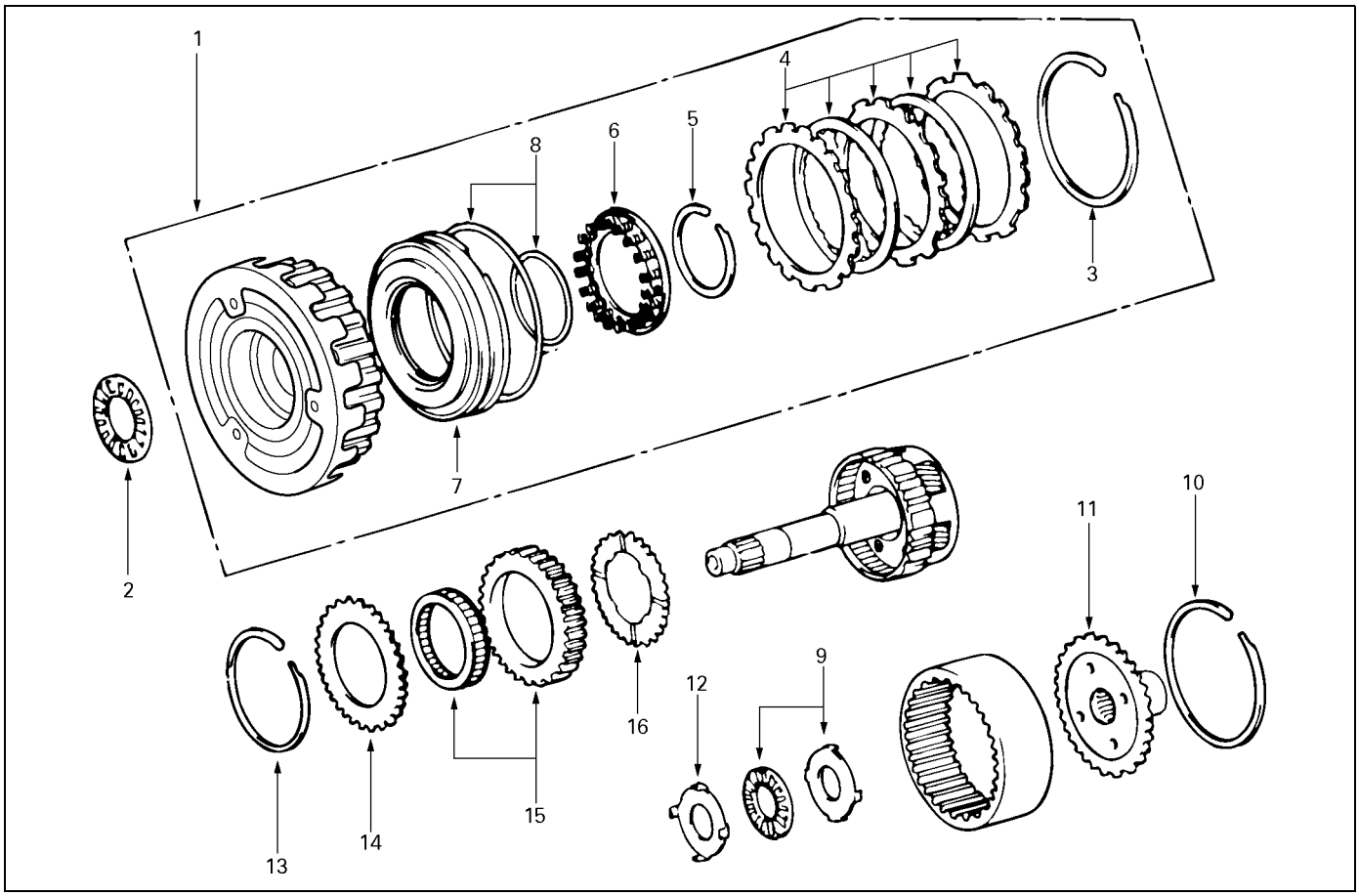

252L100002

Disassembly steps

- ▲ 1. OD direct clutch assembly
- ▲ 2. Thrust bearing
- ▲ 3. Snap ring
- ▲ 4. Flange, disc and plate
- ▲ 5. Snap ring
- ▲ 6. Piston return spring
- ▲ 7. OD direct clutch piston with O-ring
- ▲ 8. O-ring
- ▲ 9. Thrust bearing
- ▲ 10. Snap ring
- ▲ 11. Ring gear flange
- 12. Race
- ▲ 13. Snap ring
- ▲ 14. Retaining plate
- ▲ 15. OD one-way clutch
- 16. Thrust washer

Important operations

Check operation of one-way clutch

Hold the OD direct clutch drum and turn the input shaft.
The input shaft should turn freely clockwise and should lock counterclockwise.
(1): Free
(2): Lock

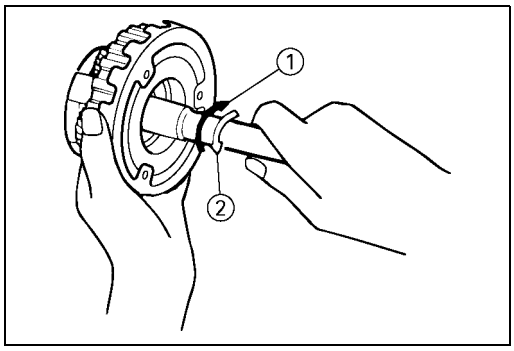

252L100003

1. **OD direct clutch assembly**
   Remove OD direct clutch assembly from OD planetary gear.
2. **Thrust bearing**
   Then remove thrust bearing with the race from OD direct clutch drum.

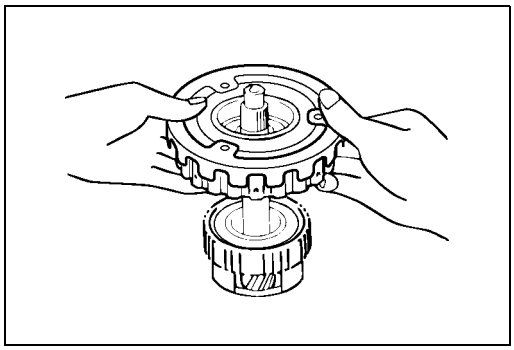

252L100004

Check piston stroke of OD direct clutch (C-O)

Place the oil pump onto the torque converter, and then place the OD direct clutch assembly onto the oil pump.

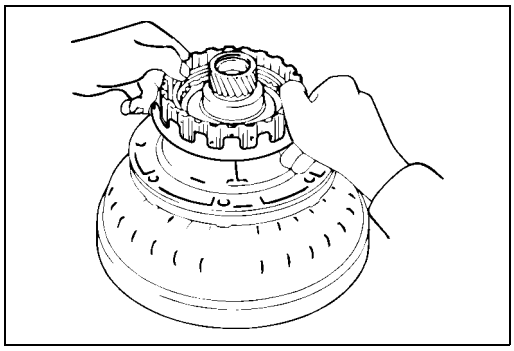

252L100005

Use a dial indicator, measure the OD direct clutch piston stroke applying and releasing the compressed air (4– 8 kg/cm^2, 57– 114 psi, 392– 785 kPa) as shown.

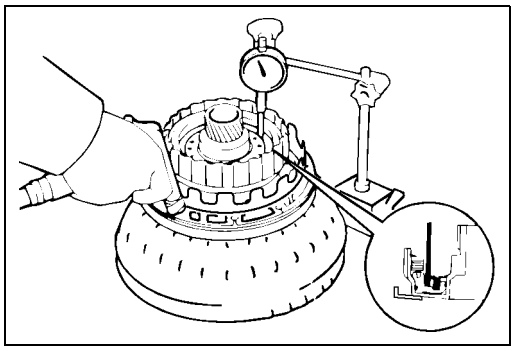

252L100016

mm (in.)

Piston stroke	1.85– 2.15 (0.0728– 0.0847)

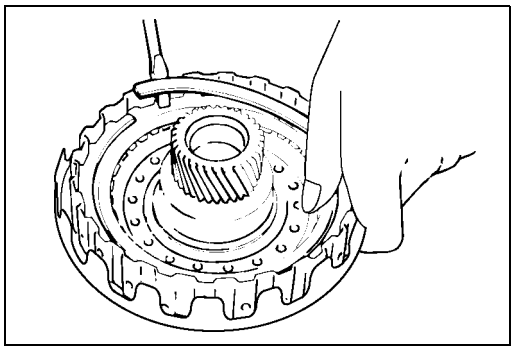

252L100006

3. Snap ring
Remove snap ring from clutch drum.

4. Flange, disc and plate
Remove flange, two discs and two plates.

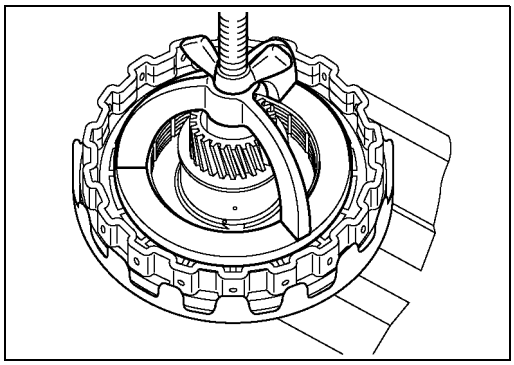

252L100007

5. Snap ring
Place special tool and a suitable ring on the spring retainer and compress the return spring. Using snap ring pliers, remove the snap ring.
Spring compressor: 5-8840-0195-0 (J-23327-1)

6. Piston return spring
Remove piston return spring.

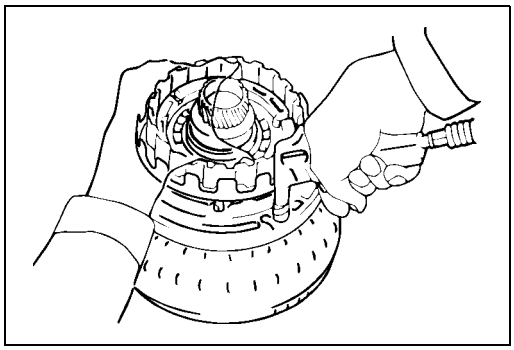

252L100008

7. OD direct clutch piston with O-ring
Place the oil pump onto the torque converter and then place the OD direct clutch onto the oil pump.
Holding the OD direct clutch piston by hand, apply compressed air to the oil pump to remove the OD direct clutch piston.
Remove the OD direct clutch piston.

8. O-ring
Remove two O-rings from piston.

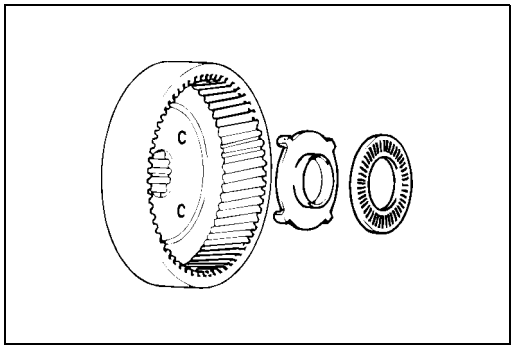

252ry00021

9. Thrust bearing
Remove bearing and race from OD planetary ring gear.

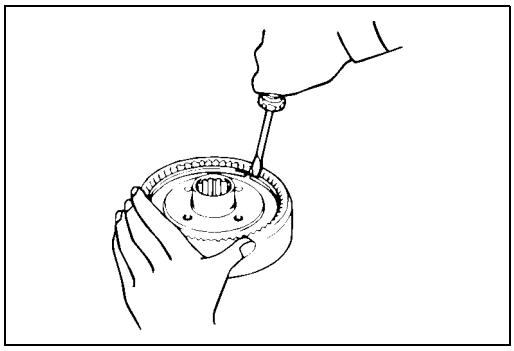

252RY00022

10. Snap ring
Remove snap ring.

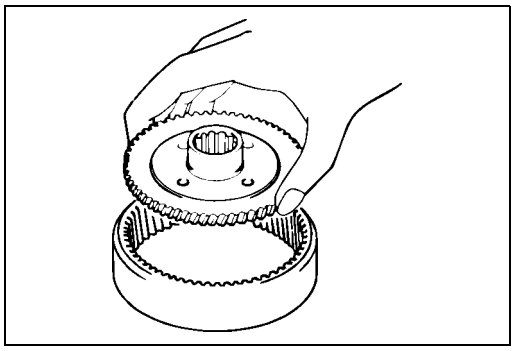

252RY00023

11. Ring gear flange
Remove ring flange from OD planetary ring gear.

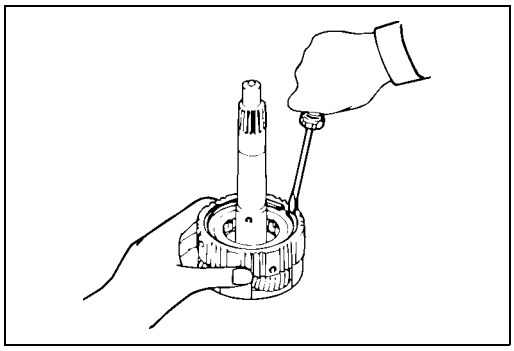

252RY00024

13. Snap ring
Remove snap ring, using screwdriver.

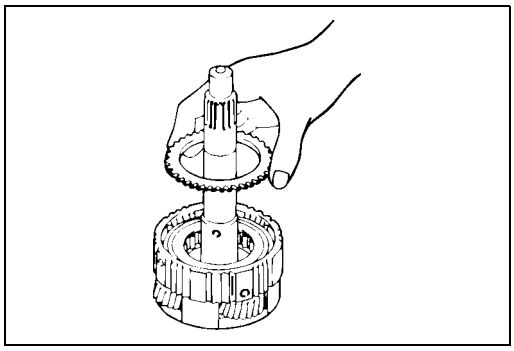

252RY00025

14. Retaining plate
Remove retaining plate from OD planetary gear.

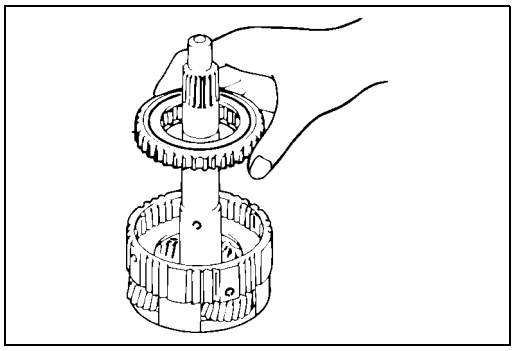

252RY00026

15. OD one-way clutch

Remove OD one-way clutch with outer race.

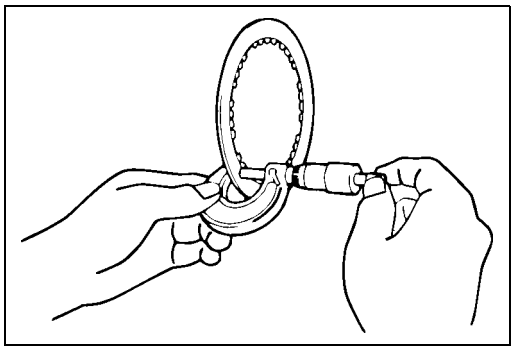

252RY00027

INSPECTION AND REPAIR

Check discs

Using a micrometer, measure the thickness of the discs.

	mm (in.)
Minimum thickness	1.84 (0.0724)

If the thickness is less than the minimum, replace the disc.

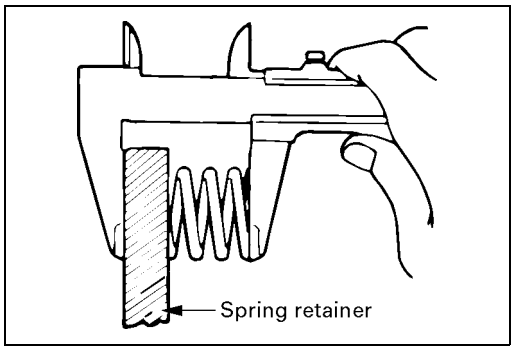

252RY00028

Check piston return spring

Using calipers, measure the free length of the return spring.

	mm (in.)
Standard length	15.8 (0.622)

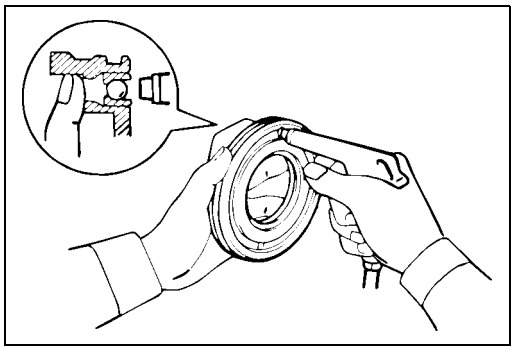

252RY00029

Check OD direct clutch piston

Check that check ball is free by shaking the piston.

Check that the valve does not leak by applying low-pressure compressed air.

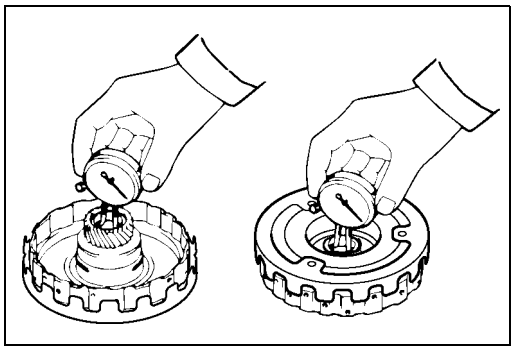

252L100009

Check OD direct clutch drum bushings

Using a dial indicator, measure the inside diameter of the clutch drum bushings.

	mm (in.)
Maximum inside diameter	27.11 (1.0673)

If the inside diameter is greater than the maximum, replace the clutch drum.

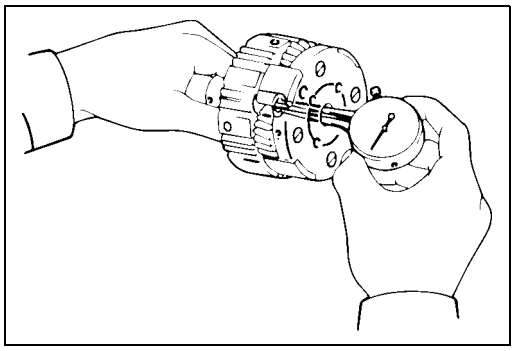

252RY00031

Check OD planetary gear bushing

Using a dial indicator, measure the inside diameter of the planetary gear bushing.

	mm (in.)
Maximum inside diameter	11.27 (0.4437)

If the inside diameter is greater than the maximum, replace the planetary gear.

REASSEMBLY

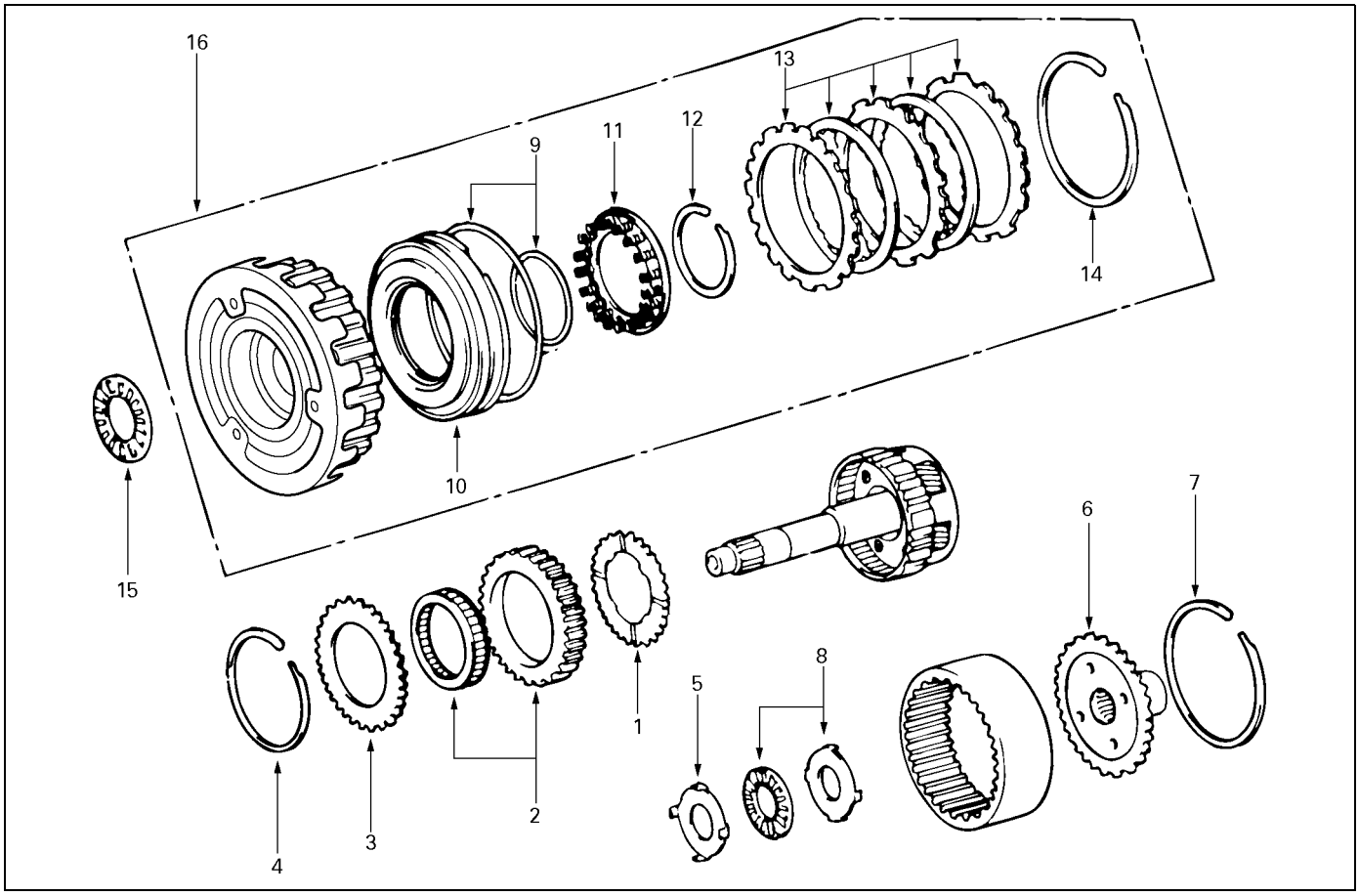

252L100010

Reassembly steps

- ▲ 1. Thrust washer
- ▲ 2. OD one-way clutch
- ▲ 3. Retaining plate
- ▲ 4. Snap ring
- ▲ 5. Race
- ▲ 6. Ring gear flange
- ▲ 7. Snap ring
- ▲ 8. Thrust bearing
- ▲ 9. O-ring
- ▲ 10. OD direct clutch piston with O-ring
- ▲ 11. Piston return spring
- ▲ 12. Snap ring
- ▲ 13. Flange, disc and plate
- ▲ 14. Snap ring
- ▲ 15. Thrust bearing
- ▲ 16. OD direct clutch assembly

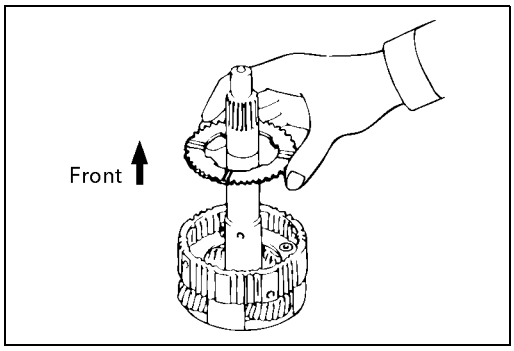

252RY00032

Important operations

1. Thrust washer

Install the thrust washer to the OD planetary gear, facing the grooved side upward.

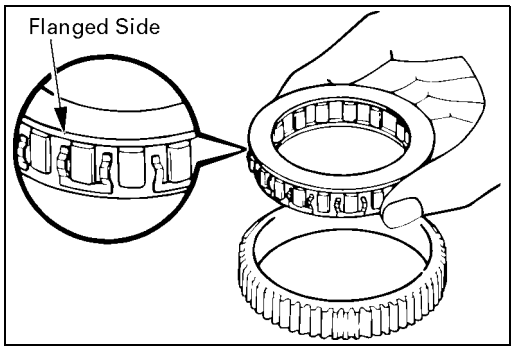

252RY00033

2. OD one-way clutch

Install the one-way clutch into the outer race, with the flanged side of the one-way clutch facing upward.

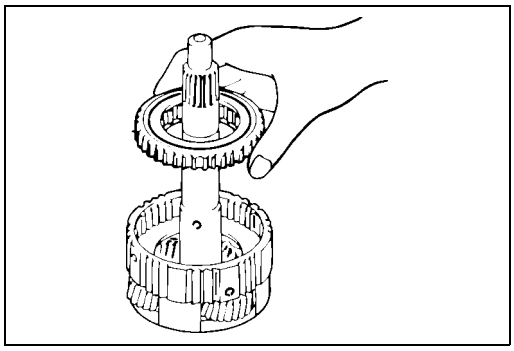

252RY00026

Install OD one-way clutch with outer race to overdrive planetary gear.

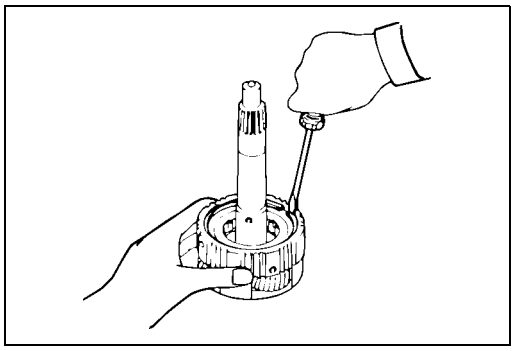

252RY00024

3. Retaining plate

4. Snap ring

Install retaining plate, then install snap ring, using a screwdriver.

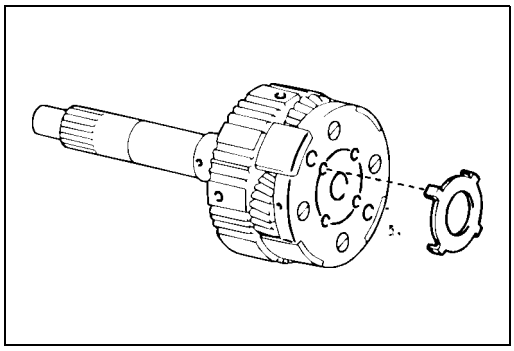

252RY00034

5. Race

Coat the race with petroleum jelly and install it to the planetary gear.

Race diameter (Reference)	mm (in.)
Inside diameter	27.3 (1.075)
Outside diameter	41.8 (1.646)

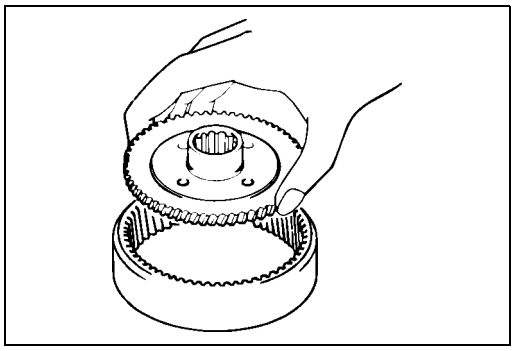

252RY00023

6. Ring gear flange

Install ring gear flange to OD planetary ring gear.

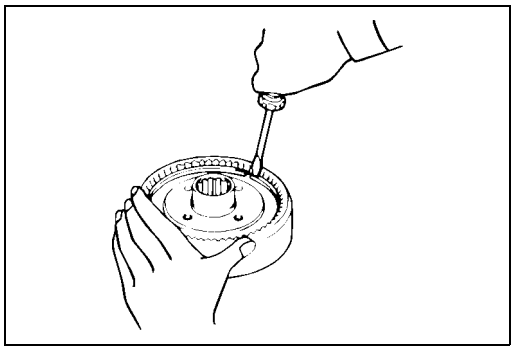

252RY00022

7. Snap ring

Install snap ring, using a screwdriver.

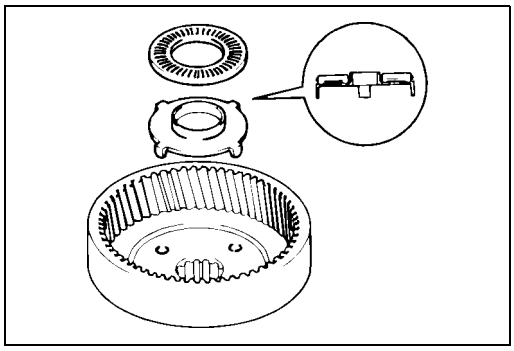

252RY00035

8. Thrust bearing

Coat the race and bearing with petroleum jelly and install them onto the OD planetary ring gear.

Race and bearing diameter (Reference)		mm (in.)
	Inside	Outside
Race	24.2 (0.953)	47.8 (1.882)
Bearing	26.0 (1.024)	46.8 (1.843)

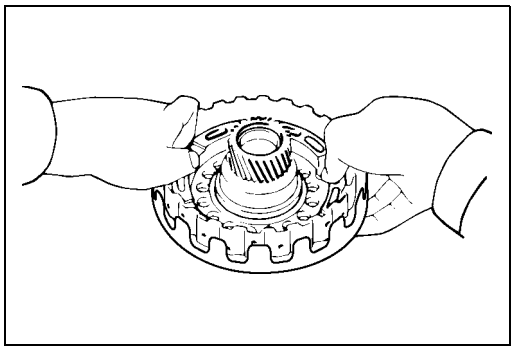

252L100011

9. O-ring

Coat new O-rings with ATF and install them on the OD direct clutch piston.

10. OD direct clutch piston with O-ring

Being careful not to damage the O-rings, press in the OD direct clutch piston into the clutch drum, using both hands.

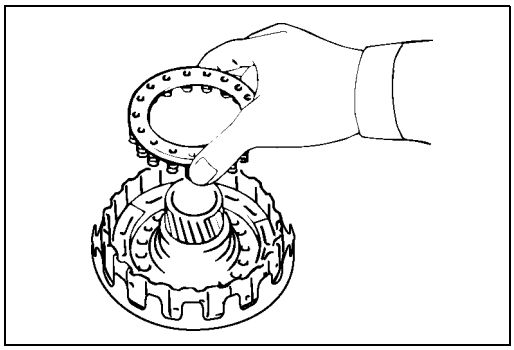

252L100012

11. Piston return spring

Install piston return spring.

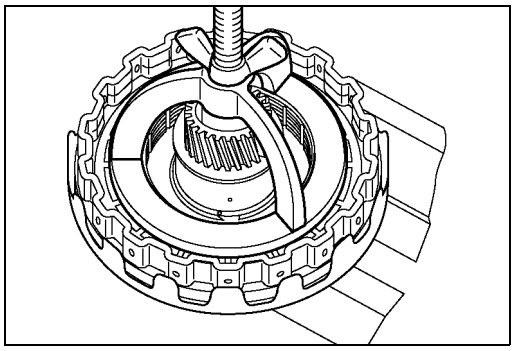

252L100007

12. Snap ring

Place special tool and a suitable ring on the spring retainer, and compress the return spring.

Spring compressor: 5-8840-0195-0 (J-23327-1)

Install the snap ring with snap ring pliers. Be sure the end gap of the snap ring is not aligned with the spring retainer claw.

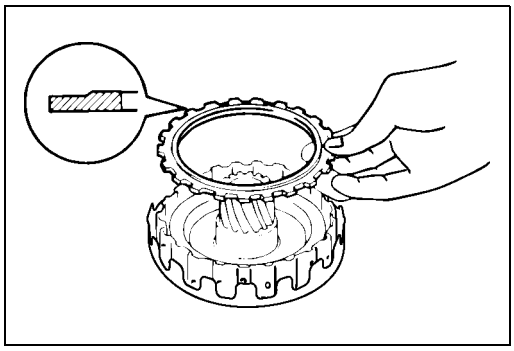

252L100013

13. Flange, disc and plate

Install two plates and two discs then install the flange, with the flat side facing downward.

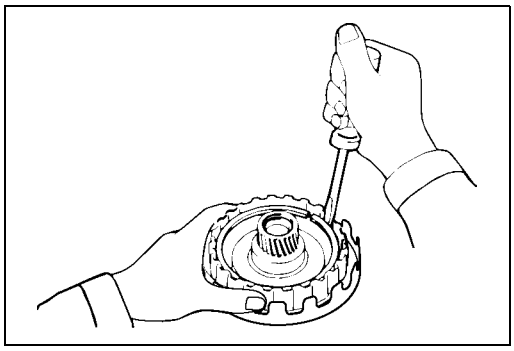

252L100014

14. Snap ring

Install snap ring.

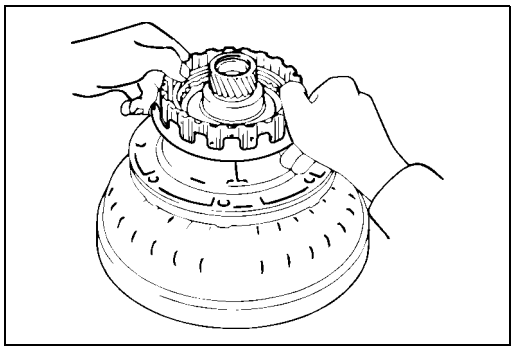

252L100005

Check piston stroke of OD direct clutch (C-0).
Place the oil pump onto the torque converter, and then place the OD direct clutch assembly onto the oil pump.

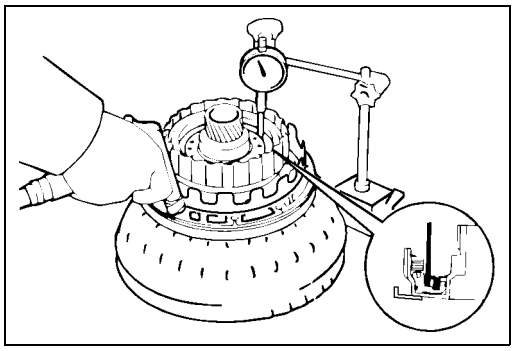

252L100016

Using a dial indicator, measure the OD direct clutch piston stroke by applying and releasing the compressed air (4– 8 kg/cm^2, 57– 114 psi or 392– 785 kPa) as shown.

mm (in.)

Piston stroke mm (in.)	1.85– 2.15 (0.0728– 0.0847)

If the piston stroke is not within specification, replace the disc and recheck the piston stroke.
If the piston stroke is non standard, select another flange.
There are six flange sizes.

mm (in.)

No.	Flange thickness	No.	Flange thickness
16	3.6 (0.142)	19	3.3 (0.130)
17	3.5 (0.138)	20	3.2 (0.126)
18	3.4 (0.134)	21	3.1 (0.122)

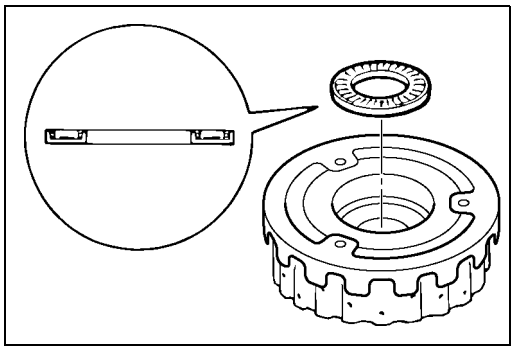

252L100015

15. Thrust bearing

Coat the assembled bearing and race with petroleum jelly and install it with the race side facing downward.

Assembled bearing and race (Reference)	mm (in.)
Inside diameter	28.9 (1.138)
Outside diameter	50.2 (1.976)

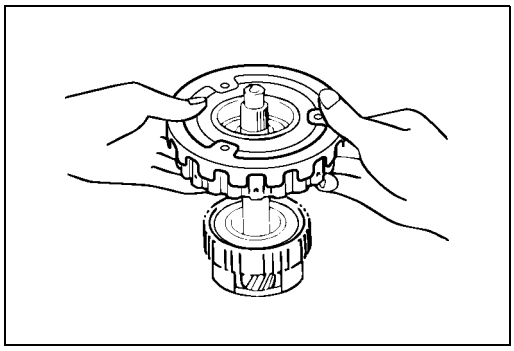

252L100004

16. OD direct clutch assembly

Align the flukes of discs in the direct clutch .
Install the OD direct clutch assembly onto the OD planetary gear.

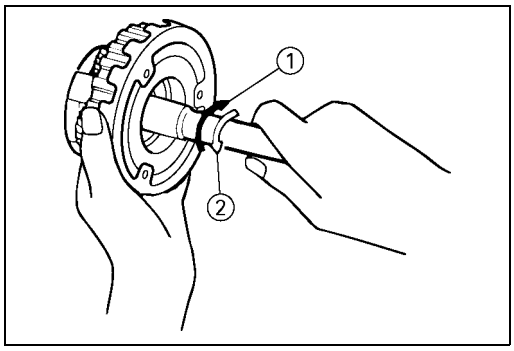

252L100003

Check operation of one-way clutch.

Hold the OD direct clutch drum and turn the input shaft.
The input shaft should turn freely clockwise and should lock counterclockwise.
(1): Free
(2): Lock

OD SUPPORT ASSEMBLY

DISASSEMBLY

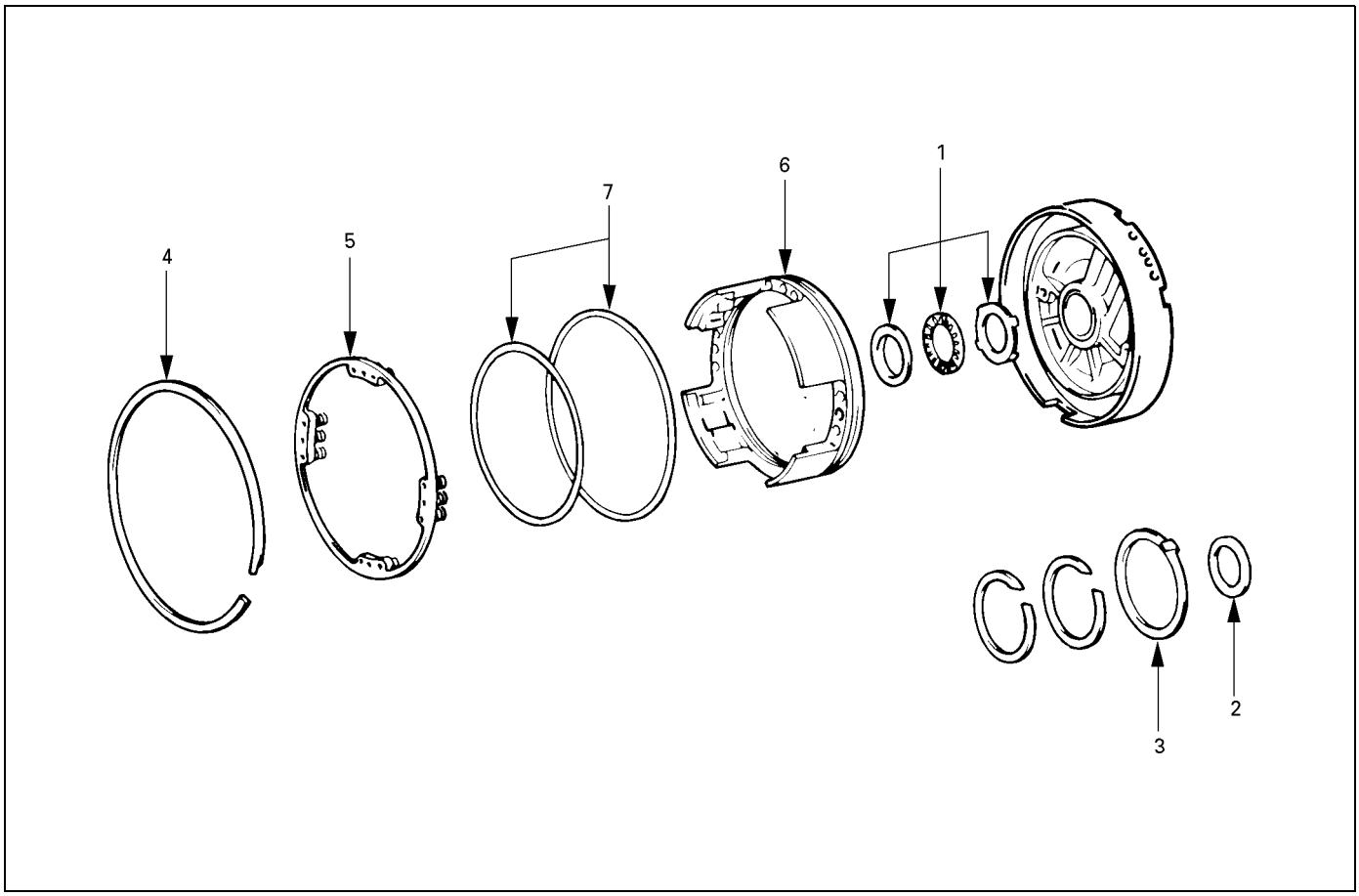

252RY00041

Disassembly steps

1. Thrust bearing
2. Race
3. Thrust washer (plastic)
▲ 4. Snap ring
5. Piston return spring
▲ 6. OD brake piston
7. O-ring

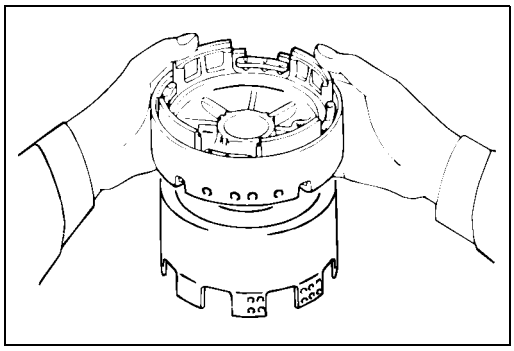

252RY00042

Important operations

Check OD brake piston

Place the OD support assembly onto the direct clutch assembly.

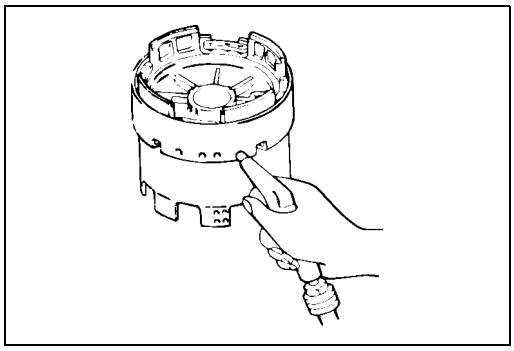

252RY00043

Apply compressed air into the oil passage as shown, and be sure that the OD brake piston moves smoothly.

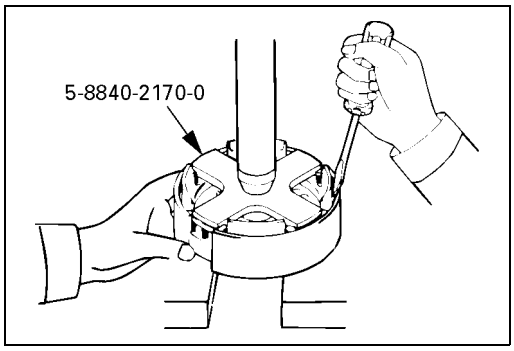

252RY00044

4. Snap ring

Place special tool on the spring retainer, and compress the return spring with a shop press.

Spring compressor: 5-8840-2170-0 (J-37233)

Remove the snap ring with a screwdriver.

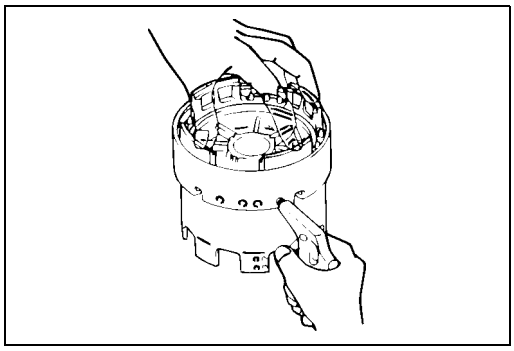

252RY00045

6. OD brake piston

Place the OD support onto the direct clutch assembly.

Hold the OD brake piston so it is not slanted and apply compressed air into the passage to remove the OD brake piston.

Remove the OD brake piston.

INSPECTION AND REPAIR

Make necessary correction or parts replacement if wear, damage or any abnormal conditions are found through inspection.

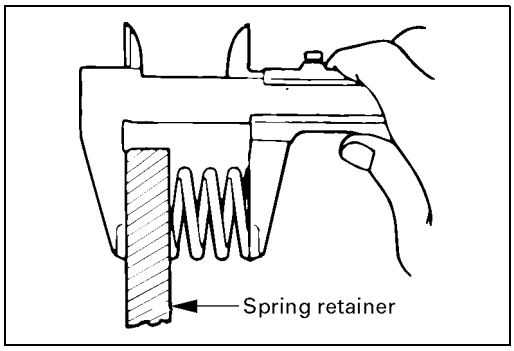

252RY00046

Check piston return spring

Using calipers, measure the free length of the return spring.

	mm (in.)
Standard	17.2 (0.677)

REASSEMBLY

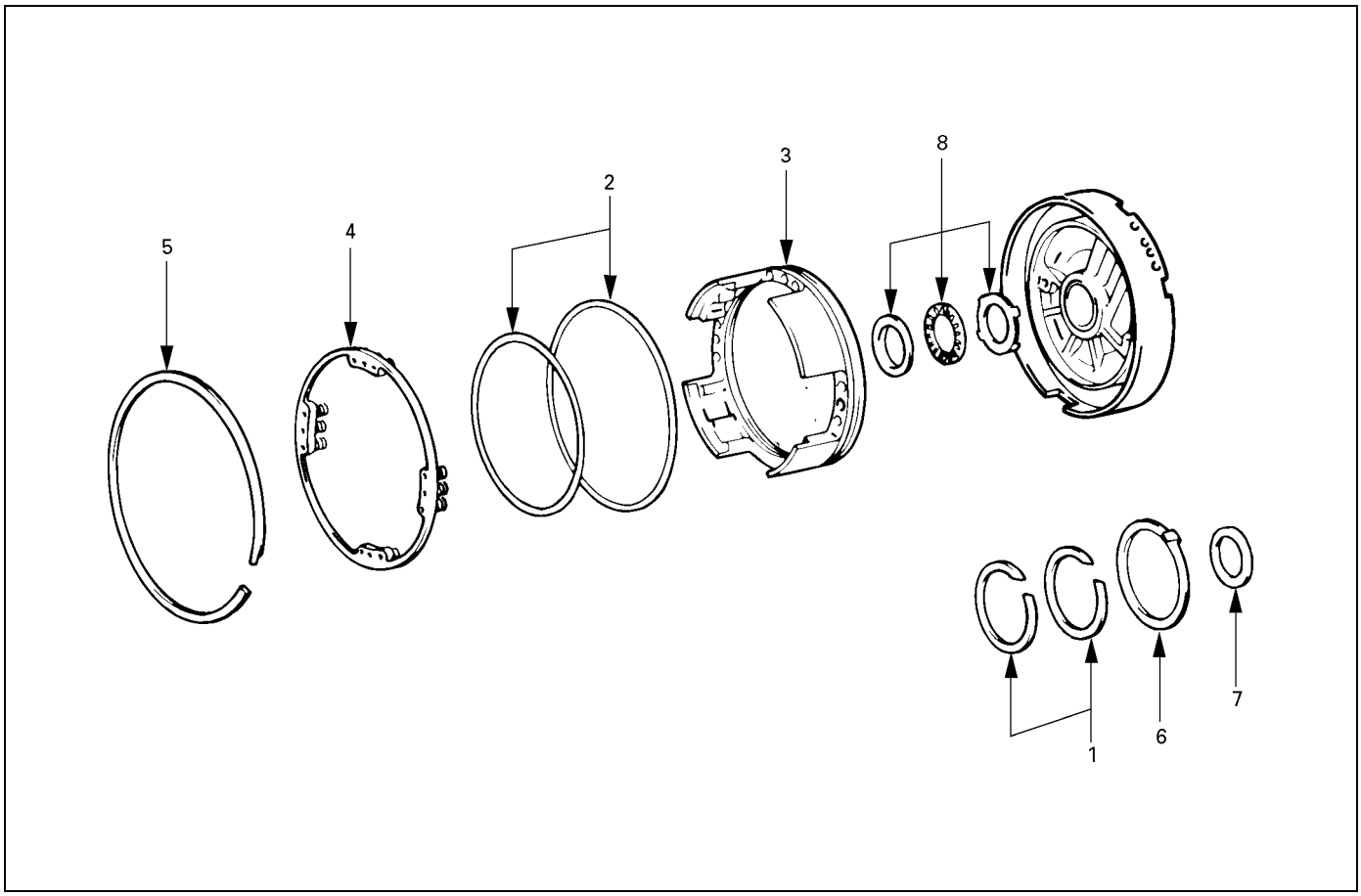

252RY00068

Reassembly steps

- ▲ 1. Oil seal ring
- ▲ 2. O-ring
- ▲ 3. OD brake piston
- ▲ 4. Piston return spring
- ▲ 5. Snap ring
- ▲ 6. Thrust washer (Plastic)
- ▲ 7. Race
- ▲ 8. Thrust bearing

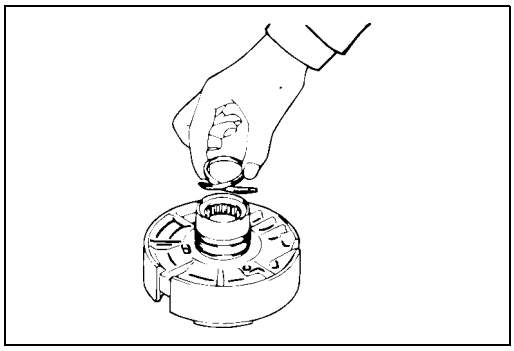

252RY00047

Important operations

1. Oil seal ring
Coat the two oil seal rings with ATF.
Contract the oil seals as shown, and install them onto the OD support.

NOTE:
Do not spread the ring ends more than necessary.

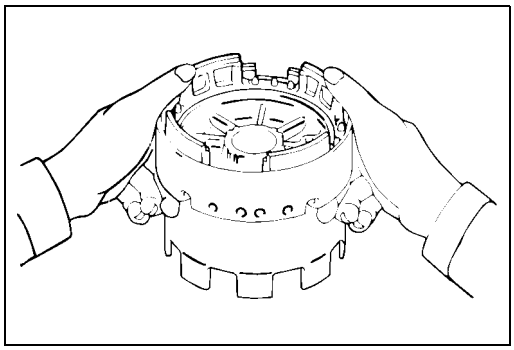

252RY00048

2. O-ring
Coat two new O-rings with ATF and install them on the OD brake piston.

3. OD brake piston
Being careful not to damage the O-rings, press in the brake piston into the OD support, using both hands.

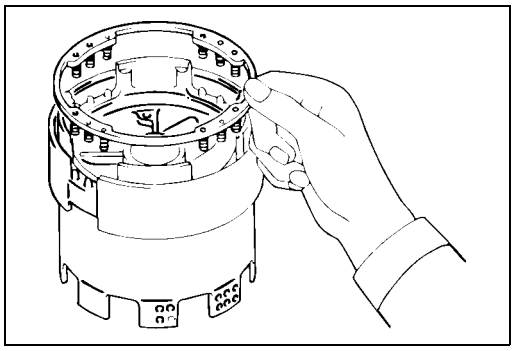

252RY00049

4. Piston return spring
Install piston return spring.

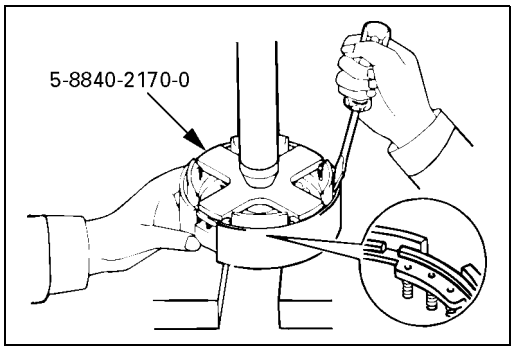

252RY00050

5. Snap ring
Place special tool on the spring retainer, and compress the return spring with a shop press.
Spring compressor: 5-8840-2170-0 (J-37233)
Install the snap ring with a screwdriver. Be sure the end gap of the snap ring is not aligned with cutout portion of the OD support.

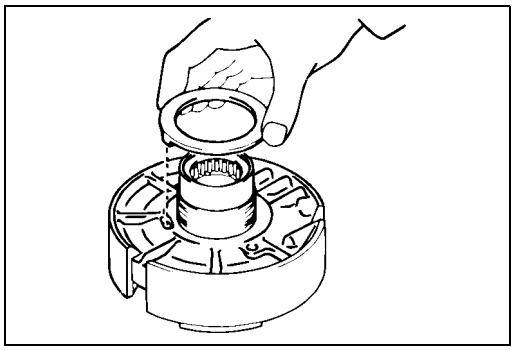

252RY00051

6. Thrust washer (plastic)

Coat the thrust washer with petroleum jelly and install it onto the OD support.

NOTE:
Make sure that the lug fits into the hole on the OD support.

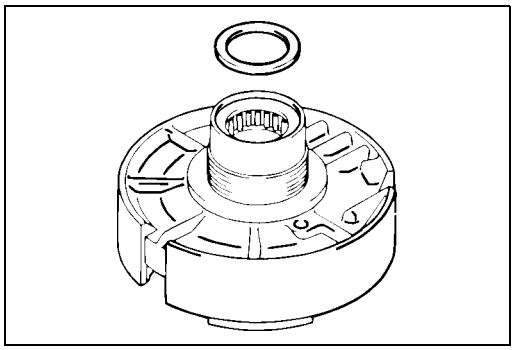

252RY00052

7. Race

Coat the race with petroleum jelly, and install it onto the OD support.

Race diameter (Reference)	mm (in.)
Inside diameter	36.8 (1.449)
Outside diameter	50.9 (2.004)

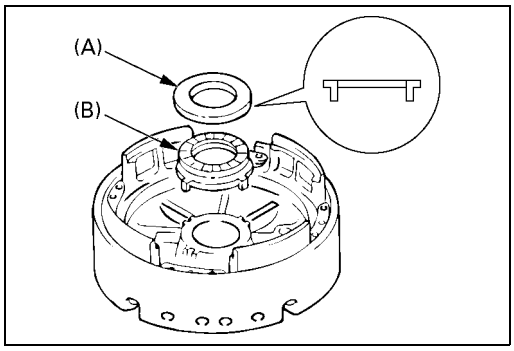

252RY00069

8. Thrust bearing

Turn over OD support.

Coat the two races with petroleum jelly, and install them onto the OD support.

Race and bearing diameter (Reference) mm (in.)

	Inside	Outside
Race (A)	37.2 (1.465)	58.8 (2.315)
Bearing	36.5 (1.437)	48.5 (1.910)
Race (B)	33.7 (1.327)	50.1 (1.973)

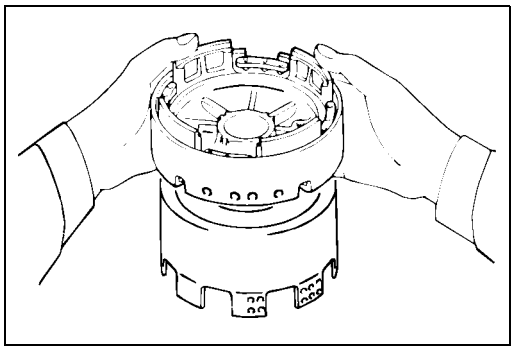

252RY00042

Check OD brake piston

Place the OD support assembly onto the direct clutch assembly.

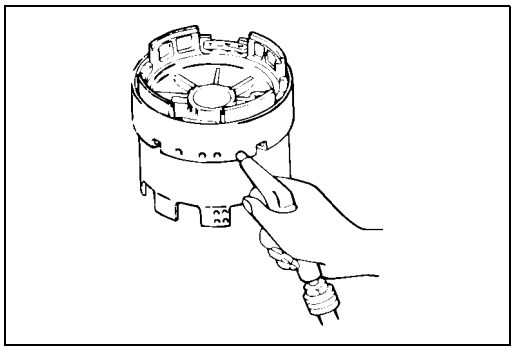

252RY00043

Apply compressed air into the oil passage as shown, and be sure that the OD brake piston moves smoothly.

DIRECT CLUTCH ASSEMBLY (C-2)

DISASSEMBLY

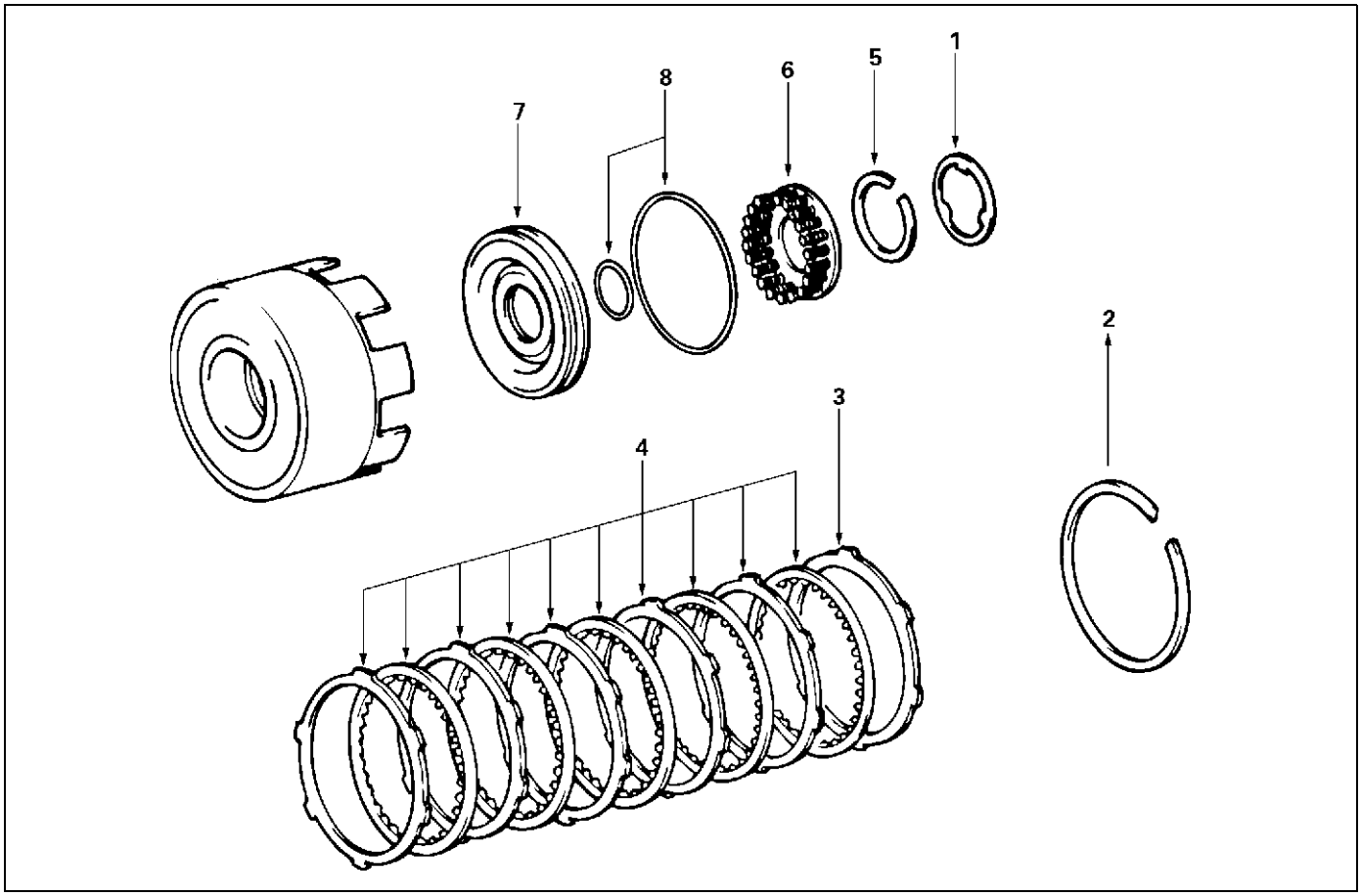

248RY00059

Disassembly steps

1. Clutch drum thrust washer
2. Snap ring
3. Flange
4. Plate and disc
▲ 5. Snap ring
6. Piston return spring
▲ 7. Direct clutch piston
8. O-ring

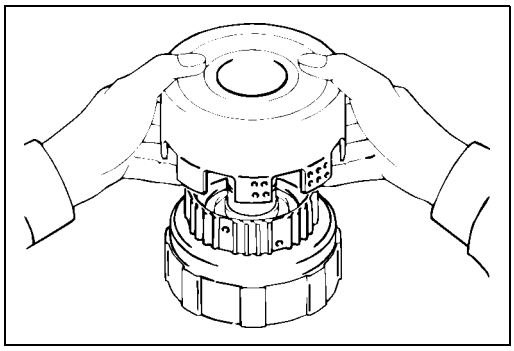

248RY00028

Important operations

Remove direct clutch drum assembly from forward clutch assembly.

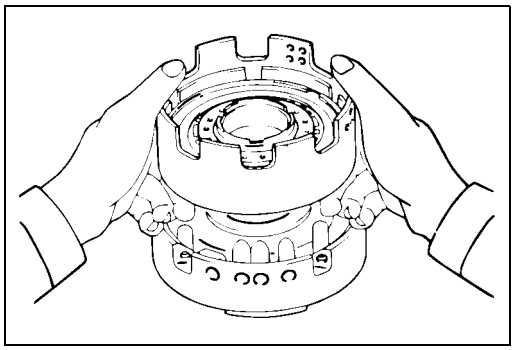

248RY00029

Check piston stroke of direct clutch (C-2)

Place the direct clutch assembly onto the OD support assembly.

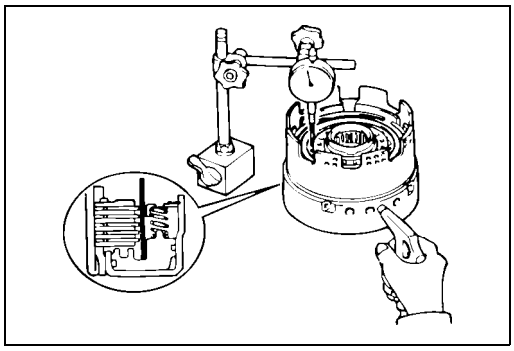

248RY00061

Using a dial indicator, measure the direct clutch piston stroke by applying and releasing compressed air (4– 8 kg/ cm^2, 57– 114 psi or 392– 785 kPa) as shown.

	mm (in.)
Piston stroke	1.6– 1.9 (0.0630– 0.0748)

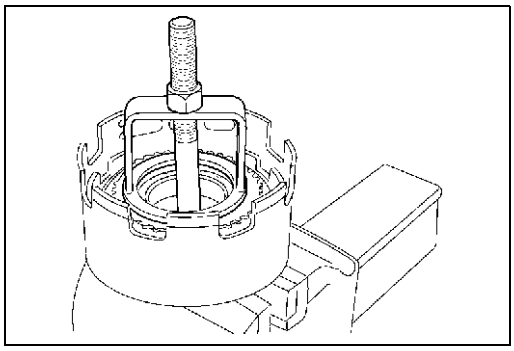

248RY00002

5. Snap ring

Place special tool and a suitable ring on the spring retainer and compress the return spring. Using snap ring pliers, remove the snap ring.

Spring compressor: 5-8840-0254-0 (J-25048)

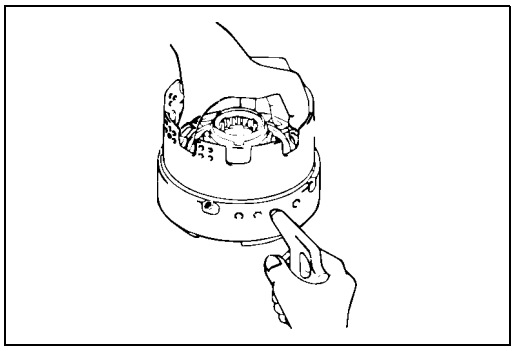

248RY00030

7. Direct clutch piston

Place the direct clutch drum onto the OD support.
Holding the direct clutch piston by hand, apply compressed air to the OD support to remove the direct clutch piston.
Remove the direct clutch piston.
Remove two O-ring from piston.

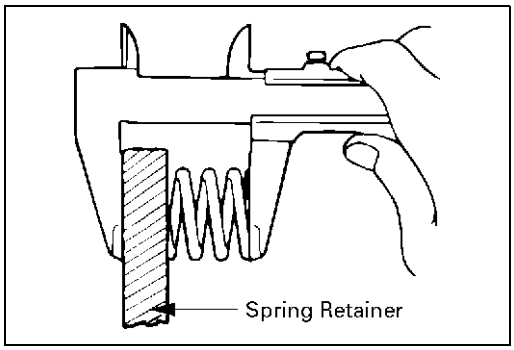

247RY00034

INSPECTION AND REPAIR

Check piston return spring

Using calipers, measure the free length of the return spring.

	mm (in.)
Standard	21.3 (0.839)

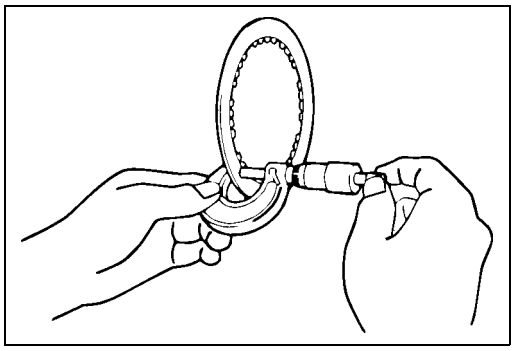

252RY00027

Check discs

Using a micrometer, measure the thickness of the discs.

	mm (in.)
Minimum thickness	1.84 (0.0724)

If the thickness is less than the minimum, replace the disc.

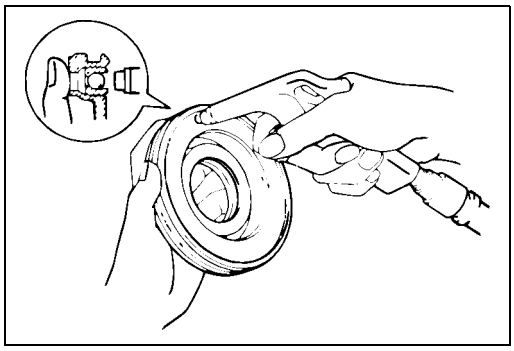

248RY00031

Check direct clutch piston

Check that check ball is free by shaking the piston.
Check that the valve does not leak by applying low-pressure compressed air.

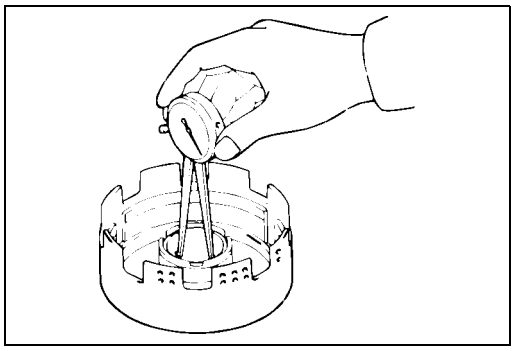

248RY00032

Check direct clutch drum bushing

Using a dial indicator, measure the inside diameter of the clutch drum bushing.

	mm (in.)
Maximum inside diameter	53.99 (2.1256)

If the inside diameter is grater than maximum, replace the clutch drum.

REASSEMBLY

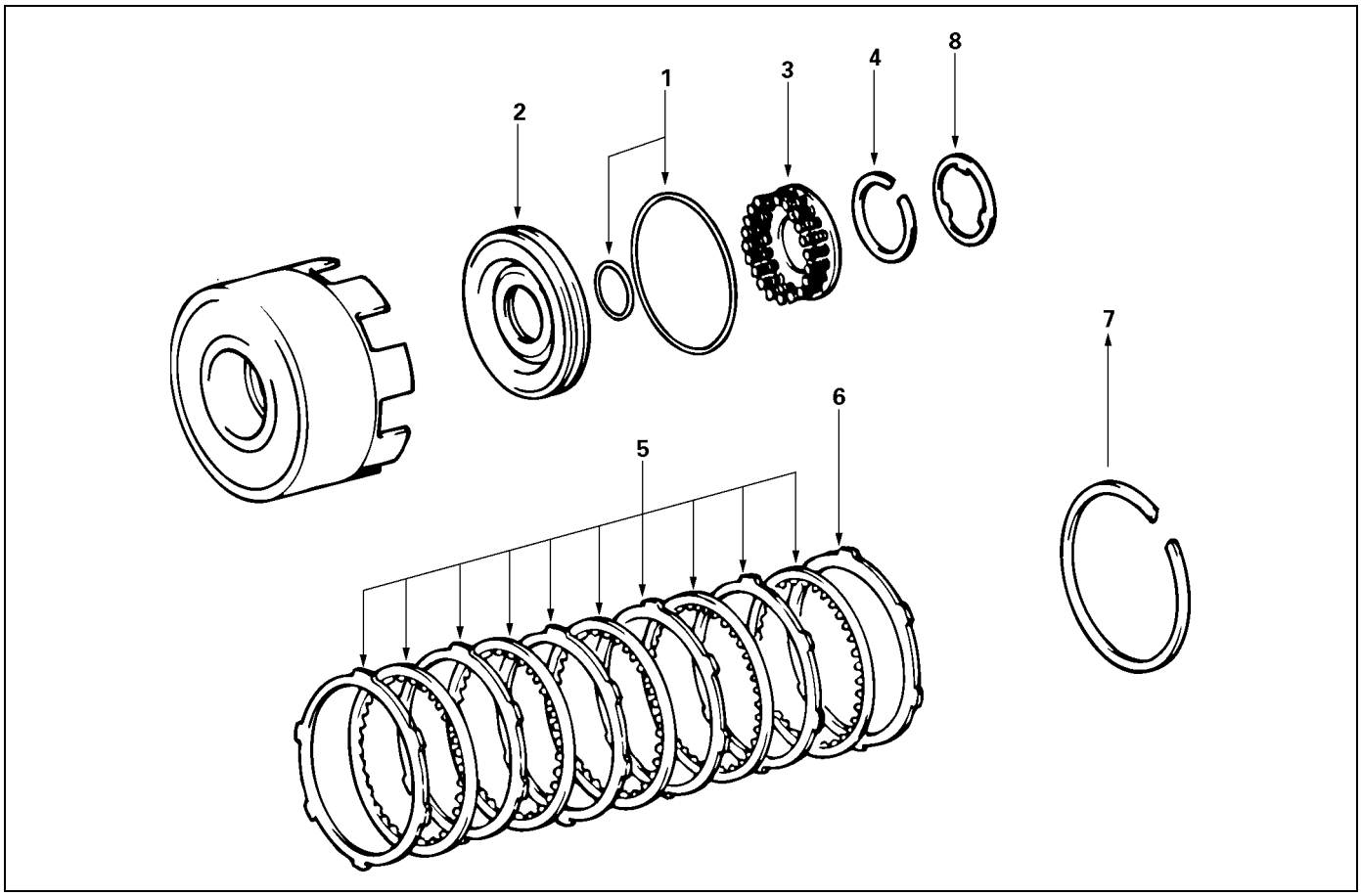

248RY00060

Reassembly steps

- ▲ 1. O-ring
- ▲ 2. Direct clutch piston
- ▲ 3. Piston return spring
- ▲ 4. Snap ring
- ▲ 5. Disc and plate
- ▲ 6. Flange
- ▲ 7. Snap ring.
- ▲ 8. Clutch drum thrust washer (plastic)

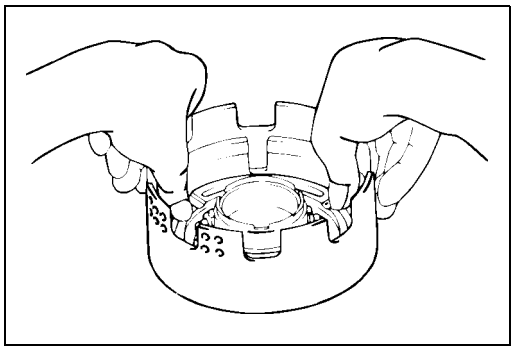

248RY00033

Important operations

1. **O-ring**
   Coat new O-rings with ATF and install them on the direct clutch piston.
2. **Direct clutch piston**
   Install direct clutch piston to direct clutch drum.
   Being careful not to damage the O-rings, press in the direct clutch piston into the clutch drum, using both hands.

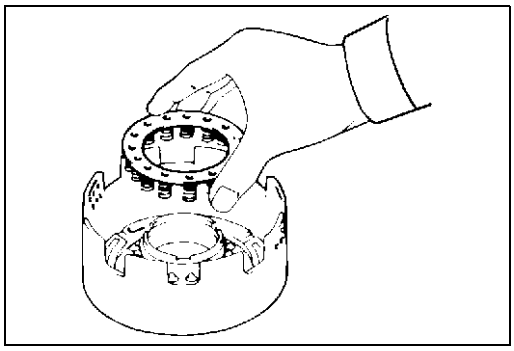

248RY00034

3. **Piston return spring**
   Install piston return spring.

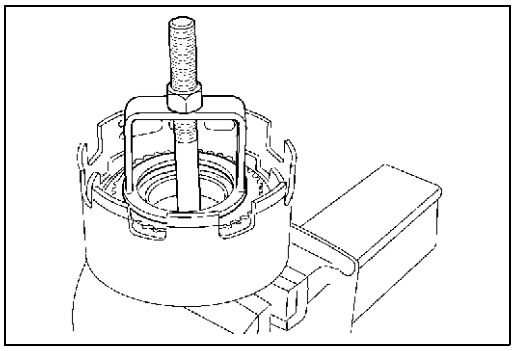

248RY00002

4. **Snap ring**
   Compress piston return spring and install snap ring in groove.
   Place special tool and a suitable ring on the spring retainer, and compress the return spring.
   Install the snap ring with snap ring pliers. Be sure the end gap of the snap ring is not aligned with the spring retainer claw.
   Spring compressor: 5-8840-0254-0 (J-25048)

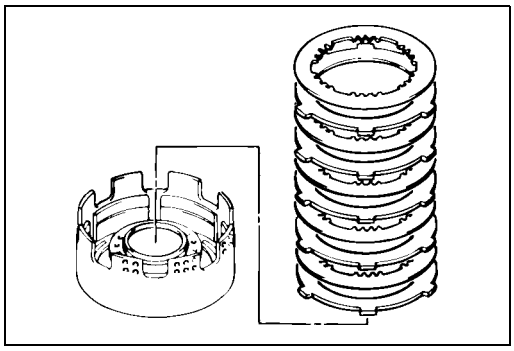

248RY00062

5. **Disc and plate**
   Install plates and discs.
   Install in order: P– D– P– D– P– D– P– D– P– D
   P: Plate, D: Disc

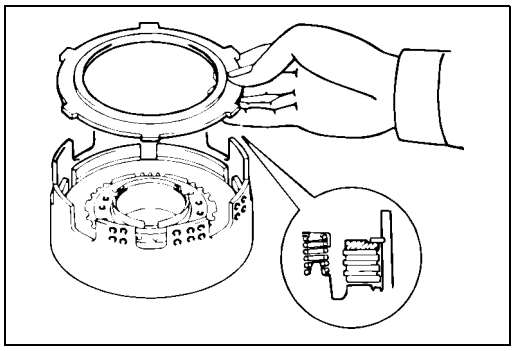

248RY00035

6. Flange

Install the flange, with the flat side facing downward.

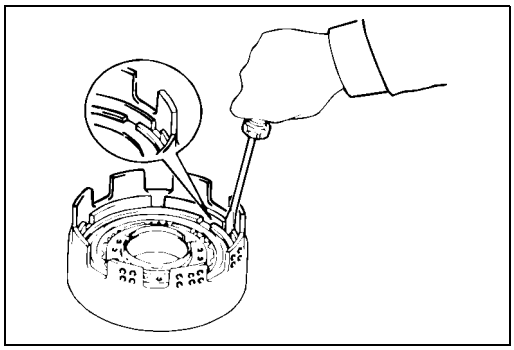

248RY00036

7. Snap ring

Install the snap ring with a screwdriver. Be sure the end gap of the snap ring is not aligned with the cutout portion of the direct clutch drum.

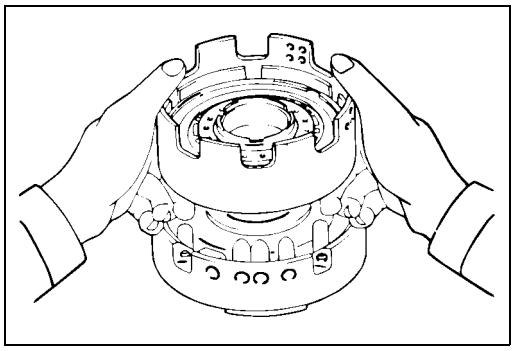

248RY00029

Check piston stroke of direct clutch (C-2)

Place the direct clutch assembly onto the OD support assembly.

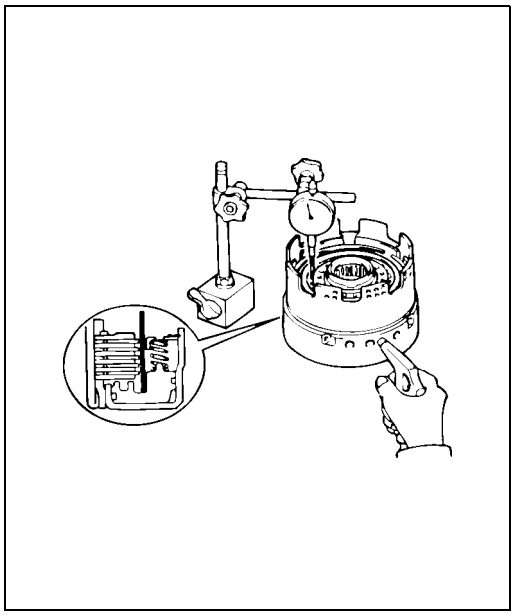

248RY00061

Using a dial indicator, measure the direct clutch piston stroke by applying and releasing compressed air (4– 8 kg/ cm^2, 57– 114 psi or 392– 785 kPa) as shown.

mm (in.)

Piston stroke	1.6– 1.9 (0.0630– 0.0748)

If the piston stroke is not within specification, replace the discs and recheck the piston stroke.
If the piston stroke is non standard, select another flange.
There are eight flanges.

mm (in.)

No.	Flange thickness	No.	Flange thickness
33	3.3 (0.130)	37	3.7 (0.146)
34	3.4 (0.134)	38	3.8 (0.150)
35	3.5 (0.138)	39	3.9 (0.154)
36	3.6 (0.142)	40	4.0 (0.158)

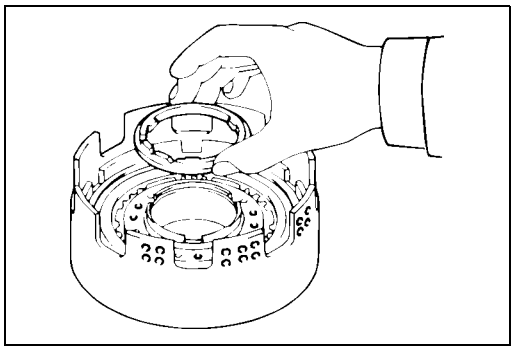

248RY00037

8. Clutch drum thrust washer (plastic)

Coat the thrust washer with petroleum jelly and install it onto the direct clutch.

NOTE:

Make sure that the lugs fit into the cutout portions on the direct clutch.

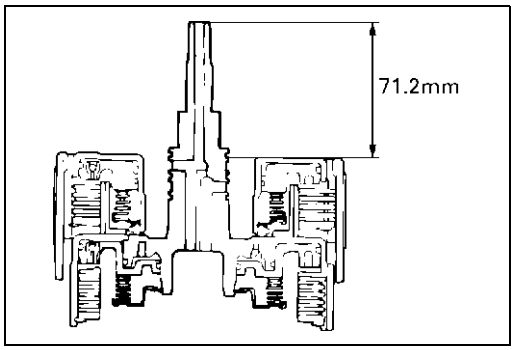

248RY00038

Install direct clutch assembly

Align the flukes of discs in the direct clutch.

Install the direct clutch assembly onto the forward clutch assembly.

Check that the distance from the direct clutch end to the forward clutch end is 71.2 mm (2.803 in.).

FORWARD CLUTCH ASSEMBLY (C-1)

DISASSEMBLY

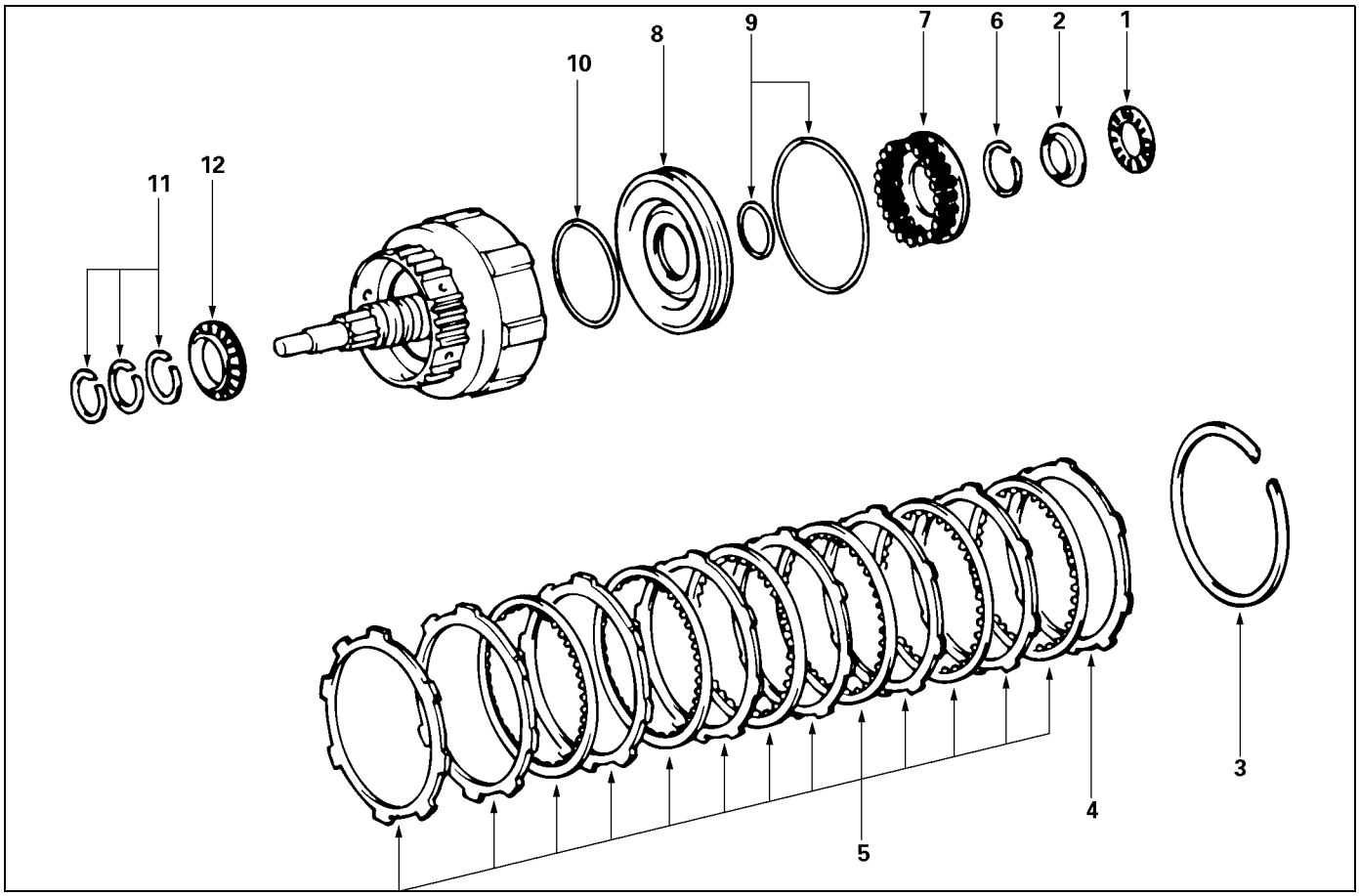

248RY00063

Disassembly steps

- ▲ 1. Thrust bearing
- 2. Race
- ▲ 3. Snap ring
- 4. Flange
- 5. Disc and plate
- ▲ 6. Snap ring
- 7. Piston return spring
- ▲ 8. Piston
- 9. O-ring
- 10. O-ring
- 11. Oil seal ring
- 12. Thrust bearing

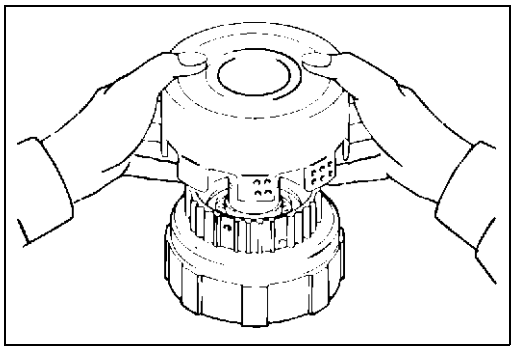

248RY00039

Important operations

Remove forward clutch assembly from direct clutch assembly.

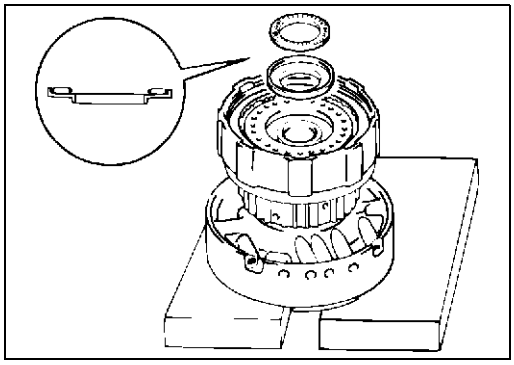

248RY00048

1. Thrust bearing

Place wooden blocks, etc, to prevent forward clutch shaft from touching the work stand, and place the OD support on them.

Place the forward clutch onto the OD support and remove the bearing and race.

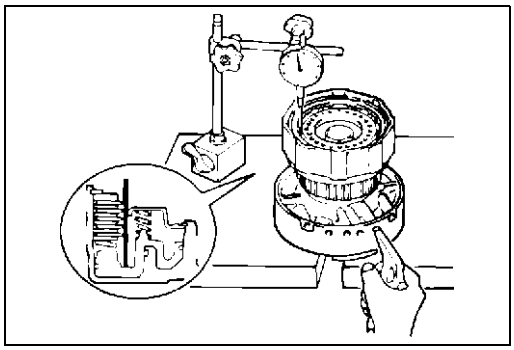

248RY00040

Check piston stroke of forward clutch (C–1)

Using a dial indicator, measure the forward clutch piston stroke by applying and releasing compressed air (4–8kg/cm^2, 57–114psi or 392–785kPa)as shown.

mm (in.)

Pack clearance	0.6–1.0 (0.0236–0.0394)

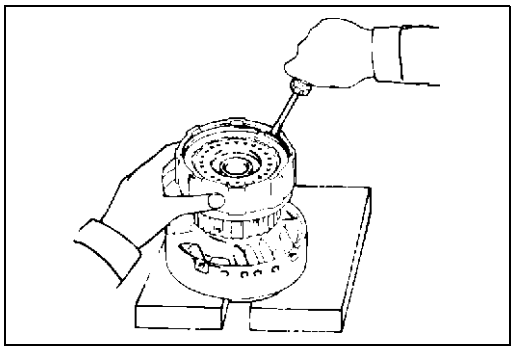

248RY00041

3. Snap ring

Remove snap ring from clutch drum.

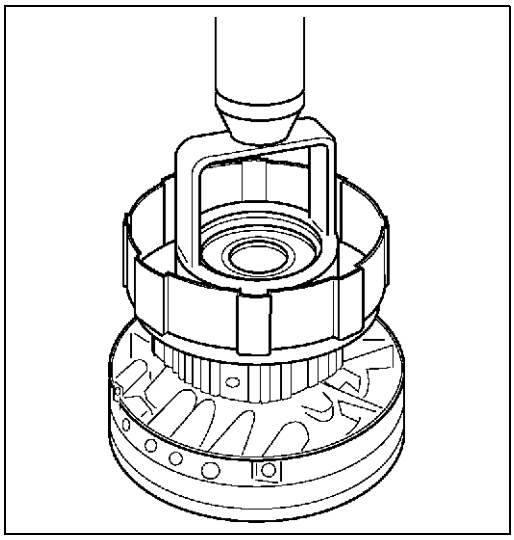

248RY00003

6. Snap ring

Place special tool on the spring retainer and compress the return spring. Using snap ring pliers, remove the snap ring.
Spring compressor : 5–8840–0254–0 (J–25048)

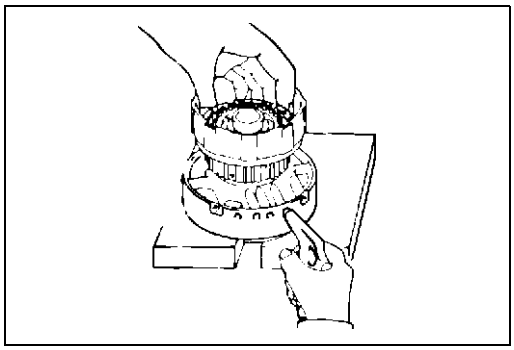

248RY00042

8. Piston

PLace the forward clutch drum onto the OD support. Holding the forward clutch piston by hand, apply compressed air to the OD support to remove the forward clutch piton.

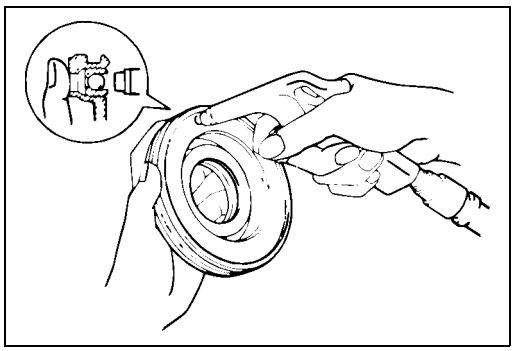

248RY00031

INSPECTION AND REPAIR

Check forward clutch piston

Check that check ball is free by shaking the piston.
Check that the valve does not leak by applying low-pressure compressed air.

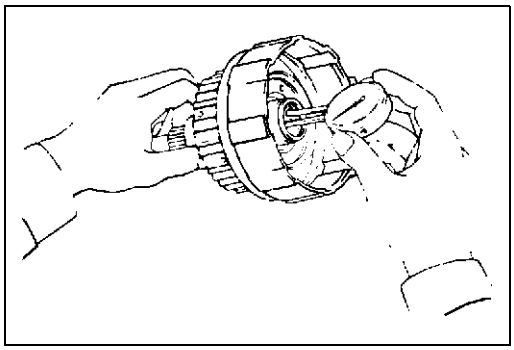

248RY00043

Check forward clutch drum bushing

Using a dial indicator, measure the inside diameter of the forward clutch drum bushing.

	mm (in.)
Maximum inside diameter	24.08 (0.948)

If the inside diameter is greater than the maximum, replace the forward clutch drum.

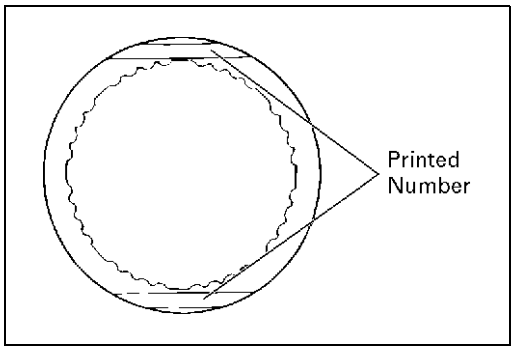

248RY00045

Check disc, plate and flange

Check to see if the sliding surface of the disc, plate and flange are worn or burnt. If necessary, replace them.

- If the lining of the disc is peeling off or discolored, or even if parts of the printed numbers are defaced, replace all discs.
- Before assembling new discs, soak them in ATF for at least fifteen minutes.

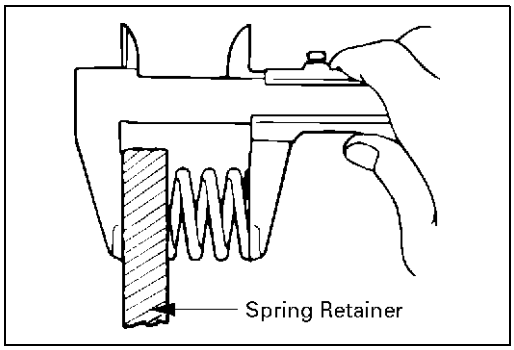

247RY00034

Check piston return spring

Using calipers, measure the free length of the return spring.

	mm (in.)
Standard length	19.47 (0.7665)

REASSEMBLY

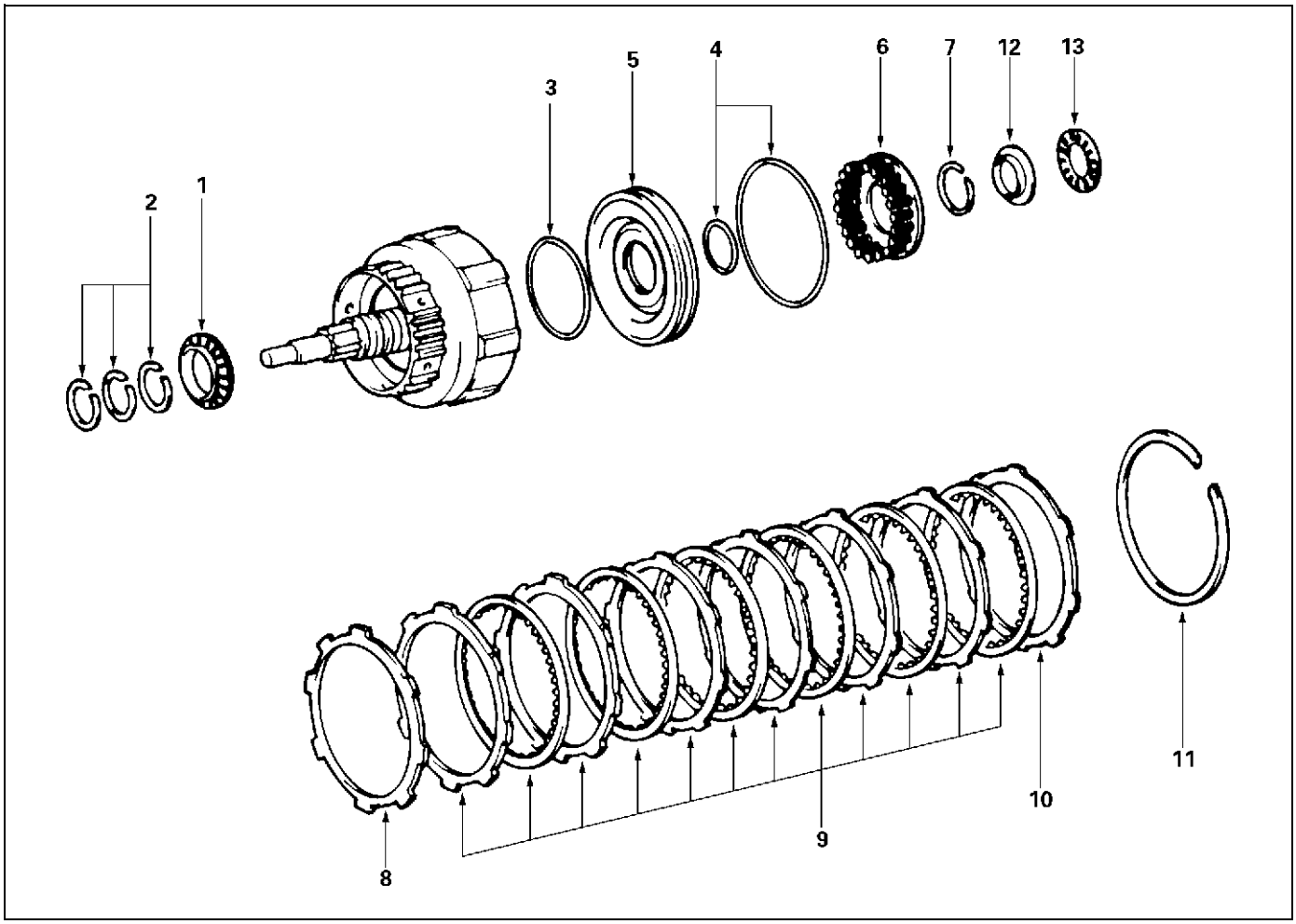

248RY00064

Reassembly steps

- ▲ 1. Thrust bearing
- ▲ 2. Oil seal ring
- ▲ 3. O-ring
- ▲ 4. O-ring
- ▲ 5. Forward clutch piston
- ▲ 6. Piston return spring
- ▲ 7. Snap ring
- ▲ 8. Cushion plate
- ▲ 9. Disc and plate
- ▲ 10. Flange
- ▲ 11. Snap ring
- ▲ 12. Race
- ▲ 13. Thrust bearing

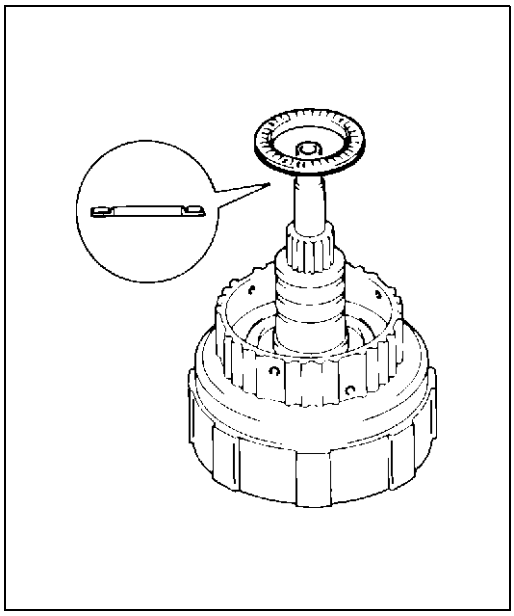

248RY00044

Important operations

1. **Thrust bearing**
   Coat the assembled bearing and race with petroleum jelly and install it onto the forward clutch drum, with the race side facing downward.

Assembled bearing and race (Reference) mm (in.)

Inside diameter	33.7 (1.327)
Outside diameter	47.8 (1.882)

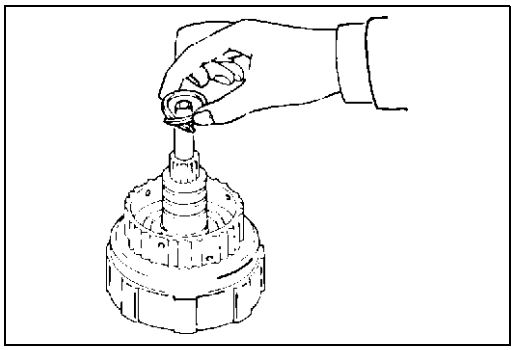

248RY00046

2. **Oil seal ring**
   Coat the three oil rings with ATF.
   Contract the oil seal rings as shown, and install three oil seal rings onto the forward clutch drum.

NOTE:
Do not spread the ring ends more than necessary.

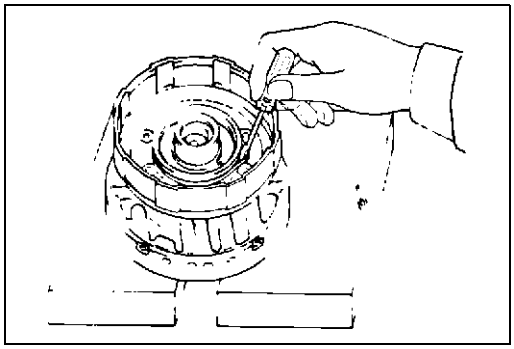

248RY00047

3. **O-ring**
   Coat a new O-ring with ATF and install O-ring on the forward clutch drum.
4. **O-ring**
   Coat new O-rings with ATF and install two O-rings on the forward clutch piston.

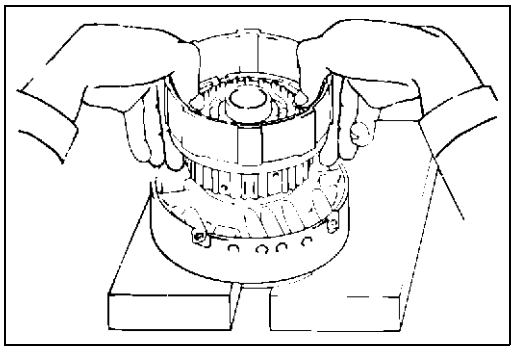

248RY00049

5. **Forward clutch piston**
   Being careful not to damage the O-rings, press the forward clutch piston into the forward clutch drum.

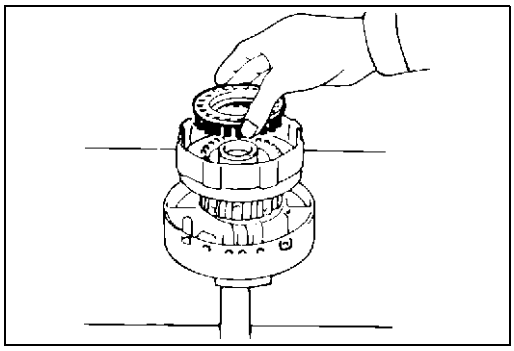

248RY00065

6. Piston return spring

Install piston return spring.

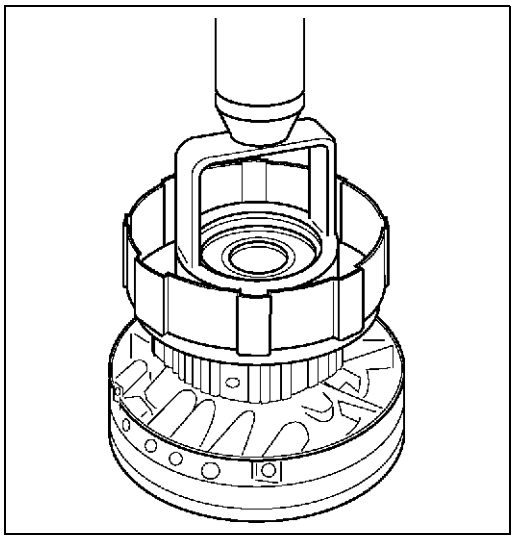

248RY00003

7. Snap ring

Place special tool on the spring retainer, and compress the return spring.

Spring compressor: 5–8840–0254–0 (J–25048)

Install the snap ring with snap ring pliers. Be sure the end gap of the snap ring is not aligned with the spring retainer claw.

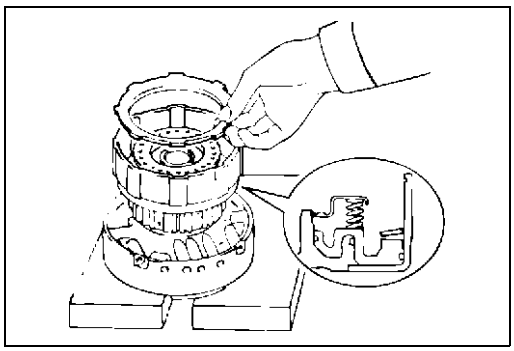

248RY00069

8. Cushion plate

Install cushion plate rounded side down as shown.

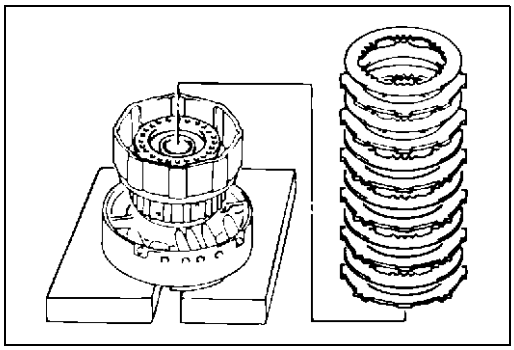

248RY00070

9. Disc and plate

Install discs. plates and flange.

Install in order:P–D–P–D–P–D–P–D–P–D–P–D

10. Flange

And then install the flange, with the rounded edge facing downward.

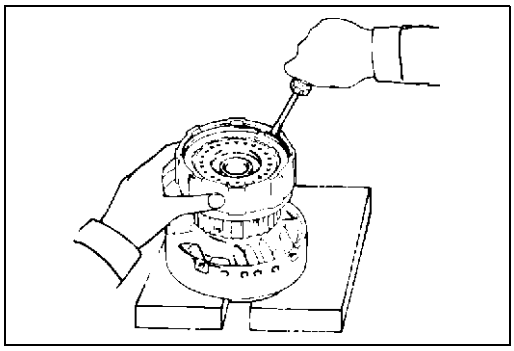

248RY00041

11. Snap ring

Install the snap ring with a screw driver. Be sure the end gap of the snap ring is not aligned with the cutout portion of the forward clutch drum.

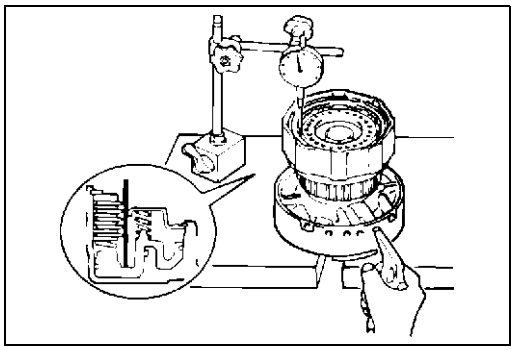

248RY00040

Check piston stroke of forward clutch (C–1)

Using a dial indicator, measure the forward clutch piston stroke by applying and releasing the compressed air (4–8kg/cm^2, 57–114psi or 392–785kPa) as shown.

mm(in.)

Pack clearance	0.6–1.0 (0.0236–0.0394)

If the Pack clearance is not within specification, select another flange, and recheck the piston stroke.
There are eight flanges.

mm (in.)

No.	Flange thickness	No.	Flange thickness
61	3.0 (0.118)	92	3.4 (0.134)
63	4.2 (0.165)	93	3.6 (0.142)
64	4.4 (0.173)	94	3.8 (0.150)
91	3.2 (0.126)	95	4.0 (0.158)

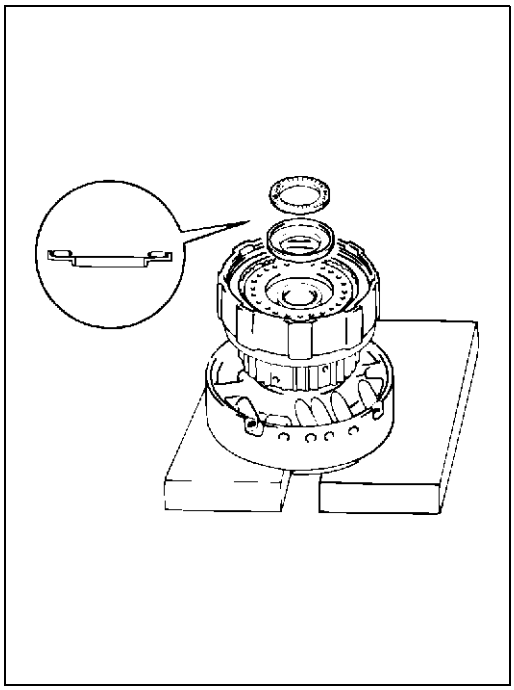

248RY00048

12. Race

13. Thrust bearing

Coat the race and bearing with petroleum jelly, and install them onto the forward clutch drum.

Race and bearing diameter (Reference) mm(in.)

	Inside	Outside
Race	26.0 (1.024)	48.9 (1.925)
Bearing	26.0 (1.024)	46.7 (1.839)

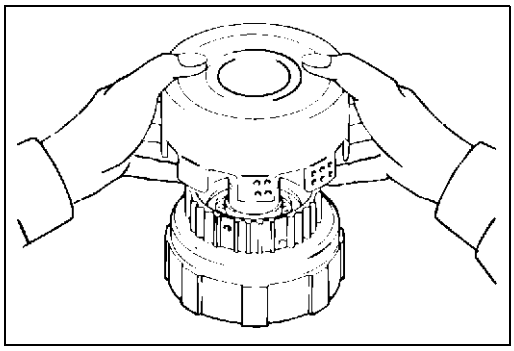

248RY00039

Install direct clutch assembly to forward clutch assembly

Align the flukes of discs in the direct clutch.

Install the direct clutch assembly onto the forward clutch assembly.

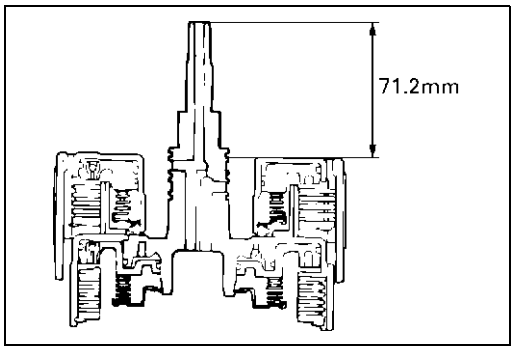

248RY00038

Check that distance from the direct clutch end to the forward clutch end is 71.2 mm (2.803 in.).

mm (in.)
71.2 (2.803)

FRONT PLANETARY GEAR

DISASSEMBLY

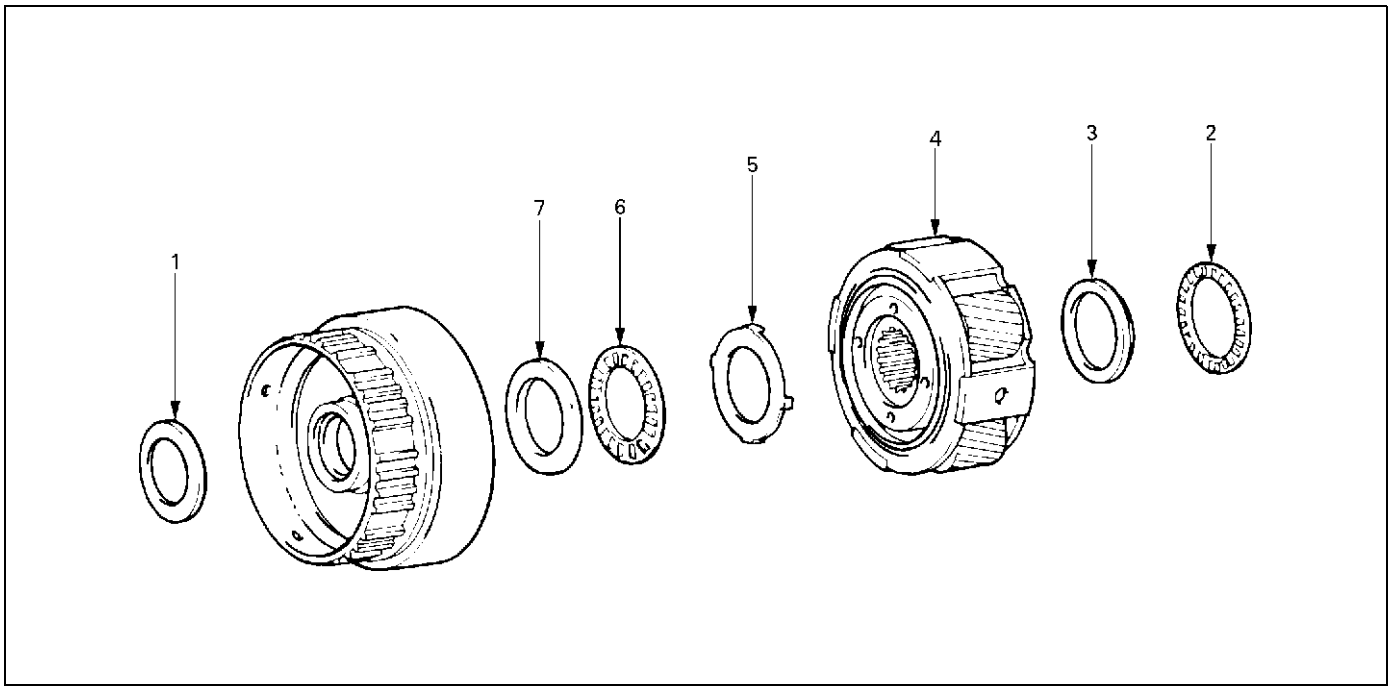

247RY00022

Disassembly steps

1. Race
2. Thrust bearing
3. Race
4. Front planetary gear
5. Race (Metal)
6. Thrust bearing
7. Race

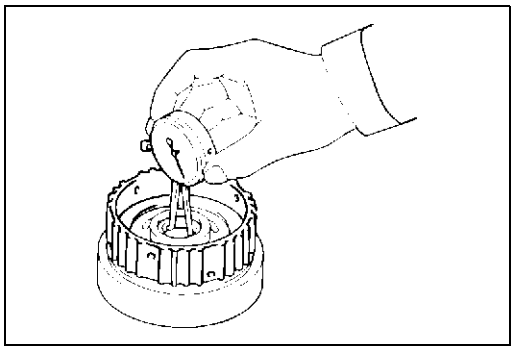

247RY00021

INSPECTION AND REPAIR

Check front planetary ring gear bushing

Using a dial indicator, measure the inside diameter of the planetary ring gear bushing.

mm (in.)

Maximum inside diameter	24.08 (0.9480)

If the inside diameter is greater than the maximum, replace the planetary ring gear.

REASSEMBLY

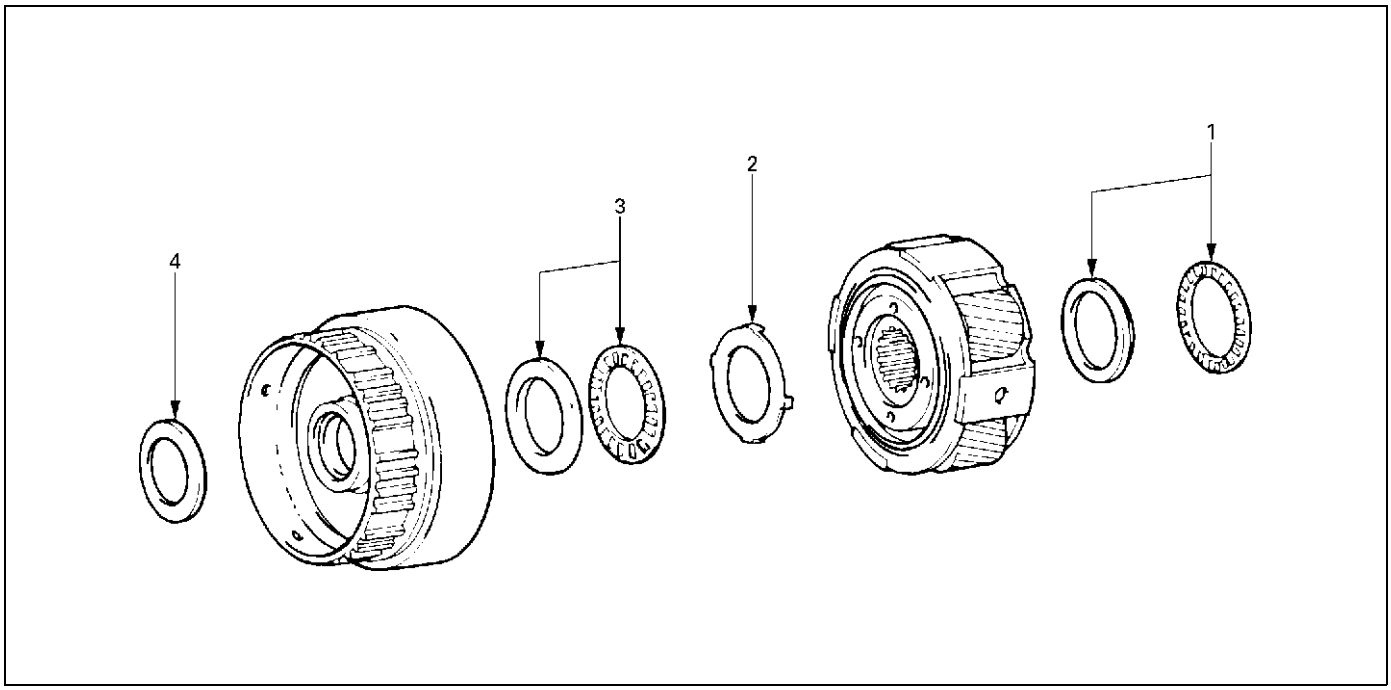

247RY00045

Reassembly steps

▲ 1. Thrust bearing and race

▲ 2. Race (Metal)

▲ 3. Thrust bearing and race

▲ 4. Race

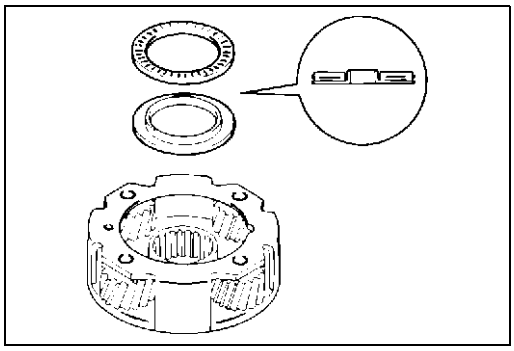

247RY00023

Important operations

1. Thrust bearing and race

Coat the races and bearing with petroleum jelly.
Install the race and bearing to the rear side of the planetary gear.

mm (in.)

	Inside	Outside
Bearing	35.6 (1.402)	47.7 (1.878)
Race	33.7 (1.327)	47.6 (1.874)

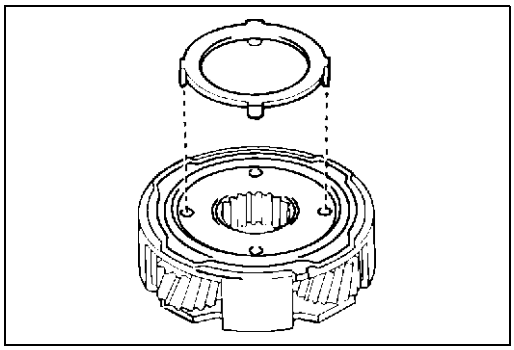

247RY00024

2. Race (Metal)

Turn over the planetary gear and install the race.
Make sure that the lugs fit into the holes on the planetary gear.

Bearing and races diameter (Reference) mm (in.)

	Inside	Outside
Race	34.3 (1.350)	47.8 (1.882)

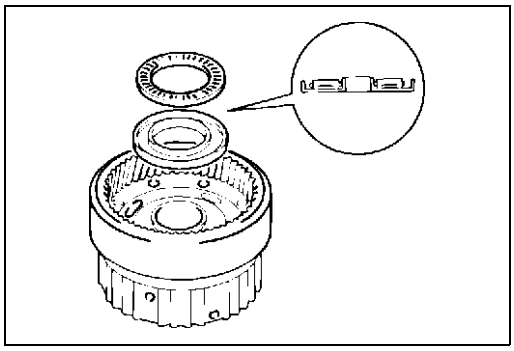

247RY00025

3. Thrust bearing and race

Coat the races and bearing with petroleum jelly.
Install the race and bearing onto the rear side of the planetary ring gear.

mm (in.)

	Inside	Outside
Race	30.6 (1.205)	53.6 (2.110)
Bearing	32.7 (1.287)	47.7 (1.878)

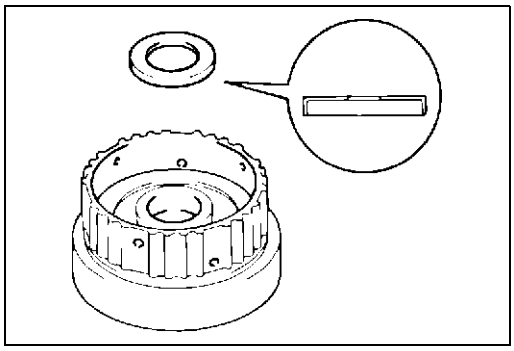

247RY00026

4. Race

Turn over the planetary ring gear and install the race onto the front side of the planetary ring gear.

Races and bearing diameter (Reference) mm (in.)

	Inside	Outside
Race	26.8 (1.055)	47.0 (1.850)

PLANETARY SUN GEAR AND NO.1 ONE–WAY CLUTCH

DISASSEMBLY

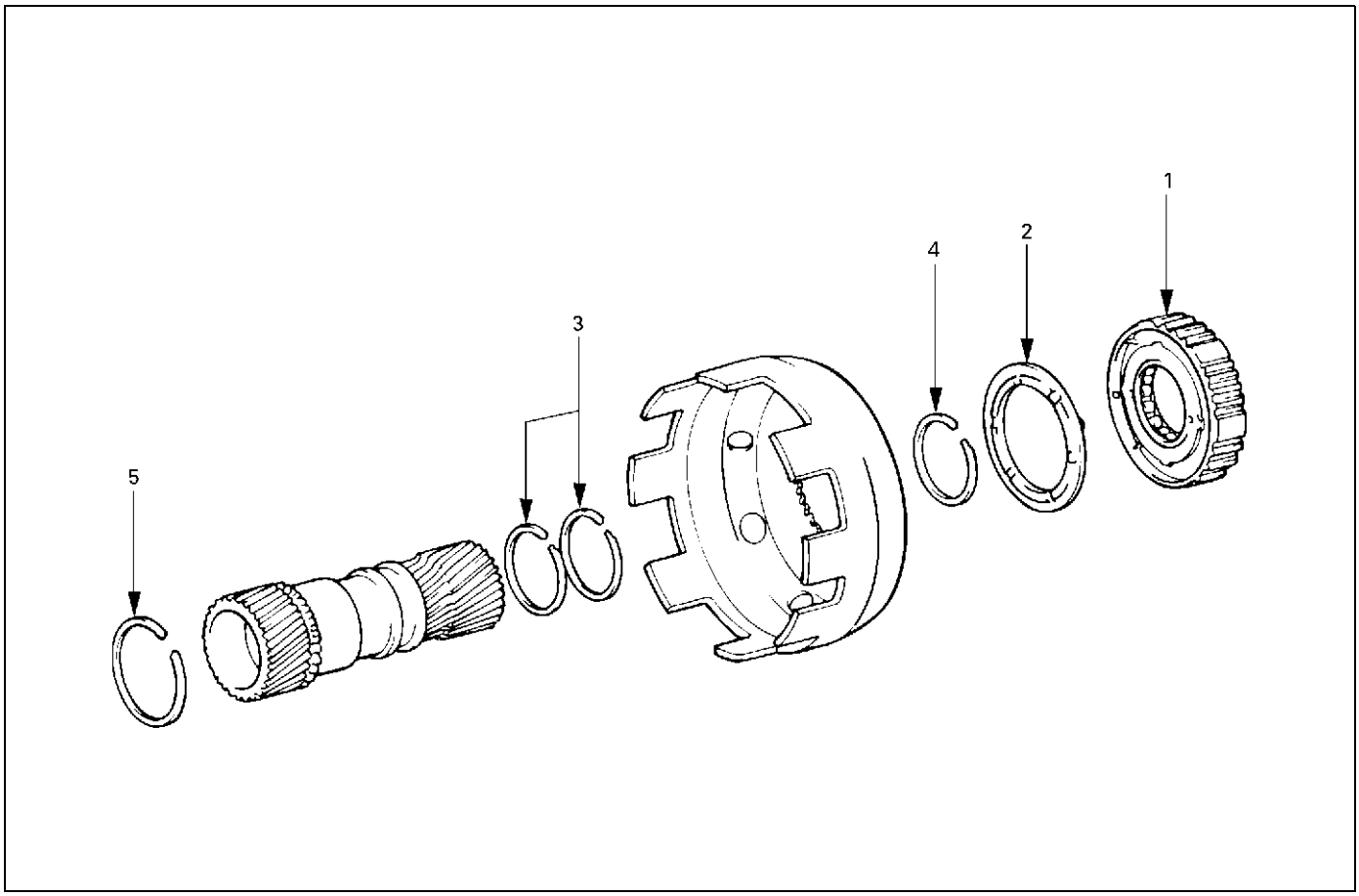

248RY00050

Disassembly steps

1. One–way clutch and second brake hub
2. Thrust washer (Plastic)
3. ▲ Oil seal ring (Metal)
4. ▲ Snap ring
5. Snap ring

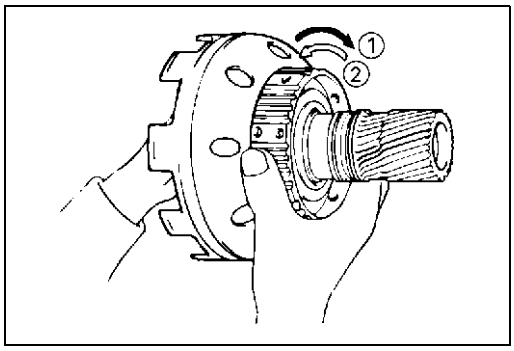

248RY00051

Important operations

Check operation of No.1 one–way clutch

Hold the planetary sun gear and turn the second brake hub. The second brake hub should turn freely clockwise and should lock counterclockwise.
(1) : Free
(2) : Lock

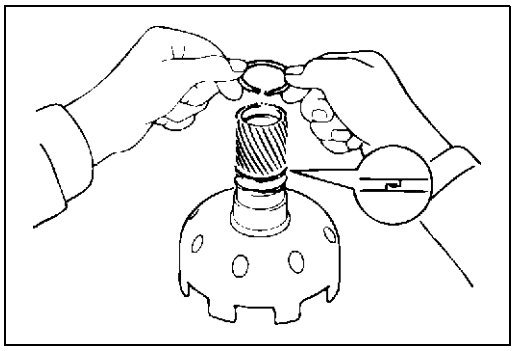

248RY00052

3. Oil seal ring (Metal)

Remove two oil seal rings.

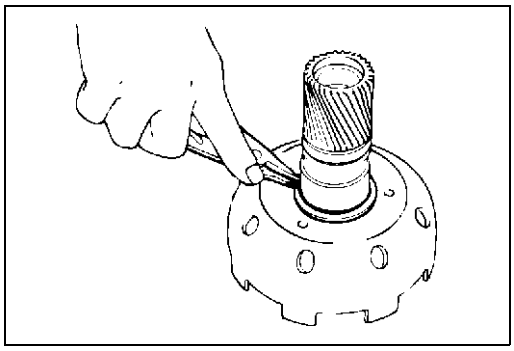

248RY00053

4. Snap ring

Remove the snap ring with snap ring pliers.

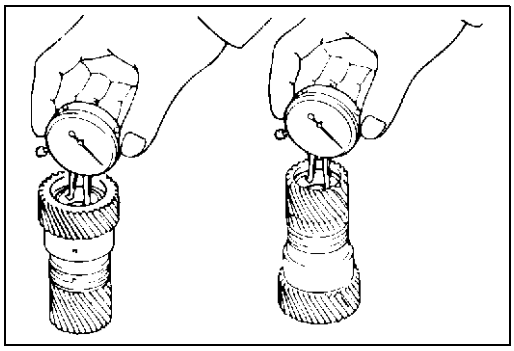

248RY00054

INSPECTION AND REPAIR

Check planetary sun gear bushing

Using a dial indicator, measure the inside diameter of the planetary sun gear bushing.

	mm (in.)
Maximum inside diameter	27.08 (1.0661)

If the inside diameter is greater than the maximum, replace the planetary sun gear.

REASSEMBLY

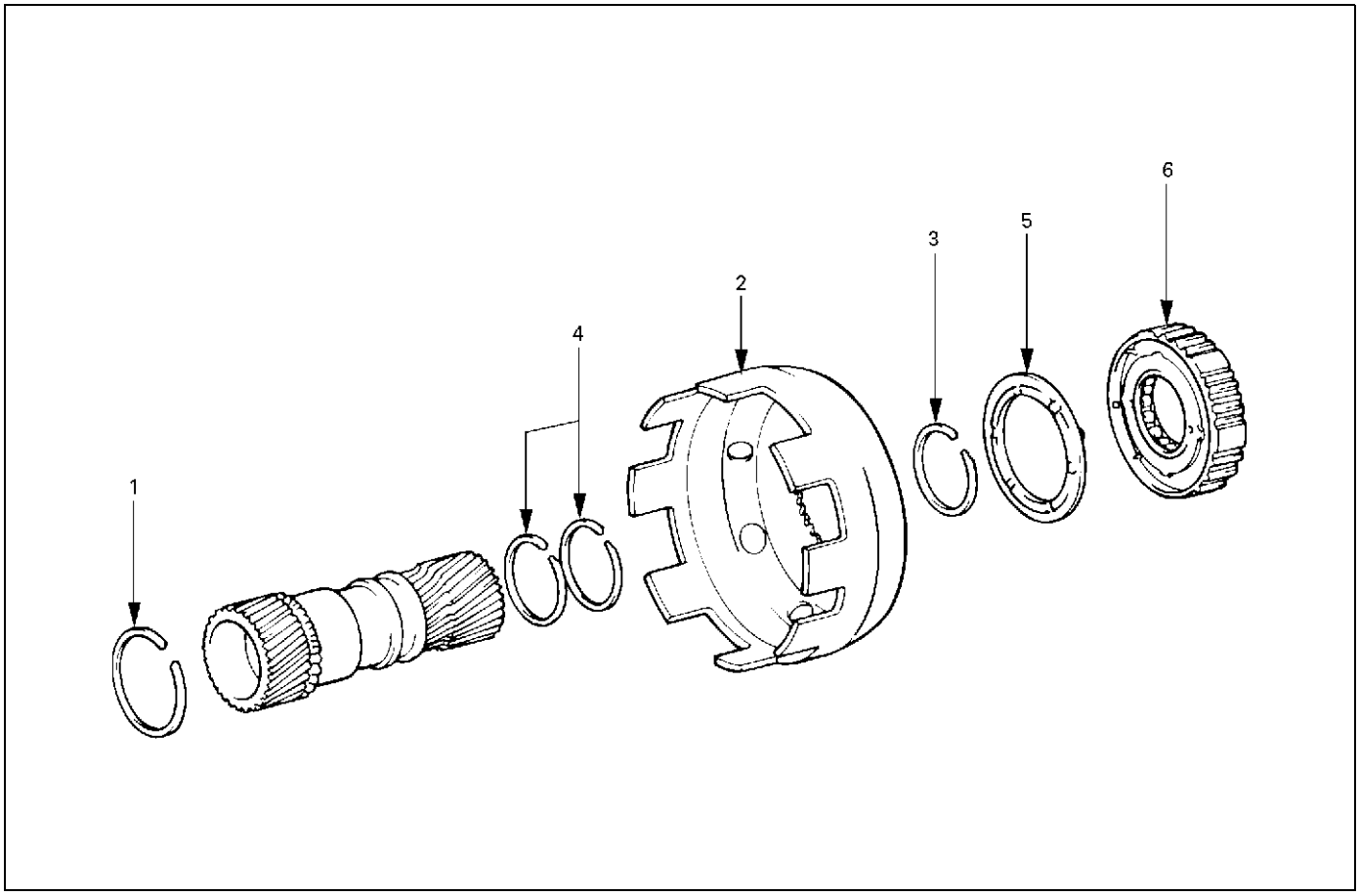

248RY00066

Reassembly steps

- ▲ 1. Snap ring
- ▲ 2. Sun gear input drum
- ▲ 3. Snap ring
- ▲ 4. Oil seal ring (Metal)
- ▲ 5. Thrust washer (Plastic)
- ▲ 6. One–way clutch and second brake hub

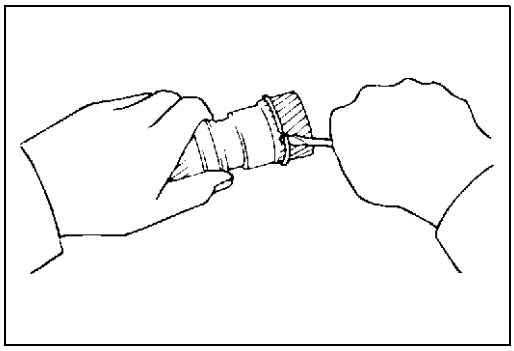

248RY00055

Important operations

1. Snap ring

Install snap ring to planetary sun gear.

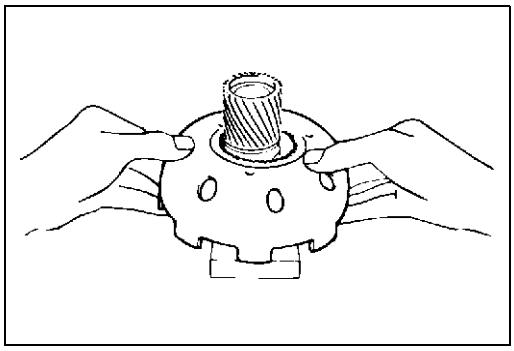

248RY00056

2. Sun gear input drum

Place a wooden block, etc. as a work stand and place the planetary sun gear onto it.

Install the sun gear input drum onto the planetary sun gear.

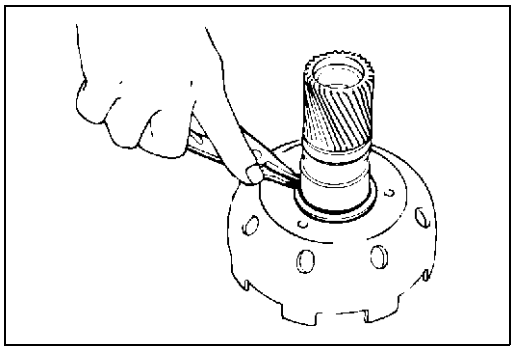

248RY00053

3. Snap ring

Install snap ring with snap ring pliers.

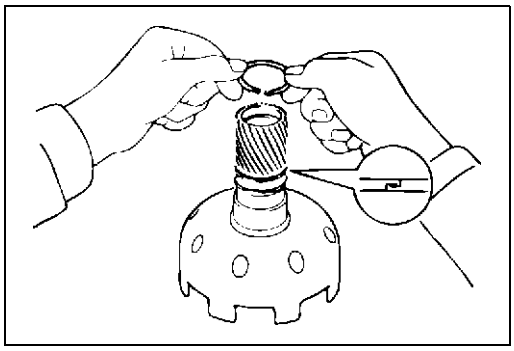

248RY00052

4. Oil seal ring (Metal)

Coat the two oil seal rings with ATF.

Install the two oil seal rings onto the planetary sun gear.

NOTE:

Do not spread the ring ends too much.

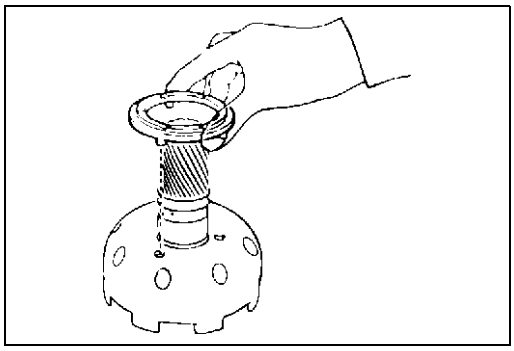

248RY00057

5. Thrust washer (plastic)

Install thrust washer.

NOTE:

Make sure that the lugs fit into the holes on the sun gear input drum.

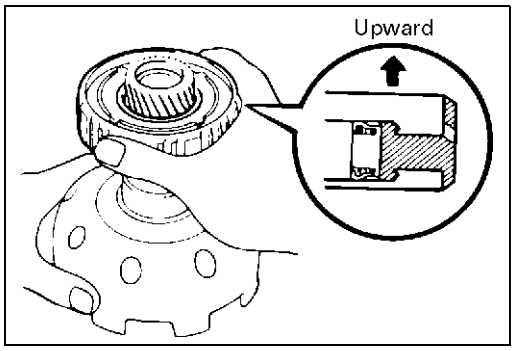

248RY00058

6. One–way clutch and second brake hub

Install assembled No.1 one–way clutch and second brake hub onto planetary sun gear as shown.

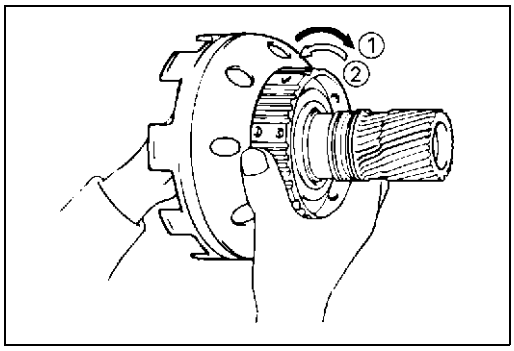

248RY00051

Check operation of No.1 one–way clutch

Hold the planetary sun gear and turn the second brake hub. The second brake hub should turn freely clockwise and should lock counterclockwise.

(1) : Free

(2) : Lock

SECOND BRAKE ASSEMBLY (B–2)

DISASSEMBLY

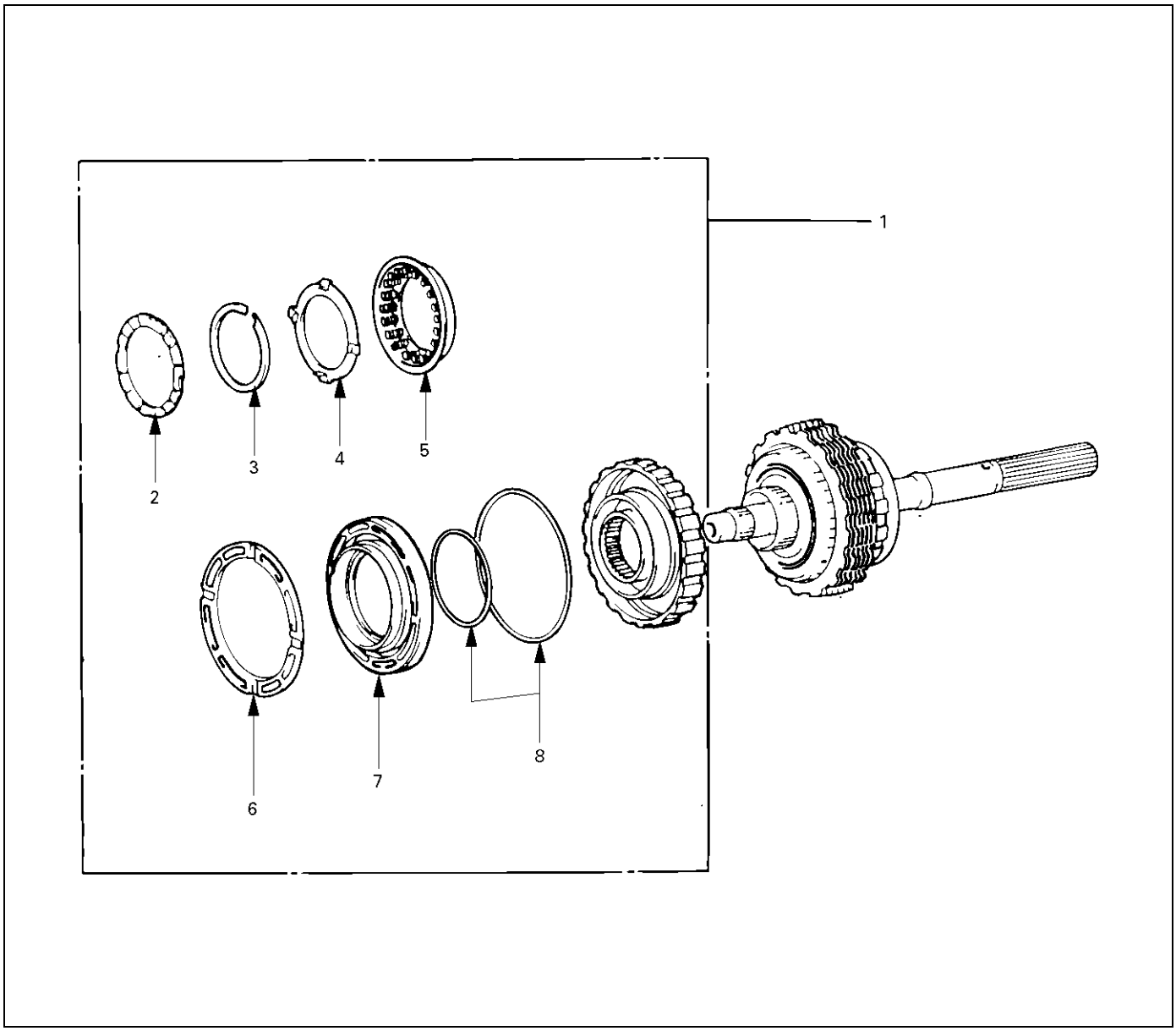

246RY00006

Disassembly steps

▲ 1. Second brake assembly
2. Thrust washer (Plastic)
▲ 3. Snap ring
4. Spring retainer
5. Piston return spring
6. Piston sleeve
▲ 7. Second brake piston
8. O–ring

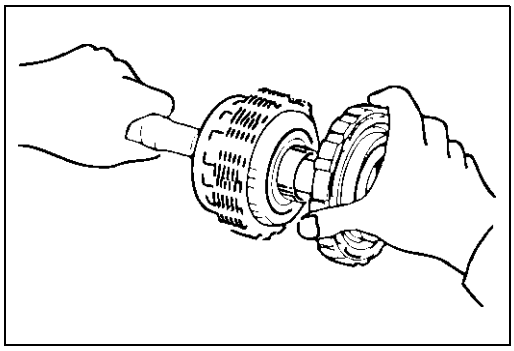

246RY00007

Important operations

1. Second brake assembly

Remove second brake assembly from output shaft.

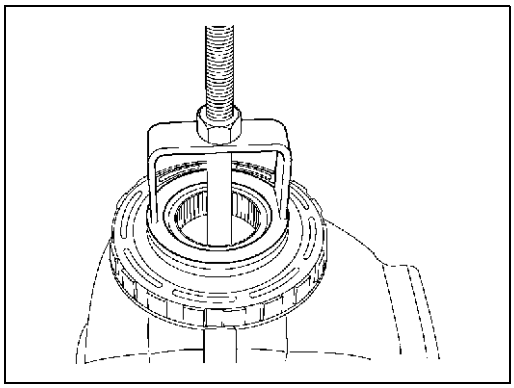

247RY00001

2. Snap ring

Place special tool on the spring retainer, and compress the return spring.
Spring compressor : 5–8840–0254–0 (J–25048)
Remove the snap ring with snap ring pliers.

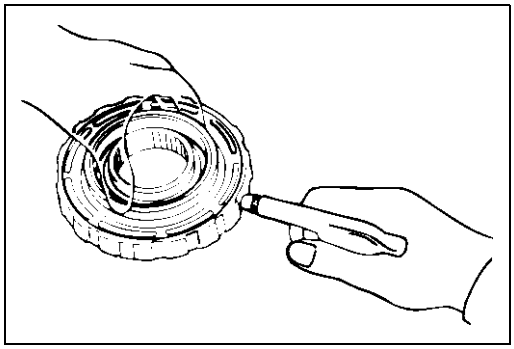

246RY00008

7. Second brake piston

Holding the second brake piston by hand, apply compressed air to the second brake drum to remove the second brake piston.
Remove the second brake piston.

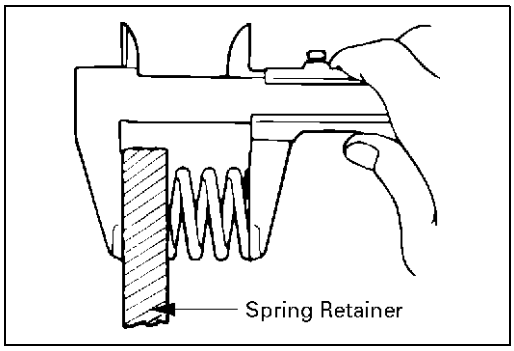

247RY00034

INSPECTION AND REPAIR

Check piston return spring

Using calipers, measure the free length of the return spring.

mm (in.)

Standard length	16.05 (0.6319)

REASSEMBLY

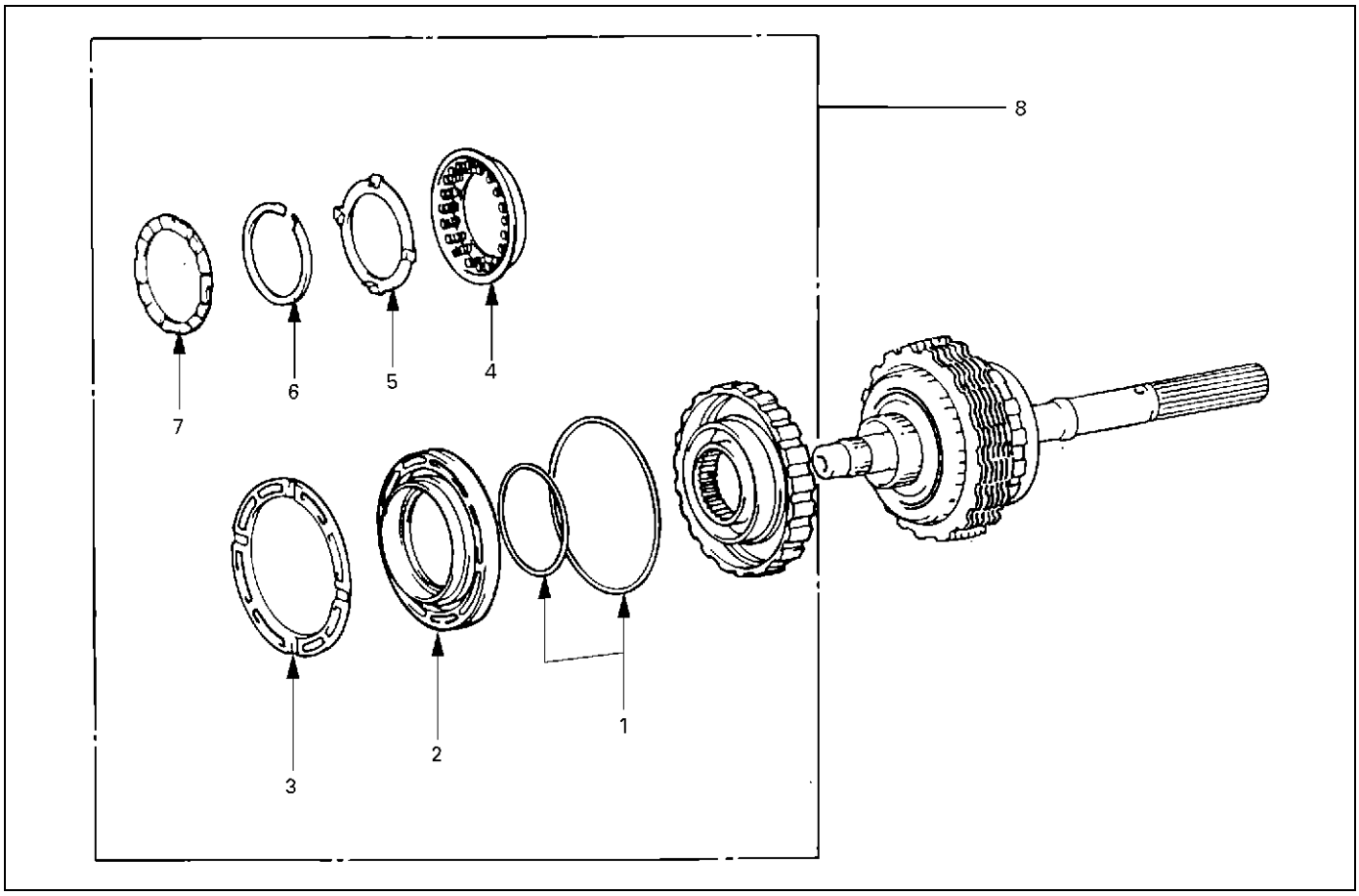

246RY00023

Reassembly steps

- ▲ 1. O–ring
- ▲ 2. Second brake piston
- ▲ 3. Piston sleeve
- ▲ 4. Piston return spring
- ▲ 5. Spring retainer
- ▲ 6. Snap ring
- ▲ 7. Thrust washer (Plastic)
- ▲ 8. Second brake assembly

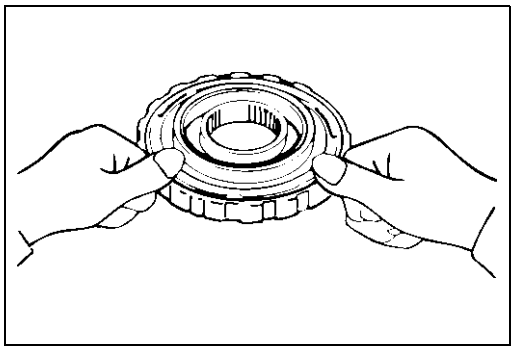

246RY00009

Important operations

1. **O–ring**
   Coat new O–ring with ATF and install them on the second brake piston.
2. **Second brake piston**
   Being careful not to damage the O–rings, press in the second brake piston into the second brake drum.
3. **Piston sleeve**
   Install piston sleeve.

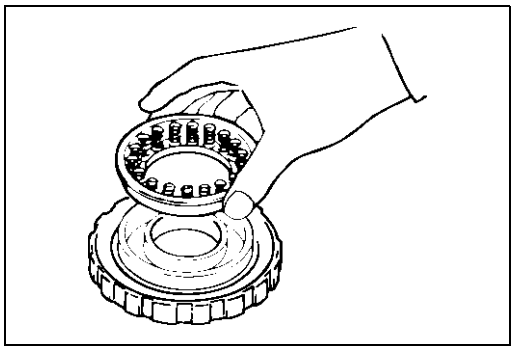

246RY00010

4. **Piston return spring**
   Install piston return spring.
5. **Spring retainer**
   Install spring retainer.

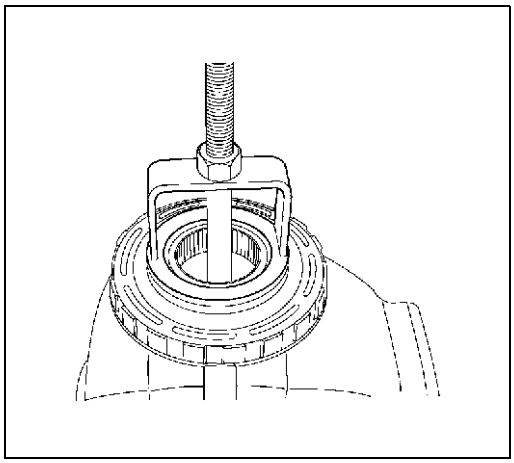

247RY00001

6. **Snap ring**
   Place special tool on the spring retainer, and compress the return spring.
   Spring compressor : 5–8840–0254–0(J–25048)
   Install the snap ring with snap ring pliers. Be sure the end gap of the snap ring is not aligned with the spring retainer claw.

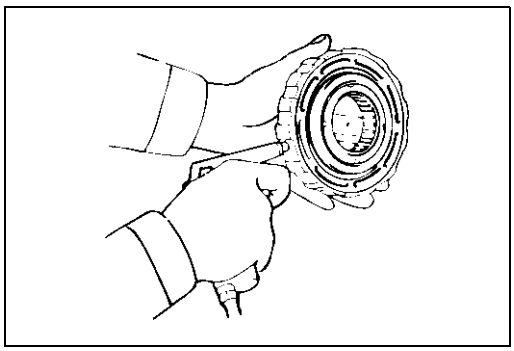

246RY00011

Check second brake piston movement

Make sure the second brake piston moves smoothly when applying and releasing the low compressed air to the second brake drum.

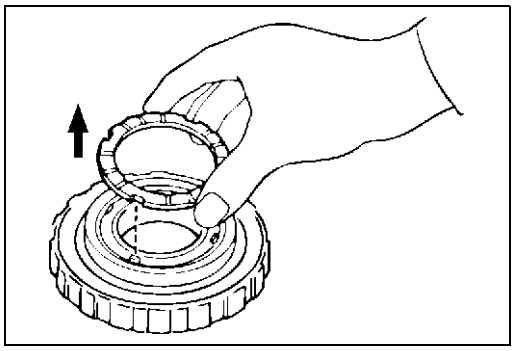

246RY00012

7. Thrust washer (Plastic)

Coat the thrust washer with petroleum jelly and install it to the second brake piston, with the grooved side facing upward.

NOTE:

Make sure that the cutout portions of the thrust washer match the teeth of the spring retainer.

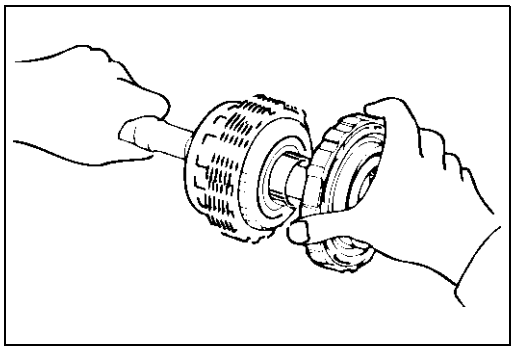

246RY00014

8. Second brake assembly

Install second brake assembly to output shaft.

REAR PLANETARY GEAR ASSEMBLY AND OUTPUT SHAFT

DISASSEMBLY

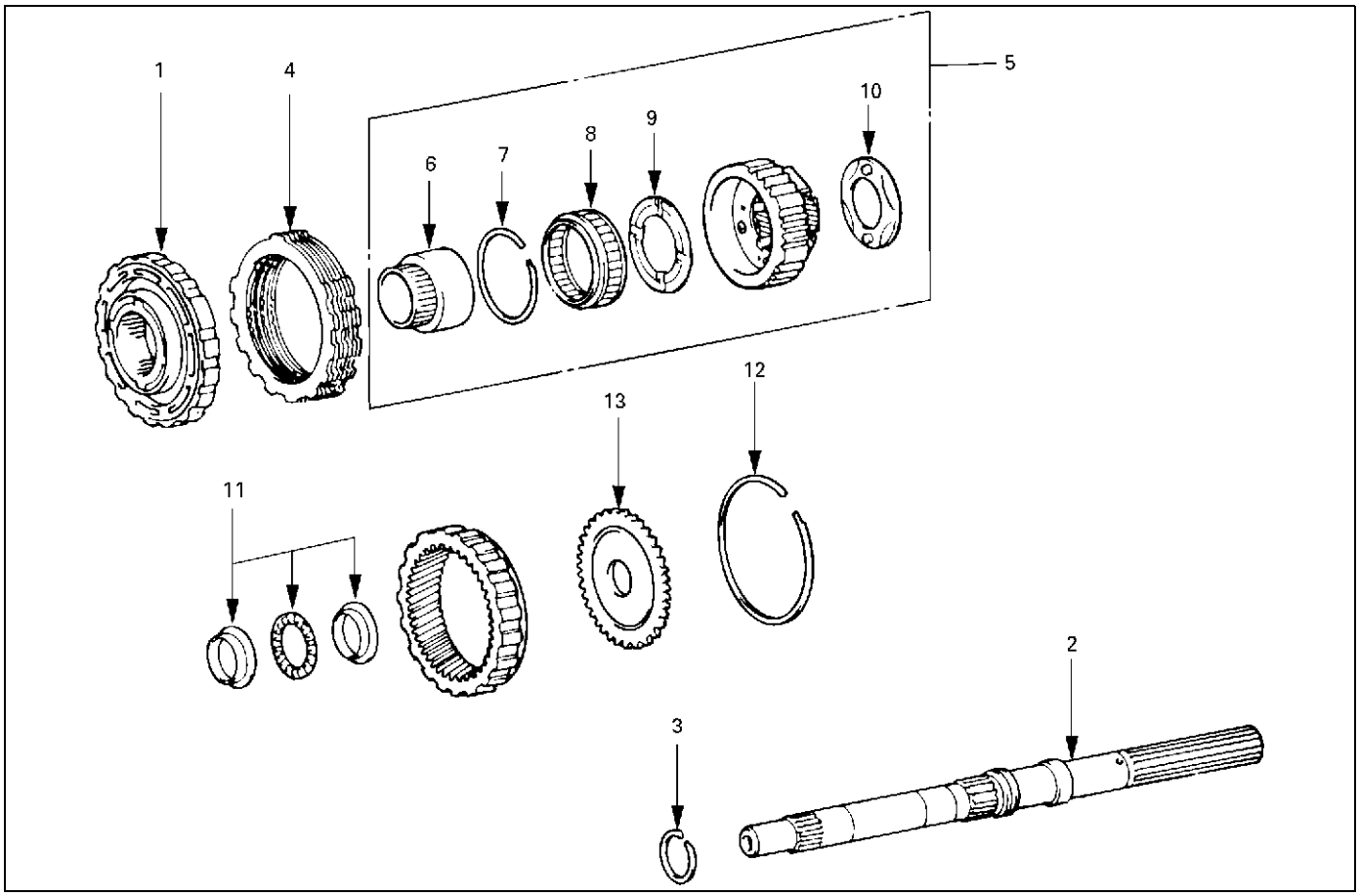

247RY00027

Disassembly steps

1. Second brake assembly
2. Output shaft
3. ▲ Oil seal ring
4. Disc, plate and flange
5. ▲ Rear planetary gear assembly
6. ▲ One–way clutch inner race
7. ▲ Snap ring
8. ▲ One–way clutch
9. Thrust washer (Plastic)
10. Thrust washer (Plastic)
11. Thrust bearing and race
12. Snap ring
13. Ring gear flange

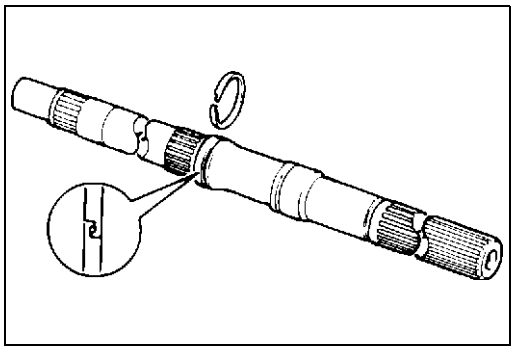

247RY00028

Important operations

3. Oil seal ring

Remove oil seal ring from output shaft.

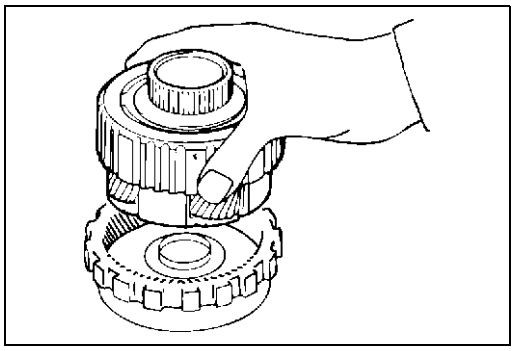

247RY00029

5. Rear planetary gear assembly

Remove rear planetary gear from rear planetary ring gear.

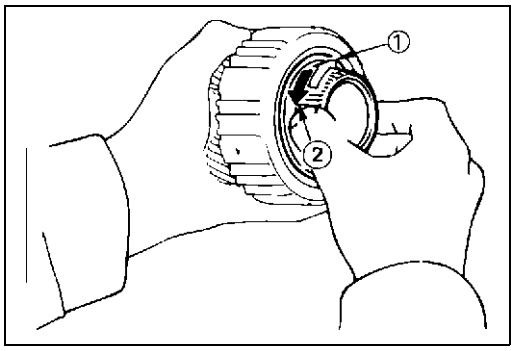

247RY00030

Check operation of No.2 one–way clutch

Hold the planetary gear and turn the one–way clutch inner race. The one–way clutch inner race should turn freely counterclockwise and should lock clockwise.

(1) : Lock

(2) : Free

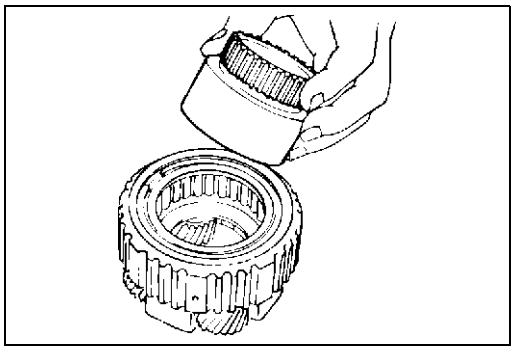

247RY00031

6. One–way clutch inner race

Remove the one–way clutch inner race from the rear planetary gear.

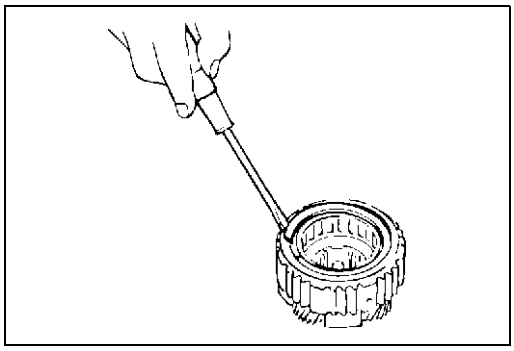

247RY00032

7. Snap ring

Remove the snap ring with a screwdriver.

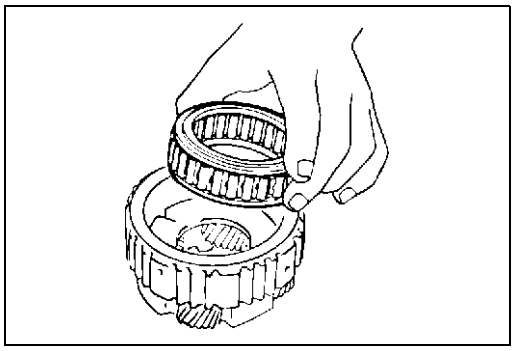

247RY00033

8. One–way clutch

Remove the one–way clutch with retainers from the planetary gear.

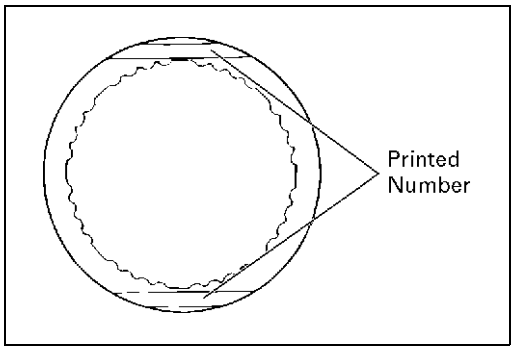

248RY00045

Check disc, plate and flange

Check to see if the sliding surface of the disc, plate and flange are worn or burnt. If necessary, replace them.

- If the lining of the disc is peeling off or discolored, or even if parts of the printed numbers are defaced, replace all discs.
- Before assembling new discs, soak them in ATF for at least fifteen minutes.

REASSEMBLY

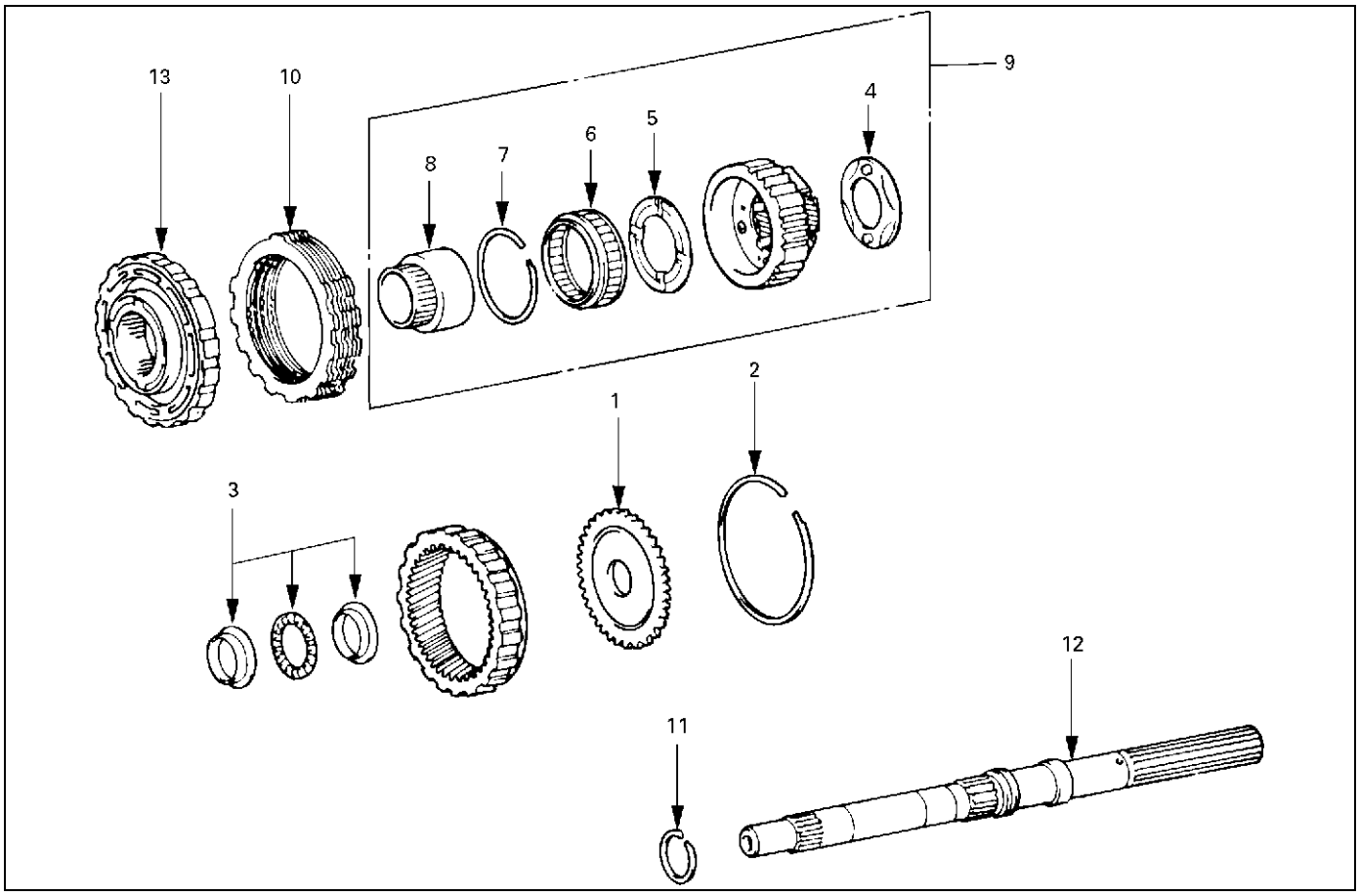

247RY00046

Reassembly steps

- ▲ 1. Ring gear flange
- ▲ 2. Snap ring
- ▲ 3. Thrust bearing and race
- ▲ 4. Thrust washer (Plastic)
- ▲ 5. Thrust washer (Plastic)
- ▲ 6. One–way clutch
- ▲ 7. Snap ring
- ▲ 8. One–way clutch inner race
- ▲ 9. Rear planetary gear assembly
- ▲ 10. Disc, plate, and flange
- ▲ 11. Oil seal ring
- ▲ 12. Output shaft
- ▲ 13. Second brake assembly

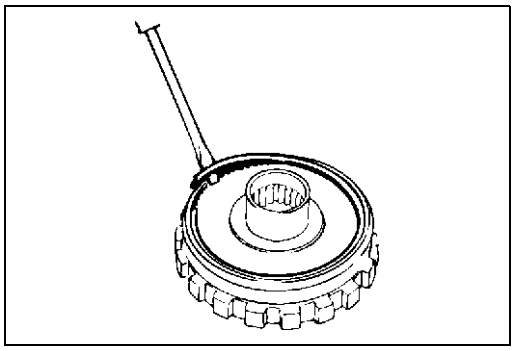

247RY00035

Important operations

1. **Ring gear flange**
   Install ring gear flange to the ring gear.
2. **Snap ring**
   Install snap ring to the ring gear.

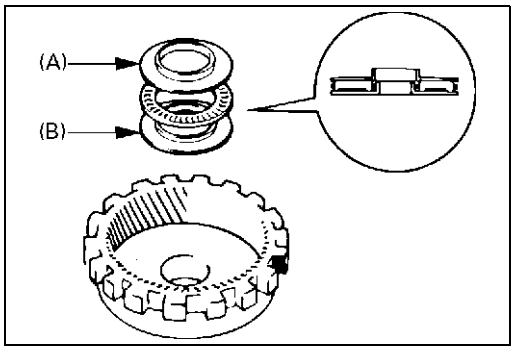

247RY00036

3. **Thrust bearing and race**
   Coat the races and bearing with petroleum jelly, and install them onto the rear planetary ring gear.

Races and bearing diameter (Reference) mm (in.)

	Inside	Outside
Race (A)	28.8 (1.134)	44.8 (1.764)
Bearing	30.1 (1.185)	44.7 (1.760)
Race (B)	27.8 (1.095)	44.8 (1.764)

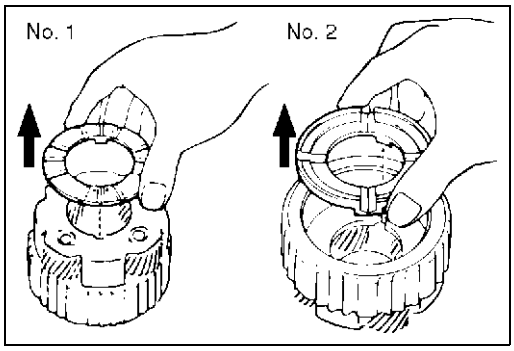

247RY00037

4. **Thrust washer (Plastic)**
5. **Thrust washer (Plastic)**
   Coat the thrust washer with petroleum jelly.
   Install the thrust washer onto both sides of the rear planetary gear, facing the grooved side upward.

NOTE:
Make sure that the lugs fit into the cutout portions on the rear planetary gear.

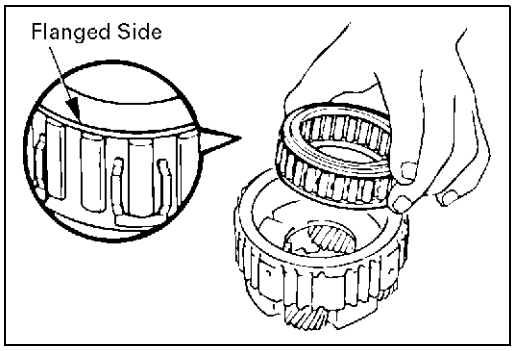

247RY00038

6. **One–way clutch**
   Install the one–way clutch with the flanged side facing upward onto the rear planetary gear.

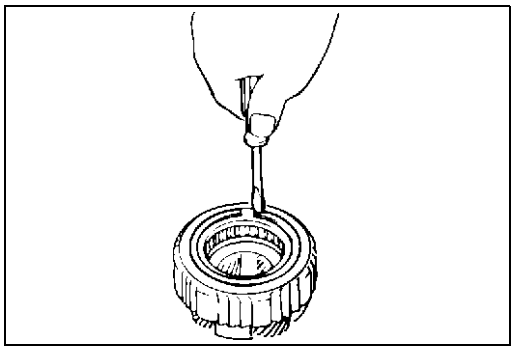

247RY00039

7. Snap ring

Install snap ring.

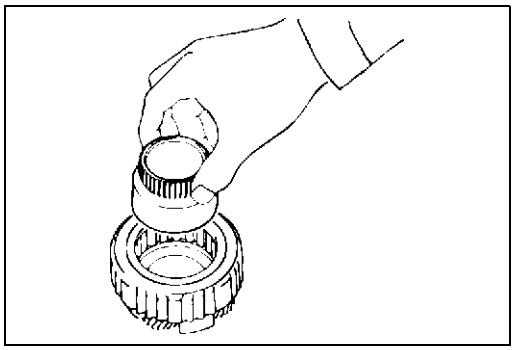

247RY00040

8. One–way clutch inner race

While turning counterclockwise, install one–way clutch inner race to rear planetary gear.

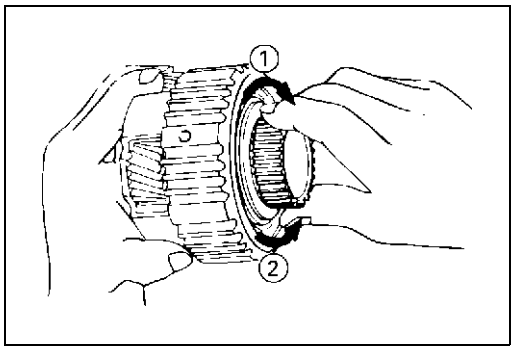

247RY00041

Check operation of one–way clutch

Hold the planetary gear and turn the one–way clutch inner race. The one–way clutch inner race should turn freely counterclockwise and should lock clockwise.

(1) : Lock

(2) : Free

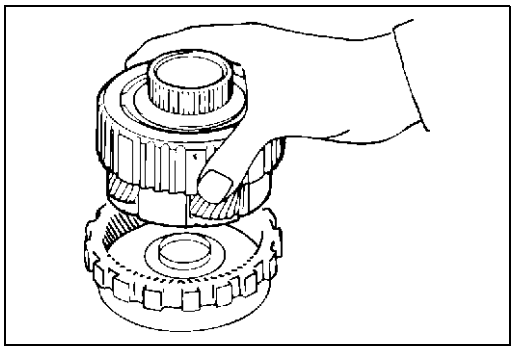

247RY00029

9. Rear planetary gear assembly

Install rear planetary gear onto rear planetary ring gear.

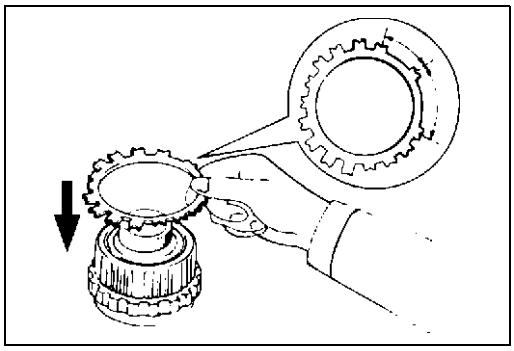

246RY00013

10. Disc, plate, and flange

Install a clutch plate onto the rear planetary gear assembly.

NOTE:
The claw interval of the plate should be as shown in the figure when viewing the clutch plate from the arrow direction.

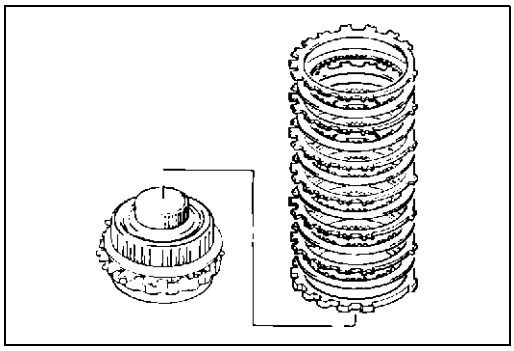

247RY00047

Install a brake flange onto the rear planetary gear assembly.
Install seven clutch discs and seven brake plates alternately, starting with clutch disc, onto the rear planetary gear assembly.

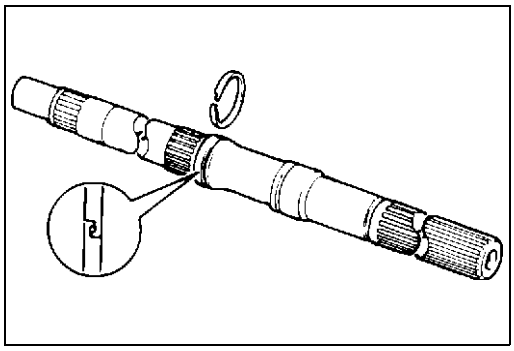

247RY00028

11. Oil seal ring

Coat the oil seal ring with ATF and install it to the output shaft.

NOTE:
Do not spread the ring ends too much.

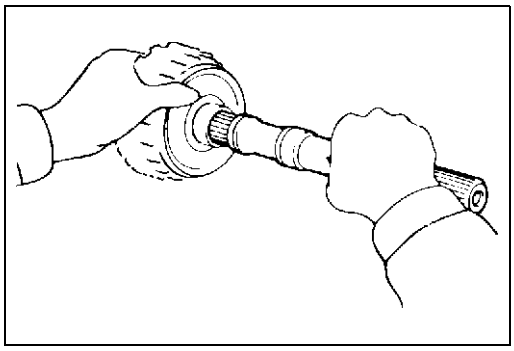

247RY00042

12. Output shaft

Install output shaft into rear planetary assembly.

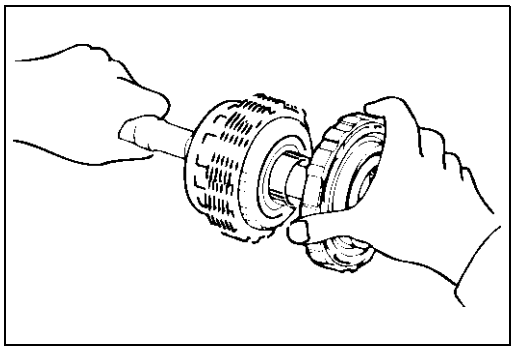

246RY00014

13. Second brake assembly

Install second brake assembly to output shaft.

FIRST AND REVERSE BRAKE (B–3)

DISASSEMBLY

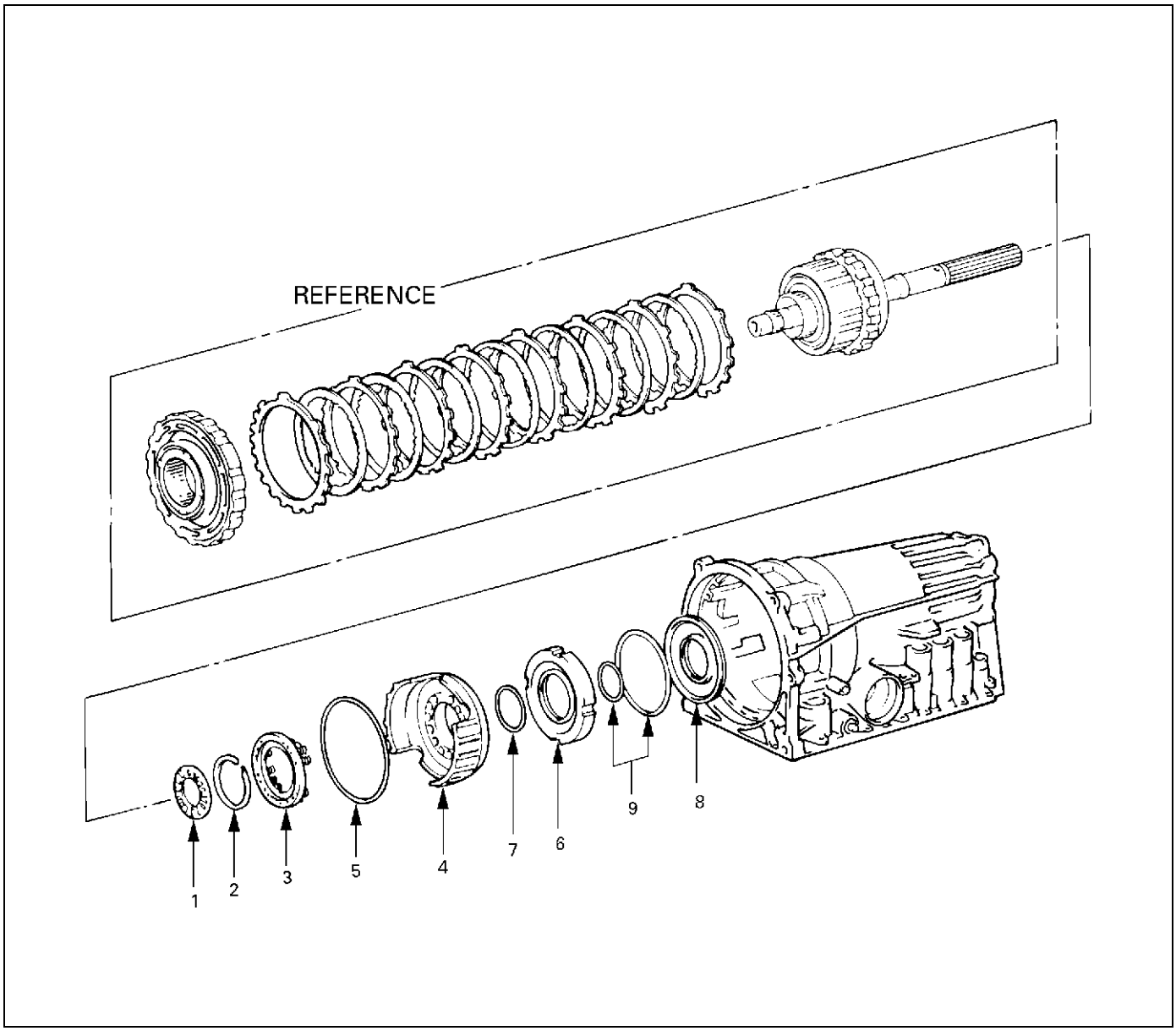

246RY00024

Disassembly steps

- ▲ 1. Thrust bearing and race
- ▲ 2. Snap ring
- 3. Piston return spring
- ▲ 4. 1st and reverse brake piston No.2
- 5. O–ring
- ▲ 6. Reaction sleeve
- 7. O–ring
- ▲ 8. 1st and reverse brake piston No.1
- 9. O–ring

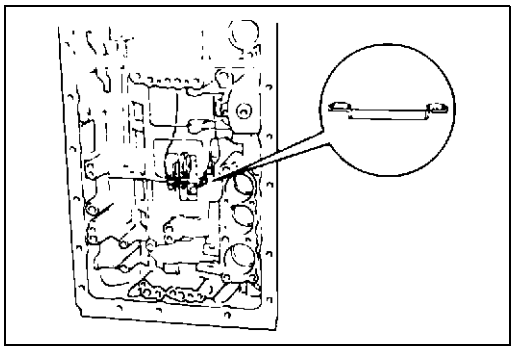

247RY00043

Important operations

1. Thrust bearing and race

Remove assembled bearing and race from transmission case.

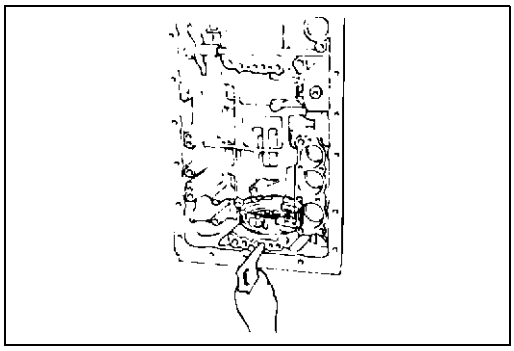

246RY00016

Check first and reverse brake piston movement

Make sure that first and reverse brake piston moves smoothly when applying and releasing the compressed air into the transmission case.

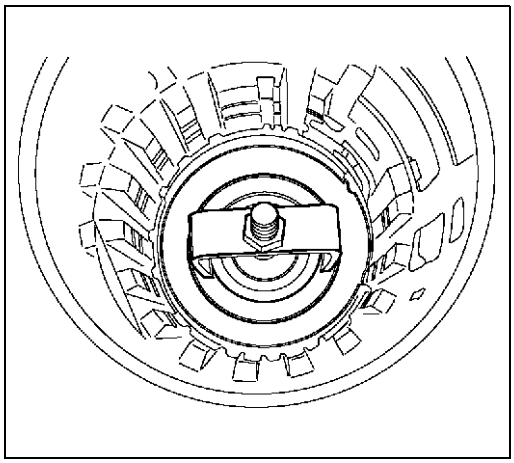

247RY00002

2. Snap ring

Set special tool on the spring retainer, and compress the return spring.

Spring compressor:5–8840–0254–0 (J–25048)

Remove the snap ring with snap ring pliers.

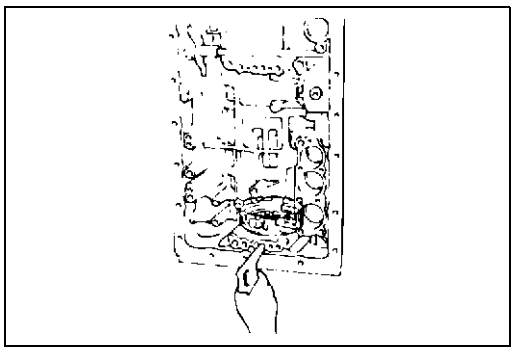

246RY00016

4. 1st and reverse brake piston No.2

Holding the No.2 first and reverse brake piston by hand, apply compressed air to the transmission case to remove the No.2 first and reverse brake piston.

Remove the No.2 first and reverse brake piston.

If the piston does not pop out with compressed air, lift the piston out with needle–nose pliers.

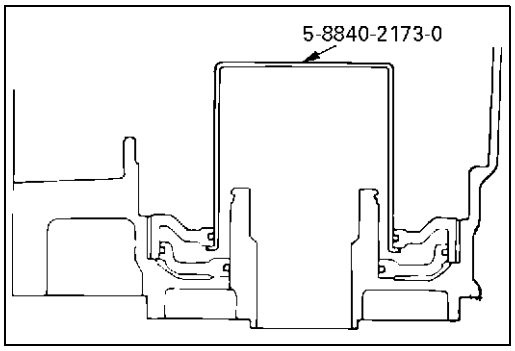

246RY00017

6. Reaction sleeve

Insert special tool behind the reaction sleeve and gradually lift it out of the transmission case.
Reaction sleeve puller : 5–8840–2173–0 (J–37236)

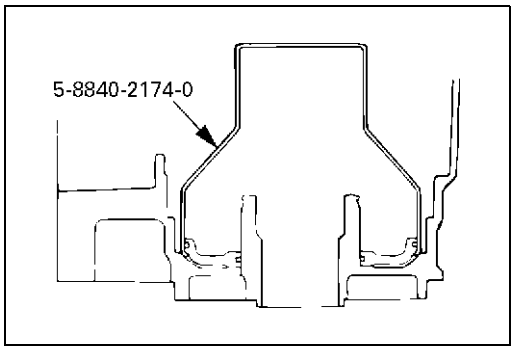

247RY00044

8. 1st and reverse brake piston No.1

Insert special tool behind the No.1 brake piston and gradually lift it out of the transmission case.
Piston puller : 5–8840–2174–0 (J–37237)

REASSEMBLY

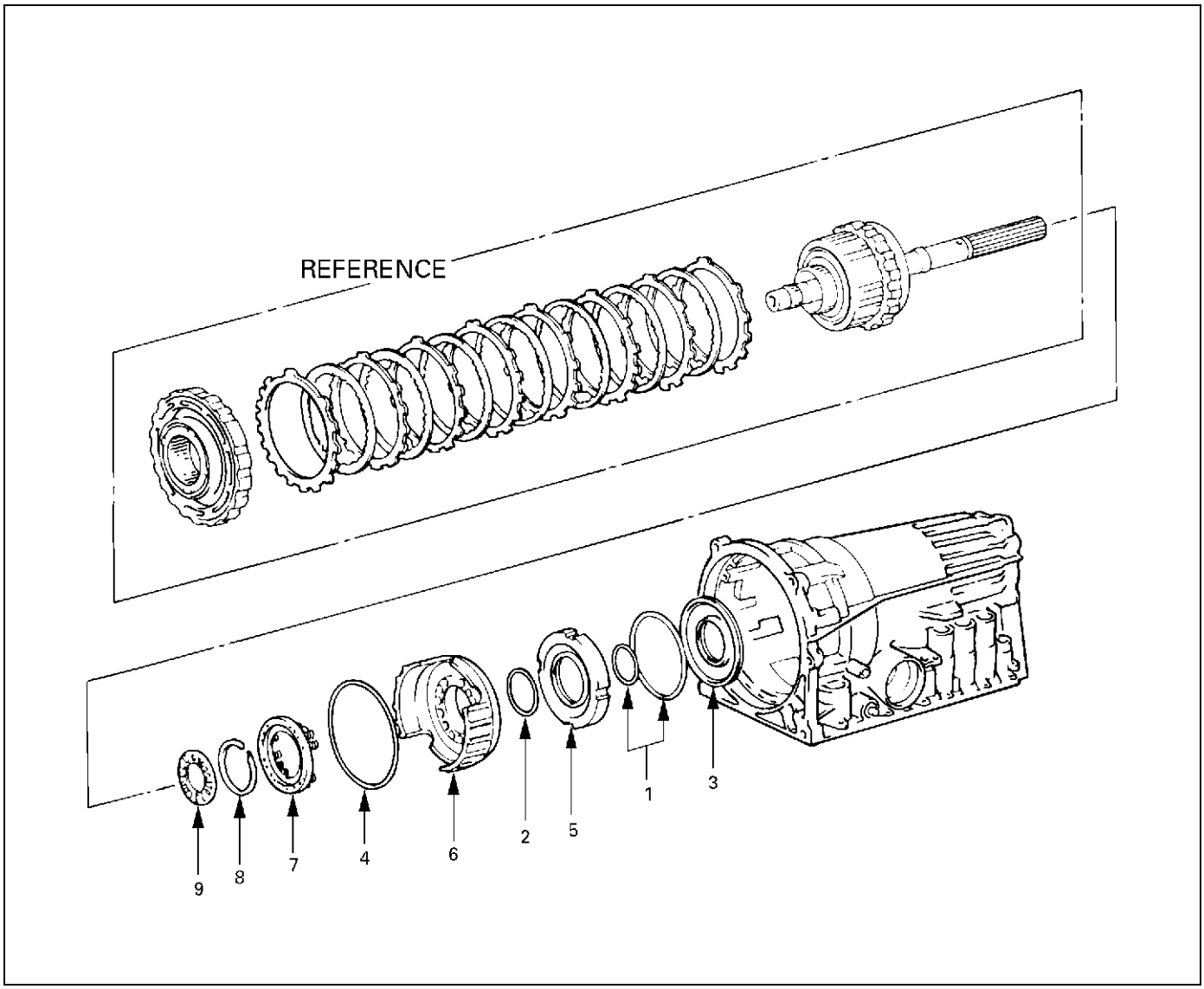

246RY00025

Reassembly steps

- ▲ 1. O–ring
- ▲ 2. O–ring
- ▲ 3. 1st and reverse brake piston No.1
- ▲ 4. O–ring
- ▲ 5. Reaction sleeve
- ▲ 6. 1st and reverse brake piston No.2
- ▲ 7. Return spring
- ▲ 8. Snap ring
- ▲ 9. Thrust bearing and race

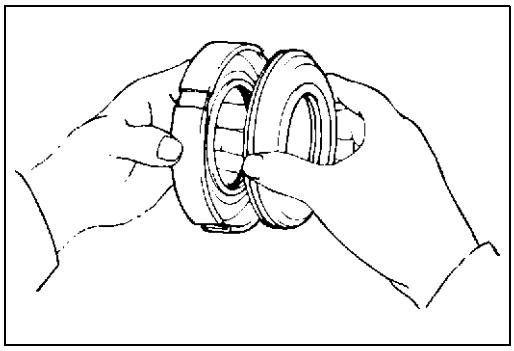

246RY00018

Important operations

1. **O–ring**
   Coat three new O–rings with ATF.
   Install the two O–ring on the No.1 piston.
2. **O–ring**
   Install the O–ring on the reaction sleeve.
3. **1st and reverse brake piston No.1**
   Install the No.1 piston to the reaction sleeve.

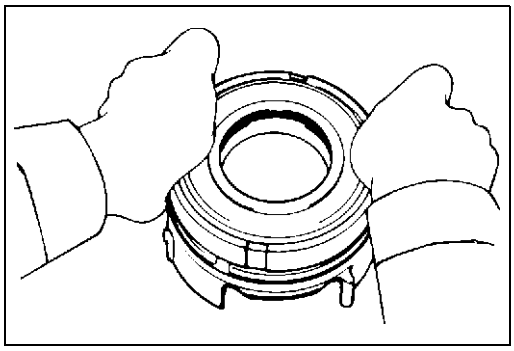

246RY00019

4. **O–ring**
   Coat a new O–ring with ATF and install it on the No.2 piston.
5. **Reaction sleeve**
   Install the No.1 piston with reaction sleeve onto the No.2 piston.

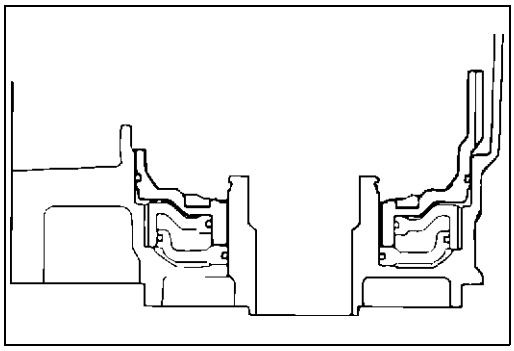

246RY00020

6. **1st reverse brake piston No.2**
   Align the teeth of the No.2 piston into the proper grooves.
   Being careful not to damage the O–rings, press in the No.2 with No.1 first and reverse brake pistons into the transmission case.

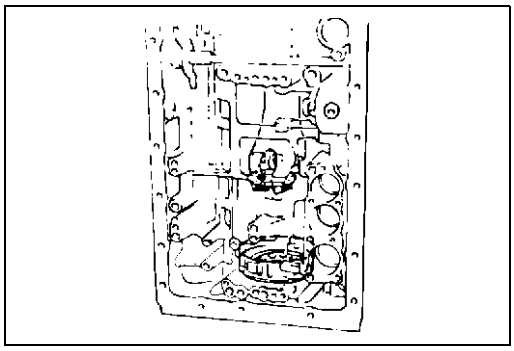

246RY00021

7. **Return spring**
   Place piston return spring onto No.2 piston.

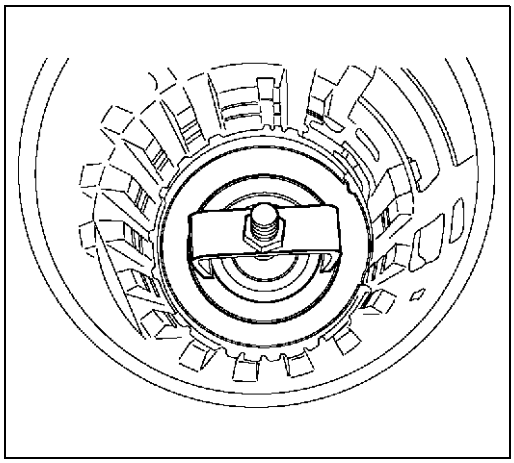

247RY00002

8. Snap ring

Set special tool as shown, and compress the return spring with special tool.

Spring compressor : 5–8840–0254–0 (J–25048)

Install the snap ring with snap ring pliers. Be sure the end gap of the snap ring is not aligned with the spring retainer claw.

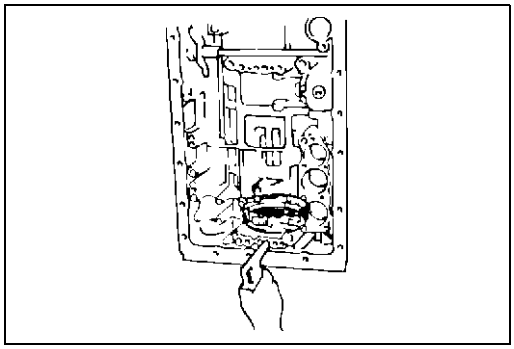

246RY00022

Check first and reverse brake piston

Make sure the first and reverse brake piston moves smoothly when applying and releasing the compressed air into the transmission case.

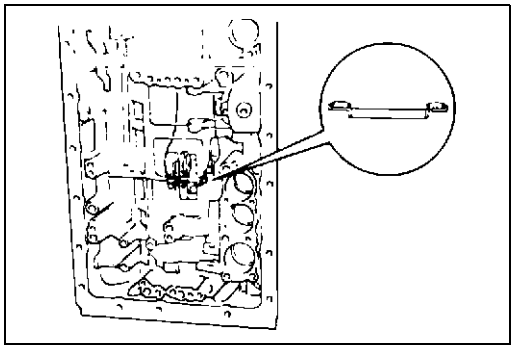

247RY00043

9. Thrust bearing and race

Coat the assembled bearing and race with petroleum jelly.

Install the assembled bearing and race facing the bearing side upward.

Assembled bearing and race diameter. (Reference) mm (in.)

Inside diameter	39.2 (1.543)
Outside diameter	57.7 (2.272)

TRANSMISSION CASE

DISASSEMBLY

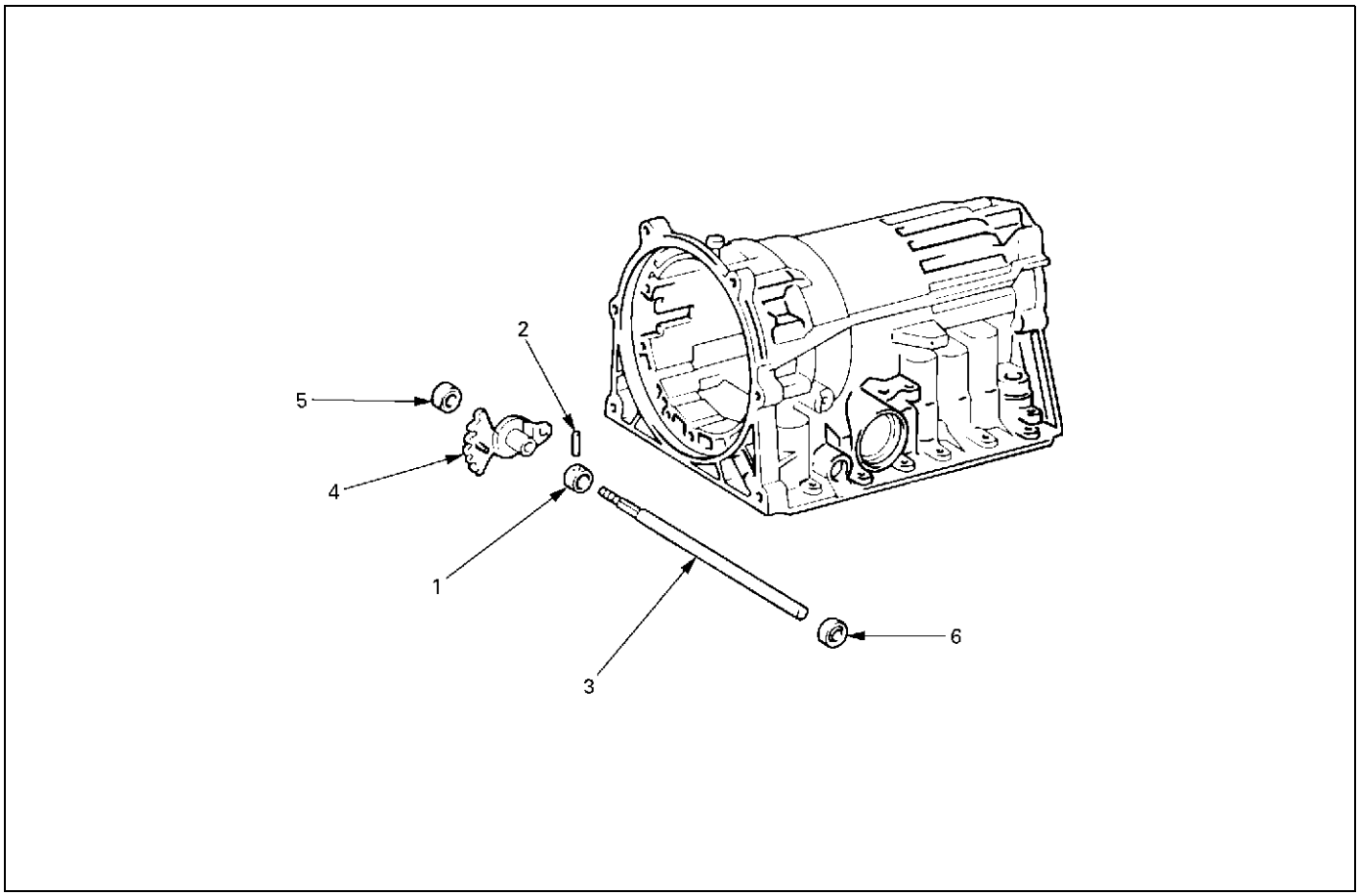

249RY00001

Disassembly steps

- ▲ 1. Spacer
- ▲ 2. Pin
- ▲ 3. Manual valve lever shaft
- ▲ 4. Manual valve lever
- ▲ 5. Oil seal
- ▲ 6. Oil seal

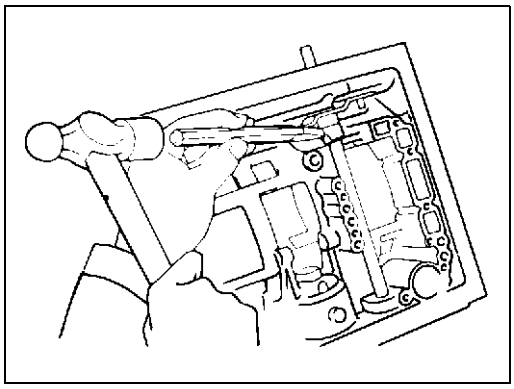

249RY00002

Important operations

1. **Spacer**
   Using a chisel, cut off the spacer and remover it from the shaft.

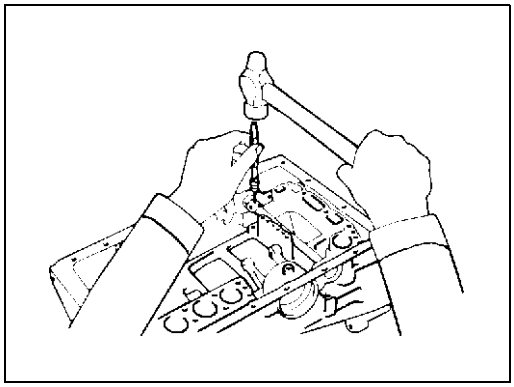

249RY00003

2. **Pin**
   Using a punch, drive out the pin.
3. **Manual valve lever shaft**
4. **Manual valve lever**
   Pull the manual valve lever shaft out through the case by the threads.

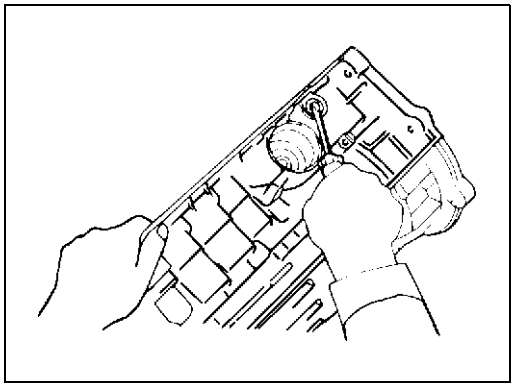

249RY00004

5. **Oil seal**
6. **Oil seal**
   Using a screwdriver, remove the oil seal.

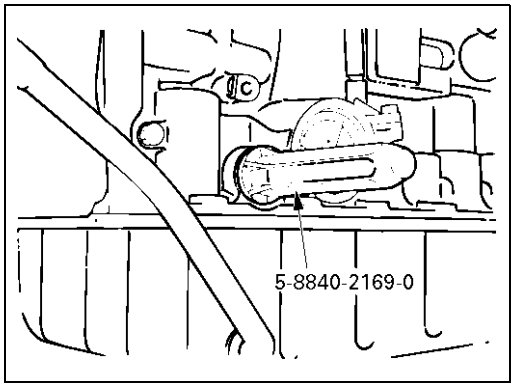

240RY00021

On–vehicle replacement of oil seal

Using special tool, install the oil seal.
Installer : 5–8840–2169–0 (J–37232–2)

REASSEMBLY

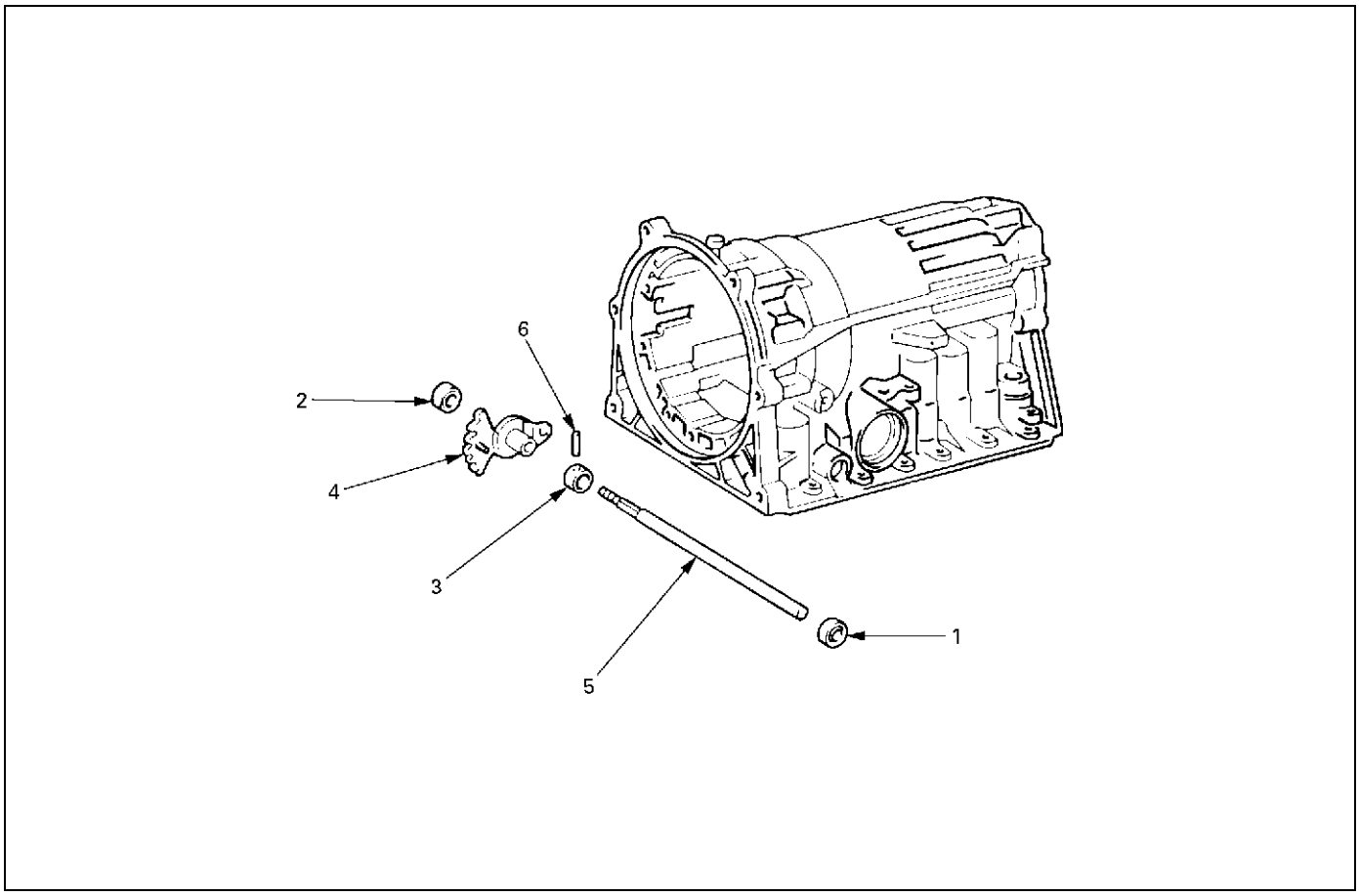

249RX00001

Reassembly steps

- ▲ 1. Oil seal
- ▲ 2. Oil seal
- ▲ 3. Spacer
- ▲ 4. Manual valve lever
- ▲ 5. Manual valve lever shaft
- ▲ 6. Pin

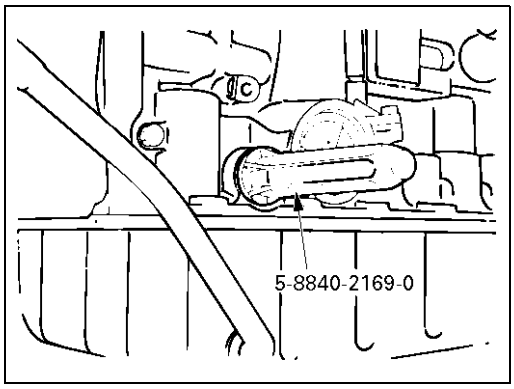

240RY00021

Important operations

1. **Oil seal**
2. **Oil seal**
   Coat a new oil seal lip with multi purpose grease.
   Using special tool, drive in the oil seal.
   Oil seal installer : 5–8840–2169–0 (J–37232–2)

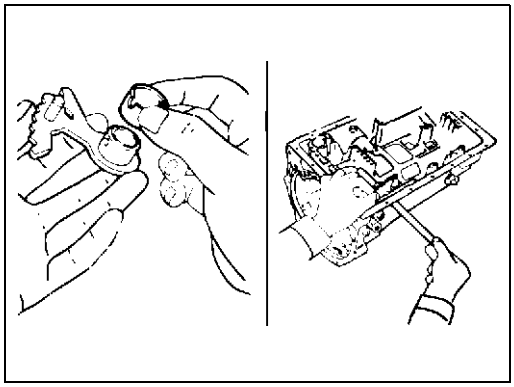

249RY00005

3. **Spacer**
4. **Manual valve lever**
   Assemble a new spacer to the manual valve lever.
5. **Manual valve lever shaft**
   Install the manual valve lever shaft to the transmission case through the manual valve lever by the threads.

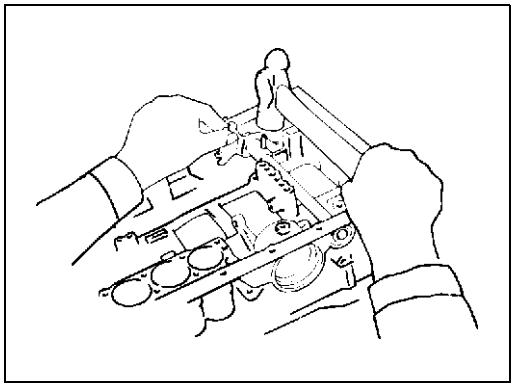

249RY00006

6. **Pin**
   Drive in the pin with the slot at a right angle to the shaft.

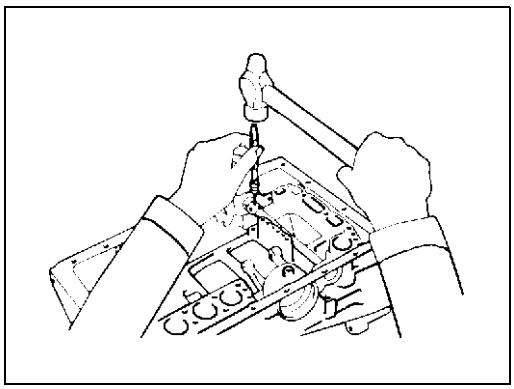

249RY00003

Match the spacer hole to the lever staking hollow and stake the spacer to the lever.
Make sure the manual valve lever shaft turns smoothly.

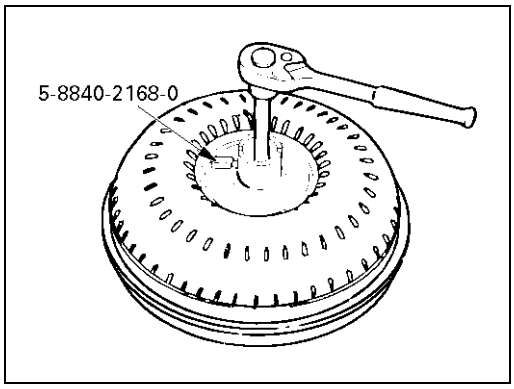

241RY00018

TORQUE CONVERTER

INSPECTION AND REPAIR

Insert special tool in end of torque converter

Insert a turning tool into the inner race of the one–way clutch.

One–way clutch testing tool : 5–8840–2168–0 (J–35467)

Insert the stopper so that it fits in the notch of the converter hub and outer race of the one–way clutch.

Test one–way clutch

The clutch should lock when turned counterclockwise, and rotate freely and smoothly clockwise. Less than 25kg·cm (22 Ib·in) of torque should be required to rotate the clutch clockwise. If necessary, clean the converter and retest the clutch. Replace the converter if the clutch still fails the test.

REASSEMBLY OF MAJOR COMPONENTS

Disassembly, inspection and reassembly of each component group have been indicated in the preceding chapter. Before reassembly, make sure, again, that all component groups are assembled correctly.
If something wrong is found in a certain component group during assembly, inspect and repair this group immediately.

GENERAL ASSEMBLY NOTES:

1. The automatic transmission is composed of highly precision–finished parts, necessitating careful inspection before assembly because even a small nick could cause fluid leakage or affect performance.
2. Before assembling new clutch discs and brake bands, soak them in automatic transmission fluid for at least thirty minutes.
3. Apply automatic transmission fluid on the sliding or rotating surfaces of parts before assembly.
4. Use petroleum jelly to keep small parts in their places.
5. Do not use adhesive cements on gaskets and similar parts.
6. When assembling the transmission, be sure to use new gaskets and O–rings.
7. Dry all parts with compressed air - never use shop rags.
8. Be sure to install the thrust bearings and races in the correct direction and position.

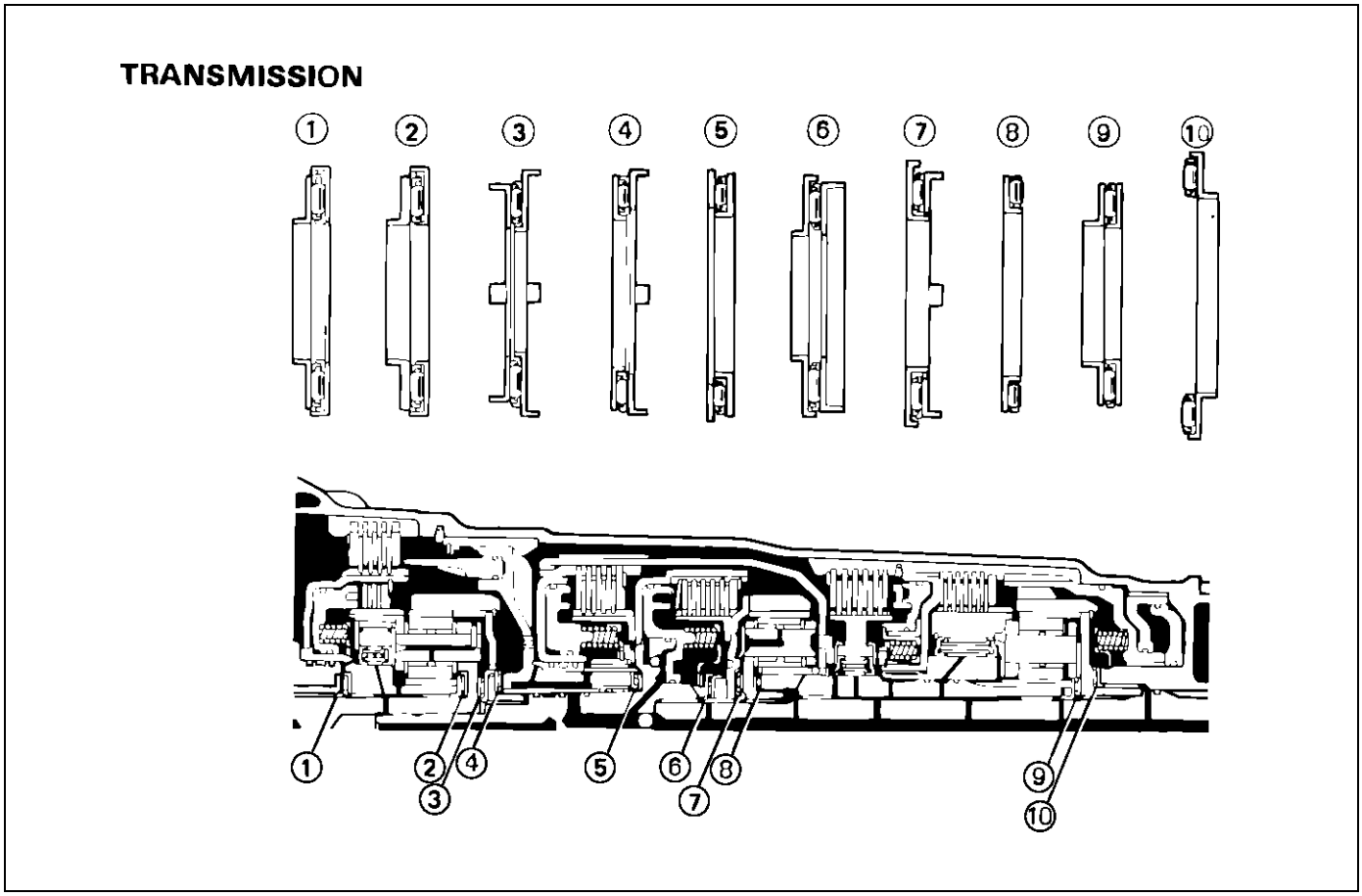

240RY00022

REASSEMBLY OF MAJOR COMPONENTS (1)

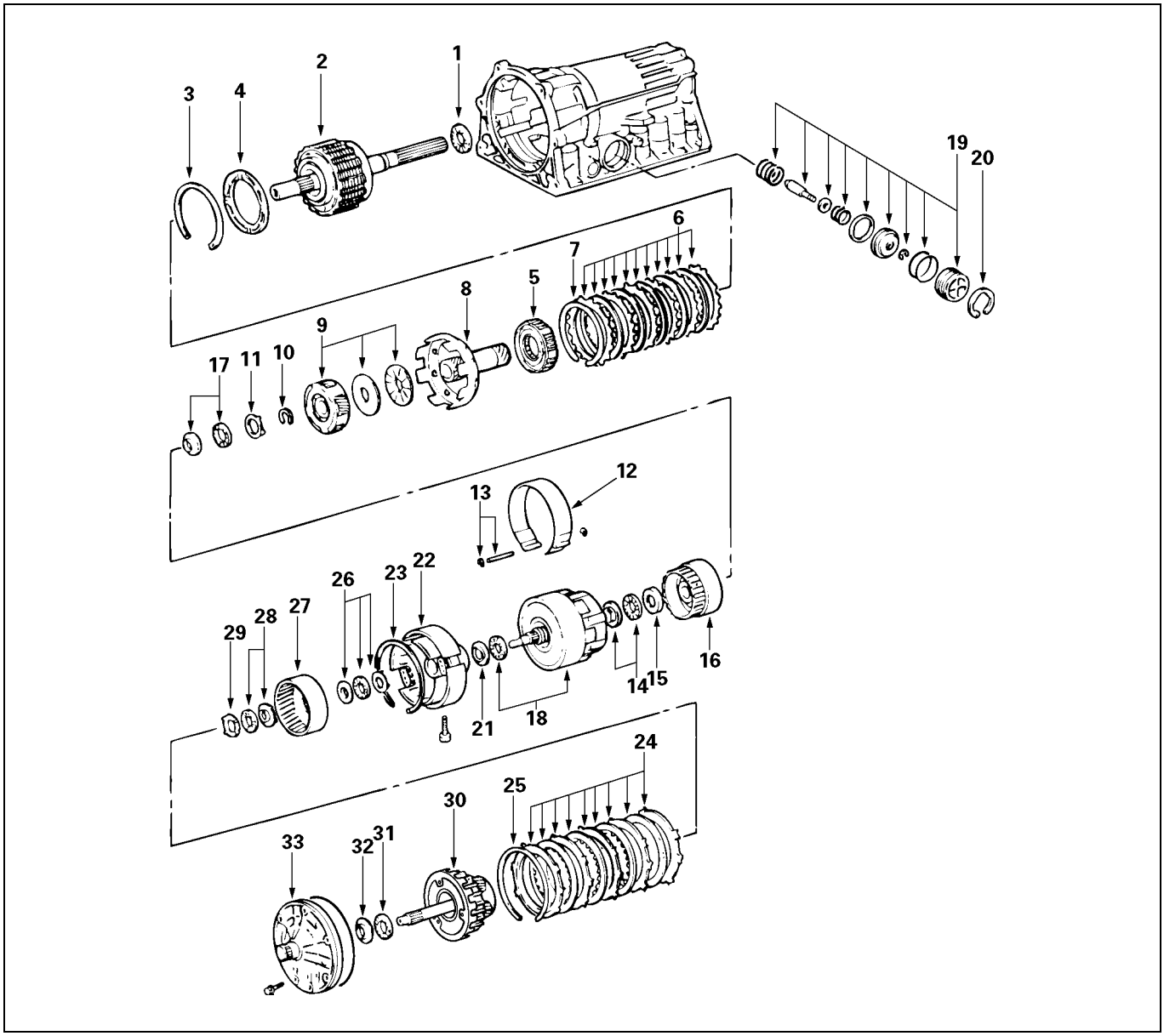

248L100002

Reassembly steps

- ▲ 1. Bearing
- ▲ 2. Rear planetary gear, second brake drum and output shaft
- ▲ 3. Snap ring
- ▲ 4. Second brake piston sleeve
- ▲ 5. One–way clutch
- ▲ 6. Flange plate and disc
- ▲ 7. Snap ring
- ▲ 8. Drum
- ▲ 9. Front planetary gear and bearing
- ▲ 10. Snap ring
- ▲ 11. Race
- ▲ 12. Second coast brake band
- ▲ 13. E–ring and pin
- ▲ 14. Bearing and race
- ▲ 15. Race
- ▲ 16. Front planetary ring gear
- ▲ 17. Bearing and race
- ▲ 18. Direct clutch and forward clutch
- ▲ 19. Second coast brake piston assembly
- ▲ 20. Snap ring
- ▲ 21. Race

▲ 22. OD support
▲ 23. Snap ring
▲ 24. Flange, plate and disc
▲ 25. Snap ring
▲ 26. Bearing and race
▲ 27. OD planetary ring gear
▲ 28. Bearing and race
▲ 29. Race
▲ 30. OD planetary gear and OD direct clutch
▲ 31. Bearing
▲ 32. Race
▲ 33. Oil pump

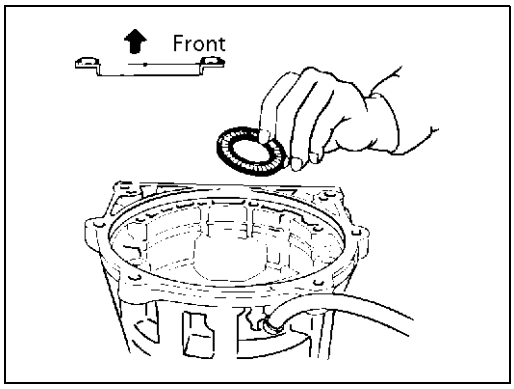

247RY00008

Important operations

1. Bearing

Coat the assembled bearing and race with petroleum jelly and install it onto the case.

Assemble bearing and race (reference) mm (in.)

Bearing and race	Diameter
Inside	39.2 (1.543)
Outside	57.7 (2.272)

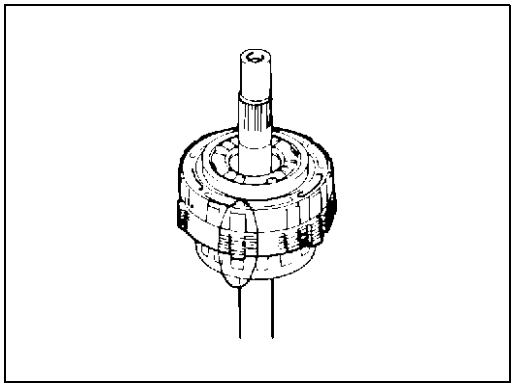

247RY00009

2. Rear planetary gear, second brake drum and output shaft

Align the teeth of the second brake drum, flanges, discs and plates as shown in the figure.

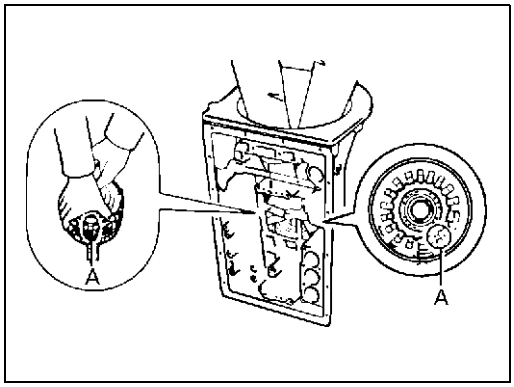

247RY00010

Align the splines of the transmission case and the assembled rear planetary gear, second brake drum and output shaft, indicated by A in the figure at left.

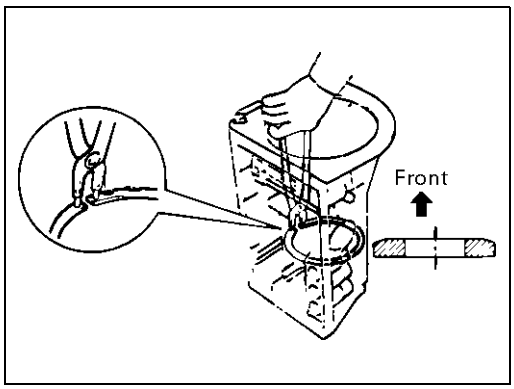

246RY00003

3. Snap ring

Using snap ring pliers, install the snap ring.

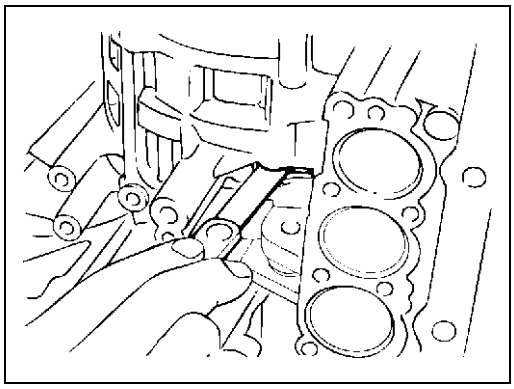

248RY00016

Check pack clearance of first and reverse brake

Using a thickness gauge, measure the clearance between the plate and second brake drum as shown in the figure.

mm (in.)

Clearance	0.7–1.0 (0.0276–0.0394)

If the values are nonstandard, check for an improper installation.

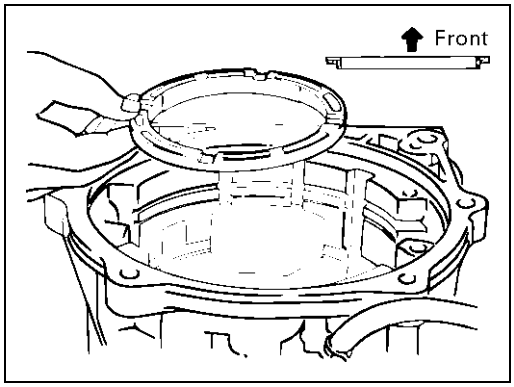

246RY00004

4. Second brake piston sleeve

Install second brake piston sleeve.

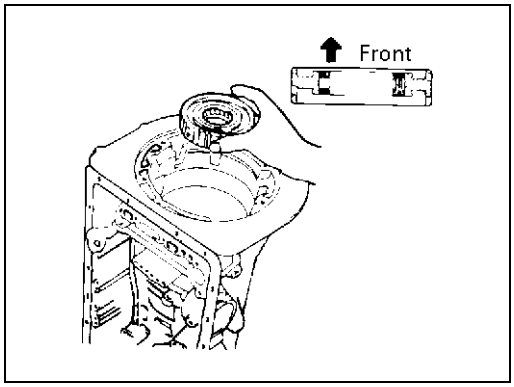

247RY00011

5. One–way clutch

Install one–way clutch.

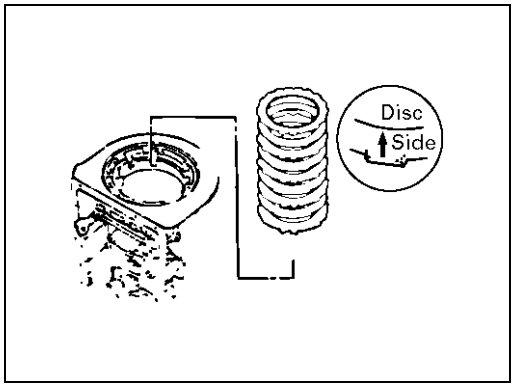

246RY00005

6. Flange plate and disc

Install flange, discs and plates.

Install the 2.5mm (0.098in.) thick plate with the rounded edge side of the plate facing the disc.

Alternately install four discs and three plates (Disc first)

Install the flange with the rounded edge of the flange facing the disc.

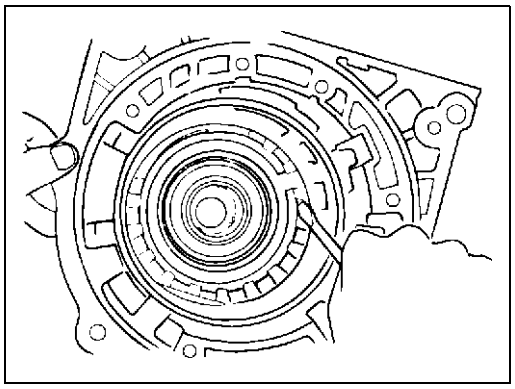

248RY00014

7. Snap ring

Install the snap ring.

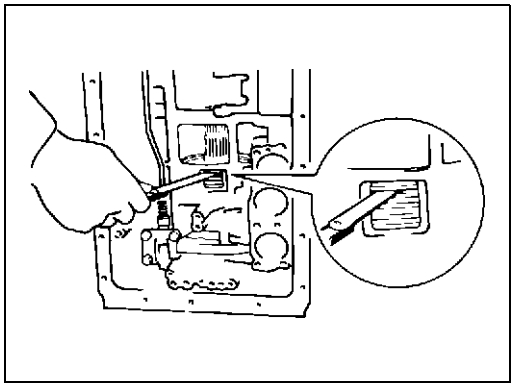

248RY00019

Check pack clearance of second brake

Using a thickness gauge, measure the clearance between the snap ring and flange as shown in the figure.

mm (in.)

Clearance	0.62–1.98 (0.0244–0.0780)

If the values are nonstandard, check for an improper installation.

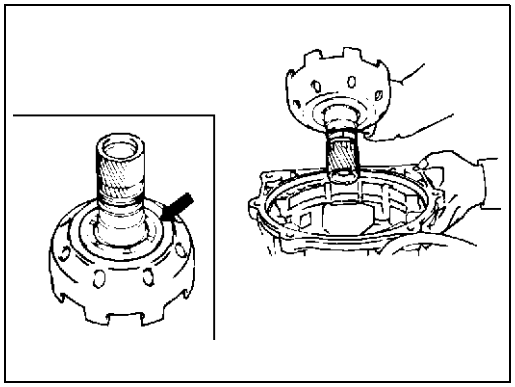

248RY00020

8. Drum

While turning the sun gear input drum clockwise, install it into the one-way clutch.

NOTE:
Confirm the thrust washers are installed correctly.

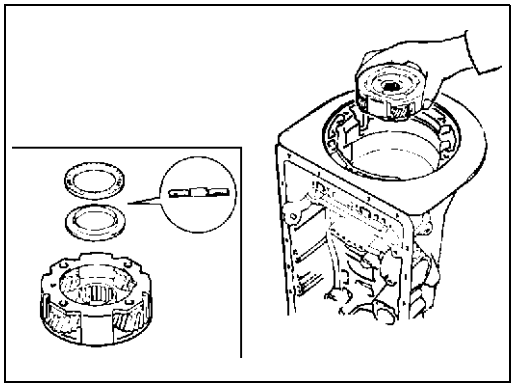

247RY00012

9. Front planetary gear and bearing

Install the front planetary gear to the sun gear.

NOTE:
Confirm the bearing and race is installed correctly.

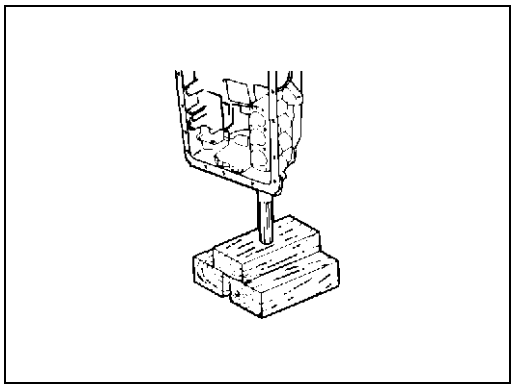

247RY00013

With wooden blocks under the output shaft, stand the transmission on the output shaft.

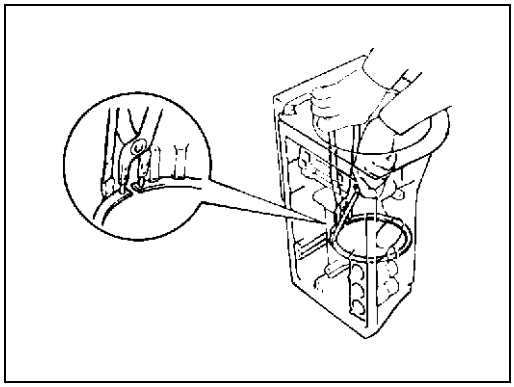

248RY00017

10. Snap ring

Using snap ring pliers, install the snap ring.

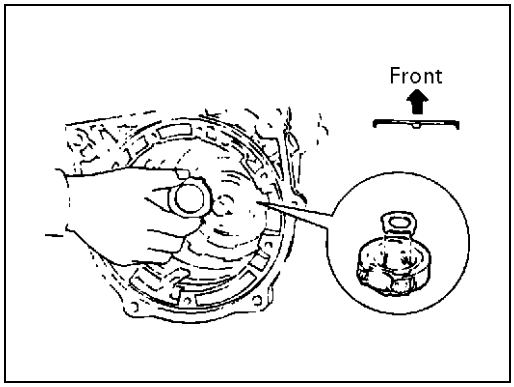

247RY00014

11. Race

Coat the bearing race with petroleum jelly and install it onto the front planetary gear.

Bearing race diameter (Reference) mm (in.)

Bearing race	Diameter
Inside	34.3 (1.350)
Outside	47.8 (1.882)

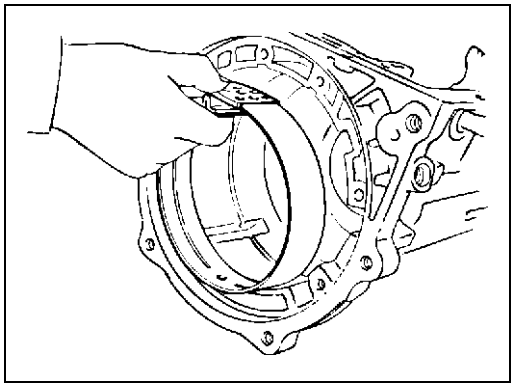

248RY00010

12. Second coast brake band

Insert the second coast brake band to the case.

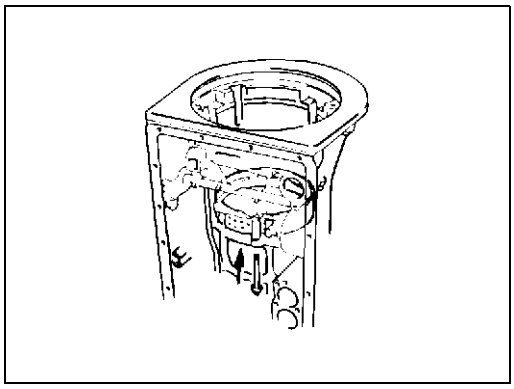

248RY00021

13. E–ring and pin

Install the pin through the brake band.

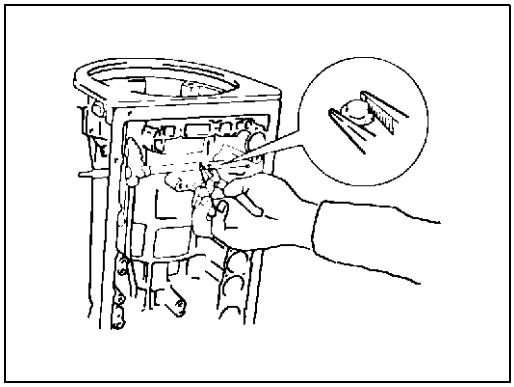

248RY00022

Install the E–ring to the pin.

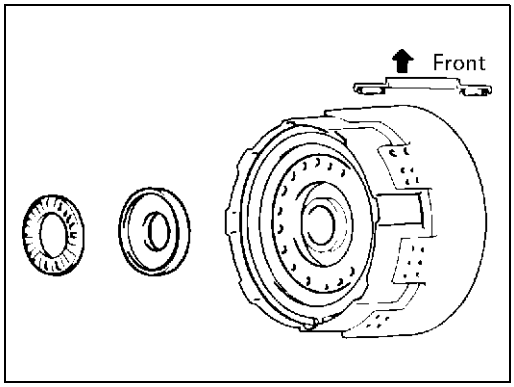

248RY00023

14. Bearing and race

Coat the bearing and race with petroleum jelly and install them onto the forward clutch.

Bearing and race diameter (Reference) mm (in.)

	Inside	Outside
Bearing	26.0 (1.024)	46.7 (1.839)
Race	26.0 (1.024)	48.9 (1.925)

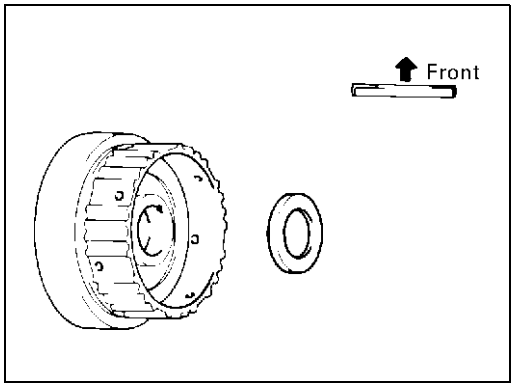

247RY00015

15. Race

Coat the race with petroleum jelly and install it onto the front planetary ring gear.

Race diameter (Reference) mm (in.)

	Inside	Outside
Race	26.8 (1.055)	47.0 (1.850)

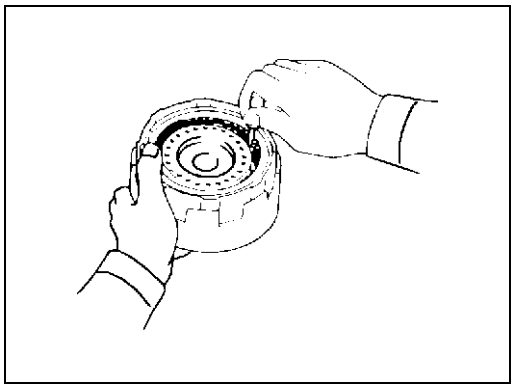

247RY00016

Align the flukes of the discs in the forward clutch.

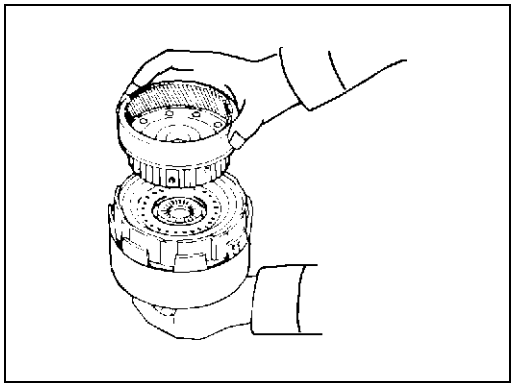

247RY00017

16. Front planetary ring gear

Align the spline of th front planetary gear with the flukes of the discs and install the front planetary gear to the forward clutch.

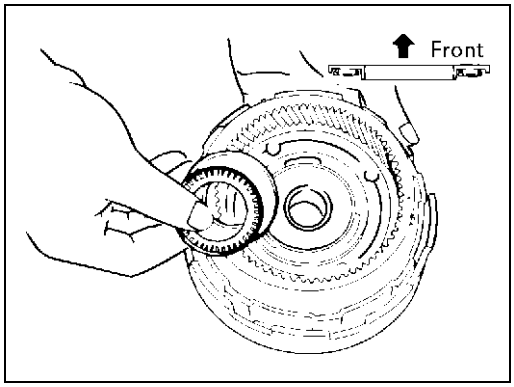

247RY00019

17. Bearing and race

Coat the bearing and race with petroleum jelly and install them onto the ring gear.

Bearing and race diameter (Reference) mm (in.)

	Inside	Outside
Bearing	32.6 (1.283)	47.7 (1.878)
Race	30.6 (1.205)	53.6 (2.110)

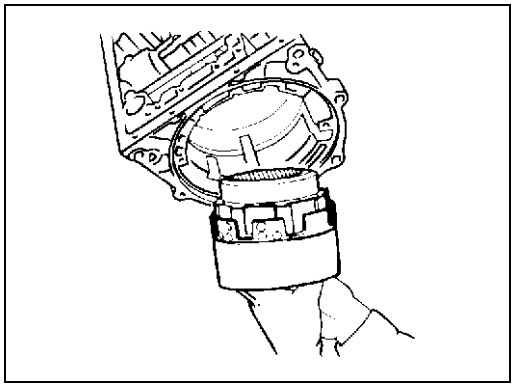

247RY00018

18. Direct clutch and forward clutch

Install the assembled direct clutch, forward clutch and front planetary ring gear into the transmission case.

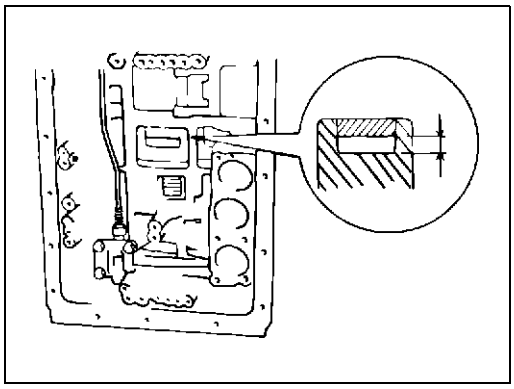

248RY00024

Using vernier calipers, measure the distance between the sun gear input drum and direct clutch drum as shown in the figure.

mm (in.)

Height	9.8 – 11.8 (0.386 – 0.465)

If the values are nonstandard, check for an improper installation.

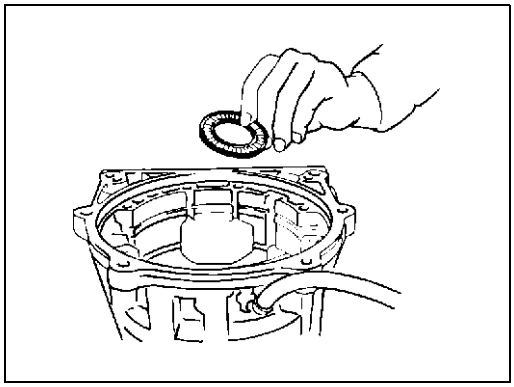

248RY00025

Coat the assembled bearing and race with petroleum jelly and install it onto the forward clutch.

Assembled bearing and race diameter (Reference)

mm (in.)

	Inside	Outside
Bearing and race	33.7 (1.327)	47.8 (1.882)

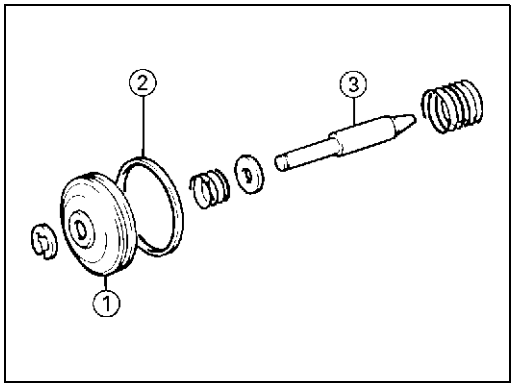

248RY00026

19. Second coast brake piston assembly

Coat the oil seal ring with ATF and install it to the second coast brake piston.

Install the washer, spring and piston to the piston rod. Install the E–ring.

(1): Second coast brake piston

(2): Oil seal

(3): Piston rod

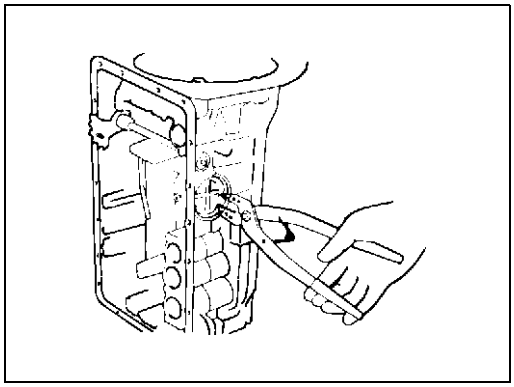

248RY00027

20. Snap ring

Coat two new oil seals with ATF and install them to the piston cover.

Install the spring, second coast brake piston assembly and piston cover to the case.

Using snap ring pliers, install the snap ring.

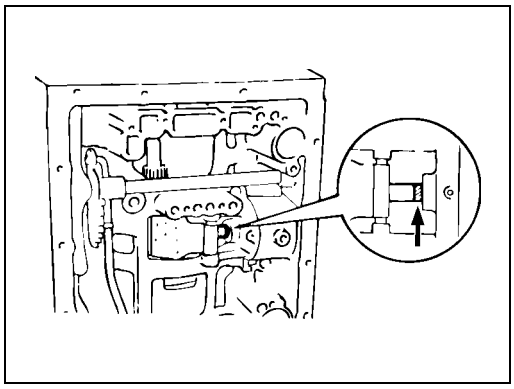

248RY00005

Check piston stroke of second coast brake

Place a mark on the second coast brake piston rod as shown in the figure.

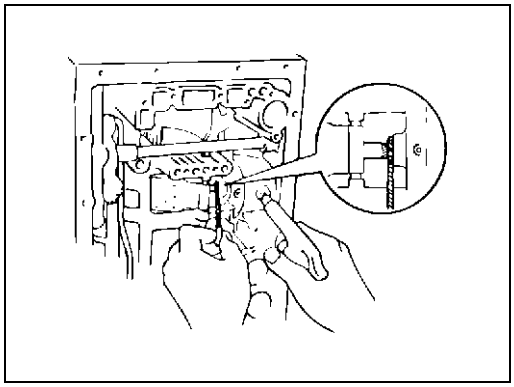

248RY00004

Using wire gage, measure the stroke by applying the compressed air (4–8kg/cm^2, 57–114 psi or 392–785kPa) as shown in the figure.

mm (in.)

Piston stroke	1.5–3.0 (0.059–0.118)

If the values are nonstandard, check for an improper installation.

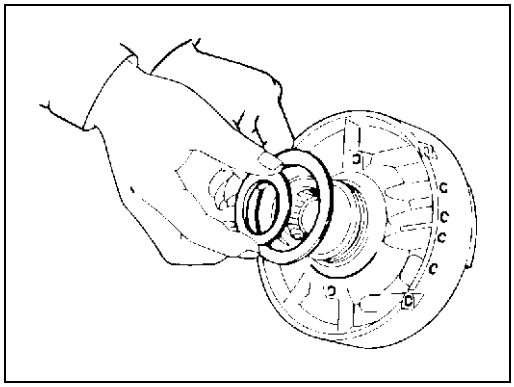

252RY00007

21. Race

Coat the race with petroleum jelly and install it onto the overdrive support assembly.

Race diameter (Reference) mm (in.)

	Inside	Outside
Race	36.8 (1.450)	50.9 (2.004)

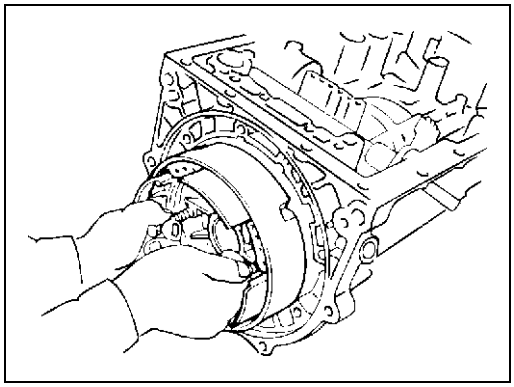

252RY00005

22. OD support

Aim the bolt and oil holes of the overdrive support toward the valve hole side, and align them with the bolt hole of the transmission case and insert.

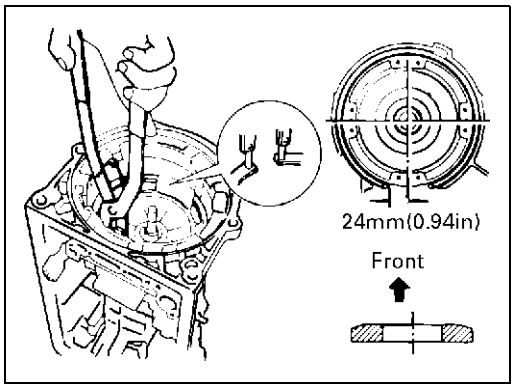

252RY00008

23. Snap ring

Using snap ring pliers, install the snap ring as shown in the figure.

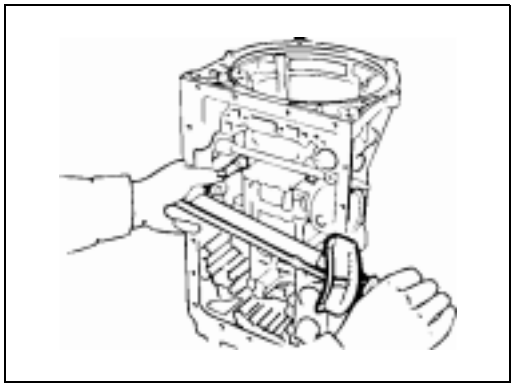

252RY00004

Install and tighten the two bolts.

	N·m(kg·m / lb·ft)
Torque	25 (2.6/19)

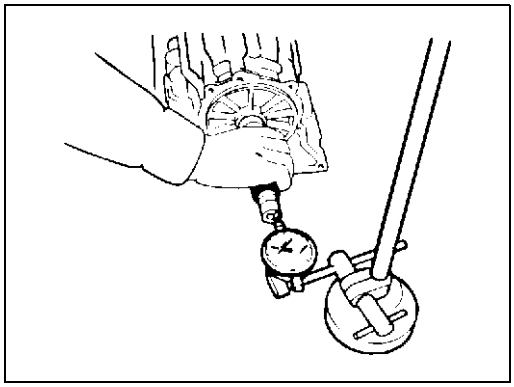

247RY00020

Check end of output shaft

Using a dial indicator, measure the end play of the output shaft by hand.

	mm (in.)
End play	0.27–0.86 (0.0106–0.0339)

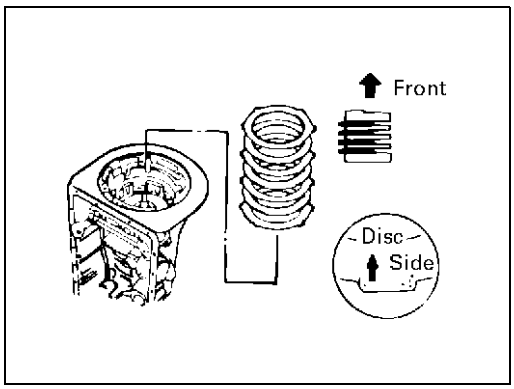

252RY00009

24. Flange, plate and disc

Install the (flat ring) 4.0 mm (0.157 in.) thick flange with the rounded edge side of the flange facing the disc.
Alternately install four discs and three plates. (Disc first)

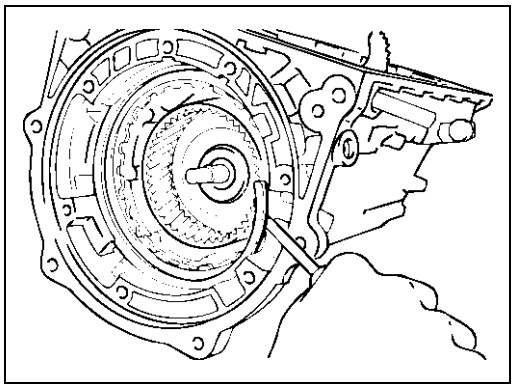

246RY00001

25. Snap ring

Install the (stepped ring) flange with the flat side of the flange facing the disc.
Install the snap ring.

Snap ring (Reference)	mm (in.)
Inside diameter	167.9 (6.61)

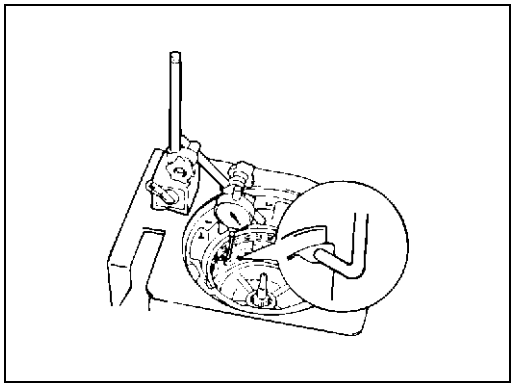

252RY00003

Check piston stroke of overdrive brake

Place a dial indicator onto the overdrive brake piston as shown in the figure.

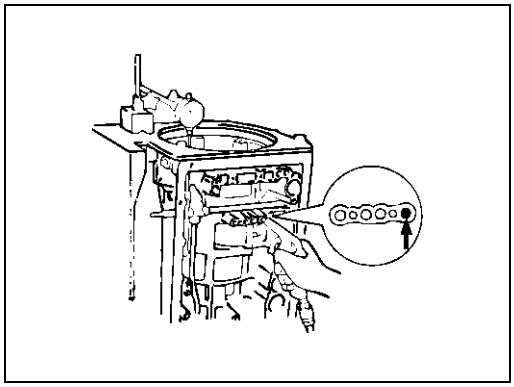

244RY00001

Measure the stroke by applying and releasing the compressed air (4–8kg/cm^2, 57–114–psi or 392–785 kPa) as shown in the figure.

	mm (in.)
Piston stroke	1.40–1.70 (0.0551–0.0670)

If the values are nonstandard, select another flange.

Available Flange size	mm(in.)
3.3 (0.130)	3.8 (0.150)
3.5 (0.138)	3.9 (0.154)
3.6 (0.142)	4.0 (0.158)
3.7 (0.146)	

Remove the snap ring.

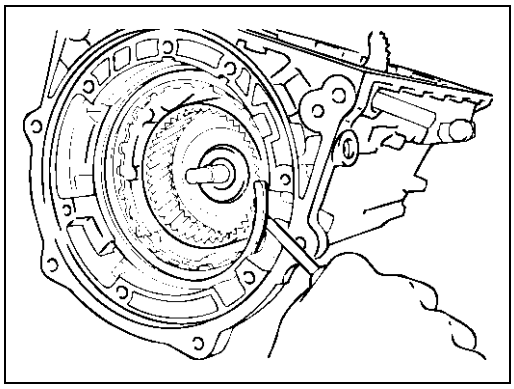

246RY00001

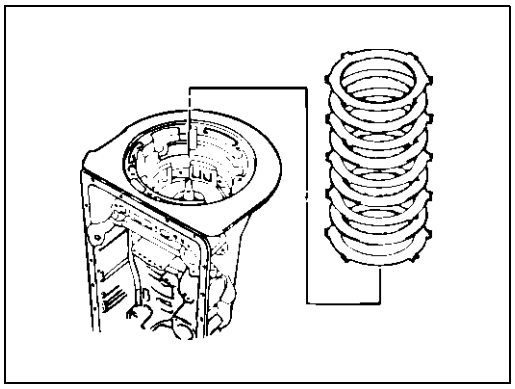

246RY00026

Remove two flanges, three plates and four discs.

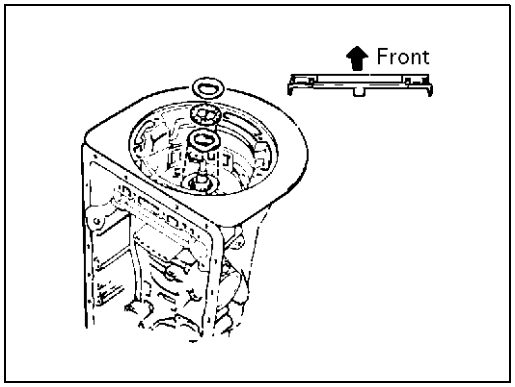

252RY00010

26. Bearing and race

Coat the bearing and races with petroleum jelly and install them onto the overdrive support.

Bearing and races diameter (Reference) mm (in.)

	Inside	Outside
Bearing	36.5 (1.437)	48.5 (1.910)
Race (Front)	37.2 (1.465)	58.8 (2.315)
Race (Rear)	33.7 (1.327)	50.1 (1.973)

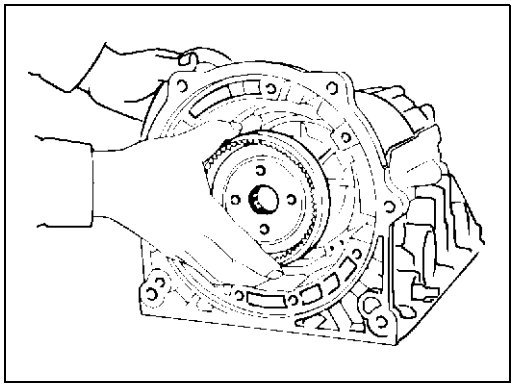

252RY00002

27. OD planetary ring gear

Install the overdrive planetary ring gear.

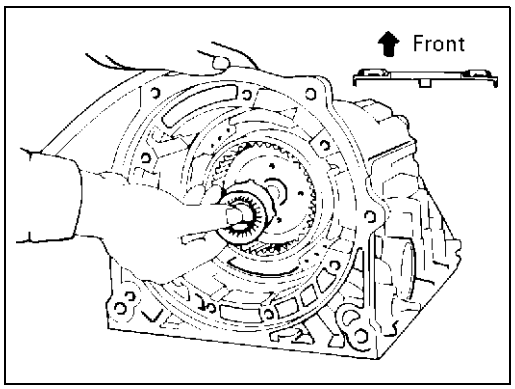

252RY00011

28. Bearing and race

Coat the bearing and race with petroleum jelly and install them onto the planetary ring gear.

Bearing and race diameter (Reference) mm (in.)

	Inside	Outside
Bearing	26.0 (1.024)	46.8 (1.843)
Race	24.2 (0.953)	47.8 (1.882)

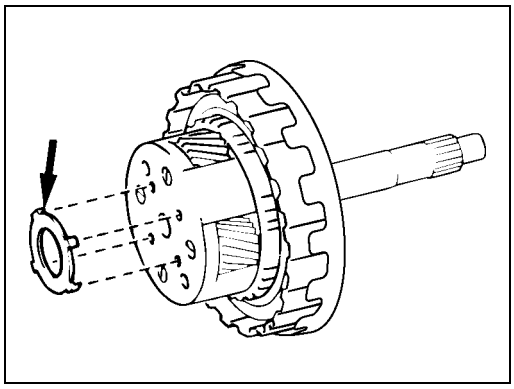

252L100017

29. Race

Coat the race with petroleum jelly and install it onto the planetary gear.

Race diameter (Reference) mm (in.)

	Inside	Outside
Race	27.3 (1.075)	41.8 (1.646)

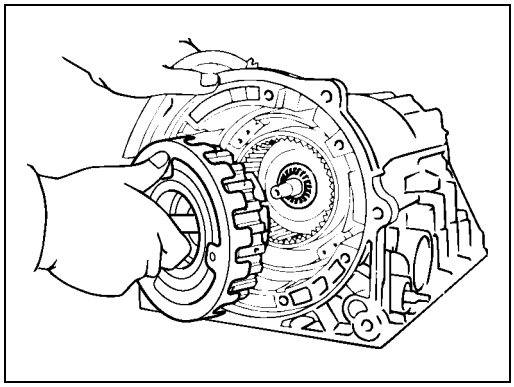

252L100001

30.OD planetary gear and OD direct clutch

Install the overdrive planetary gear and direct clutch.

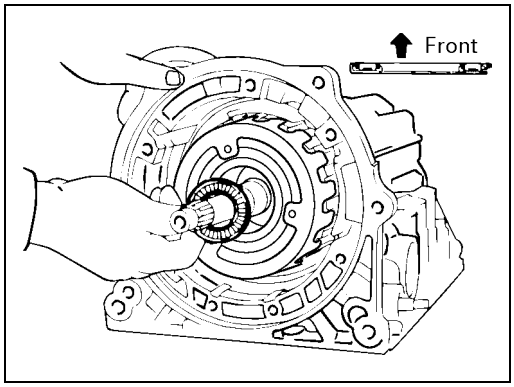

252L100018

31.Bearing

Coat the assembled bearing and race with petroleum jelly and install it onto the direct clutch.

Bearing and race diameter (Reference) mm (in.)

	Inside	Outside
Bearing and race	28.9 (1.138)	50.2 (1.976)

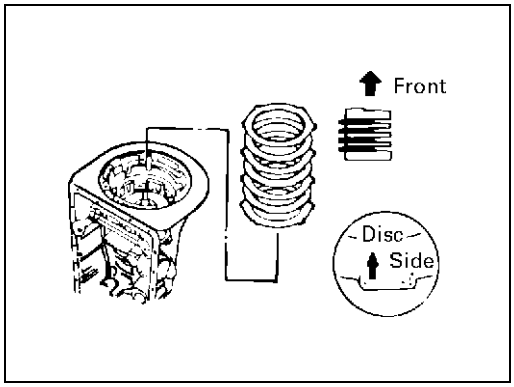

252RY00009

Install the (flat ring) 4.0mm (0.157 in.) thick flange with the rounded edge side of the flange facing the disc.
Alternately install three discs and two plates. (Disc first)

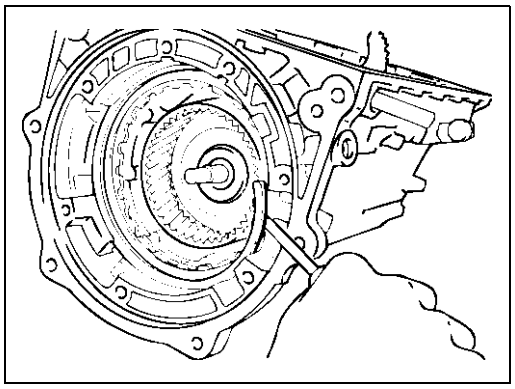

246RY00001

Install the (stepped ring) flange with the flat side of the flange facing the disc.
Install the snap ring.

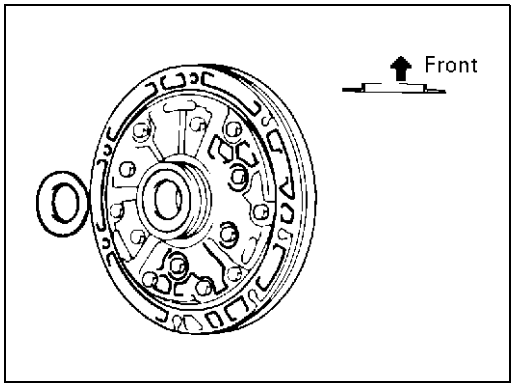

252RY00014

32.Race

Coat the race with petroleum jelly and install it onto the oil pump.

Race diameter (Reference) mm (in.)

	Inside	Outside
Race	28.1 (1.106)	47.3 (1.862)

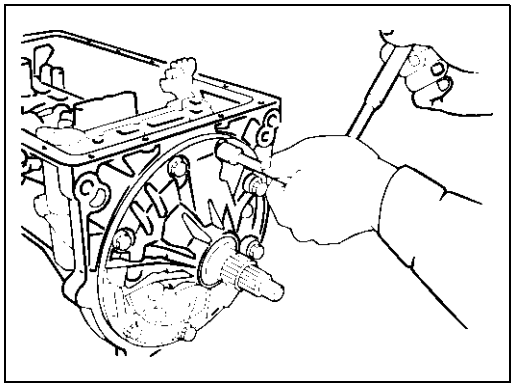

241RY00003

33.Oil pump

Coat the O–ring with ATF and install it around the pump body.
Place the oil pump through the input shaft, and align the bolt holes of the pump body with the transmission case.
Hold the input shaft, and lightly press the oil pump body to slide the oil seal rings on the stator shaft through the direct clutch drum.

NOTE:
Do not push on the oil pump strongly or the oil seal ring will stick to the direct clutch drum.

Install the seven bolts.

N·m(kg·m / lb·ft)

Torque	22 (2.2/16)

Check input shaft rotation

Make sure the input shaft rotates smoothly.

REASSEMBLY OF MAJOR COMPONENTS (2)

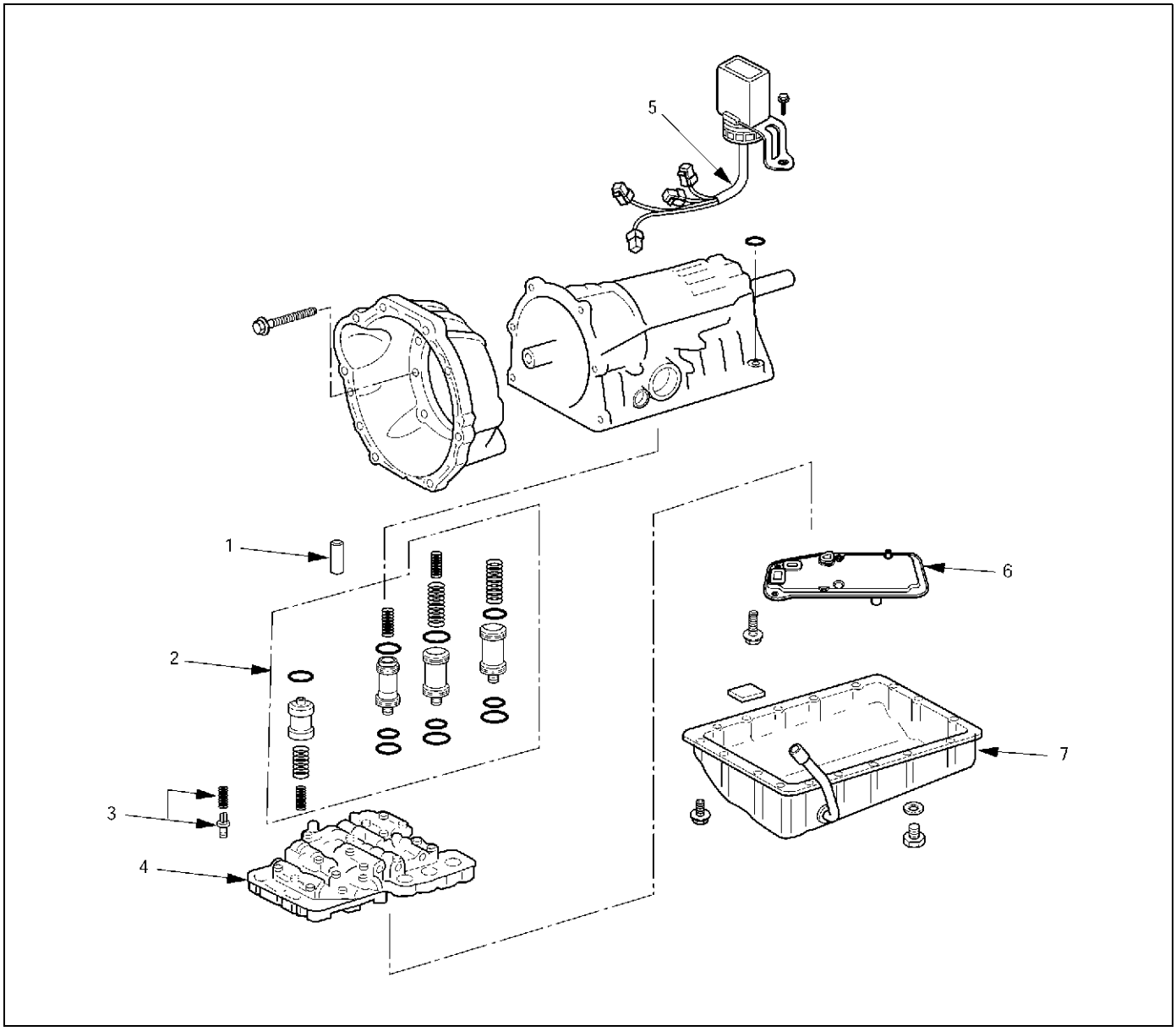

242RY00006

Reassembly steps

- ▲ 1. Second brake drum gasket
- ▲ 2. Accumulator piston
- ▲ 3. Check valve, spring
- ▲ 4. Valve body
- ▲ 5. Solenoid wiring
- ▲ 6. Oil strainer assembly
- ▲ 7. Oil pan

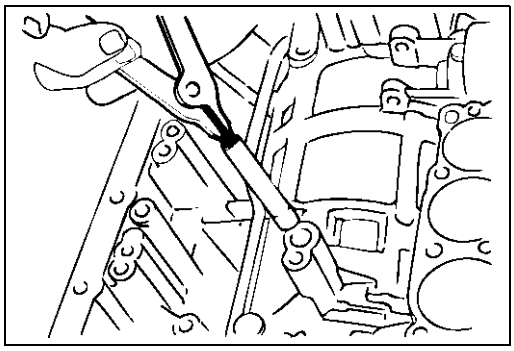

240RY00013

Important operations

1. Second brake drum gasket

Install a new brake drum gasket to the transmission case.

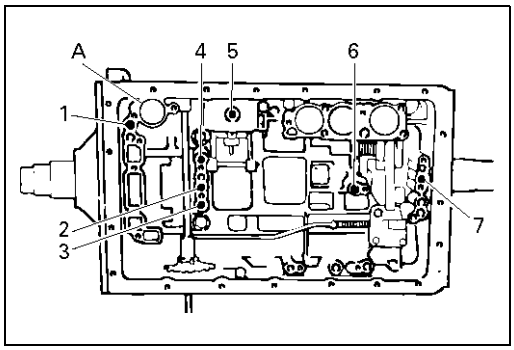

240RY00014

Individual piston operation inspection

Check for the sound of operation while injecting compressed air into the oil hole indicated in the figure.

1: OD direct clutch	5: Second coast brake
2: Direct clutch	6. Second brake
3: Forward clutch	7. First and reverse brake
4: OD brake	

NOTE:

When inspecting the direct clutch, check with the C–0 accumulator piston hole closed. If there is no noise, disassemble and check the condition of the parts.

A : C–0 Accumulator piston hole

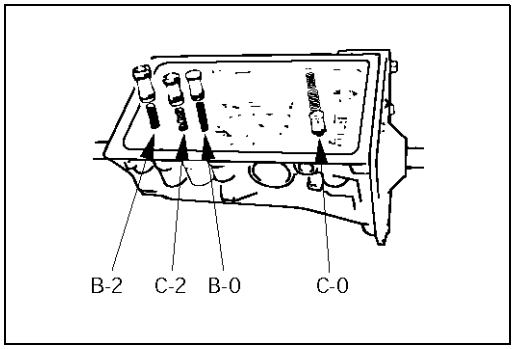

240RY00027

2. Accumulator piston

Coat the O–ring with ATF and install it to the piston.

Install the five springs and four accumulator pistons to the bore as shown in the figure.

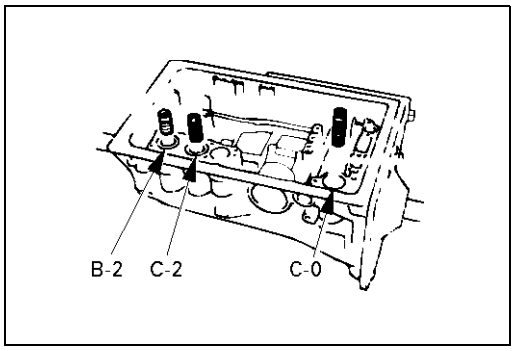

240RY00015

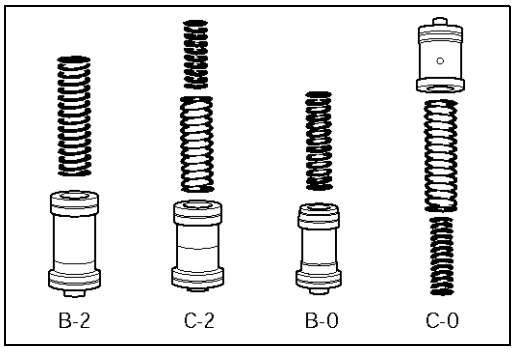

240RY00029

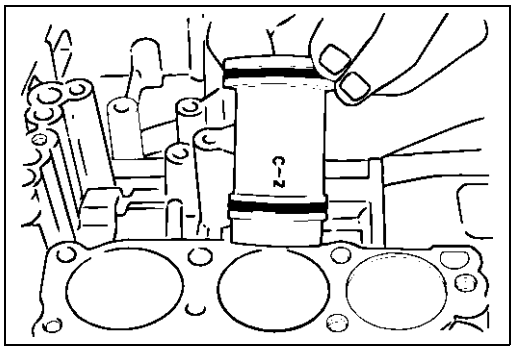

240RY00010

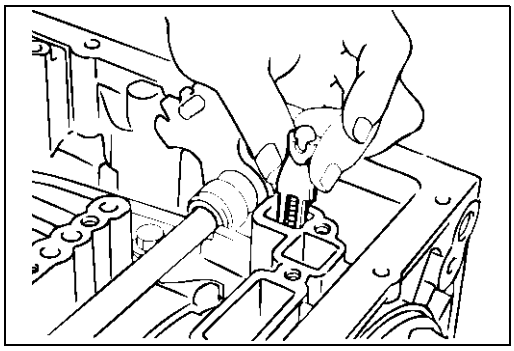

240RY00016

mm (in.)

Piston	Outer diameter	Height
B–2	36.8 (1.449)	62.5 (2.461)
C–2	36.8 (1.449)	56.6 (2.228)
B–0	31.8 (1.252)	52.0 (2.047)
C–0	29.8 (1.173)	44.0 (1.732)

Spring	Free length	Outer diameter
(1) B–2	75.8 (2.984)	20.1 (0.791)
(2) C–2 (Inner)	42.1 (1.658)	14.7 (0.579)
(3) C–2 (Outer)	64.0 (2.520)	20.2 (0.795)
(4) B–0	63.6 (2.504)	16.0 (0.630)
(5) C–0(Outer)	74.6 (2.937)	20.9 (0.823)
(6) C–0(Inner)	46.0 (1.811)	14.0 (0.551)

3. Check valve, spring

Install new check valve and spring.

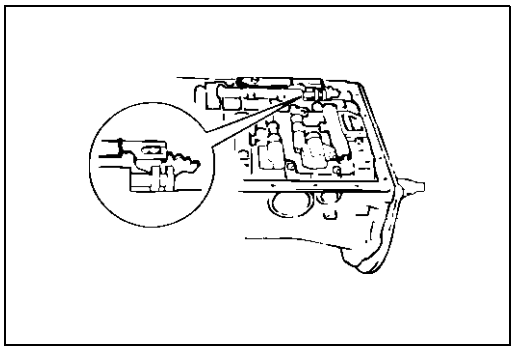

240RY00017

4. Valve body

Align the groove of the manual valve to the pin of the lever.

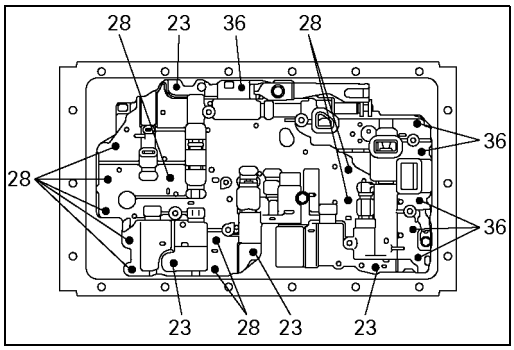

244RY00017

Install the twenty bolts.

Each bolt length (mm) is indicated in the figure.

	N·m (kg·m/lb·in)
Torque	10 (1.0/87)

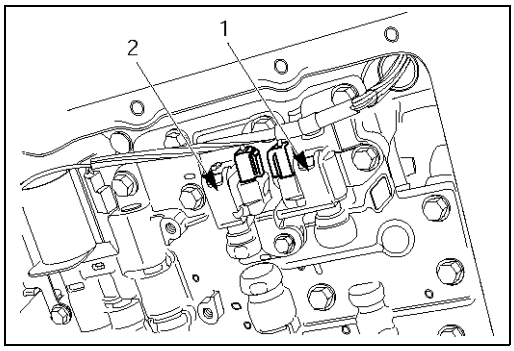

249RY00011

5. Solenoid wiring

Coat a new O–ring with ATF, and install it to the solenoid wiring.

Insert the solenoid wiring to the case and install the stopper plate.

Connect the connectors to the solenoid S1(1), S2(2), lock-up solenoid (3), and pressure control solenoid (4).

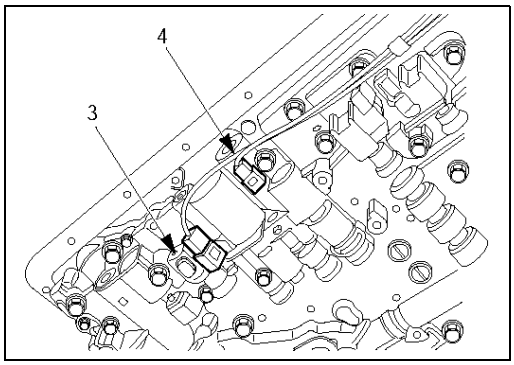

249RY00012

6. Oil strainer assembly

Install a new oil strainer assembly with gaskets.

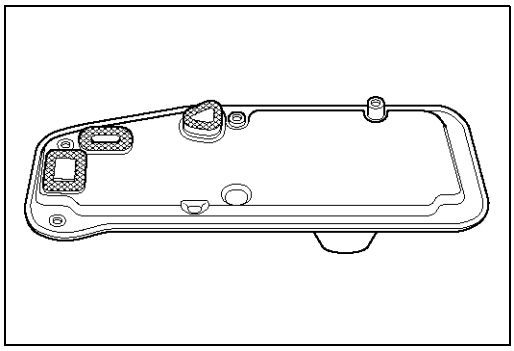

244RY00002

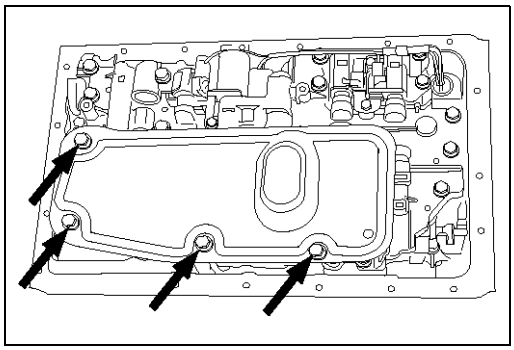

244RY00003

Install the oil strainer with the gaskets to the valve body. Tighten the four bolts.

	N·m (kg·m/lb·in)
Torque	10 (1.0/87)

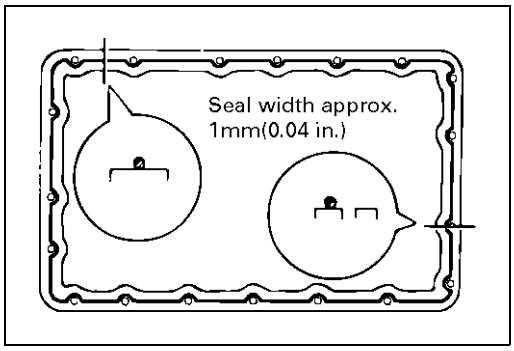

240RY00019

7. Oil pan

Install magnet in pan.

Remove any packing material and be careful not to drop oil on the contacting surfaces of the transmission case and oil pan.

Apply liquid gasket (TB1281 or its equivalent) to the oil pan as shown in the figure.

NOTE:

Install the oil pan as soon as the seal packing is applied.

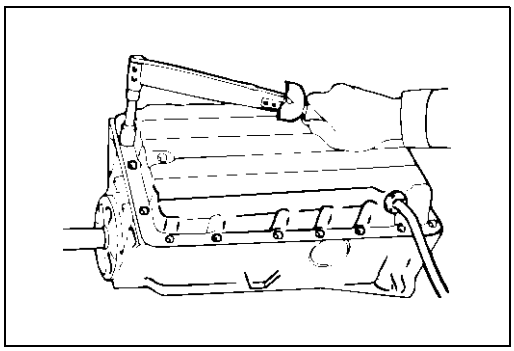

240RY00020

Install and tighten the nineteen bolts.

	N·m (kg·m/lb·in)
Torque	8 (0.8/69)

REASSEMBLY OF MAJOR COMPONENTS (3)

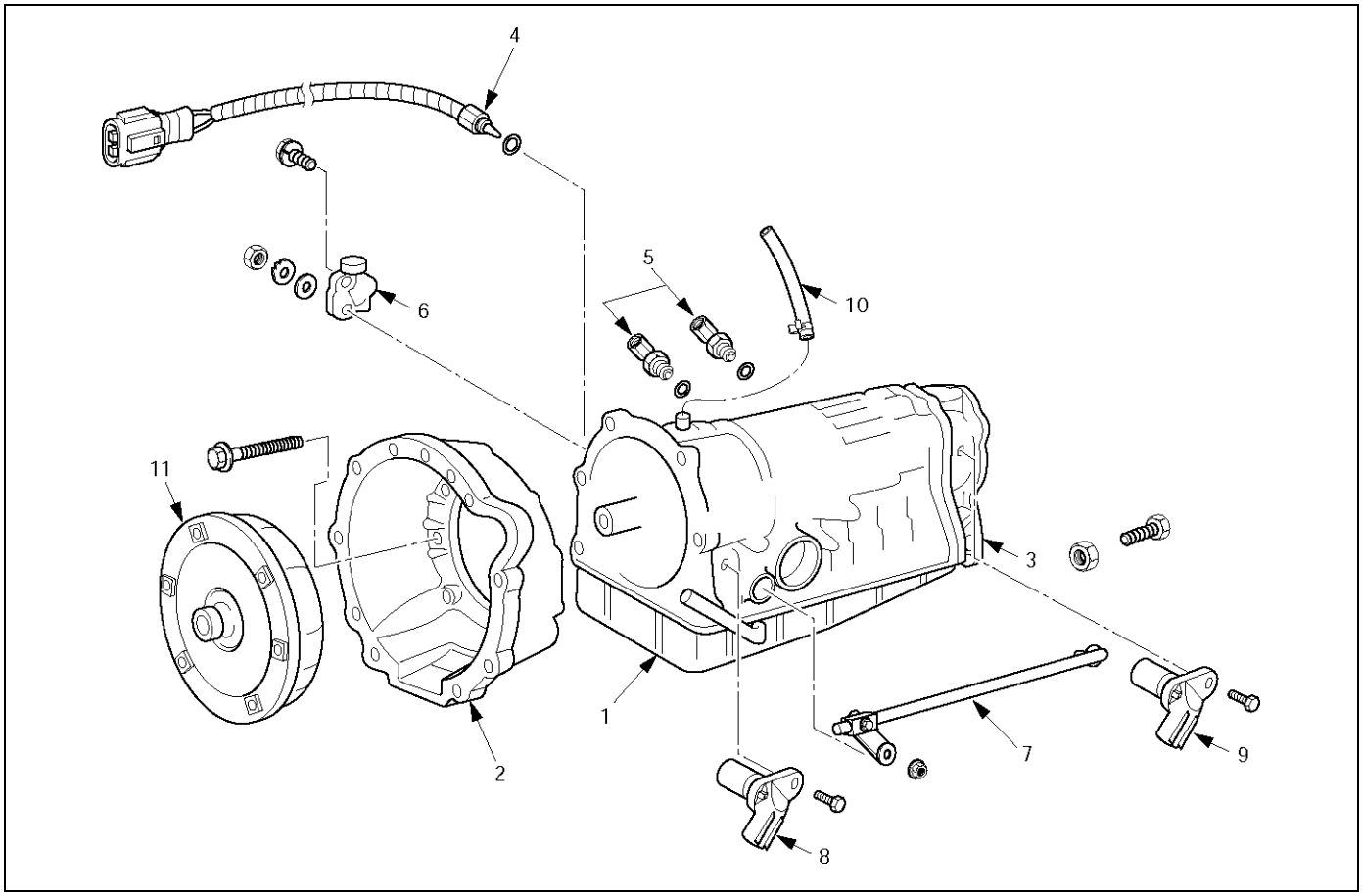

240RY00030

Reassembly steps

1. Transmission assembly
▲ 2. Converter housing
▲ 3. Adapter housing
▲ 4. Oil temperature sensor
▲ 5. Elbow
▲ 6. Neutral start switch
▲ 7. Transmission control rod and shift lever
8. Input revolution sensor
9. Output revolution sensor
10. Breather hose
▲ 11. Torque converter

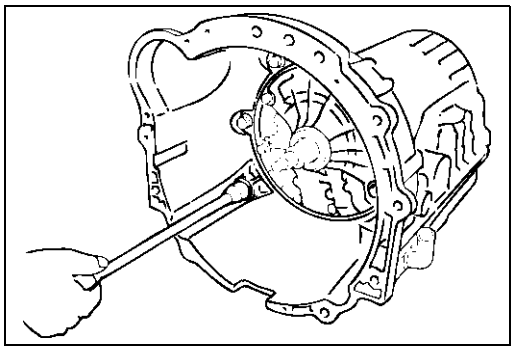

240RY00006

Important operations

2. Converter housing

N·m (kg·m/lb·ft)

Torque	M10	34 (3.5/25)
	M12	57 (5.8/42)

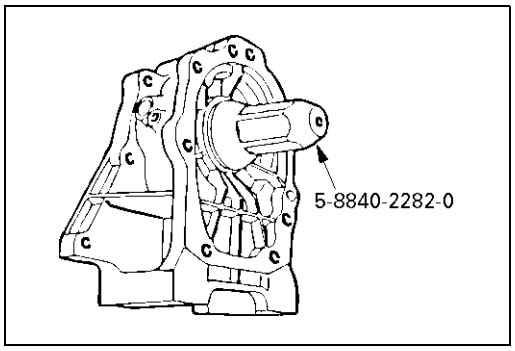

240RY00003

3. Adapter housing

Oil seal replacement

(1)Using a screwdriver, remove the oil seal.

(2)Apply ATF to a new oil seal lip.

(3)Using special tool, install the oil seal.
Installer:5–8840–2282–0

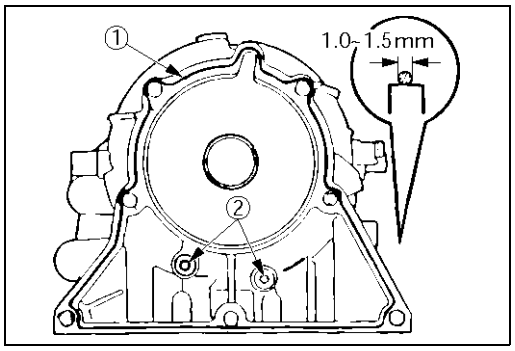

241RY00020

Remove any gasket material on the contacting surfaces of the adapter case and transmission case.
Apply liquid gasket (TB1281–B or its equivalent) (1) and install the apply gaskets (2) to the adapter case as shown in the figure.
Install the adapter housing to the transmission case.

N·m (kg·m/lb·ft)

Torque	34 (3.5/25)

4. Oil temperature sensor

Install the oil temperature sensor to the transmission case.

N·m (kg·m/lb·ft)

Torque	15 (1.5/11)

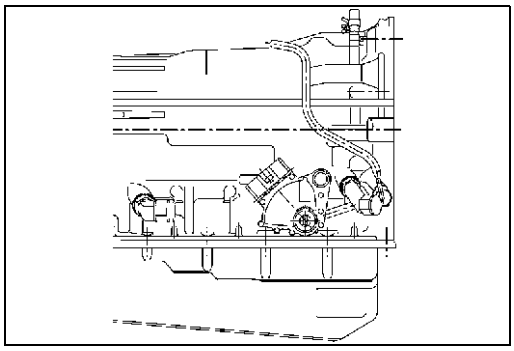

249RW003

5. Elbow

Coat new O–rings with ATF, install them to the two elbows. Install the elbows as shown in the figure.

	N·m (kg·m/lb·ft)
Torque	29 (3.0/22)

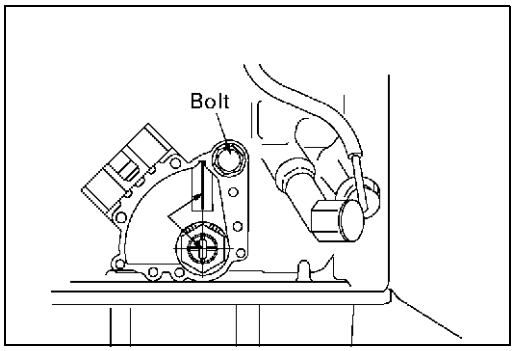

249RY00008

6. Neutral start switch

Using the control shift lever, fully turn the manual lever shaft back and return two notches. It is now in neutral.
Insert the neutral start switch onto the manual valve shaft and temporarily tighten the adjusting bolt.
Install the lock washer and install and torque the nut.

	N·m (kg·m/lb·in)
Torque	7 (0.7/61)

Align the neutral standard line and the switch groove and tighten the adjusting bolt.

	N·m (kg·m/lb·in)
Torque	13 (1.3/113)

Bend the tabs of the lock washer.

NOTE:
Bend at least two of the lock washer tabs.

7. Control rod and shift lever

Install control shift lever.

	N·m (kg·m/lb·ft)
Torque	29 (3.0/22)

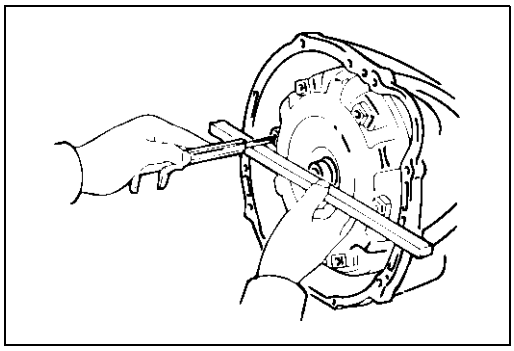

240RY00005

11. Torque converter

Using calipers and a straight edge, measure from the installed surface of the transmission housing.

	mm (in.)
Correct distance	67(2.64) or more

MAIN DATA AND SPECIFICATIONS

GENERAL SPECIFICATIONS

				Remarks
Model			AW30-40LE	
Engine			4JX1-TC	
Type			Electronic control planetary gear type	
			3-element 1-stage 2-phase type (with lock-up mechanism)	
Gear ratio	1st		2.804	
	2nd		1.532	
	3rd		1.000	
	4th (O/D)		0.705	
	Reverse		2.394	
Oil used	Name		BESCO ATF III	
	Q'ty (ℓ)		8.7	
Torque converter			2450 ± 150	Stall speed (rpm)
Friction element	Forward clutch	C-1	6	Number of discs
	Direct clutch	C-2	5	
	O/D direct clutch	C-0	2	
	2nd coast brake	B-1	40mm	Band width or No. of discs
	2nd brake	B-2	5	No. of discs
	1st & reverse brake	B-3	7	
	Overdrive brake	B-0	4	
Clutch	One-way clutch No.1	F-1	22	Number of sprags
	One-way clutch No.2	F-2	28	
	O/D one-way clutch	F-0	24	
Planetary gear	Front planetary	Sun gear	42	Number of teeth
		Pinion gear	19	
		Ring gear	79	
	Rear planetary	Sun gear	33	
		Pinion gear	23	
		Ring gear	79	
	O/D planetary	Sun gear	33	
		Pinion gear	23	
		Ring gear	79	

TORQUE SPECIFICATIONS

N·m (kg·m/lb·ft)

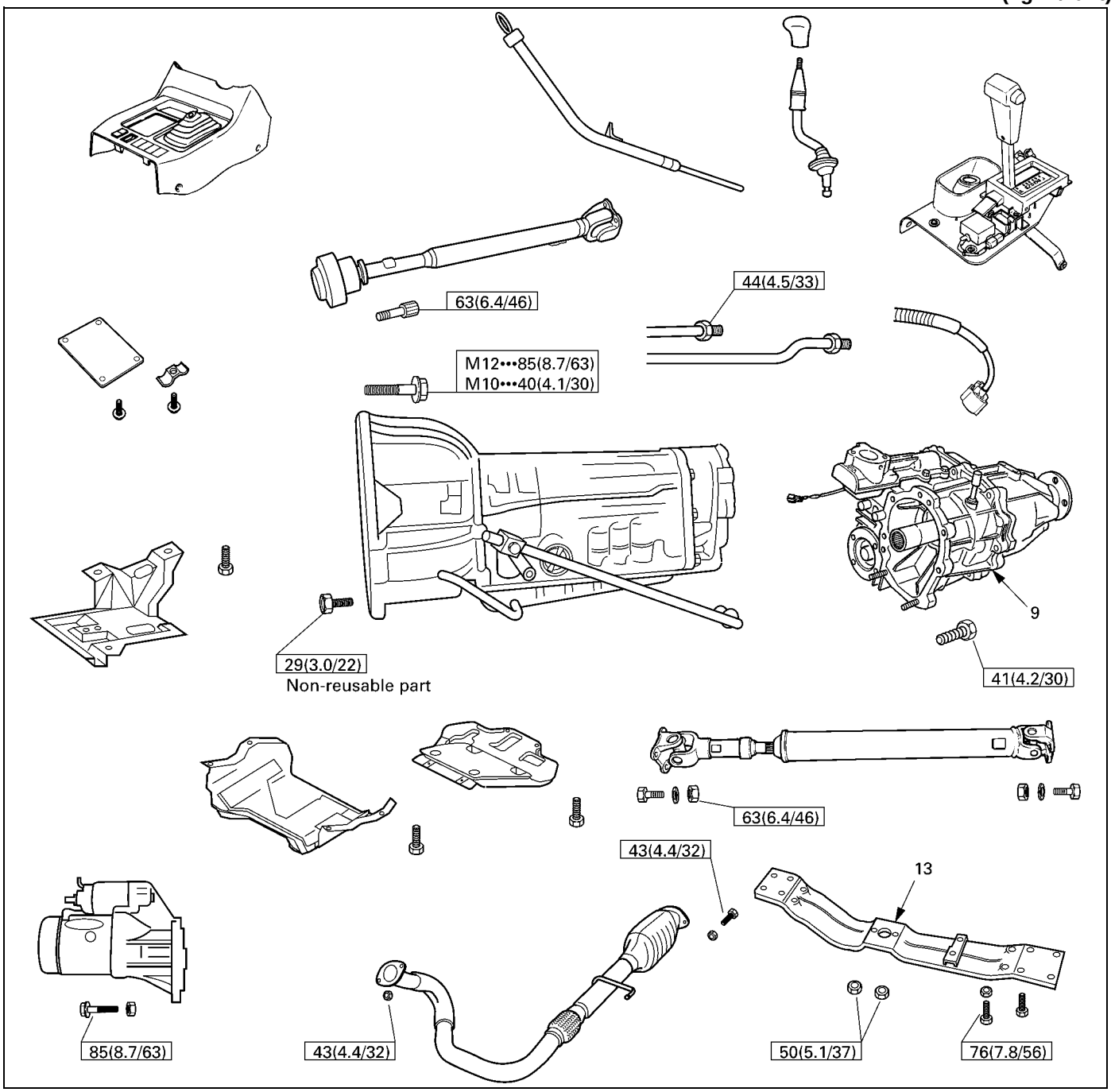

E07RY00009

TORQUE SPECIFICATIONS

N·m (kg·m/lb·ft)

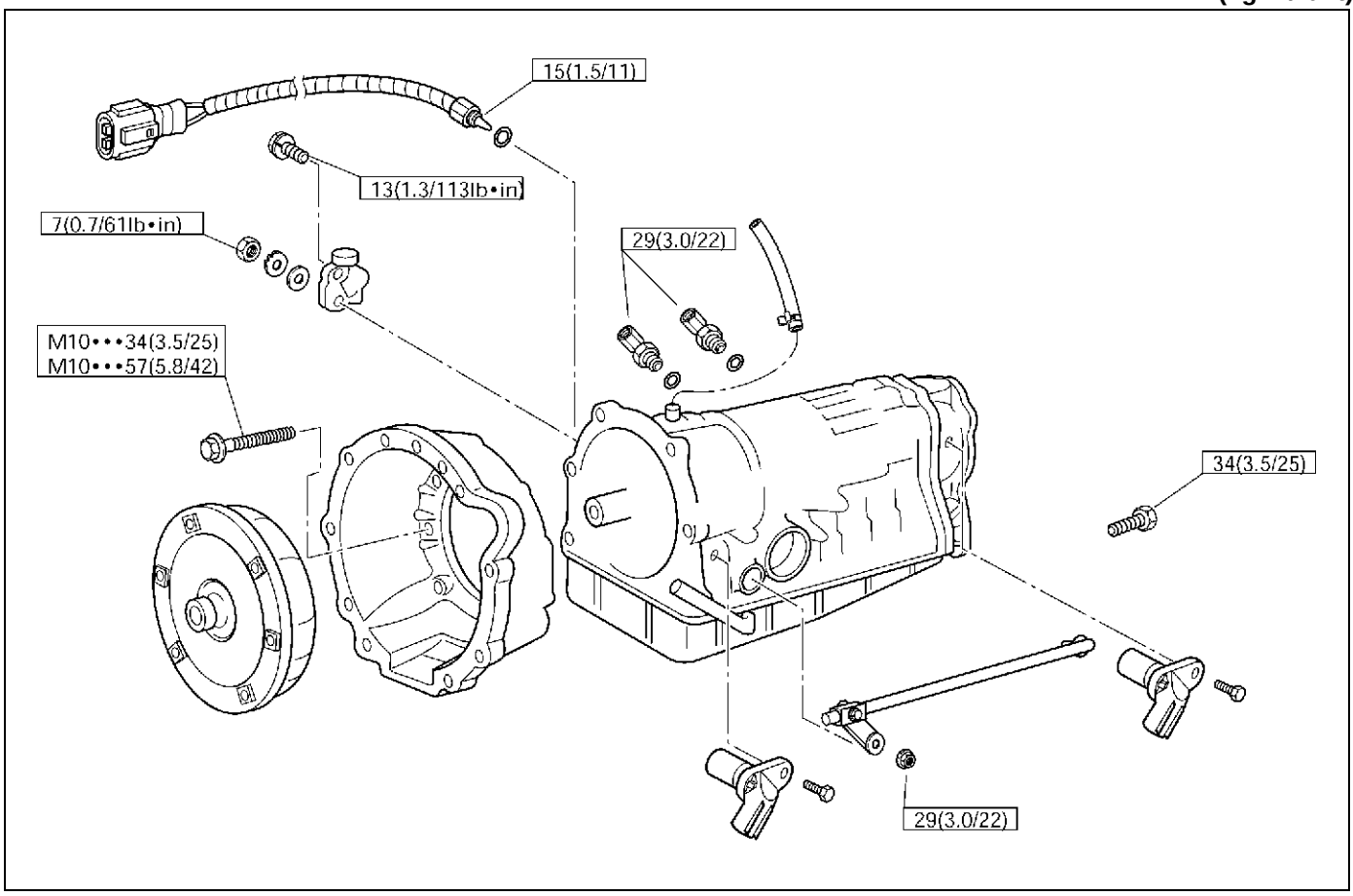

E07RY00006

TORQUE SPECIFICATIONS

N·m (kg·m/lb·ft)

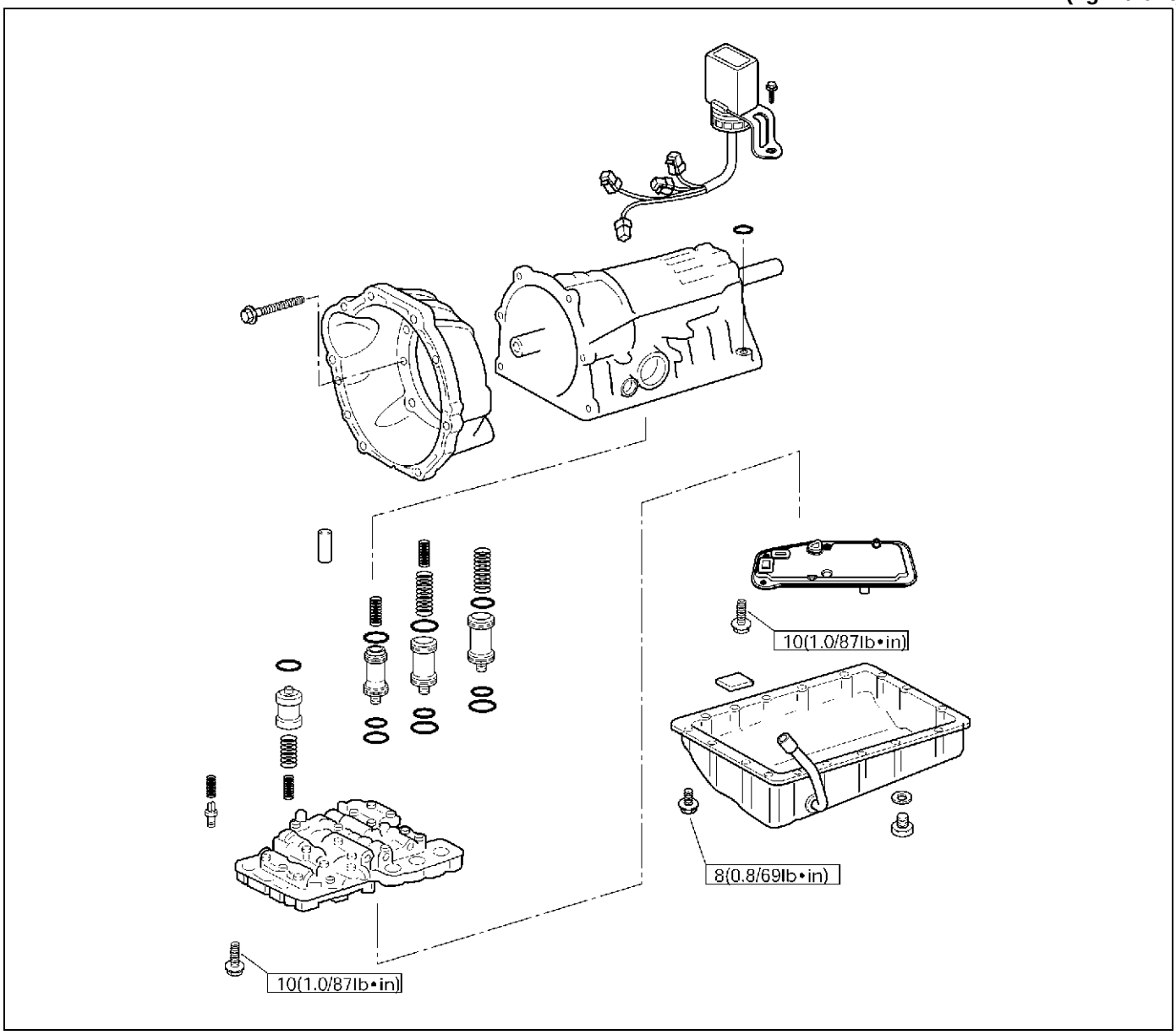

E07RY00007

SPECIAL TOOLS

ILLUSTRATION	PART NO.	PART NAME
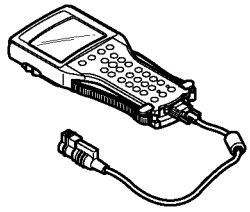 901RW176	7000057 & 3000095	TECH2 unit and DLC cable
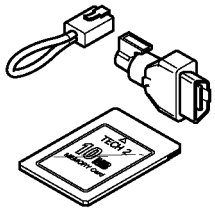 901RY00016	3000098, 9000112 & 3000117	SAE 16/19 adapter RS232 loop back connector PCMCIA card
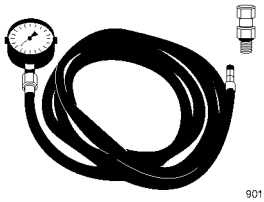 901RY00017	5-8840-0093-0	Oil pressure gauge
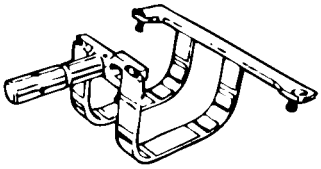 901RY00018	5-8840-2152-0 (J-37227)	Holding fixture
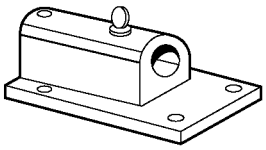 901RT096	5-8840-0003-0 (J-3289-20)	Holding fixture base
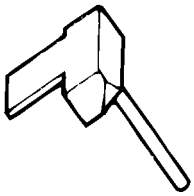 901RY00019	5-8840-2153-0 (J-37228)	Oil pan seal cutter
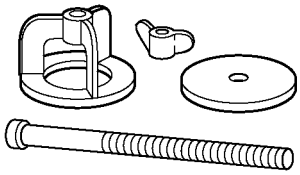 901RY00028	5-8840-0195-0 (J-23327-1)	Spring compressor

ILLUSTRATION	PART NO.	PART NAME
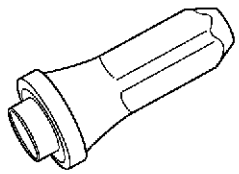	5-8840-2256-0 (J-9617)	Oil seal installer
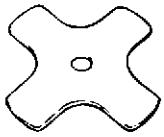	5-8840-2170-0 (J-37233)	OD brake piston spring compressor
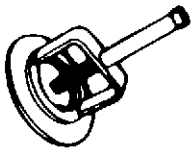	5-8840-0254-0 (J-25048)	Spring compressor (snap ring)
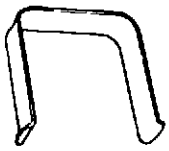	5-8840-2173-0 (J-37236)	1st/reverse brake puller
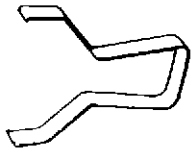	5-8840-2174-0 (J-37237)	1st/reverse brake puller
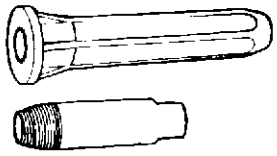	5-8840-2169-0 (J-37232-2)	Manual valve shaft seal installer & remover
	5-8840-2168-0 (J-35467)	One-way clutch testing tool; torque converter
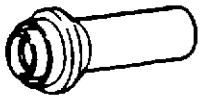	5-8840-2282-0	Oil seal installer

TRANSMISSION

TRANSMISSION CONTROL SYSTEM (4L30–E)

CONTENTS

Service Precaution 7A1–2
General Description 7A1–2
Electronic Control Diagram 7A1–3
Powertrain Control Module (PCM) 7A1–4
Control System Diagram 7A1–5
Shift Control 7A1–6
Band Apply Control 7A1–6
Torque Converter Clutch Control 7A1–6
Line Pressure Control 7A1–6
On–Board Diagnostic System 7A1–6
Fail Safe Mechanism 7A1–6
Torque Management Control 7A1–6
ATF Warning Control 7A1–6
ABS Control (If equipped) 7A1–6
Shift Mode Control 7A1–7
Gear Shift Control 7A1–8
Winter Drive Mode 7A1–9
Backup Mode 7A1–9
Functions of Input / Output Components . . 7A1–10
Diagnosis 7A1–11
Electronic Diagnosis 7A1–11
Check Trans Indicator 7A1–11
Diagnostic Check 7A1–11
“Check Trans” Check 7A1–12
Tech2 OBD II Connection 7A1–13
F0: Transmission Data 7A1–18
F1: PC Solenoid Data 7A1–19
OBD II Diagnostic Management System . . 7A1–20
16 – Terminal Data Link Connector (DLC) . 7A1–21
Malfunction Indicator Lamp (MIL) 7A1–22
Types Of Diagnostic Trouble Codes (DTCs) 7A1–22
Clear DTC 7A1–22
DTC Check 7A1–23
PCM Precaution 7A1–23
Information On PCM 7A1–23
Intermittent Conditions 7A1–23
Transmission And PCM Identification 7A1–24
Isuzu Trooper 7A1–25
Diagnostic Trouble Code (DTC) Identification 7A1–26
DTC P0218 Transmission Fluid Over Temperature 7A1–27
DTC P0560 System Voltage Malfunction . . . 7A1–29
DTC P0705 Transmission Range Switch (Mode Switch) Illegal Position 7A1–32
DTC P0706 Transmission Range Switch (Mode Switch) Performance 7A1–35
DTC P0712 Transmission Fluid Temperature (TFT) Sensor Circuit Low Input 7A1–38
DTC P0713 Transmission Fluid Temperature (TFT) Sensor Circuit High Input 7A1–41
DTC P0719 TCC Brake Switch Circuit High (Stuck On) 7A1–44
DTC P0722 Transmission Output Speed Sensor (OSS) Low Input 7A1–47
DTC P0723 Transmission Output Speed Sensor (OSS) Intermittent 7A1–50
DTC P0730 Transmission Incorrect Gear Ratio 7A1–53
DTC P0748 Pressure Control Solenoid (PCS) (Force Motor) Circuit Electrical 7A1–56
DTC P0753 Shift Solenoid A Electrical 7A1–58
DTC P0758 Shift Solenoid B Electrical 7A1–61
DTC P1790 ROM Transmission Side Bad Check Sum 7A1–65
DTC P1792 EEPROM Transmission Side Bad Check Sum 7A1–66
DTC P1835 Kickdown Switch Always On . . . 7A1–67
DTC P1850 Brake Band Apply Solenoid Malfunction 7A1–69
DTC P1860 TCC Solenoid Electrical 7A1–73
Transmission Fluid Temperature (TFT) Sensor Specifications 7A1–76

Service Precaution

WARNING: IF SO EQUIPPED WITH A SUPPLEMENTAL RESTRAINT SYSTEM (SRS), REFER TO THE SRS COMPONENT AND WIRING LOCATION VIEW IN ORDER TO DETERMINE WHETHER YOU ARE PERFORMING SERVICE ON OR NEAR THE SRS COMPONENTS OR THE SRS WIRING. WHEN YOU ARE PERFORMING SERVICE ON OR NEAR THE SRS COMPONENTS OR THE SRS WIRING, REFER TO THE SRS SERVICE INFORMATION. FAILURE TO FOLLOW WARNINGS COULD RESULT IN POSSIBLE AIR BAG DEPLOYMENT, PERSONAL INJURY, OR OTHERWISE UNNEEDED SRS SYSTEM REPAIRS.

CAUTION: Always use the correct fastener in the proper location. When you replace a fastener, use ONLY the exact part number for that application. ISUZU will call out those fasteners that require a replacement after removal. ISUZU will also call out the fasteners that require thread lockers or thread sealant. UNLESS OTHERWISE SPECIFIED, do not use supplemental coatings (Paints, greases, or other corrosion inhibitors) on threaded fasteners or fastener joint interfaces. Generally, such coatings adversely affect the fastener torque and the joint clamping force, and may damage the fastener. When you install fasteners, use the correct tightening sequence and specifications. Following these instructions can help you avoid damage to parts and systems.

General Description

The 4L30–E is a 4–speed fully automatic transmission. It uses a microcomputer as a control unit to judge running conditions including throttle opening rate and vehicle speed, then it sets the shifting point in the optimum timing so that best driving performance can be achieved.
In addition, the built–in shift mode select function can select three shift modes according to the driver's preference:

- Normal mode –Normal shift pattern.
- Winter mode –Starts in 3rd gear to reduce slippage on ice or snow.
- Power mode has a delayed upshift for when more powerful acceleration is required.

Also, the built–in fail safe function ("backup mode") assures driving performance even if the vehicle speed sensor, throttle signal or any solenoid fails.
Further, the self–diagnostic function conducts diagnosis in a short time when the control system fails, thus improving serviceability.
The major features of 4L30–E are as follows:

- A compact structure consisting of 2 sets of planetary gears and flat torque converter.
- Electronic control selects the optimum shift mode according to the driving conditions.
- Electronic control maintains the optimum hydraulic pressure for clutch, band brake as well as transmission so that shift feeling is improved.
- Two sets of planetary gears reduce friction of power train.

  Also, a lockup mechanism in the torque converter reduces fuel consumption.
- Wide gear ratio and high torque rate of torque converter provide excellent starting performance.

Electronic Control Diagram

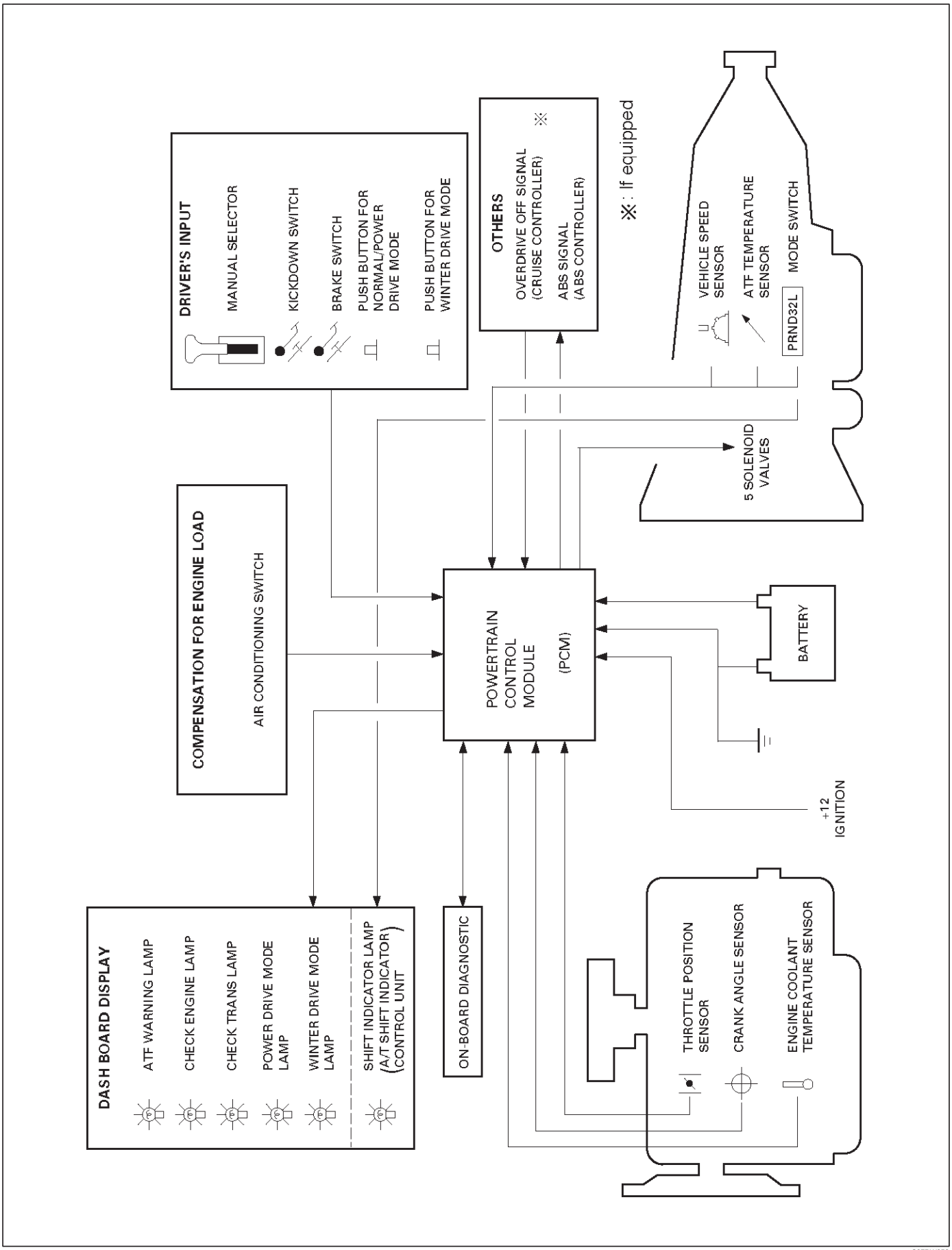

C07RW052

Powertrain Control Module (PCM)

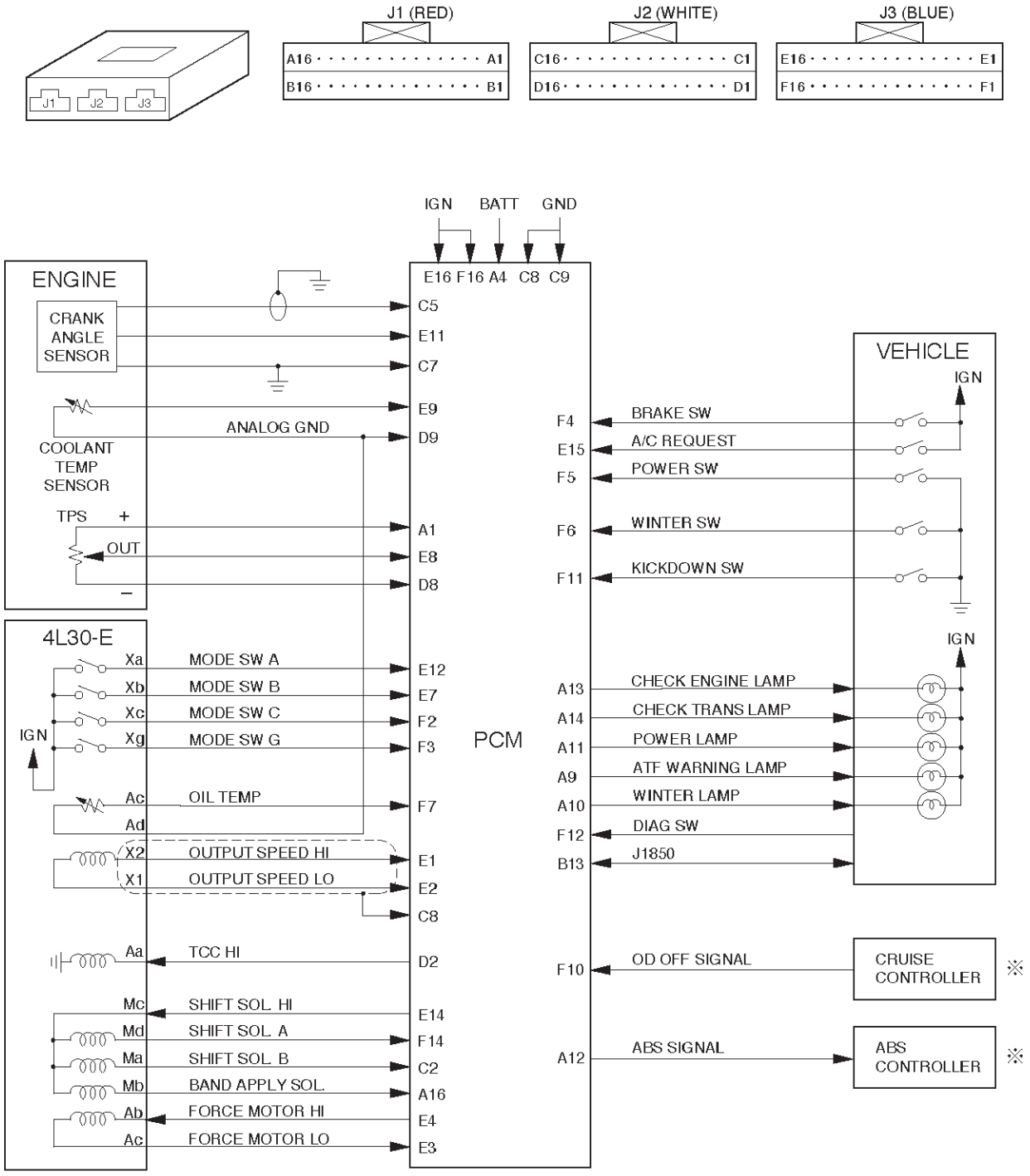

TPS: Throttle Position Sensor
TCC: Torque Converter Clutch
ABS: Anti-Lock Brake System
※: If equipped

C07RW051

Control System Diagram

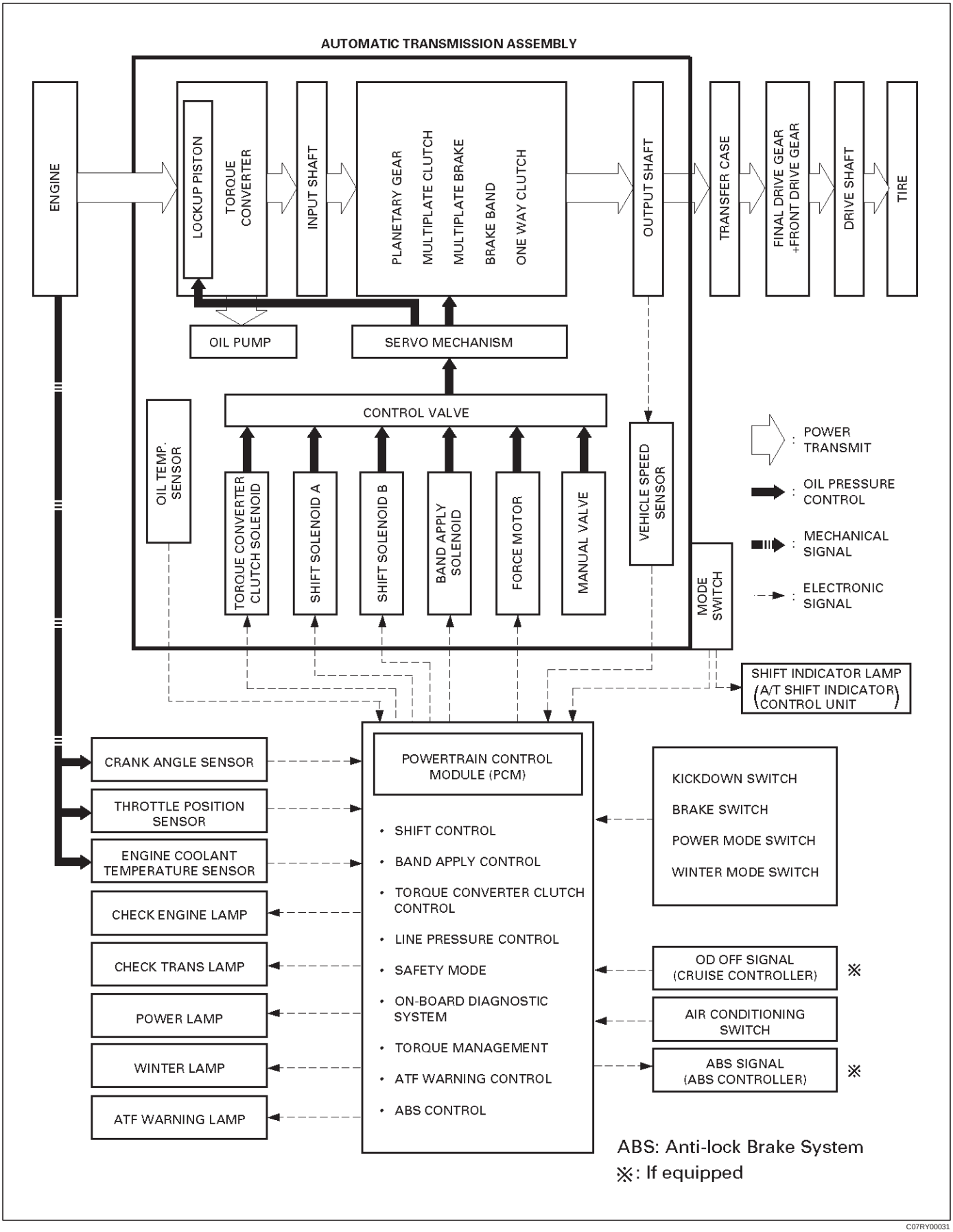

C07RY00031

Shift Control

The transmission gear is shifted according to the shift pattern selected by the driver. In shifting gears, the gear ratio is controlled by the ON/ OFF signal using the shift solenoid A and the shift solenoid B.

Band Apply Control

The band apply is controlled when in the 3–2 downshift (engine overrun prevention) and the garage shift (shock control).
The band apply solenoid is controlled by the signal from the Pulse Width Modulation (PWM) to regulate the flow of the oil.

Torque Converter Clutch Control

The clutch ON/OFF is controlled by moving the converter clutch valve through shifting Torque Converter Clutch (TCC) solenoid using the ON/OFF signal.

Line Pressure Control

The throttle signal allows the current signal to be sent to the force motor. After receiving the current signal, the force motor activates the pressure regulator valve to regulate the line pressure.

On–Board Diagnostic System

Several malfunction displays can be stored in the Powertrain Control Module (PCM) memory, and read out of it afterward.
The serial data lines, which are required for the testing of the final assembly and the coupling to other electronic modules, can be regulated by this function.

Fail Safe Mechanism

If there is a problem in the transmission system, the PCM will go into a “backup” mode.
The vehicle can still be driven, but the driver must use the select lever to shift gears.

Torque Management Control

The transmission control side sends the absolute spark advance signal to the engine control side while the transmission is being shifted. This controls the engine spark timing in compliance with the vehicle running condition to reduce the shocks caused by the change of speed.

ATF Warning Control

The oil temperature sensor detects the ATF oil temperature to control the oil temperature warning, TCC, and the winter mode.

ABS Control (If equipped)

When the select lever is at “L” or “R” range, a signal is sent to the ABS controller as one of the ABS control conditions.

Shift Mode Control

① Mode Type

Mode Type	Select lever position
Normal drive mode (NOR)	Entire range (excluding "R")
Power drive mode (PWR)	Entire range (excluding "R")
Winter drive mode	"D", "N", "R" and "P" range

② Mode selection

	SWITCH (SW)		LAMP	
Mode Type	POW/NOR. SW	WINTER SW	POWER DRIVE LAMP	WINTER DRIVE LAMP
Normal drive mode (NOR)	OFF	OFF	OFF	OFF
Power drive mode (PWR)	ON	OFF	ON	OFF
Winter drive mode	ON/OFF	ON	OFF	ON

However, the winter switch prevails over the PWR/NOR switch.
The mode becomes normal drive mode when the winter switch is operated from ON to OFF.

③ Comparison of mode

(1) The normal drive mode is set at the normal shift points.

(2) The shift points of the power drive mode are shifted to the higher speed side, compared to the normal drive mode.

(3) The winter drive mode is a special mode used exclusively for starting in third gear.

Shift diagram

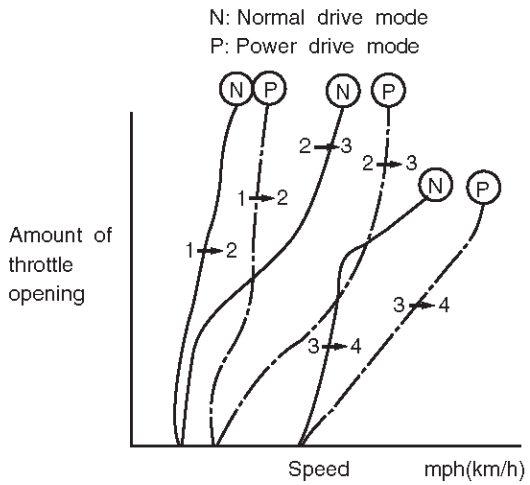

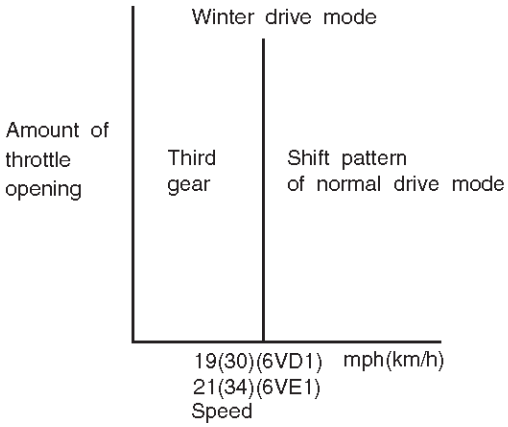

C07RY00012

Gear Shift Control

① Shift pattern

SELECT LEVER RANGE	SHIFT PATTERN
D (Drive)	1⇄2TCC ⇄3TCC ⇄4TCC
3 (Third)	1⇄2TCC ⇄3TCC ←4TCC
2 (Second)	1⇄2TCC ←3TCC
L (First)	1←2

TCC = Torque Converter Clutch

② Gear position

The gear is selected by ON/OFF of two solenoids.

Gear \ SOL	A	B
4 (Fourth)	×	×
3 (Third)	○	×
2 (Second)	○	○
1 (First)	×	○
P (park) R (Reverse) N (Neutral)	×	○

○ = ON

× = OFF

Shift solenoid A (Normally closed) ON → PRESSURE TO SHIFT VALVE

Shift solenoid B (Normally open) OFF → PRESSURE TO SHIFT VALVE

③ Selecting gear pisition

Seven types of positions can be selected according to 5 signals from the mode switch as below.

SELECT LEVER RANGE	MODE SW TERMINALS				
	5(D)	8(A)	7(B)	6(C)	3(G)
P (park)	•	•			•
R (Reverse)	•	•	•		
N (Neutral)	•		•		•
D (Drive)	•		•	•	
3 (Third)	•	•	•	•	•
2 (Second)	•	•		•	
L (First)	•			•	•

• = Continuity

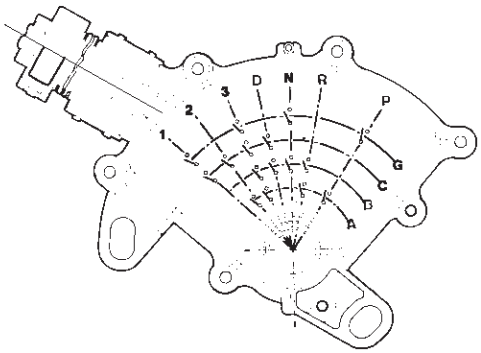

F07RT034

Winter Drive Mode

1. **Operation**
   The winter switch will operate when switched on after all of the following conditions are present:
   a. The gear select position is “D”, “N”, “R” and “P” range.
   b. Vehicle speed is 7 mph (11 km/h) or less.
   c. Transmission oil temperature is 130˚C (266˚F) or less.
   d. Kickdown switch is off.
   e. Accelerator opening is at 8% or less.
2. **Cancel Release**
   1. Cancellation by driver
      a. Turning off the winter drive mode switch
      b. Shifting select position to “3”, “2”, or “L” (Winter drive mode is not canceled by selecting “N”, “R”, or “P” from “D”)
      c. Ignition key is turned off.
   2. Automatic cancellation
      a. When vehicle runs at 19mph (30 km/h) (6VD1) or 21 mph (34 km/h) (6VE1) or more for 1 second or more
      b. When transmission oil temperature reaches 130˚C (266˚F) or above

NOTE: The mode returns to normal drive mode or power drive mode after the winter drive mode is canceled.

Backup Mode

If a major system failure occurs which could affect safety or damage the transmission under normal vehicle operation, the diagnostic system detects the fault and overrides the Powertrain Control Module (PCM).
The “CHECK TRANS” light flashes to alert the driver, and the transmission must be manually shifted as follows:

Select lever position	Gear Ratio Selected
D	4 (Fourth)
Manual 3	4 (Fourth)
Manual 2	3 (Third)
Manual L	1 (First)
R	Reverse

Shifts are firmer to prevent clutch slip and consequent wear. The fault should be corrected as soon as possible.

Functions of Input / Output Components

Components			Function
INPUT SIGNAL	Speed sensor (fixed to transmission (T/M))		Senses rotation of output shaft and feeds the data to Powertrain Control Module (PCM).
	Throttle position sensor (TPS) (fixed to engine)		Senses the extent of throttle valve opening and the speed of the throttle valve lever motion to open the valve. Feeds the data to PCM.
	Brake Switch (SW) (fixed to brake pedal)		Senses whether the driver has pressed the brake pedal or not and feeds the information to PCM.
	Kickdown SW (fixed to accelerator pedal)		Senses whether the driver has pushed the accelerator pedal fully or not, and feeds the information to PCM.
	Mode SW (fixed to T/M)		Senses the select lever position, and feeds the information to PCM.
	Power drive SW (fixed to front console)		Senses whether the driver has selected the power mode, and feeds the information to PCM.
	T/M oil temp. sensor		Senses the T/M oil temperature and feeds the data to PCM
	Engine coolant temperature sensor		Senses the engine coolant temperature, and feeds the data to PCM.
	Engine speed signal		Feeds the signals monitoring engine speed to PCM from crank angle sensor.
	Air conditioning information		Senses whether the air conditioner has been switched on or not, and feeds the information to PCM.
	Winter switch (fixed to front console)		Senses whether the driver has selected the winter mode, and feeds the information to PCM.
	Cruise controller * (Overdrive OFF signal)		Downshift takes place when Overdrive OFF signal is received from auto cruise control unit.
OUTPUT SIGNAL	SOLENOID	Shift solenoid A, B	Selects shift point and gear position suited to the vehicle running condition on the basis of PCM output.
		Band apply solenoid	Controls oil flow suited to the vehicle running condition on the basis of PCM output.
		Torque Converter Clutch solenoid	Controls clutch engagement/disengagement suited to the vehicle running condition on the basis of PCM output.
		Force motor (Pressure regulator valve)	Adjusts the oil pump delivery pressure to line pressure suited to the vehicle running condition on the basis of PCM output.
	Power drive mode lamp		Informs the driver whether the vehicle is in power mode or not.
	Winter drive mode lamp		Informs the driver whether the vehicle is in winter mode or not.
	T/M monitor lamp (“CHECK TRANS”)		Informs the driver of failure in the system.
	ATF warning lamp		Lights when ATF oil temperature rises.
	ABS signal *		When the select lever is at “Reverse” or “L” range, sends a signal to the ABS controller as one of the ABS control conditions.

* If equipped

Diagnosis

Electronic Diagnosis

How To Diagnose The Problem

1. To avoid incorrect diagnostics, this book needs to be followed accurately. Unless stated, do not jump directly to a section that could contain the solution. Some important information may be missed.
2. The sections in CAPITALS and bold are the main sections that can be found in the contents.
3. The GOTO **“SECTION”** means to continue to check going to the “section”.
4. The GOTHROUGH **“SECTION”** means to go through the “section” and then to go back to the place the GOTHROUGH was written.
5. BASIC ELECTRIC CIRCUITS:
   You should understand the basic theory of electricity. This includes the meaning of voltage, amps, ohms, and what happens in a circuit with an open or shorted wire. You should also be able to read and understand wiring diagrams.

Check Trans Indicator

Find CHECK TRANS indicator and verify if it is

A. Flashing: GOTO **DIAGNOSTIC CHECK.**

B. Staying on: GOTHROUGH **CHECK TRANS CHECK**.

C. Is never ON when the ignition key is turned on: GOTHROUGH **CHECK TRANS CHECK**

D. Is ON during 2 seconds at ignition but OFF after: Normal operation. No DTC or malfunction.

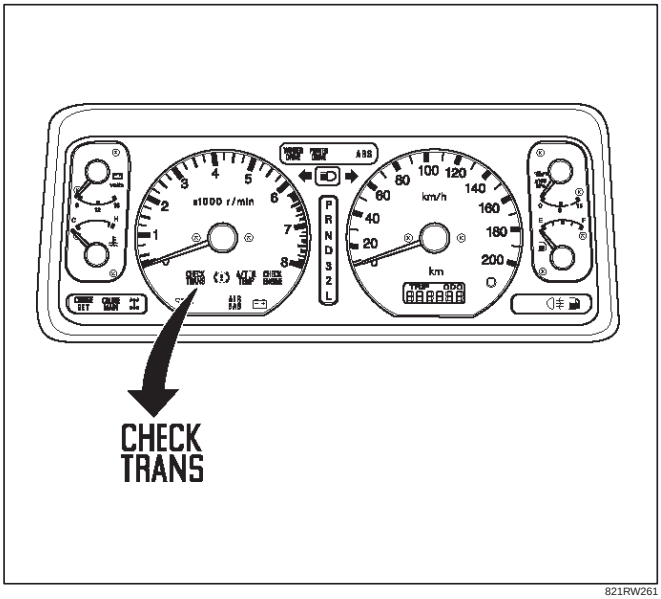

821RW261

Diagnostic Check

This test determines if the transmission or its inputs, outputs, connections, or sensors are failing.

1. Connect the Tech2: GOTHROUGH **Tech2 OBD II CONNECTION**.
2. Turn on the ignition but not the engine.
3. Push “F2” on Tech2 to see the Diagnostic Trouble Code (DTC):
4. Do you have a DTC?
   YES: write down all code numbers and do the **DTC CHECK**
   NO: the DTC can not help you finding the problem.
   1. GOTHROUGH **“CHECK TRANS” CHECK**
   2. IF it is flashing and the flash is 0.2 seconds ON and 0.2 seconds OFF, this means that you should have a DTC stored. Please recheck GOTO **DIAGNOSTIC CHECK** and if you find the same problem, replace the Powertrain Control Module (PCM).

Normal

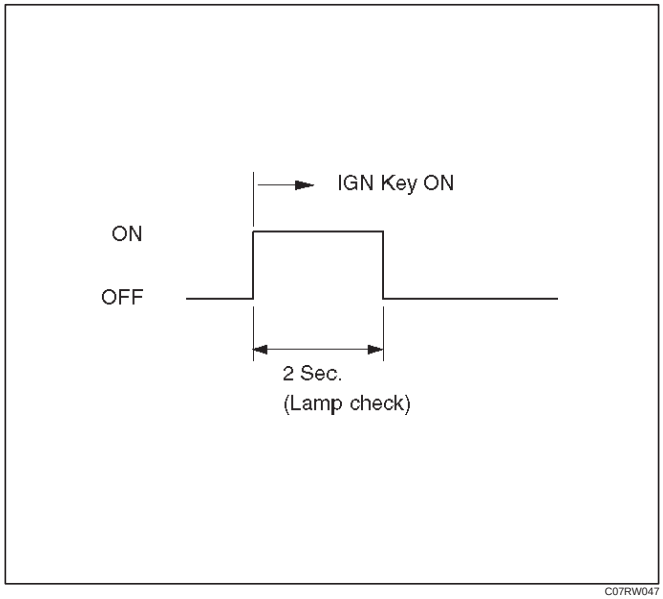

C07RW047

Abnormal

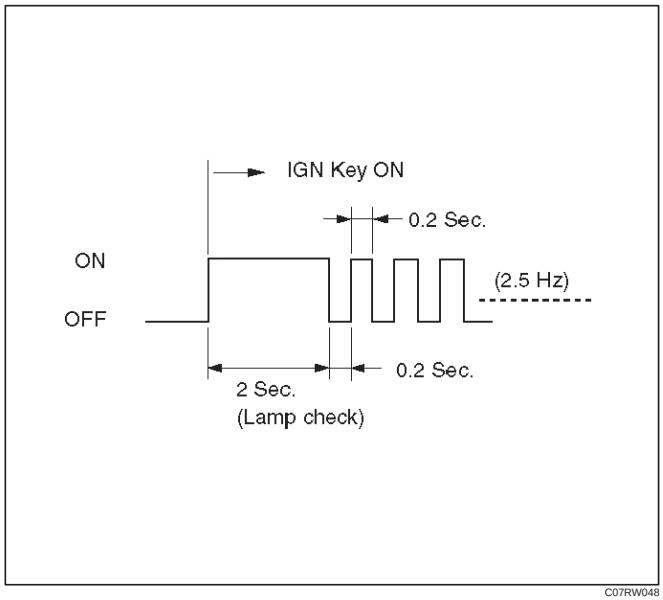

C07RW048

“Check Trans” Check

1. Indicator it is ON during 2 seconds at ignition (or when the engine is cranked) but it is OFF after the engine starts. The indicator is working normally GOTO **DIAGNOSTIC CHECK**.

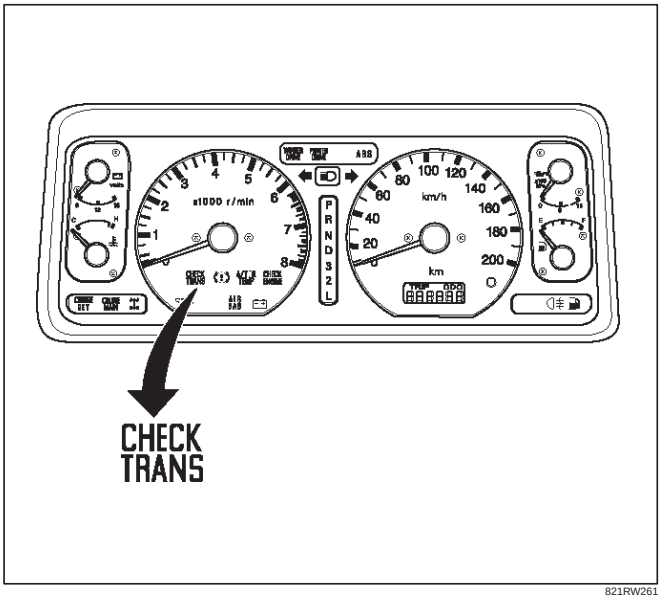

821RW261

Normal

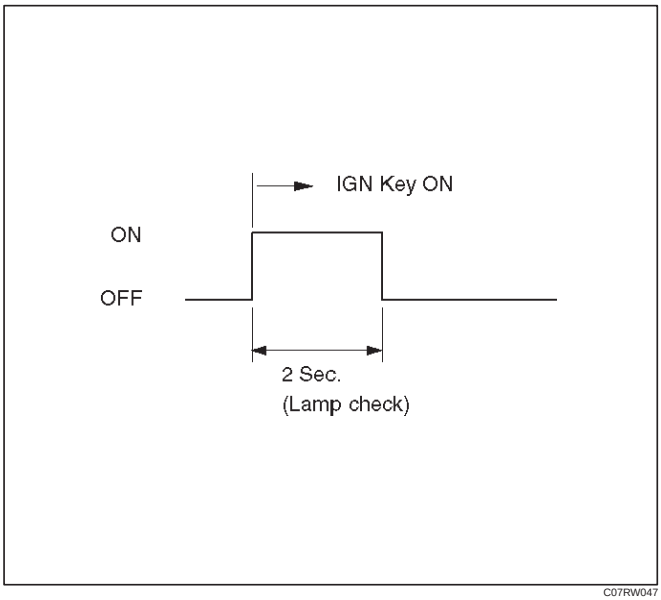

C07RW047

2. Indicator it is flashing and the flash is 0.2 seconds ON and 0.2 seconds OFF always when ignition is on (engine cranked or not). This means that there is a malfunction. GOTO **DIAGNOSTIC CHECK**.

Abnormal

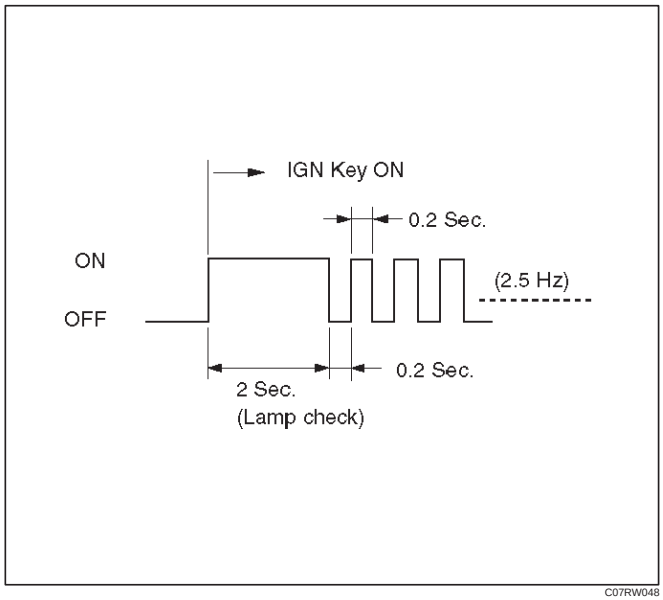

C07RW048

3. Indicator it is staying ON always when Ignition is ON.
   1. This means that connection between the lamp and the PCM is shorted to ground.
   2. Verify if instrument panel terminal 3 of connector I–9 is shorted to ground.
   3. Verify if the PCM connector J1 (RED) terminal A14 is shorted to ground.
   4. Verify that the instrument panel terminal 15 of connector I–9 is connected to battery.
   5. IF problem solved: GOTO **CHECK TRANS INDICATOR**.

   NO:Replace Powertrain Control Module (PCM).
4. Indicator it is staying OFF with the ignition ON (engine OFF).
   1. This means that connection between the lamp and the PCM is shorted to battery or opened.
   2. Verify if instrument panel terminal 3 of connector I–9 is shorted to battery or open.
   3. Verify if the PCM connector J1 (RED) terminal A14 is shorted to battery or open.
   4. Verify that the instrument panel terminal 15 of connector I–9 is connected to battery. If not, check the fuses and the connections voltage.
   5. IF problem solved: GOTO **CHECK TRANS INDICATOR**.

   NO: Replace Powertrain Control Module (PCM).

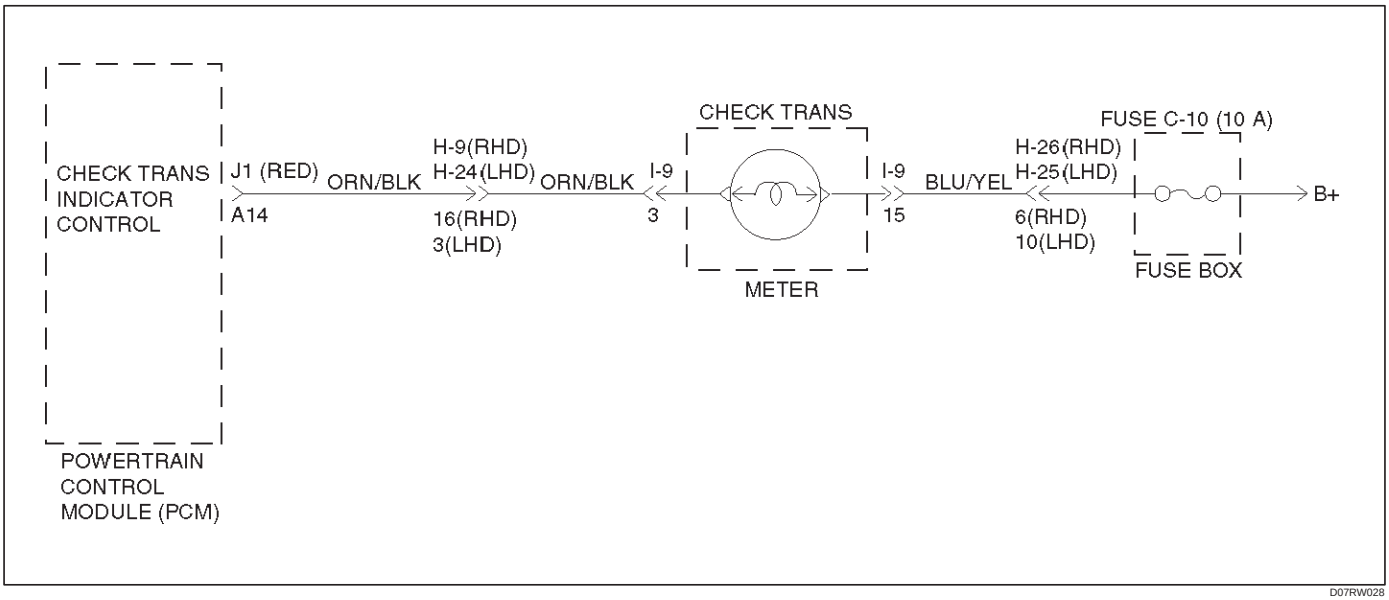

D07RW028

Tech2 OBD II Connection

In order to access OBD II Powertrain Control Module (PCM) data, use of the Tech2 scan tool kit (7000086) is required.

1. The electronic diagnosis equipment is composed of:
   1. Tech2 (7000057) hand–held scan tool unit and DLC cable (3000095).

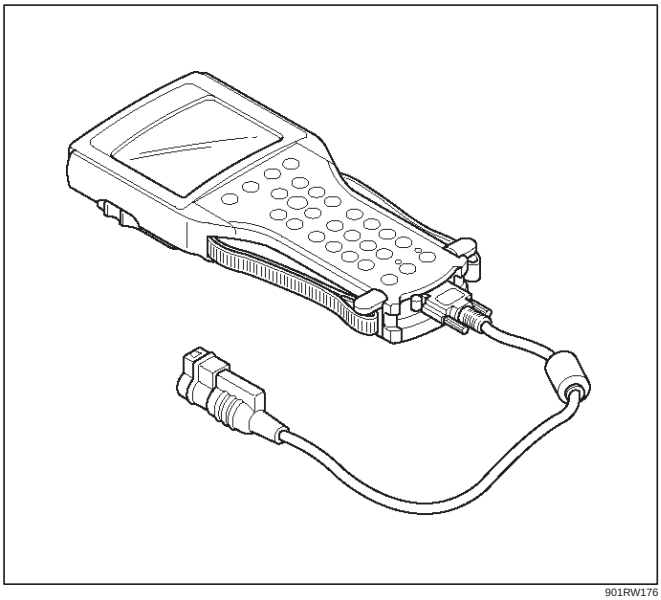

901RW176

   2. SAE 16/19 adapter (3000098) (1), RS 232 loop back connector (3000112) (2), and PCMCIA card (3000117) (3).

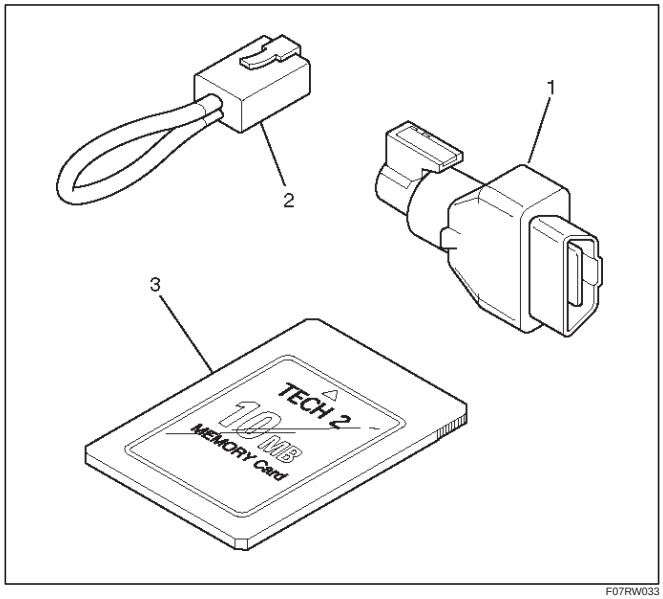

F07RW033

2. Connecting the TECH2

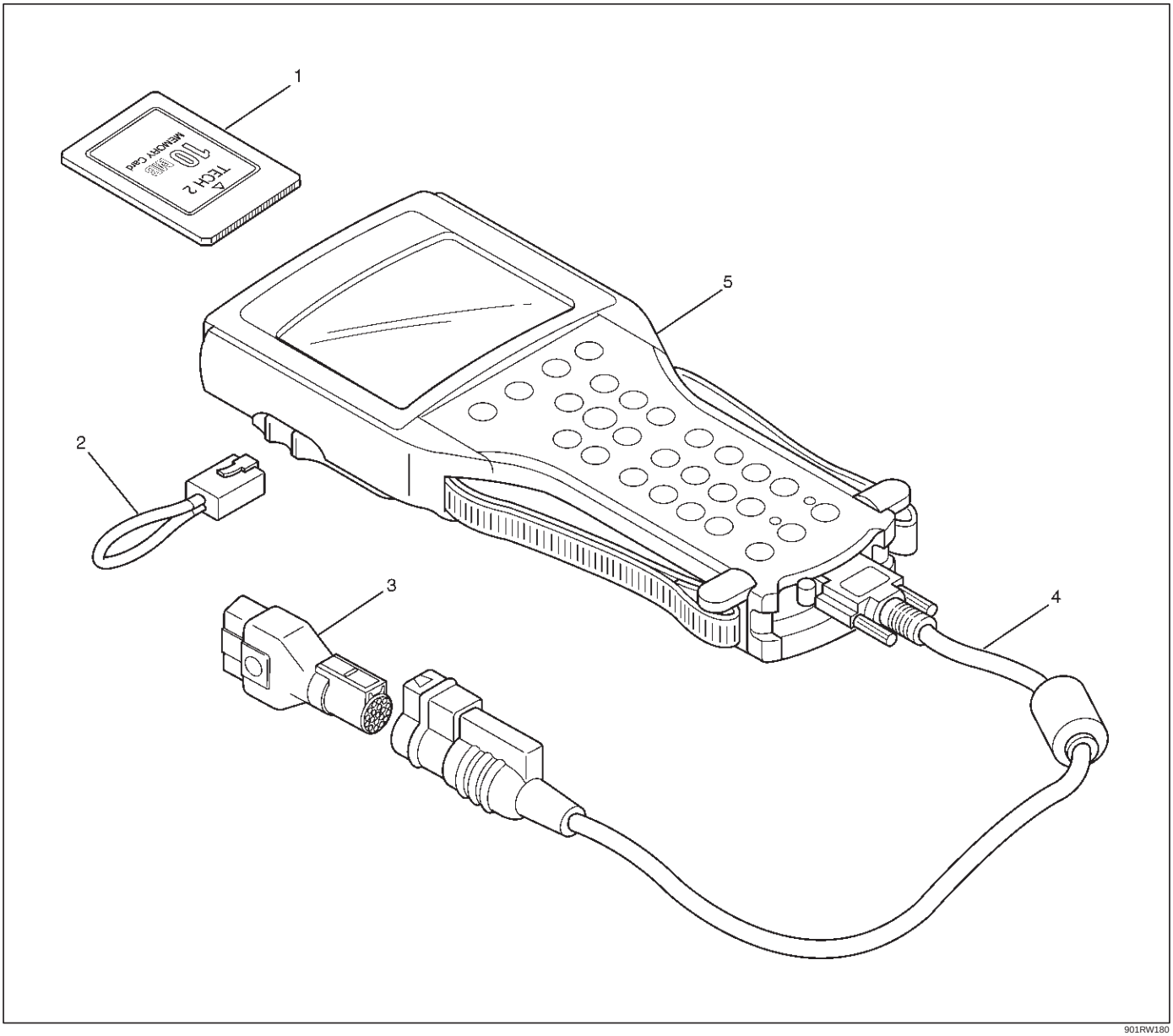

Legend

(1) PCMCIA Card
(2) RS 232 Loop Back Connector
(3) SAE 16/19 Adapter
(4) DLC Cable
(5) Tech2

- Before operating the Isuzu PCMCIA card with the Tech 2, the following steps must be performed:

1. The Isuzu 2000 System PCMCIA card (1) inserts into the Tech 2 (5).
2. Connect the SAE 16/19 adapter (3) to the DLC cable (4).
3. Connect the DLC cable to the Tech 2 (5)
4. Make sure the vehicle ignition is off.

5. Connect the Tech 2 SAE 16/19 adaptor to the vehicle DLC.

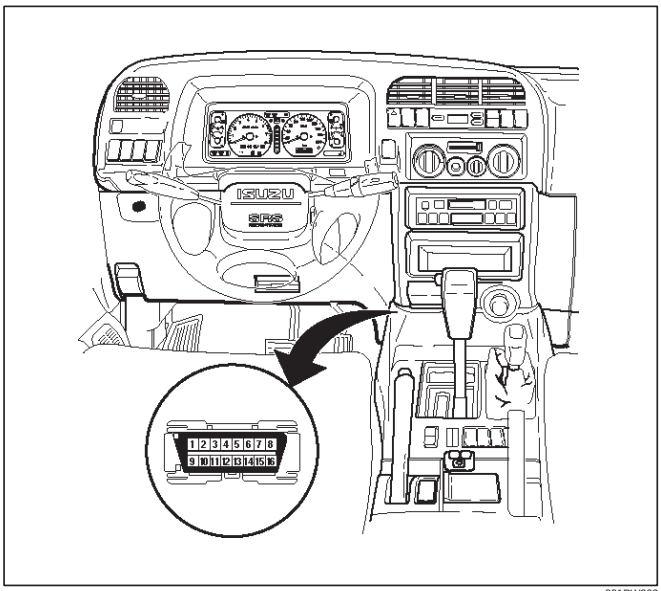

821RW262

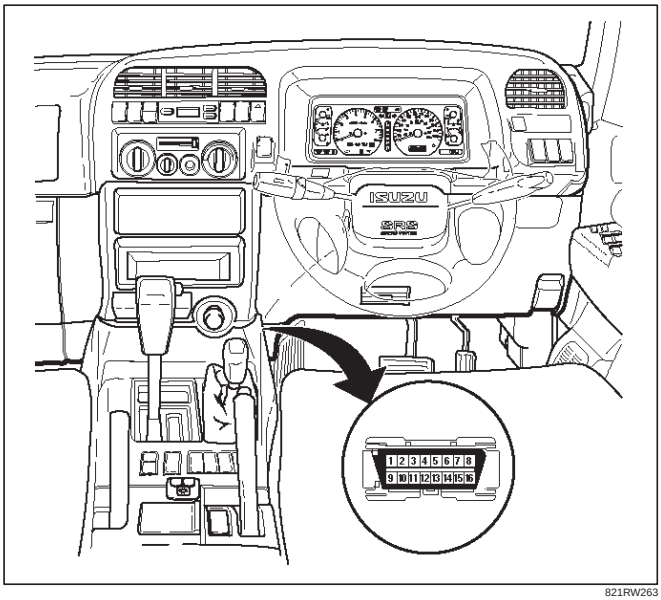

821RW263

6. The vehicle ignition turns on.
7. Verify the Tech 2 power up display.

060RW009

NOTE: The RS232 Loop back connector is only to use for diagnosis of Tech 2 and refer to user guide of the Tech 2.

8. The power up screen is displayed when you power up the tester with the Isuzu systems PCMCIA card. Follow the operating procedure below.

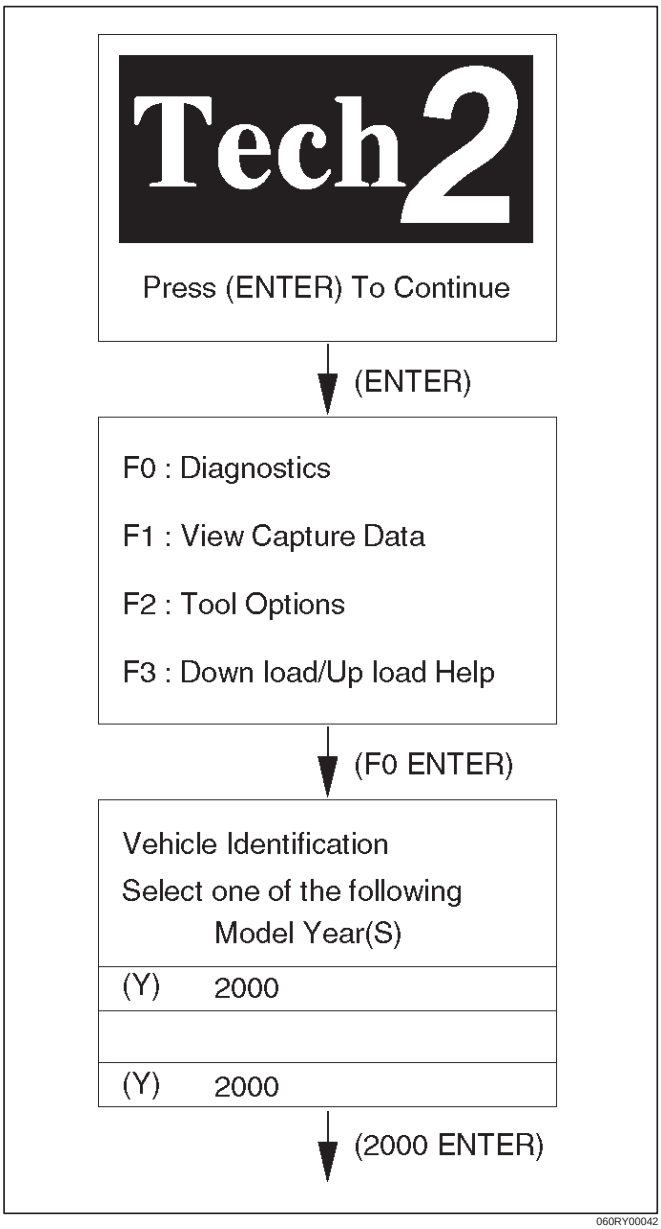
Tech2
Press (ENTER) To Continue
(ENTER)
F0 : Diagnostics
F1 : View Capture Data
F2 : Tool Options
F3 : Down load/Up load Help
(F0 ENTER)
Vehicle Identification
Select one of the following
Model Year(S)
(Y) 2000
(Y) 2000
(2000 ENTER)
060RY00042

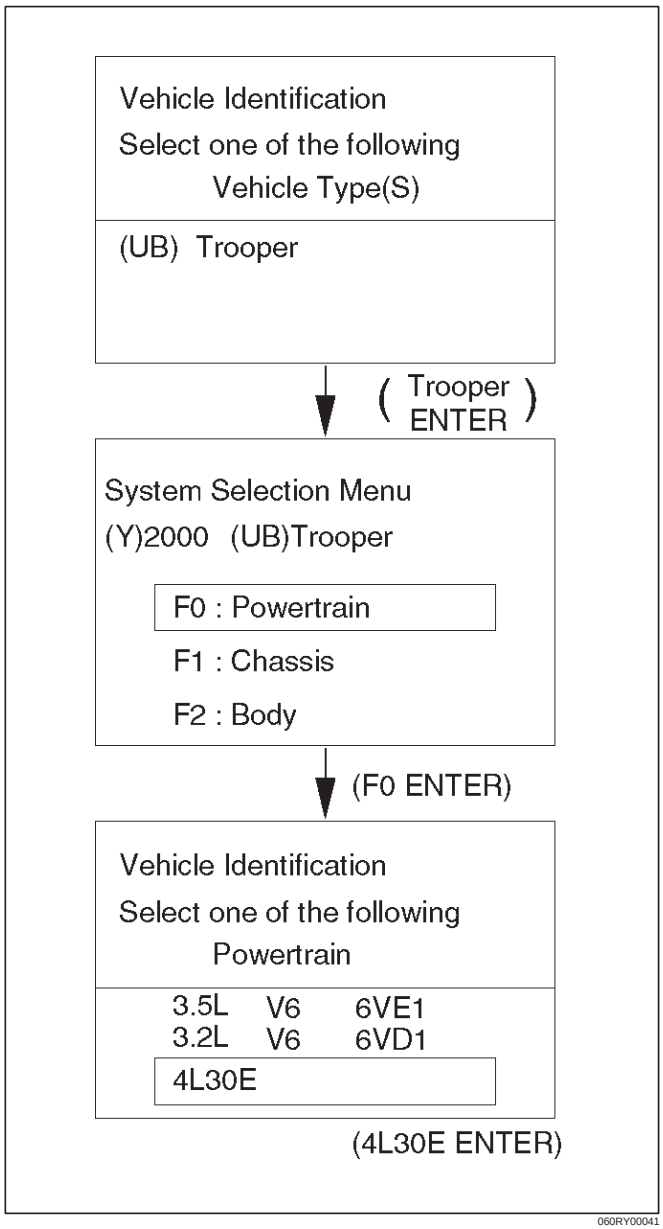
Vehicle Identification
Select one of the following
Vehicle Type(S)
(UB) Trooper
(Trooper ENTER)
System Selection Menu
(Y)2000 (UB)Trooper
F0 : Powertrain
F1 : Chassis
F2 : Body
(F0 ENTER)
Vehicle Identification
Select one of the following
Powertrain
3.5L V6 6VE1
3.2L V6 6VD1
4L30E
(4L30E ENTER)
060RY00041

Once the test vehicle has been identified an “Application (Powertrain) Menu” screen appears. Please select the appropriate application.

Data Display

When F1: Data Display is selected, a “Data Display Menu” screen appears.
Please select either “Transmission Data” or “PC Solenoid Data”.

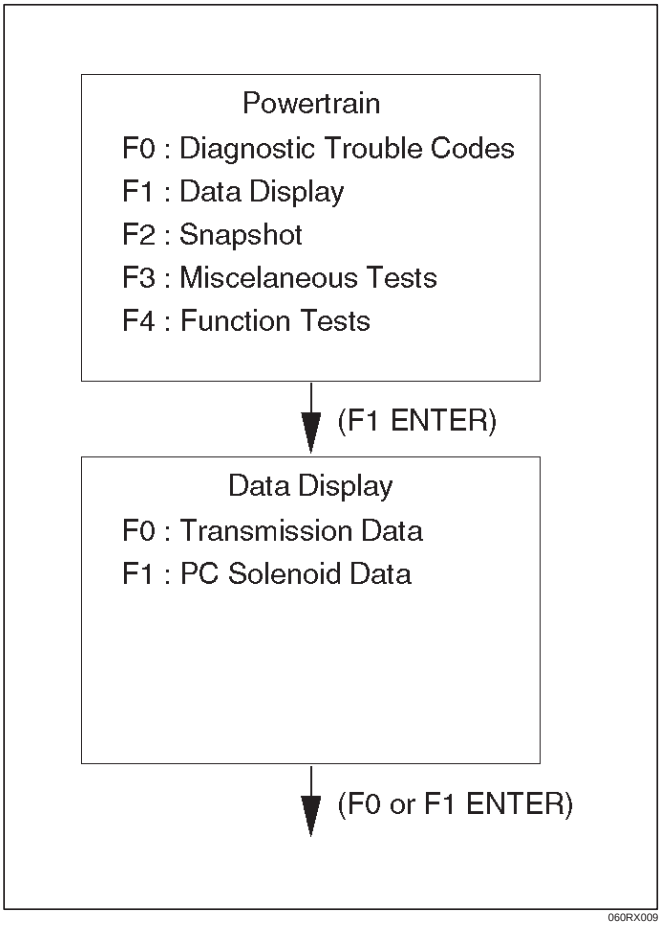

Function Tests (Reset Oil Life Monitor)

When F4: Function Tests is selected from the “Powertrain Menu”, a “Reset Oil Life Monitor Menu” screen appears. When the ATF has been replaced, select “F0” and reset “Oil Life Monitor” data.

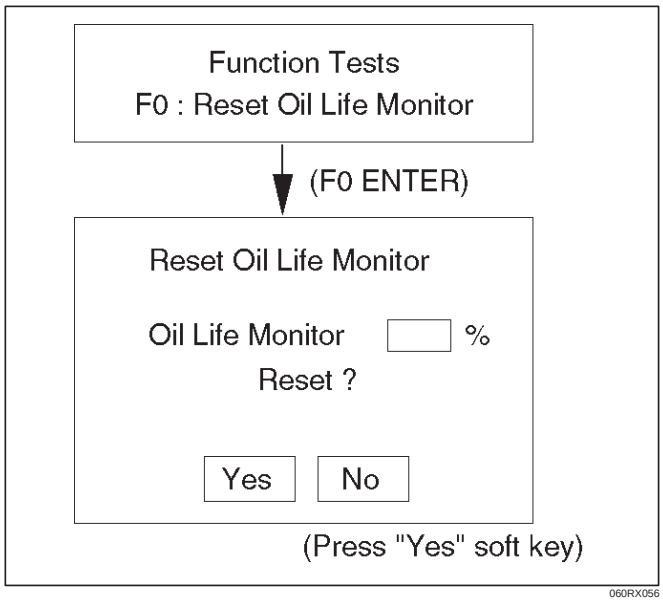

F0: Transmission Data

Item	Unit	Engine running at idle
Engine Speed	RPM	750 ~ 900 RPM
Vehicle Speed	km/h, MPH	0 MPH
Throttle Position	%	0 %
Throttle Position Sensor	V	0.5 ~ 1.0 V
Manifold Absolute Pressure	kPa	approx. 40 kPa
Barometric Pressure	kPa	approx. 102 kPa
AT Output Speed (Automatic Transmission)	RPM	0 RPM
AT Input Speed Ratio (Automatic Transmission)		0.0
Ignition Voltage	V	12.8 ~ 14.1 V
AT Oil Temperature (Automatic Transmission)	˚C, ˚F	70 ~ 80˚C (158 ~ 176˚F)
AT Oil Life Monitor (Automatic Transmission)	%	100 %
Commanded Gear		1
Current Gear		1
Mode Switch C	Inactive, Active	Inactive
Mode Switch B	Inactive, Active	Inactive
Mode Switch A	Inactive, Active	Active
Mode Switch G	Inactive, Active	Active
Actual Gear		Park
1–2 Shift Solenoid A	Off, On	Off
2–3 Shift Solenoid B	Off, On	On
Brake Switch	Off, On	Off
Solenoid Brake Band	Off, On	Off
TCC Slip Speed	RPM	750 ~ 900 RPM
TCC Status	Disabled, Enabled	Enabled
TCC Solenoid	Off, On	Off
TCC Duty Cycle	%	0 %
TCC Apply Mode	No Apply, In Apply	No Apply
TCC Release Mode	No, Yes	No
TCC On Mode	No, Yes	No
TCC Off Mode	No, Yes	Yes
Default Gear	No, Yes	No
Engine Warm	No, Yes	Yes
A/C Request	Yes, No	Yes
A/C Clutch Relay	Off, On	On
Winter Switch	Off, On	Off
Winter Drive Lamp	Off, On	Off
Kickdown Switch	Off, On	Off
ATF Lamp (Automatic Transmission)	Off, On	Off
Power Switch	Normal, Power	Normal
Power Drive Lamp	Off, On	Off
ABS Status	On, Off	Off

F1: PC Solenoid Data

Item	Unit	Engine running at idle
Engine Speed	RPM	750 ~ 900 RPM
Vehicle Speed	km/h, MPH	0 MPH
Throttle Position	%	0 %
Throttle Position Sensor	V	0.5 ~ 1.0 V
Manifold Absolute Pressure	kPa	approx. 40 kPa
Barometric Pressure	kPa	approx. 102 kPa
PCS Current (Pressure Control Solenoid)	A	approx. 1.0 A
PCS Actual Current (Pressure Control Solenoid)	A	approx. 1.0 A
PCS Duty Cycle (Pressure Control Solenoid)	%	approx. 45 %
Desired PCS Pressure (Pressure Control Solenoid)	kPa	43 ~ 52 kPa
Shift Pressure (Line Pressure)	kPa	43 ~ 52 kPa
Transmission Temperature	˚C, ˚F	75 ~ 110˚C (167 ~ 230˚F)

OBD II Diagnostic Management System

Powertrain Control Module (PCM) Location

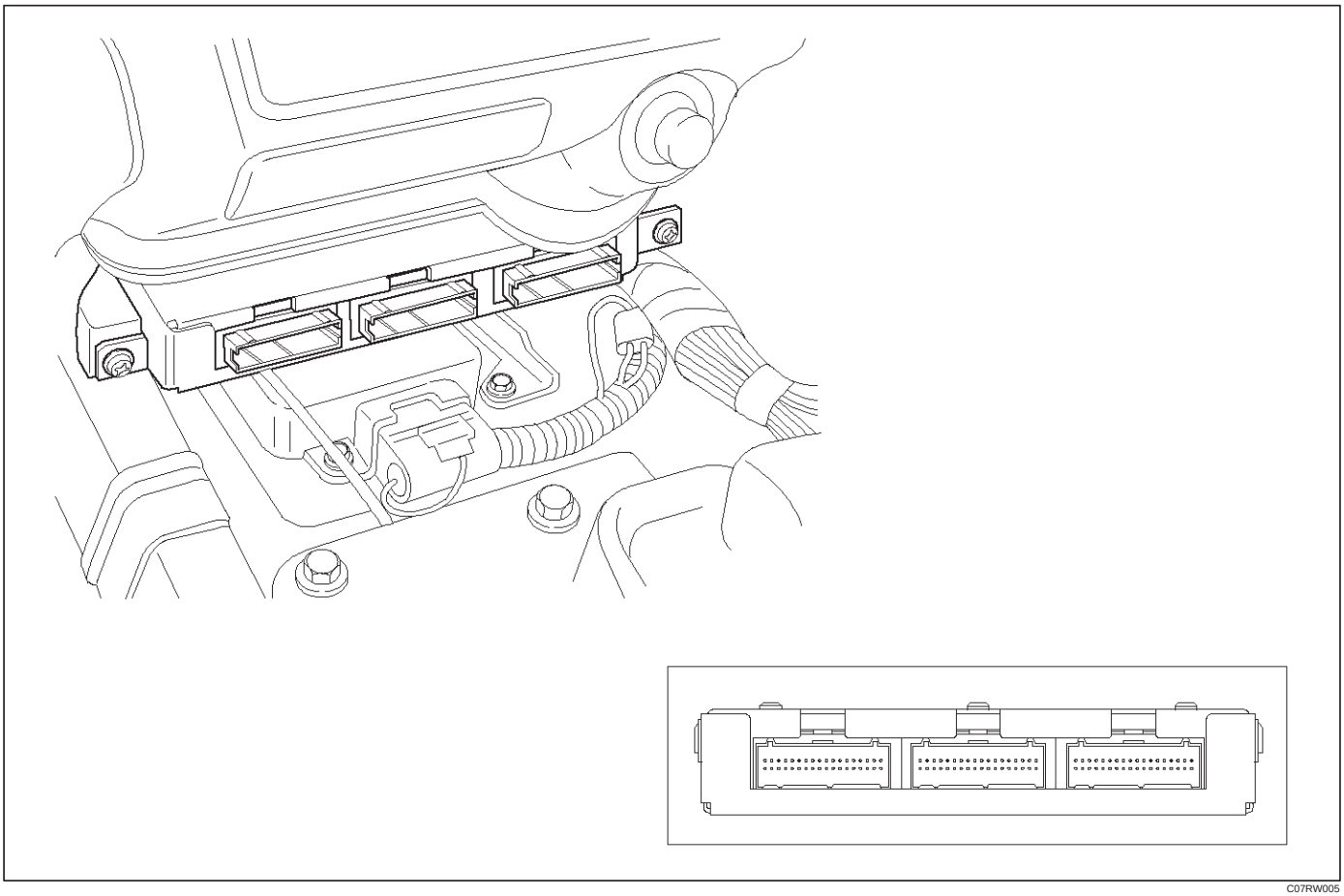

C07RW005

Class 2 Serial Data Bus

OBD II technology requires a much more sophisticated PCM than does OBD I technology. The OBD II PCM diagnostic management system not only monitors systems and components that can impact emissions, but they also run active tests on these systems and components. The decision making functions of OBD II PCMs have also greatly increased. To accommodate this expansion in diagnostic complexity, Isuzu engineers have designed the Class 2 serial data bus, which meets SAE J1850 recommended practice for serial data.

"Serial Data" refers to information which is transferred in a linear fashion – over a single line, one bit at a time. A "Data Bus" is an electronic pathway through which serial data travels.

TROOPER previously used a 5 volt data bus called UART, which is an acronym for "Universal Asynchronous Receive and Transmit". When neither the vehicle's control module nor the diagnostic tool, such as a Tech2, are "talking," the voltage level of the bus at rest is 5 volts. The two computers talk to each other at a rate of 8,192 bits per second, by toggling or switching the voltage on the data bus from 5 volts to ground.

Class 2 data, which is used on OBD II vehicles, is quite different. Data is transferred at a rate of 10.4 kilobits per second, and the voltage is toggled between zero and 7 volts.

C07RT006

Class 2 data is also pulse width modulated. Each bit of information can have one of two lengths: long or short. On the other hand, UART data bits come in only one length (short). The pulse width modulation of Class 2 data allows better utilization of the data line.

The message carried on Class 2 data streams are also prioritized. This means that if two devices try to communication on the data line at the same time, only the higher priority message will continue. The device with the lower priority message must wait.

NOTE: The Class 2 data wire is always terminal 2 of the new 16–terminal Data Link Connector (DLC).

16 – Terminal Data Link Connector (DLC)

OBD II standardizes Data Link Connector (DLC) configurations. The DLC, formerly referred to as the ALDL, will be a 16–terminal connector found on the lower left side of the driver's side instrument panel. All manufacturers must conform to this 16–terminal standard.

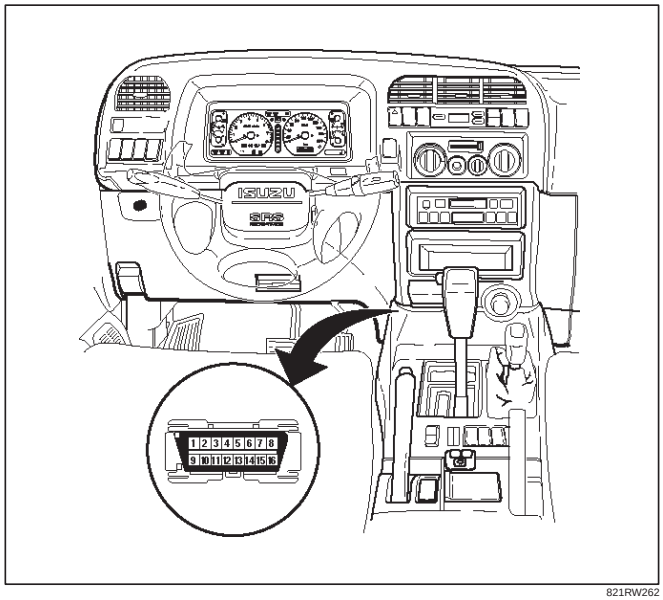

821RW262

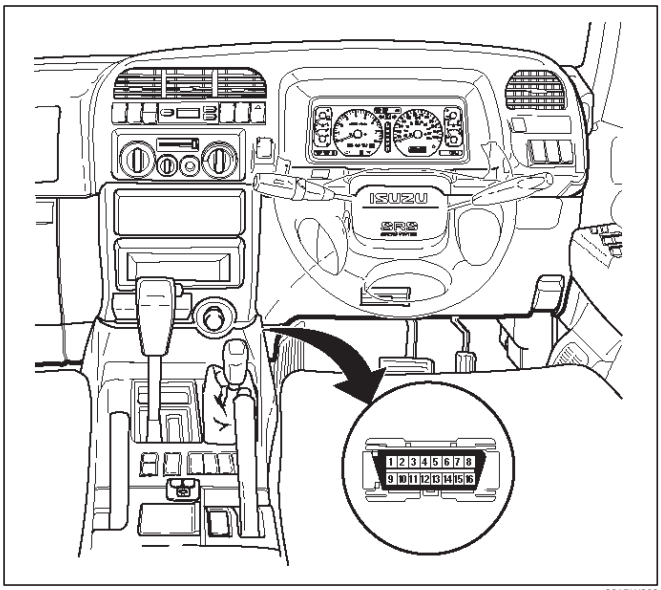

821RW263

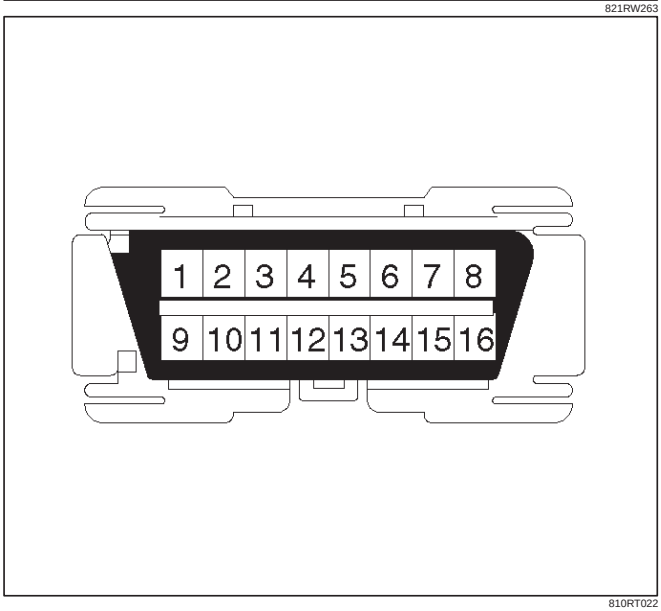

810RT022

PIN 1 – (Not used)
PIN 2 – J1850 Bus + L line on 2–wire systems, or single wire (Class 2)
PIN 3 – (Not used)
PIN 4 – Chassis ground pin
PIN 5 – Signal ground pin
PIN 6 – PCM diagnostic enable
PIN 7 – (Not used)
PIN 8 – (Not used)
PIN 9 – Primary UART
PIN 10 – (Not used)
PIN 11 – (Not used)
PIN 12 – ABS diagnostic or CCM diagnostic enable
PIN 13 – SIR diagnostic enable
PIN 14 – (Not used)
PIN 15 – (Not used)
PIN 16 – Battery power from vehicle unswitched (4 AMP MAX.)

Malfunction Indicator Lamp (MIL)

The Malfunction Indicator Lamp (MIL) looks the same as the MIL you are already familiar with (“CHECK ENGINE” lamp). However, OBD II requires that it illuminate under a strict set of guidelines. Basically, the MIL is turned on when the PCM detects a DTC that will impact the vehicle’s emissions.

The MIL is under the control of the Diagnostic Executive. The MIL will be turned on if a component or system which has an impact on vehicle emissions indicates a malfunction or fails to pass an emissions–related diagnostic test. It will stay on until the system or component passes the same test, for three consecutive trips, with no emissions–related faults.

Types Of Diagnostic Trouble Codes (DTCs)

The Diagnostic Executive classifies Diagnostic Trouble Codes (DTCs) into certain categories. Each type has different requirements to set the code, and the Diagnostic Executive will only illuminate the Malfunction Indicator Lamp (MIL) for emissions–related DTCs. DTCs fall into four categories: A, B, C, and D; only types A and B are emission–related The following descriptions define these categories:

TYPE A

Will store the DTC and turn on the MIL (“Check Engine” lamp) on the first trip in which an emission–related diagnostic test has run and reported a “test failed” to the Diagnostic Executive.

TYPE B

Will store the DTC and turn on the MIL on the second consecutive trip in which an emission–related diagnostic test has run and reported a “test failed” to the Diagnostic Executive. After one failure, the type B DTC is “armed,” or prepared to store a history code and turn on the MIL if a second failure occurs. One passed test will disarm a type B DTC. Some special conditions apply to misfire and fuel trim DTCs. For a type B DTC to store and turn on the MIL, two ignition cycles are required.

TYPE C

Will store the DTC and turn on a “SERVICE” lamp (“Check Trans” lamp) on the first trip that a non–emission–related diagnostic test has run and reported a “test failed” to the Diagnostic Executive. This type of DTC will be used in future applications.

TYPE D

Will store a DTC but will not turn on the MIL on the first trip that a non–emission–related diagnostic test has run and reported a “test failed” to the Diagnostic Executive. These codes can be very helpful for vehicle service when the driver may comment about a condition, but the MIL did not turn on.

Clear DTC

NOTE: If you clear the DTC (Diagnostic Trouble Codes) you will not be able to read any codes recorded during the last occurrence.

NOTE: To use the DTC again to identify a problem, you will need to reproduce the fault or the problem. This may require a new test drive or just turning the ignition on (this depends on the nature of the fault).

1. IF you have a Tech2:
   1. Connect the Tech2 if it is still not connected GOTHROUGH **Tech2 OBD II CONNECTION.**
   2. Push “F1= Clear DTC Info” in the Application Menu and answer “Yes” to the question “Do you want to clear DTC’s?”
      a. When a malfunction remains as it is the Tech2 displays “4L30E CODES NOT CLEARED”. This means that the problem is still there or that the recovery was not done. Please **GOTO DTC CHECK.**
      b. When a malfunction has been repaired and the recovery is done. The Tech2 displays “4L30E CODES CLEARED”.
2. IF you have no Tech2:
   To clear the DTC, remove Fuse “Stop, A/T CONT” (C–14, 15A) for at least 10 seconds.

DTC Check

1. Diagnostic Trouble Codes (DTC) have been identified by Tech2.
2. You have written the list of the DTCs. The order of the malfunctions has no meanings for this PCM. Usually only one or two malfunctions should be set for a given problem.
3. Check directly the DTCs you identified. The DTCs are sorted by number. Refer to Diagnostic Trouble Code (DTC) Identification in this section.

PCM Precaution

The PCM can be damaged by:

1. Electrostatic discharge
2. The short circuit of some terminals to voltage or to ground.

Electrostatic Discharge Damage Description:

1. Electronic components used to control systems are often designed to carry very low voltage, and are very susceptible to damage caused by electrostatic discharge. It is possible for less than 100 volts of static electricity to cause damage to some electronic components. By comparison, it takes as much as 4,000 volts for a person to even feel the zap of a static discharge.
2. There are several ways for a person to become statically charged. The most common methods of charging are by friction and induction. An example of charging by friction is a person sliding across a car seat, in which a charge of as much as 25,000 volts can build up. Charging by induction occurs when a person with well insulated shoes stands near a highly charged object and momentarily touches ground. Charges for the same polarity are drained off, leaving the person highly charged with the opposite polarity. Static charges of either type can cause damage, therefore, it is important to use care when handling and testing electronic components.

NOTICE: **To prevent possible electrostatic discharge damage:**

1. Do not touch the PCM connector pins or soldered components on the PCM circuit board.
2. Be sure to follow the guidelines listed below if servicing any of these electronic components:
3. Do not open the replacement part package until it is time to install the part.
4. Avoid touching electrical terminals of the part.
5. Before removing the part from its package, ground the package to a known good ground on the vehicle.
6. Always touch a known good ground before handling the part. This step should be repeated before installing the part if the part has been handled while sliding across the seat, while sitting down from a standing position or while walking some distance.

Information On PCM

1. The Powertrain Control Module (PCM) is located in the center console and is the control center of the electronic transmission control system.
2. The PCM must be maintained at a temperature below 85˚C (185˚F) at all times. This is most essential if the vehicle is put through a paint baking process. The PCM will become inoperative if its temperature exceeds 85˚C (185˚F). Therefore, it is recommended that the PCM be removed or that temporary insulation be placed around the PCM during the time the vehicle is in a paint oven or other high temperature process.
3. The PCM is designed to process the various inputs and then respond by sending the appropriate electrical signals to control transmission upshift, downshift, shift feel and torque converter clutch engagement.
4. The PCM constantly interprets information from the various sensors, and controls the systems that affect transmission and vehicle performance. By analyzing operational problems, the PCM is able to perform a diagnostic function by displaying DTC(s) and aid the technician in making repairs.

Intermittent Conditions

If the Tech2 displays a diagnostic trouble code as intermittent, or if after a test drive a DTC does not reappear though the detection conditions for this DTC are present, the problem is most likely a faulty electrical connection or loose wiring. Terminals and grounds should

always be the prime suspect. Intermittents rarely occur inside sophisticated electronic components such as the PCM.
Use the DTC information to understand which wires and sensors are involved.
When an intermittent problem is encountered, check suspect circuits for:

1. Poor terminal to wire connection.
2. Terminals not fully seated in the connector body (backed out).
3. Improperly formed or damaged terminals.
4. Loose, dirty, or corroded ground connections:
   HINT: Any time you have an intermittent in more than one circuit, check whether the circuits share a common ground connection.
5. Pinched or damaged wires.
6. Electro–Magnetic Interference (EMI):
   HINT: Check that all wires are properly routed away from spark plug wires, distributor wires, coil, and generator. Also check for improperly installed electrical options, such as lights, 2–way radios, etc.

Use the F3 SNAPSHOT mode of the Tech2 to help isolate the cause of an intermittent fault. The snapshot mode will record information before and after the problem occurs. Set the snapshot to “trigger” on the suspect DTC. If you notice the reported symptom during the test drive, trigger the snapshot manually.
After the snapshot has been triggered, command the Tech2 to play back the flow of data recorded from each of the various sensors. Signs of an intermittent fault in a sensor circuit are sudden unexplainable jump in data values out of the normal range.

Transmission And PCM Identification

The chart below contains a list of all important information concerning rear axle ratio, Powertrain Control Module (PCM), and transmission identification.

VEHICLE		Rr axle Ratio	PCM	TRANSMISSION		
Type	Engine		ISUZU Parts No.	Calibration Code	Isuzu Part No.	Model Code
Isuzu / Trooper	3.2L V6	4.555	8–16254–949–0 8–16254–749–0 8–16253–989–0	G20	8–96018–272–3	FP (4X4)
	3.5L V6	4.300	8–16254–019–1 8–16254–959–1 8–09376–619–1	G21	8–96018–270–4	FK (4X4)

Isuzu Trooper

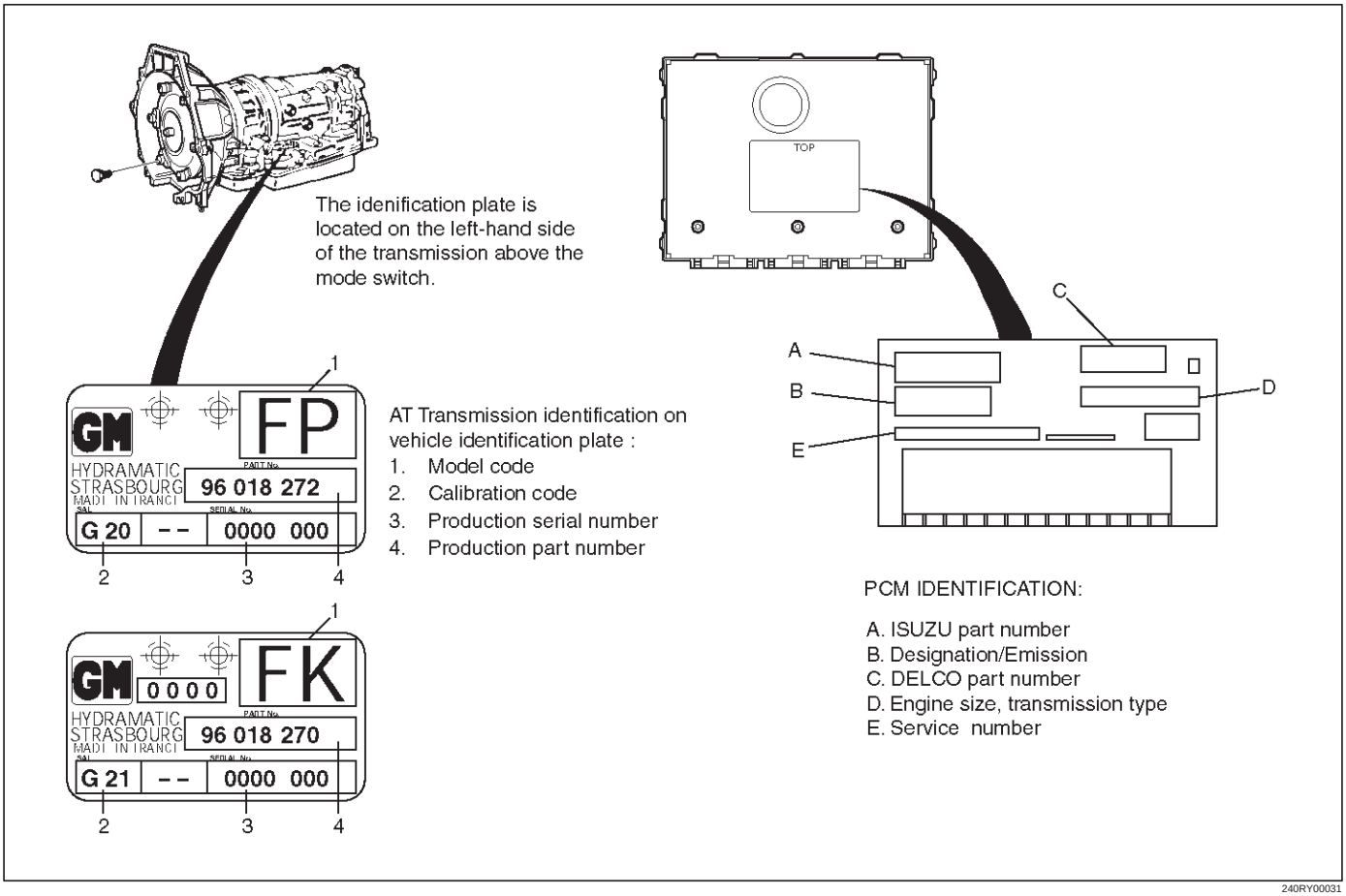

240RY00031

Diagnostic Trouble Code (DTC) Identification

DTC NUMBER	DTC NAME	DTC TYPE	“CHECK TRANS”
P0218	Transmission Fluid Over Temperature	D	
P0560	System Voltage Malfunction	C	Flash
P0705	Transmission Range Switch (Mode Switch) Illegal Position	D	
P0706	Transmission Range Switch (Mode Switch) Performance	D	
P0712	Transmission Fluid Temperature Sensor Circuit Low Input (TFT)	D	
P0713	Transmission Fluid Temperature (TFT) Sensor Circuit High Input	D	
P0719	TCC Brake Switch Circuit High (Stuck ON)	D	
P0722	Transmission Output Speed Sensor (OSS) Low Input	C	Flash
P0723	Transmission Output Speed Sensor (OSS) Intermittent	C	Flash
P0730	Transmission Incorrect Gear Ratio	C	Flash
P0748	Pressure Control Solenoid (PCS) (Force Motor) Circuit Electrical	C	Flash
P0753	Shift Solenoid A Electrical	C	Flash
P0758	Shift Solenoid B Electrical	C	Flash
P1790	ROM Transmission Side Bad Check Sum	C	Flash
P1792	EEPROM Transmission Side Bad Check Sum	C	Flash
P1835	Kickdown Switch Always ON	D	
P1850	Brake Band Apply Solenoid Malfunction	D	
P1860	TCC Solenoid Electrical	D	

DTC TYPE	DEFINITION
C	Flashing Check Trans on 1st failure
D	No lamps

NOTE: On the following charts, refer to the Powertrain Control Module (PCM) section for the Wiring System, and the Body and Accessories section for circuit diagram details, parts location, and connector configuration.

DTC P0218 Transmission Fluid Over Temperature

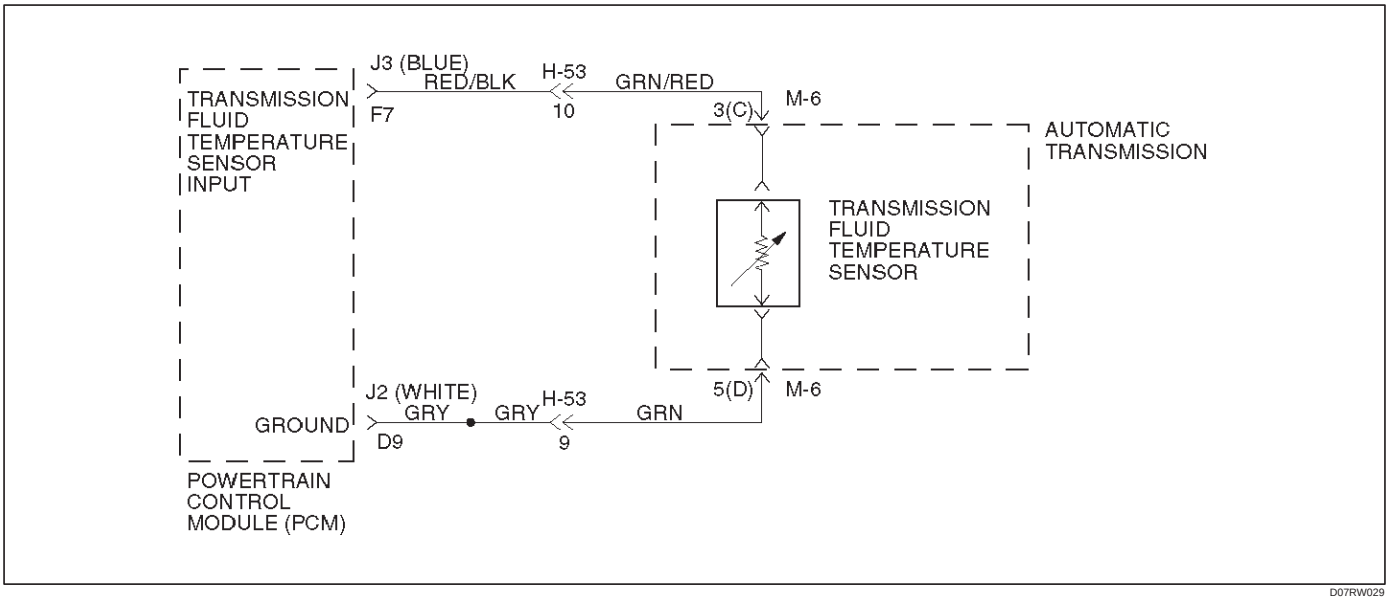

Circuit Description

The Transmission Fluid Temperature (TFT) sensor is a thermister that controls the signal voltage to the PCM. The PCM supplies a 5–volt reference to the sensor on circuit RED/BLK–GRN/RED. When the transmission fluid is cold, the sensor resistance is high and the PCM will sense high signal voltage. As the fluid temperature warms to a normal transmission operating temperature of 100˚C (212˚F), the sensor resistance becomes less and the voltage decreases to 1.5 to 2.0 volts.
This DTC detects a high transmission temperature for a long period of time. This is a type “D” DTC.

Conditions For Setting The DTC

- No TFT DTCs P0712 or P0713.
- TFT is greater than 135˚C (275˚F).
- All conditions met for 21 seconds.

Action Taken When The DTC Sets

- Hot mode TCC Shift Pattern.
- The PCM will not illuminate the CHECK TRANS Lamp.
- ATF Lamp ON. (TFT is greater than 145˚C (293˚F).)
- Disable E–side TCC OFF request.

Conditions For Clearing The DTC

- The DTC can be cleared from the PCM history by using a scan tool.
- The DTC will be cleared from history when the vehicle has achieved 40 warm–up cycles without a failure reported.
- The PCM will cancel the DTC default actions when the fault no longer exists and the ignition is cycled “off” long enough to power down the PCM.

Diagnostic Aids

- Inspect the wiring for poor electrical connections at the PCM and at the transmission 16–way connector. Look for possible bent, backed out, deformed, or damaged terminals. Check for weak terminal tension as well.

  Also check for a chafed wire that could short to bare metal or other wiring. Inspect for a broken wire inside the insulation.
- When diagnosing for a possible intermittent short or open condition, move the wiring harness while observing test equipment for a change.
- Check harness routing for a potential short to ground in circuit RED/BLK–GRN/RED.
- Scan tool TFT sensor temperature should rise steadily to about 100˚C (212˚F), then stabilize.
- Check for a “skewed” (mis–scaled) sensor by comparing the TFT sensor temperature to the ambient temperature after a vehicle cold soak. A “skewed” sensor can cause delayed garage shifts or TCC complaints.
- Check for a possible torque converter stator problem.
- Verify customer driving habits, trailer towing, etc.

Test Description

The numbers below refer to the step numbers on the diagnostic chart.

2. This test checks for a “skewed” sensor or shorted circuit.
3. This test simulates a TFT DTC P0713.

DTC P0218 Transmission Fluid Over Temperature

Step	Action	Yes	No
1	Perform the following checks: ● Check for possible engine system problems. ● Transmission fluid checking procedure. Refer to Checking Transmission Fluid Level and Condition in Automatic Transmission (4L30–E) Section. Were the checks performed?	Go to Step 2	—
2	1. Install the scan tool. 2. With the engine “off”, turn the ignition switch “on”. NOTE: Before clearing DTC(s), use the scan tool to record “Failure Records” for reference, as data will be lost when “Clear Info” function is used. 3. Record the DTC “Failure Records”. Is the TFT sensor signal voltage less than 1.54 volts?	Go to Step 3	Go to Diagnostic Aids
3	1. Turn the ignition “off”. 2. Disconnect the transmission 16–way connector H–53 (additional DTCs may set). Is the TFT sensor signal voltage greater than 4.92 volts?	Go to Internal Wiring Harness Check.	Go to Step 4
4	Inspect/repair circuit RED/BLK–GRN/RED for a short to ground. Was a problem found?	Go to Step 6	Go to Step 5
5	1. Inspect the PCM for poor connections. 2. Replace the PCM if no poor connections were found. Is the replacement complete?	Go to Step 6	—
6	1. After the repair is complete, use the scan tool to select “DTC”, then “Clear Info” function and ensure the following conditions are met: TFT is less than 125˚C (257˚F) for at least 10 seconds. 2. Review the scan tool “DTC Info”. Has the last test failed or is the current DTC displayed?	Begin diagnosis again Go to Step 1	Repair verified Exit DTC table

DTC P0560 System Voltage Malfunction

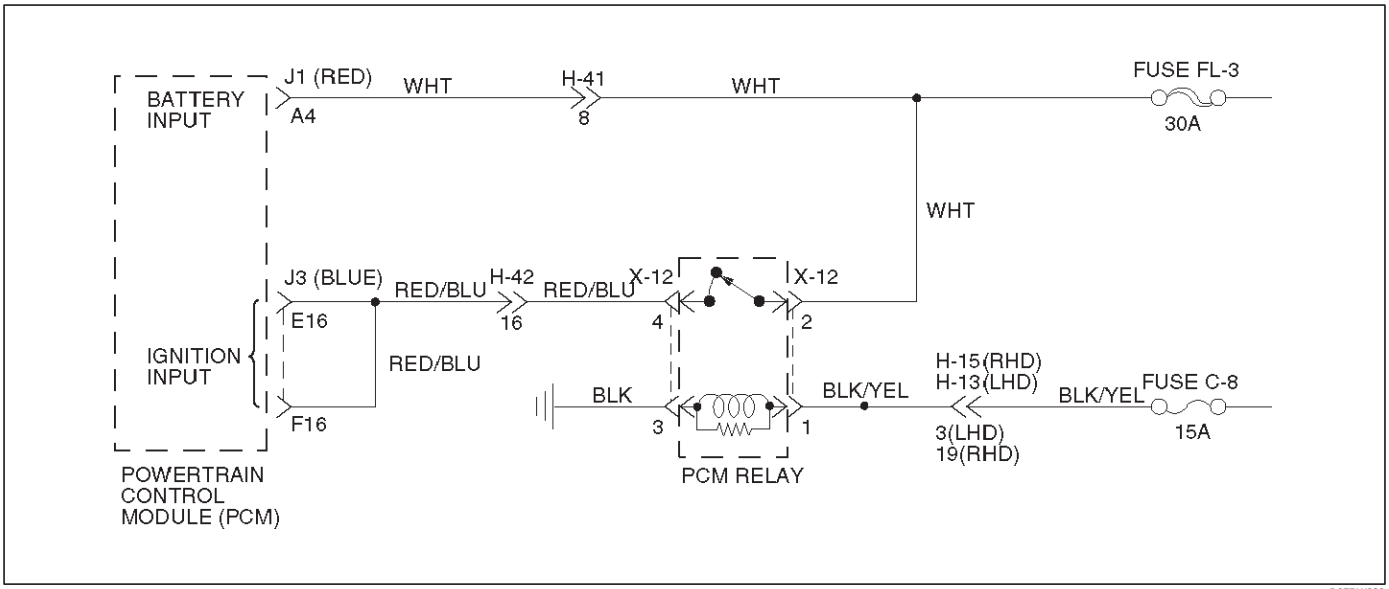

Circuit Description

Circuit WHT is the battery voltage feed for the PCM. Circuit RED/BLU is the ignition voltage feed for the PCM. This DTC detects a low voltage or a high voltage. This is a type “C” DTC.

Conditions For Clearing The DTC

System Voltage Low:

- Engine speed is greater than 1,000 rpm.
- System voltage is less than 10 volts at a maximum transmission temperature of 150˚C (302˚F).
- System voltage is less than 7.3 volts at a minimum transmission temperature of –40˚C (–40˚F).
- All conditions met for 4 seconds.

System Voltage High:

- System voltage is greater than 16 volts for 2 seconds.

Action Taken When The DTC Sets

- Fixed to 4th gear.
- Maximum line pressure.
- Inhibit TCC engagement.
- The PCM will illuminate the CHECK TRANS Lamp.

Conditions For Clearing The DTC/CHECK TRANS Lamp

- The DTC can be cleared from the PCM history by using a scan tool.
- The PCM will turn off the CHECK TRANS Lamp after three consecutive ignition cycles without a failure reported.
- The DTC will be cleared from history when the vehicle has achieved 40 warmup cycles without a failure reported.
- The PCM will cancel the DTC default actions when the fault no longer exists and the ignition is cycled “off” long enough to power down the PCM.

Diagnostic Aids

- Charging the battery with a battery charger and jump starting an engine may set DTC(s). If DTC(s) set when an accessory is operated, check for faulty connections or excessive current draw.
- Check for faulty connections at the starter solenoid or fusible link.
- Check for loose/damaged terminals at generator.
- Check belt wear/tension.

Test Description

The numbers below refer to the step numbers on the diagnostic chart.

3. This test checks charging system voltage.
4. This test checks battery voltage input at the PCM.
6. This test checks ignition voltage input at the PCM.

DTC P0560 System Voltage Malfunction

Step	Action	Yes	No
1	1. Install the scan tool. 2. With the engine “off”, turn the ignition switch “on”. NOTE: Before clearing DTC(s), use the scan tool to record “Failure Records” for reference, as data will be lost when the “Clear Info” function is used. 3. Record the DTC “Failure Records”. Note: If any other DTCs are present, refer to their applicable diagnostic charts before continuing. 4. Using the J–39200 DVOM, measure the battery voltage across the battery terminals. Record the measurement for future reference. Is the voltage higher than 10.5 volts?	Go to Step 2	Go to Engine Electrical in Engine section
2	Start the engine and warm to normal operating temperature. Is the generator/check engine light “on”?	Go to Starting and Charging System in Engine section	Go to Step 3
3	1. Increase the engine speed to 1,000–1,500 rpm. 2. Observe scan tool system voltage. Is the system voltage within 13–15 volts.	Go to Step 4	Go to Starting and Charging System in Engine section
4	1. Turn the ignition switch “off”. 2. Disconnect the J1(RED) and J3 (BLUE) PCM connector (additional DTCs will set). 3. With the engine “off”, turn the ignition switch “on”. 4. Using the J39200 DVOM, measure the battery voltage input at PCM connector terminals J1–A4 and J3–E16. Is there a voltage variance between the voltage measured at the battery (taken in Step 1) and at terminals J1–A4 and J3–E16 that is greater than 0.5 volts?	Go to Step 5	Go to Step 6
5	Repair the high resistance condition in circuit WHT. Was the circuit repaired?	Go to Step 10	—
6	1. Disconnect the J3 (BLUE) PCM connector. 2. Measure the ignition voltage input at PCM connector terminals J3–E16 and J3–F16. Is there a voltage variance between the voltage measured at the battery (taken in Step 1) and at terminals J3–E16 and J3–F16 that is greater than 0.5 volts?	Go to Step 7	Go to Step 8
7	Repair the high resistance condition is circuit RED/BLU. Was the circuit repaired?	Go to Step 10	—
8	Check PCM connector terminals J1–A4, J3–E16 and J3–F16 for bent, damaged, or backed out connector pins. Also check for weak terminal tension. Was a problem found?	Go to Step 10	Go to Step 9

DTC P0560 System Voltage Malfunction (Cont'd)

Step	Action	Yes	No
9	Replace the PCM. Is the replacement complete?	Go to Step 10	—
10	1. After the repair is complete, use the scan tool to select "DTC", then "Clear Info" function and operate the vehicle under the following conditions: Start the vehicle and warm to normal operating temperature. The PCM must see a system voltage between 10 and 16 volts. 2. Review the scan tool "DTC Info". Has the last test failed or is the current DTC displayed?	Begin diagnosis again Go to Step 1	Repair verified Exit DTC table

DTC P0705 Transmission Range Switch (Mode Switch) Illegal Position

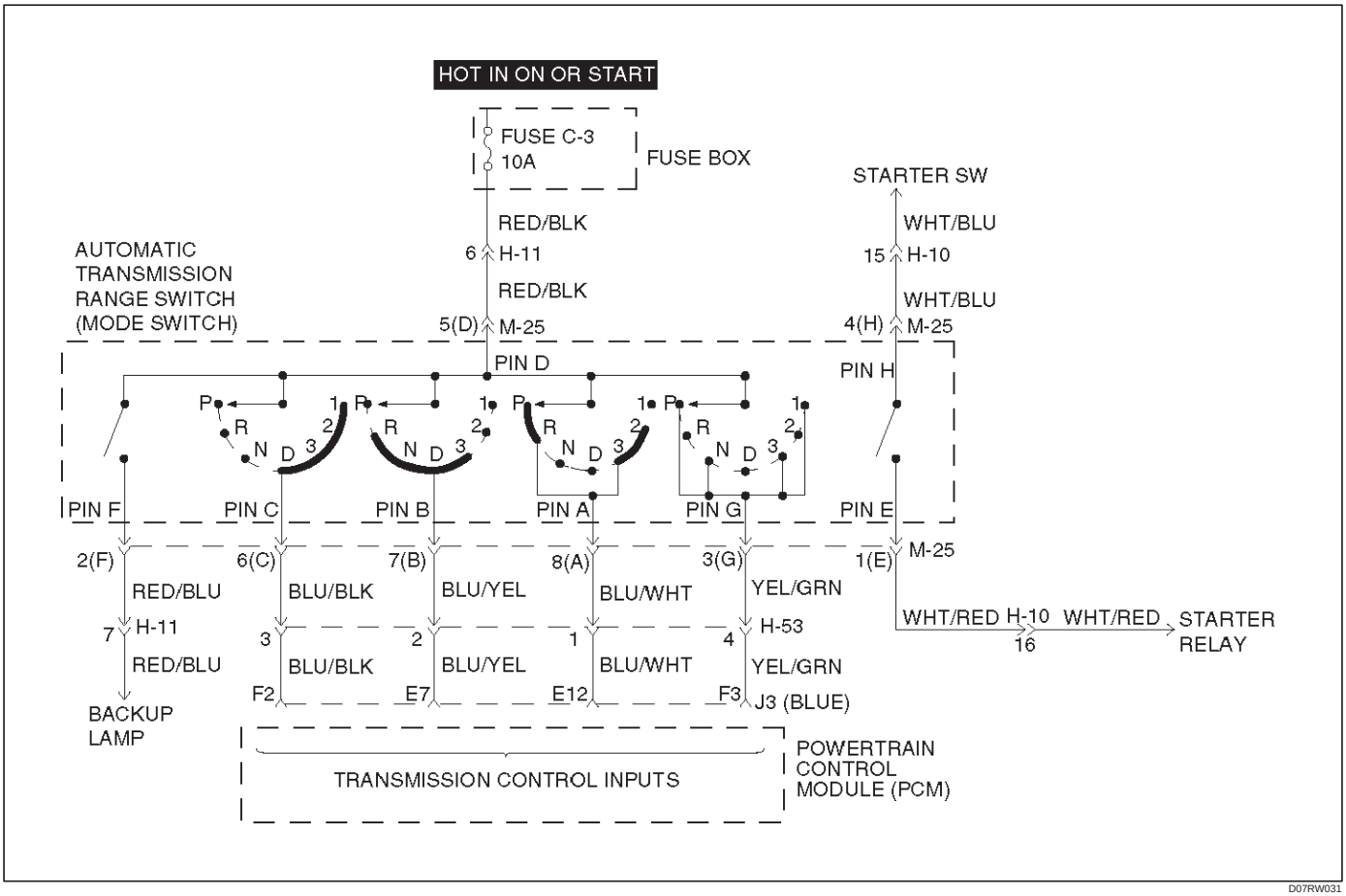

Circuit Description

- The range switch supplies the Powertrain Control Module (PCM) with information regarding the selector lever position: P, R, N, D 3, 2 or L. The selector lever position is indicated by the state of four ON/OFF contracts. The range switch is located on one side of the transmission. It is on the transmission manual shaft and is fixed to the main case.
- The range switch is also used to provide the information P or N to the engine crank wiring. The engine can be cranked only if connector M–25 terminal 4(H) is connected to terminal 1(E) which is connected to ground.
- The range switch is also used to provide the backup lamp power in reverse. This is why the range switch is supplied through a 10A fuse (C–3). This fuse can burn due to a short circuit in the backup lamp.

This DTC detects when a fuse is open or the range switch circuit does not work. This is a type “D” DTC.

Conditions For Setting The DTC

- Range switch illegal positions met for 5 seconds.

Action Taken When The DTC Sets

- Default to D position.
- Inhibit torque management.
- Maximum line pressure.
- The PCM will not illuminate the CHECK TRANS Lamp.

Conditions For Clearing The DTC

- The DTC can be cleared from the PCM history by using a scan tool.
- The DTC will be cleared from history when the vehicle has achieved 40 warmup cycles without a failure reported.
- The PCM will cancel the DTC default actions when the fault no longer exists and the ignition is cycled “off” long enough to power down the PCM.

Diagnostic Aids

- Refer to accompanying chart for the normal range signals and the illegal combinations.
- Inspect the wiring for poor electrical connections at the PCM and at the transmission 8–way connector. Look for possible bent, backed out, deformed or damaged terminals. Check for weak terminal tension as well. Also check for a chafed wire that could short to bare metal or other wiring. Inspect for a broken wire inside the insulation.
- When diagnosing for a possible intermittent short or open condition, move the wiring harness while observing test equipment for a change.

- Refer to the “Range Switch Logic Table” or “Functional Test Procedure” for further information.

Test Description

The numbers below refer to the step numbers on the diagnostic chart:

2. This test checks the indicated range signal to the manual valve actually selected.
5. This test checks for continuity between each selected range switch connector terminals.

Range Switch Logic Table

Range Position	Range Switch Pin			
	A	B	C	P(G)
Park	ON	OFF	OFF	ON
Reverse	ON	ON	OFF	OFF
Neutral	OFF	ON	OFF	ON
D4	OFF	ON	ON	OFF
D3	ON	ON	ON	ON
2	ON	OFF	ON	OFF
L	OFF	OFF	ON	ON
Illegal	OFF	OFF	OFF	OFF
Illegal	OFF	OFF	OFF	ON

DTC P0705 Transmission Range Switch (Mode Switch) Illegal Position

Step	Action	Yes	No
1	Perform the following checks: ● The transmission linkage from the select lever to the manual valve is adjusted properly. ● Diagnostic circuit check. Were the checks performed?	Go to Step 2	—
2	1. Install the scan tool. 2. With the engine “off”, turn the ignition switch “on”. NOTE: Before clearing DTC(s), use the scan tool to record “Failure Records” for reference, as data will be lost when the “Clear Info” function is used. 3. Record the DTC “Failure Records”. 4. Select each transmission range: DL, D2, D3, D4, N, R, and P. Does each selected transmission range match the scan tool “Range Switch” display?	Go to Diagnostic Aids	Go to Step 3
3	Are all range switch pin displays incorrect?	Go to Step 4	Go to Step 5
4	Check fuse and wiring to the 8–way connector terminal 5(D) for opens. Refer to Mode Switch in Automatic Transmission (4L30–E) section. If no problem was found, replace the range switch. Is the replacement complete?	Go to Step 8	—
5	1. Disconnect the 8–way range switch connector. 2. Using ohmmeter, check continuity between terminal 5(D) and respectively terminals 3(G), 6(C), 7(B) and 8(A) of the 8–way range switch connector. 3. Move shift selector lever through all positions and compare results with “Range Switch Logic Table”. Is one range switch pin display incorrect?	Go to Step 6	Go to Step 7
6	Check the affected wiring and connector, and repair. Is the repair complete?	Go to Step 8	—

DTC P0705 Transmission Range Switch (Mode Switch) Illegal Position (Cont'd)

Step	Action	Yes	No
7	Check the Powertrain Control Module (PCM) connectors for poor connection. If no problem was found, replace the PCM. Is the replacement complete?	Go to Step 8	—
8	1. After the repair is complete, use the scan tool to select "DTC", then "Clear Info" function and road test the vehicle. 2. Review the scan tool "DTC Info". Has the last test failed or is the current DTC displayed?	Begin diagnosis again Go to Step 1	Repair verified Exit DTC table

DTC P0706 Transmission Range Switch (Mode Switch) Performance

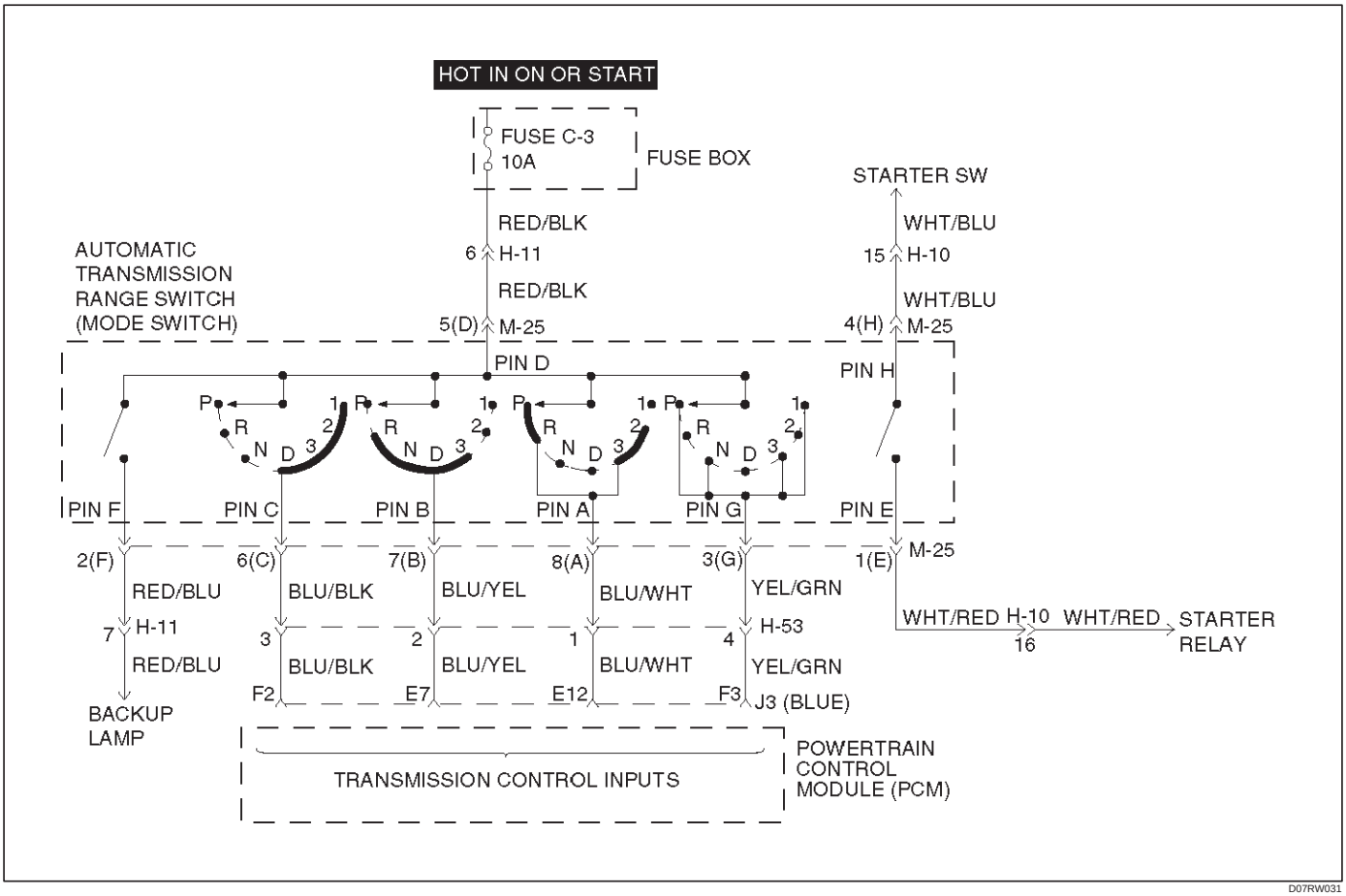

Circuit Description

- The range switch supplies the Powertrain Control Module (PCM) with information regarding the selector lever position: P, R, N, D, 3, 2 or L. The selector lever position is indicated by the state of four ON/OFF contracts. The range switch is located on one side of the transmission. It is on the transmission manual shaft and is fixed to the main case.
- The range switch is also used to provide the information P or N to the engine crank wiring. The engine can be cranked only if connector M–25 terminal 4(H) is connected to terminal 1(E) which is connected to ground.
- The range switch is also used to provide the backup lamp power in reverse. This is why the mode switch is supplied through a 10A fuse (C–3). This fuse can burn due to a shot circuit in the backup lamp.
- This DTC detects an invalid state of the range switch or the range switch circuit by deciphering the range switch inputs. This is a type “D” DTC.

Conditions For Setting The DTC

This DTC will set if any of the following conditions occurs:

Condition 1 (“R” bad position):

- Engine is running.
- No output speed DTCP0722, P0723.
- Output speed greater than 3,200 RPM.
- Range switch indicates “R”.
- All conditions met for 4 seconds.

Condition 2 (“P” or “N” bad position):

- Engine is running.
- No TPS codes.
- Engine speed is less than 3,000 RPM.
- TP angle is greater than 20%.
- Range switch indicates “P” or “N”.
- All conditions met for 4 seconds.

Action Taken When The DTC Sets

- Default to “D” position.
- The PCM will not illuminate the CHECK TRANS Lamp.

Conditions For Clearing The DTC

- The DTC can be cleared from the PCM history by using a scan tool.
- The DTC will be cleared from history when the vehicle has achieved 40 warmup cycles without a failure reported.
- The PCM will cancel the DTC default actions when the fault no longer exists and the ignition is cycled “off” long enough to power down the PCM.

Diagnostic Aids

- Refer to the accompanying chart for the normal range signals and the illegal combinations.
- Inspect the wiring for poor electrical connections at the PCM and at the transmission 8–way connector. Look for possible bent, backed out, deformed or damaged terminals. Check for weak terminal tension as well. Also check for a chafed wire that could short to bare metal or other wiring. Inspect for a broken wire inside the insulation.
- When diagnosing for a possible intermittent short or open condition, move the wiring harness while observing test equipment for a change.
- Refer to the “Range Switch Logic Table” for further information.

Test Description

The numbers below refer to the step numbers on the diagnostic chart:

2. This test checks the indicated range signal to the manual valve actually selected.
5. This test checks for continuity between each selected range switch connector terminals.

Range Switch Logic Table

Range Position	Range Switch Pin			
	A	B	C	P(G)
Park	ON	OFF	OFF	ON
Reverse	ON	ON	OFF	OFF
Neutral	OFF	ON	OFF	ON
D4	OFF	ON	ON	OFF
D3	ON	ON	ON	ON
2	ON	OFF	ON	OFF
L	OFF	OFF	ON	ON
Illegal	OFF	OFF	OFF	OFF
Illegal	OFF	OFF	OFF	ON

DTC P0706 Transmission Range Switch (Mode Switch) Performance

Step	Action	Yes	No
1	Perform the following checks: ● The transmission linkage from the select lever to the manual valve is adjusted properly. ● Diagnostic circuit check. Were the checks performed?	Go to Step 2	—
2	1. Install the scan tool. 2. With the engine “off”, turn the ignition switch “on”. NOTE: Before clearing DTC(s), use the scan tool to record “Failure Records” for reference, as data will be lost when the “Clear Info” function is used. 3. Record the DTC “Failure Records”. 4. Select each transmission range: DL, D2, D3, D4, N, R, and P. Does each selected transmission range match the scan tool “Range Switch” display?	Go to Diagnostic Aids	Go to Step 3
3	Are all range switch pin displays incorrect?	Go to Step 4	Go to Step 5
4	Check fuse and wiring to the 8–way connector terminal 5(D) for opens. Refer to Mode Switch in Automatic Transmission (4L30–E) section. If no problem was found, replace the range switch. Is the replacement complete?	Go to Step 8	—
5	1. Disconnect the 8–way range switch connector. 2. Using ohmmeter, check continuity between terminal 5(D) and respectively terminals 3(G), 6(C), 7(B) and 8(A) of the 8–way range switch connector. 3. Move shift selector lever through all positions and compare results with “Range Switch Logic Table”. Is one range switch pin display incorrect?	Go to Step 6	Go to Step 7
6	Check the affected wiring and connector, and repair. Is the repair complete?	Go to Step 8	—

DTC P0706 Transmission Range Switch (Mode Switch) Performance (Cont'd)

Step	Action	Yes	No
7	Check the Powertrain Control Module (PCM) connectors for poor connection. If no problem was found, replace the PCM. Is the replacement complete?	Go to Step 8	—
8	1. After the repair is complete, use the scan tool to select "DTC", then "Clear Info" function and road test the vehicle. 2. Review the scan tool "DTC Info". Has the last test failed or is the current DTC displayed?	Begin diagnosis again Go to Step 1	Repair verified Exit DTC table

DTC P0712 Transmission Fluid Temperature (TFT) Sensor Circuit Low Input

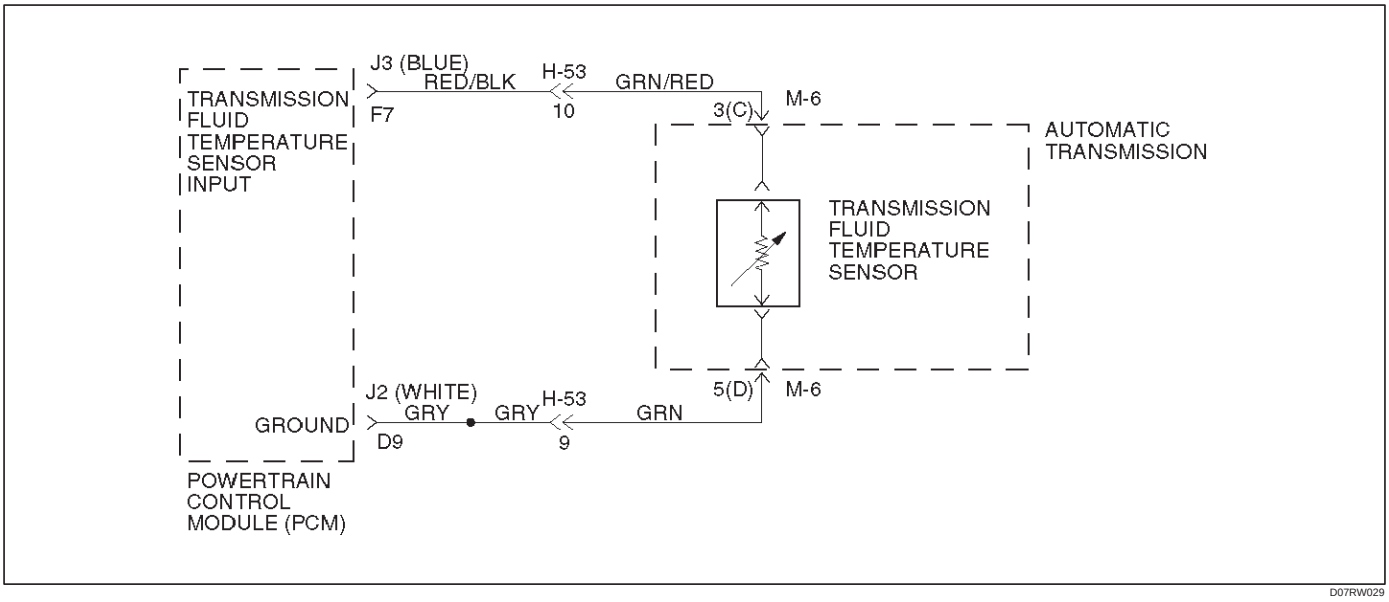

Circuit Description

The TFT sensor is a thermister that controls the signal voltage to the PCM. The PCM supplies a 5–volt reference signal to the sensor on circuit RED/BLK–GRN/RED. When the transmission fluid is cold, the sensor resistance is high. The PCM detects high signal voltage. As the transmission fluid temperature increases to the normal operating temperature of 100˚C (212˚F), the sensor resistance becomes less and the voltage decreases to 1.5 to 2 volts. With transmission fluid over temperature and DTC P0218 also set, check the transmission cooling system.

This DTC detects a continuous short to ground in the TFT signal circuit or the TFT sensor. This is a type “D” DTC.

Conditions For Setting The DTC

- Battery voltage is between 10 and 16 volts.
- Ignition is “on”.
- TFT sensor indicating a voltage less than 0.4 volts.
- All conditions met for 20 seconds.

Action Taken When The DTC Sets

- Transmission default temperature will be:

  80˚C (176˚F) if engine temperature code is set.

  100˚C (212˚F) if engine temperature is warm.

  80˚C (176˚F) if engine run time is greater than 5 minutes.

  21˚C (69.8˚F) if engine run time is less than 5 minutes.
- The PCM will not illuminate the CHECK TRANS Lamp.

Conditions For Clearing The DTC

- The DTC can be cleared from the PCM history by using a scan tool.
- The DTC will be cleared from history when the vehicle has achieved 40 warmup cycles without a failure reported.
- The PCM will cancel the DTC default actions when the fault no longer exists and the ignition is cycled “off” long enough to power down the PCM.

Diagnostic Aids

- Check harness routing for a potential short to ground in circuit RED/BLK–GRN/RED. Scan tool TFT display should rise steadily to about 100˚C (212˚F), then stabilize.
- Inspect the wiring for poor electrical connection at the PCM and at the transmission 16–way connector. Look for possible bent, backed out, deformed or damaged terminals. Check for weak terminal tension as well. Also check for a chafed wire that could short to bare metal or other wiring. Inspect for a broken wire inside the insulation.
- When diagnosing for a possible intermittent short or open condition, move the wiring harness while observing test equipment for a change.
- The temperature to resistance value scale may be used to test the TFT sensor at the various temperature levels to evaluate the possibility of a “skewed” (mis–scaled) sensor.

  A “skewed” sensor could result in delayed garage shifts or TCC complaints.
- Verify customer driving habits, trailer towing, etc.

Test Description

The numbers below refer to the step numbers on the diagnostic chart:

2. This test checks for a short to ground or a “skewed” sensor.
3. This test checks for an internal fault within the transmission by creating an open.

Resistance Chart

˚C	˚F	Resistance (kΩ)
–40	–40	672
0	32	65
20	68	25
80	176	2.5
120	248	0.78
150	304	0.37

DTC P0712 Transmission Fluid Temperature (TFT) Sensor Circuit Low Input

Step	Action	Yes	No
1	Perform the transmission fluid checking procedure. Refer to Checking Transmission Fluid Level and Condition in Automatic Transmission (4L30–E) section. Was the fluid checking procedure performed?	Go to Step 2	Refer to Checking Transmission Fluid Level and Condition in Automatic Transmission (4L30–E) section
2	1. Install the scan tool. 2. With the engine “off”, turn the ignition switch “on”. NOTE: Before clearing DTC(s), use the scan tool to record “Failure Records” for reference, as data will be lost when the “Clear Info” function is used. 3. Record the DTC “Failure Records”. Does the scan tool display a TFT sensor signal voltage less than 0.4 volts?	Go to Step 3	Go to Diagnostic Aids
3	1. Turn the ignition “off”. 2. Disconnect the transmission 16–way connector H–53. 3. Turn the ignition “on”. Does the TFT signal voltage change to match the voltage 4.92 volts?	Go to Step 4	Go to Step 9
4	Using the J39200 DVOM, measure the resistance between terminals 3(C) and 5 (D). Is the resistance within specifications? (See Resistance Chart.)	Go to Diagnostic Aids	Go to Step 5
5	1. Disconnect the transmission 5–way connector M–6. 2. Using the J39200 DVOM, measure the resistance between terminals 3(C) and 5(D). Is the resistance within specifications? (See Resistance Chart.)	Go to Diagnostic Aids	Go to Step 6
6	1. Remove the transmission oil pan. Refer to Transmission Oil Temperature Sensor (Adapter Case) in Automatic Transmission (4L30–E) section. 2. Check the internal wiring harness for a short to ground. Was a problem found?	Go to Step 8	Go to Step 7
7	1. Disconnect the internal wiring harness at the TFT sensor. 2. Measure the resistance of the TFT sensor. Is the resistance within specifications? (See Resistance Chart.)	Go to Diagnostic Aids	Go to Step 8
8	Replace the TFT Sensor. Is the replacement complete?	Go to Step 12	—

DTC P0712 Transmission Fluid Temperature (TFT) Sensor Circuit Low Input (Cont'd)

Step	Action	Yes	No
9	Check circuit RED/BLK–GRN/RED for a short to ground. Was a problem found?	Go to Step 12	Go to Step 10
10	Check the PCM for faulty connections. Was a problem found?	Go to Step 12	Go to Step 11
11	Replace the PCM. Refer to Powertrain Control Module (PCM) in Automatic Transmission (4L30–E) section. Is the replacement complete?	Go to Step 12	—
12	1. After the repair is complete, use the scan tool to select "DTC", then "Clear Info" function and ensure the following conditions are met: TFT sensor indicates a voltage greater than 0.33 volts for 2 seconds. 2. Review the scan tool "DTC info". Has the last test failed or is the current DTC displayed?	Begin diagnosis again Go to Step 1	Repair verified Exit DTC table

DTC P0713 Transmission Fluid Temperature (TFT) Sensor Circuit High Input

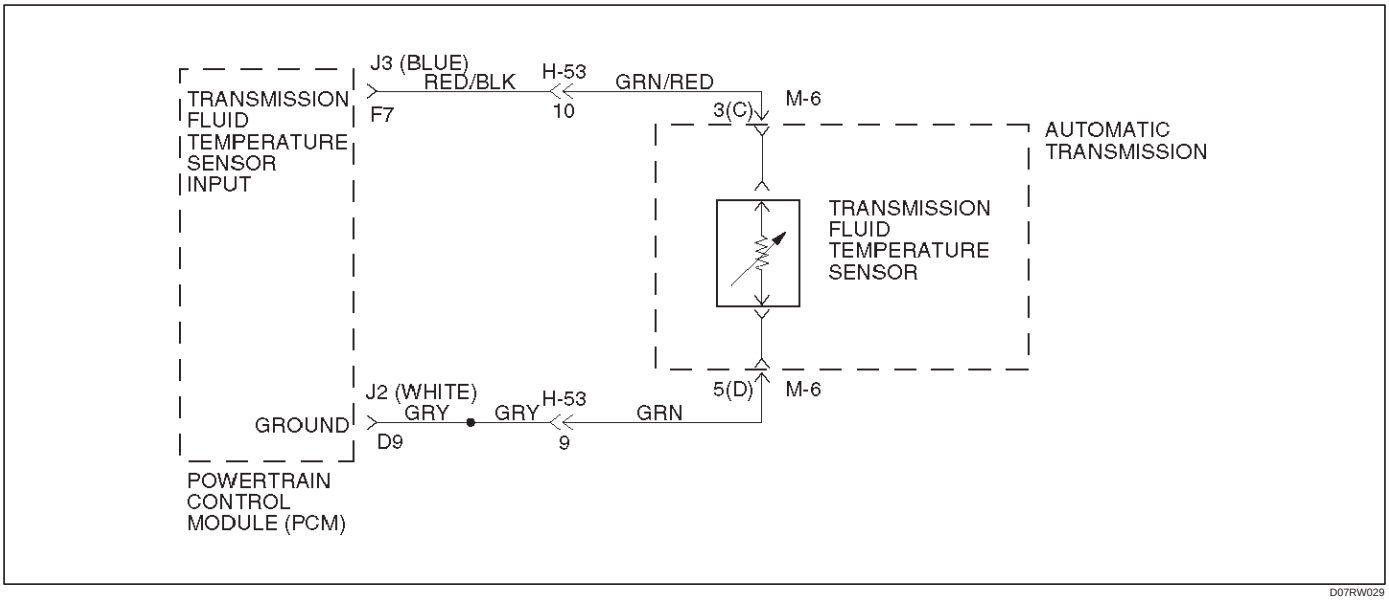

Circuit Description

The TFT sensor is a thermistor that controls the signal voltage to the PCM. The PCM supplies a 5–volt reference signal to the sensor on circuit RED/BLK–GRN/RED. When the transmission fluid is cold, the sensor resistance is high and the PCM will sense high signal voltage. As the transmission fluid temperature warms to the normal operating temperature of 100˚C (212˚F), the sensor resistance becomes less and the voltage decreases to about 1.5 to 2 volts.

This DTC detects a continuous open or short to power in the TFT signal circuit or the TFT sensor. This is a type “D” DTC.

Conditions For Setting The DTC

- Battery voltage is between 10 and 16 volts.
- Ignition is “on”.
- TFT sensor indicating a voltage greater than 4.86 volts.
- All conditions met for 20 seconds.

Action Taken When The DTC Sets

- Transmission default temperature will be:

  80˚C (176˚F) if engine temperature code is set.

  100˚C (212˚F) if engine temperature is warm.

  80˚C (176˚F) if engine run time is greater than 5 minutes.

  21˚C (69.8˚F) if engine run time is less than 5 minutes.
- The PCM will not illuminate the CHECK TRANS Lamp.

Conditions For Clearing The DTC

- The DTC can be cleared from the PCM history by using a scan tool.
- The DTC will be cleared from history when the vehicle has achieved 40 warmup cycles without a failure reported.
- The PCM will cancel the DTC default actions when the fault no longer exists and the ignition is cycled “off” long enough to power down the PCM.

Diagnostic Aids

- Inspect the wiring for poor electrical connection at the PCM and at the transmission 16–way connector. Look for possible bent, backed out, deformed or damaged terminals. Check for weak terminal tension as well. Also check for a chafed wire that could short to bare metal or other wiring. Inspect for a broken wire inside the insulation.
- When diagnosing for a possible intermittent short or open condition, move the wiring harness while observing test equipment for a change.
- Scan tool displays transmission fluid temperature in degrees. After transmission is operating, the temperature should rise steadily to about 100˚C (212˚F), then stabilize.
- The temperature to resistance value scale may be used to check the TFT sensor at the various temperature levels to evaluate the possibility of a “skewed” (mis–scaled) sensor.

  A “skewed” sensor could result in hard shifts or TCC complaints.

Test Description

The numbers below refer to the step numbers on the diagnostic chart:

2. This check verifies problem in the TFT sensor circuit.
3. This test simulates a TFT sensor DTC P0712. If the PCM recognizes the low signal voltage (high temperature), and the scan tool displays 146˚C (295˚F) or greater, the PCM and wiring are OK.

5. This test checks the TFT sensor and internal wiring harness.

Resistance Chart

˚C	˚F	Resistance (kΩ)
–40	–40	672
0	32	65
20	68	25
80	176	2.5
120	248	0.78
150	304	0.37

DTC P0713 Transmission Fluid Temperature (TFT) Sensor Circuit High Input

Step	Action	Yes	No
1	Perform the transmission fluid checking procedure. Refer to Checking Transmission Fluid Level and Condition in Automatic Transmission (4L30–E) section. Was the fluid checking procedure performed?	Go to Step 2	Refer to Checking Transmission Fluid Level and Condition in Automatic Transmission (4L30–E) section
2	1. Install the scan tool. 2. With the engine “off”, turn the ignition switch “on”. NOTE: Before clearing DTC(s), use the scan tool to record “Failure Records” for reference, as data will be lost when the “Clear Info” function is used. 3. Record the DTC “Failure Records”. Does the scan tool display a TFT sensor signal voltage greater than 4.86 volts?	Go to Step 3	Go to Diagnostic Aids
3	1. Turn the ignition “off”. 2. Disconnect the transmission 16–way connector H–53. 3. Install a fused jumper wire from terminal 3(C) to 5(D) on the engine harness. 4. Turn the ignition “on”. Does the TFT signal voltage drop to less than 0.4 volts?	Go to Step 4	Go to Step 9
4	1. Turn the ignition “off”. 2. Using the J39200 DVOM, measure the resistance between terminals 3(C) and 5(D). Is the resistance within specifications? (See Resistance Chart.)	Go to Diagnostic Aids	Go to Step 5
5	1. Disconnect the transmission 5–way connector M–6. 2. Using the J39200 DVOM, measure the resistance between terminals 3(C) and 5(D). Is the resistance within specifications? (See Resistance Chart.)	Go to Diagnostic Aids	Go to Step 6
6	1. Remove the transmission oil pan. 2. Check the internal wiring harness for an open. Refer to Transmission Oil Temperature Sensor (Adapter Case) in Automatic Transmission (4L30–E) section. Was a problem found and corrected?	Go to Step 13	Go to Step 7
7	1. Disconnect the internal wiring harness at the TFT sensor. 2. Measure the resistance of the TFT sensor. Is the resistance within specifications? (See Resistance Chart.)	Go to Diagnostic Aids	Go to Step 8

DTC P0713 Transmission Fluid Temperature (TFT) Sensor Circuit High Input (Cont'd)

Step	Action	Yes	No
8	Replace TFT sensor. Refer to Transmission Oil Temperature Sensor (Adapter Case) in Automatic Transmission (4L30–E) section. Is the replacement complete?	Go to Step 13	—
9	Check circuit RED/BLK–GRN/RED for an open or short to B+. Was a problem found?	Go to Step 13	Go to Step 10
10	Check circuit GRY–GRN for an open. Was a problem found?	Go to Step 13	Go to Step 11
11	Check the PCM for faulty or intermittent connections. Was a problem found?	Go to Step 13	Go to Step 12
12	Replace the PCM. Refer to Powertrain Control Module (PCM) in Automatic Transmission (4L30–E) section. Is the replacement complete?	Go to Step 13	—
13	1. After the repair is complete, use the scan tool to select "DTC", then "Clear Info" function and ensure the following conditions are met: 2. TFT sensor indicates a voltage less than 4.92 volts for 2 seconds. 3. Review the scan tool "DTC Info". Has the last test failed or is the current DTC displayed?	Begin diagnosis again Go to Step 1	Repair verified Exit DTC table

DTC P0719 TCC Brake Switch Circuit High (Stuck On)

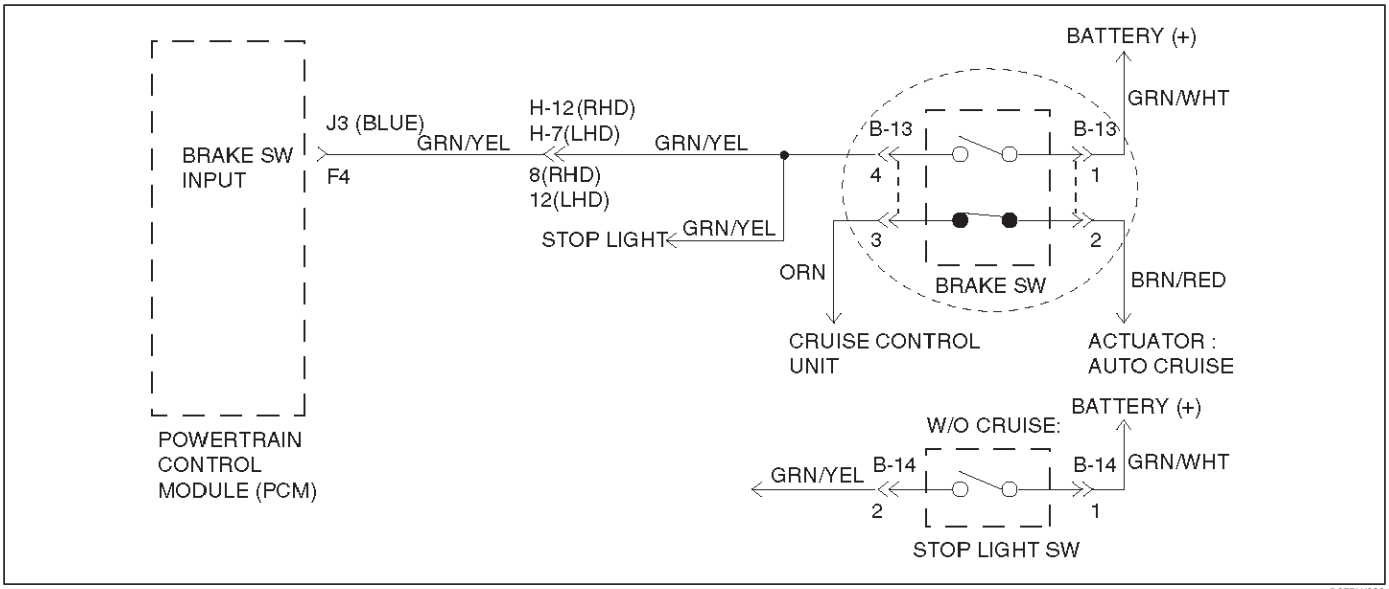

Circuit Description

The TCC brake switch is used to indicate brake pedal status. The normally opened brake switch signal voltage circuit is opened.

Brake switch supplies a B+ signal on circuit GRN/YEL to the PCM when the brakes are applied. The PCM uses this signal to deenergize the TCC solenoid when the brakes are applied.

This DTC detects a closed brake switch during accelerations. This is a type “D” DTC.

Conditions For Setting The DTC

- No OSS DTCs P0722 or P0723.
- The PCM detects a closed brake switch/circuit (12 volts) for 2 seconds, and the following events occur seven consecutive times: vehicle speed is less than 8 km/h (5 mph); then vehicle speed is between 8 and 32 km/h (5 and 20 mph) for 4 seconds; then vehicle speed is greater than 32 km/h (20 mph) for 4 seconds.

Action Taken When The DTC Sets

- If throttle opening is greater than 10% and vehicle speed is greater than 45 km/h (28 mph), then disregard brake switch contingency for TCC off mode.
- The PCM will not illuminate the CHECK TRANS Lamp.

Conditions For Clearing The DTC

- The DTC can be cleared from the PCM history by using a scan tool.
- The DTC will be cleared from history when the vehicle has achieved 40 warmup cycles without a failure reported.
- The PCM will cancel the DTC default actions when the fault no longer exists and the ignition is cycled “off” long enough to power down the PCM.

Diagnostic Aids

- Inspect the wiring for poor electrical connections at the PCM and TCC brake switch. Look for possible bent, backed out, deformed or damaged terminals. Check for weak terminal tension as well. Also check for a chafed wire that could short to bare metal or other wiring. Inspect for a broken wire inside the insulation.
- When diagnosing for a possible intermittent short or open condition, move the wiring harness while observing test equipment for a change.
- Check customer driving habits and/or unusual driving conditions (i.e. stop and go, highway).
- Check brake switch for proper mounting and adjustment.

Test Description

The numbers below refer to the step numbers on the diagnostic chart:

2. This test checks for voltage at the brake switch.
5. This test checks the brake switch.
8. This test checks circuit GRN/YEL at the PCM.

DTC P0719 TCC Brake Switch Circuit High (Stuck On)

Step	Action	Yes	No
1	1. Install the scan tool. 2. With the engine “off”, turn the ignition switch “on”. If ABS code is set, check applicable fuse. NOTE: Before clearing DTC(s), use the scan tool to record “Failure Records” for reference, as data will be lost when the “Clear Info” function is used. 3. Record the DTC “Failure Records”. 4. Apply then release the brake pedal. Does the scan tool display “TCC Brake Switch” as “closed” with the brake pedal applied, and then display “open” when the brake pedal is released?	Go to Diagnostic Aids	Go to Step 2
2	1. Connect the test light to ground. 2. Back probe ignition feed circuit terminal B13–1 at the brake switch. Is the test light “on”?	Go to Step 3	Go to Step 4
3	1. Connect the test light to ground. 2. Back probe circuit terminal B13–4 at the brake switch. Is the test light “off”?	Go to Step 7	Go to Step 5
4	Repair the open in battery feed circuit terminal B13–1 to the brake switch. If fuse is open, check circuit terminal B13–4 for a short to ground. Is the repair complete?	Go to Step 13	—
5	Disconnect brake switch connector B–13 and ignition switch “on”. Is the test light “on”?	Go to Step 8	Go to Step 6
6	Check the brake switch short (B13–1 and B13–4). Was a problem found?	Go to Step 9	Go to Step 10
7	Check circuit terminal B13–4 for a short to voltage. Ignition switch “on”. Is the test light “on”?	Go to Step 8	Go to Step 10
8	1. Disconnect the J3 (BLUE) PCM connector. 2. Check circuit terminal B13–4 for a short to voltage. Was a problem found?	Go to Step 13	Go to Step 10
9	Replace the brake switch. Is the replacement complete?	Go to Step 13	—
10	1. Turn the ignition “off”. 2. Reconnect the J3 (BLUE) PCM connector. 3. Turn the ignition “on”. Does the scan tool display “TCC Brake Switch” as “open” with the brake applied, then display “closed” with the brake pedal released?	Go to Diagnostic Aids	Go to Step 11
11	Check the PCM for faulty or intermittent connections. Was a problem found and corrected?	Go to Step 13	Go to Step 12

DTC P0719 TCC Brake Switch Circuit High (Stuck On) (Cont'd)

Step	Action	Yes	No
12	Replace the PCM. Refer to Powertrain Control Module (PCM) in Automatic Transmission (4L30–E) section. Is the replacement complete?	Go to Step 13	—
13	1. After the repair is complete, use the scan tool to select "DTC", then "Clear Info" function and ensure the following conditions are met: The PCM brake switch signal must indicate 0 volts for 1 seconds with the brake pedal applied. 2. Review the scan tool "DTC Info". Has the last test failed or is the current DTC displayed?	Begin diagnosis again Go to Step 1	Repair verified Exit DTC table

DTC P0722 Transmission Output Speed Sensor (OSS) Low Input

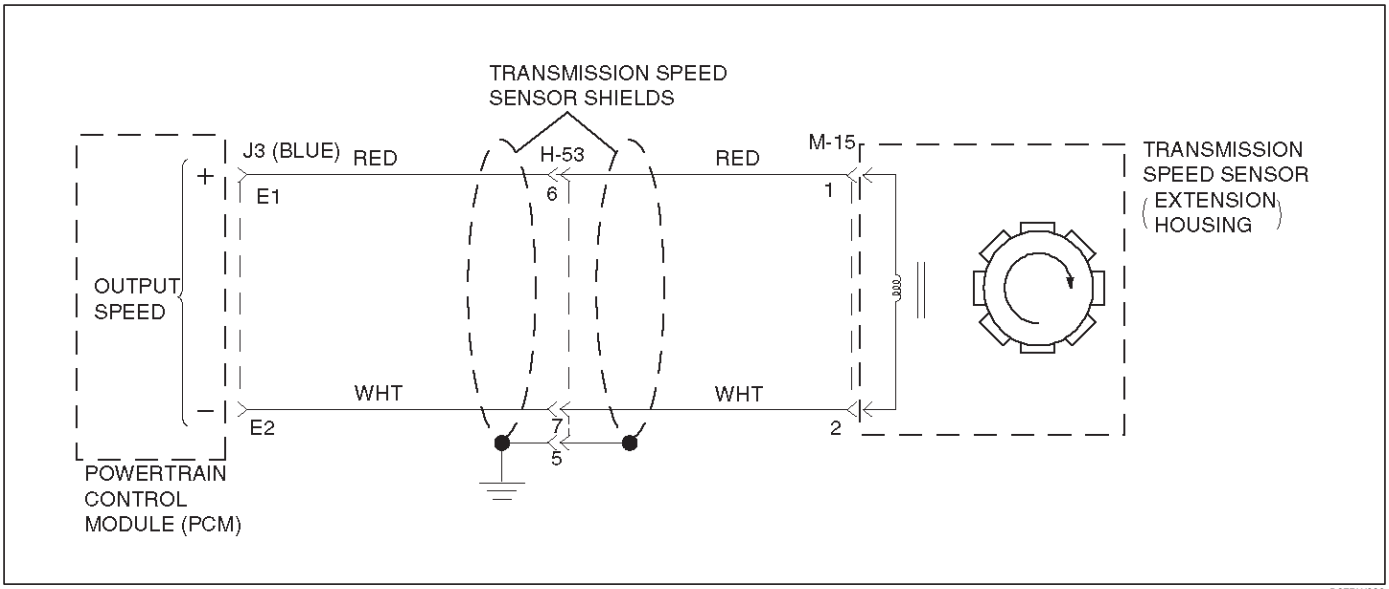

Circuit Description

Output speed information is provided to the PCM by the OSS, which is a permanent magnet (PM) generator. The PM generator produces a pulsing AC voltage. The AC voltage level and number of pulses increases as the speed of the vehicle increases. The PCM then converts the pulsing voltage to output speed, which is used for calculations. The vehicle speed can be displayed with a scan tool.

This DTC detects a low output speed when there is a high engine speed in a drive gear range. This is a type “C” DTC.

Conditions For Setting The DTC

- No MAP DTCs P0107 or P0108, P0106, P1106, P1107.
- No TPS DTCs P0122 or P0123.
- Not in Park or Neutral.
- TP angle is greater than 10%.
- Engine vacuum is between 0 and 70kPa.
- Engine speed is between 3,000 and 7,000 rpm.
- Transmission output speed is less than 0 rpm.
- All conditions met for 5 seconds.

Action Taken When The DTC Sets

- Fixed to 4th gear.
- Maximum line pressure.
- Inhibit TCC engagement.
- The PCM will illuminate the CHECK TRANS Lamp.

Conditions For Clearing The DTC/CHECK TRANS Lamp

- The PCM will turn off the CHECK TRANS Lamp after three consecutive ignition cycles without a failure reported.
- The DTC can be cleared from the PCM history by using a scan tool. The DTC will be cleared from history when the vehicle has achieved 40 warmup cycles without a failure reported.
- The PCM will cancel the DTC default actions when the fault no longer exists and the ignition is cycled “off” long enough to power down the PCM.

Diagnostic Aids

- An OSS DTC P0722 will set when no output speed is at detected at start off.
- Inspect the wiring for poor electrical connection at the PCM. Look for possible bent, backed out, deformed or damaged terminals. Check for weak terminal tension as well. Also check for a chafed wire that could short to bare metal or other wiring. Inspect for a broken wire inside the insulation.
- When diagnosing for a possible intermittent short or open condition, move the wiring harness while observing test equipment for a change.

Test Description

The numbers below refer to the step numbers on the diagnostic chart:

4. This test checks the OSS circuit.
5. This test checks the integrity of the OSS.
7. This test checks the 5–volt and ground circuit of the PCM.

DTC P0722 Transmission Output Speed Sensor (OSS) Low Input

Step	Action	Yes	No
1	1. Install the scan tool. 2. With the engine “off”, turn the ignition switch “on”. NOTE: Before clearing DTC(s), use the scan tool to record “Failure Records” for reference, as data will be lost when the “Clear Info” function is used. 3. Record the DTC “Failure Records”. 4. Raise the drive wheels. 5. Start the engine. 6. Place the transmission in any drive range. With the drive wheels rotating, does the “Trans Output Speed” increase with the drive wheel speed?	Go to Diagnostic Aids	Go to Step 2
2	Does the speedometer work?	Go to Step 3	Go to Step 4
3	Check for the most current and/or incorrect calibration. Is the calibration current?	Go to Step 16	Go to Step 4
4	1. Turn the ignition “off”. 2. Disconnect the J3 (BLUE) PCM connector. 3. Using the J39200 DVOM, measure the resistance between harness connector terminals J3–E1 and J3–E2. Is the reading 3,000 ohms?	Go to Step 5	Go to Step 6
5	1. Select AC volts. 2. Rotate the rear wheels, ensuring the driveshaft is turning. Is the voltage greater than 0.5 volts?	Go to Step 7	Go to Step 8
6	Inspect circuits RED and WHT for a poor connection or an open circuit. Was a problem found?	Go to Step 17	Go to Step 8
7	1. Reconnect the J3 (BLUE) PCM connector. 2. Disconnect the OSS harness from the OSS. 3. With the engine “off”, turn the ignition “on”. 4. Using the J 39200 DVOM, measure the voltage at the OSS harness connector terminals M15–1 and M15–2. Is the reading between 4.0 to 5.1 volts?	Go to Step 16	Go to Step 10
8	1. Remove the OSS. 2. Check the output shaft speed sensor rotor for damage or misalignment. Refer to Speed Sensor (Extension Housing) in Automatic Transmission (4L30–E) section. Was a problem found?	Go to Step 17	Go to Step 9
9	Replace the OSS. Is the replacement complete?	Go to Step 17	—
10	Was the reading in step 7 less than 4.0 volts?	Go to Step 12	Go to Step 11
11	Was the reading in step 7 greater than 5.1 volts?	Go to Step 15	—
12	Using the J 39200 DVOM to chassis ground, measure the voltage on circuit RED. Is the reading between 4.0 to 5.1 volts?	Go to Step 13	Go to Step 14
13	Repair the open in circuit WHT. Is the repair complete?	Go to Step 17	—
14	Check circuit RED for a short to ground or open. Was a problem found and corrected?	Go to Step 17	Go to Step 16

DTC P0722 Transmission Output Speed Sensor (OSS) Low Input (Cont'd)

Step	Action	Yes	No
15	Repair the short to B+ in circuit RED. Is the repair complete?	Go to Step 17	—
16	Replace the PCM. Refer to Powertrain Control Module (PCM) in automatic Transmission (4L30–E) section. Is the replacement complete?	Go to Step 17	—
17	1. After the repair is complete, use the scan tool to select "DTC", then "Clear Info" function and operate the vehicle under the following conditions: Transmission output speed is greater than 101 rpm for 3 seconds. 2. Review the scan tool "DTC Info". Has the last test failed or is the current DTC displayed?	Begin diagnosis again Go to Step 1	Repair verified Exit DTC table

DTC P0723 Transmission Output Speed Sensor (OSS) Intermittent

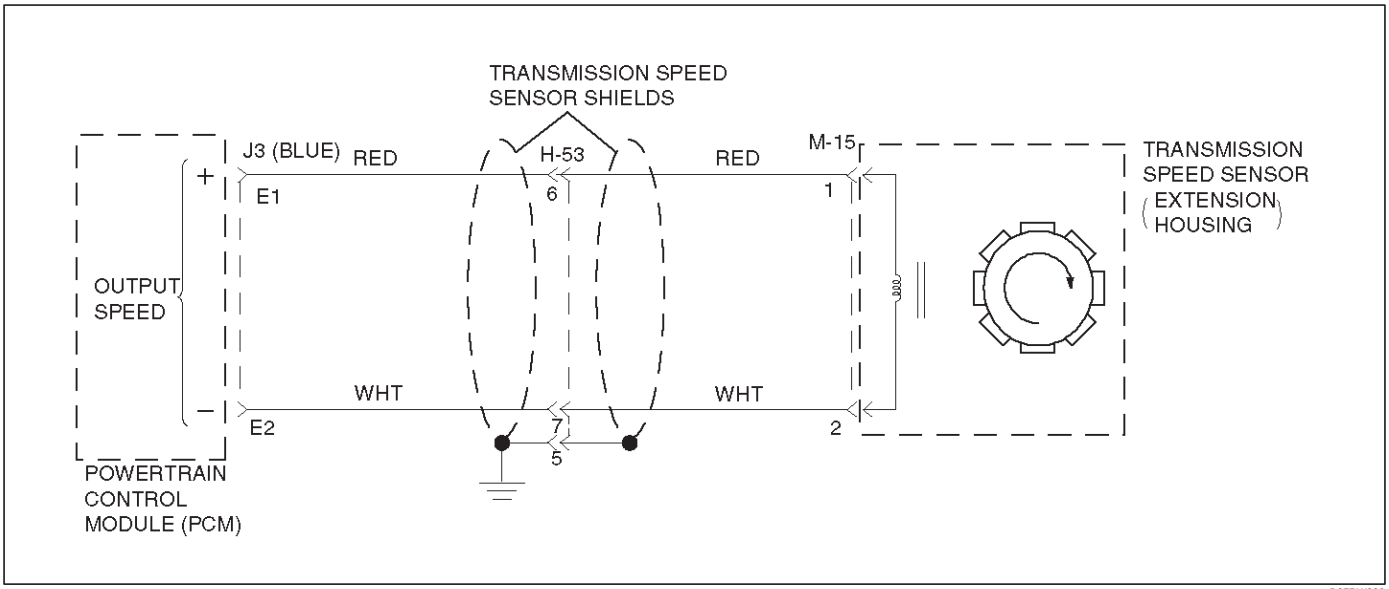

Circuit Description

Output speed information is provided to the PCM by the OSS, which is a permanent magnet (PM) generator. The PM generator produces a pulsing AC voltage. The AC voltage level and number of pulses increases as the speed of the vehicle increases. The PCM then converts the pulsing voltage to output speed, which is used for calculations. The vehicle speed can be displayed with a scan tool.

This DTC detects a low output speed when there is a high engine speed in a drive gear range. This is a type “C” DTC.

Conditions For Setting The DTC

In Park or Neutral:

- Transmission output speed change is greater than 10,000 rpm.
- Conditions met for 6 seconds.
- Engine running time is greater than 2 seconds.

Not in Park or Neutral:

- Transmission output speed change is greater than 512 rpm.
- Conditions met for 0.075 seconds
- Engine running time is greater than 2 seconds.
- Engine vacuum is less than 70 kPa.
- Output speed is greater than 1,380 rpm for 1 second.
- NORAW–NOLAST < 60 rpm for 6 seconds.

  NORAW: Latest raw data of output shaft speed.

  NOLAST: Filtered pervious data of output speed.

Action Taken When The DTC Sets

- Fixed to 4th gear.
- Maximum line pressure.
- Inhibit TCC engagement.
- The PCM will illuminate the CHECK TRANS Lamp.

Conditions For Clearing The DTC/CHECK TRANS Lamp

- The PCM will turn off the CHECK TRANS Lamp after three consecutive ignition cycles without a failure reported.
- The DTC can be cleared from the PCM history by using a scan tool.
- The DTC will be cleared from history when the vehicle has achieved 40 warmup cycles without a failure reported.
- The PCM will cancel the DTC default actions when the fault no longer exists and the ignition is cycled “off” long enough to power down the PCM.

Diagnostic Aids

- A OSS DTC P0723 will set when output speed has been detected and is lost.
- Inspect the wiring for poor electrical connection at the PCM. Look for possible bent, backed out, deformed or damaged terminals. Check for weak terminal tension as well. Also check for a chafed wire that could short to bare metal or other wiring. Inspect for a broken wire inside the insulation.
- When diagnosing for a possible intermittent short or open condition, move the wiring harness while observing test equipment for a change.

Test Description

The numbers below refer to the step numbers on the diagnostic chart:

4. This test checks the OSS circuit.
5. This test checks the integrity of the OSS.
7. This test checks the 5–volt and ground circuit of the PCM.

DTC P0723 Transmission Output Speed Sensor (OSS) Intermittent

Step	Action	Yes	No
1	1. Install the scan tool. 2. With the engine “off”, turn the ignition switch “on”. NOTE: Before clearing DTC(s), use the scan tool to record “Failure Records” for reference, as data will be lost when the “Clear Info” function is used. 3. Record the DTC “Failure Records”. 4. Raise the drive wheels. 5. Start the engine. 6. Place the transmission in any drive range. With the drive wheels rotating, does the “Trans Output Speed” increase with the drive wheel speed?	Go to Diagnostic Aids	Go to Step 2
2	Does the speedometer work?	Go to Step 3	Go to Step 4
3	Check for the most current and/or incorrect calibration. Is the calibration current?	Go to Step 16	Go to Step 4
4	1. Turn the ignition “off”. 2. Disconnect the J3 (BLUE) PCM connector. 3. Using the J39200 DVOM, measure the resistance between harness connector terminals J3–E1 and J3–E2. Is the reading 3,000 ohms?	Go to Step 5	Go to Step 6
5	1. Select AC volts. 2. Rotate the rear wheels, ensuring the driveshaft is turning. Is the voltage greater than 0.5 volts?	Go to Step 7	Go to Step 8
6	Inspect circuits RED and WHT for a poor connection or an open circuit. Was a problem found?	Go to Step 17	Go to Step 8
7	1. Reconnect the J3 (BLUE) PCM connector. 2. Disconnect the OSS harness from the OSS. 3. With the engine “off”, turn the ignition “on”. 4. Using the J 39200 DVOM, measure the voltage at the OSS harness connector terminals M15–1 and M15–2. Is the reading between 4.0 to 5.1 volts?	Go to Step 16	Go to Step 10
8	1. Remove the OSS. 2. Check the output shaft speed sensor rotor for damage or misalignment. Refer to Speed Sensor (Extension Housing) in Automatic Transmission (4L30–E) section. Was a problem found?	Go to Step 17	Go to Step 9
9	Replace the OSS. Is the replacement complete?	Go to Step 17	—
10	Was the reading in step 7 less than 4.0 volts?	Go to Step 12	Go to Step 11
11	Was the reading in step 7 greater than 5.1 volts?	Go to Step 15	—
12	Using the J 39200 DVOM to chassis ground, measure the voltage on circuit RED. Is the reading between 4.0 to 5.1 volts?	Go to Step 13	Go to Step 14
13	Repair the open in circuit WHT. Is the repair complete?	Go to Step 17	—
14	Check circuit RED for a short to ground or open. Was a problem found and corrected?	Go to Step 17	Go to Step 16

DTC P0723 Transmission Output Speed Sensor (OSS) Intermittent (Cont'd)

Step	Action	Yes	No
15	Repair the short to B+ in circuit RED. Is the repair complete?	Go to Step 17	—
16	Replace the PCM. Refer to Powertrain Control Module (PCM) in Automatic Transmission (4L30–E) section. Is the replacement complete?	Go to Step 17	—
17	1. After the repair is complete, use the scan tool to select "DTC", then "Clear Info" function and operate the vehicle under the following conditions: Transmission output speed is greater than 101 rpm for 3 seconds. 2. Review the scan tool "DTC Info". Has the last test failed or is the current DTC displayed?	Begin diagnosis again Go to Step 1	Repair verified Exit DTC table

DTC P0730 Transmission Incorrect Gear Ratio

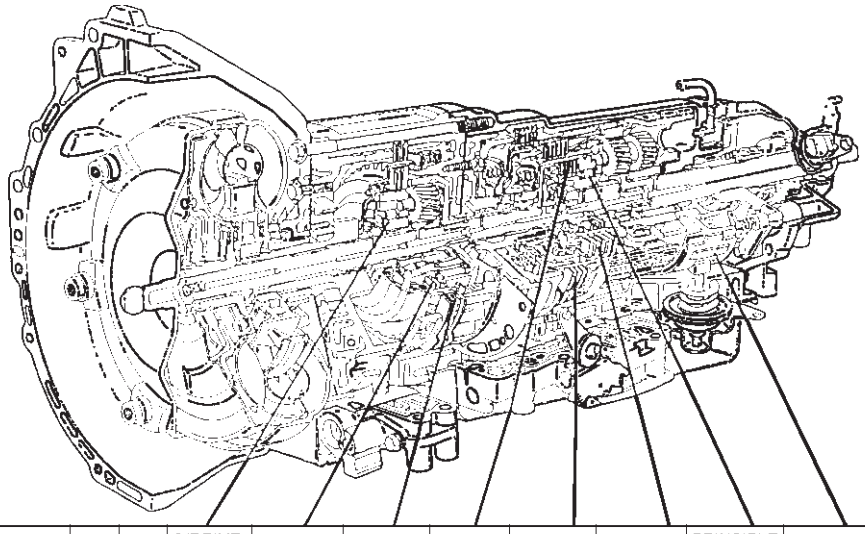

RANGE	GEAR	SOL A N.C.	SOL B N.O.	O/DRIVE ROLLER CLUTCH (OFW)	OVERRUN CLUTCH (OC)	FOURTH CLUTCH (C4)	THIRD CLUTCH (C3)	REVERSE CLUTCH (RC)	SECOND CLUTCH (C2)	PRINCIPLE SPRAG ASSEMBLY (PFW)	BAND ASSEMBLY (B)	ENGINE BRAKING
P-N		OFF	ON		APPLIED							NO
R	REVERSE	OFF	ON	LD	APPLIED			APPLIED		LD		NO
D	1ST	OFF	ON	LD	APPLIED					LD	APPLIED	NO
	2ND	ON	ON	LD	APPLIED				APPLIED	FW	APPLIED	YES
	3RD	ON	OFF	LD	APPLIED		APPLIED		APPLIED	NE		YES
	4TH	OFF	OFF	FW		APPLIED	APPLIED		APPLIED	NE		YES
3	1ST	OFF	ON	LD	APPLIED					LD	APPLIED	NO
	2ND	ON	ON	LD	APPLIED				APPLIED	FW	APPLIED	YES
	3RD	ON	OFF	LD	APPLIED		APPLIED		APPLIED	NE		YES
2	1ST	OFF	ON	LD	APPLIED		APPLIED			LD	APPLIED	YES
	2ND	ON	ON	LD	APPLIED				APPLIED	FW	APPLIED	YES
L	1ST	OFF	ON	LD	APPLIED		APPLIED			LD	APPLIED	YES

LD : LOCKED IN DRIVE FW : FREEWHEELING NE : NOT EFFECTIVE

D07RT015

Circuit Description

- The Powertrain Control Module (PCM) calculates the slippage of the converter and transmission based upon the engine speed, the output speed, and the current gear ratio.
- The slippage of the converter at a high enough engine speed is low. The transmission should not slip more than a given value when there is no shift.
- This DTC detects a slip at each gear. This is a type “C” DTC.

Conditions For Setting The DTC

- No Output Speed Sensor DTC(s) P0722, P0723.
- Not in Park, Neutral, or Reverse.
- Engine speed is greater than 3,500 rpm.
- 3 seconds since upshift.
- 3 seconds since downshift.
- 3 seconds since garage shift (N→D).
- And one of the following conditions occur:
  - Slip is greater than 508 rpm in 1st gear.
  - Slip is greater than 468 rpm in 2nd gear.
  - Slip is greater than 449 rpm on 3rd gear.
  - Slip is greater than 440 rpm on 4th gear.
- All conditions met for 5.5 seconds.

Action Taken When The DTC Sets

- Maximum line pressure.
- The PCM will illuminate the CHECK TRANS Lamp.

Conditions For Clearing The DTC/CHECK TRANS Lamp

- The PCM will turn “off” the CHECK TRANS Lamp after three consecutive ignition cycles without a failure reported.
- The DTC can be cleared from PCM memory by using a scan tool.
- The DTC can also be cleared from memory when the vehicle has made 40 warmup cycles without a failure reported.
- The PCM will cancel the DTC Actions Taken items when the fault conditions no longer exist and the ignition is cycles “off” long enough to power down the PCM.

Diagnostic Aids

- Check for intermittent output speed sensor circuit problems.
- Check for possible incorrect calibration. (PCM part No., tire specification, and rear axle ratio)

Test Description

The numbers below refer to the step numbers on the diagnostic chart:

2. This step checks for possible low fluid level causing slipping resulting in an undefined gear ratio.
3. This step checks for correct gear ratios for commanded gears.
4. This step checks for low line pressure.

DTC P0730 Transmission Incorrect Gear Ratio

Step	Action	Yes	No
1	Visually inspect the transmission cooling system for fluid leaks. ● Refer to Chart 16: Possible Causes of Transmission Fluid Leaks of Mechanical/Hydraulic Diagnosis Symptoms Index in Automatic Transmission (4L30–E) section Was condition found and corrected?	Go to Step 6	Go to Step 2
2	Refer to Checking Transmission Fluid Level and Condition in Automatic Transmission (4L30–E) section. Has transmission fluid checking procedure been performed?	Go to Step 3	Go to Checking Transmission Fluid Level and Condition in Automatic Transmission (4L30–E) section
3	1. Install the scan tool. 2. Turn the ignition switch to the “on” position. 3. Engine not running. NOTE: Before clearing DTC(s) use the scan tool to record the “Failure Records” for reference, as data will be lost when the “Clear Info” function is used. 4. Record the Failure Record data. 5. Use the scan tool snapshot mode to record transmission gear ratios. 6. Drive vehicle in transmission gear ranges L, 2, 3, and D with the engine speed is greater than 3,500 rpm for 5.5 seconds. 7. Record each transmission gear. 1st:2.73 – 2.99 2nd:1.54 – 1.71 3rd:0.93 – 1.05 4th:0.66 – 0.78 Does commanded gear ratio match ranges as shown?	Refer to Diagnostic Aids	Go to Step 4
4	Perform line pressure check. ● Refer to Line Pressure Test in Automatic Transmission (4L30–E) section. Was condition found and corrected?	Go to Step 6	Go to Step 5

DTC P0730 Transmission Incorrect Gear Ratio (Cont'd)

Step	Action	Yes	No
5	Check for possible clutch slippage. ● Refer to Chart 6: Diagnostic Trouble Code (DTC) P0730 of Mechanical/Hydraulic Diagnosis Symptoms Index in Automatic Transmission (4L30–E) section. Was condition found and corrected?	Go to Step 6	—
6	1. After the repair is complete, use the scan tool to select "DTC", then "Clear info" function. 2. Operate the vehicle under the following conditions: ● Drive the vehicle in D4 with the engine speed greater than 3,500 rpm to obtain anyone of the following gear ratios for seven seconds. 1st 1:2.73 – 1:2.99 2nd 1:1.54 – 1:1.71 3rd 1:0.93 – 1:1.05 4th 1:0.66 – 1:0.78 Has the last test failed?	Begin diagnosis again Go to Step 1	Repair verified Exit DTC table

DTC P0748 Pressure Control Solenoid (PCS) (Force Motor) Circuit Electrical

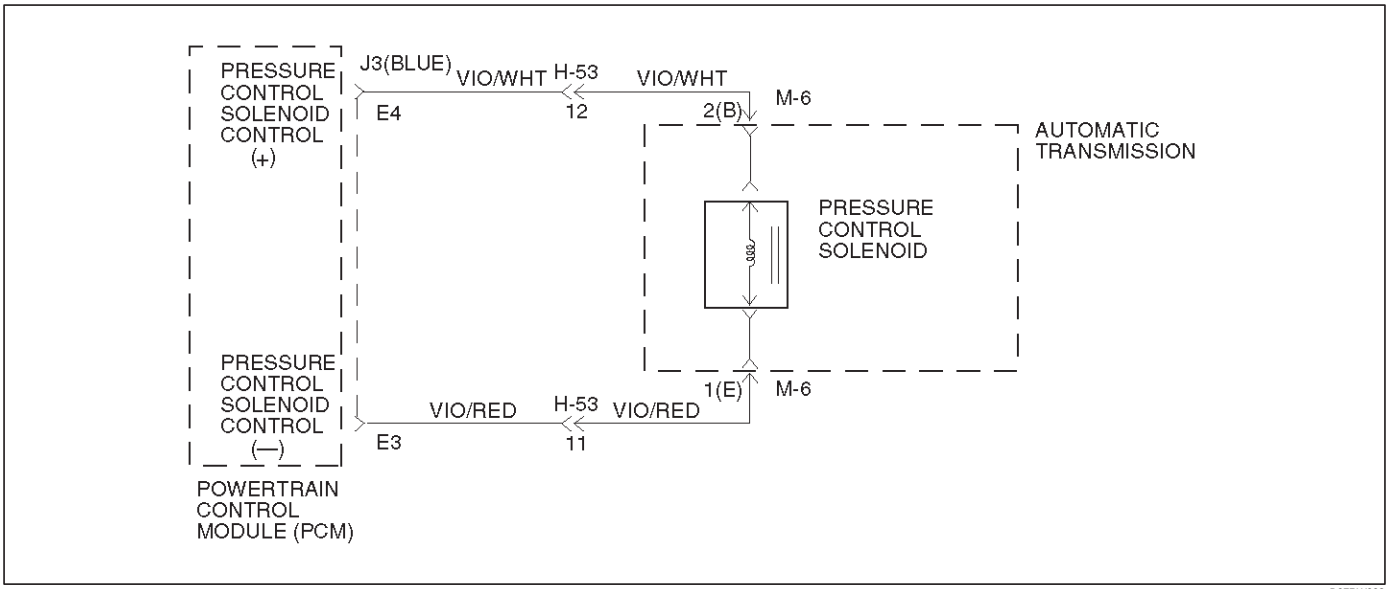

D07RW008

Circuit Description

The PCS is a PCM–controlled device used to regulate transmission line pressure. The PCM compares TPS voltage, engine rpm, and other inputs to determine the line pressure appropriate for a given load. The PCM will regulate the pressure by applying a varying amperage to the PCS. The applied amperage can vary from 0.1 to 1 amp, and is monitored by the PCM.

This DTC detects a continuous open or short to ground in the PCS circuit or the PCS. This is a type “C” DTC.

Conditions For Setting The DTC

- Battery voltage is between 10 and 16 volts.
- The PCM detects that the different between commanded and actual current is 200 milliampere (mA) for over 1 second.

Action Taken When the DTC Sets

- Maximum line pressure.
- The PCM will illuminate the CHECK TRANS Lamp.

Conditions For Clearing The DTC/CHECK TRANS Lamp

- The PCM will turn “off” the CHECK TRANS Lamp after three consecutive ignition cycles without a failure reported.
- The DTC can be cleared from PCM history by using a scan tool.
- The DTC will be cleared from memory when the vehicle has achieved 40 warmup cycles without a failure reported.
- The PCM will cancel the DTC default actions when the fault no longer exists and the ignition is cycled “off” long enough to power down the PCM.

Diagnostic Aids

- Inspect the wiring for poor electrical connection at the PCM and at the transmission 5–way connector. Look for possible bent, backed out, deformed or damaged terminals. Check for weak terminal tension as well. Also check for a chafed wire that could short to bare metal or other wiring. Inspect for a broken wire inside the insulation.
- When diagnosing for a possible intermittent short or open condition, move the wiring harness while observing test equipment for a change.

Test Description

The numbers below refer to the step numbers on the diagnostic chart:

1. This test checks the ability of the PCM to command the PCS.
2. This test checks the PCS and internal wiring harness for incorrect resistance.

DTC P0748 Pressure Control Solenoid (PCS) (Force Motor) Circuit Electrical

Step	Action	Yes	No
1	1. Install the scan tool. 2. With the engine “off”, turn the ignition switch “on”. NOTE: Before clearing DTC(s), use the scan tool to record “Failure Records” for reference, as data will be lost when the “Clear Info” function is used. 3. Record the DTC “Failure Records”. 4. While the engine is operating, put the transmission in Park. 5. Using the scan tool, apply 0.1 amp through 1.0 amp while observing “PC Ref. Current” and “PC Act. Current”. Is the “PC Act. Current” reading always within 0.16 amp?	Go to Diagnostic Aids	Go to Step 2
2	1. Turn the ignition “off”. 2. Disconnect the transmission 5–way connector M–6. 3. Using the J39200 DVOM, measure the resistance between terminals M6–2(B) and M6–1(E). Is the resistance within 3–7 ohms?	Go to Step 6	Go to Step 3
3	1. Remove the transmission oil pan. Refer to Solenoid (Adapter Case Valve Body) in Automatic Transmission (4L30–E) section. 2. Disconnect the internal wiring harness at the PCS. 3. Measure the resistance of the PCS. Is the resistance within 3–7 ohms?	Go to Step 5	Go to Step 4
4	Replace the PCS. Is the replacement complete?	Go to Step 9	—
5	Repair the internal wiring harness for an open. Is the repair complete?	Go to Step 9	—
6	Inspect/repair circuits J3–E4, M6–2(B), J3–E3, and M6–1(E). Was a problem found?	Go to Step 9	Go to Step 7
7	Inspect/repair circuits J3–E4, M6–2(B), J3–E3, and M6–1(E) for a short to ground or poor connections. Was a problem found?	Go to Step 9	Go to Step 8
8	Replace the PCM. Refer to Powertrain Control Module (PCM) in Automatic Transmission (4L30–E) section. Is the replacement complete?	Go to Step 9	—
9	1. After the repair is complete, use the scan tool to select “DTC”, then “Clear Info” function and ensure the following conditions are met: The PCS duty cycle is not at its electrical high or low limit. 2. Review the scan tool “DTC Info”. Has the last test failed or is the current DTC displayed?	Begin diagnosis again Go to Step 1	Repair verified Exit DTC table

DTC P0753 Shift Solenoid A Electrical

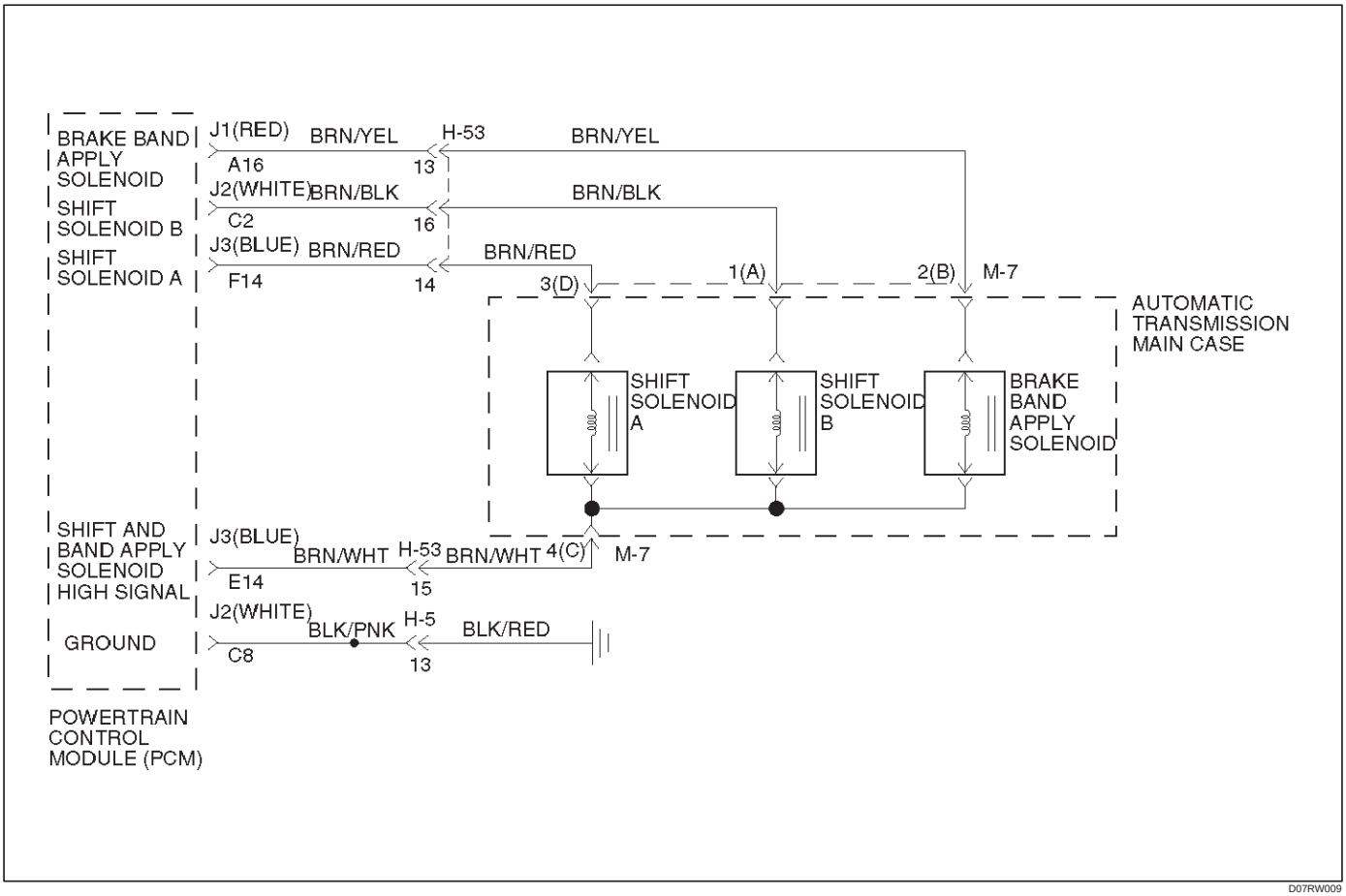

Circuit Description

- The shift solenoid A is a simple on/off solenoid located in the main case valve body. The solenoid is the normally closed type. In second or third gear, the Powertrain Control Module (PCM) energizes the solenoid to open a fluid inlet port. When the port is open, fluid pressure actuates the shift valve.
- The solenoid is activated by current. This current is produced by applying a voltage to one side (the High side) and a ground to the other side (Low side).
- The High Side Driver (HSD) is a circuit of the PCM that acts as a switch between the solenoids and the supply voltage. The High side of the solenoid is permanently supplied with voltage, except in BACKUP MODE or when ignition is off the HSD is turned off.

This DTC detects a continuous open or short to ground in the shift solenoid A circuit or the shift solenoid A. This is a type “C” DTC.

Conditions For Setting The DTC

- Ignition is “on”, Engine “run”.
- Battery voltage is between 10 and 16 volts.
- The PCM commands the solenoid “on” and the voltage remains high (B+) or the PCM commands the solenoid “off” and the voltage remains low (zero volts).
- All conditions met for 0.33 seconds.

Action Taken When The DTC Sets

- Maximum line pressure.
- Immediate landing to 4th gear.
- Inhibit TCC engagement.
- The PCM will illuminate the CHECK TRANS Lamp.

Conditions For Clearing The DTC/CHECK TRANS Lamp

- The PCM will turn off the CHECK TRANS Lamp after three consecutive ignition cycles without a failure reported.
- The DTC can be cleared from the PCM history by using a scan tool.
- The DTC will be cleared from history when the vehicle has achieved 40 warmup cycles without a failure reported.
- The PCM will cancel the DTC default actions when the fault no longer exists and the ignition is cycled “off” long enough to power down the PCM.

Diagnostic Aids

- Inspect the wiring for poor electrical connection at the PCM and at the transmission 16–way connector. Look for possible bent, backed out, deformed or damaged terminals. Check for weak terminal tension as well. Also check for a chafed wire that could short to bare metal or other wiring. Inspect for a broken wire inside the insulation.

- When diagnosing for a possible intermittent short or open condition, move the wiring harness while observing test equipment for a change.
- An open ignition feed circuit can cause multiple DTCs to set.

Test Description

The numbers below refer to the step numbers on the diagnostic chart:

2. This test checks for power to the shift solenoid A from the ignition through the PCM.
4. This test measures the resistance of the component.
8. This test checks the function of the shift solenoid A and the transmission internal wiring harness.

Shift Solenoid Status Chart

Gear	Shift solenoid A	Shift solenoid B
1st	OFF	ON
2nd	ON	ON
3rd	ON	OFF
4th	OFF	OFF

DTC P0753 Shift Solenoid A Electrical

Step	Action	Yes	No
1	1. Install the scan tool. 2. With the engine “on”, turn the ignition switch “on”. NOTE: Before clearing DTC(s), use the scan tool to record “Failure Records” for reference, as data will be lost when the “Clear Info” function is used. 3. Record the DTC “Failure Records”. Were DTCs P0753, P0758, P1860 set?	Go to Step 2	Go to Diagnostic Aids
2	1. Turn the ignition “on”. 2. Using the J39200 DVOM, measure the voltage between PCM connector terminals J3–E14 and J2–C8 (GND). Is the voltage within 10–12 volts?	Go to Step 3	Go to Step 4
3	1. Turn the ignition “off”. 2. Disconnect the J3 (BLUE) PCM connector. 3. Turn the ignition “on”. 4. Using the J39200 DVOM, measure the voltage between PCM connector terminals J3–F14 and ground. Is the voltage within 10 – 12 volts?	Go to Step 10	Go to Step 4
4	1. Turn the ignition “off”. 2. Disconnect the J3 (BLUE) PCM connector. 3. Using the J39200 DVOM, measure the resistance between PCM connector terminals J3–E14 and J3–F14. Is the resistance within 18 – 20 ohms?	Go to Step 5	Go to Step 6
5	1. Disconnect the J1 (RED) and J2 (WHITE) PCM connectors. 2. Using the J39200 DVOM, check a continuity between PCM terminals J3–F14 and ground. Is there a continuity?	Go to Step 11	Go to Step 7
6	1. Disconnect the 16–way harness connector H–53. 2. Using the J39200 DVOM, measure the resistance between terminals H53–14 and H53–15. Is the resistance within 18–20 ohms?	Go to Step 13	Go to Step 8
7	Using the J39200 DVOM, check a continuity between J3 (BLUE) PCM terminal E14 and ground. Is there a continuity?	Go to Step 12	Go to Step 9
8	1. Disconnect the transmission main case 4 pin connector M–7. 2. Using the J39200 DVOM, measure the resistance between terminals M7–3(D) and M7–4(C). Is the resistance within 18–20 ohms?	Go to Step 14	Go to Step 15

DTC P0753 Shift Solenoid A Electrical (Cont'd)

Step	Action	Yes	No
9	Check every connection at the PCM connector. Was a problem found?	Go to Step 17	Go to Step 16
10	The wiring harness between PCM connector terminals J3–F14 and transmission harness terminal M7–3(D) is shorted to voltage. Was a problem found and corrected?	Go to Step 18	—
11	The wiring harness between PCM connector terminal J3–F14 and transmission harness terminal M7–3(D) is shorted to ground. Was a problem found and corrected?	Go to Step 18	—
12	The wiring harness between PCM connector terminals J3–E14 and transmission harness terminal M7–4(C) is shorted to ground. Was a problem found and corrected?	Go to Step 18	—
13	The wiring harness between PCM connector J3 and transmission 16–way connector H–53 is open or poor connection. Was a problem found and corrected?	Go to Step 18	—
14	The wiring harness between transmission 16–way connector H–53 and transmission main case connector M–7 is open or has a poor connection. Was a problem found and corrected?	Go to Step 18	—
15	The shift solenoid A is faulty. Replace the shift solenoid A. Refer to Solenoid (Main Case Valve Body) in Automatic Transmission (4L30–E) section. Is the replacement complete?	Go to Step 18	—
16	The PCM may be faulty. Replace the PCM. Refer to Powertrain Control Module (PCM) in Automatic Transmission (4L30–E) section. Is the replacement complete?	Go to Step 18	—
17	Repair the PCM connector connection. Was a problem found and corrected?	Go to Step 18	—
18	1. After the repair is complete, use the scan tool to select "DTC", then "Clear Info" function and operate the vehicle under the following conditions: ● The shift solenoid A is commanded "on" and voltage drops to zero. ● The shift solenoid A is commanded "off" and voltage increases to B+. 2. Review the scan tool "DTC Info". Has the last test failed or is the current DTC displayed?	Begin diagnosis again Go to Step 1	Repair verified Exit DTC table

DTC P0758 Shift Solenoid B Electrical

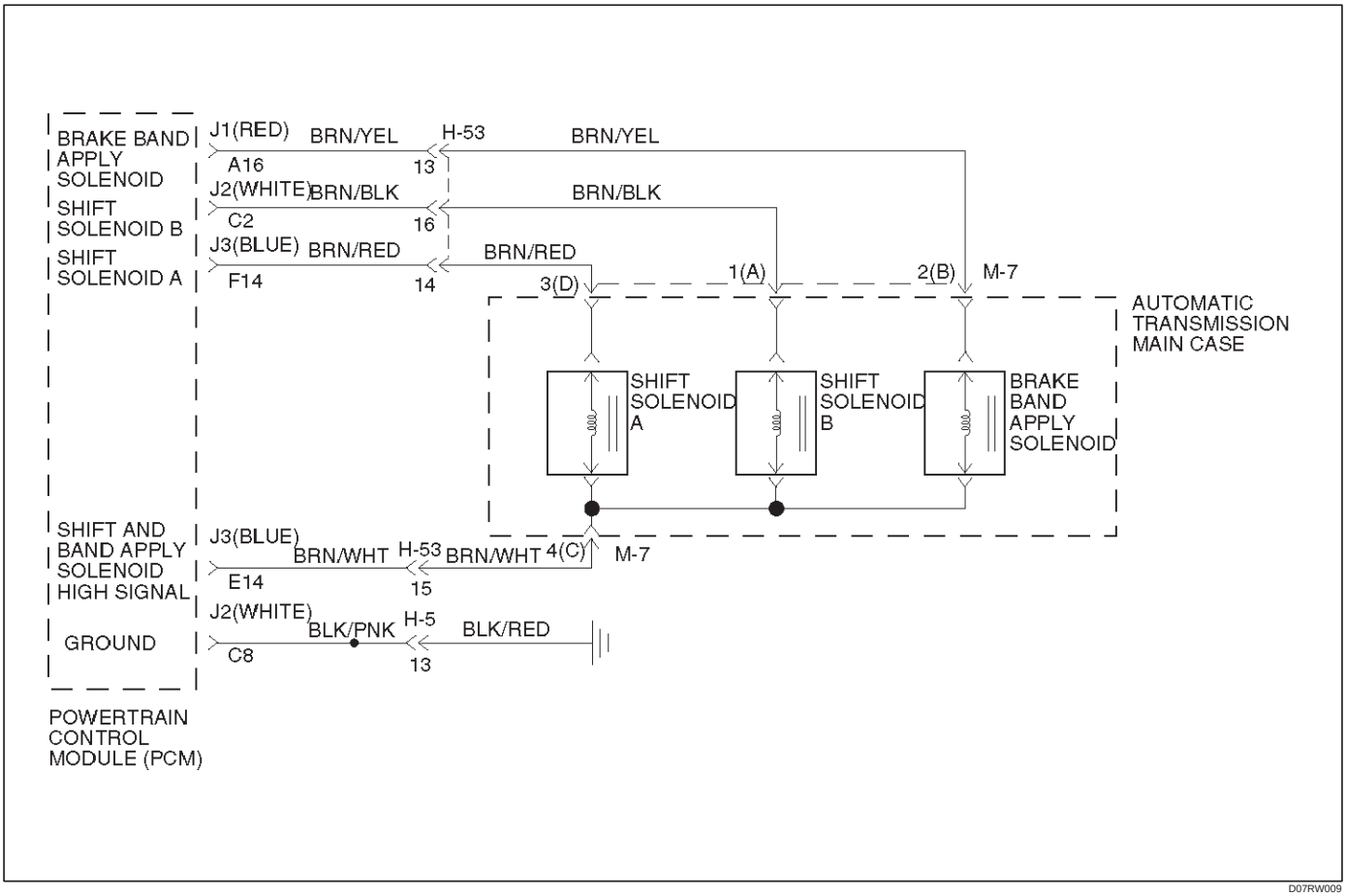

Circuit Description

- The shift solenoid B is a simple on/off solenoid located in the main case valve body. It is normally open. When the port is open, fluid pressure actuates the shift valve. In first or second gear, the Powertrain Control Module (PCM) energizes the solenoid to close a fluid inlet port.
- The solenoid is activated by current. This current is procuded by applying a voltage to one side (the High side) and a ground to the other side (Low side).
- The High Side Driver (HSD) is a circuit of the PCM that acts as a switch between the solenoids and the supply voltage. The High side of the solenoid is permanently supplied with voltage. In BACKUP MODE or when the ignition is off, the HSD is turned off.

This DTC detects a continuous open or short to ground in the shift solenoid B circuit or shift solenoid B. This is a type “C” DTC.

Conditions For Setting The DTC

- Ignition is “on”, Engine “run”.
- Battery voltage is between 10 and 16 volts.
- The PCM commands the solenoid “on” and the voltage remains high (B+)or the PCM commands the solenoid “off” and the voltage remains low (zero volts).
- All conditions met for 0.33 seconds.

Action Taken When The DTC Sets

- Fixed to 4th gear.
- Maximum line pressure.
- Inhibit TCC engagement.
- The PCM will illuminate the CHECK TRANS Lamp.

Conditions For Clearing The DTC/CHECK TRANS Lamp

- The PCM will turn off the CHECK TRANS Lamp after three consecutive ignition cycles without a failure reported.
- The DTC can be cleared from the PCM history by using a scan tool.
- The DTC will be cleared from history when the vehicle has achieved 40 warmup cycles without a failure reported.
- The PCM will cancel the DTC default actions when the fault no longer exists and the ignition is cycled “off” long enough to power down the PCM.

Diagnostic Aids

- Inspect the wiring for poor electrical connections at the PCM and at the transmission 16–way connector. Look for possible bent, backed out, deformed or damaged terminals. Check for weak terminal tension as well. Also check for a chafed wire that could short to bare metal or other wiring. Inspect for a broken wire inside the insulation.

- When diagnosing for a possible intermittent short or open condition, move the wiring harness while observing test equipment for a change.

Test Description

The numbers below refer to the step numbers on the diagnostic chart:

4. This test measures the resistance of the component.
6. This test checks the function of the shift solenoid B and the transmission internal wiring harness.
10. This test checks for power to the shift solenoid B from the ignition through the PCM.

Shift Solenoid Status Chart

Gear	Shift solenoid A	Shift solenoid B
1st	OFF	ON
2nd	ON	ON
3rd	ON	OFF
4th	OFF	OFF

DTC P0758 Shift Solenoid B Electrical

Step	Action	Yes	No
1	1. Install the scan tool. 2. With the engine “on”, turn the ignition switch “on”. NOTE: Before clearing DTC(s), use the scan tool to record “Failure Records” for reference, as data will be lost when the “Clear Info” function is used. 3. Record the DTC “Failure Records”. Were DTCs P0753, P0758, P1860 set?	Go to Step 3	Go to Step 2
2	1. The engine “on”. 2. Apply brake pedal and select transmission range “D”. 3. Press and hold down the winter switch and select transmission mode “winter”. Does the scan tool display DTC P0758 at 3rd gear?	Go to Step 7	Go to Diagnostic Aids
3	1. Turn the ignition “off”. 2. Disconnect the J2 (WHITE) and J3 (BLUE) PCM connectors. 3. Turn the ignition “on”. 4. Using the J39200 DVOM, measure the voltage between PCM connector terminals J2–C2 and J2–C8. Is the voltage within 10 – 12 volts?	Go to Step 14	Go to Step 4
4	1. Turn the ignition “off”. 2. Using the J39200 DVOM, measure the resistance between PCM connector terminals J2–C2 and J3–E14. Is the resistance within 18 – 20 ohms?	Go to Step 15	Go to Step 5
5	1. Disconnect the transmission 16–way connector H–53. 2. Using the J39200 DVOM, measure the resistance between terminals H53–16 and H53–15. Is the resistance within 18 – 20 ohms?	Go to Step 16	Go to Step 6
6	1. Disconnect the transmission main case connector M–7. 2. Using the J39200 DVOM, measure the resistance between terminals M7–1(A) and M7–4(C). Is the resistance within 18 – 20 ohms?	Go to Step 17	Go to Step 18
7	1. Turn the ignition “off”. 2. Disconnect the J2 (WHITE) and J3 (BLUE) PCM connectors. 3. Using the J39200 DVOM, measure the resistance between PCM connector terminals J2–C2 and J3–E14. Is the resistance within 18 – 20 ohms?	Go to Step 8	Go to Step 9
8	Using the J39200 DVOM, check a continuity between PCM connector terminal J2–C2 and ground. Is there a continuity?	Go to Step 19	Go to Step 10

DTC P0758 Shift Solenoid B Electrical (Cont'd)

Step	Action	Yes	No
9	1. Disconnect the transmission 16–way connector H–53. 2. Using the J39200 DVOM, measure the resistance between terminals H53–16 and H53–15. Is the resistance within 18–20 ohms?	Go to Step 20	Go to Step 11
10	Using the J39200 DVOM, check a continuity between PCM connector terminal J3–E14 and ground. Is there a continuity?	Go to Step 21	Go to Step 12
11	1. Disconnect the transmission main case connector M–7. 2. Using the J39200 DVOM, measure the resistance between terminals M7–1(A) and M7–4(C). Is the resistance within 18 – 20 ohms?	Go to Step 22	Go to Step 23
12	Check every connection of the PCM and transmission 16–way connector H–53. Was a problem found and corrected?	Go to Step 25	Go to Step 13
13	1. Connect the J2 (WHITE) and J3 (BLUE) PCM connectors to the PCM. 2. Turn the ignition "on", the engine "on". 3. Repeat Step 2. Does the scan tool display DTC P0758 at 3rd gear?	Go to Step 24	Go to Diagnostic Aids
14	The wiring harness between PCM connector terminal J2–C2 and transmission main case terminal M7–1(A) is shorted to voltage. Was a problem found and corrected?	Go to Step 25	—
15	The PCM internal terminal J2–C2 is shorted to voltage. Replace the PCM. Refer to Powertrain Control Module (PCM) in Automatic Transmission (4L30–E) section. Is the replacement complete?	Go to Step 25	—
16	The wiring harness between PCM connector and transmission 16–way connector is shorted. Was a problem found and corrected?	Go to Step 25	—
17	The wiring harness between transmission 16–way connector and transmission main case connector is shorted. Was a problem found and corrected?	Go to Step 25	—
18	The shift solenoid B is faulty, or the internal wiring harness from the shift solenoid B is shorted. Was a problem found and corrected?	Go to Step 25	—
19	The wiring harness between PCM connector terminal J2–C2 and transmission main case connector terminal M7–1(A) is shorted to ground. Was a problem found and corrected?	Go to Step 25	—
20	The wiring harness between PCM connector terminal J2–C2 and transmission 16–way connector terminal H53–16, or between PCM connector terminal J3–E14 and 16–way connector terminal H53–15 is open. Was a problem found and corrected?	Go to Step 25	—

DTC P0758 Shift Solenoid B Electrical (Cont'd)

Step	Action	Yes	No
21	The wiring harness between PCM connector terminal J3–E14 and transmission main case connector terminal M7–4(C) is shorted to ground. Was a problem found and corrected?	Go to Step 25	—
22	The wiring harness between transmission 16–way connector terminal H53–16 and transmission main case connector terminal M7–1(A), or between H53–15 and M7–4(C) is open. Was a problem found and corrected?	Go to Step 25	—
23	The internal wiring harness from the shift solenoid B is open, or the shift solenoid B is faulty. Was a problem found and corrected?	Go to Step 25	—
24	Replace the PCM. Is the replacement complete?	Go to Step 25	—
25	1. After the repair is complete, use the scan tool to select "DTC", then "Clear Info" function and operate the vehicle under the following conditions: ● The shift solenoid B is commanded "on" and voltage drop to zero. ● The shift solenoid B is commanded "off" and voltage increases to B+. 2. Review the scan tool "DTC Info". Has the last test failed or is the current DTC displayed?	Begin diagnosis again Go to Step 1	Repair verified Exit DTC table

DTC P1790 ROM Transmission Side Bad Check Sum

Circuit Description

Transmission Side Read Only Memory (ROM) and Electronically Erasable Programmable Read Only Memory (EEPROM) is an electronic circuit that controls the transmission control in the Powertrain Control Module (PCM).
This DTC detects a check sum error. This is a type “C” DTC.

Conditions For Setting The DTC

- Detects check sum error for 1 second.

Action Taken When The DTC Sets

- Maximum line pressure.
- Immediate landing to 4th gear.
- Inhibit TCC engagement.
- The PCM will illuminate the CHECK TRANS Lamp.

Conditions For Clearing The DTC/CHECK TRANS Lamp

- The PCM will turn off the CHECK TRANS Lamp after three consecutive ignition cycles without a failure reported.
- The DTC can be cleared from the PCM history by using a scan tool.
- The DTC will be cleared from history when the vehicle has achieved 40 warmup cycles without a failure reported.
- The PCM will cancel the DTC default actions when the fault no longer exists and the ignition is cycled “off” long enough to power down the PCM.

DTC P1790 ROM Transmission Side Bad Check Sum

Step	Action	Yes	No
1	1. Install the scan tool. 2. With the engine “off”, turn the ignition switch “on”. NOTE: Before clearing DTC(s), use the scan tool to record “Failure Records” for reference, as data will be lost when the “Clear Info” function is used. 3. Record the DTC “Failure Records”. Was DTC P1790 set?	Go to Step 4	Go to Step 2
2	Was DTC P1792 set?	Go to Step 3	—
3	1. Remove the PCM. Refer to Powertrain Control Module (PCM) in Automatic Transmission (4L30–E) section. 2. Using the ITCS, make a reprogramming the transmission EEPROM. Was the reprogramming complete?	Go to Step 5	—
4	Replace the PCM. Is the replacement complete?	Go to Step 5	—
5	1. After the repair is complete, use the scan tool to select “DTC”, then “Clear Info” function and operate the vehicle. 2. Review the scan tool “DTC Info”. Has the last test failed or is the current DTC displayed?	Begin diagnosis again Go to Step 1	Repair verified Exit DTC table

DTC P1792 EEPROM Transmission Side Bad Check Sum

Circuit Description

Transmission Side Read Only Memory (ROM) and Electronically Erasable Programmable Read Only Memory (EEPROM) is an electronic circuit that controls the transmission control in the Powertrain Control Module (PCM).
This DTC detects a check sum error. This is a type “C” DTC.

Conditions For Setting The DTC

- Detects check sum error for 1 second.

Action Taken When The DTC Sets

- Maximum line pressure.
- Immediate landing to 4th gear.
- Inhibit TCC engagement.
- The PCM will illuminate the CHECK TRANS Lamp.

Conditions For Clearing The DTC/CHECK TRANS Lamp

- The PCM will turn off the CHECK TRANS Lamp after three consecutive ignition cycles without a failure reported.
- The DTC can be cleared from the PCM history by using a scan tool.
- The DTC will be cleared from history when the vehicle has achieved 40 warmup cycles without a failure reported.
- The PCM will cancel the DTC default actions when the fault no longer exists and the ignition is cycled “off” long enough to power down the PCM.

DTC P1792 EEPROM Transmission Side Check Bad Check Sum

Step	Action	Yes	No
1	1. Install the scan tool. 2. With the engine “off”, turn the ignition switch “on”. NOTE: Before clearing DTC(s), use the scan tool to record “Failure Records” for reference, as data will be lost when the “Clear Info” function is used. 3. Record the DTC “Failure Records”. Was DTC P1790 set?	Go to Step 4	Go to Step 2
2	Was DTC P1792 set?	Go to Step 3	—
3	1. Remove the PCM. Refer to Powertrain Control Module (PCM) in Automatic Transmission (4L30–E) section. 2. Using the ITCS, make a reprogramming the transmission EEPROM. Was the reprogramming complete?	Go to Step 5	—
4	Replace the PCM. Is the replacement complete?	Go to Step 5	—
5	1. After the repair is complete, use the scan tool to select “DTC”, then “Clear Info” function and operate the vehicle. 2. Review the scan tool “DTC Info”. Has the last test failed or is the current DTC displayed?	Begin diagnosis again Go to Step 1	Repair verified Exit DTC table

DTC P1835 Kickdown Switch Always On

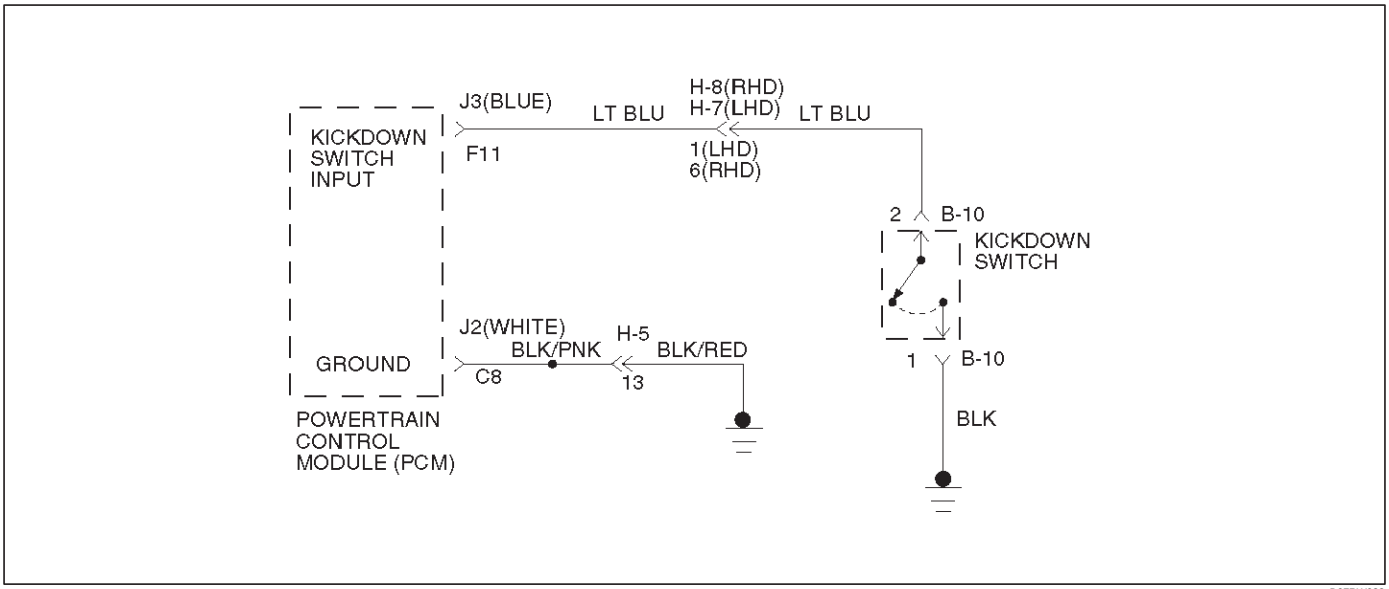

D07RW033

Circuit Description

- When the driver presses the accelerator pedal down fully, the kickdown switch closes, sending a ground signal to the Powertrain Control Module (PCM).
- This information is used to perform shifts at high engine speed.
- When the kickdown switch is closed, the Throttle Position Sensor (TPS) is already is at 100%.
- This DTC detects a closed kickdown switch when TP angle is less than 70%.
- This is a type “D” DTC.

Conditions For Setting The DTC

- No TPS DTCs P0122 or P0123.
- TP angle is less than 70%.
- Kickdown switch is “on”.
- All conditions met for 1 second.

Action Taken When The DTC Sets.

- Kickdown mode control is off.
- The PCM will not illuminate the CHECK TRANS Lamp.

Conditions For Clearing The DTC

- The DTC can be cleared from the PCM history by using a scan tool.
- The DTC will be cleared from history when the vehicle has achieved 40 warmup cycles without a failure reported.
- The PCM will cancel the DTC default actions when the fault no longer exists and the ignition is cycled “off” long enough to power down the PCM.

Diagnostic Aids

- Check the wiring harness for a short to ground between the PCM and kickdown switch.
- Check the kickdown switch for failure.
- Check kickdown adjustment.

Test Description

The numbers below refer to the step numbers on the diagnostic chart:

1. This test checks for short to ground or kickdown switch failure.
3. This test checks for regulation kickdown switch.

DTC P1835 Kickdown Switch Always On

Step	Action	Yes	No
1	1. Install the scan tool. 2. With the engine “on”, turn the ignition switch “on”. NOTE: Before clearing DTC(s), use the scan tool to record “Failure Records” for reference, as data will be lost when the “Clear Info” function is used. 3. Record the DTC “Failure Records”. Does the scan tool display “Kickdown switch” “low” (closed switch)?	Go to Step 2	Go to Step 3
2	1. Turn the ignition “off”. 2. Disconnect the J3 (BLUE) PCM connector. 3. Using the J39200 DVOM, check a continuity between PCM connector terminal J3–F11 and ground. Is there a continuity?	Go to Step 4	Go to Step 7
3	The TP angle goes from 0% to 100% with the accelerator pedal depressed. Is the kickdown switch “on” when TP angle is below 70%?	Go to Step 5	Go to Diagnostic Aids
4	1. Disconnect the kickdown switch connector B–10. 2. Using the J39200 DVOM, check a continuity between terminals B10–1 and B10–2. Is there a continuity?	Go to Step 6	Go to Step 8
5	Adjust the kickdown switch. Is the kickdown switch “on” when TP angle is above 95%?	Go to Step 9	—
6	Replace the kickdown switch. Is the replacement complete?	Go to Step 9	—
7	Replace the PCM. Refer to Powertrain Control Module (PCM) in Automatic Transmission (4L30–E) section. Is the replacement complete?	Go to Step 9	—
8	Repair the short to ground in circuit LT BLUE. Is the repair complete?	Go to Step 9	—
9	1. After the repair is complete, use the scan tool to select “DTC”, then “Clear Info” function and ensure the following condition is met: The torque converter stator temperature switch circuit does not indicate a hot mode when the transmission fluid temperature is less than 60˚C (140˚F) for at least 5 seconds. 2. Review the scan tool “DTC Info”. Has the last test failed or is the current DTC displayed?	Begin diagnosis again Go to Step 1	Repair verified Exit DTC table

DTC P1850 Brake Band Apply Solenoid Malfunction

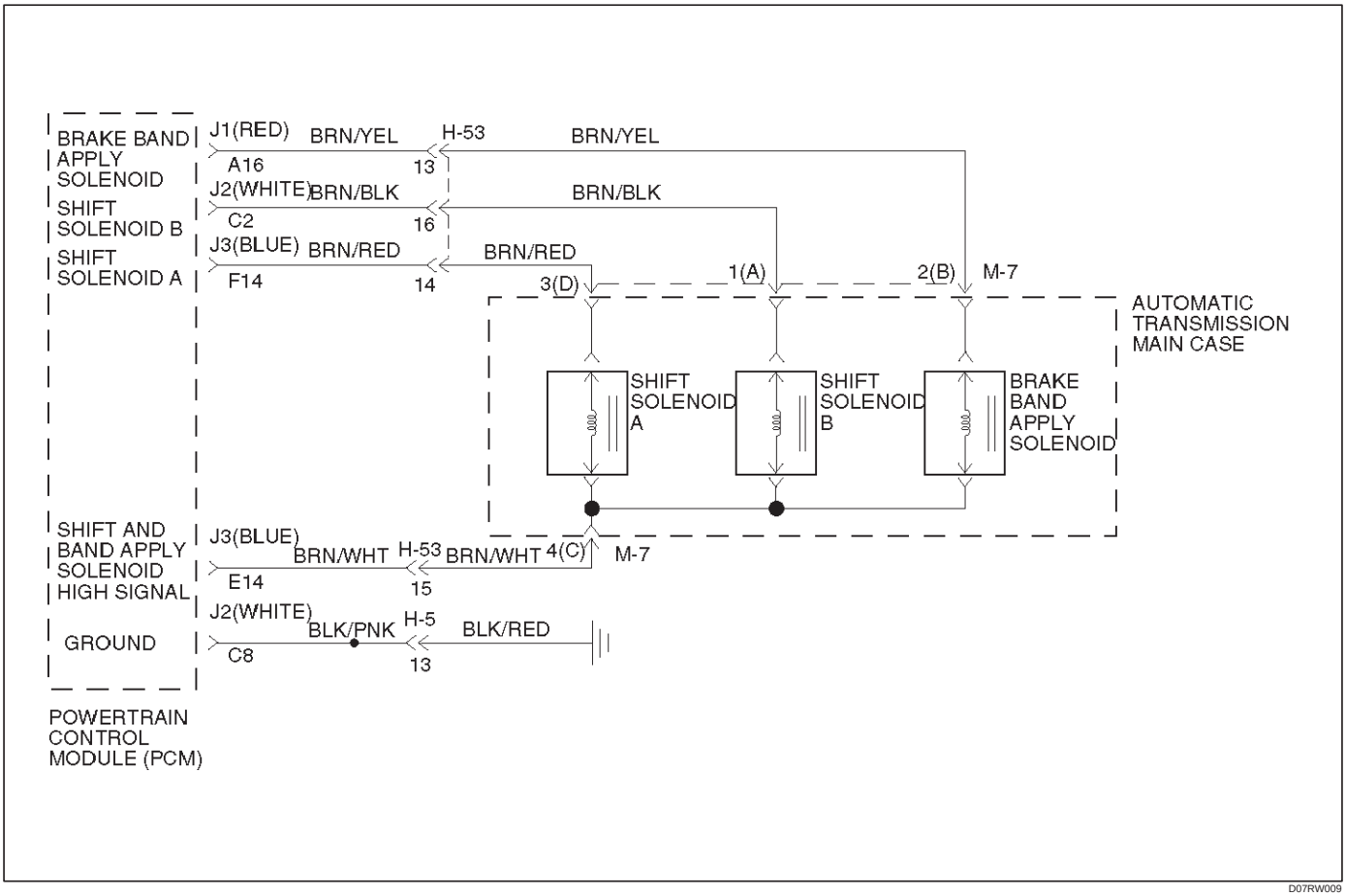

Circuit Description

- The brake band apply solenoid is a normally open solenoid which controls the flow of fluid for brake band application. The Powertrain Control Module (PCM) uses Pulse Width Modulation (PWM) and changes the duty cycle to control the solenoid. The PCM turns the solenoid on (energized) and off (deenergized) at a constant frequency. The length of time the solenoid is energized during each on/off cycle is called the pulse width. By varying or “modulating” the pulse width, the solenoid output pressure is changed. Since the solenoid is normally open, increasing the pulse width increases the duty cycle and decreases the output pressure. PWM control provides smooth band application without an accumulator. The band is only applied in first and second gears.
- In the event of an electrical failure (open), the solenoid regulates at the maximum oil flow (0% duty cycle).
- The solenoid is activated by current. This current is produced by applying a voltage to one side (the High side) and a ground to the other side (Low side).
- The High Side Driver (HSD) is a circuit of the PCM that acts as a switch between the solenoids and the supply voltage. The High side of the solenoid is permanently supplied with voltage. When the ignition is off, the HSD is turned off.

This DTC detects a continuous open or short to ground in the brake band apply solenoid circuit or the brake band apply solenoid. This is a type “D” DTC.

Conditions For Setting The DTC

- Battery voltage is between 10 and 16 volts.
- Ignition is “on”, Engine “run”.
- The PCM commands the solenoid “on” and the voltage remains high (B+) or the PCM commands the solenoid “off” and the voltage remains low (zero volts).
- All conditions met in 1.3 seconds.

Action Taken When The DTC Sets

- Inhibit brake band apply solenoid.
- The PCM will not illuminate the CHECK TRANS Lamp.

Conditions For Clearing The DTC

- The DTC can be cleared from the PCM history by using a scan tool.
- The DTC will be cleared from history when the vehicle has achieved 40 warmup cycles without a failure reported.
- The PCM will cancel the DTC default actions when the fault no longer exists and the ignition is cycled “off” long enough to power down the PCM.

Diagnostic Aids

- Inspect the wiring for poor electrical connection at the PCM and at the transmission 16–way connector. Look for possible bent, backed out, deformed or damaged terminals. Check for weak terminal tension as well. Also check for a chafed wire that could short to bare metal or other wiring. Inspect for a broken wire inside the insulation.
- When diagnosing for a possible intermittent short or open condition, move the wiring harness while observing test equipment for a change.

Test Description

The numbers below refer to the step numbers on the diagnostic chart:

2. This test checks for power to the brake band apply solenoid from the ignition through the PCM.
3. This test checks the resistance of the transmission internal wiring harness and brake band apply solenoid.
4. This test checks the ability of the PCM and wiring to control the ground circuit.

DTC P1850 Brake Band Apply Solenoid Malfunction

Step	Action	Yes	No
1	1. Install the scan tool. 2. With the engine “on”, turn the ignition switch “on”. NOTE: Before clearing DTC(s), use the scan tool to record “Failure Records” for reference, as data will be lost when the “Clear Info” function is used. 3. Record the DTC “Failure Records”. Were DTCs P0753, P0758 set?	Go to Step 2	Go to Step 3
2	Using the J39200 DVOM, back probe between PCM connector terminals J3–E14 and J2–C8. Is the voltage between 10 to 12 volts?	Go to Step 4	Go to Step 5
3	1. Turn the ignition “off”. 2. Disconnect the J1 (RED) and J3 (BLUE) PCM connectors. 3. Using the J39200 DVOM, measure the resistance between PCM connector terminals J1–A16 and J3–E14. Is the resistance within 10–12 ohms?	Go to Step 11	Go to Step 12
4	Using the J39200 DVOM, back probe between PCM connector terminals J1–A16 and J2–C8. Is the voltage between 10 to 12 volts?	Go to Step 25	Go to Step 3
5	1. Turn the ignition “off”. 2. Disconnect the J1 (RED) and J3 (BLUE) PCM connectors. 3. Using the J39200 DVOM, check continuity between PCM terminal J3–E14 and ground. Is there a continuity?	Go to Step 6	Go to Step 8
6	1. Disconnect the transmission 16–way connector H–53. 2. Using the J39200 DVOM, check continuity between connector H53–13 and ground. Is there a continuity?	Go to Step 7	Go to Step 16
7	1. Disconnect the transmission main case connector M–7. 2. Using the J39200 DVOM, check continuity between the terminal M7–2(B) and ground. Is there a continuity?	Go to Step 17	Go to Step 18
8	1. Disconnect the J1 (RED) PCM Connector. 2. Using the J39200 DVOM, measure the resistance between PCM connector terminals J1–A16 and J3–E14. Is the resistance within 10–12 ohms?	Go to Step 25	Go to Step 9
9	1. Disconnect the transmission 16–way connector H–53. 2. Using the J39200 DVOM, measure the resistance between terminal H53–13 and H53–15. Is the resistance within 10–12 ohms?	Go to Step 16	Go to Step 10

DTC P1850 Brake Band Apply Solenoid Malfunction (Cont'd)

Step	Action	Yes	No
10	1. Disconnect the transmission main case connector M–7. 2. Using the J39200 DVOM, measure the resistance between terminals M7–2(B) and M7–4(C). Is the resistance within 10–12 ohms?	Go to Step 19	Go to Step 20
11	Using the J39200 DVOM, check continuity between PCM terminal J1–A16 and ground. Is there a continuity?	Go to Step 13	Go to Step 25
12	1. Disconnect the transmission 16–way connector H–53. 2. Using the J39200 DVOM, measure the resistance between terminal H53–13 and H53–15. Is the resistance within 10–12 ohms?	Go to Step 23	Go to Step 14
13	1. Disconnect the transmission 16–way connector H–53. 2. Using the J39200 DVOM, check continuity between terminal H53–13 and ground. Is there a continuity?	Go to Step 15	Go to Step 21
14	1. Disconnect the transmission main case connector M–7. 2. Using the J39200 DVOM, measure the resistance between terminals M7–2(B) and M7–4(C). Is the resistance within 10–12 ohms?	Go to Step 24	Go to Step 20
15	1. Disconnect the transmission main case connector M–7. 2. Using the J39200 DVOM, check continuity between the terminal M7–2(B) and ground. Is there a continuity?	Go to Step 17	Go to Step 22
16	The wiring harness between PCM terminal J3–E14 and transmission 16–way connector terminal H53–15 is open. Was a problem found and corrected?	Go to Step 26	—
17	The brake band apply solenoid is faulty, or the internal wiring harness from the brake band apply solenoid is shorted to ground. Was a problem found and corrected?	Go to Step 26	—
18	The wiring harness between the transmission 16–way connector terminal H53–15 and the transmission main case connector terminal M7–4(C) is shorted to ground. Was a problem found and corrected?	Go to Step 26	—
19	The wiring harness between the transmission 16–way connector terminal H53–15 and the transmission main case connector terminal M7–4(C) is open. Was a problem found and corrected?	Go to Step 26	—
20	The brake band apply solenoid is faulty, or the internal wiring harness from the brake band apply solenoid is open. Was a problem found and corrected?	Go to Step 26	—
21	The wiring harness between the PCM connector terminal J1–A16 and transmission 16–way connector terminal H53–13 is shorted to ground. Was a problem found and corrected?	Go to Step 26	—
22	The wiring harness between the transmission 16–way connector terminal H53–13 and the transmission main case connector terminal M7–2(B) is shorted to ground. Was a problem found and corrected?	Go to Step 26	—

DTC P1850 Brake Band Apply Solenoid Malfunction (Cont'd)

Step	Action	Yes	No
23	The wiring harness between the PCM connector terminal J1–A16 and the 16–way connector terminal H53–13 is open. Was a problem found and corrected?	Go to Step 26	—
24	The wiring harness between the transmission 16–way connector terminal H53–13 and the transmission main case connector terminal M7–2(B) is open. Was a problem found and corrected?	Go to Step 26	—
25	Check every connection at the PCM. If OK, replace the PCM. Refer to Powertrain Control Module (PCM) in Automatic Transmission (4L30–E) section. Is the replacement complete?	Go to Step 26	—
26	1. After the repair is complete, use the scan tool to select "DTC", then "Clear Info" function and ensure the following conditions are met: ● The brake band apply solenoid is commanded "on" and the volts drop to zero. ● The brake band apply solenoid is commanded "off" and the volts increase to B+. 2. Review the scan tool "DTC Info". Has the last test failed or is the current DTC displayed?	Begin diagnosis again Go to Step 1	Repair verified Exit DTC table

DTC P1860 TCC Solenoid Electrical

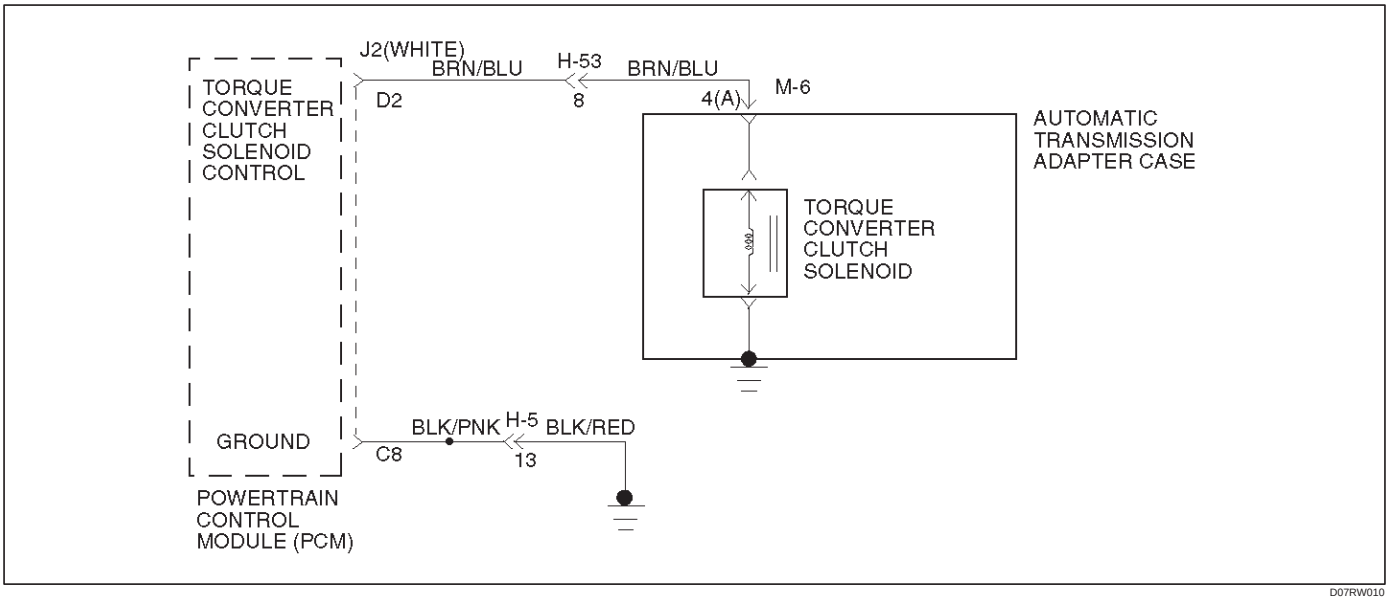

Circuit Description

The PCM allows current to flow through the solenoid coil according to the duty cycle (percentage of “on” and “off” time). This current flow through the solenoid coil creates a magnetic field that magnetizes the solid core. The magnetized core attracts the check ball to seat against spring pressure. This blocks the exhaust for the TCC signal fluid and allows 2–3 drive fluid to feed to TCC signal circuit. The TCC signal fluid pressure acts on the TCC regulator valve to regulate line pressure and to apply fluid pressure to the torque converter clutch shift valve. When the TCC shift valve is in the apply position, regulated apply fluid pressure is directed through the TCC valve to apply the torque converter clutch. The TCC solenoid is used in conjunction with the TCC solenoid to regulate fluid to the torque converter. The TCC solenoid is attached to the valve body within the transmission.

This DTC detects a continuous open or short to ground or ignition in the TCC circuit or the TCC solenoid. This is a type “D” DTC.

Conditions For Setting The DTC

- Battery voltage is between 10 and 16 volts.
- No shift solenoid A DTC P0753.
- No shift solenoid B DTC P0758.
- Ignition is “on”, Engine “run”.
- The PCM commands the solenoid “on” and the voltage remains low (zero volts).
- The PCM commands the solenoid “off” and the voltage remains high (B+).
- All conditions met for 0.25 seconds.

Action Taken When The DTC Sets

- Inhibit TCC engagement.
- The PCM will not illuminate the CHECK TRANS Lamp.

Conditions For Clearing The DTC

- The DTC can be cleared from the PCM history by using a scan tool.
- The DTC will be cleared from history when the vehicle has achieved 40 warmup cycles without a failure reported.
- The PCM will cancel the DTC default actions when the fault no longer exists and the ignition is cycled “off” long enough to power down the PCM.

Diagnostic Aids

- Inspect the wiring for poor electrical connections at the PCM and at the transmission 16–way connector. Look for possible bent, backed out, deformed or damaged terminals. Check for weak terminal tension as well. Also check for a chafed wire that could short to bare metal or other wiring. Inspect for a broken wire inside the insulation.
- When diagnosing for a possible intermittent short or open condition, move the wiring harness while observing test equipment for a change.

Test Description

The numbers below refer to the step numbers on the diagnostic chart:

2. This test checks for voltage to the solenoid.
3. This test checks the ability of the PCM and wiring to control the ignition circuit.
8. This test checks the resistance of the TCC solenoid and the internal wiring harness.

DTC P1860 TCC Solenoid Electrical

Step	Action	Yes	No
1	1. Install the scan tool. 2. With the engine “on”, turn the ignition switch “on”. NOTE: Before clearing DTC(s), use the scan tool to record “Failure Records” for reference, as data will be lost when the“Clear Info” function is used. 3. Record the DTC “Failure Records”.	Go to Step 2	Go to Step 3
2	Using the J39200 DVOM, back probe between PCM connector terminals J2–D2 and J2–C8. Is the voltage 0 ?	Go to Step 4	Go to Step 5
3	1. Apply brake pedal and select transmission range “D”. 2. Do a test drive, and increase the vehicle speed to TCC “on” at 4th. Does the scan tool display DTC P1860 at TCC “ON”?	Go to Step 9	Go to Diagnostic Aids
4	1. Turn the ignition “off”. 2. Disconnect the J2 (WHITE) PCM connector. 3. Using the J39200 DVOM, measure the resistance between PCM connector terminals J2–D2 and J2–C8. Is the resistance within 18 – 20 ohms?	Go to Step 6	Go to Step 7
5	The wiring harness between PCM connector terminal J2–D2 and transmission adapter case connector terminal M6–4(A) is shorted to voltage. Was a problem found and corrected?	Go to Step 18	Go to Step 19
6	Intermittent condition. Check the wiring harness and terminals between PCM connector J2 and transmission adapter case connector M–6. Was a problem found and corrected?	Go to Step 18	Go to Step 19
7	1. Disconnect the transmission 16–way connector H–53. 2. Using the J39200 DVOM, measure the resistance between terminal H53–8 and ground. Is the resistance within 18 – 20 ohms?	Go to Step 15	Go to Step 8
8	1. Disconnect the transmission adapter case connector M–6. 2. Using the J39200 DVOM, measure the resistance between terminal M6–4(A) and ground. Is the resistance within 18 – 20 ohms?	Go to Step 16	Go to Step 17
9	1. Turn the ignition “off”. 2. Disconnect the J2 (WHITE) PCM connector. 3. Using the J39200 DVOM, measure the resistance between terminals J2–D2 and J2–C8. Is the resistance within 18 – 20 ohms?	Go to Step 18	Go to Step 10
10	1. Disconnect the transmission 16–way connector H–53. 2. Using the J39200 DVOM, measure the resistance between terminal H53–8 and ground. Is the resistance within 18–20 ohms?	Go to Step 12	Go to Step 11
11	1. Disconnect the transmission adapter case connector M–6. 2. Using the J39200 DVOM, measure the resistance between terminal M6–4(A) and ground. Is the resistance within 18–20 ohms?	Go to Step 13	Go to Step 14

DTC P1860 TCC Solenoid Electrical (Cont'd)

Step	Action	Yes	No
12	The wiring harness between PCM connector terminal J2–D2 and transmission 16–way connector terminal H53–8 is shorted to ground. Was a problem found and corrected?	Go to Step 20	—
13	The wiring harness between transmission 16–way connector H–53 and adapter case connector M–6 is shorted to ground. Was a problem found and corrected?	Go to Step 20	—
14	The TCC solenoid is faulty, or the internal wiring harness from the TCC solenoid is shorted to ground. Was a problem found and corrected?	Go to Step 20	—
15	The wiring harness between PCM connector terminal J2–D2 and transmission 16–way connector terminal H53–8 is open. Was a problem found and corrected?	Go to Step 20	—
16	The wiring harness between transmission 16–way connector terminal H53–8 and adapter case terminal M6–4(A) is open. Was a problem found and corrected?	Go to Step 20	—
17	The TCC solenoid is faulty, or the internal wiring harness from the TCC solenoid is open. Was a problem found and corrected?	Go to Step 20	—
18	Check every connection at the PCM. If OK, replace the PCM. Refer to Powertrain Control Module (PCM) in Automatic Transmission (4L30–E) section. Is the replacement complete?	Go to Step 20	—
19	Check the PCM connector terminal J2–D2, transmission 16–way connector terminal H53–8 and transmission adapter case connector terminal M6–4(A). Was a problem found and corrected?	Go to Step 20	—
20	1. After the repair is complete, use the scan tool to select "DTC", then "Clear Info" function and ensure the following conditions are met: ● The TCC solenoid is commanded "on" and the volts increase to B+. ● The TCC solenoid is commanded "off" and the volts drop to zero. 2. Review the scan tool "DTC Info". Has the last test failed or is the current DTC displayed?	Begin diagnosis again Go to Step 1	Repair verified Exit DTC table

Transmission Fluid Temperature (TFT) Sensor Specifications

Temperature	Temperature	Minimum Resistance	Nominal Resistance	Maximum Resistance	Signal
˚C	˚F	Ω	Ω	Ω	Volts
-40	-40	600500	664200	731100	5.00
-30	-22	319800	350400	382400	4.65
-20	-4	177400	192700	208600	4.41
-10	14	102200	110100	118300	4.00
0	32	60870	65110	69450	3.52
10	50	37410	39750	42120	2.98
20	68	23660	24980	26300	2.40
30	86	15270	16120	16970	1.85
40	104	10040	10660	11290	1.43
50	122	6758	7211	7673	4.29
60	140	4645	4980	5324	4.04
70	158	3255	3506	3765	3.69
80	176	2323	2513	2710	3.34
90	194	1685	1831	1982	3.04
100	212	1242	1355	1472	2.58
110	230	929	1017	1109	2.24
120	248	704	773	846	1.97
130	266	540	595	653	1.67
140	284	419	464	511	1.42
150	302	329	365	403	1.16

TRANSMISSION

MANUAL TRANSMISSION

CONTENTS

Service Precaution 7B–1
General Description 7B–2
Diagnosis 7B–4
Manual Transmission Assembly 7B–5
Transmission and Associated Parts 7B–5
Removal 7B–6
Installation 7B–11
Rear Oil Seal (Transfer Adapter) 7B–17
Removal 7B–17
Installation 7B–17
Transmission (AR-5) 7B–18
Disassembled View 7B–18
Disassembly 7B–21
Inspection 7B–39
Reassembly 7B–41
Main Data and Specifications 7B–68
General Specifications 7B–68
Torque Specifications 7B–69
Special Tools 7B–72

Service Precaution

WARNING: IF SO EQUIPPED WITH A SUPPLEMENTAL RESTRAINT SYSTEM (SRS), REFER TO THE SRS COMPONENT AND WIRING LOCATION VIEW IN ORDER TO DETERMINE WHETHER YOU ARE PERFORMING SERVICE ON OR NEAR THE SRS COMPONENTS OR THE SRS WIRING. WHEN YOU ARE PERFORMING SERVICE ON OR NEAR THE SRS COMPONENTS OR THE SRS WIRING, REFER TO THE SRS SERVICE INFORMATION. FAILURE TO FOLLOW WARNINGS COULD RESULT IN POSSIBLE AIR BAG DEPLOYMENT, PERSONAL INJURY, OR OTHERWISE UNNEEDED SRS SYSTEM REPAIRS.

CAUTION: Always use the correct fastener in the proper location. When you replace a fastener, use ONLY the exact part number for that application. ISUZU will call out those fasteners that require a replacement after removal. ISUZU will also call out the fasteners that require thread lockers or thread sealant. UNLESS OTHERWISE SPECIFIED, do not use supplemental coatings (Paints, greases, or other corrosion inhibitors) on threaded fasteners or fastener joint interfaces. Generally, such coatings adversely affect the fastener torque and the joint clamping force, and may damage the fastener. When you install fasteners, use the correct tightening sequence and specifications. Following these instructions can help you avoid damage to parts and systems.

General Description

(6VE1)

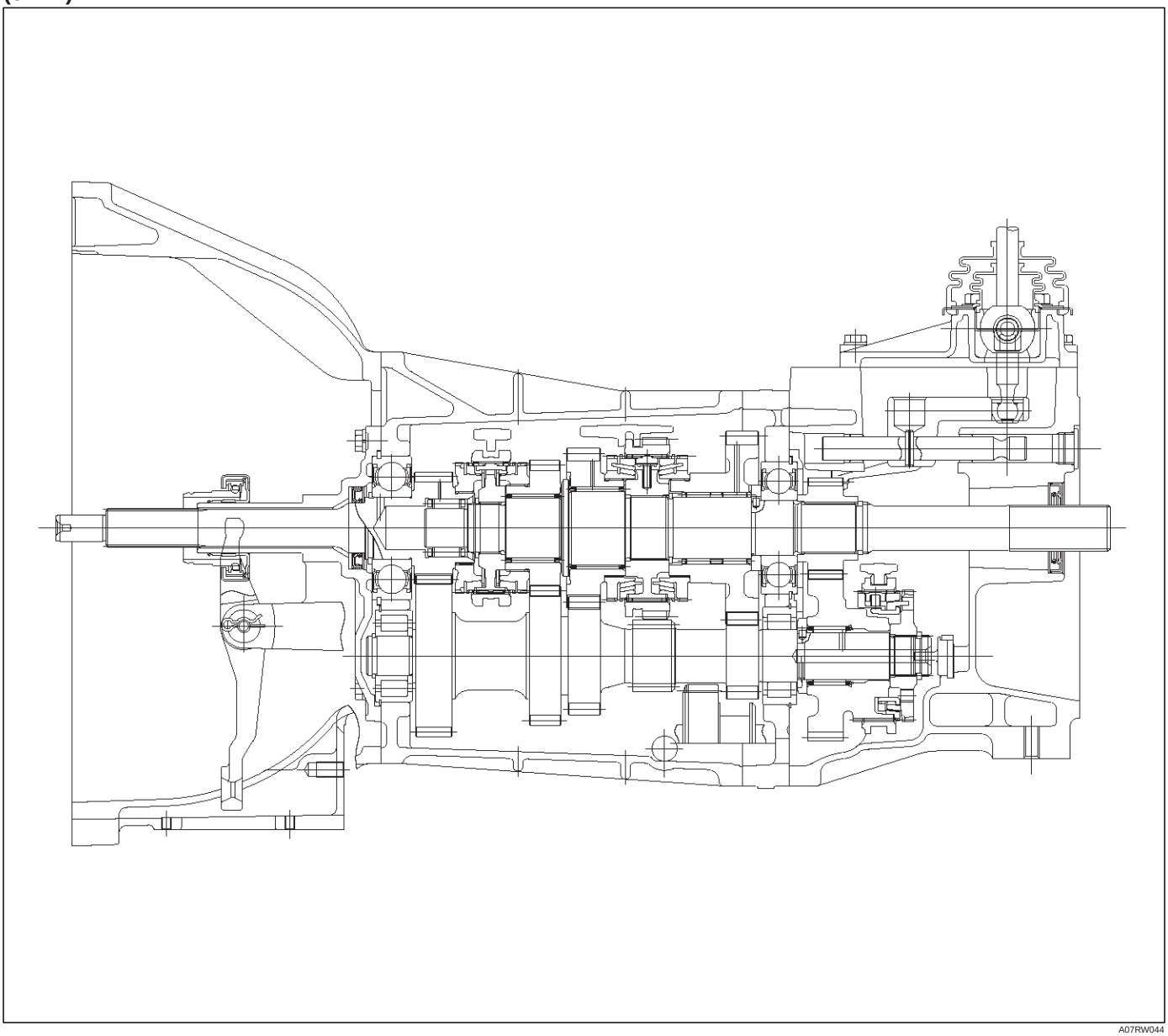

A07RW044

(4JX1)

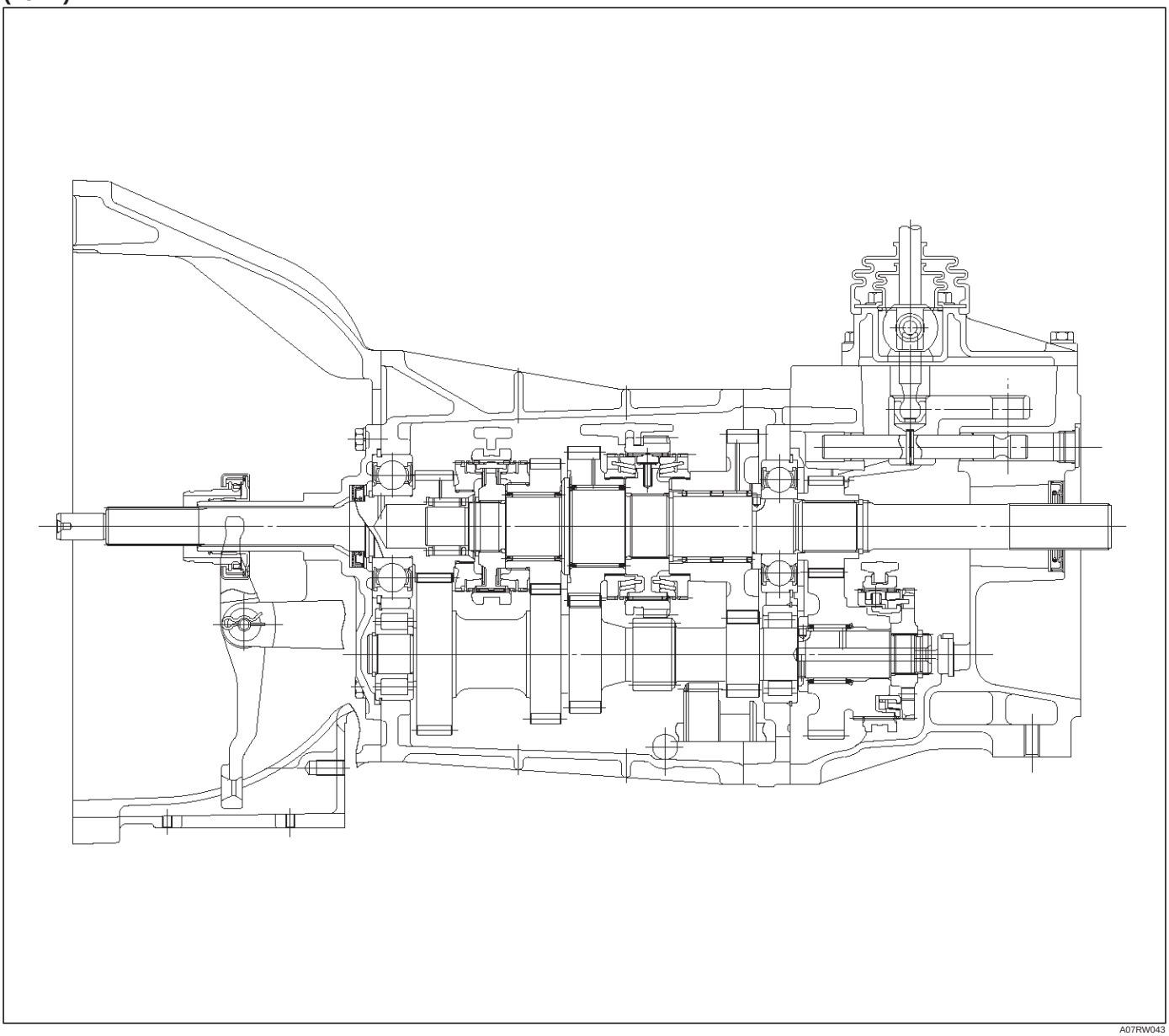

A07RW043

Diagnosis

Condition	Possible cause	Correction
Abnormal noise	Flywheel pilot bearing worn	Replace
	Bearings worn or broken (Mainshaft, counter shaft, and transfer shaft)	Replace
	Gear tooth contact surfaces worn or scuffed (Mainshaft, counter shaft, reverse idler gear and transfer gears)	Replace
	Splines worn (Mainshaft, synchronizer clutch hub)	Replace
	Gear or bearing thrust face seized	Replace
	Lack of backlash between meshing gears	Replace
Hard Shifting	Improper clutch pedal free play	Readjust
	Change lever sliding portions worn	Repair or replace Regrease
	Shift block, shift rod and/or control box sliding faces worn	Replace
	Shift arm and synchronizer sleeve groove worn	Replace worn parts
	Thrust washer, collar, and/or gear thrust faces worn (Mainshaft and counter shaft thrust play)	Replace worn parts
	Synchronizer parts worn	Replace
Walking or Jumping out of gear	Detent ball worn	Replace
	Detent spring weakened or broken	Replace
	Shift rod and/or control box sliding faces worn	Replace
	Shift arm and synchronizer sleeve groove worn	Replace worn parts
	Thrust washer, collar, and/or gear thrust faces worn (Mainshaft and counter shaft thrust play)	Replace worn parts
	Bearings worn or broken	Replace
	Splines worn (Mainshaft, synchronizer hub)	Replace
	Synchronizer spring weakened or broken	Replace
Oil leakage	Loose drain plug(s) and/or filler plug(s)	Tighten Replenish oil
	Defective or improperly installed gasket(s)	Replace
	Oil seal worn or scratched	Replace

Manual Transmission Assembly

Transmission and Associated Parts

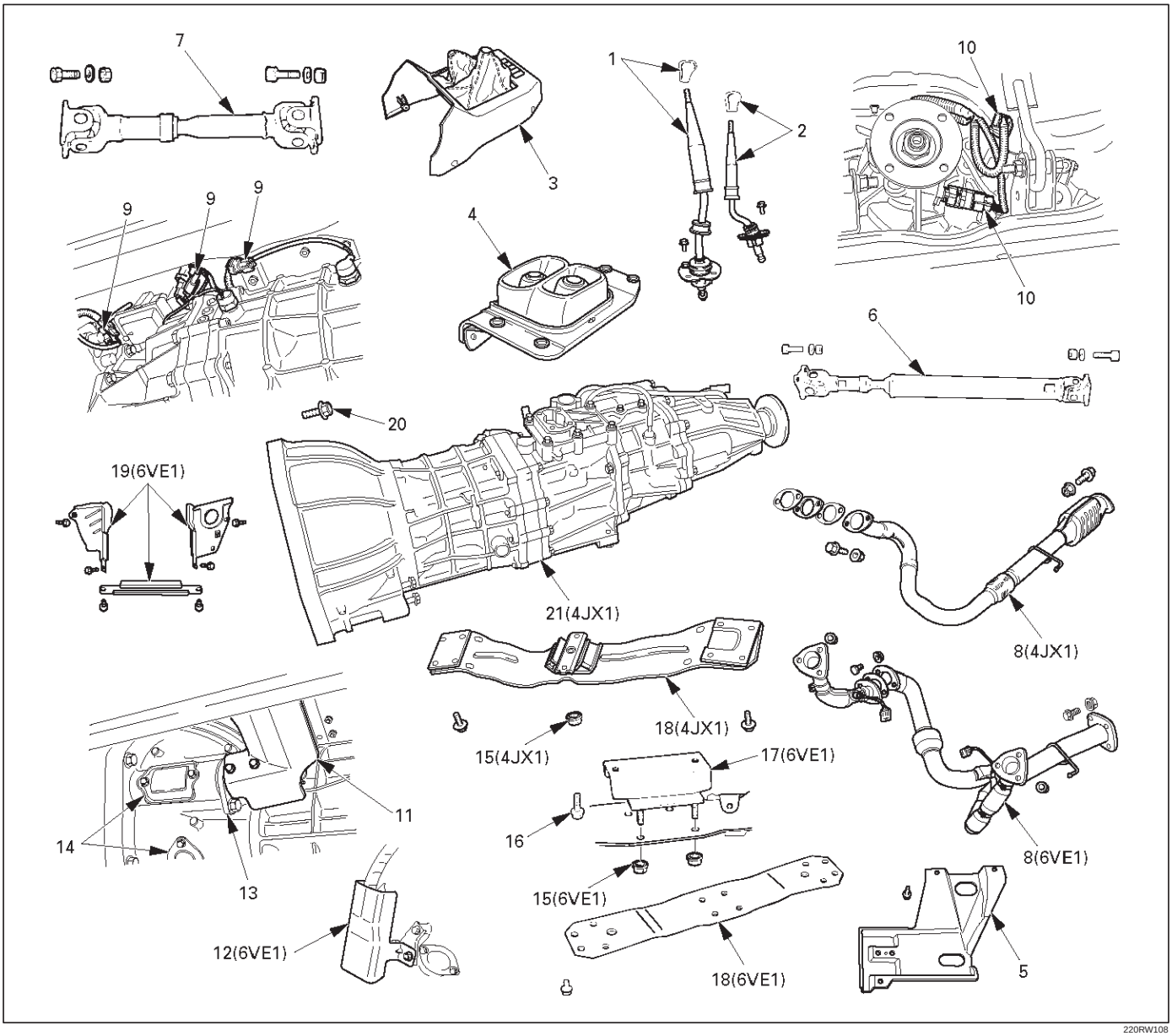

Legend

(1) Gear Control Lever and Knob
(2) Transfer Control Lever and Knob
(3) Front Console Assembly
(4) Grommet Assembly
(5) Transfer Protector
(6) Rear Propeller Shaft
(7) Front Propeller Shaft
(8) Exhaust Pipe
(9) Backup Lamp, 4WD Indicator, and 1–2 Indicator Switch Harness Connector
(10) Speedometer Sensor and 2WD–4WD Actuator Harness Connector
(11) Slave Cylinder Heat Protector
(12) Harness Heat Protector
(13) Slave Cylinder
(14) Dust Cover
(15) Engine Rear Mount Nut
(16) Engine Rear Mount Bolt
(17) Engine Rear Mount
(18) Third Crossmember
(19) Flywheel Under Cover
(20) Transmission Retaining Bolt
(21) Transmission Assembly with Transfer Case

Removal

NOTE: Before remove the transmission and transfer assembly from the vehicle, change the transfer mode to 2WD using push button on dash panel.

1. Remove engine hood.
2. Disconnect battery ground cable.
3. Remove the gear control lever knob.
4. Remove the front console assembly.
5. Remove the grommet assembly.
6. Remove the transmission control lever and transfer control lever.

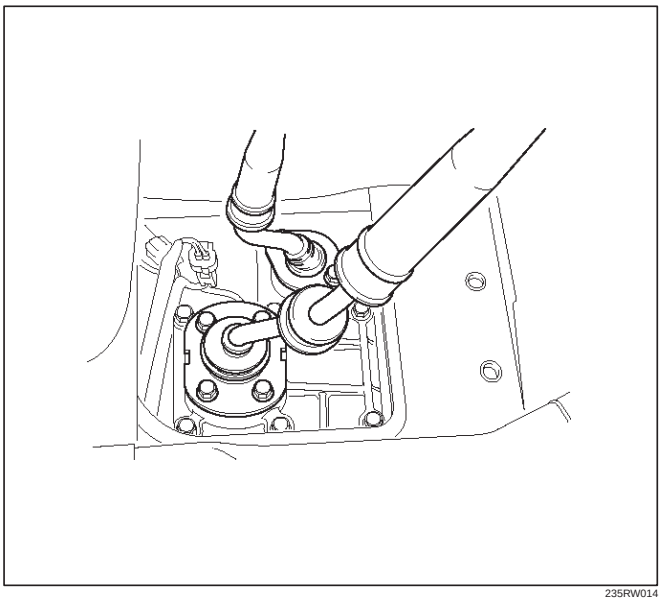

235RW014

7. Raise and support the vehicle with suitable jack stand.
8. Remove transfer protector.
9. Remove the rear propeller shaft.

NOTE: Apply alignment marks on the flange at the both front and rear side.

(4JX1)

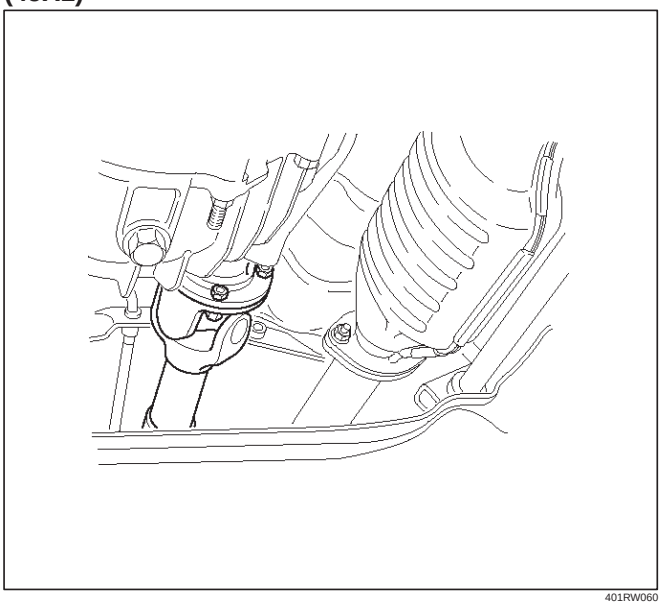

401RW060

10. Remove the front propeller shaft.

NOTE: Apply alignment marks on the flange at both the front and rear sides.

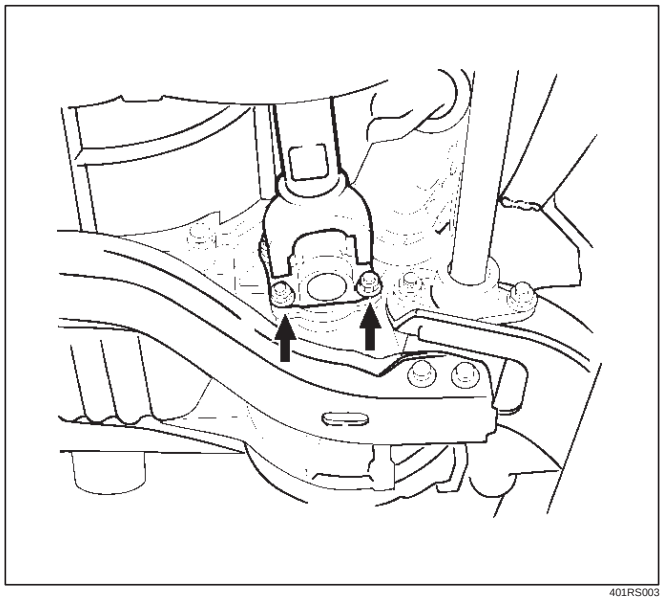

401RS003

11. Disconnect two oxygen sensor connectors from the transmission harness (6VE1).
12. Remove the front and 3 way exhaust pipe (6VE1). Remove the exhaust pipe with catalytic converter (4JX1).

(4JX1)

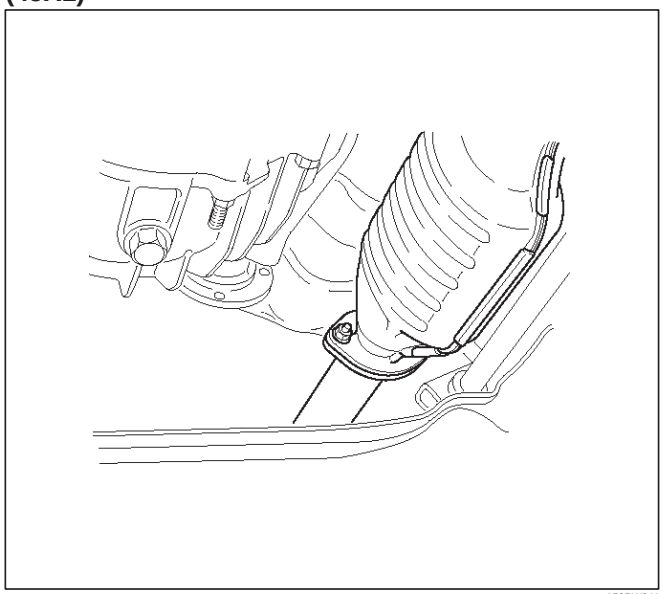

150RW041

13. Disconnect the backup lamp switch, 4WD indicator switch and 1–2 indicator switch harness connectors.

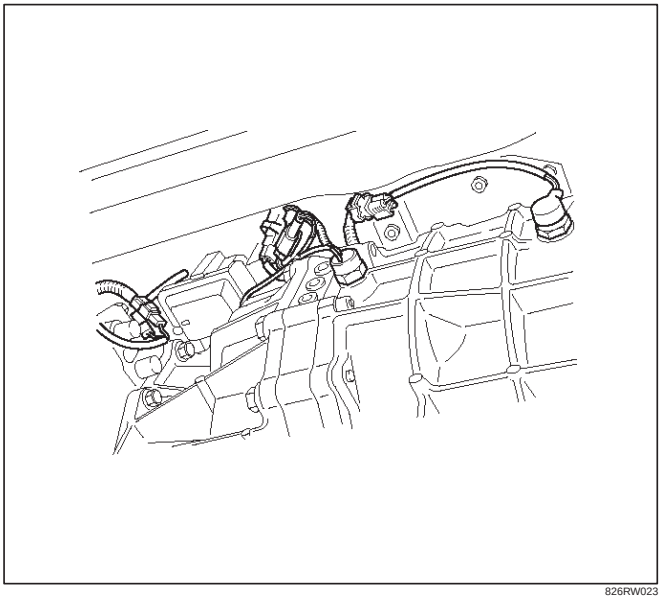

826RW023

14. Disconnect the speedometer sensor and 2WD-4WD actuator harness connectors.

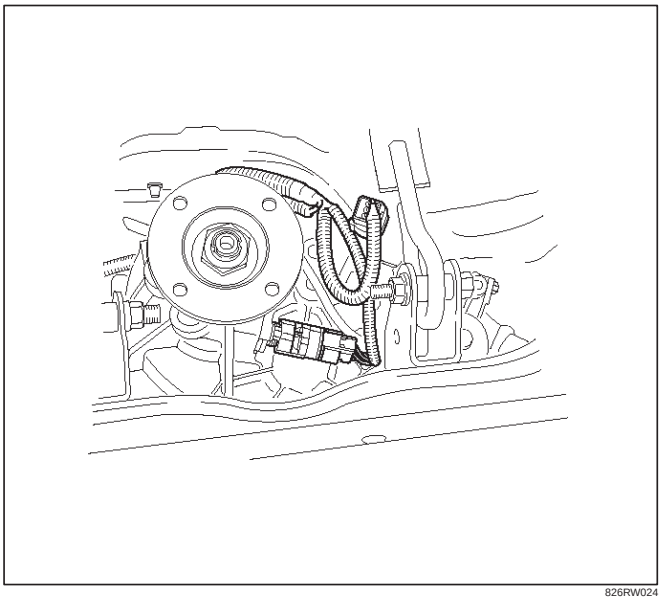

826RW024

15. Remove four fuel pipe bracket from the transmission case (6VE1).

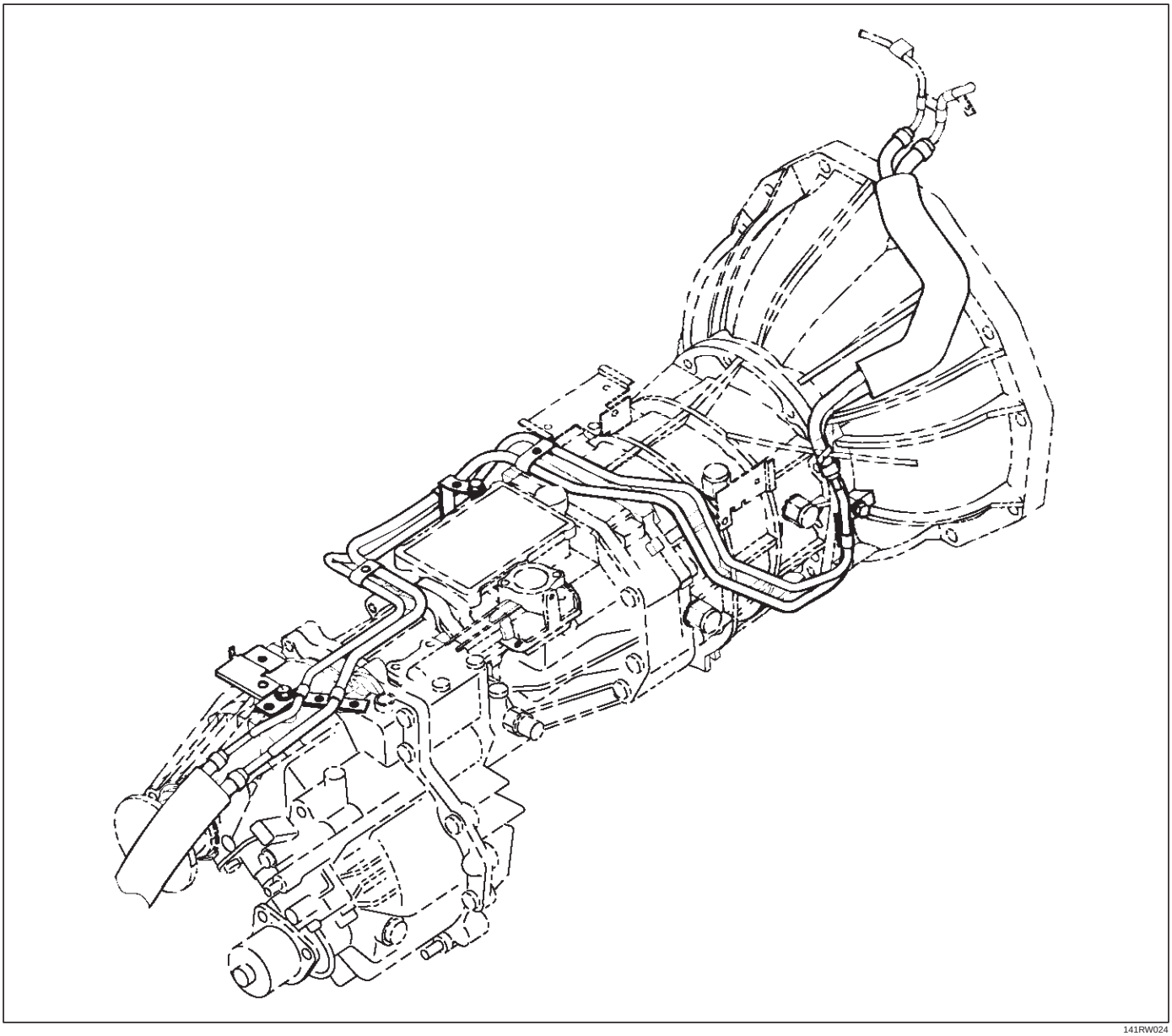

141RW024

16. Remove the slave cylinder heat protector.
17. Remove the harness heat protector (6VE1).

(6VE1)

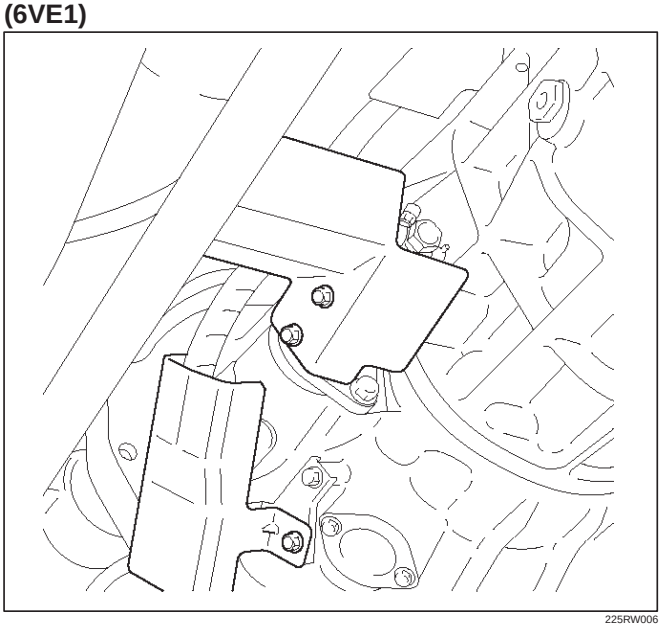

225RW006

18. Remove two transmission harness clamps and bracket (6VE1).
19. Remove the slave cylinder.

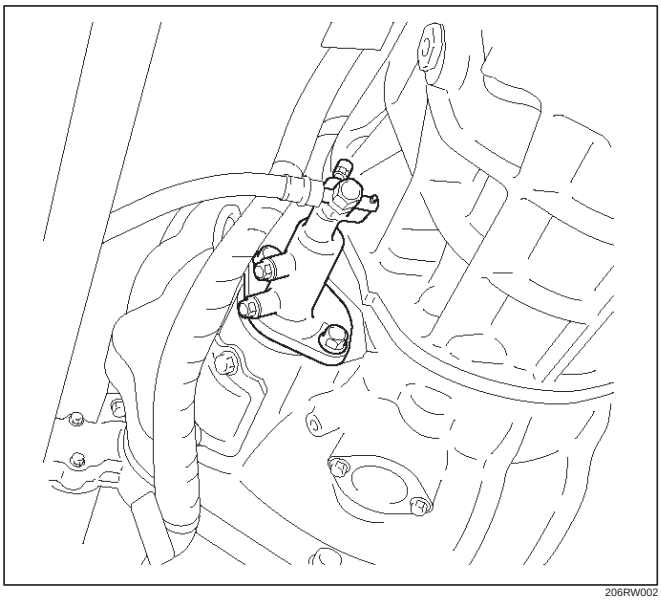

206RW002

20. Remove the two dust cover from transmission case.
21. Support the transfer case with a jack.
22. Remove two engine rear mount nuts.

(6VE1)

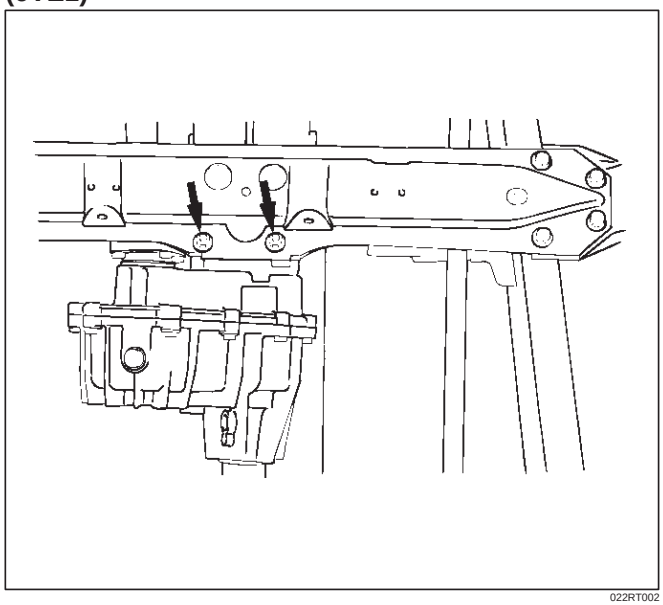

022RT002

23. Remove third crossmember (6VE1).
24. Remove third crossmember with rear mount rubber (4JX1).

(4JX1)

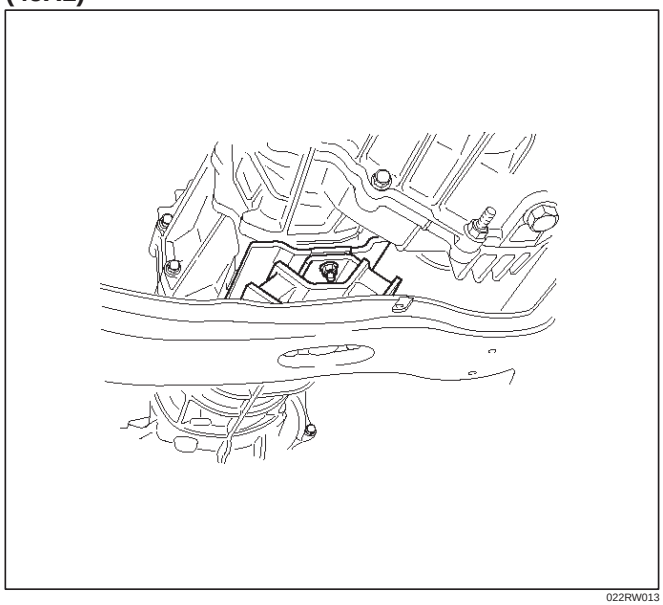

022RW013

25. Remove two engine rear mount bolts (6VE1).
26. Remove the rear mount from the transmission (6VE1).
27. Remove three flywheel under cover (6VE1).

28. Support the transmission with a transmission jack and then remove jack from the transfer case side.

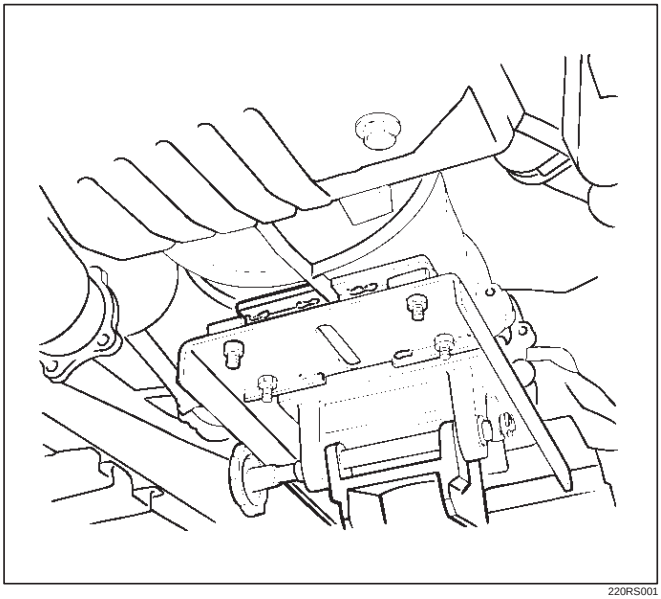

220RS001

29. Use the clutch release bearing remover 5–8840–2291–0 (J–39207) to disconnect the clutch release bearing from the clutch pressure plate.

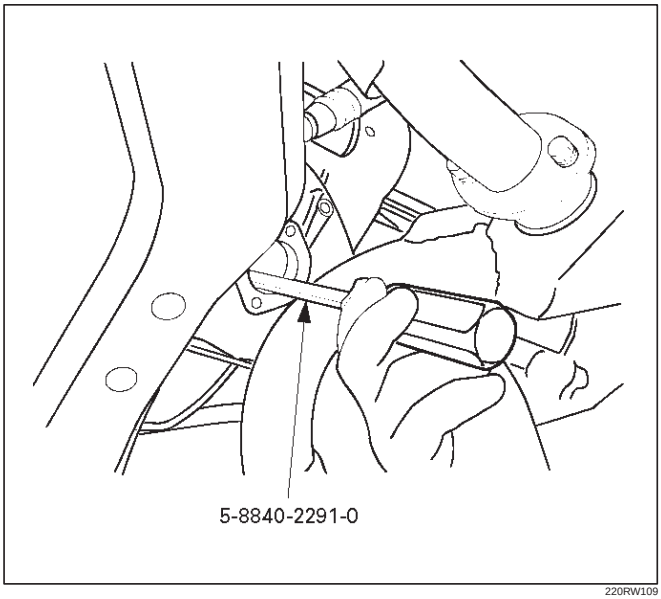

220RW109

Release bearing disconnection

1. Pull the shift fork toward the transmission to press the clutch release bearing against the clutch.
2. Insert the clutch release bearing remover between the wedge collar and the release bearing.
3. Turn the remover to separate the release bearing.

NOTE: Be sure not to insert the remover between the wedge collar and the clutch.

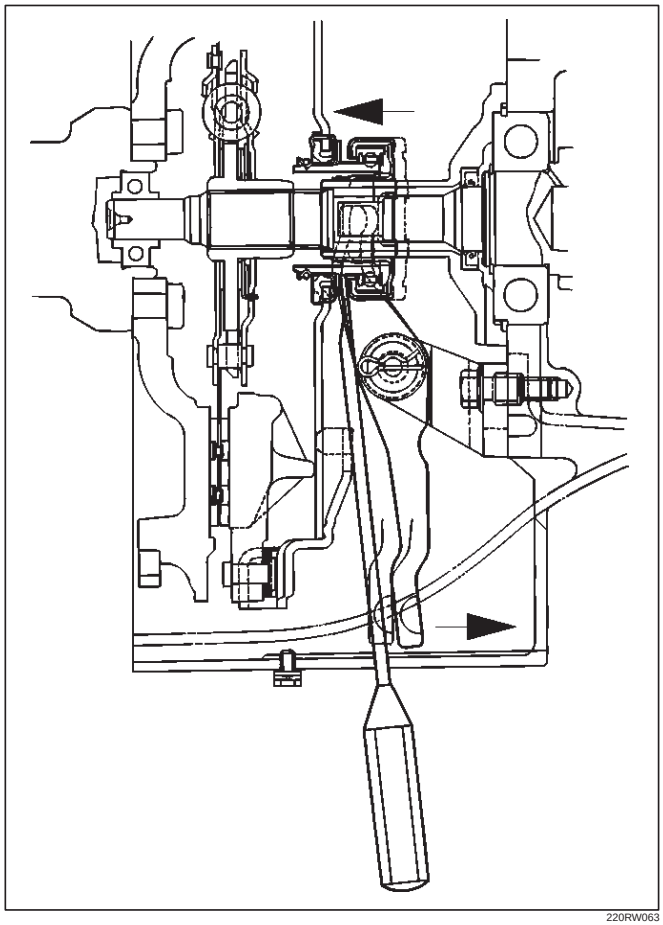

220RW063

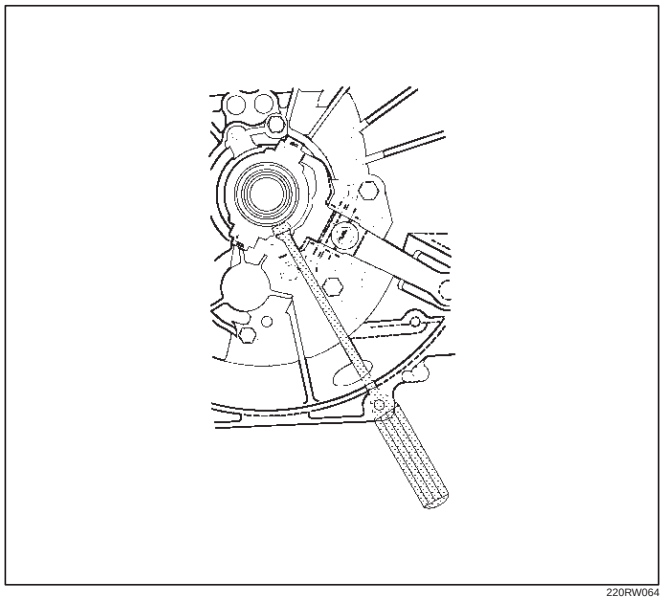

220RW064

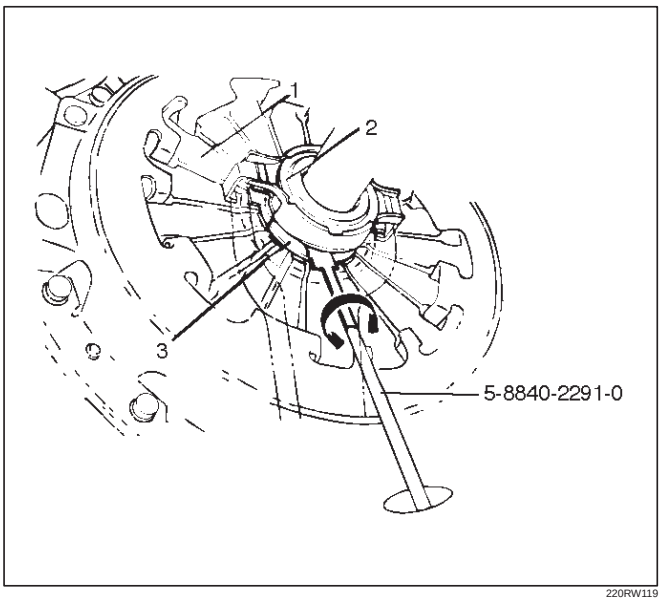

220RW119

Legend

(1) Pressure Plate Assembly
(2) Release Bearing
(3) Wedge Collar

30. Remove the transmission retaining nuts and bolts.
31. Remove the transmission assembly with transfer case from the vehicle.

NOTE: Remove the transfer case from the transmission assembly if the transmission disassembly required.

Refer to Transfer Case in Drive Line/Axle section.

Installation

1. Apply a thin coat of molybdenum disulfide grease to the top gear shaft spline.
2. Slowly operate the transmission jack until the front of transmission is aligned with the rear of the engine.
   The slope of the engine and the transmission must be the same.
3. Align the top gear shaft spline with the clutch driven plate spline.

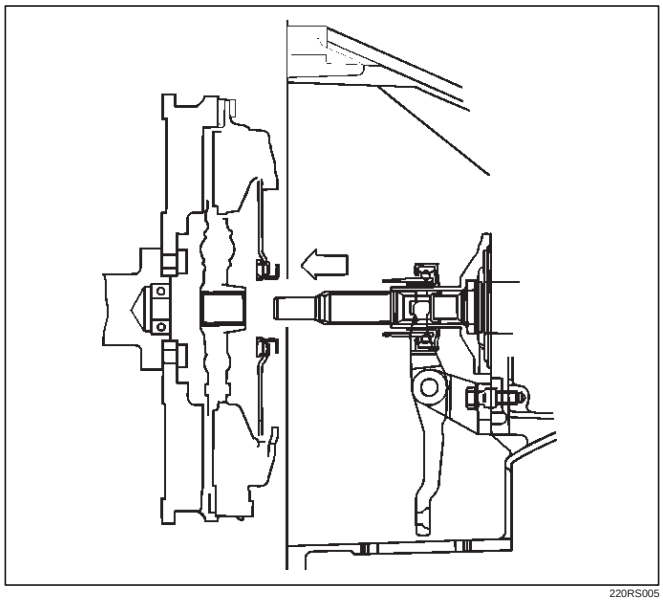

220RS005

4. Install the transmission to the engine.
   Tighten the transmission retaining nuts and bolts.

(6VE1)

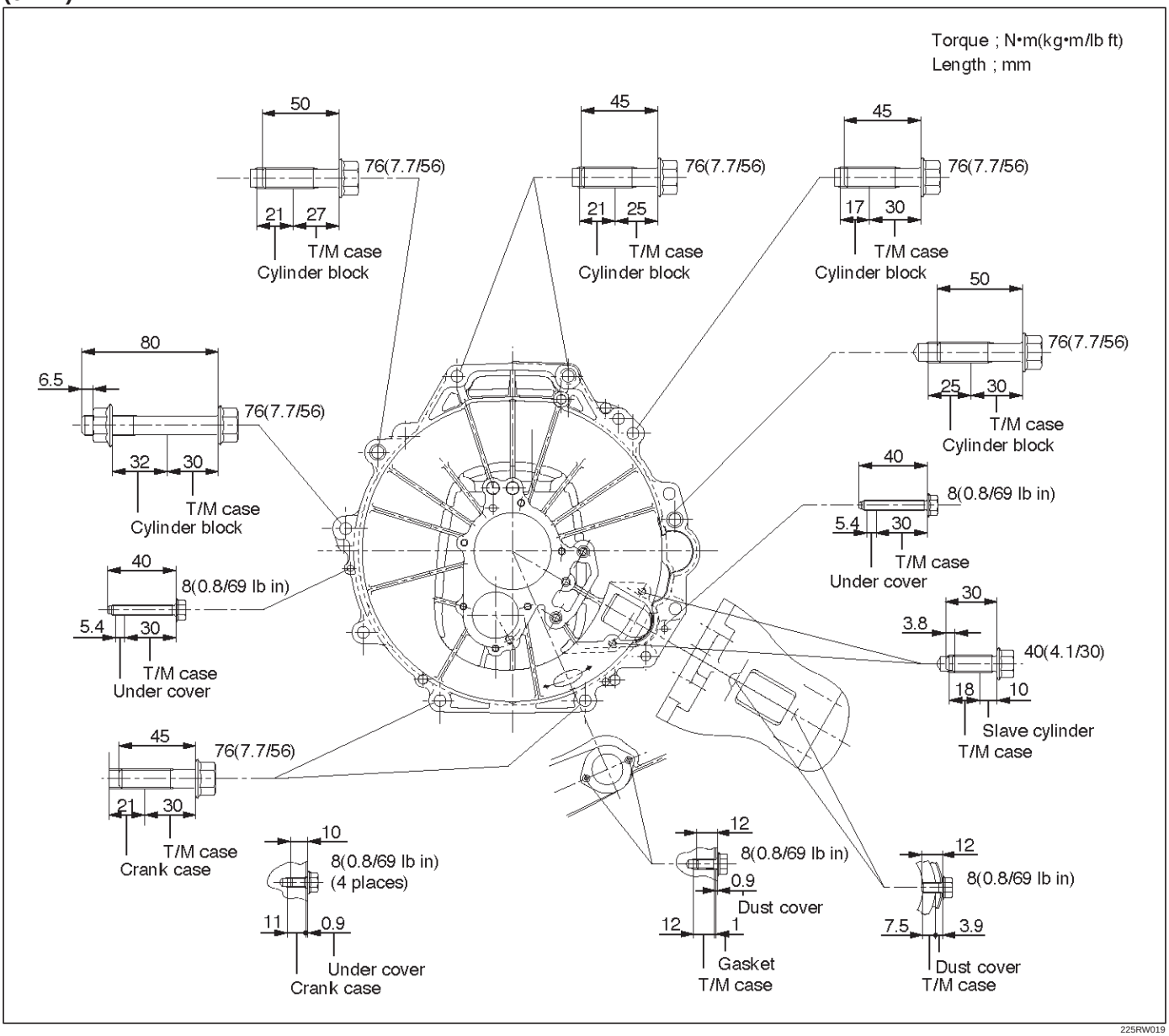

225RW019

(4JX1)

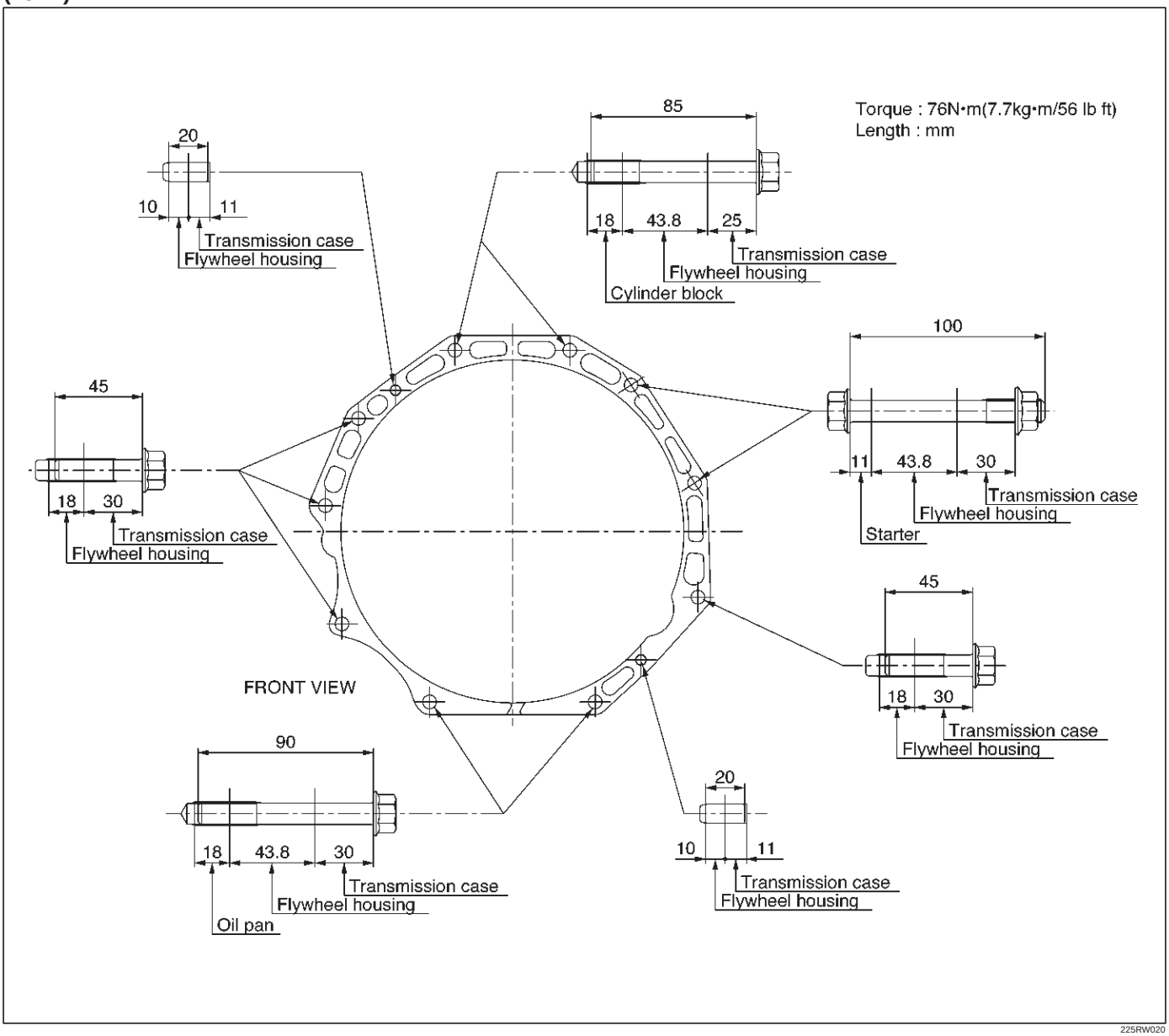

225RW020

5. Apply a force of about 113N (26 lb) to the tip of the shift fork in the direction of the transmission to engage the clutch pressure plate and release bearing.

NOTE: A clicking sound is heard when the release bearing and the tip of the diaphragm spring engage each other.

Check to see if they are securely engaged by pushing the tip of the shift fork toward the engine while applying a force of about 25 N (5.5 lb). If the shift fork will not move, then they are securely engaged.

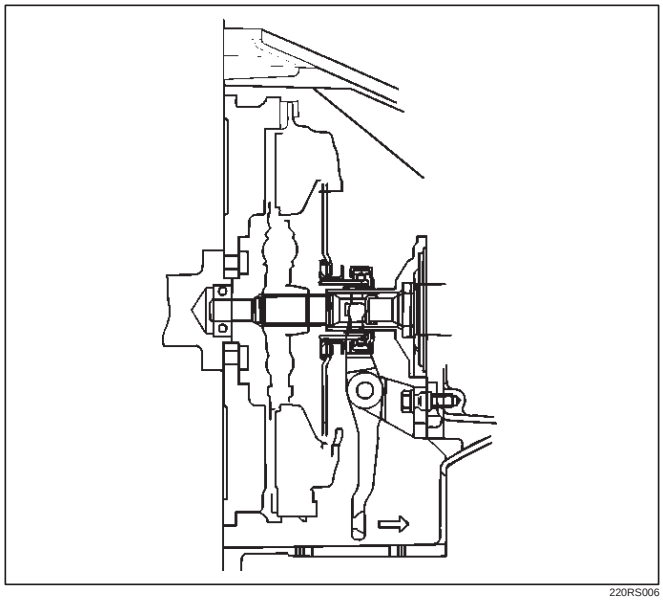

220RS006

6. Install three flywheel under cover (6VE1).

7. Install the engine rear mount to the transmission case and tighten the fixing bolts specified torque (6VE1).

   Torque: 41 N·m (4.2kg·m/30 lb ft)

8. Install the third crossmember to the frame and tighten the fixing bolts specified torque.

   Torque: 50 N·m (5.1kg·m/37 lb ft)

9. Tighten the engine rear mount nuts specified torque.

   Torque: 50 N·m (5.1kg·m/37 lb ft)

10. Remove the transmission jack.
11. Apply the grease to top hole portion of the shift fork.
12. Install the slave cylinder and tighten the fixing bolts specified torque.

    Torque: 43 N·m (4.4kg·m/32 lb ft)

13. Install the clutch dust cover to the clutch housing and tighten the fixing bolts specified torque.

    Torque: 8 N·m (0.8kg·m/69 lb in)

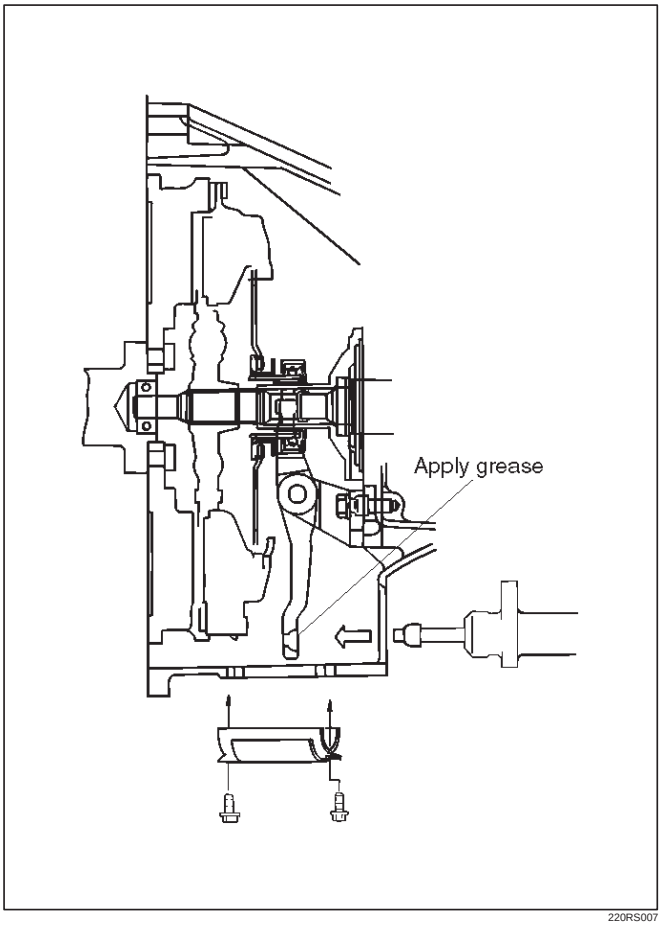

220RS007

14. Install the slave cylinder heat protector to the slave cylinder.
15. Install bracket and two transmission harness clamps to the transmission case (6VE1).
16. Install harness heat protector (6VE1).

(6VE1)

225RW006

17. Install four fuel pipe bracket (6VE1).

141RW024

18. Connect the speedometer sensor and 2WD–4WD actuator harness connector.

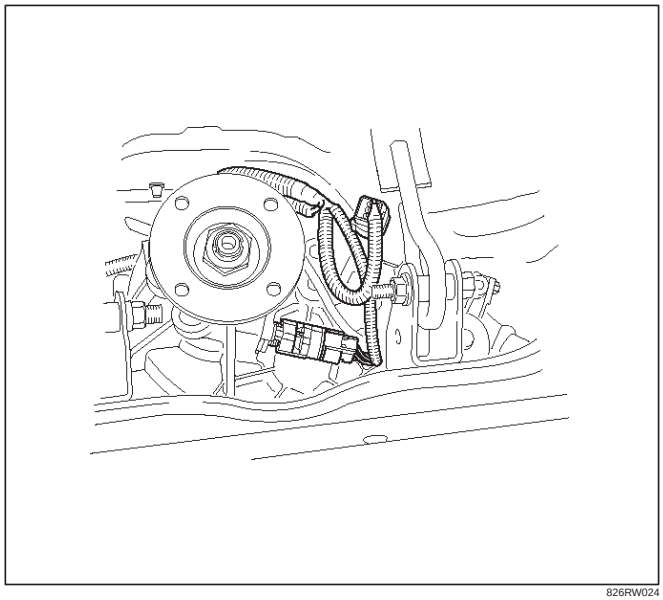

826RW024

19. Connect the backup lamp switch, 4WD indicator switch, and 1-2 indicator switch harness connectors.

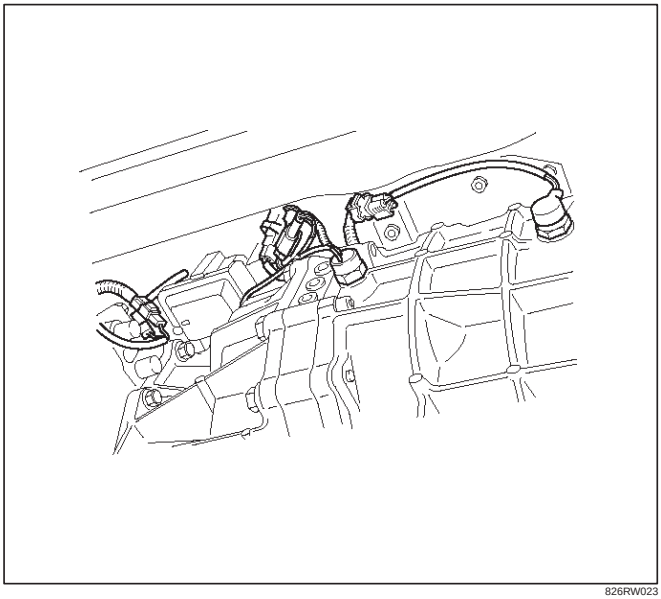

826RW023

20. Install the front and 3 way exhaust pipe (6VE1).
    Install the exhaust pipe with catalytic converter (4JX1).

    Torque:

    Exhaust pipe to exhaust manifold:
    67 N·m (6.8 kg·m/49 lb ft)

    Exhaust pipe flange bolt:
    43 N·m (4.4 kg·m/32 lb ft)

(4JX1)

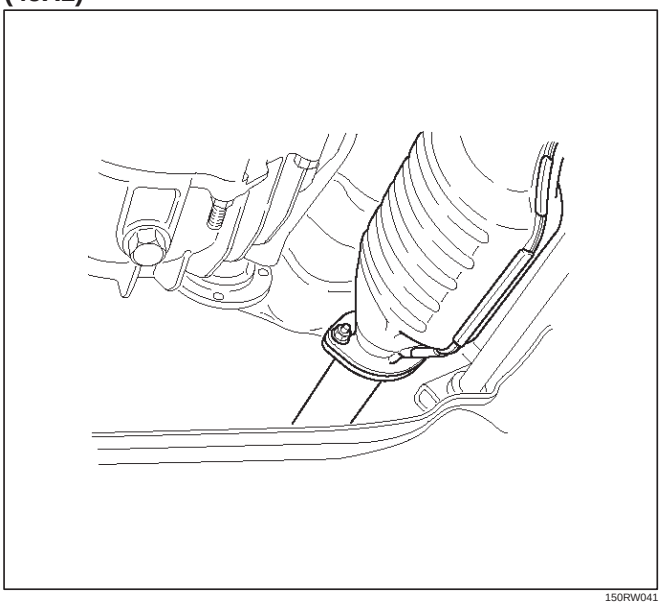

150RW041

21. Connect two oxygen sensor connectors to the transmission harness (6VE1).
22. Install the front propeller shaft and tighten the fixing bolts and nuts specified torque.

    Torque: 63 N·m (6.4 kg·m/46 lb ft)

23. Install the rear propeller shaft and tighten the fixing bolts and nuts specified torque.

    Torque: 63 N·m (6.4 kg·m/46 lb ft)

24. Install transfer protector and tighten the fixing bolts specified torque.

    Torque: 37 N·m (3.8 kg·m/27 lb ft)

25. Install the transmission control lever and transfer control lever.

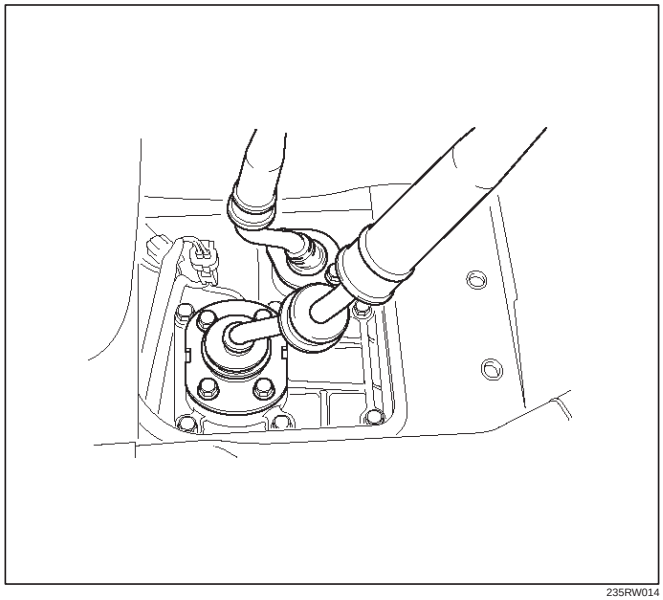

235RW014

26. Install the grommet assembly.
27. Install the front console assembly.
28. Install the gear control lever knob.
29. Connect battery ground cable.
30. Install engine hood.

Rear Oil Seal (Transfer Adapter)

Removal

1. Remove the transfer case assembly from the vehicle. Refer to Transfer Case in Drive Line/Axle section.
2. Remove the rear oil seal from the transfer adapter.

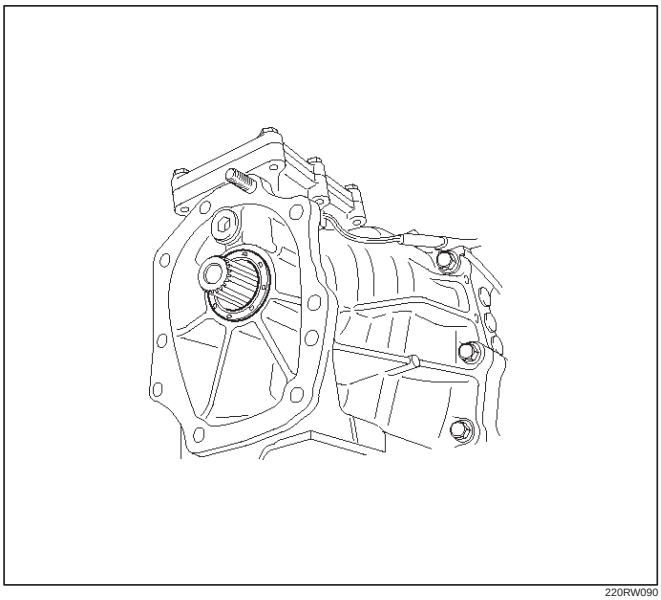

220RW090

Installation

1. Use 5–8840–2558–0 (J–42802) transfer adapter oil seal installer, and install the rear oil seal to the transfer adapter.
2. Apply grease to the oil seal lip.
3. Install the transfer case assembly to the vehicle. Refer to Transfer Case in Drive Line/Axle section.

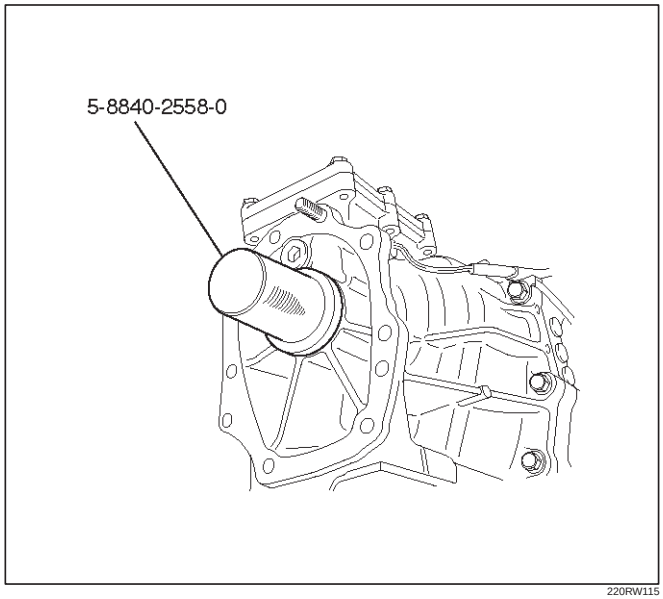

220RW115

Transmission (AR-5)

Disassembled View

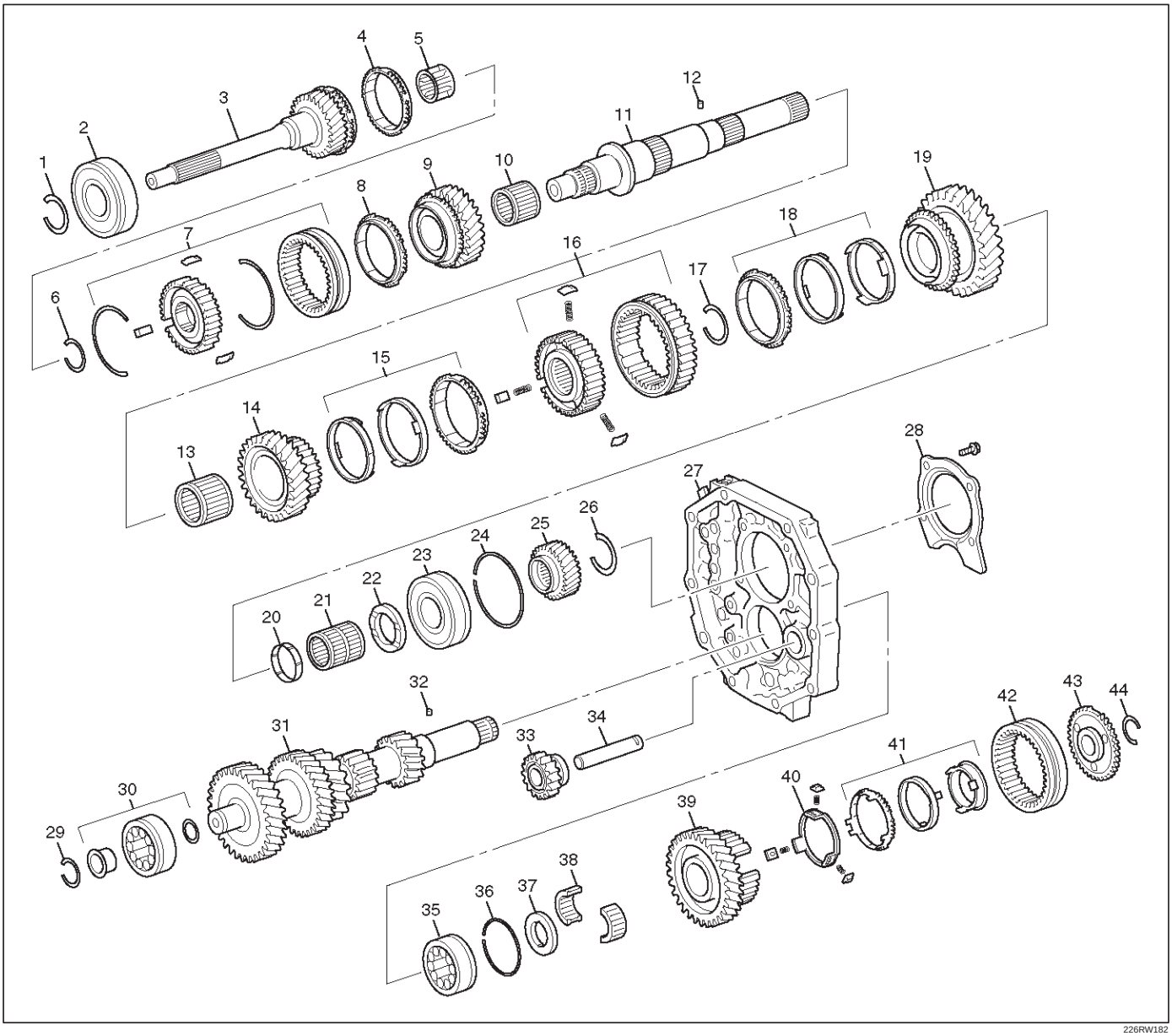

226RW182

Legend

(1) Snap Ring
(2) Bearing
(3) Top Gear Shaft
(4) Block Ring
(5) Roller Bearing
(6) Snap Ring
(7) Clutch Hub No.2 Assembly
(8) 3rd Block Ring
(9) 3rd Gear
(10) 3rd Gear Needle Roller Bearing
(11) Mainshaft
(12) Thrust Washer Pin
(13) 2nd Gear Needle Roller Bearing
(14) 2nd Gear
(15) Synchronizer Assembly
(16) Clutch Hub No.1 Assembly
(17) Snap Ring
(18) Synchronizer Assembly
(19) 1st Gear
(20) 1st Gear Bearing Spacer
(21) 1st Gear Needle Roller Bearing
(22) 1st Gear Thrust Washer
(23) Mainshaft Bearing
(24) Snap Ring
(25) 5th Gear
(26) Snap Ring
(27) Intermediate Plate
(28) Bearing Retainer
(29) Snap Ring
(30) Front Bearing Assembly
(31) Counter Gear Shaft

(32) Thrust Washer Pin
(33) Reverse Idle Gear
(34) Reverse Idle Gear Shaft
(35) Counter Gear Shaft Center Bearing
(36) Snap Ring
(37) Thrust Washer
(38) Roller Bearing
(39) Counter 5th Gear
(40) Reverse Block Ring
(41) Synchronizer Assembly
(42) Hub Sleeve No.3
(43) 5th Gear Spline Piece
(44) Snap Ring

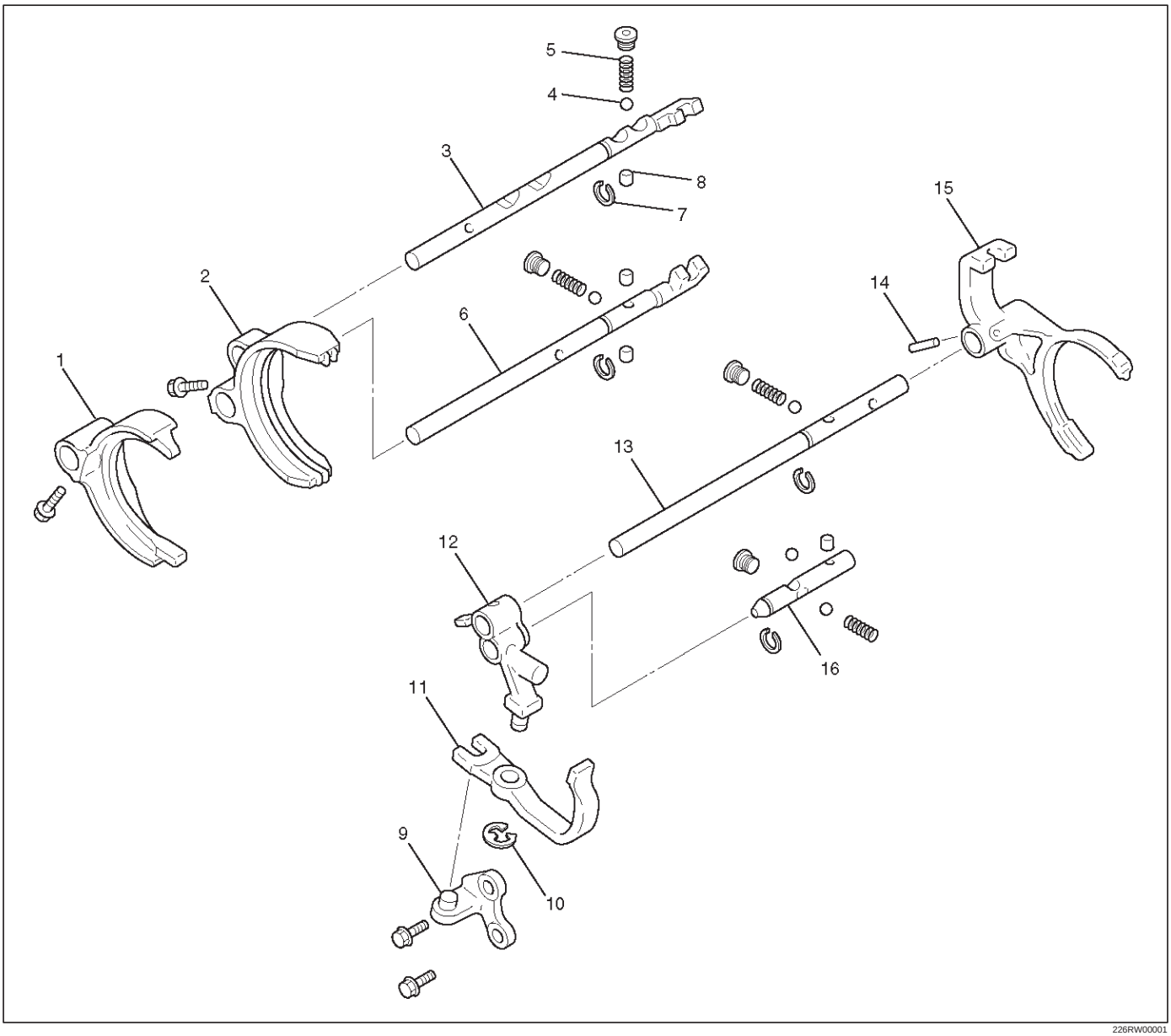

226RW00001

Legend

(1) 3rd-4th Shift Arm
(2) 1st-2nd Shift Arm
(3) 3rd-4th Shift Rod
(4) Ball
(5) Spring
(6) 1st-2nd Shift Rod
(7) Snap Ring
(8) Interlock Pin
(9) Reverse Shift Arm Bracket
(10) E–Ring
(11) Reverse Shift Arm No.2
(12) Reverse Shift Arm No.1
(13) 5th Reverse Shift Rod
(14) Spring Pin
(15) 5th Shift Arm
(16) Reverse Shift Rod

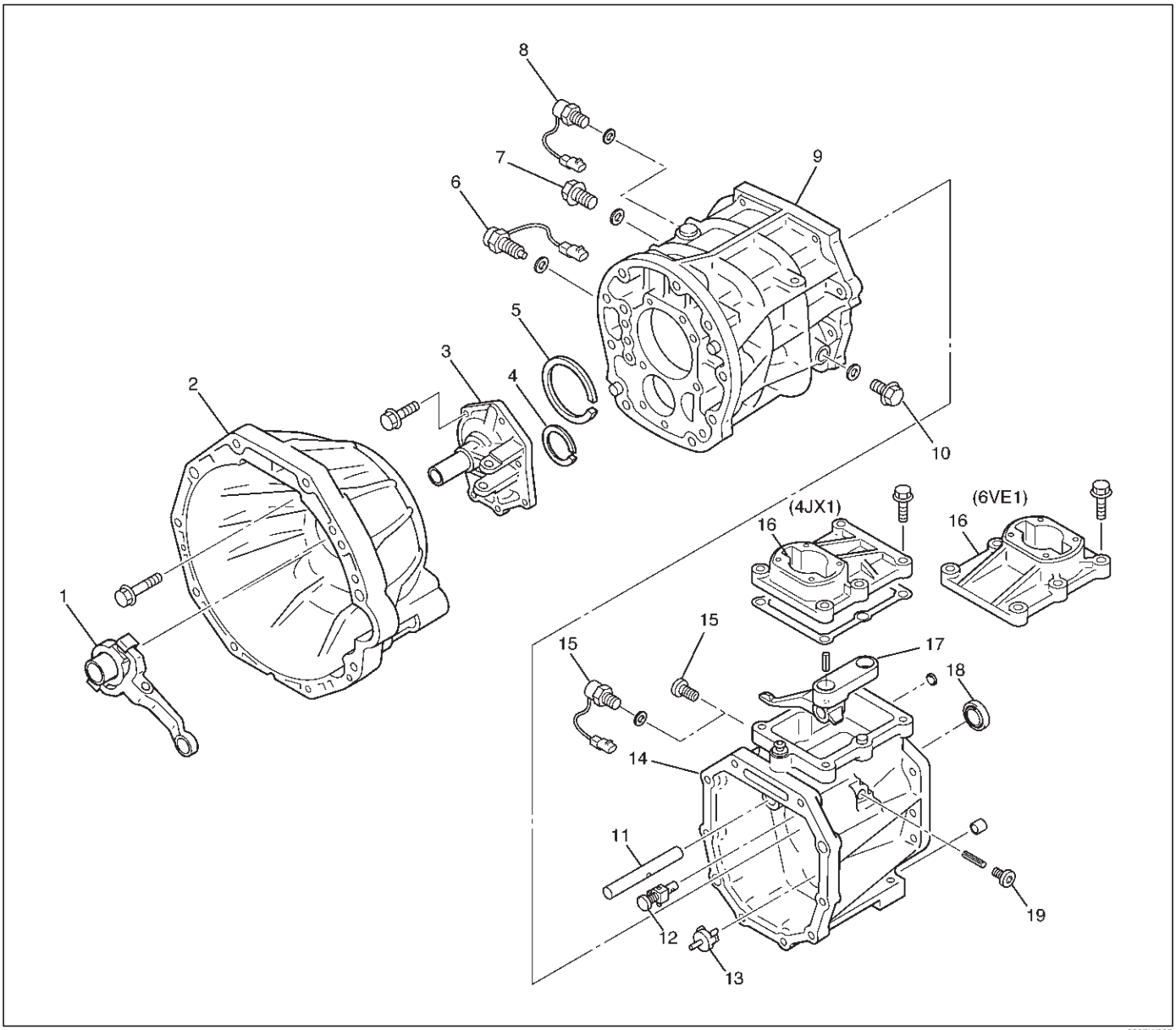

220RW095

Legend

(1) Release Bearing and Shift Fork
(2) Clutch Housing
(3) Front Cover
(4) Snap Ring
(5) Snap Ring
(6) 1st and 2nd Switch
(7) Drain Plug
(8) Backup Light Switch
(9) Transmission Case
(10) Filler Plug
(11) Gear Control Rod
(12) Reverse Restrict Pin
(13) Oil Receiver Pipe
(14) Transfer Adapter
(15) Plug (6VE1) or Neutral Switch (4JX1)
(16) Gear Control Box
(17) Shift Lever Housing
(18) Oil Seal
(19) Plug

Disassembly

1. Remove the drain plug and filler plug.
   1. Remove the drain plug (1) and gasket.
   2. Remove the filler plug (2) and gasket.

(6VE1)

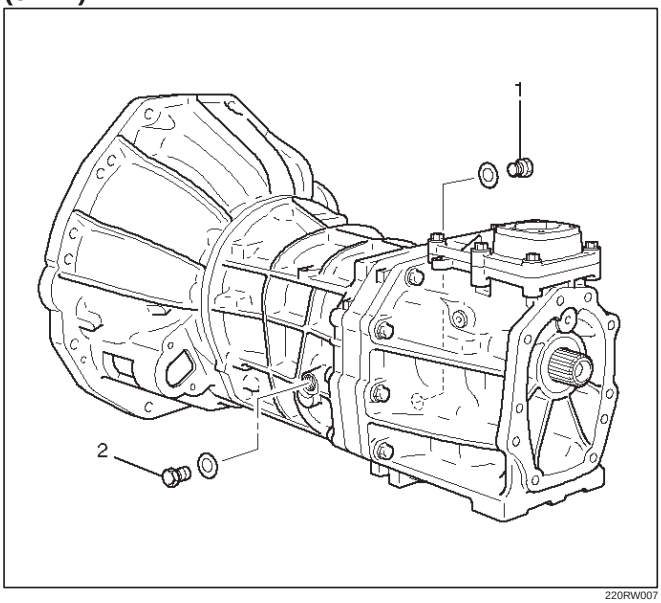

220RW007

2. Remove the clutch release bearing and shift fork.
   1. Remove the clutch release bearing (3) from the front cover.
   2. Remove the split pin (4). Remove the shaft from the under. Remove the shift fork (5).

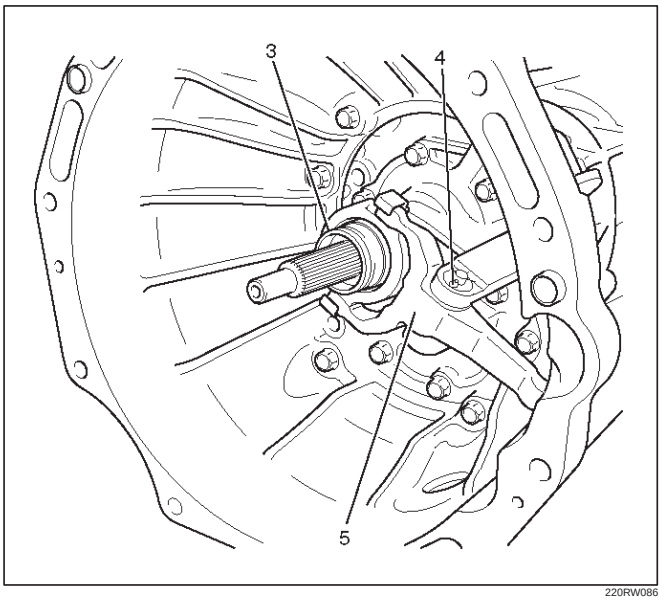

220RW086

3. Remove the switch.
   1. Remove backup light switch (6) and gasket.
   2. Remove neutral switch (7) and gasket (4JX1).
   3. Remove 1st and 2nd switch (8) and gasket.

(4JX1)

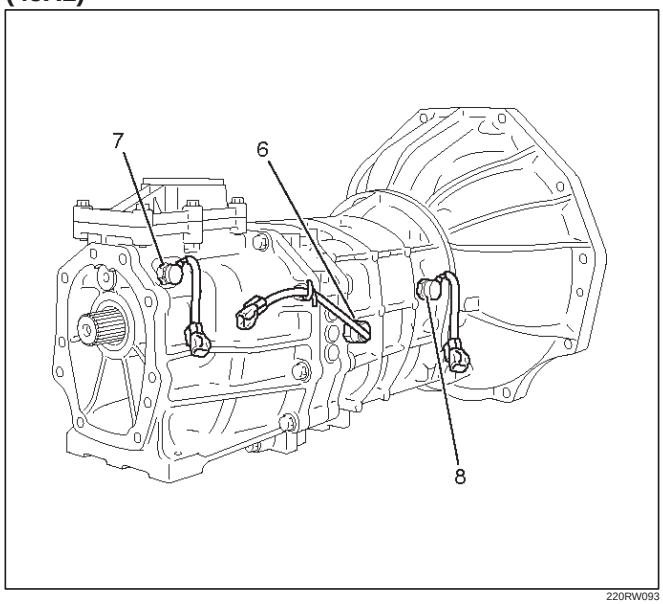

220RW093

4. Remove the clutch housing.
   1. Remove the 9 bolts.

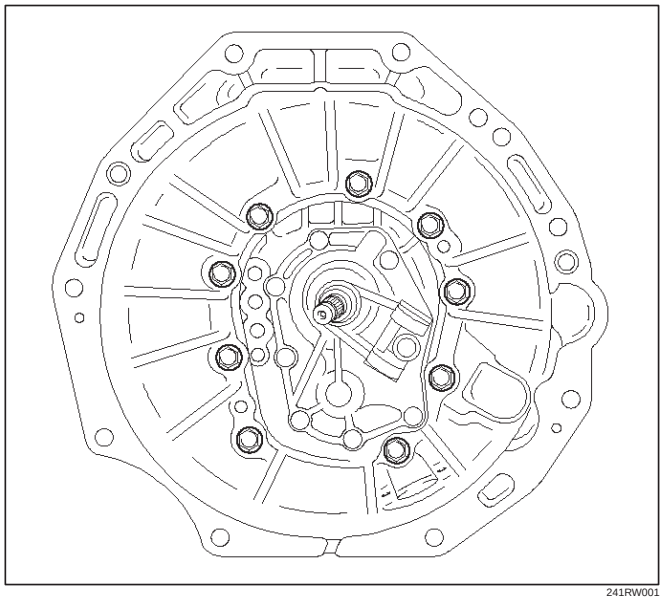

241RW001

2. Using a plastic hammer, carefully tap the clutch housing.

(6VE1)

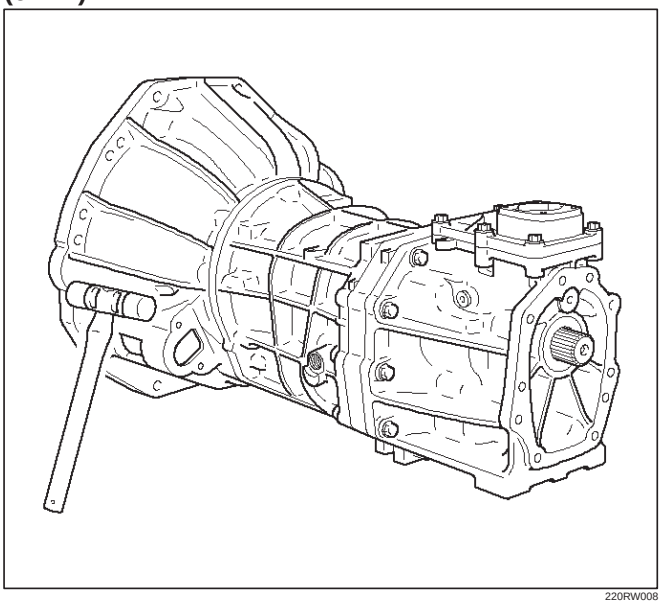

220RW008

5. Remove gear control box and gasket.
   1. Remove the 6 bolts, gear control box and gasket.

(6VE1)

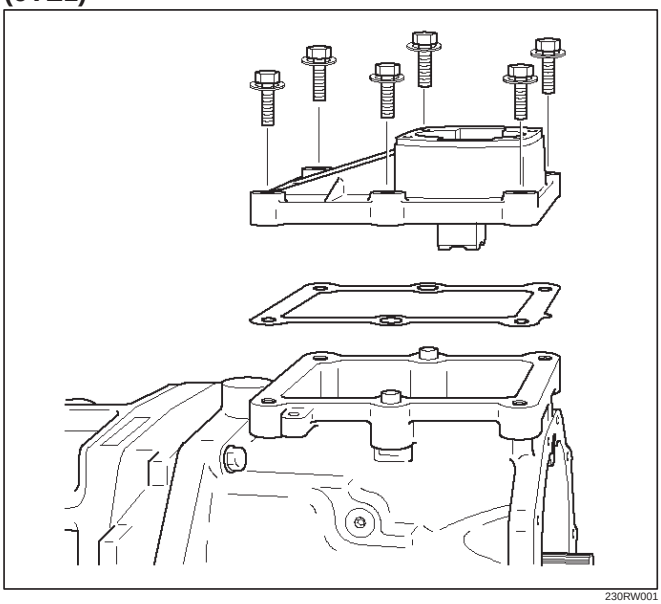

230RW001

6. Remove transfer adapter.
   1. Using a hexagon wrench, remove the plug (1).

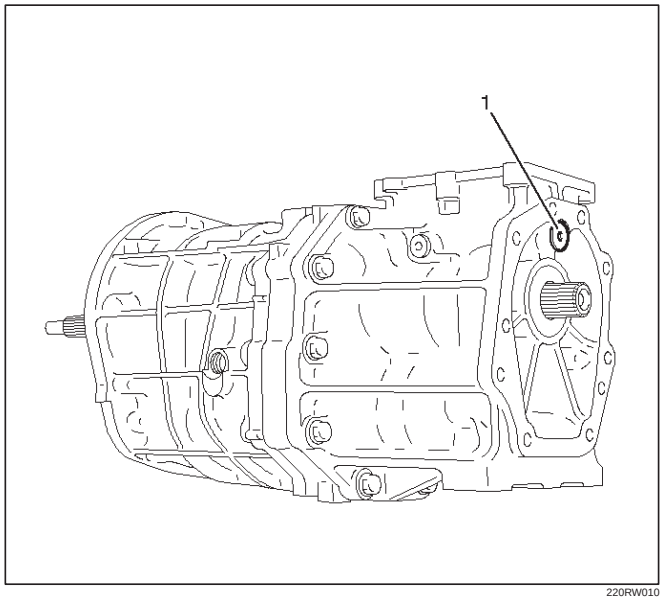

220RW010

   2. Using a pin punch and hammer, drive out the slotted spring pin (2).

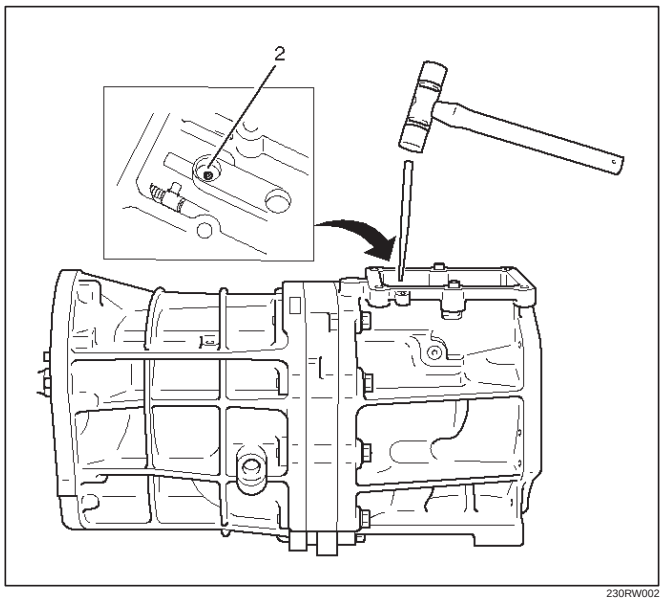

230RW002

3. Using the M8 × 1.25 bolt, remove the gear control rod and the shift lever hausing.

NOTE: Turn the M8 bolt a few times, before remove the gear control rod.

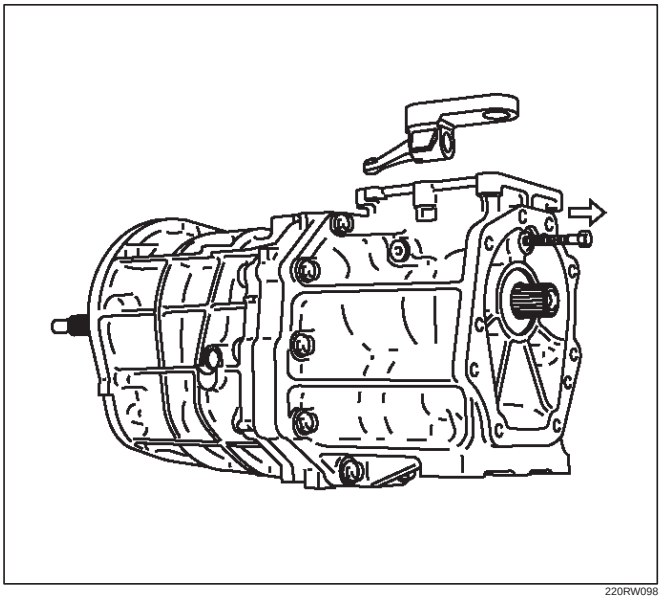

220RW098

4. Remove the 10 bolts and clamp.

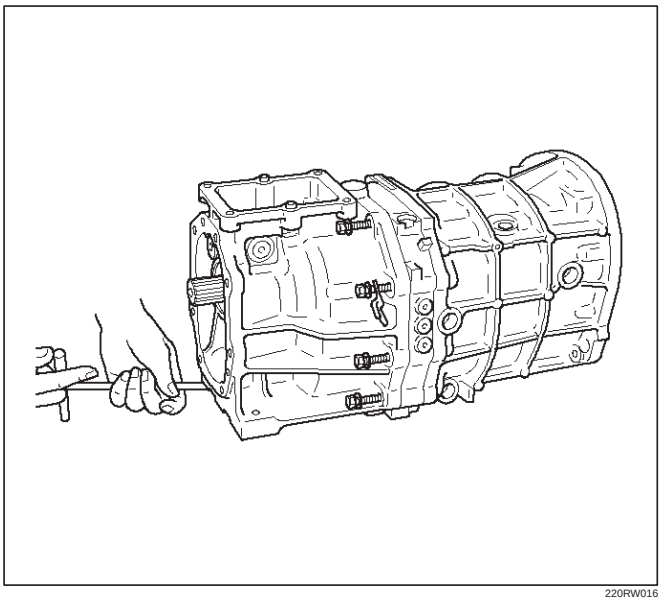

220RW016

5. Using a plastic hammer, tap the transfer adapter.

NOTE:

- Be careful not to lose the pin.
- Cover the mainshaft splines with adhesive tape. This will prevent damage to the oil seal lip.

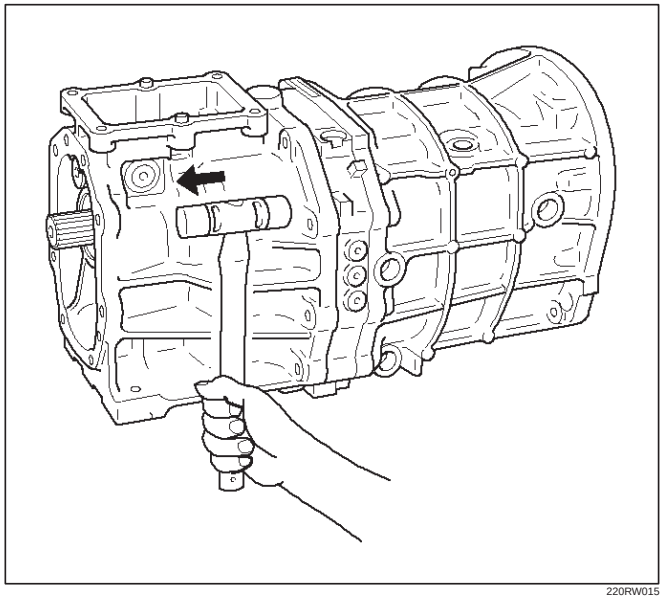

220RW015

7. Disassemble the transfer adapter assembly.
   1. Using a torx socket wrench(T40), remove the plug.

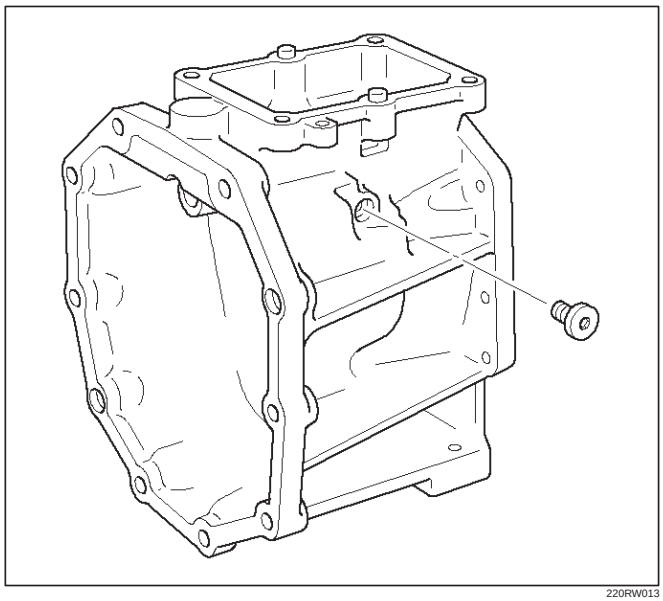

220RW013

2. Using a pin punch and hammer, drive out the slotted spring pin. Remove the reverse restrict pin.

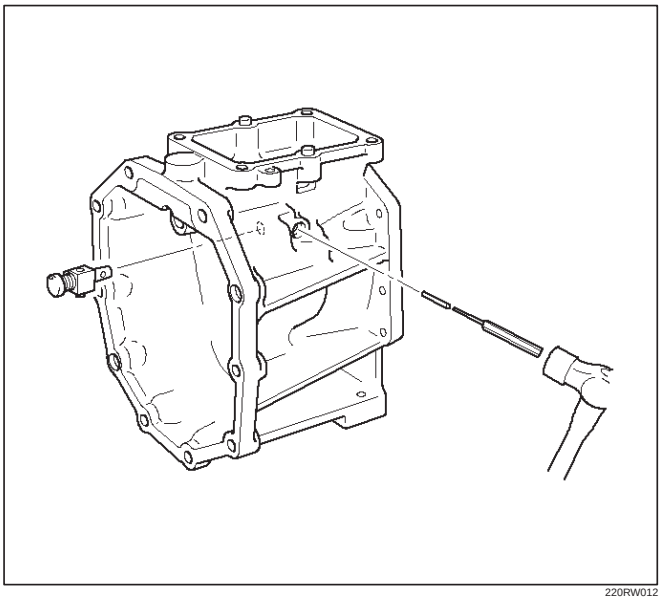

220RW012

3. Remove the oil receiver pipe.

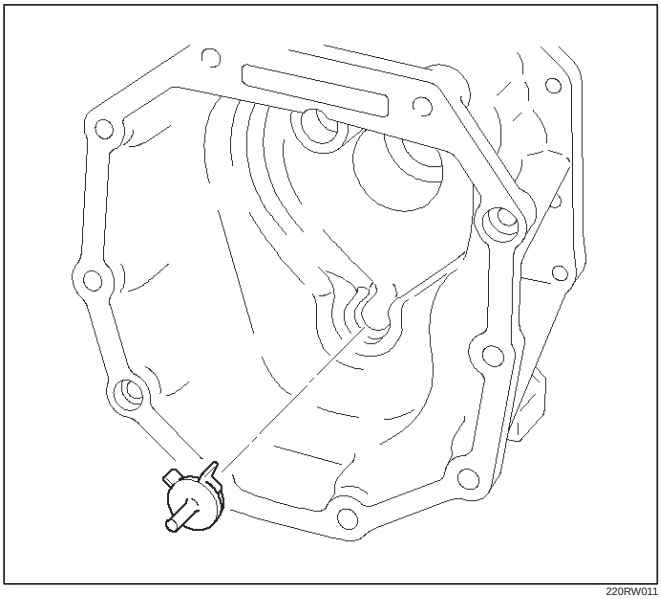

220RW011

4. Remove the oil seal.
5. Using socket hexagon wrench, remove the plug.

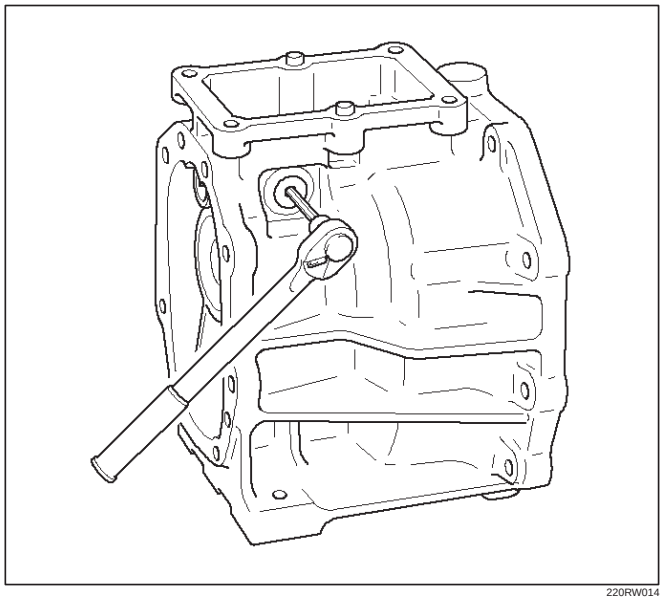

220RW014

8. Remove the front cover.
   1. Remove the 8 bolts.

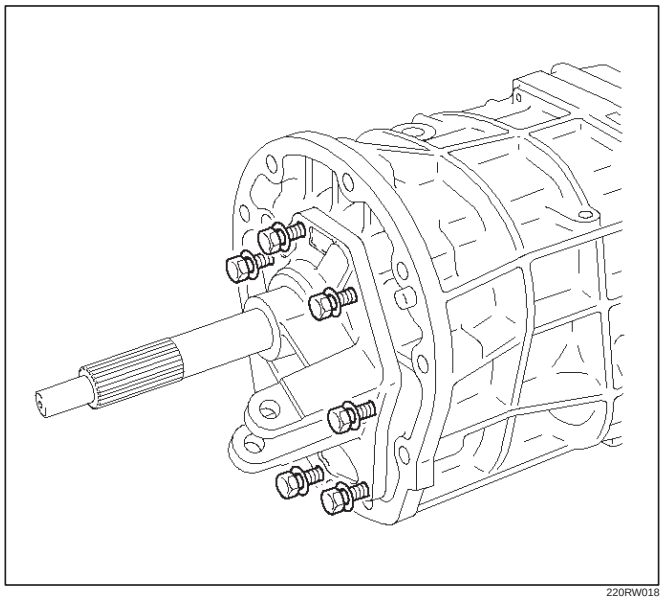

220RW018

2. Using a plastic hammer, carefully tap the front cover.

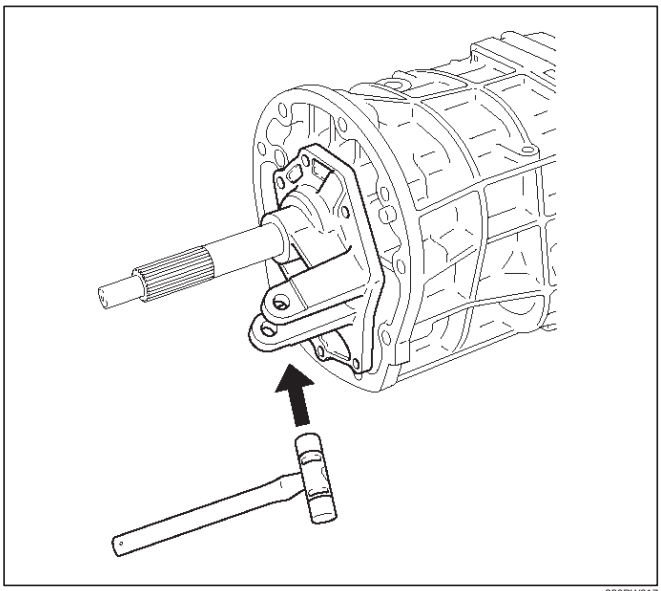

220RW017

9. Remove the front cover oil seal.
   1. Mount the front cover through the aluminum plate in a vise.
   2. Using screwdriver, remove oil seal (1).

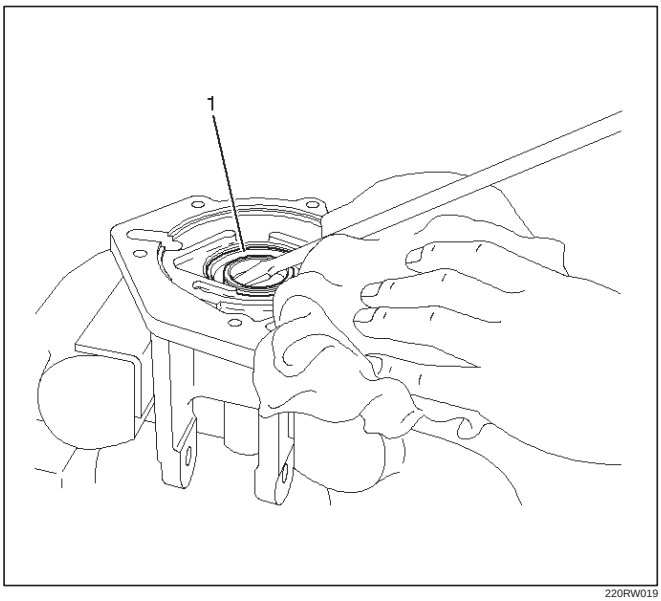

220RW019

10. Remove the transmission case.
    1. Using a snap ring expander, remove the 2 snap rings (1)(2).

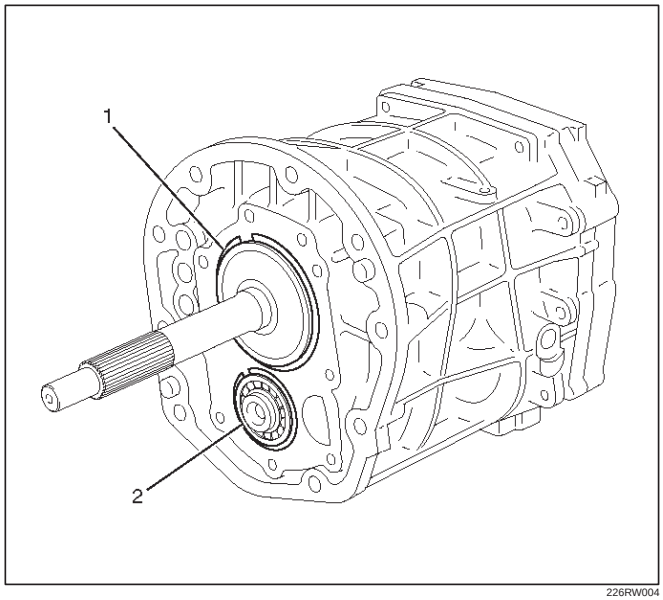

226RW004

    2. Using a plastic hammer, carefully tap the transmission case.

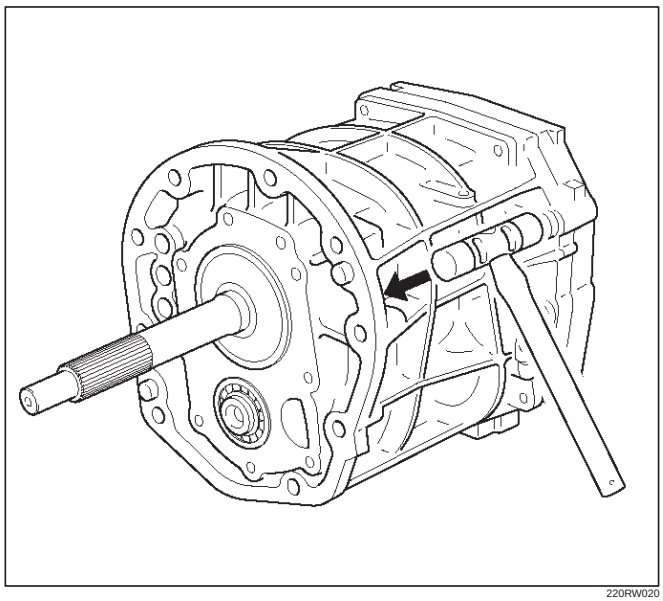

220RW020

11. Mount the intermediate plate.
    1. Mount the intermediate plate through the aluminum plate in a vise.

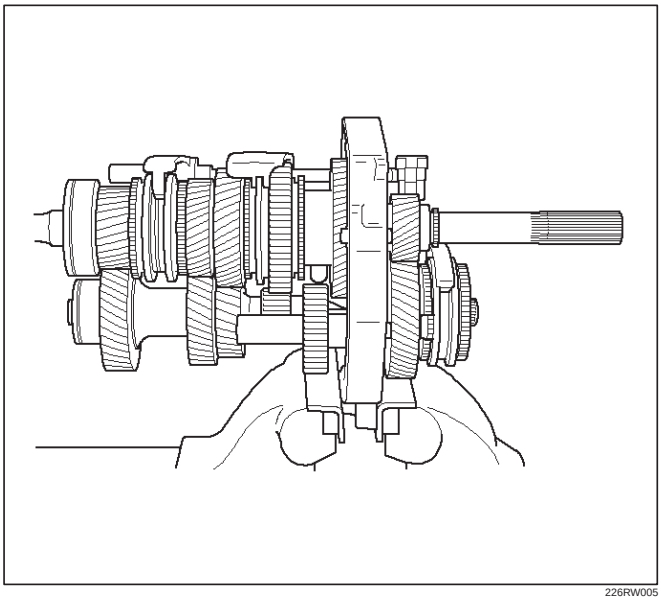

226RW005

12. Remove the slotted spring pin.
    1. Using a pin punch and hammer, drive out the pin from the arm.

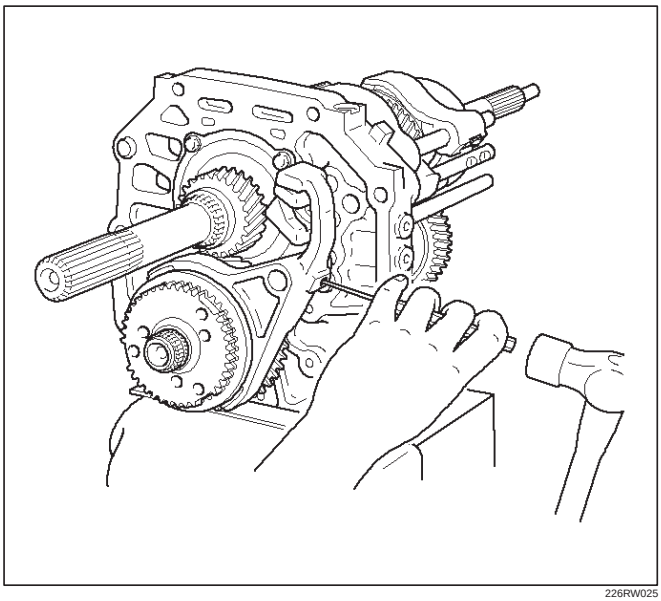

226RW025

13. Remove the shift arm set bolt.
    1. Remove the 2 bolts from the shift arm.

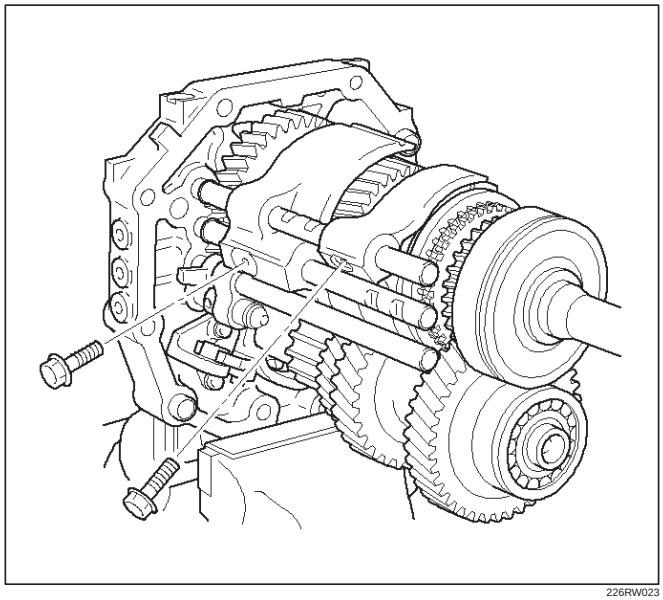

226RW023

14. Remove the counter 5th gear.
    1. Using 2 screwdrivers and hammer, tap out the snap ring.

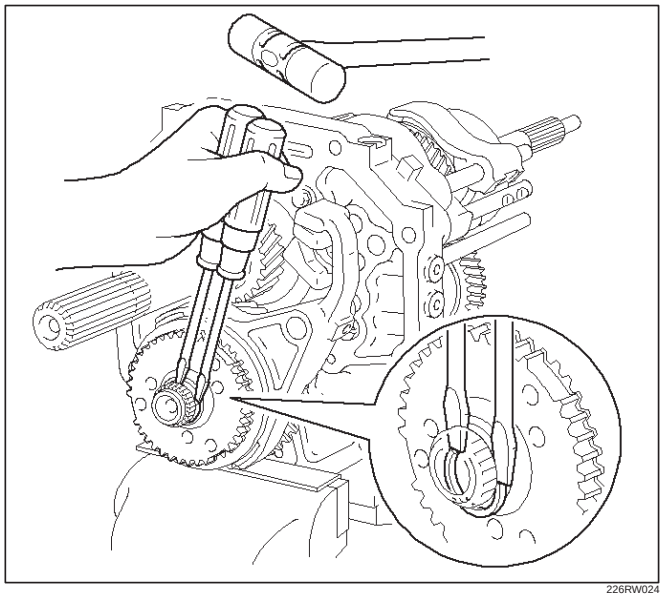

226RW024

2. Using remover 5–8840–2550–0 (J–42794) and attachment 5–8840–2560–0 (J–42988), remove the 5th gear spline piece.

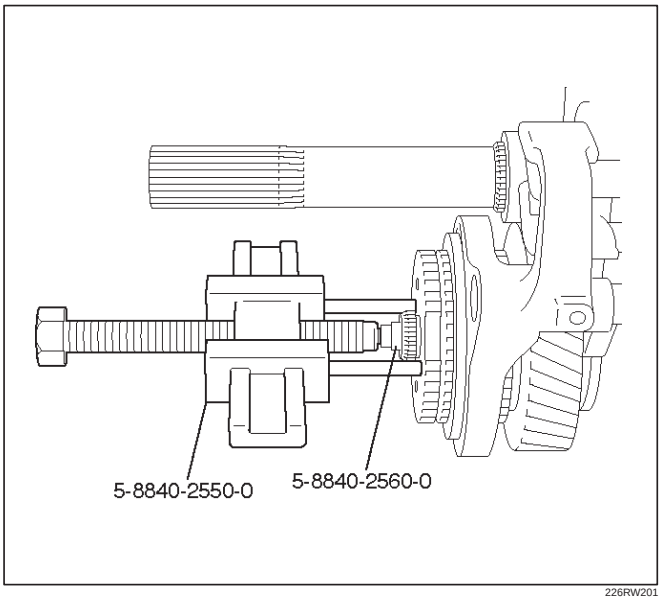

226RW201

3. Remove the hub sleeve No.3, block ring set, counter 5th gear, bearing and 5th shift arm.

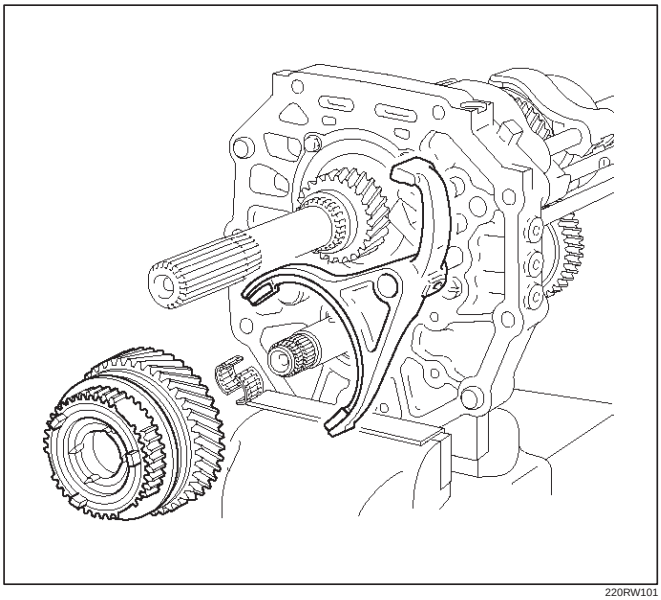

220RW101

4. Remove the synchronizer pull ring, synchronizer cone ring, and synchronizer outer ring from hub sleeve No.3.

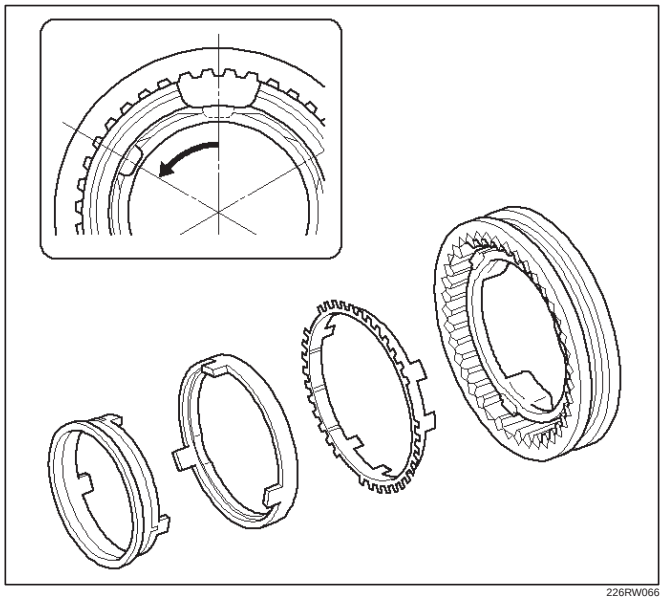

226RW066

5. Remove the reverse block ring from the hub sleeve No.3. Remove the 3 inserts and 3 compression springs.

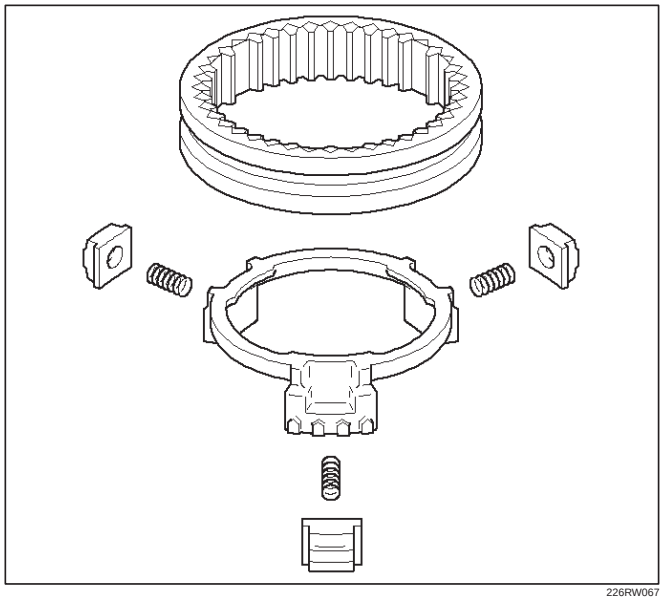

226RW067

15. Remove the thrust washer.
    1. Remove the thrust washer from counter gear shaft.
    2. Remove the thrust washer pin from counter gear shaft.

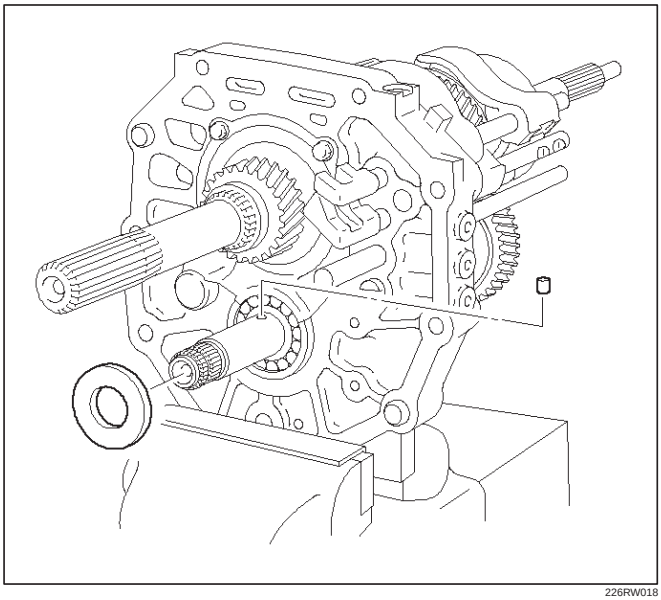

226RW018

16. Remove the bearing plate.
    1. Remove the 4 bolts and bearing retainer.

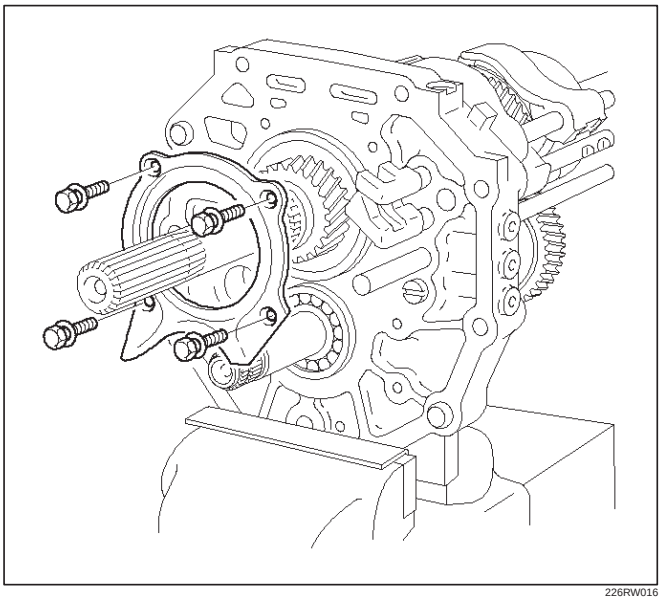

226RW016

17. Remove the reverse idle gear.
    1. Pull out the shaft foward the rear and remove the reverse idle gear.

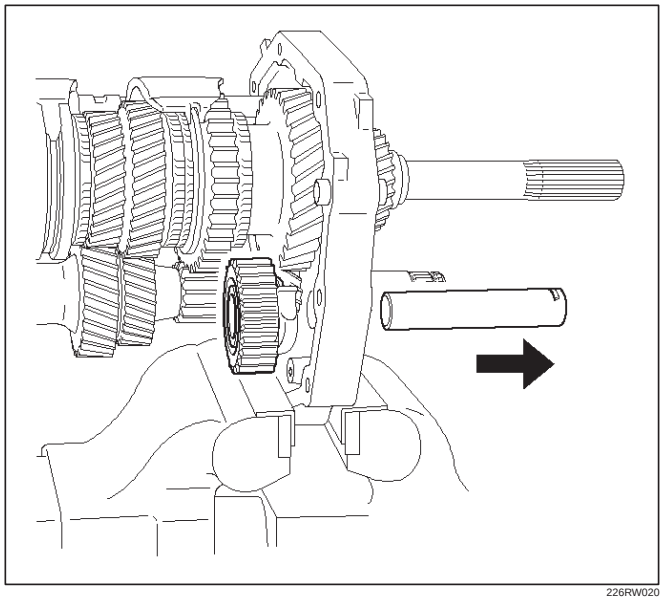

226RW020

18. Remove the counter gear shaft.
    1. Using snap ring plier, remove counter gear shaft center bearing snap ring.

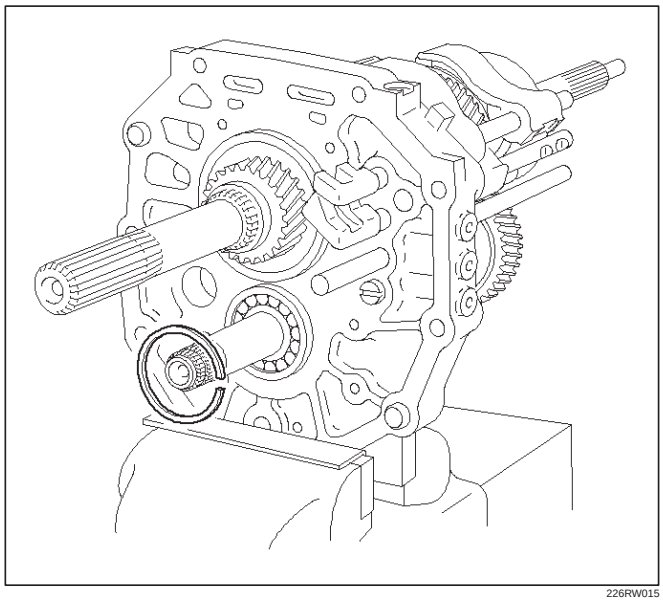

226RW015

2. Using remover 5–8840–2551–0 (J–42795) and attachment 5–8840–2560–0 (J–42988), remove counter gear shaft center bearing.

NOTE: Be careful not to drop the counter gear, when removing the bearing.

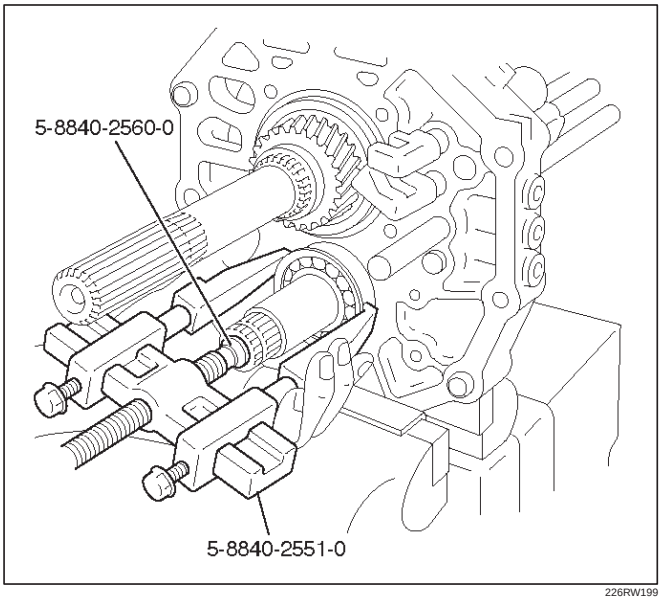

226RW199

3. Remove the counter gear from intermediate plate.

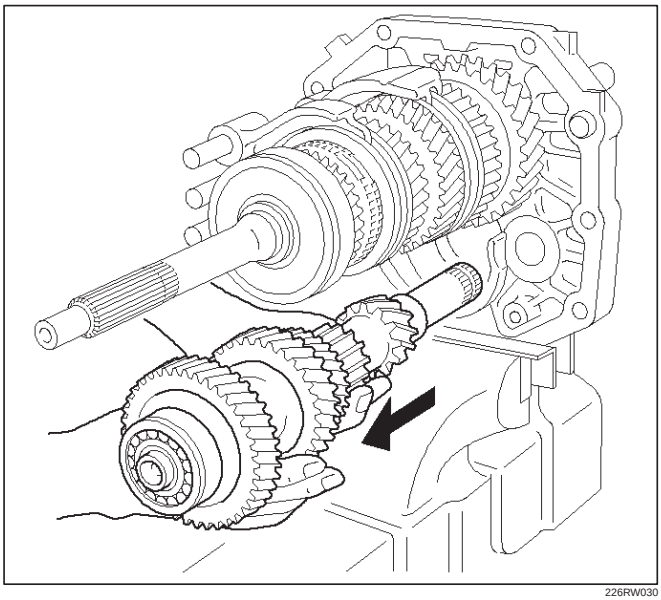

226RW030

19. Disassemble the counter gear shaft assembly.
    1. Using snap ring pliers, remove the counter gear shaft front bearing snap ring.

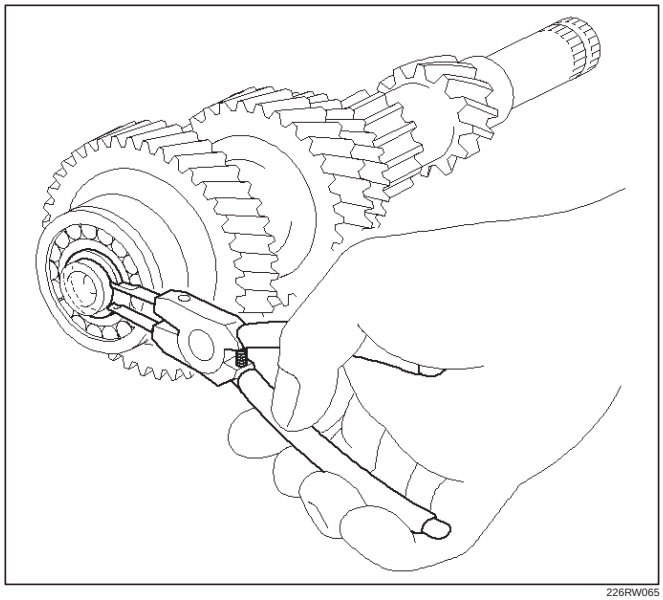

226RW065

2. Using bearing separator 5–8840–0015–0 (J–22912–01) and a press, remove the bearing.

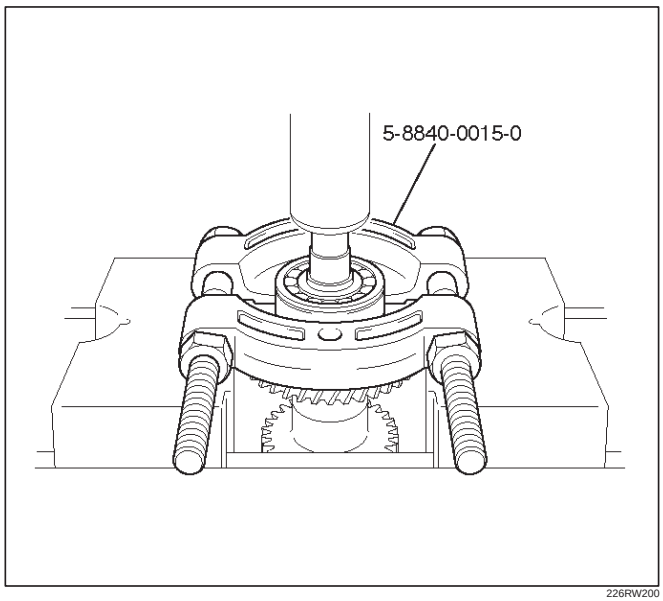

226RW200

20. Remove the top gear shaft.
    1. Remove the top gear shaft from mainshaft.

NOTE: Don’t fall needle roller bearing.

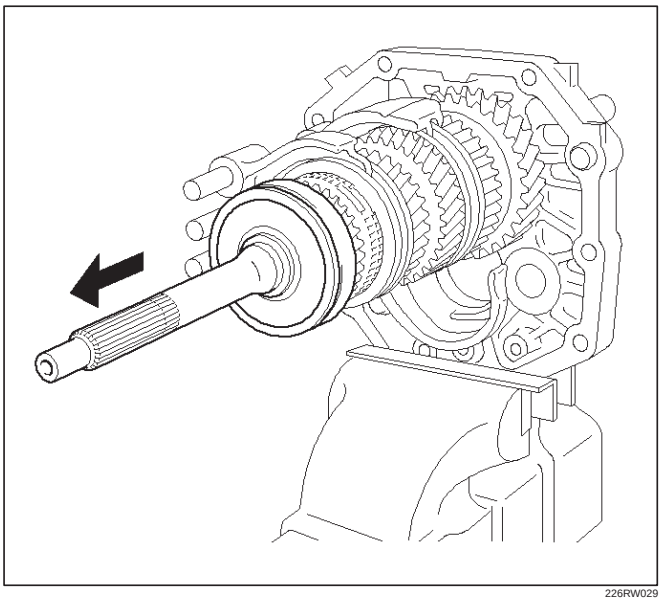

226RW029

2. Remove the 4th block ring and roller bearing.

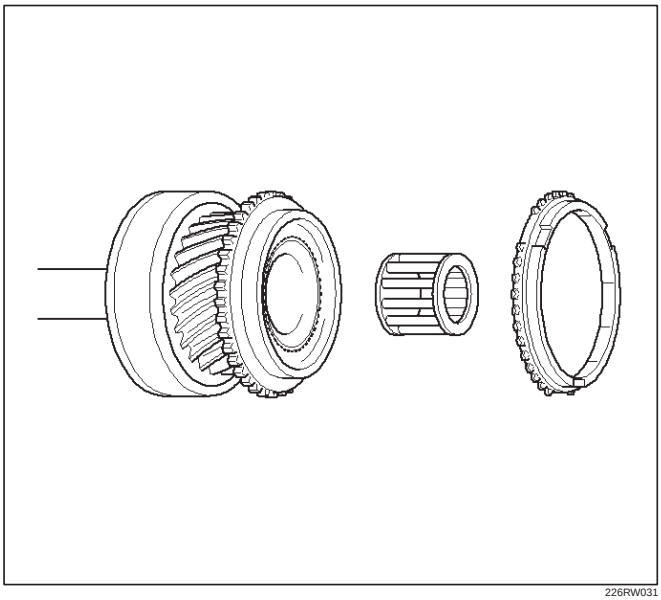

226RW031

21. Disassemble the top gear shaft assembly.
    1. Check for wear or damage.

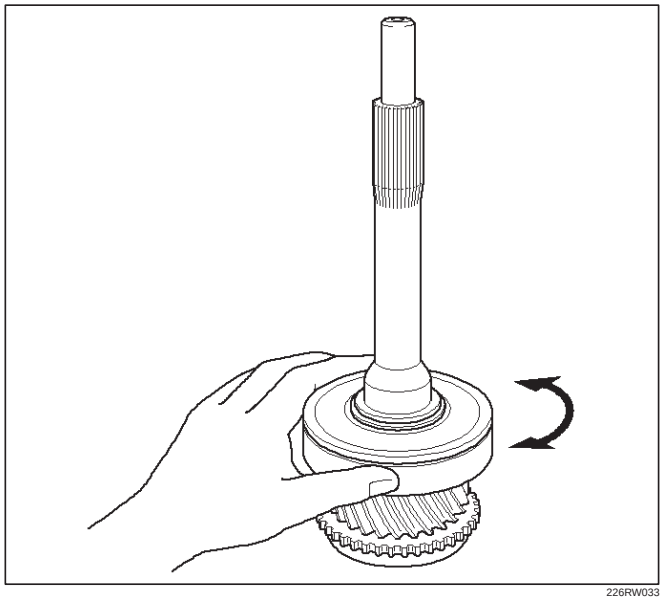

226RW033

2. Remove the front bearing shaft snap ring.

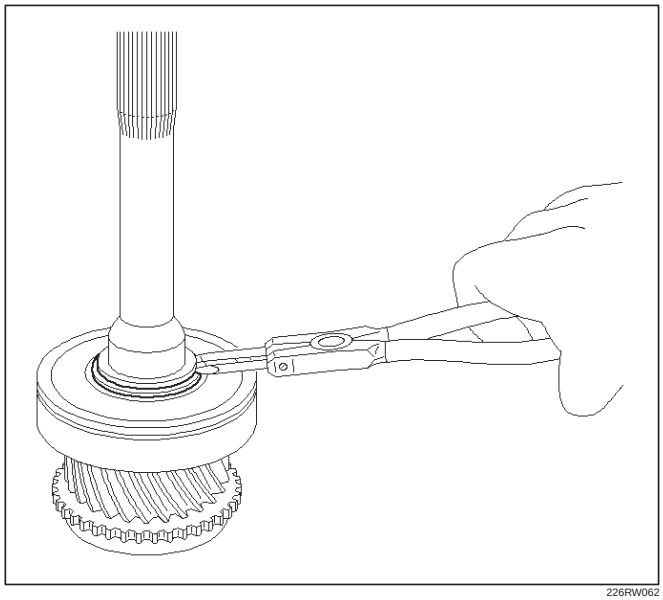

226RW062

3. Using bearing separator 5–8840–0015–0 (J–22912–01) and a press, remove the bearing.

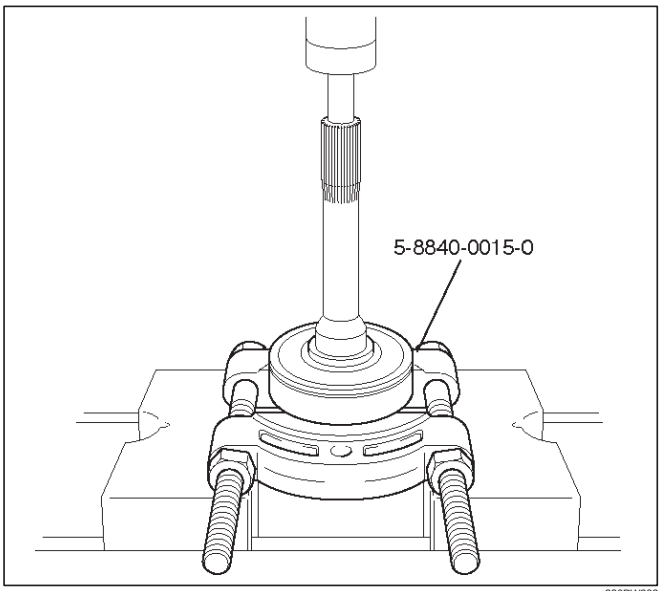

226RW202

22. Remove the mainshaft.
    1. Remove mainshaft bearing snap ring.

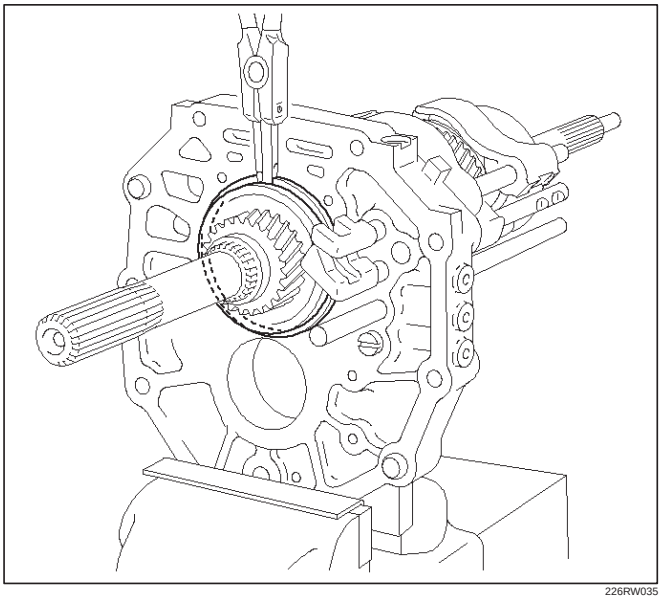

226RW035

2. Using a plastic hammer, tap the 5th-reverse shift rod at the reverse shift side.

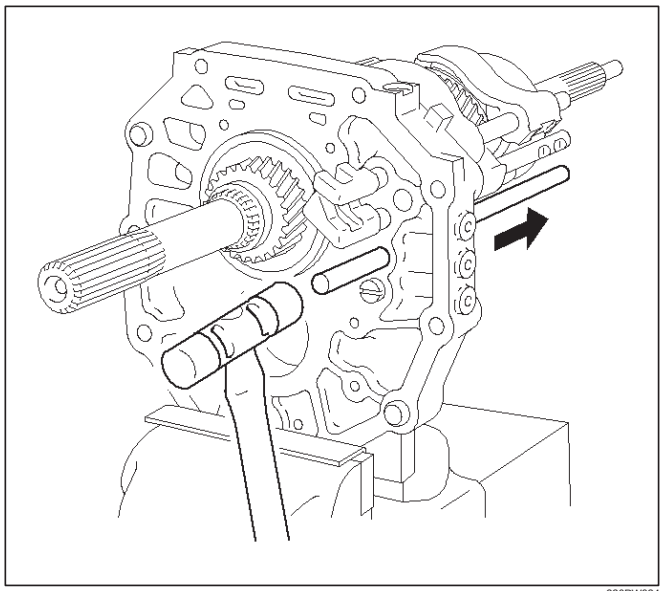

226RW034

3. Remove the intermediate plate from a vise.
4. Remove the mainshaft, 1st-2nd shift arm and 3rd-4th shift arm.

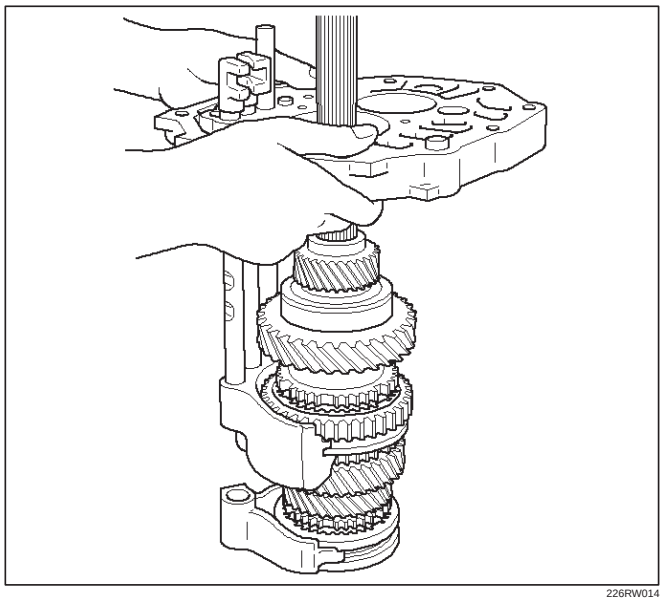

226RW014

23. Disassemble the mainshaft assembly.
    1. Inspect each gear thrust clearance.
        1. Using thickness gauge, inspect thrust clearance (1st gear, 3rd gear).

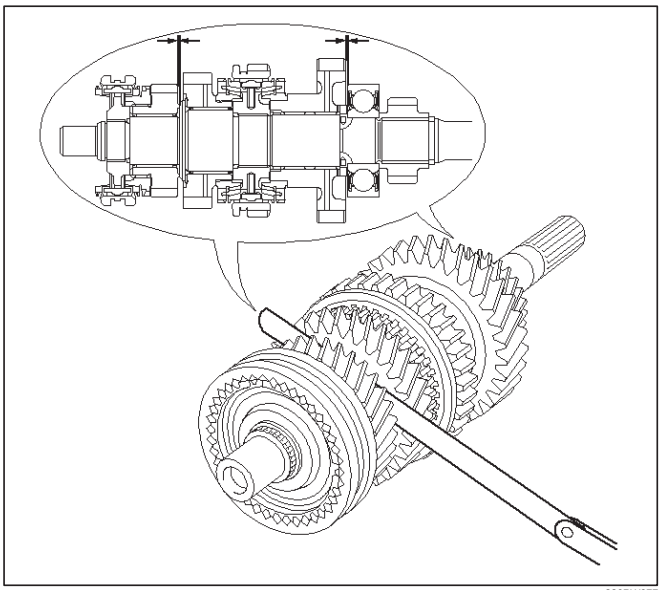

226RW077

        2. Mount the mainshaft through the aluminum plate in a vise.
        3. Using a dial indicator, measure each gear thrust clearance.

Gear	Standard Clearanse
1st	0.15 – 0.45 mm (0.0059 – 0.0177 in)
2nd	0.10 – 0.25 mm (0.0039 – 0.0098 in)
3rd	0.10 – 0.25 mm (0.0039 – 0.0098 in)

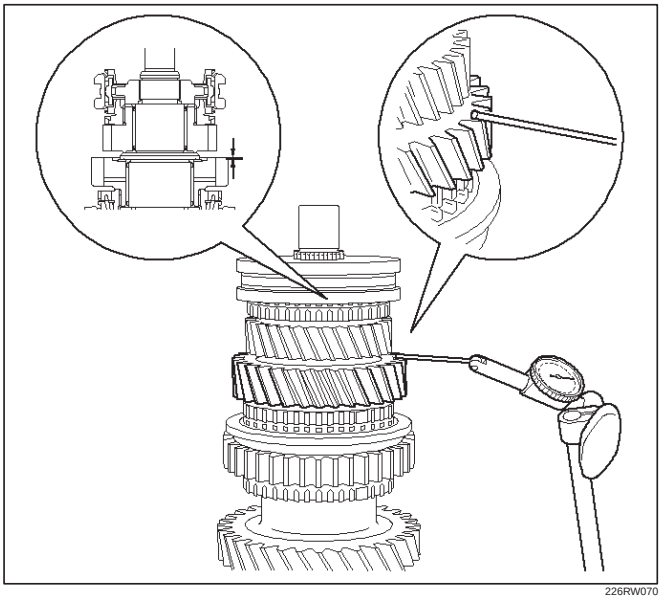

226RW070

    2. Inspect each gear radial clearance
        1. Using a dial indicator, measure the radial clearance of each gear.

Gear	Standard Clearanse
1st	0.020 – 0.074 mm (0.00078 – 0.00291 in)
2nd	0.015 – 0.068 mm (0.00059 – 0.00268 in)
3rd	0.015 – 0.068 mm (0.00059 – 0.00268 in)

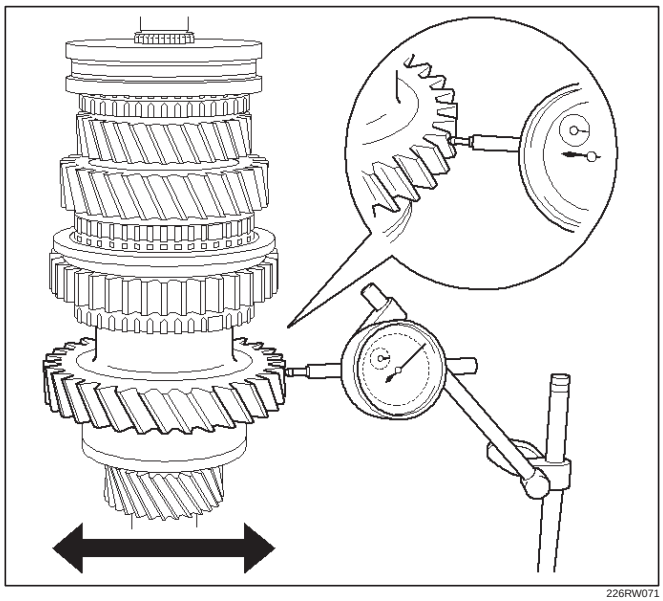

226RW071

    3. Using 2 screwdrivers and hammer, tap out the snap ring.

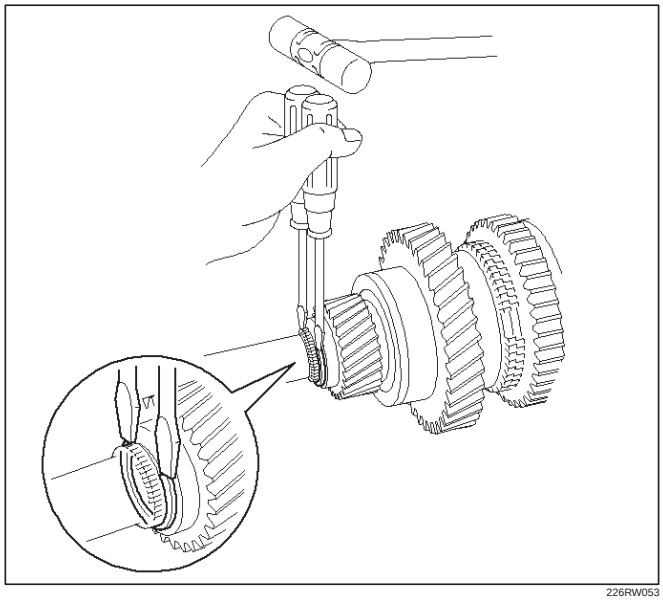

226RW053

4. Using bearing separator 5–8840–0015–0 (J–22912–01) and a press, remove the following parts.
   1. 5th gear (1).
   2. Mainshaft bearing (2).
   3. 1st gear thrust washer (3).
   4. 1st gear (4).

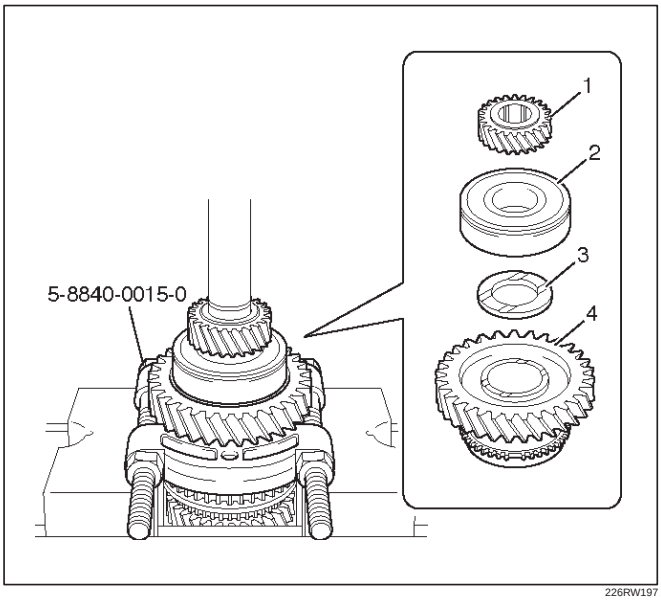

226RW197

5. Remove following parts from mainshaft.
   1. Synchronizer assembly (1).
   2. 1st gear thrust washer pin (3).
   3. 1st gear needle roller bearing (4).
   4. 1st gear bearing spacer (2).

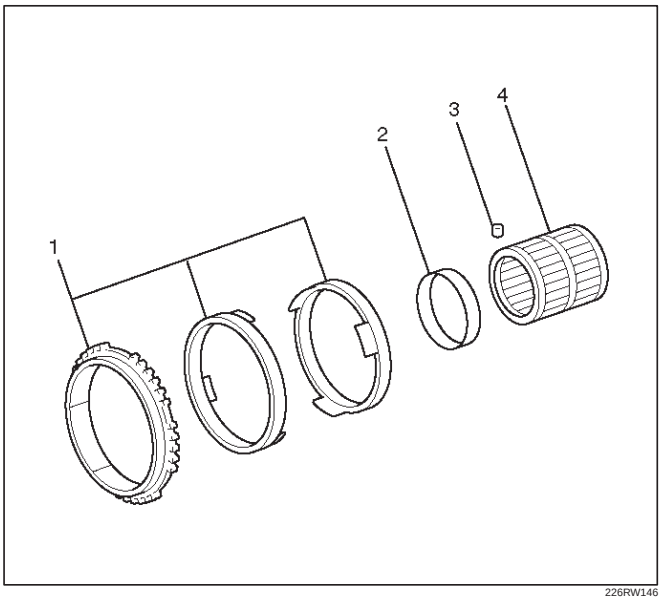

226RW146

6. Using 2 screwdrivers and hammer, tap out snap ring.

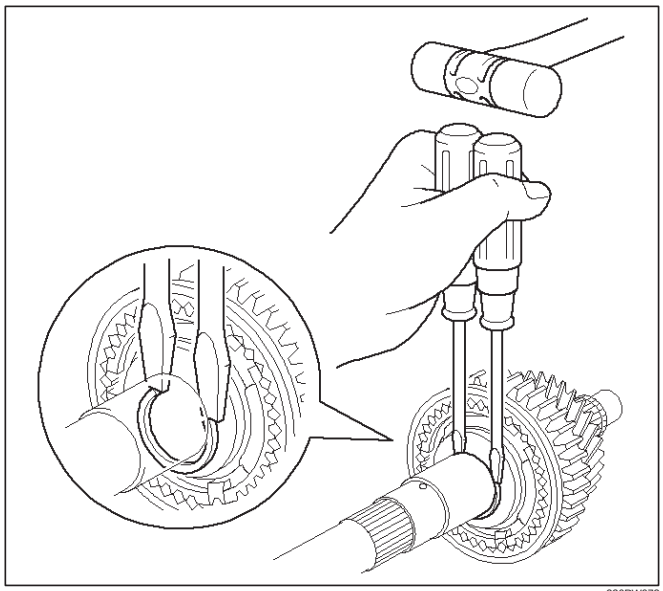

226RW073

7. Using bearing separator 5–8840–0015–0 (J–22912–01) and a press, remove the following parts.
   1. Clutch hub No.1 assembly (1).
   2. Synchronizer assembly (2).
   3. 2nd gear (3).
   4. 2nd gear needle roller bearing (4).

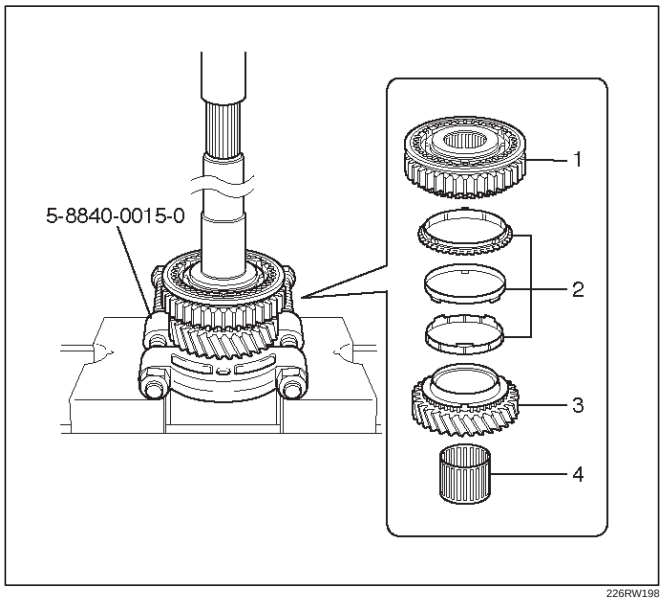

226RW198

8. Remove the reverse gear from clutch hub No.1.
9. Remove the 3 inserts and 3 compression springs.
   - When removing the inserts, push the insert spring with a screwdriver.

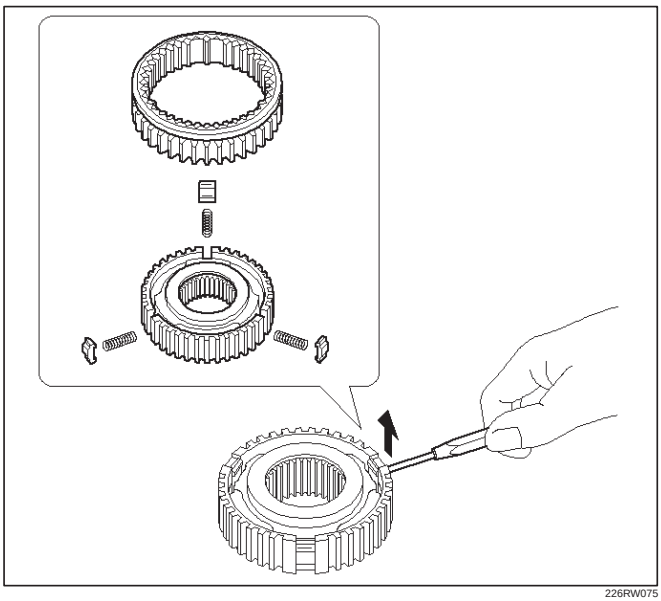

226RW075

10. Remove the snap ring.

NOTE: Don't damage the bearing surface.

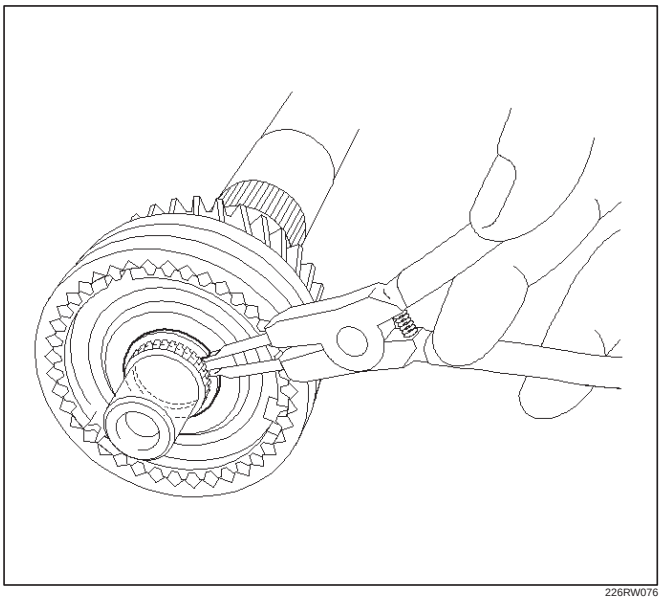

226RW076

11. Using a press, remove following parts.
    1. Clutch hub No.2 assembly (1).
    2. 3rd block ring (2).
    3. 3rd gear (3).
    4. 3rd gear needle roller bearing (4).

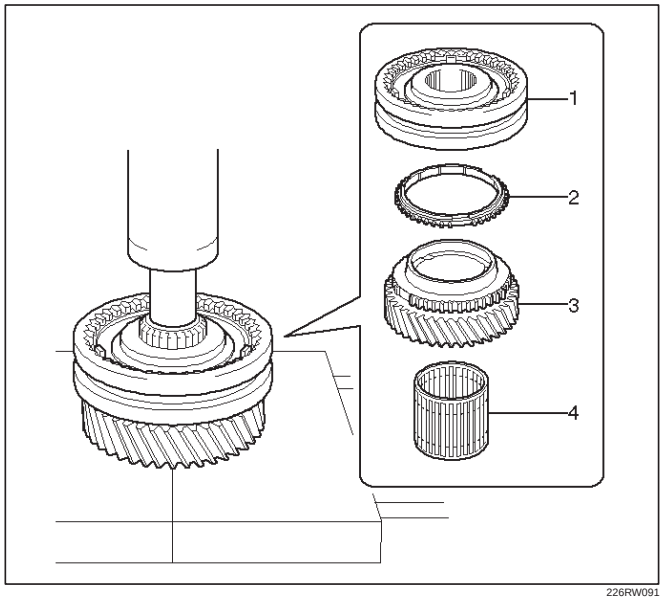

226RW091

12. Using screwdriver, remove the 2 insert springs, hub sleeve No.2, clutch hub No.2 and 3 inserts.

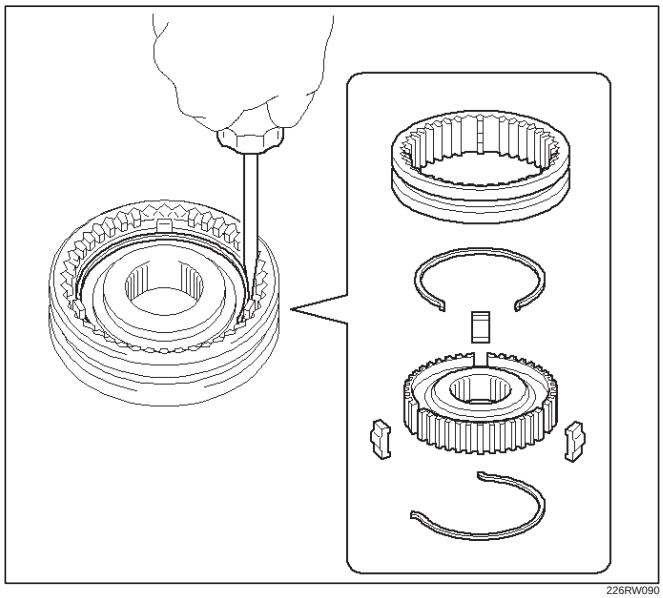

226RW090

24. Remove the shift parts and interlock parts.
    1. Mount the intermediate plate through the aluminum plate in a vise.
    2. Using a plastic hammer, tap the 5th shift rod on the neutral.

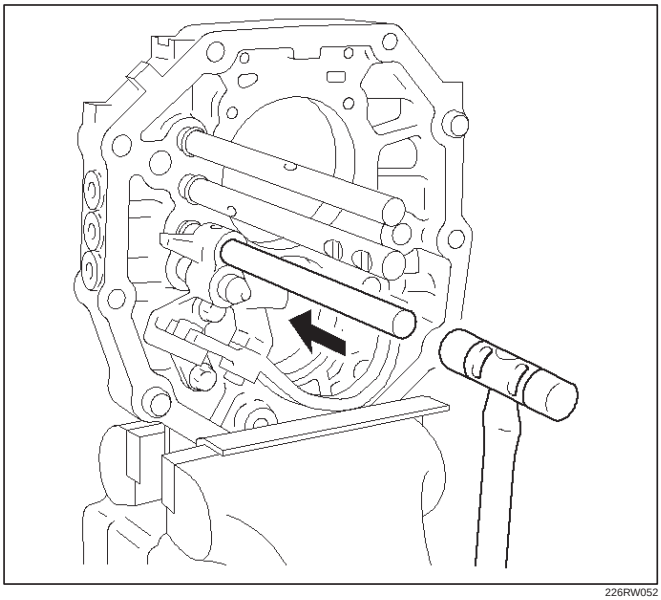

226RW052

    3. Using a torx socket wrench(T40), remove the 4 plugs.

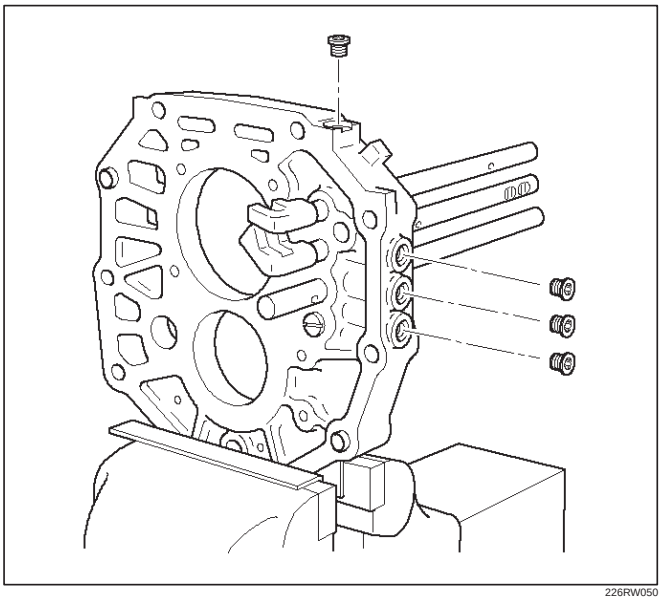

226RW050

    4. Using a magnetic finger, remove 3 springs and balls.

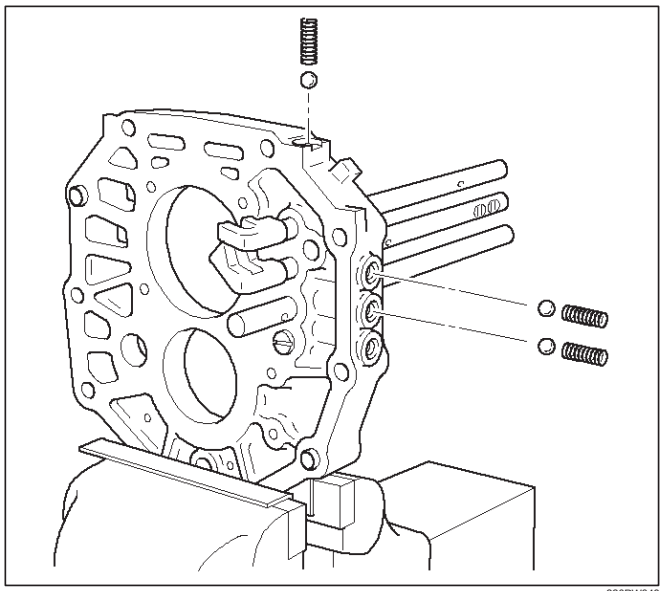

226RW049

    5. Using 2 screwdrivers and a hammer, remove 2 snap rings from each shift fork rod.

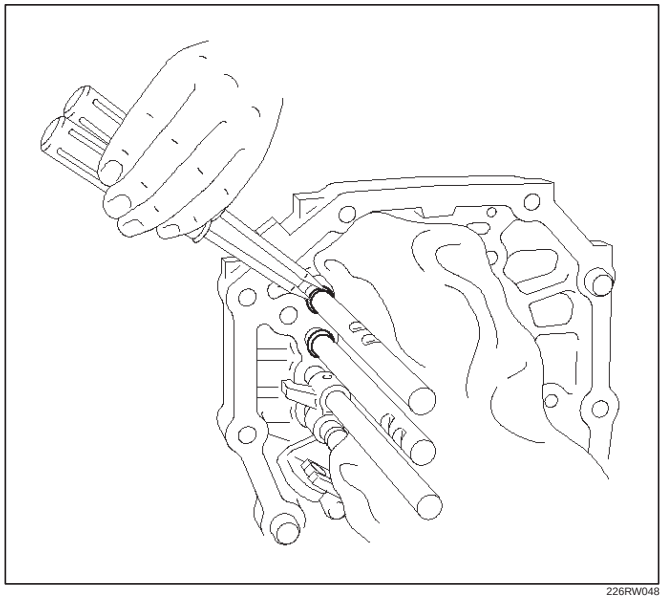

226RW048

6. Pull out the 3rd–4th shift rod at the rear.

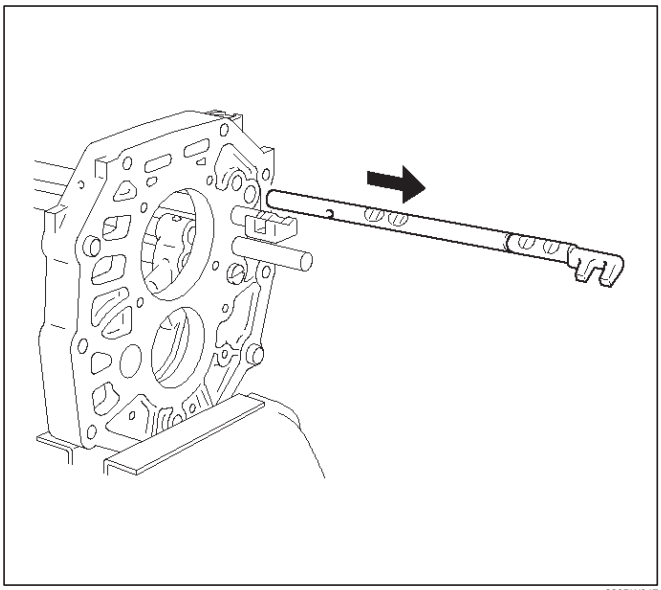

226RW047

7. Using a magnetic finger, remove the interlock pin and straight pin.

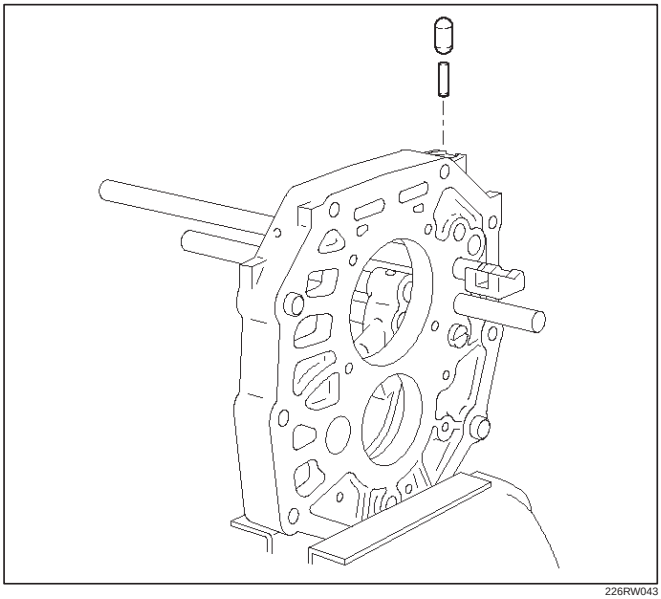

226RW043

8. Pull out the 1st–2nd shift rod at the rear.

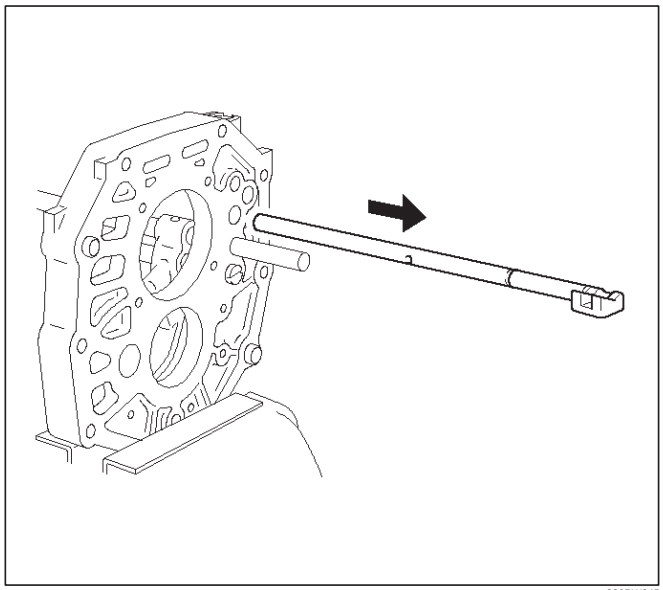

226RW045

9. Using a magnetic finger, remove the interlock pin.

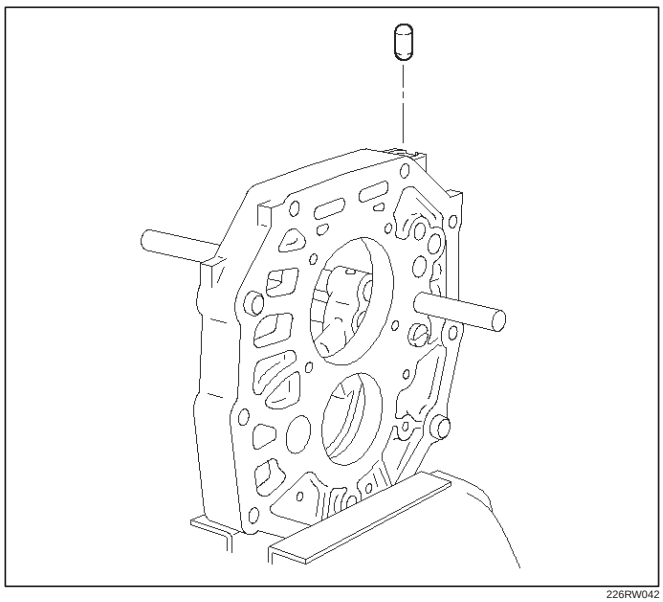

226RW042

10. Using 2 screwdrivers and a hammer, remove 2 snap rings.

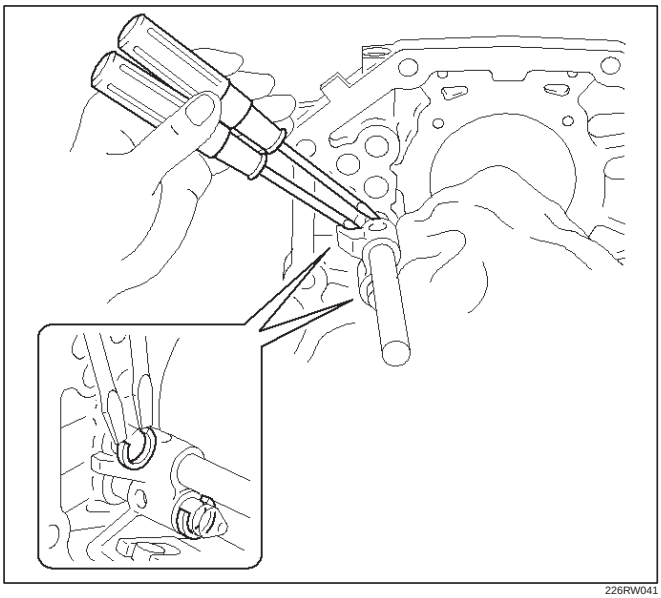

226RW041

11. Pull out the 5th-reverse shift rod at the front.

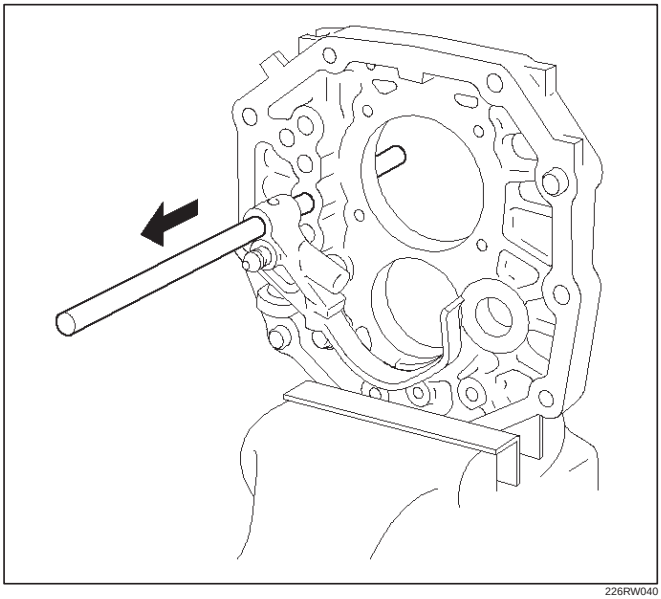

226RW040

12. Using a magnetic finger, remove the interlock pin from the intermediate plate. Remove the ball from the reverse shift arm No.1.

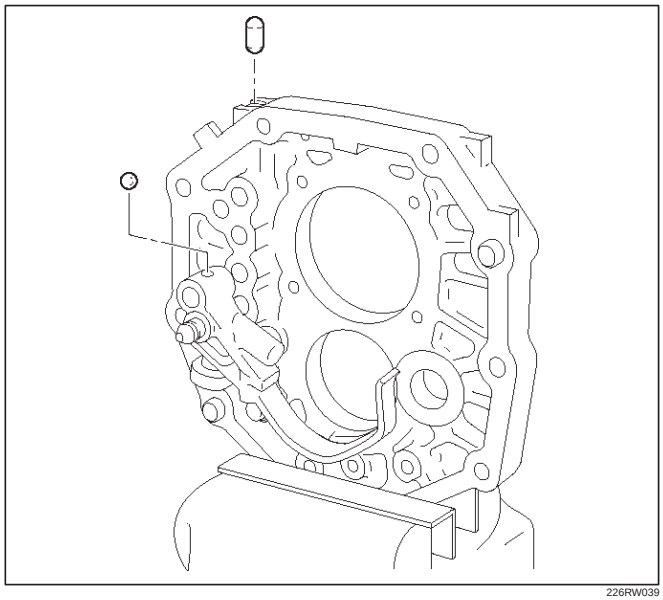

226RW039

13. Pull out at the rear reverse shift rod, reverse shift arm No.1 and reverse shift arm No.2 at the same time.

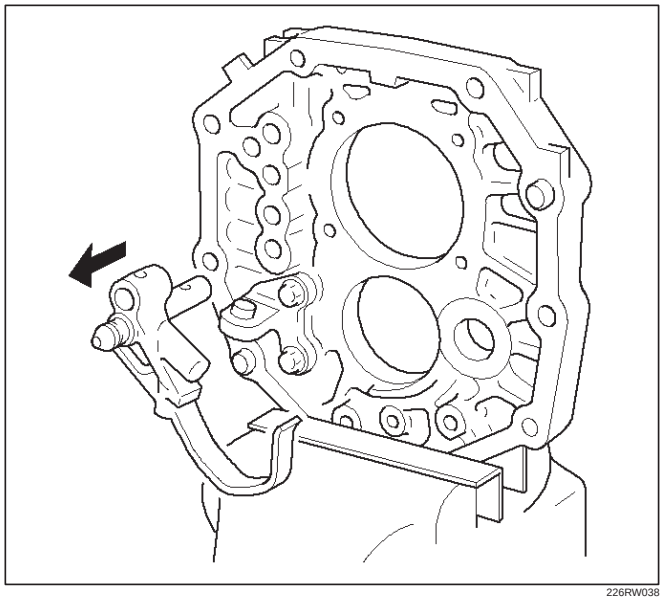

226RW038

14. Pull out reverse shift rod from reverse shift arm No.1.

NOTE: Be sure remove at the rear.

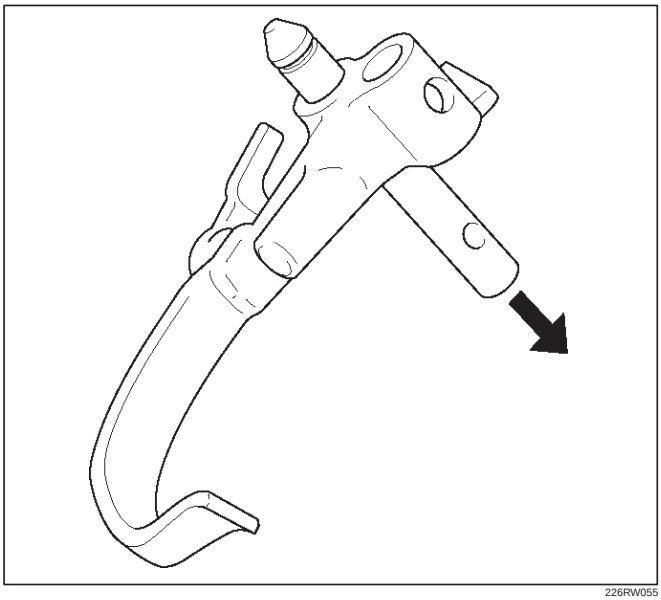

226RW055

15. Using a magnetic finger, remove the ball and spring from reverse shift arm No.1.

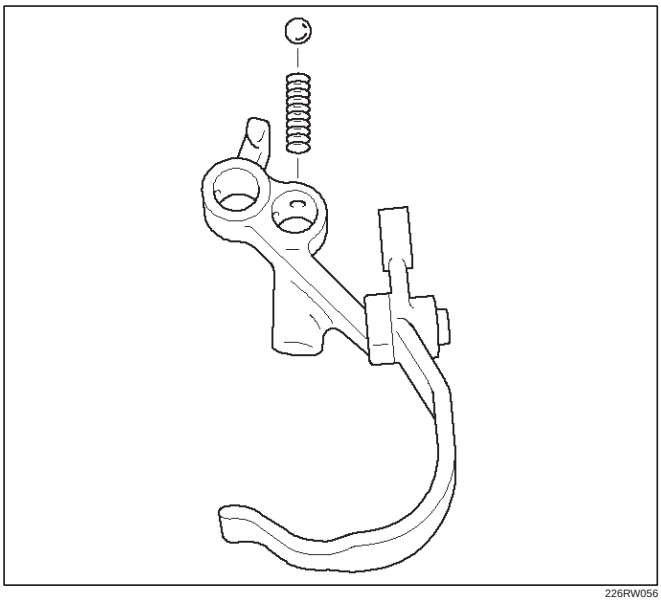

226RW056

16. Remove the reverse shift arm No.2 E–ring. Remove the reverse shift arm No.2 from reverse shift arm No.1.

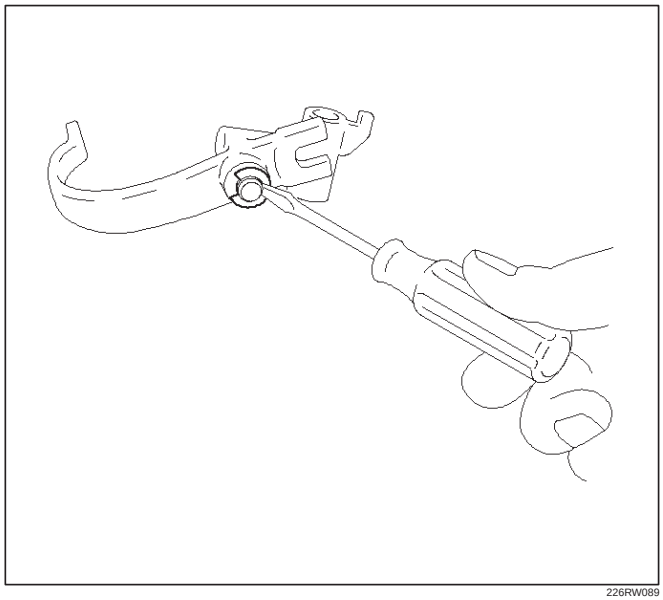

226RW089

17. Remove the 2 bolts and reverse shift arm bracket.

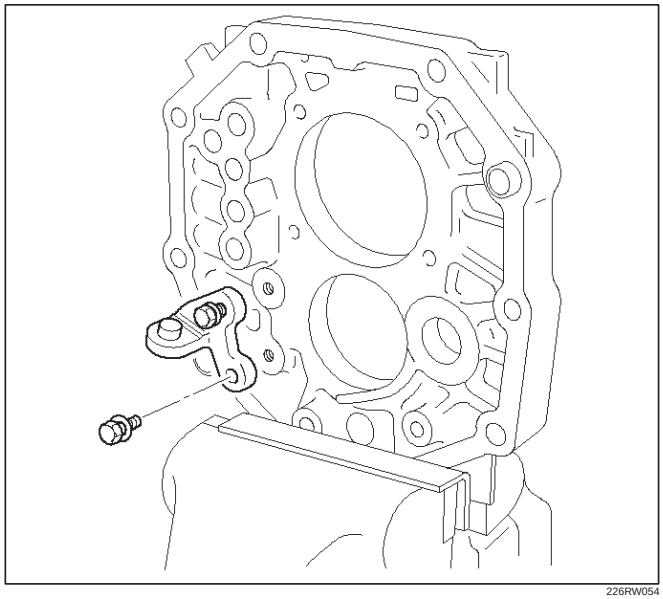

226RW054

Inspection

1. Counter 5th gear radial clearance.
   1. Install the following parts to the counter gear shaft.
      1. Counter 5th gear thrust washer pin (1).
      2. Counter 5th gear thrust washer (2).
      3. Counter 5th gear needle bearing(3).
      4. Counter 5th gear (4).

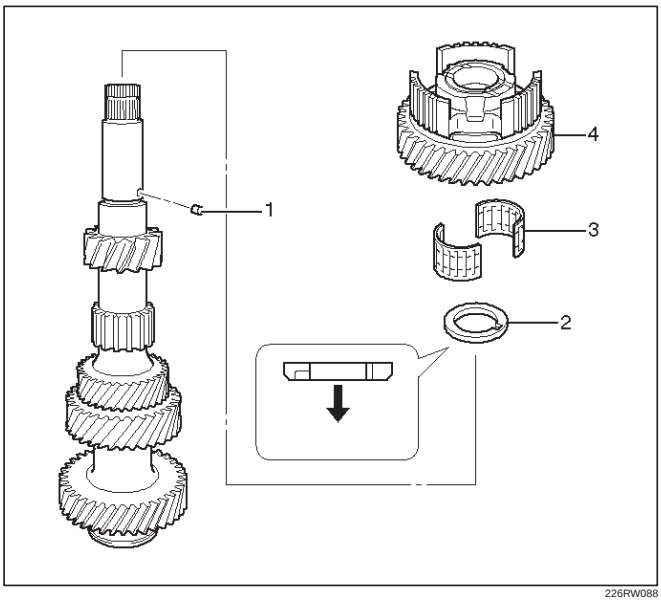

226RW088

   2. Mount the counter gear shaft through the aluminum plate in vise.
   3. Using a dial indicator, measure the counter 5th gear radial clearance.

Standard: 0.015 – 0.068 mm (0.00059 – 0.00268 in)

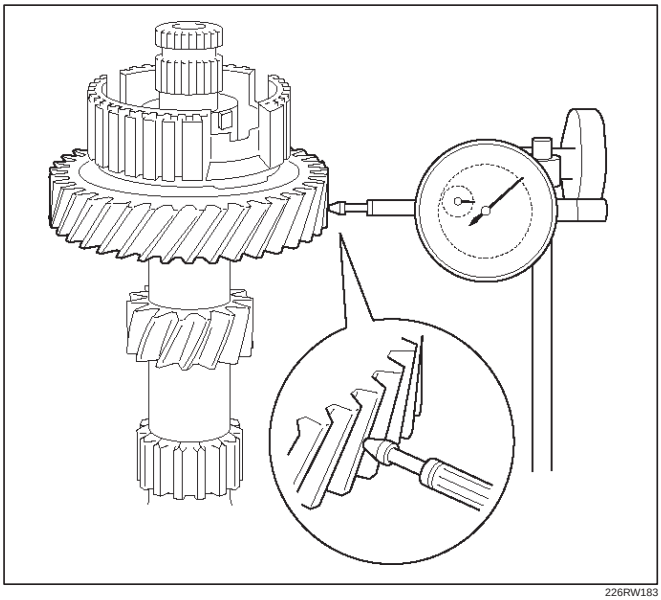

226RW183

   4. Using a inside dial indicator, measure the gear inside diameter.

Standard: 38.015 – 38.040 mm (1.49665 – 1.49763 in)

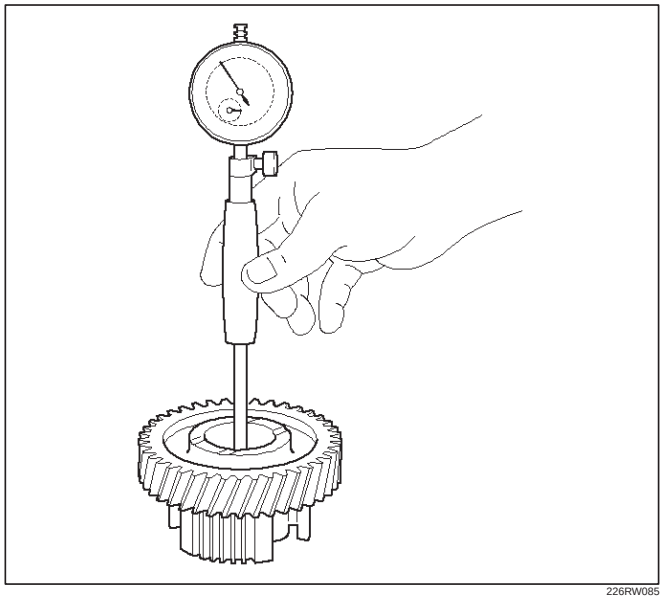

226RW085

2. 5th-reverse shift arm and hub sleeve No.3 clearance.
   1. Using a vernier caliper, measure the 5th-reverse shift arm thickness.

Reference: 10.2 mm (0.402 in)

   2. Using a vernier caliper, measure the center groove of hub sleeve No.3. Calculate the clearance between the hub sleeve No.3 and shift arm.

Standard: 0.26 – 0.84 mm (0.0102 – 0.0331 in)

Reference: Center groove dimension 10.5mm (0.413 in)

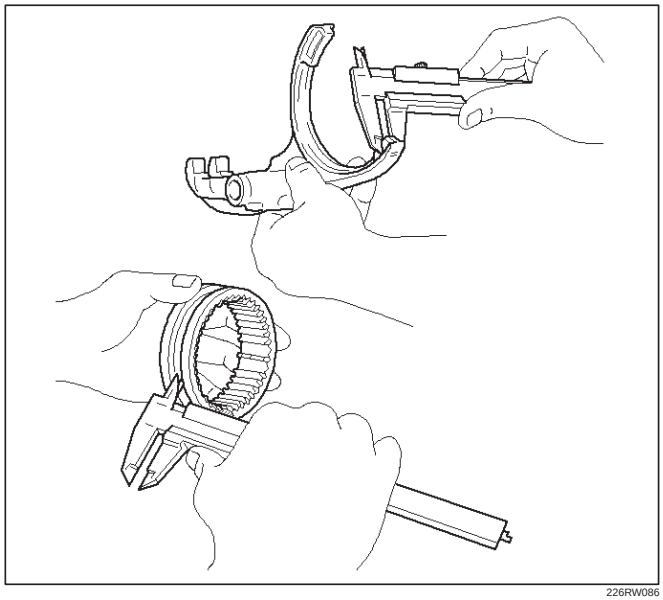

226RW086

3. Reverse block ring set.
   1. Using a thickness gauge, measure the clearance between the counter 5th gear spline piece and reverse block ring.

Standard: 0.7 – 1.7 mm (0.028 – 0.067 in)

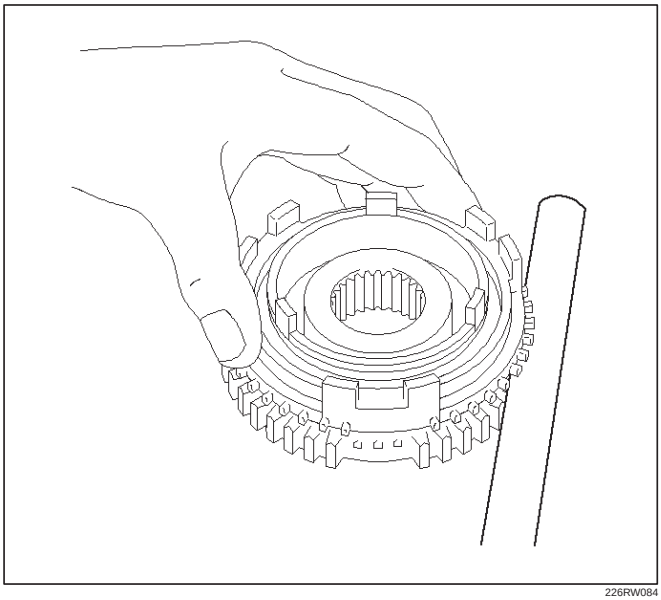

226RW084

4. Reverse idle gear and reverse idle gear shaft.
   1. Mount the reverse idle gear and reverse idle gear shaft in a vise.
   2. Using a dial indicator, measure the reverse idle gear radial clearance.

Standard: 0.040 – 0.082 mm (0.0016 – 0.0032 in)

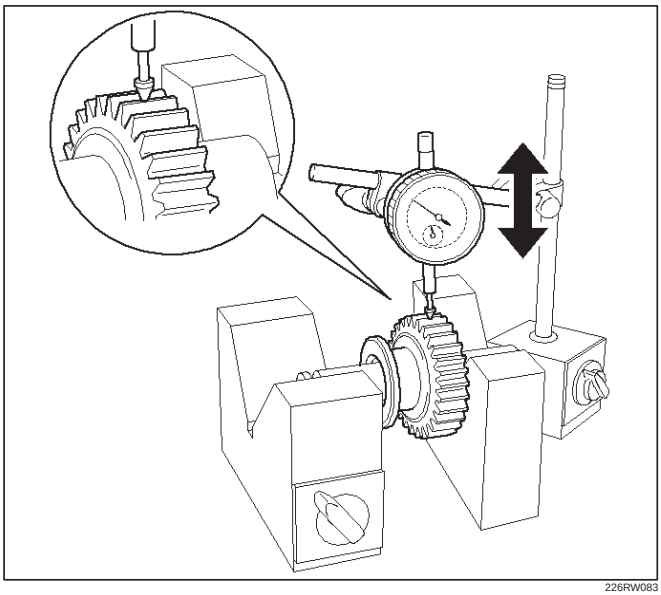

226RW083

   3. If the clearance exceeds the maximum, measure the gear inside diameter and shaft diameter.

Standard

Shaft Diameter: 23.979 – 24.000 mm (0.94405 – 0.94488 in)

Gear Diameter: 24.040 – 24.061 mm (0.94645 – 0.94728 in)

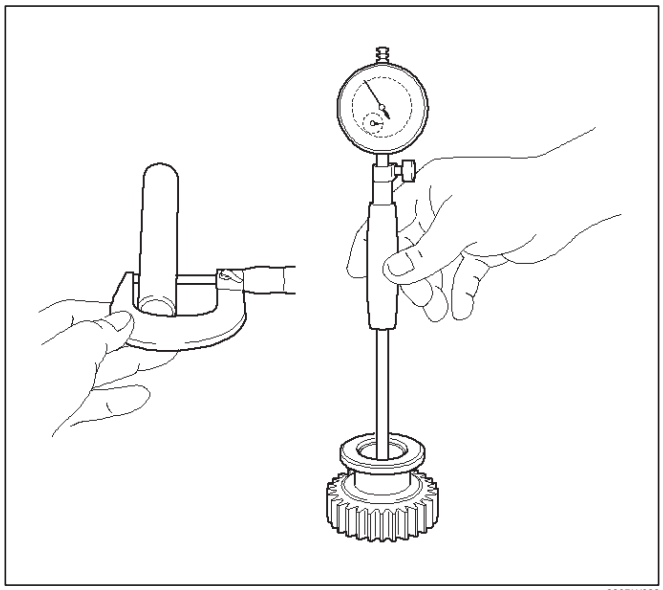

226RW082

5. Reverse shift arm No.2 thrust clearance.
   1. Using a thickness gauge, measure the clearance between the reverse idle gear and shift arm No.2.

Standard: 0.05 – 0.35 mm (0.002 – 0.014 in)

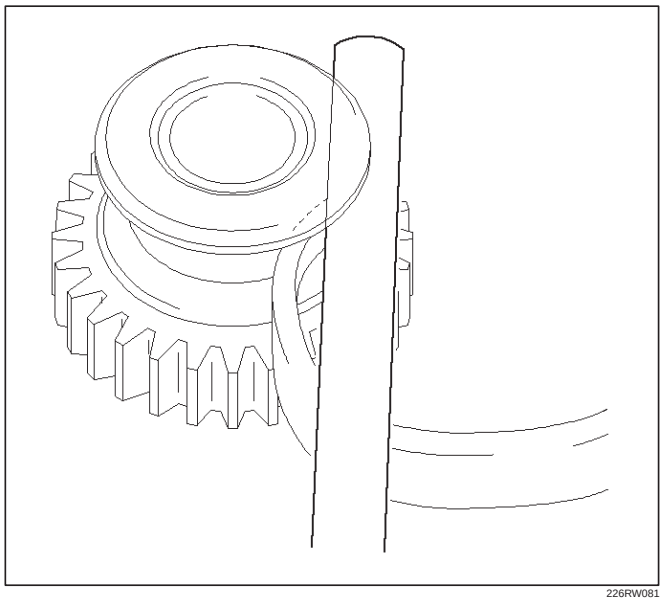

226RW081

Reassembly

1. Install the top gear shaft assembly.
   1. Using installer 5–8840–2559–0 (J–42904) and a press, install a new bearing.

NOTE: Outer race snap ring groove (1) toward front.

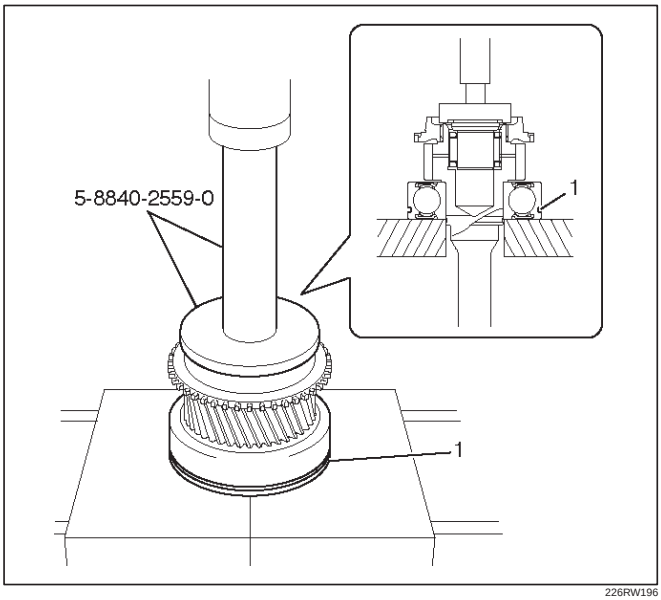

226RW196

   2. Select a snap ring that will allow minimum axial play.

Mark	Thickness
A	2.10 – 2.15 mm (0.083 – 0.085 in)
B	2.15 – 2.20 mm (0.085 – 0.087 in)
C	2.20 – 2.25 mm (0.087 – 0.089 in)
D	2.25 – 2.30 mm (0.089 – 0.091 in)
E	2.30 – 2.35 mm (0.091 – 0.093 in)
F	2.35 – 2.40 mm (0.093 – 0.095 in)
G	2.40 – 2.45 mm (0.095 – 0.097 in)

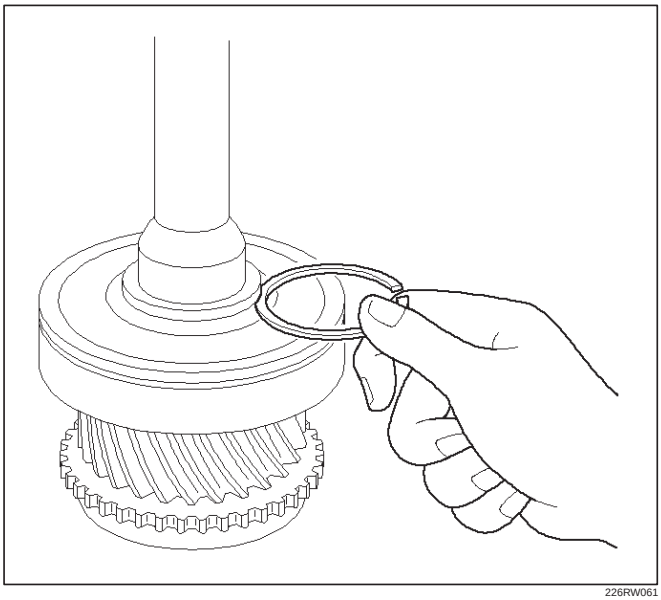

226RW061

   3. Using a snap ring expander, install the new snap ring.

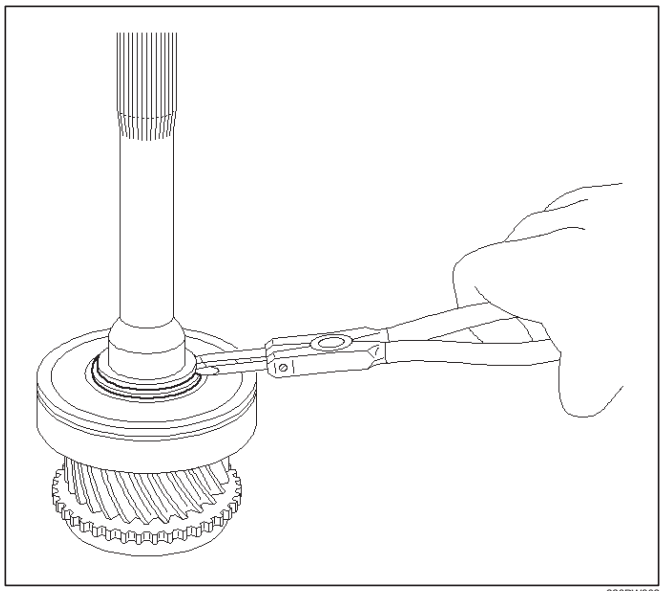

226RW062

   4. Install the 4th block ring.

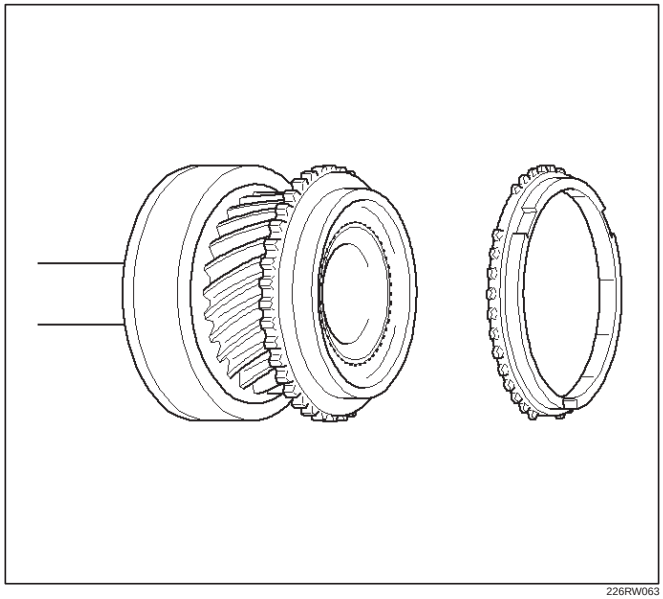

226RW063

5. Using a thickness gauge, measure the clearance between the 4th block ring back and gear spline end.

Standard: 0.75 – 1.65 mm (0.030 – 0.065 in)

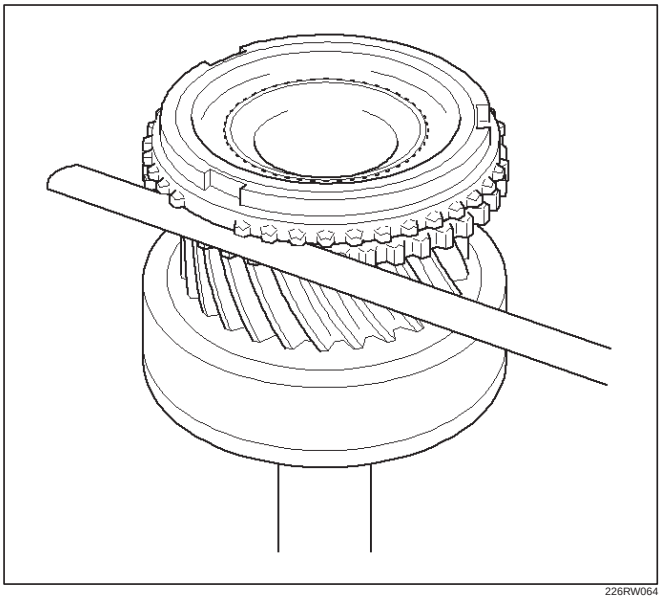

226RW064

6. Check the braking effect of the block ring. Turn the block ring in one direction while pushing it to the gear cone. Check that the ring locks. If it does not lock, replace the block ring.

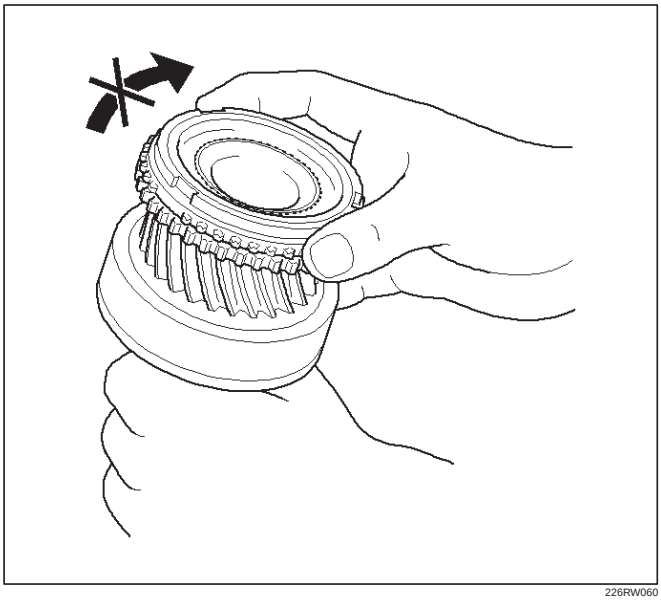

226RW060

7. Install the needle roller bearing.

2. Reassemble the mainshaft assembly.

NOTE: Apply all parts with engine oil before installing them.

3. Inspect block ring

1. Using a thickness gauge, measure the clearance between the synchronizer ring back and gear spline end.

Gear	Standard Clearanse
1st	0.80 – 1.60 mm (0.032 – 0.063 in)
2nd	0.65 – 1.75 mm (0.026 – 0.069 in)
3rd	0.75 – 1.65 mm (0.030 – 0.065 in)

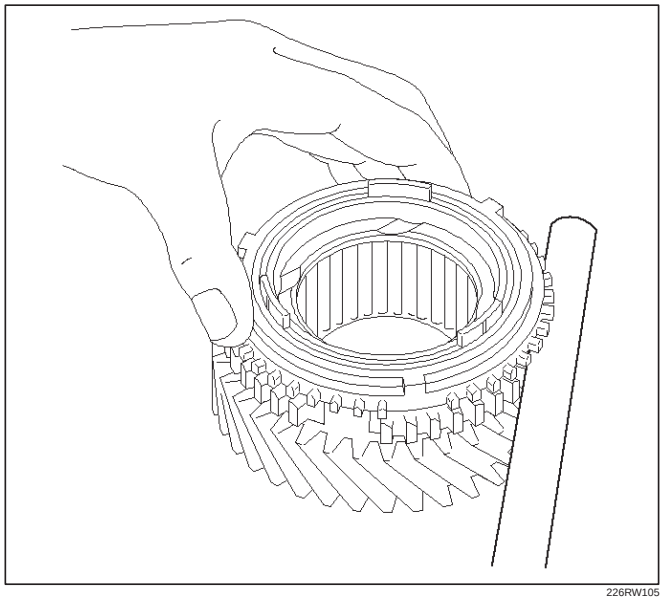

226RW105

2. Turn the synchronizer ring in one direction while pushing it to the gear cone. Check that the ring locks.

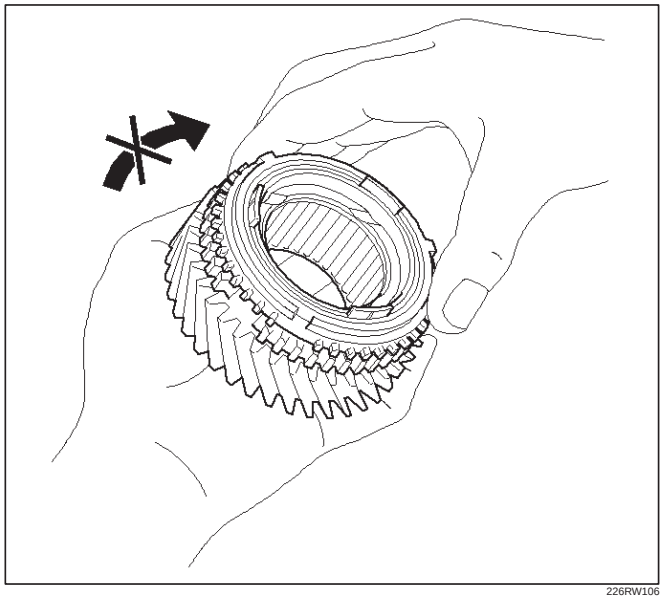

226RW106

4. Inspect hub sleeve and shift arm.

1st–2nd shift arm

1. Using a vernier caliper, measure center groove of the 1st–2nd shift arm.

Reference: 5.28 mm (0.208 in)

2. Using a vernier caliper, measure flange of the reverse gear. Calculate the clearance between the reverse gear and shift arm.

Reference: Reverse gear flange thickness 5.0 mm. (0.197 in)

Standard: 0.15 – 0.41 mm (0.006 – 0.016 in)

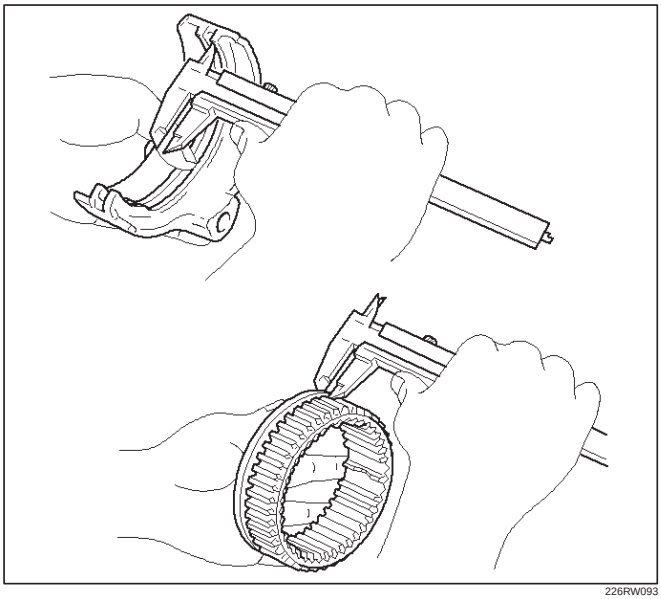

226RW093

3rd–4th shift arm

1. Using a vernier caliper, measure tip of the shift arm thickness.

Reference: 10.0mm (0.39 in)

2. Using a vernier caliper, measure center groove of the hub sleeve No.2. Calculate the clearance between the hub sleeve No.2 and shift arm.

Reference: Center groove dimension 10.2 mm (0.402 in)

Standard: 0.15 – 0.35 mm (0.006 – 0.014 in)

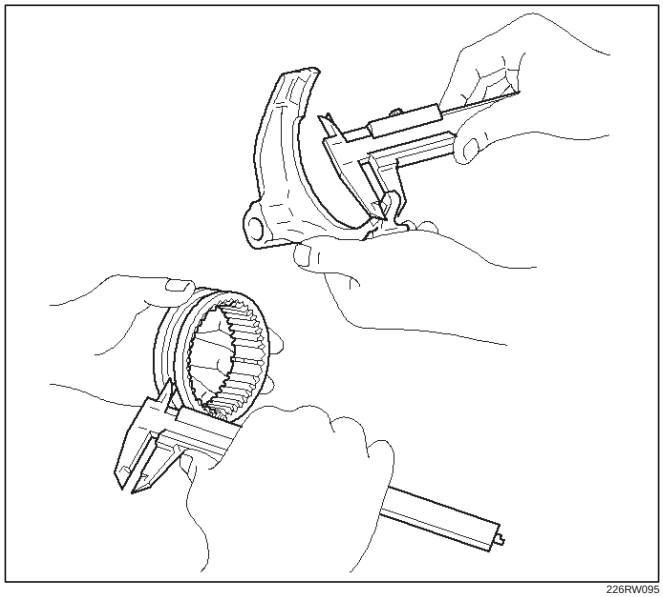

226RW095

5. Inspect clutch hub and hub sleeve.
   1. Check for wear or damage.
   2. Install the hub sleeve to the clutch hub, and check sliding smoothly.

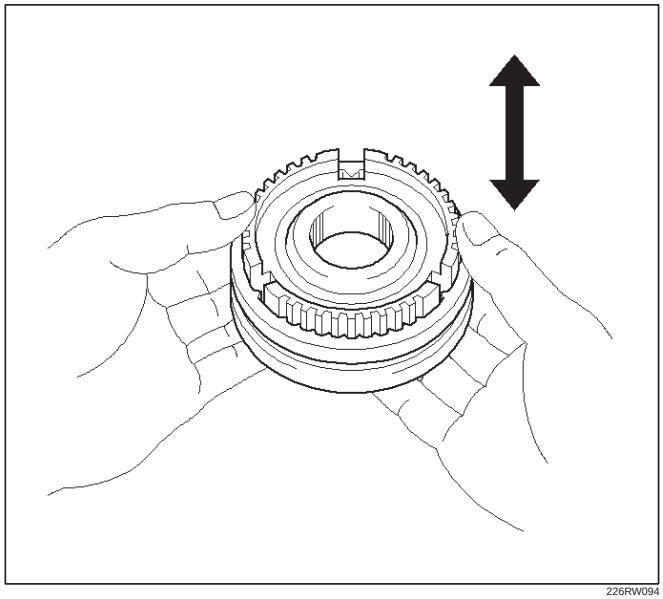

226RW094

6. Inspect gear inside diameter.
   1. Using a inside dial indicator, measure the gear inside diameter.

Gear	Standard Diameter
1st	46.015 – 46.040 mm (1.8116 – 1.8126 in)
2nd	53.015 – 53.040 mm (2.0872 – 2.0882 in)
3rd	44.015 – 44.040 mm (1.7329 – 1.7339 in)

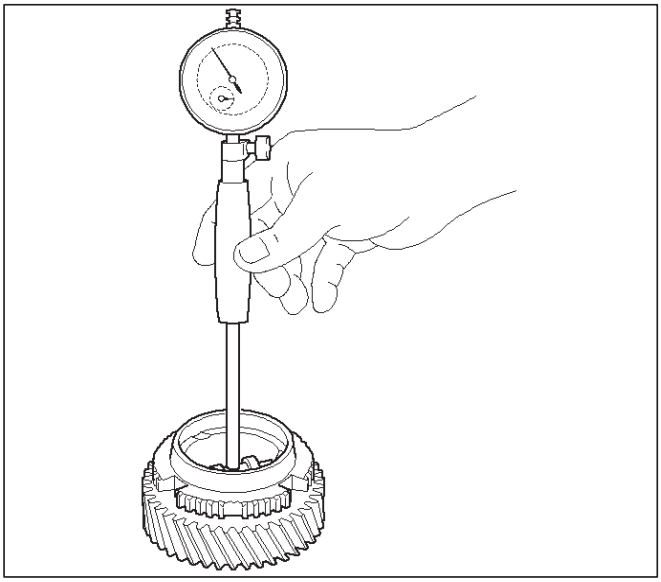

226RW096

7. Inspect mainshaft.
   1. Using a micrometer, measure the outer diameter of the mainshaft journal.

Measure Position	Standard
A	37.984 – 38.000 mm (1.4954 – 1.4961 in)
B	46.984 – 47.000 mm (1.8498 – 1.8504 in)
C	38.979 – 38.995 mm (1.5346 – 1.5352 in)

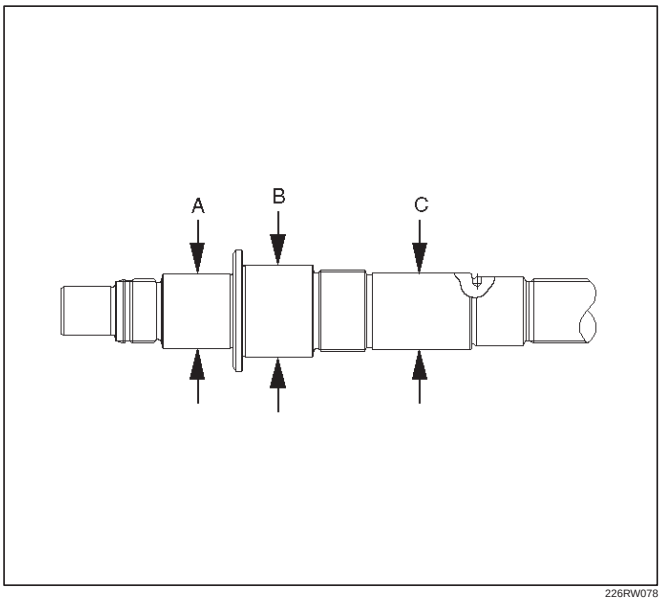

226RW078

   2. Using a micrometer, measure the mainshaft flange thickness.

Standard: 5.0 mm (0.197 in)

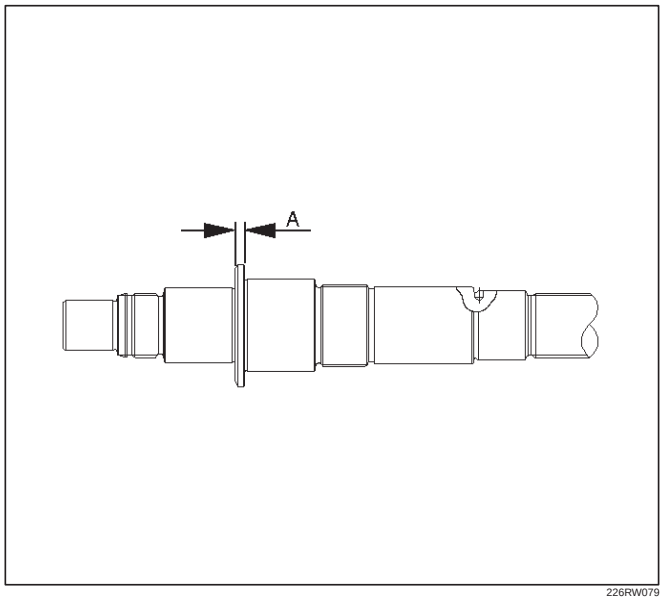

226RW079

   3. Install the mainshaft to V-blocks.
   4. Use a dial indicator to measure the mainshaft central portion run-out.

Standard: less than 0.015 mm (0.0006 in)

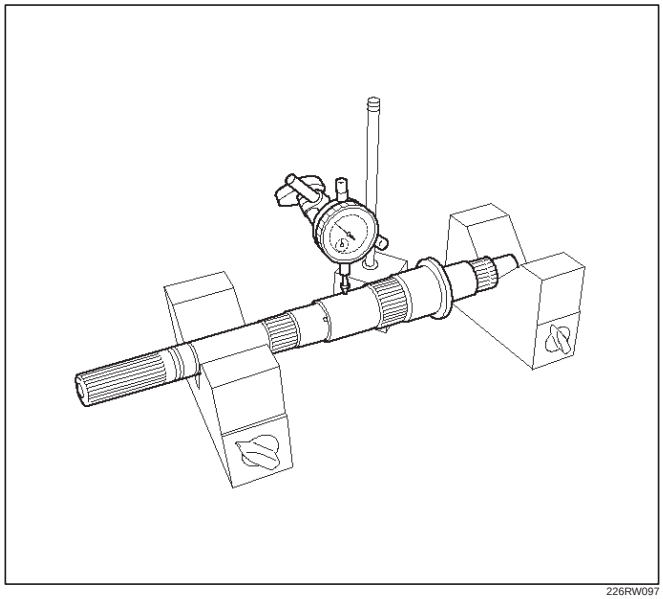

226RW097

8. Install 3rd gear.
   1. Install the 3rd gear needle bearing, 3rd gear and 3rd block ring to the mainshaft.

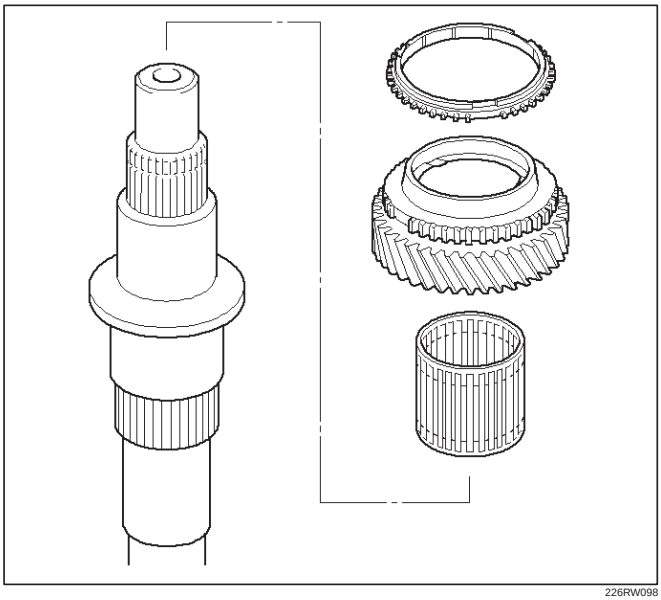

226RW098

9. Install the clutch hub No.2.
   1. Install the clutch hub No.2 and hub sleeve No.2.

NOTE: Be careful the direction of the clutch hub No.2, as shown.

   2. Using a screwdriver, install 3 inserts and 2 springs.

NOTE: Position the insert springs so that their end gaps are not in line.

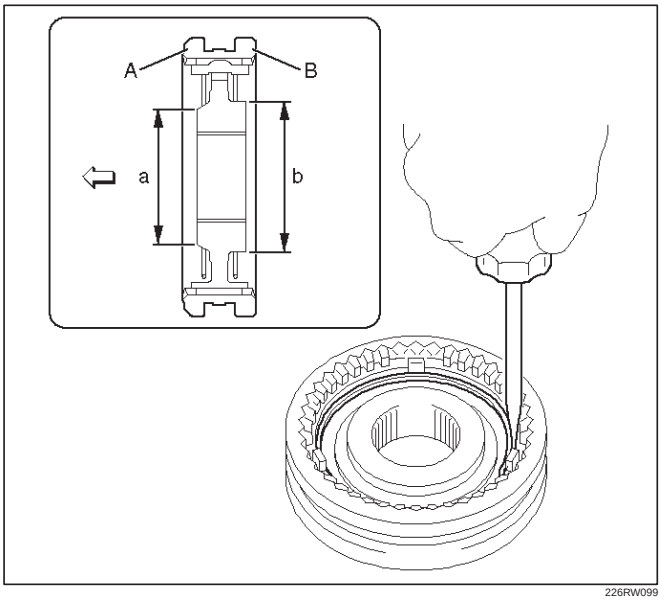

226RW099

   3. Using installer 5–8840–2553–0 (J–42797) and a press, install the clutch nob No.2 and hub sleeve No.2 to the mainshaft.

NOTE:

- Align the brock ring slots with the inserts.
- Check that the gear rotates smoothly.

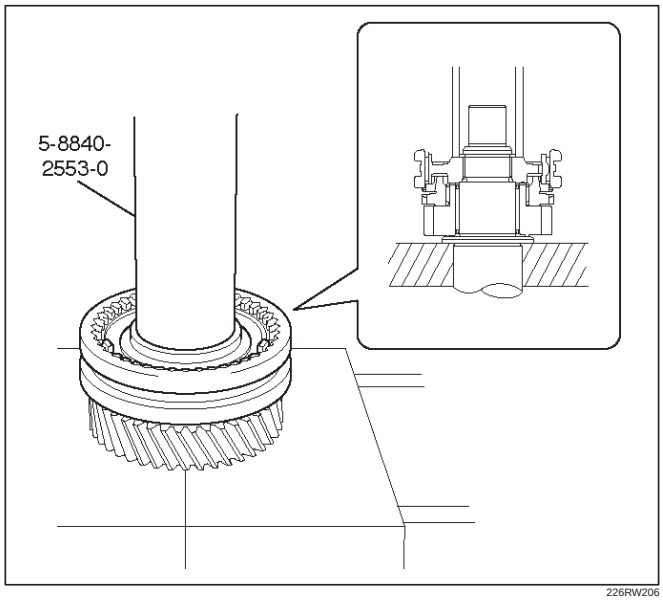

226RW206

   4. Select a snap ring that will allow minimum axial play.

Mark	Thickness
A	1.80 – 1.85 mm (0.071 – 0.073 in)
B	1.85 – 1.90 mm (0.073 – 0.075 in)
C	1.90 – 1.95 mm (0.075 – 0.077 in)
D	1.95 – 2.00 mm (0.077 – 0.079 in)
E	2.00 – 2.05 mm (0.079 – 0.081 in)
F	2.05 – 2.10 mm (0.081 – 0.083 in)
G	2.10 – 2.15 mm (0.083 – 0.085 in)

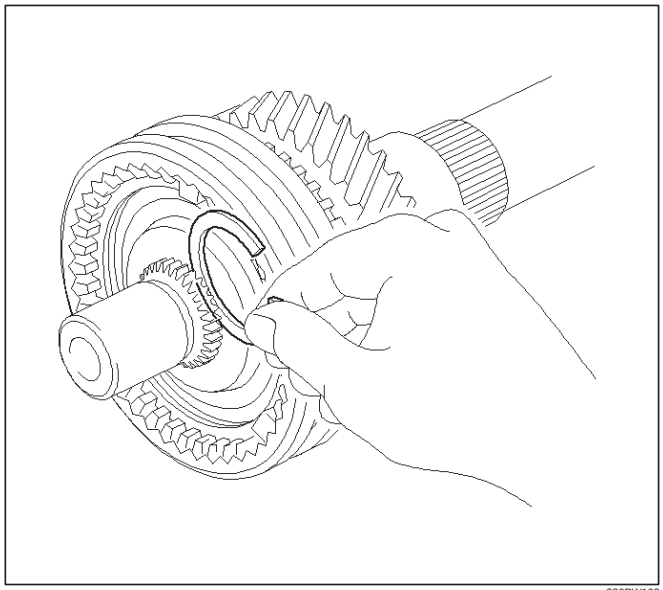

226RW102

5. Using a snap ring expander, install the new snap ring.

NOTE: Be careful not to damage the bearing surface.

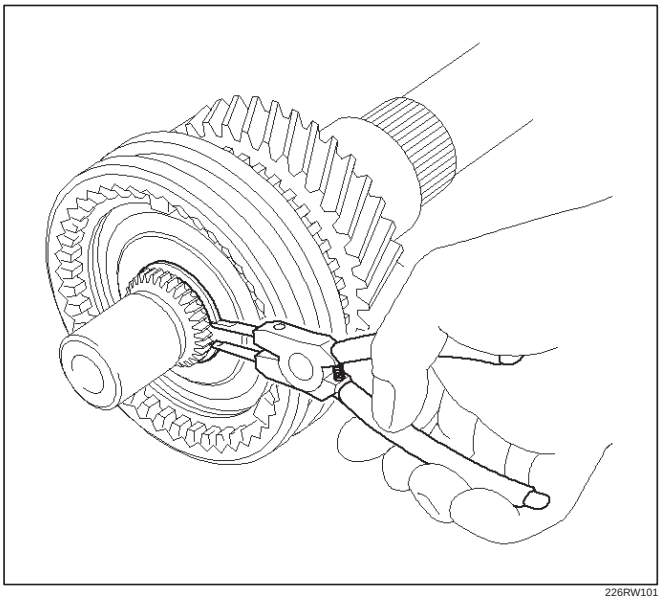

226RW101

6. Using a thickness gauge, inspect the 3rd gear thrust clearance.

Standard: 0.10 – 0.25mm (0.004 – 0.010 in)

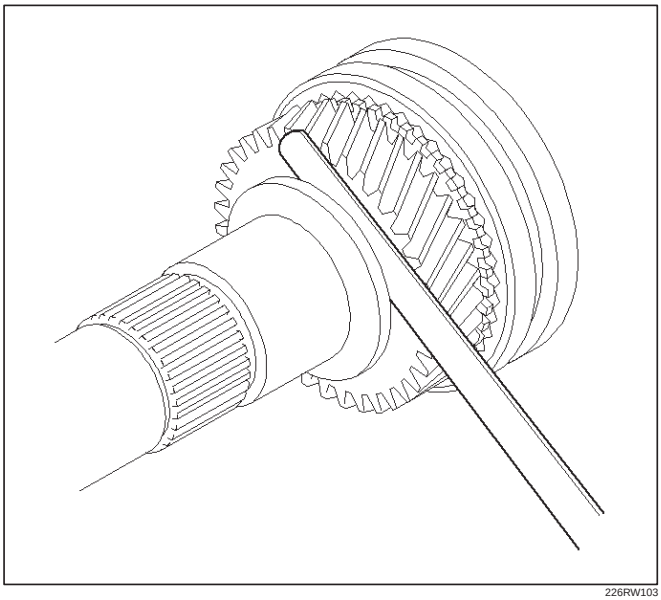

226RW103

10. Install the 2nd gear.
    1. Install the synchronizer ring set No.1 to the 2nd gear.

NOTE: Align the nail of middle ring with gear spline slots.

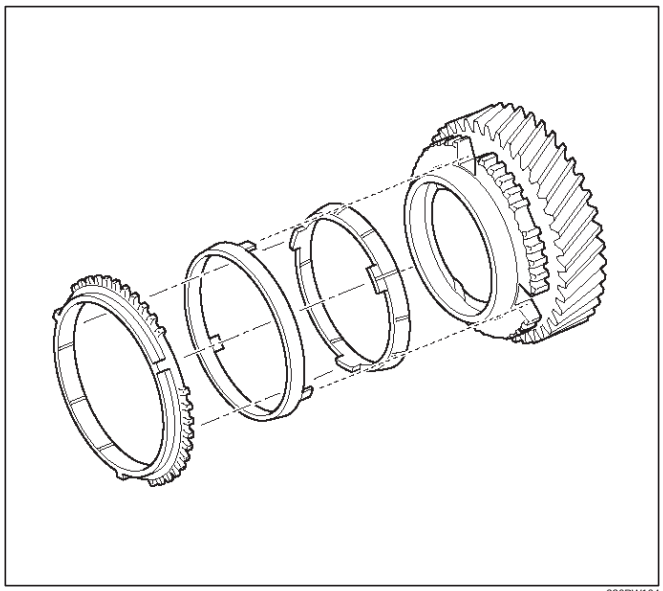

226RW104

2. Install the needle roller bearing, 2nd gear and 2nd gear block ring set to the mainshaft.

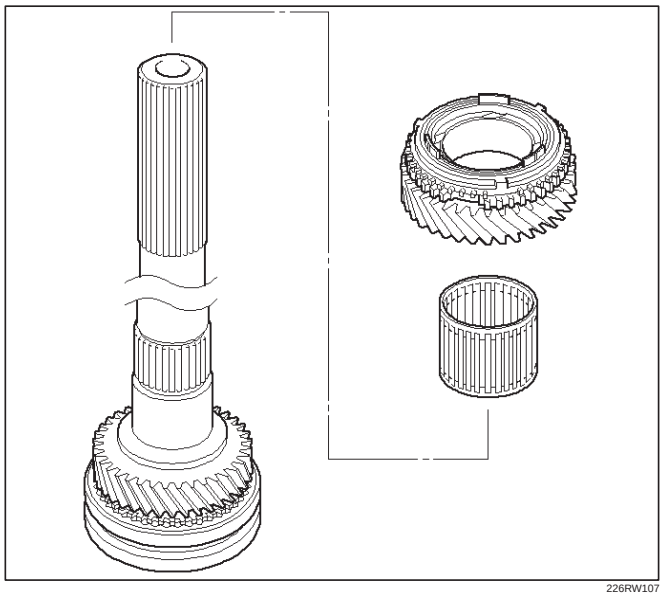

226RW107

11. Install the clutch hub No.1.
    1. Install the 3 inserts and 3 insert springs to the clutch hub No.1.
       Reference: While pushing the insert spring with a screwdriver, install the inserts.

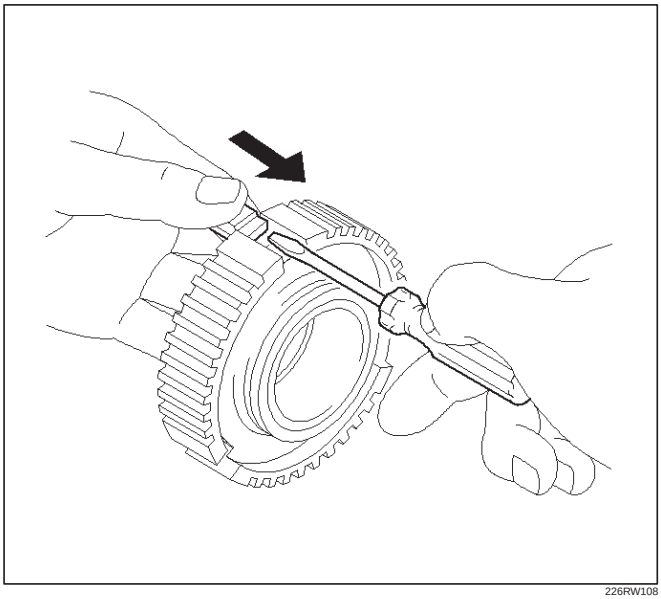

226RW108

    2. Install the clutch hub No.1 to the reverse gear.

NOTE: Check the clutch hub No.1 installing direction, as shown.

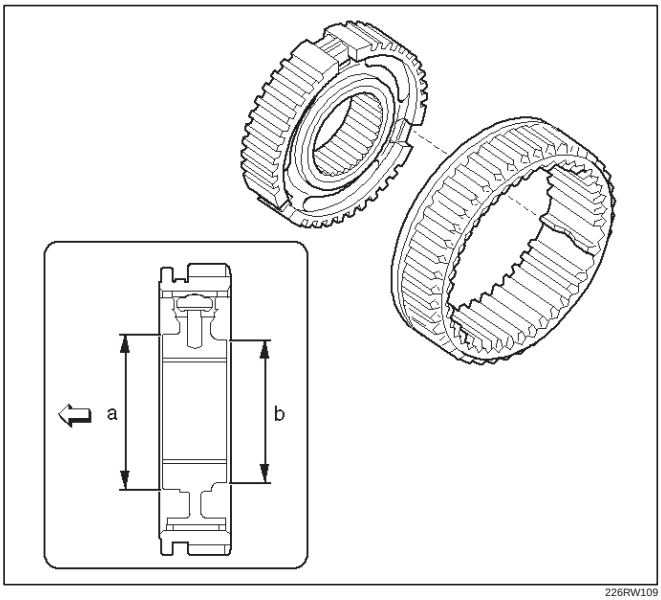

226RW109

    3. Using installer 5–8840–2554–0 (J–42798) and a press, install the hub No.1 by retaining the reverse gear.

NOTE:

- Align the projection of inner ring with hub No.1 slots.
- Check that the gear rotates smoothly.

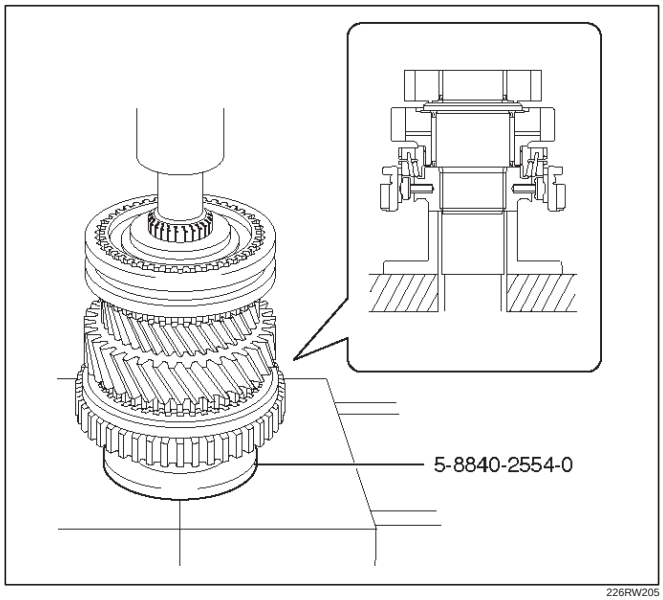

226RW205

    4. Select a snap ring that will allow minimum axial play.

Mark	Thickness
A	2.30 – 2.35 mm (0.091 – 0.093 in)
B	2.35 – 2.40 mm (0.093 – 0.095 in)
C	2.40 – 2.45 mm (0.095 – 0.097 in)
D	2.45 – 2.50 mm (0.097 – 0.098 in)
E	2.50 – 2.55 mm (0.098 – 0.100 in)
F	2.55 – 2.60 mm (0.100 – 0.102 in)
G	2.60 – 2.65 mm (0.102 – 0.104 in)

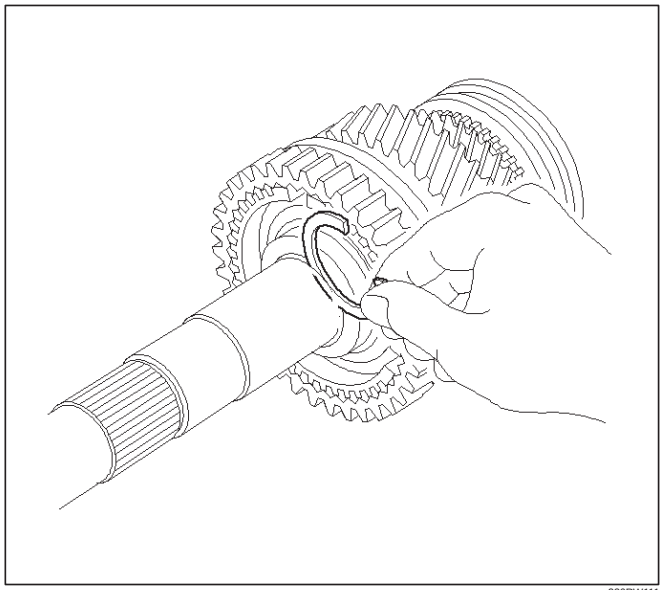

226RW111

5. Using a screwdriver and hammer, install the snap ring.

NOTE: Be careful not to damage the bearing surface.

6. Check that the gear rotates smoothly.

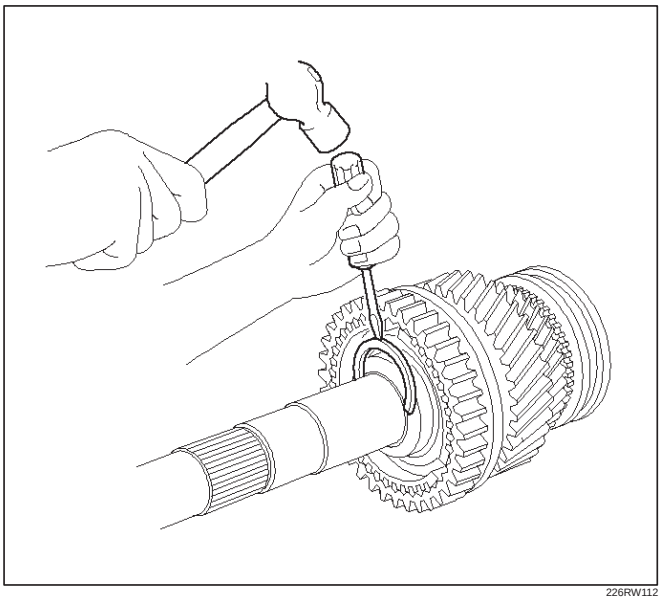

226RW112

7. Using a dial indicator, measure the 2nd gear thrust clearance.

Standard: 0.10 – 0.25mm (0.004 – 0.010 in)

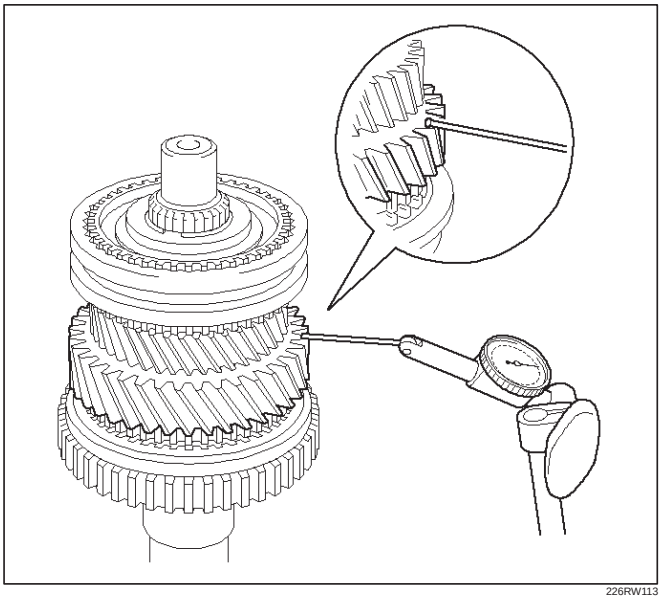

226RW113

12. Install the 1st gear.

1. Install the following parts:
   1. 1st gear bearing spacer (4).
   2. 1st gear needle roller bearing (3).
   3. Synchronizer assembly (2).
   4. 1st gear (1).

NOTE:

- Align the projection of inner ring with hub No.1 slots.
- Check that the gear rotates smoothly.

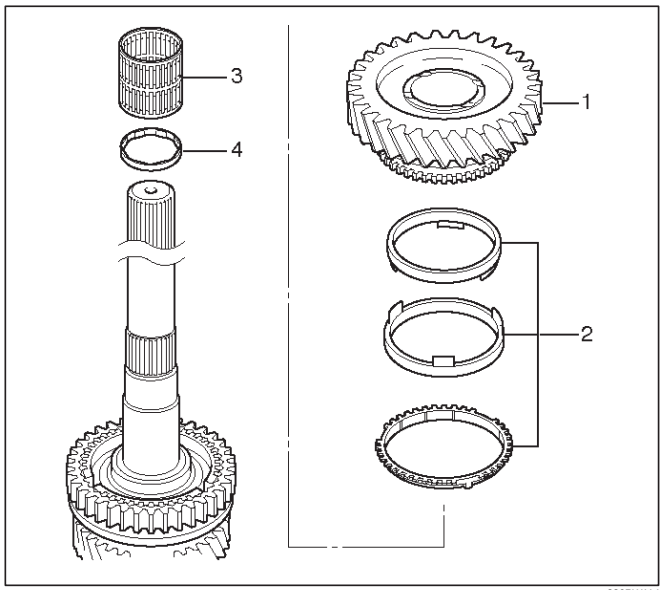

226RW114

2. Install the 1st gear thrust washer pin and 1st gear thrust washer to the mainshaft.

NOTE: Align the straight pin with the thrust washer slot.

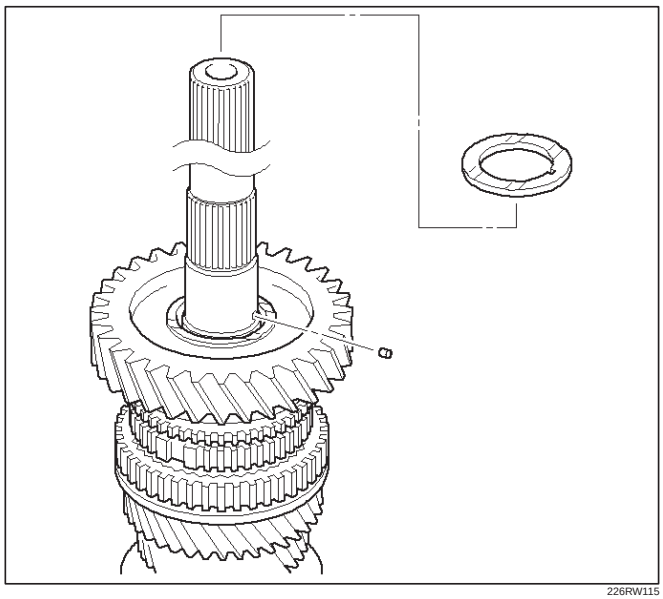

226RW115

13. Install the mainshaft center bearing.
    1. Using installer 5–8840–2555–0 (J–42799) and a press, install the mainshaft center bearing.

NOTE: Center bearing snap ring groove toward rear.

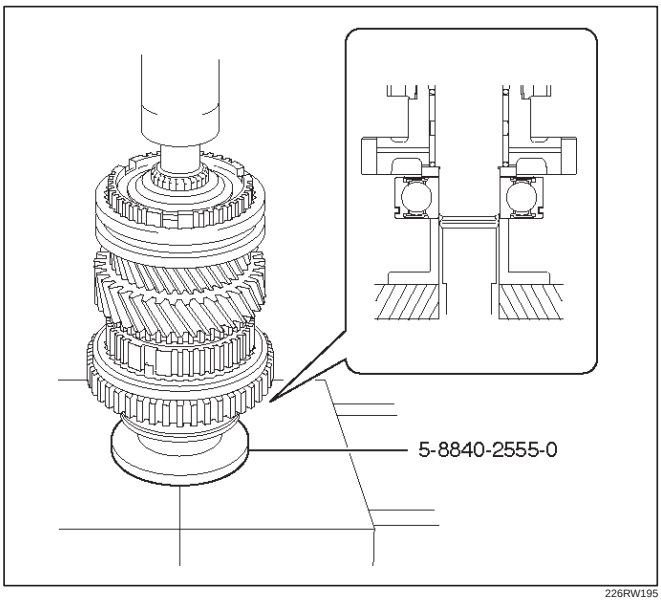

226RW195

    2. Using a thickness gauge, measure 1st gear thrust clearance.

Standard: 0.10 – 0.45mm (0.004 – 0.018 in)

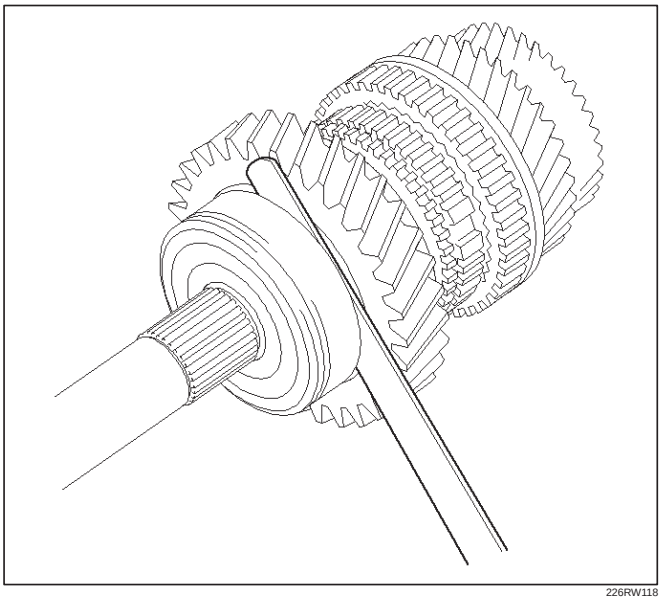

226RW118

14. Install the 5th gear.
    1. Using installer 5–8840–2555–0 (J–42799) and a press, install the 5th gear.
    2. Select a snap ring that will allow minimum axial play.

Mark	Thickness
C	2.75 – 2.80 mm (0.108 – 0.110 in)
D	2.80 – 2.85 mm (0.110 – 0.112 in)
E	2.85 – 2.90 mm (0.112 – 0.114 in)
F	2.90 – 2.95 mm (0.114 – 0.116 in)
G	2.95 – 3.00 mm (0.116 – 0.118 in)
H	3.00 – 3.05 mm (0.118 – 0.120 in)
J	3.05 – 3.10 mm (0.120 – 0.122 in)
K	3.10 – 3.15 mm (0.122 – 0.124 in)
L	3.15 – 3.20 mm (0.124 – 0.126 in)
M	3.20 – 3.25 mm (0.126 – 0.128 in)
N	3.25 – 3.30 mm (0.128 – 0.130 in)
P	3.30 – 3.35 mm (0.130 – 0.132 in)

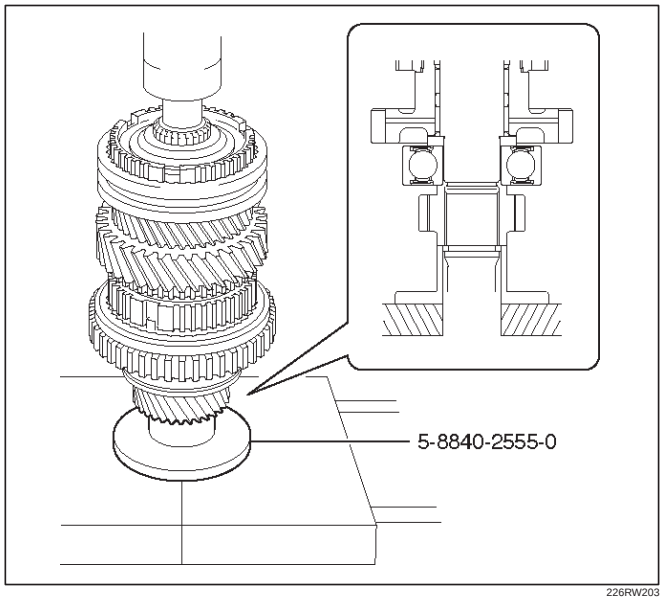

226RW203

    3. Using a screwdriver and hammer, install the new snap ring.

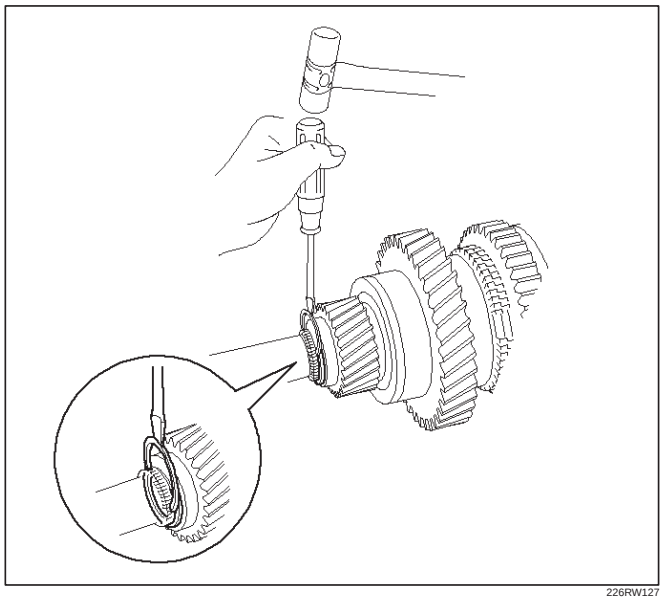

226RW127

15. Inspect each gear radial clearance.
    1. Mount the mainshaft through the aluminum plate in a vise.
    2. Using a dial indicator, measure the radial clearance of each gear.

Gear	Standard Clearanse
1st	0.020 – 0.073 mm (0.0008 – 0.0029 in)
2nd	0.015 – 0.068 mm (0.0006 – 0.0027 in)
3rd	0.015 – 0.068 mm (0.0006 – 0.0027 in)

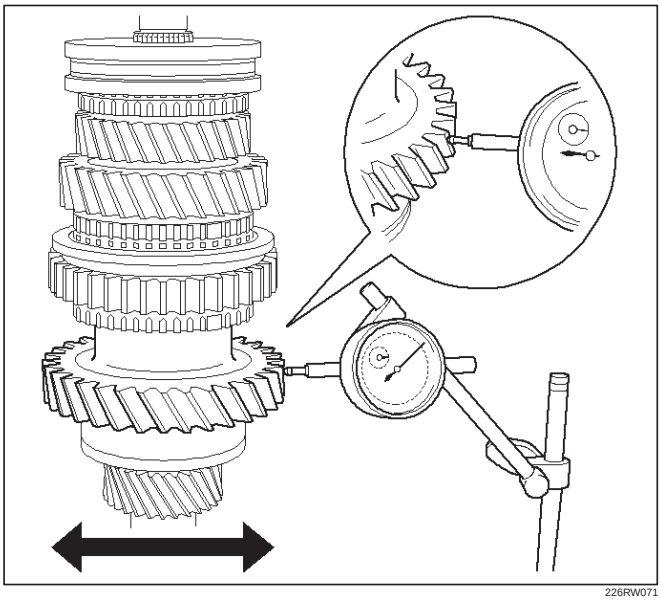

226RW071

16. Install the counter gear shaft.
    1. Check the new counter front bearing inner race and the side race, as shown.
    2. Using installer 5–8840–2556–0 (J–42800) and a press, install the counter gear shaft front bearing.

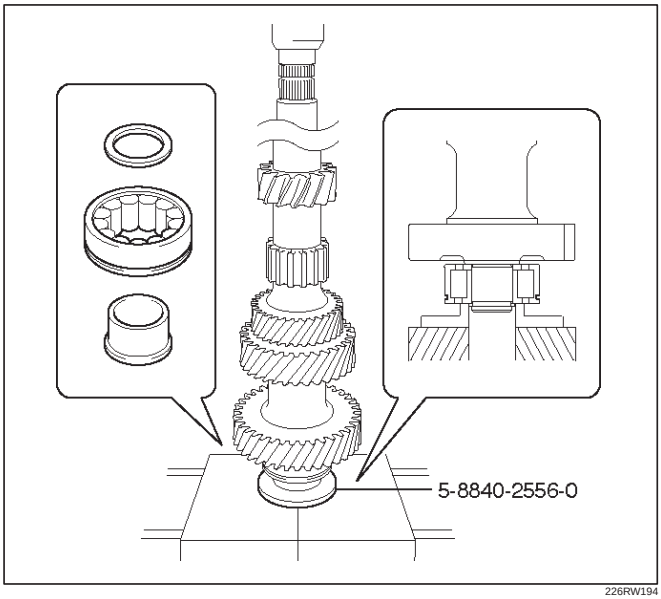

226RW194

    3. Select a snap ring that will allow minimum axial play.

Mark	Thickness
A	2.00 – 2.05 mm (0.079 – 0.081 in)
B	2.05 – 2.10 mm (0.081 – 0.083 in)
C	2.10 – 2.15 mm (0.083 – 0.085 in)
D	2.15 – 2.20 mm (0.085 – 0.087 in)
E	2.20 – 2.25 mm (0.087 – 0.089 in)
F	2.25 – 2.30 mm (0.089 – 0.091 in)

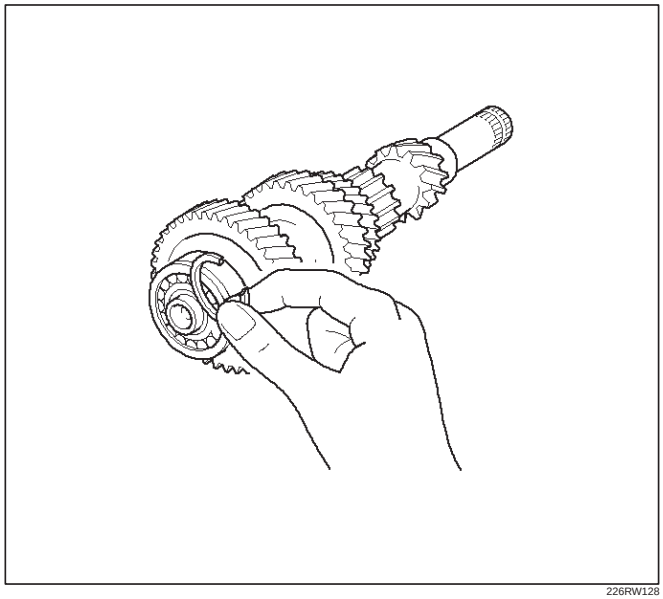

226RW128

    4. Using a snap ring expander, install the new snap ring.

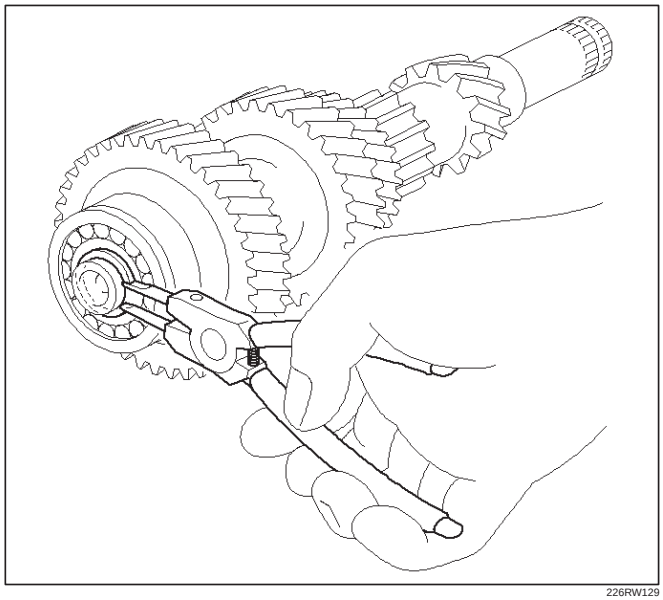

226RW129

17. Install the front cover.
    1. Using installer 5–8840–2557–0 (J–42801), grip 5–8840–0007–0 (J–8092) and a hammer, drive in a new oil seal.

    Drive in depth (from cover end): 11.7 ± 0.5 mm (0.46 ± 0.02 in)

    2. Apply grease to the seal lip.

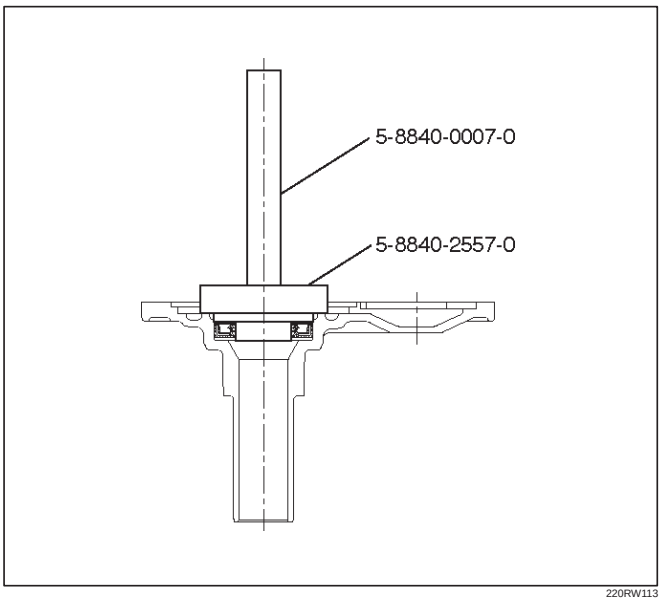

220RW113

18. Install the transfer adapter.
    1. Using installer 5–8840–2558–0 (J –42802), and a hammer drive in a new oil seal.

    Drive in depth (from transfer adapter): 10.95 ± 0.5 mm (0.431 ± 0.02 in)

    2. Apply grease to the oil seal lip.

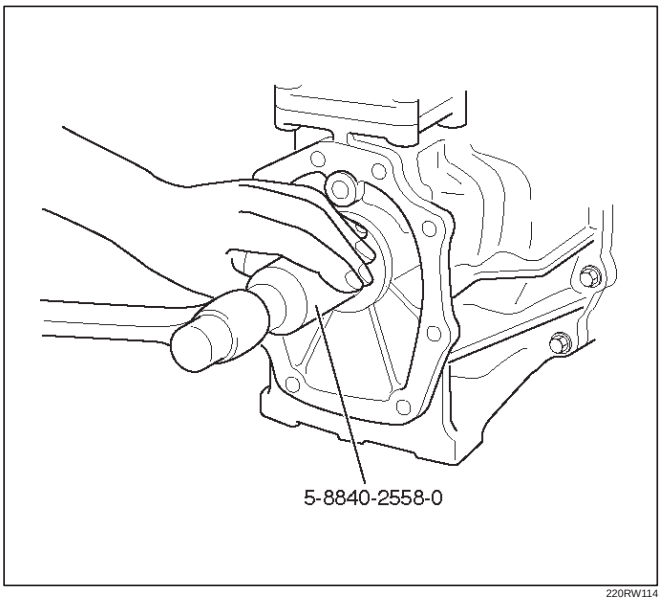

220RW114

3. Install the oil receiver pipe.

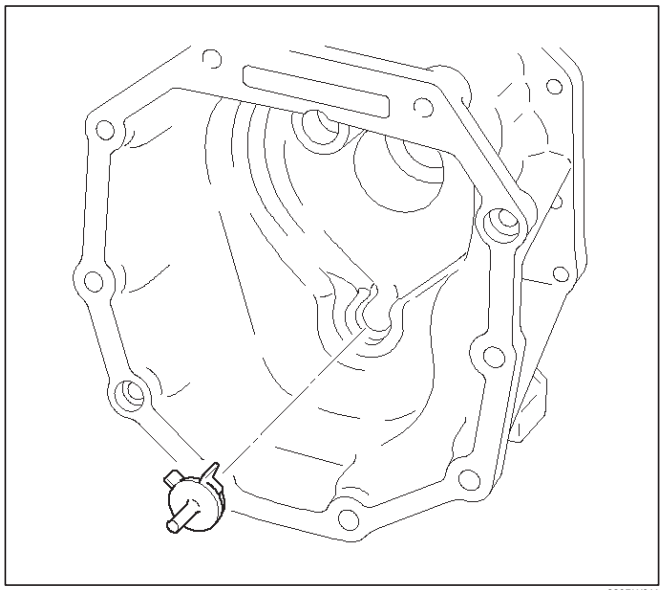

220RW011

4. Install the reverse restrict to the transfer adapter.

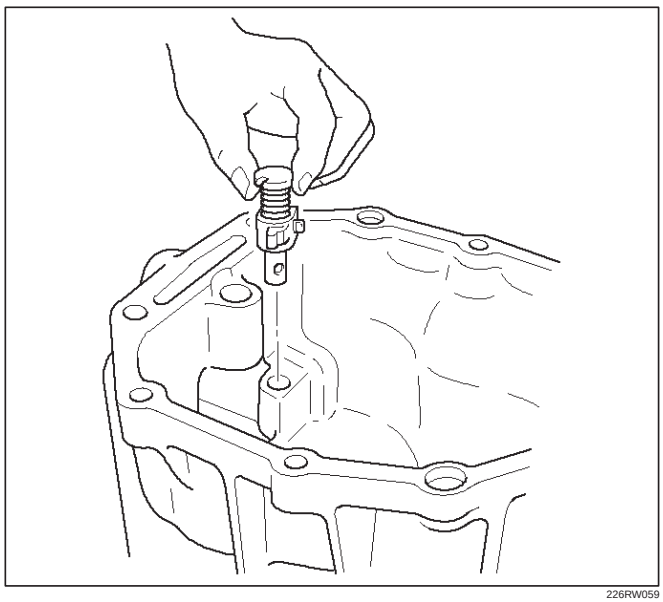

226RW059

5. Using a pin punch and hammer, drive in the slotted spring pin.

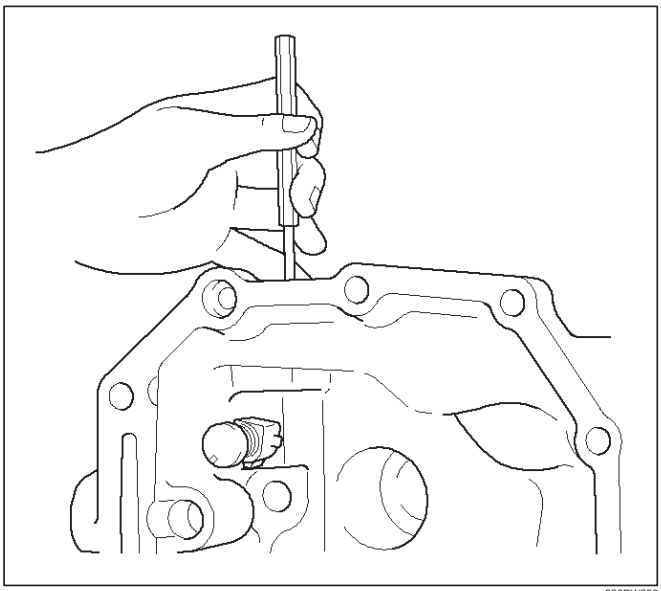

226RW058

6. Clean up the plug and plug hole.
7. Apply sealant to the plug threads. (THREE BOND 1344 or equivalent)
8. Using a torx socket wrench(T40), install and torque the plug.

Torque: 19 N·m (1.9 kg·m/14 lb ft)

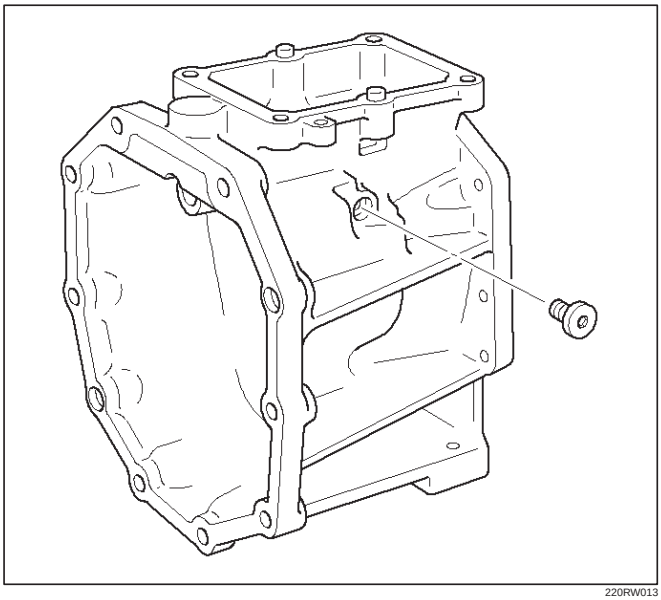

220RW013

9. Using hexagon wrench, install and torque the plug.

Torque: 37 N·m (3.8 kg·m/27 lb ft)

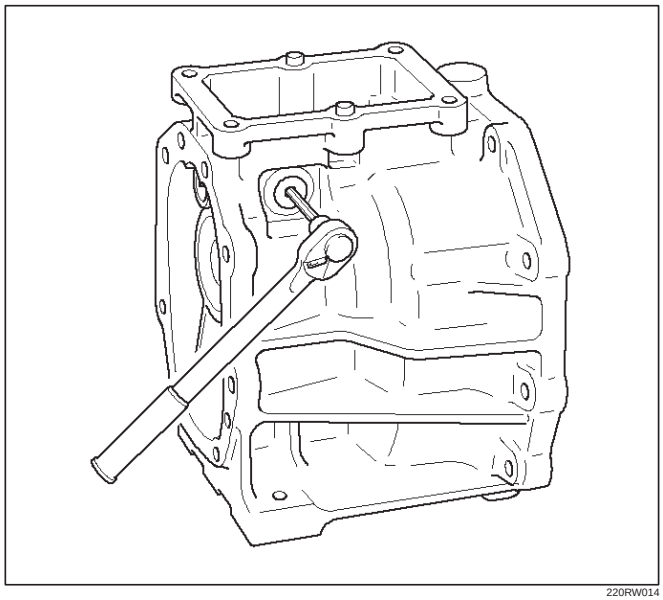

220RW014

19. Install the reverse shift arm No.1 and reverse shift arm No.2.
    1. Mount the intermediate plate through the aluminum plate in a vise.

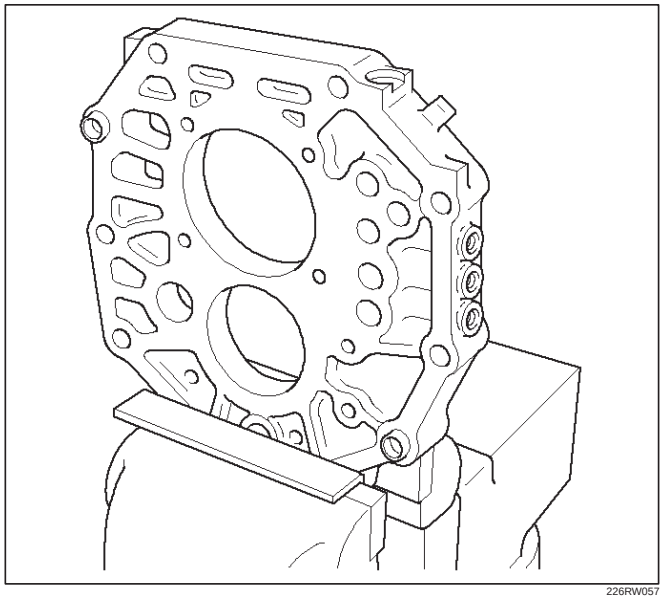

226RW057

2. Using 2 bolts, install reverse shift arm bracket.

Torque: 18 N·m (1.8 kg·m/13 lb ft)

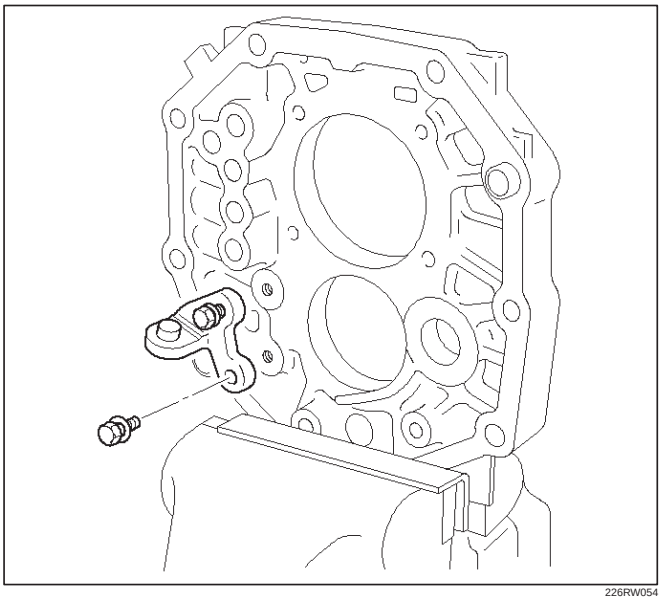

226RW054

3. Install reverse shift arm No.2 to the reverse shift arm No.1. Using screwdriver and a hammer, install the new E-ring.

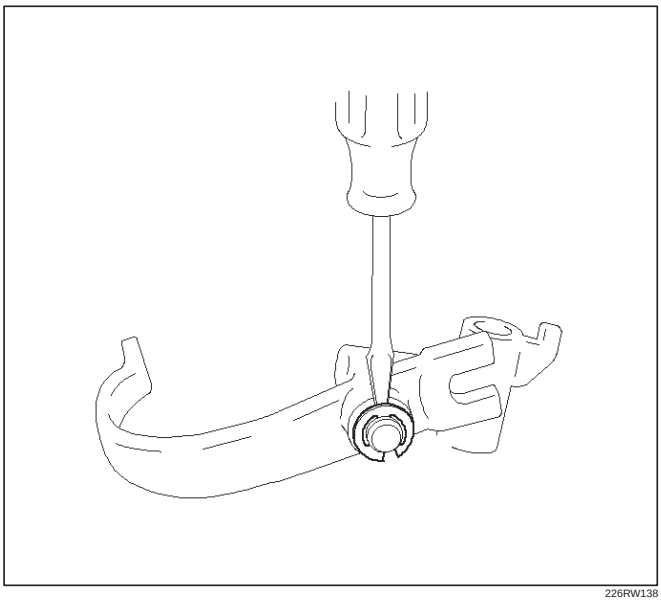

226RW138

4. Install reverse shift arm No.2 to the reverse shift arm bracket.

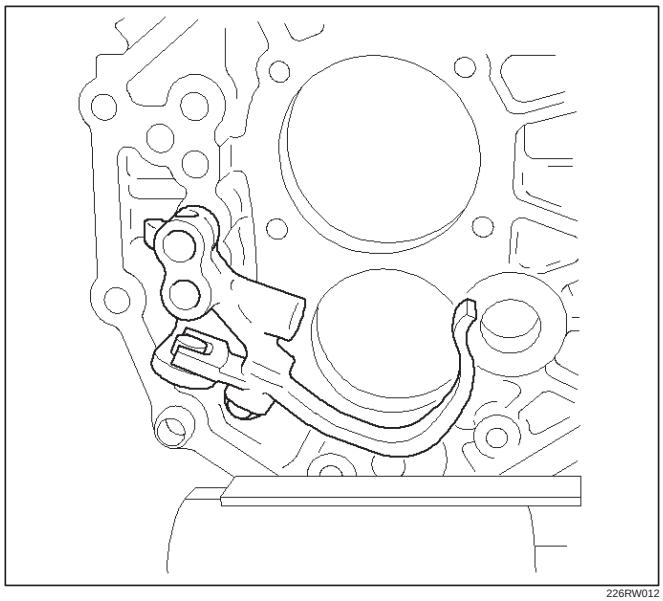

226RW012

20. Install the reverse shift rod.
    1. Install the reverse shift arm No.1 compression spring and ball to the reverse shift arm No.1.

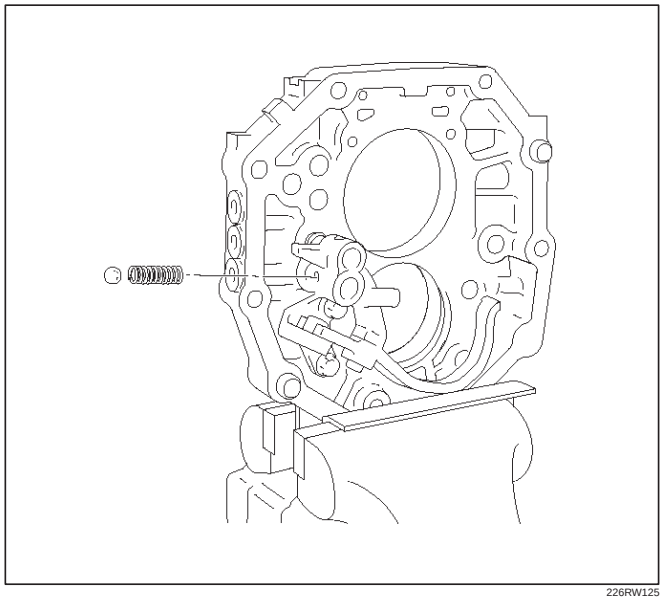

226RW125

2. Install the reverse shift rod from the rear side by pushing the ball on using a screwdriver.

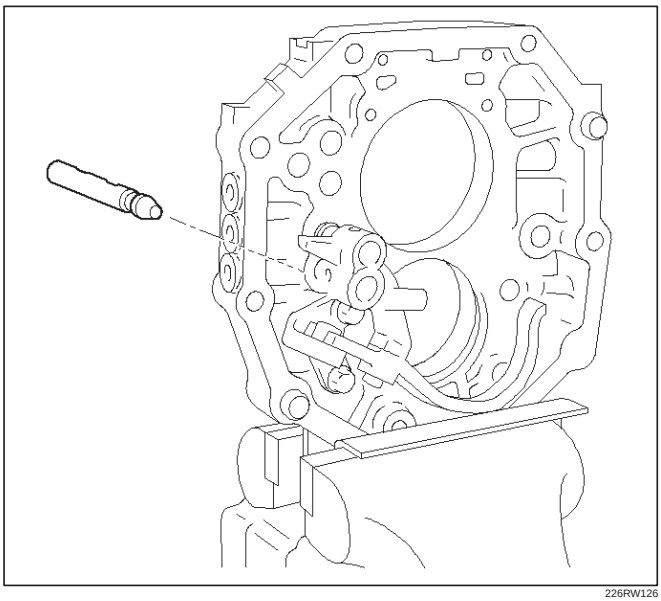

226RW126

21. Install the reverse-5th shift rod.
    1. Install the reverse shift arm No.1 lock ball to the reverse shift arm No.1.
    2. Install the interlock pin to the intermediate plate.

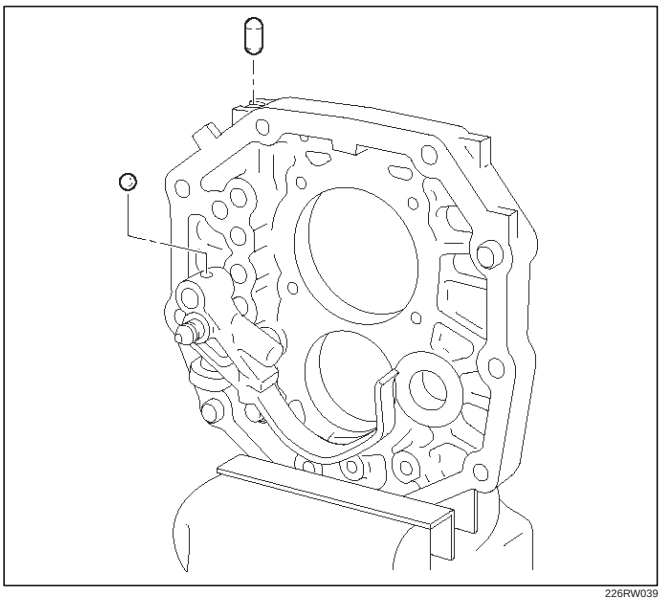

226RW039

3. Put in the reverse-5th shift rod from the front.

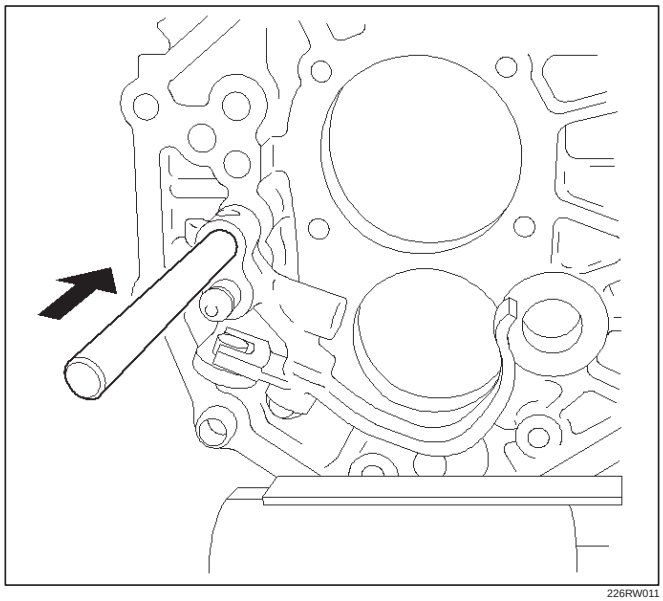

226RW011

4. Using a screwdriver and a hammer, install the 2 new shift rod snap rings to the 5th-reverse shift rod and reverse shift rod.

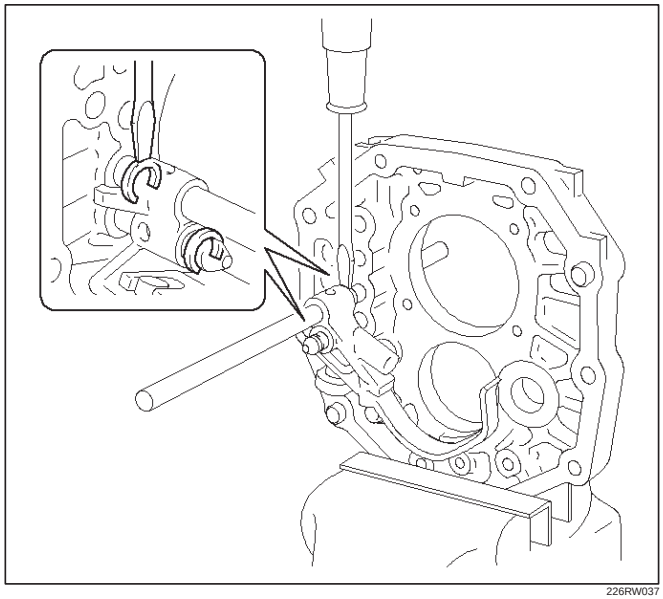

226RW037

22. Install 1st–2nd shift rod.
    1. Install the interlock pin to the intermediate plate.

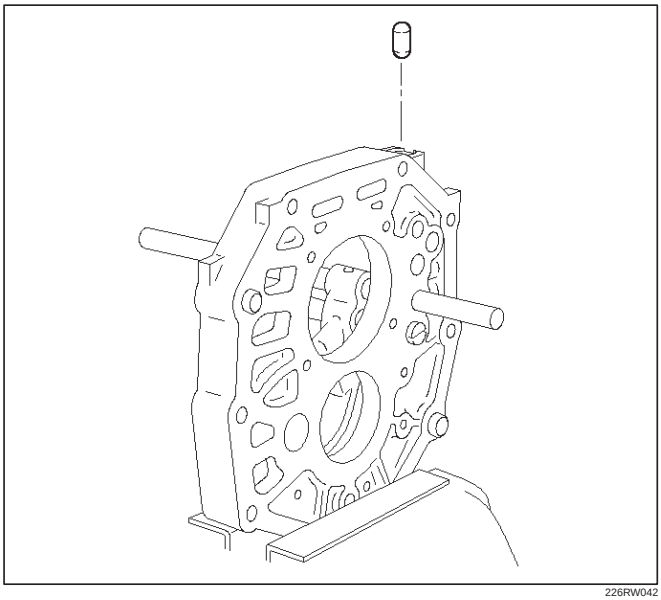

226RW042

    2. Put in the 1st–2nd shift rod from the rear.

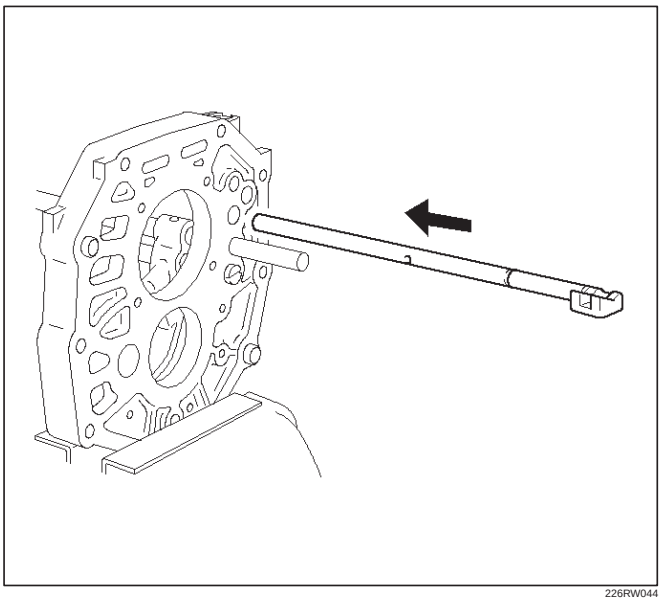

226RW044

23. Install 3rd–4th shift rod.
    1. Install the straight pin and interlock pin to the intermediate plate.

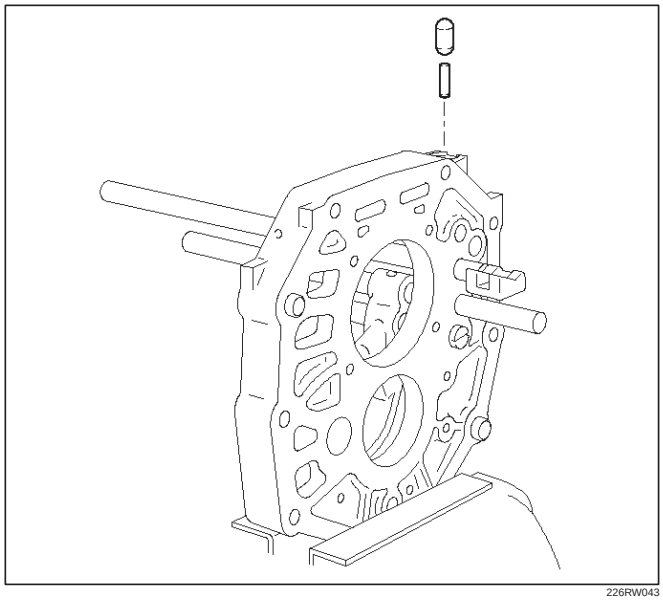

226RW043

    2. Put in the 3rd–4th shift rod from the rear.

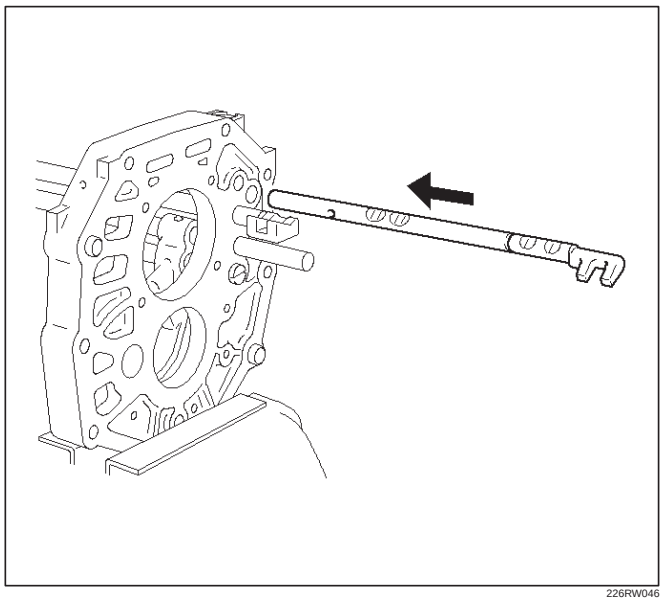

226RW046

24. Install the interlock parts.
    1. Using a screwdriver and hammer, 2 new shift rod snap rings to the 1st–2nd and 3rd–4th shift rod.

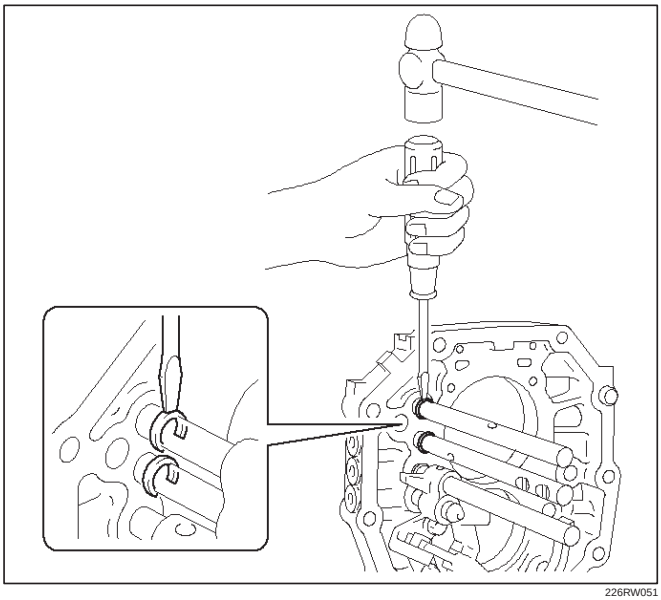

226RW051

    2. Install the 3 shift detent ball and springs to the intermediate plate.

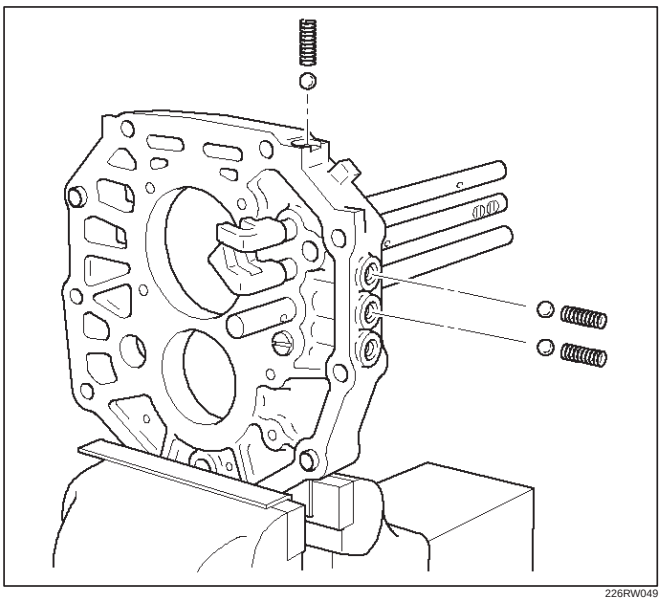

226RW049

    3. Clean up the plug hole.
    4. Apply sealant to the plug threads.
       sealant: THREE BOND 1344 or equivalent
    5. Using a torx socket wrench(T40), install and torque the 4 plugs.

Torque: 19 N·m (1.9 kg·m/14 lb ft)

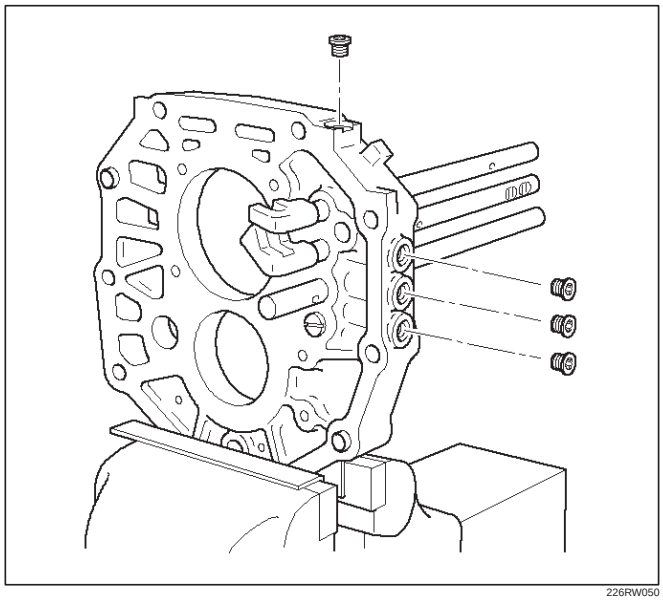

226RW050

25. Install mainshaft assembly.

NOTE: Coat all parts with gear oil before installing them.

    1. Using a plastic hammer, tap the 5th-reverse shift rod at the reverse shift.

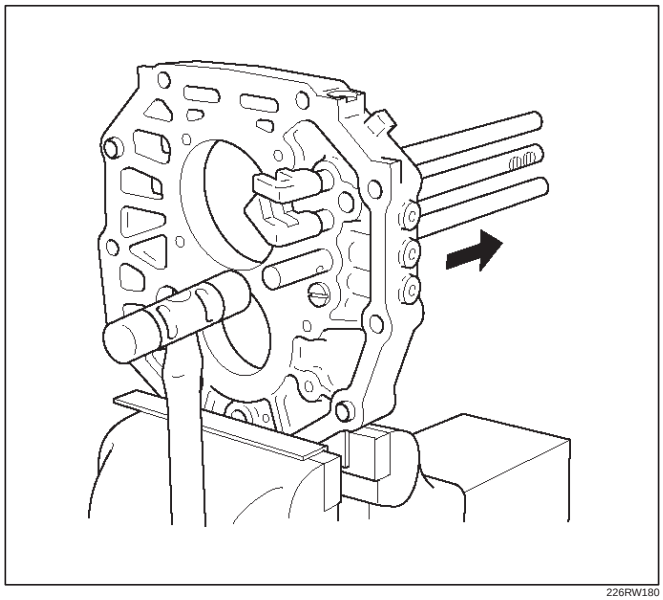

226RW180

2. Install the shift arm No.1 and No.2 to the mainshaft.

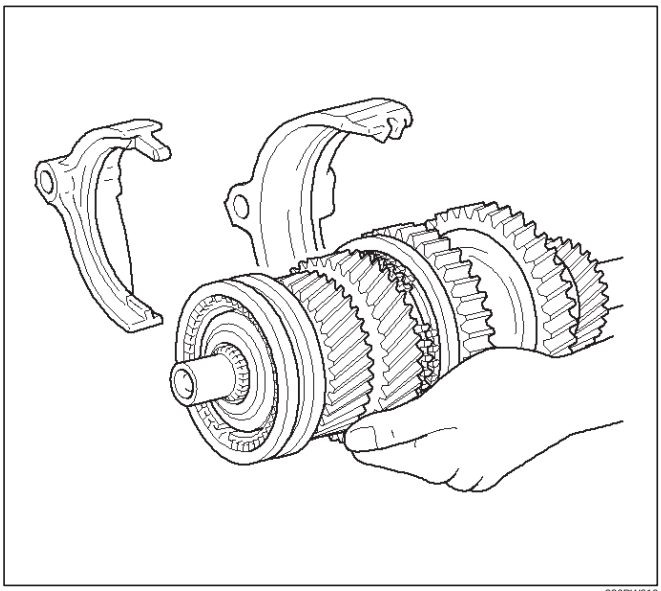

226RW010

3. Using a plastic hammer, tap the intermediate plate and install the mainshaft. Through the shift arm No.1 and No.2 to the shift rod.

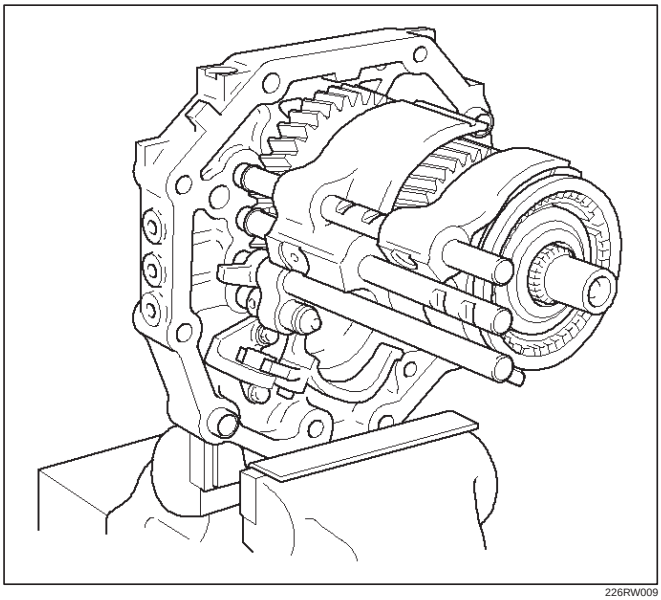

226RW009

4. Using a snap ring expander, install the snap ring.

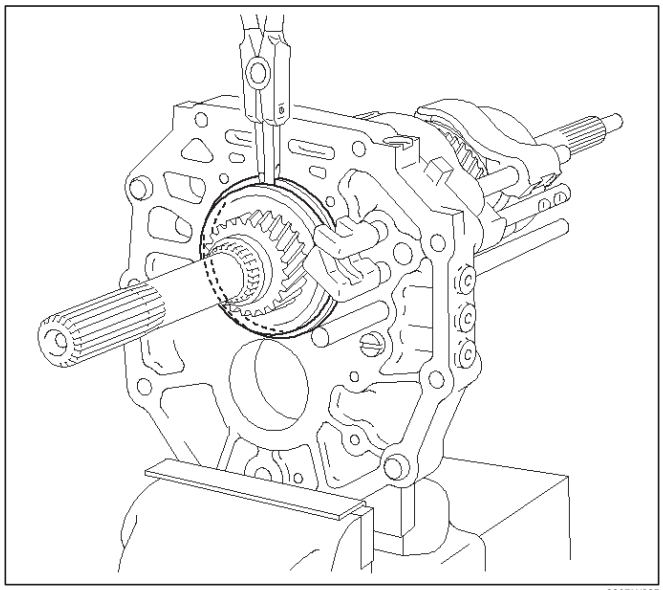

226RW035

5. Using a plastic hammer, tap the 5th-reverse shift rod at the neutral shift.

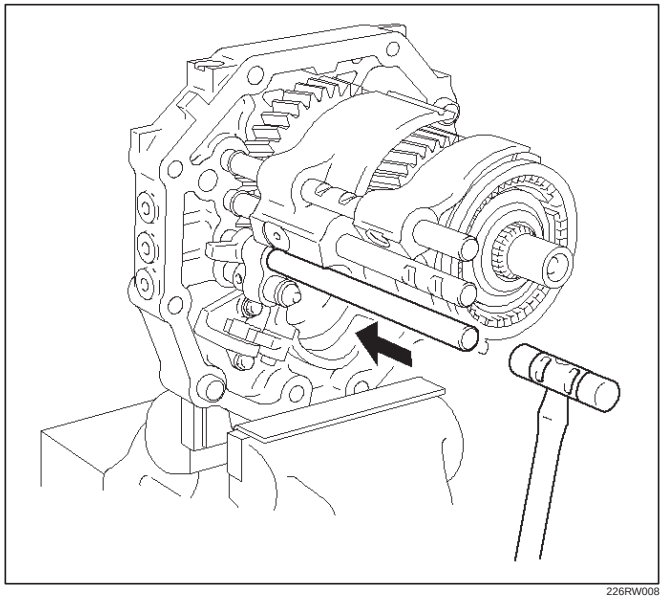

226RW008

26. Install the top gear shaft.
    1. Align the projection of the hub No.2 with the synchronizer ring slots, and install the top gear shaft assembly to the mainshaft.
    2. Check that the gear rotates smoothly.

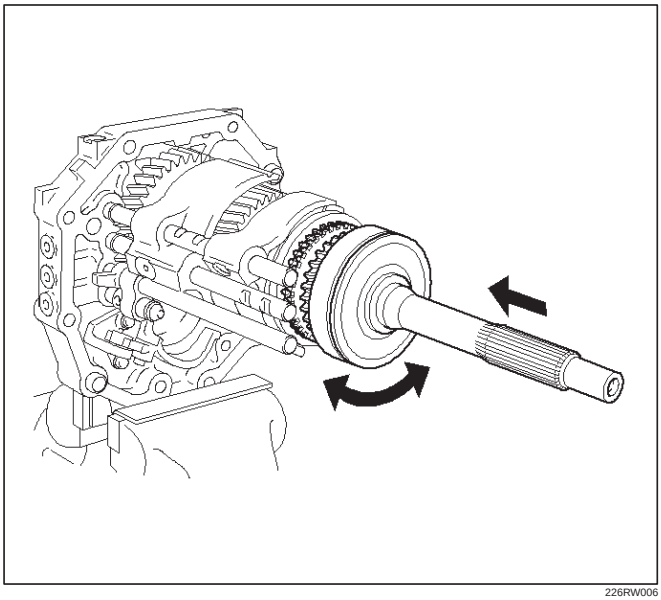

226RW006

27. Install the counter gear shaft.
    1. Temporarily install the counter gear shaft to the intermediate plate.

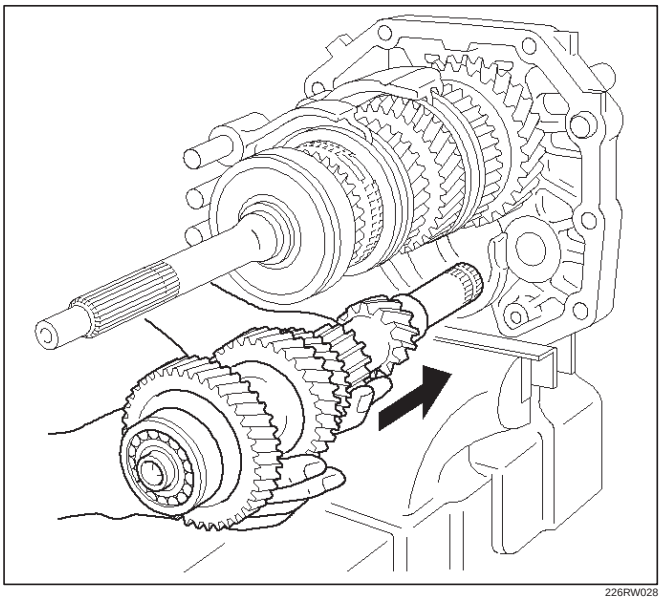

226RW028

    2. Using installer 5–8840–2552–0 (J–42796) and a hammer, drive in the center bearing as shown.

NOTE: Outer race snap ring groove toward rear.

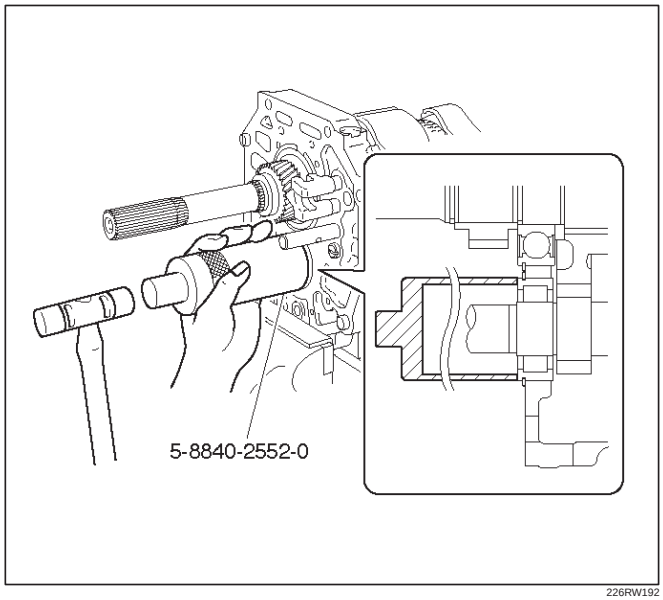

226RW192

Reference: Drive in the counter rear bearing by tapping on the front end of the counter shaft.

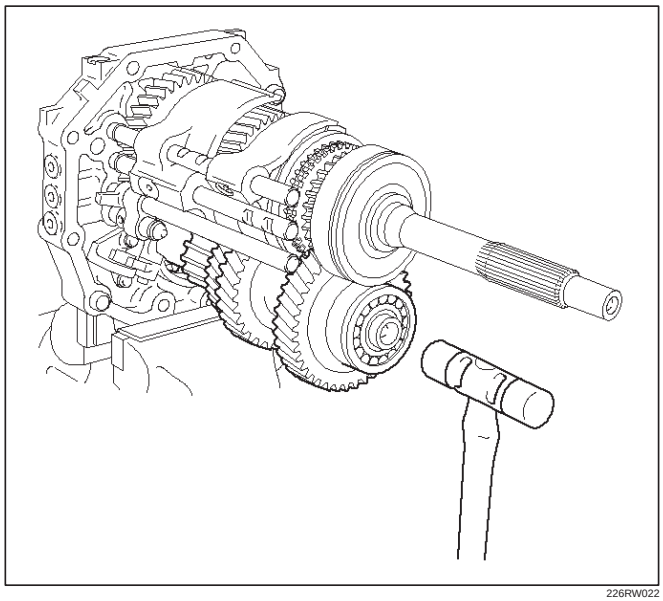

226RW022

28. Install the reverse idle gear.
    1. Install the reverse idle gear and reverse idle gear shaft.

NOTE:

- Insert the reverse idle gear shaft with the slot toward rear.
- Install the reverse idle gear with the reverse shift arm No.2.

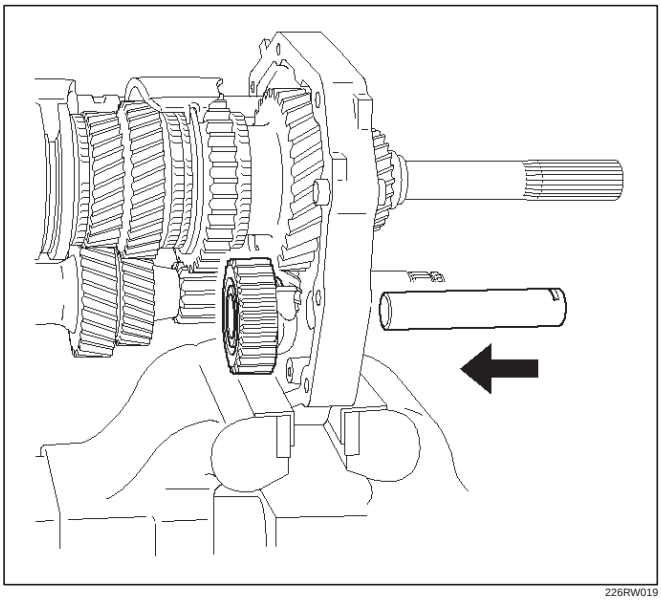

226RW019

29. Install the bearing plate.
    1. Align the bearing plate to groove of the reverse idle gear shaft.

Torque: 13 N·m (1.3 kg·m/113 lb in)

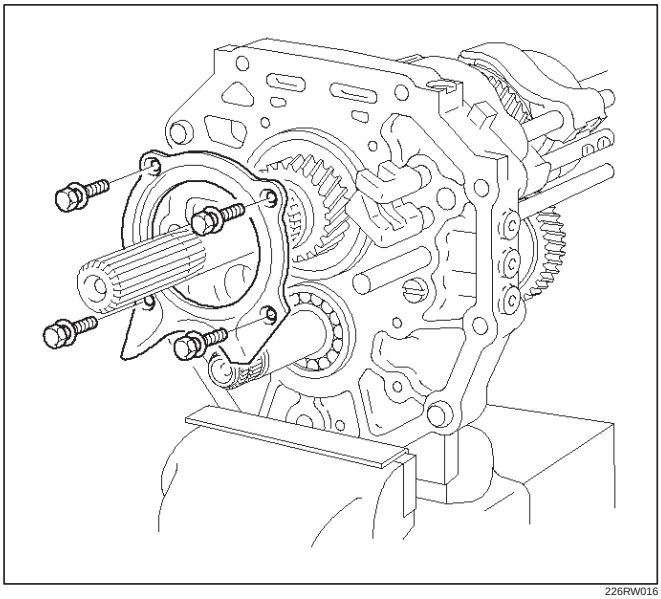

226RW016

30. Install the 5th gear thrust washer.
    1. Install the 5th gear thrust washer pin to the counter gear shaft.
    2. Install the 5th gear thrust washer to the counter gear shaft.

NOTE: Thrust washer must be assembled with the chamfered face of the washer toward the front.

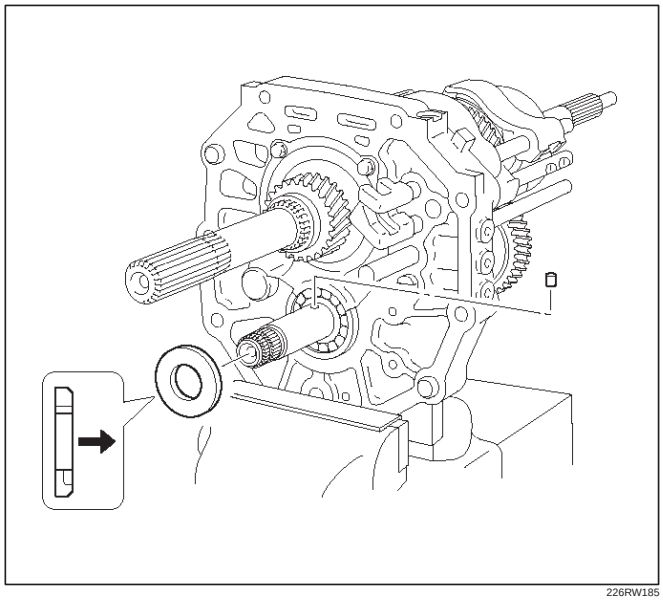

226RW185

31. Install the counter 5th gear.
    1. Install the 3 inserts and 3 compression springs to the reverse block ring.
       Reference: Push the 3 inserts with the 3 compression springs to the reverse synchronizer ring.

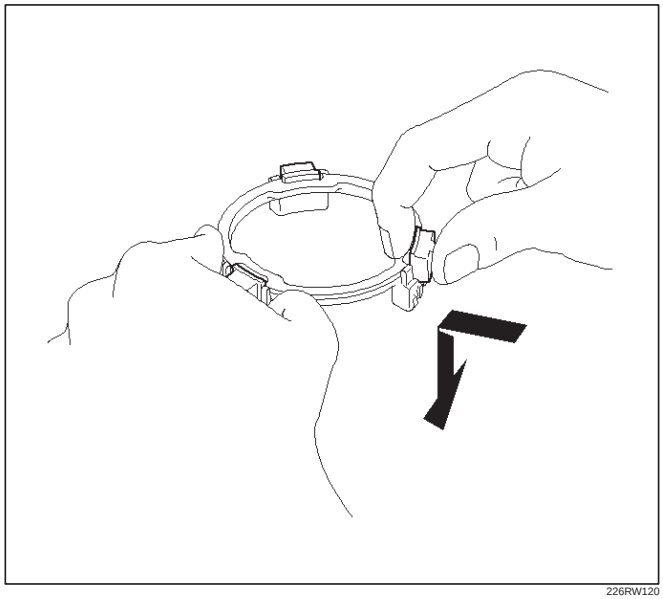

226RW120

2. Install the synchronizer outer ring, synchronizer cone ring, and synchronizer pull ring to the reverse block ring.

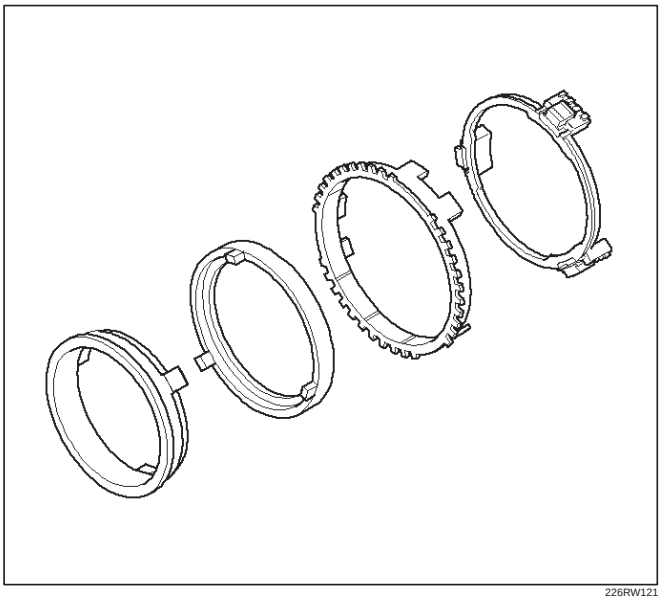

226RW121

3. Turn to 30 degree the reverse synchronizer pull ring.

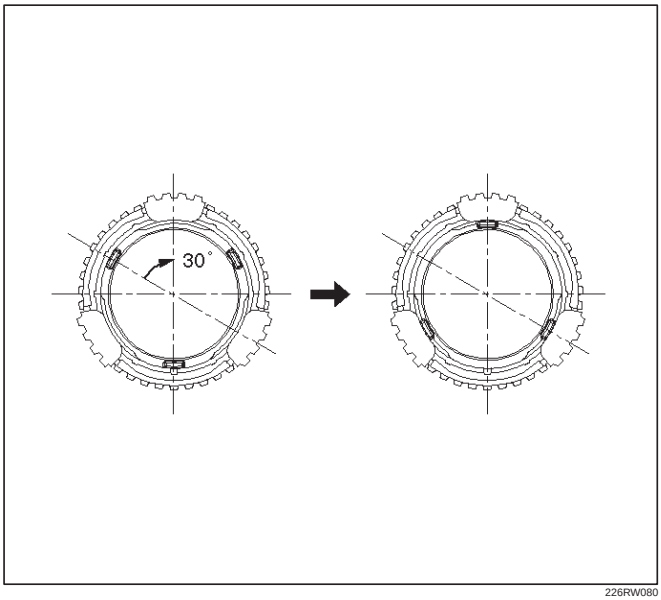

226RW080

4. Install the hub sleeve No.3 and reverse block ring set to the counter 5th gear.

NOTE: Check the hub sleeve No.3 direction, as shown.

Reference: While pushing the 3 inserts, install the synchronizer ring assembly to the hub sleeve No.3.

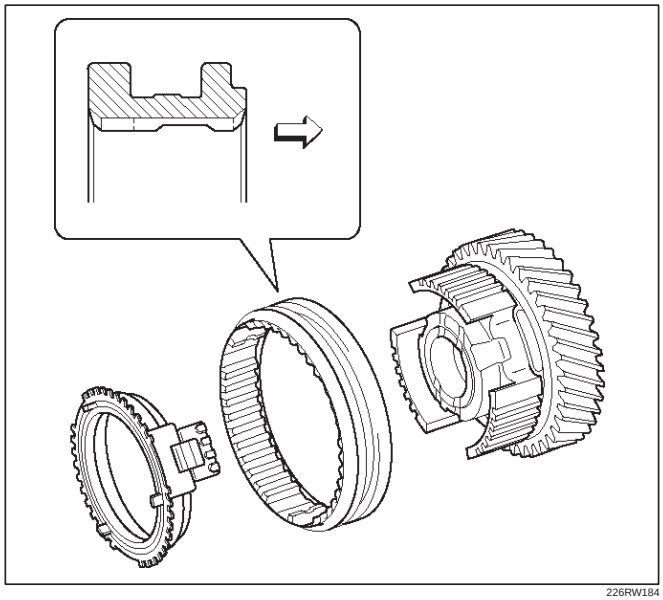

226RW184

5. Slide the hub sleeve No.3.

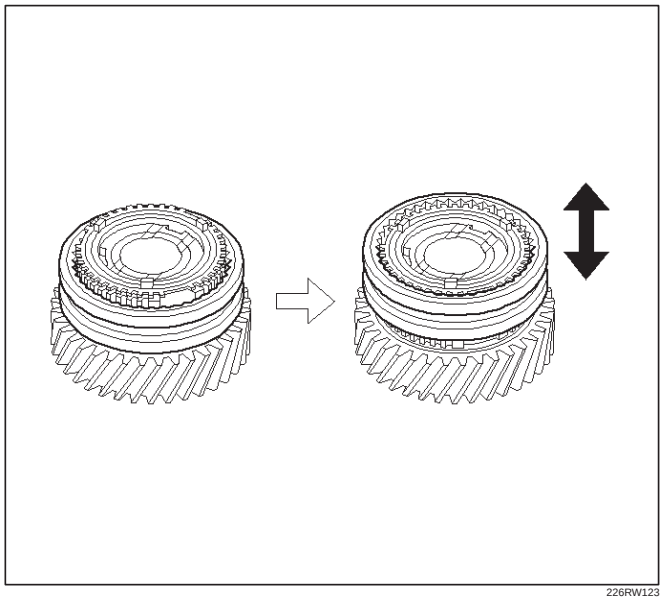

226RW123

6. Install the counter 5th gear bearing, counter 5th gear and reverse block ring set to the counter gear shaft, through the 5th reverse shift arm to the 5th reverse shift rod.

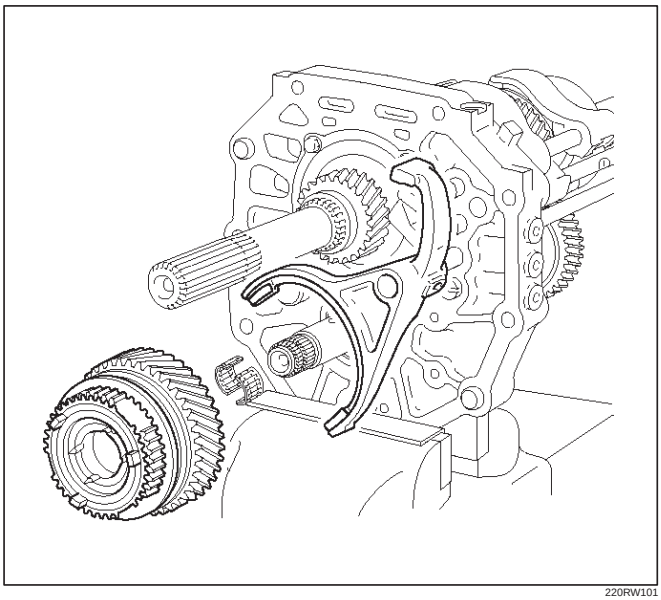

220RW101

7. Using installer 5–8840–2552–0 (J–42796) and a press, install counter 5th gear spline piece.

NOTE:

- Align the projection of the cone ring to the holes of the 5th gear spline piece.
- Check that the gear rotates smoothly.

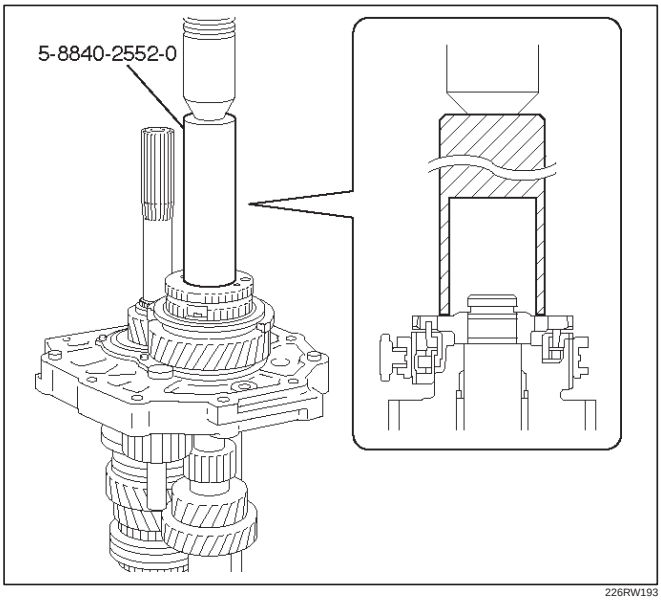

226RW193

8. Using thickness gauge, measure the counter 5th gear thrust clearance.

Standard: 0.10 – 0.35mm (0.004 – 0.014 in)

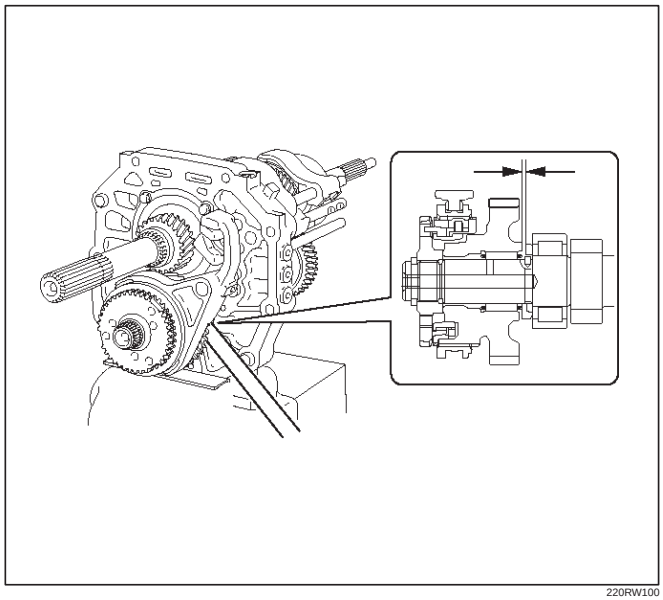

220RW100

9. Select a snap ring that will allow minimum axial play.

Mark	Thickness
A	2.80 – 2.85 (0.110 – 0.112 in)
B	2.85 – 2.90 (0.112 – 0.114 in)
C	2.90 – 2.95 (0.114 – 0.116 in)
D	2.95 – 3.00 (0.116 – 0.118 in)
E	3.00 – 3.05 (0.118 – 0.120 in)
F	3.05 – 3.10 (0.120 – 0.122 in)
G	3.10 – 3.15 (0.122 – 0.124 in)

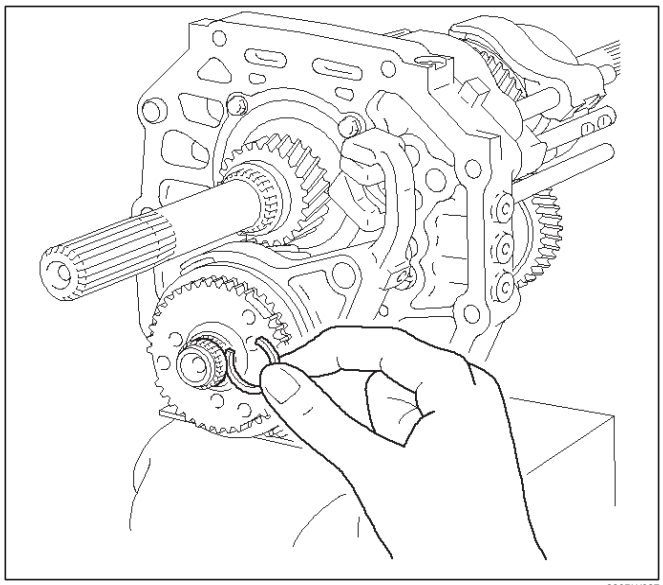

226RW027

10. Install the new snap ring.

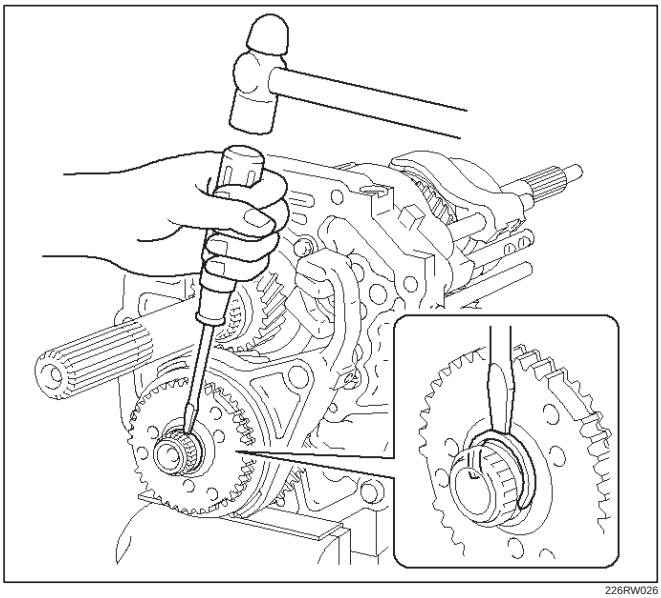

226RW026

32. Install the shift arm bolts.
    1. Install and torque the 2 shift arm bolts.

Torque: 20 N·m (2.0 kg·m/14 lb ft)

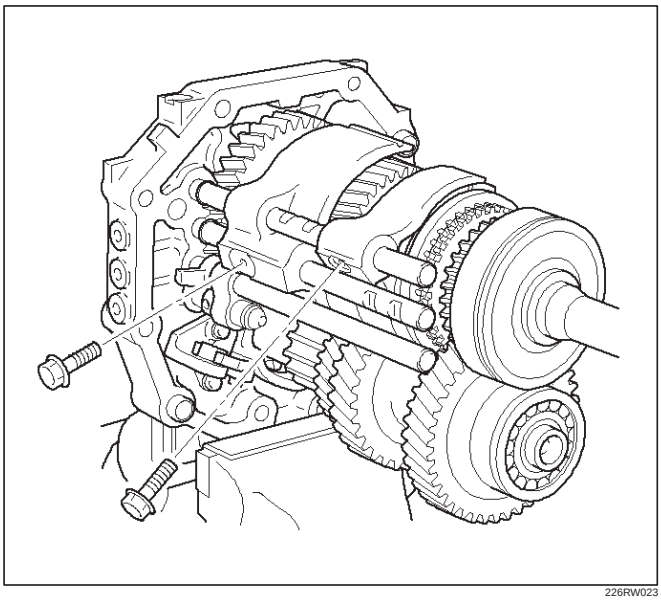

226RW023

33. Install the shift arm slotted pin.
    1. Using a pin punch and a hammer, drive in the slotted pin to the shift arm.

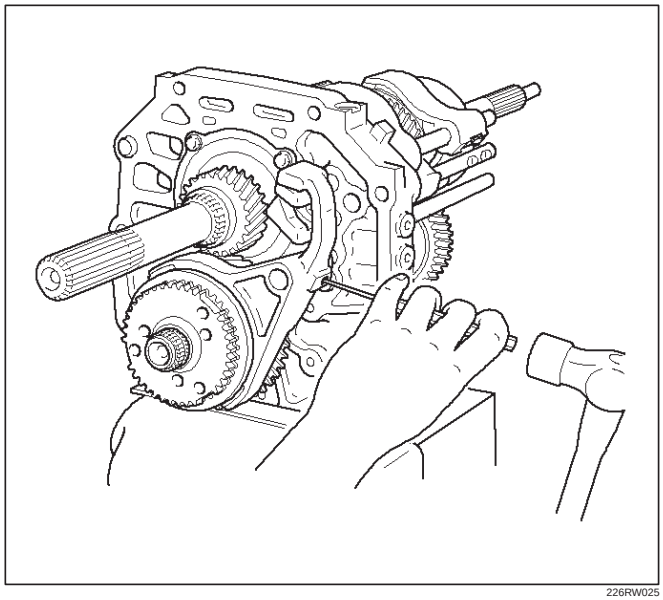

226RW025

34. Install the transmission case.
    1. Clean up the fitting surface.
    2. Apply recommended liquid gasket (THREE BOND 1281 or equivalent), as shown.

NOTE:

- Don’t dry the liquid gasket.

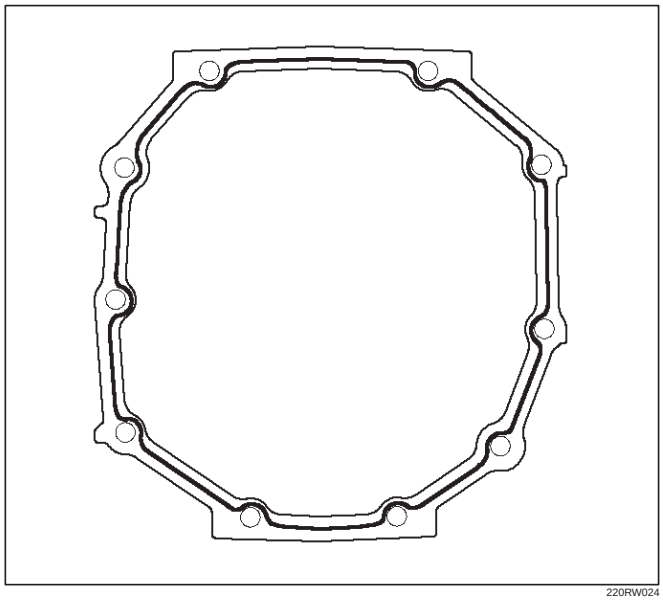

220RW024

3. Stand the transmission by the wood blocks.
4. Using a plastic hammer, tap the transmission case and attach it to the intermediate plate.

NOTE: Be careful not to add over force to bearing.

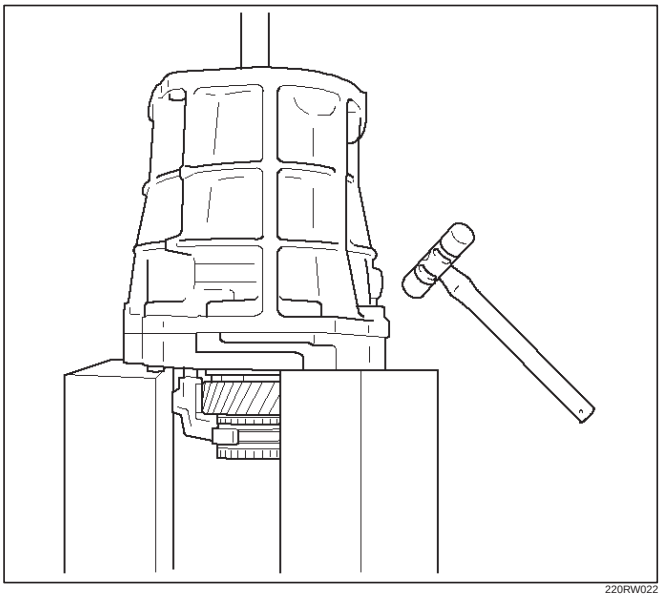

220RW022

5. Using a snap ring expander, install the front bearing shaft snap ring (1) and counter gear shaft bearing snap ring (2).

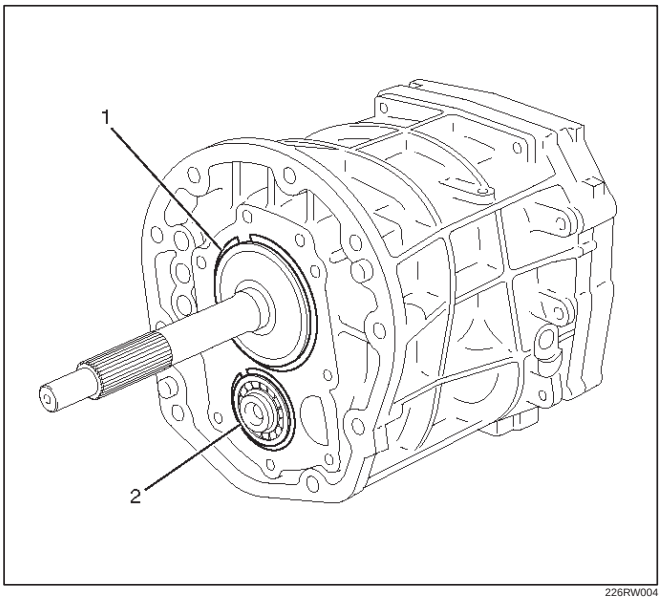

226RW004

6. Turn over the transmission.

35. Install the front cover.
1. Clean up the fitting surface.
2. Apply recommended liquid gasket (THREE BOND 1281 or equivalent), as shown.

NOTE:

- Don't dry the liquid gasket.

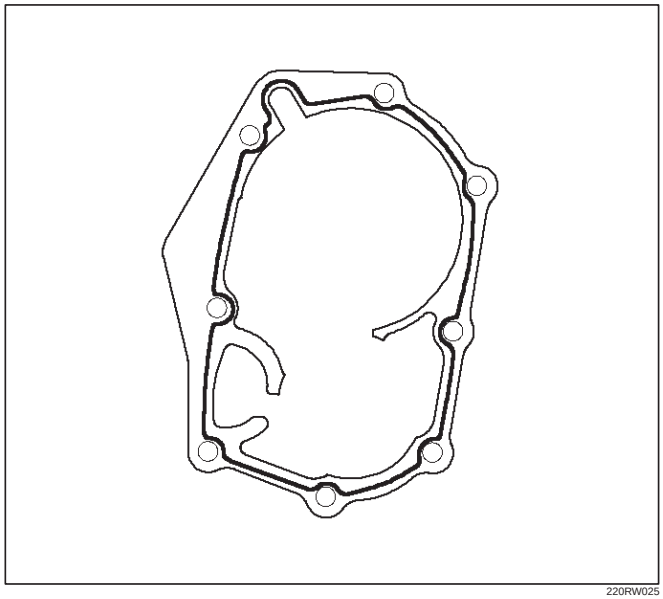

220RW025

3. Clean up and dry the bolts.
4. Apply thread sealant (THREE BOND 1344 or equivalent) to the 8 bolts.
5. Using 8 bolts, install the front cover to the transmission case.

Torque: 17 N·m (1.7 kg·m/12 lb ft)

NOTE:

- Tighten the all bolts evenly.
- Be careful not to damage the oil seal.

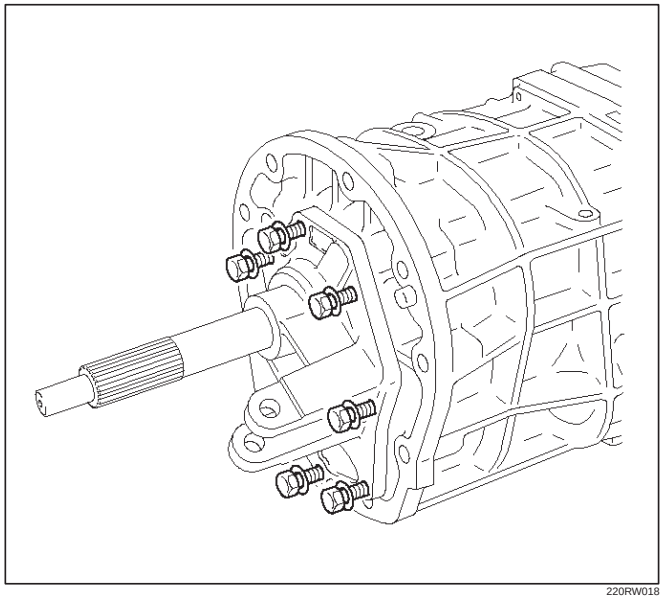

220RW018

6. Check that the top gear shaft and mainshaft rotate.

36. Install the transfer adapter.
    1. Clean up the fitting surface.
    2. Apply recommended liquid gasket (THREE BOND 1281 or equivalent), as shown.

NOTE:

- Don’t dry the liquid gasket.

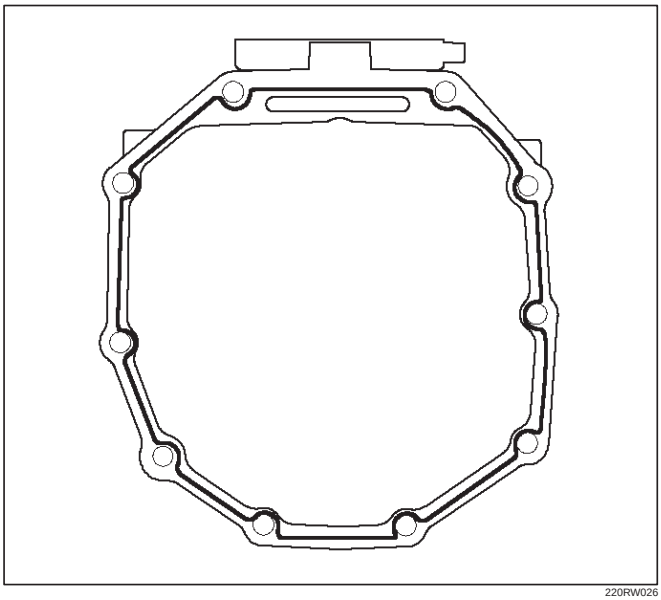

220RW026

3. Using a plastic hammer, tap the transfer adapter and attach it to the intermediate plate.

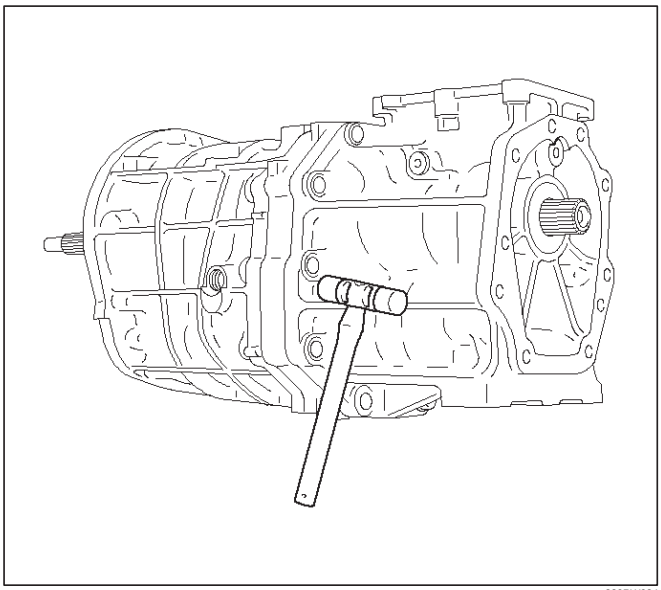

220RW034

4. Using 10 bolts, install the transfer adapter.

Torque: 37 N·m (3.8 kg·m/27 lb ft)

NOTE:

- Tighten the all bolts evenly.
- Don’t damage the lip of the oil seal.
- Install the wire clamp (9) to the transfer adapter.

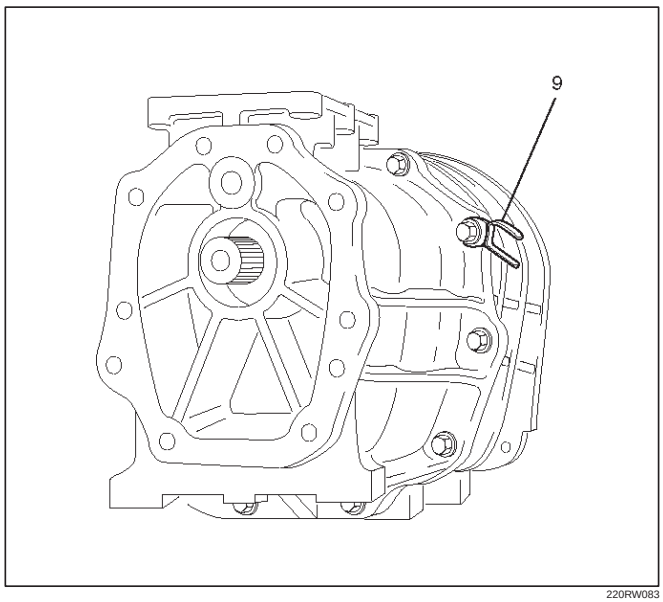

220RW083

37. Install the gear control box.
    1. Align the projection of the shift lever housing to the shaft rod groove, and install the gear control rod.

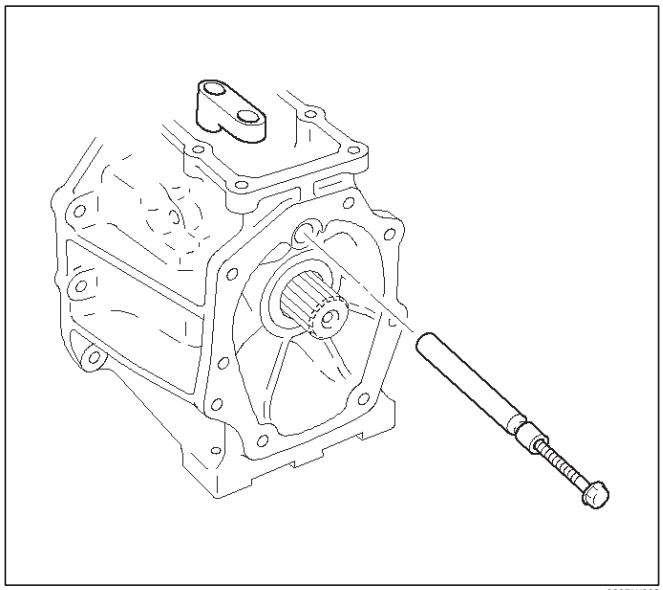

230RW003

2. Using a pin punch and hammer, drive in the slotted spring pin (2) to the shift lever housing.

NOTE: Be carefull not to drop the slotted spring pin.

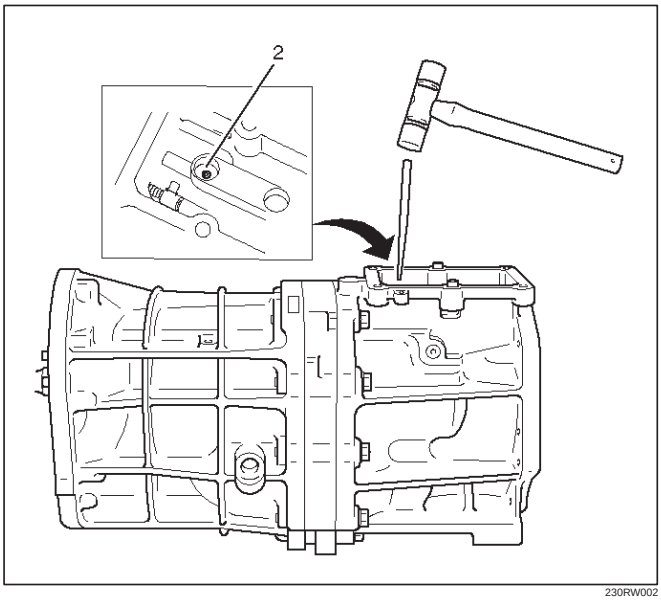

230RW002

3. Apply sealant (THREE BOND 1344 or equivalent) to the plug (1) thread.
4. Using hexagon wrench, install and torque the plug (1).

Torque: 18 N·m (1.8 kg·m/13 lb ft)

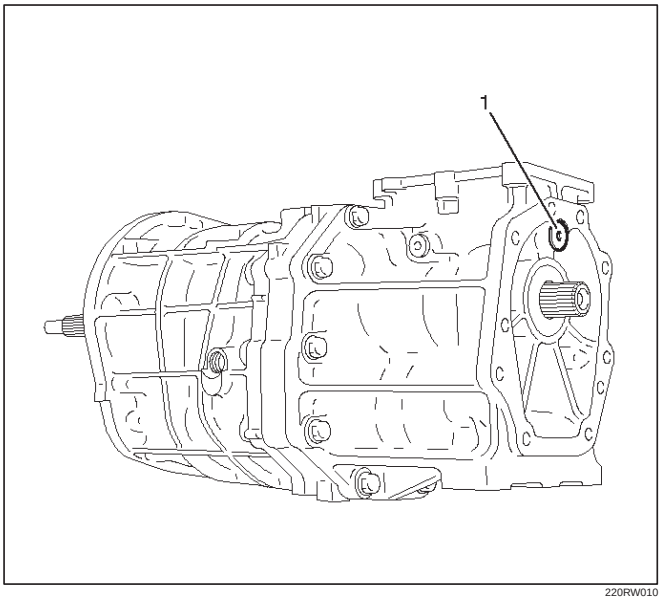

220RW010

5. Clean up the bolts and bolt hole.
6. Using 6 bolts, install the gear control box through the gasket.

Torque 18 N·m (1.8 kg·m/13 lb ft)

(6VE1)

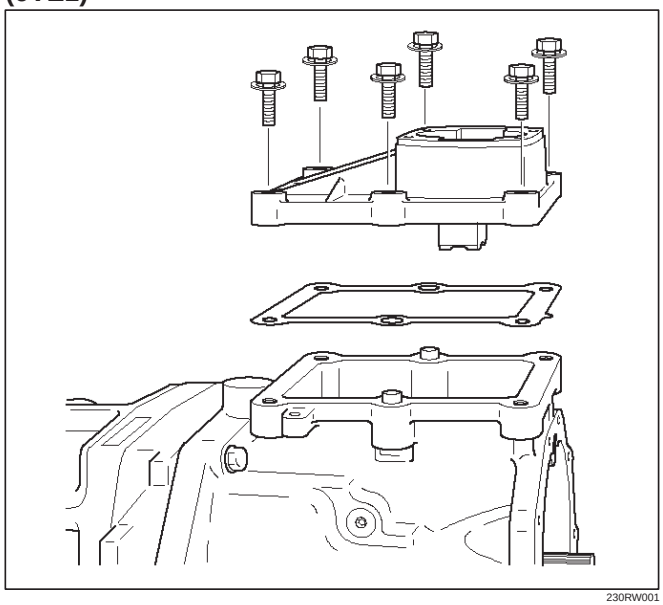

230RW001

(4JX1)

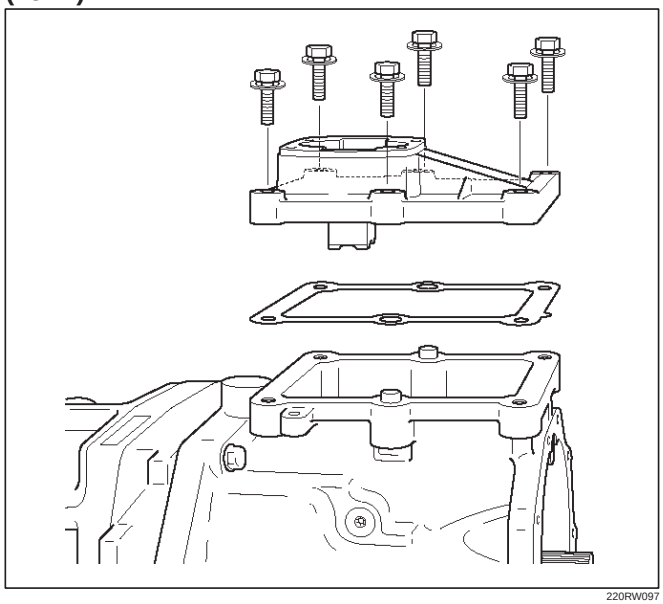

220RW097

38. Install clutch housing.
    1. Install the clutch housing to the transmission case.

    Torque: 36 N·m (3.7 kg·m/27 lb ft)

NOTE: Tighten the all bolts evenly.

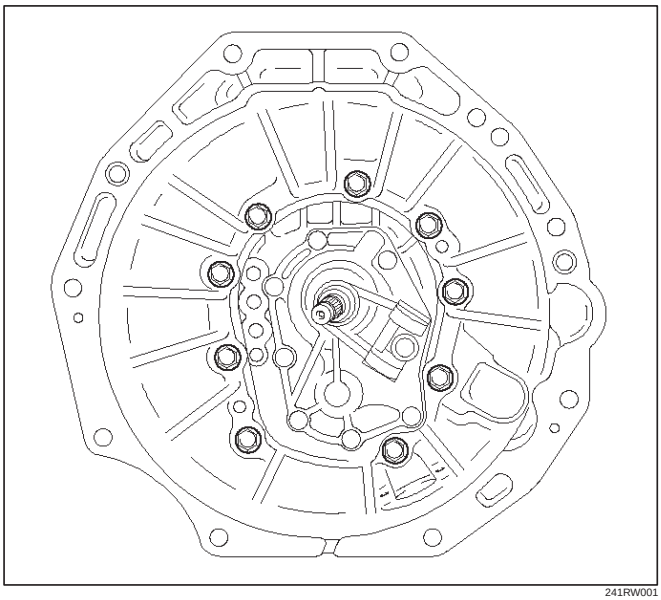

241RW001

39. Install the switches.
    1. Install the new gasket to the 1st and 2nd switch.
    2. Install the 1st and 2nd switch assembly (8).

    Torque: 39 N·m (4.0 kg·m/29 lb ft)

    3. Install the new gasket to the backup light switch.
    4. Install the backup light switch assembly (6).

    Torque: 44 N·m (4.5 kg·m/33 lb ft)

    5. Install the new gasket to the neutral switch.
    6. Install the neutral switch (7) to the transfer adapter (4JX1).

    Torque: 37 N·m (3.8 kg·m/27 lb ft)

(4JX1)

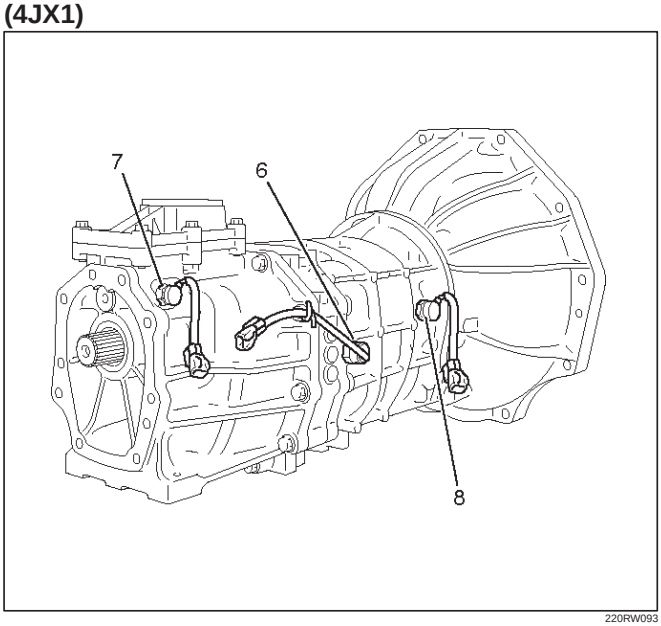

220RW093

40. Install the clutch release bearing (3) and clutch shift fork (5).
    1. Apply the clutch release grease.
        1. Fitting surface of the cylinder push rod.
        2. Fitting surface of the release bearing hub.
        3. The hole of the fork split pin (4).
    2. Apply the clutch release grease.
        1. The spline surface of the top gear shaft.
    3. Install the clutch shift fork (5).
    4. Install the snap pin.
    5. Install the clutch release bearing (3) to the clutch shift fork (5).

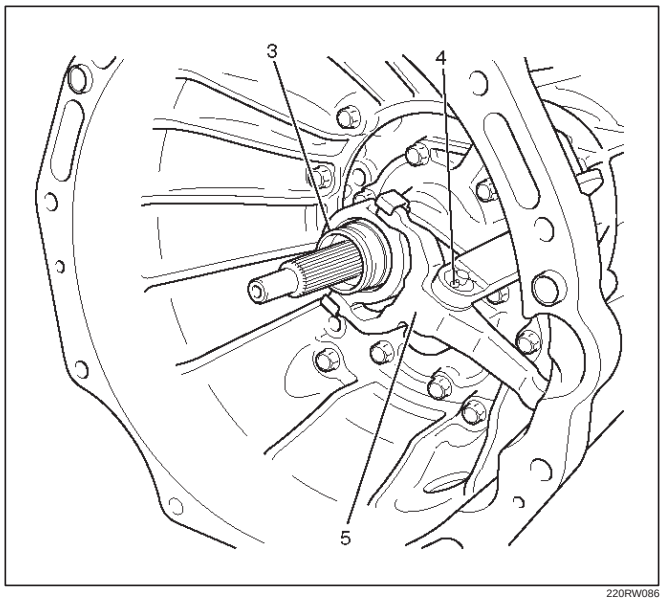

220RW086

41. Install the drain plug and filler plug.
    1. Install the drain plug (1) through the new gasket.

    Torque: 37 N·m (3.8 kg·m/27 lb ft)

    2. Install the filler plug (2) through the new gasket.

    Reference: Plug after the gear oil fill in.
    Torque: 37 N·m (3.8 kg·m/27 lb ft)

(6VE1)

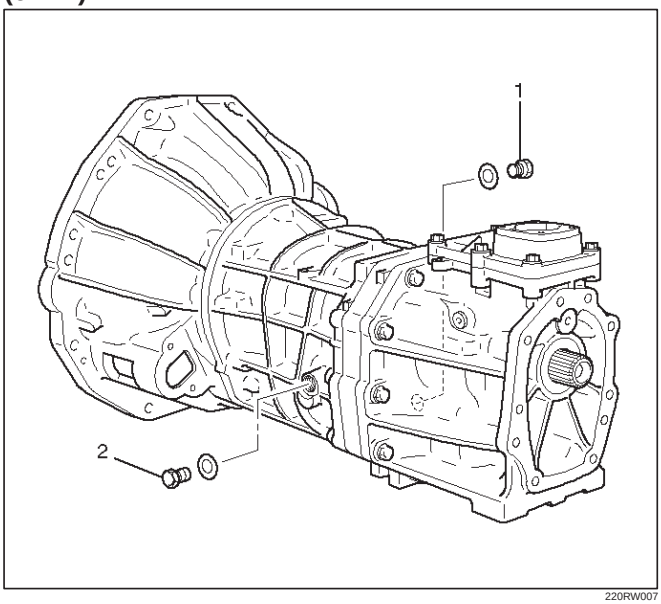

220RW007

Main Data and Specifications

General Specifications

Transmission type		Fully synchronized forward and reverse gears
Control method		Direct control with the gear shift lever on the floor
Gear ratio	1st	3.954
	2nd	2.330
	3rd	1.436
	4th	1.000
	5th	0.788
	Rev	3.918
Oil capacity lit (US qt)		2.7 (2.86)
Type of lubricant		Engine oil : Refer to the chart in “SECTION 0”

Torque Specifications

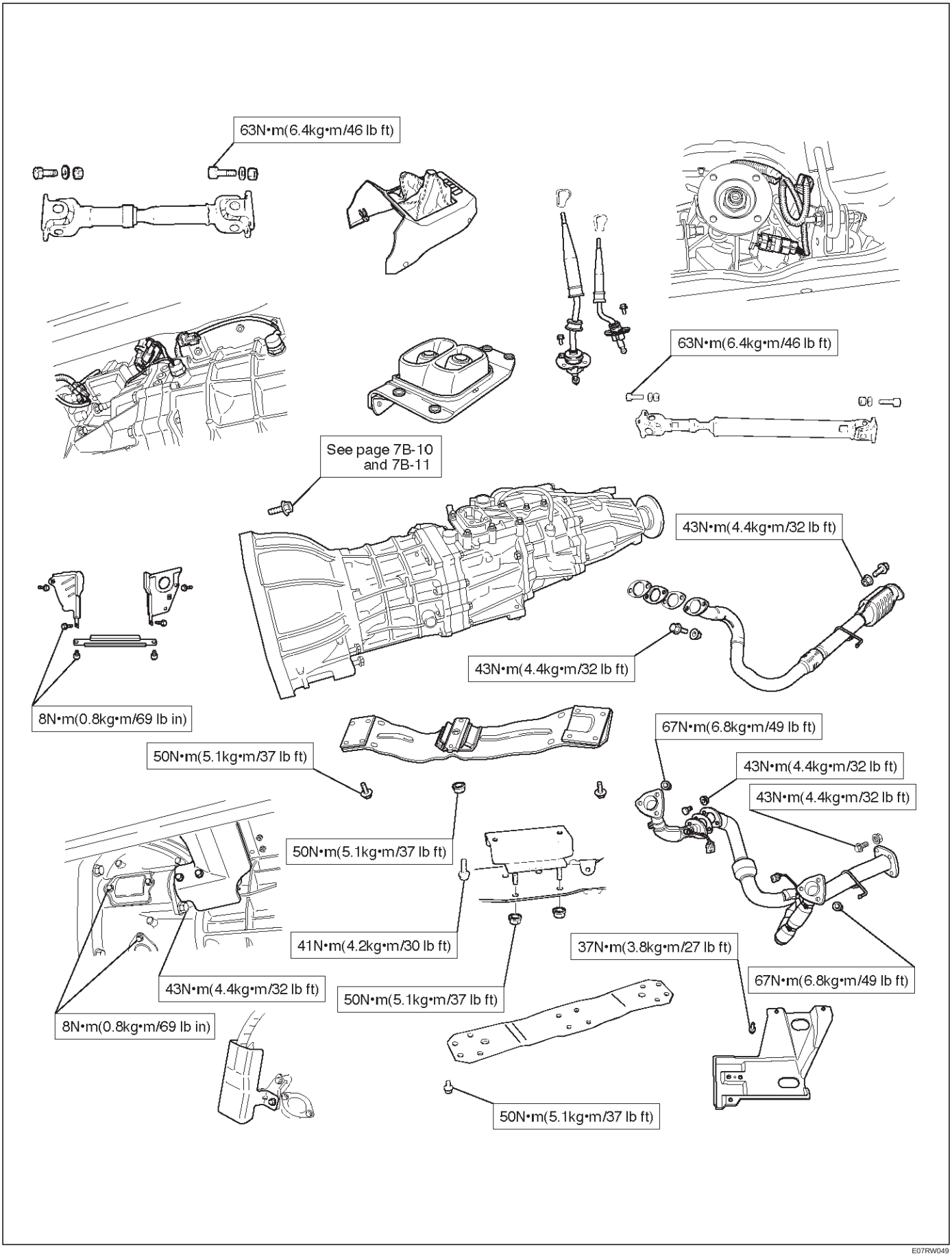

E07RW049

Torque Specifications (Cont'd)

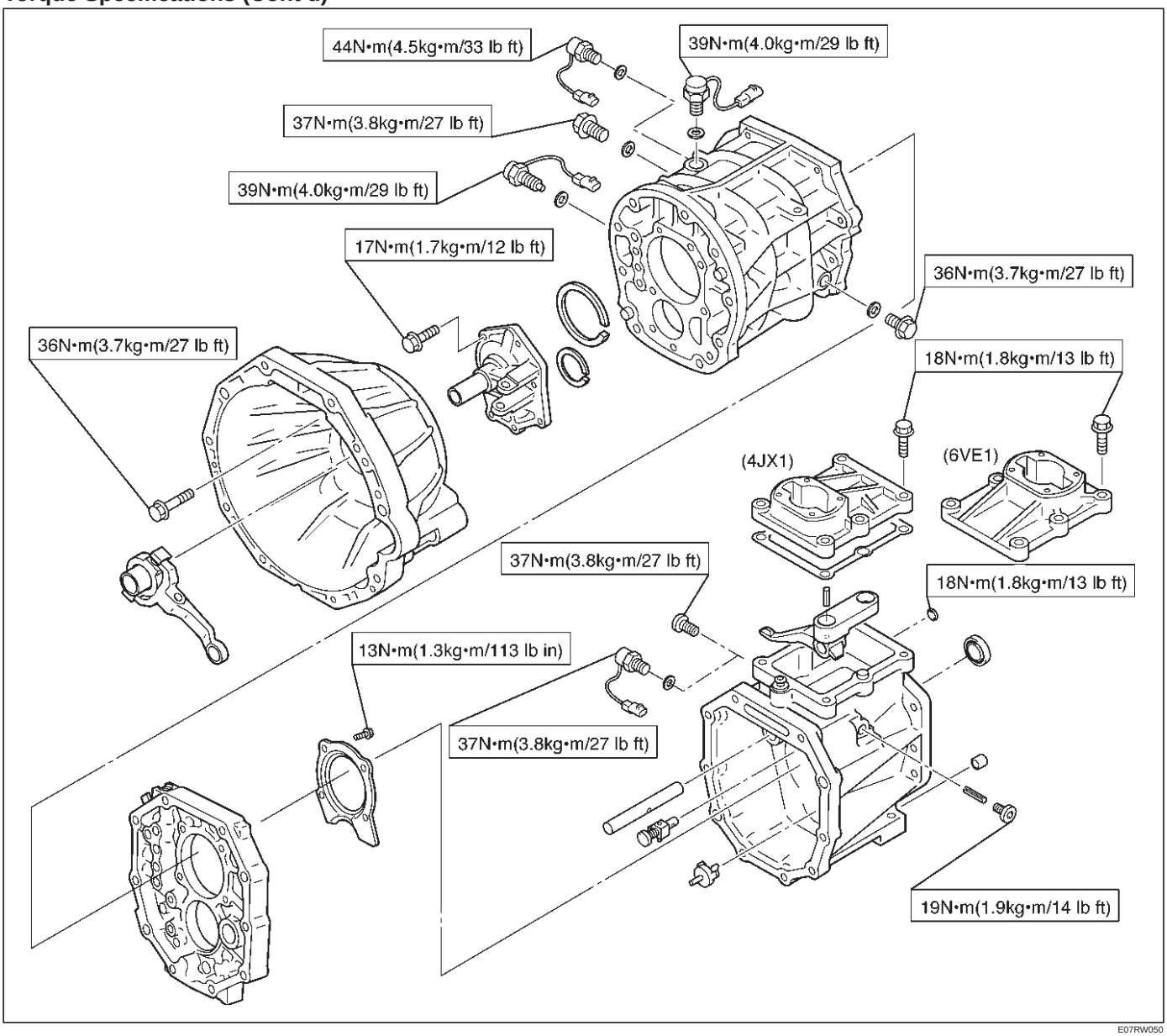

E07RW050

Torque Specifications (Cont'd)

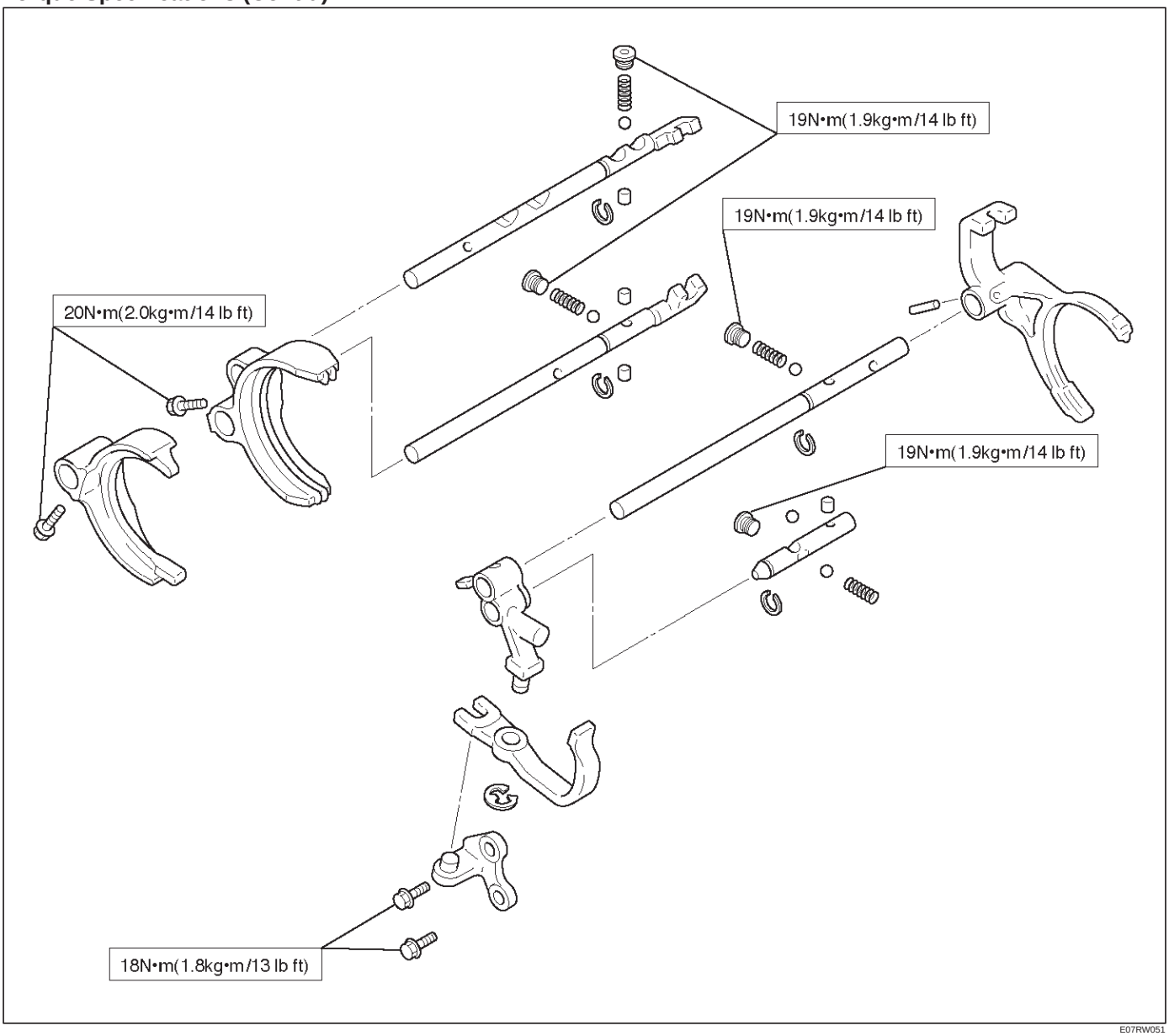

E07RW051

Special Tools

ILLUSTRATION	TOOL NO. TOOL NAME
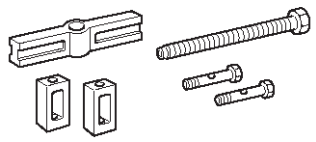 901RW201	**5–8840–2550–0** **(J–42794)** Gear spline pieace remover
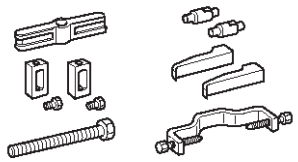 901RW202	**5–8840–2551–0** **(J–42795)** Center bearing remover
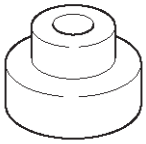 901RW203	**5–8840–2560–0** **(J–42988)** Attachment
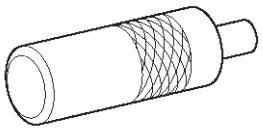 901RW204	**5–8840–2552–0** **(J–42796)** Counter gear shaft center bearing installer
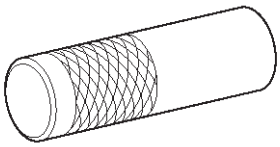 901RW205	**5–8840–2553–0** **(J–42797)** Clutch hub (No.2) installer
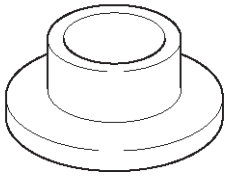 901RW206	**5–8840–2554–0** **(J–42798)** Clutch hub (No.1) installer

ILLUSTRATION	TOOL NO. TOOL NAME
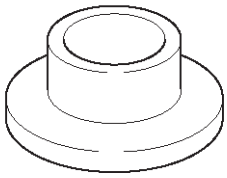 901RW206	**5–8840–2555–0** **(J–42799)** Installer
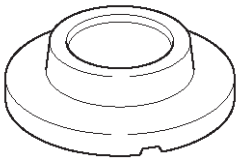 901RW207	**5–8840–2556–0** **(J–42800)** Counter gear shaft front bearing installer
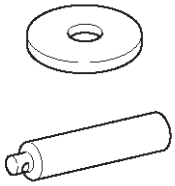 901RW208	**5–8840–2559–0** **(J–42904)** Top gear shaft front bearing installer
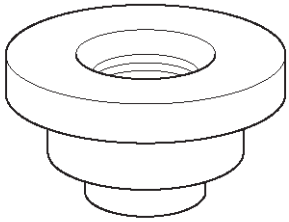 901RS296	**5–8840–2557–0** **(J–42801)** Front rerainer oil seal installer
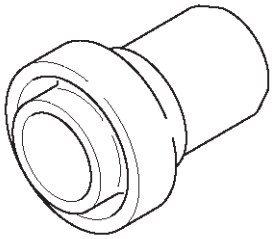 901RW095	**5–8840–2558–0** **(J–42802)** Transfer adapter oil seal installer
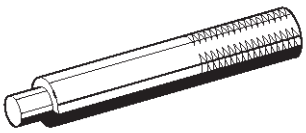 901RS218	**5–8840–0007–0** **(J–8092)** Driver handle

Special Tools (Cont'd)

ILLUSTRATION	**TOOL NO.** TOOL NAME
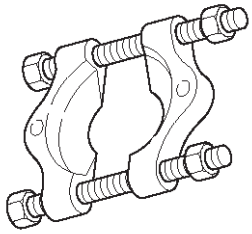	**5–8840–0015–0** **(J–22912–01)** Bearing separator

SECTION 7B1
MANUAL TRANSMISSION

TABLE OF CONTENTS

PAGE

4 x 2 Model Transmission ..... 7B1— 2
Main Data and Specifications ..... 7B1— 2
General Description ..... 7B1— 3
Torque Specifications ..... 7B1— 4
Recommended Liquid Gasket ..... 7B1— 6
Removal and Installation ..... 7B1— 7
Disassembly ..... 7B1— 16
Inspection and Repair ..... 7B1— 26
Reassembly ..... 7B1— 31
4 x 4 Model Transmission ..... 7B1— 46
Main Data and Specifications ..... 7B1— 46
General Description ..... 7B1— 47
Torque Specifications ..... 7B1— 48
Recommended Liquid Gasket ..... 7B1— 50
Removal and Installation ..... 7B1— 51
Disassembly ..... 7B1— 61
Inspection and Repair ..... 7B1— 81
Reassembly ..... 7B1— 87
Troubleshooting ..... 7B1—112

4 x 2 MODEL TRANSMISSION

MAIN DATA AND SPECIFICATIONS

Models		MUA 5C	MUA 5S
Transmission type		Fully synchronized 5-forward and revers gears.	
Gear ratio	1st	3.767	4.357
	2nd	2.248	2.502
	3rd	1.404	1.501
	4th	1.000	1.000
	5th	0.809	0.809
	Rev.	3.873	3.970
Oil capacity	lit (US gal.)	2.95 (0.78)	

GENERAL DESCRIPTION

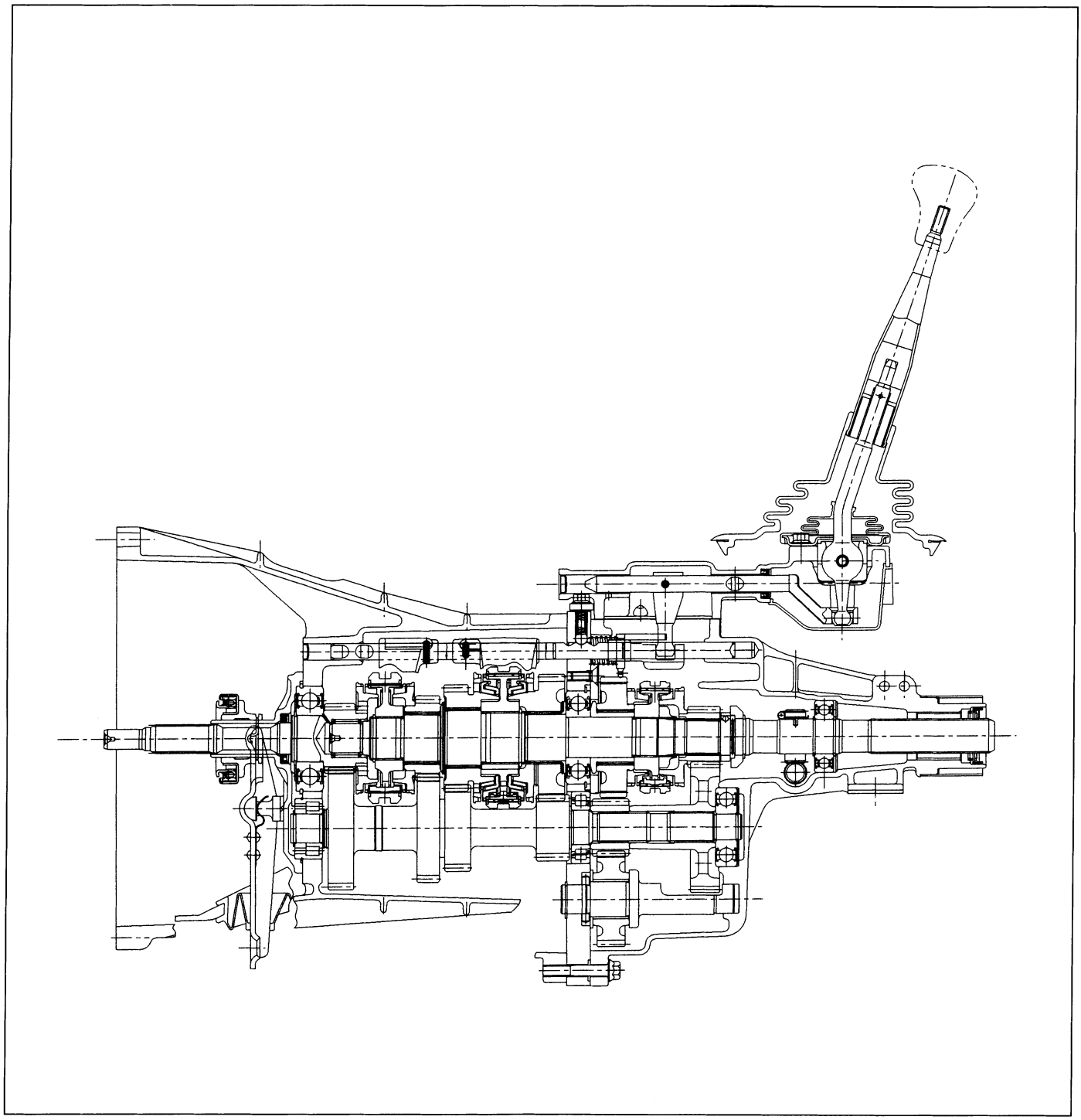

A07LV003

The transmission is designed for the quietest possible operation.

A longer center distance (77.5 mm (3.05 in)) provides increased durability.

Principle parts of the transmission are the integral clutch housing, the intermediate plate, the rear cover, and the gears.

The gear control box is built-in to the rear cover.

TORQUE SPECIFICATIONS

STANDARD BOLTS

The torque values given in the following table should be applied where a particular torque is not specified.

N·m (kg·m / lb·ft)

	Strength Class	4.8/4T	7T	8.8		9.8/9T
				Refined	Non-Refined	
	Bolt Identification	4	7	8	8	9
	Bolt Diameter× Pitch (mm)	No mark	—			
Standard Hex. Head Bolt	M6 × 1.0	6 (0.6 / 52 lb·in)	7 (0.7 / 61 lb·in)	8 (0.8 / 69 lb·in)		–
	M8 × 1.25	13 (1.3 / 113 lb·in)	17 (1.7 / 12)	20 (2.0 / 14)		24 (2.4 / 17)
	M10 × 1.25	27 (2.8 / 20)	37 (3.8 / 27)	42 (4.3 / 31)		50 (5.1 / 37)
	M12 × 1.25	61 (6.3 / 45)	76 (7.8 / 56)	87 (8.9 / 64)		95 (9.7 / 70)
	M14 × 1.5	96 (9.8 / 71)	116 (11.8 / 85)	133 (13.6 / 98)		142 (14.5 / 105)
	M16 × 1.5	130 (13.3 / 96)	170 (17.3 / 125)	193 (19.7 / 143)		200 (20.4 / 148)
	M18 × 1.5	188 (19.2 / 139)	244 (24.9 / 180)	278 (28.3 / 205)		287 (29.3 / 212)
	M20 × 1.5	258 (26.3 / 190)	337 (34.4 / 249)	385 (39.3 / 284)		396 (40.4 / 292)
	M22 × 1.5	332 (33.9 / 245)	453 (46.3 / 335)	517 (52.7 / 381)		530 (54.1 / 391)
	M24 × 2.0	449 (45.8 / 331)	570 (58.2 / 421)	651 (66.3 / 480)		692 (70.6 / 511)
	* M10 × 1.5	26 (2.7 / 20)	36 (3.7 / 27)	41 (4.2 / 30)		48 (4.9 / 35)
	* M12 × 1.75	57 (5.8 / 42)	71 (7.2 / 52)	80 (8.2 / 59)		89 (9.1 / 66)
	* M14 × 2.0	89 (9.1 / 66)	110 (11.2 / 81)	125 (12.7 / 92)		133 (13.6 / 98)
	* M16 × 2.0	124 (12.7 / 92)	162 (16.5 / 119)	185 (18.9 / 137)		191 (19.5 / 141)
Flange Bolt	M6 × 1.0	7 (0.7 / 61 lb·in)	8 (0.8 / 69 lb·in)	9 (0.9 / 78 lb·in)		–
	M8 × 1.25	15 (1.5 / 11)	19 (1.9 / 14)	22 (2.2 / 16)		26 (2.7 / 20)
	M10 × 1.25	31 (3.2 / 23)	41 (4.2 / 30)	47 (4.8 / 35)		56 (5.7 / 41)
	M12 × 1.25	69 (7.0 / 51)	85 (8.7 / 63)	97 (9.9 / 72)		106 (10.8 / 78)
	M14 × 1.5	104 (10.6 / 77)	126 (12.8 / 93)	144 (14.6 / 106)		154 (15.7 / 114)
	M16 × 1.5	145 (14.8 / 127)	188 (19.2 / 139)	214 (21.8 / 158)		221 (22.5 / 163)
	M18 × 1.5	–	–	–		–
	M20 × 1.5	–	–	–		–
	M22 × 1.5	–	–	–		–
	M24 × 2.0	–	–	–		–
	* M10 × 1.5	30 (3.1 / 22)	40 (4.1 / 30)	46 (4.7 / 34)		54 (5.5 / 40)
	* M12 × 1.75	64 (6.5 / 47)	78 (8.0 / 58)	89 (9.1 / 66)		99 (10.1 / 73)
	* M14 × 2.0	97 (9.9 / 72)	119 (12.1 / 88)	135 (13.8 / 99.7)		144 (14.7 / 107)
	* M16 × 2.0	137 (14.0 / 101)	178 (18.2 / 132)	203 (20.7 / 150)		210 (21.5 / 155)

The asterisk * indicates that the bolts are used for female-threaded parts that are made of soft materials such as casting, etc.

FLARE NUTS

N·m (kg·m / lb·ft)

Pipe diameter mm (in)	Torque	Pipe diameter mm (in)	Torque
4.76 (0.187)	16 (1.6 / 12)	10.00 (0.394)	54 (5.5 / 40)
6.35 (0.250)	26 (2.7 / 20)	12.00 (0.472)	88 (9.0 / 65)
8.00 (0.315)	44 (4.5 / 33)	15.00 (0.591)	106 (10.8 / 78)

SPECIAL PARTS FIXING NUTS AND BOLTS

kg·m(lb.ft/N·m)

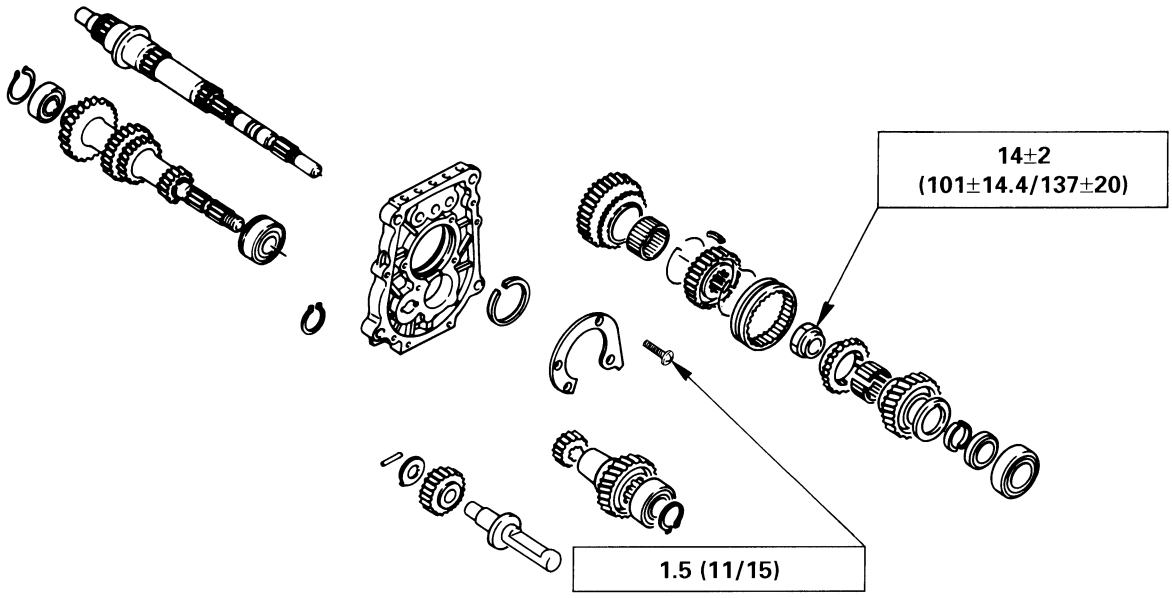

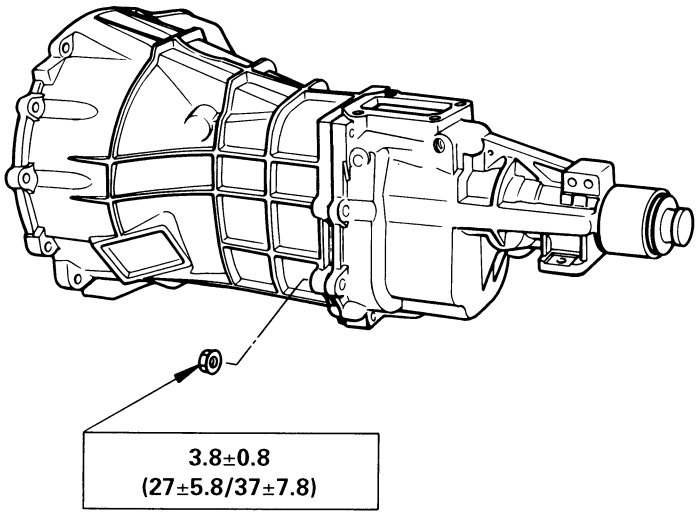

RECOMMENDED LIQUID GASKET

Type	Brand Name	Manufacturer	Remarks
RTV* Silicon Base	ThreeBond 1207B ThreeBond 1207C	Three Bond Three Bond	For Engine Repairs
	ThreeBond 1215 ThreeBond 1281	Three Bond Three Bond	For Axle Case and Transmission Repairs
Water Base	ThreeBond 1141E	Three Bond	For Engine Repairs
Solvent	ThreeBond 1104 BelcoBond 4 BelcoBond 401 BelcoBond 402	Three Bond Isuzu Isuzu Isuzu	For Engine Repairs
Anerobic	LOCTITE 515 LOCTITE 518	Loctite Loctite	All

* RTV : Room Temperature Vulcanizer

Note:

1. **It is very important that the liquid gaskets listed above or their exact equivalent be used on the vehicle.**
2. **Be careful to use the specified amount of liquid gasket.**
   Follow the manufacturer's instructions at all times.
3. **Be absolutely sure to remove all lubricants and moisture from the connecting surfaces before applying the liquid gasket.**
   The connecting surfaces must be perfectly dry.
4. **LOCTITE 515 and LOCTITE 518 harden upon contact with a metal surface.**
   Do not apply LOCTITE 515 or LOCTITE 518 between two metal surfaces having a clearance of greater than 0.25 mm (0.01 in). Poor adhesion will result.

REMOVAL AND INSTALLATION

Read this Section carefully before performing any removal and installation procedure. This Section gives you important points as well as the order of operation. Be sure that you understand everything in this Section before you begin.

Important Operations — Removal

Battery Cable

Disconnect the negative (–) cable from the battery terminal.

Engine Hood

Apply setting marks to the engine hood and the engine hood hinges before removing the engine hood.

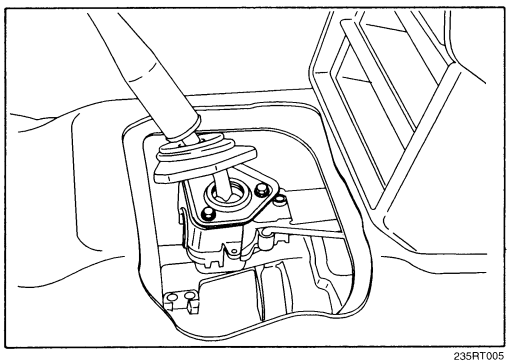

Gear Shift Lever

1. Place the gear shift lever in the neutral position.
2. Remove the gear shift lever knob.
3. Remove the front console assembly.
4. Remove the gear shift lever grommet and dust cover.
5. Remove the gear shift lever cover bolts.
6. Remove the gear shift lever.

Note:
Cover the shift lever hole to prevent the entry of foreign material into the transmission.

Lifting the Vehicle

1. Jack up the vehicle.
2. Place chassis stands at the front and the rear of the vehicle.

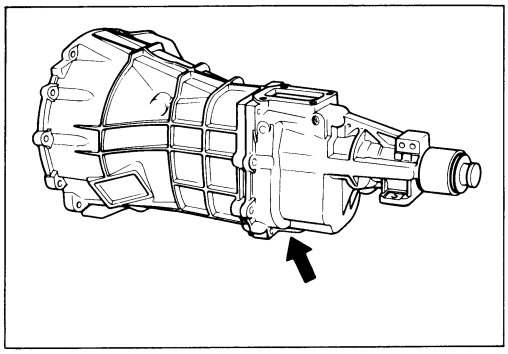

Transmission Oil Draining

1. Remove the transmission oil drain plug.
2. Replace the drain plug after draining the oil.

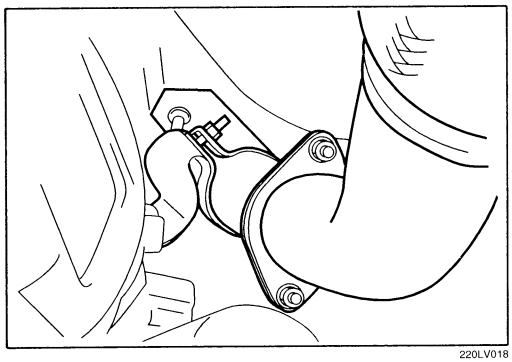

Exhaust Pipe

1. Remove the exhaust pipe bracket from the transmission case.
2. Remove the front exhaust pipe and 2nd-3rd exhaust pipe.

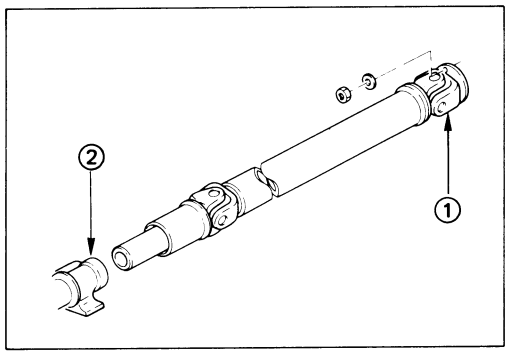

Rear Propeller Shaft (Single Shaft Type)

1. Remove the propeller shaft flange yoke at the drive pinion side ①.
2. Remove the propeller shaft from the transmission main shaft spline ②.

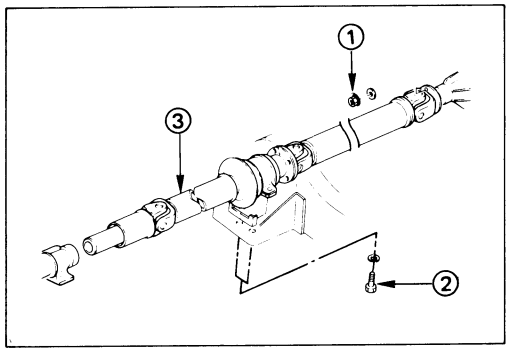

Rear Prppeller Shaft (Dual Shaft Type)

1. Apply setting marks to the 2nd propeller shaft flange yoke.
   This will prevent mispositioning during the installation procedure.
2. Remove the 2nd propeller shaft flange yoke bolts at the drive pinion side ①.
3. Remove the center bearing retainer bolts ②.
4. Remove the 1st propeller shaft ③ with the center bearing and the 2nd propeller shaft.
   Pull the 1st propeller shaft toward the rear of the vehicle unit the spline yoke is free of the transmission main shaft.

Harness Connector

Disconnect the back up light switch connector and the speedometer sensor connector.

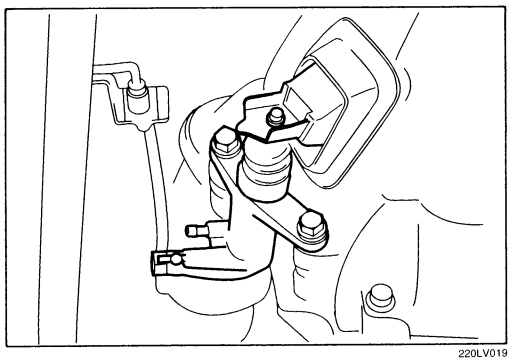

Slave Cylinder

Remove the slave cylinder from the transmission case.

Engine Lifting Hanger

1. Attach the engine lifting hanger to the front portion of the engine.
2. Attach the lifting wire to both ends of the engine lifting hanger.

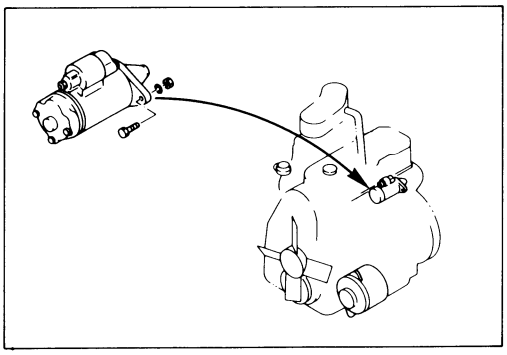

Starter Motor

Remove the starter motor from the engine rear plate.

Flywheel Under Cover (6VD1)

Remove flywheel under cover bolts.

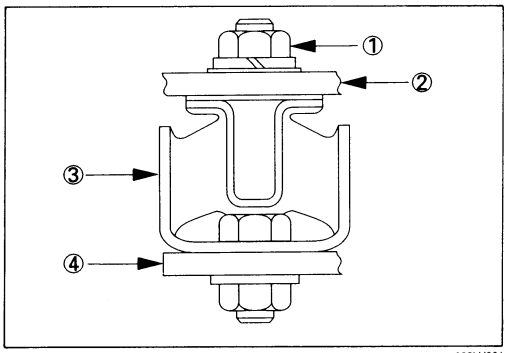

022LV001

Transmission

1. Support the transmission with a transmission jack.
2. Remove the engine rear mounting rubber nuts ① from the transmission ②.
3. Remove the rear mounting rubber ③ from the No.3 crossmember ④.
4. Remove the gear control box from the transmission.

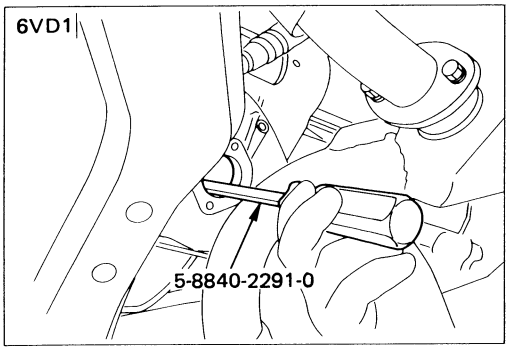

5. Use the remover for disconnect the clutch release bearing from the clutch pressure plate (6VD1).

   Clutch release bearing remover : 5-8840-2291-0 (J-39207)

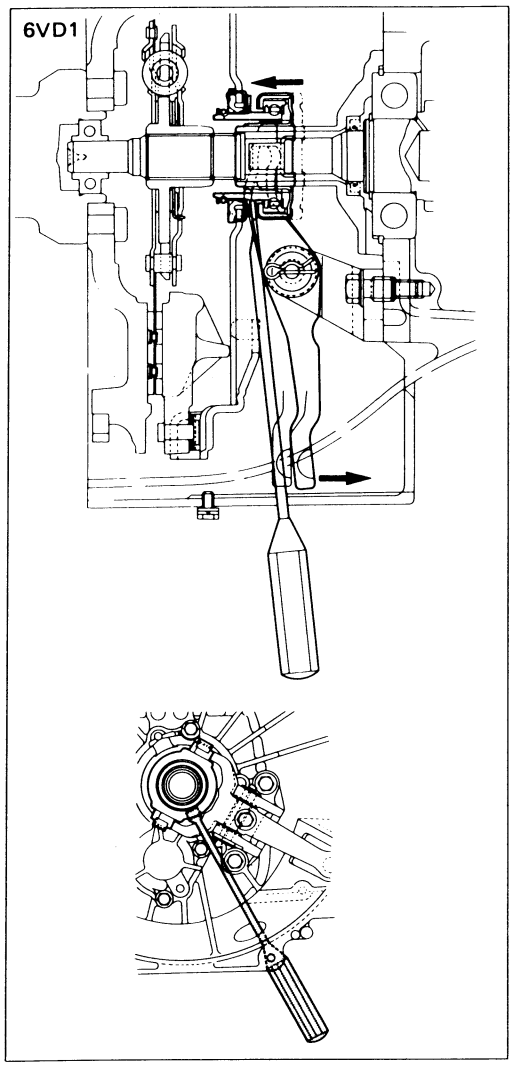

Release Bearing Disconnection (6VD1)

① Pull the shift fork toward the transmission to press the clutch release bearing against the clutch.
② Insert the clutch release bearing remover between the wedge collar and the release bearing.
③ Turn the remover to separate the release bearing.

NOTE:
Be sure not to insert the remover between the wedge collar and the clutch.

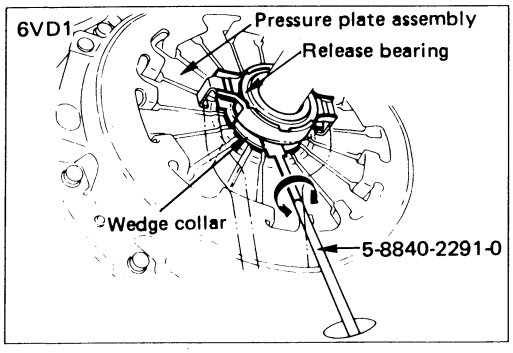

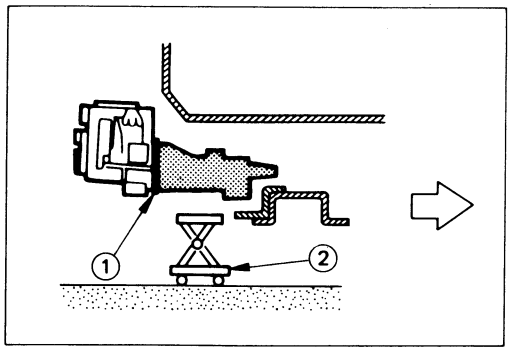

6. Remove the transmission from the engine.

   The removal of the transmission will require the cooperative efforts of two mechanics.

   1) Remove the transmission nuts and bolts ① from the engine rear plate.
   2) Place a transmission jack ② beneath the transmission.

      Do not raise the transmission jack.

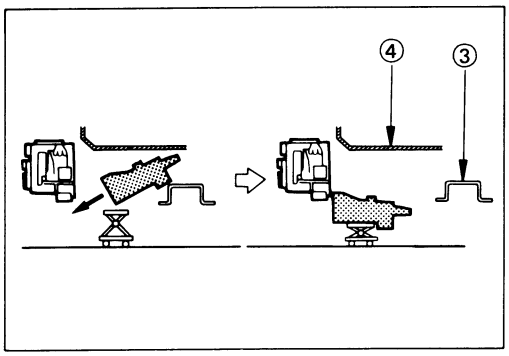

3) Manually move the transmission as far as possible toward the rear of the vehicle (into the space between the No.3 crossmember ③ and the floor panel ④.

4) Lower the clutch housing end of the transmission toward the transmission jack.

   The rear of the transmission is supported by the No. 3 crossmember at this time.

5) Firmly grasp the transmission rear cover (1st mechanic).

   Raise the transmission jack toward the transmission (2nd mechanic).

   Carefully lower the transmission onto the transmission jack.

   The transmission must be centered on the transmission jack.

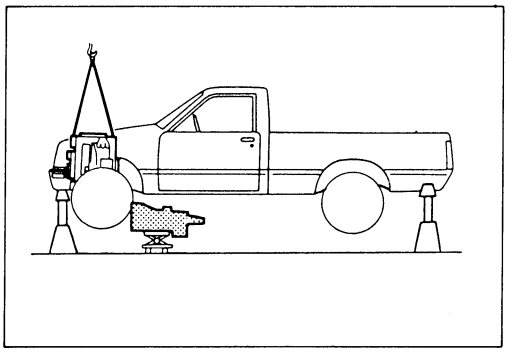

7. Carefully pull the transmission jack with the transmission from beneath the vehicle.

Important Operations — Installation

Follow the removal procedure in the reverse order to perform the installation procedure. Pay careful attention to the important points during the installation procedure.

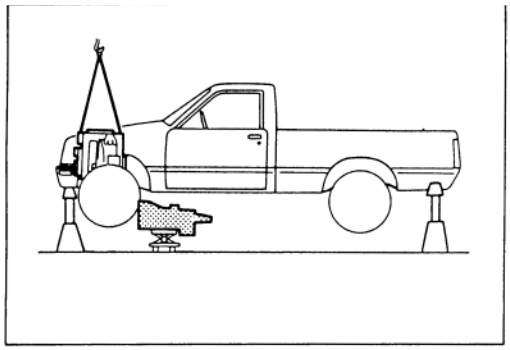

Transmission

1. Apply a thin coat of molybdenum disulfide grease to the top gear shaft spline.
2. Place the transmission on a transmission jack.
3. Carefully move the transmission jack and transmission into position behind the engine.

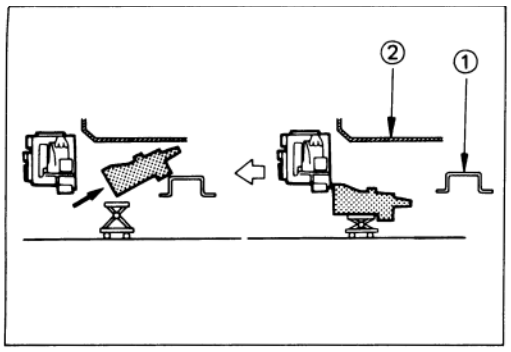

4. Slowly operate the transmission jack to raise the transmission until the rear of the transmission is at the same level as the No.3 crossmember ①.
5. Manually support the transmission rear cover.

   Move the transmission into position between the No.3 crossmember and the floor panel ②.

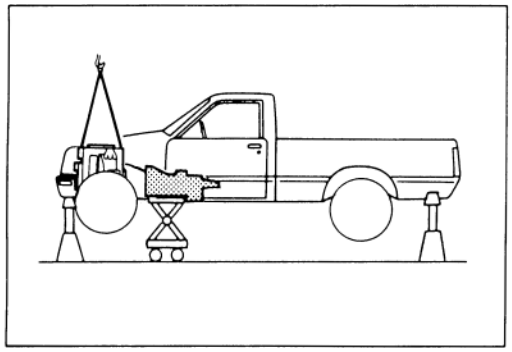

6. Slowly raise the transmission jack until the front of the transmission is aligned with the rear of the engine.

   The slope of the engine and the transmission must be the same.
7. Install the gear control box to the transmission.

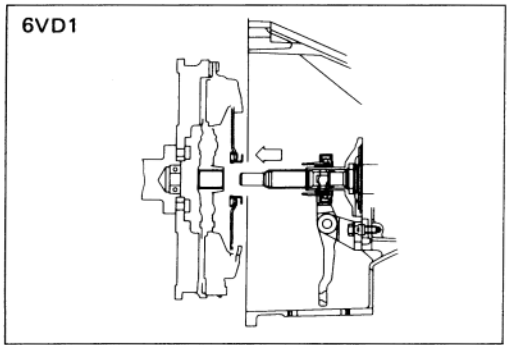

8. Align the top gear shaft spline with the clutch drive plate spline.
9. Install the transmission to the engine.

   Tighten the transmission nuts and bolts to the specified torque.

Transmission Nut and Bolt Torque	kg·m(lb·ft/N·m)
M10: 4.1 ± 1.0 (30 ± 7.2/40 ± 10)	
M12: 8.0 ± 1.6 (58 ± 12/78 ± 16)	

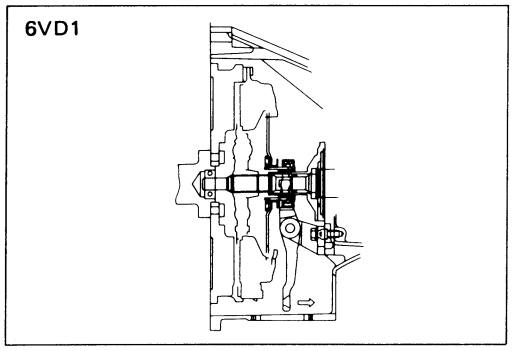

10. Apply a force of 59–78N (6–8 kg / 13.2–17.6 lb) to the tip of the shift fork in the direction of the transmission to engage the clutch pressure plate and release bearing (6VD1).

NOTE (6VD1):
A click sound is heard when the release bearing and the tip of the diaphragm spring engage each other.
Check to see if they are securely engaged by pushing the tip of the shift fork toward the engine while applying a force of about 25N (2.5 kg / 5.5 lb). If the shift fork will not move, then they are securely engaged.

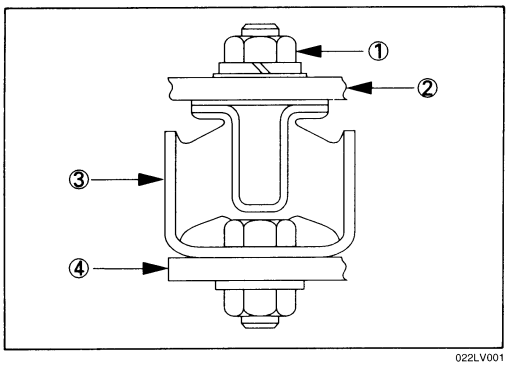

11. Install the rear mounting rubber ③ to the transmission ②.
    Install the rear mounting rubber ③ to the No.3 cross-member ④.
12. Tighten the rear mounting rubber nuts ① to the specified torque.

Rear Mounting Rubber Nut Torque	kg·m(lb·ft/N·m)
4.2 ± 0.5 (30 ± 3.6/41 ± 4.9)	

Mounting Bolt Torque	kg·m(lb·ft/N·m)
5.1 ± 0.6 (37 ± 4.3/50 ± 6)	

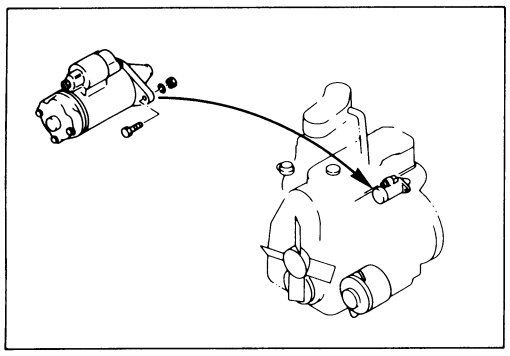

Starter Motor

1. Install the starter motor to the engine rear plate.
2. Tighten the starter motor bolts to the specified torque.

Starter Motor Bolt Torque	kg·m(lb·ft/N·m)
8.0 ± 1.6 (58 ± 12/78 ± 16)	

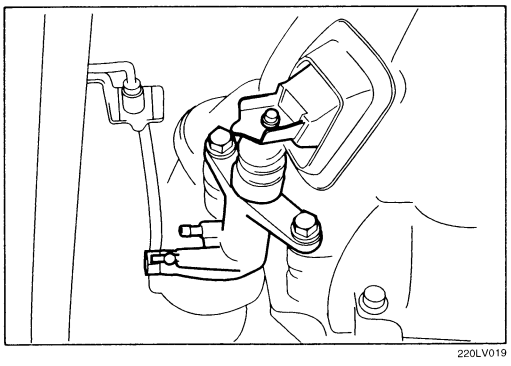

Slave Cylinder

Install the slave cylinder to the transmission case.

Slave Cylinder Bolt Torque	kg·m(lb·ft/N·m)
4.1 ± 1.0 (30 ± 7.2/40 ± 10)	

Harness Connector

Connect the back up light switch connector and speedometer sensor connector.

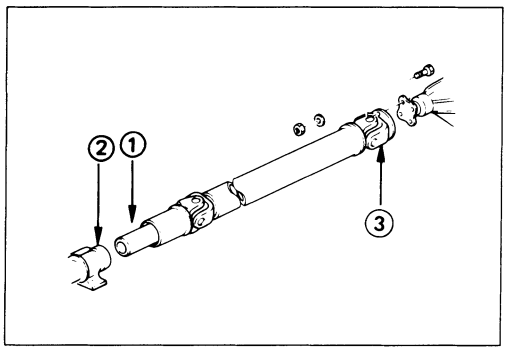

Rear Propeller Shaft (Single Shaft Type)

1. Insert the splined yoke ① with the propeller shaft into the transmission main shaft spline ②.
2. Install the propeller shaft flange yoke ③ to the drive pinion side.
3. Tighten the propeller shaft flange yoke bolt to the specified torque.

Propeller Shaft Flange Yoke Bolt Torque kg·m(lb·ft/N·m)
6.4 ± 0.4 (46.3 ± 2.9/62.7 ± 3.9)

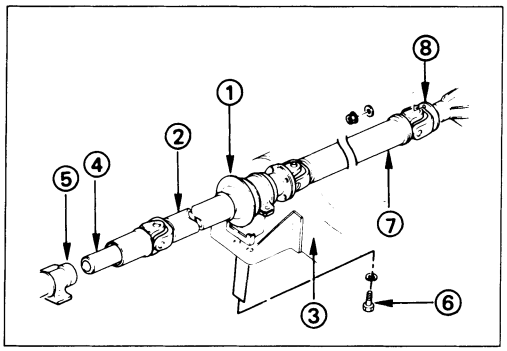

Rear Propeller Shaft (Dual Shaft Type)

1. Place the center bearing and retainer ① together with the 1st propeller shaft ② and 2nd propeller shaft ⑦ on the No.4 crossmember ③.
2. Insert the splined yoke ④ into the transmission main shaft spline ⑤.
3. Tighten the center bearing retainer bolts ⑥ to the specified torque.

Center Bearing Retainer Bolt Torque kg·m(lb·ft/N·m)
6.2 ± 1.2 (44.8 ± 8.7/60.8 ± 11.8)

4. Connect the 2nd propeller shaft ⑦ and drive pinion side ⑧.

   Be sure to align the setting marks applied at disassembly.
5. Tighten the coupling bolts to the specified torque.

Propeller Shaft Flange Yoke Bolt Torque kg·m(lb·ft/N·m)
6.4 ± 0.4 (46.3 ± 2.9/62.7 ± 3.9)

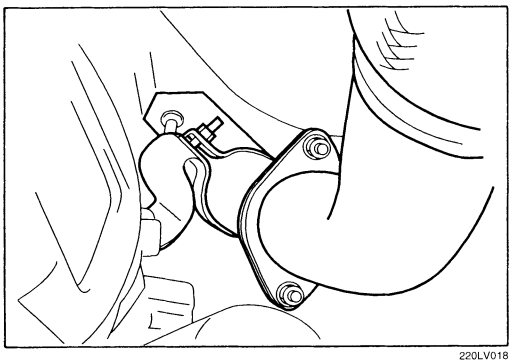

Exhaust Pipe

1. Install the front exhaust pipe and 2nd-3rd exhaust pipe.
2. Install the exhaust pipe bracket to the transmission case.

Gear Shift Lever

1. Replenish the transmission case with the specified engine oil.

Transmission Case Oil	lit(US/UK gt.)
2.95 (3.12/2.6)	

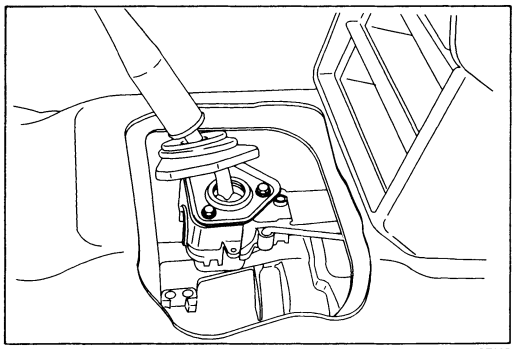

2. Install the gear shift lever to the gear control box.
3. Tighten the gear shift lever cover bolts to the specified torque.

Shift Lever Cover Bolt Torque	kg·m(lb·ft/N·m)
2.0 ± 0.2 (14.5 ± 1.5/19.6 ± 1.96)	

4. Install the dust cover and the grommet.
5 Install the front console assembly.
6. Install the gear shift lever knob.

Lowering the Vehicle

1. Place a jack beneath the vehicle.
2. Raise the jack to remove the chassis stands.
3. Lower the vehicle to the ground.

Engine Hood

Align the setting marks (applied at removal) on the engine hood and the engine hood hinges to install the engine hood.

Battery Cable

Connect the negative (–) cable to the battery terminal.

DISASSEMBLY

MAJOR COMPONENTS

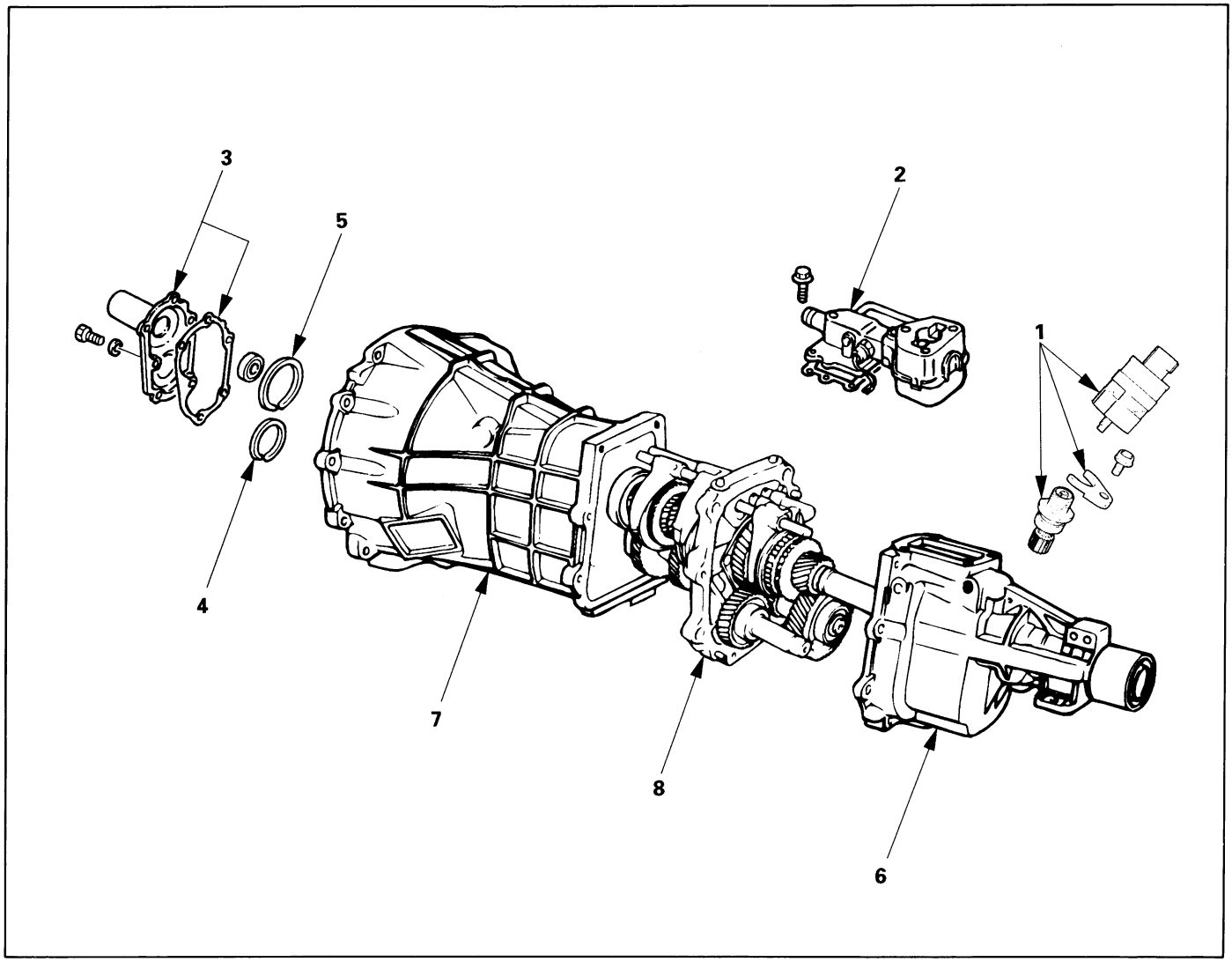

220LV004

Disassembly Steps

- ▲ 1. Speedometer sensor and speedometer driven gear
- 2. Gear control box assembly
- ▲ 3. Front cover with oil seal
- ▲ 4. Counter front bearing snap ring
- ▲ 5. Front bearing snap ring
- 6. Rear cover with oil seal
- 7. Transmission case
- 8. Intermediate plate with gear assembly

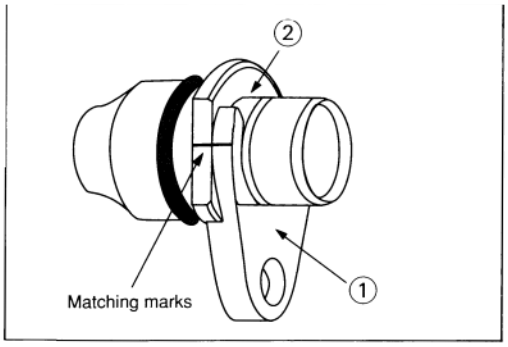

Important Operations

1. Speedometer Sensor and Speedometer Driven Gear

Mark the plate ① and bush ② alignment for reassembly.

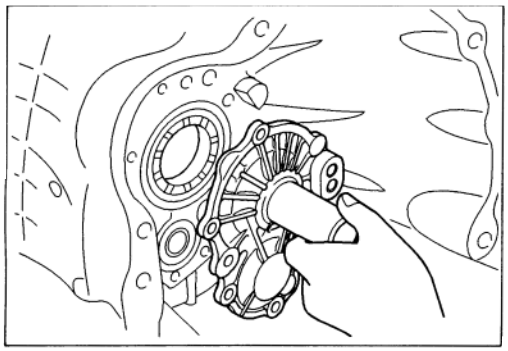

3. Front Cover with Oil Seal

Remove the front cover with oil seal from the transmission case

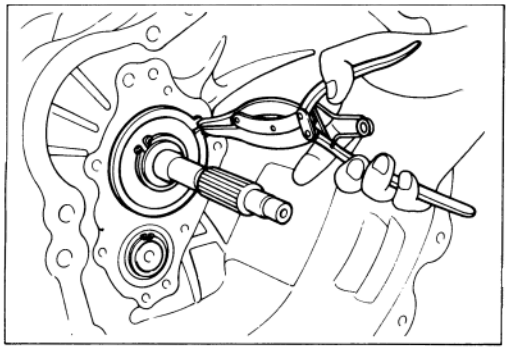

4. Counter Front Bearing Snap Ring

5. Front Bearing Snap Ring

Use a pair of snap ring pliers to remove the snap ring.

MINOR COMPONENTS

INTERMEDIATE PLATE AND GEAR ASSEMBLY, DETENT, SHIFT ARM ASSEMBLY, AND INTERLOCK PIN

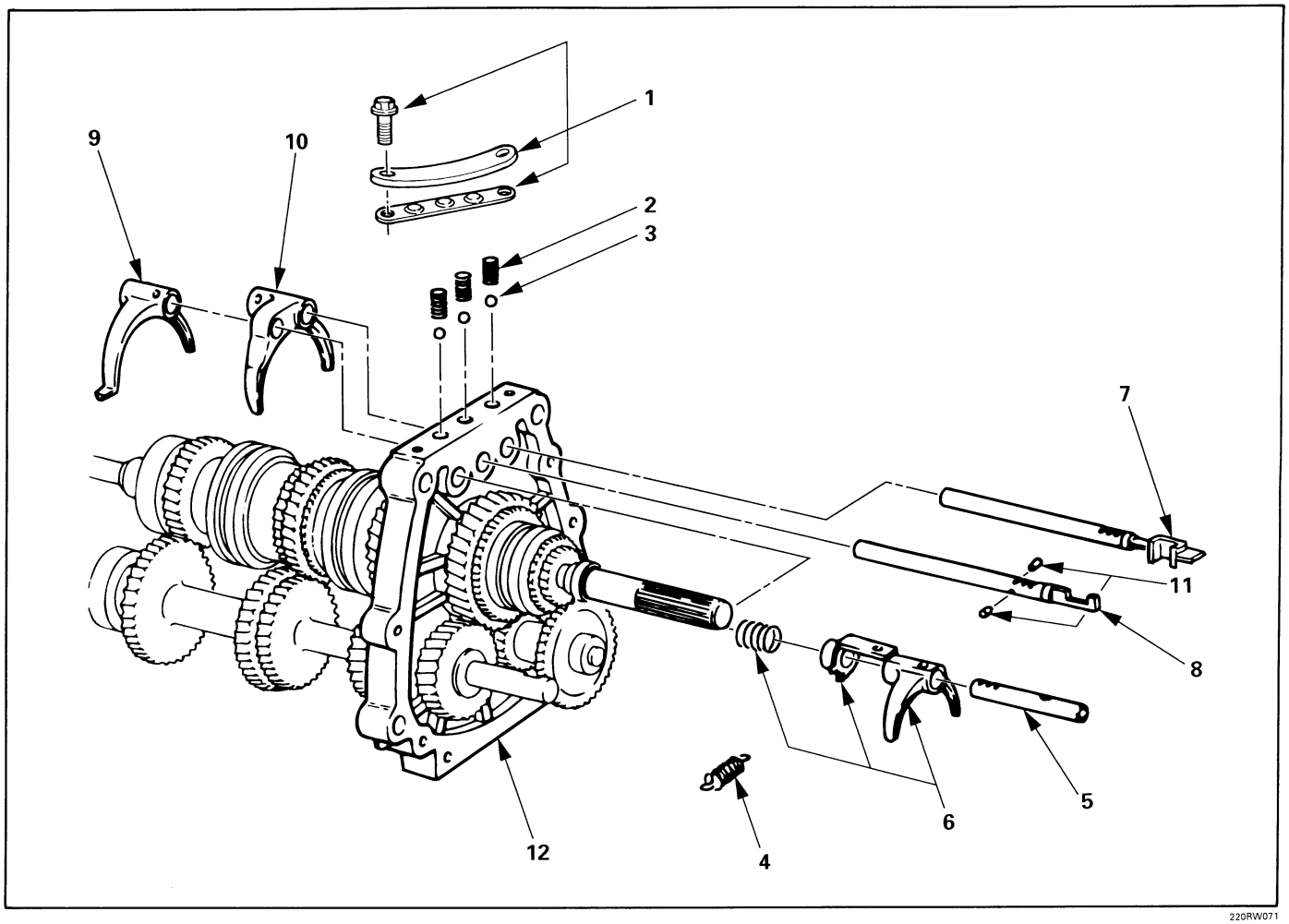

Disassembly Steps

1. Detent spring plate and gasket
2. Detent spring
▲ 3. Detent ball
4. Spring
5. Rev-5th shift rod
6. Rev-5th shift arm and reverse inhibitor
7. 1st-2nd shift rod
▲ 8. 3rd-4th shift rod
▲ 9. 3rd-4th shift arm
▲ 10. 1st-2nd shift arm
11. Interlock pin
12. Intermediate plate and gear assembly

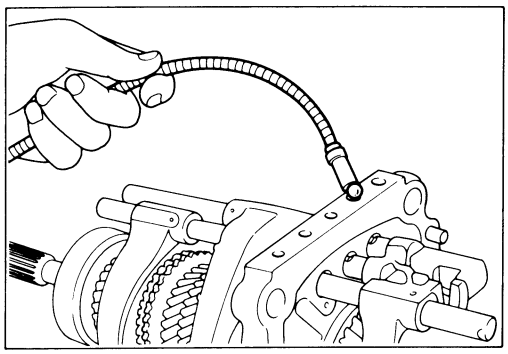

Important Operations

3. Detent Ball

Use a magnetic hand to remove the detent balls from the intermediate plate.

Take care not to lose the detent balls.

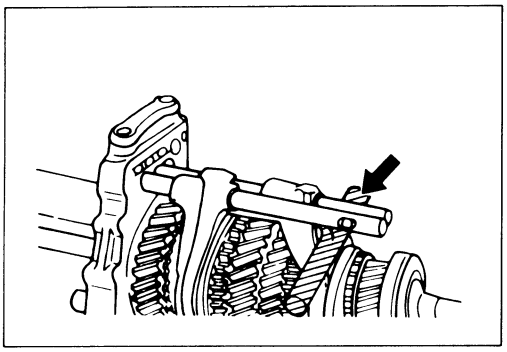

8. 3rd-4th Shift Rod

9. 3rd-4th Shift Arm

10. 1st-2nd Shift Arm

1) Hold a round bar against the shift arm end.

   This will prevent damage to other components.

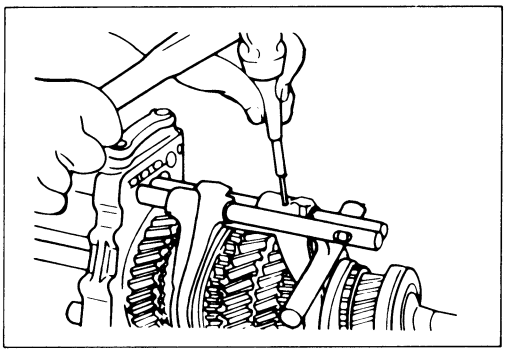

2) Use a spring pin remover to remove the shift arm spring pin from the shift arm and the shift rod.
3) Move the 3rd-4th shift rod forward.

   Take care not to lose the interlock pins.

REVERSE GEAR AND 5TH GEAR

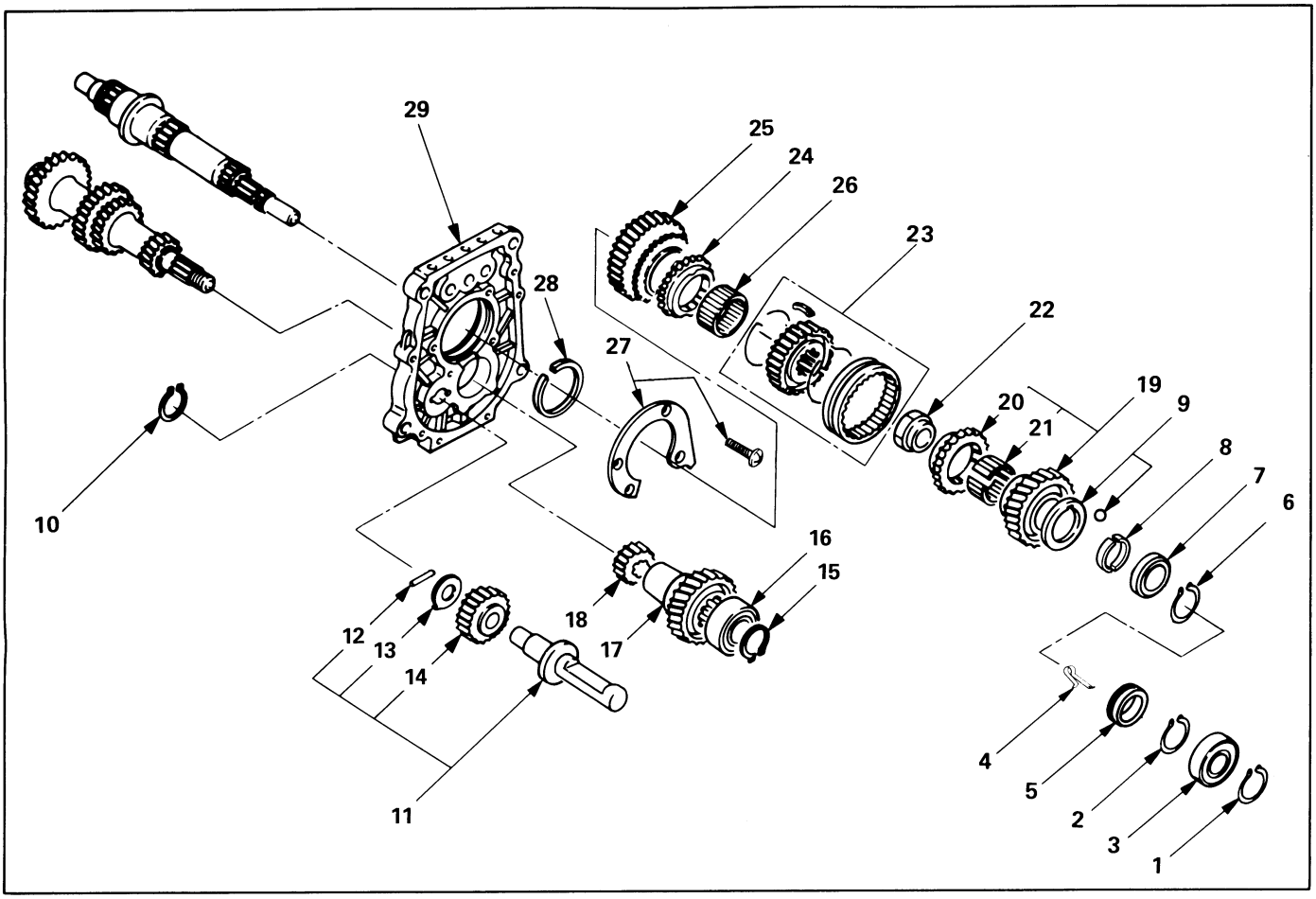

Disassembly Steps

1. Bearing snap ring
2. Bearing snap ring
▲ 3. Ball bearing
4. Clip
5. Speedometer drive gear
6. Retainer snap ring
7. Retaining ring
8. Thrust plate
9. Thrust washer and lock ball
▲ 10. Reverse gear snap ring
11. Reverse shaft
12. Idler shaft pin
13. Thrust washer
14. Reverse idler gear
15. Bearing snap ring
▲ 16. Ball bearing
▲ 17. Counter 5th gear
18. Counter reverse gear
19. 5th gear
20. 5th block ring
▲ 21. Needle bearing
▲ 22. Mainshaft nut
▲ 23. Rev-5th synchronizer assembly
▲ 24. Reverse block ring
▲ 25. Reverse gear
26. Needle bearing
▲ 27. Bearing plate and screw
▲ 28. Bearing snap ring
▲ 29. Intermediate plate

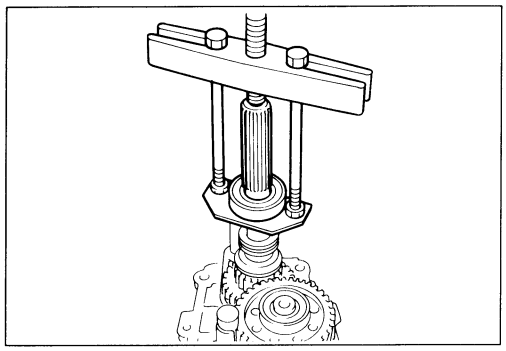

Important Operations

3. Ball Bearing

Set the bearing remover to the bearing and the mainshaft end to remove the bearing.

Bearing Remover : 5-8840-2155-0 (J-32717)
Puller : 5-8840-2027-0

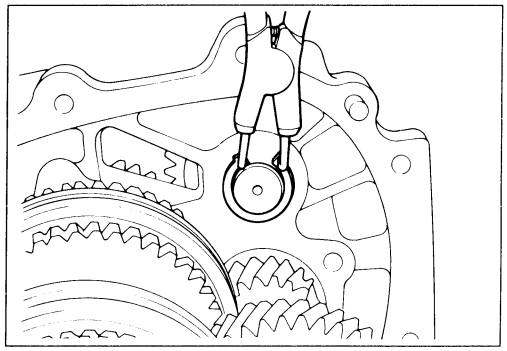

10. Reverse Gear Snap Ring

Use a pair of snap ring pliers to remove the snap ring.

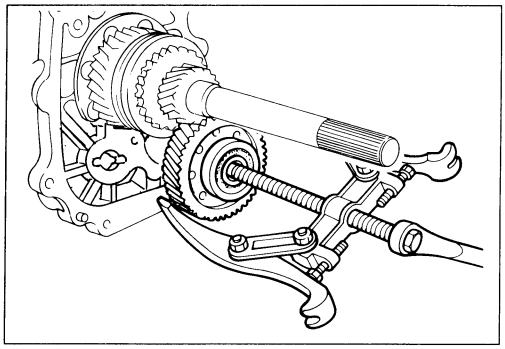

16. Ball Bearing
17. Counter 5th Gear

Use the bearing remover to remove the bearing.

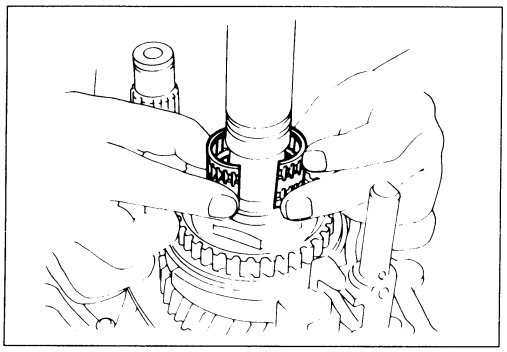

21. Needle Bearing

Remove the needle bearing (2 piece type).

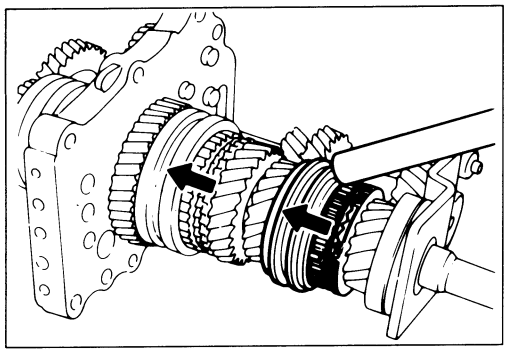

22. Mainshaft Nut

1) Engage the 3rd - 4th synchronizer with the 3rd gear.
2) Engage the 1st-2nd synchronizer with the 1st gear.
3) Attach the holding fixture to the mainshaft and the counter gear.

   Holding Fixture: 5-8840-2160-0 (J-37224)

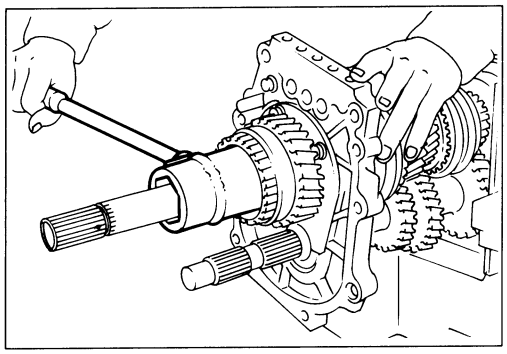

4) Use the mainshaft nut wrench to remove the mainshaft nut.

   Wrench: 5-8840-2156-0 (J-37219)

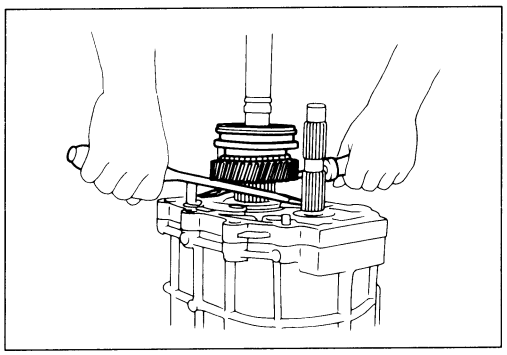

23. Rev.-5th Synchronizer Assembly

24. Reverse Ring

25. Reverse Gear

Use screw drivers between the reverse gear and bearing plate to remove the Rev.-5th synchronizer assembly together with reverse ring and gear.

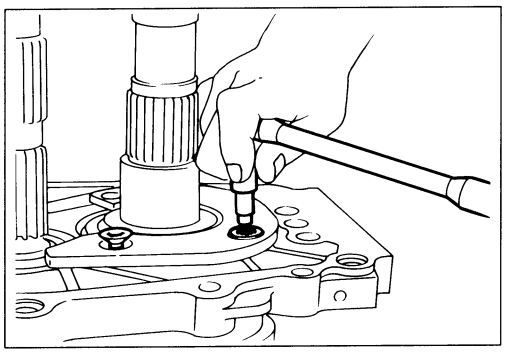

27. Bearing Plate and Screw

Use the torx bit wrench to remove the bearing plate screw from the intermediate plate.

Torx Bit Wrench: 5-8840-0047-0 (J-37225 : T45)

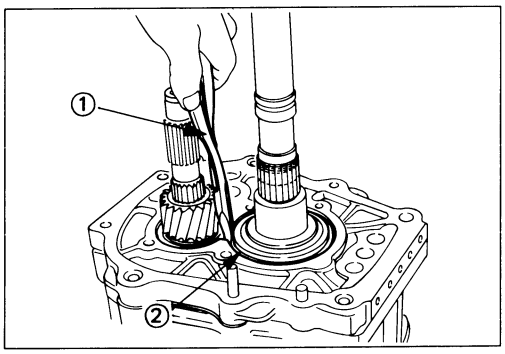

28. Bearing Snap Ring

29. Intermediate Plate

1) Insert the snap ring pliers into the mainshaft bearing snap ring hole.
2) Use the snap ring pliers ① to force open the mainshaft bearing snap ring ②.

   Hold the snap ring open with the pliers.
3) Push the intermediate plate toward the rear of the transmission to remove it.

   The ball bearing snap ring will come free.

TOP GEAR SHAFT, MAIN GEAR SHAFT, AND COUNTER GEAR

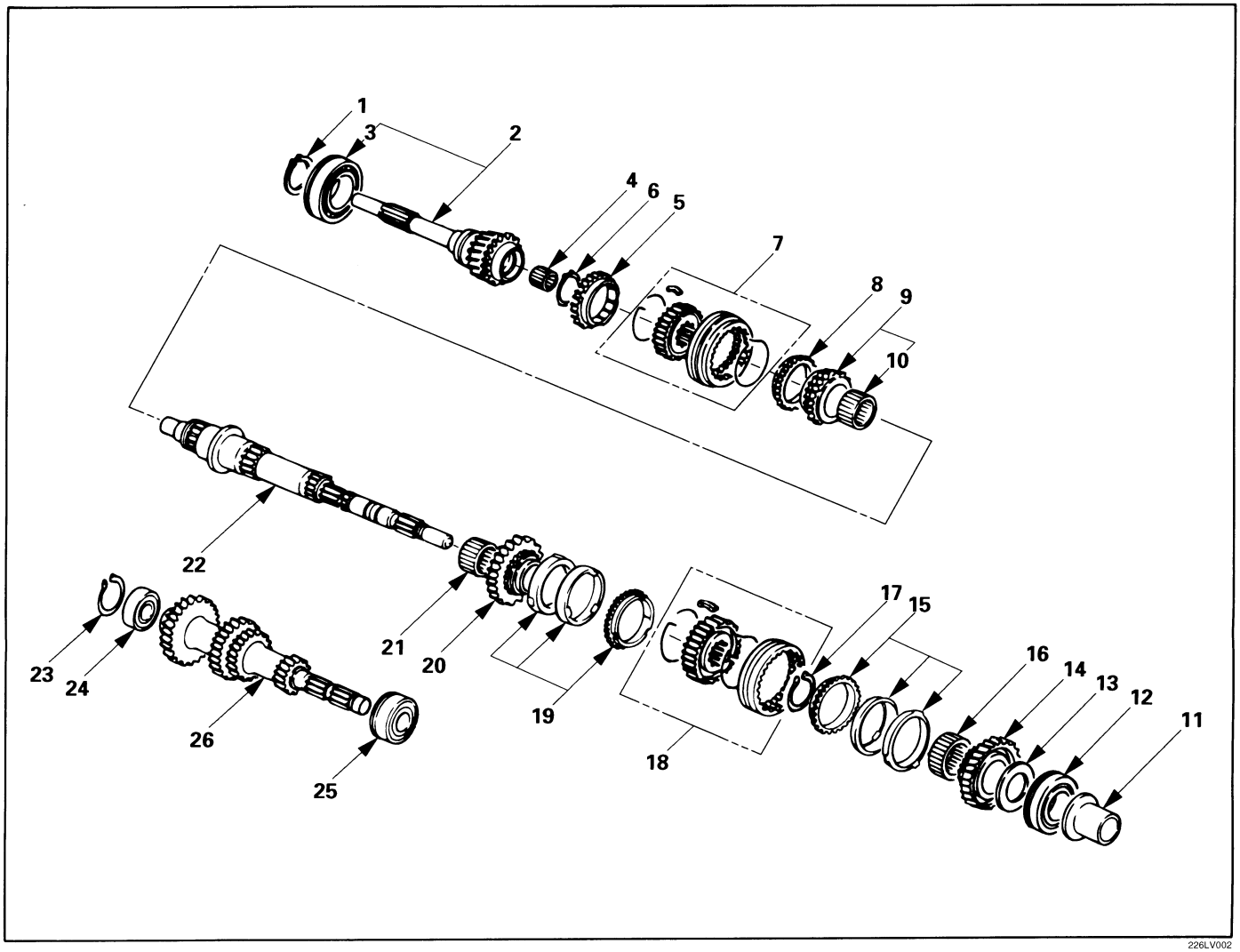

Disassembly Steps

1. Top gear shaft snap ring
2. Top gear shaft
3. ▲ Top gear ball bearing
4. Needle bearing
5. Top block ring
6. ▲ Mainshaft snap ring
7. ▲ 3rd-4th synchronizer assembly
8. 3rd block ring
9. 3rd gear
10. Needle bearing
11. ▲ Needle bearing collar
12. ▲ Mainshaft ball bearing
13. ▲ 1st gear thrust bearing and plate
14. ▲ 1st gear
15. 1st block ring (set)
16. Needle bearing
17. ▲ Clutch hub snap ring
18. ▲ 1st-2nd synchronizer assembly
19. ▲ 2nd block ring (set)
20. ▲ 2nd gear
21. Needle bearing
22. Mainshaft
23. Bearing snap ring
24. ▲ Counter gear front bearing
25. Counter gear center bearing
26. Counter gear

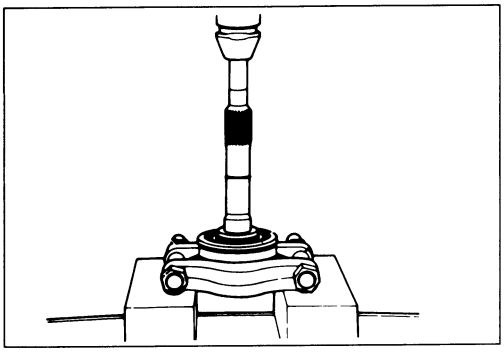

Important Operations

3. Top Gear Ball Bearing

Use a bench press and the bearing replacer to remove the ball bearing.

Bearing Replacer : 5-8840-0015-0 (J-22912-01)

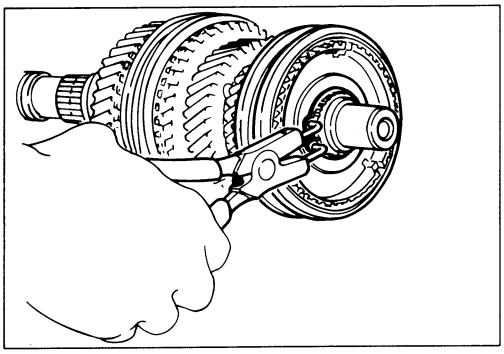

6. Mainshaft Snap Ring

Use a pair of snap ring pliers to remove the snap ring.

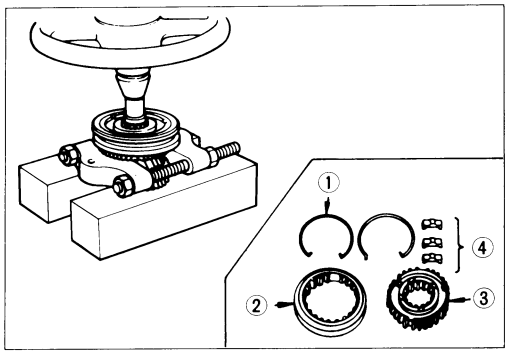

7. 3rd-4th Synchronizer Assembly

1) Use a bench press and the bearing replacer to remove the synchronizer assembly as a set.
2) Disassemble the synchronizer assembly.
   ① Springs
   ② Sleeve
   ③ Clutch Hub
   ④ Inserts

Note:

Mark the hub and sleeve alignment for reassembly.

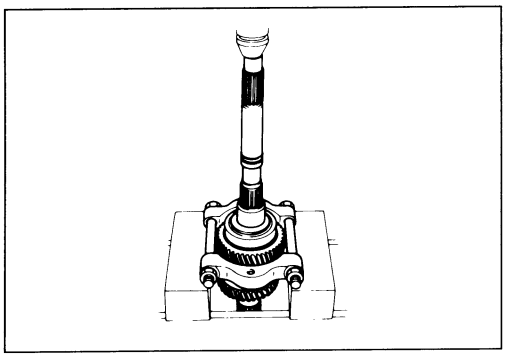

11. Needle Bearing Collar

12. Mainshaft Ball Bearing

13. 1st Gear Thrust Bearing and Plate

14. 1st Gear

Use a bench press and the bearing replacer to remove the ball bearing.

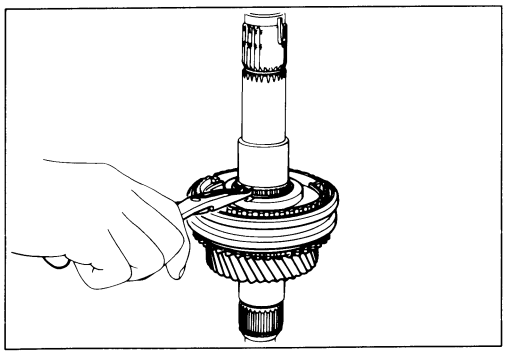

17. Clutch Hub Snap Ring

Use a pair of snap ring pliers to remove the snap ring.

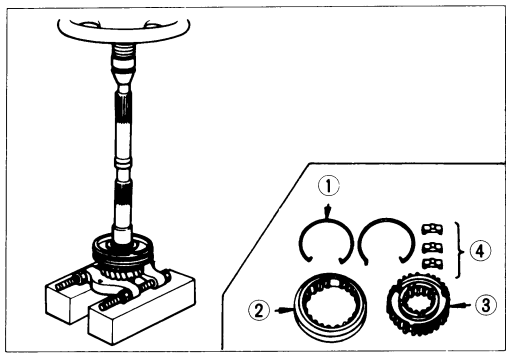

18. 1st-2nd Synchronizer Assembly

19. 2nd Block Ring (Set)

20. 2nd Gear

1) Use a bench press and the bearing remover to remove the 2nd gear together with synchronizer assembly.

   Remover: 5-8840-0015-0 (J-22912-01)

2) Disassemble the synchronizer assembly.

   ① Springs
   ② Sleeve
   ③ Clutch Hub
   ④ Inserts

Note:

Mark the hub and sleeve alignment for reassembly.

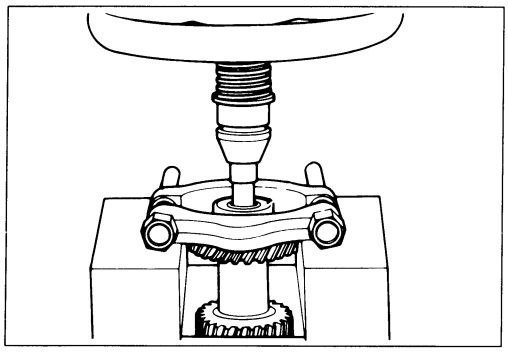

24. Counter Gear Front Bearing

Use a bench press and the bearing remover to remove the bearing.

Bearing Remover : 5-8840-0015-0 (J-22912-01)

INSPECTION AND REPAIR

Make the necessary adjustments, repairs, and part replacements if excessive wear or damage is discovered during inspection.

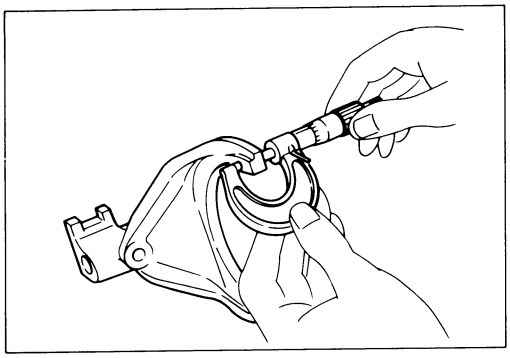

SHIFT ARM THICKNESS

Use a micrometer to measure the shift arm thickness.
If the measured value is less than the specified limit, the shift arm must be replaced.

Shift Arm Thickness — mm(in)

	Standard	Limit
1st–2nd	9.60–9.85 (0.378–0.388)	9.0 (0.354)
3rd–4th Rev.–5th	9.60–9.80 (0.378–0.386)	

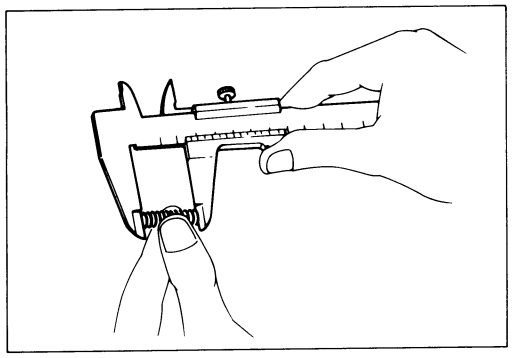

DETENT SPRING FREE LENGTH

Use a venier caliper to measure the detent spring free length.

If the measured value is less than the specified limit, the detent spring must be replaced.

Detent Spring Free Length — mm(in)

Standard	Limit
26.8 (1.06)	26.2 (1.03)

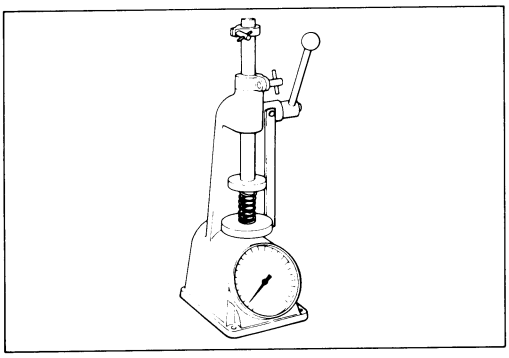

DETENT SPRING TENSION

Use a spring tester to measure the detent spring tension.

If the measured value is less than the specified standard, the detent spring must be replaced.

Detent Spring Tension — kg(lb/N)

Compressed Height	Standard
20 mm (0.787 in)	8.9–9.9 (19.6–21.8/87.2–97)

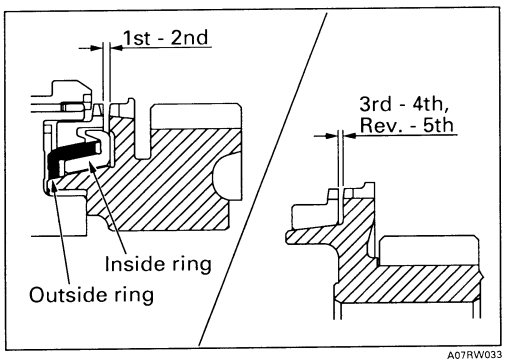

BLOCK RING AND DOG TEETH CLEARANCE

Use a thickness gauge to measure the clearance between the block ring and the dog teeth.

If the measured value exceeds the specified limit, the block ring must be replaced.

Block Ring and Dog Teeth Clearance — mm(in)

Standard	Limit
1.5 (0.059)	0.8 (0.032)

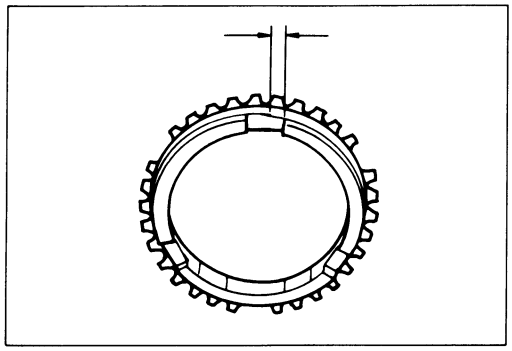

BLOCK RING AND INSERT CLEARANCE

Use a vernier caliper or thickness gauge to measure the clearance between the block ring and the insert.

If the measured value exceeds the specified limit, the block ring and the insert must be replaced.

Block Ring and Insert Clearance mm(in)

	Standard	Limit
3rd-4th	3.46–3.74 (0.136–0.147)	4.0 (0.158)
1st-2nd	4.34–4.66 (0.171–0.183)	4.9 (0.193)
Rev.-5th	3.59–3.91 (0.141–0.154)	4.1 (0.161)

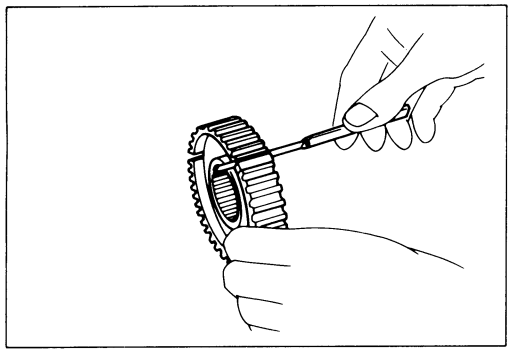

CLUTCH HUB AND INSERT CLEARANCE

Use a thickness gauge to measure the clearance between the clutch hub and the insert.

If the measured value exceeds the specified limit, the clutch hub and the insert must be replaced.

Clutch Hub and Insert Clearance mm(in)

	Standard	Limit
3rd-4th	0.01-0.19 (0.0004-0.0075)	0.4 (0.016)
1st-2nd Rev.-5th	0.09-0.31 (0.0035-0.0122)	

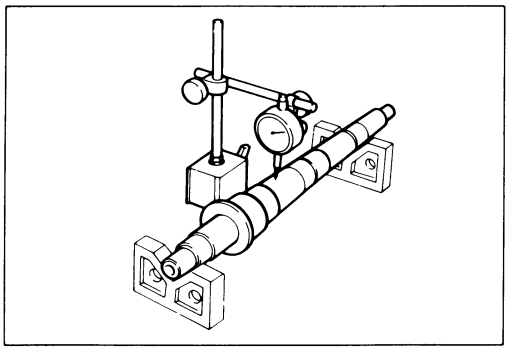

MAINSHAFT RUN-OUT

1. Install the mainshaft to a grinding machine.
2. Use a dial indicator to measure the mainshaft central portion run-out.

   If the measured mainshaft run-out exceeds the specified limit, the mainshaft must be replaced.

Mainshaft Run Out mm(in)

Limit
0.05 (0.0020)

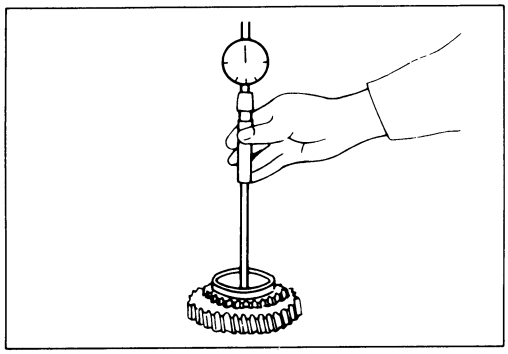

GEAR INSIDE DIAMETER

Use an inside dial indicator to measure the gear inside diameter.

If the measured value is less than the specified limit, the gear must be replaced.

Gear Inside Diameter mm(in)

	Standard	Limit
1st 3rd	45.000-45.013 (1.771-1.772)	45.100 (1.776)
2nd	52.000-52.013 (2.047-2.048)	52.100 (2.051)
Rev.	48.000-48.013 (1.889-1.890)	48.100 (1.894)
5th	32.000-32.013 (1.259-1.260)	32.100 (1.264)

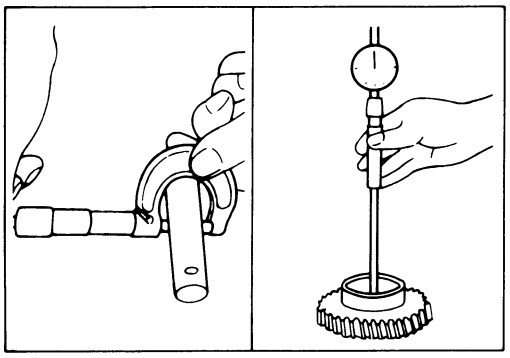

REVERSE IDLER GEAR AND IDLER GEAR SHAFT CLEARANCE

1. Use a micrometer to measure the idler gear shaft diameter.
2. Use an inside dial indicator to measure the idler gear inside diameter.
3. Calculate the idler gear and idler gear shaft clearance.

   Idler gear inside diameter – idler gear shaft diameter = idler gear and idler gear shaft clearance.

   If the measured value exceeds the specified limit, the idler gear and/or the idler gear shaft must be replaced.

Idler Gear and Idler Gear Shaft Clearance mm(in)

Standard	Limit
0.041 – 0.074 (0.0016 – 0.0029)	0.150 (0.0059)

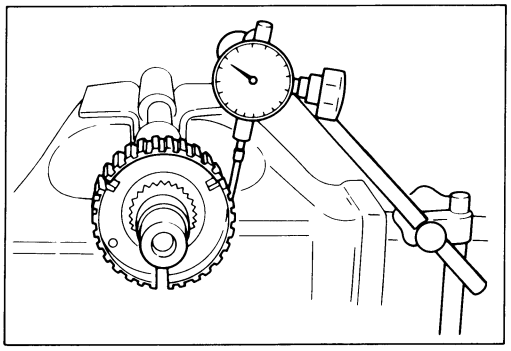

CLUTCH HUB SPLINE PLAY

1. Set a dial indicator to the clutch hub to be measured.
2. Move the clutch hub as far as possible to both the right and the left.

   Note the dial indicator reading.

   If the measured value exceeds the specified limit, the clutch hub must be replaced.

Clutch Hub Spline Play — mm(in)

	Standard	Limit
1st-2nd 3rd-4th	0-0.1 (0-0.0039)	0.2 (0.0079)
Rev.-5th	0-0.2 (0-0.0079)	0.3 (0.0118)

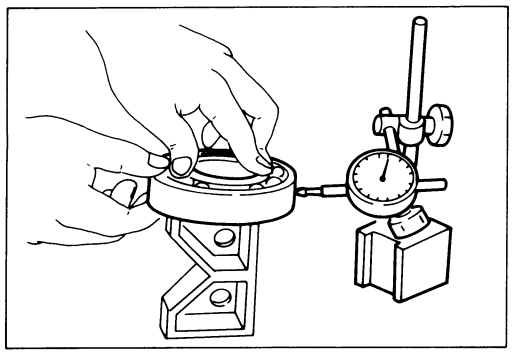

BALL BEARING PLAY

Use a dial indicator to measure the ball bearing play.

Ball Bearing Play — mm(in)

Limit
0.2 (0.0079)

FRONT COVER OIL SEAL

Oil Seal Replacement

Oil Seal Removal

Use a screwdriver to pry the oil seal from the front cover.

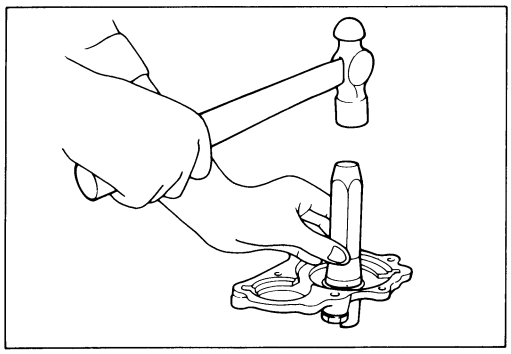

Oil Seal Installation

1. Use the oil seal installer to install the oil seal to the front cover.

   Oil Seal Installer : 5-8840-0026-0 (J-26540)
2. Apply gear oil to the oil seal lip.

REAR COVER OIL SEAL

Oil Seal Replacement

Oil Seal Removal

Use a screwdriver to pry the oil seal from the rear cover.

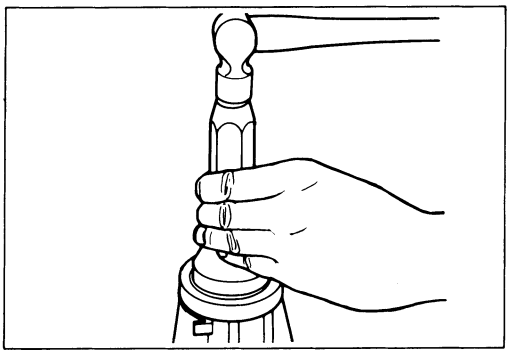

Oil Seal Installation

1. Use the oil seal installer to install the oil seal to the rear cover.

   Oil Seal Installer : 5-8522-0050 (J-29769)

2. Apply engine oil to the oil seal lip.

REASSEMBLY

MINOR COMPONENTS

TOP GEAR SHAFT, MAIN GEAR SHAFT, AND COUNTER GEAR

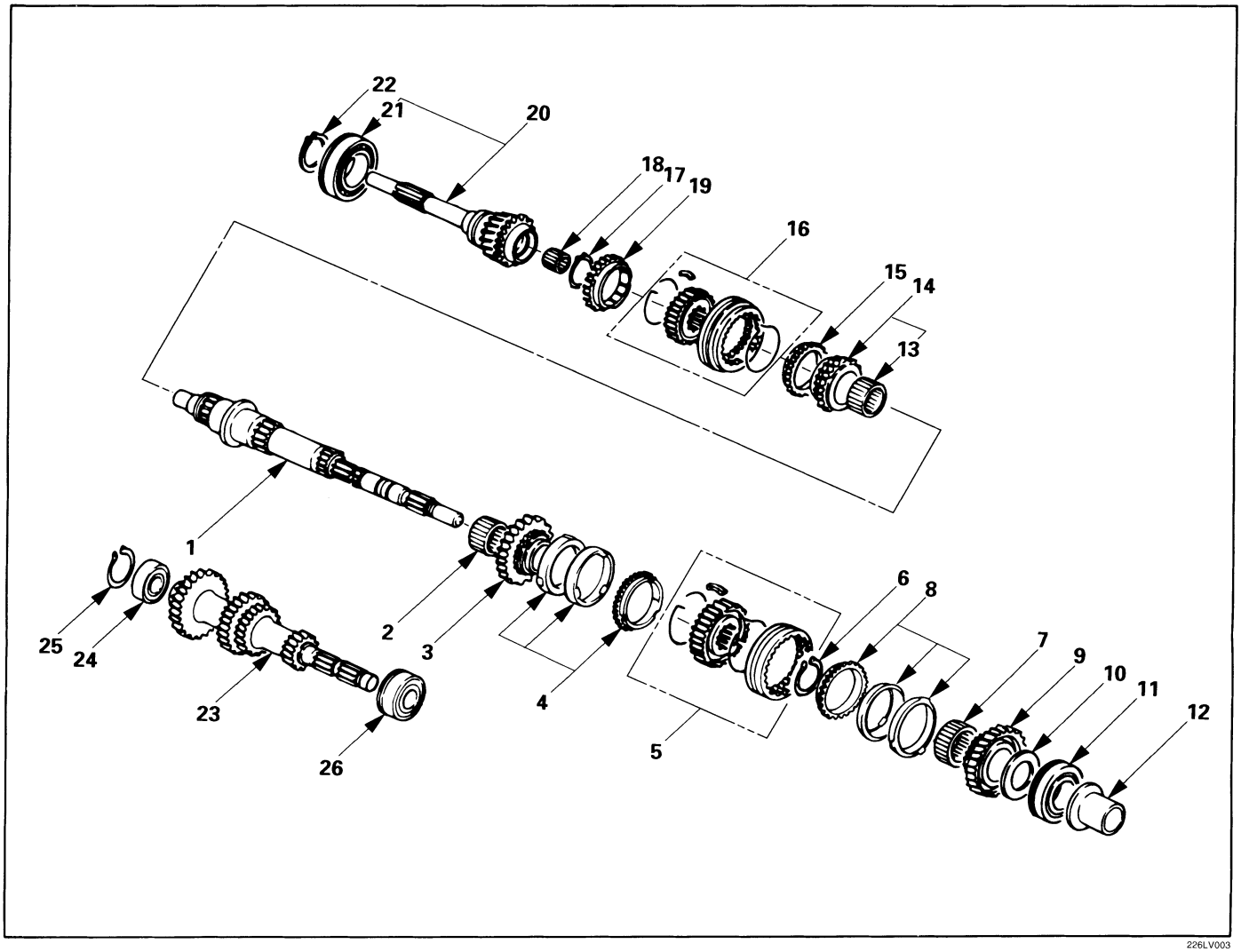

Reassembly Steps

1. Mainshaft
▲ 2. Needle bearing
▲ 3. 2nd gear
4. 2nd block ring (set)
▲ 5. 1st-2nd synchronizer assembly
▲ 6. Clutch hub snap ring
▲ 7. Needle bearing
8. 1st block ring (set)
▲ 9. 1st gear
▲ 10. 1st gear thrust bearing and plate
▲ 11. Mainshaft ball bearing
▲ 12. Needle bearing collar
▲ 13. Needle bearing
▲ 14. 3rd gear
15. 3rd block ring
▲ 16. 3rd-4th synchronizer assembly
▲ 17. Mainshaft snap ring
18. Needle bearing
19. Top block ring
20. Top gear shaft
▲ 21. Top gear ball bearing
▲ 22. Top gear shaft snap ring
23. Counter gear
▲ 24. Counter gear front bearing
25. Snap ring
26. Counter gear center bearing

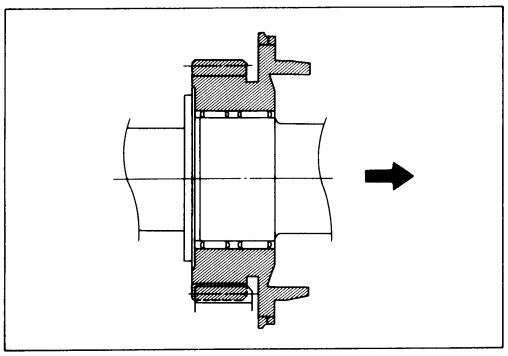

Important Operations

2. Needle Bearing

3. 2nd Gear

1) Apply engine oil to the needle bearing and the 2nd gear thrust surfaces.
2) Install the needle bearing and the 2nd gear to the mainshaft.

   The 2nd gear dog teeth must be facing the transmission rear side.

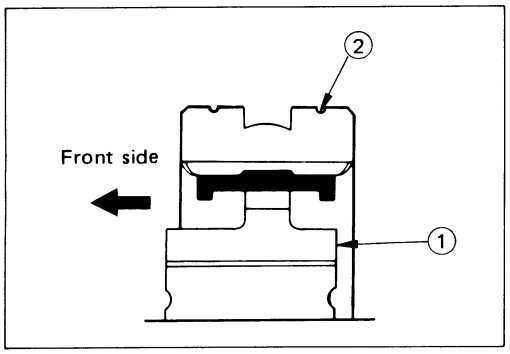

5. 1st-2nd Synchronizer Assembly

1) Turn the clutch hub face ① shallow toward the sleeve small groove ② on the outer circumference.

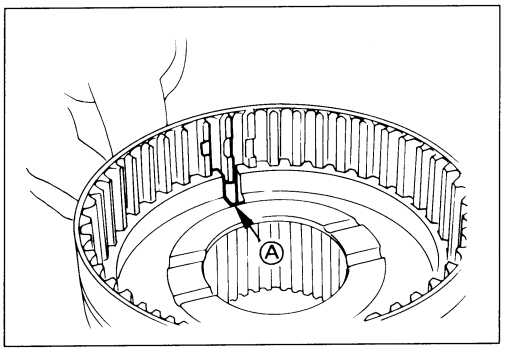

Note:
The clutch hub groove Ⓐ must be aligned with the key groove of sleeve.

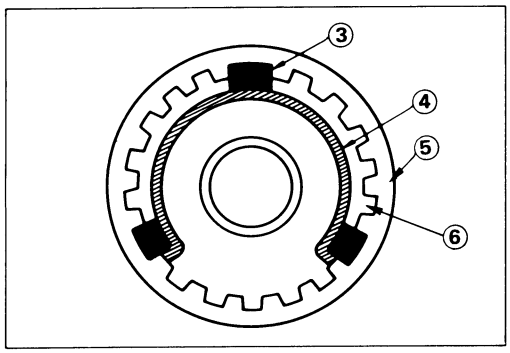

2) Check that the inserts ③ fit snugly into the block ring insert grooves.
3) Check that the insert springs ④ are fitted to the inserts as shown in the illustration.
4) Check that the clutch hub ⑤ and the sleeve ⑥ slide smoothly.
5) Install the synchronizer assembly to the mainshaft.

   The clutch hub face (with the heavy boss) must be facing the 2nd gear side.

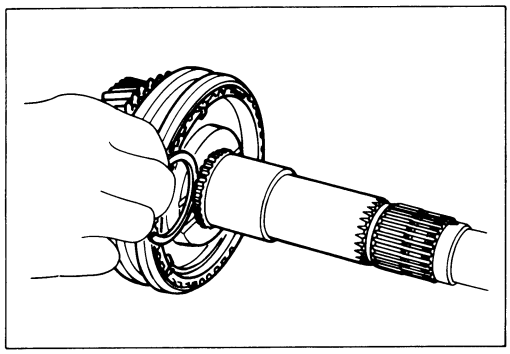

6. Clutch Hub Snap Ring

1) Select the snap ring which will provide the minimum clearance between the 1st-2nd clutch hub and the snap ring.

   There are three snap ring sizes available.

   The snap rings are color-coded to indicate their thickness.

Clutch Hub and Snap Ring Clearance	mm(in)
Standard	
0 — 0.1 (0 — 0.0039)	

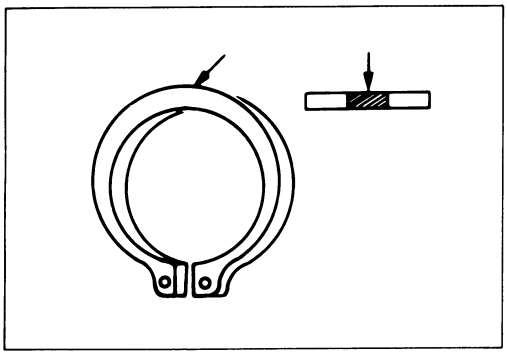

Snap Ring Availability mm(in)

Thickness	Color-Coding
1.80 (0.071)	White
1.85 (0.073)	Yellow
1.90 (0.075)	Blue

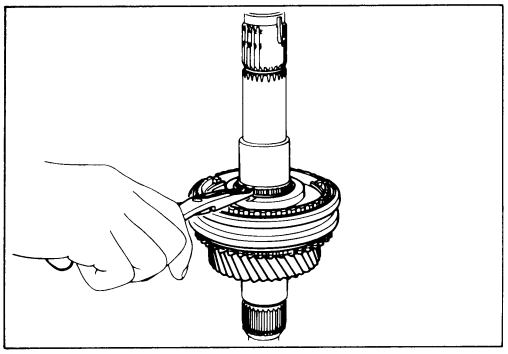

2) Use a pair of snap ring pliers to install the snap ring to the mainshaft.

   Snap Ring Pliers

   The snap ring must be fully inserted into the mainshaft snap ring groove.

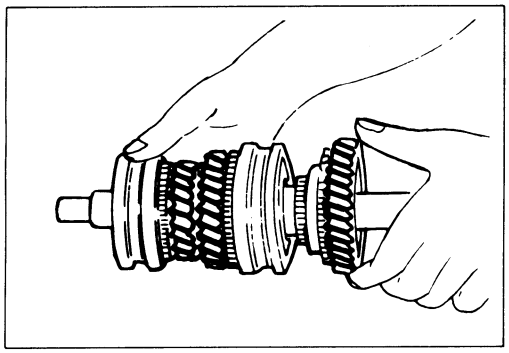

7. Needle Bearing

9. 1st Gear

1) Apply engine oil to the needle bearing and the 1st gear thrust surfaces.
2) Install the needle bearing and the 1st gear to the mainshaft.

   The 1st gear dog teeth must be facing the transmission front side.

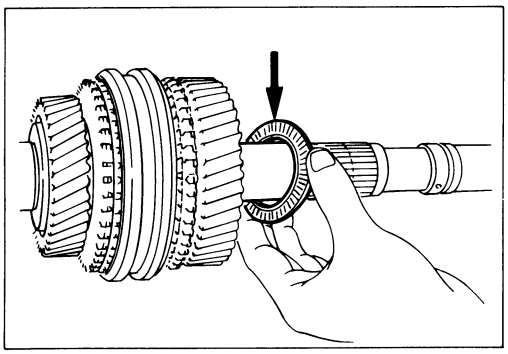

10. 1st Gear Thrust Bearing and Plate

Install the thrust bearing and the race to the main shaft.

The thrust bearing side must be facing the transmission front side.

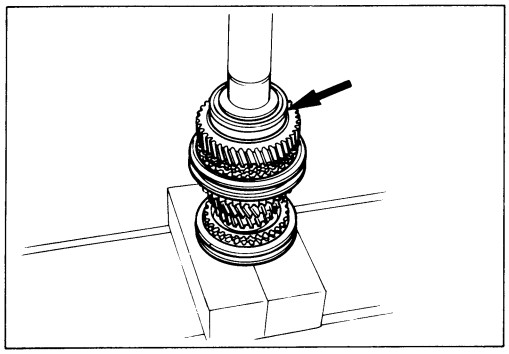

11. Mainshaft Ball Bearing

12. Needle Bearing Collar

1) Apply engine oil to the ball bearing and the mainshaft.
2) Install the ball bearing and collar to the mainshaft. The ball bearing snap ring groove must be facing the transmission rear side.
3) Use a bench press to slowly force the collar into place.

   Installer : 5-8840-2195-0 (J-6133-01)

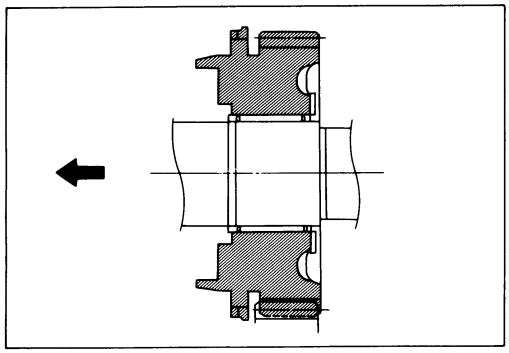

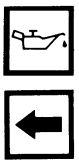

13. Needle Bearing

14. 3rd Gear

1) Apply engine oil to the needle bearing and the 3rd gear thrust surfaces.
2) Install the needle bearing and the 3rd gear to the mainshaft.

   The 3rd gear dog teeth must be facing the transmission front side.

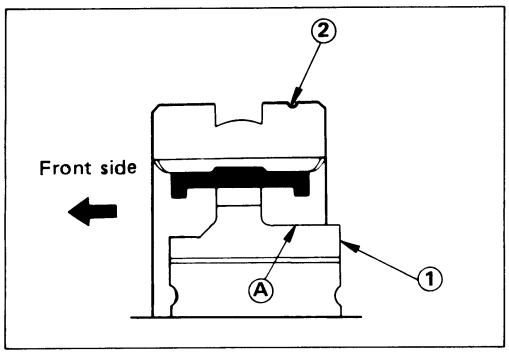

16. 3rd-4th Synchronizer Assembly

1) Turn the clutch hub face ① with the heavy boss Ⓐ toward the sleeve small groove ② on the outer circumference.

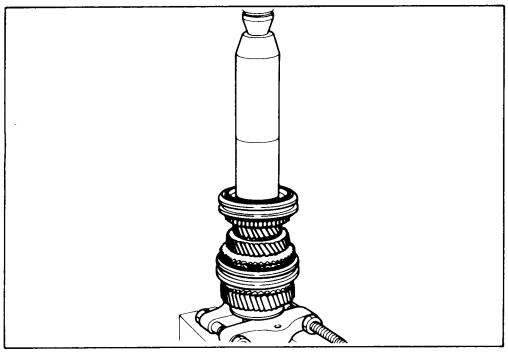

2) Check that the inserts fit snugly into the block ring insert grooves.
3) Check that the insert springs are fitted to the inserts as shown in the illustration.
4) Check that the clutch hub and the sleeve slide smoothly.
5) Install the synchronizer assembly to the main shaft.

   The clutch hub face (with the heavy boss) must be facing the 3rd gear side.

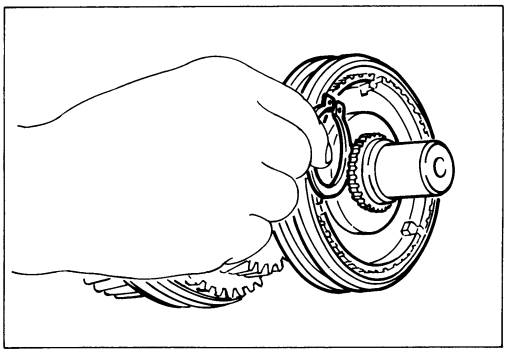

17. Mainshaft Snap Ring

1) Select the snap ring which will provide the minimum clearance between the 3rd-4th clutch hub and the snap ring.

   There are three snap ring sizes available.

   The snap rings are color-coded to indicate their thickness.

Clutch Hub and Snap Ring Clearance — mm(in)

Standard
0 — 0.1 (0 — 0.0039)

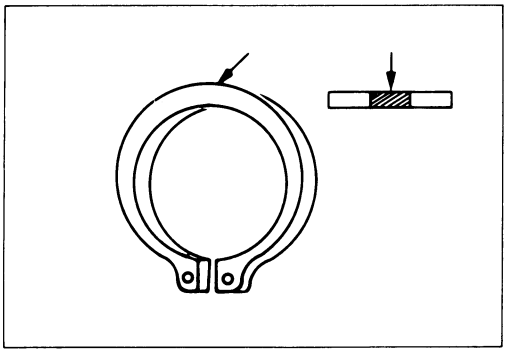

Snap Ring Availability — mm(in)

Thickness mm(in)	Color-Coding
1.80 (0.071)	White
1.85 (0.073)	Yellow
1.90 (0.075)	Blue

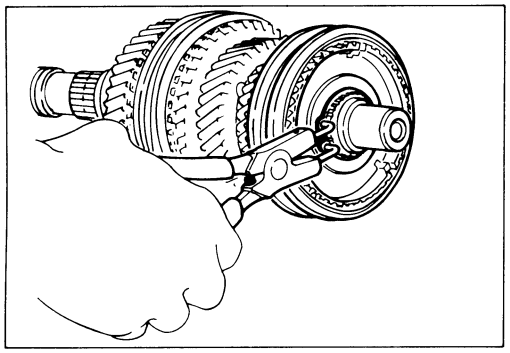

2) Use a pair of snap ring pliers to install the snap ring to the mainshaft.

   The snap ring must be fully inserted into the mainshaft snap ring groove.

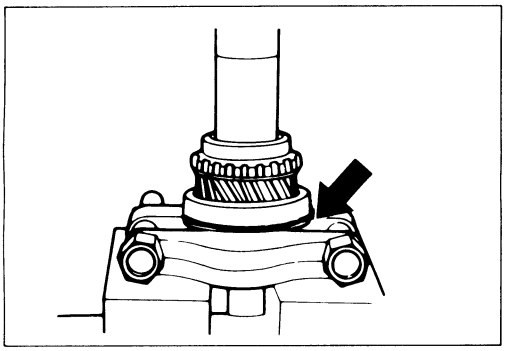

21. Top Gear Ball Bearing

22. 4th Gear Shaft Snap Ring

1) Use a bench press to install the top gear shaft ball bearing to the mainshaft.

   The snap ring groove must be facing the transmission front side.

2) Use a pair of snap ring pliers to install the snap ring to the bearing.

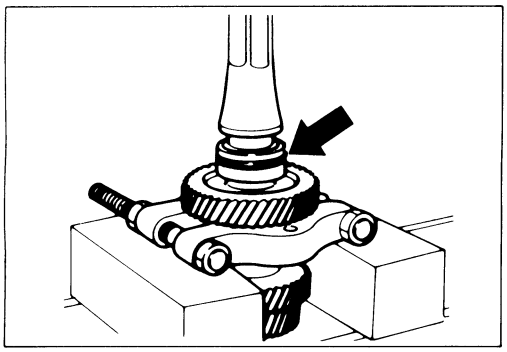

24. Counter Gear Front Bearing

Use a bench press to install the counter gear front bearing to the mainshaft.

The snap ring groove must be facing the transmission front side.

Bearing Installer: 5-8840-2194-0 (J-35283)

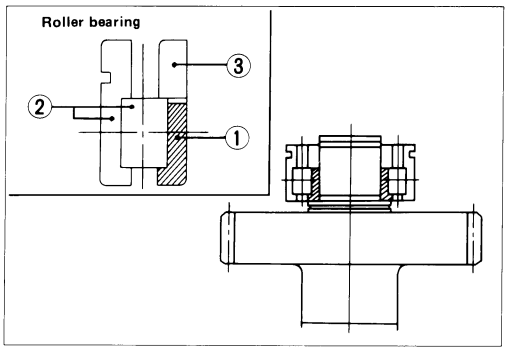

1) Apply engine oil to the bearing and install the inner race ① and outer race with roller ② in the proper direction to the mainshaft.
2) Then install the inner race ③ with taper side turned to outer race ②.

Note:
The inner race ③ should be installed with stamp on die face side turned to the front side of transmission.

REVERSE GEAR AND 5TH GEAR

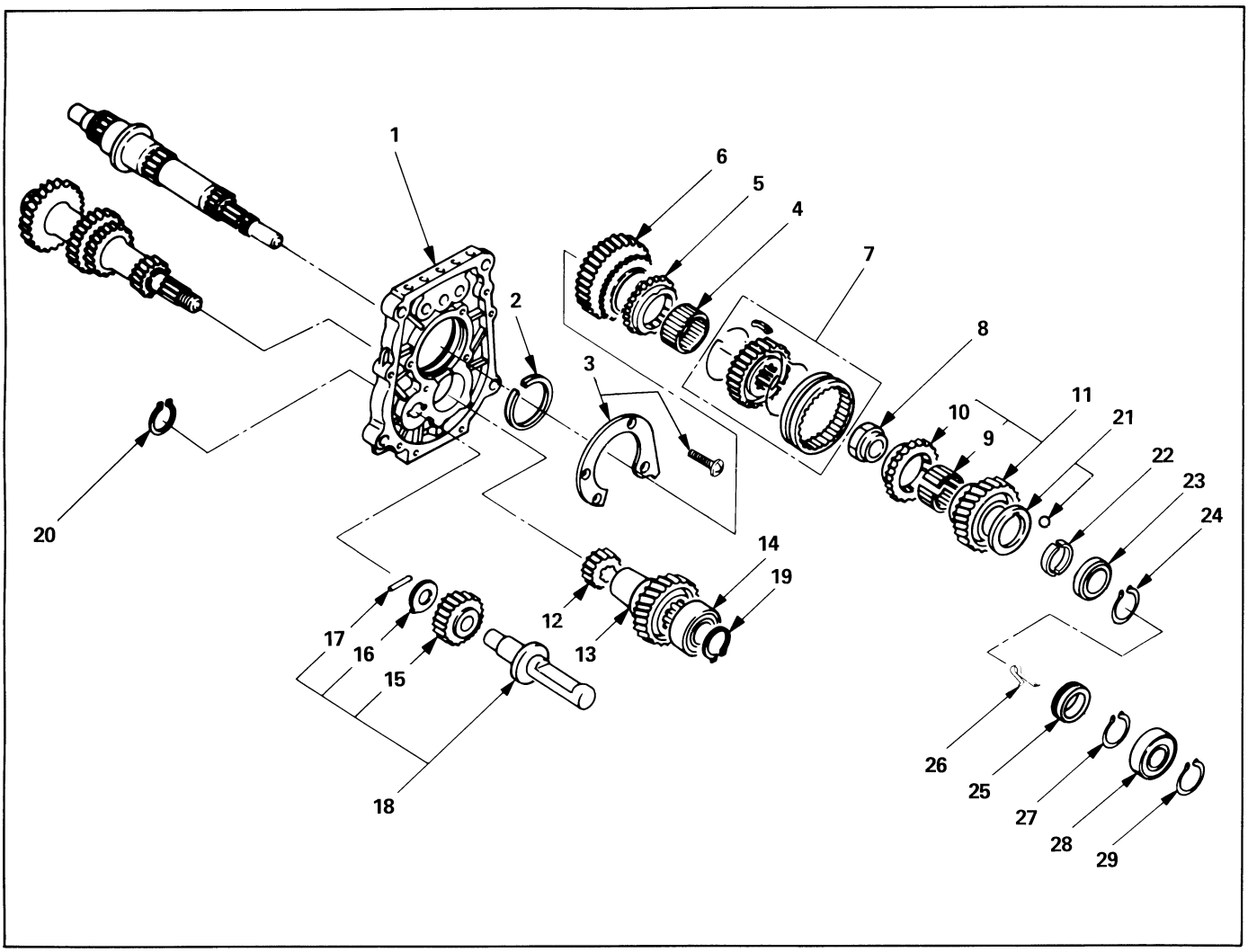

Reassembly Steps

- ▲ 1. Intermediate plate
- 2. Bearing snap ring
- ▲ 3. Bearing plate and screw
- 4. Needle bearing
- 5. Reverse block ring
- 6. Reverse gear
- ▲ 7. Rev.-5th synchronizer assembly
- ▲ 8. Mainshaft nut
- 9. Needle bearing
- 10. 5th block ring
- 11. 5th gear
- ▲ 12. Counter reverse gear
- 13. Counter 5th gear
- 14. Ball bearing
- 15. Reverse idler gear
- 16. Thrust washer
- 17. Idler shaft pin
- 18. Reverse idler shaft
- ▲ 19. Bearing snap ring
- ▲ 20. Reverse gear snap ring
- ▲ 21. Thrust washer and lock ball
- 22. Thrust plate
- 23. Retaining ring
- 24. Retainer snap ring
- 25. Speedometer drive gear
- 26. Clip
- 27. Bearing snap ring
- ▲ 28. Ball bearing
- 29. Bearing snap ring

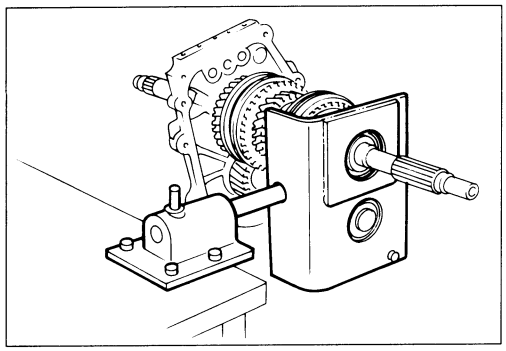

Important Operations

1. Intermediate Plate

1) Mesh the counter gear with the mainshaft assembly.
2) Install the holding fixture to the mainshaft and the counter gear.

   Holding Fixture: 5-8840-2160-0 (J-37224)
   Holding Base: 5-8840-0003-0 (J-3289-20)
3) Place the holding fixture (with the mainshaft and the countershaft) in a vise.
4) Install the intermediate plate.

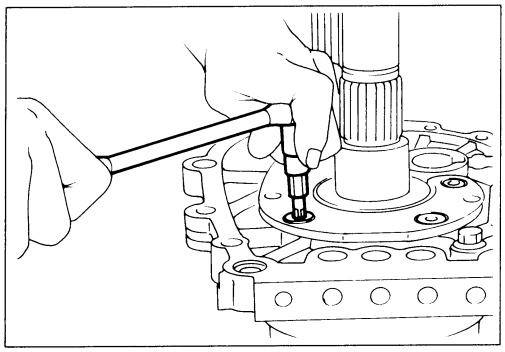

3. Bearing Plate and Screw

1) Apply recommended thread locking agents or its equivalent to each of the bearing plate screw threads.
2) Tighten the screws to the specified torque.

   Torx Bit Wrench: 5-8840-0047-0 (J-37225 : T45)

Bearing Plate Screw Torque	kg·m (lb·ft/N·m)
1.5 (11/15)	

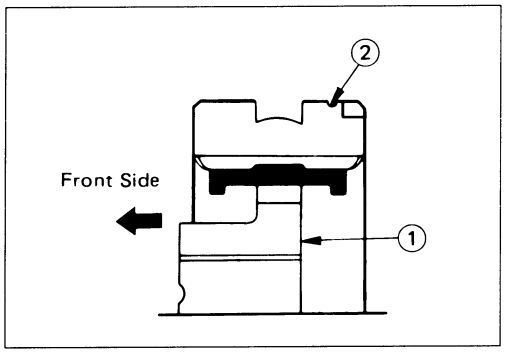

7. Rev-5th Synchronizer Assembly

1) Turn the clutch hub face ① toward the sleeve small groove ② on the outer circumference.
2) Install the synchronizer assembly to the mainshaft.

   The clutch hub face (with the heavy boss) must be facing the reverse gear side.

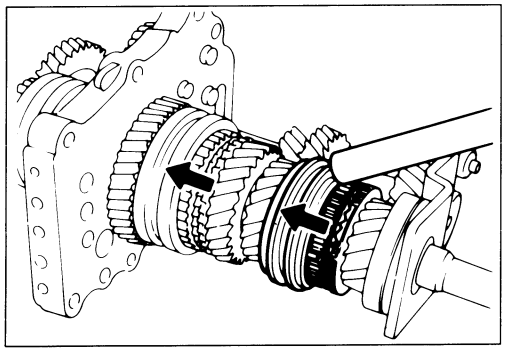

8. Mainshaft Nut

1) Mesh the 1st-2nd synchronizer with both the 1st and 3rd gears (double engagement).

   This will prevent the mainshaft from turning.

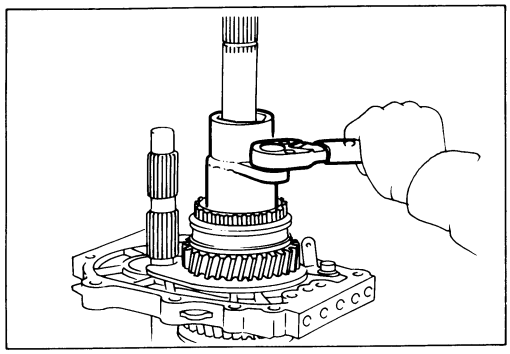

2) Install the mainshaft hub nut.
3) Use the mainshaft nut wrench to tighten the mainshaft nut to the specified torque.

   Wrench: 5-8840-2156-0 (J-37219)

Mainshaft Nut Torque	kg·m(lb·ft/N·m)
14 ± 2 (101 ± 14.2/137 ± 20)	

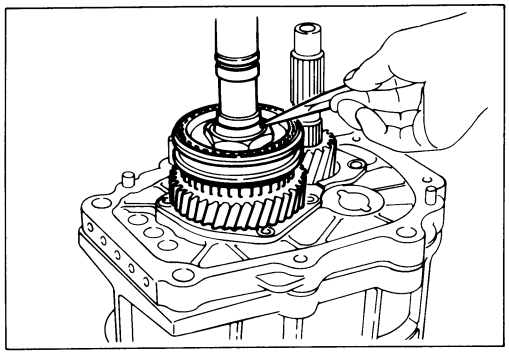

4) Use a punch to caulk the mainshaft nut.

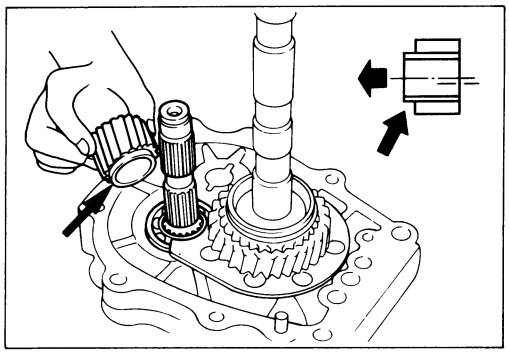

12. Counter Reverse Gear

1) Apply engine oil to the counter reverse gear and the reverse gear.
2) Install the counter reverse gear to the counter gear.

   Note the projection at either side of the counter reverse gear.

   The larger projection must be facing the intermediate plate.

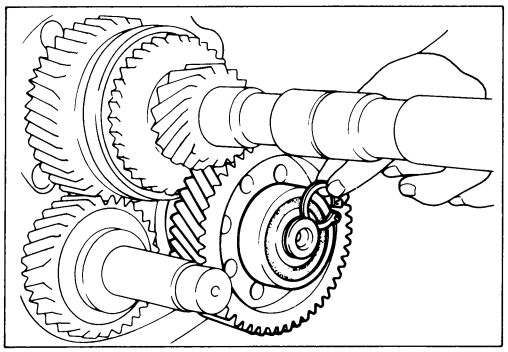

19. Bearing Snap Ring

1) Select the snap ring which will provide the minimum clearance between the ball bearing and the snap ring.

   There are six snap ring sizes available.

   The snap rings are color-coded to indicate their thickness.

Ball Bearing and Snap Ring Clearance	mm(in)
Standard	
0 — 0.15 (0 — 0.0059)	

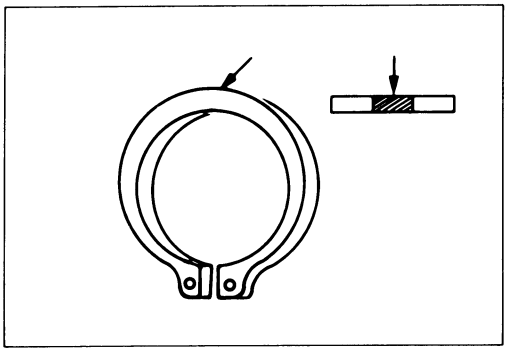

Snap Ring Availability mm(in)

Thickness mm(in)	Color-Coding
1.1 (0.043)	White
1.2 (0.047)	Yellow
1.3 (0.051)	Blue
1.4 (0.055)	Pink
1.5 (0.059)	Green
1.6 (0.063)	Brown

2) Use a pair of snap ring pliers to install the snap ring to the counter 5th gear.
Snap Ring Pliers
The snap ring must be fully inserted into the reverse idler shaft snap ring groove.

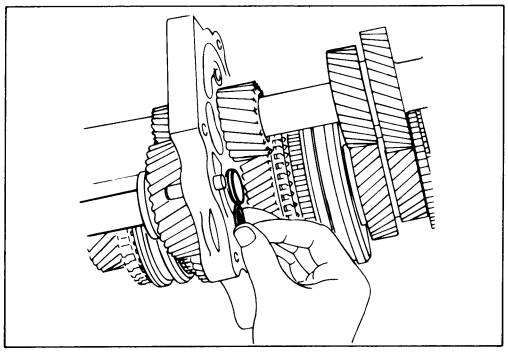

20. Reverse Gear Snap Ring

1) Select the snap ring which will provide the minimum clearance between the intermediate plate and the snap ring.
There are three snap ring sizes available.
The snap rings are color-coded to indicate their thickness.

Intermediate Plate and Snap Ring Clearance mm(in)

Standard
0 — 0.15 (0 — 0.0059)

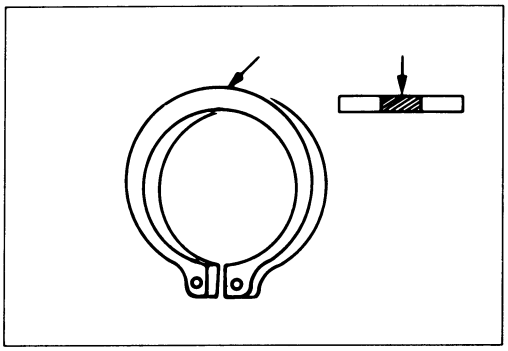

Snap Ring Availability mm(in)

Thickness mm(in)	Color-Coding
1.2 (0.047)	White
1.3 (0.051)	Yellow
1.4 (0.055)	Blue

2) Use a pair of snap ring pliers to install the snap ring to the reverse idler shaft.
Snap Ring Pliers
The snap ring must be fully inserted into the reverse idler shaft snap ring groove.

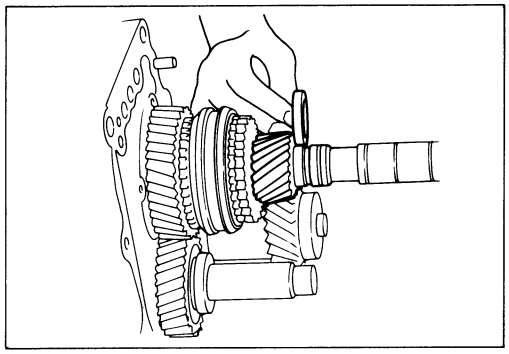

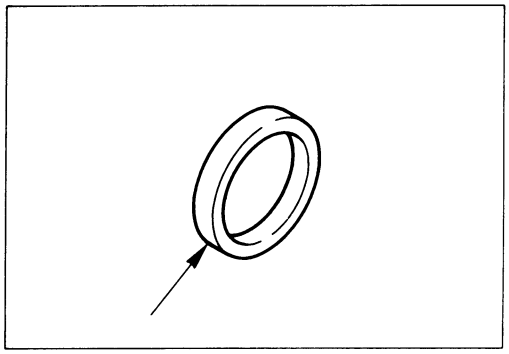

21. Thrust Washer and Lock Ball

1) Use a thickness gauge to measure the clearance between the 5th gear and the thrust washer.

5th Gear and Thrust Washer Clearance mm(in)
Standard
0.10 – 0.25 (0.0039 – 0.0098)

If required, replace the existing thrust washer with a new thrust washer to bring the clearance to specification.

There are four thrust washer sizes available.
The snap rings are color-coded to indicate their thickness.

Thrust Washer Availability mm(in)

Thickness	Color-Coding
7.9 (0.311)	White
8.0 (0.315)	Yellow
8.1 (0.319)	Green
8.2 (0.323)	Blue

2) Apply grease to the thrust washer and the lock ball.
3) Install the thrust washer and the lock ball.

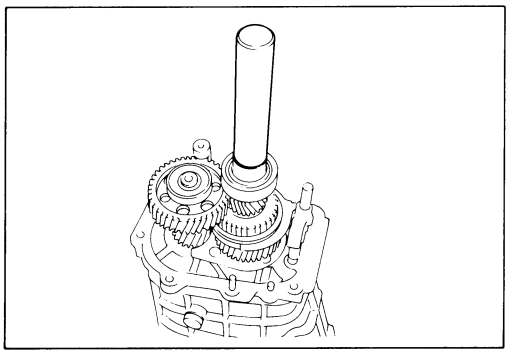

28. Ball Bearing

Use the installer to install the ball bearing to the mainshaft.

Installer: 5-8840-2159-0 (J-37223)

INTERMEDIATE PLATE AND GEAR ASSEMBLY, DETENT, SHIFT ARM ASSEMBLY, AND INTERLOCK PIN

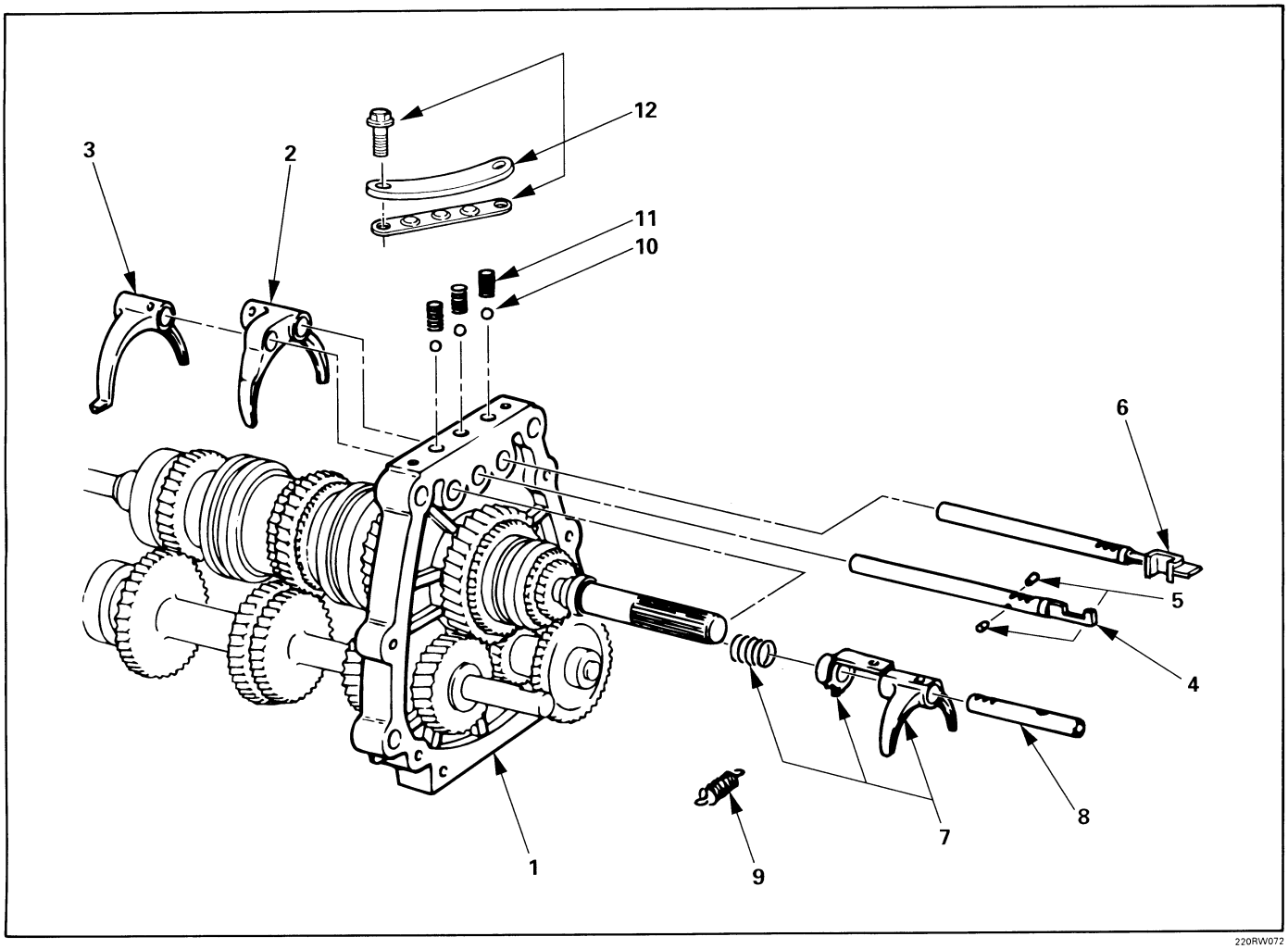

Reassembly Steps

1. Intermediate plate and gear assembly
2. 1st-2nd shift arm
3. 3rd-4th shift arm
4. ▲ 3rd-4th shift rod
5. ▲ Interlock pin
6. 1st-2nd shift rod
7. Rev-5th shift arm and reverse inhibitor
8. Rev-5th shift rod
9. Spring
10. Detent ball
11. Detent spring
12. ▲ Detent spring plate and gasket

Important Operations

4. 3rd-4th Shift Rod

5. Interlock Pin

1) Install the interlock pin to the shift rod.
2) Install the shift rod together with the interlock pin to the intermediate plate.

   Do not allow the interlock pin to fall from the shift rod.

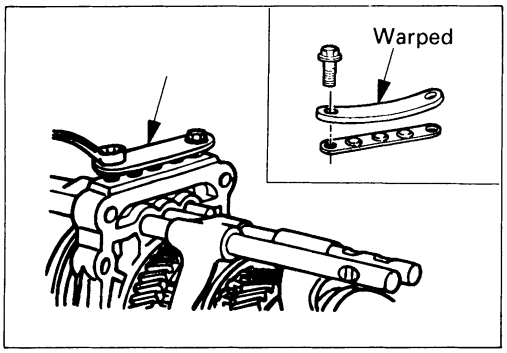

12. Detent Spring Plate and Gasket

1) Install the new-detent plate and new gasket onto the transmission case into the correct direction.
2) Tighten the detent spring plate bolts to the specified torque.

Detent Spring Plate Bolt Torque	kg·m(lb·ft/N·m)
2.0 ± 0.4 (14 ± 3/20 ± 4)	

MAJOR COMPONENTS

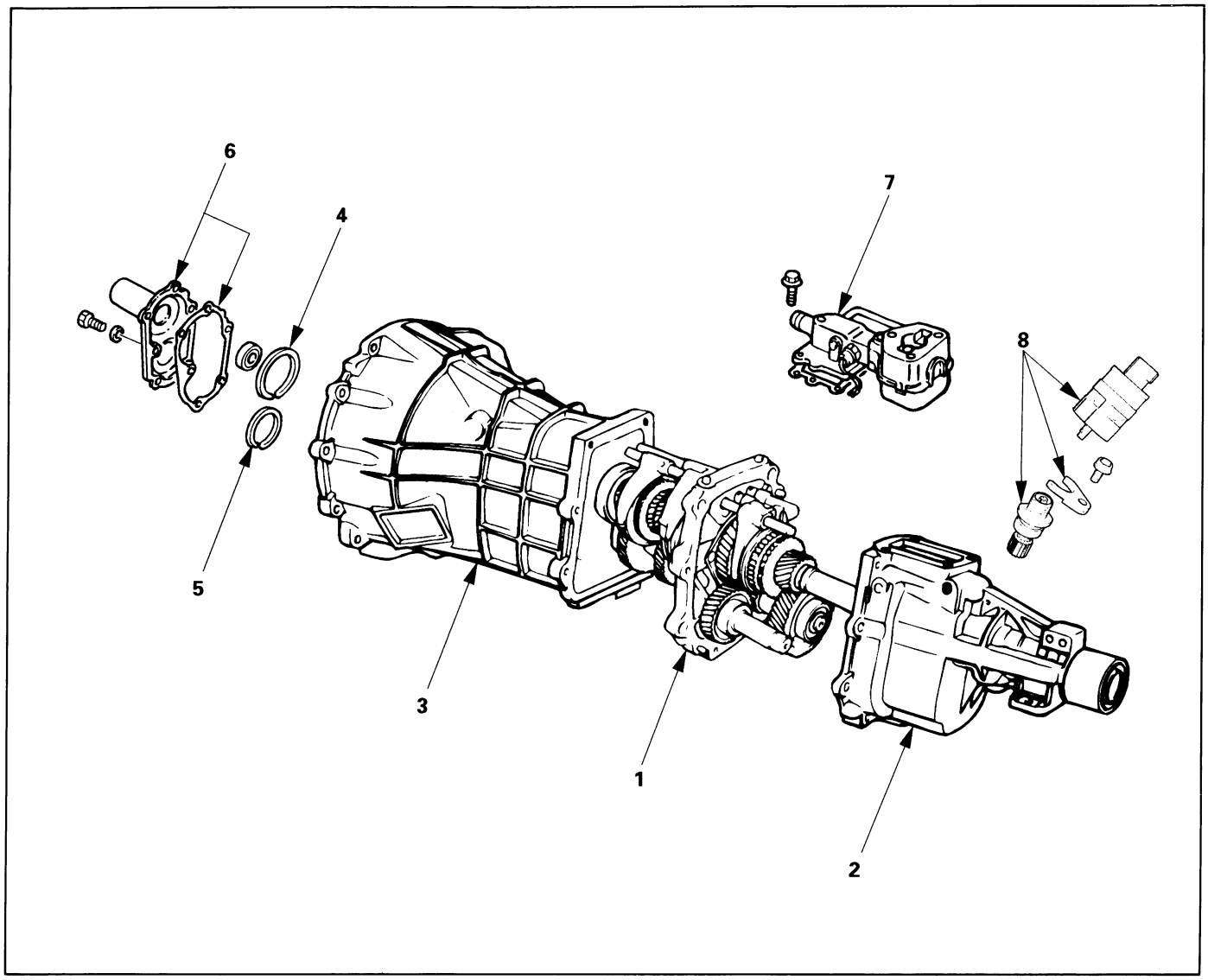

Reassembly Steps

- ▲ 1. Intermediate plate with gear assembly
- ▲ 2. Rear cover with oil seal
- ▲ 3. Transmission case
- ▲ 4. Front bearing snap ring
- ▲ 5. Counter front bearing snap ring
- ▲ 6. Front cover with oil seal
- ▲ 7. Gear control box assembly
- 8. Speedometer driven gear and speedometer sensor

Important Operations

1. Intermediate Plate with Gear Assembly

1) Apply a light coat of oil to the transmission case top gear shaft ball bearing fitting faces and the shift rods.

   This will facilitate smooth installation.

2) Install the intermediate plate assembly.

3) Pull out the top gear shaft until the ball bearing snap ring groove protrudes from the transmission case front cover fitting face.

   Avoid subjecting the mainshaft to sudden shock or stress.

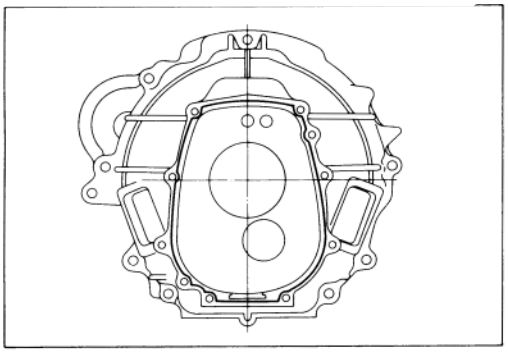

2. Rear Cover with Oil Seal

3. Transmission Case

1) Apply recommended liquid gasket or its equivalent to the transmission case and rear cover fitting surfaces.

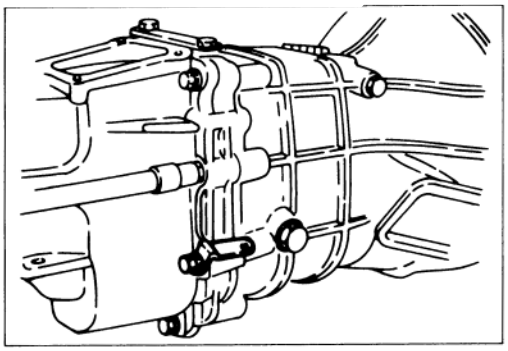

2) Install the rear cover and the transmission case to the intermediate plate.

3) Tighten the rear cover bolts to the specified torque.

Rear Cover Bolt Torque	kg·m (lb·ft/N·m)
	3.8 ± 0.8 (27 ± 5.8 / 37 ± 7.8)

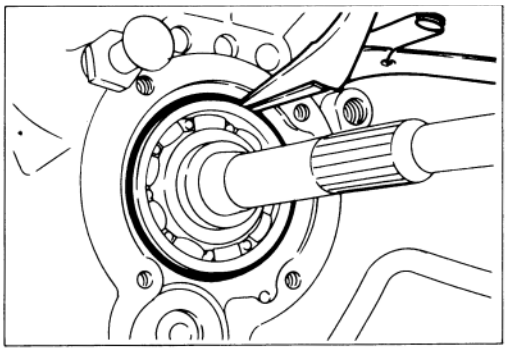

4. Front Bearing Snap Ring

5. Counter Front Bearing Snap Ring

Use a pair of snap ring pliers to install the snap rings to the mainshaft.

The snap rings must be fully inserted into the ball bearing snap ring groove.

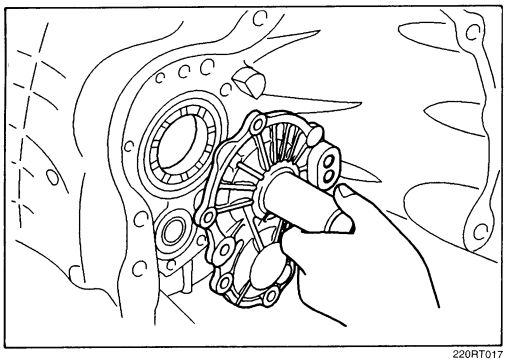

220RT017

6. Front Cover with Oil Seal

1) **Apply recommended liquid gasket or its equivalent to the through bolt threads.**
2) Install the new gasket and the front cover to the transmission case

   Take care not to damage the oil seal.
3) **Tighten the front cover bolts to the specified torque.**

Front Cover Bolt Torque	kg·m (lb·ft/N·m)
1.9 ± 0.4 (13.7 ± 2.9/18.6 ± 3.9)	

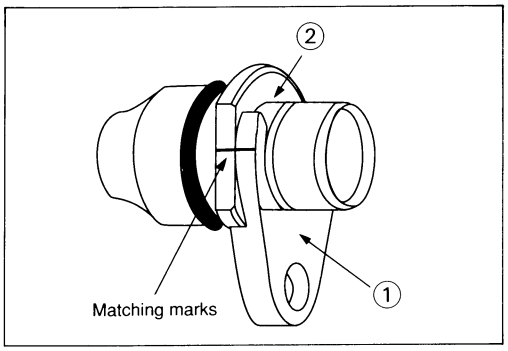

7. Speedometer Driven Gear and Speedometer Sensor

1) Install the O-ring to the speedometer driven gear bushing.
2) Install the driven gear to the speedometer driven gear bushing.
3) Align the matching marks on plate ① and bush ②, then tighten the bolt.

Bolt Torque	kg·m (lb·ft/N·m)
1.5 (10.8/14.7)	

4) Install the speedometer sensor.

Speedometer Sensor Torque	kg·m (lb·ft/N·m)
2.8 (20/27)	

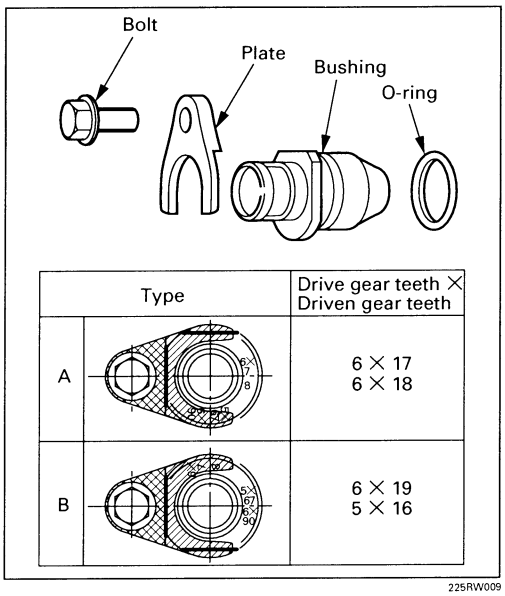

225RW009

4 x 4 MODEL TRANSMISSION

MAIN DATA AND SPECIFICATIONS

			MUA 5C	MUA 5S
Transmission type			Fully synchronized 5-forward and reverse gears.	
Transfer case type			Constant mesh type Low-High and 2H-4H gears.	
Gear ratio :	Transmissior	1st	3.767	4.357
		2nd	2.248	2.502
		3rd	1.404	1.501
		4th	1.000	1.000
		5th	0.809	0.809
		Rev.	3.873	3.970
	Transfer	High	1.000	
		Low	2.050	
Oil capacity :	Transmission	lit (US gal.)	2.95 (0.78)	
:	Transfer	lit (US gal.)	1.45 (0.38)	

GENERAL DESCRIPTION

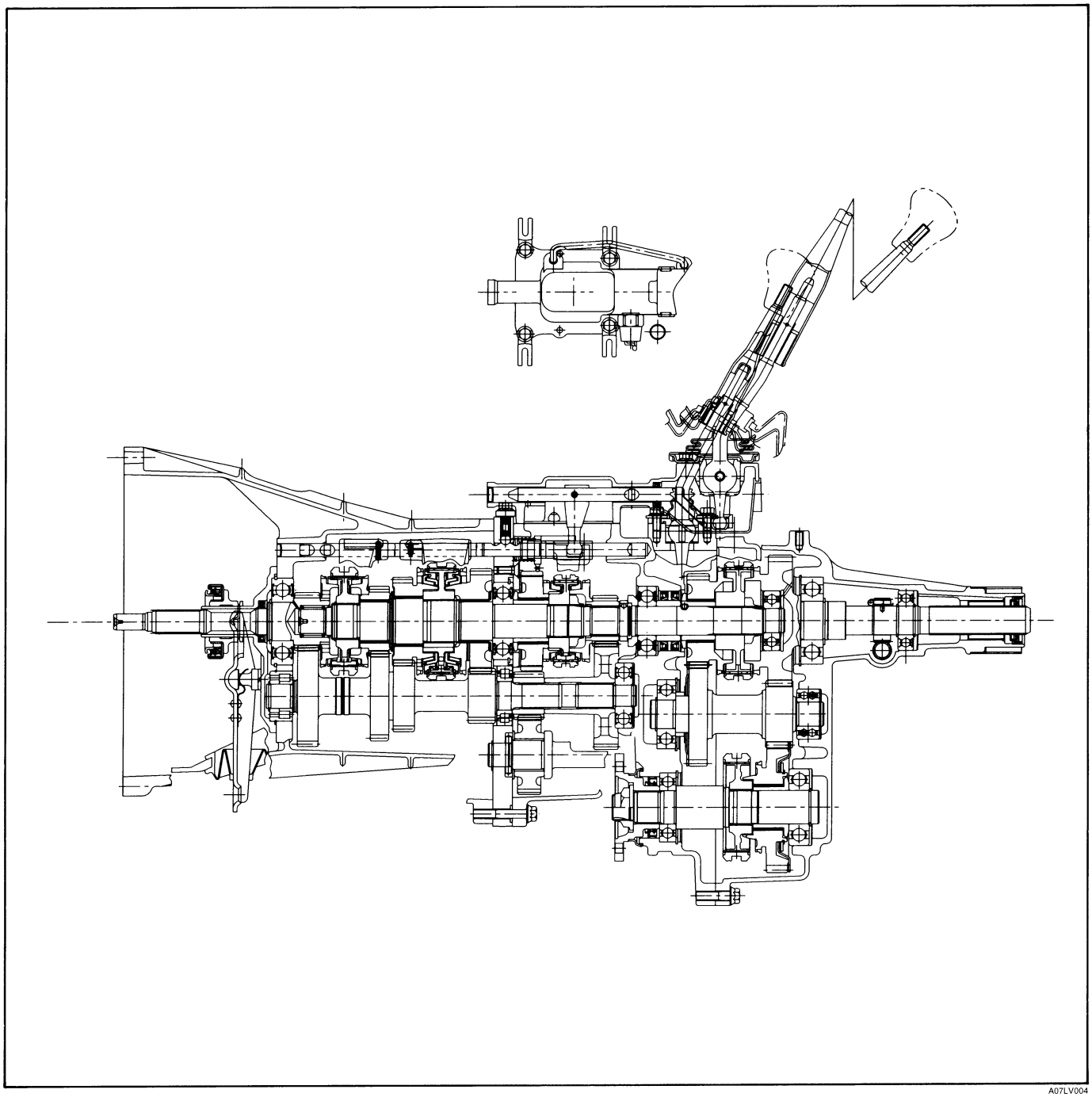

A07LV004

The transmission is designed for the quietest possible operation.

A longer center distance (77.5 mm (3.05 in)) provides increased durability.

Principle parts of the transmission are the integral clutch housing, the intermediate plate, the rear cover, and the gears.

The gear control box is built-in to the transfer case.

Transfer gear ratio is 1 : 2.050.

TORQUE SPECIFICATIONS

STANDARD BOLTS

The torque values given in the following table should be applied where a particular torque is not specified.

N·m (kg·m / lb·ft)

	Strength Class	4.8/4T	7T	8.8		9.8/9T
				Refined	Non-Refined	
	Bolt Identification	4	7	8	8	9
	Bolt Diameter× Pitch (mm)	No mark	—			
Standard Hex. Head Bolt	M6 × 1.0	6 (0.6 / 52 lb·in)	7 (0.7 / 61 lb·in)	8 (0.8 / 69 lb·in)		–
	M8 × 1.25	13 (1.3 / 113 lb·in)	17 (1.7 / 12)	20 (2.0 / 14)		24 (2.4 / 17)
	M10 × 1.25	27 (2.8 / 20)	37 (3.8 / 27)	42 (4.3 / 31)		50 (5.1 / 37)
	M12 × 1.25	61 (6.3 / 45)	76 (7.8 / 56)	87 (8.9 / 64)		95 (9.7 / 70)
	M14 × 1.5	96 (9.8 / 71)	116 (11.8 / 85)	133 (13.6 / 98)		142 (14.5 / 105)
	M16 × 1.5	130 (13.3 / 96)	170 (17.3 / 125)	193 (19.7 / 143)		200 (20.4 / 148)
	M18 × 1.5	188 (19.2 / 139)	244 (24.9 / 180)	278 (28.3 / 205)		287 (29.3 / 212)
	M20 × 1.5	258 (26.3 / 190)	337 (34.4 / 249)	385 (39.3 / 284)		396 (40.4 / 292)
	M22 × 1.5	332 (33.9 / 245)	453 (46.3 / 335)	517 (52.7 / 381)		530 (54.1 / 391)
	M24 × 2.0	449 (45.8 / 331)	570 (58.2 / 421)	651 (66.3 / 480)		692 (70.6 / 511)
	* M10 × 1.5	26 (2.7 / 20)	36 (3.7 / 27)	41 (4.2 / 30)		48 (4.9 / 35)
	* M12 × 1.75	57 (5.8 / 42)	71 (7.2 / 52)	80 (8.2 / 59)		89 (9.1 / 66)
	* M14 × 2.0	89 (9.1 / 66)	110 (11.2 / 81)	125 (12.7 / 92)		133 (13.6 / 98)
	* M16 × 2.0	124 (12.7 / 92)	162 (16.5 / 119)	185 (18.9 / 137)		191 (19.5 / 141)
Flange Bolt	M6 × 1.0	7 (0.7 / 61 lb·in)	8 (0.8 / 69 lb·in)	9 (0.9 / 78 lb·in)		–
	M8 × 1.25	15 (1.5 / 11)	19 (1.9 / 14)	22 (2.2 / 16)		26 (2.7 / 20)
	M10 × 1.25	31 (3.2 / 23)	41 (4.2 / 30)	47 (4.8 / 35)		56 (5.7 / 41)
	M12 × 1.25	69 (7.0 / 51)	85 (8.7 / 63)	97 (9.9 / 72)		106 (10.8 / 78)
	M14 × 1.5	104 (10.6 / 77)	126 (12.8 / 93)	144 (14.6 / 106)		154 (15.7 / 114)
	M16 × 1.5	145 (14.8 / 127)	188 (19.2 / 139)	214 (21.8 / 158)		221 (22.5 / 163)
	M18 × 1.5	–	–	–		–
	M20 × 1.5	–	–	–		–
	M22 × 1.5	–	–	–		–
	M24 × 2.0	–	–	–		–
	* M10 × 1.5	30 (3.1 / 22)	40 (4.1 / 30)	46 (4.7 / 34)		54 (5.5 / 40)
	* M12 × 1.75	64 (6.5 / 47)	78 (8.0 / 58)	89 (9.1 / 66)		99 (10.1 / 73)
	* M14 × 2.0	97 (9.9 / 72)	119 (12.1 / 88)	135 (13.8 / 99.7)		144 (14.7 / 107)
	* M16 × 2.0	137 (14.0 / 101)	178 (18.2 / 132)	203 (20.7 / 150)		210 (21.5 / 155)

The asterisk * indicates that the bolts are used for female-threaded parts that are made of soft materials such as casting, etc.

FLARE NUTS

N·m (kg·m / lb·ft)

Pipe diameter mm (in)	Torque	Pipe diameter mm (in)	Torque
4.76 (0.187)	16 (1.6 / 12)	10.00 (0.394)	54 (5.5 / 40)
6.35 (0.250)	26 (2.7 / 20)	12.00 (0.472)	88 (9.0 / 65)
8.00 (0.315)	44 (4.5 / 33)	15.00 (0.591)	106 (10.8 / 78)

SPECIAL PARTS FIXING NUTS AND BOLTS

kg·m(lb.ft/N·m)

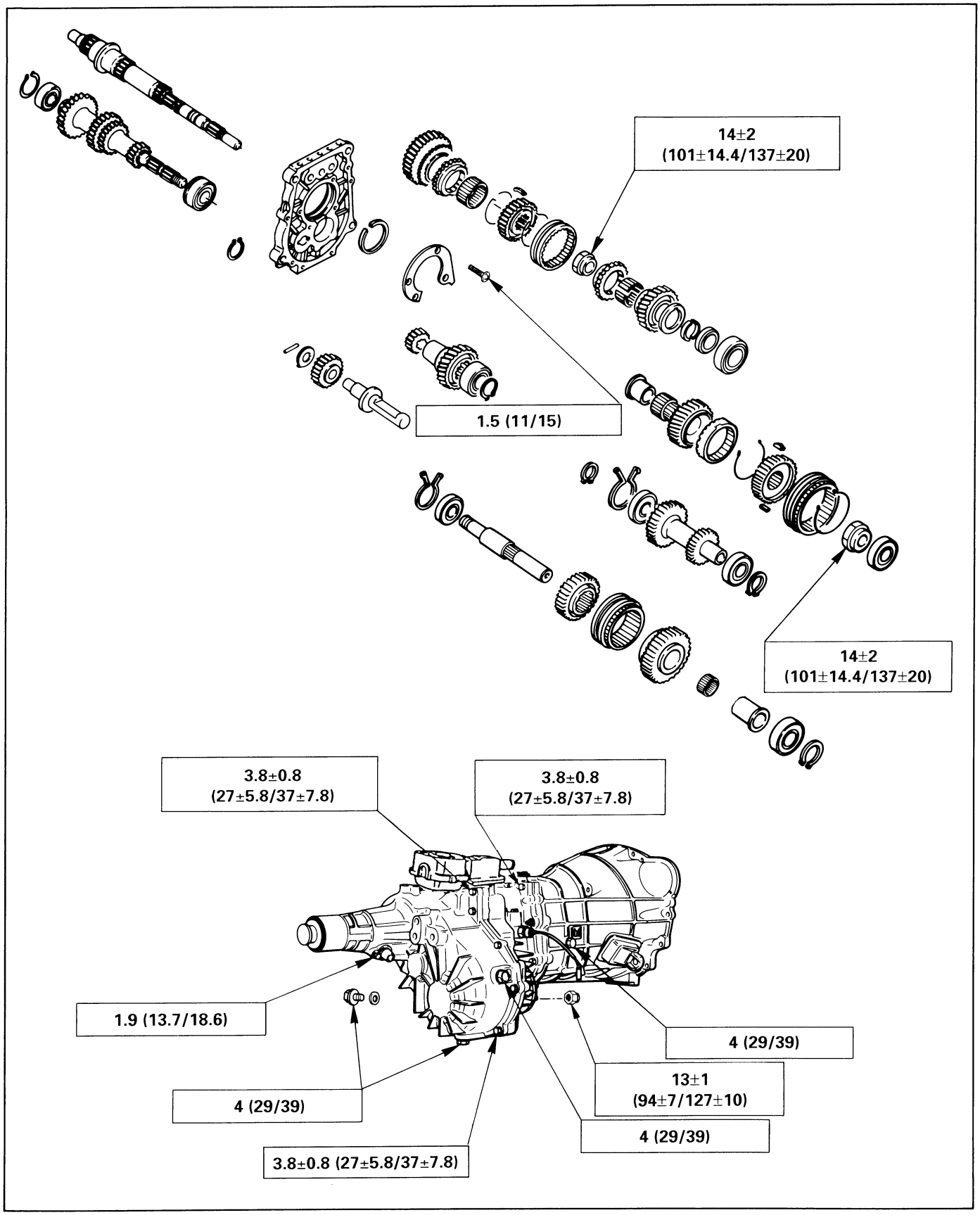

RECOMMENDED LIQUID GASKET

Type	Brand Name	Manufacturer	Remarks
RTV* Silicon Base	ThreeBond 1207B ThreeBond 1207C	Three Bond Three Bond	For Engine Repairs
	ThreeBond 1215 ThreeBond 1281	Three Bond Three Bond	For Axle Case and Transmission Repairs
Water Base	ThreeBond 1141E	Three Bond	For Engine Repairs
Solvent	ThreeBond 1104 BelcoBond 4 BelcoBond 401 BelcoBond 402	Three Bond Isuzu Isuzu Isuzu	For Engine Repairs
Anerobic	LOCTITE 515 LOCTITE 518	Loctite Loctite	All

* RTV : Room Temperature Vulcanizer

Note:

1. **It is very important that the liquid gaskets listed above or their exact equivalent be used on the vehicle.**
2. **Be careful to use the specified amount of liquid gasket.**
   Follow the manufacturer's instructions at all times.
3. **Be absolutely sure to remove all lubricants and moisture from the connecting surfaces before applying the liquid gasket.**
   The connecting surfaces must be perfectly dry.
4. **LOCTITE 515 and LOCTITE 518 harden upon contact with a metal surface.**
   Do not apply LOCTITE 515 or LOCTITE 518 between two metal surfaces having a clearance of greater than 0.25 mm (0.01 in). Poor adhesion will result.

REMOVAL AND INSTALLATION

Read this Section carefully before performing any removal and installation procedure. This Section gives you important points as well as the order of operation. Be sure that you understand everything in this Section before you begin.

Important Operations – Removal

Battery Cable

Disconnect the negative (–) cable from the battery terminal.

Engine Hood

Apply setting marks to the engine hood and the engine hood hinges before removing the engine hood.

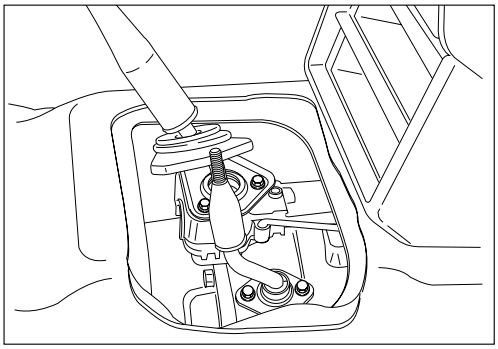

235RT004

Gear Shift Lever and Transfer Change Lever

1. Place the gear shift lever in the neutral position.
2. Place the transfer change lever in the “H” position.
3. Remove the gear shift lever knob and transfer change lever konb.
4. Remove the center console assembly and front console assembly.
5. Remove the grommet and dust cover.
6. Remove the gear shift lever cover bolt.
7. Remove the gear shift lever.
8. Remove the transfer change lever retainer bolts.
9. Remove the transfer change lever and O-ring.

Note:

Cover the shift lever and change lever holes to prevent the entry of foreign material into the transmission.

Lifting the Vehicle

1. Jack up the vehicle.
2. Place chassis stands at the front and the rear of the vehicle.

Transfer Case Protector (Except 00 Year or Subsequent ones)

Remove the transfer case protector from the transmission mounting member and the side member.

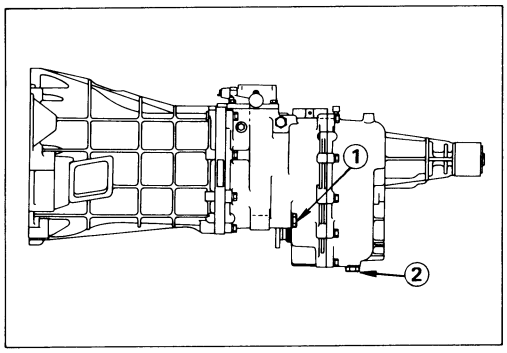

Transmission and Transfer Case Oil Draining

1. Remove the transmission oil drain plug ①.
2. Remove the transfer case oil drain plug ②.
3. Replace the drain plug(s) after draining the oil.

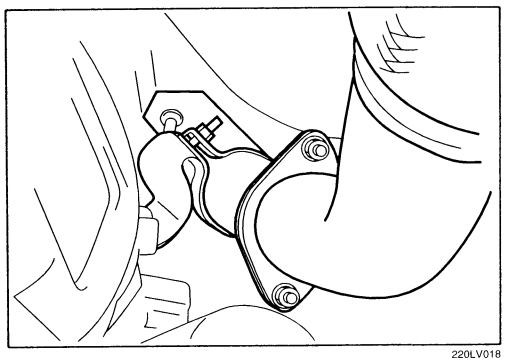

Exhaust Pipe

1. Remove the exhaust pipe bracket from the transmission case.
2. Remove the front exhaust pipe and 2nd-3rd exhaust pipe.

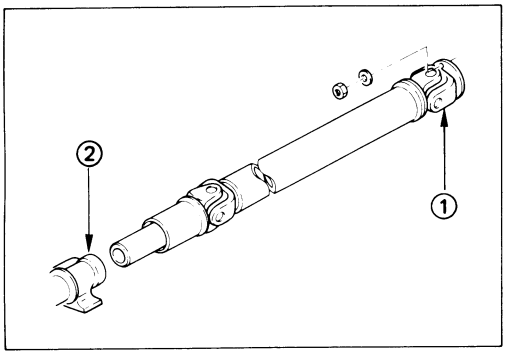

Rear Propeller Shaft (Single Shaft Type)

1. Remove the propeller shaft flange yoke at the drive pinion side ①.
2. Remove the propeller shaft from the transmission main shaft spline ②.

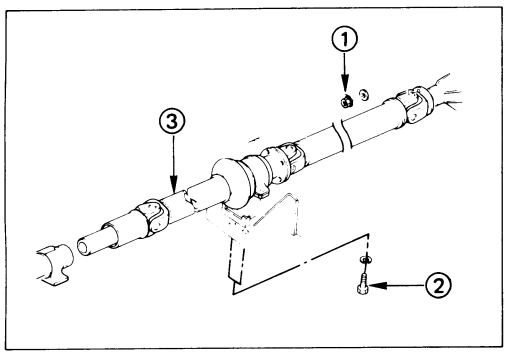

Rear Propeller Shaft (Dual Shaft Type)

1. Apply setting marks to the 2nd propeller shaft flange yoke.
   This will prevent mispositioning during the installation procedure.
2. Remove the 2nd propeller shaft flange yoke bolts at the drive pinion side ①.
3. Remove the center bearing retainer bolts ②.
4. Remove the 1st propeller shaft ③ with the center bearing and the 2nd propeller shaft.
   Pull the 1st propeller shaft toward the rear of the vehicle until the spline yoke is free of the transmission main shaft.

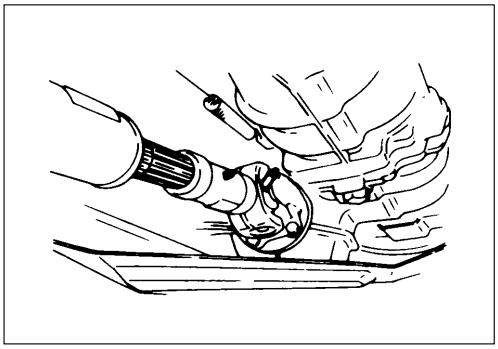

Front Propeller Shaft

Remove the splined yoke flange bolt at the transfer case side.

Do not allow the splined yoke to fall away from the front propeller shaft.

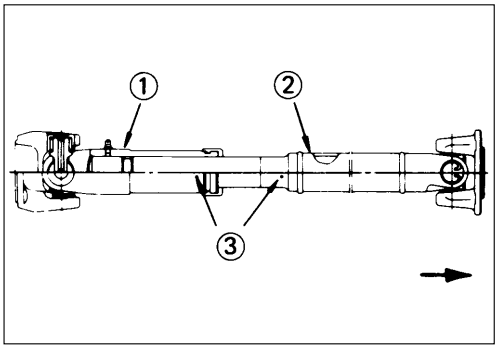

If the splined yoke should fall away from the front propeller shaft, align the setting marks ③ on the splined yoke ① and the propeller shaft ② to reassemble the two parts.

The setting marks ③ are punched circles approximately 3 mm (0.12 in) in diameter.

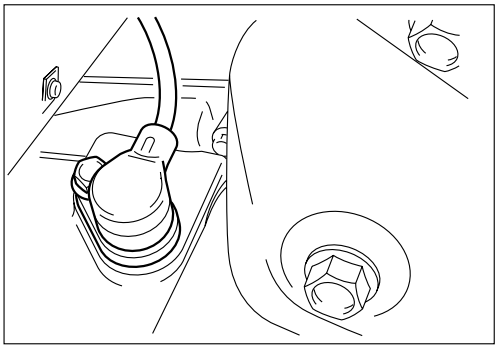

220R200001

TDC Sensor (4JA1TC Model)

Disconnect the TDC sensor from the transmission housing.

Harness Connector

Disconnect the 4WD switch connectors, back up light switch connector and the speedometer sensor connector.

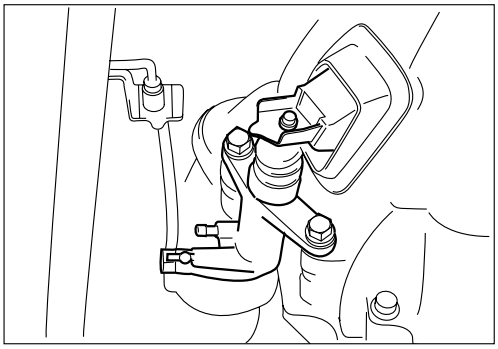

220LV019

Slave Cylinder

Remove the slave cylinder from the transmission case.

Engine LIfting Hanger

1. Attach the engine lifting hanger to the front portion of the engine.
2. Attach the lifting wire to both ends of the engine lifting hange.

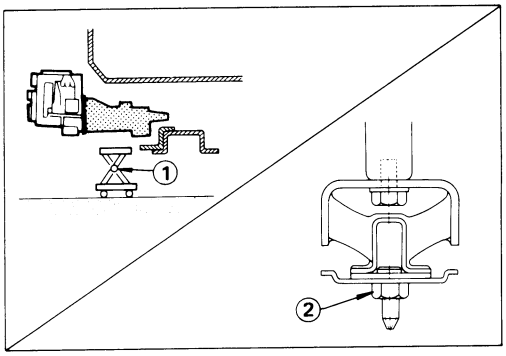

Engine Rear Mounting and Mounting Member

1. Support the transmission with a transmission jack ①.
2. Remove the engine rear mounting nuts ②.
3. Remove the engine rear mounting bolts.
4. Loosen the mounting member bolts.
5. Remove the mounting member from the sidemembers.
6. Remove the engine rear mounting.

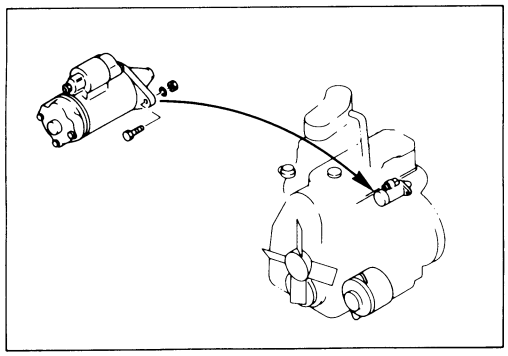

Starter Motor

Remove the starter motor from the engine rear plate.

Flywheel Under Cover (6VD1)

Remove flywheel under cover bolts.

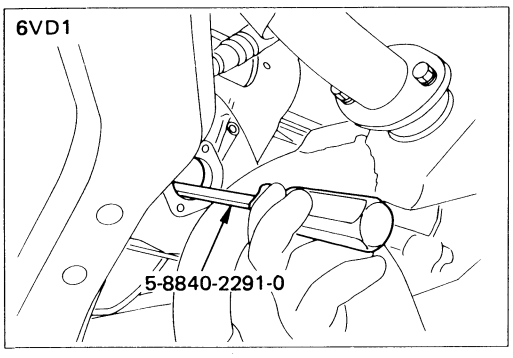

Transmission with Transfer

1. Use the remover for disconnect the clutch release bearing from the clutch pressure plate (6VD1).

   Clutch release bearing remover: 5-8840-2291-0 (J-39207)

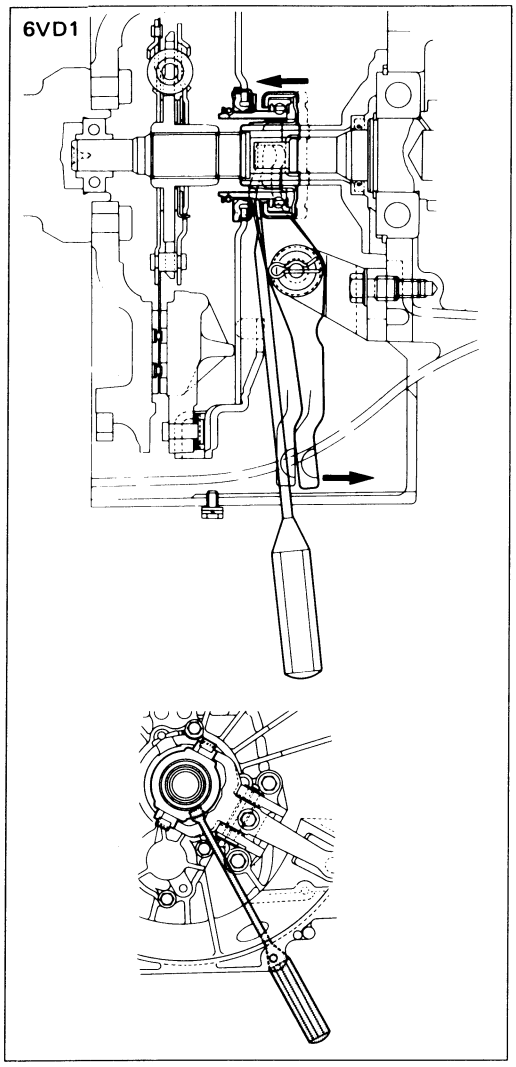

Release Bearing Disconnection (6VD1)

① Pull the shift fork toward the transmission to press the clutch release bearing against the clutch.
② Insert the clutch release bearing remover between the wedge collar and the release bearing.
③ Turn the remover to separate the release bearing.

NOTE:
Be sure not to insert the remover between the wedge collar and the clutch.

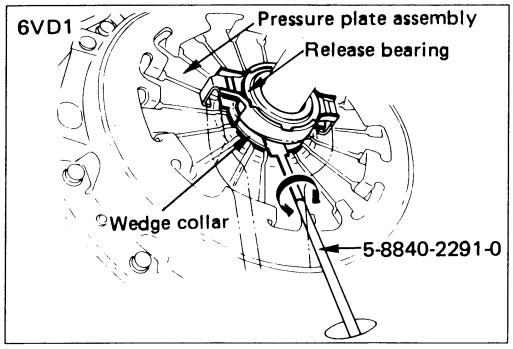

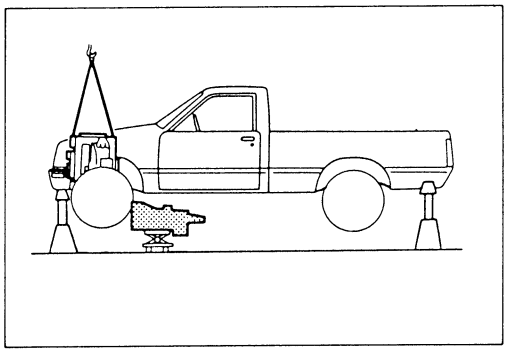

2. Remove the transmission nuts and bolts from the engine rear plate.
3. Carefully pull the transmission with the transmission jack toward the rear of the vehicle.
4. Operate the transmission jack to slowly lower the transmission.

Important Operations — Installation

Follow the removal procedure in the reverse order to perform the installation procedure. Pay careful attention to the important points during the installation procedure.

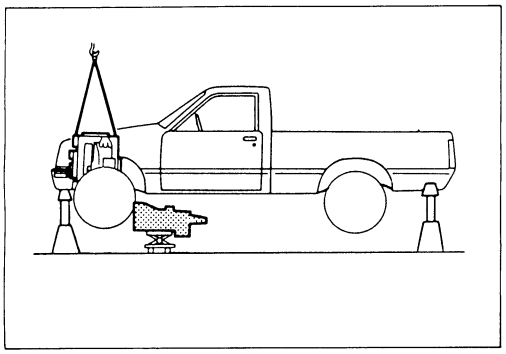

Transmission with Transfer

1. Apply a thin coat of molybdenum disulfide grease to the top gear shaft spline.
2. Place the transmission on a transmission jack.
3. Carefully move the transmission jack and transmission into position behind the engine.

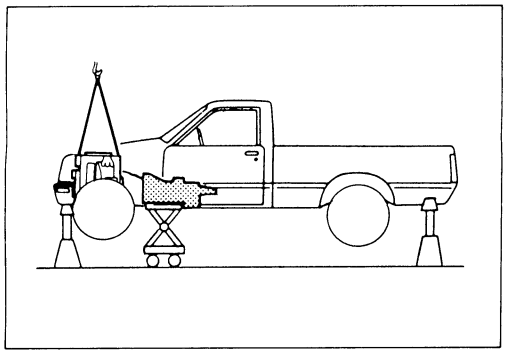

4. Slowly raise the transmission jack until the front of the transmission is aligned with the rear of the engine.

   The slope of the engine and the transmission must be the same.

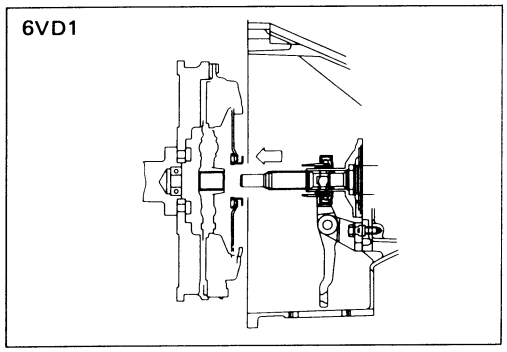

5. Align the top gear shaft spline with the clutch driven plate spline.
6. Install the transmission to the engine.

   Tighten the transmission nuts and bolts to the specified torque.

Transmission Nut and Bolt Torque	kg·m(lb·ft/N·m)
M10: 4.1 ± 1.0 (30 ± 7.2/40 ± 10)	
M12: 8.0 ± 1.6 (58 ± 12/78 ± 16)	

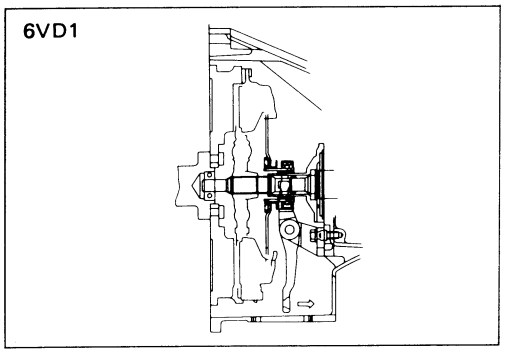

7. Apply a force of 59–78N (6–8 kg / 13.2–17.6 lb) to the tip of the shift fork in the direction of the transmission to engage the clutch pressure plate and release bearing (6VD1).

NOTE (6VD1):
A click sound is heard when the release bearing and the tip of the diaphragm spring engage each other.
Check to see if they are securely engaged by pushing the tip of the shift fork toward the engine while applying a force of about 25N (2.5 kg / 5.5 lb). If the shift fork will not move, then they are securely engaged.

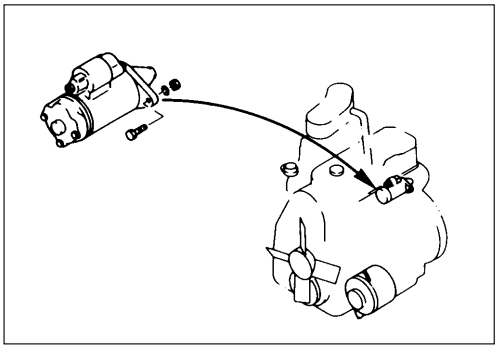

Starter Motor

1. Install the starter motor to the engine rear plate.

Starter Motor Bolt Torque	kg·m (lb·ft/N·m)
8.0 ± 1.6 (58 ± 12/78 ± 16)	

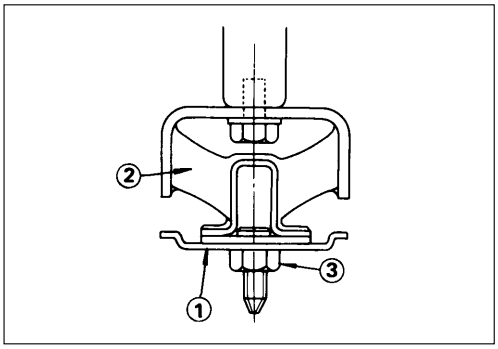

Engine Rear Mounting and Mounting Member

1. Install the engine rear mounting to the transmission.

Rear Mounting Bolt Torque	kg·m (lb·ft/N·m)
4.2 ± 0.5 (30 ± 3.6/41 ± 4.9)	

2. Install the mounting member ① to the mounting rubber ②.

Mounting Rubber Nut Torque	kg·m (lb·ft/N·m)
5.1 ± 0.6 (37 ± 4.3/50 ± 6)	

3. Install the mounting member to the sidemembers.

Mounting Member Bolt Torque	kg·m (lb·ft/N·m)
5.1 ± 0.6 (37 ± 4.3/50 ± 6)	

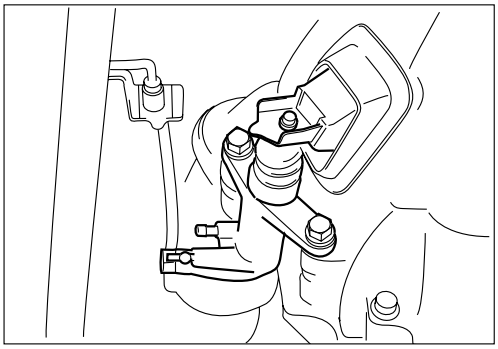

220LV019

Slave Cylinder

Install the slave cylinder to the transmission case.

Slave Cylinder Bolt Torque	kg·m (lb·ft/N·m)
4.1 ± 1.0 (30 ± 7.2/40 ± 10)	

Harness Connector

Disconnect the 4WD switch connectors back up light switch connector and speedometer sensor connector.

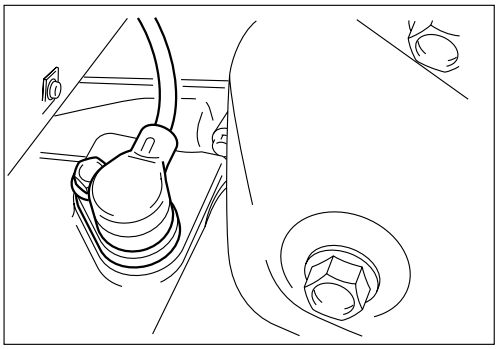

220R200001

TDC Sensor (4JA1TC Model)

Connect the TDC sensor from the transmission housing.

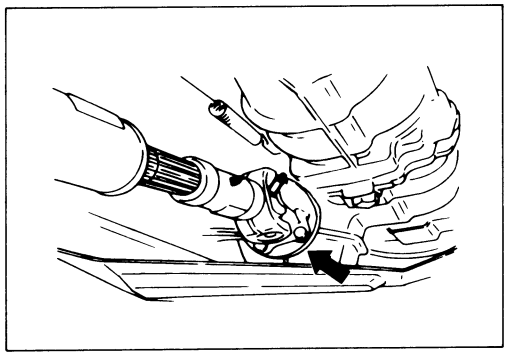

Front Propeller Shaft

1. Connect the propeller shaft flange yoke to the matching flange.
2. Tighten the propeller shaft flange yoke bolt to the specified torque.

Propeller Shaft Flange Yoke Bolt Torque kg·m (lb·ft/N·m)
6.4 ± 0.4 (46.3 ± 2.9/62.7 ± 3.9)

Note:

If the splined yoke and the front propeller shaft have accidentally separated, align their setting marks and recouple them.
Refer to "FRONT PROPELLER SHAFT REMOVAL".

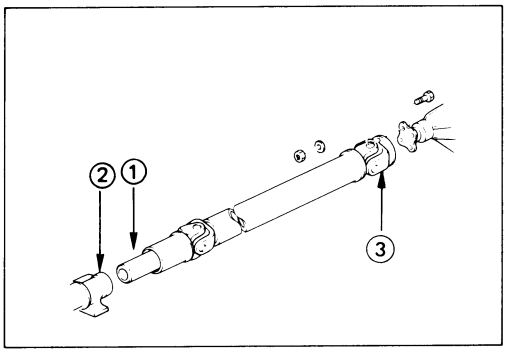

Rear Propeller Shaft (Single Shaft Type)

1. Insert the splined yoke ① with the propeller shaft into the transmission main shaft spline ②.
2. Install the propeller shaft flange yoke ③ to the drive pinion side.
3. Tighten the propeller shaft flange yoke bolt to the specified torque.

Propeller Shaft Flange Yoke Bolt Torque kg·m (lb·ft/N·m)
6.4 ± 0.4 (46.3 ± 2.9/62.7 ± 3.9)

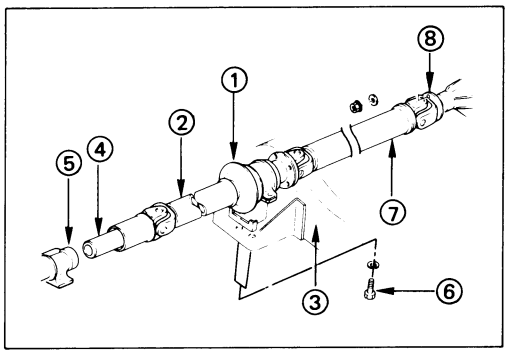

Rear Propeller Shaft (Dual Shaft Type)

1. Place the center bearing ① together with the 1st propeller shaft ② and 2nd propeller shaft ⑦ on the No.4 crossmember ③.
2. Insert the splined yoke ④ into the transmission main shaft spline ⑤.
3. Tighten the center bearing retainer bolts ⑥ to the specified torque.

Center Bearing Retainer Bolt Torque kg·m(lb·ft/N·m)
6.2 ± 1.2 (44.8 ± 8.7/60.8 ± 11.8)

4. Connect the 2nd propeller shaft ⑦ and drive pinion side ⑧.

   Be sure to align the setting marks applied at disassembly.

5. Tighten the coupling bolts to the specified torque.

Propeller Shaft Flange Yoke Bolt Torque kg·m(lb·ft/N·m)
6.4 ± 0.4 (46.3 ± 2.9/62.7 ± 3.9)

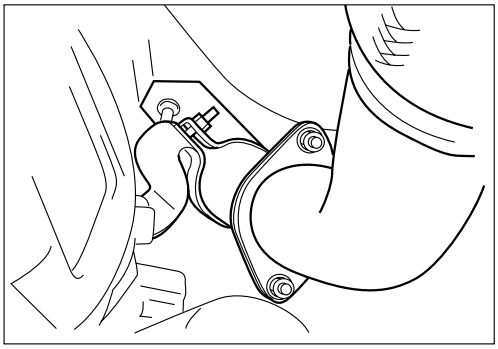

220LV018

Exhaust Pipe

1. Connect the front exhaust pipe and 2nd-3rd exhaust pipe.
2. Install the exhaust pipe bracket to the transmission case.

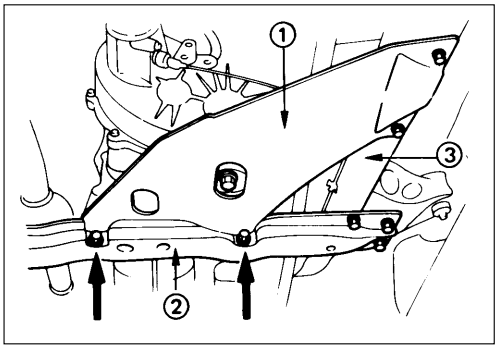

Transfer Case Protector (Except 00 Year or Subsequent ones)

1. Install the transfer case protector ① to the mounting member ② and the sidemebers ③.
2. Tighten the transfer case protector bolts to the specified torque.

Transfer Case Protector Bolt Torque	kg·m (lb·ft/N·m)
3.7 ± 1.0 (26.8 ± 7.2/36.3 ± 9.8)	

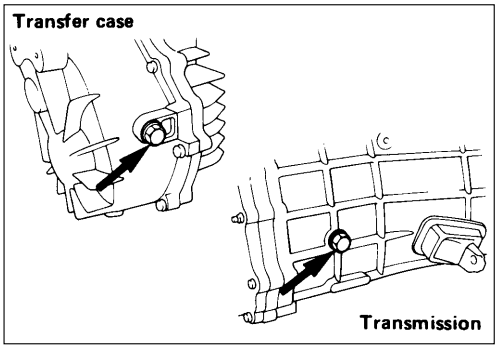

Gear Shift Lever and Transfer Change Lever

1. Replenish the transmission case and the transfer case with the specified engine oil.

Transmission and Transfer Case Oil	lit (US/UK qt.)
Transmission Case	2.95 (3.12/2.6)
Transfer Case	1.45 (1.53/1.28)

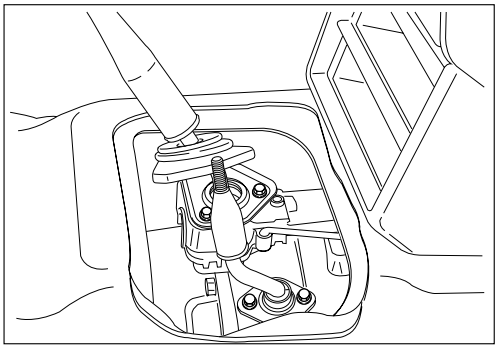

235RT004

2. Install the gear shift lever to the gear control box.

Shift Lever Cover Bolt Torque	kg·m (lb·ft/N·m)
2.0 ± 0.2 (14.5 ± 1.5/19.6 ± 1.96)	

3. Install the dust cover.
4. Insert the transfer change lever to the transfer case.

Change Lever Retainer Bolt Torque	kg·m (lb·ft/N·m)
2.0 ± 0.2 (14.5 ± 1.5/19.6 ± 1.96)	

5. Install the grommet.
6. Install the front console assembly and center console assembly.
7. Install the gear shift lever and the transfer change lever knobs.

Lowering the Vehicle

1. Place a jack beneath the vehicle.
2. Raise the jack to remove the chassis stands.
3. Lower the vehicle to the ground.

Engine Hood

Align the setting marks (applied at removal) on the engine hood and the engine hood hinges to install the engine hood.

Battery Cable

Connect the negative (–) cable to the battery terminal.

DISASSEMBLY

EXTERAL COMPONENTS

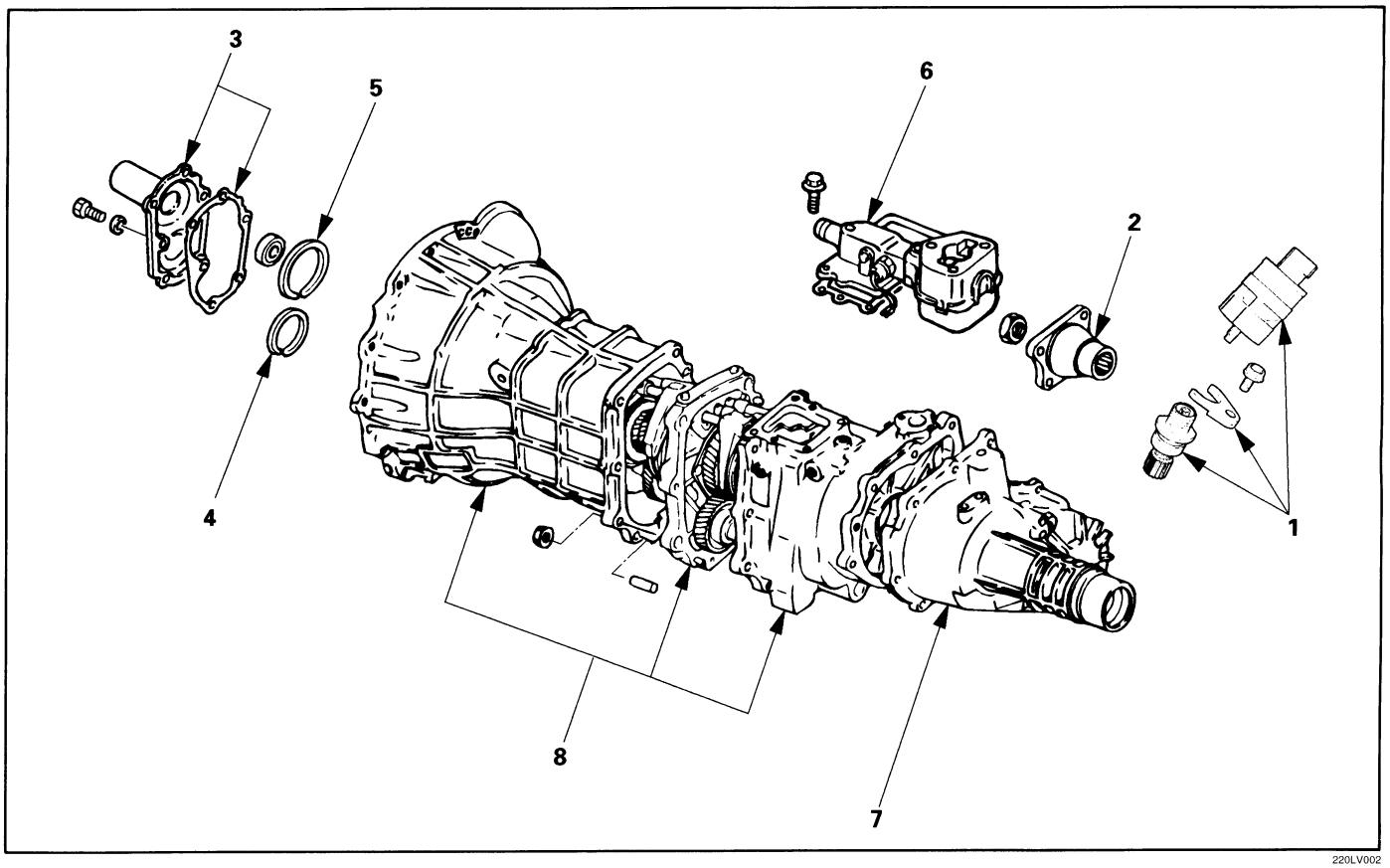

Disassembly Steps

- ▲ 1. Speedometer sensor and speedometer driven gear
- ▲ 2. Transfer flange
- ▲ 3. Front cover with oil seal
- ▲ 4. Counter gear snap ring
- ▲ 5. Bearing snap ring
- 6. Gear control box assembly
- 7. Transfer rear case assmbly
- 8. Transmission and transfer case assembly

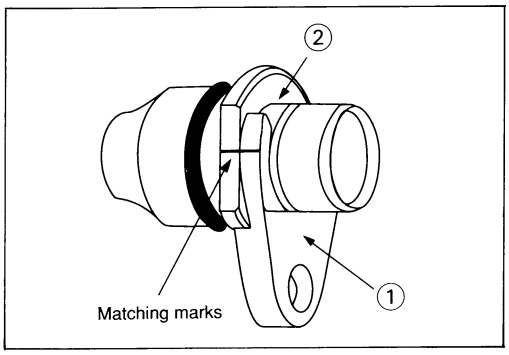

Important Operations

1. Speedometer Sensor and Speedometer Driven Gear

Mark the plate ① and bush ② alignment for reassembly.

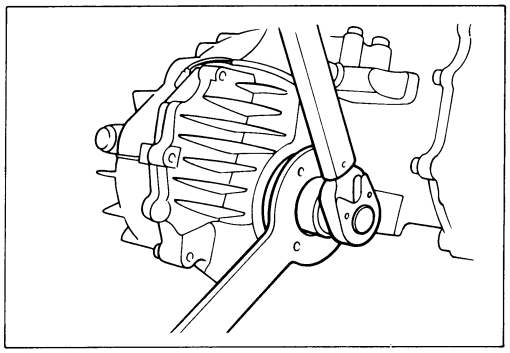

2. Transfer Flange

Use the transfer flange holder to remove the transfer flange.

Transfer Flange Holder: 5-8840-2157-0 (J-37221)

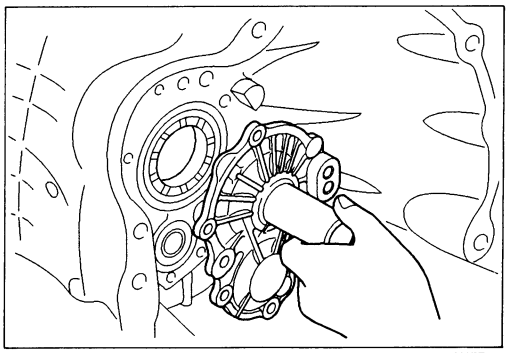

220RT017

3. Front Cover with Oil Seal

Remove the front cover with oil seal from the transmission case.

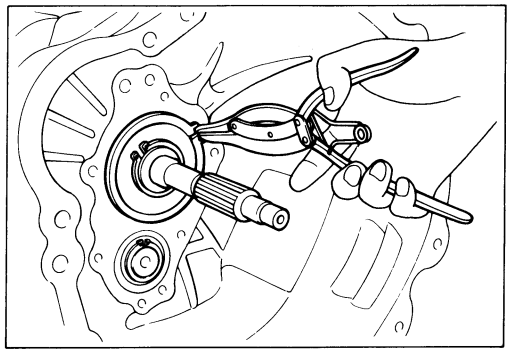

4. Counter Gear Snap Ring

5. Bearing Snap Ring

Use a pair of snap ring pliers to remove the snap ring.

MAJOR COMPONENT (TRANSFER CASE)

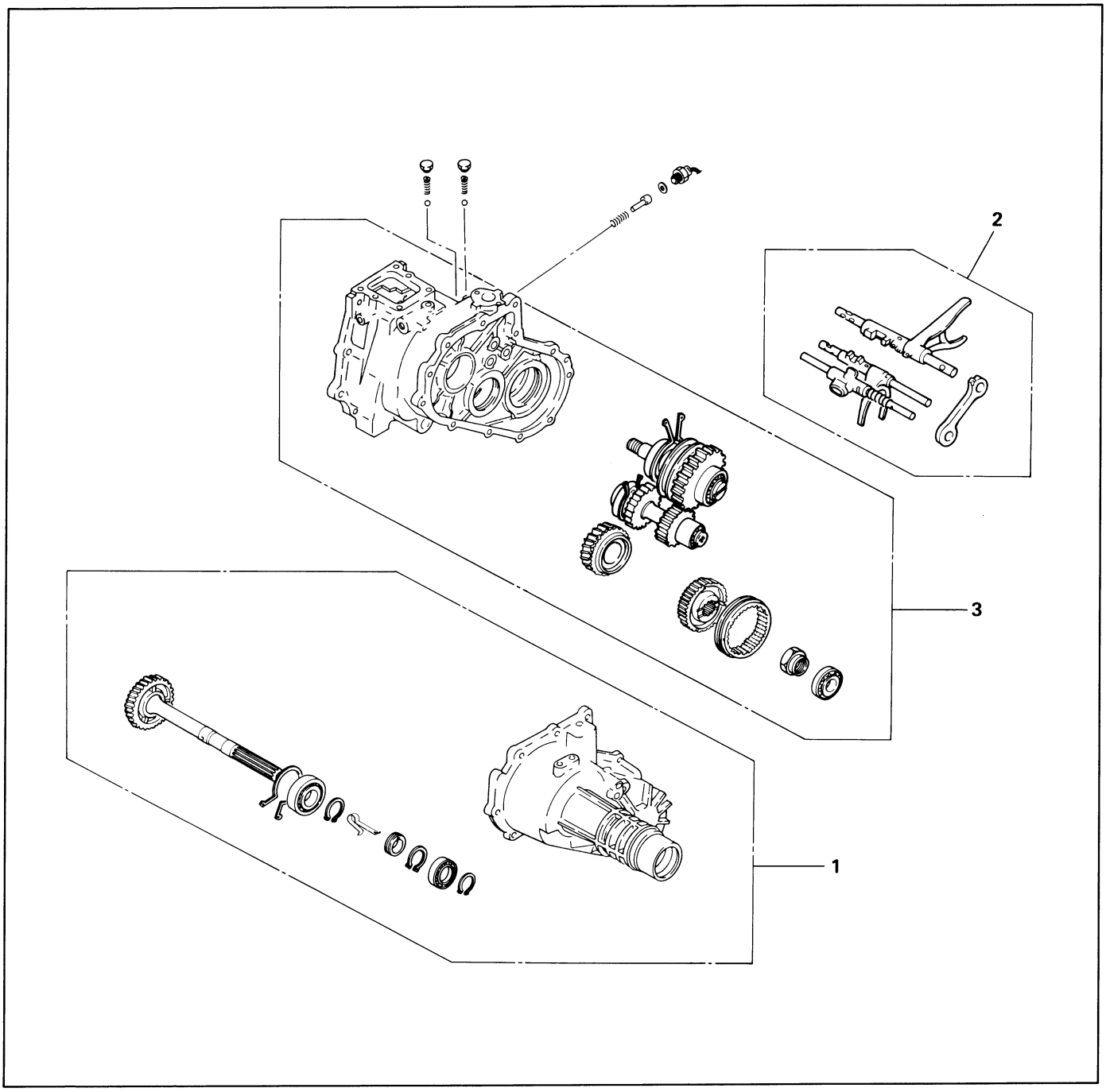

Disassembly Steps

1 Transfer rear case assembly
2. Shift fork assembly & interlock pin & detent assembly
3. Transfer case assembly

MAJOR COMPONENT (TRANSMISSION)

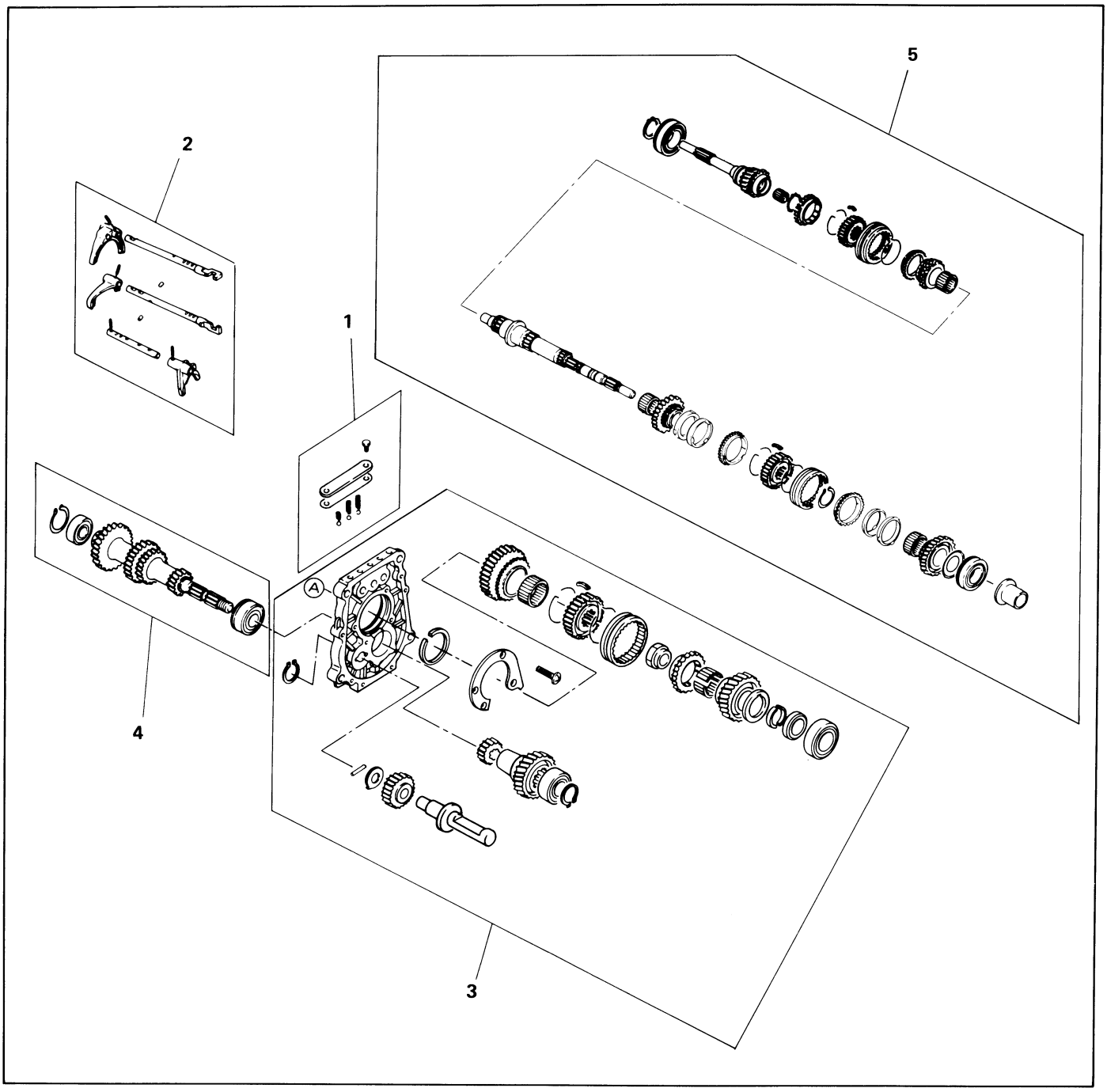

Disassembly Steps

1 Detent assembly
2. Shift fork assembly & interlock pin
3. Rev. and 5th gear assembly
4. Counter gear shaft assembly
5. Top & main gear shaft assembly

MINOR COMPONENT

TRANSFER REAR CASE ASSEMBLY

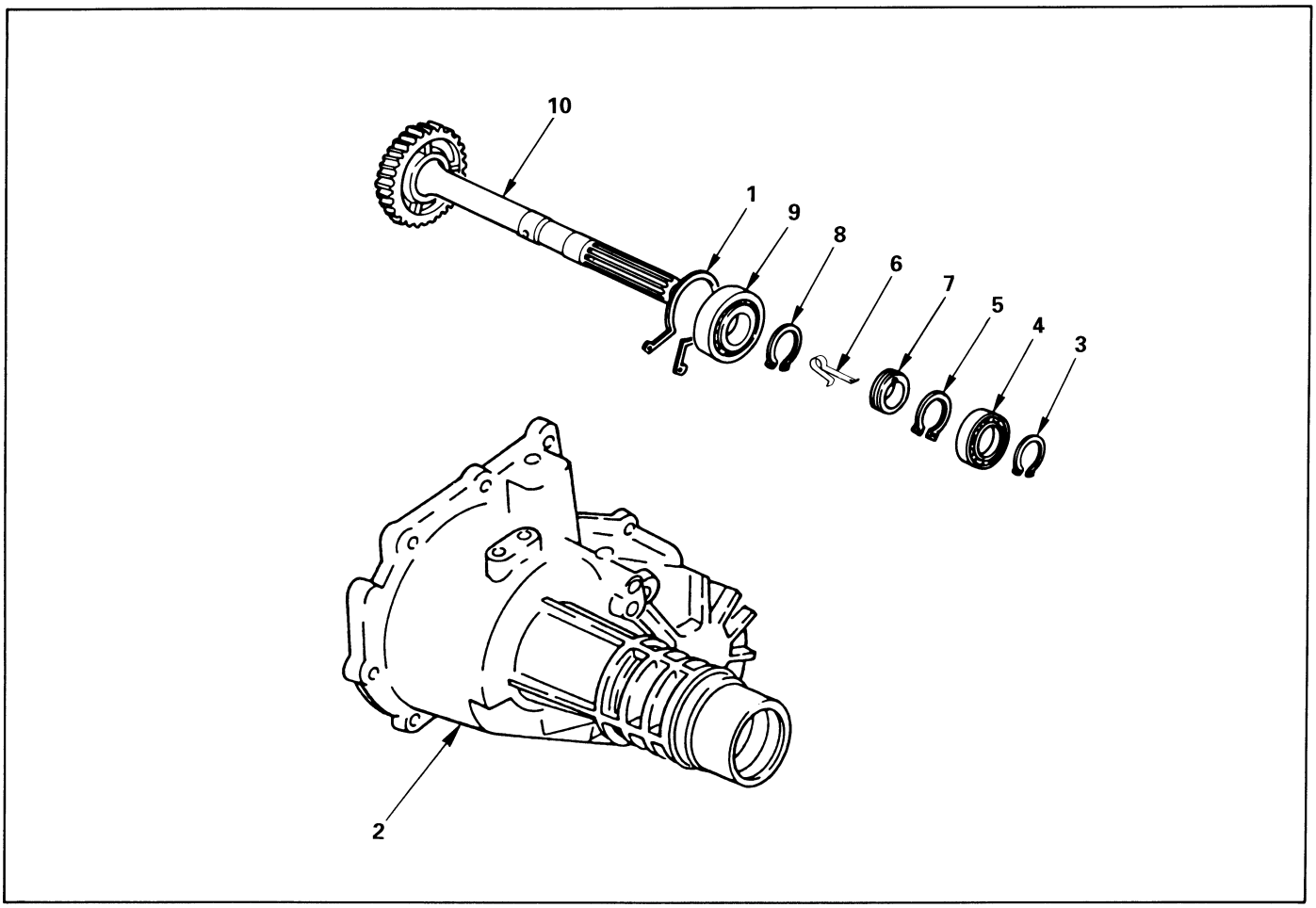

Disassembly Steps

▲ 1. Bearing snap ring
2. Transfer rear case
3. Bearing snap ring
▲ 4. Ball bearing
5. Bearing snap ring
6. Clip
7. Speedometer drive gear
8. Bearing snap ring
▲ 9. Ball bearing
10. Rear output shaft

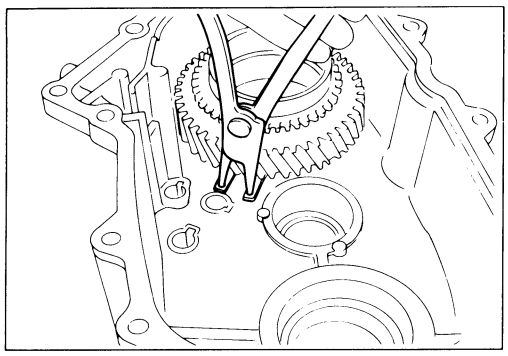

Important Operations

1. Bearing Snap Ring

Use a pair of snap ring pliers to remove the snap ring.

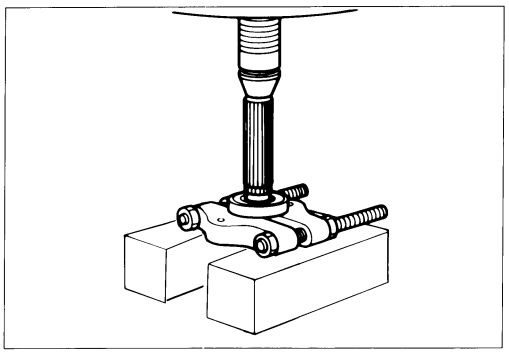

4. Ball Bearing

Use a bench press and the bearing remover to remove the ball bearing.

Bearing Remover: 5-8840-0015-0 (J-22912-01)

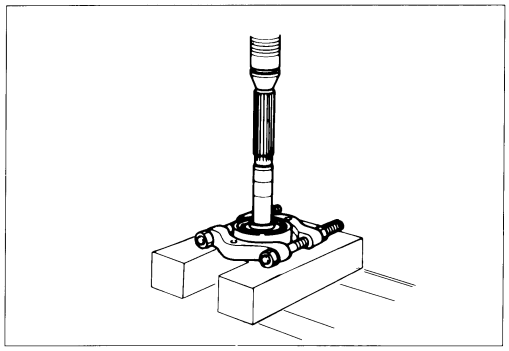

9. Ball Bearing

Use a bench press and the bearing remover to remove the ball bearing.

DETENT, SHIFT ARM ASSEMBLY AND INTERLOCK PIN

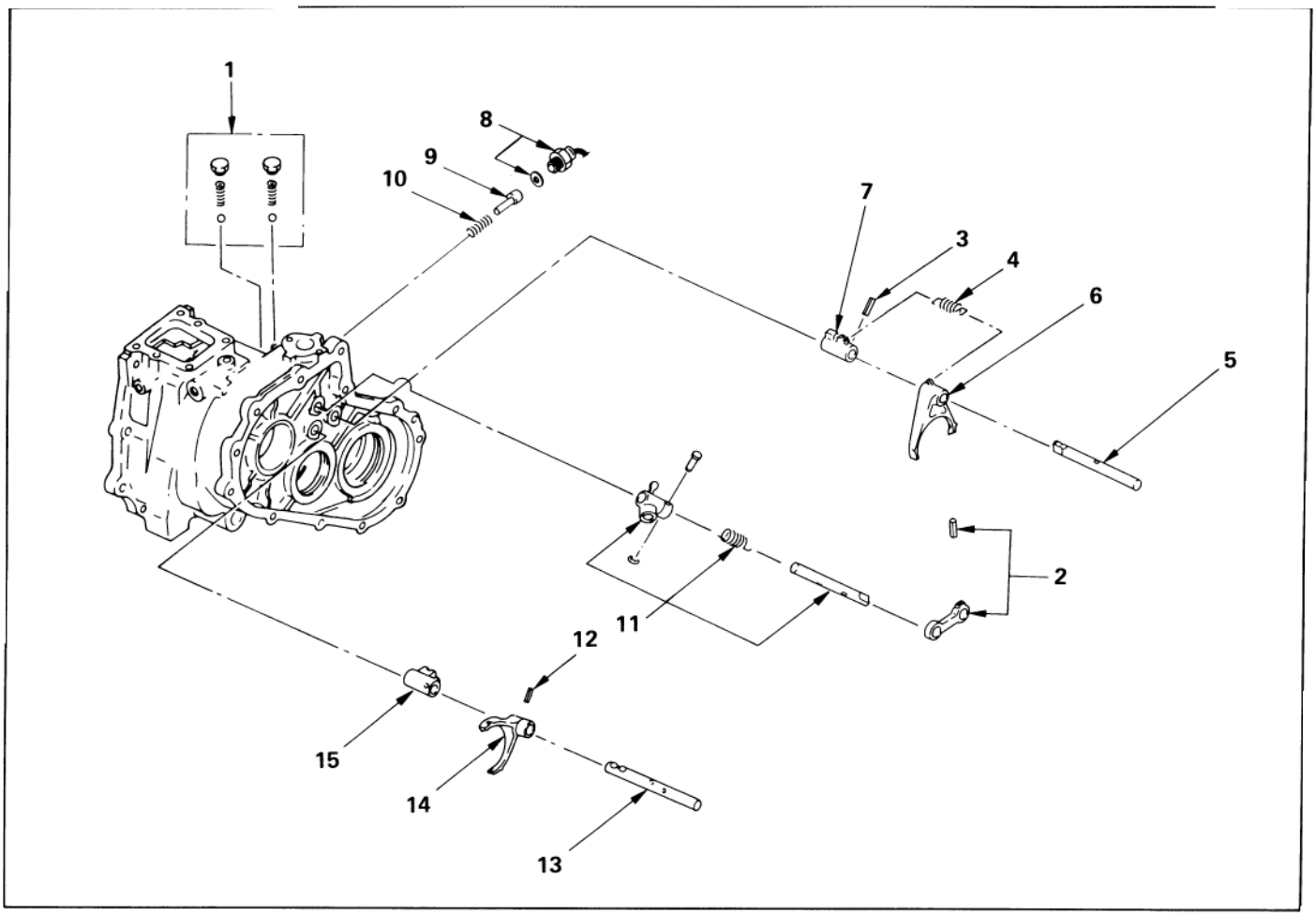

Disassembly Steps

1. Detent ball, spring and plug
▲ 2. Pin and bridge
3. Pin
4. Spring
▲ 5. 2WD-4WD shift rod
6. Shift arm
7. Shift block
8. 4WD indicator switch
▲ 9. Interlock pin
10. Spring
11. Select rod assembly
12. Pin
▲ 13. High-low shift rod
14. Shift arm
15. Shift block

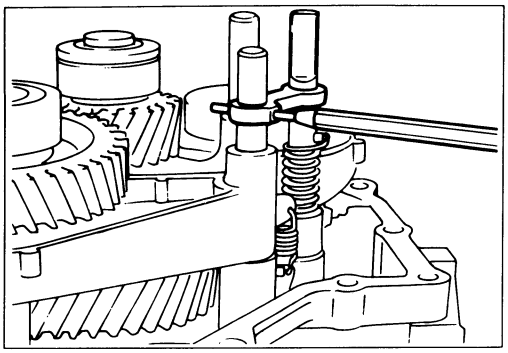

Important Operations

2. Bridge

Use a spring pin remover to remove the spring from the bridge.

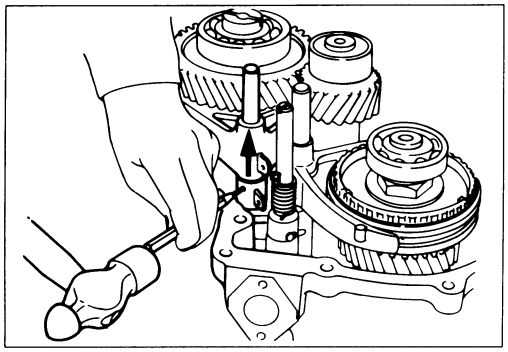

5. 2WD-4WD Shift Rod

1) Engage the 2nd-4th sleeve with the front output gear.
2) Remove the spring pin from the block.
3) Remove the shift rod.

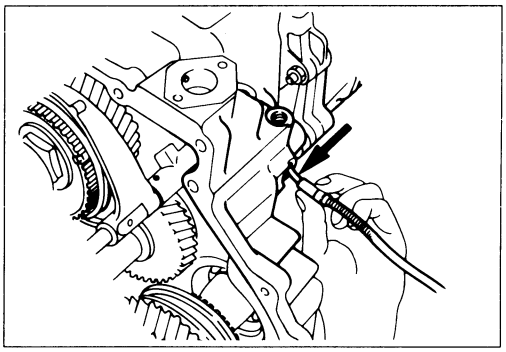

9. Interlock Pin

Use a magnetic tool to remove the interlock pin from the transfer case.

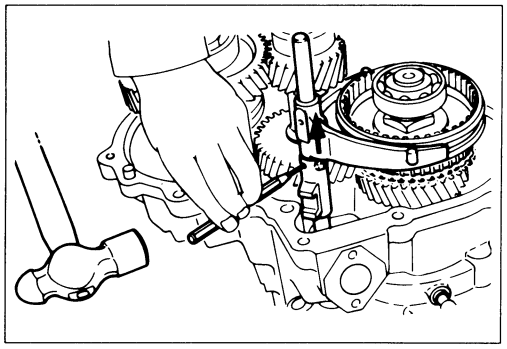

13. High-Low Shift Rod

Use a spring pin remover to remove the shift arm spring from the shift arm and the shift rod.

TRANSFER CASE ASSEMBLY AND MAINSHAFT GEAR

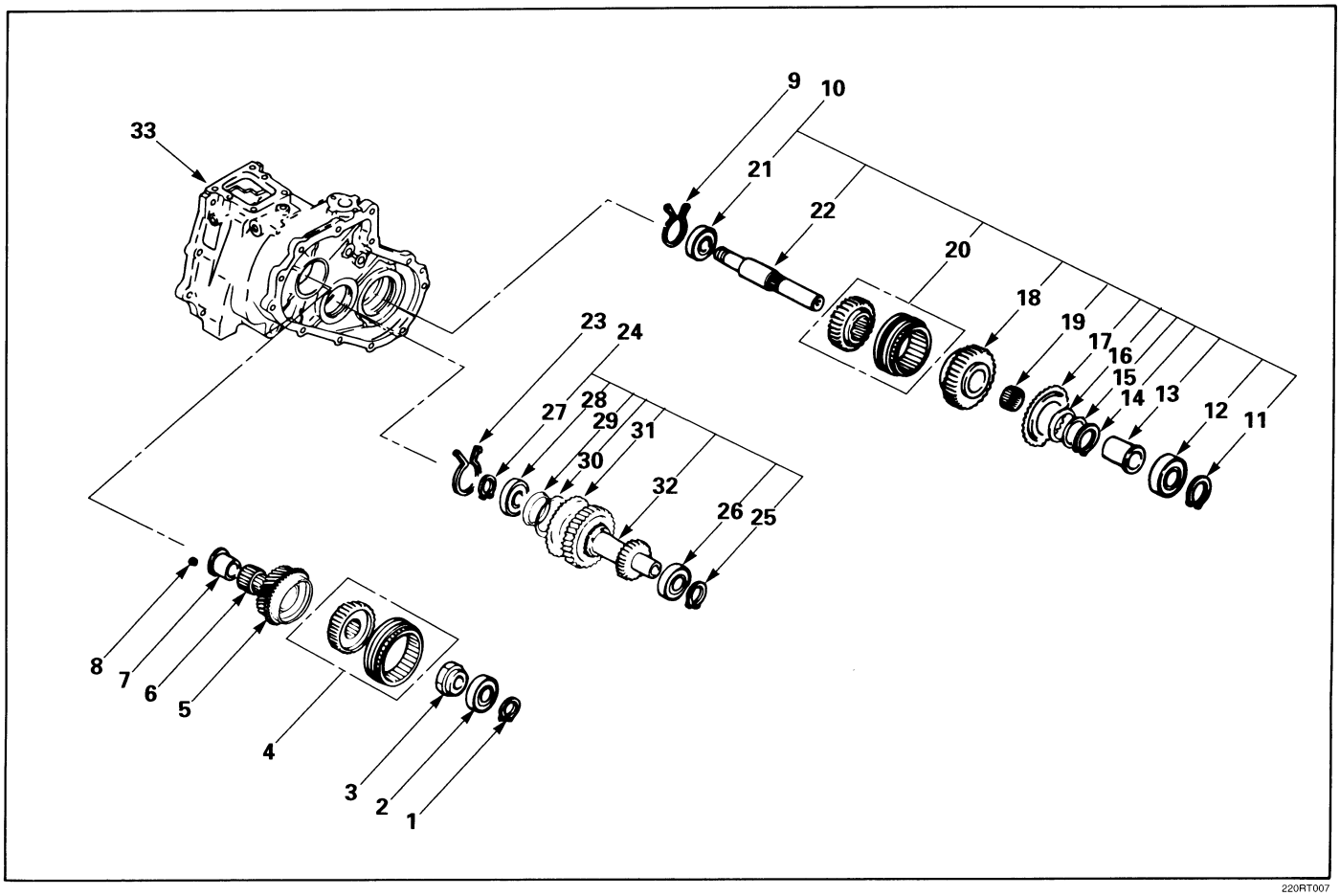

Disassembly Steps

1. Bearing snap ring
▲ 2. Mainshaft end ball bearing
▲ 3. Mainshaft end lock nut
▲ 4. High-low clutch hub and sleeve
▲ 5. Transfer input gear
6. Needle bearing
▲ 7. Bearing collar
8. Ball
▲ 9. Bearing snap ring
10. Front output gear assembly
11. Bearing snap ring
▲ 12. Ball bearing
13. Bearing collar
▲ 14. Anti-lash plate snap ring
15. Spacer
16. Belleville spring
17. Sub gear (Anti-lash plate)
18. Front output gear
19. Needle bearing
20. Clutch hub and sleeve
▲ 21. Ball bearing
22. Front output shaft
23. Bearing snap ring
24. Counter gear assembly
25. Bearing snap ring
▲ 26. Ball bearing
27. Bearing snap ring
▲ 28. Ball bearing
29. Spacer
30. Belleville spring
31. Sub gear (Anti-lash plate)
32. Counter gear
33. Transfer case

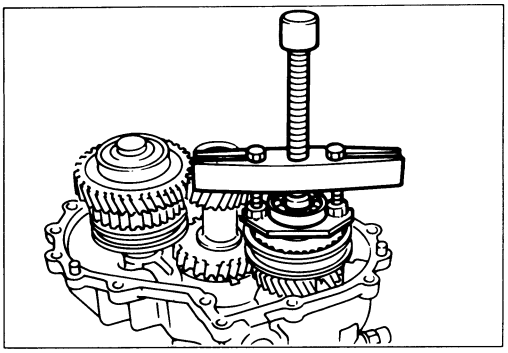

Important Operations

2. Mainshaft End Ball Bearing

Use a bearing remover to remove the ball bearing.

Remover : 5-8840-2155-0 (J-37217)
Puller : 5-8840-2027-0

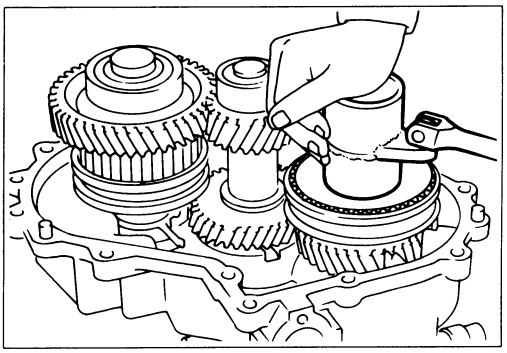

3. Mainshaft End Lock Nut

1) Engage the 3rd-top synchronizer with the 3rd gear.
2) Engage the low-2nd synchronizer with the low gear.
3) Use the lock nut wrench to remove the lock nut.
   Lock Nut Wrench: 5-8840-2156-0 (J-37219)

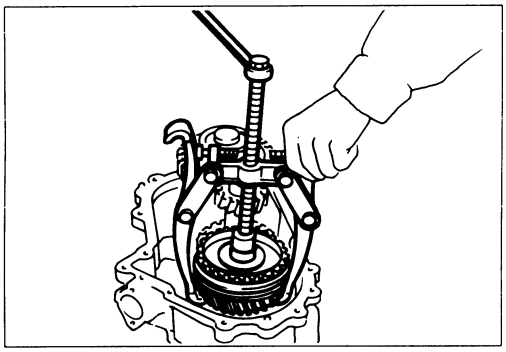

4. High-Low Clutch Hub and Sleeve

5. Transfer Input Gear

Use the universal puller to remove the high-low synchronizer assembly, the high-low block ring, and the transfer input gear.

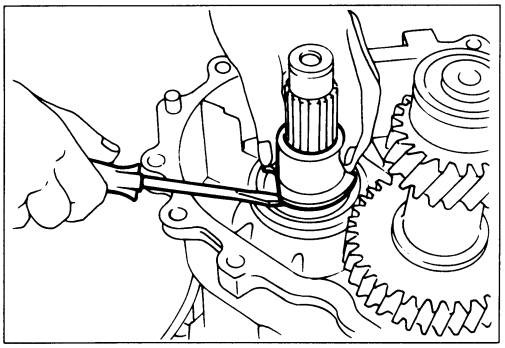

7. 8.Bearing Collar and Ball

Using screw driver to remove the bearing collar.

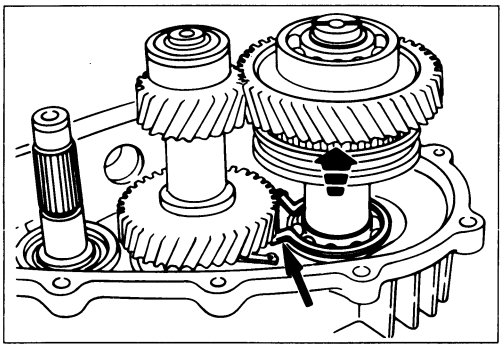

9. Bearing Snap Ring

Use a pair of snap ring pliers to expand the bearing snap ring.

Use a plastic hammer to tap the front output gear assembly free.

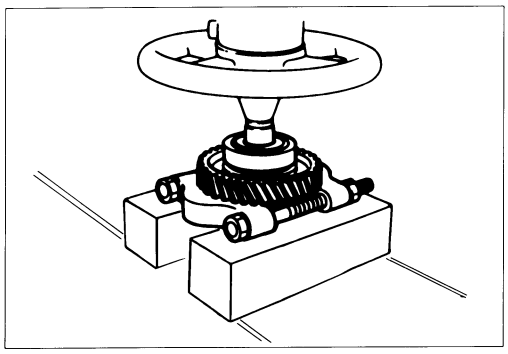

12. Ball Bearing

Use a bench press and the ball bearing remover to remove the ball bearing.

Bearing Remover: 5-8840-0015-0 (J-22912-01)

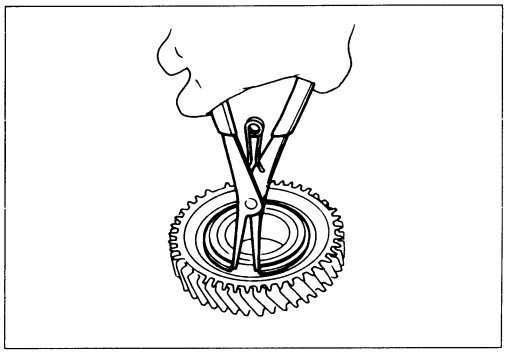

14. Anti-lash Plate Snap Ring

Use a pair of pliers to remove the snap ring.

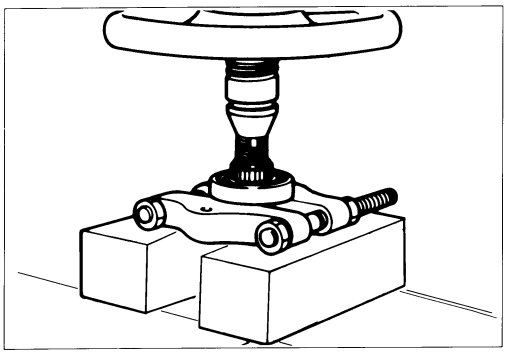

21. Ball Bearing

Use a bench press and the bearing remover to remove the ball bearing.

Bearing Remover: 5-8840-0015-0 (J-22912-01)

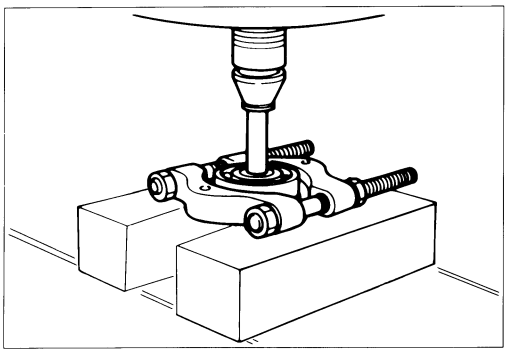

26. Ball Bearing
28. Ball Bearing

Use a bench press and the bearing remover to remove the ball bearings.

MINOR COMPONENT

INTERMEDIATE PLATE AND GEAR ASSEMBLY, DETENT, SHIFT ARM ASSEMBLY, AND INTERLOCK PIN

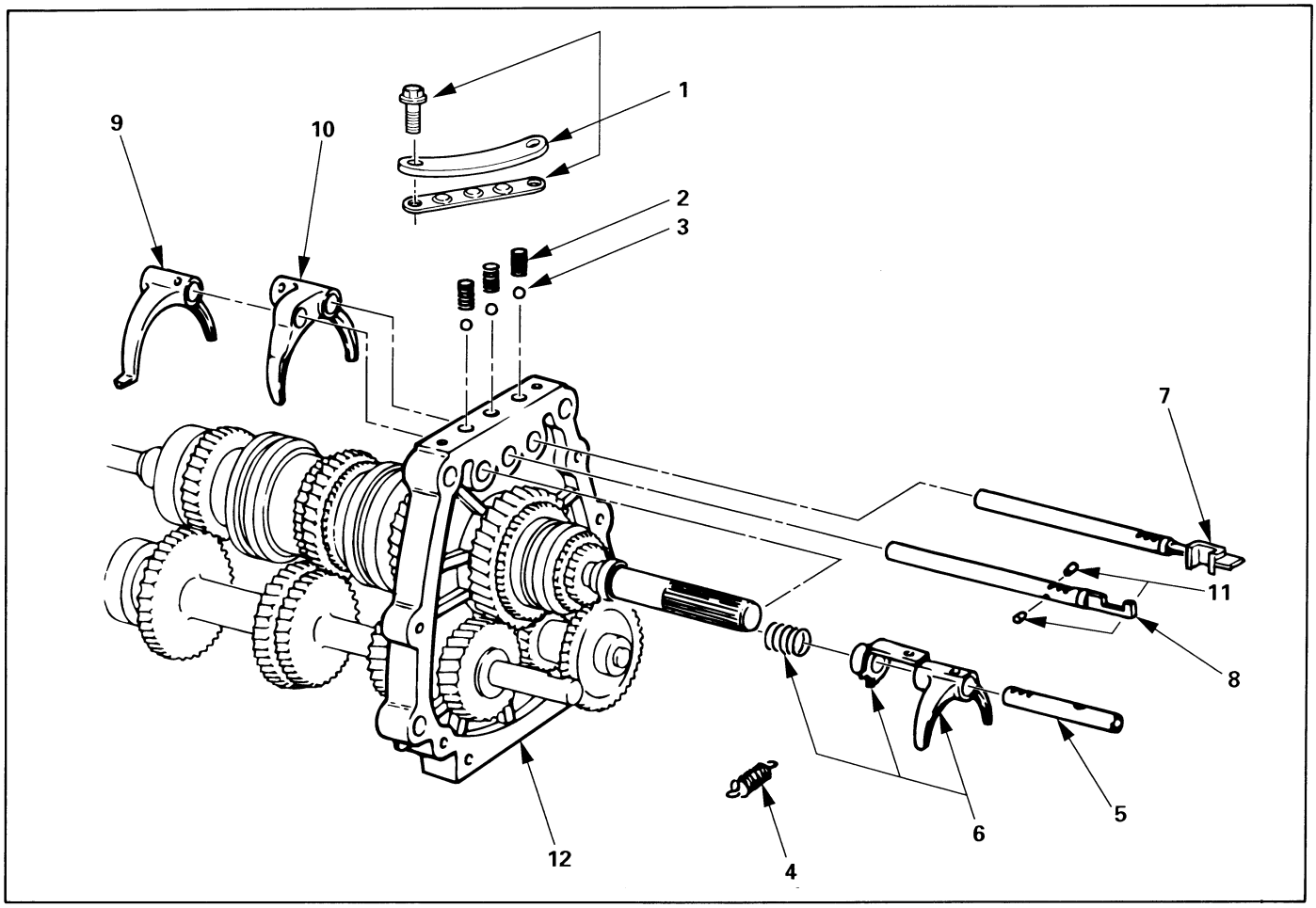

220RW071

Disassembly Steps

1. Detent spring plate and gasket
2. Detent spring
3. ▲ Detent ball
4. Spring
5. Rev-5th shift rod
6. Rev-5th shift arm and reverse inhibitor
7. 1st-2nd shift rod
8. ▲ 3rd-4th shift rod
9. ▲ 3rd-4th shift arm
10. ▲ 1st-2nd shift arm
11. ▲ Interlock pin
12. Intermediate plate and gear assembly

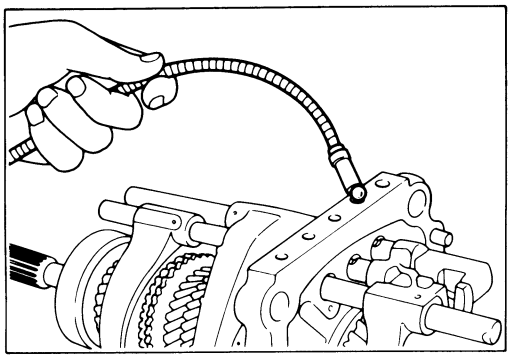

Important Operations

3. Detent Ball

Use a magnetic tool to remove the detent balls from the intermediate plate.

Take care not to lose the detent balls.

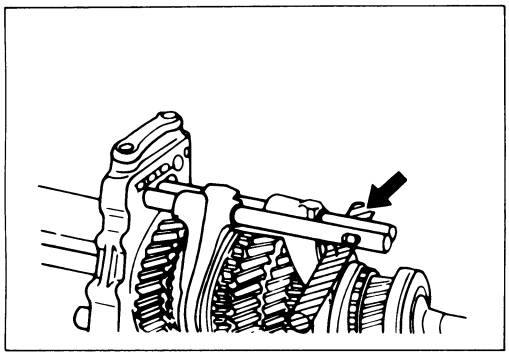

8. 3rd-4th Shift Rod

9. 3rd-4th Shift Arm

10. 1st-2nd Shift Arm

1) Hold a round bar against the shift arm end.

   This will prevent damage to other components.

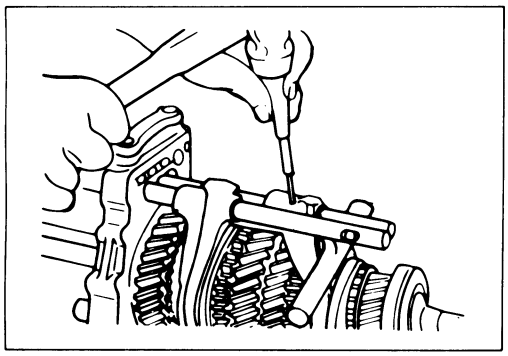

2) Use a spring pin remover to remove the shift arm spring pin from the shift arm and the shift rod.

   Discard the used spring pin.

3) Move the 3rd-4th shift rod forward.

   Take care not to lose the interlock pins.

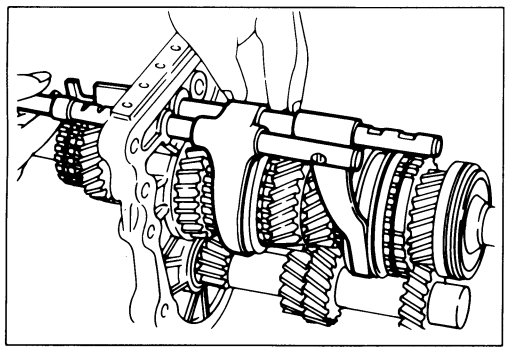

11. Interlock Pin

Carefully remove the reverse shifter rod forward to avoid losing the interlock pins.

Note:

Remove the shifter rods carefully. Interlock pins are located between the shifter rod in the intermediate plate.

REVERSE GEAR AND 5TH GEAR

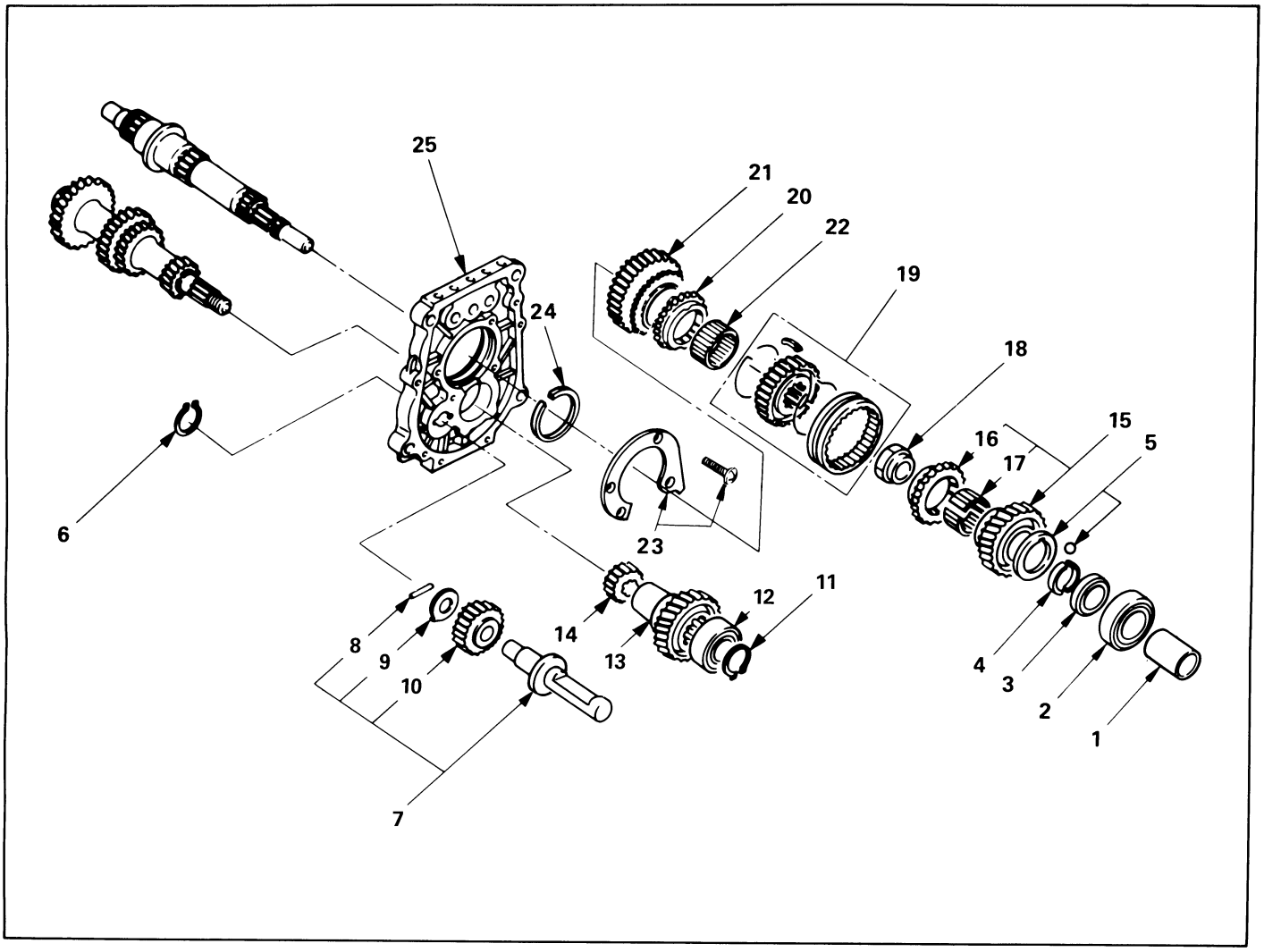

Disassembly Steps

- ▲ 1. Oil seal collar
- ▲ 2. Bearing
- ▲ 3. Retainer
- 4. Thrust plate
- 5. Thrust washer and lock ball
- ▲ 6. Reverse idler gear snap ring
- 7. Reverse idler shaft
- 8. Idle shaft pin
- 9. Thrust washer
- 10. Reverse idler gear
- 11. Bearing snap ring
- ▲ 12. Ball bearing
- ▲ 13. Counter 5th gear
- 14. Counter reverse gear
- 15. 5th gear
- 16. 5th block ring
- ▲ 17. Needle bearing
- ▲ 18. Clutch hub nut
- ▲ 19. Rev-5th synchronizer assembly
- ▲ 20. Reverse block ring
- ▲ 21. Reverse gear
- 22. Needle bearing
- ▲ 23. Bearing plate and screw
- ▲ 24. Bearing snap ring
- ▲ 25. Intermediate plate

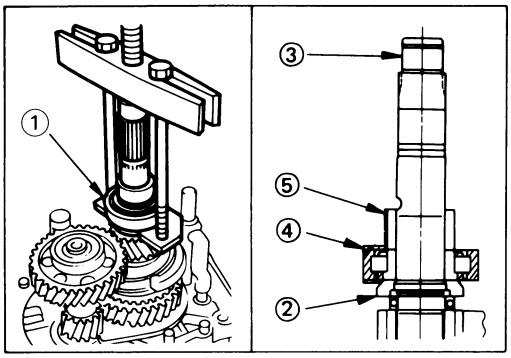

Important Operations

1. Oil Seal Collar

2. Bearing

3. Retainer

1) Set the retaining ring remover ① to the retainer ② and the mainshaft end ③.
2) Remove the retainer together with the bearing ④ and the oil seal collar ⑤.

The universal puller may be used in place of the retaining ring remover.

Retainer Remover: 5-8840-2158-0 (J-37222)

Universal Puller: 5-8840-2027-0

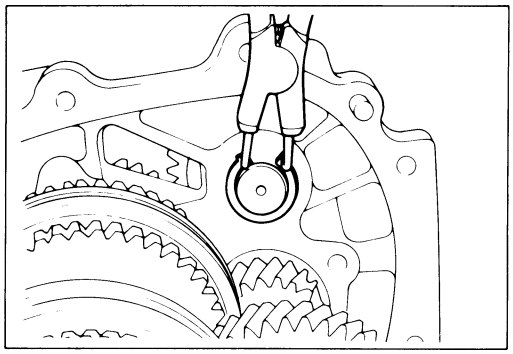

6. Reverse Idler Gear Snap Ring

Use a pair of snap ring pliers to remove the snap ring.

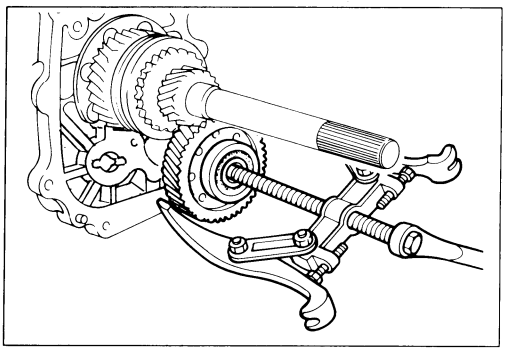

12. Ball Bearing

13. Counter 5th Gear

Use the bearing remover to remove the ball bearing.

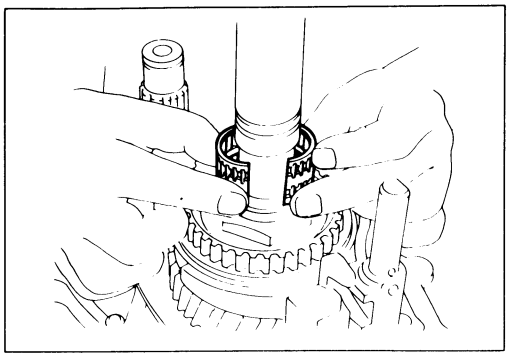

17. Needle Bearing

Remove the needle bearing (2 piece type).

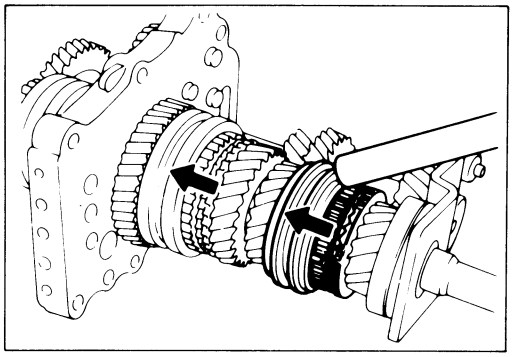

18. Clutch Hub Nut

1) Engage the 3rd-4th synchronizer with the 3rd gear.
2) Engage the 1st-2nd synchronizer with the 1st gear.
3) Attach the holding fixture together with the holding base to the mainshaft front bearing and the counter gear front bearing.

   Holding Fixture: 5-8840-2160-0 (J-37224)

   Holding Base: 5-8840-0003-0 (J-3289-20)

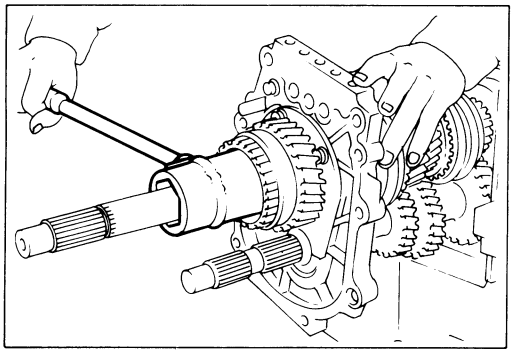

4) Use the hub nut wrench to remove the hub nut.

   Hub Nut Wrench: 5-8840-2156-0 (J-37219)

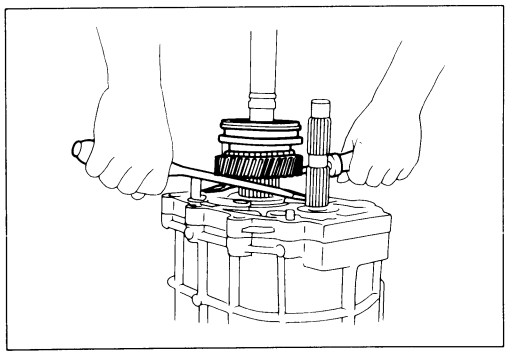

19. Rev.-5th Synchronizer Assembly

20. Reverse Ring

21. Reverse Gear

Use screw drivers between the reverse gear and bearing plate to remove the Rev.-5th synchronizer assembly together with reverse ring and gear.

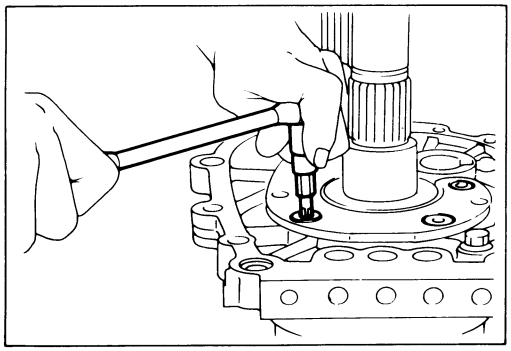

23. Bearing Plate and Screw

Use the Torx bit to remove the bearing plate screw from the intermediate plate.

Torx Bit Wrench: 5-8840-0047-0 (J-37225) (T45)

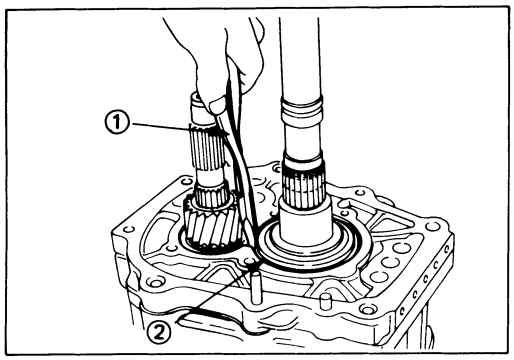

24. Ball Bearing Snap Ring

25. Intermediate Plate

1) Insert the snap ring pliers into the mainshaft bearing snap ring hole.
2) Use the snap ring pliers ① to force open the mainshaft bearing snap ring ②.

   Hold the snap ring open with the pliers.
3) Push the intermediate plate toward the rear of the transmission to remove it.

   The ball bearing snap ring will come free.

TOP GEAR SHAFT, MAIN GEAR SHAFT, AND COUNTER GEAR

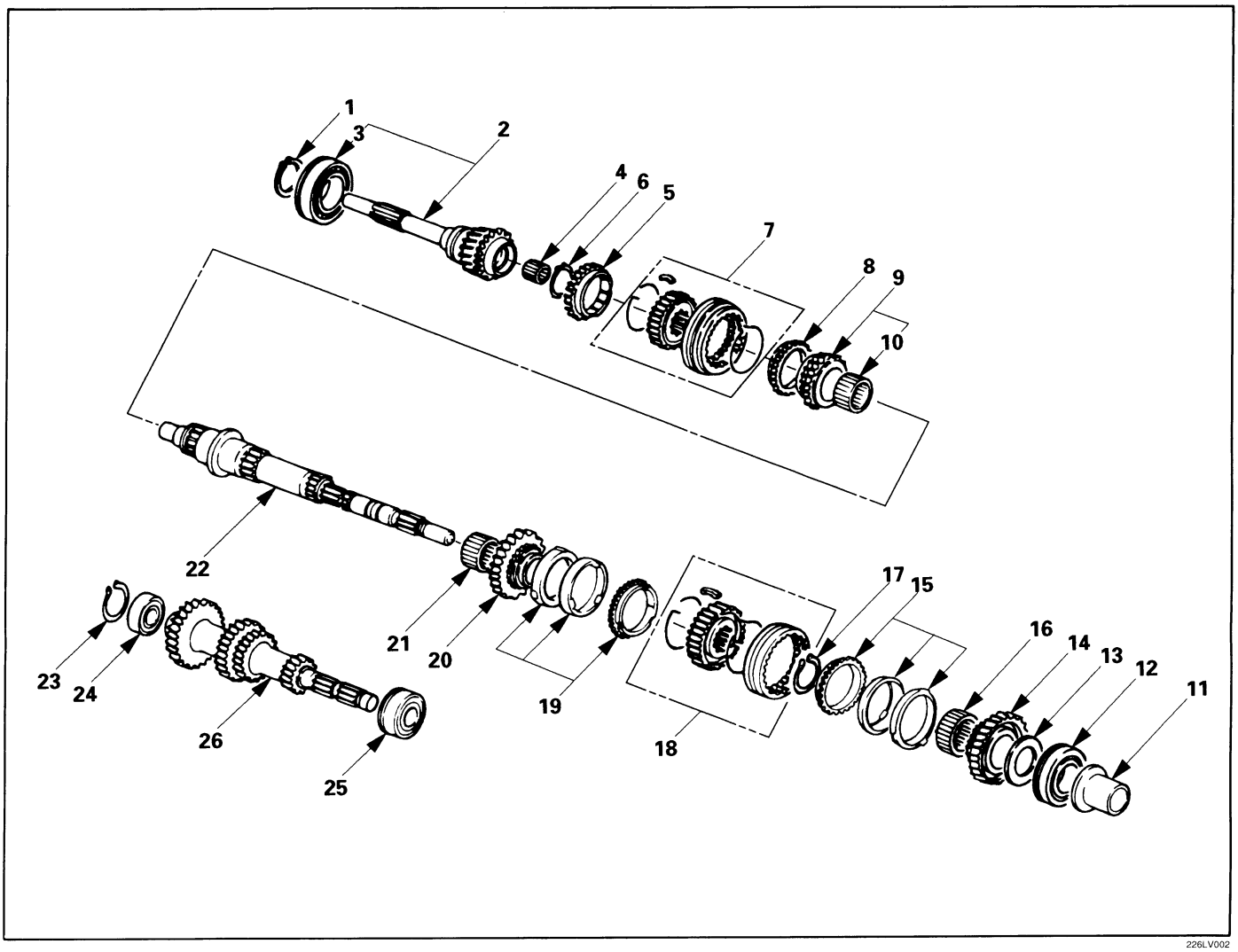

Disassembly Steps

1. Top gear shaft snap ring
2. Top gear shaft
▲ 3. Top gear ball bearing
4. Needle bearing
5. Top block ring
▲ 6. Mainshaft snap ring
▲ 7. 3rd-4th synchronizer assembly
8. 3rd block ring
9. 3rd gear
10. Needle bearing
▲ 11. Needle bearing collar
▲ 12. Mainshaft ball bearing
▲ 13. 1st gear thrust bearing
▲ 14. 1st gear
15. 1st block ring (set)
16. Needle bearing
▲ 17. Clutch hub snap ring
▲ 18. 1st-2nd synchronizer assembly
▲ 19. 2nd block ring (set)
▲ 20. 2nd gear
21. Needle bearing
22. Mainshaft
23. Bearing snap ring
▲ 24. Counter gear front bearing
25. Counter gear center bearing
26. Counter gear

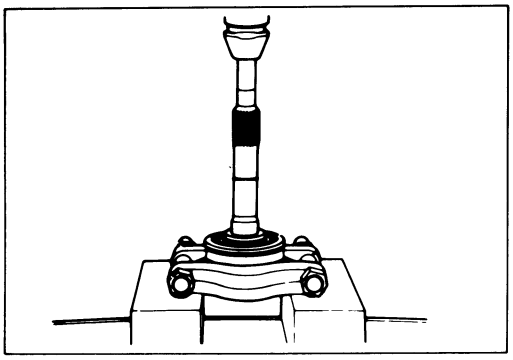

Important Operations

3. Top Gear Ball Bearing

Use a bench press and the bearing remover to remove the ball bearing.

Bearing Remover : 5-8840-0015-0 (J-22912-01)

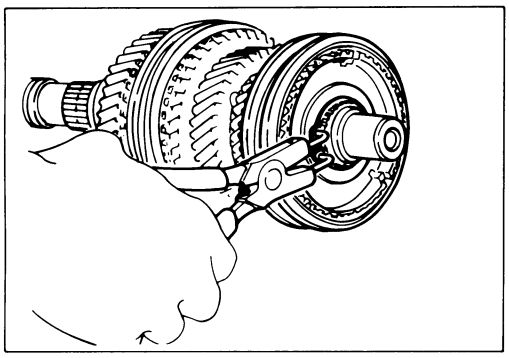

6. Mainshaft Snap Ring

Use a pair of snap ring pliers to remove the snap ring.

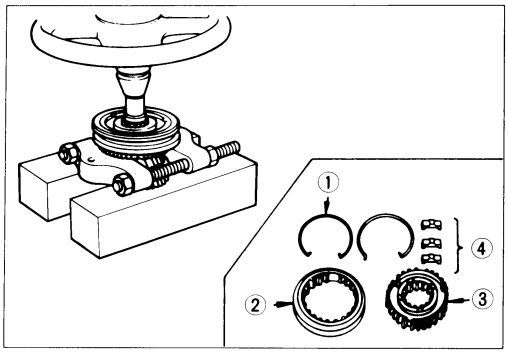

7. 3rd-4th Synchronizer Assembly

1) Use a bench press and the bearing replacer to remove the synchronizer assembly as a set.
2) Disassemble the synchronizer assembly.
   ① Springs
   ② Sleeve
   ③ Clutch Hub
   ④ Inserts

Note:

Mark the hub and sleeve alignment for reassembly.

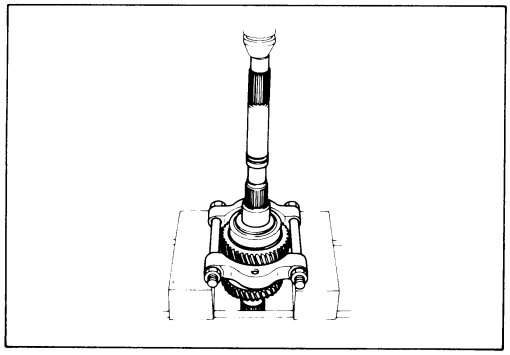

11. Needle Bearing Collar
12. Mainshaft Ball Bearing
13. 1st Gear Thrust Bearing
14. 1st Gear

Use a bench press and the bearing remover to remove the ball bearing.

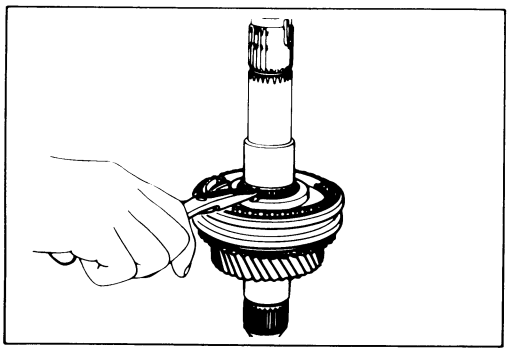

17. Clutch Hub Snap Ring

Use a pair of snap ring pliers to remove the snap ring.

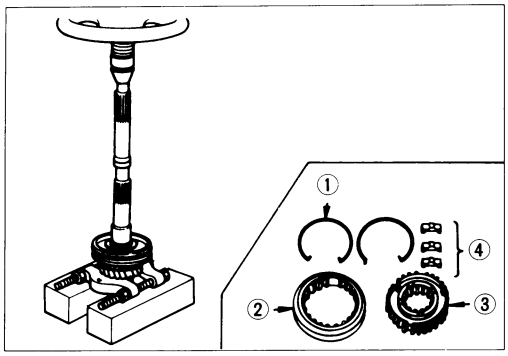

18. 1st-2nd Synchronizer Assembly

19. 2nd Block Ring (Set)

20. 2nd Gear

1) Use a bench press and the bearing remover to remove the ball bearing 2nd gear together with synchronizer assembly.

   Remover: 5-8840-0015-0 (J-22912-01)

2) Disassemble the synchronizer assembly.

   ① Springs
   ② Sleeve
   ③ Clutch Hub
   ④ Inserts

Note:

Mark the hub and sleeve alignment for reassembly.

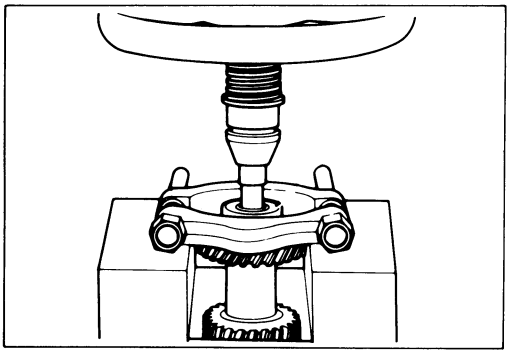

24. Counter Gear Front Bearing

Use a bench press and the bearing remover to remove the bearing.

Bearing Remover: 5-8840-0015-0 (J-22912-01)

INSPECTION AND REPAIR

Make the necessary adjustments, repairs, and part replacements if excessive wear or damage is discovered during inspection.

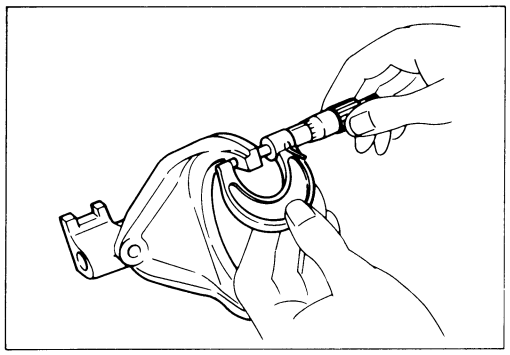

SHIFT ARM THICKNESS

Use a micrometer to measure the shift arm thickness.

If the measured value is less than the specified limit, the shift arm must be replaced.

Shift Arm Thickness — mm(in)

		Standard	Limit
1st–2nd Transfer	4x4/4x2 High/Low	9.60–9.85 (0.378–0.388)	9.0 (0.354)
3rd–4th Rev.–5th		9.60–9.80 (0.378–0.386)	

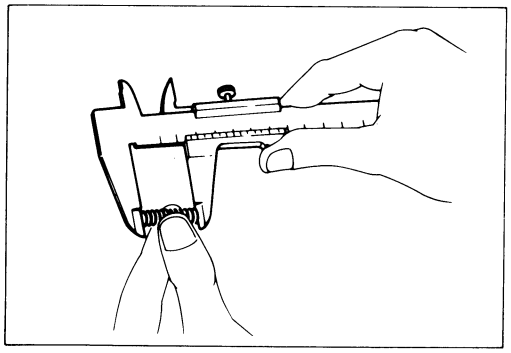

DETENT AND INTERLOCK SPRINGS FREE LENGTH

Use a venier caliper to measure the springs free length.

If the measured value is less than the specified limit, the springs must be replaced.

Springs Free Length — mm(in)

		Standard	Limit
(Detent Ball)	Transmission	26.8 (1.06)	26.2 (1.03)
	Transfer case	23.4 (0.92)	22.8 (0.90)
(Interlock Pin)	Transfer case	15.9 (0.626)	15.3 (0.602)

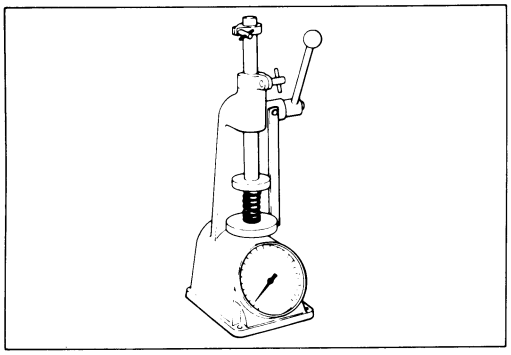

DETENT SPRING TENSION

Use a spring tester to measure the springs tension. If the measured value is less than the specified standard, the springs must be replaced.

Springs Tension — kg(lb/N)

		Compressed Height	Standard
(Detent Ball)	Transmission	20 mm (0.787 in)	8.9—9.9 (19.6—21.8/ 87.2—97)
	Transfer case	18.7 mm (0.736 in)	7.0–9.0 (15.4–19.8/ 68.6–88.2)
(Interlock Pin)	Transfer case	11.5 mm (0.453 in)	1.0 (2.2/9.8)

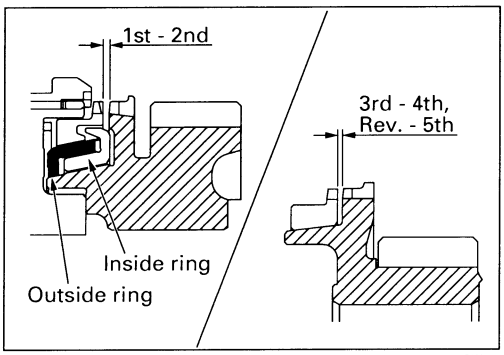

A07RW033

BLOCK RING AND DOG TEETH CLEARANCE

Use a thickness gauge to measure the clearance between the block ring and the dog teeth.

If the measured value exceeds the specified limit, the block ring must be replaced.

Block Ring and Dog Teeth Clearance — mm(in)

Standard	Limit
1.5 (0.059)	0.8 (0.032)

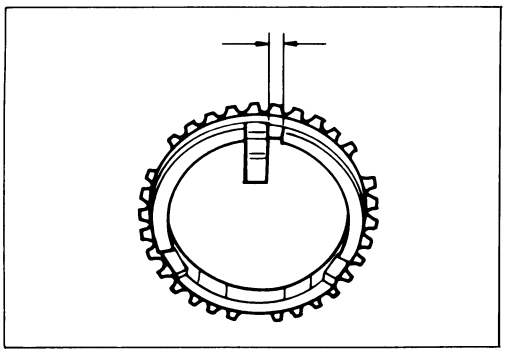

BLOCK RING AND INSERT CLEARANCE

Use a vernier caliper to measure the clearance between the block ring and the insert.

If the measured value exceeds the specified limit, the block ring and the insert must be replaced.

Block Ring and Insert Clearance — mm(in)

	Standard	Limit
3rd-4th	3.46–3.74 (0.136–0.147)	4.0 (0.158)
1st-2nd	4.34–4.66 (0.171–0.183)	4.9 (0.193)
Transfer	2.46–2.74 (0.097–0.108)	3.0 (0.118)
Rev.-5th	3.59–3.91 (0.141–0.154)	4.1 (0.161)

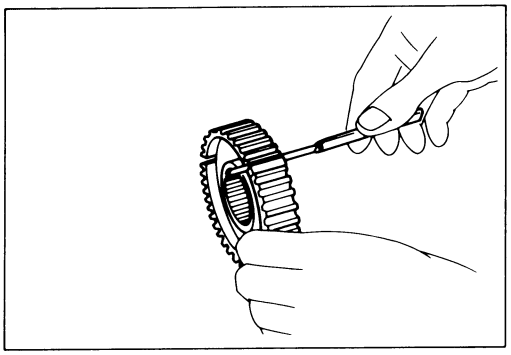

CLUTCH HUB AND INSERT CLEARANCE

Use a thickness gauge to measure the clearance between the clutch hub and the insert.

If the measured value exceeds the specified limit, the clutch hub and the insert must be replaced.

Clutch Hub and Insert Clearance — mm(in)

	Standard	Limit
3rd-4th	0.01-0.19 (0.0004-0.0075)	0.3 (0.012)
1st-2nd Rev.-5th	0.09-0.31 (0.0035-0.0122)	0.4 (0.016)

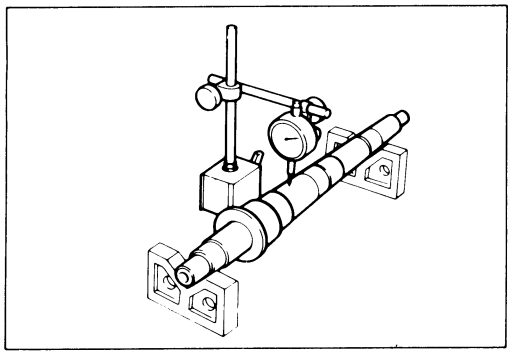

MAINSHAFT RUN-OUT

1. Install the mainshaft to a grinding machine.
2. Use a dial indicator to measure the mainshaft central portion run-out.
   If the measured mainshaft run-out exceeds the specified limit, the mainshaft must be replaced.

Mainshaft Run Out — mm(in)

Limit
0.05 (0.0020)

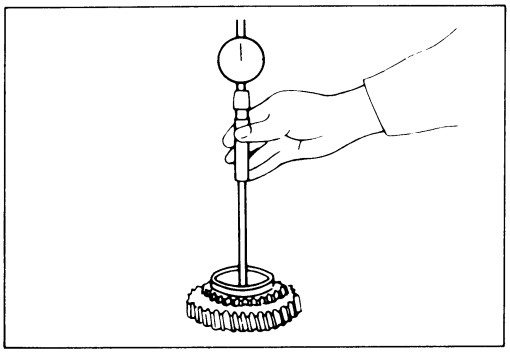

GEAR INSIDE DIAMETER

Use an inside dial indicator to measure the gear inside diameter.

If the measured value is less than the specified limit, the gear must be replaced.

Gear Inside Diameter — mm(in)

	Standard	Limit
1st 3rd	45.000-45.013 (1.771-1.772)	45.100 (1.776)
2nd	52.000-52.013 (2.047-2.048)	52.100 (2.051)
Rev. Transfer	48.000-48.013 (1.889-1.890)	48.100 (1.894)
5th	32.000-32.013 (1.259-1.260)	32.100 (1.264)

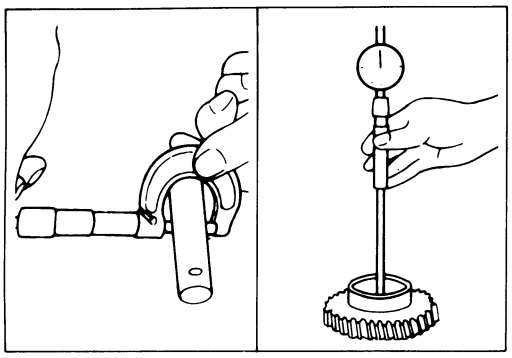

REVERSE IDLER GEAR AND IDLER GEAR SHAFT CLEARANCE

1. Use a micrometer to measure the idler gear shaft diameter.
2. Use an inside dial indicator to measure the idler gear inside diameter.
3. Calculate the idler gear and idler gear shaft clearance.

   Idler gear inside diameter – idler gear shaft diameter = idler gear and idler gear shaft clearance.

   If the measured value exceeds the specified limit, the idler gear and/or the idler gear shaft must be replaced.

Idler Gear and Idler Gear Shaft Clearance mm(in)

Standard	Limit
0.041 – 0.074 (0.0016 – 0.0029)	0.150 (0.0059)

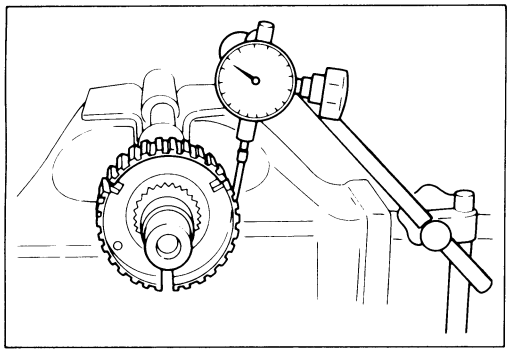

CLUTCH HUB SPLINE PLAY

1. Set a dial indicator to the clutch hub to be measured.
2. Move the clutch hub as far as possible to both the right and the left.

   Note the dial indicator reading.

   It the measured value exceeds the specified limit, the clutch hub must be replaced.

Clutch Hub Spline Play mm(in)

	Standard	Limit
1st—2nd 3rd—4th Transfer 4×2/4×4 High/Low	0 — 0.1 (0 — 0.0039)	0.2 (0.0079)
Rev.—5th	0 — 0.2 (0 — 0.0079)	0.3 (0.0118)

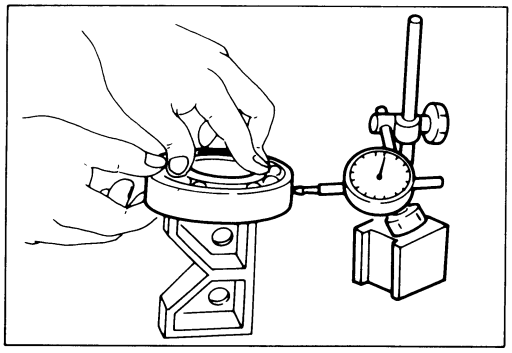

BALL BEARING PLAY

Use a dial indicator to measure the ball bearing play.

Ball Bearing Play mm(in)

Limit
0.2 (0.0079)

FRONT COVER OIL SEAL

Oil Seal Replacement

Oil Seal Removal

Use a screwdriver to pry the oil seal from the front cover.

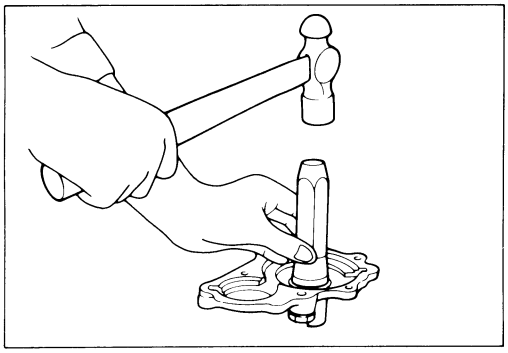

Oil Seal Installation

1. Use the oil seal installer to install the oil seal to the front cover.

   Oil Seal Installer : 5-8840-0026-0 (J-26540)
2. Apply gear oil to the oil seal lip.

REAR COVER OIL SEAL

Oil Seal Replacement

Oil Seal Removal

Use a screwdriver to pry the oil seal from the rear cover.

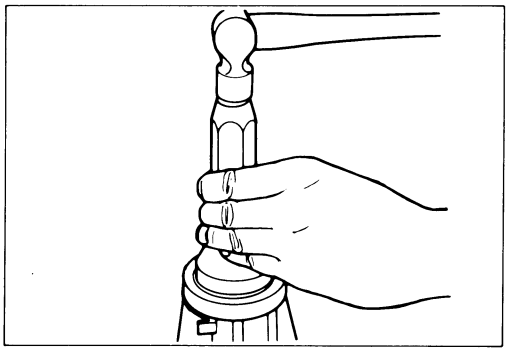

Oil Seal Installation

1. Use the oil seal installer to install the oil seal to the rear cover.

   Oil Seal Installer : 5-8522-0050 (J-29769)
2. Apply engine oil to the oil seal lip.

TRANSFER CASE MAINSHAFT OIL SEAL

Oil Seal Replacement

Oil Seal Removal

Use a screwdriver to pry the oil seal from the transfer case.

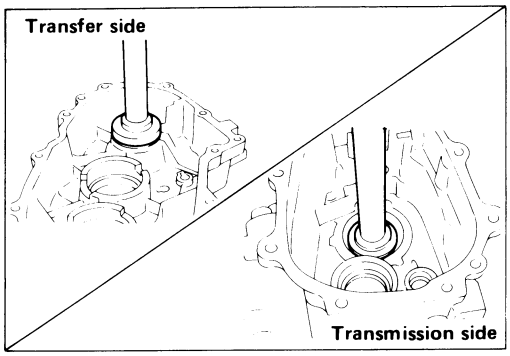

Oil Seal Installation

1. Use the oil seal installer to install the oil seal to the transfer case.

   Oil Seal Installer : 5-8840-2193-0 (J-37488)
   Drive Handle : 5-8840-0007-0 (J-8092)

2. Apply engine oil to the oil seal lip.

TRANSFER CASE FRONT OUTPUT SHAFT OIL SEAL

Oil Seal Replacement

Oil Seal Removal

Use a screwdriver to pry the oil seal from the transfer case.

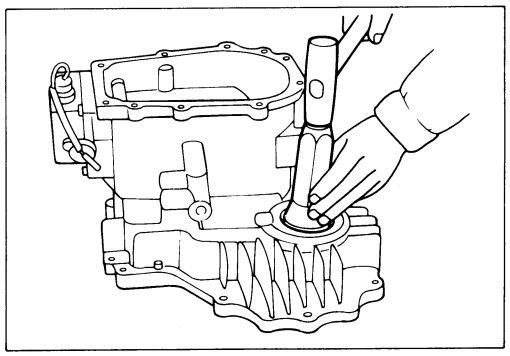

Oil Seal Installation

1. Use the oil seal installer to install the oil seal to the transfer case.

   Oil Seal Installer : 5-8840-2161-0 (J-37226)

2. Apply engine oil to the oil seal lip.

REASSEMBLY

MAJOR COMPONENT (TRANSMISSION)

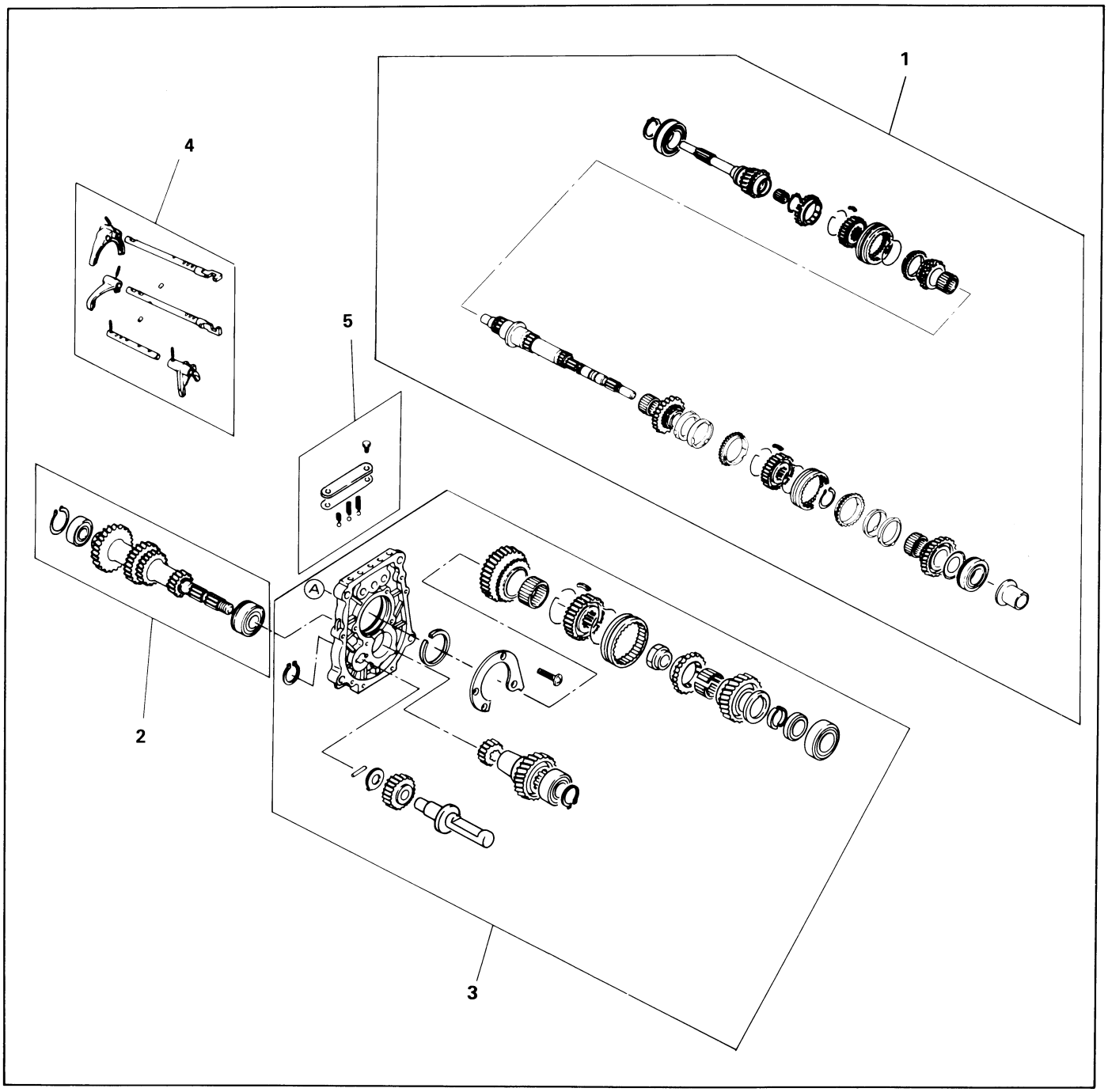

Reassembly Steps

1 Top & main gear shaft assembly
2. Counter gear shaft assembly
3. Rev. and 5th gear assembly
4. Shift arm assembly & interlock pin
5. Detent assembly

MAJOR COMPONENT (TRANSFER CASE)

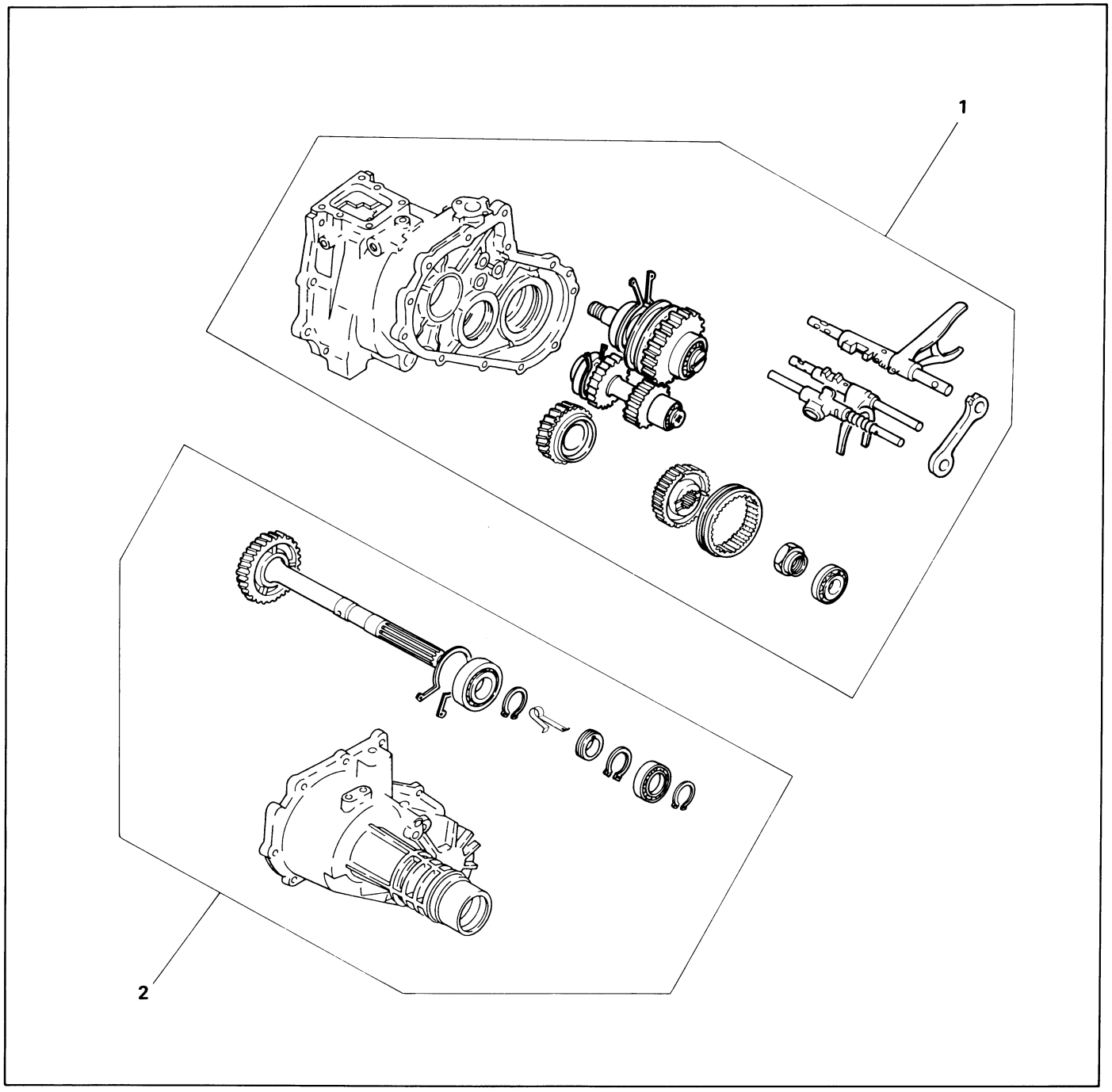

Reassembly Steps

1 Transfer case assembly
2. Transfer rear case assembly

MINOR COMPONENT (TRANSMISSION)

INTERMEDIATE PLATE AND GEAR ASSEMBLY TOP GEAR SHAFT, MAIN SHAFT GEAR AND COUNTER GEAR

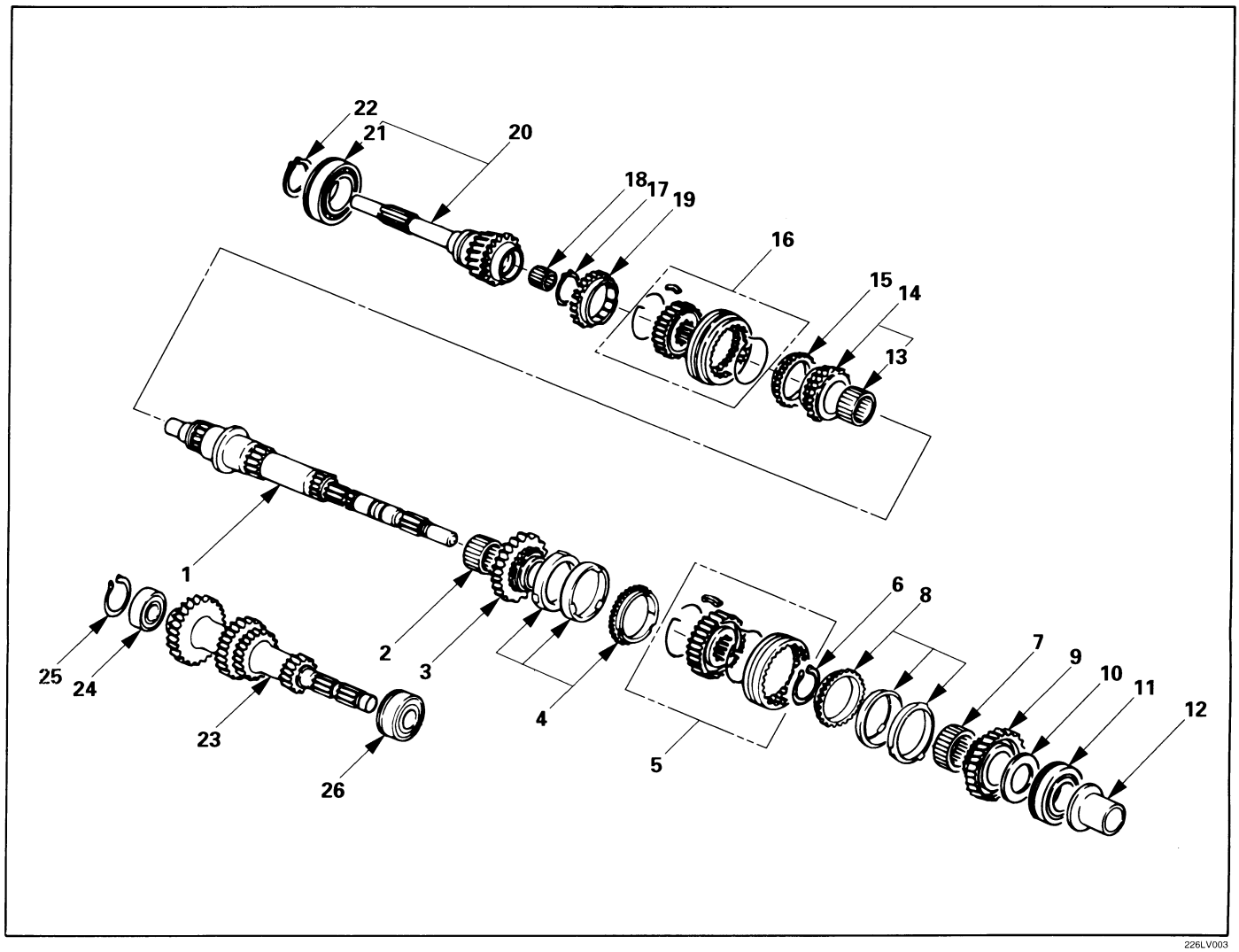

Reassembly Steps

1. Mainshaft
▲ 2. Needle bearing
▲ 3. 2nd gear
4. 2nd block ring (set)
▲ 5. 1st—2nd synchronizer assembly
▲ 6. Clutch hub snap ring
▲ 7. Needle bearing
8. 1st block ring (set)
▲ 9. 1st gear
▲ 10. 1st gear thrust bearing
▲ 11. Mainshaft ball bearing
▲ 12. Needle bearing collar
▲ 13. Needle bearing
▲ 14. 3rd gear
15. 3rd block ring
▲ 16. 3rd—4th synchronizer assembly
▲ 17. Mainshaft snap ring
18. Needle bearing
19. Top block ring
20. Top gear shaft
▲ 21. Ball bearing
▲ 22. Top gear shaft snap ring
23. Counter gear
▲ 24. Counter gear front bearing
25. Snap ring
26. Counter gear center bearing

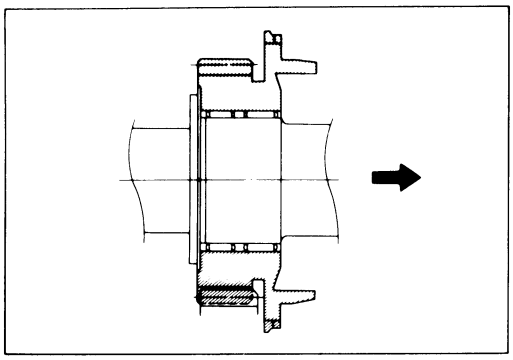

Important Operations

2. Needle Bearing

3. 2nd Gear

1) Apply engine oil to the needle bearing and the 2nd gear thrust surfaces.
2) Install the needle bearing and the 2nd gear to the mainshaft.
   The dog teeth of the 2nd gear must be facing the rear side of the transmission.

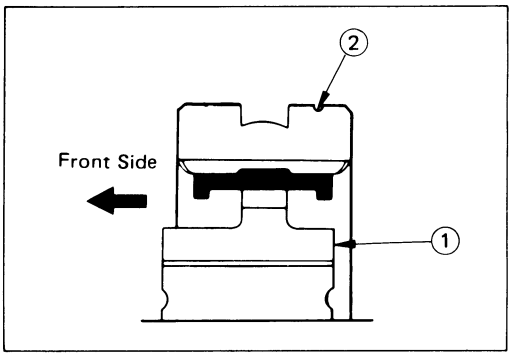

5. 1st—2nd Synchronizer Assembly

1) Turn the shallow clutch hub face ① toward the side of the sleeve with small groove ② on the outer circumference.

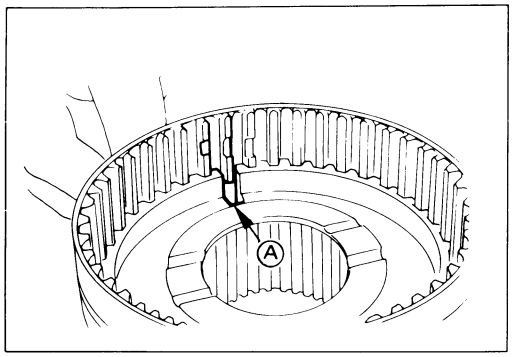

Note:
The clutch hub groove Ⓐ must be aligned with the key groove of sleeve.

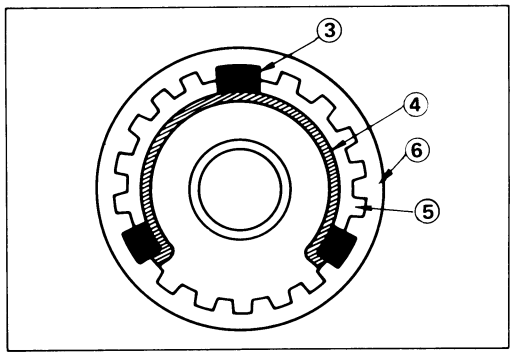

2) Check that the inserts ③ fit snugly into the block ring insert grooves.
3) Check that the insert springs ④ are fitted to the inserts as shown in the illustration.
4) Check that the clutch hub ⑤ and the sleeve ⑥ slide smoothly.
5) Install the synchronizer assembly to the mainshaft.
   The clutch hub face (with the heavy boss) must be facing the 2nd gear side.

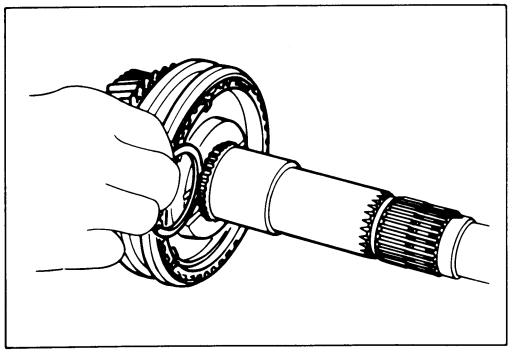

6. Clutch Hub Snap Ring

1) Select the snap ring which will provide the minimum clearance between the 1st/2nd clutch hub and the snap ring.
   There are three snap ring sizes available.
   The snap rings are color-coded to indicate their thickness.

Clutch Hub and Snap Ring Clearance	mm(in)
Standard	
0 – 0.1 (0.0039)	

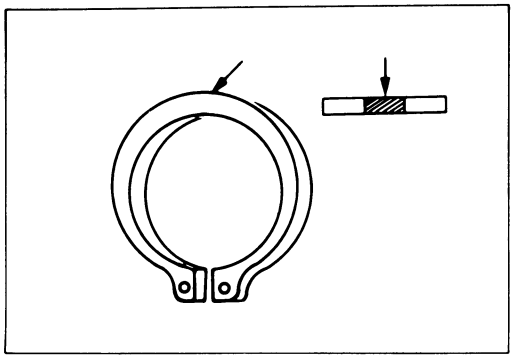

Snap Ring Avalilability

Thickness mm(in)	Color-Coding
1.80 (0.071)	White
1.85 (0.073)	Yellow
1.90 (0.075)	Blue

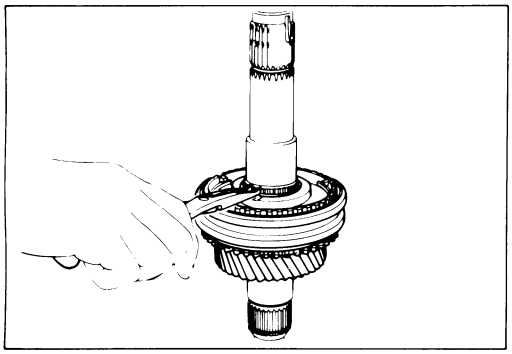

2) Use a pair of snap ring pliers to install the snap ring to the mainshaft.

The snap ring must be fully inserted into the mainshaft snap ring groove.

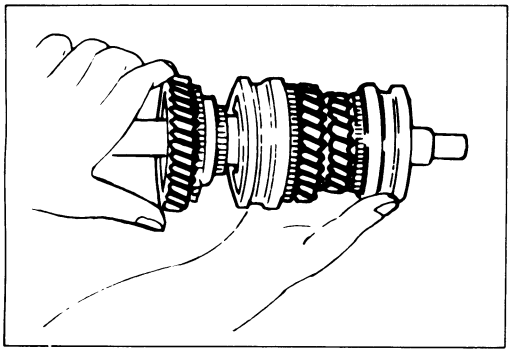

7. Needle Bearing

9. 1st Gear

1) Apply engine oil to the needle bearing and the 1st gear thrust surfaces.
2) Install the needle bearing and the 1st gear to the mainshaft.

The 1st gear dog teeth must be facing the transmission front side.

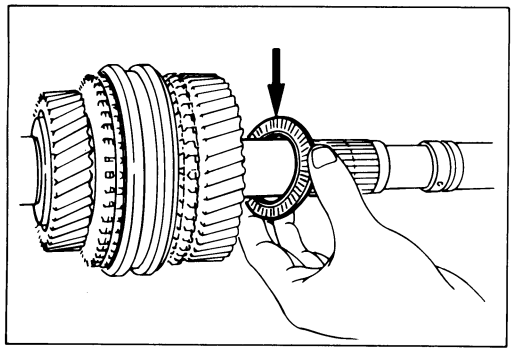

10. 1st Gear Thrust Bearing

Install the thrust bearing to the mainshaft.

The thrust bearing side must be facing the transmission front side.

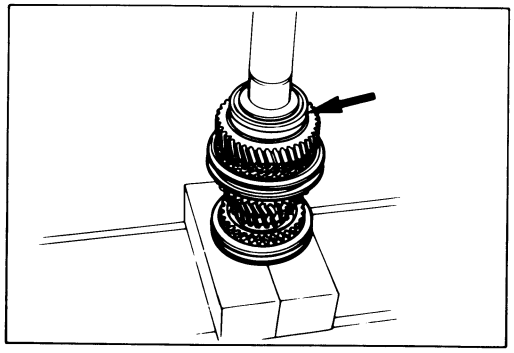

11. Mainshaft Ball Bearing

12. Needle Bearing Collar

1) Apply engine oil to the ball bearing and the mainshaft.
2) Install the ball bearing and collar to the mainshaft. The ball bearing snap ring groove must be facing the transmission rear side.
3) Use a bench press to slowly force the collar into place.

Installer: 5-8840-2195-0 (J-6133-01)

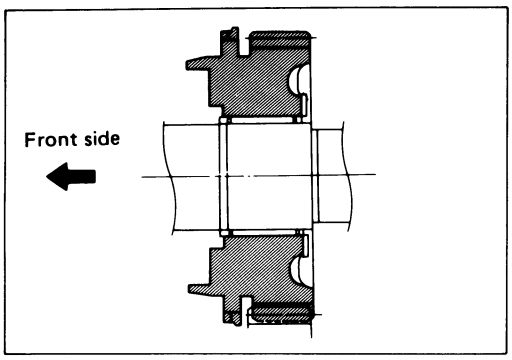

13. Needle Bearing

14. 3rd Gear

1) Apply engine oil to the needle bearing and the 3rd gear thrust surfaces.
2) Install the needle bearing and the 3rd gear to the mainshaft.

   The dog teeth of the 3rd gear must be facing the front side of the transmission.

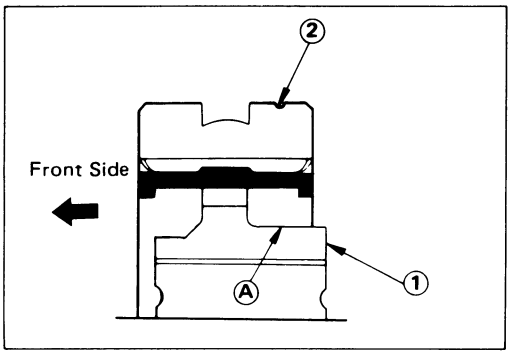

16. 3rd—4th Synchronizer Assembly

1) Turn the clutch hub face ① with the heavy boss Ⓐ toward the side of the sleeve with small groove ② on the outer circumference.

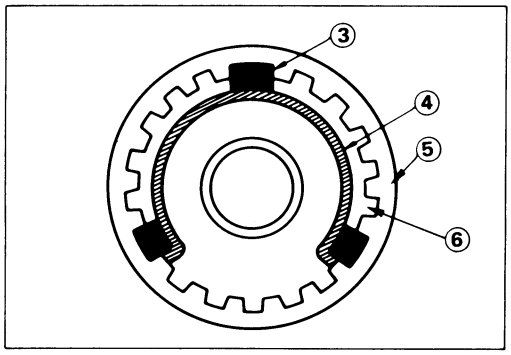

2) Check that the inserts ③ fit snugly into the block ring insert grooves.
3) Check that the insert springs ④ are fitted to the inserts as shown in the illustration.
4) Check that the clutch hub ⑤ and the sleeve ⑥ slide smoothly.
5) Install the synchronizer assembly to the mainshaft.

   The clutch hub face (with the heavy boss) must be facing the 3rd gear side.

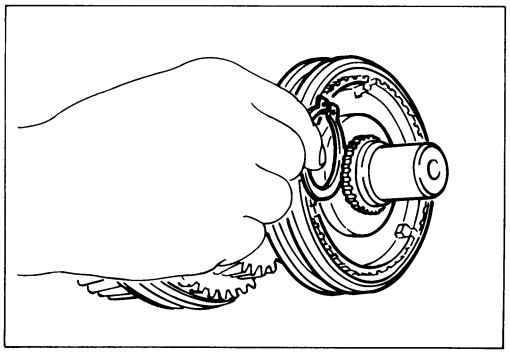

17. Mainshaft Snap Ring

1) Select the snap ring which will provide the minimum clearance between the 3rd—4th clutch hub and the snap ring.

   There are three snap ring sizes available.

   The snap rings are color-coded to indicate their thickness.

Clutch Hub and Snap Ring Clearance	mm(in)
Standard	
0 – 0.1 (0.0039)	

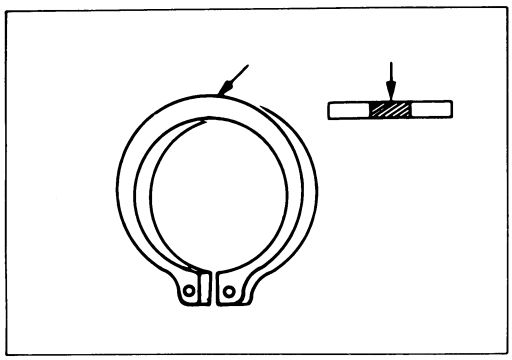

Snap Ring Availability mm(in)

Thickness	Color-Coding
1.80 (0.071)	White
1.85 (0.073)	Yellow
1.90 (0.075)	Blue

2) Use a pair of snap ring pliers to install the snap ring to the mainshaft.
3) The snap ring must be fully inserted into the mainshaft snap ring groove.

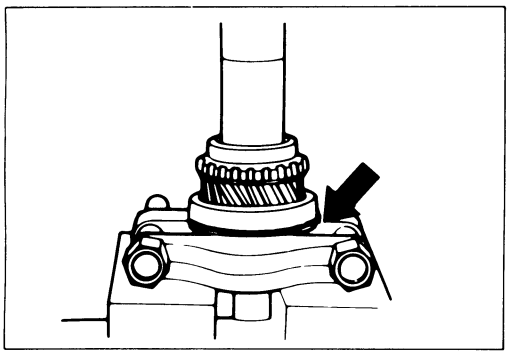

21. Ball Bearing

22. Top Gear Shaft Snap Ring

1) Use a bench press to install the top gear shaft ball bearing to the mainshaft.

   The snap ring groove must be facing the transmission front side.
2) Use a pair of snap ring pliers to install the snap ring to the bearing.

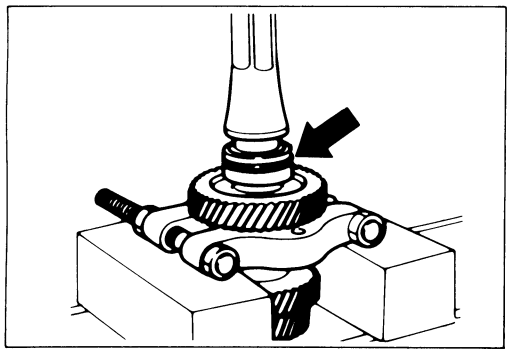

24. Counter Gear Front Bearing

Use a bench press to install the counter gear front ball bearing to the mainshaft.

The snap ring groove must be facing the transmission front side.

Bearing installer : 5-8840-2194-0 (J-35283)

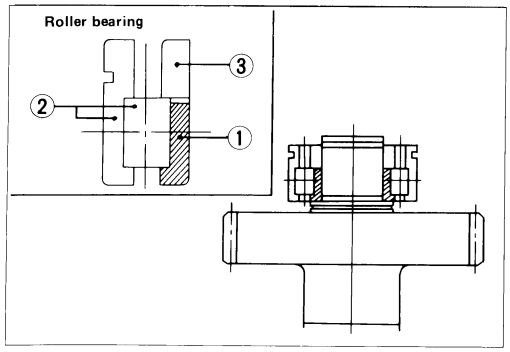

1) Apply engine oil to the bearing and install the inner race ① and outer race with roller ② in the proper direction to the mainshaft.
2) Then install the inner race ③ with taper side turned to outer race ②.

Note:
The inner race ③ should be installed with stamp on die face side turned to the front side of transmission.

REVERSE GEAR AND 5TH GEAR

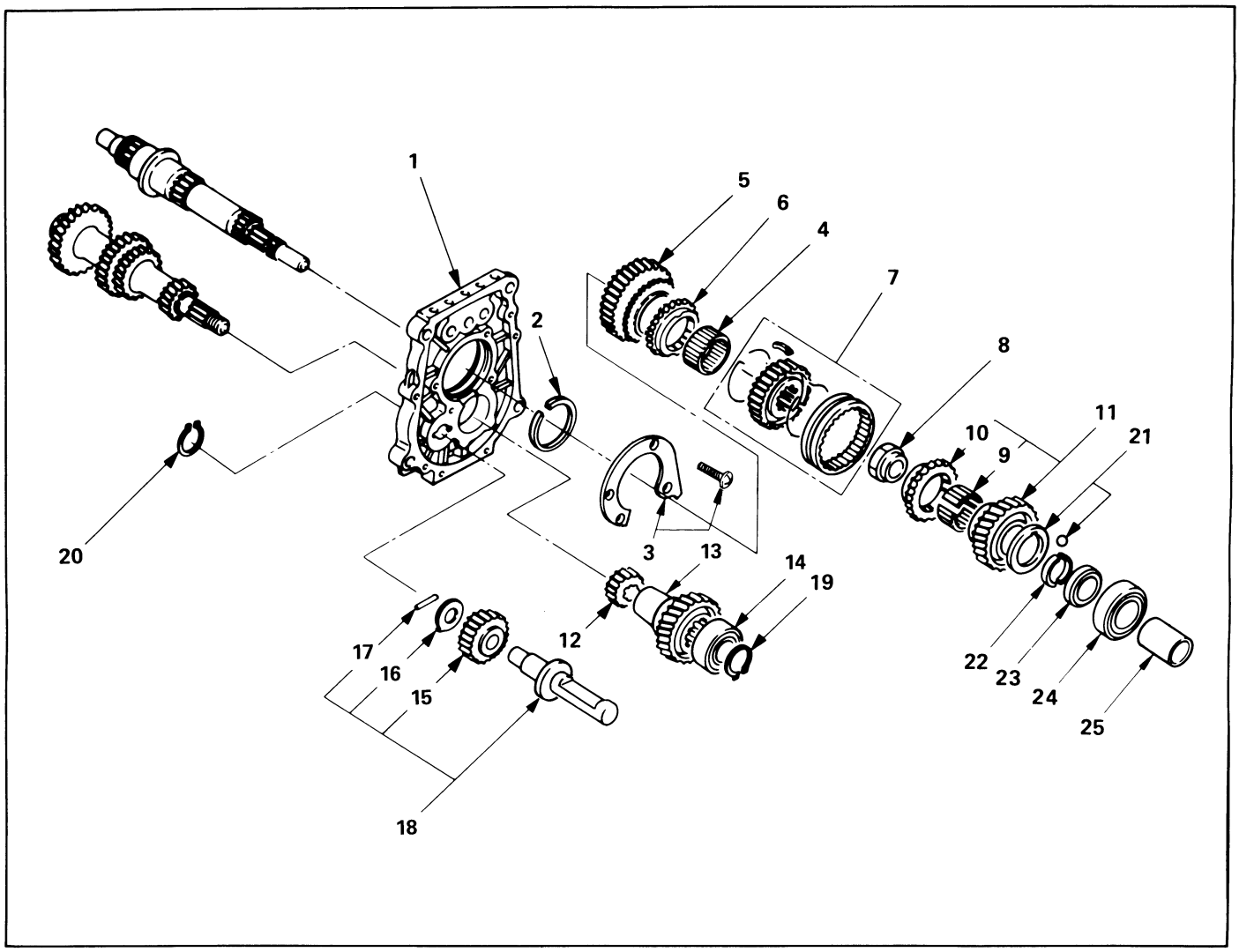

Reassembly Steps

- ▲ 1. Intermediate plate
- 2. Bearing snap ring
- ▲ 3. Bearing plate and screw
- 4. Needle bearing
- 5. Mainshaft reverse gear
- 6. Reverse block ring
- ▲ 7. Rev.-5th synchronizer assembly
- ▲ 8. Clutch hub nut
- 9. Needle bearing
- 10. 5th block ring
- 11. 5th gear
- ▲ 12. Counter reverse gear
- 13. Counter 5th gear
- 14. Ball bearing
- 15. Reverse idler gear
- 16. Thrust washer
- 17. Idler shaft pin
- 18. Reverse idler shaft
- ▲ 19. Bearing snap ring
- ▲ 20. Reverse gear snap ring
- ▲ 21. Thrust washer and lock ball
- 22. Thrust plate
- 23. Retainer
- ▲ 24. Roller bearing
- 25. Oil seal collar

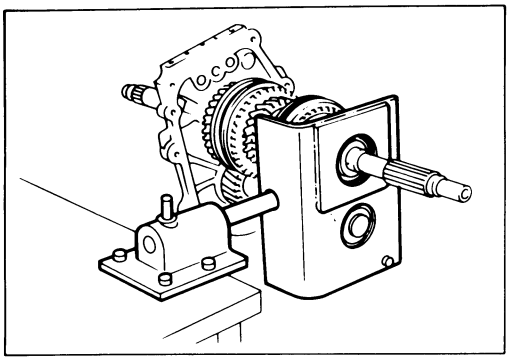

Important Operations

1. Intermediate Plate

1) Mesh the counter gear with the mainshaft assembly.
2) Install the holding fixture to the mainshaft and the counter gear.

   Holding Fixture : 5-8840-2160-0 (J-37224)

   Holding base : 5-8840-0003-0 (J-3289-20)
3) Place the holding fixture (with the mainshaft and the counter shaft) in a vise.
4) Install the intermediate plate.

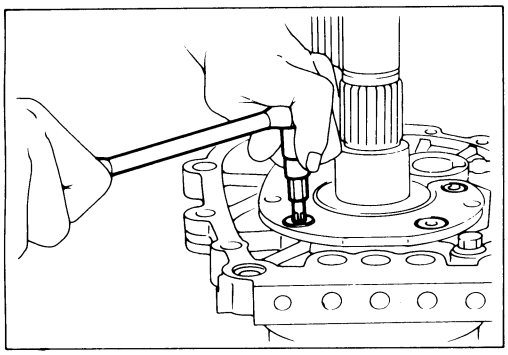

3. Bearing Plate and Screw

1) Apply recommended thread locking agents or its equivalent to each of the plate screw threads.
2) Use the wrench to tighten the screws to the specified torque.

   Torx Bit Wrench : 5-8840-0047-0 (J-37225) (T45)

Plate Screw Torque	kg·m (lb·ft/N·m)
	1.5 (11/15)

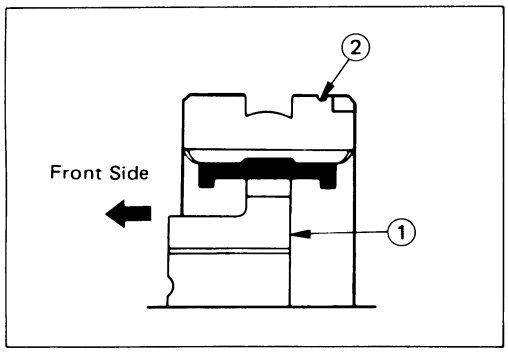

7. Rev.—5th Synchronizer Assembly

1) Turn the clutch hub face ① toward the side of the sleeve with small groove ② on the outer circumference.

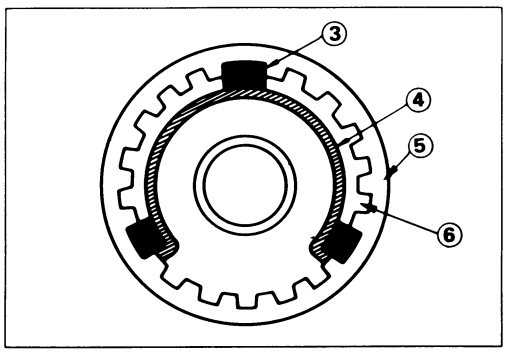

2) Check that the inserts ③ fit snugly into the block ring insert grooves.
3) Check that the insert springs ④ are fitted to the inserts as shown in the illustration.
4) Check that the clutch hub ⑤ and the sleeve ⑥ slide smoothly.
5) Install the synchronizer assembly to the mainshaft.

   The clutch hub face (with the heavy boss) must be facing the reverse gear side.

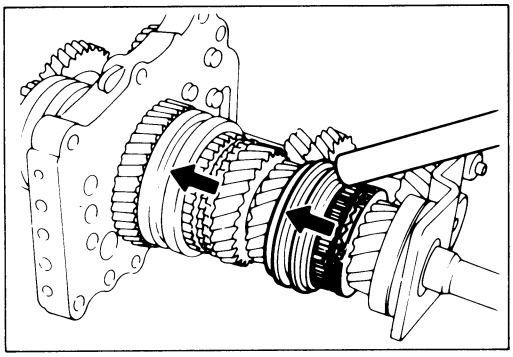

8. Clutch Hub Nut

1) Mesh the 1st—2nd synchronizer with both the 1st and 3rd gears (double engagement).

   This will prevent the mainshaft from turning.

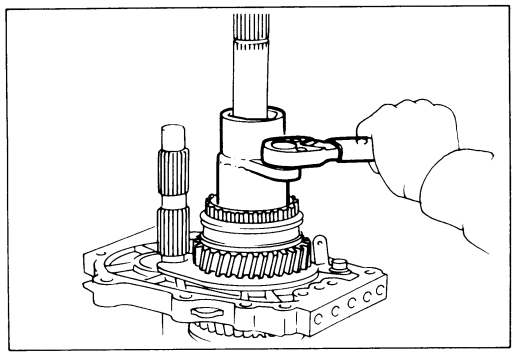

2) Install the mainshaft lock nut.
3) Use the lock nut wrench to tighten the lock nut to the specified torque.

   Wrench: 5-8840-2156-0 (J-37219)

Hub Nut Torque	kg·m(lb.ft/N·m)
14 ± 2 (101 ± 14.4/137 ± 20)	

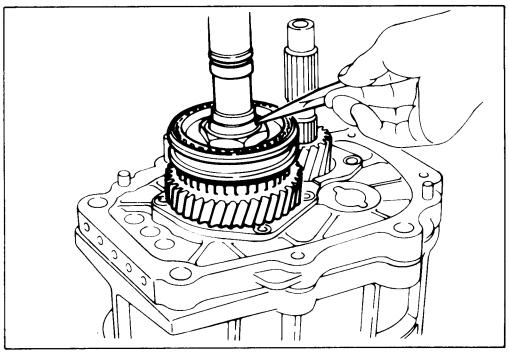

4) Use a punch to stake the lock nut.

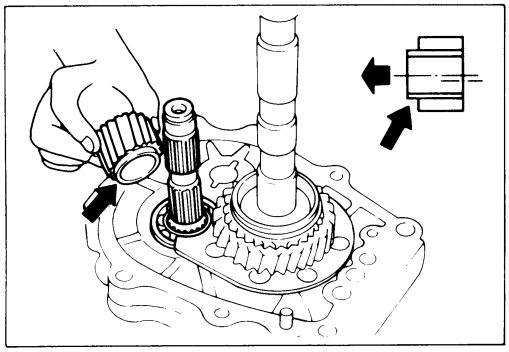

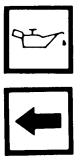

12. Counter Reverse Gear

1) Apply engine oil to the counter reverse gear and the reverse gear.
2) Install the counter reverse gear to the counter gear.

   The reverse gear projection must be facing the side of the intermediate plate.

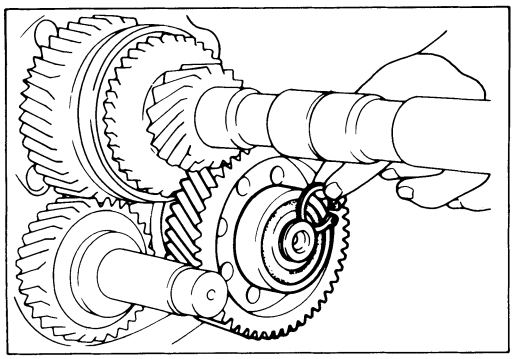

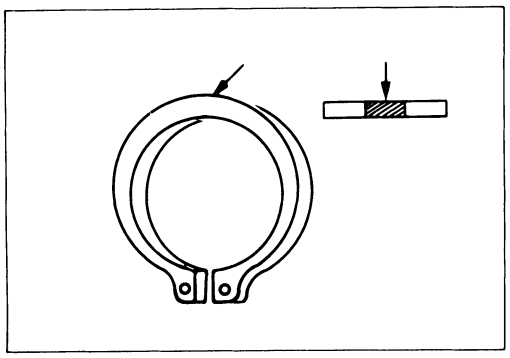

19. Bearing Snap Ring

1) Select the snap ring which will provide the minimum clearnance between the ball bearing and the snap ring.

   There are six snap ring sizes available.

   The snap rings are color-coded to to indicate their thickness.

Ball Bearing and Snap Ring Clearance mm(in)

Standard	0 – 0.15 (0 – 0.0059)

Snap Ring Availability mm(in)

Thickness mm(in)	Color-Coding
1.1 (0.043)	White
1.2 (0.047)	Yellow
1.3 (0.051)	Blue
1.4 (0.055)	Pink
1.5 (0.059)	Green
1.6 (0.063)	Brown

2) Use a pair of snap ring pliers to install the snap ring to the counter 5th gear.
   The snap ring must be fully inserted into the counter 5th gear snap ring groove.

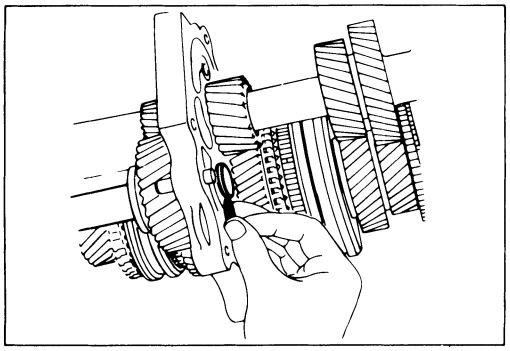

20. Reverse Gear Snap Ring

1) Select the snap ring which will provide the minimum clearance between the intermediate plate and the snap ring.
   There are three snap ring sizes available.
   The snap rings are color-coded to indicate their thickness.

Intermediate Plate and Snap Ring Clearance mm(in)

Standard	0 – 0.15 (0 – 0.0059)

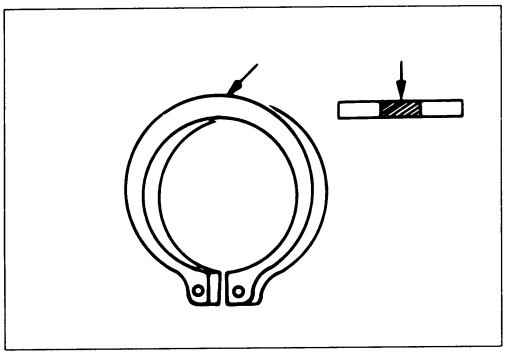

Snap Ring Availability mm(in)

Thickness mm(in)	Color-Coding
1.2 (0.047)	White
1.3 (0.051)	Yellow
1.4 (0.055)	Blue

2) Use a pair of snap ring pliers to install the snap ring to the reverse idler shaft.
The snap ring must be fully inserted into the reverse idler shaft snap ring groove.

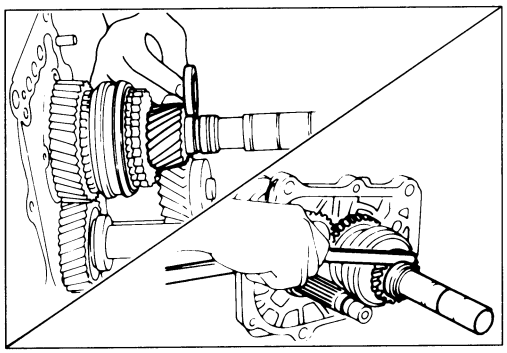

21. Thrust Washer and Lock Ball

1) Use a thickness gauge to measure the clearance between the 5th gear and the thrust washer.

5th Gear and Thrust Washer Clearance mm(in)

Standard
0.10 – 0.25 (0.0039 – 0.0098)

If required, replace the exsisting thrust washer with a new thrust washer to bring the clearance to specification.

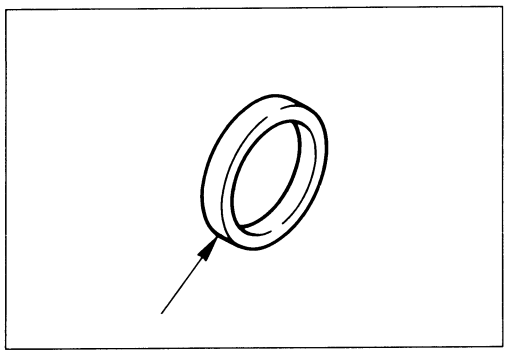

There are four thrust washer sizes available.

The snap rings are color-coded to indicate their thickness.

Thrust Washer Availability mm(in)

Thickness	Color-Coding
7.9 (0.311)	White
8.0 (0.315)	Yellow
8.1 (0.319)	Green
8.2 (0.323)	Blue

2) Apply grease to the thrust washer and the lock ball.
3) Install the thrust washer and the lock ball to the mainshaft.

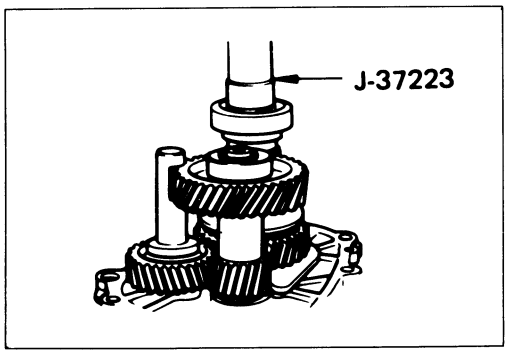

24. Roller Bearing

Apply engine oil to the bearing inner and outer circumference.

Use the installer to install the roller bearing to the mainshaft.

Installer : 5-8840-2159-0 (J-37223)

Note:

Be sure the bearing is installed in the direction it was removed from.

DETENT, SHIFT ARM ASSEMBLY AND INTERLOCK PIN

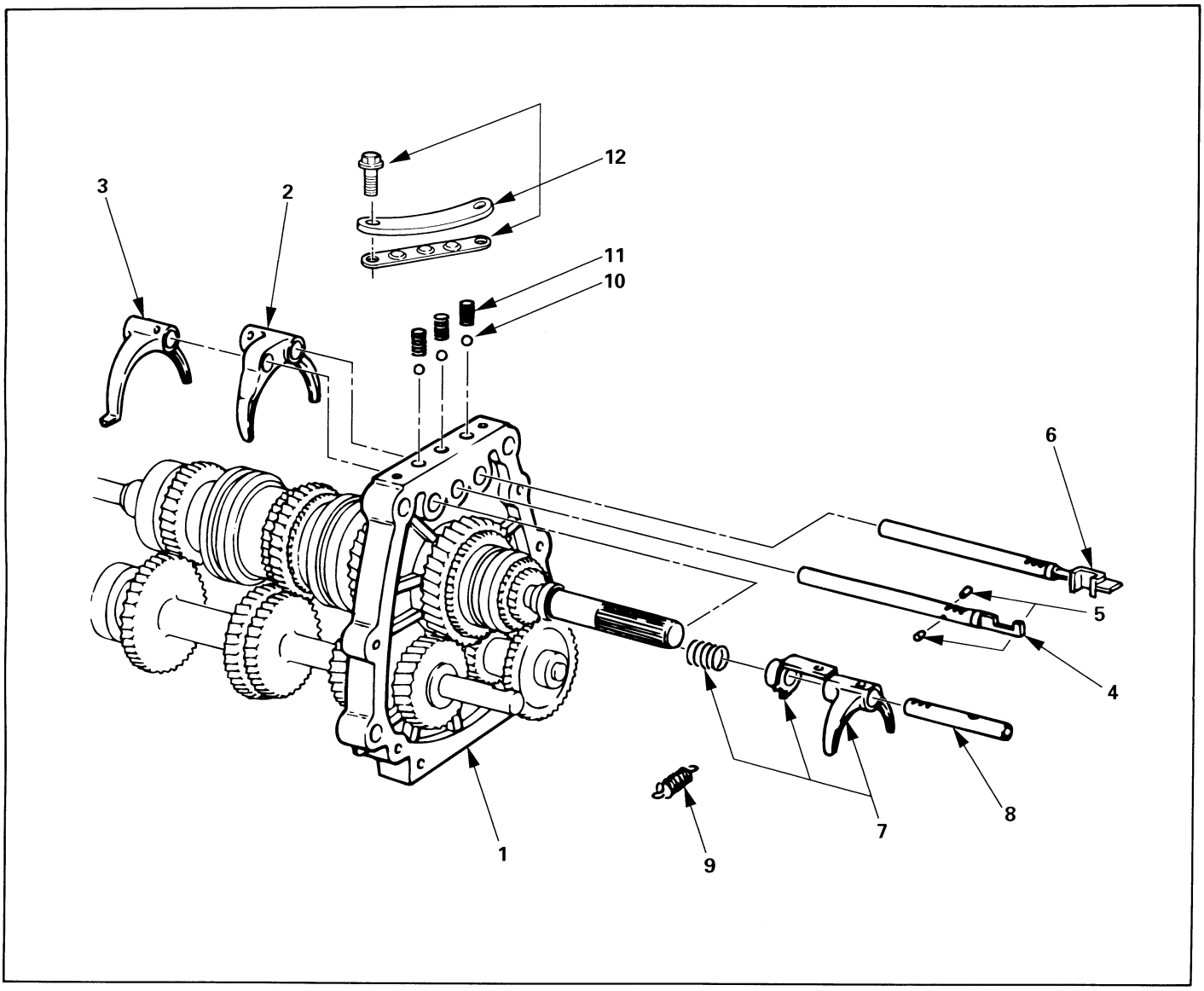

Reassembly Steps

1. Intermediate plate and gear assembly
▲ 2. 1st—2nd shift arm
▲ 3. 3rd—4th shift arm
▲ 4. 3rd—4th shift rod
▲ 5. Interlock pin
6. 1st—2nd shift rod
7. Rev.—5th shift arm and inhibiter
8. Rev.—5th shift rod
9. Spring
10. Detent ball
11. Detent spring
▲ 12. Detent spring plate and gasket

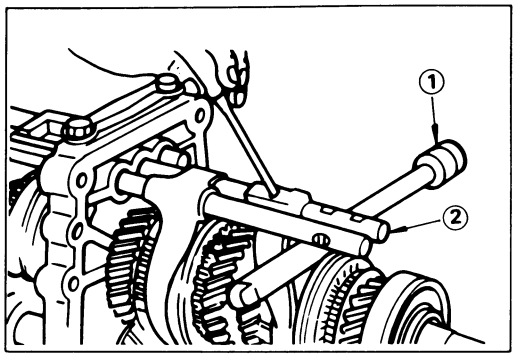

Important Operations

2. 1st—2nd Shift Arm

3. 3rd—4th Shift Arm

Hold a round bar ① against the shift rod end lower face ② to protect it against damage.

Install the new spring pin.

Never reinstall the used spring pin.

4. 3rd—4th Shift Rod

5. Interlock pin

1) Install the interlock pin to the shift rod.
2) Install the shift rod together with the interlock pin to the intermediate plate.

   Do not allow the interlock pin to fall from the shift rod.

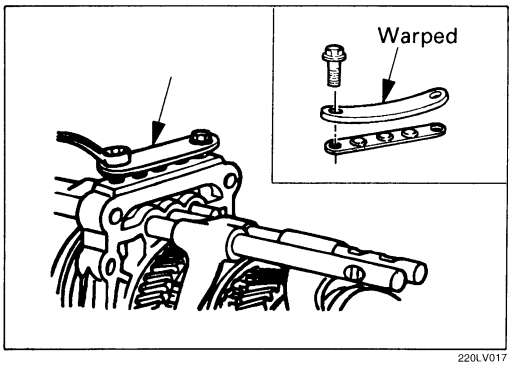

12. Detent Spring Plate and Gasket

1) Install the new-detent plate and new gasket onto the transmisson case into the correct direction.
2) Tighten the detent spring plate bolts to specified torque.

Detent Spring Plate Bolt Torque	kg·m(lb.ft/N·m)
2.0 ± 0.4 (14 ± 3/20 ± 4)	

MINOR COMPONENT

TRANSFER CASE ASSEMBLY

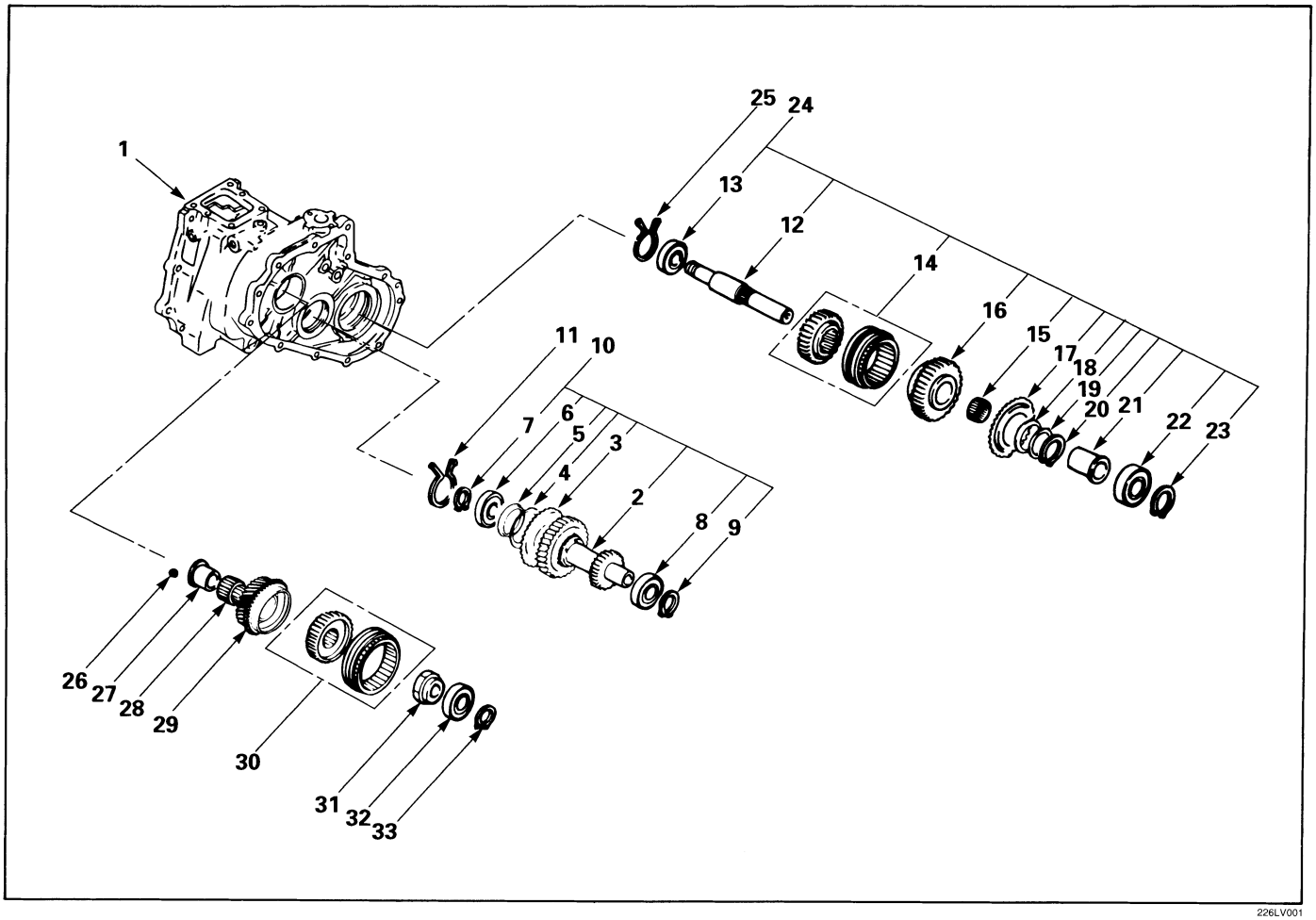

226LV001

Reassembly Steps

- ▲ 1. Transfer case
- ▲ 2. Counter gear
- ▲ 3. Sub gear (Anti-lash plate)
- 4. Belleville spring
- 5. Spacer
- 6. Ball bearing
- ▲ 7. Snap ring
- 8. Ball bearing
- 9. Snap ring
- 10. Counter gear assembly
- 11. Bearing snap ring
- 12. Front output shaft
- 13. Ball bearing
- 14. Clutch hub and sleeve
- 15. Needle bearing
- ▲ 16. Front output gear
- ▲ 17. Sub gear (Anti-lash plate)
- ▲ 18. Belleville spring
- ▲ 19. Spacer
- ▲ 20. Anti-lash plate snap ring
- ▲ 21. Bearing collar
- 22. Ball bearing
- ▲ 23. Snap ring
- 24. Front output gear assembly
- 25. Bearing snap ring
- 26. Ball
- 27. Bearing collar
- 28. Needle bearing
- 29. Transfer input gear
- ▲ 30. High-low clutch hub and sleeve
- ▲ 31. Mainshaft end lock nut
- ▲ 32. Ball bearing
- 33. Snap ring

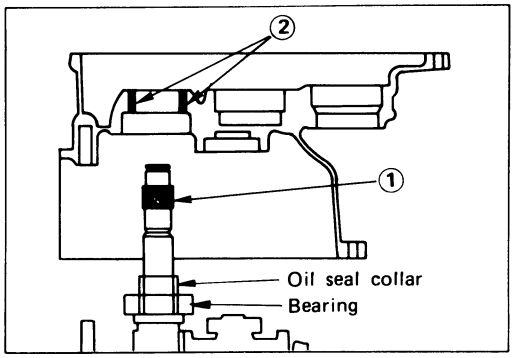

Important Operations

1. Transfer Case

1) Cover the shaft spline with adhesive tape ①.
   This will prevent damage to the oil seal lip ②.

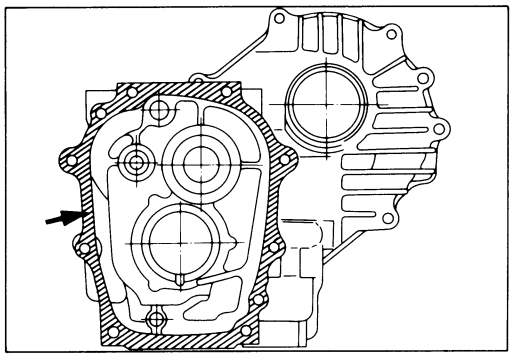

2) Apply recommend liquid gasket or its equivalent to the transfer case fitting surfaces.
3) Tighten the transfer case bolts to the specified torque a little at a time.

Transfer Case Bolt Torque	kg·m (lb·ft/N·m)
3.8 ± 0.8 (27 ± 5.8 / 37 ± 7.8)	

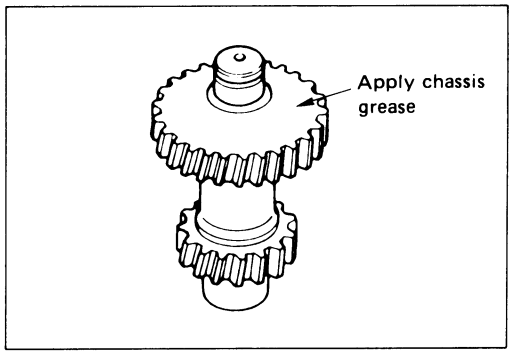

2. Counter Gear

3. Sub Gear (Anti-lash Plate)

Apply chassis grease to the sub-gear and the counter gear thrust surfaces.

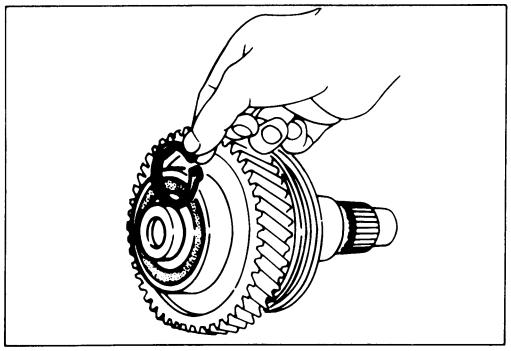

7. Snap Ring

1) Select a snap ring that will allow the minimum axial play.
2) Use a pair of snap ring pliers to install the snap ring to the counter gear.

Bearing and Snap Ring Clearance	mm(in)
Standard	
0 – 0.1 (0 – 0.0039)	

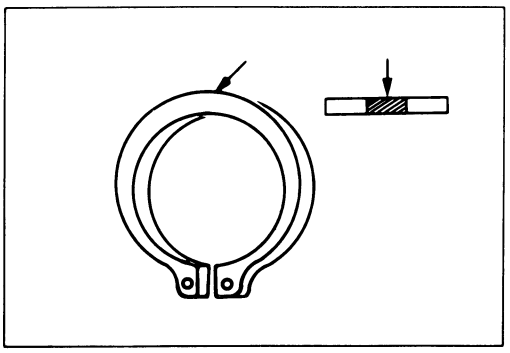

Snap Ring Availability	mm(in)
Thickness	Color-Coding
1.50 (0.059)	White
1.55 (0.061)	Yellow
1.60 (0.063)	Blue

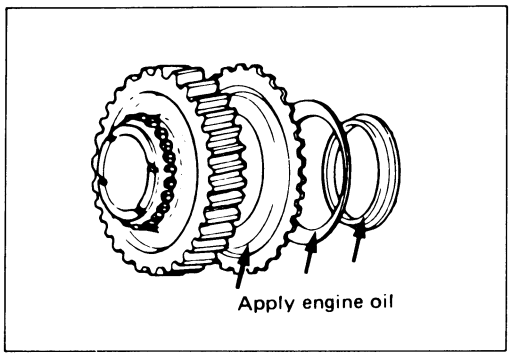

16. Front Output Gear

17. Sub Gear (Anti-lash Plate)

18. Belleville Spring

19. Spacer

Apply engine oil to the thrust surfaces of the sub-gear, the belleville spring, and the spacer.

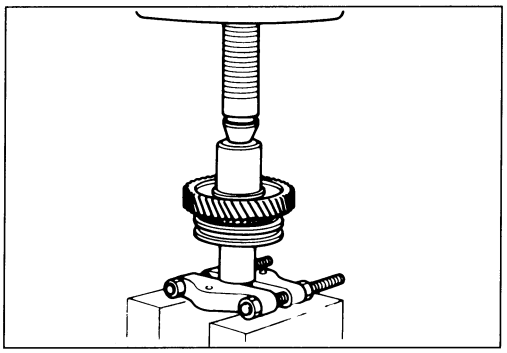

20. Anti-lash Plate Snap Ring

21. Bearing Collar

Use a bench press to install the needle bearing and collar together with the front output gear.

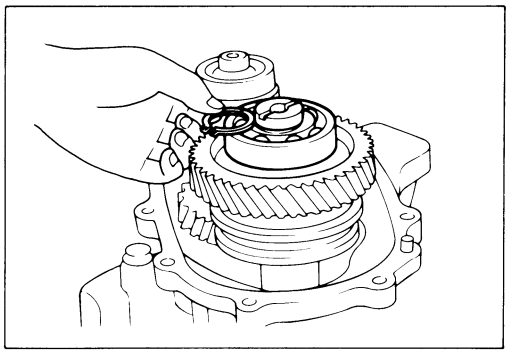

23. Snap Ring

1) Select a snap ring that will allow the minimum axial play.
2) Use a pair of snap ring pliers to install the snap ring to the output shaft.

Bearing and Snap Ring Clearance mm(in)
Standard
0 – 0.1 (0 – 0.0039)

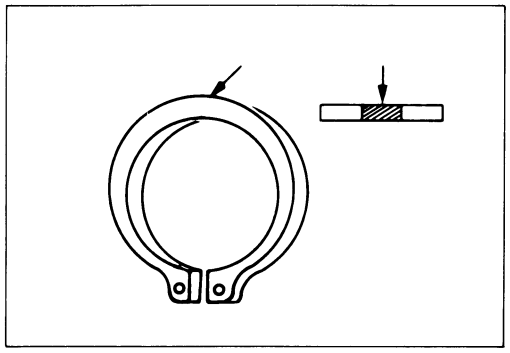

Snap Ring Availability mm(in)

Snap Ring Thickness	Color Coding
1.55 (0.061)	White
1.60 (0.063)	Yellow
1.65 (0.065)	Blue
1.70 (0.067)	Pink
1.75 (0.069)	Green
1.80 (0.071)	Brown
1.85 (0.073)	Red
1.90 (0.075)	Orange

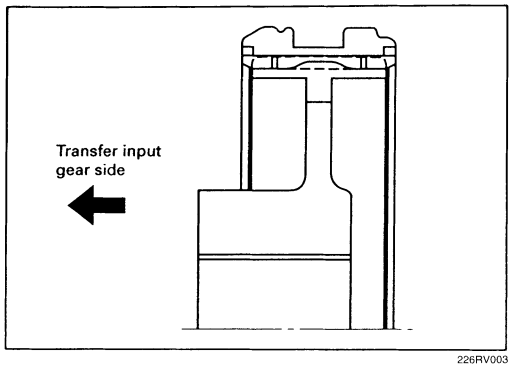

30. High-Low Clutch Hub and Sleeve

The clutch hub face with the heavy bass must be facing the transfer input gear side.

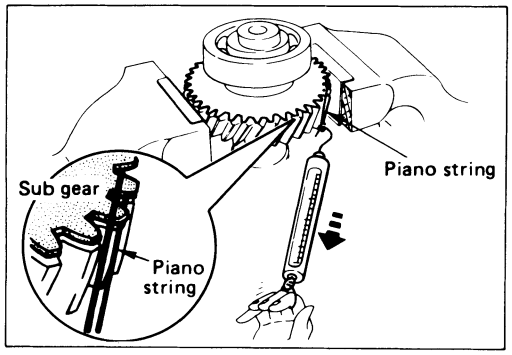

Sub Gear (Anti-lash Plate) Preload

1) Hook a length of piano wire over one of the sub-gear teeth.
2) Attach the other end of the piano wire to a spring balancer.
3) Measure the sub-gear preload.

Sub-Gear Preload	kg(lb/N)
Standard	
6 – 10 (13 – 22/59 – 98)	

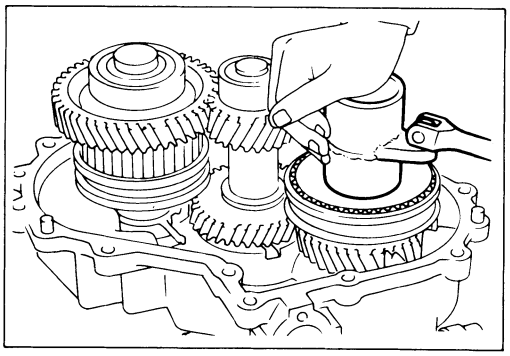

32. Mainshaft End Lock Nut

1) Use the lock nut wrench to tighten the mainshaft end lock nut to the specified torque.

   Lock Nut Wrench : J-37219

Mainshaft End Lock Nut Torque	kg·m (lb·ft/N·m)
14 ± 2 (101 ± 14.4/137 ± 20)	

2) Stake the lock nut.

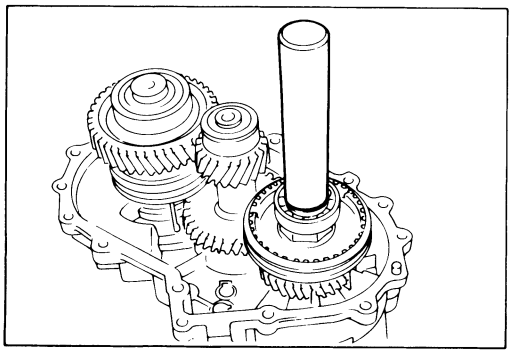

33. Ball Bearing

Use the ball bearing installer to install the ball bearing.

Installer: 5-8840-2159-0 (J-37223)

DETENT, SHIFT ARM ASSEMBLY AND INTERLOCK PIN

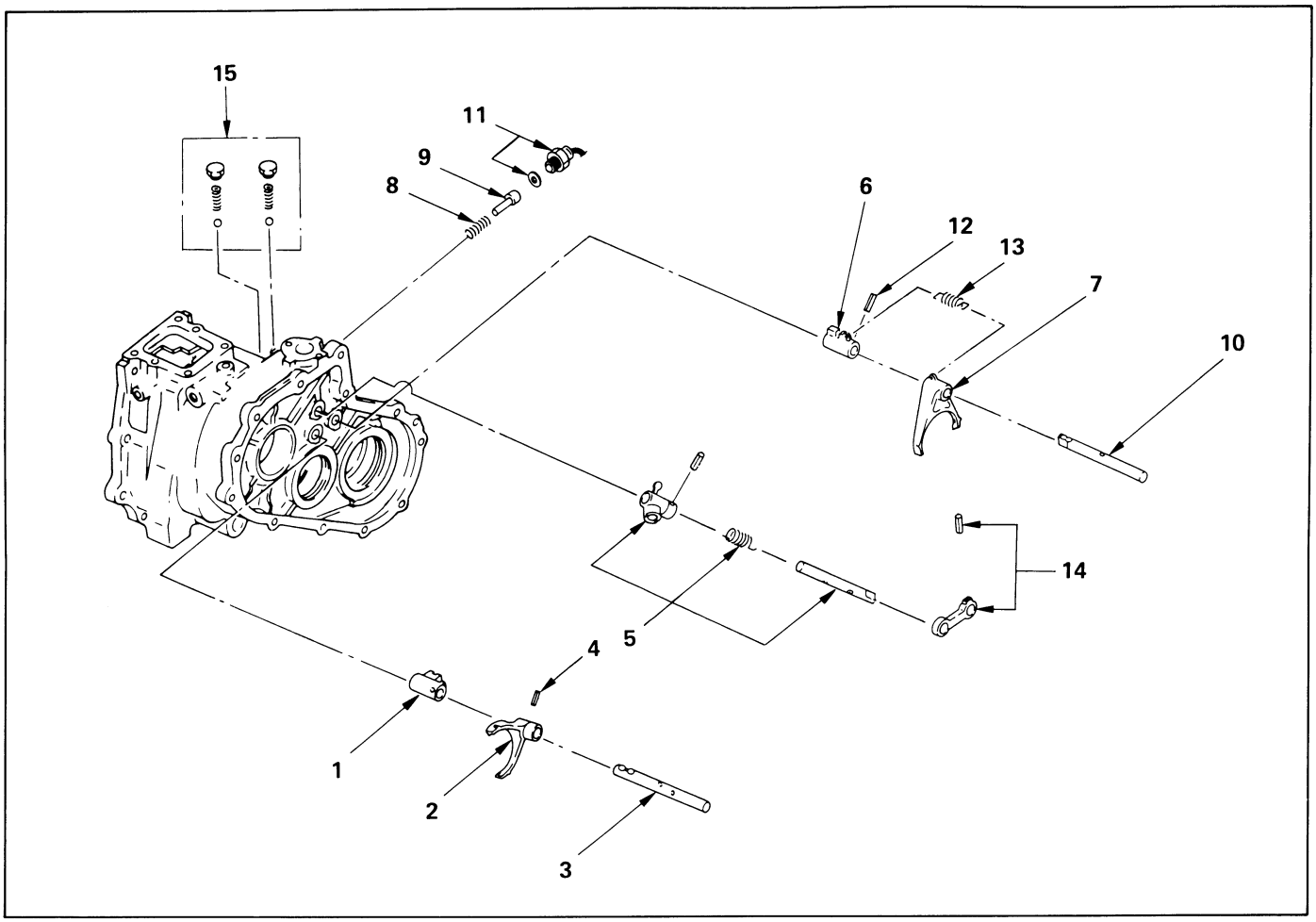

Reassembly Steps

1. Shift block
2. Shift arm
3. ▲ High-low shift rod
4. ▲ Spring pin
5. Select rod assembly
6. Shift block
7. Shift arm
8. Spring
9. ▲ Interlock pin
10. ▲ 2WD-4WD shift rod
11. ▲ 4WD indicator switch
12. ▲ Spring pin
13. Spring
14. Pin and bridge
15. ▲ Detent ball, spring and plug

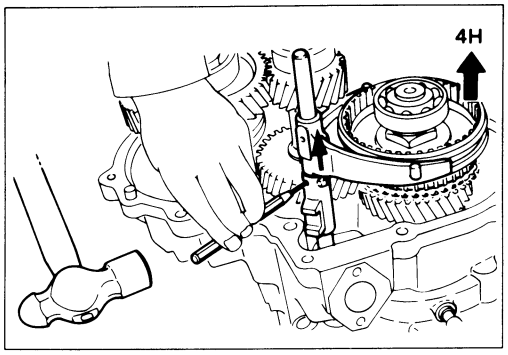

Important Operations

3. High-Low Shift Rod

4. Spring Pin

1) Engage the High-Low sleeve with 4H side.
2) Install the spring pin to the shift block.

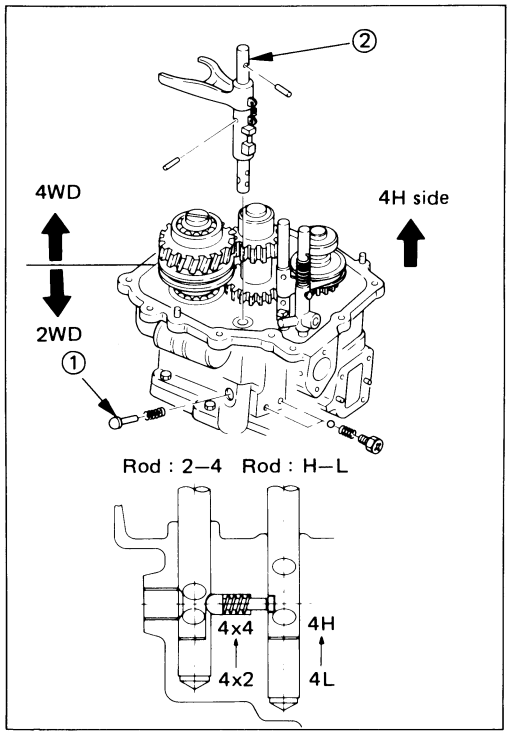

9. Interlock Pin

10. 2WD-4WD Shift Rod

1) Engage the High-Low synchronizers with 4H side and install the interlock pin 1 in proper direction.
2) Install the shift rod: 2WD-4WD 2 with the interlock pin pushed it in.

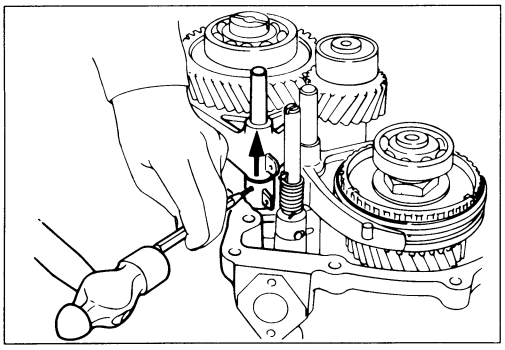

12. Spring Pin

1) Engage the 2WD-4WD sleeve with the 4WD side and install the spring pin.

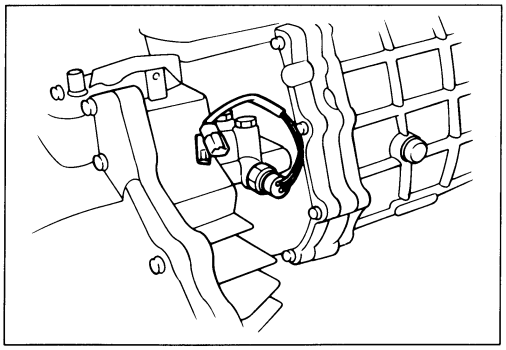

11. 4WD Indicator Switch

Tighten the switch to the specified torque.

Switch Torque	kg·m(lb.ft/N·m)
	4 (29.0/39.2)

15. Detent Ball, Spring and Plug

Tighten the plugs to the specified torque.

Plug Torque	kg·m(lb.ft/N·m)
	1.9 ± 0.4 (13.7 ± 2.9/18.6 ± 3.9)

TRANSFER REAR CASE ASSEMBLY

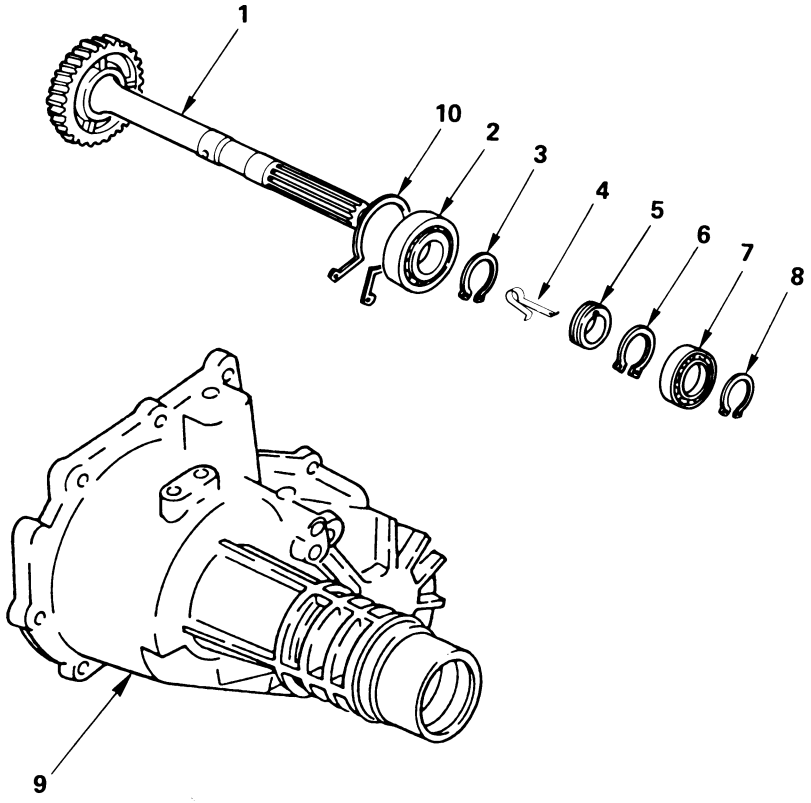

Reassembly Steps

1. Rear output shaft
▲ 2. Ball bearing
3. Bearing snap ring
▲ 4. Clip
5. Speedometer drive gear
6. Bearing snap ring
▲ 7. Ball bearing
8. Bearing snap ring
9. Rear case
10. Bearing snap ring

Important Operations

2. Ball Bearing

Use the ball bearing installer and the adapter to install the ball bearing.

Ball Bearing Installer : 5-8840-2159-0 (J-37223)

Adapter : 5-8840-2192-1 (J-37486-A)

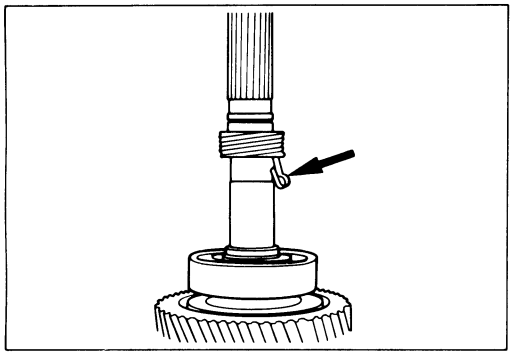

4. Clip

Install the clip to the drive gear groove.

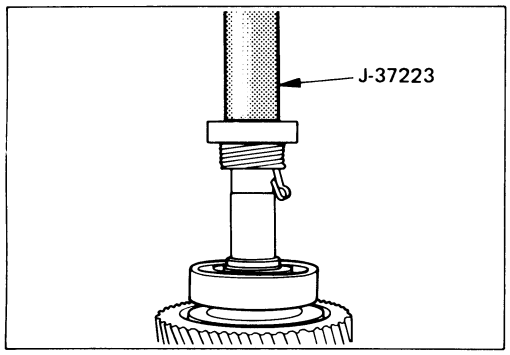

7. Ball Bearing

Use the ball bearing installer to install the ball bearing.

Ball Bearing Installer : 5-8840-2159-0 (J-37223)

REASSEMBLY

EXTERNAL COMPONENTS

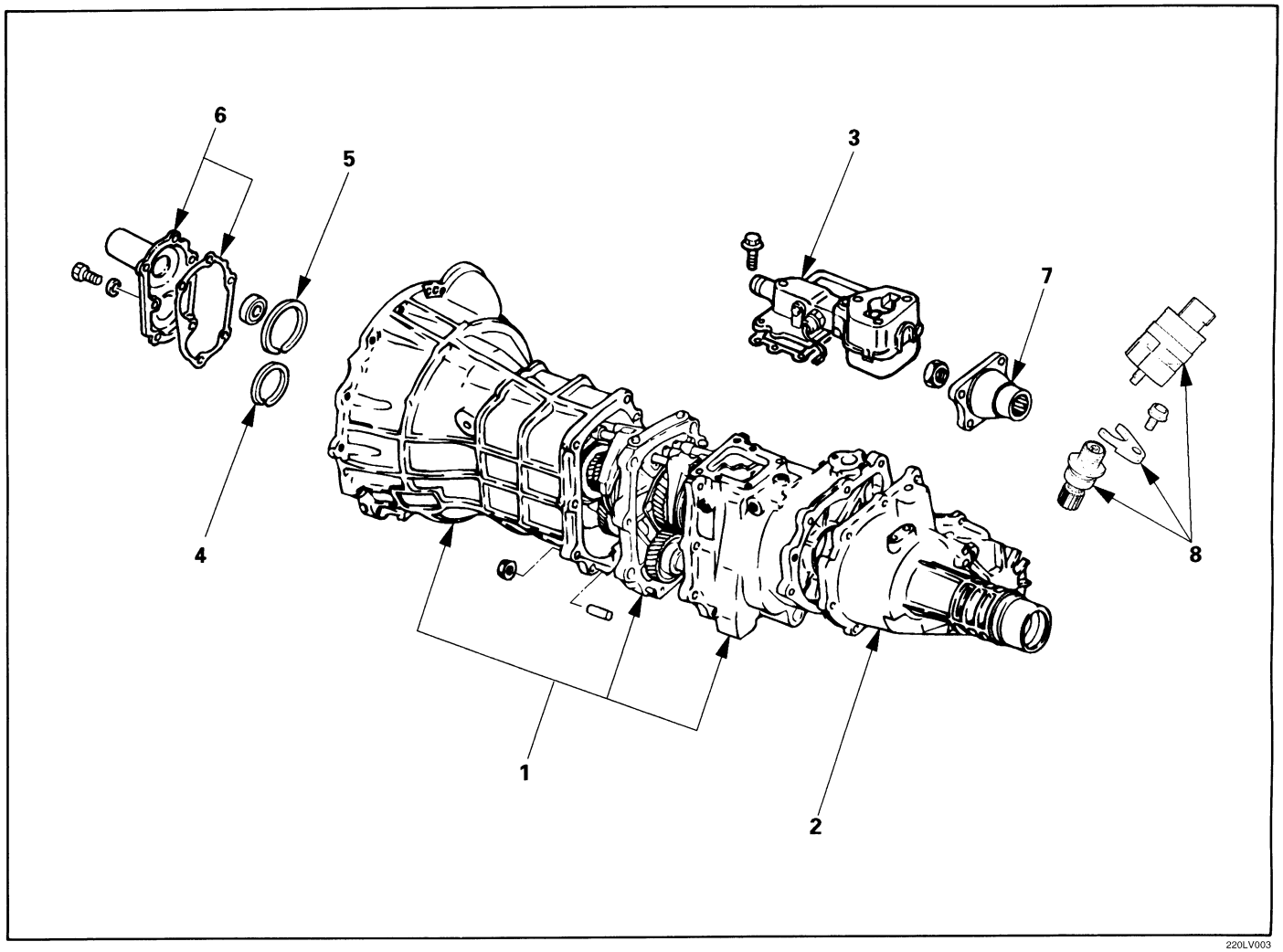

220LV003

Reassembly Steps

1. Transmission and transfer assembly
2. ▲ Transfer rear case assembly
3. Gear control box assembly
4. ▲ Counter gear snap ring
5. ▲ Bearing snap ring
6. ▲ Front cover with oil seal
7. ▲ Transfer flange
8. ▲ Speedometer driven gear and speedometer sensor

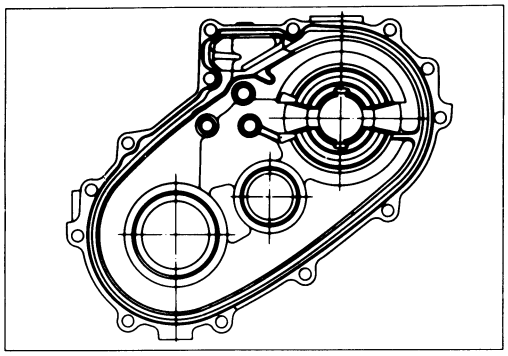

Important Operations

2. Transfer Rear Case Assembly

1) Apply recommended liquid gasket or its equivalent to the transfer rear case fitting faces.

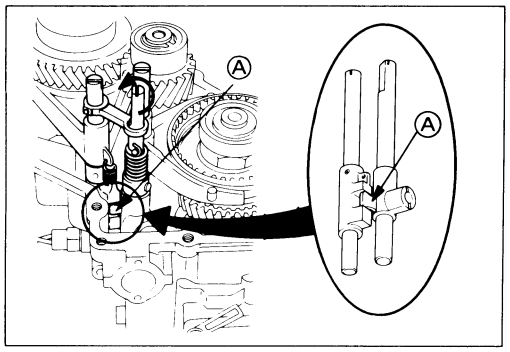

2) Apply the following steps before fitting the transfer rear case.
   ① Shift the High-Low synchronizer to the 4H side.
   ② Turn the select rod counterclockwise so that the select block projection Ⓐ may enter into the 2WD-4WD shift block.

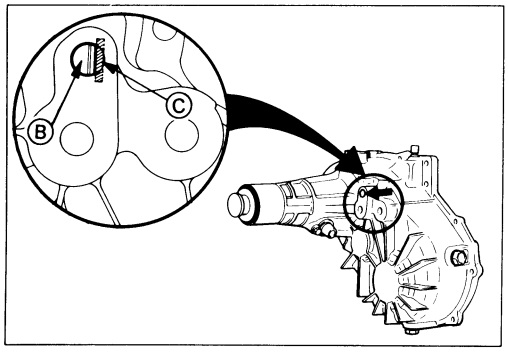

When the rear case is fitted under this condition ②, the direction of the cut-away portion of select rod head Ⓑ aligns with that of the rear case hole's stopper Ⓒ.

3) Tighten the rear transfer rear case bolts to the specified torque.

Transfer Case Bolt Torque	kg·m (lb·ft/N·m)
3.8 ± 0.8 (27 ± 5.8 / 37 ± 7.8)	

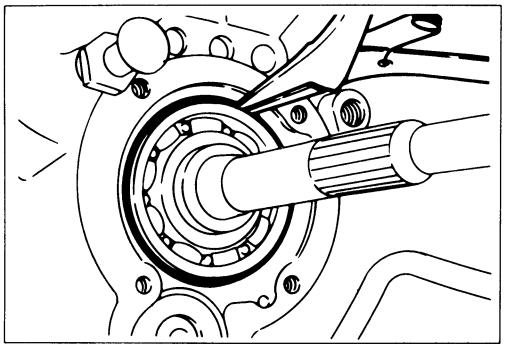

4. Counter Gear Snap Ring

5. Bearing Snap Ring

Use a pair of snap ring pliers to install the snap ring to the mainshaft.

The snap ring must be fully inserted into the ball bearing snap ring groove.

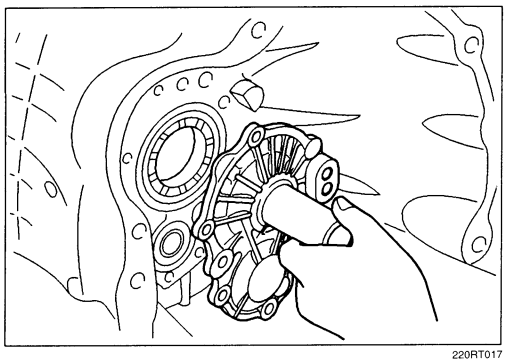
220RT017

6. Front Cover with Oil Seal

1) Apply recommended liquid gasket or its equivalent to the through bolt threads.
2) Install the new gasket and the front cover with oil seal to the transmission case.

   Take care not to damage the oil seal.
3) Tighten the front cover bolts to the specified torque.

Front Cover Bolt Torque	kg·m (lb·ft/N·m)
1.9 ± 0.4 (13.7 ± 2.9/18.6 ± 3.9)	

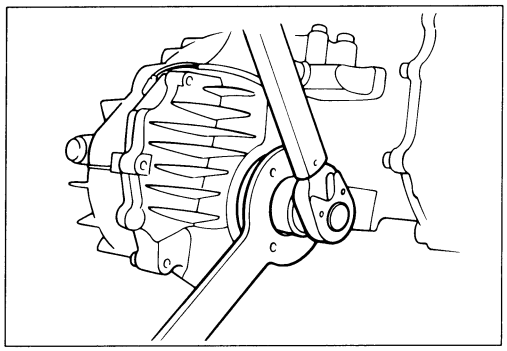

7. Transfer Flange

1) Use the flange holder to install the flange to the rear transfer case.

   Flange Holder : 5-8840-2157-0 (J-27221)
2) Tighten the transfer flange bolts to the specified torque.

Transfer Flange Bolt Torque	kg·m(lb.ft/N·m)
14 ± 2 (101 ± 14.4/ 137 ± 20)	

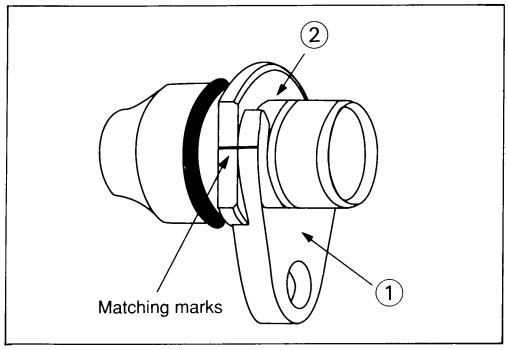

8. Speedometer Driven Gear and Speedometer Sensor

1) Install the O-ring to the speedometer driven gear bushing.
2) Install the driven gear to the speedometer driven gear bushing.
3) Align the matching marks on plate ① and bush ② then tighten the bolt.

Bolt Torque	kg·m (lb·ft/N·m)
1.5 (10.8/14.7)	

4) Install the speedmeter sensor.

	kg·m (lb·ft/N·m)
2.8 (20/27)	

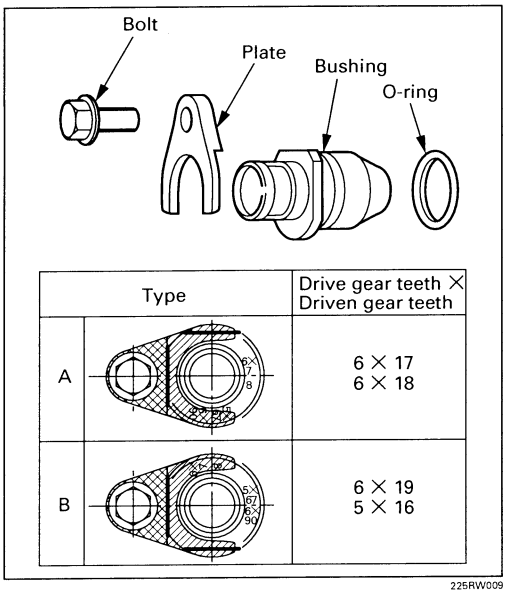

225RW009

TROUBLESHOOTING

Refer to this Section to quickly diagnose and repair engine problems. Each troubleshooting chart has three headings arranged from left to right.

(1) Checkpoint (2) Trouble Cause (3) Countermeasure

This Section is divided into four sub-sections:

1. Abnormal Noise
   1) Noise in Neutral
   2) Noisy Operation
2. Head Shifting
3. Walking or Jumping Out of Gear
4. Oil Leakage

1. ABNORMAL NOISE

1) NOISY IN NEUTRAL

Checkpoint		Trouble Cause	Countermeasure
Gear oil	NG	Insufficient or improper gear oil	Replenish or replace the gear oil
OK			
Flywheel pilot bearing	NG	Worn flywheel pilot bearing	Replace the flywheel pilot
OK			
Bearings (Mainshaft, counter-shaft, and transfer shaft)	NG	Worn or broken bearing(s)	Replace the bearing(s)
OK			
Gears (Mainshaft, counter-shaft, reverse idler gear and transfer gears	NG	Worn or scuffed gear tooth contact surfaces	Replace the gear(s)
OK			
Mainshaft splines Synchronizer clutch hub splines	NG	Worn splines	Replace the main shaft and the synchronizer clutch hub
OK			
Transmission	NG	Transmission misalignment	Realign the transmission

2) NOISY OPERATION

Checkpoint		Trouble Cause	Countermeasure
Gear oil (Metallic rattling)	NG	Insufficient or improper gear oil	Replenish or replace the gear oil
OK			
Bearings (Hissing, thumping or bumping)	NG	Worn or broken bearing(s)	Replace the bearing(s)
OK			
Gears (Growling, humming, or grinding)	NG	Worn, chipped, or cracked gear(s)	Replace the gear(s)
OK			
Gears (Squealing at high speeds)	NG	Free running gears seizing on the thrust face or the inner face	Replace the gear(s)
OK			
Gears (Gear whining)	NG	Lack of backlash between meshing gears	Replace the gear(s)

2. HARD SHIFTING

Checkpoint		Trouble Cause	Countermeasure
Gear oil	NG	Insufficient or improper gear oil	Replenish or replace the gear oil
OK			
Clutch pedal free play	NG	Improper clutch pedal free play	Readjust the clutch pedal free play
OK			
Change lever operation	NG	Hard operating change lever caused insufficient grease	Repair or regrease the change lever assembly
OK			
Change lever play	NG	Worn change lever sliding portions	Repair or replace the applicable parts and regrease
OK			
Shift block sleeve movement	NG	Sleeve movement failure	Repair or replace the sleeve
OK			
Shift rod and quadrant box sliding faces, and other parts	NG	Worn shift rod and/or sliding faces	Replace the shift rod and/ or the quadrant box

Continued on the next page

Continued from the previous page

Checkpoint		Trouble Cause	Countermeasure
Shift arm and synchronizer sleeve	NG	Worn shift arm and/or synchronizer sleeve groove	Replace the worn parts
Mainshaft and countershaft thrust play	NG	Worn thrust washer, collar, and/or gear thrust faces	Replace the worn parts
Synchronizer assembly	NG	Worn synchronizer parts	Replace the worn parts

OK

OK

OK

3. WALKING OR JUMPING OUT OR GEAR

Checkpoint		Trouble Cause	Countermeasure
Change lever play	NG	Insufficient stroke caused by sliding position wear and excessive play	Replace the worn parts
OK			
Detent ball	NG	Worn detent ball	Replace the detent ball
OK			
Detent spring	NG	Detent spring weak or broken	Repair or replace the detent spring
OK			
Shift rod and quadrant box sliding faces	NG	Worn shift rod and/or sliding faces	Replace the shift rod and/or the quadrant box
OK			
Shift arm and synchronizer sleeve	NG	Worn shift arm and/or synchronizer sleeve groove	Replace the worn parts
OK			
Mainshaft and countershaft thrust play	NG	Worn thrust washer, collar, and/or gear thrust faces	Replace the worn parts

Continued on the next page

Continued from the previous page

Checkpoint		Trouble Cause		Countermeasure
Bearings (Mainshaft, countershaft, and individual gears)	NG	Worn or broken bearing(s)		Replace the bearing(s)
Mainshaft splines Synchronizer clutch hub splines	NG	Worn splines		Replace the main shaft and the synchronizer clutch hub
Synchronizer assembly	NG	Weak or broken spring		Replace the spring

OK

OK

OK

4. OIL LEAKAGE

Checkpoint		Trouble Cause	Countermeasure
Oil level	NG	Oil level too high	Drain the oil to the correct level
OK			
Gear oil	NG	Improper gear oil	Replace the gear oil
OK			
Drain plug and/or filler plug	NG	Loose plug(s)	Tighten the plug(s) and replenish the oil
OK			
Gaskets	NG	Defective or improperly installed gasket(s)	Replace the gasket(s)
OK			
Air breather	NG	Air breather not installed Air breather clogged	Install the air breather Replace the air breather
OK			
Front cover oil seal	NG	Worn or scratched oil seal	Replace the oil seal
OK			
Rear cover oil seal	NG	Worn or scratched oil seal	Replace the oil seal

TRANSMISSION

CLUTCH

CONTENTS

Service Precaution 7C–1
General Description 7C–2
Diagnosis 7C–8
Clutch Assembly 7C–9
Clutch Assembly and Associated Parts . . . 7C–9
Removal 7C–9
Inspection and Repair 7C–10
Installation 7C–15
Clutch Control 7C–17
Clutch Control Parts 7C–17
Removal 7C–18
Inspection and Repair 7C–18
Installation 7C–19
Adjustment 7C–19
Master Cylinder 7C–22
Disassembled View 7C–22
Disassembly 7C–23
Inspection and Repair 7C–23
Reassembly 7C–23
Slave Cylinder 7C–24
Disassembled View 7C–24
Disassembly 7C–24
Inspection and Repair 7C–24
Reassembly 7C–25
Damper Cylinder 7C–26
Disassembled View 7C–26
Disassembly 7C–26
Inspection and Repair 7C–26
Reassembly 7C–26
Main Data and Specifications 7C–27
General Specifications 7C–27
Torque Specifications 7C–27
Special Tools 7C–30

Service Precaution

WARNING: IF SO EQUIPPED WITH A SUPPLEMENTAL RESTRAINT SYSTEM (SRS), REFER TO THE SRS COMPONENT AND WIRING LOCATION VIEW IN ORDER TO DETERMINE WHETHER YOU ARE PERFORMING SERVICE ON OR NEAR THE SRS COMPONENTS OR THE SRS WIRING. WHEN YOU ARE PERFOMING SERVICE ON OR NEAR THE SRS COMPONENTS OR THE SRS WIRING, REFER TO THE SRS SERVICE INFORMATION. FAILURE TO FOLLOW WARNINGS COULD RESULT IN POSSIBLE AIR BAG DEPLOYMENT, PERSONAL INJURY, OR OTHERWISE UNNEEDED SRS SYSTEM REPAIRS.

CAUTION: Always use the correct fastner in the proper location. When you reolace a fastener, use ONLY the exact part number for that application. ISUZU will call out those fasteners that requir a replacement after removal. ISUZU will also call out the fasteners that requir thread lockers or thread sealant. UNLESS OTHERWISE SPECIFIED , do not use supplemental coatings (Paints, greases, or other corrosion inhibitors) on threaded fastners or fastner joint interfaces. Generally,such coatings adversely affect the fastner torque and the joint clamping force, and may damage the fastner. When you install fasteners, use the correct tightening sequence and specifications. Following these instructions can help you avoid damage to parts and systems.

General Description

Clutch

(6VE1)

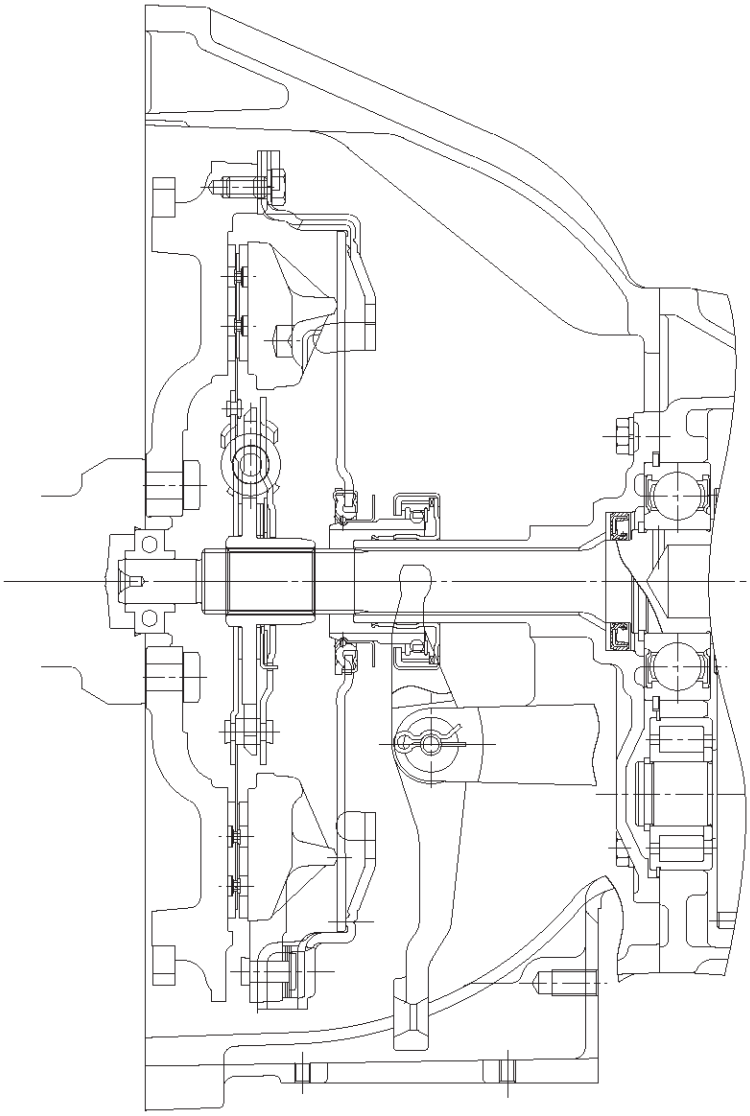

A07RW046

For 6VE1 (3.5L) and 4JX1 (3.0L) engine models, the pull-type clutch is employed. The pull-type clutch is disengaged by pulling the release lever (release bearing) to disengage the pressure plate.

Master Cylinder

(6VE1 LHD)

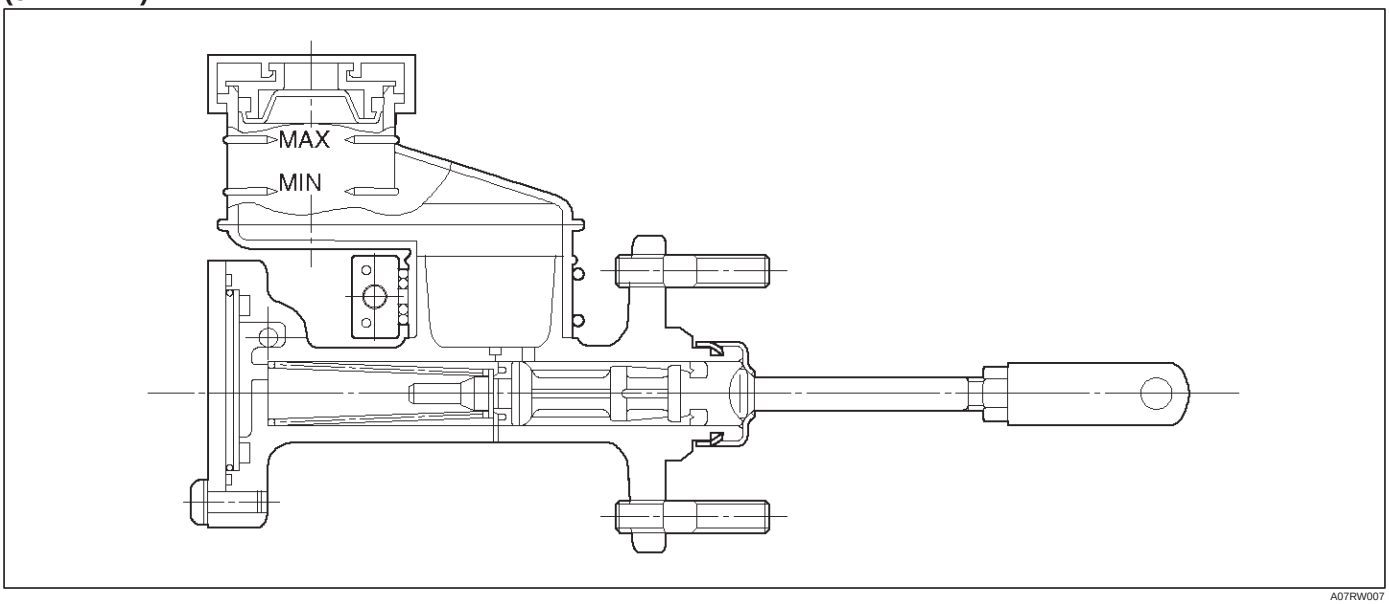

A07RW007

(6VE1 RHD)

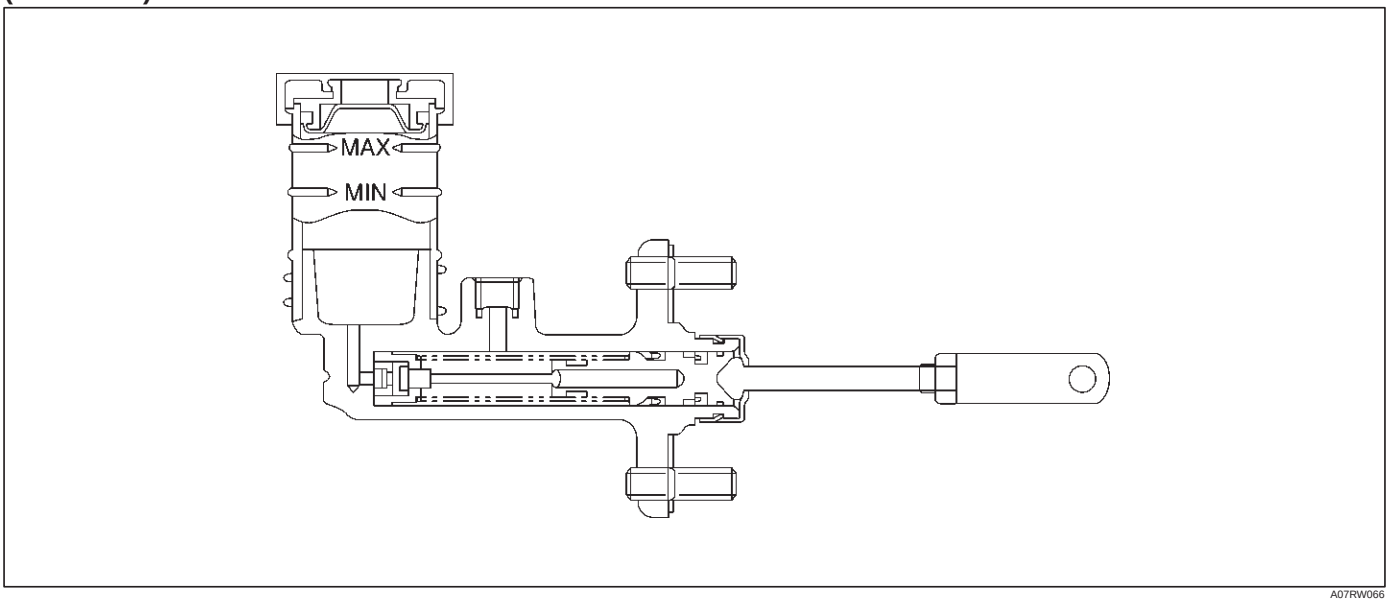

A07RW066

(4JX1)

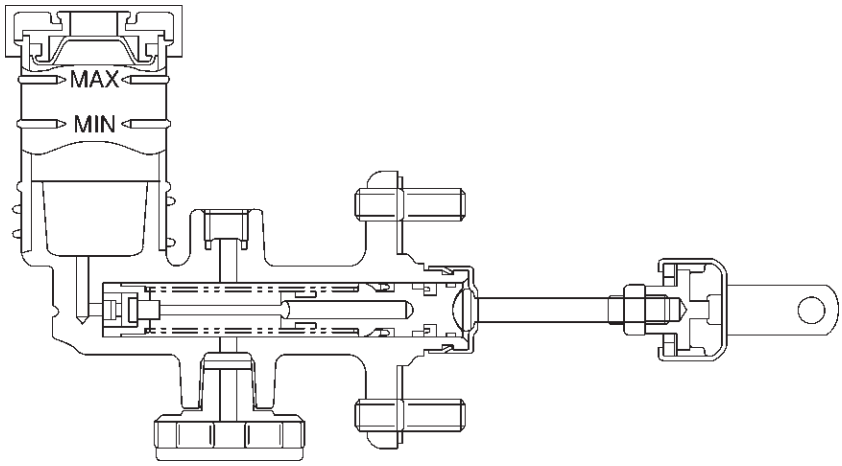

A07RW067

Damper Cylinder

(Except 6VE1 LHD)

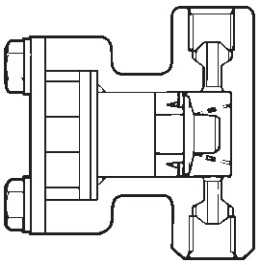

A07RS004

In order to reduce the occurrence of noises at the clutch hydraulic system, the damper cylinder is used in the clutch hydraulic line between the master cylinder and slave cylinder.

Slave Cylinder

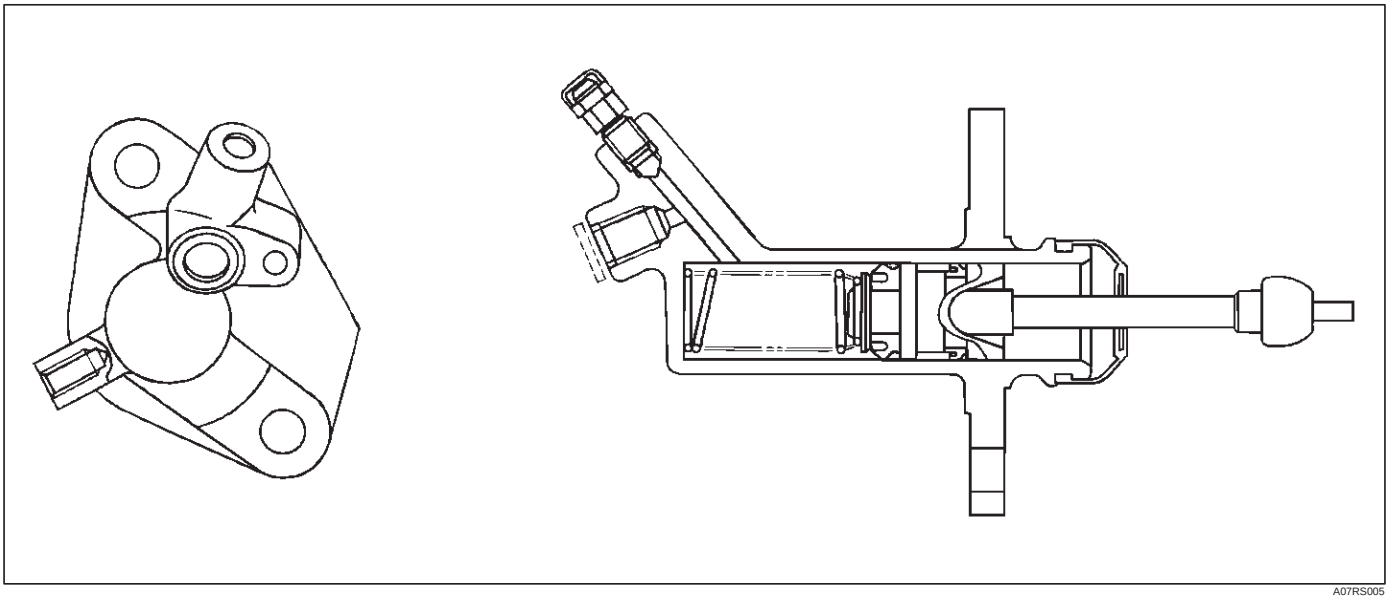

A07RS005

Pressure Plate Assembly

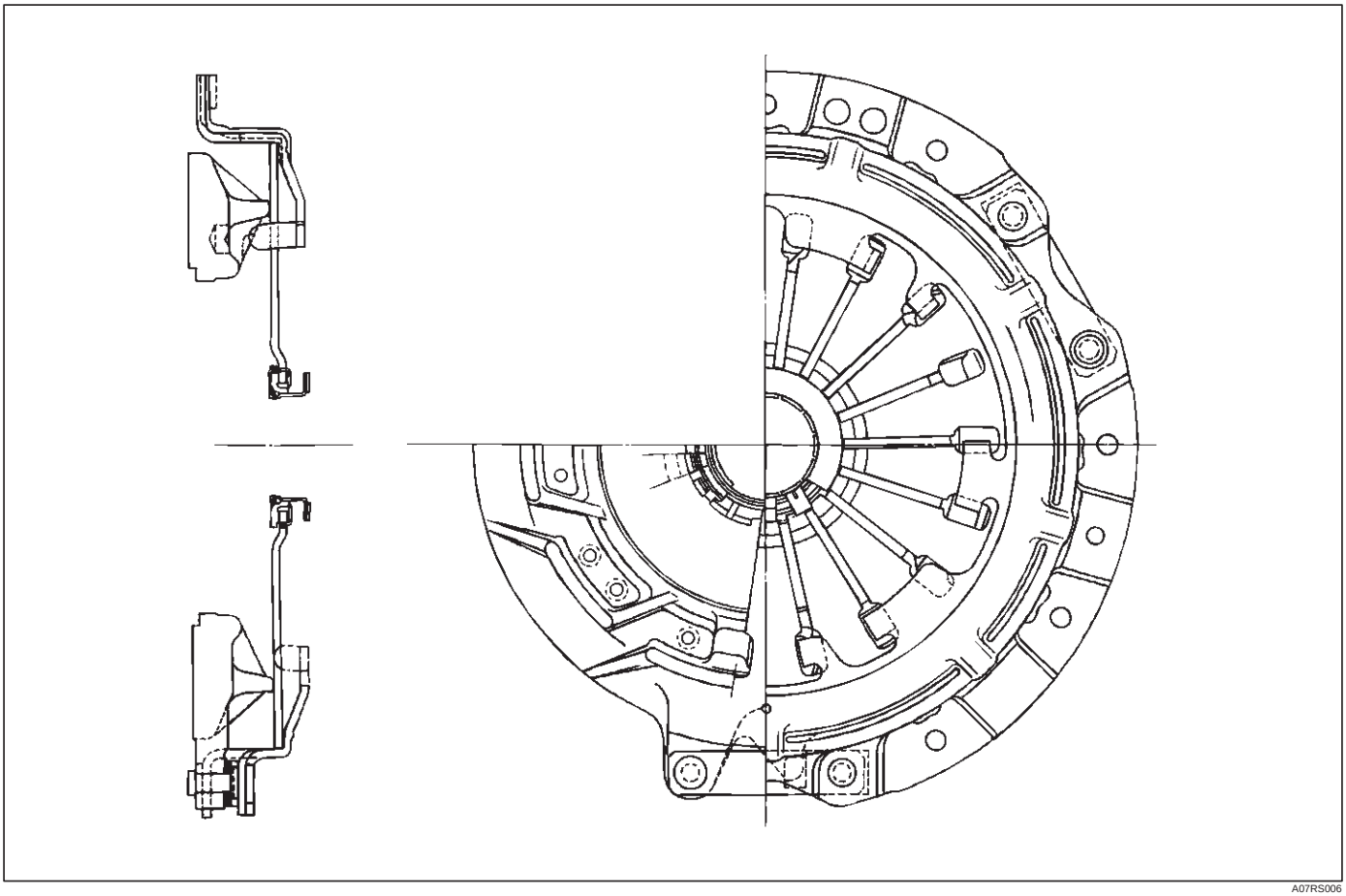

A07RS006

Driven Plate Assembly

(6VE1)

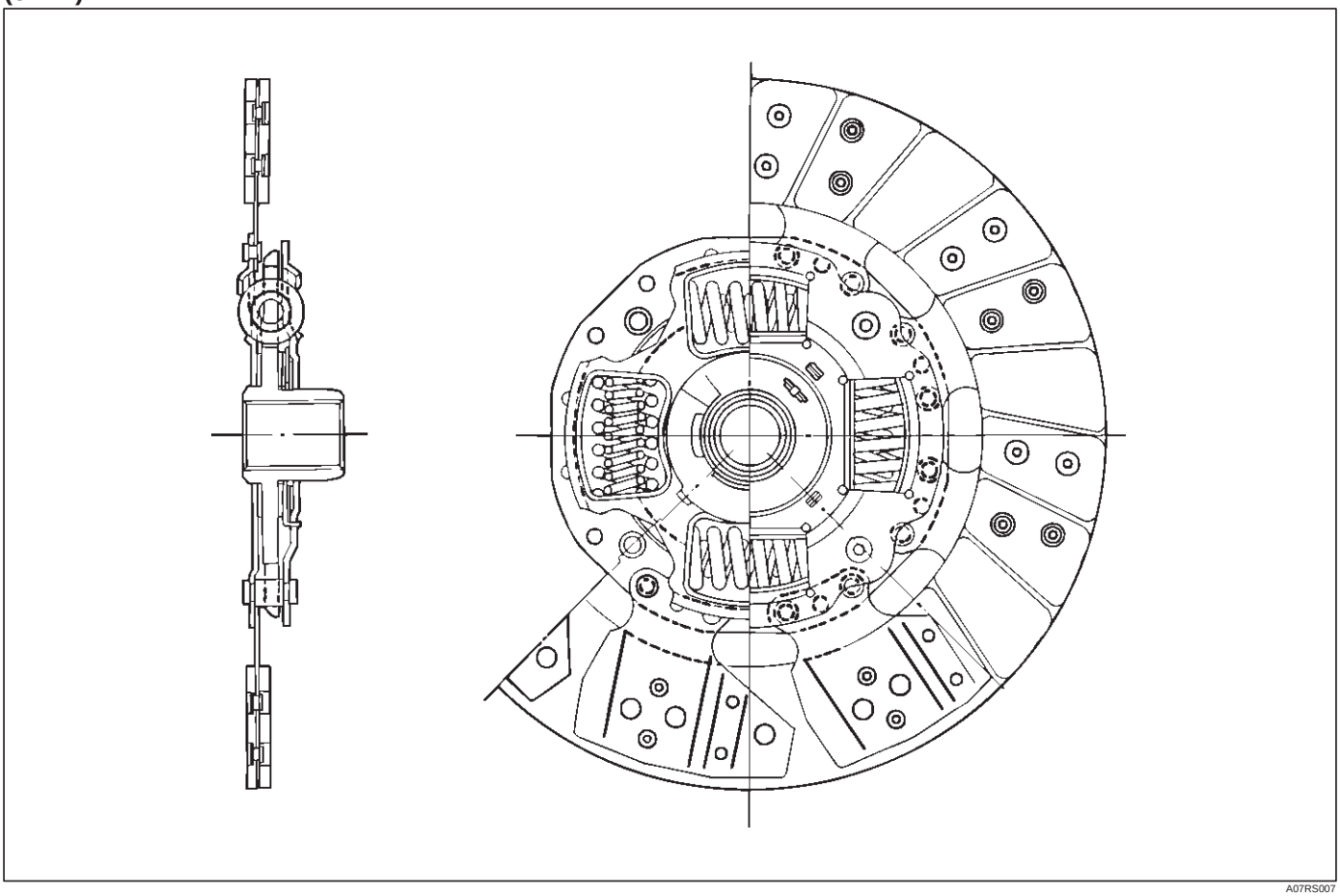

A07RS007

(4JX1)

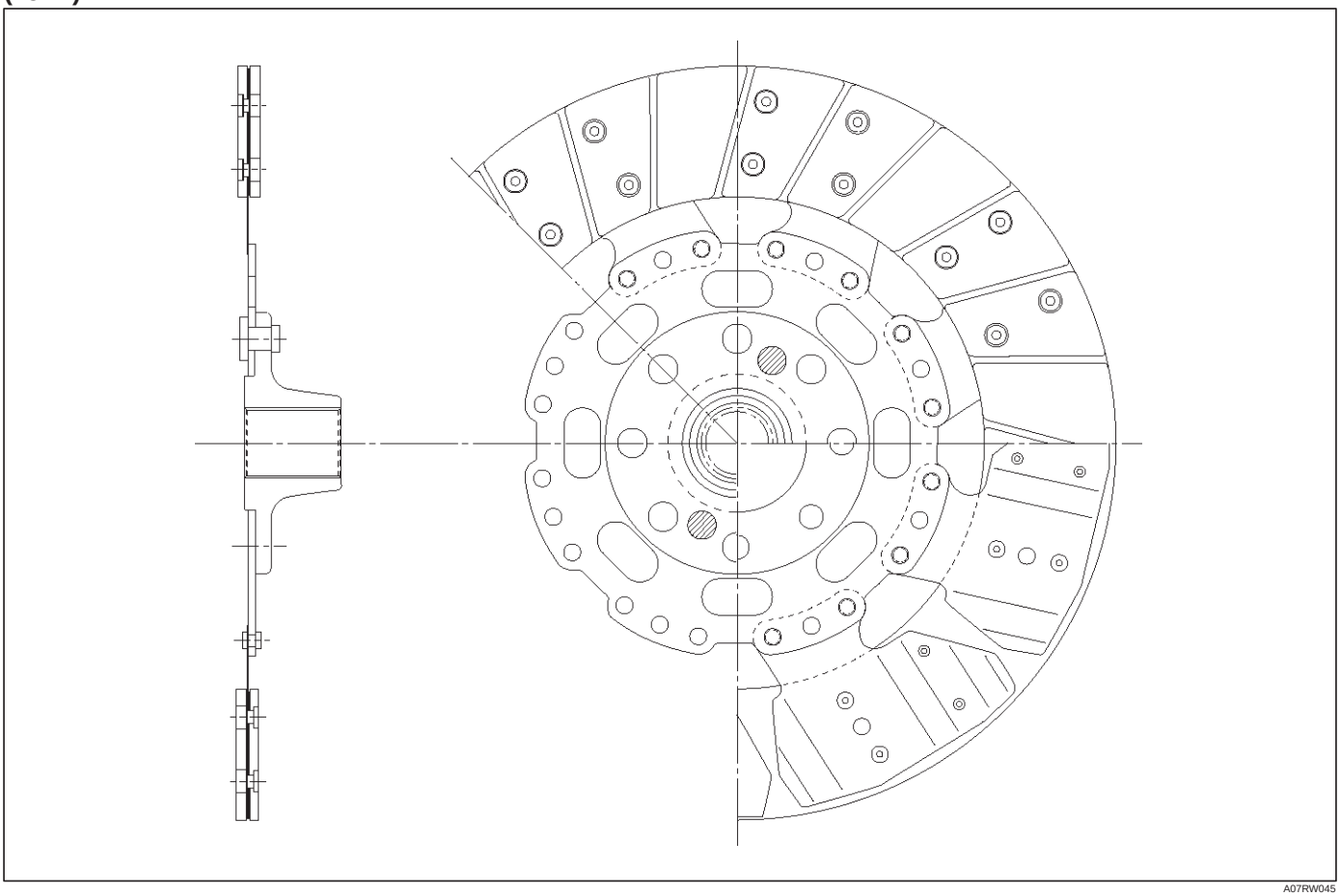

A07RW045

Diagnosis

Condition	Possible cause	Correction
Dragging	Fluid leakage.	Repair
	Air in hydraulic line.	Bleed
	Master cylinder and slave cylinder seals worn.	Replace master cylinder. Replace slave cylinder seals.
	Driven plate warped.	Replace driven plate.
	Diaphragm spring weakened or tip of fingers worn.	Replace pressure plate
	Driven plate sticking on splines.	Lubricate with grease or replace.
	Clutch spline worn.	Repair
	Release bearing worn or damaged.	Replace release bearing.
Slipping	Driven plate facing worn or oil–soaked.	Replace driven plate and check for leaks.
	Diaphragm spring weakened.	Replace pressure plate.
	Pressure plate or flywheel warped.	Correct or replace.
	Master cylinder and slave cylinder seals worn.	Replace master cylinder. Replace slave cylinder seals.
Chattering	Engine mounts loose or damaged.	Tighten or replace.
	Driven plate facing warped.	Replace driven plate.
	Surface of facing hardened.	Replace driven plate
	Driven plate facing oil soaked.	Replace driven plate and check for leaks.
	Damper springs weakened or broken.	Replace.
	Pressure plate or flywheel warped.	Correct or replace.
Noisy	Replace bearing binding.	Correct, or replace if damaged, and lubricate.
	Replace bearing worn or damaged.	Replace release bearing.
	Release bearing poorly lubricated.	Lubricate.
	Pilot bearing worn.	Replace pilot bearing.
	Damper springs weakened or broken.	Replace driven plate.
	Rivets of driven plate exposed.	Replace driven plate.
Replace driven plate.	Hydraulic line blocked.	Clean out or replace.
	Master or slave cylinders binding.	Repair or replace as needed.

Clutch Assembly

Clutch Assembly and Associated Parts

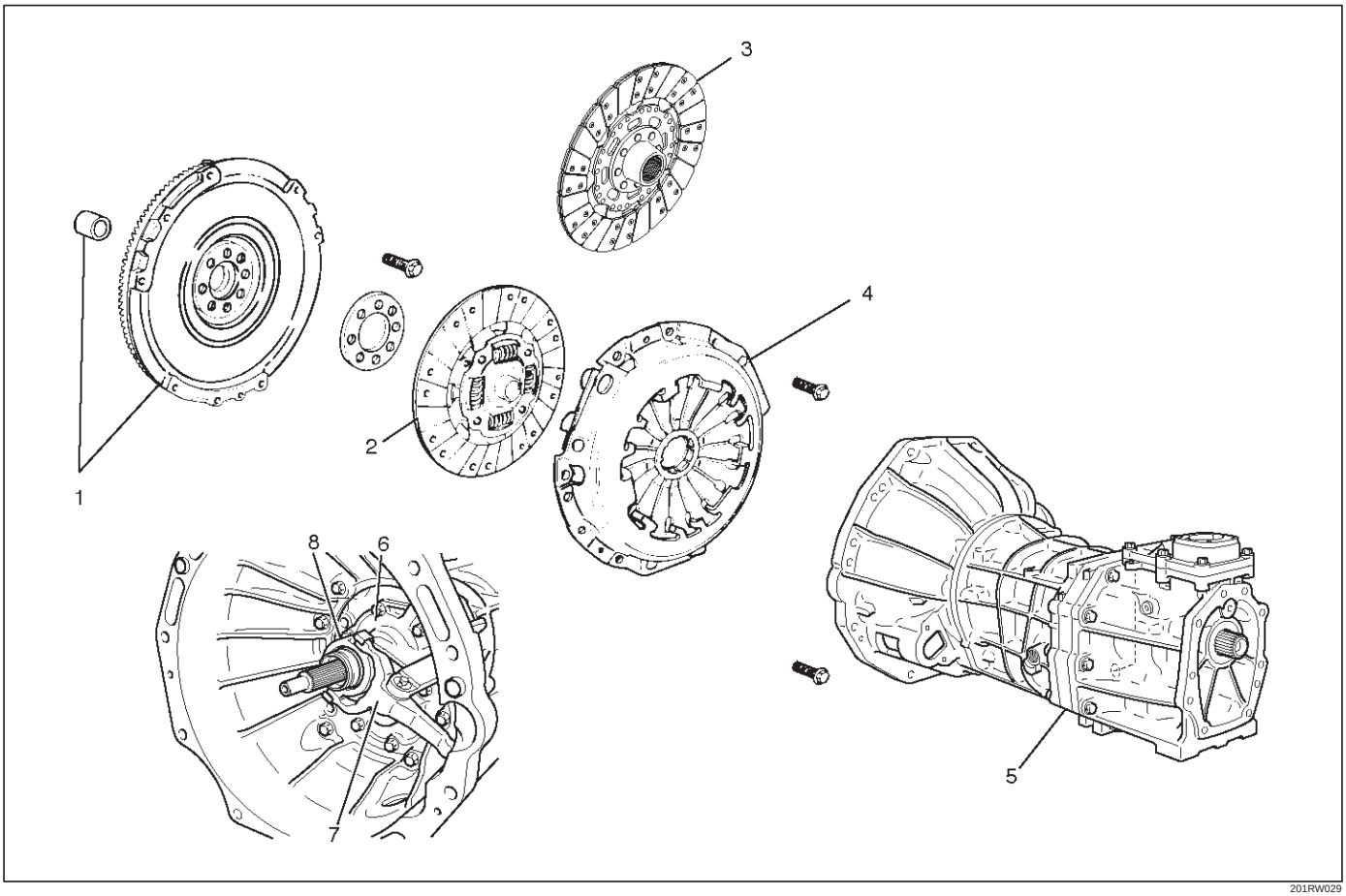

201RW029

Legend

(1) Flywheel Assembly and Crankshaft Bearing
(2) Driven Plate Assembly (6VE1)
(3) Driven Plate Assembly (4JX1)
(4) Pressure Plate Assembly
(5) Transmission Assembly
(6) Front Cover
(7) Shift Fork
(8) Release Bearing

Removal

1. Remove transmission assembly, refer to ”MANUAL TRANSMISSION” of Section 7B for ”Removal AND INSTALLATION” procedure.
2. Mark the flywheel, clutch cover and pressure plate lug for alignment when installing.
3. Remove pressure plate assembly (3).
4. Remove driven plate assembly (1) or (2). Use the pilot aligner 5-85253-001-0 (J-24547) to prevent the driven plate assembly from falling free.

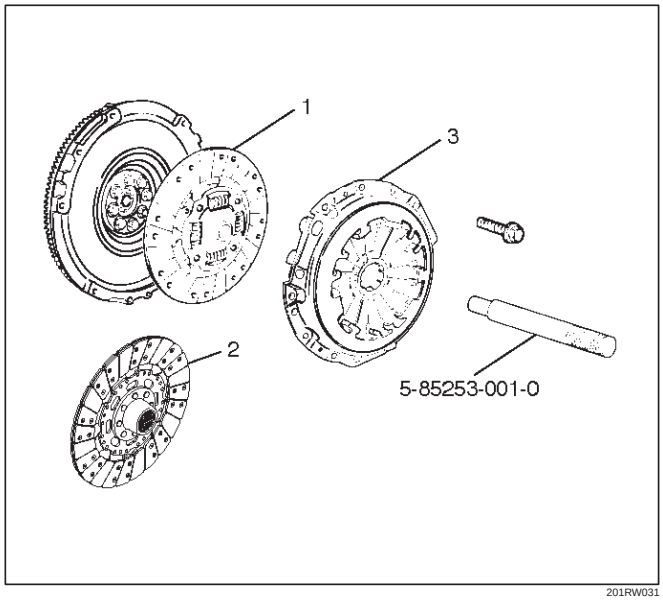

201RW031

5. Mark the flywheel, clutch cover and pressure plate lug for alignment when installing.
6. Remove the release bearing (3) from the transmission case .
7. Remove the shift fork snap pin.
8. Remove the shift fork pin and shift fork (4) from the front cover.
9. Remove the front cover bolts.
10. Remove the front cover (5) from the transmission case.

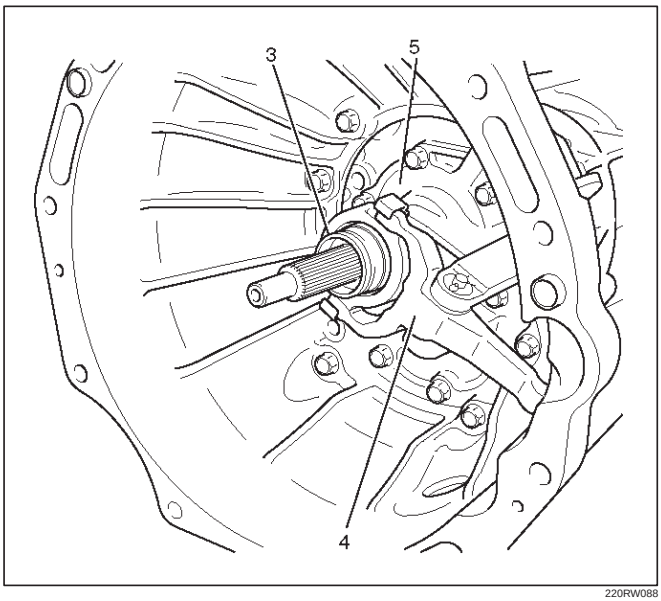

220RW088

11. Remove flywheel assembly and crankshaft bearing. Do not remove except for replacement.
12. Use the remover 5–8840–2000–0 (J–5822) and sliding hammer 5–8840–0019–0 (J–23907) to remove the crankshaft bearing

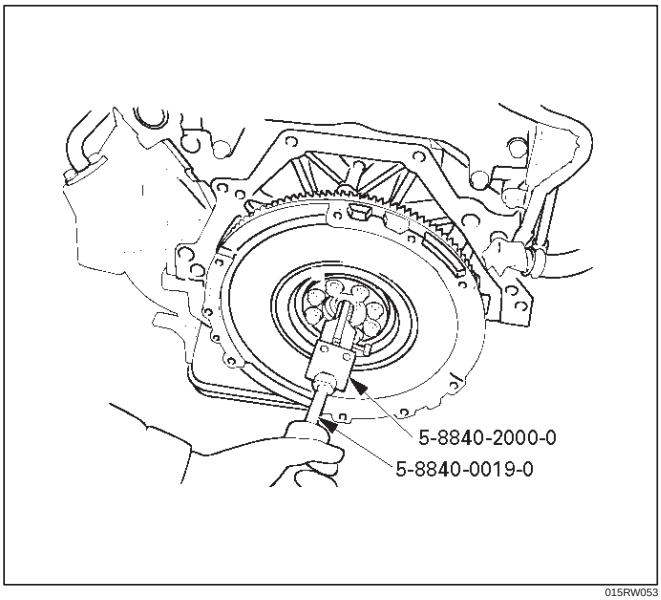

015RW053

Inspection and Repair

Make necessary correction or parts replacement if wear, damage, or any other abnormal condition are found through inspection.

Pressure Plate Assembly

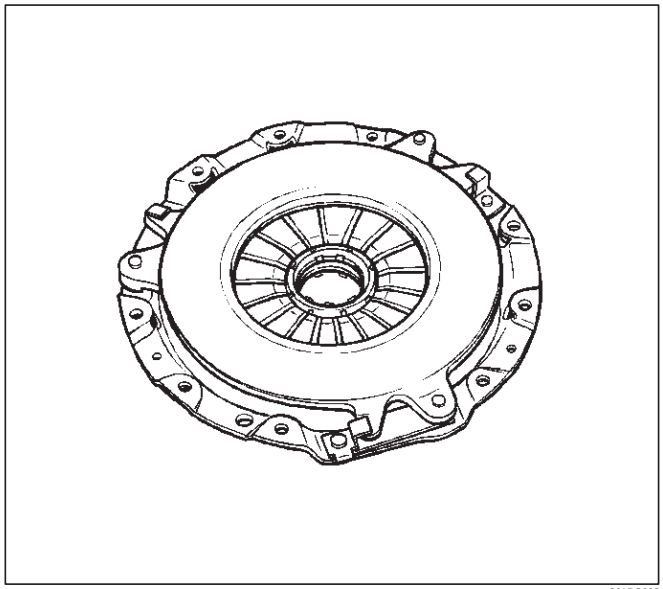

201RS002

1. Visually check the pressure plate friction surface for excessive wear and heat cracks.
2. If excessive wear or deep heat cracks are present, the pressure plate must be replaced.

Pressure Plate Warpage

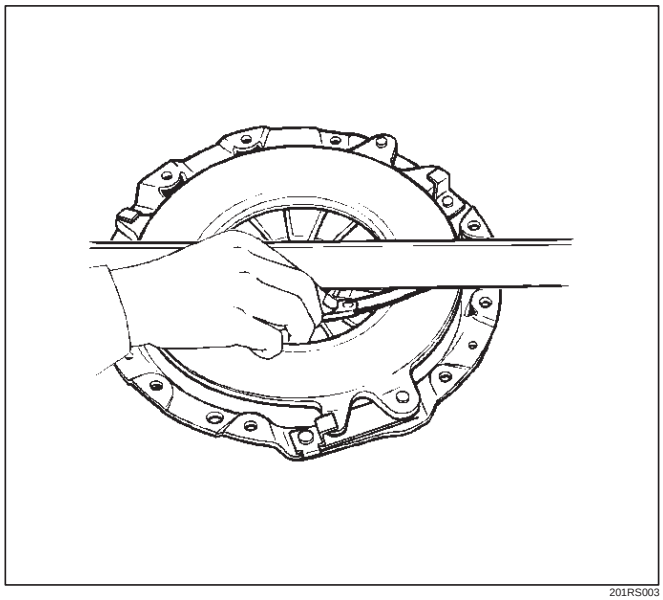

201RS003

1. Use a straight edge and a feeler gauge to measure the pressure plate friction surface flatness in four directions.
2. If any of the measured values exceeds the specified limit, the pressure plate must be replaced.

Pressure Plate Warpage

Limit: 0.3 mm (0.012 in)

Clutch Cover

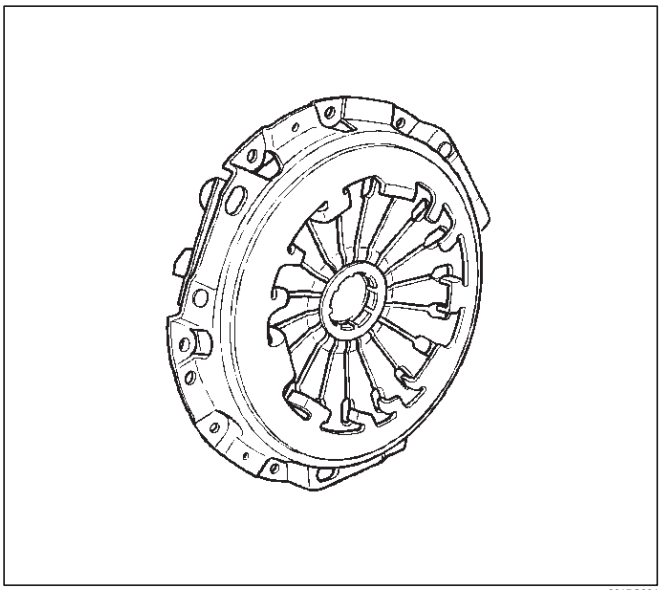

201RS004

1. Visually check the entire clutch cover for excessive wear, cracking, and other damage.
2. The clutch cover must be replaced if any of these conditions are present.

Clutch Set Force

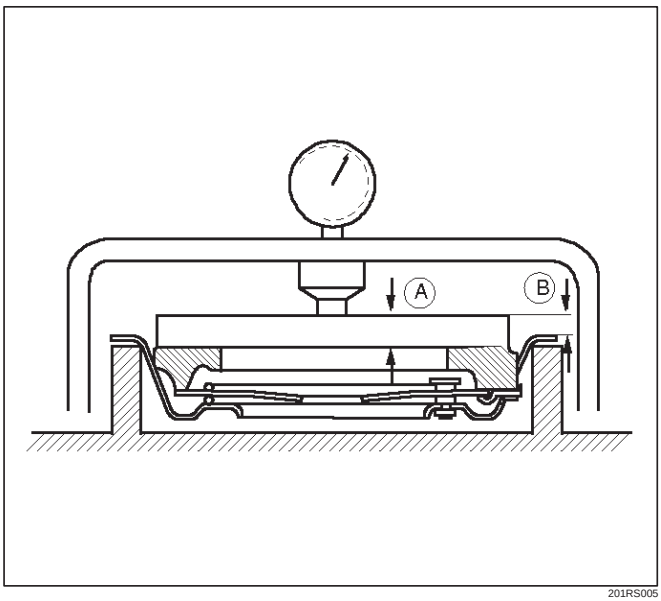

201RS005

1. Invert the pressure plate assembly.
2. Place a new driven plate over the pressure plate. A metal sheet with “A” thickness of 8.3 mm (0.327 in) may be used in place of the driven plate.
3. Compress the pressure plate assembly until the distance “B” becomes 12 mm (0.472 in).
4. Note the pressure gauge reading.
5. If the measured value is less than the specified limit, the pressure plate assembly must be replaced.

Clutch Set Force

Standard: 7208 N (1621 lb)

Limit: 6468 N (1454 lb)

Diaphragm Spring Finger Height

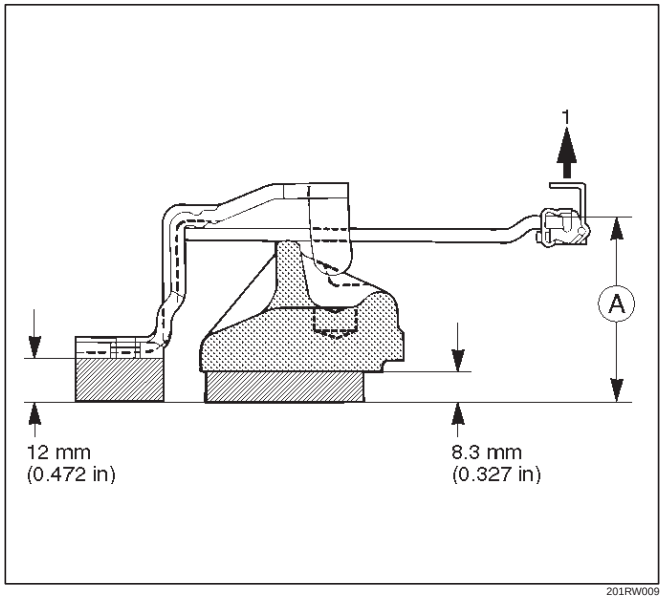

201RW009

Legend

(1) Release Side

1. Place a new driven plate or a 8.3 mm (0.327 in) spacer beneath the pressure plate.
2. Fully compress the pressure plate and diaphragm spring.
3. There are two ways to do this.
4. Use a bench press to press down on the assembly from the top.
5. Tighten the fixing bolts.

NOTE: Preload on diaphragm spring finger must be 49 – 98 N (11 – 22 lb) in direction of release, when clutch cover assembly is bolted to the flywheel.

6. Measure the spring height from base to spring tip “A”. If the measured value exceeds the specified limit, the pressure plate assembly must be replaced.

Diaphragm Spring Finger Height

Standard: 49.9 mm – 51.9 mm (1.965 in – 2.043 in)

Driven Plate Assembly

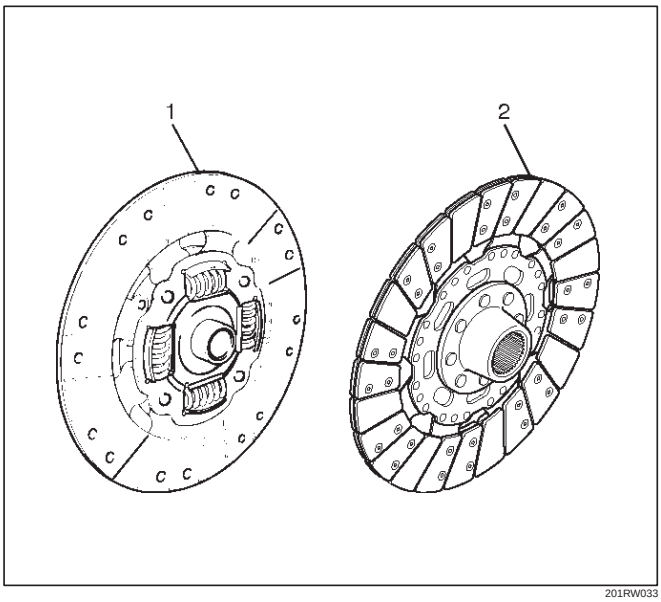

Legend

(1) Driven Plate Assembly (6VE1)
(2) Driven Plate Assembly (4JX1)

1. Visually check the torsion spring for looseness, breakage, and weakening.
2. If any of these conditions are discovered, the driven plate assembly must be replaced.
3. Visually check the facing surfaces for cracking and excessive scorching.
4. Visually inspect the facing surfaces for the presence of oil or grease.
5. If any of these conditions are discovered, the facing must be cleaned or replaced.
6. Check that the driven plate moves smoothly on the transmission top gear shaft spline.
7. Minor ridges on the top gear shaft spline may be removed with an oil stone.

Driven Plate Warpage

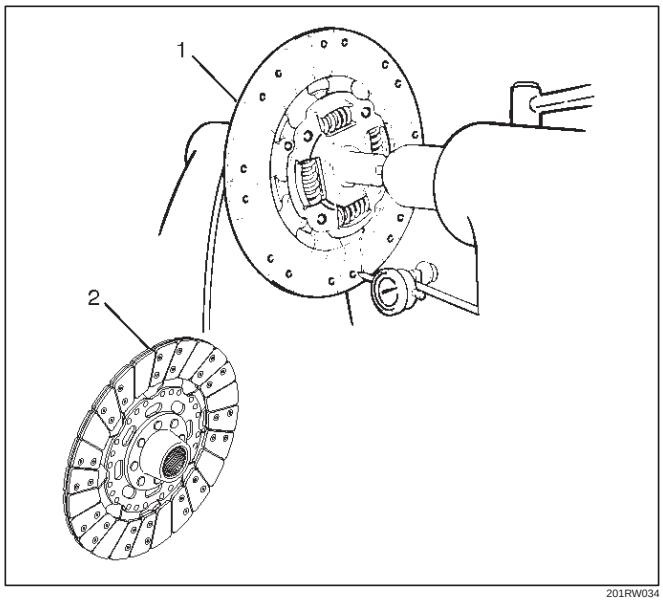

Legend

(1) Driven Plate Assembly (6VE1)
(2) Driven Plate Assembly (4JX1)

1. Insert the clutch pilot aligner into the driven plate splined hub.
2. The clutch pilot aligner J-24547 must be held perfectly horizontal.
3. Set a dial indicator to the driven plate outside circumference.
4. Slowly turn the driven plate.
5. Read the dial indicator as you turn the driven plate.
6. If the measured value exceeds the specified limit, the driven plate assembly must be replaced.

Driven Plate Warpage

Standard: 0.7 mm (0.028 in)

Limit: 1.0 mm (0.039 in)

Driven Plate Splined Hub Spline Wear

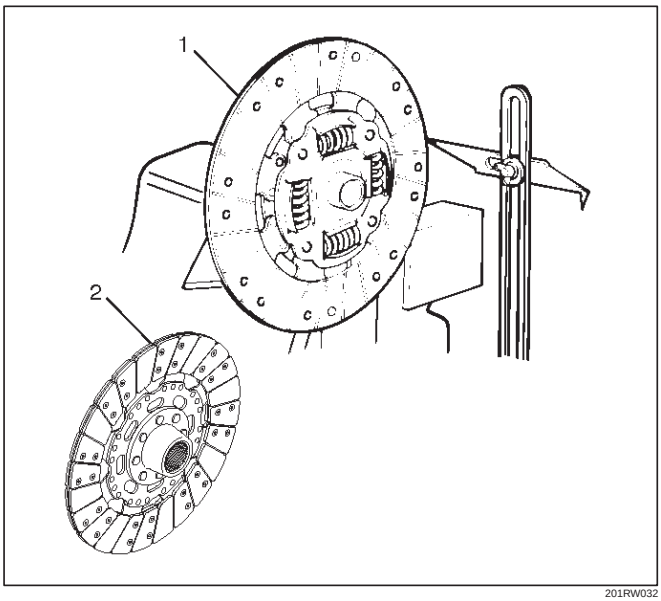

201RW032

Legend

(1) Driven Plate Assembly (6VE1)
(2) Driven Plate Assembly (4JX1)

1. Clean the driven plate splined hub.
2. Install the driven plate to the transmission top gear shaft spline.
3. Set a surface gauge to the driven plate outside circumference.
4. Slowly turn the driven plate counterclockwise.
5. Measure the spline rotation play as you turn the driven plate.
6. If the measured value exceeds the specified limit, the driven plate assembly must be replaced.

Driven Plate Splined Hub Spline Wear

Standard: 0.5 mm (0.020 in)

Limit: 1.0 mm (0.039 in)

Rivet Head Depression

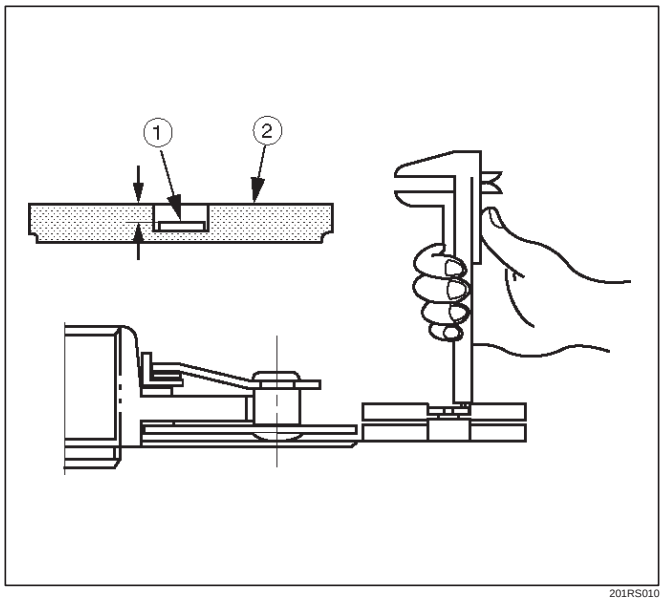

201RS010

1. Use a depth gauge or a straight edge with steel rule to measure the rivet head depression 1 from the facing surface 2.
2. Be sure to measure the rivet head depression on both sides of the driven plate.
3. If the measured value is less than the specified limit, the driven plate assembly must be replaced.

Rivet Head Depression

Standard:

	Flywheel side	Pressure plate side
6VE1	1.95mm (0.077 in)	1.95mm (0.077 in)
4JX1	1.60mm (0.063 in)	1.60mm (0.063 in)

Limit: 0.2 mm (0.008 in)

Release Bearing

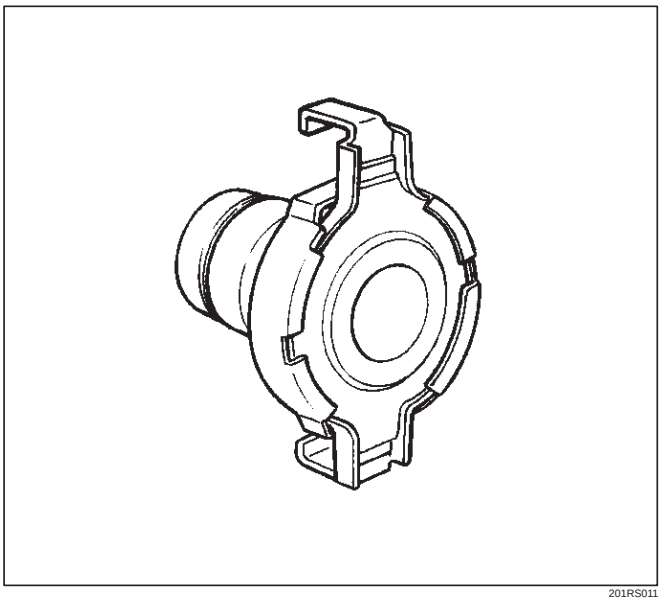

201RS011

1. Visually check the release bearing for excessive play, noise and breakage.
2. If any of these conditions are discovered, the release bearing must be replaced.
3. When replacing the release bearing, replace both the wedge collar and wire ring at the same time.

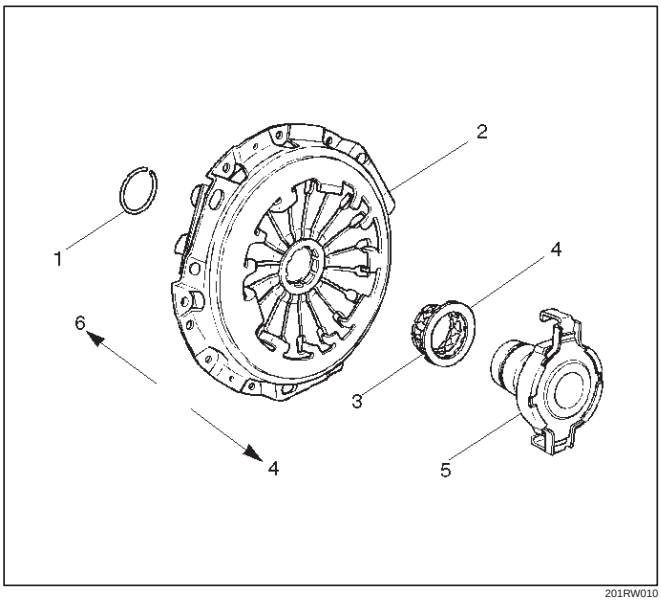

201RW010

Legend

(1) Wire Ring
(2) Pressure Plate Assembly
(3) Wedge Collar
(4) T/M Side
(5) Release Bearing
(6) Engine Side

Wedge Collar

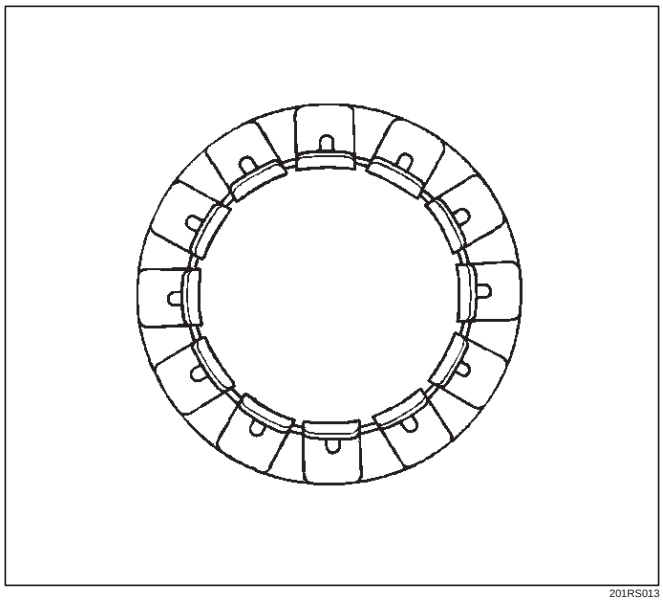

201RS013

1. Visually check the surfaces of the wedge collar making contact with the release bearing for excessive wear and damage.
2. Replace any exhibiting excessive wear or damage.

Shift Fork

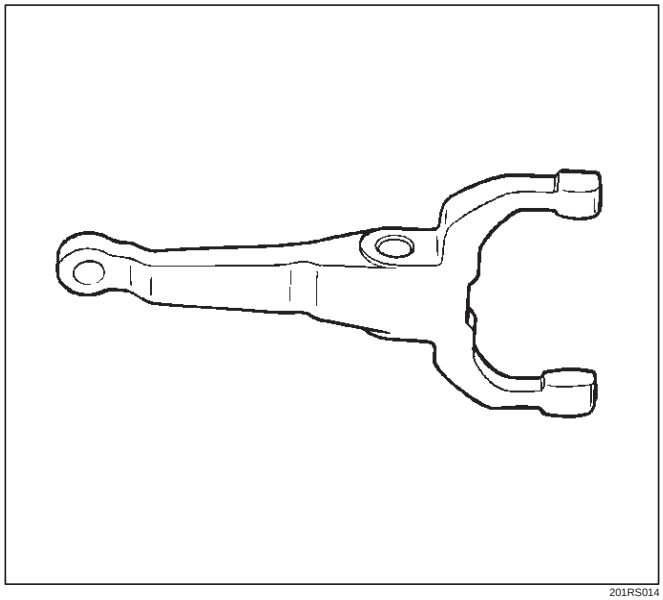

201RS014

1. Visually check the surfaces of the shift fork making contact with the release bearing for excessive wear and damage.
2. Remove any minor stepping or abrasion from shift fork with an oil stone.
3. Replace any exhibiting excessive wear or damage.

Installation

To install, follow the removal steps in the reverse order, noting the following points:

1. Install flywheel assembly and crankshaft bearing. Use the installer 5-8840-0125-0 (J-26516-A) and driver handle 5-8840-0007-0 (J-8092) to install the crankshaft bearing then clean and lubricate with grease.

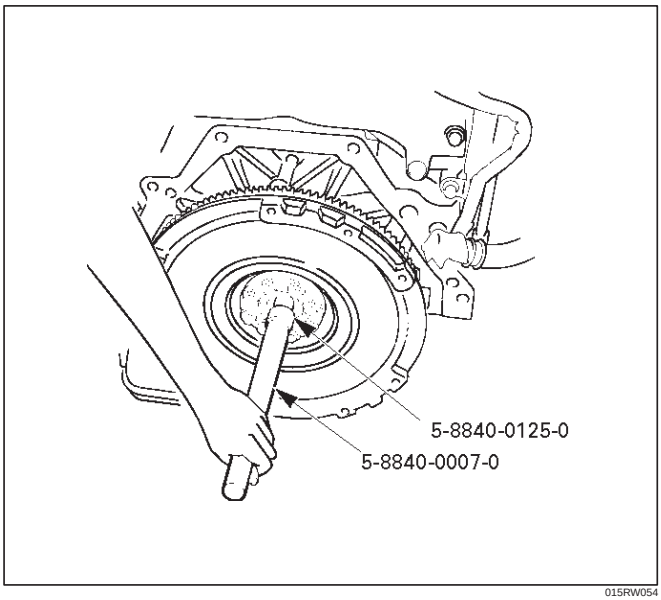

015RW054

2. Install new flywheel fixing bolts in the order illustrated and tighten them to the specified torque.

   Torque:

   6VE1: 54 N·m (5.5 kg·m/40 lb ft)

   4JX1: 60 N·m (6.1 kg·m/44 lb ft)+60°

NOTE: Do not reuse the bolt and do not apply oil or thread lock to the bolt.

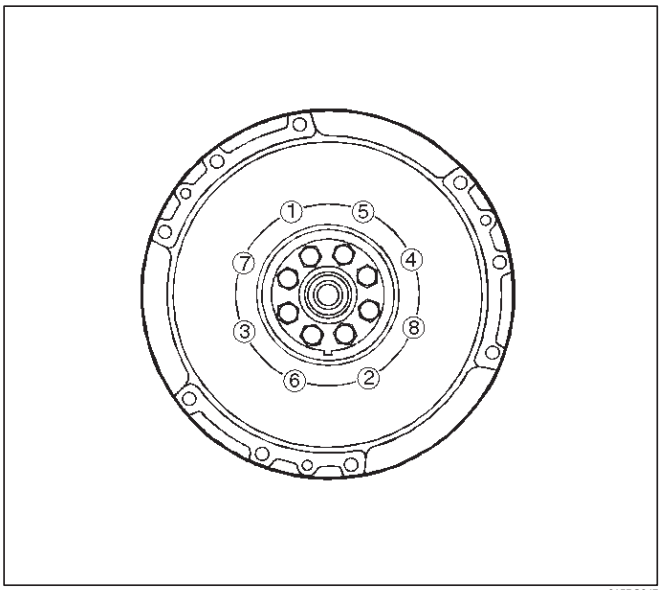

015RS047

3. Install the front cover (5) to the transmission case.
4. Tighten eight front cover bolts to the specified torque.

   Torque: 17 N·m (1.7 kg·m/12 lb ft)

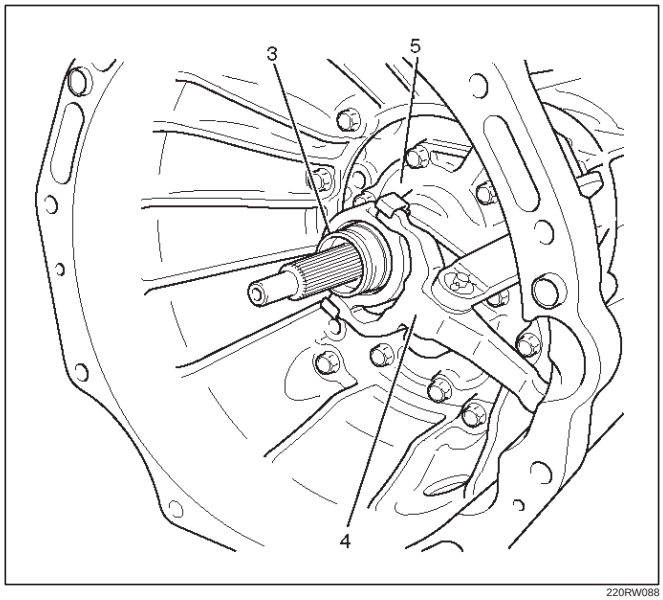

220RW088

5. Apply molybednum disulfide type grease to the pin hole inner circumferences and thrust surfaces.
6. Attach the shift fork to the front cover and insert the pin from below of the front cover.
7. Install the washer and snap pin.

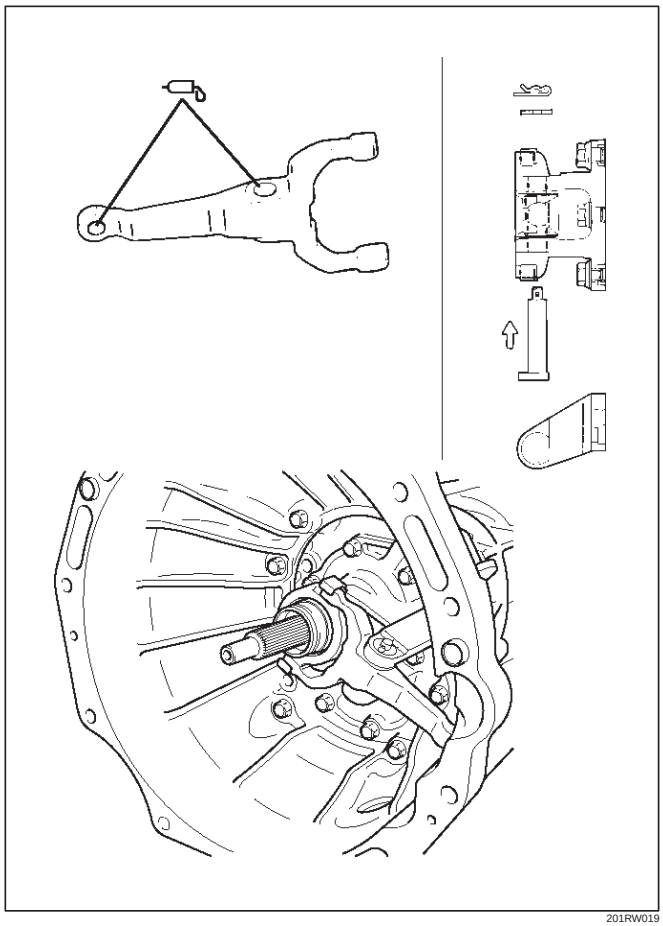

201RW019

8. Apply molybdenum disulfide type grease to the areas shown in illustration.

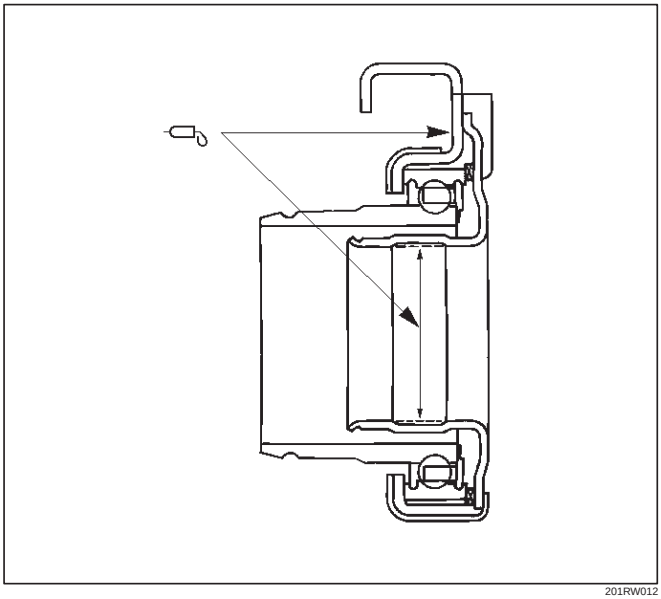

201RW012

9. Install the release bearing in the proper direction.

NOTE: Ensure release bearing is properly positioned during installation, as shown in illustration.

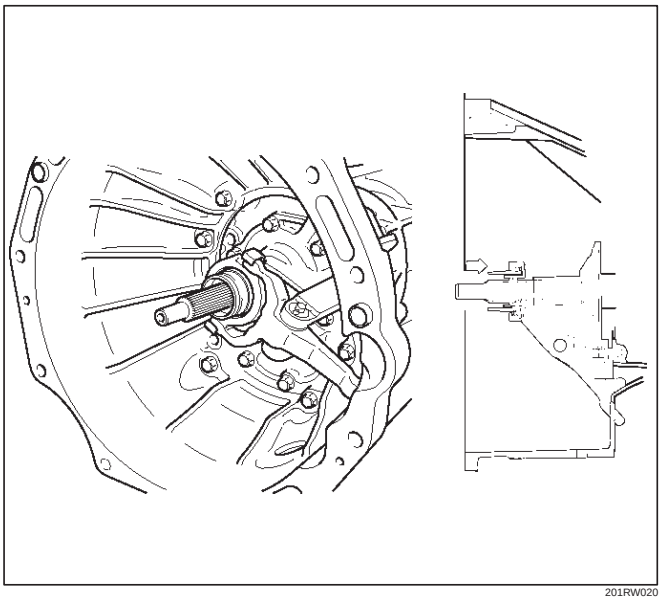

201RW020

10. Install driven plate assembly. Use the pilot aligner 5-85253-001-0 (J-24547) to install the driven plate assembly.

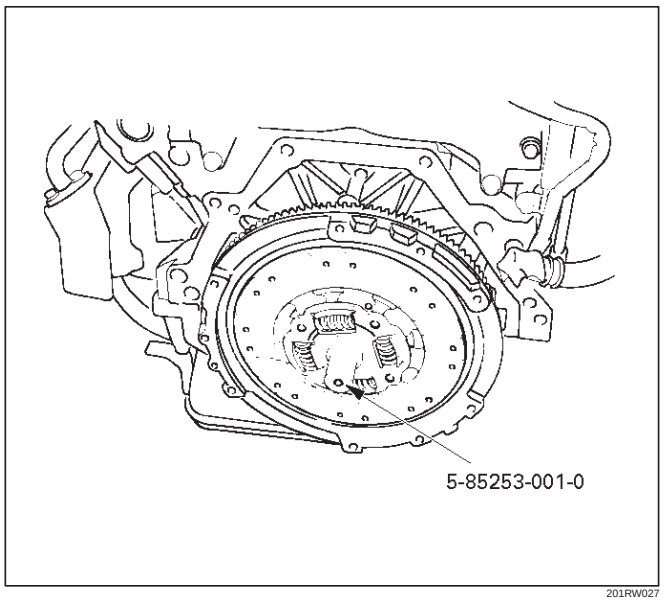

201RW027

11. Install pressure plate assembly and tighten the bolts holding the pressure plate assembly in the order shown in illustration.

Torque: 18 N·m (1.8 kg·m/13 lb ft)

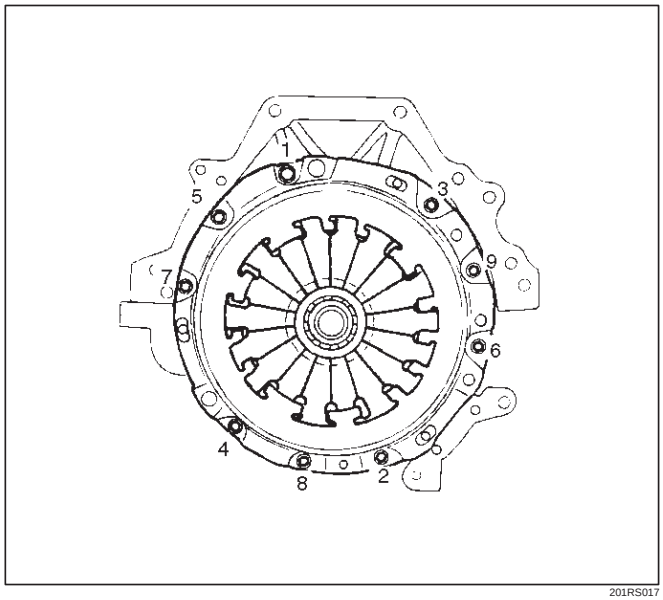

201RS017

12. Remove the aligner.

NOTE: Do not strike the aligner with a hammer to remove it.

13. Install transmission assembly.

Clutch Control

Clutch Control Parts

(6VE1 LHD)

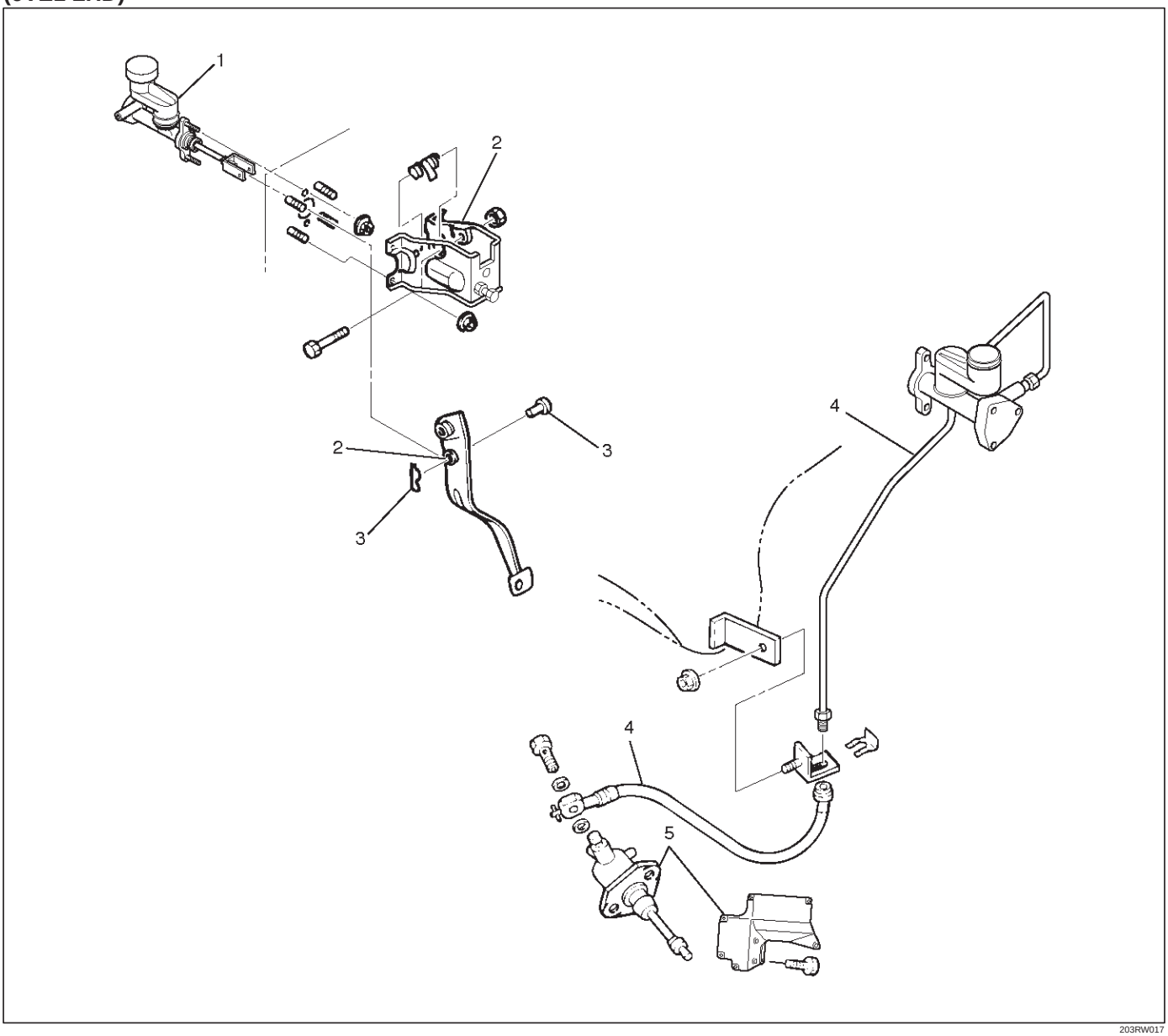

203RW017

Legend

(1) Master Cylinder Assembly
(2) Pedal Assembly
(3) Pin and Jaw Joint Pin
(4) Oil Line Pipe
(5) Slave Cylinder Assembly and Heat Protector

(Except 6VE1 LHD)

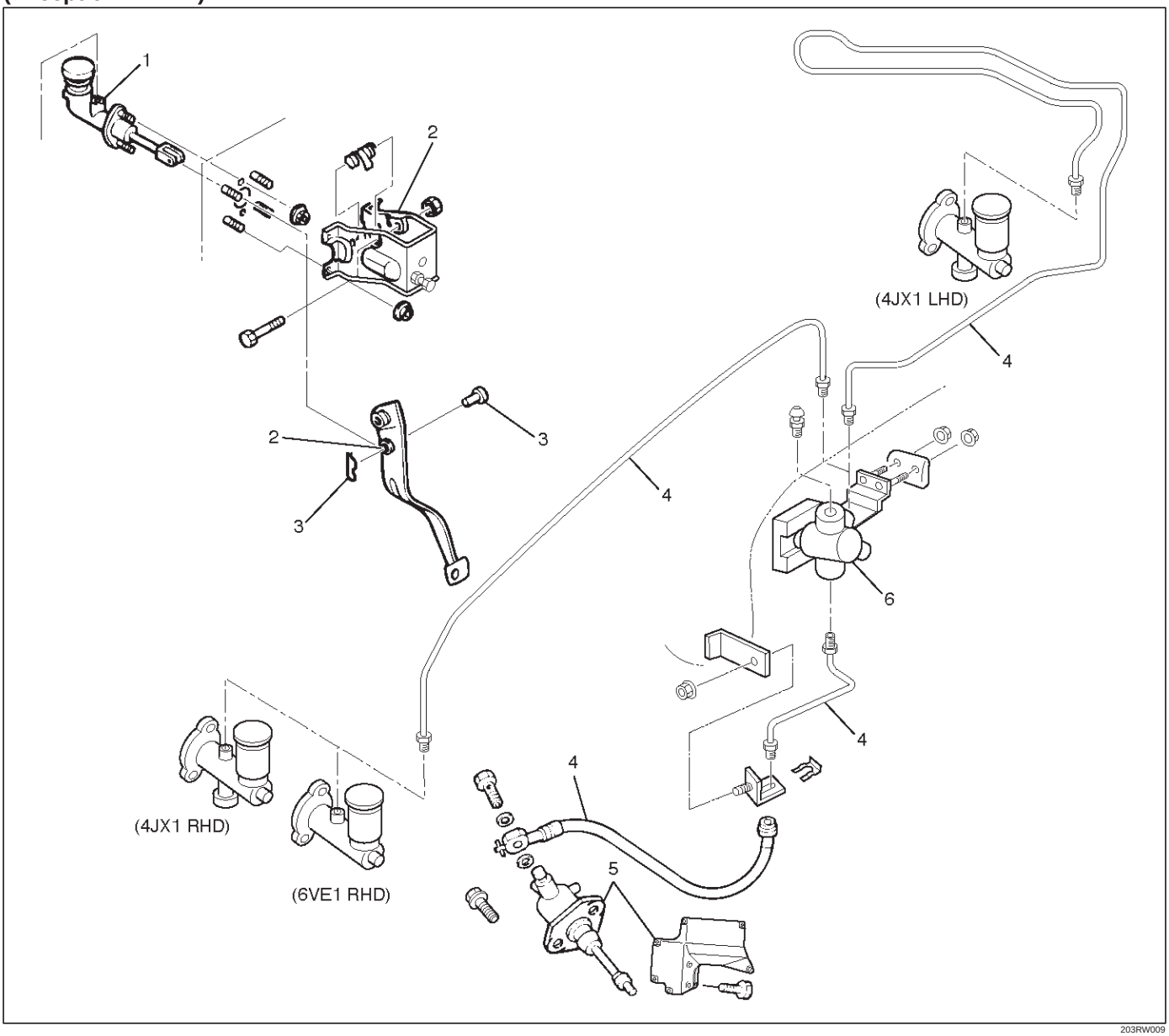

Legend

(1) Master Cylinder Assembly
(2) Pedal Assembly
(3) Pin and Joint Pin
(4) Oil Line Pipe
(5) Slave Cylinder Assembly and Heat Protector
(6) Damper Cylinder Assembly

Removal

1. Remove pin and jaw joint pin.
2. Remove pedal assembly.
3. Remove oil line pipe.
4. Remove slave cylinder assembly and heat protector.
5. Remove master cylinder assembly.
6. Remove damper cylinder assembly (except V6 LHD).

Inspection and Repair

Make necessary adjustments, repairs, and part replacement if wear, damage or other problems are discovered during inspection.

Installation

1. Install damper cylinder assembly (except V6 LHD).
2. Install master cylinder assembly.
3. Install slave cylinder assembly and heat protector.
4. Install oil line pipe.
5. Install pedal assembly.
6. Install pin and jaw joint pin.

Adjustment

Clutch Pedal Adjustment

1. Loosen the clutch pedal adjusting bolt so that there is enough gap between the clutch pedal and the adjusting bolt to allow push rod adjustment.

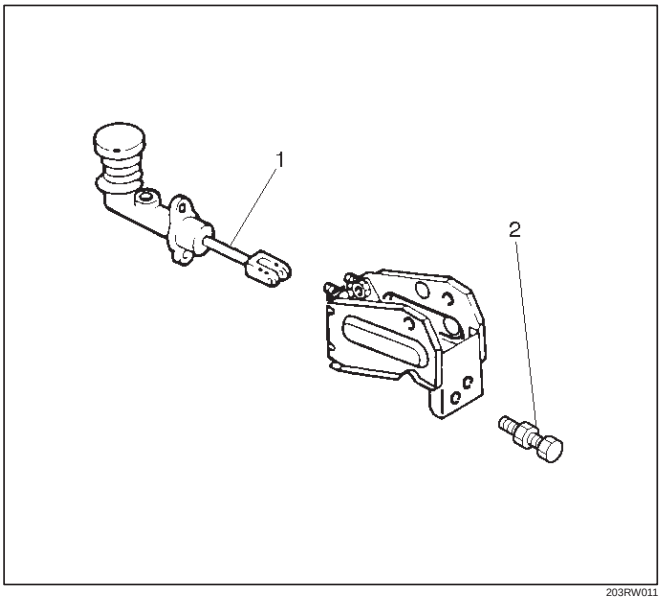

203RW011

Legend
(1) Push Rod
(2) Adjusting Bolt

2. Loosen clutch master cylinder push rod lock nut. Turn push rod by hand to set clutch pedal height (5) to within specification.

Clutch pedal height (5):

LHD: 217 mm – 227 mm (8.543 in – 8.937 in)

RHD:

(6VE1) 238.5 mm – 248.5 mm (9.390 in – 9.783 in)

(4JX1) 231 mm – 241 mm (9.094 in – 9.488 in)

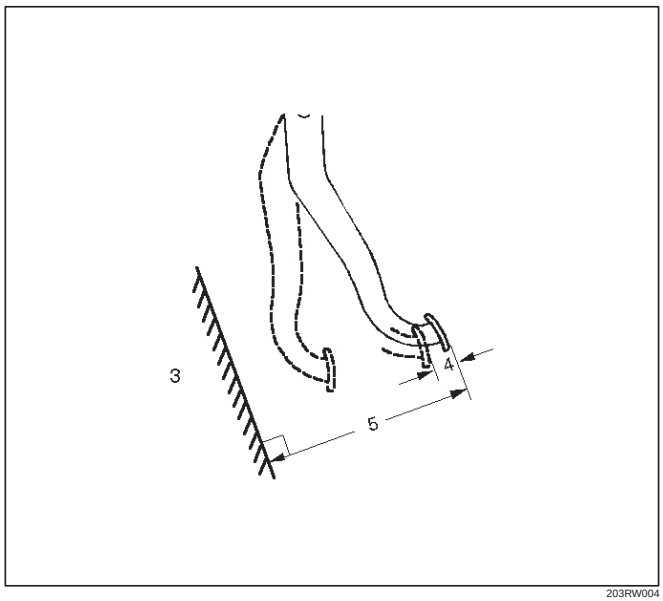

203RW004

Legend
(3) Floor Panel
(4) Pedal Free Play
(5) Clutch Pedal Height

3. Tighten push rod lock nut.
4. Adjusting bolt adjustment.
   1. Turn the adjusting bolt until it just touches the clutch pedal arm.

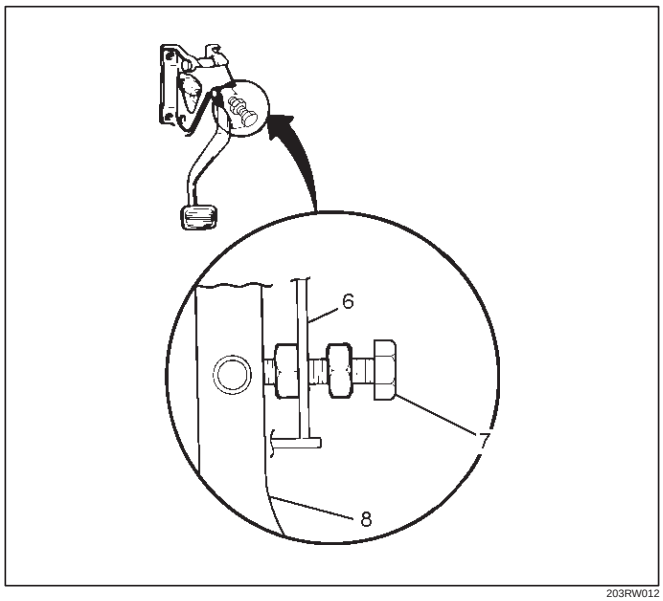

203RW012

Legend
(6) Blacket
(7) Adjusting Bolt
(8) Clutch Pedal Arm

2. Adjust clutch padel adjusting bolt by backing it out half a turn, and measure the clearance (δ) between the clutch pedal arm and the adjusting bolt.

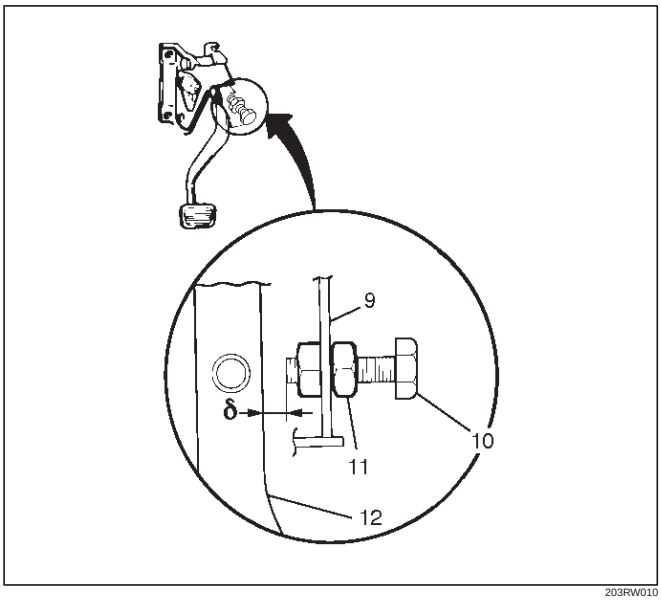

203RW010

Legend

(9) Bracket
(10) Clutch Pedal Adjusting Bolt
(11) Lock Nut
(12) Clutch Pedal Arm

3. Lock the lock nut.

Clutch Switch and Clutch Pedal Clearance (δ)

0.5 mm – 1.5 mm (0.020 in – 0.059 in)

5. After adjusting the clutch pedal height, push the clutch pedal by hand rightly to check the clutch pedal free play (4) to within specification.

Pedal Free Play (4)

5 mm – 15 mm (0.20 in – 0.59 in)

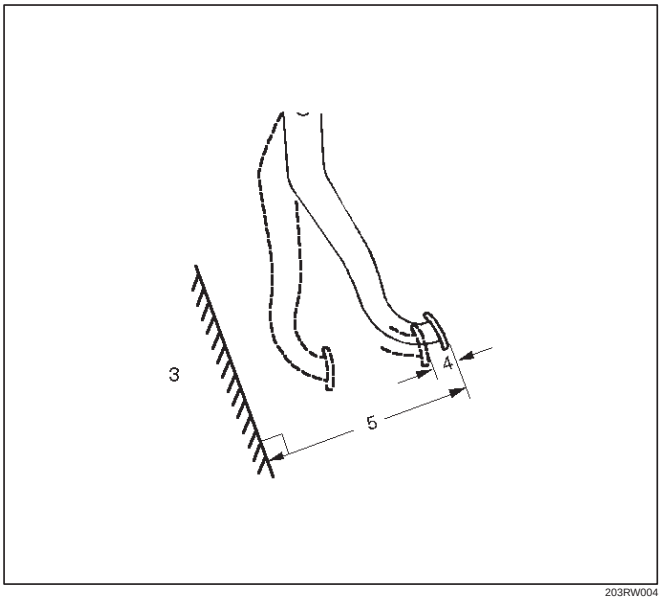

203RW004

6. Clutch pedal engagement height inspection:
   1. Operate the parking brake lever and block the wheels.
   2. Start the engine, fully step on the clutch pedal, and move the shift lever to 1st position.
   3. With the engine idling, release the clutch pedal slowly and measure its stroke just prior to its clutching position.

Clutch Pedal Engagement Height (14)

MIN. 30 mm (1.18 in)

7. If the measured value exceeds the specified limit, check the following points. Repair if necessary:
   - Hydraulic circuit for fluid leakage or air in circuit.
   - Clutch disc warped.
   - Diaphragm spring weakened or tip of fingers worn.
   - Driven plate sticking on sprines.
   - Release bearing worn or damaged.
   - Master cylinder and slave cylinder worn.

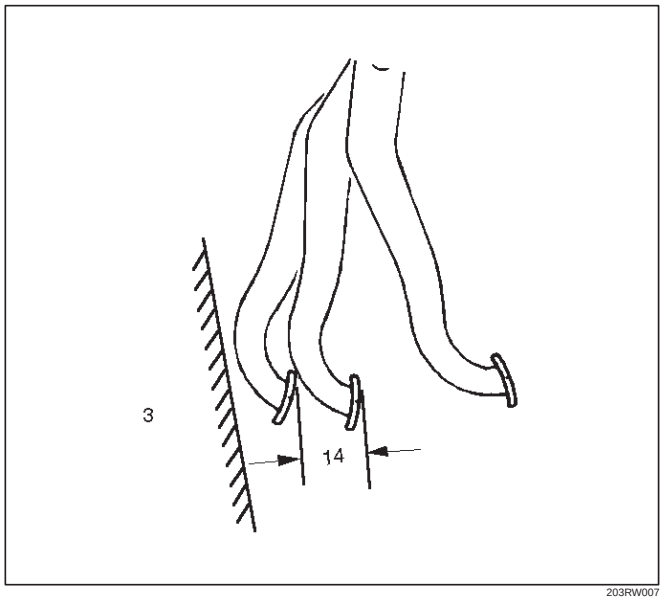

203RW007

Legend

(3) Floor Panel
(14) Clutch Pedal Engagement Height

Torque Specifications

- **Master cylinder to dash panel**
  Torque: 16 N·m (1.6 kg·m/12 lb ft)
- **Clutch pedal to dash panel**
  Torque: 21 N·m (2.1 kg·m/15 lb ft)
- **Master cylinder push rod to yoke**
  Torque: 17 N·m (1.7 kg·m/12 lb ft)
- **Clutch pipe to master cylinder**
  Torque: 20 N·m (2.0 kg·m/14 lb ft)
- **Clutch pipe to flex, hose**
  Torque:
  M 10: 16 N·m (1.6 kg·m/12 lb ft)
  M 12: 20 N·m (2.0 kg·m/14 lb ft)
- **Slave cylinder to case**
  Torque: 43 N·m (4.4 kg·m/32 lb ft)
- **Slave cylinder bleeder screw**
  Torque: 8 N·m (0.8 kg·m/69 lb in)
- **Flexible hose to slave cylinder**
  Torque: 20 N·m (2.0 kg·m/14 lb ft)
- **Clutch pipe to damper cylinder**
  Torque: 12 N·m (1.2 kg·m/104 lb in)
- **Damper cylinder bleeder screw**
  Torque: 8 N·m (0.8 kg·m/69 lb in)

Bleeding

1. Check the level of clutch fluid in the reservoir and replenish if necessary.
   Bleeding the damper cylinder (except V6 LHD model).
2. Remove the rubber cap from the bleeder screw and wipe clean the bleeder screw. Connect a vinyl tube to the bleeder screw and insert the other end of the vinyl tube into a transparent container.
3. Pump the clutch pedal repeatedly and hold it depressed.

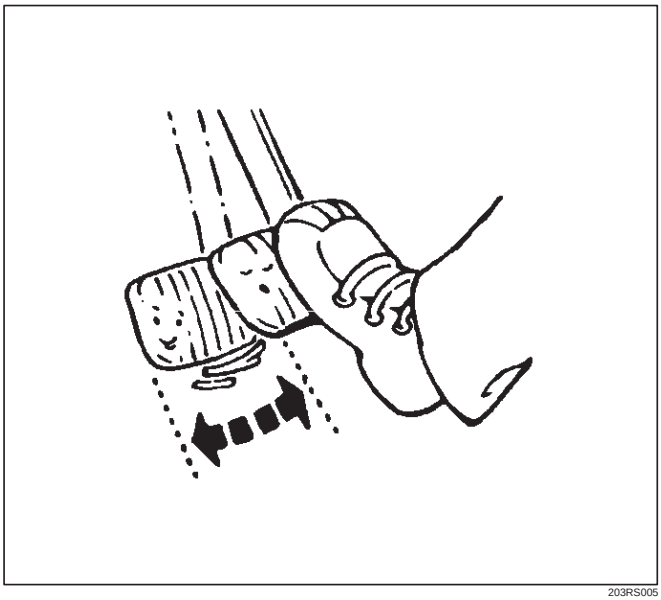

203RS005

4. Loosen the bleeder screw to release clutch fluid with air bubbles into the container, then tighten the bleeder screw immediately.
5. Release the clutch pedal carefully. Repeat the above operation until air bubbles disappear from the clutch fluid being pumped out into the container. During the bleeding operation, keep the clutch fluid reservoir filled to the specified level. Reinstall the rubber cap.
   Bleeding the slave cylinder
6. Repeat step 2 through 5 for bleeding the slave cylinder.

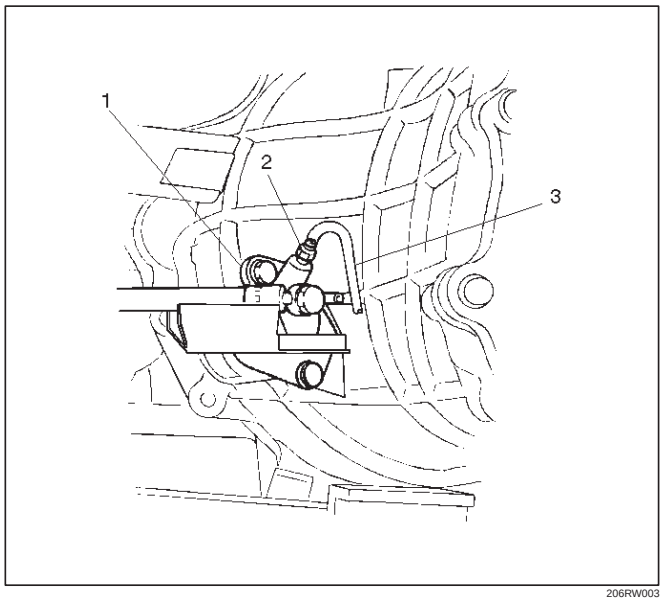

206RW003

Legend

(1) Slave Cylinder
(2) Bleeder Screw
(3) Vinyl Tube

Master Cylinder

Disassembled View

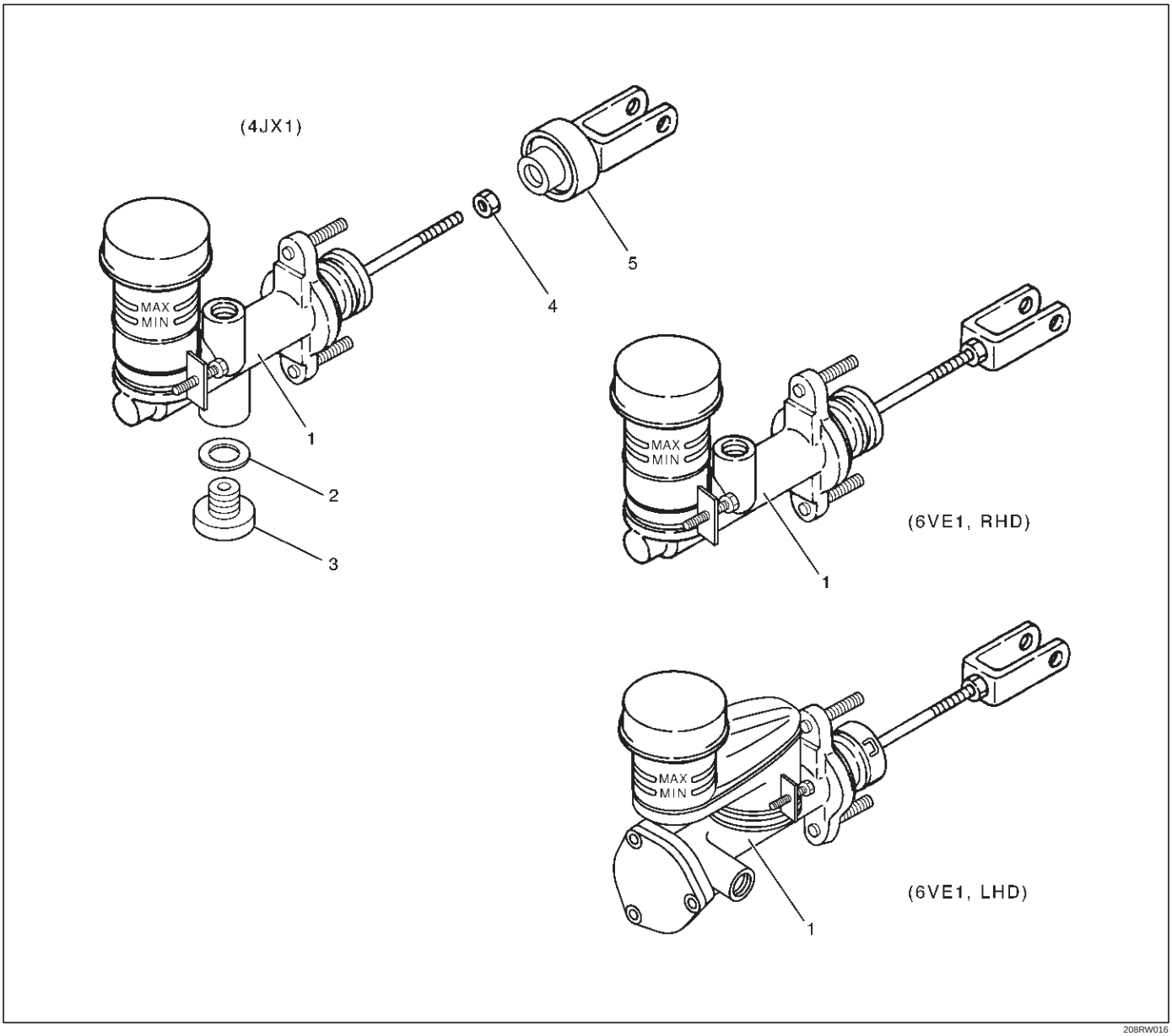

208RW016

Legend

(1) Master Cylinder Assembly
(2) Gasket
(3) Damper Cylinder Assembly
(4) Nut
(5) Push Rod Damper

Disassembly

(4JX1)

1. Remove damper cylinder assembly and gasket.
2. Remove push rod damper.

NOTE: The master cylinder assembly cannot be disassembled because of point–staked rod stopper.

Inspection and Repair

Clean and inspect the removed parts.
Make necessary parts replacement if any abnormalities such as wear, oil leaks or other damage are found through inspection.

Reassembly

To reassemble, follow the disassembly steps in the reverse order, noting the following points:

1. **Push rod set length**
   RHD: 117.5 mm (4.626 in)
   LHD: 119 mm (4.685 in)
2. **Push rod nut torque**
   17 N·m (1.7 kg·m/12 lb ft)
3. **Damper cylinder torque**
   47 N·m (4.8 kg·m/35 lb ft)

Slave Cylinder

Disassembled View

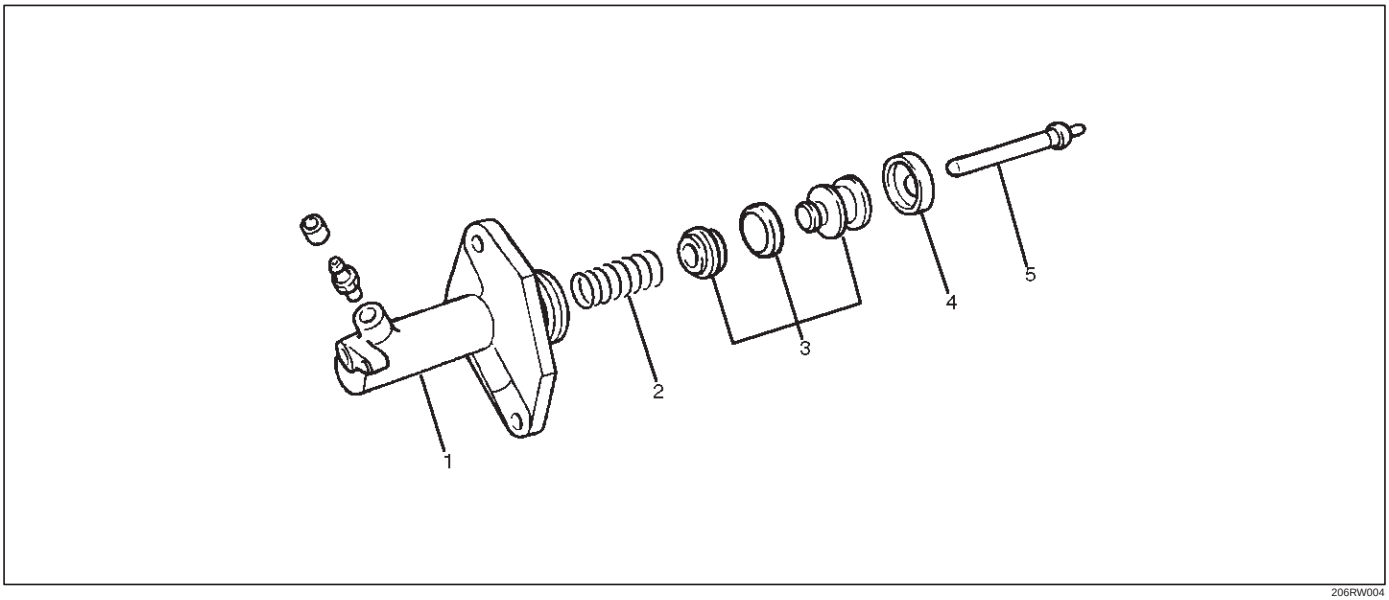

206RW004

Legend

(1) Cylinder Body
(2) Spring
(3) Piston and Piston Cup
(4) Boot
(5) Push Rod

Disassembly

1. Remove boot.
2. Remove push rod.
3. Remove piston and piston cup.
4. Remove spring.

Inspection and Repair

Make the necessary adjustments, repairs, and part replacements if excessive wear or damage is discovered during inspection.

Cylinder Body

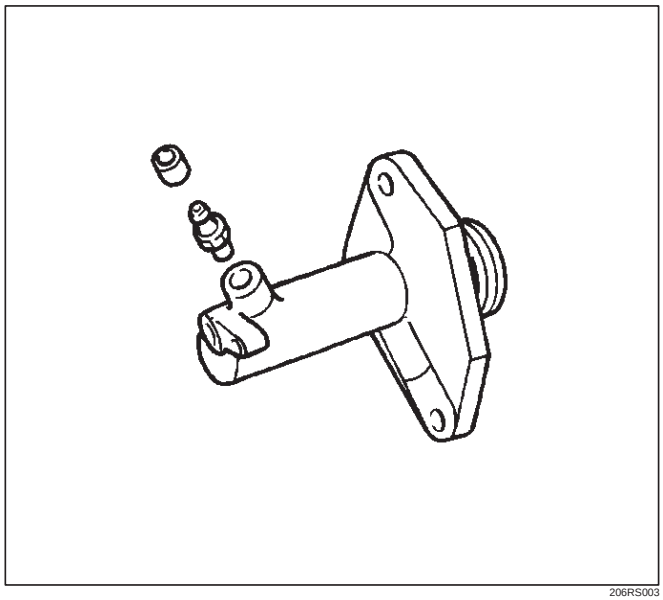

206RS003

1. Clean the cylinder body.
2. Check the fluid return port for restrictions and clean it if necessary.

Piston and Piston Cup

1. Visually inspect the disassembled piston and piston cup for excessive wear and damage.
2. Replace the inner parts with new parts shown in the illustration.

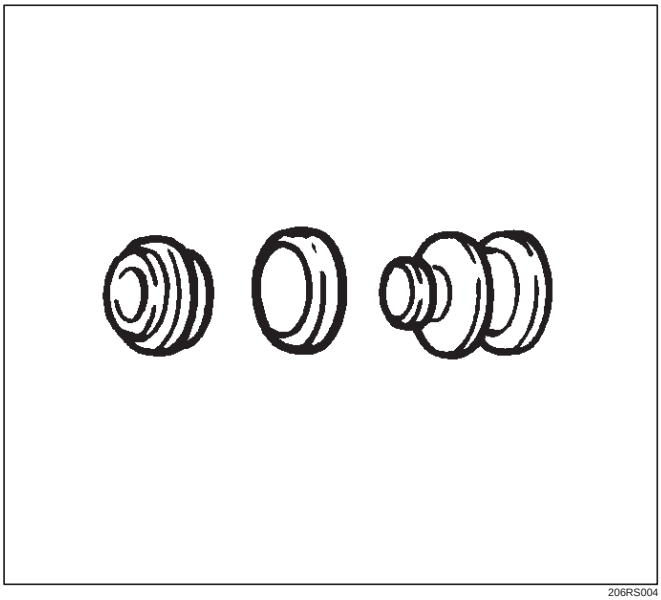

206RS004

3. Measure the clearance between slave cylinder wall and piston.
4. If the measured value exceeds the specified limit, the slave cylinder assembly must be replaced.

Standard: 0.07 mm (0.0028 in)

Limit: 0.15 mm (0.0059 in)

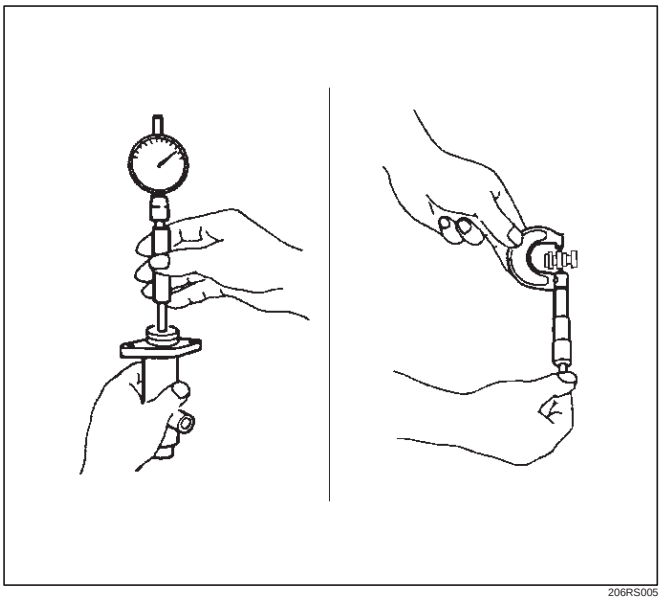

206RS005

Reassembly

To reassemble, follow the disassembly steps in the reverse order, noting the following points:

1. Before installing the parts, apply a thin coat of rubber grease.
2. Install cup in groove in piston with the lip turned to the front of cylinder. Use care so as not to scratch the cylinder.

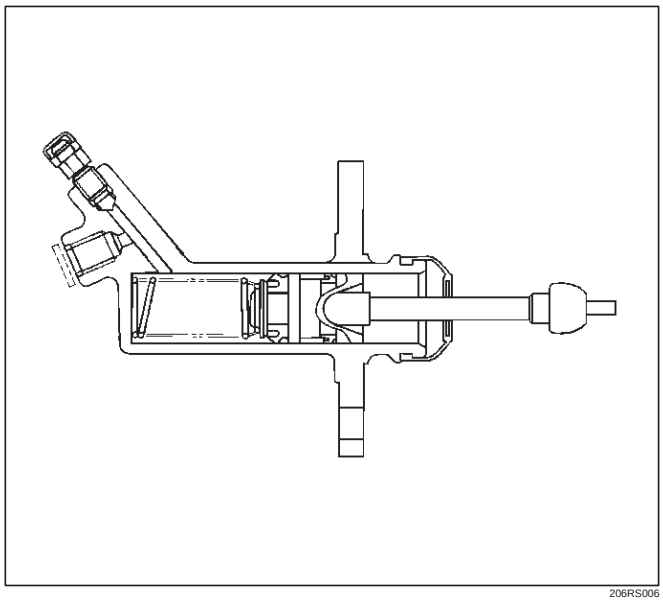

206RS006

Damper Cylinder

Disassembled View

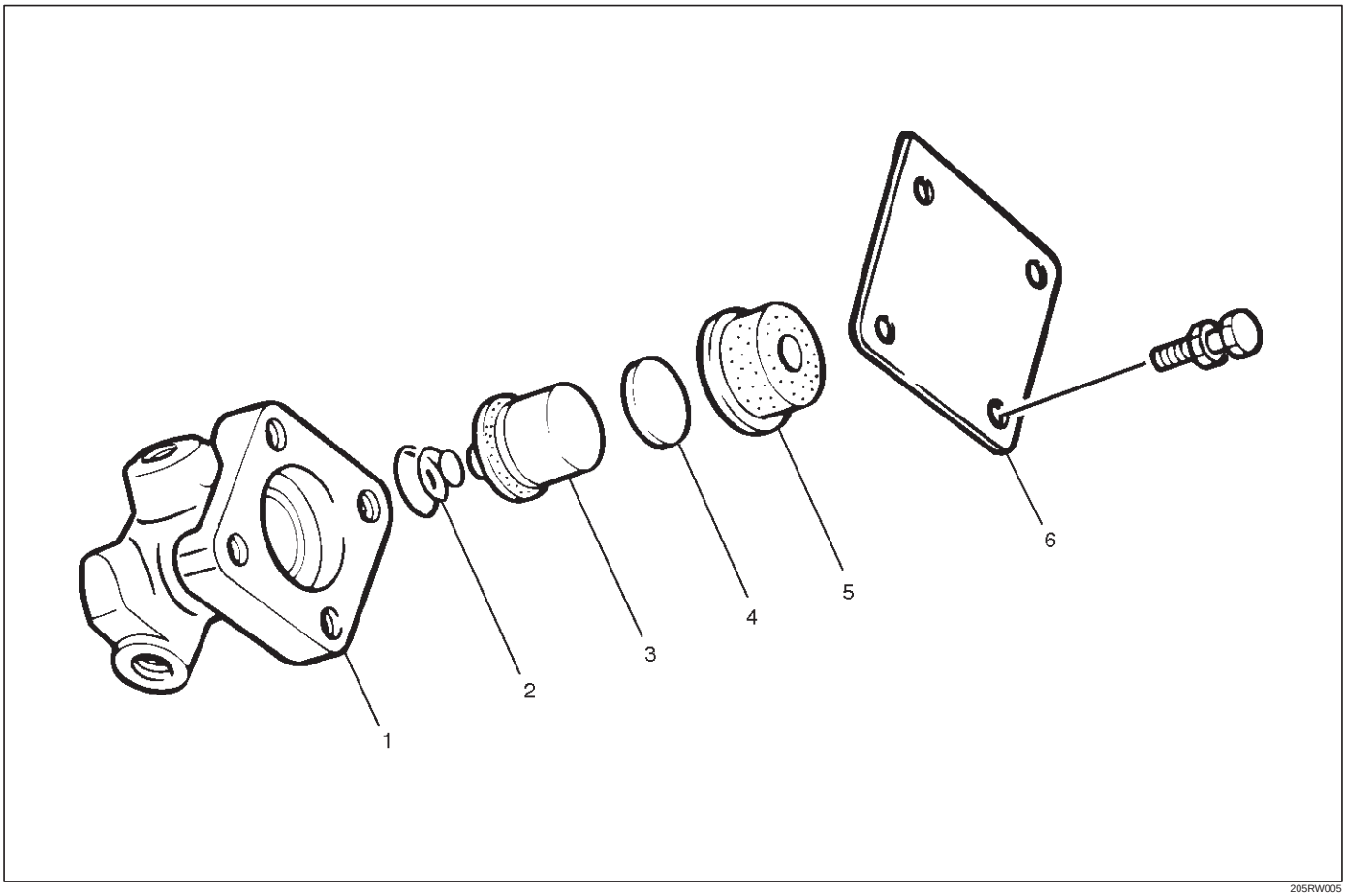

205RW005

Legend

(1) Cylinder Body
(2) Spring
(3) Piston Assembly
(4) Spacer
(5) Damper Rubber
(6) Cover and Gasket

Disassembly

1. Remove cover and gasket.
2. Remove damper rubber.
3. Remove spacer.
4. Remove piston assembly.
5. Remove spring.

Inspection and Repair

Check damper rubber and piston cup for cracks, deformation or damage.
Replace the damper cylinder assembly if necessary.

Reassembly

To assemble, follow the disassembly steps in the reverse order.

Main Data and Specifications

General Specifications

Type	Dry single plate type with diaphragm spring
Size	275 mm (10.83 in)
Pressure plate Outside diameter	332 mm (13.07 in)
Pressure plate Clamping force	7208 N (1621 lb)
Pressure plate Spring finger height	49.9 – 51.9 mm (1.965 – 2.043 in)
Driven plate Outside diameter x inside diameter	275 × 180 mm (10.83 × 6.69 in)
Thickness Clutch disengaged	8.8 mm (0.346 in)
Thickness Clutch engaged	8.3 mm (0.327 in)
Total friction area	339 ×2 cm^2 (52 ×2 in^2)
Clutch control type	Hydraulic
Clutch pedal free play	5 – 15 mm (0.20 – 0.59 in)
Clutch pedal height	LHD: 217 – 227 mm (8.543 – 8.937 in) RHD: (6VE1) 238.5 mm – 248.5 mm (9.390 in – 9.783 in) (4JX1) 231 mm – 241 mm (9.094 in – 9.488 in)
Clutch pedal stroke	152.5 – 162.5 mm (6.004 – 6.398 in) 4JX1, RHD: 145 – 155mm (5.709 – 6.102 in)

Torque Specifications

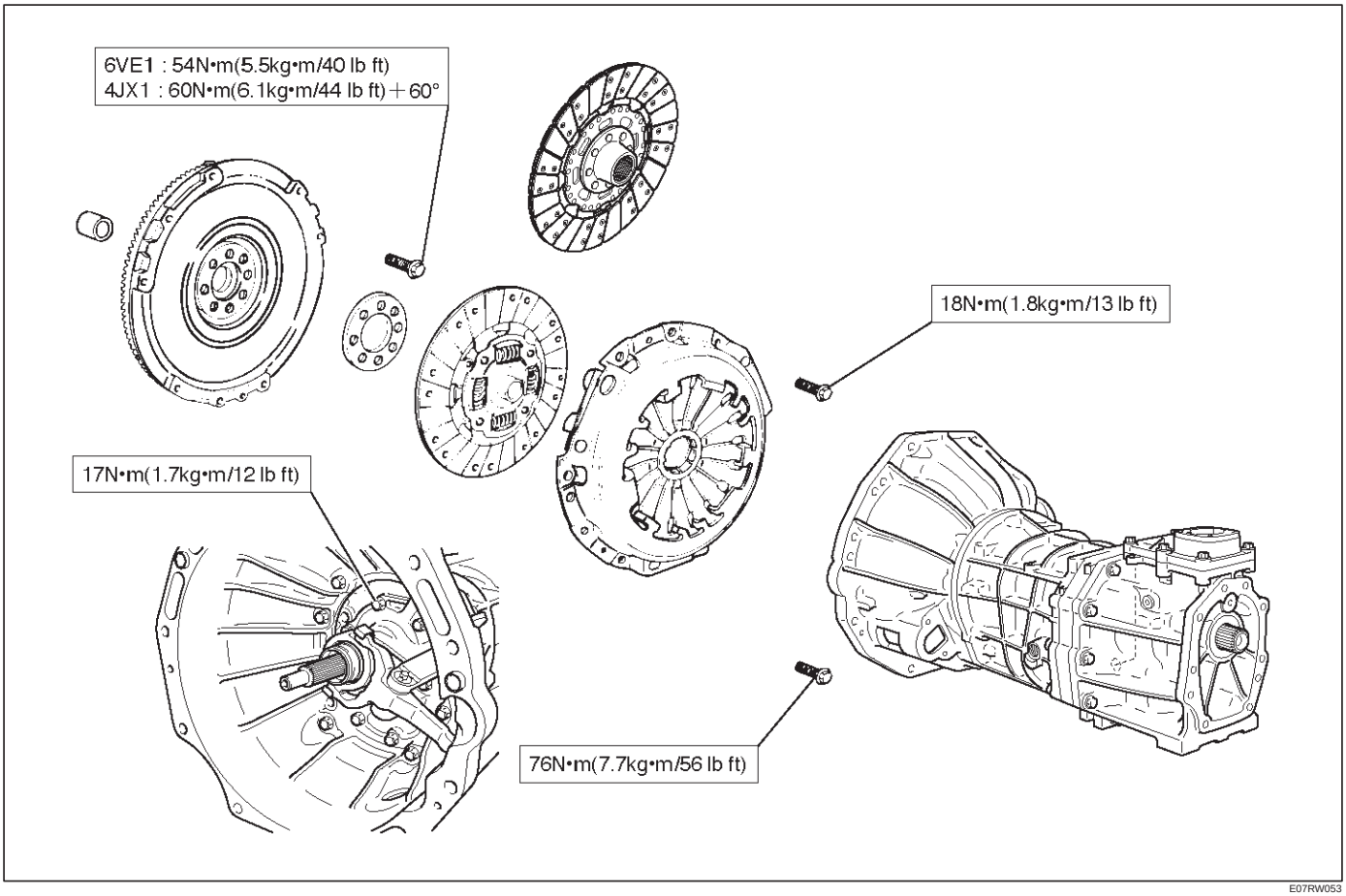

E07RW053

Torque Specifications (Cont'd)

(6VE1 LHD)

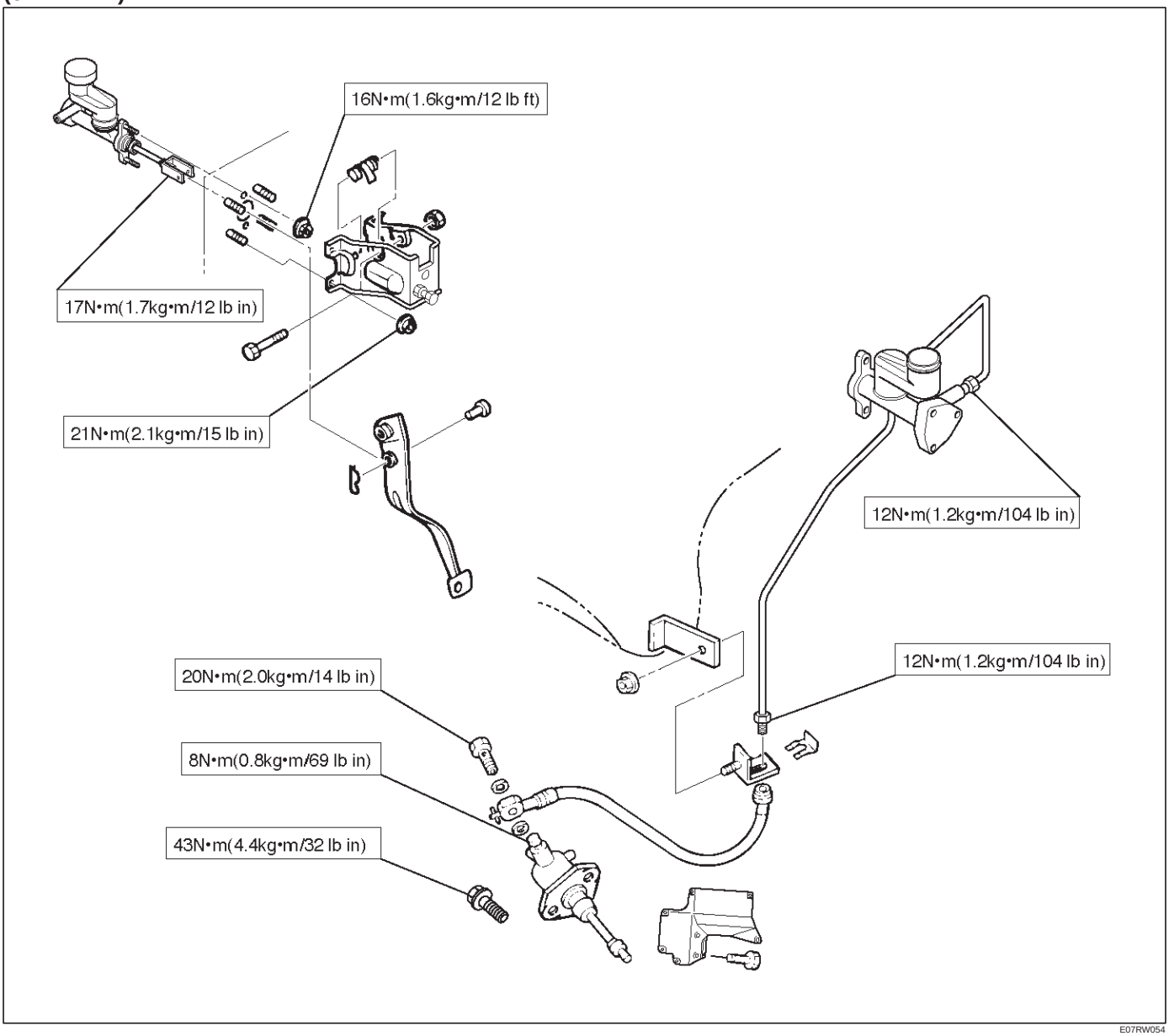

E07RW054

Torque Specifications (Cont'd)

(Except 6VE1 LHD)

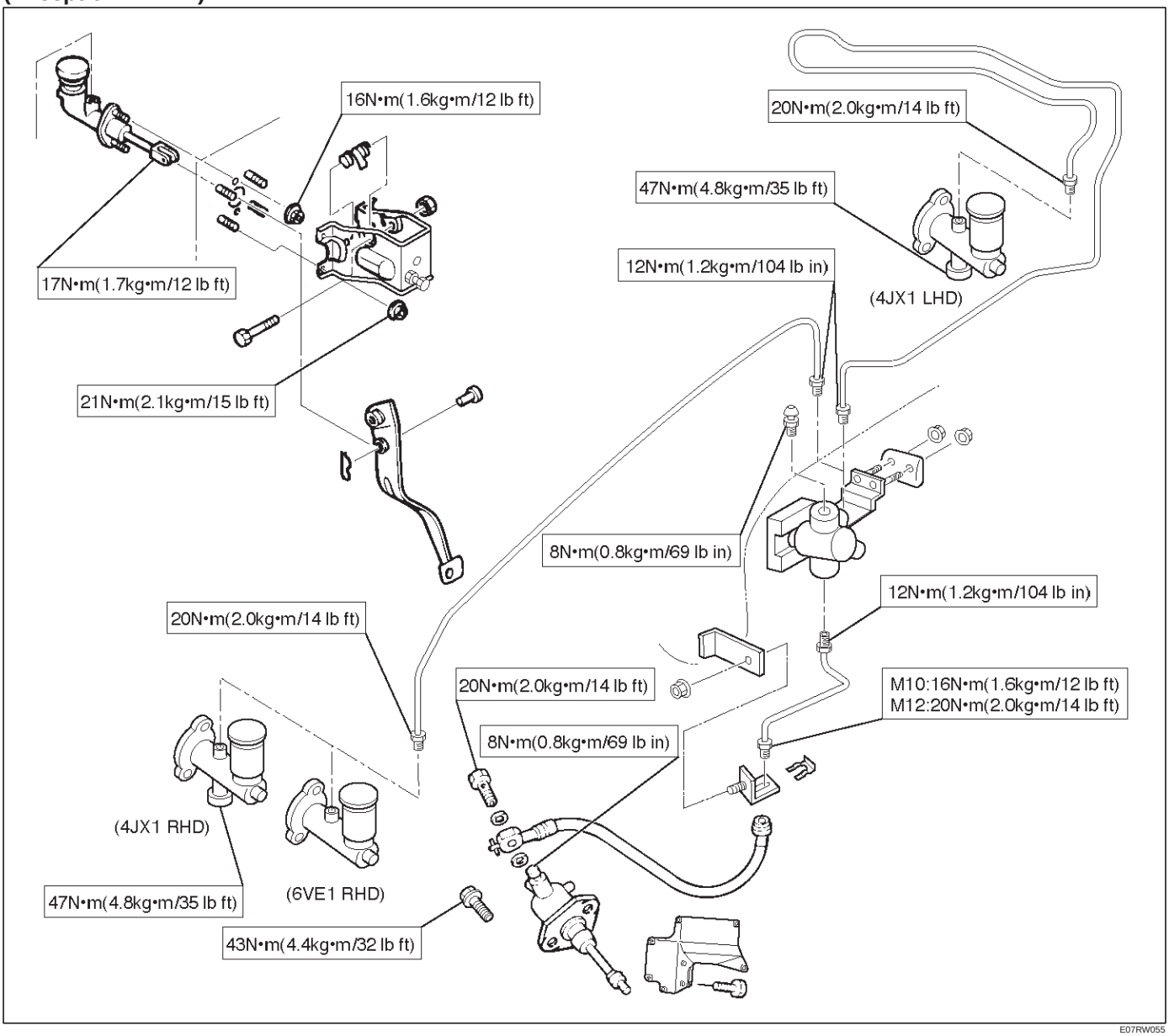

E07RW055

Special Tools

ILLUSTRATION	**TOOL NO.** TOOL NAME
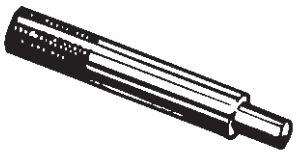 901RS265	**5-85253-001-0** **(J-24547)** Driven plate aligner
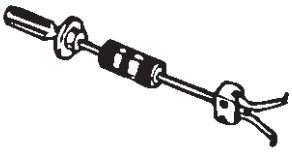 901RS266	**5-8840-2000-0 and** **5-8840-0019-0** **(J-5822 and J-23907)** Pilot bearing remover and Sliding hammer
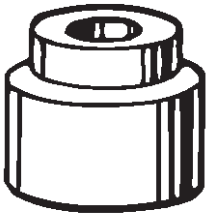 901RS267	**5-8840-0125-0** **(J-26516-A)** Crankshaft pilot bearing installer
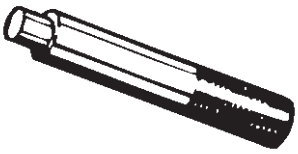 901RS268	**5-8840-0007-0** **(J-8092)** Driver handle

BODY AND ACCESSORIES

CONTENTS

Lighting System 8A
Wiper/Washer System 8B
Entertainment 8C
Wiring System 8D
Meter and Gauge 8E
Body Structure 8F
Seats 8G
Security and Locks 8H
Sun Roof/Convertible Top 8I
Exterior/Interior Trim 8J

LIGHTING SYSTEM

CONTENTS

Service Precaution 8A–2
Headlight Bulb 8A–3
Removal 8A–3
Installation 8A–3
Headlight 8A–4
Headlight and Associated Parts 8A–4
Removal 8A–4
Installation 8A–4
Headlight Adjustment 8A–4
Fog Light Bulb 8A–5
Removal 8A–5
Installation 8A–5
Fog Light Assembly 8A–6
Removal 8A–6
Installation 8A–6
Fog Light Adjustment 8A–6
Clarence Light Bulb 8A–6
Removal 8A–6
Installation 8A–6
Rear Fog Light Bulb (RHD) 8A–7
Removal 8A–7
Installation 8A–7
Taillight Bulb (Body) 8A–7
Removal 8A–7
Installation 8A–7
Taillight Bulb (Bumper) 8A–8
Removal 8A–8
Installation 8A–8
License Plate Light Bulb (Body) 8A–8
Removal 8A–8
Installation 8A–8
License Plate Light Bulb (Bumper) 8A–9
Removal 8A–9
Installation 8A–9
Stoplight Bulb 8A–9
Removal and Installation 8A–9
High Mount Stoplight 8A–10
Removal 8A–10
Installation 8A–10
Front Turn Signal Light Bulb 8A–10
Removal 8A–10
Installation 8A–10
Side Turn Signal Light Bulb 8A–11
Removal 8A–11
Installation 8A–11
Rear Turn Signal Light Bulb 8A–11
Removal 8A–11
Installation 8A–11
Backup Light Bulb 8A–12
Removal 8A–12
Installation 8A–12
Dome Light Bulb 8A–12
Removal 8A–12
Installation 8A–12
Luggage Room Light Bulb 8A–13
Removal 8A–13
Installation 8A–13
Courtesy Light Bulb 8A–13
Removal 8A–13
Installation 8A–13
Map Light Switch/Bulb 8A–14
Removal 8A–14
Installation 8A–14
Ashtray Illumination Bulb 8A–15
Removal 8A–15
Installation 8A–15
Glove Box Illumination Bulb 8A–15
Removal 8A–15
Installation 8A–15
Vanity Mirror Illumination Bulb 8A–16
Removal 8A–16
Installation 8A–16

Starter Switch 8A–17
Removal 8A–17
Installation 8A–17
Lighting Switch (Combination Switch) 8A–18
Removal 8A–18
Installation 8A–18
Fog Light Switch 8A–19
Removal 8A–19
Installation 8A–19
Stoplight Switch (W/O Cruise Control) 8A–20
Removal 8A–20
Installation 8A–20
Brake Switch (W/Cruise Control) 8A–21
Removal 8A–21
Installation 8A–21
Turn Signal Switch (Combination Switch) . . . 8A–21
Removal and Installation 8A–21
Hazard Warning Switch 8A–22
Removal 8A–22
Installation 8A–22
Tailgate Switch 8A–23
Removal 8A–23
Installation 8A–23
Door Switch 8A–23
Removal 8A–23
Installation 8A–23
Rear Defogger Switch 8A–24
Removal 8A–24
Installation 8A–24
Seat Heater Switch 8A–25
Removal 8A–25
Installation 8A–25
Key Remind Switch (Starter Switch) 8A–25
Removal and Installation 8A–25
Illumination Controller 8A–26
Removal 8A–26
Installation 8A–26
Power/Winter Switch 8A–27
Removal 8A–27
Installation 8A–27
Main Data and Specifications 8A–28

Service Precaution

WARNING: IF SO EQUIPPED WITH A SUPPLEMENTAL RESTRAINT SYSTEM (SRS), REFER TO THE SRS COMPONENT AND WIRING LOCATION VIEW IN ORDER TO DETERMINE WHETHER YOU ARE PERFORMING SERVICE ON OR NEAR THE SRS COMPONENTS OR THE SRS WIRING. WHEN YOU ARE PERFORMING SERVICE ON OR NEAR THE SRS COMPONENTS OR THE SRS WIRING, REFER TO THE SRS SERVICE INFORMATION. FAILURE TO FOLLOW WARNINGS COULD RESULT IN POSSIBLE AIR BAG DEPLOYMENT, PERSONAL INJURY, OR OTHERWISE UNNEEDED SRS SYSTEM REPAIRS.

CAUTION: Always use the correct fastener in the proper location. When you replace a fastener, use ONLY the exact part number for that application. ISUZU will call out those fasteners that require a replacement after removal. ISUZU will also call out the fasteners that require thread lockers or thread sealant. UNLESS OTHERWISE SPECIFIED, do not use supplemental coatings (Paints, greases, or other corrosion inhibitors) on threaded fasteners or fastener joint interfaces. Generally, such coatings adversely affect the fastener torque and the joint clamping force, and may damage the fastener. When you install fasteners, use the correct tightening sequence and specifications. Following these instructions can help you avoid damage to parts and systems.

Headlight Bulb

Removal

1. Disconnect the battery ground cable.
2. Disconnect the connector.
3. Remove the cap(3) while turning it counter clockwise.
4. Remove the cover(2).
5. Pull the bulb(1) out from the headlight body.

CAUTION: The halogen bulb develops a very high temperature. Do not touch the glass portion. If any stain is on the glass surface, It will scorch and the glass will be damaged.

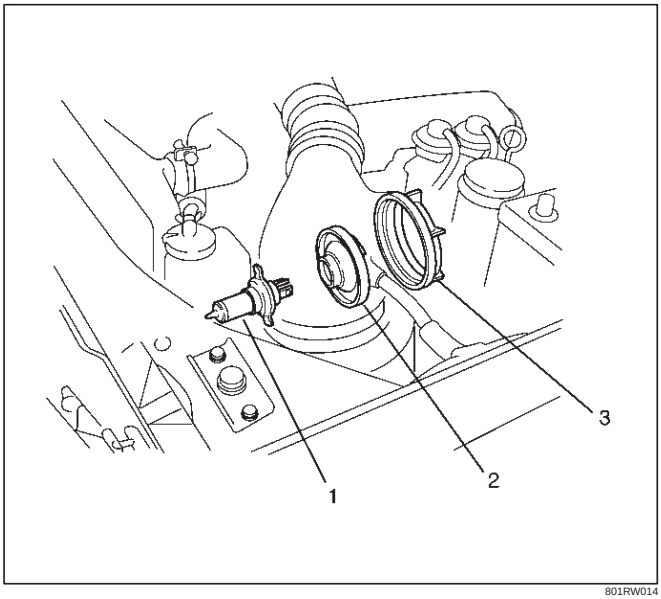

801RW014

Installation

To install, follow the removal steps in the reverse order.

Headlight

Headlight and Associated Parts

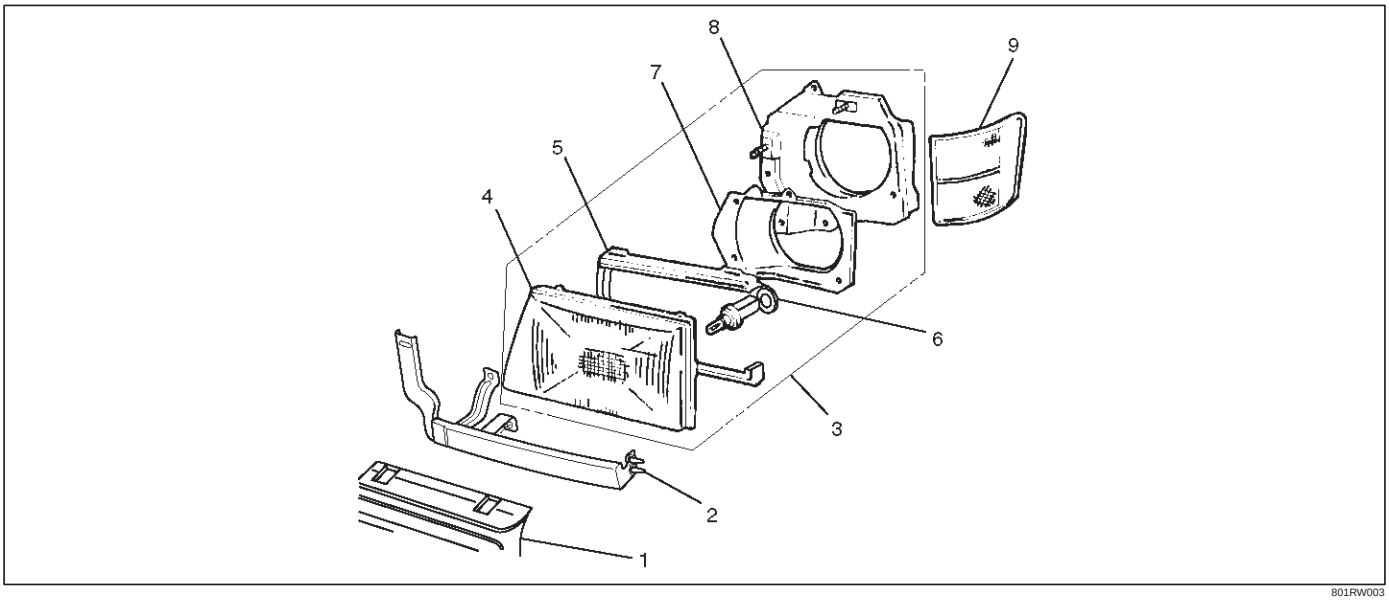

801RW003

Legend

(1) Radiator Grille
(2) Front End Lower Panel
(3) Headlight Assembly
(4) Headlight
(5) Headlight Rim
(6) Headlight Bulb
(7) Rear Cover
(8) Bracket
(9) Front Combination Light

Removal

1. Disconnect the battery ground cable.
2. Remove the screw and pull out the two projecting portions on the fender to remove the front combination light.
3. Remove five clips and two screws to remove the radiator grille.
4. Remove two screws to remove the front end lower panel(2).
5. Remove two bolts and two nuts to remove the headlight assembly (with bracket).
6. Remove the headlight bulb.
7. Remove two screws, two nuts and the spring for the headlight aim adjustment to remove the bracket.
8. Remove four screws to remove the rear cover.
9. Remove the headlight rim.
10. Remove the headlight.

Installation

To install, follow the removal steps in the reverse order.

CAUTION: After installing the headlight, be sure to adjust the headlight aim.

Headlight Adjustment

Preparation

Place the unloaded vehicle on a level surface and check to see if the inflation pressure of the tires is correct, the lenses are clean, and the battery is sufficiently charged. Adjust the aim with the headlight tester, if necessary. When adjusting, follow the procedure of the tester manufacturer's.

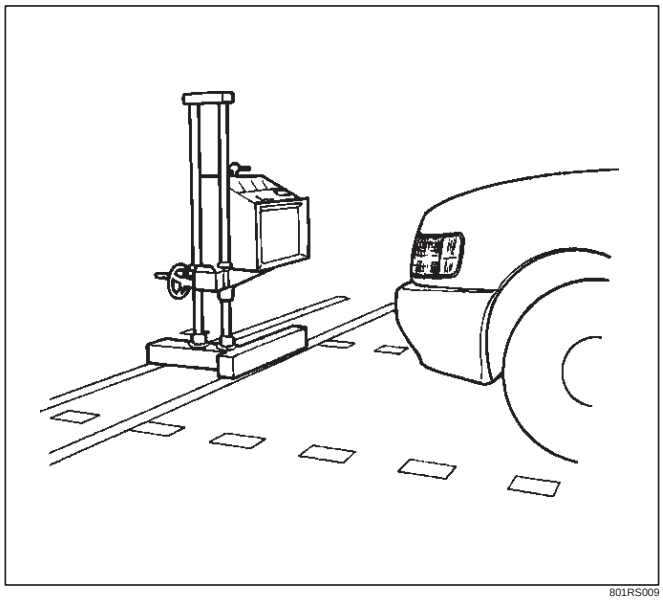

801RS009

Vertical adjustment

Use a screwdriver for vertical adjustment.

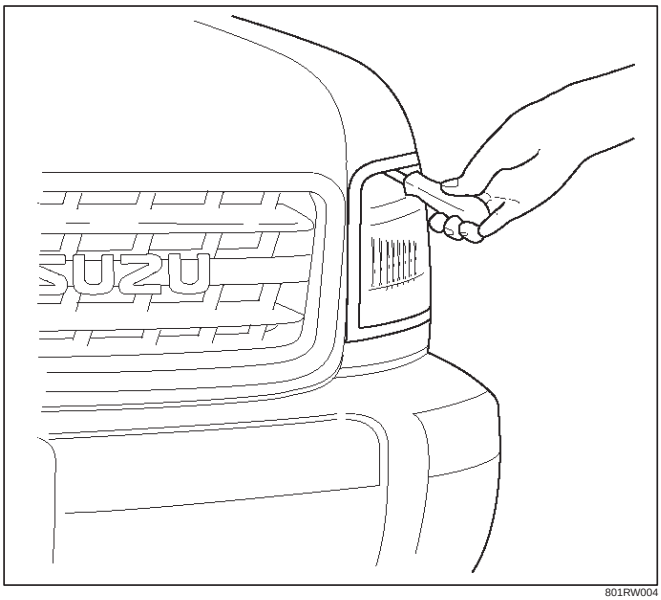

801RW004

Horizontal adjustment

Use a screwdriver for horizontal adjustment.

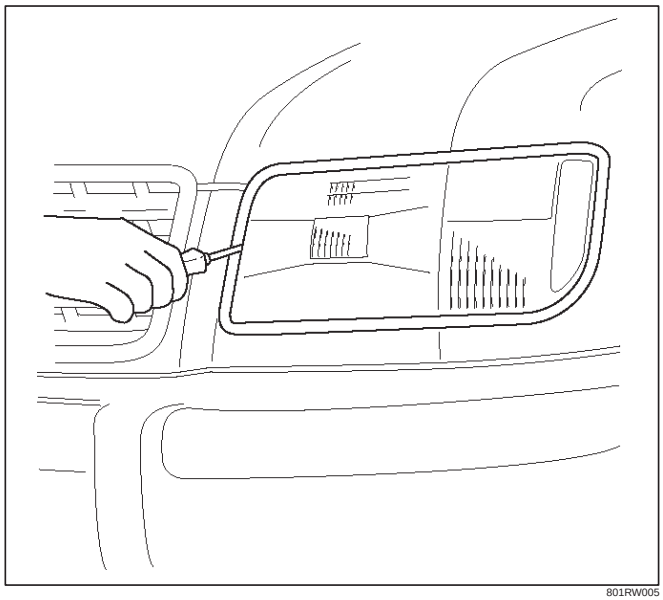

801RW005

Fog Light Bulb

Removal

1. Disconnect the battery ground cable.
2. Open the rear cover(1) of the case.
3. Remove the dust cover.
4. Disconnect the bulb connector.
5. Remove the clip(3).
6. Remove the fog light bulb(2).

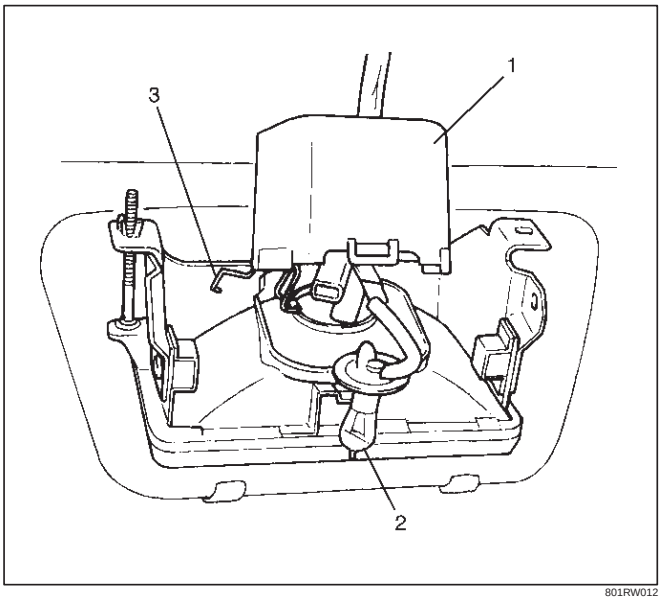

801RW012

Installation

1. Install the fog light bulb(1).
2. Install the clip(2).
3. Connect the bulb connector.
4. Install the dust cover.
5. Close the rear cover(3) of the case.

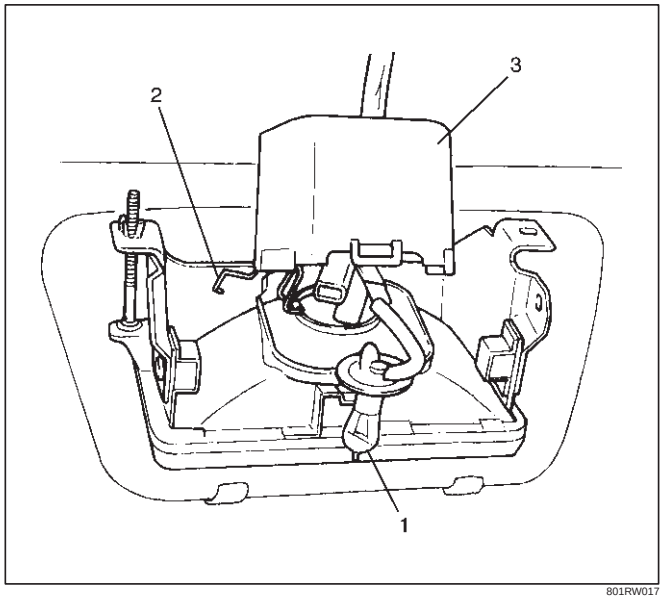

801RW017

6. Connect the battery ground cable.

Fog Light Assembly

Removal

1. Disconnect the battery ground cable.
2. Remove two nuts from the bracket.
3. Disconnect the connector.
4. Remove the fog light assembly (1).

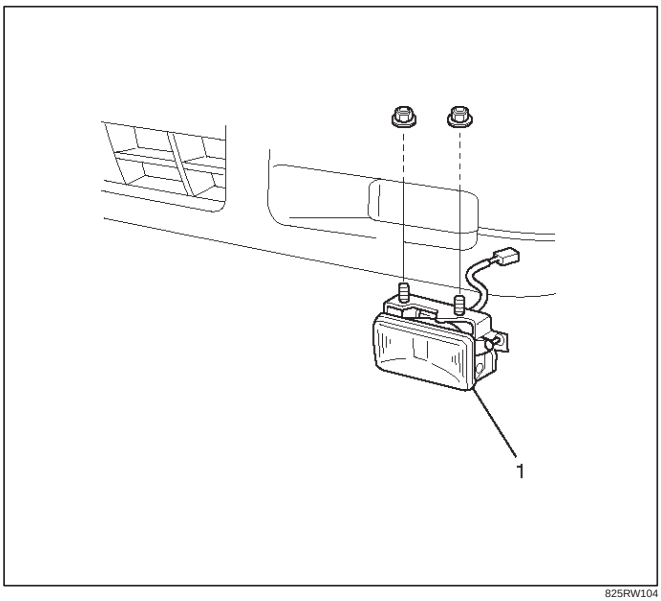

825RW104

CAUTION: After installing the fog light, be sure to adjust the fog light aim.

Fog Light Adjustment

Turn the adjusting screw with a screwdriver to adjust the aim of the fog light vertically.

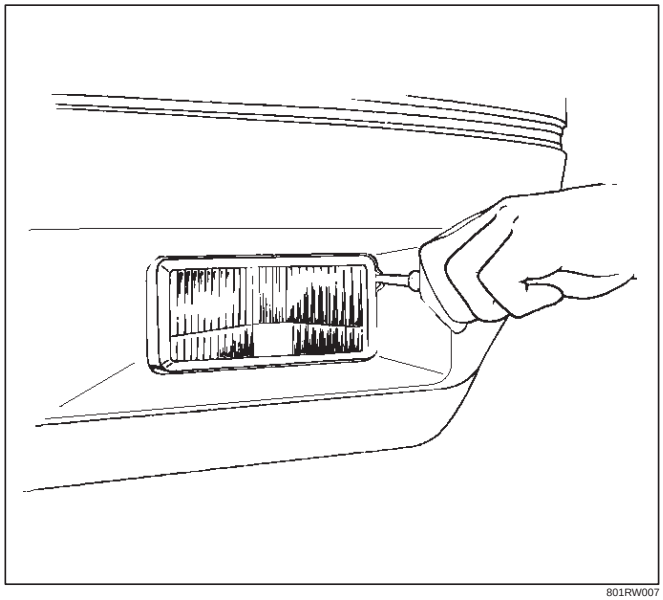

801RW007

Installation

To install, follow the removal steps in the reverse order.

Clarence Light Bulb

Removal

1. Disconnect the battery ground cable.
2. Remove the screw at the upper portion of the light bracket and then remove the bracket from the fender.
3. Remove the front combination light assembly(1).
4. Remove the front side marker light socket(2) by turning it counterclockwise.
5. Pull out the bulb(3) from the socket.

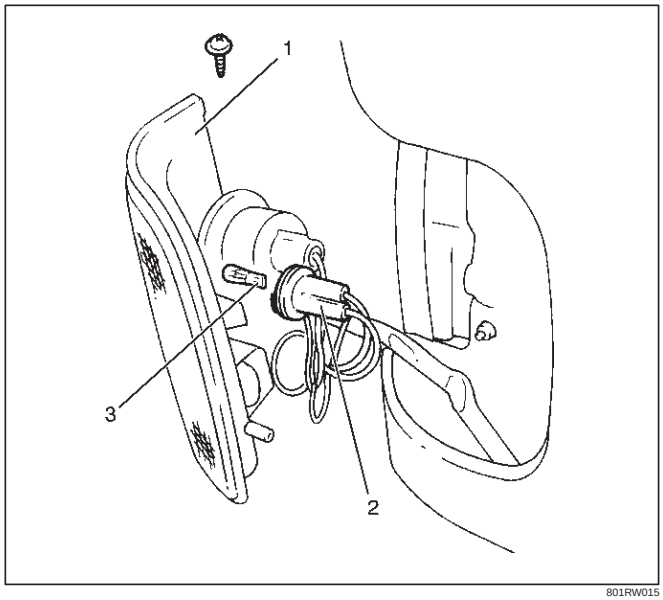

801RW015

Installation

To install, follow the removal steps in the reverse order.

Rear Fog Light Bulb (RHD)

Removal

1. Disconnect the battery ground cable.
2. Remove three screws and release locks at two locations to remove the rear combination light assembly(2).
3. Remove the socket(3) by turning it counterclockwise.
4. Turn the bulb(1) counterclockwise while pushing it to remove it from the socket.

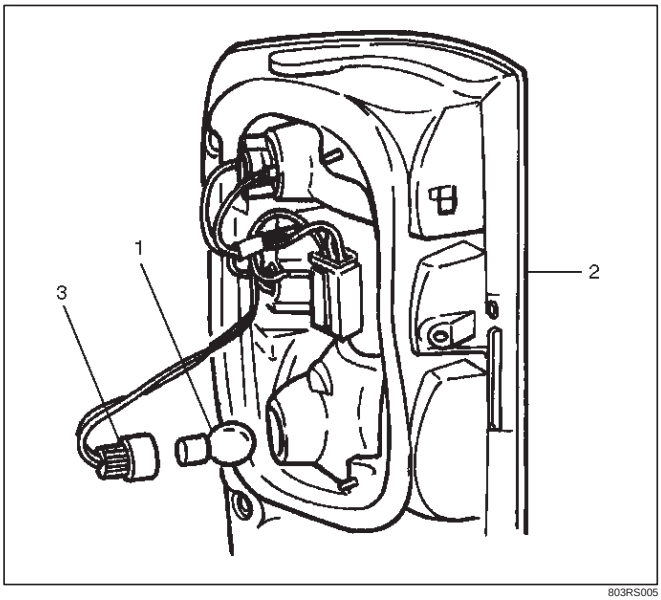

803RS005

Installation

To install, follow the removal steps in the reverse order.

Taillight Bulb (Body)

Removal

1. Disconnect the battery ground cable.
2. Remove three screws and release locks at two locations to remove the rear combination light assembly(2).
3. Remove the socket(3) by turning it counterclockwise.
4. Turn the bulb(1) counterclockwise while pushing it to remove it from the socket.

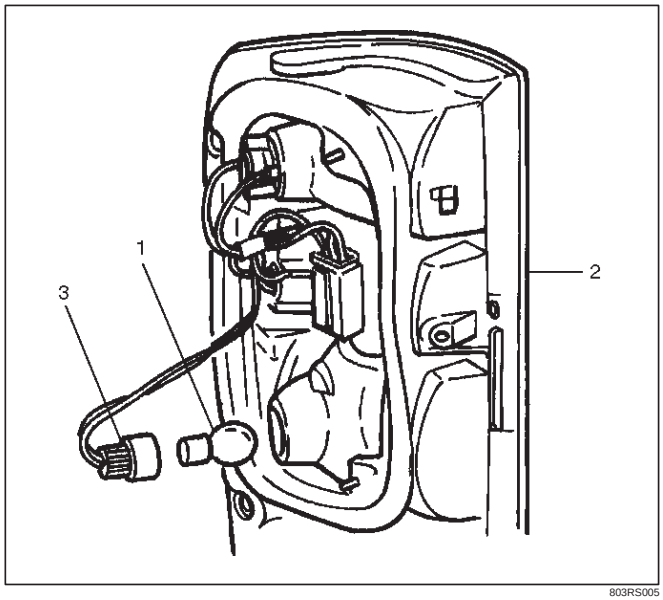

803RS005

Installation

To install, follow the removal steps in the reverse order.

Taillight Bulb (Bumper)

Removal

1. Disconnect the battery ground cable.
2. Remove two screws to remove the rear combination light assembly(2).
3. Remove the socket(1) by turning it counterclockwise.
4. Remove the bulb(3) by turning it counterclockwise while pushing.

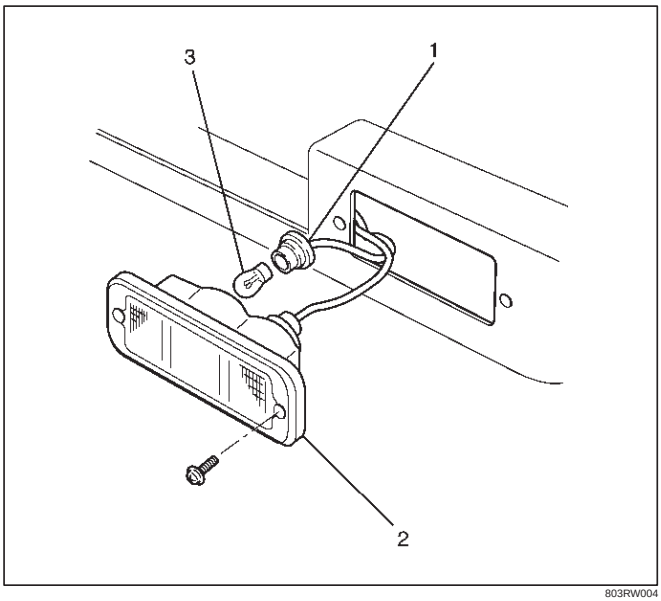

803RW004

Installation

To install, follow the removal steps in the reverse order.

License Plate Light Bulb (Body)

Removal

1. Disconnect the battery ground cable.
2. Remove two screws to remove the lens(2).
3. Pull out the bulb(1) from the socket.

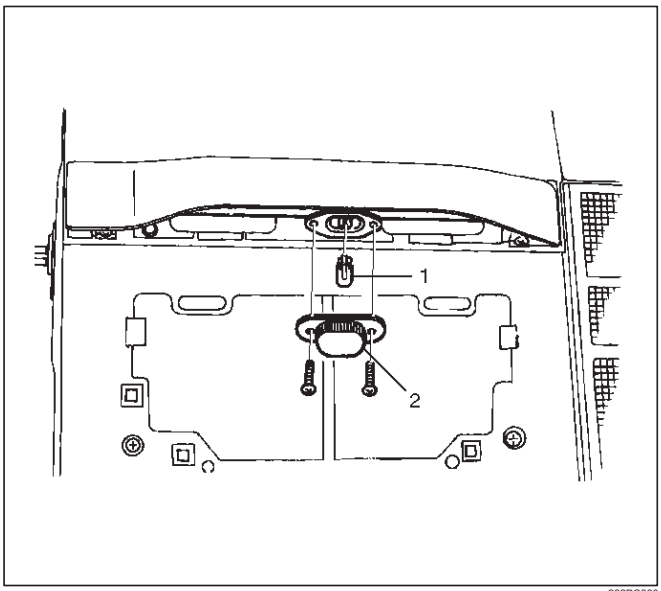

803RS006

Installation

To install, follow the removal steps in the reverse order.

License Plate Light Bulb (Bumper)

Removal

1. Disconnect the battery ground cable.
2. Remove two screws to remove the license plate light(1).
3. Pull out the bulb(3) from the socket(2).

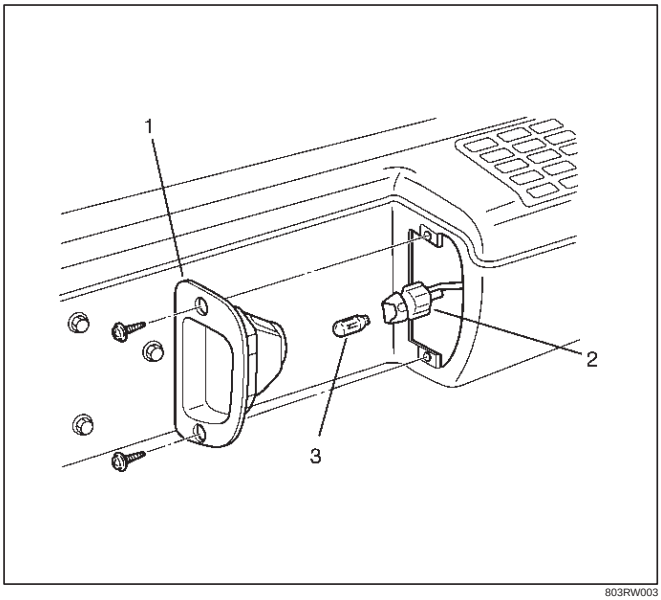

803RW003

Installation

To install, follow the removal steps in the reverse order.

Stoplight Bulb

Removal and Installation

Refer to the Taillight Bulb in this section.

High Mount Stoplight

Removal

1. Disconnect the battery ground cable.
2. Remove the clips(2).
3. Pull out the high mount stoplight(1).
4. Remove the connector.
5. Remove the high mount stoplight.

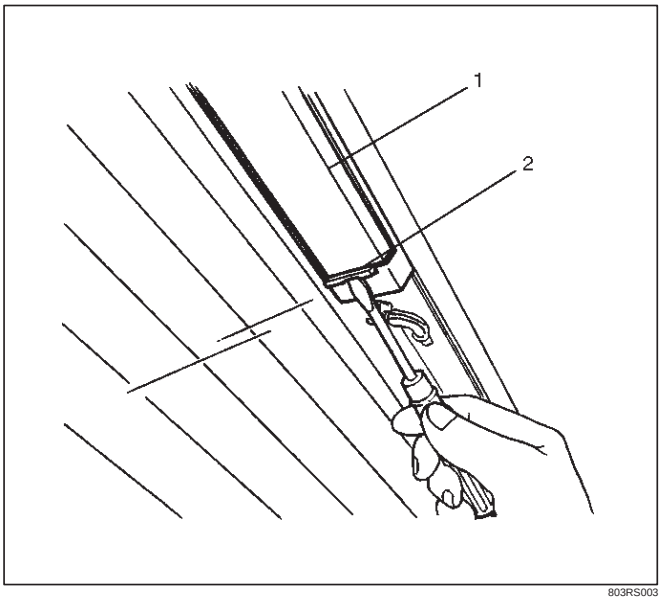

803RS003

Installation

1. Insert the clips(1)(3) into the high mount stoplight(2).
2. Reconnect the connector.
3. Install the high mount stoplight.

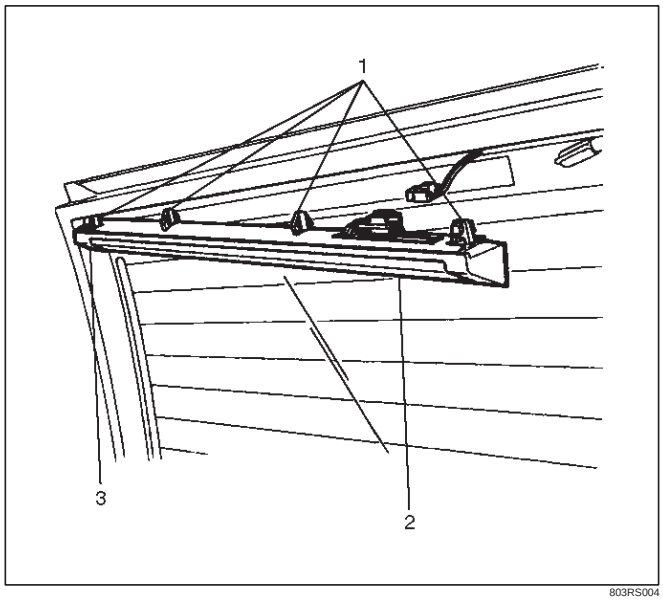

803RS004

Front Turn Signal Light Bulb

Removal

1. Disconnect the battery ground cable.
2. Remove the screw at the upper portion of the light bracket, and remove the bracket from the fender.
3. Remove the front combination light(1).
4. Remove the turn signal light socket(3) by turning it counterclockwise.
5. Remove the bulb(2) by turning it counterclockwise while pushing it at the same time.

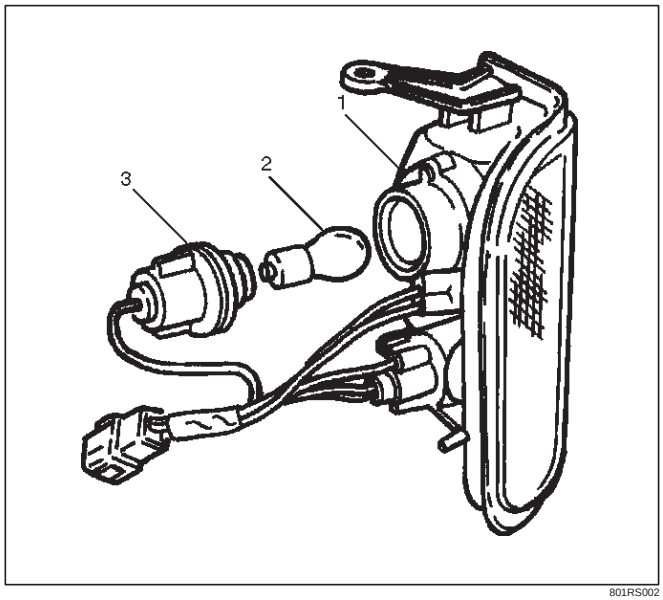

801RS002

Installation

To install, follow the removal steps in the reverse order.

Side Turn Signal Light Bulb

Removal

1. Disconnect the battery ground cable.
2. Pull the light/bulb(1) toward you while pushing the light housing in the rear direction of the vehicle to release its lock.
3. Remove the bulb by turning it counterclockwise while pushing it at the same time.

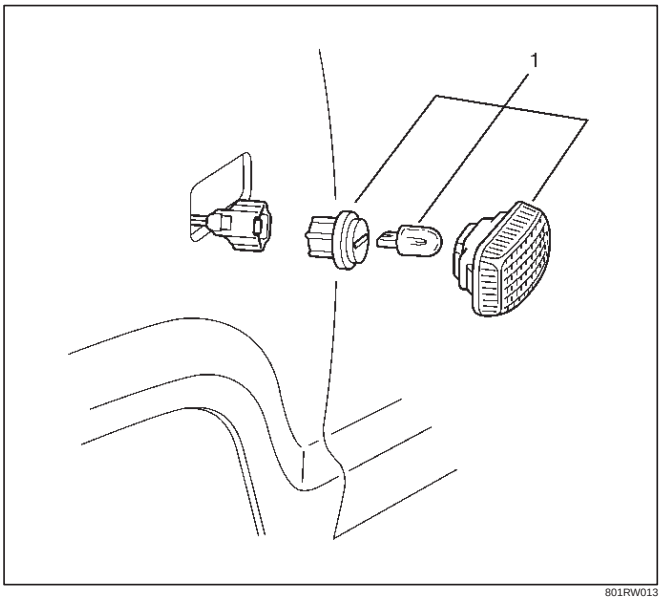

801RW013

Installation

To install, follow the removal steps in the reverse order.

Rear Turn Signal Light Bulb

Removal

1. Disconnect the battery ground cable.
2. Remove the three screws and release the lock at two positions.
3. Remove the rear combination light(3).
4. Remove the turn signal light socket/bulb(1) by turning it counterclockwise.
5. Remove the bulb(2) by turning it counterclockwise while pushing it at the same time.

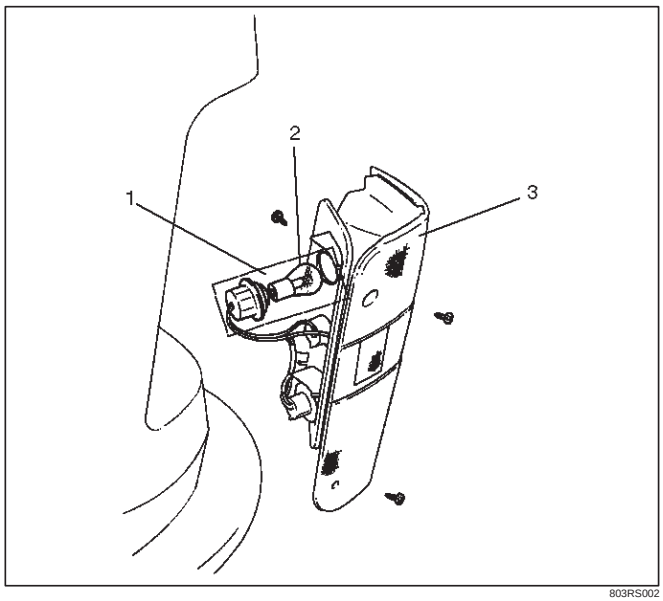

803RS002

Installation

To install, follow the removal steps in the reverse order.

Backup Light Bulb

Removal

1. Disconnect the battery ground cable.
2. Remove three screws and release the lock at two positions.
3. Remove the rear combination light(3).
4. Remove the backup light socket/bulb(1) by turning it counterclockwise.
5. Remove the bulb(2) by turning it counterclockwise while pushing it at the same time.

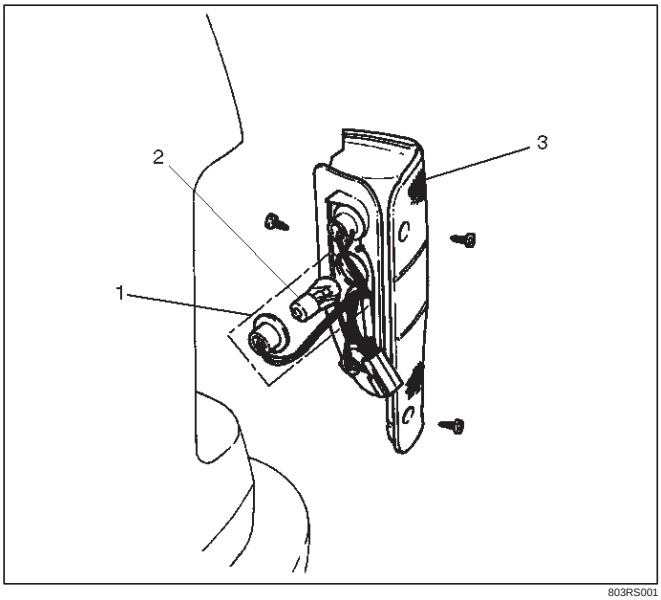

803RS001

Installation

To install, follow the removal steps in the reverse order.

Dome Light Bulb

Removal

1. Disconnect the battery ground cable.
2. Remove the lens(2) by releasing the locks at three locations.
3. Remove the bulb(1).

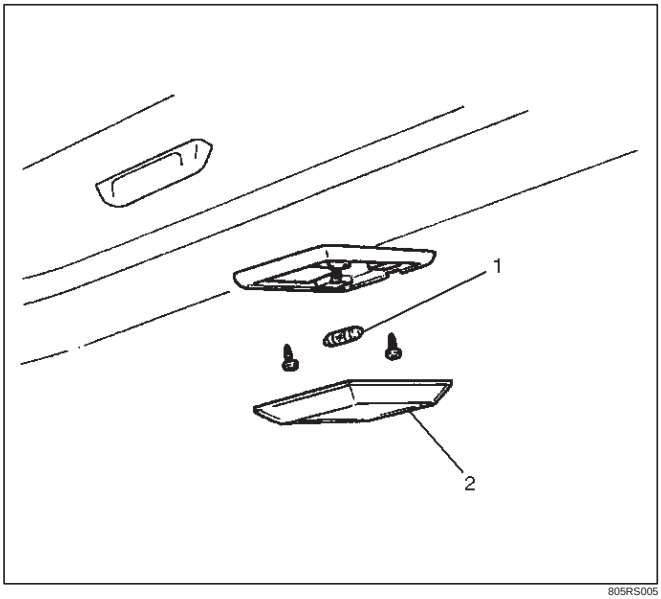

805RS005

Installation

To install, follow the removal steps in the reverse order.

Luggage Room Light Bulb

Removal

1. Disconnect the battery ground cable.
2. Remove the lens(2) by releasing the locks at four locations.
3. Remove the bulb(1).

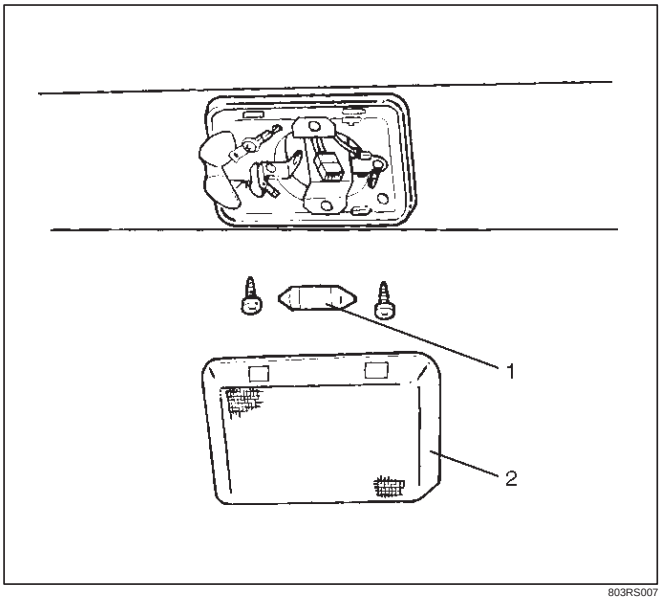

803RS007

Installation

To install, follow the removal steps in the reverse order.

Courtesy Light Bulb

Removal

1. Disconnect the battery ground cable.
2. Remove two screws to remove the lens(1).
3. Pull out the bulb(2) from the socket.

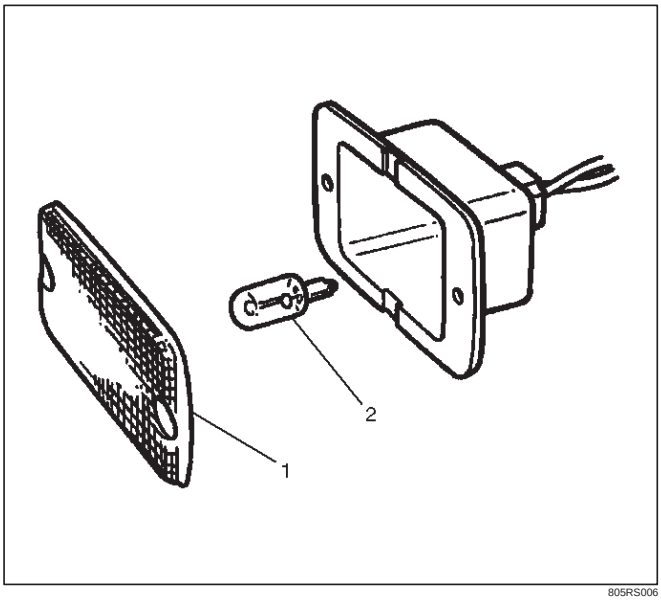

805RS006

Installation

To install, follow the removal steps in the reverse order.

Map Light Switch/Bulb

Removal

1. Disconnect the battery ground cable.
2. Pull the map light body downward to release the lock.
3. Disconnect the connectors of the map light and the sun roof switch.
4. Remove the map light switch.
5. Turn the socket counterclockwise to remove it.
6. Pull out the bulb from the socket.

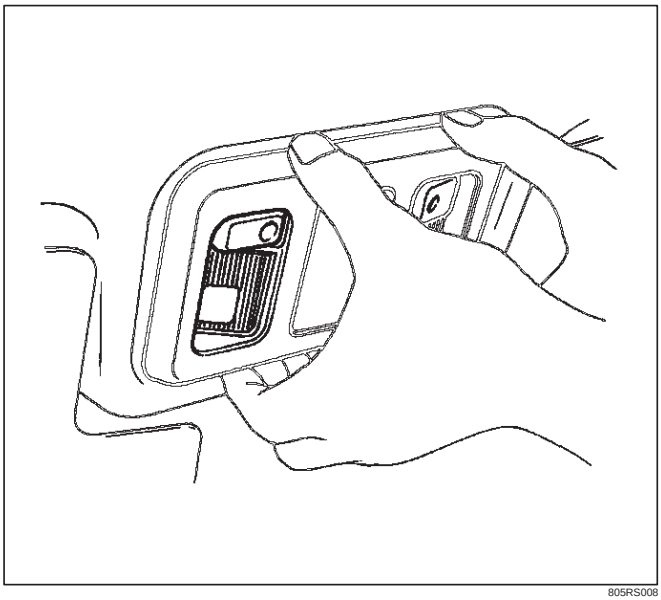

805RS008

Installation

To install, follow the removal steps in the reverse order.

Ashtray Illumination Bulb

Removal

1. Disconnect the battery ground cable.
2. Removal eight screws to remove the instrument cluster panel(1).
3. Remove the ashtray(5).
4. Remove four screws to remove the audio box(4).
5. Remove two screws to remove the ashtray guide(2).
6. Turn the socket counterclockwise to remove it then pull out the bulb(3).

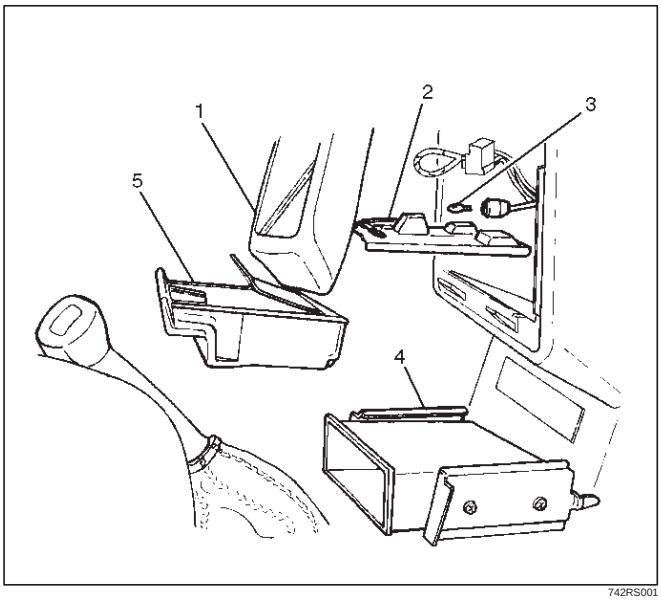

742RS001

Installation

To install, follow the removal steps in the reverse order.

Glove Box Illumination Bulb

Removal

1. Disconnect the battery ground cable.
2. Open the glove box lid, and then pull out the bulb(1).

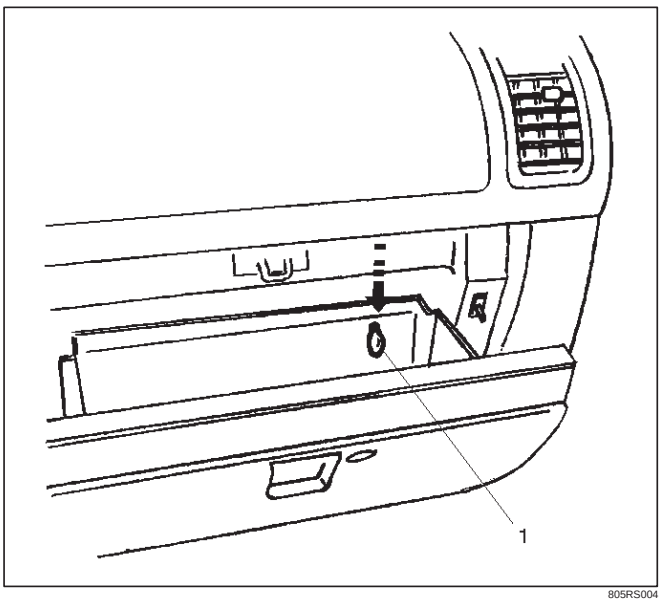

805RS004

Installation

To install, follow the removal steps in the reverse order.

Vanity Mirror Illumination Bulb

Removal

1. Disconnect the battery ground cable.
2. Remove the lens(2).
3. Remove the bulb(1).

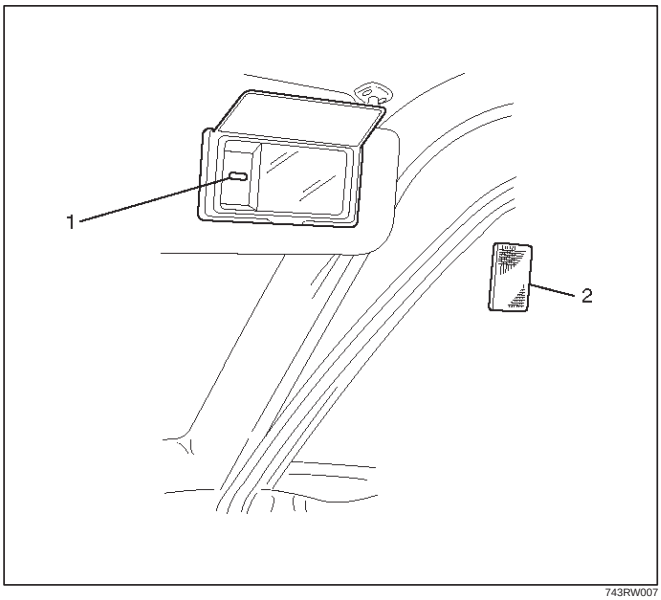

743RW007

Installation

To install, follow the removal steps in the reverse order.

Starter Switch

Removal

1. Disconnect the battery ground cable.
2. Remove the front console assembly(1).
   Refer to Instrument Panel Assembly in Body Structure section.
3. Remove the lower cluster assembly(2).
   Refer to the Instrument Panel Assembly in Body Structure section.
4. Remove the instrument panel driver lower cover assembly(3).
   Refer to the Instrument Panel Assembly in Body Structure section.

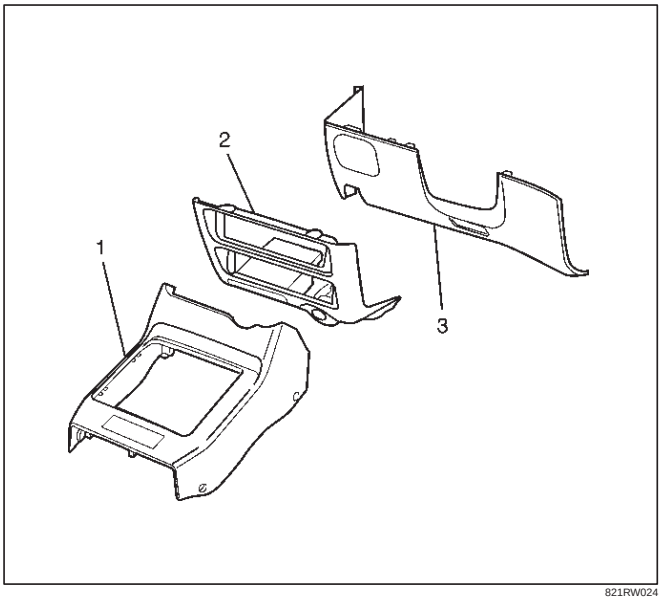

821RW024

5. Remove seven screws to remove the steering cowl(6).
6. Disconnect the connector, remove the screw(4) and then remove the starter switch(5).

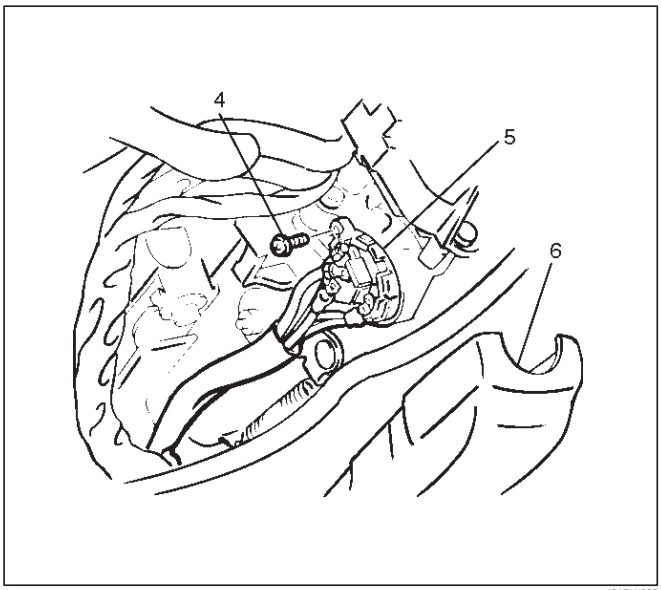

431RW005

Installation

To install, follow the removal steps in the reverse order noting the following point.

1. When installing the steering cowl(10), be sure to pass the harnesses through the route as shown in the figure so that the starter switch harness(7), the combination switch harness(8) and the inflator module harness(9) will not get caught.

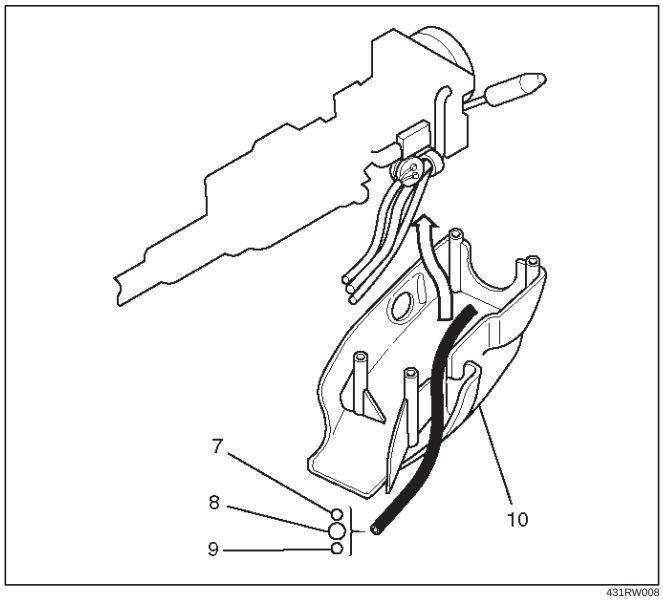

431RW008

Lighting Switch (Combination Switch)

Removal

1. Disconnect the battery ground cable.
2. Remove the instrument panel driver lower cover(5).
   Refer to the Instrument Panel Assembly in Body Structure section.
3. Remove seven screws to remove the steering cowl(4).
4. Disconnect the SDM (air bag controller) connector located at lower of the instrument panel driver lower cover.
5. Remove four fixing screws and disconnect the driver inflator module connector to remove the driver inflator module(3).

CAUTION: When carrying a live inflator module, make sure the bag opening is pointed away from you. In case of an accidental deployment, the bag will then deploy with minimal chance of injury. Never carry the inflator module by the wires or connector on the underside of the module.

When placing a live inflator module on a bench or other surface, always face the bag and trim cover up, away from the surface. This is necessary so that a free space is provided to allow the air bag to expand in the unlikely event of accidental deployment.

6. Remove the steering wheel(2).
   Refer to the Steering Wheel in Steering section.
7. Disconnect the SRS coil assembly connector, remove four fixing screws to remove the SRS coil assembly(1).
8. Disconnect the lighting switch connector, remove four fixing screws to remove the lighting switch(6).

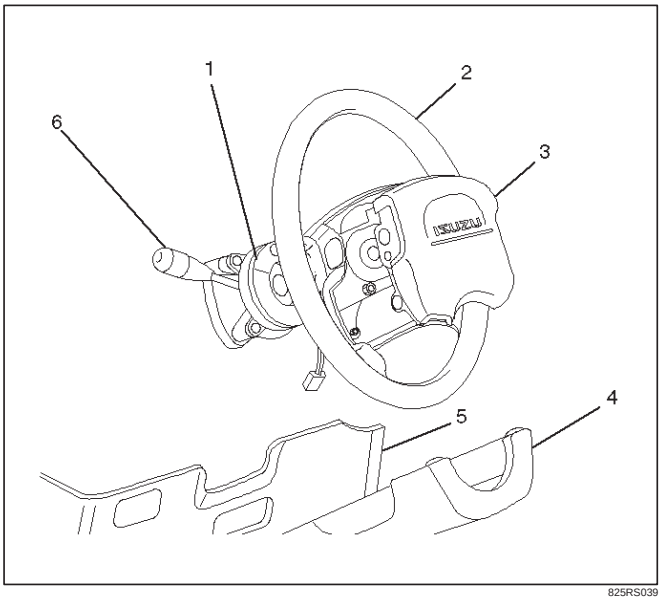

825RS039

Installation

To install, follow the removal steps in the reverse order, noting the following points.

1. Check to see if the vehicle is in the straight driving condition and turn the rotary section of the SRS coil assembly provided to the upper surface of the lighting switch (combination switch) counterclockwise fully until it stops.
   Then from where it stops, turn it back about 3 rotations to set the alignment marks(7) together before installing the steering wheel.

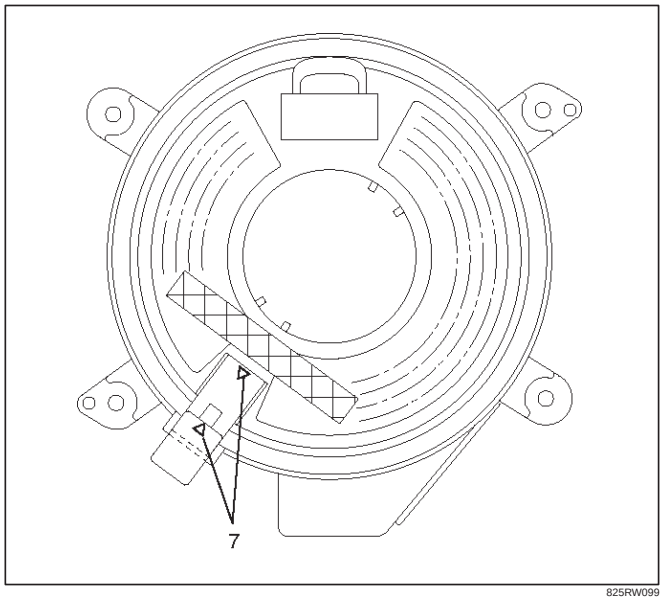

825RW099

2. Tighten the steering shaft nut to the specified torque.

   Torque: 34 N·m (3.5 kg·m/25 lb ft)

3. When connect the double lock type of inflator module connector, insert the connector completely and lock at outside.
   Imperfect locking may cause malfunction of SRS system circuit.
4. When installing the steering cowl(11), be sure to pass the harnesses through the route as shown in the figure so that the starter switch harness(8), the combination switch harness(9) and inflator module harness(10) will not get caught.

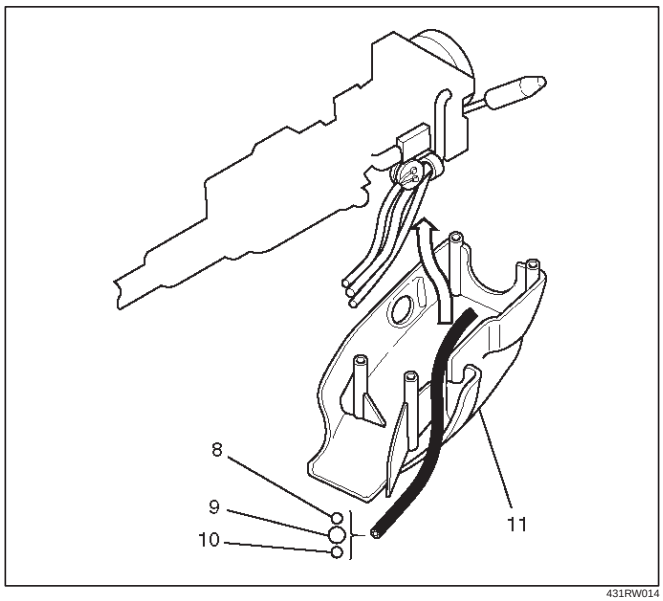

431RW014

Fog Light Switch

Removal

1. Disconnect the battery ground cable.
2. Remove the front console assembly(1).
   Refer to the Instrument Panel Assembly in Body Structure section.
3. Remove the lower cluster assembly(2).
   Refer to the Instrument Panel Assembly in Body Structure section.
4. Remove the instrument panel driver lower cover assembly(3).
   Refer to the Instrument Panel Assembly in Body Structure section.

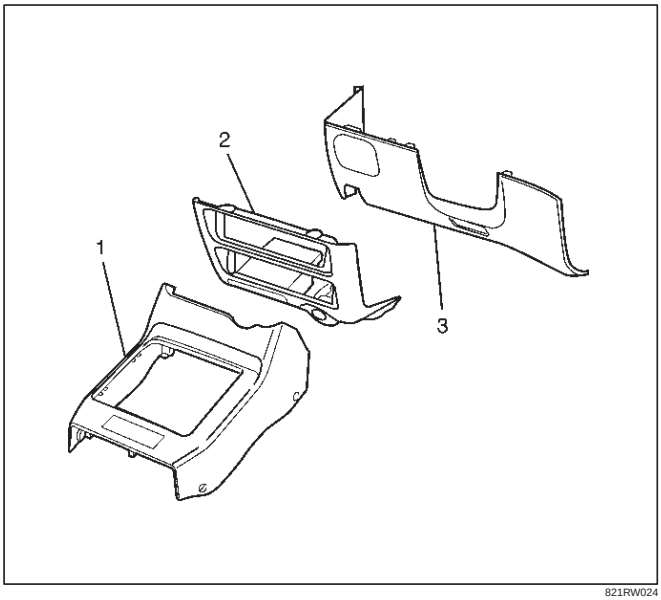

821RW024

5. Remove the instrument panel cluster assembly(4).
   Refer to the Instrument Panel Assembly in Body Structure section.
6. Disconnect the connector and push the lock from the back side of the instrument panel cluster assembly to remove the fog light switch(5).

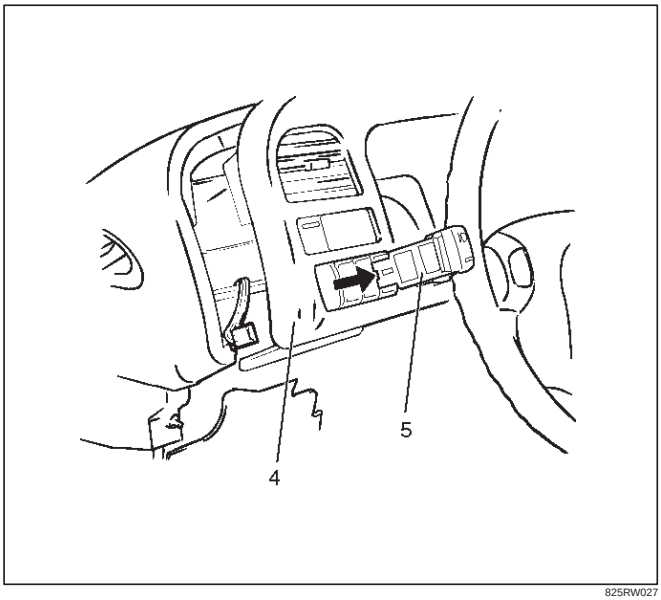

825RW027

Installation

To install, follow the removal steps in the reverse order, noting the following point:

1. Push in the switch with your fingers until the switch is locked securely.

Stoplight Switch (W/O Cruise Control)

Removal

1. Disconnect the battery ground cable.
2. Disconnect the connector(3), loosen the lock nut(1) and then remove the stoplight switch(2) by turning it.

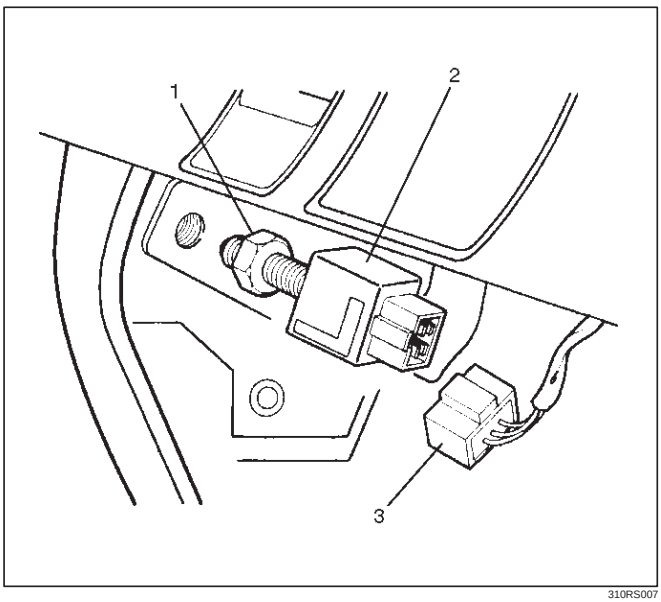

310RS007

Installation

To install, follow the removal steps in the reverse order, noting the following points.

1. Check to see if the brake pedal has been returned by the return spring to the specified position.
2. Turn the stoplight switch(1) clockwise until the tip of the threaded portion of the switch contacts the pedal arm(2).
3. Turn the switch counterclockwise until the space between the tip of the threaded portion and the pedal arm is 0.5 to 1.0 mm (0.02 – 0.04 in.).

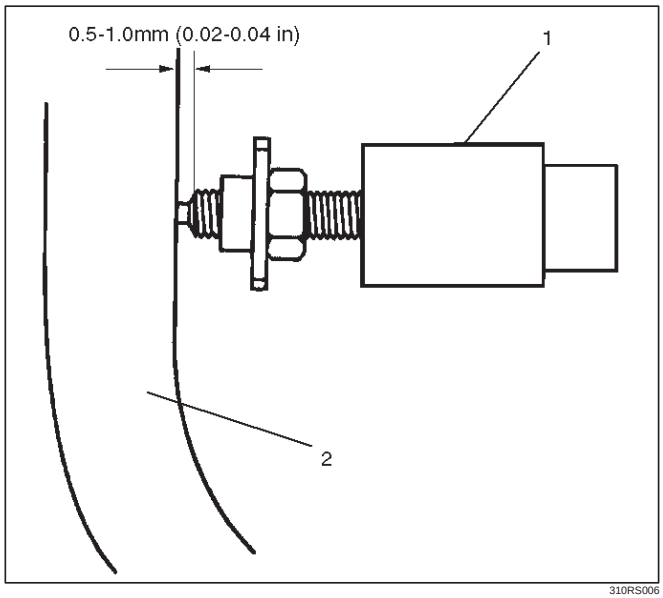

310RS006

Brake Switch (W/Cruise Control)

Removal

1. Disconnect the battery ground cable.
2. Disconnect the connector(1), loosen the lock nut(3) and then remove the brake switch(2) by turning it.

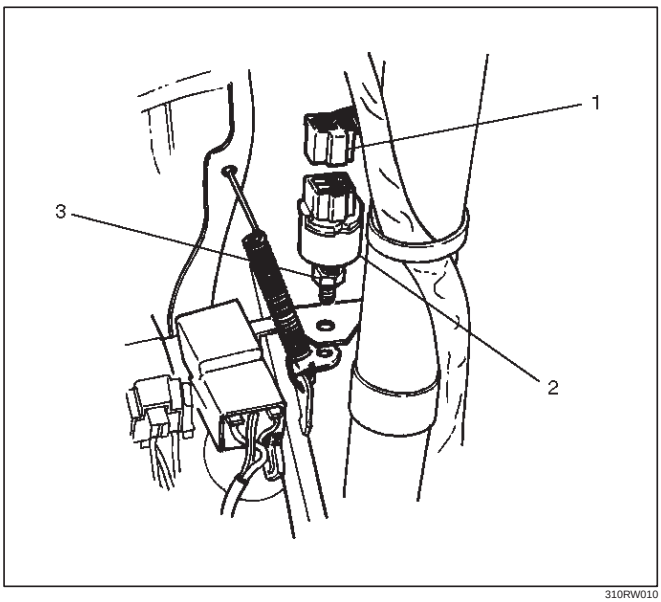

310RW010

Installation

To install, follow the removal steps in the reverse order, noting the following points.

1. Check to see if the brake pedal has been returned by the return spring to the specified position.
2. Turn the switch clockwise until the tip of the threaded portion of the brake switch contacts the pedal arm.
3. Turn the switch counterclockwise until the space between the tip of the threaded portion and the pedal arm is 0.5 to 1.0 mm (0.02 – 0.04 in.).

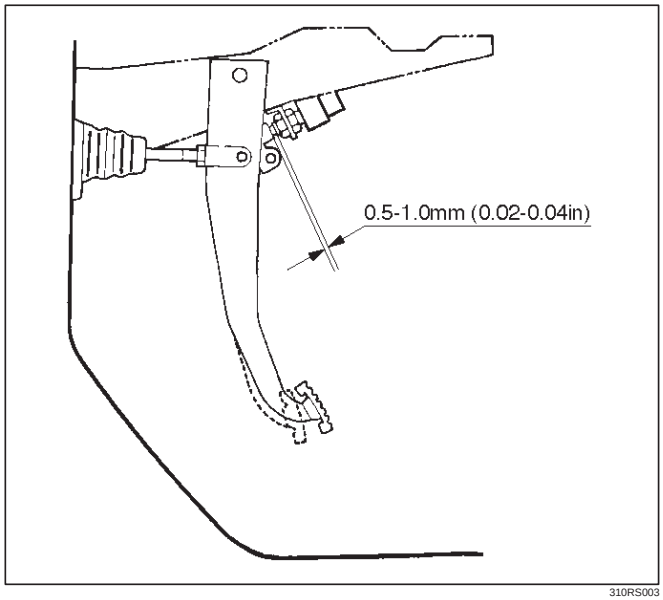

310RS003

Turn Signal Switch (Combination Switch)

Removal and Installation

Refer to the removal and installation steps of the Lighting Switch (Combination Switch) in this section.

Hazard Warning Switch

Removal

1. Disconnect the battery ground cable.
2. Remove the front console assembly(1).
   Refer to the Instrument Panel Assembly in Body Structure section.
3. Remove the lower cluster assembly(2).
   Refer to the Instrument Panel Assembly in Body Structure section.
4. Remove the instrument panel driver lower cover assembly(3).
   Refer to the Instrument Panel Assembly in Body Structure section.

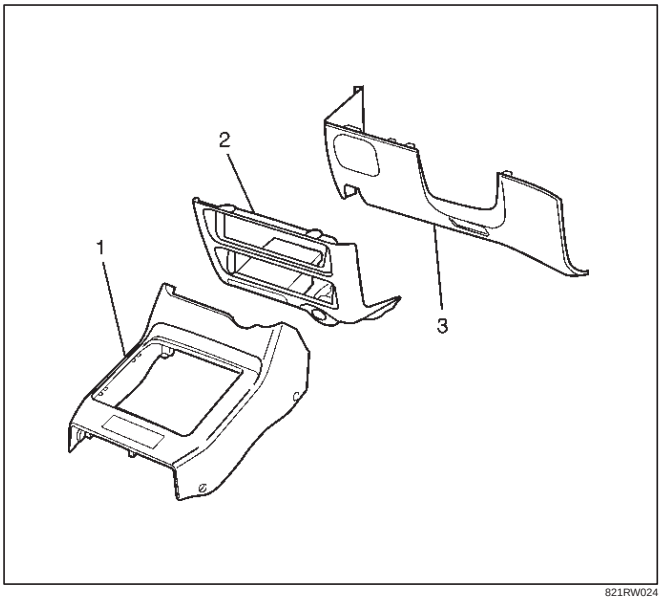

821RW024

5. Remove the instrument panel cluster assembly(4).
   Refer to the Instrument Panel Assembly in Body Structure section.
6. Disconnect the connector and push the lock from the back side of the instrument panel cluster assembly to remove the hazard warning switch(5).

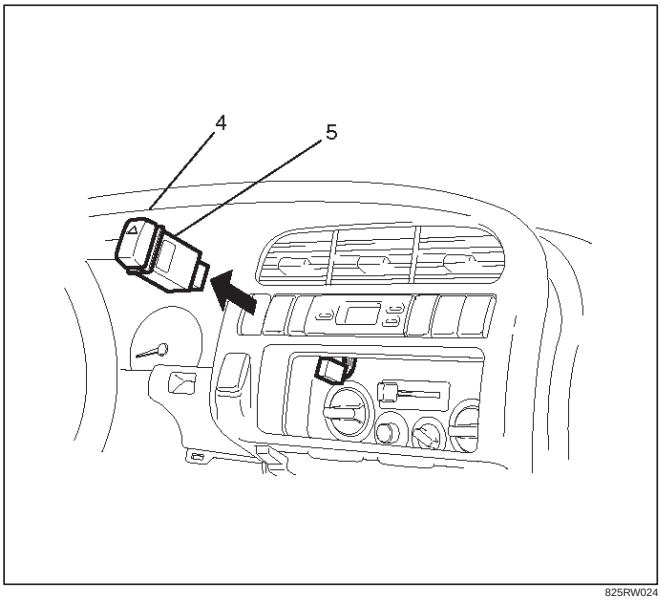

825RW024

Installation

To install, follow the removal steps in the reverse order, noting the following point.

1. Push in the switch with your fingers until it locks securely.

Tailgate Switch

Removal

1. Disconnect the battery ground cable.
2. Remove the screw and disconnect the connector(1) to remove the tailgate switch(2).

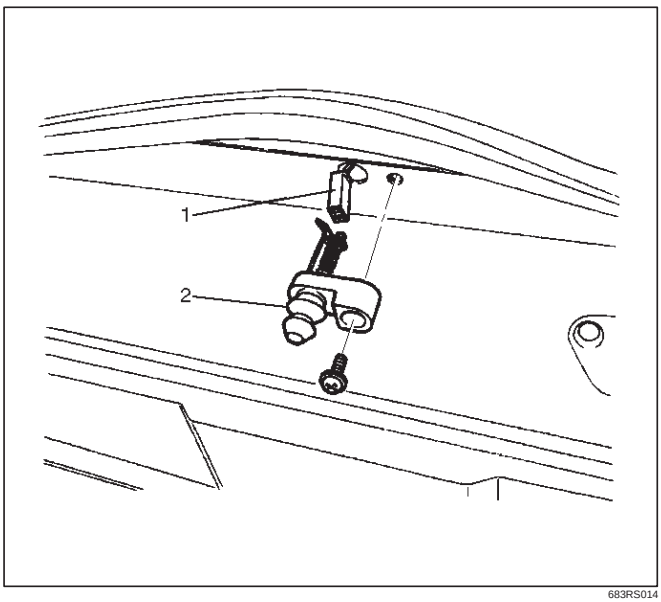

683RS014

Installation

To install, follow the removal steps in the reverse order.

Door Switch

Removal

1. Disconnect the battery ground cable.
2. Remove the screw and disconnect the connector to remove the door switch(1).

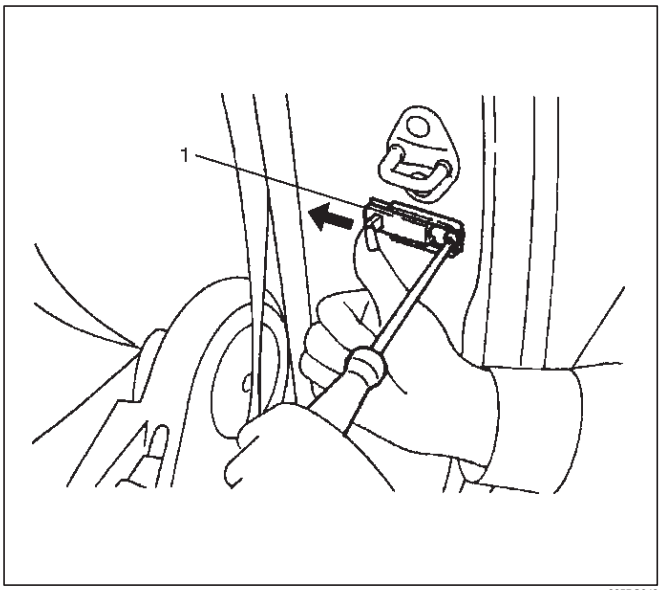

825RS043

Installation

To install, follow the removal steps in the reverse order.

Rear Defogger Switch

Removal

1. Disconnect the battery ground cable.
2. Remove the front console assembly(1).
   Refer to the Instrument Panel Assembly in Body Structure section.
3. Remove the lower cluster assembly(2).
   Refer to the Instrument Panel Assembly in Body Structure section.
4. Remove the instrument panel driver lower cover assembly(3).
   Refer to the Instrument Panel Assembly in Body Structure section.

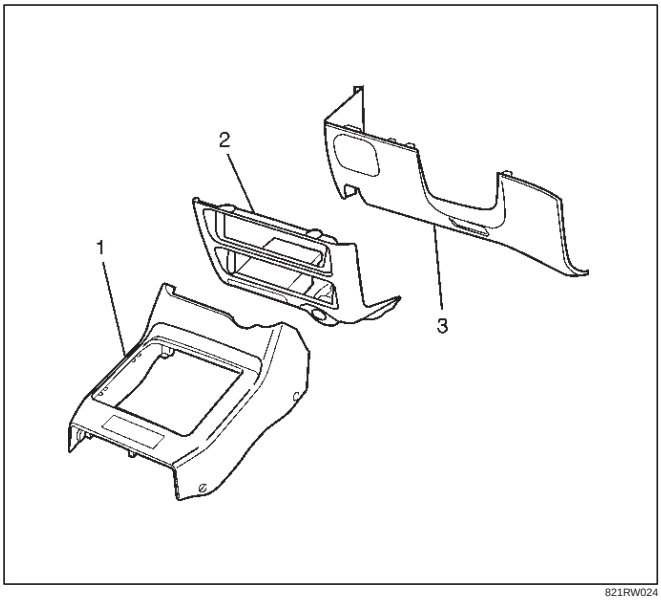

821RW024

5. Remove the instrument panel cluster assembly(4).
   Refer to the Instrument Panel Assembly in Body Structure section.
6. Disconnect the connector and push the lock from the back side of the instrument panel cluster assembly to remove the rear defogger switch(5).

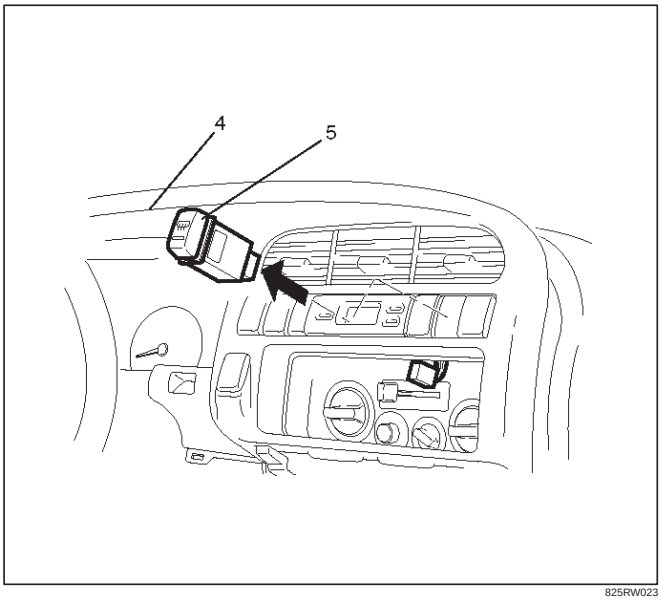

825RW023

Installation

To install, follow the removal steps in the reverse order, noting the following point.

1. Push in the switch with your fingers until it locks securely.

Seat Heater Switch

Removal

1. Disconnect the battery ground cable.
2. Remove four fixing screws and disconnect the switch connectors to remove the front console assembly(4).
3. Push the lock from the back side of the front console assembly to remove the seat heater switch(5).

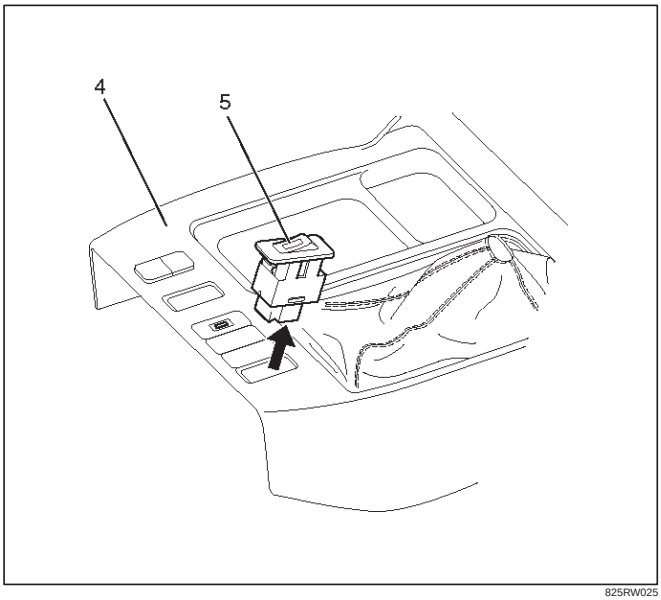

825RW025

Installation

To install, follow the removal steps in the reverse order, noting the following point.

1. Push the switch with your fingers until it locks securely.

Key Remind Switch (Starter Switch)

Removal and Installation

Refer to the removal and installation on steps of the Starter Switch in this section.

Illumination Controller

Removal

1. Disconnect the battery ground cable.
2. Remove the front console assembly(1).
   Refer to the Instrument Panel Assembly in Body Structure section.
3. Remove the lower cluster assembly(2).
   Refer to the Instrument Panel Assembly in Body Structure section.
4. Remove the instrument panel driver lower cover assembly(3).
   Refer to the Instrument Panel Assembly in Body Structure section.

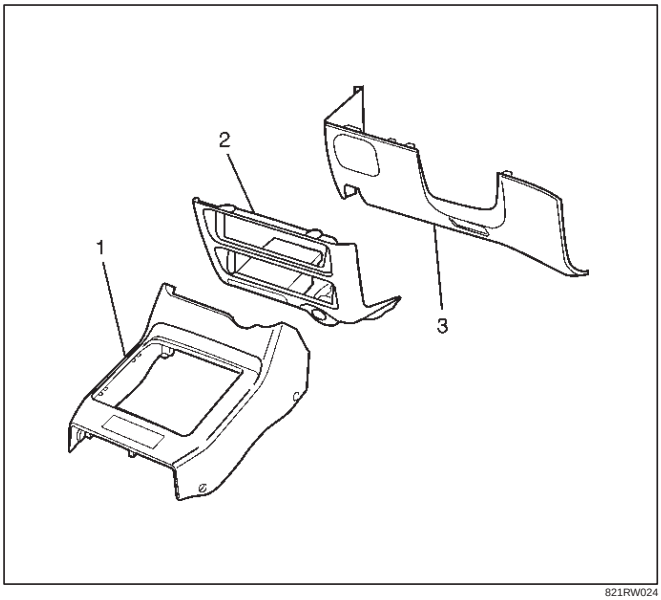

821RW024

5. Remove the instrument panel cluster assembly(4).
   Refer to the Instrument Panel Assembly in Body Structure section.
6. Disconnect the connector and push the lock from the back side of the instrument panel cluster assembly to remove the illumination controller(5).

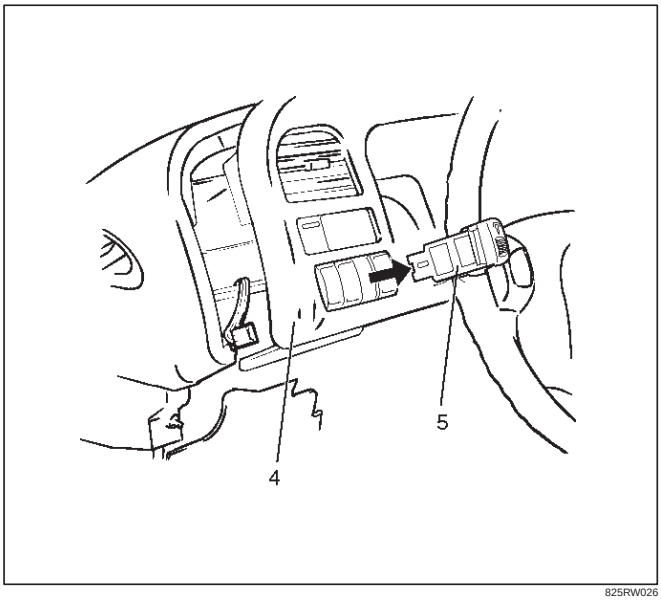

825RW026

Installation

To install, follow the removal steps in the reverse order, noting the following point.

1. Push in the switch with your fingers until the switch is locked securely.

Power/Winter Switch

Removal

1. Disconnect the battery ground cable.
2. Remove four fixing screws and disconnect the switch connectors to remove the front console assembly(4).
3. Push the lock from the back side of the front console assembly to remove the power/winter switch(5).

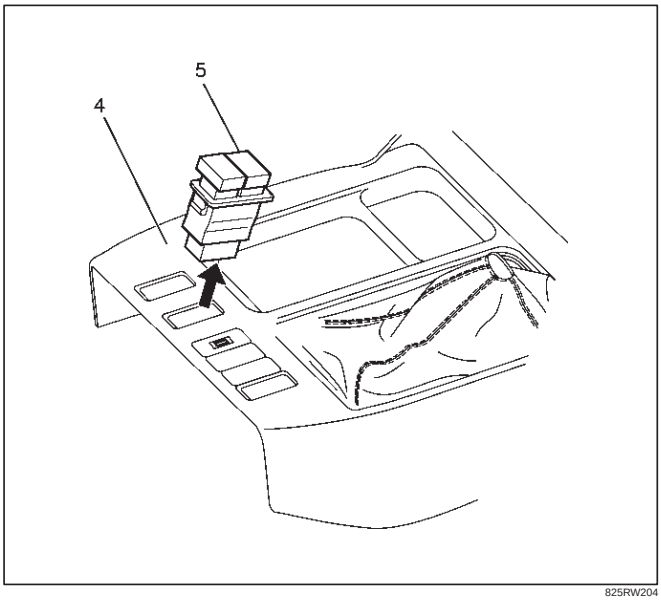

825RW204

Installation

To install, follow the removal steps in the reverse order, noting the following point.

1. Push the switch with your fingers until it locks securely.

Main Data and Specifications

Light and Bulb Specifications

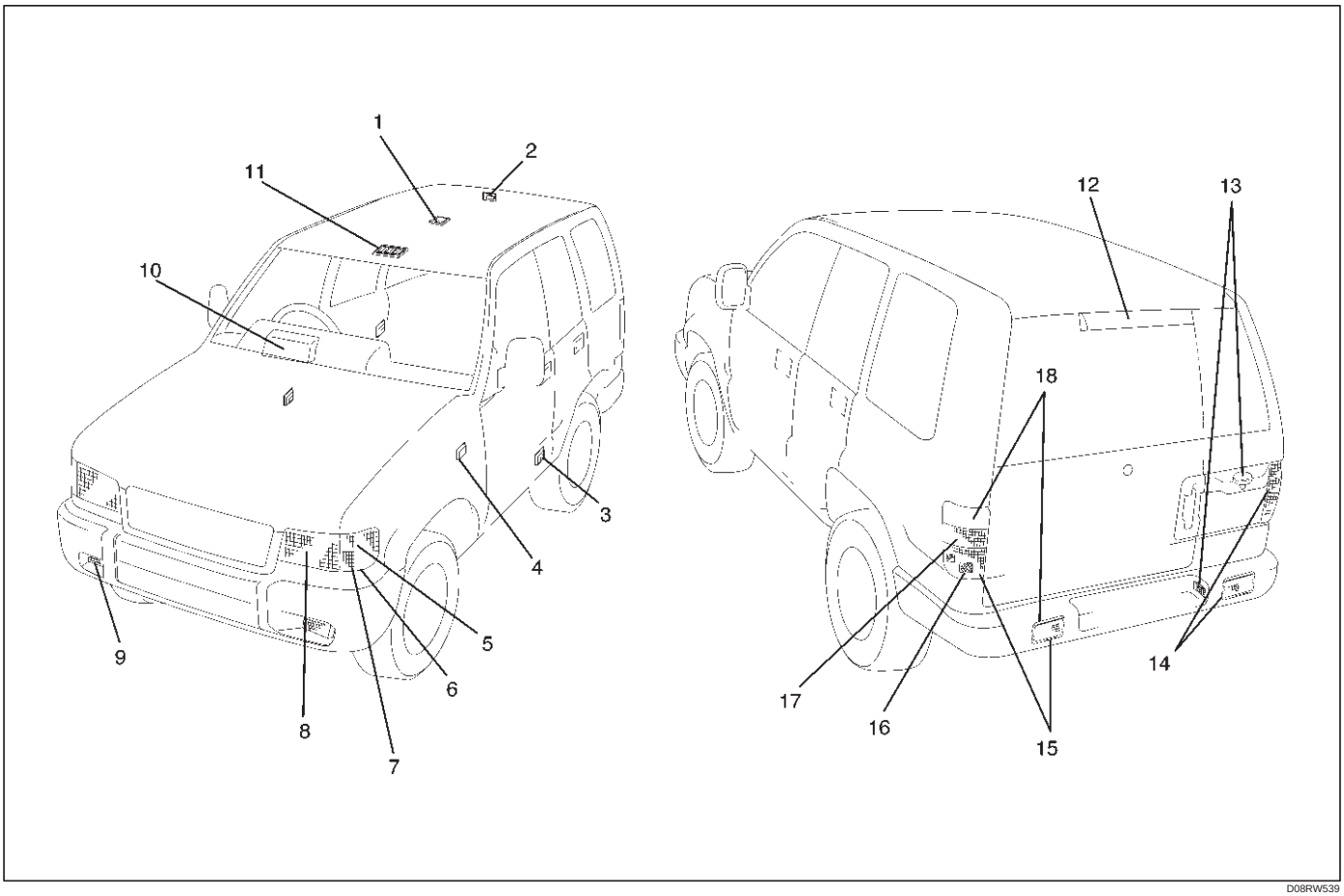

Legend

(1) Dome Light
(2) Luggage Room Light
(3) Courtesy Light
(4) Side Turn Signal Light
(5) Front Turn Signal Light
(6) Clearance Light
(7) Front Combination Light
(8) Headlight
(9) Fog Light
(10) Meter
(11) Map Light
(12) High Mount Step Light
(13) License Plate Light
(14) Rear combination Light
(15) Taillight/Stoplight
(16) Rear Fog Light
(17) Backup Light
(18) Rear Turn Signal Light.

Light Name			Rated Power	Number of Bulbs	Lens Color	Remarks
Headlight			60w/55w	2	White	Halogen
Front combination light	Turn signal light		21w	2	White	
	Clearance light		5w	2	Amber	
FRT fog light			55w	2	White	Halogen
Rear combination light	Bumper	Taillight/Stoplight	5w/21w	2	Red	
		Turn signal light	21w	2	Amber	
	Body	Taillight/Stoplight	5w/21w	2	Red	
		Turn signal light	21w	2	Amber	
Backup light			21w	2	White	
RR fog light			21w	2	Red	
Side turn signal light			5w	2	Amber	
License plate light	Bumper		5w	2	White	
	Body		5W	1	White	
High mount stoplight			—	—	Red	LED
Map light			5w	2	White	
Dome light			10w	1	White	
Luggage room light			8w	1	White	
Courtesy light			3.8w	2	White	
Indicator/ Warning light	A/C SW		60mA	1		
	RR defogger SW		0.84w	1		
	Mirror defogger SW		0.84w	1		
	FRT fog light SW		0.7w	1		
	RR fog light SW		0.7w	1		
	Cruise (Set)		1.4w	1		Meter
	Cruise (Main)		1.4w	1		Meter
	Check trans		3w	1		Meter
	Anti-theft		3w	1		Warning box
	Turn signal		1.4w	2		Meter
	Glow		1.4w	1		Meter
	Water sedimenter		1.4w	1		Meter
	High beam		1.4w	1		Meter
	ABS		1.4w	1		Meter
	Check engine		1.4w	1		Meter
	Low fuel		1.4w	1		Meter
	4WD		1.4w	1		Meter
	Oil Pressure		1.4w	1		Meter
	Brake system		1.4w	1		Meter
	Charge		1.4w	1		Meter
	Seat belt		2w	1		Meter
	A/T shift position		0.91w	7		Meter
	A/T oil temp		3w	1		Meter

	Power drive	1.4w	1		Meter
	Winter drive	1.4w	1		Meter
	Air bag	2w	1		Meter
Illumination Light	Engine warming SW	0.84w	1		
	FRT fog light SW	0.84w	1		
	RR fog light SW	0.84w	1		
	Glove box	1.2w	1		
	Ashtray	1.4w	1		
	Illumination controller	0.7w	1		
	Heater bezel	150mA	2		
	Hazard warning light SW	0.84w	1		
	Meter	3.4w	4		Meter ASM
	Rear wiper & washer SW	0.84w	1		
	Rear defogger SW	0.84w	1		
	Mirror control SW	45mA	1		
	Mirror defogger SW	0.7w	1		
	Mirror folding SW	0.7w	1		
	A/T select lever	1.2w	1		
	Power & Winter SW	50mA	2		
	Cruise control main SW	0.84w	1		
	Headlight wiper SW	0.84w	1		

Torque Specifications

Application	N·m	kg·m	Lb Ft	Lb In
Steering Shaft Nut	34	3.5	25	—

WIPER / WASHER SYSTEM

CONTENTS

Service Precaution 8B–2
Windshield Wiper/Washer System 8B–2
General Description 8B–2
Windshield Wiper And Washer Switch 8B–2
Removal and Installation 8B–2
Windshield Wiper Motor 8B–2
Removal 8B–2
Installation 8B–2
Windshield Washer Motor 8B–3
Removal 8B–3
Installation 8B–3
Windshield Wiper Linkage 8B–4
Windshield Wiper Linkage and Associated Parts 8B–4
Removal 8B–4
Installation 8B–4
Windshield Wiper Arm/Blade 8B–5
Removal 8B–5
Installation 8B–5
Windshield Wiper Blade Rubber 8B–6
Removal 8B–6
Installation 8B–6
Rear Wiper/Washer System 8B–7
General Description 8B–7
Rear Wiper and Washer Switch 8B–7
Removal 8B–7
Installation 8B–7
Rear Wiper Motor 8B–8
Removal 8B–8
Installation 8B–8
Alarm & Relay Control Unit 8B–9
Removal 8B–9
Installation 8B–9
Rear Washer Motor 8B–9
Removal 8B–9
Installation 8B–9
Rear Wiper Arm/Blade 8B–10
Removal 8B–10
Installation 8B–10
Rear Washer Nozzle 8B–10
Removal 8B–10
Installation 8B–10
Rear Washer Nozzle Angle Adjustment . . . 8B–10
Rear Wiper Blade Rubber 8B–11
Removal and Installation 8B–11
Headlight Wiper/Washer 8B–11
General Description 8B–11
Headlight Wiper and Washer Switch 8B–12
Removal 8B–12
Installation 8B–12
Headlight Wiper Arm & Blade 8B–13
Removal 8B–13
Installation 8B–13
Headlight Wiper Motor 8B–13
Removal 8B–13
Installation 8B–13
Headlight Washer Motor 8B–14
Removal and Installation 8B–14
Main Data and Specifications 8B–14

Service Precaution

WARNING: IF SO EQUIPPED WITH A SUPPLEMENTAL RESTRAINT SYSTEM (SRS), REFER TO THE SRS COMPONENT AND WIRING LOCATION VIEW IN ORDER TO DETERMINE WHETHER YOU ARE PERFORMING SERVICE ON OR NEAR THE SRS COMPONENTS OR THE SRS WIRING. WHEN YOU ARE PERFORMING SERVICE ON OR NEAR THE SRS COMPONENTS OR THE SRS WIRING, REFER TO THE SRS SERVICE INFORMATION. FAILURE TO FOLLOW WARNINGS COULD RESULT IN POSSIBLE AIR BAG DEPLOYMENT, PERSONAL INJURY, OR OTHERWISE UNNEEDED SRS SYSTEM REPAIRS.

CAUTION: Always use the correct fastener in the proper location. When you replace a fastener, use ONLY the exact part number for that application. ISUZU will call out those fasteners that require a replacement after removal. ISUZU will also call out the fasteners that require thread lockers or thread sealant. UNLESS OTHERWISE SPECIFIED, do not use supplemental coatings (Paints, greases, or other corrosion inhibitors) on threaded fasteners or fastener joint interfaces. Generally, such coatings adversely affect the fastener torque and the joint clamping force, and may damage the fastener. When you install fasteners, use the correct tightening sequence and specifications. Following these instructions can help you avoid damage to parts and systems.

Windshield Wiper/Washer System

General Description

The circuit consists of the starter switch, windshield wiper & washer switch, windshield wiper motor, windshield washer motor and windshield intermittent relay.

When the wiper & washer switch is turned on with the starter switch on, the battery voltage is applied to the wiper motor to activate the wiper.
The washer motor squirts glass cleaning fluid while the washer switch is being pushed. The intermittent relay is used to control motion of the wiper.

Windshield Wiper And Washer Switch

Removal and Installation

Refer to the Lighting Switch (Combination Switch) in Lighting System section.

Windshield Wiper Motor

Removal

1. Disconnect the battery ground cable.
2. Disconnect the connector.
3. Remove 4 mounting bolts.
4. Remove the windshield wiper motor(1).

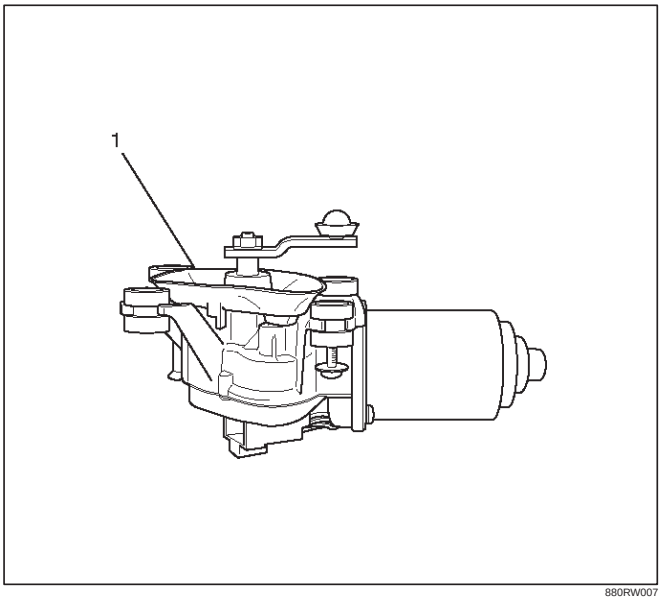

880RW007

Installation

To install, follow the removal steps in the reverse order.

Windshield Washer Motor

Removal

1. Disconnect the battery ground cable.
2. Remove the fender inner liner (right side) (1).
3. Remove the screws and then remove the front combination light(2).
4. Remove 2 screws, the filler neck and the hose.
5. Disconnect the windshield washer motor connector and remove the washer tank (4).
6. Pull the windshield washer motor(3) from the washer tank(4).

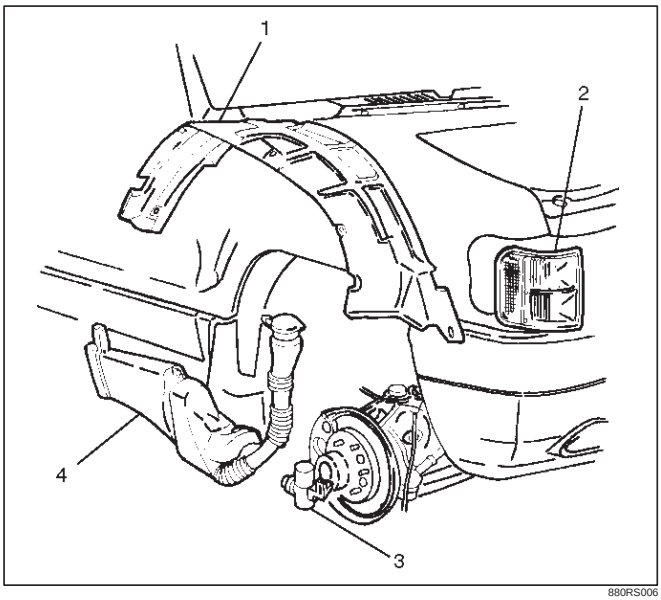

880RS006

Installation

To install, follow the removal steps in the reverse order.

Windshield Wiper Linkage

Windshield Wiper Linkage and Associated Parts

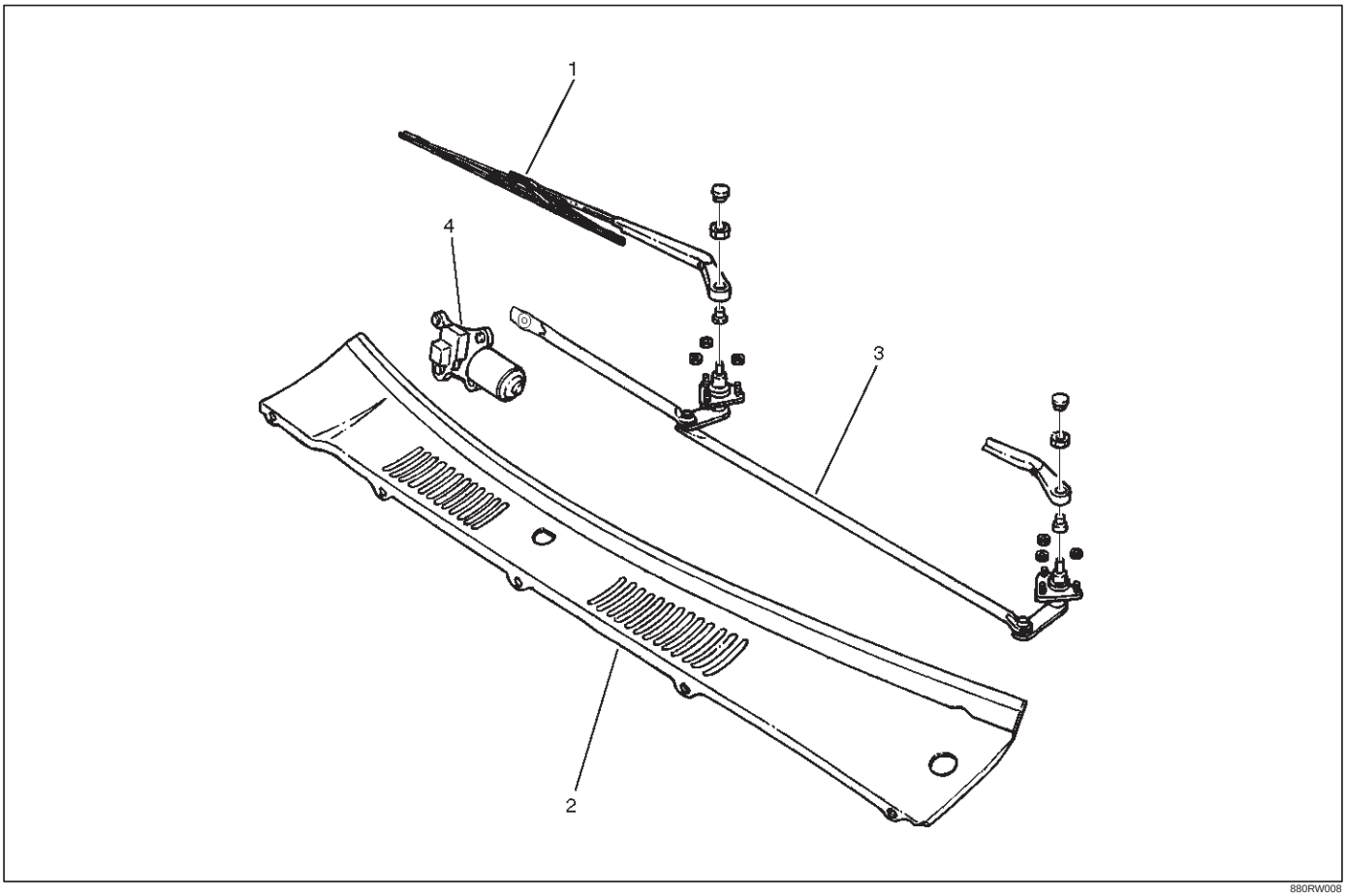

880RW008

Legend

(1) Windshield Wiper Arm/Blade
(2) Vent Cowl Cover
(3) Windshield Wiper Linkage Assembly
(4) Windshield Wiper Motor

Removal

1. Disconnect the battery ground cable.
2. Remove the windshield wiper arm/blade.
3. Remove the windshield wiper motor.
4. Remove the pivot assembly mounting nuts, fixing screws and then remove the vent cowl cover.
5. Take out the windshield wiper linkage assembly from the opening of the cowl.

Installation

To install, follow the removal steps in the reverse order.

Windshield Wiper Arm/Blade

Removal

1. Pry the cap(2) off with the tip of a screwdriver.
2. Remove the nut(3).
3. Remove the wiper/blade(1).

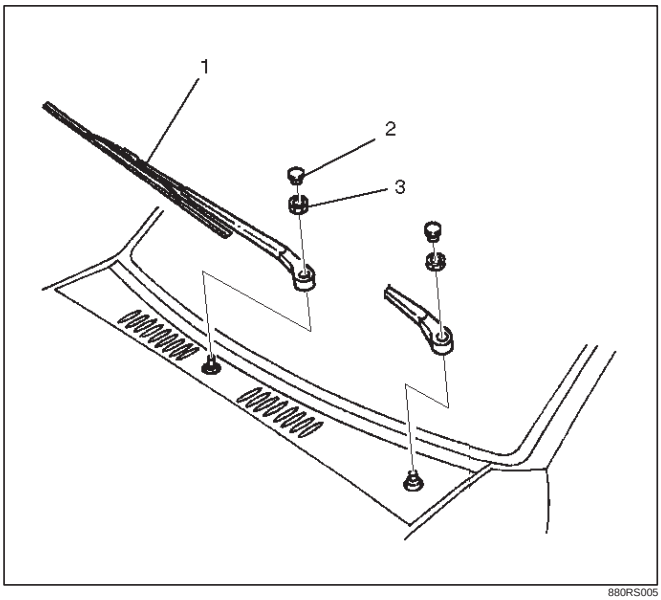

880RS005

Installation

To install, follow the removal steps in the reverse order, noting the following points.

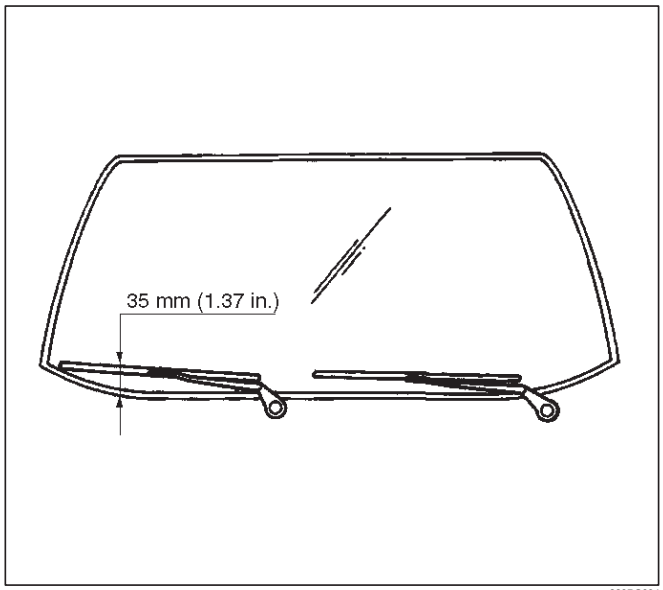

880RS004

1. Wiper arm/blade
   - Before installing the wiper arm/blade to the shaft, confirm that the motor stops at the auto-stop position.
   - Set the wiper arm/blade so that the tips of both blades are positioned about 35 mm (1.37 in) from the upper edge of the cowl cover as shown in the figure.
   - Tighten the nuts to the specified torque.

   Torque: 31 N·m (3.2 kg·m/23 lb ft)

Windshield Wiper Blade Rubber

Removal

1. Push the wiper blade lock(1) while pulling the wiper blade in the arrow direction as shown in the figure.

CAUTION: When the wiper blade has been removed, wrap the tip of the wiper arm with cloth, to avoid damaging the glass.

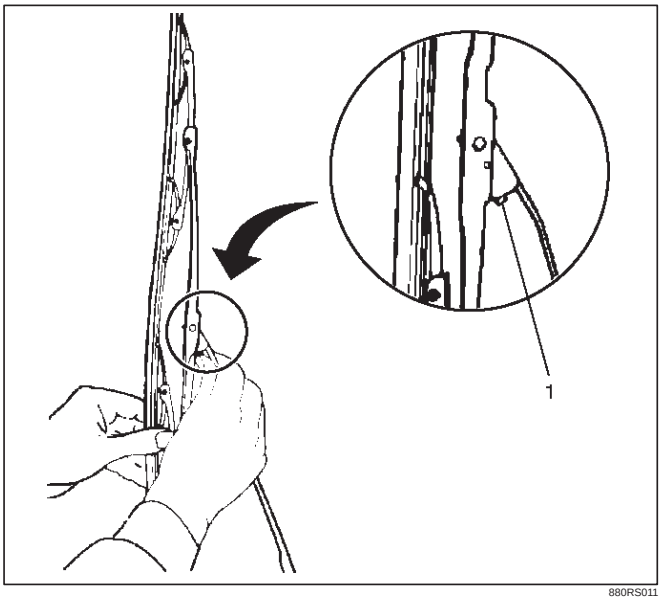

880RS011

2. Pull the end of rubber and remove the projection(3) from the click of the blade stay (2).

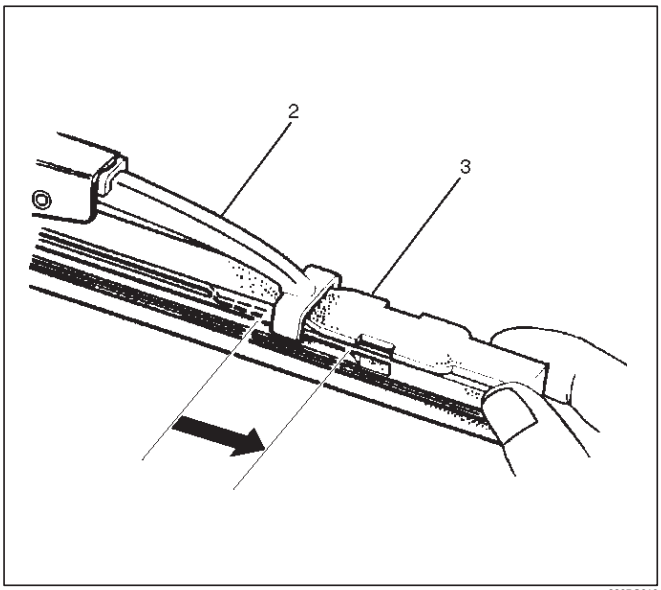

880RS010

3. Pull the rubber out in the same direction.

Installation

To install, follow the removal steps in the reverse order, noting the following points.

1. Install the click of the blade stay in the groove of the new rubber and slide it in. Complete wiper blade installation by pushing the click.

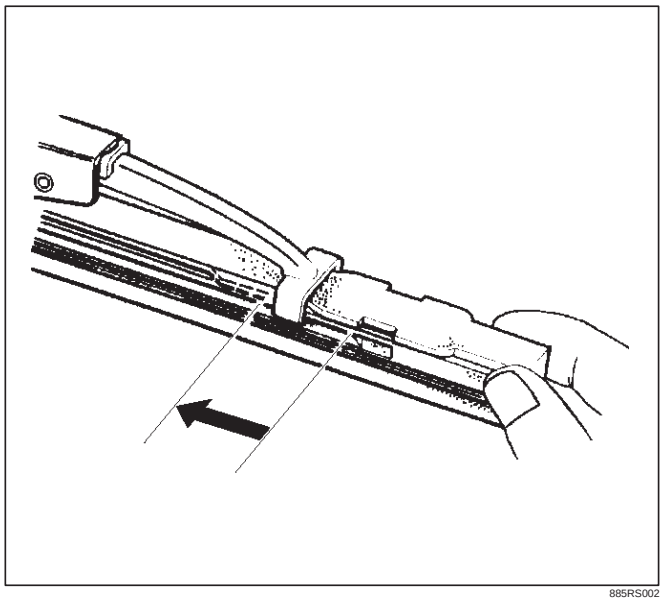

885RS002

2. Finally, check that the click of the stay has caught in the hole of the rubber.

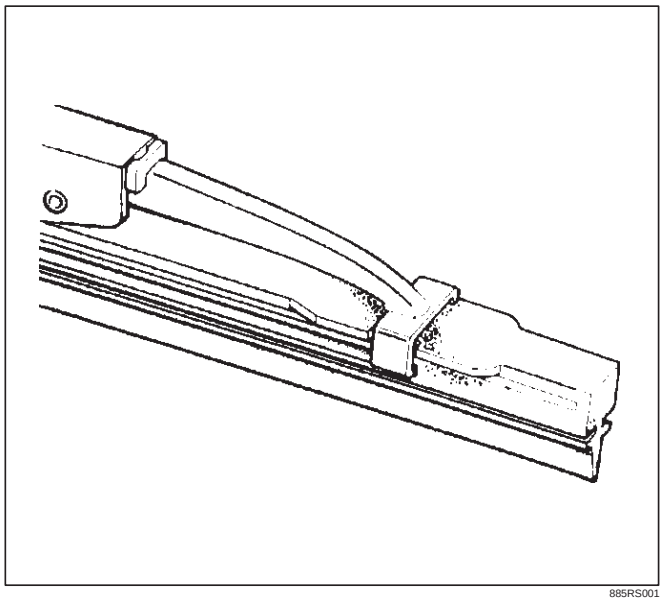

885RS001

Rear Wiper/Washer System

General Description

The circuit consists of the starter switch, rear wiper & washer switch, rear wiper motor, rear washer motor and rear intermittent relay.

When the wiper & washer switch is turned on with the starter switch on, the battery voltage is applied to the wiper motor to activate the wiper.
The washer motor squirts glass cleaning fluid while the washer switch is being pushed. The intermittent relay is used to control motion of the wiper.

Rear Wiper and Washer Switch

Removal

1. Disconnect the battery ground cable.
2. Remove the front console assembly(1).
   Refer to the Instrument Panel Assembly in Body Structure section.
3. Remove the lower cluster assembly(2).
   Refer to the Instrument Panel Assembly in Body Structure section.
4. Remove the instrument panel driver lower cover(3).
   Refer to the Instrument Panel Assembly in Body Structure section.

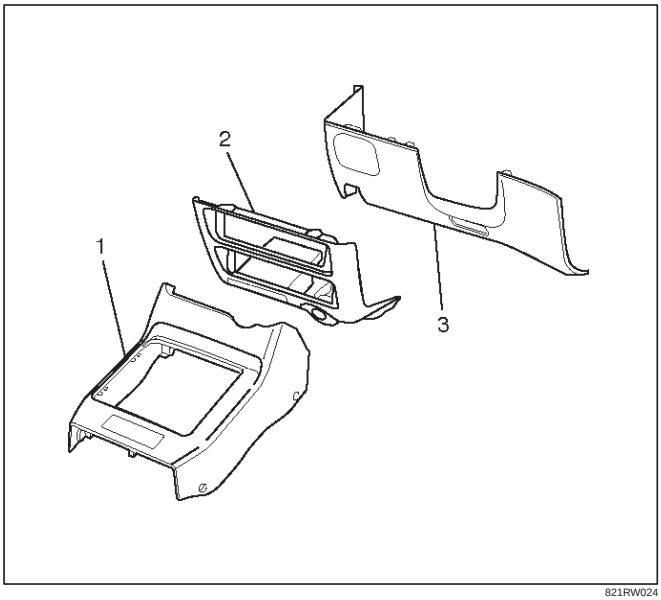

821RW024

5. Remove the instrument panel cluster assembly(4).
   Refer to the Instrument Panel Assembly in Body Structure section.
6. Disconnect the connector and push the lock from the back side of the instrument panel cluster assembly to remove the rear wiper & washer switch(5).

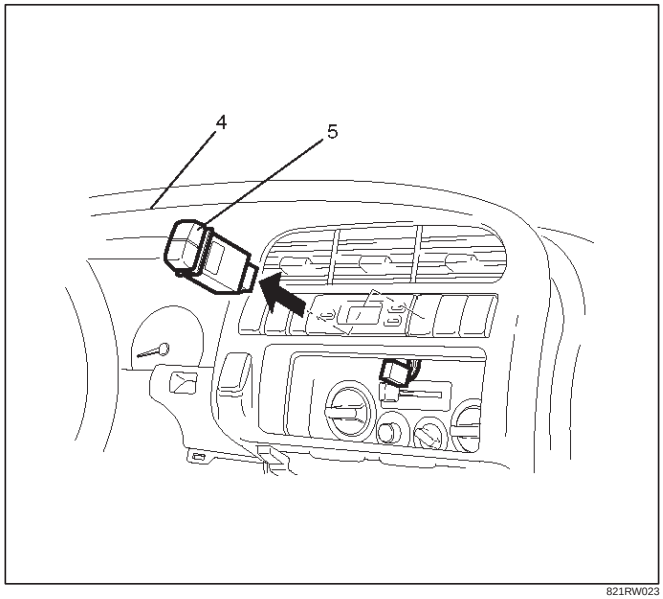

821RW023

Installation

To install, follow the removal steps in the reverse order, noting the following point:

1. Push the switch with your fingers until it locks securely.

Rear Wiper Motor

Removal

1. Disconnect the battery ground cable.
2. Remove the tailgate trim pad.
3. Remove the wiper arm/blade.
   Refer to the removal steps of the Rear Wiper Arm/Blade in this section.
4. Disconnect the connector remove the wiper shaft nut, remove the fixing screws and then remove the rear wiper motor(1).

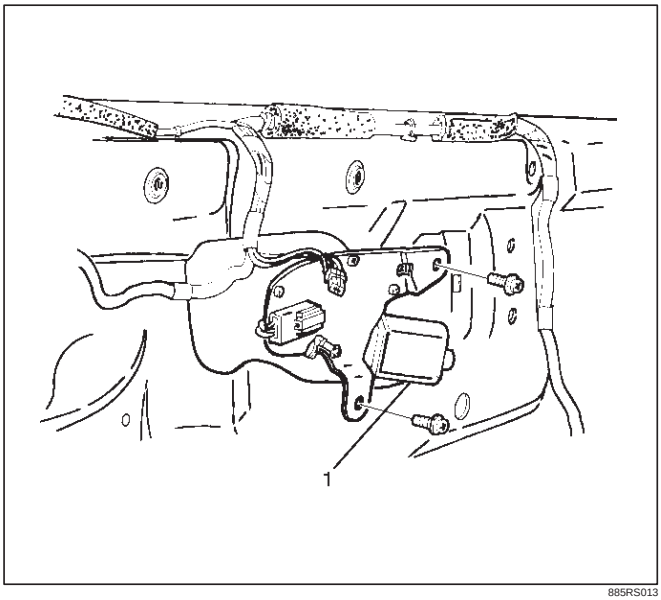

885RS013

Installation

To install, follow the removal steps in the reverse order, noting the following points.

1. Before installing the wiper arm/blade to the motor shaft, confirm that the motor stops at the auto-stop position.
2. Install the wiper arm so that the blade gets parallel to the lowermost heat wire(2) of the rear defogger (w/rear defogger), or position the blade 20 mm (0.79 in) from edge of tailgate glass (W/O rear defogger).

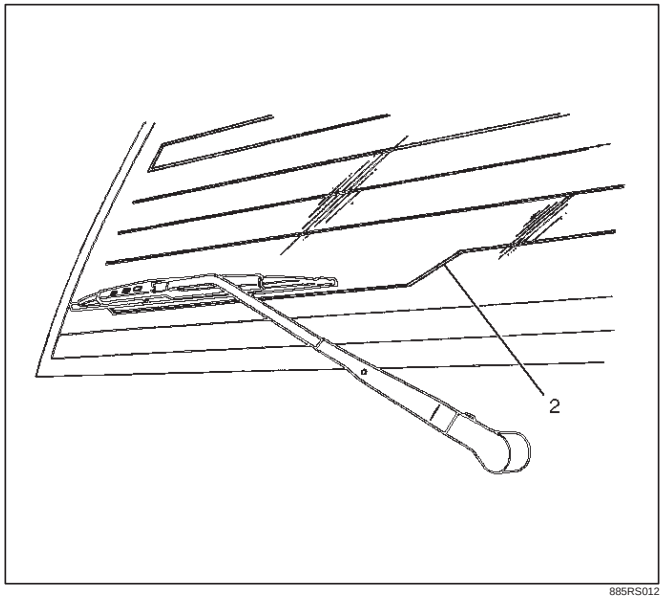

885RS012

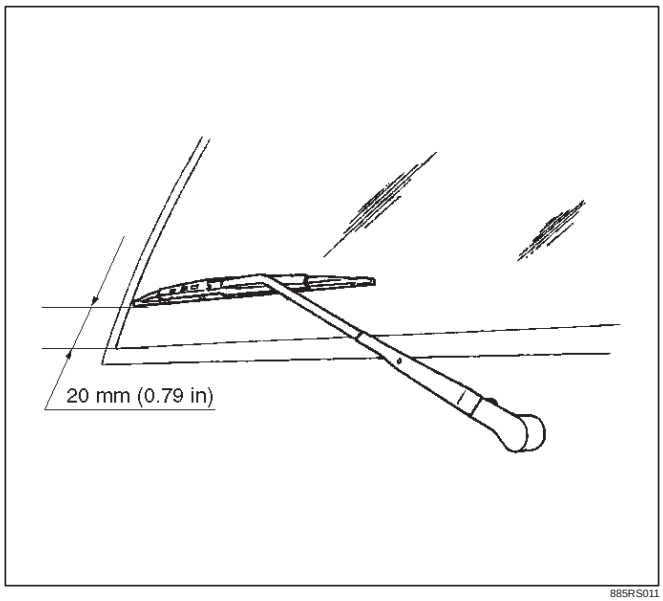

885RS011

3. Tighten the motor shaft nut to the specified torque.
   Torque: 6 N·m (0.6 kg·m/52 lb in)
4. Tighten the wiper arm nut to the specified torque.
   Torque: 9 N·m (0.9 kg·m/78 lb in)

Alarm & Relay Control Unit

Removal

1. Disconnect the battery ground cable.
2. Remove the glove box.
3. Remove the instrument panel passenger lower cover assembly.
4. Remove the passenger Knee bolster reinforcement assembly.
5. Remove the fixing bolts, disconnect the connectors and then remove the alarm & relay control unit (1).

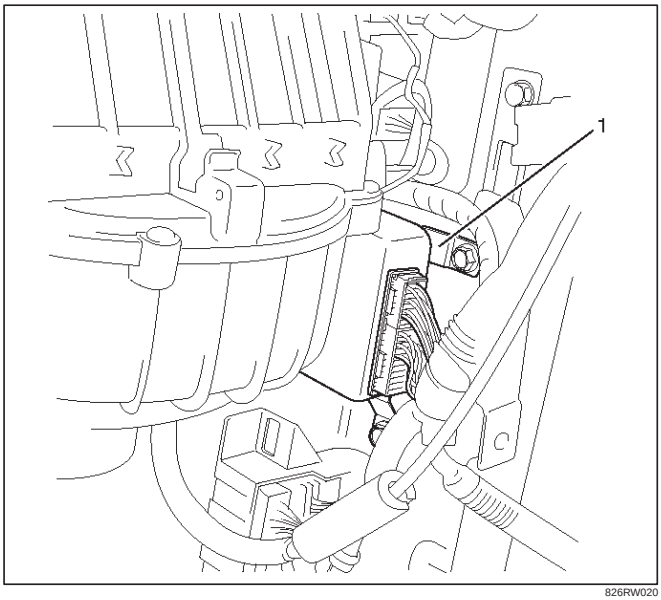

826RW020

Installation

To install, follow the removal steps in the reverse order.

Rear Washer Motor

Removal

1. Disconnect the battery ground cable.
2. Remove the tailgate trim pad(2).
3. Remove two screws, disconnect the connector, remove the washer hose and then remove the rear washer tank(3).
4. Pull out the rear washer motor(1) from the washer tank.

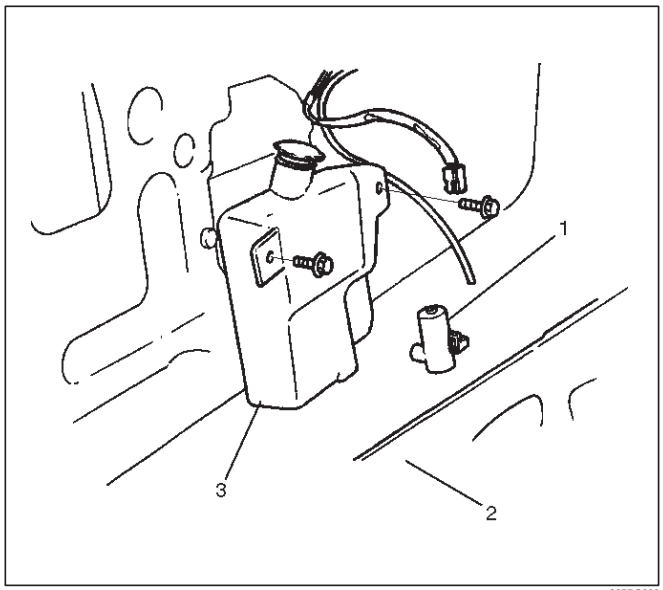

885RS009

Installation

To install, follow the removal steps in the reverse order.

Rear Wiper Arm/Blade

Removal

1. Remove the arm nut(2).
2. Remove the wiper arm/blade(1).

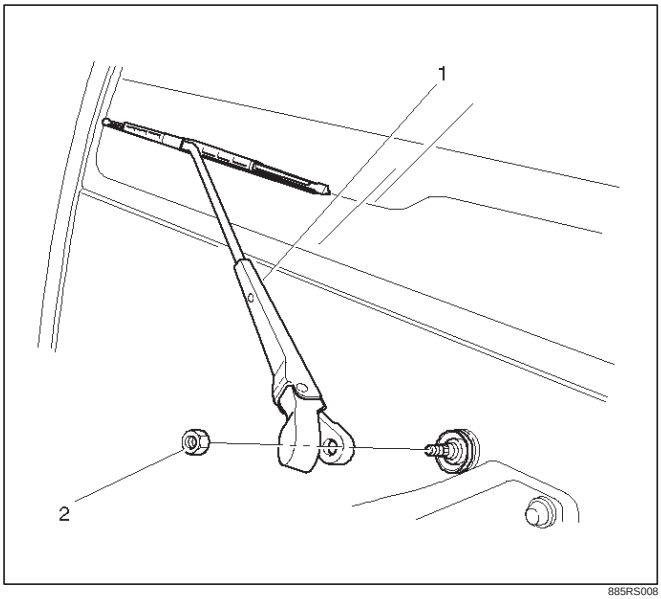

885RS008

Installation

Refer to the installation steps of the Rear Wiper Motor in Wiper/Washer System section.

Rear Washer Nozzle

Removal

1. Disconnect the hose(3).
2. Remove the lock nut(2), and then remove the washer nozzle(1).

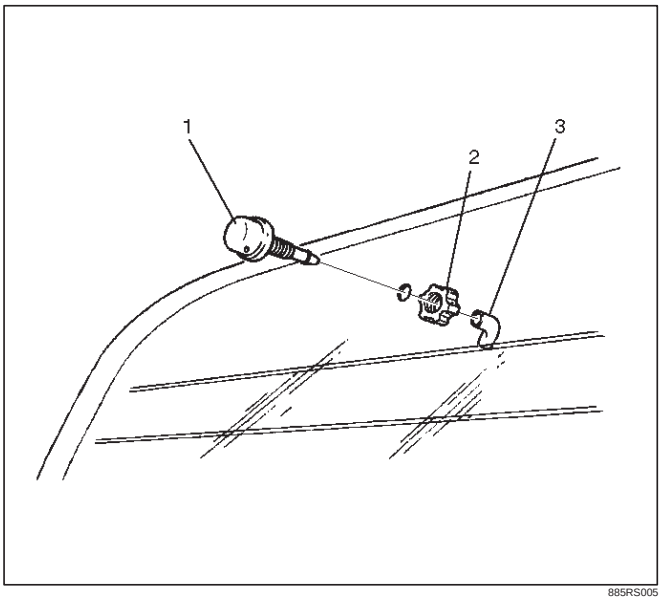

885RS005

Installation

To install, follow the removal steps in the reverse order.

Rear Washer Nozzle Angle Adjustment

Loosen the lock nut(2) of the washer nozzle(1) to adjust the injection angle of the cleaning fluid, and then retighten the lock nut(2).

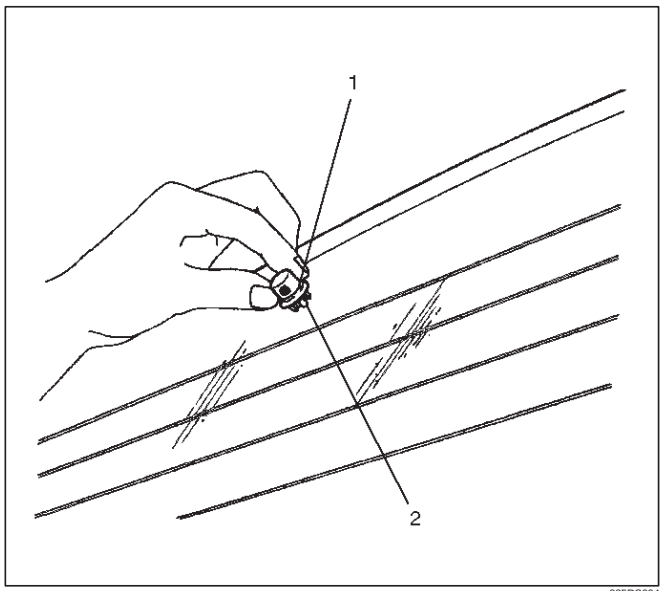

885RS004

Rear Washer Spray Pattern

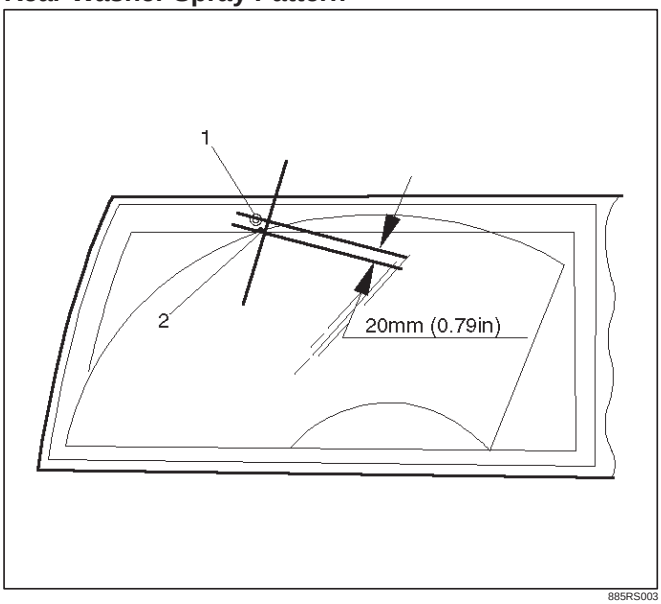

Legend
(1) Washer Nozzle
(2) Spray Target

Rear Wiper Blade Rubber

Removal and Installation

Refer to the Windshield Wiper Blade Rubber in this section.

Headlight Wiper/Washer

General Description

The circuit consists of the starter switch, headlight wiper/washer switch, headlight wiper motor and washer motor. By pushing the headlight wiper/washer switch with the starter switch on, the wiper will make 5 strokes with washer solution applied between each of the first 4 strokes, regardless of the length of time the switch is held down.
The washer nozzle is installed to the wiper blade, and the tank to which the washer motor is installed shared among the headlight washer and the windshield washer.

Headlight Wiper and Washer Switch

Removal

1. Disconnect the battery ground cable.
2. Remove the front console assembly(1).
   Refer to the Instrument Panel Assembly in Body Structure section.
3. Remove the lower cluster assembly(2).
   Refer to the Instrument Panel Assembly in Body Structure section.
4. Remove the instrument panel driver lower cover(3).
   Refer to the Instrument Panel Assembly in Body Structure section.

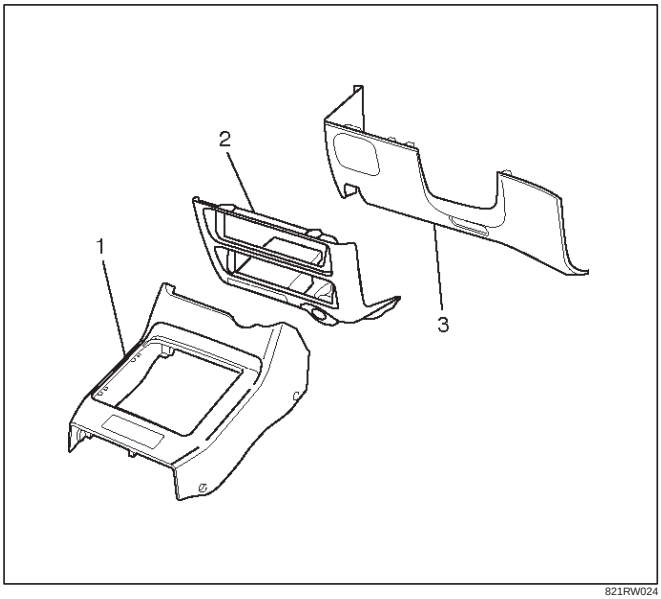

821RW024

5. Remove the instrument panel cluster assembly(4).
   Refer to the Instrument Panel Assembly in Body Structure section.
6. Disconnect the connector and push the lock from the back side of the instrument panel cluster assembly to remove the headlight wiper switch(5).

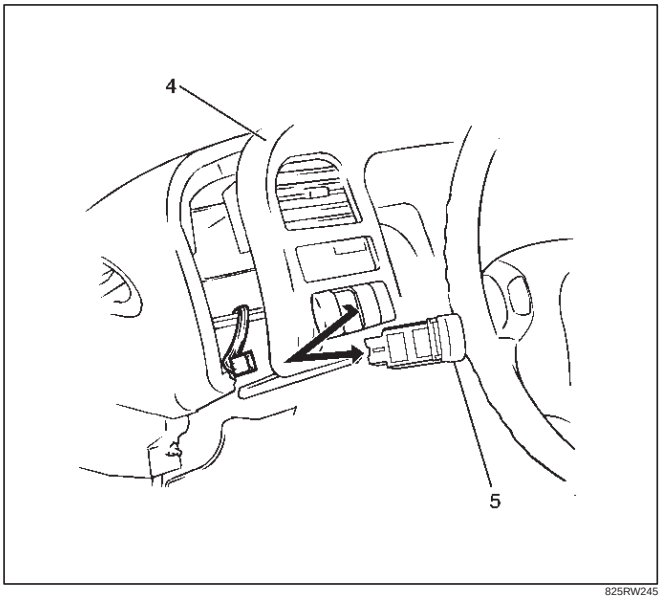

825RW245

Installation

To install, follow the removal steps in the reverse order, noting the following point:

1. Push the switch with your fingers until it locks securely.

Headlight Wiper Arm & Blade

Removal

1. Remove the wiper arm nut and the wiper arm & blade(1).
2. Disconnect the washer hose.

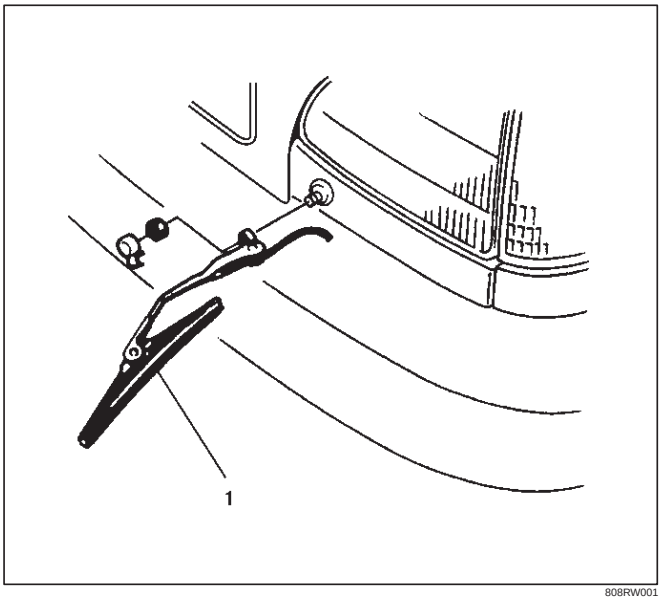

808RW001

Installation

To install, follow the removal steps in the reverse order, noting the following point:

1. Tighten the wiper arm nut to the specified torque.

   Torque: 5 N·m (0.5 kg·m/44 lb ft)

Headlight Wiper Motor

Removal

1. Disconnect the battery ground cable.
2. Remove the headlight wiper arm/blade(1).
3. Remove the headlight assembly(2).
   Refer to the Headlight removal steps in this section.
4. Remove 2 nuts and screws, the remove headlight wiper motor(3).

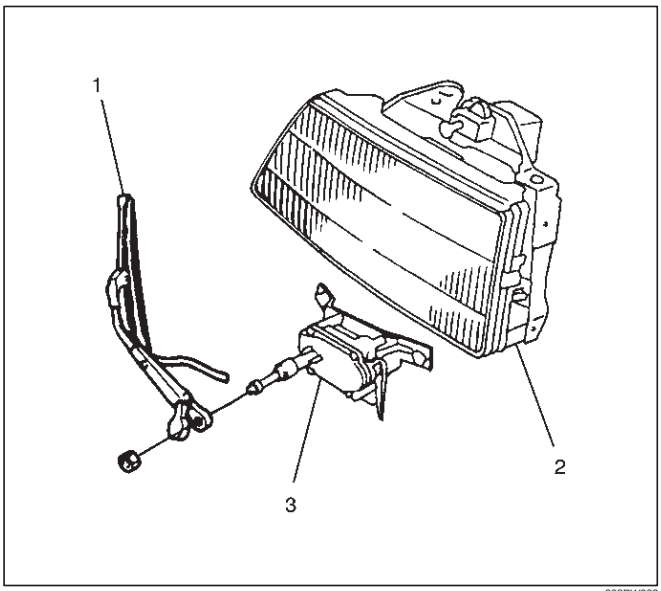

808RW002

Installation

To install, follow the removal steps in the reverse order, noting the following point:

1. Make sure that the motor stops at auto stop position prior to installing the wiper arm & blade to the motor shaft.

Headlight Washer Motor

Removal and Installation

Refer to the removal and installation steps of the windshield washer tank/motor under »Windshield Wiper/Washer And Rear Wiper/Washer” in this section.

Main Data and Specifications

Torque Specifications

Application	N·m	kg·m	Lb Ft	Lb In
Windshield Wiper Motor Shaft Nut	14	1.4	—	122
Windshield Wiper Arm Nuts	31	3.2	23	—
Rear Wiper Motor Shaft Nut	6	0.6	—	52
Rear Wiper Arm Nut	9	0.9	—	78
Headlight Wiper Arm Nuts	5	0.5	—	44

ENTERTAINMENT

CONTENTS

Service Precaution 8C–1
Cigarette Lighter 8C–2
General Description 8C–2
Removal 8C–2
Installation 8C–2
Digital Clock 8C–3
Removal 8C–3
Installation 8C–3
Rod Type Antenna 8C–4
Removal 8C–4
Installation 8C–4
Auto Antenna 8C–5
General Description 8C–5
Removal 8C–5
Installation 8C–5
Antenna Rod 8C–6
Removal 8C–6
Installation 8C–6
Radio 8C–7
Removal 8C–7
Installation 8C–7
Front Speaker 8C–8
Removal 8C–8
Installation 8C–8
Rear Speaker 8C–9
Removal 8C–9
Installation 8C–9

Service Precaution

WARNING: IF SO EQUIPPED WITH A SUPPLEMENTAL RESTRAINT SYSTEM (SRS), REFER TO THE SRS COMPONENT AND WIRING LOCATION VIEW IN ORDER TO DETERMINE WHETHER YOU ARE PERFORMING SERVICE ON OR NEAR THE SRS COMPONENTS OR THE SRS WIRING. WHEN YOU ARE PERFORMING SERVICE ON OR NEAR THE SRS COMPONENTS OR THE SRS WIRING, REFER TO THE SRS SERVICE INFORMATION. FAILURE TO FOLLOW WARNINGS COULD RESULT IN POSSIBLE AIR BAG DEPLOYMENT, PERSONAL INJURY, OR OTHERWISE UNNEEDED SRS SYSTEM REPAIRS.

CAUTION: Always use the correct fastener in the proper location. When you replace a fastener, use ONLY the exact part number for that application. ISUZU will call out those fasteners that require a replacement after removal. ISUZU will also call out the fasteners that require thread lockers or thread sealant. UNLESS OTHERWISE SPECIFIED, do not use supplemental coatings (Paints, greases, or other corrosion inhibitors) on threaded fasteners or fastener joint interfaces. Generally, such coatings adversely affect the fastener torque and the joint clamping force, and may damage the fastener. When you install fasteners, use the correct tightening sequence and specifications. Following these instructions can help you avoid damage to parts and systems.

Cigarette Lighter

General Description

When the cigarette lighter is pushed in with the starter switch at either “ACC” or “ON” position, a circuit is formed in the cigarette lighter case to heat the lighter coil.
The cigarette lighter is sprung back to its original position after the lighter coil is heated.

Removal

1. Disconnect the battery ground cable.
2. Remove the lower cluster assembly(1).
   Refer to the Instrument Panel Assembly removal steps in Body Structure section.
3. Disconnect the connectors, remove the socket, the retaining ring(7), the outer case(6), the cigarette lighter(3) and socket(4), the bezel(5) and then remove the cigarette lighter assembly(2).

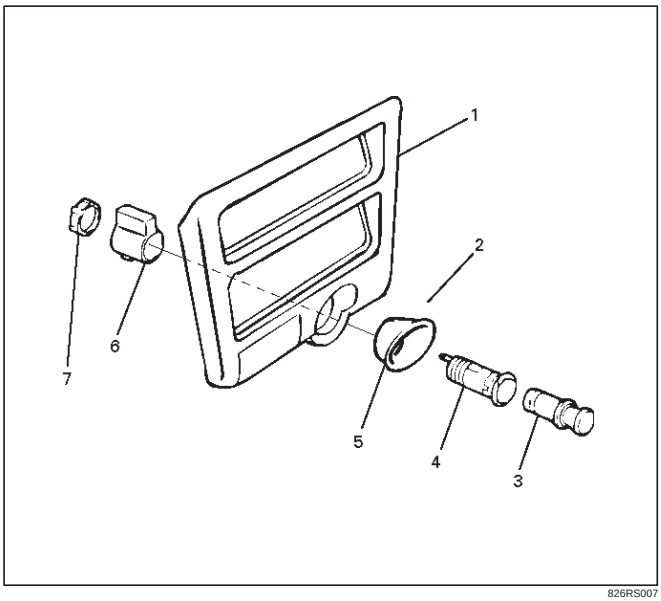

826RS007

Installation

To install, follow the removal steps in the reverse order, noting the following point.

1. When installing the bezel, align the projected portion of the socket with the notch of the bezel.

Digital Clock

Removal

1. Disconnect the battery ground cable.
2. Remove the front console assembly(1).
   Refer to the Instrument Panel Assembly in Body Structure section.
3. Remove the lower cluster assembly(2).
   Refer to the Instrument Panel Assembly in Body Structure section.
4. Remove the instrument panel driver lower cover assembly(3).
   Refer to the Instrument Panel Assembly in Body Structure section.

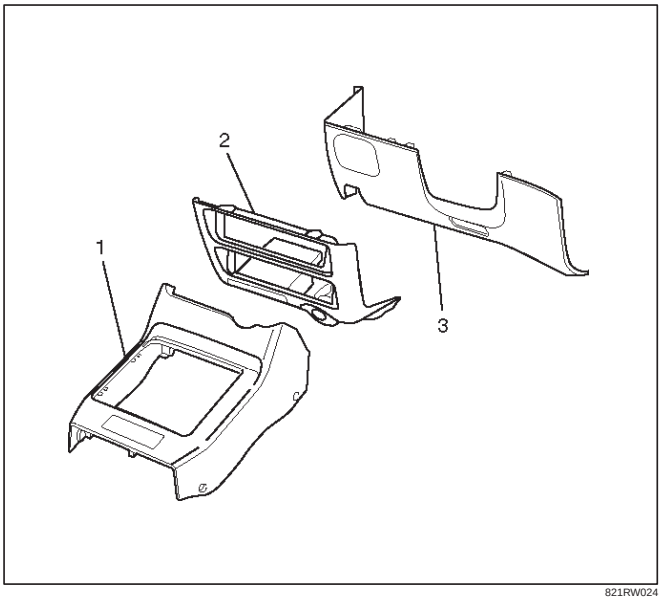

821RW024

5. Remove the instrument panel cluster assembly(4).
   Refer to the Instrument Panel Assembly in Body Structure section.
6. Disconnect the connector and push the lock from the back side of the instrument panel cluster assembly to remove the digital clock(5).

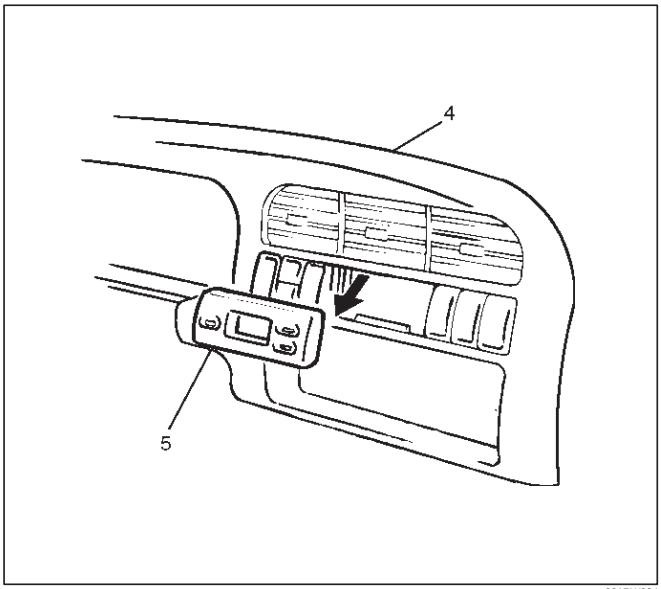

821RW034

Installation

To install, follow the removal steps in the reverse order, noting the following point.

1. Push in the switch with your fingers until it locks securely.

Rod Type Antenna

Removal

1. Disconnect the battery ground cable.
2. Turn the antenna rod(1) counterclockwise to remove it.
3. Remove three screws and nine clips to remove the fender inner liner(2).
4. Disconnect the feeder cable connector at the inside of the vehicle, remove the housing bracket screw, turn the lock nut counterclockwise to remove it together with the base mold and then remove the housing(3).

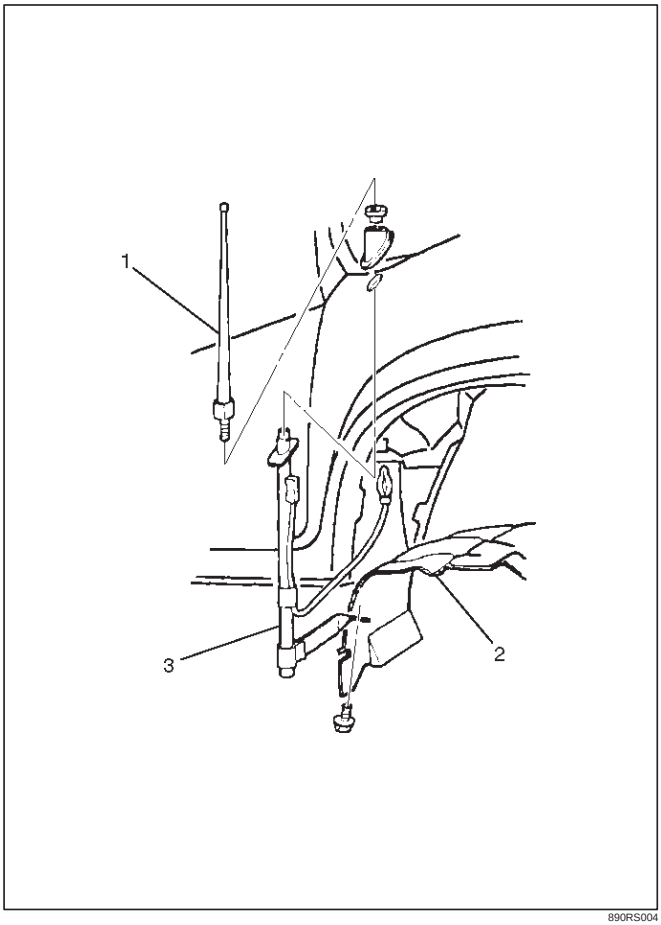

890RS004

Installation

To install, follow the removal steps in the reverse order.

Auto Antenna

General Description

The auto antenna is interlocked with the radio switch. The antenna rod goes up when the switch is on, and goes down when the switch is off. The antenna rod also goes down when the starter switch is turned off with the radio on.
The antenna rod goes up or down when the cable connected to the uppermost rod is let out or taken up by the rotation of motor.
The motor is provided with a built-in limit switch. When the up/down motion of the antenna is completed, the limit switch is activated to cut off the circuit.

Removal

1. Disconnect the battery ground cable.
2. Remove three screws and nine clips to remove the fender inner liner(4).
3. Disconnect the feeder cord and the antenna motor connector at the inside of the vehicle.
4. Remove the lock nut(1) and base mold(2).
5. After taking off the clips and screws, remove the motor bracket(5).

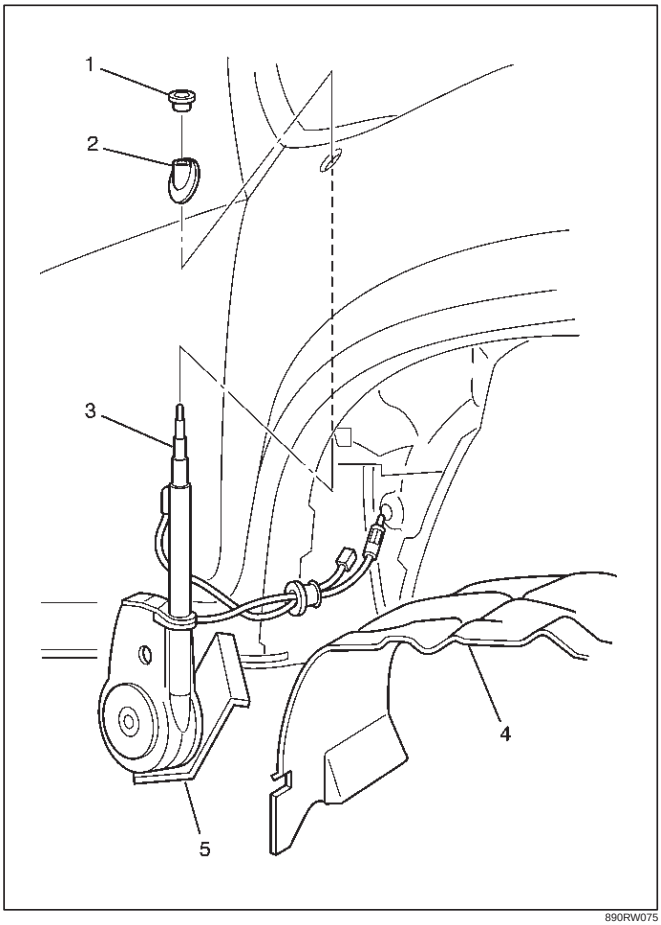

890RW075

Installation

To install, follow the removal steps in the reverse order.

Antenna Rod

Removal

1. Disconnect the battery ground cable.
2. Remove the antenna nut(1).
3. Until the lower part of the antenna rod(4) is removed from the bezel part, rotate the antenna motor in an ascending way, and expand the rod.
4. Turn the antenna top(2) counterclockwise.
5. Remove the contact sleeve(3).
6. Remove the antenna rod(4).

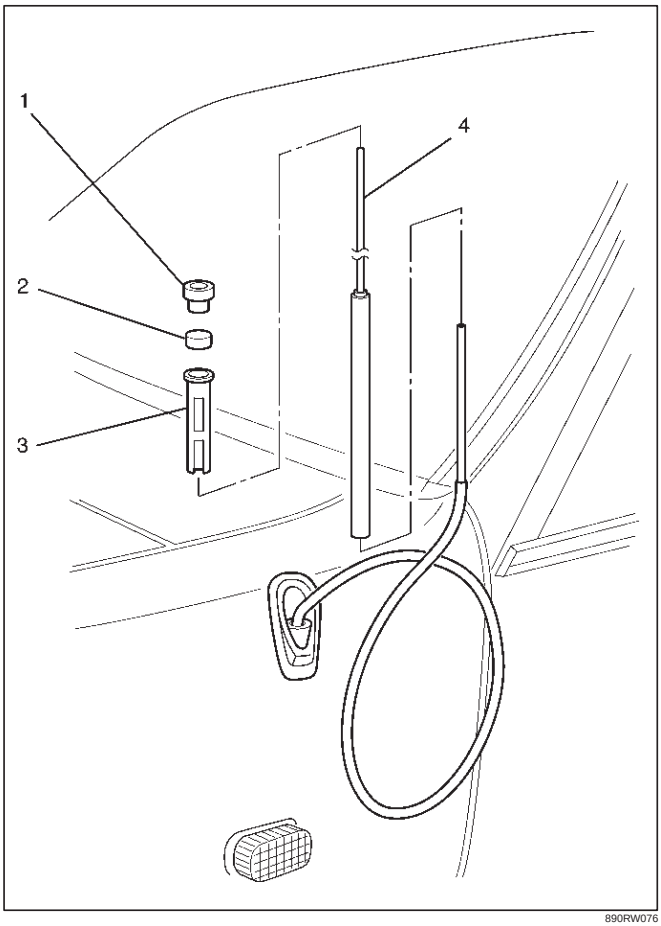

890RW076

Installation

To install, follow the removal steps in the reverse order, nothing the following points.

1. Rotate the antenna motor in a descend way, and push in vertically until the antenna rod is in the complete state of storage.
2. After ending the installation, confirm that the antenna rod works correctly.

Radio

Removal

1. Disconnect the battery ground cable.
2. Remove the front console assembly (1).
   Refer to the Instrument Panel Assembly in Body Structure section.
3. Remove the lower cluster assembly (2).
   Refer to the Instrument Panel Assembly in Body Structure section.
4. Remove the instrument panel driver lower cover assembly (3).
   Refer to the Instrument Panel Assembly in Body Structure section.

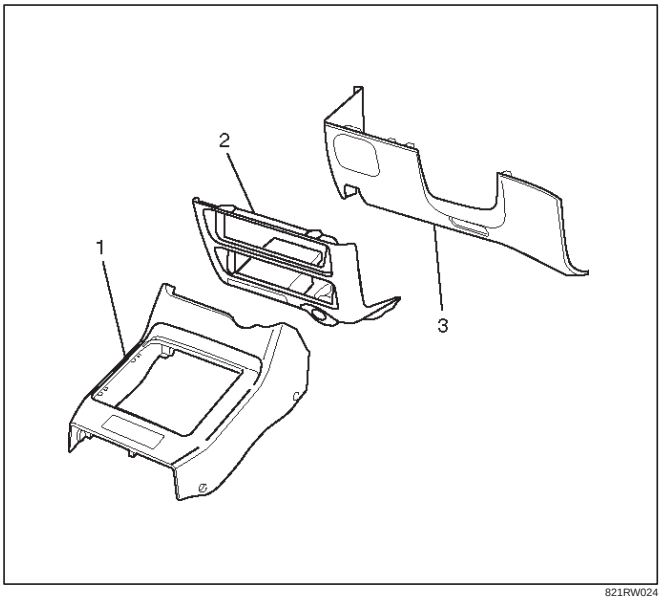

821RW024

5. Remove the instrument panel cluster assembly(4).
   Refer to the Instrument Panel Assembly in Body Structure section.
6. Remove two screws and disconnect the radio connector(5) and antenna feeder plug(6) to remove the radio(7).

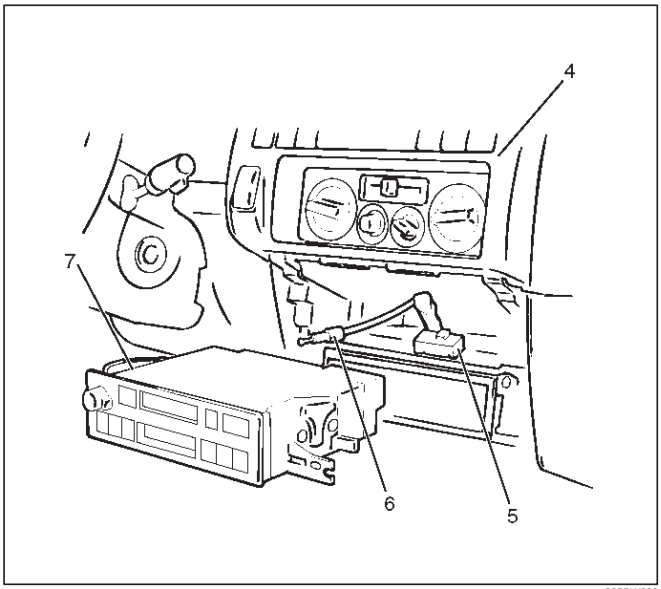

825RW039

Installation

To install, follow the removal steps in the reverse order.

Front Speaker

Removal

1. Disconnect the battery ground cable.
2. Pull the grille(1) to release the locks and then remove it.
3. Remove four screws and disconnect the connector(3) to remove the speaker(2).

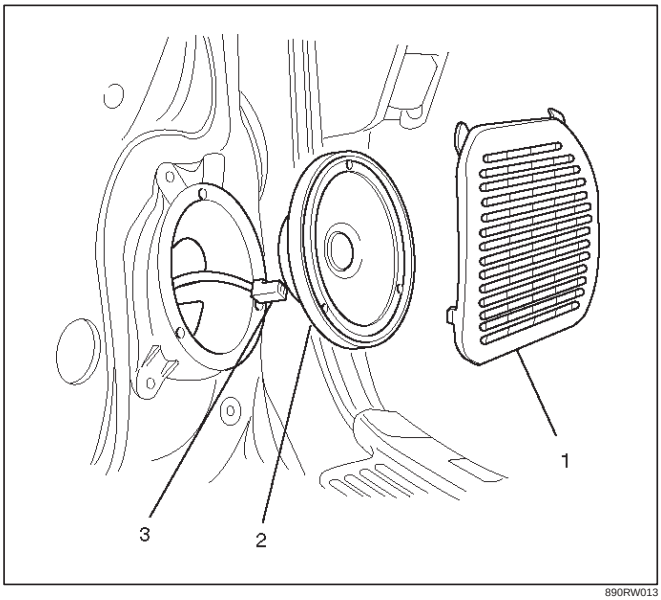

890RW013

Installation

To install, follow the removal steps in the reverse order.

Rear Speaker

Removal

1. Disconnect the battery ground cable.
2. Pull the grille(1) to release the locks and then remove it.
3. Remove four screws and disconnect the connector(3) to remove the speaker(2).

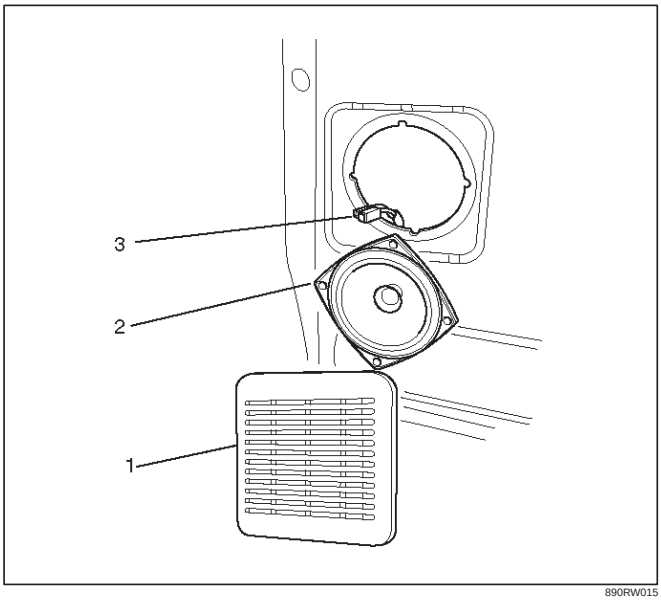

890RW015

Installation

To install, follow the removal steps in the reverse order.

MEMO

BODY AND ACCESSORIES

WIRING SYSTEM

CONTENTS

Service Precautions 8D–3
General Description 8D–4
Notes for Working on Electrical Items . . 8D–4
Symbols and Abbreviations 8D–10
Parts for Electrical Circuit 8D–12
Reading the Circuit Diagram 8D–21
Main Data and Specifications 8D–24
Fuse, Fusible Link and Circuit Breaker Location 8D–24
Relay Location 8D–27
Diode Location 8D–30
Grounding Point 8D–31
Cable Harness Routing 8D–43
Fuse Block Circuit 8D–51
Circuit Diagram 8D–52
Start and Charging 8D–65
General Description 8D–65
Circuit Diagram 8D–66
Parts Location 8D–68
Powertrain Control Module (PCM) 8D–78
General Description 8D–78
Circuit Diagram 8D–79
Parts Location 8D–91
QOSIII (4JG2) 8D–109
General Description 8D–109
Circuit Diagram 8D–110
Parts Location 8D–112
QOS and EGR System (4JG2) 8D–116
General Description 8D–116
Circuit Diagram 8D–117
Parts Location 8D–120
Headlight and Fog Light 8D–125
General Description 8D–125
Circuit Diagram 8D–126
Parts Location 8D–128
Diagnosis 8D–132
Rear Foglight 8D–148
General Description 8D–148
Circuit Diagram 8D–149
Parts Location 8D–152
Diagnosis 8D–153
Headlight Leveling 8D–155
General Description 8D–155
Circuit Diagram 8D–156
Parts Location 8D–157
Diagnosis 8D–158
Clearance Light, Taillight and License Plate Light 8D–161
General Description 8D–161
Circuit Diagram 8D–162
Parts Location 8D–165
Diagnosis 8D–170
Interior Illumination Light 8D–182
General Description 8D–182
Circuit Diagram 8D–183
Parts Location 8D–187
Diagnosis 8D–194
Turn Signal Light and Hazard Warning Light 8D–195
General Description 8D–195
Circuit Diagram 8D–196
Parts Location 8D–199
Diagnosis 8D–203
Stoplight 8D–210
General Description 8D–210
Circuit Diagram 8D–211
Parts Location 8D–214
Diagnosis 8D–218
Backup Light 8D–222
General Description 8D–222
Circuit Diagram 8D–223
Parts Location 8D–225
Diagnosis 8D–229
Horn 8D–232
General Description 8D–232
Circuit Diagram 8D–233
Parts Location 8D–234
Diagnosis 8D–237
Dome Light, Luggage Room Light, Courtesy Light and Map Light 8D–239
General Description 8D–239
Circuit Diagram 8D–240
Parts Location 8D–242
Power Door Lock 8D–246
General Description 8D–246
Circuit Diagram 8D–247
Parts Location 8D–252
Diagnosis 8D–258
Power Window 8D–263
General Description 8D–263
Circuit Diagram 8D–264
Parts Location 8D–265

Diagnosis 8D–268
Cruise Control 8D–274
General Description 8D–274
Circuit Diagram 8D–275
Parts Location 8D–277
Diagnosis 8D–281
Anti–Lock Brake System (ABS) 8D–286
General Description 8D–286
Circuit Diagram 8D–287
Parts Location 8D–293
A/T Shift Lock 8D–300
General Description 8D–300
Circuit Diagram 8D–301
Parts Location 8D–302
Windshield Wiper/Washer 8D–305
General Description 8D–305
Circuit Diagram 8D–306
Parts Location 8D–307
Diagnosis 8D–310
Rear Wiper/Washer 8D–318
General Description 8D–318
Circuit Diagram 8D–319
Parts Location 8D–321
Diagnosis 8D–325
Headlight Wiper/Washer 8D–331
General Description 8D–331
Circuit Diagram 8D–332
Parts Location 8D–334
Diagnosis 8D–338
Rear Defogger 8D–344
General Description 8D–344
Circuit Diagram 8D–345
Parts Location 8D–346
Diagnosis 8D–349
Audio 8D–352
General Description 8D–352
Circuit Diagram 8D–353
Parts Location 8D–357
Cigarette Lighter and Digital Clock 8D–361
General Description 8D–361
Circuit Diagram 8D–362
Parts Location 8D–363
Power Door Mirror 8D–366
General Description 8D–366
Circuit Diagram 8D–367
Parts Location 8D–370
Diagnosis 8D–375
Anti–Theft System with Keyless Entry 8D–382
Circuit Diagram 8D–383
Parts Location 8D–394
Diagnosis 8D–401
Meter and Warning/Indicator Light 8D–414
General Description 8D–414
Circuit Diagram 8D–415
Parts Location 8D–433
Diagnosis 8D–449
A/T Shift Indicator 8D–468
General Description 8D–468
Circuit Diagram 8D–469
Parts Location 8D–471
Heater and Air Conditioning 8D–475
General Description 8D–475
Circuit Diagram 8D–476
Parts Location 8D–478
Sun Roof 8D–488
General Description 8D–488
Circuit Diagram 8D–489
Parts Location 8D–490
Diagnosis 8D–493
Seat Heater 8D–497
General Description 8D–497
Circuit Diagram 8D–498
Parts Location 8D–499
Diagnosis 8D–502
Power Seat 8D–504
General Description 8D–504
Circuit Diagram 8D–505
Parts Location 8D–507
Diagnosis 8D–511
Shift on the Fly System 8D–517
Circuit Diagram 8D–518
Parts Location 8D–520
Torque on Demand (TOD) 8D–542
Circuit Diagram 8D–543
Parts Location 8D–546
Supplemental Restraint System (SRS)–
AIR BAG 8D–547
General Description 8D–547
Circuit Diagram 8D–548
Parts Location 8D–552
Connector List 8D–554

Service Precaution

WARNING: THIS VEHICLE HAS A SUPPLEMENTAL RESTRAINT SYSTEM (SRS). REFER TO THE SRS COMPONENT AND WIRING LOCATION VIEW IN ORDER TO DETERMINE WHETHER YOU ARE PERFORMING SERVICE ON OR NEAR THE SRS COMPONENTS OR THE SRS WIRING. WHEN YOU ARE PERFORMING SERVICE ON OR NEAR THE SRS COMPONENTS OR THE SRS WIRING, REFER TO THE SRS SERVICE INFORMATION. FAILURE TO FOLLOW WARNINGS COULD RESULT IN POSSIBLE AIR BAG DEPLOYMENT, PERSONAL INJURY, OR OTHERWISE UNNEEDED SRS SYSTEM REPAIRS.

CAUTION: Always use the correct fastener in the proper location. When you replace a fastener, use ONLY the exact part number for that application. ISUZU will call out those fasteners that require a replacement after removal. ISUZU will also call out the fasteners that require thread lockers or thread sealant. UNLESS OTHERWISE SPECIFIED, do not use supplemental coatings (Paints, greases, or other corrosion inhibitors) on threaded fasteners or fasteners joint interfaces. Generally, such coatings adversely affect the fastener torque and the joint clamping force, and may damage the fasteners. When you install fasteners, use the correct tightening sequence and specifications. Following these instructions can help you avoid damage to parts and systems.

General Description

The chassis electrical system is a 12–volt system with a negative ground polarity.
Wire size are appropriate to respective circuits, and classified by color. (The classification of harnesses by color is shown on the circuit diagram for ease of harness identification.)
The wire size is determined by load capacity and the length of wire required.
The vehicle harnesses are: body harness, chassis harness, engine room harness, instrument harness, transmission harness, engine ECGI harness, dome light harness, door harness, rear body harness, tailgate harness, SRS harness and battery cables.
The harnesses are protected either by tape or corrugated tube, depending on harness location.
The circuit for each system consists of the power source, wire, fuse, relay, switch, load parts and ground, all of which are shown on the circuit diagram.
In this section, each electrical device is classified by system.
For major parts shown on the circuit based on the circuit diagram for each system, a summary, diagnosis of troubles and inspection procedures are detailed.

Notes for Working on Electrical Items

Disconnecting the Battery Cable

1. All switches should be in the “OFF” position.
2. Disconnect the battery ground cable (2).
3. Disconnect the battery positive cable (1).

CAUTION: It is important that the battery ground cable be disconnected first. Disconnecting the battery positive cable first can result in a short circuit.

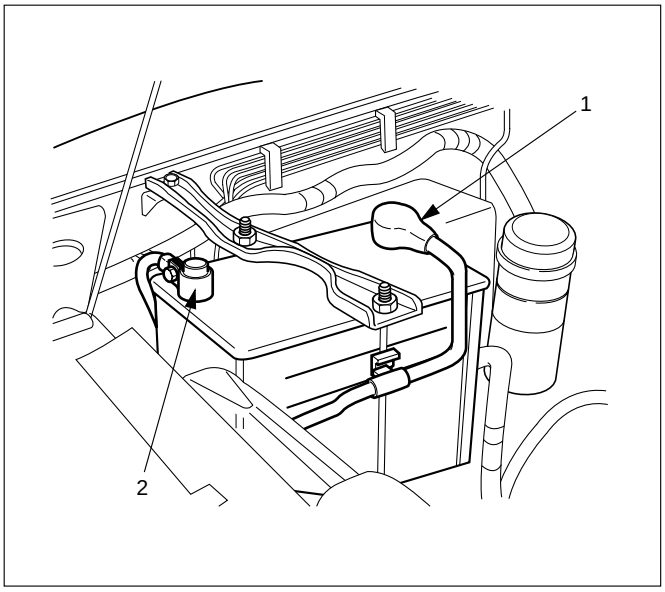

Connecting the Battery Cable

Follow the disconnecting procedure in the reverse order.

CAUTION: Clean the battery terminal and apply a light coat of grease to prevent terminal corrosion.

Disconnecting the Connector

Some connectors have a tang lock to hold the connectors together during vehicle operation.
Some tang locks are released by pulling them towards you (1).
Other tang locks are released by pressing them forward (2).
Determine which type of tang lock is on the connector being handled.

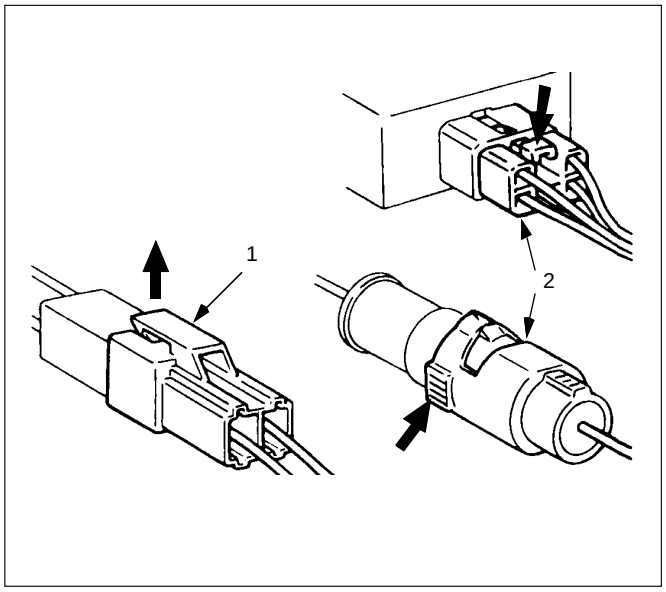

Firmly grasp both sides (male and female) of the connector (3).
Release the tang lock and carefully pull the two halves of the connector apart.
Never pull on the wires to separate the connectors (4).

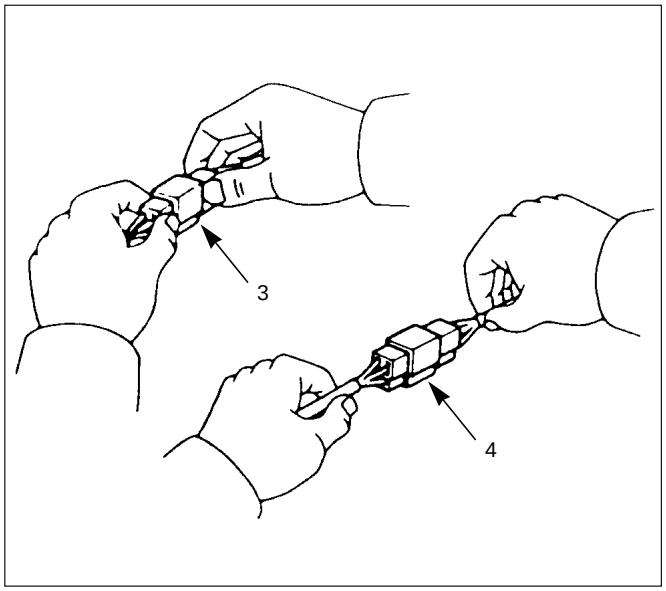

When removing the connector for relay (MR5B type) (5), unfasten the tang lock of the connector by using a screwdriver, then pull the relay out as shown in the figure.

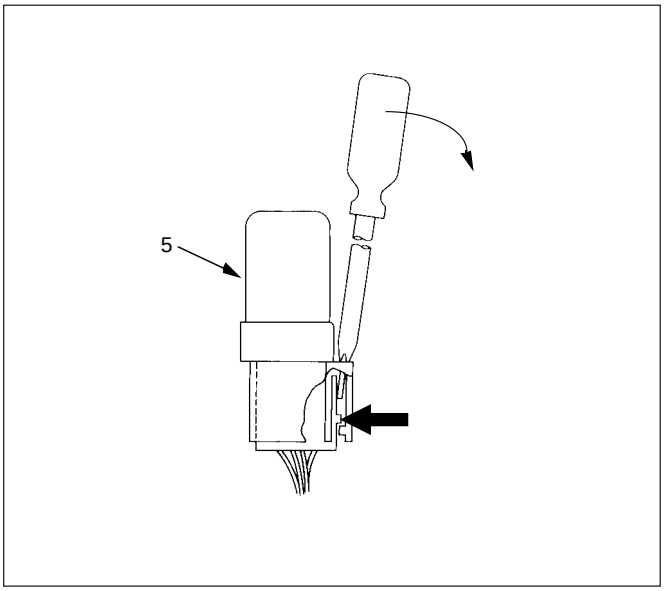

Connecting the Connector

Firmly grasp both sides (male and female) of the connectors. Be sure that both sides of the connectors are aligned with each other.
Firmly but carefully push the two sides of the connectors together until a distinct click is heard (2).
Do not connect them by force if they can not be connected smoothly (1).

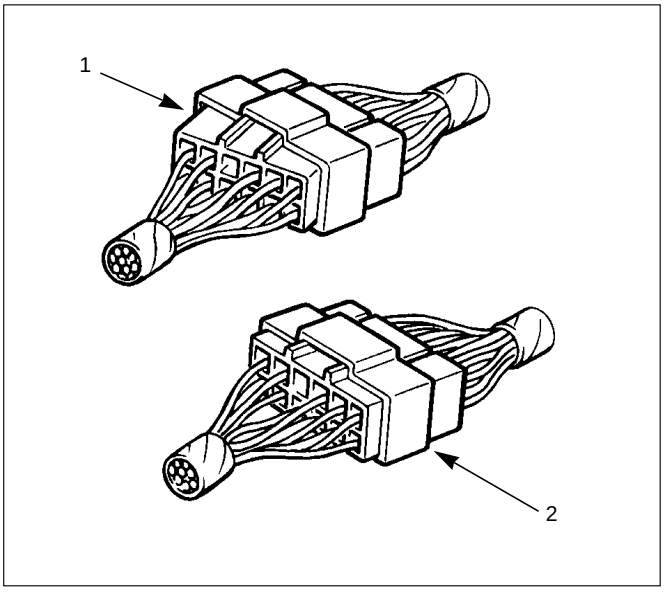

Connector Inspection

Use a circuit tester to check the connector for continuity. Insert the test probes (1) from the connector wire side.

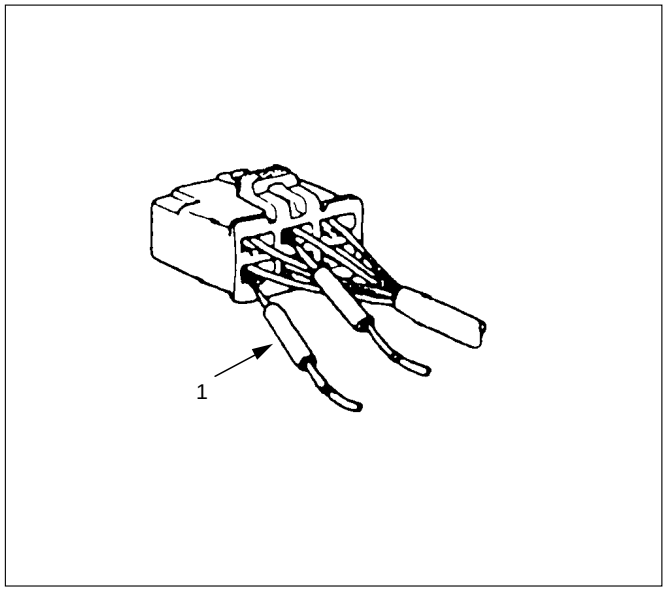

Never insert the circuit tester test probes (2) into the connector open end to test the continuity.
Broken or open connector terminals will result.

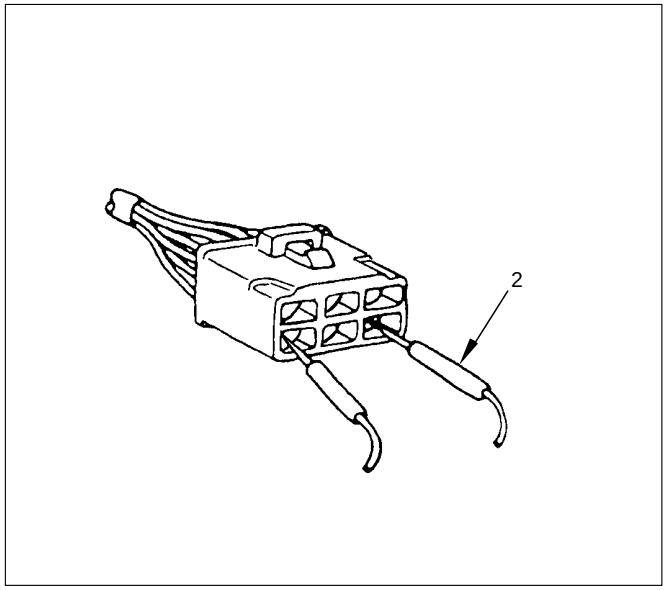

Waterproof Connector Inspection

It is not possible to insert the test probes (2) into the connector wire side of a waterproof connector.
Use one side of a connector (1) with its wires cut to make the test. Connect the test connector to the connector to be tested (3). Connect the test probes to the cut wires to check the connector continuity.

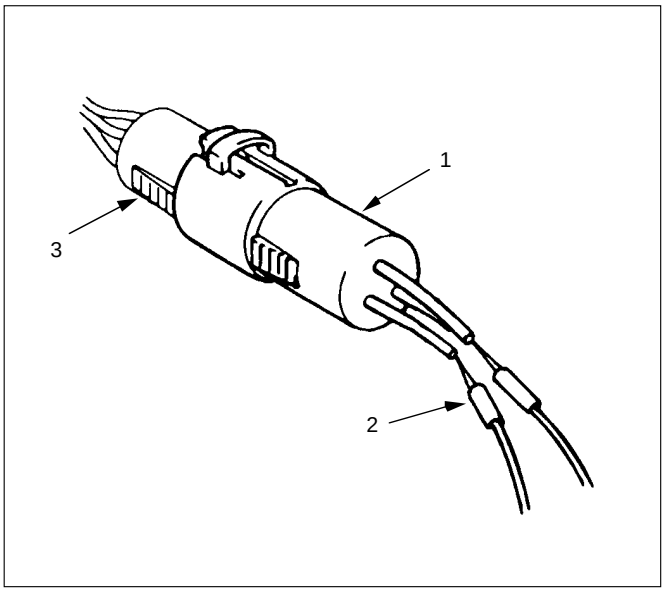

Connector Pin Removal – Connector Housing Tang Lock Type

1. Insert a slender shaft (1) into the connector housing open end (5).
2. Push the tang lock (2) up (in the direction of the arrow in the illustration).
   Pull the wire (3) with pin (4) free from the wire side of the connector.

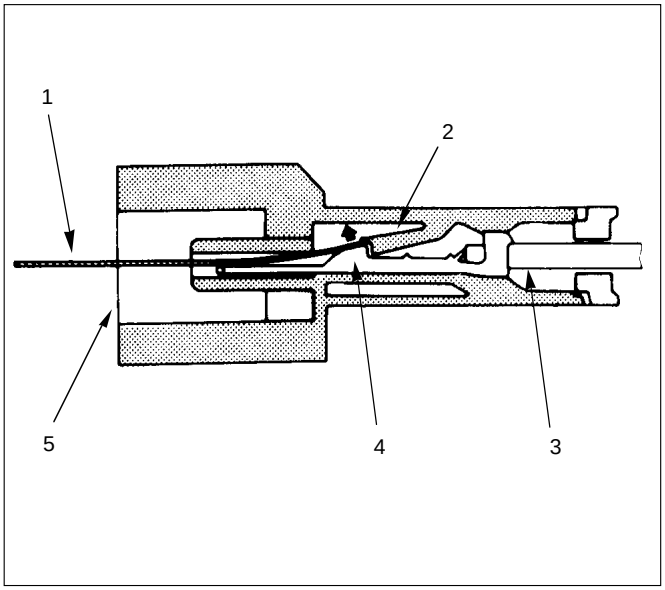

Connector Pin Removal – Pin Tang Lock Type

1. Insert a slender shaft (1) into the connector housing open end (5).
2. Push the tang lock (2) flat (toward the wire (3) side of the connector.
   Pull the wire with pin (4) free from the wire side of the connector.

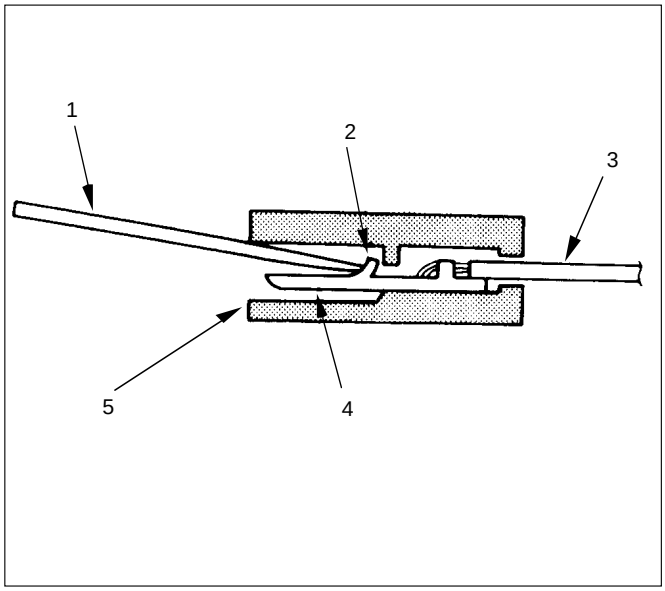

Connector Pin Insertion

1. Check that the tang lock (1) is fully up.
2. Insert the pin (3) from the connector wire (2) side.
   Push the pin in until the tang lock closes firmly.
3. Gently pull on the wires to make sure that the connector pin is firmly set in place.

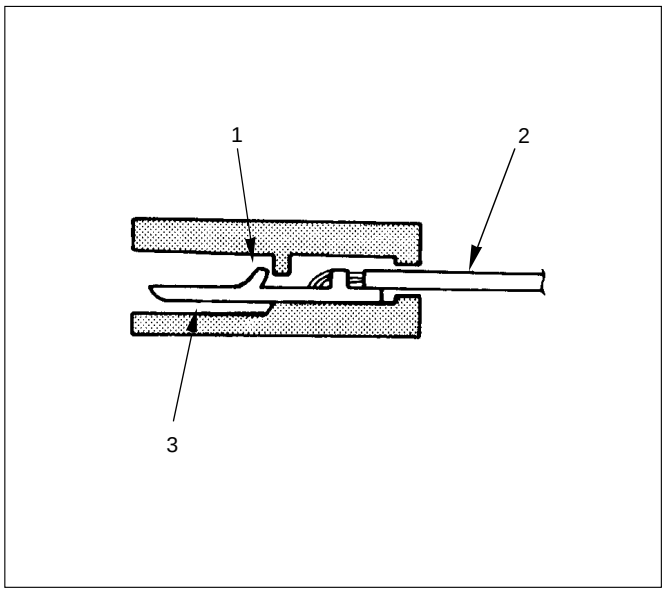

Parts Handling

Be careful when handling electrical parts. They should not be dropped or thrown, because short circuit or other damage may result.

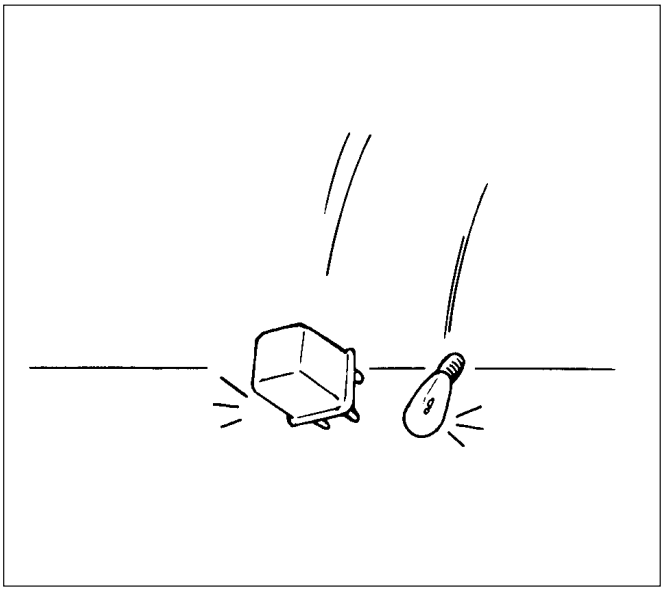

Cable Harness

1. When installing the parts, be careful not to pinch or wedge the wiring harness.
2. All electrical connections must be kept clean and tight.

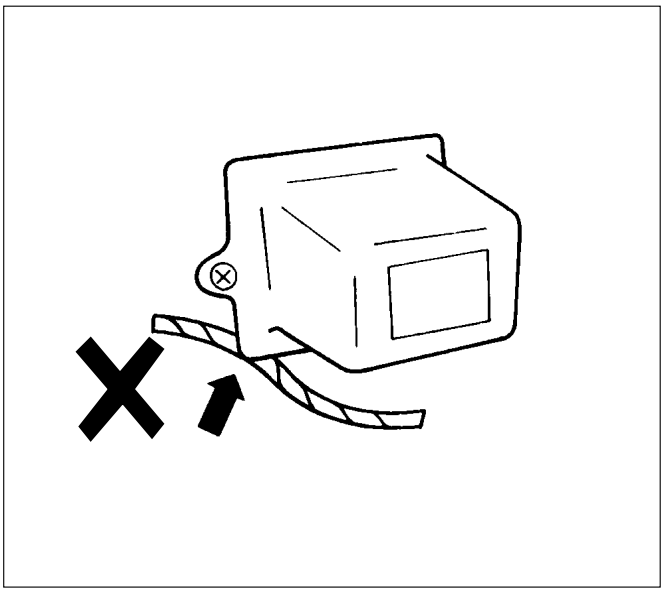

3. Use a grommet or guard tube (1) to protect the wiring harness from contacting a sharp edge or surface (2).

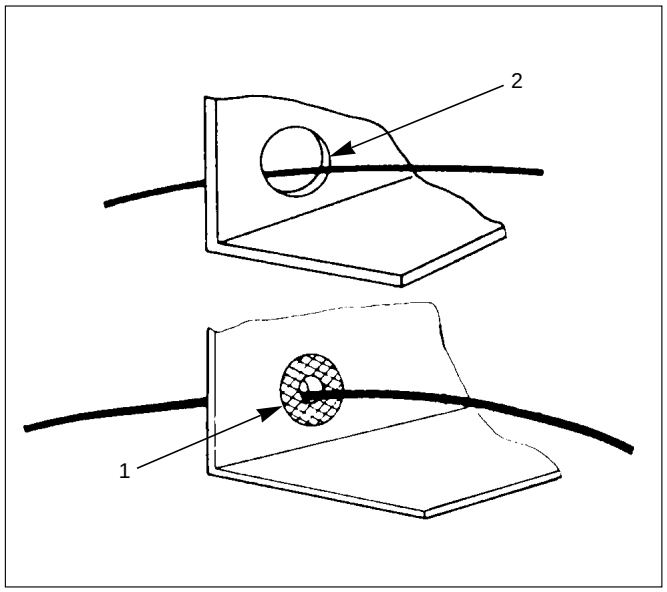

4. Position the wiring harness with enough clearance from the other parts and guard the wiring harness with a vinyl tube (2) and clips (1) to avoid direct contact.

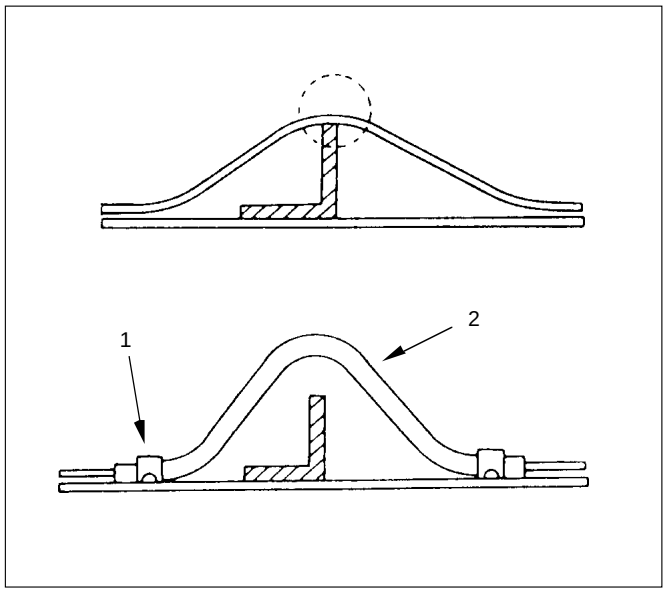

5. The wiring harness between engine and chassis should be long enough (2). Tension of the wire (1) may causes chafing or damage due to various vibrations.

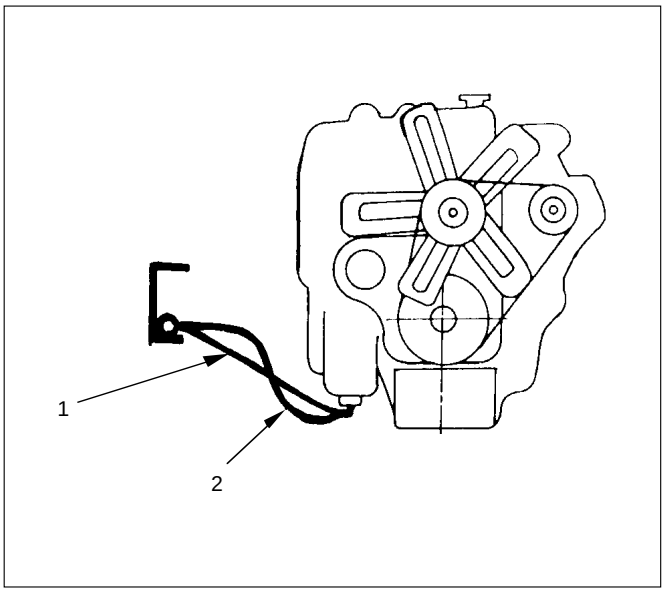

Splicing Wire

1. If the harness is taped, remove the tape. To avoid wire insulation damage, use a sewing “seam ripper” (available from sewing supply stores) to cut open the harness.

   If the harness has a black plastic conduit, simply pull out the desired wire.
2. Begin by cutting as little wire off the harness as possible. You may need the extra length of wire later if you decide to cut more wire off to change the location of a splice. You may have to adjust splice locations to make certain that each splice is at least 1–1/2” (40 mm) away from other splices, harness branches, or connectors.
3. When replacing a wire, use a wire of the same size as the original wire.

   Check the stripped wire for nicks or cut stands. If the wire is damaged, repeat the procedure on a new section of wire. The two stripped wire ends should be equal in length.
4. Select the proper clip to secure the splice.

   To determine the proper clip size for the wire being spliced, follow the directions included with your clips.

   Select the correct anvil on the crimper. (On most crimpers your choice is limited to either a small or large anvil.)

   Overlap the two stripped wire ends and hold them between your thumb and forefinger as shown in the figure.

   The center the spline clip (1) under the stripped wires and hold it in place.

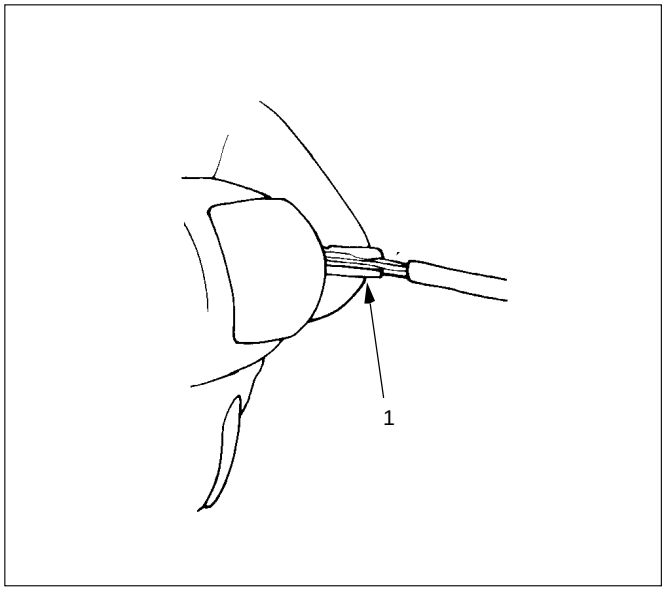

- Open the crimping tool to its full width and rest one handle on a firm flat surface.
- Center the back of the splice clip on the proper anvil and close the crimping tool to the point where the back of the splice clip touches the wings of the clip.
- Make sure that the clip and wires are still in the correct position. Then, apply steady pressure until the crimping tool closes as shown in the figure.

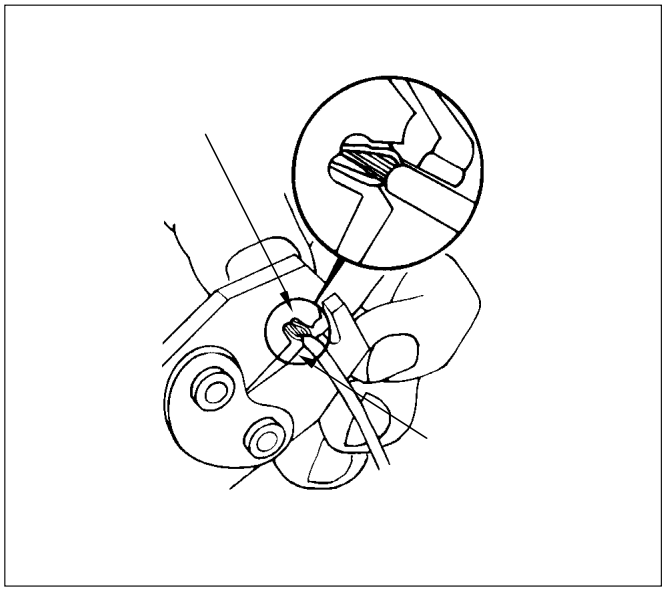

Before crimping the ends of the clip (1), be sure that:

- The wires extend beyond the clip in each direction.
- No strands of wire are cut loose, and
- No insulation is caught under the clip.

Crimp the splice again, once on each end.
Does not let the crimping tool (2) extend beyond the edge of the clip or you may damage or nick the wires as shown in the figure.

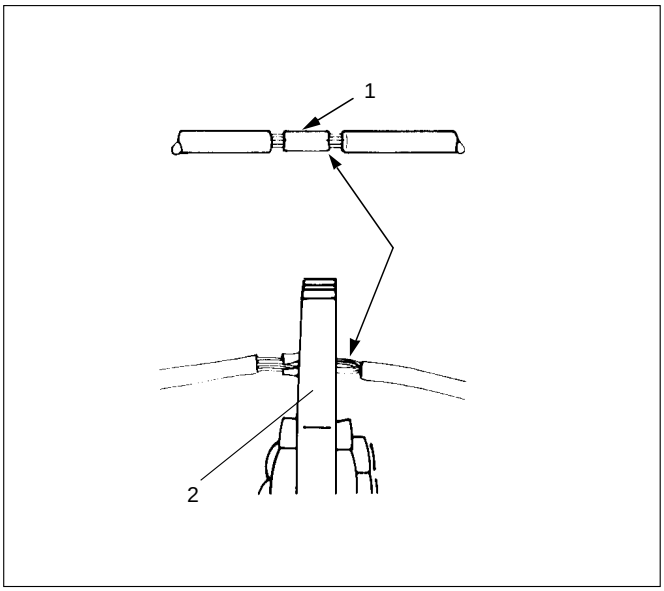

5. Apply 60/40 resin core solder to the opening in the back of the clip as shown in the figure.

   Follow the manufacturer's instructions for the solder equipment you are using.

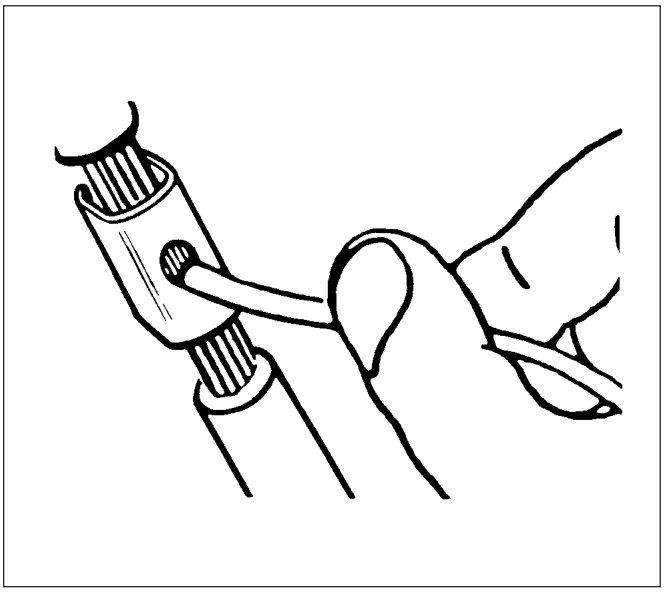

6. Center and roll the splicing tape.

   The tape should cover the entire splice.

   Roll on enough tape (1) to duplicate the thickness of the insulation on the existing wires.

   Does not flag the tape (2). Flagged tape may not provide enough insulation, and the flagged ends will tangle with the other wires in the harness as shown in the figure.

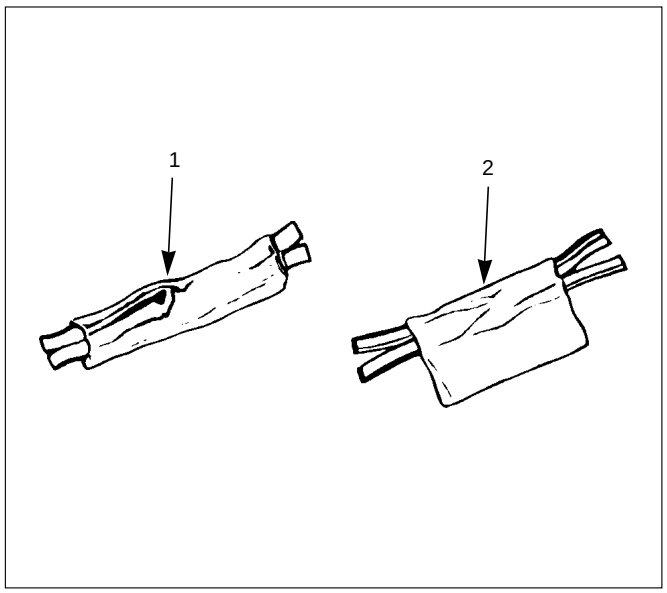

   If the wire does not belong in a conduit or other harness covering, tape the wire again. use a winding motion to cover the first piece of tape as shown in the figure.

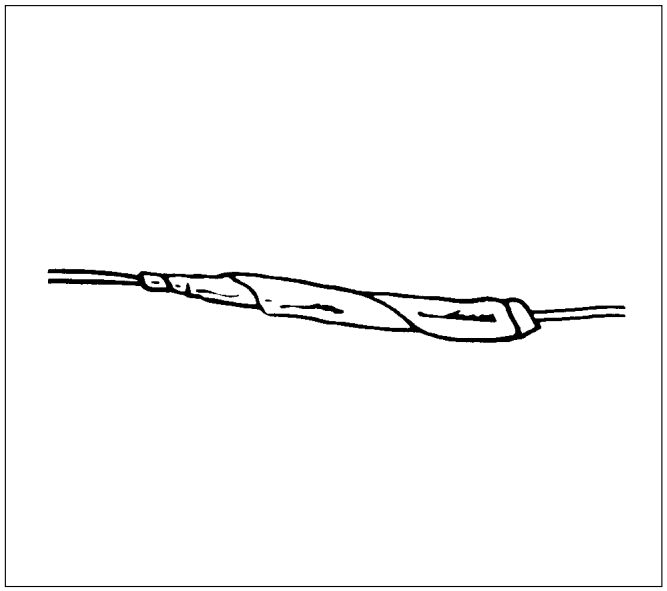

Symbols and Abbreviations

Symbols

Symbol	Meaning of Symbol	Symbol	Meaning of Symbol
	Fuse		Bulb
	Fusible link		Double filament bulb
	Fusible link wire	M	Motor
	Switch		Variable register Rheostat
	Switch		Coil (inductor), solenoid, magnetic valve
	Switch (Normal close type)		Relay
	Contact wiring		
+ –	Battery		
	Diode		Connector
	Electronic parts		Light emitting diode
	Resistor		Reed switch
	Speaker		Condenser
	Buzzer		Horn
	Circuit breaker		Vacuum switching valve

Abbreviations

Abbreviation	Meaning of Abbreviation	Abbreviation	Meaning of Abbreviation
A	Ampere (S)	kW	Kilowatt
ABS	Anti-lock brake system	LH	Left hand
ASM	Assembly	LWB	Long wheel base
AC	Alternating current	M/T	Manual transmission
A/C	Air conditioner	OD	Over drive
ACC	Accessories	OPT	Option
A/T	Automatic transmission	PCM	Powertrain control module
C/B	Circuit breaker	QOS	Quick on start
CSD	Cold start device	RH	Right hand
DIS	Direct ignition system	RR	Rear
EBCM	Electronic brake control module	SDM	Sensing and diagnostic module
ECGI	Electronic control gasoline injection	SRS	Supplemental restraint system
ECM	Engine control module	ST	Start
ECU	Electronic control unit	STD	Standard
EFE	Early fuel evaporation	SW	Switch
EGR	Exhaust gas recirculation	SWB	Short wheel base
4A/T	4-speed automatic transmission	3A/T	3-speed automatic transmission
4WD	Four-wheel drive	V	Volt
FL	Fusible link	VSV	Vacuum switching valve
FRT	Front	W	Watt (S)
H/L	Headlight	WOT	Wide open throttle
IC	Integrated circuit	W/	With
IG	Ignition	W/O	Without

Parts for Electrical Circuit

Wiring – Wire color

All wires have color–coded insulation.
Wires belonging to a system's main harness will have a single color (1). Wires belonging to a system's subcircuits will have a colored stripe (2). Striped wires use the following code to show wire size and colors.

Example: 0.5 G / R

- R — Red (Stripe color)
- G — Green (Base color)
- 0.5 — Wire size (0.5 mm^2)

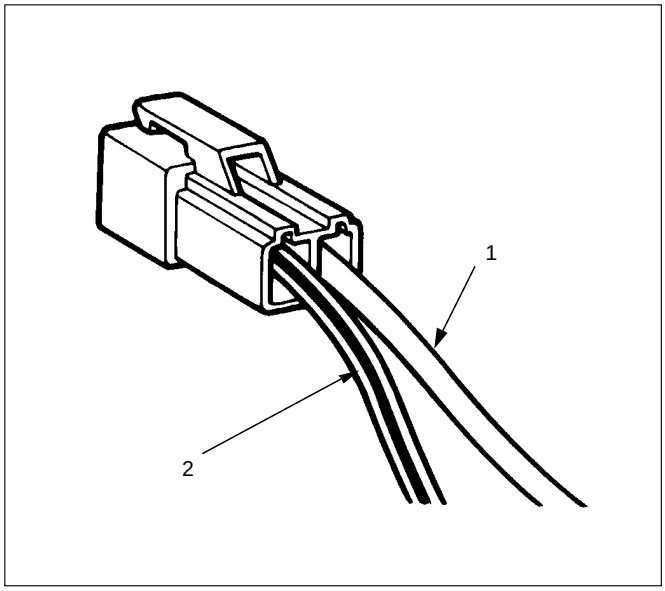

Wiring – Wire Color Coding

Abbreviations are used to indicate wire color within a circuit diagram.
Refer to the following table.

Color Coding	Meaning	Color Coding	Meaning
B	Black	BR	Brown
W	White	LG	Light green
R	Red	GR	Grey
G	Green	P	Pink
Y	Yellow	LB	Light blue
L	Blue	V	Violet
O	Orange		

Wiring – Wire Size

The size of wire used in a circuit is determined by the amount of current (amperage), the length of the circuit, and the voltage drop allowed. The following wire size and load capacity are specified. (Nominal size means approximate cross sectional area (1).)

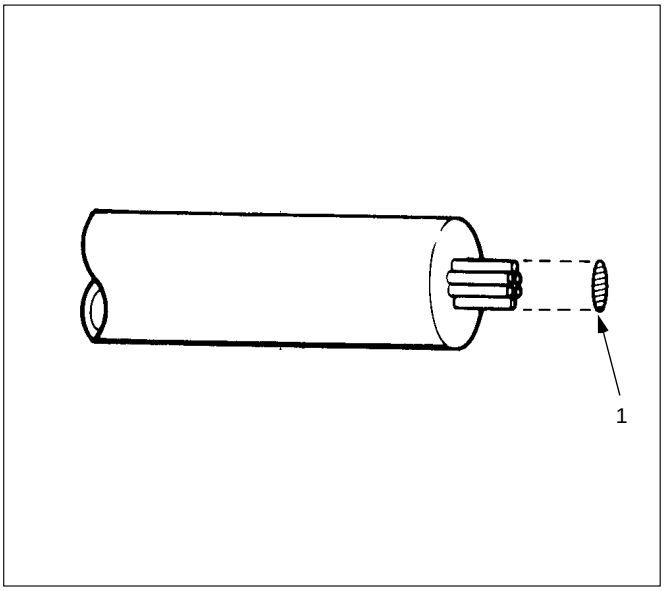

Wiring – Wire Size Table

Nominal size	Cross sectional area (mm^2)	Outside diameter (mm)	Allowable current (A)
0.3	0.372	1.5	9
0.5	0.563	1.7	12
0.85	0.885	1.9	16
1.25	1.287	2.2	21
2	2.091	2.7	28
3	3.296	3.6	37.5
5	5.227	4.4	53
8	7.952	5.5	67
15	13.36	7.0	75
20	20.61	8.2	97

Fuse

Fuses are the most common form of circuit protection used in vehicle wiring. A fuse is a thin piece of wire or strip of metal encased in a glass or plastic housing. It is wired in series with the circuit it protects. When there is an overload of current in a circuit, such as a short of a ground, the metal strip is designed to burn out and interrupt the flow of current. This prevents a surge of high current from reaching and damaging other components in the circuit.
Determine the cause of the overloaded before replacing the fuse.
The replacement fuse must have the same amperage specification as the original fuse.
Never replace a blown fuse with a fuse of a different amperage specification.
Doing so can result in an electrical fire or other serious circuit damage. A blown fuse is easily identified as shown in the figure.

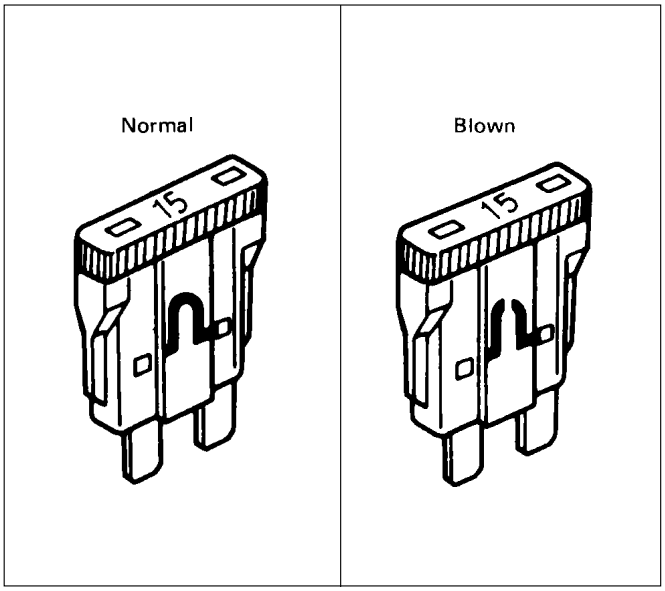

Fusible Link

The fusible link is primarily used to protect circuits where high amounts of current flow and where it would not be practical to use a fuse. For example, the starter circuit. When a current overload occurs, the fusible link melts open and interrupts the flow of current so as to prevent the rest of the wiring harness from burning.
Determine the cause of the overload before replacing the fusible link. the replacement fusible link must have the same amperage specification as the original fusible link.
Never replace a blown fusible link with fusible link of a different amperage specification. Doing so can result in an electrical fire or other serious circuit damage.
A blown fusible link is easily identified as shown in the figure.

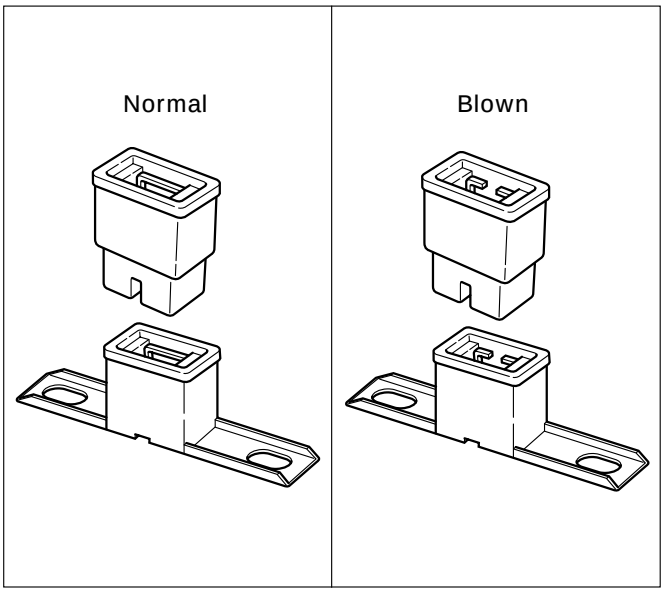

Fusible Link Specifications

Type	Rating	Case Color	Maximum Circuit Current (A)
Connector	30A	Pink	15
Connector	40A	Green	20
Bolted	50A	Red	25
Bolted	60A	Yellow	30
Bolted	80A	Black	40

Circuit Breaker

The circuit breaker is a protective device designed to open the circuit when a current load is in excess of rated breaker capacity. If there is a short or other type of overload condition in the circuit, the excessive current will open the circuit between the circuit breaker terminals. The reset knob (1) pops out when the circuit is open. Push the reset knob in place to restore the circuit after repairing it.

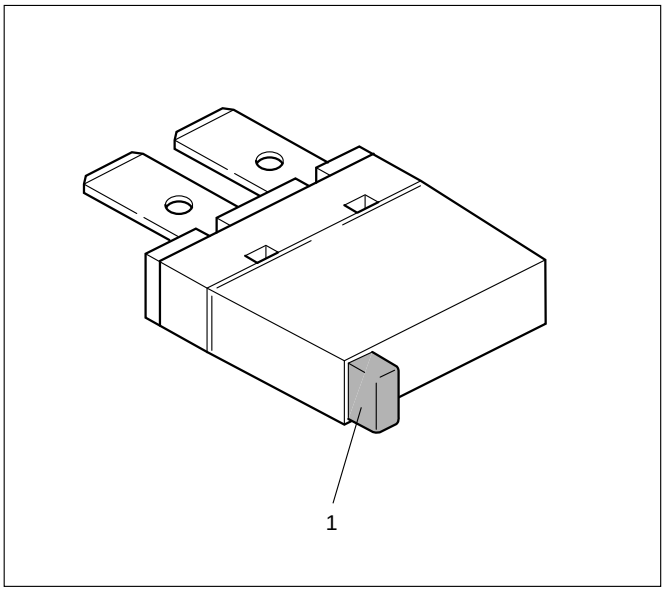

Relay

Battery and load location may require that a switch be placed some distance from either component. This means a longer wire and a higher voltage drop (1).
The installation of a relay between the battery and the load reduces the voltage drop (2).
Because the switch controls the relay, amperage through the switch can be reduced.

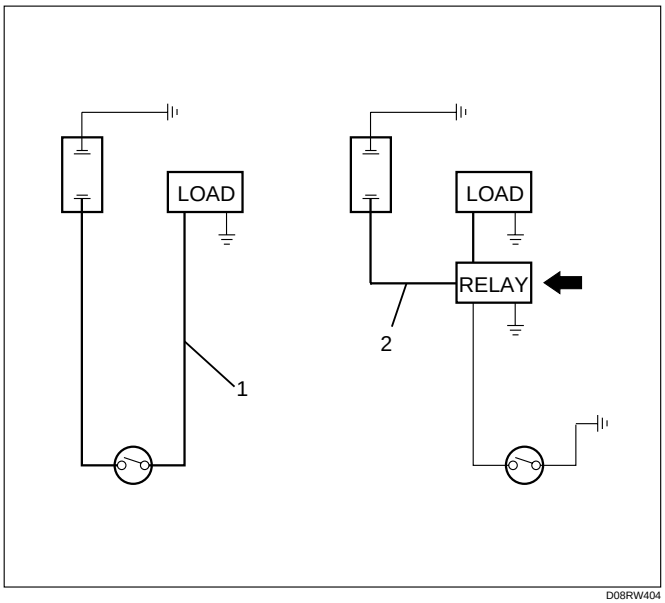

D08RW404

Relay Specifications and Configurations

Name/ Color	Rated voltage/Coil resistance	Internal circuit	Name/ Color	Rated voltage/Coil resistance	Internal circuit
1M (MR5L)/ Black	12V/ Approx. 80Ω Minimum operating voltage: 7V at 77˚F (25˚C)	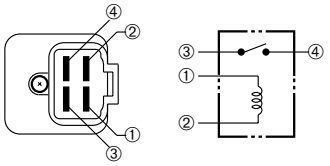	2M (MR5)/ Brown	12V/ Approx. 80Ω Minimum operating voltage: 7V at 77˚F (25˚C)	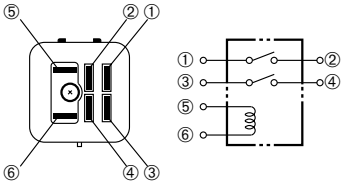
1B (MR5L)/ Grey	↑	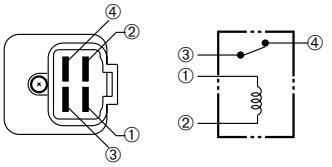	1B-1M (MR5)/ Grey	↑	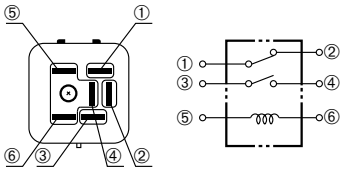
1M (MR5)/ Black (Case), Blue (Base)	↑	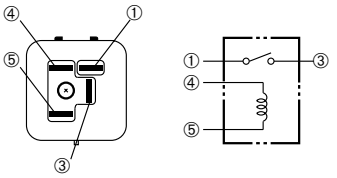	1M	↑ Minimum operating voltage: 9V at 68˚F (20˚C)	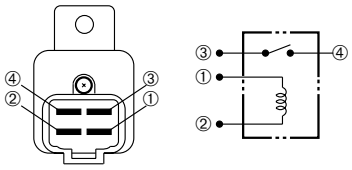
1T (MR5)/ Black/ Blue	↑	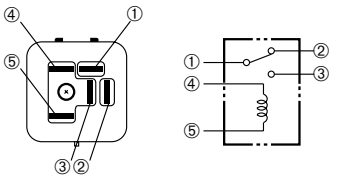	1M (MR5B)/ Black	12V Minimum operating voltage: 4.3V at 77˚F (25˚C)	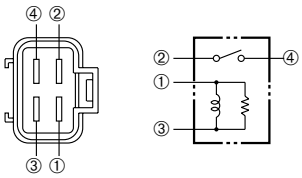
1M (Horn relay)	12V/ Minimum operating voltage: 8V at 68˚F (20˚C)	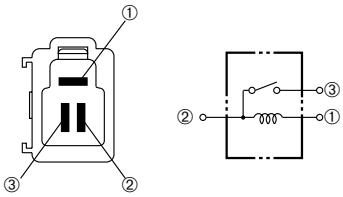			

* Relay contact shown in the wiring diagram indicates condition before actuation.

Diode – Diode Specifications and Configurations

SHAPE	MARK/ COLOR	CONSTRUCTION	CHECKING (THERE SHOULD BE CONTINUITY IN EITHER A OR B WHEN A CIRCUIT TESTER IS CONNECTED WITH DIODE TERMINAL)
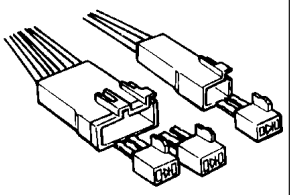	BLACK	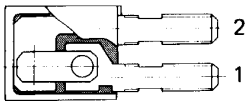	
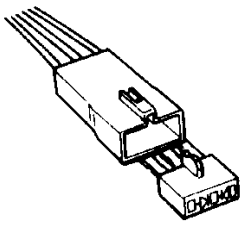	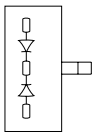 BLACK	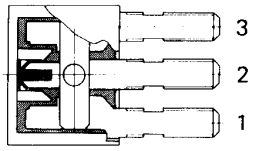	
	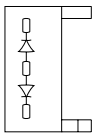 BLACK		
	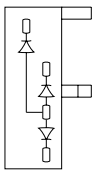 BLACK	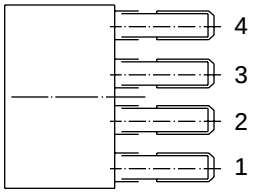	

CHECKING – CONNECTION PATTERN

TERMINAL NO.		2	1
CONNECTION PATTERN	A	⊕	⊖
	B	⊖	⊕

TERMINAL NO.		3	2	1
CONNECTION PATTERN	A	⊖	⊕	
			⊕	⊖
	B	⊕	⊖	
			⊖	⊕

TERMINAL NO.		3	2	1
CONNECTION PATTERN	A	⊖	⊕	
			⊕	⊖
	B	⊕	⊖	
			⊖	⊕

TERMINAL NO.		4	3	2	1
CONNECTION PATTERN	A			⊕	⊖
			⊖	⊕	
		⊖		⊕	
	B			⊖	⊕
			⊕	⊖	
		⊕		⊖	

Diode – Maximum Rating (Temp. = 77°F (25°C))

Items	Rating	Remarks
Peak reverse voltage	400V	
Transient peak reverse voltage	500V	
Average output current	1.5A	Temp. = 104°F (40°C)
Working ambient temperature	–22°F~176°F (–30°C~80°C)	
Storage temperature	–40°F~212°F (–40°C~100°C)	

Connector

The connector pin shape (2) determines whether the connector is male (3) or female (1).

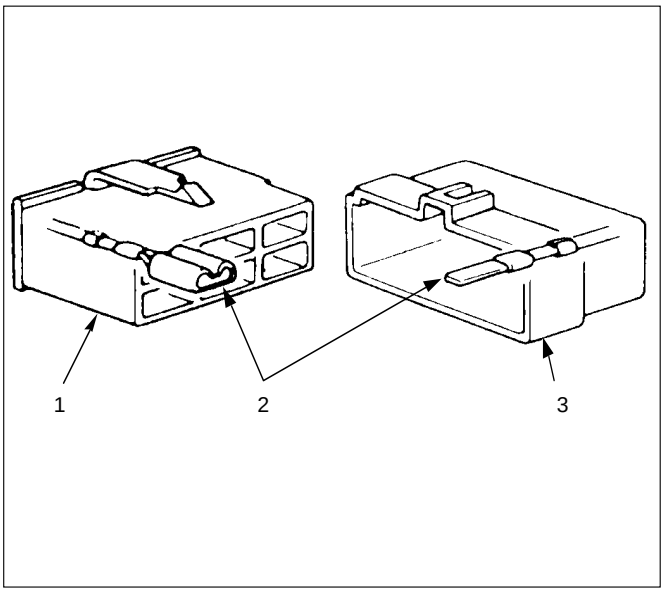

The symbol illustrated in the figure is used as connector, in the circuit of this section.

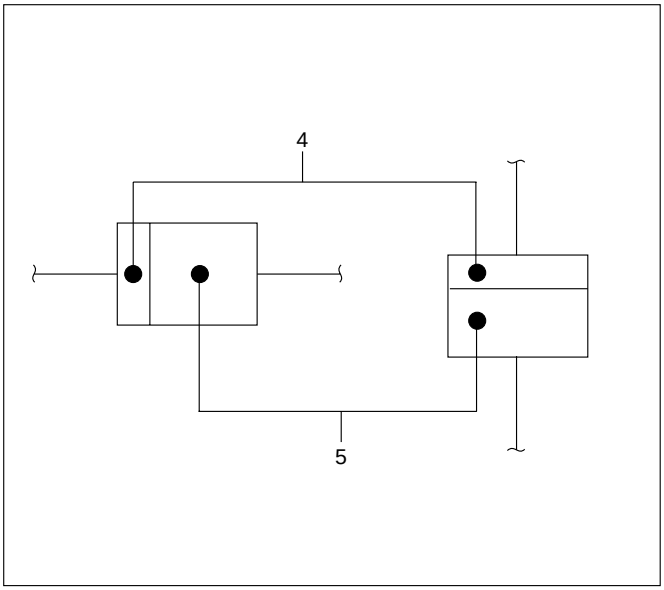

Legend
(4) Female Side Connector
(5) Male Side Connector

Connector is identified with a connector number (6)

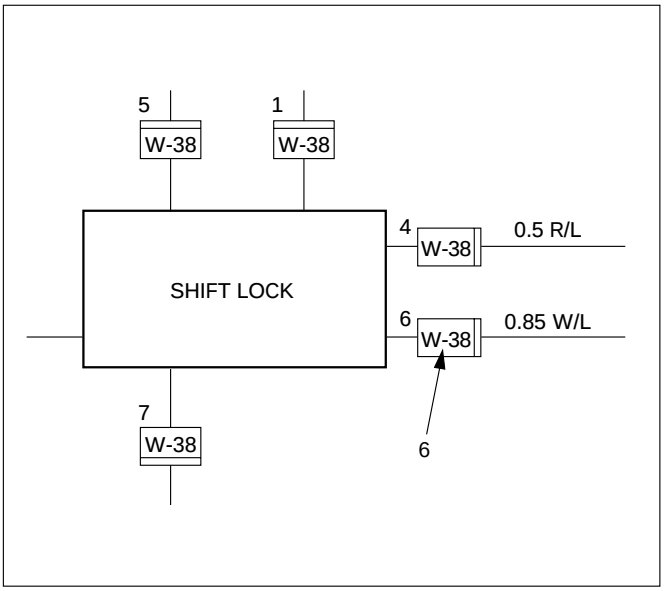

The applicable terminal number (7) is shown for each connector.

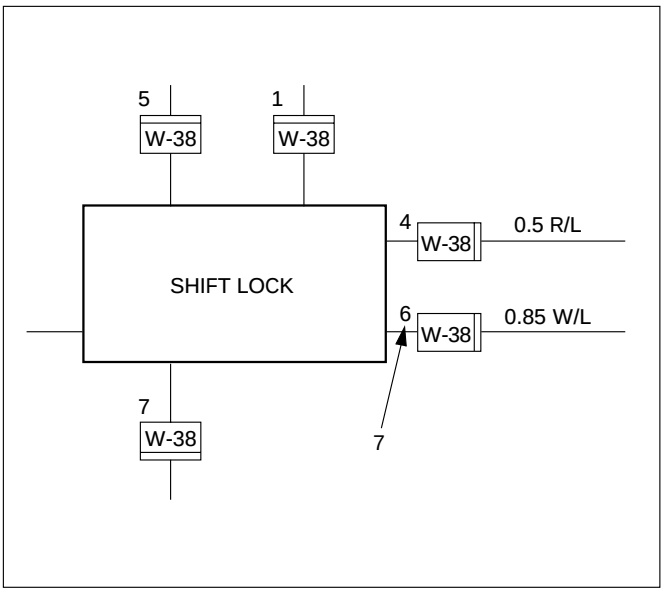

Connector terminal numbers (10) are clearly shown.
Male side connector (9) terminal numbers are in sequence from upper right to lower left.
Female side connector (8) terminal numbers are in sequence from upper left to lower right.

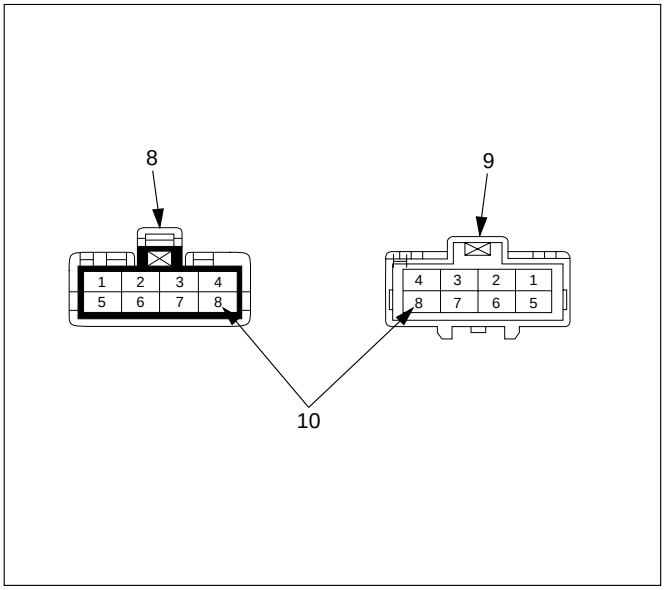

NOTE:
1. For those connectors on which specific terminal numbers or symbols are shown (such as PCM), the terminal numbers or symbols are used in the circuit diagram, irrespective of the above rule.
   Refer to the following figure.

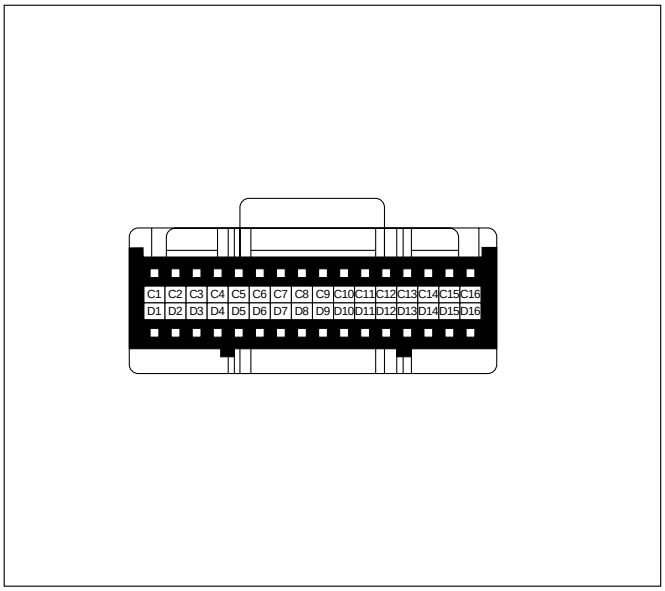

2. The connectors used for relays have their own terminal number assignment, irrespective of the above rule.
   Refer to the following figure.

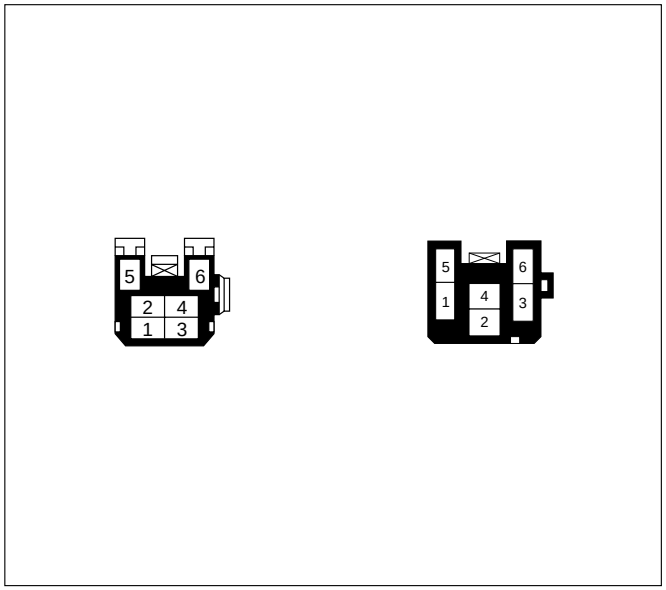

Double Lock Type Connector

Double lock type yellow color connectors are used for supplemental restraint system–air bag circuit. When removing the cable harness, disconnect the connector by unlocking at two places, outside (1) and inside (2). In such a case, do not pull the cables. Otherwise, cable disconnection may occur.
When connecting the connector, insert the connector completely and lock at outside. Imperfect locking may cause malfunction of SRS system circuit.

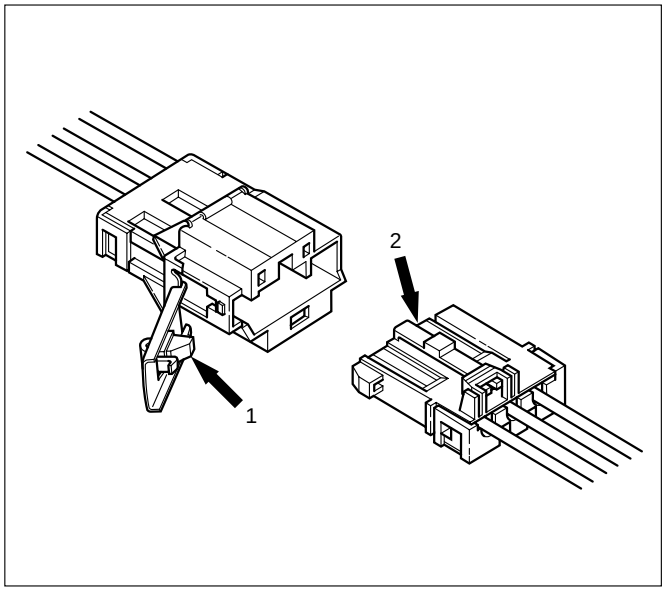

Reading the Circuit Diagram

In this section, each system has its own parts location illustration and circuit diagram.
And harness connector faces used in the circuit diagram are shown at the end of this section.

Parts Location

The parts location shows the location of the connectors (1) and the harness (2) used in each harness routing.

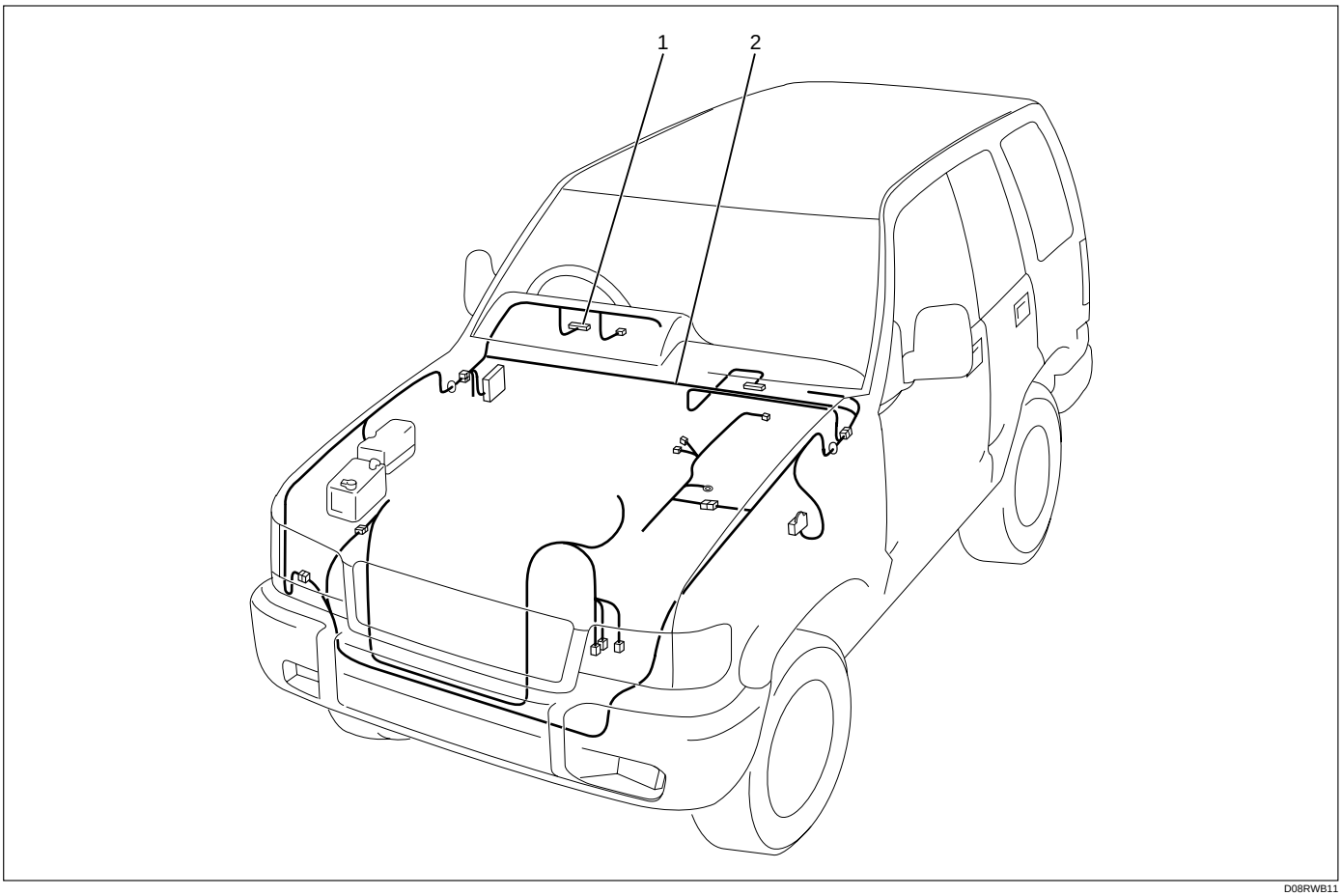

D08RWB11

Circuit Diagram

The circuit diagram shows the power supply (1), the load or loads (2) and the grounding point(s) (3).

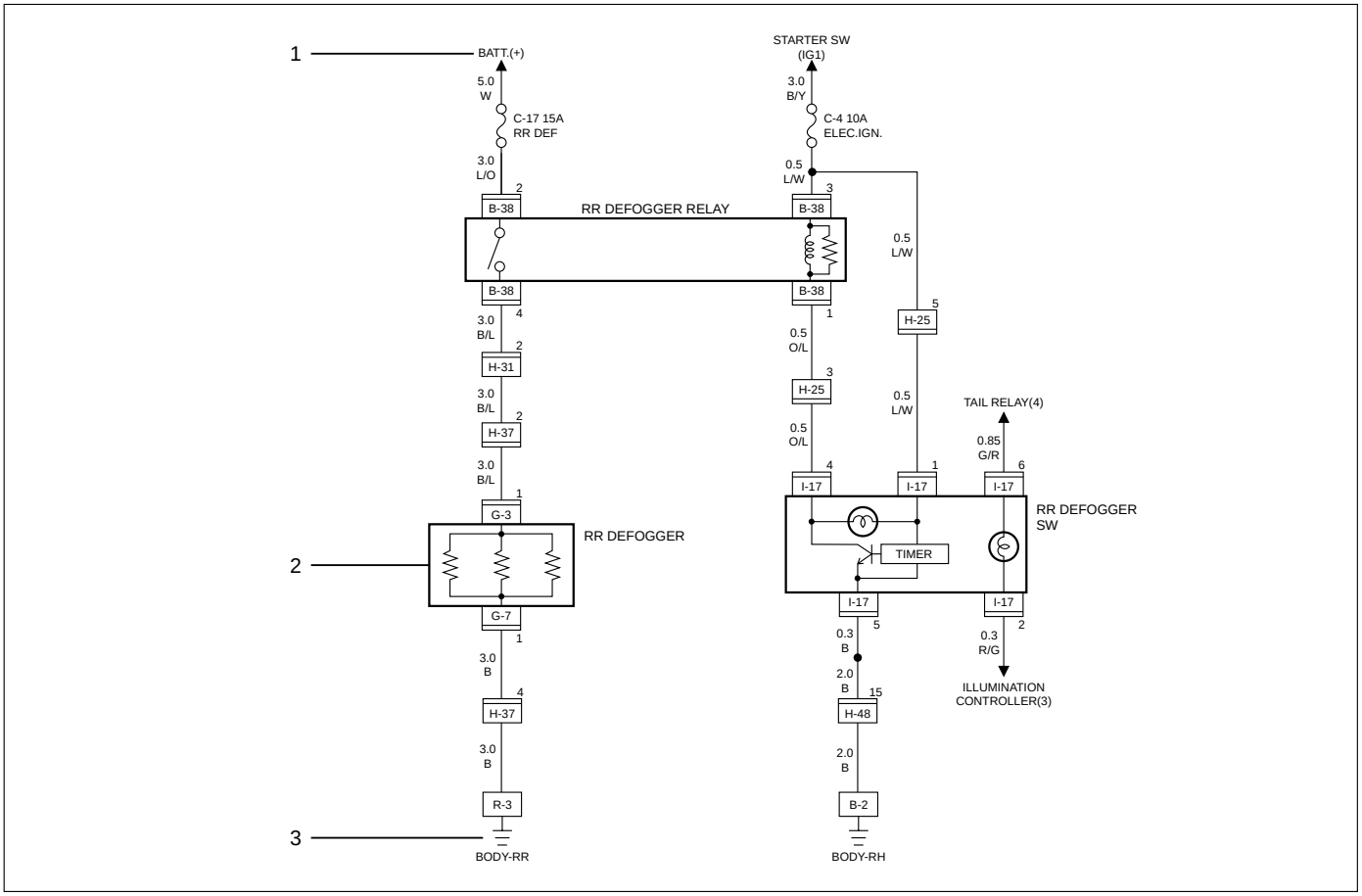

D08RW425

Harness Connector Faces

The harness connector faces show each connector's number (1), configuration (2) and the pin number (3).

No.	Connector face	No.	Connector face
B-21	NOT USED	B-31	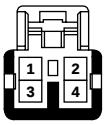
B-22	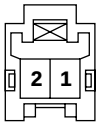	B-32	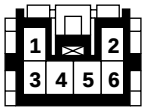 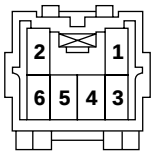
B-23	NOT USED	B-33	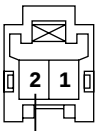

1 2 3

D08RW424

Main Data and Specifications

Fuse, Fusible Link and Circuit Breaker Location

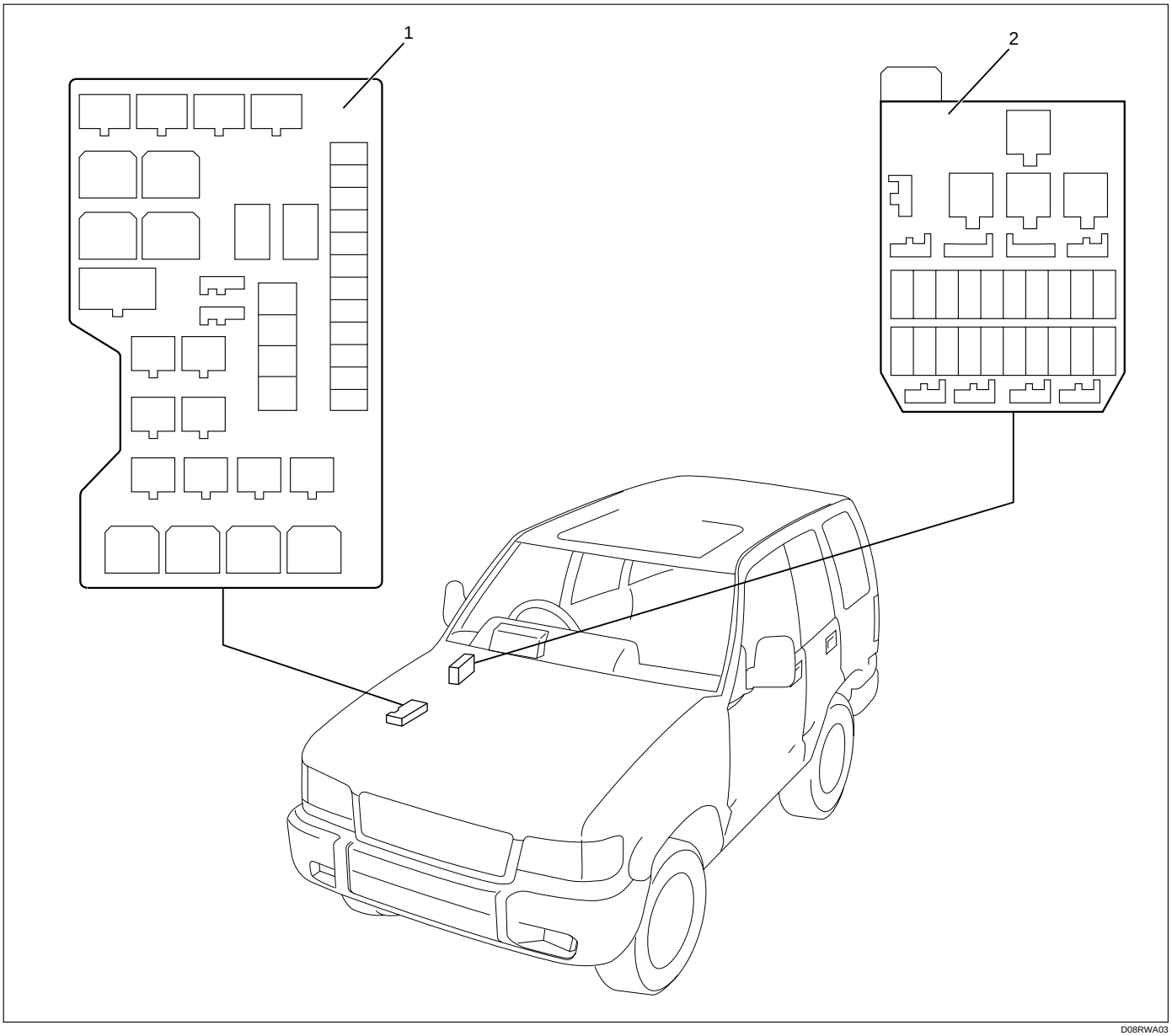

Legend

(1) Relay and Fuse Box
(2) Fuse Box

Relay & Fuse Box

RELAY AND FUSE BOX

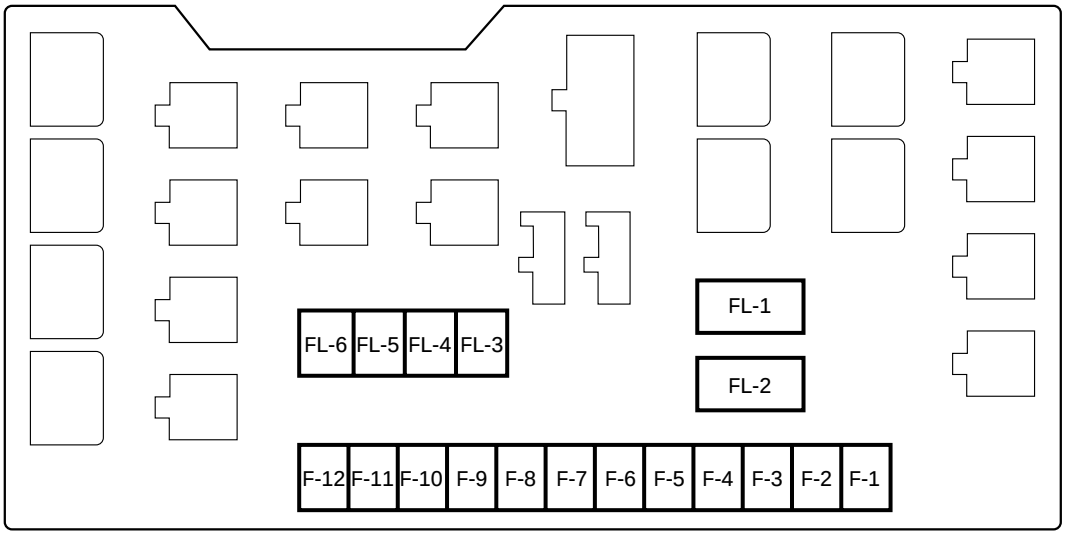

810RS027

	MODEL / No.	RHD	LHD
FUSIBLE LINK	FL-1	80A MAIN	80A MAIN
	FL-2	50A KEY SW	50A KEY SW
	FL-3	30A ECM (GASOLINE)	30A ECM (GASOLINE)
	FL-4	30A CONDENSER FAN	30A CONDENSER FAN
	FL-5	50A GLOW (4JG2)	50A GLOW (4JG2)
	FL-6	40A ABS	40A ABS
FUSE	F-1	10A RR SUB	15A RR COOLER/ANTI-THEFT
	F-2	10A O_2 SENSOR (GASOLINE)	10A O_2 SENSOR (GASOLINE)
	F-3	15A HORN HAZARD	15A HORN HAZARD
	F-4	15A H/LAMP-LH	10A H/LAMP-LH (HI)
	F-5	15A H/LAMP-RH	10A H/LAMP-RH (HI)
	F-6	10A RR COOLER	10A H/LAMP-LH (LOW)
	F-7	15A ANTI-THEFT (4JG2) 20A ACC SOCKET (6V*1)	10A H/LAMP-RH (LOW)
	F-8	20A FOG	20A FOG
	F-9	20A ABS	20A ABS
	F-10	15A FUEL PUMP (GASOLINE)	15A FUEL PUMP (GASOLINE)
	F-11	15A ANTI-THEFT	10A TAIL-LH
	F-12	15A TAIL	10A TAIL-RH

Fuse Box

This illustration is based on RHD

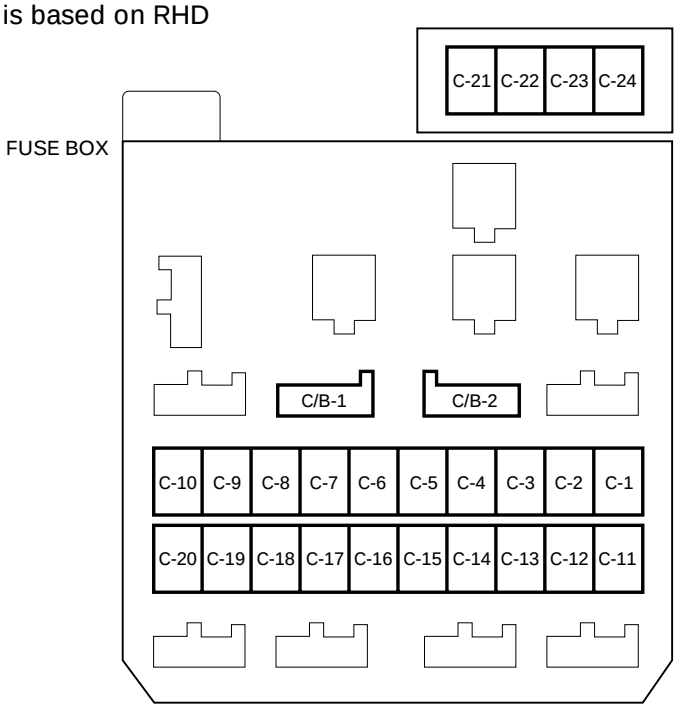

810RV026

FUSE

No.	RHD	LHD
C-1	10A STARTER RELAY	10A STARTER RELAY
C-2	15A SEAT HEATER	15A SEAT HEATER
C-3	10A TURN, BACK	10A TURN, BACK
C-4	15A ELEC. IGN.	15A ELEC. IGN.
C-5	15A FRT WIPER AND WASHER	15A FRT WIPER AND WASHER
C-6	10A RR WIPER AND WASHER	10A RR WIPER AND WASHER
C-7	10A H/LAMP WIPER	10A H/LAMP WIPER
C-8	15A ENGINE	15A ENGINE
C-9	15A IGN. COIL (GASOLINE) 15A FUEL CUT (4JG2)	15A IGN. COIL (GASOLINE) 15A FUEL CUT (4JG2)
C-10	10A METER, GAUGE	10A METER, GAUGE
C-11	10A AUDIO, MIRROR	10A AUDIO, MIRROR
C-12	20A CIGARETTE	20A CIGARETTE
C-13	10A ANTI-THEFT	10A ANTI-THEFT
C-14	15A STOP, A/T CONT.	15A STOP, A/T CONT.
C-15	20A TELEPHONE	20A TELEPHONE
C-16	10A CLOCK, ROOM	10A CLOCK, ROOM
C-17	25A RR DEFOG.	25A RR DEFOG.
C-18	20A DOOR LOCK	20A DOOR LOCK
C-19	25A BLOWER	25A BLOWER
C-20	10A AIR CON.	10A AIR CON.
C-21	10A SRS-1	10A SRS-1
C-22	—	—
C-23	—	—
C-24	—	—

CIRCUIT BREAKER

No.	RHD	LHD
C/B-1	—	—
C/B-2	30A P/W, P/S, S/R	30A P/W, P/S, S/R

Relay Location-1 (Relay and Fuse Box)

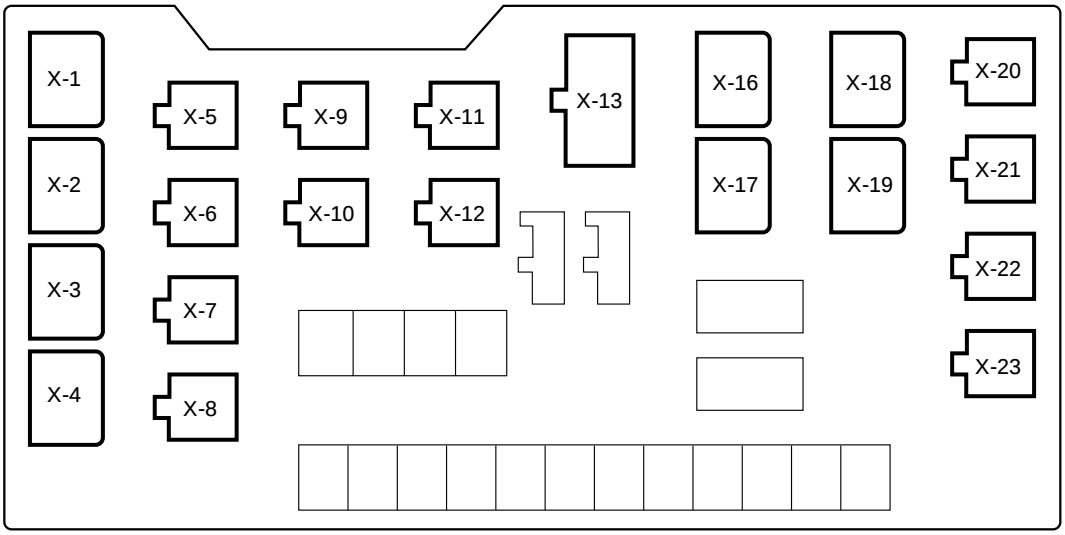

No.	RHD	LHD
X-1	RELAY ; LIGHTING	RELAY ; LIGHTING
X-2	—	—
X-3	—	RELAY ; DIMMER
X-4	RELAY ; ACC SOCKET	—
X-5	RELAY ; A/C THERMO	RELAY ; A/C THERMO
X-6	RELAY ; RR COOLER	RELAY ; RR COOLER
X-7	RELAY ; COMPRESSOR (GASOLINE)	RELAY ; COMPRESSOR (GASOLINE)
X-8	RELAY ; HORN	RELAY ; HORN
X-9	RELAY ; TAIL	RELAY ; TAIL
X-10	—	—
X-11	RELAY ; FUEL PUMP (GASOLINE)	RELAY ; FUEL PUMP (GASOLINE)
X-12	RELAY ; ECM MAIN (GASOLINE)	RELAY ; ECM MAIN (GASOLINE)
X-13	—	—
X-16	RELAY ; ANTI-THEFT	RELAY ; ANTI-THEFT
X-17	RELAY ; STARTER (GASOLINE) RELAY ; CHARGE (DIESEL)	RELAY ; STARTER (GASOLINE) RELAY ; CHARGE (DIESEL)
X-18	RELAY ; SHIFT ON THE FLY	RELAY ; SHIFT ON THE FLY
X-19	RELAY ; CONDENSER FAN (GASOLINE)	RELAY ; CONDENSER FAN
X-20	RELAY ; CORNERING LIGHT RELAY ; IMMOBILIZER	—
X-21	—	—
X-22	RELAY ; RR FOG LIGHT	—
X-23	RELAY ; FRT FOG LIGHT	RELAY ; FRT FOG LIGHT

Relay Location-2 (Fuse Box)

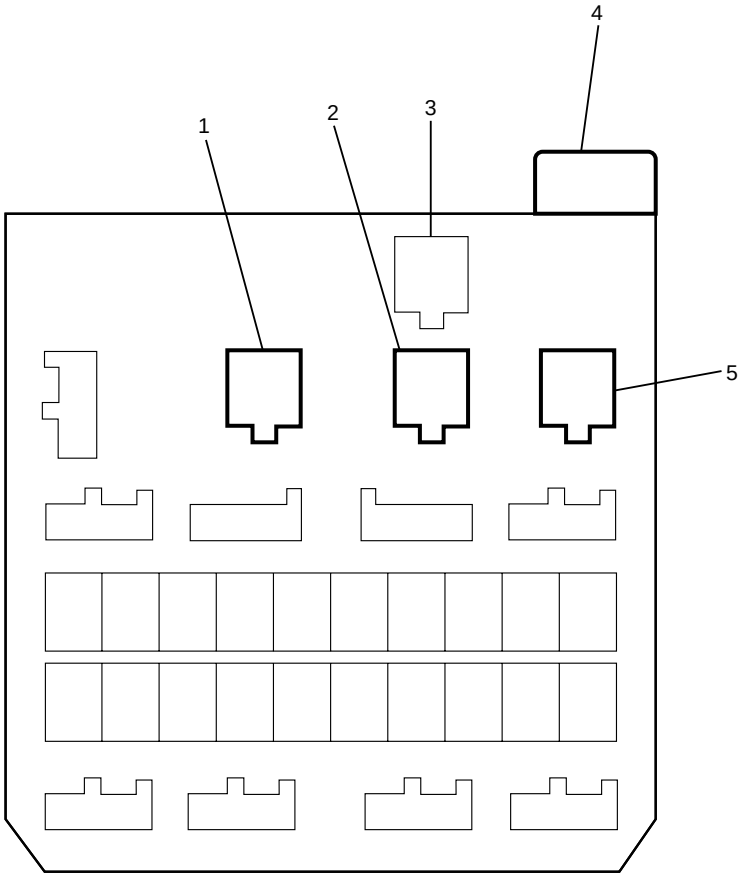

810RW330

Legend

(1) Heater & A/C Relay
(2) Power Window Relay
(3) H-63
(4) Flasher Unit
(5) Rear Defogger Relay

Relay Location-3

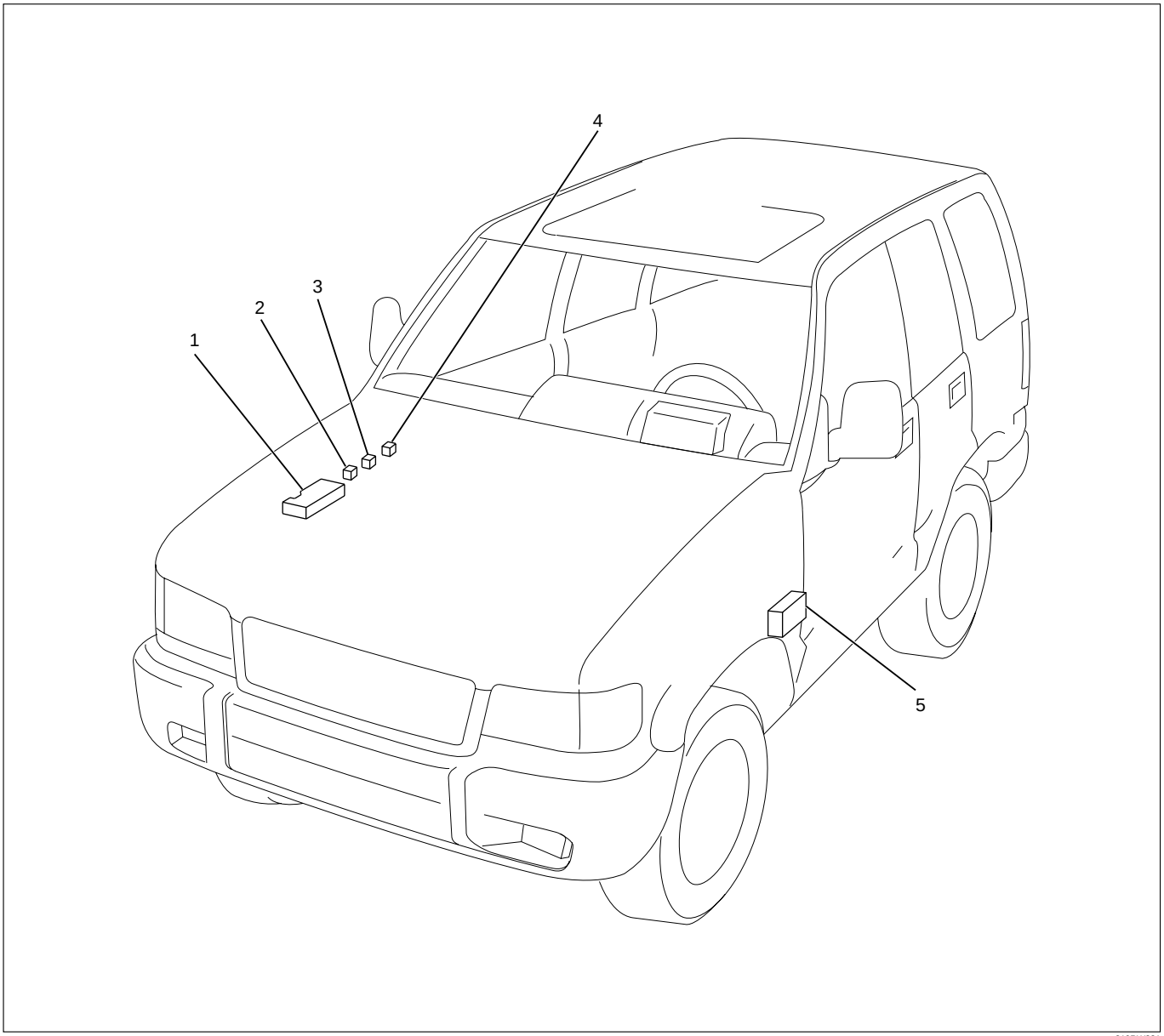

810RW331

Legend

(1) Relay and Fuse Box
(2) Glow Relay-1
(3) Glow Relay-2
(4) Starter Relay
(5) Fuse Box

Diode Location

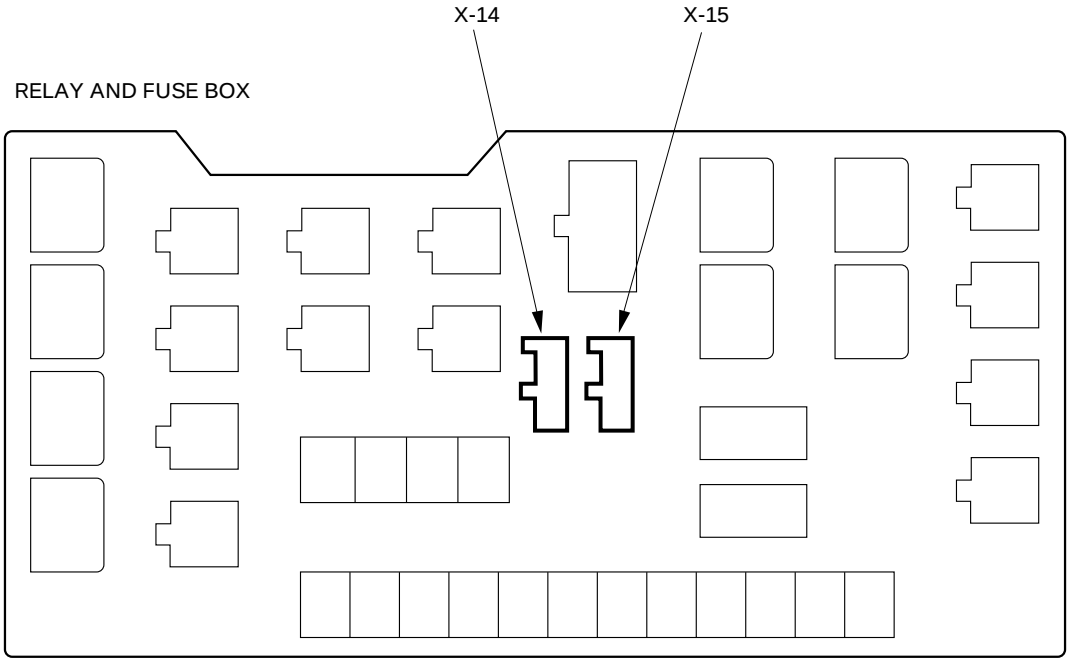

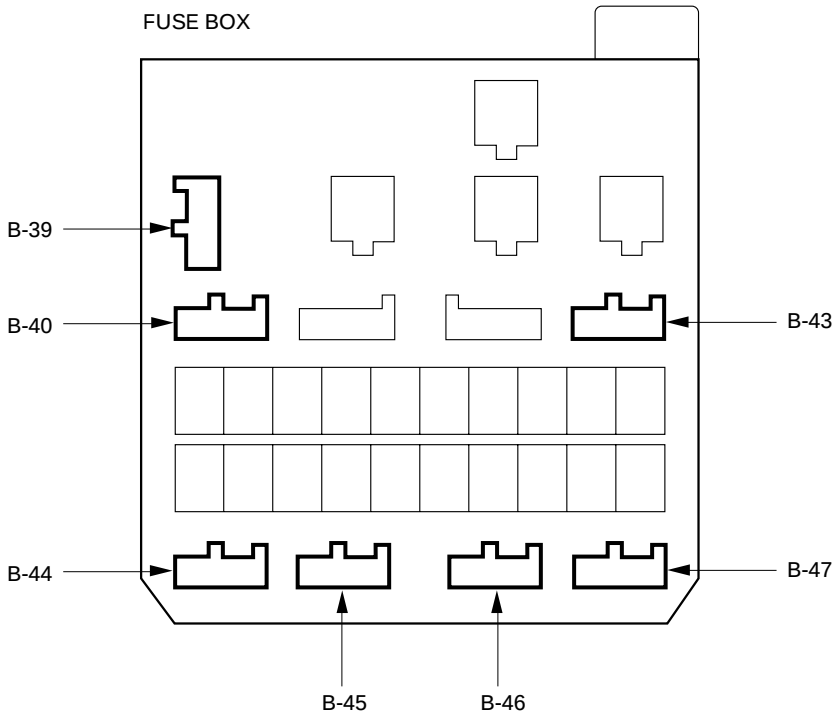

Grounding Point

Reference Table

(6VD1 RHD)

Connector No.	Cable harness	Location	Parts (Load)
B-1	Body harness	Body-LH	Door mirror defogger (LH), Fan SW, FRT power window & door lock SW-LH, Cruise control unit, FRT door key SW-LH, FRT door lock actuator-LH, FRT door lock SW-LH
B-2			Sun roof SW, Sun roof control unit, Safety SW, Limit SW
B-18		Body-RH	FRT door key SW-RH, FRT door lock & power window SW-RH, FRT door lock actuator & lock SW-RH, FRT door lock SW-RH, Door mirror defogger (RH), RR wiper intermittent relay, Mode SW (A/T), Starter relay
B-19			Cigar lighter, Dimmer·passing SW, Illumination controller, RR defogger SW, Flasher unit, Power window relay, Cruise main indicator light, Lighting SW, Glove box illumination light, Ashtray illumination light, Headlight wiper SW, Clock, FRT fog light SW, Variable intermittent (FRT wiper & washer SW), Kick down SW, Anti-theft controller, Turn signal indicator light, Heater & A/C relay
B-26		Body-center	RR Power window SW-RH, Mirror control SW, Mirror defogger SW, Mirror folding SW, Car telephone, Shift lock controller, POWER & WINTER SW, Seat heater, Seat heater SW, RR door lock actuator-LH, EBCM
B-28			RR power window SW-RH, Power & winter SW, Power seat SW, Tilt motor & SW, Recliner motor & SW, RR door lock actuator-RH, EBCM
1 C-16	Engine room harness	Fender-LH	Clearance light, FRT turn signal light
2 C-16			Pump & VSV, Headlight wiper timer
3 C-16			4WD SW, VSV;FRT axle, FRT axle SW
4 C-16			Headlight wiper motor
5 C-16			FRT fog light
6 C-16			O_2 Sensor, Headlight leveling actuator-RH
7 C-16			P/S pressure SW, Headlight leveling actuator-LH
8 C-16			Side turn signal light (LH)

Connector No.	Cable harness	Location	Parts (Load)
1 C-39	Engine room harness	Fender-RH	Windshield washer motor
2 C-39			Windshield wiper motor
3 C-39			Windshield intermittent relay
4 C-39			FRT fog light relay
5 C-39			Fuel pump relay, ECM main relay
6 C-39			Meter, Vehicle speed sensor (Meter), Fuel tank unit
7 C-39			Side turn signal light (RH)
8 C-39			Vehicle speed sensor, Brake fluid SW
E-28	Engine ECGI harness	Engine-common chamber	ECM, O_2 sensor
E-29			ECM, Data link connector
E-30			DIS
E-31			ECM, Data link connector, A/T Shift indicator control unit
R-3	Rear body harness	Body-RR	RR washer motor, Rear wiper motor, Luggage room light, RR defogger, High mount stoplight, Tailgate key SW, RR door lock actuator-LH, Tailgate lock actuator-LH, RR power window SW-LH
R-4			Taillight, Stoplight, RR turn signal light, Backup light, License plate light, Fuel tank unit, Fuel pump, Trailer harness connector, RR fog light
M-16	Mission harness	Engine	TCM
I-39	Instrument harness	Body-FRT	Audio
C-85	Engine room harness	Body-Center	EBCM
U-2	SRS harness	Body-FRT	SDM

(6VD1 LHD)

Connector No.	Cable harness	Location	Parts (Load)
B-1	Body harness	Body-RH	FRT power window & door lock SW-RH, FRT door key SW-RH, FRT door lock actuator-RH, Door lock SW-RH, Door mirror defogger (RH), Key & light remind buzzer (Saudi Arabia), Sun roof SW, Sun roof control unit, Safety SW, Limit SW
B-2			Seat belt warning light (Saudi Arabia), Cruise control unit, Fan SW, Turn signal indicator light, Clock, Glove box illumination light, Ashtray illumination light, RR defogger SW, Cigar lighter
B-18		Body-LH	FRT door key SW-LH, FRT door lock actuator & lock SW-LH, Door lock SW-LH, FRT door lock & power window SW-LH, Door mirror defogger (LH), RR wiper intermittent relay, Starter relay, Mode SW (A/T), Power window relay
B-19			Dimmer·passing SW, Illumination controller, RR defogger SW, Flasher unit, Cruise main indicator light, Lighting SW, Headlight wiper SW, Clock, FRT fog light SW, Variable intermittent (FRT wiper & washer SW), Anti-theft controller, Heater & A/C relay, Kick down SW
B-26		Body-center	Mirror control SW, Mirror folding SW, Mirror defogger SW, RR Door lock actuator-RH, Car telephone, Shift lock controller, POWER & WINTER SW, Seat heater, Seat heater SW, EBCM, RR power window SW-RH
B-28			EBCM, Seat belt SW (Saudi Arabia), Tilt motor & SW, Recliner motor & SW, Power seat SW
1 C-16	Engine room harness	Fender-LH	Clearance light, FRT turn signal light
3 C-16			4WD SW, VSV;FRT axle, FRT axle SW
4 C-16			Headlight wiper motor
5 C-16			FRT fog light
6 C-16			P/S pressure SW
7 C-16			O_2 Sensor
8 C-16			Side turn signal light (LH)

Connector No.	Cable harness	Location	Parts (Load)
1 C-39	Engine room harness	Fender-RH	Windshield washer motor, Side turn signal light (RH)
2 C-39			Windshield wiper motor
3 C-39			Windshield intermittent relay
4 C-39			Headlight-LH, FRT fog light relay
5 C-39			Condenser fan (Saudi Arabia)
6 C-39			Meter, Vehicle speed sensor (Meter), Fuel tank unit
7 C-39			Pump & VSV, Headlight-RH, Fuel pump relay, ECM main relay
8 C-39			High-beam indicator light, Vehicle speed sensor, Headlight wiper timer
C-85		Body-Center	EBCM
E-28	Engine ECGI harness	Engine-common chamber	ECM, O_2 sensor
E-29			ECM, Data link connector
E-30			DIS
E-31			ECM, Data link connector, A/T Shift indicator control unit
R-3	Rear body harness	Body-RR	RR washer motor, Rear wiper motor, Luggage room light, RR defogger, Tailgate key SW, Tailgate lock actuator-LH, RR Door lock actuator-LH, High mount stoplight, RR power window SW-LH
R-4			Taillight, Stoplight, RR turn signal light, License plate light, Fuel tank unit, Fuel pump, Backup light
M-16	Mission harness	Engine	TCM
I-39	Instrument harness	Body-FRT	Audio

(4JG2 RHD)

Connector No.	Cable harness	Location	Parts (Load)
B-1	Body harness	Body-LH	Door mirror defogger (LH), FRT power window & door lock SW-LH, Fan SW, FRT door key SW-LH, FRT door lock actuator-LH, FRT door lock SW-LH
B-2			Sun roof SW, Sun roof control unit, Safety SW, Limit SW
B-18		Body-RH	FRT door key SW-RH, FRT door lock & power window SW-RH, FRT door lock actuator & lock SW-RH, Door lock SW-RH, Door mirror defogger (RH), RR wiper intermittent relay, Starter relay
B-19			Headlight wiper SW, Dimmer·passing SW, Illumination controller, RR defogger SW, Flasher unit, Power window relay, Lighting SW, Glove box illumination light, Ashtray illumination light, Clock, FRT fog light SW, Variable intermittent (FRT wiper & washer SW), Cigar lighter, Vehicle speed sensor (Meter), Heater & A/C relay, Turn signal indicator light, Anti-theft controller, RR power window SW-RH
B-26		Body-center	Mirror control SW, Mirror folding SW, Mirror defogger SW, Car telephone, Seat heater, Seat heater SW, RR door lock actuator-LH, EBCM
B-28			RR power window SW-RH, EBCM, RR door lock actuator-RH, Tilt motor & SW, Power seat SW, Recliner motor & SW
1 C-16	Engine room harness	Fender-LH	Clearance light, FRT turn signal light
2 C-16			4WD SW, Fuel filter SW
3 C-16			VSV;FRT axle, FRT axle SW
4 C-16			Headlight wiper motor
5 C-16			FRT fog light
7 C-16			QOS-III control unit, Headlight wiper timer, VSV;FICD, QOS/EGR control unit, Data link connector
8 C-16			Side turn signal light (LH)

Connector No.	Cable harness	Location	Parts (Load)
1 C-39	Engine room harness	Fender-RH	Windshield washer motor
2 C-39			Windshield wiper motor
3 C-39			Windshield intermittent relay, Charge relay
4 C-39			FRT fog light relay
5 C-39			Tacho sensor
6 C-39			Vehicle speed sensor (Meter), Meter, Fuel tank unit
7 C-39			Side turn signal light (RH)
8 C-39			Vehicle speed sensor, Brake fluid SW
C-85		Body-FRT	EBCM
R-3	Rear body harness	Body-RR	RR washer motor, Rear wiper motor, Luggage room light, RR defogger, High mount stoplight, Tailgate key SW, RR door lock actuator-LH, Tailgate lock actuator-LH, RR power window SW-LH
R-4			Taillight, Stoplight, RR turn signal light, Backup light, License plate light, Fuel tank unit, RR fog light, Trailer harness connector
I-39	Instrument harness	Body-FRT	Audio

(4JG2 LHD)

Connector No.	Cable harness	Location	Parts (Load)
B-1	Body harness	Body-RH	Door mirror defogger (RH), FRT door lock key SW-RH, FRT door lock actuator-RH, Door lock SW-RH, FRT power window & door lock SW-RH, Key & light remind buzzer (Saudi Arabia), Sun roof SW, Sun roof control unit, Safety SW, Limit SW
B-2			Seat belt warning light (Saudi Arabia), Fan SW, Turn signal indicator light, Vehicle speed sensor (Meter), RR defogger SW, Clock, Cigar lighter, Glove box illumination light, Ashtray illumination light
B-18		Body-LH	FRT door lock key SW-LH, FRT door lock actuator & lock SW-LH, Door lock SW-LH, FRT door lock & power window SW-LH, Door mirror defogger (LH), RR wiper intermittent relay, Starter relay, Power window relay
B-19			Dimmer·passing SW, Illumination controller, RR defogger SW, Flasher unit, Lighting SW, Headlight wiper SW, FRT fog light SW, Variable intermittent (FRT wiper & washer SW), Heater & A/C relay, Anti-theft controller
B-26		Body-center	Mirror control SW, Mirror folding SW, Mirror defogger SW, RR power window SW-RH, Car telephone, RR door lock actuator-RH, Seat heater, Seat heater SW, EBCM
B-28			Seat belt SW (Saudi Arabia), EBCM, Tilt motor & SW, Power seat SW, Recliner motor & SW
1 C-16	Engine room harness	Fender-LH	Clearance light, FRT turn signal light
2 C-16			4WD SW, Fuel filter SW
3 C-16			VSV;FRT axle, FRT axle SW, Brake fluid SW
4 C-16			Headlight wiper motor
5 C-16			FRT fog light
7 C-16			VSV; FICD
8 C-16			Data link connector, Side turn signal light (LH), QOS-III control unit

Connector No.	Cable harness	Location	Parts (Load)
1 C-39	Engine room harness	Fender-RH	Windshield washer motor, Headlight-LH, Side turn signal light (RH)
2 C-39			Windshield wiper motor
3 C-39			Windshield intermittent relay
4 C-39			FRT fog light relay, Charge relay, Headlight-LH
5 C-39			Condenser fan (Saudi Arabia)
6 C-39			Meter, Vehicle speed sensor (Meter), Fuel tank unit
7 C-39			Headlight-RH, Tacho sensor
8 C-39			Headlight wiper timer, High-beam indicator light, Vehicle speed sensor
C-85		Body-FRT	EBCM
R-3	Rear body harness	Body-RR	RR washer motor, Rear wiper motor, Luggage room light, RR defogger, Tailgate key SW, Tailgate lock actuator-LH, RR door lock actuator-LH, RR power window SW-LH, High mount stoplight
R-4			Taillight, Stoplight, RR turn signal light, License plate light, Backup light
I-39	Instrument harness	Body-FRT	Audio

Grounding Point

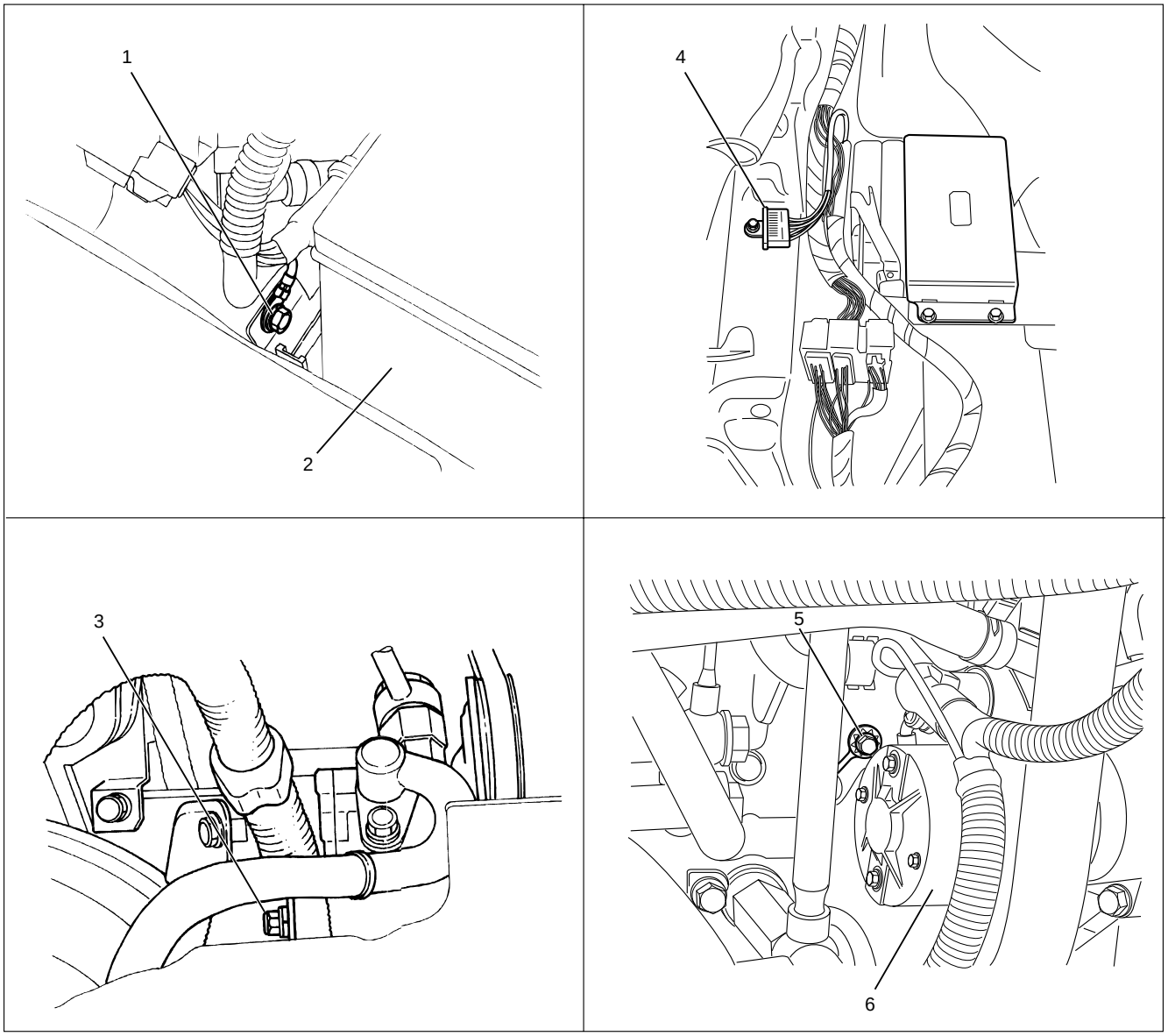

D08RWA22

Legend

(1) P-6
(2) Battery
(3) P-7
(4) C-85
(5) E-4
(6) Starter

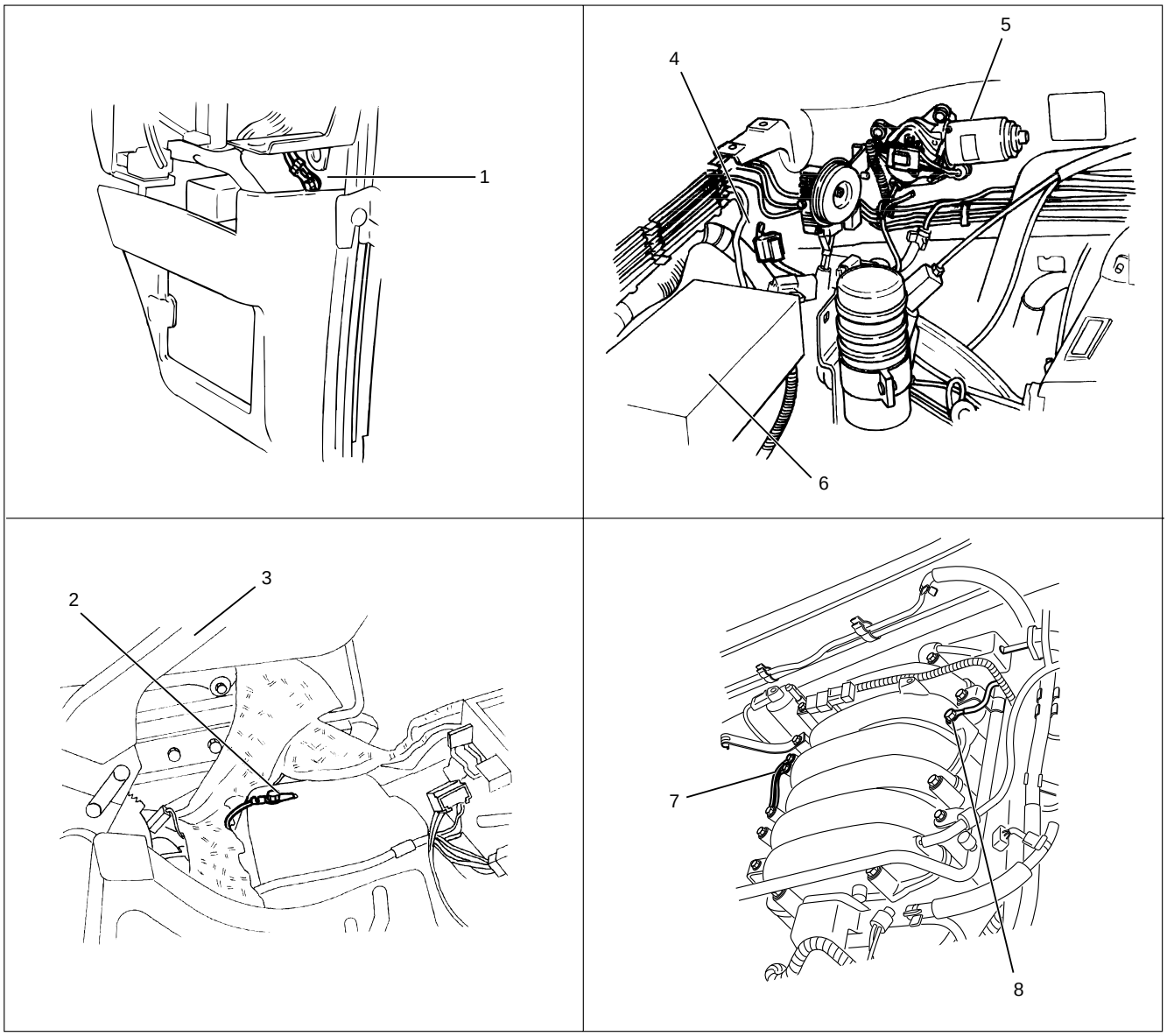

D08RWA24

Legend

(1) B-18, B-19
(2) B-26
(3) Parking Brake Lever
(4) C-39
(5) Windshield Wiper Motor
(6) Relay and Fuse Box
(7) Common Chamber: RH
(8) Common Chamber: LH

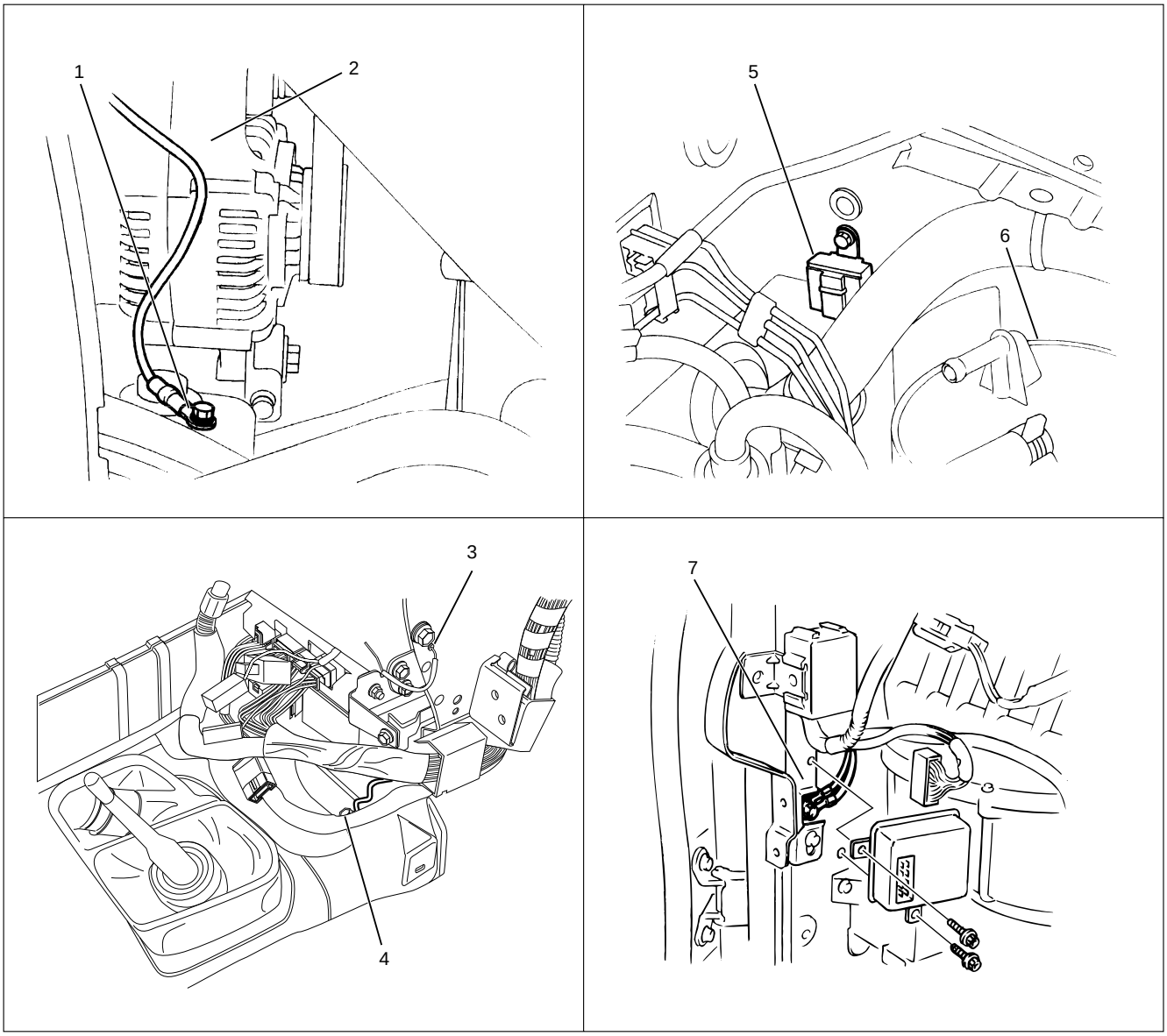

D08RWA23

Legend

(1) P-10
(2) AC Generator
(3) I-39
(4) U-2
(5) C-16
(6) Canister
(7) B-1, B-2

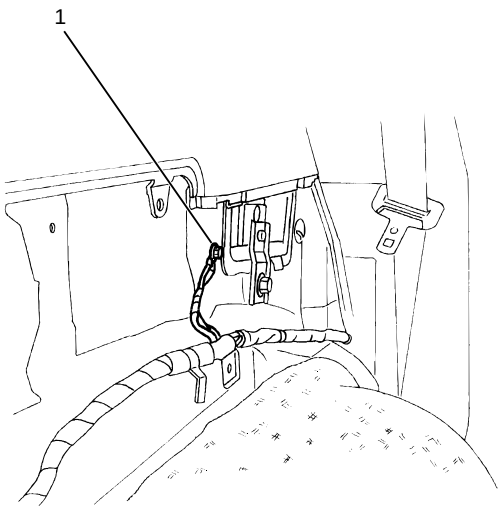

D08RWA30

Legend

(1) R-3, R-4

Cable Harness Routing (RHD) – 1

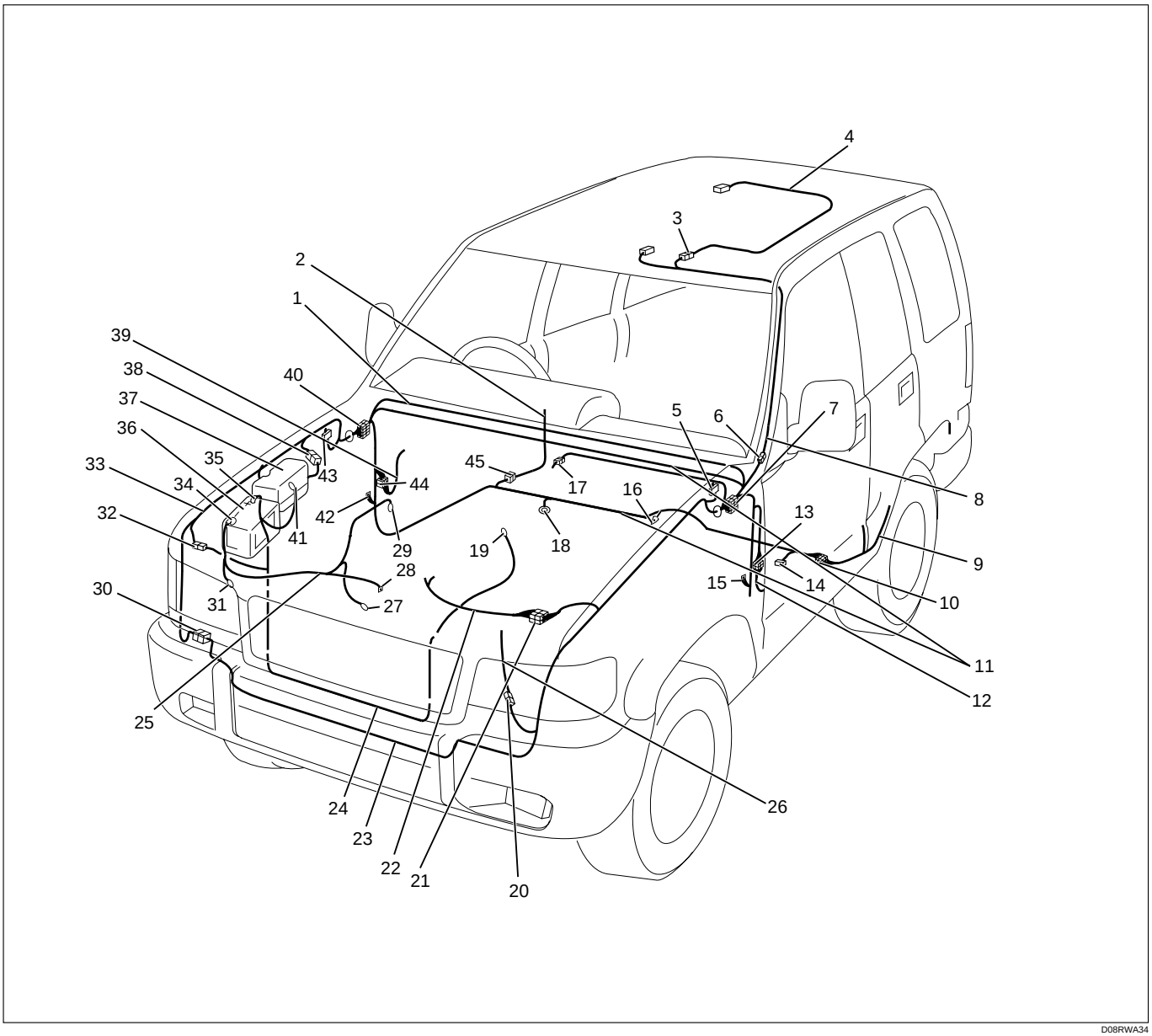

Legend

(1) Instrument Harness
(2) RR Door Extension Harness
(3) H-45
(4) Sun Roof Harness
(5) C-16
(6) H-21
(7) H-7, H-8, H-9, H-20, H-24, H-65
(8) Domelight Harness
(9) RR Body Harness
(10) H-31, H-32, H-46
(11) Body Harness
(12) FRT Door Harness
(13) H-18, H-19
(14) C-85
(15) B-1, B-2
(16) B-26
(17) H-12
(18) B-28
(19) P-4
(20) H-10, H-11, H-53
(21) H-4, H-5, H-6
(22) Engine Harness
(23) Engine Room Harness (LH)
(24) Battery Positive Cable
(25) Battery Negative Cable
(26) Transmission Harness
(27) P-7
(28) P-10
(29) P-9
(30) H-41, H-42, H-43, H-60
(31) P-6

(32) H-2, H-3 (4J∗∗)
(33) Engine Room Harness (RH)
(34) P-5
(35) P-1
(36) Battery
(37) Relay and Fuse Box
(38) H-1, H-2, H-3 (6V∗1)
(39) FRT Door Harness (RH)
(40) H-13, H-14, H-15, H-16, H-25, H-26, H-27, H-61, H-62, H-64, H-66
(41) P-2
(42) B-18, B-19
(43) C-39
(44) H-22, H-23
(45) H-47

Cable Harness Routing (RHD) – 2

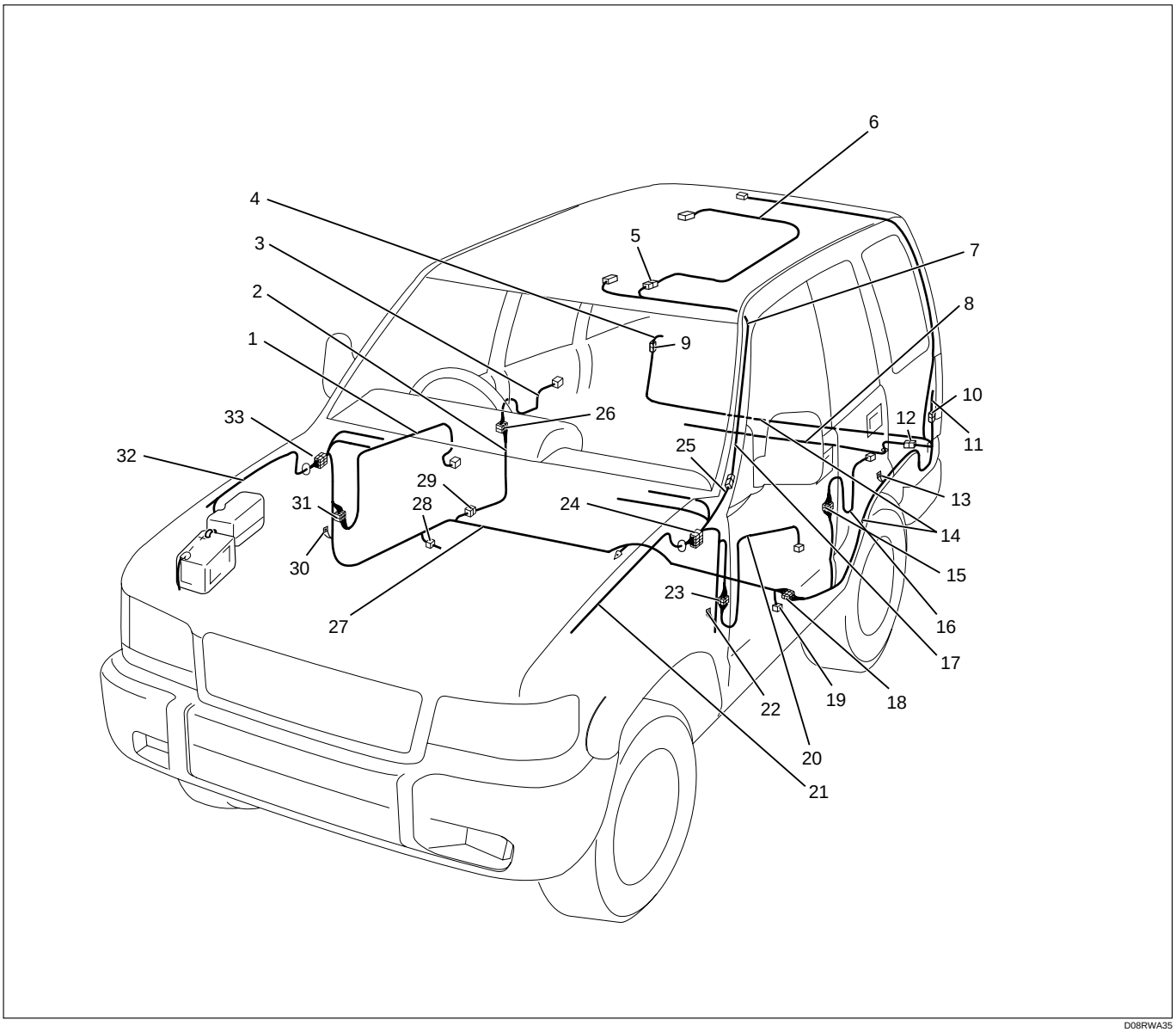

D08RWA35

Legend

(1) FRT Door Harness (RH)
(2) RR Door Extension Harness
(3) RR Door Harness (RH)
(4) Tail Gate Harness (RH)
(5) H-45
(6) Sun Roof Harness
(7) Domelight Harness
(8) Chassis Harness
(9) H-39
(10) H-37, H-38
(11) Tailgate Harness (LH)
(12) H-33
(13) R-3, R-4
(14) RR Body Harness
(15) H-28, H-29
(16) RR Door Harness (LH)
(17) Domelight Harness
(18) H-31, H-32, H-46
(19) H-58
(20) FRT Door Harness (LH)
(21) Engine Room Harness (LH)
(22) B-1, B-2
(23) H-18, H-19
(24) H-7, H-8, H-9, H-20, H-24, H-65
(25) H-21
(26) H-34, H-35
(27) Body Harness
(28) H-57
(29) H-47
(30) B-18, B-19
(31) H-22, H-23
(32) Engine Room Harness (RH)
(33) H-13, H-14, H-15, H-16, H-25, H-26, H-27, H-61, H-62, H-64, H-65

Cable Harness Routing (RHD) – 3

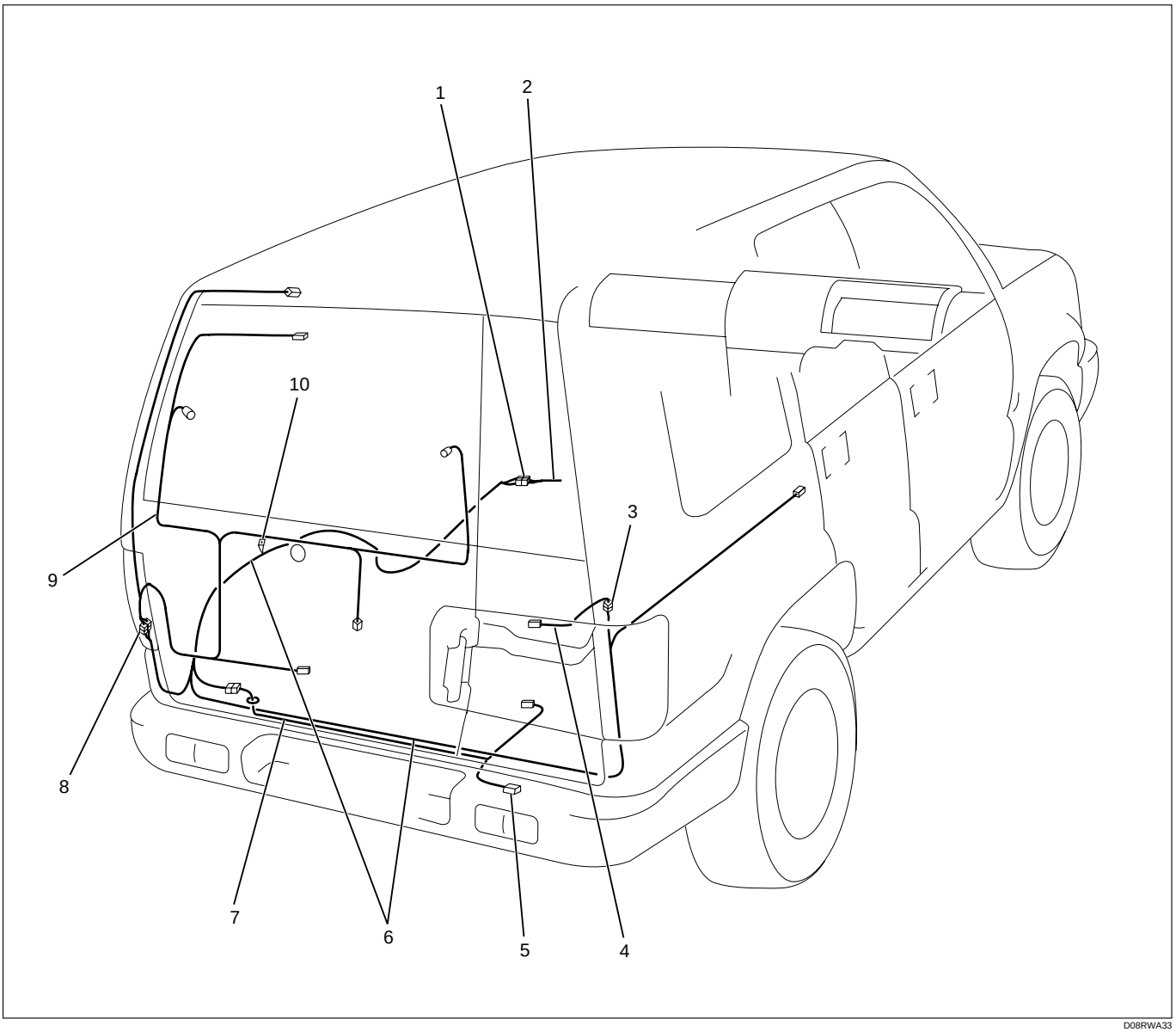

D08RWA33

Legend

(1) H-31, H-32, H-46
(2) Body Harness
(3) H-39
(4) Tail Gate Harness (RH)
(5) H-44
(6) RR Body Harness
(7) Chassis Harness
(8) H-37, H-38
(9) Tail Gate Harness (LH)
(10) R-3, R-4

Cable Harness Routing (LHD) – 1

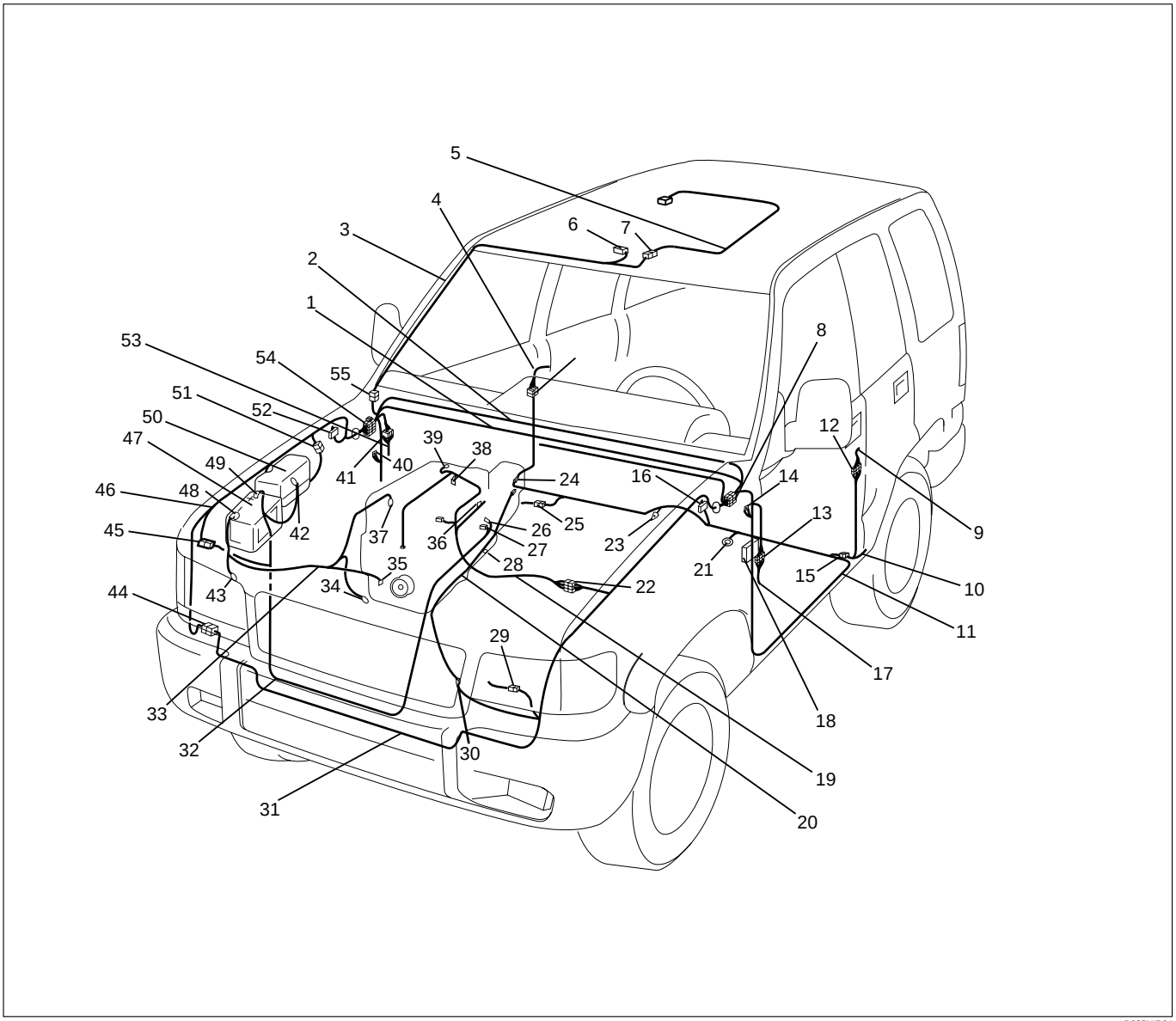

D08RWB04

Legend

(1) Body Harness
(2) Instrument Harness
(3) Domelight Harness
(4) RR Door Harness (RH)
(5) Sun Roof Harness
(6) L-1
(7) H-45
(8) H-7, H-8, H-9, H-24, H-25, H-26, H-61, H-62, H-64, H-65, H-66
(9) RR Door Harness (LH)
(10) RR Body Harness
(11) Body Harness
(12) H-28, H-29
(13) H-22, H-23
(14) B-18, B-19
(15) H-31, H-32, H-46
(16) C-16
(17) FRT Door Harness (LH)
(18) Fuse Box
(19) Engine Harness
(20) Transmission Harness
(21) B-28
(22) H-4, H-5, H-6
(23) B-26
(24) H-47
(25) H-58
(26) P-4
(27) P-3
(28) M-16
(29) H-51
(30) H-10, H-11, H-53
(31) Engine Room Harness (LH)
(32) Battery Positive Cable

(33) Battery Negative Cable
(34) P-7
(35) P-10
(36) E-16
(37) P-9
(38) E-31, E-32
(39) E-5
(40) B-1, B-2
(41) H-18, H-19
(42) P-2
(43) P-6
(44) H-41, H-42, H-43, H-60
(45) H-2, H-3 (4J∗∗)
(46) Engine Room Harness (RH)
(47) Battery
(48) P-5
(49) P-1
(50) Relay and Fuse Box
(51) H-1, H-2, H-3 (6V∗1)
(52) C-39
(53) FRT Door Harness (RH)
(54) H-12, H-13, H-14, H-15, H-16, H-20, H-48
(55) H-21

Cable Harness Routing (LHD) – 2

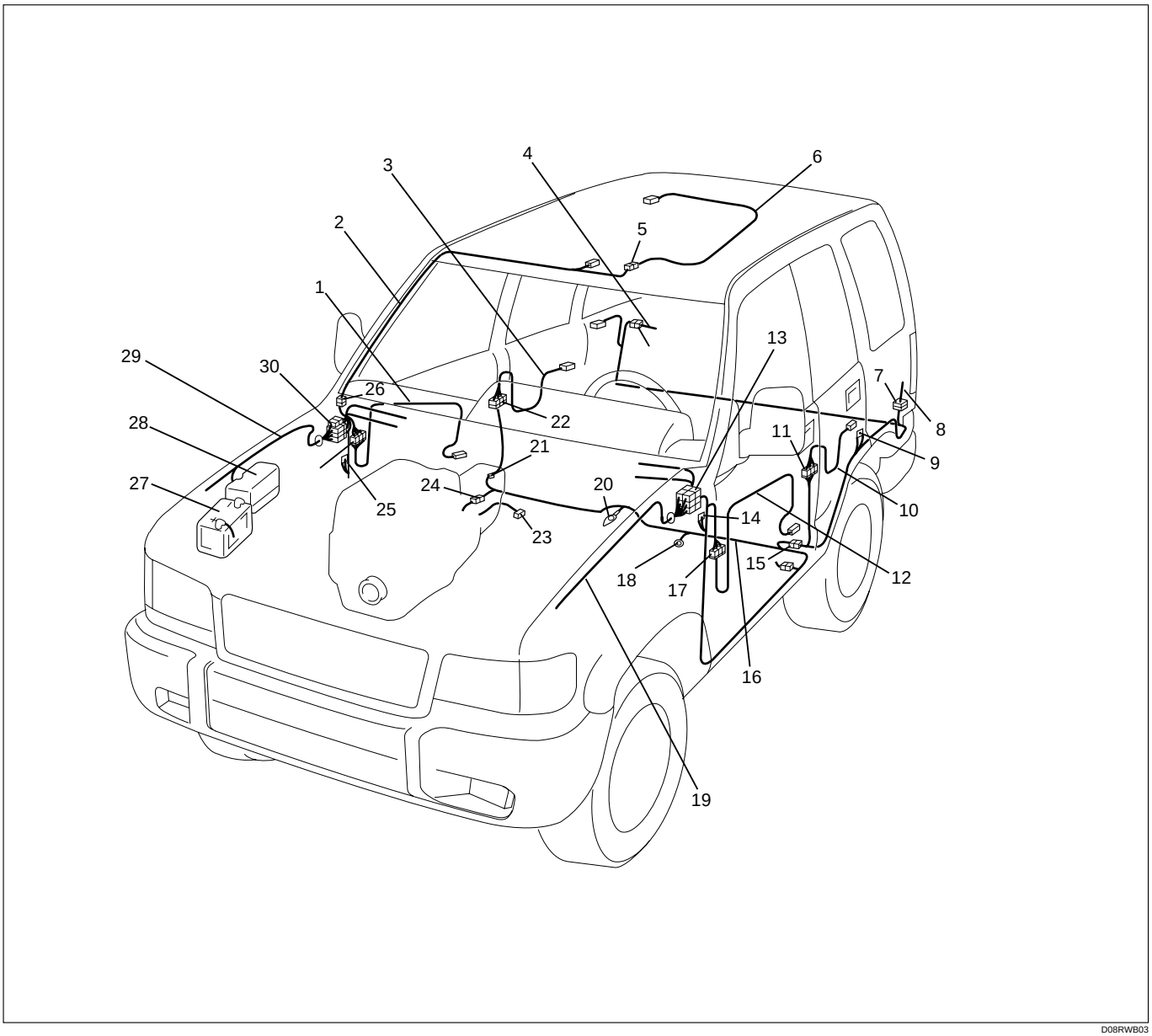

Legend

(1) FRT Door Harness (RH)
(2) Domelight Harness
(3) RR Door Harness (RH)
(4) Tail Gate Harness (RH)
(5) H-45
(6) Sun Roof Harness
(7) H-37, H-38
(8) Tail Gate Harness (LH)
(9) R-3, R-4
(10) RR Door Harness (LH)
(11) H-28, H-29
(12) FRT Door Harness (LH)
(13) H-7, H-8, H-9, H-24, H-25, H-26, H-61, H-62, H-64, H-65, H-66
(14) B-18, B-19
(15) H-31, H-32, H-46
(16) Body Harness
(17) H-22, H-23
(18) B-28
(19) Engine Room Harness (LH)
(20) B-26
(21) H-47
(22) H-34, H-35
(23) C-85
(24) H-58
(25) B-1, B-2
(26) H-21
(27) Battery
(28) Relay and Fuse Box
(29) Engine Room Harness (RH)
(30) H-12, H-13, H-14, H-15, H-16, H-20, H-48

Cable Harness Routing (LHD) – 3

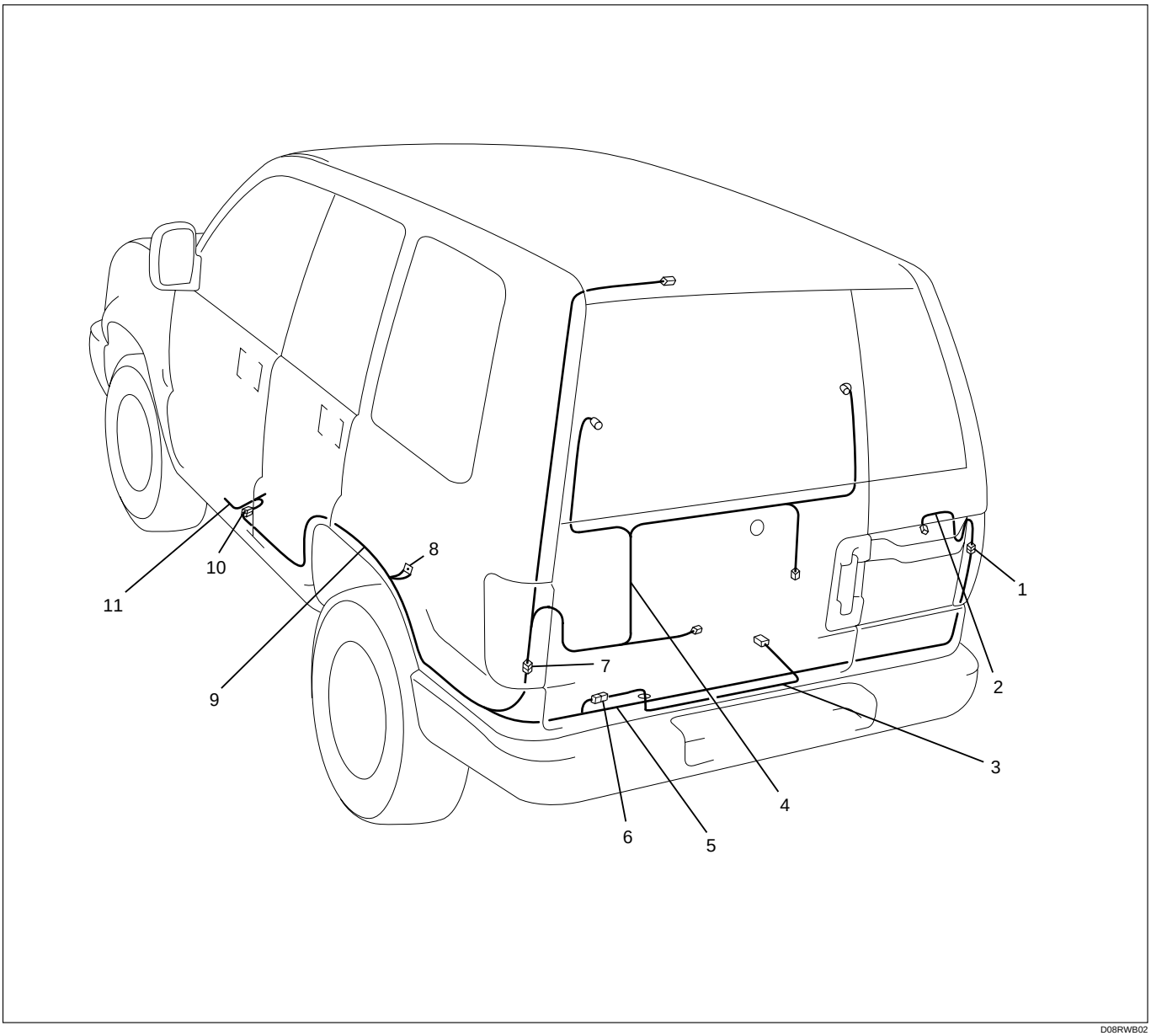

Legend

(1) H-39
(2) Tail Gate Harness (RH)
(3) Chassis Harness
(4) Tail Gate Harness (LH)
(5) RR Body Harness
(6) H-33
(7) H-37, H-38
(8) R-3, R-4
(9) RR Body Harness
(10) H-31, H-32, H-46
(11) Body Harness

Fuse Block Circuit

Circuit Diagram (6V∗1) – 1

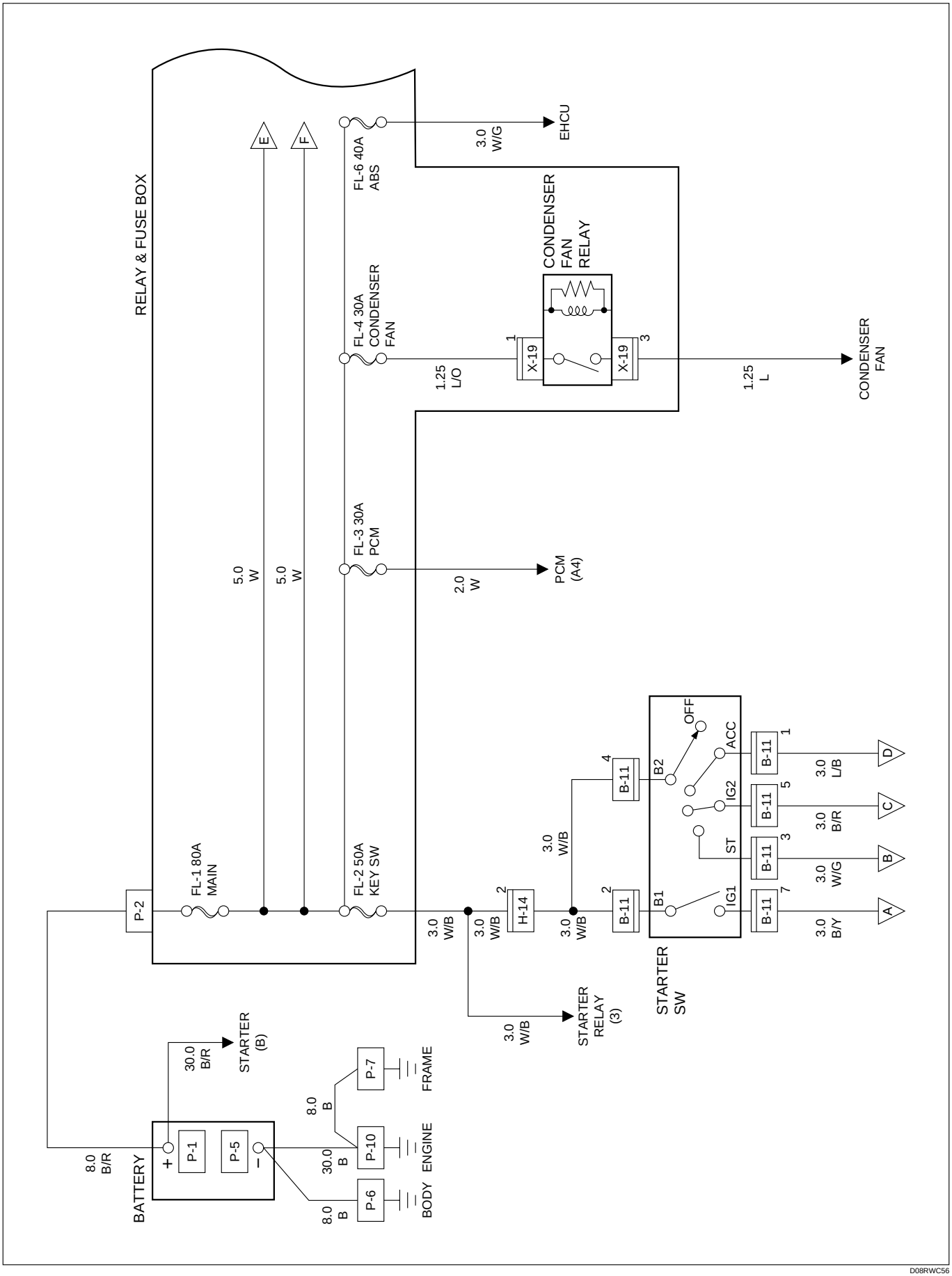

D08RWC56

Circuit Diagram (RHD 6V∗1) – 2

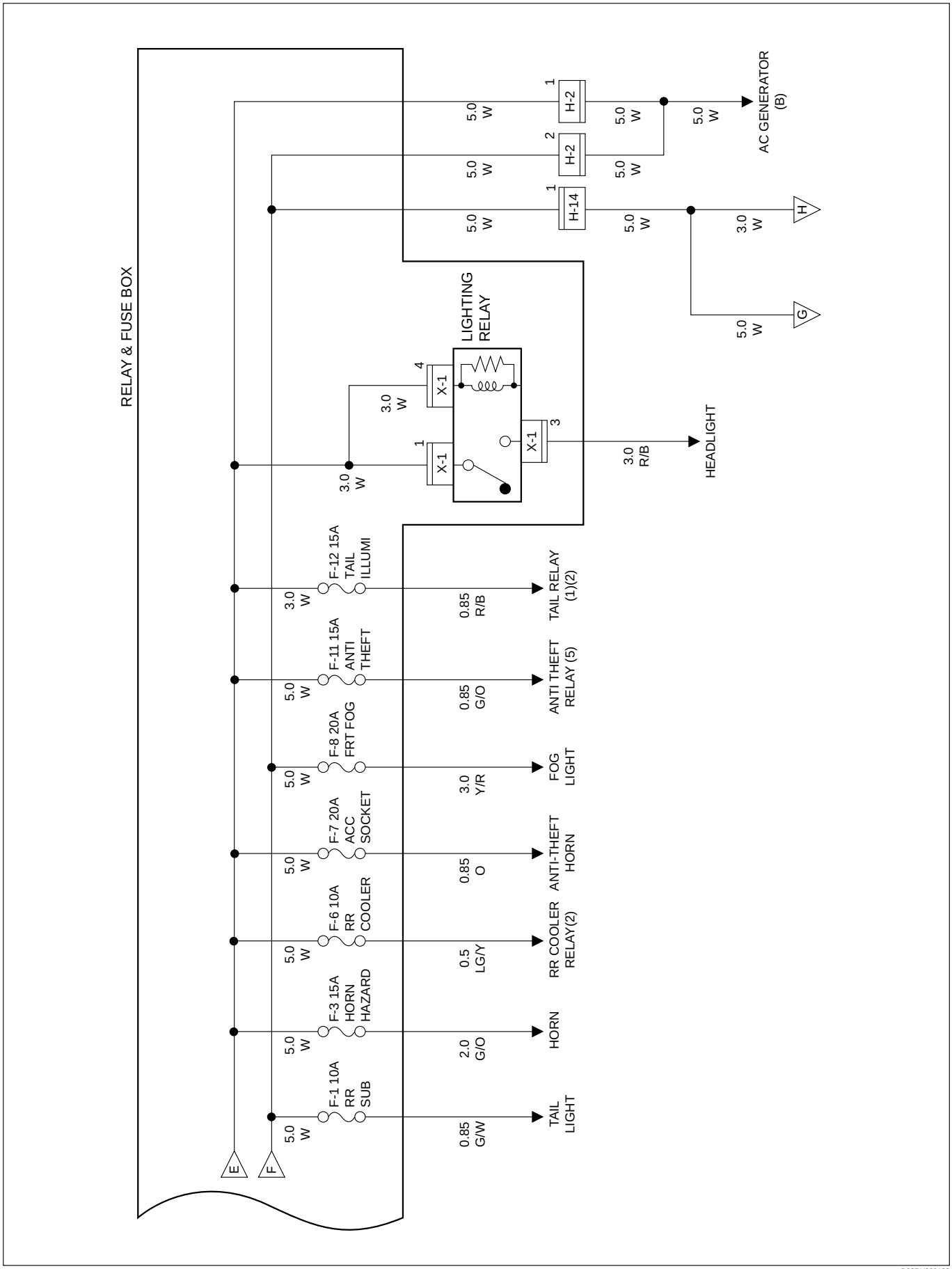

D08RY000189

Circuit Diagram (LHD 6V∗1) – 2

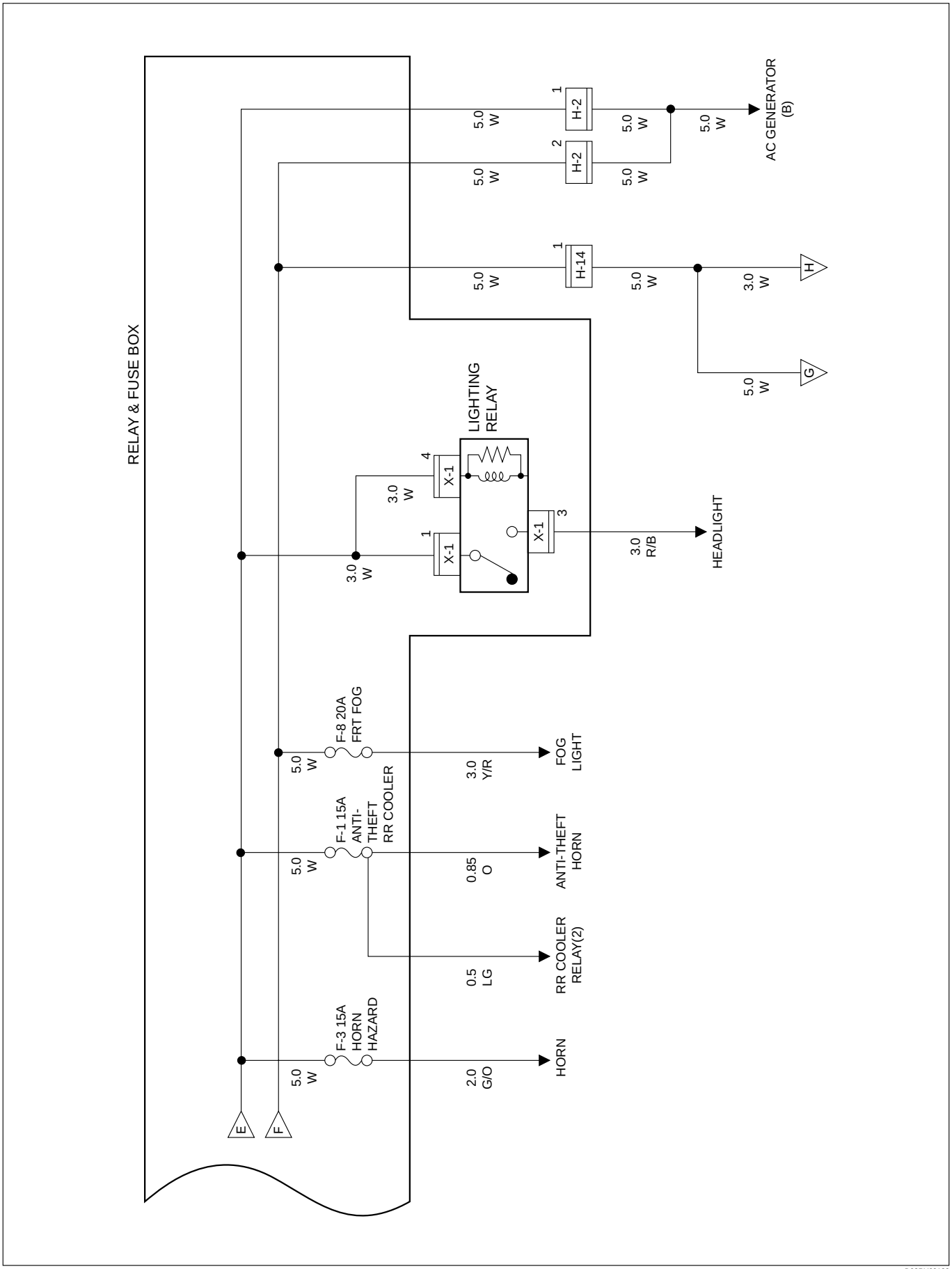

D08RY00188

Circuit Diagram (6V∗1) – 3

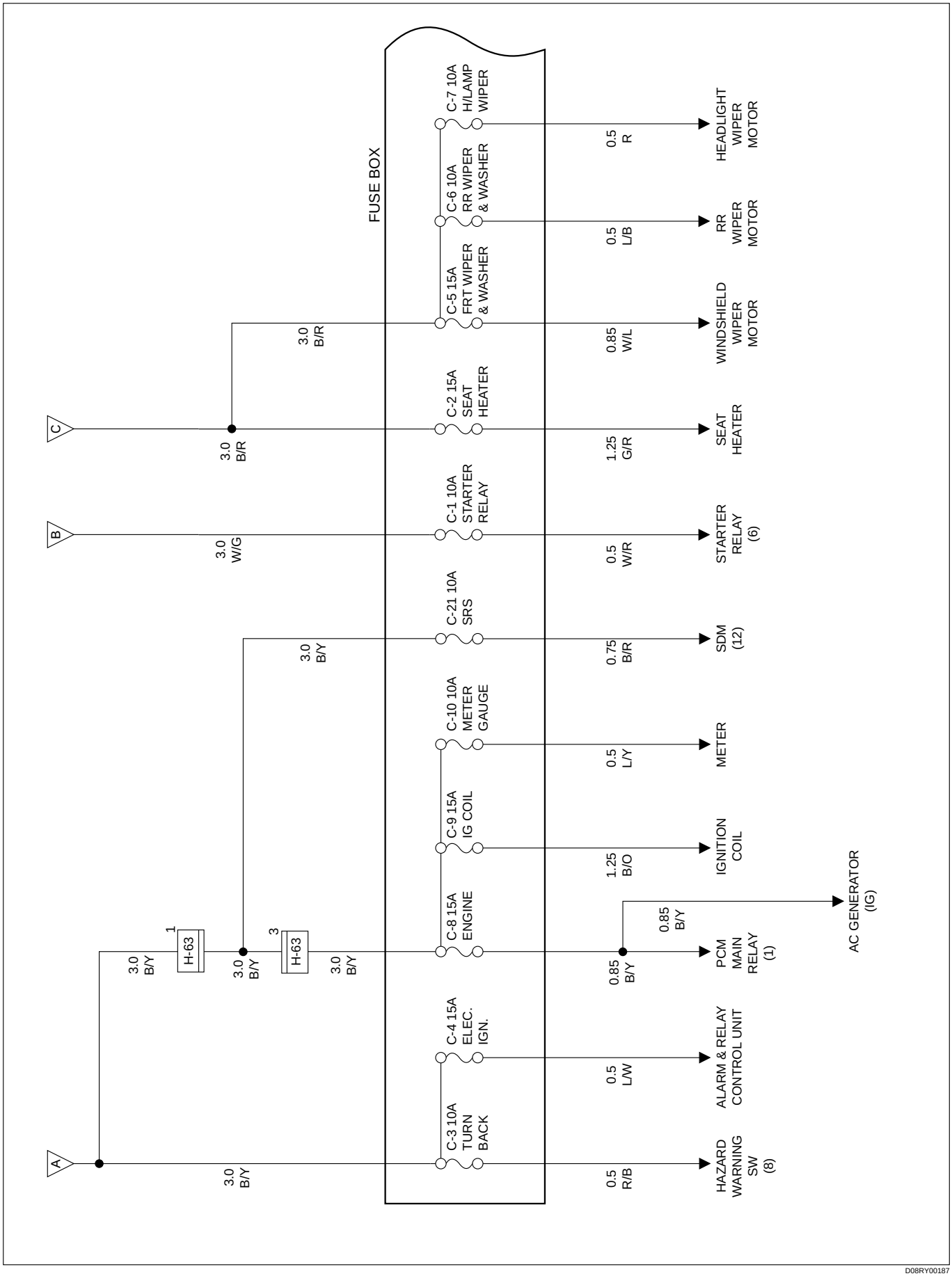

D08RY00187

Circuit Diagram (6V∗1) – 4

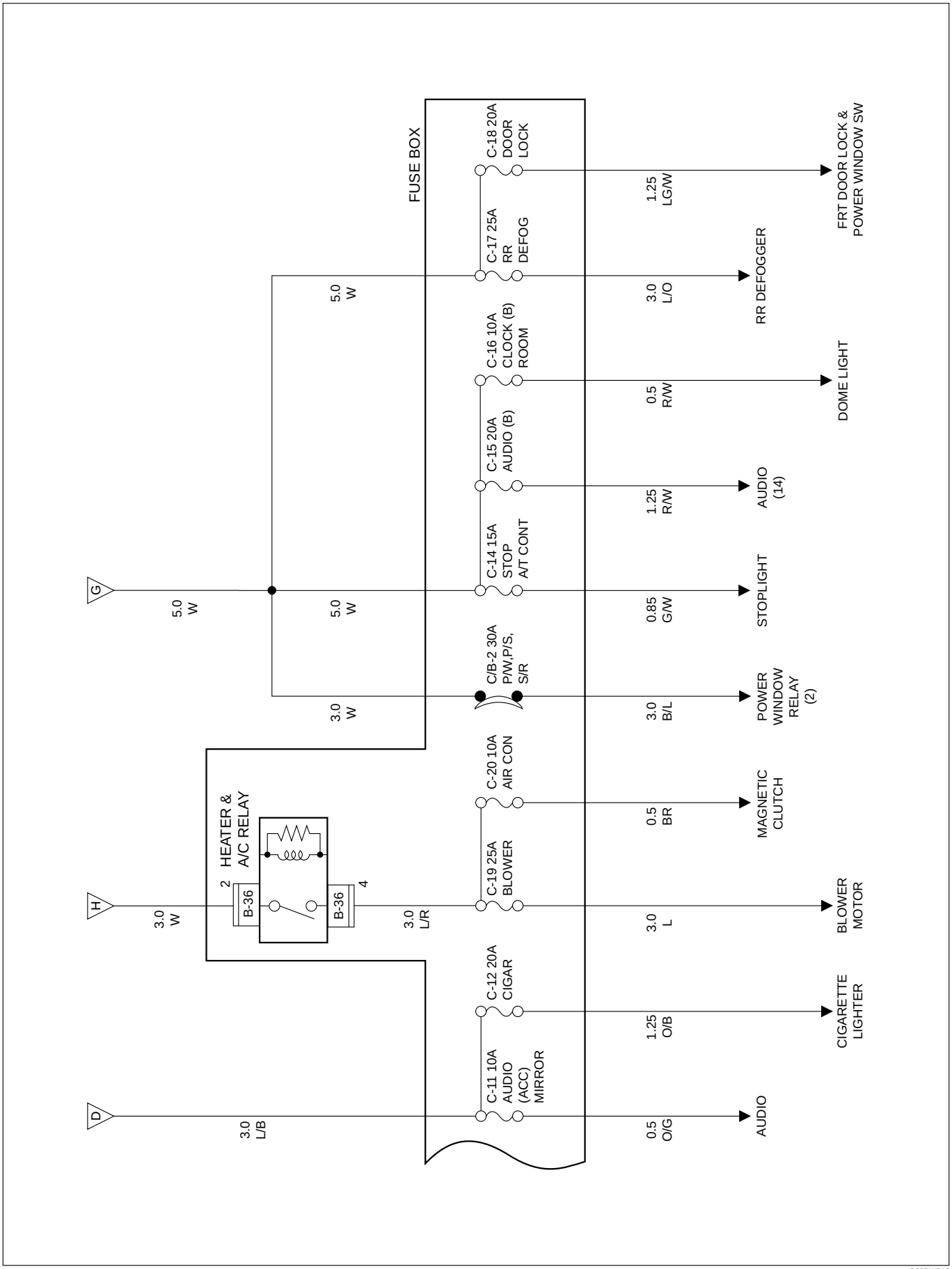

D08RWB16

Circuit Diagram (4JX1) – 1

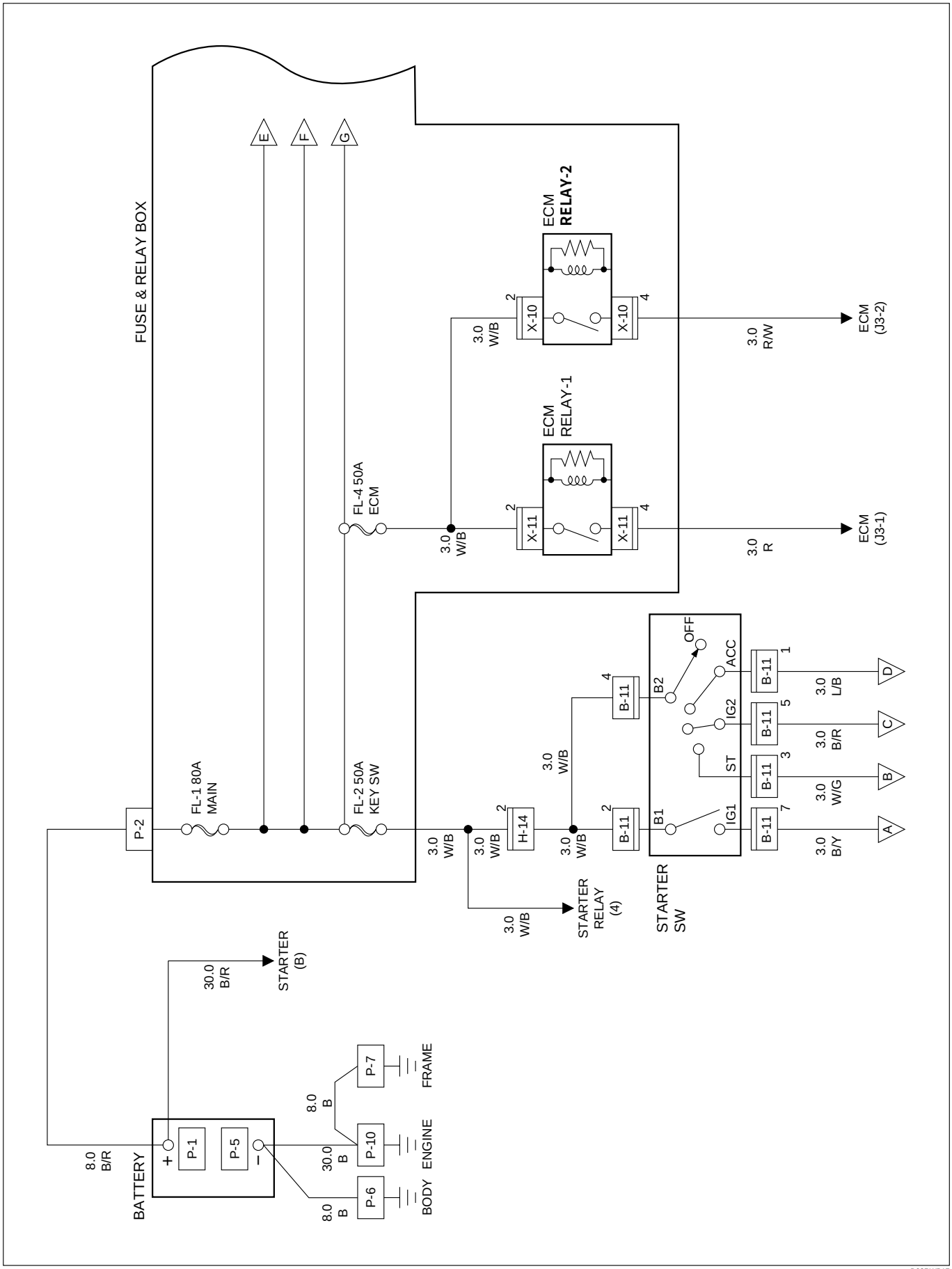

D08RWB17

Circuit Diagram (4JG2) – 1

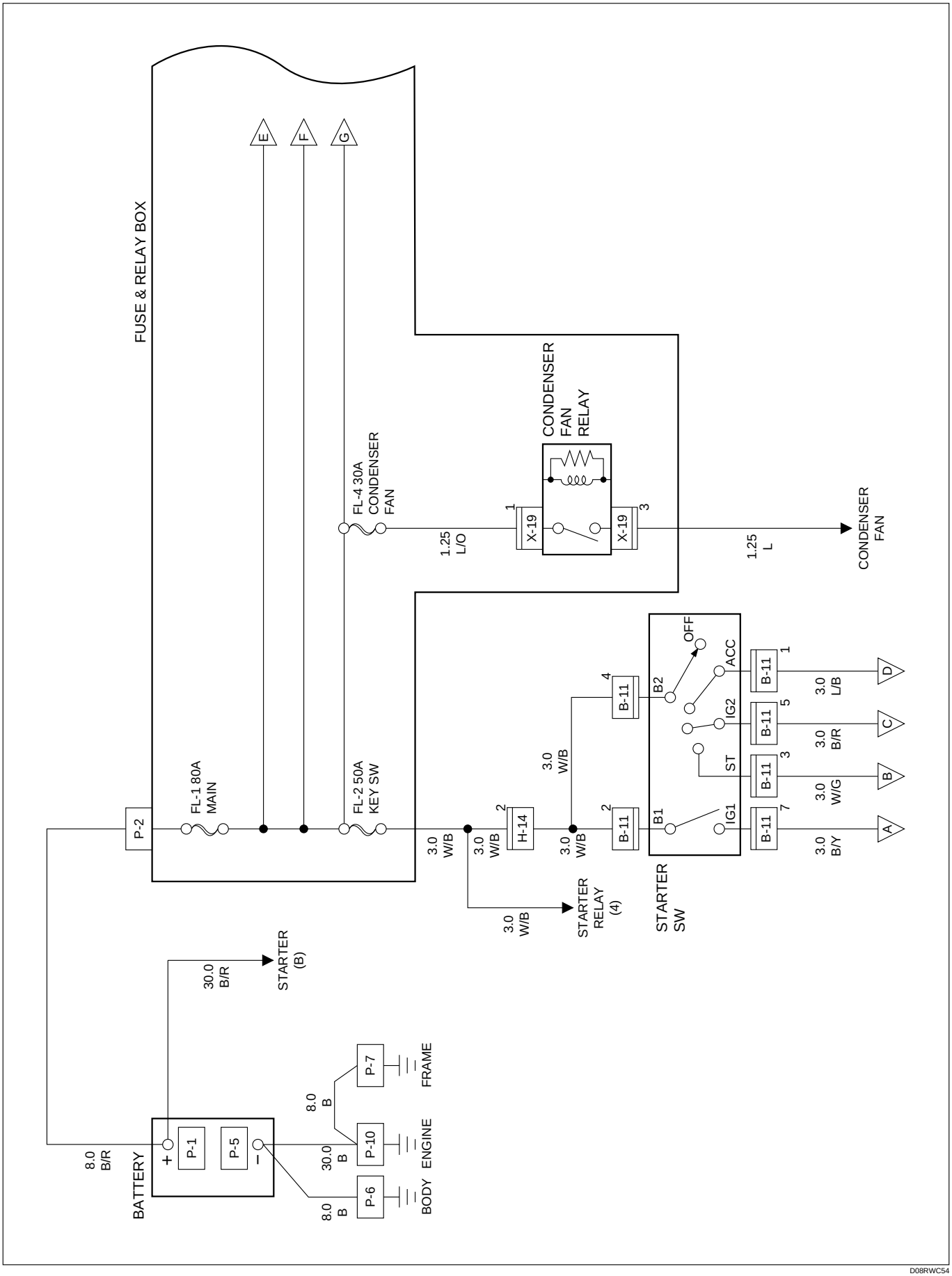

D08RWC54

Circuit Diagram (4JX1) – 2

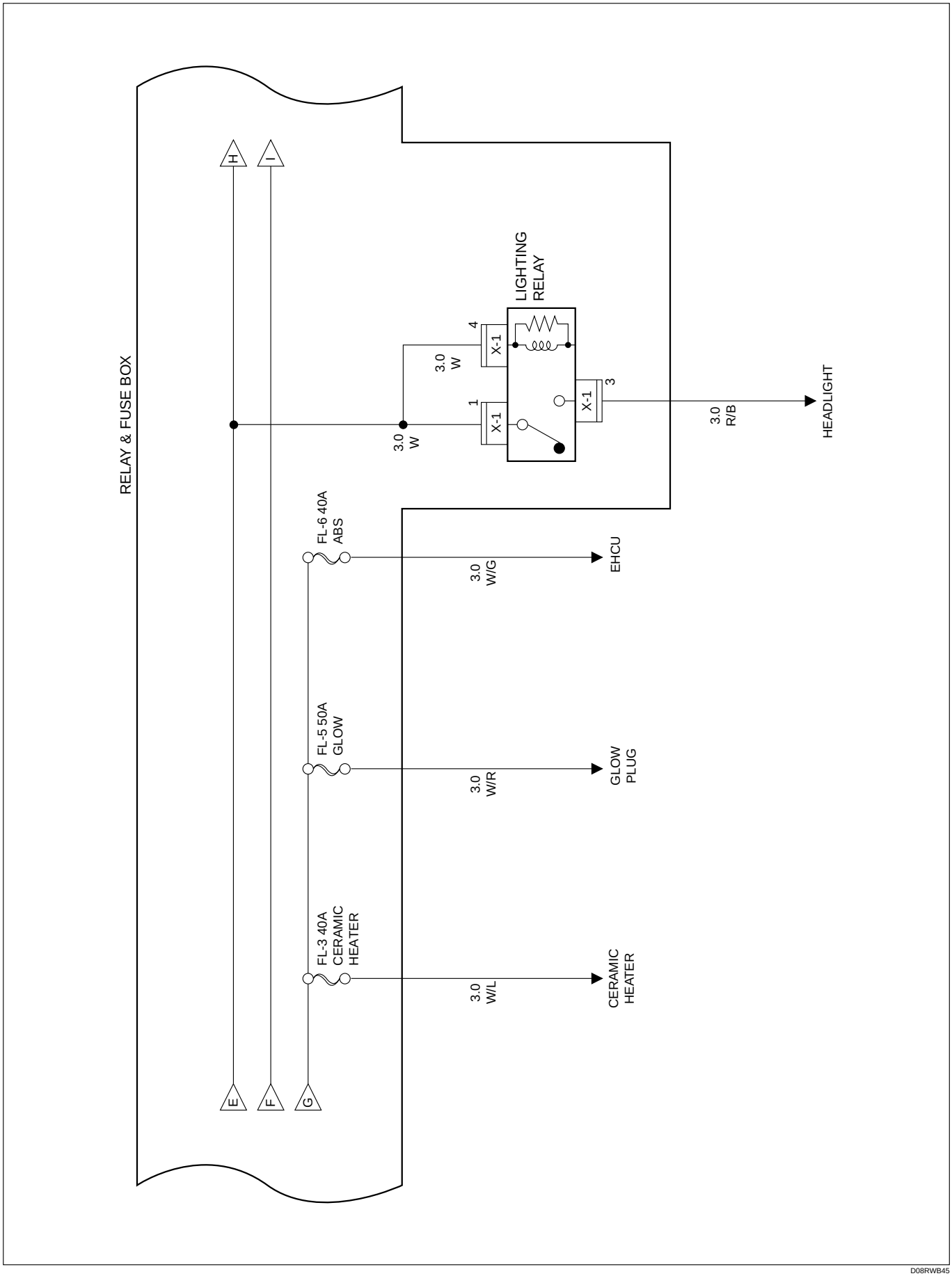

D08RWB45

Circuit Diagram (4JG2) – 2

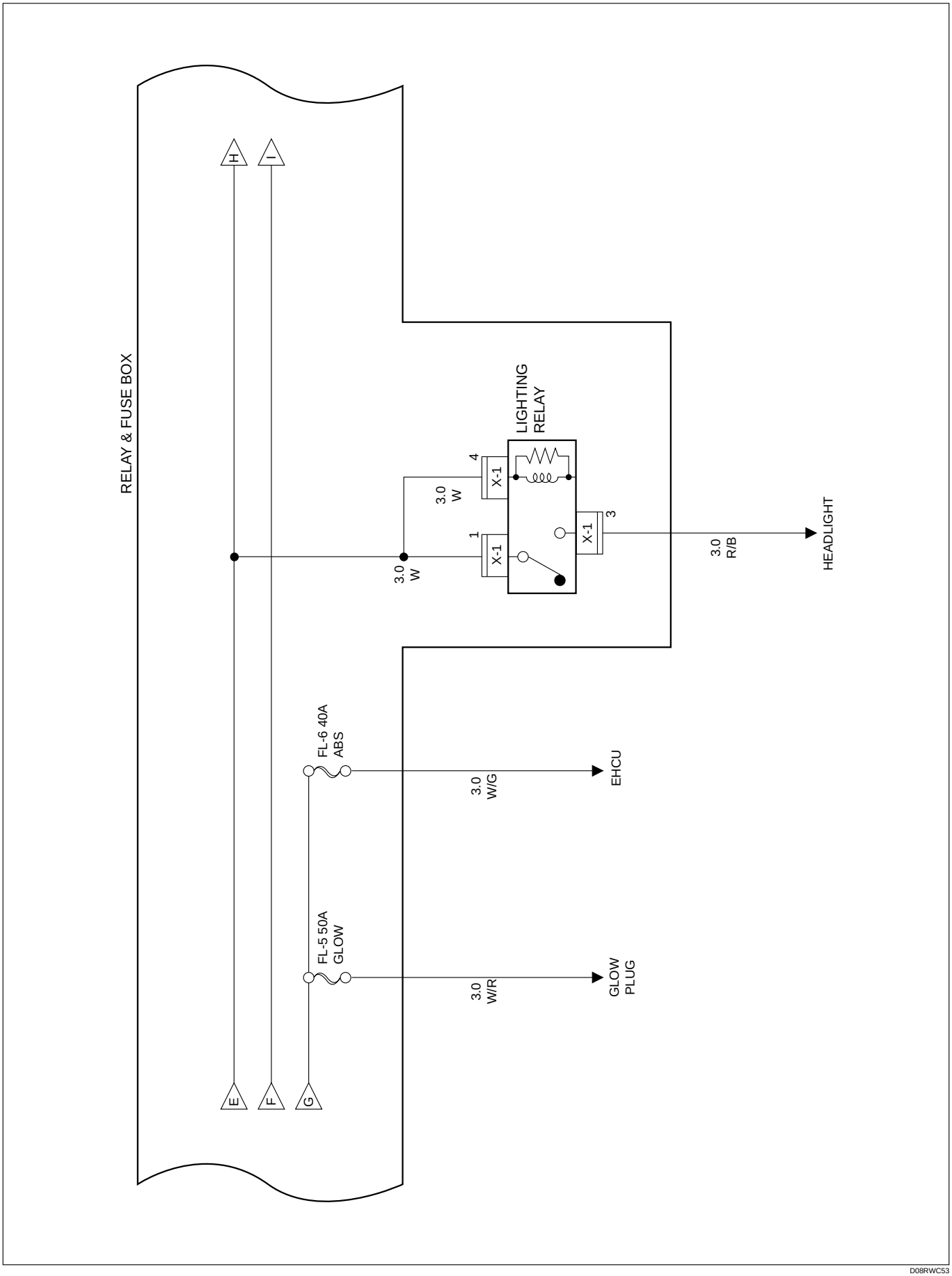

D08RWC53

Circuit Diagram (RHD Diesel) – 3

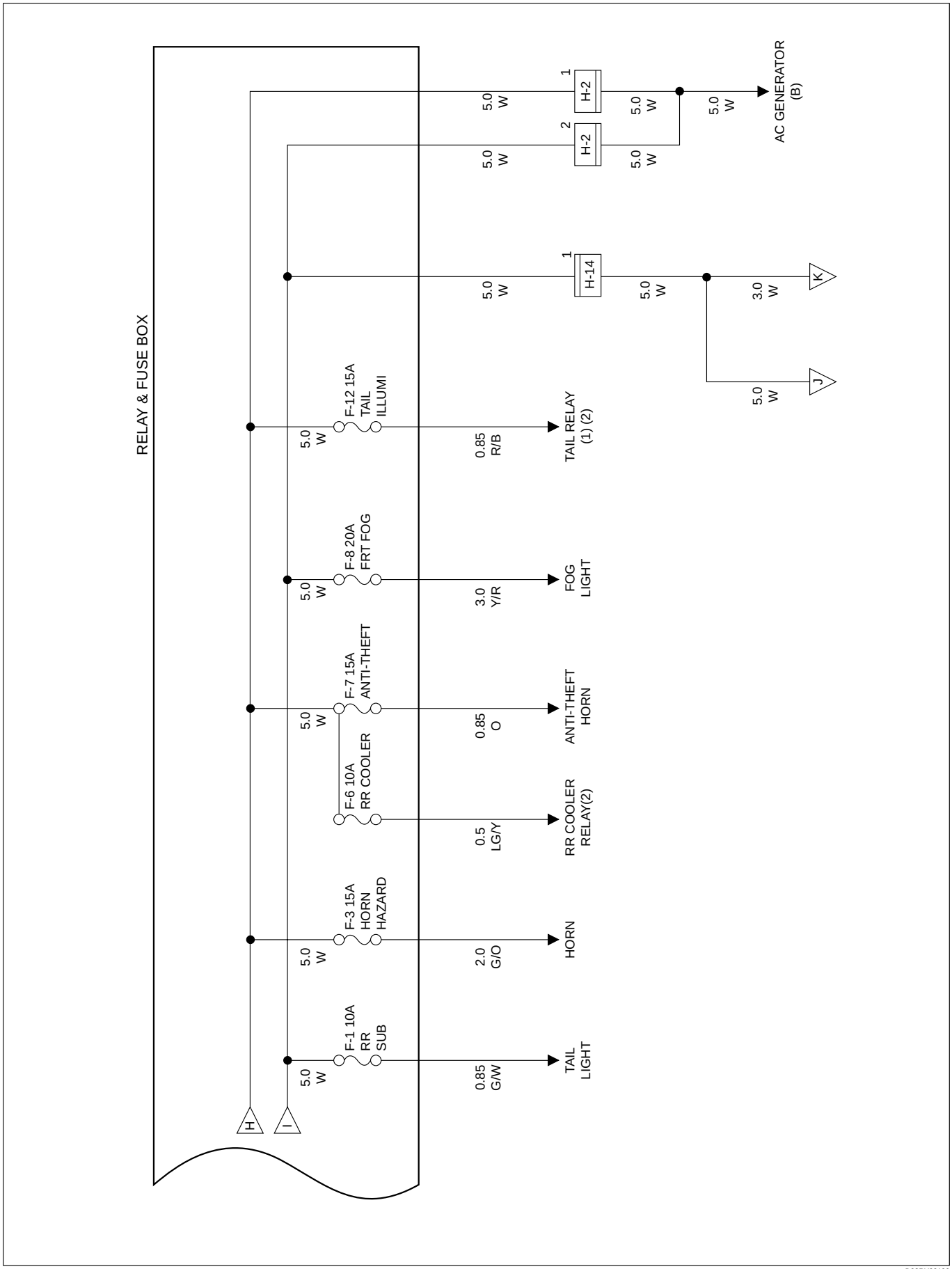

D08RY00190

Circuit Diagram (LHD Diesel) – 3

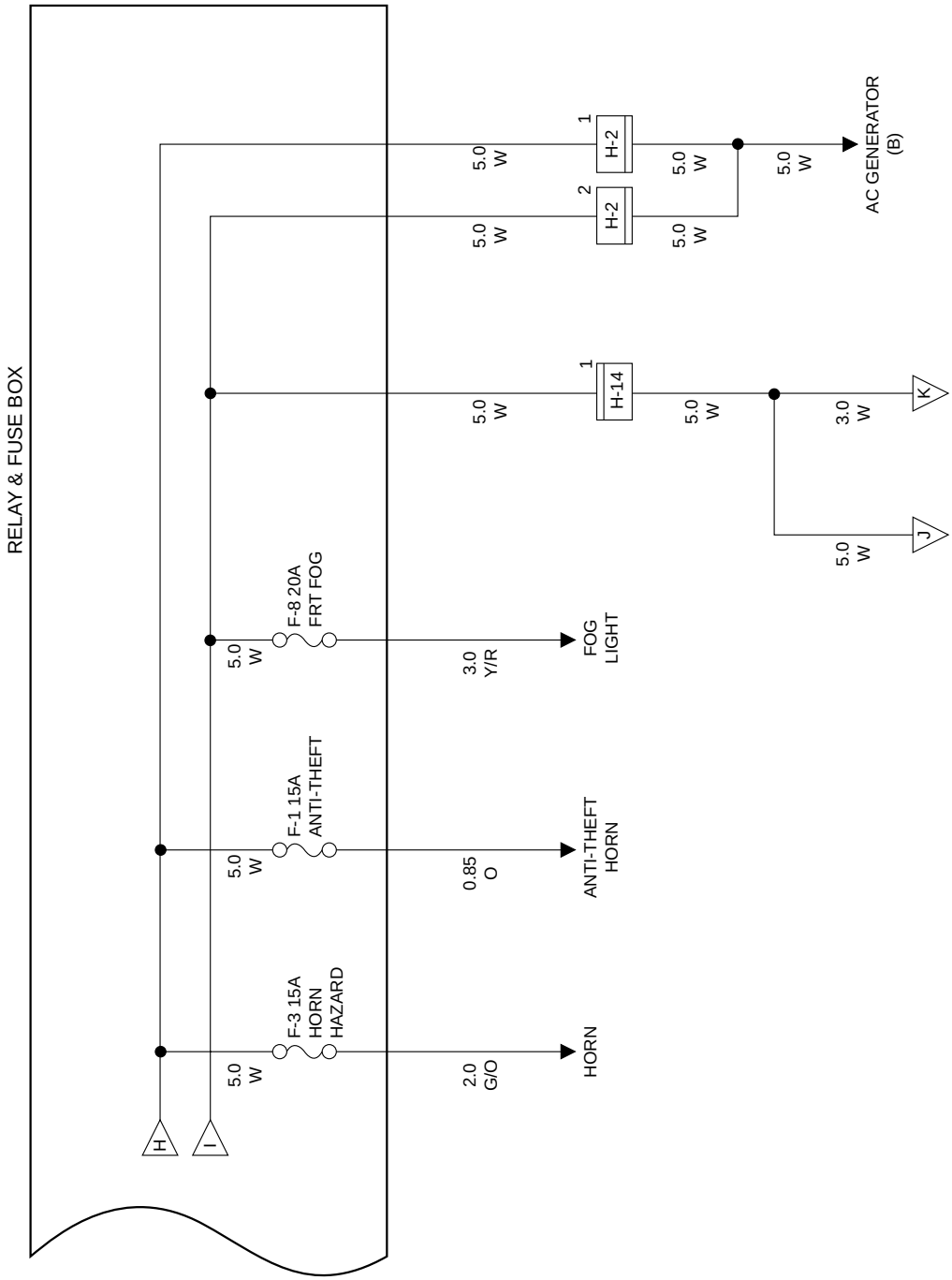

D08RWC52

Circuit Diagram (Diesel) – 4

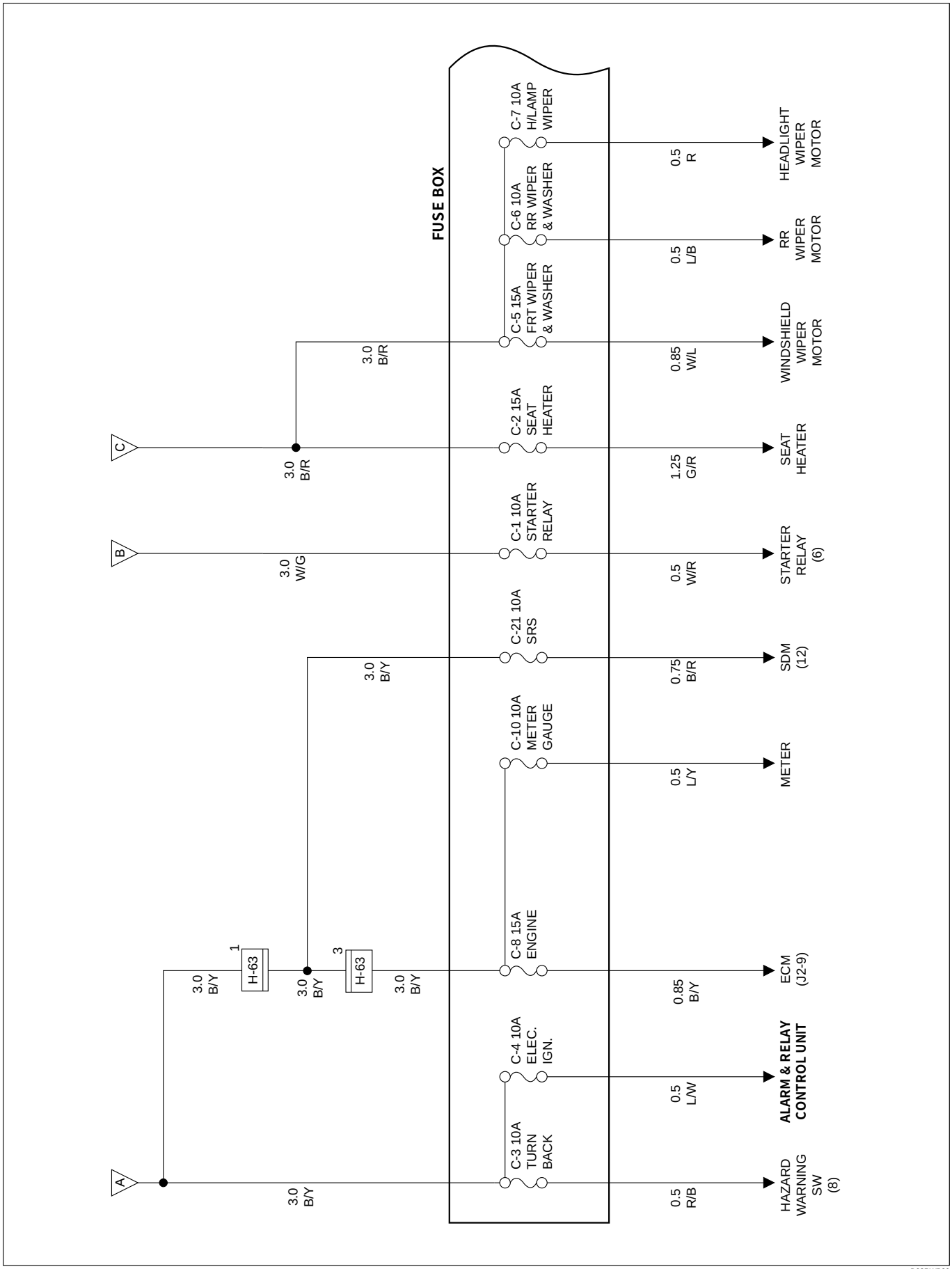

D08RWB20

Circuit Diagram (Diesel) – 5

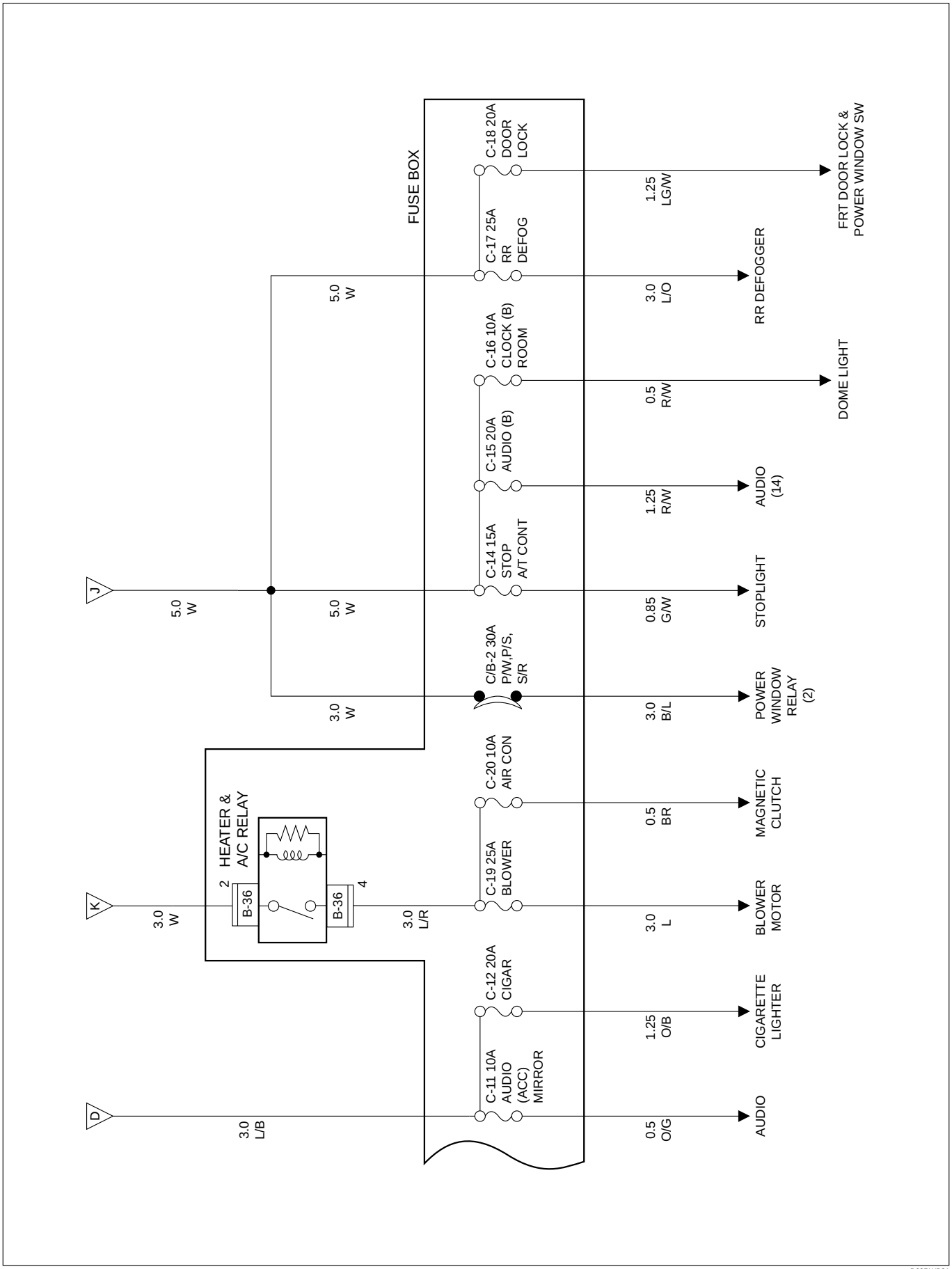

D08RWB21

Start and Charging

General Description

The system consists of the starter switch, starter, AC generator, starter relay, mode SW (A/T), charge relay (Diesel) and heater & A/C relay.
When the starter SW is set to the “ST” position with the A/T select at "P" (Parking) or "N" (Neutral) position (Mode SW "ON"), the battery voltage is applied to the starter solenoid coil through the starter relay to start the starter. At the same time, the starter relay (charge relay; Diesel) cuts off the blower motor and the A/C circuit.

Circuit Diagram (RHD 6V∗1) – 1

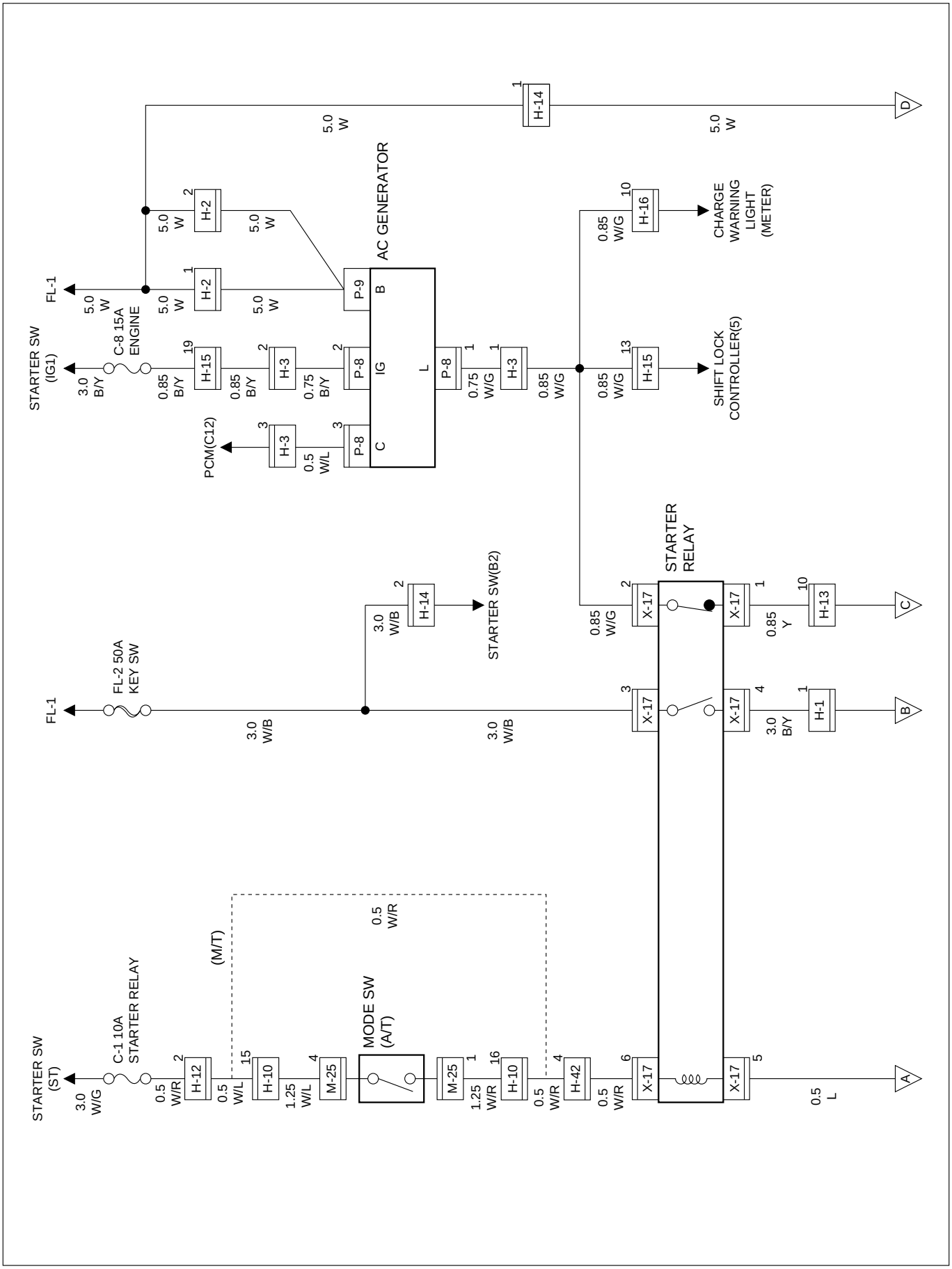

D08RY00094

Circuit Diagram (RHD 6V∗1) – 2

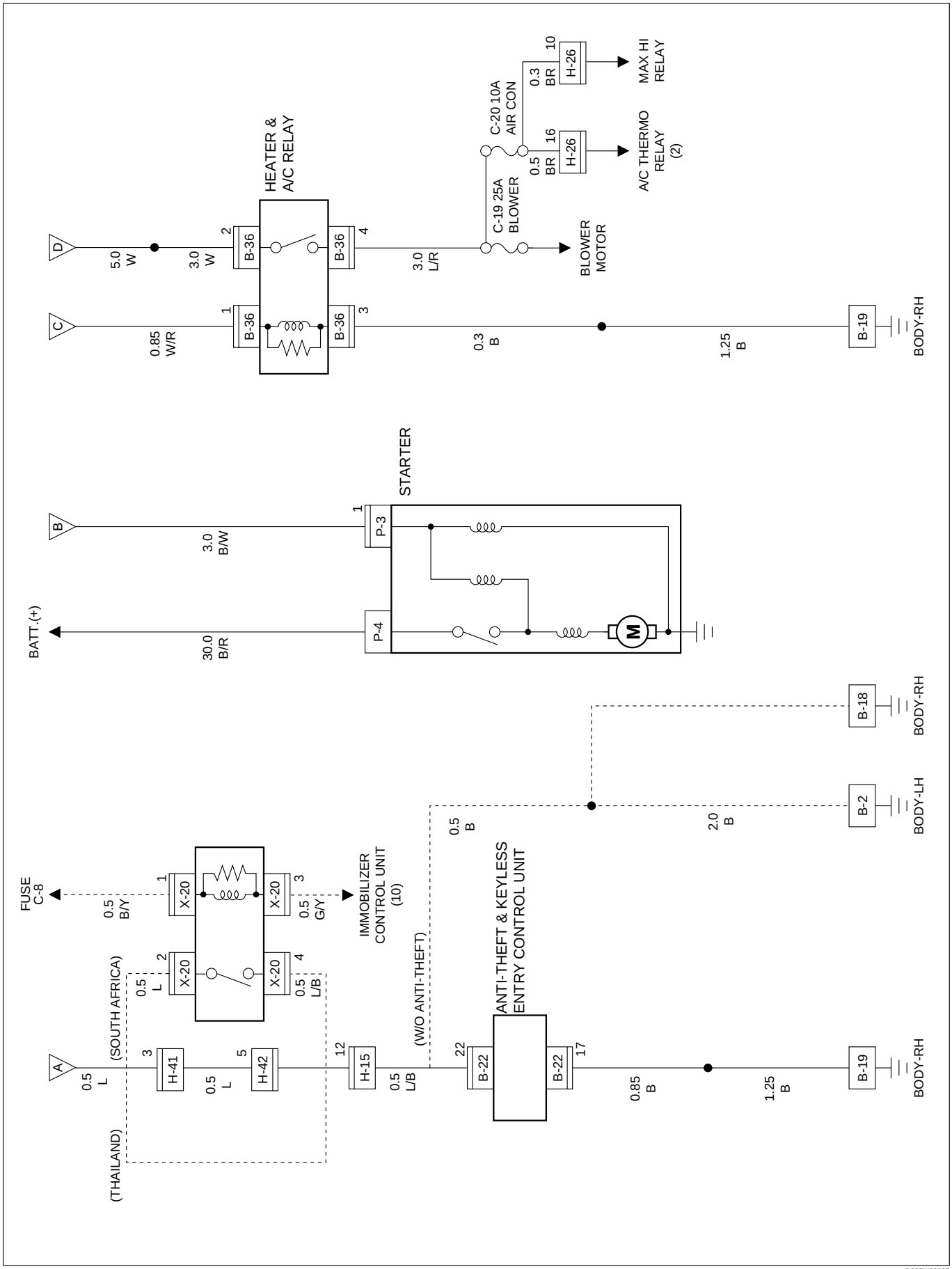

D08RY00087

Parts Location (RHD 6V∗1)

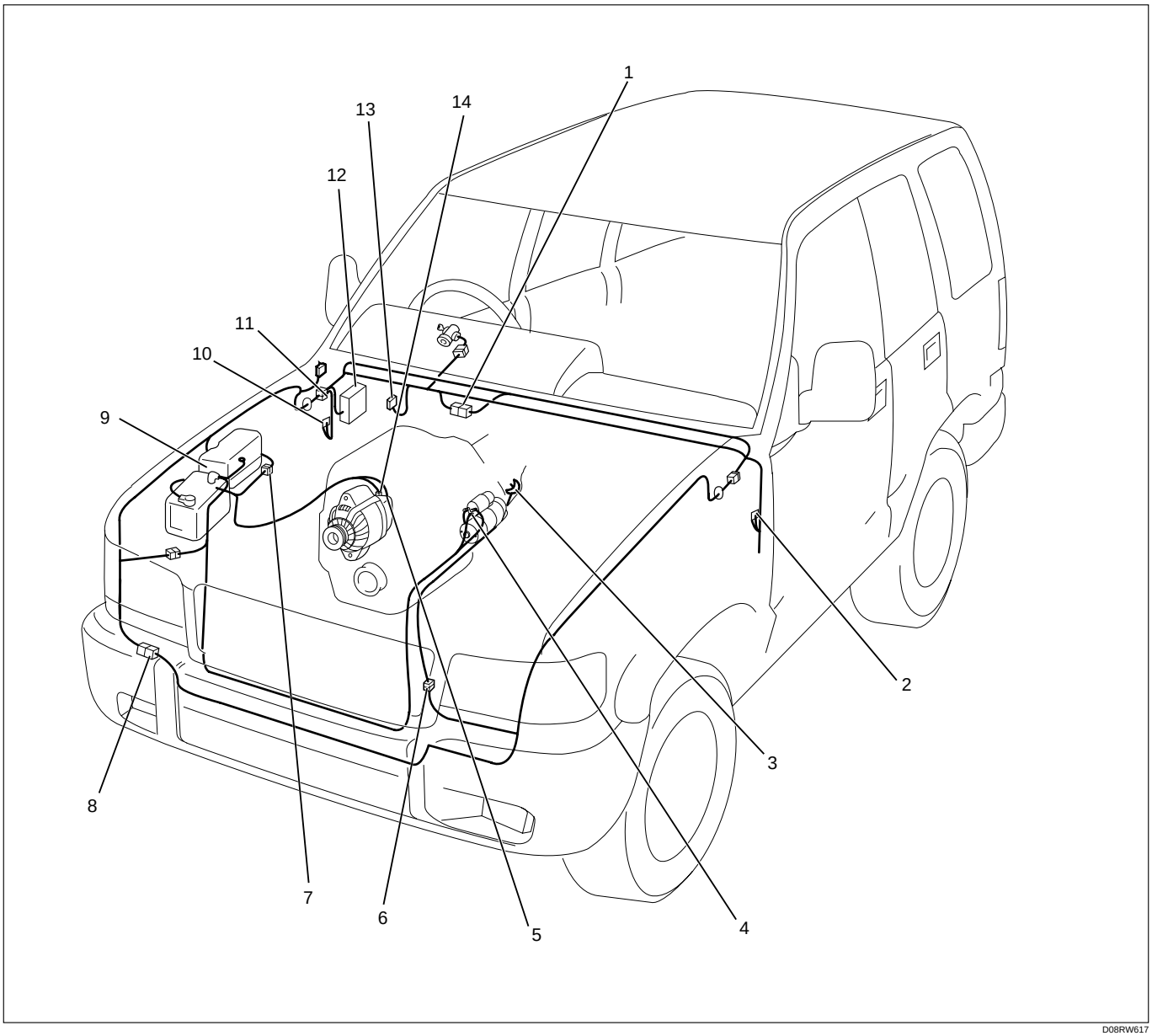

D08RW617

Legend

(1) H-12
(2) B-2
(3) M-25
(4) P-3
(5) P-9
(6) H-10
(7) H-1, H-2, H-3
(8) H-42
(9) Relay and Fuse Box (X-17, X-20)
(10) B-18, B-19
(11) H-13, H-14, H-15, H-16
(12) Fuse Box (B-36)
(13) B-20
(14) P-8

Circuit Diagram (RHD 4JG2)–1

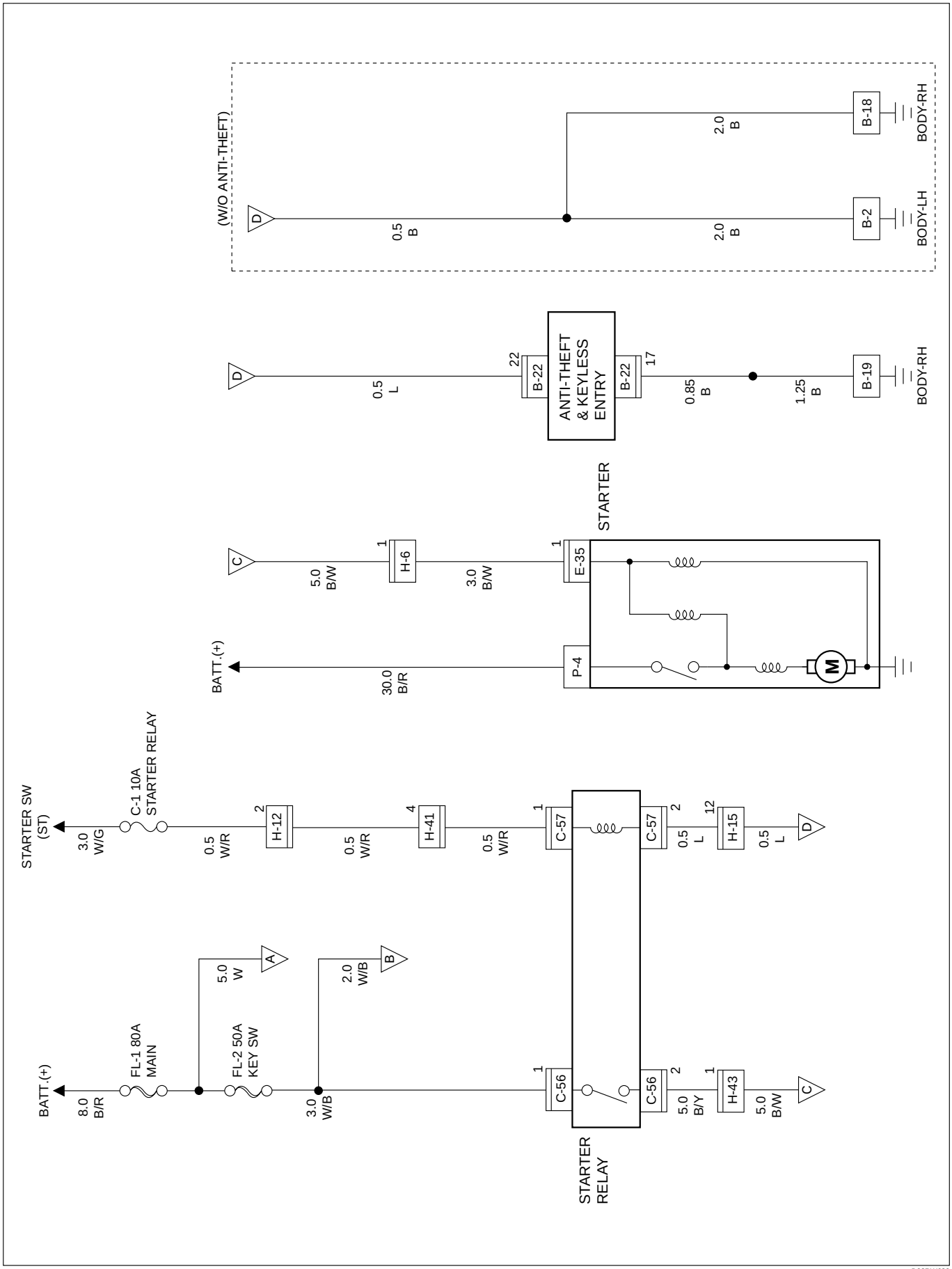

D08RW632

Circuit Diagram (RHD 4JG2) – 2

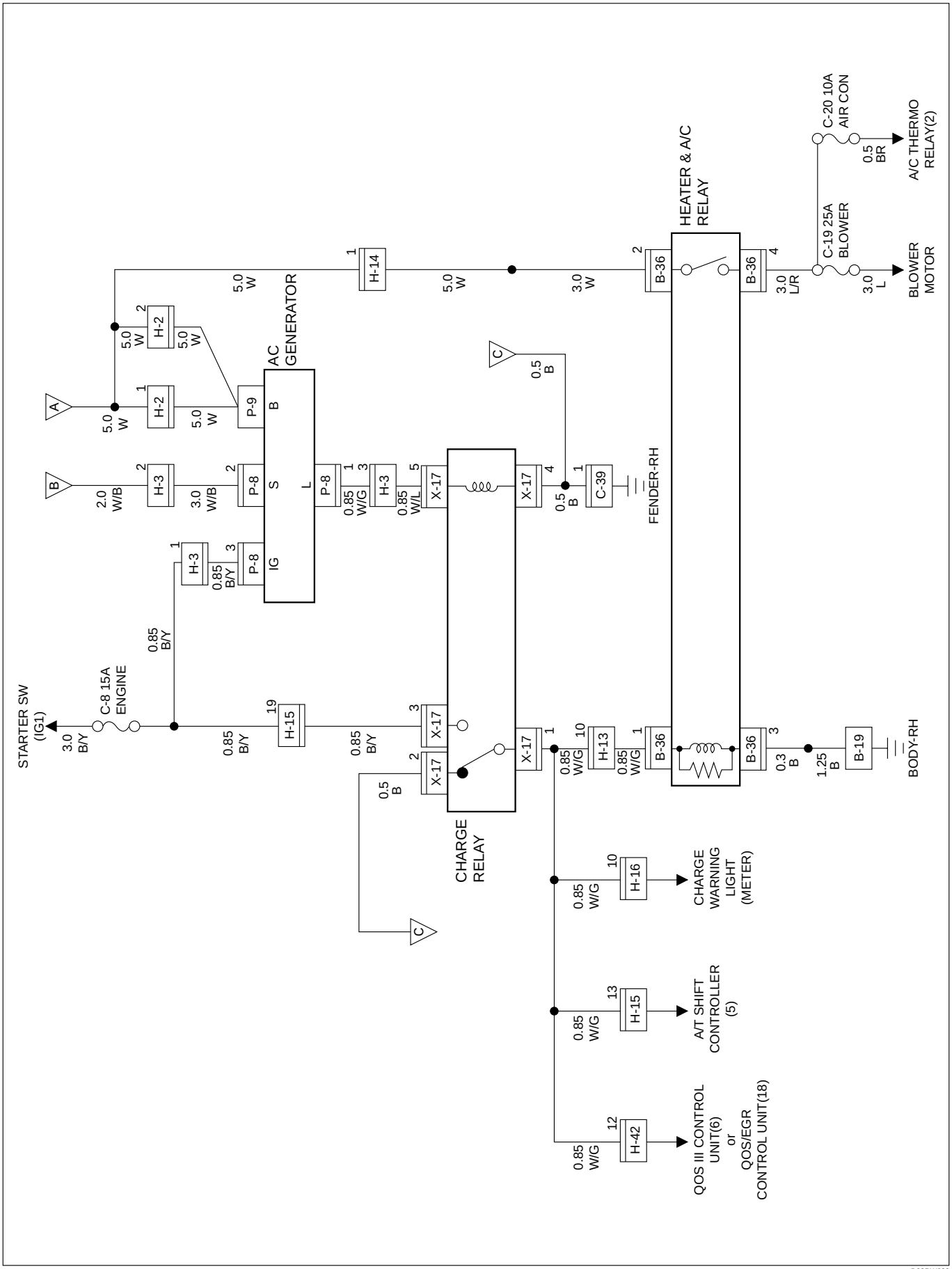

D08RW633

Parts Location (RHD 4JG2)

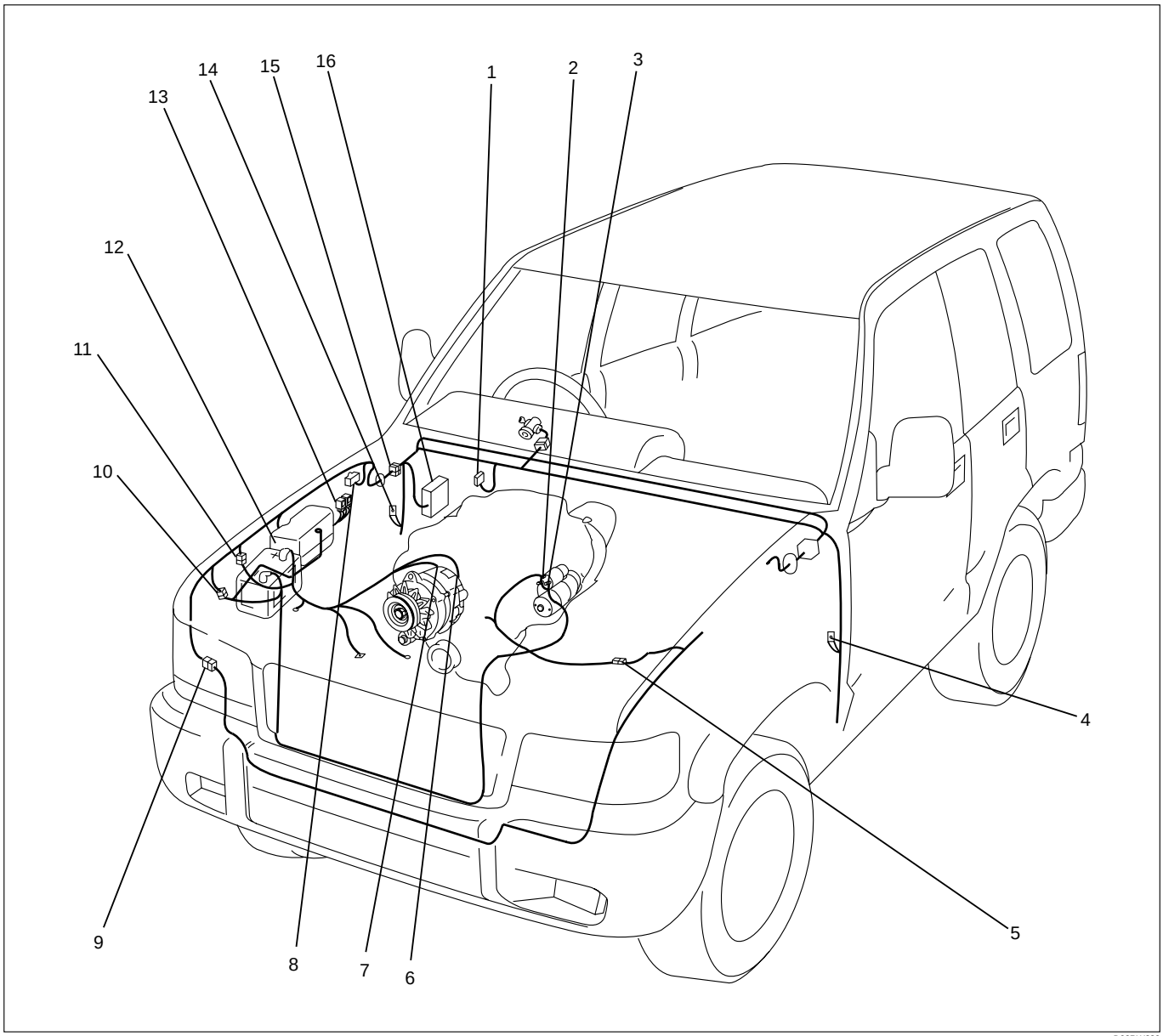

D08RW839

Legend

(1) B-22
(2) E-35
(3) P-4
(4) B-2
(5) H-6
(6) P-9
(7) P-8
(8) C-39
(9) H-41, H-42, H-43
(10) H-2
(11) H-3
(12) Relay and Fuse Box (X-17)
(13) C-56, C-57
(14) B-18, B-19
(15) H-12, H-13, H-14, H-15, H-16
(16) Fuse Box (B-36)

Circuit Diagram (LHD 6V∗1)–1

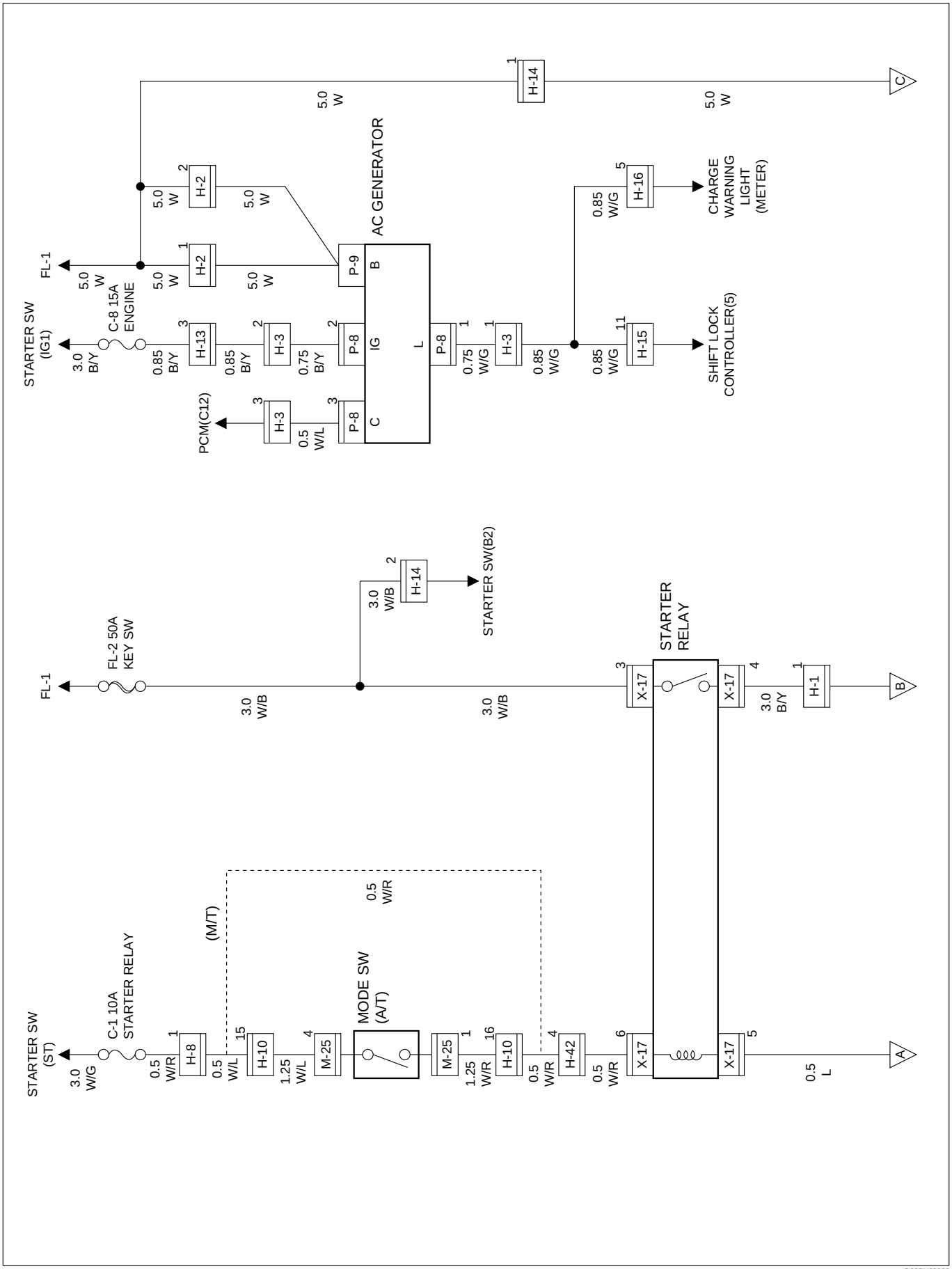

D08RY00088

Circuit Diagram (LHD 6V∗1) – 2

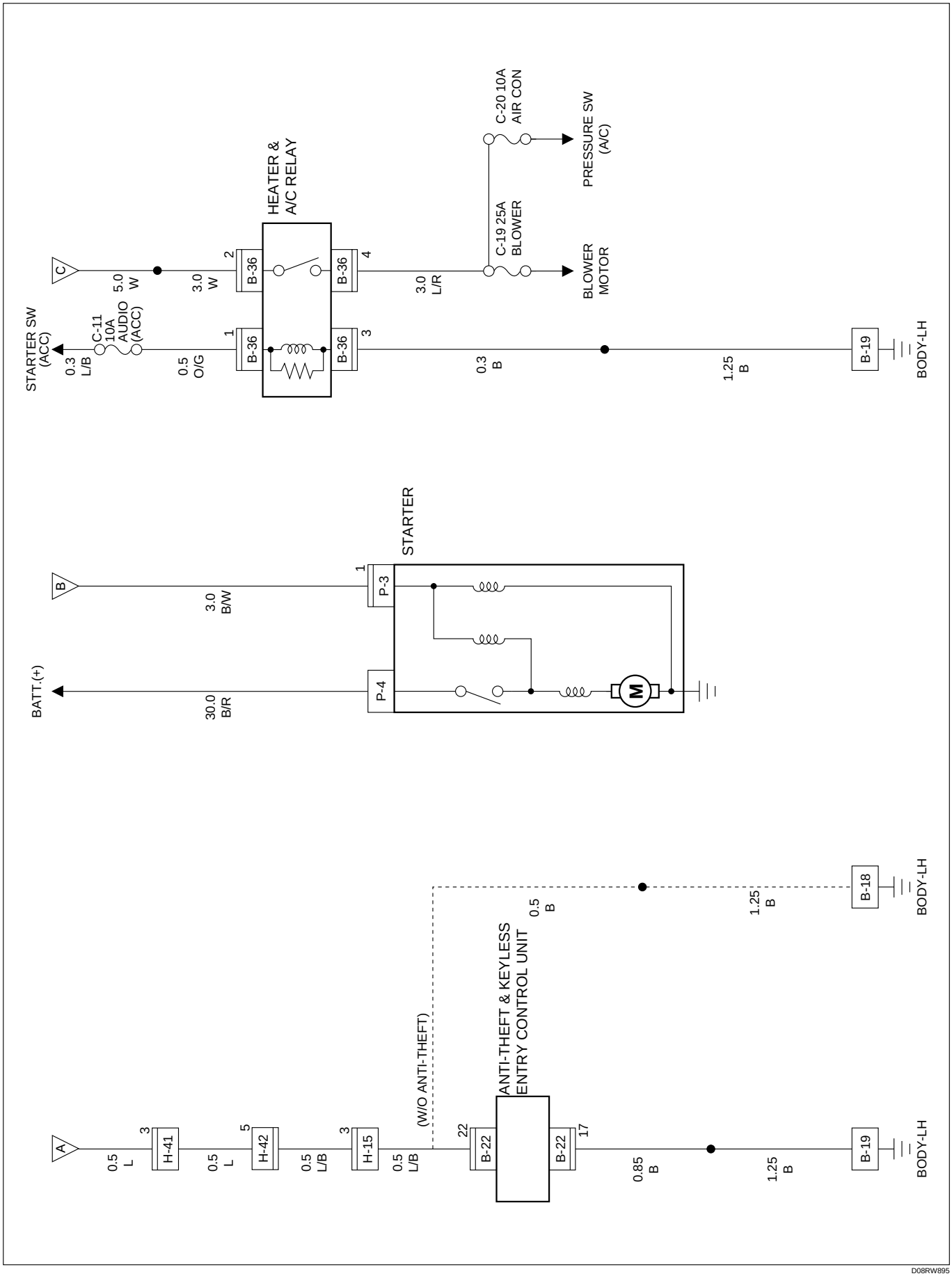

D08RW895

Parts Location (LHD 6V∗1)

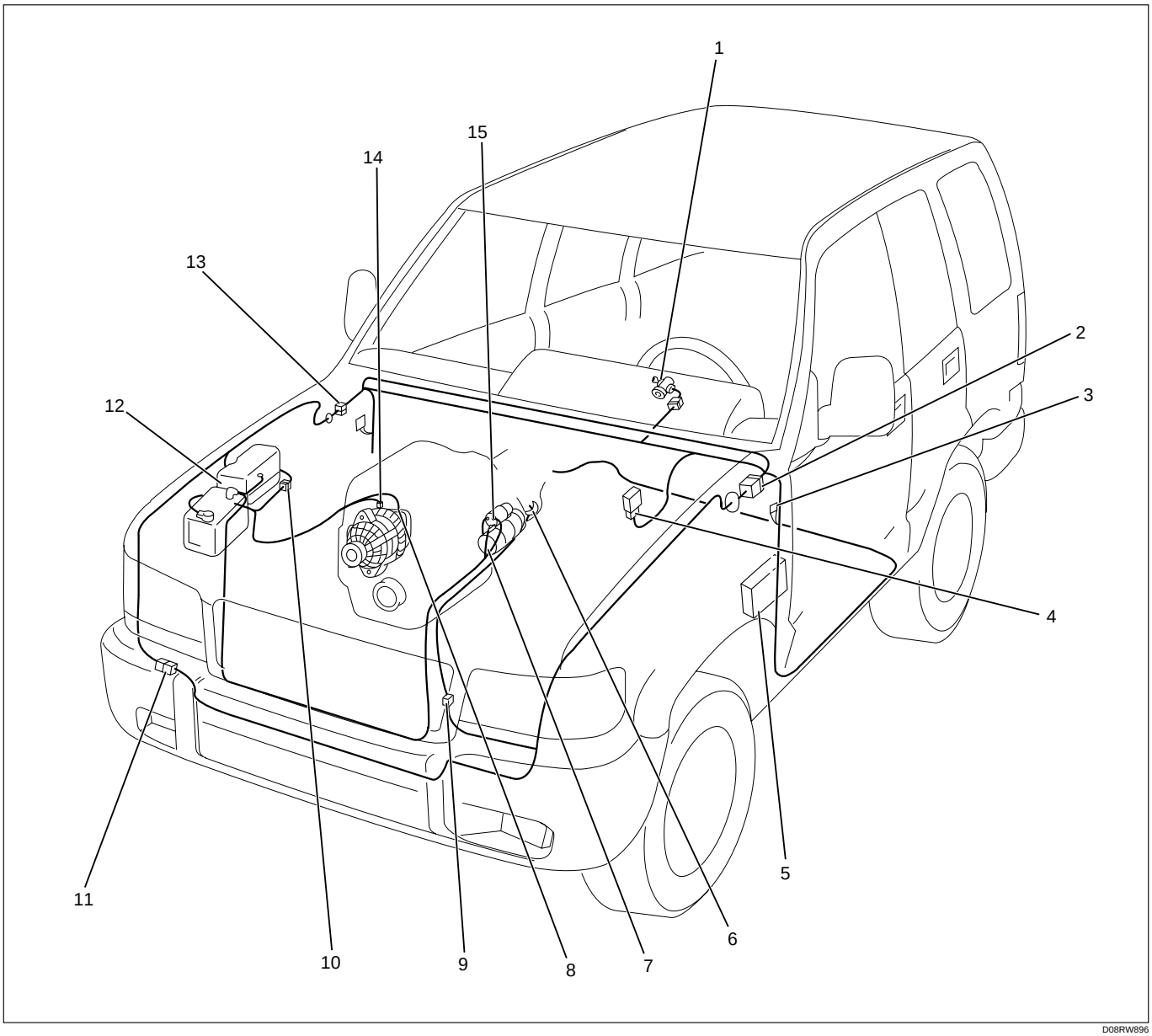

D08RW896

Legend

(1) Starter Switch
(2) H-8
(3) B-18, B-19
(4) B-20
(5) Fuse Box (B-36)
(6) M-25
(7) P-3
(8) P-9
(9) H-10
(10) H-1, H-2, H-3
(11) H-41, H-42
(12) Relay and Fuse Box (X-17)
(13) H-13, H-14, H-15, H-16
(14) P-8
(15) P-4

Circuit Diagram (LHD 4JG2)–1

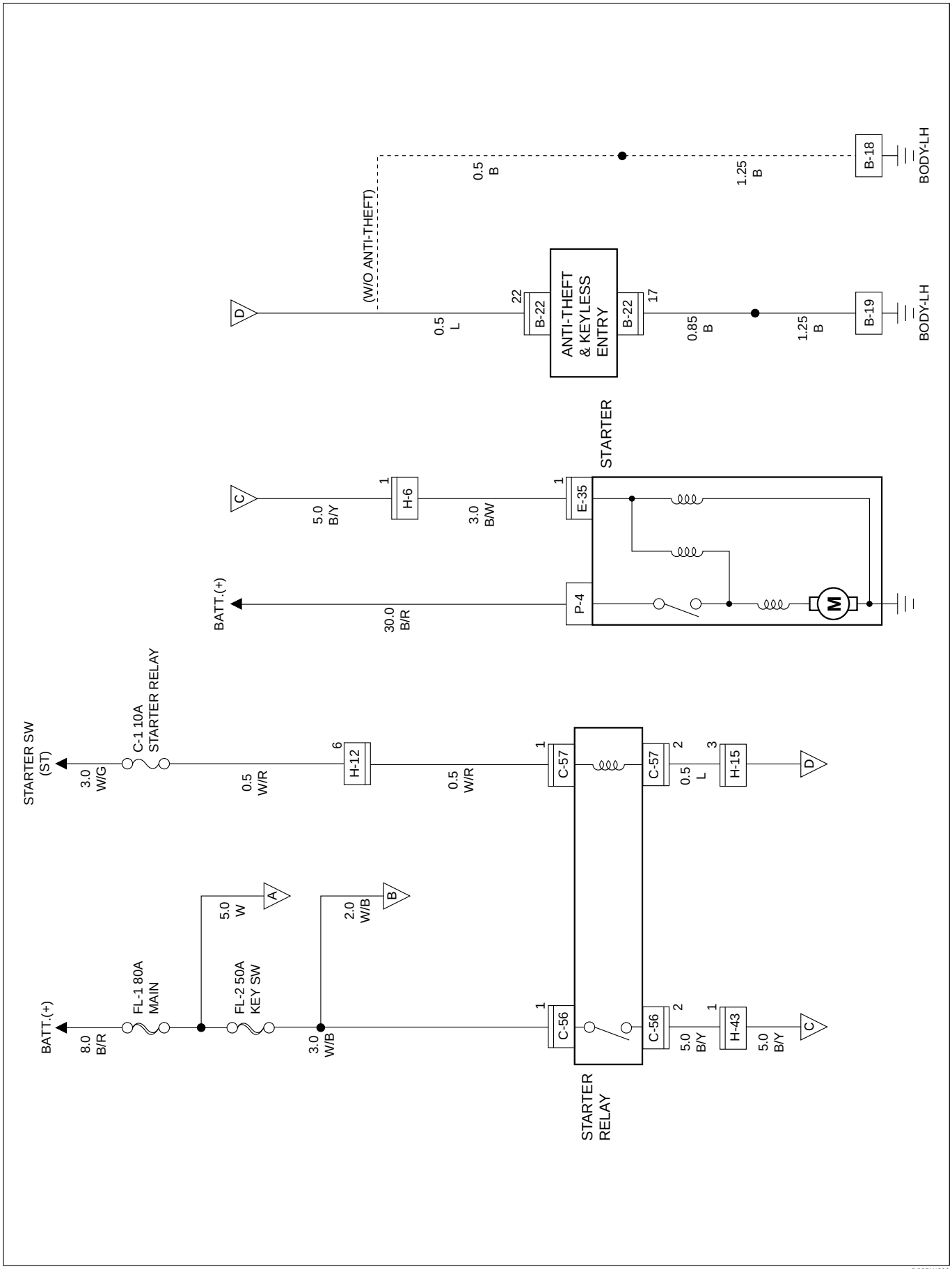

D08RW899

Circuit Diagram (LHD 4JG2)–2

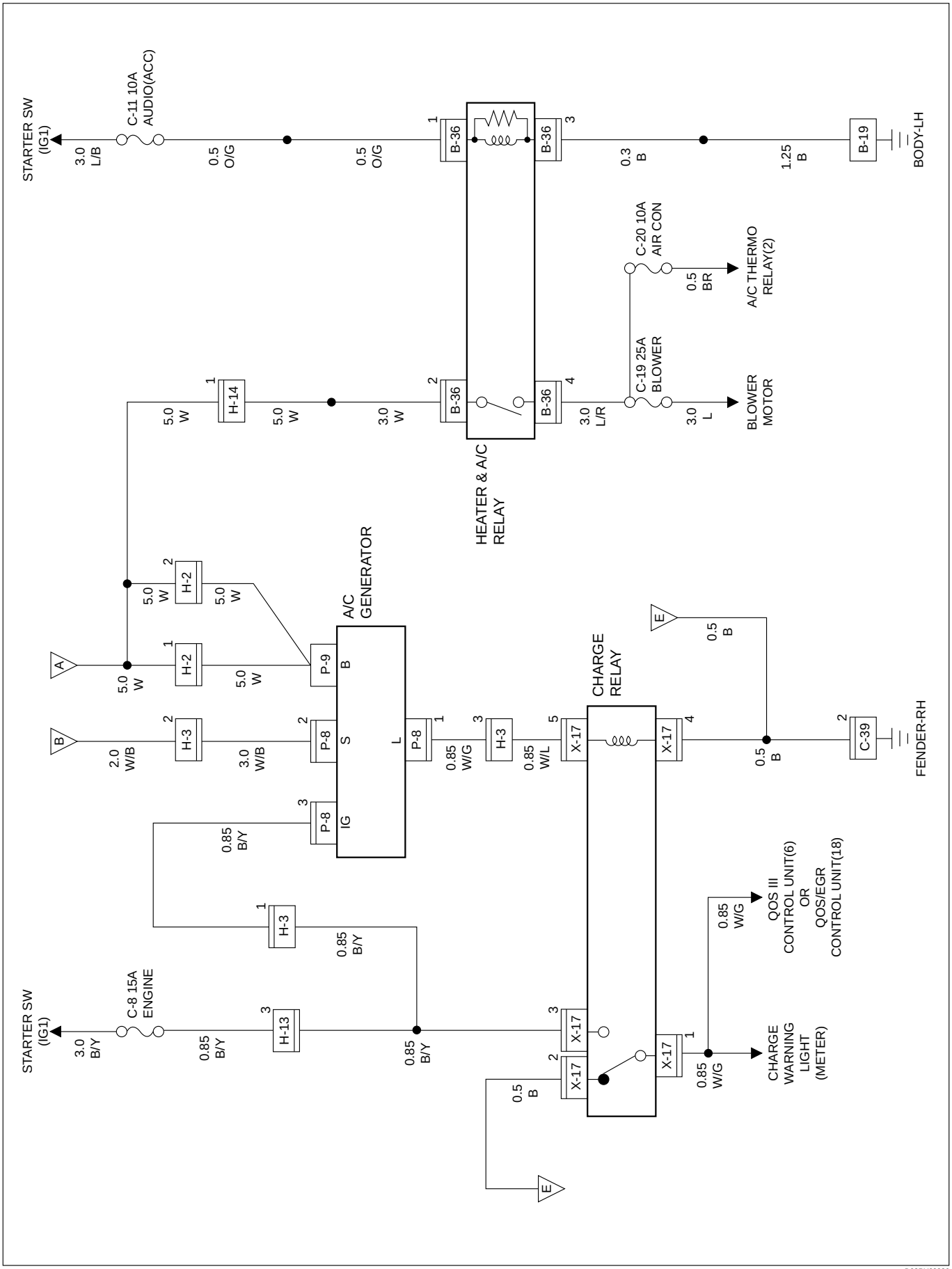

D08RY00086

Parts Location (LHD 4JG2)

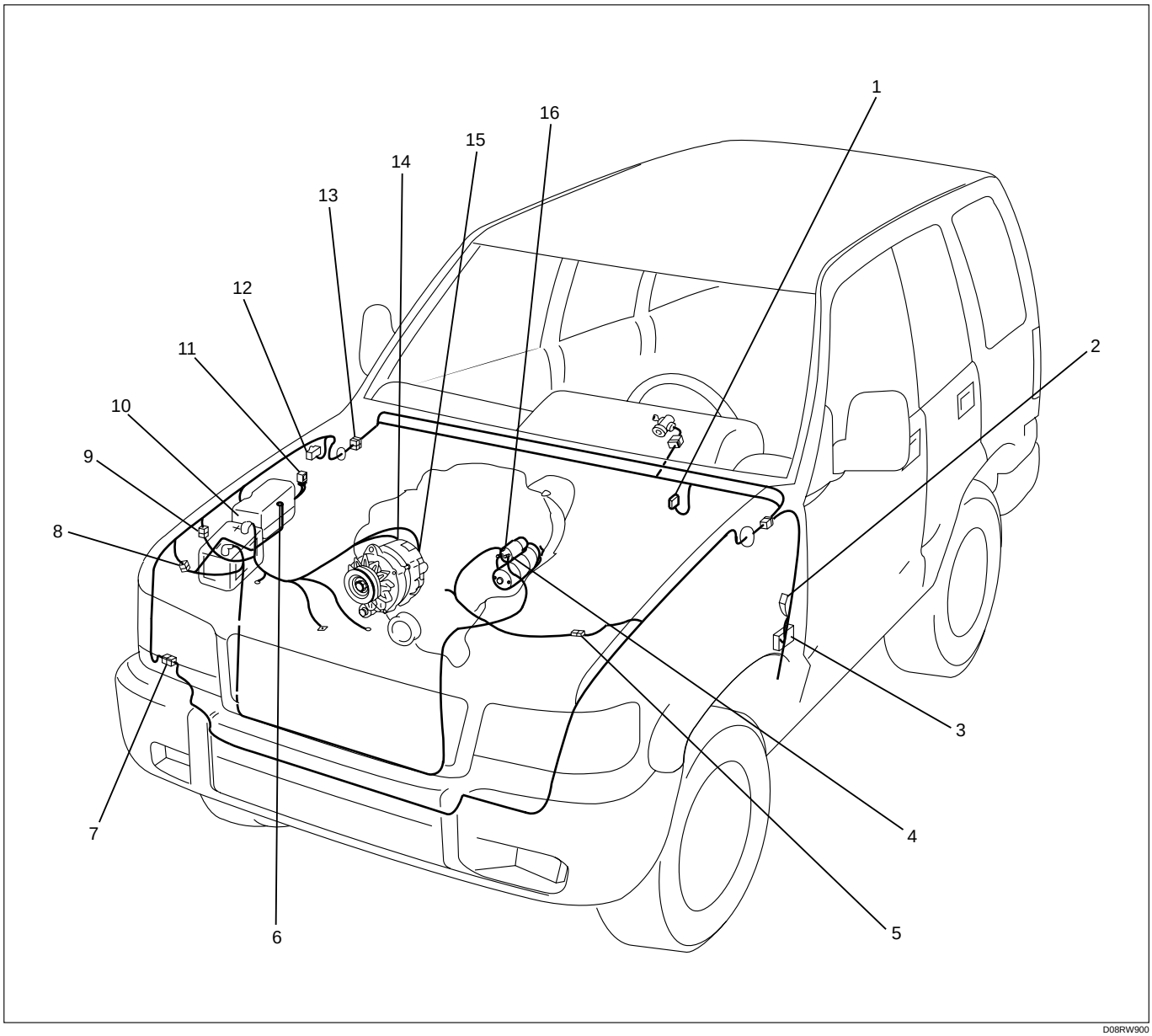

Legend

(1) B-22
(2) B-18, B-19
(3) Fuse Box (B-36)
(4) P-4
(5) H-6
(6) P-2
(7) H-43
(8) H-2
(9) H-3
(10) Relay and Fuse Box (X-17)
(11) C-56, C-57
(12) C-39
(13) H-13, H-14, H-16
(14) P-8
(15) P-9
(16) E-35

Powertrain Control Module (PCM)

General Description

The Powertrain Control Module (PCM) is located in the passenger compartment.

The PCM constantly monitors the information from various sensors, and controls the systems that affect vehicle performance.

The PCM performs the diagnostic function of the system. It can recognize operational problems, alert the driver through the Malfunction Indicator Light (MIL) and store a Diagnostic Trouble Code (DTC) or DTC(s) which identify the problem areas to aid the technician in making repairs.

The PCM is designed to process the various input informations and then sends the necessary electrical responses to control fuel delivery, spark timing and other emission control systems. The input information has an interrelation to more than one output, therefore, if the one input failed, it could affect more than one system operation.

Refer to Driveability and Emission in Engine section and Automatic Transmission in Transmission section.

Circuit Diagram (RHD 6V∗1)–1

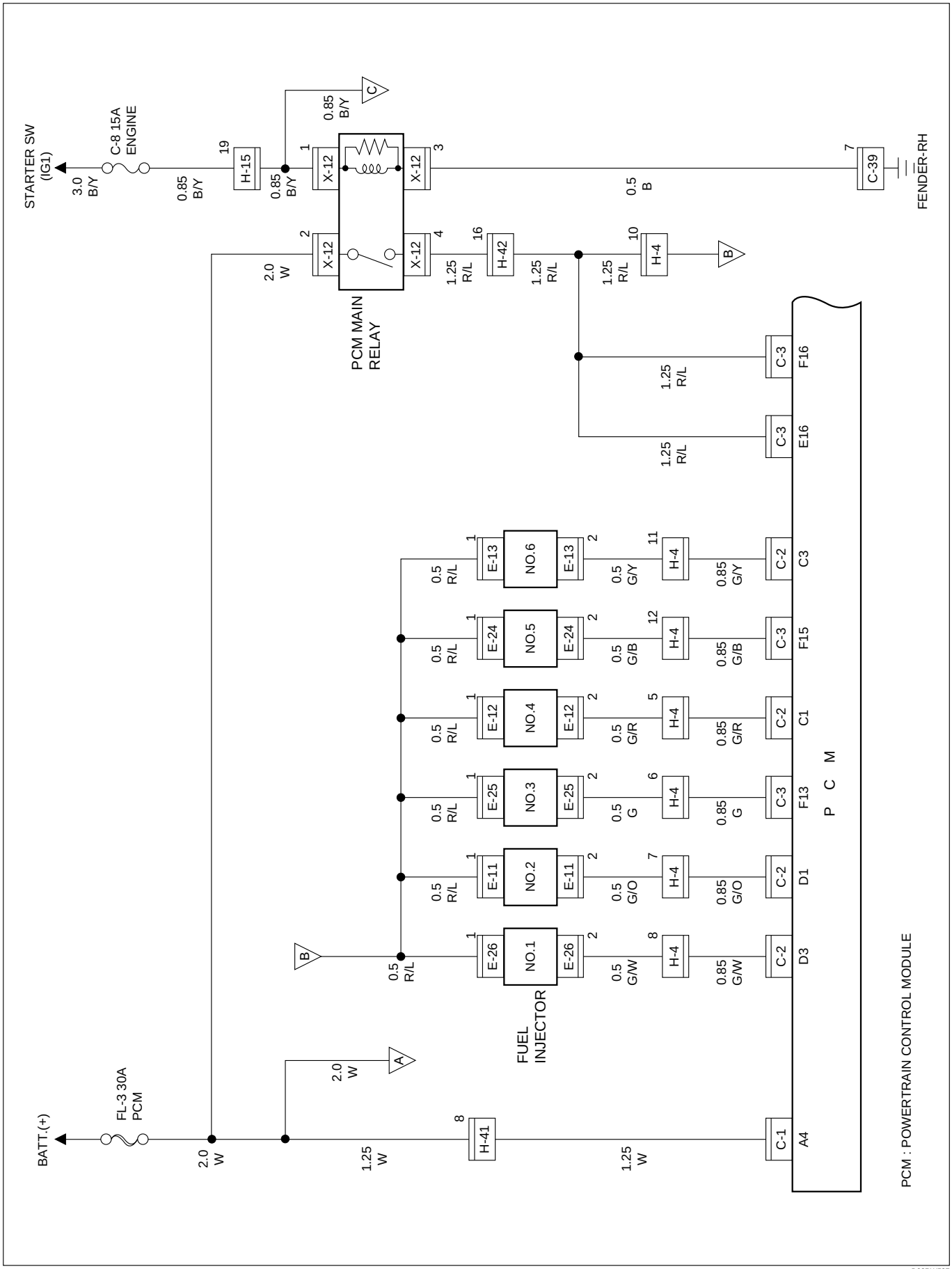

D08RW587

Circuit Diagram (RHD 6V∗1)–2

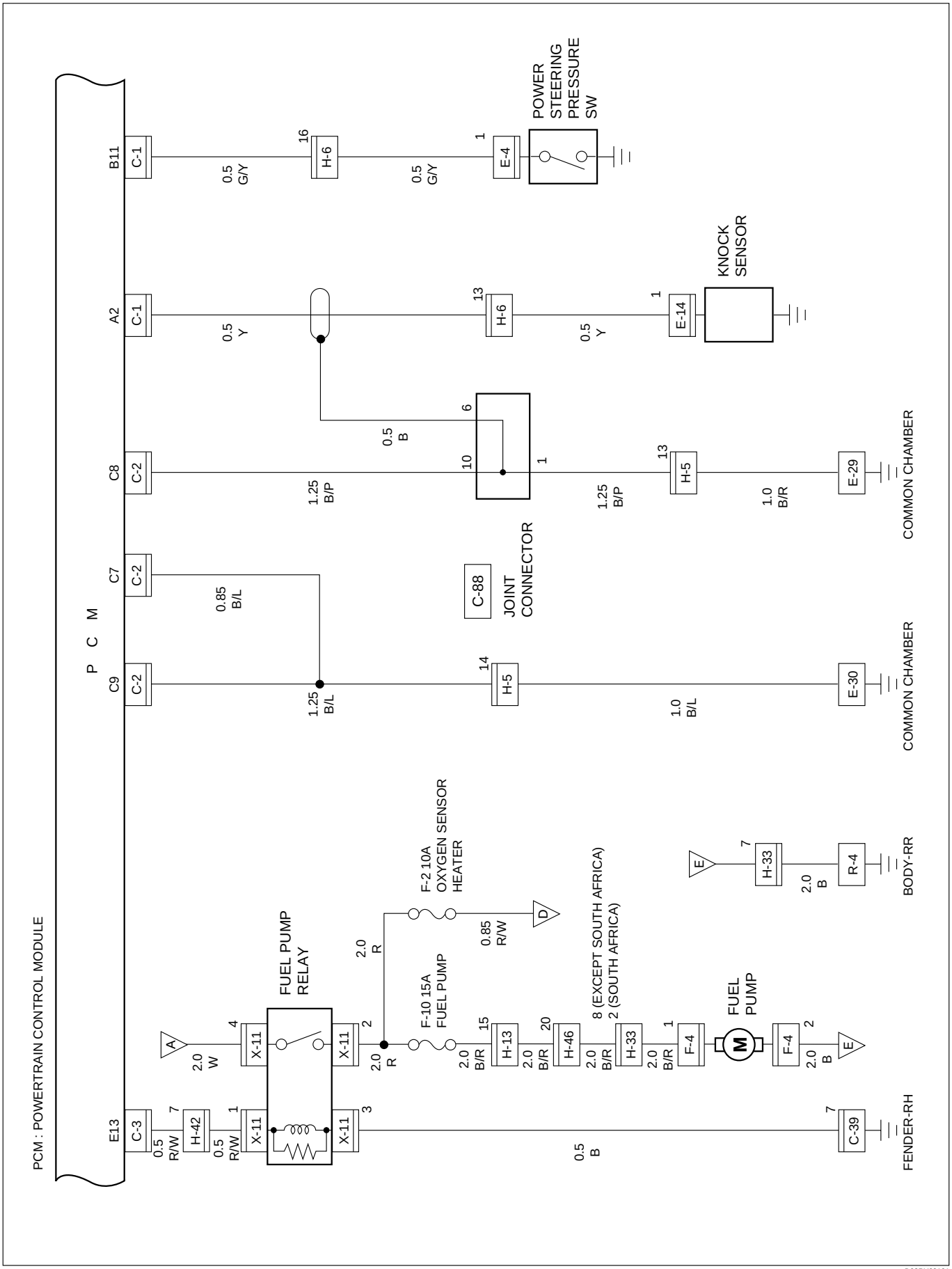

D08RY00101

Circuit Diagram (RHD 6V∗1)–3

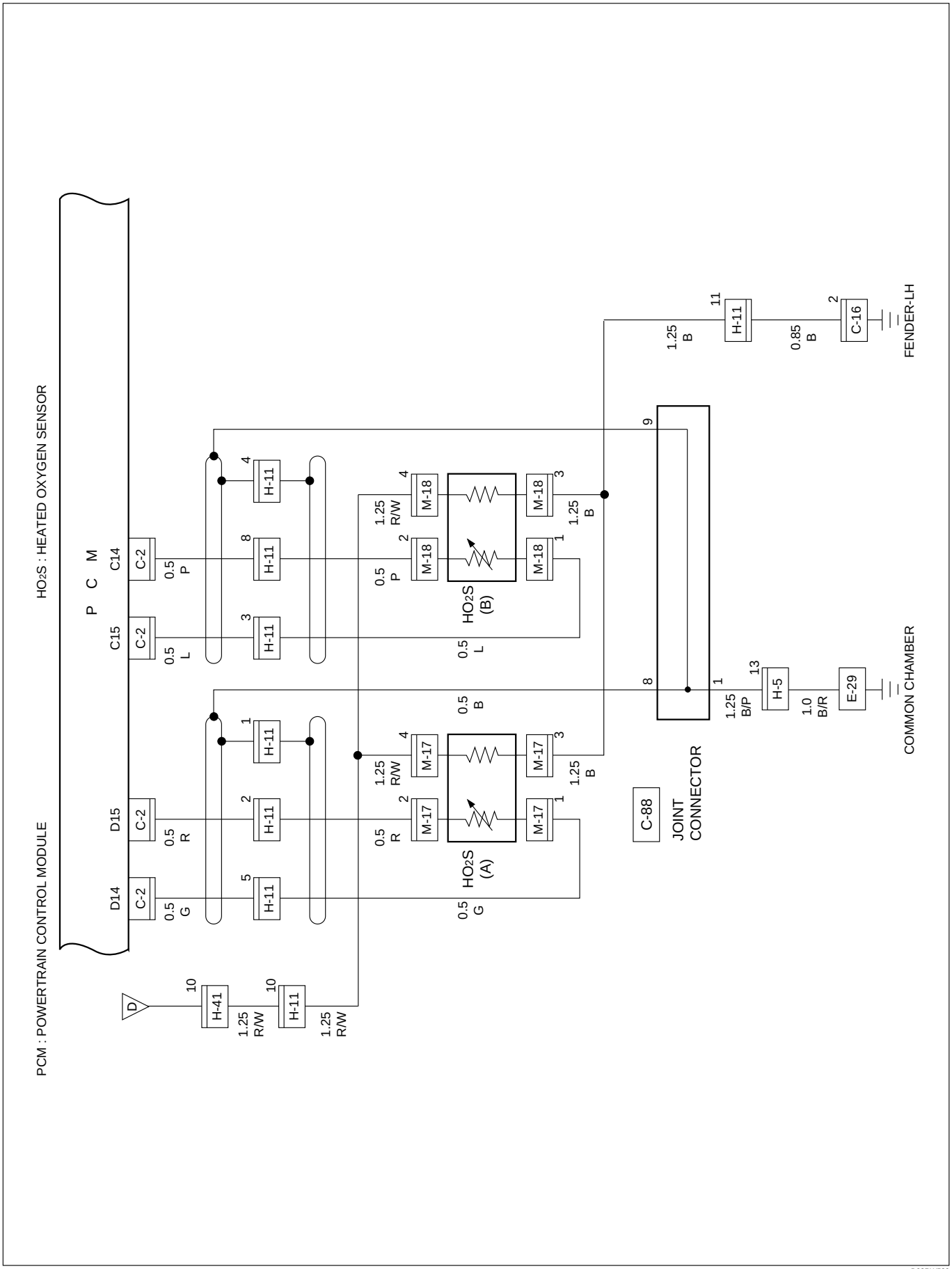

D08RW589

Circuit Diagram (RHD 6V∗1)–4

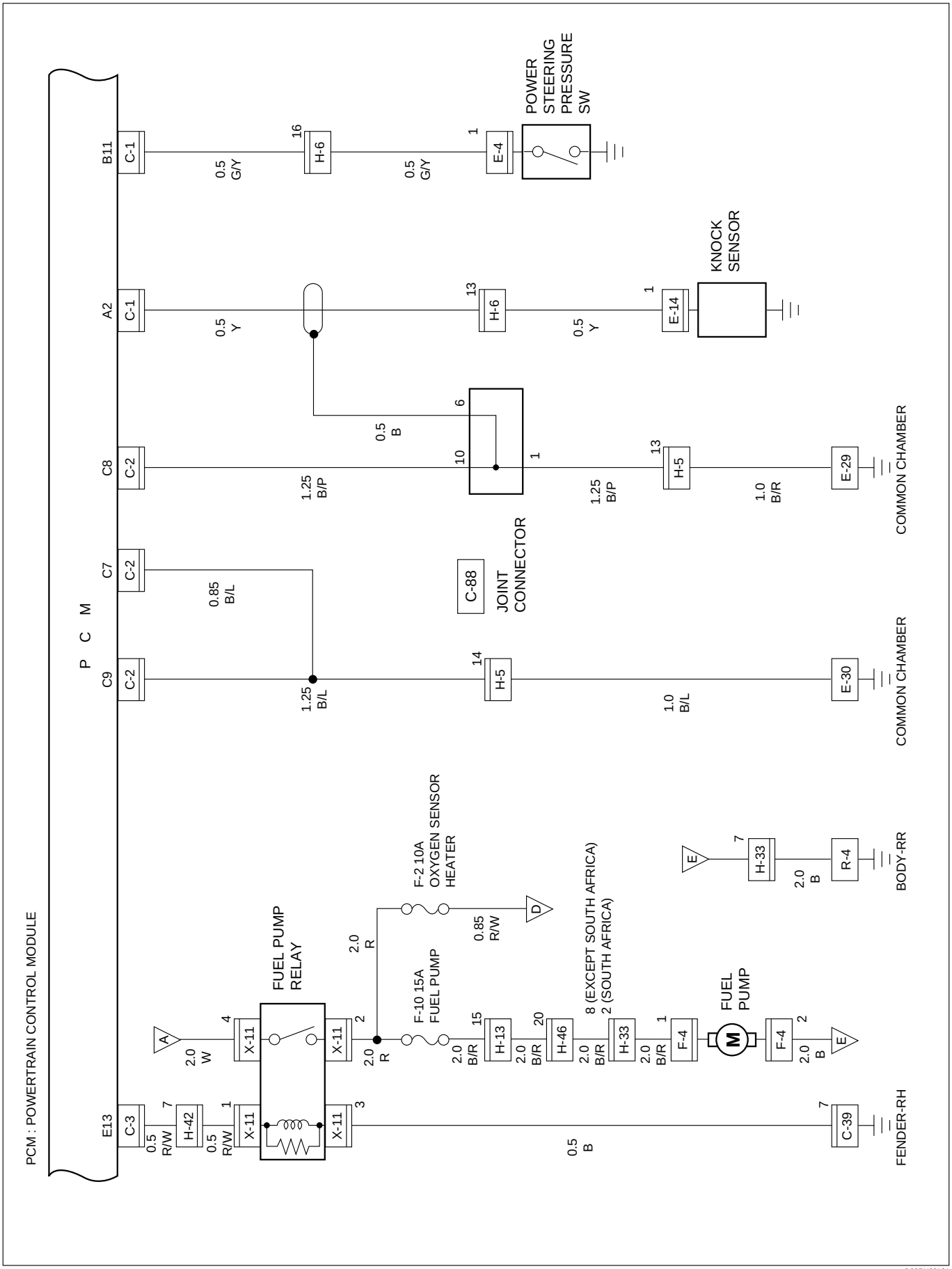

D08RY00101

Circuit Diagram (RHD 6V∗1)–5

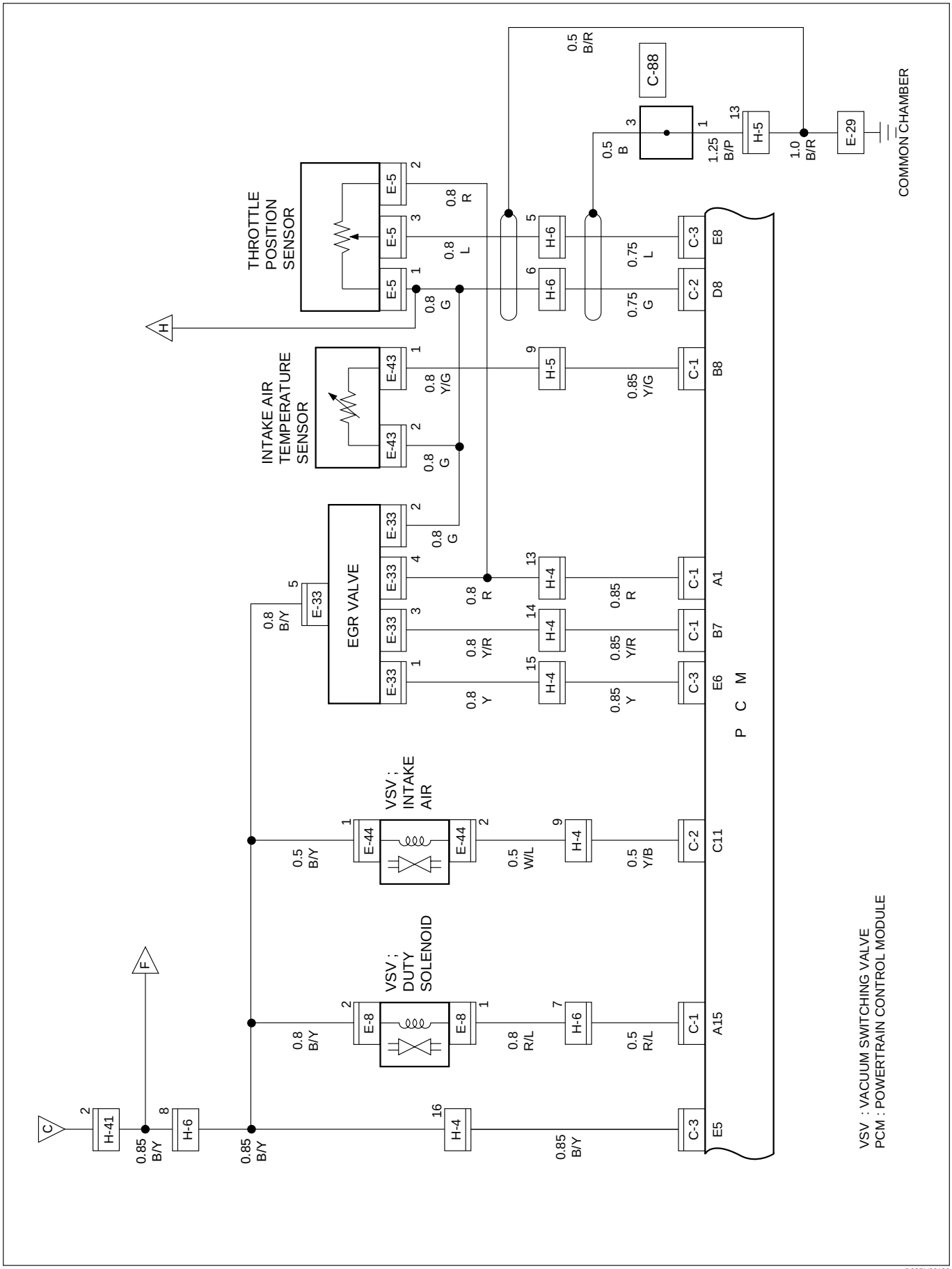

D08RY00186

Circuit Diagram (RHD 6V∗1)–6

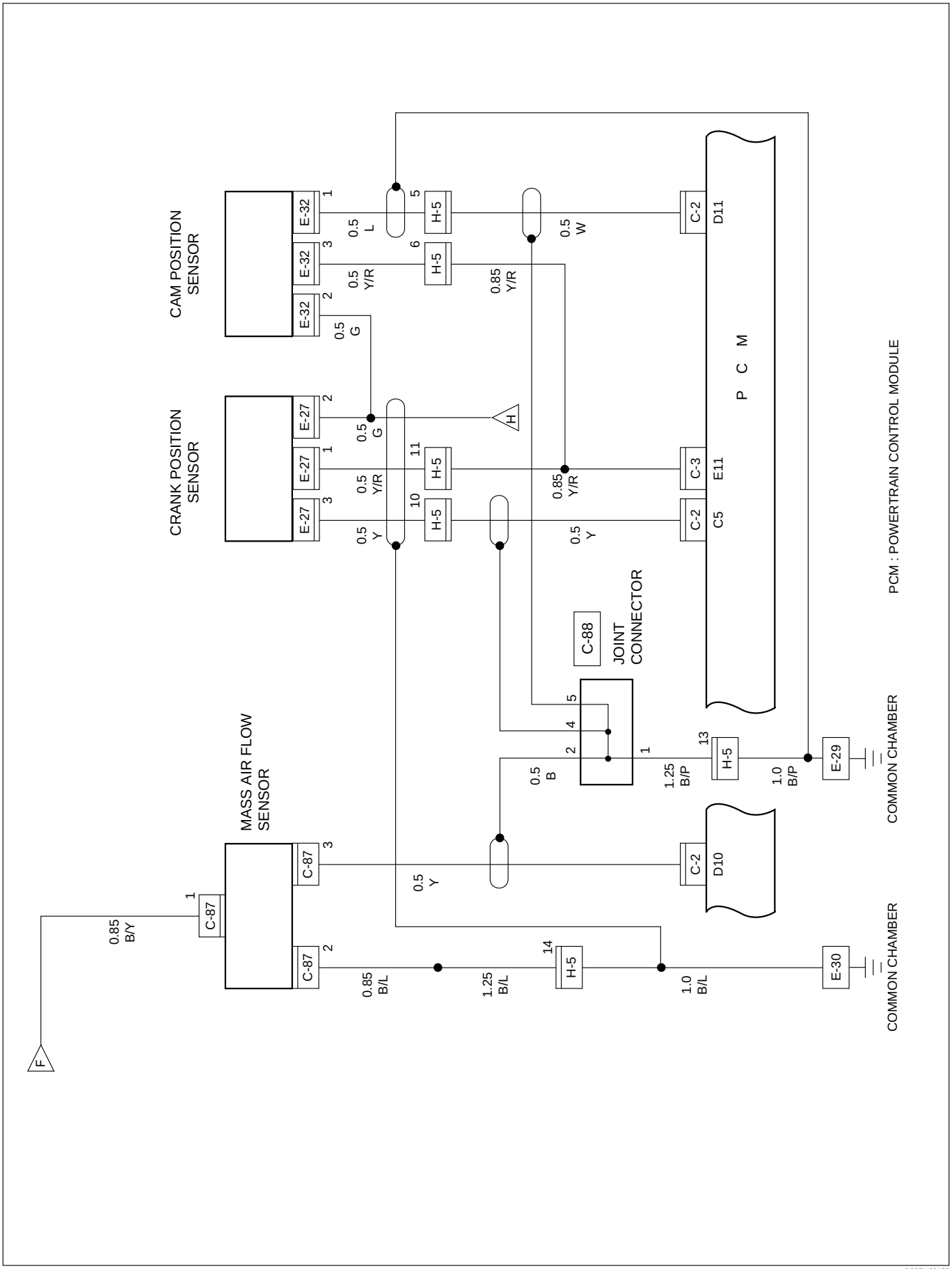

D08RY00185

Circuit Diagram (RHD 6V∗1)–7

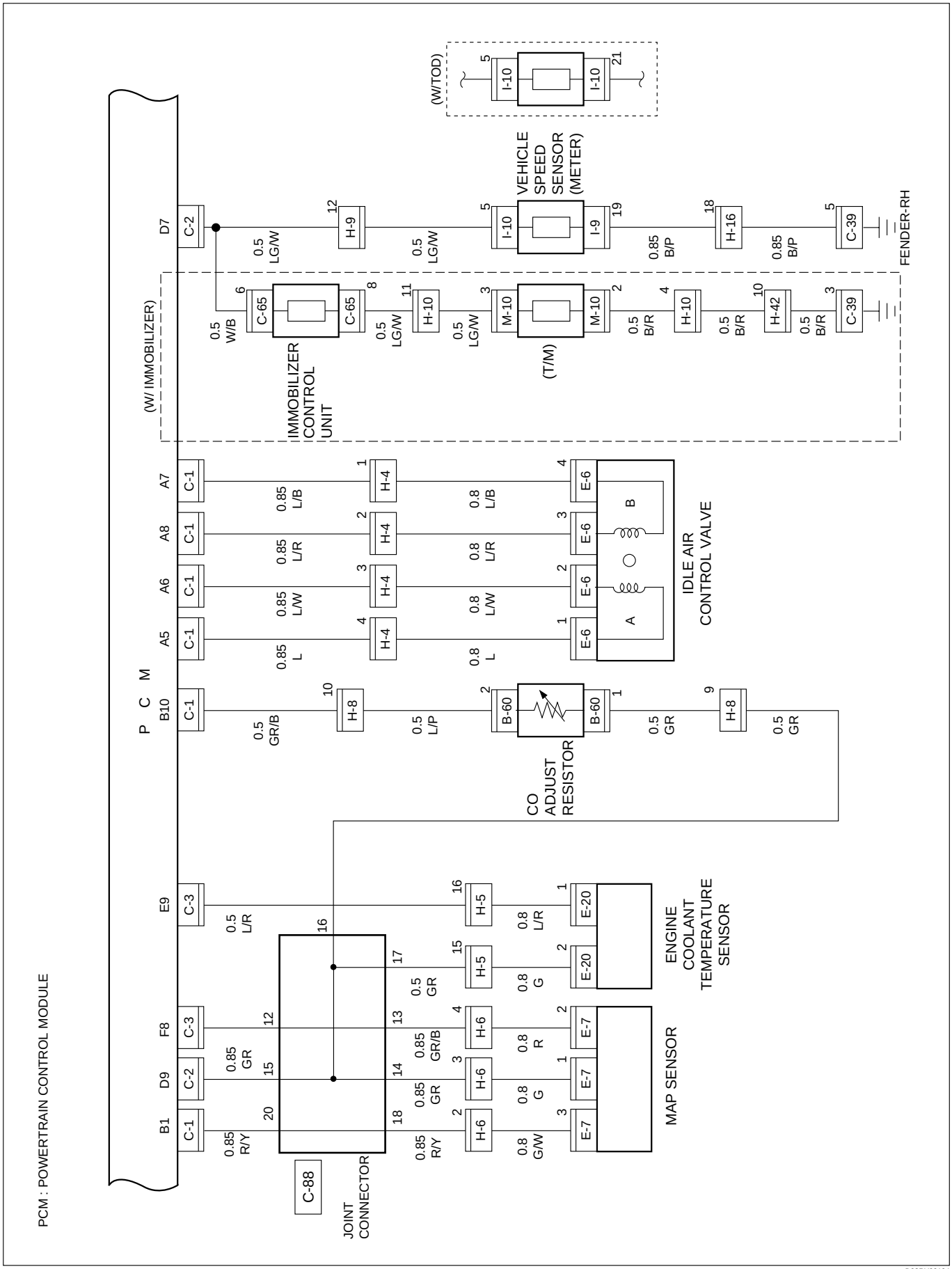

Circuit Diagram (RHD 6V∗1)–8

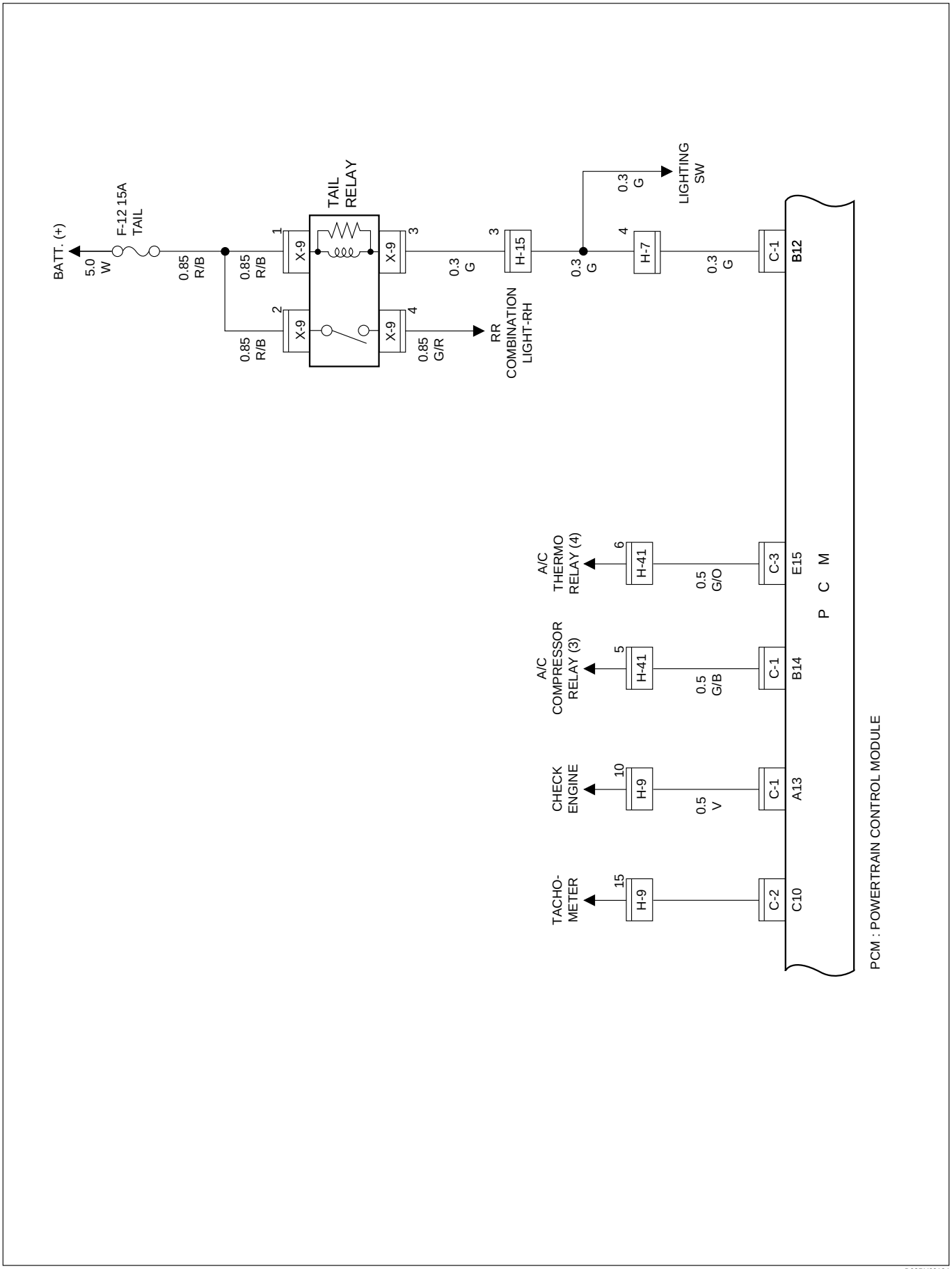

D08RY00184

Circuit Diagram (RHD 6V∗1)–9

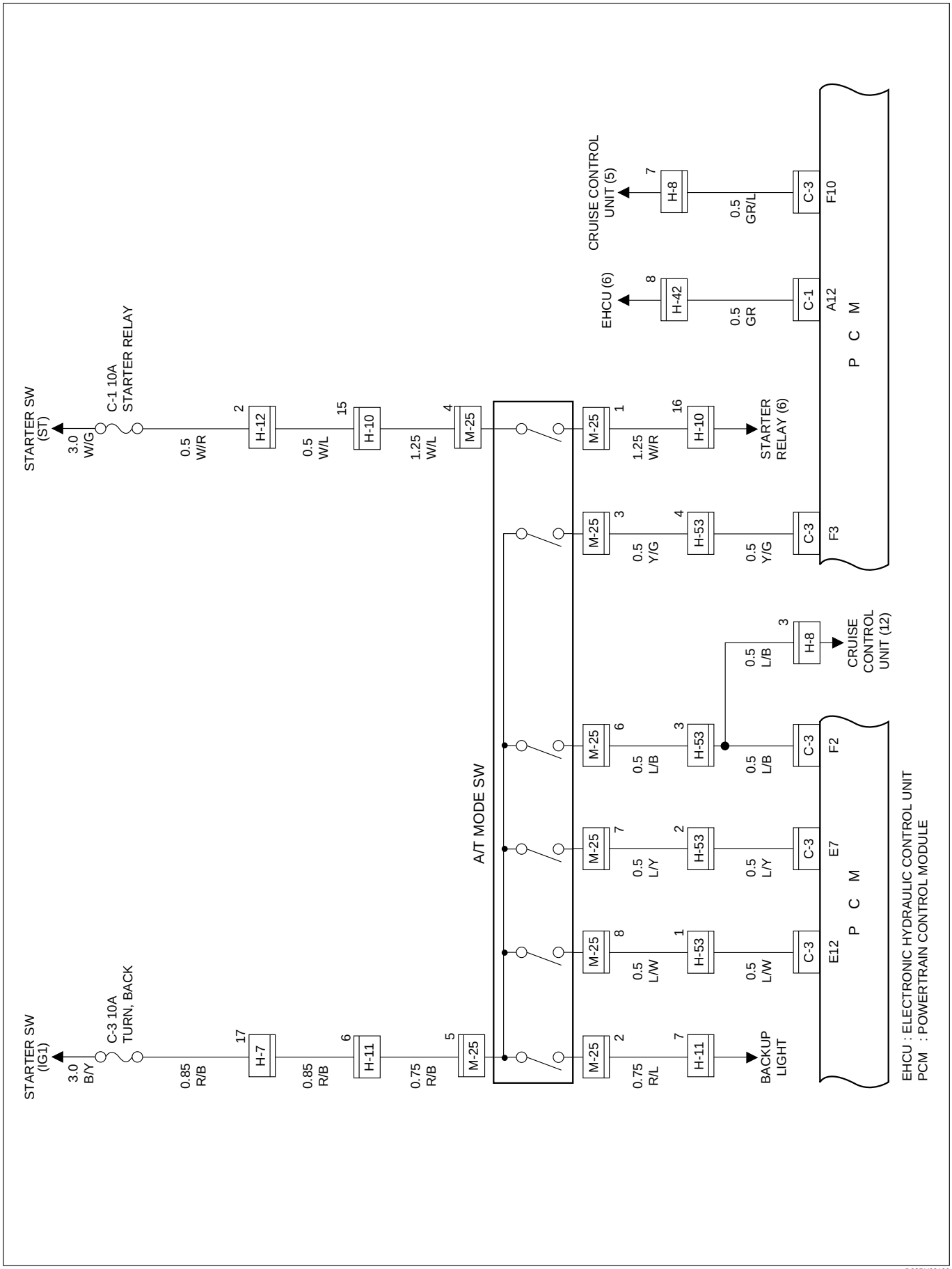

D08RY00106

Circuit Diagram (RHD 6V∗1)–10

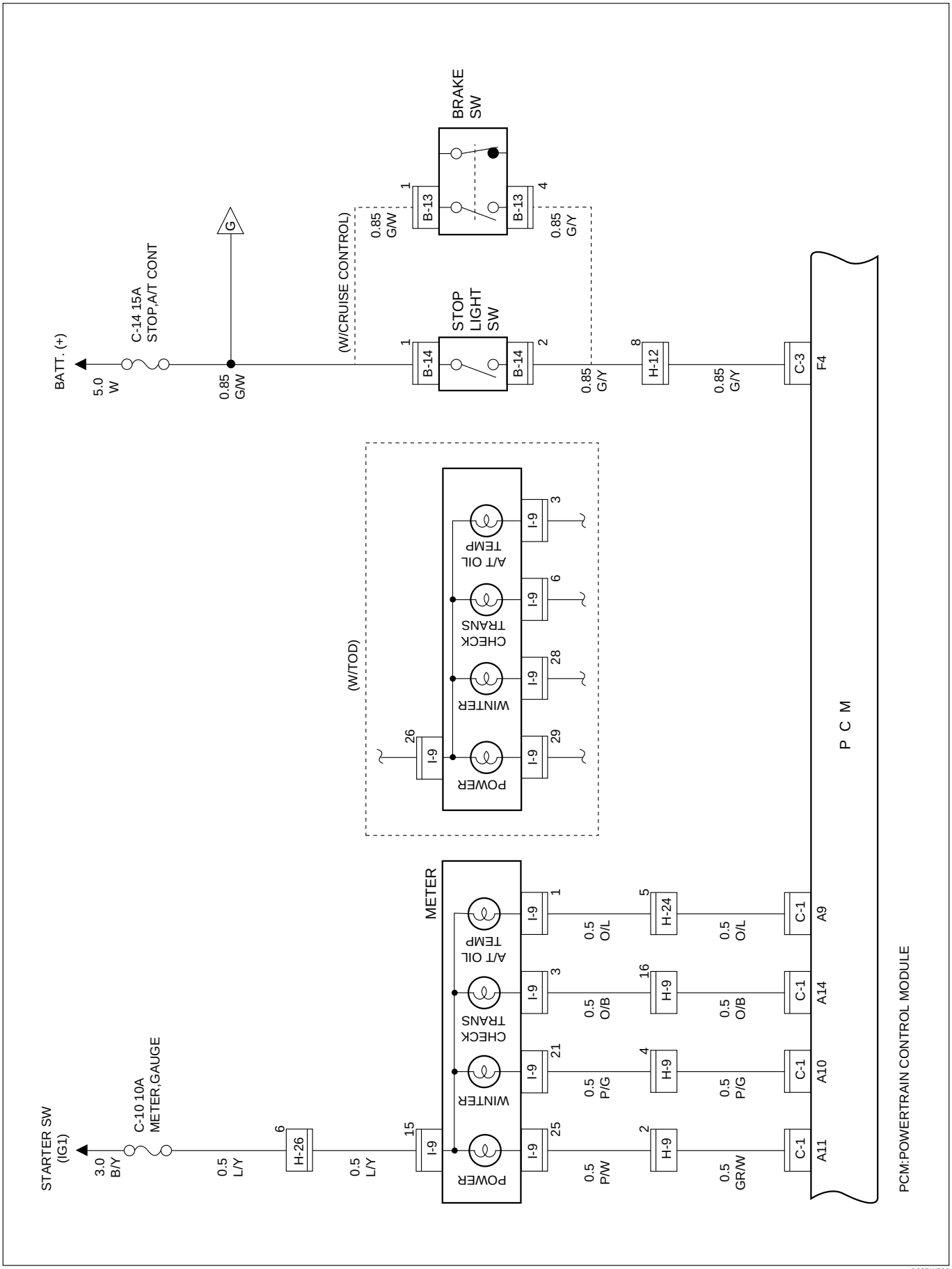

D08RW596

Circuit Diagram (RHD 6V∗1)–11

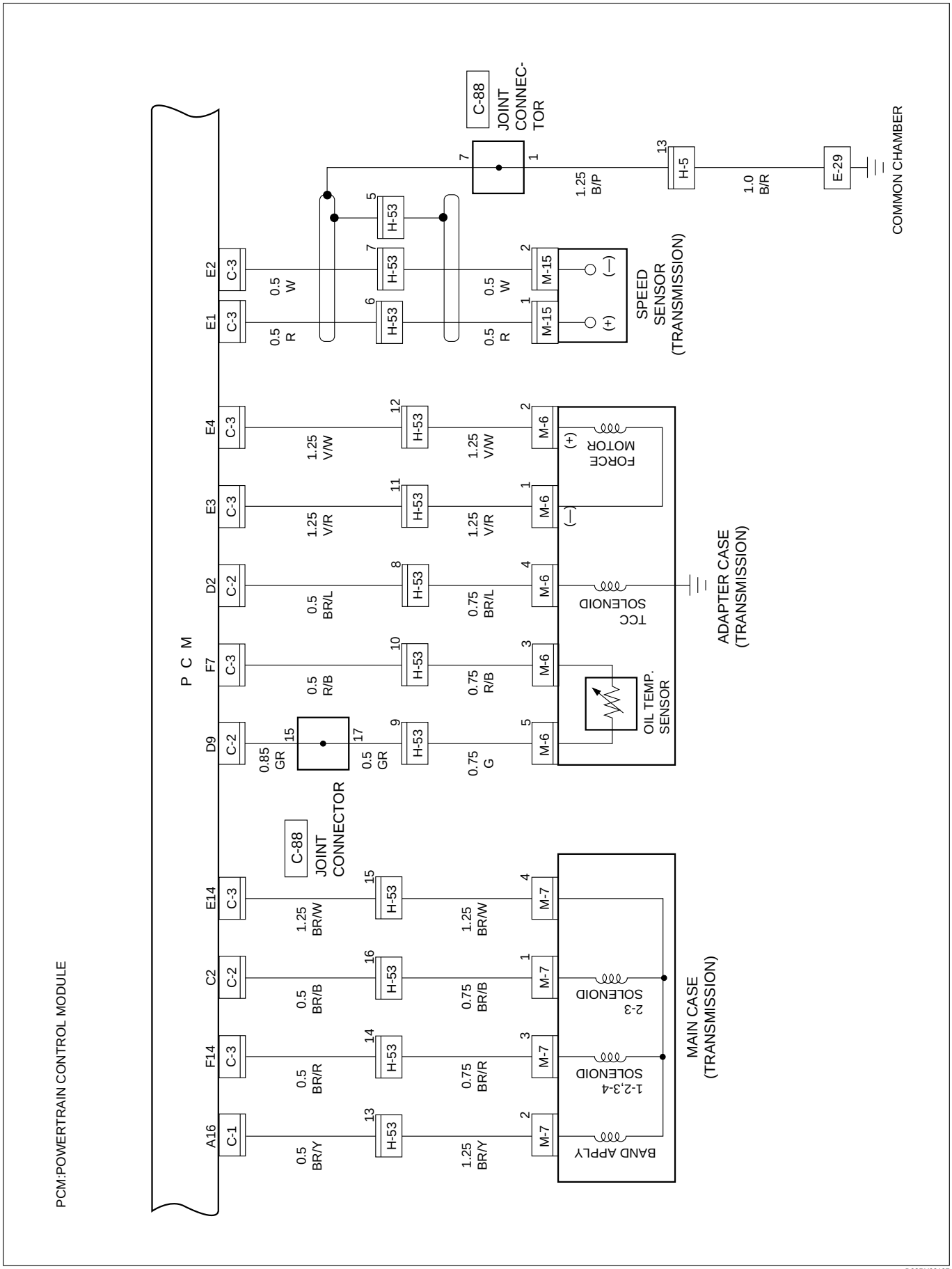

D08RY00107

Circuit Diagram (RHD 6V∗1)–12

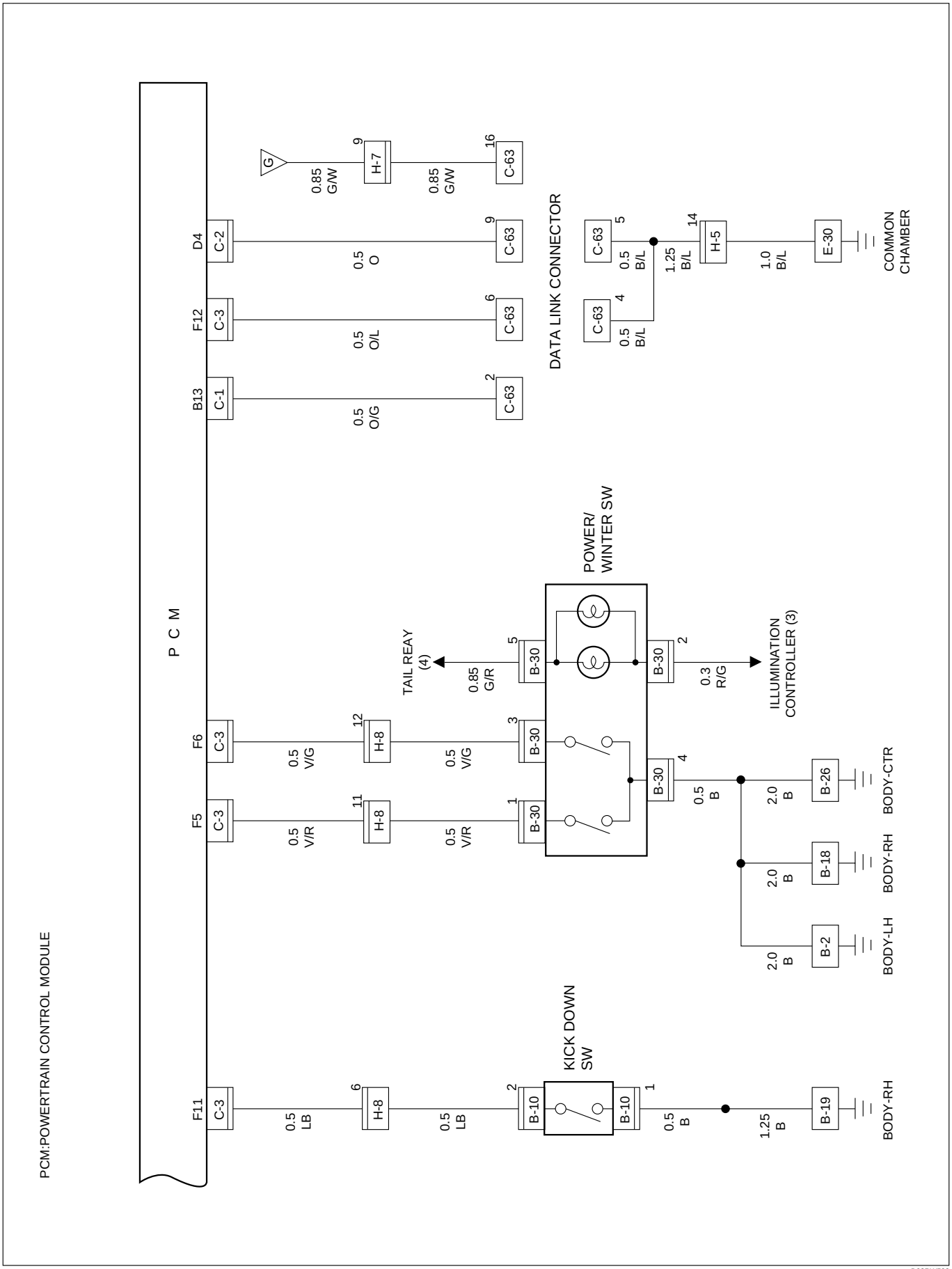

D08RW598

Parts Location (RHD 6V∗1) – 1

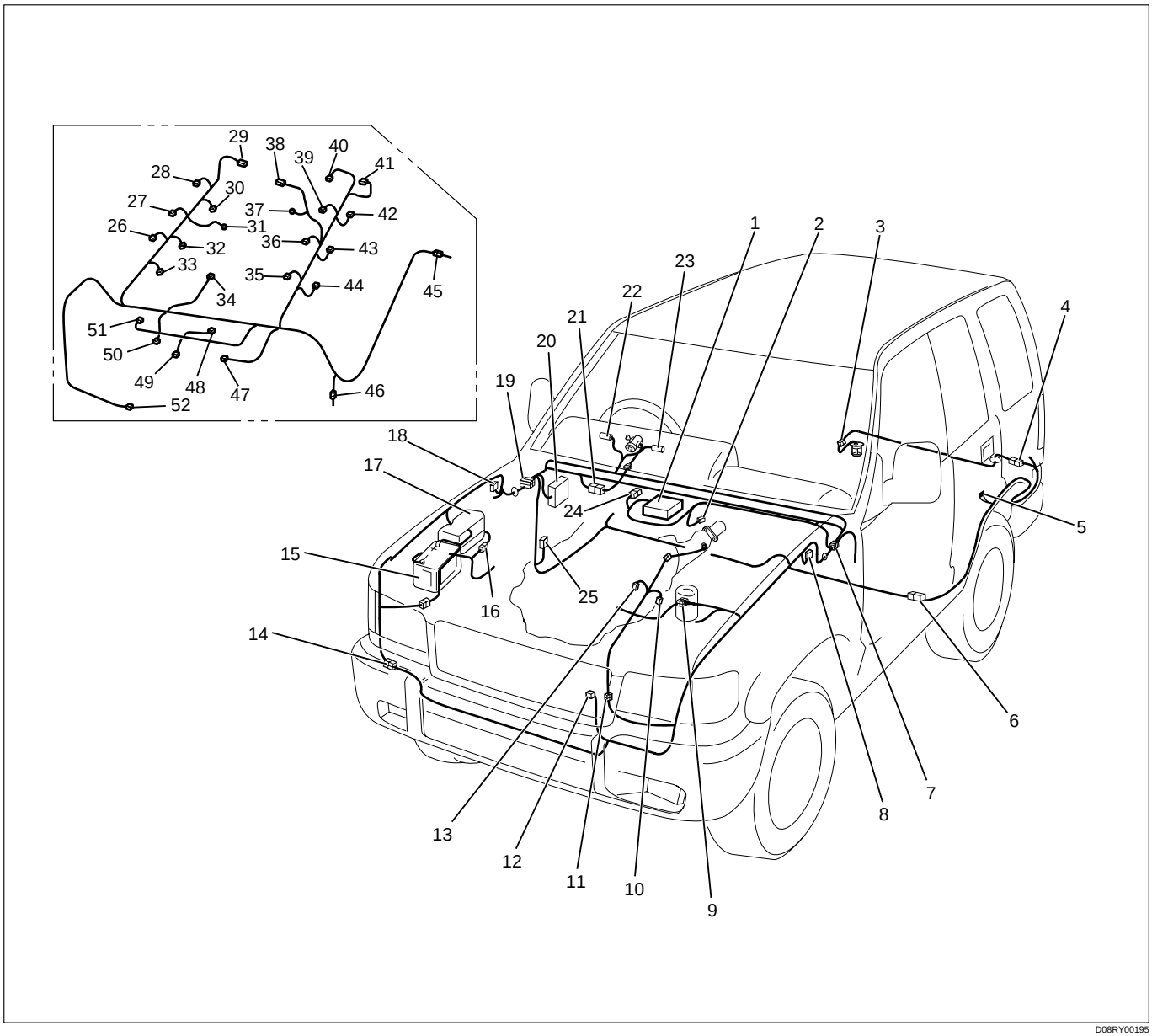

D08RY00195

Legend

(1) PCM
(2) C-63
(3) F-4
(4) H-33
(5) R-4
(6) H-46
(7) H-7, H-8, H-9, H-24
(8) C-16
(9) H-4, H-5, H-6
(10) M-18
(11) H-10, H-11
(12) C-87
(13) M-17
(14) H-41, H-42
(15) Battery
(16) H-3
(17) Relay and Fuse Box (X-9, X-11, X-12)
(18) C-39
(19) H-13, H-15, H-16, H-26
(20) Fuse Box
(21) H-12
(22) I-10
(23) I-9
(24) C-88
(25) B-60
(26) E-37
(27) E-38
(28) E-39
(29) E-33
(30) E-24
(31) E-30

(32) E-25
(33) E-26
(34) E-14
(35) E-11
(36) E-12
(37) E-28, E-29
(38) E-7
(39) E-13
(40) E-32
(41) E-44
(42) E-42
(43) E-41
(44) E-40
(45) H-4, H-5, H-6
(46) E-4
(47) E-8
(48) E-5
(49) E-43
(50) E-20
(51) E-6
(52) E-27

Parts Location (RHD 6V∗1) – 2

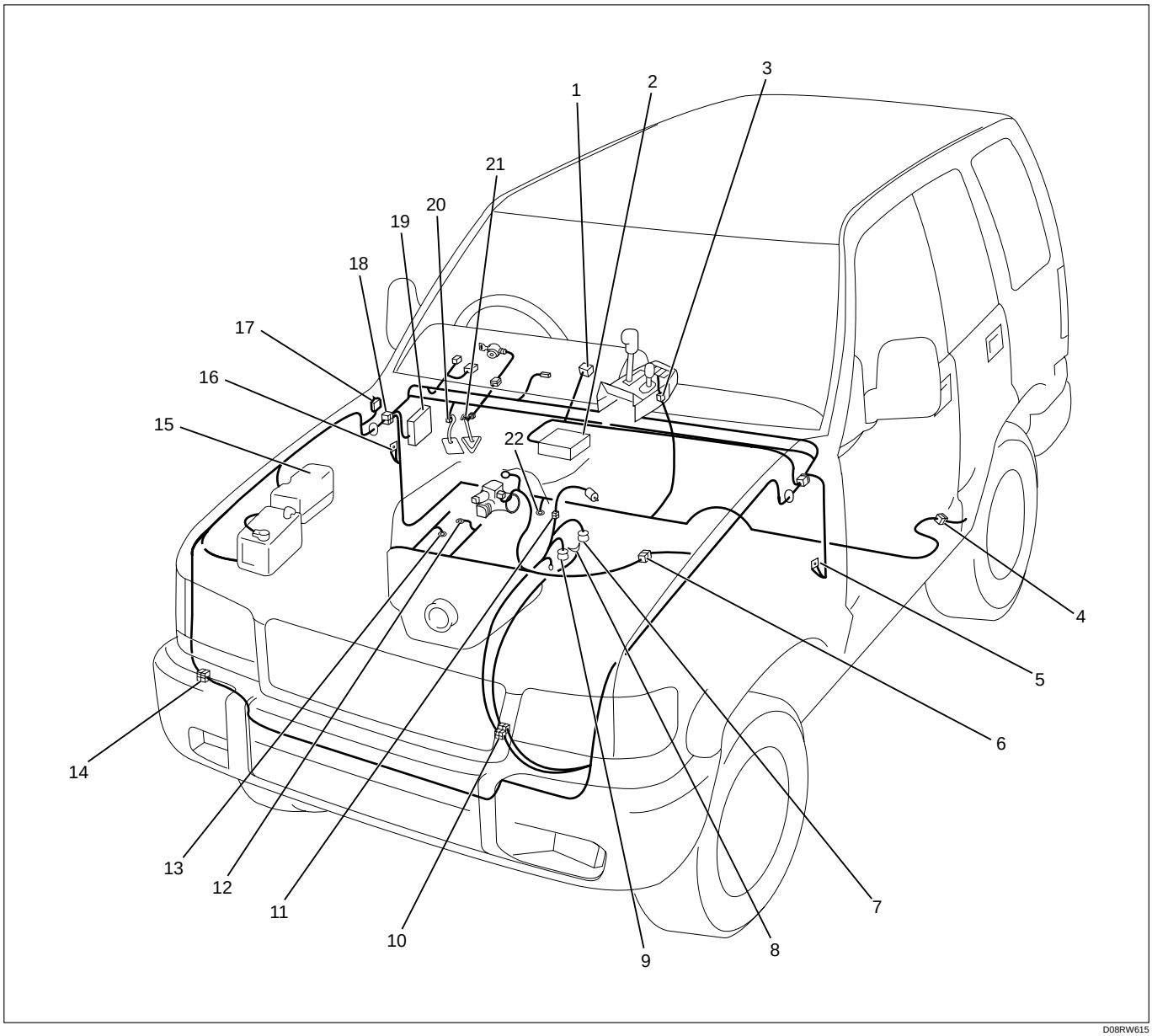

Legend

(1) C-63
(2) PCM
(3) B-30
(4) H-7, H-8, H-9, H-24
(5) B-2
(6) H-4, H-5, H-6
(7) M-7
(8) M-25
(9) M-6
(10) H-10, H-11, H-53
(11) M-15
(12) E-28, E-29
(13) E-30
(14) H-41
(15) Relay and Fuse Box
(16) B-18, B-19
(17) C-39
(18) H-13, H-15, H-16, H-26
(19) Fuse Box
(20) B-10
(21) B-13, B-14
(22) B-26

Circuit Diagram (LHD 6V∗1)–1

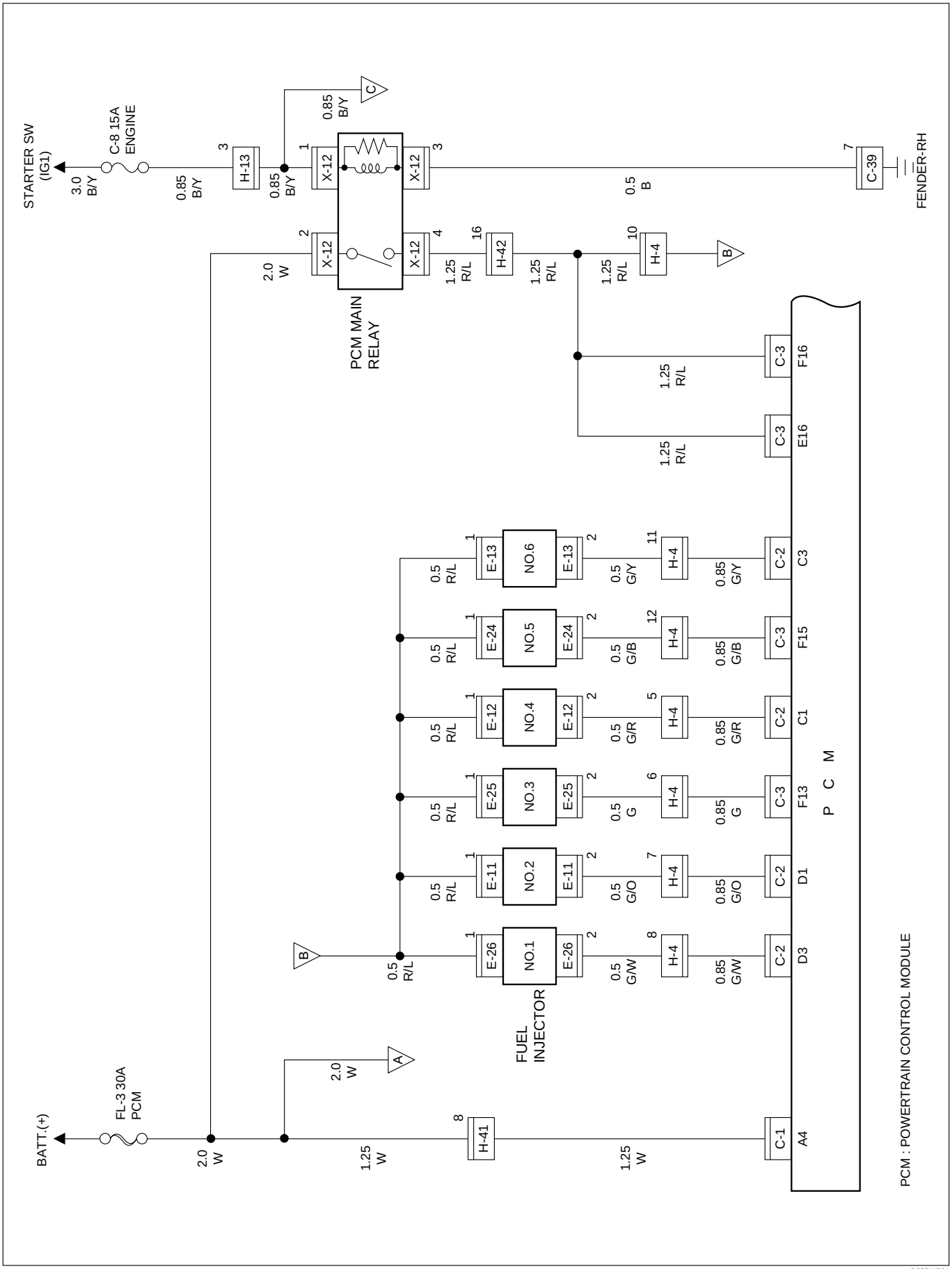

D08RW901

Circuit Diagram (LHD 6V∗1)–2

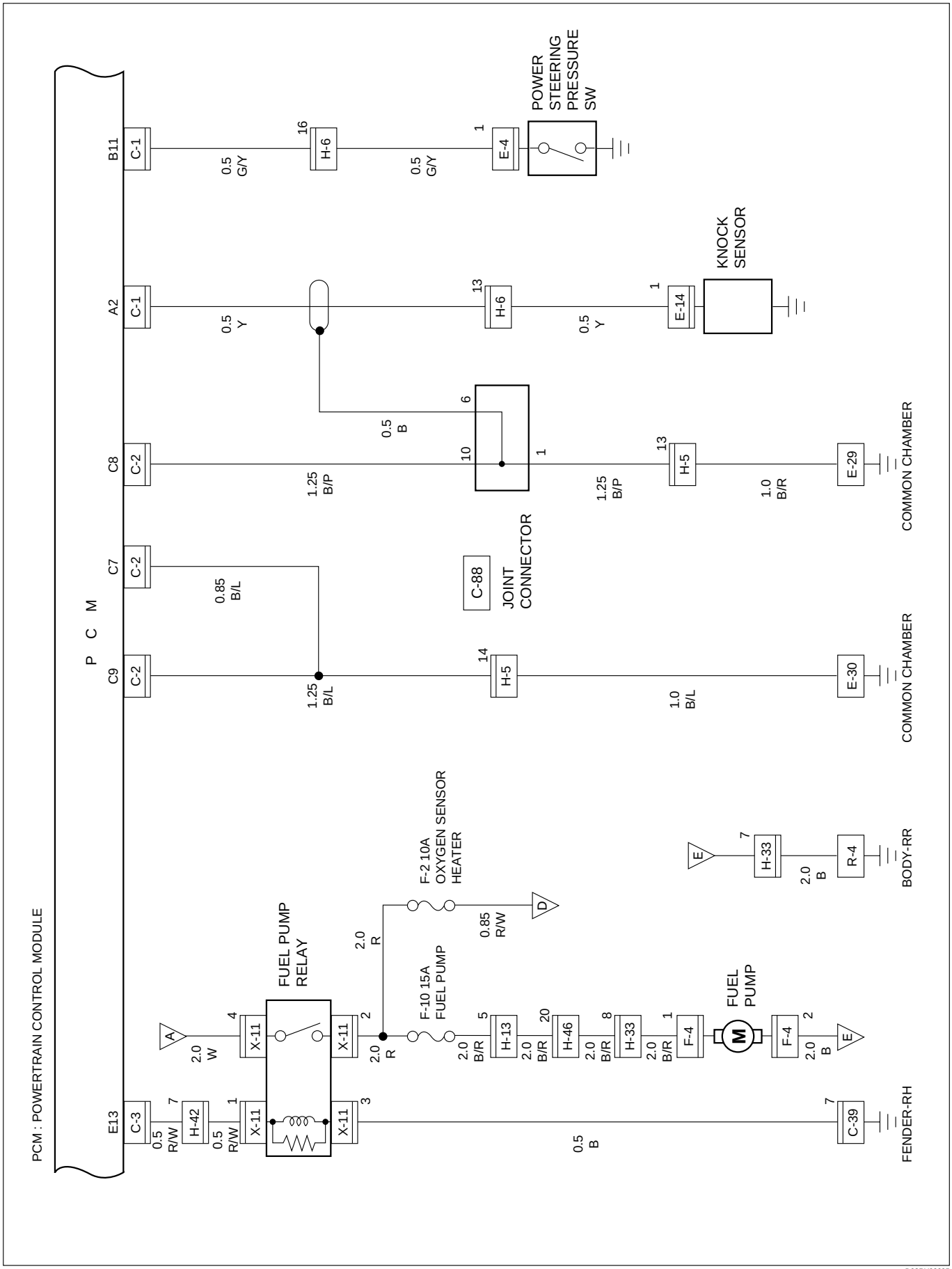

D08RY00095

Circuit Diagram (LHD 6V∗1)–3

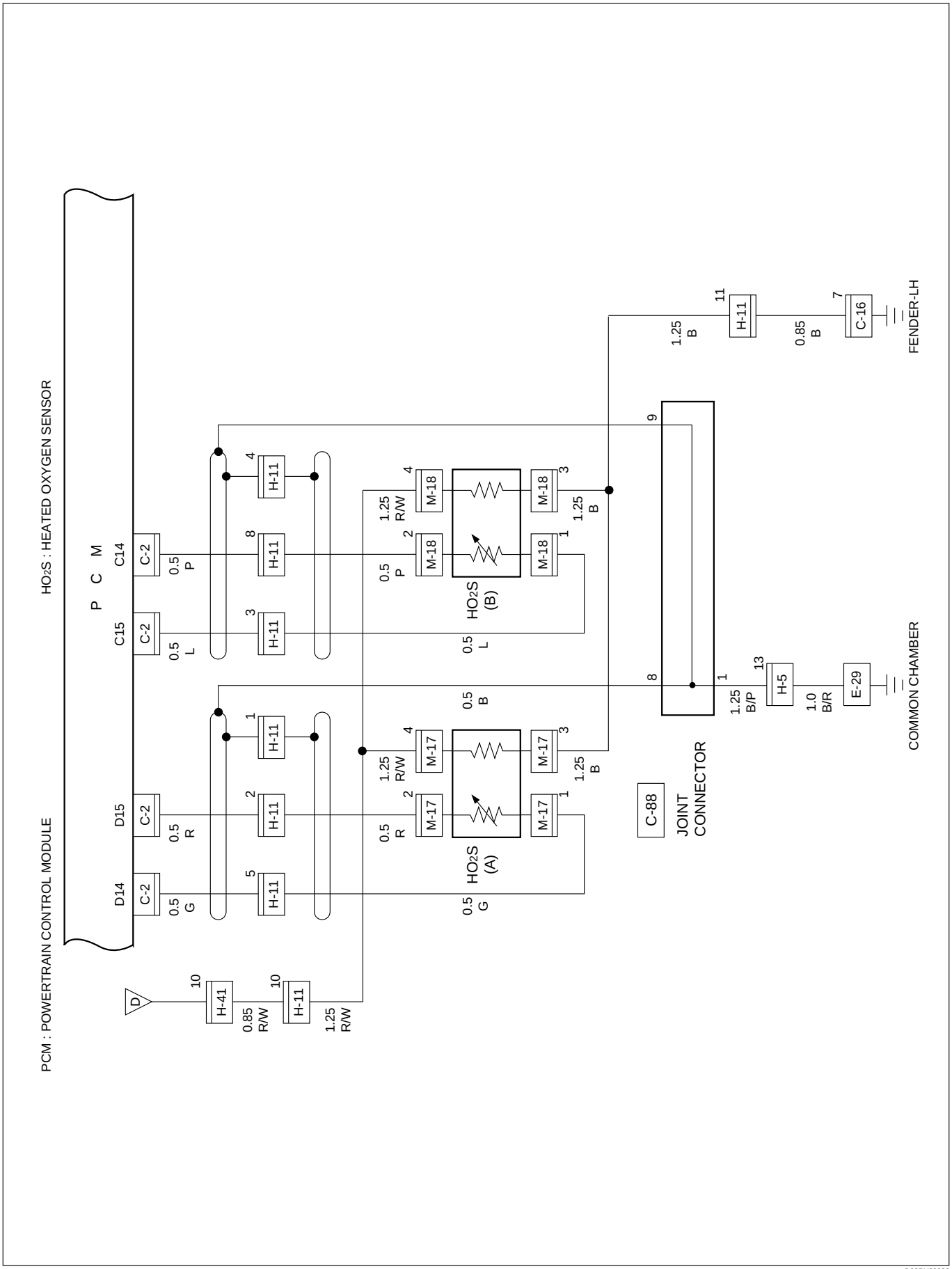

D08RY00096

Circuit Diagram (LHD 6V∗1)–4

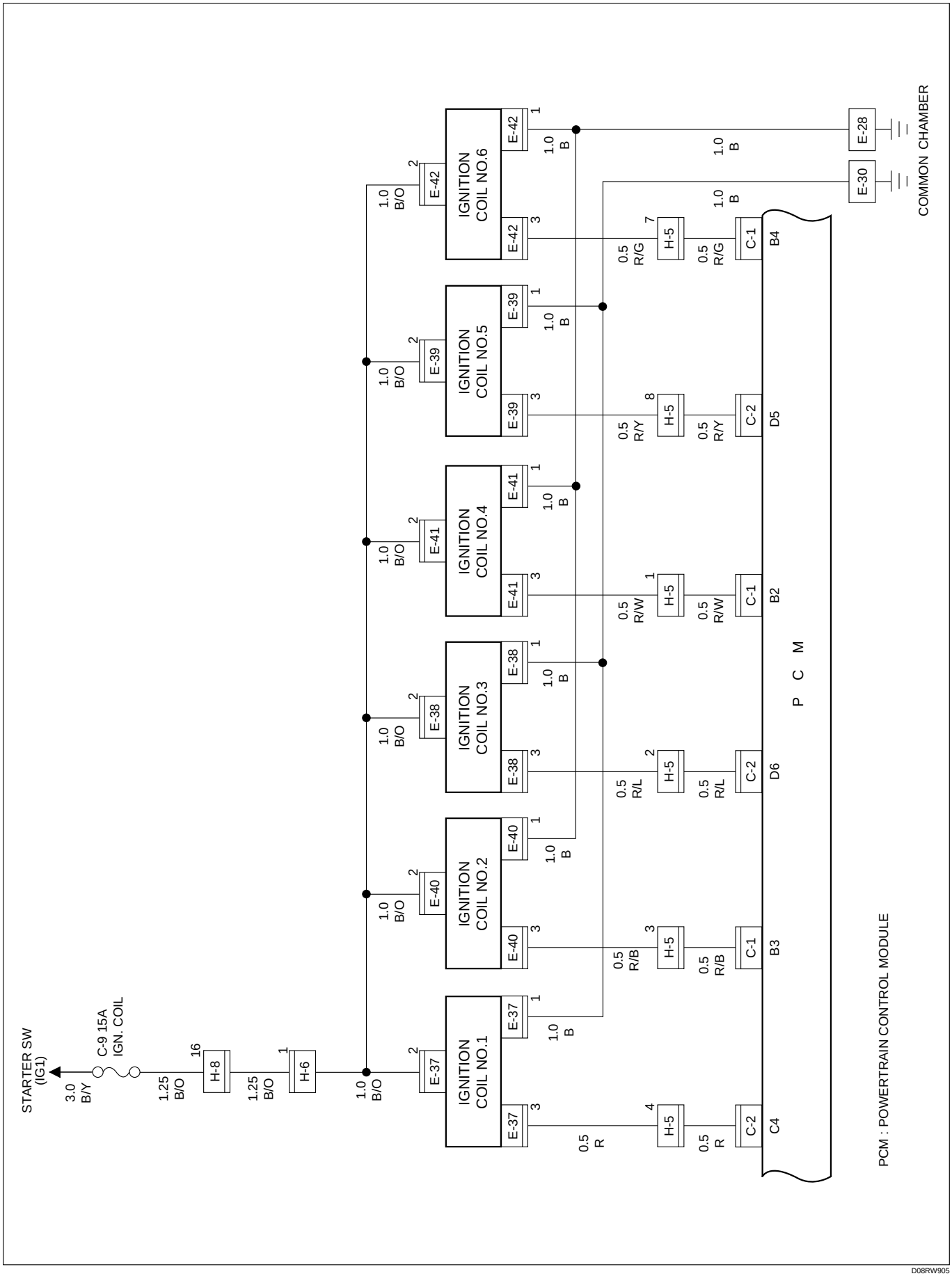

D08RW905

Circuit Diagram (LHD 6V∗1)–5

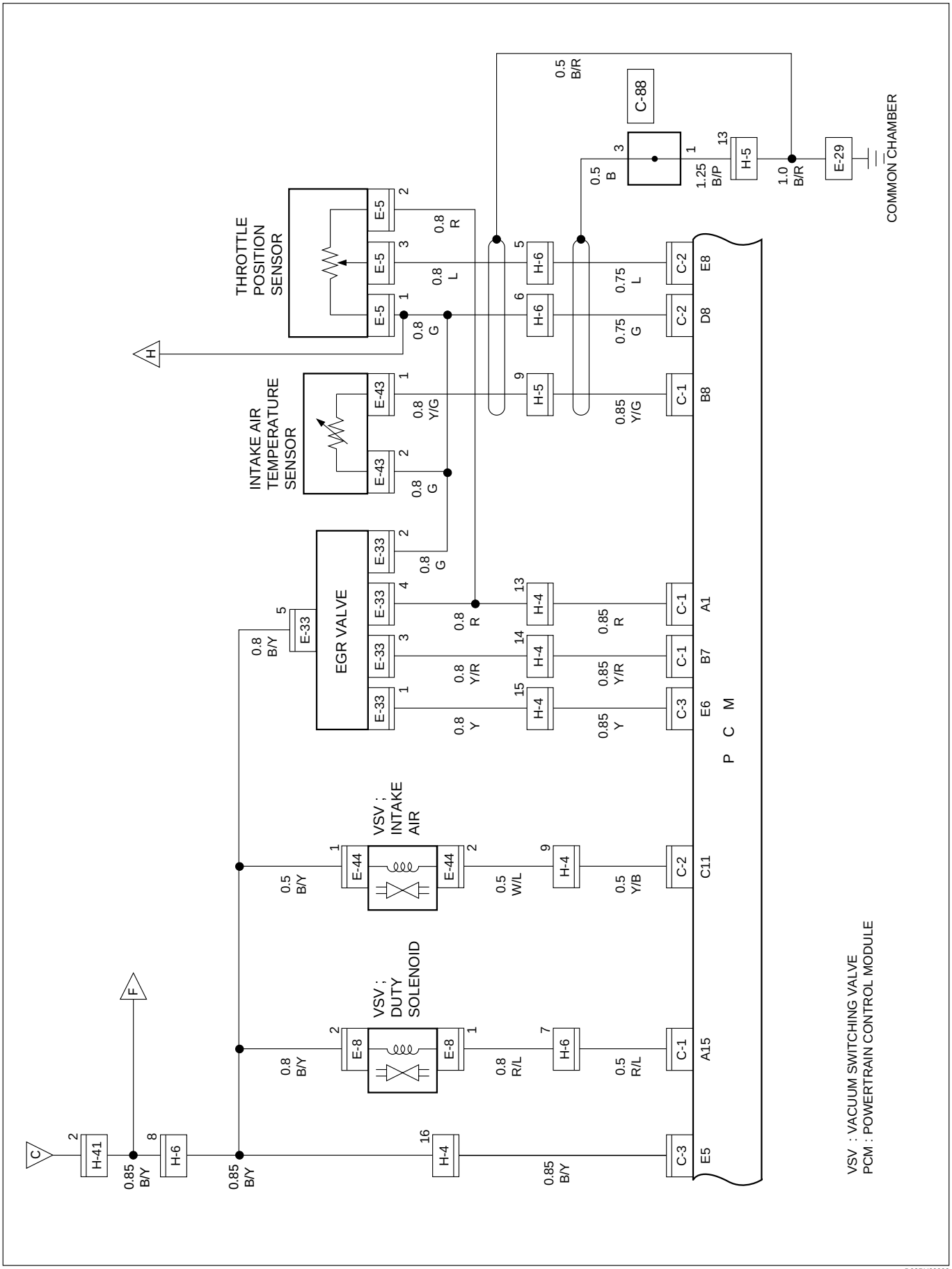

D08RY00098

Circuit Diagram (LHD 6V∗1)–6

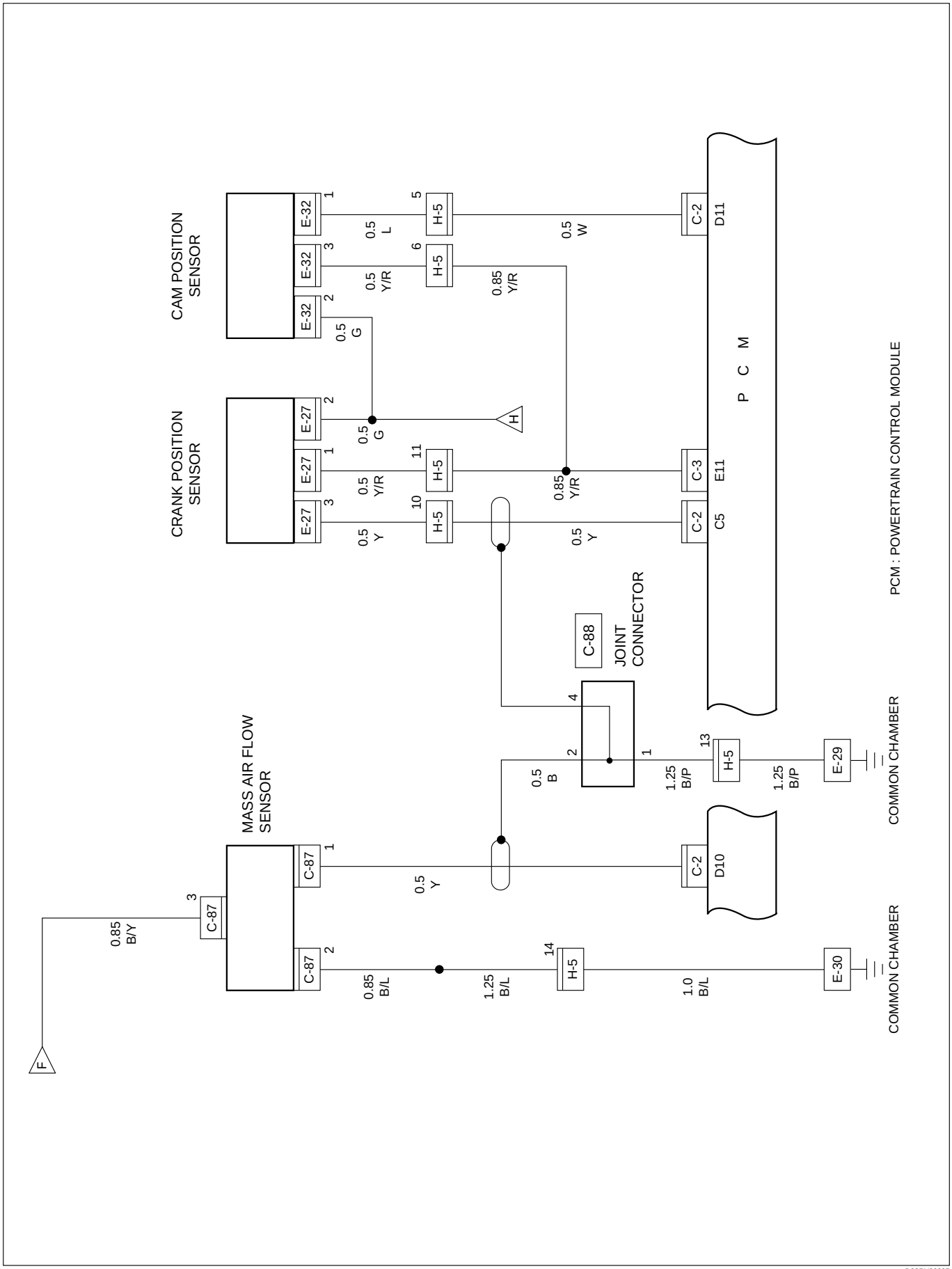

D08RY00097

Circuit Diagram (LHD 6V∗1)–7

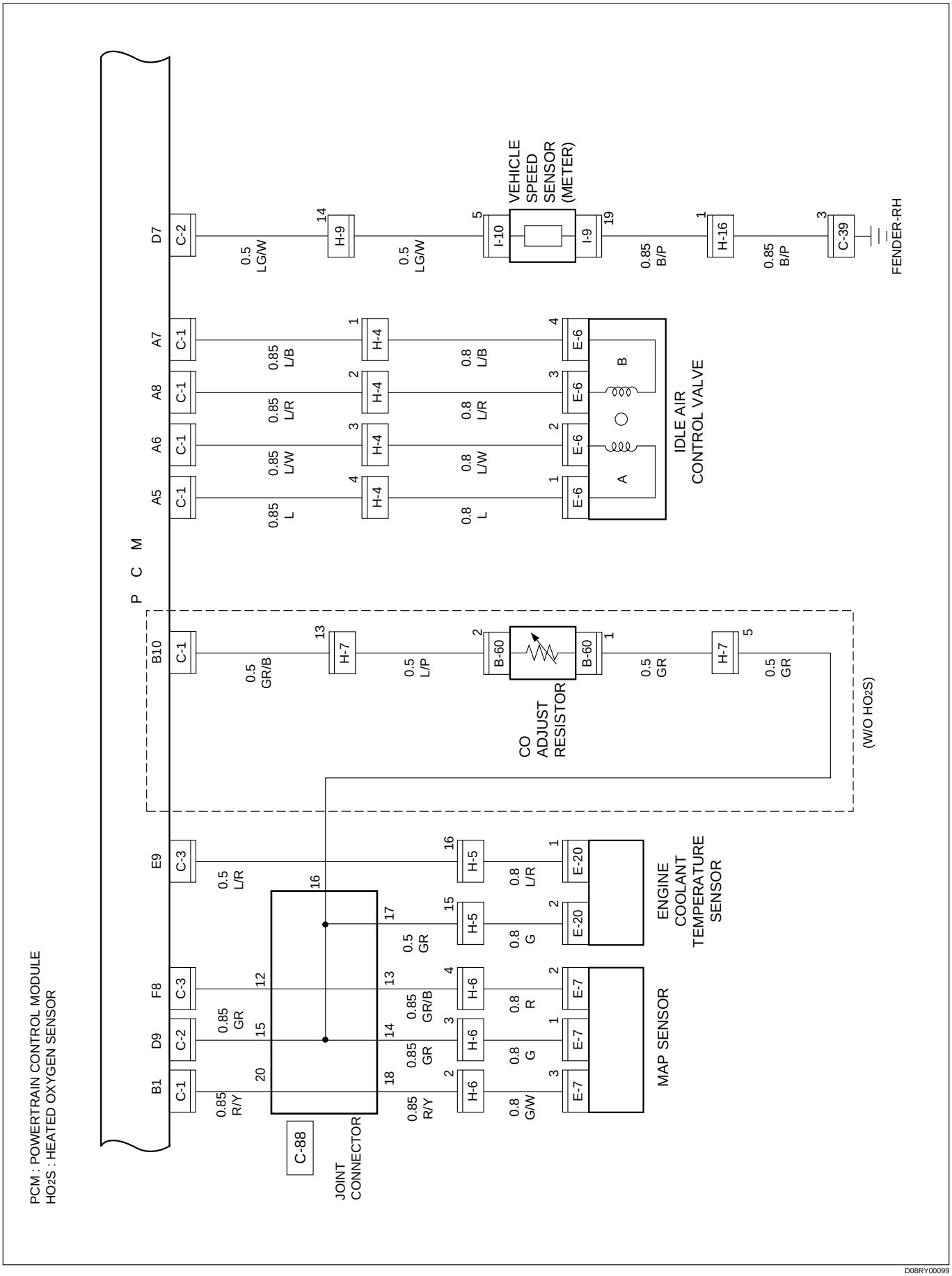

Circuit Diagram (LHD 6V∗1)–8

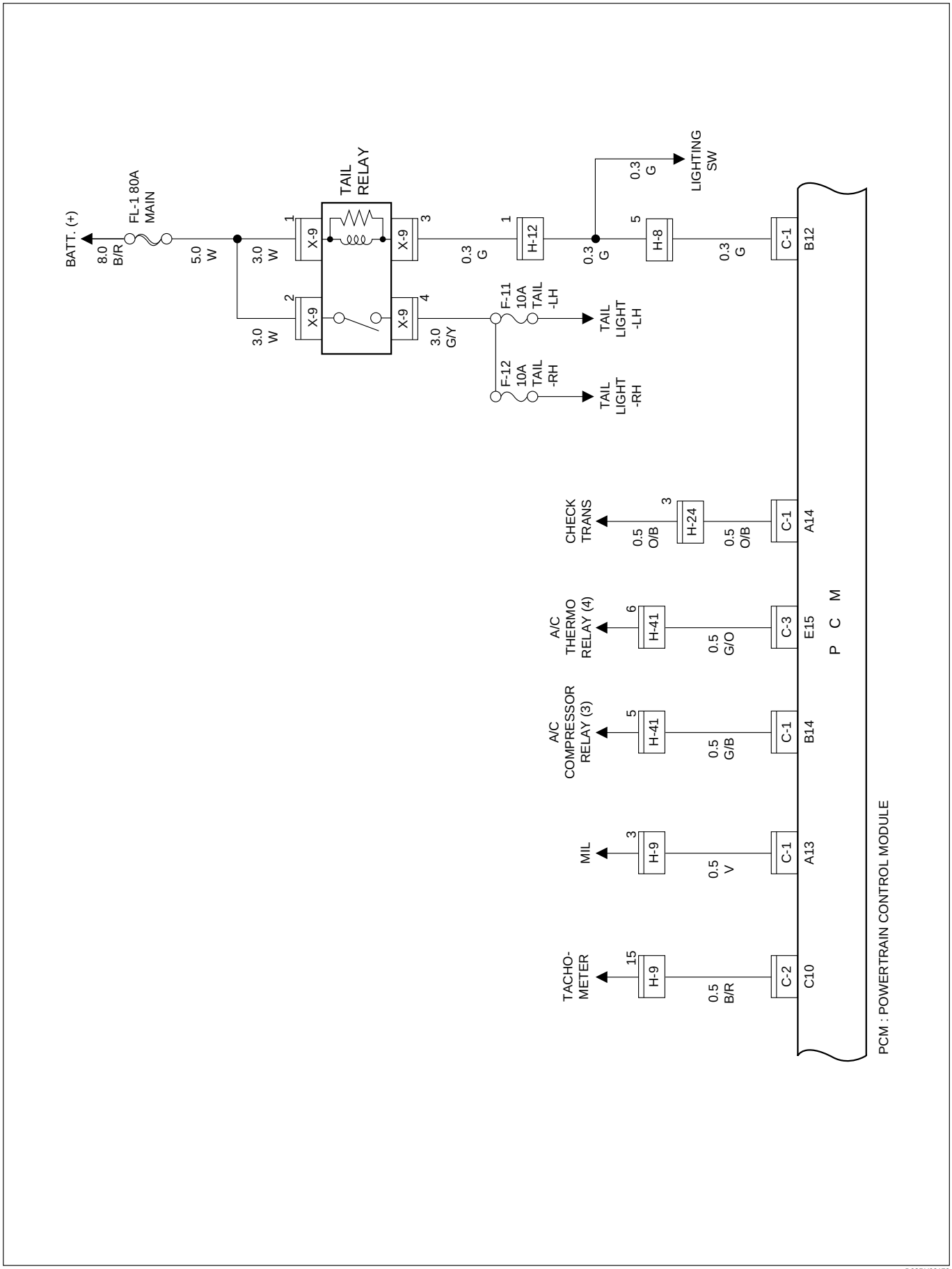

D08RY00173

Circuit Diagram (LHD 6V∗1)–9

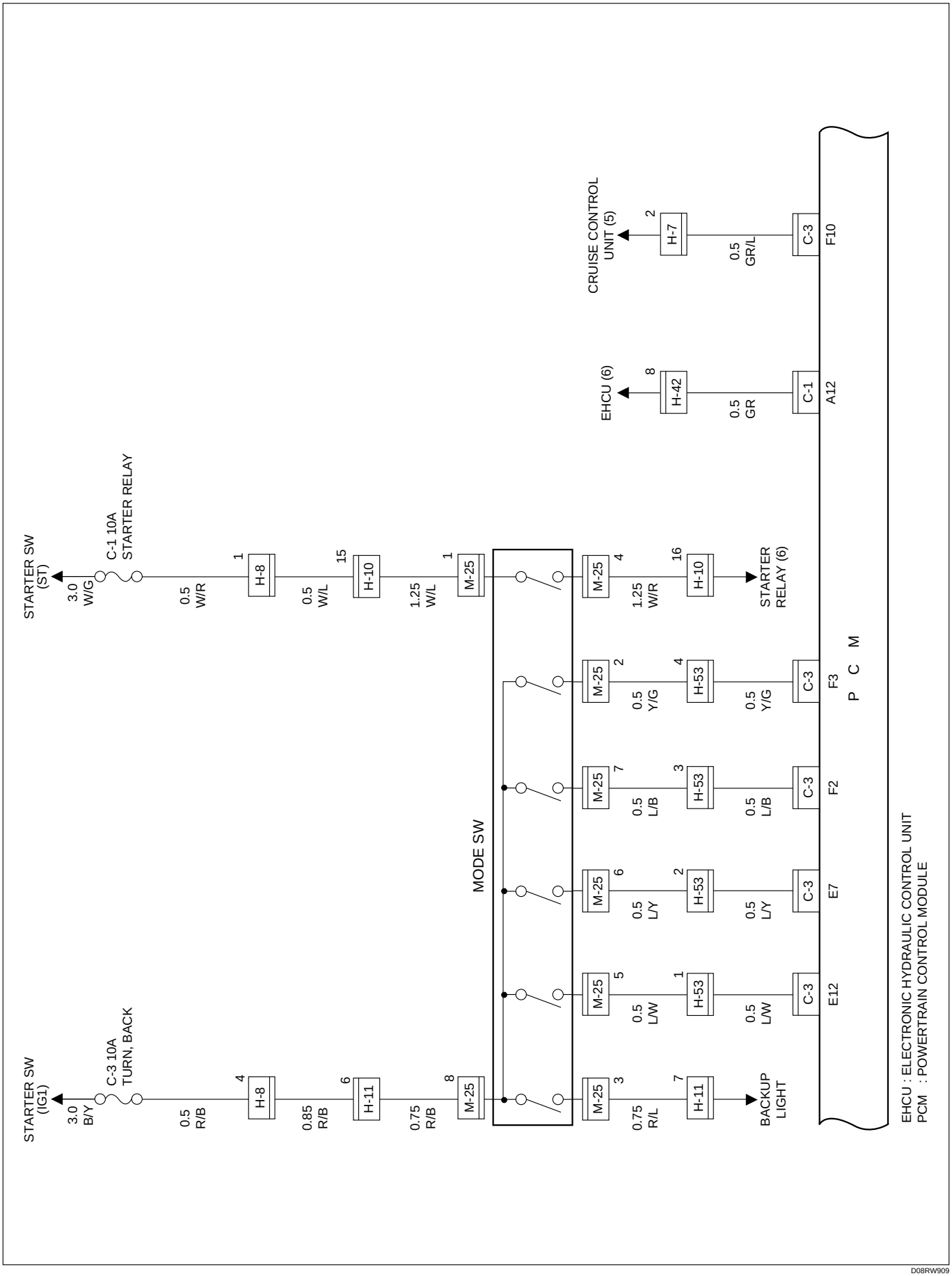

D08RW909

Circuit Diagram (LHD 6V∗1)–10

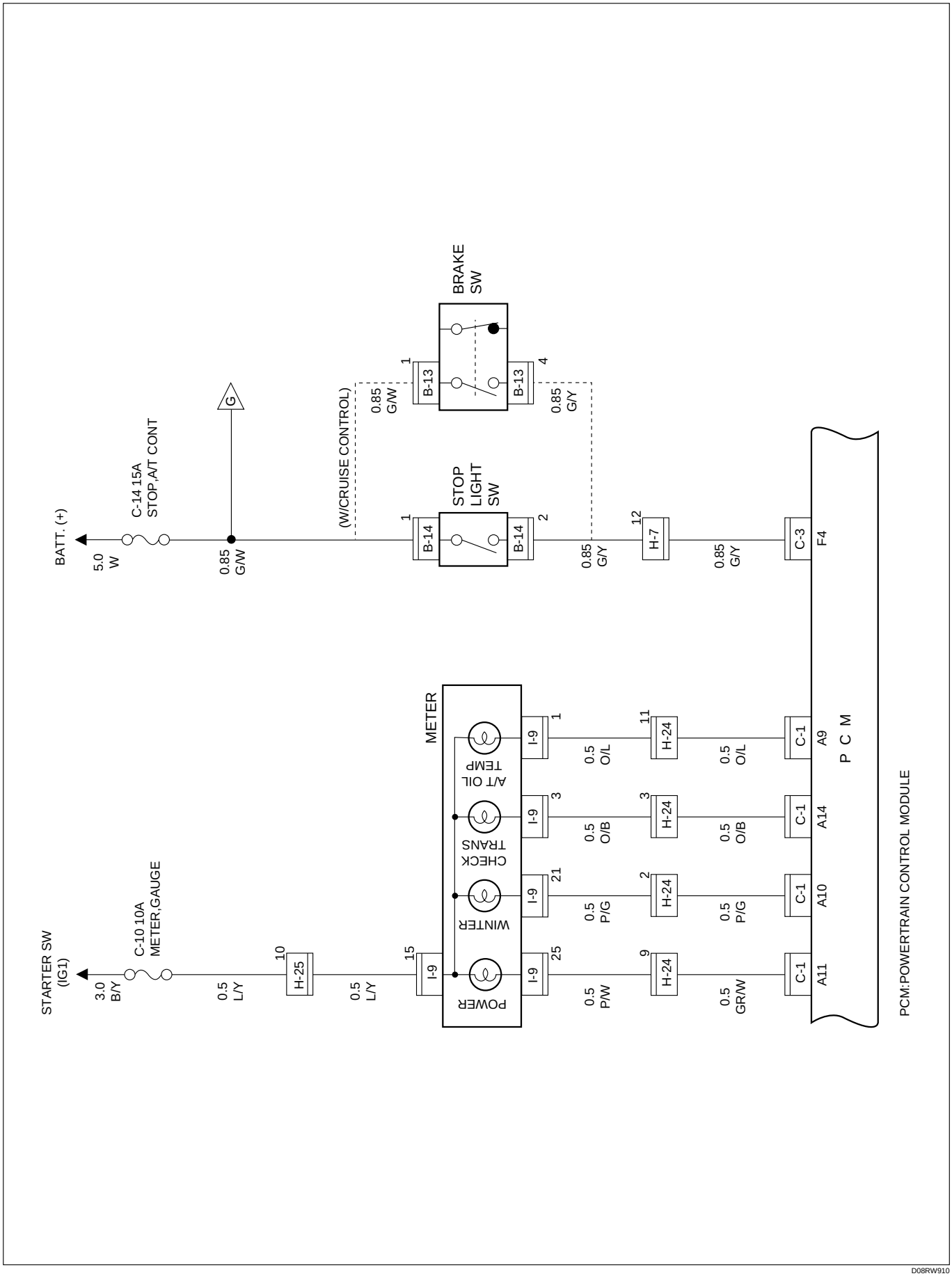

D08RW910

Circuit Diagram (LHD 6V∗1)–11

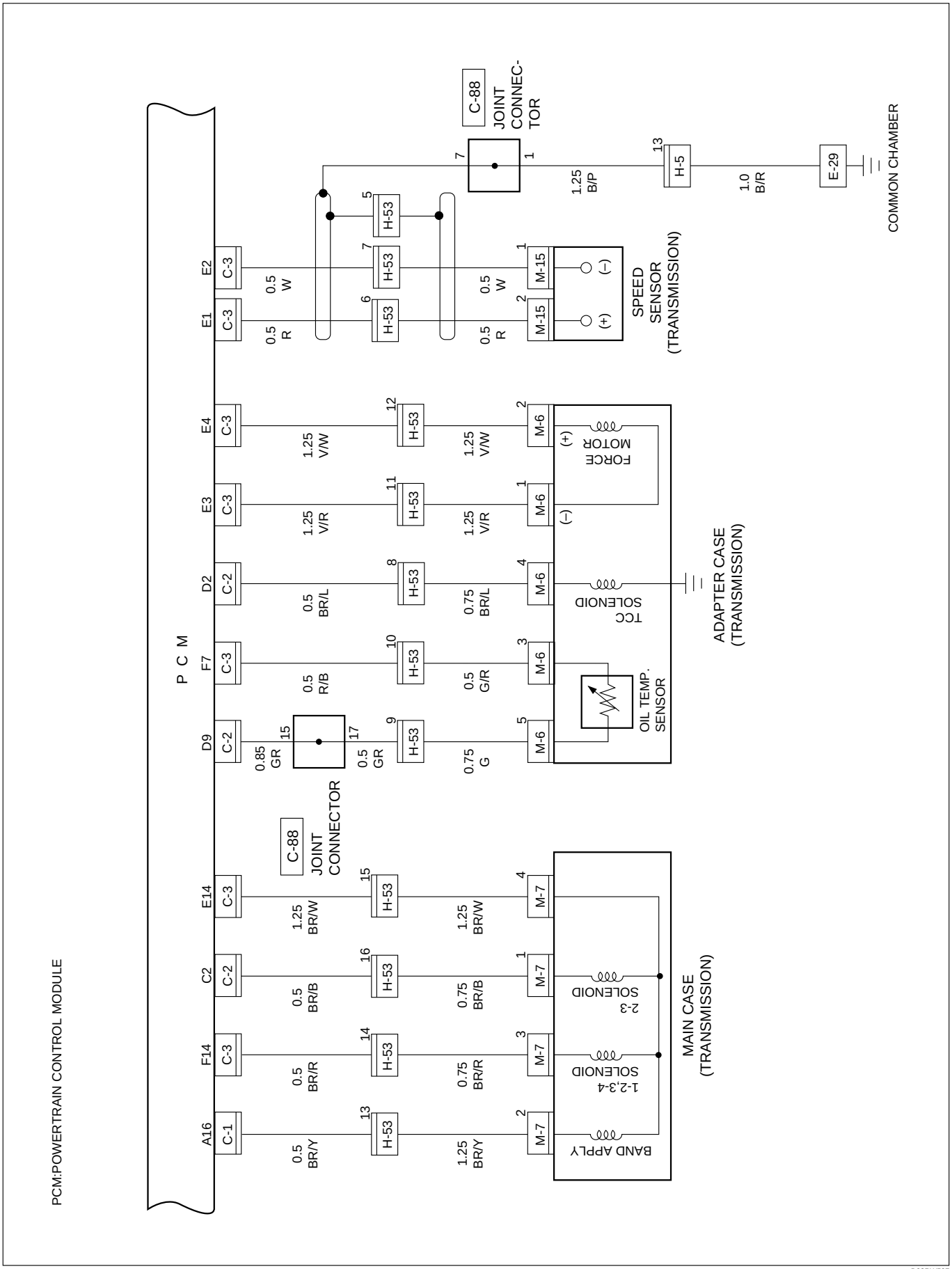

D08RW597

Circuit Diagram (LHD 6V∗1)–12

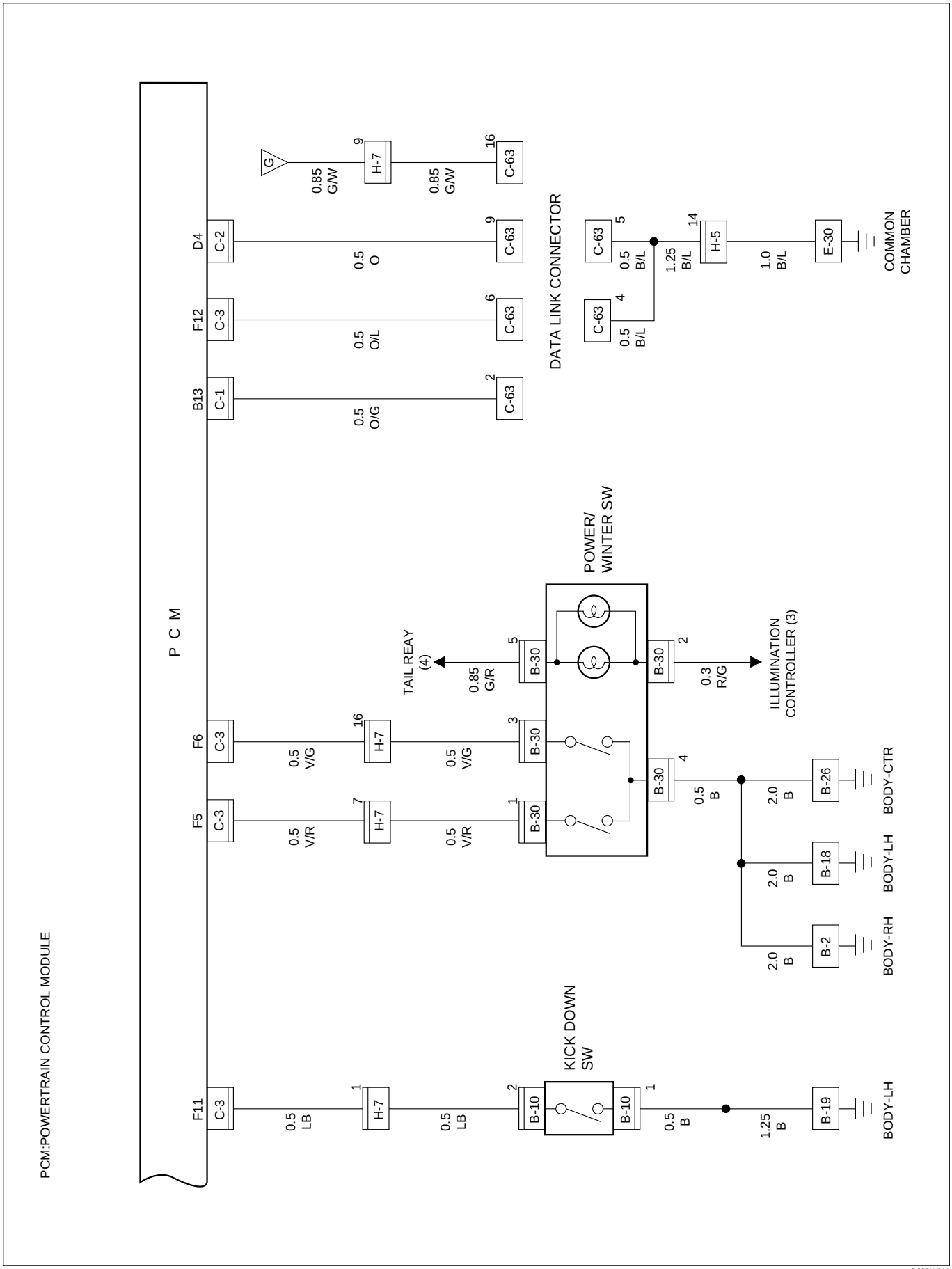

D08RW911

Parts Location (LHD 6V∗1) – 1

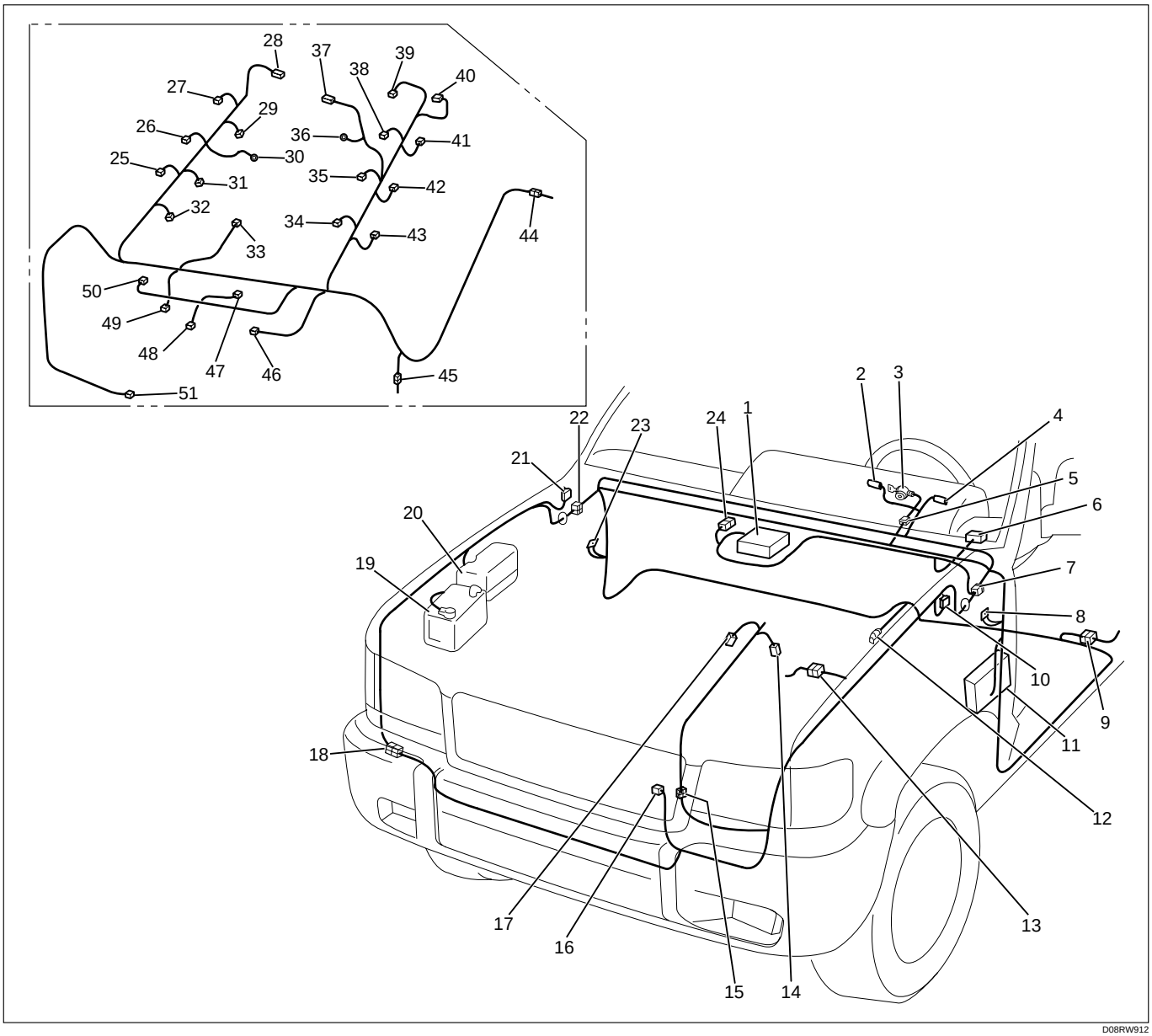

Legend

(1) PCM
(2) I-10
(3) Starter Switch
(4) I-9
(5) B-10
(6) C-63
(7) H-7, H-8, H-9, H-24
(8) B-18, B-19
(9) H-46
(10) C-16
(11) Fuse Box
(12) B-26
(13) H-4, H-5, H-6
(14) M-18
(15) H-11
(16) C-87
(17) M-17
(18) H-41, H-42
(19) Battery
(20) Relay and Fuse Box (X-12, X-11)
(21) C-39
(22) H-12, H-13, H-16
(23) B-1, B-2
(24) C-88
(25) E-37
(26) E-38
(27) E-39
(28) E-33
(29) E-24
(30) E-30
(31) E-25
(32) E-26
(33) E-14

(34) E-11
(35) E-12
(36) E-28, E-29
(37) E-7
(38) E-13
(39) E-32
(40) E-44
(41) E-42
(42) E-41
(43) E-40
(44) H-4, H-5, H-6
(45) E-4
(46) E-8
(47) E-5
(48) E-43
(49) E-20
(50) E-6
(51) E-27

Parts Location (LHD 6V∗1) – 2

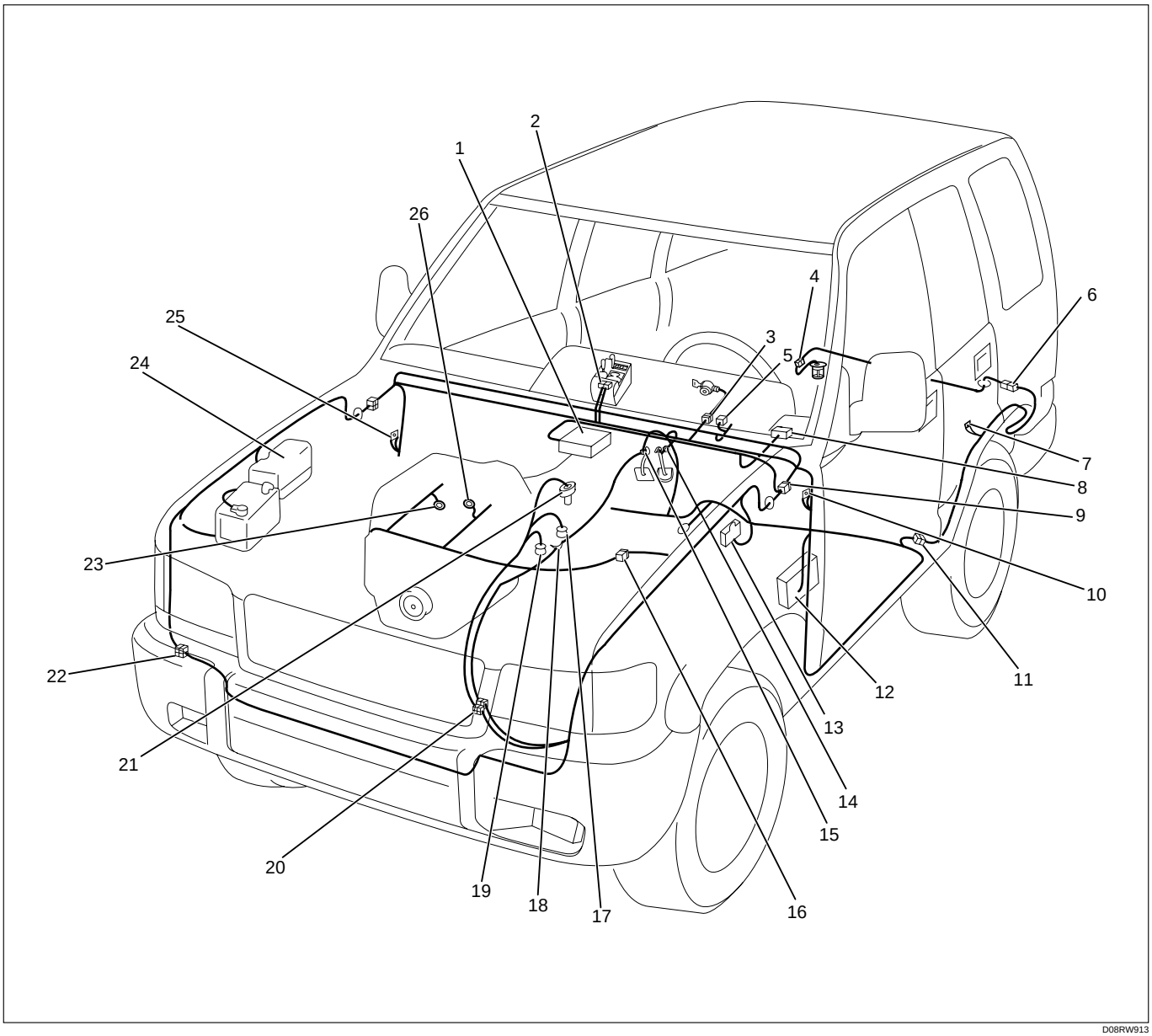

D08RW913

Legend

(1) PCM
(2) B-30
(3) B-11
(4) F-4
(5) I-9
(6) H-33
(7) R-4
(8) C-63
(9) H-7, H-8, H-9
(10) B-18, B-19
(11) H-46
(12) Fuse Box
(13) C-16
(14) B-13 or B-14
(15) B-10
(16) H-5
(17) M-7
(18) M-25
(19) M-6
(20) H-10, H-11, H-53
(21) M-15
(22) H-41
(23) E-30
(24) Relay and Fuse Box
(25) B-2
(26) E-28, E-29

QOS-III (4JG2)

General Description

The circuit consists of the starter switch, QOS-III control unit, glow relay, charge relay, fuel cut solenoid, dropping resistor, thermo sensor, glow indicator light (meter), glow plug and car speed sensor. The engine coolant temperature at the time of the engine start-up is sensed by the thermo sensor to change the glow time so that the optimum starting conditions can always be obtained.

The idling speed just after the engine start-up can also be placed in the most suitable conditions in accordance with the coolant temperature by the operation of the delay timer.

The indicator timer is activated upon the starter switch turned to the ON position, and the indicator light comes on for as much time as suitable for the engine coolant temperature at the time of the engine start-up.

Circuit Diagram (RHD)-1

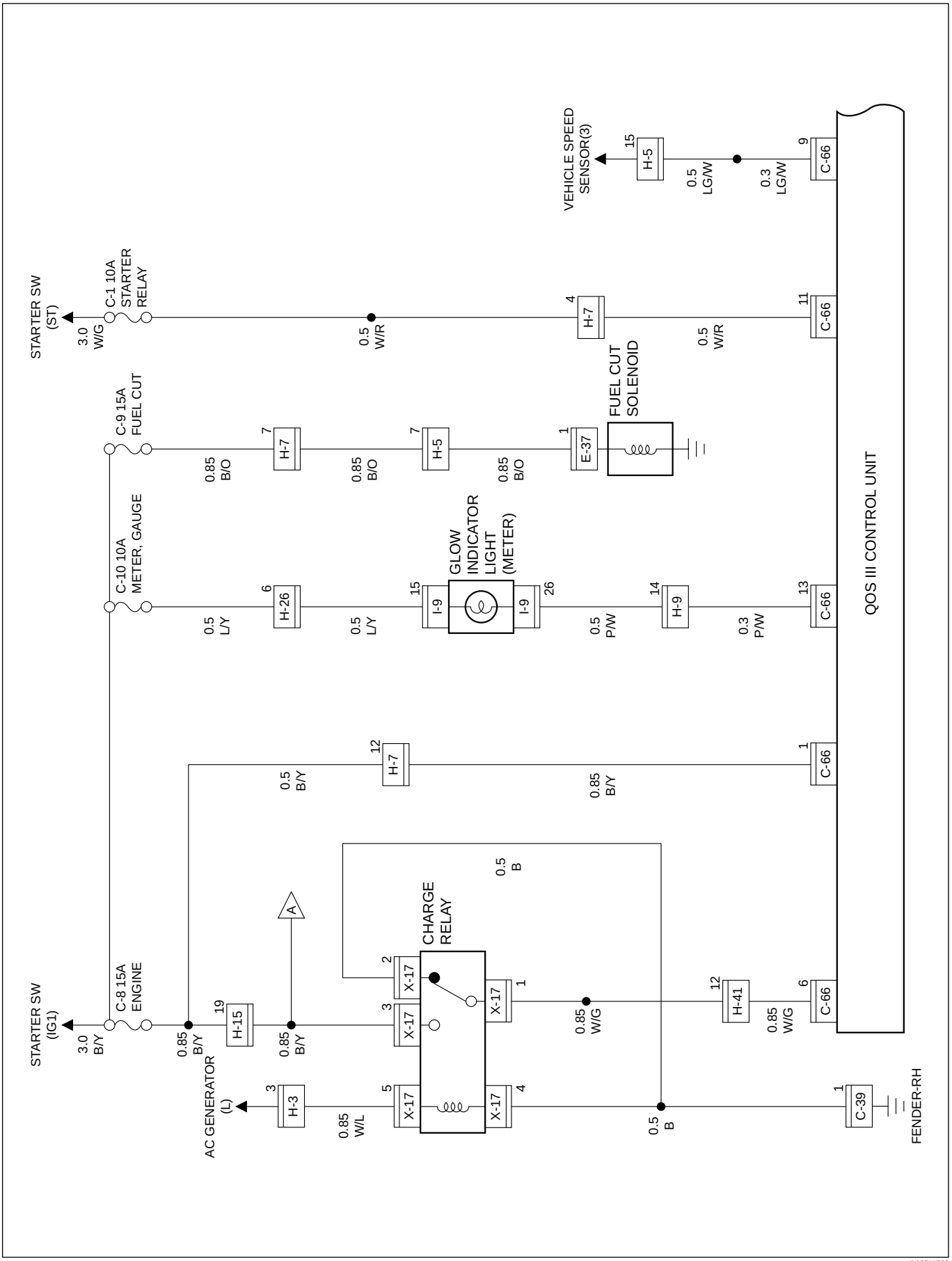

D08RW982

Circuit Diagram (RHD)-2

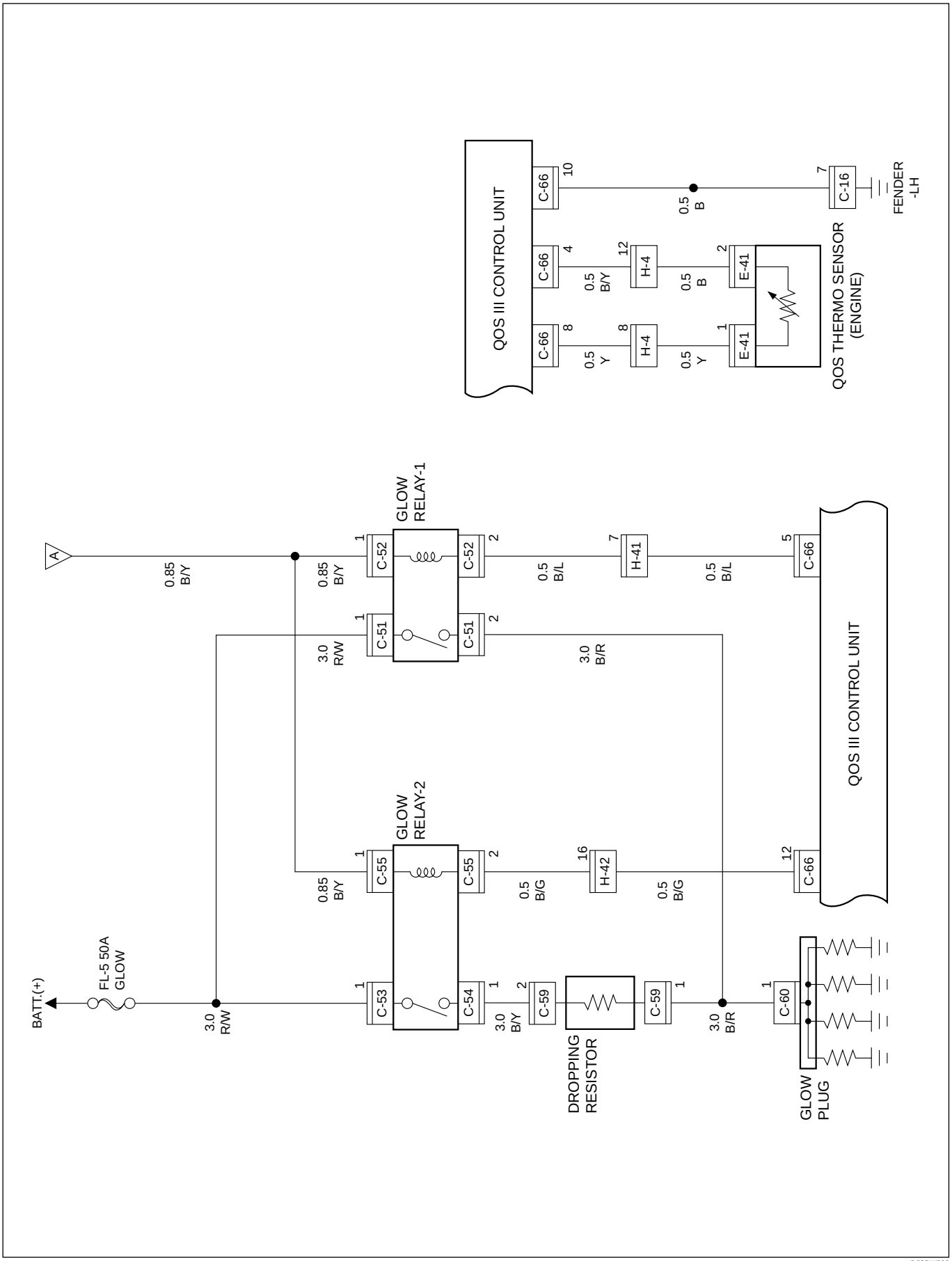

D08RW980

Parts Location (RHD)

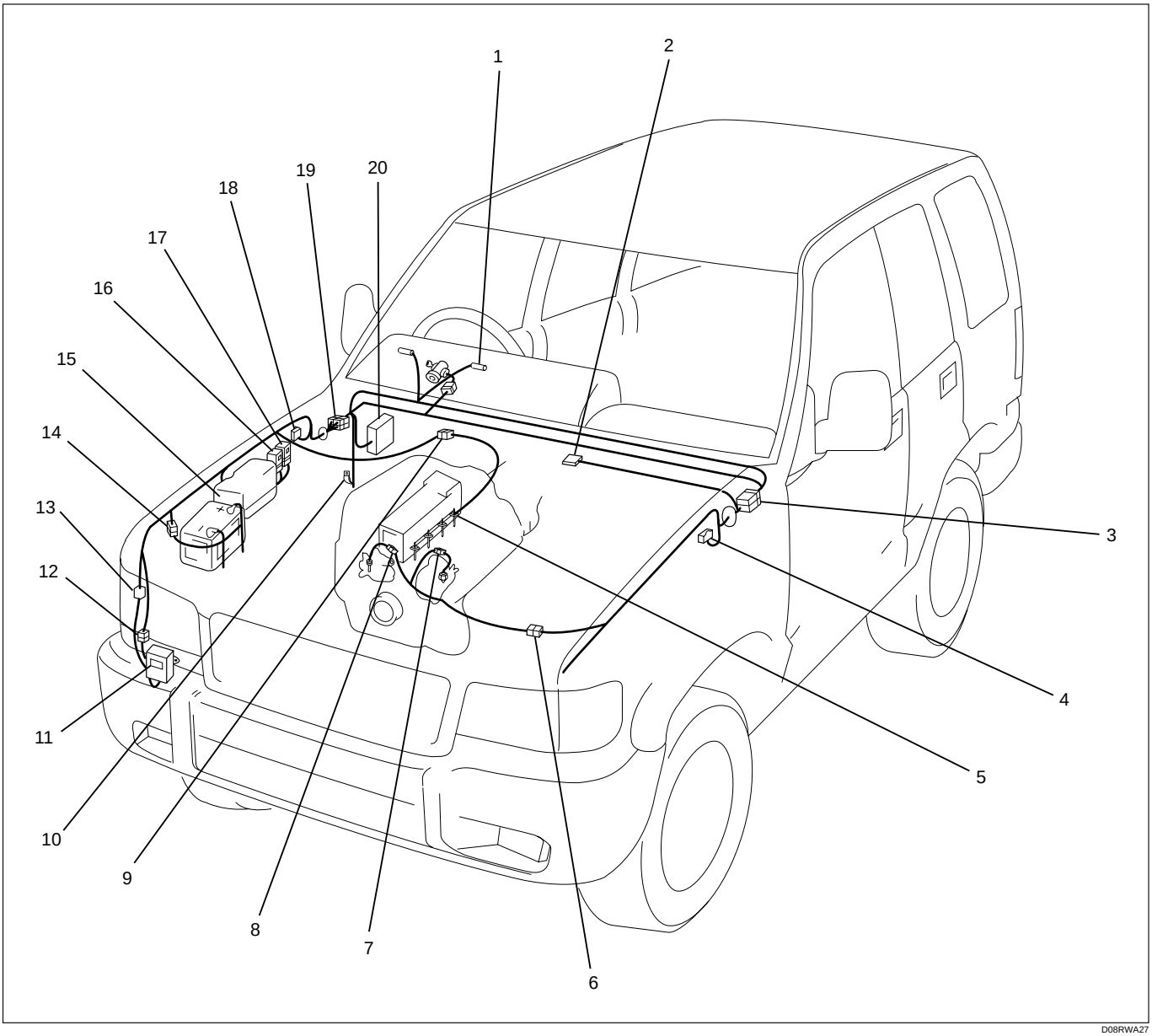

Legend

(1) I-9
(2) C-66
(3) H-7, H-9
(4) C-16
(5) Glow Plug × 4
(6) H-4, H-5
(7) E-37
(8) E-41
(9) C-60
(10) B-19
(11) Dropping Resistor
(12) C-59
(13) H-41, H-42
(14) H-3
(15) Relay and Fuse Box (X-17)
(16) Glow Relay-1 (C-51, C-52)
(17) Glow Relay-2 (C-53, C-54, C-55)
(18) C-39
(19) H-15, H-26
(20) Fuse Box

Circuit Diagram (LHD)-1

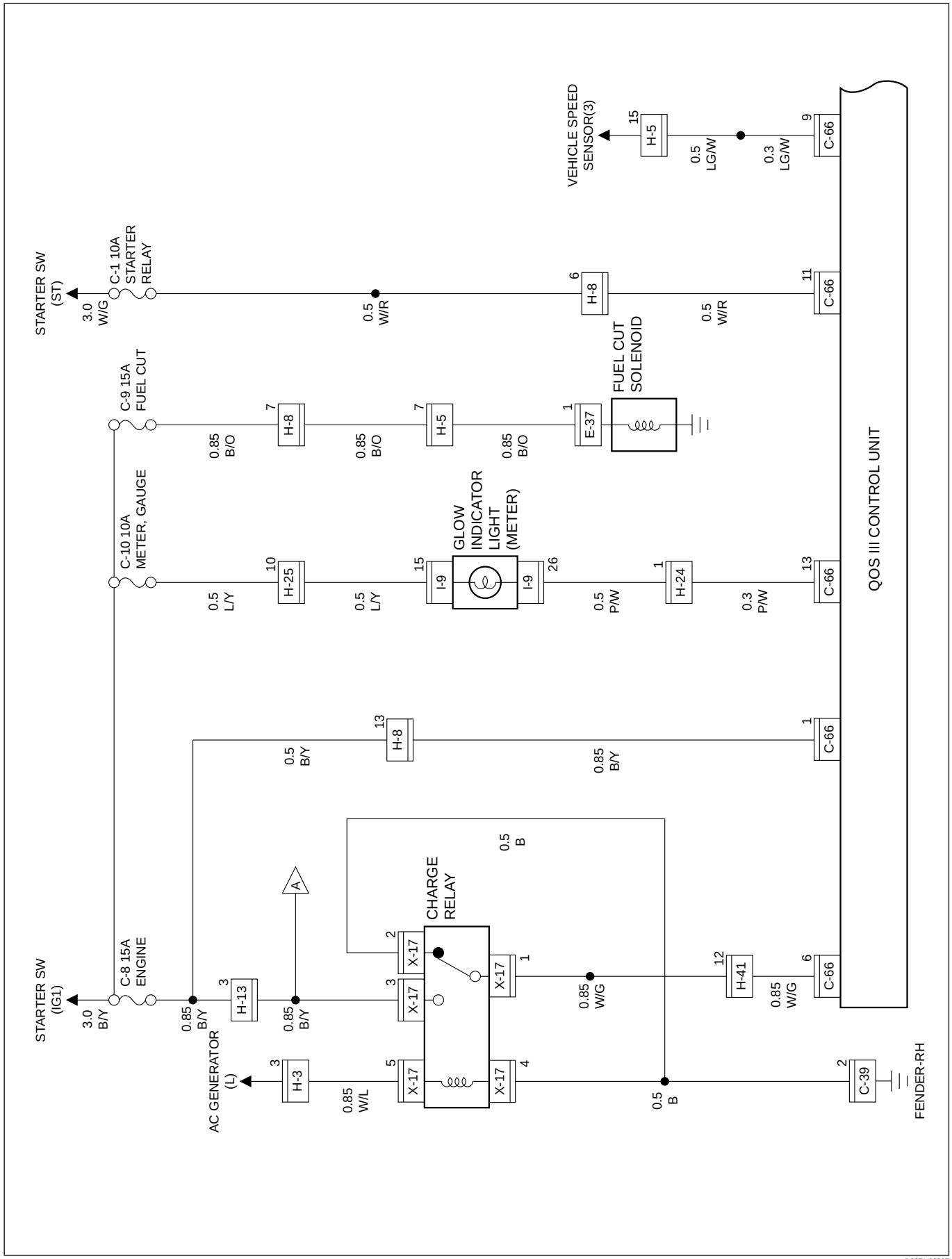

D08RY00297

Circuit Diagram (LHD)-2

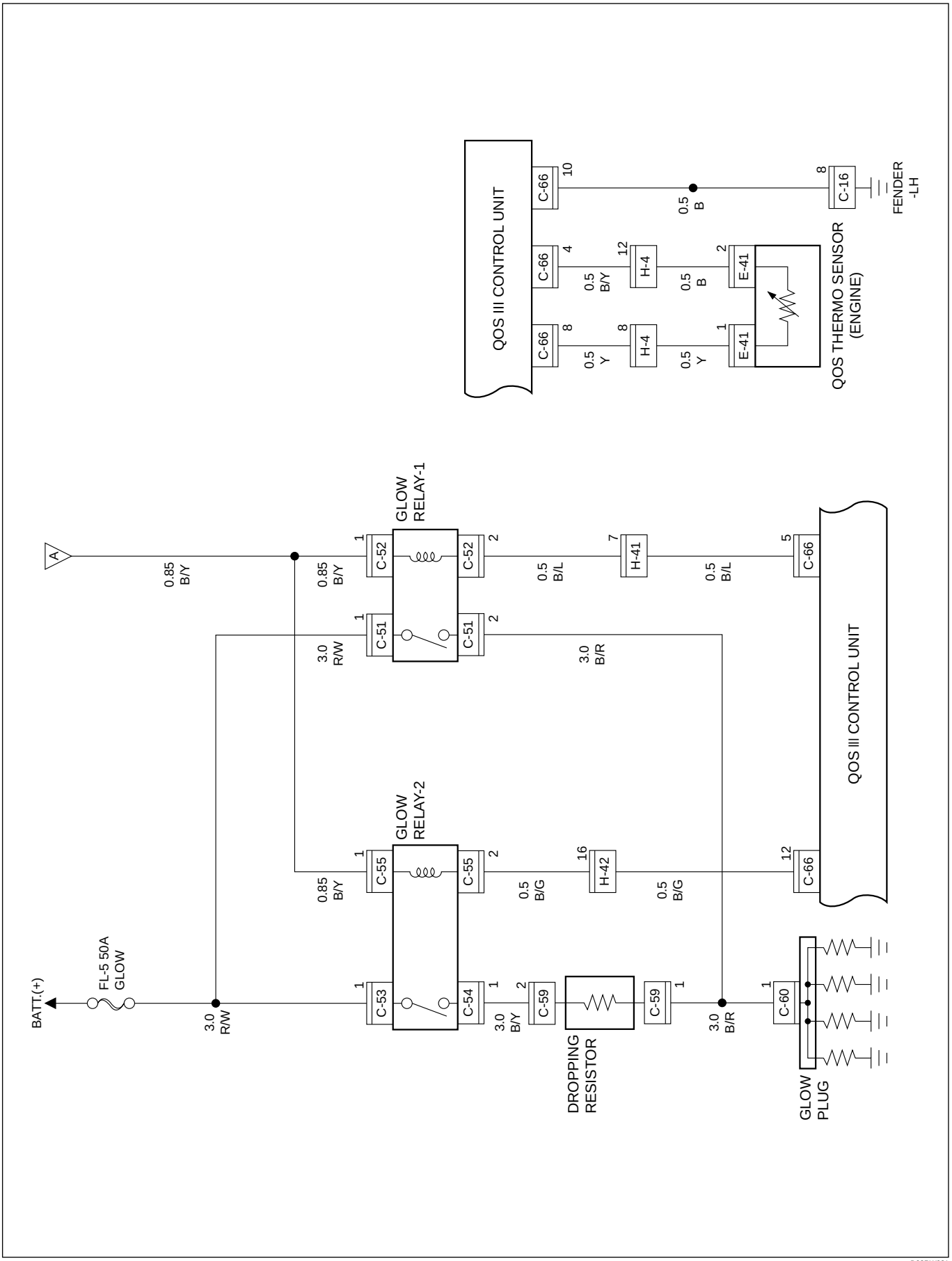

D08RW981

Parts Location (LHD)

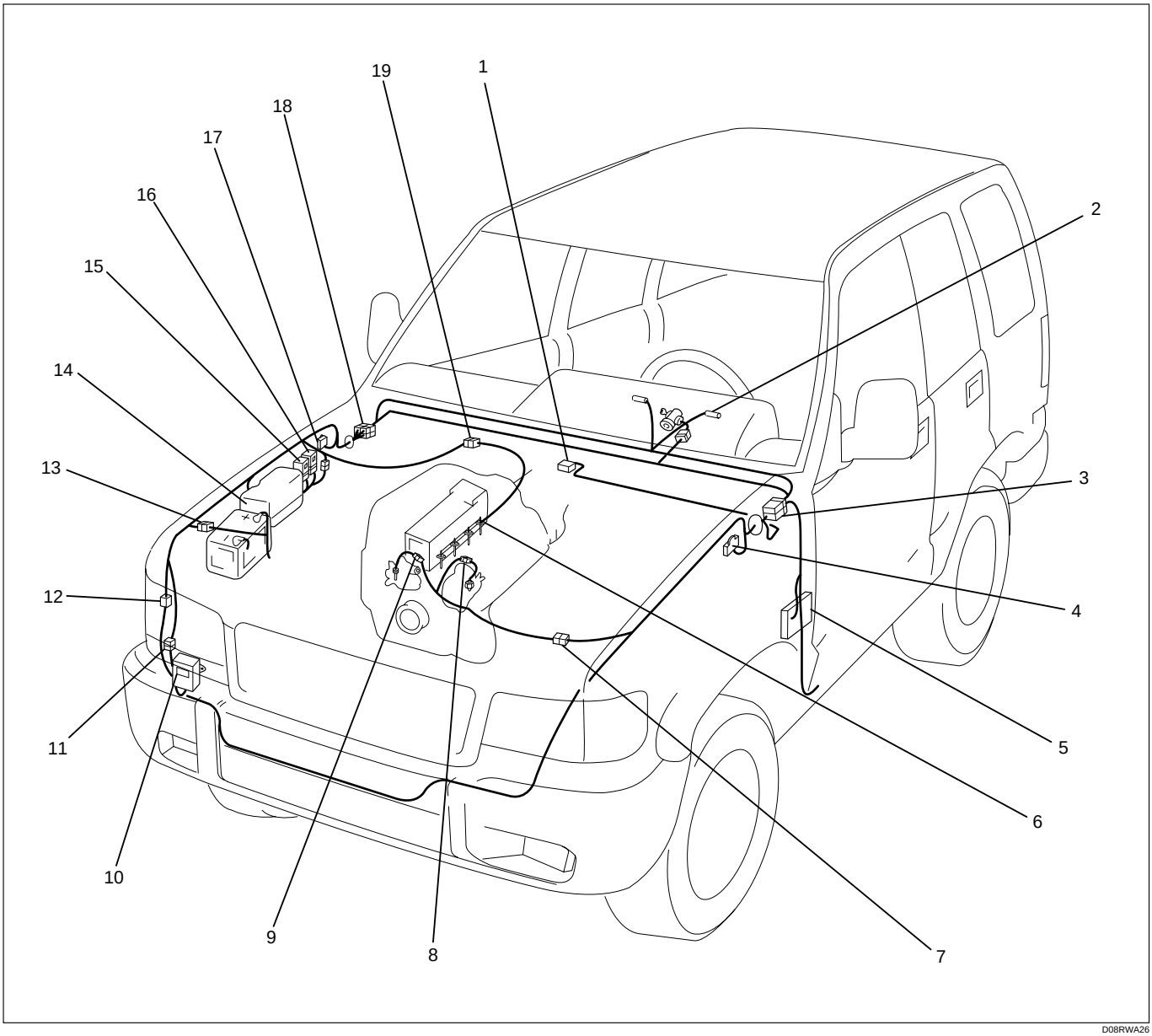

D08RWA26

Legend

(1) C-66
(2) I-9
(3) H-7, H-8, H-24, H-25
(4) C-16
(5) Fuse Box
(6) Glow Plug × 4
(7) H-4, H-5
(8) E-37
(9) E-41
(10) Dropping Resistor
(11) C-59
(12) H-41, H-42
(13) H-3
(14) Relay and Fuse Box (X-17)
(15) Glow Relay-1 (C-51, C-52)
(16) Glow Relay-2 (C-53, C-54, C-55)
(17) C-39
(18) H-13
(19) C-60

QOS and EGR System (4JG2)

General Description

The circuit consists of the starter switch, QOS/EGR control unit, glow relay, charge relay, fuel cut solenoid, dropping resistor, thermo sensor, glow indicator light (meter), glow plug, vehicle speed sensor, tacho sensor, throttle position sensor, EVRV and VSV; EGR.

The engine coolant temperature at the time of the engine start-up is sensed by the thermo sensor to change the glow time so that the optimum starting conditions can always be obtained.

The idling speed just after the engine start-up can also be placed in the most suitable conditions in accordance with the coolant temperature by the operation of the delay timer.

The indicator timer is activated upon the starter switch turned to the ON position, and the indicator light comes on for as much time as suitable for the engine coolant temperature at the time of the engine start-up.

EGR system controls the information of NOx by returning a small amount of exhaust gas from the intake manifold to the combustion chamber through the EGR valve.

Circuit Diagram (RHD)-1

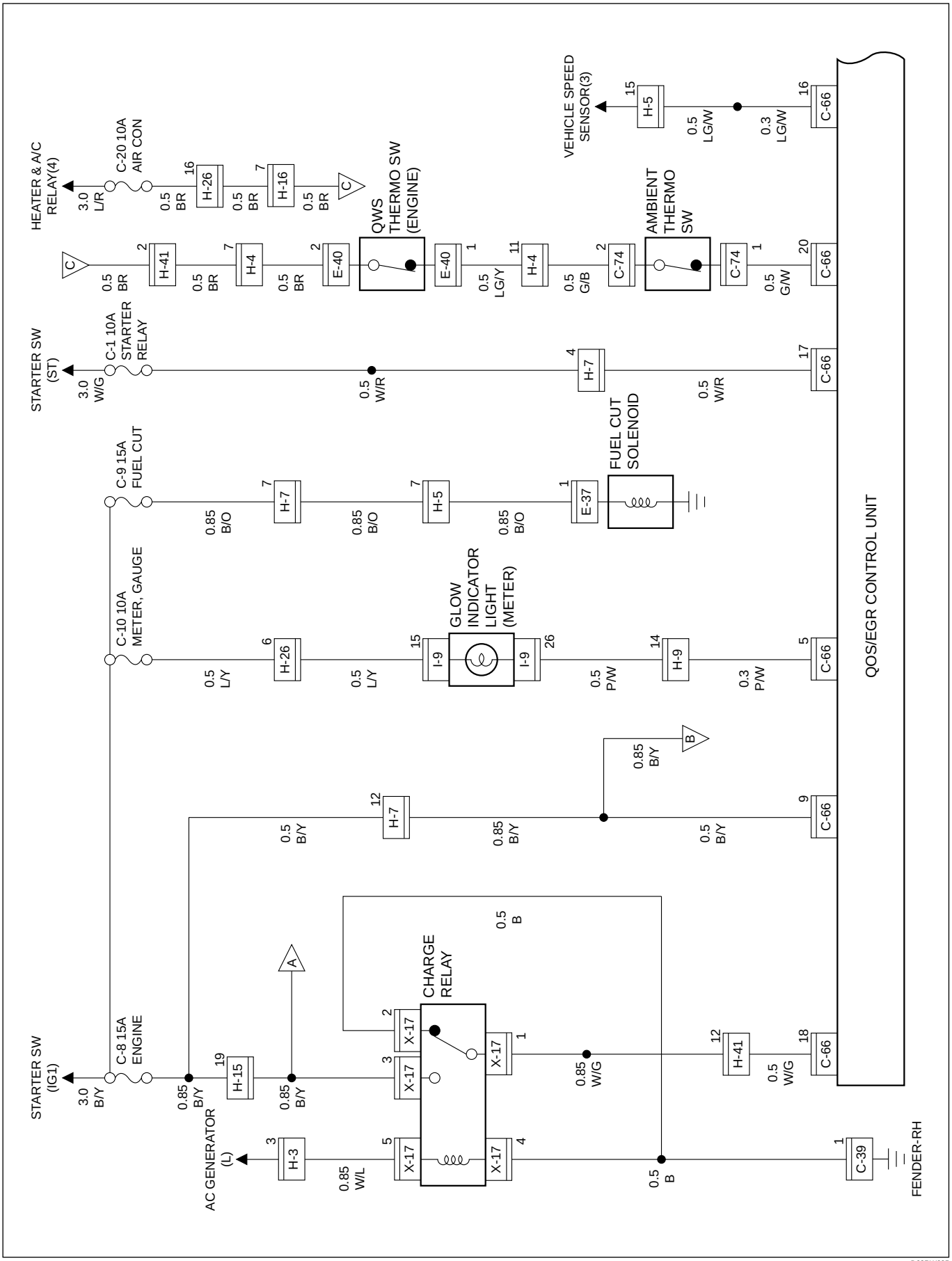

D08RW695

Circuit Diagram (RHD)-2

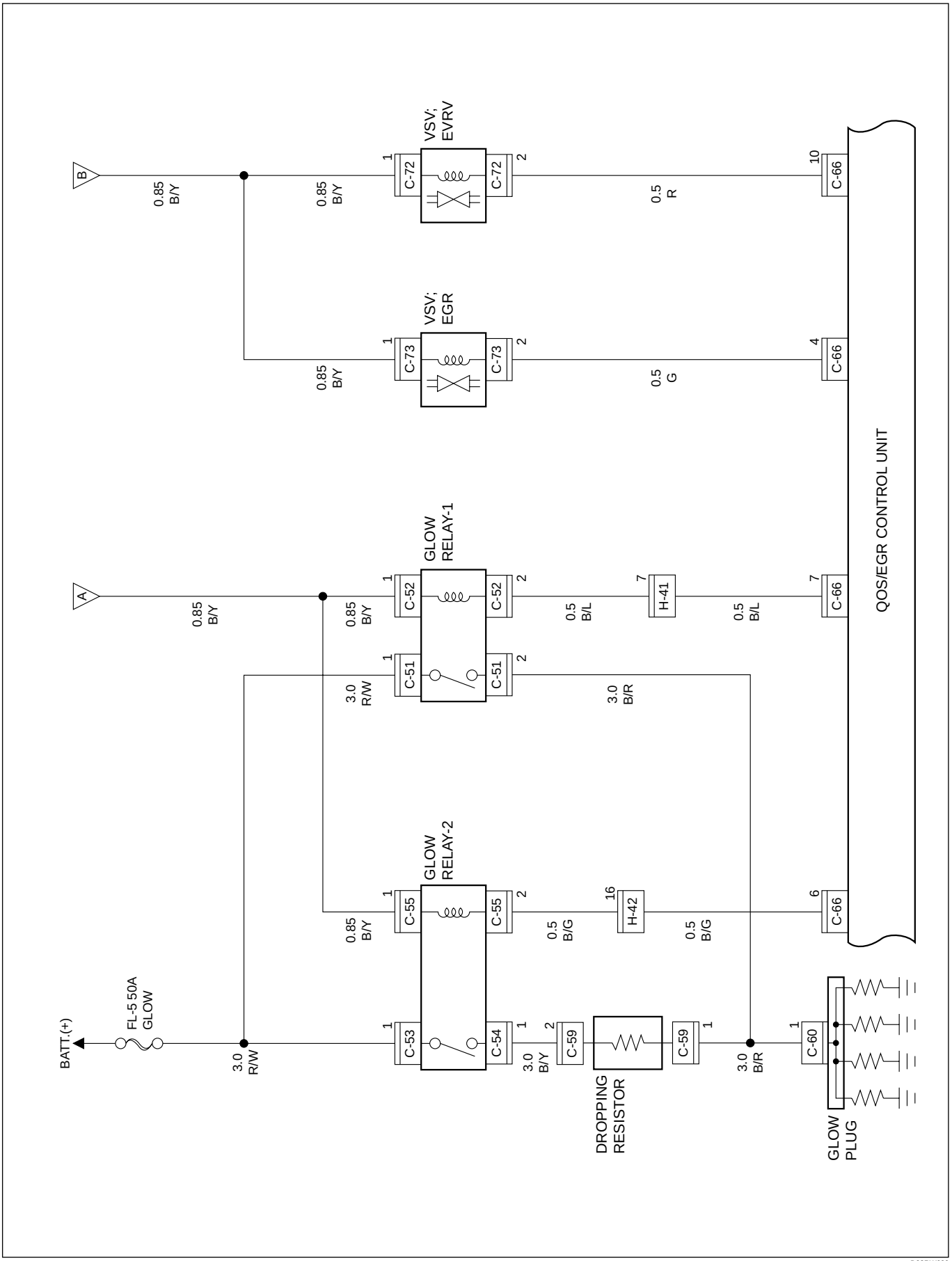

D08RW696

Circuit Diagram (RHD)-3

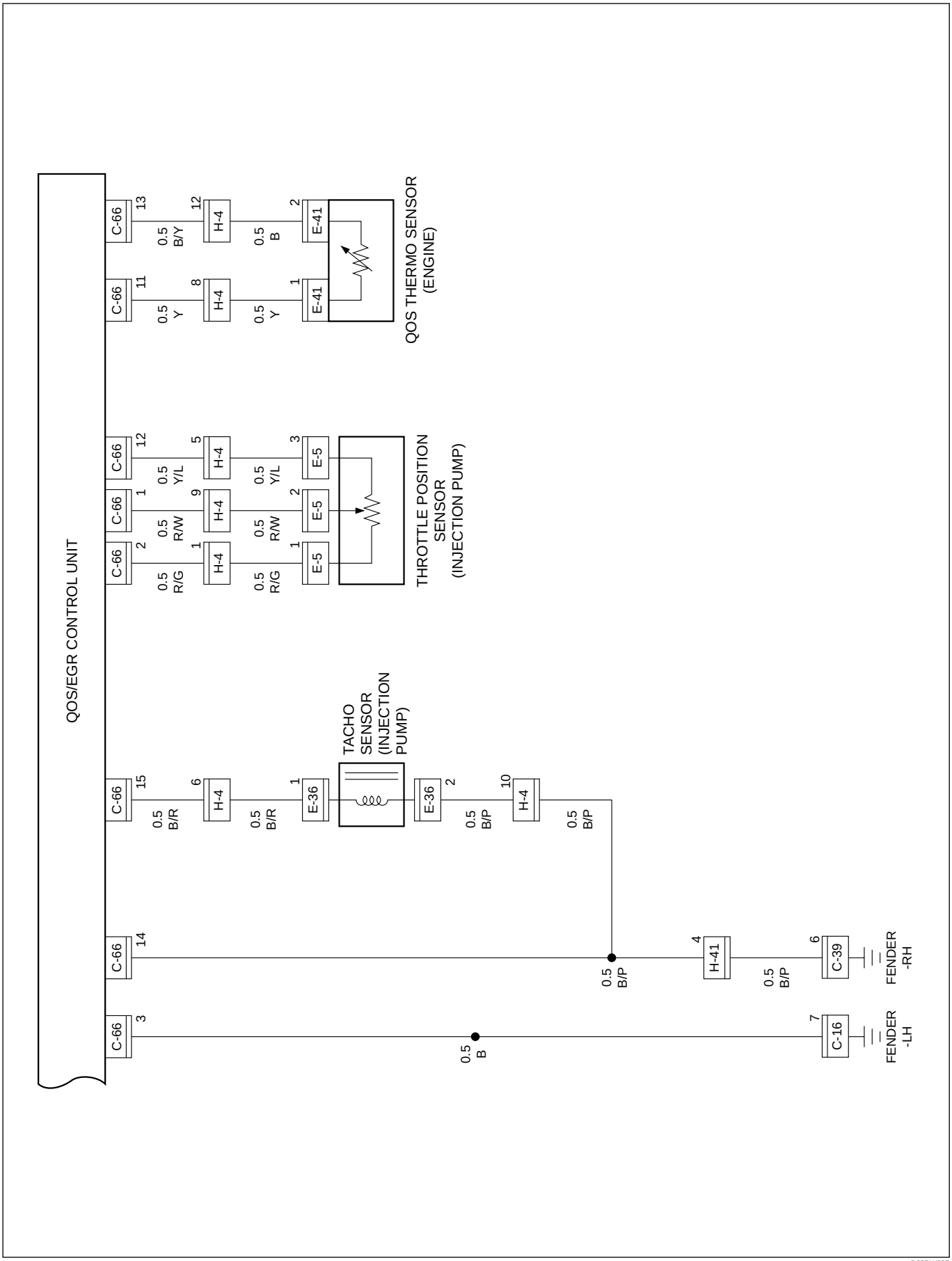

D08RW697

Parts Location (RHD)

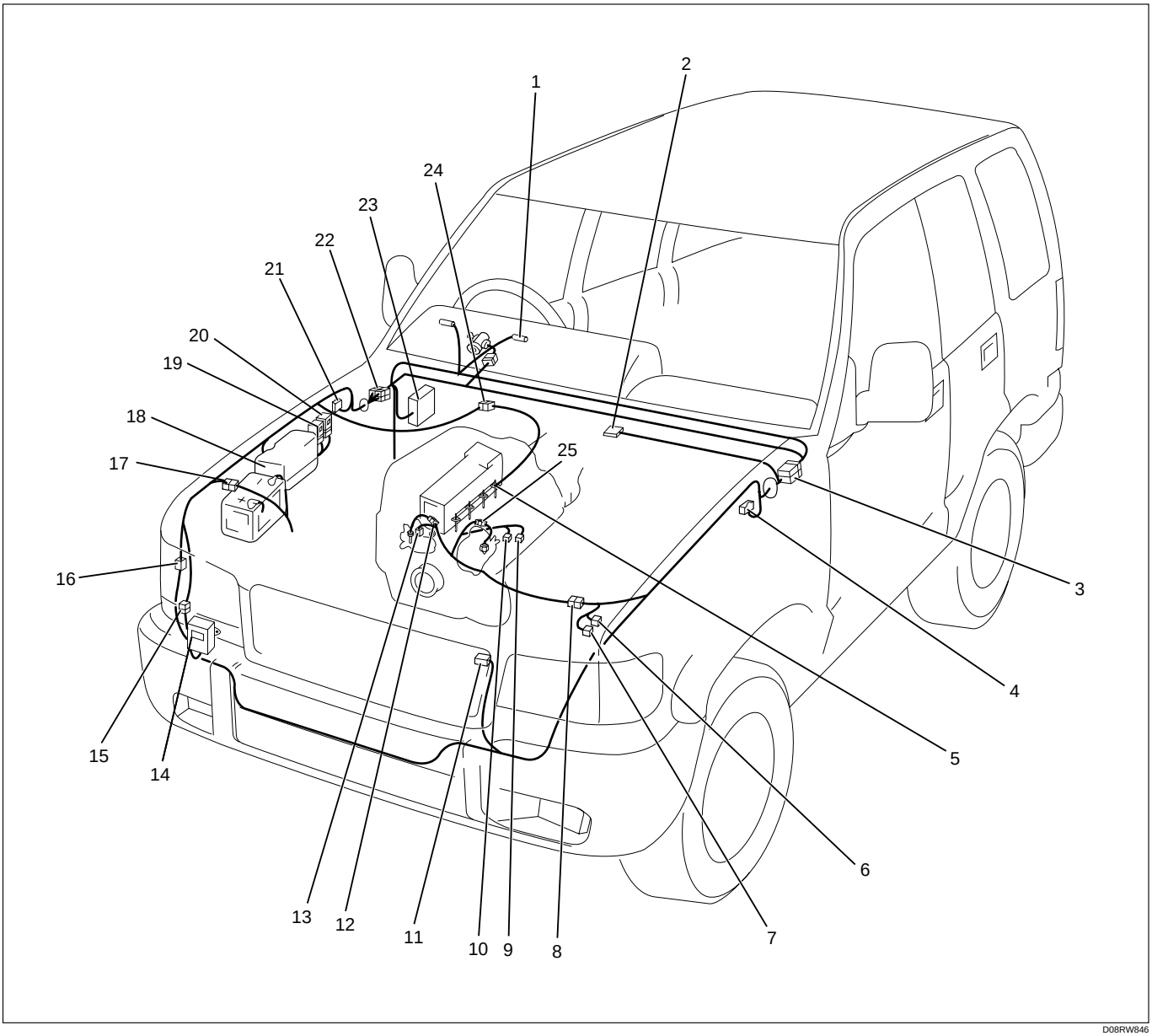

Legend

(1) I-9
(2) C-66 (QOS/EGR Control Unit)
(3) H-7, H-9
(4) C-16
(5) Glow Plug
(6) C-72
(7) C-73
(8) H-4, H-5
(9) E-36
(10) E-5
(11) C-74
(12) E-41
(13) E-40
(14) Dropping Resistor
(15) C-59
(16) H-41, H-42
(17) H-3
(18) Relay and Fuse Box (X-17)
(19) C-51, C-52 (Glow Relay-1)
(20) C-53, C-54, C-55 (Glow Relay-2)
(21) C-39
(22) H-15, H-16, H-26
(23) Fuse Box
(24) C-60
(25) E-37

Circuit Diagram (LHD)-1

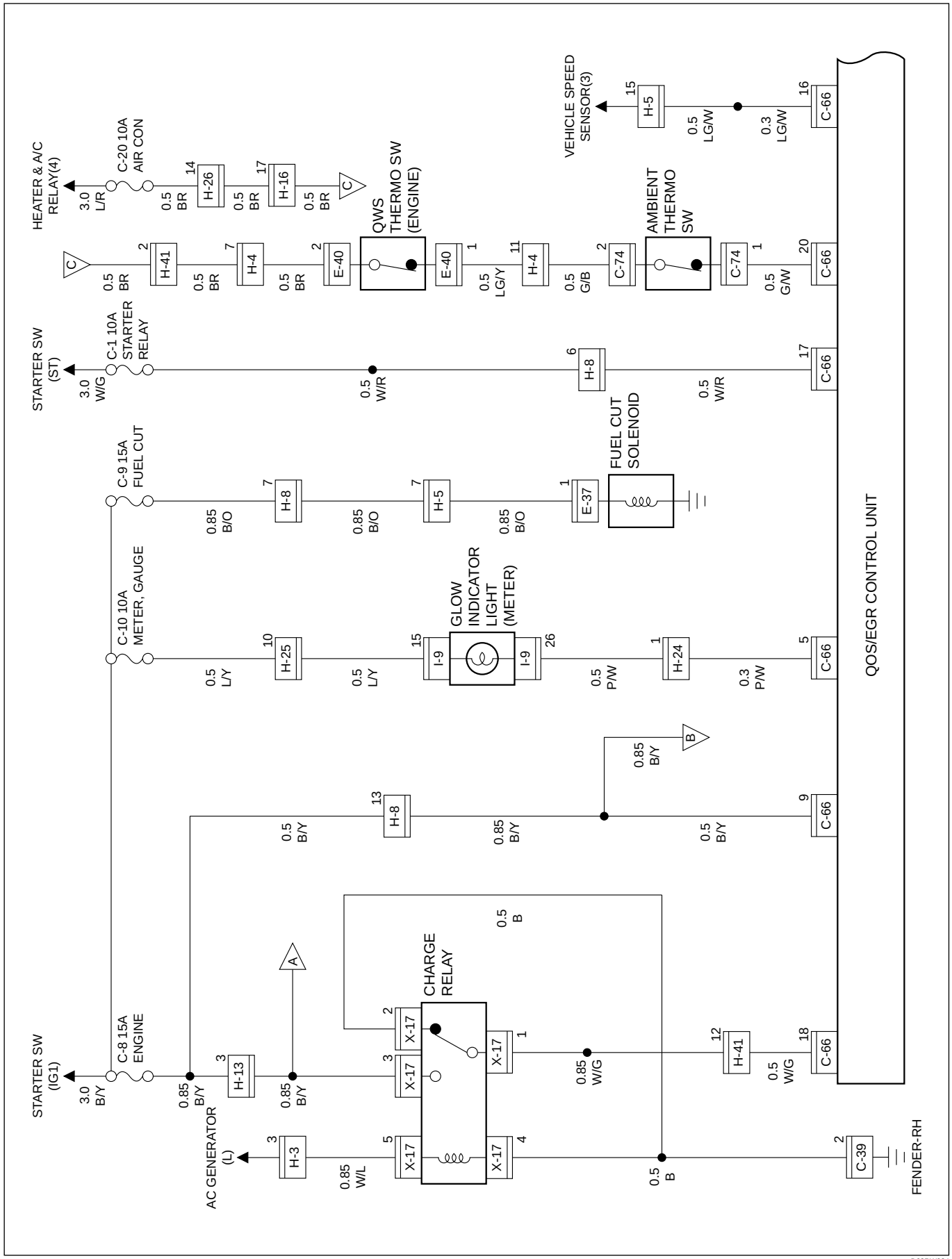

D08RW984

Circuit Diagram (LHD)-2

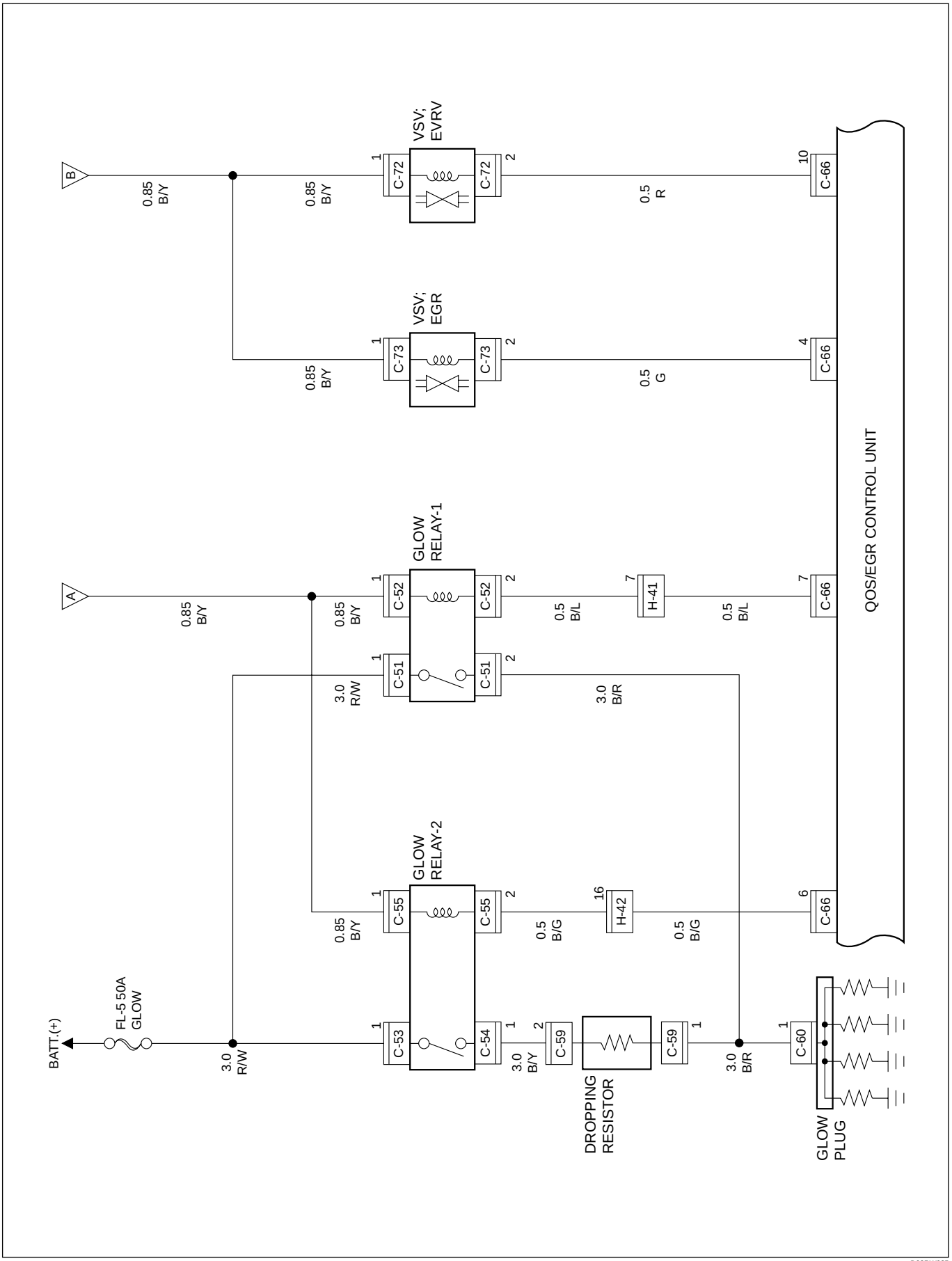

Circuit Diagram (LHD)-3

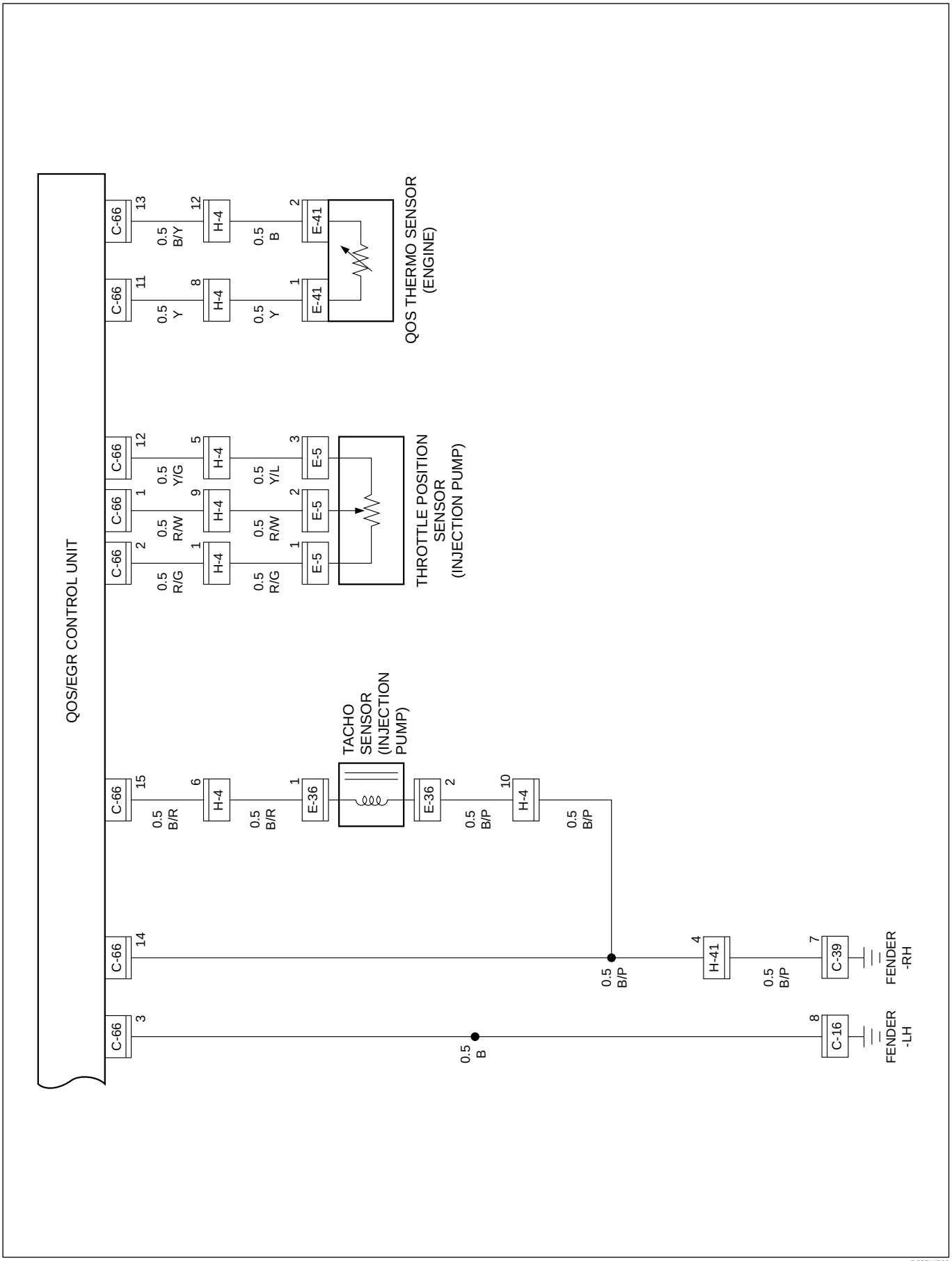

D08RW986

Parts Location (LHD)

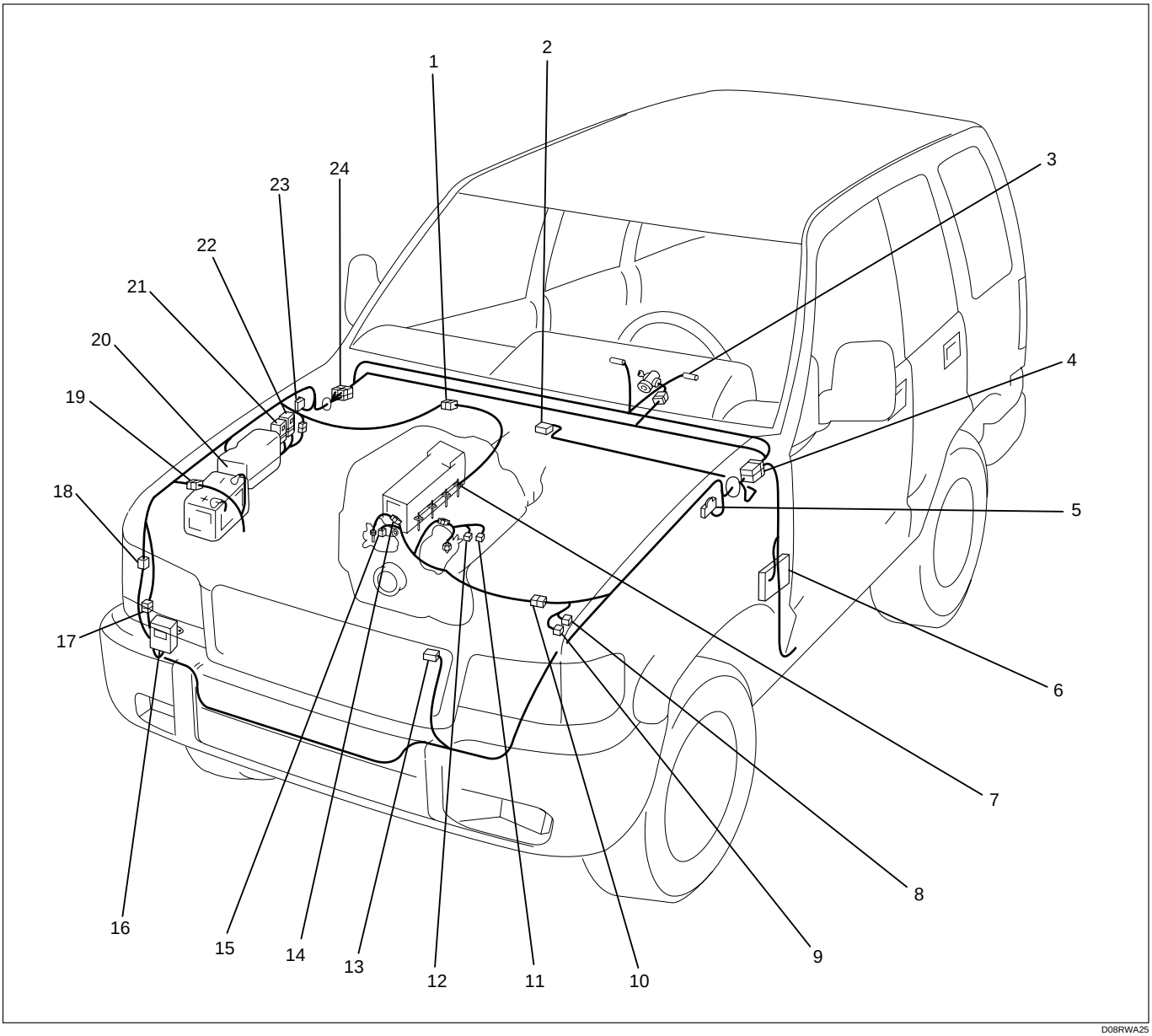

Legend

(1) C-60
(2) QOS/EGR Control Unit (C-66)
(3) I-9
(4) H-8, H-24, H-25, H-26
(5) C-16
(6) Fuse Box
(7) Glow Plug × 4
(8) C-72
(9) C-73
(10) H-4, H-5
(11) E-36
(12) E-5
(13) C-74
(14) E-41
(15) E-40
(16) Dropping Resister
(17) C-59
(18) H-41, H-42
(19) H-3
(20) Relay and Fuse Box (X-17)
(21) Glow Relay-1 (C-51, C-52)
(22) Glow Relay-2 (C-53, C-54, C-55)
(23) C-39
(24) H-13, H-16

Headlight and Fog Light

General Description

The circuit consists of the headlight, FRT fog light, lighting SW, dimmer•passing SW, FRT fog light SW, high beam indicator, tail relay, lighting relay, FRT fog light relay and dimmer relay (LHD).

When the lighting SW is turned on by setting it at headlight position, the lighting relay is activated to turn on the headlight. The optical axis of the headlight can be turned up or down by operating the dimmer SW while the headlight is on.

The passing SW is independent of the lighting SW, and the optical axis of the passing light can be turned up only while the switch lever is pulled up and held in this state.

FRT fog lights turn on when the lighting SW is at clearance light or headlight position.

Circuit Diagram (RHD)-1

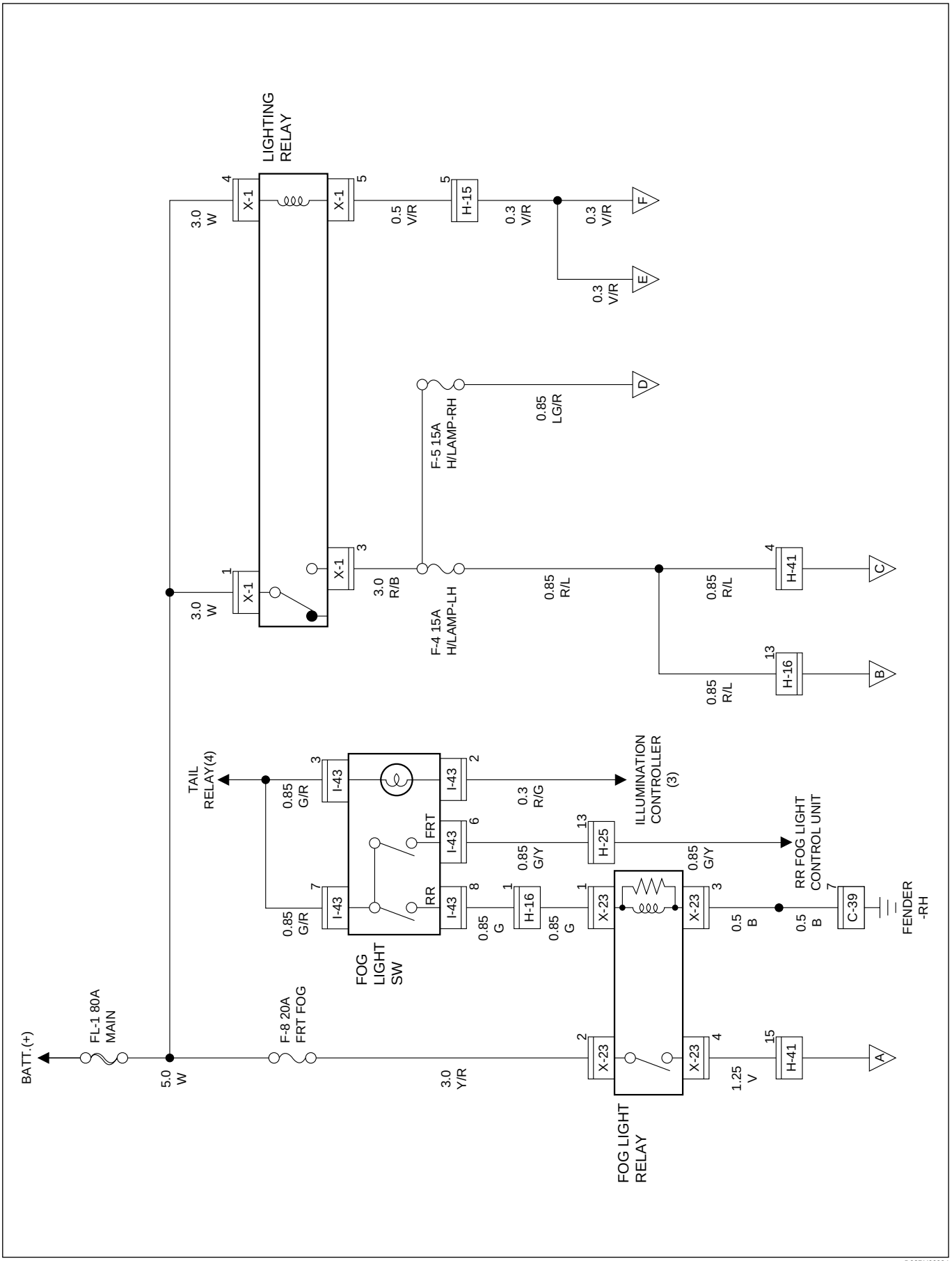

D08RY00084

Circuit Diagram (RHD)-2

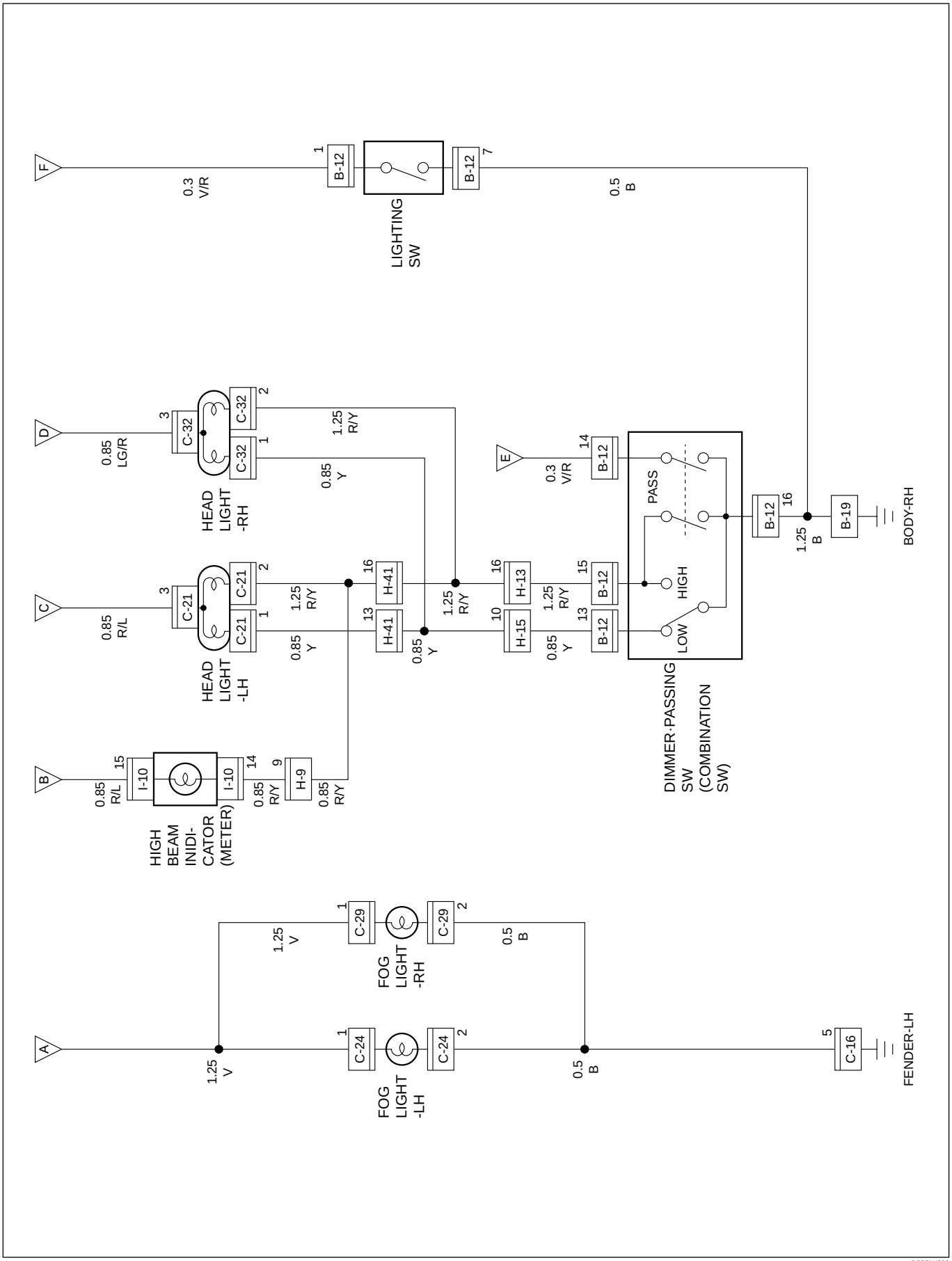

D08RW609

Parts Location (RHD)

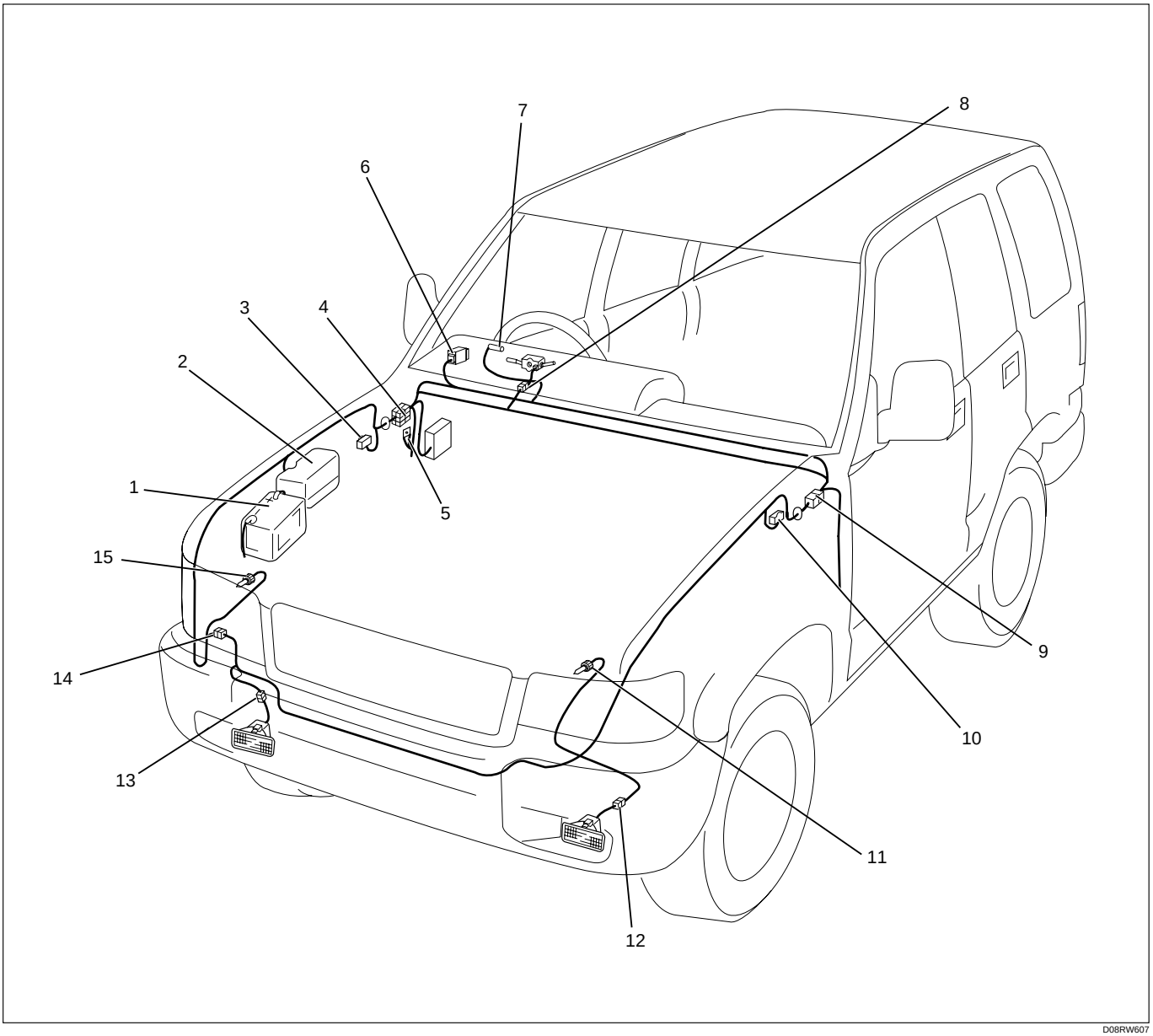

D08RW607

Legend

(1) Battery
(2) Relay and Fuse Box (X-1, X-23)
(3) C-39
(4) H-13, H-15, H-16, H-26
(5) B-19
(6) I-5
(7) I-10
(8) B-12
(9) H-9
(10) C-16
(11) C-21
(12) C-24
(13) C-29
(14) H-41, H-42
(15) C-32

Circuit Diagram (LHD)-1

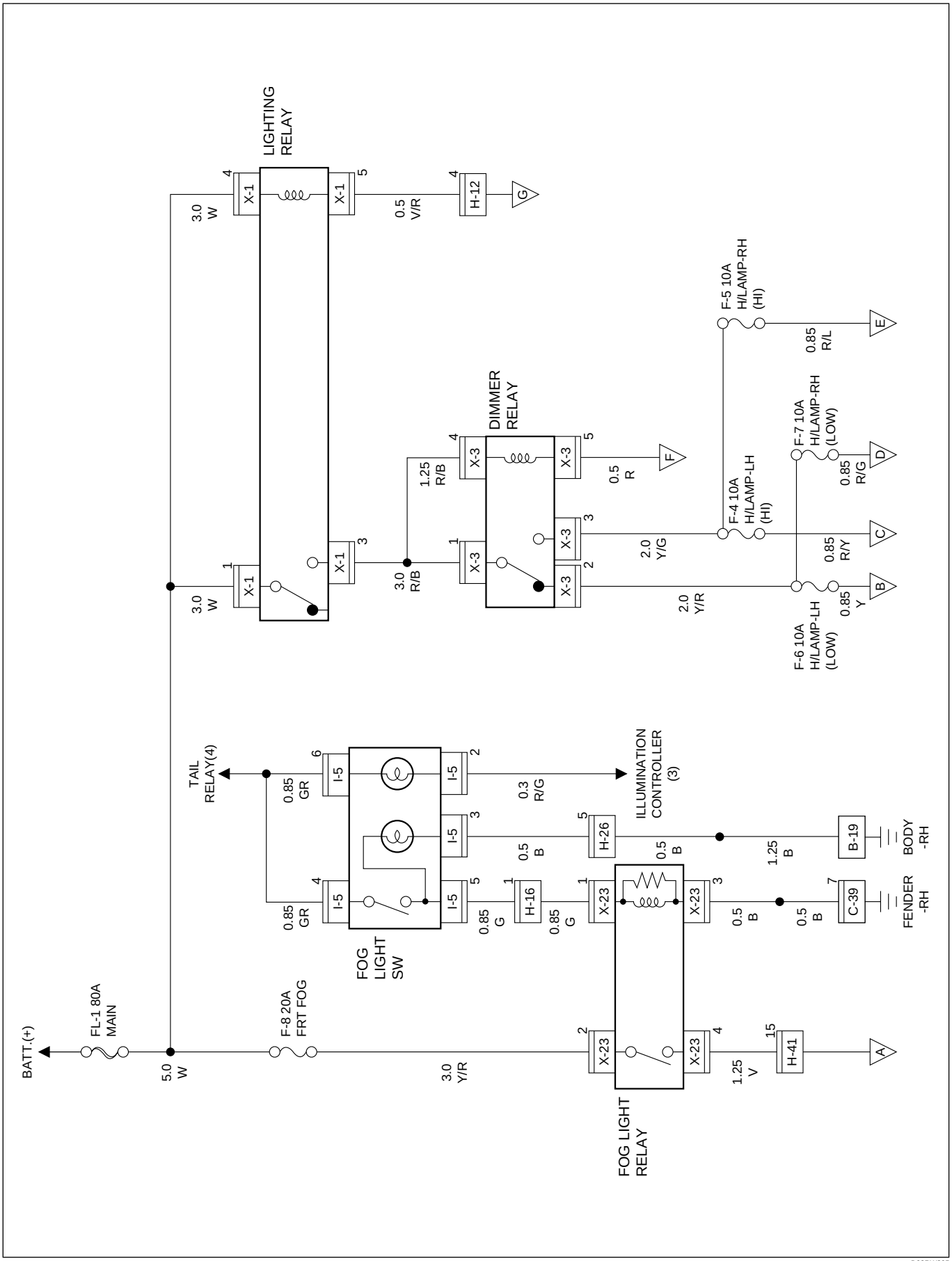

D08RW805

Circuit Diagram (LHD)-2

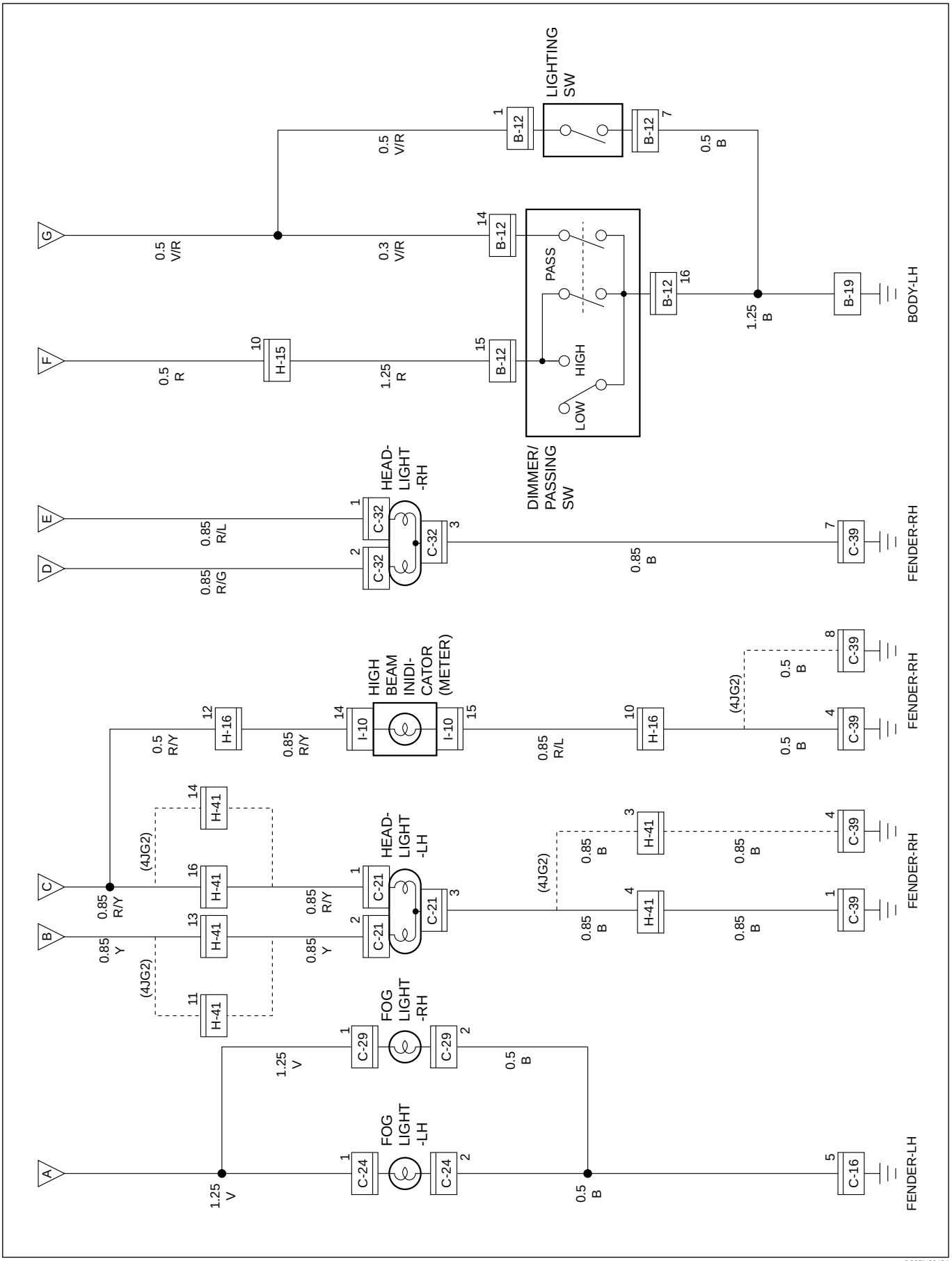

D08RY00424

Parts Location (LHD)

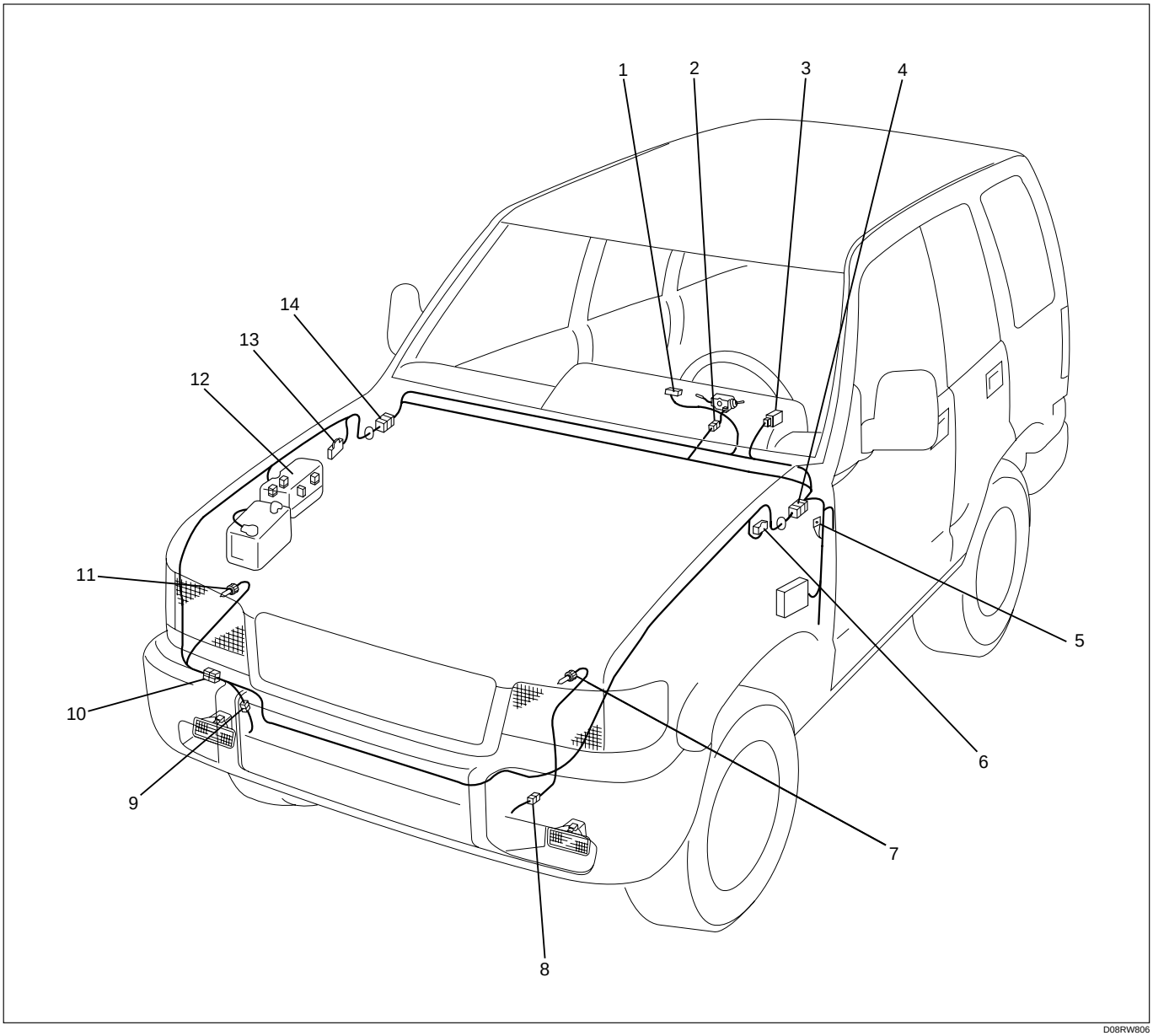

D08RW806

Legend

(1) I-10
(2) B-12
(3) I-5
(4) H-26
(5) B-19
(6) C-16
(7) C-21
(8) C-24
(9) C-29
(10) H-41, H-42
(11) C-32
(12) Relay and Fuse Box (X-1, X-3, X-23)
(13) C-39
(14) H-12, H-15, H-16

Diagnosis

Quick Chart for Check Points

1. Headlight (RHD)

Check point / Trouble mode	Fuse		Lighting relay	Lighting SW	Dimmer• Passing SW	Headlight bulb		Cable harness
	F–4 (15A)	F–5 (15A)				LH	RH	
1–1. Both Headlights inoperative			○	○	○			○
1–2. Headlight on the left (or right) side inoperative	○	○				○	○	○
1–3. Both headlights in low-beam inoperative					○			○
1–4. Headlight low-beam on the left (or right) side inoperative	○	○			○	○	○	○
1–5. Both headlights in high–beam inoperative					○			○
1–6. Headlight high-beam on the left (or right) side inoperative	○	○			○	○	○	○
1–7. Headlight beam does not change					○			○
1–8. Headlights remain on when the lighting SW is turned off			○	○				○
1–9. Headlights come on with the lighting SW at the clearance light position				○				
1–10. Passing lights inoperative					○			○

2. Headlight (LHD)

Check point / Trouble mode	Fuse				Lighting relay	Dimmer relay	Diode	Lighting SW	Dimmer• Passing SW	Headlight bulb		Cable harness
	F–4 (10A)	F–5 (10A)	F–6 (10A)	F–7 (10A)						LH	RH	
2–1. Both Headlights inoperative					○	○	○	○				○
2–2. Headlight on the left (or right) side inoperative										○	○	○
2–3. Both headlights in low-beam inoperative						○						○
2–4. Headlight low-beam on the left (or right) side inoperative			○	○						○	○	○
2–5. Both headlights in high-beam inoperative						○			○			○
2–6. Headlight high-beam on the left (or right) side inoperative	○	○								○	○	○
2–7. Headlight beam does not change						○			○			○
2–8. Headlights remain on when the lighting SW is turned off					○			○				○
2–9. Headlights come on with the lighting SW at the clearance light position								○				
2–10. Passing lights inoperative									○			○

3. FRT fog lights

Check point / Trouble mode	Fuse F–8 (15A or 20A)	FRT fog light SW	FRT fog light relay	RR fog light SW	RR fog light relay	Fog light bulb		Cable harness
						LH	RH	
3–1. Both FRT fog lights inoperative (while the clearance light is ON)	○	○	○					○
3–2. FRT fog light on the left (or rigth) side inoperative (while the clearance light is ON)						○	○	○

1-1. Both Headlights Inoperative

- IS THE LIGHTING RELAY NORMAL?

YES

- IS B-19 GROUNDED SECURELY?

NO

REPLACE THE LIGTHING RELAY

YES

- IS THE DIODE NORMAL?

NO

GROUND IT SECURELY

YES

- DISCONNECT THE LIGTHING SW CONNECTOR
- IS THE BATTERY VOLTAGE APPLIED BETWEEN THE HARNESS SIDE CONNECTOR 1 B-12 AND GROUND?

NO

REPLACE THE DIODE

YES

- REMOVE THE LIGHTING SW
- IS THERE CONTINUITY BETWEEN 1 B-12 AND 7 B-12 WHEN SETTING THE LIGHTING SW AT THE HEADLIGHT POSITION ?

NO

REPAIR A POOR CONNECTION AT THE CONNECTORS OR AN OPEN CIRCUIT BETWEEN THE FUSUBLE LINK FL-1 (80A) AND 1 B-12

YES

REPAIR A POOR CONNECTION AT THE CONNECTORS OR AN OPEN CIRCUIT BETWEEN THE HARNESS SIDE CONNECTOR 7 B-12 AND B-19

NO

REPAIR OR REPLACE THE LIGHTING SW

1-2. Headlight On The Left (Or Right) Side Inoperative

- IS THE FUSE F-4 (15A) (OR F-5 (15A)) NORMAL?

YES

- IS THE HEADLIGHT BULB ON THE LEFT (OR RIGHT) SIDE NORMAL?

YES

REPAIR A POOR CONNECTION AT THE CONNECTORS OR AN OPEN CIRCUIT BETWEEN
FUSE F-4 (15A) AND 3 C-21 (LH)
FUSE F-5 (15A) AND 3 C-32 (RH)

NO

REPLACE THE BULB

NO

REPLACE THE FUSE

1-3. Both Headlights In Low-Beam Inoperative

- DISCONNECT THE DIMMER•PASSING SW CONNECTOR (COMBINATION SW)
- WITH THE SWITCH AT THE LOW-BEAM POSITION, IS THERE CONTINUITY BETWEEN THE SW CONNECTOR TERMINALS 13 B-12 AND 16 B-12

YES

REPAIR A POOR CONNECTION AT THE CONNECTORS OR AN OPEN CIRCUIT BETWEEN
13 B-12 AND 10 H-15

NO

REPAIR OR REPLACE THE DIMMER•PASSING SW

1–4. Headlight Low-Beam On The Left (Or Right) Side Inoperative

- IS THE HEADLIGHT BULB ON THE LEFT (OR RIGHT) SIDE NORMAL?

YES

- IS THE FUSE F–4 (15A) (OR F–5 (15A)) NORMAL?

NO

REPLACE THE BULB

YES

- IS THE CONTINUITY BETWEEN 3 [C–21] AND F–4 (15A) (OR 3 [C–32] AND F–5 (15A)) NORMAL?

NO

REPLACE THE FUSE

YES

- DISCONNECT THE DIMMER·PASSING SW CONNECTOR
- WITH THE SWITCH AT THE LOW–BEAM POSITION, IS THERE CONTINUITY BETWEEN 13 [B–12] AND 16 [B–12] ?

NO

REPAIR A POOR CONNECTION AT THE CONNECTORS OR AN OPEN CIRCUIT BETWEEN 3 [C–21] AND F–4 (15A) (OR 3 [C–32] AND F–5 (15A))

YES

REPAIR A POOR CONNECTION AT THE CONNECTORS OR AN OPEN CIRCUIT BETWEEN 13 [B–12] AND 1 [C–21] (OR 13 [B–12] AND 1 [C–32])

NO

REPAIR OR REPLACE THE DIMMER·PASSING SW

1–5. Both Headlights In High-Beam Inoperative

- DISCONNECT THE DIMMER•PASSING SW CONNECTOR (COMBINATION SW)
- WITH THE SWITCH AT HIGH-BEAM, IS THERE CONTINUITY BETWEEN THE SWITCH CONNECTOR TERMINALS 15 B-12 AND 16 B-12 ?

YES → REPAIR A POOR CONNECTION AT THE CONNECTORS OR AN OPEN CIRCUIT BETWEEN 15 B-12 AND 16 H-16

NO → REPAIR OR REPLACE THE DIMMER•PASSING SW

1–6. Headlight High-Beam On The Left (Or Right) Side Inoperative

- IS THE HEADLIGHT BULB ON THE LEFT (OR RIGHT) SIDE NORMAL?

YES →

- IS THE FUSE F–4 (15A) (OR F–5 (15A)) NORMAL?

NO → REPLACE THE BULB

YES →

- IS THE CONTINUITY BETWEEN 3 C–21 AND F–4 (15A) (OR 3 C–32 AND F–5 (15A)) NORMAL?

NO → REPLACE THE FUSE

YES →

- DISCONNECT THE DIMMER·PASSING SW CONNECTOR
- WITH THE SWITCH AT THE HIGH–BEAM POSITION, IS THERE CONTINUITY BETWEEN 15 B–12 AND 16 B–12 ?

NO → REPAIR A POOR CONNECTION AT THE CONNECTORS OR AN OPEN CIRCUIT BETWEEN 3 C–21 AND F–4 (15A) (OR 3 C–32 AND F–5 (15A))

YES → REPAIR A POOR CONNECTION AT THE CONNECTORS OR AN OPEN CIRCUIT BETWEEN 15 B–12 AND 2 C–21 (OR 15 B–12 AND 2 C–32)

NO → REPAIR OR REPLACE THE DIMMER·PASSING SW

1-7. Headlight Beam Does Not Change

- DOES THE LEVER OF THE DIMMER•PASSING SW OPERATE SMOOTHLY AND SECURELY?

YES

- DISCONNECT THE DIMMER•PASSING SW
- WITH THE SWITCH AT THE LOW-BEAM POSITION, IS THERE CONTINUITY BETWEEN 13 B-12 AND 16 B-12 ? ALSO, WITH IT AT THE HIGH-BEAM POSITION, IS THERE CONTINUITY BETWEEN 15 B-12 AND 16 B-12 ?

NO

REPAIR OR REPLACE THE DIMMER•PASSING SW

NO

REPAIR OR REPLACE THE DIMMER•PASSING SW

1-8. Headlights Remain On When The Lighting SW Is Turned Off

- IS THE LIGHTING RELAY NORMAL?

YES

- DISCONNECT THE LIGHTING SW CONNECTOR
- IS THE CONTINUITY BETWEEN THE SWITCH CONNECTOR TERMINALS 1 B-12 AND 7 B-12 NORMAL?

NO

REPLACE THE LIGHTING RELAY

YES

REPAIR A SHORT CIRCUIT BETWEEN 5 X-1 AND 1 B-12

NO

REPAIR OR REPLACE THE LIGHTING SW

1-9. Headlights Come On With The Lighting SW At The Clearance Light Position

REPAIR OR REPLACE THE LIGHTING SW

1-10. Passing Lights Inoperative

- DISCONNECT THE DIMMER•PASSING SW CONNECTOR
- WITH THE SWITCH AT PASSING POSITION, IS THERE CONTINUITY BETWEEN THE SWITCH CONNECTOR TERMINALS 14 B-12 AND 16 B-12 , AND 15 B-12 AND 16 B-12 ?

YES

REPAIR A POOR CONNECTION AT THE CONNECTORS OR AN OPEN CIRCUIT BETWEEN 5 H-15 AND 14 B-12

NO

REPAIR OR REPLACE THE SWITCH

2-1. Both Headlights Inoperative

- IS THE LIGHTING RELAY NORMAL?

YES

- IS B-19 GROUNDED SECURELY?

YES

- IS THE DIODE NORMAL ?

YES

- IS THE DIMMER RELAY NORMAL?

YES

- DISCONNECT THE LIGHTING SW CONNECTOR
- IS THE BATTERY VOLTAGE APPLIED BETWEEN THE HARNESS SIDE CONNECTOR 1 B-12 AND GROUND?

YES

- REMOVE THE LIGHTING SW
- IS THERE CONTINUITY BETWEEN 1 B-12 AND 7 B-12 WHEN SETTING THE LIGHTING SW AT THE HEADLIGHT POSITION?

YES

REPAIR A POOR CONNECTION AT THE CONNECTORS OR AN OPEN CIRCUIT BETWEEN THE LIGHTING SW HARNESS SIDE CONNECTOR 7 B-12 AND B-19

NO

REPAIR OR REPLACE THE LIGHTING SW

NO

REPAIR A POOR CONNECTION AT THE CONNECTORS OR AN OPEN CIRCUIT BETWEEN THE FUSIBLE LINK FL-1 (80A) AND 1 B-12

NO

REPLACE THE RELAY

NO

REPLACE THE DIODE

NO

GROUND IT SECURELY

NO

REPLACE THE RELAY

2-2. Headlight On The Left (Or Right) Side Inoperative

- IS THE HEADLIGHT BULB ON THE LEFT (OR RIGHT) SIDE NORMAL?

YES

- IS 7 [C-39] (OR 5 [C-39]) GROUNDED SECURELY? (RH)
  IS 4 [C-39] (OR 7 [C-16]) GROUNDED SECURELY? (LH)

YES

REPAIR AN OPEN CIRCUIT BETWEEN
3 [C-32] AND 7 [C-39] (OR 5 [C-39]) (RH)
3 [C-21] AND 4 [C-39] (OR 7 [C-16]) (LH)

NO

GROUND IT SECURELY

NO

REPLACE THE BULB

2-3. Both Headlights In Low-Beam Inoperative

- IS THE DIMMER RELAY NORMAL?

YES

REPAIR A POOR CONNECTION AT THE CONNECTORS OR AN OPEN CIRCUIT BETWEEN 2 [X-3] AND FUSE F-6 (10A)

NO

REPLACE THE RELAY

2-4. Headlight Low-Beam On The Left (Or Right) Side Inoperative

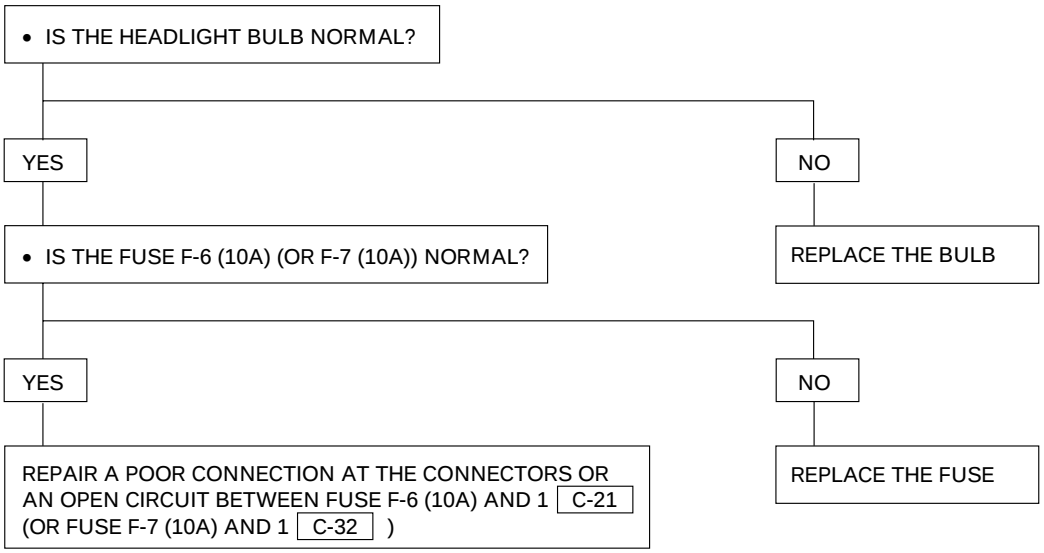

2-5. Both Headlights In High-Beam Inoperative

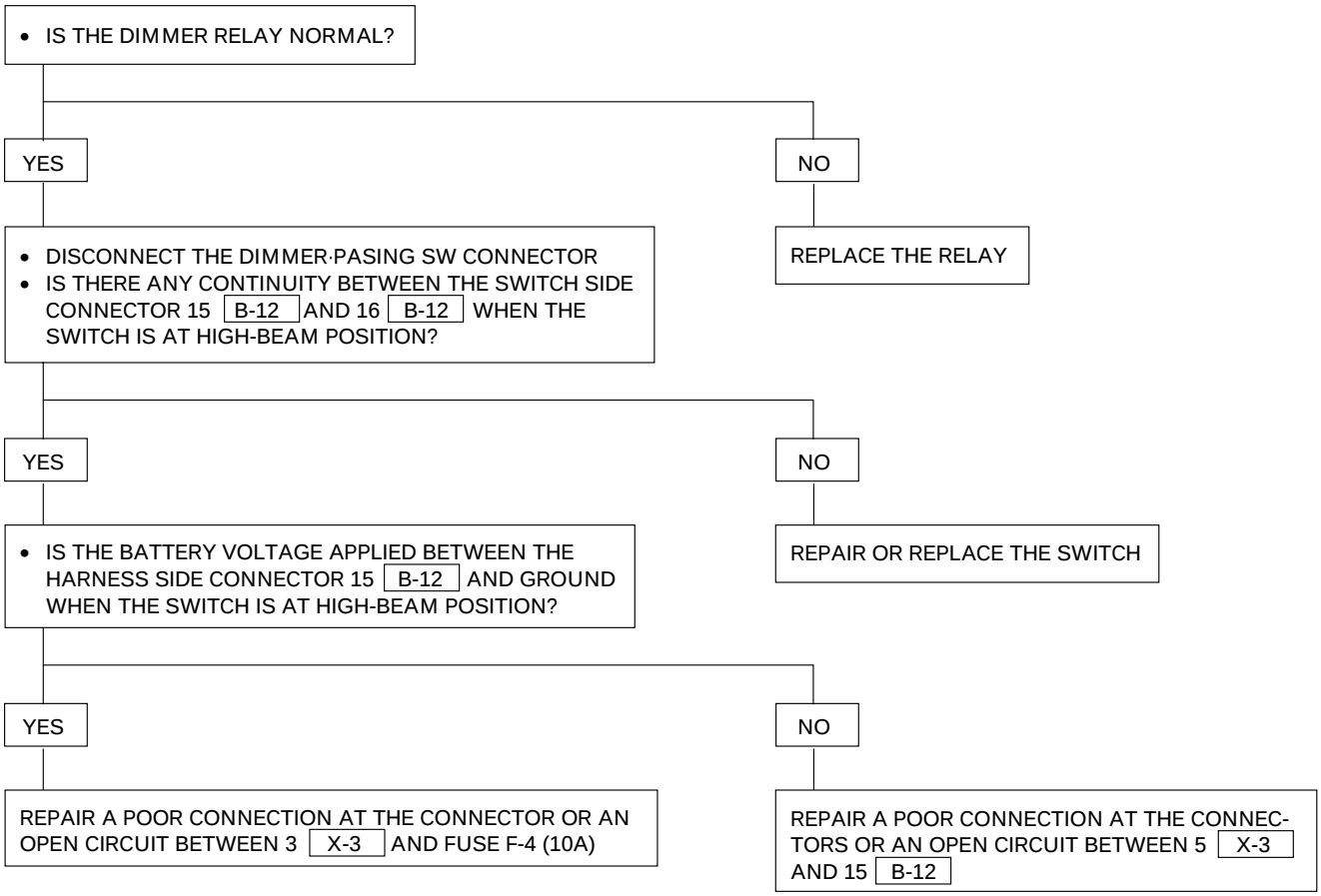

2-6. Headlight High-Beam On The Left (Or Right) Side Inoperative

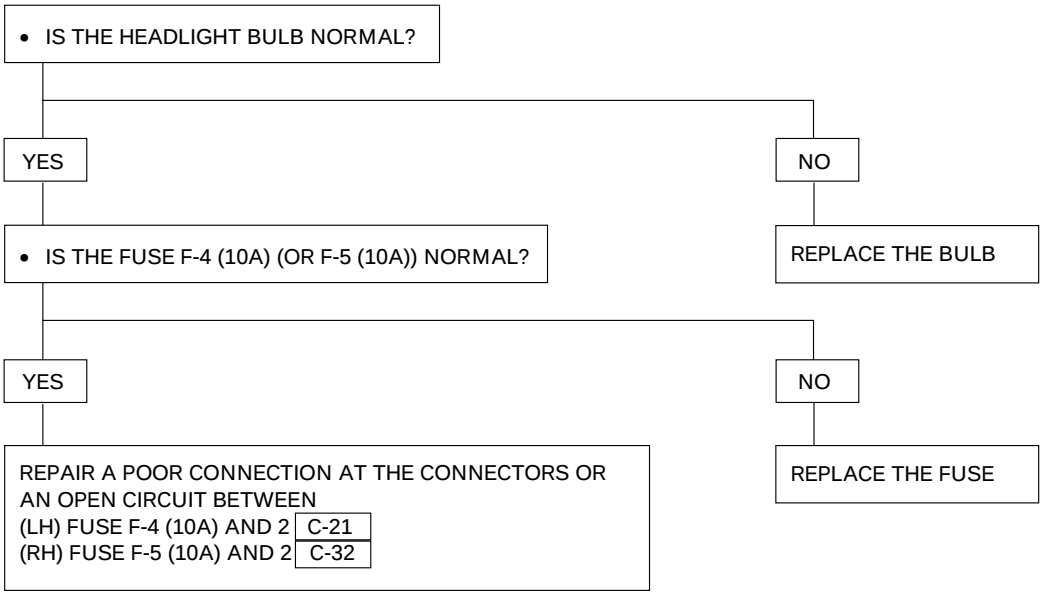

2-7. Headlight Beam Does Not Change

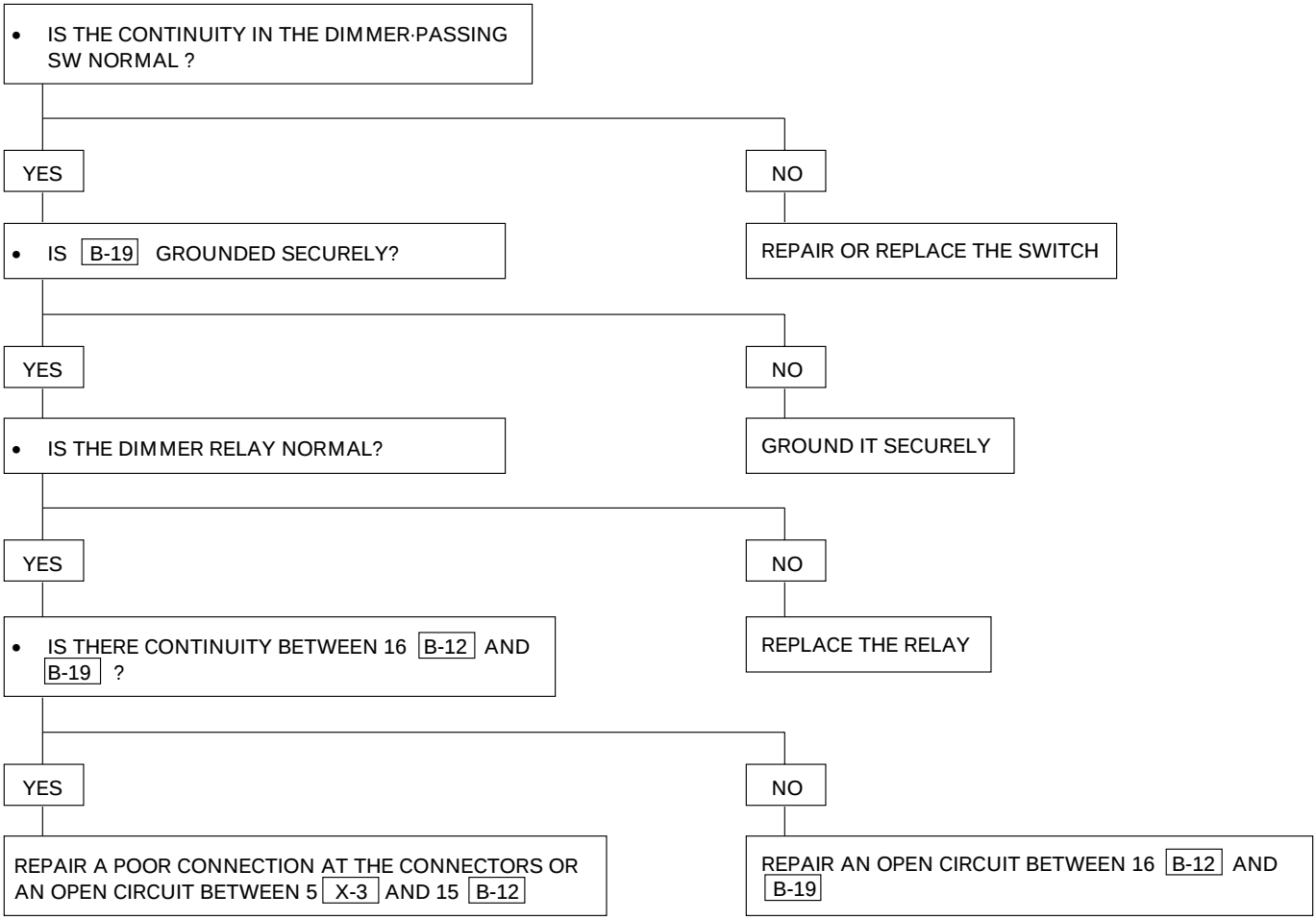

2-8. Headlights Remain On When The Lighting SW Is Turned Off

- IS THE LIGHTING RELAY NORMAL?

YES

- DISCONNECT THE LIGHTING SW CONNECTOR
- IS THE CONTINUITY BETWEEN THE SWITCH CONNECTOR TERMINALS 1 B-12 AND 7 B-12 NORMAL?

YES

REPAIR A SHORT CIRCUIT BETWEEN 5 X-1 AND 1 B-12

NO

REPAIR OR REPLACE THE LIGHTING SW

NO

REPLACE THE RELAY

2-9. Headlights Come On When The Lighting SW At The Clearance Light Position

REPAIR OR REPLACE THE LIGHTING SW

2-10. Passing Lights Inoperative

- DISCONNECT THE DIMMER·PASSING SW CONNECTOR
- WITH THE AT PASSING POSITION, IS THERE CONTINUITY BETWEEN THE SWITCH CONNECTOR TERMINALS 14 B-12 AND 16 B-12, AND 15 B-12 AND 16 B-12 ?

YES

REPAIR A POOR CONNECTION AT THE CONNECTORS OR AN OPEN CIRCUIT BETWEEN 4 H-12 AND 14 B-12

NO

REPAIR OR REPLACE THE SWITCH

3-1. Both FRT Fog Lights Inoperative (While The Clearance Light Is On)

- IS THE FUSE F-8 (20A OR 15A) NORMAL?

YES

- IS 5 C-16 (OR 6 C-16) GROUNDED SECURELY?

YES

- REMOVE THE FRT FOG LIGHT SWITCH
- IS THE CONTINUITY IN THE SWITCH NORMAL?

YES

- WITH THE LIGHTING SWITCH AT CLEARANCE LIGHT POSITION, IS THE BATTERY VOLTAGE APPLIED BETWEEN 4 I-5 AND THE GROUND?

YES

- REMOVE THE FRT FOG LIGHT RELAY
- IS THE RELAY NORMAL?

YES

- REINSTALL THE FRT FOG LIGHT SWITCH
- WITH THE LIGHTING SWITCH AT CLEARANCE LIGHT POSITION AND FRT FOG LIGHT SWITCH AT ON POSITION, IS THE BATTERY VOLTAGE APPLIED BETWEEN I X-23 AND THE GROUND?

YES

- IS THERE CONTINUITY BETWEEN 3 X-23 AND THE GROUND?

YES

REPAIR A POOR CONNECTION AT THE CONNECTORS OR AN OPEN CIRCUIT BETWEEN 4 X-23 AND 13 H-42 (OR 4 H-41)

NO

REPAIR A POOR CONNECTION AT THE CONNECTORS OR AN OPEN CIRCUIT BETWEEN 3 X-23 AND 4 C-39

NO

REPAIR A POOR CONNECTION AT THE CONNCETORS OR AN OPEN CIRCUIT BETWEEN 5 I-5 AND 1 X-23

NO

REPAIR OR REPLACE THE RELAY

NO

REPAIR A POOR CONNECTION AT THE CONNECTORS OR AN OPEN CIRCUIT BETWEEN 4 X-9 (OR FUSE F-12) AND 4 I-5

NO

REPAIR OR REPLACE THE SWITCH

NO

GROUND IT SECURELY

NO

REPLACE THE FUSE

3-2. FRT Fog Light On The Left (Or Right) Side Inoperative (While The Clearance Light Is ON)

- IS THE BULB NORMAL ?

YES

- IS THERE CONTINUITY BETWEEN 13 H-42 (4 H-41) AND 1 C-24 (OR 1 C-29)?

YES

REPAIR A POOR CONNECTION AT THE CONNECTORS OR AN OPEN CIRCUIT BETWEEN 2 C-24 (2 C-29) AND 5 C-16 (OR 6 C-16)

NO

REPAIR A POOR CONNECTION AT THE CONNECTORS OR AN OPEN CIRCUIT BETWEEN 13 H-42 (4 H-41) AND 1 C-24 (OR 1 C-29)

NO

REPLACE THE BULB

Rear Fog Light

General Description

The circuit consists of the RR fog light, the FRT & RR fog light SW, the RR fog light control unit, the RR fog light relay, the RR fog light indicator, the tail relay and the lighting SW.
The RR fog light is turned on by the RR fog light control unit when the FRT fog light or the headlight is on.

Circuit Diagram-1

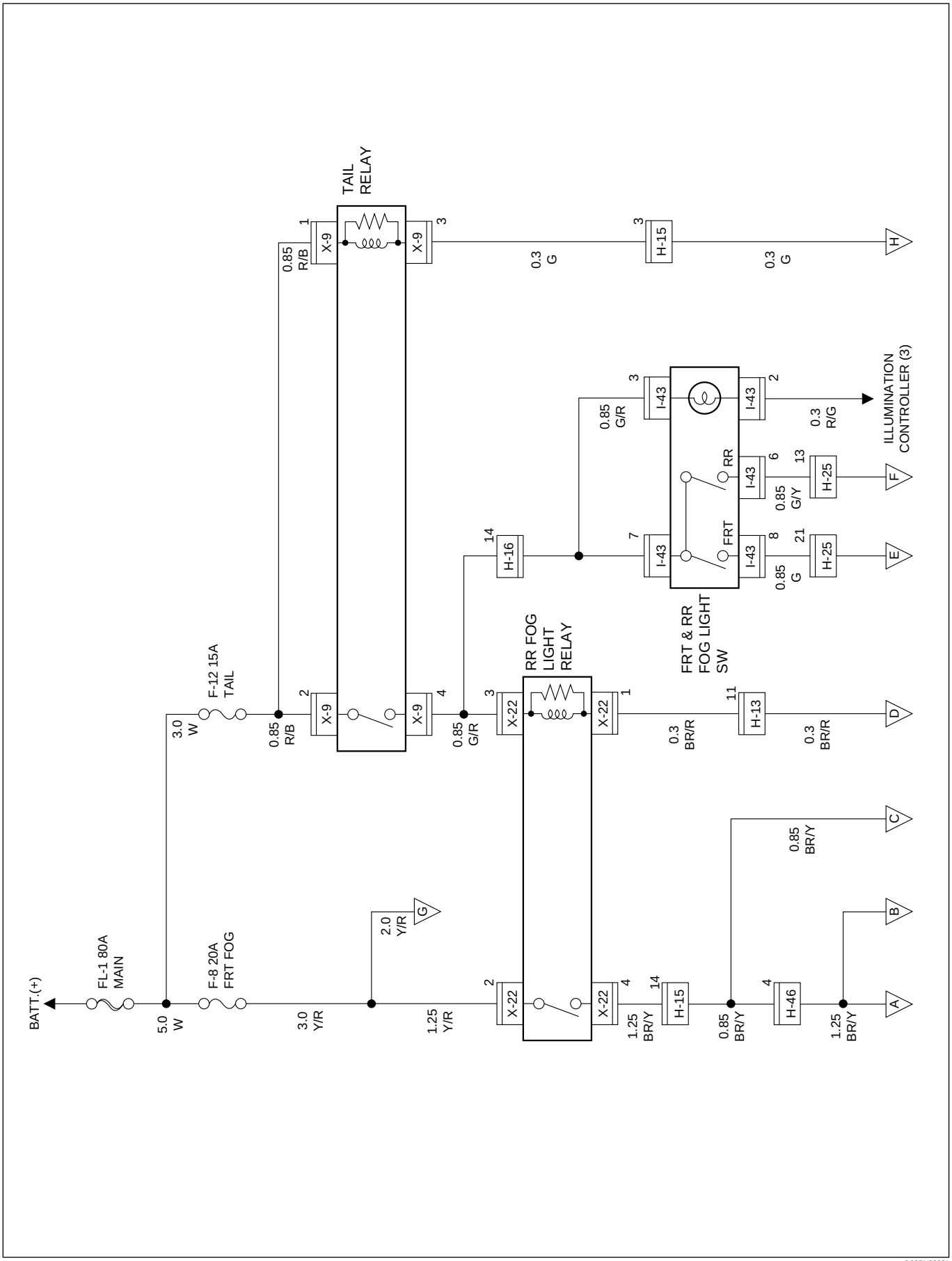

D08RY00081

Circuit Diagram-2

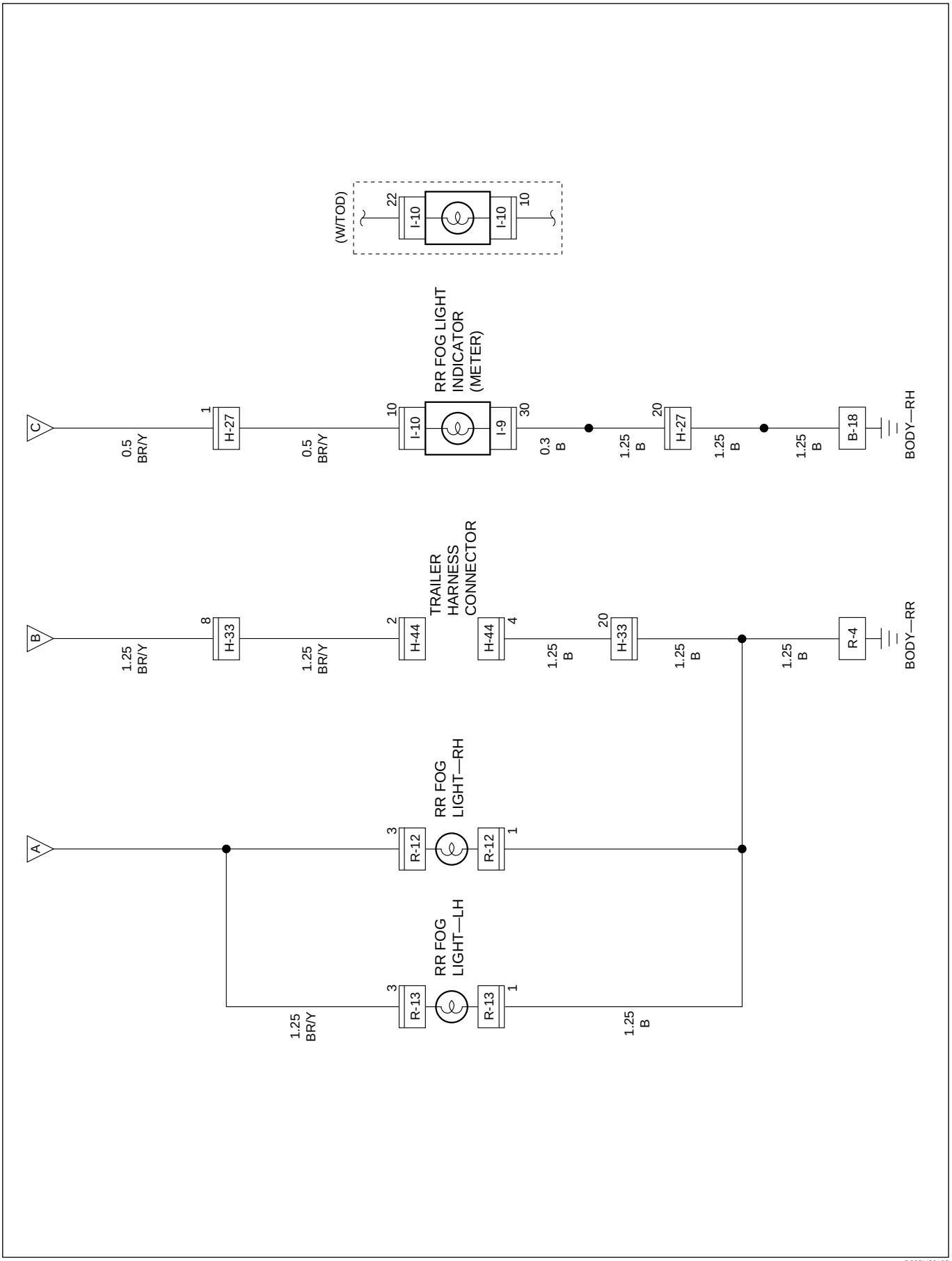

D08RY00198

Circuit Diagram-3

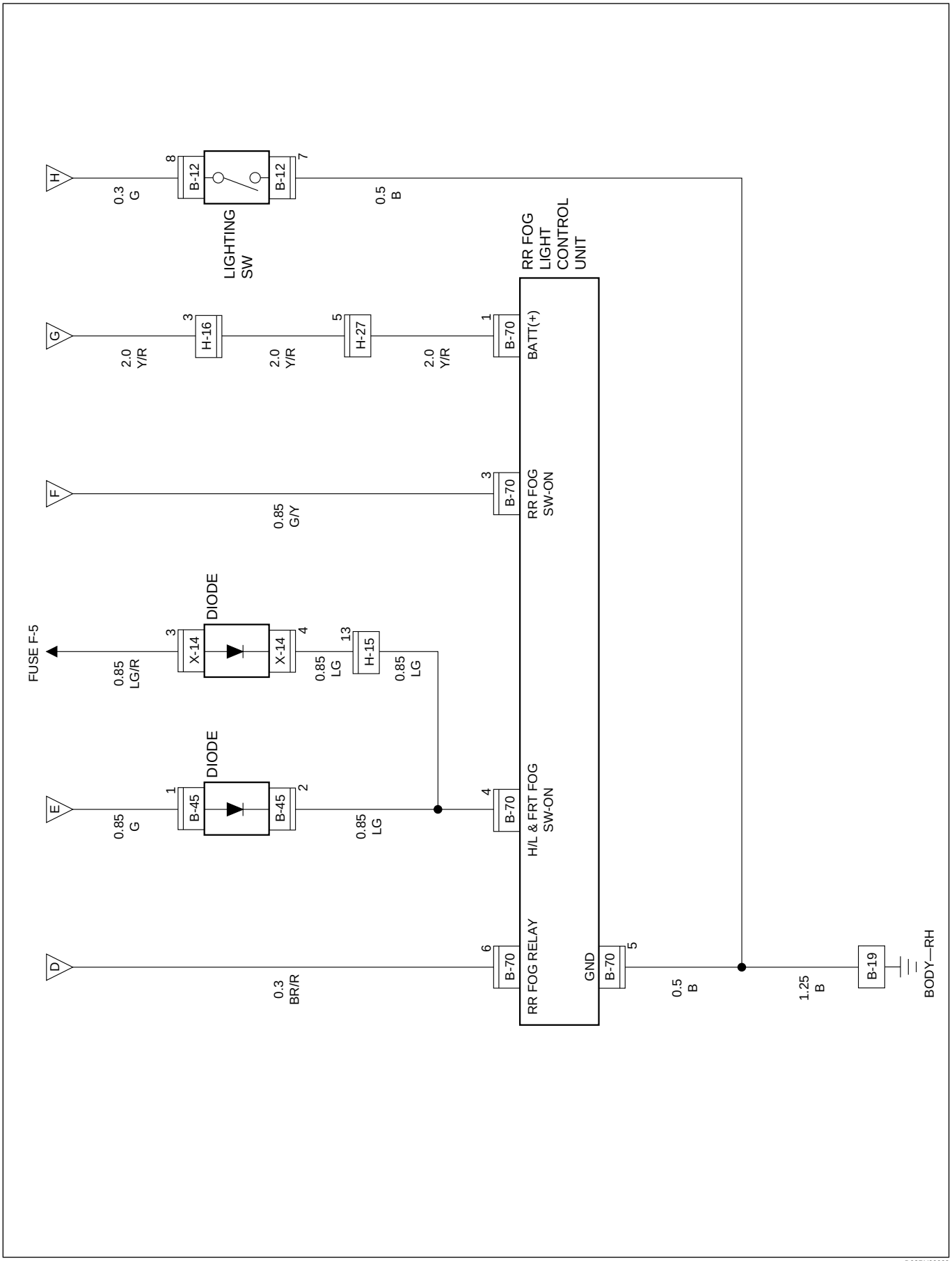

D08RY00083

Parts Location

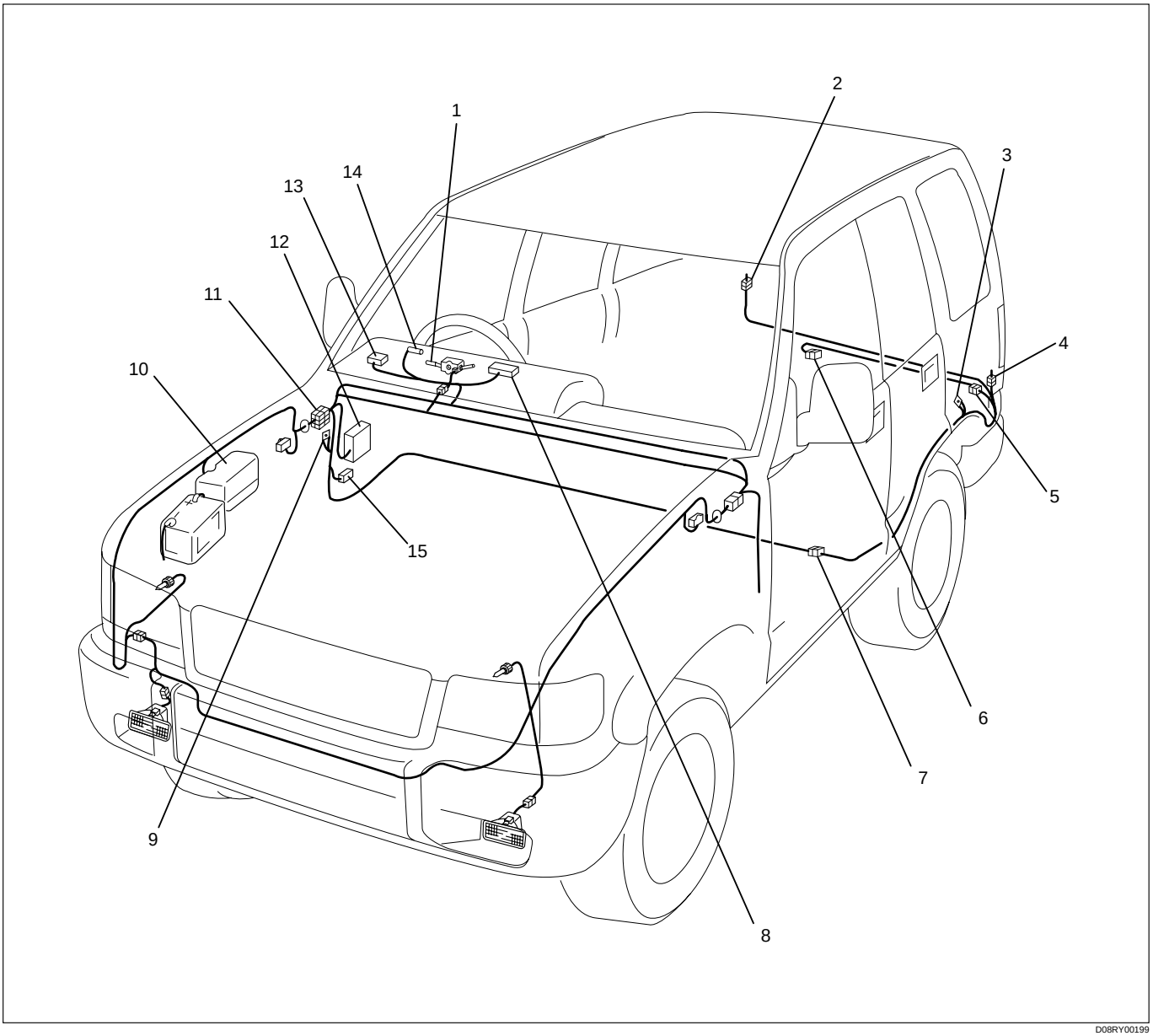

D08RY00199

Legend

(1) Lighting Switch
(2) R-12
(3) R-4
(4) R-13
(5) H-33
(6) H-44
(7) H-46
(8) I-9
(9) B-18, B-19
(10) Relay and Fuse Box (X-9, X-14, X-22)
(11) H-13, H-15, H-16, H-25, H-27
(12) Fuse Box (B-45)
(13) I-43
(14) I-10
(15) B-70

Diagnosis

Both RR Fog Light Inoperative

- DO THE FRT FOG LIGHT WORK NORMALLY?

YES

- REMOVE THE RR FOG LIGHT RELAY
- IS THE RELAY NORMAL?

NO

REFER TO THE DIAGNOSIS CHARTS OF THE HEADLIGHT AND FOG LIGHT SECTION

YES

- REMOVE THE FRT & RR FOG LIGHT SW
- IS THE SW NORMAL?

NO

REPLACE THE RELAY

YES

- DISCONNECT THE RR FOG LIGHT CONTROL UNIT CONNECTOR B-70
- IS THE BATTERY VOLTAGE APPLIED BETWEEN THE HARNESS SIDE CONNECTOR 1 B-70 AND THE GROUND?

NO

REPAIR OR REPLACE THE SW

YES

- IS THERE CONTINUITY BETWEEN THE HARNESS SIDE CONNECTOR 5 B-70 AND THE GROUND?

NO

REPAIR A POOR CONNECTION AT THE CONNECTORS OR AN OPEN CIRCUIT BETWEEN THE FUSE F-8 AND 1 B-70

YES

- INSTALL THE FRT & RR FOG LIGHT SW
- TURN THE LIGHTING SW AND THE FRT FOG LIGHT SW
- IS THE BATTERY VOLTAGE APPLIED BETWEEN THE HARNESS SIDE CONNECTOR 4 B-70 AND THE GROUND?

NO

REPAIR AN OPEN CIRCUIT BETWEEN 5 B-70 AND THE GROUND B-19

YES

A

NO

B

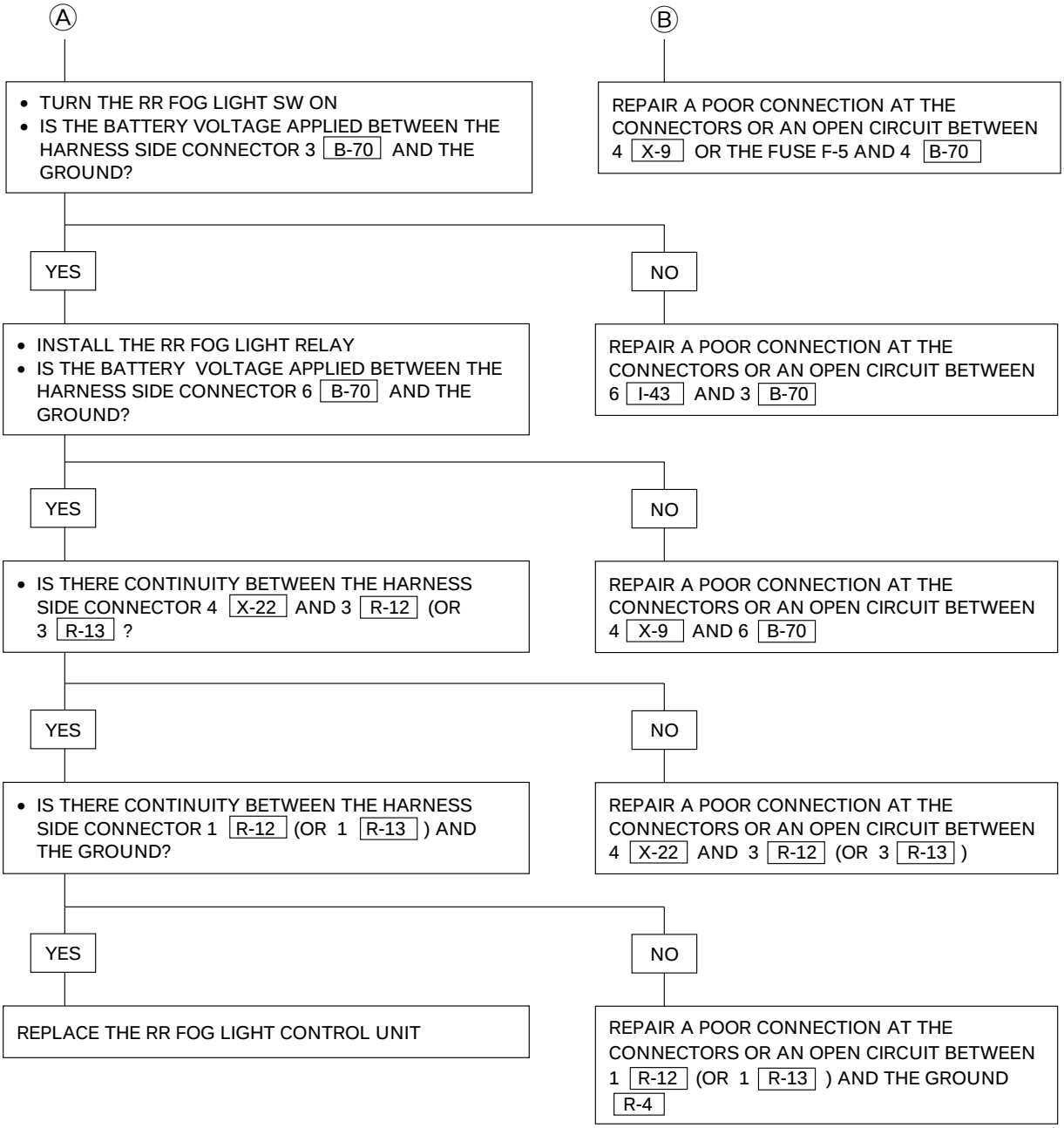
A
B
• TURN THE RR FOG LIGHT SW ON
• IS THE BATTERY VOLTAGE APPLIED BETWEEN THE HARNESS SIDE CONNECTOR 3 B-70 AND THE GROUND?
REPAIR A POOR CONNECTION AT THE CONNECTORS OR AN OPEN CIRCUIT BETWEEN 4 X-9 OR THE FUSE F-5 AND 4 B-70
YES
NO
• INSTALL THE RR FOG LIGHT RELAY
• IS THE BATTERY VOLTAGE APPLIED BETWEEN THE HARNESS SIDE CONNECTOR 6 B-70 AND THE GROUND?
REPAIR A POOR CONNECTION AT THE CONNECTORS OR AN OPEN CIRCUIT BETWEEN 6 I-43 AND 3 B-70
YES
NO
• IS THERE CONTINUITY BETWEEN THE HARNESS SIDE CONNECTOR 4 X-22 AND 3 R-12 (OR 3 R-13 ?
REPAIR A POOR CONNECTION AT THE CONNECTORS OR AN OPEN CIRCUIT BETWEEN 4 X-9 AND 6 B-70
YES
NO
• IS THERE CONTINUITY BETWEEN THE HARNESS SIDE CONNECTOR 1 R-12 (OR 1 R-13) AND THE GROUND?
REPAIR A POOR CONNECTION AT THE CONNECTORS OR AN OPEN CIRCUIT BETWEEN 4 X-22 AND 3 R-12 (OR 3 R-13)
YES
NO
REPLACE THE RR FOG LIGHT CONTROL UNIT
REPAIR A POOR CONNECTION AT THE CONNECTORS OR AN OPEN CIRCUIT BETWEEN 1 R-12 (OR 1 R-13) AND THE GROUND R-4

Headlight Leveling

General Description

The circuit consists of the headlight leveling SW and headlight leveling actuators. The actuator is made up of a motor, two relays and disk-type sensor. The sensor rotates in accordance with the rotation of the motor and stops the rotation of the motor at each position corresponding to the levels 0 to 3.

Circuit Diagram

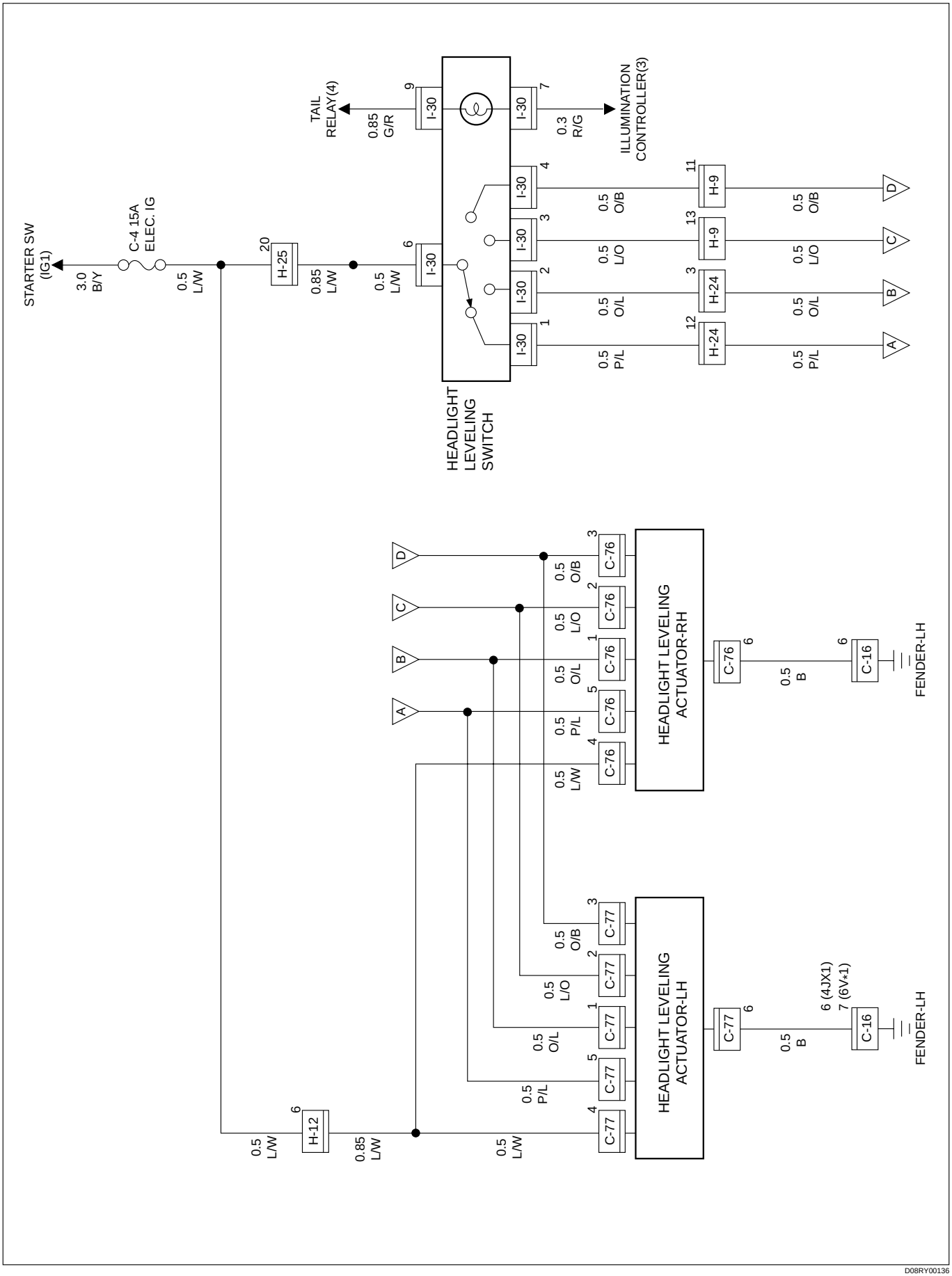

D08RY00136

Parts Location

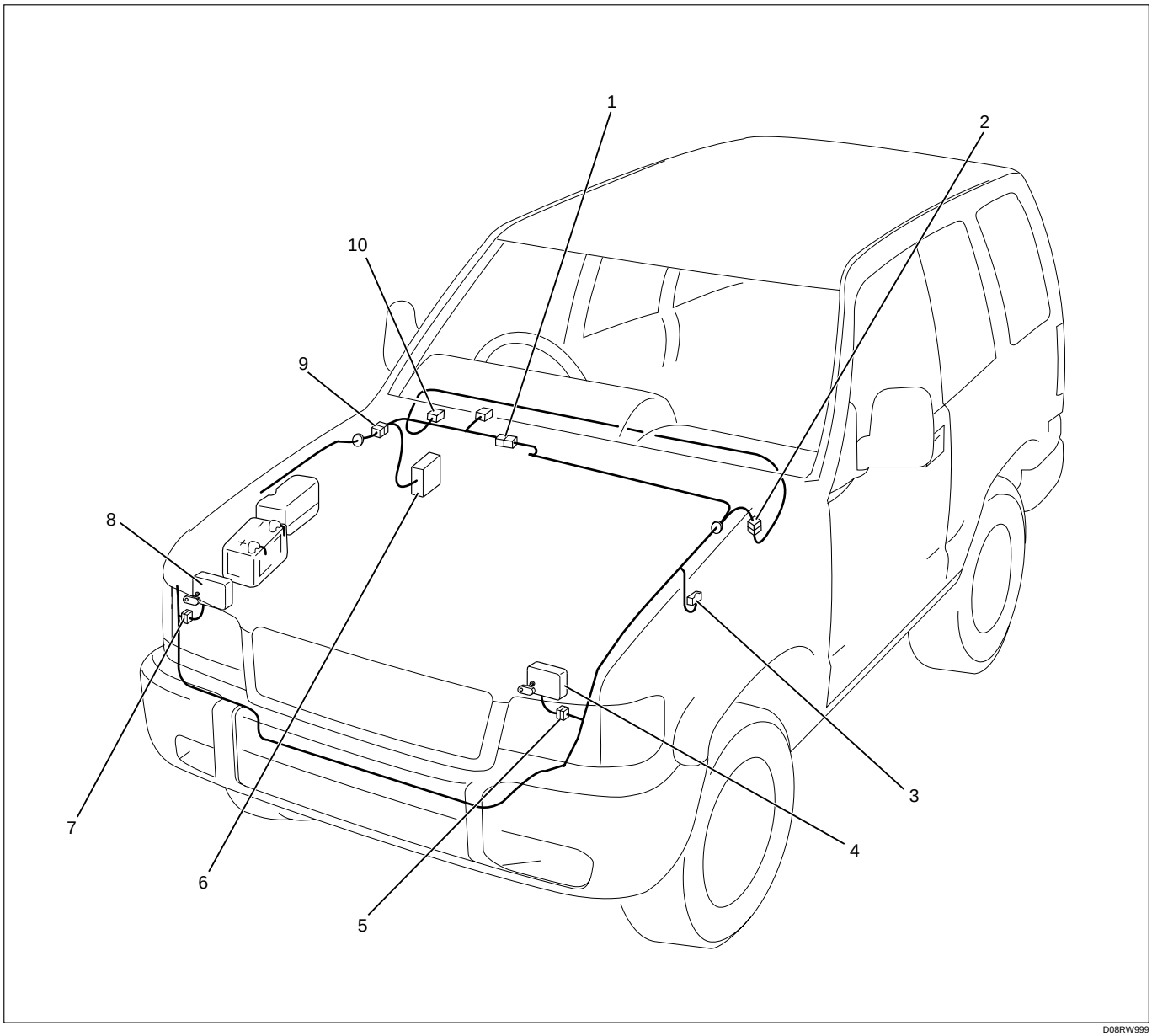

D08RW999

Legend

(1) H-12
(2) H-9, H-24
(3) C-16
(4) Headlight Leveling Actuator-LH
(5) C-77
(6) Fuse Box
(7) C-76
(8) Headlight Leveling Actuator-RH
(9) H-25
(10) I-30

Diagnosis

Quick Chart for Check Points

Trouble mode \ Check point	Fuse C-4 (15A)	Leveling SW	Actuator		Cable harness
			LH	RH	
1. Both actuators inoperative	○	○			○
2. Actuator on the left (or right) side inoperative			○	○	○
3. Actuator on the left (or right) side does not stop			○	○	

1. Both Actuators Inoperative

- IS THE FUSE C-4 (15A) NORMAL?

YES

- IS 6 C-16 AND 7 C-16 GROUNDED SECURELY?

YES

- IS THE CONTINUITY IN THE HEADLIGHT LEVELING SW NORMAL?

YES

REPAIR A POOR CONNECTION AT THE CONNECTORS OR OPEN CIRCUIT BETWEEN FUSE C-4 AND 6 I-30

NO

REPAIR OR REPLACE THE SWITCH

NO

GROUND THEM SECURELY

NO

REPLACE THE FUSE

2. Actuator On The Left (Or Right) Side Inoperative

- DOES THE ACTUATOR-LH (OR RH) OPERATES NORMALLY WHEN THE BATTERY IS CONNECTED TO THE ACTUATOR CONNECTOR TERMINALS?

YES

REPAIR A POOR CONNECTION AT THE CONNECTORS OR A OPEN CIRCUIT BETWEEN FUSE C-4 AND 4 C-77 (OR 4 C-76)

NO

REPAIR OR REPLACE THE ACTUATOR

3. Actuator On The Left (Or Right) Side Does Not Stop

- IS THERE CONTINUITY BETWEEN MOTOR CONNECTOR TERMINALS 4 C-77 AND 6 C-77 (OR 4 C-76 AND 6 C-76)?

YES

REPAIR OR REPLACE THE ACTUATOR (FAILURE OF THE RELAY IN THE ACTUATOR)

NO

REPAIR OR REPLACE THE ACTUATOR (FAILURE OF THE SENSOR OR A SHORT CIRCUIT IN THE ACTUATOR)

Clearance Light, Taillight and License Plate Light

General Description

The circuit consists of the lighting switch, clearance light, taillight and license plate light.
All these lights come on when the lighting switch are turned on with the switch to either clearance or headlight position.

Circuit Diagram (RHD)-1

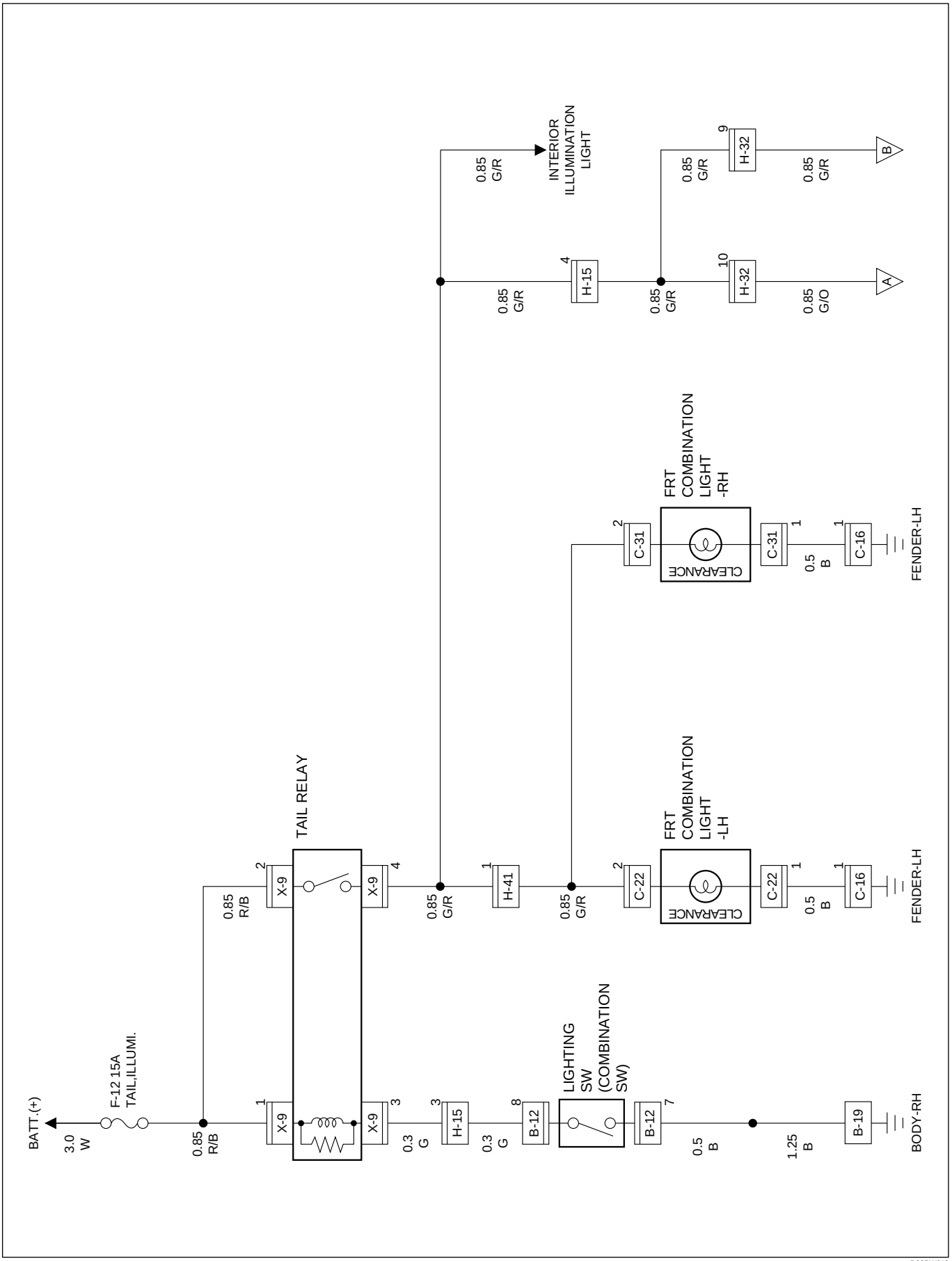

D08RW619

Circuit Diagram (RHD)-2

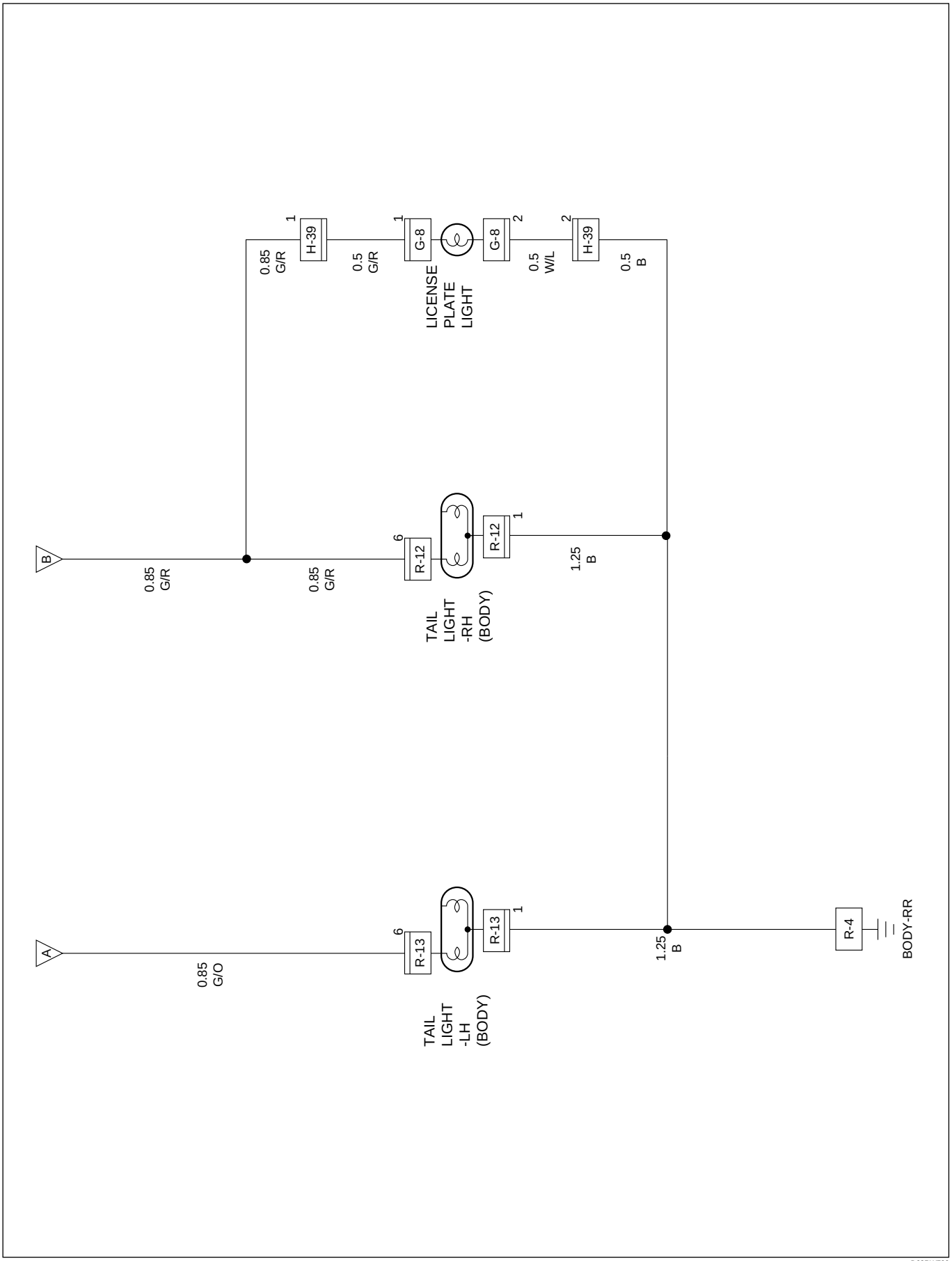

D08RW799

Circuit Diagram (Bumper Built-in Type Taillight)-2

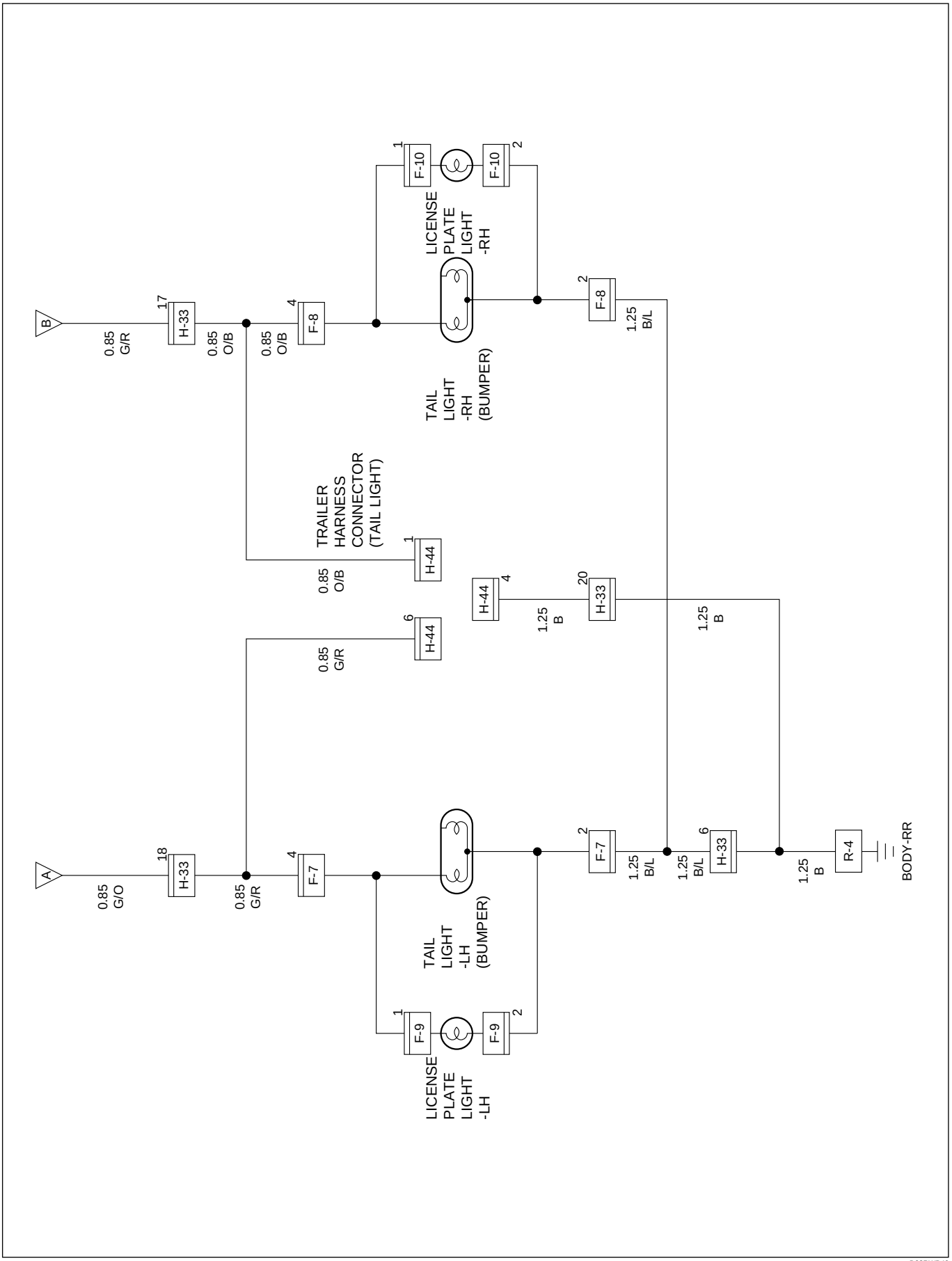

D08RWB46

Parts Location (RHD)

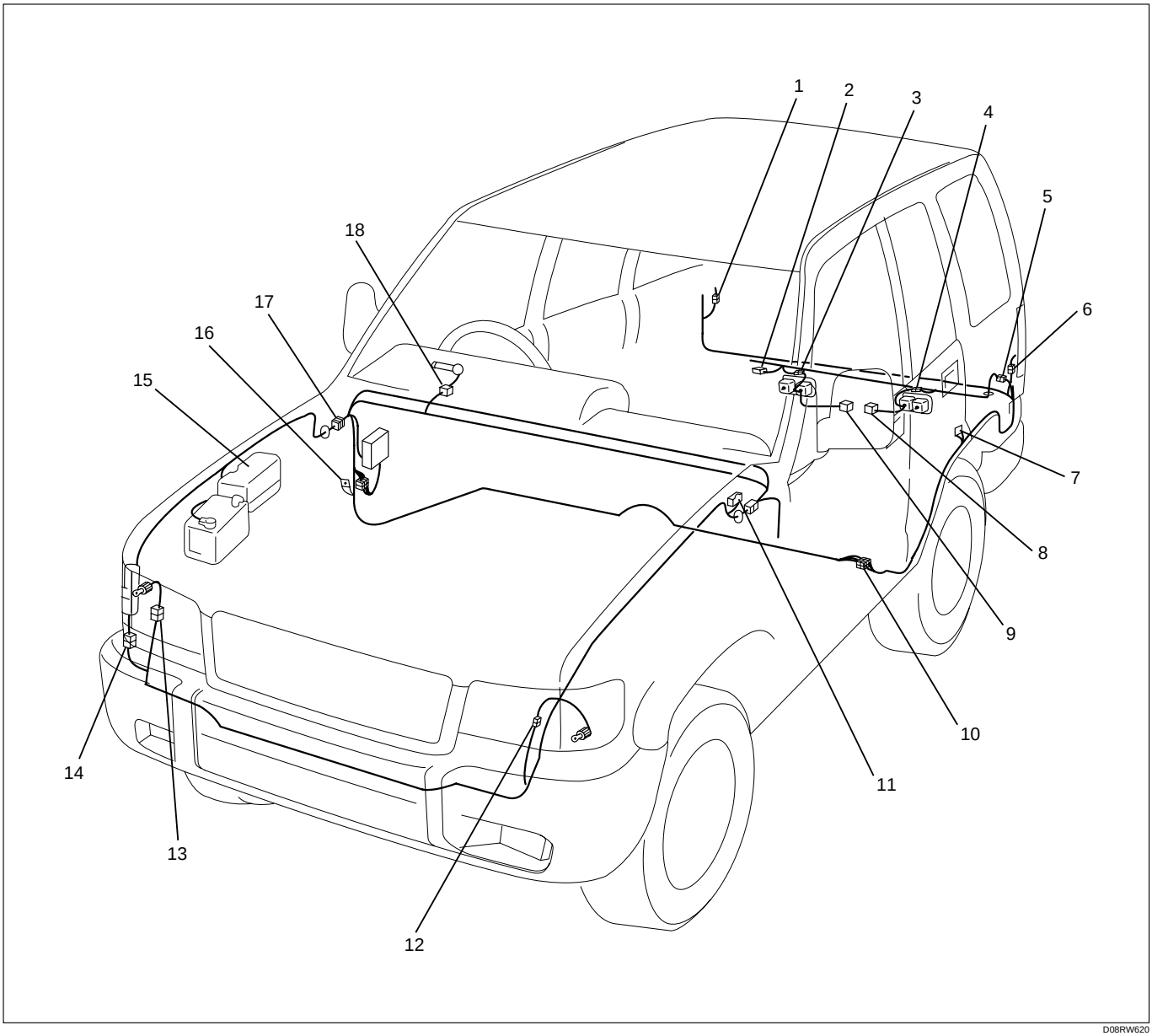

D08RW620

Legend

(1) R-12
(2) H-44
(3) F-8
(4) F-7
(5) H-33
(6) R-13
(7) R-4
(8) F-9
(9) F-10
(10) H-32
(11) C-16
(12) C-22
(13) C-31
(14) H-41
(15) Relay and Fuse Box (X-9)
(16) B-19
(17) H-15
(18) B-12

Circuit Diagram (LHD)-1

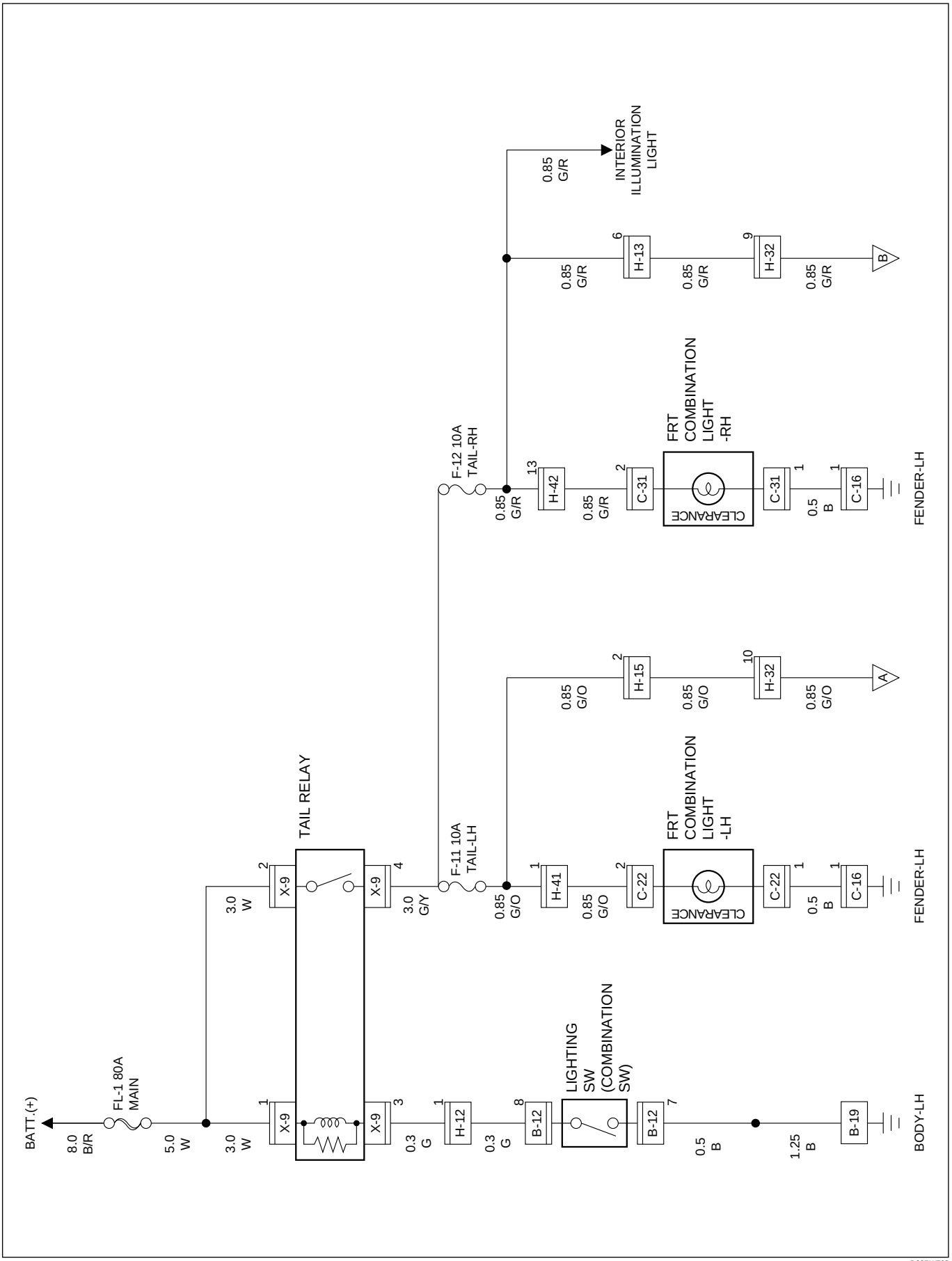

D08RW798

Circuit Diagram (LHD)-2

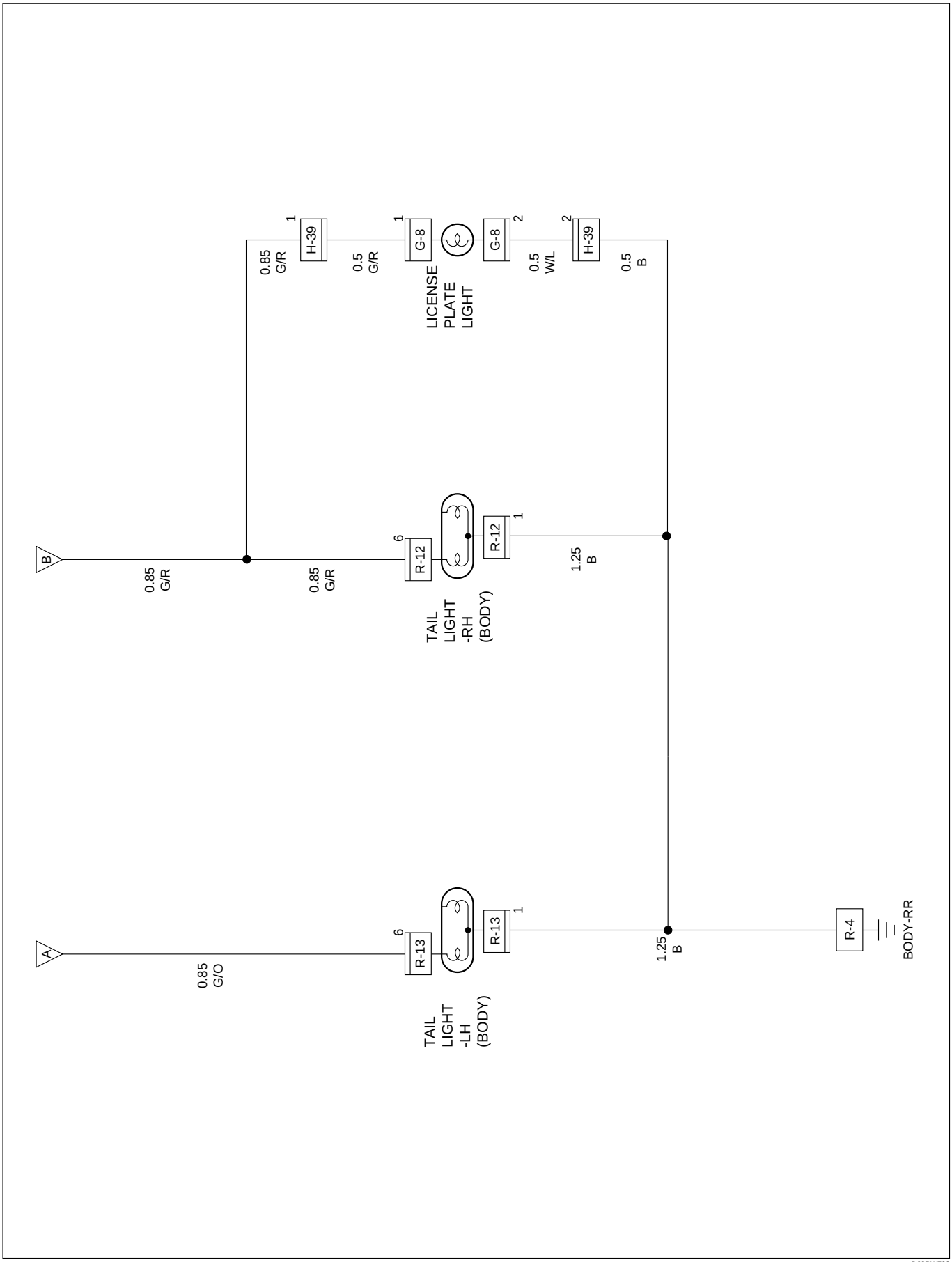

D08RW799

Circuit Diagram (Bumper Built-in Type Taillight)-2

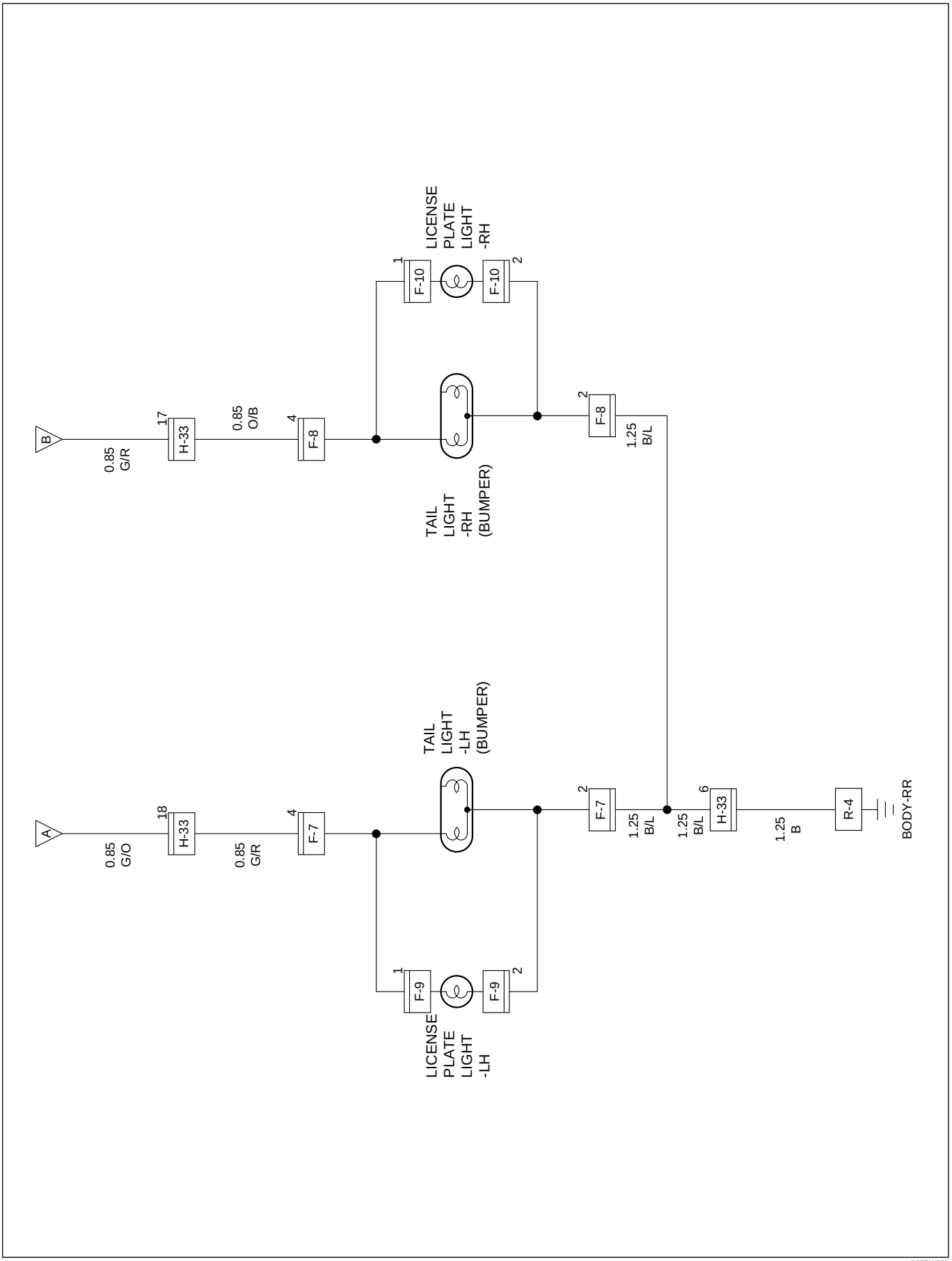

D08RW800

Parts Location (LHD)

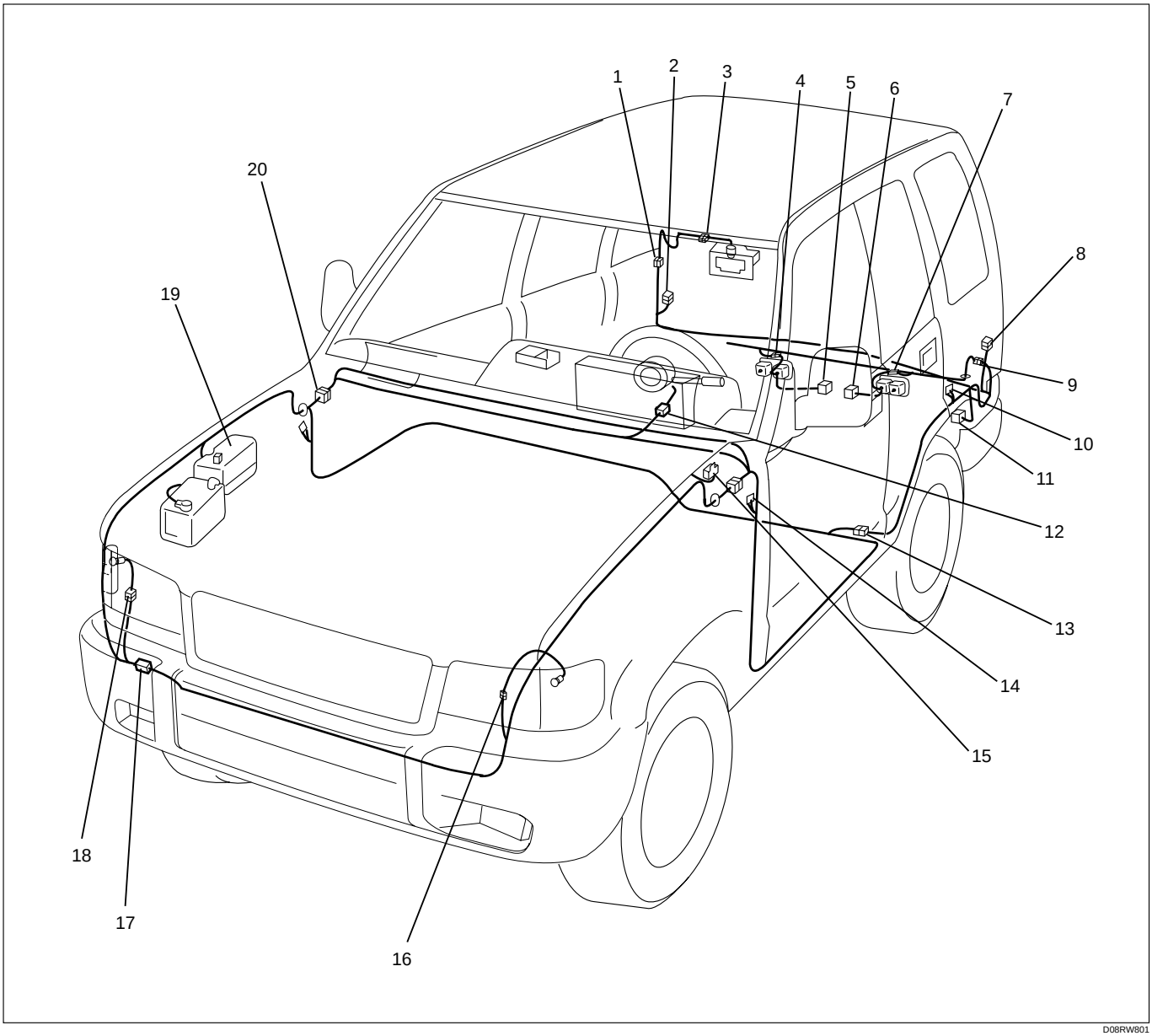

D08RW801

Legend

(1) H-39
(2) R-12
(3) G-8
(4) F-8
(5) F-10
(6) F-9
(7) F-7
(8) R-13
(9) H-33
(10) R-4
(11) H-44
(12) B-12
(13) H-32
(14) B-19
(15) C-16
(16) C-22
(17) H-41, H-42
(18) C-31
(19) Relay and Fuse Box (X-9)
(20) H-12, H-13, H-15

Diagnosis

Quick Chart for Check Point

1. RHD

Trouble mode \ Check point		Fuse F-12 (15A)	Lighting SW	Tail relay	Taillight bulb	Clearance light bulb	License plate light bulb	Cable harness
1-1 All illumination lights inoperative		○	○	○				○
1-2 Both Taillights inoperative								○
1-3 Taillight on the left (or right) side inoperative					○			○
1-4 Both clearance lights inoperative		○	○	○				○
1-5 Clearance light on the left (or right) side inoperative						○		○
1-6 License plate light inoperative	RHD-1						○	○
	RHD-2	○	○	○				○
1-7 License plate light on the left (or right) side inoperative	RHD-2						○	○

2. LHD

Trouble Mode \ Check point		Tail relay	Fuse F-11 (10A)	Fuse F-12 (10A)	Lighting SW	Taillight bulb	Clearance light bulb	License plate light bulb	Cable harness
2-1 All illumination lights inoperative		○			○				○
2-2 Both taillights inoperative									○
2-3 Taillight on the left (or right) side inoperative			○	○		○			○
2-4 Both clearance lights inoperative									○
2-5 Clearance light on the left (or right) side inoperative							○		○
2-6 License plate light inoperative	LHD-1			○				○	○
	LHD-2								○
2-7 License plate light on the left (or right) side inoperative	LHD-2		○	○				○	○
2-8 Both taillight and clearance light on the left (or right) side inoperative			○	○					○

1-1 All Illuminations Lights Inoperative

- IS FUSE F-12 (15A) NORMAL?
  - YES
    - IS THE CONTINUITY IN THE LIGHTING SWITCH NORMAL?
      - YES
        - IS TAIL RELAY (X-9) NORMAL?
          - YES
            - IS THE BATTERY VOLTAGE APPLIED BETWEEN HARNESS SIDE CONNECTOR 8 B-12 AND GROUND WHEN LIGHTING SWITCH IS "ON" ?
              - YES
                - REPAIRA POOR CONNECTION AT THE CONNECTORS OR AN OPEN CIRCUIT BETWEEN 7 B-12 AND B-19 OR BETWEEN 4 X-9 AND 1 H-41)
              - NO
                - REPAIR A POOR CONNECTION AT THE CONNECTORS OR AN OPEN CIRCUIT BETWEEN 8 B-12 AND FUSE F-12 (15A)
          - NO
            - REPAIR OR REPLACE THE RELAY
      - NO
        - REPAIR OR REPLACE THE SWITCH
  - NO
    - REPLACE THE FUSE

1-2 Both Taillights Inoperative

- DOES THE LICENSE PLATE LIGHT LIGHT UP WHEN THE LIGHTING SWITCH IS AT THE CLEARANCE LIGHT POSITION?
  - YES
    - REPAIR A POOR CONNECTION AT THE CONNECTORS OR AN OPEN CIRCUIT BETWEEN 4 H-15 AND 10 H-32
  - NO
    - GROUND R-4 SECURELY

1-3 Taillight On The Left (Or Right) Side Inoperative

- IS THE TAILLIGHT BULB ON THE LEFT (OR RIGHT) SIDE NORMAL?

YES

- WITH THE LIGHTING SWITCH AT THE CLEARANCE LIGHT POSITION, IS THE BATTERY VOLTAGE APPLIED BETWEEN 6 R-13 (OR 6 R-12) AND THE GROUND, OR 4 F-7 (OR 4 F-8) AND THE GROUND?

YES

REPAIR A POOR CONNECTION AT THE CONNECTORS OR AN OPEN CIRCUIT BETWEEN 1 R-13 (OR 1 R-12) AND R-4, OR 2 F-7 (OR 2 F-8) AND R-4

NO

REPAIR A POOR CONNECTION AT THE CONNECTORS OR AN OPEN CIRCUIT BETWEEN 10 H-32 AND 6 R-13 (OR 9 H-32 AND 6 R-12), OR 10 H-32 AND 4 F-7 (OR 9 H-32 AND 4 F-8)

NO

REPLACE THE BULB

1-4 Both Clearance Lights Inoperative

- IS FUSE F-12 (15A) NORMAL?
  - YES
    - IS THE TAIL RELAY NORMAL?
      - YES
        - IS 1 C-16 GROUNDED SECURELY?
          - YES
            - REMOVE THE CONNECTOR OF THE LIGHTING SWITCH
            - IS THERE ANY CONTINUITY BETWEEN 8 B-12 AND 7 B-12 WHEN THE SWITCH IS TURNED TO THE CLEARANCE LIGHT OR HEADLIGHT POSITION?
              - YES
                - IS THE BATTERY VOLTAGE APPLIED BETWEEN THE HARNESS SIDE CONNECTOR 8 B-12 AND THE GROUND?
                - YES
                - REPAIR A POOR CONNECTION AT THE CONNECTORS OR AN OPEN CIRCUIT BETWEEN 4 X-9 AND 1 H-41
                - NO
                - REPAIR A POOR CONNECTION AT THE CONNECTORS OR AN OPEN CIRCUIT BETWEEN 3 X-9 AND 8 B-12
              - NO
              - REPAIR OR REPLACE THE LIGHTING SWITCH
            - NO
            - GROUND IT SECURELY
          - NO
          - REPLACE THE RELAY
      - NO
      - REPLACE THE FUSE
  - NO
  - REPLACE THE FUSE

1-5 Clearance Light On The Left (Or Right) Side Inoperative

- IS THE CLEARANCE LIGHT BULB ON THE LEFT (OR RIGHT) SIDE NORMAL?

YES

- IS THERE ANY CONTINUITY BETWEEN THE HARNESS SIDE CONNECTOR 1 H-41 AND 2 C-22 (OR 2 C-31)?

YES

REPAIR A POOR CONNECTION AT THE CONNECTORS OR AN OPEN CIRCUIT BETWEEN 1 C-22 (OR 1 C-31) AND 1 C-16

NO

REPAIR A POOR CONNECTION AT THE CONNECTORS OR AN OPEN CIRCUIT IN THE CIRCUIT

NO

REPLACE THE BULB

1-6 License Plate Light Inoperative

(RHD-1)

- DO THE BOTH TAILLIGHTS LIGHT UP WHEN THE LIGHTING SWITCH IS AT THE CLEARANCE LIGHT POSITION?

YES

- IS THE LICENSE PLATE LIGHT BULB NORMAL?

YES

- IS THERE ANY CONTINUITY BETWEEN THE HARNESS SIDE CONNECTOR 1 G-8 AND 1 H-39 ?

YES

REPAIR A POOR CONNECTION AT THE CONNECTORS OR AN OPEN CIRCUIT BETWEEN 2 G-8 AND R-4

NO

REPAIR A POOR CONNECTION AT THE CONNECTORS OR AN OPEN CIRCUIT IN THE CIRCUIT

NO

REPLACE THE BULB

NO

GROUND R-4 SECURELY

NO

REPLACE THE BULB

(RHD-2)

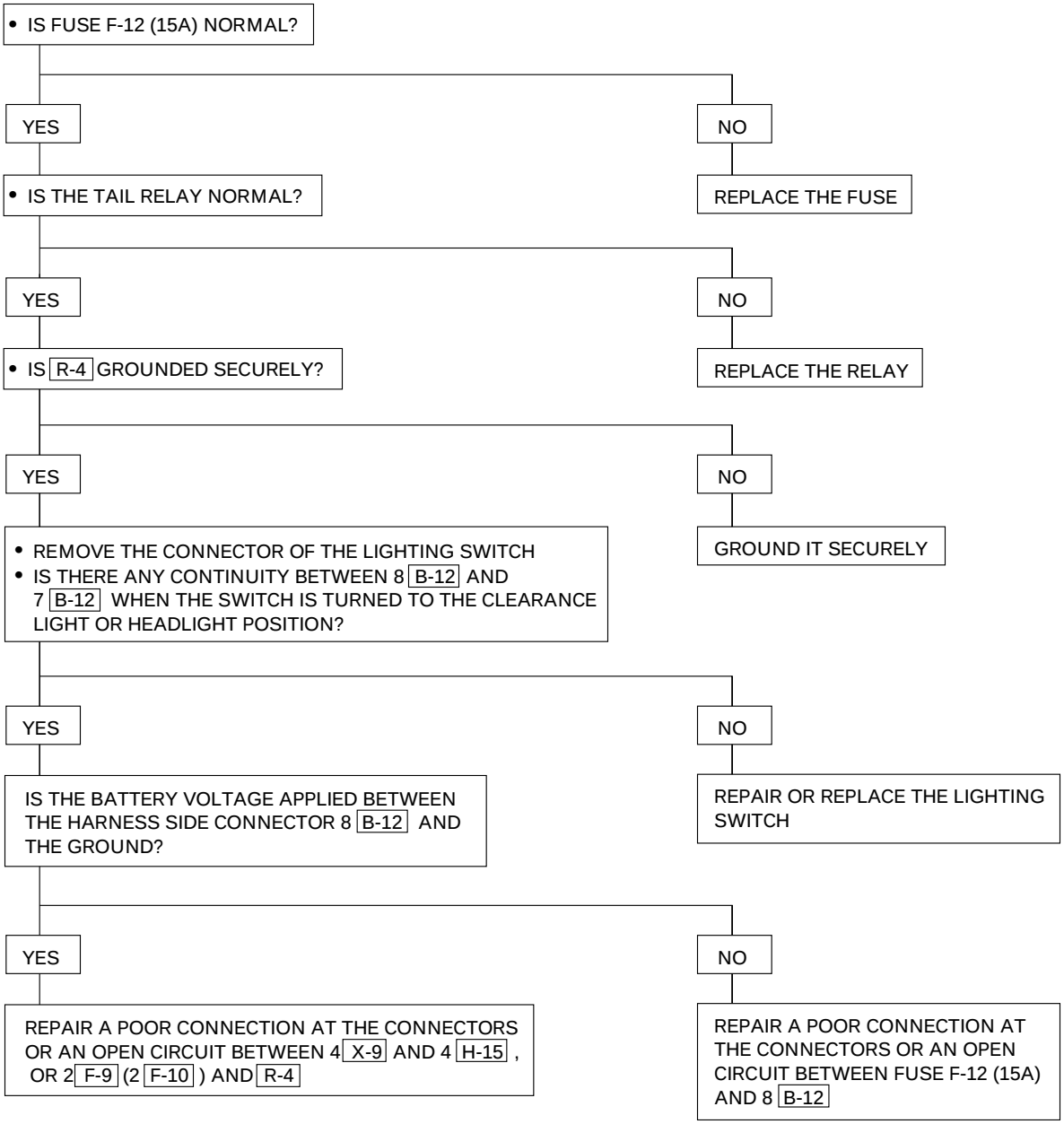
• IS FUSE F-12 (15A) NORMAL?
YES
NO
REPLACE THE FUSE
• IS THE TAIL RELAY NORMAL?
YES
NO
REPLACE THE RELAY
• IS R-4 GROUNDED SECURELY?
YES
NO
GROUND IT SECURELY
• REMOVE THE CONNECTOR OF THE LIGHTING SWITCH
• IS THERE ANY CONTINUITY BETWEEN 8 B-12 AND 7 B-12 WHEN THE SWITCH IS TURNED TO THE CLEARANCE LIGHT OR HEADLIGHT POSITION?
YES
NO
REPAIR OR REPLACE THE LIGHTING SWITCH
IS THE BATTERY VOLTAGE APPLIED BETWEEN THE HARNESS SIDE CONNECTOR 8 B-12 AND THE GROUND?
YES
NO
REPAIR A POOR CONNECTION AT THE CONNECTORS OR AN OPEN CIRCUIT BETWEEN 4 X-9 AND 4 H-15 , OR 2 F-9 (2 F-10) AND R-4
REPAIR A POOR CONNECTION AT THE CONNECTORS OR AN OPEN CIRCUIT BETWEEN FUSE F-12 (15A) AND 8 B-12

1-7 License Plate Light On The Left (Or Right) Side Inoperative (RHD-2)

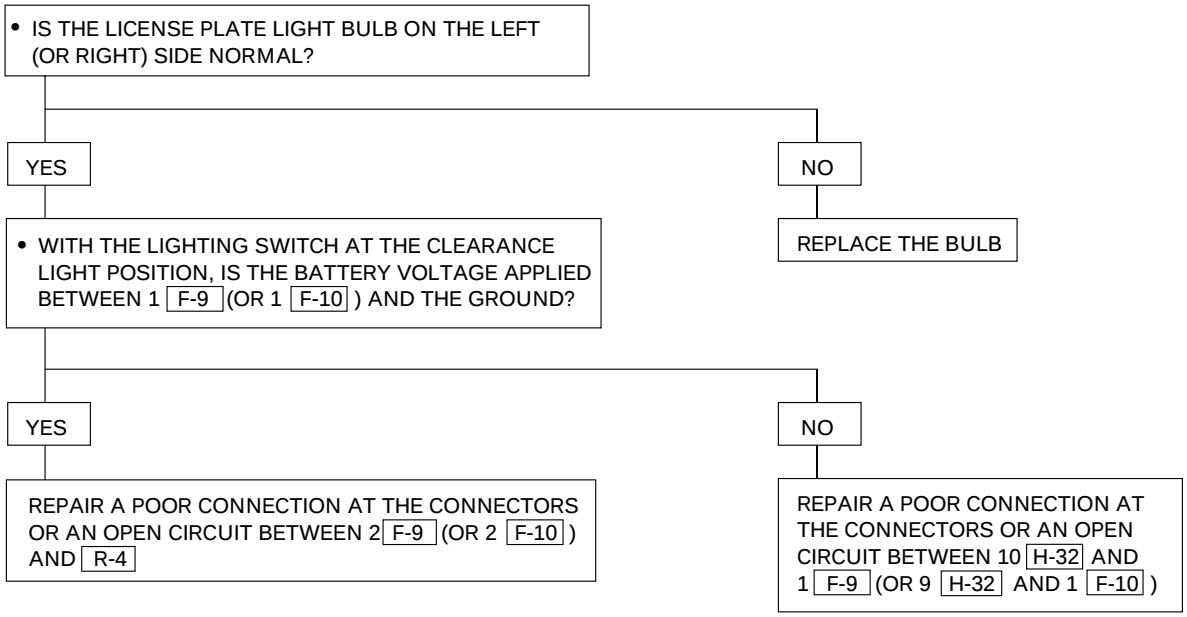

2-1 All Illumination Lights Inoperative

- IS TAIL RELAY NORMAL?
  - NO → REPLACE THE RELAY
  - YES ↓
- IS THE CONTINUITY IN THE LIGHTING SWITCH NORMAL?
  - NO → REPAIR OR REPLACE THE SWITCH
  - YES ↓
- IS B-19 GROUNDED SECURELY?
  - NO → GROUND IT SECURELY
  - YES ↓
- IS THE BATTERY VOLTAGE APPLIED BETWEEN 8 B-12 AND GROUND WHEN LIGHTING SWITCH IS ON?
  - NO → REPAIR A POOR CONNECTION AT THE CONNECTORS OR AN OPEN CIRCUIT IN THE CIRCUIT BETWEEN FUSE F-12 AND 8 B-12
  - YES ↓
- REPAIR A POOR CONNECTION AT THE CONNECTORS OR AN OPEN CIRCUIT BETWEEN 7 B-12 AND B-19

2-2 Both Taillights Inoperative

- DOES THE LICENCE PLATE LIGHT LIGHT UP WHEN THE LIGHTING SWITCH IS AT THE CLEARANCE LIGHT POSITION?
  - NO → GROUND R-4 SECURELY
  - YES ↓
- REPAIR A POOR CONNECTION AT THE CONNECTORS OR AN OPEN CIRCUIT BETWEEN 1 R-13 (1 R-12) AND R-4 , OR 2 F-7 (2 F-8) AND R-4

2-3 Taillight On The Left (Or Right) Side Inoperative

- IS FUSE F-11 (10A) (OR F-12 (10A)) NORMAL?
  - NO → REPLACE THE FUSE
  - YES →
- IS THE TAILLIGHT BULB ON THE LEFT (OR RIGHT) SIDE NORMAL?
  - NO → REPLACE THE BULB
  - YES →
- WITH THE LIGHTING SWITCH AT THE CLEARANCE LIGHT POSITION, IS THE BATTERY VOLTAGE APPLIED BETWEEN 6 R-13 (OR 6 R-12) AND THE GROUND, OR 4 F-7 (OR 4 F-8) AND THE GROUND?
  - NO → REPAIR A POOR CONNECTION AT THE CONNECTORS OR AN OPEN CIRCUIT BETWEEN 10 H-32 AND 6 R-13 (OR 9 H-32 AND 6 R-12), OR 10 H-32 AND 4 F-7 (OR 9 H-32 AND 4 F-8)
  - YES → REPAIR A POOR CONNECTION AT THE CONNECTORS OR AN OPEN CIRCUIT BETWEEN 1 R-13 (OR 1 R-12) AND R-4, OR 2 F-7 (OR 2 F-8) AND R-4

2-4 Both Clearance Lights Inoperative

- IS 1 C-16 (2 C-16 : 4ZE1) GROUNDED SECURELY?
  - NO → GROUND IT SECURELY
  - YES → REPAIR A POOR CONNECTION AT THE CONNECTORS OR AN OPEN CIRCUIT BETWEEN 1 C-16 (2 C-16 : 4ZE1) AND 1 C-22 (1 C-31)

2-5 Clearance Light On The Left (Or Right) Side Operative

- IS THE CLERANCE LIGHT BULB ON THE LEFT (OR RIGHT) SIDE NORMAL?

YES

- IS THERE ANY CONTINUITY BETWEEN THE HARNESS SIDE CONNECTOR
  2 C-22 AND FUSE F-11 (10A)
  2 C-31 AND FUSE F-12 (10A)

YES

REPAIR A POOR CONNECTION AT THE CONNECTORS OR AN OPEN CIRCUIT BETWEEN 1 C-22 (OR 1 C-31) AND 1 C-16 (OR 2 C-16 : 4ZE1)

NO

REPAIR A POOR CONNECTION AT THE CONNECTORS OR AN OPEN CIRCUIT IN THE CIRCUIT

NO

REPLACE THE BULB

2-6 License Plate Light Inoperative

(LHD-1)

- IS FUSE F-12 (10A) NORMAL?

YES

- DOES THE BOTH TAILLIGHT LIGHT UP WHEN THE LIGHTING SWITCH IS AT THE CLEARANCE LIGHT POSITION?

YES

- IS THE LICENCE PLATE LIGHT BULB NORMAL?

YES

- IS THERE ANY CONTINUITY BETWEEN THE HARNESS SIDE CONNECTOR
  1 G-8 AND 1 H-39 ?

YES

REPAIR A POOR CONNECTION AT THE CONNECTORS OR AN OPEN CIRCUIT BETWEEN 2 G-8 AND R-4

NO

REPAIR A POOR CONNECTION AT THE CONNECTORS OR AN OPEN CIRCUIT IN THE CIRCUIT

NO

REPLACE THE BULB

NO

GROUND R-4 SECURELY

NO

REPLACE THE FUSE

NO

(LHD-2)

- DOES THE TAILLIGHT LIGHT UP WHEN THE LIGHTING SWITCH IS AT THE CLEARANCE LIGHT POSITION?

YES

REPAIR A POOR CONNECTION AT THE CONNECTORS OR AN OPEN CIRCUIT BETWEEN 2 F-9 (2 F-10) AND R-4

NO

GROUND R-4 SECURELY

2-7 License Plate Light On The Left (Or Right) Side Inoperative

(LHD-2)

- IS THE LICENSE PLATE LIGHT BULB ON THE LEFT (OR RIGHT) SIDE NORMAL?

YES

- IS FUSE F-11 (10A) (F-12 (10A)) NORMAL?

YES

- WITH THE LIGHTING SWITCH AT THE CLEARANCE LIGHT POSITION, IS THE BATTERY VOLTAGE APPLIED BETWEEN 1 F-9 (OR 1 F-10) AND THE GROUND?

YES

REPAIR A POOR CONNECTION AT THE CONNECTORS OR AN OPEN CIRCUIT BETWEEN 2 F-9 (OR 2 F-10) AND R-4

NO

REPAIR A POOR CONNECTION AT THE CONNECTORS OR AN OPEN CIRCUIT BETWEEN 1 F-9 AND FUSE F-11 (10A) (OR 1 F-10 AND FUSE F-12 (10A))

NO

REPLACE THE FUSE

NO

REPLACE THE BULB

2-8 Both Taillights And Clearance Lights On The Left (Or Right) Side Inoperative

- IS FUSE F-11 (10A) OR F-12 (10A) NORMAL?

YES

REPAIR A POOR CONNECTION AT THE CONNECTORS OR AN OPEN CIRCUIT BETWEEN
FUSE F-11 (10A) AND 18 H-12
FUSE F-12 (10A) AND 11 H-12

NO

REPLACE THE FUSE

Interior Illumination Light

General Description

The circuit consists of a lighting switch, tail relay, illumination controller and illumination lights.
All these lights come on when the lighting switch is turned on with the switch turned to either parking or headlight position.
The brightness of illumination lights except the ones for ashtray, glove box and vanity mirror, can be adjusted by the illumination controller.

Circuit Diagram (RHD)-1

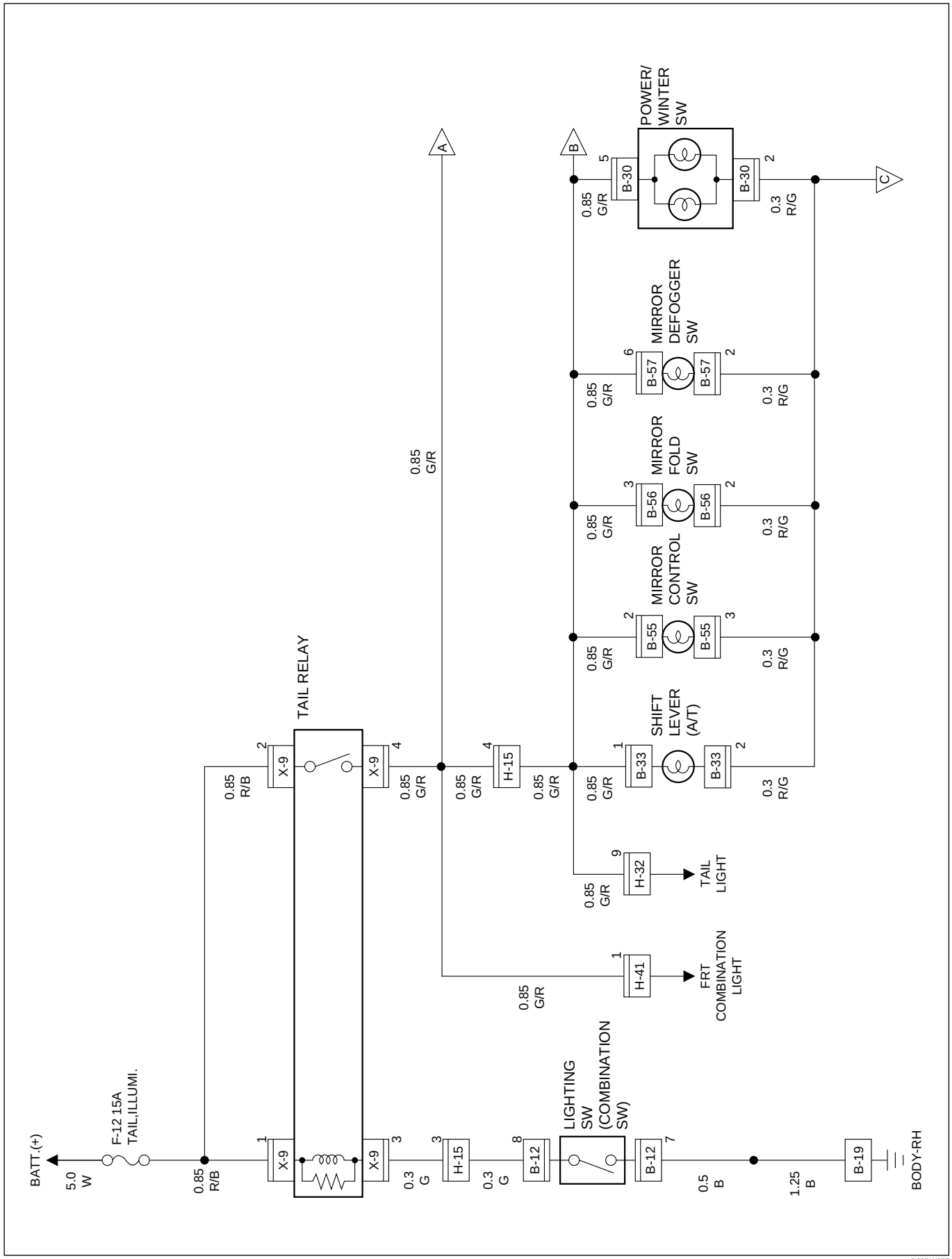

D08RW657

Circuit Diagram (RHD)-2

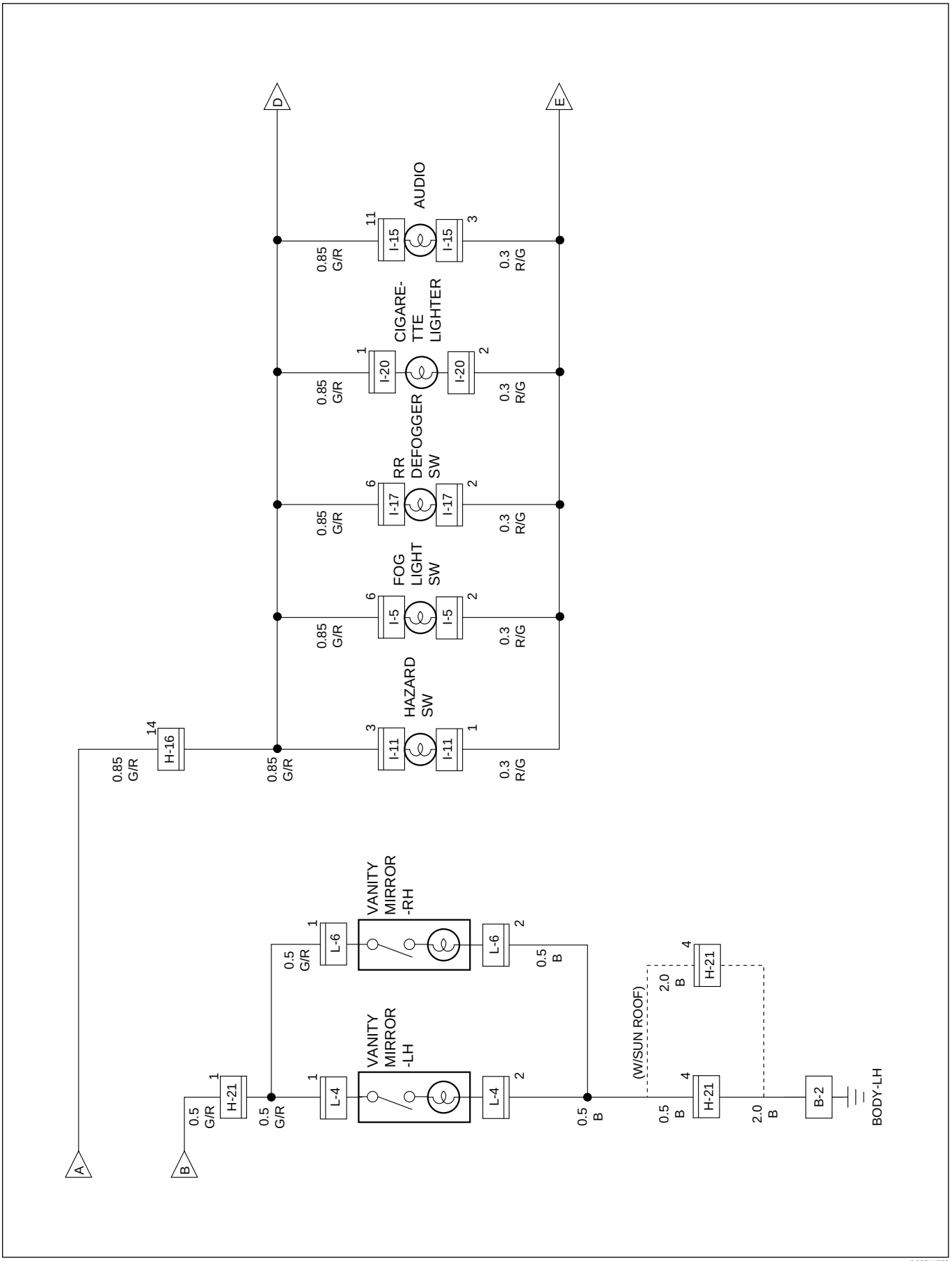

D08RW656

Circuit Diagram (RHD)-3

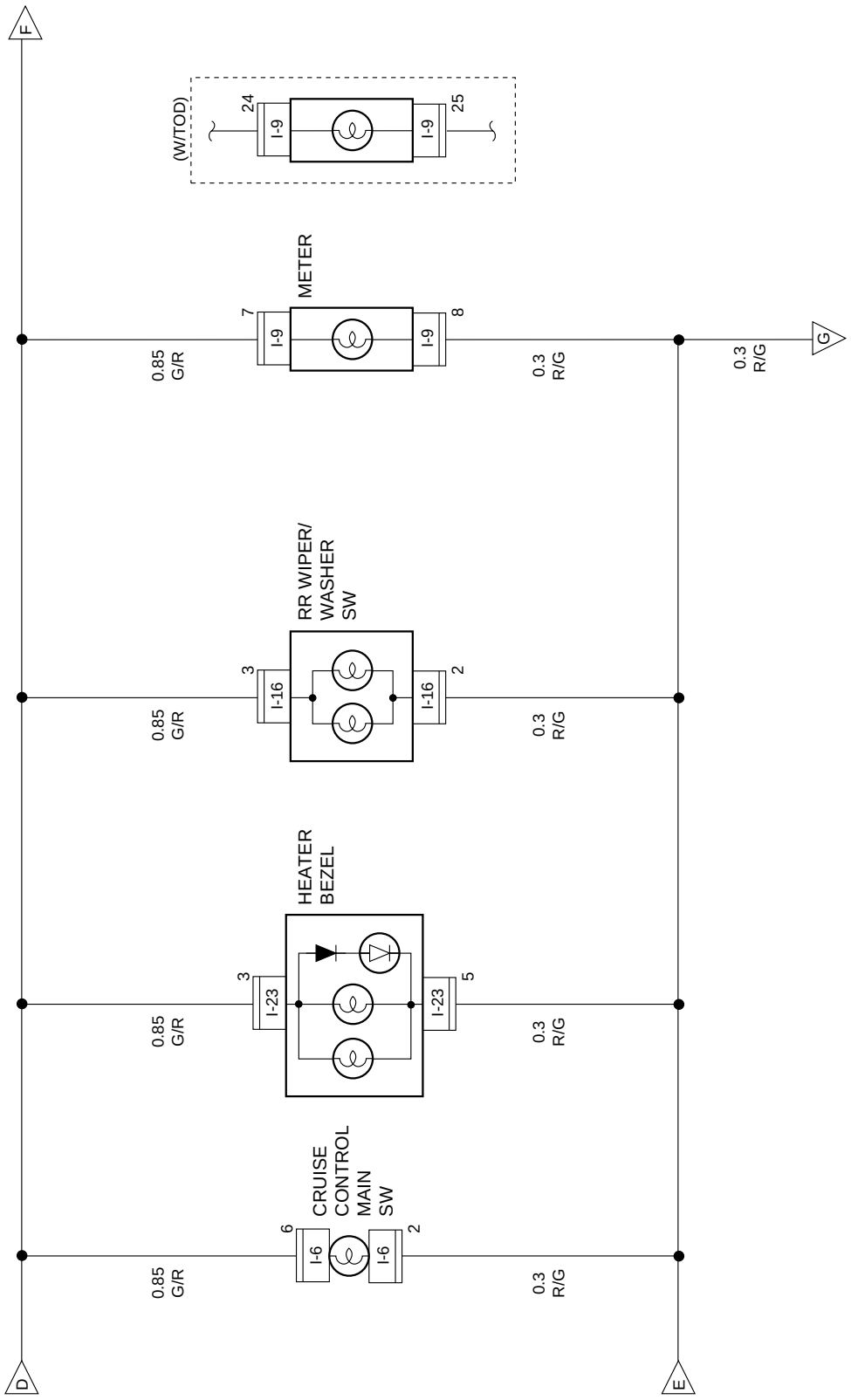

D08RW655

Circuit Diagram (RHD)-4

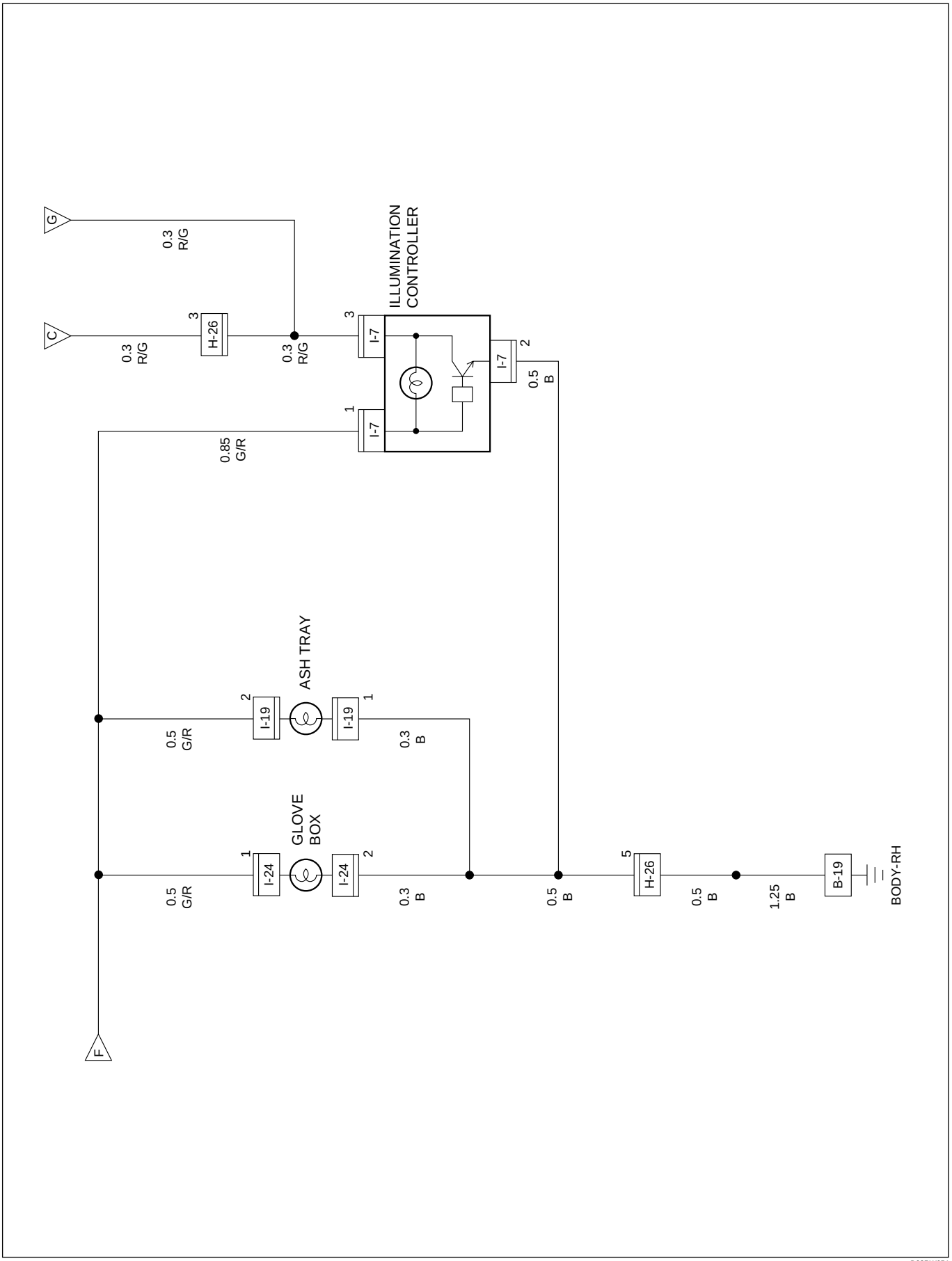

D08RW654

Parts Location (RHD)

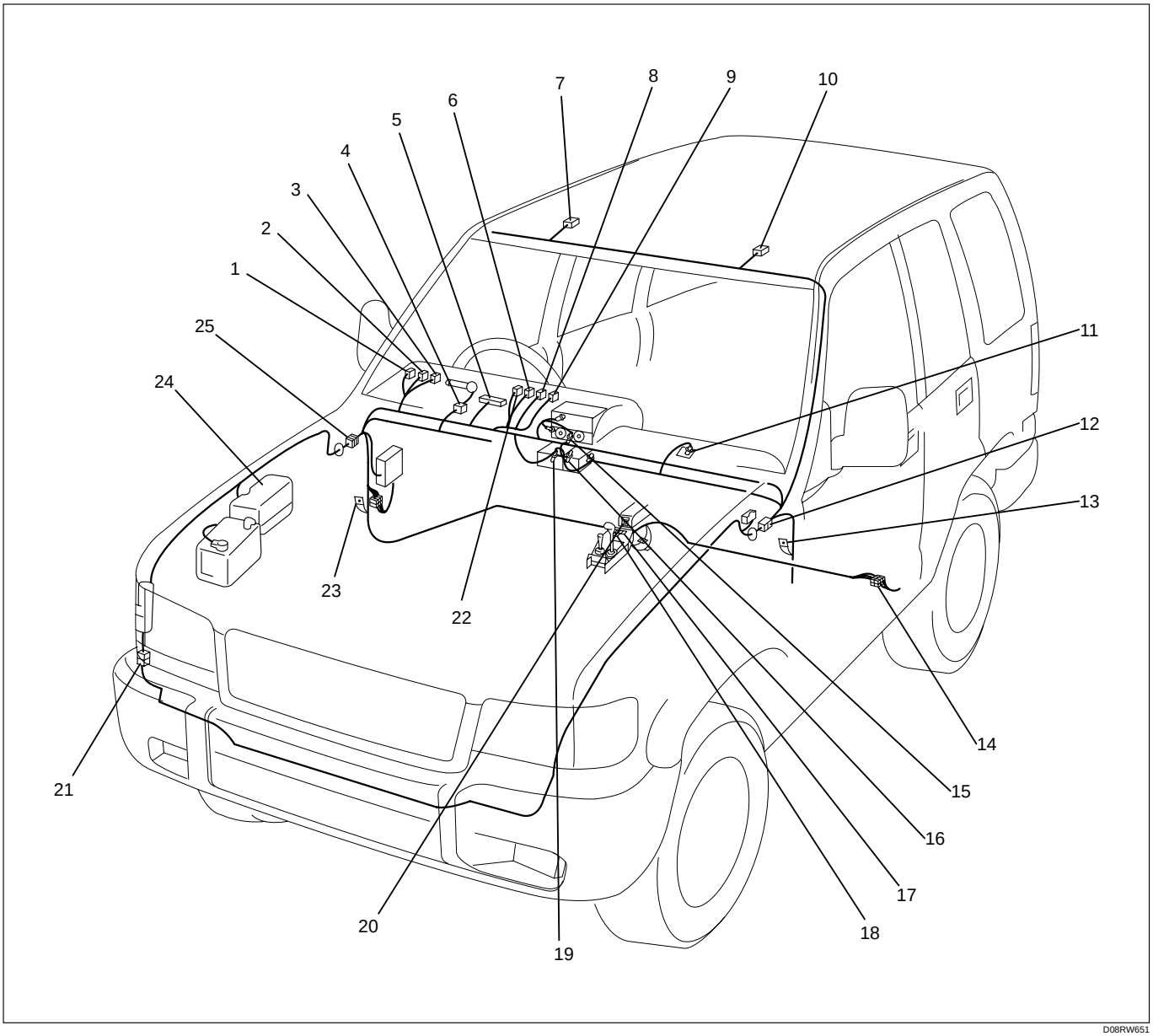

D08RW651

Legend

(1) Front Fog Light Switch (I-5)
(2) Head Light Wiper / Washer Switch (I-4)
(3) Illumination Controller
(4) B-12
(5) I-9
(6) Hazard Switch (I-11)
(7) L-6
(8) I-16
(9) I-17
(10) L-4
(11) I-24
(12) H-21
(13) B-2
(14) H-32
(15) I-23
(16) I-20
(17) B-30
(18) B-33
(19) I-19
(20) B-55, B-56, B-57
(21) H-41
(22) I-16
(23) B-19
(24) Relay and Fuse Box (X-9)
(25) H-15, H-16, H-26

Circuit Diagram (LHD)-1

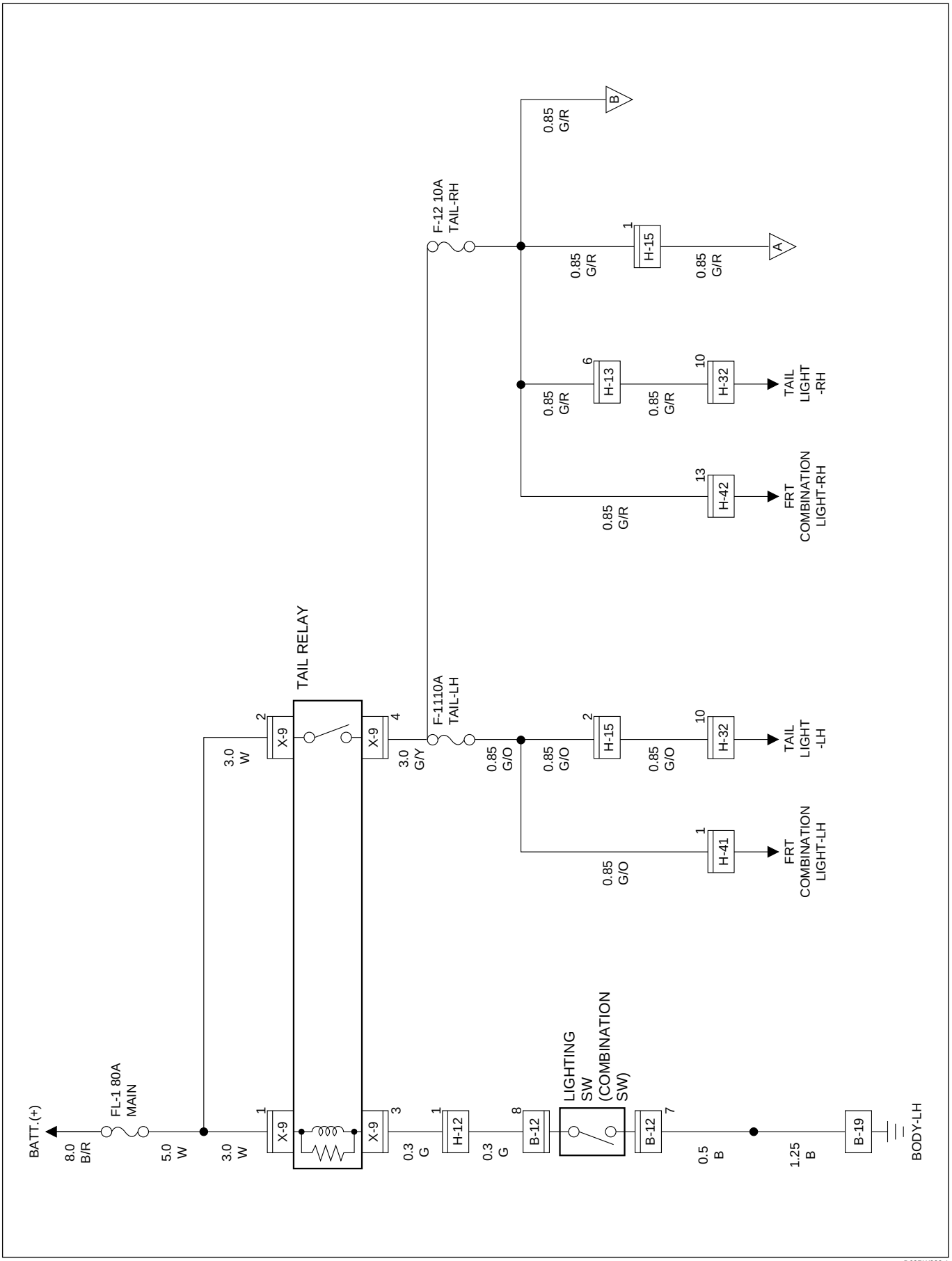

D08RW888-1

Circuit Diagram (LHD)-2

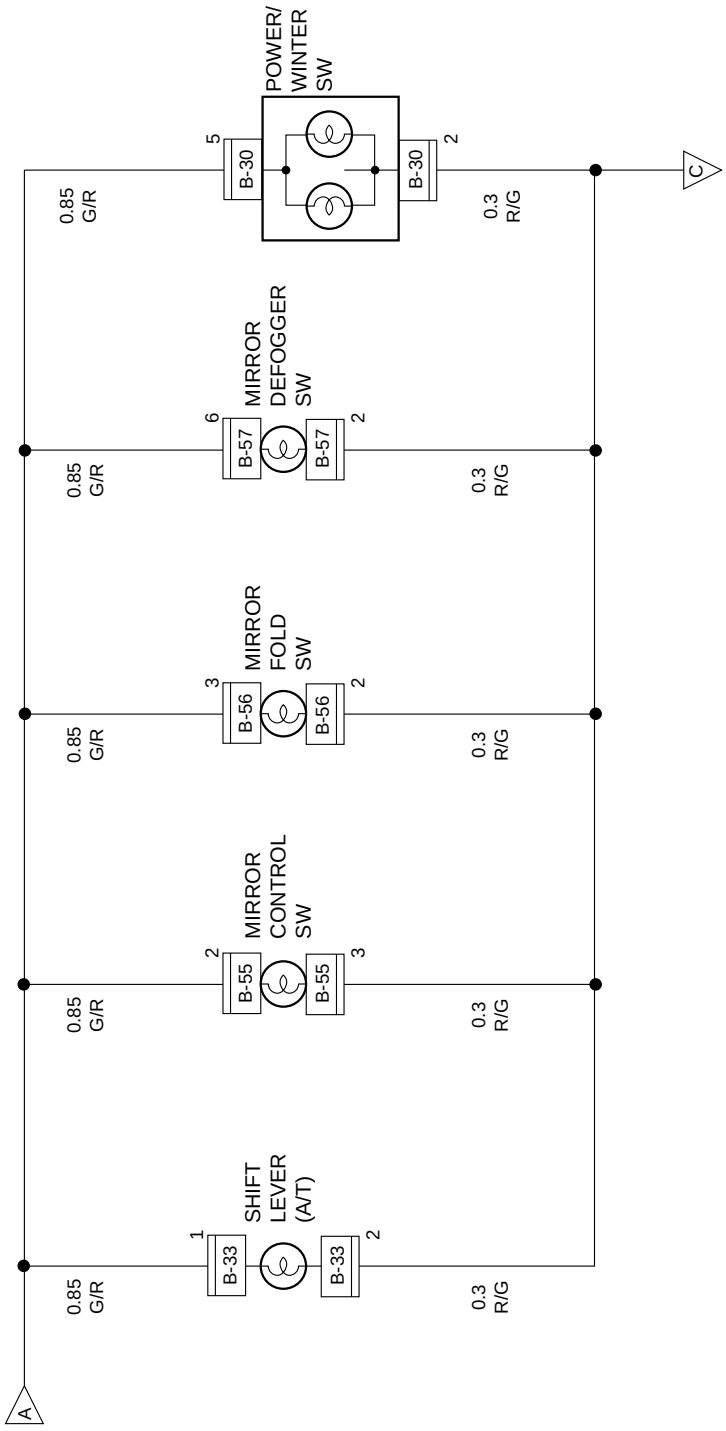

D08RW889-1

Circuit Diagram (LHD)-3

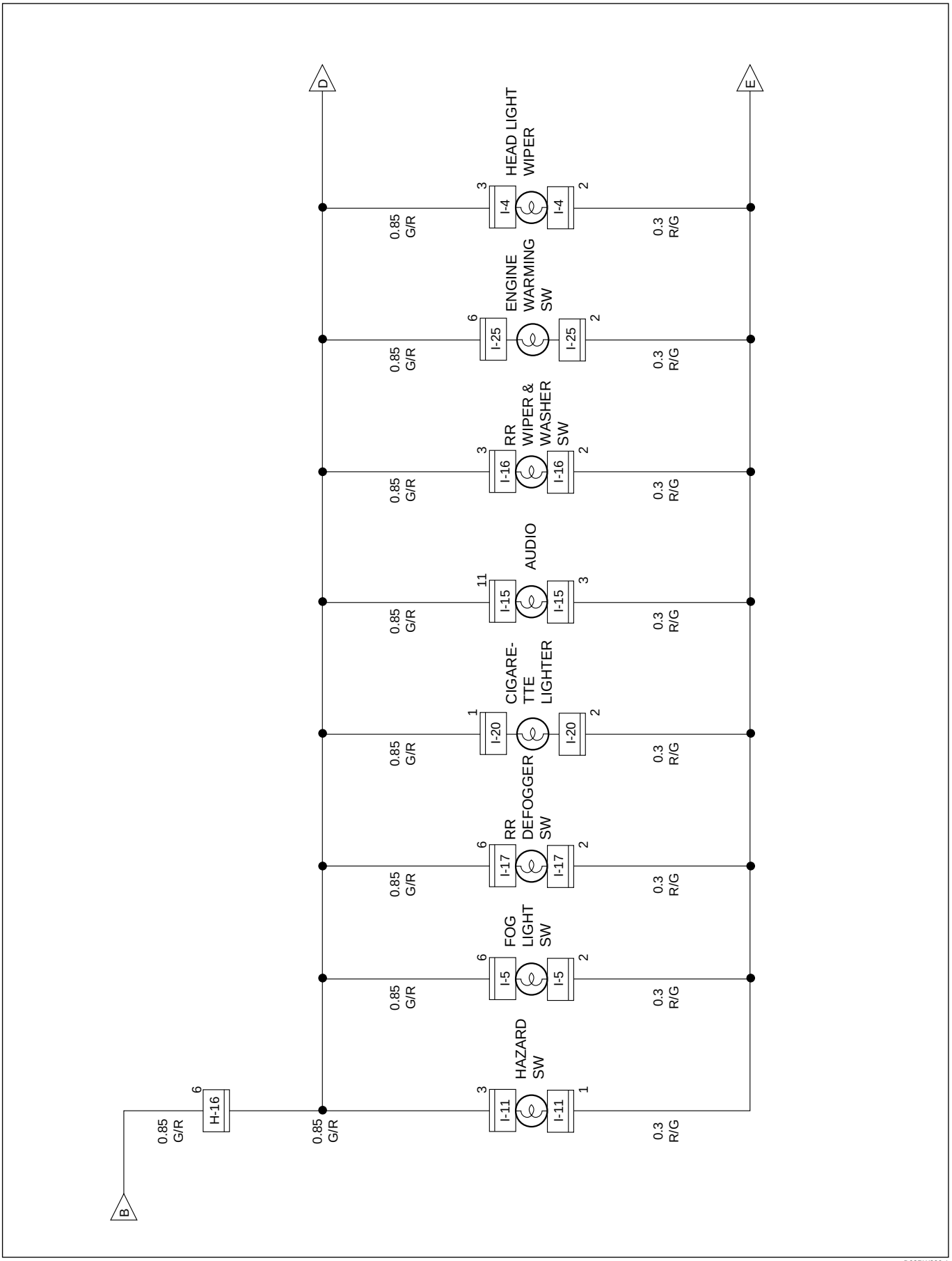

D08RW890-1

Circuit Diagram (LHD)-4

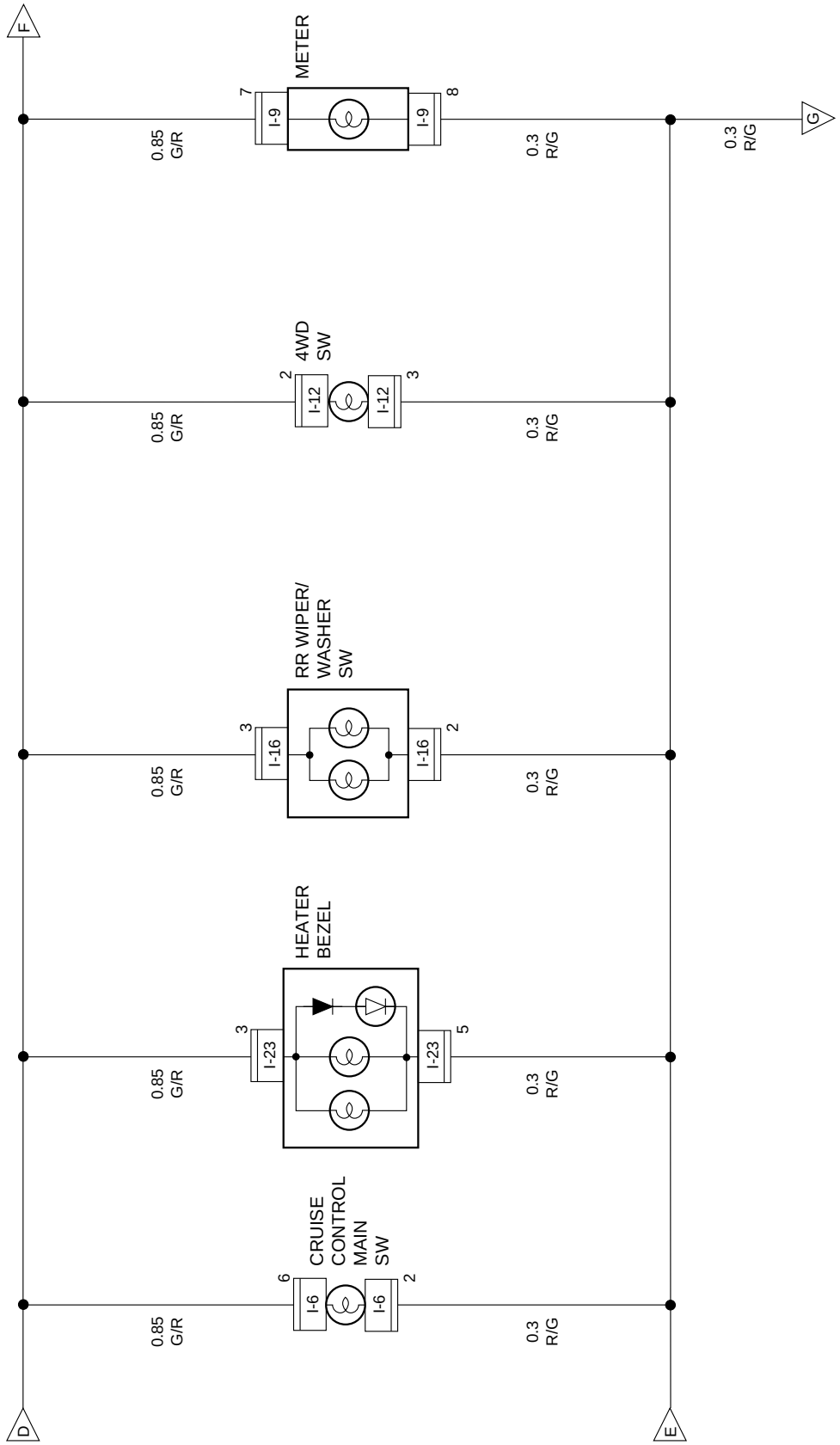

D08RW891

Circuit Diagram (LHD)-5

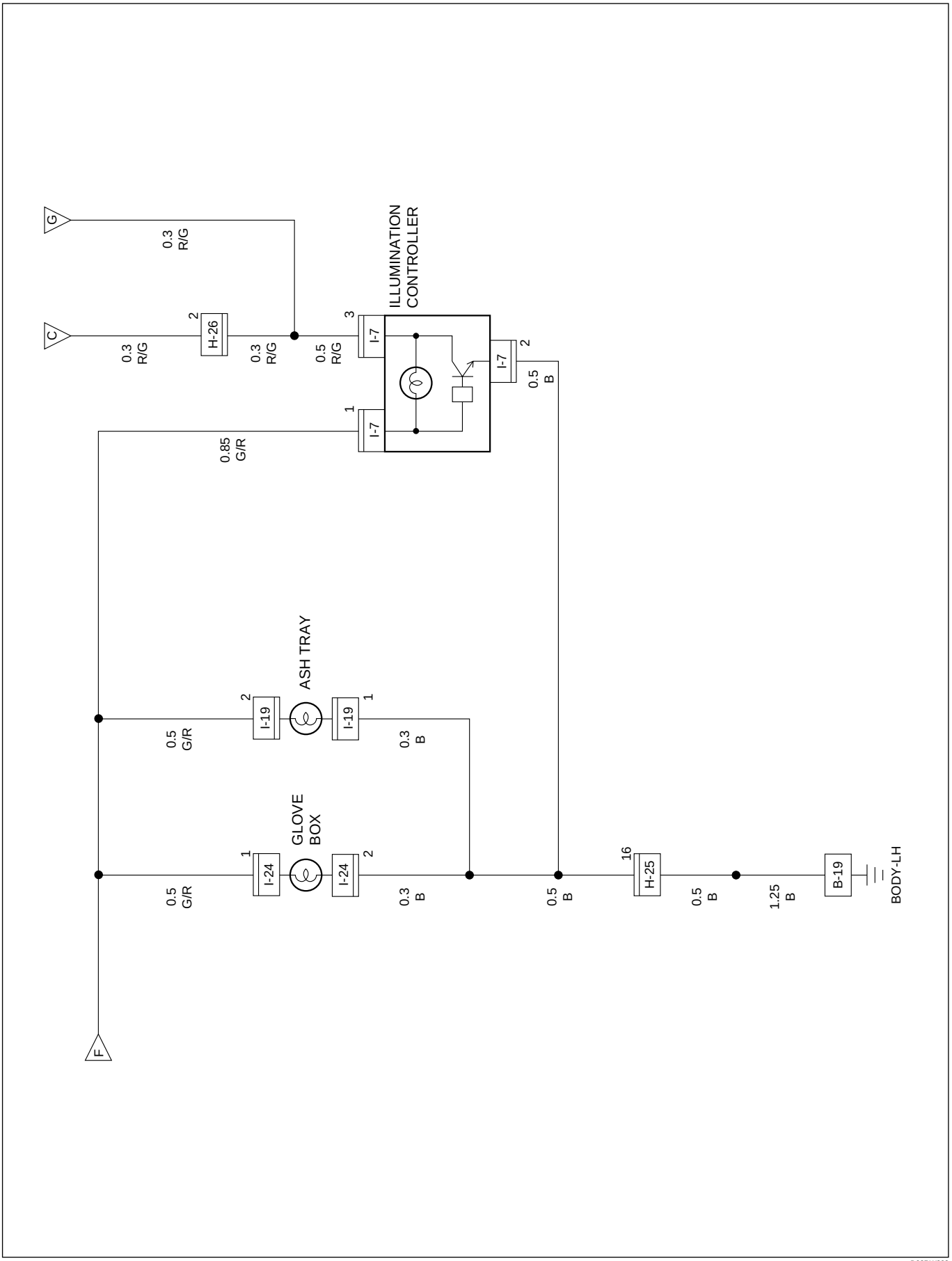

D08RW892

Parts Location (LHD)

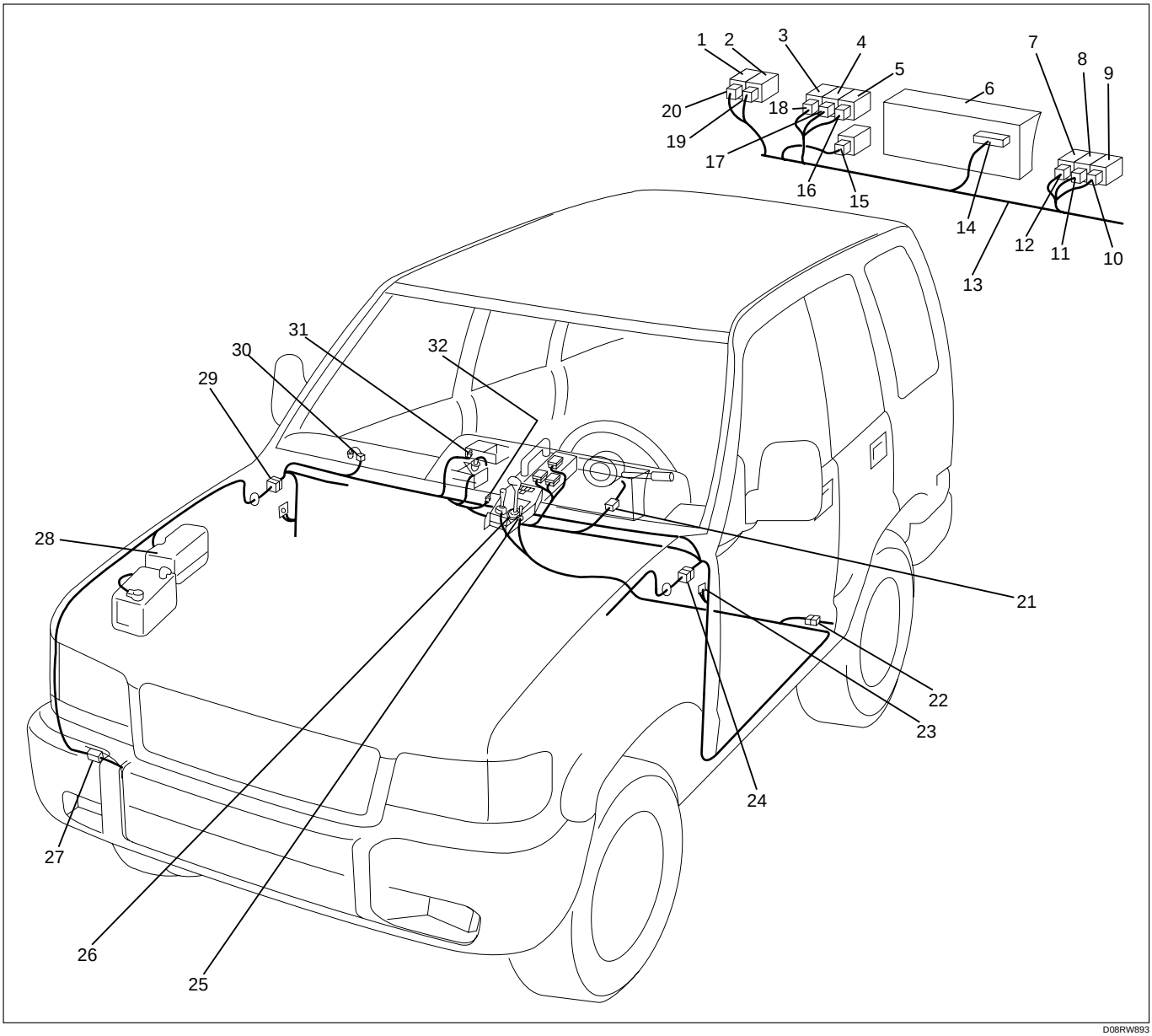

D08RW893

Legend

(1) Rear Deffoger Switch
(2) Rear Wiper / Washer Switch
(3) Engin Warming Switch
(4) 4WD Switch
(5) Hazard Switch
(6) Meter
(7) Illumination Contoroller
(8) Head Light Wiper and Washer Switch
(9) Fog Light Switch
(10) I-5
(11) I-4
(12) I-7
(13) Instrument Harness
(14) I-9
(15) I-6
(16) I-11
(17) I-12
(18) I-25
(19) I-16
(20) I-17
(21) B-12
(22) H-32
(23) B-19
(24) H-25, H-26
(25) B-33
(26) B-30
(27) H-41, H-42
(28) Relay and Fuse Box (X-9)
(29) H-13, H-15, H-16
(30) I-24
(31) I-28
(32) I-20

Diagnosis

Interior Illumination Lights Inoperative

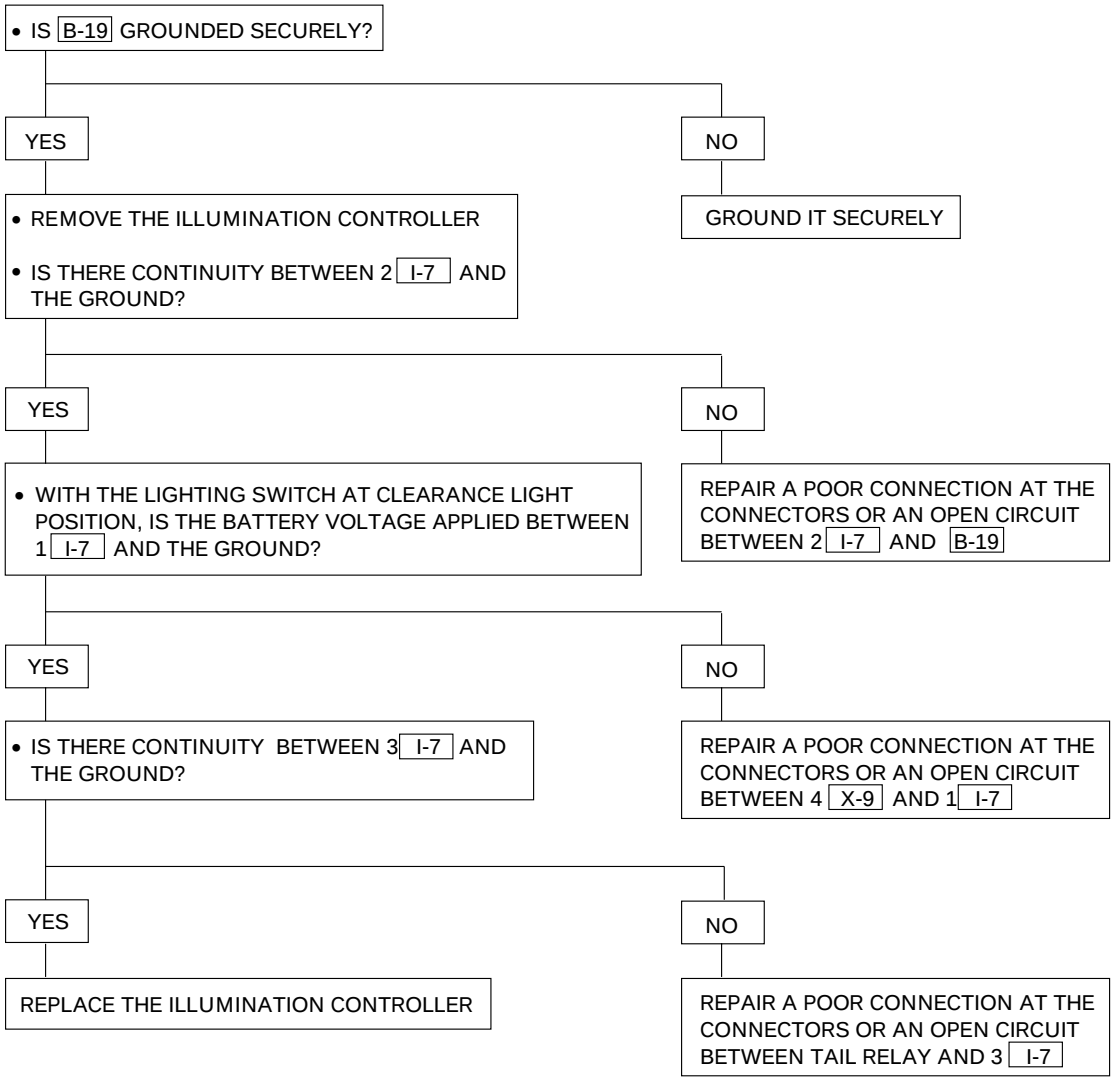

Turn Signal Light and Hazard Warning Light

General Description

The circuit consists of a turn signal switch (combination switch), turn signal light, hazard warning switch and flasher unit. When the turn signal light switch is turned on with starter switch on, turn signal light will operate. When turn signal light is flashing, indicator light in meter also starts flashing. When hazard warning switch is turned on, current flows to flasher unit through hazard warning switch to cause hazard warning light to flash independent of position of starter switch. At the same time, indicator lights in meter also start flashing.

Circuit Diagram (RHD)-1

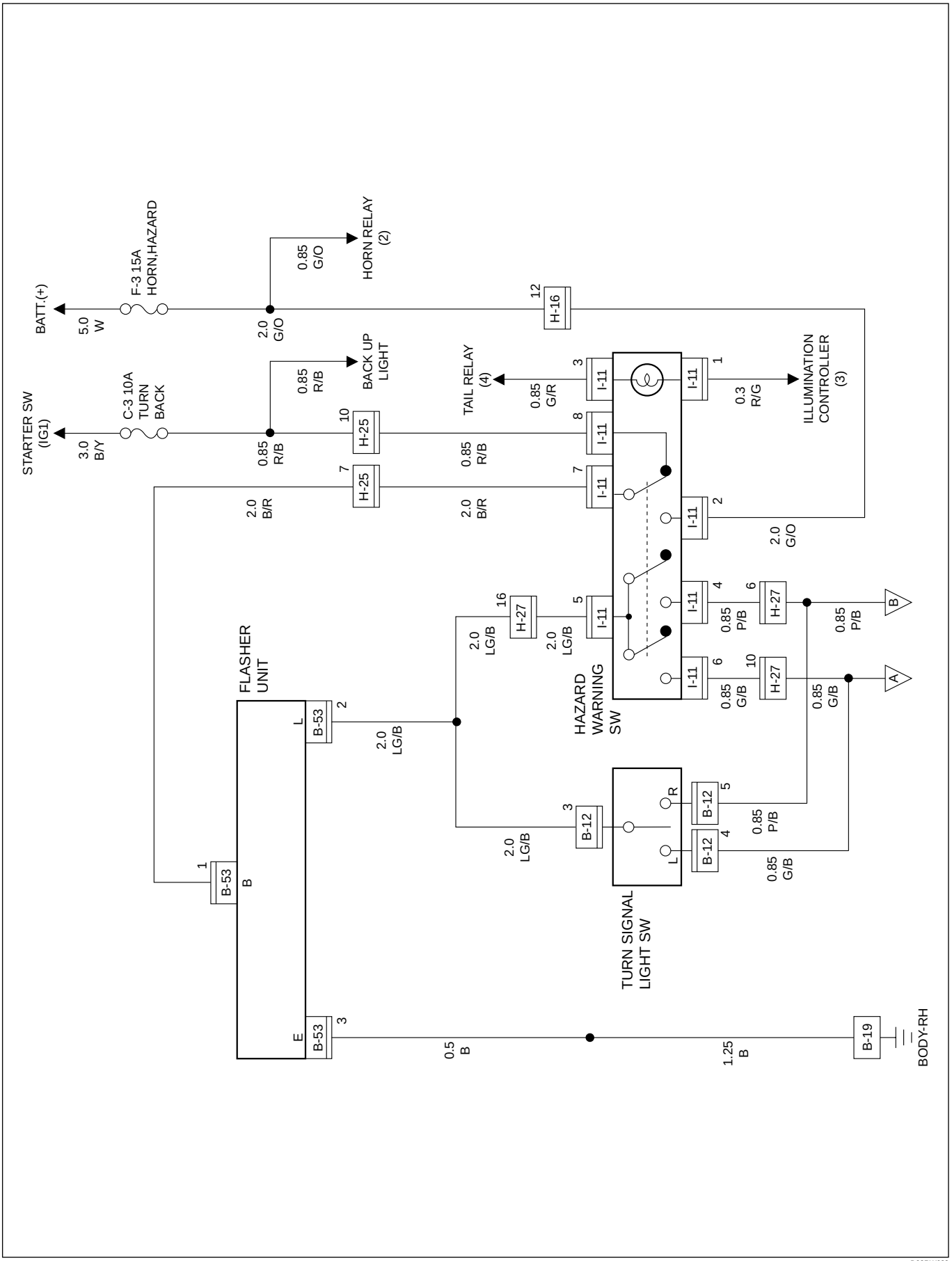

D08RW683

Circuit Diagram (RHD)-2

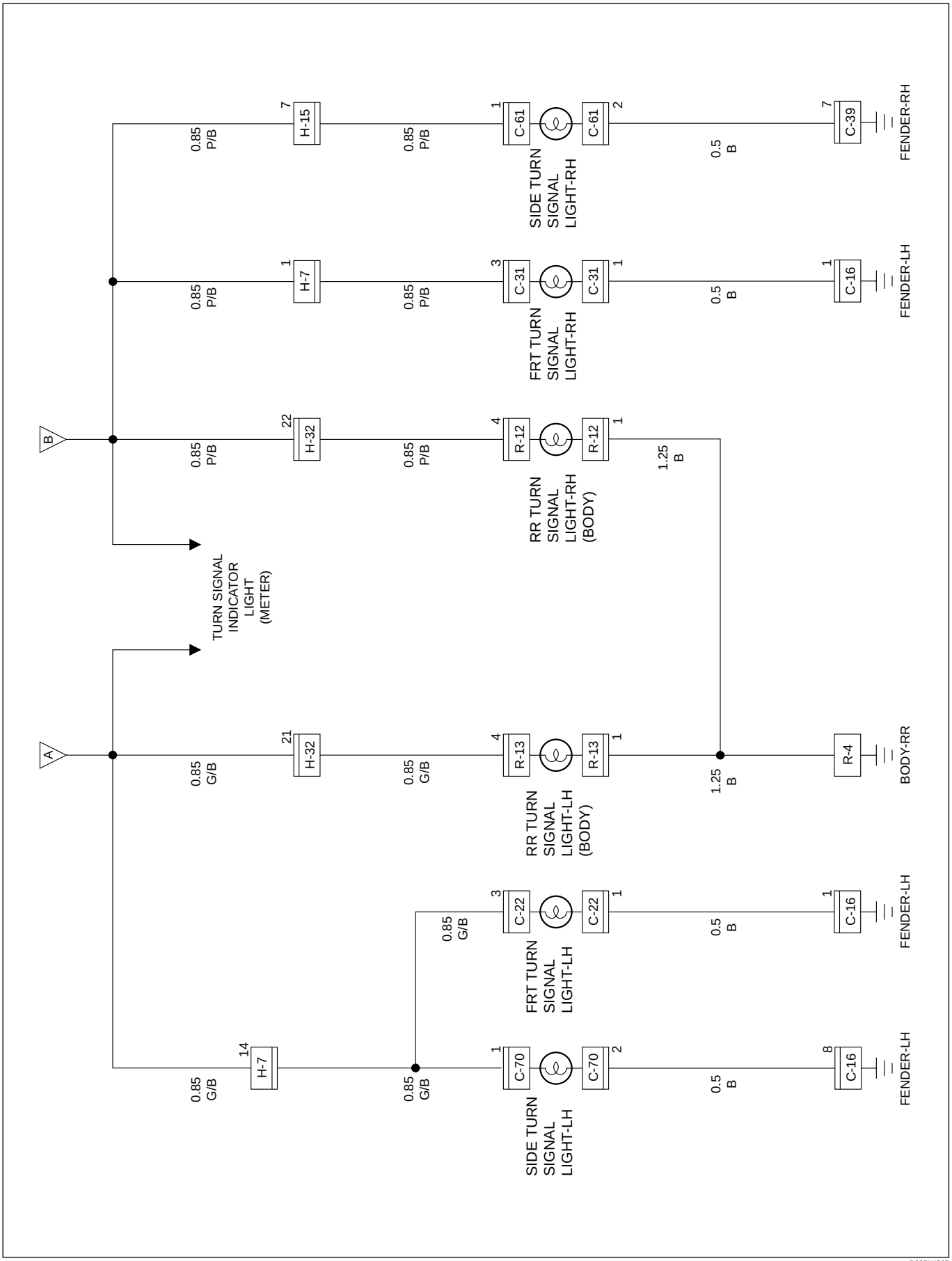

D08RWC67

Circuit Diagram (RHD W/Bumper Built-in Type RR Turn Signal Light) -2

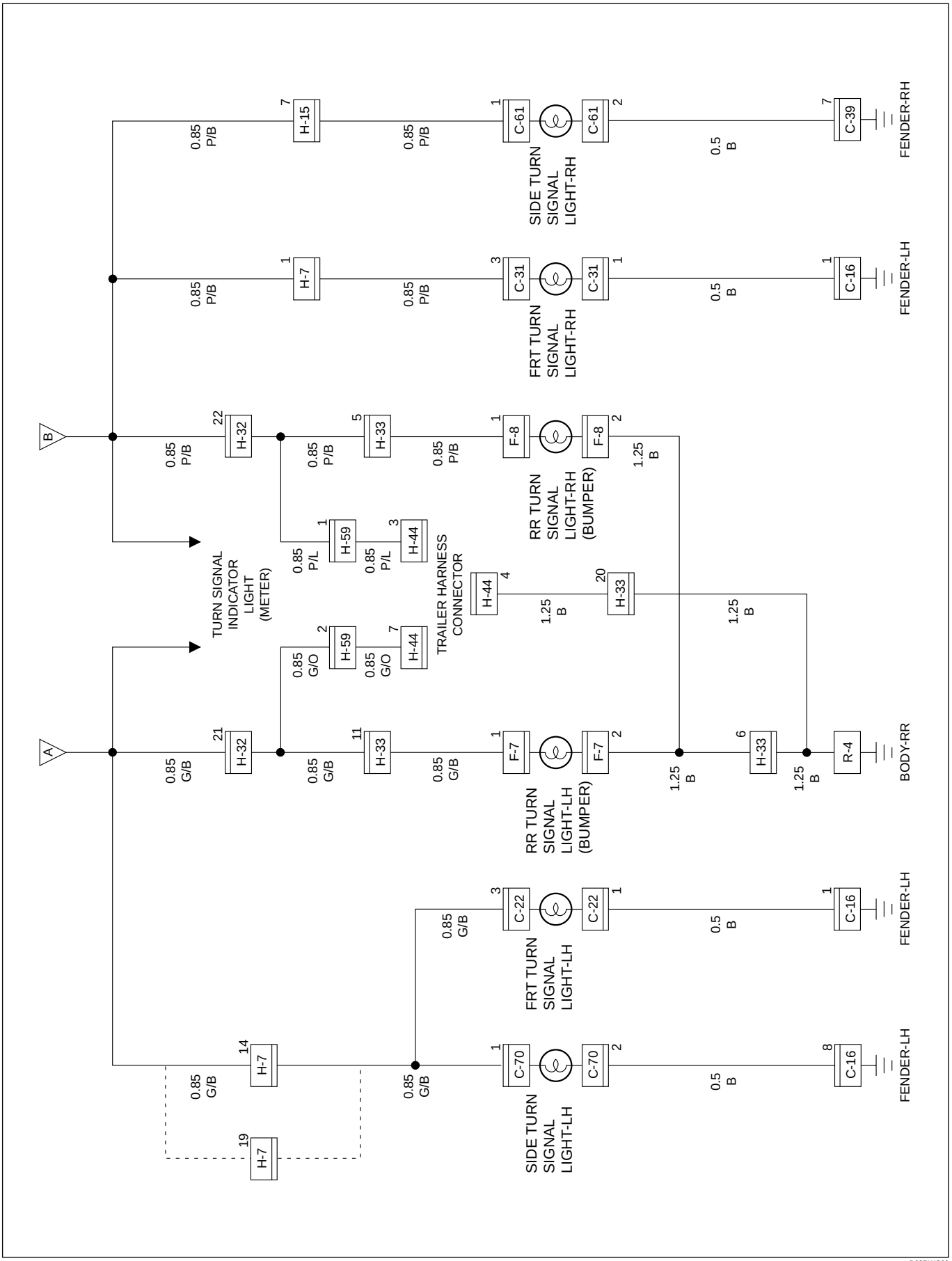

D08RWC66

Parts Location (RHD)

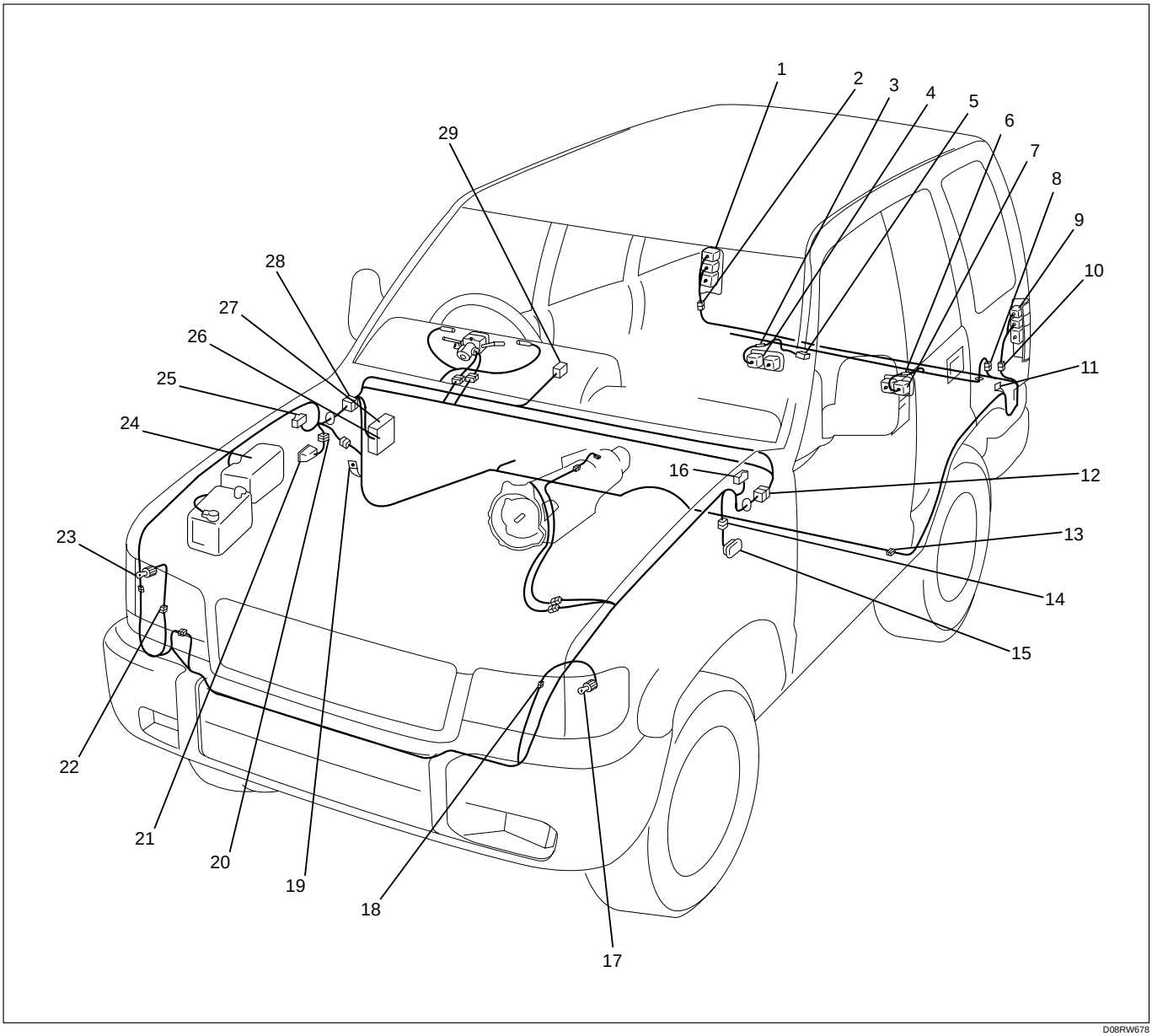

D08RW678

Legend

(1) Rear Turn Signal Light–RH (Body)
(2) R–12
(3) F–8
(4) Rear Turn Signal Light–RH (Bumper)
(5) H–44
(6) F–7
(7) Rear Turn Signal Light–LH (Bumper)
(8) H–33, H–59
(9) Rear Turn Signal Light–LH (Body)
(10) R–13
(11) R–4
(12) H–7
(13) H–32
(14) C–70
(15) Side Turn Signal Light–LH
(16) C–16
(17) Front Turn Signal Light–LH
(18) C–22
(19) B–19
(20) C–61
(21) Side Turn Signal Light–RH
(22) C–31
(23) Front Turn Signal Light–RH
(24) Relay and Fuse
(25) C–39
(26) Fuse Box (Flasher Unit)
(27) Fuse Box
(28) H–15, H–16, H–25, H–27
(29) I–11

Circuit Diagram (LHD)-1

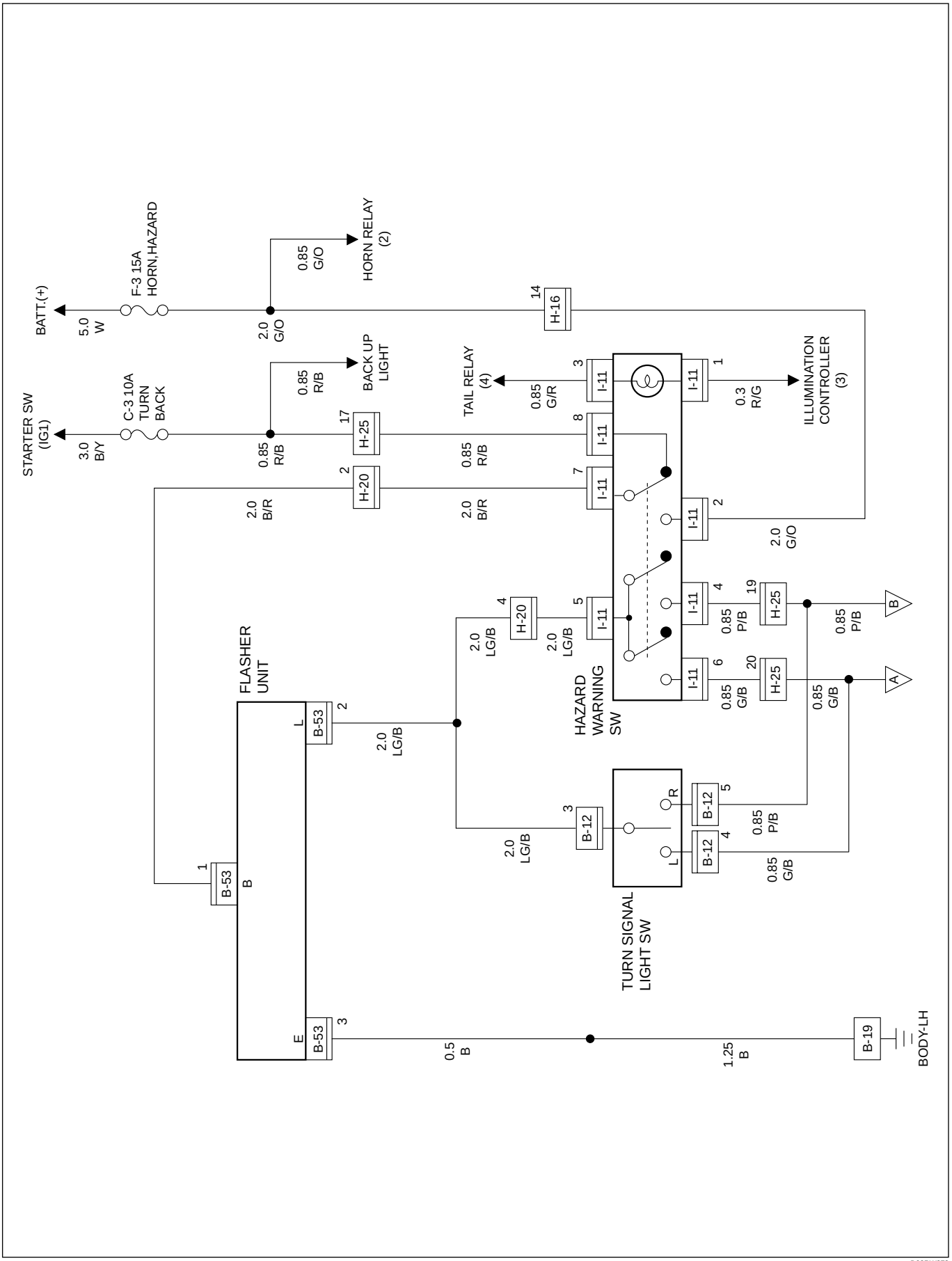

D08RW872

Circuit Diagram (LHD)-2

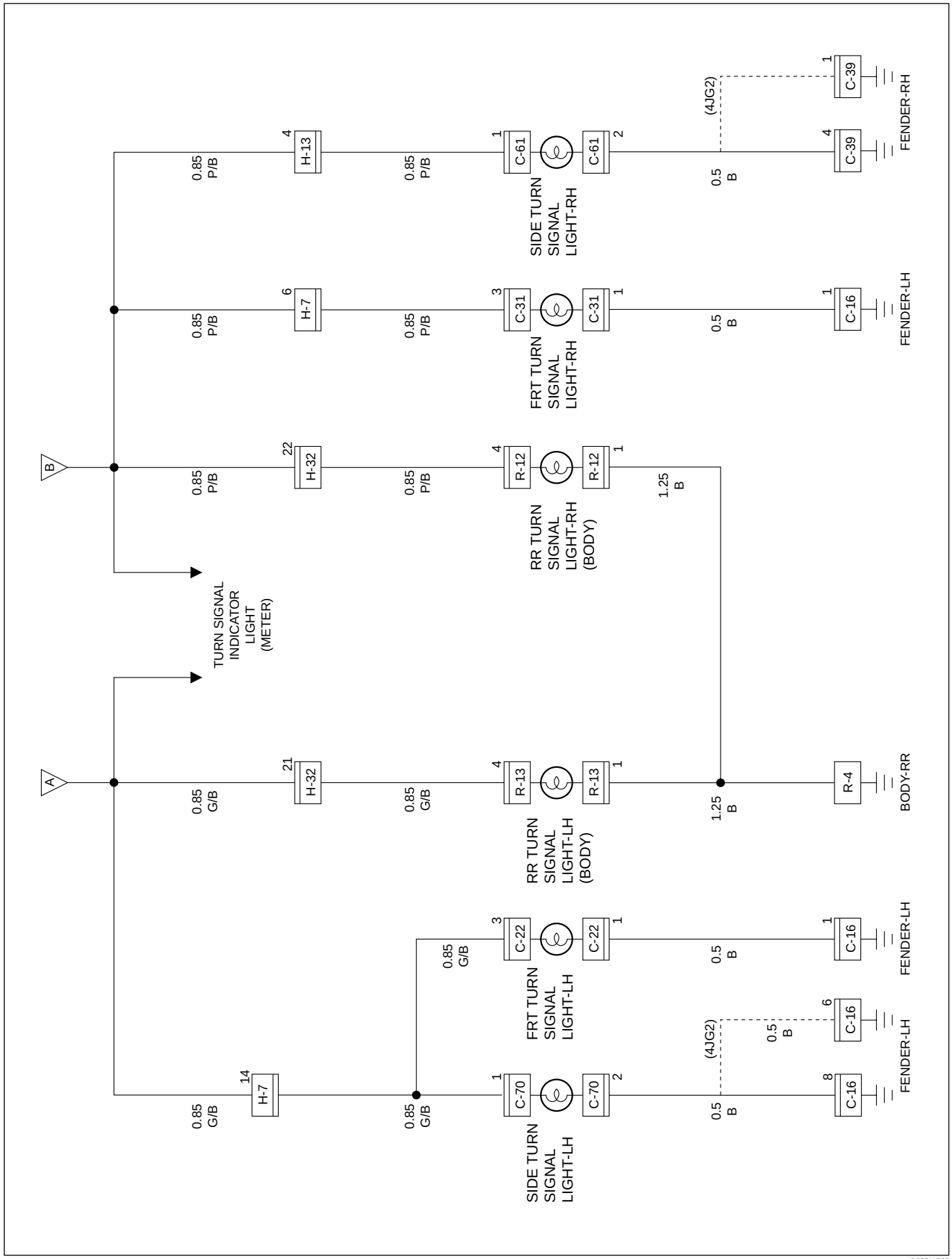

D08RW867

Circuit Diagram (LHD W/Bumper Built-in Type RR Turn signal Light)-2

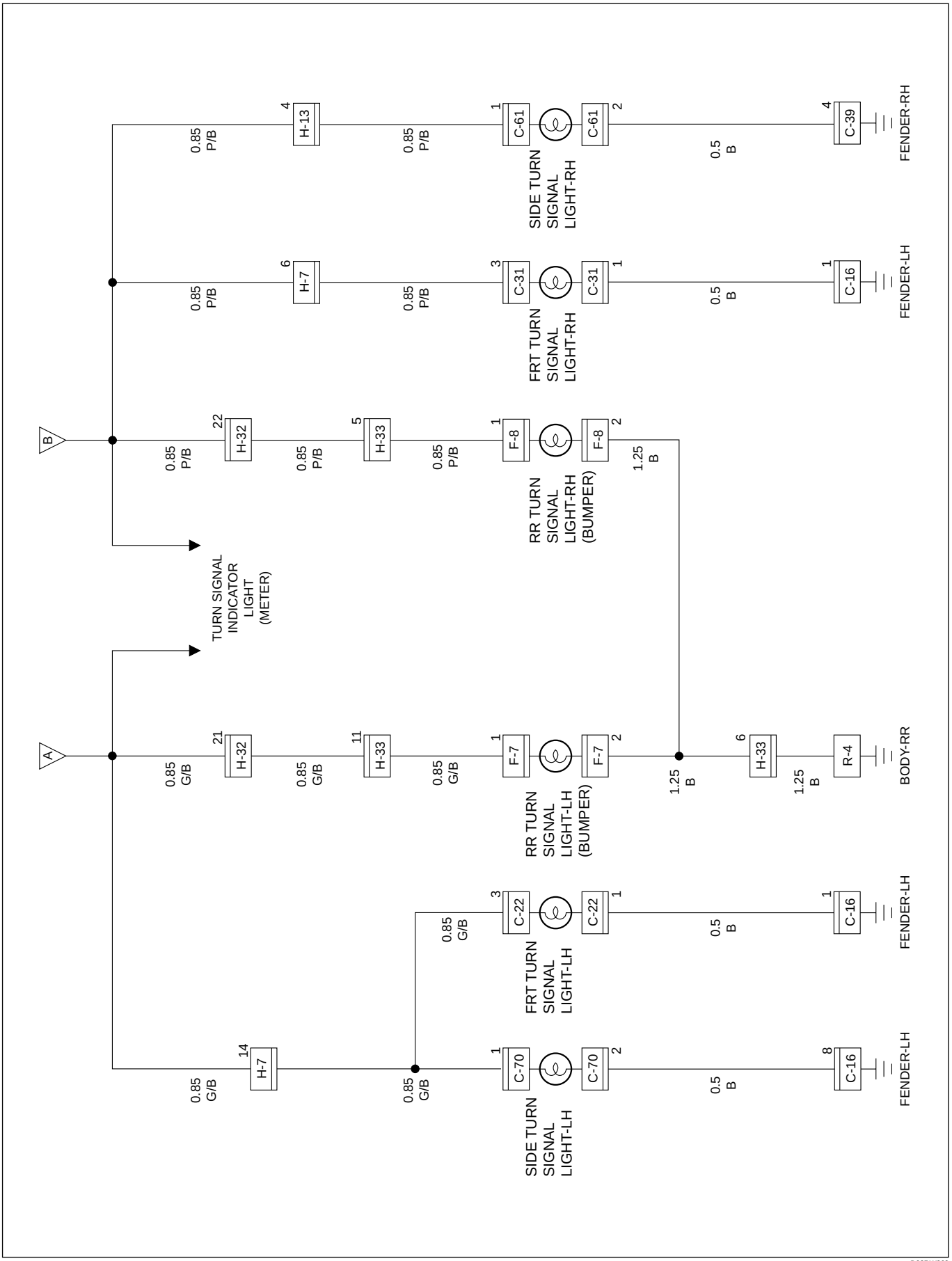

D08RW868

Parts Location (LHD)

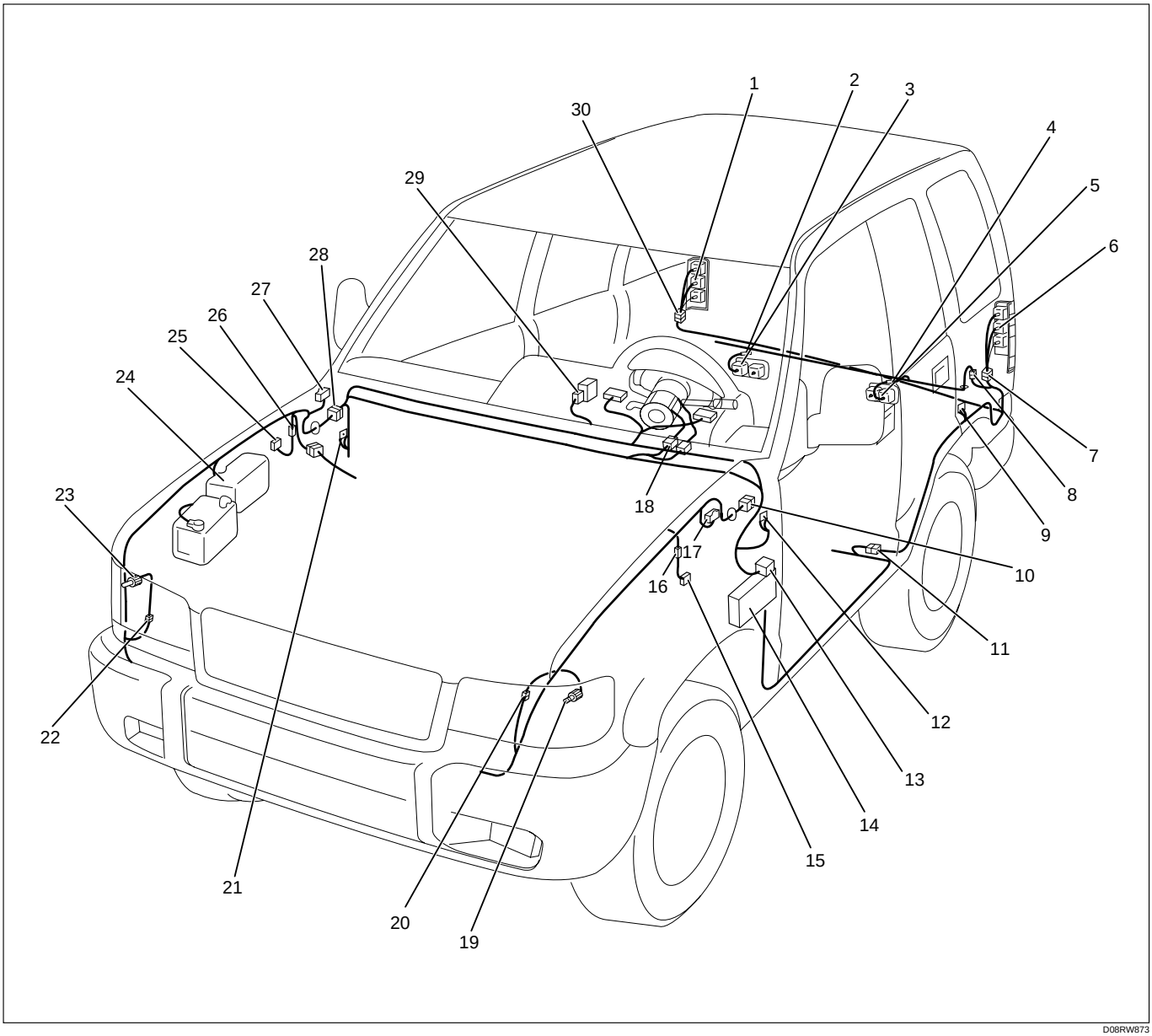

Legend

(1) Rear Turn Signal Light–RH (Body)
(2) F–8
(3) Rear Turn Signal Light–RH (Bumper)
(4) F–7
(5) Rear Turn Signal Light–LH (Bumper)
(6) Rear Turn Signal Light–LH (Body)
(7) R–13
(8) H–33
(9) R–4
(10) H–7, H–25
(11) H–32
(12) B–19
(13) B–53
(14) Fuse Box
(15) Side Turn Signal Light–LH
(16) C–70
(17) C–16
(18) B–12
(19) Front Turn Signal Light–LH
(20) C–22
(21) B–2
(22) C–31
(23) Front Turn Signal Light–RH
(24) Relay and Fuse Box
(25) Side Turn Signal Light–RH
(26) C–61
(27) C–39
(28) H–12, H–13, H–16, H–20
(29) I–11 (Hazard Warning Switch)
(30) R–12

Diagnosis

Quick Chart for Check Points

Check point / Trouble mode	Fuse		Turn signal SW	Hazard SW	Flasher unit	Turn signal bulb	Cable harness
	C-3 (10A)	F-3 (15A)					
1 Both turn signal lights and hazard warning lights inoperative				○	○		○
2 Turn signal light flashes too quickly						○	
3 Hazard warning lights inoperative		○		○			○
4 Turn signal lights inoperative	○		○	○			○
5 Turn signal lights on the right (or left) side inoperative			○				○
6 Hazard warning lights on the right (or left) side inoperative				○			○
7 Turn signal lights and hazard warning ligths on the right (or left) side inoperative							○

1 Both Turn Signal Lights and Hazard Warning Lights Inoperative

- IS THE HAZARD WARNING SW NORMAL?

YES

- REMOVE THE FLASHER UNIT
- TURN THE STARTER SW ON
- IS THE BATTERY VOLTAGE APPLIED BETWEEN 1 B-53 AND THE GROUND?

YES

- IS B-19 GROUNDED SECURELY?

YES

- IS THERE ANY CONTINUITY BETWEEN THE HARNESS SIDE CONNECTOR 3 B-53 AND THE GROUND?

YES

REPLACE THE FLASHER UNIT

NO

REPAIR A POOR CONNECTION AT THE CONNECTORS OR AN OPEN CIRCUIT BETWEEN 3 B-53 AND B-19

NO

GROUND IT SECURELY

NO

REPAIR A POOR CONNECTION AT THE CONNECTORS OR AN OPEN CIRCUIT BETWEEN 7 I-11 AND 1 B-53

NO

REPAIR OR REPLACE THE SW

2 Turn Signal Light Flashes Too Quickly

REINSTALL OR REPLACE THE BULB, REPAIR AN OPEN CIRCUIT IN THE CIRCUIT, OR CHECK THE GROUND CONNECTION

3 Hazard Warning Lights Inoperative

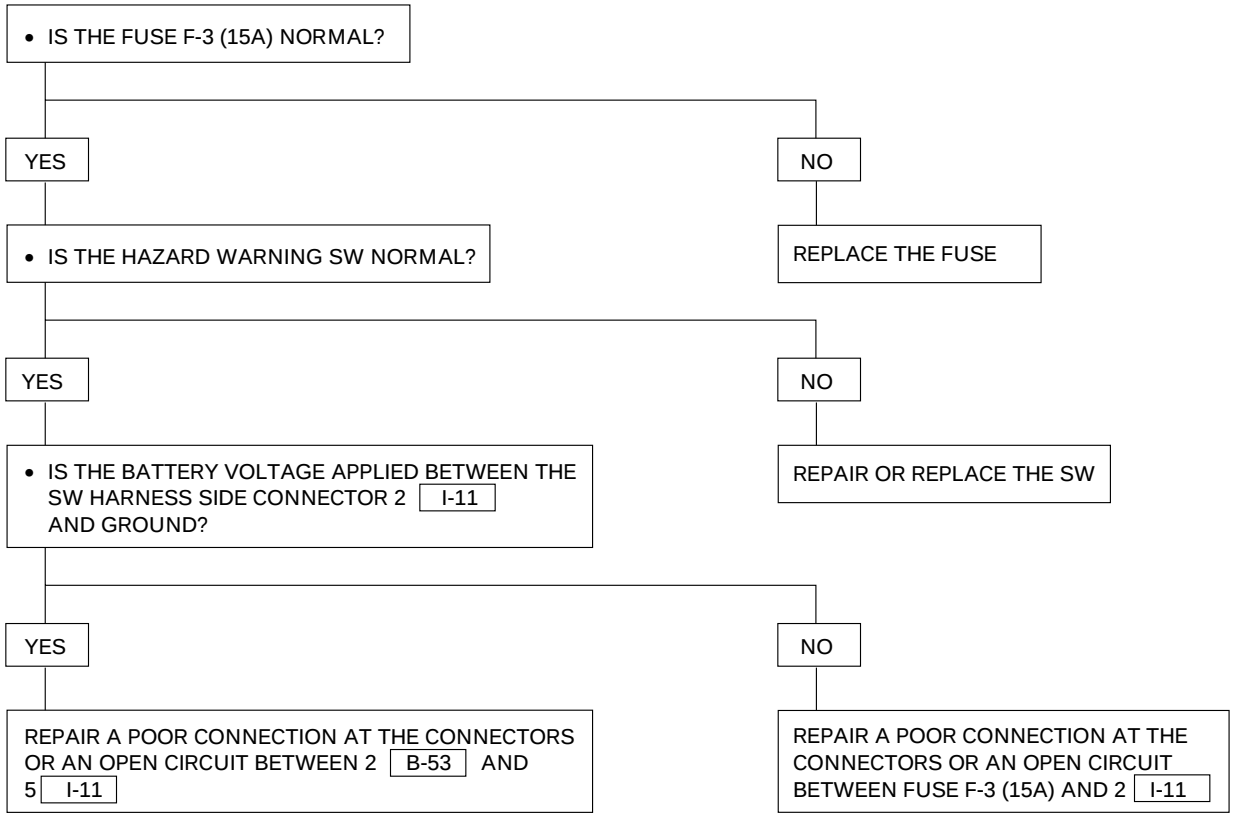

4 Turn Signal Lights Inoperative

- IS FUSE C-3 (10A) NORMAL?

YES

- DISCONNECT THE CONNECTOR OF THE HAZARD WARNING SWITCH
- TURN THE STARTER SWITCH ON.
- IS THE BATTERY VOLTAGE APPLIED BETWEEN THE HAZARD WARNING SWITCH HARNESS SIDE CONNECTOR 8 I-11 AND GROUND?

NO

REPLACE THE FUSE

YES

- WITH THE HAZARD WARNING SWITCH TURNED OFF, IS THERE ANY CONTINUITY BETWEEN THE SWITCH CONNECTORS 7 I-11 AND 8 I-11 ?

NO

REPAIR A POOR CONNECTION AT THE CONNECTORS OR AN OPEN CIRCUIT BETWEEN THE FUSE C-3 (10A) AND 8 I-11 .

YES

- DISCONNECT THE TURN SIGNAL SWITCH CONNECTOR
- IS THERE ANY CONTINUITY BETWEEN THE SWITCH CONNECTORS 3 B-12 AND 4 B-12 (WHEN TURNING TO THE LEFT), AND BETWEEN 3 B-12 AND 5 B-12 (WHEN TURNING TO THE RIGHT)?

NO

REPAIR OR REPLACE THE SWITCH

YES

REPAIR A POOR CONNECTION AT THE CONNECTORS OR AN OPEN CIRCUIT BETWEEN THE HARNESS SIDE CONNECTORS 2 B-53 AND 3 B-12 .

NO

REPAIR OR REPLACE THE SWITCH.

5 Turn Signal Lights On The Right (Or Left) Side Inoperative

- IS TURN SIGNAL SWITCH NORMAL?

YES

REPAIR A POOR CONNECTION AT THE CONNECTORS OR AN OPEN CIRCUIT
[LH]
BETWEEN 4 B-12 AND 21 H-32
[RH]
BETWEEN 5 B-12 AND 22 H-32

NO

REPLACE OR REPAIR THE SWITCH

6 Hazard Warning Lights On The Right (Or Left) Side Inoperative

- IS HAZARD WARNING SWITCH NORMAL?

YES

REPAIR A POOR CONNECTION AT THE CONNECTORS OR AN OPEN CIRCUIT
[LH]
BETWEEN 6 I-11 AND 21 H-32
[RH]
BETWEEN 4 I-11 AND 22 H-32

NO

REPLACE OR REPAIR THE SWITCH

7 Turn Signal Lights and Hazard Warning Lights On The Right (Or Left) Side Inoperative

REPAIR A POOR CONNECTION AT THE CONNECTORS OR AN OPEN CIRCUIT
[LH]
BETWEEN 4 B-12 AND 21 H-32
[RH]
BETWEEN 5 B-12 AND 22 H-32

Stoplight

General Description

The circuit consists of the stoplight, stoplight switch (vehicles w/o cruise control), brake switch (vehicles w/ cruise control).
With the brake pedal depressed, the stoplight switch or the brake switch is turned on to illuminate the stoplight. The brake switch controls not only the operation of the stoplight but also the input of the cruise cancel signals to the cruise control unit.

Circuit Diagram (RHD)

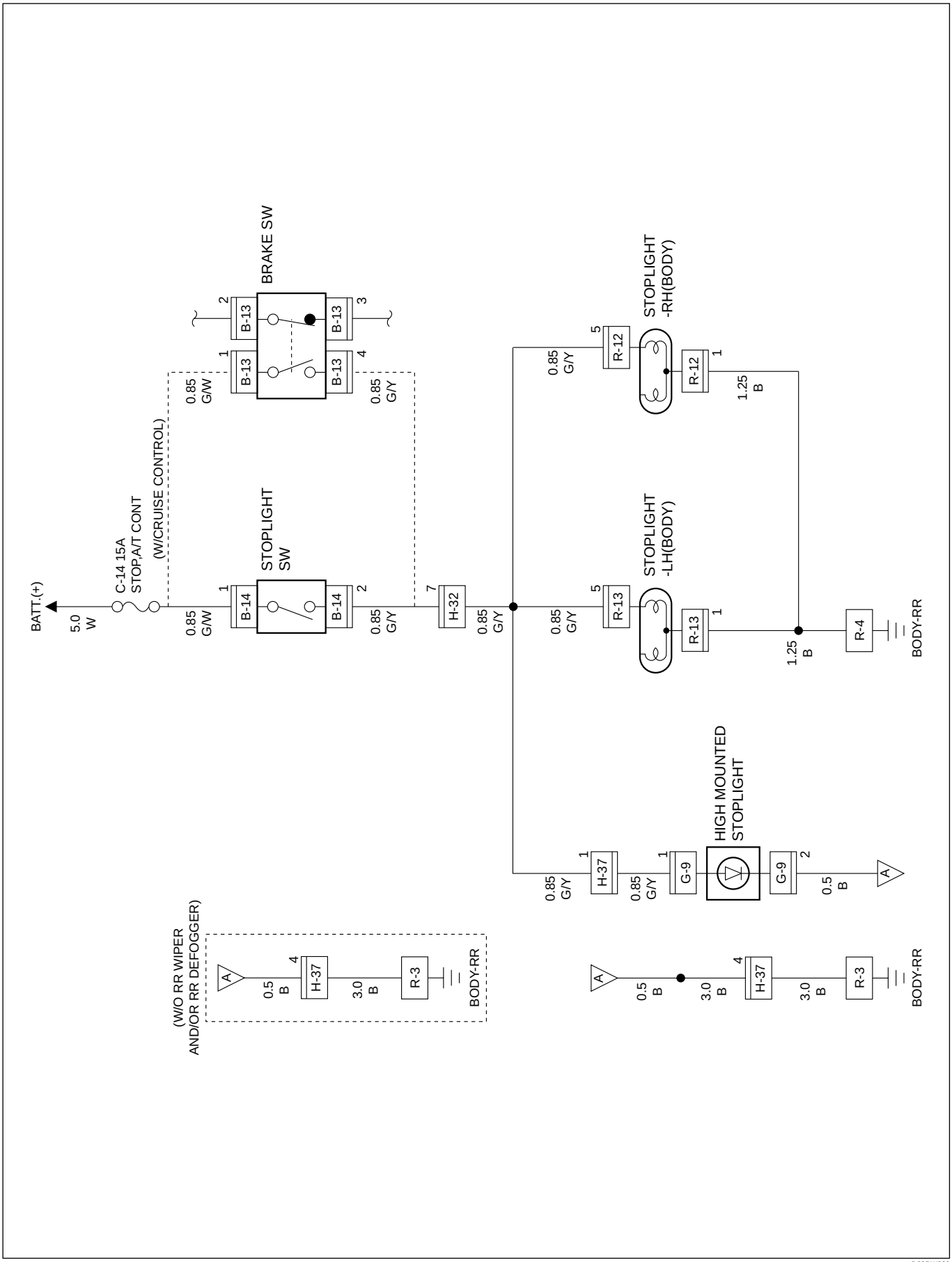

D08RW989

Circuit Diagram (RHD W/Bumper Built-in Type Stoplight)-1

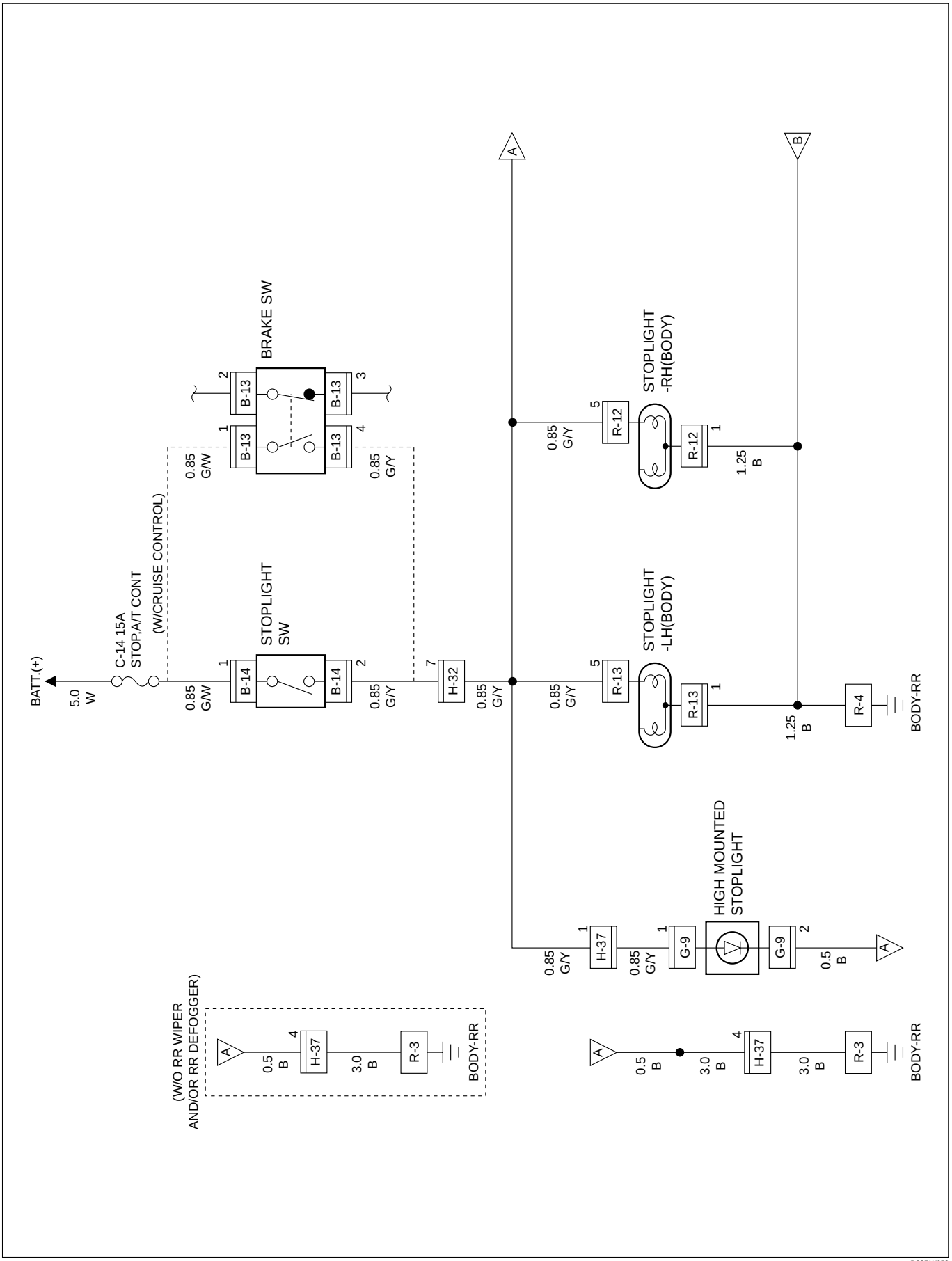

D08RW658

Circuit Diagram (RHD W/Bumper Built-in Type Stoplight)-2

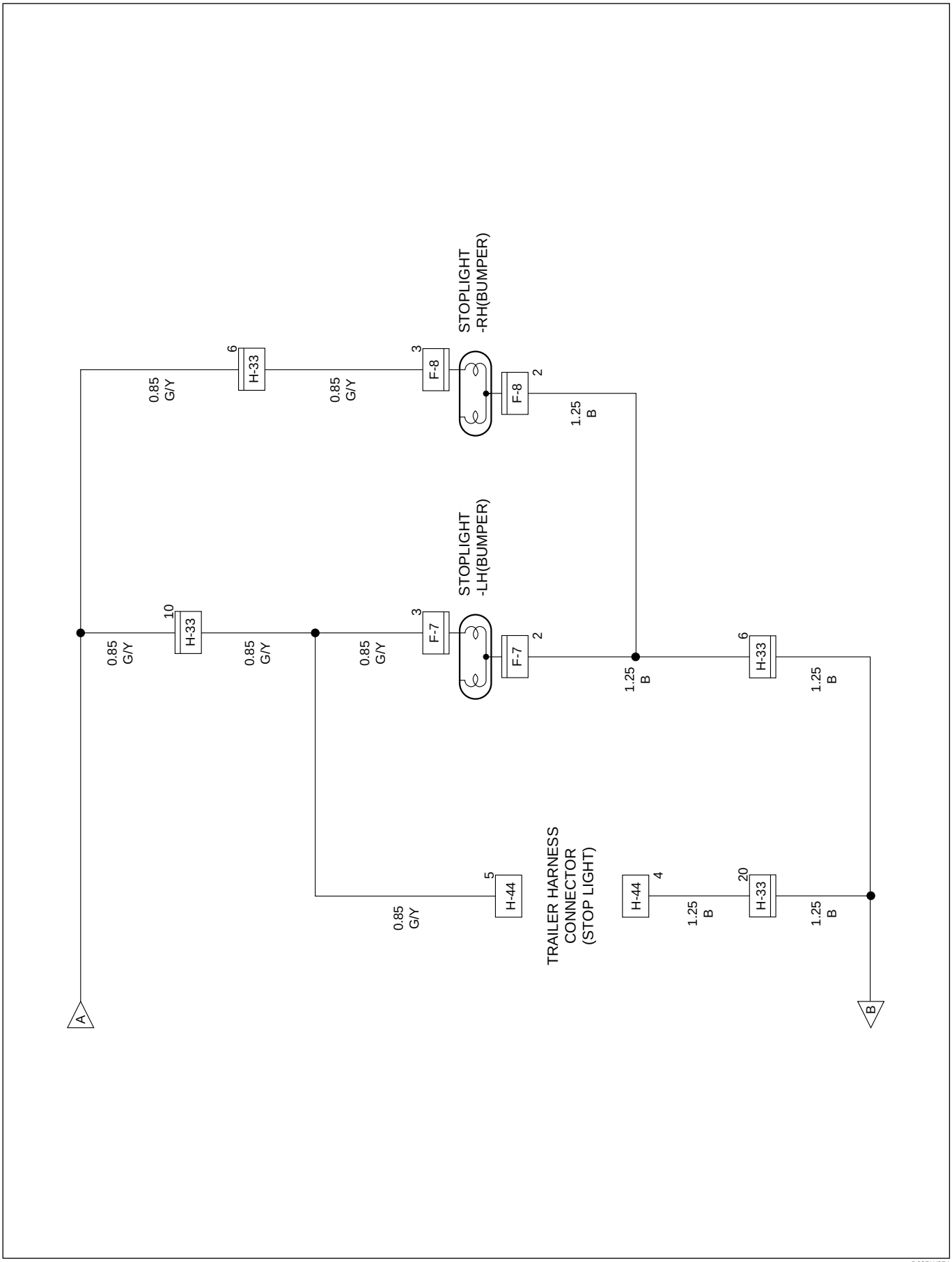

Parts Location (RHD)

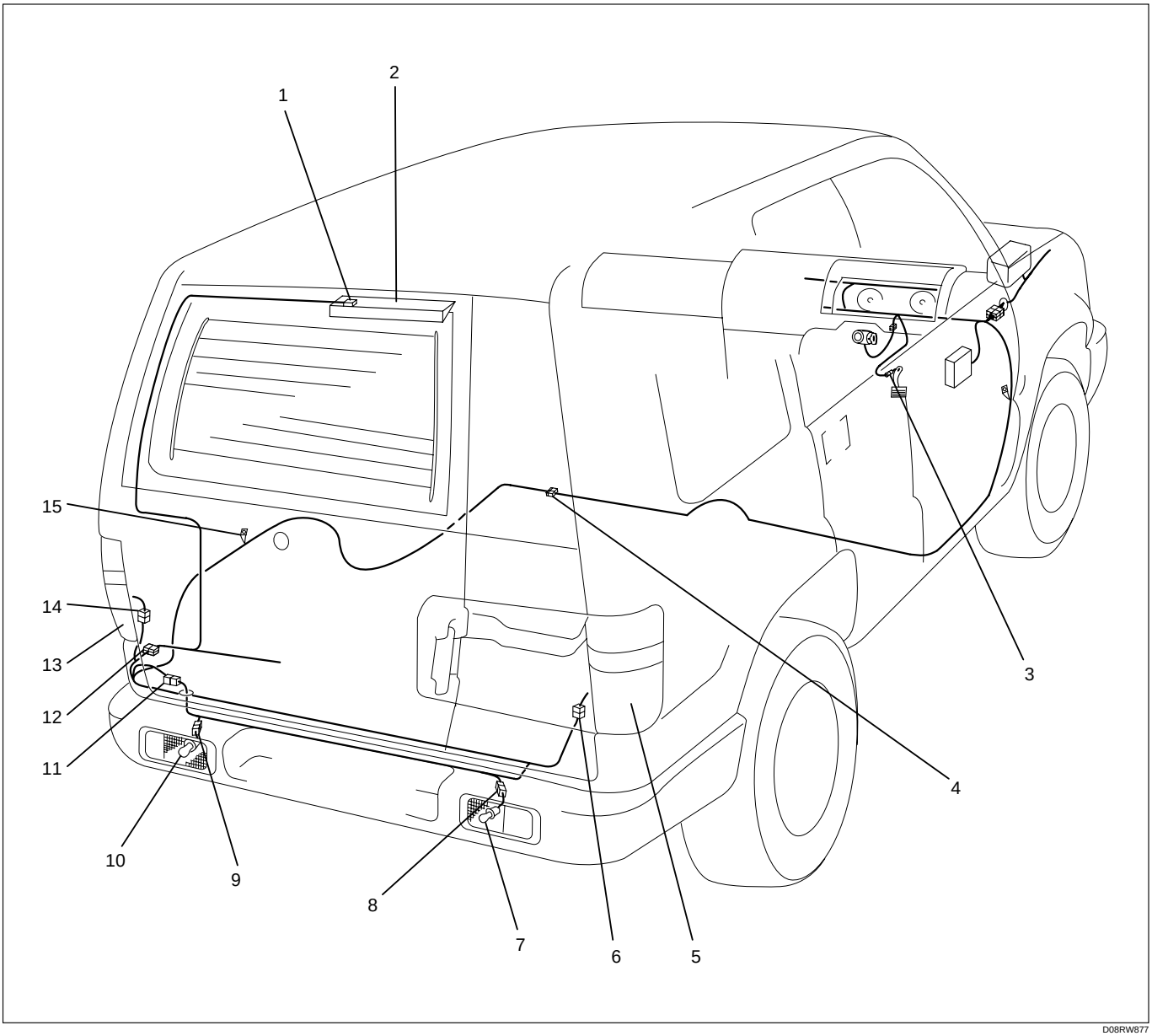

Legend

(1) G-9
(2) High Mounted Stoplight
(3) B-13 or B-14
(4) H-32
(5) Stoplight-RH (Body)
(6) R-12
(7) Stoplight-RH (Bumper)
(8) F-8
(9) F-7
(10) Stoplight-LH (Bumper)
(11) H-33
(12) H-37
(13) Stoplight-LH (Body)
(14) R-13
(15) R-3, R-4

Circuit Diagram (LHD)

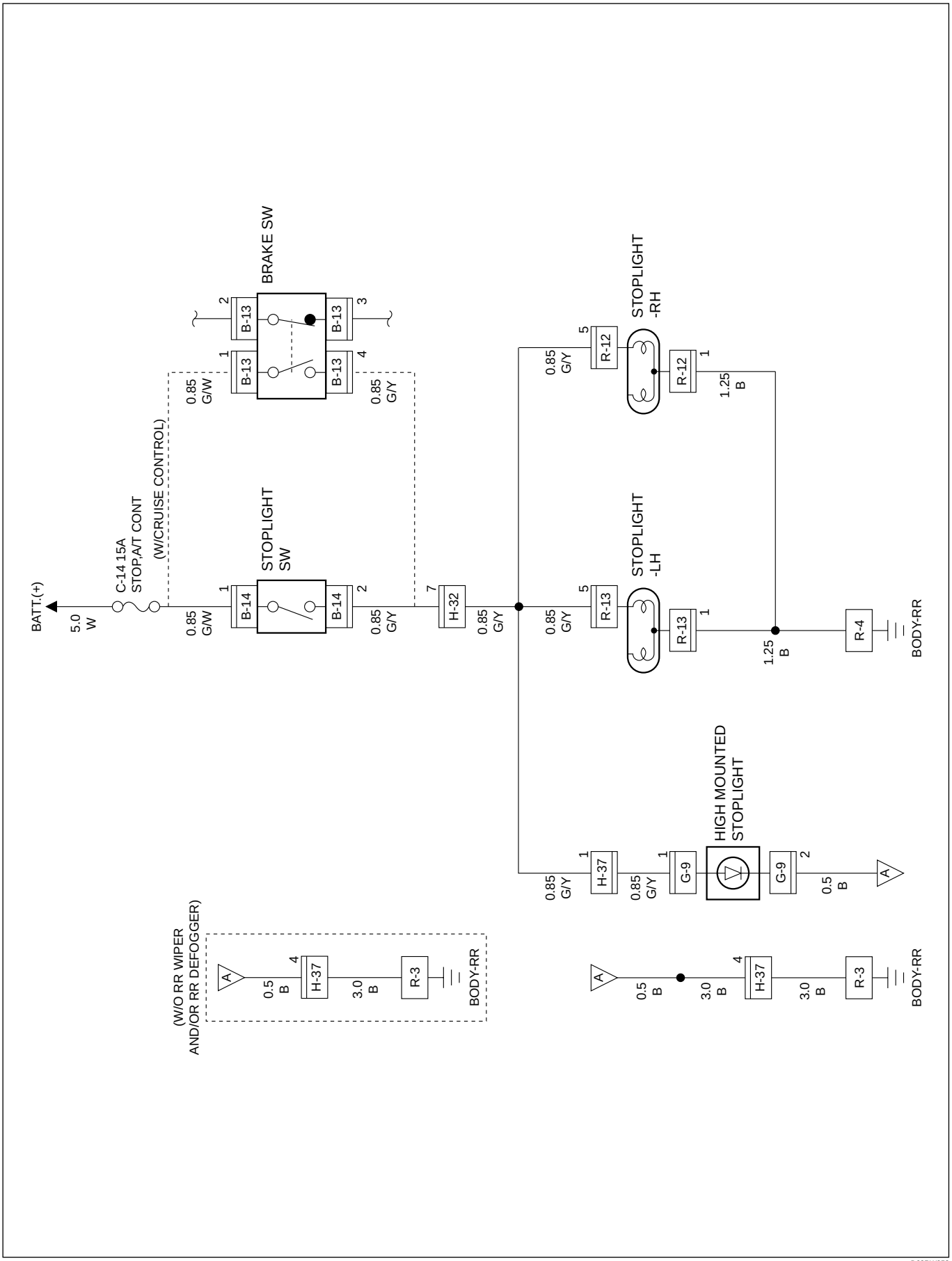

D08RW953

Circuit Diagram (LHD W/Bumper Built-in Type Stoplight)

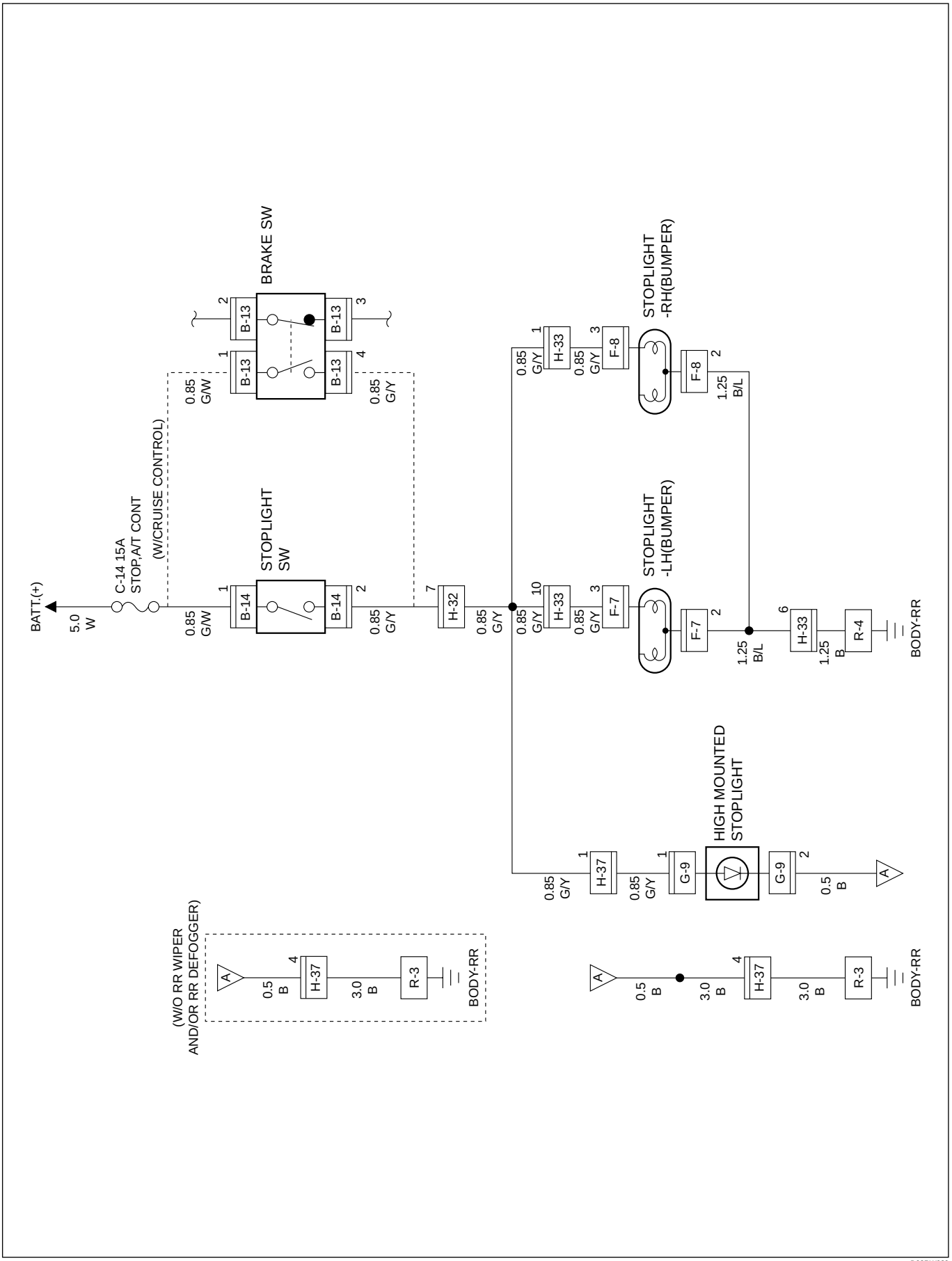

D08RW939

Parts Location (LHD)

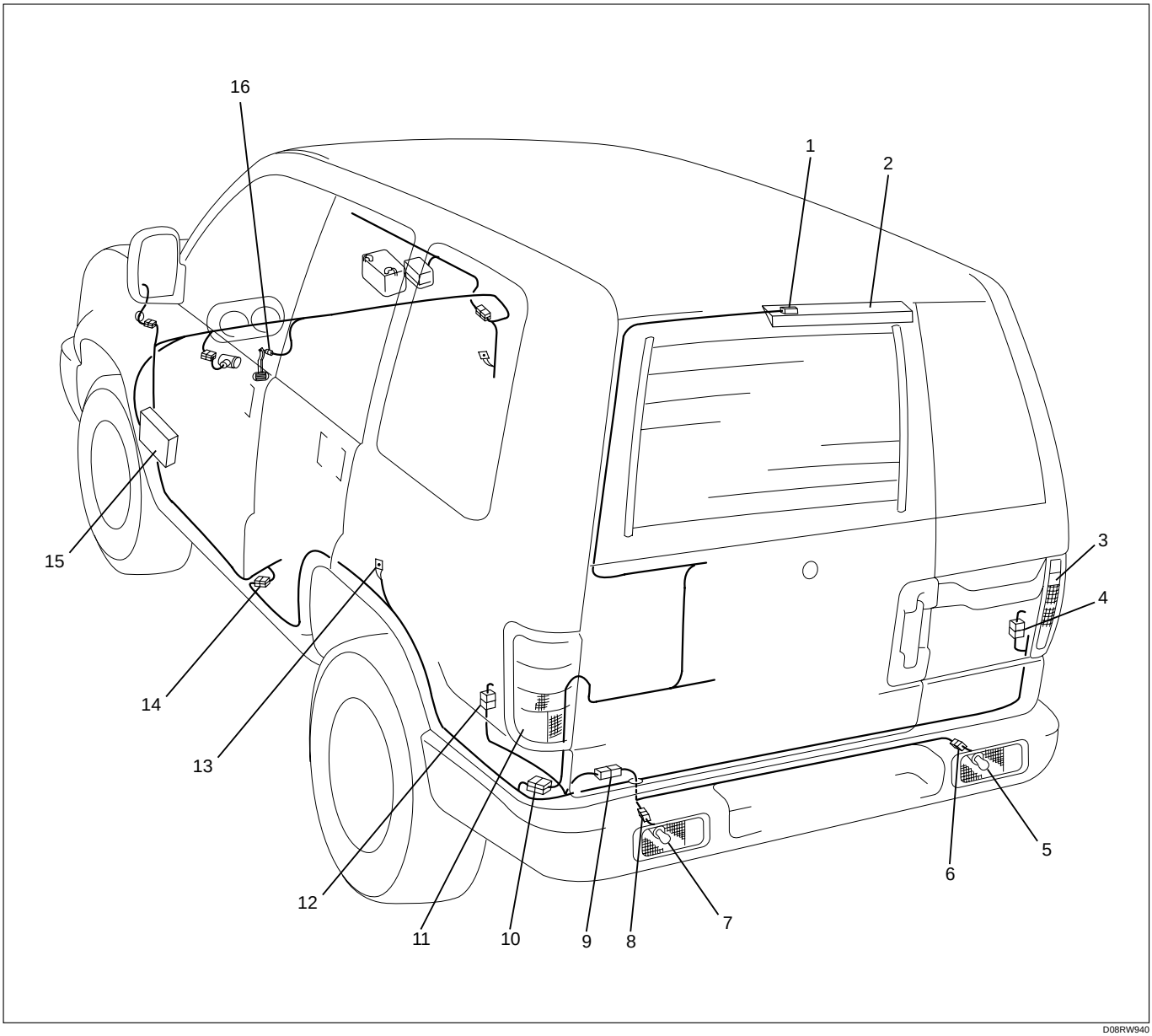

D08RW940

Legend

(1) G-9
(2) High Mounted Stoplight
(3) Stoplight-RH (Body)
(4) R-12
(5) Stoplight-RH (Bumper)
(6) F-8
(7) Stoplight-LH (Bumper)
(8) F-7
(9) H-33
(10) H-37
(11) Stoplight-LH (Body)
(12) R-13
(13) R-3, R-4
(14) H-32
(15) Fuse Box
(16) B-13 or B-14

DIAGNOSIS

Quick Chart for Check Points

Trouble mode \ Check point	Fuse C-14 (15A)	Stoplight SW or brake SW	Stoplight bulb	High mount stoplight ASM	Cable harness
1 Both stoplights inoperative	○	○			○
2 Stoplight on the left (or right) side inoperative			○		○
3 High mounted stoplight inoperative				○	○

1 Both Stoplights Inoperative

- IS FUSE C-14 (15A) NORMAL?

YES

- IS R-4 GROUNDED SECURELY?

NO

REPLACE THE FUSE

YES

- IS THE BATTERY VOLTAGE APPLIED TO 1 B-14 (1 B-13) OF THE STOPLIGHT SW (OR THE BRAKE SW)?

NO

GROUND IT SECURELY

YES

- REMOVE THE STOPLIGHT SW (OR THE BRAKE SW) CONNECTOR.
- WHEN DEPRESS THE BRAKE PEDAL, IS THERE ANY CONTINUITY BETWEEN THE 1 B-14 AND 2 B-14 (OR 1 B-13 AND 4 B-13) OF THE SWITCH?

NO

REPAIR A POOR CONNECTION AT THE CONNECTORS OR AN OPEN CIRCUIT BETWEEN THE FUSE C-14 (15A) AND 1 B-14 (1 B-13)

YES

- DOES THE PUSH ROD OF THE STOPLIGHT SW (OR THE BRAKE SW) OPERATE SMOOTHLY?

NO

REPLACE THE STOPLIGHT SW (OR BRAKE SW)

YES

REPAIR A POOR CONNECTION AT THE CONNECTORS OR AN OPEN CIRCUIT BETWEEN 2 B-14 (4 B-13) AND 7 H-32

NO

REPLACE THE STOPLIGHT SW (OR BRAKE SW)

2 Stoplight On The Left (Or Right) Side Inoperative

(Body Build-in Type Stoplight)

- IS THE STOPLIGHT BULB ON THE LEFT (OR RIGHT) SIDE NORMAL?

YES

- WITH THE STOPLIGHT SW OR BRAKE SW DEPRESSED, IS THE BATTERY VOLTAGE APPLIED BETWEEN 5 R-13 (OR 5 R-12) AND THE GROUND?

YES

REPAIR A POOR CONNECTION AT THE CONNECTORS OR AN OPEN CIRCUIT BETWEEN 1 R-13 (1 R-12) AND R-4

NO

REPAIR A POOR CONNECTION AT THE CONNECTORS OR AN OPEN CIRCUIT BETWEEN 7 H-32 AND 5 R-13 (OR 5 R-12)

NO

REPLACE THE BULB

(Bumper Build-in Type Stoplight)

- IS THE STOPLIGHT BULB ON THE LEFT (OR RIGHT) SIDE NORMAL?

YES

- WITH THE STOPLIGHT SW OR BRAKE SW DEPRESSED, IS THE BATTERY VOLTAGE APPLIED BETWEEN 3 F-7 (OR 3 F-8) AND THE GROUND?

YES

REPAIR A POOR CONNECTION AT THE CONNECTORS OR AN OPEN CIRCUIT BETWEEN 2 F-7 (2 F-8) AND R-4

NO

REPAIR A POOR CONNECTION AT THE CONNECTORS OR AN OPEN CIRCUIT BETWEEN 7 H-32 AND 3 F-7 (OR 3 F-8)

NO

REPLACE THE BULB

3 High Mounted Stoplight Inoperative

- IS R-3 SECURELY GROUNDED?

YES

- ROMOVE THE HIGH MOUNTED STOPLIGHT CONNECTOR
- IS THERE ANY CONTINUITY BETWEEN THE HIGH MOUNTED STOPLIGHT CONNECTOR 1 G-9 AND 2 G-9 ?

YES

- IS THE BATTERY VOLTAGE APPLIED BETWEEN 1 G-9 AND THE GROUND WHEN THE BRAKE PEDAL IS DEPRESSED?

YES

REPAIR A POOR CONNECTION AT THE CONNECTORS OR AN OPEN CIRCUIT BETWEEN 2 G-9 AND R-3

NO

REPAIR A POOR CONNECTION AT THE CONNECTORS OR AN OPEN CIRCUIT BETWEEN 1 G-9 AND 1 H-37

NO

REPAIR OR REPLACE THE HIGH MOUNTED STOPLIGHT

NO

GROUND IT SECURELY

Backup Light

General Description

The circuit consists of backup light switch (M/T), mode switch (A/T) and backup light.
When shfit lever is set to “R” position, backup light switch (M/T) or mode switch (A/T) is activated to illuminate backup light.

Circuit Diagram (RHD)

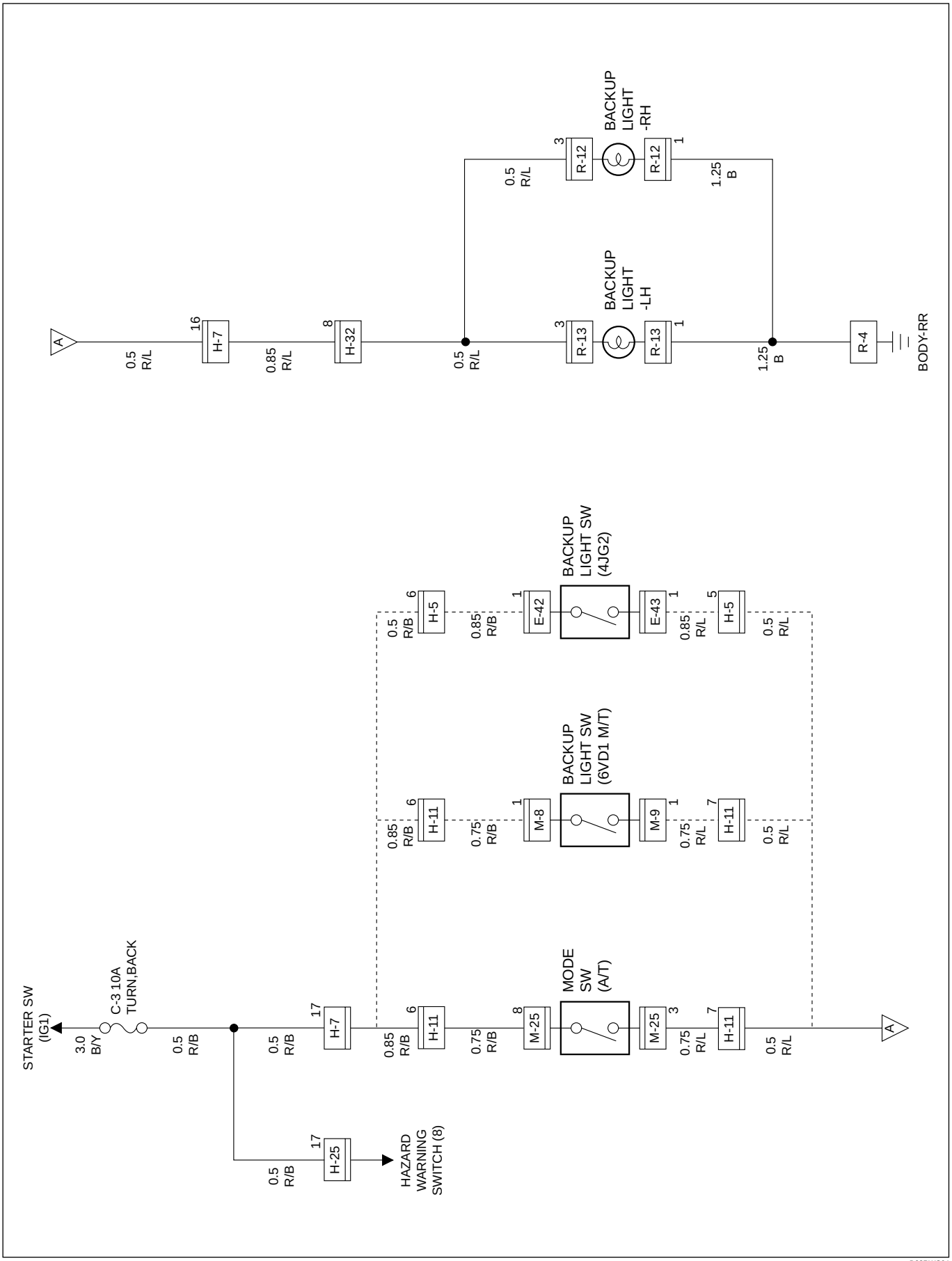

D08RWC64

Circuit Diagram (RHD W/Bumper Built-in Type RR Combination Light)

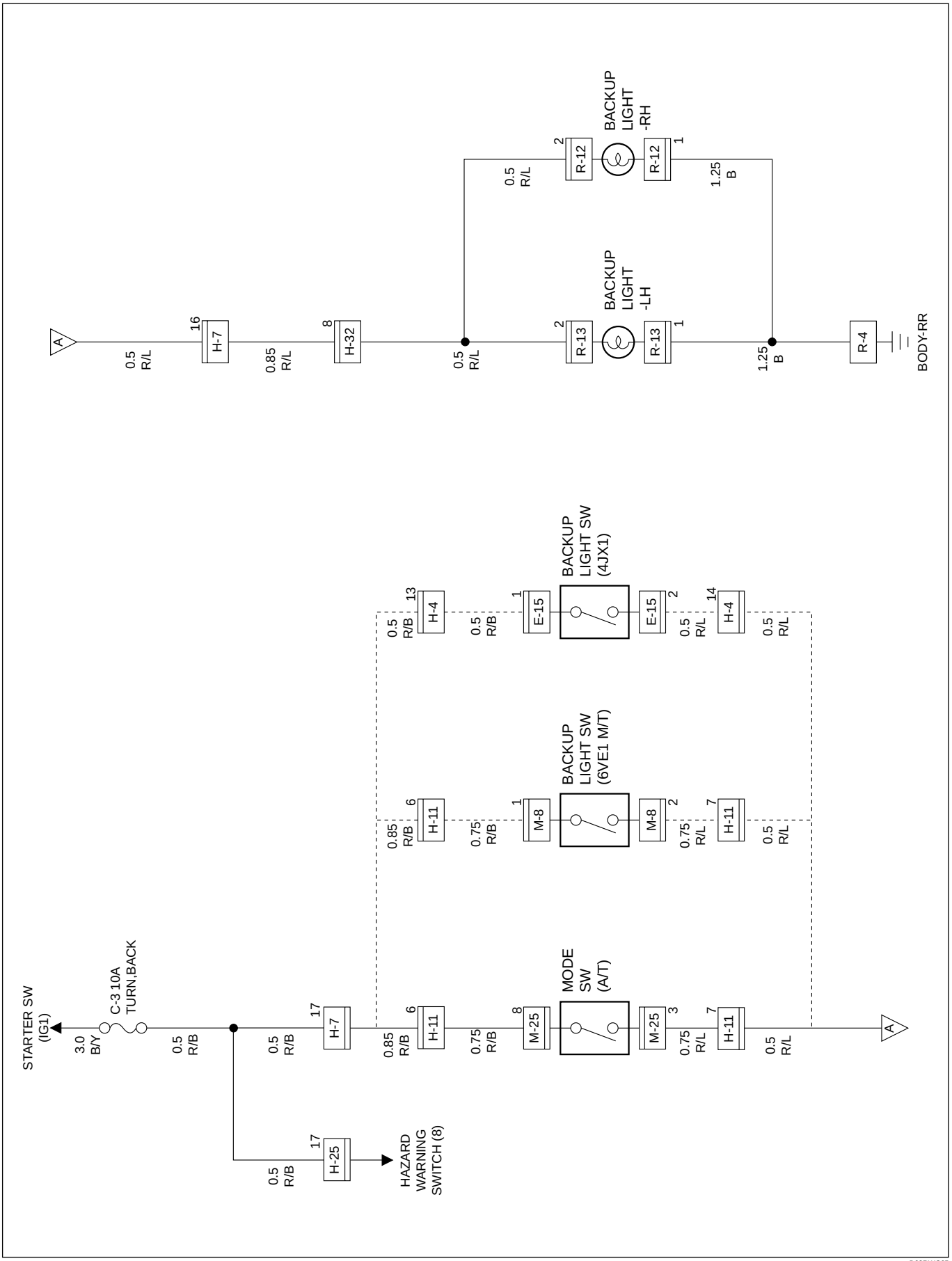

D08RWC65

Parts Location (RHD)

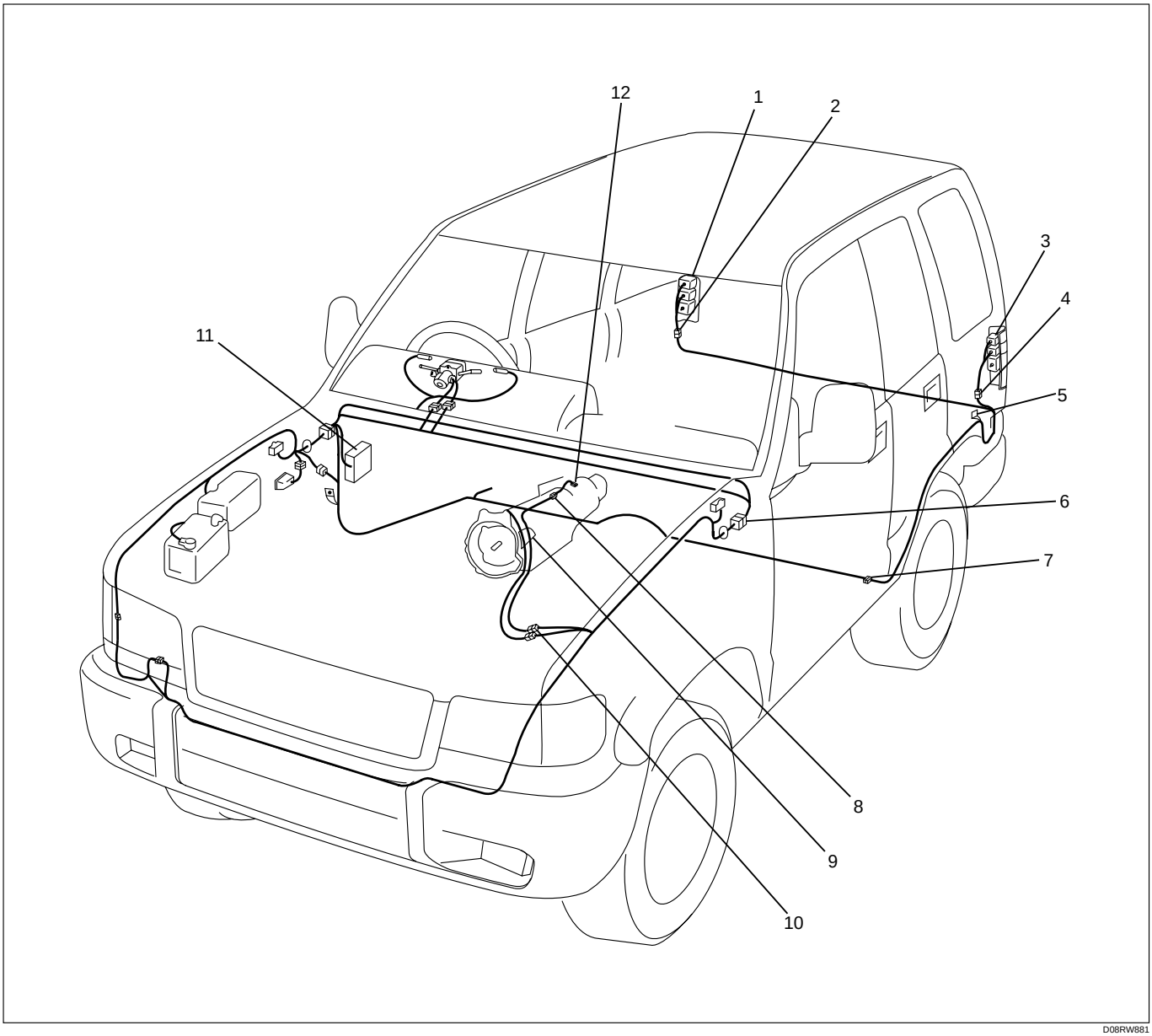

D08RW881

Legend

(1) Backup Light-RH
(2) R-12
(3) Backup Light-LH
(4) R-13
(5) R-4
(6) H-7, H-25
(7) H-32
(8) M-8 (6V*1 M/T), E-42, E-43 (4JG2)
(9) Mode Switch (A/T), M-25
(10) H-4, H-5
(11) Fuse Box
(12) Backup Light Switch (M/T)

Circuit Diagram (LHD)

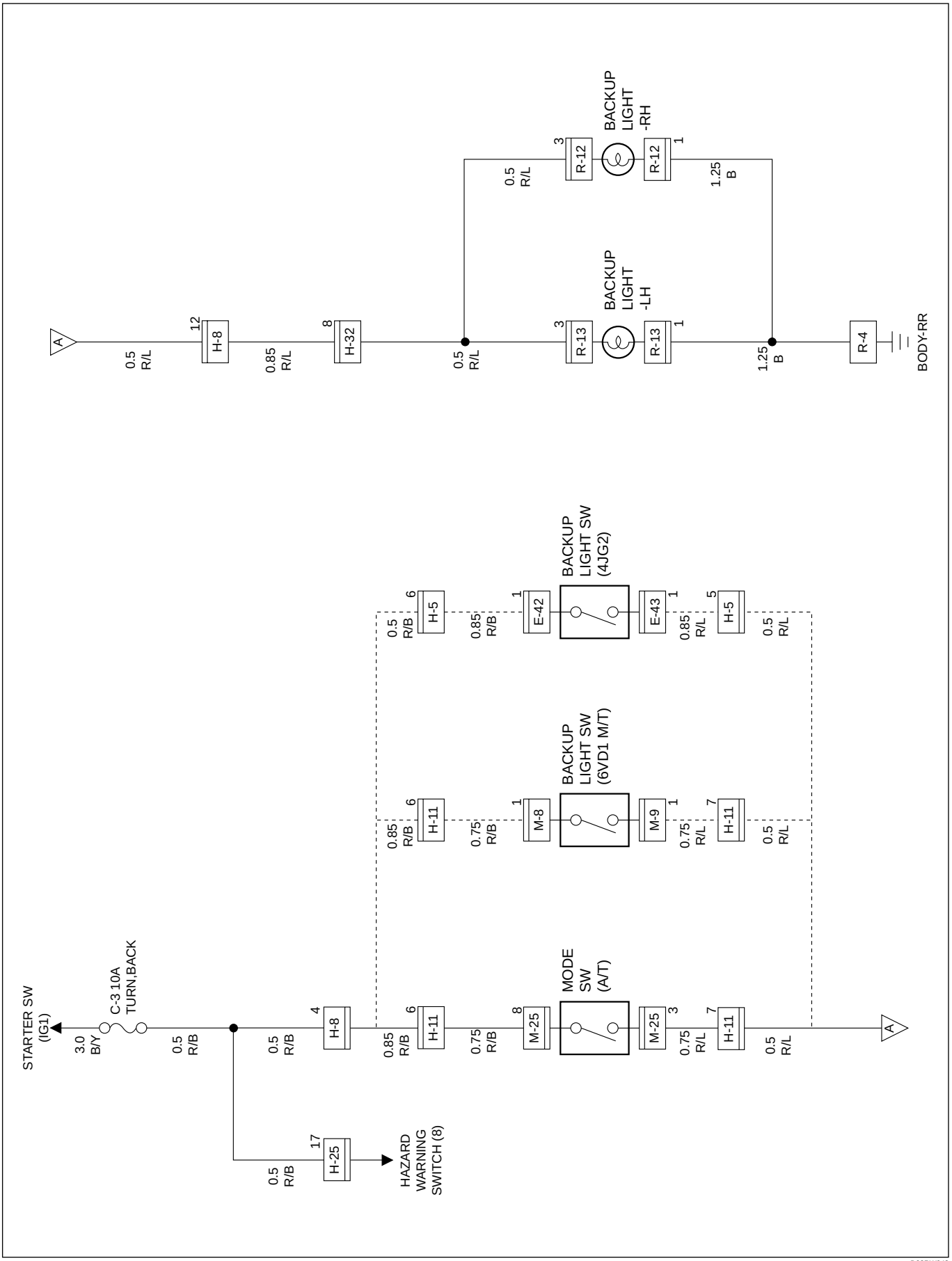

D08RW942

Circuit Diagram (LHD W/Bumper Built-in Type RR Combination Light)

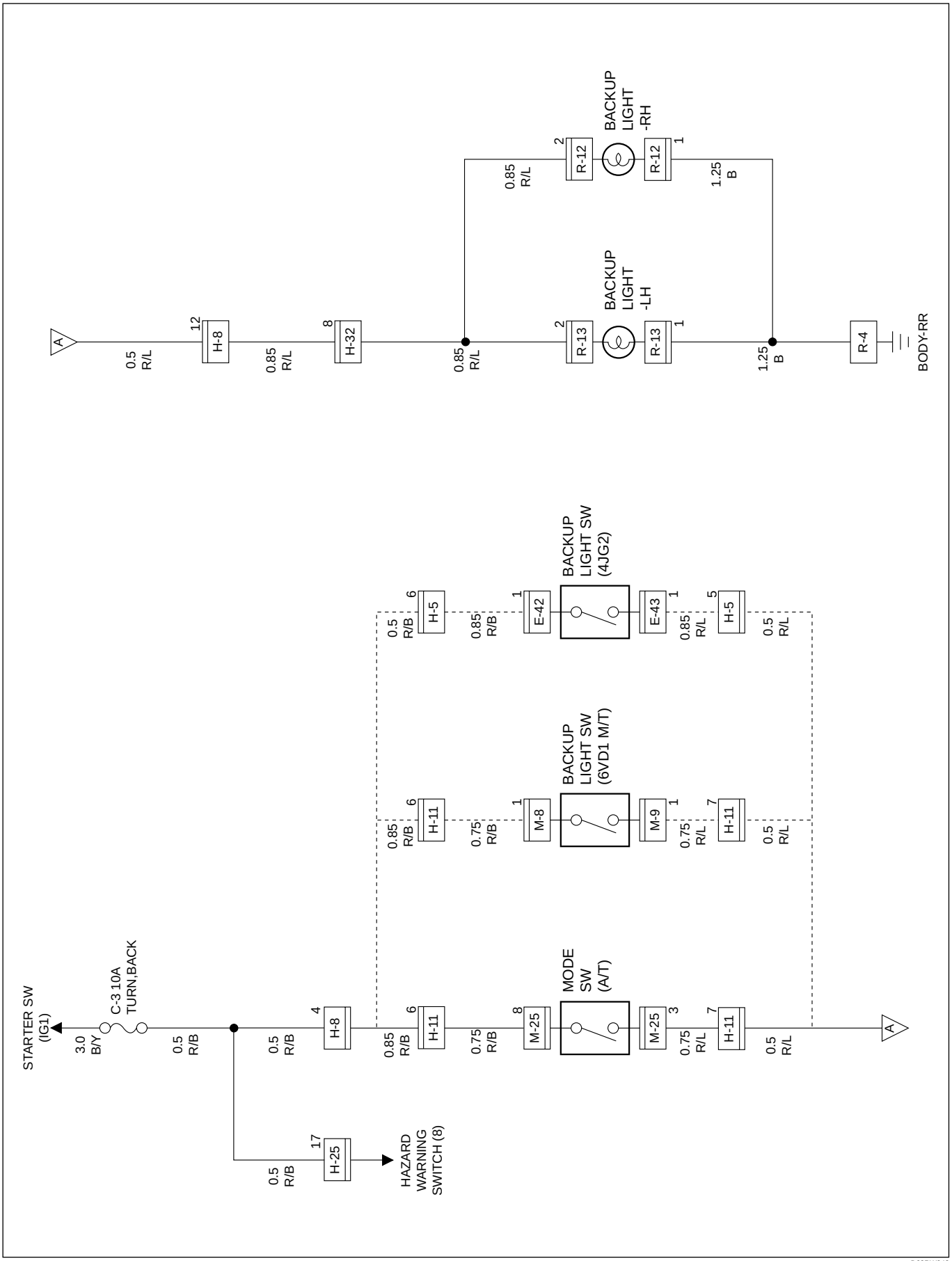

D08RW943

Parts Location (LHD)

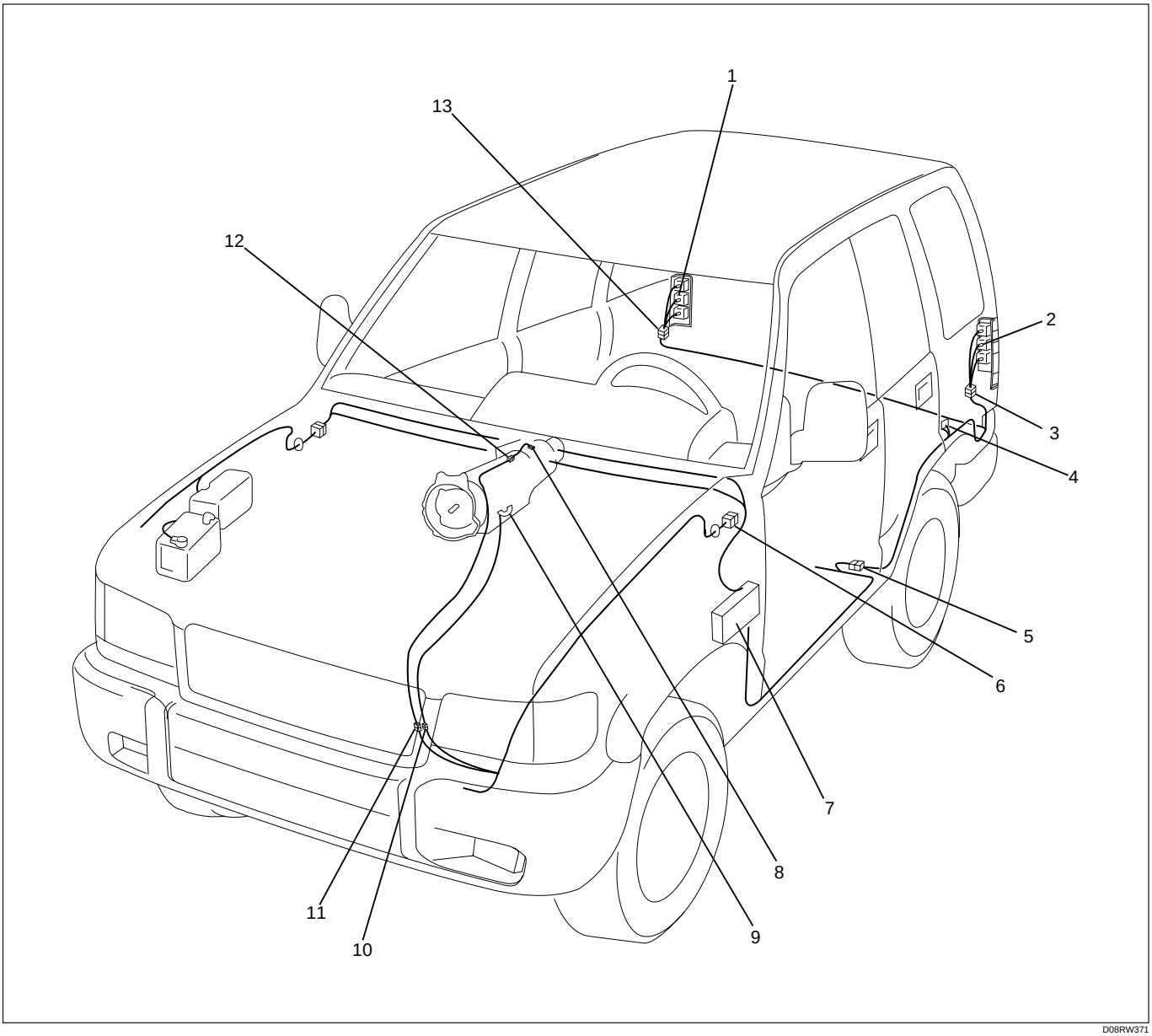

D08RW371

Legend

(1) Backup Light-RH
(2) Backup Light-LH
(3) R-13
(4) R-4
(5) H-32
(6) H-8, H-25
(7) Fuse Box
(8) Backup Light Switch (M/T)
(9) Mode Switch (A/T) M-25
(10) H-11
(11) H-5
(12) M-8, M-9, E-42, E-43
(13) R-12

Diagnosis

Quick Chart for Check Points

Trouble mode \ Check point	Fuse		Backup light SW/ Mode SW	Backup light bulb	Horn SW	Horn relay	Cable harness
	C-3 (10A)	F-3 (15A)					
1 Both backup lights inoperative	○		○				○
2 Backup light on the left (or right) side do not light up				○			○
3 Backup light remains on			○				

1 Both Backup Lights Inoperative

- IS FUSE C-3 (10A) NORMAL?

YES

- IS R-4 GROUNDED SECURELY?

YES

- TURN THE STARTER SW ON
- IS THE BATTERY VOLTAGE APPLIED BETWEEN THE MODE SW (OR BACKUP LIGHT SW) HARNESS SIDE CONNECTORS 8 M-25 (1 E-42 , 1 M-8 OR 1 E-15) AND THE GROUND?

YES

- SET THE TRANSMISSION GEAR TO THE REVERSE POSITION
- WITH THE MODE SW (OR BACKUP LIGHT SW) CONNECTOR DISCONNECTED, IS THERE CONTINUITY BETWEEN THE SW SIDE CONNECTORS 5 C-43 AND 2 C-43 (1 E-42 AND 1 E-43 OR 1 M-8 AND 1 M-9) ?

REPAIR A POOR CONNECTION AT THE CONNECTORS OR AN OPEN CIRCUIT BETWEEN 2 C-43 (1 E-43 OR 1 M-9) AND 8 H-32

NO

REPAIR OR REPLACE THE MODE SW (BACKUP LIGHT SW)

NO

REPAIR A POOR CONNECTION AT THE CONNECTORS OR AN OPEN CIRCUIT BETWEEN THE FUSE C–3 (10A) AND MODE SW (BACKUP LIGHT SW)

NO

GROUND IT SECURELY

NO

REPLACE THE FUSE

2 Backup Light On The Left (Or Right) Side Inoperative

- IS THE BACKUP LIGHT BULB ON THE LEFT (OR RIGHT) SIDE NORMAL?

YES

- WITH THE STARTER SW AND THE BACKUP LIGHT SW AT ON POSITION, IS THE BATTERY VOLTAGE APPLIED BETWEEN 3 R-13 (OR 3 R-12) AND THE GROUND OR 2 R-13 (OR 2 R-12) AND THE GROUND?

YES

REPAIR A POOR CONNECTION AT THE CONNECTORS OR AN OPEN CIRCUIT BETWEEN BACKUP LIGHT HARNESS SIDE CONNECTOR 1 R-13 (OR 1 R-12) AND R-4

NO

REPAIR A POOR CONNECTION AT THE CONNECTORS OR AN OPEN CIRCUIT BETWEEN 8 H-32 AND 3 R-13 (OR 3 R-12) OR 8 H-32 AND 2 R-13 (OR 2 R-12)

NO

REPLACE THE BULB

3 Backup Light Remains ON

REPAIR OR REPLACE THE MODE SW (BACKUP LIGHT SW)

Horn

General Description

The circuit consists of horn (high note), horn (low note), horn relay and horn switch.
When horn switch is pushed, (independent of position of starter switch) horn relay is activated to sound horns.

Circuit Diagram (RHD)

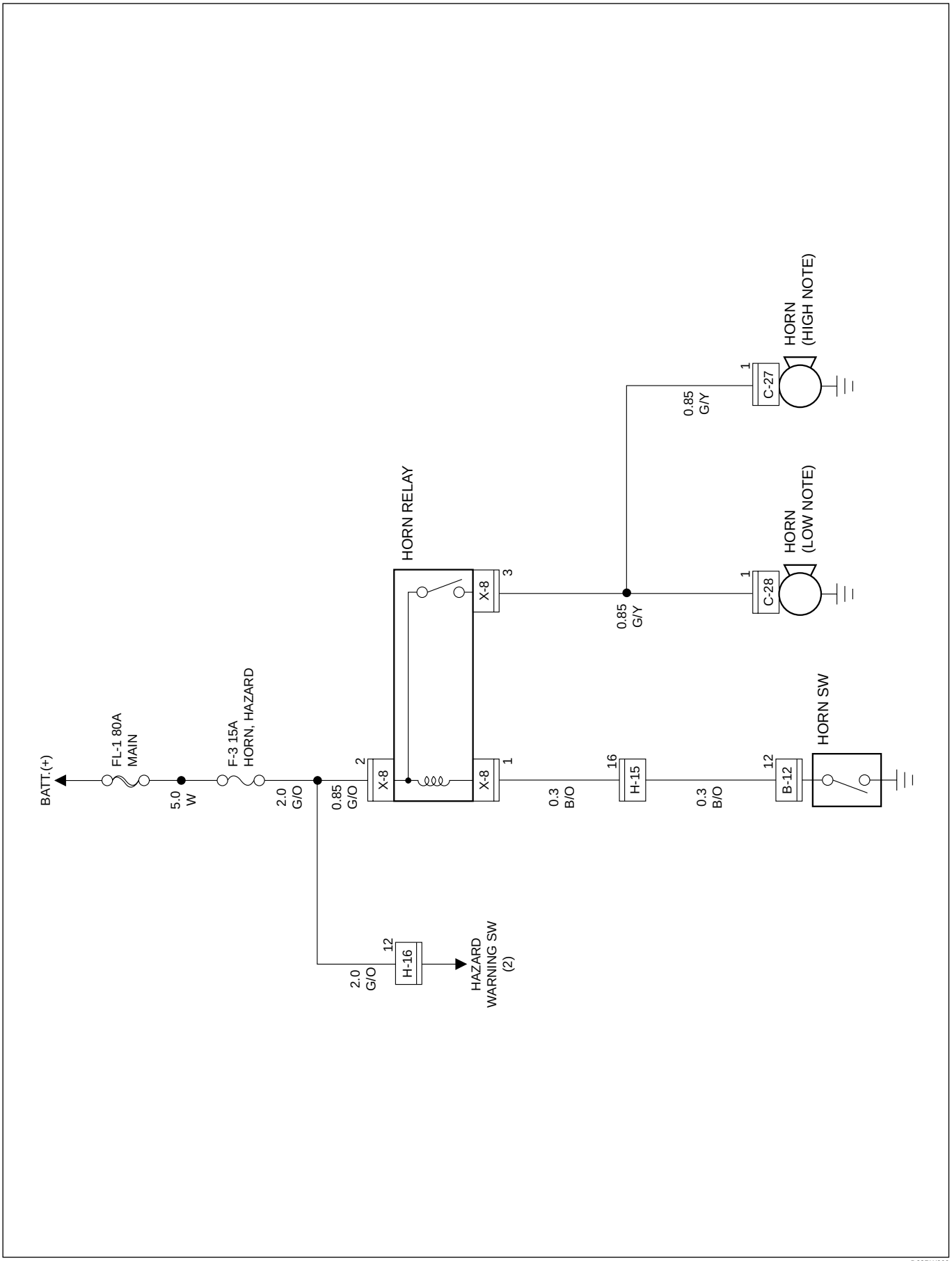

D08RW660

Parts Location (RHD)

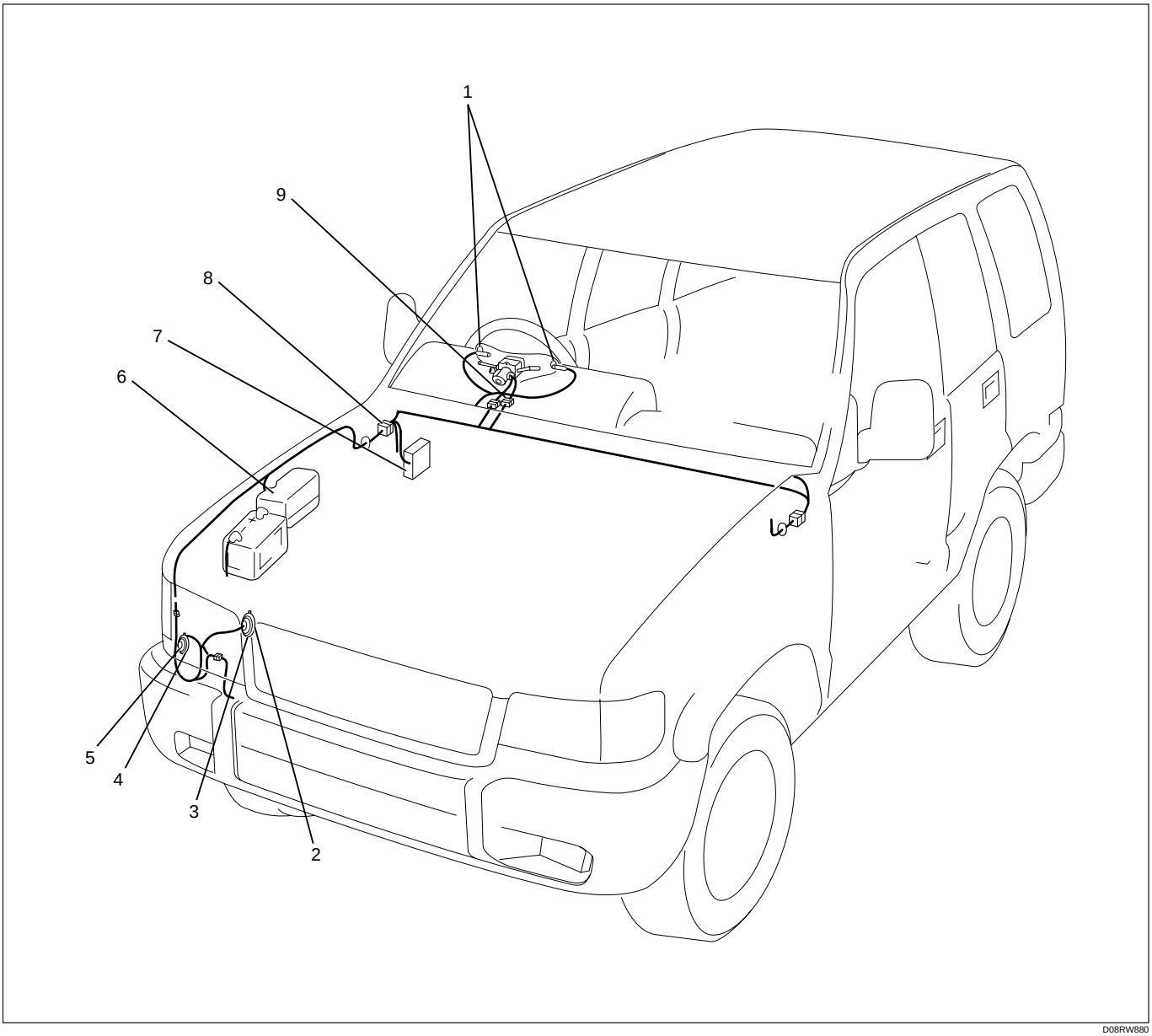

D08RW880

Legend

(1) Horn Switch
(2) Horn (Low Note)
(3) C-28
(4) C-27
(5) Horn (High Note)
(6) Relay and Fuse Box (X-8)
(7) Fuse Box
(8) H-15, H-16
(9) B-12

Circuit Diagram (LHD)

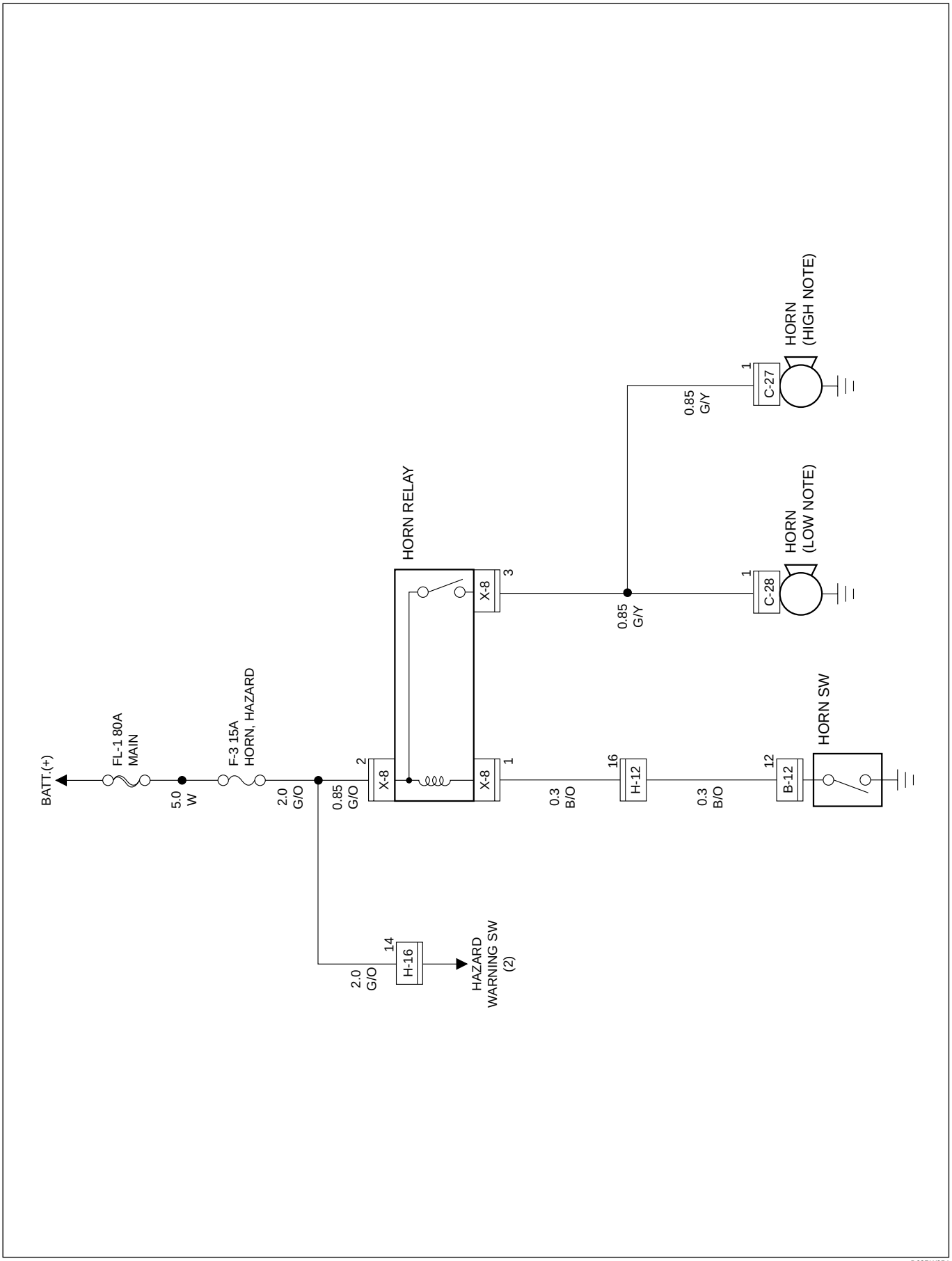

D08RW954

Parts Location (LHD)

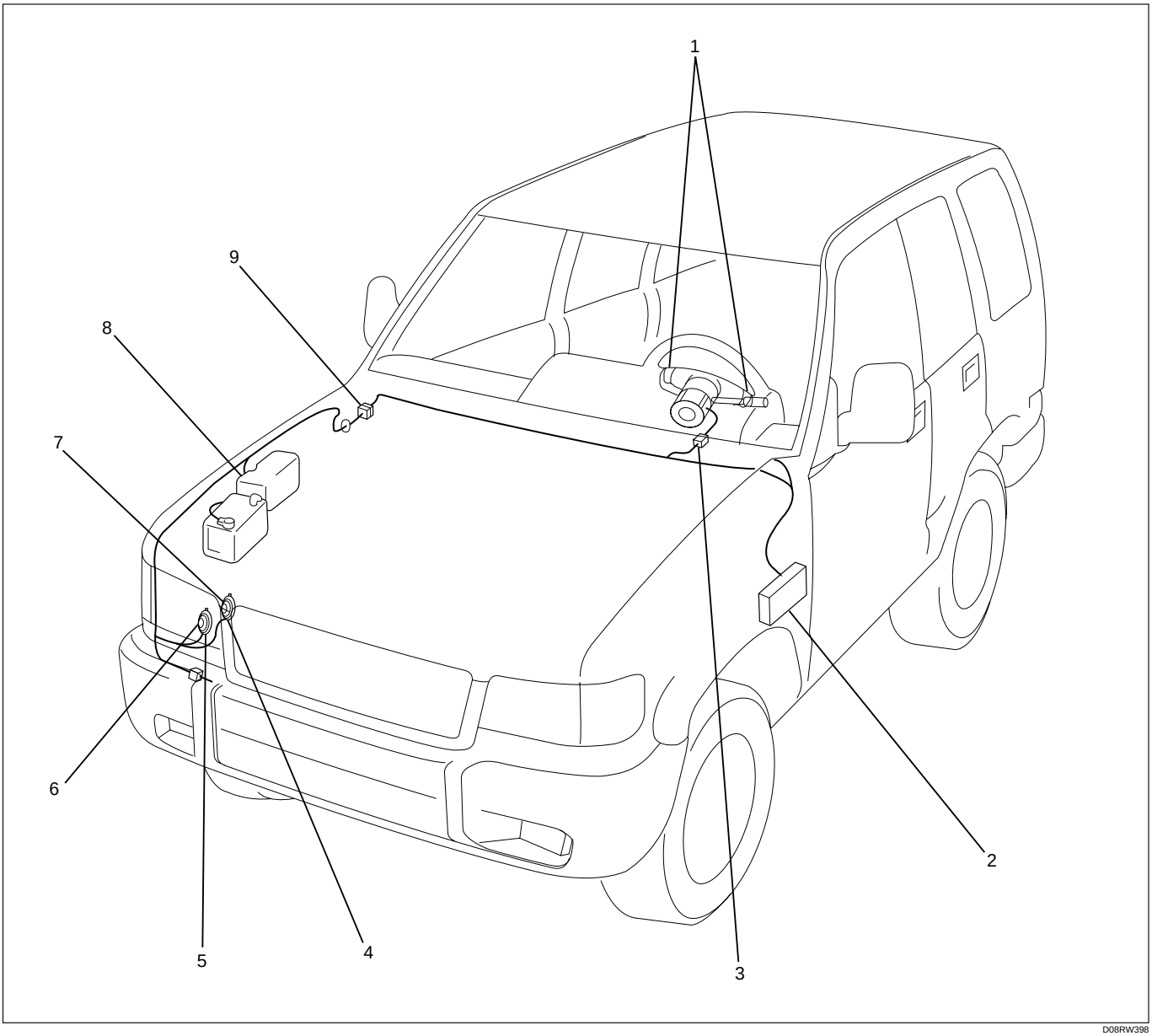

D08RW398

Legend

(1) Horn Switch
(2) Fuse Box
(3) B-12
(4) C-28
(5) C-27
(6) Horn (High Note)
(7) Horn (Low Note)
(8) Relay and Fuse Box (X-8)
(9) H-12, H-16

1 Horns Do Not Sound

- IS FUSE F-3 (15A) NORMAL?

YES

- IS THE HORN RELAY NORMAL?

NO

REPLACE THE FUSE

YES

- IS THE BATTERY VOLTAGE APPLIED BETWEEN 2 X-8 AND THE GROUND?

NO

REPLACE THE HORN RELAY

YES

- IS THE HORN SWITCH NORMAL?

NO

REPAIR A POOR CONNECTION AT THE CONNECTORS OR AN OPEN CIRCUIT BETWEEN FUSE F-3 (15A) AND 2 X-8

YES

- WITH THE HORN SWITCH DEPRESSED,
- IS THERE CONTINUITY BETWEEN 1 X-8 AND THE GROUND?

NO

REPAIR OR REPLACE THE SWITCH

YES

REPAIR A POOR CONNECTION AT THE CONNECTORS OR AN OPEN CIRCUIT BETWEEN 3 X-8 AND 1 C-27 (1 C-28)

NO

REPAIR A POOR CONNECTION AT THE CONNECTORS OR AN OPEN CIRCUIT BETWEEN 1 X-8 AND 12 B-12

WARNING:

WHEN SERVICING A VEHICLE EQUIPPED WITH SUPPLEMENTAL RESTRAINT SYSTEM, PAY CLOSE ATTENTION TO ALL WARNINGS AND CAUTIONS.
FOR DETAILED EXPLANATION ABOUT SRS, REFER TO SECTION 9J “SUPPLEMENTAL RESTRAINT SYSTEM (SRS)” AND 3F4 “SUPPLEMENTAL RESTRAINT SYSTEM STEERING WHEEL & COLUMN”.

2 Horns Do Not Shut Off

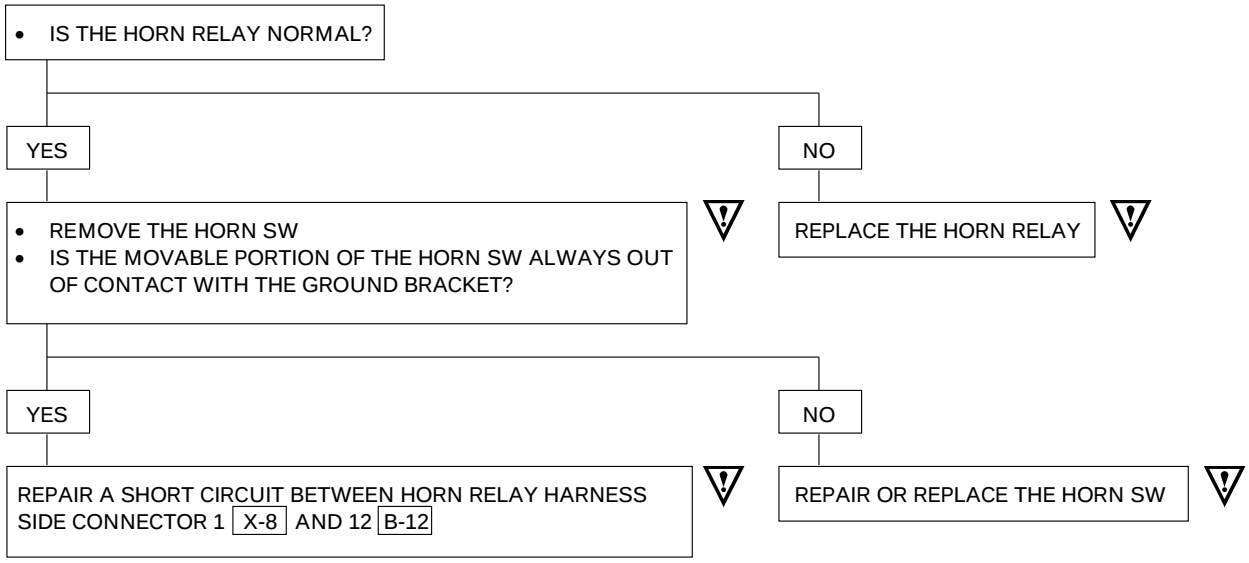

WARNING:

WHEN SERVICING A VEHICLE EQUIPPED WITH SUPPLEMENTAL RESTRAINT SYSTEM, PAY CLOSE ATTENTION TO ALL WARNINGS AND CAUTIONS.
FOR DETAILED EXPLANATION ABOUT SRS, REFER TO SECTION 9J “SUPPLEMENTAL RESTRAINT SYSTEM (SRS)” AND 3F4 “SUPPLEMENTAL RESTRAINT SYSTEM STEERING WHEEL & COLUMN”.

Dome Light, Luggage Room Light, Courtesy Light and Map Light

General Description

This circuit consists of the starter switch, door switch, dome light, luggage room light, courtesy light, map light, and alarm & relay control unit.
The dome light lights up when any one of doors except the tailgate is opened with the switch set at the door mode.
The courtesy lights for the front doors are controlled by front door switch–LH.
The luggage room light illuminates by opening the tailgate when the switch is set at the door mode.
The map light illuminates by turning the switch on.
All these lights light up by turning on respective switches regardless of the position of the starter switch key.
The buzzer in the alarm & relay control unit sounds to remind the driver to turn off the lights when the starter switch is turned off.

Circuit Diagram (RHD)-1

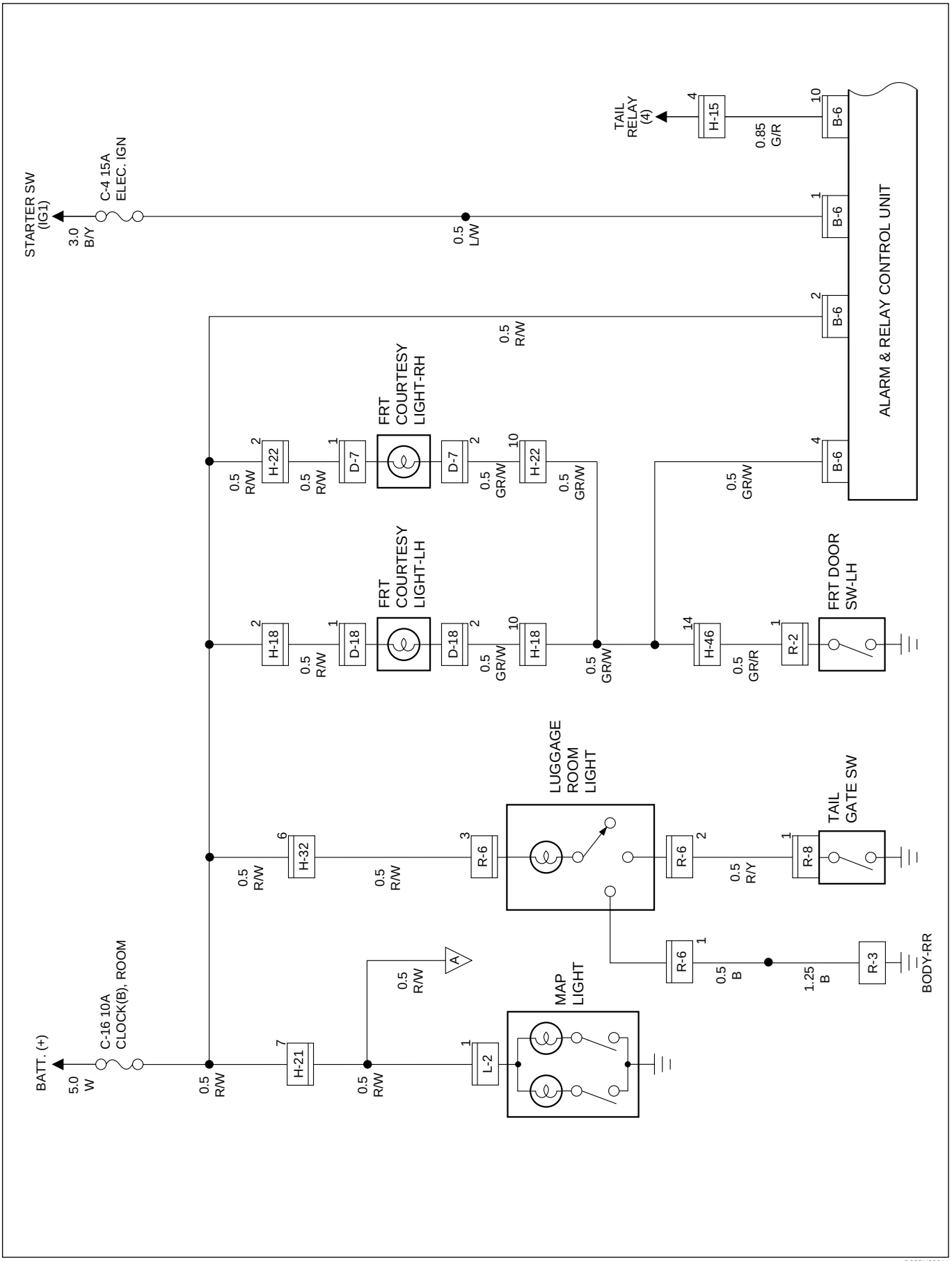

D08RY00214

Circuit Diagram (RHD)-2

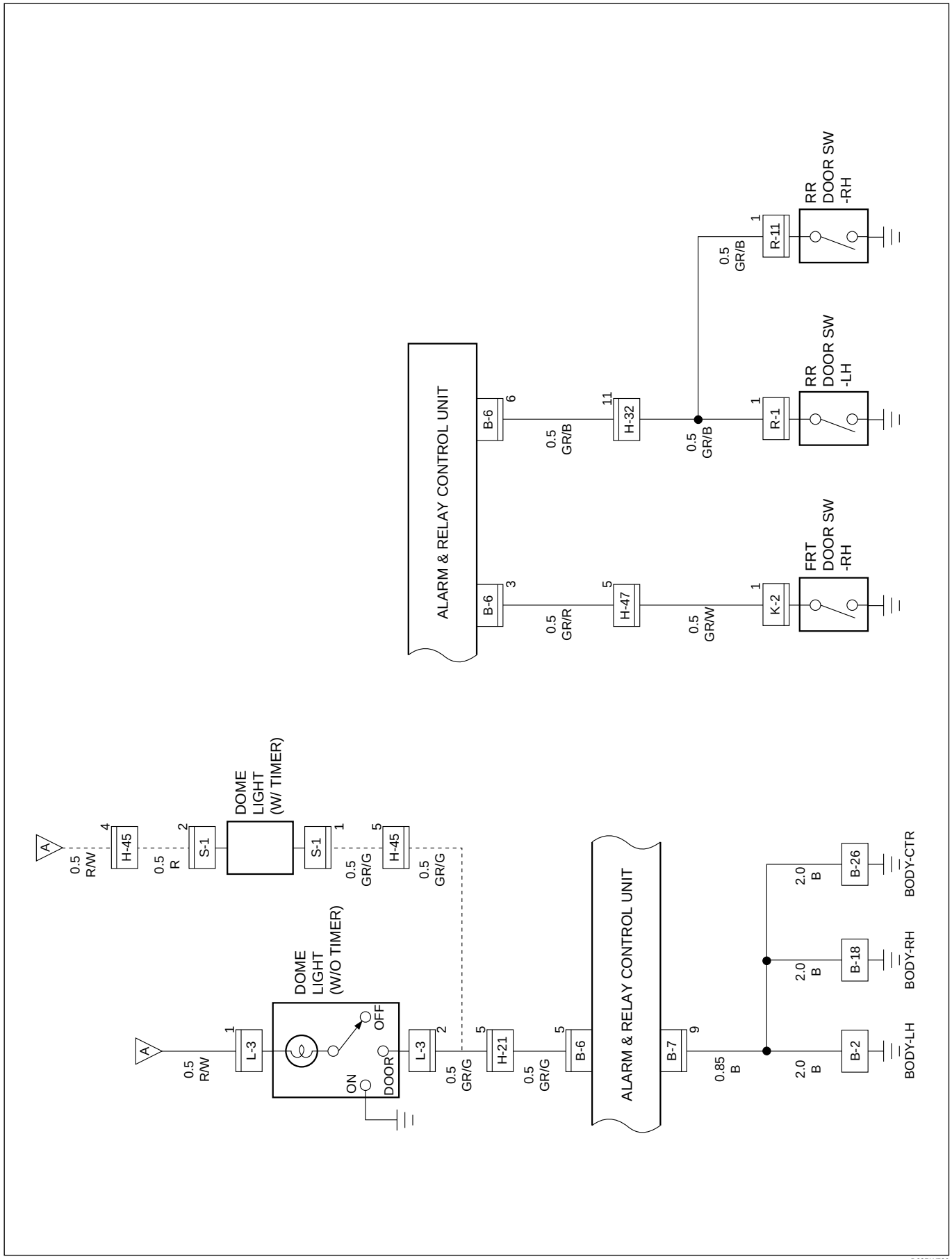

D08RW780

Parts Location (RHD)

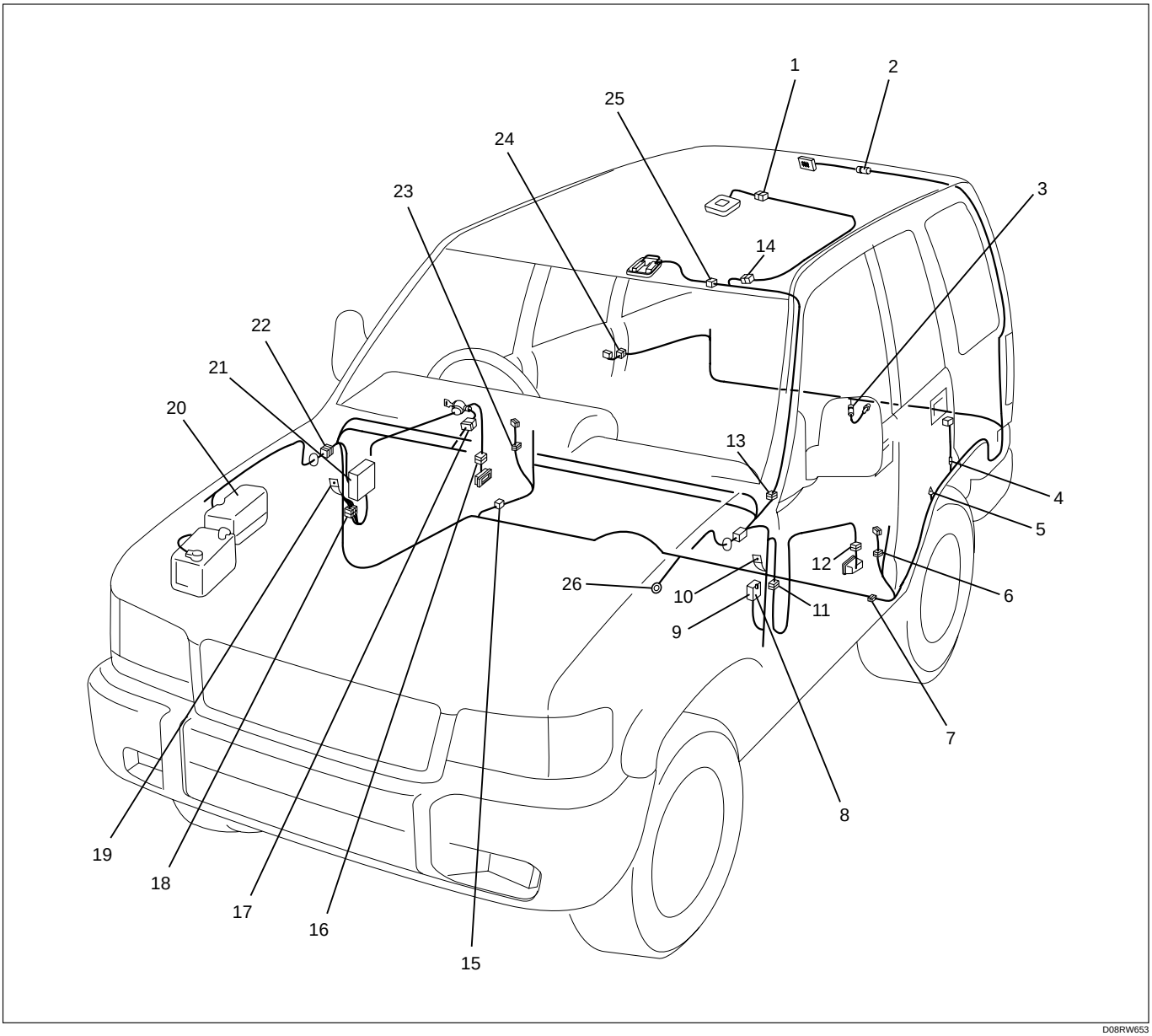

Legend

(1) S-1, L-3 (W/O Sun Roof)
(2) R-6
(3) R-8
(4) R-1
(5) R-3
(6) R-2
(7) H-32, H-46
(8) Alarm and Relay control Unit
(9) B-6, B-7
(10) B-2
(11) H-18
(12) D-18
(13) H-21
(14) H-45
(15) H-47
(16) D-7
(17) B-11
(18) H-22
(19) B-18
(20) Relay and Fuse Box
(21) Fuse Box
(22) H-25, H-26
(23) K-2
(24) R-11
(25) L-2
(26) B-26

Circuit Diagram (LHD)-1

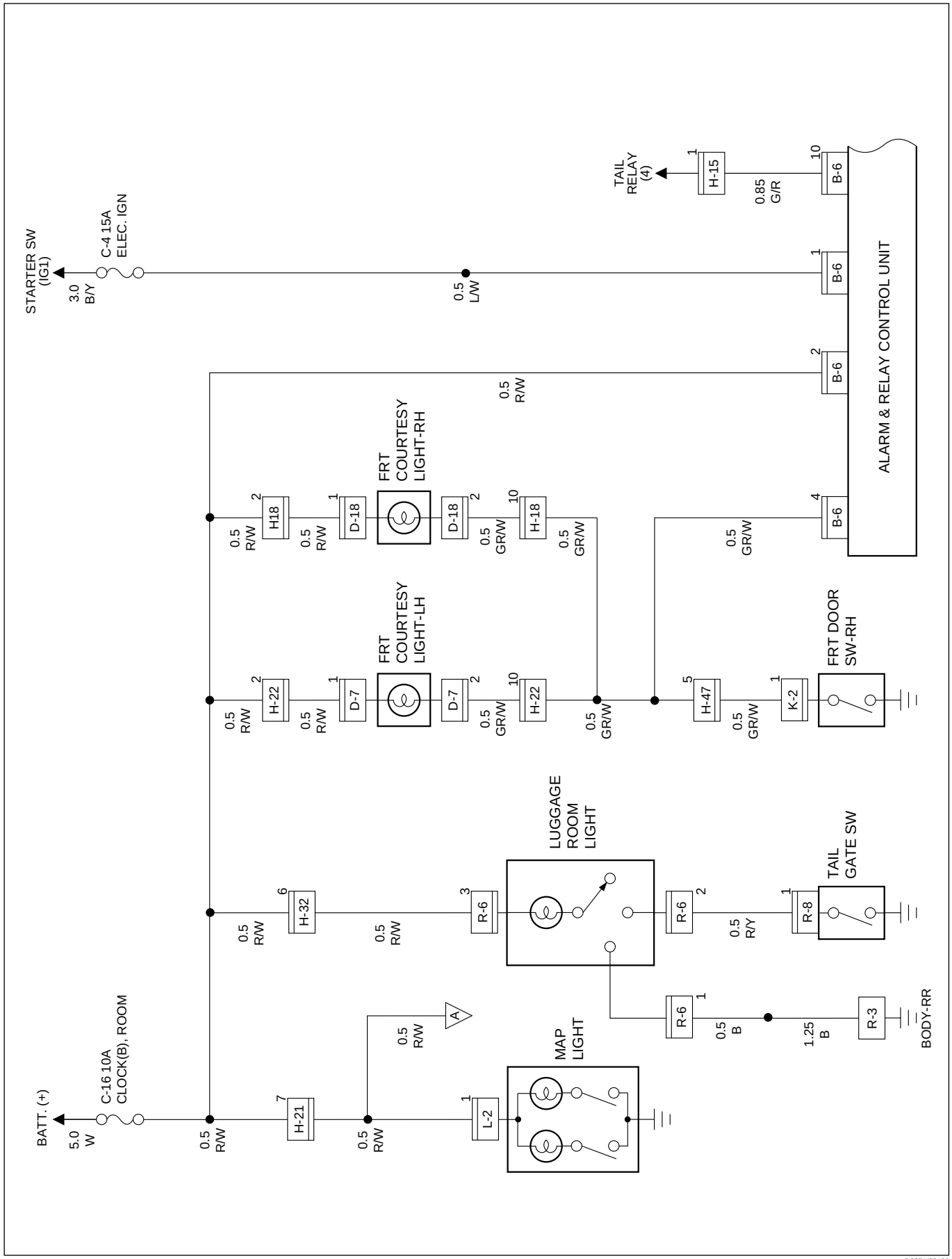

D08RY00426

Circuit Diagram (LHD)-2

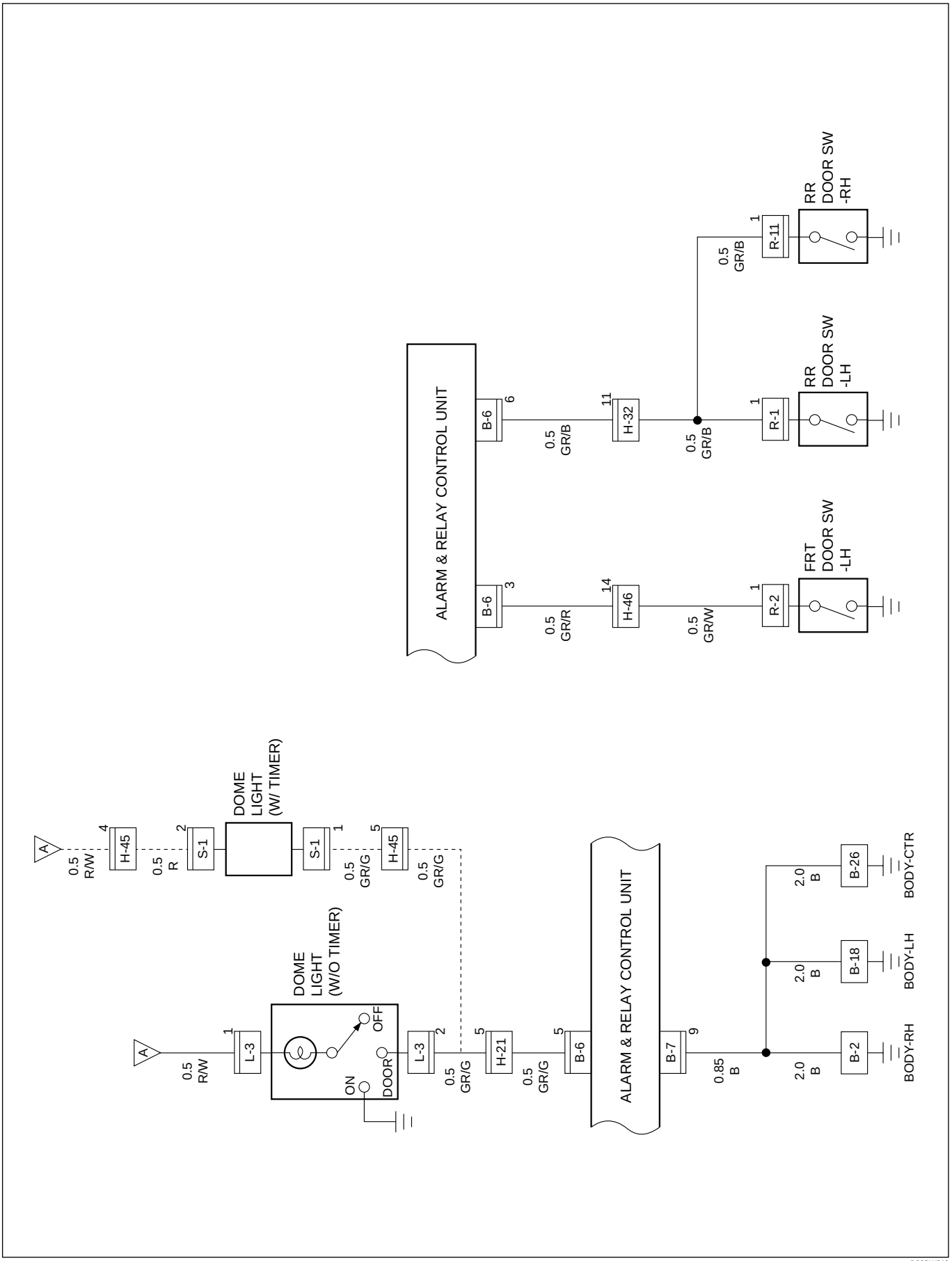

D08RW813

Parts Location (LHD)

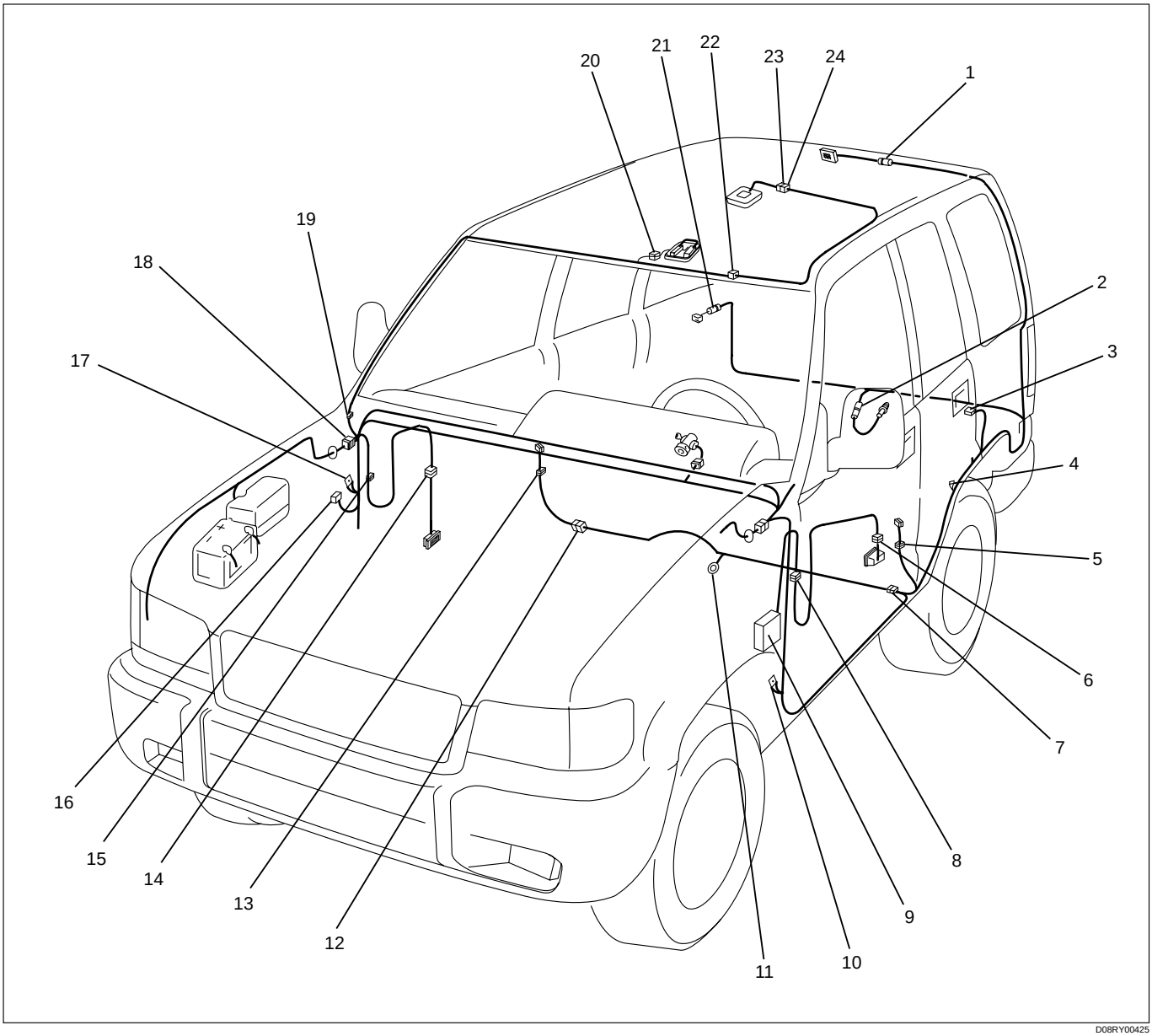

D08RY00425

Legend

(1) R–6
(2) R–8
(3) R–1
(4) R–3
(5) R–2
(6) D–18
(7) H–32, H–46
(8) H–22
(9) Fuse Box
(10) B–18
(11) B–26
(12) H–47
(13) K–2
(14) D–18
(15) H–18
(16) B–6
(17) B–2
(18) H–15
(19) H–21
(20) L–2
(21) R–11
(22) H–45
(23) L–3
(24) S–1

Power Door Lock

General Description

The circuit consists of door lock (& power window) switch, door lock actuator for front and rear door, tailgate lock actuator and door lock key switch.
Front door lock switch–LH is always provided with battery voltage. The key or the inside lock button on the both driver's and front passenger's door can activate the lock mechanism of all the door (including tailgate).
When driver's door lock switch or front passenger's door lock switch is turned on, current flows for about one second to door lock actuator of each door connected in parallel with front door lock (& power window) switch–LH to activate actuator to lock and unlock doors.

Circuit Diagram (RHD)-1

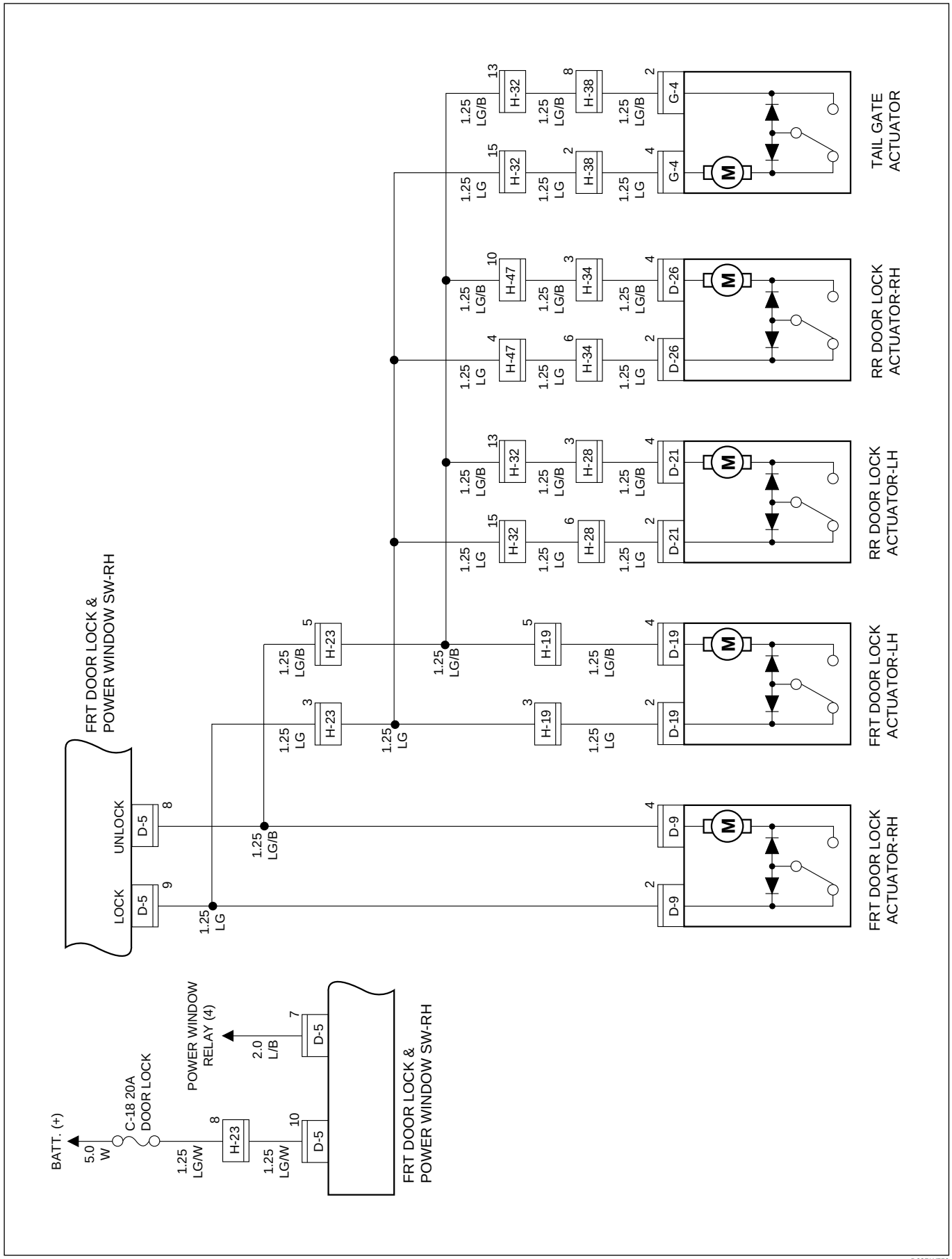

D08RW759

Circuit Diagram (RHD)-2

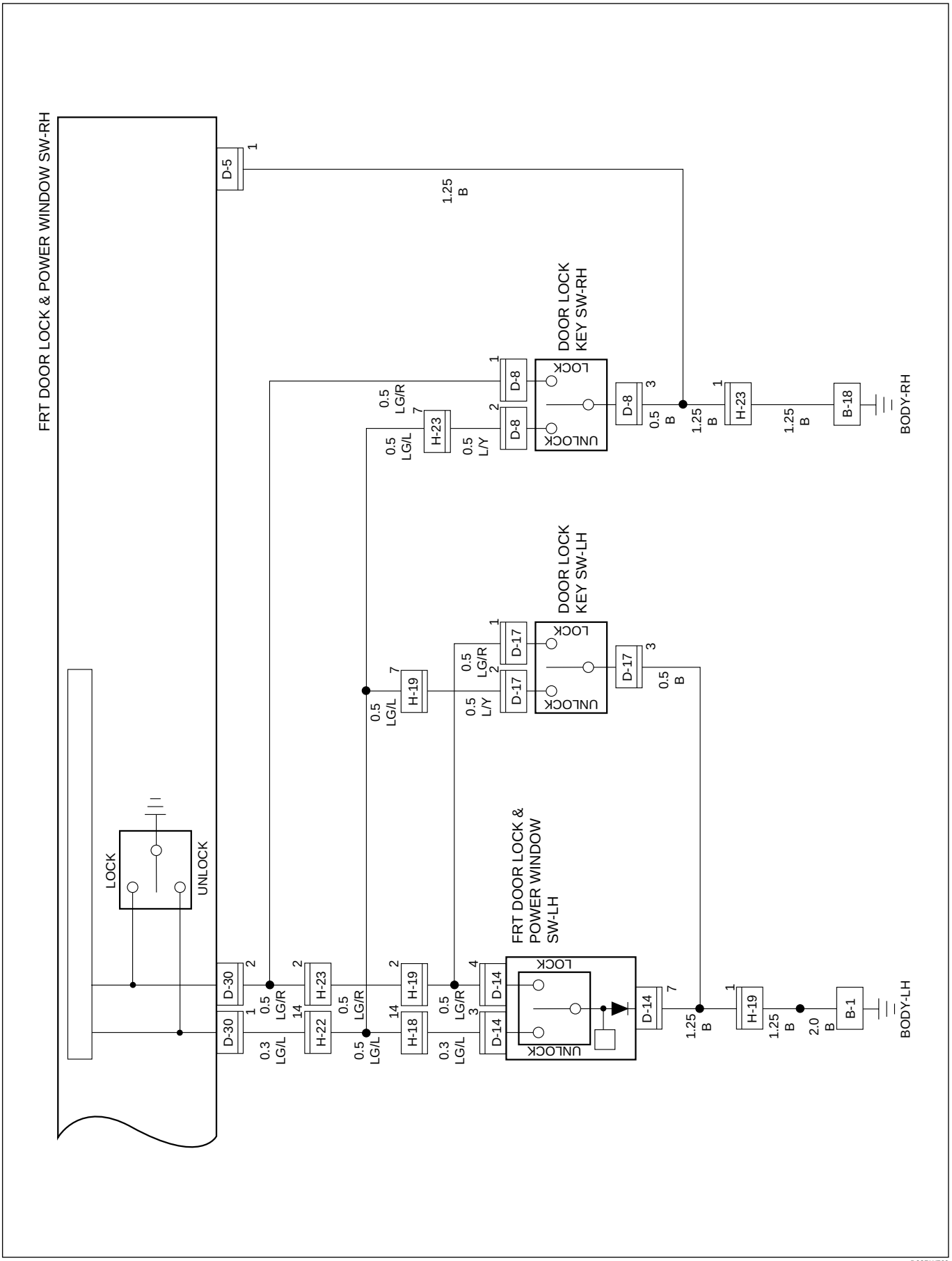

D08RW760

Circuit Diagram (RHD W/Keyless Entry)-1

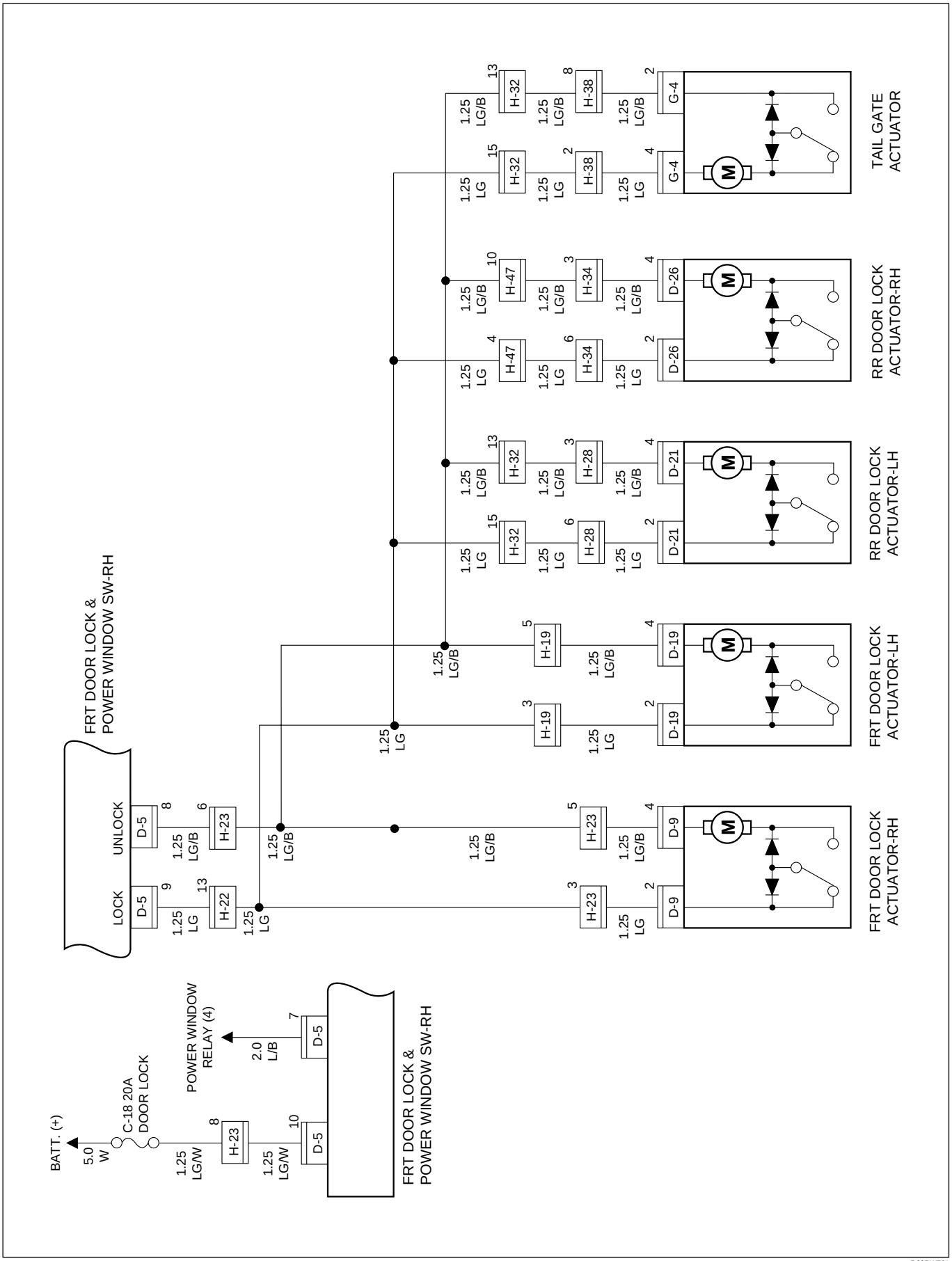

D08RW761

Circuit Diagram (RHD W/Keyless Entry)-2

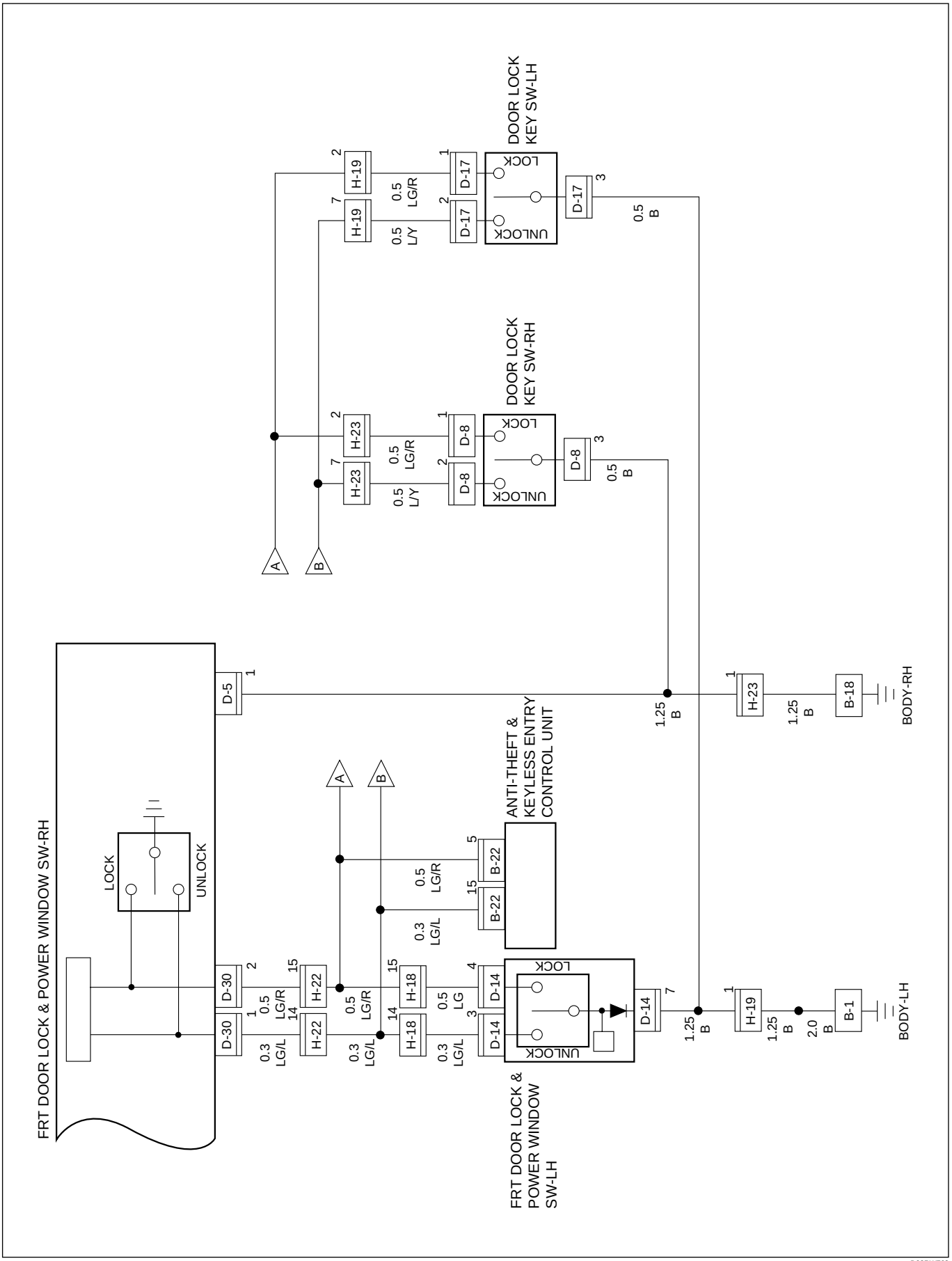

D08RW762

Circuit Diagram (South Africa W/Keyless Entry)-2

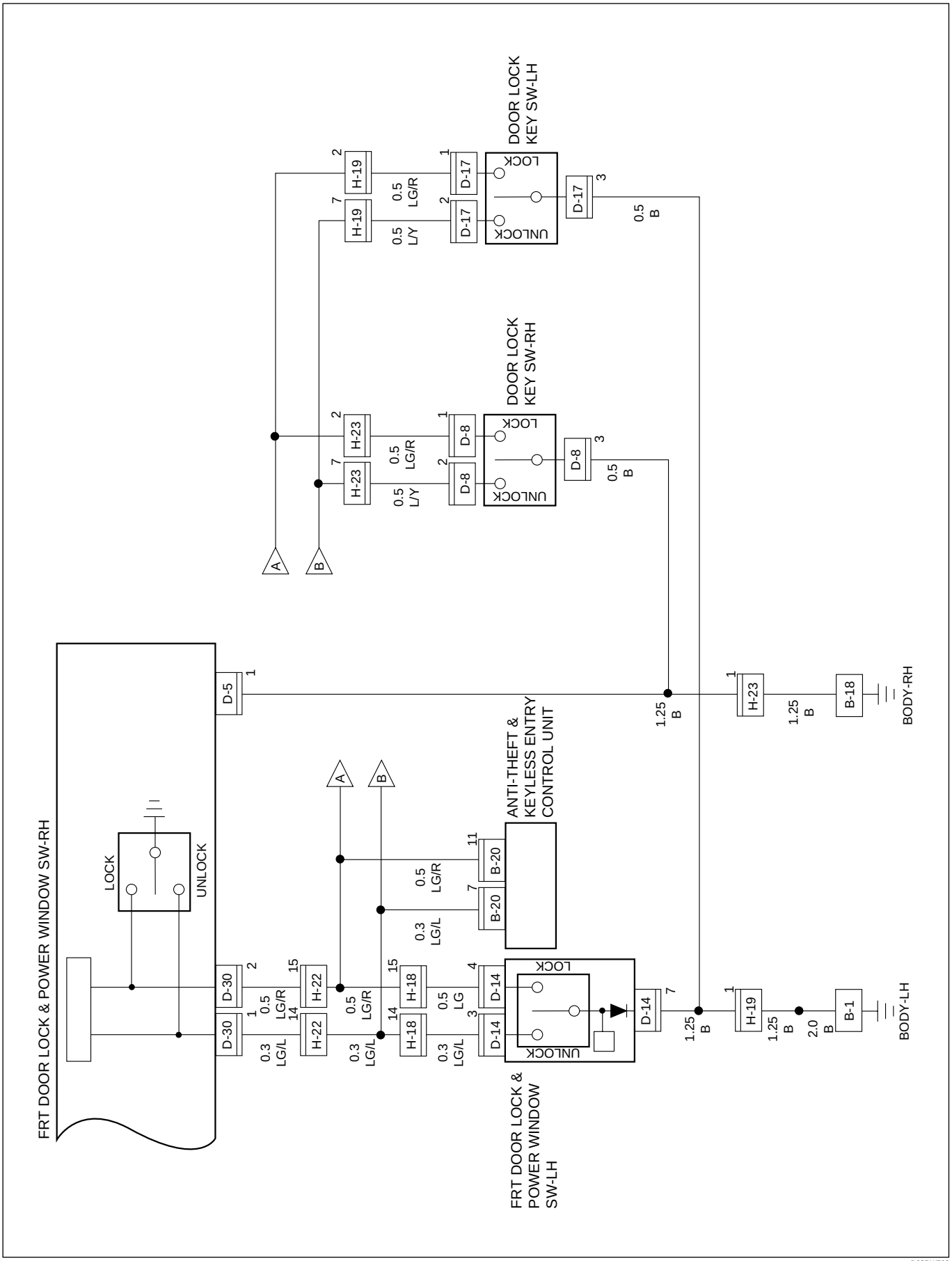

D08RW763

Parts Location (RHD)

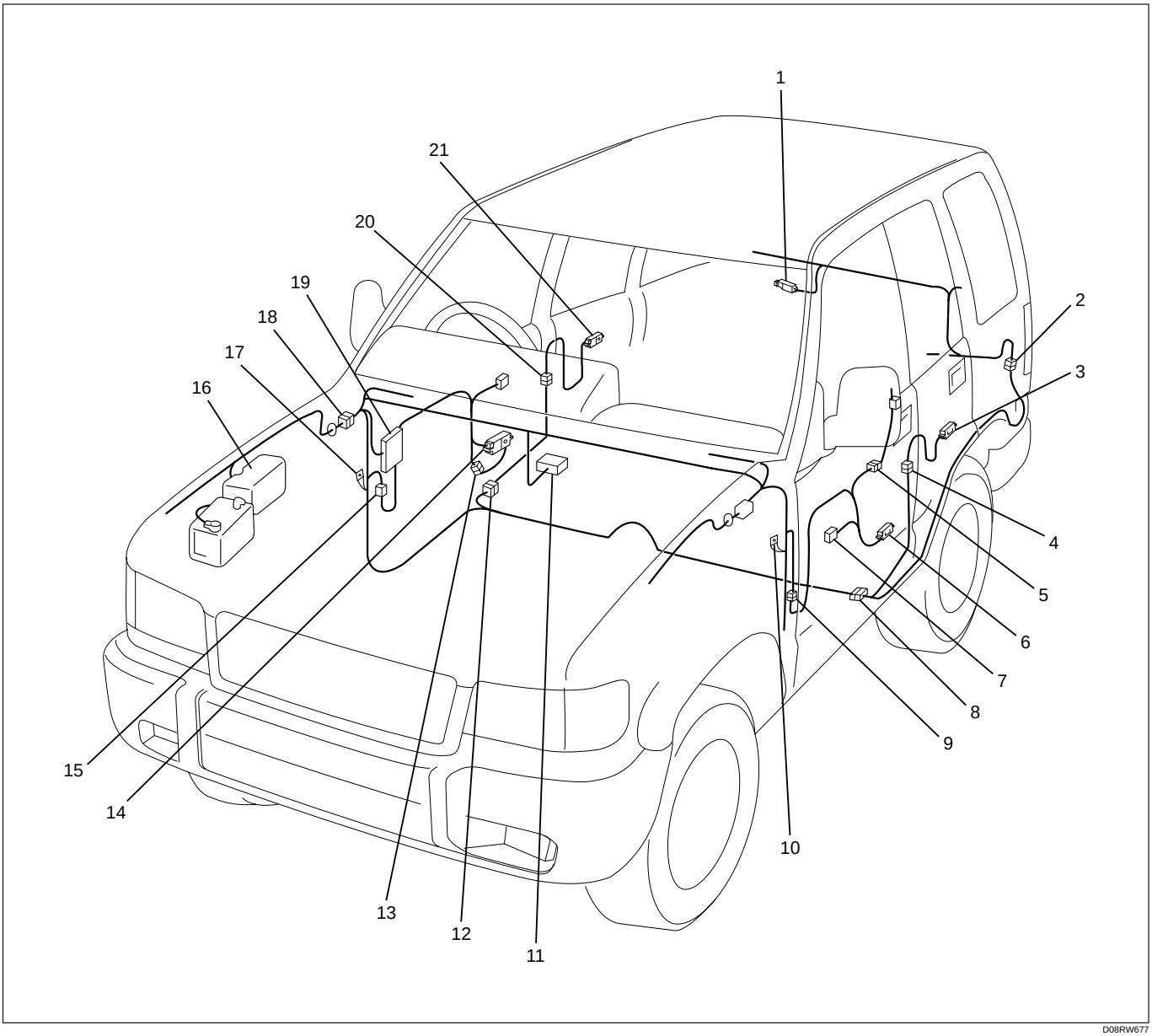

Legend

(1) G-4
(2) H-38
(3) D-21
(4) H-28
(5) D-17
(6) D-19
(7) D-14
(8) H-32
(9) H-18, H-19
(10) B-1
(11) B-22 (B-20, South Africa)
(12) H-47
(13) D-8
(14) D-9
(15) H-22, H-23
(16) Relay and Fuse Box
(17) B-18
(18) H-14
(19) Fuse Box
(20) H-34
(21) D-26

Circuit Diagram (LHD)-1

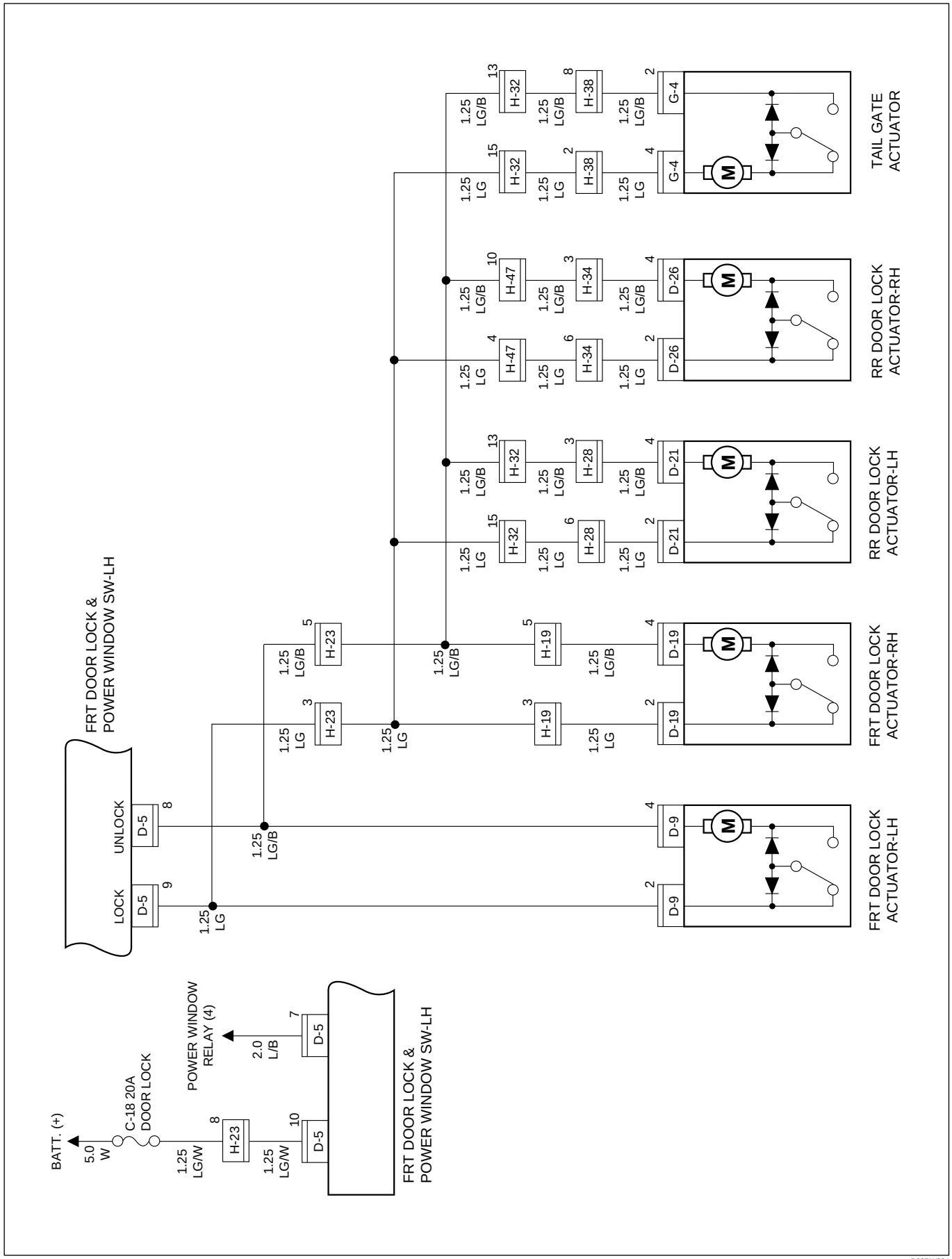

D08RW884

Circuit Diagram (LHD)-2

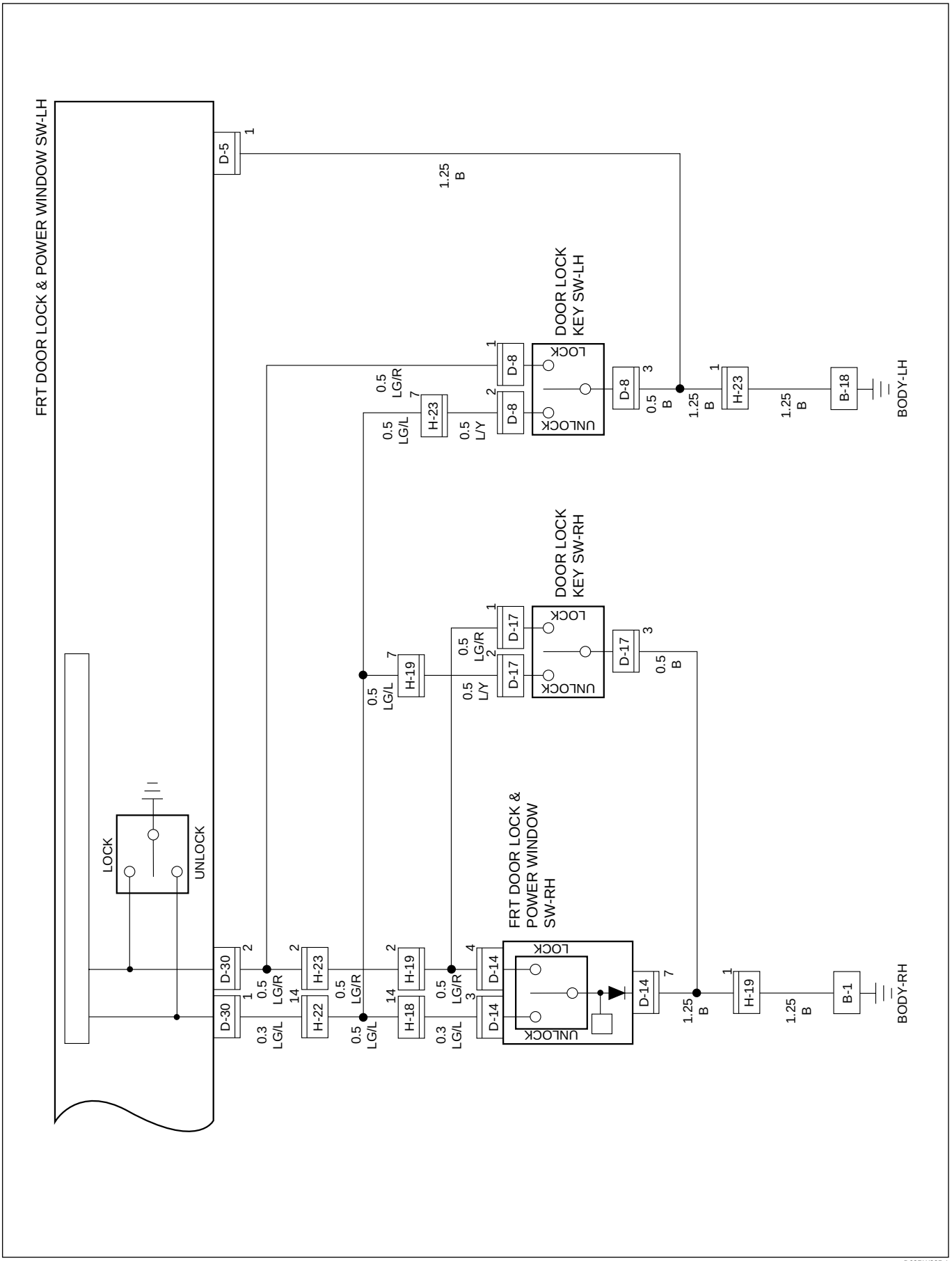

D08RW885-1

Circuit Diagram (LHD W/Keyless Entry)-1

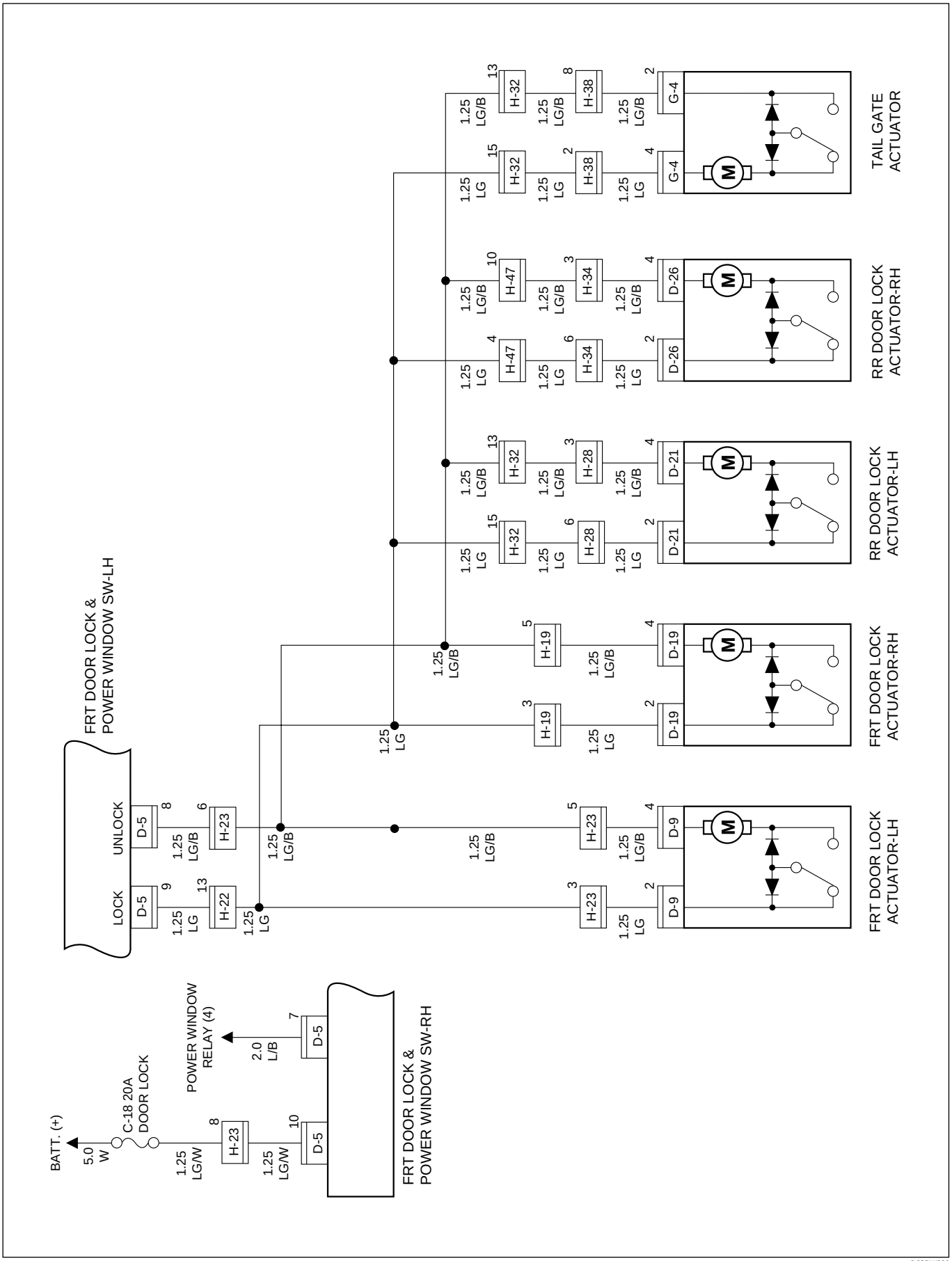

D08RW886

Circuit Diagram (LHD W/Keyless Entry)-2

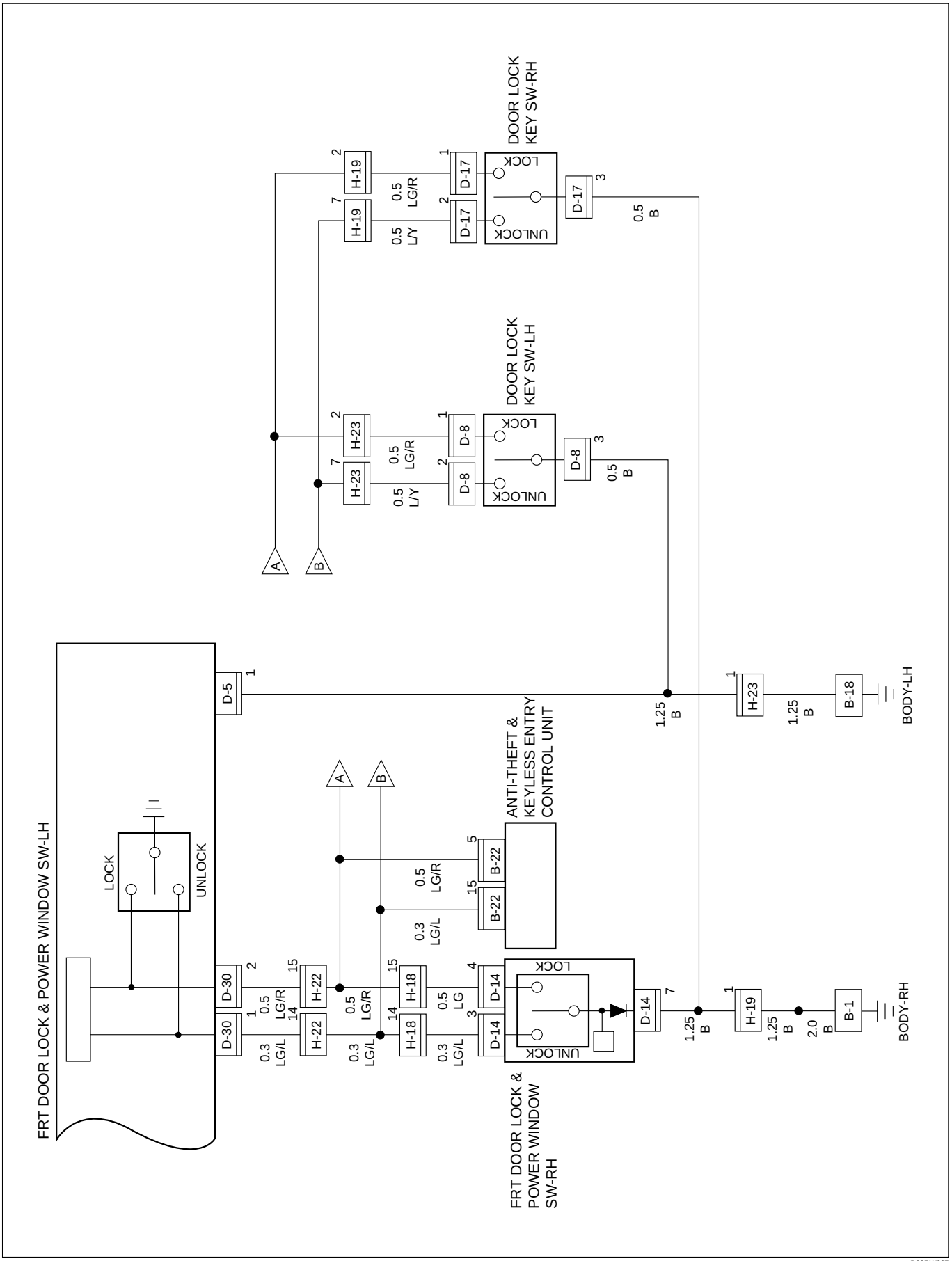

D08RW887

Parts Location (LHD)

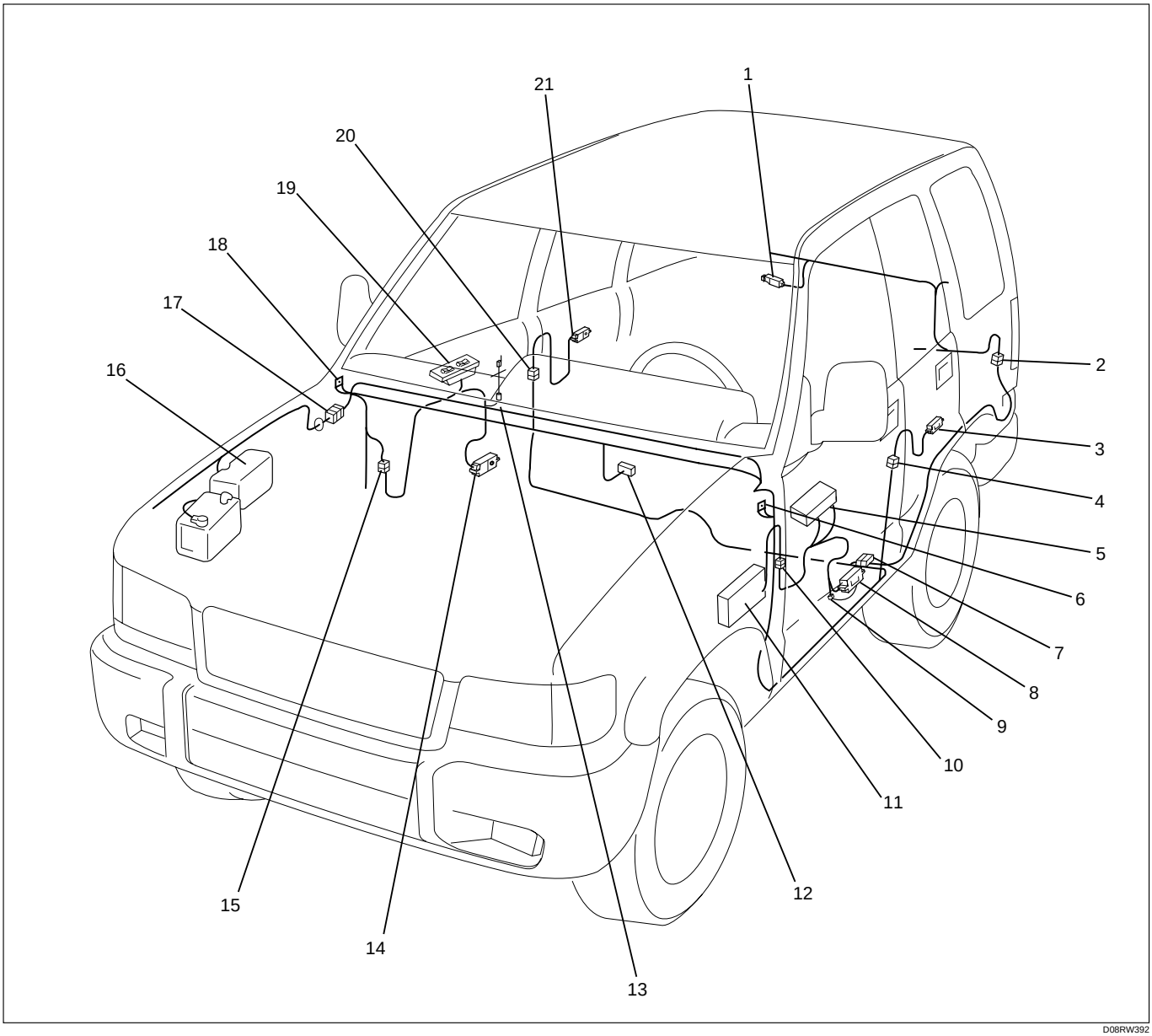

D08RW392

Legend

(1) G-4
(2) H-38
(3) D-21
(4) D-28
(5) D-5, D-30
(6) B-18
(7) H-32
(8) D-9
(9) D-8
(10) H-22, H-23
(11) Fuse Box
(12) B-22
(13) D-17
(14) D-19
(15) H-18, H-19
(16) Relay and Fuse Box
(17) H-14
(18) B-2
(19) D-14
(20) H-34
(21) D-26

Diagnosis

Quick Chart for Check Points

Check point / Trouble mode	Fuse (C-18 20A)	FRT Door lock (& power window) SW-Driver's side	FRT Door lock (& power window) SW-Passen-ger's side	Door lock switch FRT–Driver's side	Door lock switch FRT–Passen-ger's side	Door lock actuator					
						FRT–LH	FRT–RH	RR–LH	RR–RH	Tailgate	Cable harness
1. All the doors do not lock and unlock by door lock SW-Driver's side	○	○									○
2. All the doors do not get locked (or unlocked) by door lock SW-Passenger's side		○	○								○
3. FRT door–LH does not get locked (or unlocked)						○					○
4. FRT door–RH does not get locked (or unlocked)							○				○
5. RR door–LH does not get locked (or unlocked)								○			○
6. RR door–RH does not get locked (or unlocked)									○		○
7. Tailgate does not get locked (or unlocked)										○	○
8. Door lock does not operate when operated from the door lock key SW-Driver's side		○		○							○
9. Door lock does not operate when operated from the door lock key SW-Passenger's side		○			○						○

1. All The Doors Do Not Lock And Unlock By Door Lock SW-Driver's Side

- IS FUSE C-18 (20A) NORMAL?

YES

- IS B-18 GROUNDED SECURELY?

YES

- DISCONNECT THE DOOR LOCK SW-DRIVER'S SIDE CONNECTOR
- IS BATTERY VOLTAGE APPLIED BETWEEN 10 D-5 AND GROUND?

YES

- IS THERE ANY CONTINUITY BETWEEN 1 D-5 AND B–18

YES

REPAIR OR REPLACE THE FRT DOOR LOCK & POWER WINDOW SW-DRIVER'S SIDE

NO

REPAIR A POOR CONNECTION OF CONNECTORS OR AN OPEN CIRCUIT BETWEEN 1 D-5 AND B-18

NO

REPAIR A POOR CONNECTION AT CONNECTORS OR AN OPEN CIRCUIT BETWEEN FUSE C-18 (20A) AND 10 D-5

NO

GROUND B-18 SECURELY

NO

REPLACE THE FUSE

2. All The Doors Do Not Get Locked (Or Unlocked) By FRT Door Lock SW-Passenger's Side

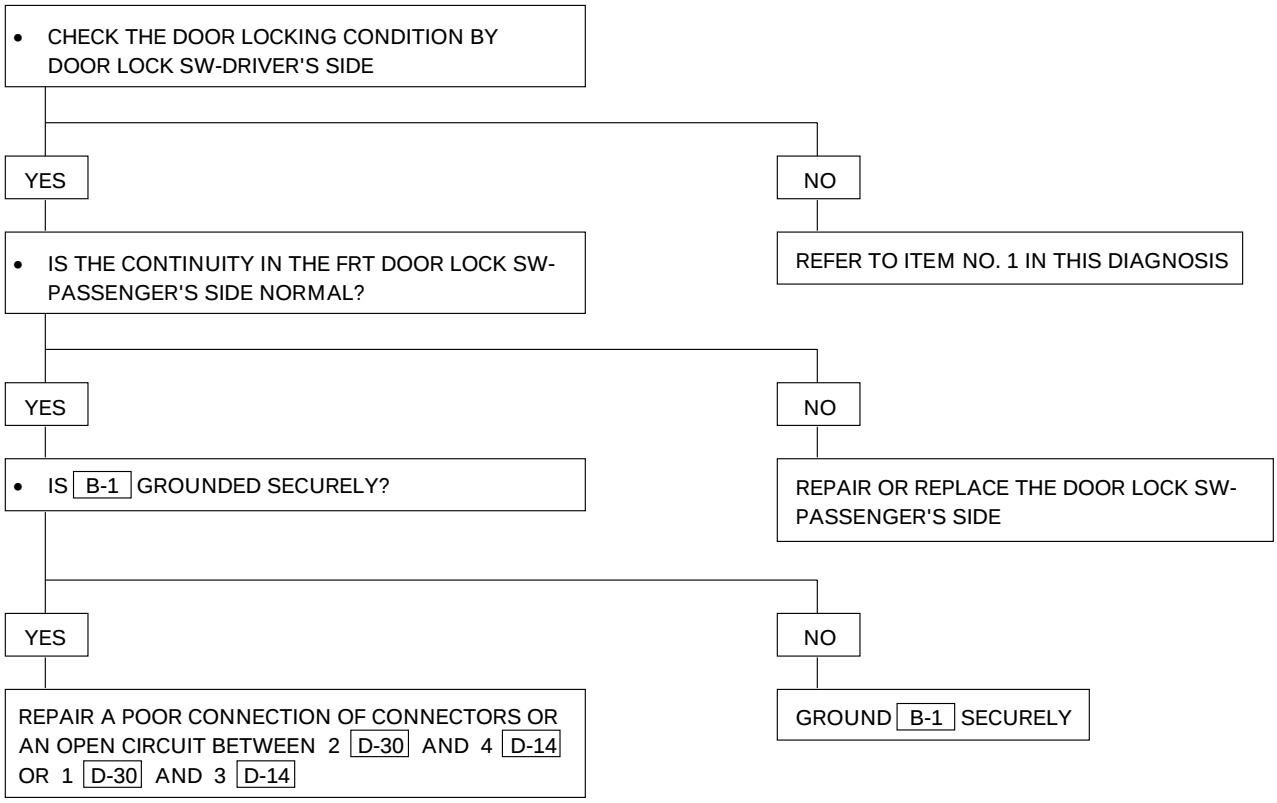

3. FRT Door–LH Does Not Get Locked (Or Unlocked)

4. FRT Door–RH Does Not Get Locked (Or Unlocked)

5. RR Door–LH Does Not Get Locked (Or Unlocked)

6. RR Door–RH Does Not Get Locked (Or Unlocked)

7. Tailgate Does Not Get Locked (Or Unlocked)

REPLACE THE DOOR LOCK ACTUATOR

8. Door Lock Does Not Operate When Operated From The Door Lock Key SW-Driver's Side

- CHECK THE DOOR LOCKING CONDITION OPERATED BY DOOR LOCK SW-DRIVER'S SIDE

YES

- IS THE CONTINUITY IN THE DOOR LOCK KEY SW-DRIVER'S SIDE NORMAL?

NO

REFER TO ITEM 1 IN THIS DIAGNOSIS

YES

- IS THERE CONTINUITY BETWEEN 3 D-8 AND THE GROUND?

NO

REPAIR OR REPLACE THE SW

YES

REPAIR A POOR CONNECTION AT THE CONNECTORS OR AN OPEN CIRCUIT BETWEEN 1 D-8 AND 2 D-30 OR 2 D-8 AND 1 D-30

NO

REPAIR A POOR CONNECTION AT THE CONNECTORS OR AN OPEN CIRCUIT BETWEEN 3 D-8 AND B-18

9. Door Lock Does Not Operate When Operated From The Door Lock Key SW-Passenger's Side

- CHECK THE DOOR LOCKING CONDITION OPERATED BY DOOR LOCK SW-DRIVER'S SIDE

YES

- IS THE CONTINUITY IN THE DOOR LOCK KEY SW-PASSENGER'S SIDE

YES

- IS THERE ANY CONTINUITY BETWEEN 3 D-17 AND THE GROUND?

YES

REPAIR A POOR CONNECTION AT THE CONNECTORS OR AN OPEN CIRCUIT BETWEEN 1 D-17 AND 2 H-19 OR 2 D-17 AND 14 H-22

NO

REPAIR OR REPLACE THE DOOR LOCK KEY SW-PASSENGER'S SIDE

NO

REPAIR A POOR CONNECTION AT THE CONNECTORS OR AN OPEN CIRCUIT BETWEEN 3 D-17 AND B-1

NO

REFER TO ITEM 1 IN THIS DIAGNOSIS

Power Window

General Description

The circuit consists of (door lock &) power window switch for each of front windows, power window switch for rear doors and power window motors.
When starter switch is turned on, battery voltage is applied to each of power window switches through circuit breaker and power window relay on the circuit.
Driver's power window switch has "ONE TOUCH" function for driver's side window.
This function opens driver's side window fully by just setting the switch to "AUTO" position.
When lock switch on driver's side power window switch is depressed, battery voltage to passenger's power window switches are shut off. So, even if these switches are operated, power window motor does not operate.

Circuit Diagram (RHD)

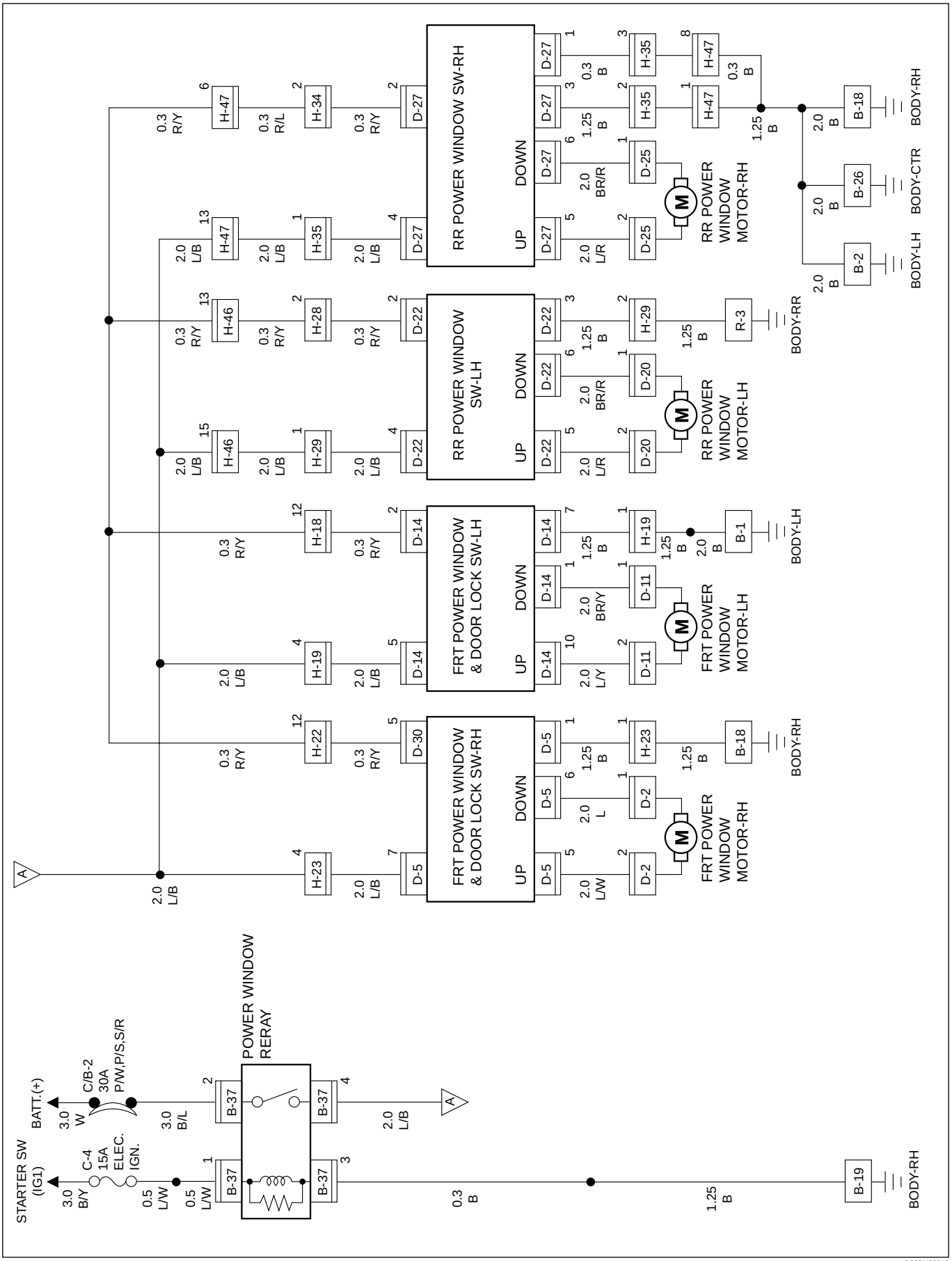

Parts Location (RHD)

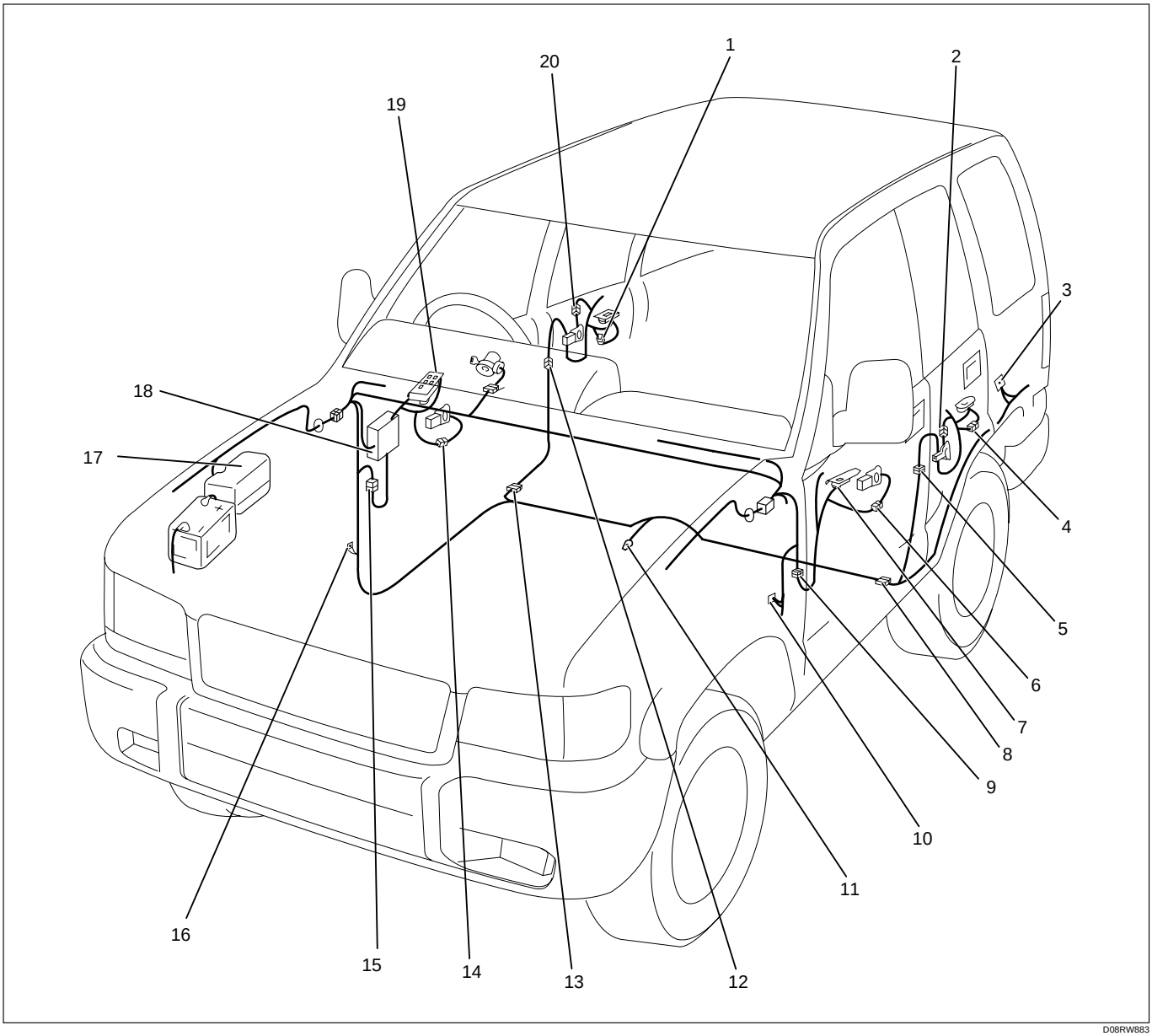

D08RW883

Legend

(1) D-27
(2) D-20
(3) R-3
(4) D-22
(5) H-28, H-29
(6) D-11
(7) D-14
(8) H-46
(9) H-18, H-19
(10) B-1, B-2
(11) B-26
(12) H-34, H-35
(13) H-47
(14) D-2
(15) H-22, H-23
(16) B-18, B-19
(17) Relay and Fuse Box
(18) Fuse Box (B-37)
(19) D-5, D-30
(20) D-25

Circuit Diagram (LHD)

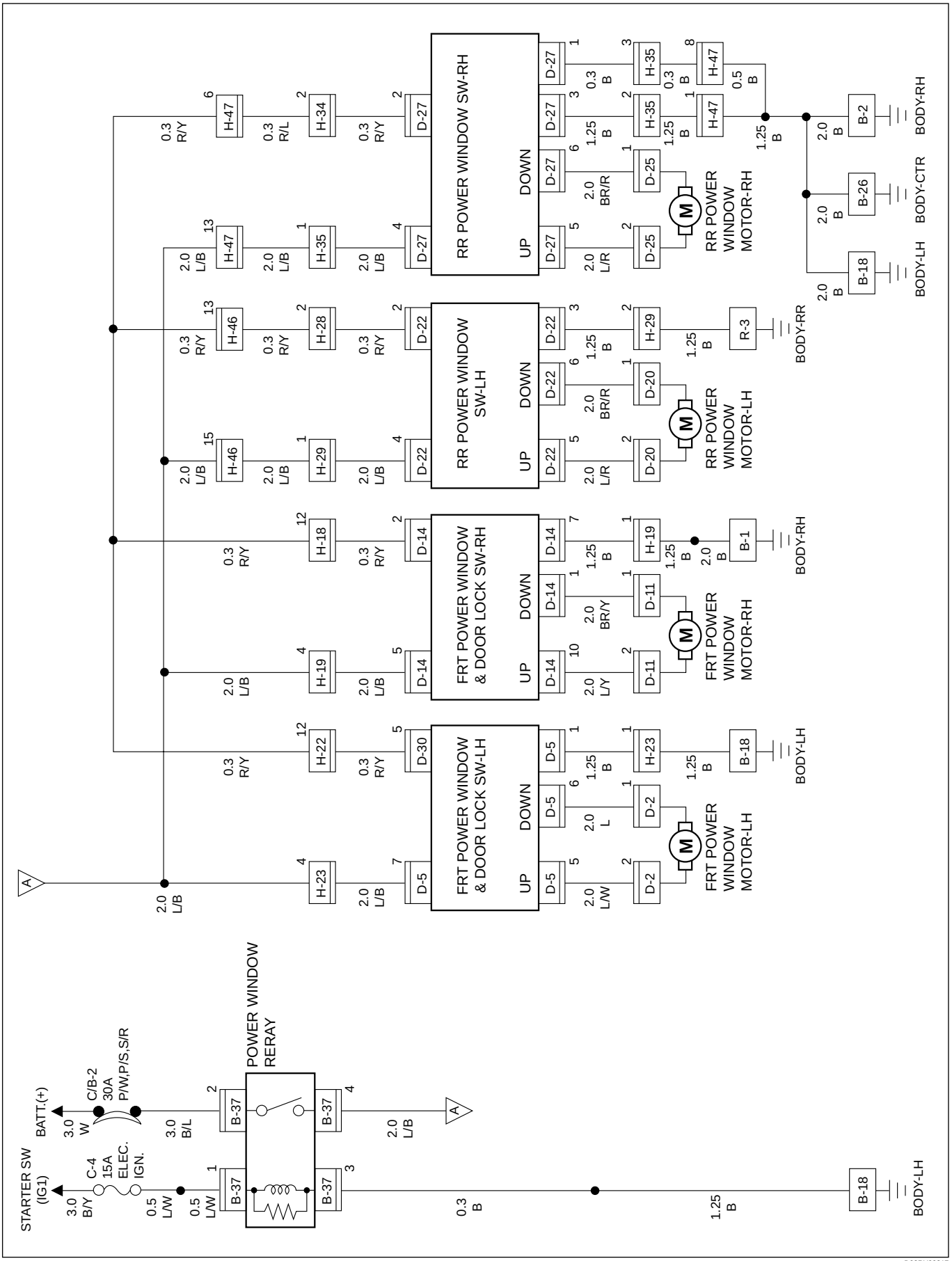

Parts Location (LHD)

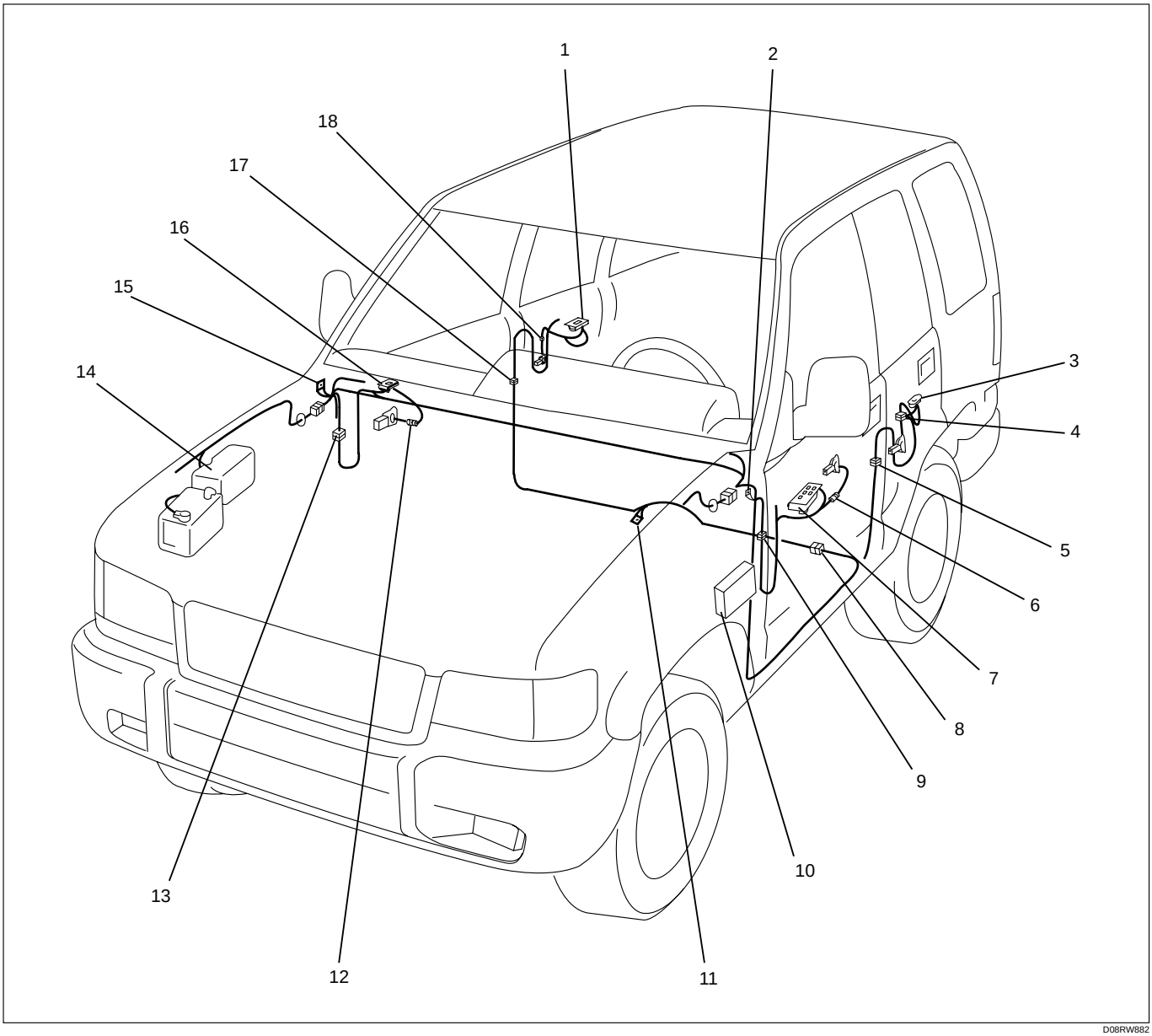

Legend

(1) D-27
(2) B-18, B-19
(3) D-22
(4) D-20
(5) H-28, H-29
(6) D-2
(7) D-5, D-30
(8) H-46
(9) H-22, H-23
(10) Fuse Box (B-37)
(11) B-26
(12) D-11
(13) H-18, H-19
(14) Relay and Fuse Box
(15) B-2
(16) D-14
(17) H-34, H-35
(18) D-25

Diagnosis

All Windows Do Not Operate

STEP	ACTION	VALUE(S)	YES	NO
1	Is the fuse C–4 normal?	–	Go to step 2	Replace the fuse
2	Is the circuit breaker C/B–2 normal?	–	Go to step 3	Replace the circuit breaker
3	Is B–19 grounded securely?	–	Go to step 4	Ground it securely
4	Disconnect the power window relay connector B–37. Is the battery voltage applied between harness side connector B–37 terminal 2 and the ground?	Approx. 12V	Go to step 6	Go to step 5
5	Repair an open circuit between the circuit breaker C/B–2 and connector B–37 terminal 2. Is the action complete?	–	Go to step 4	–
6	Turn the starter switch on Is the battery voltage applied between harness side connector B–37 terminal 1 and the ground?	Approx. 12V	Go to step 8	Go to step 7
7	Repair an open circuit between the fuse C–4 and connector B–37 terminal 1. Is the action complete?	–	Go to step 6	–
8	Is there continuity between harness side connector B–37 terminal 3 and the ground B–19?	–	Replace the relay	Go to step 9
9	Repair an open circuit between connector B–37 terminal 3 and the ground B–19. Is the action complete?	–	Verify repair	–

Window On The Driver's Side Does Not Operate

STEP	ACTION	VALUE(S)	YES	NO
1	Is B–18 grounded securely?	–	Go to step 2	Ground it securely
2	Is there continuity between harness side connector D–5 terminal 1 and the ground B–18?	–	Go to step 4	Go to step 3
3	Repair an open circuit between connector D–5 terminal 1 and the ground B–18. Is the action complete?	–	Go to step 2	–
4	Turn the starter switch on. Is the battery voltage applied between harness side connector D–5 terminal 7 and the ground?	Approx. 12V	Go to step 6	Go to step 5
5	Repair an open circuit between connector B–37 terminal 4 and connector D–5 terminal 7. Is the action complete?	–	Go to step 4	–
6	Connect the battery positive terminal with harness side connector D–5 terminal 5 or 6, and the negative terminal with harness side connector D–5 terminal 6 or 5. Does the motor operate?	–	Replace the front power window & door lock switch–RH	Go to step 7
7	1. Disconnect the front power window motor–RH connector D–2. 2. Connect the battery positive terminal with the motor side connector D–2 terminal 1 or 2, and connect the battery negative terminal with the motor side connector D–2 terminal 2 or 1. Does the motor operate?	–	Go to step 8	Replace the motor
8	Repair an open circuit between the front power window & door lock switch–RH and the front power window motor–RH. Is the action complete?	–	Verify repair	–

Window On The Front Passenger's Side Does Not Operate

STEP	ACTION	VALUE(S)	YES	NO
1	Is B–1 grounded securely?	–	Go to step 2	Ground it securely
2	Disconnect the front power window & door lock switch–LH connector D–14. Is there continuity between harness side connector D–14 terminal 7 and the ground B–1?	–	Go to step 4	Go to step 3
3	Repair an open circuit between connector D–14 terminal 7 and the ground B–1. Is the action complete?	–	Go to step 2	–
4	Turn the starter switch on. Is the battery voltage applied between harness side connector D–14 terminal 5 and the ground?	Approx. 12V	Go to step 6	Go to step 5
5	Repair an open circuit between connector B–37 terminal 4 and connector D–14 terminal 5. Is the action complete?	–	Go to step 4	–
6	Connect the battery positive terminal with harness side connector D–14 terminal 10 or 1, and connect the battery negative terminal with harness side connector D–14 terminal 1 or 10. Does the motor operate?	–	Replace the front power window & door lock switch–LH	Go to step 7
7	1. Disconnect the front power window motor–LH connector D–11. 2. Connect the battery positive terminal with the motor side connector D–11 terminal 1 or 2, and connect the battery negative terminal with the motor side connector D–11 terminal 2 or 1. Does the motor operate?	–	Go to step 8	Replace the motor
8	Repair an open circuit between the front power window & door lock switch–LH and the front power window motor–LH. Is the action complete?	–	Verify repair	–

Rear Window On The Left (or Right) Side Does Not Operate

STEP	ACTION	VALUE(S)	YES	NO
1	1. Disconnect the rear power window switch–LH connector D–22 or the rear power window & door lock switch–RH connector D–27. 2. Turn the starter switch on. Is the battery voltage applied between harness side connector D–22 terminal 4 and the ground, or harness side connector D–27 terminal 4 and the ground?	Approx. 12V	Go to step 3	Go to step 2
2	Repair an open circuit between connector B–37 terminal 4 and connector D–22 terminal 4 or connector D–27 terminal 4. Is the action complete?	–	Go to step 1	–
3	Is there continuity between harness side connector D–22 terminal 3 and the ground, or harness side connector D–27 terminal 3 and the ground?	–	Go to step 5	Go to step 4
4	Repair an open circuit between connector D–22 terminal 3 or connector D–27 terminal 3 and the ground. Is the action complete?	–	Go to step 3	–
5	Connect the battery positive terminal with harness side connector D–22 terminals 5 or harness side connector D–27 terminal 5, and connect the battery negative terminal with harness side connector D–22 terminal 6 or harness side connector D–27 terminal 6. Does the motor operate?	–	Replace the rear power window switch–LH or –RH	Go to step 6
6	1. Disconnect the rear power window motor connector D–20 or D–25. 2. Connect the battery positive terminal with motor side connector D–20 or D–25 terminal 1 or 2, and connect the battery negative terminal with the motor side connector D–20 or D–25 terminal 2 or 1. Does the motor operate?	–	Go to step 7	Replace the motor
7	Repair an open circuit between the rear power window switch and the rear power window motor. Is the action complete?	–	Verify repair	–

Window on the Front Passenger's Side Does Not Operate by the Front Power Window & Door Lock Switch – RH

STEP	ACTION	VALUE(S)	YES	NO
1	Disconnect the front power window & door lock switch–RH connector D–30 and the front power window & door lock switch–RH connector D–14. Is there continuity between harness side connector D–30 terminal 5 and harness side connector D–14 terminal 2?	–	Replace the front power window & door lock switch–RH	Go to step 2
2	Repair an open circuit between connector D–30 terminal 5 and connector D–14 terminal 2. Is the action complete?	–	Verify repair	–

Lock SW Does Not Function

STEP	ACTION	VALUE(S)	YES	NO
1	Repair or replace the front power window & door lock switch–RH. Is the action complete?	–	Verify repair	–

Cruise Control

General Description

The circuit consists of cruise control unit, cruise main switch, combination switch, clutch switch (M/T), mode switch (A/T), brake switch, actuator and indicator lights.
Cruise control system keeps the vehicle running at a fixed speed until a signal canceling this fixed speed is received.
When the cruise main switch is turned on with the vehicle in the running mode, the battery voltage is applied to the control unit.
When a signal from the combination switch is input to the control unit while vehicle is in this state, the actuator is activated to operate the system. Also, while the system is operating, the cruise indicator light in the meter panel lights up.

Set Function

When the cruise main switch turned on and the set switch is depressed with the vehicle speed within the set limit and cancel operation is refused, the vehicle speed when the set switch is released is stored in the control unit as the set speed. But in case of the vehicle speed is over maximum limit speed of cruise control, maximum limit speed in the control unit is stored as the set speed.

Resume Function

Unless the vehicle speed falls below the minimum speed limit after canceling the set speed by the cancel switch, pushing the resume switch causes the vehicle to resume the speed before cancellation.

Acceleration Function

During cruise control driving, pushing the acceleration switch (on time is more than 0.6 sec.) causes an increase in cruise speed and vehicle accelerates at a controlled rate untill acceleration switch released.
Vehicle speed at the acceleration switch released plus 1.0 km/h is stored in the control unit as the set speed.

Tap up Function

During cruise control driving, pushing the coast switch (on time is more than 0.6 sec.) causes a decrease in cruise speed and the vehicle decelerate at a controlled rate until coast switch released.
Vehicle speed at the coast switch released minus approx. 1.0 km/h is stored in the control unit as the set speed.

Tap down Function

During cruise control driving, the set speed can be lowered approx. 1.0 km/h each time by operating the coast switch quickly within 0.6 sec.

Cancel Function

During cruise control driving, the cruise control is released if the control unit receives a signal from the cancel switch, mode switch, clutch switch or brake switch, but the set speed is still stored.

Down Cancel Function

The cruise control is canceled when the vehicle speed becomes the set speed minus 20 km/h during the cruise control working and the set speed is erased.

Over Drive (OD) Cancel Function

OD cancel function is required when the vehicle speed becomes the set speed minus 3 km/h during the cruise control working.
OD cancel function is enabled when the acceleration function and/or resume function are working except the vehicle speed is in more than 120 km/h.

Circuit Diagram (RHD)-1

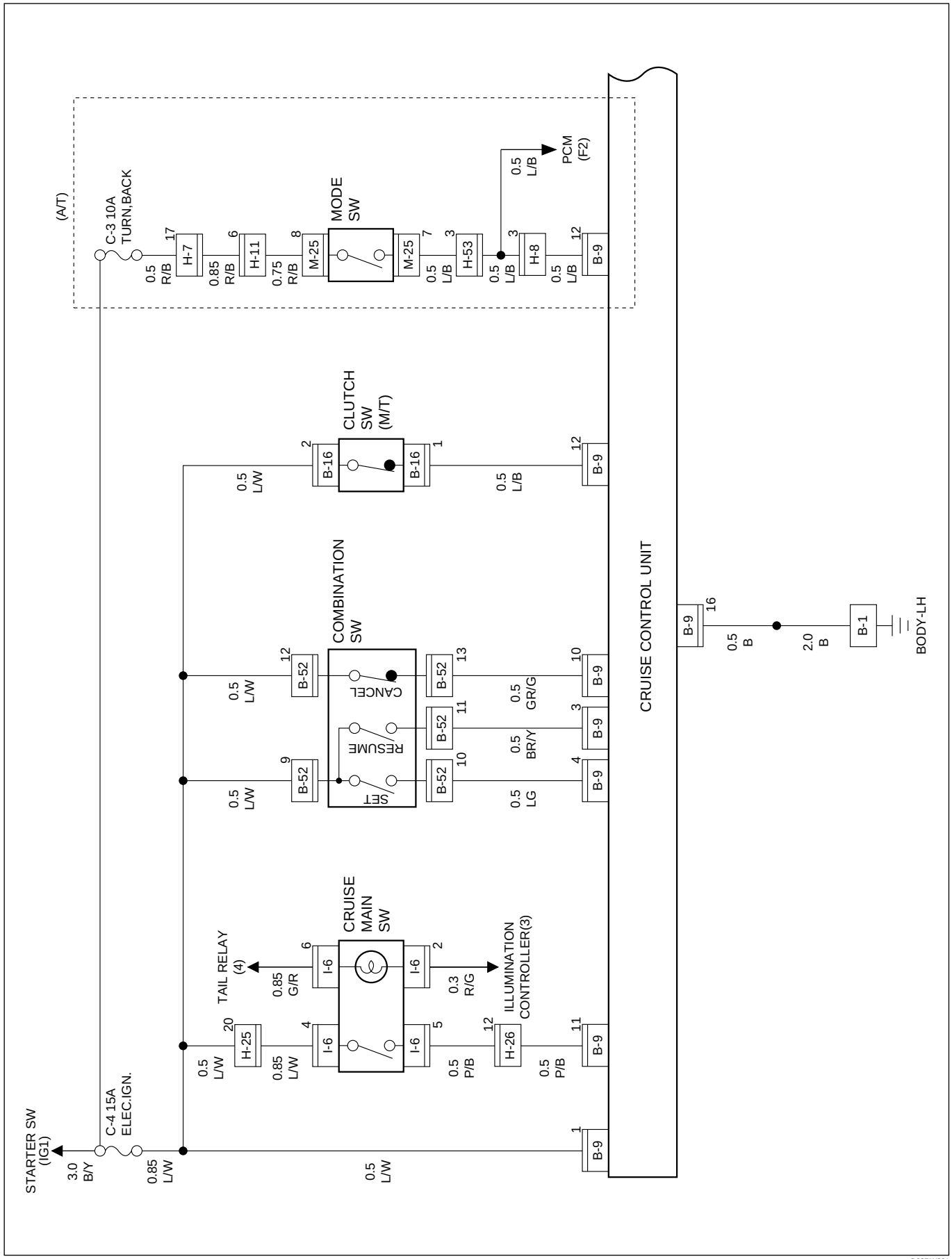

D08RW661

Circuit Diagram (RHD)-2

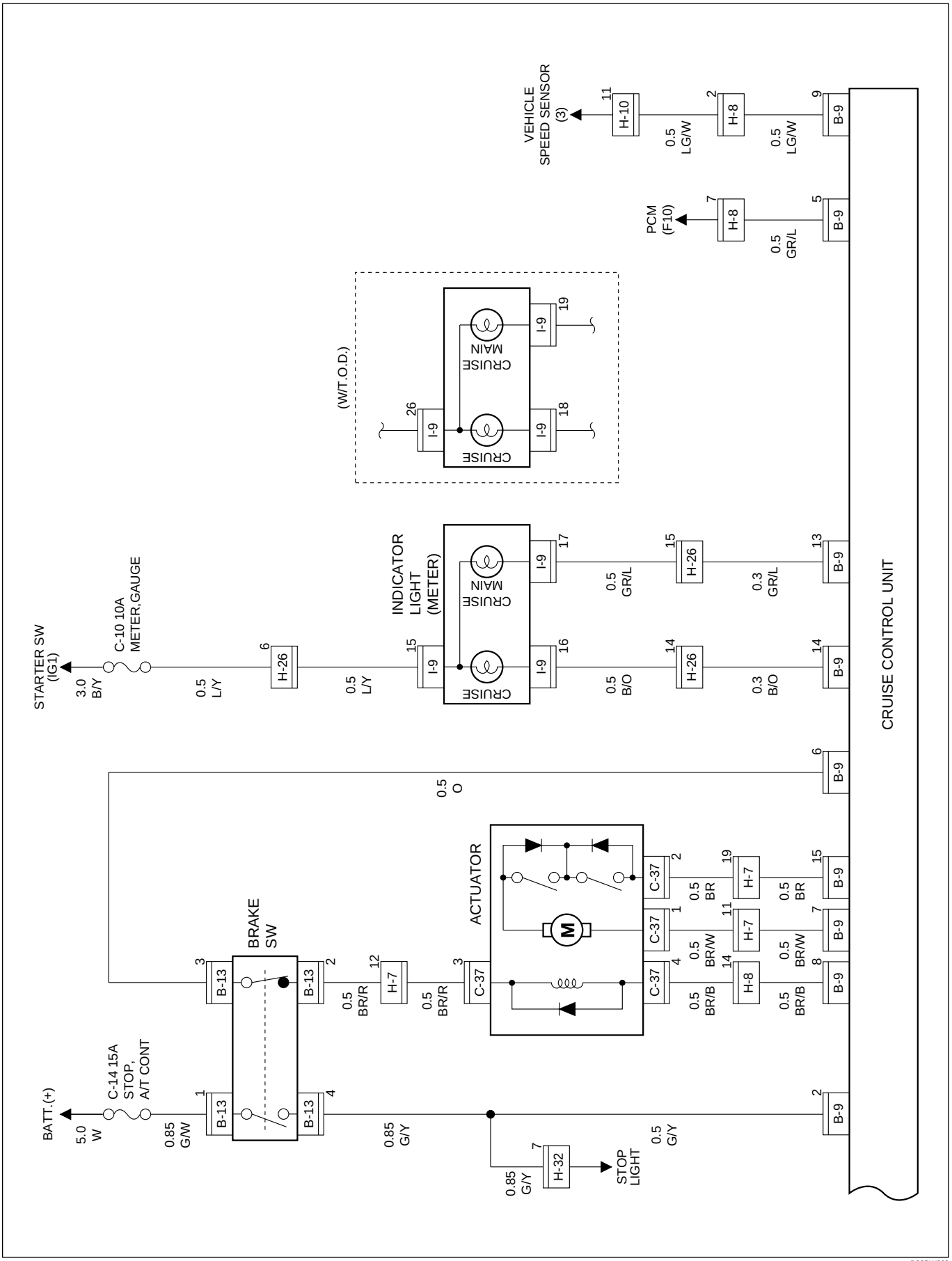

D08RW662

Parts Location (RHD)

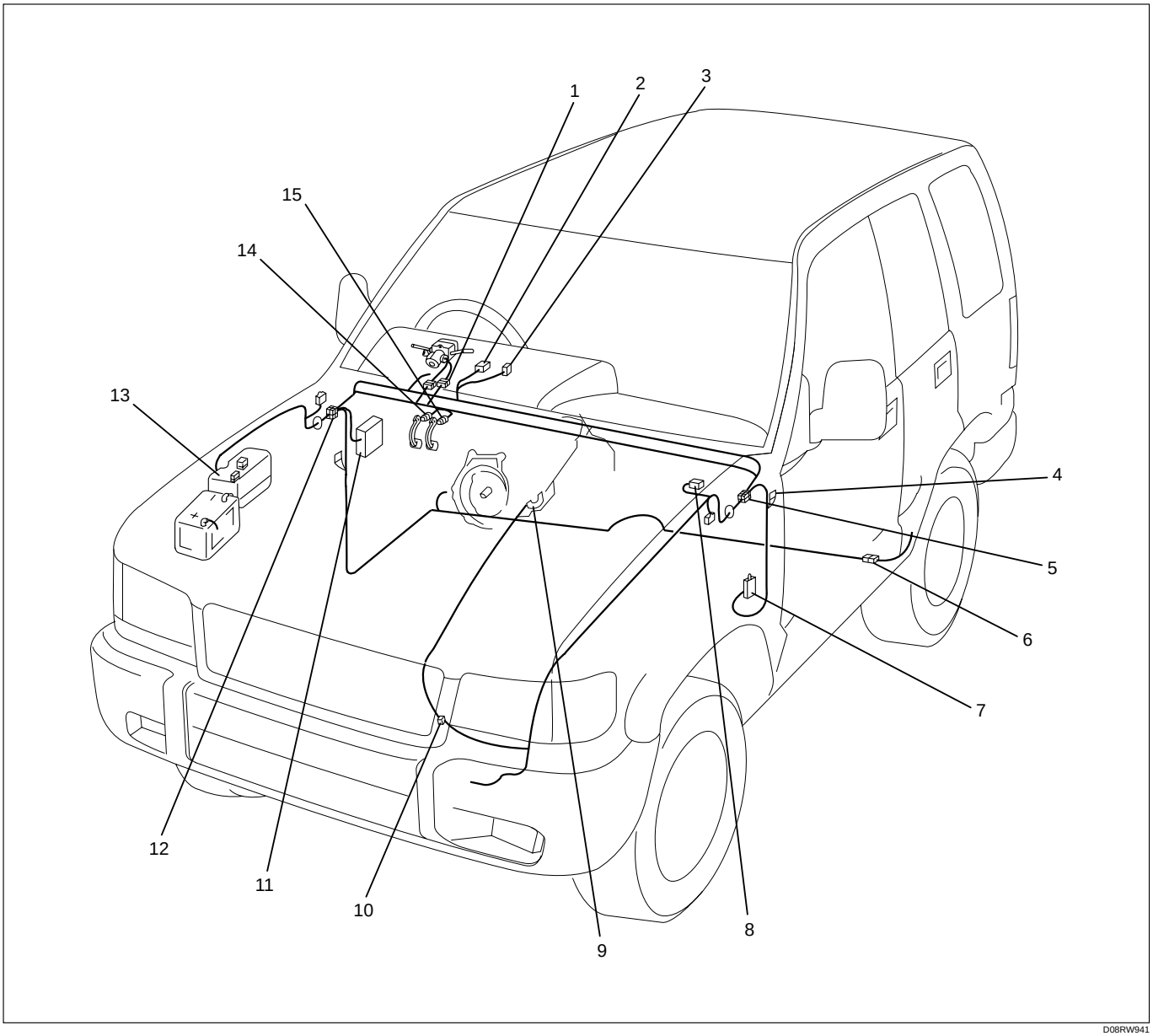

D08RW941

Legend

(1) B-52
(2) I-9
(3) I-6
(4) B-1
(5) H-7, H-8
(6) H-32
(7) Cruis Control Unit (B-9)
(8) C-37
(9) Mode Switch A/T (M-25)
(10) H-10, H-11, H-53
(11) Fuse Box
(12) H-25, H-26
(13) Relay and Fuse Box
(14) B-13
(15) B-16

Circuit Diagram (LHD)-1

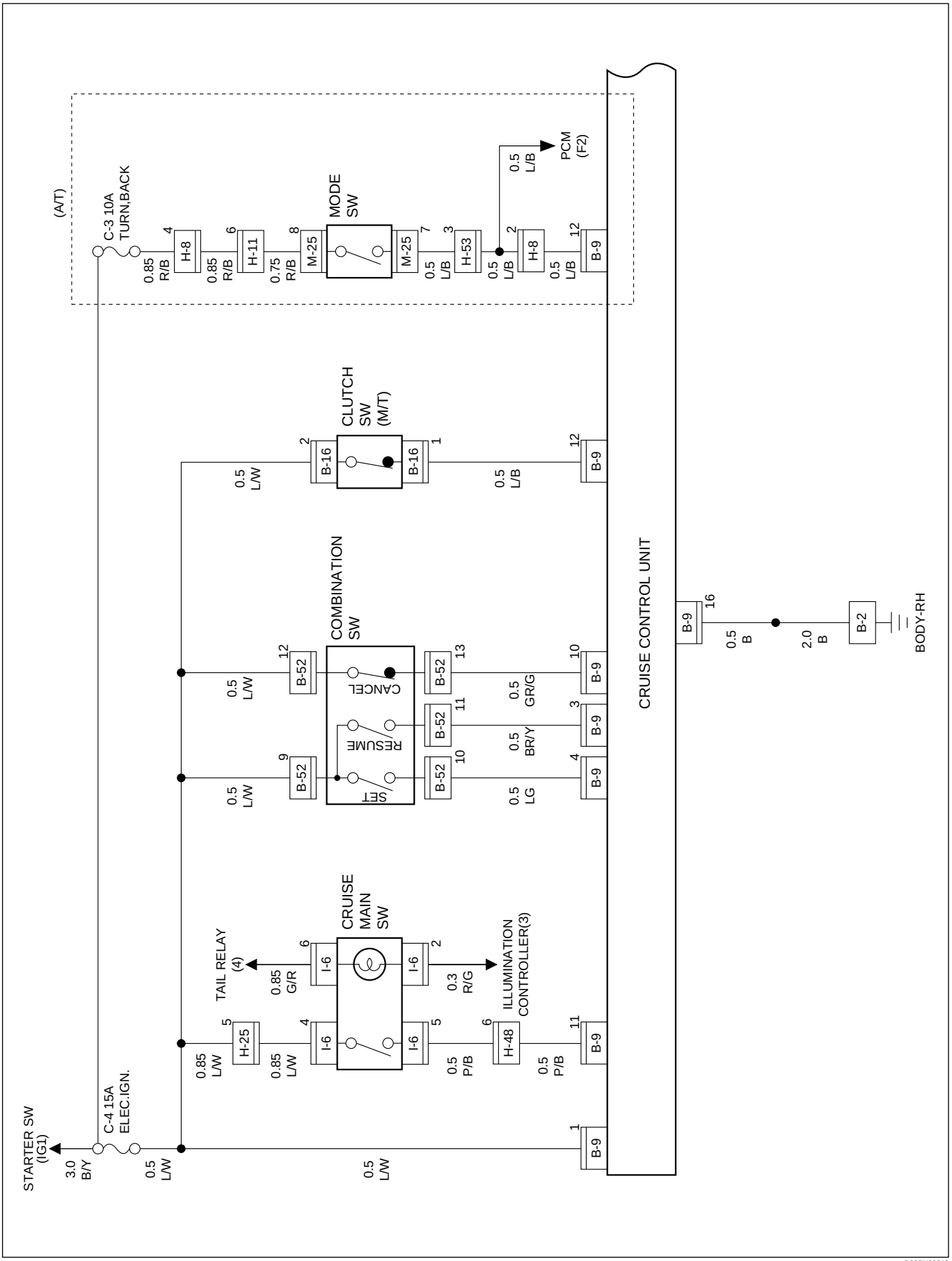

D08RY00218

Circuit Diagram (LHD)-2

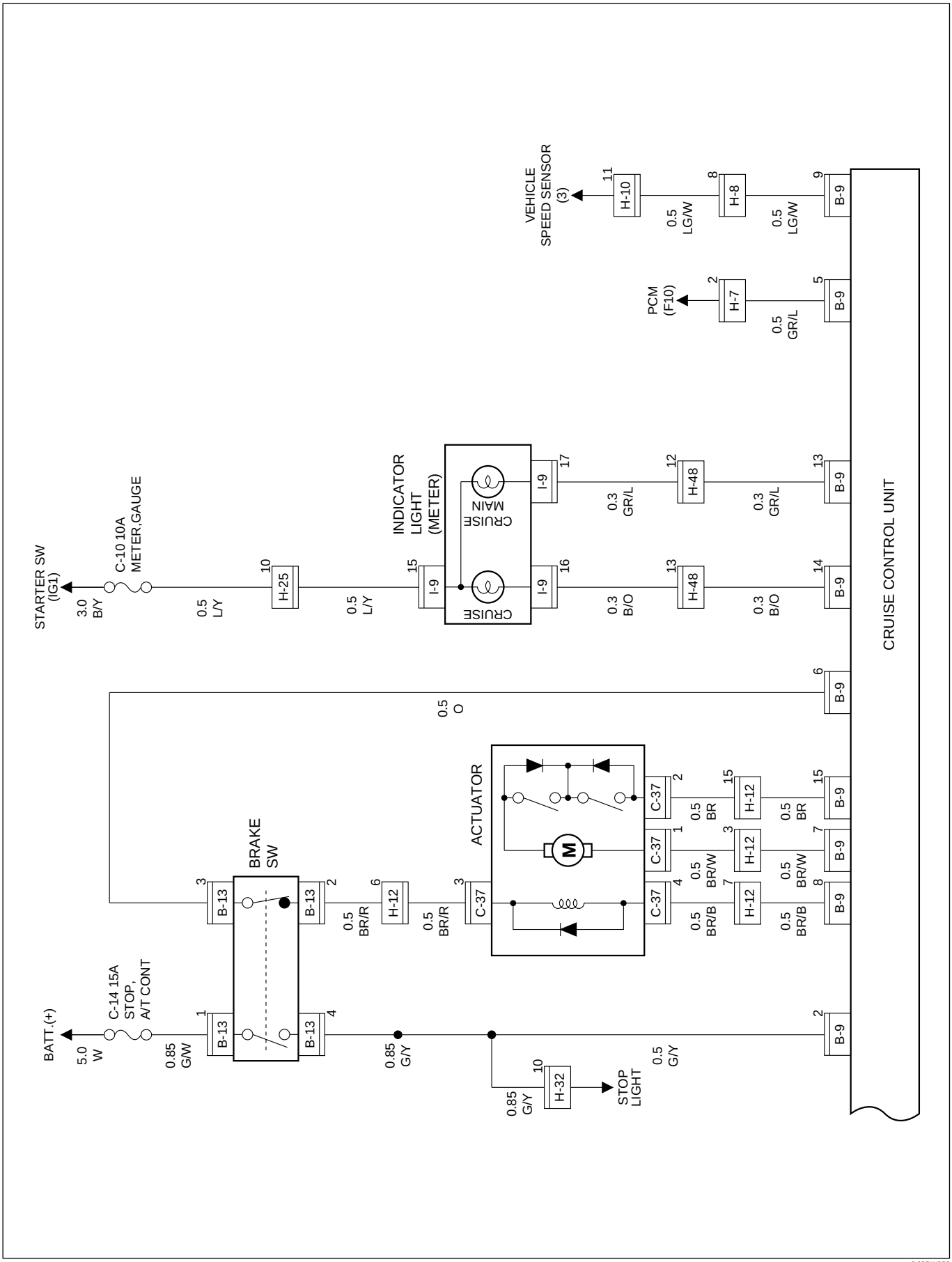

D08RW958

Parts Location (LHD)

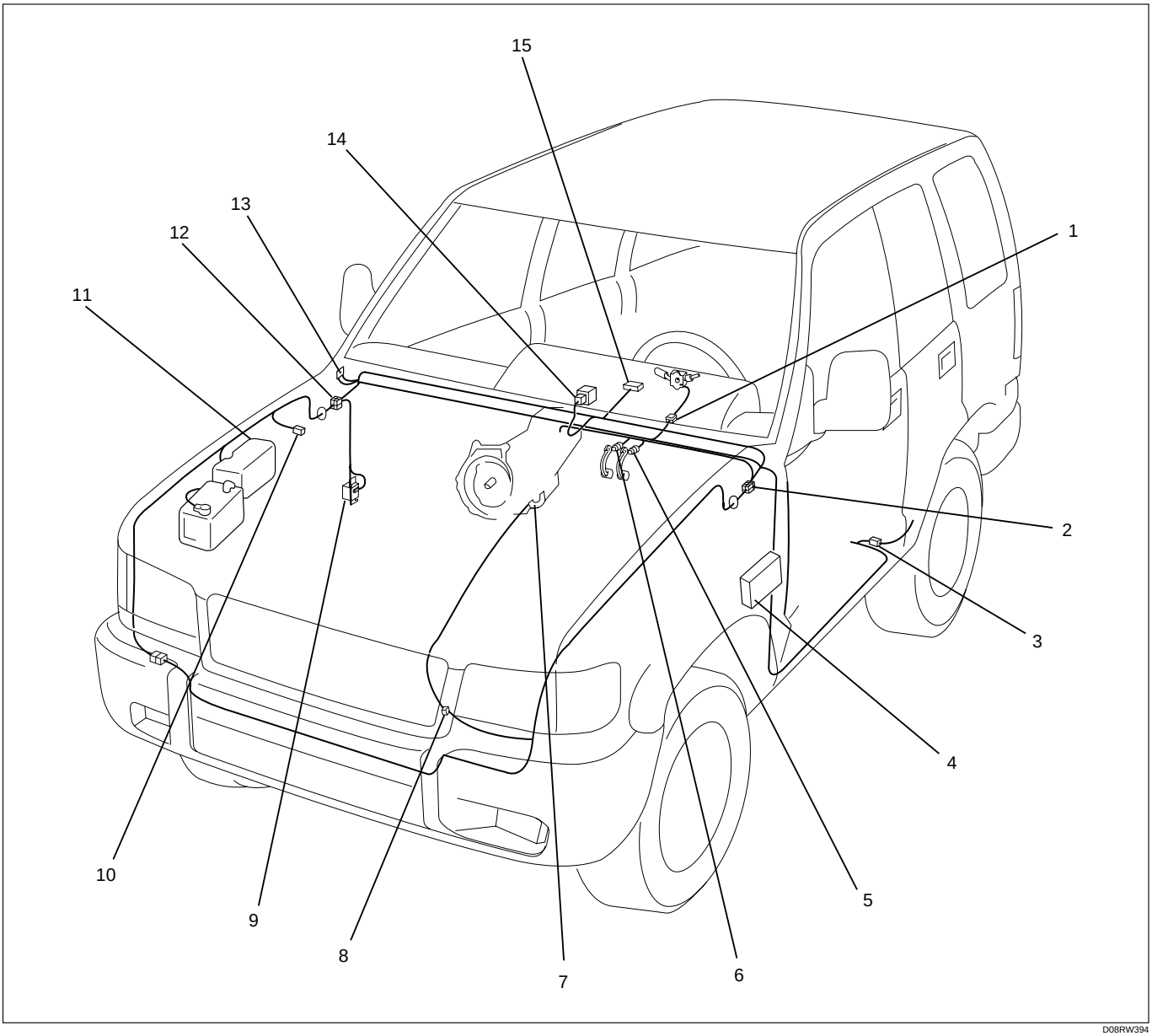

D08RW394

Legend

(1) B-52
(2) H-7, H-8, H-25
(3) H-32
(4) Fuse Box
(5) B-16
(6) B-13
(7) Mode Switch (M-25)
(8) H-10, H-11, H-53
(9) Cruise Control Unit (B-9)
(10) C-37
(11) Relay and Fuse Box
(12) H-12, H-48
(13) B-2
(14) I-6
(15) I-9

Diagnosis

The cruise control unit uses the cruise main indicator light and diagnoses the failure, when the control unit detects abnormality on the table below.

PART	POSIBLE CAUSE	DETECTION PERIOD	DTC
Actuator	Motor system short circuit	Energizing motor	1–1
	Clutch system short circuit	Energizing clutch	1–2
	Clutch system open circuit	Energizing clutch	1–2
	Mechanical defect	Cruise controlling	1–3
	Close side of motor system open circuit	Cruise controlling	1–1
Cruise control unit	Open side of motor system continuously energizing	While starter sw on	1–4
	Clutch output abnormality	While starter sw on	1–4
Vehicle speed sensor	Signal of vehicle speed disconnection	Cruise controlling	2–1
	Signal of vehicle speed abnormality	Cruise controlling	2–1
Switch	Turning on switch at all times	While starter sw on	3–1
	Turning on switch at the same time.	While starter sw on	3–1

DTC: Diagnostic Trouble Code

DTC Display Condition

1. While starter switch on and vehicle speed is 0 km/h, the DTC output begins in top priority by cancel switch turn on and off being repeated three times for 2 sec. while cruise main switch pushing on, and stops the DTC output whether vehicle speed is more than 10 km/h or the resume switch is turned on.
2. The cruise control unit outputs the DTC(s) in order from small figure of the code.
3. The header of display of DTC(s) is assumed 4 sec., and it is 2 sec. between different kind of codes.
4. The DTC(s) are erased with the starter switch turned off.

DTC Display Format

1. When no DTCs are detected. (The unit : sec.)

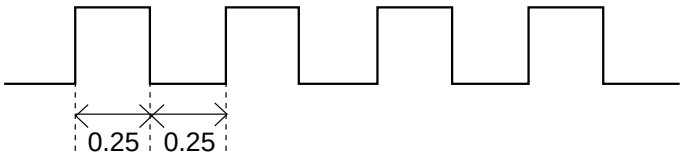

2. When two or more DTCs are detected. (The unit ; sec.)

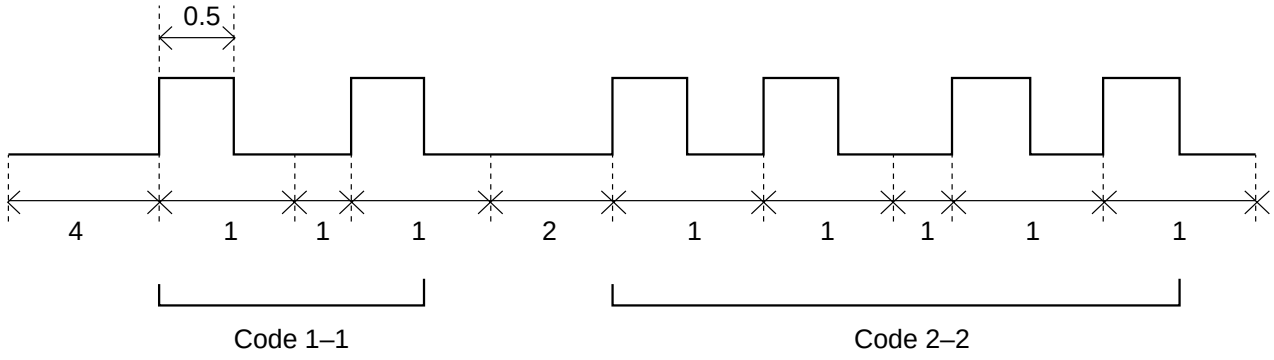

DTC 1–1 Motor System Short Circuit

STEP	ACTION	VALUE(S)	YES	NO
1	1. Turn the starter switch off. 2. Disconnect the actuator connector C–37. 3. Measure resistance between actuator side connector terminal 1 and 2. **NOTE: If control plate position is fully opened or fully closed, resistance can not be measured.** Is the resistance within range specified in the value(s) column?	More than 4.2Ω	Go to step 2	Replace the actuator
2	Measure continuity between harness side connector C–37 terminal 1 and the ground, terminal 2 and the ground, and terminal 1 and 2. Are the results same as specified in the value(s) columns?	No continuity	Replace the control unit	Repair or replace the harness

DTC 1–2 Clutch System Open or Short Circuit

STEP	ACTION	VALUE(S)	YES	NO
1	1. Turn the starter switch off. 2. Disconnect the actuator connector C–37. 3. Measure resistance between actuator side connector terminal 3 and 4. Is the resistance within range specified in the value(s) column?	34.7 – 42.4Ω	Go to step 2	Replace the actuator
2	1. Disconnect the brake switch connector B–13. 2. Check continuity between switch side connector terminal 2 and 3. Is there continuity between terminals?	–	Go to step 3	Adjust the switch or replace it
3	1. Reconnect the brake switch connector B–13. 2. Check continuity between harness side connector B–9 terminal 6 and connector C–37 terminal 3, connector C–37 terminal 4 and connector B–9 terminal 8. Is there continuity between terminals?	–	Go to step 4	Repair open circuit
4	Is there continuity between harness side connector C–37 terminal 3 and the ground, connector C–37 terminal 4 and the ground, connector B–9 terminal 6 and the ground? Are the results same as specified in the value(s) column?	No continuity	Replace the control unit	Repair short circuit

DTC 1–3 Mechanical Defect

STEP	ACTION	VALUE(S)	YES	NO
1	1. Turn the starter switch off. 2. Disconnect the actuator connector C–37. 3. Connect the battery positive terminal with the actuator side connector terminal 3 and the battery negative terminal with terminal 4. Does the control plate move by hand?	–	Replace the actuator	Go to step 2
2	Connect the battery positive terminal with the actuator side connector terminal 1 and 3, and the battery negative terminal with terminal 2 and 4. Does the control plate move to full open side?	–	Go to step 3	Replace the actuator
3	Connect the battery positive terminal with the actuator side connector terminal 2 and 3, and the battery negative terminal with terminal 1 and 4. Does the control plate move to full close side?	–	Go to step 4	Replace the actuator
4	Is there continuity between harness side connector C–37 terminal 1 and connector B–9 terminal 7, connector C–37 terminal 2 and connector B–9 terminal 15?	–	Replace the control unit	Repair or replace harness

DTC 1–4 Open Side of Motor System Continuously Energizing

STEP	ACTION	VALUE(S)	YES	NO
1	1. Turn the starter switch off. 2. Disconnect the actuator connector C–37. 3. Measure resistance between actuator side connector terminal 1 and 2. **NOTE: If control plate position is fully opened or fully closed, resistance can not be measured.** Is there resistance within range specified in the value(s) column?	More than 4.2Ω	Go to step 2	Replace the actuator
2	Is there continuity between harness side connector C–37 terminal 1 and connector B–9 terminal 7, harness side connector C–37 terminal 2 and connector B–9 terminal 15?	–	Replace the control unit	Repair or replace harness

Anti-lock Brake System (ABS)

General Description

The circuit consists of EHCU (Electronic Hydraulic Control Unit), wheel speed sensor, G–sensor, stoplight switch or brake switch (w/cruise control), backup light switch, transmission switch–1, 2, indicator light and data link connector.

EHCU controls brake fluid pressure applied to front and rear wheels to prevent wheels from locking by using speed sensor and G–sensor signals.

Based on wheel speed signals from speed sensor, EHCU activates solenoid valves incorporated into the control unit to increase, maintain or decrease brake fluid pressure.

Refer to Anti–lock Brake System in Brakes section.

Circuit Diagram (RHD)-1

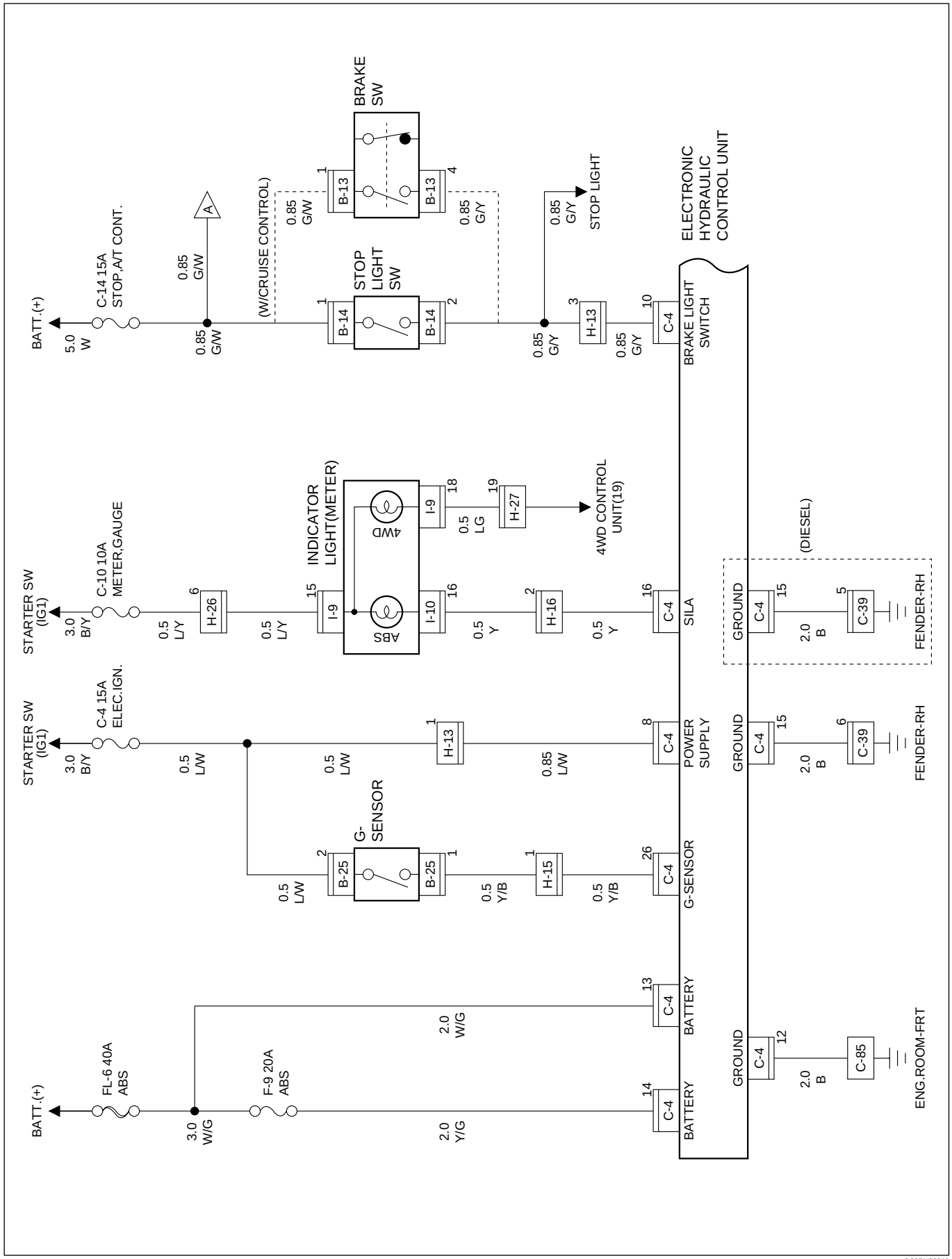

D08RY00219

Circuit Diagram (RHD 6V*1)-2

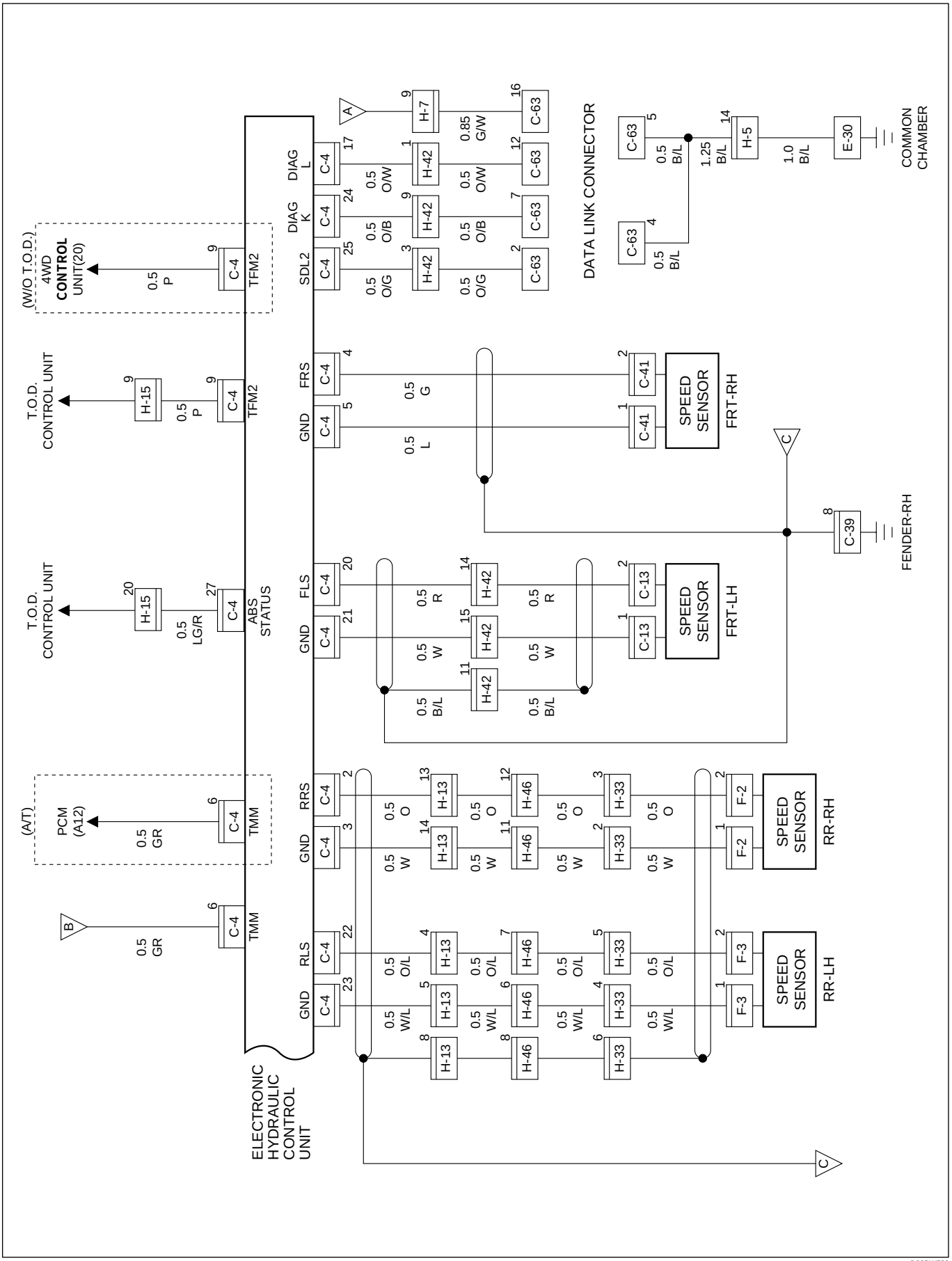

D08RW786

Circuit Diagram (RHD 4J**)-2

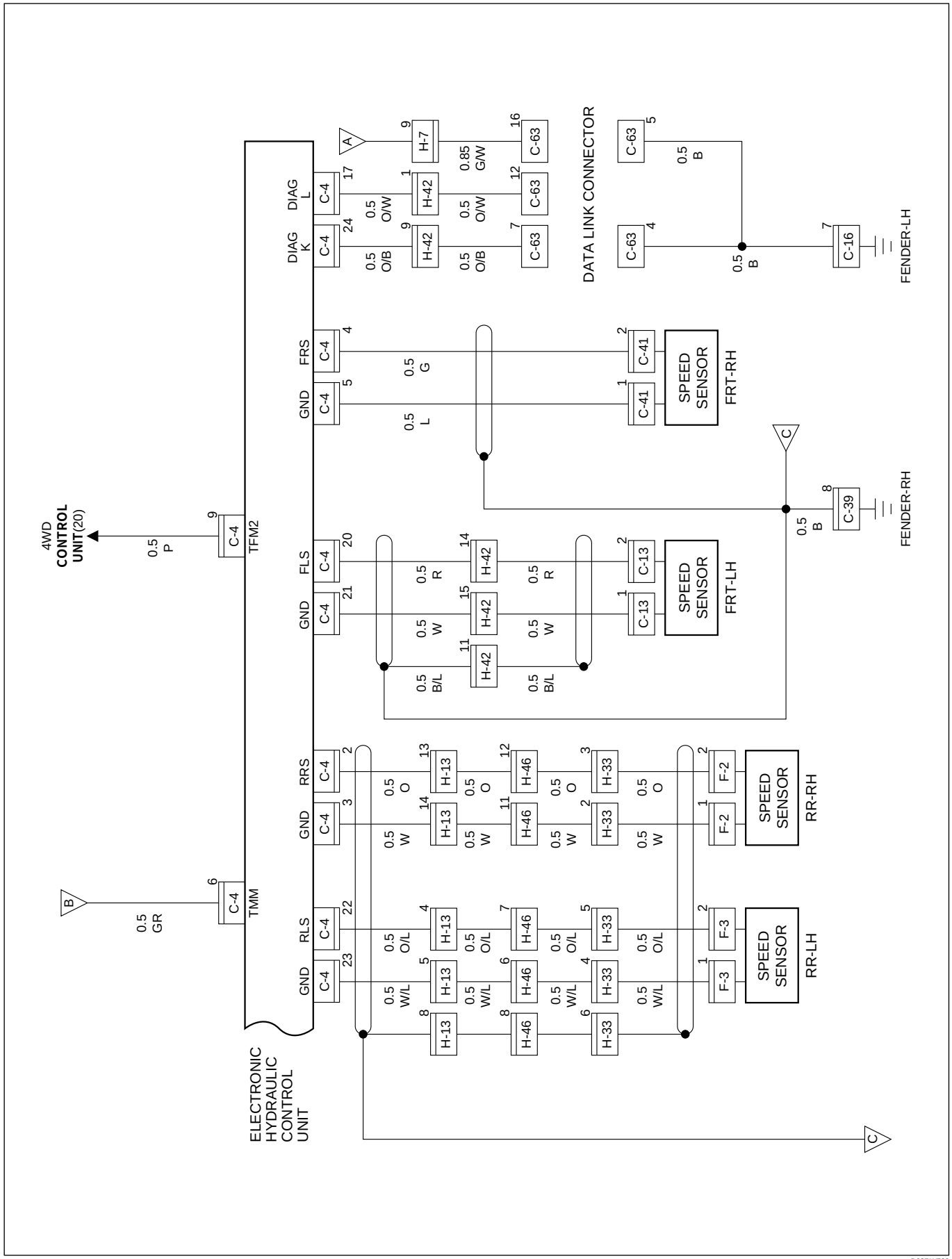

D08RW788

Circuit Diagram (RHD 6VD1)-3

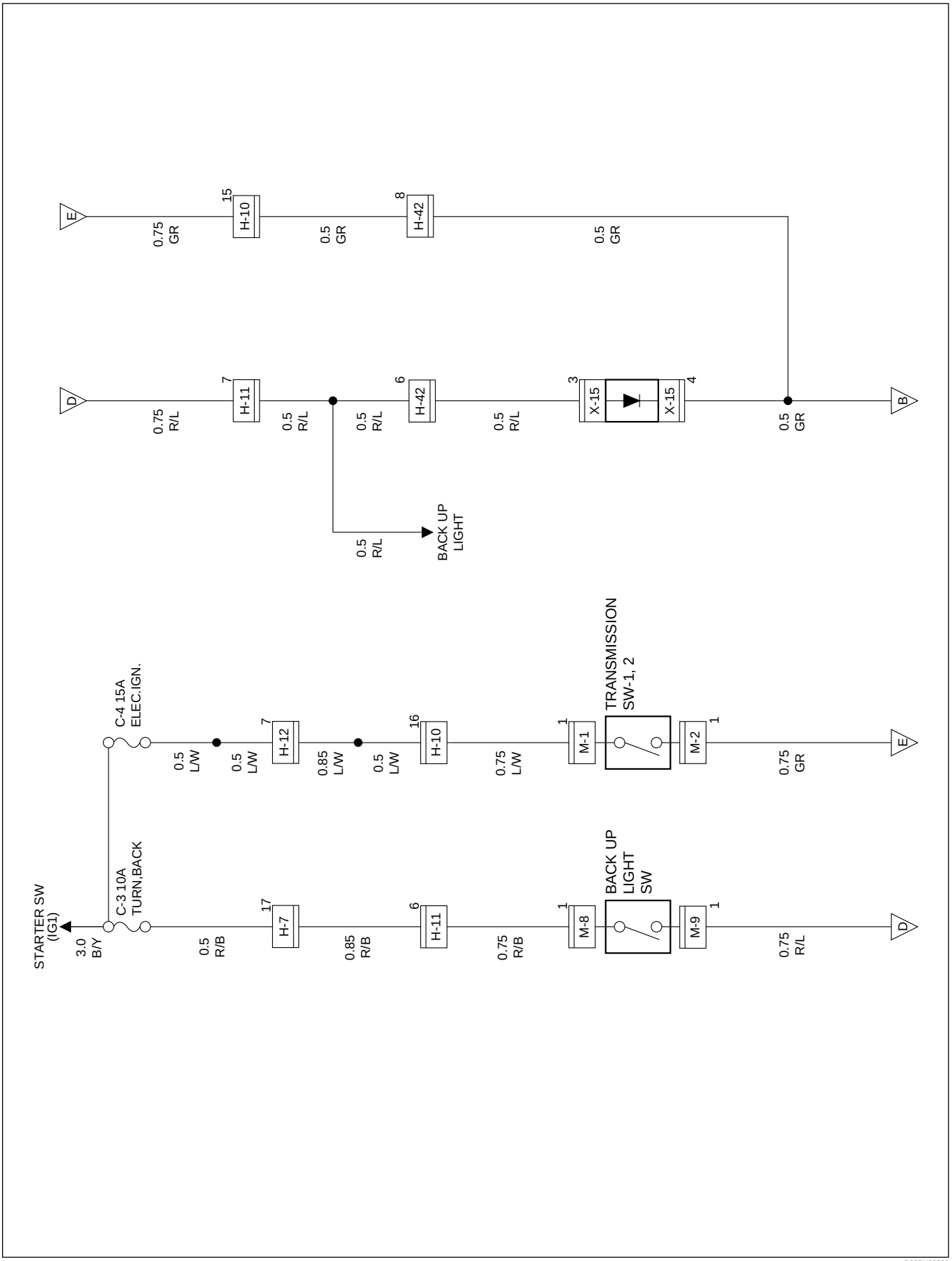

D08RY00220

Circuit Diagram (RHD 6VE1)-3

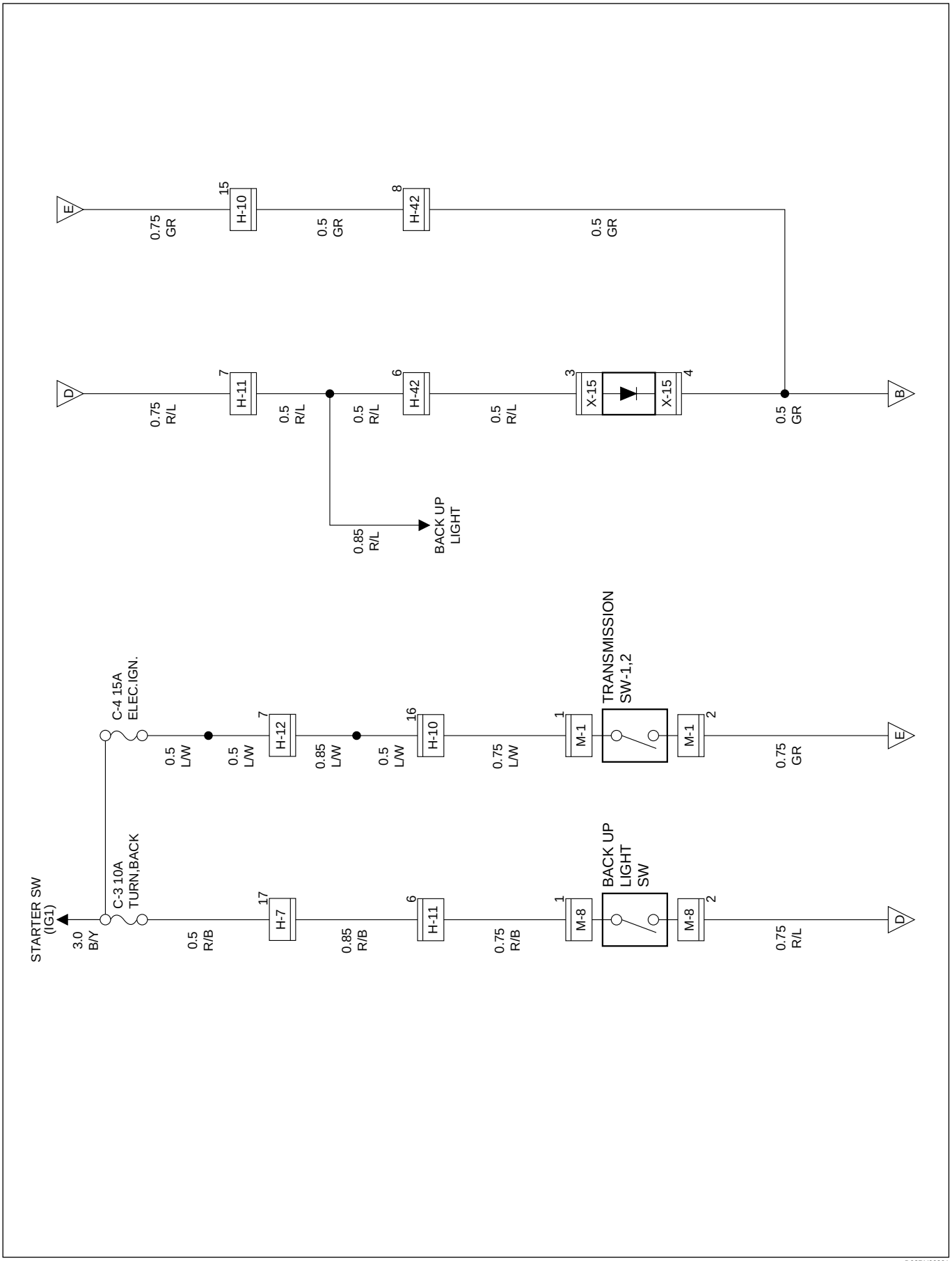

D08RY00221

Circuit Diagram (RHD 4J**)-3

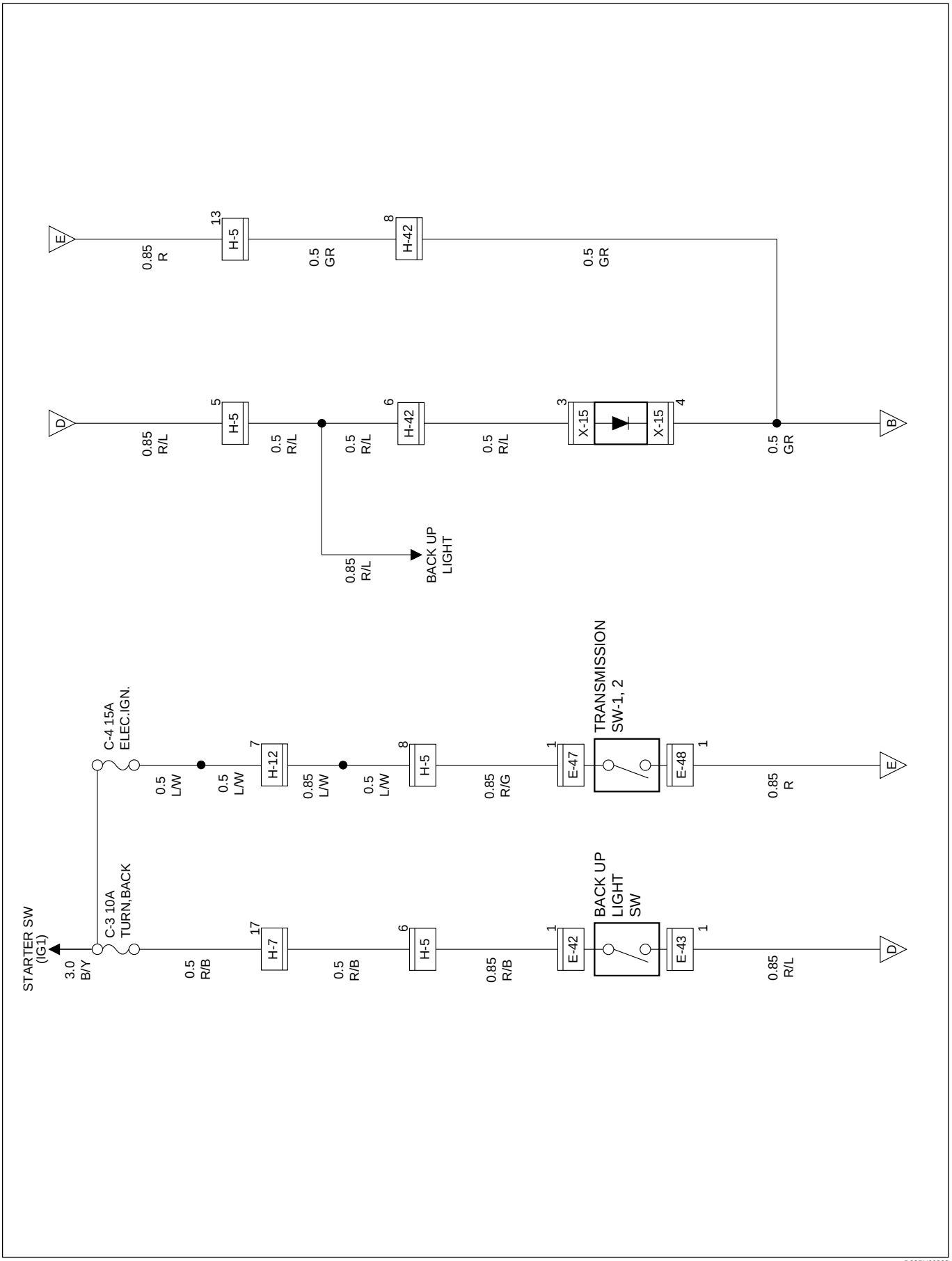

Parts Location (RHD)

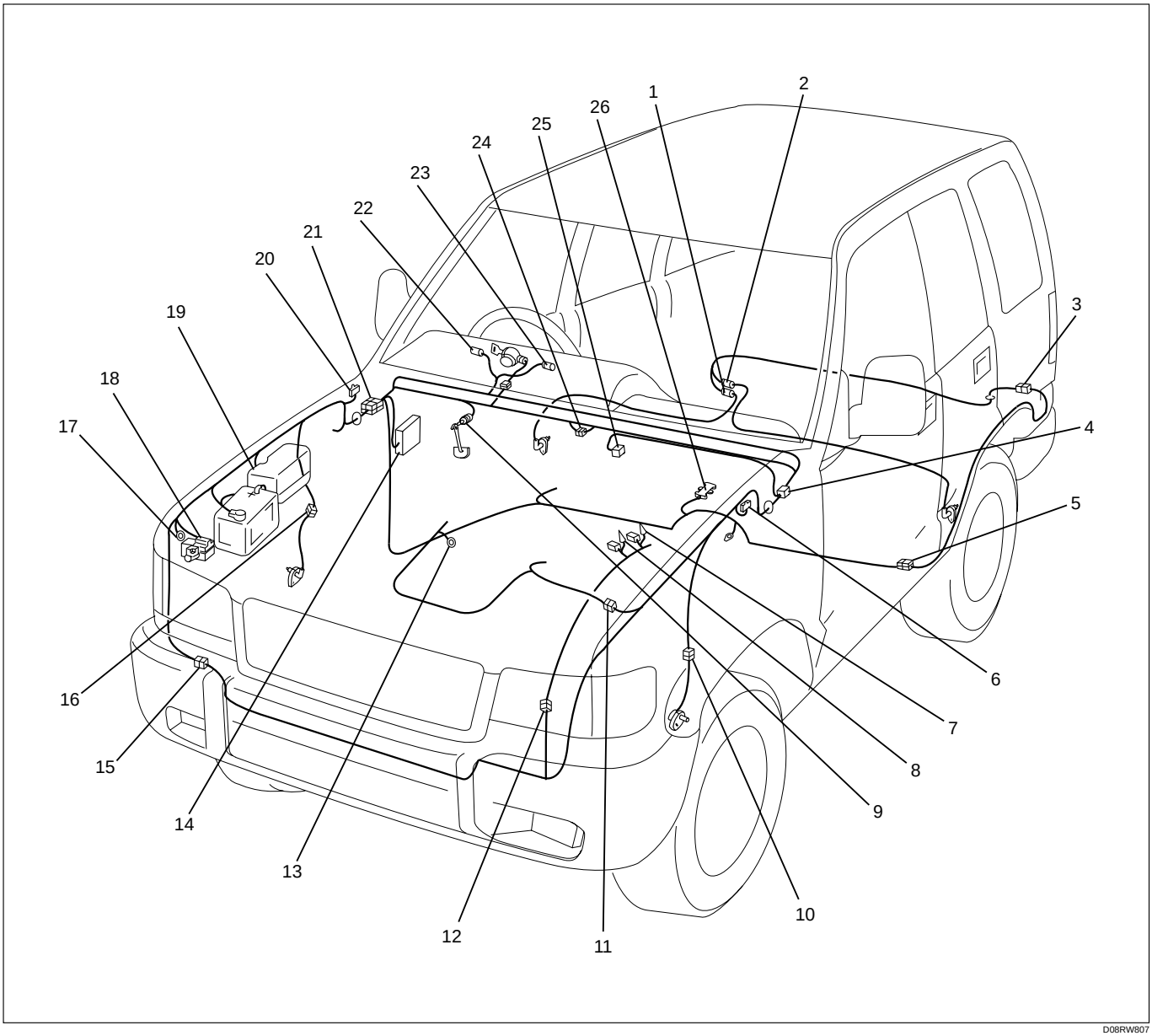

D08RW807

Legend

(1) F-2
(2) F-3
(3) H-33
(4) H-7
(5) H-46
(6) C-16
(7) E-42, E-43, M-8
(8) E-47, E-48, M-1
(9) B-13 or B-14
(10) C-13
(11) H-4, H-5, H-6
(12) H-10, H-11
(13) E-30
(14) Fuse Box
(15) H-42
(16) C-41
(17) C-85
(18) C-4 (EHCU)
(19) Relay and Fuse Box
(20) C-39
(21) H-13, H-15, H-16, H-26, H-27
(22) I-10
(23) I-9
(24) H-12
(25) C-63
(26) B-25

Circuit Diagram (LHD)-1

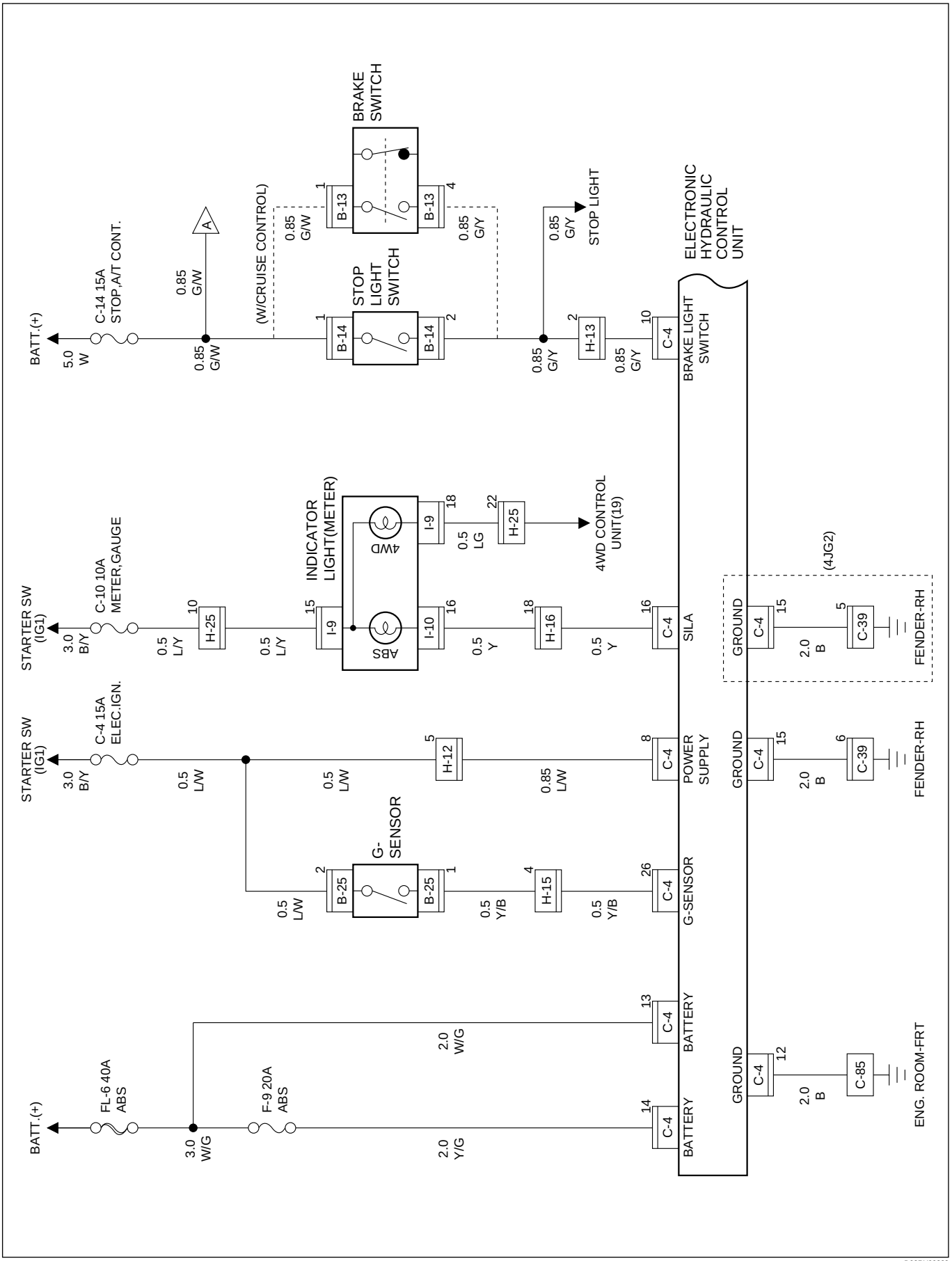

D08RY00223

Circuit Diagram (LHD 6VD1)-2

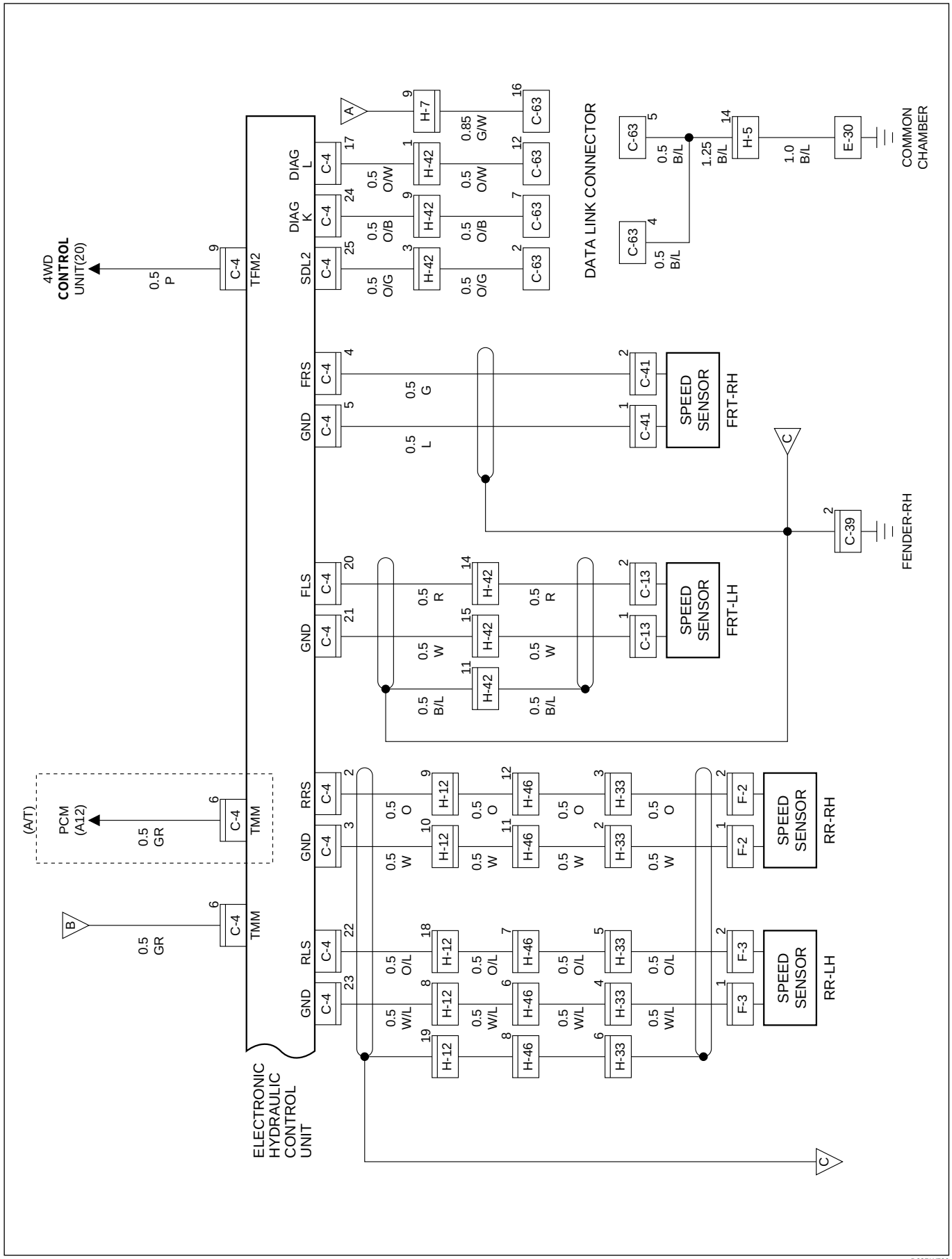

D08RW790

Circuit Diagram (LHD 4JG2)-2

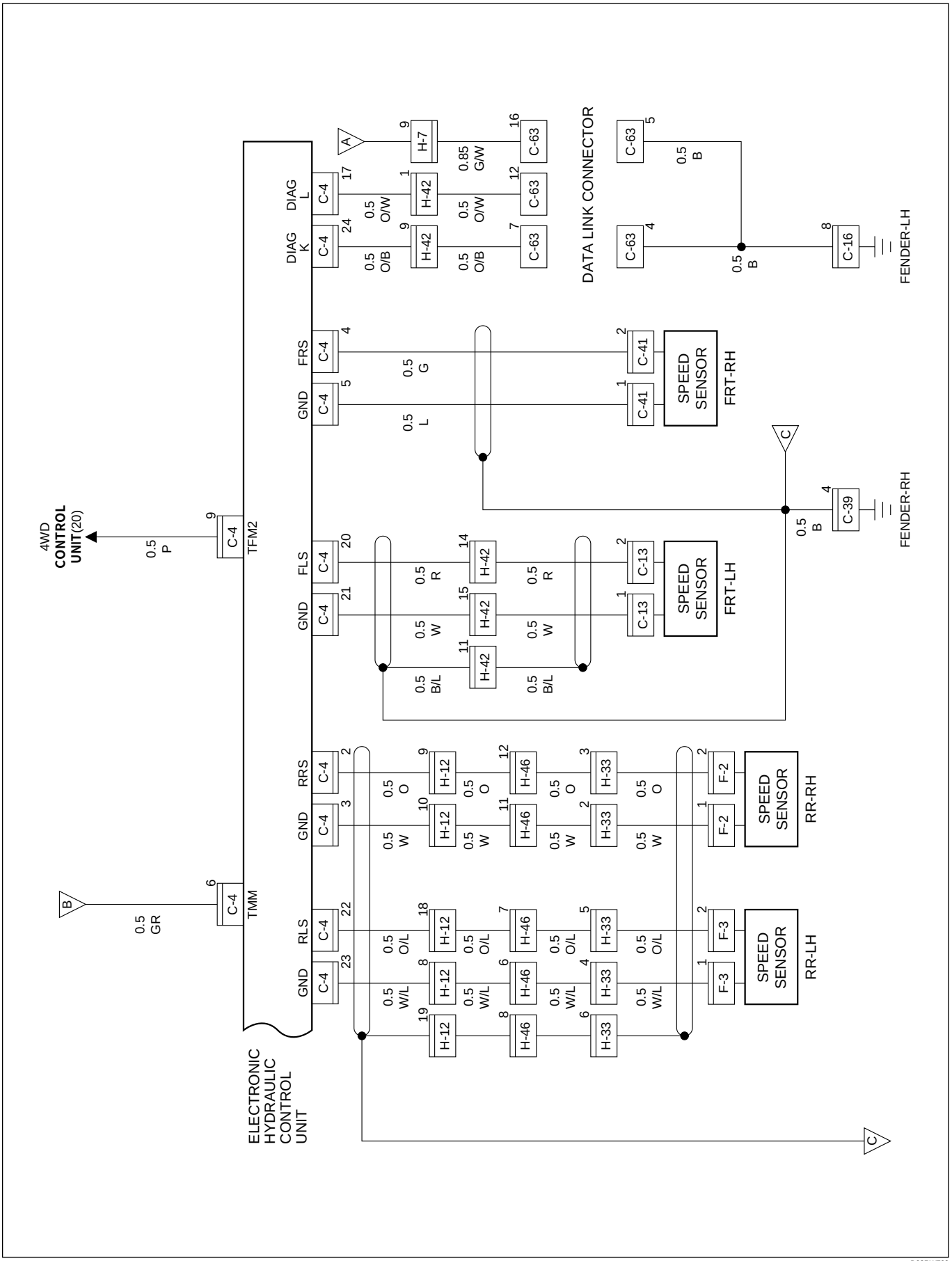

D08RW792

Circuit Diagram (LHD 6VD1)-3

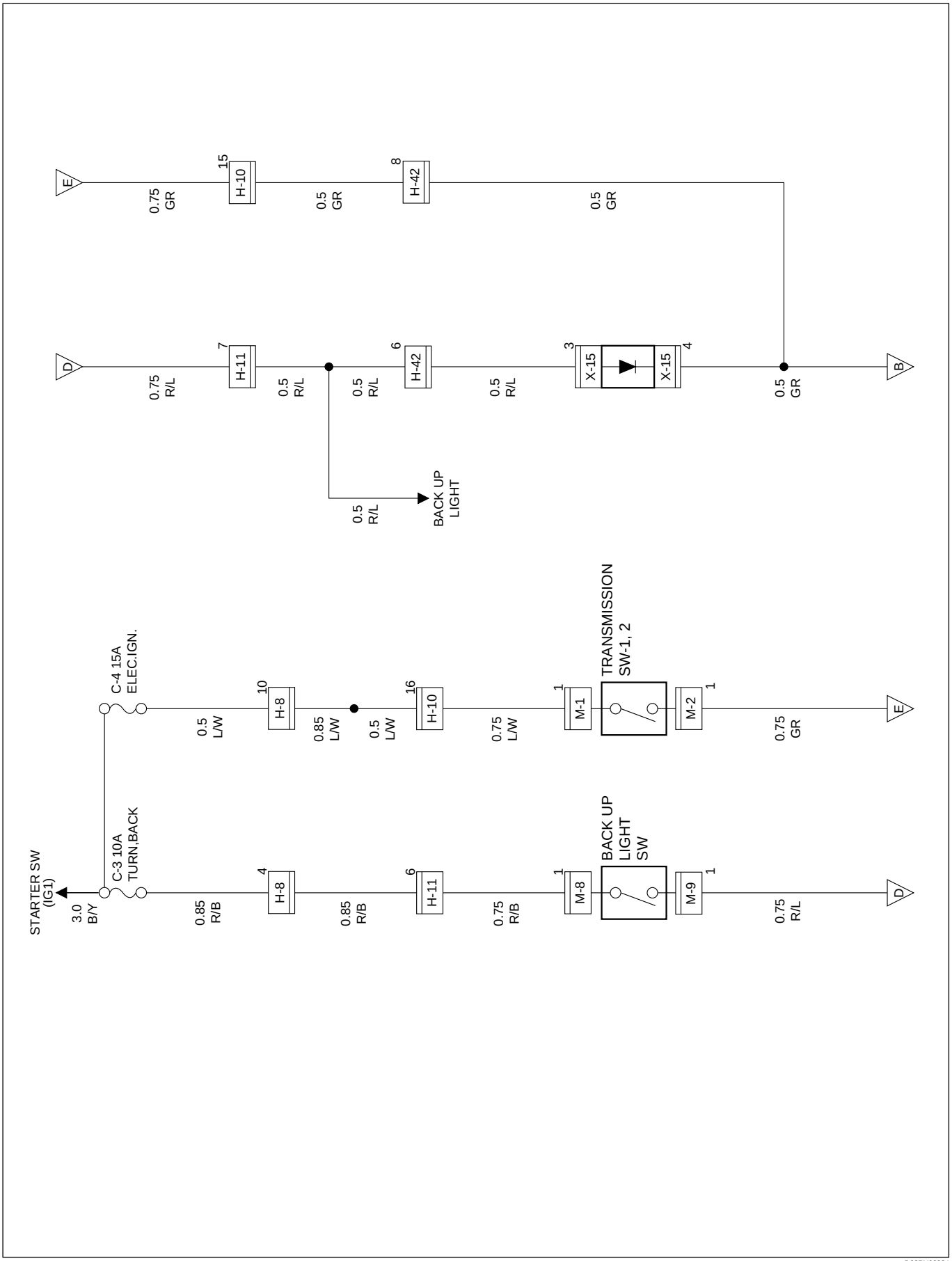

D08RY00224

Circuit Diagram (LHD 4JG2)-3

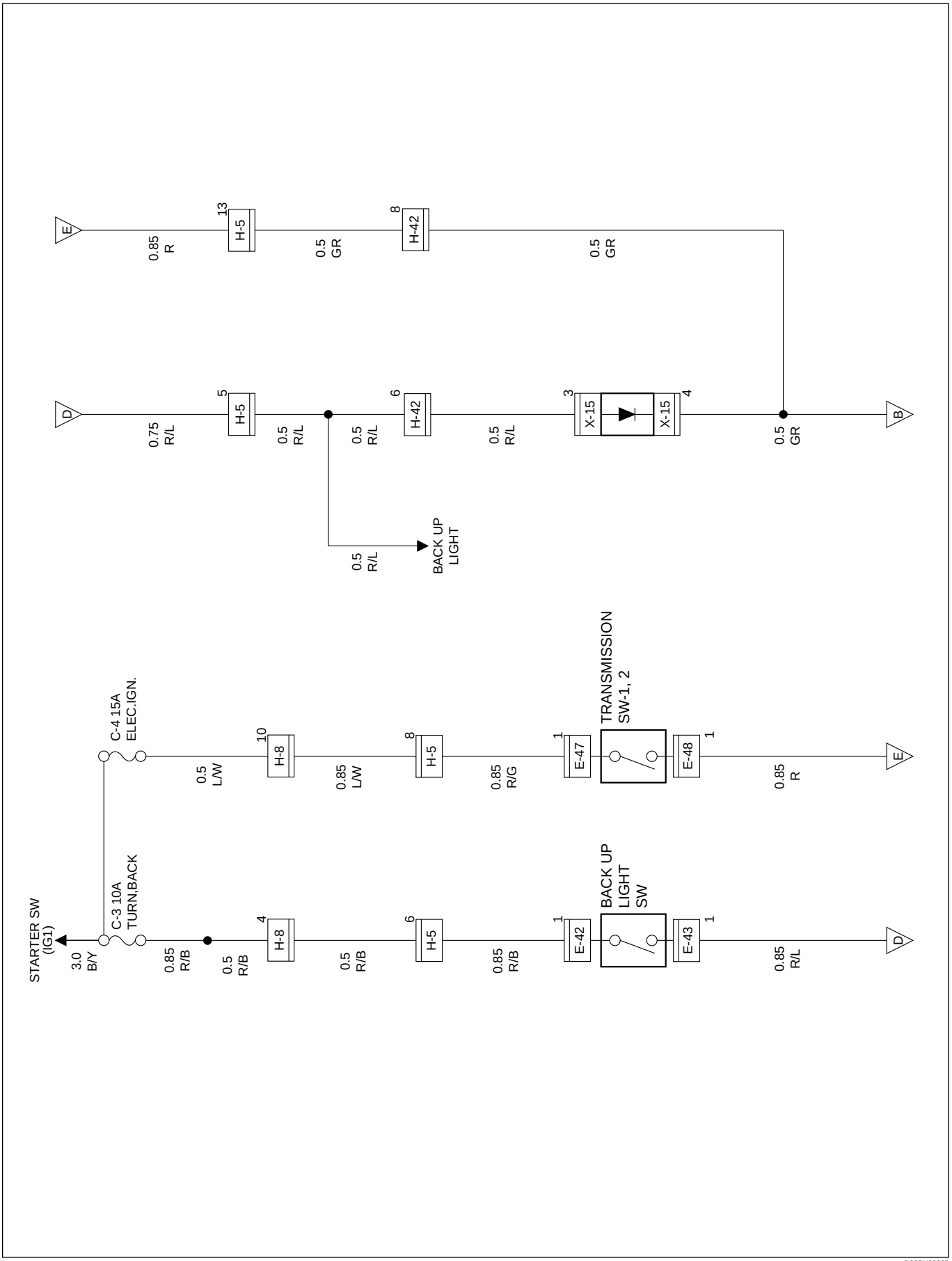

D08RY00225

Parts Location (LHD)

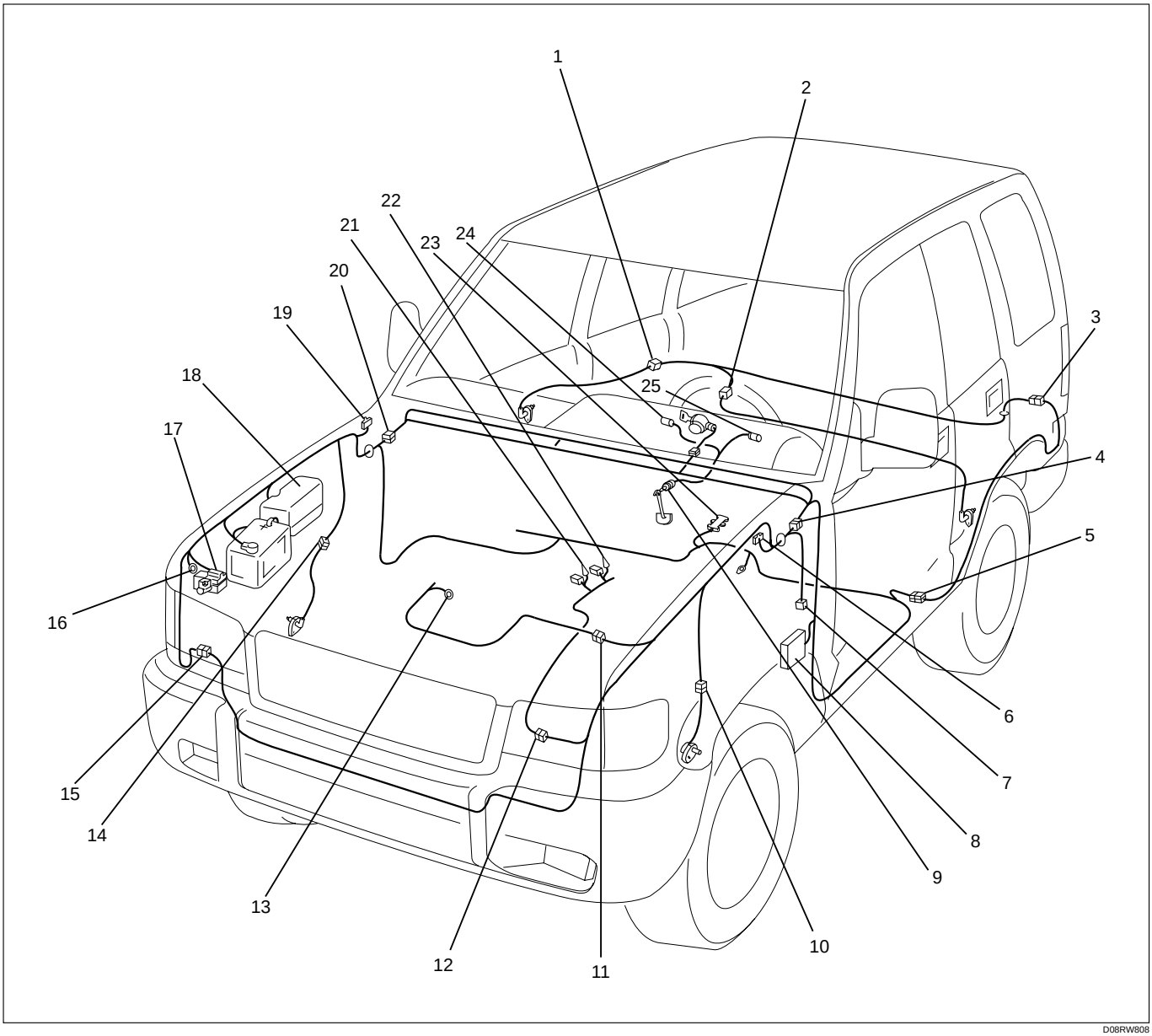

D08RW808

Legend

(1) F-2
(2) F-3
(3) H-33
(4) H-7, H-8, H-25
(5) H-46
(6) C-16
(7) C-63
(8) Fuse Box
(9) B-13 or B-14
(10) C-13
(11) H-5
(12) H-10, H-11
(13) E-30
(14) C-41
(15) H-42
(16) C-85
(17) C-4 (EHCU)
(18) Relay and Fuse Box
(19) C-39
(20) H-12, H-13, H-15, H-16
(21) E-47, E-48, M-1
(22) E-42, E-43, M-8
(23) B-25
(24) I-10
(25) I-9

A/T Shift Lock

General Description

The circuit consists of stoplight switch or brake switch and shift lock controller.
This system is designed not to allow shift lever to be shifted from “P” position to any other position without depressing brake pedal while starter switch is turned on.
The solenoid pin at the lower portion of shift lever retracts when brake pedal is not depressed, thus causing shift lever cam to be locked by link lever.

Circuit Diagram (RHD)

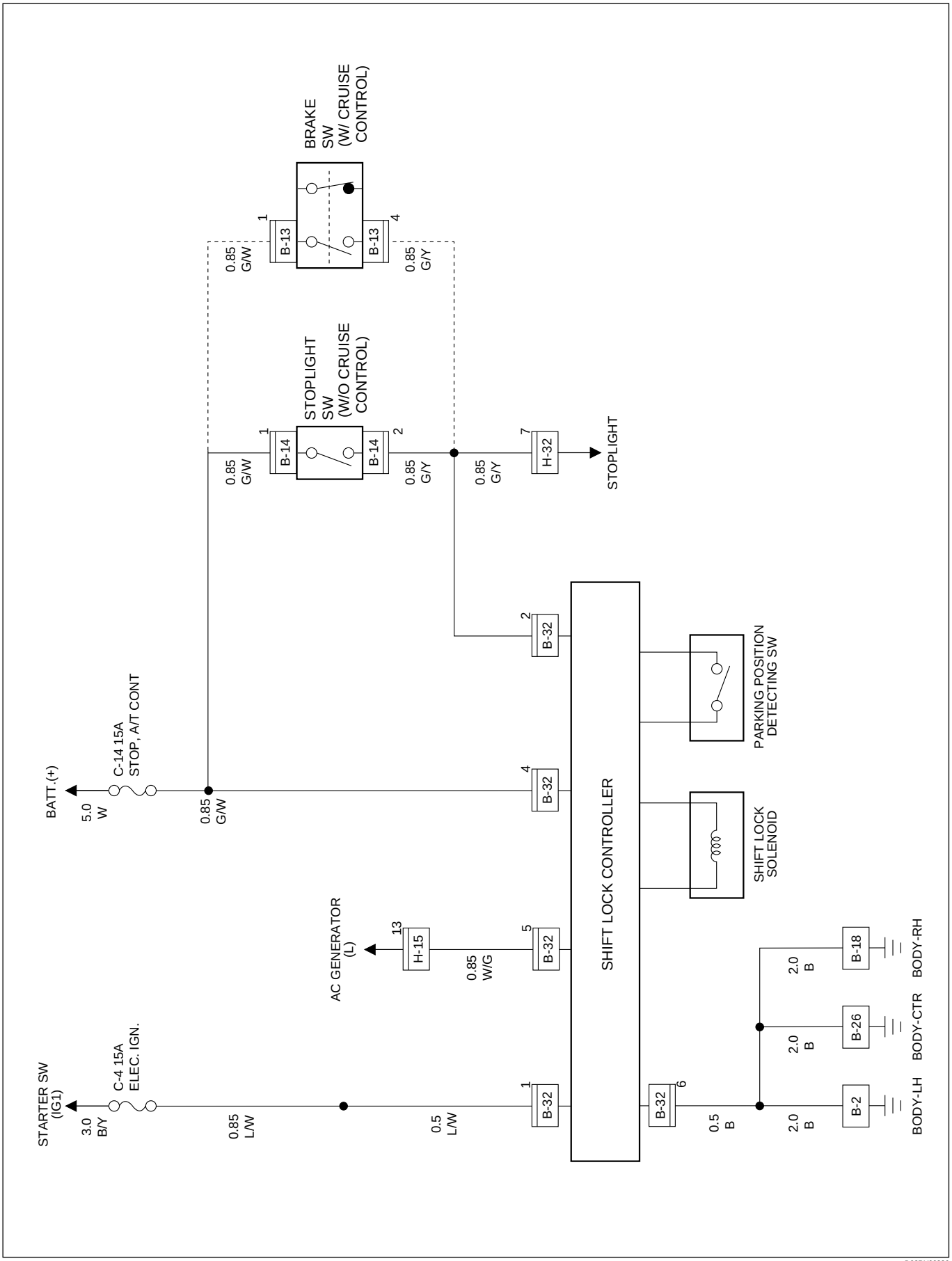

D08RY00226

Parts Location (RHD)

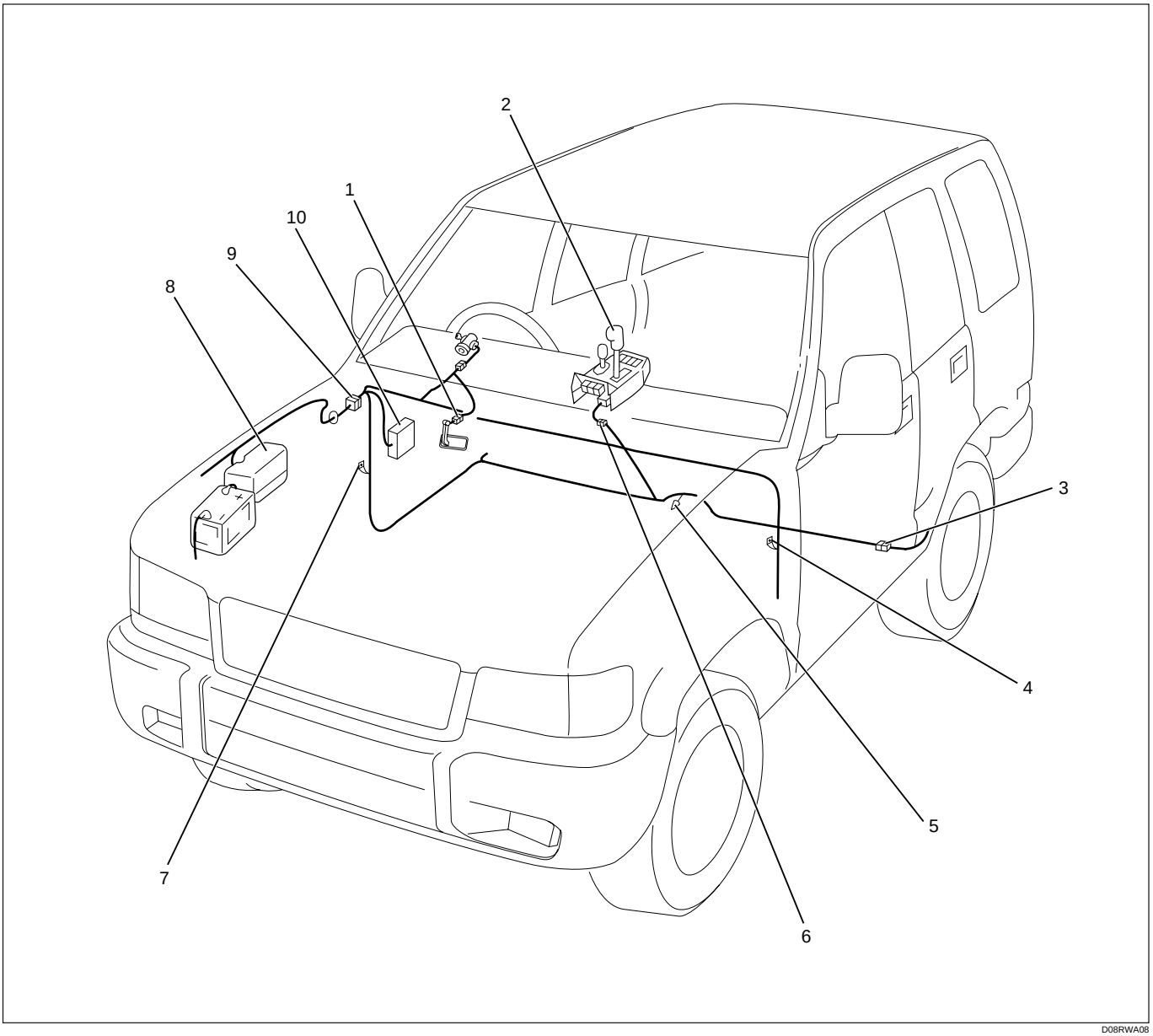

D08RWA08

Legend

(1) B-13 or B-14
(2) Shift Lever
(3) H-32
(4) B-2
(5) B-26
(6) Shift Lock Controller (B-32)
(7) B-18
(8) Relay and Fuse Box
(9) H-15
(10) Fuse Box

Circuit Diagram (LHD)

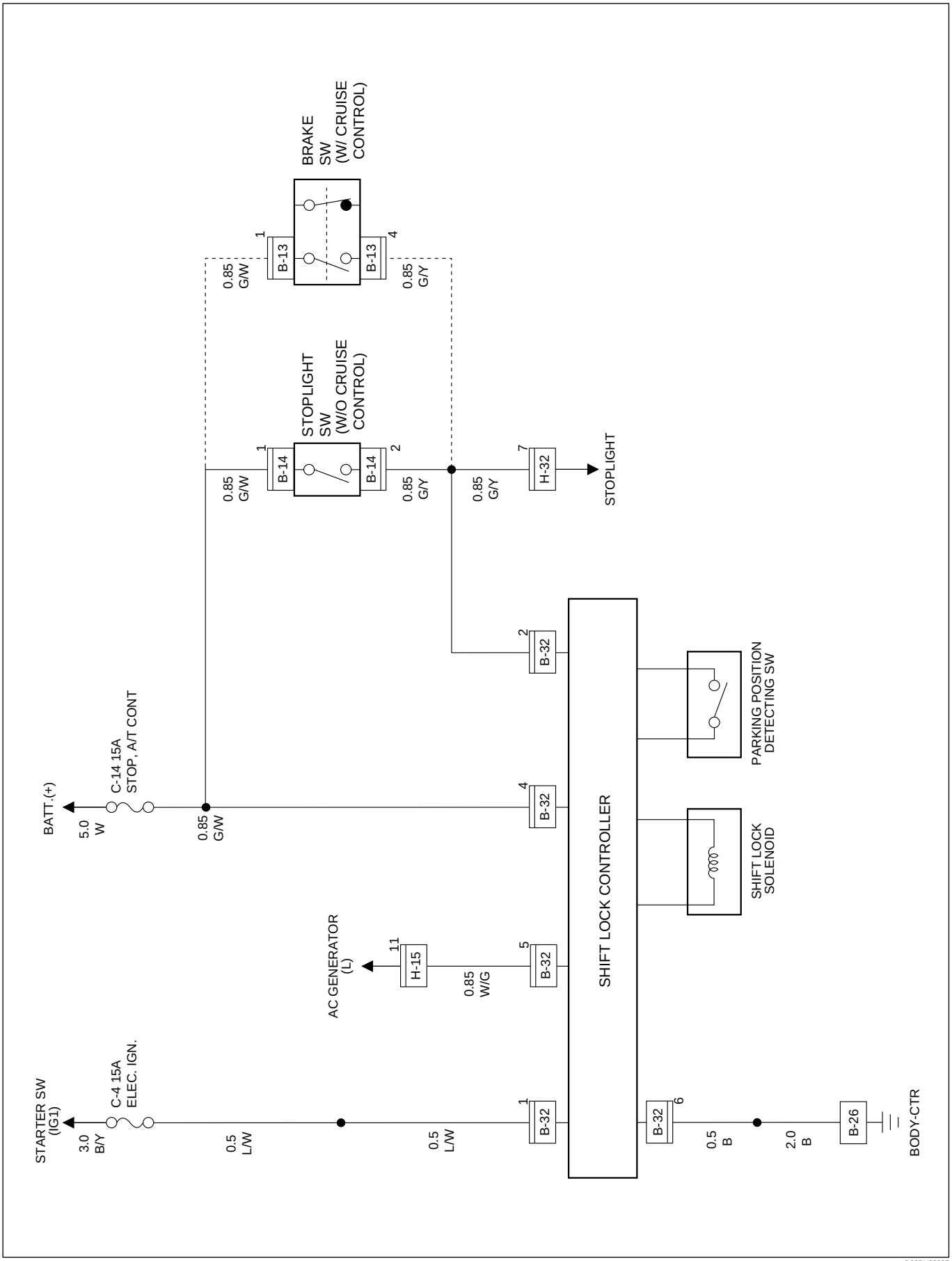

D08RY00227

Parts Location (LHD)

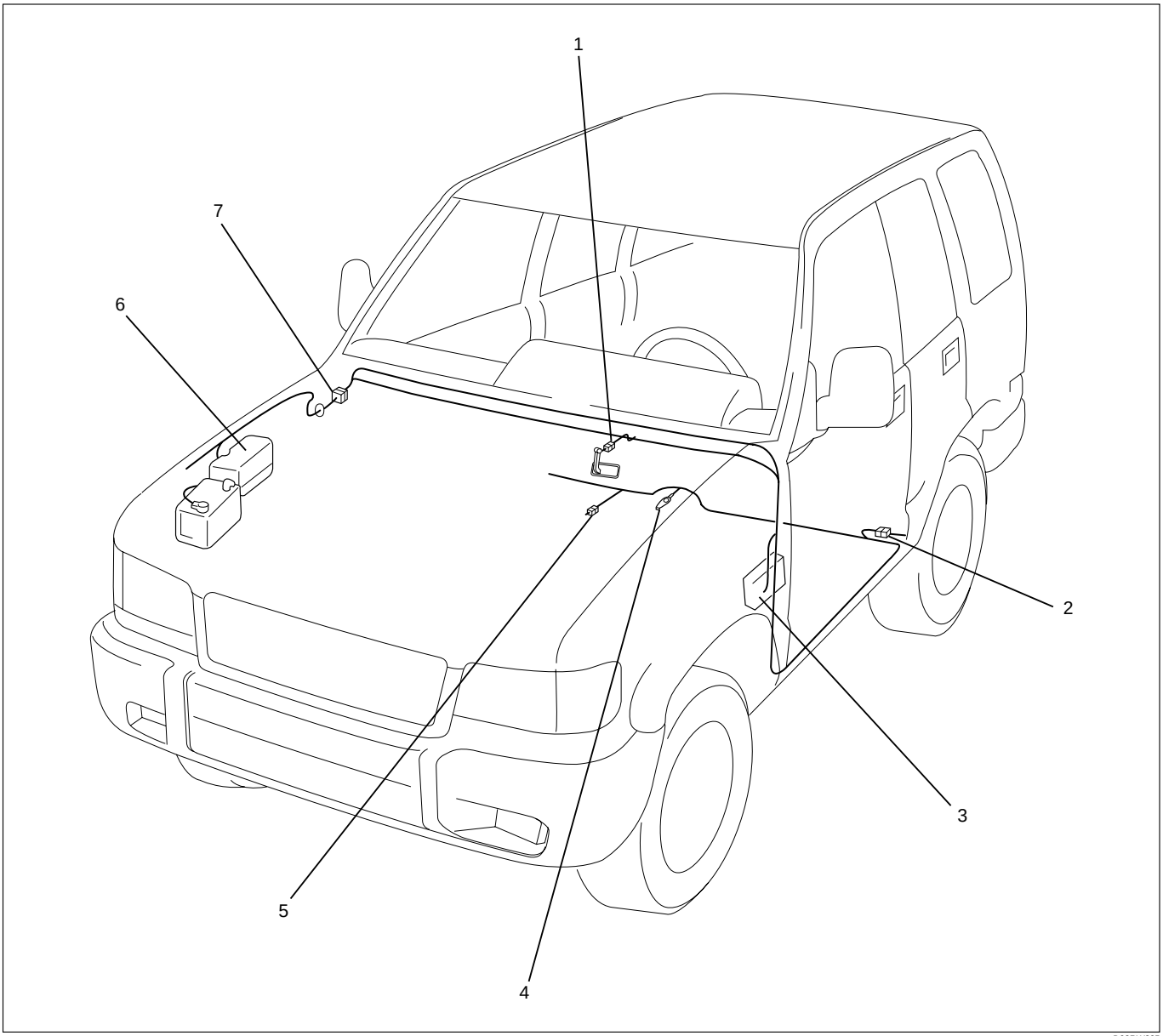

D08RW395

Legend

(1) B-13 or B-14
(2) H-32
(3) Fuse Box
(4) B-26
(5) B-32
(6) Relay and Fuse Box
(7) H-15

Windshield Wiper/Washer

General Description

The circuit consists of windshield wiper/washer switch, windshield wiper motor, windshield washer motor and alarm & relay control unit.
When windshield wiper/washer switch is turned on with starter switch on, battery voltage is applied to windshield wiper motor to activate wipers.
When windshield washer switch is turned on with starter switch on, battery voltage is applied to windshield washer motor.
Windshield washer motor squirts glass cleaning fluid while windshield washer switch is pushed and at the same time, alarm & relay control unit activates windshield wiper motor to wipe glass cleaning fluid at low speed.

Circuit Diagram (RHD)

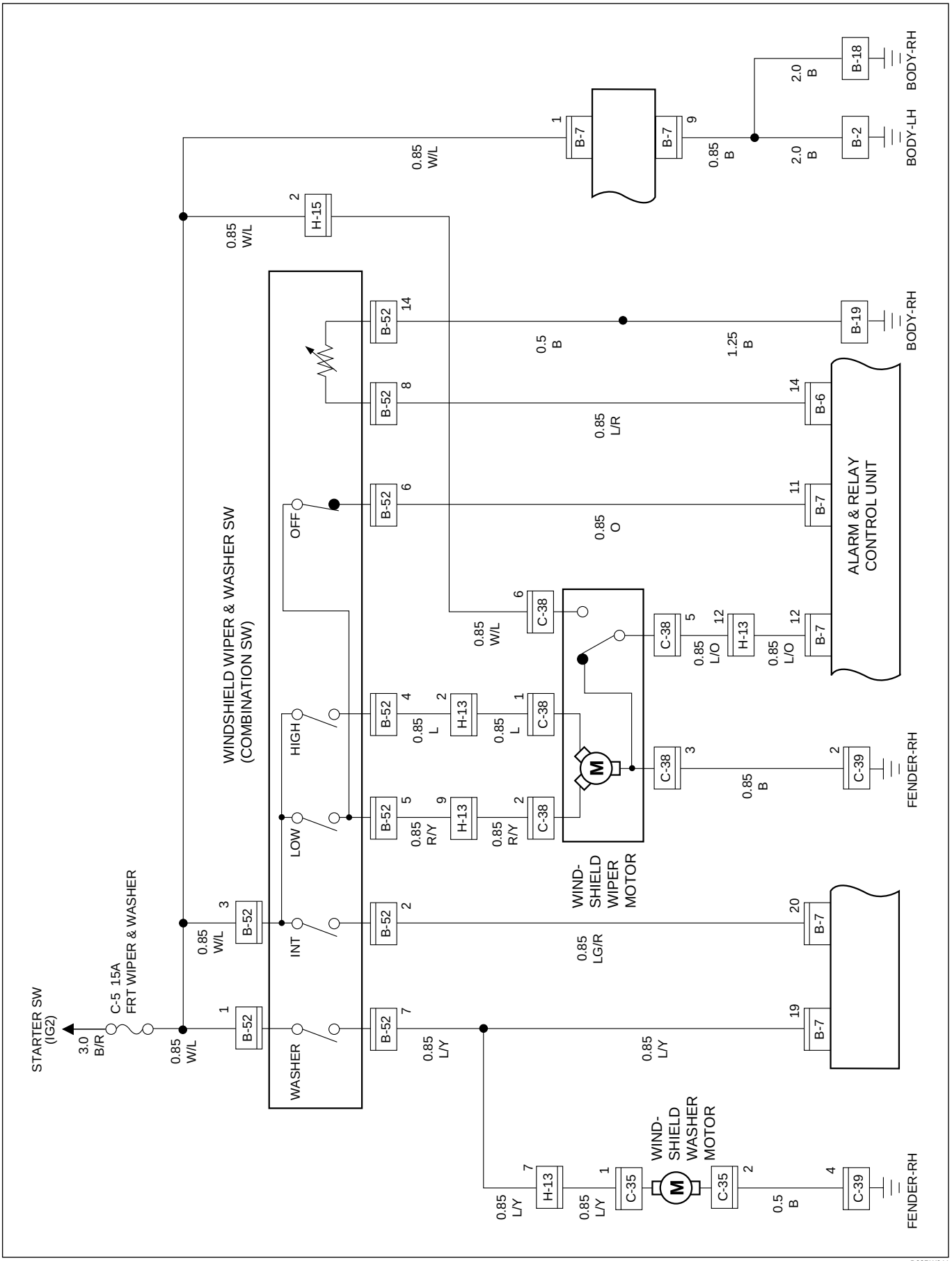

D08RW644

Parts Location (RHD)

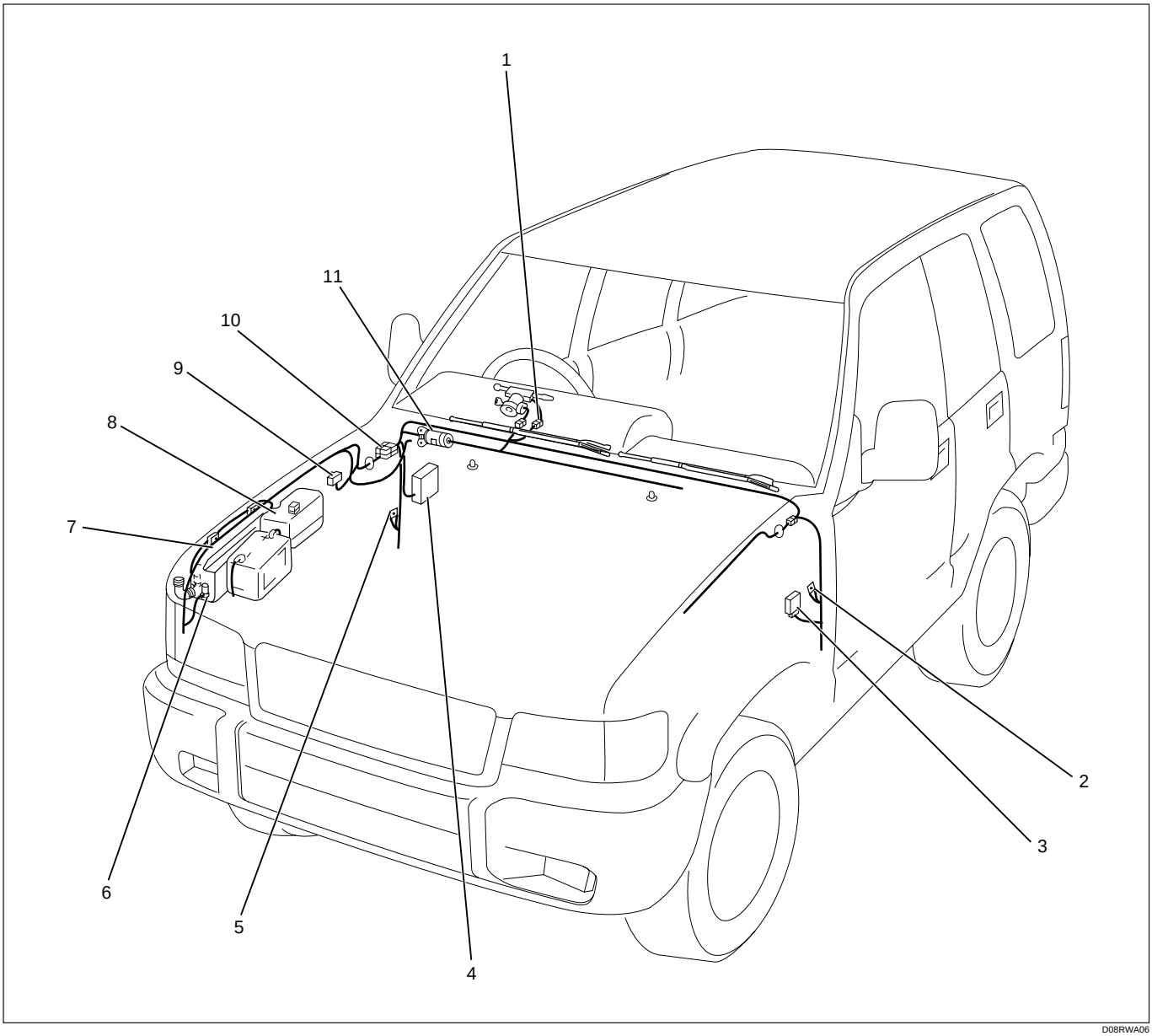

D08RWA06

Legend

(1) B-52
(2) B-2
(3) Alarm and Relay Control Unit (B-6, B-7)
(4) Fuse Box
(5) B-18, B-19
(6) FRT Wind Shild Washer Motor (C-35)
(7) Wind Shield Washer Tank
(8) Relay and Fuse Box
(9) C-39
(10) H-13, H-15
(11) Wind Shild Wiper Motor (C-38)

Circuit Diagram (LHD)

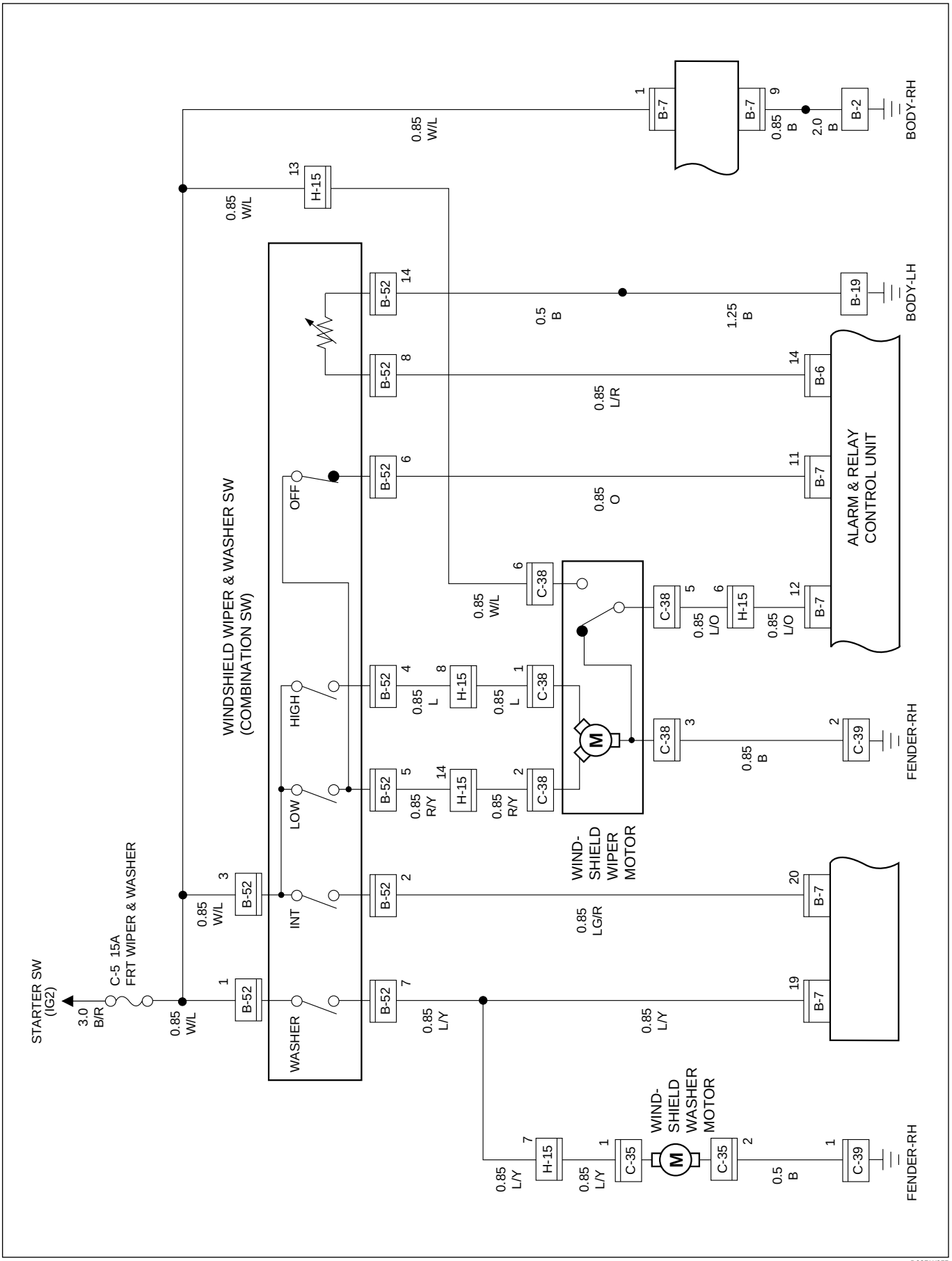

Parts Location (LHD)

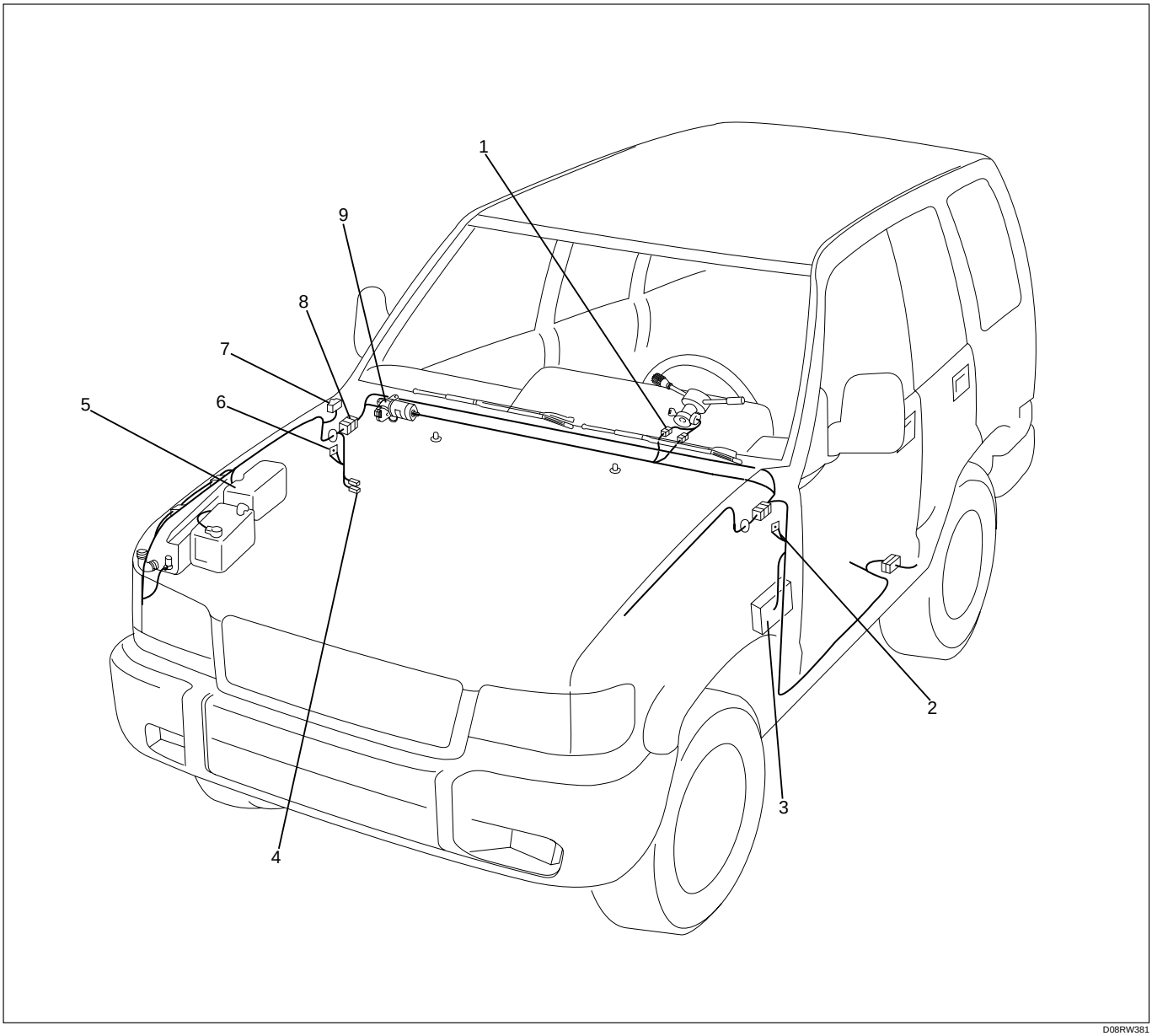

D08RW381

Legend

(1) B-52
(2) B-19
(3) Fuse Box
(4) B-6, B-7
(5) Relay and Fuse Box
(6) B-2
(7) C-39
(8) H-15
(9) C-38

Diagnosis

Quick Chart for Check Points

Trouble mode \ Check point	Fuse C-5 (15A)	Wiper & washer SW	Alarm & relay control unit	Wiper motor	Washer motor	Cable harness
1 Windshield wiper does not operate at any position	○	○		○		○
2 Windshield wiper does not operate at “INT” position		○	○			○
3 Intermittent interval does not change		○	○			○
4 Windshield wiper does not operate at “LO” position		○		○		○
5 Windshield wiper does not operate at “HI” position		○		○		○
6 Auto-stop function of the windshield wiper motor does not operate		○	○	○		○
7 Rotation of the front wiper motor does not stop		○		○		
8 Windshield washer motor does not operate	○	○			○	○

1 Windshield Wiper Does Not Operate At Any Switch Position

- IS FUSE C-5 (15A) NORMAL?

YES

- DISCONNECT THE CONNECTOR OF THE WINDSHIELD WIPER & WASHER SWITCH
- TURN THE STARTER SWITCH ON
- IS THERE ANY BATTERY VOLTAGE APPLIED BETWEEN THE SWITCH HARNESS SIDE CONNECTOR 3 B-52 AND THE GROUND?

NO

REPLACE THE FUSE

YES

- IS THE CONTINUITY IN THE WINDSHIELD WIPER & WASHER SWITCH NORMAL?

NO

REPAIR A POOR CONNECTION AT THE CONNECTORS OR AN OPEN CIRCUIT BETWEEN THE FUSE C-5 (15A) AND 3 B-52

YES

- IS 2 C-39 GROUNDED SECURELY?

NO

REPAIR OR REPLACE THE SWITCH

YES

- DISCONNECT THE CONNECTOR OF THE WINDSHIELD WIPER MOTOR
- WITH THE MOTOR CONNECTOR 2 C-38 CONNECTED TO THE BATTERY (+) TERMINAL, AND THE CONNECTOR 3 C-38 TO THE (–) TERMINAL, DOES THE MOTOR ROTATE AT A LOW SPEED?
- AND WITH THE CONNECTOR 1 C-38 CONNECTED TO THE (+) TERMINAL, DOES THE MOTOR ROTATE AT A HIGH SPEED?

NO

GROUND IT SECURELY

YES

REPAIR A POOR CONNECTION AT THE CONNECTORS OR AN OPEN CIRCUIT BETWEEN 3 C-38 AND THE GROUND

NO

REPAIR OR REPLACE THE WINDSHIELD WIPER MOTOR

2 Windshield Wiper Does Not Operate At “INT” Position

- DISCONNECT THE CONNECTORS OF THE WINDSHIELD WIPER & WASHER SWITCH
- SET THE SWITCH AT THE “INT” POSITION
- IS THERE CONTINUITY BETWEEN THE SWITCH CONNECTOR TERMINALS 3 B-52 AND 2 B-52 ?

YES

- IS B-19 GROUNDED SECURELY?

NO

REPAIR OR REPLACE THE WINDSHIELD WIPER & WASHER SWITCH

YES

- IS THERE CONTINUITY BETWEEN THE WINDSHIELD WIPER & WASHER SWITCH HARNESS SIDE CONNECTOR TERMINALS 14 B-52 AND THE GROUND?

NO

GROUND IT SECURELY

YES

- DISCONNECT THE CONNECTOR OF THE ALARM & RELAY CONTROL UNIT
- SET THE WINDSHIELD WIPER & WASHER SWITCH AT THE "INT" POSITION AND TURN THE STARTER SWITCH ON
- IS THE BATTERY VOLTAGE APPLIED BETWEEN 20 B-7 AND THE GROUND?

NO

REPAIR A POOR CONNECTION AT THE CONNECTORS OR AN OPEN CIRCUIT BETWEEN 14 B-52 AND B-19

YES

- IS THERE CONTINUITY BETWEEN 14 B-6 AND 8 B-52 ?

NO

REPAIR A POOR CONNECTION AT THE CONNECTORS OR AN OPEN CIRCUIT BETWEEN 2 B-52 AND 20 B-7

YES

REPLACE THE ALARM & RELAY CONTROL UNIT

NO

REPAIR A POOR CONNECTION AT THE CONNECTORS OR AN OPEN CIRCUIT BETWEEN 14 B-6 AND 8 B-52

3 Intermittent Interval Does Not Change

- DISCONNECT THE CONNECTOR OF THE WINDSHIELD WIPER & WASHER SWITCH
- WHEN THE INTERMITTENT KNOB IS TURNED, DOES THE RESISTANCE VALUE BETWEEN THE SWITCH CONNECTOR TERMINALS 8 B-52 AND 14 B-52 VARY BETWEEN 0Ω - 2KΩ?

YES

- IS THERE SHORT CIRCUIT BETWEEN 14 B-6 AND 8 B-52 ?

YES

REPAIR A SHORT CIRCUIT

NO

REPLACE THE ALARM & RELAY CONTROL UNIT

NO

REPAIR OR REPLACE THE SWITCH

4 Windshield Wiper Does Not Operate At “LO” Position

- DISCONNECT THE CONNECTORS OF THE WINDSHIELD WIPER & WASHER SWITCH
- TURN THE STARTER SWITCH ON
- SHORT CIRCUIT THE WINDSHIELD WIPER & WASHER SWITCH HARNESS SIDE CONNECTOR TERMINALS 3 B-52 - 5 B-52 AND CHECK TO SEE IF THE WINDSHIELD WIPER MOTOR ROTATES AT A LOW SPEED.

REPAIR OR REPLACE THE WIPER & WASHER SWITCH

5 Windshield Wiper Does Not Operate At “HI” Position

- DISCONNECT THE CONNECTOR OF THE WINDSHIELD WIPER & WASHER SWITCH
- WITH THE SWITCH SET AT “HI” POSITION, IS THERE CONTINUITY BETWEEN THE SWITCH CONNECTOR TERMINALS 3 B-52 AND 4 B-52 ?

YES

- DISCONNECT THE CONNECTOR OF THE WINDSHIELD WIPER MOTOR
- CONNECT THE MOTOR CONNECTOR 1 C-38 TO THE BATTERY (+) TERMINAL, AND 3 C-38 TO THE BATTERY (–) TERMINAL
- DOES THE MOTOR ROTATE AT A HIGH SPEED?

YES

REPAIR A POOR CONNECTION AT THE CONNECTORS OR AN OPEN CIRCUIT BETWEEN 4 B-52 AND 1 C-38

NO

REPAIR OR REPLACE THE WINDSHIELD WIPER MOTOR

NO

REPAIR OR REPLACE THE WINDSHIELD WIPER & WASHER SWITCH

6 Auto-Stop Function of The Windshield Wiper Motor Does Not Operate

- DISCONNECT THE CONNECTOR OF THE WINDSHIELD WIPER & WASHER SWITCH
- WITH THE SWITCH SET AT “OFF” POSITION, IS THERE CONTINUITY BETWEEN THE SWITCH CONNECTOR TERMINALS 5 B-52 AND 6 B-52 ?

YES

- DISCONNECT THE CONNECTOR OF THE WINDSHIELD WIPER MOTOR
- CONNECT THE MOTOR CONNECTOR 2 C-38 TO THE BATTERY (+) TERMINAL AND 3 C-38 TO THE (–) TERMINAL, AND THEN CHANGE THE CONNECTION OF THE BATTERY (+) TERMINAL TO THE CONNECTOR 6 C-38 WHILE THE MOTOR ROTATING AT A LOW SPEED
- WHEN CONNECTING THE CONNECTOR TERMINALS 2 C-38 AND 5 C-38 IN THIS CONDITION, DOES THE MOTOR STOP AT AUTO-STOP POSITION?

NO

REPAIR OR REPLACE THE WINDSHIELD WIPER & WASHER SWITCH

YES

- TURN THE STARTER SWITCH ON
- IS THERE ANY BATTERY VOLTAGE APPLIED BETWEEN THE WINDSHIELD WIPER MOTOR HARNESS SIDE CONNECTOR TERMINAL 6 C-38 AND GROUND?

NO

REPAIR OR REPLACE THE WINDSHIELD WIPER MOTOR

YES

- DISCONNECT THE CONNECTOR OF THE ALARM & RELAY CONTROL UNIT
- IS THERE CONTINUITY BETWEEN THE HARNESS SIDE CONNECTOR 12 B-7 AND THE WINDSHIELD WIPER MOTOR HARNESS SIDE CONNECTOR 5 C-38 ?

NO

REPAIR A POOR CONNECTION AT THE CONNECTORS OR AN OPEN CIRCUIT BETWEEN THE FUSE C-5 (15A) AND 6 C-38

YES

REPLACE THE ALARM & RELAY CONTROL UNIT

NO

REPAIR A POOR CONNECTION AT THE CONNECTORS OR AN OPEN CIRCUIT BETWEEN 5 C-38 AND 12 B-7

7 Rotation of The Windshield Wiper Motor Does Not Stop

- IS THE CONTINUITY IN THE WINDSHIELD WIPER & WASHER SWITCH NORMAL?

YES

REPAIR OR REPLACE THE WINDSHIELD WIPER MOTOR

NO

REPAIR OR REPLACE THE WINDSHIELD WIPER & WASHER SWITCH

8 Windshield Washer Motor Does Not Operate

- IS FUSE C-5 (15A) NORMAL?

YES

- DISCONNECT THE CONNECTOR OF THE WINDSHIELD WIPER & WASHER SWITCH
- WITH THE WASHER BUTTON DEPRESSED, IS THERE CONTINUITY BETWEEN THE SWITCH SIDE CONNECTOR TERMINALS 1 B-52 AND 7 B-52 ?

YES

- TURN THE STARTER SWITCH ON
- IS THE BATTERY VOLTAGE APPLIED BETWEEN THE WINDSHIELD WIPER & WASHER SWITCH HARNESS SIDE CONNECTOR TERMINAL 1 B-52 AND THE GROUND?

YES

- DISCONNECT THE CONNECTOR OF THE WINDSHIELD WIPER WASHER MOTOR
- TURN THE STARTER SWITCH ON
- WITH THE WASHER BUTTON OF THE WINDSHIELD WIPER & WASHER SWITCH DEPRESSED, IS THE BATTERY VOLTAGE APPLIED BETWEEN THE WASHER MOTOR HARNESS SIDE CONNECTOR TERMINAL 1 C-35 AND THE GROUND?

YES

- IS 4 I-39 GROUNDED SECURELY?

YES

- CONNECT THE MOTOR SIDE CONNECTOR 1 C-35 OF THE WINDSHIELD WASHER MOTOR TO THE BATTERY (+) TERMINAL, AND THE CONNECTOR 2 C-35 TO THE (–) TERMINAL
- DOES THE MOTOR ROTATE?

YES

REPAIR A POOR CONNECTION AT THE CONNECTORS OR AN OPEN CIRCUIT BETWEEN 2 C-35 AND THE GROUND

NO

REPLACE THE WINDSHIELD WASHER MOTOR

NO

GROUND IT SECURELY

NO

REPAIR A POOR CONNECTION AT THE CONNECTORS OR AN OPEN CIRCUIT BETWEEN 7 B-52 AND 1 C-35

NO

REPAIR A POOR CONNECTION AT THE CONNECTORS OR AN OPEN CIRCUIT BETWEEN FUSE C-5 (15A) AND 1 B-52

NO

REPAIR OR REPLACE THE WINDSHIELD WIPER & WASHER SWITCH

NO

REPLACE FUSE C-5 (15A)

Rear Wiper/Washer

General Description

The circuit consists of rear wiper/washer switch, alarm & relay control unit, rear wiper motor and rear washer motor.

When rear wiper switch on rear wiper/washer switch is depressed, battery voltage is applied to rear wiper motor through alarm & relay control unit and activates rear wiper motor.

When rear washer switch on rear wiper/washer switch is depressed, battery voltage is applied to rear washer motor and activates rear washer motor. At the same time, the current as an input signal for activating rear wiper motor flows to alarm & relay control unit, then alarm & relay control unit activates rear wiper motor to wipe glass cleaning fluid.

Circuit Diagram (RHD)-1

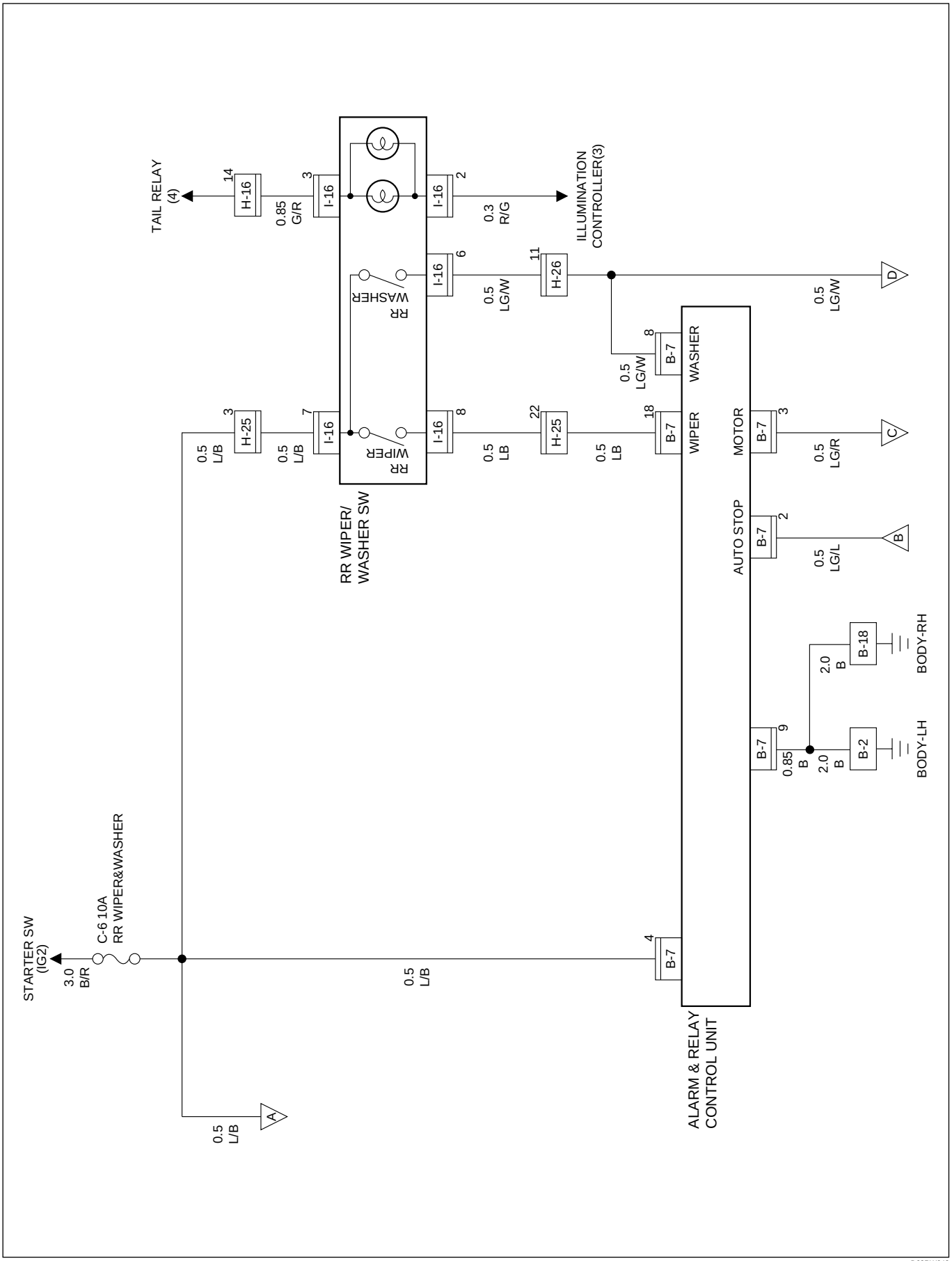

D08RW643

Circuit Diagram (RHD)-2

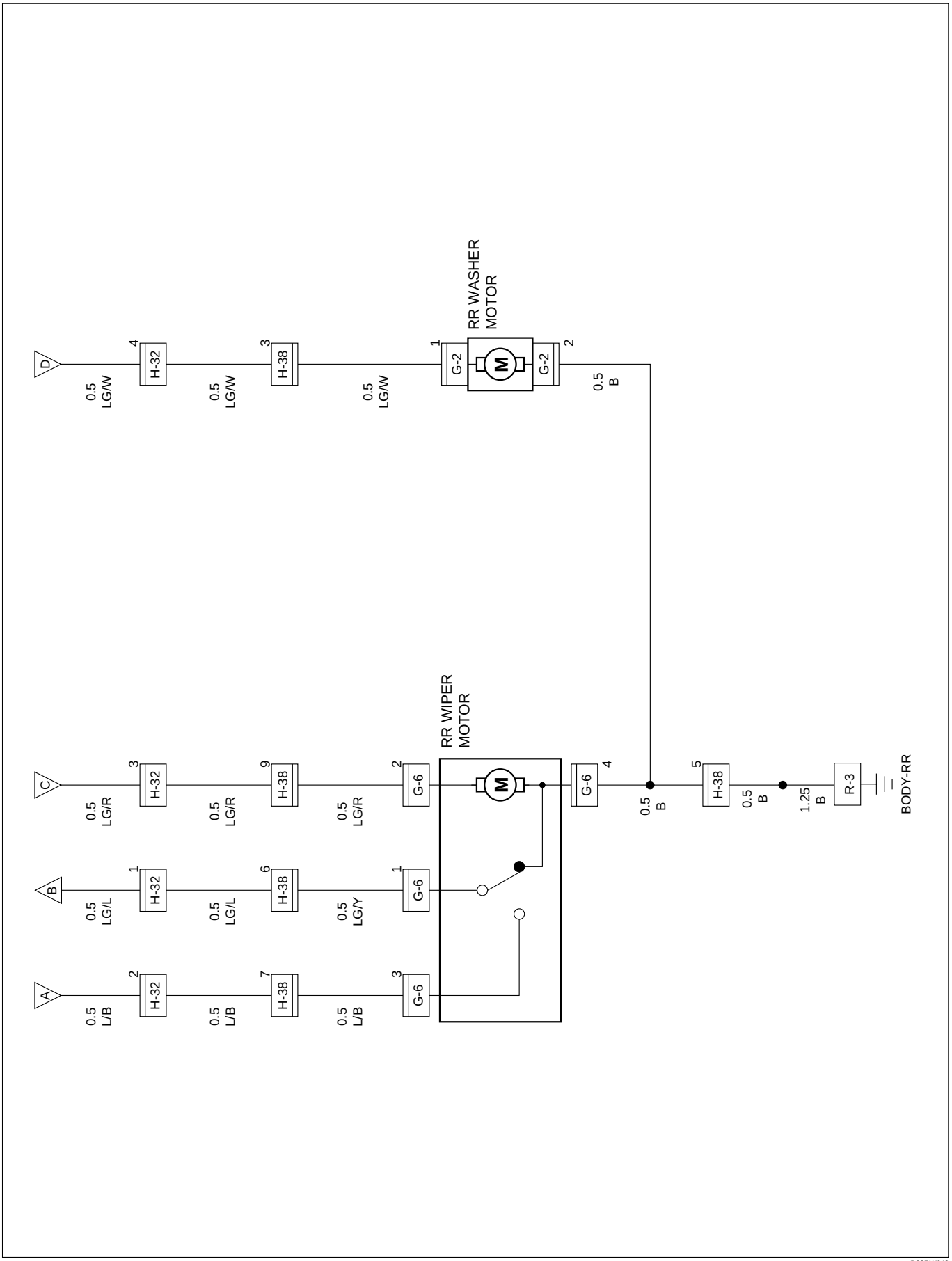

D08RW642

Parts Location (RHD)

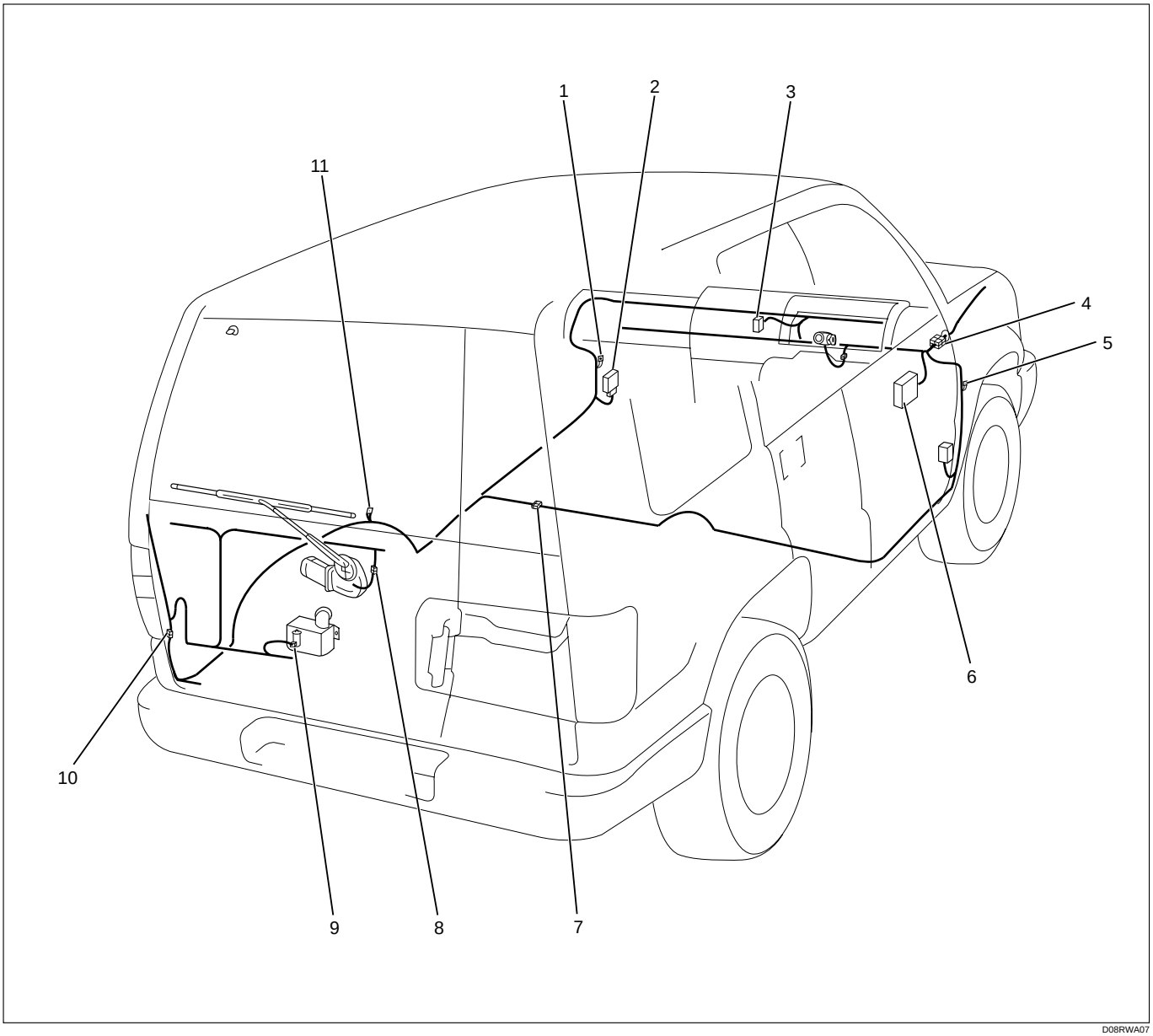

D08RWA07

Legend

(1) B-2
(2) Alarm and Relay Control Unit (B-7)
(3) I-16
(4) H-16, H-25, H-26
(5) B-18
(6) Fuse Box
(7) H-32
(8) RR Wiper Motor (G-6)
(9) RR Washer Motor (G-2)
(10) H-38
(11) R-3

Circuit Diagram (LHD)-1

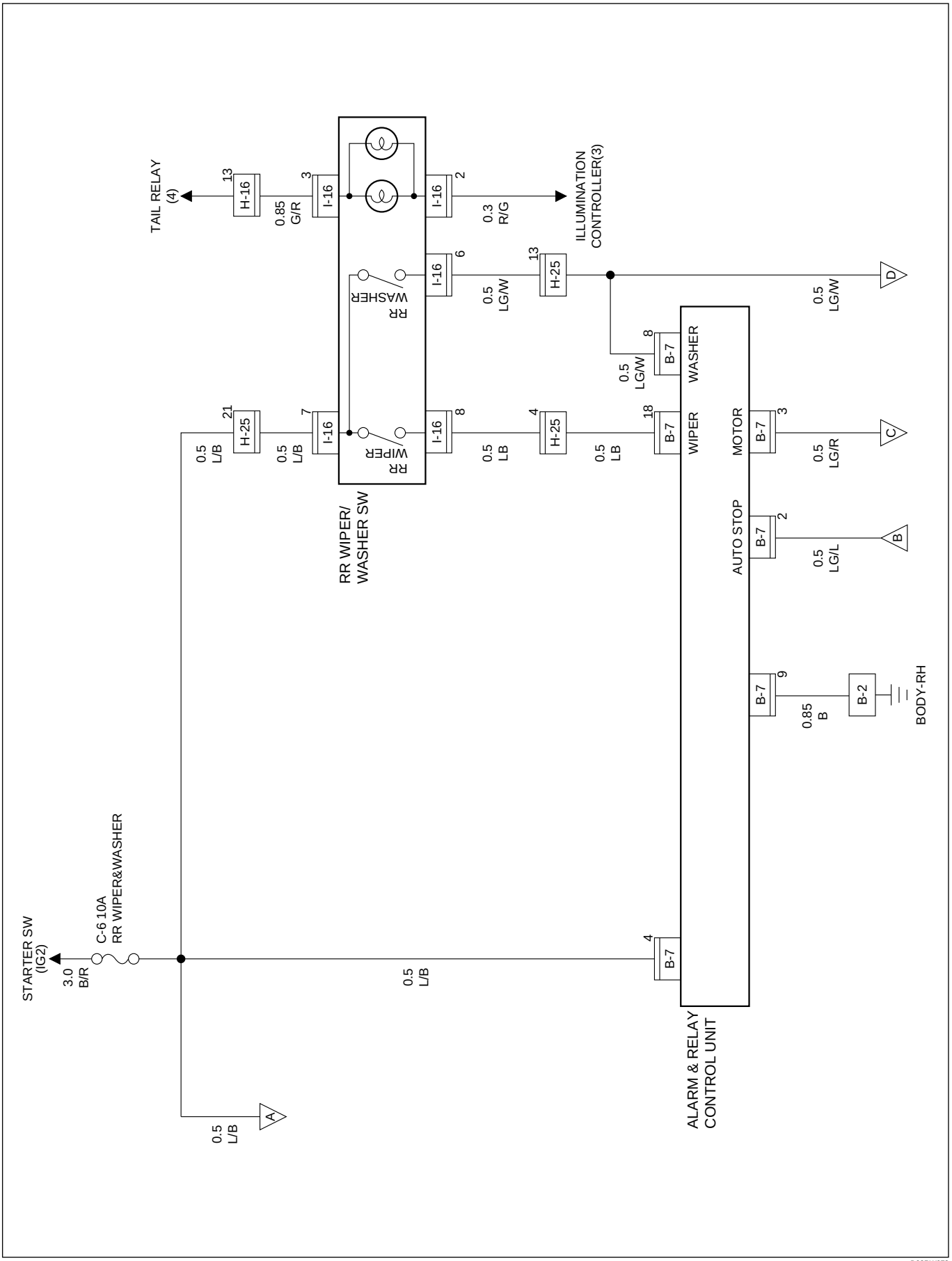

D08RW072

Circuit Diagram (LHD)-2

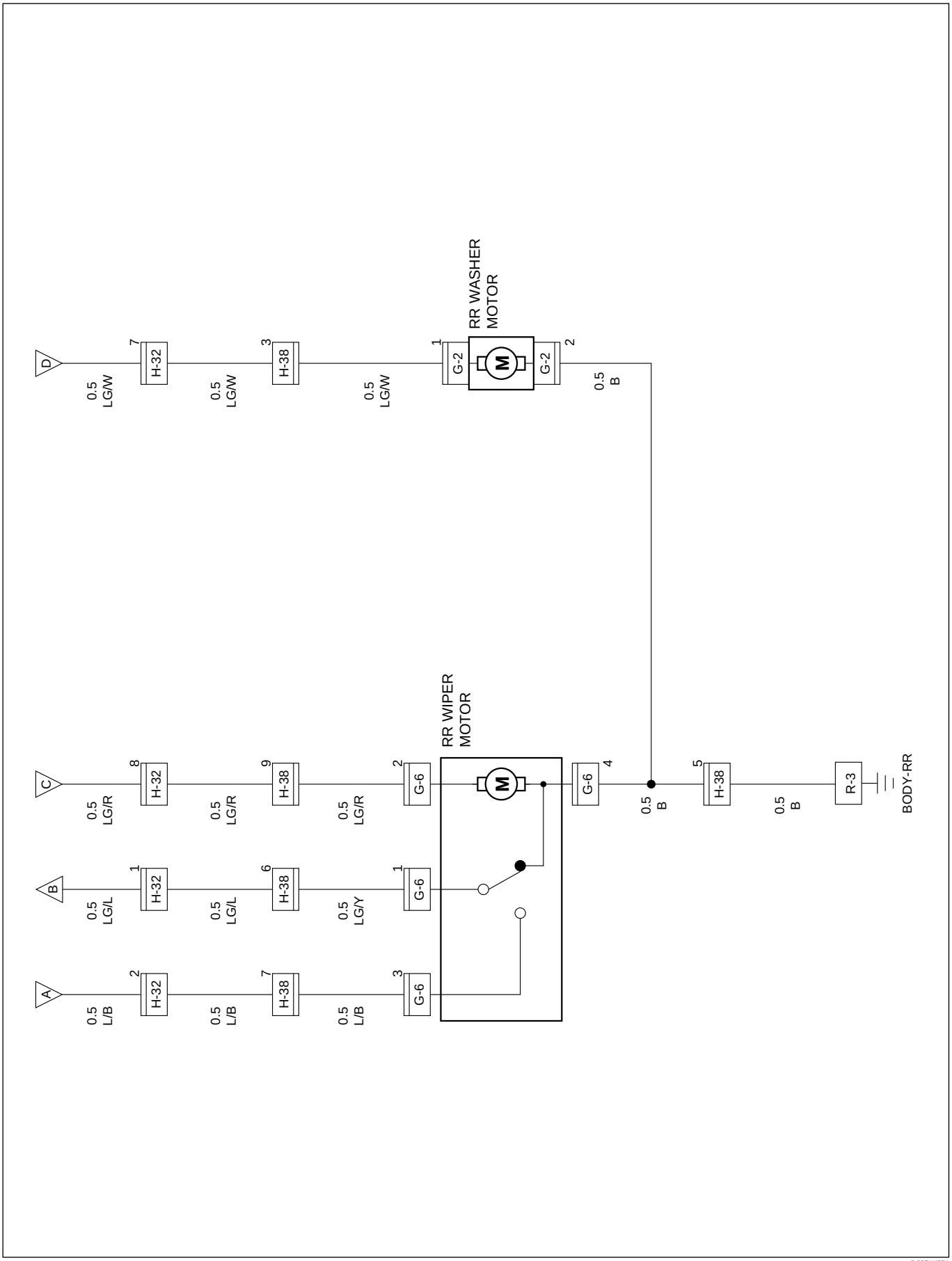

D08RW071

Parts Location (LHD)

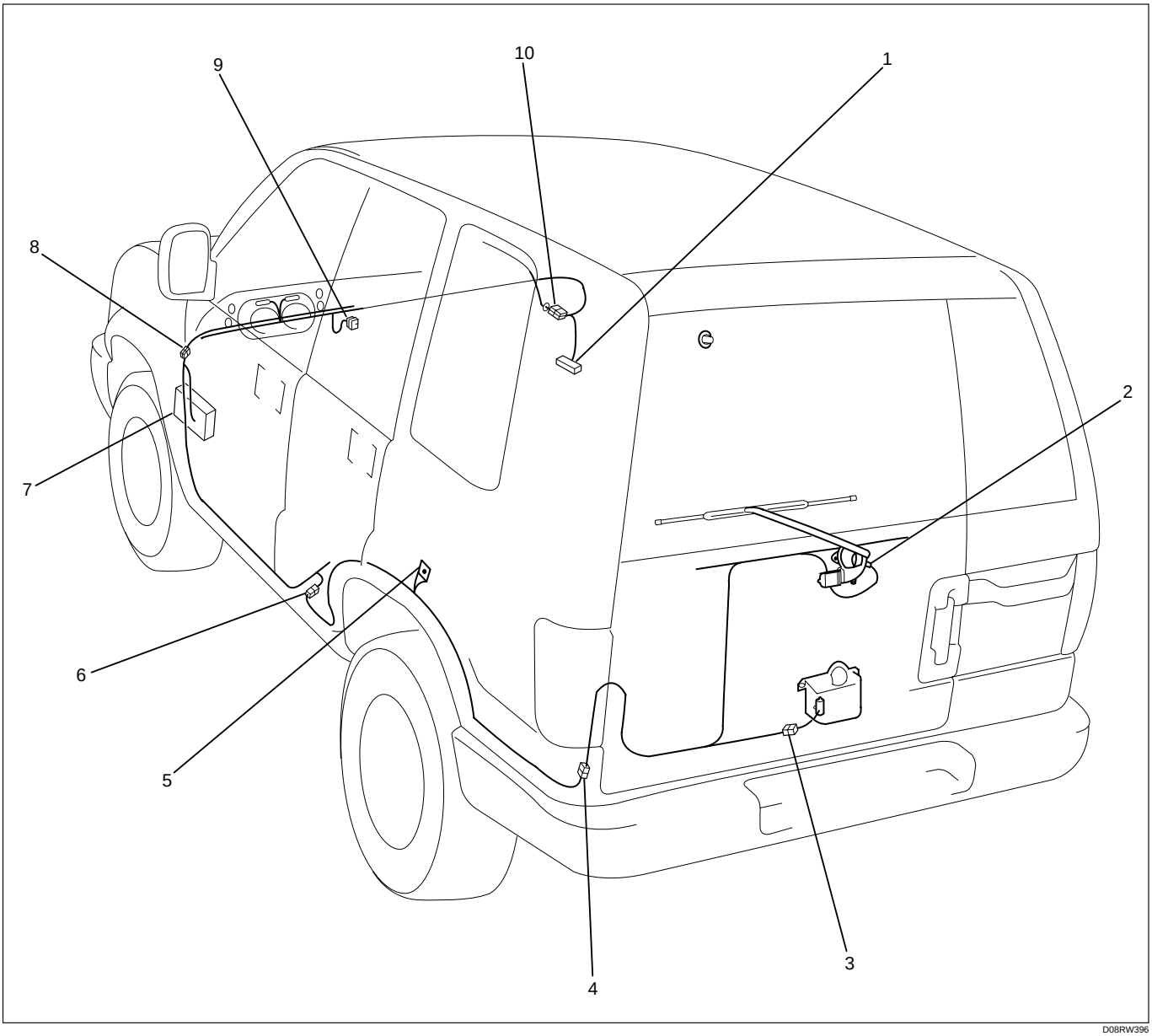

D08RW396

Legend

(1) B-7
(2) G-6
(3) G-2
(4) H-38
(5) R-3
(6) H-32
(7) Fuse Box
(8) H-25
(9) I-16
(10) H-16

Diagnosis

Quick Chart for Check Points

Trouble mode \ Check point	Fuse C-6 (10A)	Wiper & washer SW	Rear wiper motor	Washer motor	Alarm & relay control unit	Cable harness
1 Rear wiper motor does not operate	○	○	○		○	○
2 Auto-stop function of the rear wiper motor does not operate			○		○	○
3 Rear wiper motor does not operate at “WIPER” position		○			○	○
4 Rear wiper motor does not operate at “WIPER & WASHER” position		○			○	○
5 Rotation of the rear wiper motor does not stop		○	○			
6 Rear washer motor does not operate		○	○	○		○

1 Rear Wiper Motor Does Not Operate

- IS FUSE C-6 (10A) NORMAL?

YES

- DISCONNECT THE CONNECTOR OF THE REAR WIPER & WASHER SWITCH
- IS THE CONTINUITY IN THE REAR WIPER & WASHER SWITCH NORMAL?

NO

REPLACE FUSE C-6 (10A)

YES

- TURN THE STARTER SW ON
- IS THE BATTERY VOLTAGE APPLIED BETWEEN THE REAR WIPER & WASHER SWITCH HARNESS SIDE CONNECTOR TERMINAL 7 I-16 AND GROUND?

NO

REPAIR OR REPLACE THE REAR WIPER & WASHER SWITCH

YES

- DISCONNECT THE CONNECTORS OF THE REAR WIPER MOTOR
- WITH THE MOTOR SIDE CONNECTOR 2 G-6 CONNECTED TO THE BATTERY (+) TERMINAL AND THE CONNECTOR 4 G-6 TO THE (–) TERMINAL, DOES THE MOTOR ROTATE?

NO

REPAIR A POOR CONNECTION AT THE CONNECTORS OR AN OPEN CIRCUIT BETWEEN FUSE C-6 (10A) AND 7 I-16

YES

IS R-3 GROUNDED SECURELY?

NO

REPAIR OR REPLACE THE REAR WIPER MOTOR

YES

- DISCONNECT THE CONNECTORS OF THE ALARM & RELAY CONTROL UNIT
- TURN THE STARTER SWITCH ON
- WITH THE REAR WIPER & WASHER SWITCH AT WIPER POSITION, IS THE BATTERY VOLTAGE APPLIED BETWEEN 18 B-7 AND THE GROUND?

NO

GROUND IT SECURELY

YES

- IS THERE CONTINUITY BETWEEN HARNESS SIDE CONNECTOR 3 B-7 AND 2 G-6 ?

NO

REPAIR A POOR CONNECTION AT THE CONNECTORS OR AN OPEN CIRCUIT BETWEEN 8 I-16 AND 18 B-7

YES

REPLACE THE ALARM & RELAY CONTROL UNIT

NO

REPAIR A POOR CONNECTION AT THE CONNECTORS OR AN OPEN CIRCUIT BETWEEN 3 B-7 AND 2 G-6

2 Auto-Stop Function of The Rear Wiper Motor Does Not Operate

- DISCONNECT THE CONNECTOR OF THE REAR WIPER MOTOR
- CONNECT THE MOTOR SIDE CONNECTOR 2 G-6 TO THE BATTERY (+) TERMINAL AND THE TERMINAL 4 G-6 TO THE (–) TERMINAL
- WHILE ROTATING THE MOTOR, CHANGE THE CONNECTION OF THE BATTERY (+) TERMINAL TO THE CONNECTOR 3 G-6 , AND THEN CONNECT THE CONNECTOR 1 G-6 AND 2 G-6
- DOES THE REAR WIPER STOP AT THE AUTO-STOP POSITION IN THIS CONDITION?

YES

- TURN THE START SWITCH ON
- IS THE BATTERY VOLTAGE APPLIED BETWEEN THE REAR WIPER MOTOR HARNESS SIDE CONNECTOR 3 G-6 AND THE GROUND?

YES

- DISCONNECT THE CONNECTOR OF THE ALARM & RELAY CONTROL UNIT
- IS THERE CONTINUITY BETWEEN THE RELAY HARNESS SIDE CONNECTOR 2 B-7 AND THE WIPER MOTOR HARNESS SIDE CONNECTOR 1 G-6 ?

YES

REPLACE THE ALARM & RELAY CONTROL UNIT

NO

REPAIR A POOR CONNECTION AT THE CONNECTORS OR AN OPEN CIRCUIT BETWEEN 2 B-7 AND 1 G-6

NO

REPAIR A POOR CONNECTION AT THE CONNECTORS OR AN OPEN CIRCUIT BETWEEN THE FUSE C-6 (10A) AND 3 G-6

NO

REPAIR OR REPLACE THE REAR WIPER MOTOR

3 Rear Wiper Motor Does Not Operate at “Wiper” Position

- IS THE CONTINUITY IN THE REAR WIPER & WASHER SWITCH NORMAL?

YES

- DISCONNECT THE CONNECTOR OF THE ALARM & RELAY CONTROL UNIT
- TURN THE STARTER SWITCH ON
- WITH THE REAR WIPER & WASHER SWITCH SET AT “WIPER” POSITION, IS THE BATTERY VOLTAGE APPLIED BETWEEN THE CONTROL UNIT HARNESS SIDE CONNECTOR 18 B-7 AND GROUND?

YES

REPLACE THE ALARM & RELAY CONTROL UNIT

NO

REPAIR A POOR CONNECTION AT THE CONNECTORS OR AN OPEN CIRCUIT BETWEEN 18 B-7 AND 8 I-16

NO

REPAIR OR REPLACE THE REAR WIPER & WASHER SWITCH

4 Rear Wiper Motor Does Not Operate at “Washer” Position

- IS THE CONTINUITY IN THE REAR WIPER & WASHER SWITCH NORMAL?

YES

- DISCONNECT THE CONNECTOR OF THE ALARM & RELAY CONTROL UNIT
- TURN THE STARTER SWITCH ON
- WITH THE REAR WIPER & WASHER SWITCH SET AT “WASH” POSITION, IS THE BATTERY VOLTAGE APPLIED BETWEEN THE CONTROL UNIT HARNESS SIDE CONNECTOR 8 B-7 AND THE GROUND?

YES

REPLACE THE ALARM & RELAY CONTROL UNIT

NO

REPAIR A POOR CONNECTION AT THE CONNECTORS OR AN OPEN CIRCUIT BETWEEN 6 I-16 AND 8 B-7

NO

REPAIR OR REPLACE THE REAR WIPER & WASHER SWITCH

5 Rotation of The Rear Wiper Motor Does Not Stop

- IS THE CONTINUITY IN THE REAR WIPER & WASHER SWITCH NORMAL?

YES

- DISCONNECT THE ALARM & RELAY CONTROL UNIT CONNECTORS
  TURN THE STARTER SW ON
  IS THE BATTERY VOLTAGE APPLIED BETWEEN HARNESS SIDE CONNECTOR 2 B-7 AND THE GROUND?

YES

REPAIR OR REPLACE THE RR WIPER MOTOR

NO

REPLACE THE ALARM & RELAY CONTROL UNIT

NO

REPAIR OR REPLACE THE REAR WIPER & WASHER SWITCH

6 Rear Washer Motor Does Not Operate

- IS FUSE C-6 (10A) NORMAL?

YES

- DISCONNECT THE CONNECTOR OF THE REAR WIPER & WASHER SWITCH
- WITH THE SWITCH SET AT “WASH” POSITION, IS THERE CONTINUITY BETWEEN THE SWITCH CONNECTOR TERMINALS 7 I-16 AND 6 I-16 ?

YES

- TURN THE STARTER SWITCH ON
- IS THE BATTERY VOLTAGE APPLIED BETWEEN THE REAR WIPER & WASHER SWITCH HARNESS SIDE CONNECTOR 7 I-16 AND GROUND?

YES

- DISCONNECT THE CONNECTOR OF THE REAR WASHER MOTOR
- TURN THE STARTER SWITCH ON
- WITH THE REAR WIPER & WASHER SWITCH SET AT “WASH” POSITION, IS THE BATTERY VOLTAGE APPLIED BETWEEN THE REAR WASHER MOTOR HARNESS SIDE CONNECTOR 1 G-2 AND GROUND?

YES

- CONNECT THE MOTOR SIDE CONNECTOR TERMINAL 1 G-2 TO THE BATTERY (+) TERMINAL AND 2 G-2 TO THE (–) TERMINAL
- DOES THE MOTOR OPERATE?

YES

- IS R-3 GROUNDED SECURELY?

YES

REPAIR A POOR CONNECTION AT THE CONNECTORS OR AN OPEN CIRCUIT BETWEEN 2 G-2 AND R-3

NO

GROUND IT SECURELY

NO

REPLACE THE REAR WASHER MOTOR

NO

REPAIR A POOR CONNECTION AT THE CONNECTORS OR AN OPEN CIRCUIT BETWEEN 1 G-2 AND 6 I-16

NO

REPAIR A POOR CONNECTION AT THE CONNECTORS OR AN OPEN CIRCUIT BETWEEN THE FUSE C-6 (10A) AND 7 I-16

NO

REPAIR OR REPLACE THE SWITCH

NO

REPLACE THE FUSE

Headlight Wiper/Washer

General Description

The circuit consists of the starter switch, headlight wiper switch, headlight wiper motor and washer motor. By pushing the headlight wiper/washer switch with the starter switch on, the wiper will make 5 strokes with washer solution applied between each of the first 4 strokes, regardless of the length of time the switch is held down.

The washer nozzle is installed to the wiper blade, and the tank to which the washer motor is installed shared between the headlight washer and the windshield washer.

Circuit Diagram (RHD) – 1

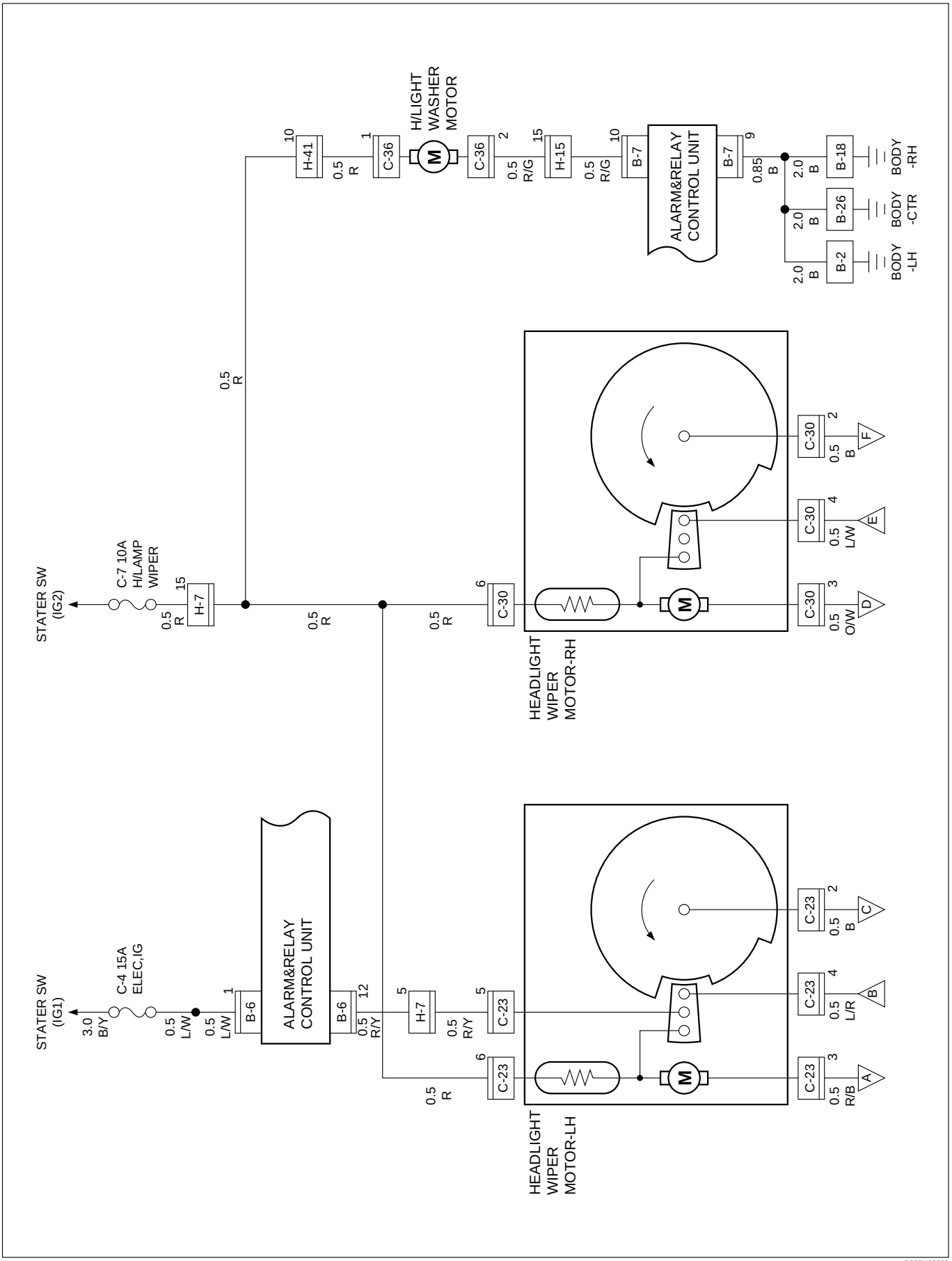

D08RY00228

Circuit Diagram (RHD) – 2

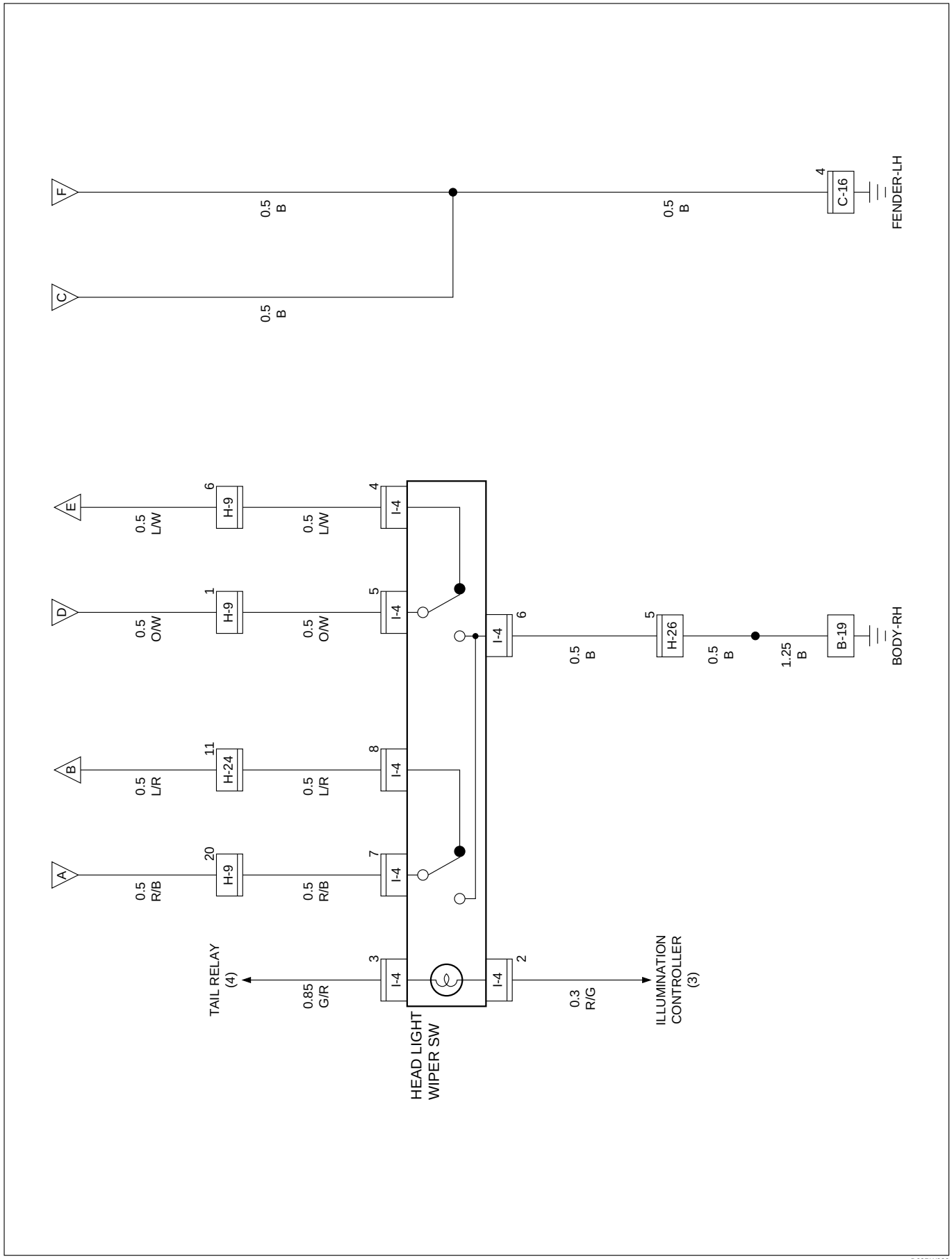

D08RW932

Parts Location (RHD)

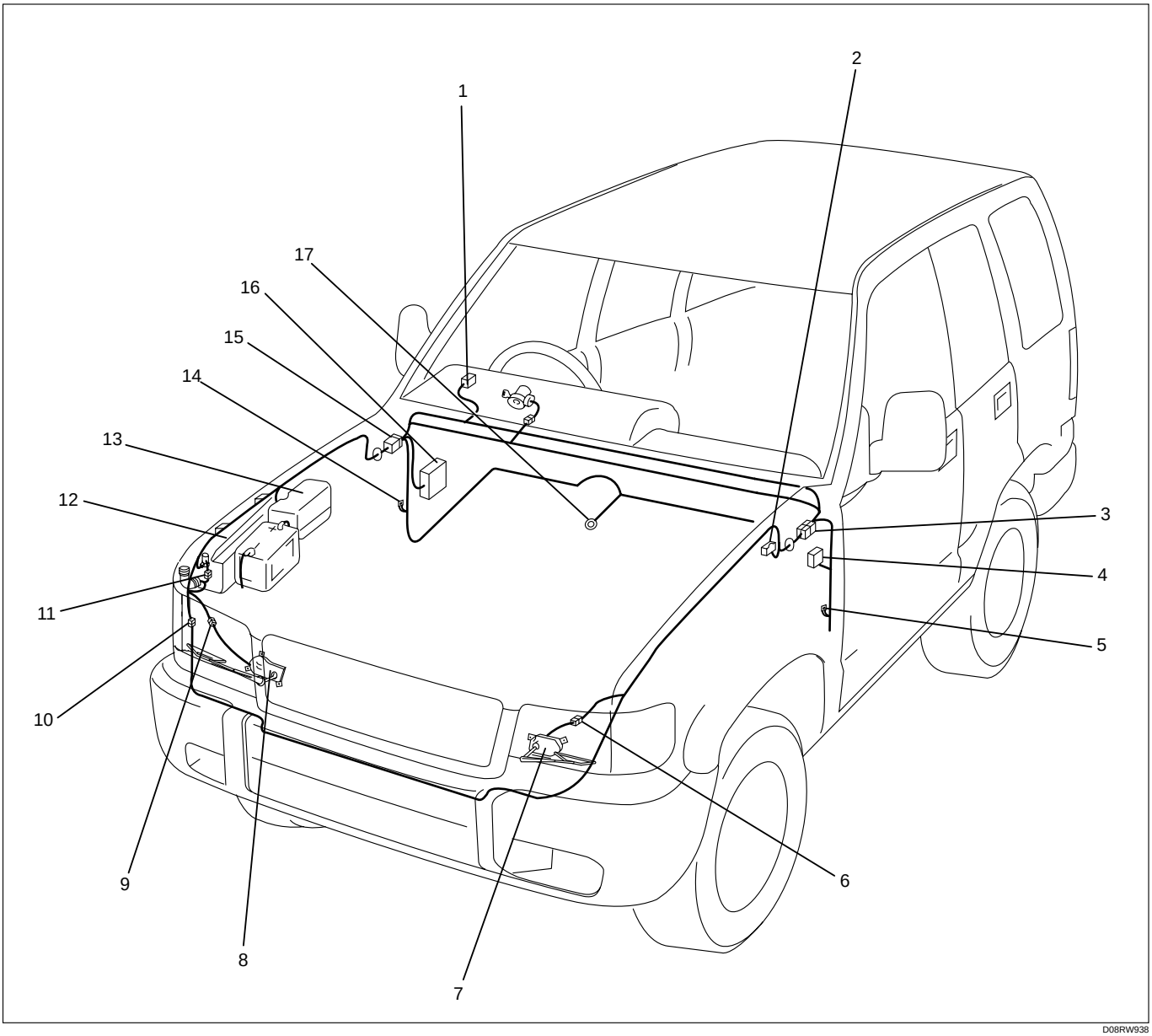

Legend

(1) I-4
(2) C-16
(3) H-7, H-9, H-24
(4) B-6, B-7
(5) B-2
(6) C-23
(7) Headlight Wiper Motor-LH
(8) Headlight Wiper Motor-RH
(9) C-30
(10) H-41
(11) C-36
(12) Washer Tank
(13) Relay and Fuse Box
(14) B-18, B-19
(15) H-15, H-26
(16) Fuse Box
(17) B-26

Circuit Diagram (LHD) – 1

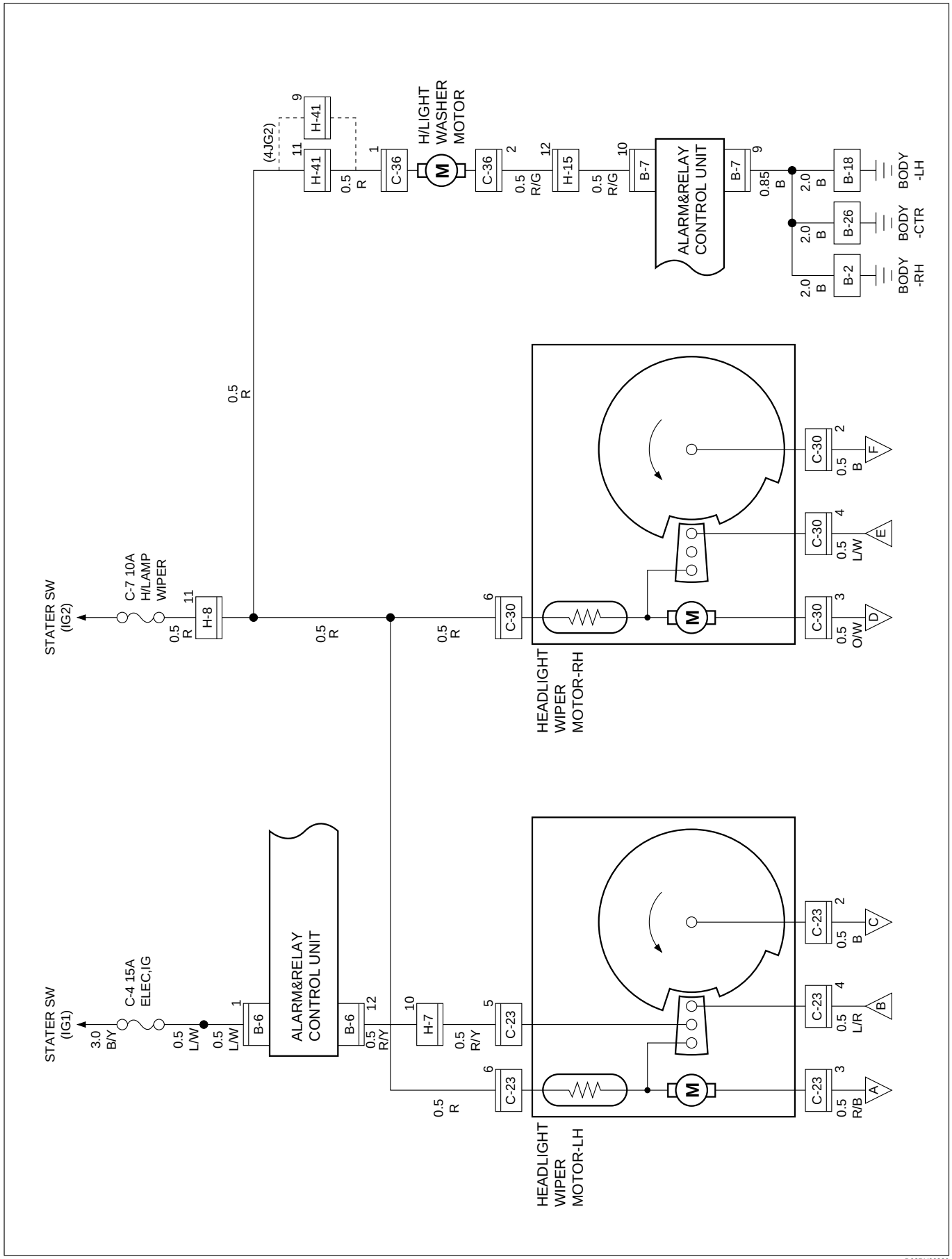

D08RY00229

Circuit Diagram (LHD)-2

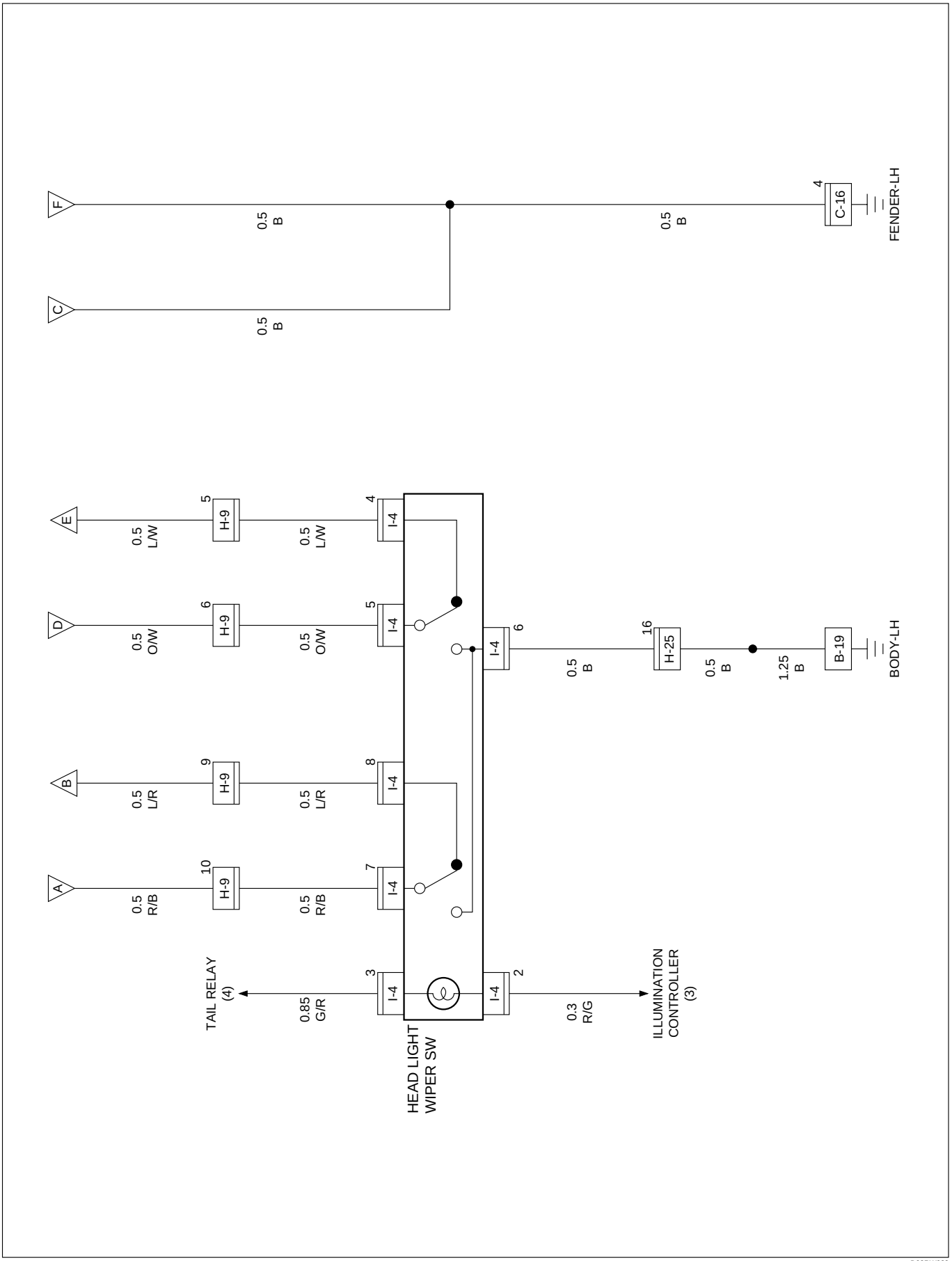

D08RW933

Parts Location (LHD)

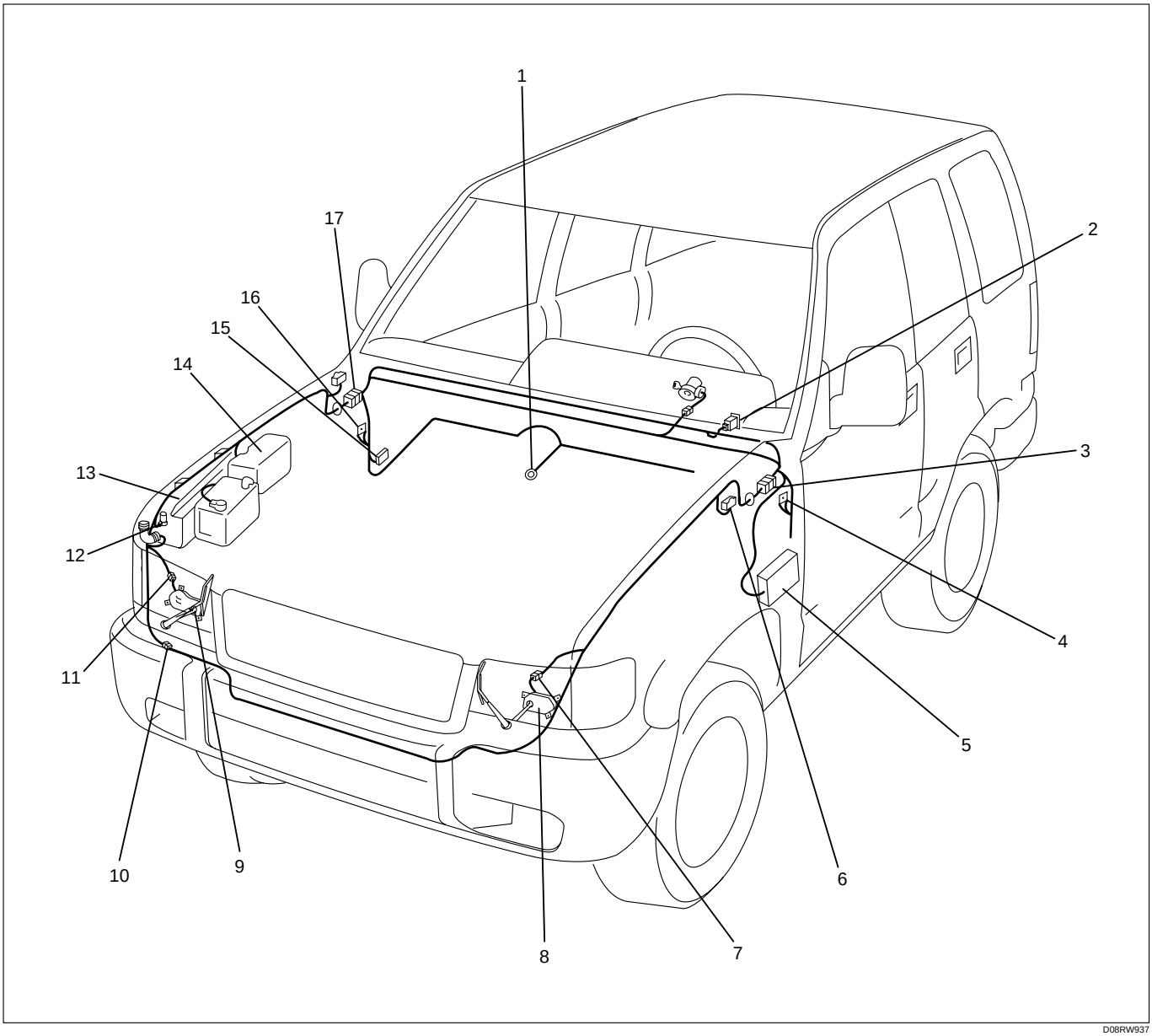

D08RW937

Legend

(1) B-26
(2) I-4
(3) H-7, H-8, H-9, H-25
(4) B-18, B-19
(5) Fuse Box
(6) C-16
(7) C-23
(8) Headlight Wiper Motor-LH
(9) Headlight Wiper Motor-RH
(10) H-41
(11) C-30
(12) C-36
(13) Washer Tank
(14) Relay and Fuse Box
(15) B-6, B-7
(16) B-2
(17) H-15

Diagnosis

Quick Chart for Check Points

Check point / Trouble mode	Fuse		Headlight wiper SW	Headlight wiper motor	Headlight washer motor	Alarm & relay control unit	Cable harness
	C-7	C-4					
1. Headlight wipers and washer do not operate on either side	○		○				○
2. Wiper on the left (or right) side does not operate			○	○			○
3. Auto-stop function of the wiper on the left (or right) side does not operate			○	○			○
4. Wiper on the left (or right) side does not stop			○	○			○
5. Washer motor does not operate		○			○	○	○

1. Headlight Wipers And Washer Do Not Operate On Either Side

- IS FUSE C-7 (10A) NORMAL?

YES

- TURN THE STARTER SWITCH ON
- IS THE BATTERY VOLTAGE APPLIED BETWEEN FUSE C-7 AND HEADLIGHT WIPER MOTOR CONNECTOR TERMINAL 6 AND THE GROUND?

NO

REPLACE THE FUSE C-7 (10A)

YES

- IS B-19 GROUNDED SECURELY?

NO

REPAIR A POOR CONNECTION AT THE CONNECTORS OR AN OPEN CIRCUIT BETWEEN FUSE C-7 AND HEADLIGHT WIPER MOTOR

YES

- DISCONNECT THE HEADLIGHT WIPER SWITCH CONNECTOR
- IS THE CONTINUITY IN THE SWITCH NORMAL?

NO

GROUND IT SECURELY

YES

REPAIR A POOR CONNECTION AT THE CONNECTORS OR AN OPEN CIRCUIT BETWEEN 6 I-4 AND B-19

NO

REPAIR OR REPLACE THE HEADLIGHT WIPER SW

2. Wiper On The Left (Or Right) Side Does Not Operate

- DISCONNECT THE HEADLIGHT WIPER SWITCH CONNECTOR
- WITH THE SWITCH ON, IS THERE CONTINUITY BETWEEN SWITCH CONNECTOR TERMINALS 7 [I-4] AND 6 [I-4] (5 [I-4] AND 6 [I-4])?

YES

- DISCONNECT THE WIPER MOTOR CONNECTOR THAT DOES NOT OPERATE
- TURN THE STARTER SWITCH ON
- IS THERE BATTERY VOLTAGE APPLIED BETWEEN THE HEADLIGHT WIPER MOTOR HARNESS SIDE CONNECTOR 6 [C-23] (6 [C-30]) AND GROUND?

YES

- CONNECT THE MOTOR SIDE CONNECTOR 6 [C-23] (6 [C-30])OF THE HEADLIGHT WIPER MOTOR TO THE BATTERY (+) TERMINAL AND 3 [C-23] (3 [C-30]) TO THE (–) TERMINAL
- DOES THE MOTOR ROTATE?

YES

REPAIR A POOR CONNECTION AT THE CONNECTORS OR AN OPEN CIRCUIT BETWEEN 3 [C-23] AND 7 [I-4] (3 [C-30] AND 5 [I-4])

NO

REPAIR OR REPLACE THE WIPER MOTOR

NO

REPAIR A POOR CONNECTION AT THE CONNECTORS OR AN OPEN CIRCUIT BETWEEN
(RHD)
6 [C-23] (6 [C-30]) AND 15 [H-7]
(LHD)
6 [C-23] (6 [C-30]) AND 11 [H-8]

NO

REPAIR OR REPLACE THE HEADLIGHT WIPER SWITCH

NO

REPAIR OR REPLACE THE HEADLIGHT WIPER SWITCH

3. Auto-stop Function Of The Wiper On The Left (Or Right) Side Does Not Operate

- DISCONNECT THE HEADLIGHT WIPER SWITCH CONNECTOR
- WITH THE SWITCH SET AT “OFF” POSITION, IS THERE CONTINUITY BETWEEN THE SWITCH CONNECTOR TERMINALS 7 I-4 AND 8 I-4 (4 I-4 AND 5 I-4)?

YES

- RECONNECT THE HEADLIGHT WIPER SW CONNECTOR AND DISCONNECT THE HEADLIGHT WIPER MOTOR CONNECTOR
- IS THERE CONTINUITY BETWEEN HARNESS SIDE CONNECTORS 3 C-23 AND 4 C-23 (3 C-30 AND 4 C-30)?

YES

- WITH THE WIPER MOTOR CONNECTOR 6 C-23 (6 C-30) CONNECTED TO THE BATTERY (+) TERMINAL, AND 3 C-23 (3 C-30) TO THE (–) TERMINAL, ROTATE THE MOTOR.
- WHILE ROTATING THE MOTOR, CHANGE THE CONNECTION OF THE (–) TERMINAL TO 2 C-23 (2 C-30) AND CONNECT 3 C-23 (3 C-30) TO 4 C-23 (4 C-30)
- DOES THE MOTOR STOP AT THE AUTO-STOP POSITION?

YES

REPAIR A POOR CONNECTION AT THE CONNECTORS OR AN OPEN CIRCUIT
[LHD]
BETWEEN 2 C-23 (2 C-30) AND 4 C-16
[RHD]
BETWEEN 2 C-23 (2 C-30) AND 4 C-16

NO

REPAIR OR REPLACE THE HEADLIGHT WIPER MOTOR

NO

REPAIR A POOR CONNECTION AT THE CONNECTORS OR AN OPEN CIRCUIT BETWEEN 4 C-23 AND 8 I-4 (4 C-30 AND 4 I-4)

NO

REPAIR OR REPLACE THE SWITCH

NOTE: If headlight wiper motor auto-stop on both sides does not function, it may be attributable either to headlight wiper switch trouble or to poor grounding of connector C-16 .

4. Wiper On The Left (Or Right) Side Does Not Stop

- STOP THE WIPER MOTOR AT THE AUTO-STOP POSITION
- DISCONNECT THE HEADLIGHT WIPER SWITCH CONNECTOR
- TURN THE STARTER SWITCH ON
- DOES THE WIPER MOTOR REMAIN STOPPED?

YES

- IS THE CONTINUITY IN THE HEADLIGHT WIPER SWITCH NORMAL?

NO

REPAIR A SHORT CIRCUIT BETWEEN 3 C-23 AND 7 I-4 (3 C-30 AND 5 I-4)

YES

- DISCONNECT THE WIPER MOTOR CONNECTOR
- IS THERE CONTINUITY BETWEEN THE MOTOR SIDE CONNECTOR TERMINALS 4 C-23 AND 2 C-23 (4 C-30 AND 2 C-30)?

NO

REPAIR OR REPLACE THE SWITCH

YES

REPAIR THE WIPER MOTOR AUTO-STOP MECHANISM, OR REPLACE THE MOTOR

NO

REPAIR A SHORT CIRCUIT BETWEEN 4 C-23 AND 8 I-4 (4 C-30 AND 4 I-4)

5. Washer Motor Does Not Operate

- IS FUSE C-4 (15A) NORMAL?

YES

- DISCONNECT THE HEADLIGHT WASHER MTOR CONNECTOR
- TURN THE STARTER SWITCH ON
- IS THERE BATTERY VOLTAGE APPLIED BETWEEN THE WASHER MOTOR HARNESS SIDE CONNECTOR 1 C-36 AND THE GROUND?

YES

- CONNECT THE MOTOR SIDE CONNECTOR TERMINAL 1 C-36 TO THE BATTERY (+) TERMINAL, AND 2 C-36 TOTHE (–) TERMINAL
- DOES THE MOTOR ROTATE?

YES

- DISCONNECT THE ALARM & RELAY CONTROL UNIT CONNECTOR B-6
- TURN THE STARTER SWITCH ON
- IS THERE BATTERY VOLTAGE APPLIED BETWEEN THE CONTROL UNIT HARNESS SIDE CONNECTOR 1 B-6 AND THE GROUND?

YES

- RECONNECT THE HEADLIGHT WASHER MOTOR CONNECTOR
- IS THERE BATTERY VOLTAGE APPLIED BETWEEN THE HARNESS SIDE CONNECTOR 10 B-7 AND THE GROUND?

YES

- IS THERE CONTINUITY BETWEEN THE HARNESS SIDE CONNECTORS 12 B-6 AND 5 C-23

YES

REPLACE THE ALARM & RELAY CONTROL UNIT

NO

REPAIR A POOR CONNECTION AT THE CONNECTORS OR AN OPEN CIRCUIT IN THE CIRCUIT

NO

REPAIR A POOR CONNECTION AT THE CONNECTORS OR AN OPEN CIRCUIT BETWEEN 2 C-36 AND 10 B-7

NO

REPAIR A POOR CONNECTION AT THE CONNECTORS OR AN OPEN CIRCUIT BETWEEN FUSE C-4 (10A) AND 1 B-6

NO

REPAIR OR REPLACE THE MOTOR

NO

REPAIR A POOR CONNECTION AT THE CONNECTORS OR AN OPEN CIRCUIT BETWEEN 1 C-36 AND FUSE C-7 (10A)

NO

REPLACE THE FUSE

Rear Defogger

General Description

When rear defogger switch is turned on with starter switch on, battery voltage is applied to rear defogger through rear defogger relay to operate rear defogger. Alarm & relay control unit is provided with a timer. When the operation time of the timer elapses which has been set in advance at manufacture, the switch is automatically turned off. (The timer operating time is normally about 30 minutes).

Circuit Diagram (RHD)

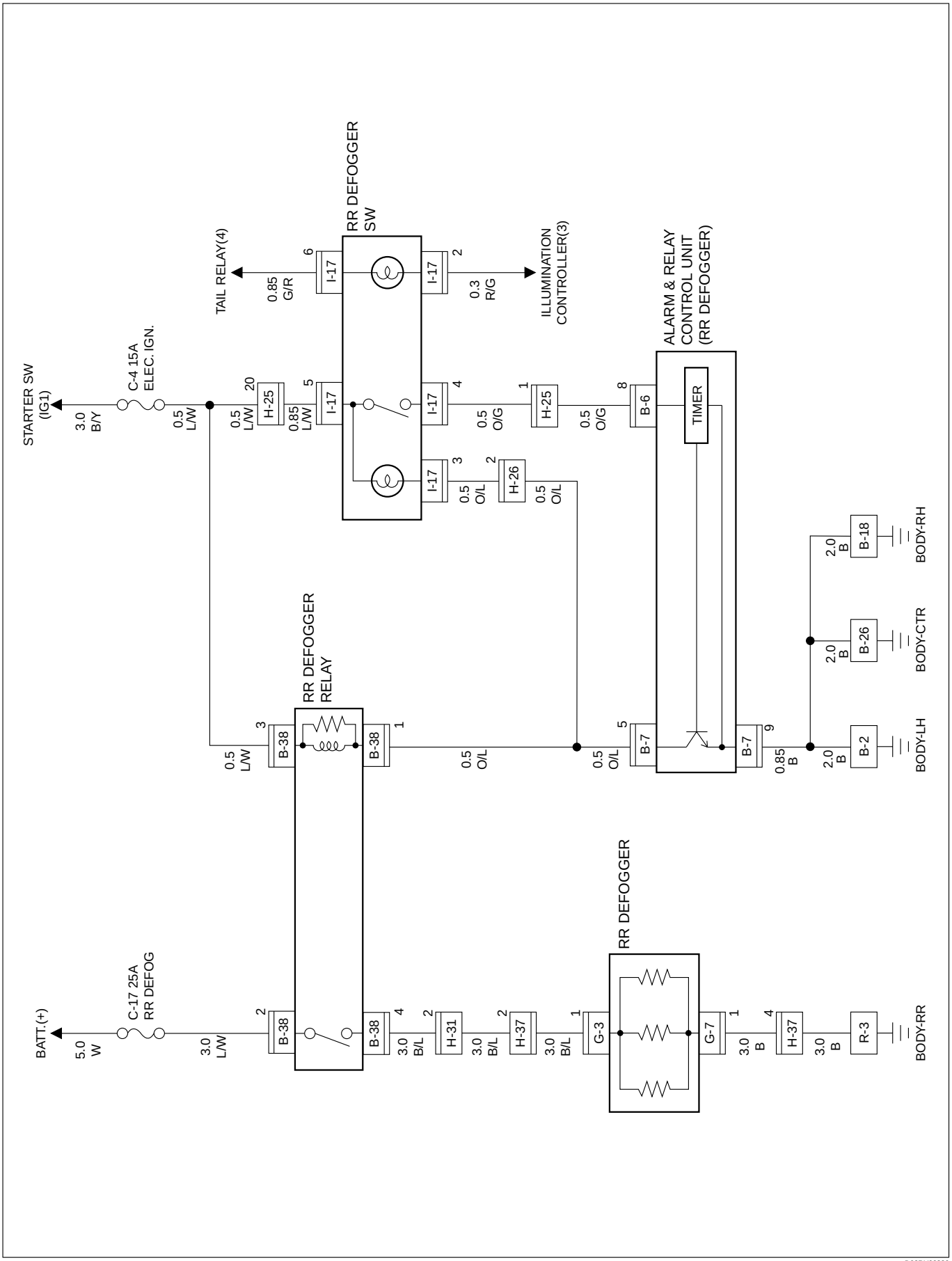

D08RY00230

Parts Location (RHD)

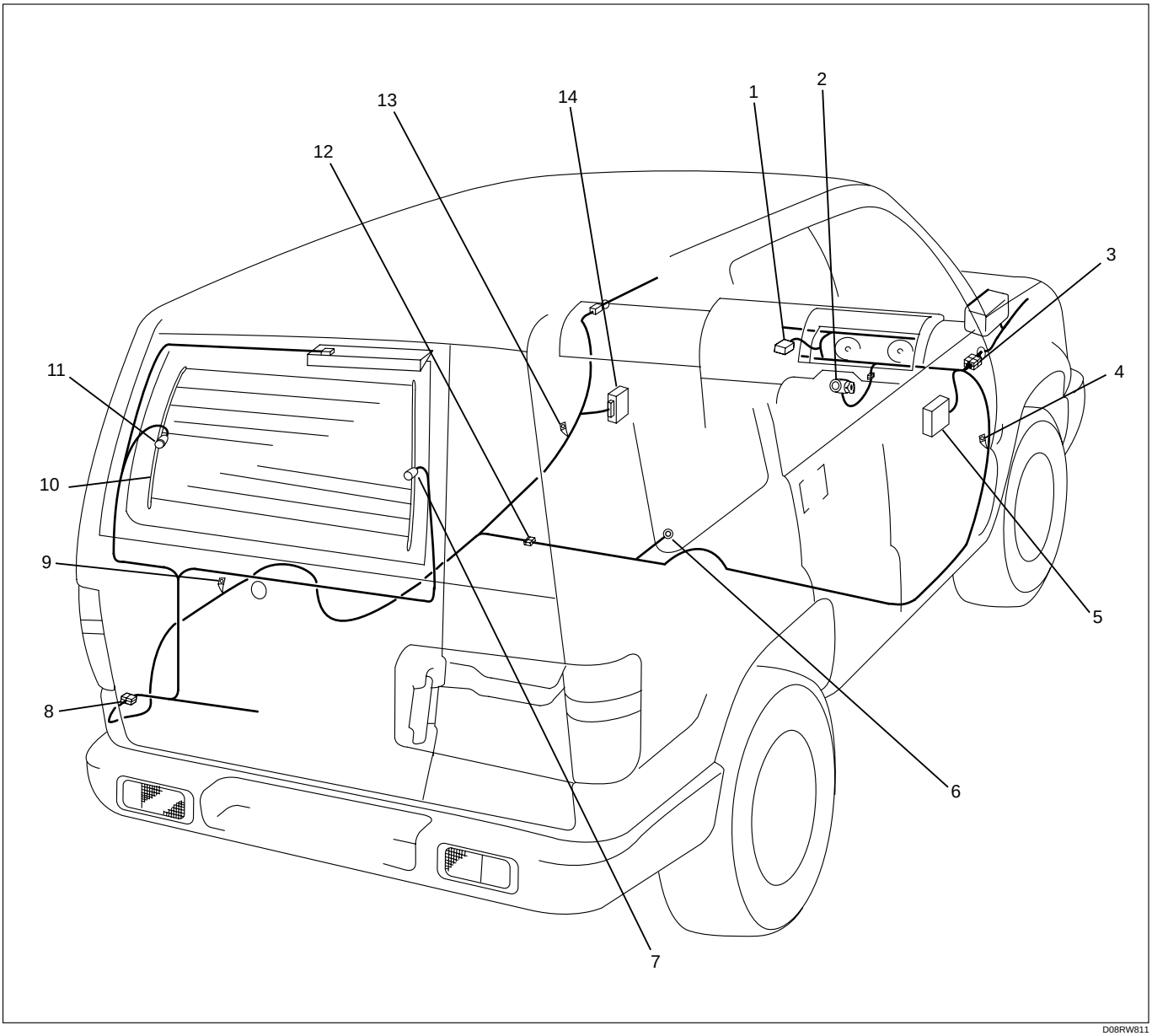

D08RW811

Legend

(1) I-17 (Rear Defogger Switch)
(2) Starter Switch
(3) H-25, H-26
(4) B-19
(5) Fuse Box (B-38)
(6) B-26
(7) G-7
(8) H-37
(9) R-3
(10) Rear Defogger
(11) G-3
(12) H-31
(13) B-2
(14) B-6, B-7 (Alarm and Relay Control Unit)

Circuit Diagram (LHD)

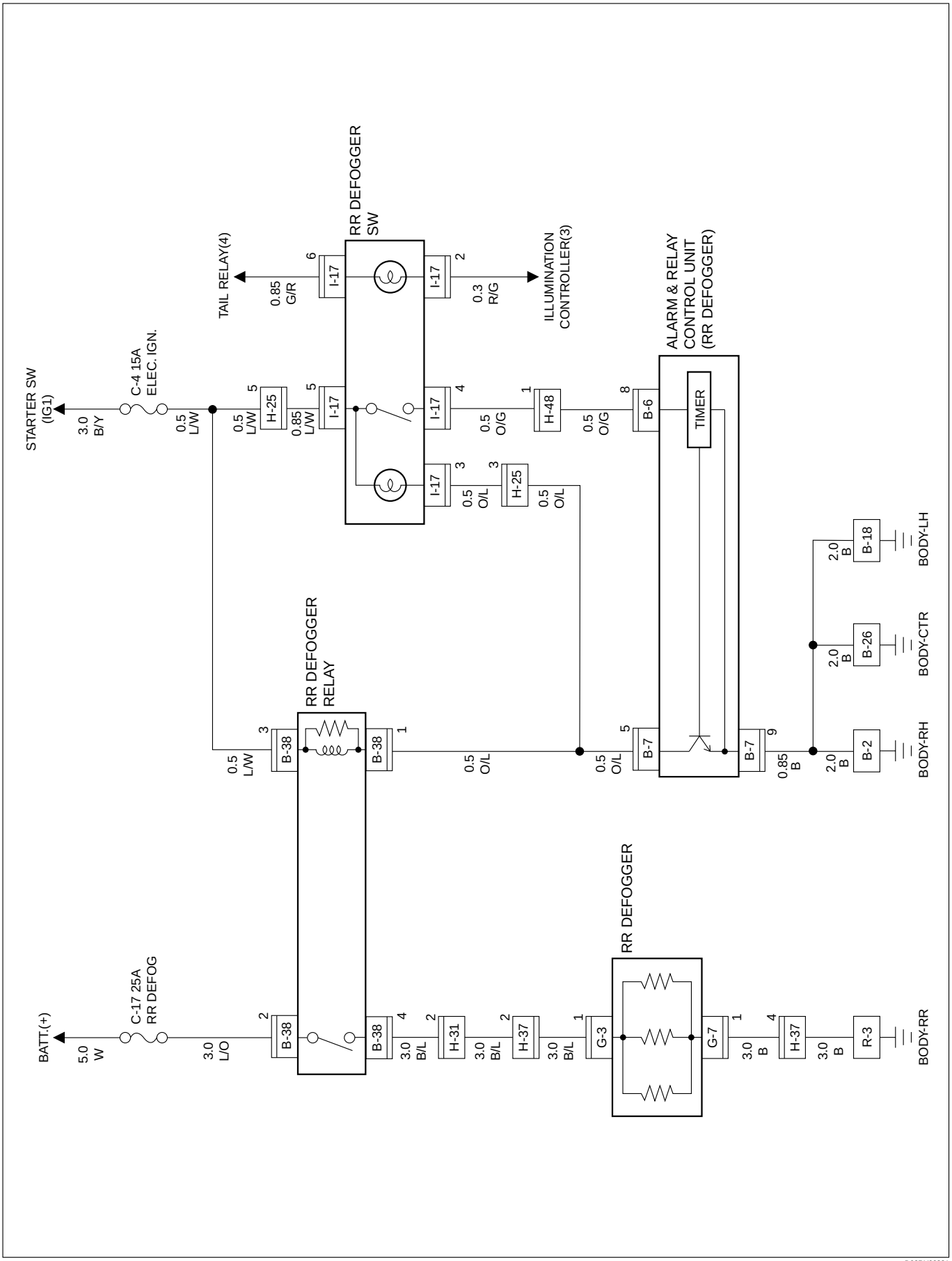

D08RY00231

Parts Location (RHD)

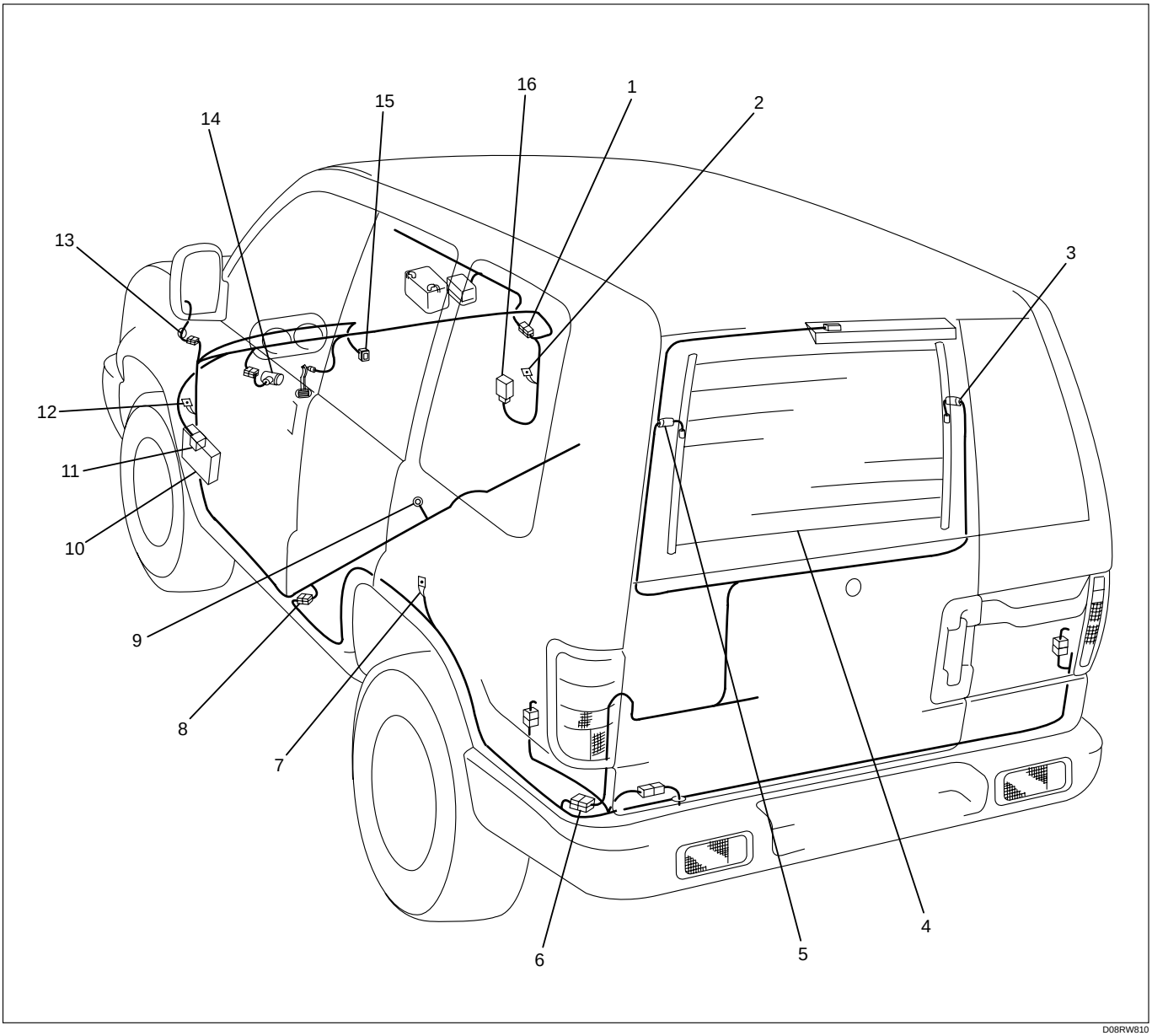

D08RW810

Legend

(1) H-48
(2) B-2
(3) G-7
(4) Rear Defogger
(5) G-3
(6) H-37
(7) R-3
(8) H-31
(9) B-26
(10) Fuse Box
(11) B-38
(12) B-18
(13) H-25
(14) Starter Switch
(15) I-17 (Rear Defogger Switch)
(16) B-6, B-7 (Alarm and Relay Control Unit)

Diagnosis

Quick Chart for Check Points

Trouble mode \ Check point	Fuse		Rear defogger SW	Rear defogger relay	Alarm & relay control unit	Cable harness
	C-4 (15A)	C-17 (25A)				
1 Rear defogger does not operate	○	○	○	○	○	○
2 Rear defogger timer does not function					○	

1 Rear Defogger Does Not Operate

- ARE THE FUSES C-4 (15A) AND C-17 (25A) NORMAL?

YES

- IS THE REAR DEFOGGER RELAY NORMAL?

NO

REPLACE THE FUSE

YES

- IS THE REAR DEFOGGER SWITCH NORMAL?

NO

REPLACE THE RELAY

YES

- IS R-3 GROUNDED SECURELY?

NO

REPAIR OR REPLACE THE SWITCH

YES

- TURN ON THE STARTER SWITCH AND THE REAR DEFOGGER SWITCH
- IS THERE A BATTERY VOLTAGE APPLIED BETWEEN THE REAR DEFOGGER CONNECTOR 1 G-3 AND THE GROUND?

NO

GROUND IT SECURELY

YES

- IS THERE CONTINUITY BETWEEN 1 G-7 AND THE GROUND?

NO

REPAIR A POOR CONNECTION AT THE CONNECTORS OR AN OPEN CIRCUIT IN EACH OF THE FOLLOWING CONNECTIONS: FUSE C-17 (25A) AND 2 B-38 , FUSE C-4 (10A) AND 3 B-38 , 4 B-38 AND 1 G-3 , 4 I-17 AND 8 B-6 , 5 I-17 AND FUSE C-4 (10A)

YES

REPLACE THE ALARM & RELAY CONTROL UNIT

NO

REPAIR A POOR CONNECTION AT THE CONNECTORS OR AN OPEN CIRCUIT BETWEEN 1 G-7 AND R-3

2 Rear Defogger Timer Does Not Function

REPLACE THE ALARM & RELAY CONTROL UNIT

Audio

General Description

The audio circuit is designed for the current to flow through the receiver circuit when the radio switch is turned on with the starter switch in “ACC” or “ON”. Current runs through the memory circuit of the audio regardless of the position of the starter switch.
The radio antenna operates in connection to the radio switch. The antenna rod goes up when the switch is ON and goes down to be stored in the fender with the switch OFF. The antenna rod also goes down when the starter switch is turned off with radio on.

Circuit Diagram (RHD)-1

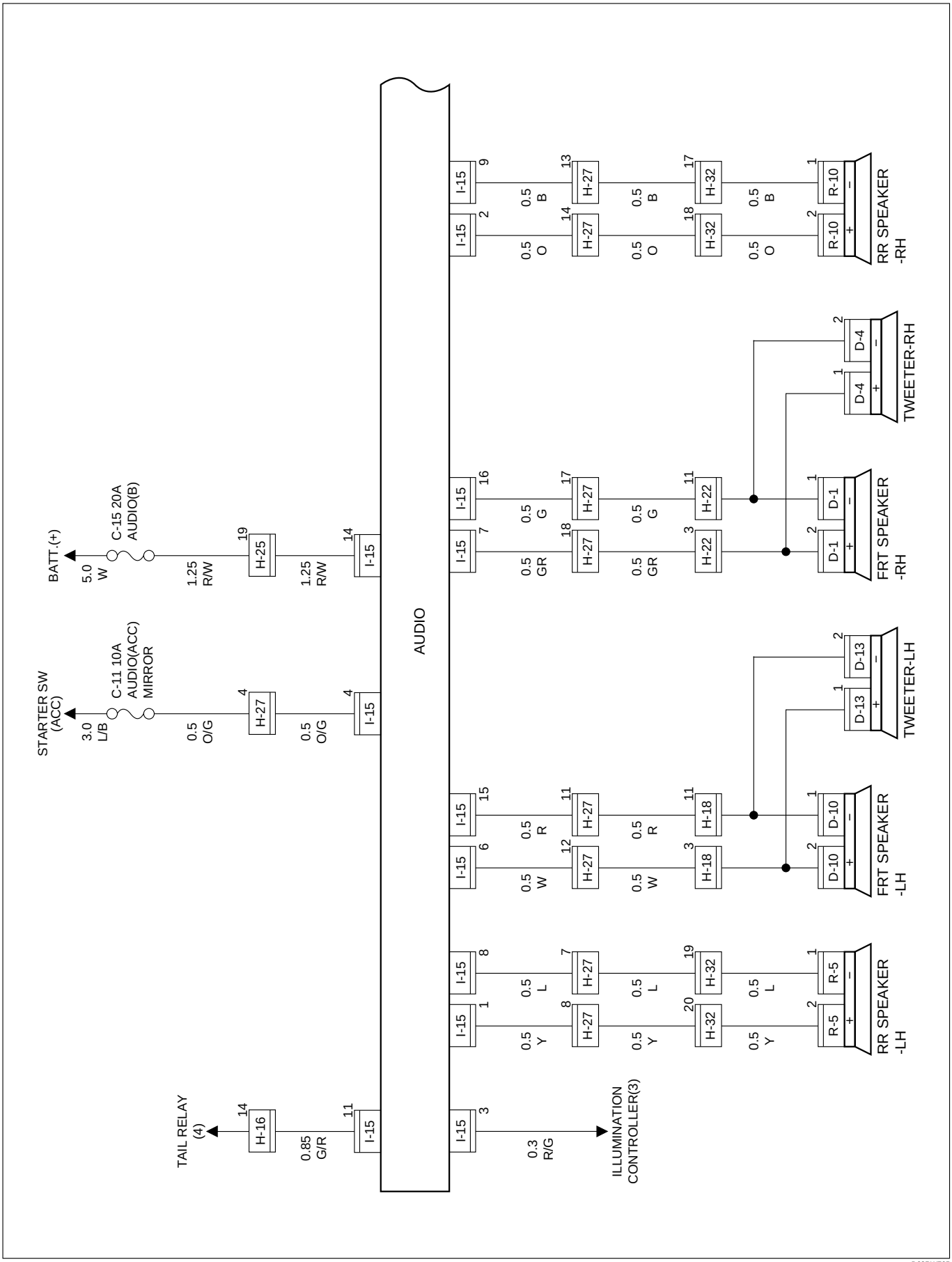

D08RW765

Circuit Diagram (RHD)-2

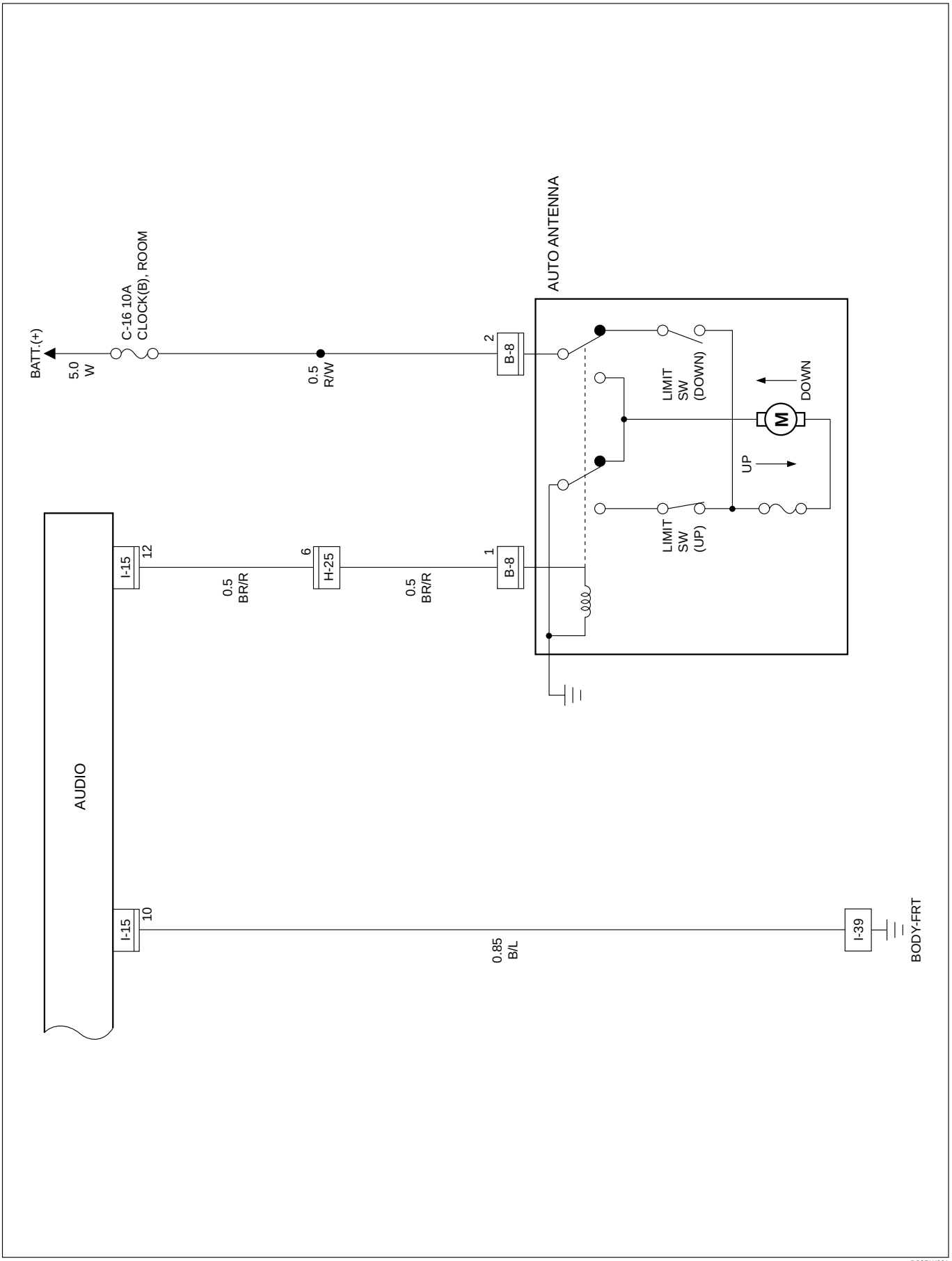

D08RW681

Circuit Diagram (South Africa)-1

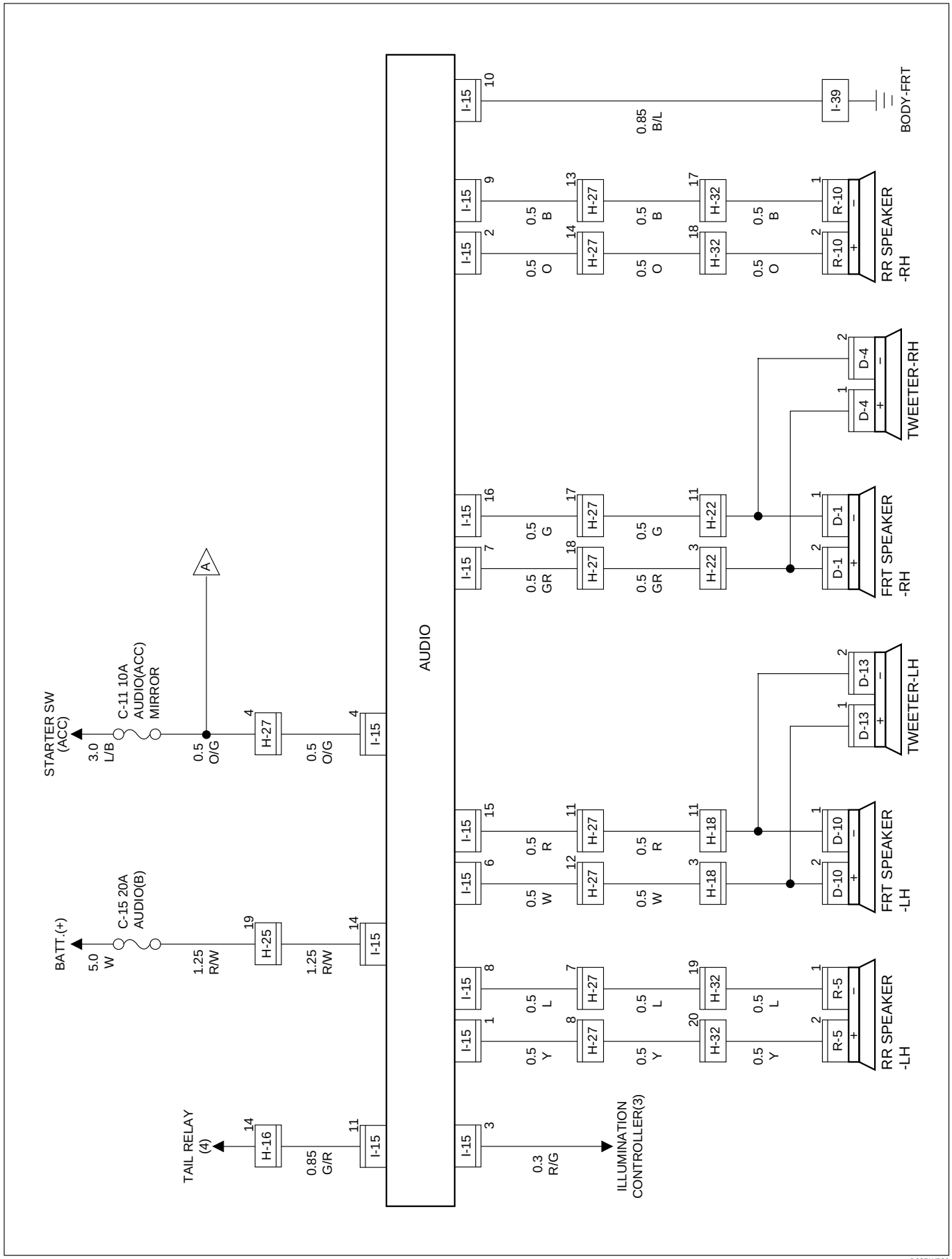

D08RWB90

Circuit Diagram (South Africa)-2

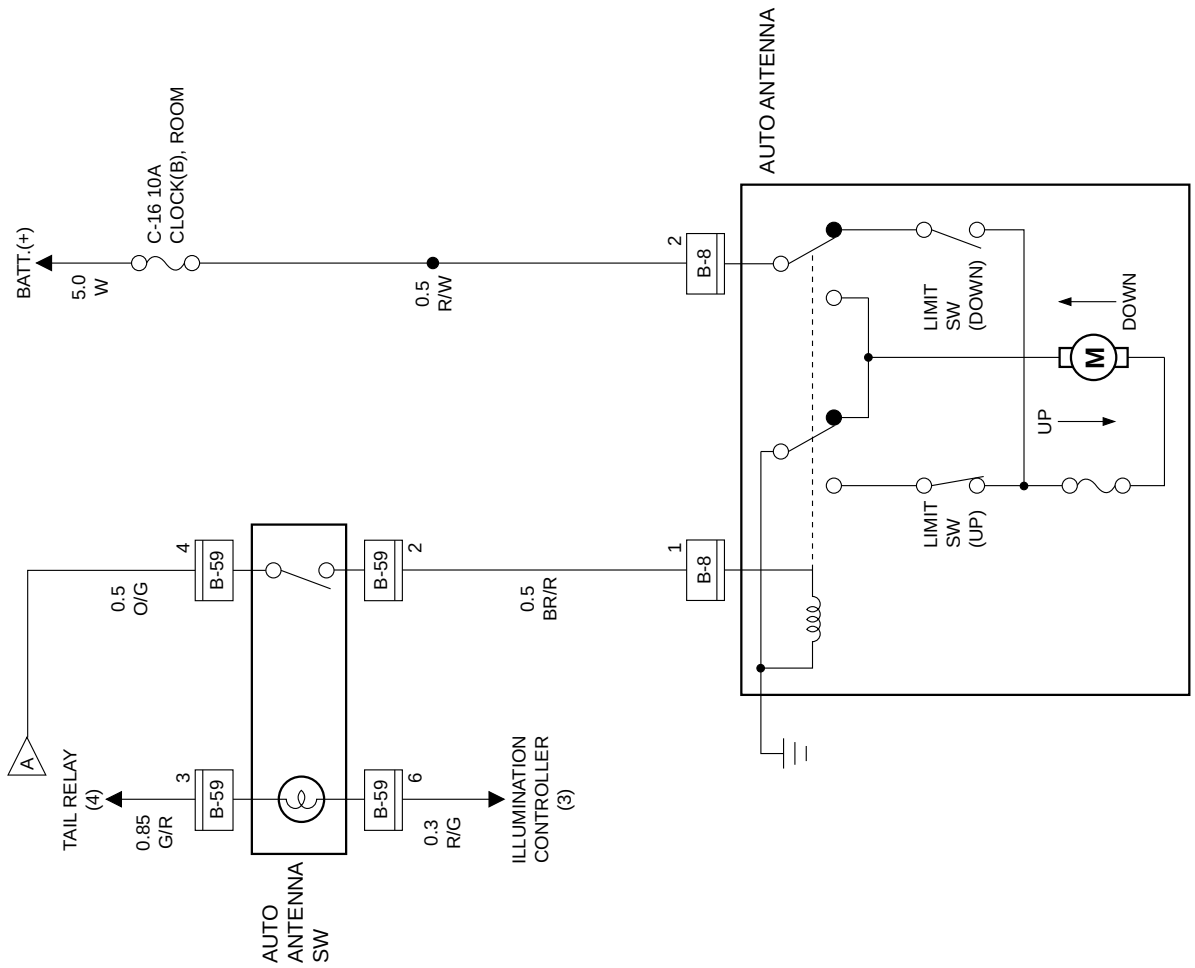

D08RWB89

Parts Location (RHD)

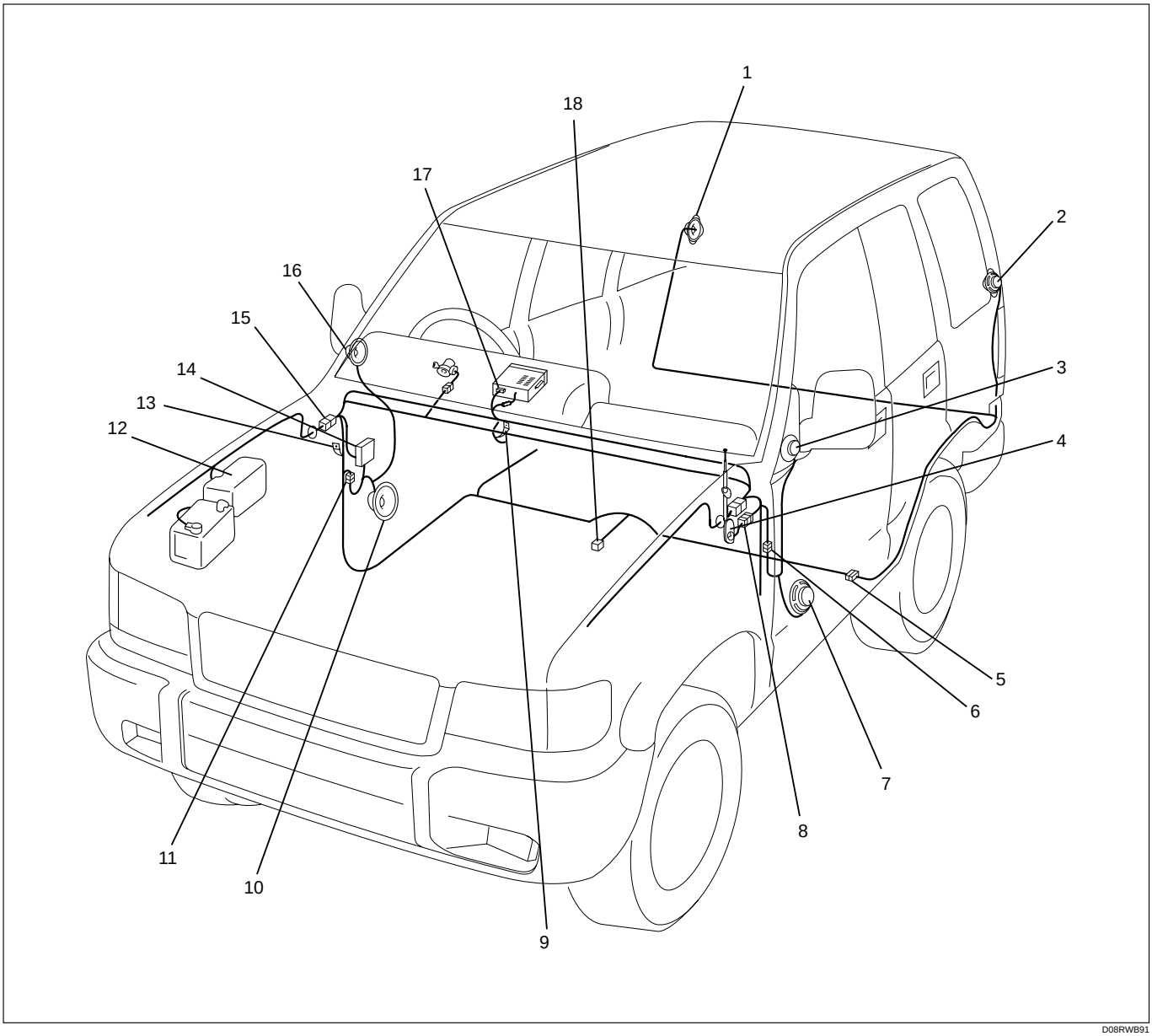

D08RWB91

Legend

(1) R-10
(2) R-5
(3) D-13
(4) Auto Antenna
(5) H-32
(6) H-18
(7) D-10
(8) B-8
(9) I-39
(10) D-1
(11) H-22
(12) Relay and Fuse Box
(13) B-19
(14) Fuse Box
(15) H-25, H-26, H-27
(16) D-4
(17) I-15
(18) B-59

Circuit Diagram (LHD)-1

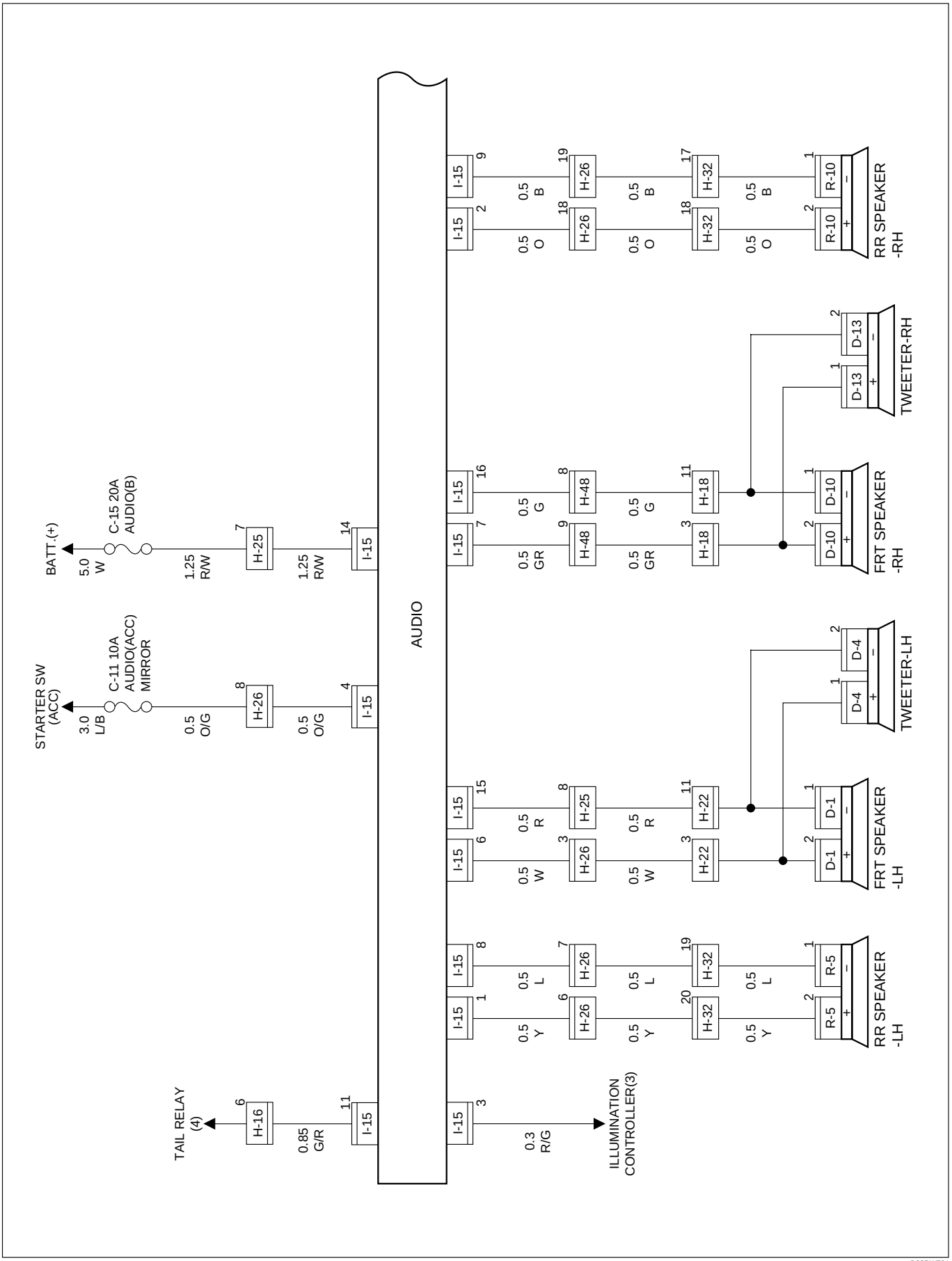

D08RW764

Circuit Diagram (LHD)-2

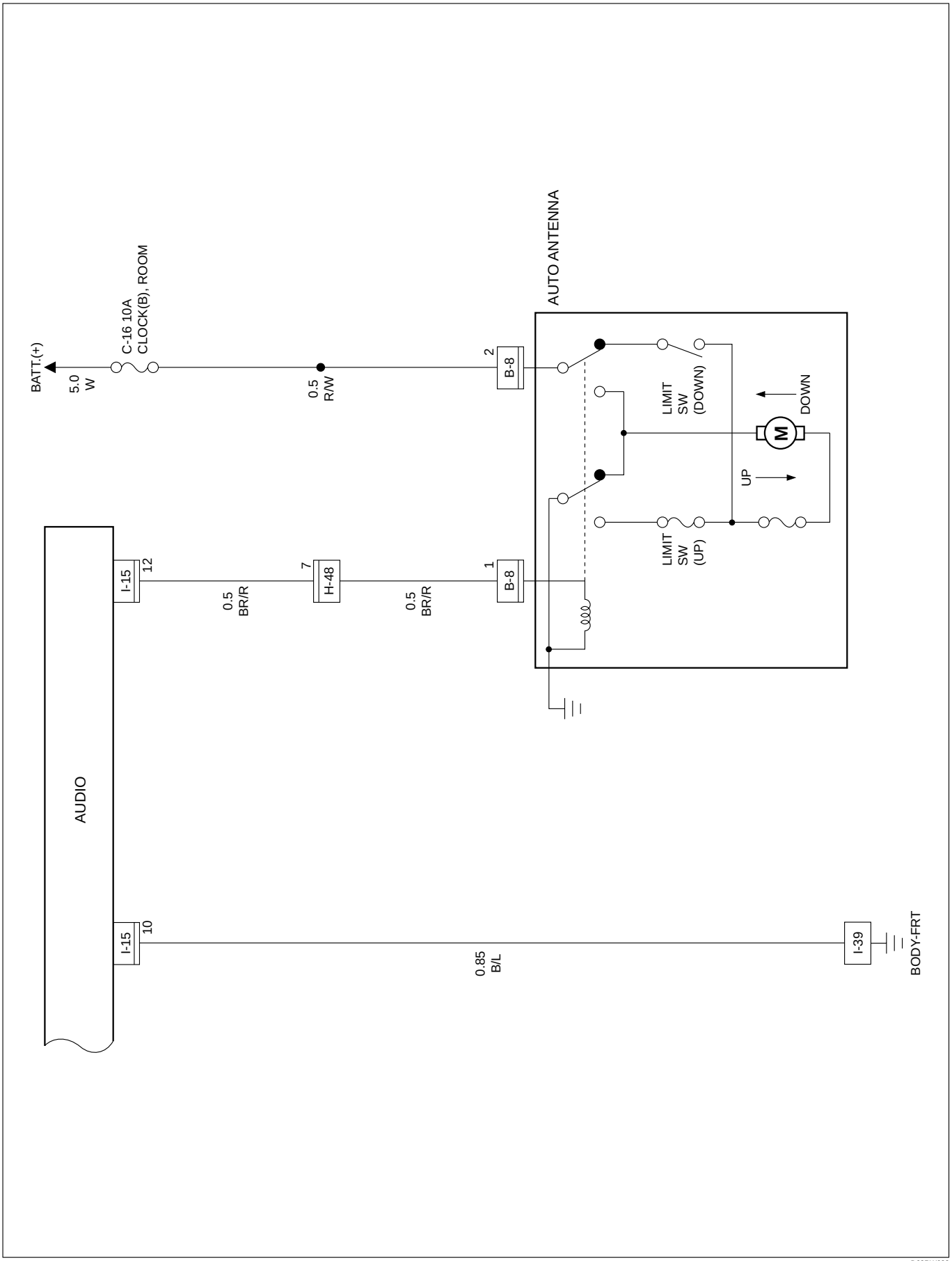

D08RW682

Parts Location (LHD)

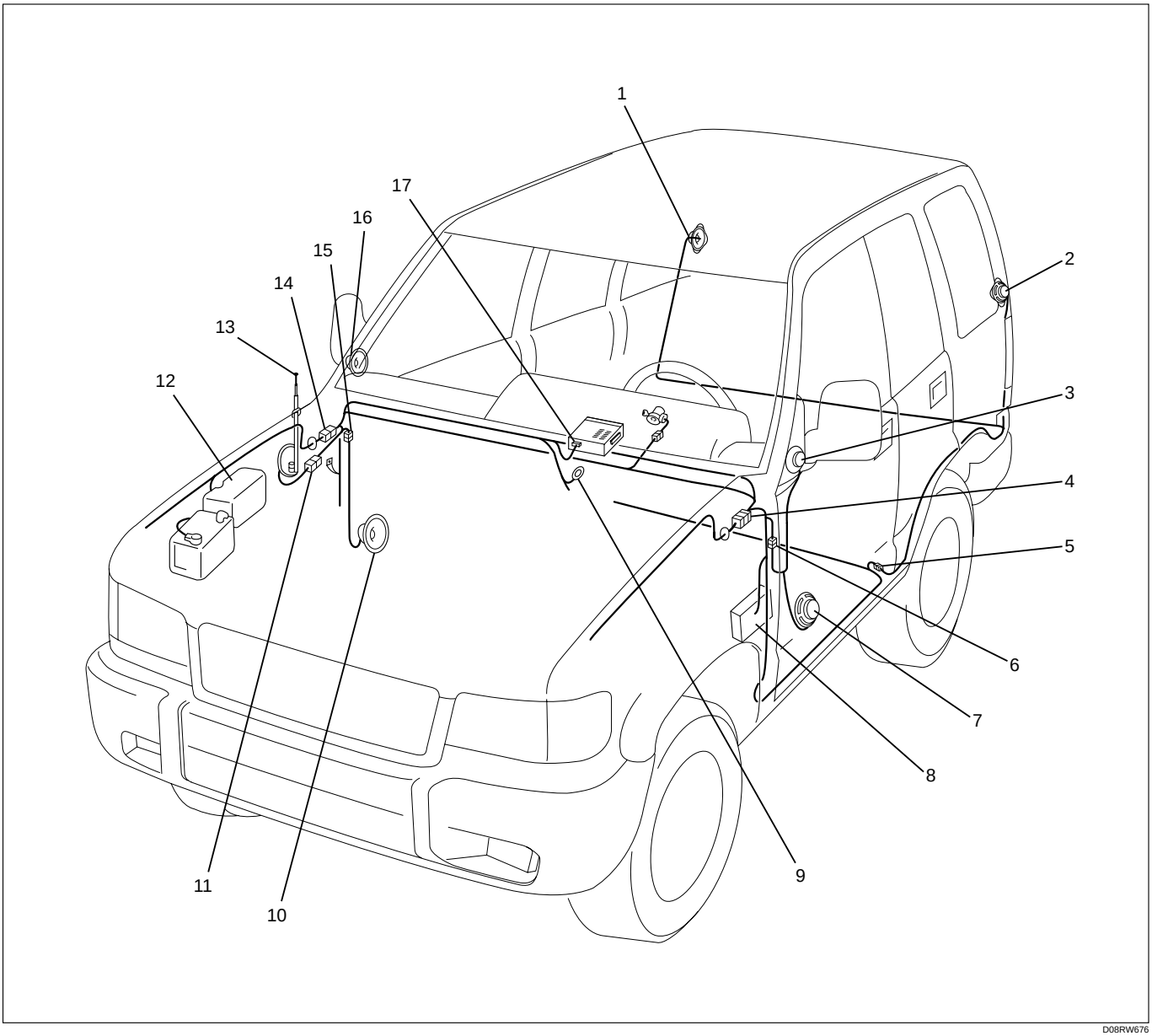

Legend

(1) R-10
(2) R-5
(3) D-4
(4) H-25, H-26
(5) H-32
(6) H-22
(7) D-1
(8) Fuse Box
(9) I-39
(10) D-10
(11) B-8
(12) Relay and Fuse Box
(13) Auto Antenna
(14) H-48
(15) H-18
(16) D-13
(17) I-15

Cigarette Lighter and Digital Clock

General Description

When cigarette lighter is pushed in with starter switch at either “ACC” or “ON” position, a circuit is formed in cigarette lighter case to heat lighter coil. Cigarette lighter springs back to its original position after lighter coil is heated.

Circuit Diagram (RHD)

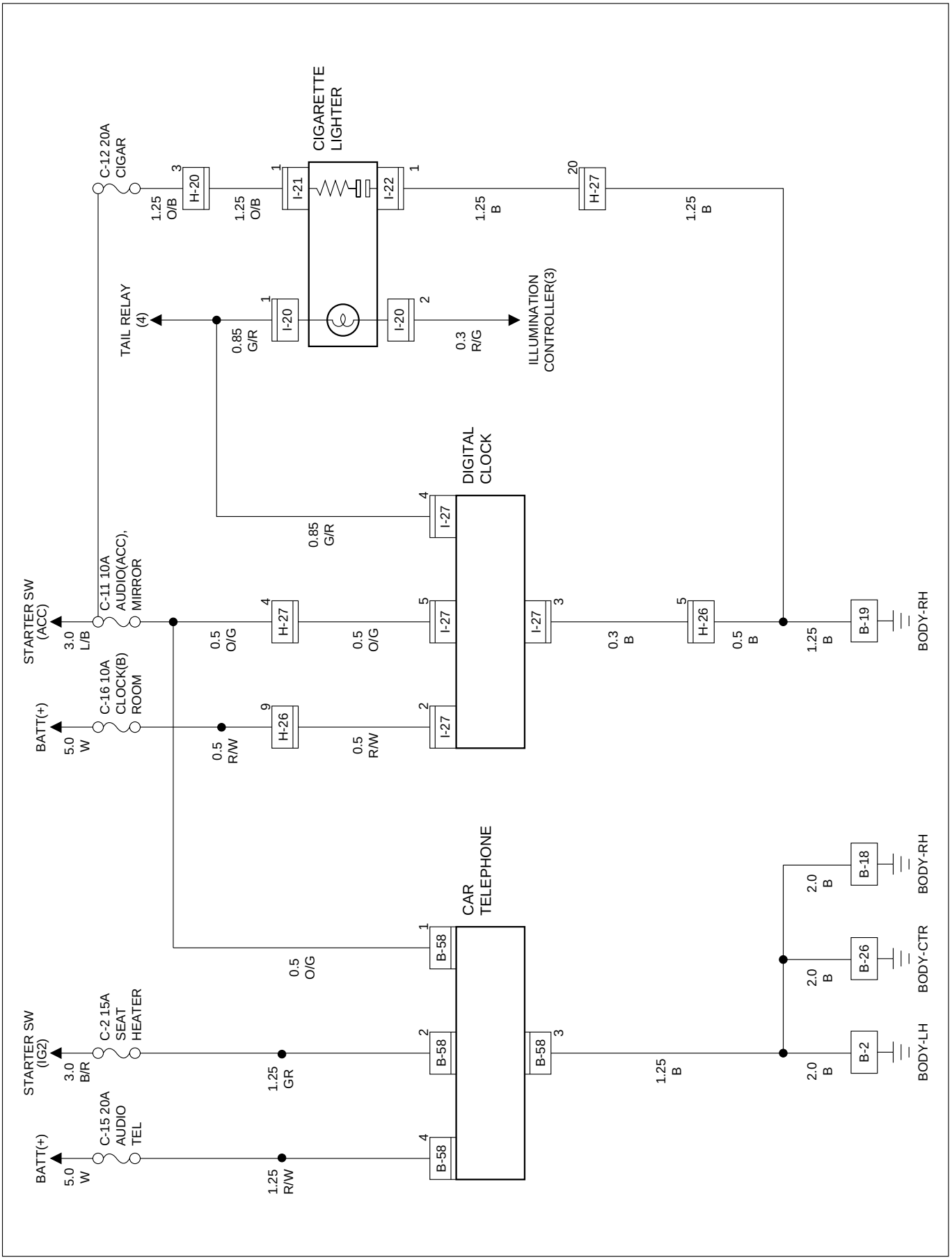

D08RWA62

Parts Location (RHD)

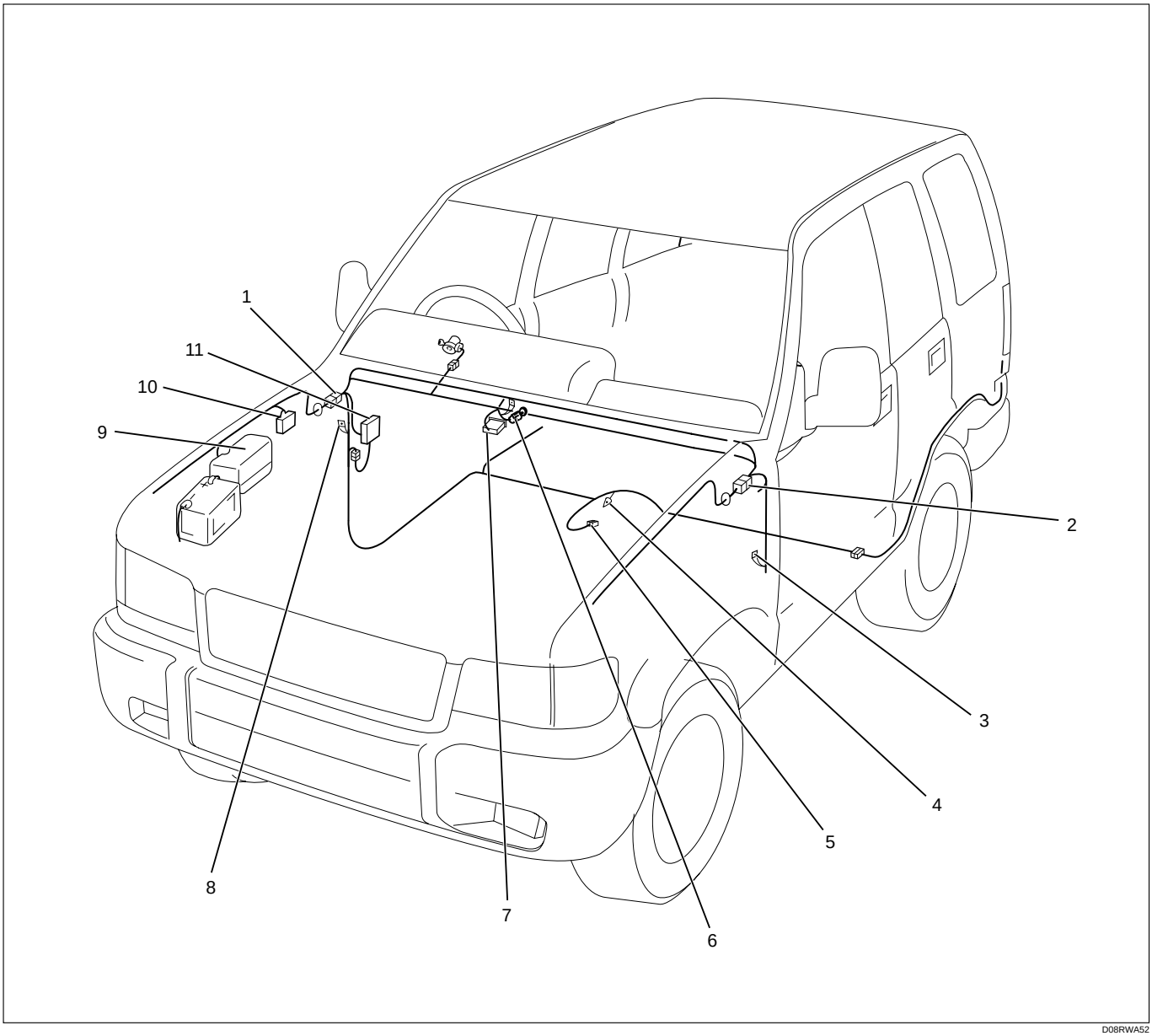

D08RWA52

Legend

(1) H-26, H-27
(2) H-20
(3) B-2
(4) B-26
(5) B-58
(6) I-20, I-21, I-22
(7) I-27
(8) B-18, B-19
(9) Relay and Fuse Box
(10) C-39
(11) Fuse Box

Circuit Diagram (LHD)

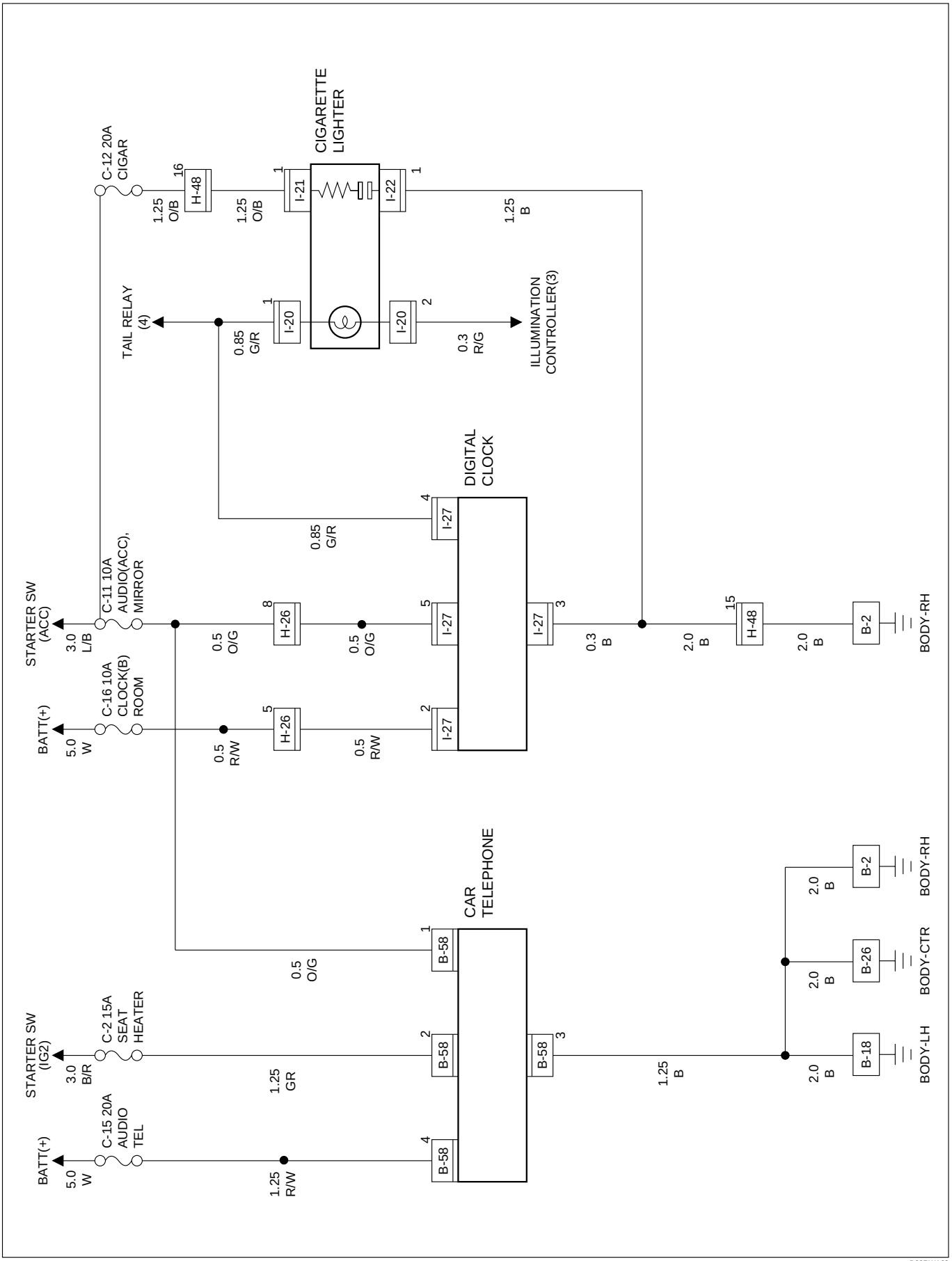

D08RWA63

Parts Location (LHD)

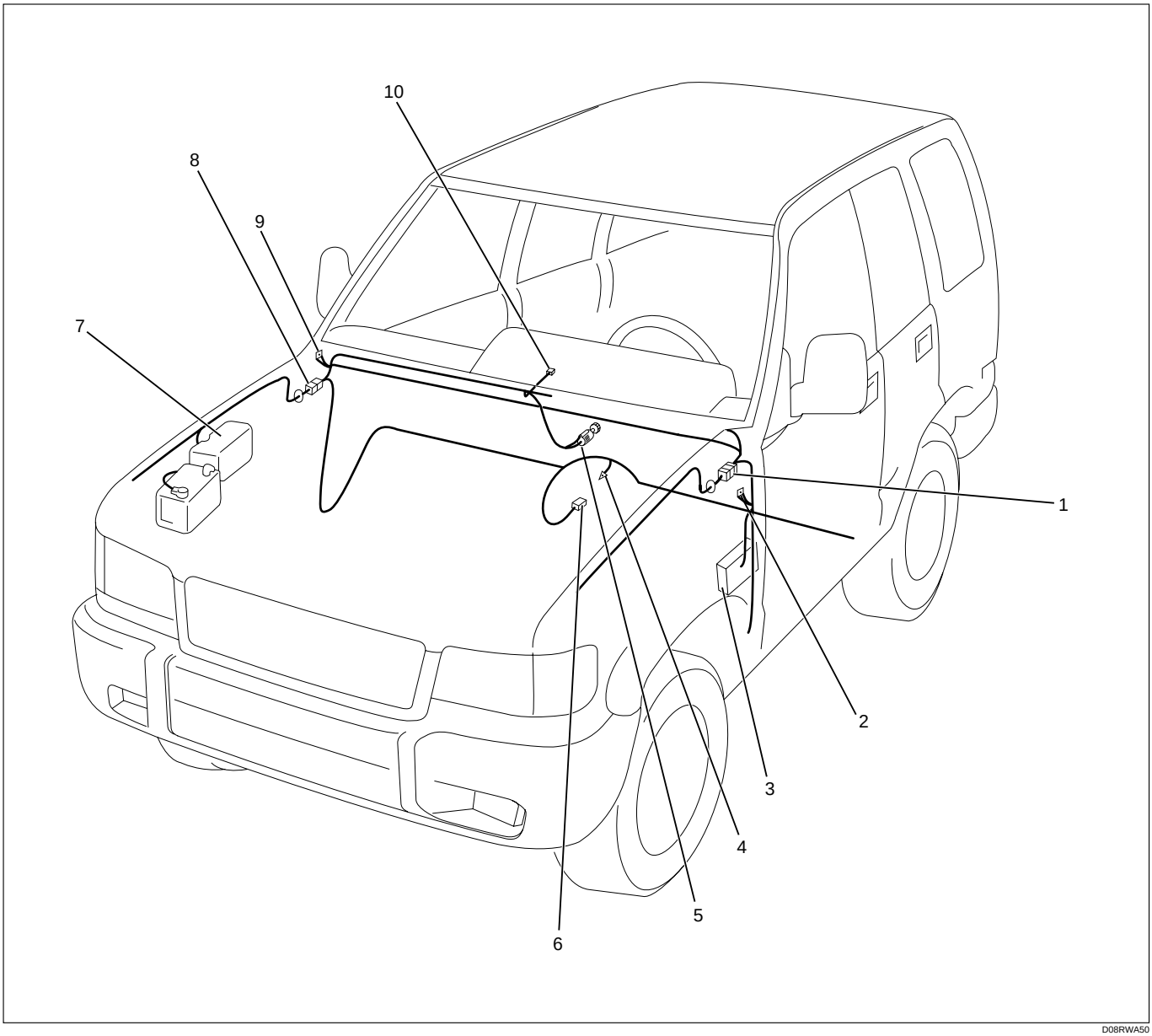

D08RWA50

Legend

(1) H-26
(2) B-18
(3) Fuse Box
(4) B-26
(5) I-20, I-21, I-22
(6) B-58
(7) Relay and Fuse Box
(8) H-48
(9) B-2
(10) I-27

Power Door Mirror

General Description

The circuit consists of door mirror control switch, folding switch, defogger switch and door mirrors on both sides.
When control switch is operated with starter switch at either “ACC” or “ON” position, motors incorporated in door mirrors on both sides rotates to allow the horizontal and vertical adjustment of mirror angle.
Folding switch can be used to fold mirror and return it to its original position.
When turning on door mirror defogger switch with starter switch at “ON” position, built–in heater in mirror is activated to perform defogger function.

Circuit Diagram (RHD)-1

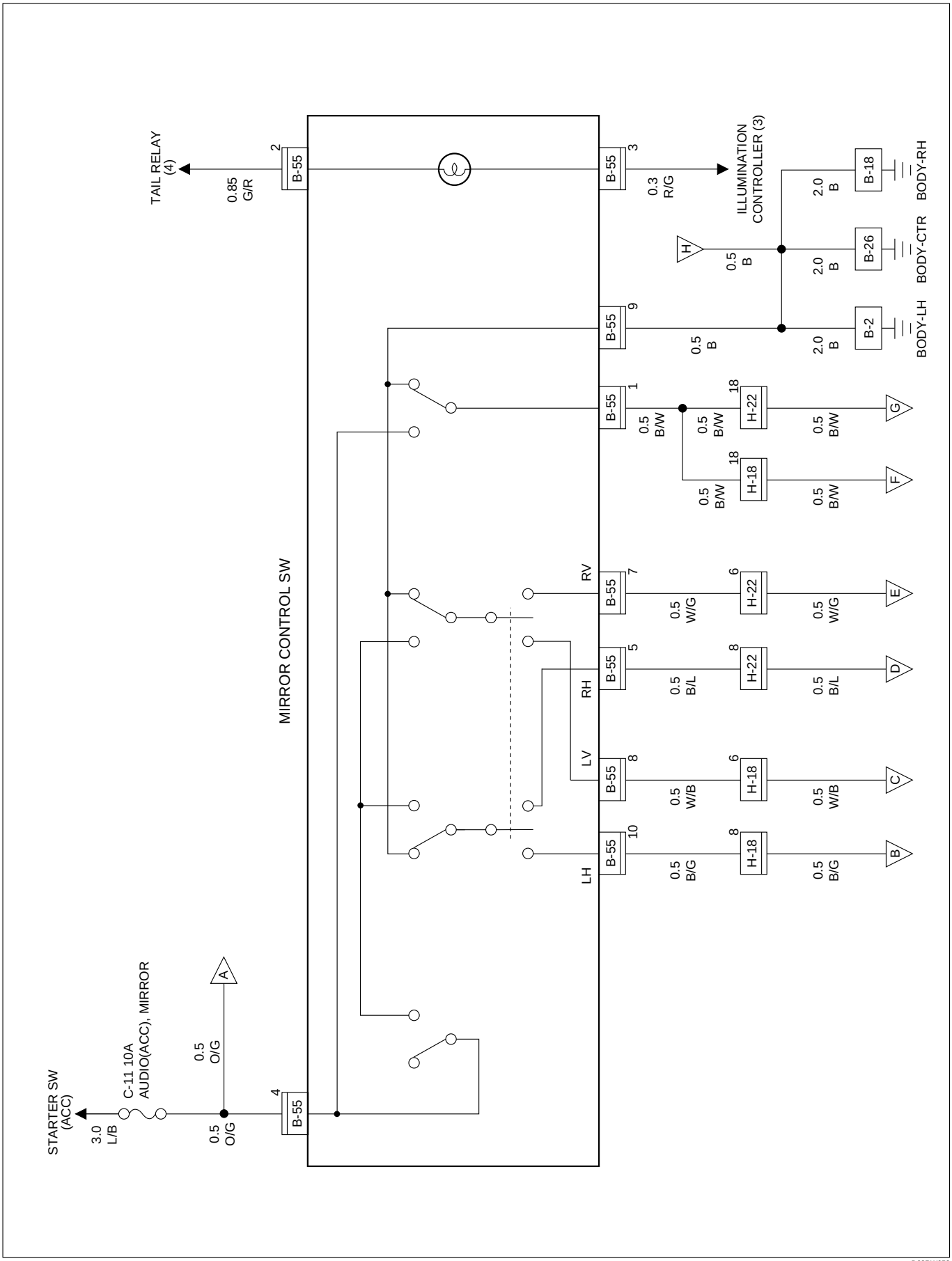

Circuit Diagram (RHD)-2

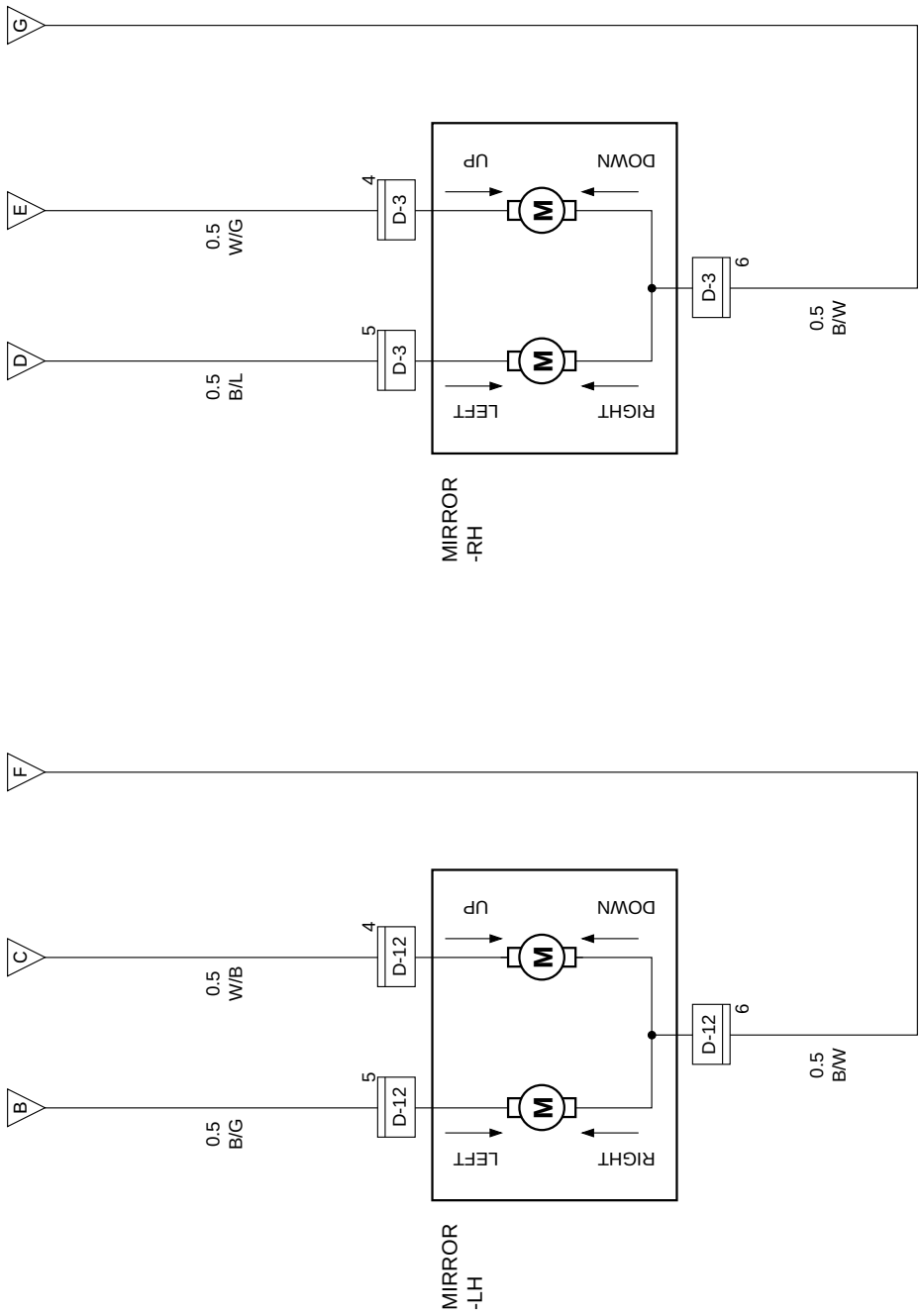

D08RW646

Circuit Diagram (RHD)-3

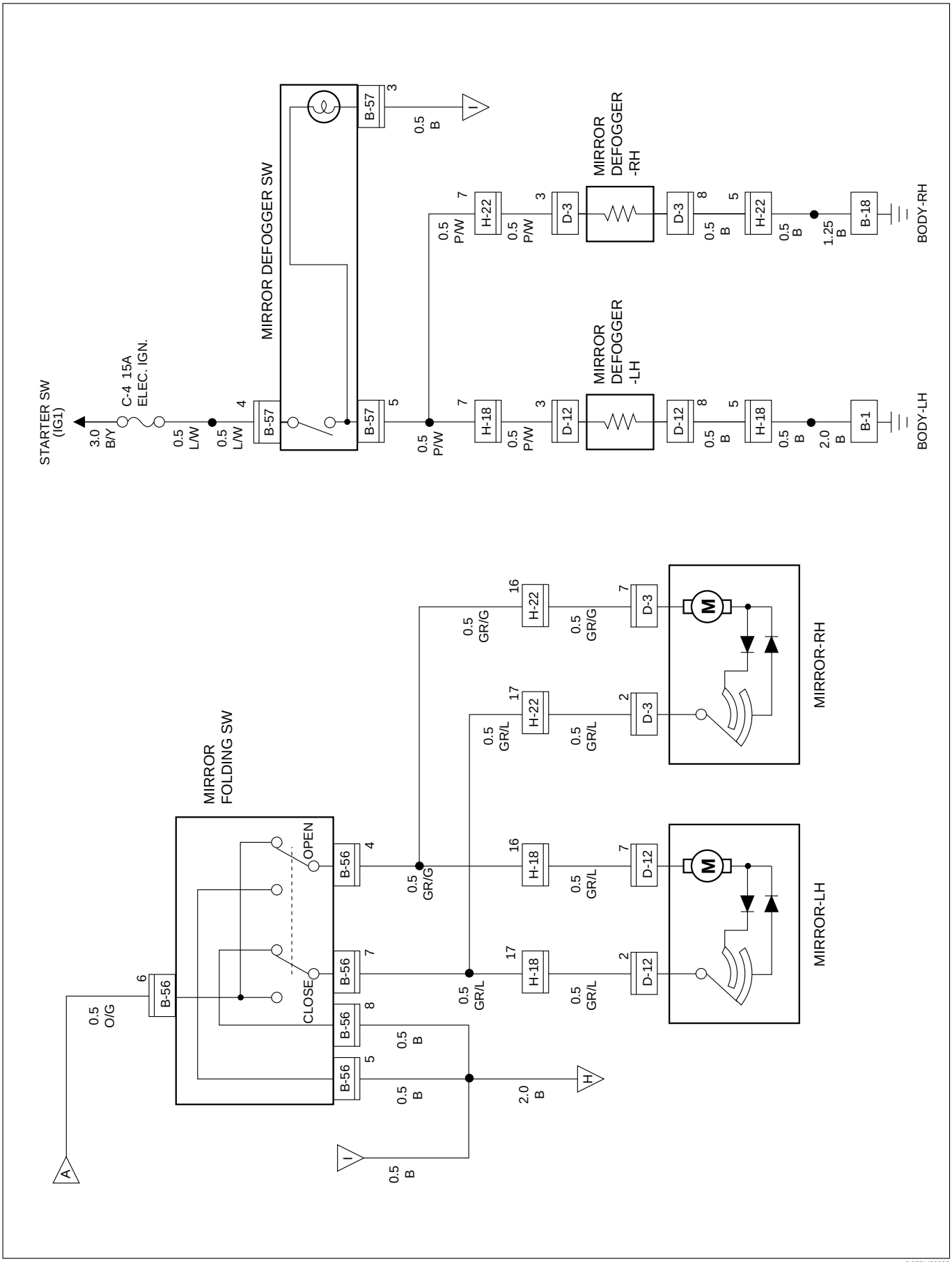

D08RY00232

Parts Location (RHD)

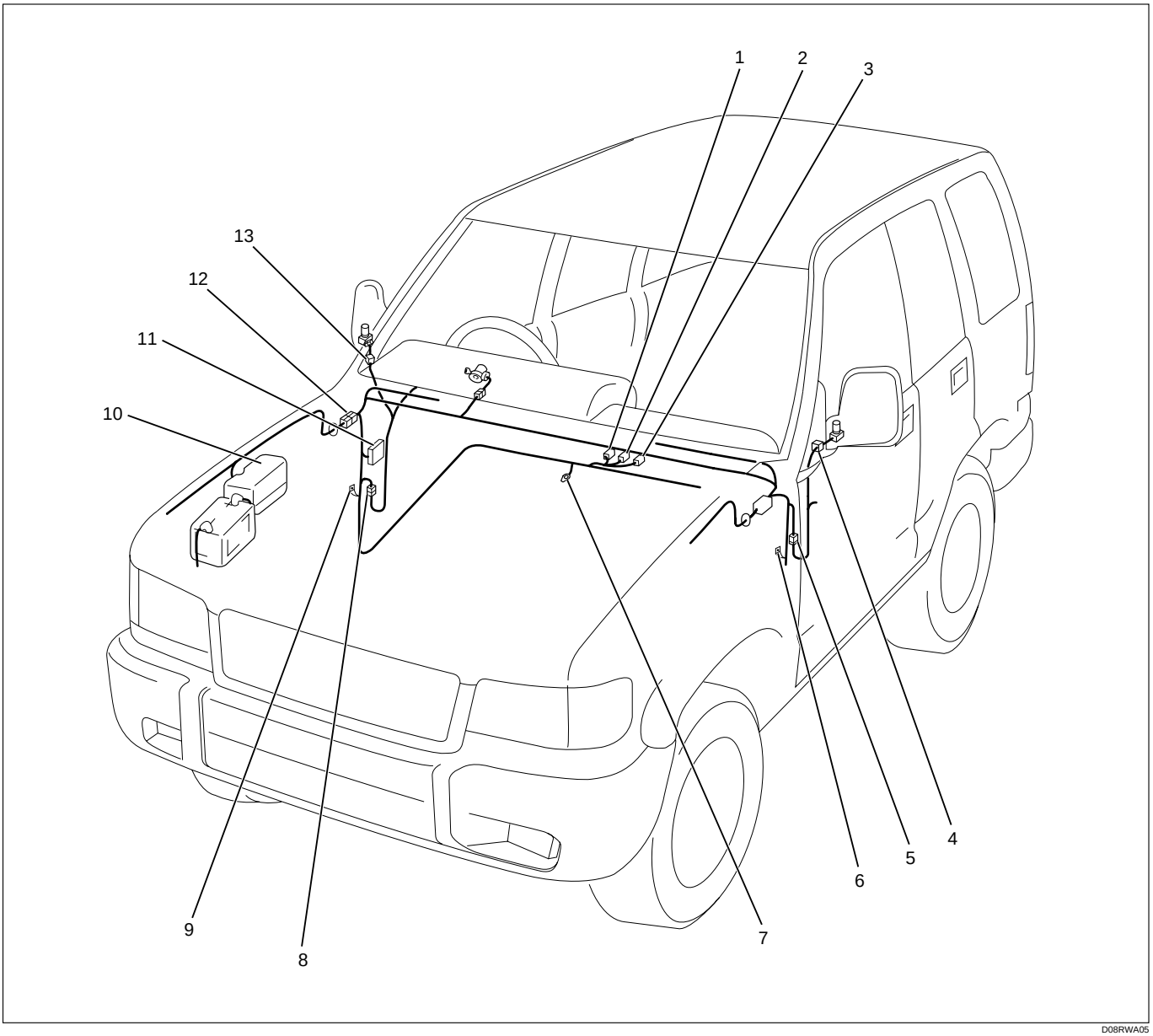

D08RWA05

Legend

(1) B-56 (Center Console)
(2) B-57 (Center Console)
(3) B-55 (Center Console)
(4) D-12
(5) H-18
(6) B-1, B-2
(7) B-26
(8) H-22
(9) B-18
(10) Relay & Fuse Box
(11) Fuse Box
(12) H-14
(13) D-3

Circuit Diagram (LHD)-1

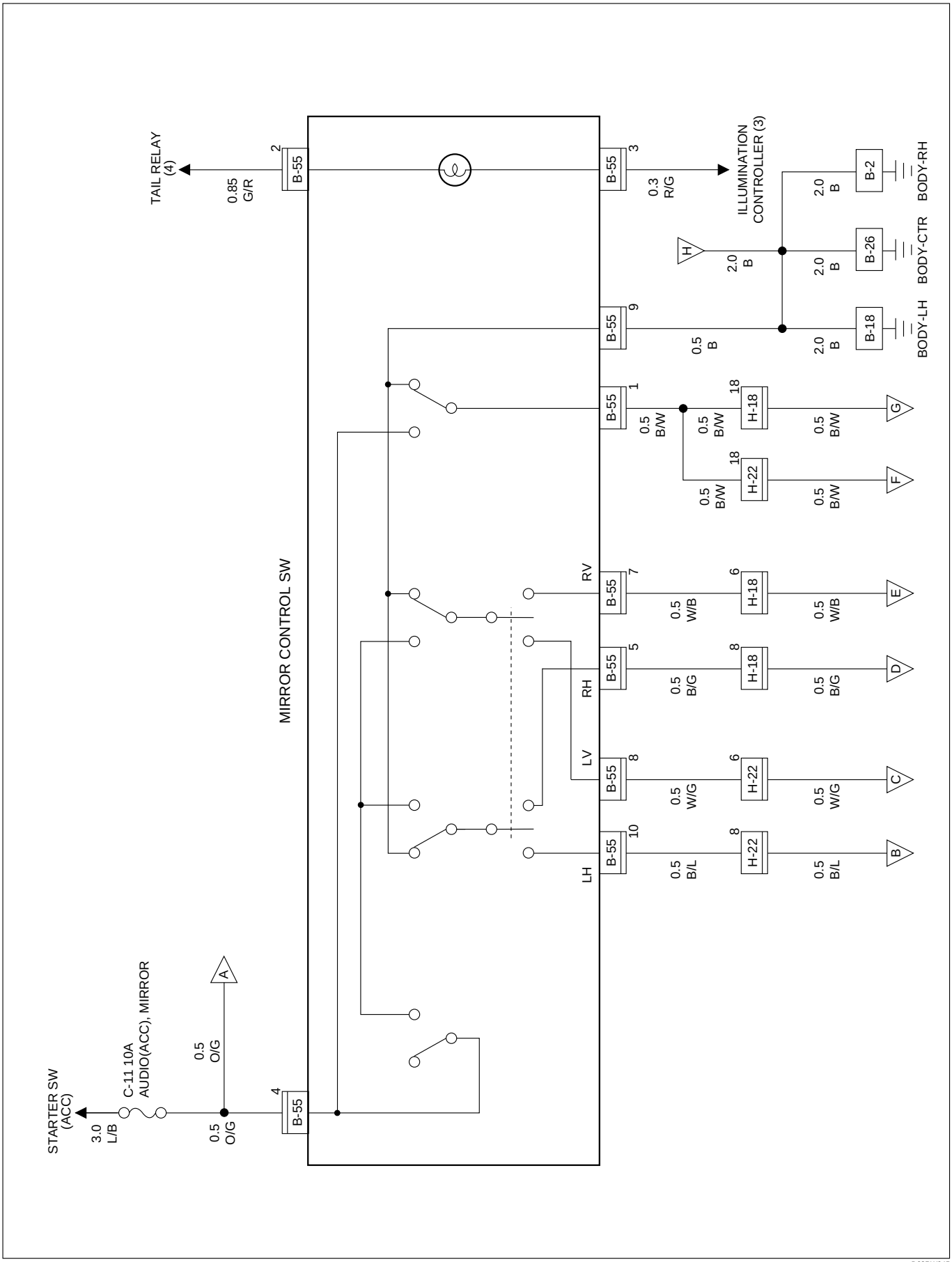

D08RW945

Circuit Diagram (LHD)-2

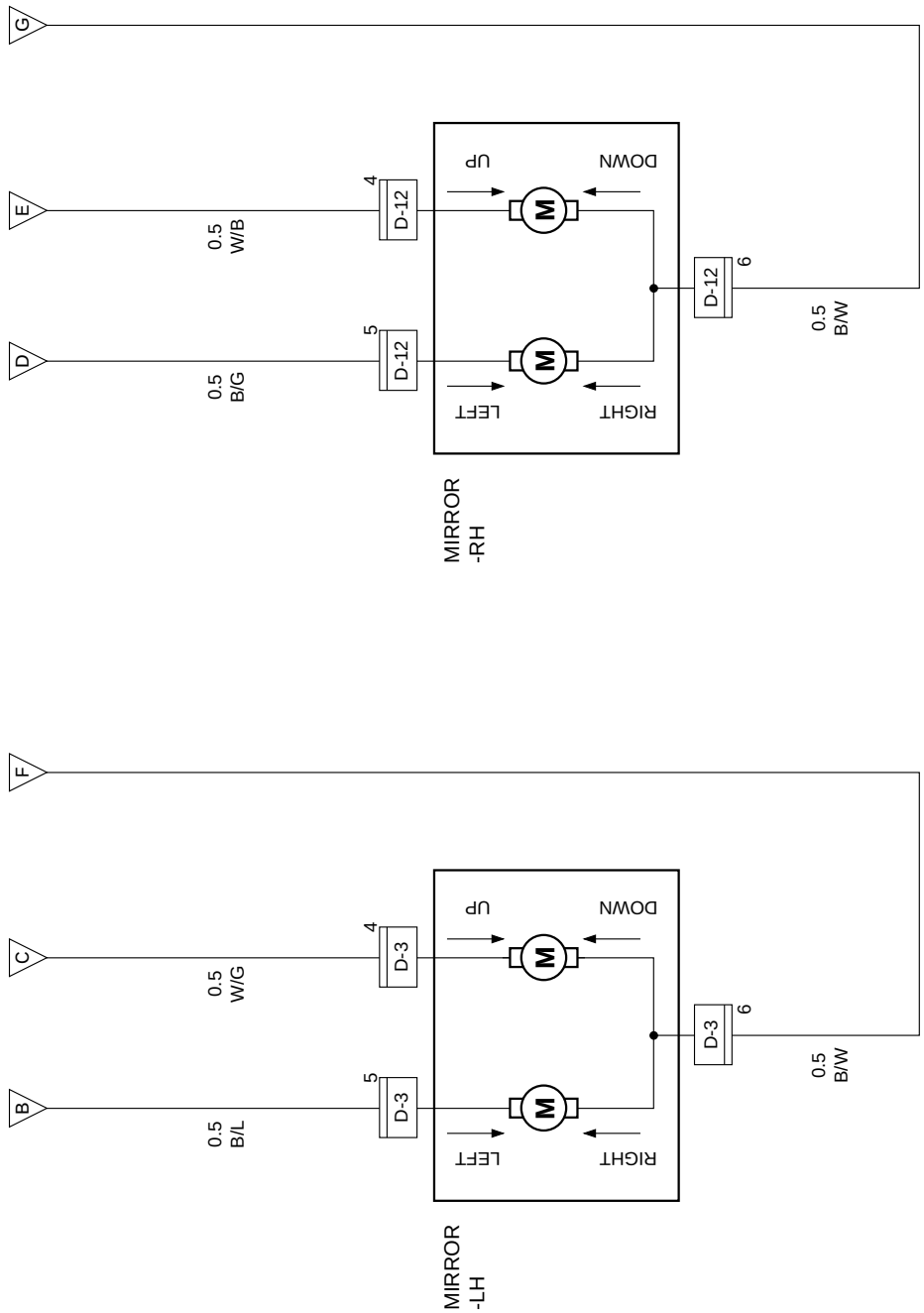

D08RW088

Circuit Diagram (LHD)-3

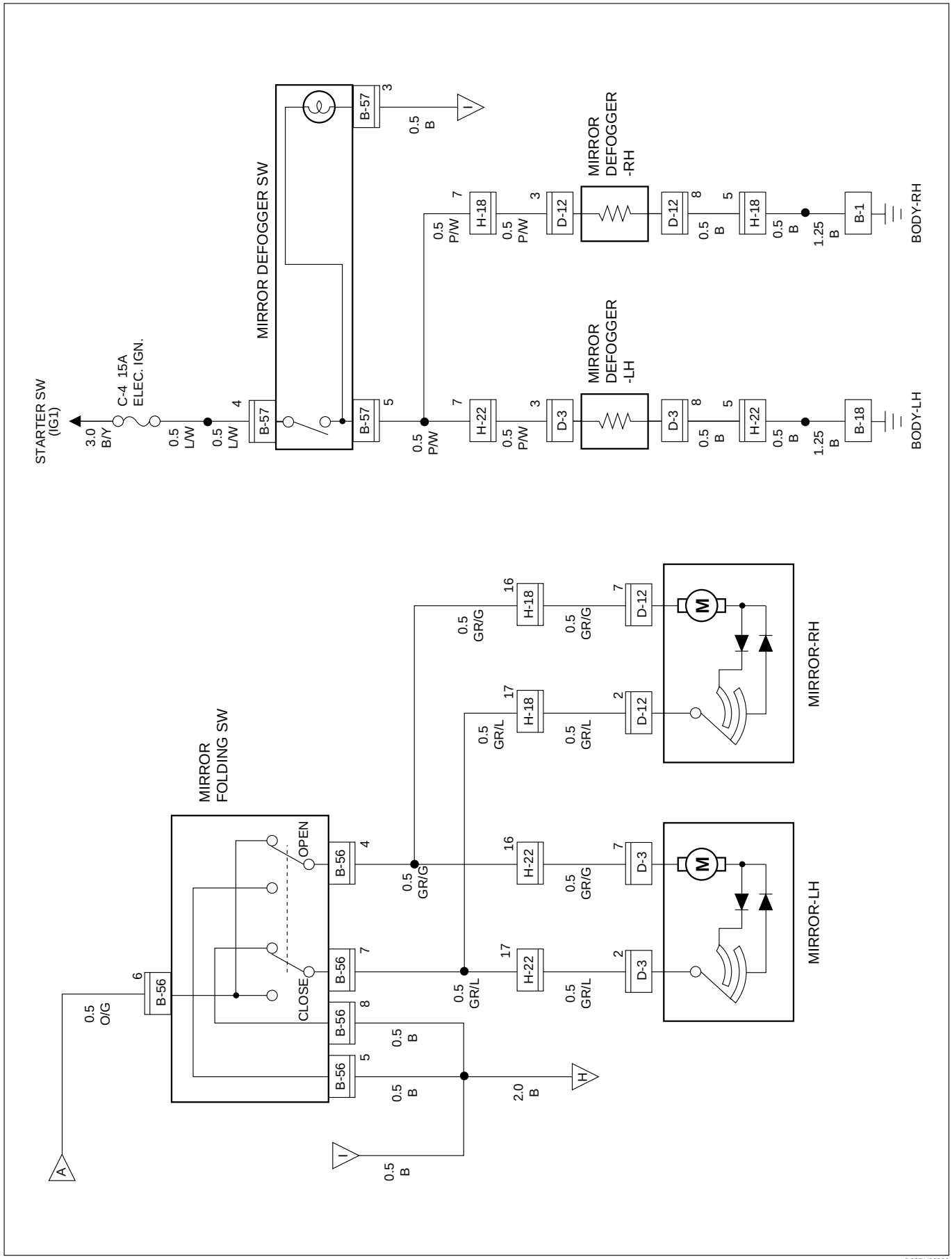

D08RY00233

Parts Location (LHD)

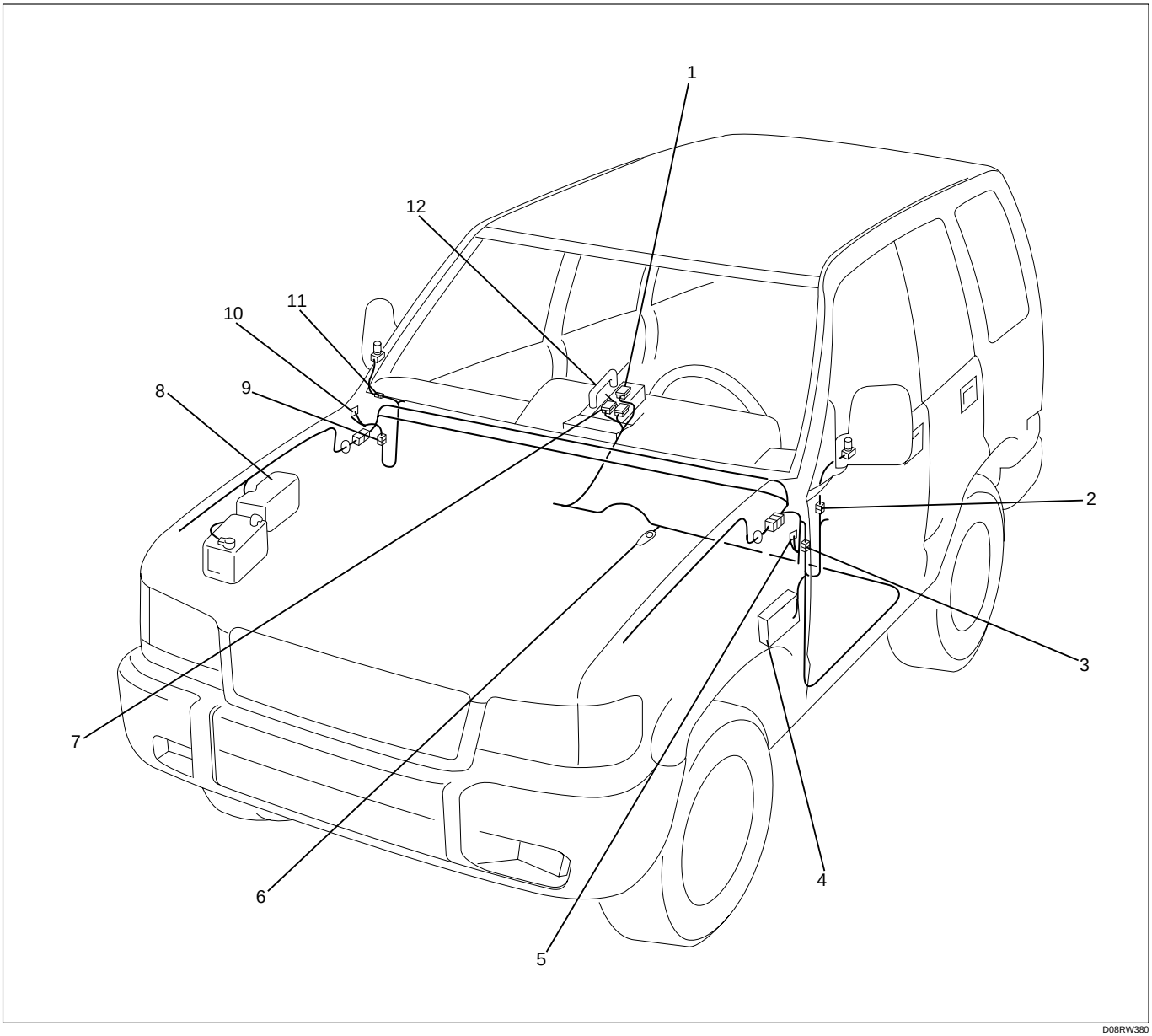

Legend

(1) B-55
(2) D-3
(3) H-22
(4) Fuse Box
(5) B-18
(6) B-26
(7) B-57
(8) Relay and Fuse Box
(9) H-18
(10) B-1, B-2
(11) D-12
(12) B-56

Diagnosis

Quick Chart for Check Points

SW	Trouble mode \ Check point	Fuse		Door mirror SW			Door mirror		Cable harness
		C-4 (15A)	C-11 (10A)	Control	Folding	Defogger	LH	RH	
Control switch	1. Mirrors on both sides do not operate		○	○					○
	2. Mirror on the left (or right) side does not operate			○			○	○	○
	3. Mirrors on both sides operate only in the vertical (or horizontal) direction			○					
	4. Mirror on the left side operates only in the vertical (or horizontal) direction			○			○		○
	5. Mirror on the right side operates only in the vertical (or horizontal) direction			○				○	○
Folding switch	6. Folding mechanism of the both mirrors does not operate		○		○				○
	7. Folding mechanism of the mirror on the left (or right) side does not operate				○		○	○	○
Defogger switch	8. Mirror defoggers on both sides do not operate	○				○			○
	9. Mirror defogger on the left (or right) side does not operate						○	○	○

1. Mirrors On Both Sides Do Not Operate

- IS THE FUSE C-11 (15A) NORMAL?

YES

- REMOVE THE CONNECTORS OF THE DOOR MIRROR CONTROL SW
- SET THE STARTER SW TO “ACC” POSITION
- IS THE BATTERY VOLTAGE APPLIED BETWEEN THE HARNESS SIDE CONNECTOR 4 B-55 AND THE GROUND?

NO

REPLACE THE FUSE

YES

- IS THERE ANY CONTINUITY BETWEEN THE HARNESS SIDE CONNECTORS 9 B-55 AND THE GROUND?

NO

REPAIR A POOR CONNECTION AT THE CONNECTORS OR AN OPEN CIRCUIT BETWEEN THE FUSE C-11 (10A) AND 4 B-55 (CONTROL SW)

YES

- IS THE CONTINUITY IN THE DOOR MIRROR CONTROL SWITCH NORMAL?

NO

REPAIR A POOR CONNECTION AT THE CONNECTORS OR AN OPEN CIRCUIT IN THE CIRCUIT

YES

REPAIR A POOR CONNECTION AT THE CONNECTORS OR AN OPEN CIRCUIT BETWEEN 1 B-55 AND 18 H-18 OR 18 H-22

NO

REPAIR THE DOOR MIRROR CONTROL SW

2. Mirror on The Left (Or Right) Side Does Not Operate

- IS THE DOOR MIRROR CONTROL SW NORMAL?

YES

- IS THE DOOR MIRROR ON THE LEFT (OR RIGHT) SIDE NORMAL?

YES

REPAIR A POOR CONNECTION OF CONNECTORS OR AN OPEN CIRCUIT BETWEEN 1 B-55 AND 6 D-12 (OR 6 D-3) OR 1 B-55 AND 6 D-3 (OR 6 D-12)

NO

REPAIR OR REPLACE THE DOOR MIRROR

NO

REPAIR OR REPLACE THE DOOR MIRROR CONTROL SW

3. Mirrors On Both Sides Operate Only In The Vertical (Or Horizontal) Direction

REPAIR OR REPLACE THE DOOR MIRROR CONTROL SW

4. Mirror On The Left Side Operates Only In The Vertical (Or Horizontal) Direction

- IS THE CONTINUITY IN THE DOOR MIRROR CONTROL SWITCH NORMAL?

YES

- IS THE DOOR MIRROR NORMAL?

YES

REPAIR A POOR CONNECTION OF CONNECTORS OR AN OPEN CIRCUIT BETWEEN 8 B-55 AND 4 D-12 (OR 10 B-55 AND 5 D-12 , OR 8 B-55 AND 4 D-3 (OR 10 B-55 AND 5 D-3)

NO

REPAIR OR REPLACE THE DOOR MIRROR

NO

REPAIR OR REPLACE THE DOOR MIRROR CONTROL SW

NOTE: Connectors shown in the parenthesis "( )" indicate a check point of the mirror that does not operate in the horizontal direction.

5. Mirror On The Right Side Operates Only In The Vertical (Or Horizontal) Direction

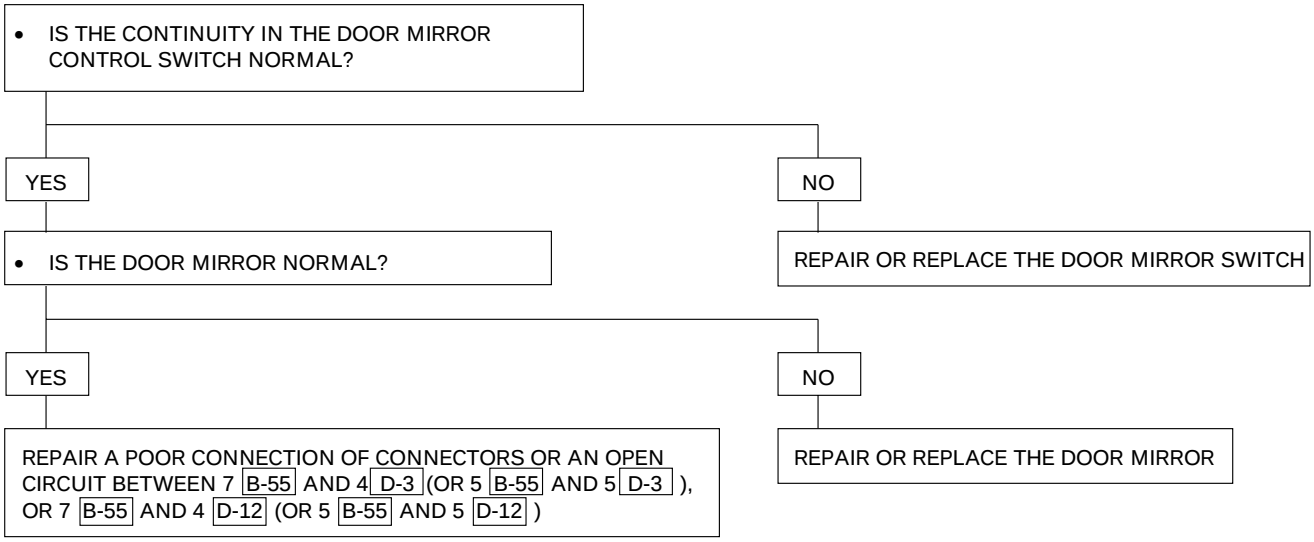

NOTE: Connectors shown in the parenthesis "( )" indicate a check point of the mirror that does not operate in the horizontal direction.

6. Folding Mechanism Of The Both Mirrors Does Not Operate

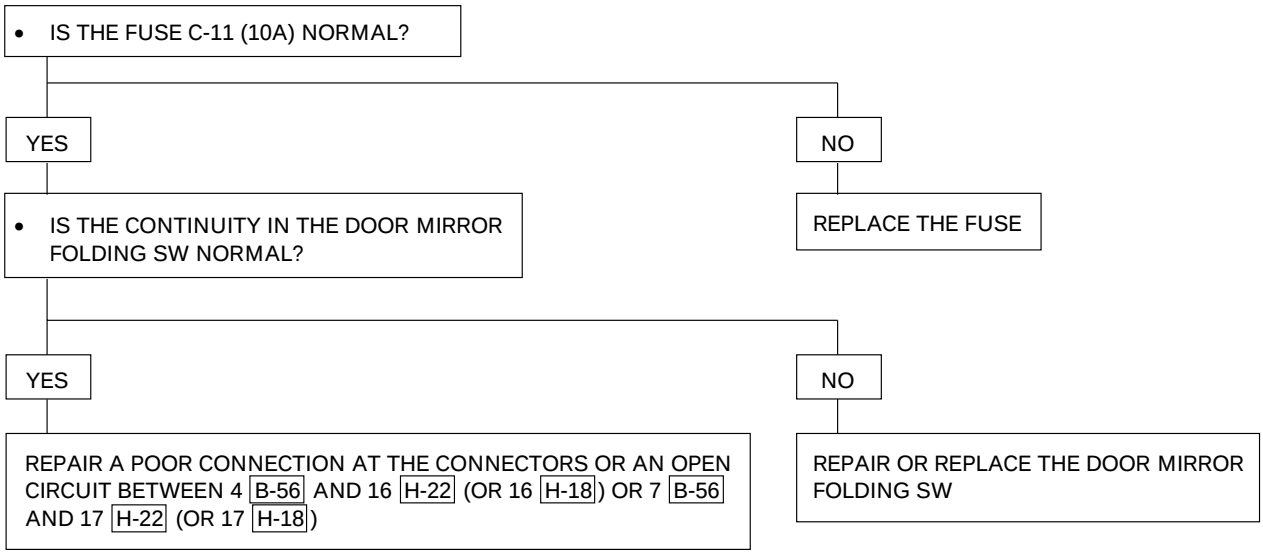

7. Folding Mechanism Of The Mirror On The Left (Or Right) Side Does Not Operate

- DISCONNECT THE CONNECTOR OF THE DOOR MIRROR
- CONNECT THE DOOR MIRROR CONNECTOR 2 D-12 (OR 2 D-3) OR 2 D-3 (OR 2 D-12) TO THE BATTERY (+) TERMINAL AND 7 D-12 (OR 7 D-3) OR 7 D-3 (OR 7 D-12) TO THE BATTERY (–) TERMINAL. DOES THE MIRROR OPERATE TO THE FOLDING DIRECTION?

  (CONNECT THE DOOR MIRROR CONNECTOR 7 D-12 (OR 7 D-3) OR 7 D-3 (OR 7 D-12) TO THE BATTERY (+) TERMINAL AND 2 D-12 (OR 2 D-3) OR 2 D-3 (OR 2 D-12) TO THE BATTERY (–) TERMINAL. DOES THE MIRROR OPERATE TO THE DRIVING POSITION?)

YES

- IS THE FOLDING SW NORMAL?

YES

REPAIR A POOR CONNECTION OF THE CONNECTORS OR AN OPEN CIRCUIT BETWEEN 7 B-56 AND 2 D-12 (OR 2 D-3) OR 4 B-56 AND 7 D-12 (OR 7 D-3), OR 7 B-56 AND 2 D-3 (OR 2 D-12) OR 4 B-56 AND 7 D-3 (OR 7 D-12)

NO

REPAIR OR REPLACE THE FOLDING SW

NO

REPAIR OR REPLACE THE DOOR MIRROR

8. Mirror Defogger On Both Sides Do Not Operate

- IS FUSE C-4 (15A) NORMAL?

YES

- IS THE DOOR MIRROR DEFOGGER SW NORMAL?

YES

- REMOVE THE CONNECTORS OF THE DOOR MIRROR DEFOGGER SW
- TURN ON THE STARTER SW
- IS BATTERY VOLTAGE APPLIED BETWEEN THE HARNESS SIDE CONNECTOR 4 B-57 AND THE GROUND?

YES

REPAIR A POOR CONNECTION OF CONNECTORS OR AN OPEN CIRCUIT BETWEEN 5 B-57 AND 7 H-22 OR 5 B-57 AND 7 H-18

NO

REPAIR A POOR CONNECTION OF CONNECTORS OR AN OPEN CIRCUIT BETWEEN THE FUSE C-4 (10A) AND 4 B-57

NO

REPAIR OR REPLACE THE DOOR MIRROR DEFOGGER SW

NO

REPAIR THE FUSE

9. Mirror Defogger On The Left (Or Right) Side Does Not Operate

- DISCONNECT THE MIRROR CONNECTOR ON THE LEFT (OR RIGHT) SIDE.
- TURN THE STARTER SWITCH AND THE DEFOGGER SWITCH ON
- IS THERE A BATTERY VOLTAGE APPLIED BETWEEN 3 D-12 (OR 3 D-3) AND GROUND, OR 3 D-3 (OR 3 D-12) AND GROUND?

YES

- IS THE CONTINUITY IN THE MIRROR NORMAL?

NO

REPAIR A POOR CONNECTION OF THE CONNECTORS OR AN OPEN CIRUICT BETWEEN 5 B-57 AND 3 D-12 (OR 3 D-3) OR 5 B-57 AND 3 D-3 (OR 3 D-12)

YES

- IS B-18 (B-1) GROUNDED SECURELY?

NO

REPAIR OR REPLACE THE MIRROR

YES

REPAIR A POOR CONNECTION OF CONNECTORS OR AN OPEN CIRCUIT BETWEEN 8 D-12 AND B-1 (OR 8 D-3 AND B-18), OR 8 D-3 AND B-18 (OR 8 D-12 AND B-1)

NO

GROUND IT SECURELY

Anti-Theft System with Keyless Entry

Circuit Diagram (RHD 6V*1)-1

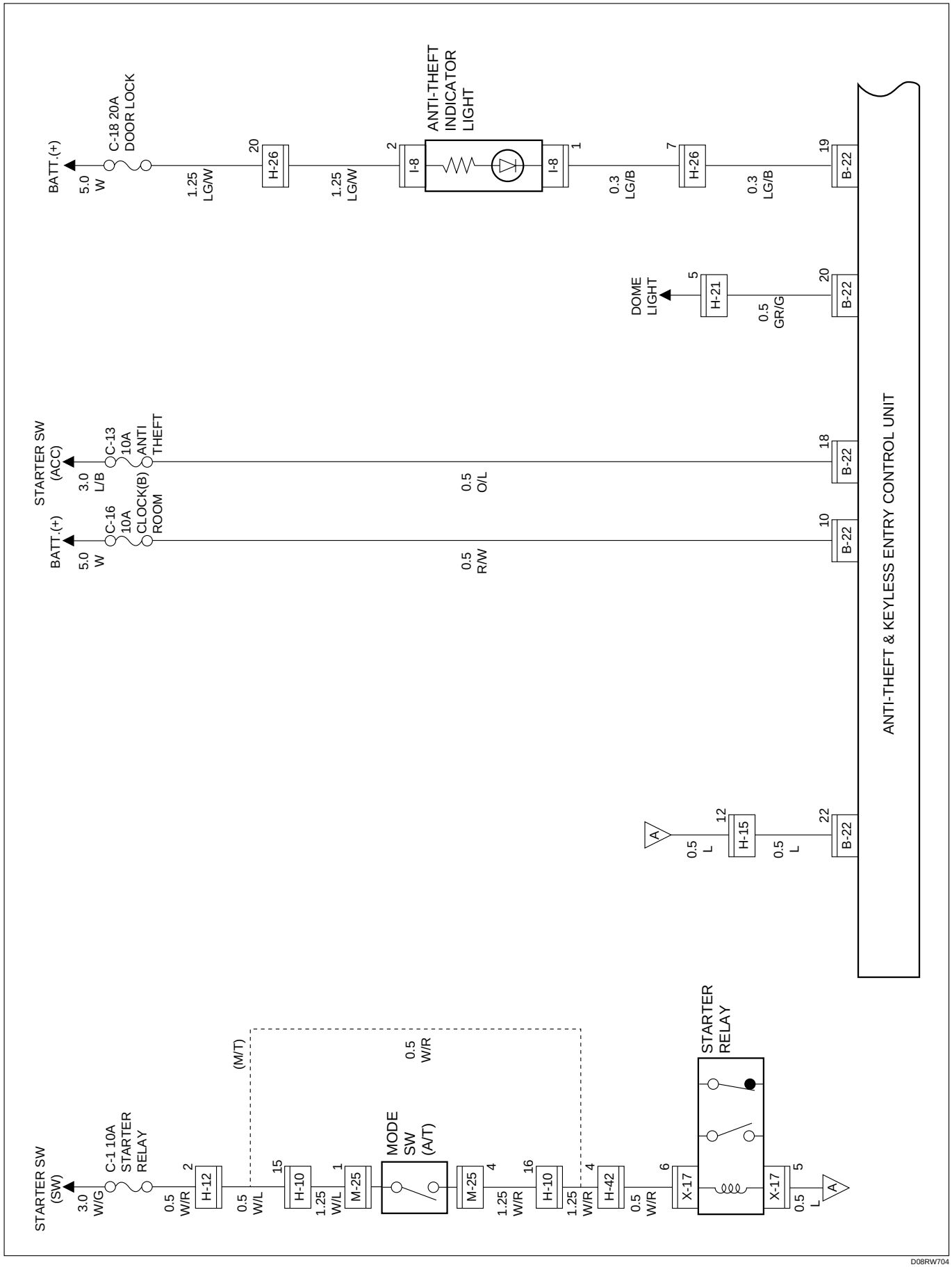

D08RW704

Circuit Diagram (RHD 4J**)-1

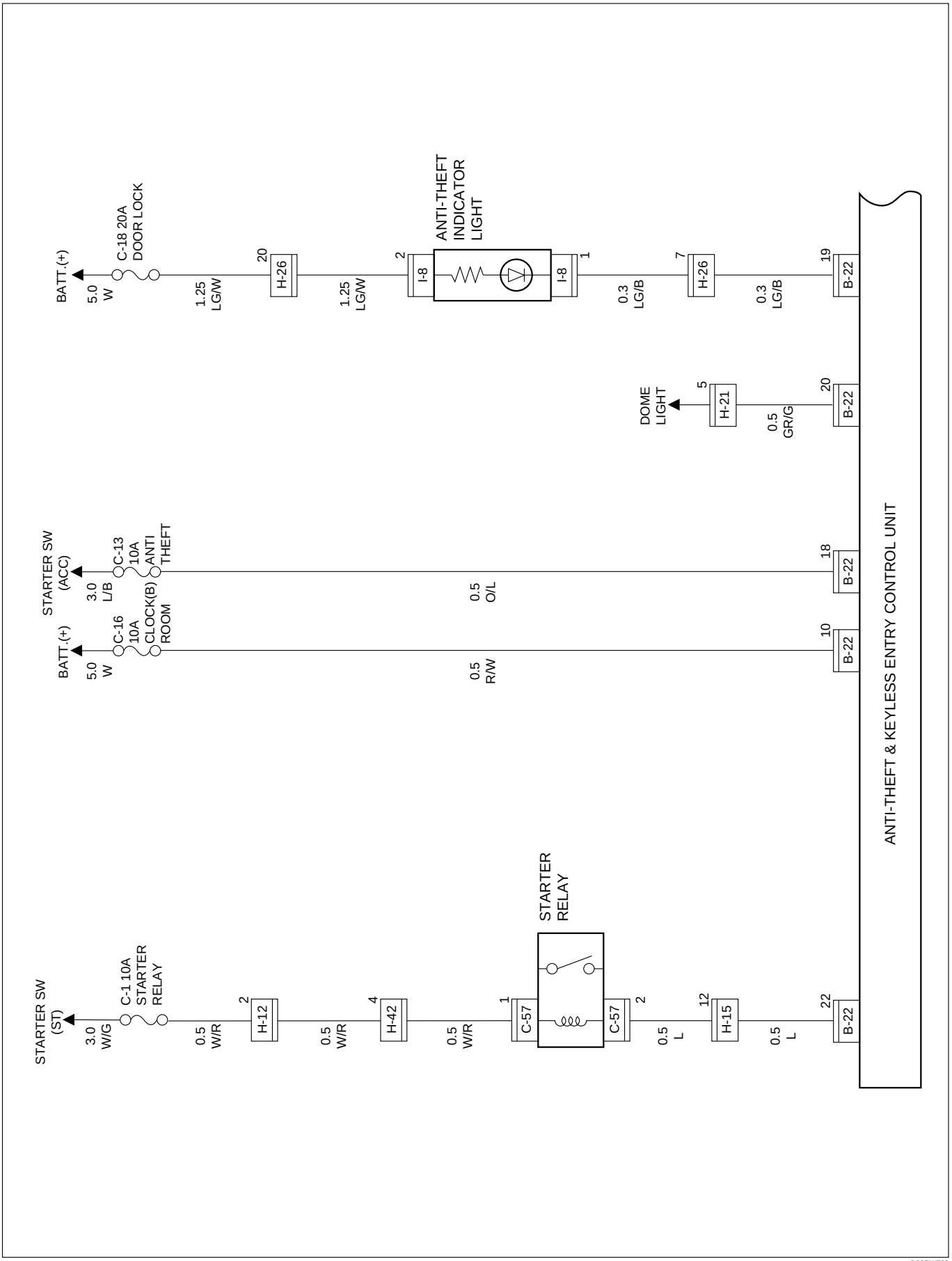

D08RW703

Circuit Diagram (RHD)-2

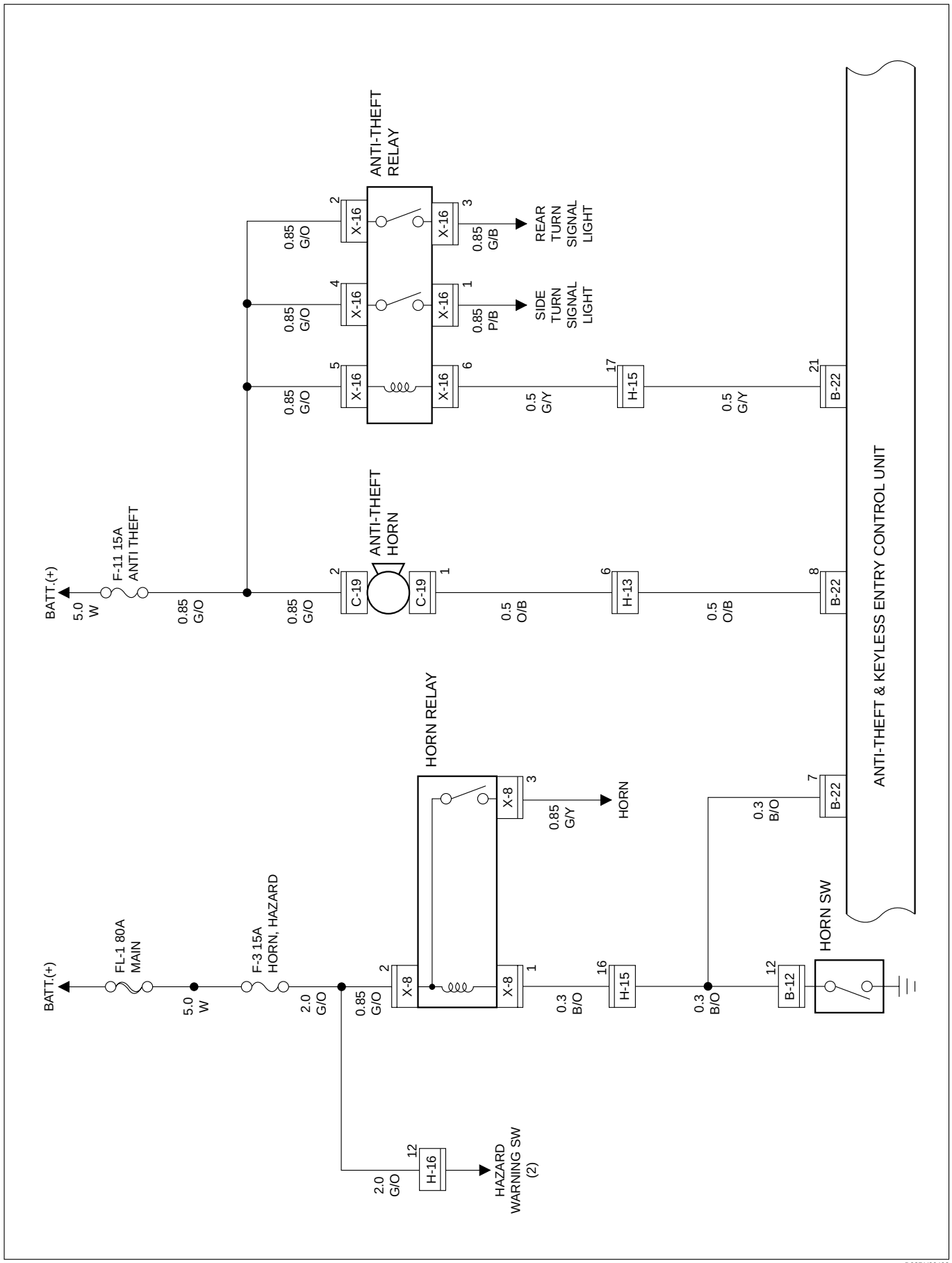

D08RY00493

Circuit Diagram (RHD)-3

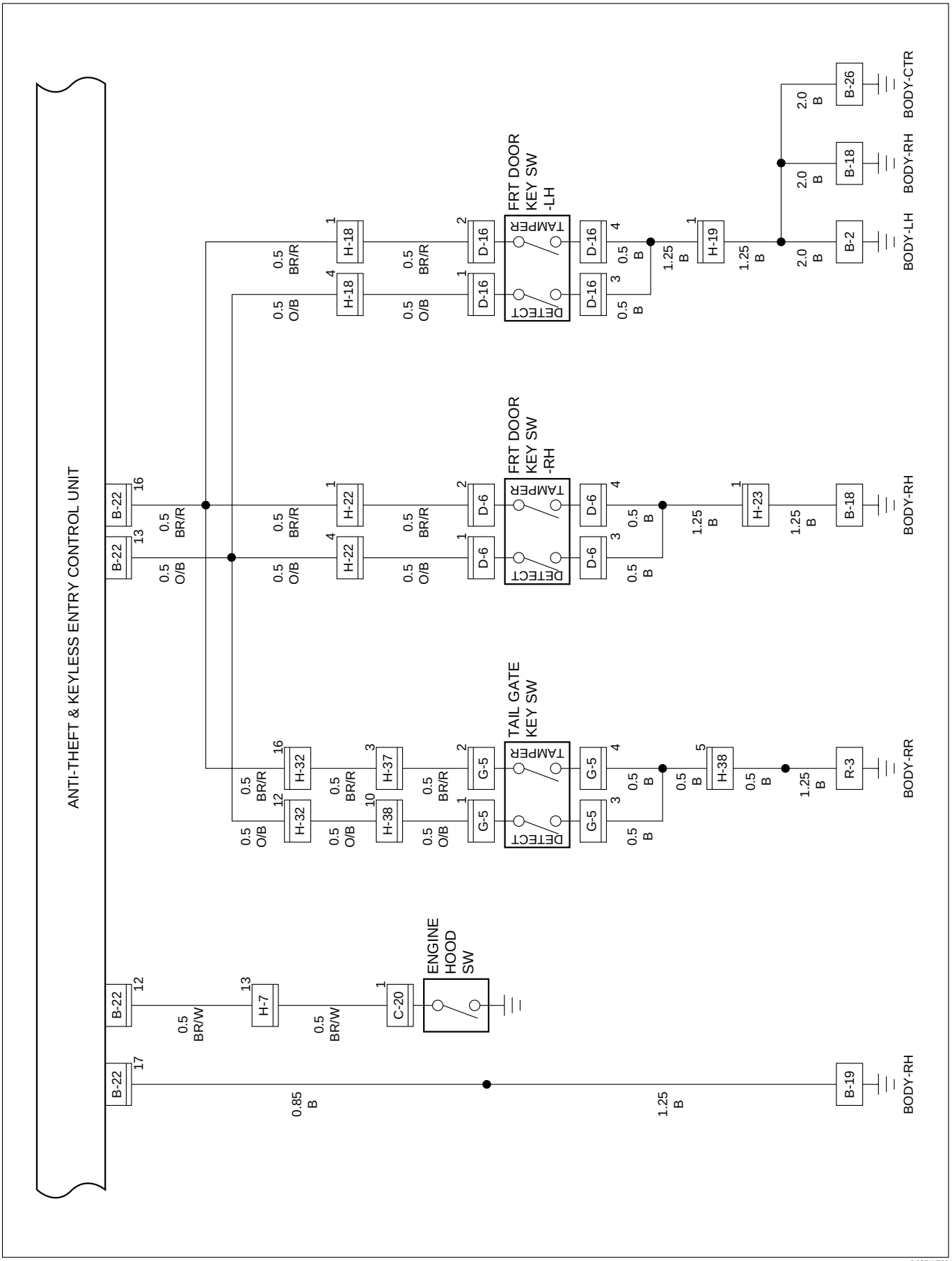

D08RW706

Circuit Diagram (RHD)-4

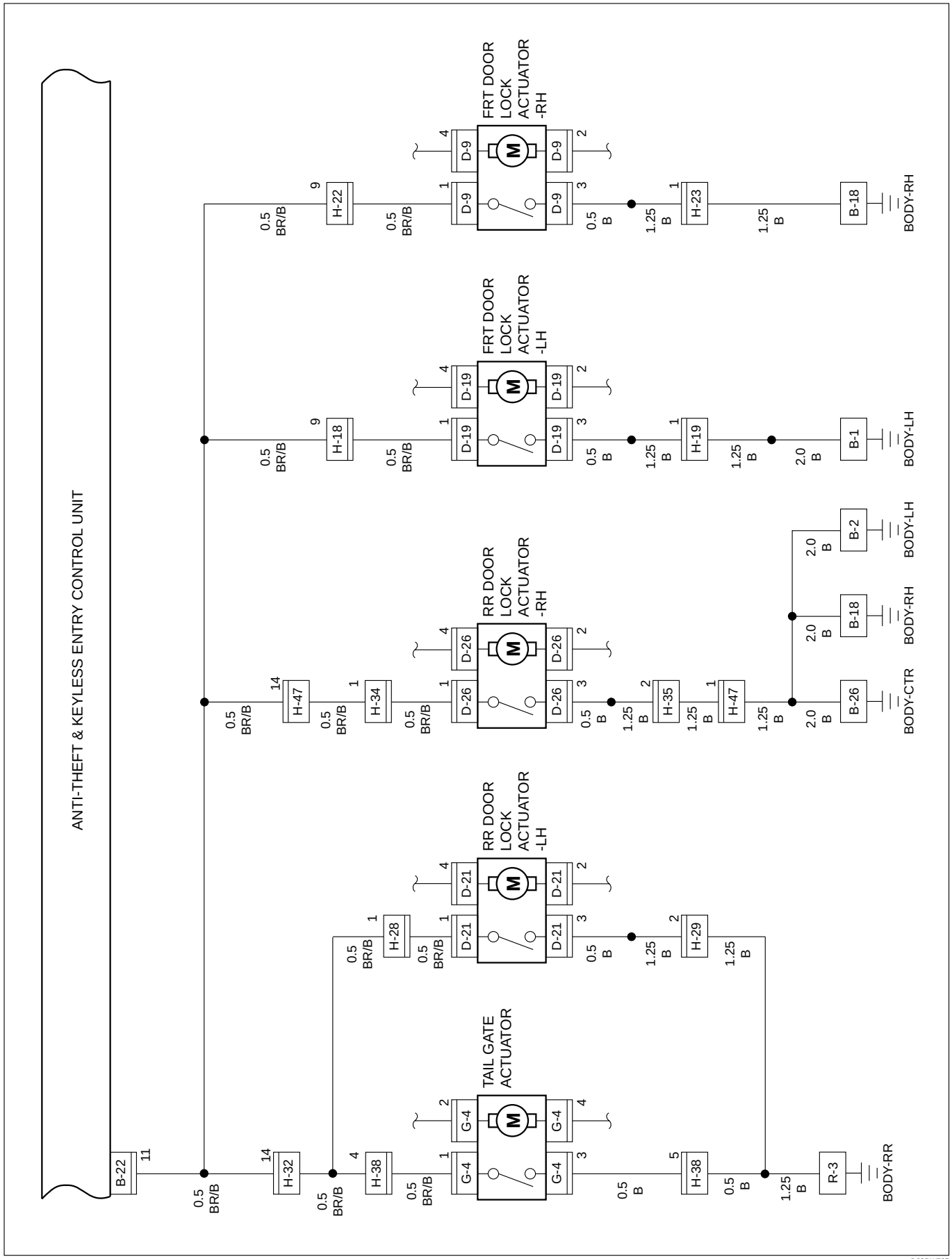

D08RW707

Circuit Diagram (RHD)-5

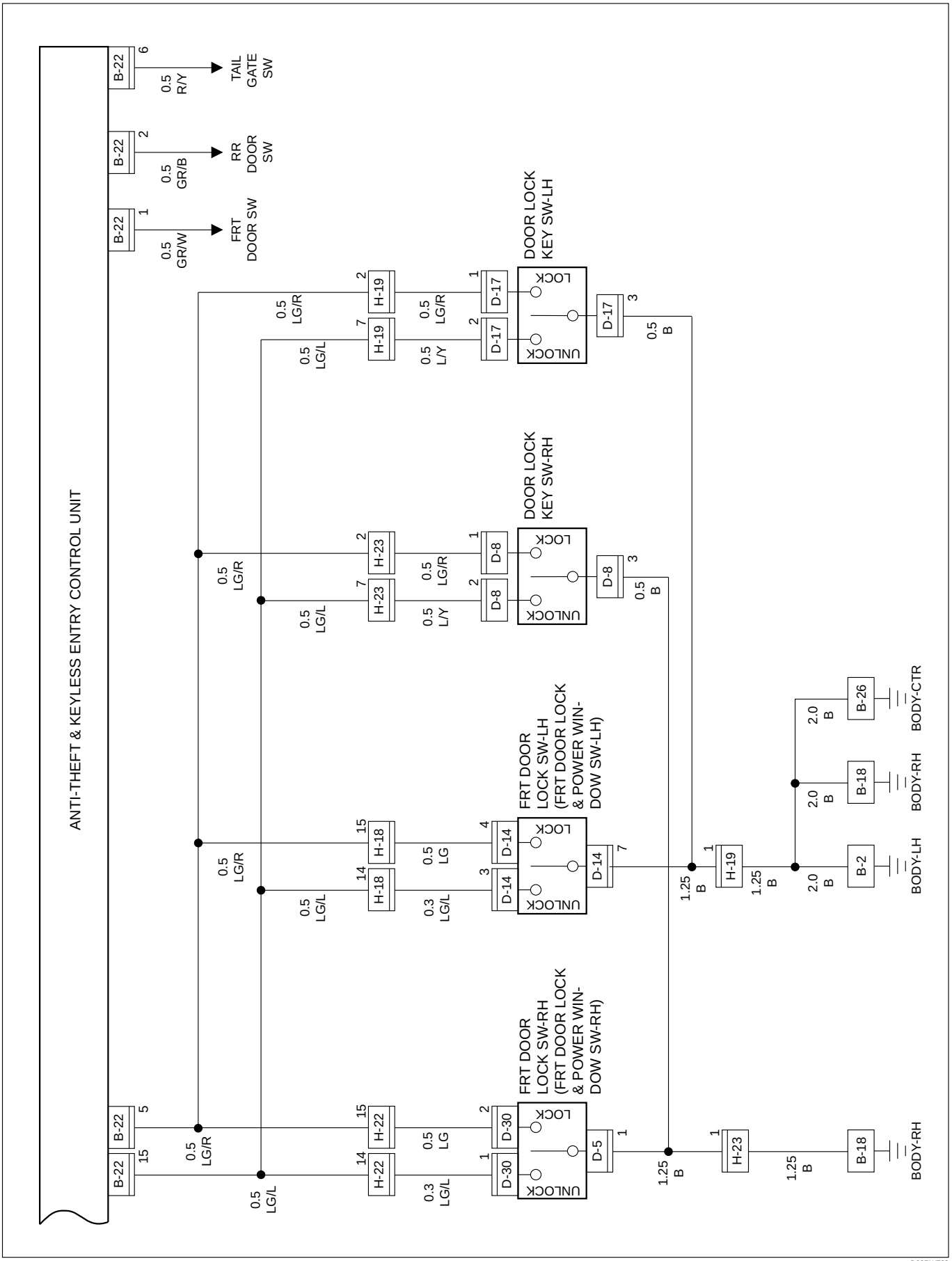

D08RW708

Circuit Diagram (South Africa)-1

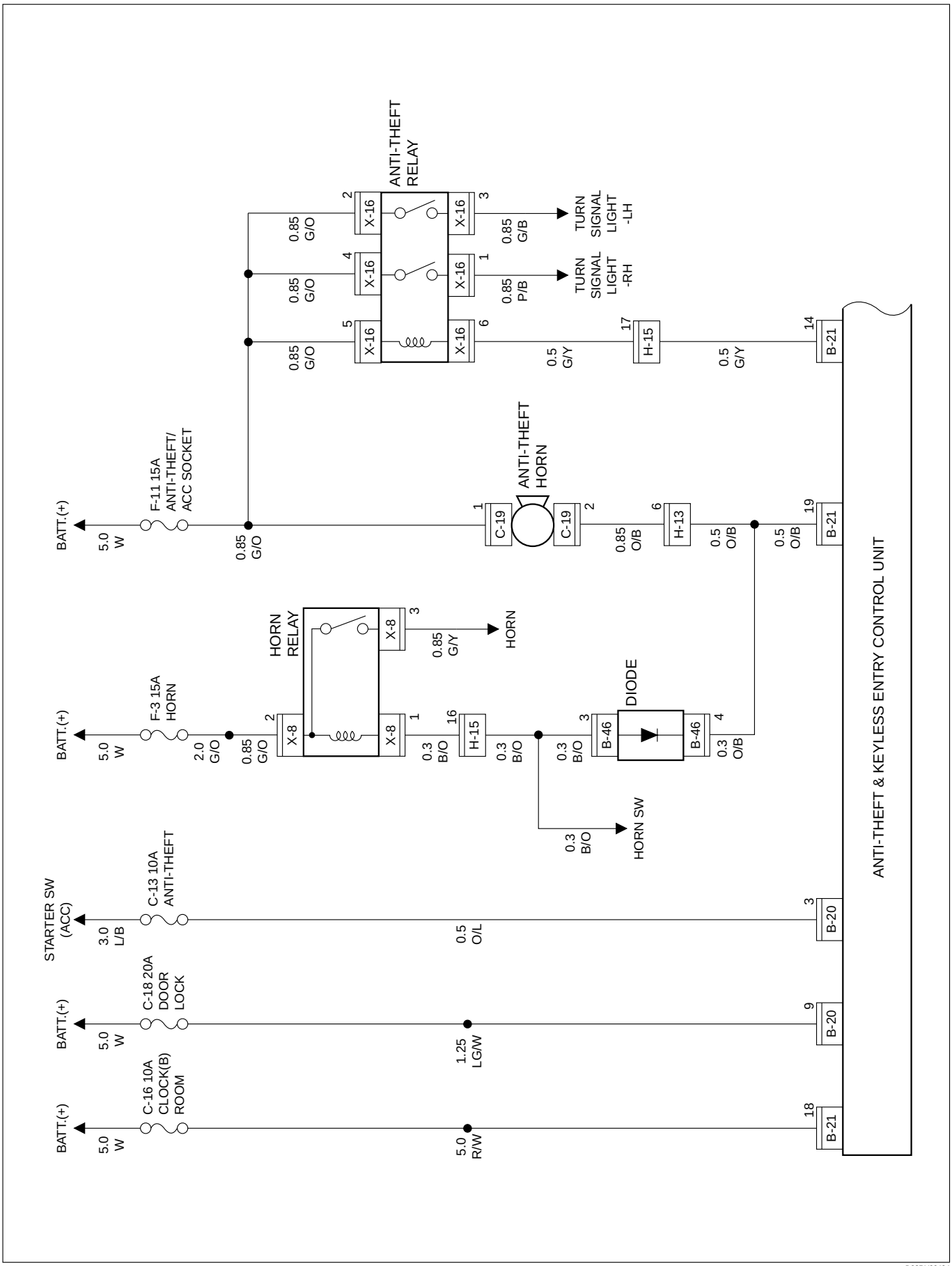

D08RY00494

Circuit Diagram (South Africa)-2

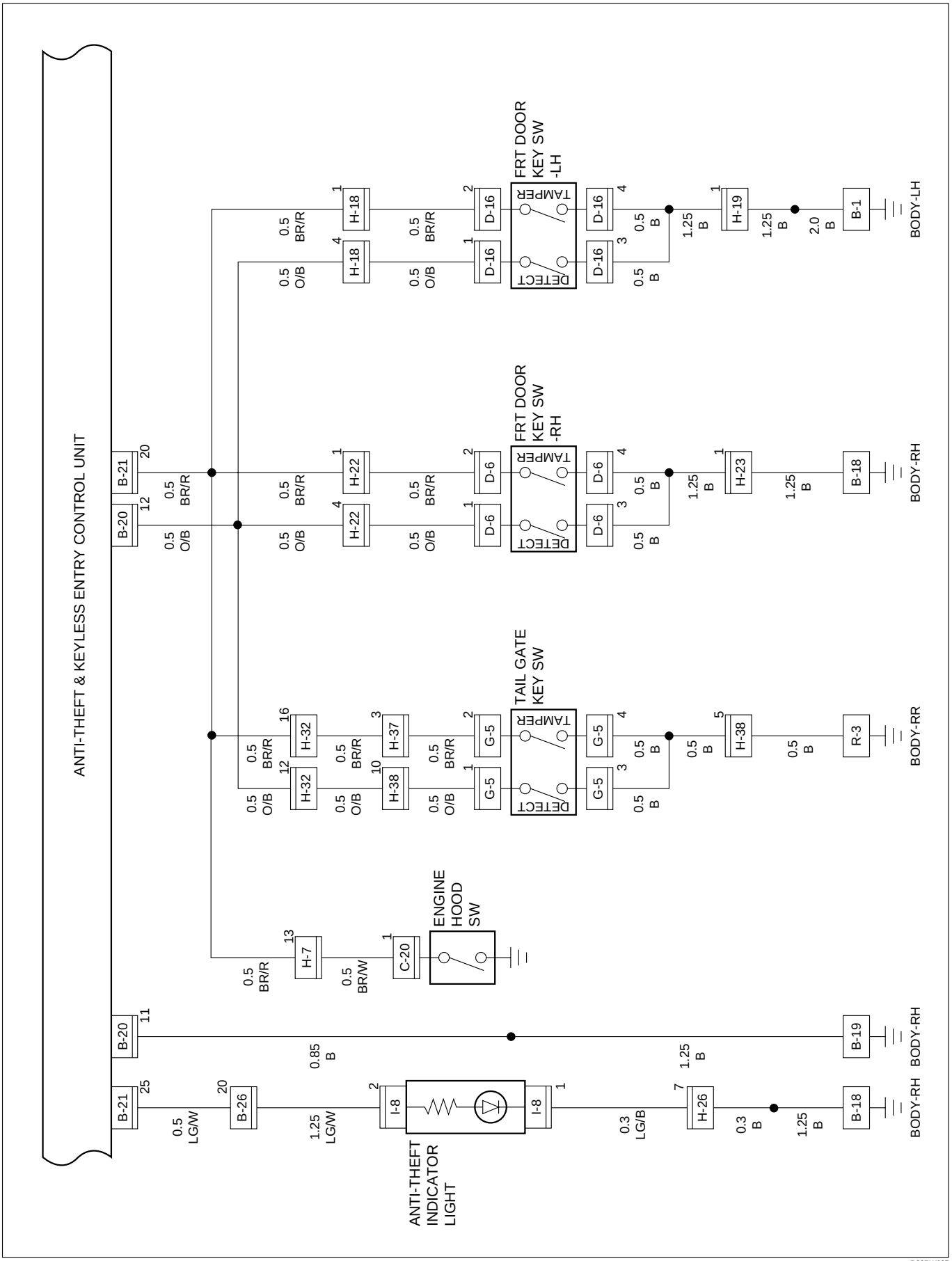

D08RW687

Circuit Diagram (South Africa)-3

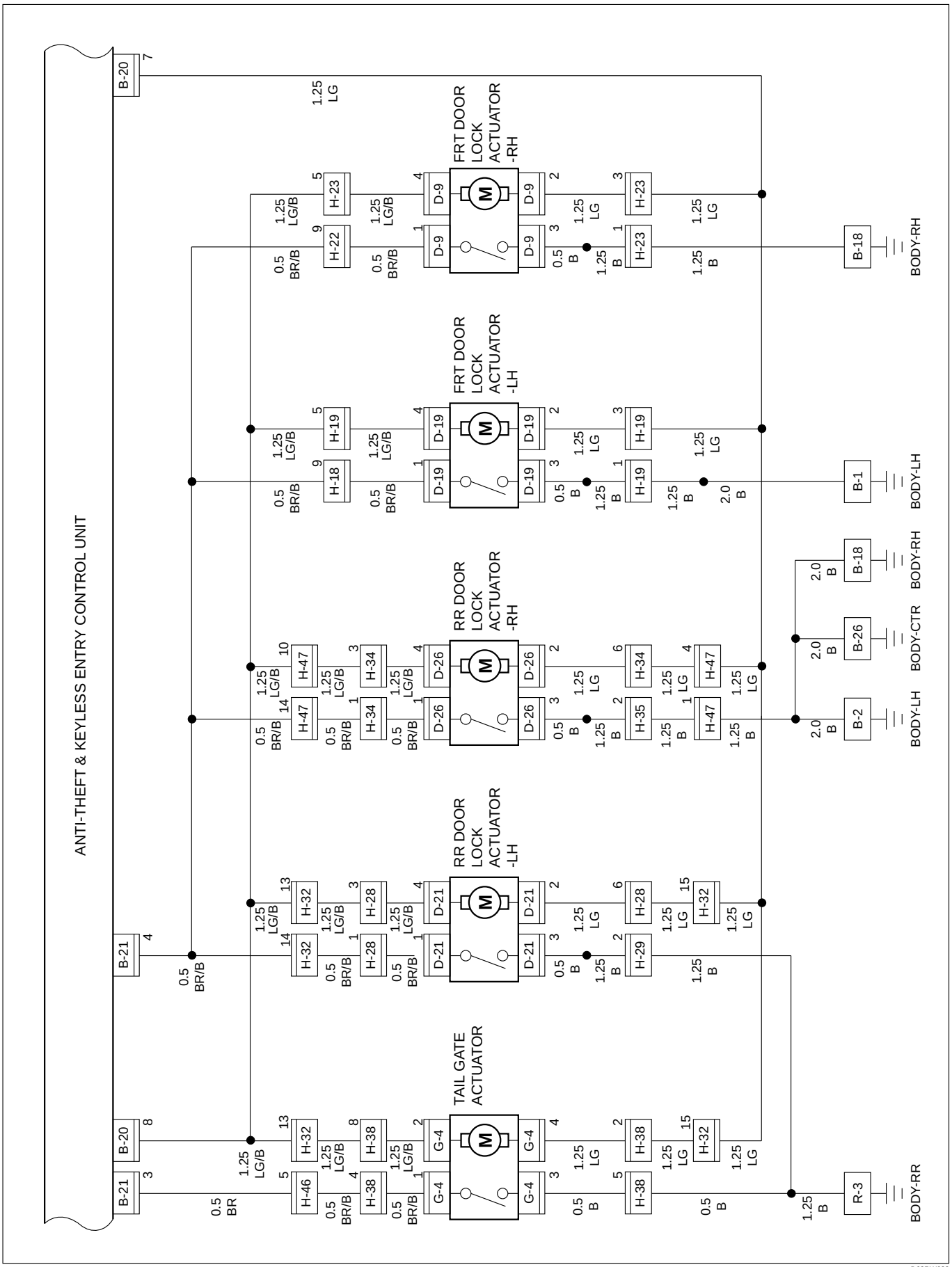

D08RW688

Circuit Diagram (South Africa)-4

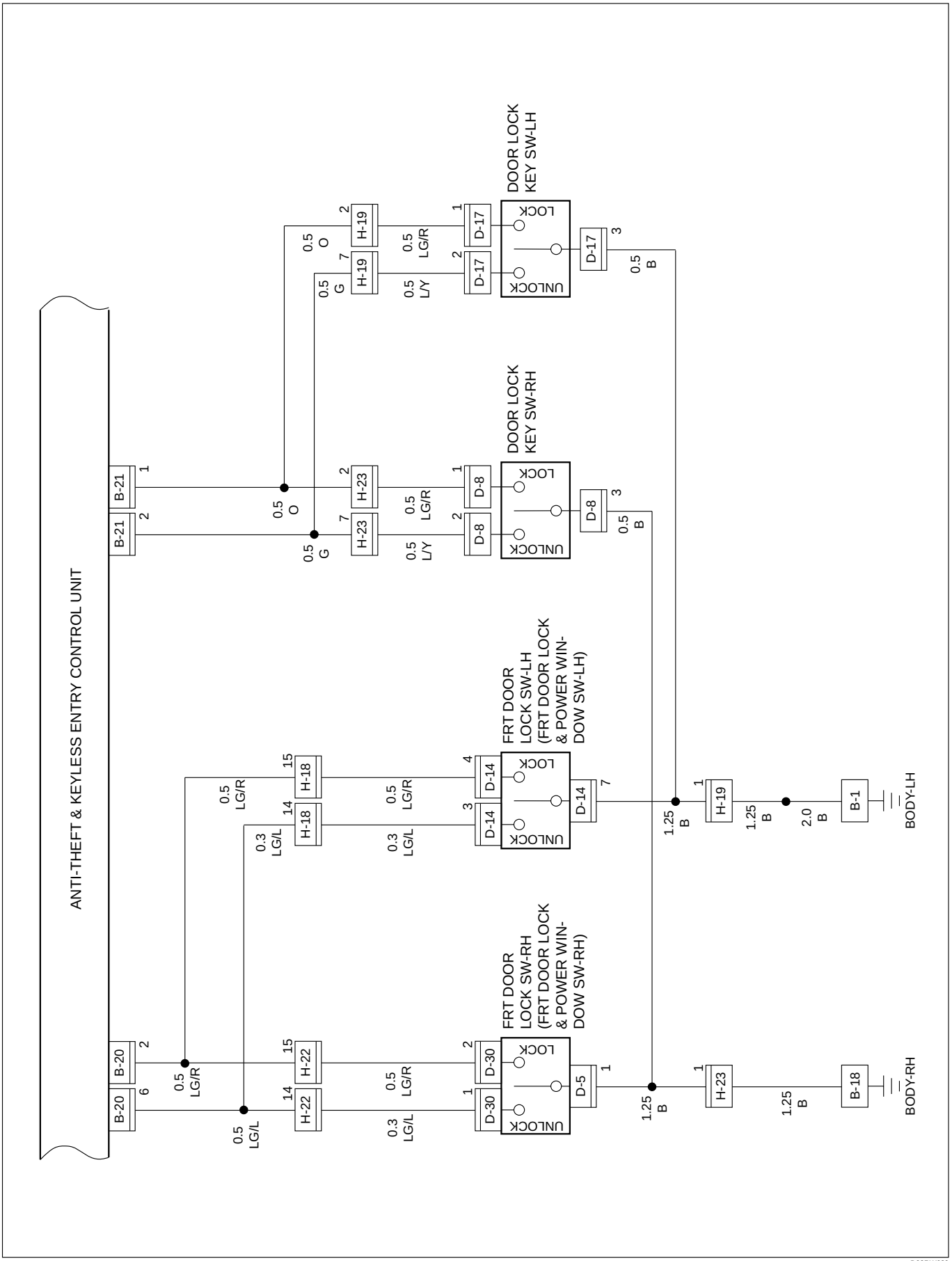

D08RW689

Circuit Diagram (South Africa)-5

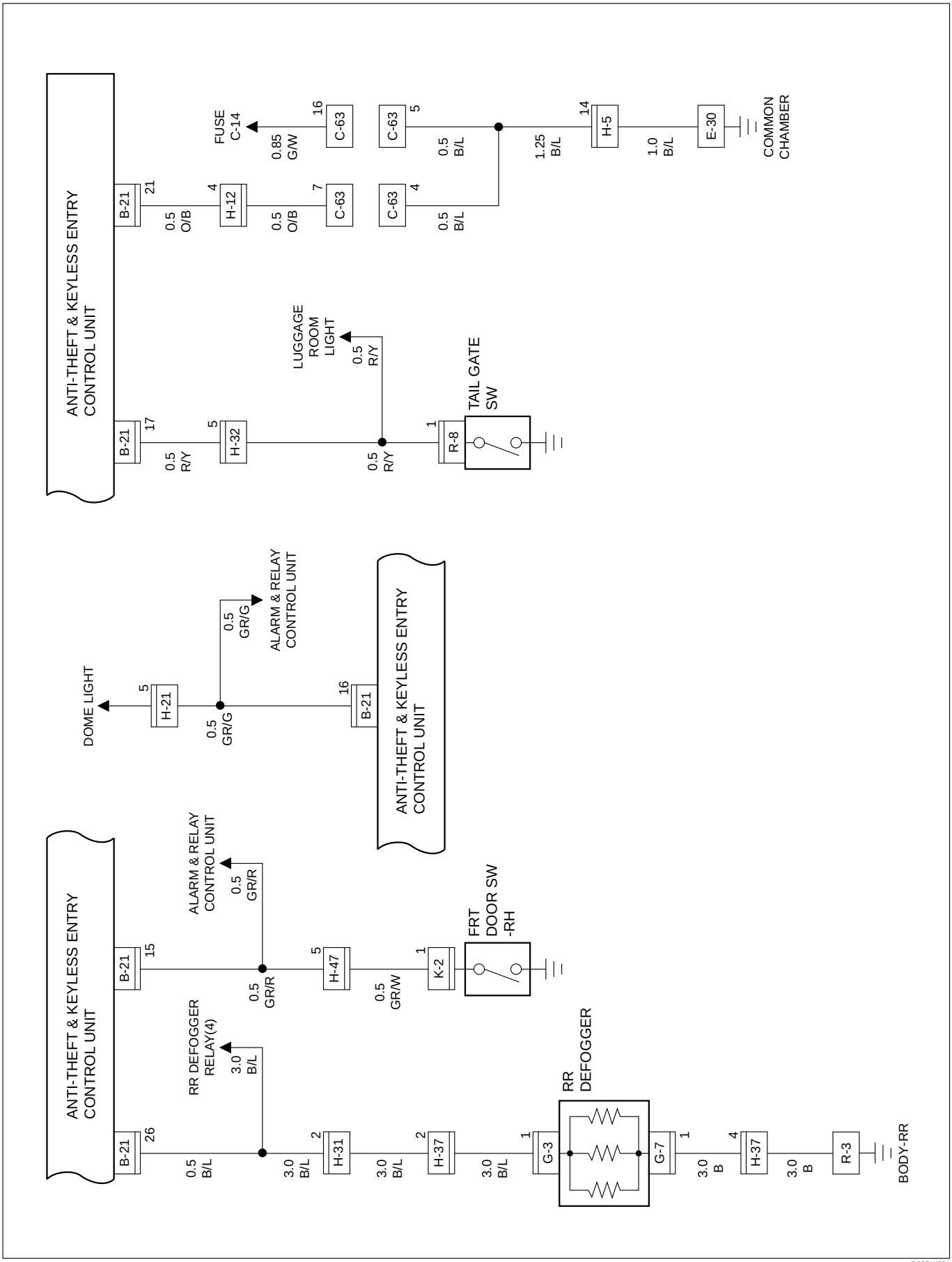

D08RW691

Parts Location (RHD)

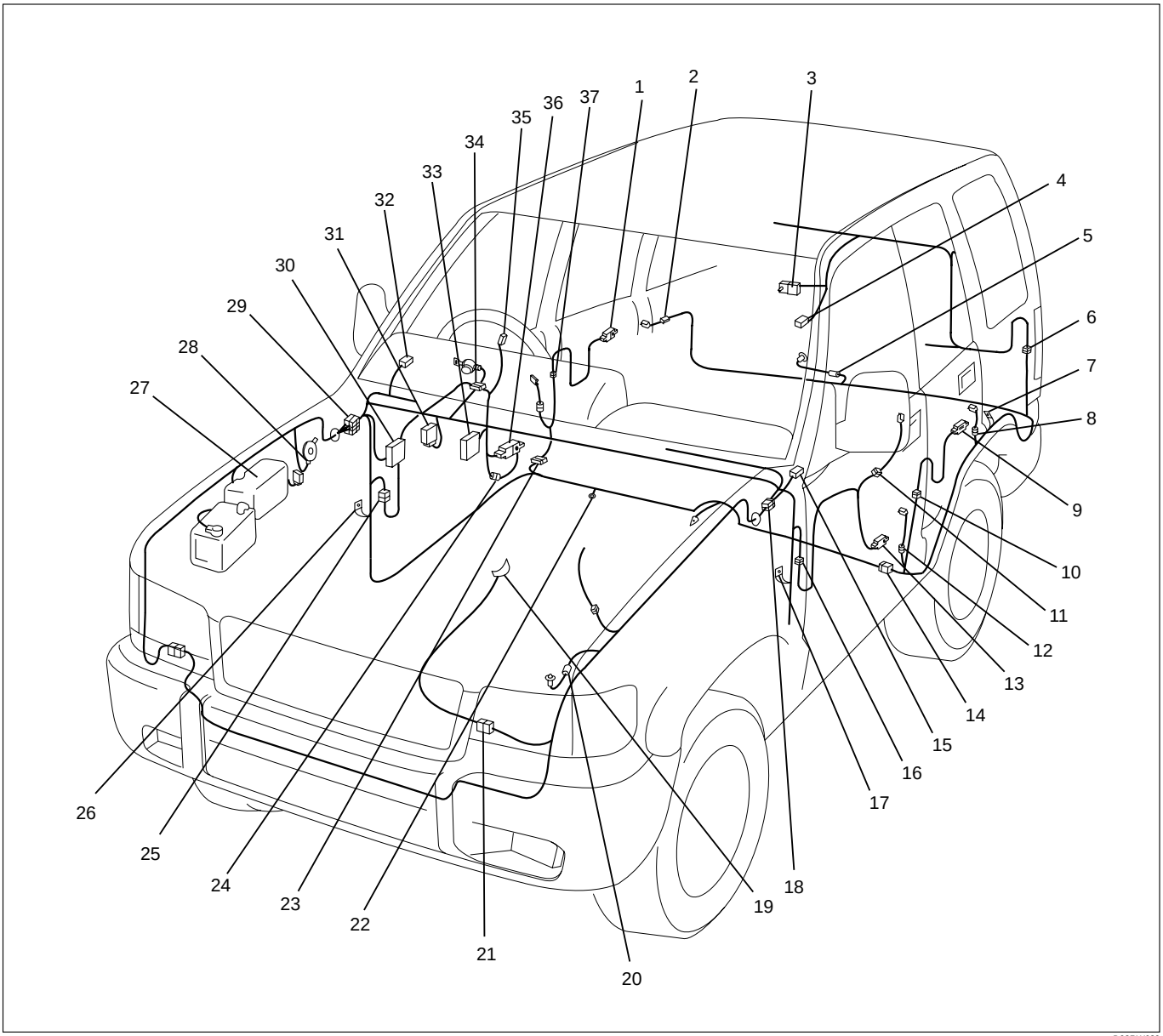

Legend

(1) D-26
(2) R-11
(3) G-4
(4) G-5
(5) R-8
(6) H-37, H-38
(7) R-3
(8) R-1
(9) D-21
(10) H-28, H-29
(11) D-17
(12) R-2
(13) D-19
(14) H-32
(15) H-21
(16) H-18, H-19
(17) B-1, B-2
(18) H-7, H-8
(19) M-25
(20) C-20
(21) H-10
(22) B-26
(23) H-47
(24) D-8
(25) H-22, H-23
(26) B-18, B-19
(27) Relay and Fuse Box
(28) C-19
(29) H-13, H-14, H-15, H-16, H-26
(30) Fuse Box
(31) B-22 (B-20, B-21 for South Africa)
(32) I-8
(33) D-5, D-30
(34) B-12
(35) D-6
(36) D-9
(37) D-26

Circuit Diagram (LHD 6VD1)-1

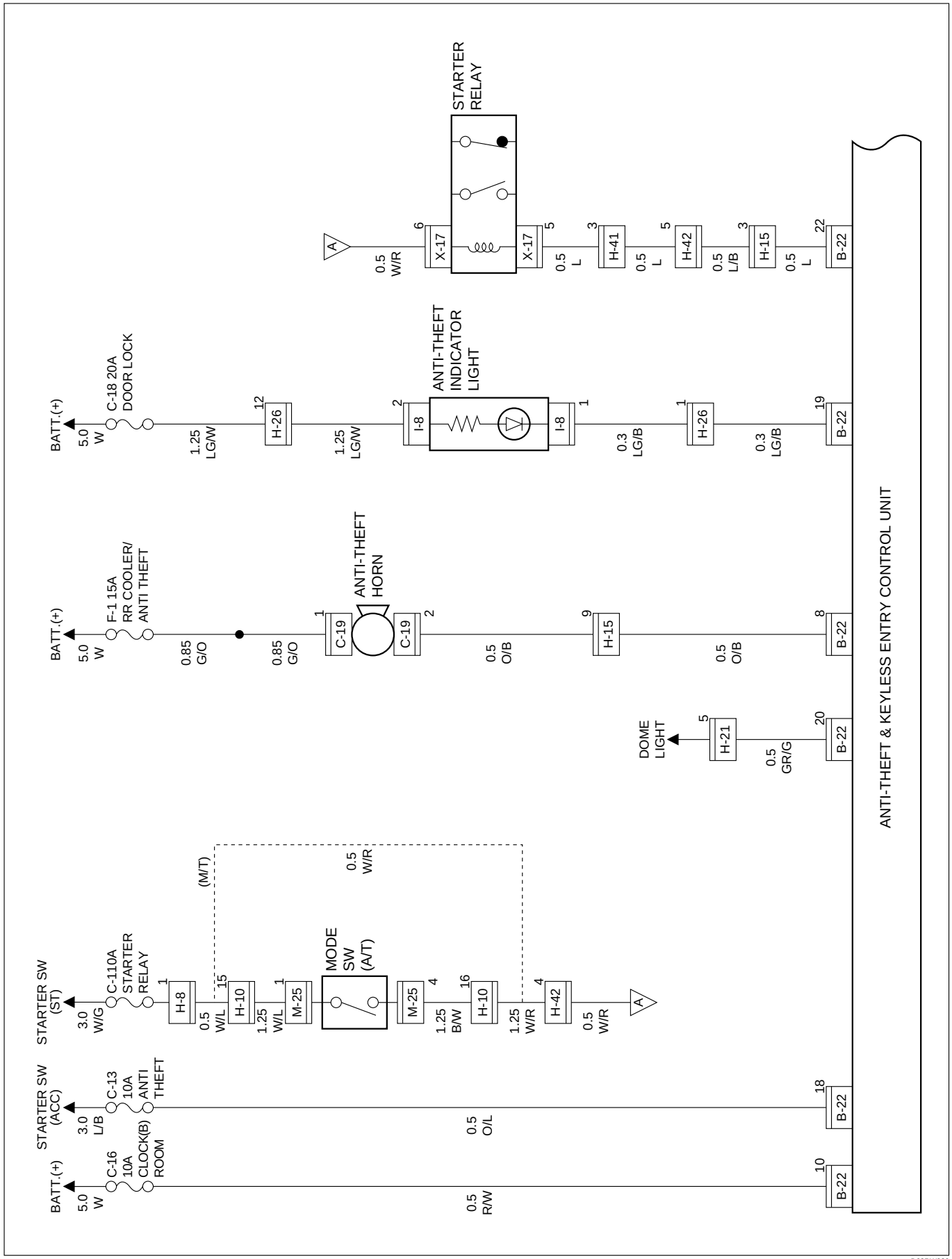

D08RW920

Circuit Diagram (LHD 4JG2)-1

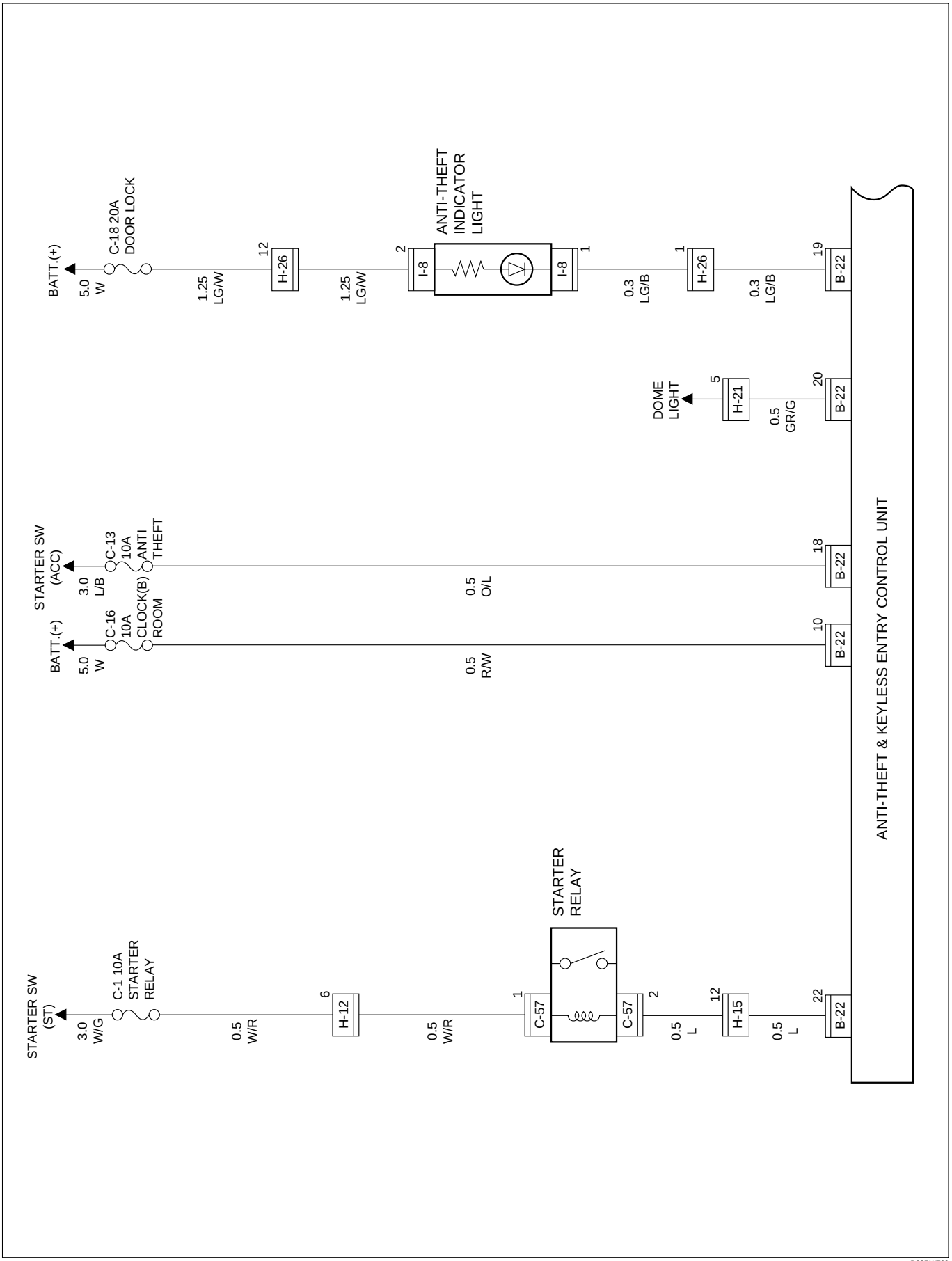

D08RW709

Circuit Diagram (LHD)-2

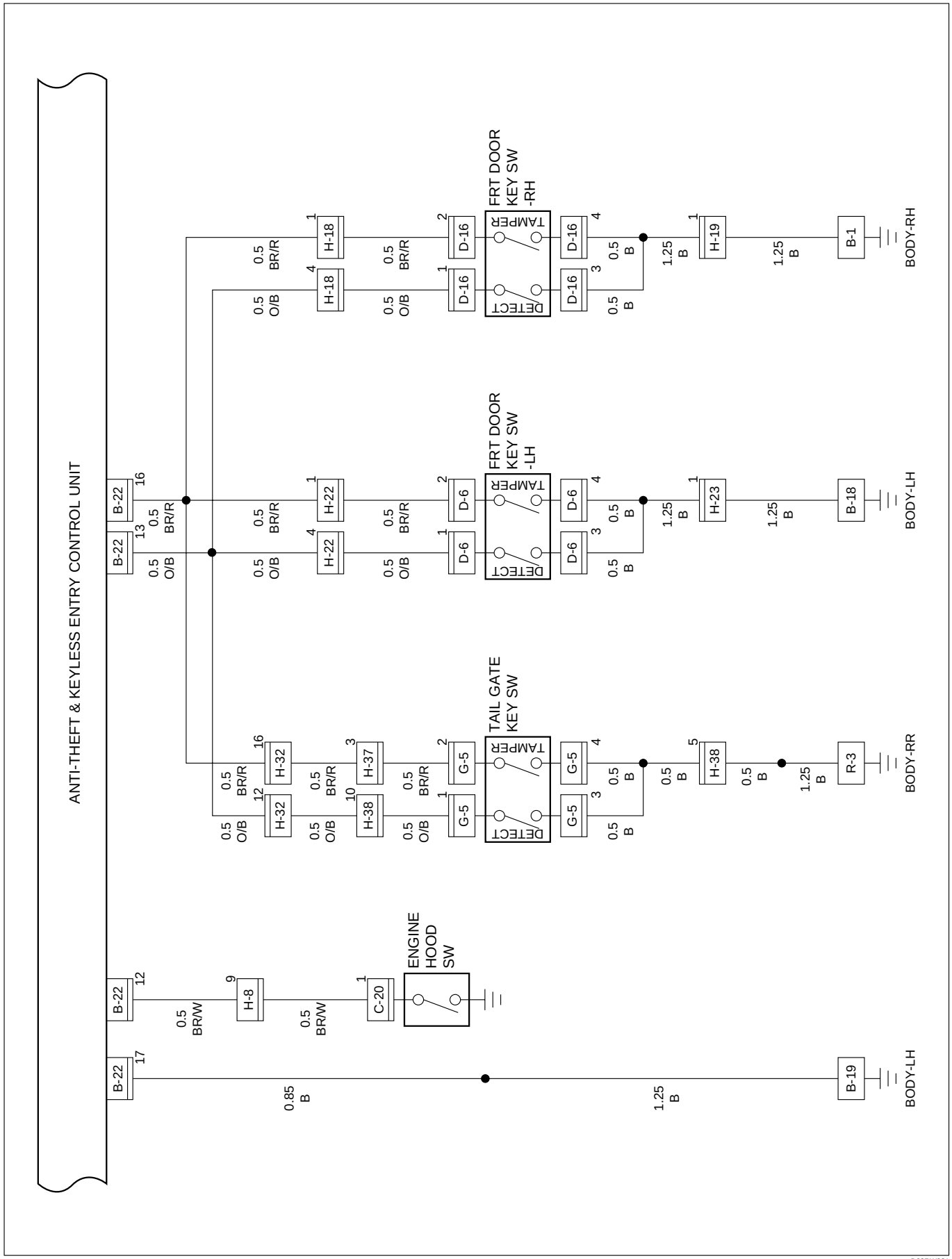

D08RW921

Circuit Diagram (LHD)-3

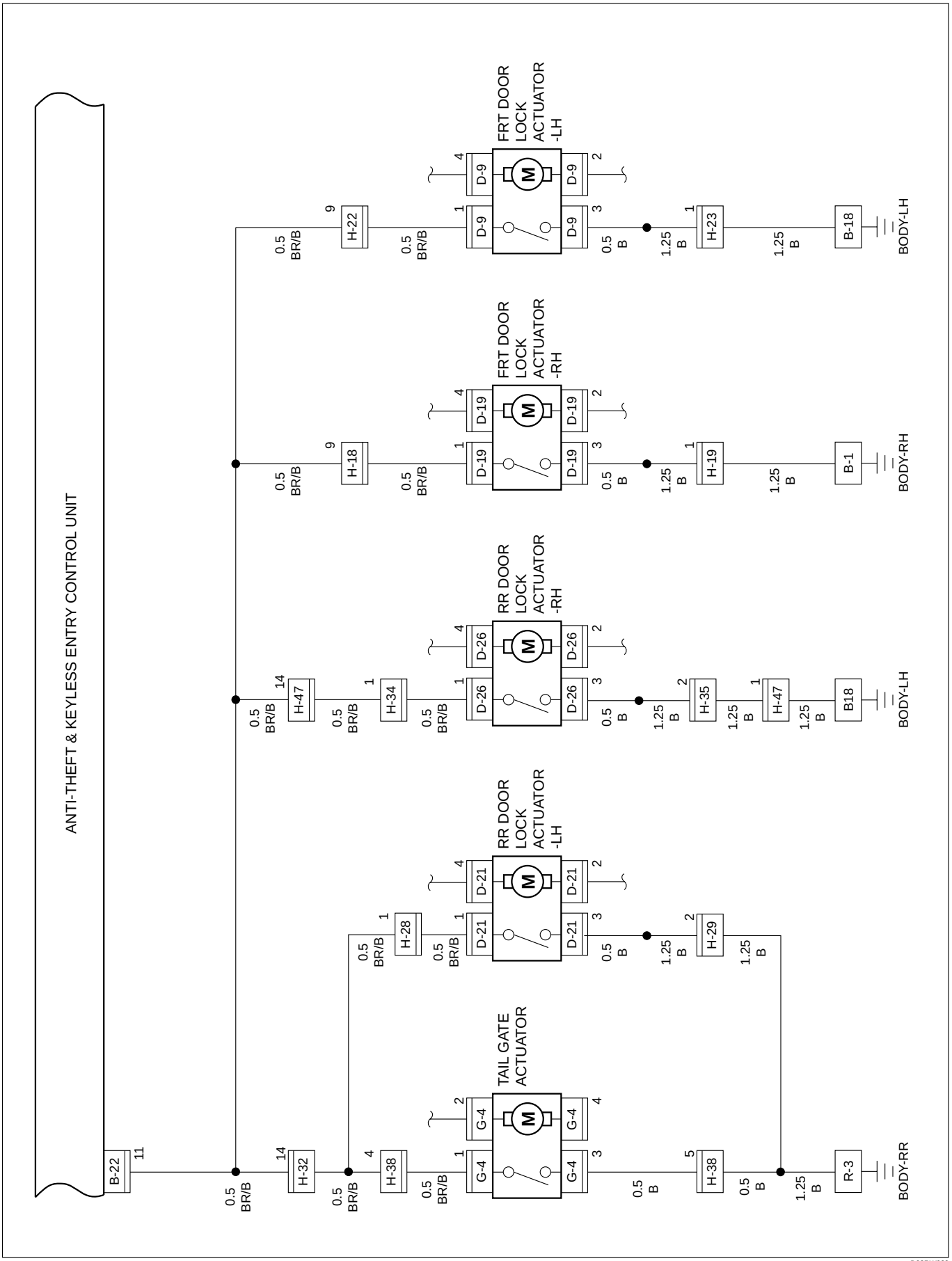

D08RW922

Circuit Diagram (LHD)-4

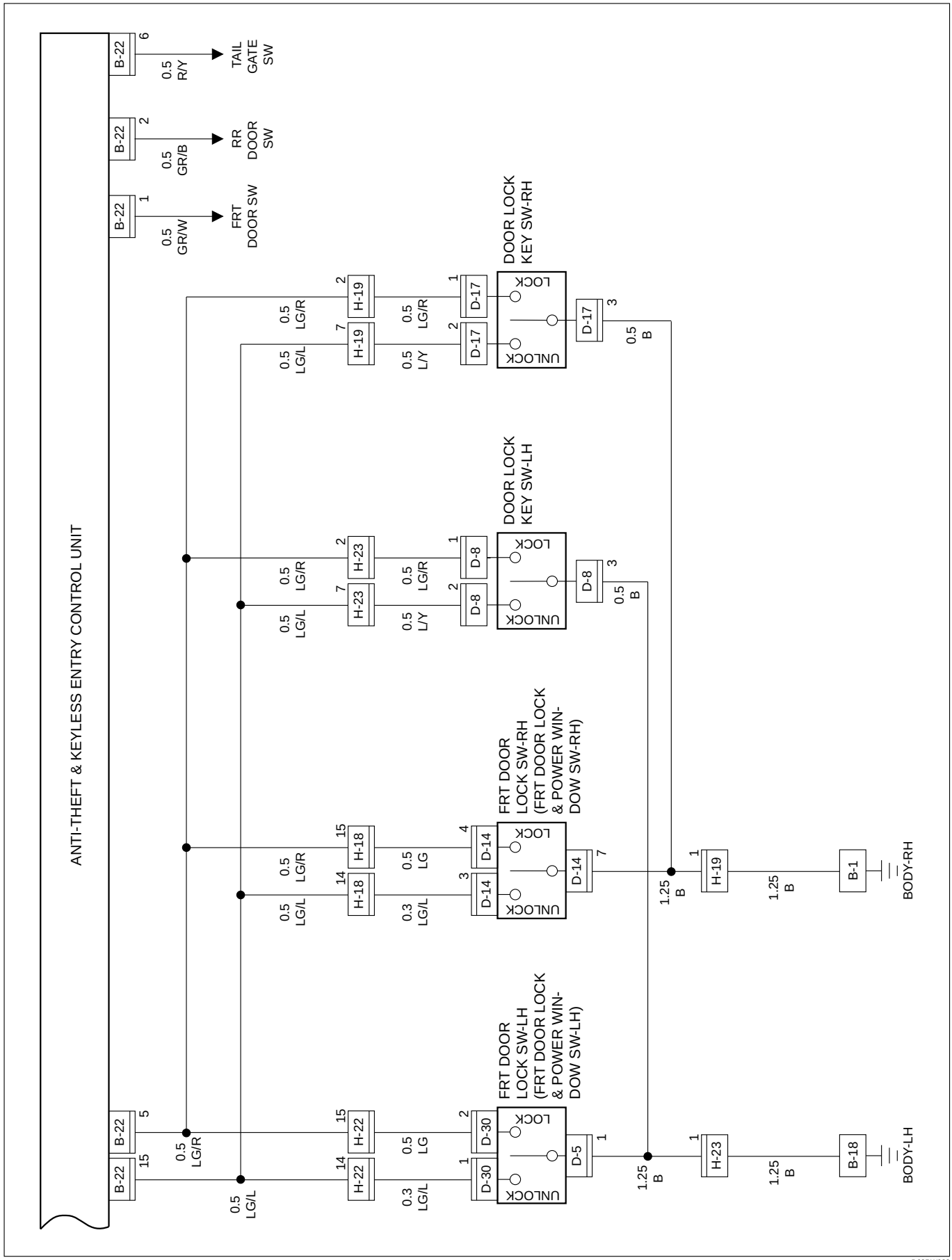

D08RW923

Parts Location (LHD)

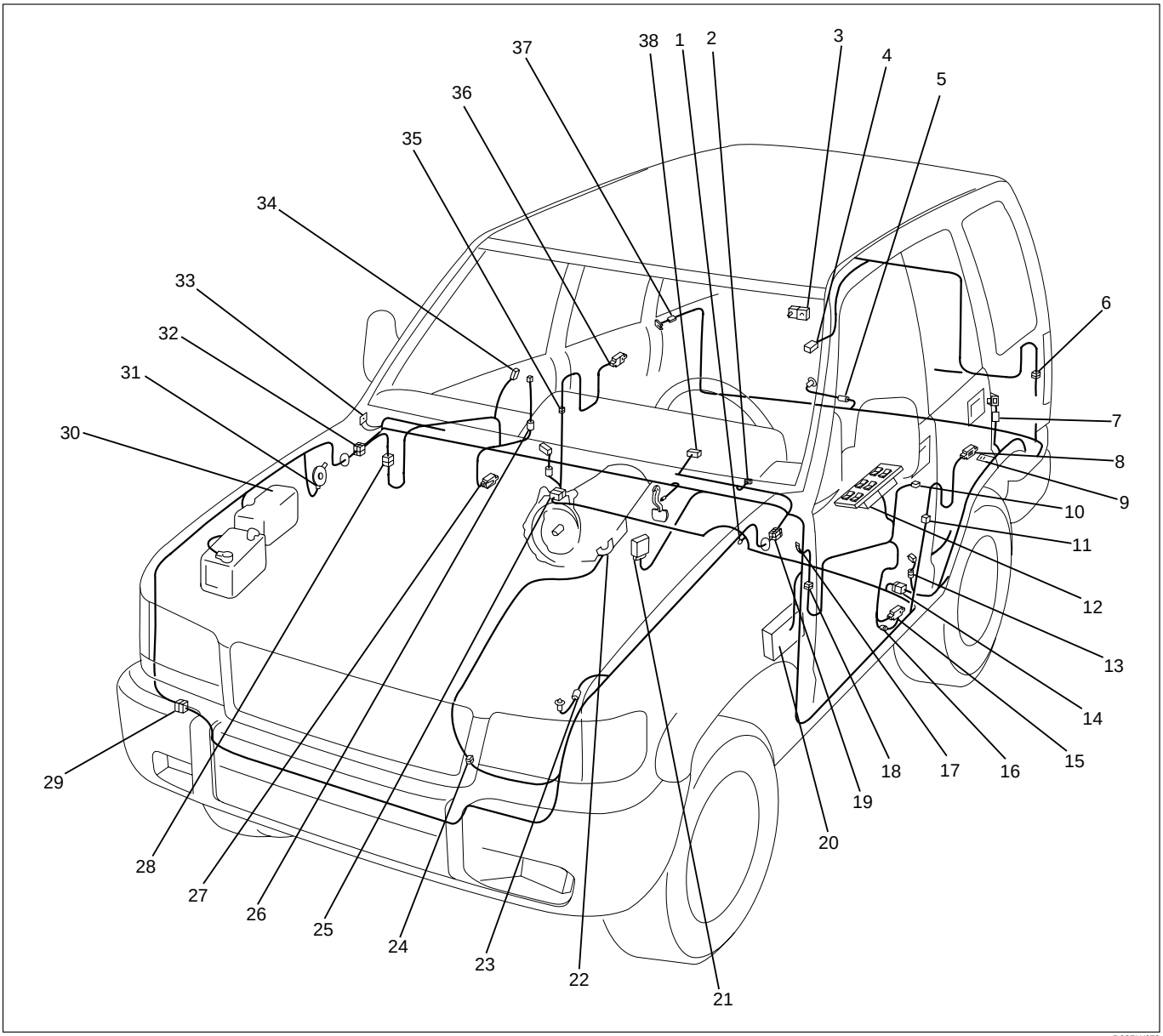

D08RW679

Legend

(1) B-26
(2) I-8
(3) G-4
(4) G-5
(5) R-8
(6) H-37, H-38
(7) R-1
(8) D-21
(9) R-3
(10) D-6
(11) H-28, H-29
(12) D-5, D-30
(13) B-22
(14) H-32
(15) D-9
(16) D-18
(17) B-8, B-19
(18) H-22, H-23
(19) H-8, H-26
(20) Fuse Box
(21) B-22
(22) M-25
(23) C-20
(24) H-10
(25) H-47
(26) D-17
(27) D-19
(28) H-18, H-19
(29) H-41, H-42
(30) Relay and Fuse Box (X-17)
(31) C-19
(32) H-12, H-15, H-21
(33) B-1
(34) D-16
(35) H-34, H-35
(36) D-26
(37) R-11
(38) B-12

Diagnosis

Diagnosis Procedure

1. Check to see if the battery voltage is normal.
2. Check to see if the fuse is normal.
3. Replace the anti–theft & keyless entry control unit with one reserved for test. If a trouble recurs even after replacing the control unit, find out the cause of the trouble by referring to “System check procedure” and the following list.

ITEM	MALFUNCTION	POSSIBLE CAUSE	DETECTING METHOD	REMARKS
A	ANTI–THEFT indicator light does not flash	Defective contact of door switch, or open circuit in door switch wiring.	With door open, dome light and courtesy light do not come on.	Burnt out indicator light bulb possible.
		Short circuit in the detect switch.	Check the control unit connector.	Refer to “Connector check table” in this system.
B	Indicator light does not change to fully ON condition, or does not come on at all.	Engine hood, doors and tailgate are not fully closed and locked.	Check to see if doors are closed and locked.	
		Defective door switch, or short circuit in switch wiring.	Dome light and courtesy light remain lit on after closing doors.	
		Defective tamper switch, or short circuit in wiring.	Check the control unit connector.	Refer to “Connector check table” in this system.
		Defective lock switch, or short circuit in wiring.	Check the control unit connector.	Refer to “Connector check table” in this system.
		Defective engine hood switch, or short circuit in wiring.	Check the control unit connector.	Refer to “Connector check table” in this system.
		Defective tailgate switch, or short circuit in wiring.	Luggage room light remains lit after closing tailgate.	
C	ANTI–THEFT indicator light does not turn off. (Steadily on)	Defective control unit.		
D	When door is opened by pulling up locking knob, alarm does not operate	Poor contact of lock switch, or open circuit in wiring.	Check alarm operation (See No. 46 of “System check procedure”), possible cause is a poor contact of lock switch of an open circuit in wiring.	
		Broken wire in wiring to headlight and horn, or a blown fuse.	Check to see if headlights go out. Check the control unit connector.	Refer to “Connector check table” in this system.
E	Alarm does not stop.	Defective contact of detect switch, or damaged switch wiring.	Check the control unit connector.	Refer to “Connector check table” in this system.

ITEM	MALFUNCTION	POSSIBLE CAUSE	DETECTING METHOD	REMARKS
F	Even when door unlocked with key, alarm operates.	Defective contact of detect switch, or damaged switch wiring.	Check the control unit connector.	Refer to “Connector check table” in this system.
		Door detect switch is assembled to wrong door.	When key is turned to lock position, alarm stops.	
G	Alarm does not operate even with tailgate open.	Defective contact of tailgate switch, or defective wiring.	When luggage room light switch is turned on with tailgate open, luggage room light does not come on.	
H	Even when tailgate is opened with key, alarm does not stop.	Defective contact of tailgate detect switch, or damage wiring.	Check the control unit connector.	Refer to “Connector check table” in this system.
I	Even when engine hood is opened with remote release, alarm does not operate	Damaged engine hood switch or wiring.		
J	Even when starter switch is turned, alarm does not stop	Defective contact of starter switch.	With starter switch turned to “ACC” position, audio, cigarette lighter and door mirrors (on “ACC” circuit) do not operate.	
K	Indicator light continues flashing	Damaged door switch, or a short circuit in wiring.	After closing door, dome light and courtesy light remain on.	
		Damaged tamper switch, or a short circuit in wiring.	Check the control unit connector.	Refer to “Connector check table” in this system.

System Check Procedure

STEP	OPERATION	ITEM TO BE CHECKED	ITEM OF MALFUNCTION	REMARKS
1	Turn starter key to “ON” position.	Check to see if engine hood, tailgate and doors are closed and locked.		
2	Open windows fully.			
3	Pull out starter key after turning it back to “OFF” position.	Check to see if indicator light remains lit off.	K	
4	Unlock left front door with locking knob.			
5	Open left front door. (And get out of the vehicle.)	Check to see if indicator light flashes.	A	
		Check to see if dome light and courtesy light illuminate.		
6	Close left front door.			Be sure to lock door with locking knob.
7	Lock left front door.	Check to see if indicator light changes from flashing to steadily on.	B	
8	Wait about 10 seconds	Check to see if indicator light turns off in about 10 seconds.	C	Activate alarm device.
9	Unlock left front door with locking knob.	Check to see if alarm operates (with headlight flashing, and horn blaring intermittently.)	D	All doors are unlocked.
10	Insert key into key cylinder of left front door and turn it in unlock direction.	Check to see if alarm stops.	E	With key set at unlock position, check to see if alarm stops.
11	Lock left front door.	Check to see if indicator light turns on.	B	All doors are locked.
12	Wait for about 10 seconds.	Check to see if indicator light goes off after about 10 seconds.	C	Activate alarm device.
13	Unlock left front door with key.	Check to see if alarm does not operate.	F	
14	Lock left front door with key.	Check to see if indicator light turns on.	B	
15	Wait for about 10 seconds.	Check to see if indicator light goes off after about 10 seconds.	C	Activate alarm device.
16	Unlock left rear door with locking knob.	Check to see if alarm starts.	D	Only left rear door is unlocked.

STEP	OPERATION	ITEM TO BE CHECKED	ITEM OF MALFUNCTION	REMARKS
17	Insert key into key cylinder of left front door and turn it to unlock direction.	Check to see if alarm stops.	E	With key set at unlock position, check to see if alarm stops. (All doors are unlocked.)
18	Open left rear door.	Check to see if indicator light flashes.	A	
		Check to see if dome light and courtesy light come on.		
19	With one person in vehicle, close left rear door.			
20	Lock left front door with locking knob.	Check to see if indicator light is steadily on.	B	All doors are locked.
21	Wait about 10 seconds.	Check to see if indicator light turns off in about 10 seconds.	C	Activate alarm device.
22	Unlock tailgate from inside with locking knob.	Check to see if alarm operates.	D	Only tailgate is unlocked.
23	Open tailgate, insert key into key cylinder of tailgate and turn it in lock direction.	Check to see if alarm stops.	H	With key set at unlock position, check to see if alarm stops.
24	Leave tailgate open.	Check to see if indicator light flashes.	A	
		Check to see if luggage room light on.	G	
25	Close tailgate			
26	Insert key into tailgate key cylinder and turn it in lock direction.	Check to see if indicator light changes over from flashing into lighting condition.	B	
27	Wait about 10 seconds.	Check to see if indicator light goes off after about 10 seconds.	C	Activate alarm device.
28	Unlock tailgate with key.	Check to see if alarm does not operate.	F	
29	Lock tailgate with key.	Check to see if indicator light come on.	B	
30	Wait about 10 seconds.	Check to see if indicator light goes off after about 10 seconds.	C	Activate alarm device.

STEP	OPERATION	ITEM TO BE CHECKED	ITEM OF MALFUNCTION	REMARKS
31	Unlock right rear door with locking knob.	Check to see if alarm operates.	D	Only right rear door is unlocked.
32	Insert key into key cylinder of right front door and turn it in unlock direction.	Check to see if alarm stops.	E	With key at unlock position, check to see if alarm stops. (With all doors unlocked.)
33	Open right rear door.	Check to see if indicator light flashes.	A	
		Check to see if dome light and courtesy light come on.		
34	Close right rear door.			
35	Insert key into key cylinder of right front door and turn it in lock direction.	Check to see if indicator light stays on steadily.	B	
36	Wait about 10 seconds.	Check to see if indicator light goes off after about 10 seconds.	C	Activate alarm device.
37	Unlock right front door with locking knob.	Check to see if alarm operates.	D	Only right front door is unlocked.
38	Insert key into key cylinder of right front door and turn it in unlock direction.	Check to see if alarm stops.	E	With key at unlock position, check to see if alarm stops. (With all doors unlocked.)
39	Open right front door.	Check to see if indicator light flashes.	A	
		Check to see if dome light and courtesy light come on.		
40	Close right front door.			
41	Lock right front door with key.	Check to see if indicator light stays on steadily.	B	
42	Wait about 10 seconds.	Check to see if indicator light goes off after about 10 seconds.	C	Activate alarm device.
43	Unlock right front door with key.	Check to see if alarm does not operate.	F	
44	Lock right front door with key.	Check to see if indicator light stays on steadily.	B	

STEP	OPERATION	ITEM TO BE CHECKED	ITEM OF MALFUNCTION	REMARKS
45	Wait about 10 seconds.	Check to see if indicator light goes off after about 10 seconds.	C	Activate alarm device.
46	Open engine hood with engine hood release handle.	Check to see if alarm operates.	I	
47	Insert key into starter switch and turn it to “ACC” position.	Check to see if alarm stops.	J	

NOTE: When the connector of the anti–theft & keyless entry control unit is disconnected, the starter is inoperative.
In the checking of short wheel base model, Step Nos. 16 through 21 and Step Nos. 31 through 36 are omitted.

Connector Check Table

Check the anti–theft & keyless entry control unit harness side connector B–20 by using a circuit tester.

TERMINAL NO.	CONNECTION	CHECK ITEM	OPERATION	CIRCUIT CONDITION
1	FRT door switch–LH, RH	Continuity	Open door	Continuity
			Close door	No continuity
2	RR door switch–LH, RH	Continuity	Open door	Continuity
			Close door	No continuity
3	—	—	–	–
4	Door lock key switch–LH, RH	Continuity	Lock with key	Continuity
5	FRT door lock switch–LH, RH	Continuity	Lock	Continuity
6	Tailgate switch	Continuity	Open tailgate	Continuity
			Close tailgate	No continuity
8	Anti–theft horn	Voltage	–	Approx. 12V
10	Battery	Voltage	–	Approx. 12V
11	Door switch	Continuity	Unlock with locking knob	Continuity
			Lock with locking knob	No continuity
12	Engine hood switch	Continuity	Open engine hood	Continuity
			Close engine hood	No continuity
13	Detect switch	Continuity	Unlock with key	Continuity
			Lock with key	No continuity
14	Door lock key switch	Continuity	Unlock	Continuity
15	FRT door lock switch–LH, RH	Continuity	Unlock	Continuity
16	Tamper switch	Continuity	–	No continuity
17	Ground	Continuity	–	Continuity
18	Starter switch	Voltage	Starter switch “ACC”	Approx. 12V
19	Indicator light	Voltage	–	Approx. 12V
20	Dome light	Voltage	Dome light “DOOR” position	Approx. 12V
21	Anti-theft relay	Voltage	–	Approx. 12V
22	Starter relay	Voltage	Mode switch “P” or “N”	Approx. 12V
			Clutch pedal depressed	Approx. 12V

ID Code Registration

There are four kinds of ID codes which can be registered, for which these three modes, ID code new registration, ID code additional registration and ID code check, are available.

ID Code New Registration

This procedure erases all registered ID codes and registers a new received ID code instead.

Step	Action	Yes	No
1	1. Open the driver's side door. 2. Turn the starter switch off. Is the action complete?	Go to Step 2	—
2	Turn the starter switch to ACC position and then off three times within five seconds after step 1. Is the action complete within five seconds?	Go to Step 3	Finished
3	Close the door and then open it two times within ten seconds after step 2. Is the action complete within ten seconds?	Go to Step 4	Finished
4	1. Turn the starter switch to ACC position and then off five times. 2. Close the door and then open it. NOTE: This step must be performed within ten seconds after step 3. Is the action complete?	Go to Step 5	Finished
5	The control unit makes lock/unlock response once with interval of one second. Is the response complete?	Go to Step 6	—
6	Operate the lock or unlock button of transmitter within twenty seconds after step 5. Is the action complete?	Go to Step 7	Finished
7	The control unit makes lock/unlock response once with interval of one second as ID temporary registration. Is the response complete?	Go to Step 8	—
8	Operate the lock or unlock button of transmitter within twenty seconds after step 7. Is the action complete?	Go to Step 9	Finished
9	The control unit compares temporary registered ID code with receiving ID code. Is temporary registered ID code the same as receiving ID code?	Go to Step 11	Go to Step 11
10	The control unit makes lock/unlock response three times with interval of one second. Is the response complete?	Finished	—
11	The control unit erases all registered ID codes and registers new ID code. Is the registration complete?	Go to Step 12	Go to Step 13

Step	Action	Yes	No
12	The control unit makes lock/unlock response once with interval of one second. Is the response complete?	Finished	—
13	The control unit makes lock/unlock response three times with interval of one second. Is the response complete?	Finished	—

ID Code Additional Registration

This procedure additionally registers a new received ID code with holding registered ID codes. When total number of registered ID codes and newly registered ID code exceeds four, they are erased in order of older one.

Step	Action	Yes	No
1	1. Open the driver's side door. 2. Turn the starter switch off. Is the action complete?	Go to Step 2	—
2	Turn the starter switch to ACC position and then off three times within five seconds after step 1. Is the action complete within five seconds?	Go to Step 3	Finished
3	Close the door and then open it two times within ten seconds after step 2. Is the action complete within ten seconds?	Go to Step 4	Finished
4	1. Turn the starter switch to ACC position and then off three times. 2. Close the door and then open it. NOTE: This step must be performed within ten seconds after step 3. Is the action complete?	Go to Step 5	Finished
5	The control unit makes lock/unlock response two times with interval of one second. Is the response complete?	Go to Step 6	—
6	Operate the lock or unlock button of transmitter within twenty seconds after step 5. Is the action complete?	Go to Step 7	Finished
7	The control unit makes lock/unlock response two times with interval of one second as ID temporary registration. Is the response complete?	Go to Step 8	—
8	Operate the lock or unlock transmitter within twenty seconds after step 7. Is the action complete?	Go to Step 9	Finished
9	The control unit compares temporary registered ID code with receiving ID code. Is temporary registered ID code the same as receiving ID code?	Go to Step 11	Go to Step 10
10	The control unit makes lock/unlock response three times with interval of one second. Is the response complete?	Finished	—
11	The control unit registers new ID code. Is the registration complete?	Go to Step 12	Go to Step 13

Step	Action	Yes	No
12	The control unit makes lock/unlock response once with interval of one second. Is the response complete?	Finished	—
13	The control unit makes lock/unlock response three times with interval of one second. Is the response complete?	Finished	—

ID Code Check

This procedure checks how many kinds of ID code are registered.

Step	Action	Yes	No
1	1. Open the driver's side door. 2. Turn the starter switch off. Is the action complete?	Go to Step 2	—
2	Turn the starter switch to ACC position and then off three times within five seconds after step 1. Is the action complete within five seconds?	Go to Step 3	Finished
3	Close the door and then open it two times within ten seconds after step 2. Is the action complete within ten seconds?	Go to Step 4	Finished
4	1. Turn the starter switch to ACC position and then off. 2. Close the door and then open it. NOTE: This step must be performed within ten seconds after step 3. Is the action complete?	Go to Step 5	Finished
5	The control unit makes lock/unlock response twice as many the number of registered ID code with interval of two seconds. (In case of no registered code, the response is made ten times.) Is the response complete?	Finished	—

Answer Back (Anti–theft Horn Operation) Change Mode

Anti–theft horn, as an answer back function for the transmitter operation, changes from available into unavailing or from unavailing into available by this procedure.

Step	Action	Yes	No
1	Open the driver's side door. Is the action complete?	Go to Step 2	—
2	Lock the door and then unlock it three times within ten seconds after step 1. Is the action complete within five seconds?	Go to Step 3	Finished
3	Close the door and then open it two times within ten seconds after step 2. Is the action complete within ten seconds?	Go to Step 4	Finished

Step	Action	Yes	No
4	1. Lock the door and unlock it three times. 2. Close the door and then open it. NOTE: This step must be performed within ten seconds after step 3. Is the action complete?	Go to Step 5	Finished
5	Answer back mode changes. Is this step complete?	Go to Step 6	Go to Step 7
6	The control unit makes lock/unlock response once with interval of one second. Is the response complete?	Finished	—
7	The control unit makes lock/unlock response three times with interval of one second. Is the response complete?	Finished	—

Anti–theft & Keyless Entry Control Unit/Transmitter Replacement

Anti–theft & Keyless Entry Control Unit Replacement

1. Remove and install the control unit.
   - Refer to Anti–theft & Keyless Entry Control Unit Removal and Installation in this section.
2. Register ID code.
   - Refer to ID Code Registration in this section.
3. Check that the keyless entry system works normally.

Transmitter Replacement

1. Prepare a new transmitter.
2. Register ID code.
   - Refer to ID Code Registration in this section.
3. Check that the keyless entry system works normally.

Transmitter Battery Replacement

1. Remove a screw to remove the cover.
2. Remove the batteries.
3. Set the new batteries into the transmitter.
4. Install the cover to the transmitter.
5. Check that the keyless entry system works normally.

Programing With Tech 2 (SOUTH AFRICA)

General Description

When the anti-theft and keyless entry control unit and / or the transmitters (remote keys) are replaced, the security codes and / or transmitter ID codes must be programed by using the Tech 2. The following pages show the procedures to program in regard to the anti-theft and keyless entry system. Please refer to Tech 2 scan tool user`s guide in detail.

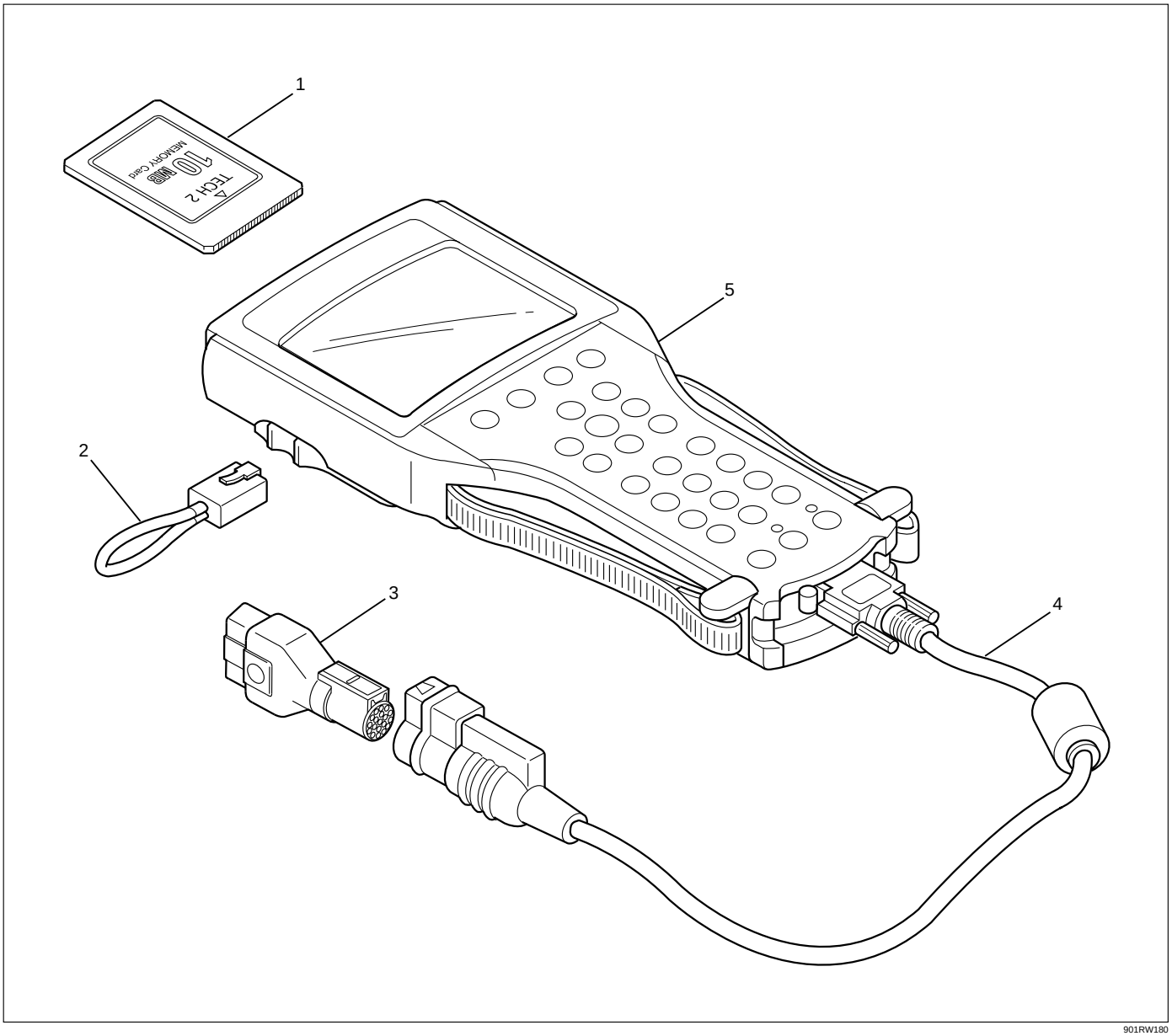

901RW180

Legend

(1) PCMCIA Card
(2) RS 232 Loop Back Connector
(3) SAE 16/19 Adaptor
(4) DLC Cable
(5) Tech 2

Programing Anti-Theft Warning

When the anti-theft and keyless entry control unit is replaced, the security code must be programed after installation.

1. Insert the Isuzu system PCMCIA card into the Tech 2.
2. Connect the SAE 16/19 adaptor to the data link connector (DLC) cable.
3. Connect the DLC cable to the Tech 2.
4. Confirm that the starter switch is off.
5. Connect the Tech 2 SAE 16/19 adaptor to the vehicle DLC.
6. Verify the Tech 2 power up display.

060RW009

7. Press the enter key.
8. Select " F0 : Diagnostics " and press the enter key.
9. Select the model year and press the enter key.
10. Select the vehicle type and press the enter key.
11. Select " F2 : Body " and press the enter key.
12. Select " Anti Theft Warning " and press the enter key.
13. Turn the starter switch on and press the confirm key (soft key).
14. Confirm " Partnumber " , " Country Code " and " Production Date " and press the confirm key (soft key).
15. Select " F4 : Programing " and press the enter key.
16. Select " F2 : Program Anti Theft Warning " and press the enter key.
17. Press the confirm key (soft key).
18. Press the confirm key (soft key).
19. Enter the security code and press the enter key.
20. Press the okey key (soft key).
21. Enter the security code and press the enter key.
22. Press the okey key (soft key).
23. Press the soft key to select " Remote Key ".
24. Select country code and press the enter key.
25. Press the confirm key (soft key).

Programing Remote Key

When the anti-theft and keyless entry control unit is replaced and / or the new transmitter (remote key) is supplied, the ID code of the transmitter must be programed by the following procedure.

1. Perform the step 1. to 15. of " Programing Anti Theft Warning ".
2. Select " F1 : Program Remote Key " and press the enter key.
3. Press the confirm key (soft key).
4. Press the lock button of the transmitter until the display changes.
5. Press the confirm key (soft key).
6. Press the Yes or No key (soft key).

Erasing Remote Keys

All the ID code stored in the control unit can be erased by the following procedure.

1. Perform the step 1. to 15. of " Programing Anti Theft Warning ".
2. Select " F0 : Erase Remote Keys " and press the enter key.
3. Press the confirm key (soft key).
4. Press the confirm key (soft key).
5. Press the confirm key (soft key).

Meter and Warning/Indicator Light

General Description

The circuit consists of meter assembly vehicle speed sensor, engine coolant temperature sensor, seat belt switch, oil pressure switch, brake fluid switch, parking brake switch and other some switches and sensors.

Meter assembly contains speedometer, tachometer, voltmeter, engine coolant temperature gauge, oil pressure gauge, fuel gauge, warning/indicator light and illumination light.

Circuit Diagram (RHD 6V*1 W/O T.O.D)-1

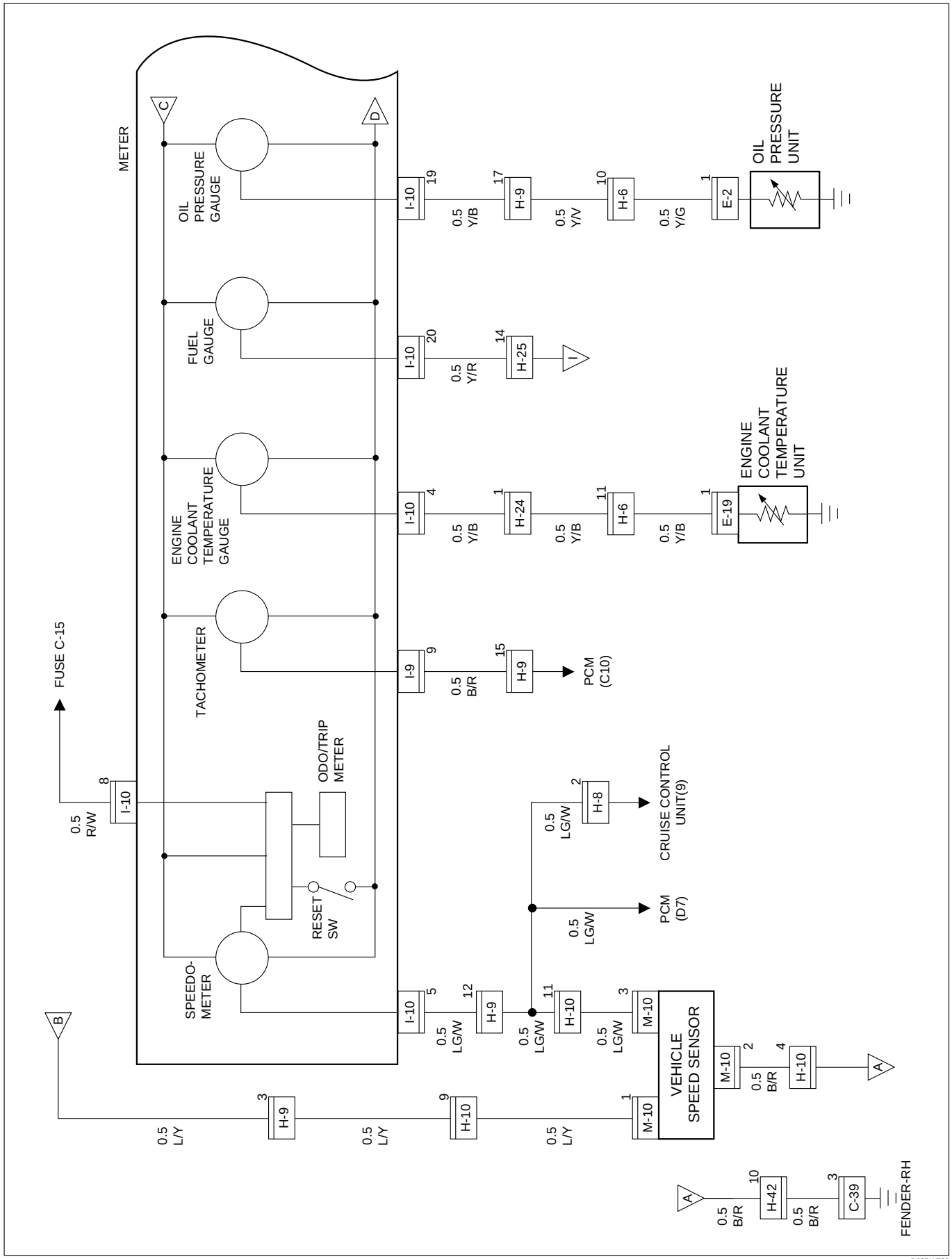

D08RW722

Circuit Diagram (RHD 6V*1 W/O T.O.D)-2

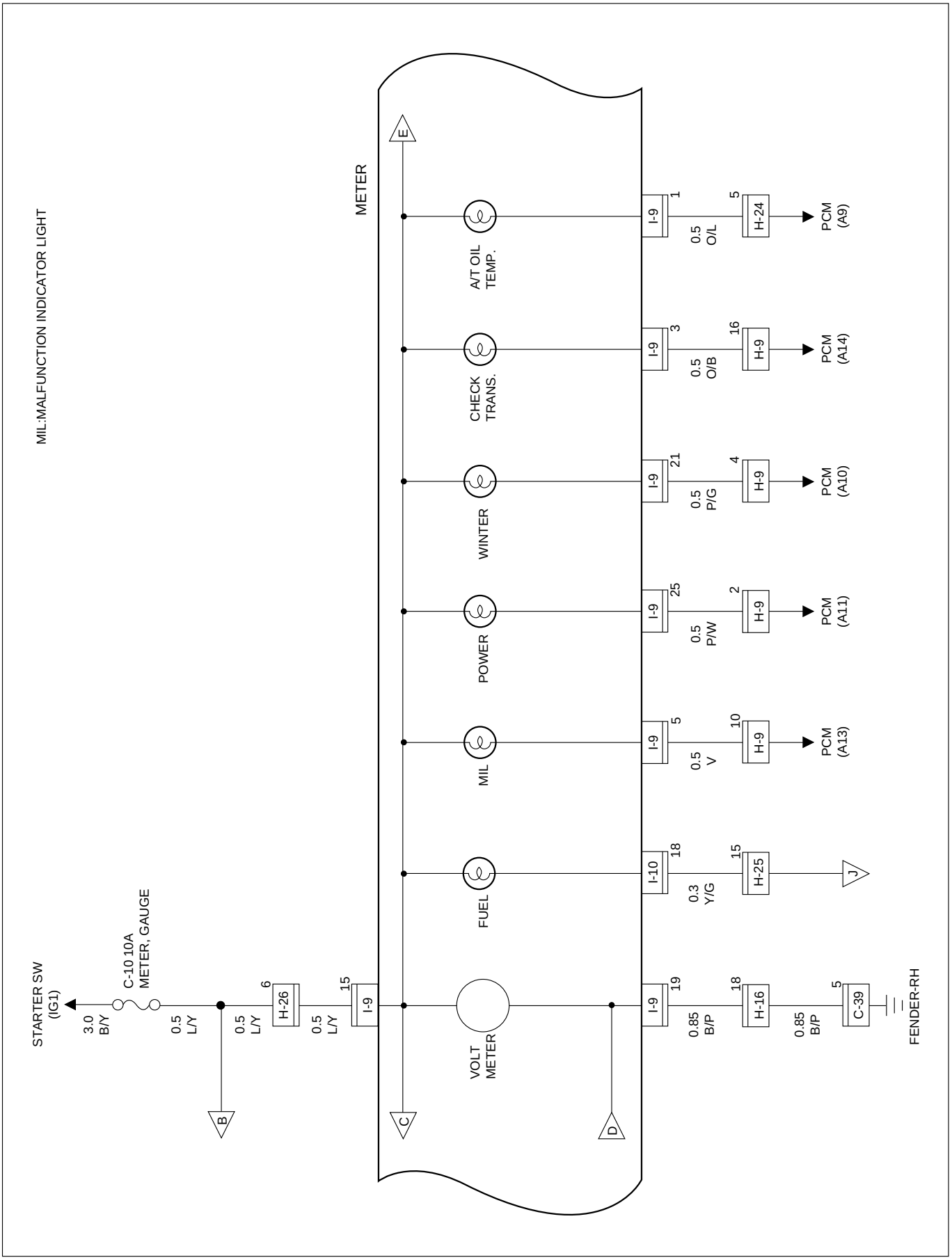

D08RW723

Circuit Diagram (RHD 6V*1 W/O T.O.D)-3

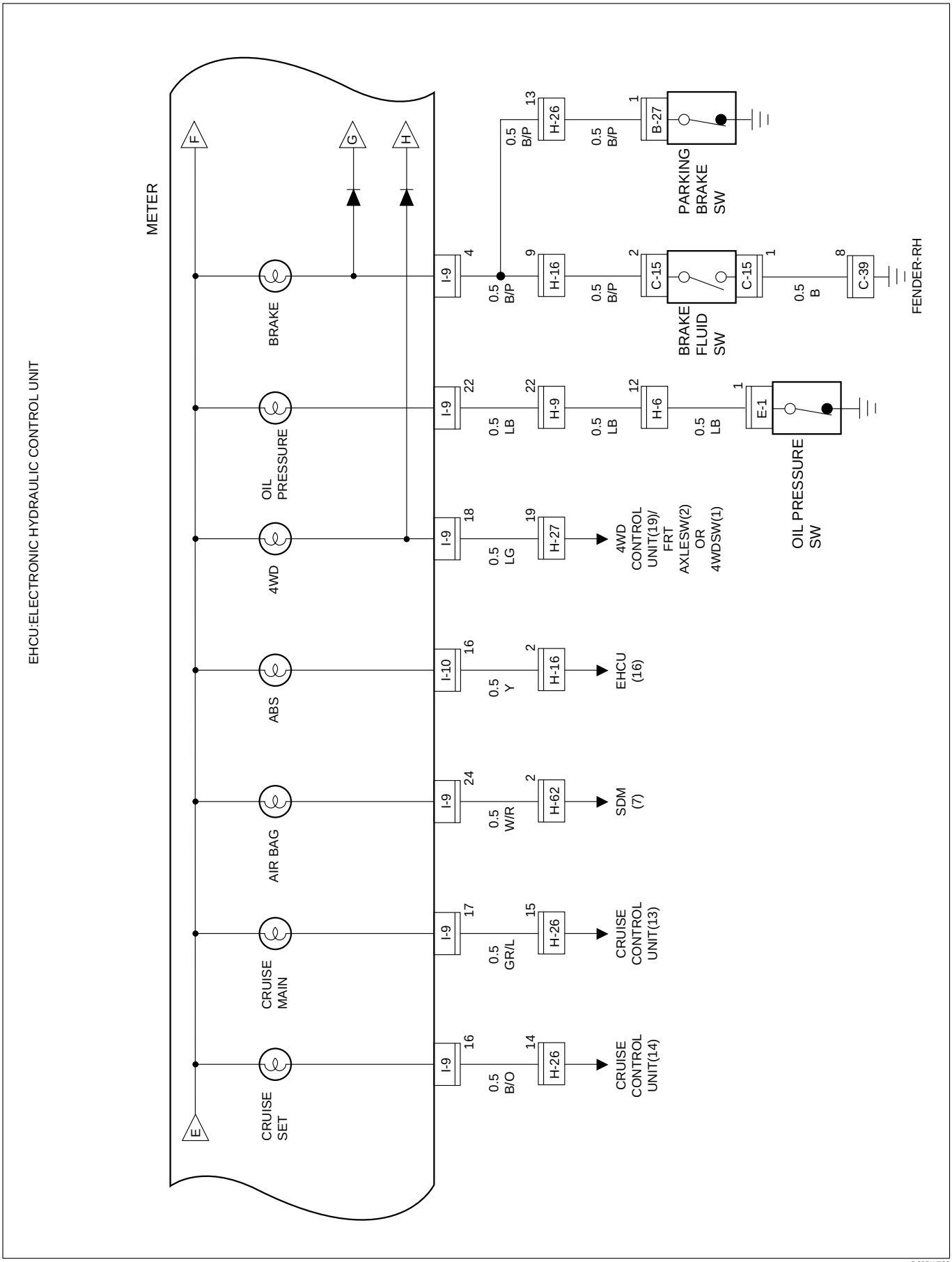

D08RW725

Circuit Diagram (RHD 6VD1 W/O T.O.D)-4

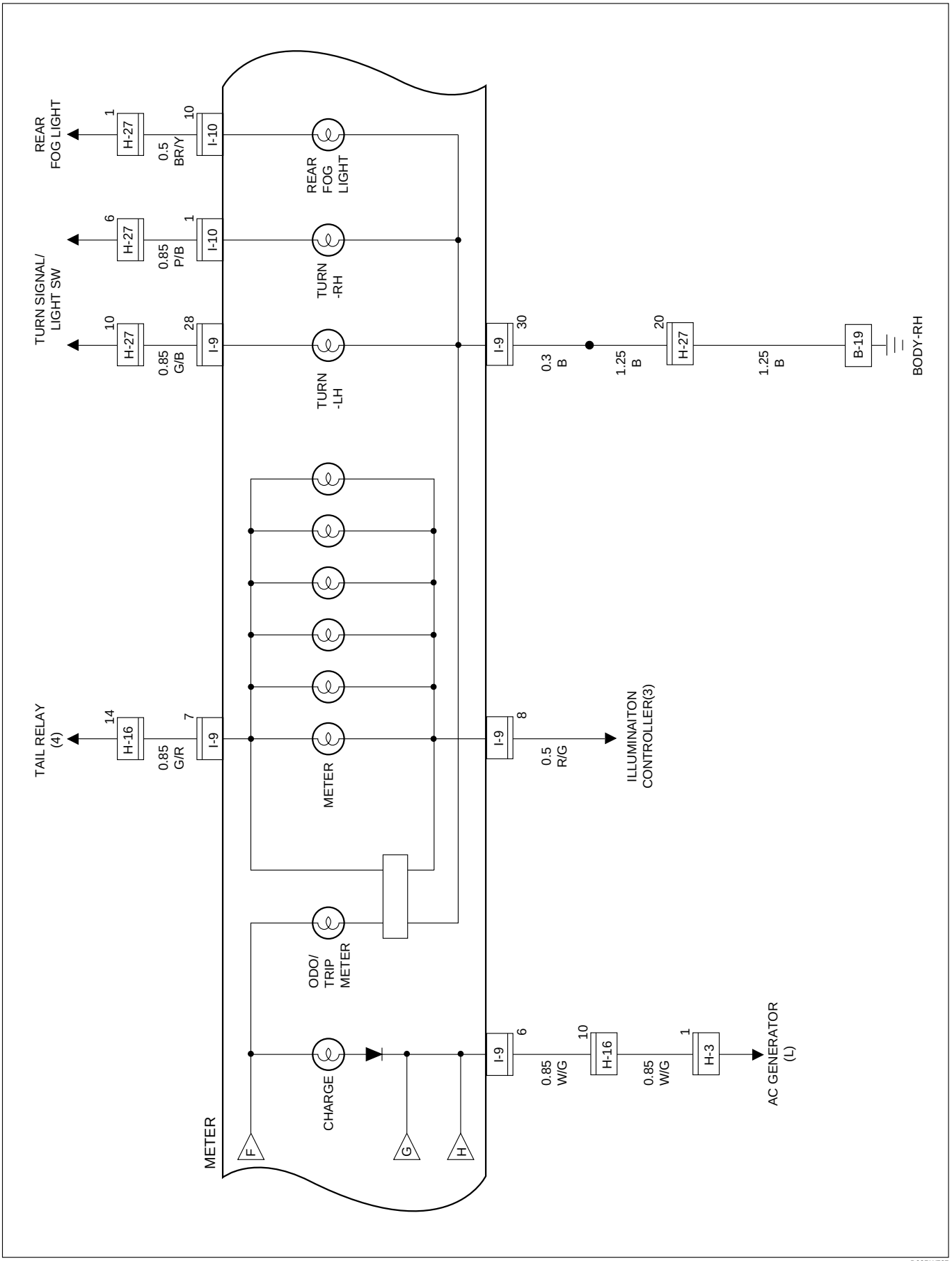

Circuit Diagram (RHD 6VD1 W/O T.O.D)-5

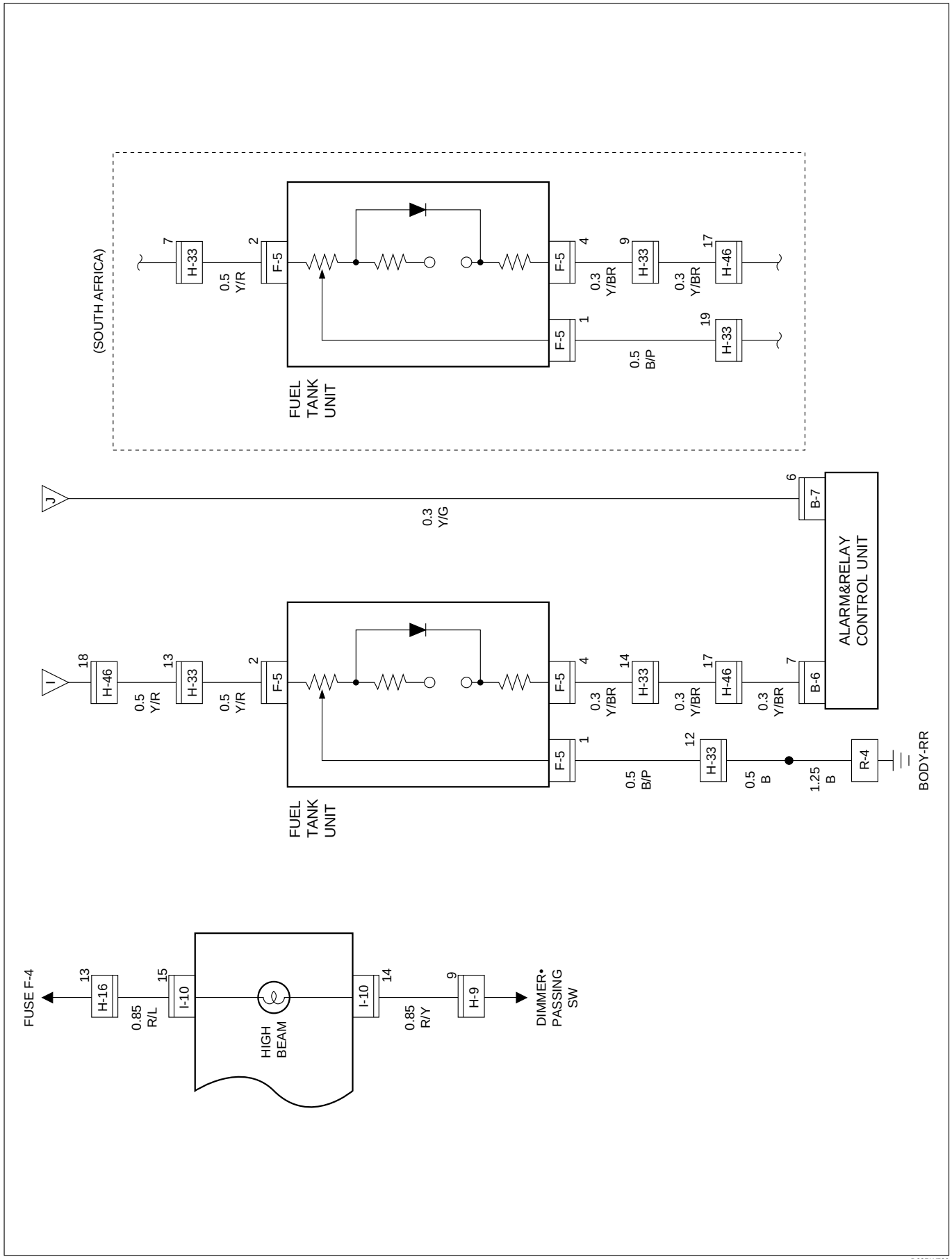

D08RW729

Circuit Diagram (RHD 6V*1 W/O T.O.D)-6

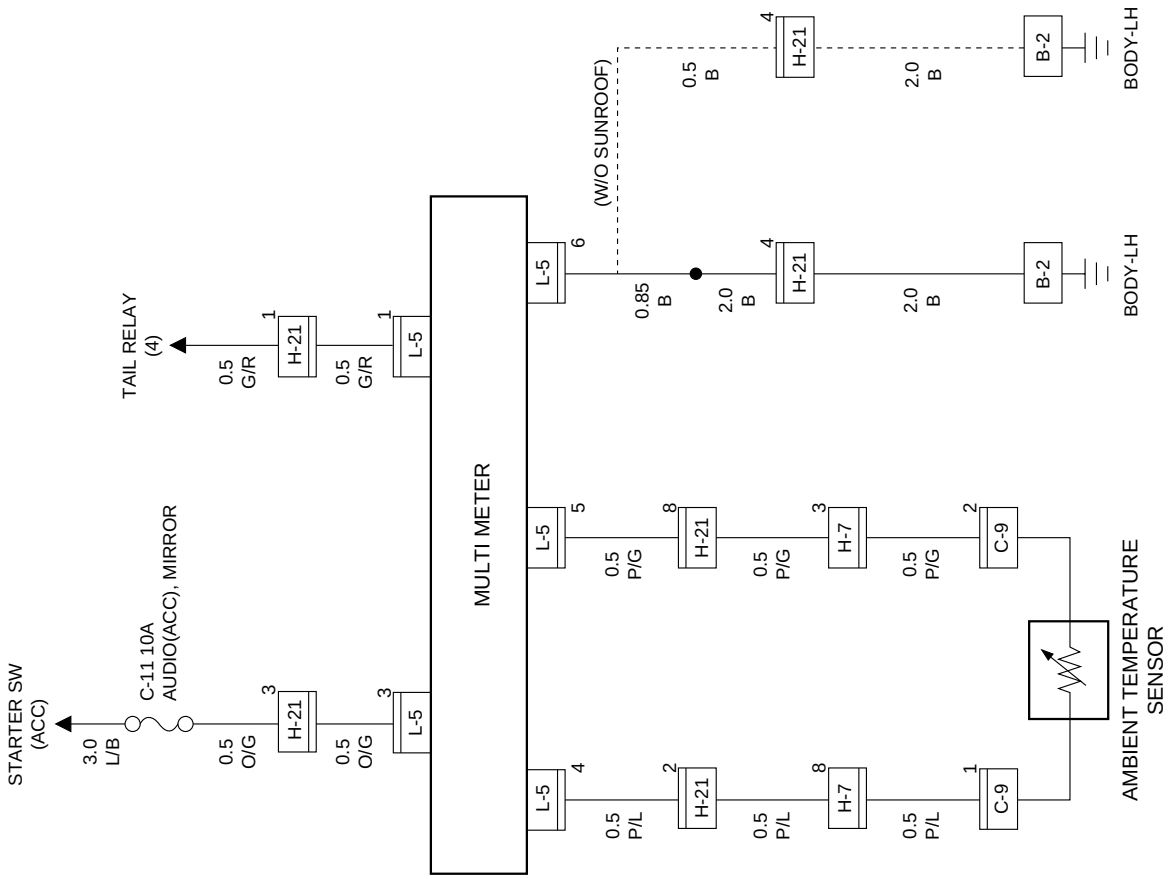

D08RW730

Circuit Diagram (RHD 6V*1 W/T.O.D)-1

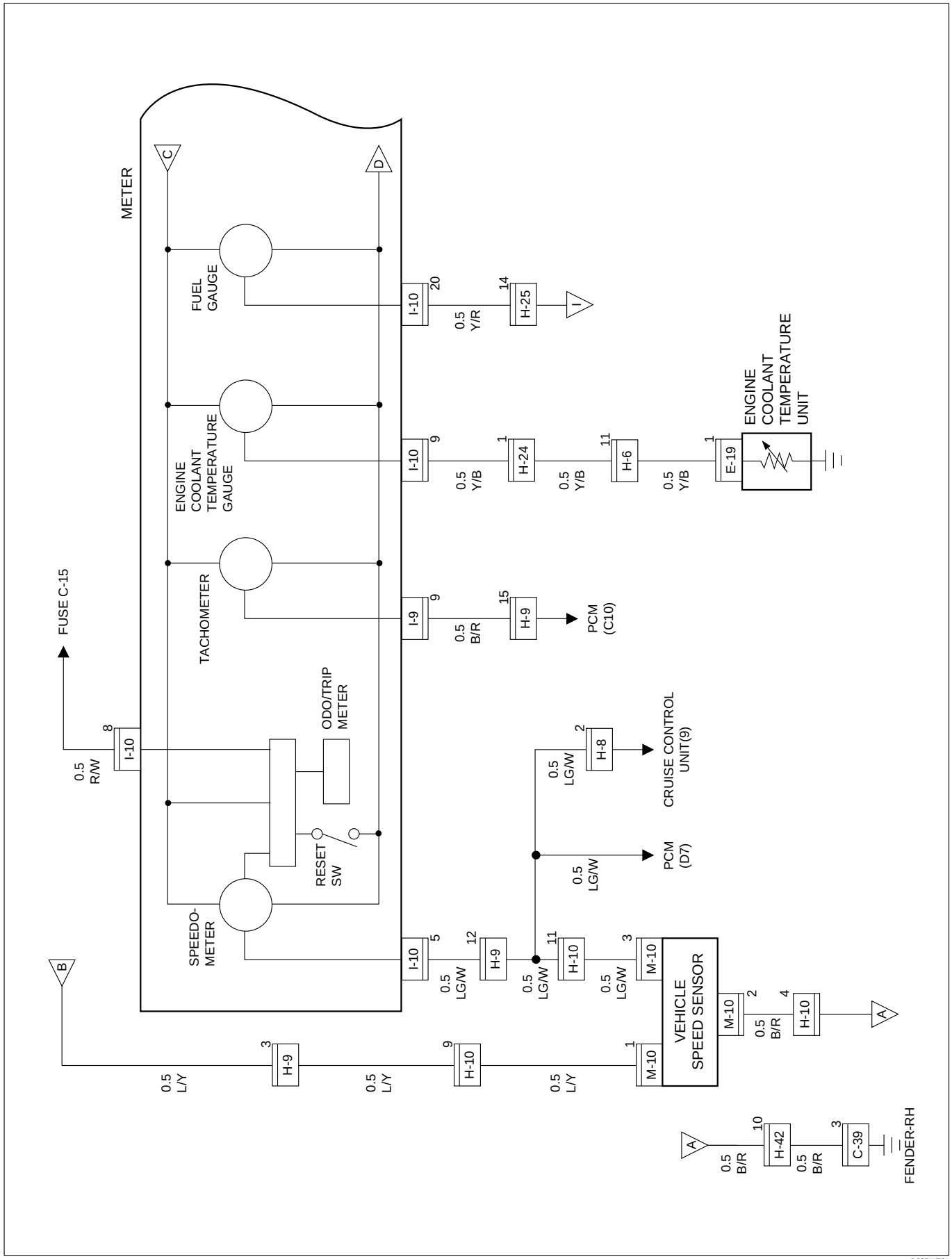

D08RW731

Circuit Diagram (RHD 6V*1 W/T.O.D)-2

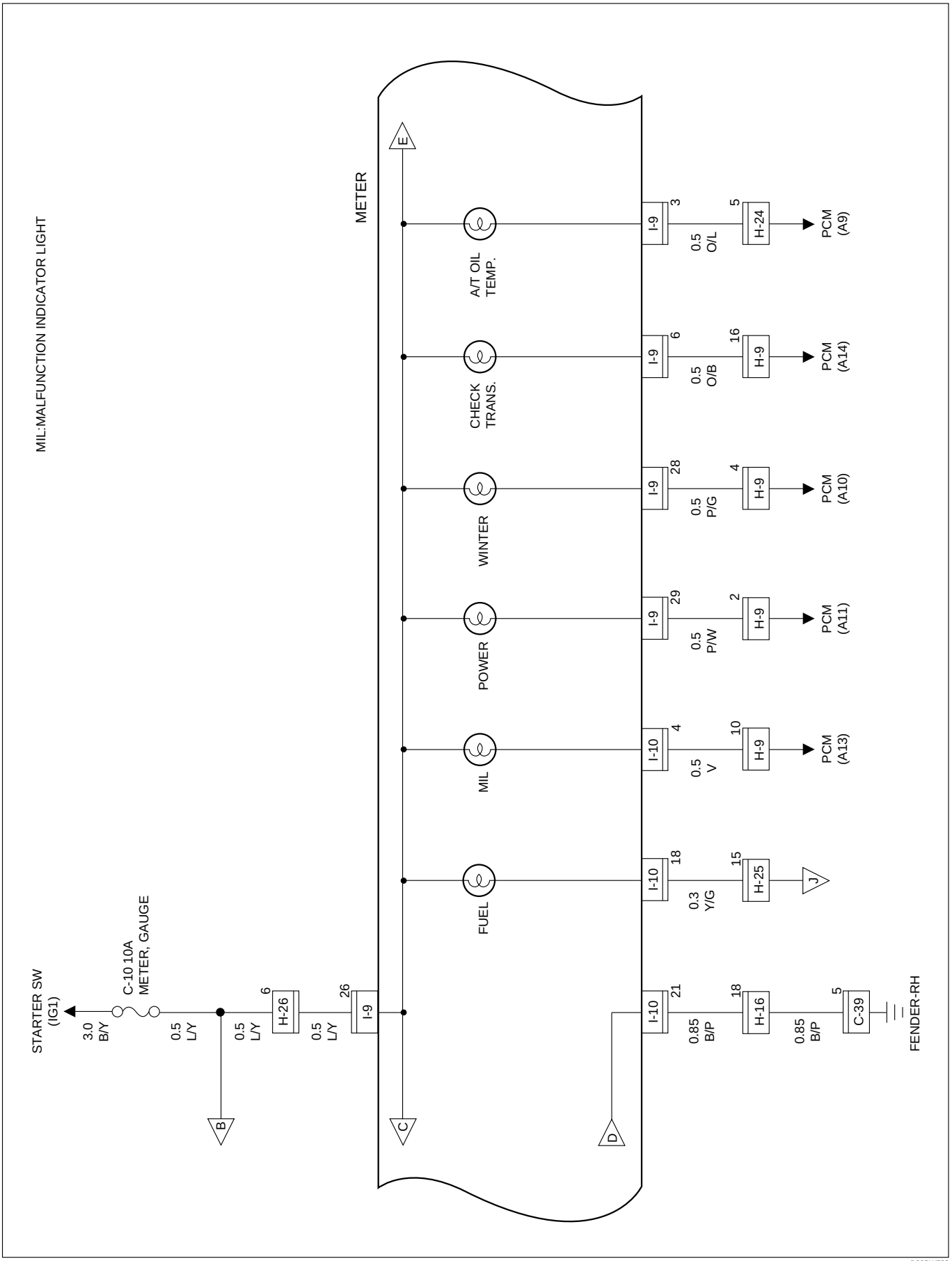

D08RW732

Circuit Diagram (RHD 6V*1 W/T.O.D)-3

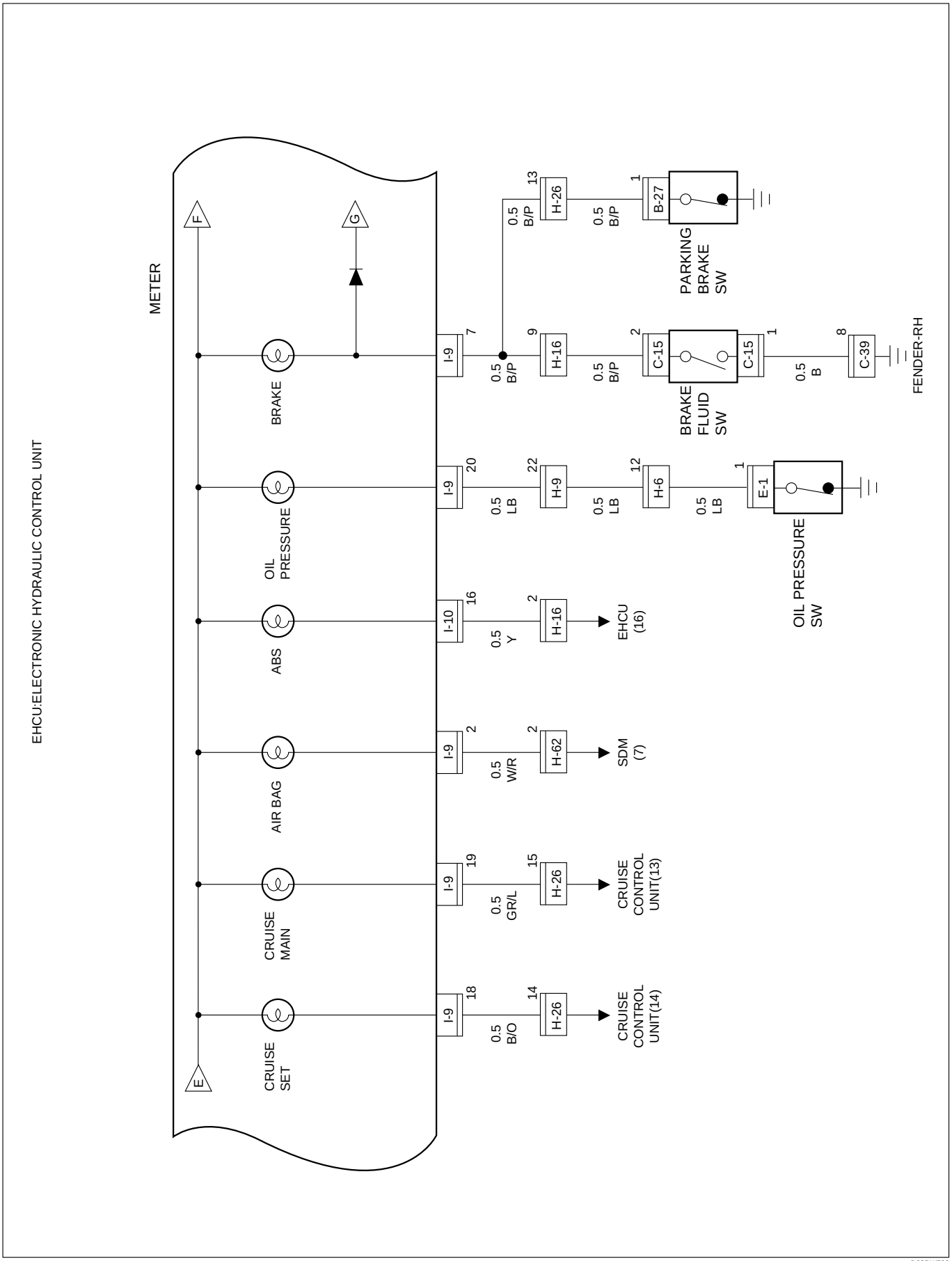

D08RW733

Circuit Diagram (RHD 6V*1 W/T.O.D)-4

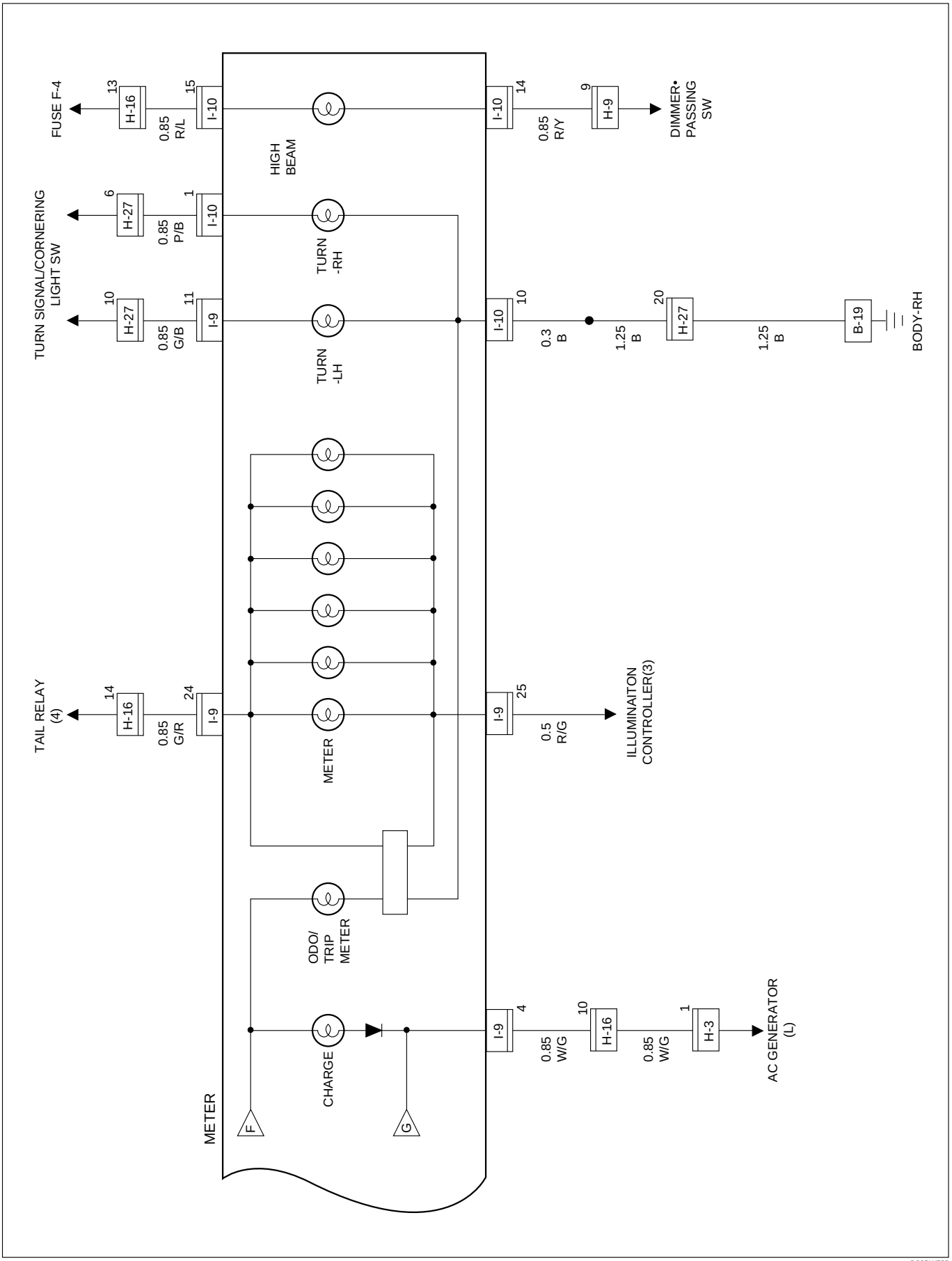

D08RW735

Circuit Diagram (RHD 6V*1 W/T.O.D)-5

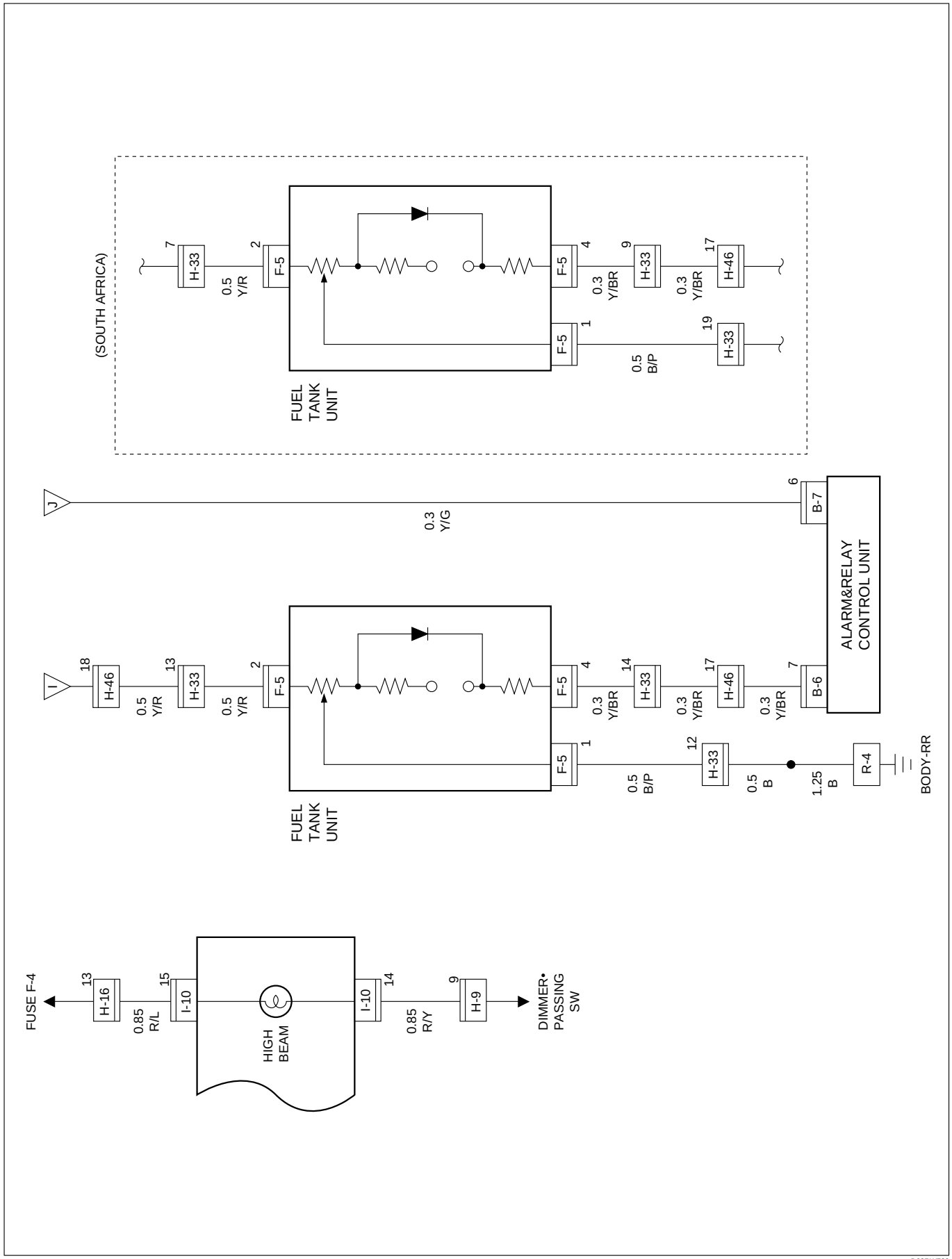

D08RW729

Circuit Diagram (RHD 6V*1 W/T.O.D)-6

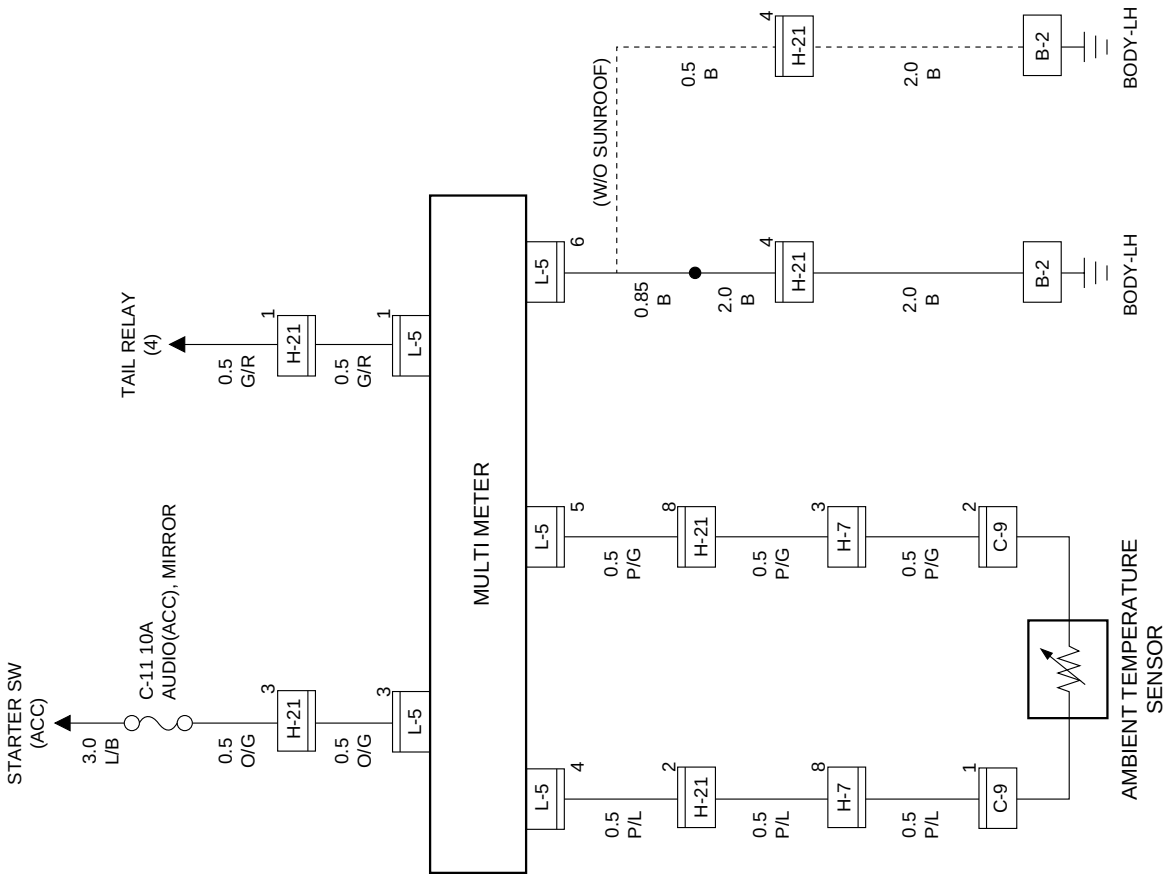

D08RW730

Circuit Diagram (RHD 4JG2)-1

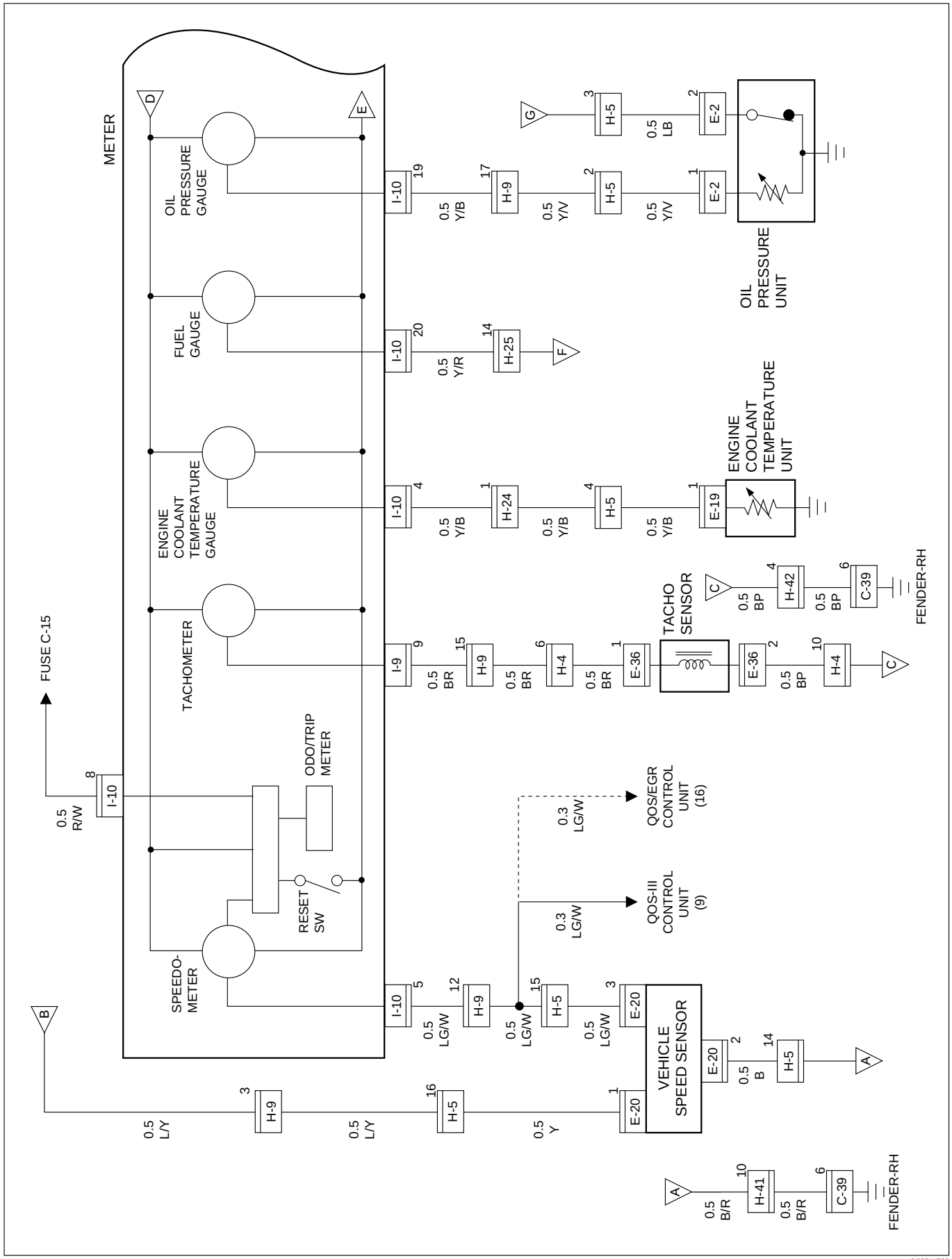

D08RW738

Circuit Diagram (RHD 4JG2)-2

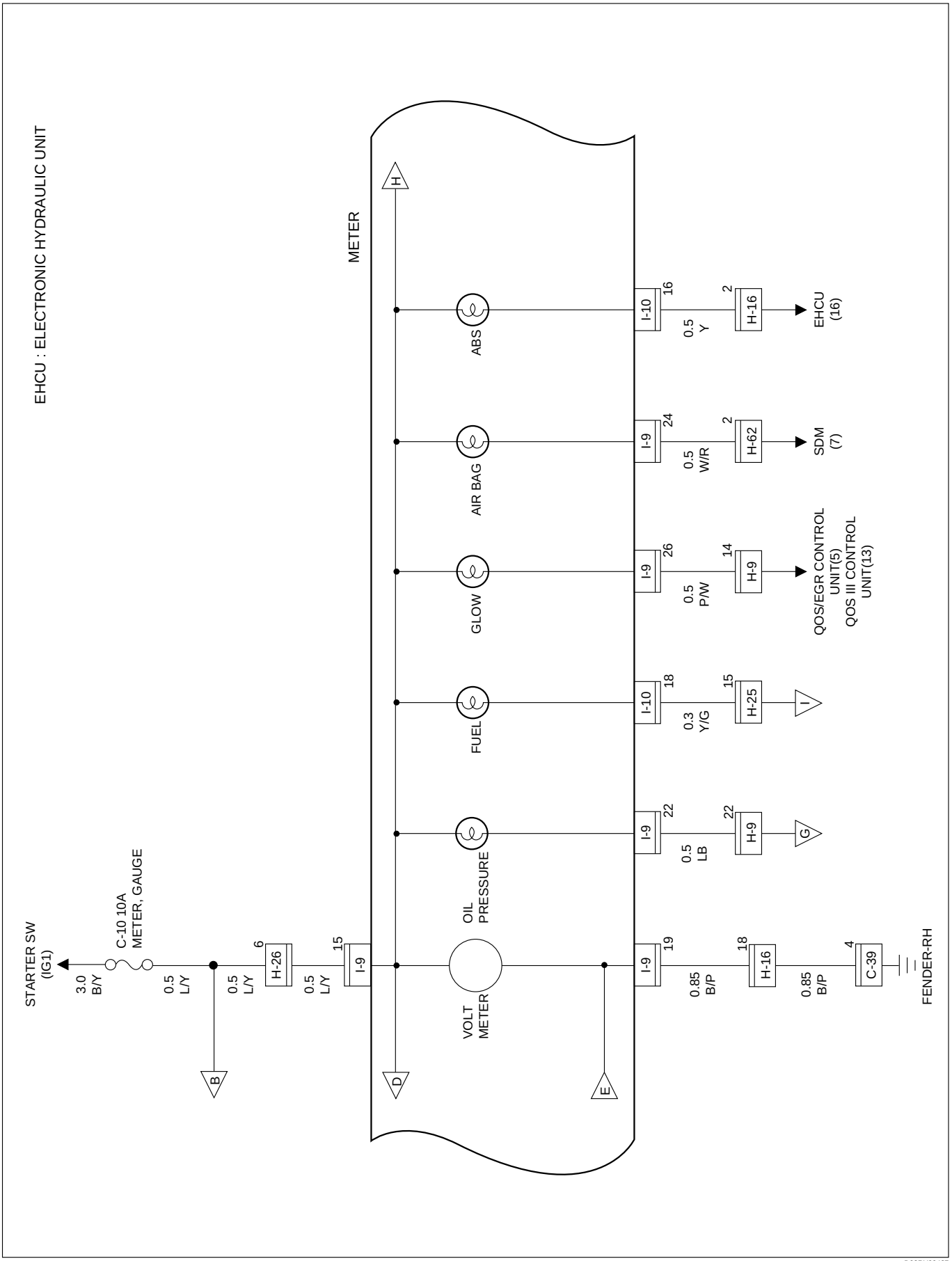

D08RY00427

Circuit Diagram (RHD 4JG2)-3

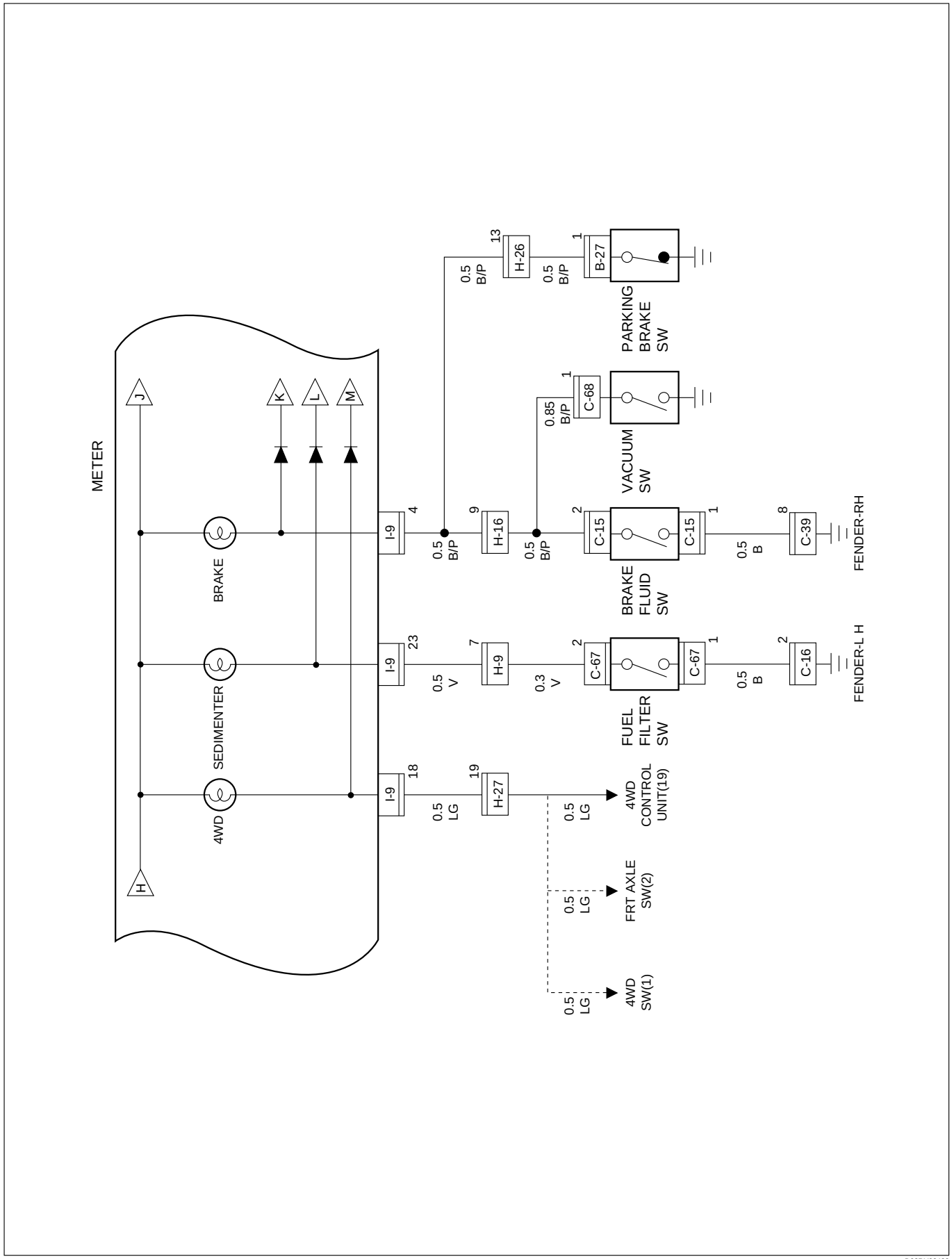

Circuit Diagram (RHD 4JG2)-4

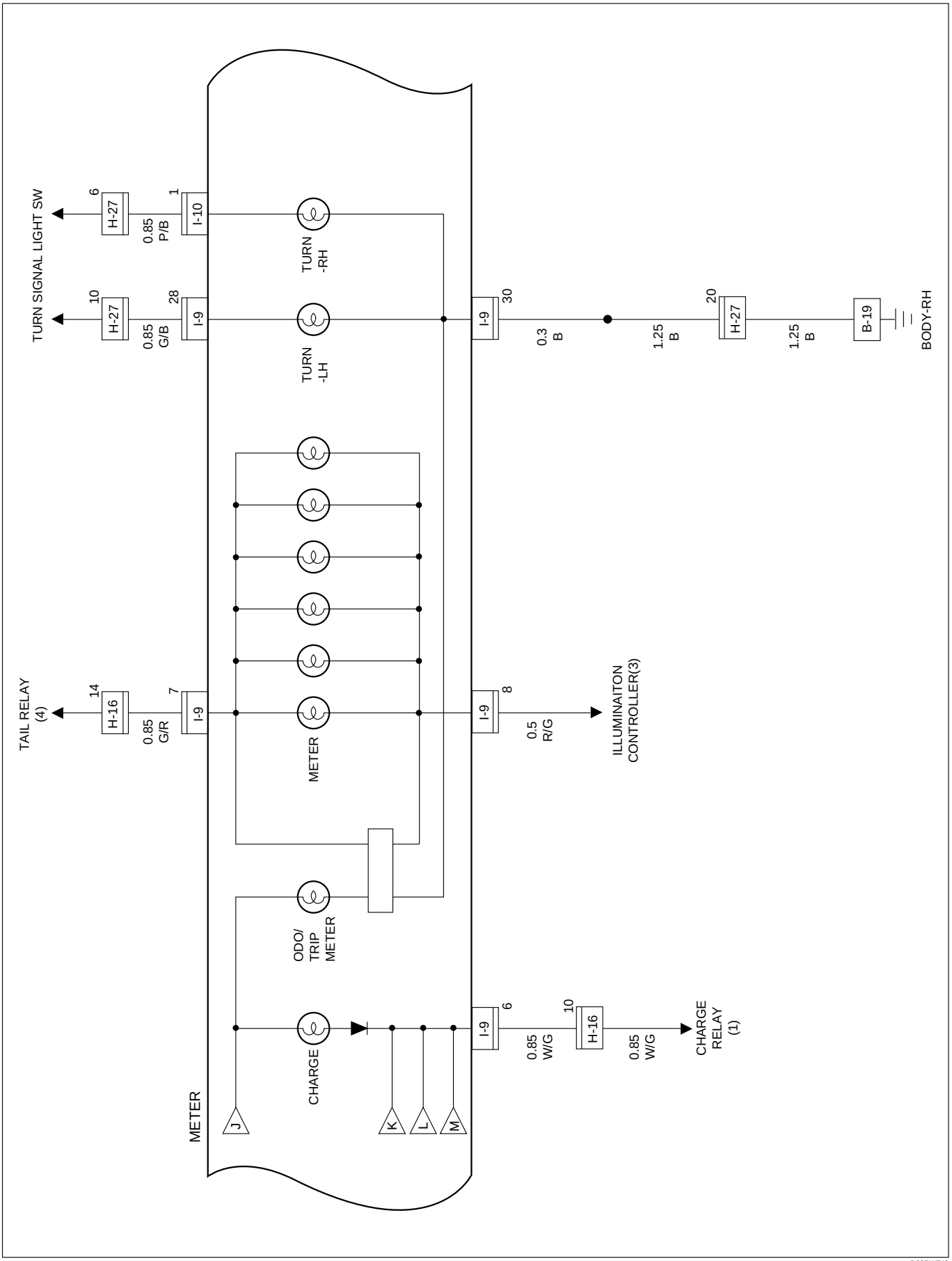

D08RW740

Circuit Diagram (RHD 4JG2)-5

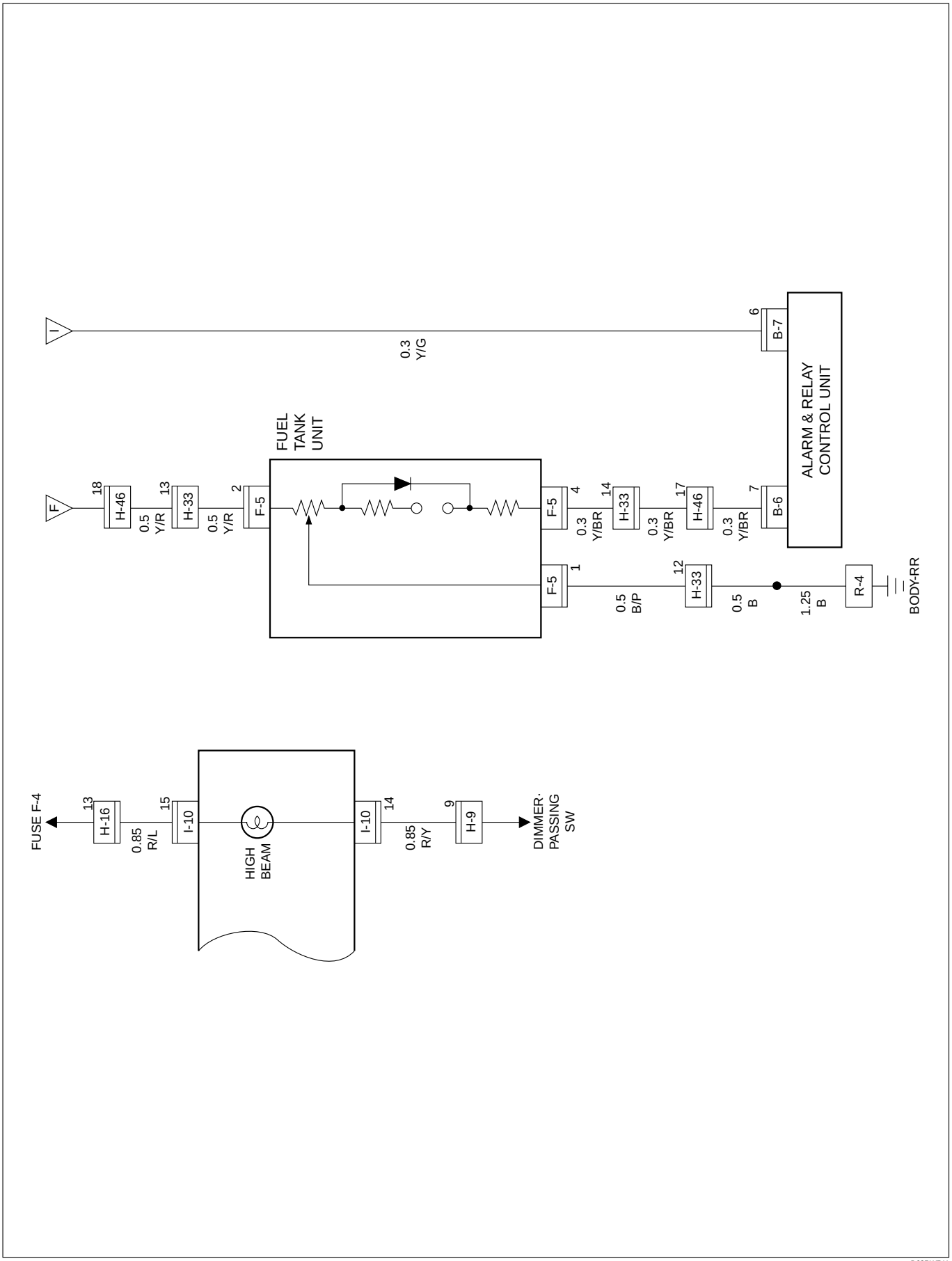

D08RW741

Circuit Diagram (RHD 4JG2)-6

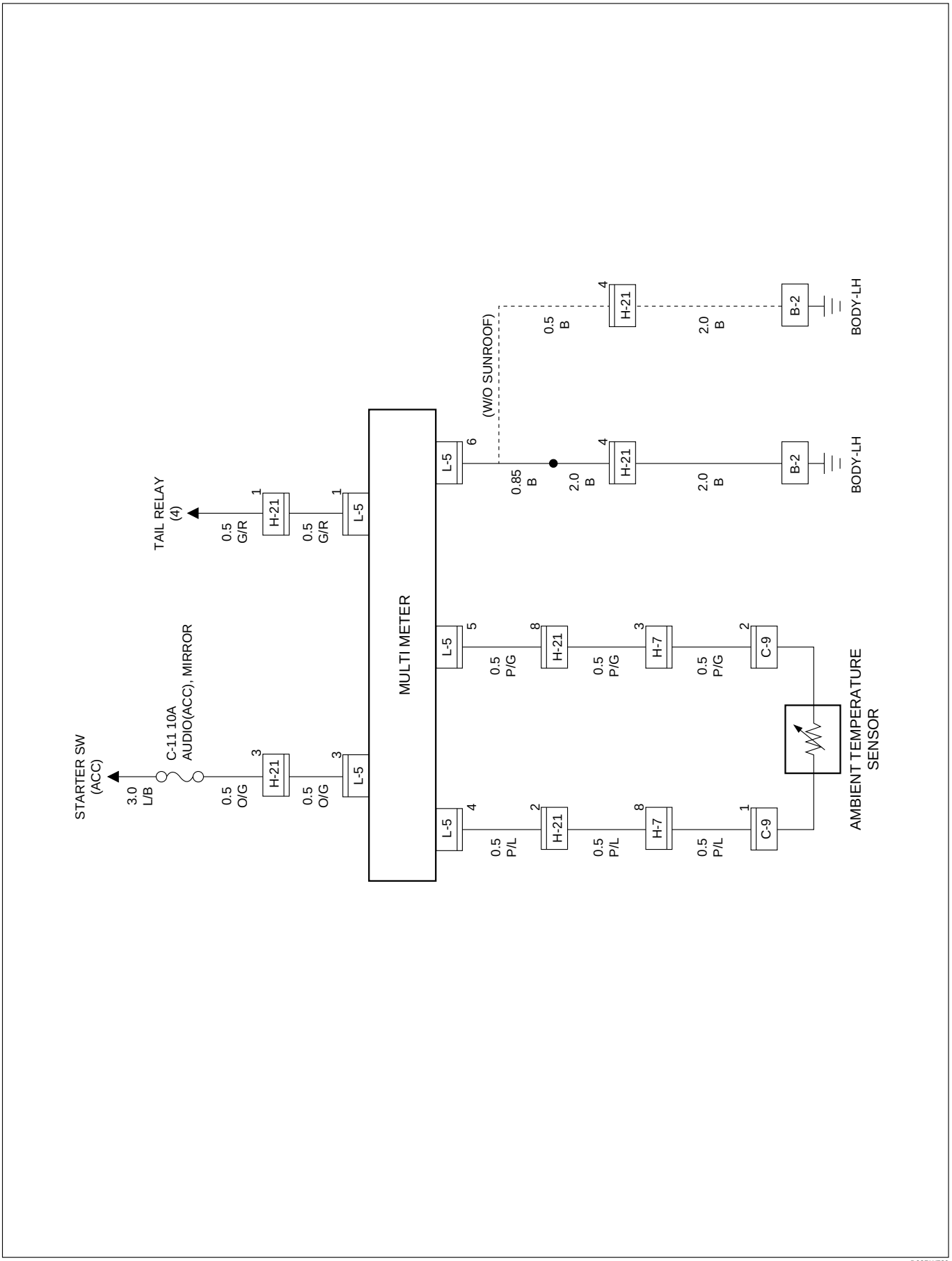

D08RW730

Parts Location (RHD 6V*1)

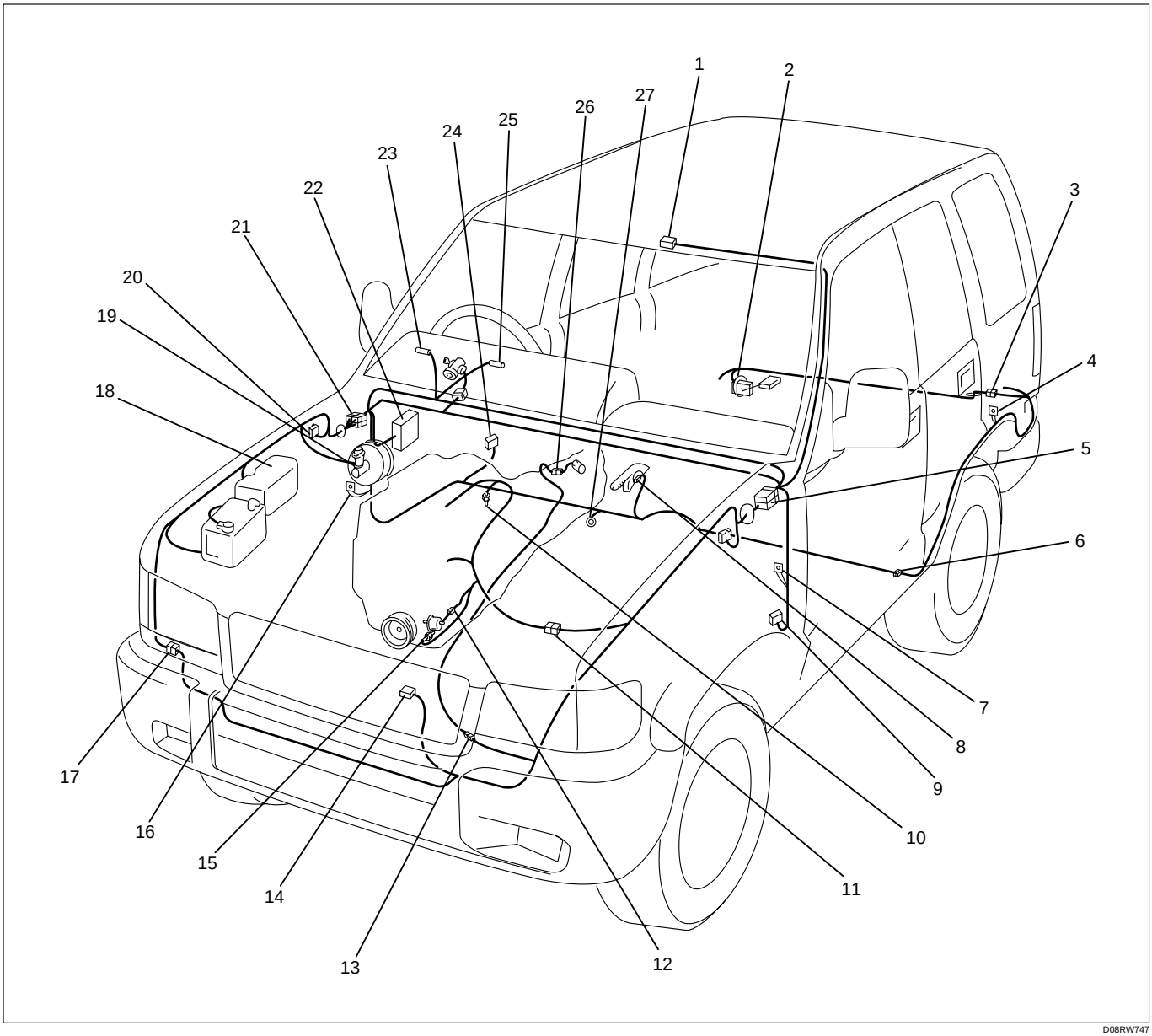

D08RW747

Legend

(1) L-5
(2) F-5
(3) H-33
(4) R-4
(5) H-7, H-8, H-9, H-21, H-24
(6) H-46
(7) B-1, B-2
(8) B-27
(9) B-6, B-7 (Alarm and Relay Control Unit)
(10) E-19
(11) H-6
(12) E-2
(13) H-10
(14) C-9
(15) E-1
(16) B-19
(17) H-41
(18) Relay and Fuse Box
(19) C-15
(20) C-39
(21) H-13, H-14, H-15, H-25, H-26, H-27, H-62
(22) Fuse Box
(23) I-10
(24) B-24
(25) I-9
(26) M-10
(27) B-26

Parts Location (RHD 4JG2)

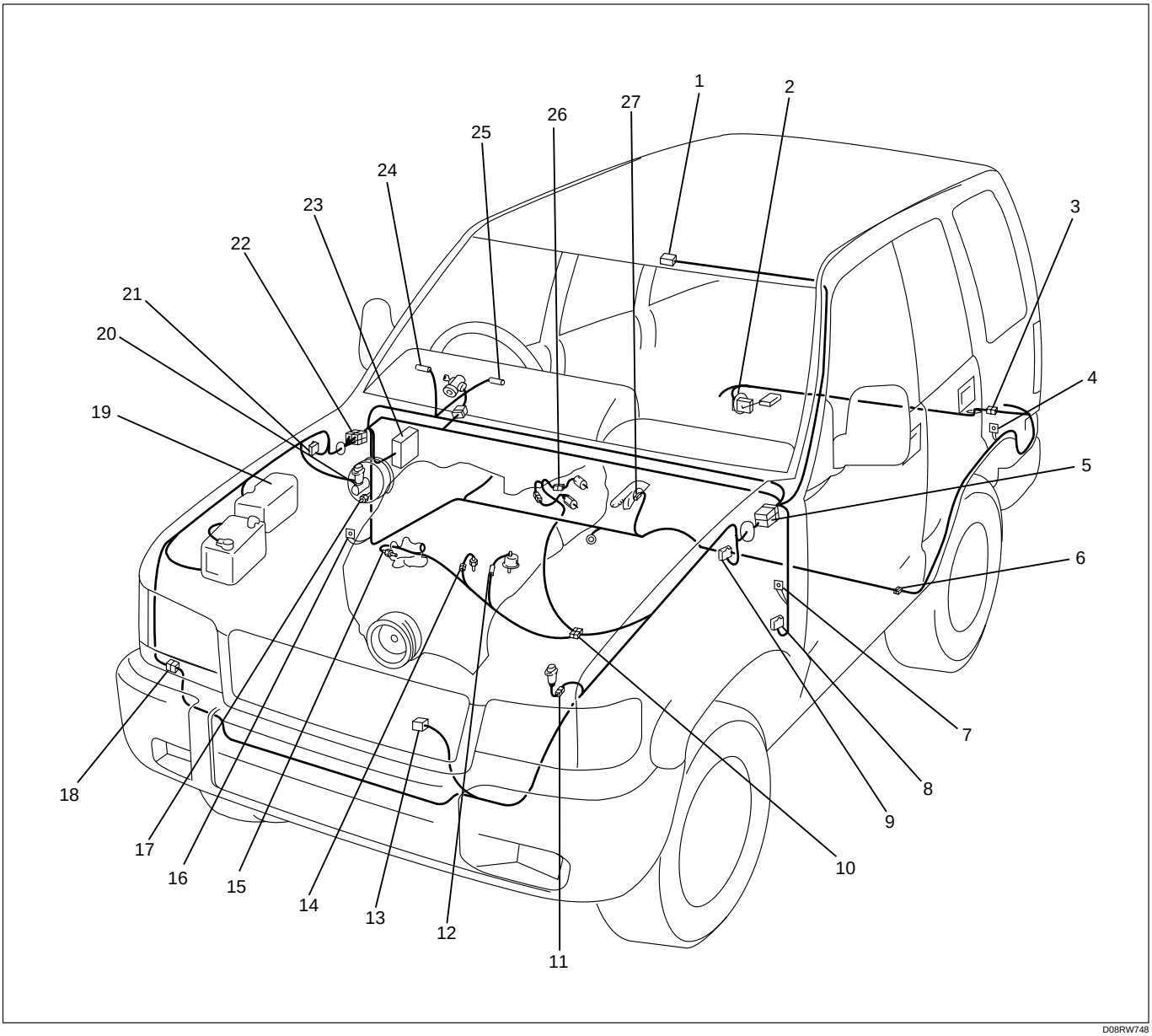

D08RW748

Legend

(1) L-5
(2) F-5
(3) H-33
(4) R-4
(5) H-7, H-9, H-21, H-24
(6) H-46
(7) B-1
(8) B-6, B-7 (Alarm and Relay Control Unit)
(9) C-16
(10) H-4, H-5
(11) C-67
(12) E-2
(13) C-9
(14) E-36
(15) E-19
(16) B-19
(17) C-68
(18) H-41, H-42
(19) Relay and Fuse Box
(20) C-15
(21) C-39
(22) H-13, H-15, H-16, H-25, H-26, H-27, H-62
(23) Fuse Box
(24) I-10
(25) I-9
(26) E-44
(27) B-27

Circuit Diagram (LHD 6V*1 W/O T.O.D)-1

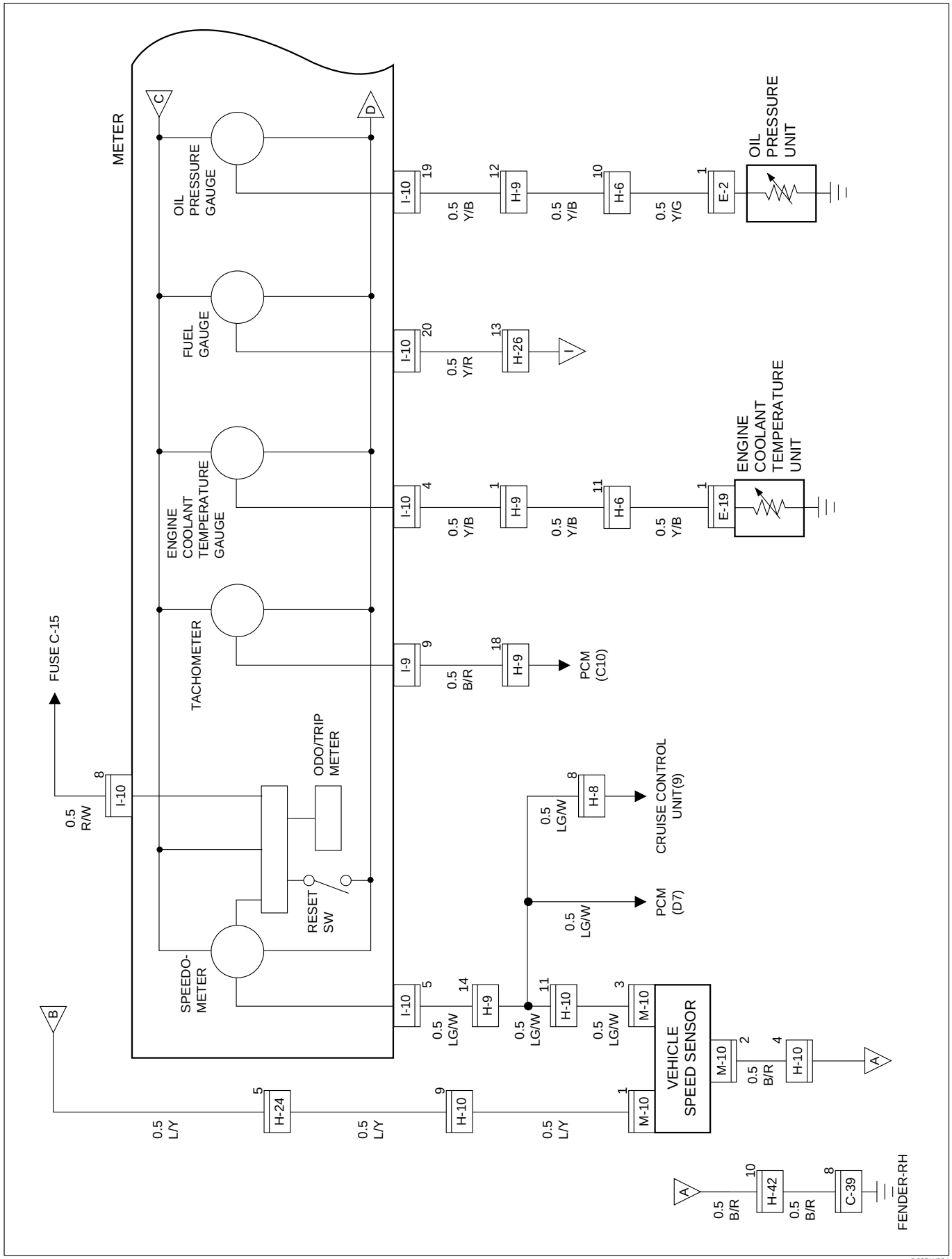

D08RW924

Circuit Diagram (LHD 6V*1 W/O T.O.D)-2

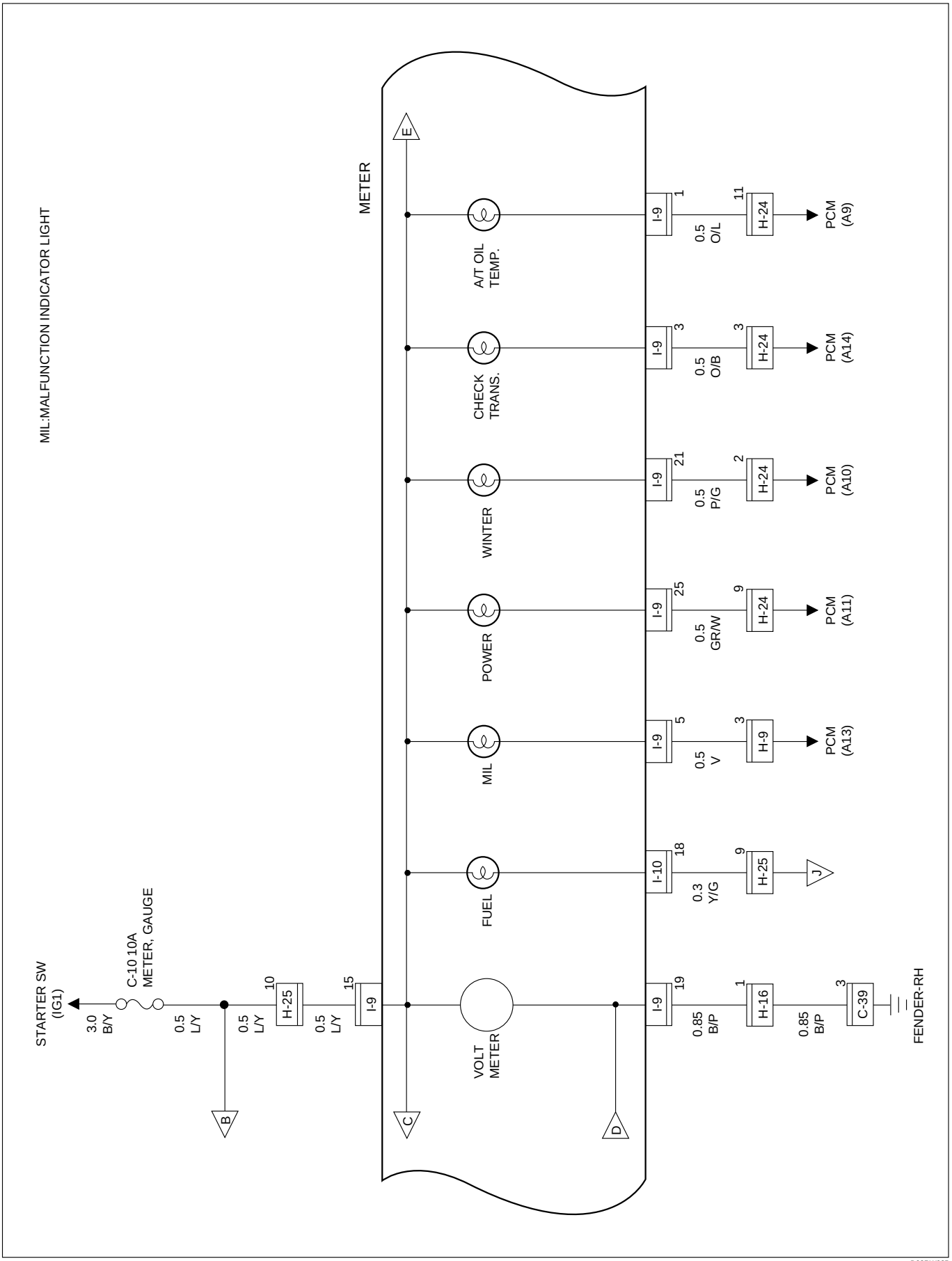

D08RW925

Circuit Diagram (LHD 6V*1 W/O T.O.D)-3

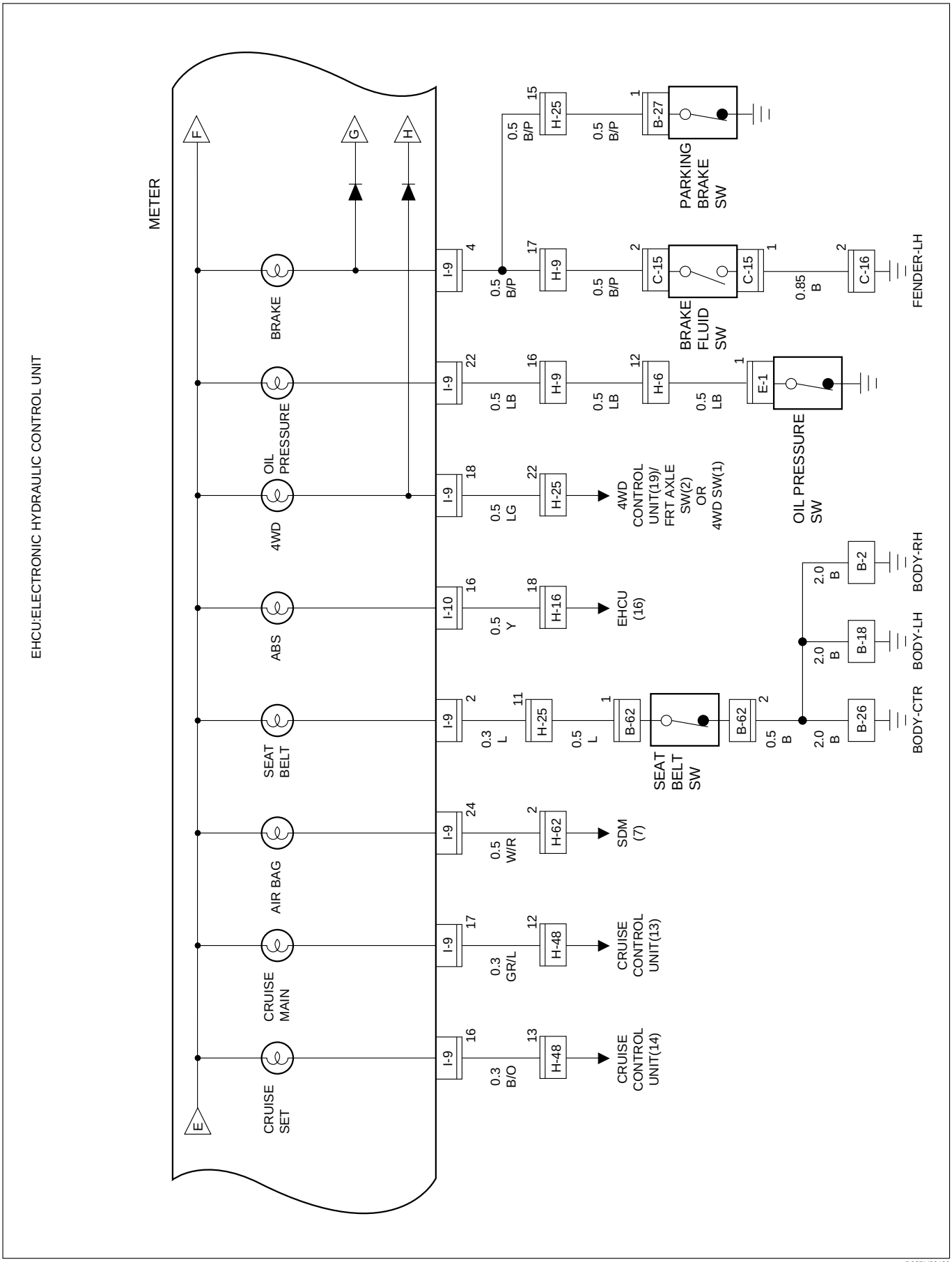

D08RY00429

Circuit Diagram (LHD 6V*1 W/O T.O.D)-4

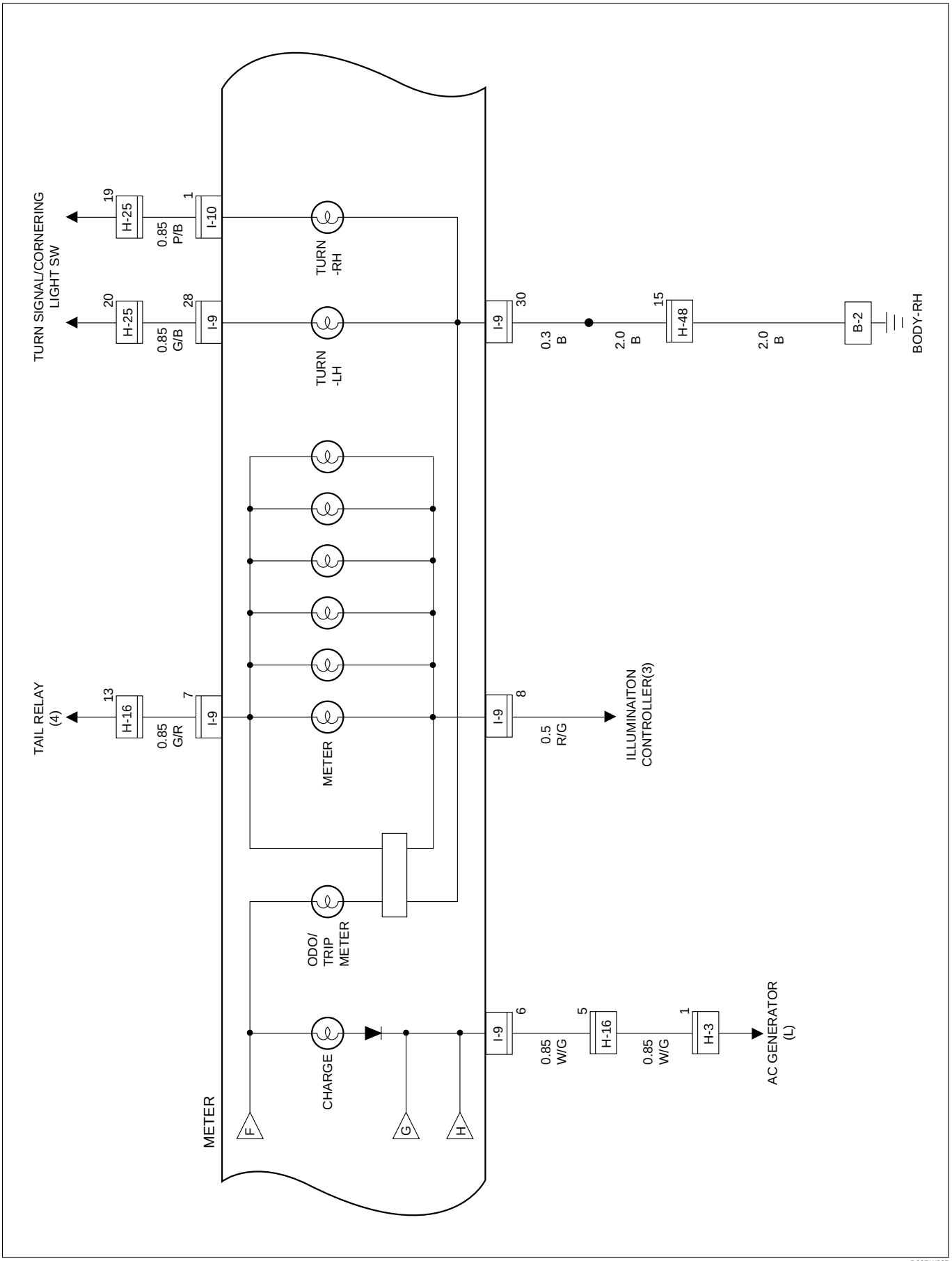

D08RW927

Circuit Diagram (LHD 6V*1 W/O T.O.D)-5

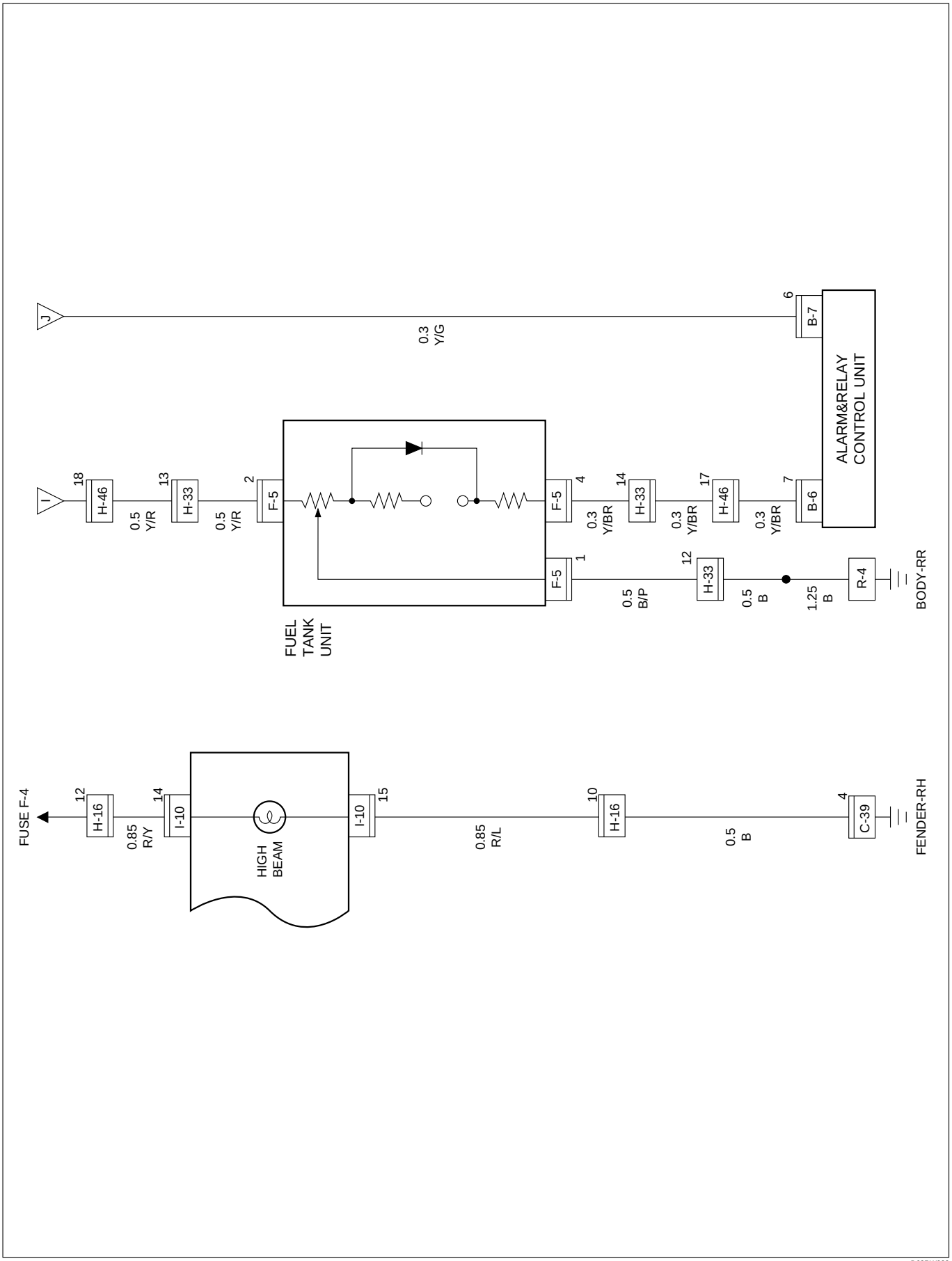

D08RW928

Circuit Diagram (LHD 6V*1 W/O T.O.D)-6

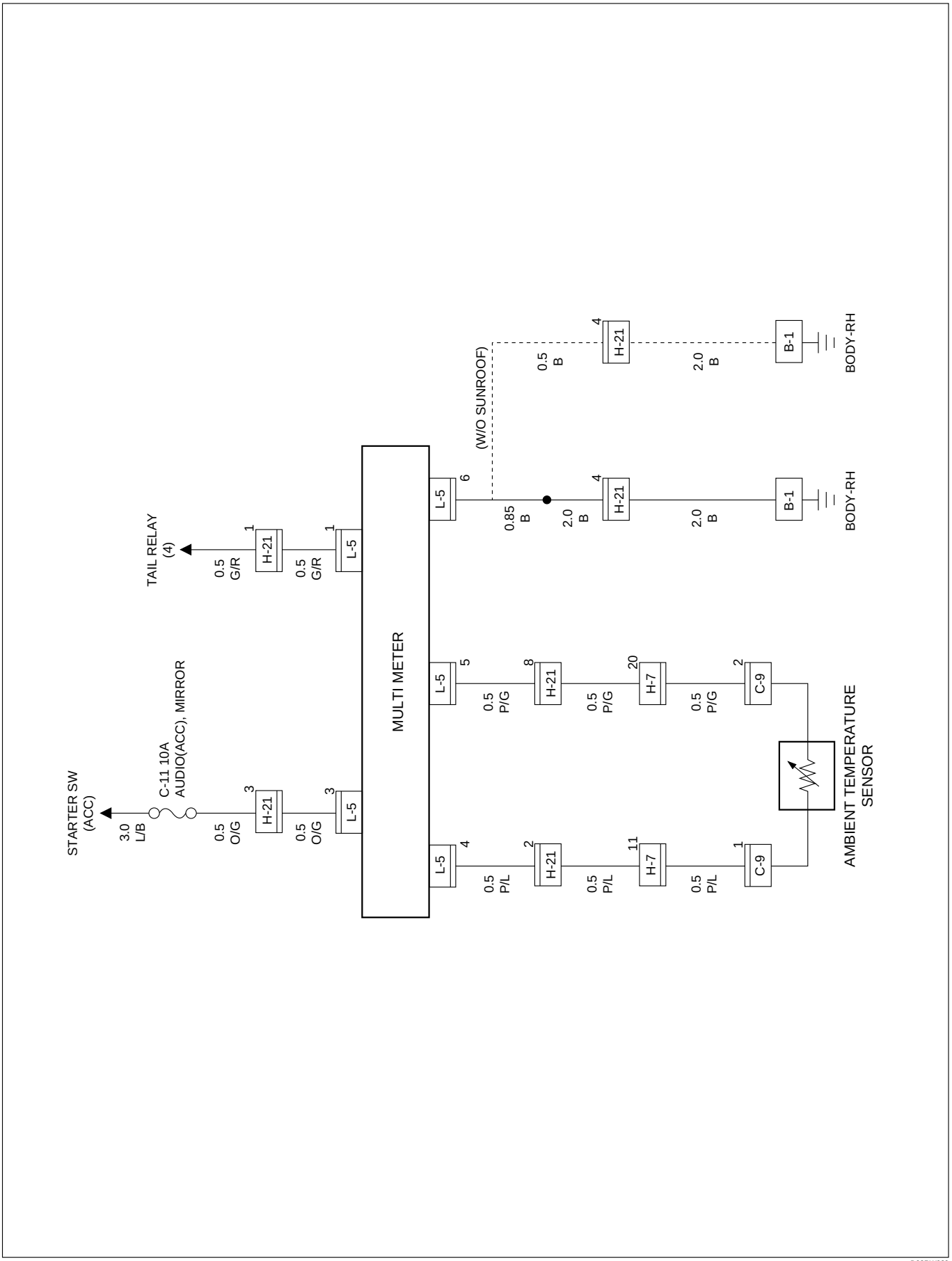

D08RW929

Circuit Diagram (LHD 4JG2)-1

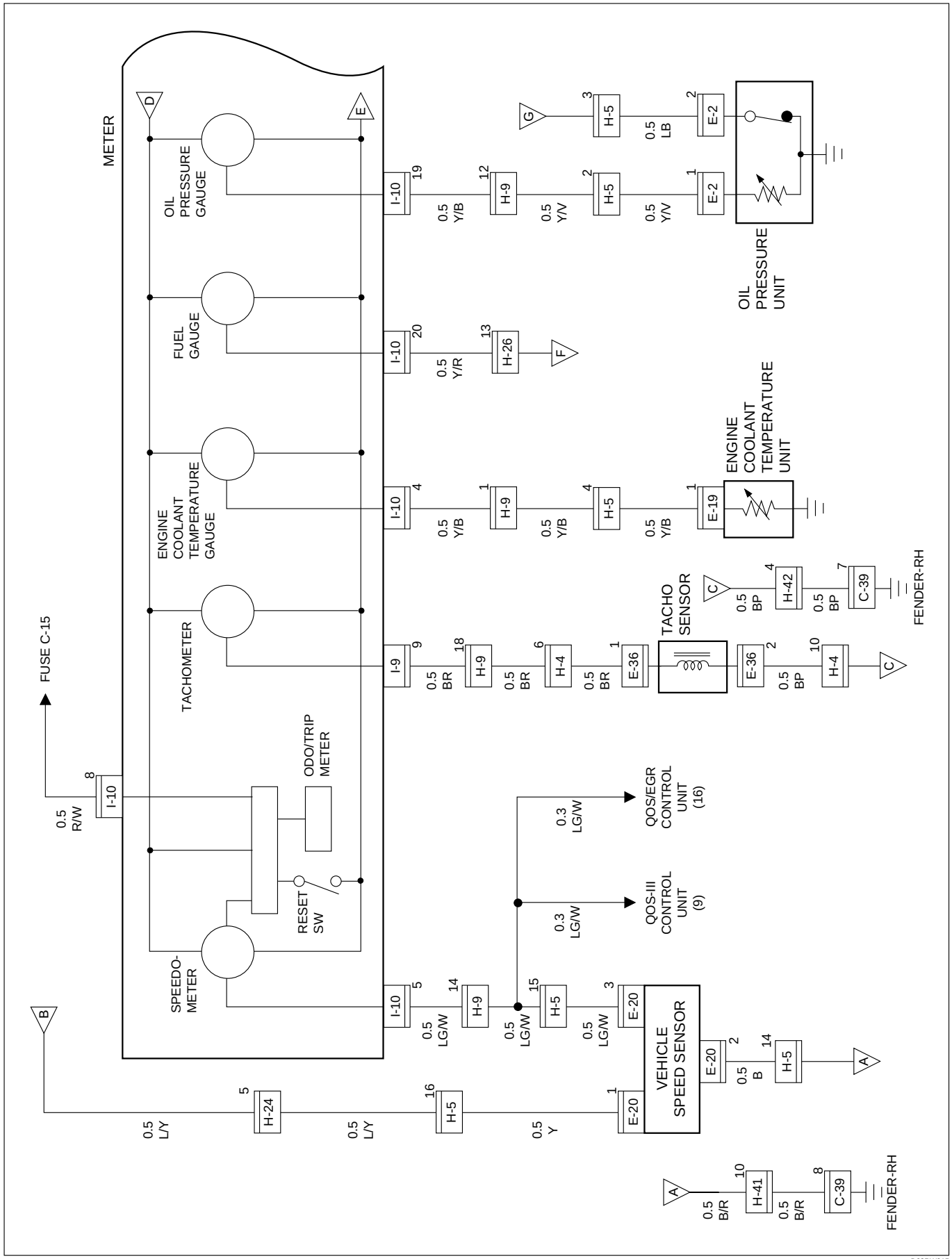

D08RW915

Circuit Diagram (LHD 4JG2)-2

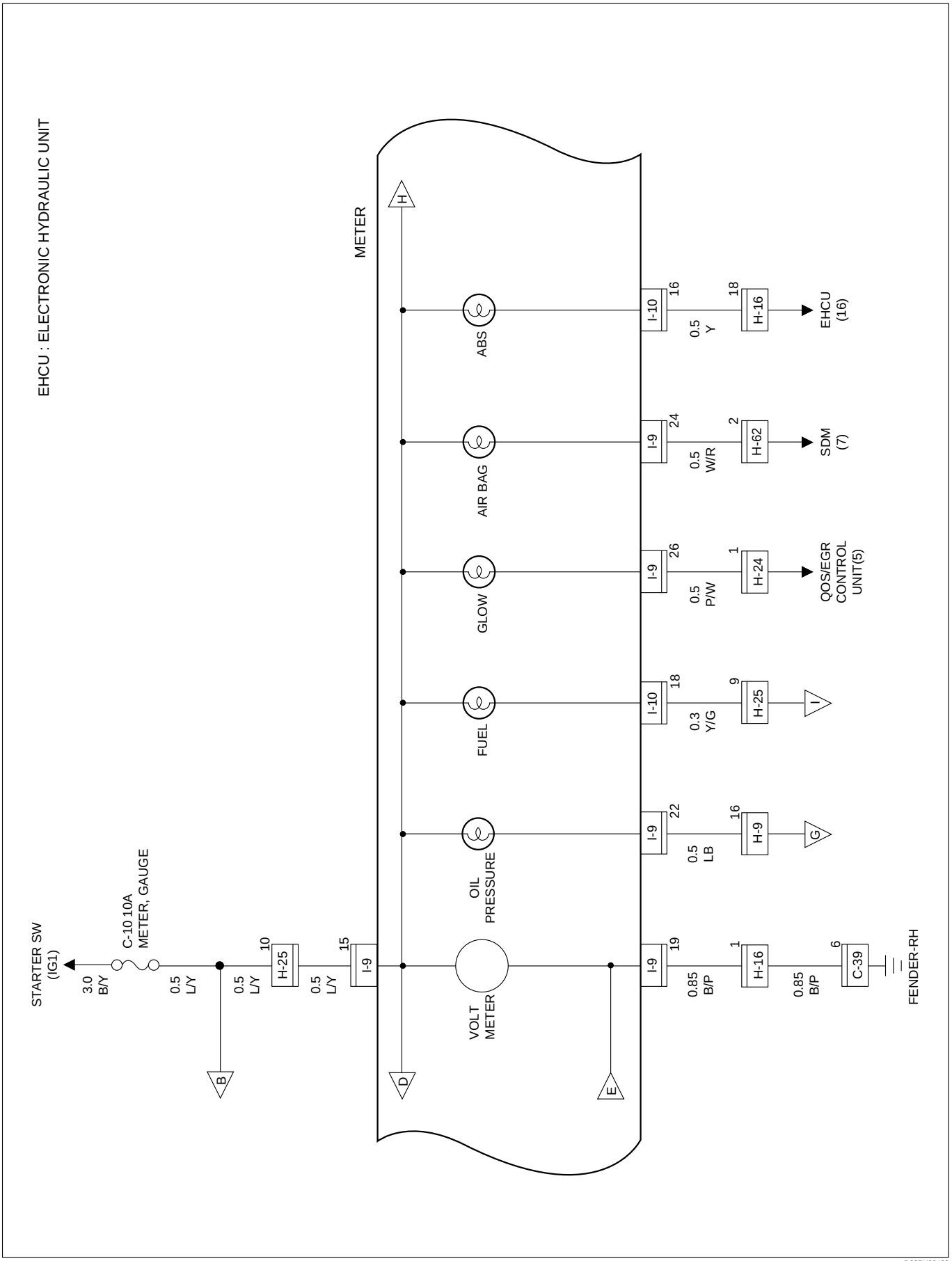

D08RY00430

Circuit Diagram (LHD 4JG2)-3

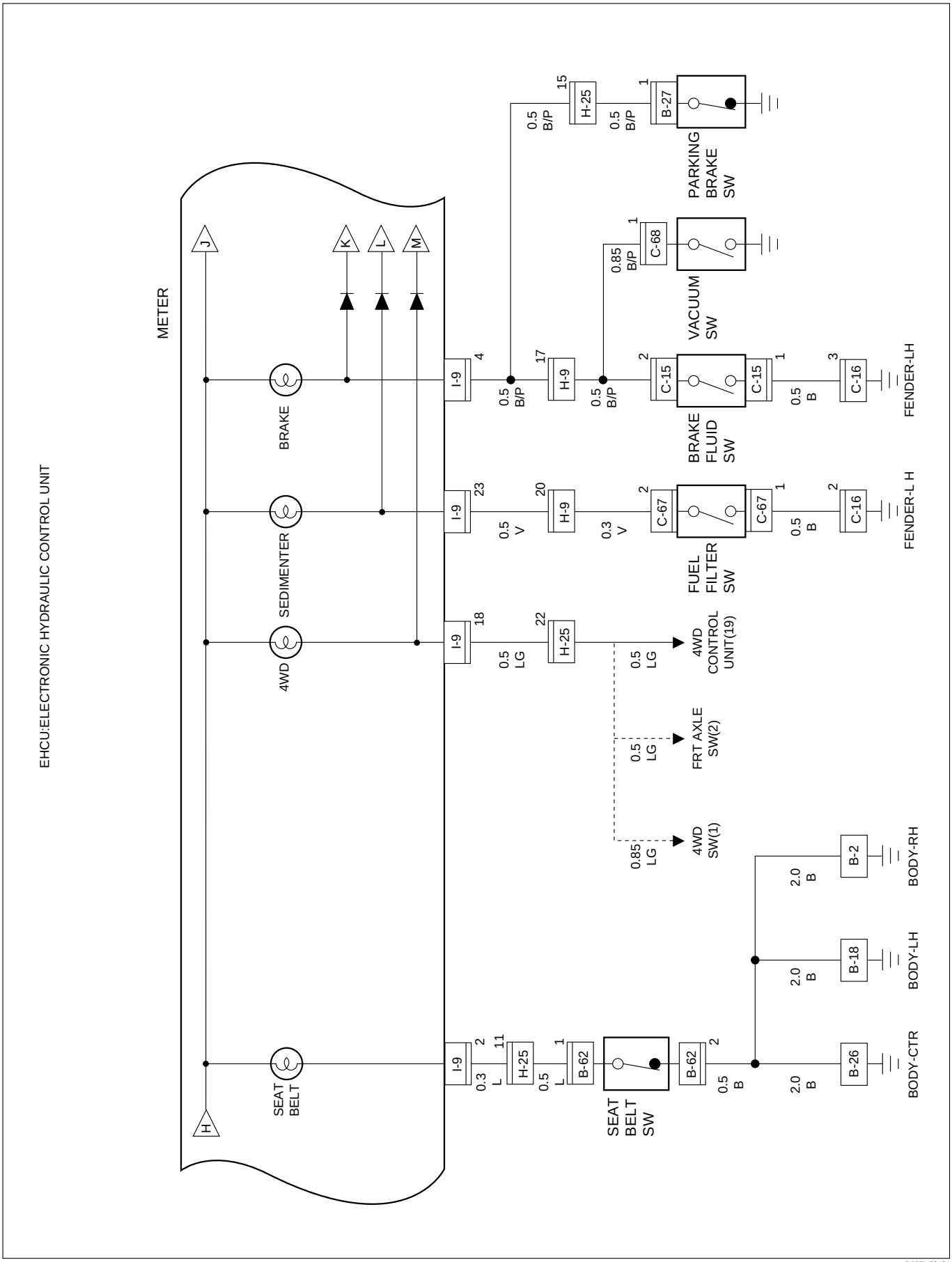

D08RY00431

Circuit Diagram (LHD 4JG2)-4

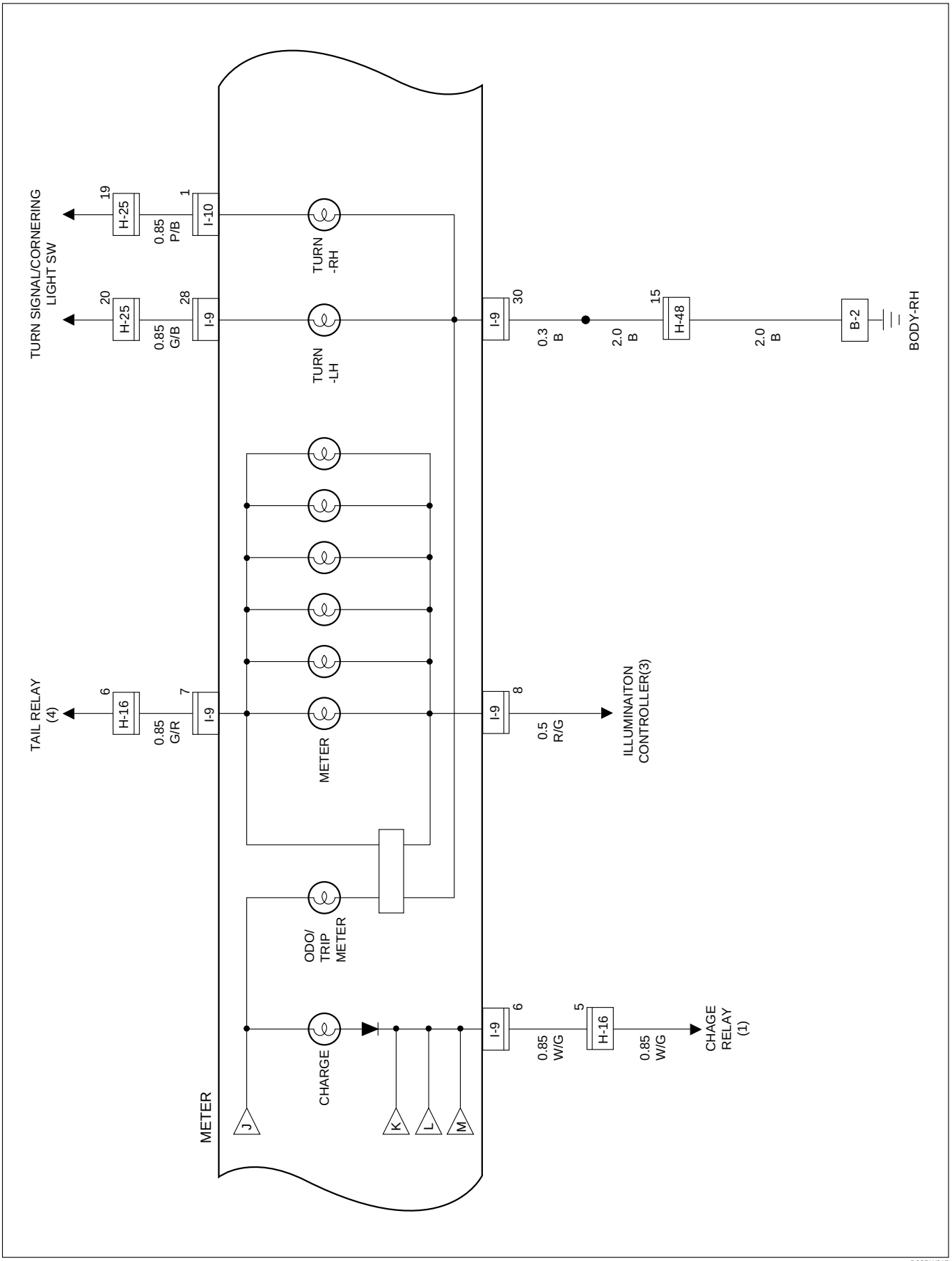

D08RW917

Circuit Diagram (LHD 4JG2)-5

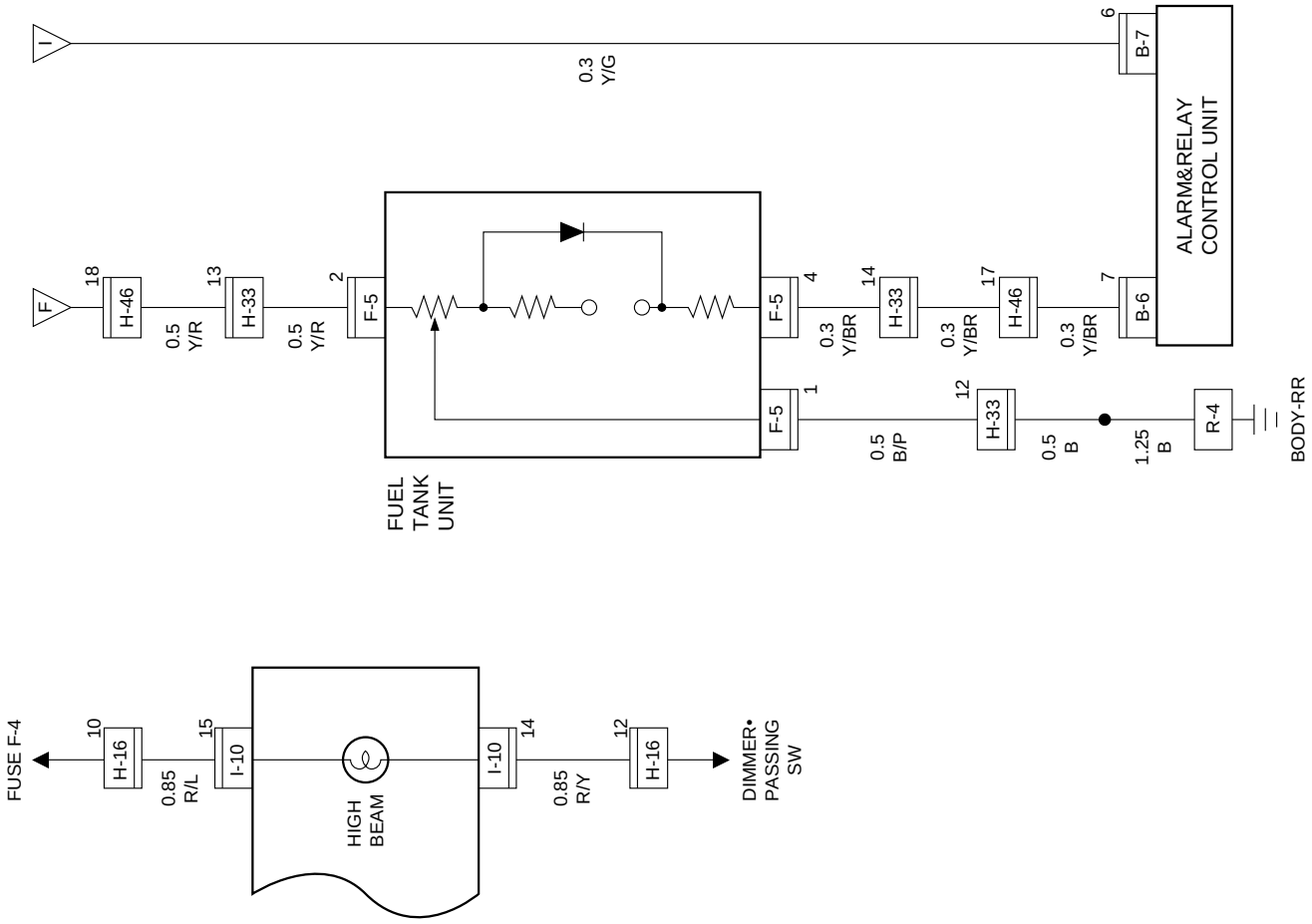

Circuit Diagram (LHD 4JG2)-6

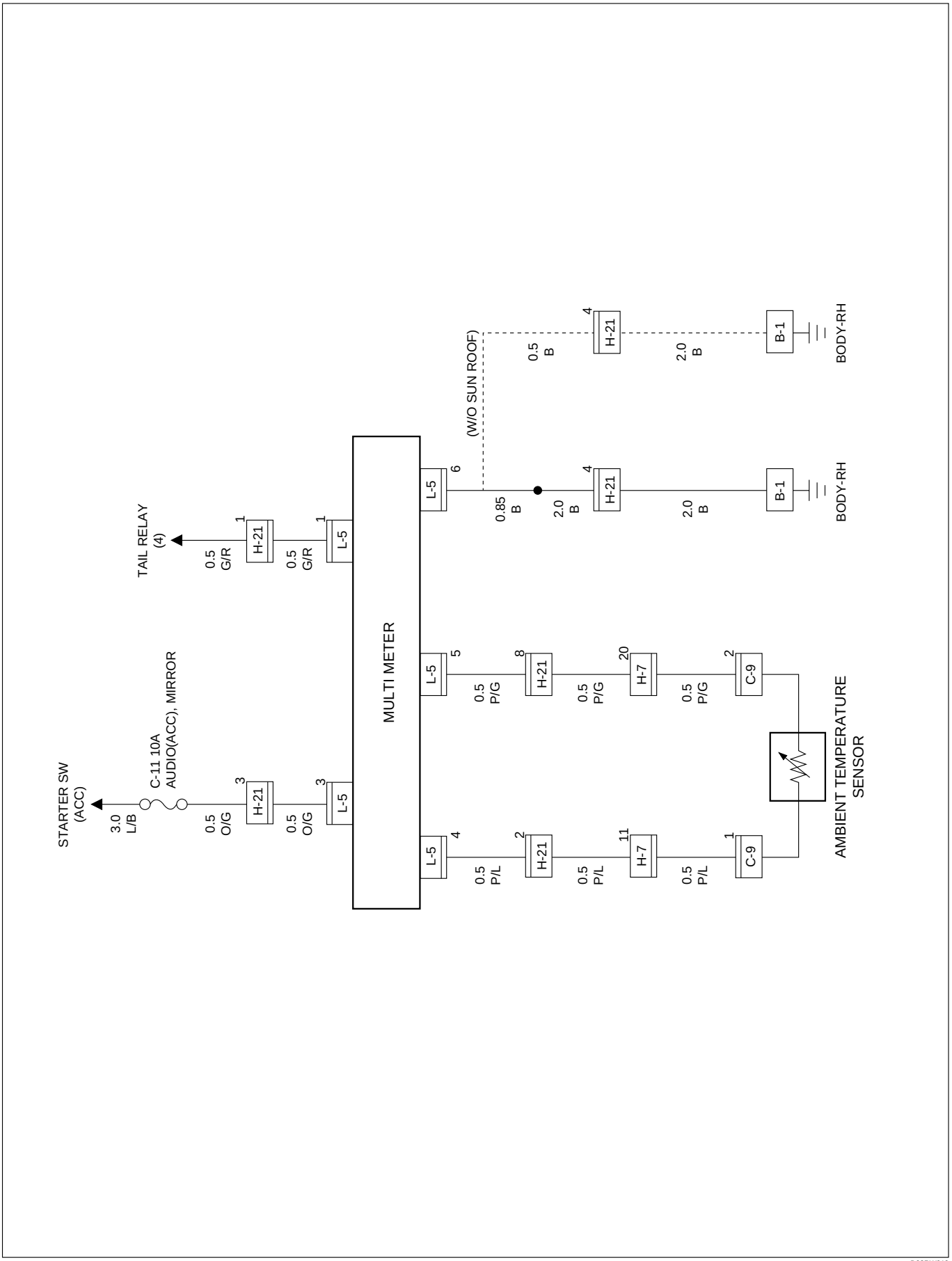

D08RW919

Parts Location (LHD W/O T.O.D 6V*1)

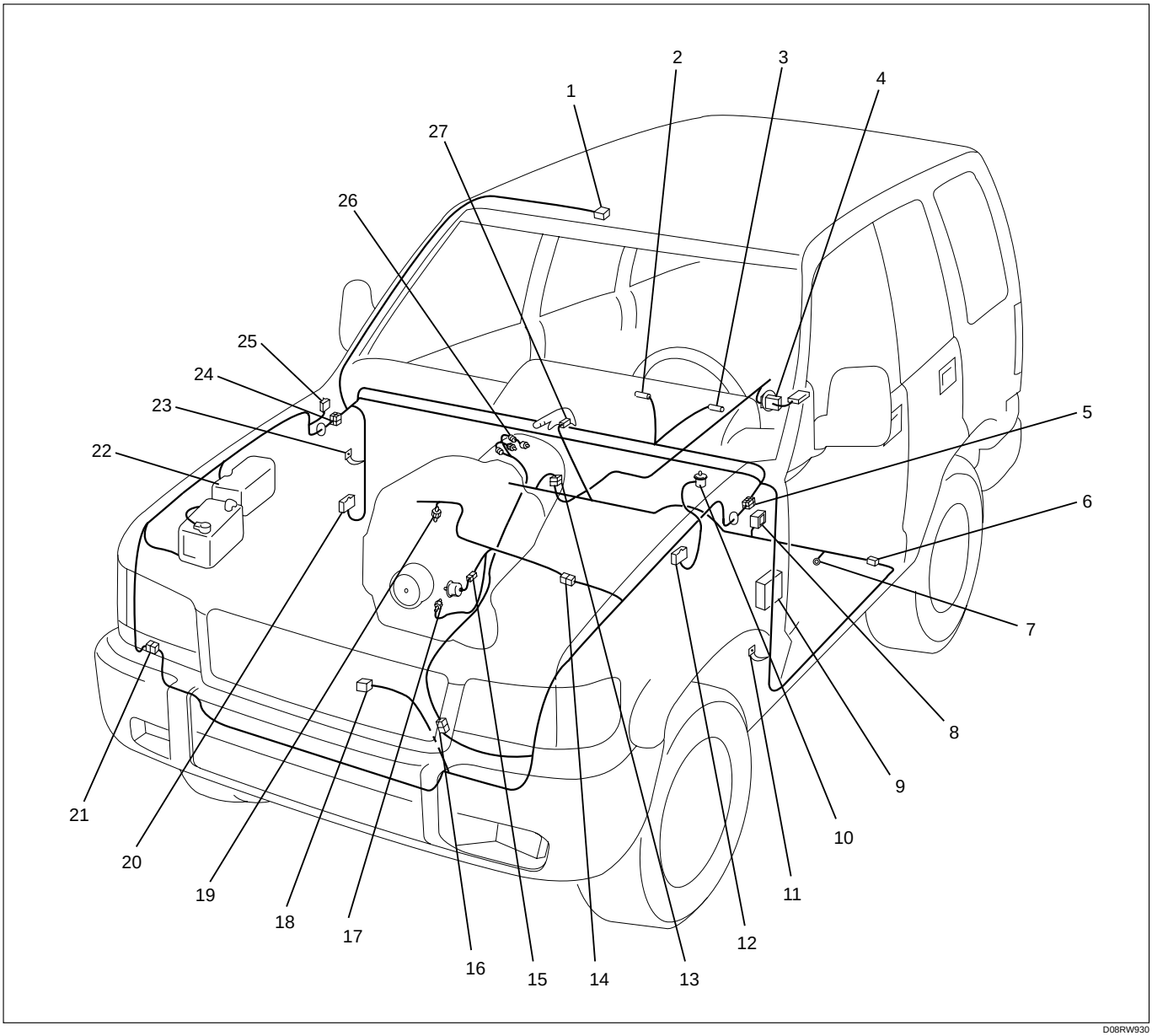

D08RW930

Legend

(1) L-5
(2) I-10
(3) I-9
(4) F-5
(5) H-7, H-8, H-9, H-24, H-25, H-26, H-62
(6) H-46
(7) B-26
(8) B-62
(9) Fuse Box
(10) C-15
(11) B-18
(12) C-16
(13) H-33
(14) H-6
(15) E-2
(16) H-10
(17) E-1
(18) C-9
(19) E-19
(20) B-6, B-7 (Alarm and Relay Control Unit)
(21) H-42
(22) Relay and Fuse Box
(23) B-1, B-2
(24) H-16, H-21, H-48
(25) C-39
(26) M-10
(27) B-27

Parts Location (LHD 4JG2)

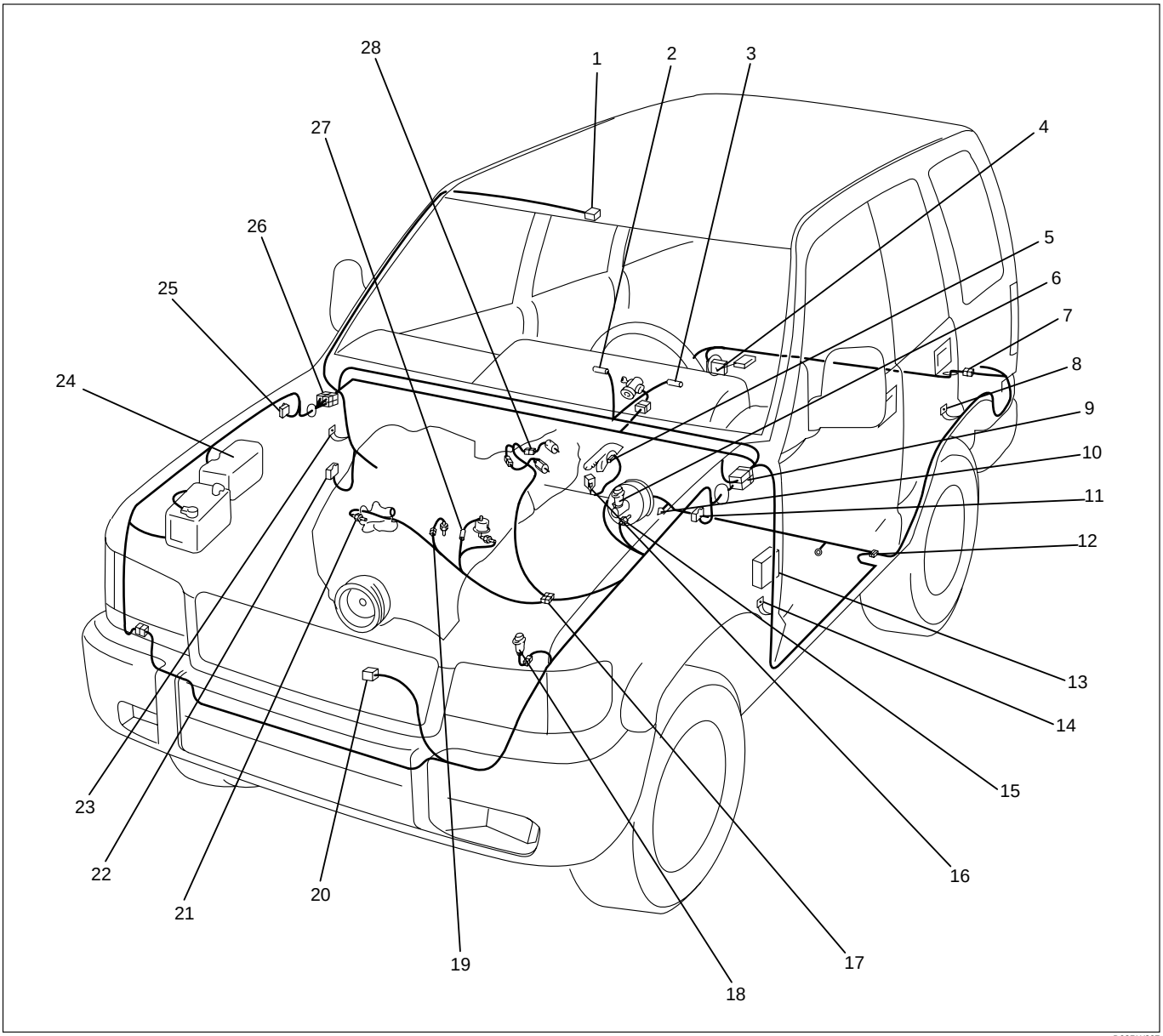

D08RW897

Legend

(1) L-5
(2) I-10
(3) I-9
(4) F-5
(5) B-27
(6) C-15
(7) H-33
(8) R-4
(9) H-7, H-9, H-24, H-25, H-62
(10) B-26
(11) C-16
(12) H-46
(13) Fuse Box
(14) B-18
(15) C-68
(16) B-62
(17) H-4, H-5
(18) C-67
(19) E-36
(20) C-9
(21) E-19
(22) B-6, B-7 (Alarm and Relay Control Unit)
(23) B-1, B-2
(24) Relay and Fuse Box
(25) C-39
(26) H-12, H-14, H-16, H-21, H-48
(27) E-2
(28) E-20

Diagnosis

1. Speedometer

1-1. Speedometer and Odometer Do Not Function

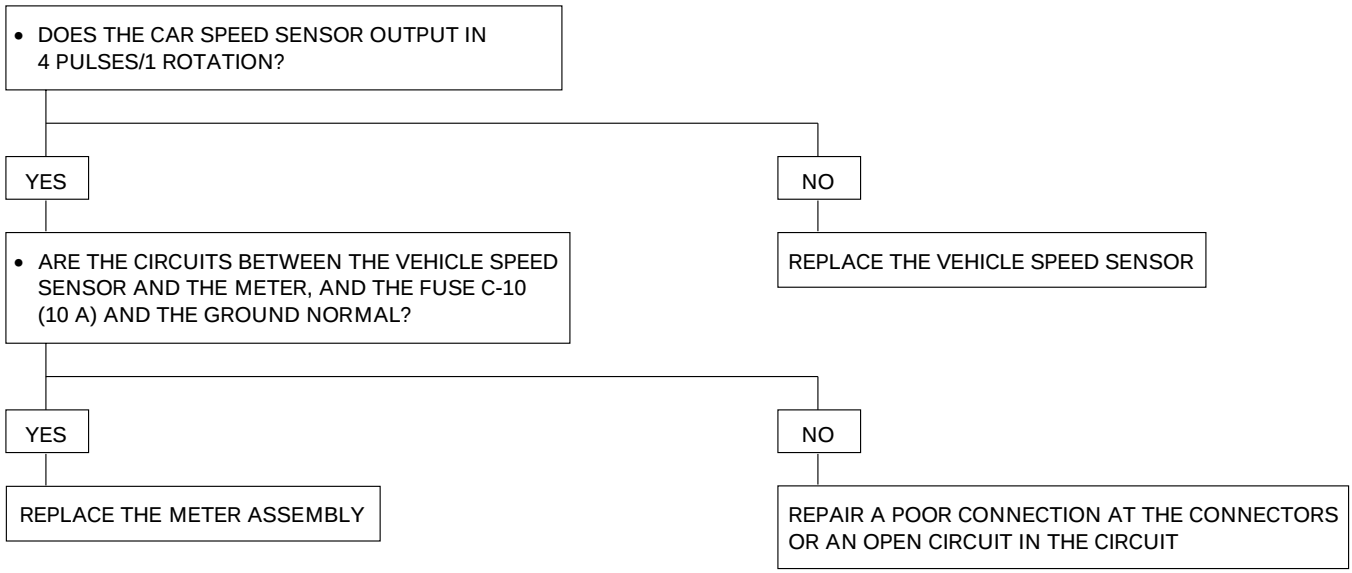

1-2. Speedometer Does Not Function (Odometer is Normal)

REPLACE THE METER ASSEMBLY

1-3. Odometer Does Not Function (Speedometer is Normal)

REPLACE THE METER ASSEMBLY

1-4. Speedometer Needle Fluctuations (May Be Wide Fluctuation)

- DOES THE VEHICLE SPEED SENSOR OUTPUT NORMALLY?

YES

REPLACE THE METER ASSEMBLY

NO

THE OSCILLOSCOPE WAVEFORM IS DEFORMED

REPLACE THE VEHICLE SPEED SENSOR OR REPAIR A POOR CONNECTION AT THE CONNECTORS IN THE CIRCUIT OR A FAILURE IN THE CABLE HARNESS

1-5. Speedometer Needle Jumps Erratically

- DOES THE VEHICLE SPEED SENSOR OUTPUT NORMALLY?

YES

REPLACE THE METER ASSEMBLY

NO

AN ABNORMAL PERIODIC WAVEFORM IS OUTPUT BY OSCILLOSCOPE

REPLACE THE VEHICLE SPEED SENSOR, OR REPAIR A POOR CONNECTION AT THE CONNECTORS IN THE CIRCUIT OR A FAILURE IN THE CABLE HARNESS

Inspection of a waveform by oscilloscope

1. Connect a resistance of 1.3 to 5k ohm (1.4W or more) between the harness side connectors 15 I-9 and 5 I-10 (w/o TOD) or 26 I-9 and 5 I-10

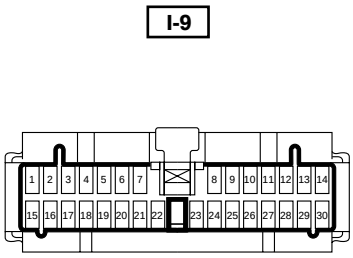

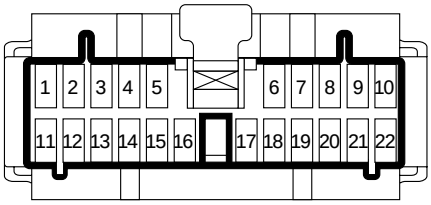

2. Install a speedometer tester.
3. Turn on the starter SW.
4. Check the waveform at the time when the car speed is at 60 km/h.

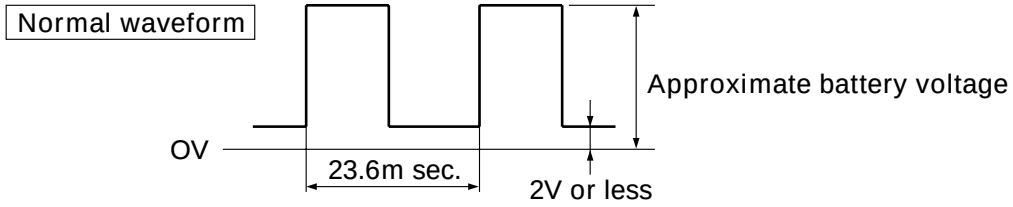

2. Tachometer

2-1. Tachometer Does Not Function

- IS THE PULSE INPUT NORMAL?

YES → REPLACE THE METER ASSEMBLY

NO → REPLACE THE PCM, ECM OR REPAIR A POOR CONNECTION AT THE CONNECTORS IN THE CIRCUIT OR A FAILURE IN THE CABLE HARNESS

2-2. Tachometer Needle Fluctuates (May Be Wide Fluctuation)

- IS THE PULSE INPUT NORMAL?

YES

REPLACE THE METER ASSEMBLY

NO

THE WAVEFORM BY OSCILLOSCOPE IS DEFORMED (ABNORMAL INPUT)

REPLACE THE PCM, ECM OR REPAIR A POOR CONNECTION AT THE CONNECTORS IN THE CIRCUIT OR A FAILURE IN THE CABLE HARNESS

2-3. Tachometer Needle Jumps Erratically

- IS THE PULSE INPUT NORMAL?

YES

REPLACE THE METER ASSEMBLY

NO

AN ABNORMAL PERIODIC WAVEFORM IS OUTPUT BY OSCILLOSCOPE

REPLACE THE PCM, ECM OR REPAIR A POOR CONNECTION AT THE CONNECTORS IN THE CIRCUIT OR A FAILURE IN THE HARNESS

Inspection of a waveform by oscilloscope

1. Check the waveform of the meter assembly connector 9 I-9 (Tachometer pulse).

I-9

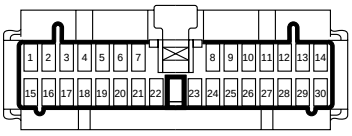

Normal waveform

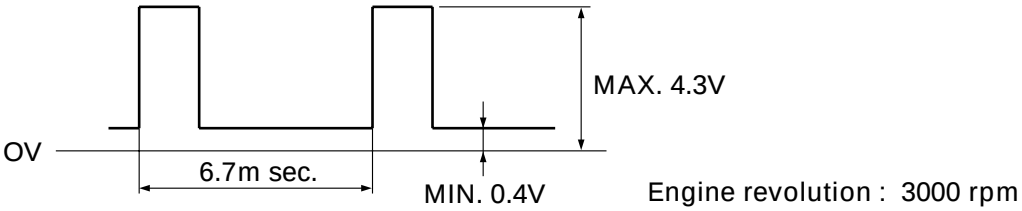

3. Voltmeter

3-1. Voltmeter Needle Does Not Move

3-2. Voltage Reading Is Too Low (Or High)

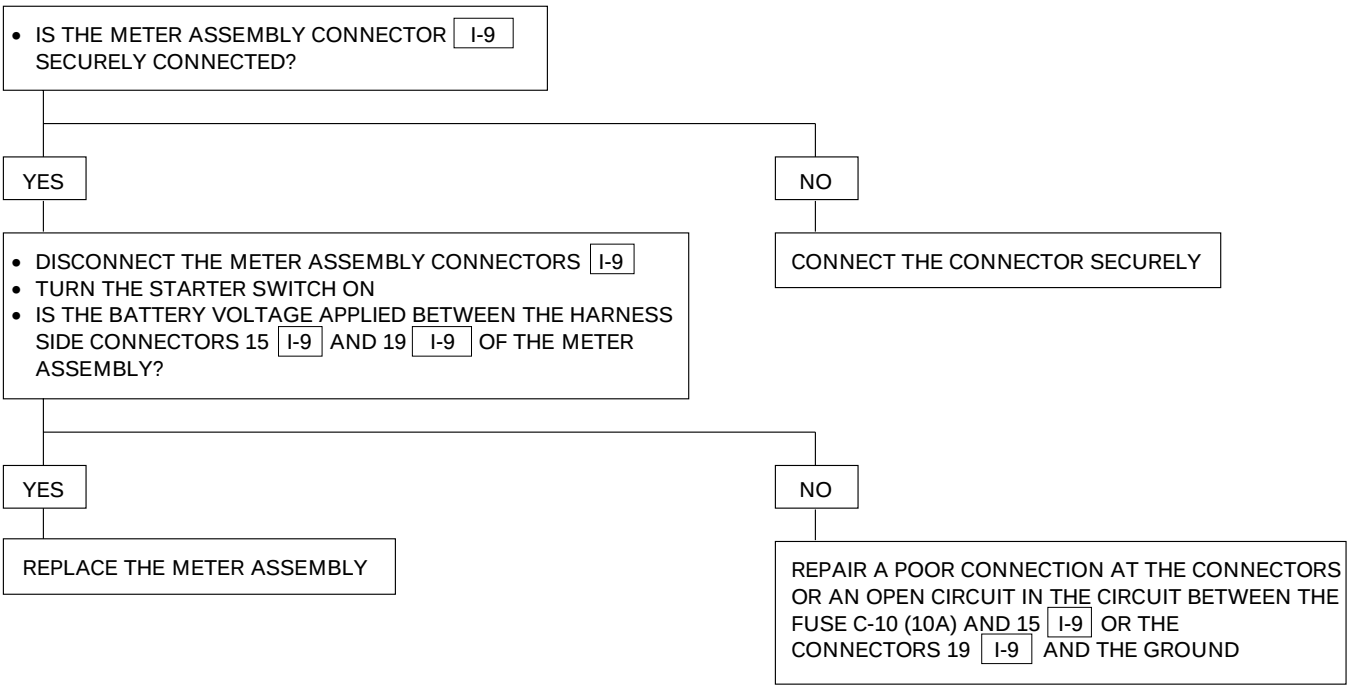

4. Engine Coolant Temperature (ECT) Gauge

4-1 Gauge Needle Does Not Move

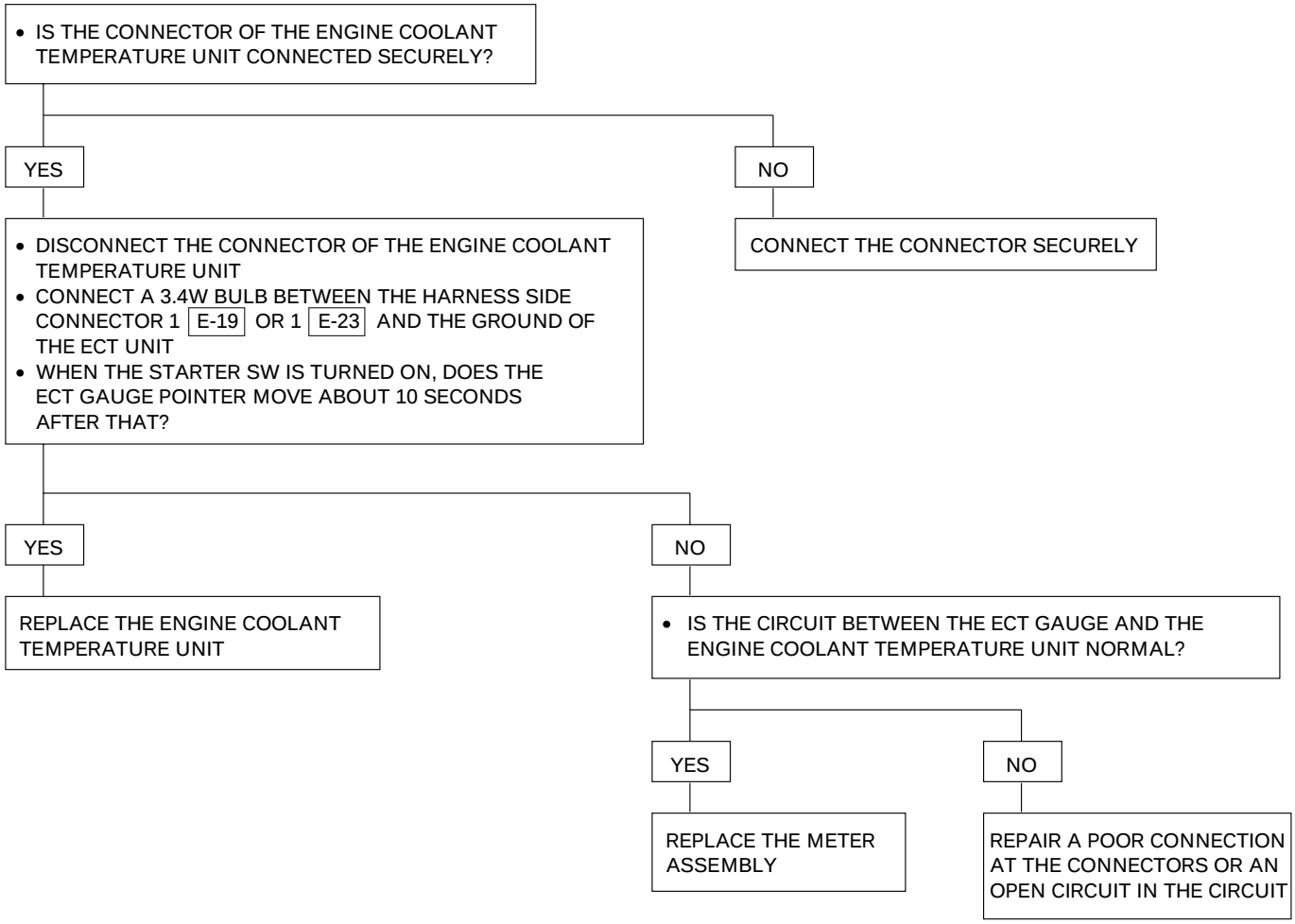

4-2 Gauge Reading Is Too Low (Or High)

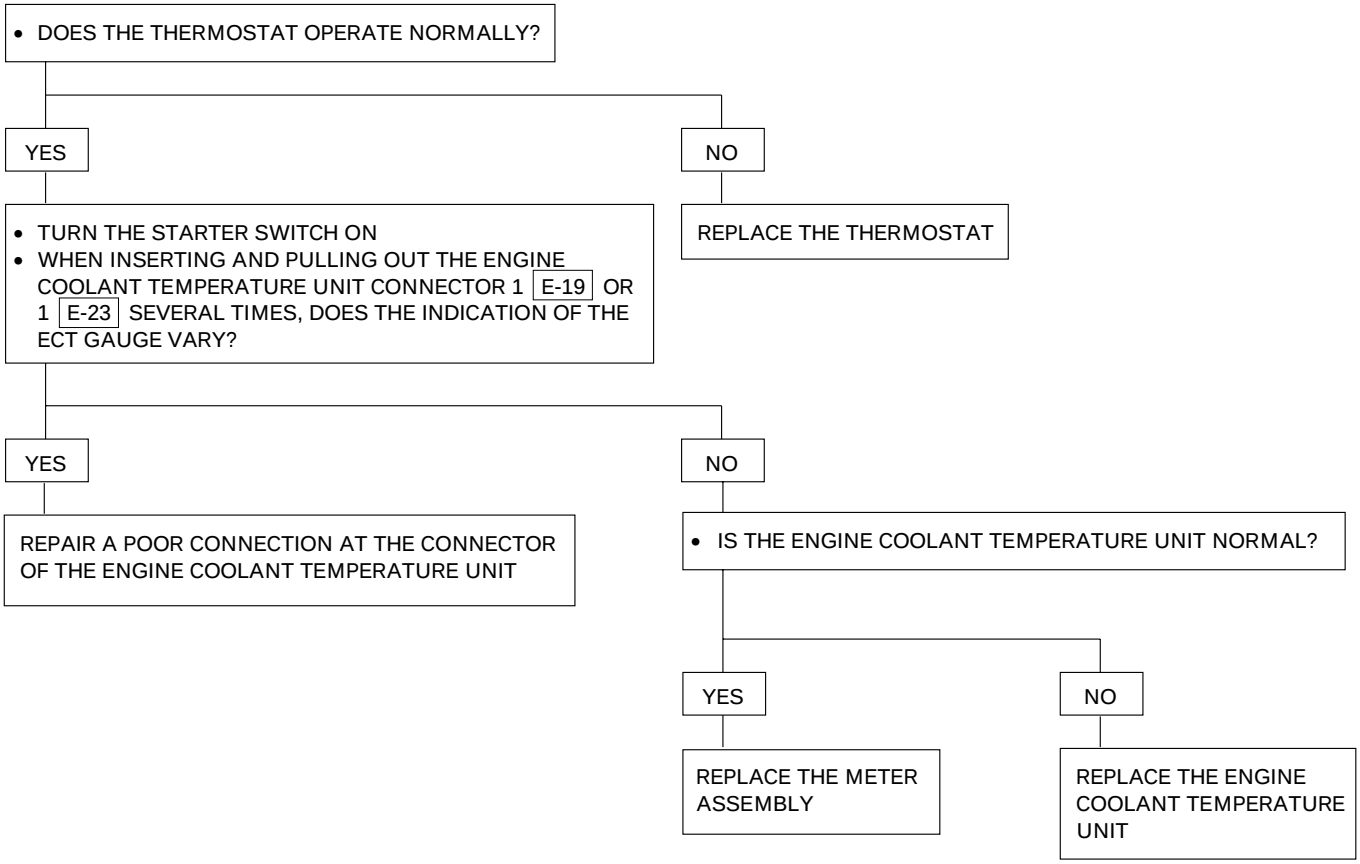

4-3 Needle Overshoots (Goes Up To The “H” Range)

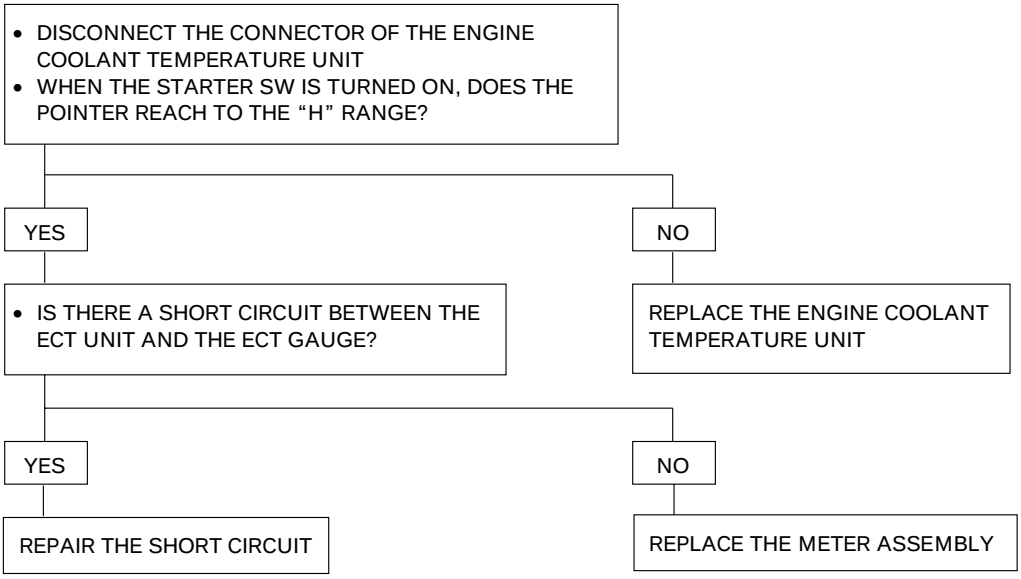

5. Oil Pressure Gauge

5-1 Needle Does Not Move

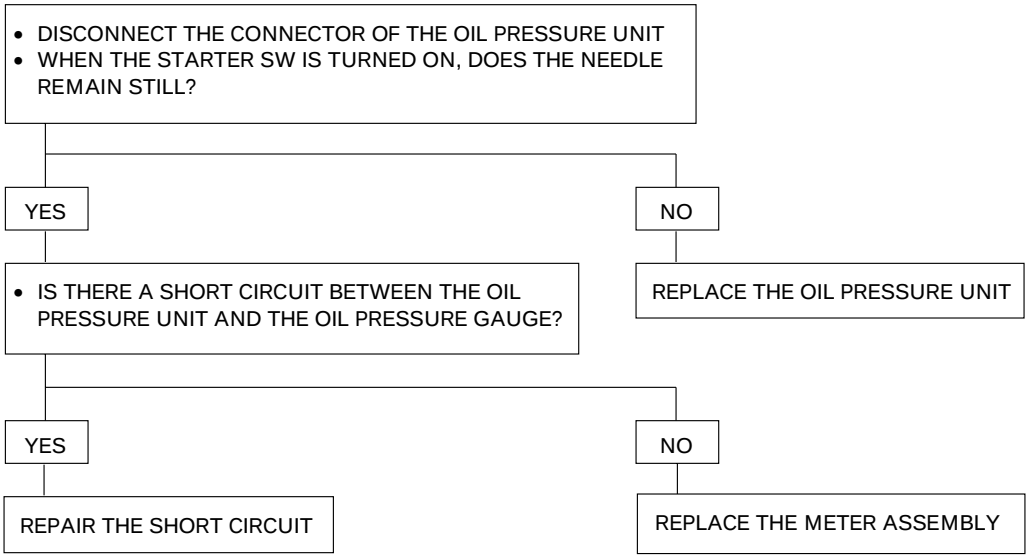

5-2 Oil Pressure Gauge Reading Is Too Low (Or High)

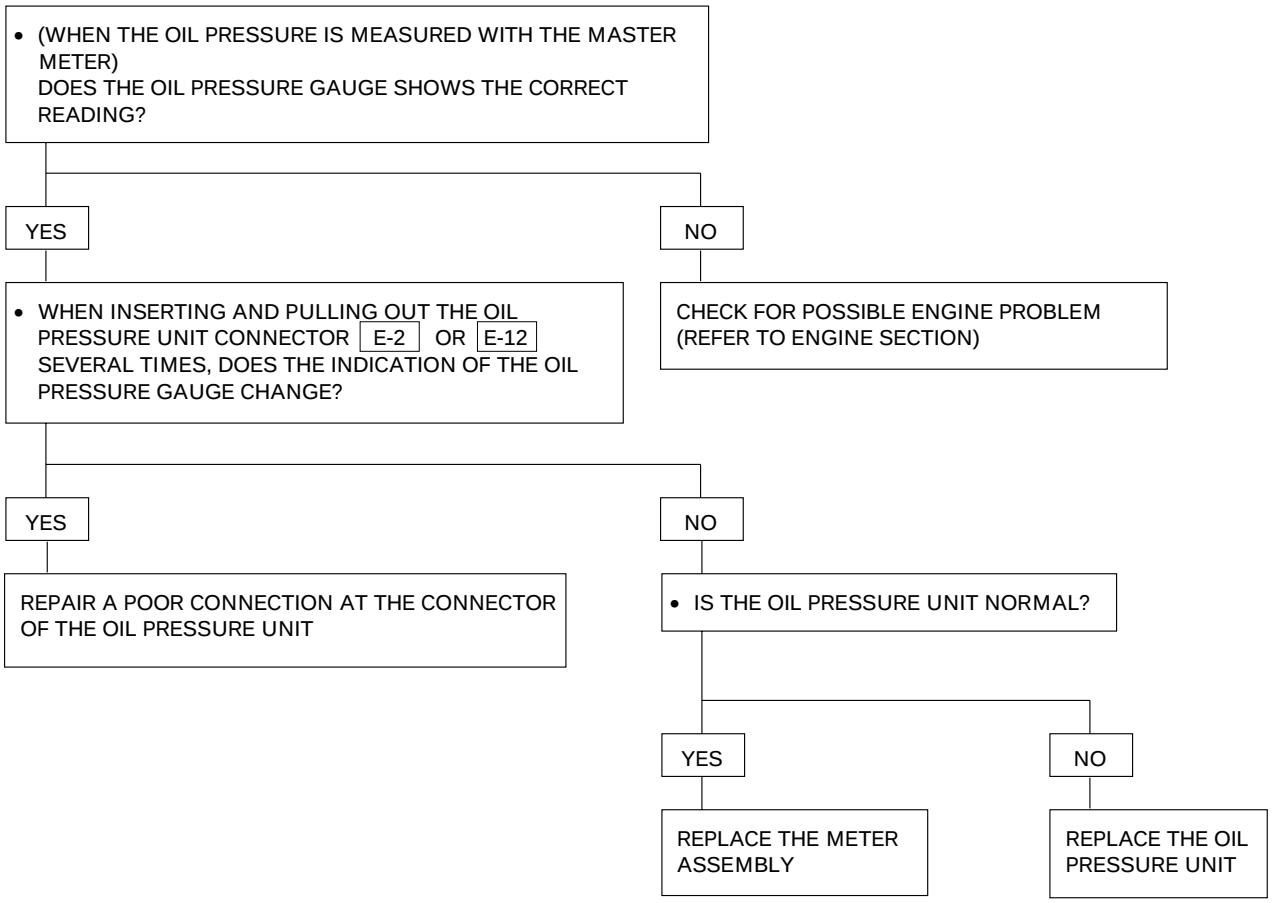

5-3 Needle Overshoots (Goes Up To 15 (x100 kPa))

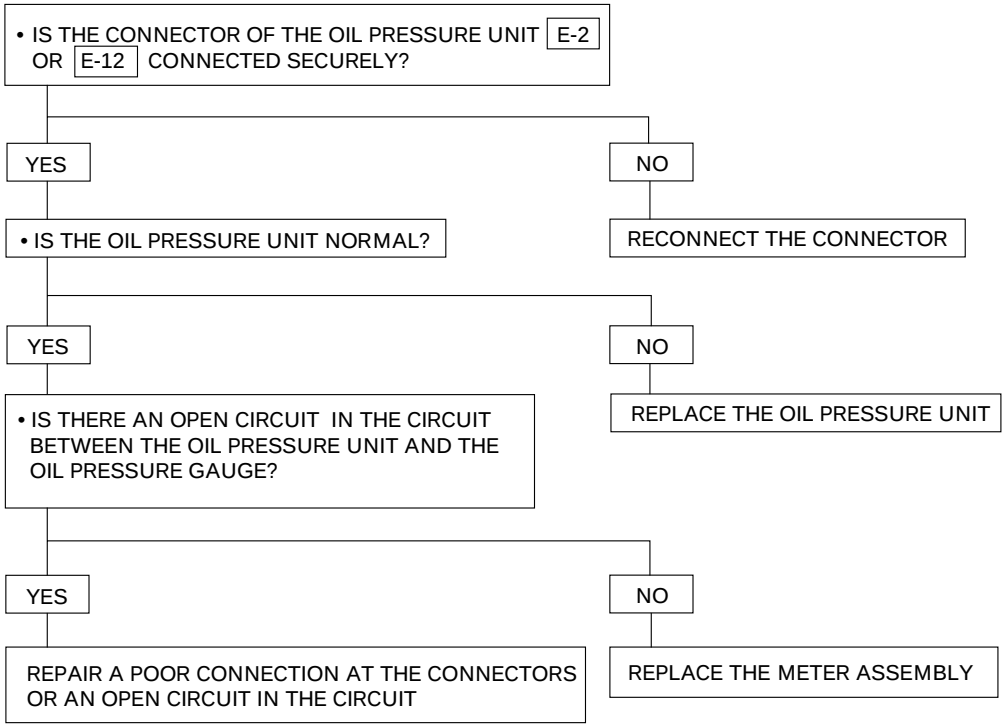

6. Fuel Gauge

6-1 Fuel Gauge Needle Does Not Move

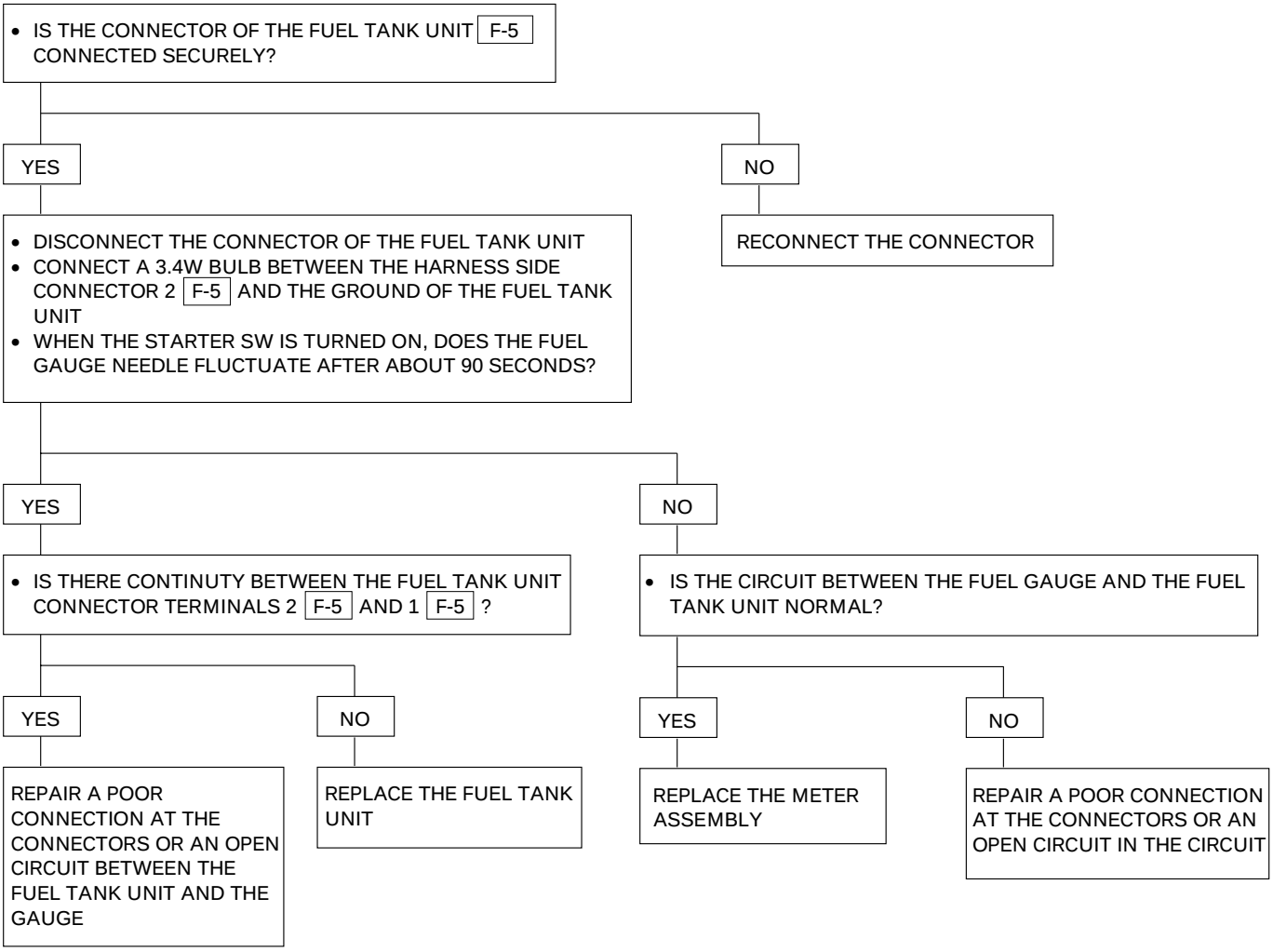

6-2 Even When The Tank Is Filled Up With Fuel, The Needle Does Not Reach “F”

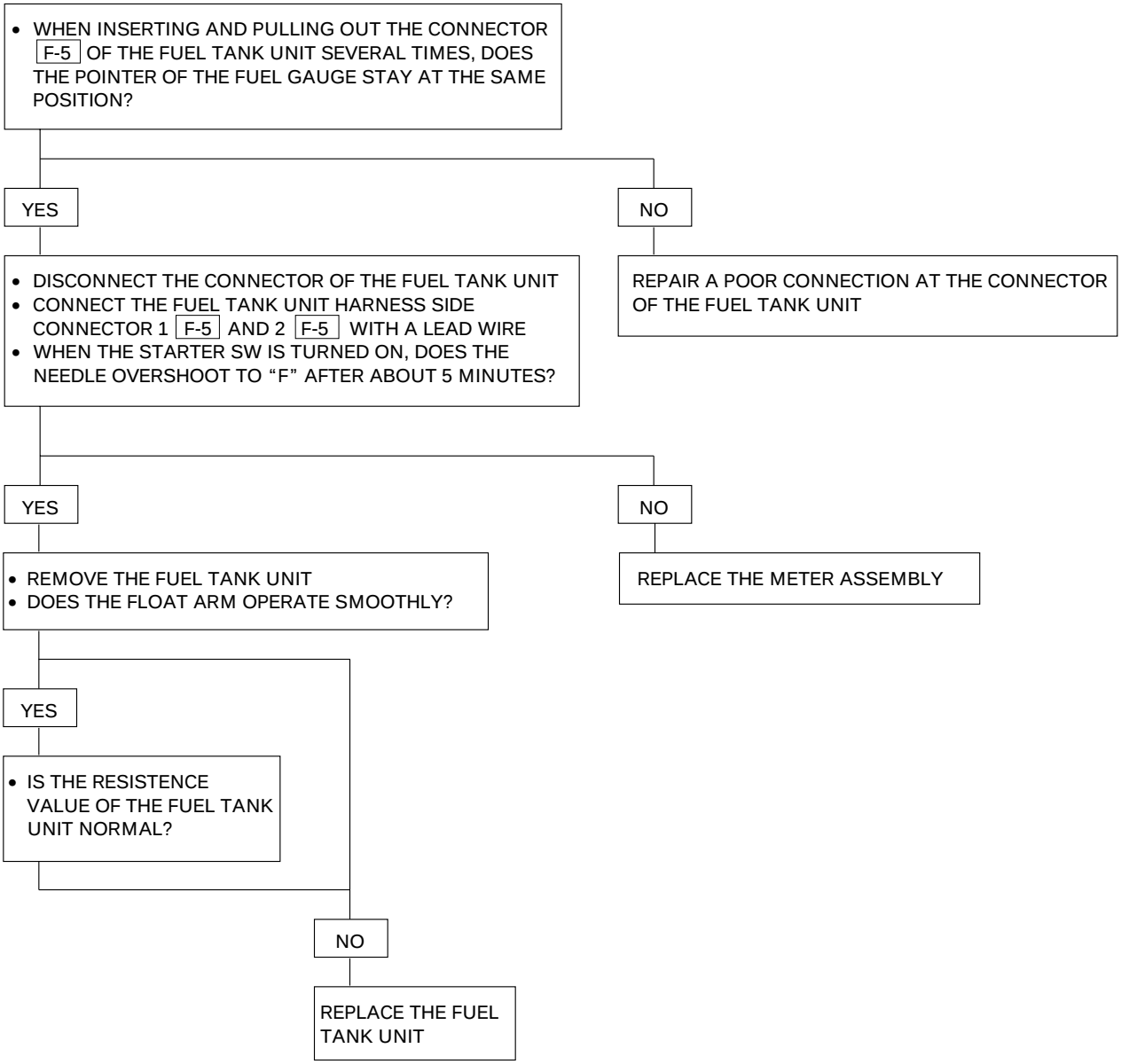

6-3 Even When The Tank Is Not Full of Fuel, The Needle Overshoots (Or Goes Up To “F”)

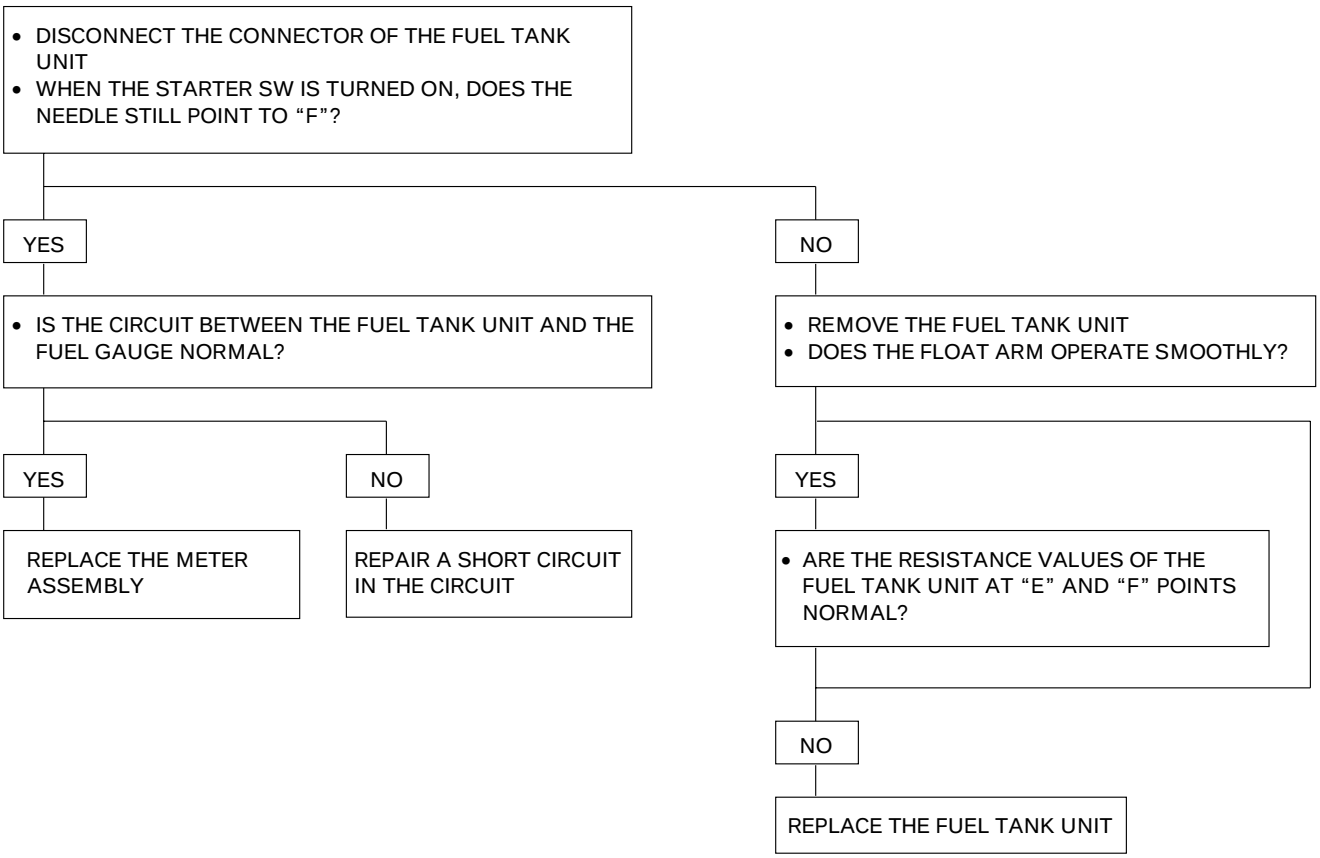

7. Warning/Indicator Light

7-1 When The Parkng Brake Lever Is Pulled, The Indicator Light Does Not Light Up

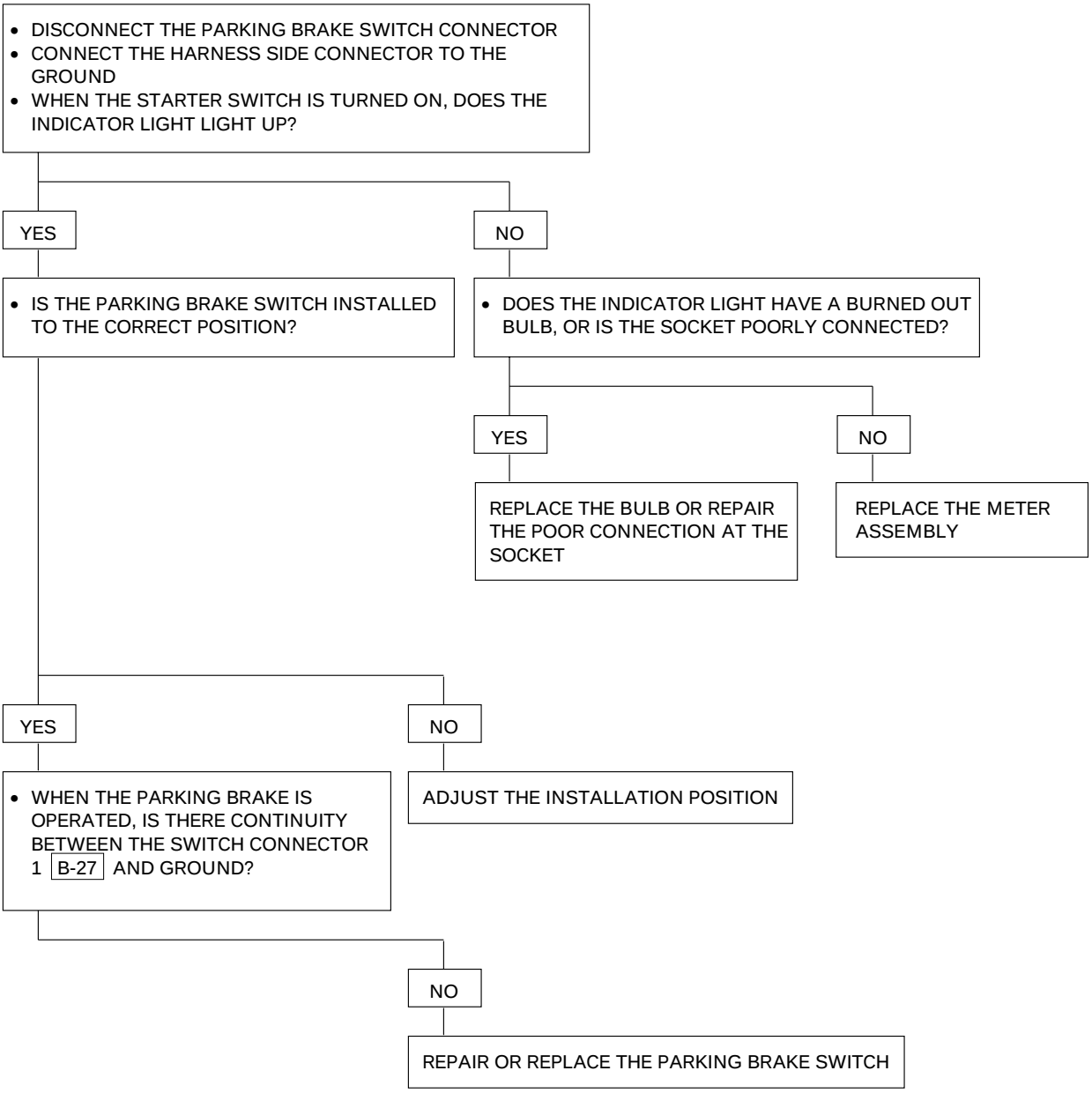

7-2 Even When The Parking Brake Lever Is Released, The Indicator Light Does Not Go Off

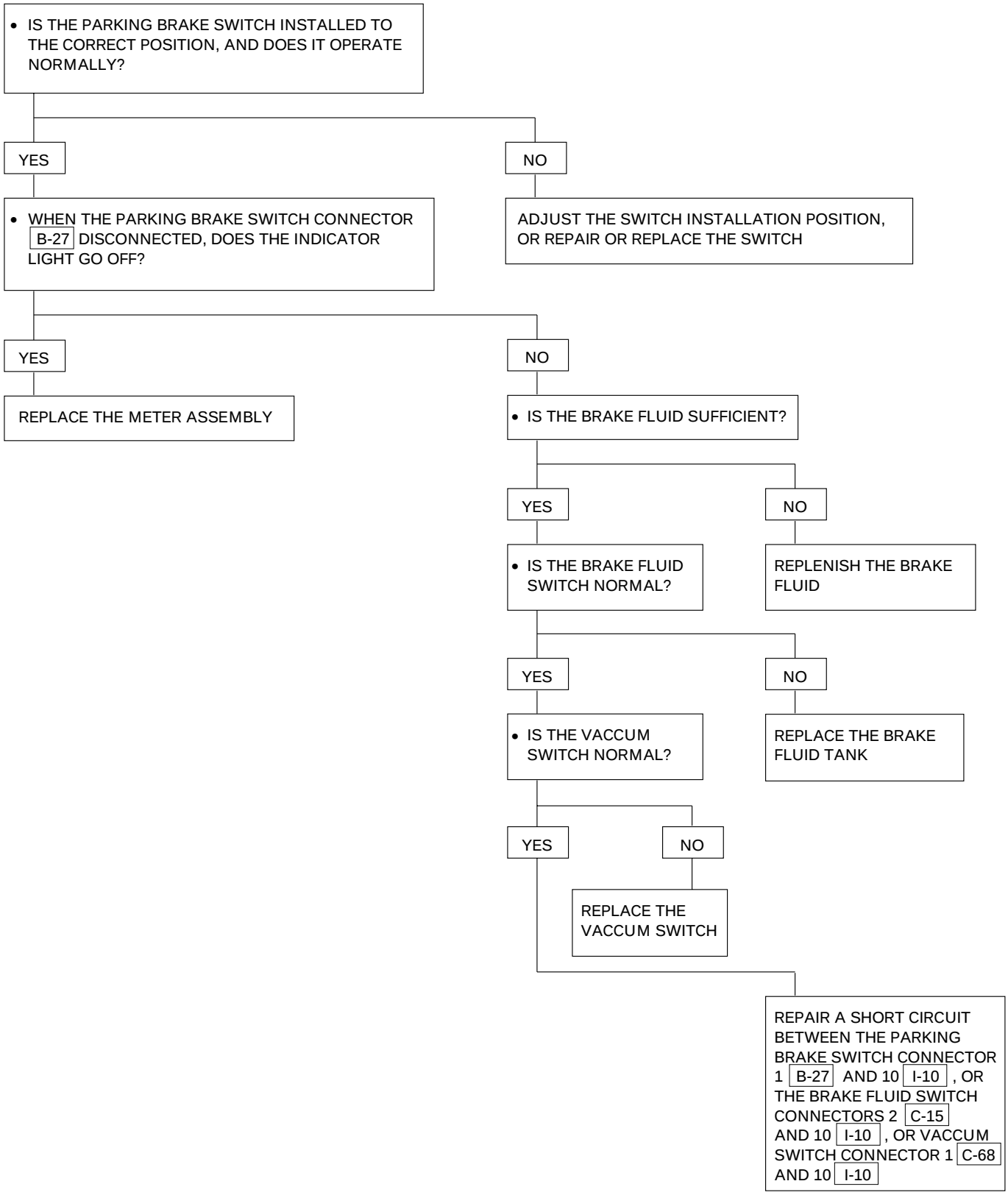

7-3 While The Engine Is Operating, The Oil Pressure Warning Light Does Not Go Off

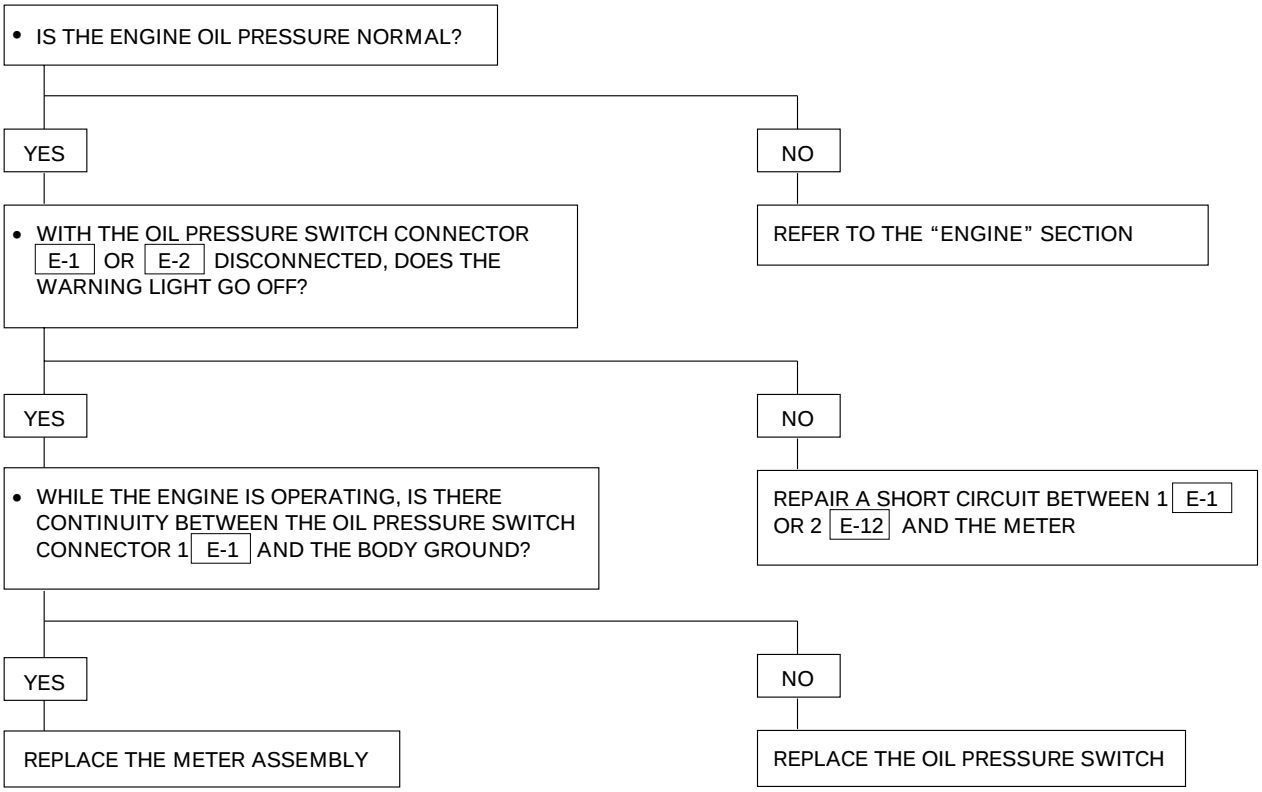

7-4 Even When The Fuel Tank Is Full With Fuel, The Low Fuel Warning Light Lights Up

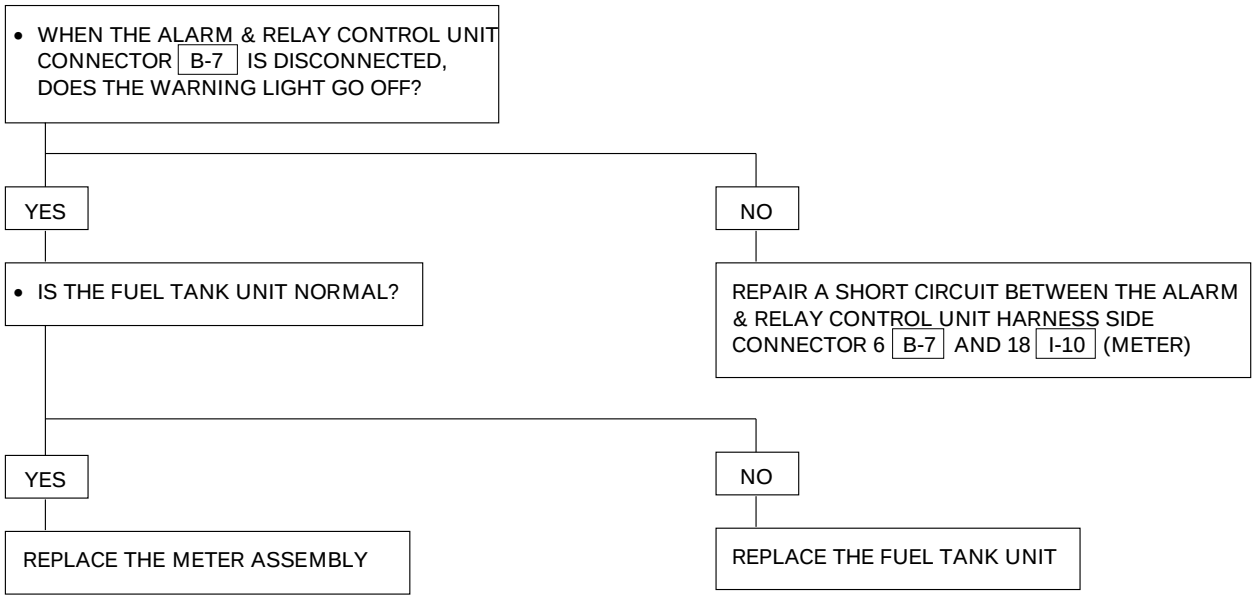

7-5 Even When The Fuel Tank Is Empty, The Low Fuel Warning Light Does Not Light Up

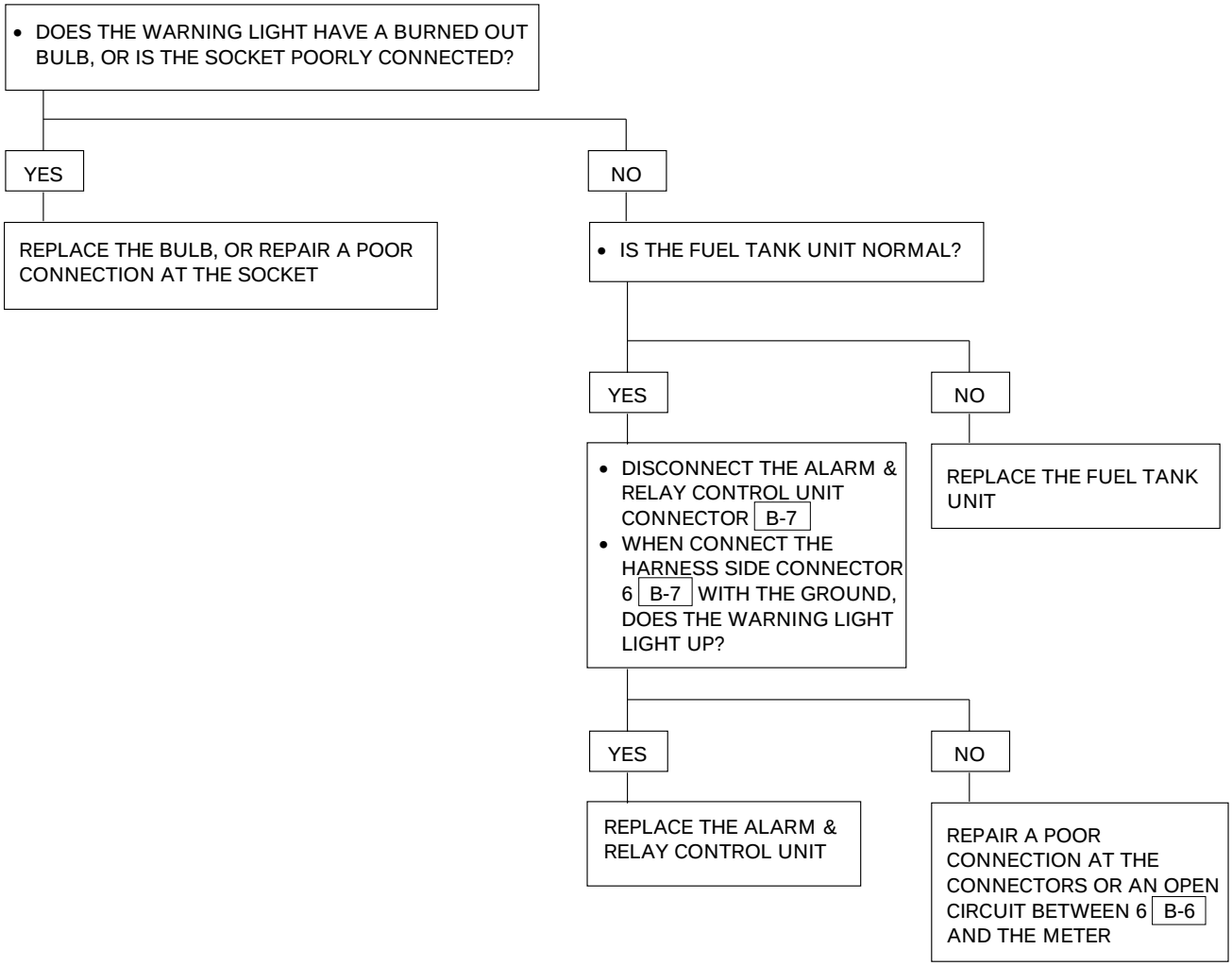

A/T Shift Indicator

General Description

The circuit consists of mode switch, A/T shift indicator control unit and A/T shift indicator (meter).
A/T shift indicator control unit controls to illuminate A/T shift indicator light according to signals from mode switch.

Circuit Diagram (RHD)-1

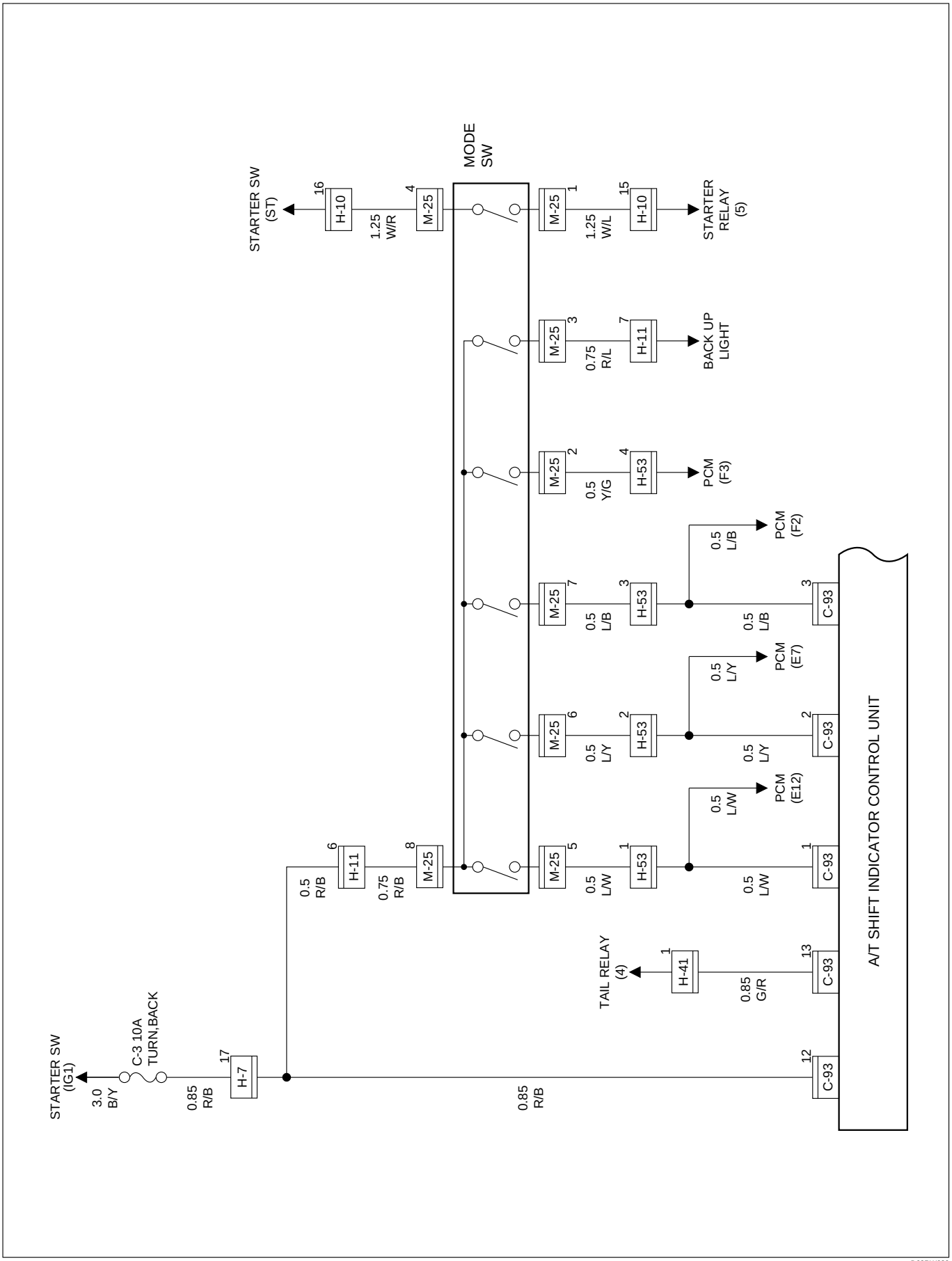

D08RW639

Circuit Diagram (RHD)-2

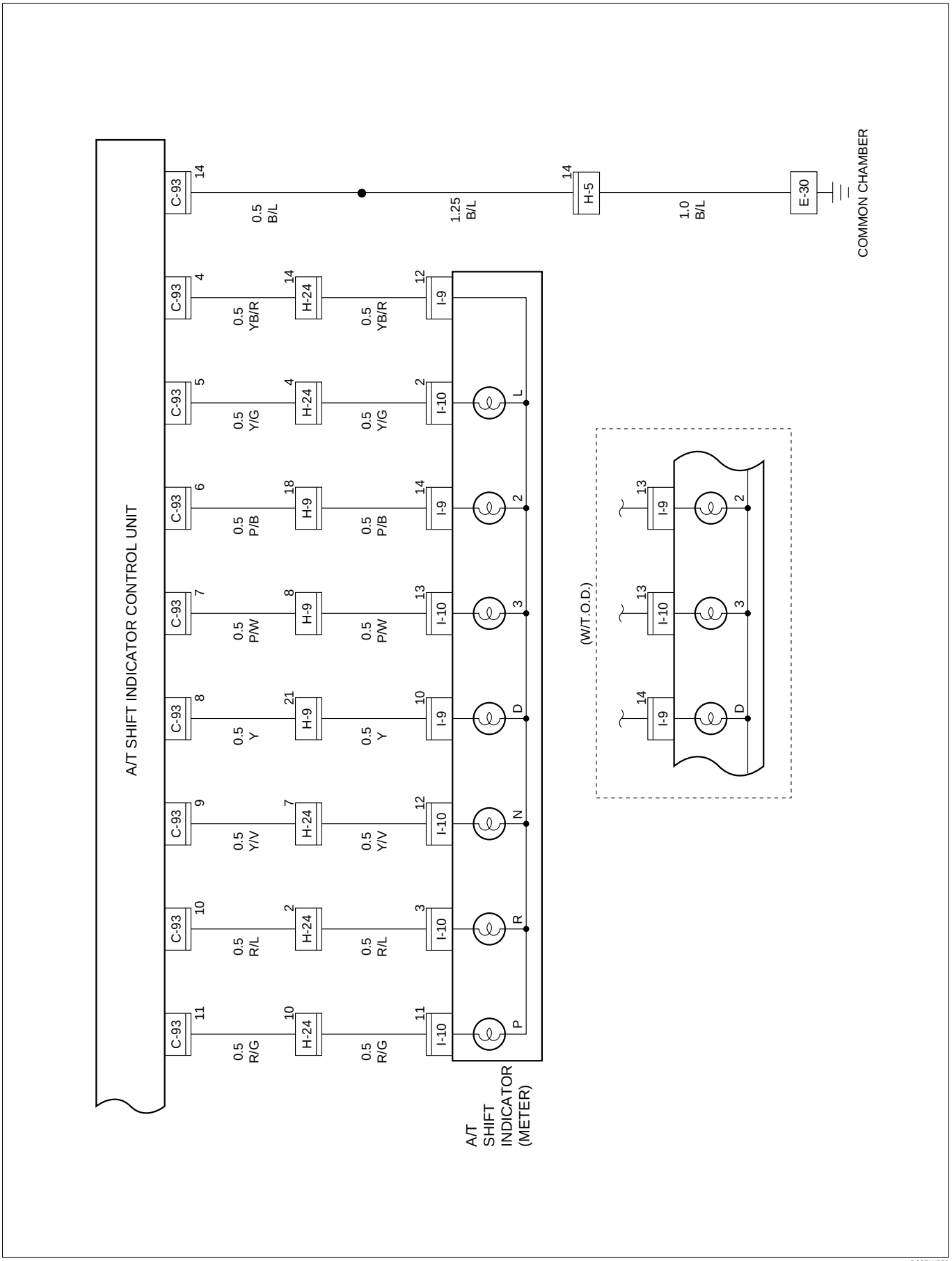

D08RW650

Parts Location (RHD)

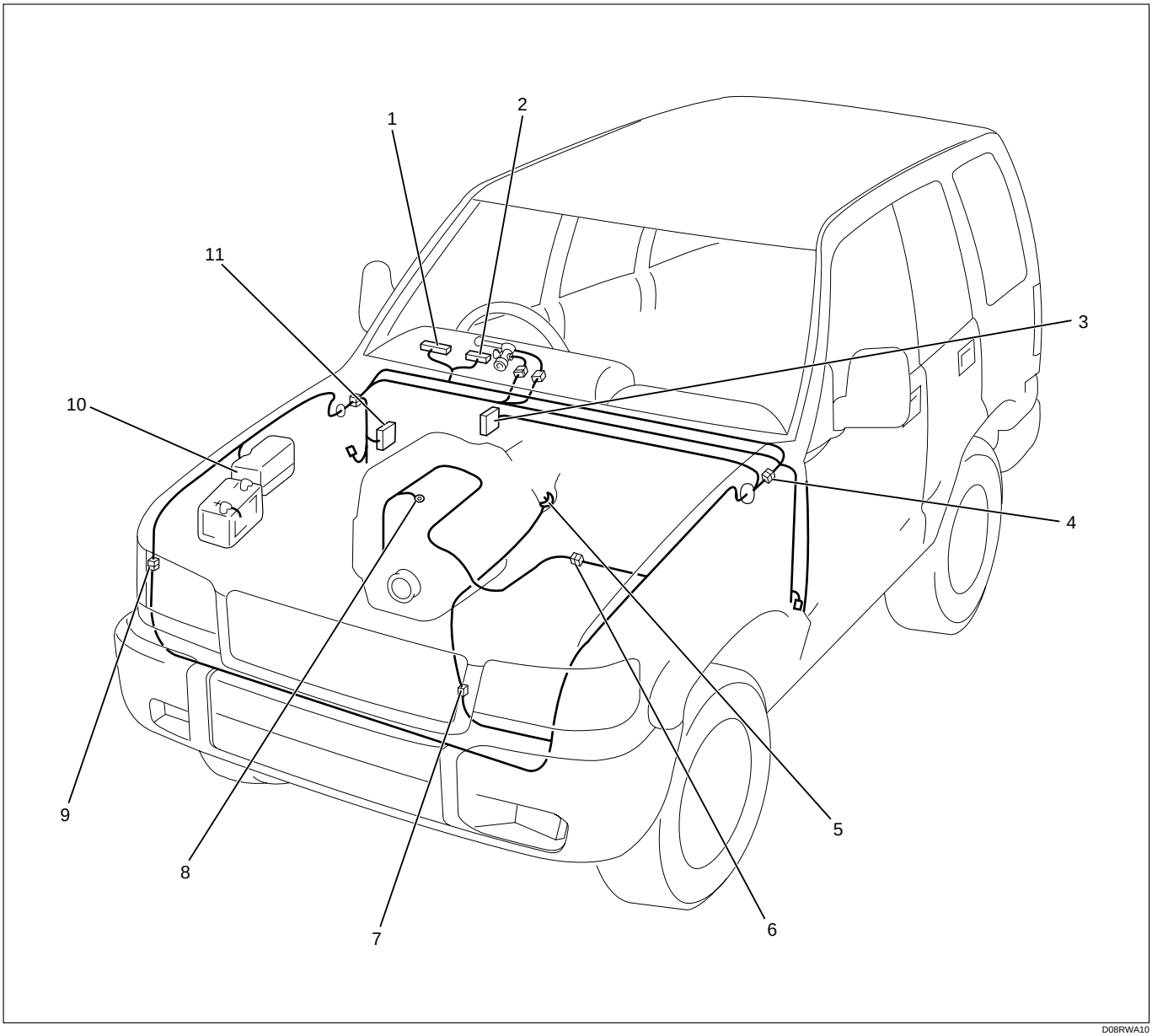

D08RWA10

Legend

(1) I-10
(2) I-9
(3) C-93
(4) H-7, H-8, H-9, H-24
(5) Mode Switch
(6) H-5
(7) H-10, H-11, H-53
(8) E-30
(9) H-41
(10) Relay and Fuse Box
(11) Fuse Box

Circuit Diagram (LHD)-1

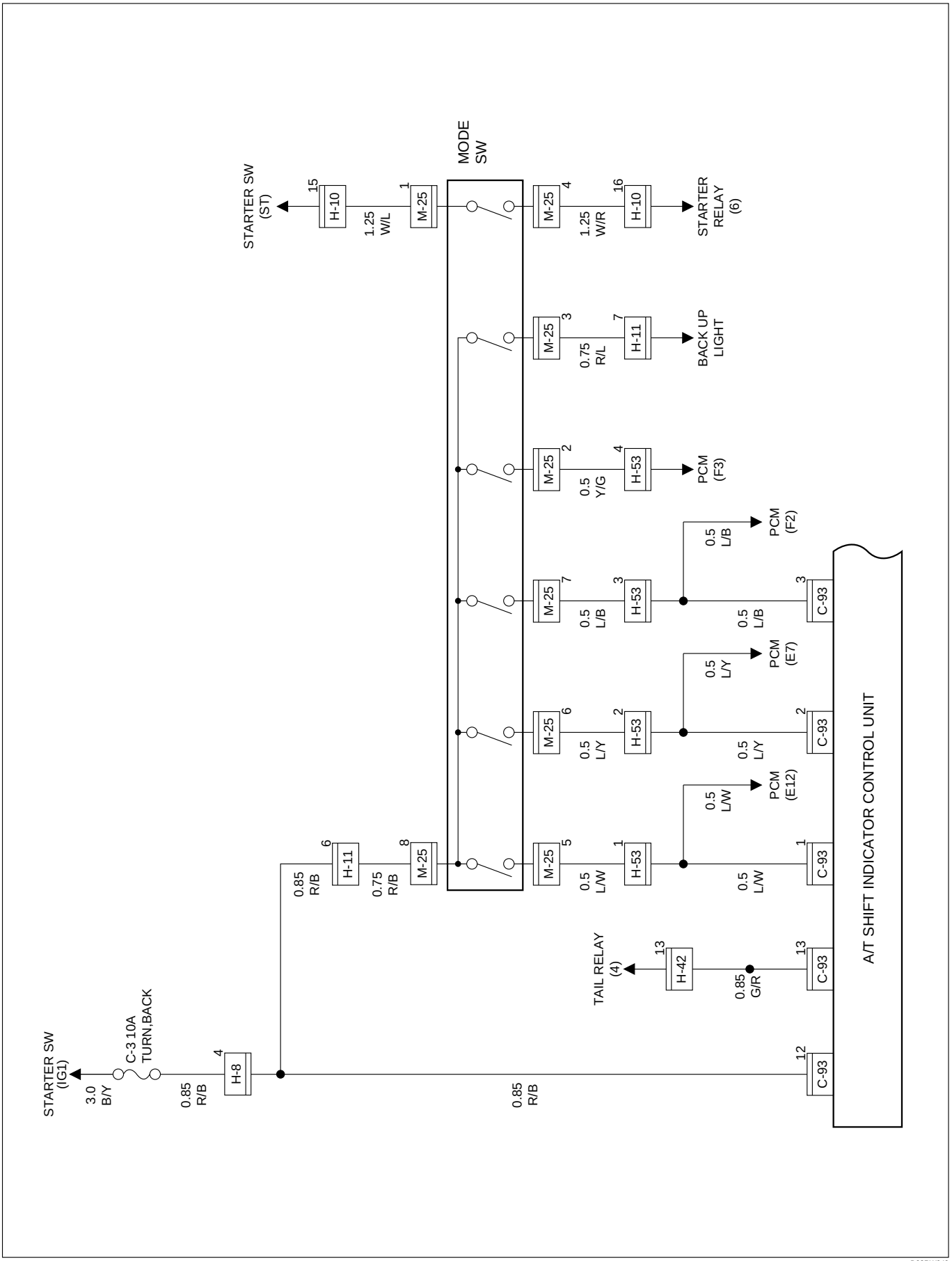

D08RW949

Circuit Diagram (LHD)-2

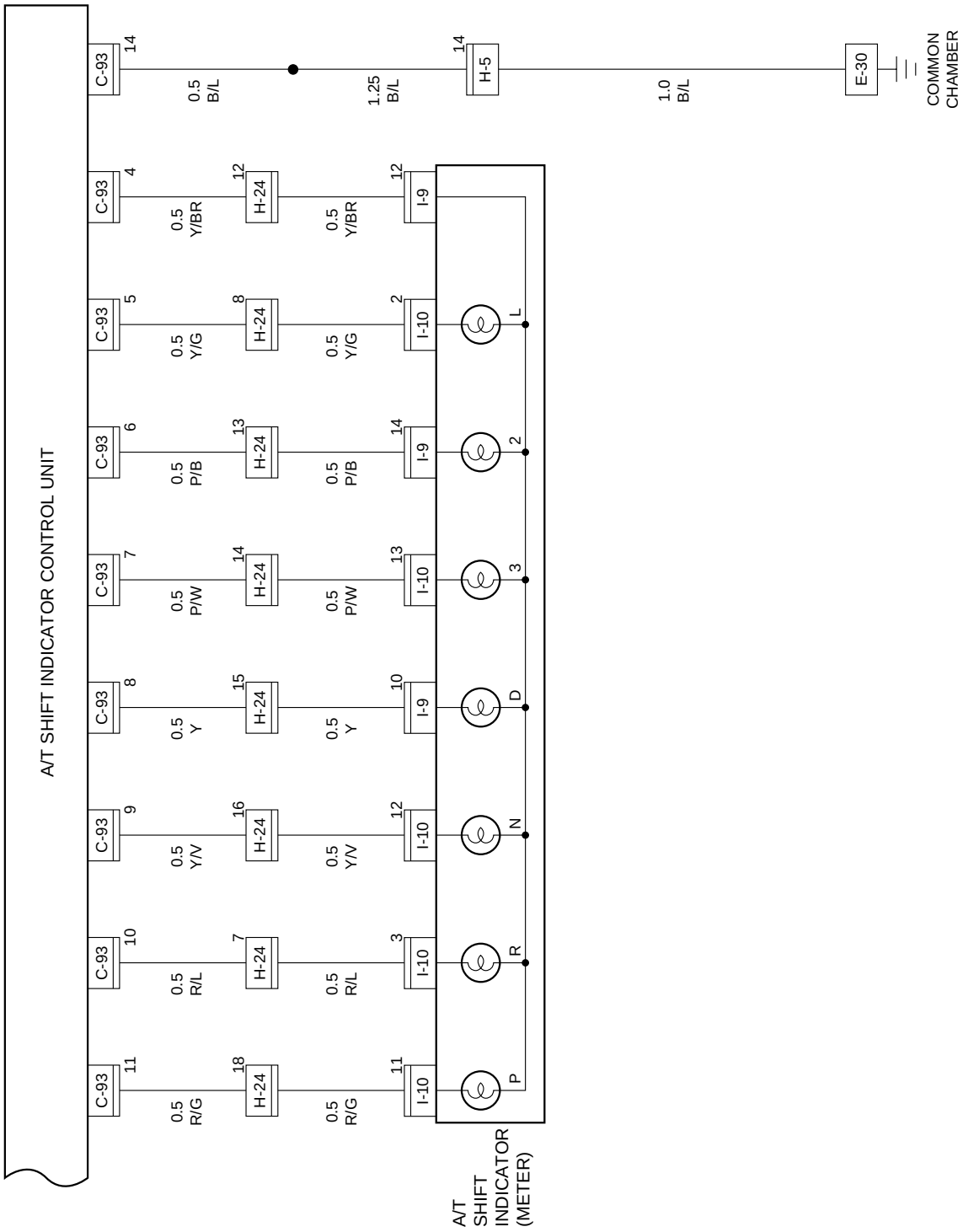

D08RW950

Parts Location (LHD)

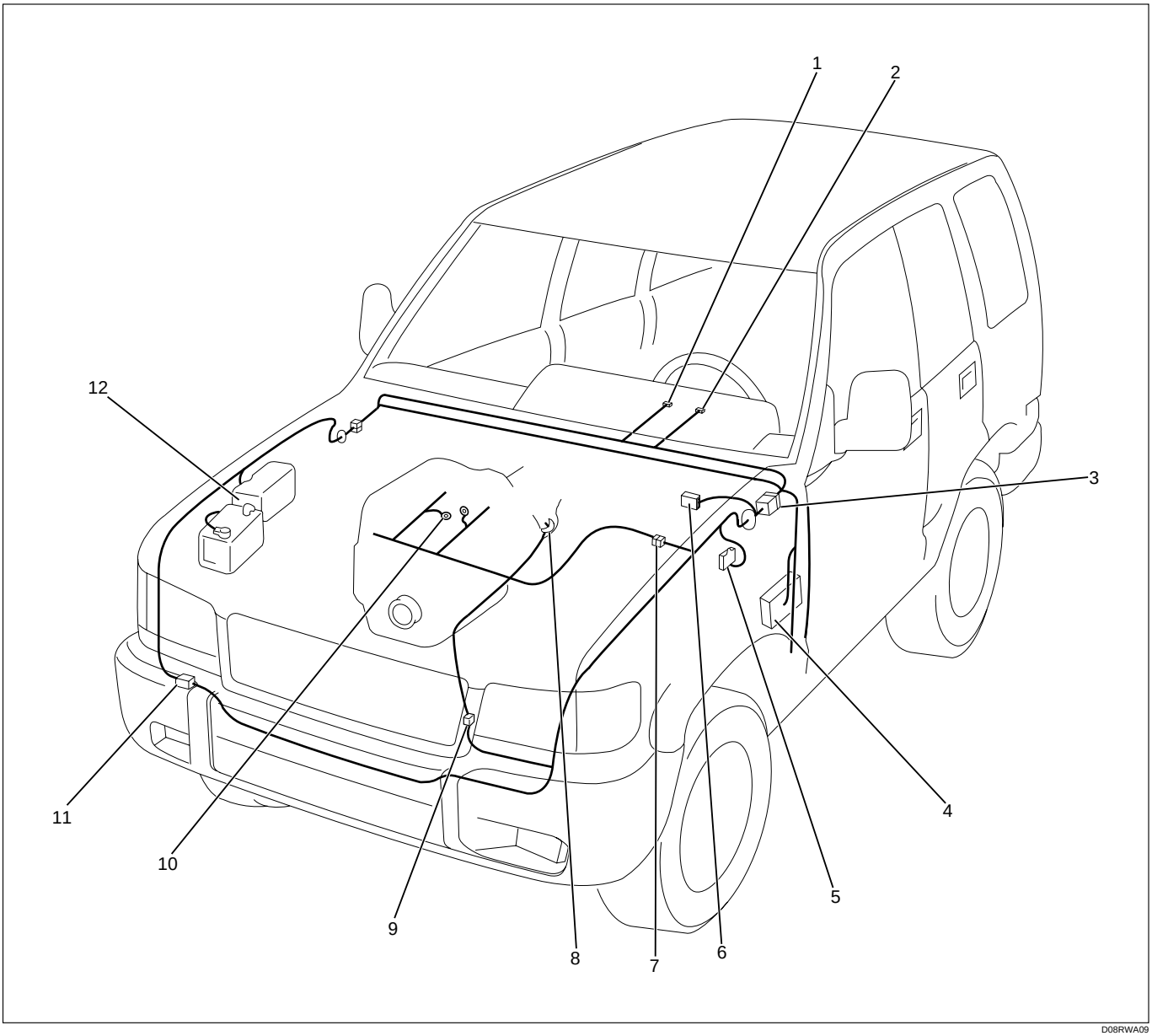

D08RWA09

Legend

(1) I-10
(2) I-9
(3) H-8, H-9, H-24
(4) Fuse Box
(5) C-16
(6) C-93
(7) H-5
(8) M-25
(9) H-10, H-11, H-53
(10) E-30
(11) H-42
(12) Relay and Fuse Box

Heater and Air Conditioning

General Description

The circuit consists of pressure switch, A/C switch, electronic thermostat, blower motor, fan switch, magnetic clutch of A/C compressor, blower resistor and relay.

The operation of A/C system is controlled by turning A/C switch on and off. Electronic thermostat and PCM can stop operation of A/C temporarily by disconnecting magnetic clutch under the predetermined conditions to adjust room temperature, preventing abnormal rise of engine coolant and reduce engine load while A/C is in operation.

Refer to Heating, Ventilation and Air Conditioning in HVAC section.

Circuit Diagram (RHD 6VD1)-1

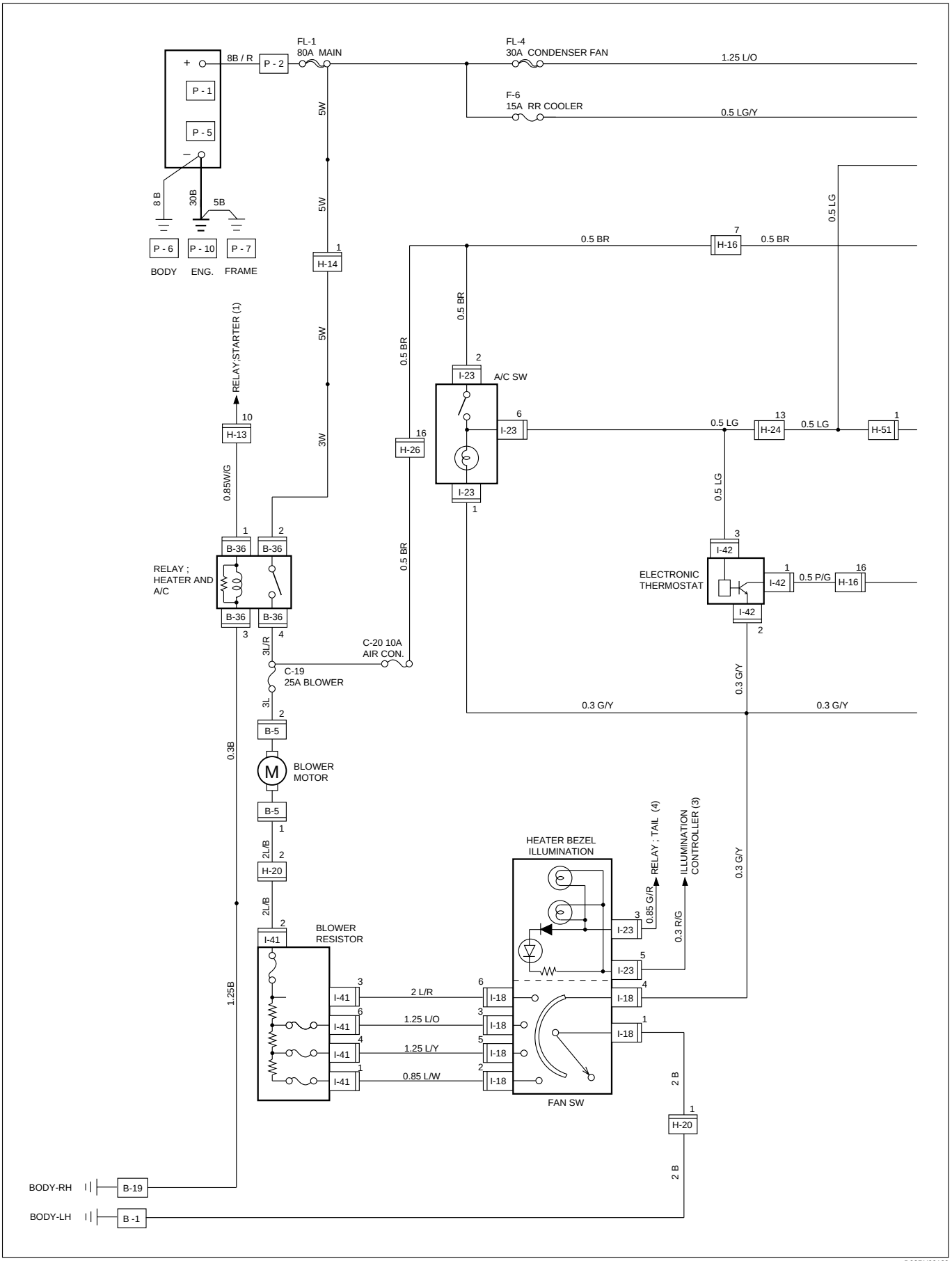

Circuit Diagram (RHD 6VD1)-2

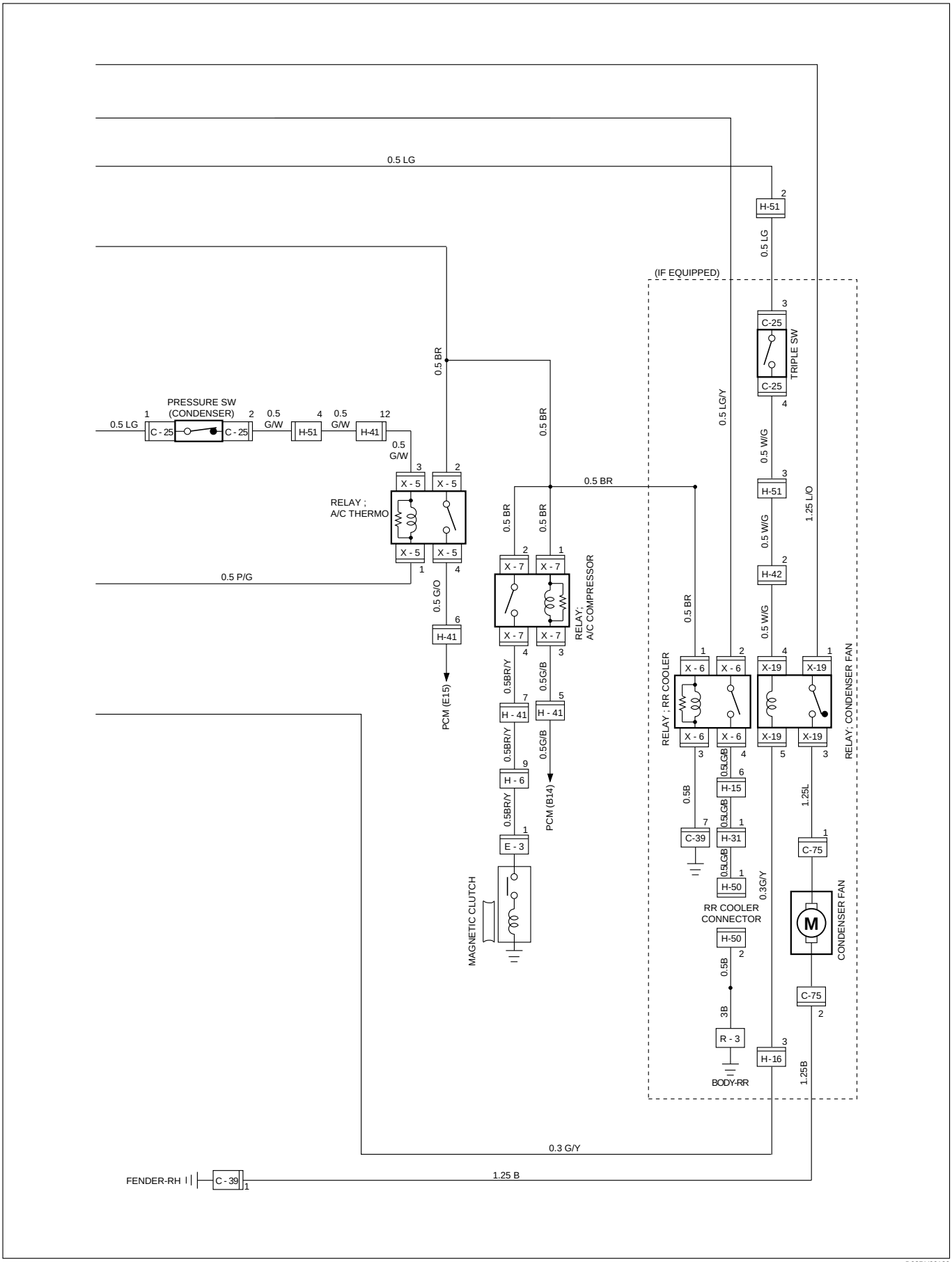

D08RY00129

Parts Location (RHD 6VD1)

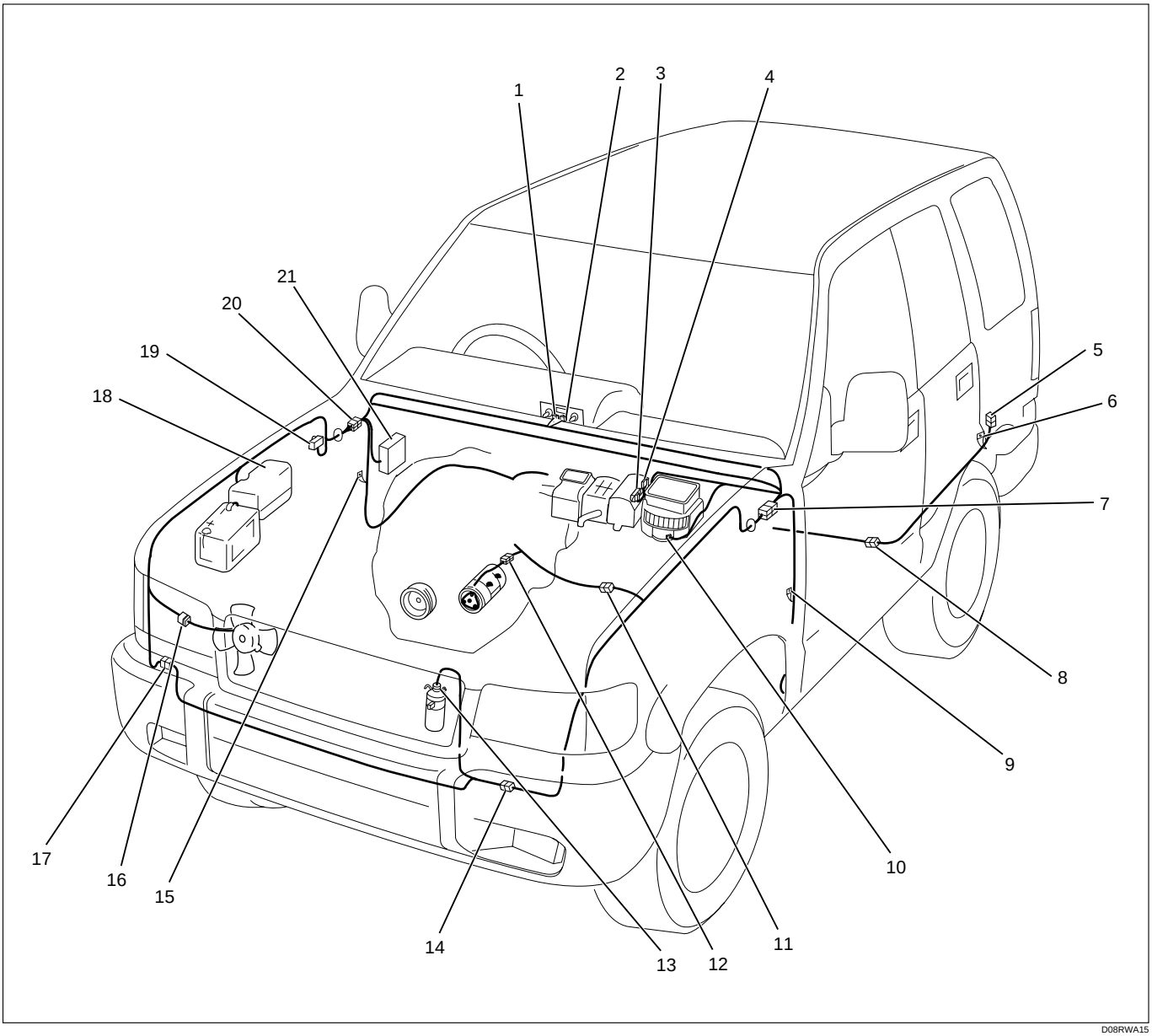

D08RWA15

Legend

(1) I-23
(2) I-18
(3) Blower Resistor (I-41)
(4) Electronic Thermostat (I-42)
(5) H-50
(6) R-3
(7) H-7, H-20, H-24
(8) H-31
(9) B-1
(10) Blower Motor (B-5)
(11) X-4
(12) E-3
(13) C-25
(14) H-51
(15) B-19
(16) C-75
(17) H-41, H-42
(18) Relay and Fuse Box (X-5, X-6, X-7, X-19)
(19) C-39
(20) H-13, H-14, H-15, H-16, H-24
(21) Fuse Box (B-36)

Circuit Diagram (LHD 6VD1)-1

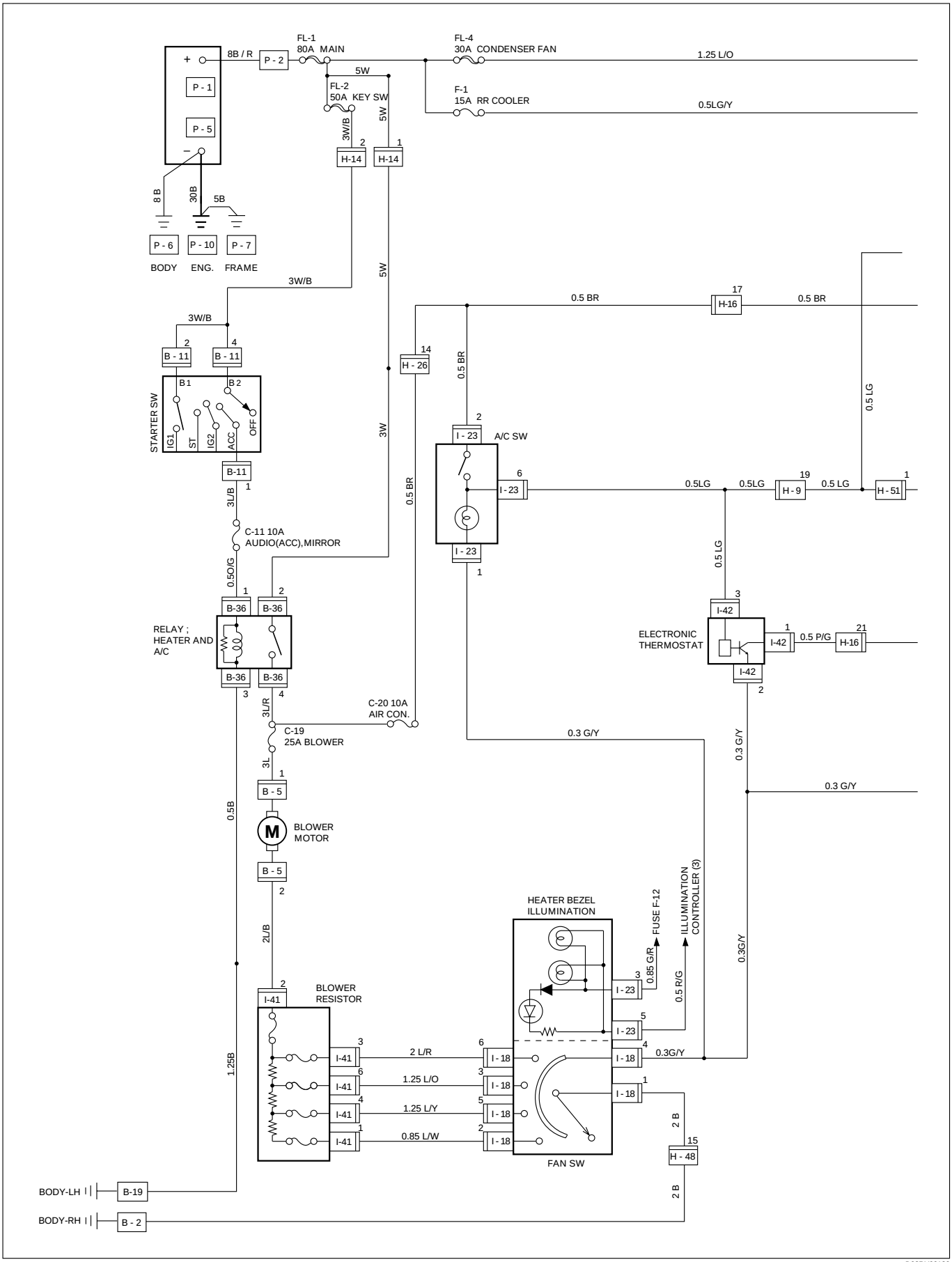

D08RY00130

Circuit Diagram (LHD 6VD1)-2

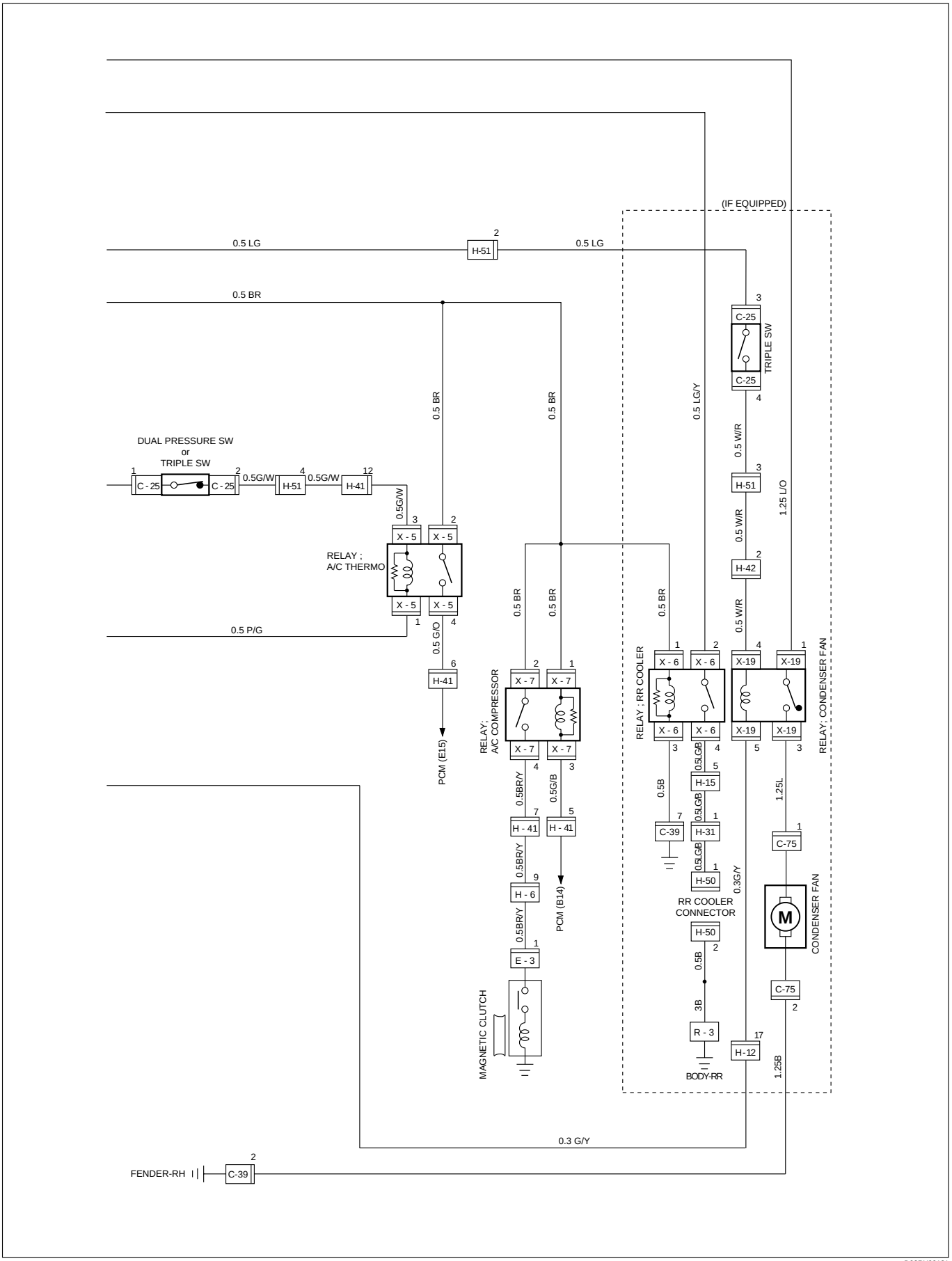

D08RY00131

Parts Location (LHD 6VD1)

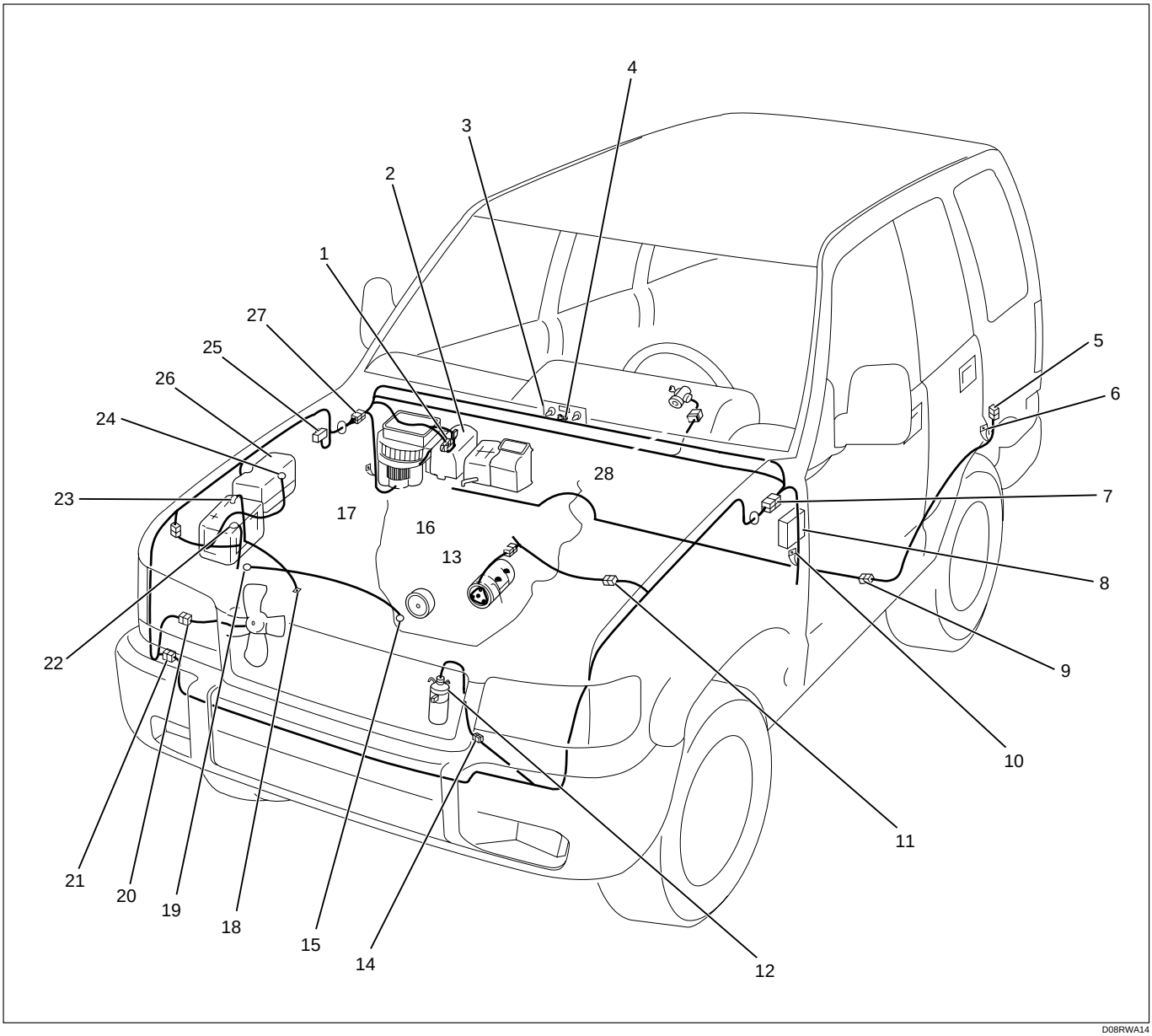

D08RWA14

Legend

(1) Blower Resistor (B-3)
(2) Electronic Thermostat (B-4)
(3) I-23
(4) I-18
(5) H-50
(6) R-3
(7) H-9, H-24
(8) Fuse Box (B-36)
(9) H-31
(10) B-19
(11) H-6
(12) C-25
(13) E-3
(14) H-51
(15) P-10
(16) Blower Motor (B-5)
(17) B-2
(18) P-7
(19) P-6
(20) C-75
(21) H-41, H-42
(22) P-5
(23) P-1
(24) P-2
(25) C-39
(26) Relay and Fuse Box (X-5, X-6, X-7, X-19)
(27) H-12, H-14, H-16, H-20, H-26, H-48
(28) B-11

Circuit Diagram (RHD 4JG2)-1

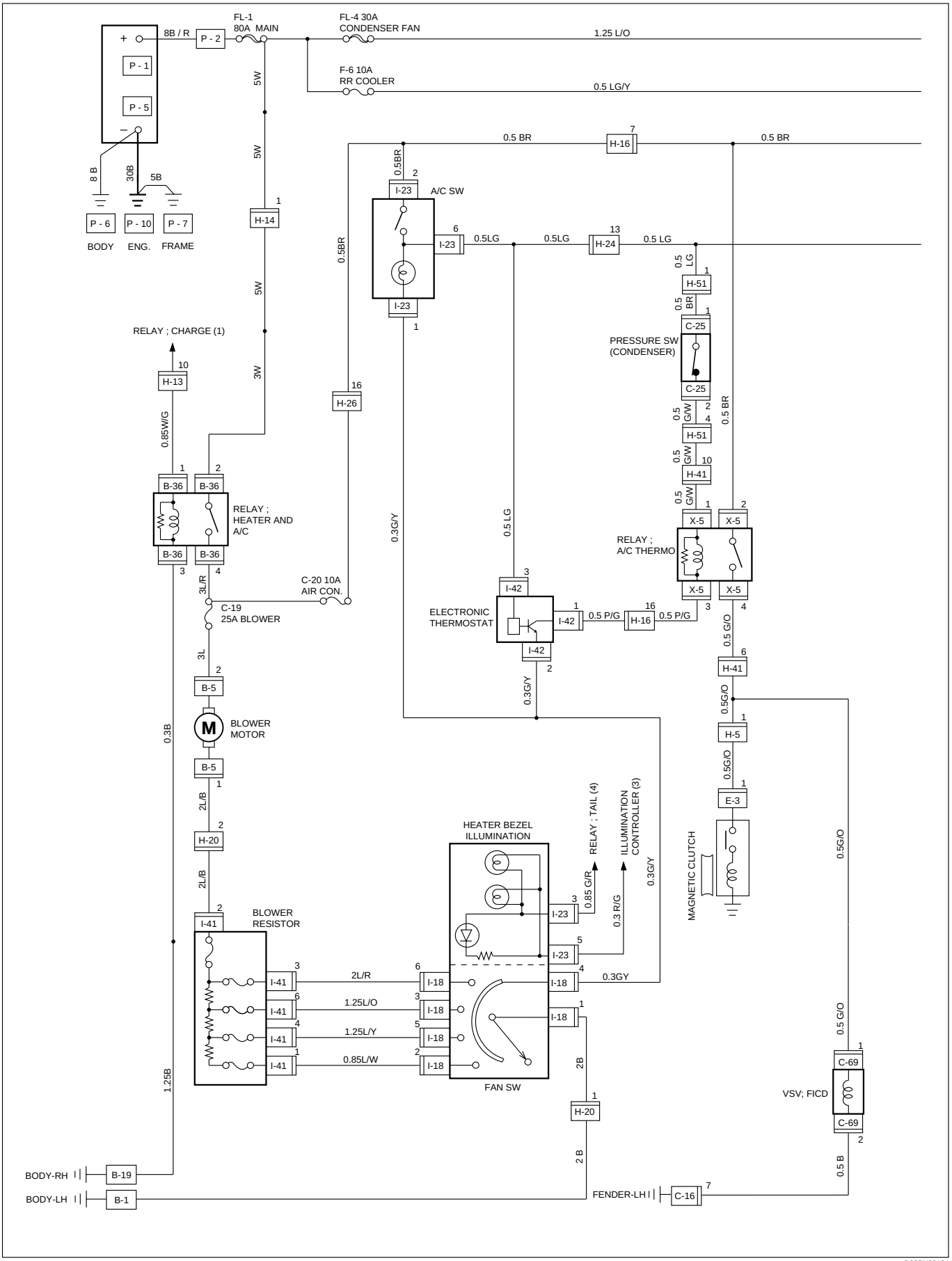

D08RY00124

Circuit Diagram (RHD 4JG2)-2

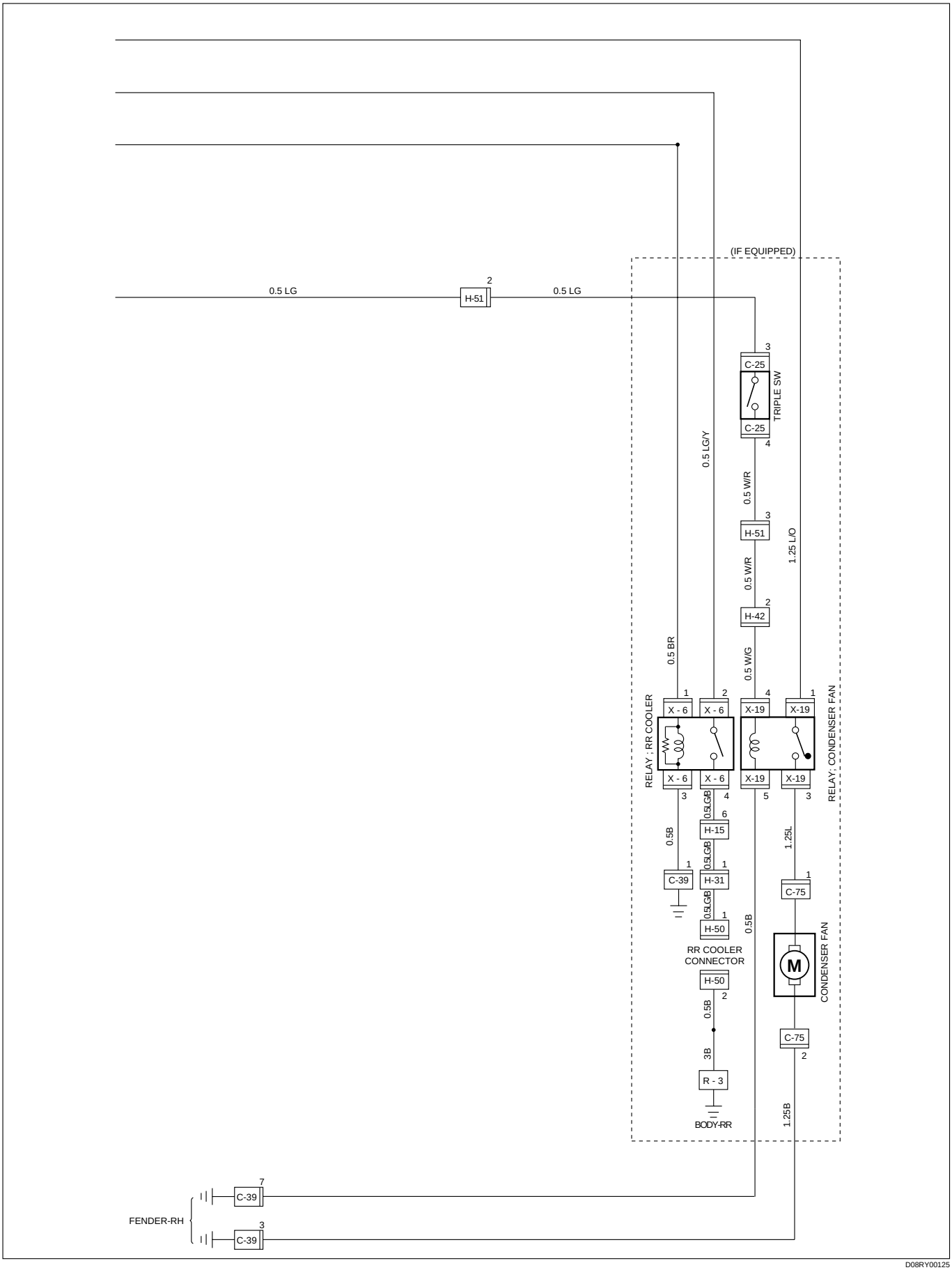

D08RY00125

Parts Location (RHD 4JG2)

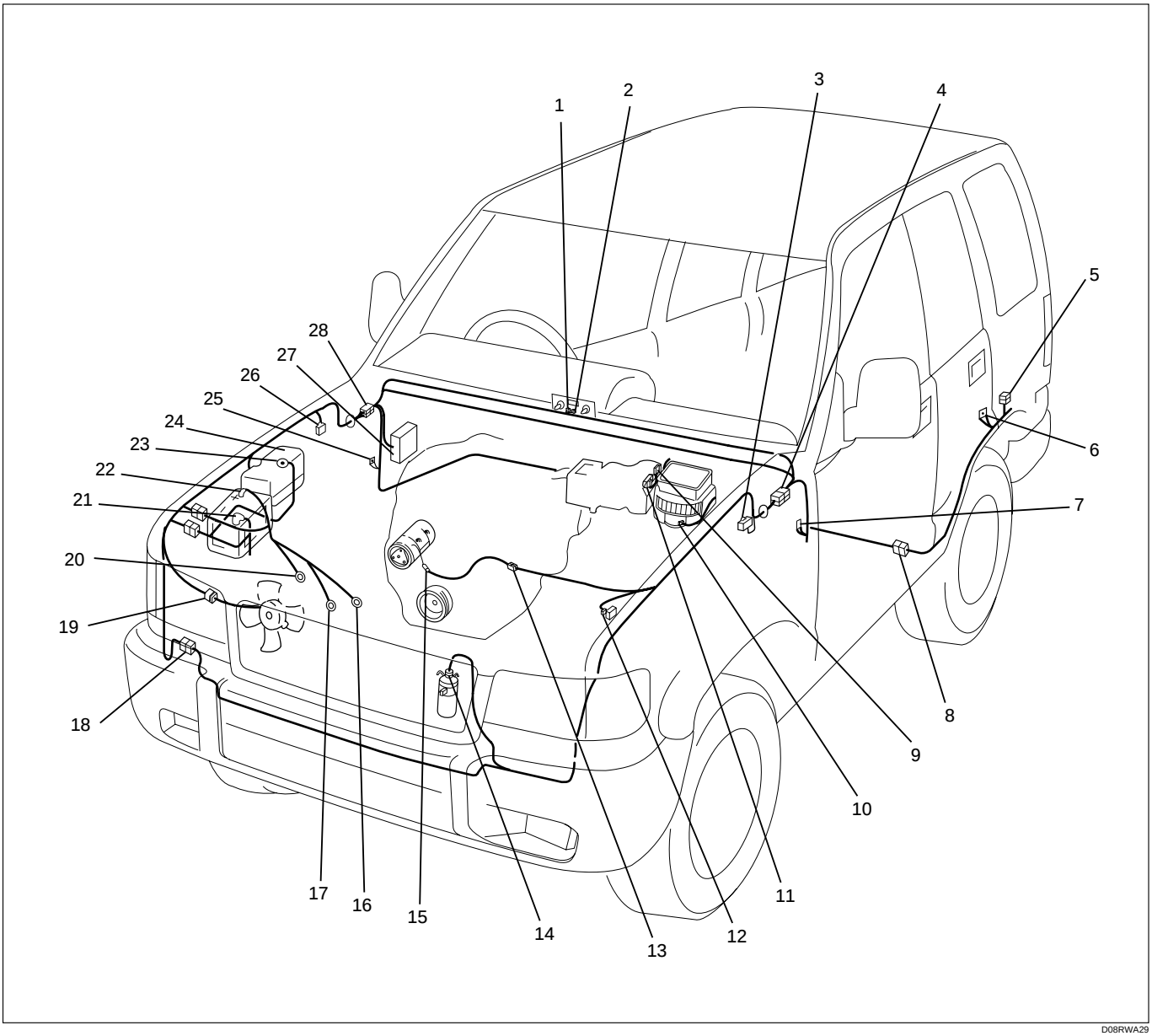

Legend

(1) I-18
(2) I-23
(3) C-16
(4) H-7, H-20, H-24
(5) H-50
(6) R-3
(7) B-1
(8) H-31
(9) Electronic Thermostat (I-42)
(10) Blower Motor (B-5)
(11) Blower Resistor (I-41)
(12) C-69
(13) H-5
(14) C-25
(15) E-3
(16) P-10
(17) P-7
(18) H-41, H-42
(19) C-75
(20) P-6
(21) P-1
(22) P-5
(23) P-2
(24) Relay and Fuse Box (X-5, X-6, X-19)
(25) B-19
(26) C-39
(27) Fuse Box (B-36)
(28) H-12, H-13, H-14, H-16, H-26

Circuit Diagram (LHD 4JG2)-1

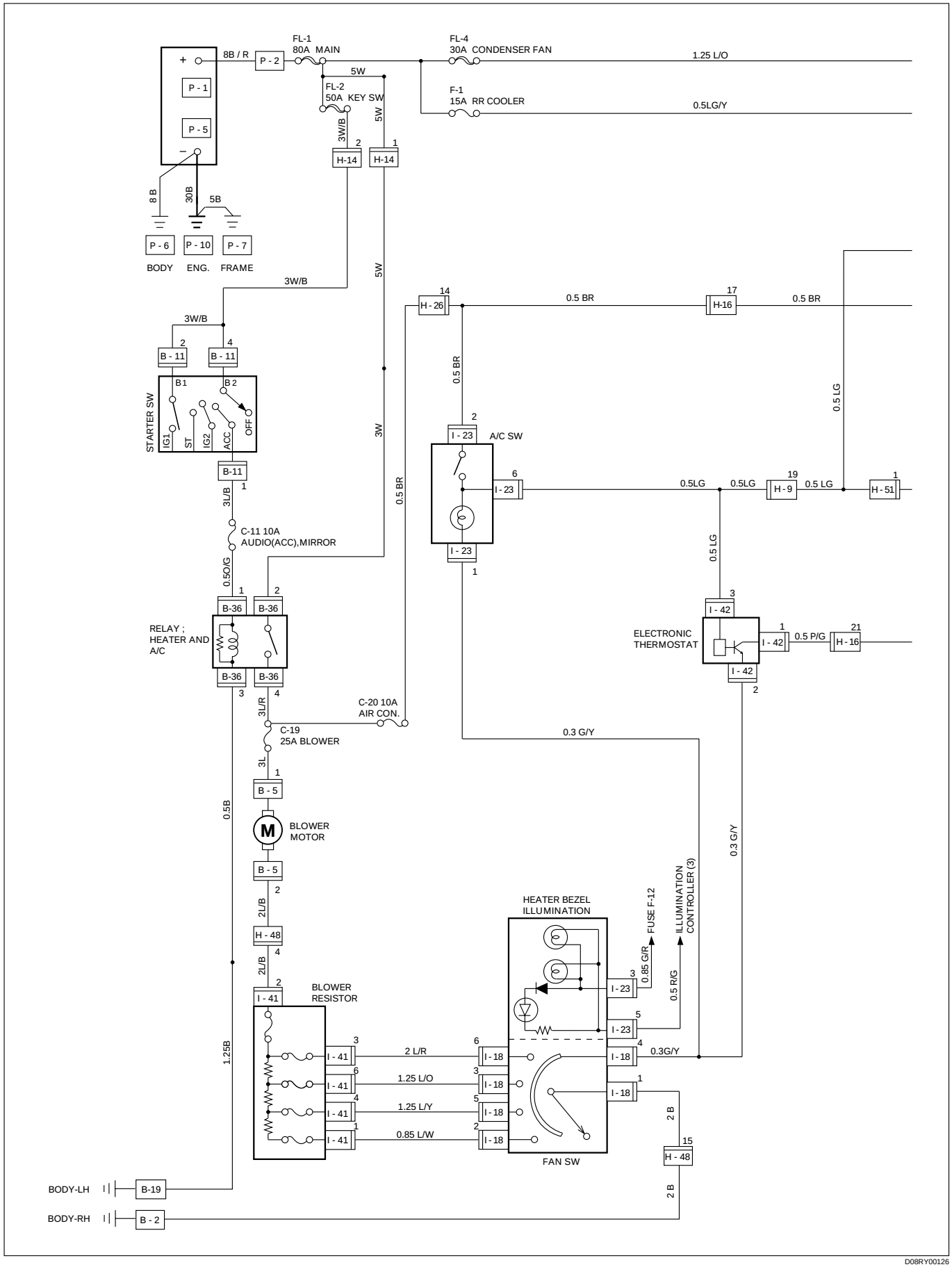

D08RY00126

Circuit Diagram (LHD 4JG2)-2

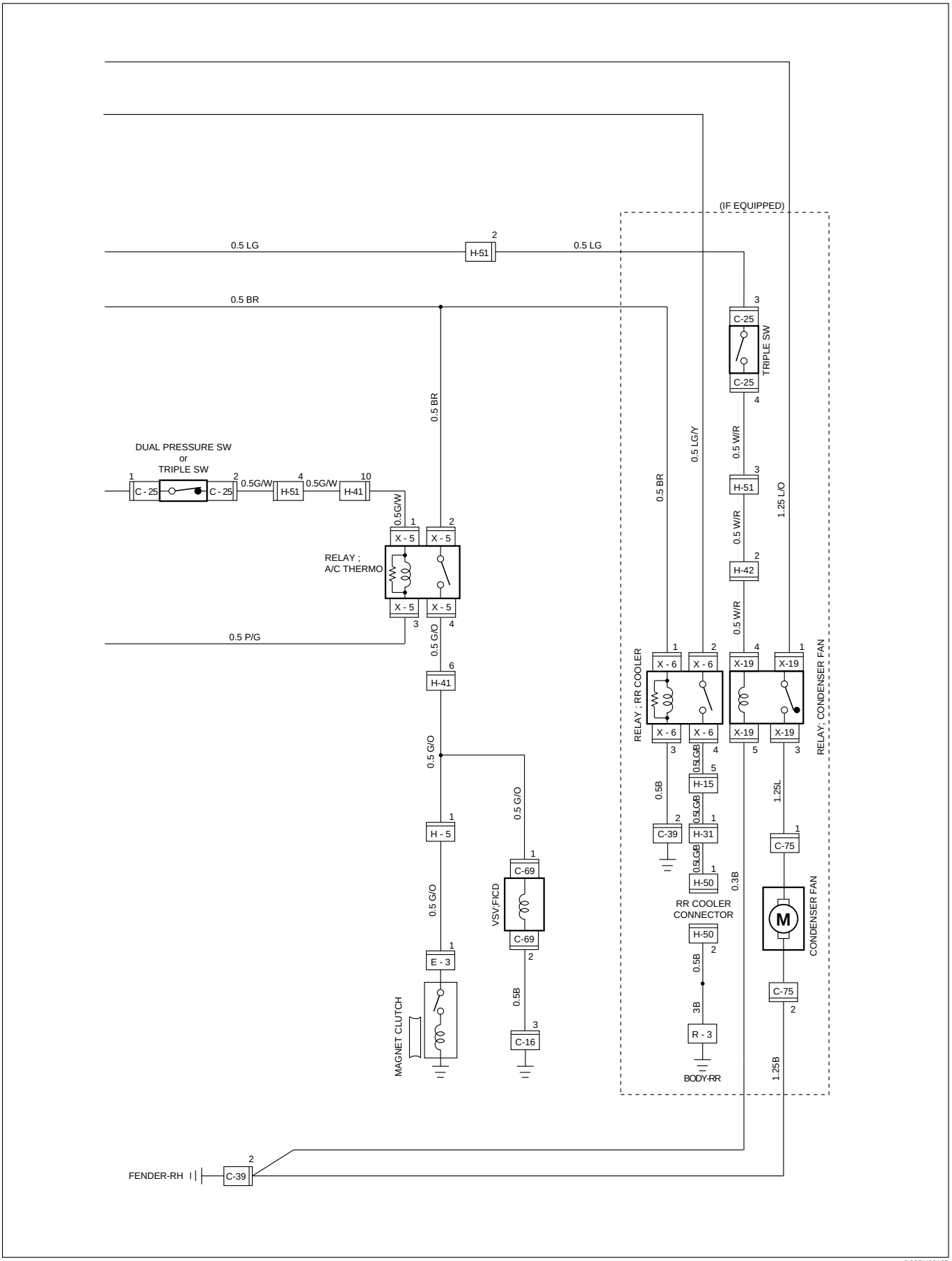

D08RY00127

Parts Location (LHD 4JG2)

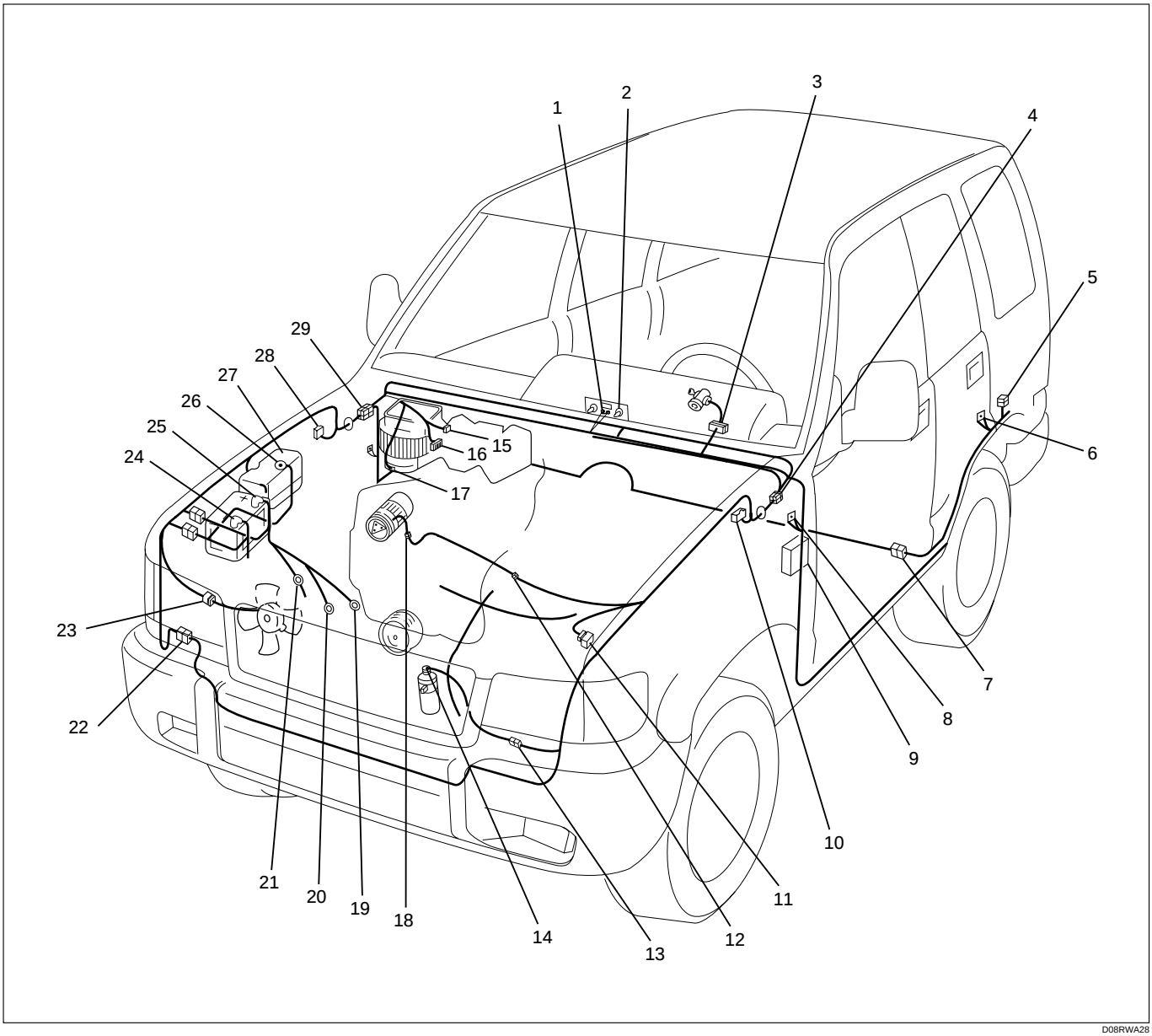

Legend

(1) I-18
(2) I-23
(3) B-11
(4) H-7, H-9, H-26
(5) H-50
(6) R-3
(7) H-31
(8) B-19
(9) Fuse Box (B-36)
(10) C-16
(11) C-69
(12) H-5
(13) H-51
(14) C-25
(15) Electronic Thermostat (B-4)
(16) Blower Resistor (B-3)
(17) Blower Motor (B-5)
(18) E-3
(19) P-10
(20) P-7
(21) P-6
(22) H-41, H-42
(23) C-75
(24) P-1
(25) P-5
(26) P-2
(27) Relay and Fuse Box (X-5, X-6, X-19)
(28) C-39
(29) H-12, H-14, H-16, H-20, H-48

Sun Roof

General Description

The circuit consists of sun roof switch, sun roof control unit, safety stop switch, limit switch and sun roof motor.
When sun roof switch is turned on, battery voltage is applied to sun roof control unit through circuit breaker and power window relay.
Accordingly, when sun roof switch is set to “Open” or “Close” position, open or close relay incorporated into the control unit is activated to change rotational direction of sun roof motor to open or close sun roof. Also, operational process (full close → limit stop → full open → safety stop → full close) of sun roof is controlled by the control unit in accordance with signals received from safety stop switch and limit switch.

Circuit Diagram (RHD)

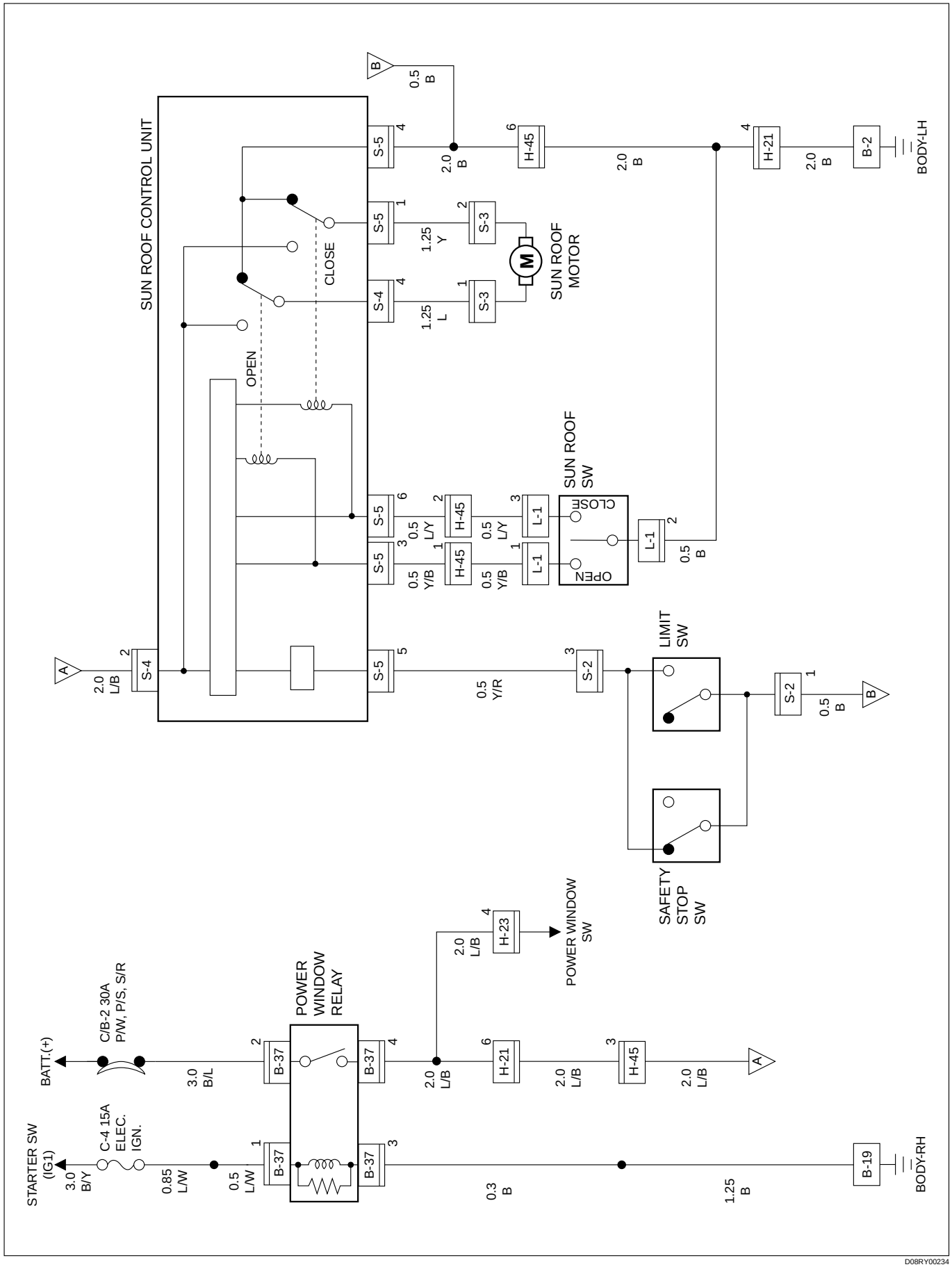

D08RY00234

Parts Location (RHD)

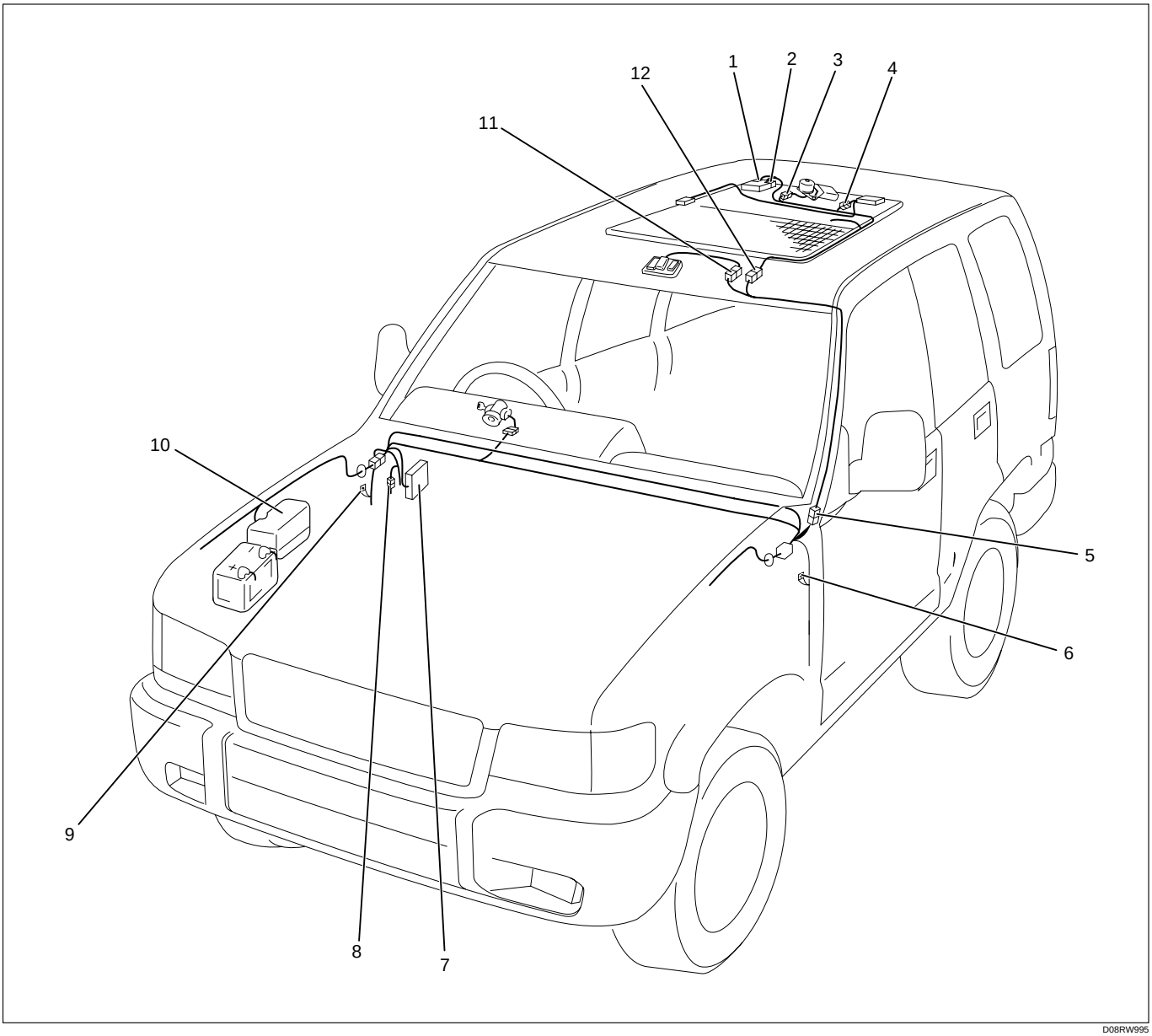

D08RW995

Legend

(1) S-5
(2) S-4
(3) S-3
(4) S-2
(5) H-21
(6) B-2
(7) Fuse Box (B-37)
(8) H-23
(9) B-19
(10) Relay and Fuse Box
(11) L-1
(12) H-45

Circuit Diagram (LHD)

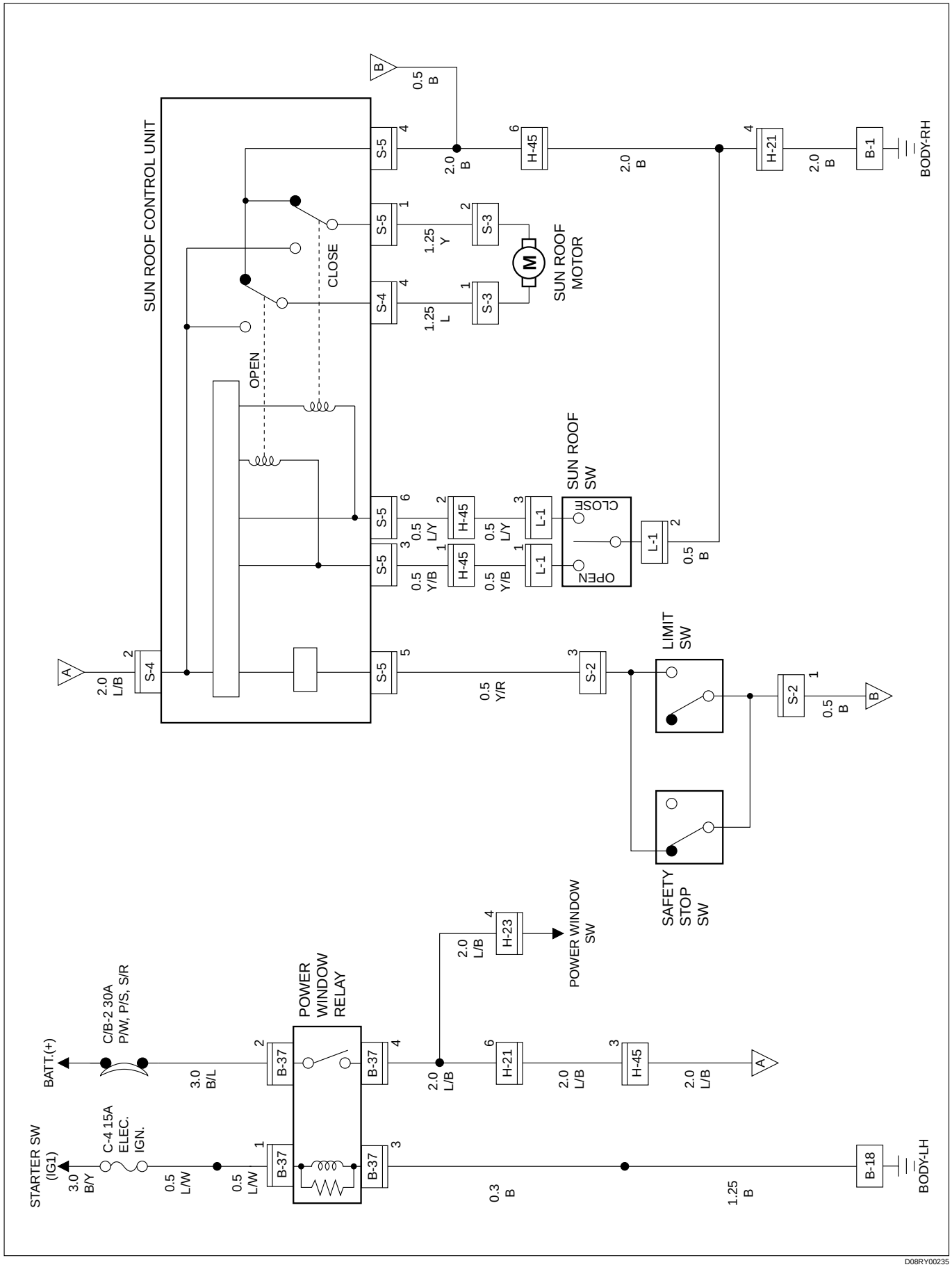

D08RY00235

Parts Location (LHD)

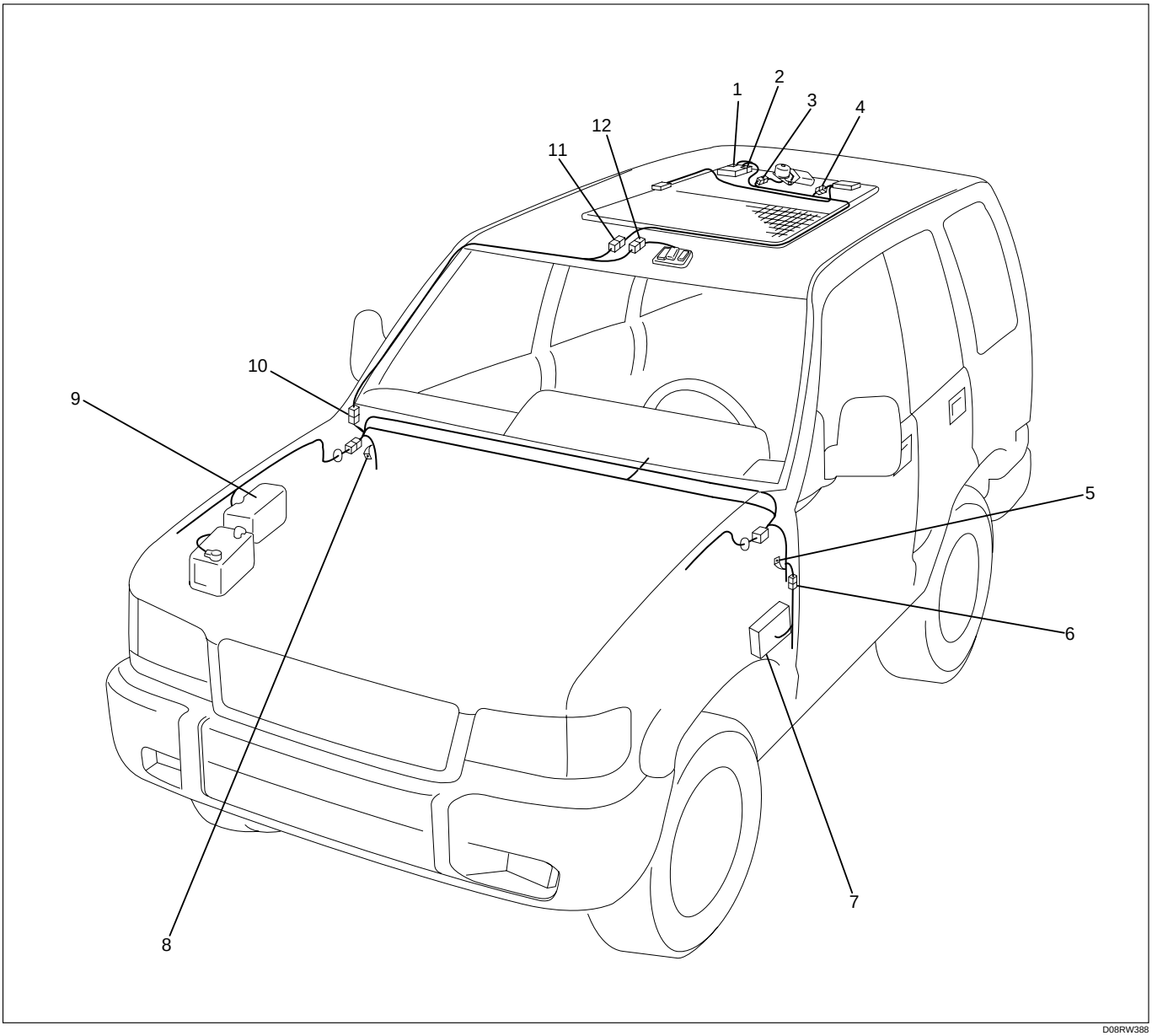

D08RW388

Legend

(1) S-5
(2) S-4
(3) S-3
(4) S-2
(5) B-18
(6) H-23
(7) Fuse Box (B-37)
(8) B-1
(9) Relay and Fuse Box
(10) H-21
(11) H-45
(12) L-1

Diagnosis

Quick Chart for Check Points

Trouble mode \ Check point	C/B-2 (30A)	Fuse C-4 (15A)	Power window relay	Sun roof switch	Sun roof control unit	Sun roof motor	Safety stop switch	Limit switch	Cable harness
1. Sun roof does not open				○	○	○			○
2. Sun roof does not close				○	○	○			○
3. Safety stop mechanism does not operate before sun roof closes completely					○		○		○
4. Limit switch mechanism does not operate before sun roof open completely					○			○	○
5. Power source circuit diagnosis	○	○	○						○

1. Sun Roof Does Not Open

2. Sun Roof Does Not Close

- TURN THE STARTER SWITCH ON
- IS BATTERY VOLTAGE APPLIED BETWEEN 2 [S-4] AND THE GROUND?

YES

- IS [B-2] (OR [B-1]) GROUNDED SECURELY?

NO

REFER TO ITEM No. 5 “POWER SOURCE CIRCUIT DIAGNOSIS” IN THIS DIAGNOSIS

YES

- IS THE SUN ROOF SWITCH NORMAL?

NO

GROUND IT SECURELY

YES

- IS THERE ANY CONTINUITY BETWEEN 3 [S-5] - 1 [L-1] (6 [S-5] - 3 [L-1])?

NO

REPAIR OR REPLACE THE SWITCH

YES

- IS THERE ANY CONTINUITY BETWEEN 2 [L-1] - [B-2] (OR [B-1])?

NO

REPAIR A POOR CONNECTION OF THE CONNECTORS OR AN OPEN CIRCUIT IN THE CIRCUIT

YES

- CONNECT THE BATTERY (+) TERMINAL TO THE SUN ROOF MOTOR SIDE CONNECTOR TERMINAL 1 [S-3] (2 [S-3]) AND THE (–) TERMINAL TO 2 [S-3] (1 [S-3])
- DOES THE MOTOR ROTATE?

NO

REPAIR A POOR CONNECTION OF THE CONNECTORS OR AN OPEN CIRCUIT IN THE CIRCUIT

YES

- IS THERE ANY CONTINUITY BETWEEN THE HARNESS SIDE CONNECTOR TERMINALS 1 [S-3] - 2 [S-3] ?

NO

REPAIR OR REPLACE THE MOTOR

YES

- IS THERE ANY CONTINUITY BETWEEN 4 [S-5] - [B-2] (OR [B-1])?

NO

REPAIR A POOR CONNECTION OF THE CONNECTORS OR AN OPEN CIRCUIT IN THE CIRCUIT

A

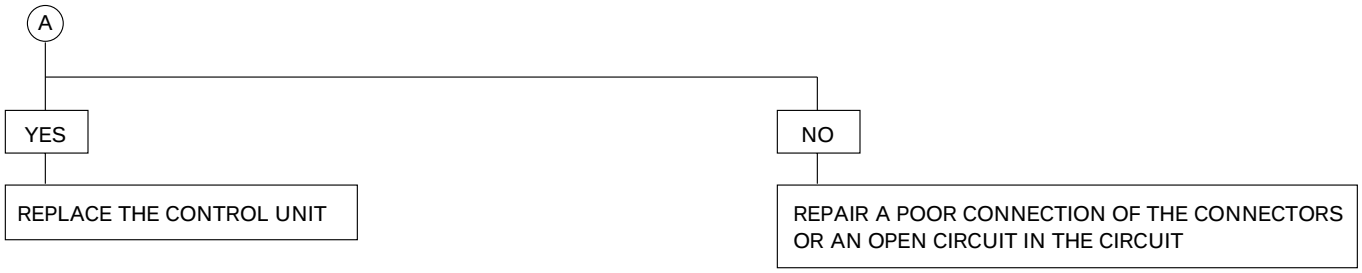

3. Safety Stop Mechanism Does Not Operate Before Sun Roof Closes Completely

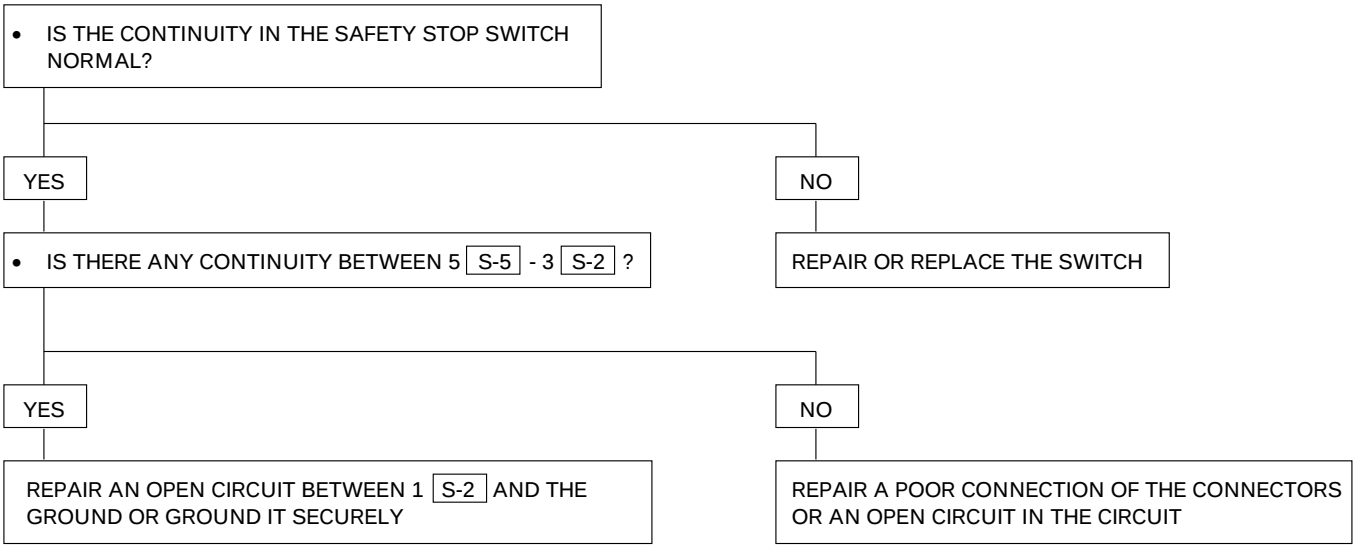

4. Limit Switch Mechanism Does Not Operate Before Sun Roof Open Completely

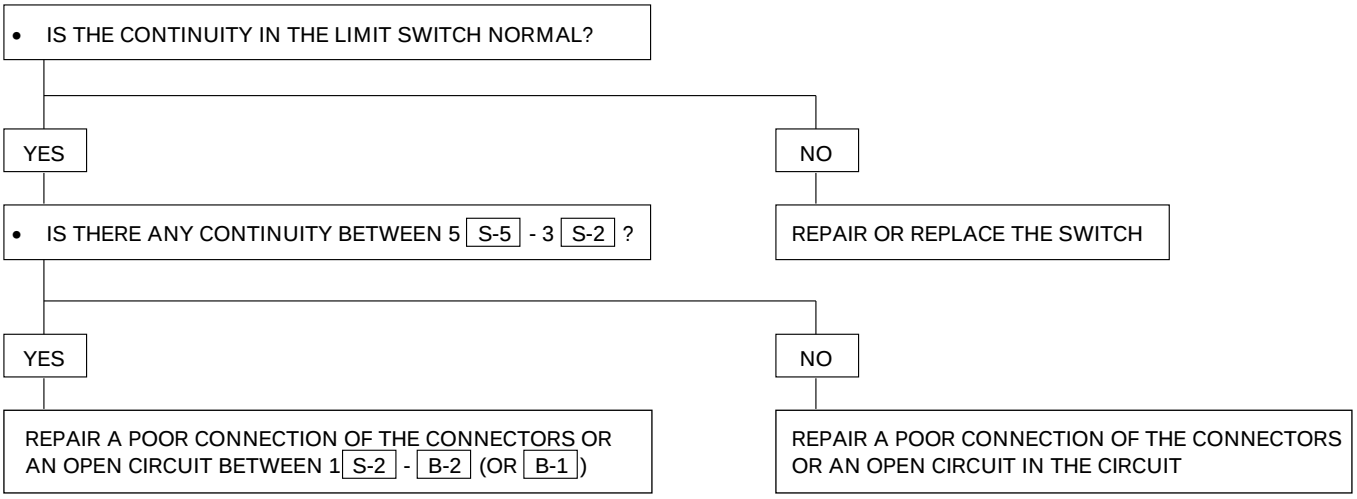

5. Power Source Circuit Diagnosis

- IS THERE ANY CONTINUITY BETWEEN THE TERMINALS OF C/B-2 (30A)?

YES

- IS FUSE C-4 (15A) NORMAL?

NO

PUSH IN THE RESET BUTTON OF CIRCUIT BREAKER AND CHECK THE CONTINUITY AGAIN
IF THERE IS NO CONTINUITY AFTER PUSHING RESET BUTTON, REPLACE IT WITH NEW ONE

YES

- IS THE POWER WINDOW RELAY NORMAL?

NO

REPLACE THE FUSE

YES

- TURN THE STARTER SWITCH ON
- IS THE BATTERY VOLTAGE APPLIED BETWEEN 1 B-37 AND THE GROUND OR 2 B-37 AND THE GROUND?

NO

REPLACE THE RELAY

YES

- IS B-19 (OR B-18) GROUNDED SECURELY?

NO

REPAIR A POOR CONNECTION OF THE CONNECTORS OR AN OPEN CIRCUIT BETWEEN FUSE C-4 (10A) AND 1 B-37 OR 1 H-14 AND 2 B-37

YES

REPAIR A POOR CONNECTION OF THE CONNECTORS OR AN OPEN CIRCUIT BETWEEN 3 B-37 AND B-19 (OR B-18)

NO

GROUND IT SECURELY

Seat Heater

General Description

The circuit consists of seat heater switch and seat heater unit.
Seat heater unit is incorporated into front seats.
To prevent from being overheated, seat heater unit has thermostat.

Circuit Diagram (RHD)

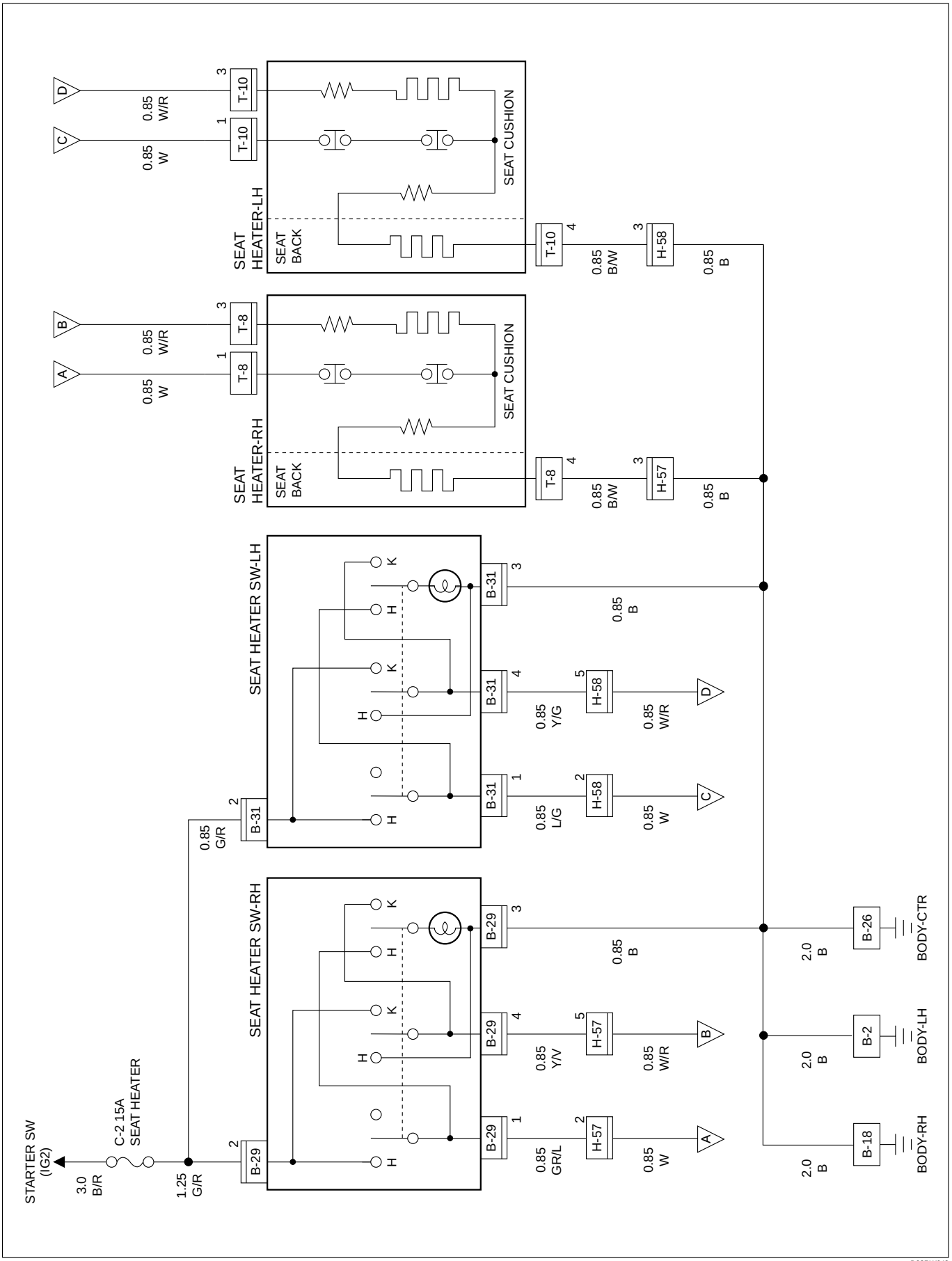

D08RW648

Parts Location (RHD)

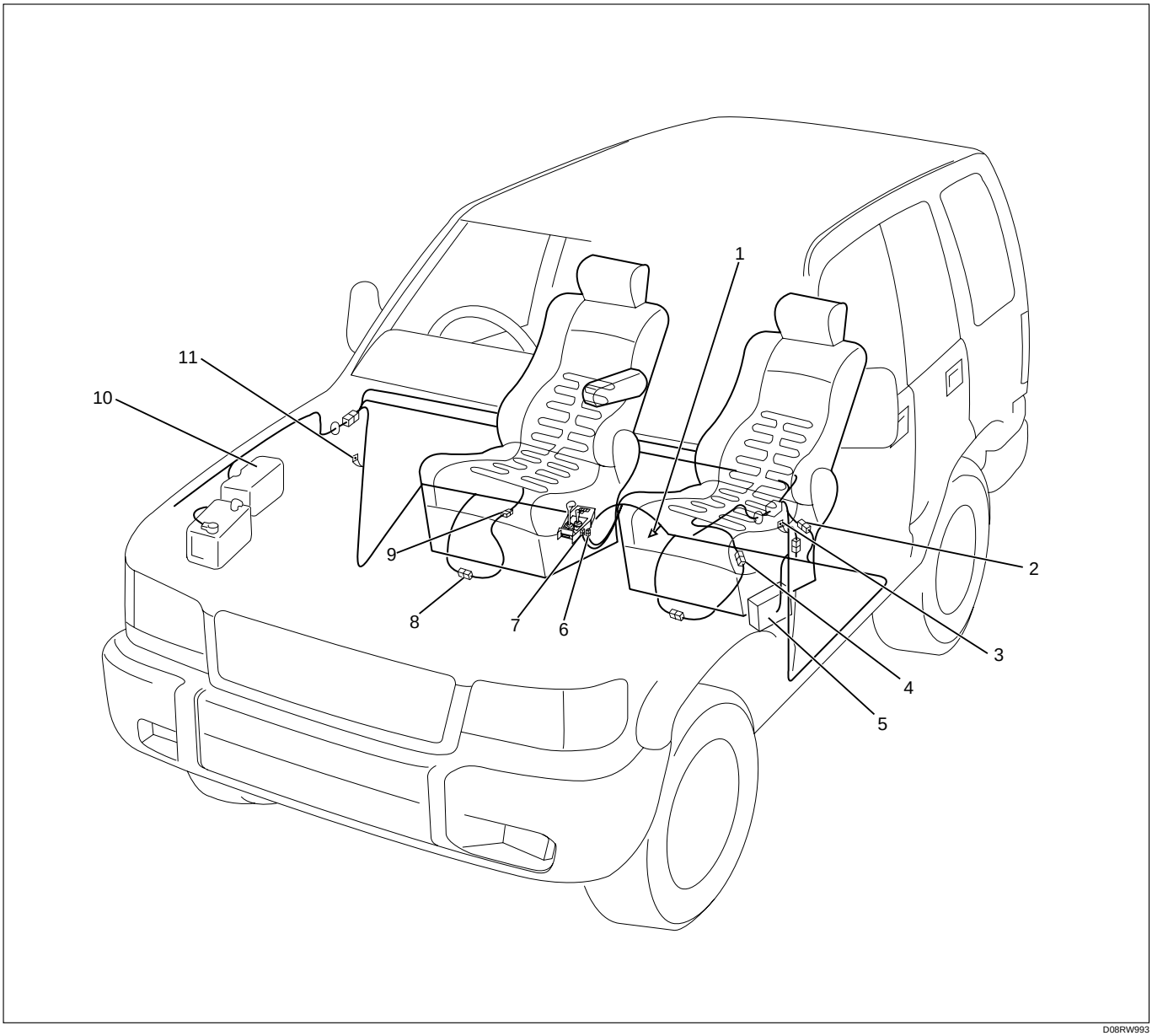

D08RW993

Legend

(1) B-26
(2) H-58
(3) B-2
(4) T-10
(5) Fuse Box
(6) B-31
(7) B-29
(8) H-57
(9) T-8
(10) Relay and Fuse Box
(11) B-18

Circuit Diagram (LHD)

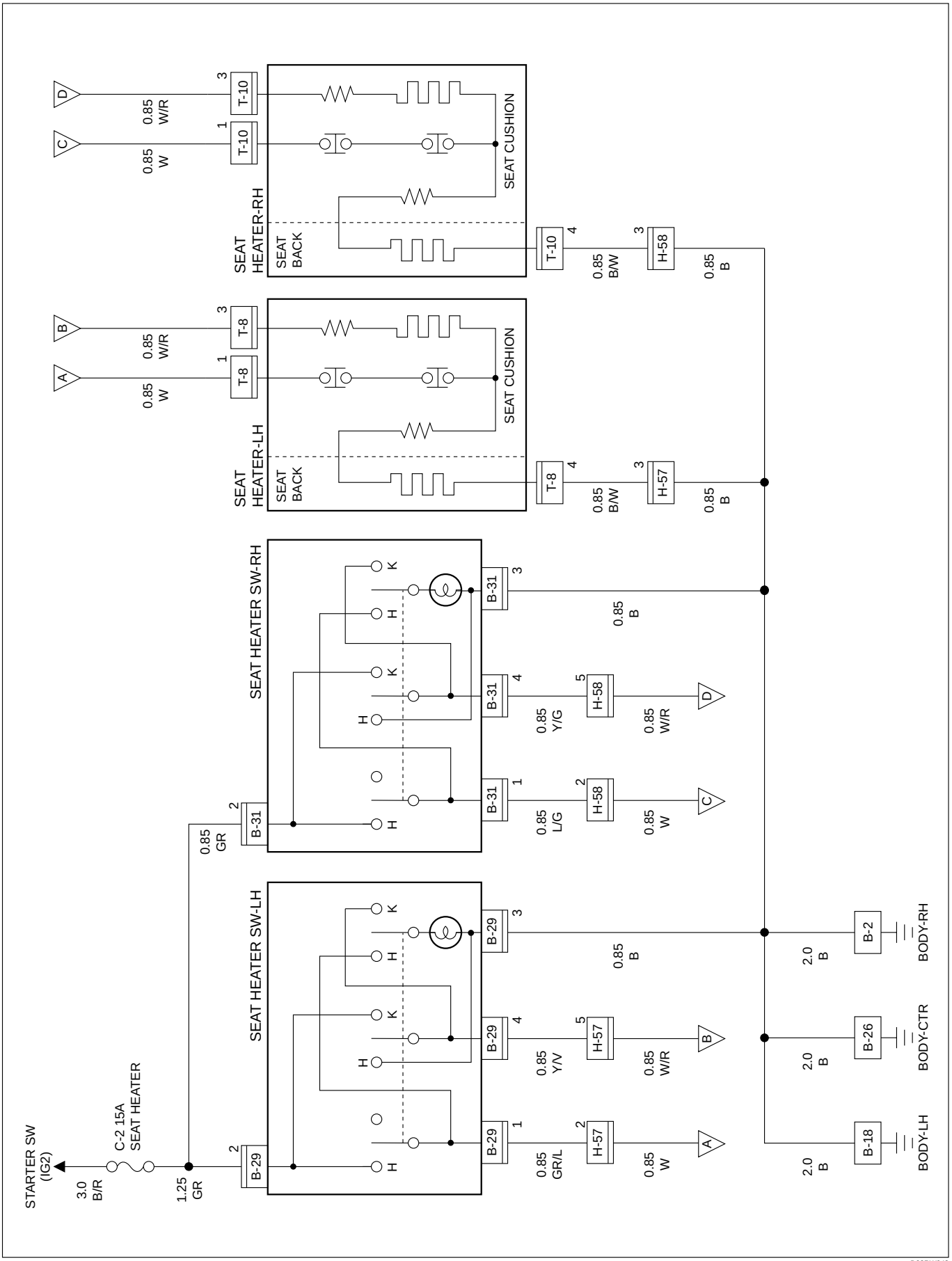

D08RW948

Parts Location (LHD)

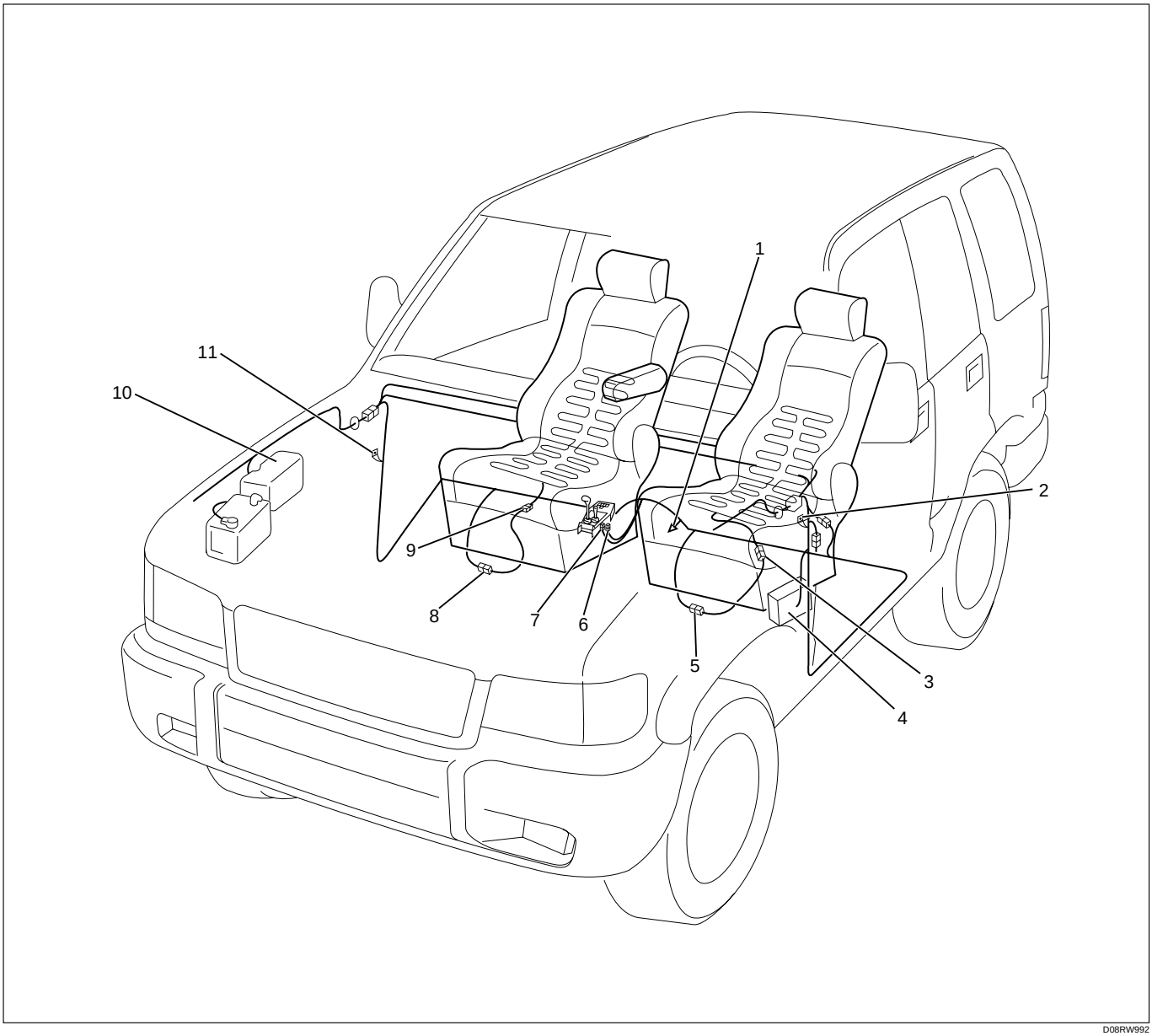

D08RW992

Legend

(1) B-26
(2) B-18
(3) T-8
(4) Fuse Box
(5) H-46
(6) B-31
(7) B-29
(8) H-47
(9) T-10
(10) Relay and Fuse Box
(11) B-2

Diagnosis

Quick Chart for Check Points

Trouble mode \ Check point	Fuse C-2 (15A)	Seat heater SW		Heat unit		Cable harness
		Driver side	Passenger side	Driver side	Passenger side	
1. Seat heater on both sides does not heat up	○					○
2. Seat heater on the driver (or passenger) side does not heat up		○	○	○	○	○
3. Heat (or keep) position does not heat up		○	○	○	○	

1. Seat Heater on Both Sides Does Not Heat Up

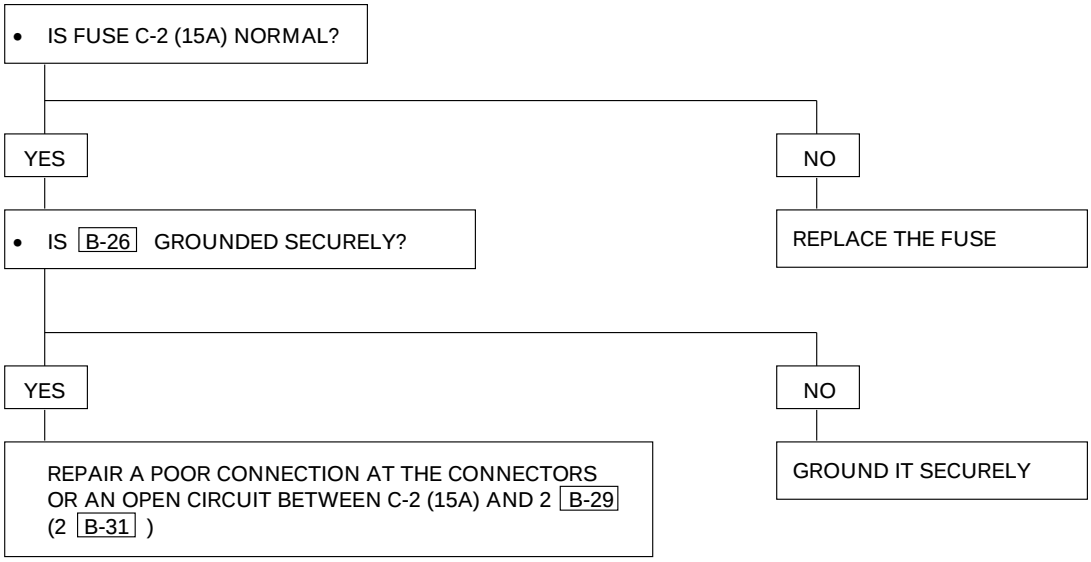

2. Seat Heater on The Driver (Or Passenger) Side Does Not Heat Up

- DISCONNECT THE SEAT HEATER SWITCH CONNECTOR
- TURN THE STARTER SWITCH "ON"
- IS THE BATTERY VOLTAGE APPLIED BETWEEN THE SEAT HEATER SW HARNESS SIDE CONNECTOR 2 B-29 (OR 2 B-31) AND THE GROUND?

YES

- IS THE SEAT HEATER SW FUNCTION NORMAL?

NO

REPAIR A POOR CONNECTION AT THE CONNECTORS OR AN OPEN CIRCUIT IN THE CIRCUIT

YES

- DISCONNECT THE HEAT UNIT CONNECTOR
- IS THERE ANY CONTINUITY BETWEEN THE HEAT UNIT CONNECTOR 1 T-8 , 3 T-8 AND 4 T-8 (OR 1 T-10 , 3 T-10 AND 4 T-10)

NO

REPLACE THE SEAT HEATER SW

YES

REPAIR A POOR CONNECTION AT THE CONNECTORS OR AN OPEN CIRCUIT BETWEEN 1 B-29 AND 1 T-8 , 4 B-29 AND 3 T-8 , 4 T-8 AND GROUND (OR 1 B-31 AND 1 T-10 , 4 B-31 AND 3 T-10 , 4 T-10 AND GROUND)

NO

REPLACE THE HEAT UNIT

3. Heat (Or Keep) Position Does Not Heat Up

- IS THE SEAT HEATER SW FUNCTION NORMAL?

YES

REPLACE THE HEAT UNIT

NO

REPLACE THE SEAT HEATER SW

Power Seat

General Description

The circuit consists of power seat switch, front tilt motor (driver's seat only), rear tilt motor (driver's seat only), slide motor and recliner motor.
Power seat switch has a tilt and slide switch and a recliner switch. The motor built in the seat can be actuated by operating these switches to move the seat to desired position, independent of position of starter switch.

Circuit Diagram (RHD)-1

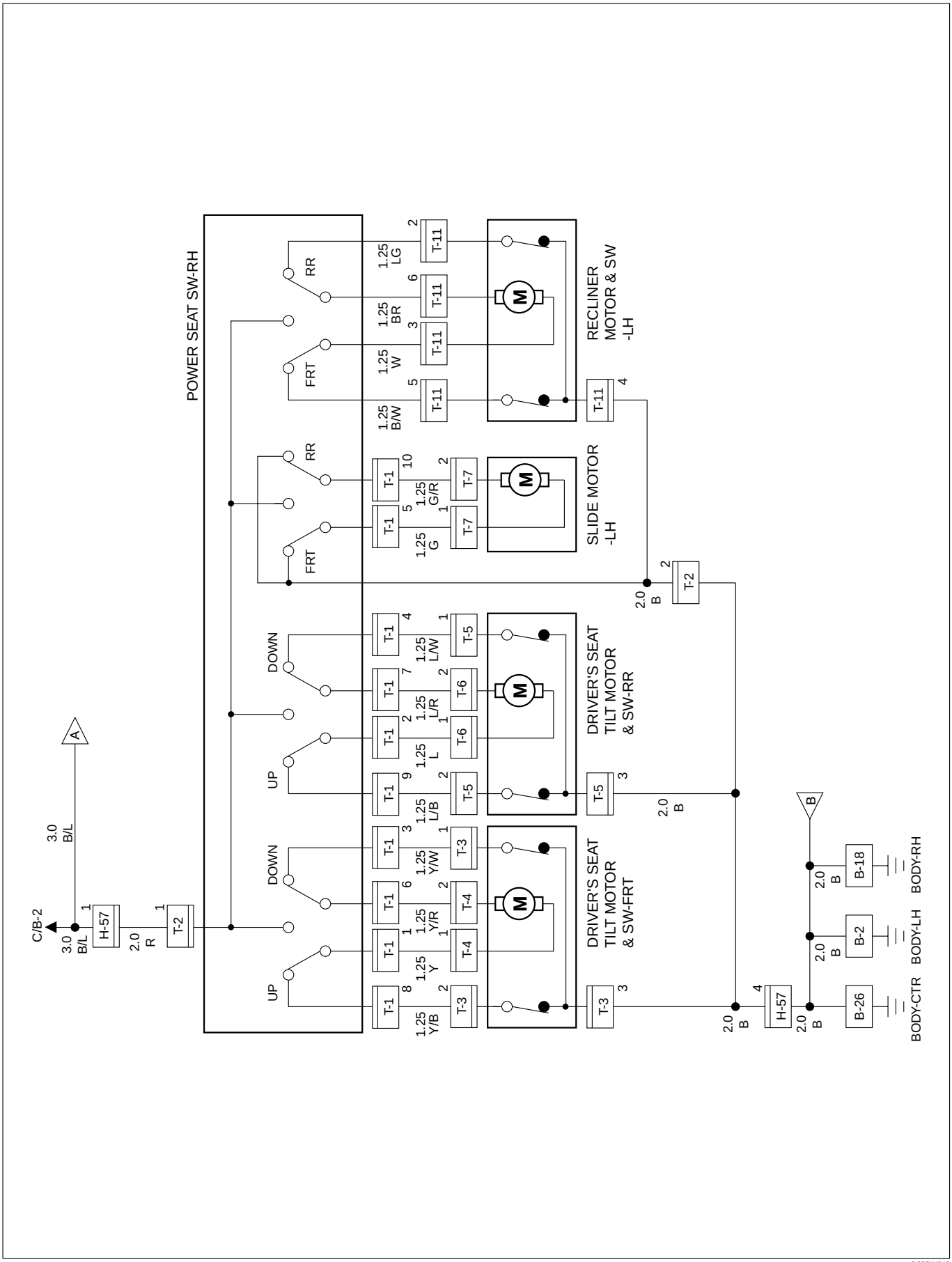

D08RW640

Circuit Diagram (RHD)-2

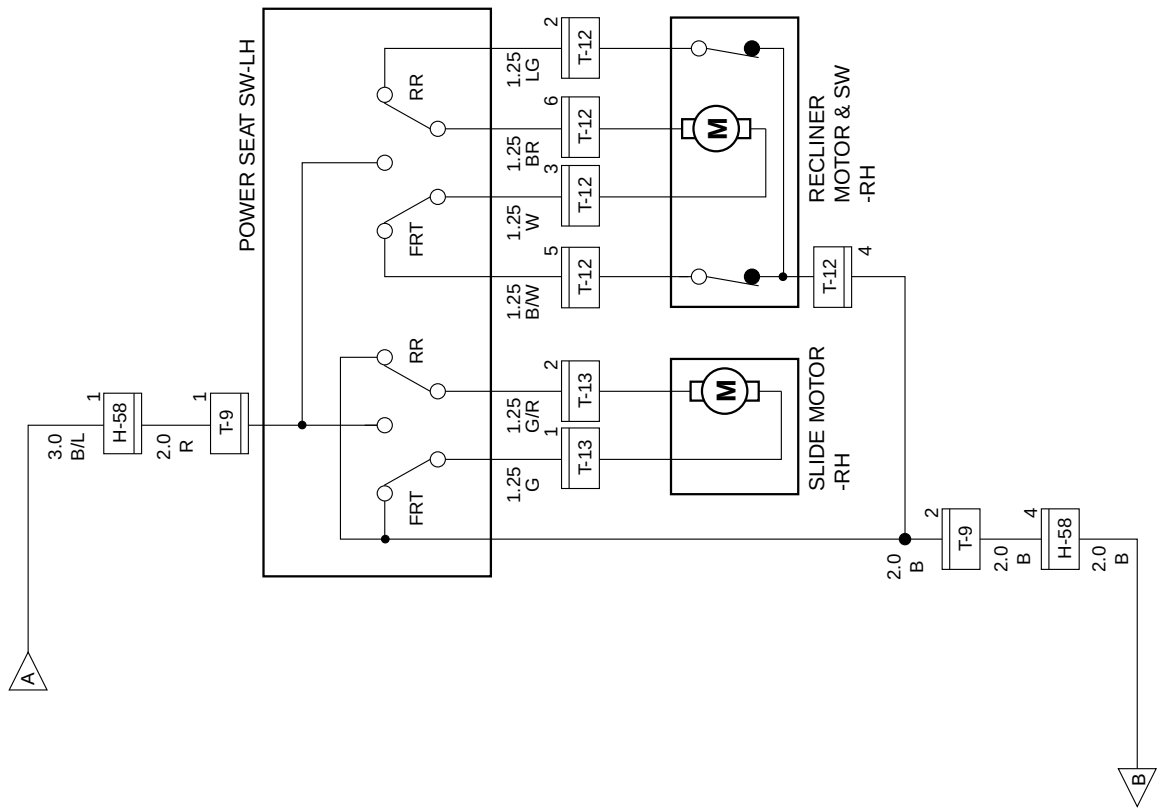

D08RW641

Parts Location (RHD)

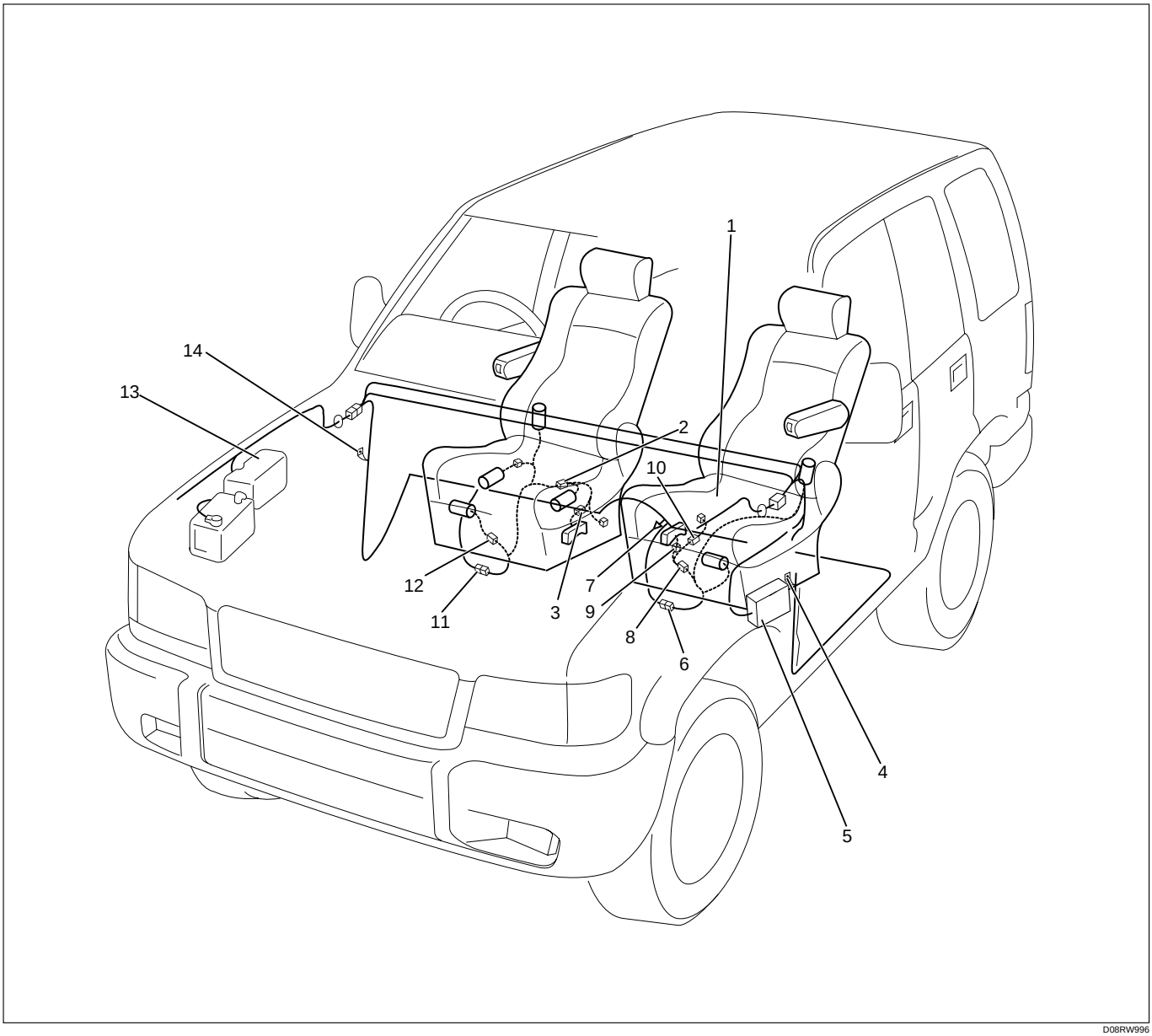

D08RW996

Legend

(1) T-6
(2) T-4
(3) T-1
(4) B-2
(5) Fuse Box
(6) H-58
(7) B-26
(8) T-9
(9) T-13
(10) T-12
(11) H-57
(12) T-7
(13) Relay and Fuse Box
(14) B-18

Circuit Diagram (LHD)-1

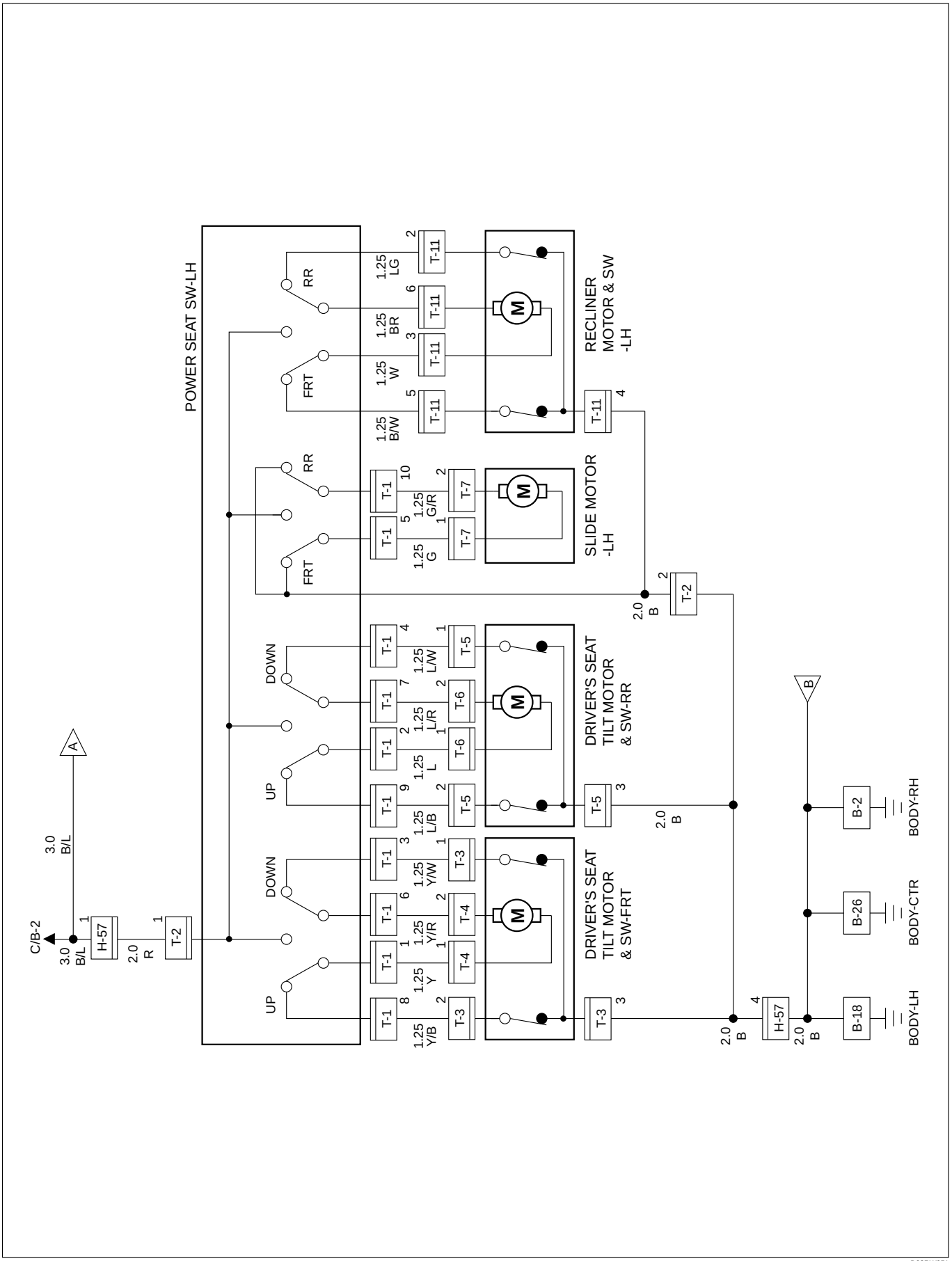

D08RW951

Circuit Diagram (LHD)-2

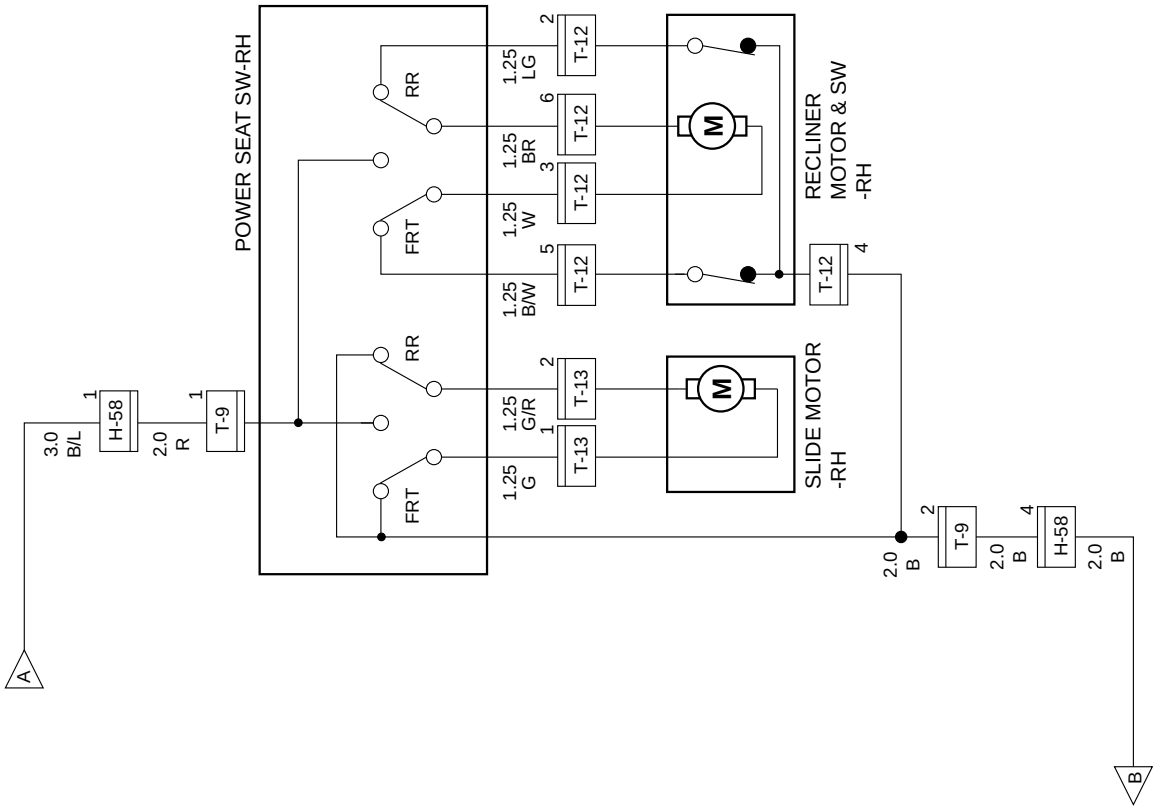

D08RW952

Parts Location (LHD)

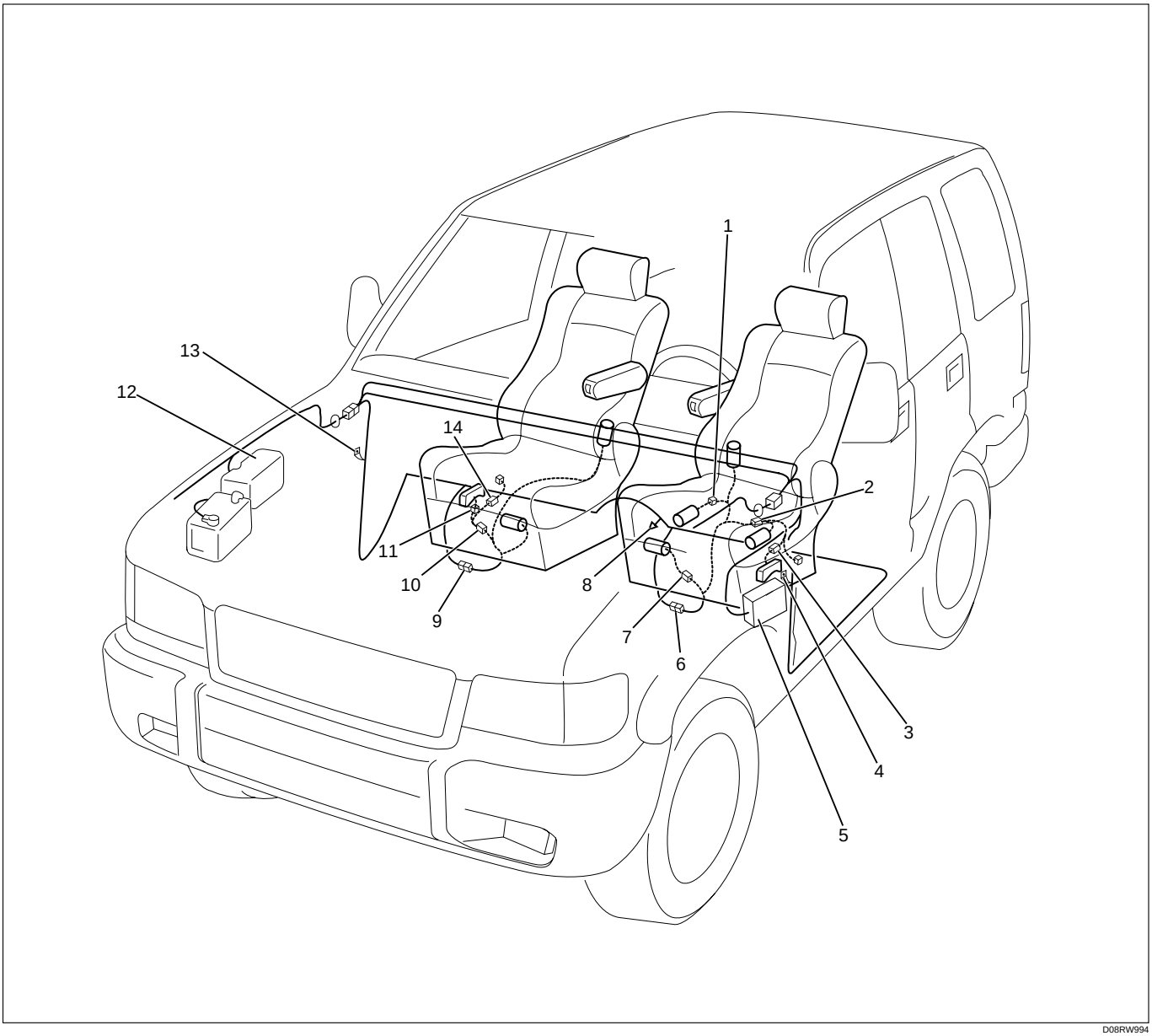

D08RW994

Legend

(1) T-6
(2) T-4
(3) T-1
(4) B-18
(5) Fuse Box
(6) H-57
(7) T-7
(8) B-26
(9) H-58
(10) T-9
(11) T-13
(12) Relay and Fuse Box
(13) B-2
(14) T-12

Diagnosis

Quick Chart for Check Points

Trouble mode \ Check point		Circuit breaker (30A)	Tilt & slide SW			Tilt & slide motor			Reclining SW	Reclining motor	Cable harness
			FRT tilt	RR tilt	Slide	FRT tilt	RR tilt	Slide			
Driver seat	1. Power seat does not operate at any direction	○									○
	2. Front tilt mechanism does not operate		○			○					○
	3. Rear tilt mechanism does not operate			○			○				○
	4. Sliding mechanism does not operate				○			○			○
	5. Reclining mechanism does not operate								○	○	○
Passenger seat	1. Power seat does not operate at any direction	○									○
	2. Sliding mechanism does not operate				○			○			○
	3. Reclining mechanism does not operate								○	○	○

Driver Seat

1. Power Seat Does Not Operate At Any Direction

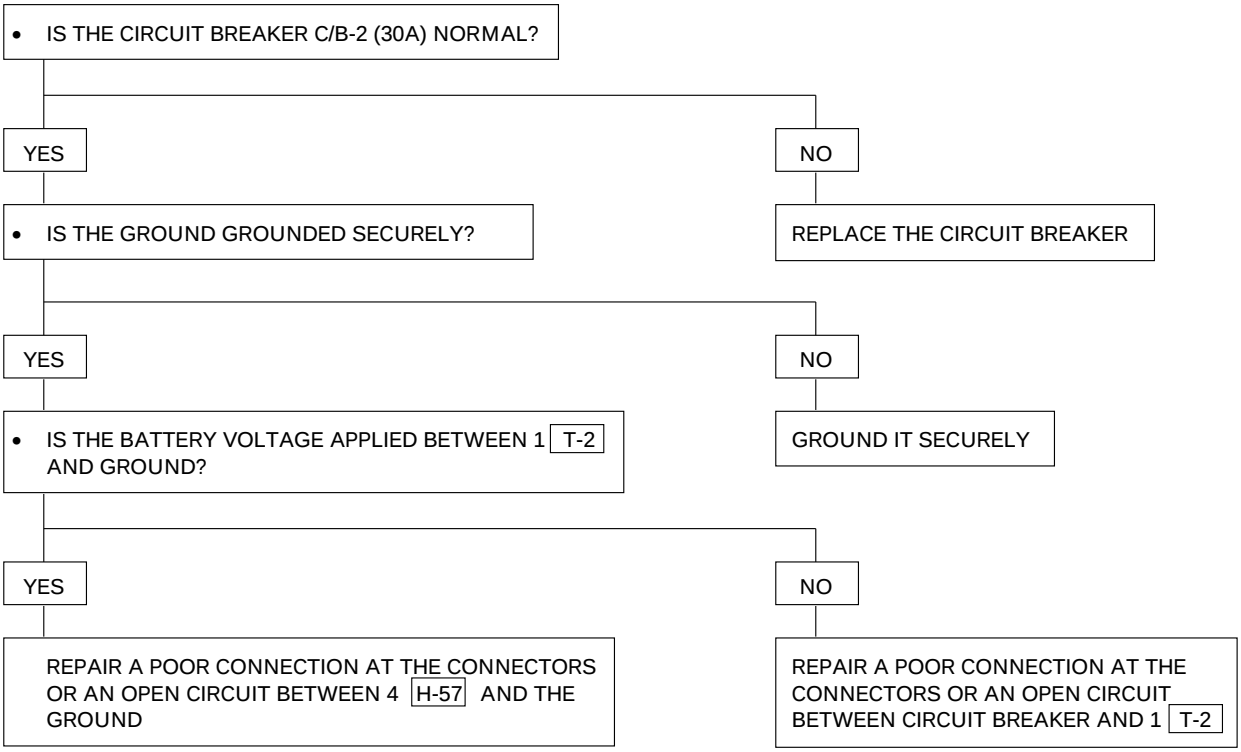

2. Front Tilt Mechanism Does Not Operate

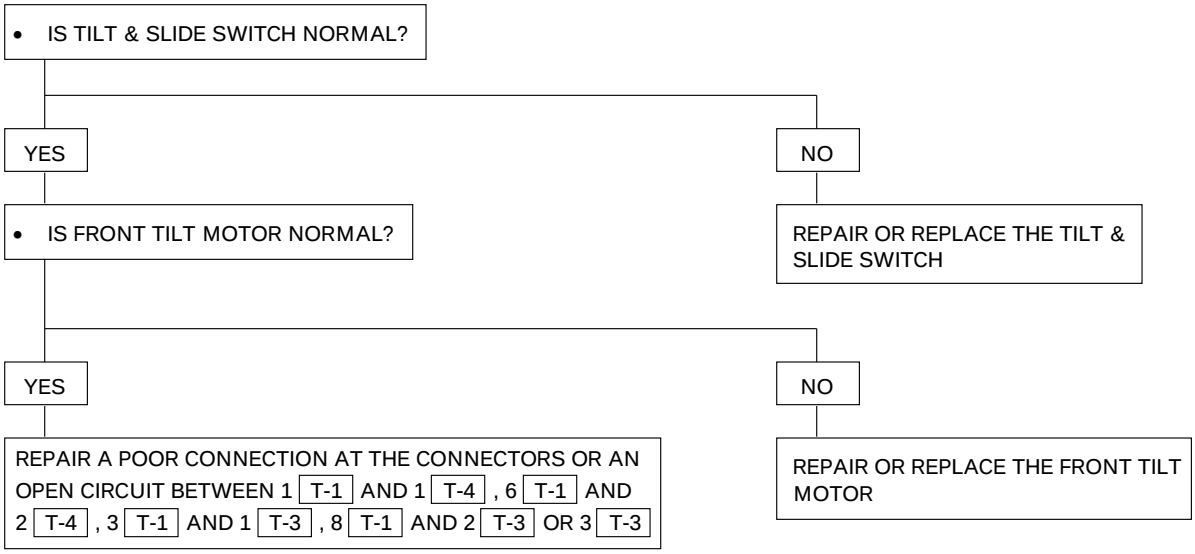

3. Rear Tilt Mechanism Does Not Operate

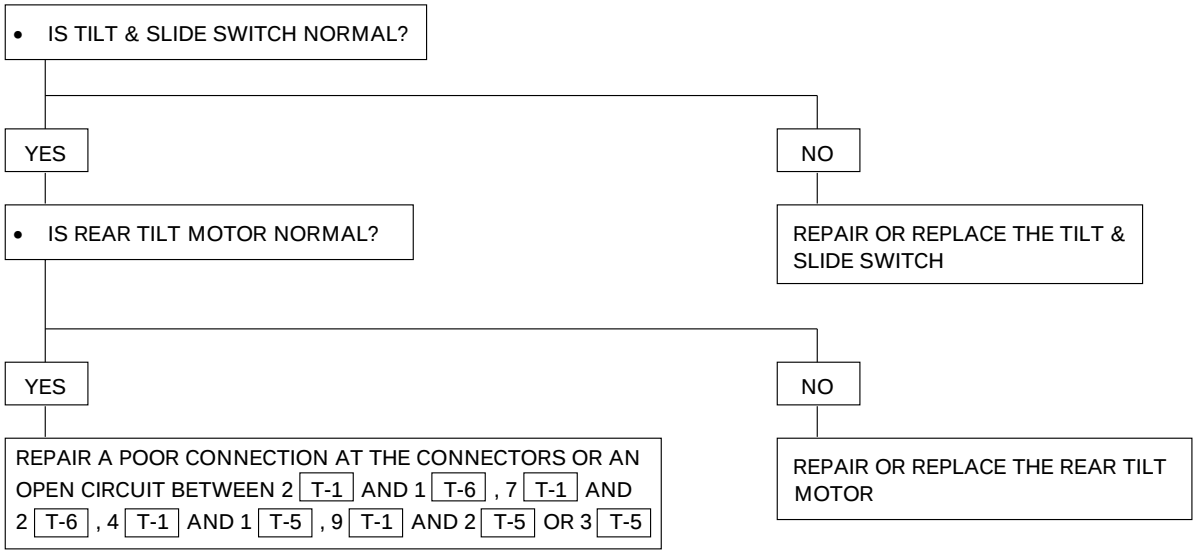

4. Sliding Mechanism Does Not Operate

- IS TILT & SLIDE SWITCH NORMAL?
  - NO → REPAIR OR REPLACE THE TILT & SLIDE SWITCH
  - YES → IS SLIDE MOTOR NORMAL?
    - NO → REPAIR OR REPLACE THE SLIDE MOTOR
    - YES → REPAIR A POOR CONNECTION AT THE CONNECTORS OR AN OPEN CIRCUIT BETWEEN 5 [T-1] AND 1 [T-7], 10 [T-1] AND 2 [T-7] OR 2 [T-2]

5. Reclining Mechanism Does Not Operate

- IS RECLINER SWITCH NORMAL?
  - NO → REPAIR OR REPLACE THE RECLINER SWITCH
  - YES → IS RECLINER MOTOR NORMAL?
    - NO → REPAIR OR REPLACE THE RECLINER MOTOR
    - YES → REPAIR A POOR CONNECTION AT THE CONNECTORS 3 [T-11], 6 [T-11], 2 [T-11], 5 [T-11] AND 4 [T-11]

Passenger Seat

1. Power Seat Does Not Operate At Any Direction

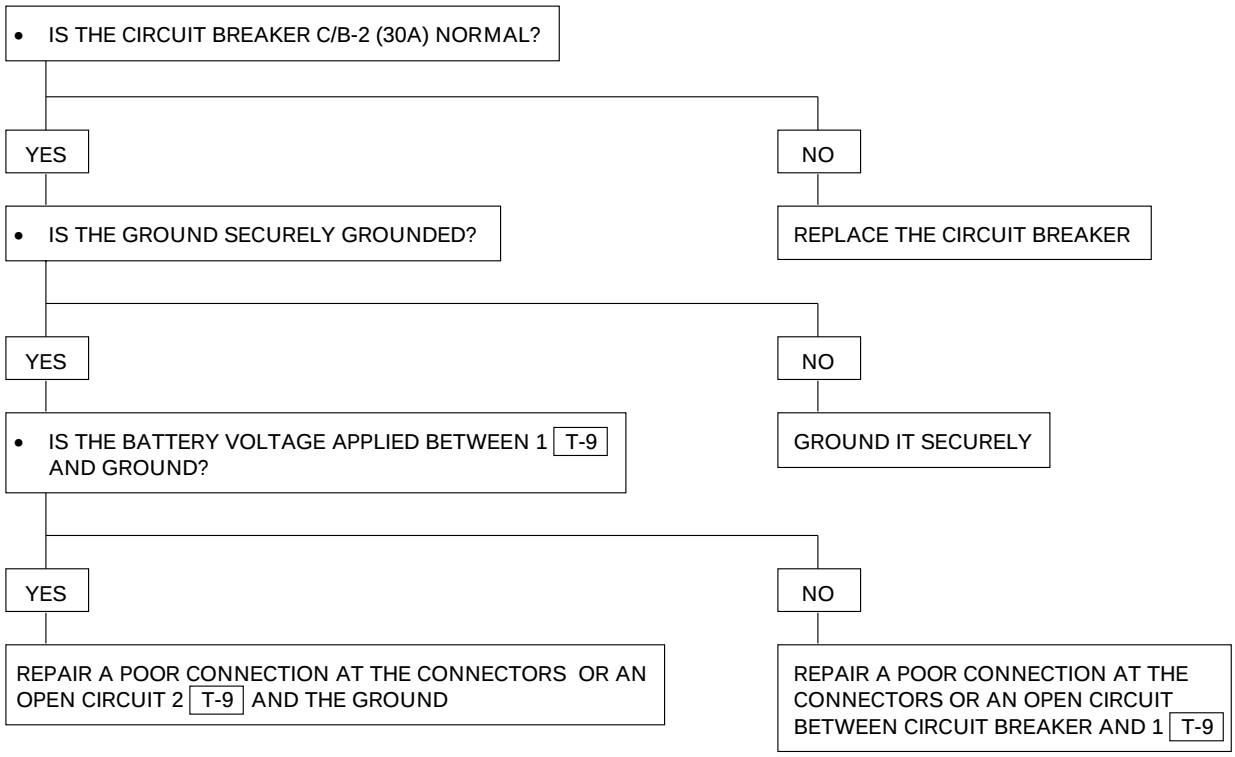

2. Sliding Mechanism Does Not Operate

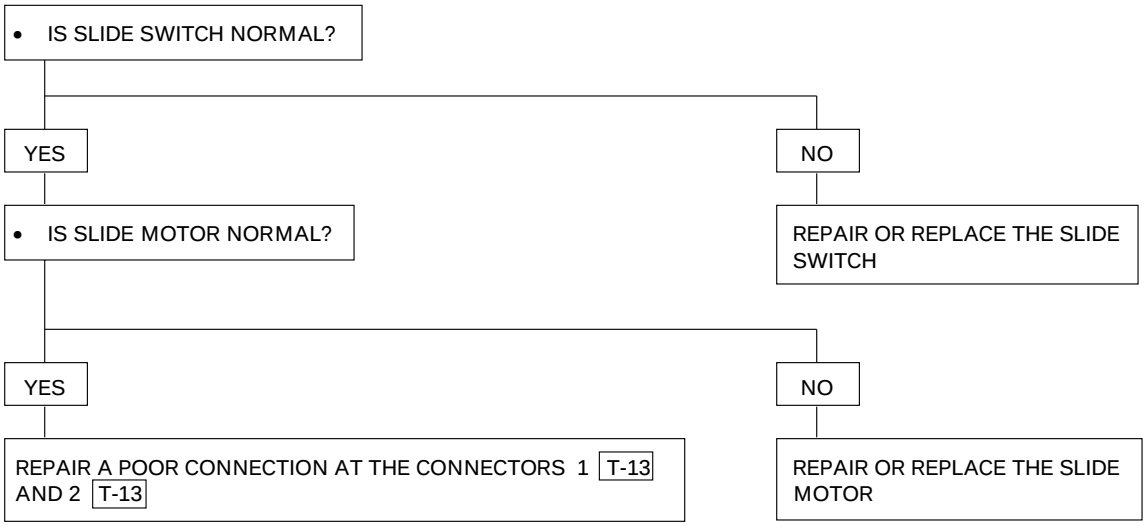

3. Reclining Mechanism Does Not Operate

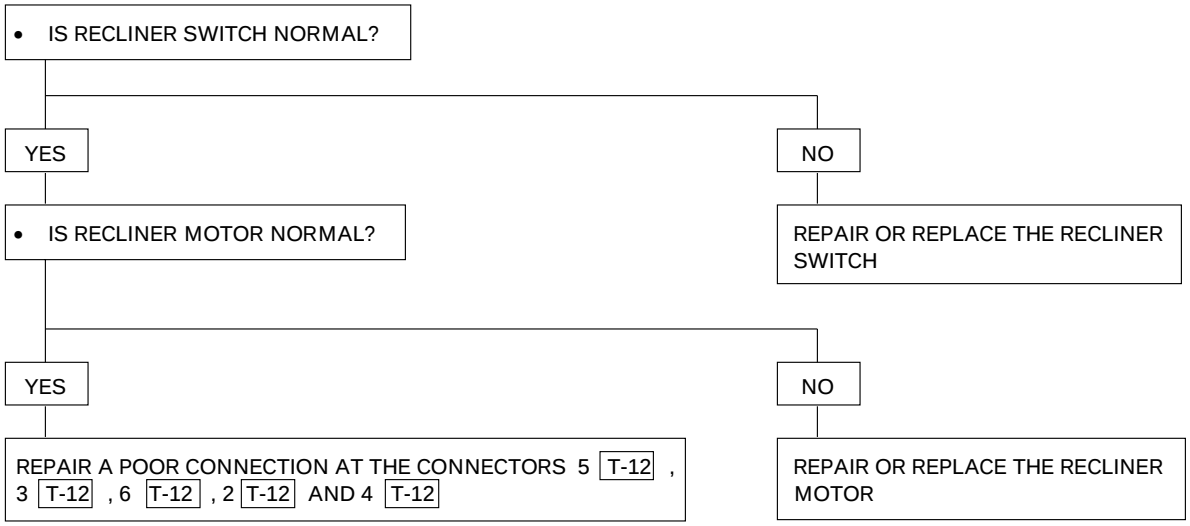

Shift On The Fly System

Circuit Diagram (RHD 6V*1 Lever Type)-1

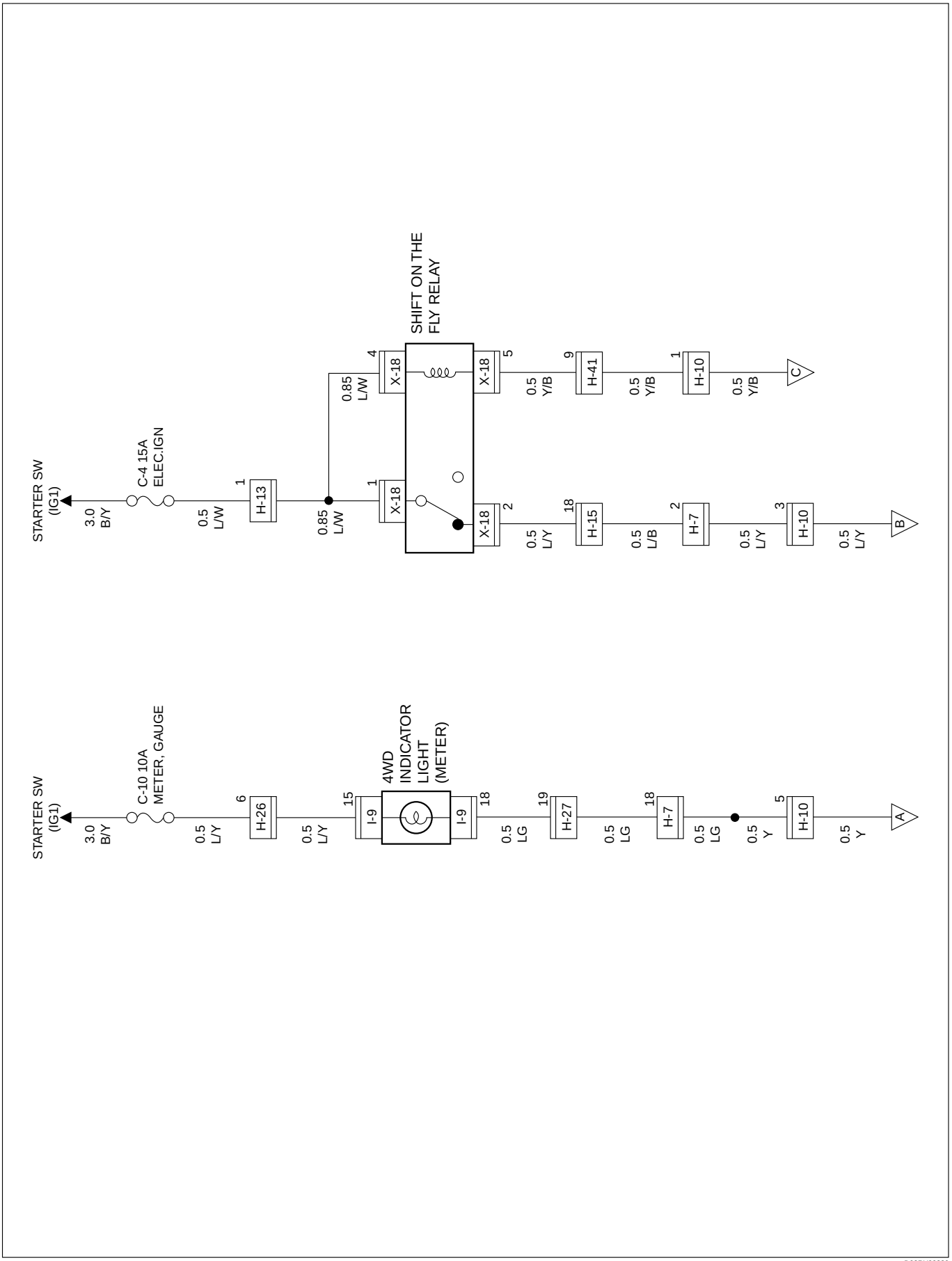

D08RY00236

Circuit Diagram (RHD 6V*1 Lever Type)-2

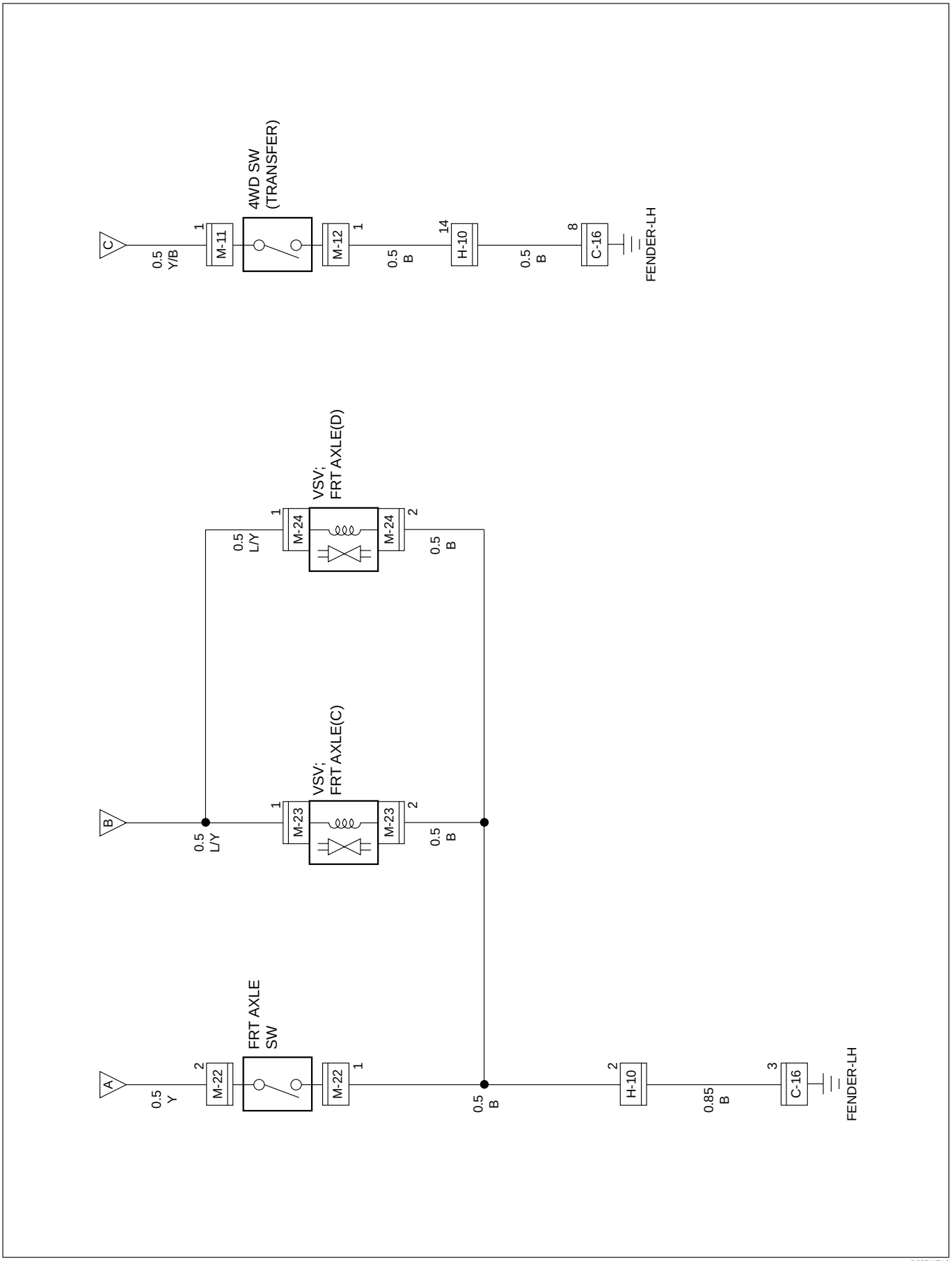

D08RW716

Parts Location (RHD 6V*1 Lever Type)

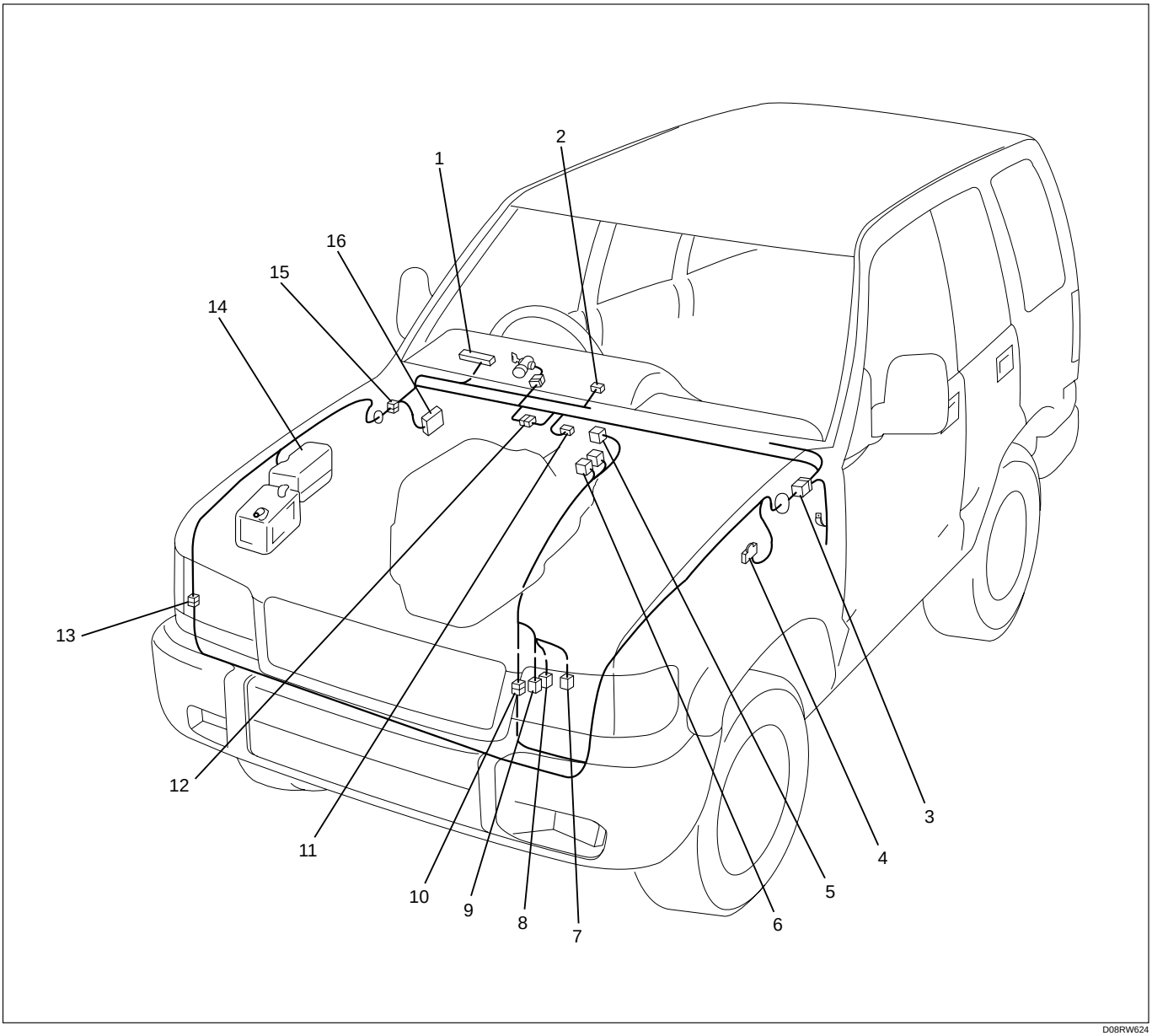

Legend

(1) I-9
(2) I-12
(3) H-7, H-9
(4) C-16
(5) M-26
(6) M-11, M-12
(7) M-22
(8) M-23
(9) M-24
(10) H-10
(11) C-94
(12) H-12
(13) H-41
(14) Relay and Fuse Box
(15) H-15, H-25
(16) Fuse Box

Circuit Diagram (RHD 4JG2 Lever Type)-1

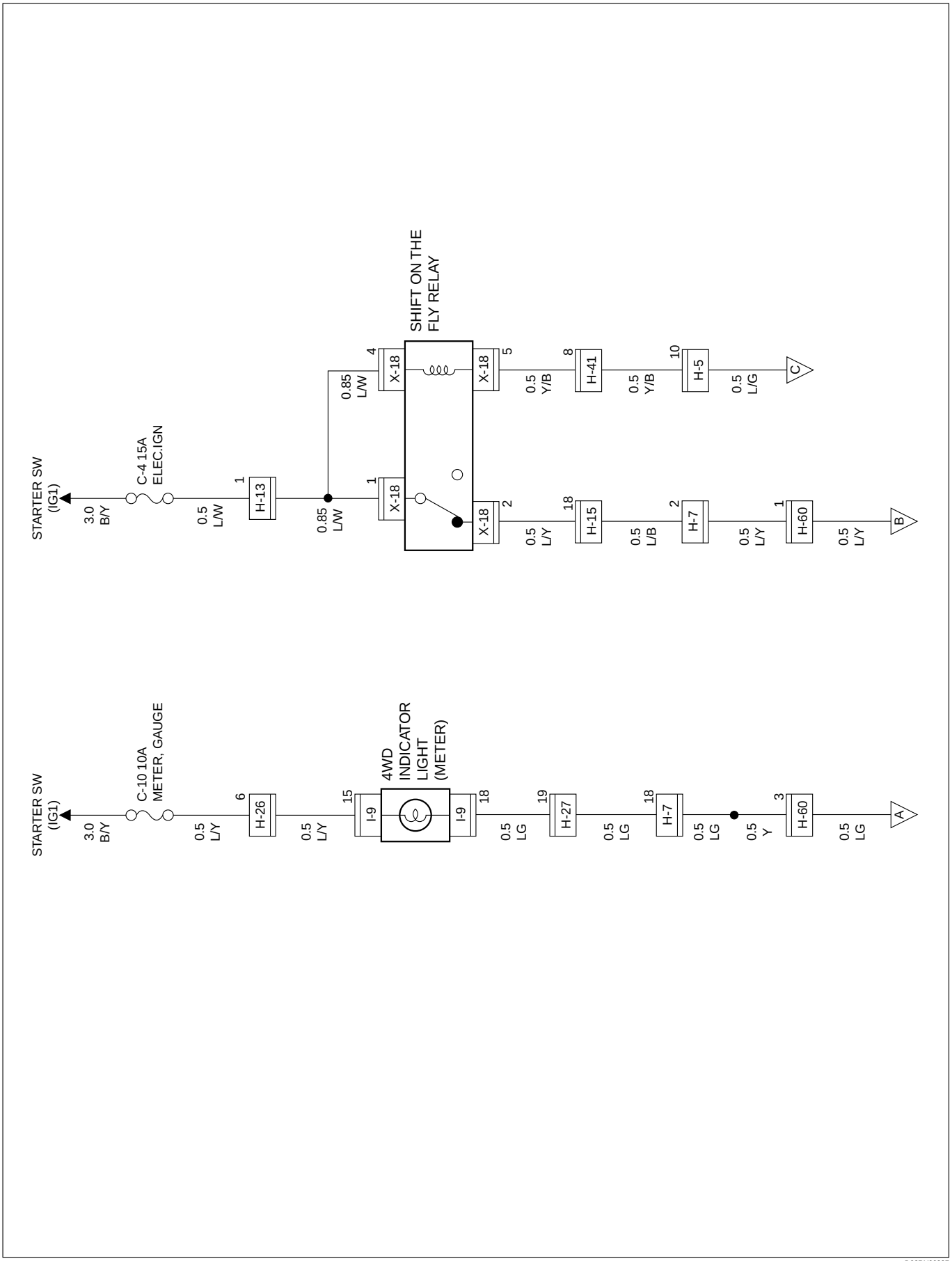

D08RY00237

Circuit Diagram (RHD 4JG2 Lever Type)-2

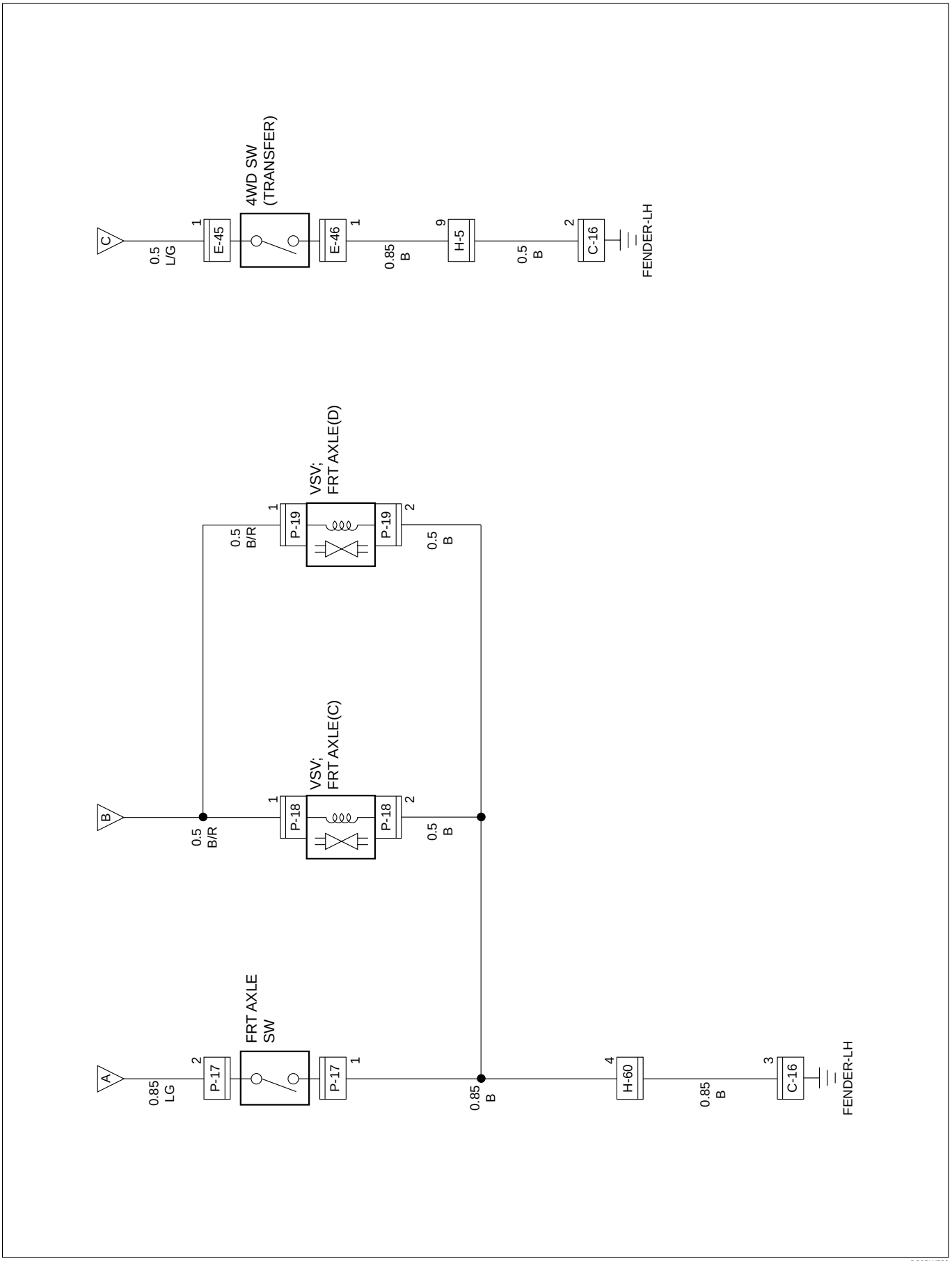

D08RW720

Parts Location (RHD 4JG2 Lever Type)

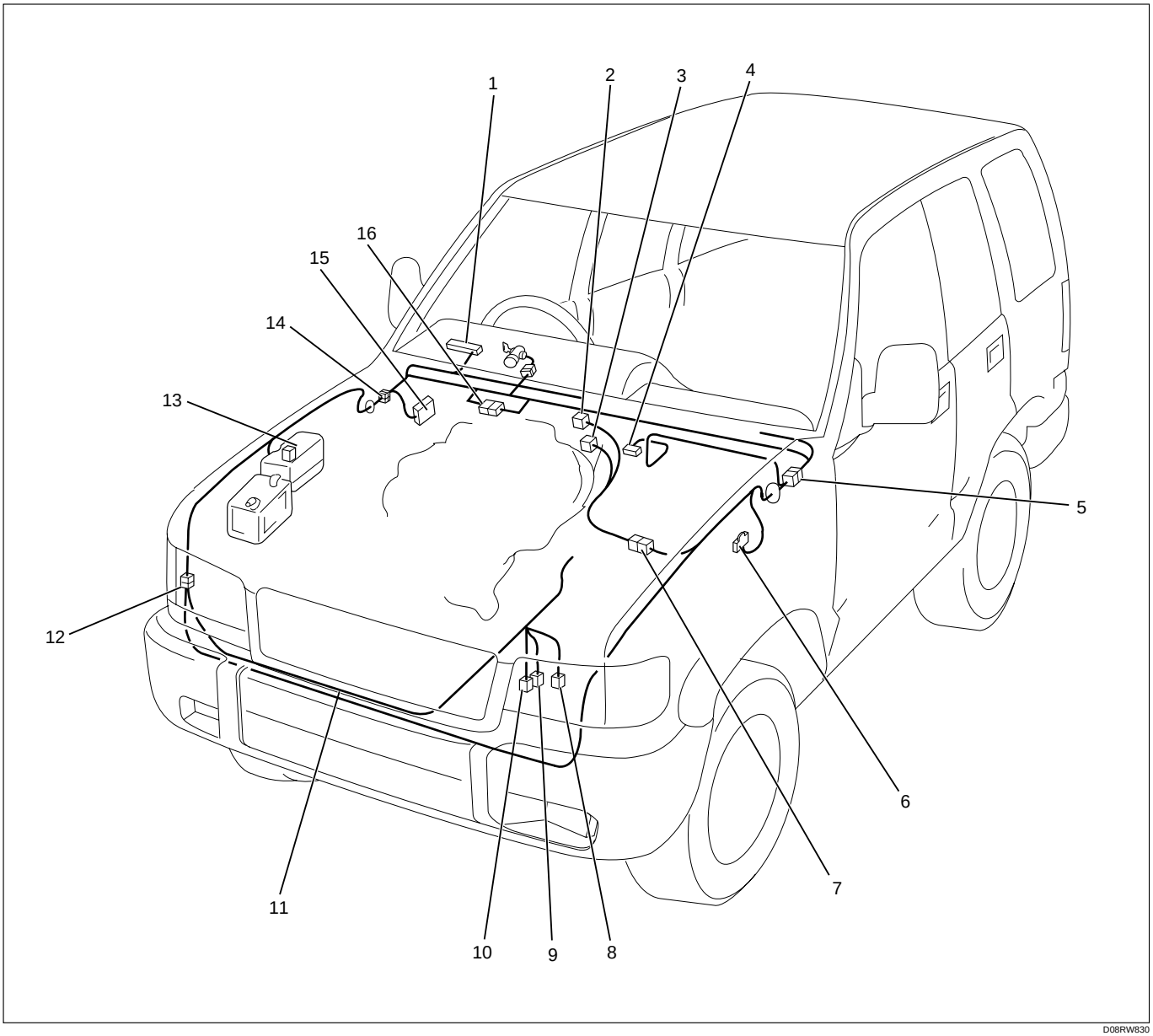

D08RW830

Legend

(1) I-9
(2) E-45
(3) E-46
(4) H-7
(5) C-16
(6) H-5
(7) P-17
(8) P-18
(9) P-19
(10) Battery (+) Cable
(11) H-41, H-60
(12) Relay and Fuse Box (X-18)
(13) H-13, H-15, H-26, H-27
(14) Fuse Box

Circuit Diagram (LHD 6VD1 LeverType)-1

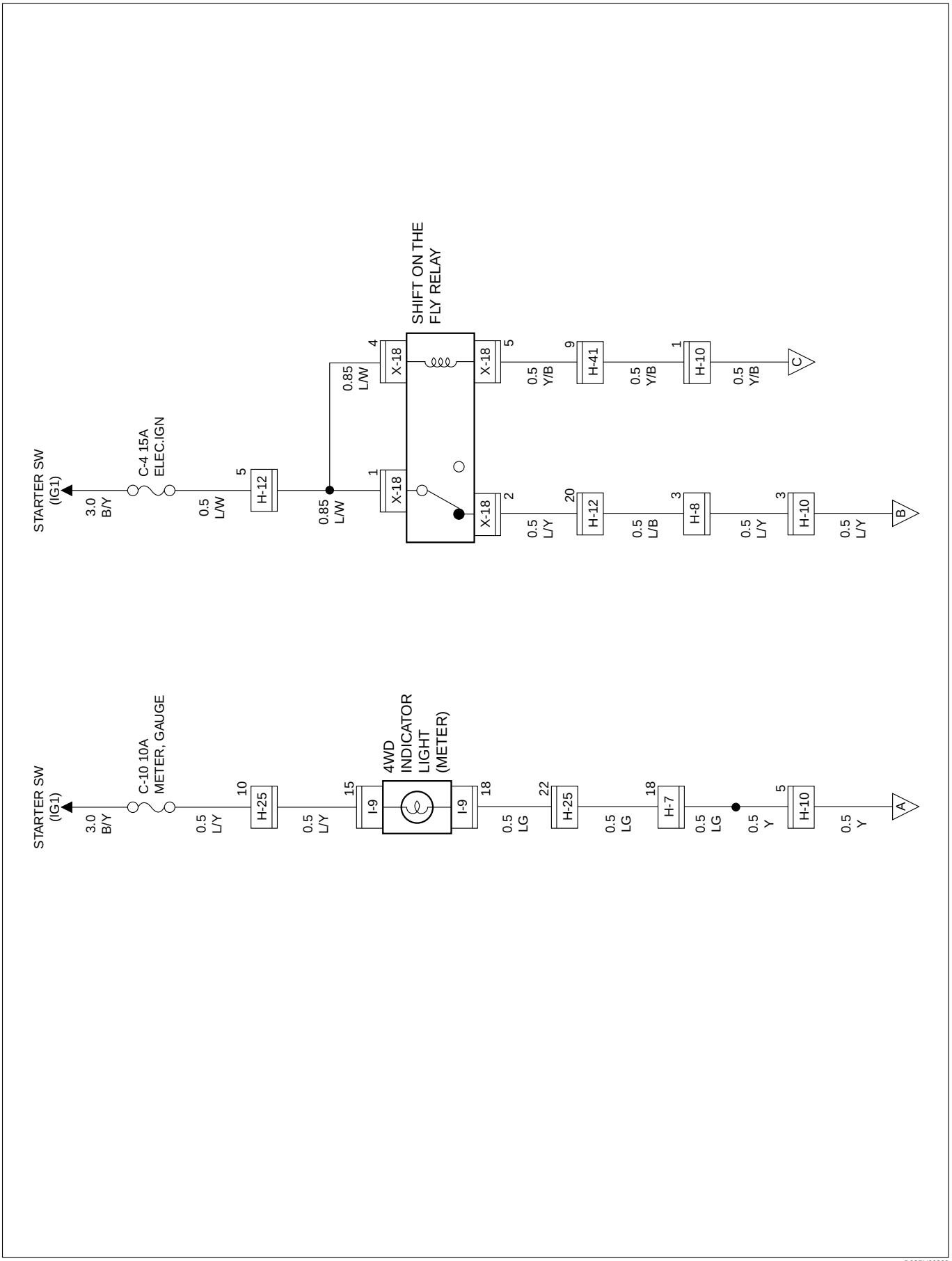

D08RY00238

Circuit Diagram (LHD 6VD1 Lever Type)-2

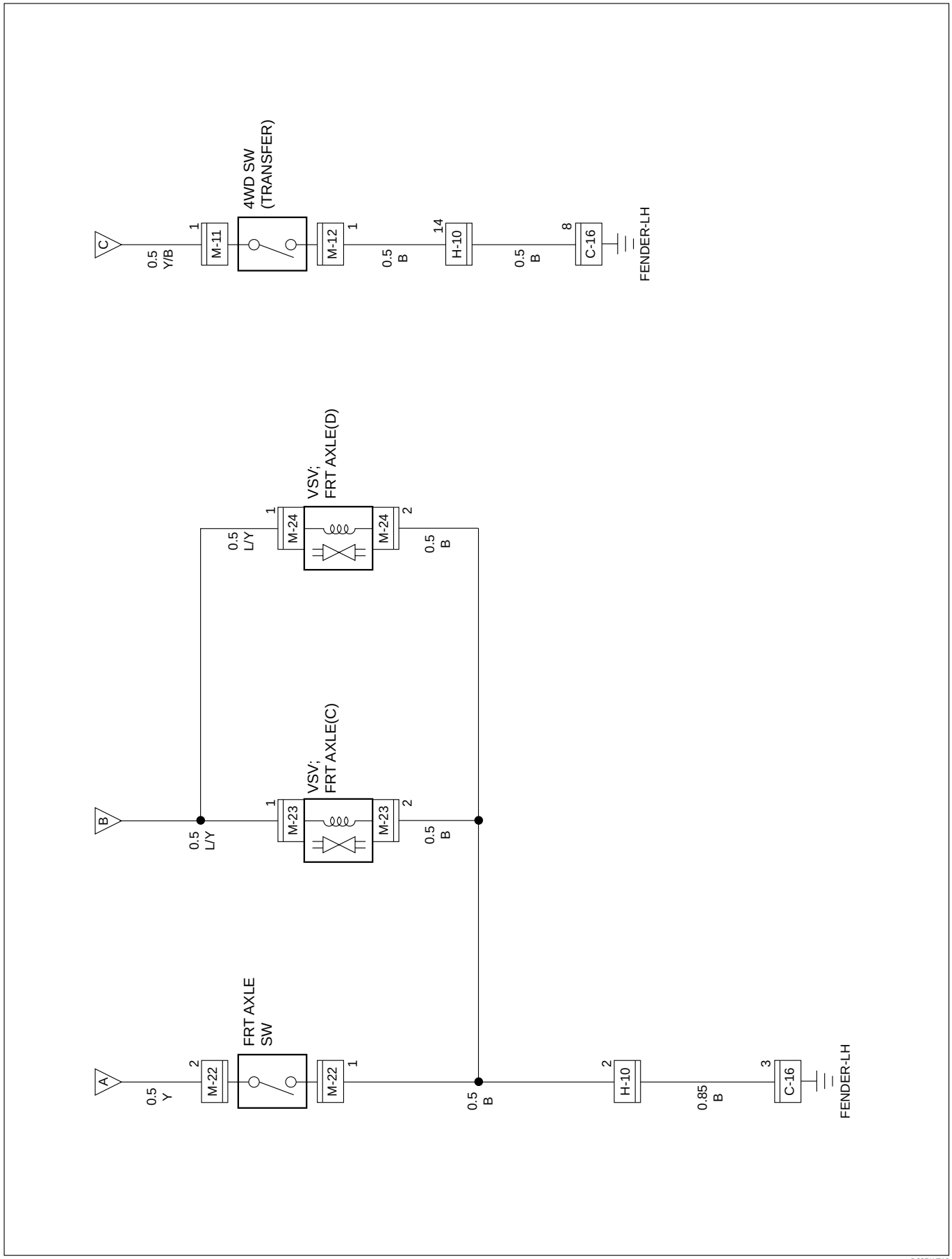

D08RW716

Parts Location (LHD 6VD1 Lever Type)

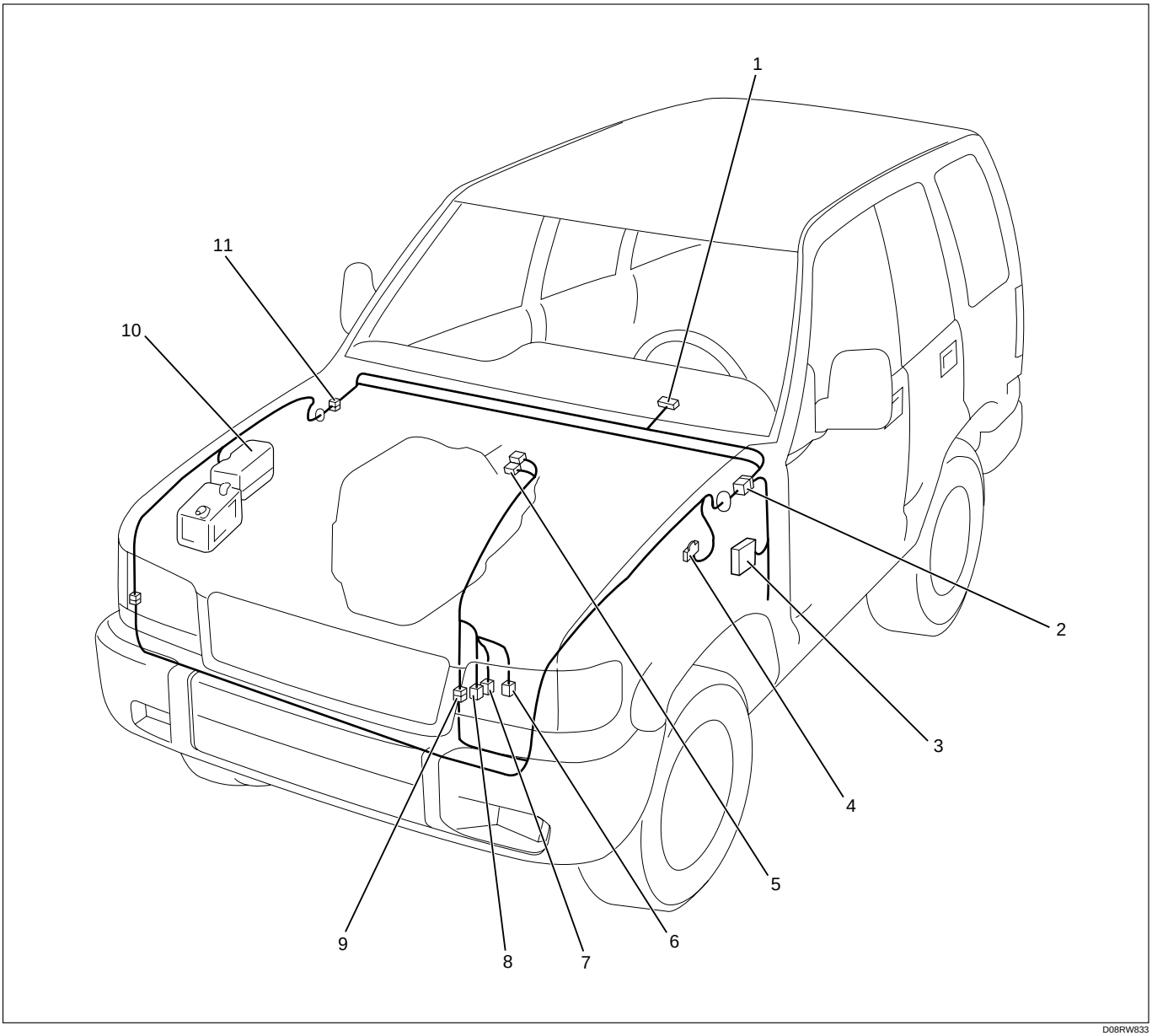

D08RW833

Legend

(1) I-9
(2) H-7, H-8, H-25
(3) Fuse Box
(4) C-16
(5) M-11, M-12
(6) M-22
(7) M-23
(8) M-24
(9) H-10
(10) Relay and Fuse Box (X-18)
(11) H-12

Circuit Diagram (LHD 4JG2 Lever Type)-1

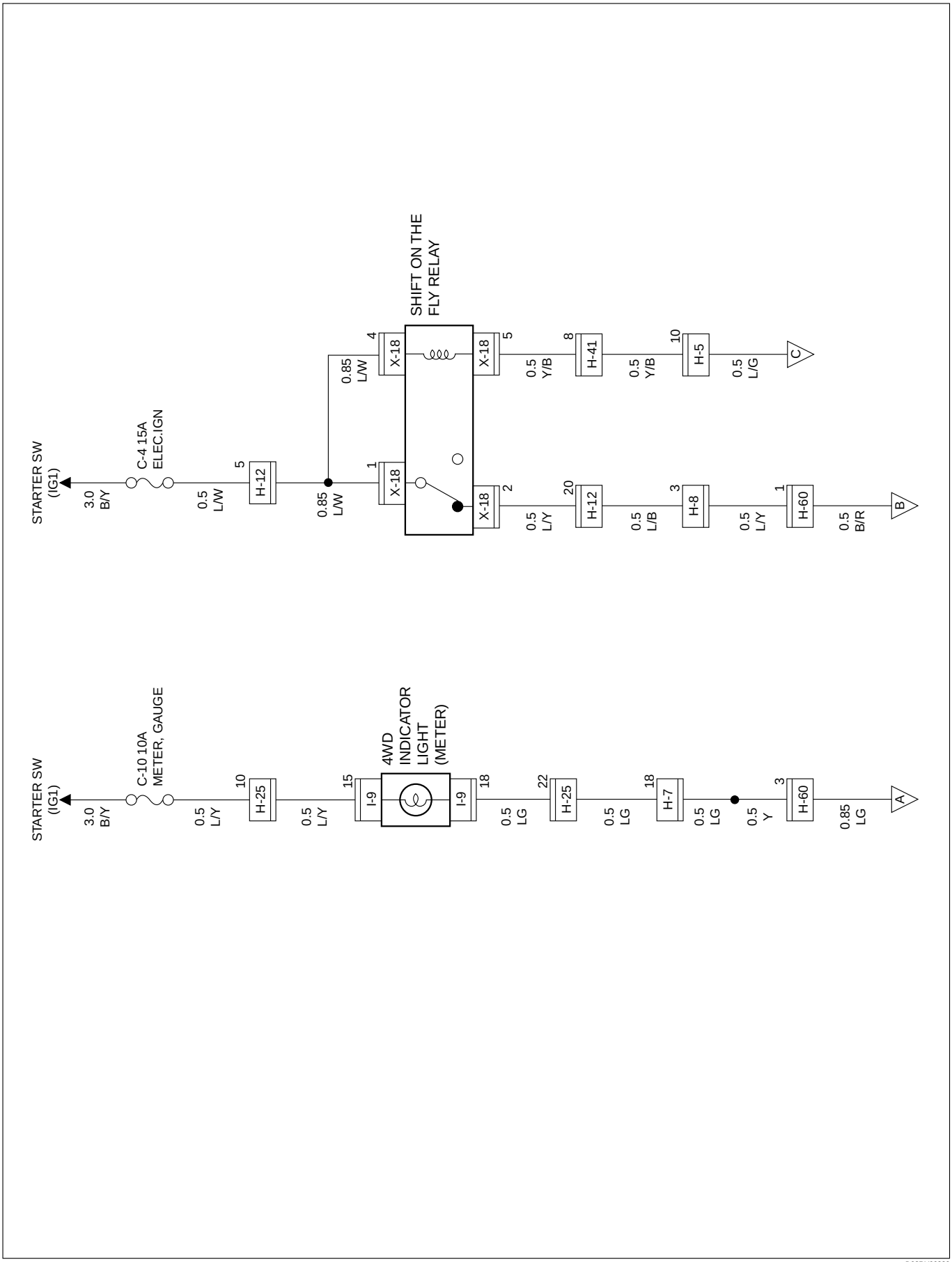

D08RY00239

Circuit Diagram (LHD 4JG2 Lever Type)-2

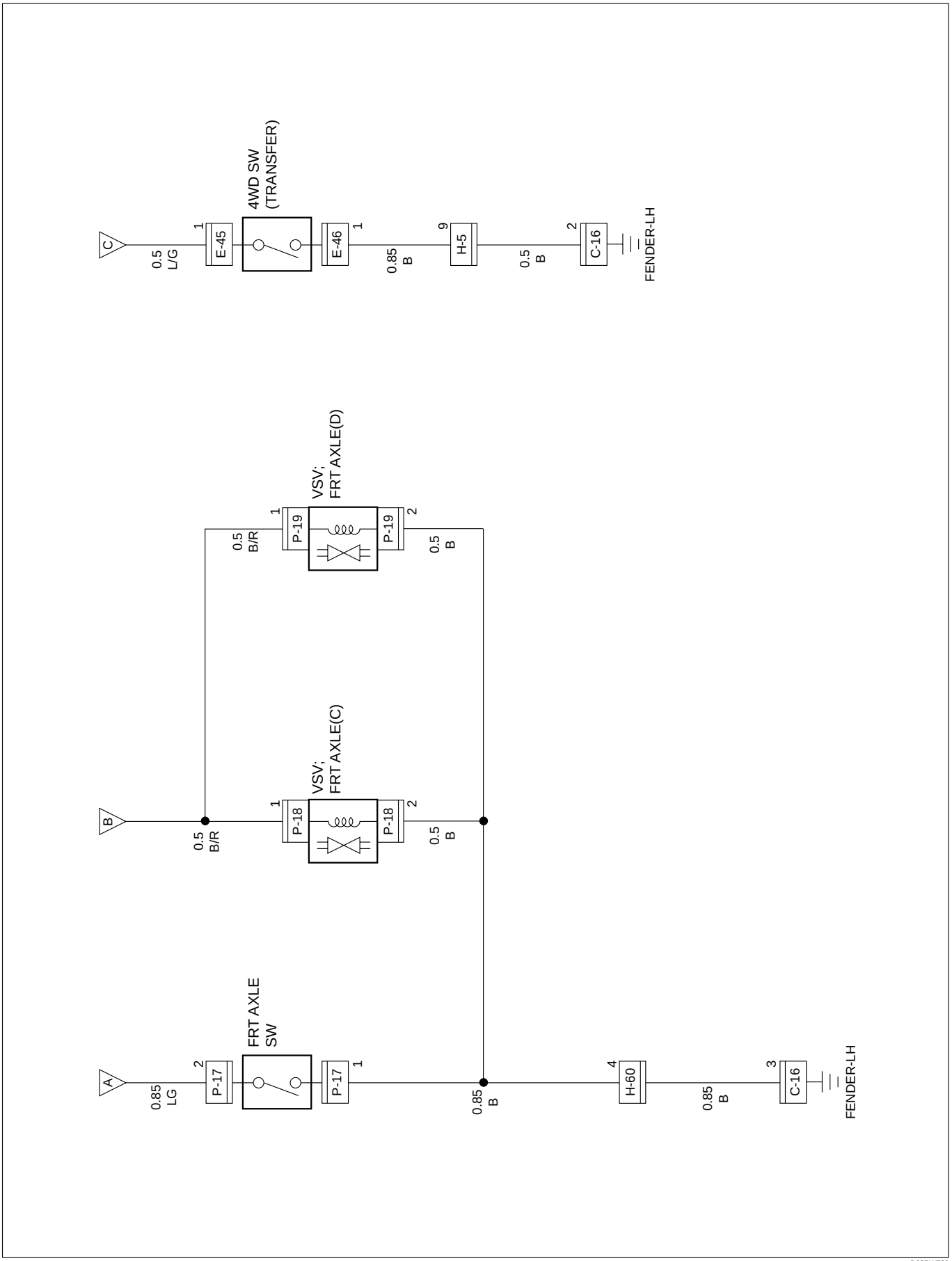

D08RW720

Parts Location (LHD 4JG2 Lever Type)

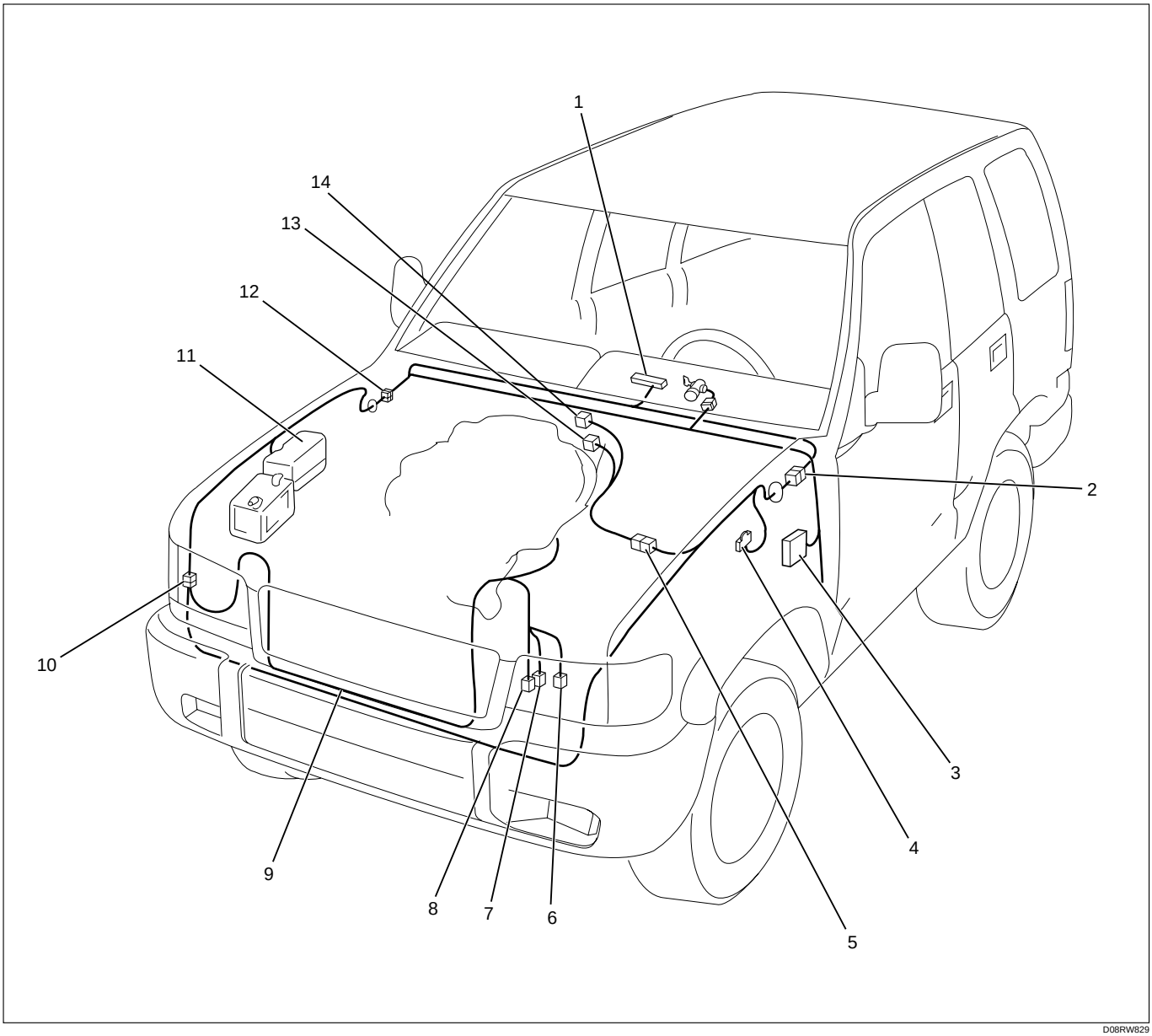

D08RW829

Legend

(1) I-9
(2) H-7, H-8, H-25
(3) Fuse Box
(4) C-16
(5) H-5
(6) P-17
(7) P-18
(8) P-19
(9) Battery (+) Cable
(10) H-42, H-60
(11) Relay and Fuse Box (X-18)
(12) H-12
(13) E-46
(14) E-45

Circuit Diagram (RHD 6V*1 Push Button Type)-1

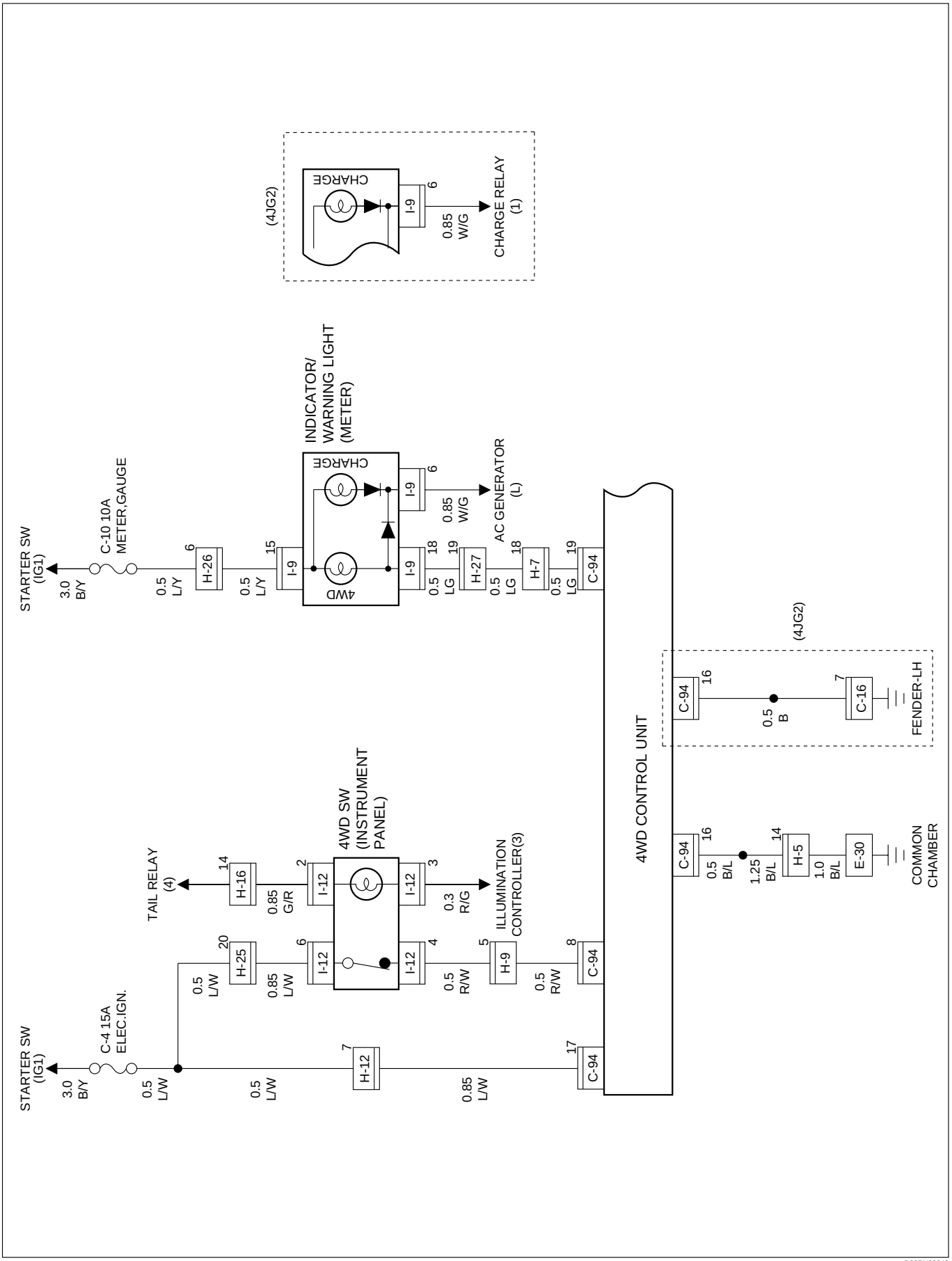

D08RY00240

Circuit Diagram (RHD 6V*1 Push Button Type)-2

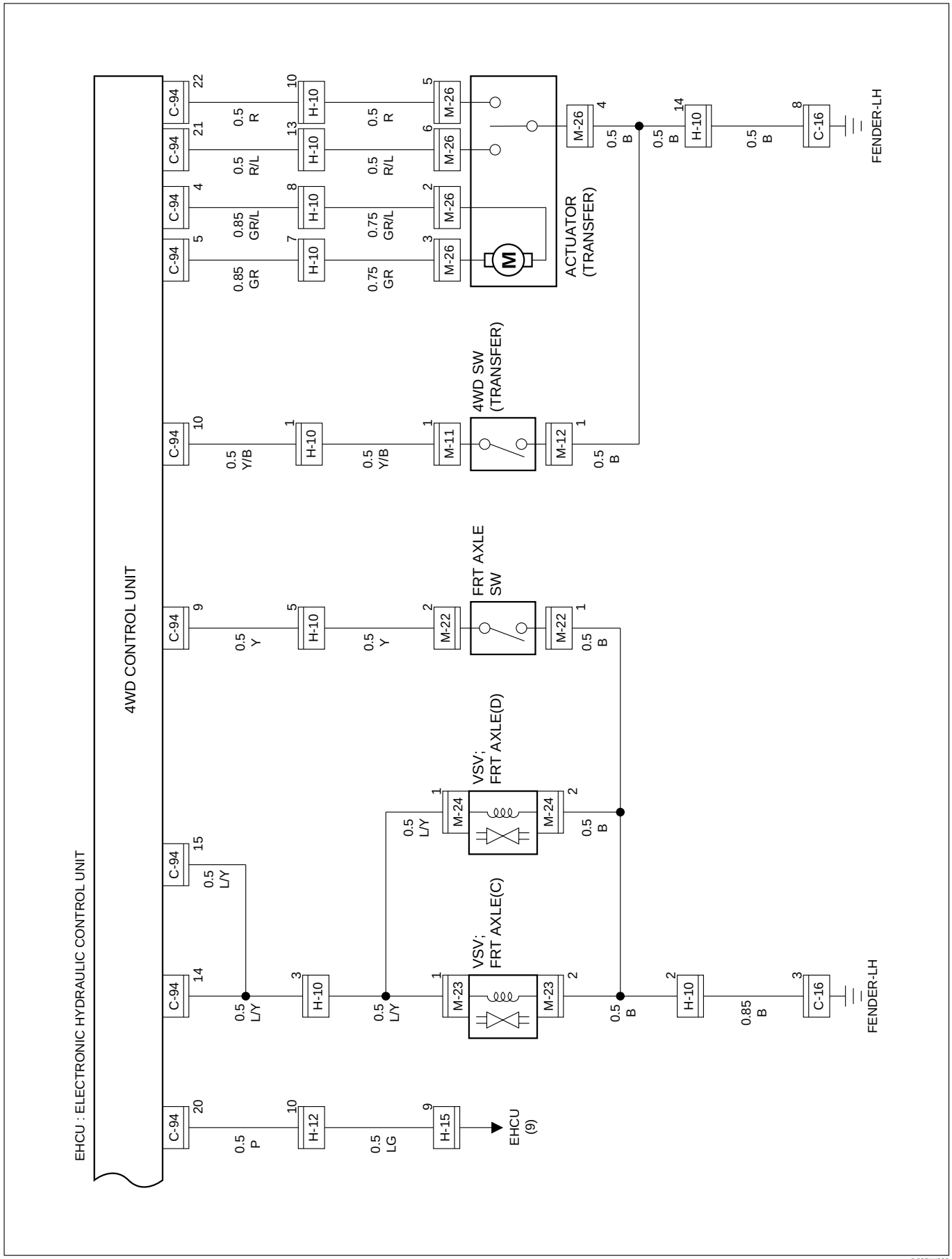

D08RW638

Parts Location (RHD 6V*1 Push Bitton Type)

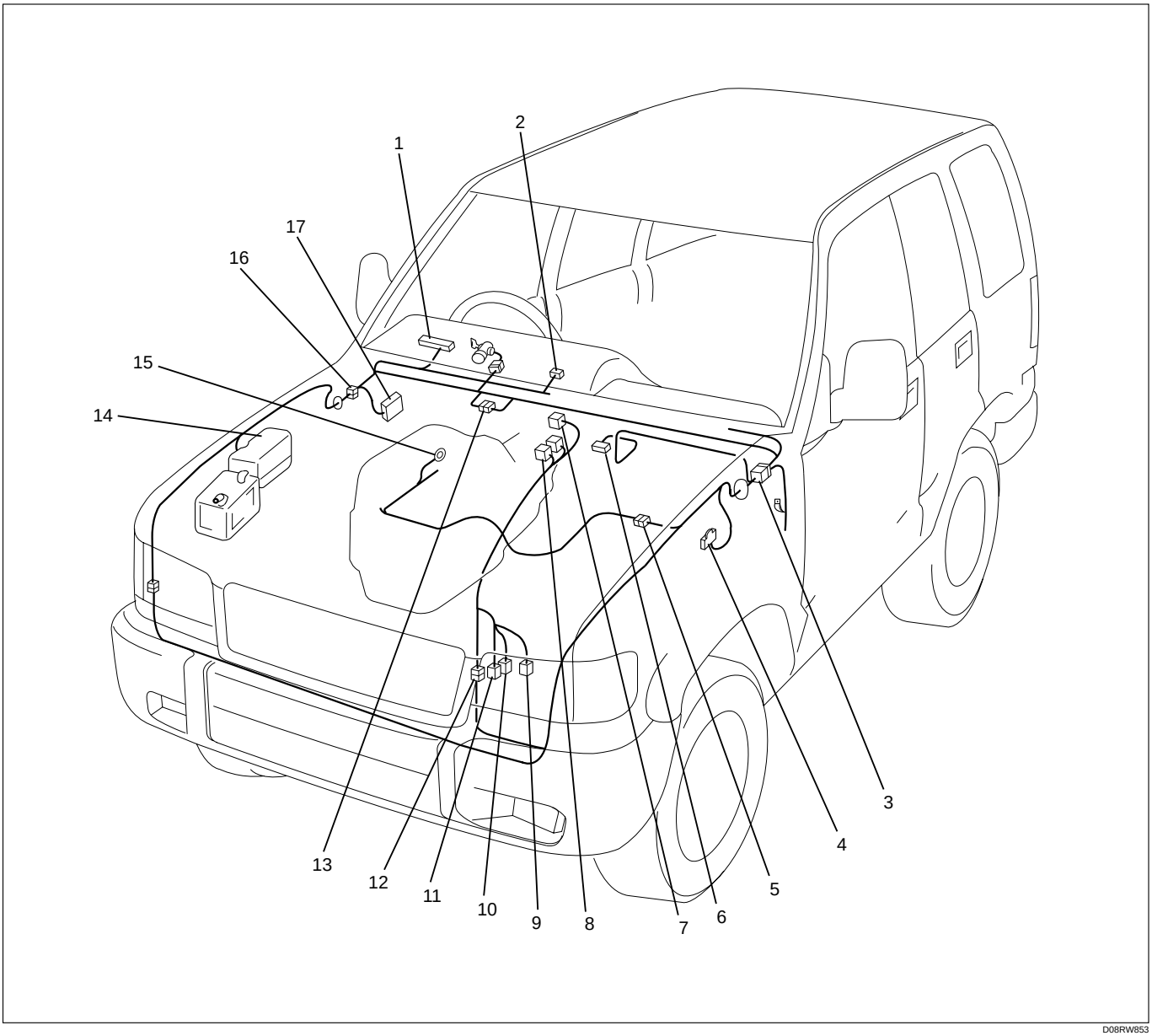

Legend

(1) I-9
(2) I-12
(3) I-12
(4) H-7, H-9
(5) C-16
(6) C-94
(7) M-26
(8) M-11, M-12
(9) M-22
(10) M-23
(11) M-24
(12) H-10
(13) H-12
(14) Relay and Fuse Box
(15) E-30
(16) H-15, H-16, H-25, H-26, H-27
(17) Fuse Box

Circuit Diagram (RHD 4JG2 Push Button Type)-1

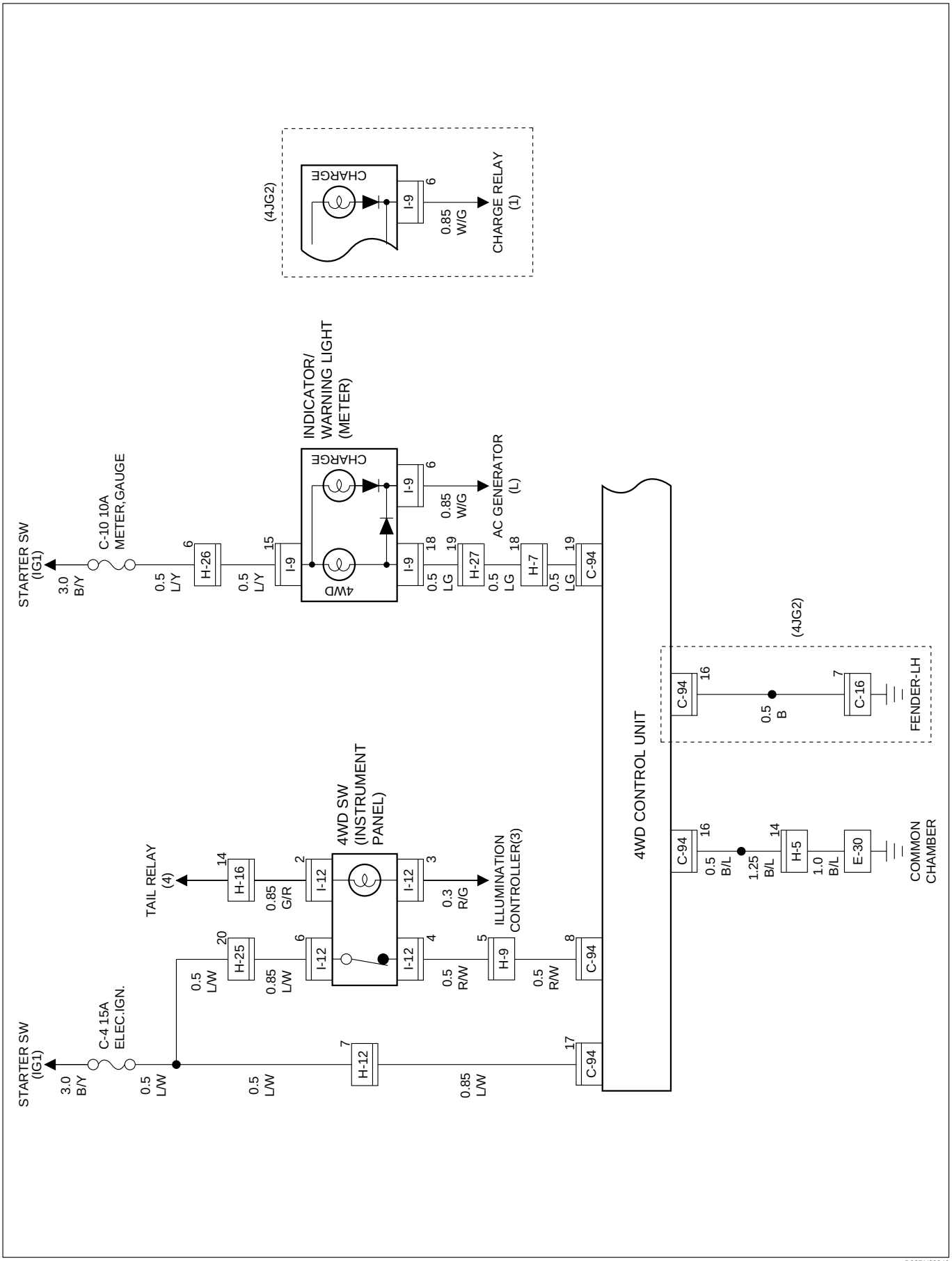

D08RY00240

Circuit Diagram (RHD 4JG2 Push Button Type)-2

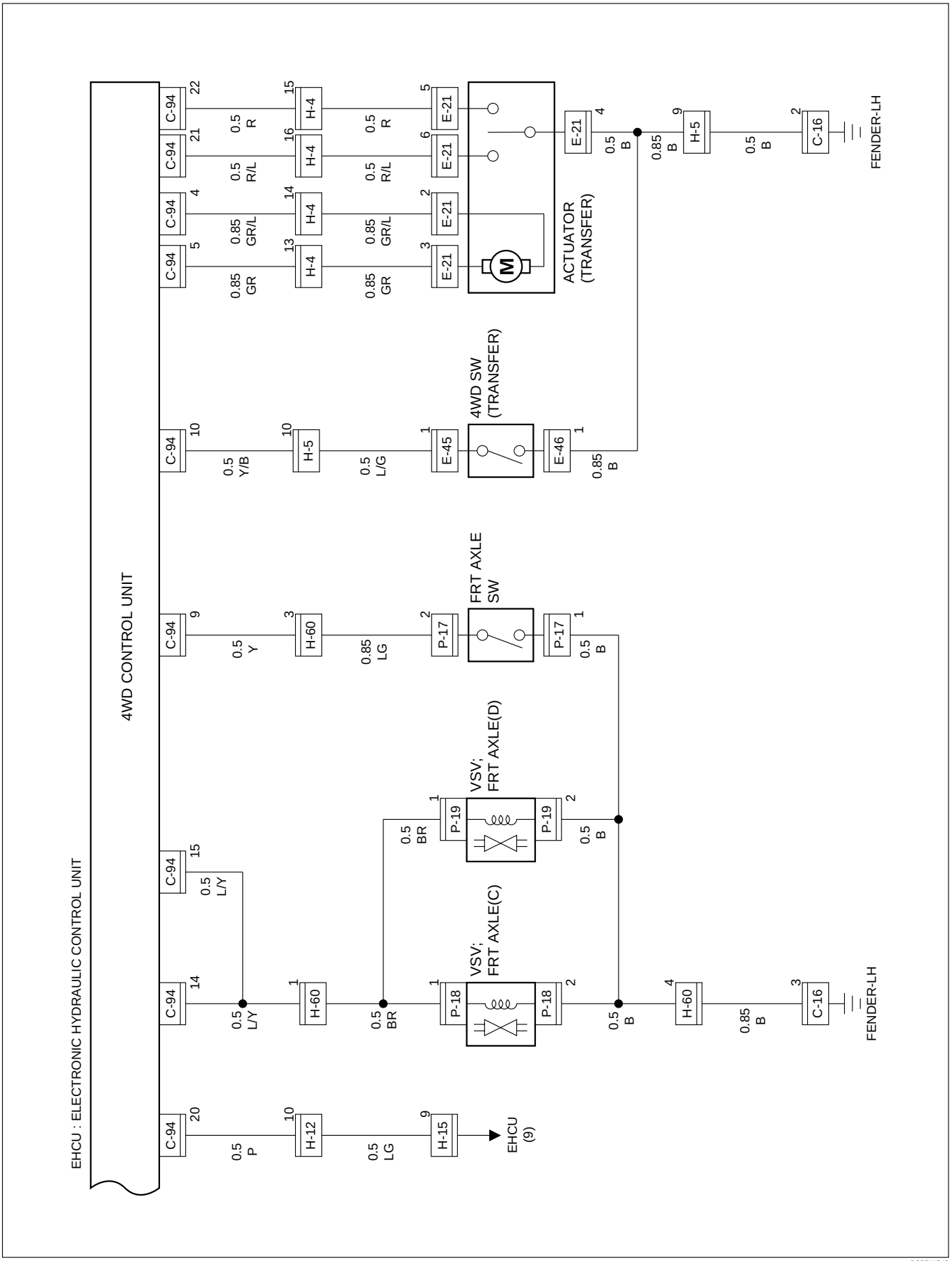

D08RW842

Parts Location (RHD 4JG2 Push Button Type)

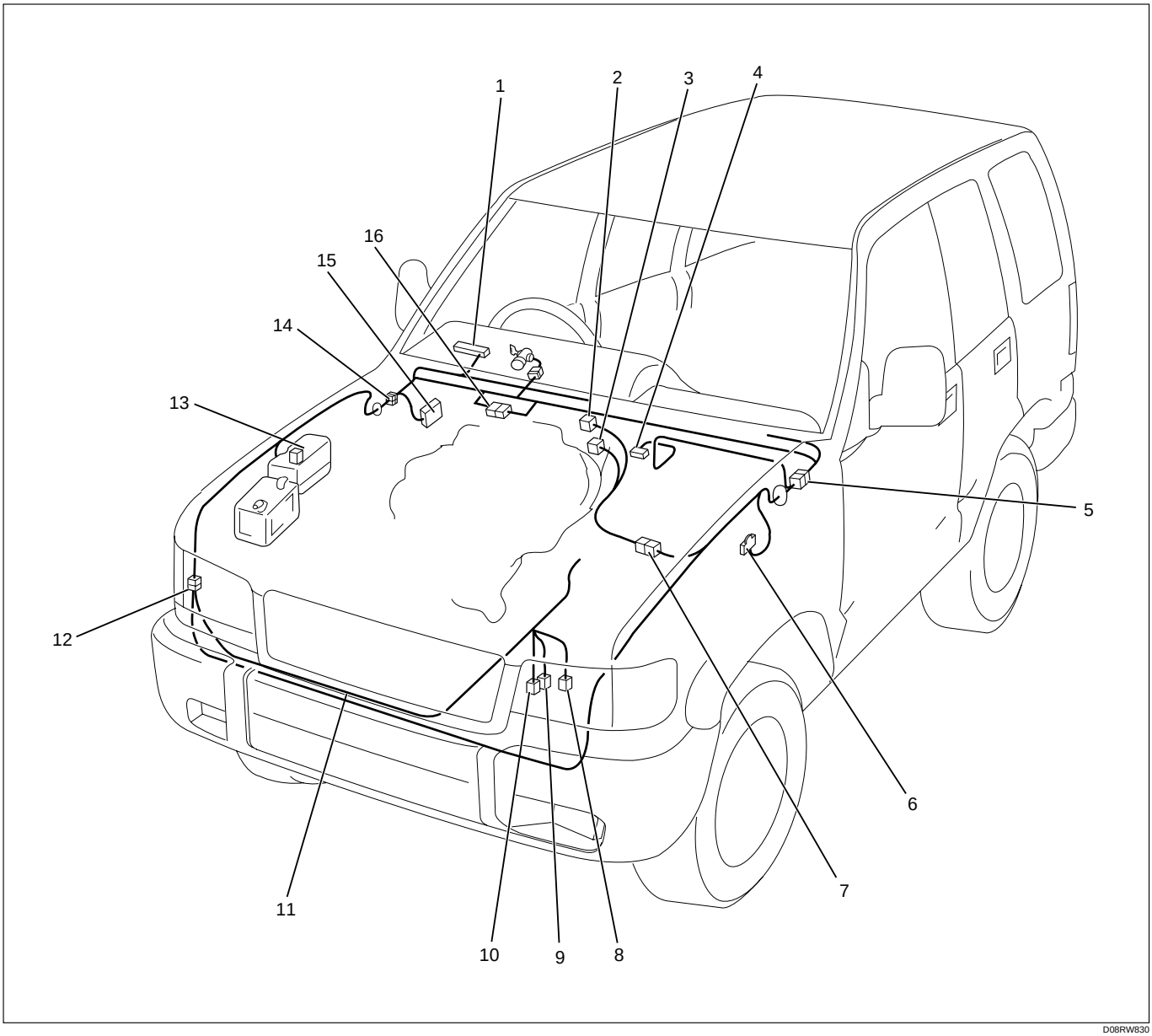

Legend

(1) I-9
(2) E-21
(3) E-45, E-46
(4) C-94
(5) H-7, H-9
(6) C-16
(7) H-4, H-5
(8) P-17
(9) P-18
(10) P-19
(11) Battery Positive Cable
(12) H-60
(13) Relay and Fuse Box
(14) H-15, H-16, H-25, H-26, H-27
(15) Fuse Box
(16) H-12

Circuit Diagram (LHD 6VD1 Push Button Type)-1

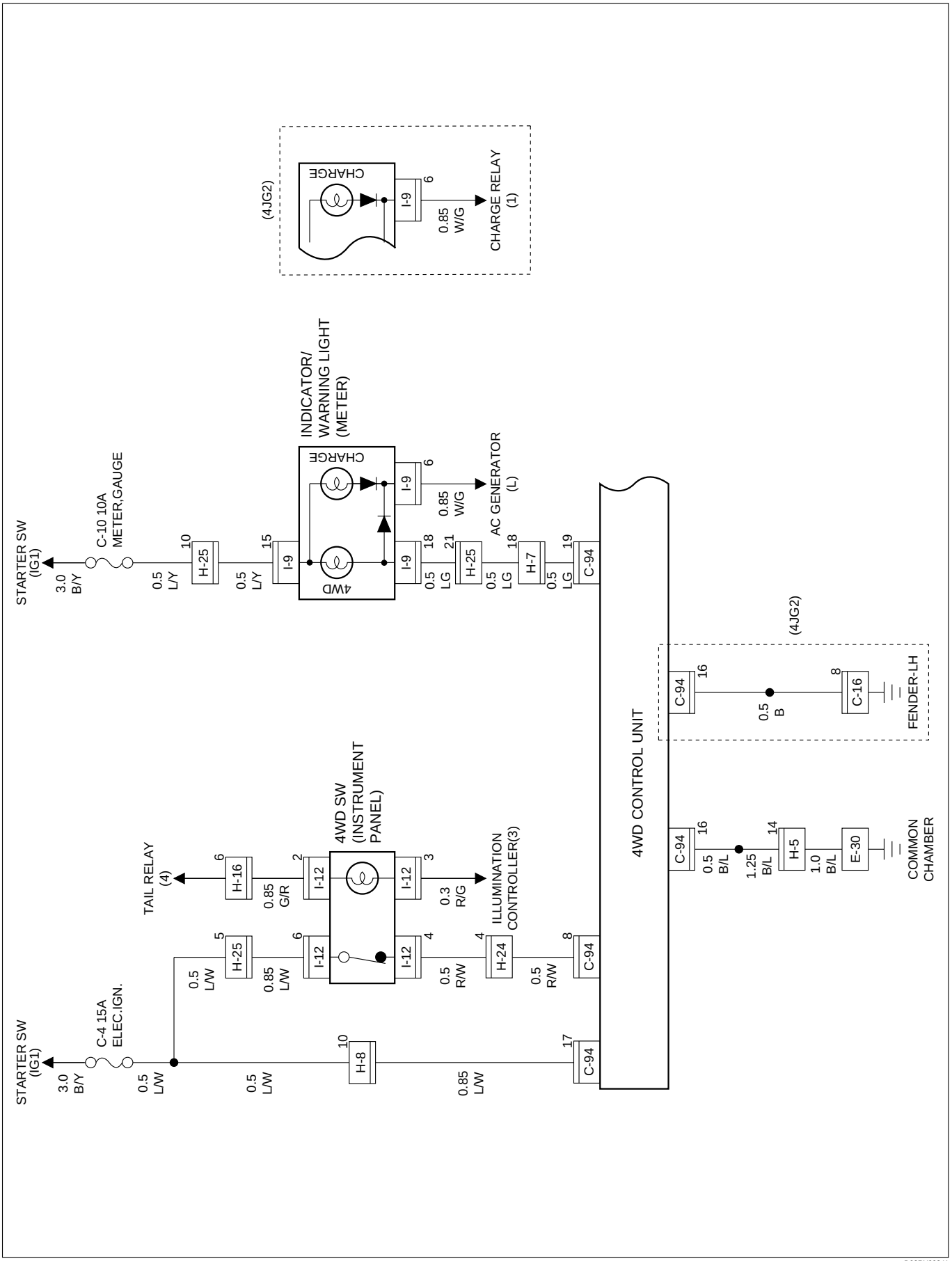

D08RY00241

Circuit Diagram (LHD 6VD1 Push Button Type)-2

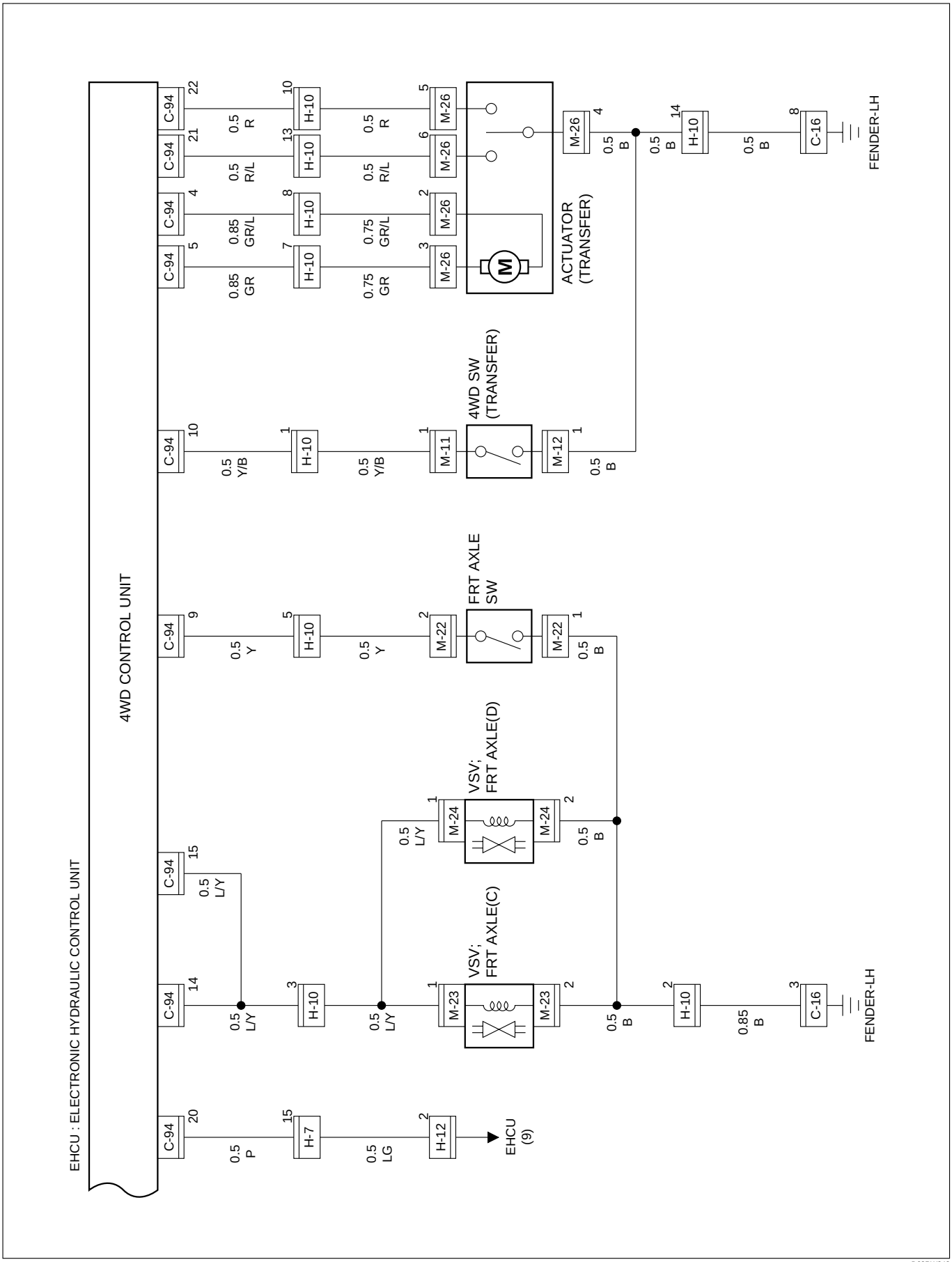

D08RW843

Parts Location (LHD 6VD1 Push Button Type)

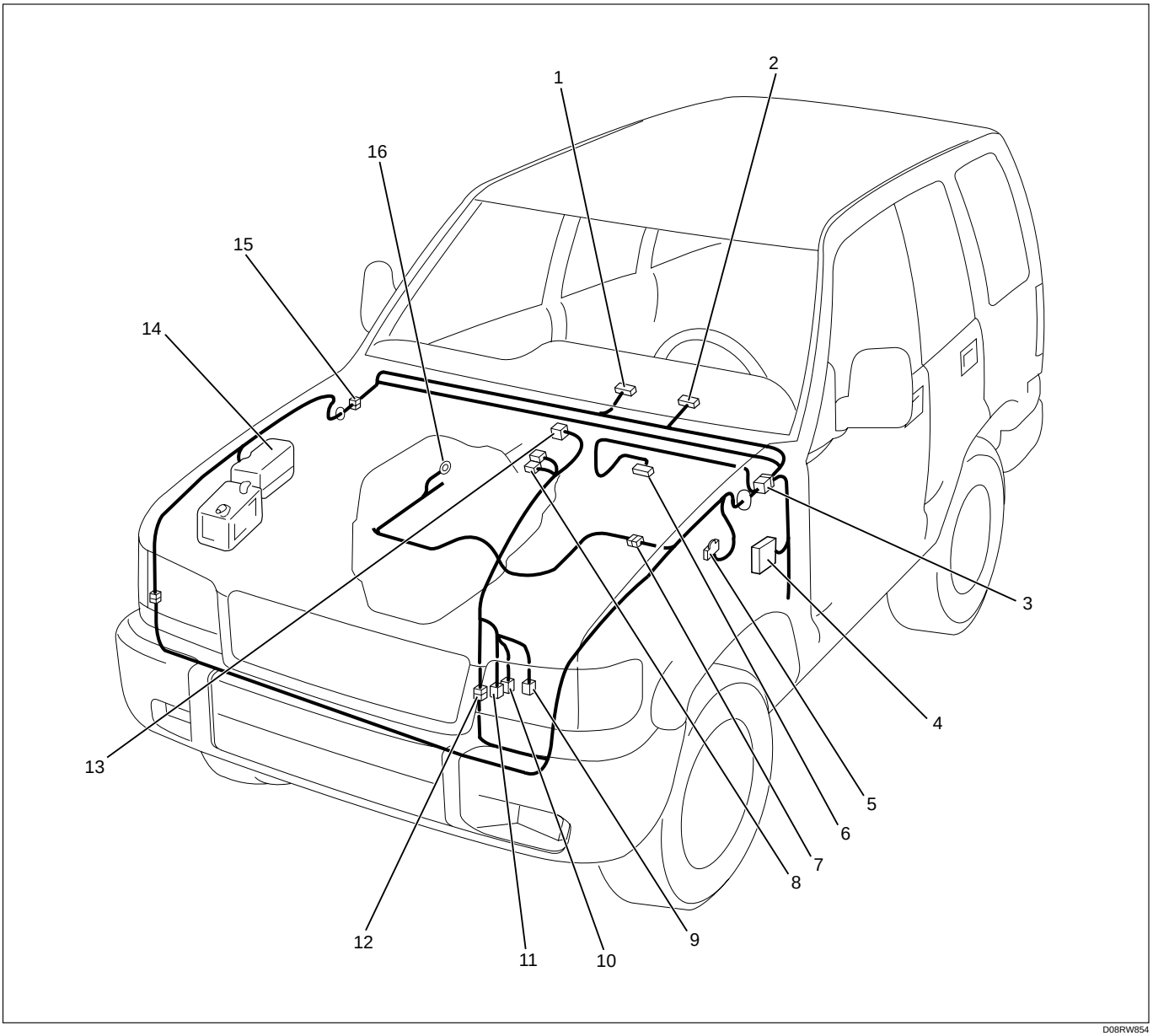

D08RW854

Legend

(1) I-12
(2) I-9
(3) H-7, H-8, H-24, H-25
(4) Fuse Box
(5) C-16
(6) C-94
(7) H-5
(8) M-11, M-12
(9) M-22
(10) M-23
(11) M-24
(12) H-10
(13) M-26
(14) Relay and Fuse Box
(15) H-12, H-16
(16) E-30

Circuit Diagram (LHD 4JG2 Push Button Type)-1

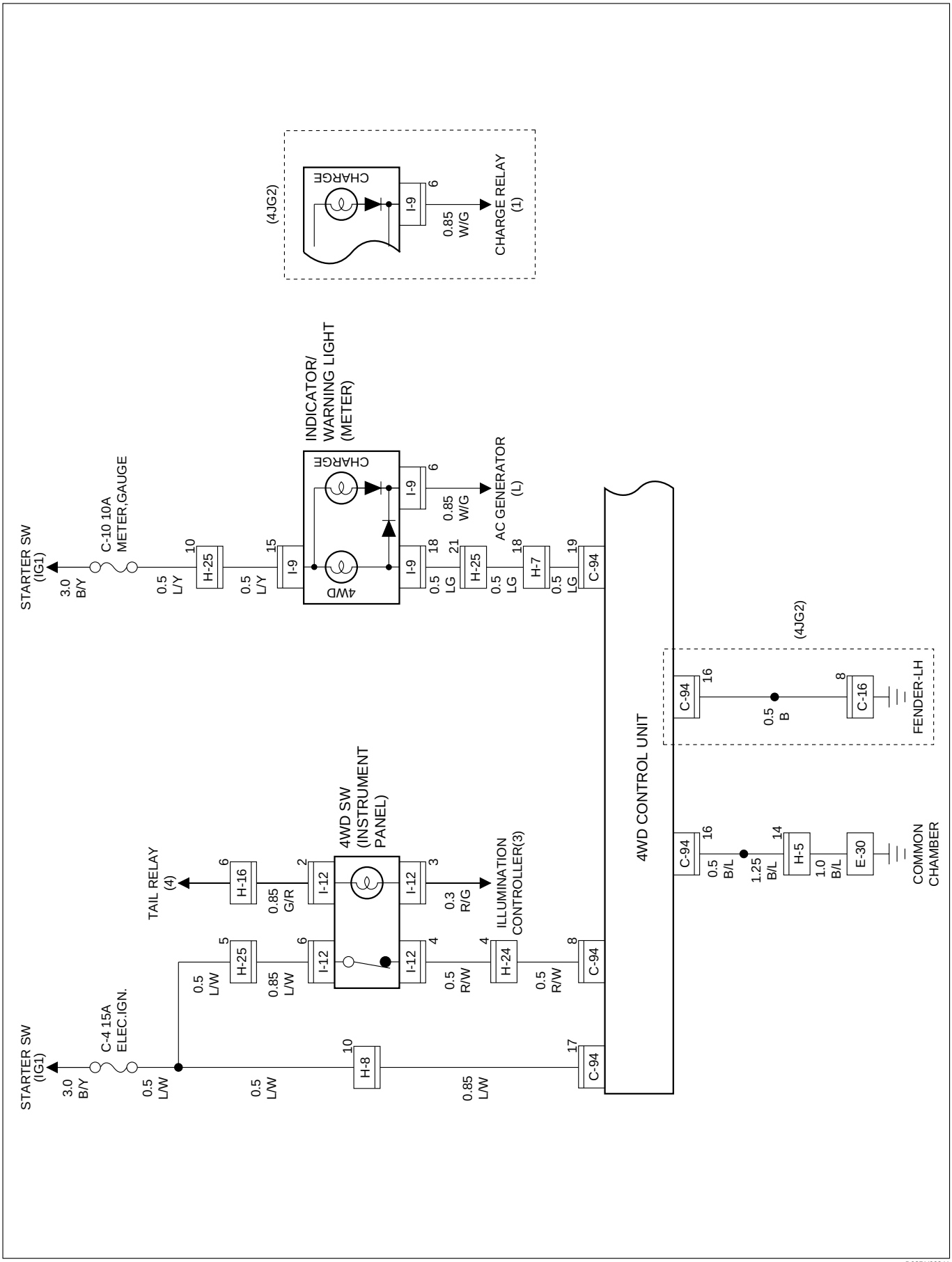

D08RY00241

Circuit Diagram (LHD 4JG2 Push Button Type)-2

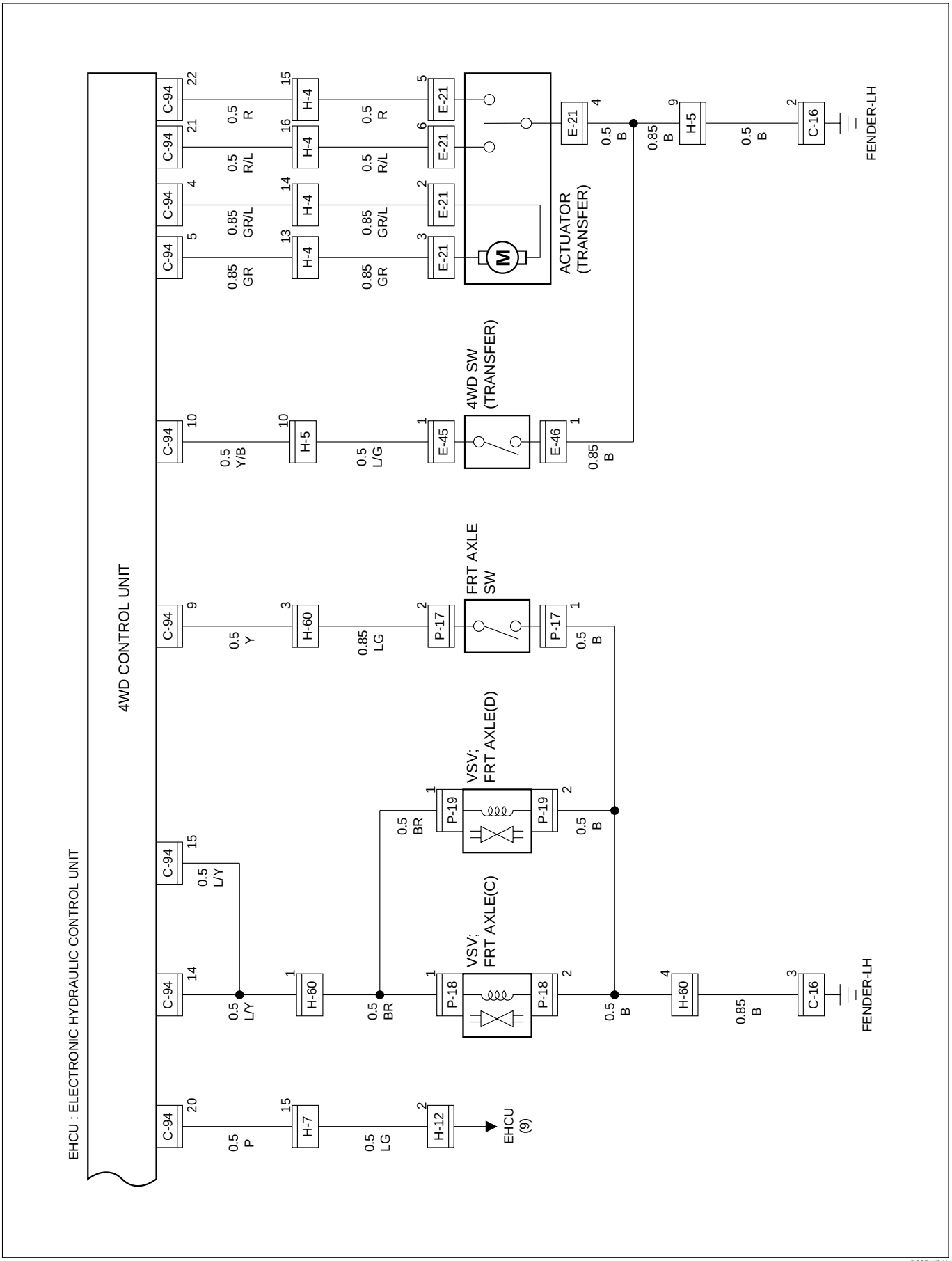

D08RW841

Parts Location (LHD 4JG2 Push Button Type)

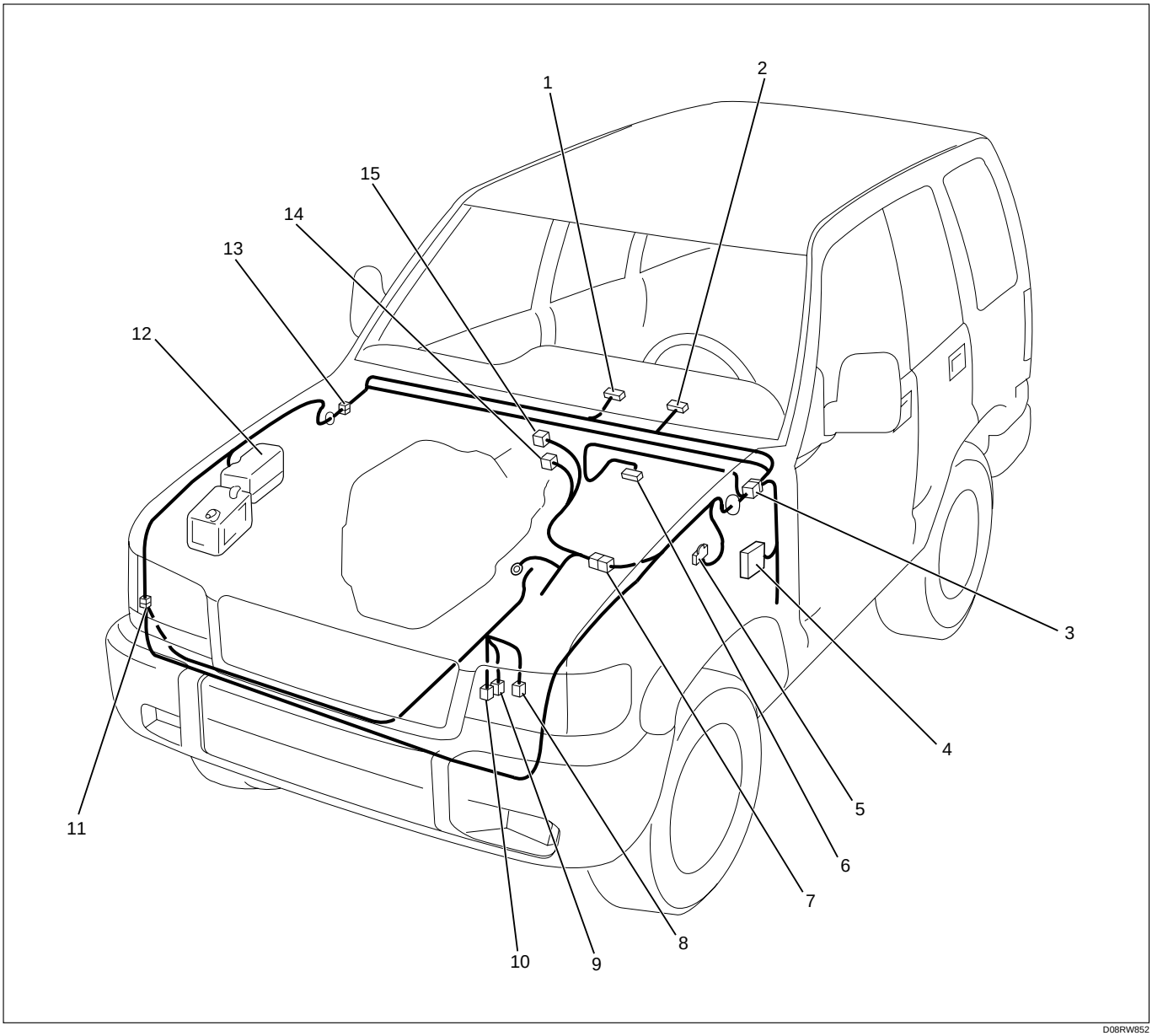

D08RW852

Legend

(1) I-12
(2) I-9
(3) H-7 H-8, H-24, H-25
(4) Fuse Box
(5) C-16
(6) C-94
(7) H-4, H-5
(8) P-17
(9) P-18
(10) P-19
(11) H-60
(12) Relay and Fuse Box
(13) H-12, H-16
(14) E-45, E-46
(15) E-21

Torque on Demand (T.O.D.)

Circuit Diagram (RHD 6VE1)-1

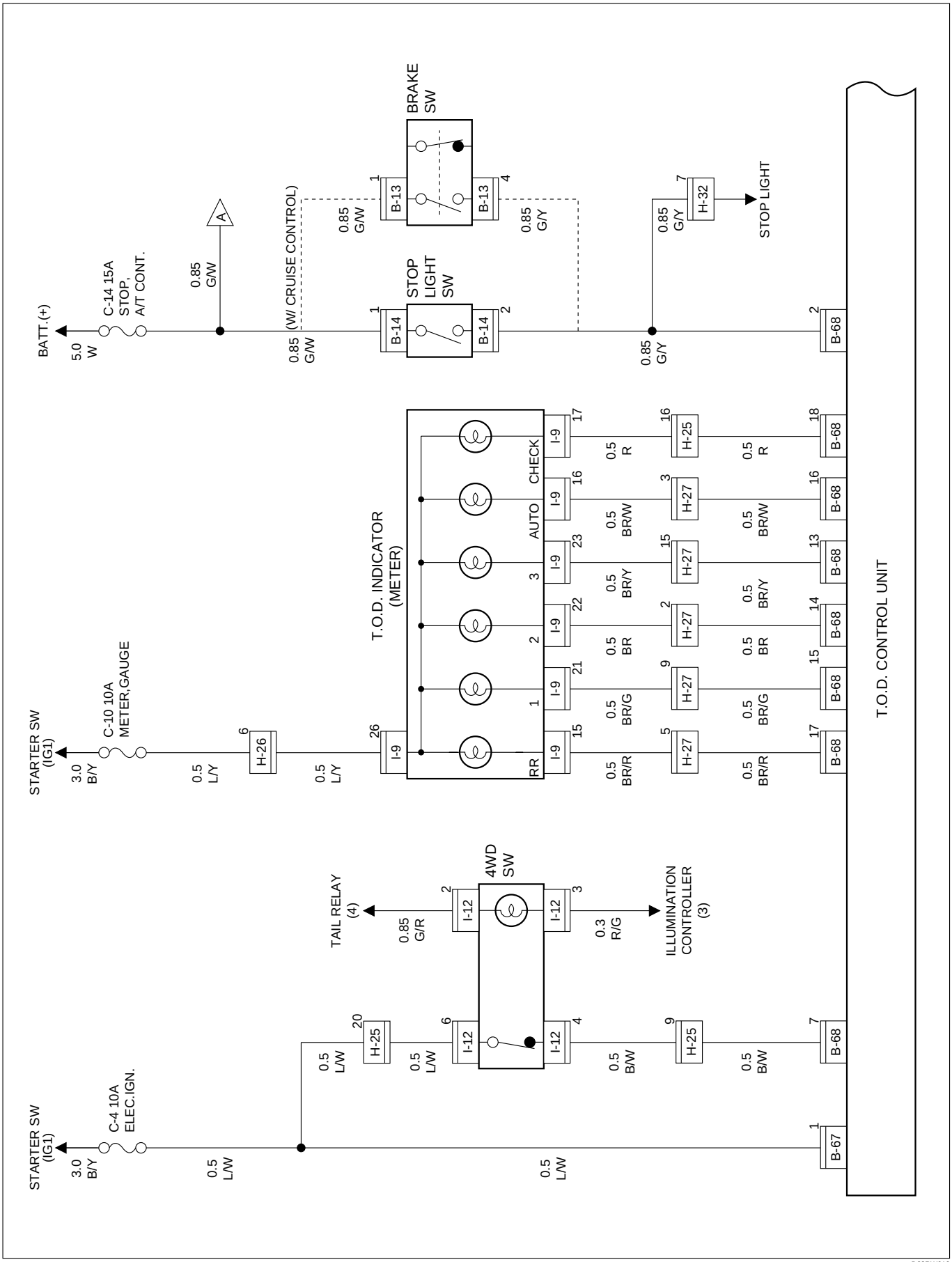

D08RW610

Circuit Diagram (RHD 6VE1)-2

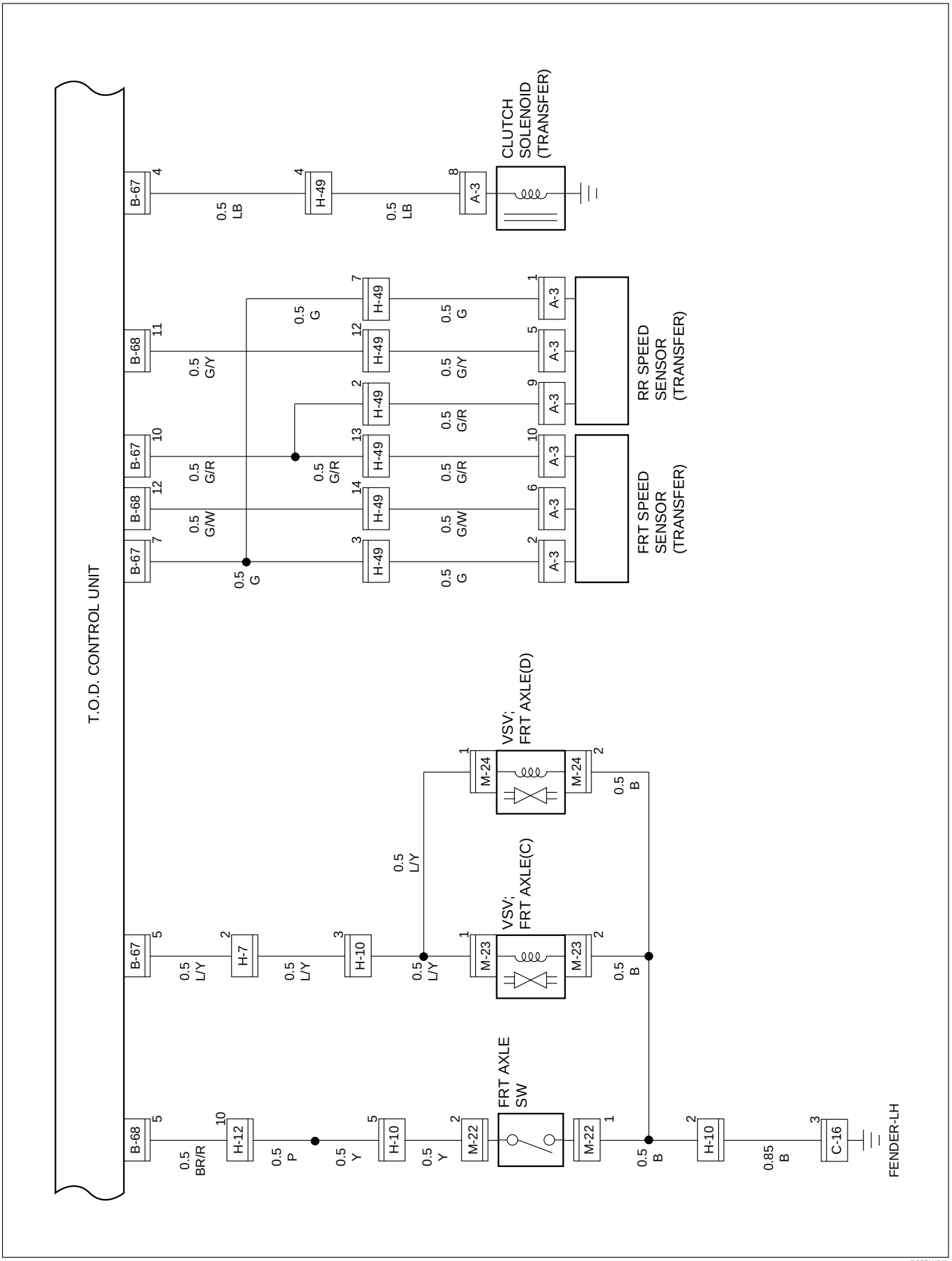

D08RW611

Circuit Diagram (RHD 6VE1)-3

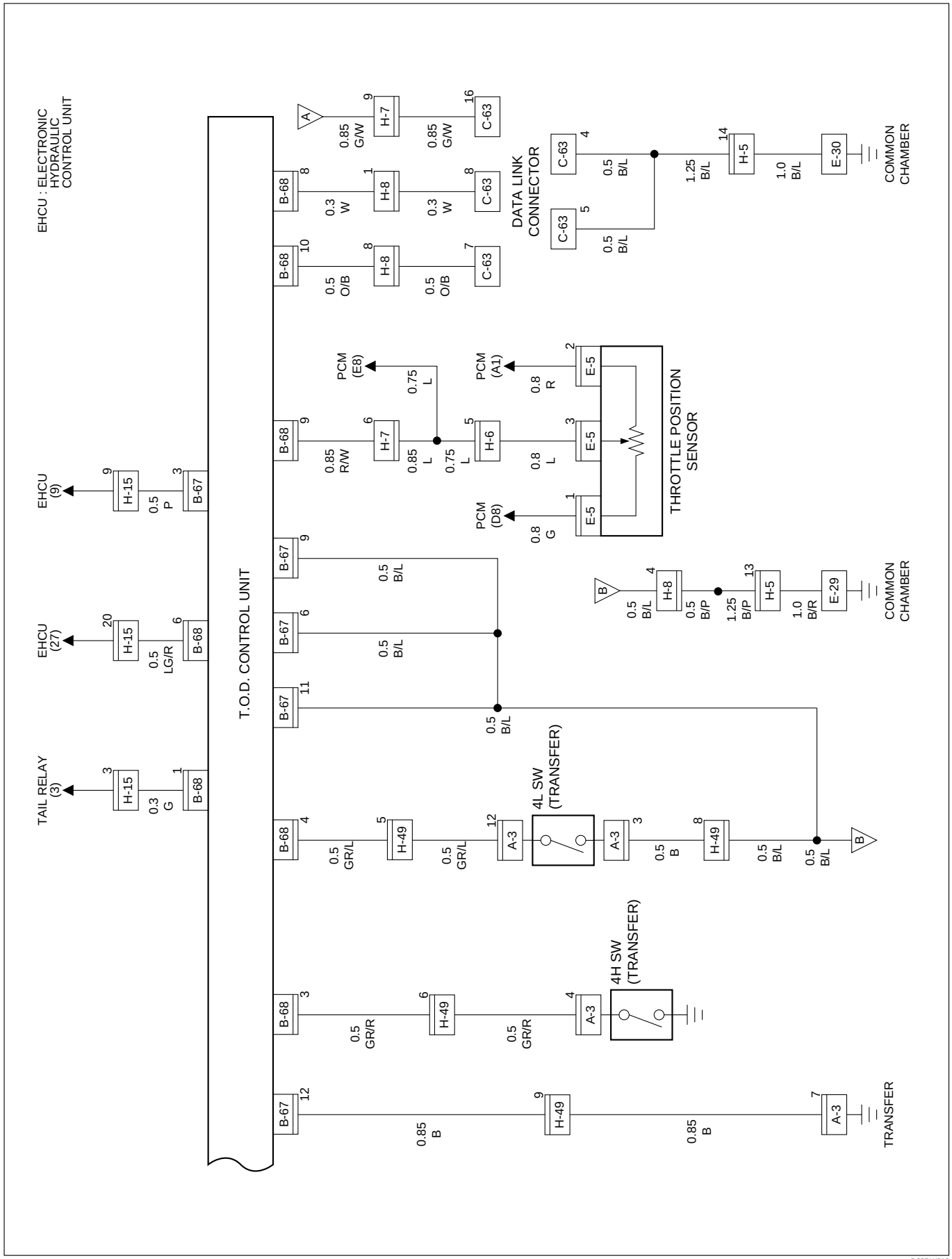

D08RW612

Parts Location

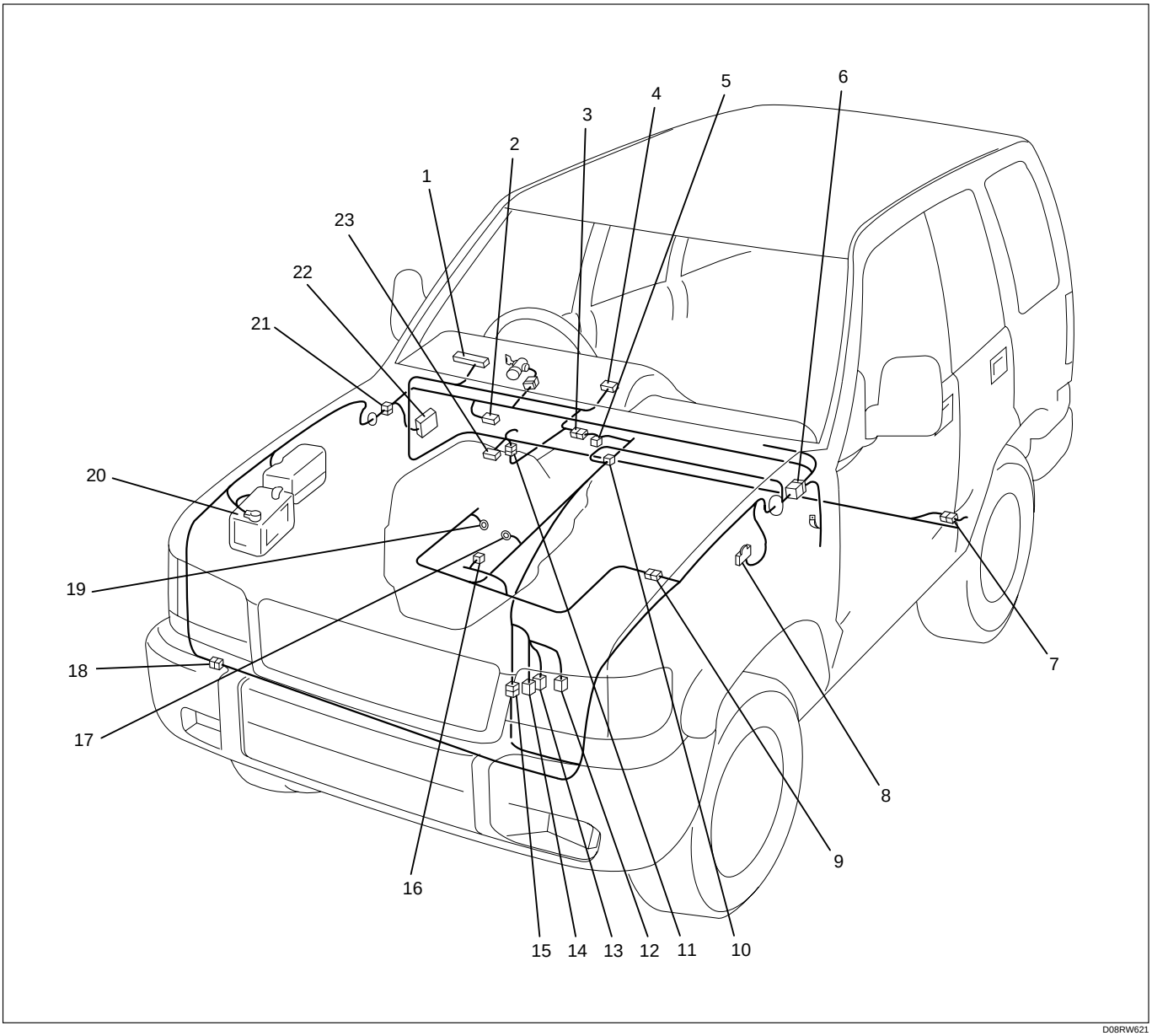

D08RW621

Legend

(1) I-9
(2) B-13 or B-14
(3) H-12
(4) I-12
(5) A-3
(6) H-7, H-8
(7) H-32
(8) C-16
(9) H-5, H-6
(10) C-63
(11) H-49
(12) M-22
(13) M-23
(14) M-24
(15) H-10
(16) E-5
(17) E-29
(18) H-42
(19) E-30
(20) Battery
(21) H-13, H-15, H-26
(22) Fuse Box
(23) B-67, B-68

Supplemental Restraint System (SRS) – Air Bag

General Description

The circuit consists of Sensing and Diagnostic Module (SDM), driver's air bag assembly, SRS coil assembly, passenger's air bag assembly, and "AIR BAG" warning light. SDM, SRS coil assembly (driver side only), driver air bag assembly, passenger air bag assembly and connector wire make up the deployment loops. The function of the deployment loops is to supply current through air bag assembly, which will cause deployment of the air bags in the event of a frontal crash of sufficient force, up to 30 degrees off the center line of the vehicle. The air bag assemblies are only supplied enough current to deploy when the SDM detects vehicle velocity changes severe enough to warrant deployment.

The SDM contains a sensing device which converts vehicle velocity changes to an electrical signal.

The electrical signal generated is processed by the SDM and then compared to a value stored in memory. When the generated signal exceeds the stored value, the SDM will cause current to flow through the air bag assembly deploying the air bags.

Refer to Supplemental Restraint System in Restraints section.

Circuit Diagram (6VD1)

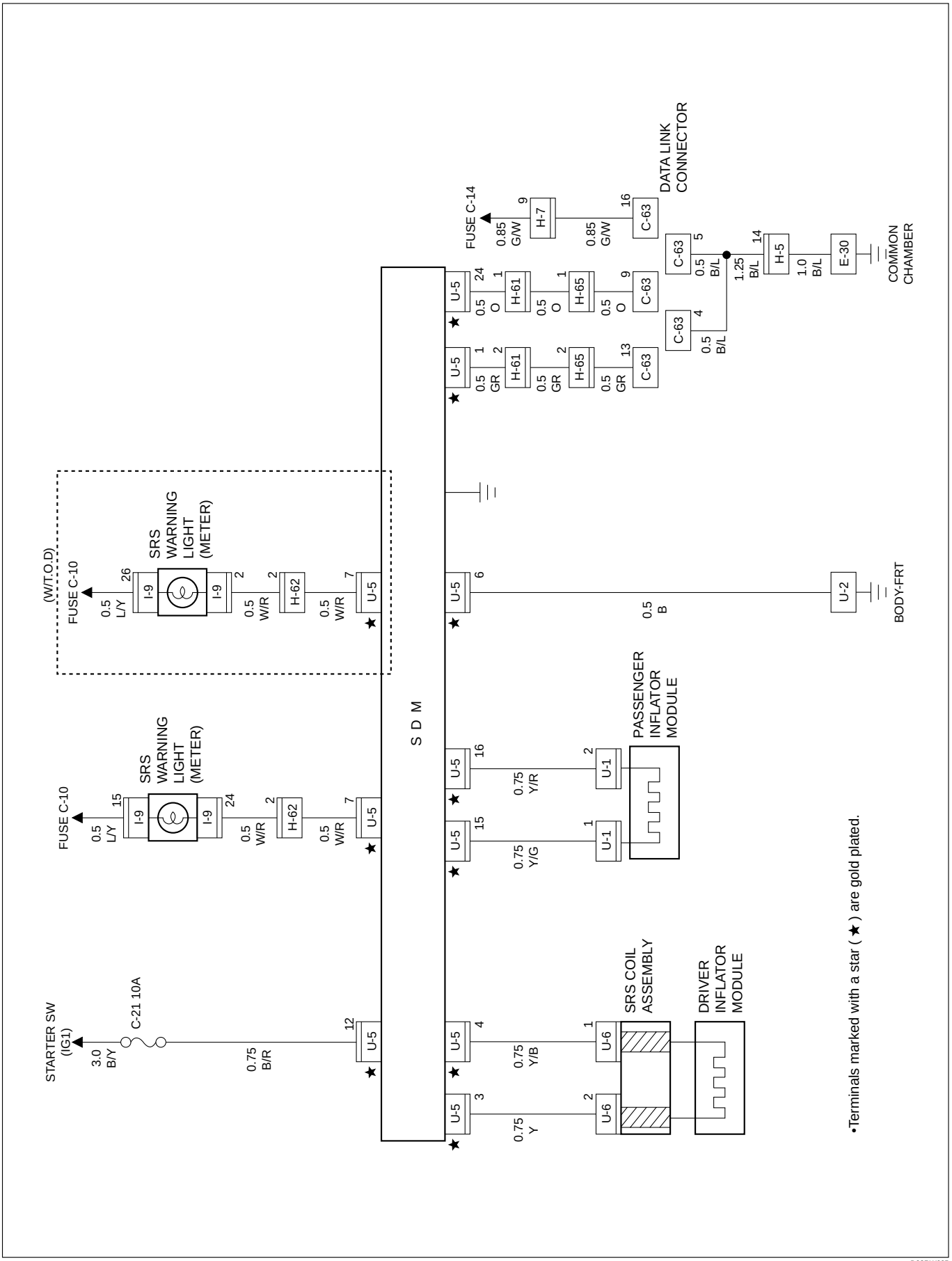

D08RW605

Circuit Diagram (4JG2)

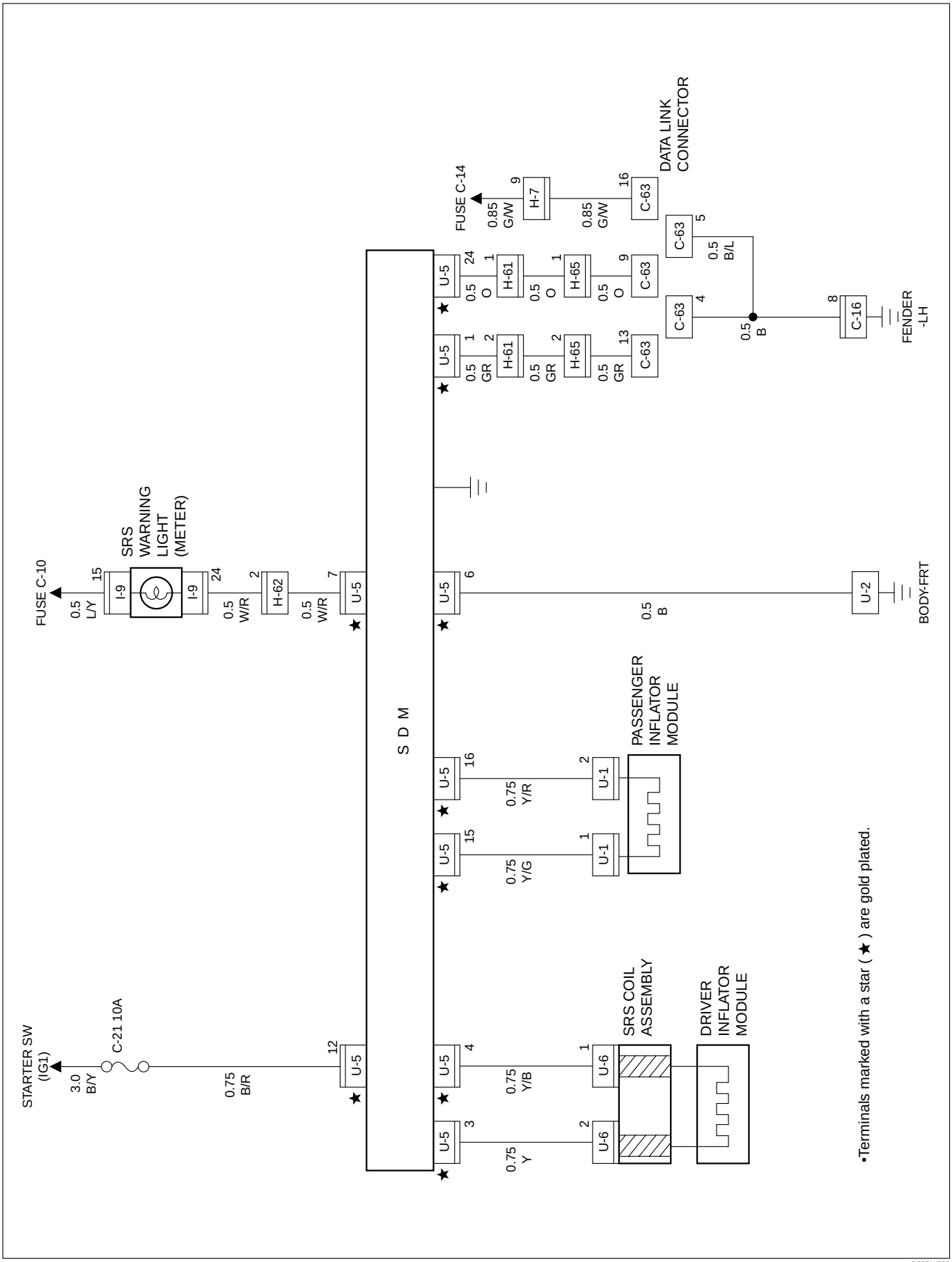

D08RW990

Circuit Diagram (6VE1 South Africa)-1

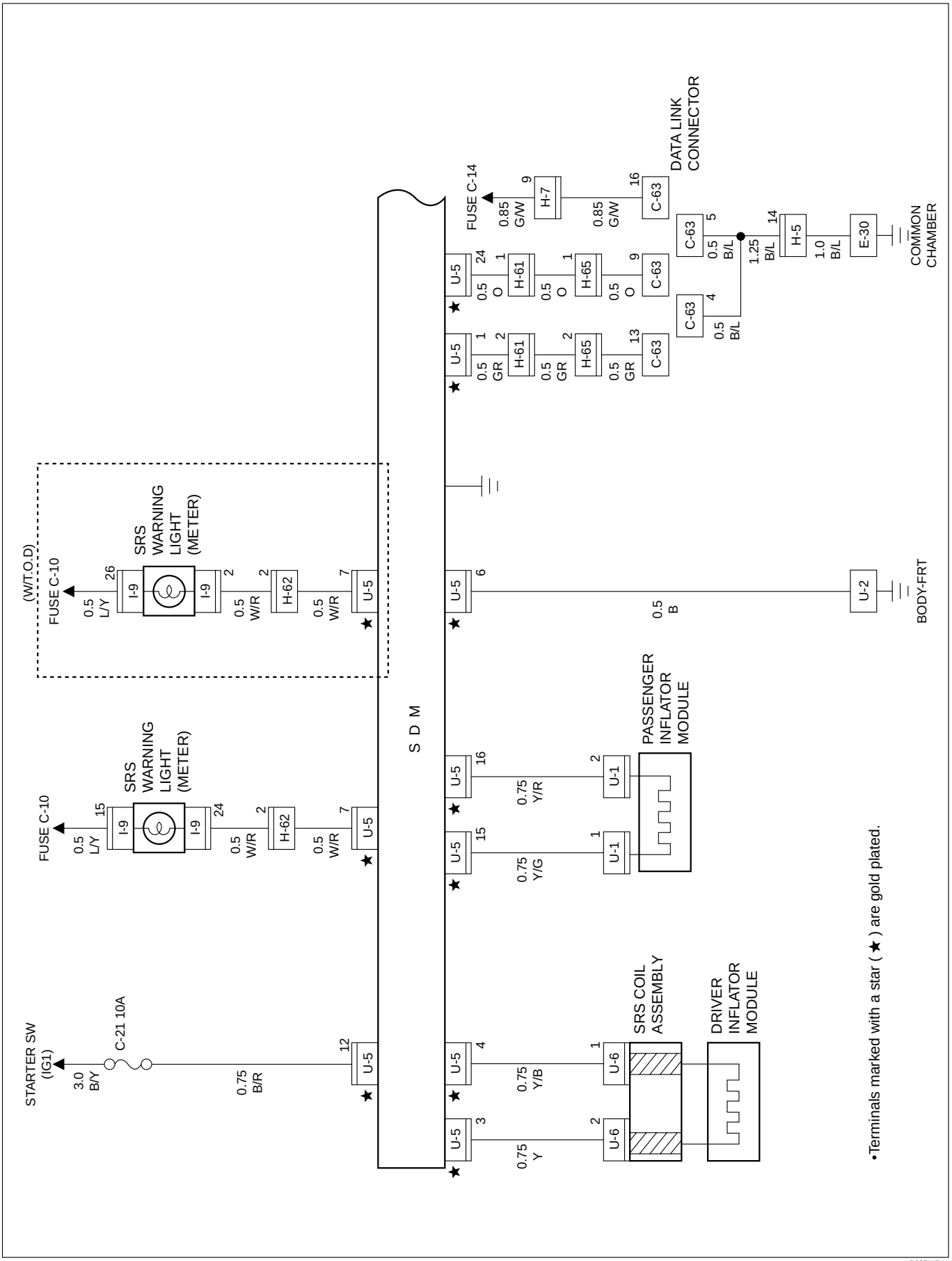

D08RWB41

Circuit Diagram (6VE1 South Africa)-2

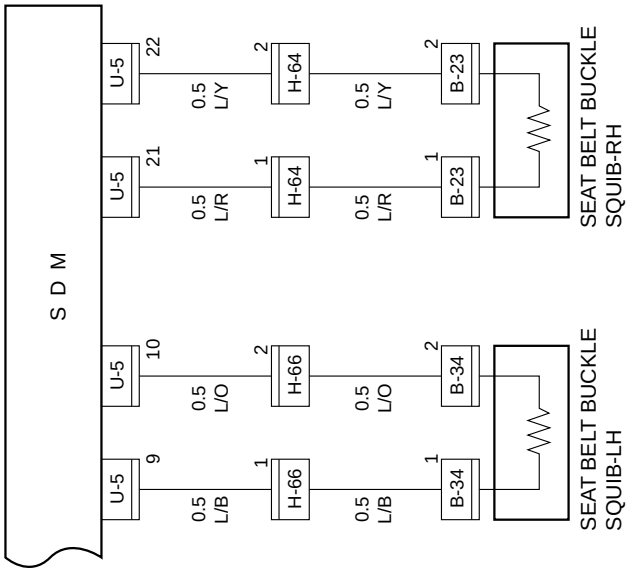

Parts Location (RHD)

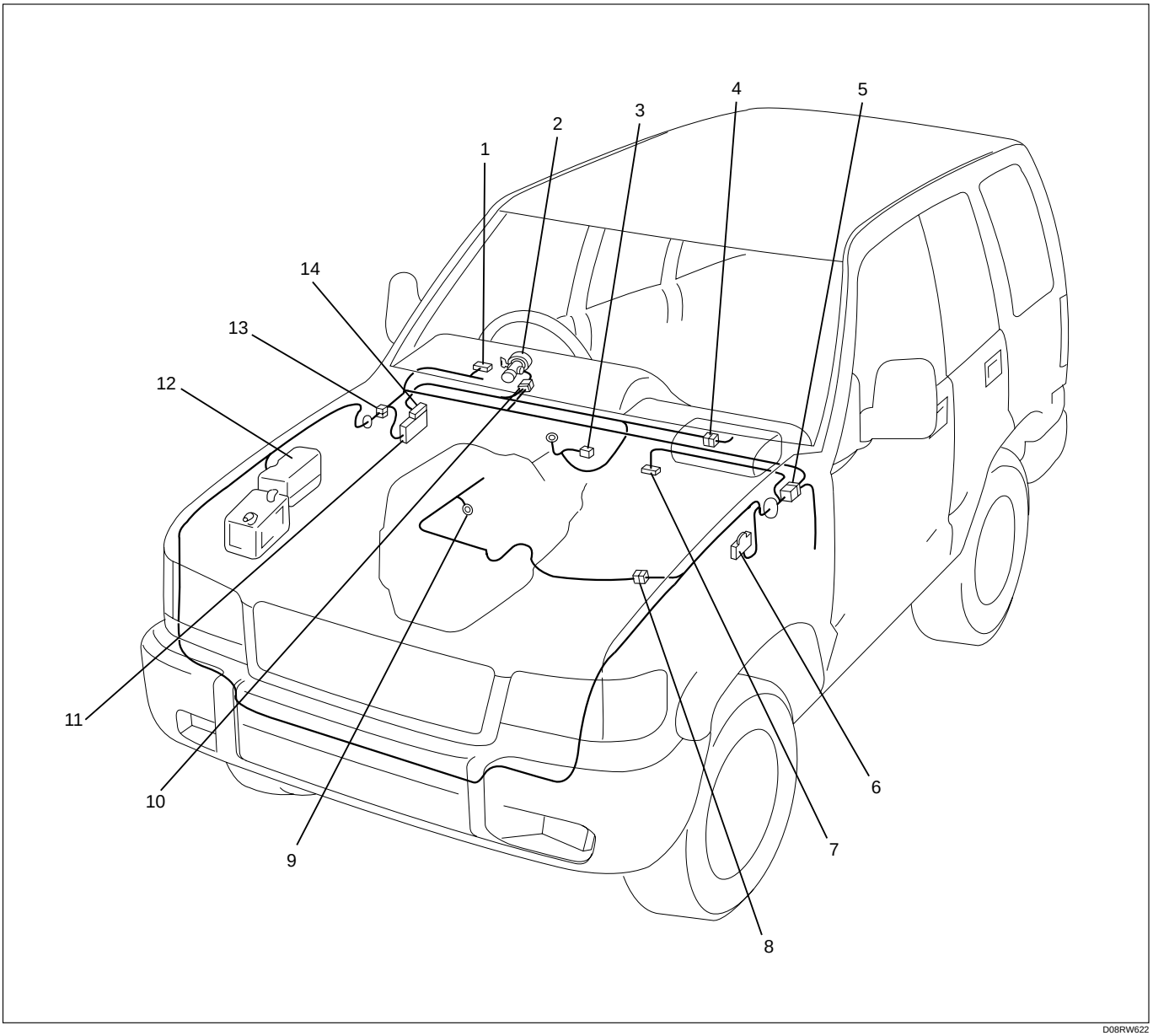

D08RW622

Legend

(1) I-9
(2) SRS Coil Assembly
(3) U-5
(4) U-1
(5) H-7, H-65
(6) C-16
(7) C-63
(8) H-5
(9) E-30
(10) U-2
(11) Fuse Box
(12) Relay and Fuse Box
(13) H-61, H-62
(14) Fuse Box (C-21)

Parts Location (LHD)

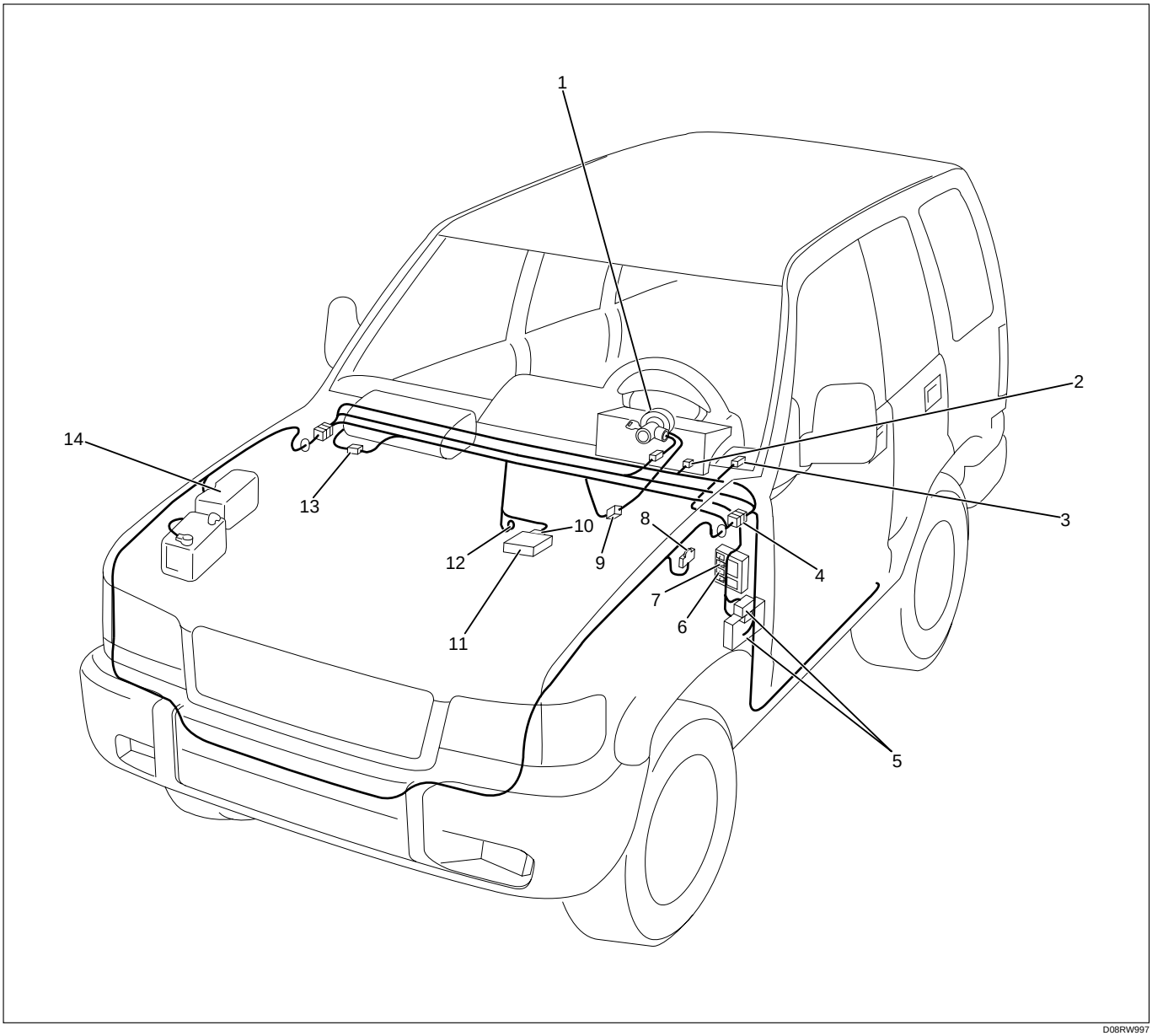

D08RW997

Legend

(1) SRS Coil Assembly
(2) I-37
(3) C-63
(4) H-7
(5) Fuse Box (H-49)
(6) H-52
(7) H-51
(8) C-16
(9) U-6
(10) U-5
(11) SDM
(12) U-2
(13) U-1
(14) Relay and Fuse Box

Connector List

No.	Connector face	No.	Connector face
A-1	NOT USED		
A-2	NOT USED		
A-3			

No.	Connector face	No.	Connector face
B-1	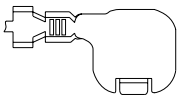	B-11	
B-2	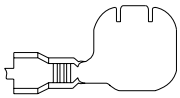	B-12	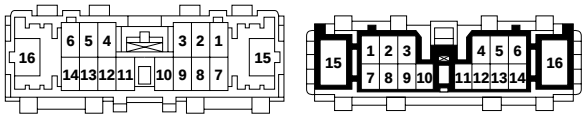
B-3	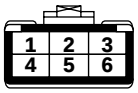	B-13	
B-4	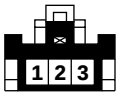	B-14	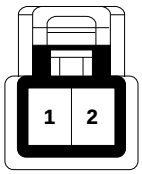
B-5		B-15	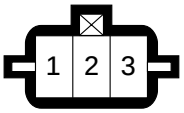
B-6	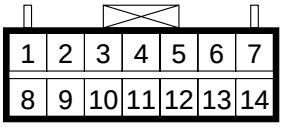	B-16	
B-7	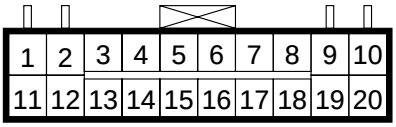	B-17	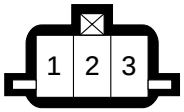
B-8		B-18	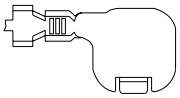
B-9	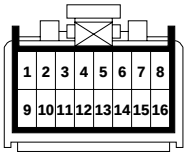	B-19	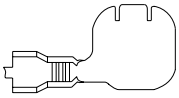
B-10		B-20	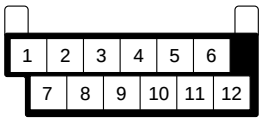

No.	Connector face	No.	Connector face
B-21	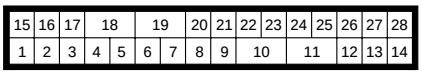	B-31	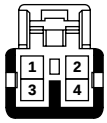
B-22	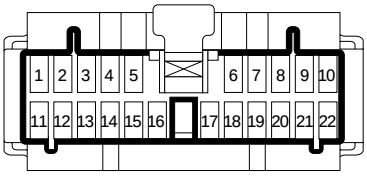	B-32	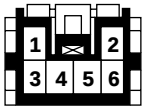
B-23	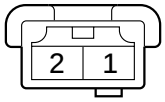	B-33	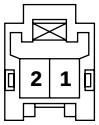
B-24	**NOT USED**	B-34	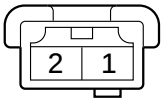 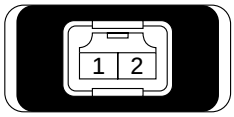
B-25		B-35	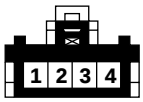 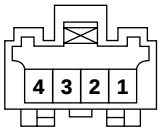
B-26	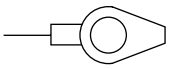	B-36	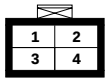
B-27		B-37	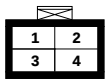
B-28	**NOT USED**	B-38	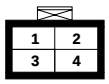
B-29	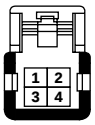	B-39	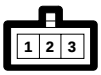
B-30		B-40	**NOT USED**

No.	Connector face	No.	Connector face
B-41	NOT USED	B-51	NOT USED
B-42	—	B-52	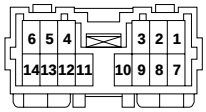 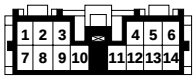
B-43	NOT USED	B-53	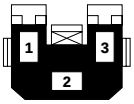
B-44	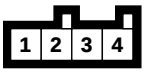	B-54	NOT USED
B-45	NOT USED	B-55	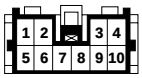 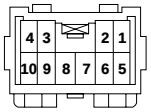
B-46	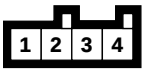	B-56	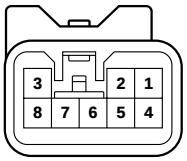
B-47	NOT USED	B-57	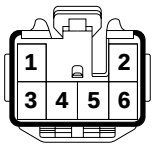
B-48	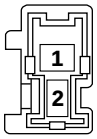 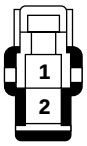	B-58	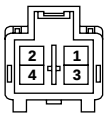
B-49	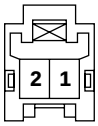	B-59	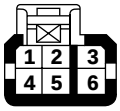
B-50	NOT USED	B-60	NOT USED

No.	Connector face	No.	Connector face
B-61	**NOT USED**		
B-62	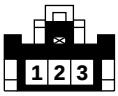 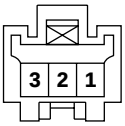		
B-63	**NOT USED**		
B-64	**NOT USED**		
B-65	**NOT USED**		
B-66	**NOT USED**		
B-67	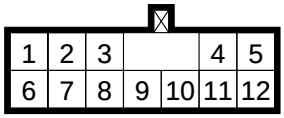		
B-68	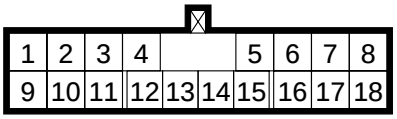		
B-69	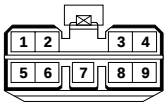		

No.	Connector face	No.	Connector face
C-1	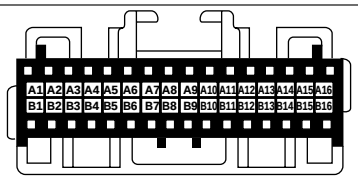	C-11	NOT USED
C-2	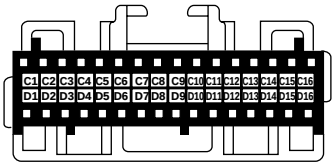	C-12	NOT USED
C-3	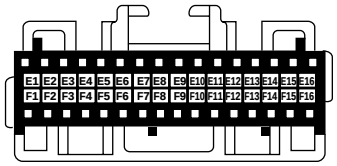	C-13	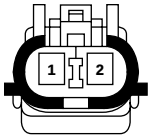 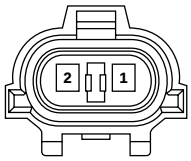
C-4	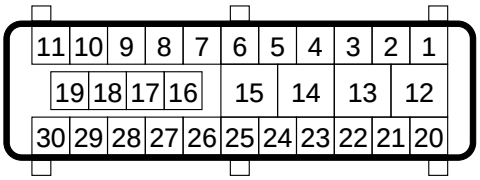	C-14	NOT USED
C-5	NOT USED	C-15	
C-6	NOT USED	C-16	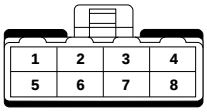 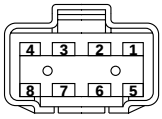
C-7	NOT USED	C-17	NOT USED
C-8	NOT USED	C-18	NOT USED
C-9		C-19	
C-10	NOT USED	C-20	

No.	Connector face	No.	Connector face
C-21	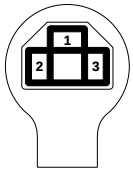	C-31	
C-22		C-32	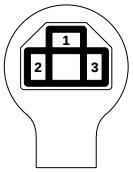
C-23		C-33	NOT USED
C-24		C-34	NOT USED
C-25		C-35	
C-26	NOT USED	C-36	
C-27	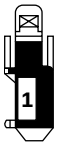	C-37	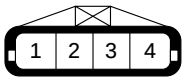
C-28	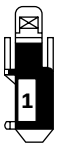	C-38	
C-29		C-39	
C-30		C-40	NOT USED

No.	Connector face	No.	Connector face
C-41		C-55	
C-42	NOT USED	C-56	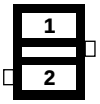
C-43	NOT USED	C-57	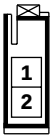
C-44		C-58	NOT USED
C-45		C-59	NOT USED
C-46 ~ C-50	NOT USED	C-60	
C-51	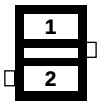	C-61	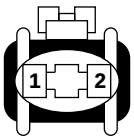
C-52	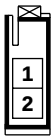	C-62	NOT USED
C-53		C-63	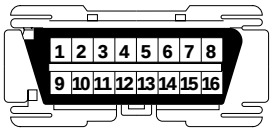
C-54		C-64	NOT USED

No.	Connector face	No.	Connector face
C-65	NOT USED	C-74	
C-66 (QOS/ EGR)	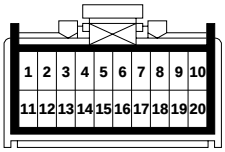	C-75	
C-66 (QOS-Ⅲ)	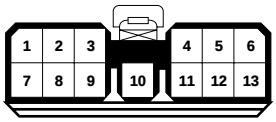	C-76	
C-67		C-77	
C-68	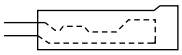	C-85	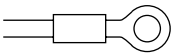
C-69		C-86	
C-70	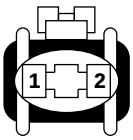	C-87	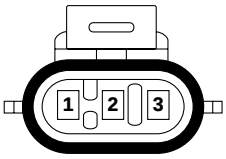
C-71	NOT USED	C-88	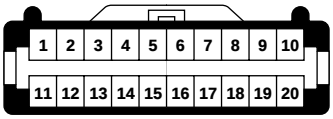
C-72		C-89 ~ C-92	NOT USED
C-73		C-93	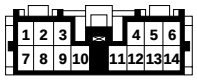

No.	Connector face	No.	Connector face
C-94	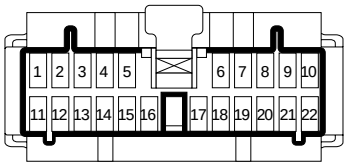		

No.	Connector face	No.	Connector face
D-1	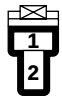	D-11	
D-2		D-12	
D-3		D-13	
D-4		D-14	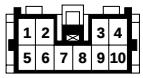
D-5	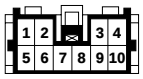	D-15	**NOT USED**
D-6		D-16	
D-7		D-17	
D-8		D-18	
D-9	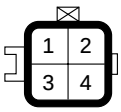	D-19	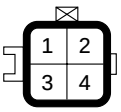
D-10	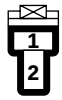	D-20	

No.	Connector face	No.	Connector face
D-21	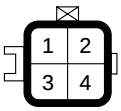		
D-22	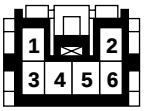		
D-23	**NOT USED**		
D-24	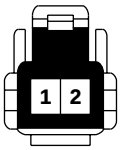		
D-25	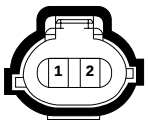 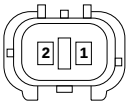		
D-26	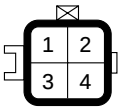		
D-27	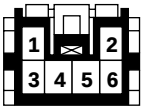		
D-28	**NOT USED**		
D-29	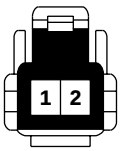		
D-30	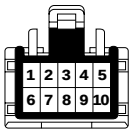		

No.	Connector face	No.	Connector face
E-1	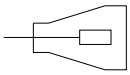	E-11	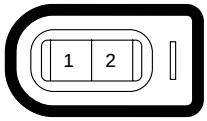
E-2		E-12	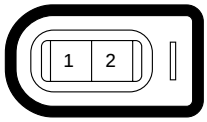
E-3	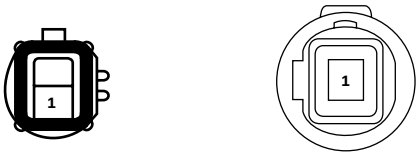	E-13	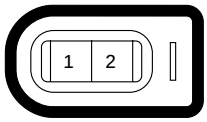
E-4		E-14	
E-5	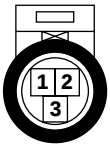	E-15	
E-6	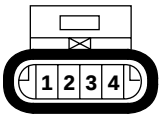	E-16	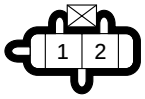
E-7	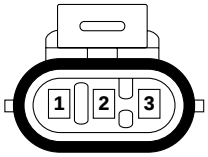	E-17	
E-8	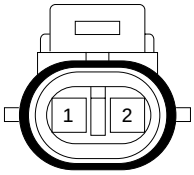	E-18	
E-9	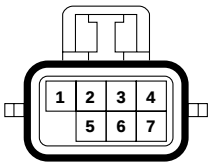 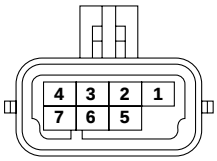	E-19	
E-10	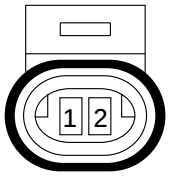	E-20	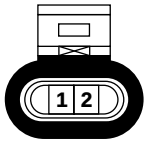

No.	Connector face	No.	Connector face
E-21		E-31	
E-22	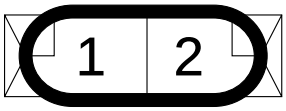	E-32	
E-23		E-33	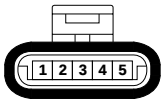
E-24	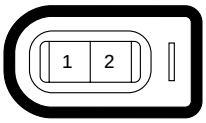	E-34	**NOT USED**
E-25	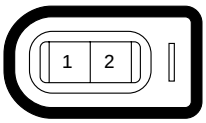	E-35	**NOT USED**
E-26	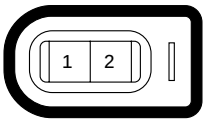	E-36	**NOT USED**
E-27	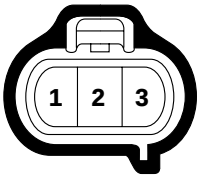	E-37	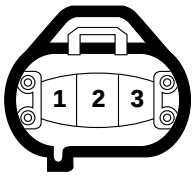
E-28	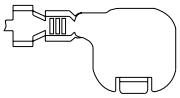	E-38	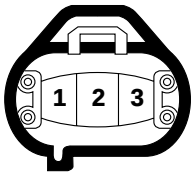
E-29	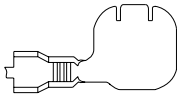	E-39	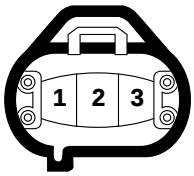
E-30	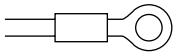	E-40	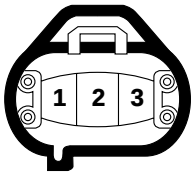

No.	Connector face	No.	Connector face
E-41	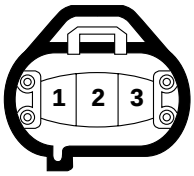		
E-42	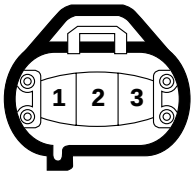		
E-43	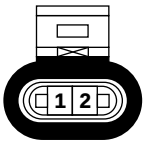		
E-44	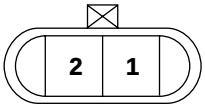		
E-45	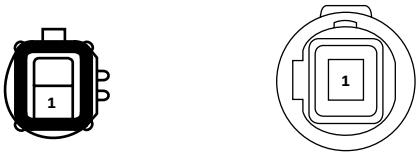		

No.	Connector face	No.	Connector face
F-1	NOT USED		
F-2			
F-3			
F-4			
F-5	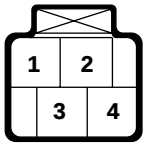		
F-6	NOT USED		
F-7			
F-8			
F-9	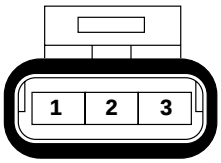		

No.	Connector face	No.	Connector face
G-1	NOT USED		
G-2			
G-3			
G-4	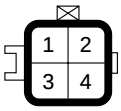		
G-5	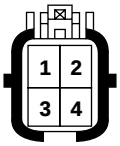 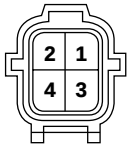		
G-6	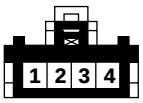		
G-7			
G-8	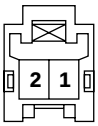		
G-9	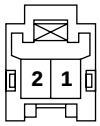		

No.	Connector face	No.	Connector face
H-1	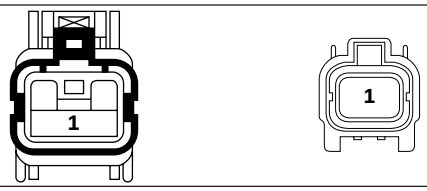	H-8 (LHD)	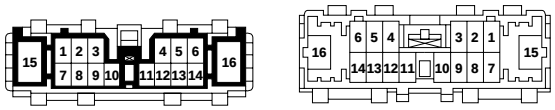
H-2		H-9 (RHD)	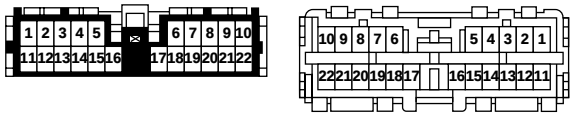
H-3 (6V*1)		H-9 (LHD)	
H-3 (4JG2)		H-10	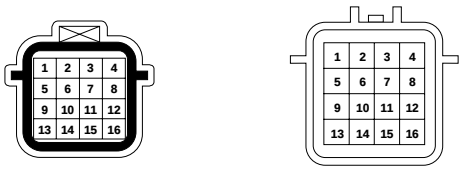
H-4	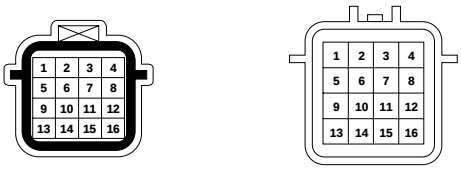	H-11	
H-5	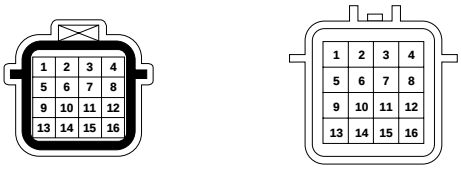	H-12 (RHD)	
H-6 (6V*1)	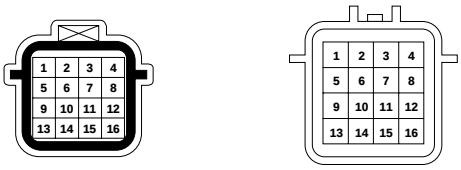	H-12 (LHD)	
H-6 (4JG2)		H-13 (RHD)	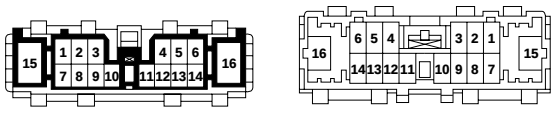
H-7		H-13 (LHD)	
H-8 (RHD)	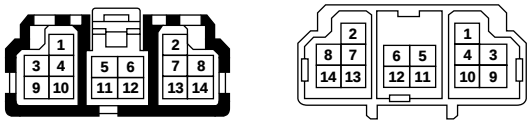	H-14	

No.	Connector face	No.	Connector face
H-15 (RHD)		H-23	
H-15 (LHD)	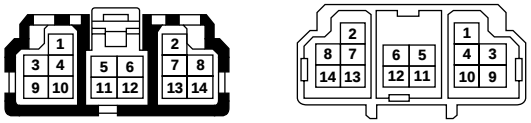	H-24 (RHD)	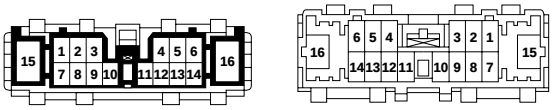
H-16 (RHD)	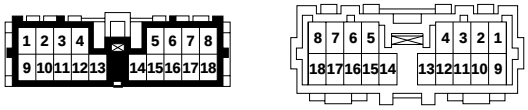	H-24 (LHD)	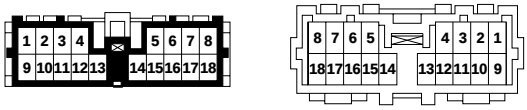
H-16 (LHD)	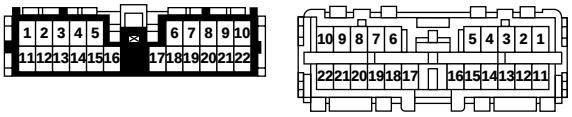	H-25	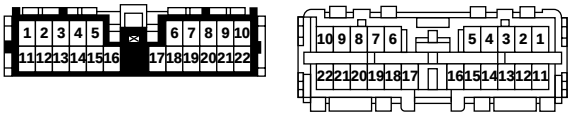
H-17	NOT USED	H-26	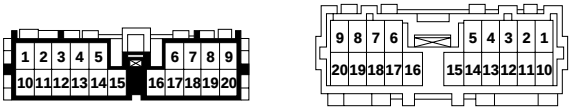
H-18	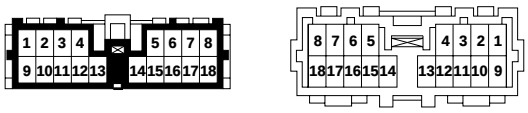	H-27	
H-19		H-28	
H-20		H-29	
H-21		H-30	NOT USED
H-22	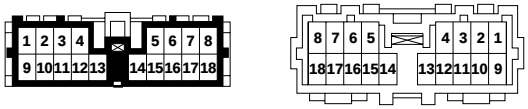	H-31	

No.	Connector face	No.	Connector face
H-32	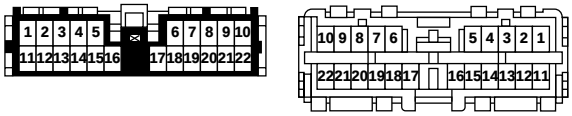	H-41 (4JG2)	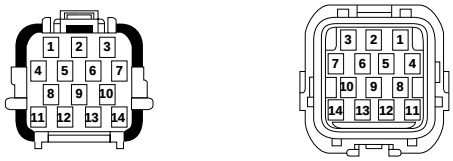
H-33		H-43	
H-34		H-44	
H-35		H-45	
H-36	NOT USED	H-46	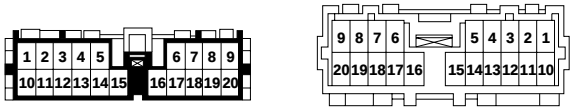
H-37		H-47	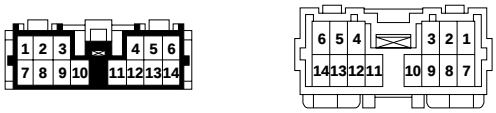
H-38		H-48	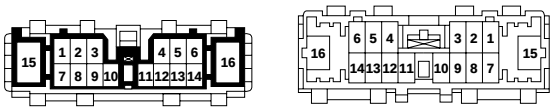
H-39		H-49 (W/ TOD)	
H-40	NOT USED	H-49 (W/O TOD)	
H-41 (6V*1)	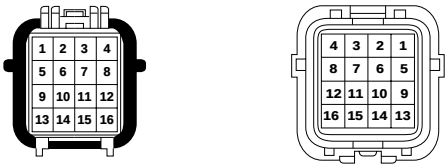	H-50	NOT USED

No.	Connector face	No.	Connector face
H-51		H-61	
H-52	**NOT USED**	H-62	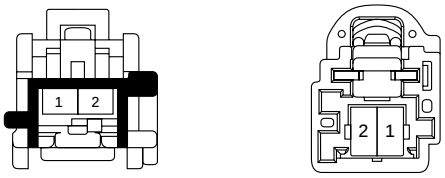
H-53	**NOT USED**	H-63	
H-54	**NOT USED**	H-64	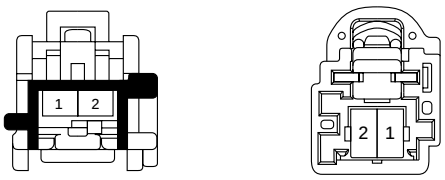
H-55	**NOT USED**	H-65	
H-56	**NOT USED**		
H-57			
H-58			
H-59			
H-60			

No.	Connector face	No.	Connector face
I-1	NOT USED	I-11	
I-2	NOT USED	I-12	
I-3	NOT USED	I-13	NOT USED
I-4		I-14	NOT USED
I-5	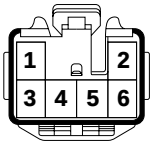	I-15	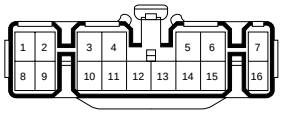 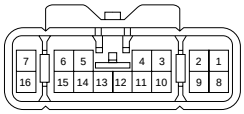
I-6	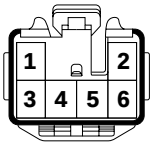	I-16	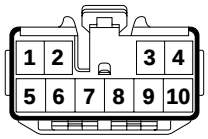
I-7	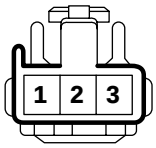	I-17	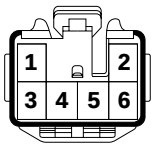
I-8		I-18	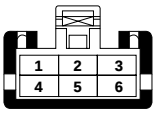
I-9	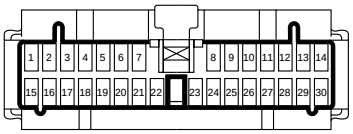	I-19	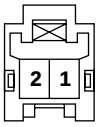
I-10	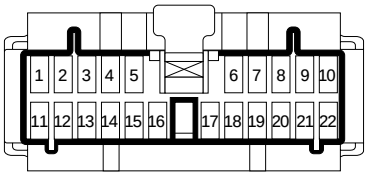	I-20	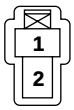

No.	Connector face	No.	Connector face
I-21		I-30 ~ I-38	NOT USED
I-22		I-39	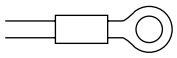
I-23	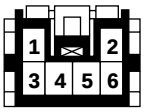	I-40	NOT USED
I-24	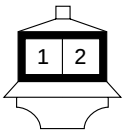	I-41	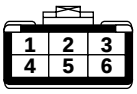
I-25	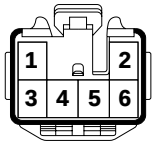	I-42	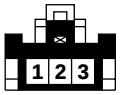
I-26	NOT USED		
I-27	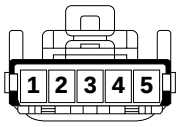		
I-28	NOT USED		
I-29	NOT USED		
I-30	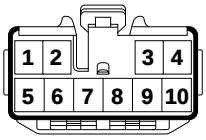		

No.	Connector face	No.	Connector face
K-1	NOT USED		
K-2			

No.	Connector face	No.	Connector face
L-1			
L-2			
L-3			
L-4	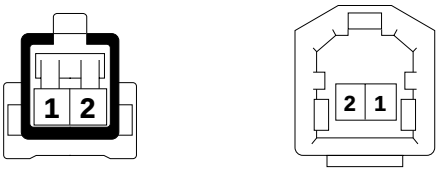		
L-5	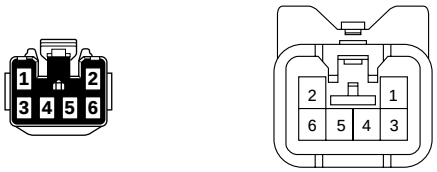		
L-6	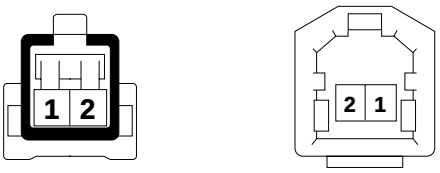		

No.	Connector face	No.	Connector face
M-1	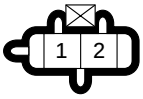	M-11	
M-2	NOT USED	M-12	
M-3	NOT USED	M-13	NOT USED
M-4	NOT USED	M-14	NOT USED
M-5	NOT USED	M-15	
M-6	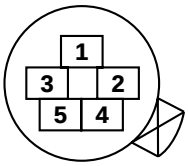	M-16	NOT USED
M-7	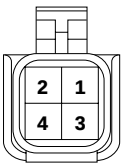	M-17	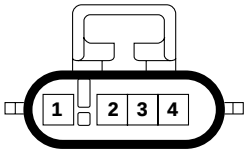 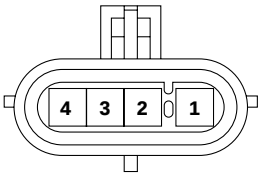
M-8		M-18	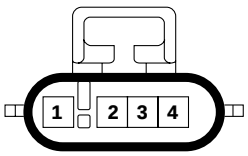 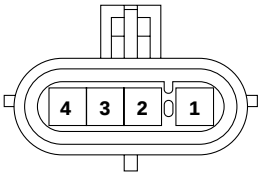
M-9	NOT USED	M-19	NOT USED
M-10	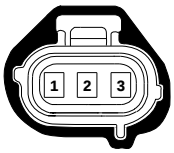	M-20	NOT USED

No.	Connector face	No.	Connector face
M-21	NOT USED		
M-22			
M-23			
M-24			
M-25	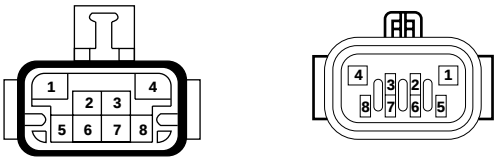		
M-26			

No.	Connector face	No.	Connector face
P-1	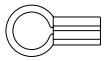	P-10	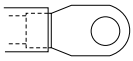
P-2	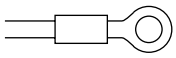	P-11	NOT USED
P-3		P-12	NOT USED
P-4	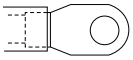	P-13	NOT USED
P-5	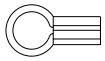	P-14	NOT USED
P-6	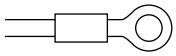	P-15	NOT USED
P-7	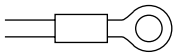	P-16	NOT USED
P-8 (6V*1)	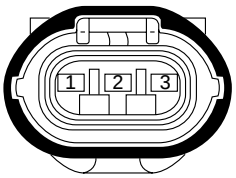	P-17	
P-8 (4JG2)	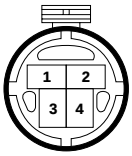	P-18	
P-9	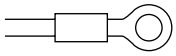	P-19	

No.	Connector face	No.	Connector face
R-1		R-11	
R-2		R-12	
R-3	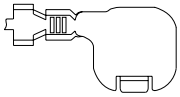	R-12	 (South Africa, China)
R-4	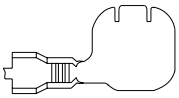	R-13	
R-5		R-13	 (South Africa, China)
R-6		R-14	NOT USED
R-7	NOT USED	R-15	NOT USED
R-8		R-16	
R-9	NOT USED		
R-10			

No.	Connector face	No.	Connector face
S-1	NOT USED		
S-2			
S-3			
S-4			
S-5	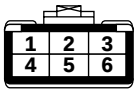		

No.	Connector face	No.	Connector face
T-1	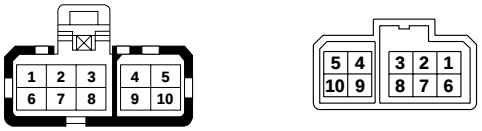	T-11	
T-2		T-12	
T-3		T-13	
T-4			
T-5			
T-6			
T-7			
T-8			
T-9			
T-10			

No.	Connector face	No.	Connector face
U-1			
U-2	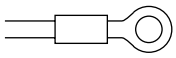		
U-3	**NOT USED**		
U-4	**NOT USED**		
U-5	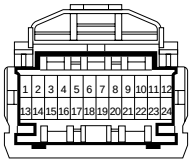		
U-6			

No.	Connector face	No.	Connector face
X-1	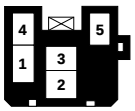	X-11	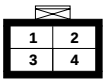
X-2	NOT USED	X-12	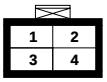
X-3	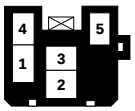	X-13	NOT USED
X-4	NOT USED	X-14	NOT USED
X-5	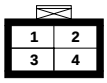	X-15	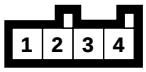
X-6	NOT USED	X-16	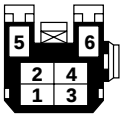
X-7	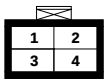	X-17 (6V*1)	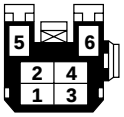
X-8	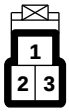	X-17 (4JG2)	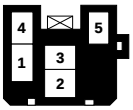
X-9	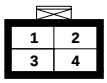	X-18	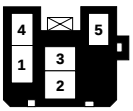
X-10	NOT USED	X-19	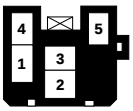

No.	Connector face	No.	Connector face
X-20	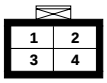		
X-21	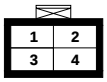		
X-22	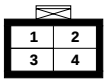		
X-23	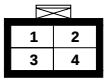		

MEMO

BODY AND ACCESSORIES

METER AND GAUGE

CONTENTS

Service Precaution 8E–1
General Description 8E–1
Meter Assembly 8E–2
General Description 8E–2
Layout for Meters/Gauges, Warning Lights, Indicator Lights and Illumination Lights . . . 8E–2
Table for Meter/Gauge Connector Terminal Connections 8E–8
Removal 8E–16
Installation 8E–16
Warning Light Bulb, Indicator Light Bulb, Illumination Light Bulb, A/T Indicator Light Bulb 8E–16
Removal 8E–16
Installation 8E–16
Vehicle Speed Sensor 8E–17
Removal 8E–17
Installation 8E–17
Fuel Tank Unit 8E–17
Removal 8E–17
Installation 8E–17
Multi Meter 8E–18
Removal 8E–18
Installation 8E–18
Ambient Sensor 8E–18
Removal 8E–18
Installation 8E–18
Main Data and Specifications 8E–19

Service Precaution

WARNING: IF SO EQUIPPED WITH A SUPPLEMENTAL RESTRAINT SYSTEM (SRS), REFER TO THE SRS COMPONENT AND WIRING LOCATION VIEW IN ORDER TO DETERMINE WHETHER YOU ARE PERFORMING SERVICE ON OR NEAR THE SRS COMPONENTS OR THE SRS WIRING. WHEN YOU ARE PERFORMING SERVICE ON OR NEAR THE SRS COMPONENTS OR THE SRS WIRING, REFER TO THE SRS SERVICE INFORMATION. FAILURE TO FOLLOW WARNINGS COULD RESULT IN POSSIBLE AIR BAG DEPLOYMENT, PERSONAL INJURY, OR OTHERWISE UNNEEDED SRS SYSTEM REPAIRS.

CAUTION: Always use the correct fastener in the proper location. When you replace a fastener, use ONLY the exact part number for that application. ISUZU will call out those fasteners that require a replacement after removal. ISUZU will also call out the fasteners that require thread lockers or thread sealant. UNLESS OTHERWISE SPECIFIED, do not use supplemental coatings (Paints, greases, or other corrosion inhibitors) on threaded fasteners or fastener joint interfaces. Generally, such coatings adversely affect the fastener torque and the joint clamping force, and may damage the fastener. When you install fasteners, use the correct tightening sequence and specifications. Following these instructions can help you avoid damage to parts and systems.

General Description

The circuit consists of the starter switch, meter assembly, vehicle speed sensor, transmission switch, lighting switch, turn signal switch, thermo unit, oil pressure unit, Powertrain Control Module (PCM), fuel tank unit, 4WD switch, oil pressure switch, parking brake switch, brake fluid switch, seat belt switch, illumination controller, multi meter and ambient sensor.

Meter Assembly

General Description

The meter assembly has the speedometer, tachometer, engine coolant temperature gauge, fuel gauge and warning/indicator lights. In addition, the meter assembly containing TOD (Torque on Demand) has the TOD indicator light, or the meter assembly not containing TOD has the voltmeter and oil pressure gauge instead of the TOD indicator.

Layout for Meters/Gauges, Warning Lights, Indicator Lights and Illumination Lights

Meter Assembly–Gasoline W/O TOD (Front View)

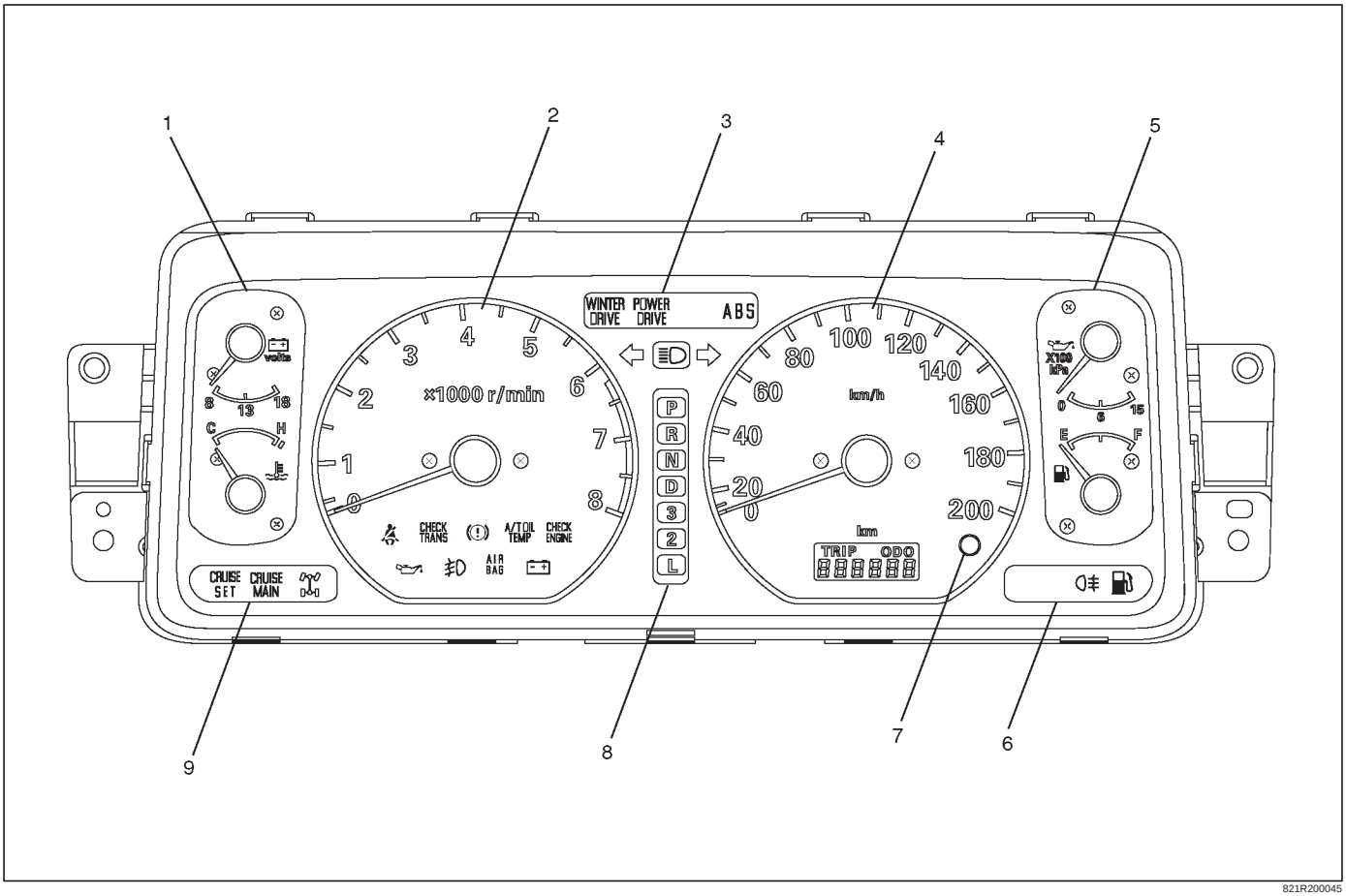

821R200045

Legend

(1) Voltmeter & Engine Coolant Temperature Gauge
(2) Tachometer
(3) Warning Light Lens
(4) Speedometer
(5) Oil Pressure Gauge & Fuel Gauge
(6) Warning Light Lens
(7) Reset Knob
(8) A/T Shift Indicator
(9) Warning Light Lens

Meter Assembly–Gasoline W/O TOD (Rear View)

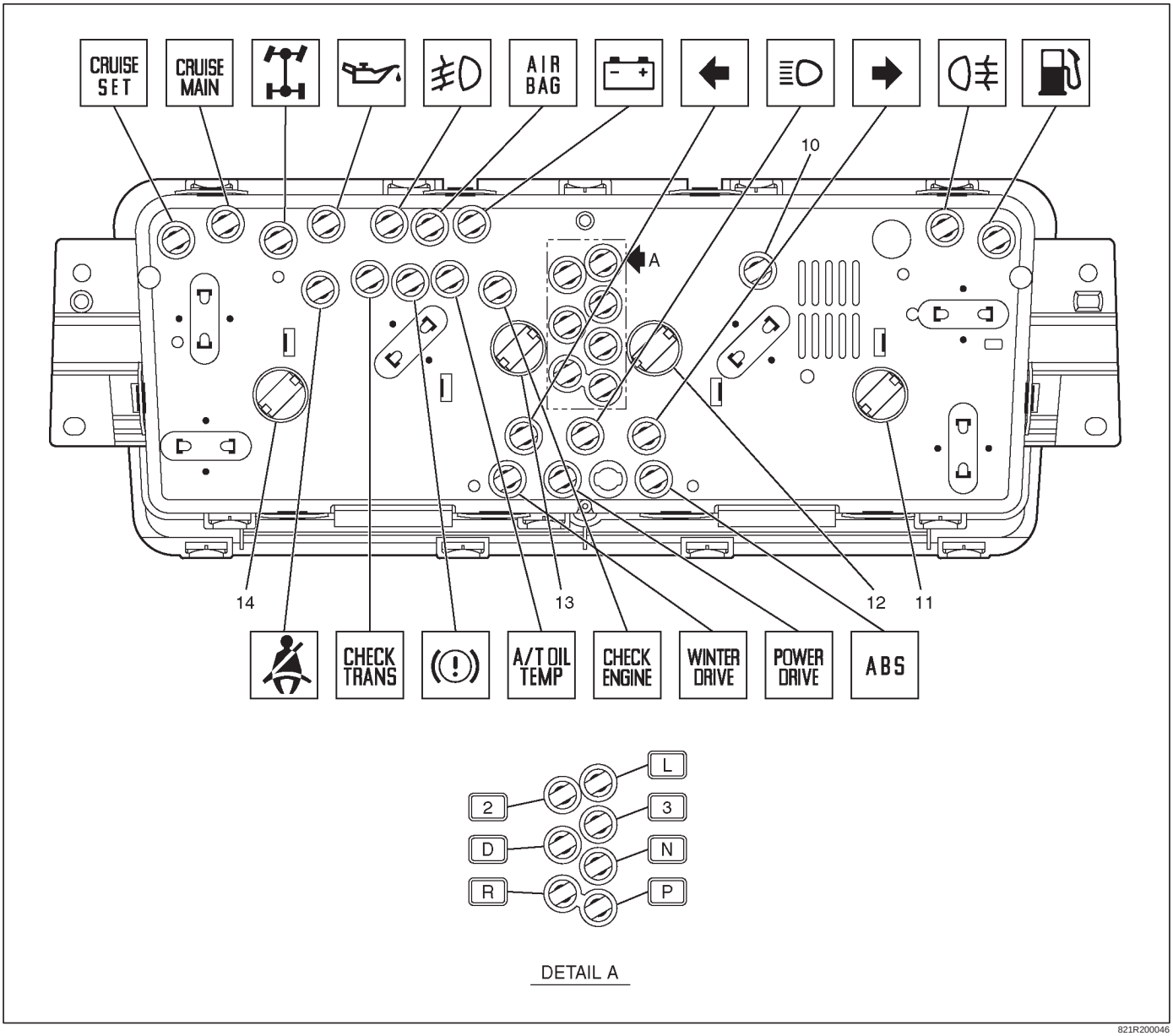

821R200046

Legend

(10) LCD Light
(11) Illumination Light
(12) Illumination Light
(13) Illumination Light
(14) Illumination Light

Meter Assembly–Gasoline W/TOD (Front View)

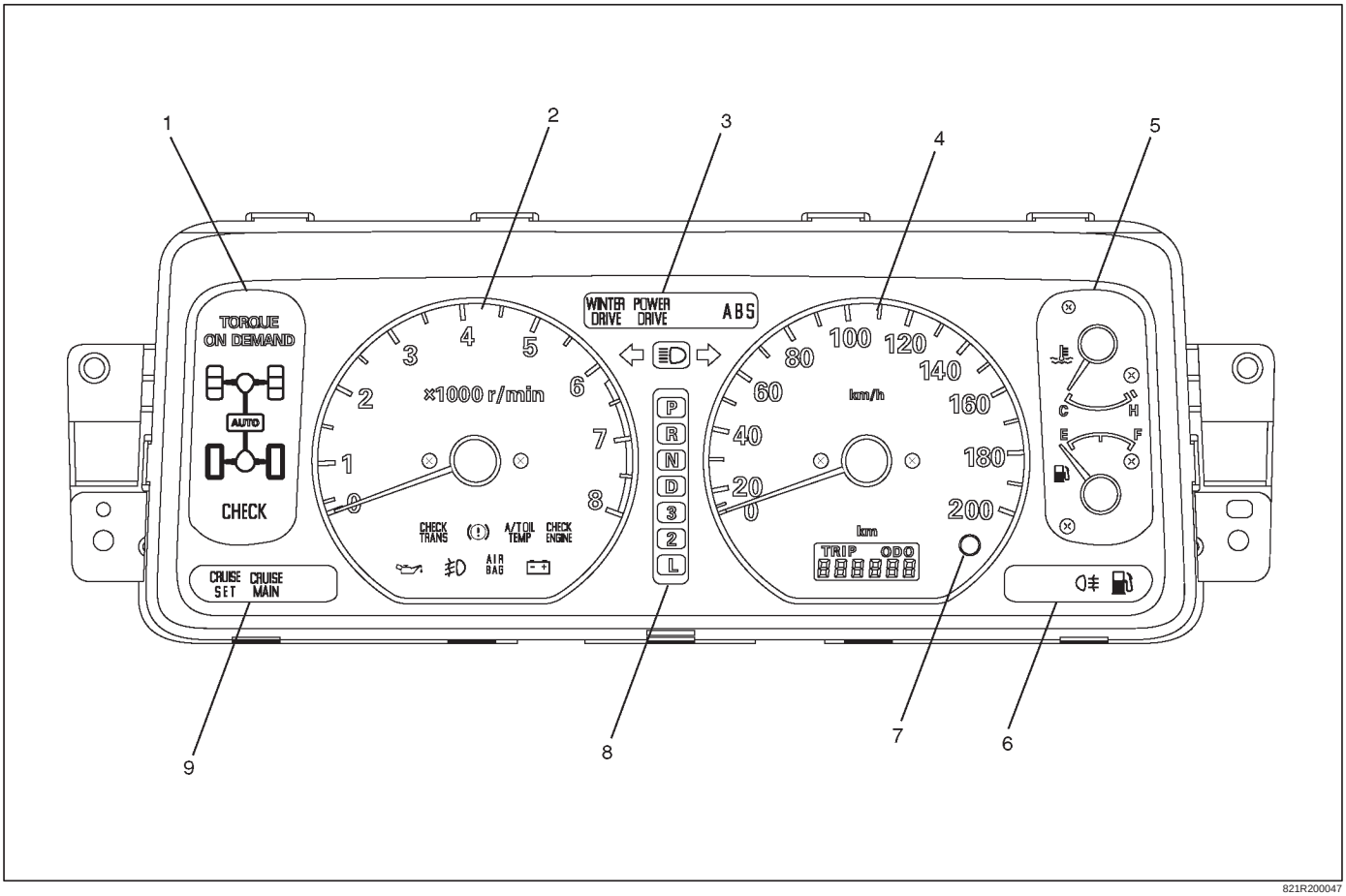

821R200047

Legend

(1) TOD Indicator
(2) Tachometer
(3) Warning Light Lens
(4) Speedometer
(5) Coolant Temperature Gauge & Fuel Gauge
(6) Warning Light Lens
(7) Reset Knob
(8) A/T Shift Indicator
(9) Warning Light Lens

Meter Assembly–Gasoline W/TOD (Rear View)

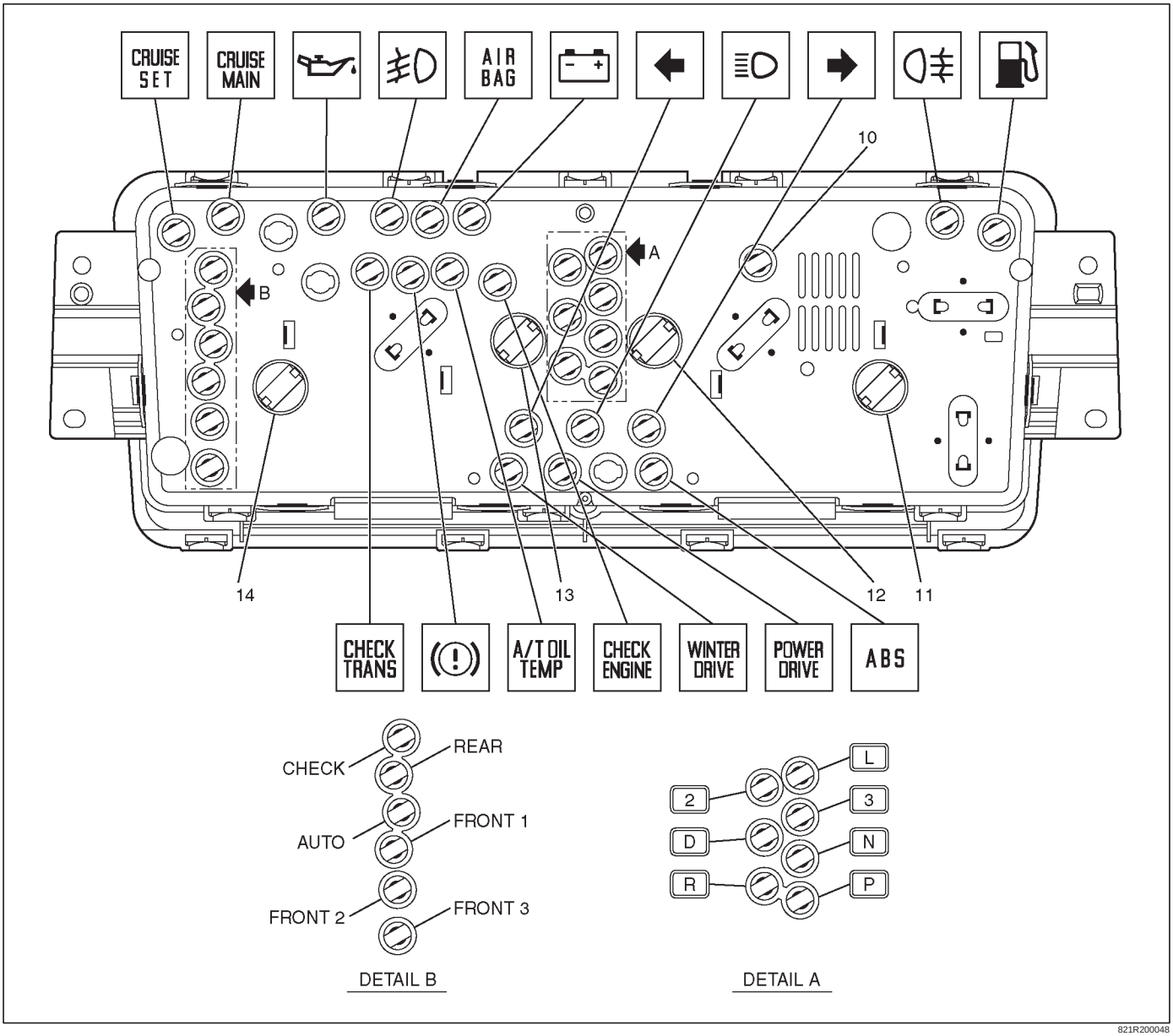

821R200048

Legend

(10) LCD Light
(11) Illumination Light
(12) Illumination Light
(13) Illumination Light
(14) Illumination Light

Meter Assembly–Diesel (Front View)

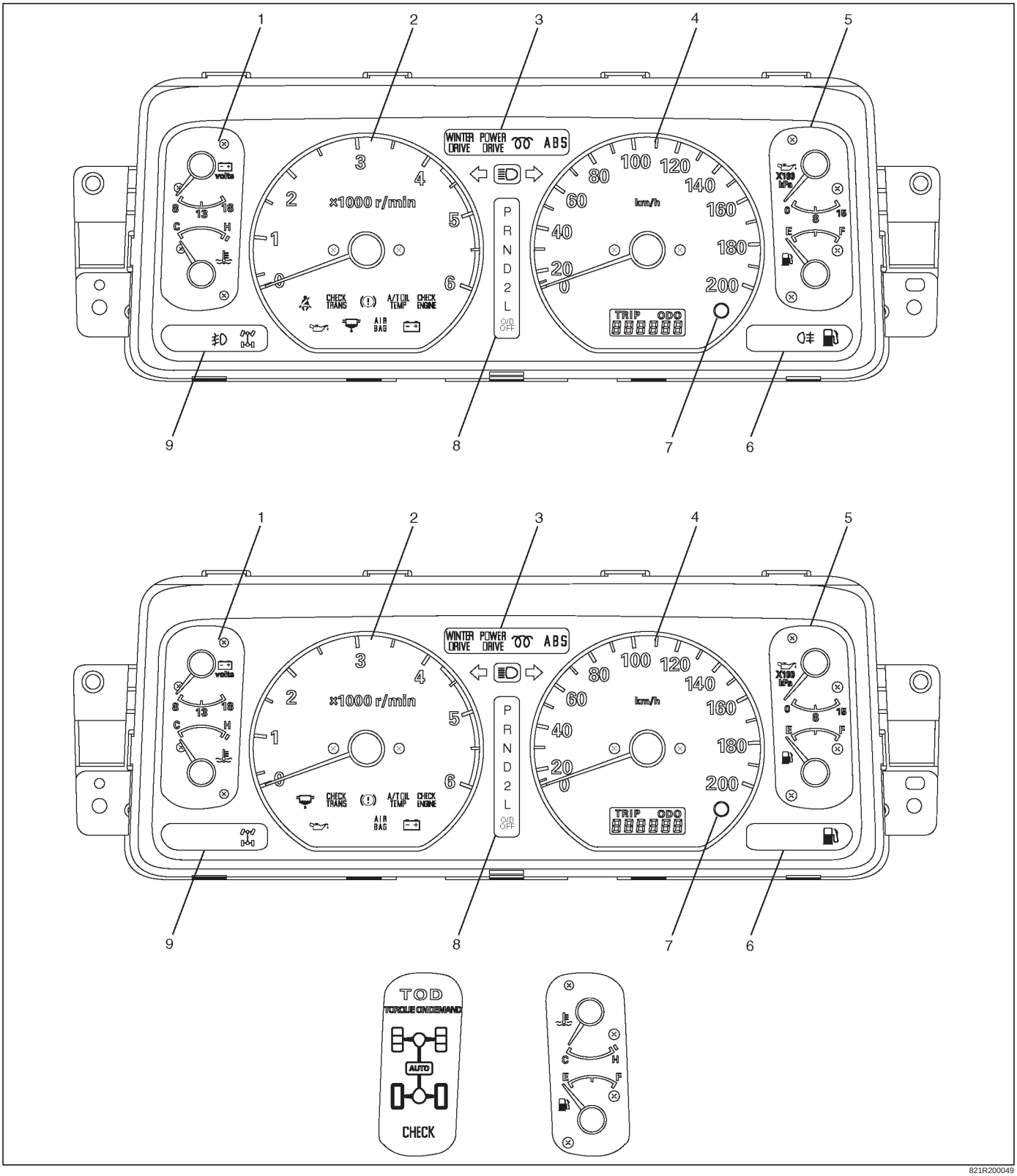

821R200049

Legend

(1) TOD Indicator
(2) Tachometer
(3) Warning Light Lens
(4) Speedometer
(5) Coolant Temperature Gauge & Fuel Gauge
(6) Warning Light Lens
(7) Reset Knob
(8) A/T Shift Indicator
(9) Warning Light Lens

Meter Assembly–Diesel (Rear View)

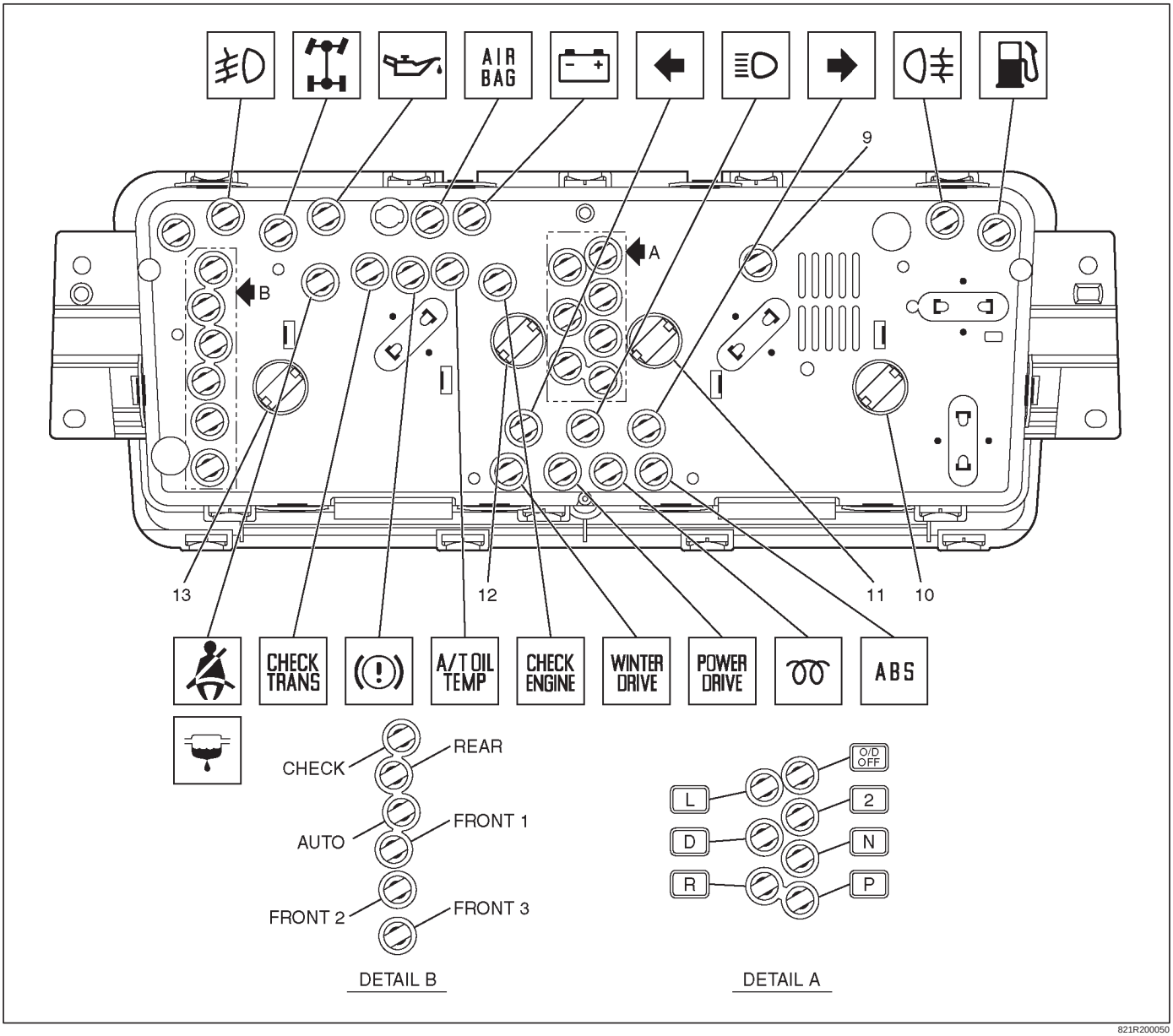

821R200050

Legend

(9) LCD Light
(10) Illumination Light
(11) Illumination Light
(12) Illumination Light
(13) Illumination Light

Table for Meter/Gauge Connector Terminal Connections

Meter Assembly–Gasoline W/O TOD–1

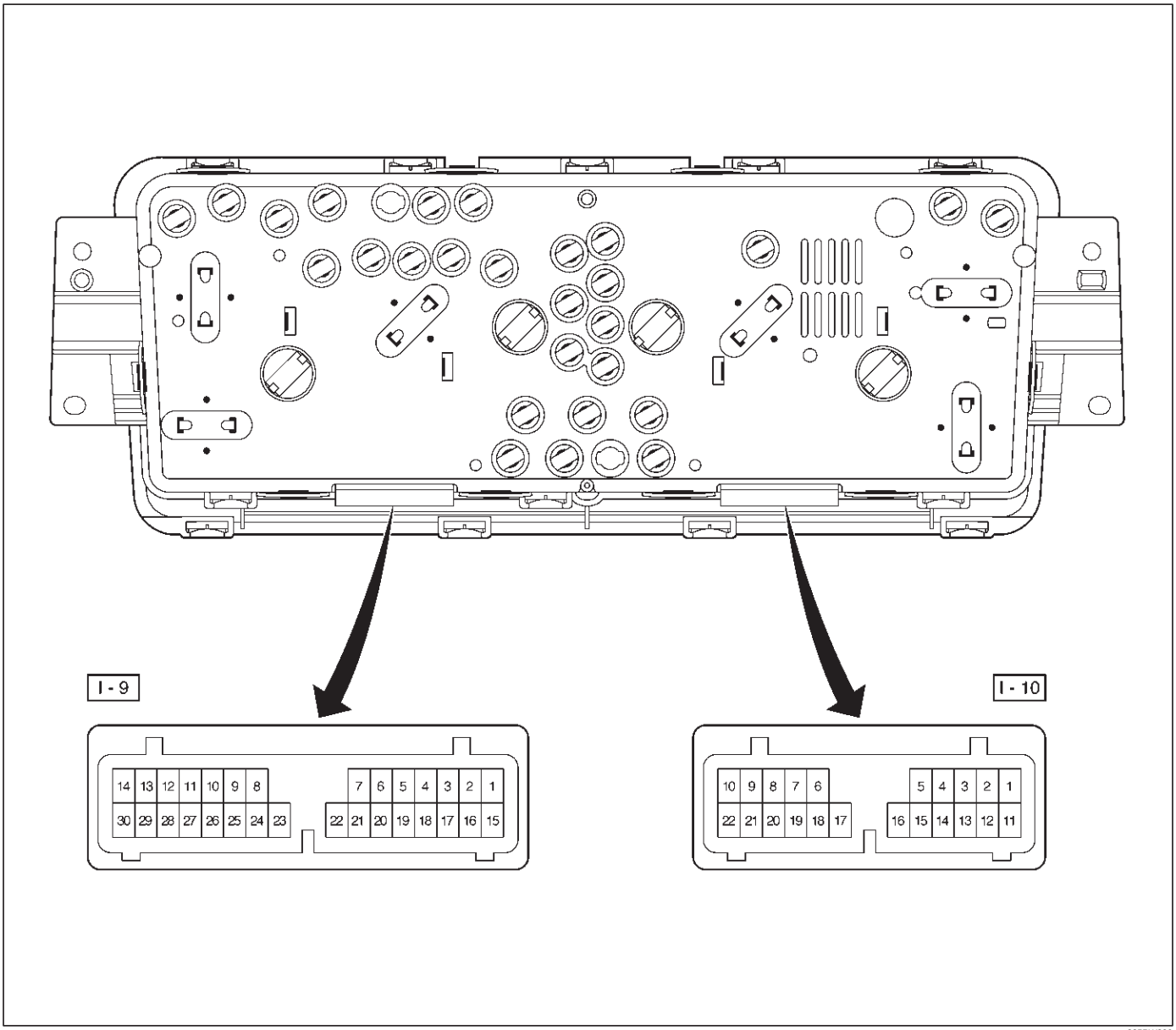

825RW206

Meter Assembly–Gasoline W/O TOD–2

Connector No. I–9	
Terminal	**Function**
1	A/T oil temp warning light
2	Seat belt warning light
3	Check trans warning light
4	Brake warning light
5	Check engine warning light
6	Charge warning light
7	Meter illumination light
8	Illumination controller
9	Tachometer
10	D position (A/T)
11	—
12	A/T shift indicator control unit
13	—
14	2 position (A/T)
15	Starter switch
16	Ground (Gauge)
17	Cruise set indicator light
18	Cruise main indicator light
19	4WD indicator light
20	—
21	Winter drive indicator light
22	Oil pressure warning light
23	Front fog light
24	Air bag warning light
25	Power drive indicator light
26	—
27	—
28	Turn signal indicator light (Left)
29	—
30	Ground

Connector No. I–10	
Terminal	**Function**
1	Turn signal indicator light (Right)
2	L position (A/T)
3	R position (A/T)
4	Engine coolant temperature gauge
5	Speedometer
6	—
7	—
8	Battery (+)
9	—
10	Rear fog light
11	P position (A/T)
12	N position (A/T)
13	3 position (A/T)
14	High-beam indicator light (–)
15	High-beam indicator light (+)
16	ABS indicator light
17	—
18	Fuel warning light
19	Oil pressure gauge
20	Fuel gauge
21	—
22	—

Meter Assembly–Gasoline W/TOD–1

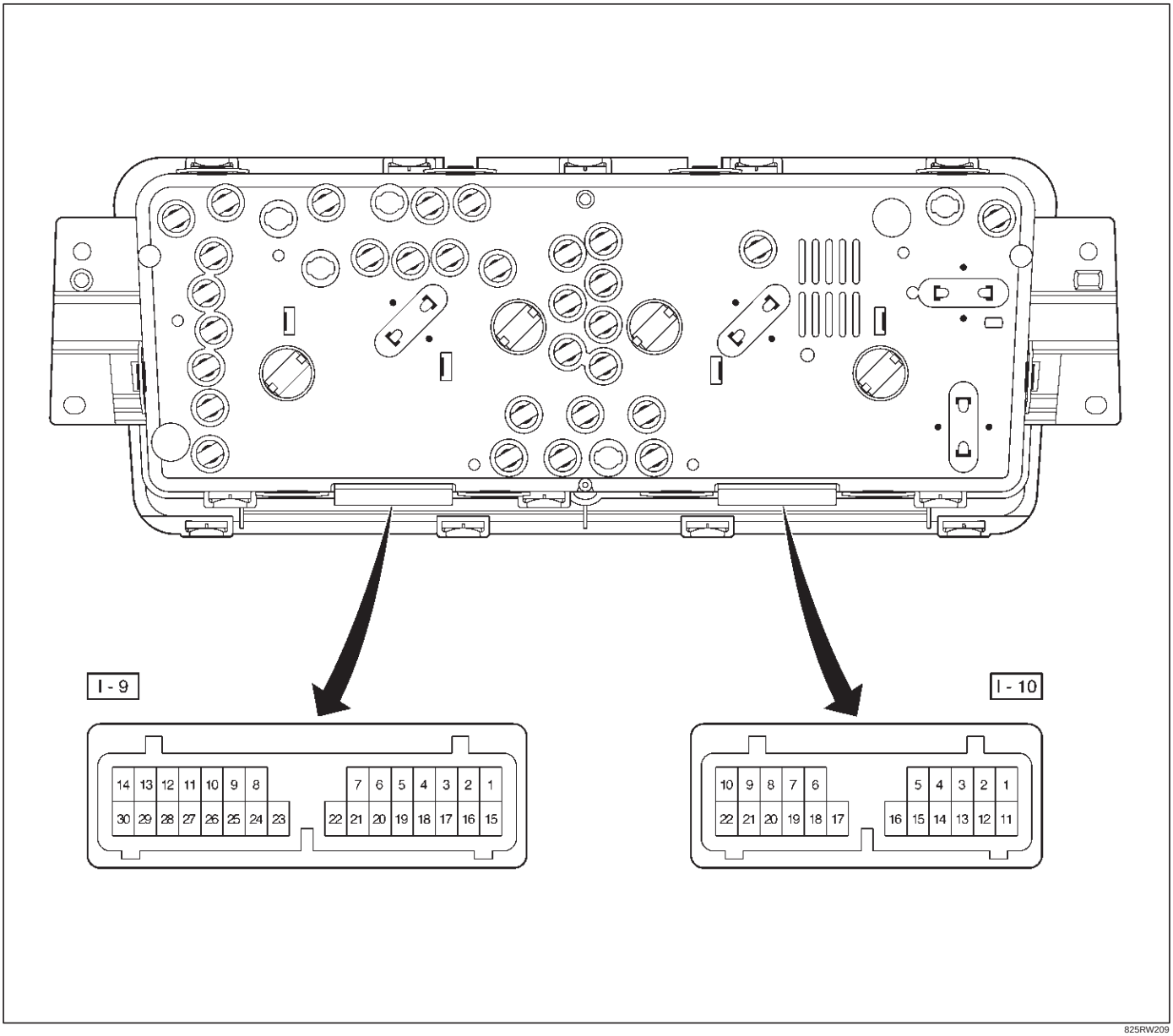

825RW209

Meter Assembly–Gasoline W/TOD–2

Connector No. I–9	
Terminal	**Function**
1	Front fog light
2	Air bag warning light
3	A/T oil temp warning light
4	Charge warning light
5	Seat belt warning light
6	Check trans warning light
7	Brake warning light
8	—
9	Tachometer
10	—
11	Turn signal indicator light (Left)
12	A/T shift indicator control unit
13	2 position (A/T)
14	D position (A/T)
15	Rear (TOD)
16	Auto (TOD)
17	Check (TOD)
18	Cruise set indicator light
19	Cruise main indicator light
20	Oil pressure warning light
21	Front “1” (TOD)
22	Front “2” (TOD)
23	Front “3” (TOD)
24	Cigarette lighter illumination light
25	Illumination controller
26	Starter switch
27	—
28	Winter drive indicator light
29	Power drive indicator light
30	—

Connector No. I–10	
Terminal	**Function**
1	Turn signal indicator light (Right)
2	L position (A/T)
3	R position (A/T)
4	Ground
5	Speedometer
6	—
7	—
8	Ground (Gauge)
9	Check engine warning light
10	Battery (+)
11	P position (A/T)
12	N position (A/T)
13	3 position (A/T)
14	High beam indicator light (–)
15	High beam indicator light (+)
16	ABS indicator light
17	—
18	Fuel warning light
19	—
20	Fuel gauge
21	Rear fog light
22	Engine coolant temperature

Meter Assembly–Diesel W/O TOD–1

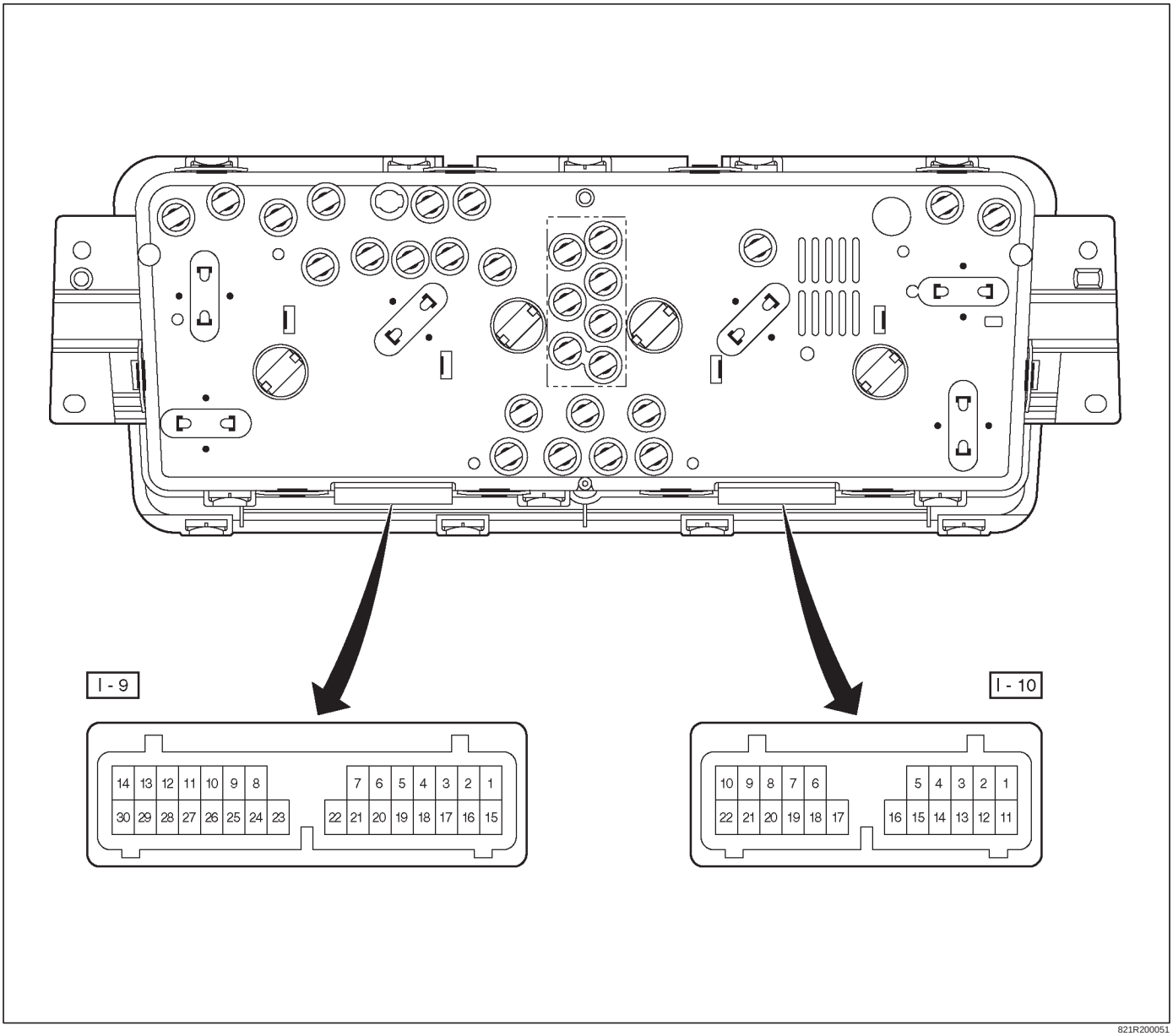

821R200051

Meter Assembly–Diesel W/O TOD–2

Connector No. I–9	
Terminal	**Function**
1	A/T oil temp warning light
2	Seat belt warning light Water sedimenter
3	Check trans warning light
4	Brake warning light
5	Check engine warning light
6	Charge warning light
7	Meter illumination light
8	Illumination controller
9	Tachometer
10	D position (A/T)
11	—
12	—
13	—
14	L position (A/T)
15	Starter switch
16	Ground (Gauge)
17	—
18	Front fog light
19	4WD indicator light
20	—
21	Winter drive indicator light
22	Oil pressure warning light
23	Water sedimenter
24	Air bag warning light
25	Power drive indicator light
26	Glow indicator light
27	—
28	Turn signal indicator light (Left)
29	—
30	Ground

Connector No. I–10	
Terminal	**Function**
1	Turn signal indicator light (Right)
2	O/D OFF position (A/T)
3	R position (A/T)
4	Engine coolant temperature gauge
5	Speedometer
6	—
7	—
8	Battery (+)
9	—
10	Rear fog light
11	P position (A/T)
12	N position (A/T)
13	2 position (A/T)
14	High-beam indicator light (–)
15	High-beam indicator light (+)
16	ABS indicator light
17	—
18	Fuel warning light
19	Oil pressure gauge
20	Fuel gauge
21	—
22	—

Meter Assembly–Diesel W/TOD–1

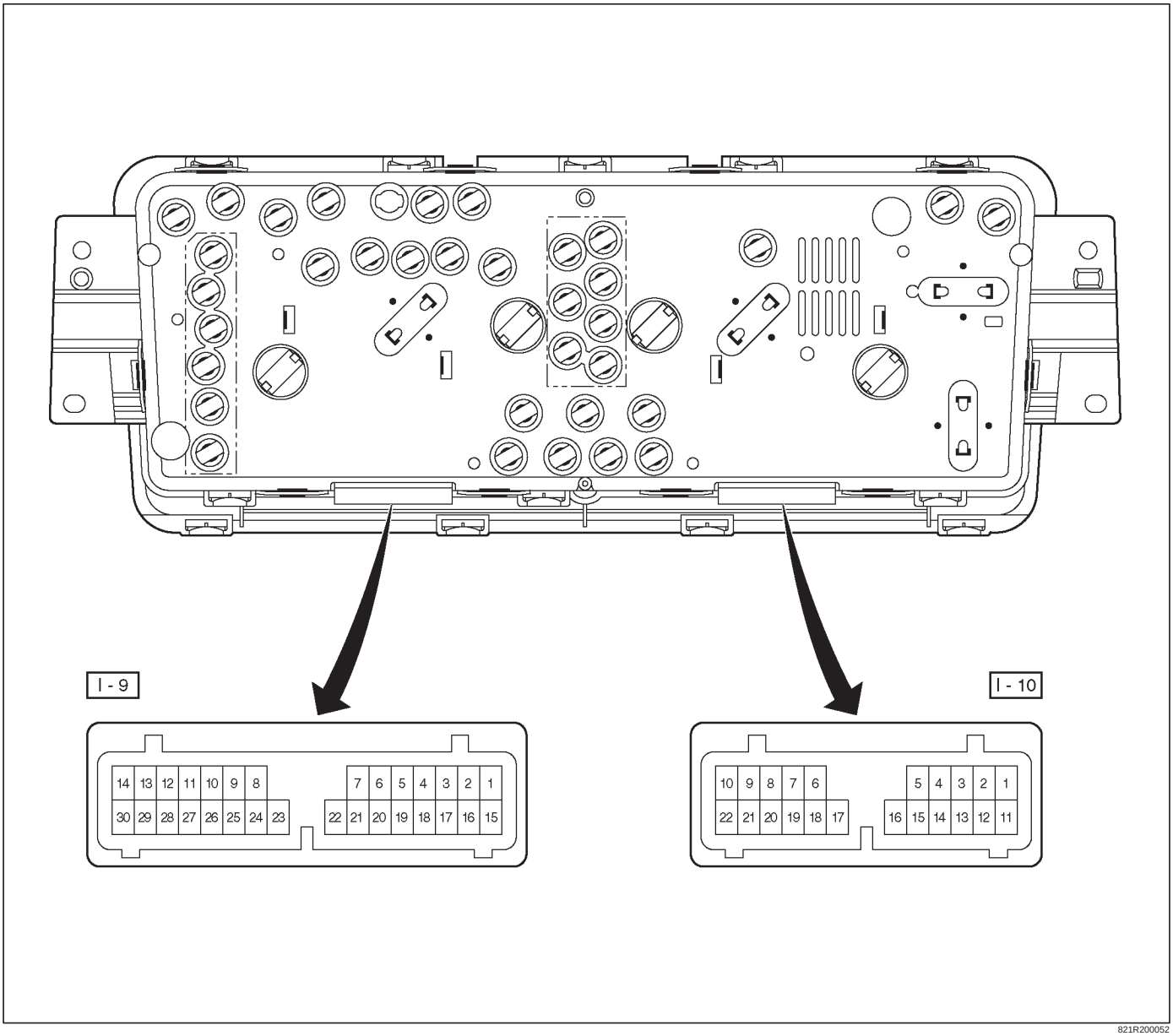

821R200052

Meter Assembly–Diesel W/TOD–2

Connector No. I–9	
Terminal	**Function**
1	—
2	Air bag warning light
3	A/T oil temp warning light
4	Charge warning light
5	Seat belt warning light Water sedimenter
6	Check trans warning light
7	Brake warning light
8	—
9	Tachometer
10	—
11	Turn signal indicator light (left)
12	—
13	L position (A/T)
14	D position (A/T)
15	Rear (TOD)
16	Auto (TOD)
17	Check (TOD)
18	—
19	—
20	Oil pressure warning light
21	Front “1” (TOD)
22	Front “2” (TOD)
23	Front “3” (TOD)
24	Meter illumination light
25	Illumination controller
26	Starter switch
27	—
28	Winter drive indicator light
29	Power drive indicator light
30	Glow indicator light

Connector No. I–10	
Terminal	**Function**
1	Turn signal indicator light (Right)
2	O/D OFF position (A/T)
3	R position (A/T)
4	Ground
5	Speedometer
6	—
7	—
8	Ground (Gauge)
9	Check engine warning light
10	Battery (+)
11	P position (A/T)
12	N position (A/T)
13	2 position (A/T)
14	High-beam indicator light (–)
15	High-beam indicator light (+)
16	ABS indicator light
17	—
18	Fuel warning light
19	—
20	Fuel gauge
21	Rear fog light
22	Engine coolant temperature

Removal

1. Disconnect the battery ground cable.
2. Remove the front console assembly(1).
   Refer to the Instrument Panel Assembly in Body Structure section.
3. Remove the lower cluster assembly(2).
   Refer to the Instrument Panel Assembly in Body Structure section.
4. Remove the instrument panel driver lower cover(3).
   Refer to the Instrument Panel Assembly in Body Structure section.

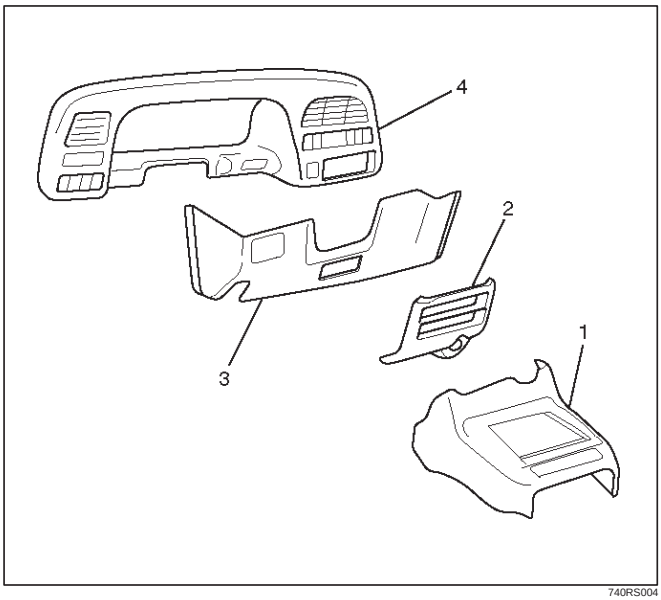

740RS004

5. Remove four fixing screws and disconnect the meter connectors to remove the meter assembly(5).

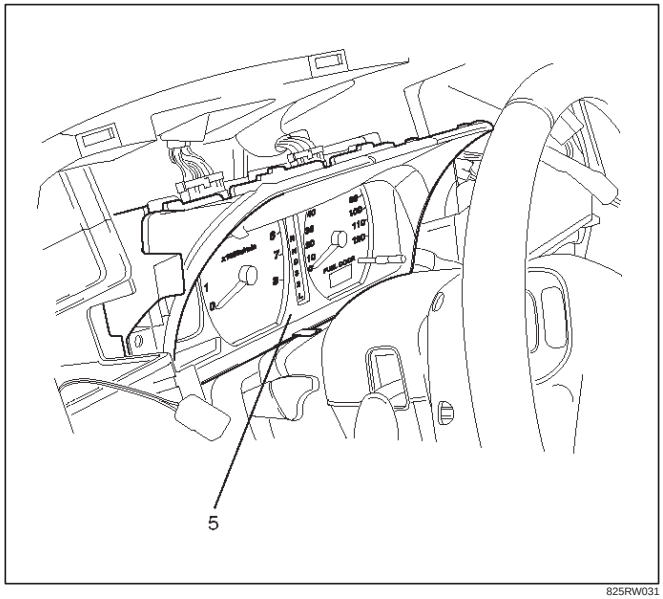

825RW031

CAUTION: The removed meter assembly should be placed upright or with its face side up.

Installation

To install, follow the removal steps in the reverse order.

Warning Light Bulb, Indicator Light Bulb, Illumination Light Bulb, A/T Indicator Light Bulb

Removal

1. Disconnect the battery ground cable.
2. Remove the meter assembly(1).
   Refer to the Meter Assembly removal steps in this section.
3. Hold the bulb socket by hand and rotate it counterclockwise to remove the socket & bulb(2) from the meter body.

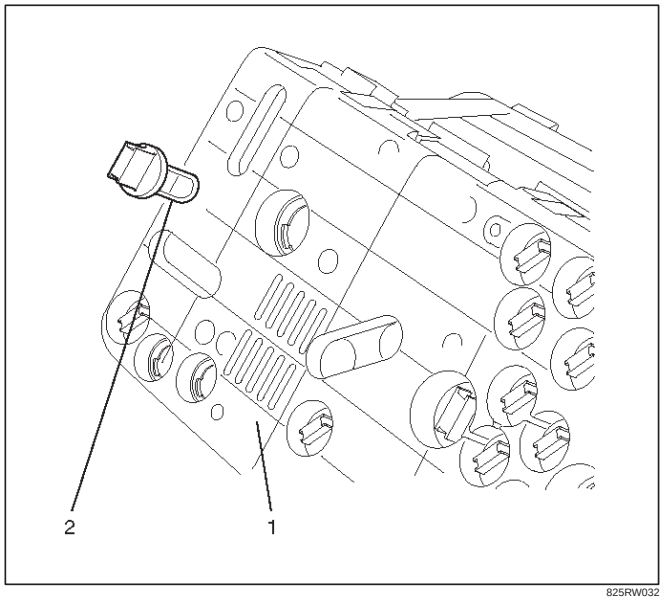

825RW032

Installation

To install, follow the removal steps in the reverse order.

Vehicle Speed Sensor

Removal

1. Disconnect the battery ground cable.
2. Disconnect the connector, remove the vehicle speed sensor body by rotating it and then remove the vehicle speed sensor(1).

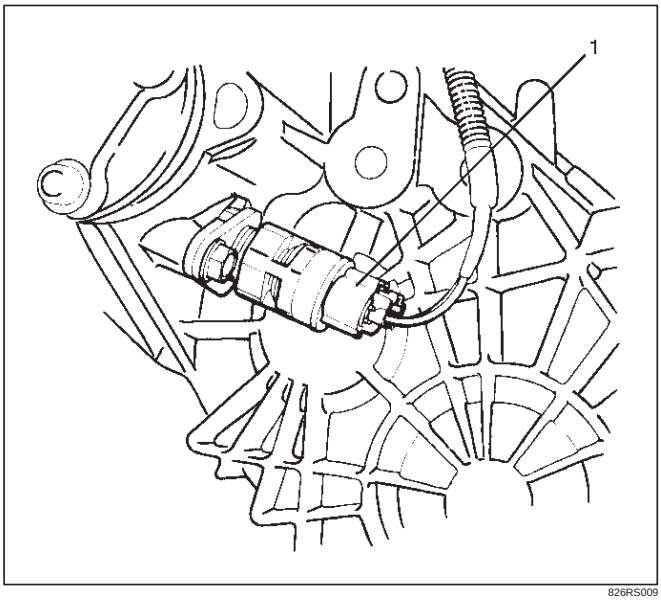

826RS009

Installation

To install, follow the removal steps in the reverse order, noting the following point.

1. Tighten the vehicle speed sensor to the specified torque.

Torque: 27 N·m (2.8 kg·m/20 lb ft)

Fuel Tank Unit

Removal

1. Disconnect the battery ground cable.
2. Remove the fuel tank(1).
   Refer to the Fuel Tank removal steps in Engine section
3. Disconnect the connectors, remove five screws and then remove the fuel tank unit(2).

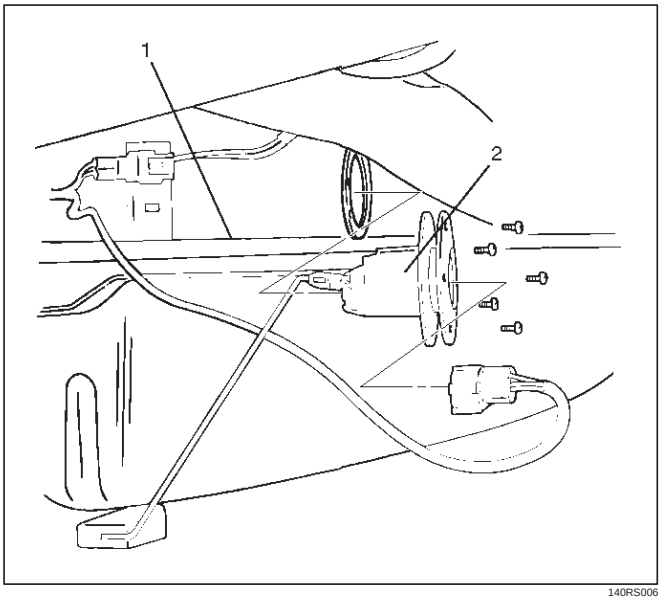

140RS006

Installation

To install, follow the removal steps in the reverse order.

Multi Meter

Removal

1. Disconnect the battery ground cable.
2. Remove two caps, two screws and disconnect the connector to remove the multi meter(1).

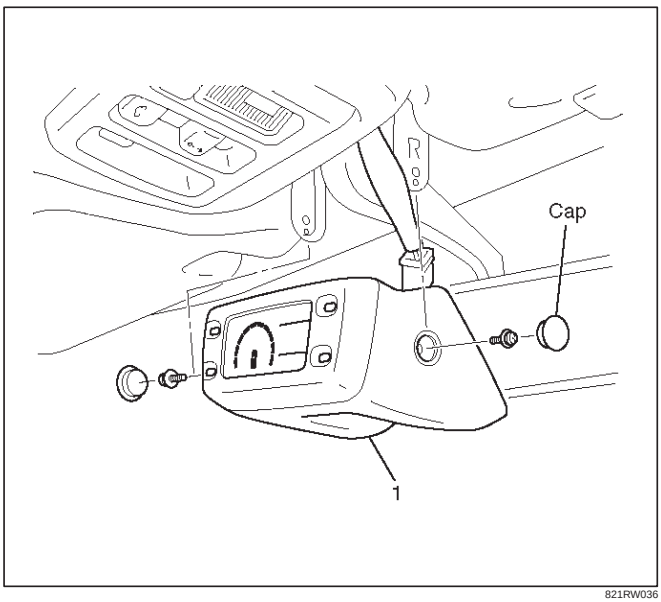

821RW036

Installation

To install, follow the removal steps in the reverse order.

Ambient Sensor

Removal

1. Disconnect the battery ground cable.
2. Disconnect the connector and remove the nut to remove the ambient sensor(1).

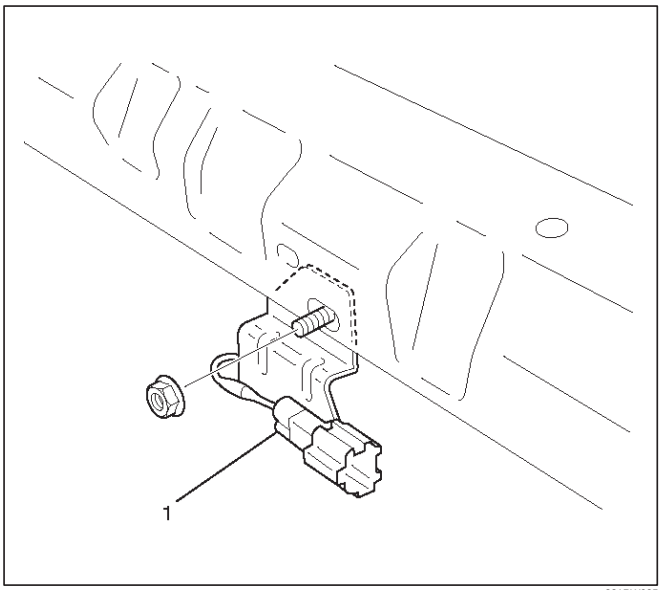

821RW035

Installation

To install, follow the removal steps in the reverse order.

Main Data and Specifications

Torque Specifications

Application	N·m	kg·m	Lb Ft	Lb In
Vehicle Speed Sensor Fixing	27	2.8	20	—

BODY AND ACCESSORIES

BODY STRUCTURE

CONTENTS

Service Precaution 8F–3
Frame 8F–3
General Description 8F–3
Frame Dimensions (L W B) 8F–4
Frame Dimensions (S W B) 8F–5
General Description 8F–6
Front Bumper 8F–6
Parts Location 8F–6
Removal 8F–7
Installation 8F–7
Front Bumper Slider Bracket 8F–7
Removal 8F–7
Installation 8F–7
Rear Bumper 8F–8
Parts Location 8F–8
Removal 8F–8
Installation 8F–9
Parts Location (W/Rear Combination Light and License Light) 8F–10
Removal 8F–10
Installation 8F–11
Rear Bumper Slider 8F–12
Removal 8F–12
Installation 8F–12
General Description 8F–13
Cowl Cover 8F–13
Parts Location 8F–13
Removal 8F–13
Installation 8F–14
Engine Hood 8F–14
Removal 8F–14
Installation 8F–14
Air Bulge 8F–15
Parts Location 8F–15
Removal 8F–15
Installation 8F–15
Engine Hood Hinge 8F–16
Parts Location 8F–16
Removal 8F–16
Installation 8F–16
Engine Hood Lock 8F–17
Parts Location 8F–17
Removal 8F–17
Installation 8F–18
Radiator Grille And Front End Lower Panel . 8F–18
Parts Location 8F–18
Removal 8F–18
Installation 8F–19
Front Fender Panel 8F–20
Parts Location 8F–20
Removal 8F–20
Installation 8F–21
Body Mounting 8F–22
Parts Location 8F–22
Removal (No.1 – No. 2) 8F–22
Removal (No. 3 — No. 6) 8F–23
Installation 8F–24
General Description 8F–25
Body Dimension 8F–26
Instrument Panel Assembly 8F–46
Parts Location 8F–46
Removal 8F–47
Installation 8F–51
Cross Beam Assembly 8F–52
Parts Location 8F–52
Removal 8F–52
Installation 8F–53
Front Door Assembly 8F–54
Parts Location 8F–54
Removal 8F–54
Installation 8F–54
Rear Door Assembly 8F–55
Parts Location 8F–55
Removal 8F–55
Installation 8F–56
Door Strikers 8F–56
Adjustment 8F–56
Door Check Arm Assembly (Front & Rear) . . 8F–57
Parts Location 8F–57
Removal 8F–57
Installation 8F–58
Front Window Regulator, Glass And Glass Run 8F–58
Parts Location 8F–58
Removal 8F–58
Installation 8F–60
Rear Window Regulator And Glass 8F–61
Parts Location 8F–61

Removal 8F–61
Installation 8F–62
Rear Door Fixed Glass And Glass Run 8F–63
Parts Location 8F–63
Removal 8F–63
Installation 8F–64
Front Door Sash Moulding 8F–65
Parts Location 8F–65
Removal 8F–65
Installation 8F–65
Rear Door Moulding 8F–66
Parts Location 8F–66
Removal 8F–66
Installation 8F–66
Front Door Waist Seal 8F–67
Parts Location 8F–67
Removal 8F–67
Installation 8F–67
Rear Door Waist Seal 8F–68
Parts Location 8F–68
Removal and Installation 8F–68
Front Door Weatherstrip 8F–69
Parts Location 8F–69
Removal 8F–69
Installation 8F–70
Rear Door Weatherstrip 8F–71
Parts Location 8F–71
Removal and Installation 8F–71
Front Door Seal Finisher 8F–72
Parts Location 8F–72
Removal 8F–72
Installation 8F–72
Rear Door Seal Finisher 8F–73
Parts Location 8F–73
Removal 8F–73
Installation 8F–73
Tailgate Assembly (LH) 8F–74
Parts Location 8F–74
Removal 8F–74
Installation 8F–75
Tailgate Assembly (RH) 8F–76
Parts Location 8F–76
Removal 8F–76
Installation 8F–77
Tailgate Strikers 8F–78
Adjustment 8F–78
Tailgate Stopper Assembly 8F–78
Parts Location 8F–78
Removal 8F–78
Installation 8F–78
Tailgate Dove-Tail 8F–79
Parts Location 8F–79
Removal 8F–79
Installation 8F–79
Tailgate Dove-Tail Striker 8F–80
Adjustment 8F–80
Tailgate Frame Cover (LH) 8F–81
Parts Location 8F–81
Removal 8F–81
Installation 8F–81
Tailgate Frame Cover (RH) 8F–82
Removal 8F–82
Installation 8F–82
Tailgate Sash Trim Cover 8F–83
Parts Location 8F–83
Removal 8F–83
Installation 8F–83
Tailgate Outer Weatherstrip 8F–84
Parts Location 8F–84
Removal 8F–84
Installation 8F–84
Tailgate Center Weatherstrip 8F–85
Parts Location 8F–85
Removal 8F–85
Installation 8F–85
Tailgate Main Weatherstrip 8F–86
Parts Location 8F–86
Removal 8F–86
Installation 8F–86
Spare Tire Carrier 8F–87
Parts Location 8F–87
Removal 8F–87
Installation 8F–87
Headlining 8F–88
Parts Location 8F–88
Removal 8F–88
Installation 8F–89
Rear Air Deflector 8F–90
Parts Location 8F–90
Removal 8F–90
Installation 8F–90
Roof Moulding 8F–92
Parts Location 8F–92
Removal 8F–92
Installation 8F–93
Windshield 8F–94
Parts Location 8F–94
Removal 8F–94
Installation 8F–95
Rear Quarter Side Glass 8F–99
Parts Location 8F–99
Removal 8F–99
Installation 8F–100
Tailgate Glass 8F–102

Parts Location 8F–102
Removal 8F–102
Installation 8F–103
Main Data and Specifications 8F–104
Special Tools 8F–115

Service Precaution

WARNING: THIS VEHICLE HAS A SUPPLEMENTAL RESTRAINT SYSTEM (SRS). REFER TO THE SRS COMPONENT AND WIRING LOCATION VIEW IN ORDER TO DETERMINE WHETHER YOU ARE PERFORMING SERVICE ON OR NEAR THE SRS COMPONENTS OR THE SRS WIRING. WHEN YOU ARE PERFORMING SERVICE ON OR NEAR THE SRS COMPONENTS OR THE SRS WIRING, REFER TO THE SRS SERVICE INFORMATION. FAILURE TO FOLLOW WARNINGS COULD RESULT IN POSSIBLE AIR BAG DEPLOYMENT, PERSONAL INJURY, OR OTHERWISE UNNEEDED SRS SYSTEM REPAIRS.

CAUTION: Always use the correct fastener in the proper location. When you replace a fastener, use ONLY the exact part number for that application. ISUZU will call out those fasteners that require a replacement after removal. ISUZU will also call out the fasteners that require thread lockers or thread sealant. UNLESS OTHERWISE SPECIFIED, do not use supplemental coatings (Paints, greases, or other corrosion inhibitors) on threaded fasteners or fastener joint interfaces. Generally, such coatings adversely affect the fastener torque and the joint clamping force, and may damage the fastener. When you install fasteners, use the correct tightening sequence and specifications. Following these instructions can help you avoid damage to parts and systems.

Frame

General Description

Proper frame alignment is important to assure normal vehicle life and performance of many other parts of the vehicle. If the vehicle has been involved in a fire, collision or has been overloaded, it is necessary to check the frame alignment.

Frame Dimensions (L W B)

This illustration is based on the gasoline engine and A/T model.

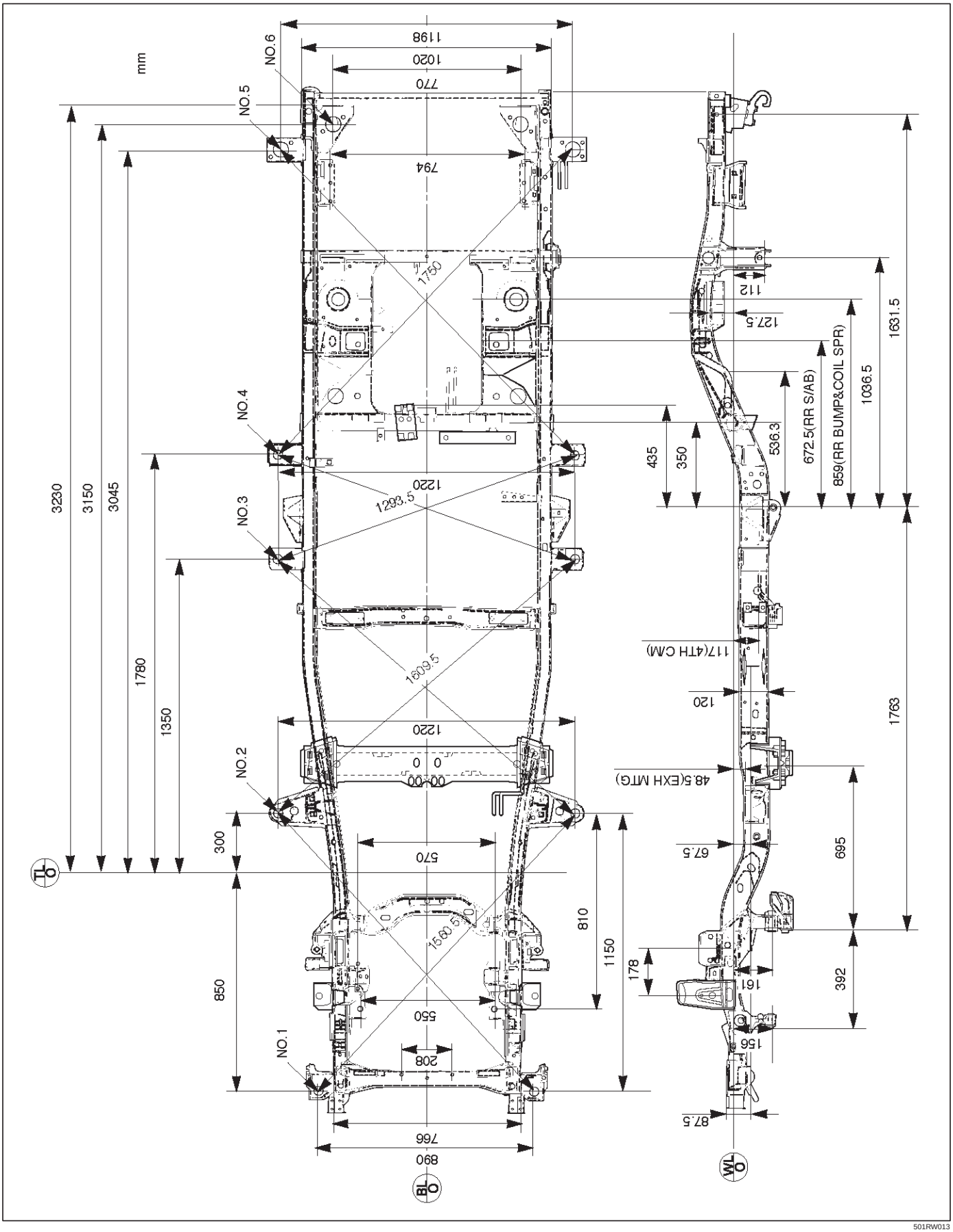

501RW013

Frame Dimensions (S W B)

This illustration is based on the gasoline engine and A/T model.

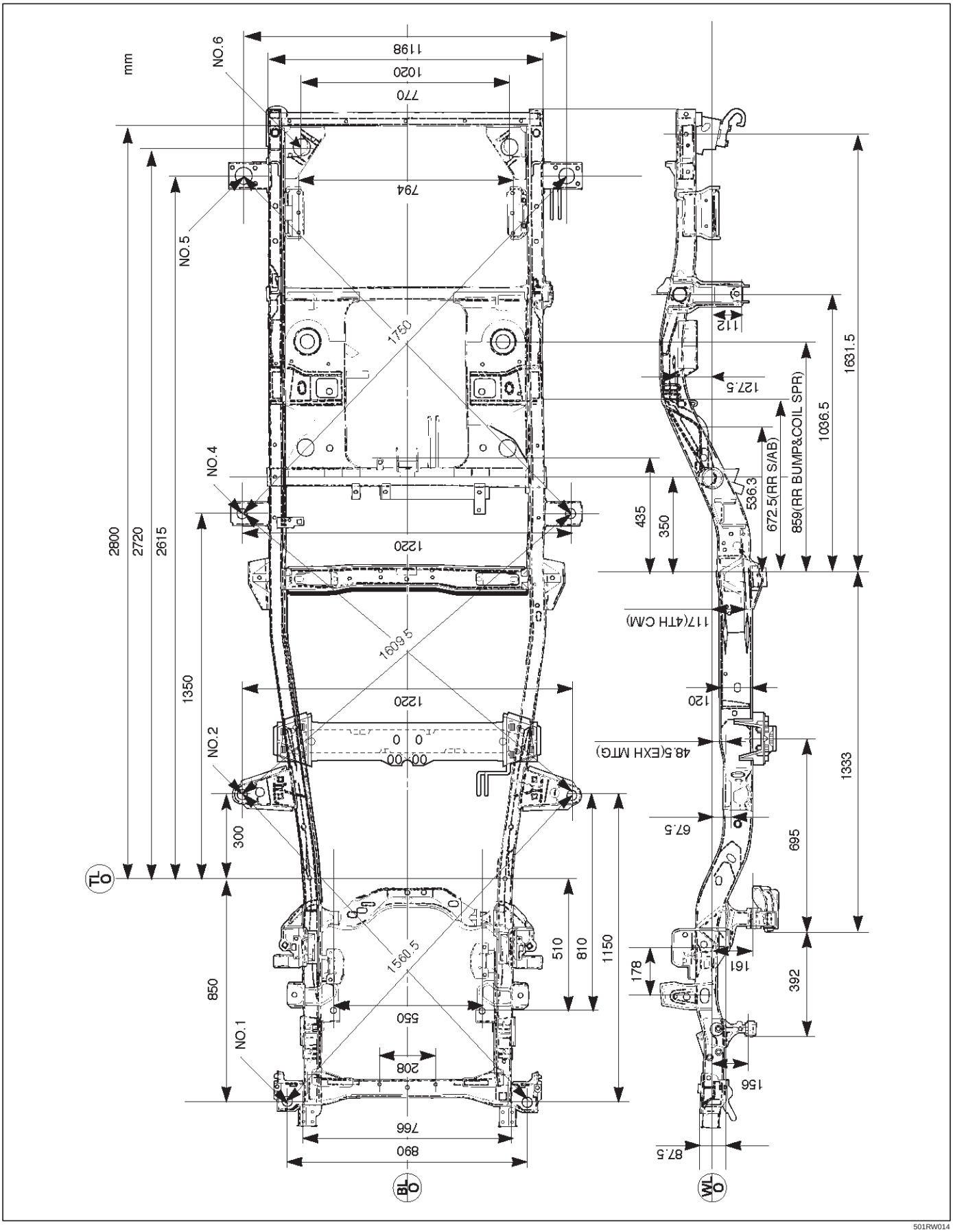

501RW014

General Description

This section describes how to remove and install front and rear bumpers. Each bumper is installed with two fixing bolts used on either side to fasten the backbar to the frame, a slider is used to fasten the bumper fascia to the fender panel. The bumpers can be removed by taking them out forward or backward after removing the two fixing bolts on either side.

Front Bumper

Parts Location

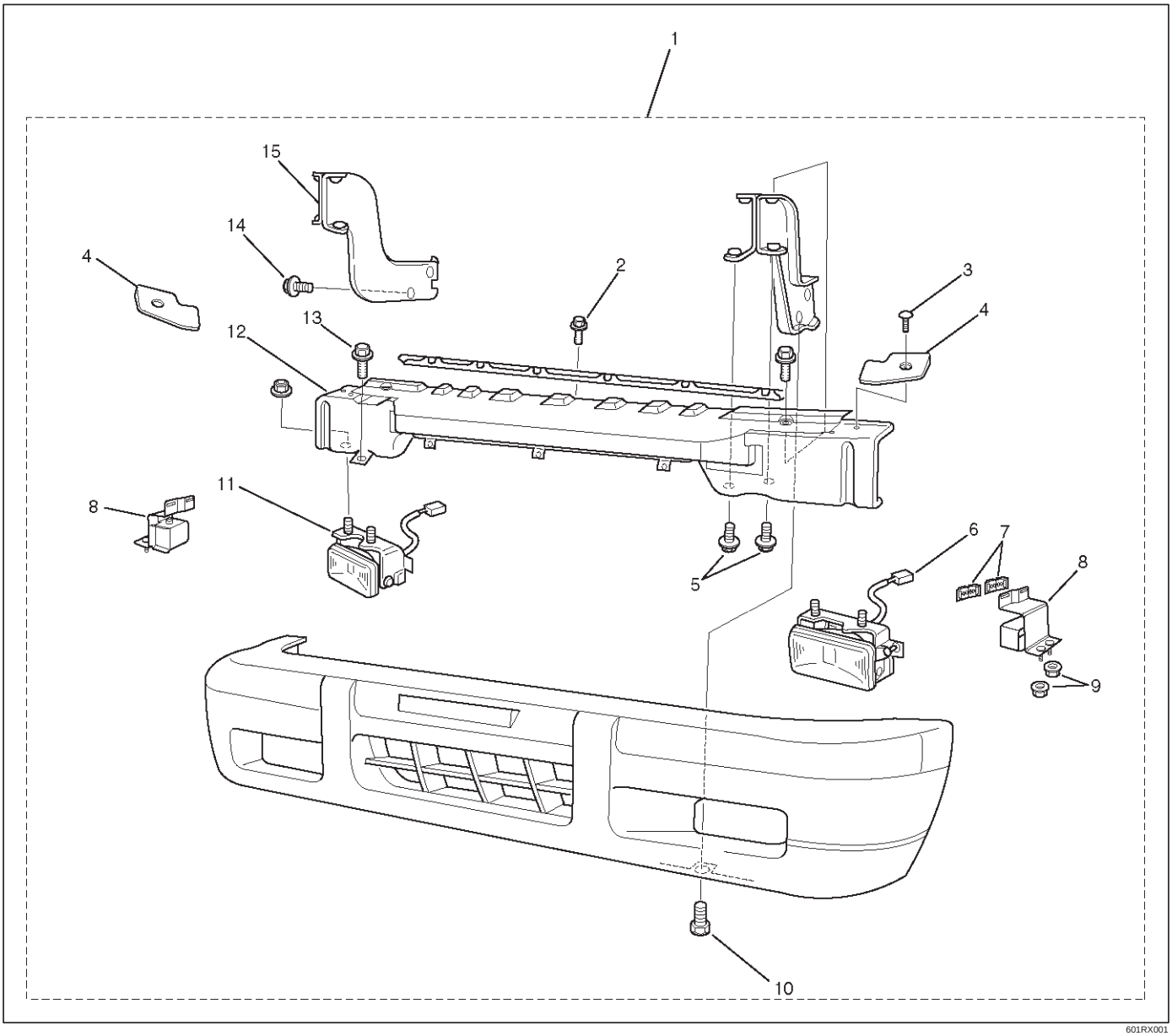

601RX001

Legend

(1) Front Bumper Assembly
(2) Front Bumper Retainer Bolt
(3) Support Fixing Clip
(4) Bumper Spacer Support
(5) Back Bar Fixing Bolt
(6) Front Fog Light Connector
(7) Front Bumper Slider Fixing Clip
(8) Front Bumper Slider
(9) Front Bumper Slider Fixing Nut
(10) Bumper Fascia Lower Bolt
(11) Front Fog Light Assembly
(12) Reinforce Assembly
(13) Reinforce Lower Bolt
(14) Front Bumper Fixing Bolt
(15) Back Bar

Removal

1. Disconnect battery ground cable.
2. Remove front fog light connector.
3. Remove front bumper assembly fixing bolt.
   - Remove the two bolts from both sides of the front bumper.

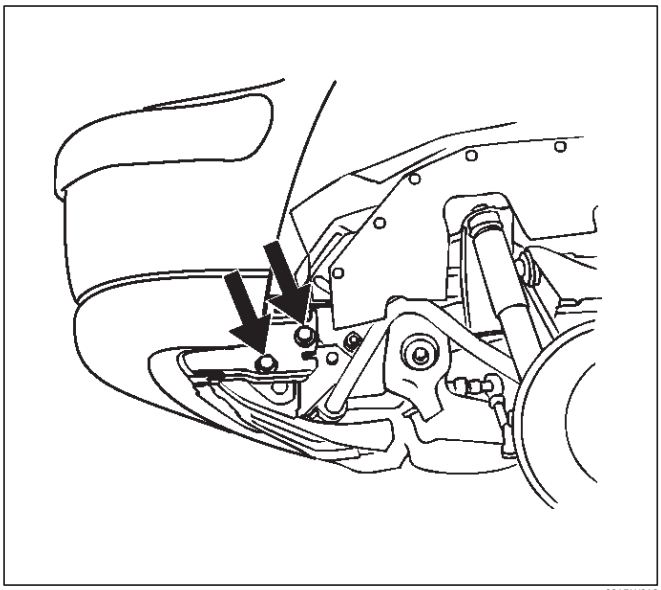

601RW010

4. Remove front bumper assembly.
5. Remove bumper fascia lower bolts.
6. Remove front bumper retainer.
7. Remove reinforce lower bolts.
   - Loosen the five bolts and release claws.
8. Remove reinforce assembly.
9. Remove backbar fixing bolts.
   - Remove the four bolts at each backbar.
10. Remove front fog light assembly.
11. Remove the front bumper slider(1).
    - Remove the two clips(4) and the two nuts(3), and release the claw from the washer(2).

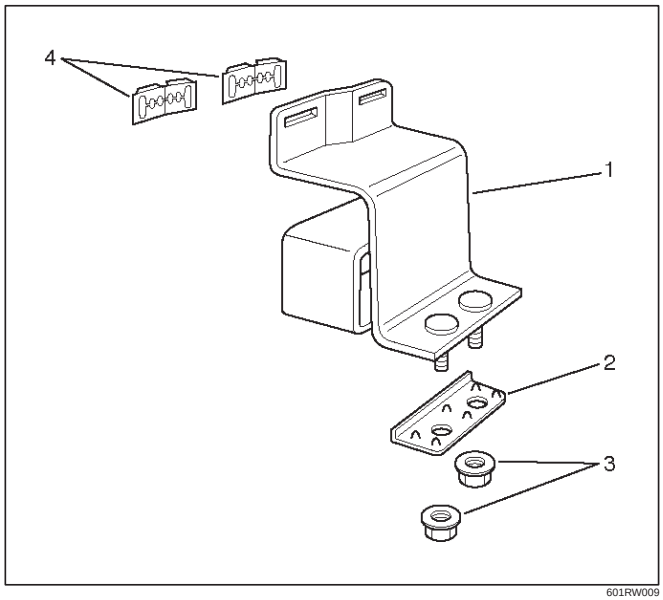

601RW009

Installation

To install, follow the removal steps in reverse order noting the following points:

1. Tighten the front bumper assembly fixing bolts to the specified torque.

   Torque: 132 N•m (13.5kg·m/98 lb ft)

Front Bumper Slider Bracket

Removal

1. Disconnect battery ground cable.
2. Remove the Front bumper.
   - Refer to Front Bumper in this section.
3. Remove the three nuts(1) and draw out the slider bracket(2).

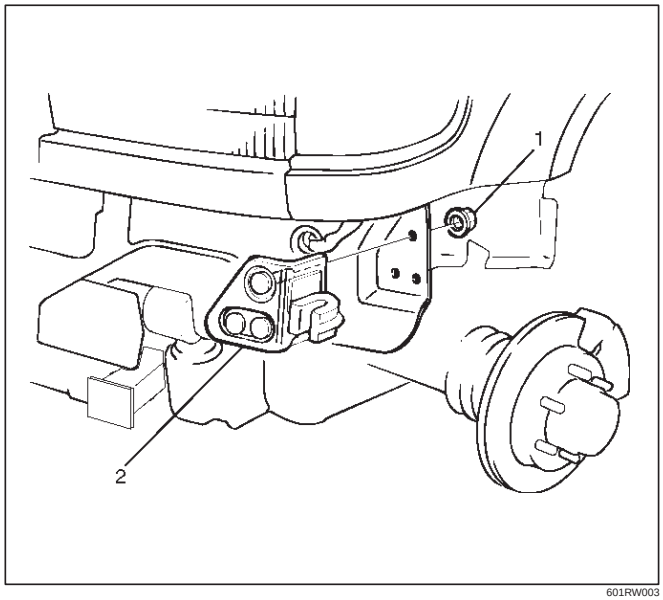

601RW003

Installation

To install, follow the removal steps in reverse order.

Rear Bumper

Parts Location

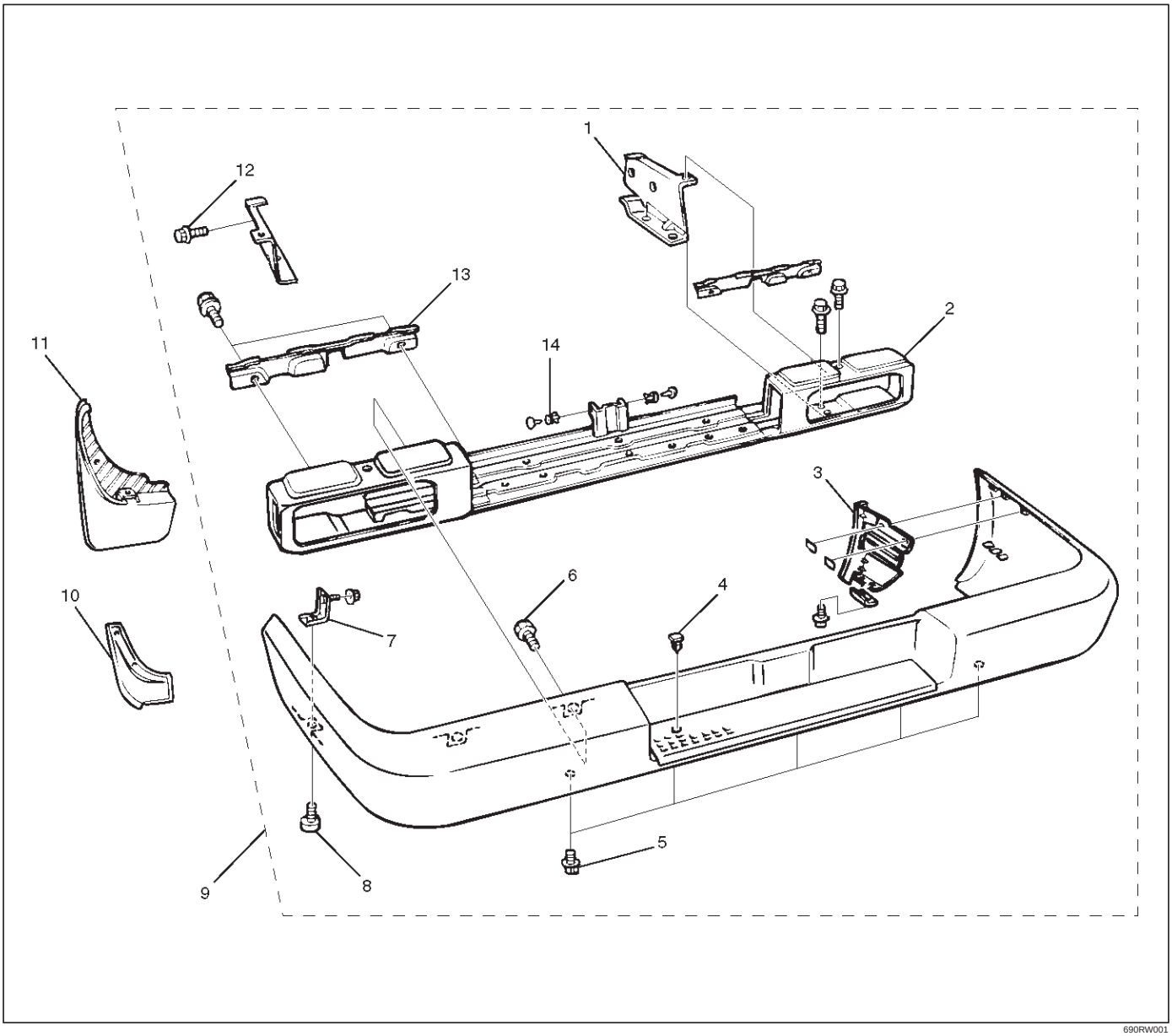

690RW001

Legend

(1) Back Bars
(2) Reinforce Assembly
(3) Rear Bumper Slider Brackets
(4) Rear Step Clips
(5) Reinforce Lower Screws
(6) Reinforce Upper Bolts
(7) Rear Bumper Fascia Brackets
(8) Rear Bumper Fascia Bracket Screws
(9) Rear Bumper Assembly
(10) Rear Bumper Side Covers
(11) Mud Flaps
(12) Rear Bumper Assembly Fixing Bolts
(13) Rear Bumper Retainers
(14) Clips

Removal

1. Remove rear bumper side covers.
2. Remove mud flaps.
   - Remove three screws.
3. Remove bumper fascia bracket screws.

4. Remove rear bumper assembly fixing bolts.
   - Remove two bolts from each side.

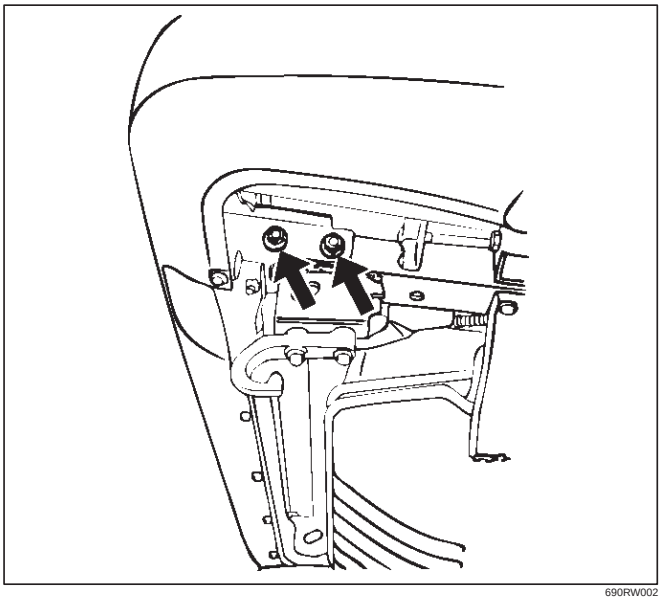

690RW002

5. Remove rear bumper assembly.
6. Remove rear bumper retainers.
7. Remove reinforce upper bolts.
   - Remove the rear bumper retainer from each side, and then remove two upper bolts.
8. Remove reinforce lower screws.
9. Remove clips.
10. Remove rear step clips.
11. Remove reinforce assembly.
    - Pull out both ends of the bumper fascia and take out the reinforce assembly.
12. Remove backbars.
    - Remove the three bolts from each backbar.
13. Remove rear bumper slider brackets(4).
    - Remove the two clips(1) and two screws(3), and then remove claw caught in the washer(2).

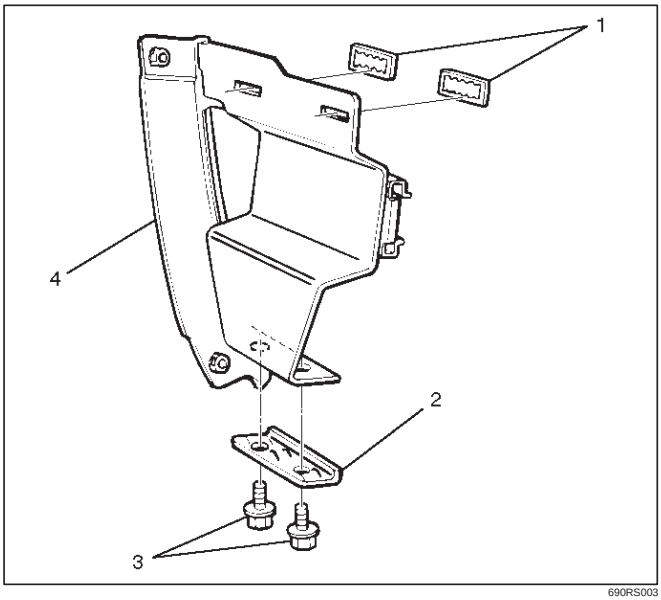

690RS003

14. Remove bumper fascia brackets.
    - Remove the fixing nut on the back side of the fender panel.

Installation

To install, follow the removal steps in reverse order noting the following points:

1. Tighten the rear bumper assembly fixing bolts to the specified torque.

   Torque: 132 N•m (13.5kg·m/98 lb ft)

2. Apply chassis grease to the slider and the slider bracket moving surface.

Parts Location (W/Rear Combination Light and License Light)

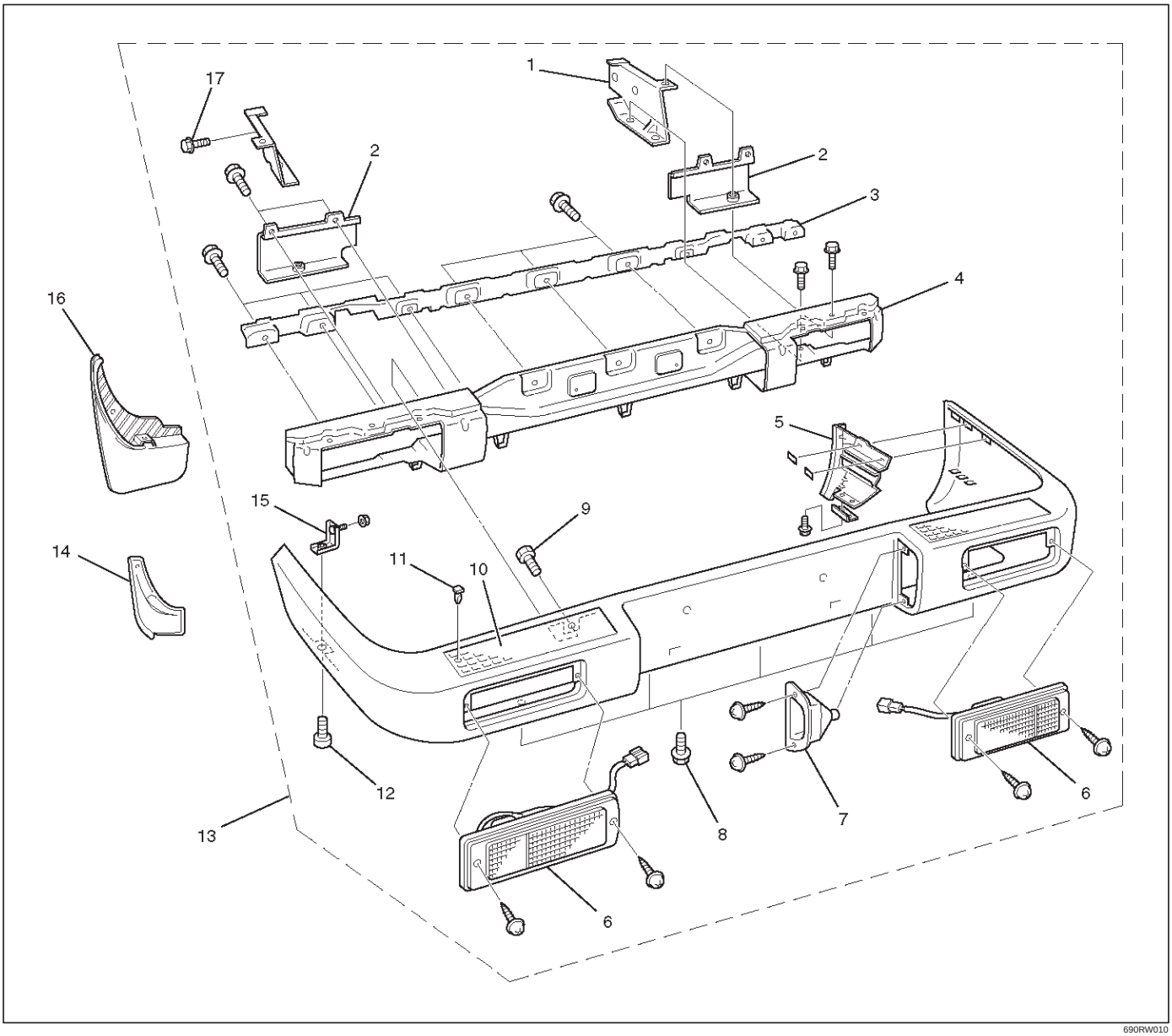

690RW010

Legend

(1) Back Bar
(2) Rear Combination Light Back Plate
(3) Rear Bumper Retainer
(4) Reinforce Assembly
(5) Rear Bumper Slider Brackets
(6) Rear Combination Light Assembly
(7) License Light
(8) Reinforce Lower Screws
(9) Reinforce Upper Bolts
(10) Rear Step
(11) Rear Step Clips
(12) Rear Bumper Fascia Bracket Screws
(13) Rear Bumper Assembly
(14) Rear Bumper Side Covers
(15) Rear Bumper Fascia Brackets
(16) Mud Flaps
(17) Rear Bumper Assembly Fixing Bolts

Removal

1. Disconnect battery ground cable.
2. Remove rear bumper side covers.
3. Remove mud flaps.
   - Remove three screws.
4. Remove rear bumper fascia bracket screws.

5. Remove rear bumper assembly fixing bolts.
   - Remove two bolts from each side.

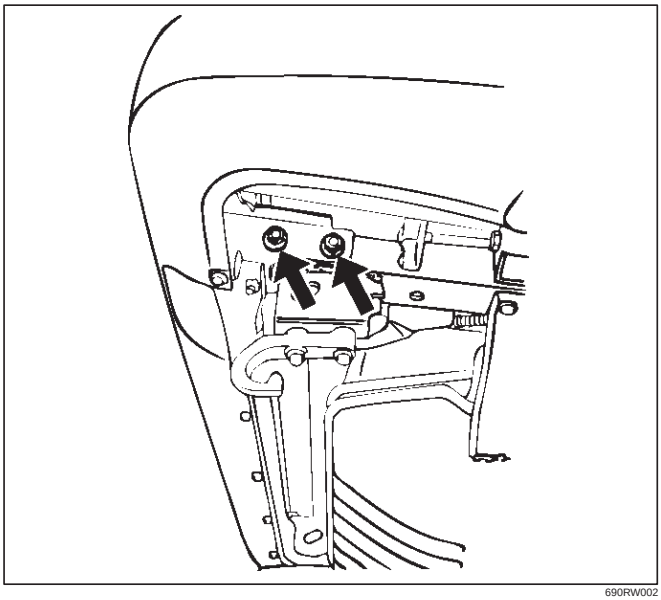

690RW002

6. Remove rear bumper assembly.
7. Remove rear bumper retainers.
8. Remove rear combination light back plate.
9. Remove reinforce upper bolts.
   - Remove the rear bumper retainer from each side, and then remove two upper bolts.
10. Remove reinforce lower screws.
11. Remove rear step clips.
12. Remove rear step.
13. Remove reinforce assembly.
    - Pull out both ends of the bumper fascia and take out the reinforce assembly.
14. Remove backbars.
    - Remove the three bolts from each backbar.
15. Remove rear bumper slider brackets(4).
    - Remove the two clips(1) and two screws(3), and then remove claw caught in the washer(2).

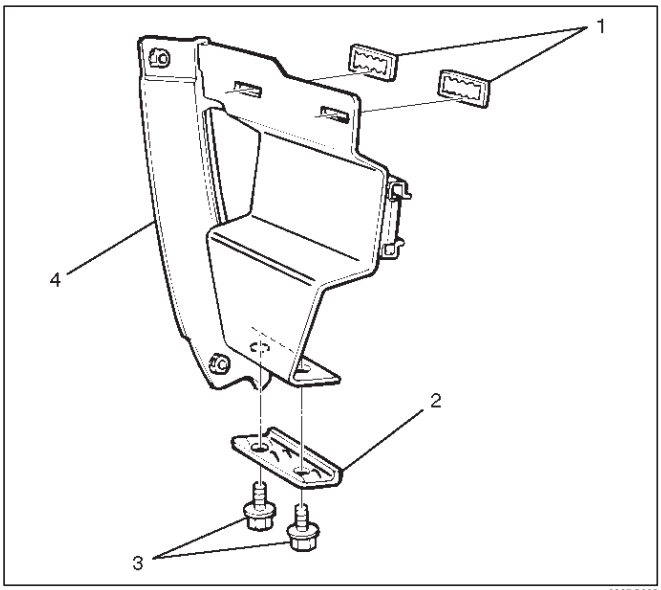

690RS003

16. Remove bumper fascia brackets.
    - Remove the fixing nut on the back side of the fender panel.
17. Remove rear combination light assembly.
18. Remove license light.

Installation

To install, follow the removal steps in reverse order noting the following points:

1. Tighten the rear bumper assembly fixing bolts to the specified torque.

   Torque: 132 N•m (13.5kg·m/98 lb ft)

2. Apply chassis grease to the slider and the slider bracket moving surface.

Rear Bumper Slider

Removal

1. Remove the rear bumper.
   - Refer to Rear Bumper removal in this section.
2. Remove the three bolts (2).
3. Remove rear bumper slider (1).

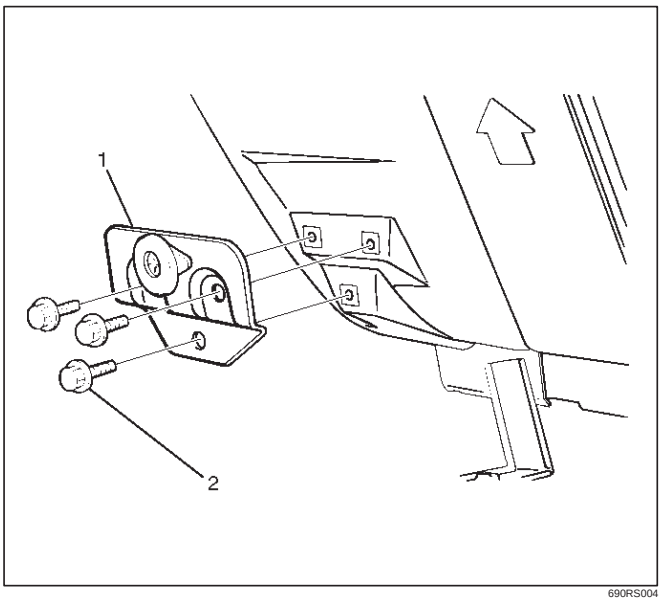

690RS004

Installation

To install, follow the removal steps in reverse order noting the following points:

1. Apply chassis grease to the slider and the slider bracket moving surface.

General Description

This section includes items of front end sheet metal that are attached by bolts, screws or clips and related accessory components.

Anti-corrosion materials have been applied to the interior surfaces of some metal panels to provide rust resistance. When servicing these panels, areas on which this material has been disturbed should be properly recoated with service-type anti-corrosion material.

Cowl Cover

Parts Location

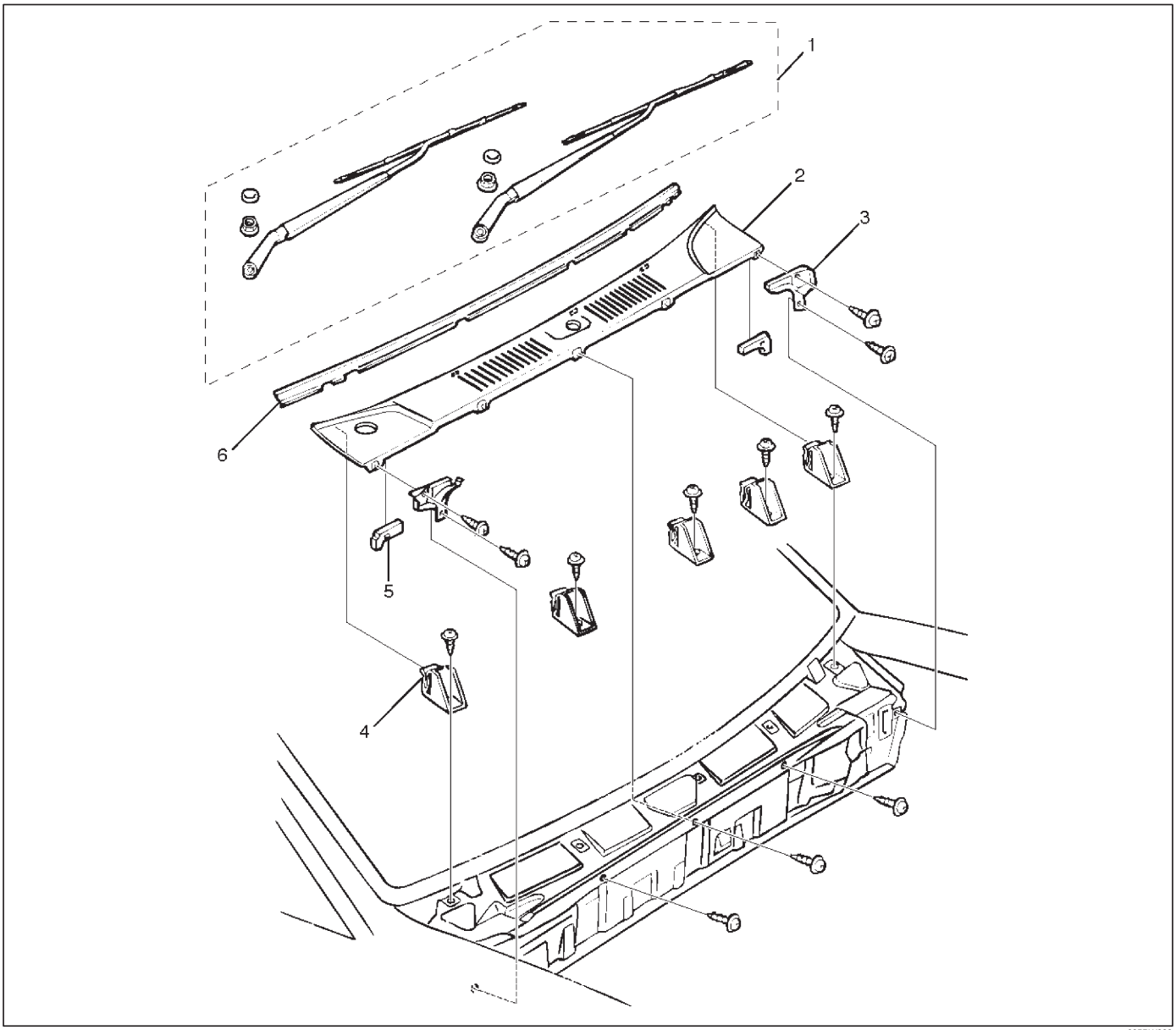

605RW009

Legend

(1) Front Wiper Arms
(2) Cowl Cover
(3) Cowl Cover Brackets
(4) Cowl Cover Stoppers
(5) Cowl Cover Seals
(6) Front Window Lower Molding

Removal

1. Open the hood.
2. Support the hood.
3. Remove front wiper arms.
   - Refer to Windshield Wiper Arm/Blade in Wiper/Washer System section.

4. Remove cowl cover brackets.
   - Disconnect two screws each side.
5. Remove cowl cover.
   - Disconnect three screws.
6. Remove cowl cover seals.
7. Remove front window lower molding.
8. Remove cowl cover stoppers.

Installation

To install, follow the removal steps in reverse order.

Engine Hood

Removal

1. Open the hood.
2. Support the hood.
3. Remove windowshield washer nozzle tube.

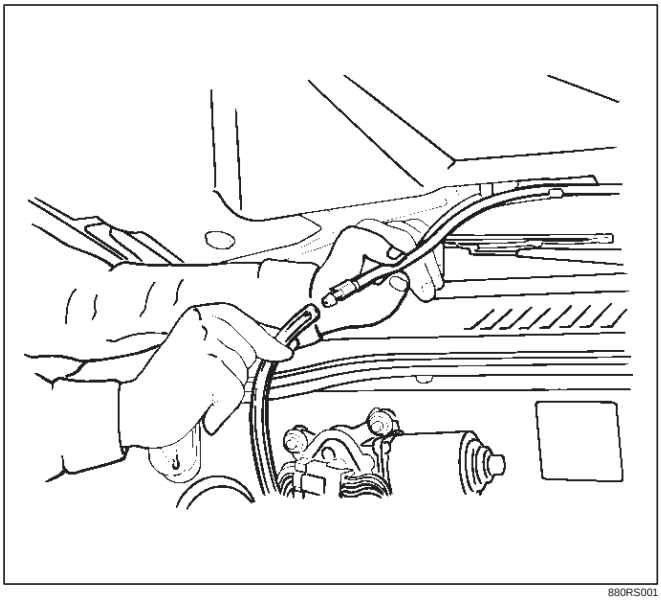

880RS001

4. Remove hood hinge bolts (3).
   - Before removing the hinges from the engine hood (1), scribe a mark (2) showing location of the hinges to facilitate installation in the original position.

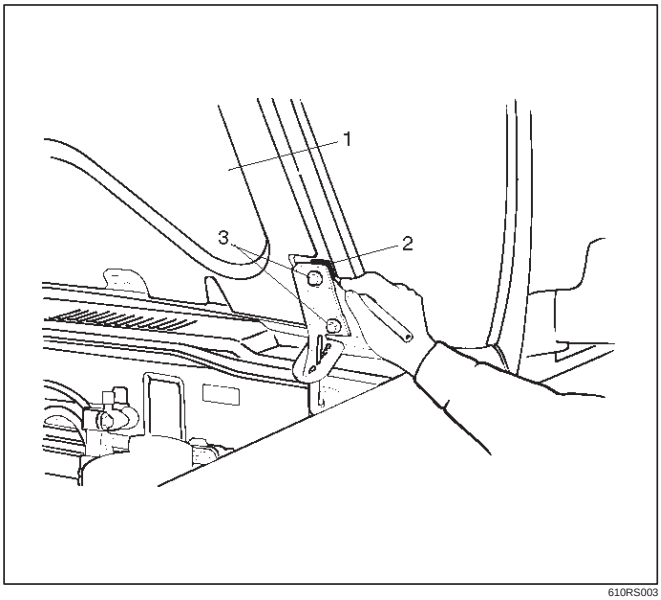

610RS003

5. Remove engine hood.

Installation

To install, follow the removal steps in the reverse order noting the following points:

1. Tighten the engine hood fixing bolts to the specified torque.

   Torque: 13 N•m (1.3kg·m/113 lb in)

2. Adjust the engine hood mounting gap with reference to Body Dimension in this section.
3. Check and see if the engine hood lock operates normally.

Air Bulge

Parts Location

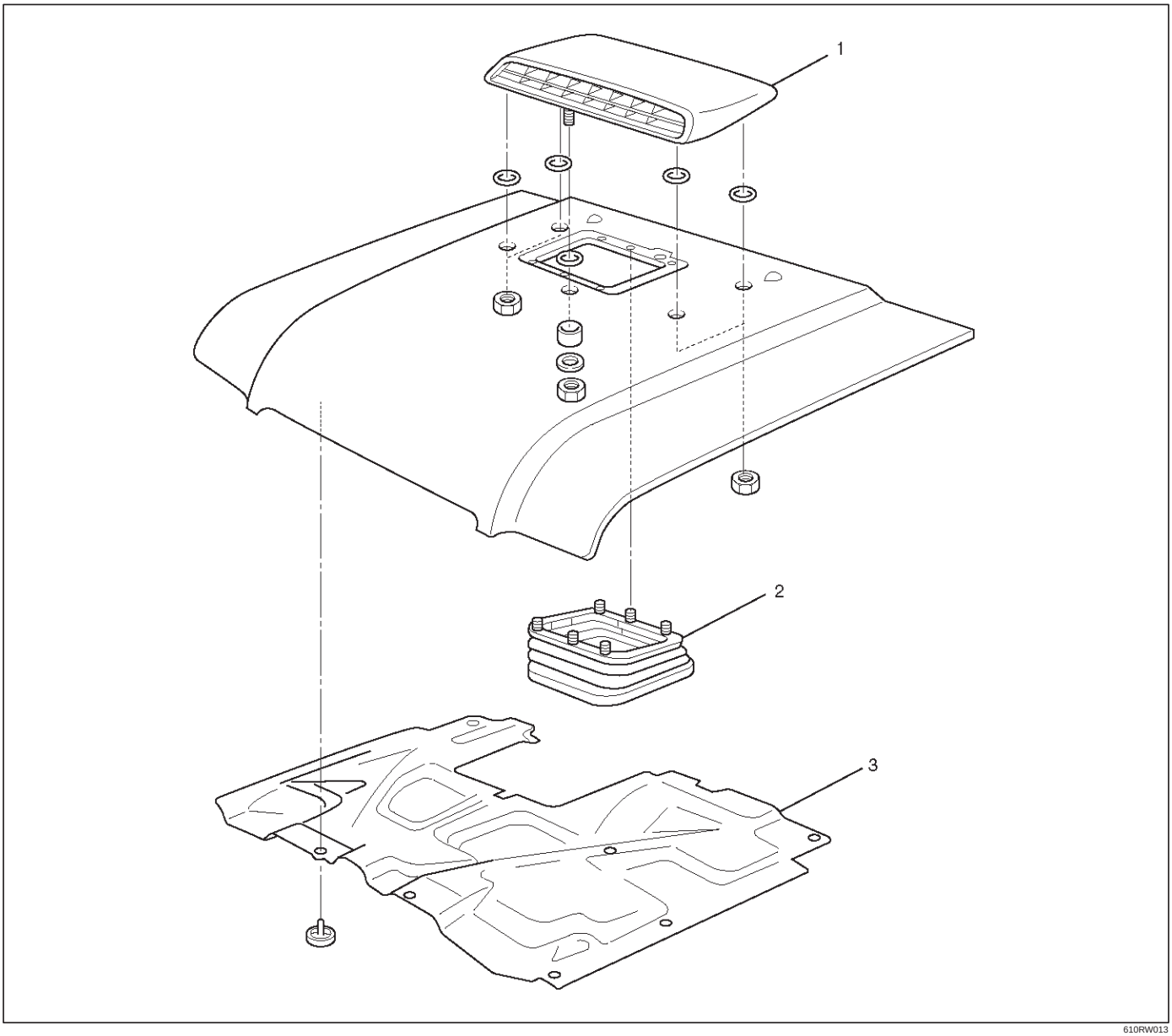

Legend

(1) Air Bulge
(2) Intercooler Seal
(3) Engine Hood Insulator

Removal

1. Remove engine food insulator.
   - Remove the sixteen clips.
2. Remove Intercooler seal.
   - Remove the six clips.
3. Remove air bulge.
   - Remove the six nuts.

Installation

To install, follow the removal steps in the reverse order noting the following points:

1. Tighten the air bulge fixing nuts to the specified torgue.

   Torque 8 N•m (0.8kg·m/ 69 lb in)

Engine Hood Hinge

Parts Location

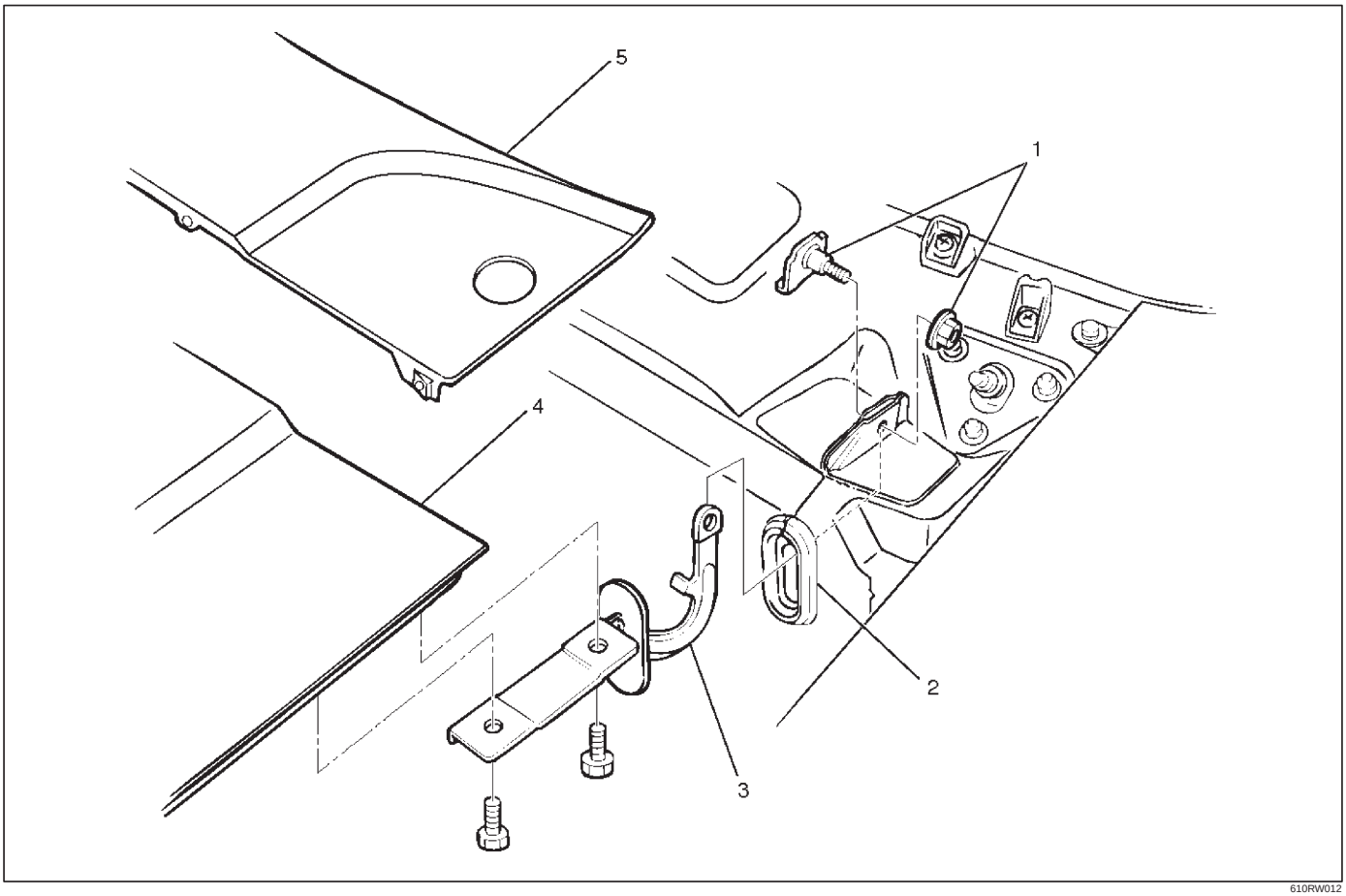

610RW012

Legend

(1) Hinge Fixing Bolts And Nuts
(2) Hood End Seal
(3) Engine Hood Hinge
(4) Engine Hood
(5) Cowl Cover

Removal

1. Remove cowl cover.
   - Refer to Cowl Cover in this section.
2. Remove engine hood.
   - Refer to Engine Hood in this section.
3. Remove hinge fixing bolt and nut.
4. Remove engine hood hinge.
5. Remove hood end seal.

Installation

To install, follow the removal steps in reverse order noting the following points:

1. Tighten the hood hinge fixing bolt and nut to the specified torque.

   Torque 13 N•m (1.3kg·m/113 lb in)

Engine Hood Lock

Parts Location

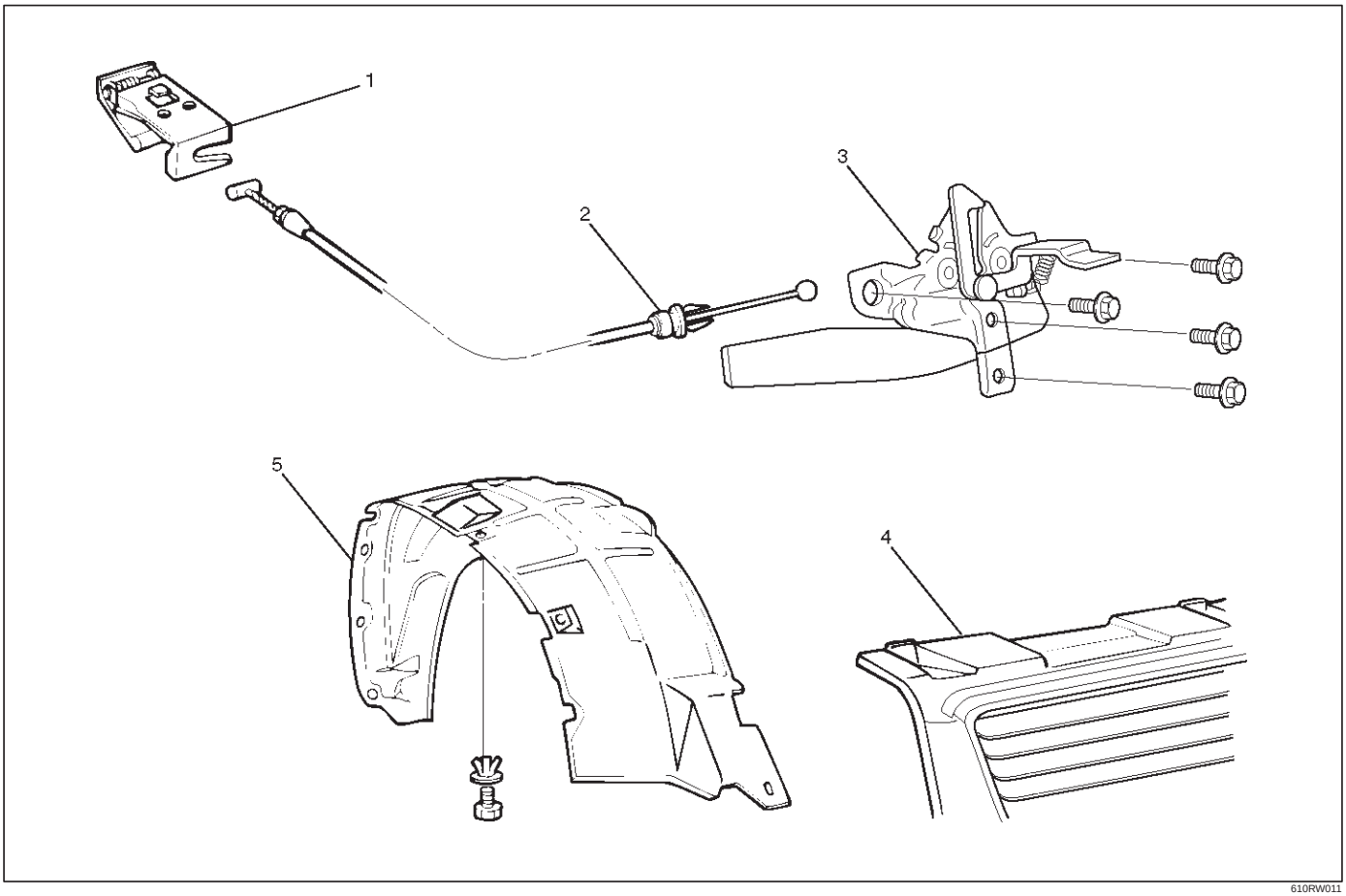

610RW011

Legend

(1) Hood Lock Control Lever
(2) Control Cable
(3) Engine Hood Lock Assembly
(4) Radiator Grille
(5) Inner Liner

Removal

1. Remove hood lock control lever.
2. Remove inner liner.
3. Remove control cable.
   - Remove the cable fixing clips from the body panel.
4. Remove radiator grille.
   - Refer to Radiator Grille And Front End Lower Panel in this section.
5. Remove engine hood lock assembly.
   - Apply setting marks (1) to the hood lock assembly and the body prior to removal.

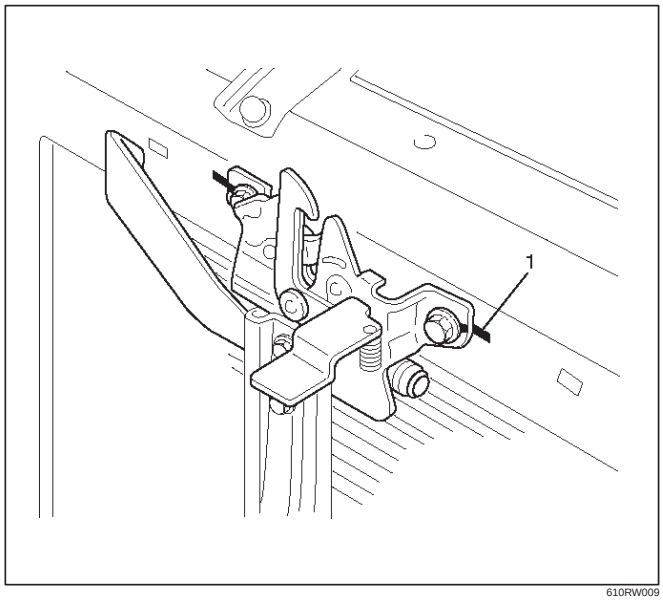

610RW009

Installation

To install, follow the removal steps in reverse order noting the following points:

1. Reroute the control cable to its original position, and check and see if the lock assembly and control lever work normally.
2. Tighten the hood lock assembly fixing bolts to the specified torque.

Torque : 10 N•m (1.0kg·m/87 lb in)

Radiator Grille And Front End Lower Panel

Parts Location

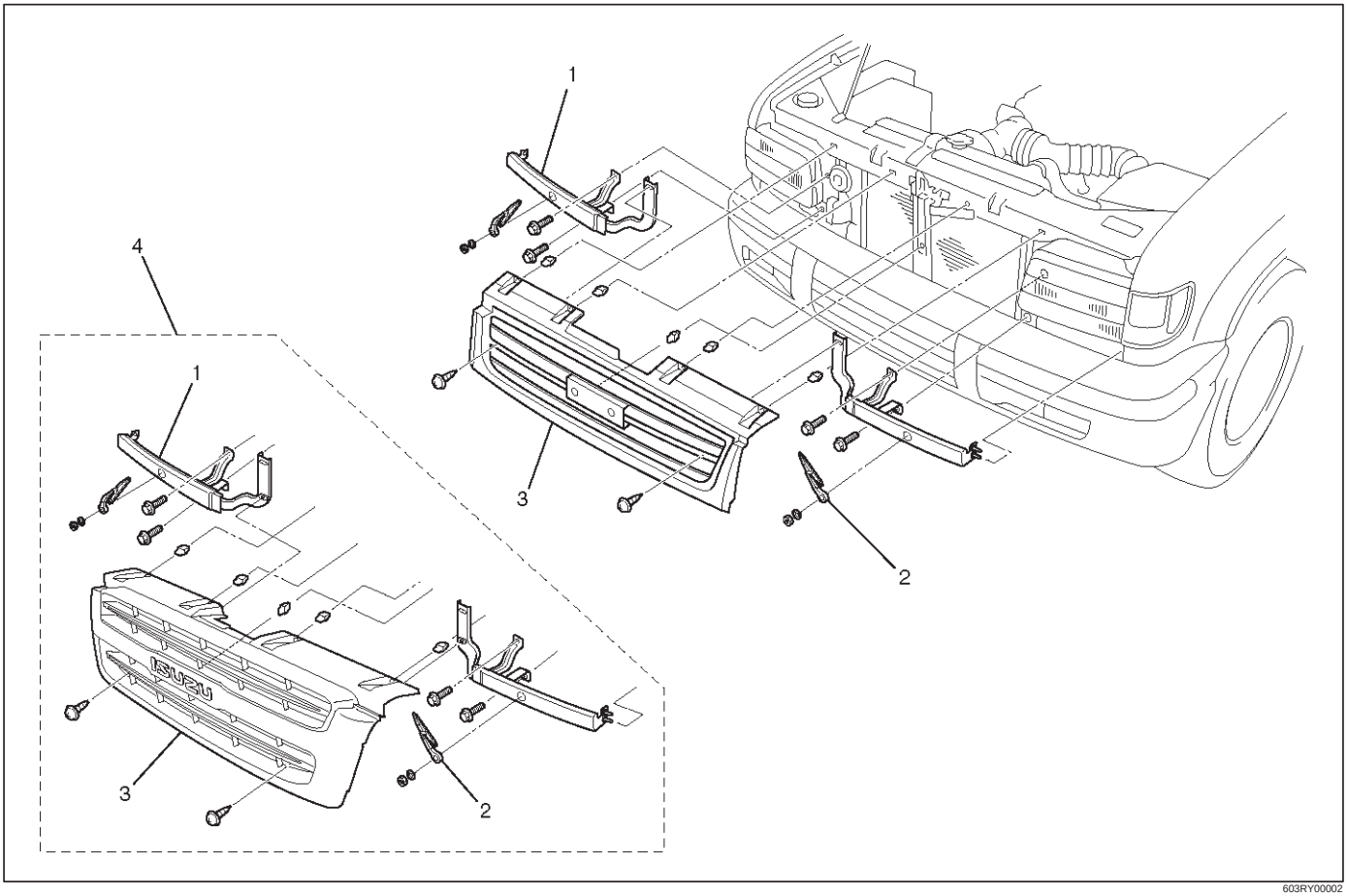

603RY00002

Legend

(1) Front End Lower Panel
(2) Head Light Wiper
(3) Radiator Grille
(4) For ISUZU Brand Vehicle Only

Removal

1. Open the hood.
2. Support the hood.
3. Remove headlight wiper.
   - Refer to Headlight Wiper Arm & Blade in Wiper/Washer System section.

4. Remove radiator grille.
   - Raise the clips (1) on the radiator grille and remove two screws.

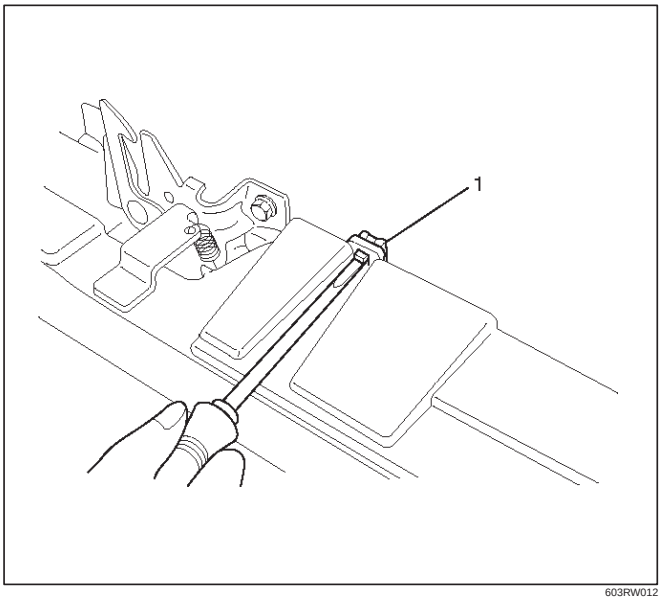

603RW012

5. Remove front end lower panel.
   - Remove two fixing bolts and remove the panel from the fender.

Installation

To install, follow the removal steps in reverse order, noting the following point.

1. Install the radiator grille clips remaining on the body side in the radiator grille, and then install the radiator grille on the body.

Front Fender Panel

Parts Location

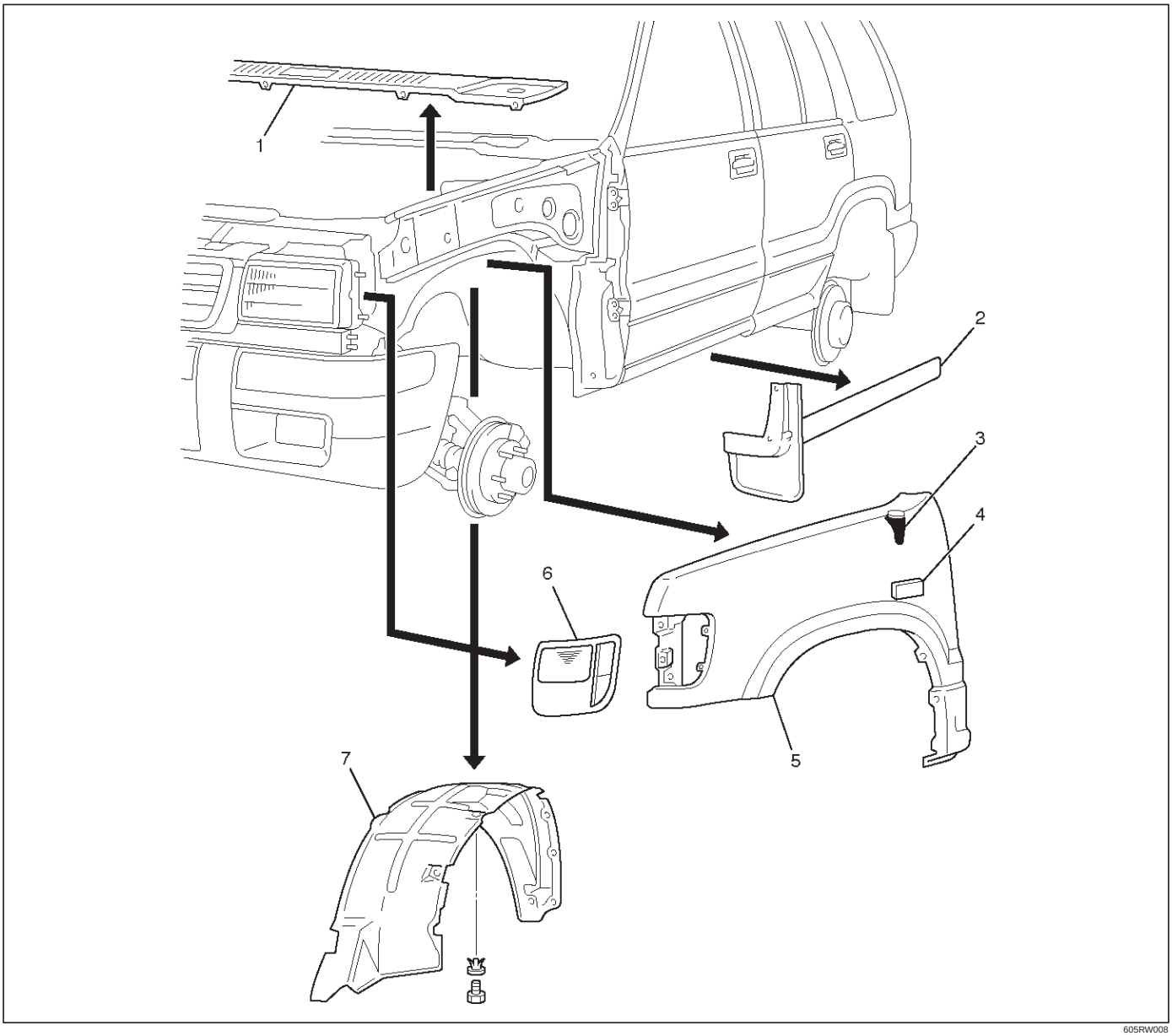

Legend

(1) Cowl Cover
(2) Front Mud Flap
(3) Antenna Bezel
(4) Side Turn Signal Light
(5) Front Fender Panel
(6) Front Combination Light Assembly
(7) Inner Liner

Removal

1. Open the hood.
2. Support the hood.
3. Disconnect the battery ground cable.
4. Remove cowl cover.
   - Refer to Cowl Cover in this section.
5. Remove front combination lamp assembly.
   - Disconnect fixing screw and connector.
6. Remove front mud flap.
   - Disconnect three fixing screws and four clips.
7. Remove inner liner.
8. Remove antenna bezel.
   - Refer to Antenna in Entertainment section.
9. Remove side turn signal light.
   - Refer to Side Turn Signal Light Bulb in Lighting System section.

10. Remove front fender panel.
    - Disconnect ten fixing bolts and two nuts.

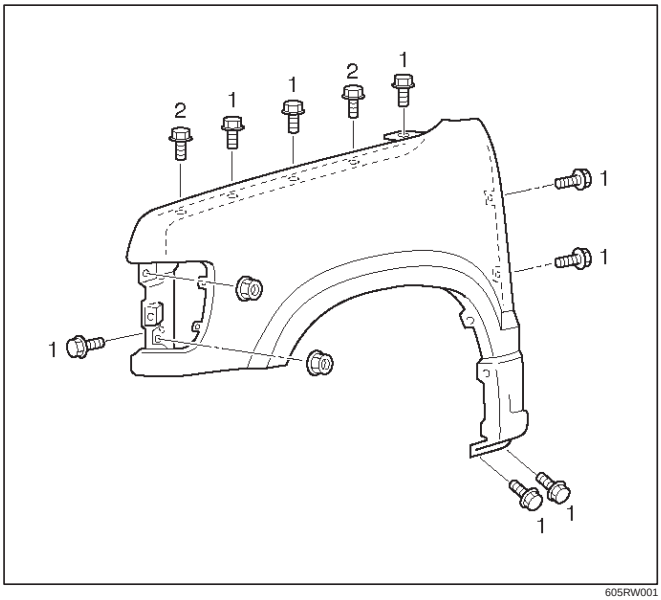

605RW001

Installation

To install, follow the removal steps in the reverse order noting the following points:

1. Tighten the front fender panel fixing bolts to the specified torque.

   (1) Torque : 9 N•m (0.9kg·m/78 lb in)

   (2) Torque : 7 N•m (0.7kg·m/61 lb in)

Body Mounting

Parts Location

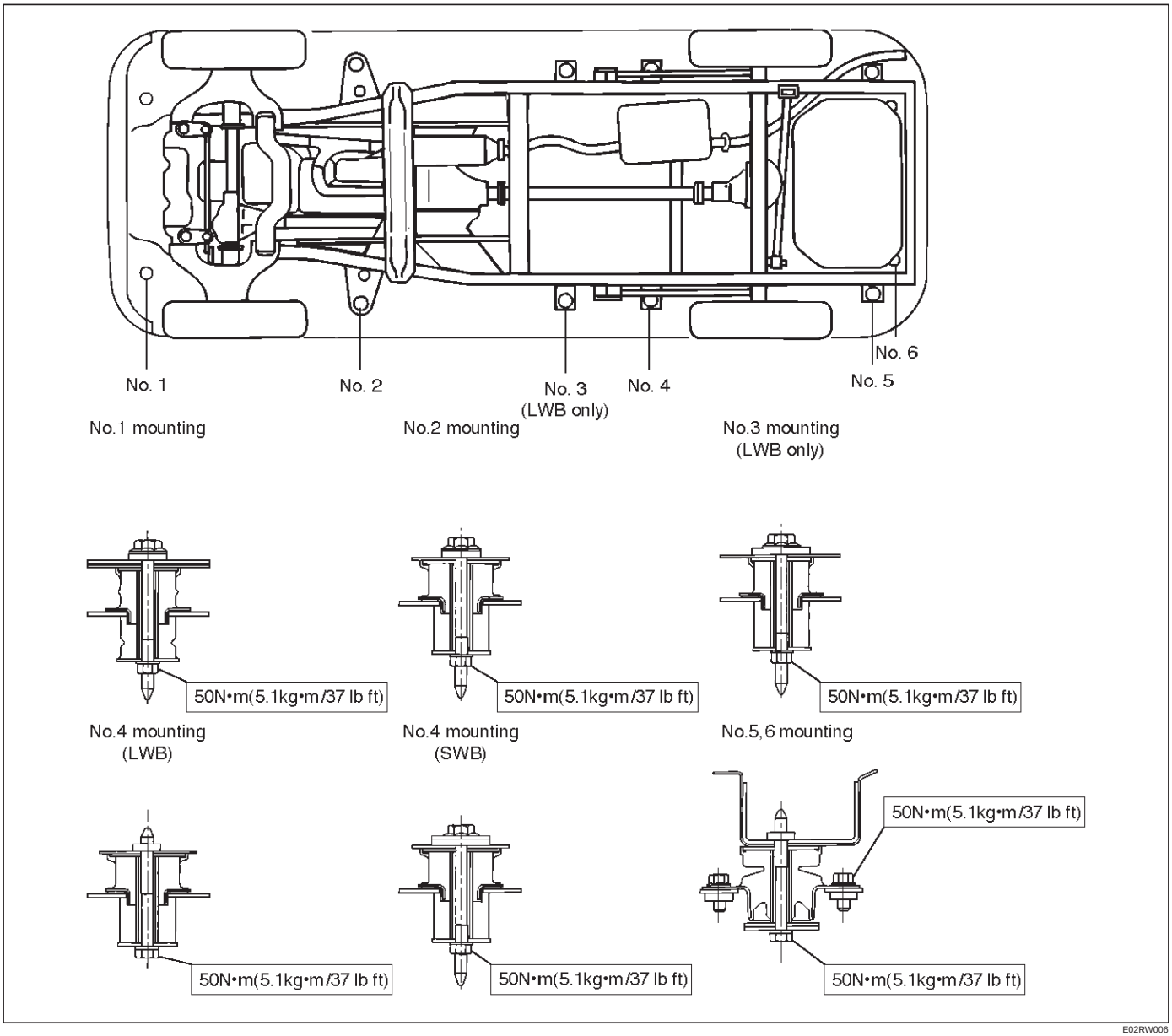

Removal (No.1 – No. 2)

1. Remove the front bumper.
2. Jack up the vehicle by the frame.
3. Support the front side sill and rear axle with stands.
   Further, support the front jack up point with a jack.

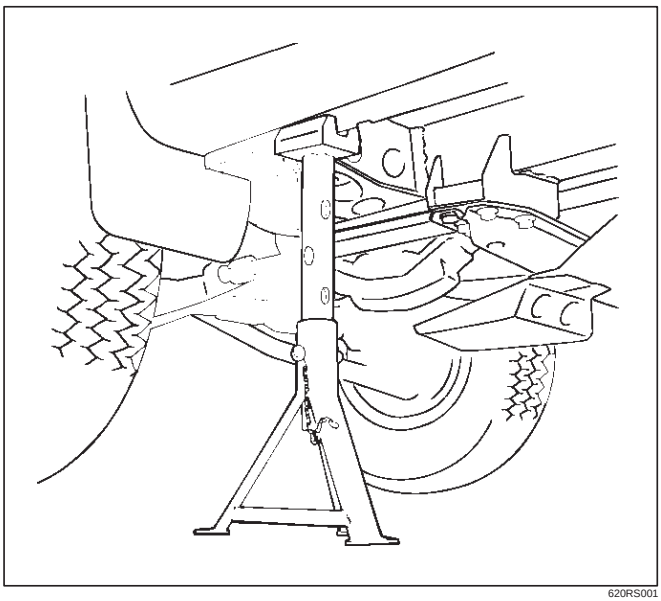

620RS001

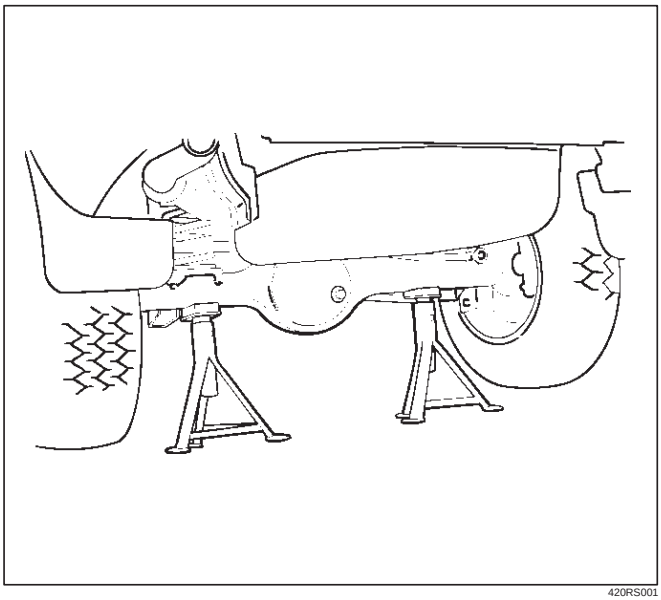

420RS001

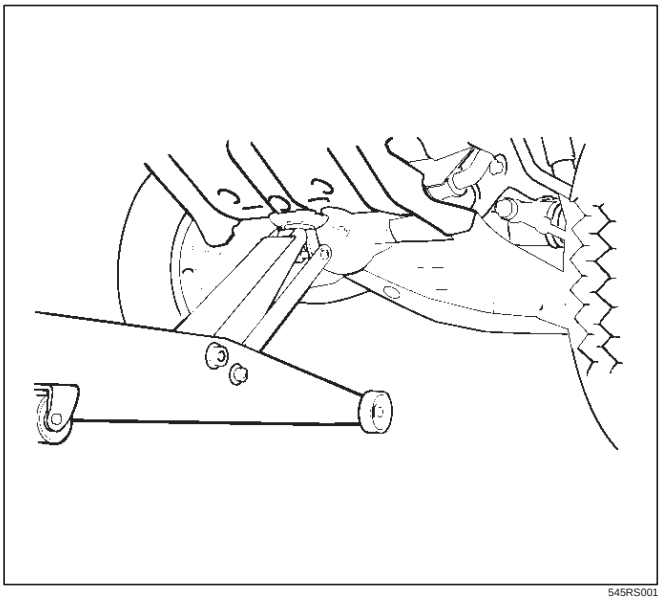

545RS001

4. Remove the mounting bolts (No. 1-4) on either side.
   - No. 1 – Hold in check not to turn from the inside of the front fender.
   - No. 2 – Remove the front door sill plate and dash side trim panel, turn over the floor carpet and hold the bolt in check not to turn.
   - No. 3 (LWB only)– Remove the rear door sill plate and center pillar lower trim cover, turn over the floor carpet and hold the bolt in check not to turn.
   - No. 4 (SWB)– Remove the luggage side trim cover, turn over the floor carpet and hold the bolt in chek not to turn.
   - No. 4 (LWB)– Remove the bolt from under the frame.
5. Loosen the mounting bolts (No. 5-6) on either side.
6. Remove the frame side mounting and washer.
7. Gently lower the jack supporting the front axle until the cab side mounting can be removed.
8. Remove the cab side mounting.
   - Be sure to use a splice bar around the mounting to be removed.

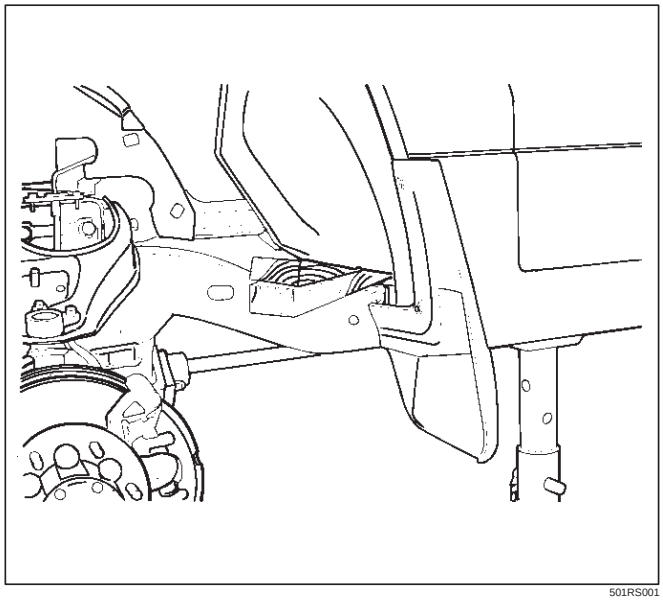

501RS001

Removal (No. 3 — No. 6)

1. Remove the rear bumper.
2. Jack up the vehicle by the frame.

3. Support the rear side sill and frame stands, and support the rear axle with a jack.

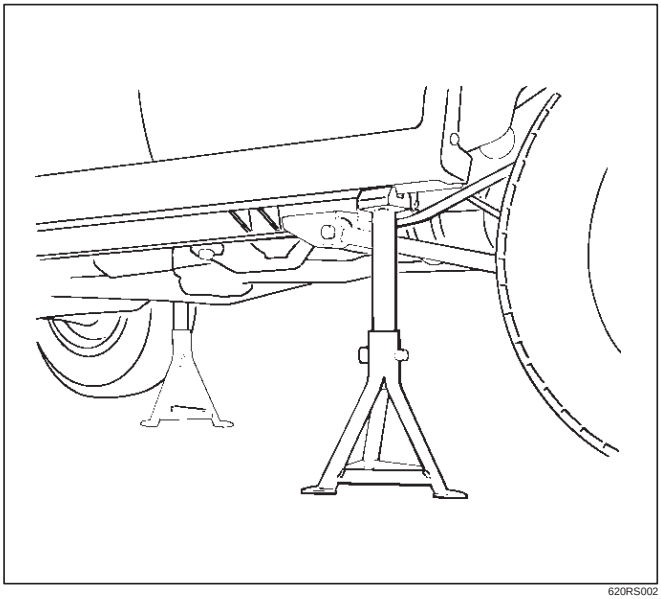

620RS002

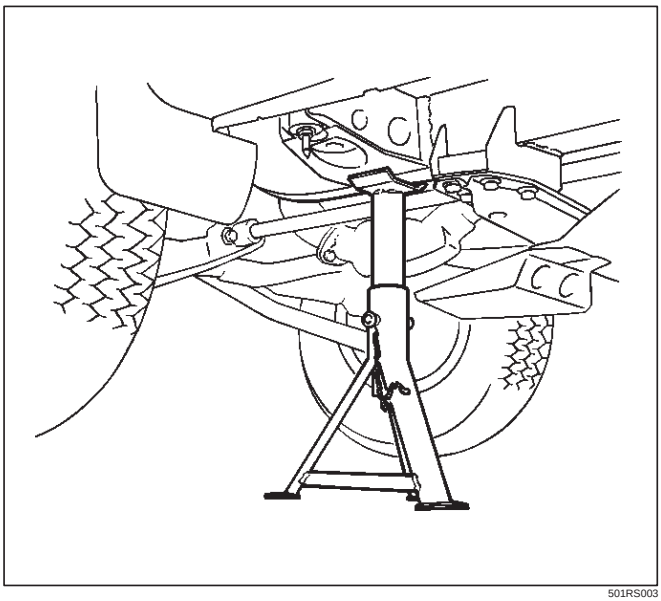

501RS003

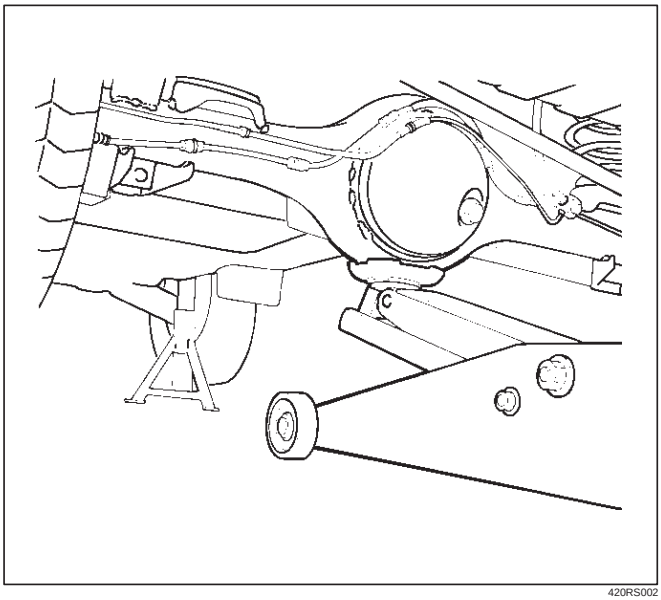

420RS002

4. Remove the mounting bolts (No. 3-6) on either side.
   - No. 3 (LWB only) — Remove the rear door sill plate and center pillar lower-trim cover, turn over the floor carpet and hold the bolt in check not to turn.
   - No. 4 (SWB) — Remove the luggage side trim cover, turn over the floor carpet and hold the bolt in check not to turn.
   - No. 4 (LWB) and No. 5 – 6
5. Remove the frame side mounting and washer.
6. Gently lower the jack supporting the rear axle until the cab side mounting can be removed.
7. Remove the cab side mounting.
   - Be sure to use a splice bar around the mounting to be removed.
   - As for No. 5 and 6, remove the frame side bracket fixing bolts after lowering the frame gently.

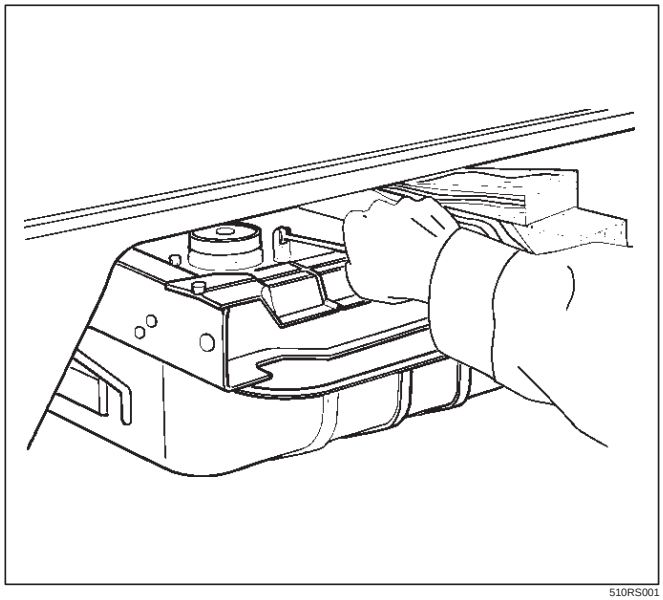

510RS001

Installation

To install, follow the removal steps in the reverse order, noting the following point:

1. Tighten each mounting bolt to the specified torque.

   Torque : 50 N•m (5.1kg·m/37 lb ft)

General Description

This section describes major items of the removal, installation and servicing procedures pertaining to the TROOPER body. Each servicing instruction is applicable to all models of the TROOPER, unless otherwise specifically mentioned. For those differing by specific models from the common procedures, they are detailed for each model.

Body Dimension

Upper Body

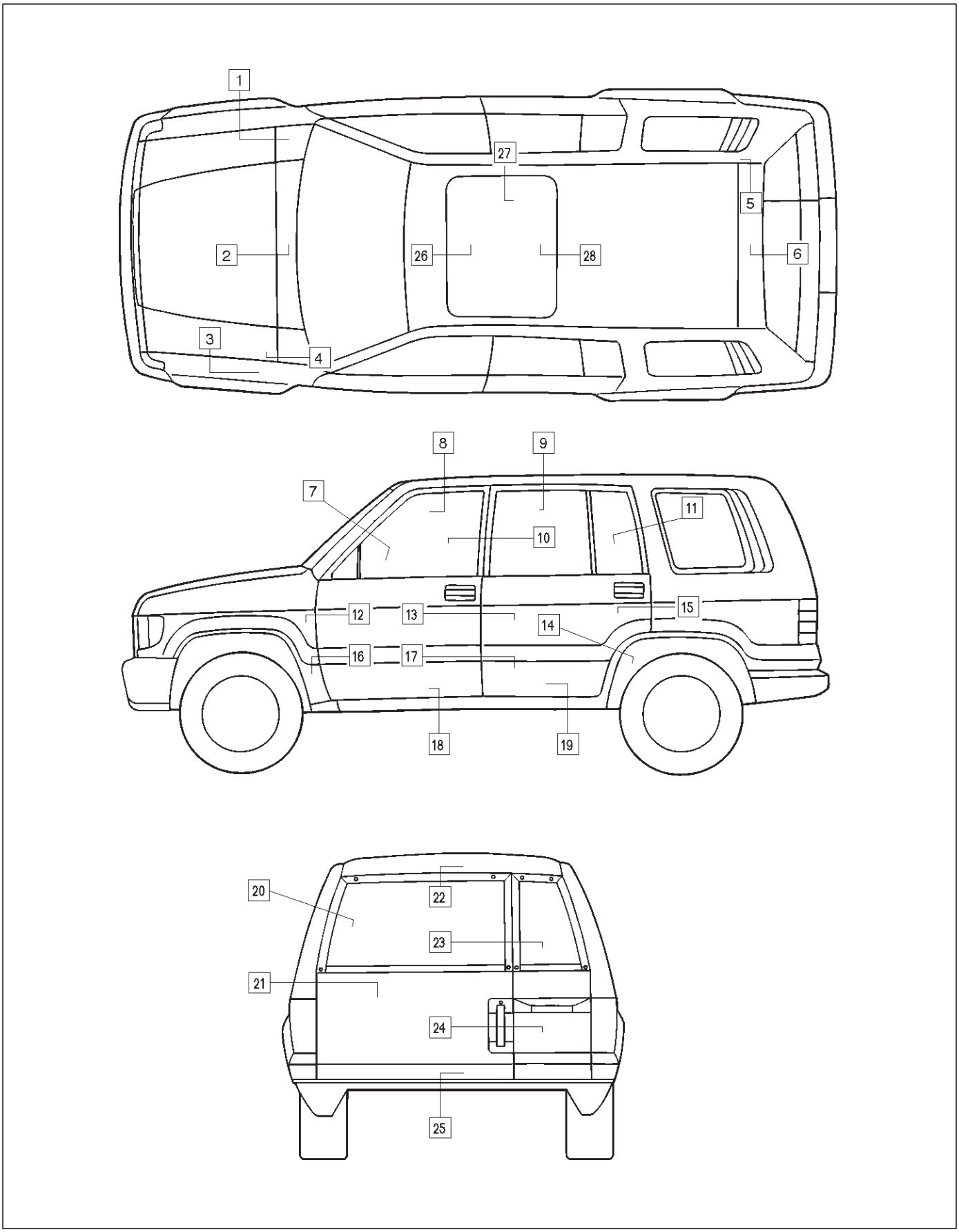

A10RW001

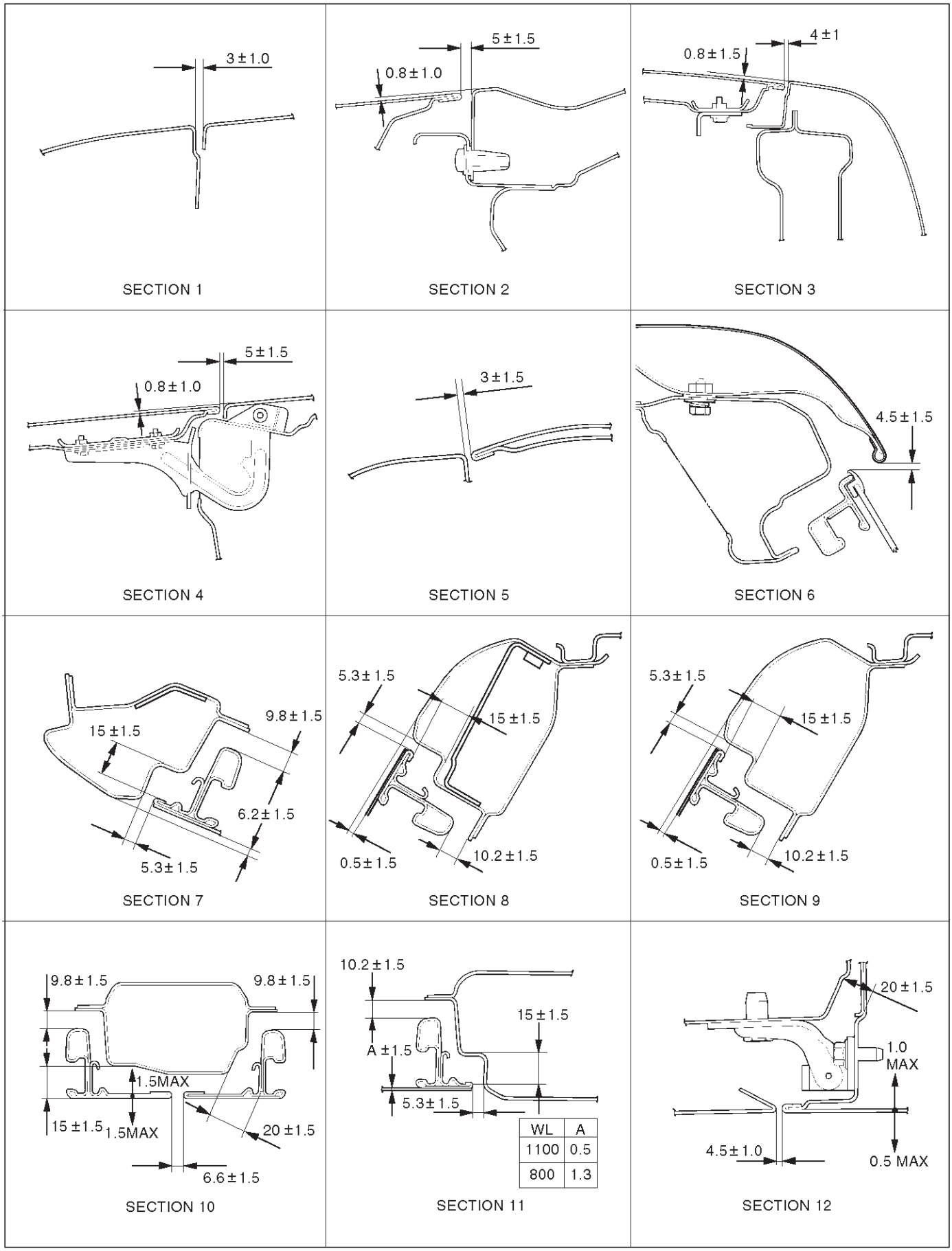
3 ± 1.0
SECTION 1
5 ± 1.5
0.8 ± 1.0
SECTION 2
4 ± 1
0.8 ± 1.5
SECTION 3
5 ± 1.5
0.8 ± 1.0
SECTION 4
3 ± 1.5
SECTION 5
4.5 ± 1.5
SECTION 6
9.8 ± 1.5
15 ± 1.5
6.2 ± 1.5
5.3 ± 1.5
SECTION 7
5.3 ± 1.5
15 ± 1.5
0.5 ± 1.5
10.2 ± 1.5
SECTION 8
5.3 ± 1.5
15 ± 1.5
0.5 ± 1.5
10.2 ± 1.5
SECTION 9
9.8 ± 1.5
9.8 ± 1.5
1.5MAX
15 ± 1.5
1.5MAX
20 ± 1.5
6.6 ± 1.5
SECTION 10
10.2 ± 1.5
15 ± 1.5
A ± 1.5
5.3 ± 1.5
WL A
1100 0.5
800 1.3
SECTION 11
20 ± 1.5
1.0 MAX
4.5 ± 1.0
0.5 MAX
SECTION 12

A10RY00001

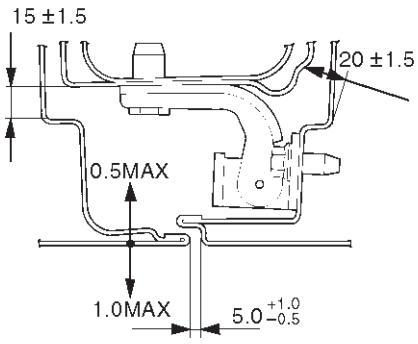

SECTION 13

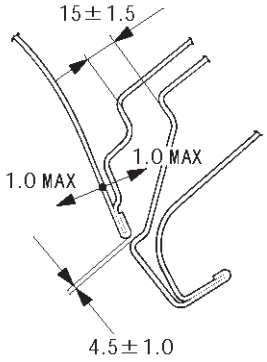

SECTION 14

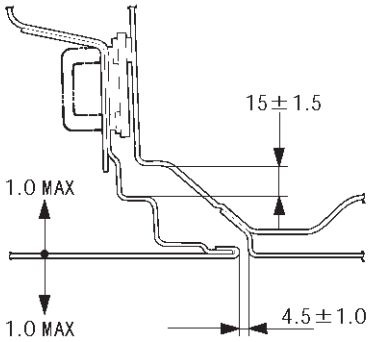

SECTION 15

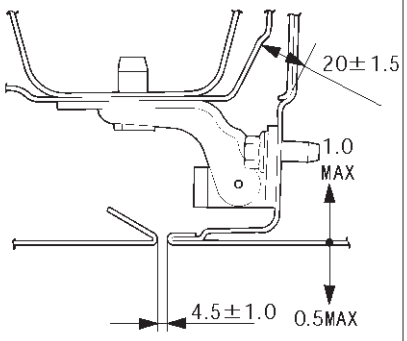

SECTION 16

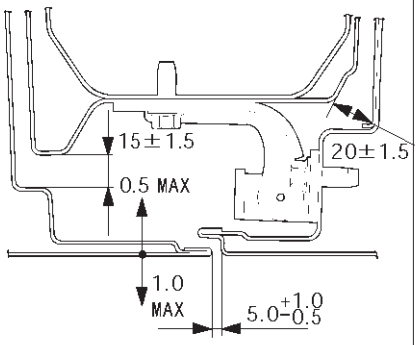

SECTION 17

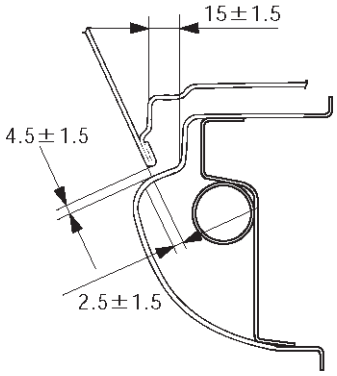

SECTION 18

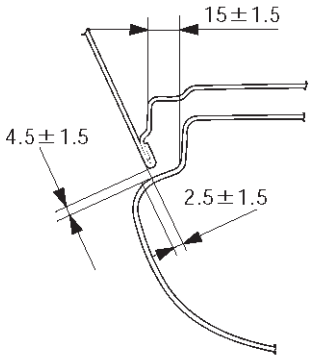

SECTION 19

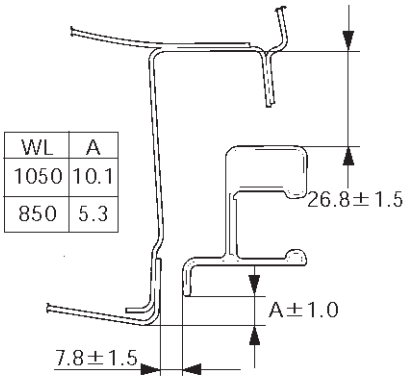

WL	A
1050	10.1
850	5.3

SECTION 20

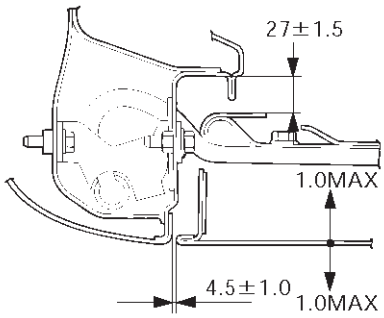

SECTION 21

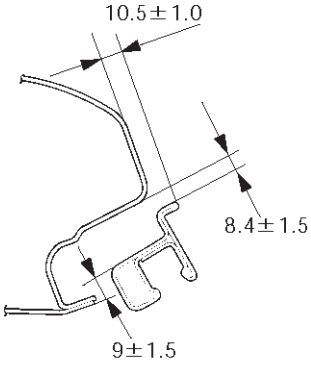

SECTION 22

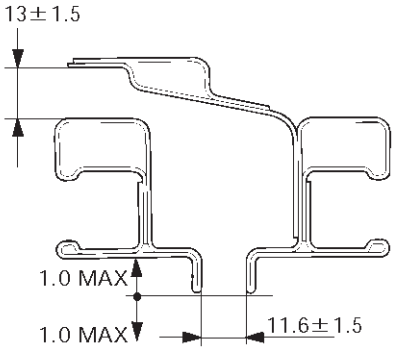

SECTION 23

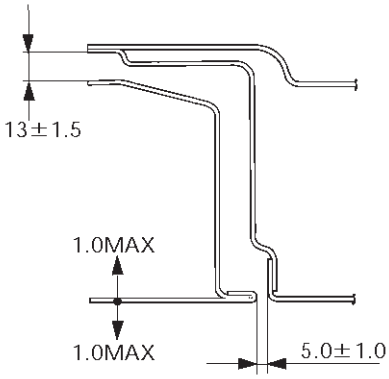

SECTION 24

A10RY00002

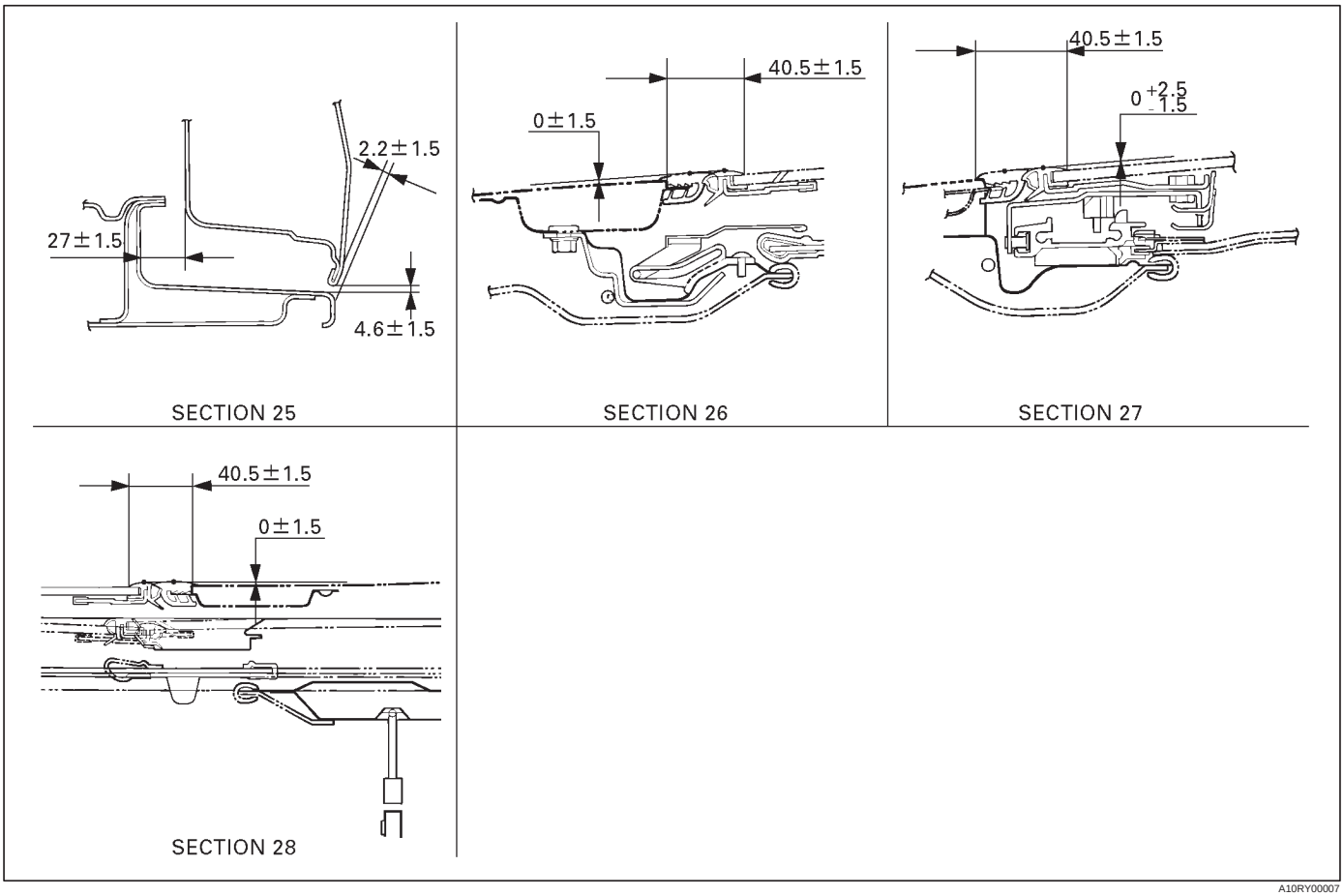
2.2±1.5
27±1.5
4.6±1.5
SECTION 25
40.5±1.5
0±1.5
SECTION 26
40.5±1.5
0 +2.5 -1.5
SECTION 27
40.5±1.5
0±1.5
SECTION 28

A10RY00007

Front Section

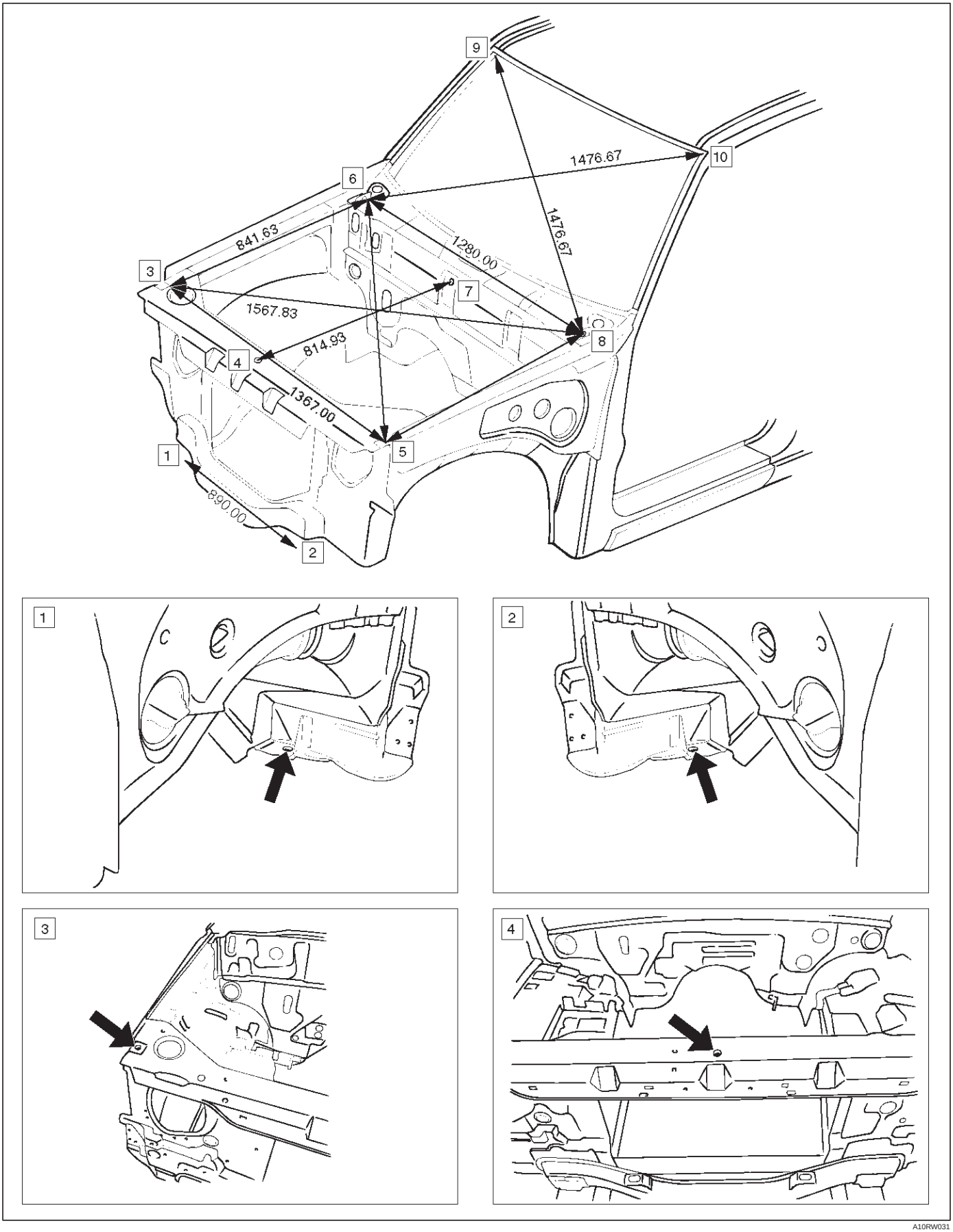

A10RW031

5

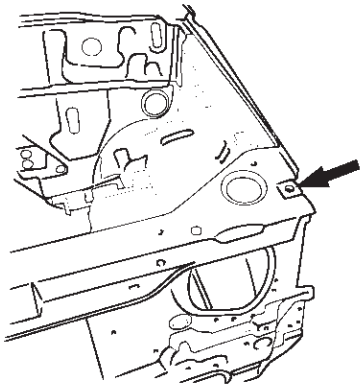

6

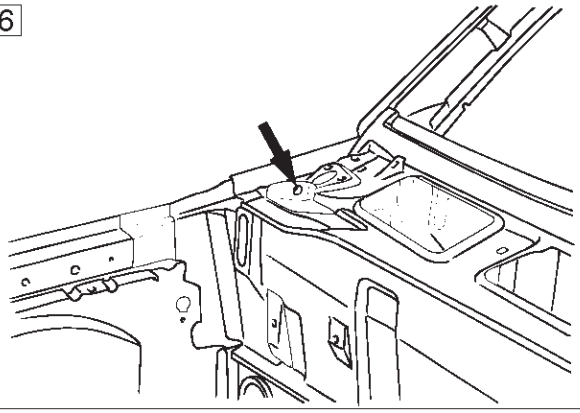

7

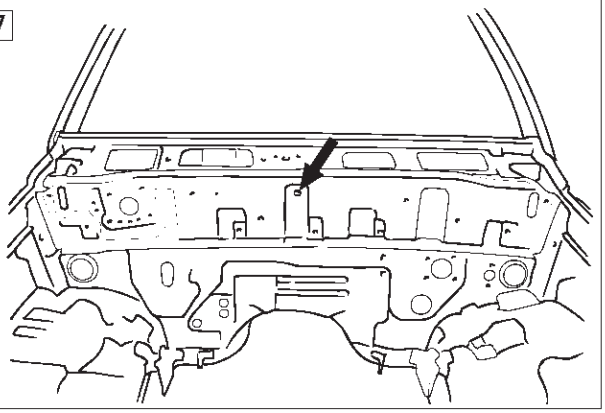

8

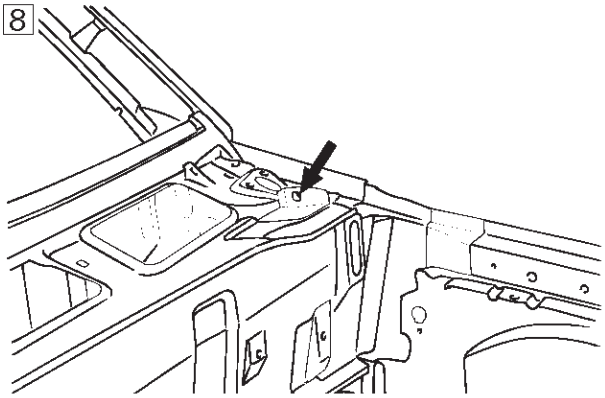

9

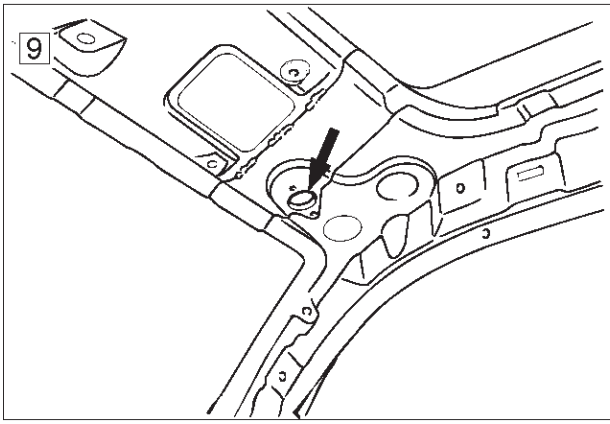

10

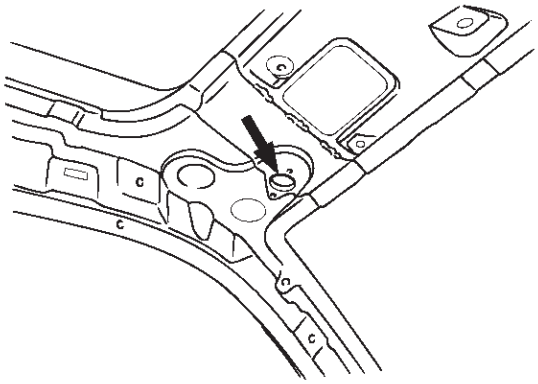

A10RW004

Room Section (LWB)

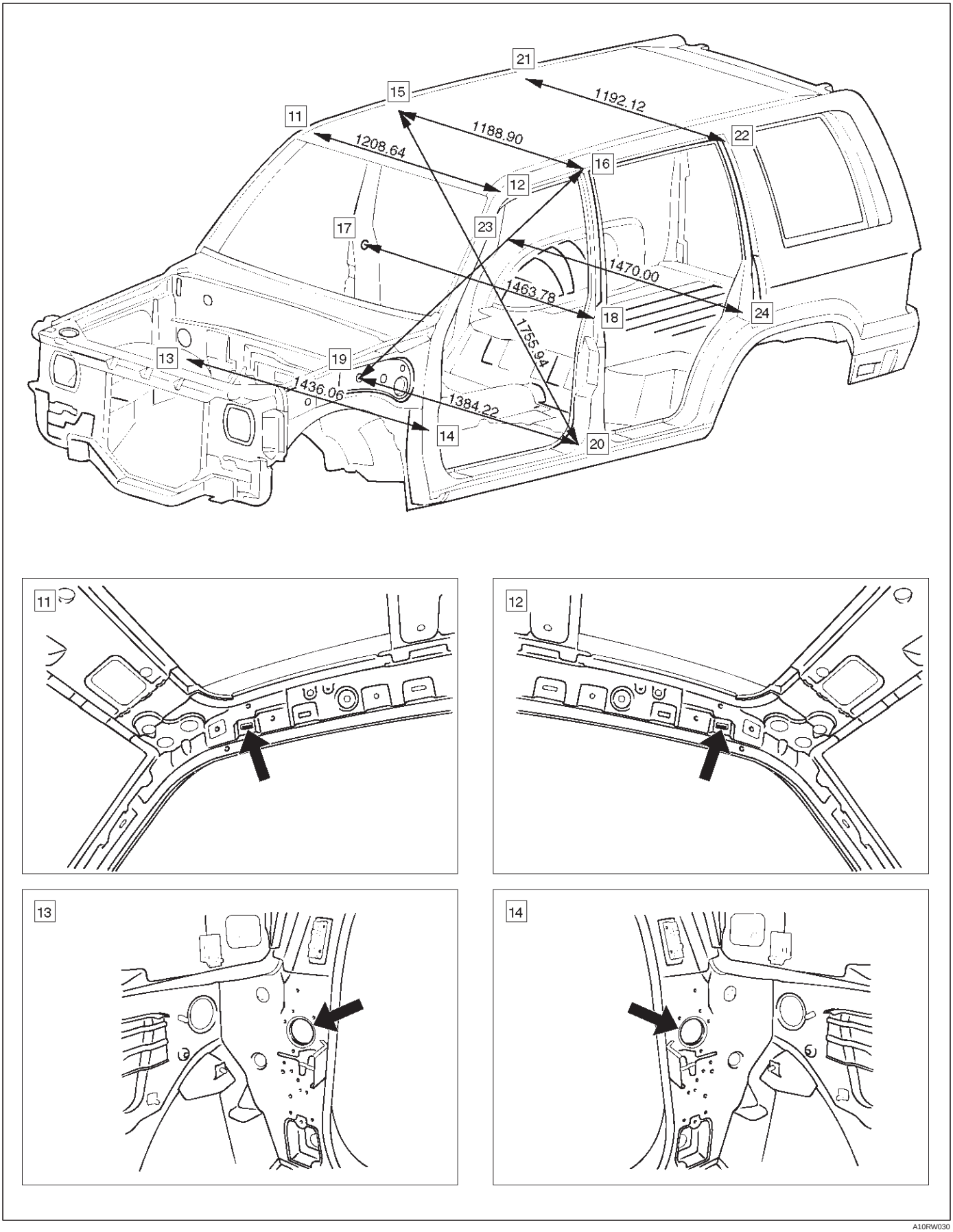

A10RW030

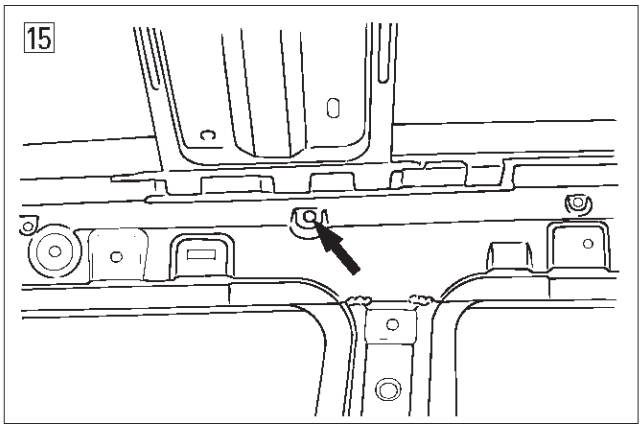

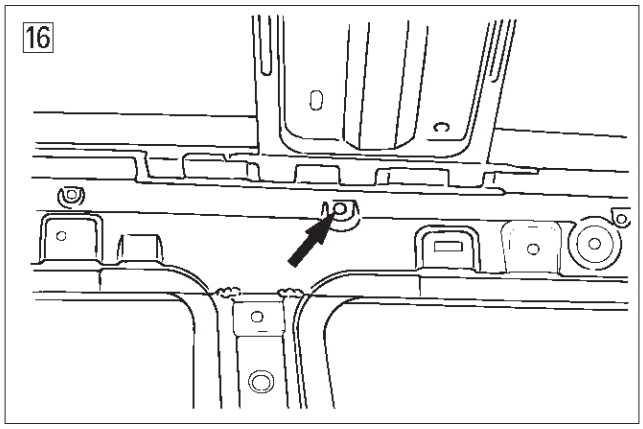

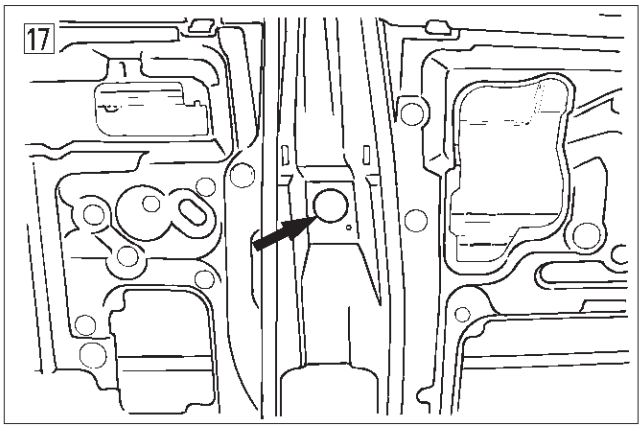

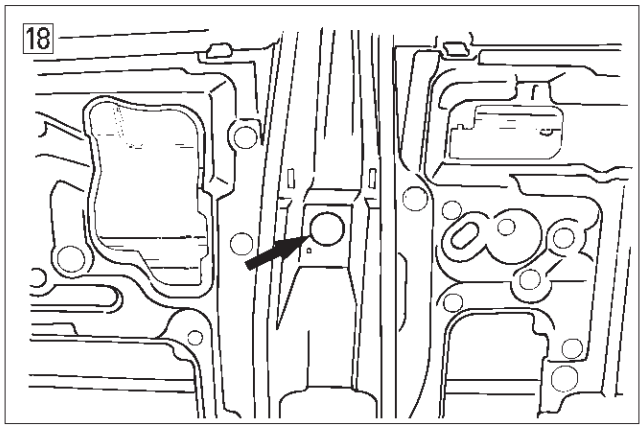

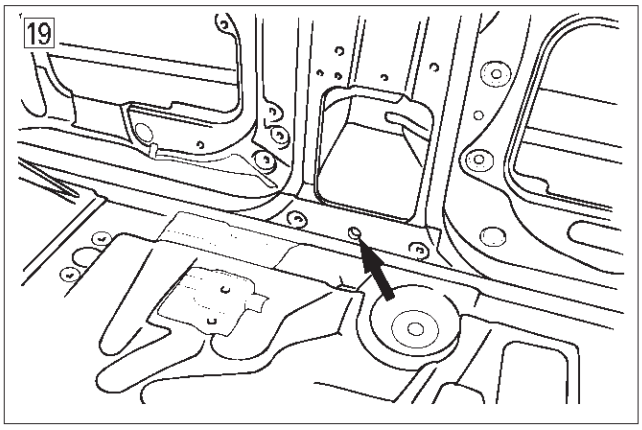

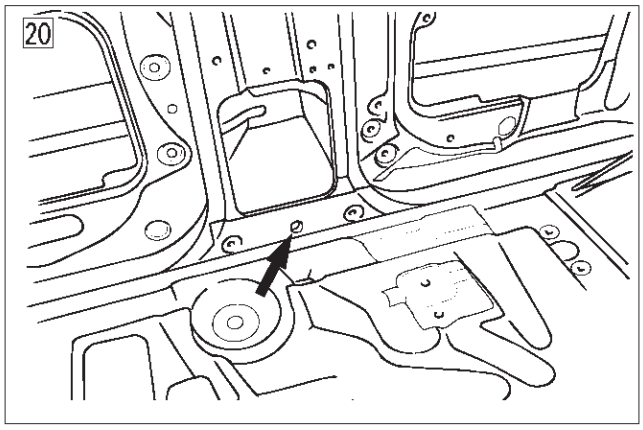

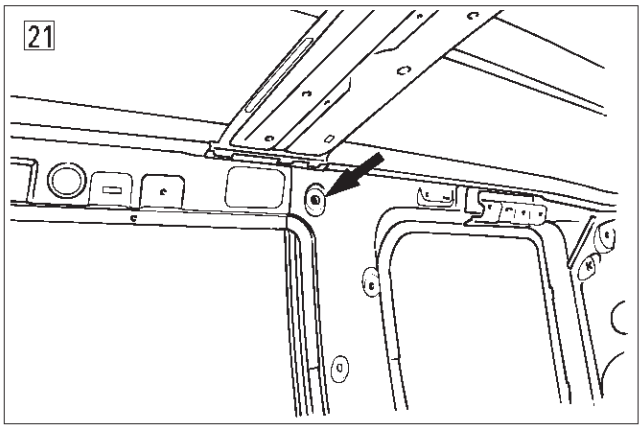

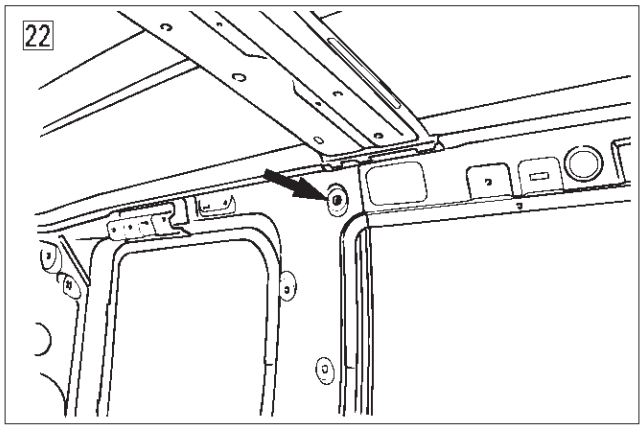

A10RW005

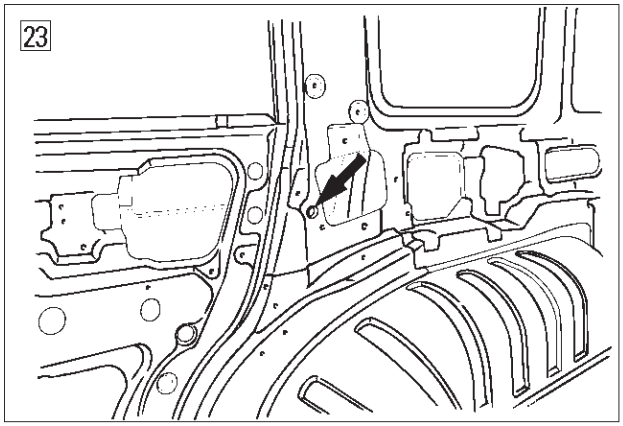

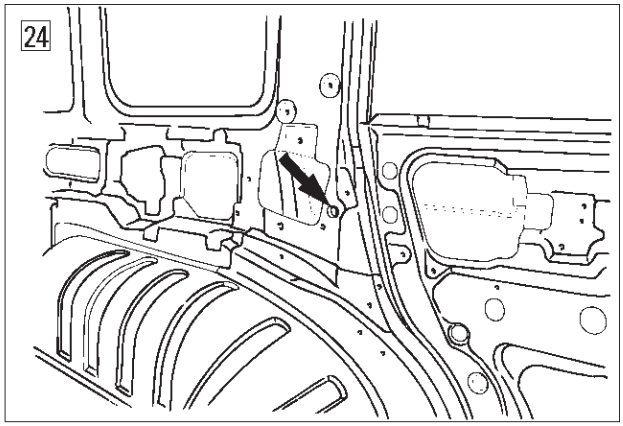

A10RW006

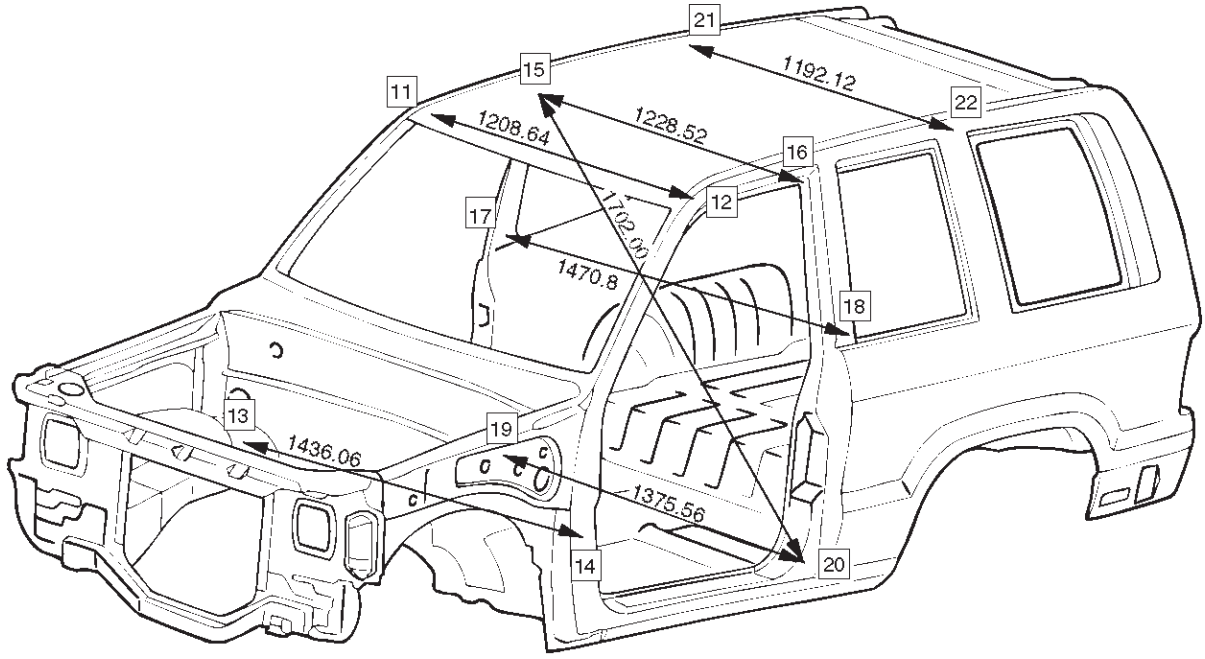
21
15
11
1192.12
22
1208.64
1228.52
16
12
17
1702.00
1470.8
18
13
19
1436.06
1375.56
14
20

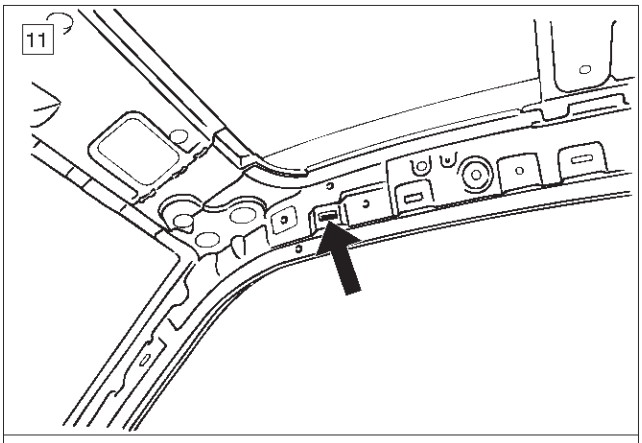
11

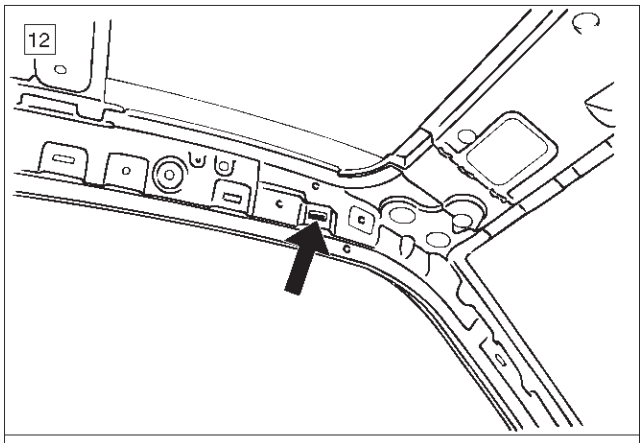
12

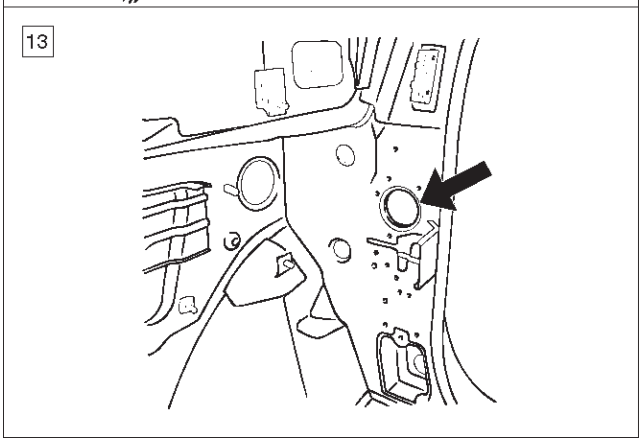
13

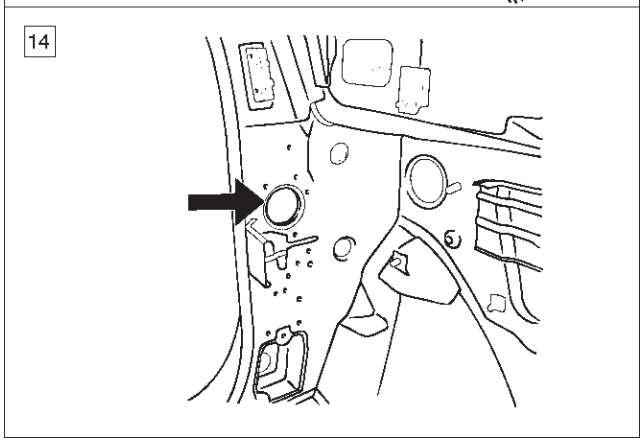
14

A10RW024

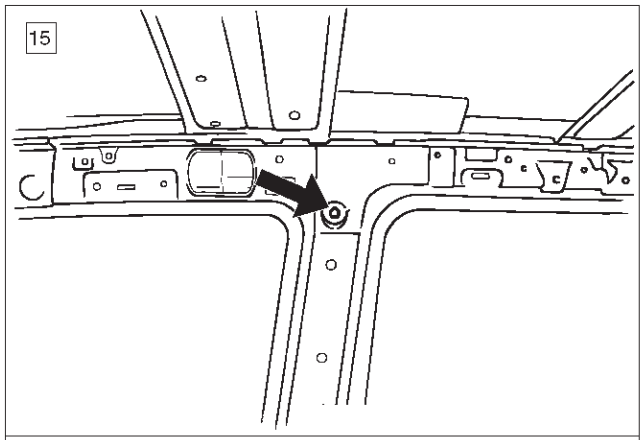

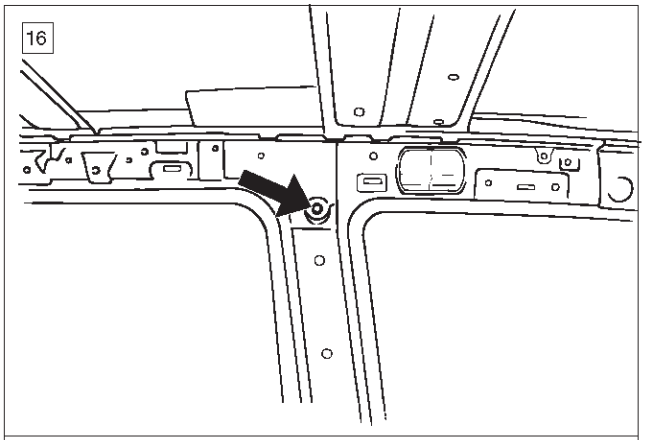

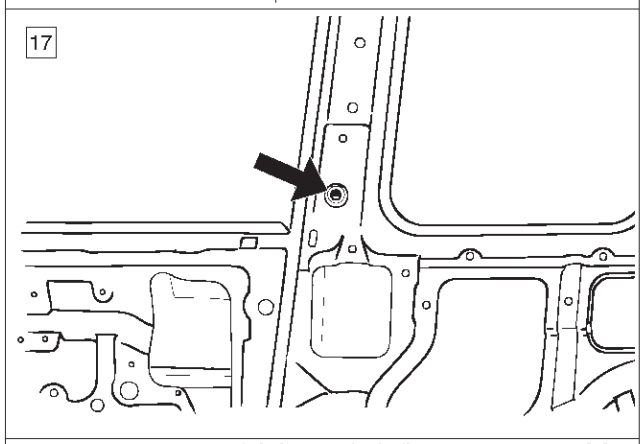

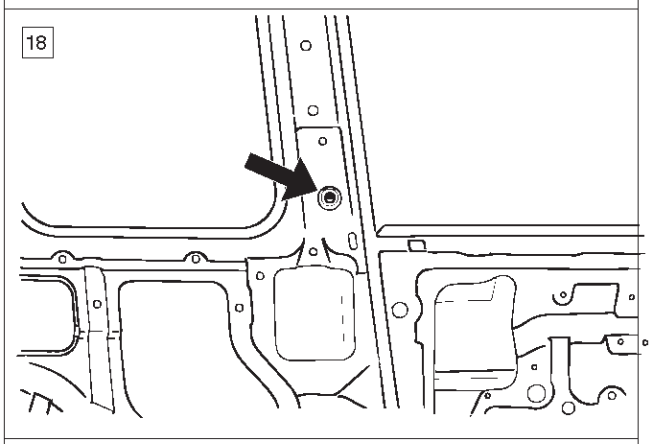

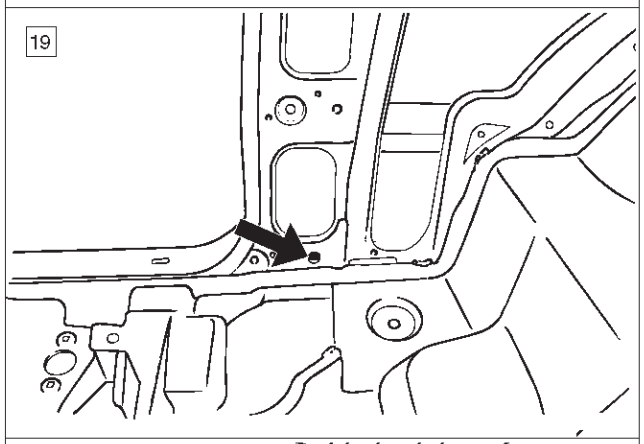

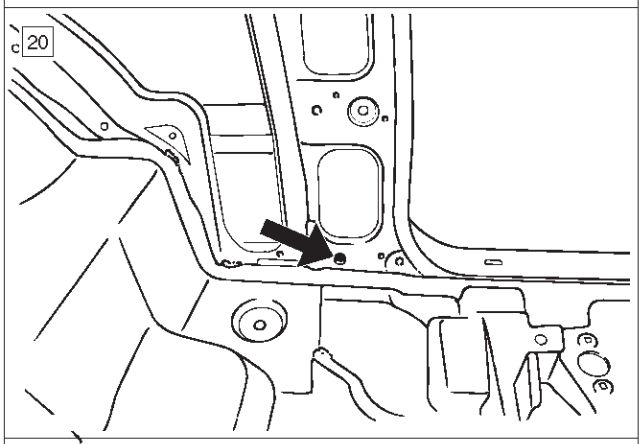

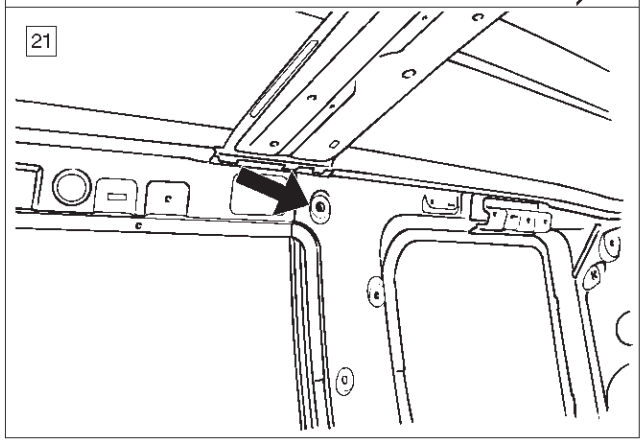

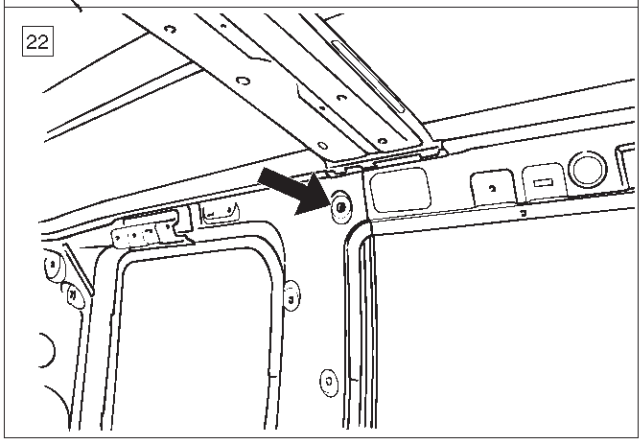

A10RW025

Rear Section

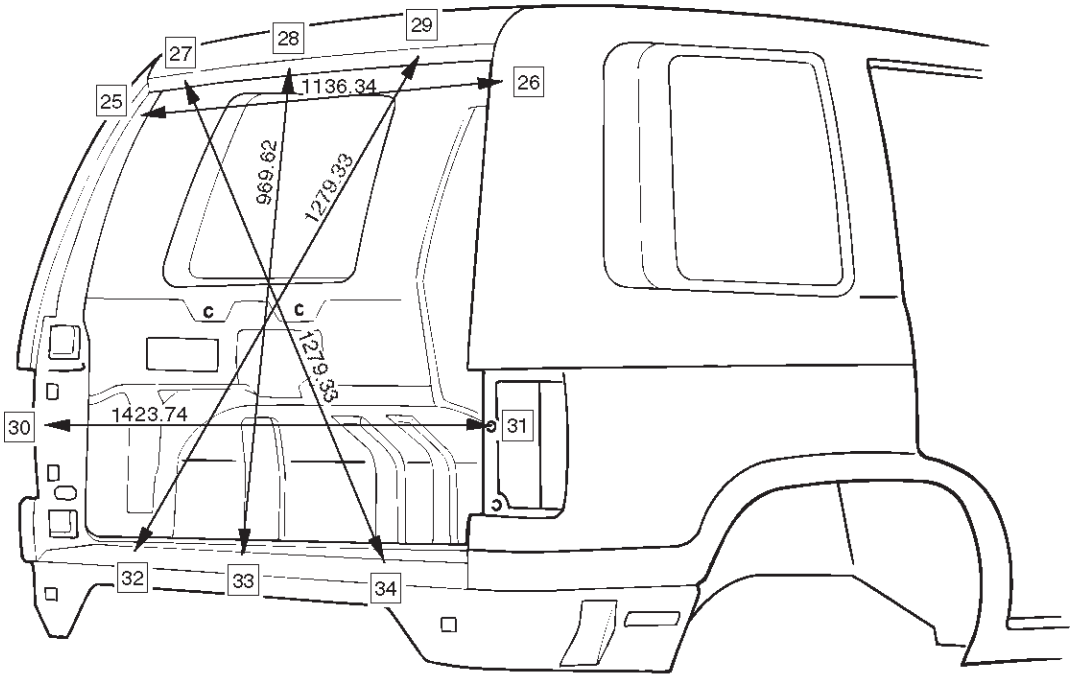

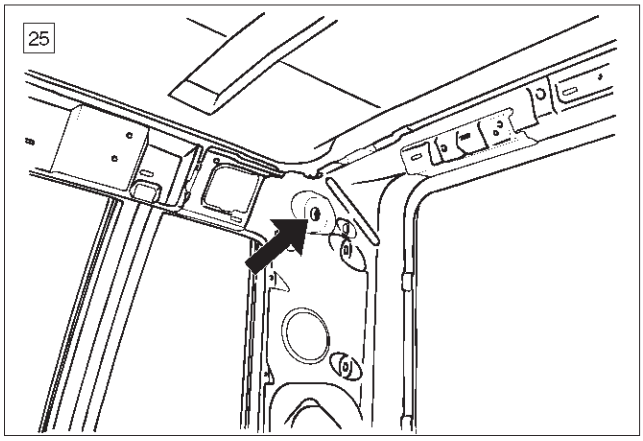

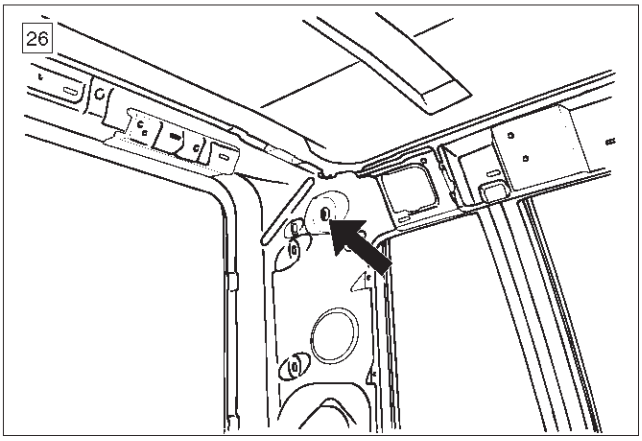

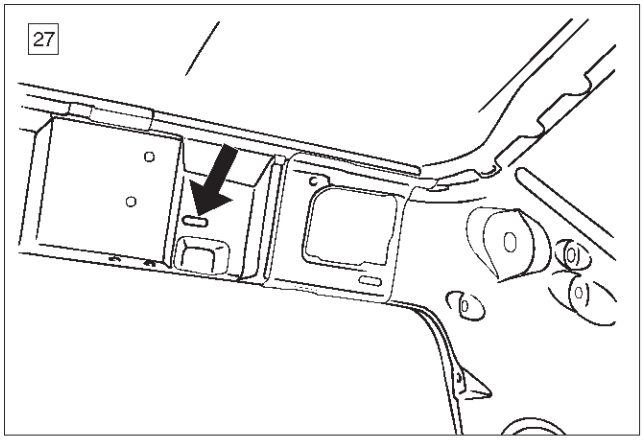

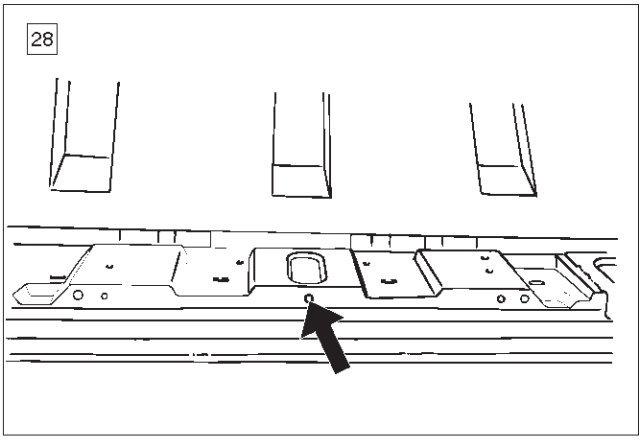

A10RW032

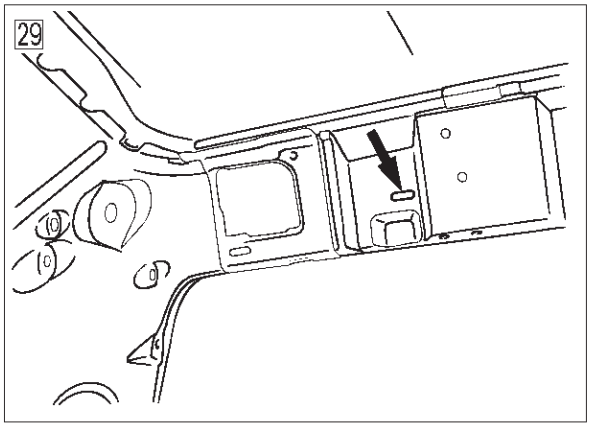

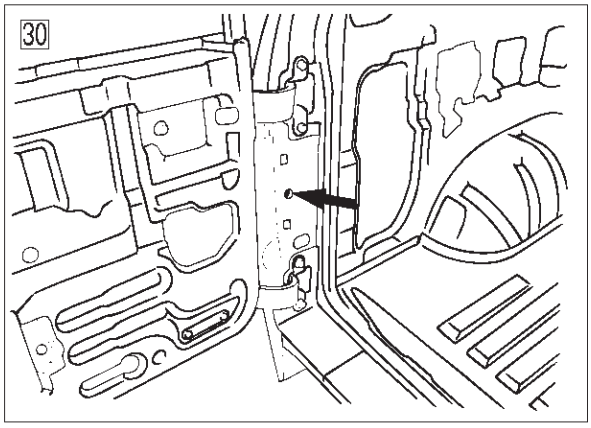

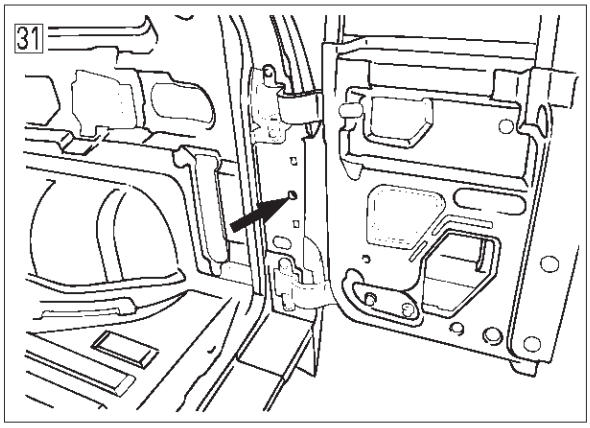

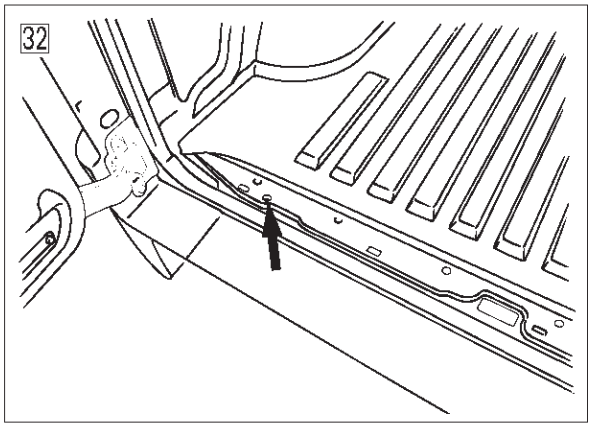

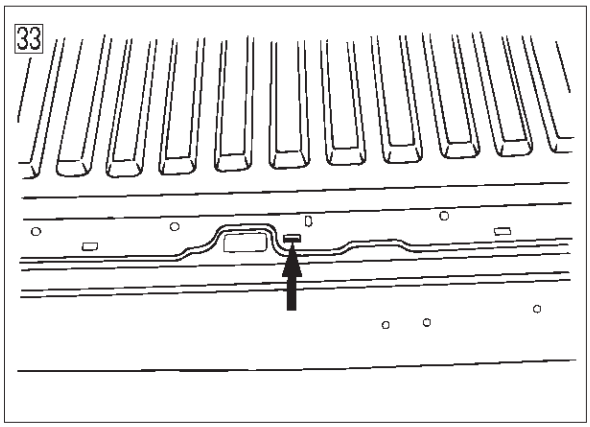

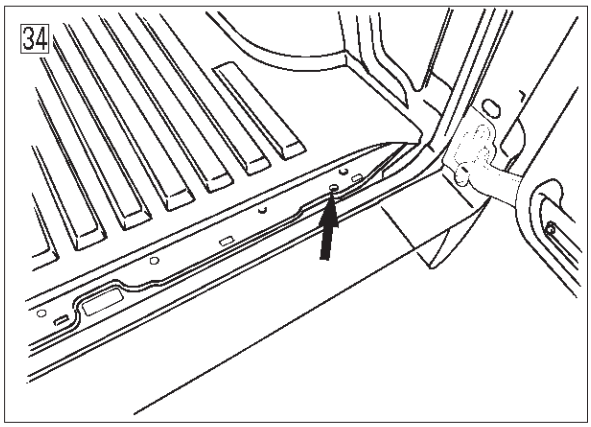

A10RW008

Side Body

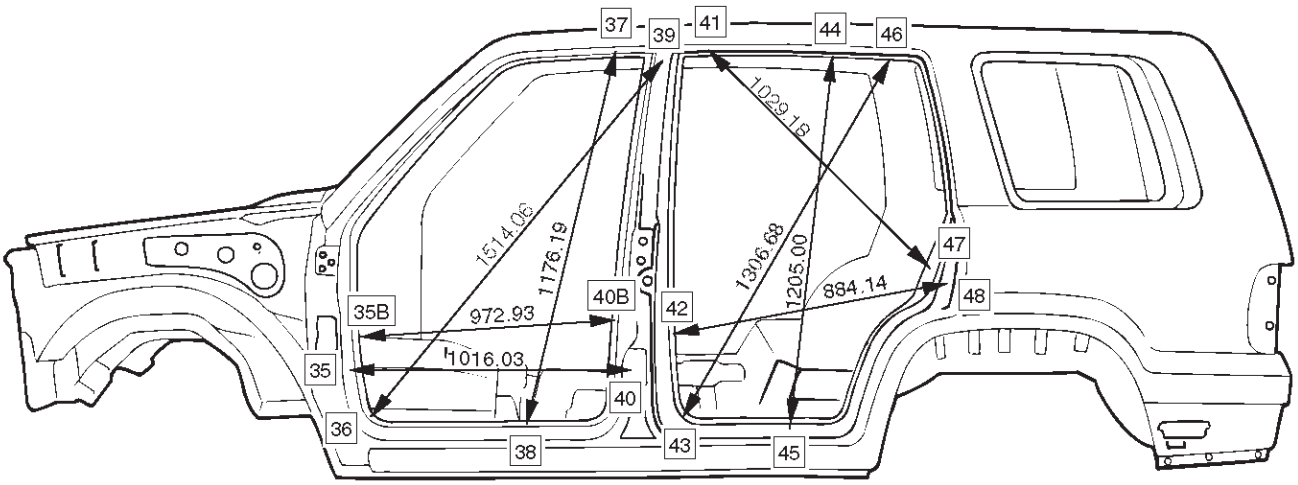

* 35B ~ 40B : Short Wheel Base Only

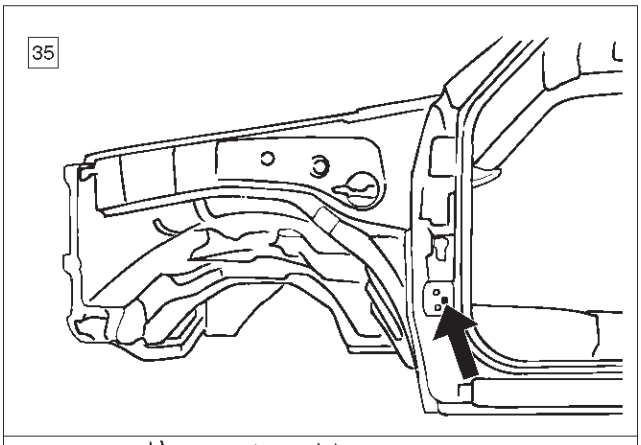

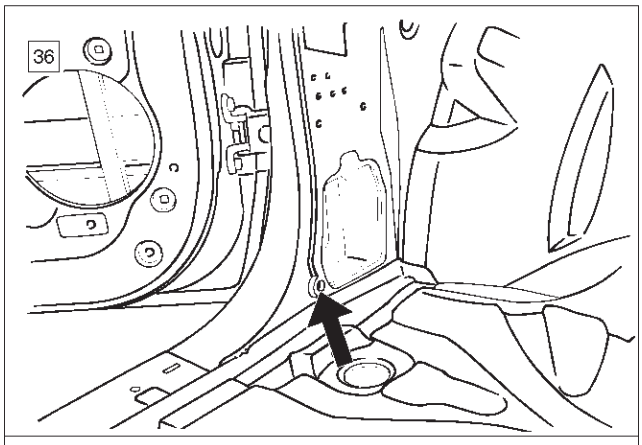

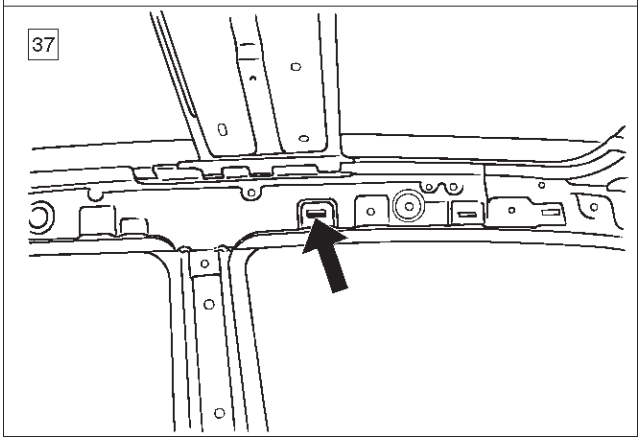

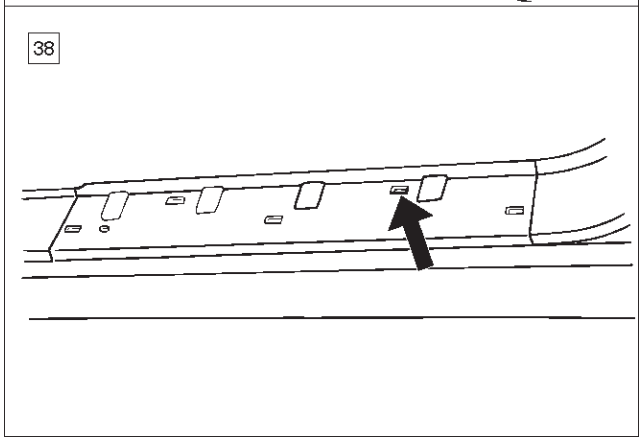

A10RW026

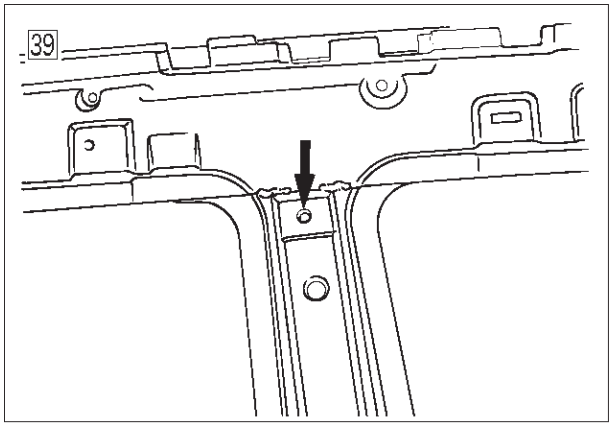

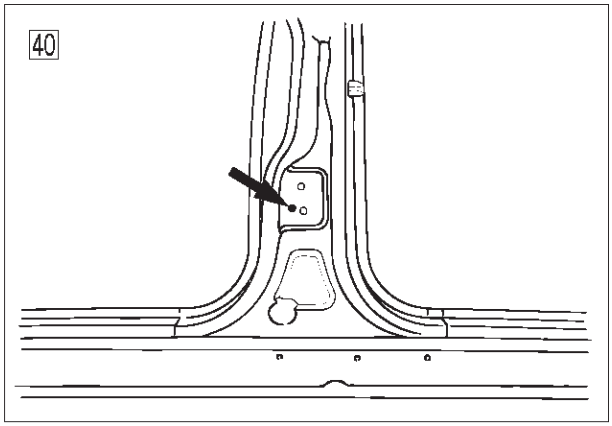

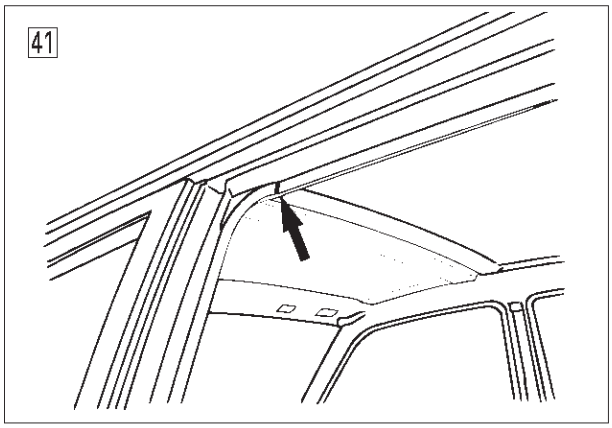

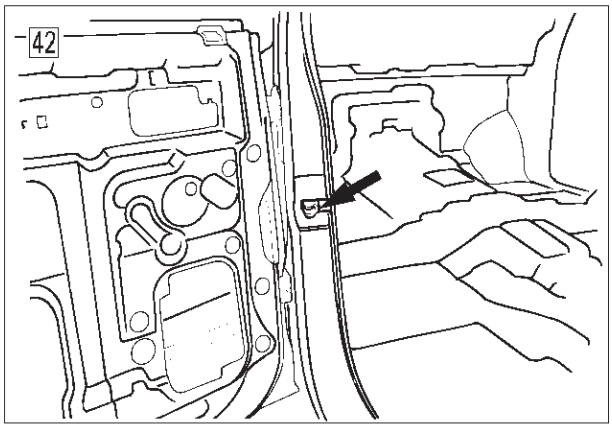

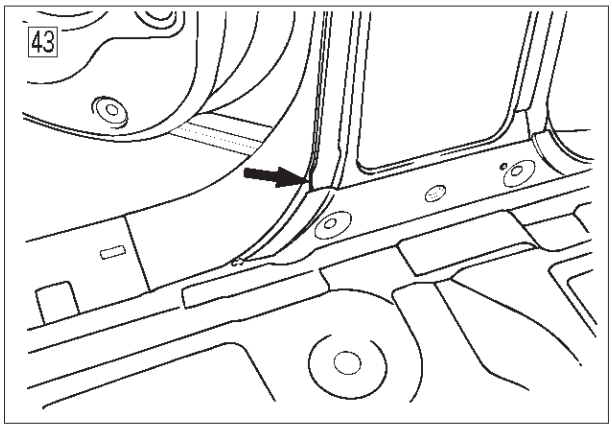

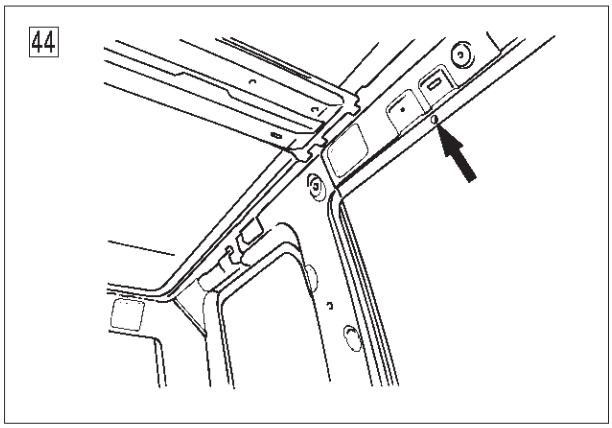

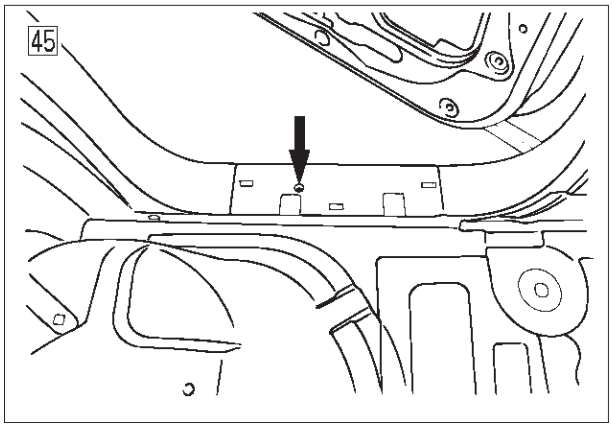

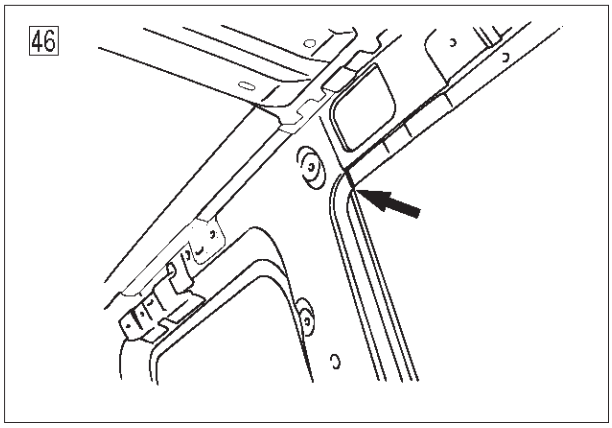

A10RW009

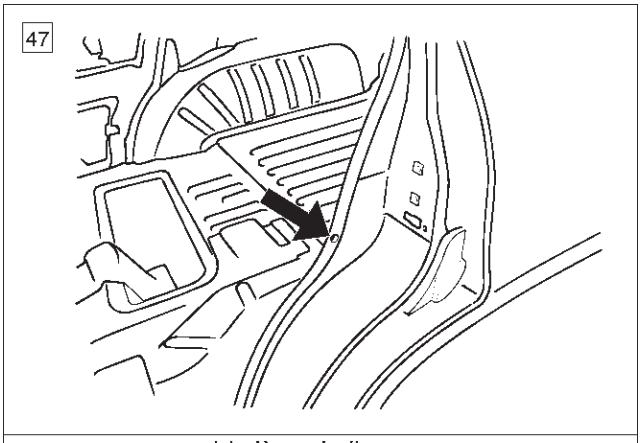

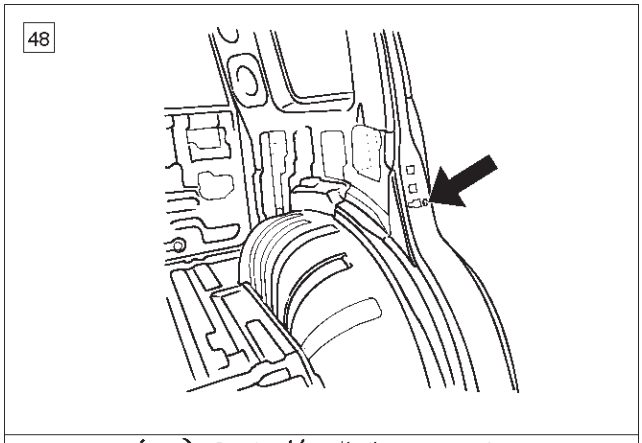

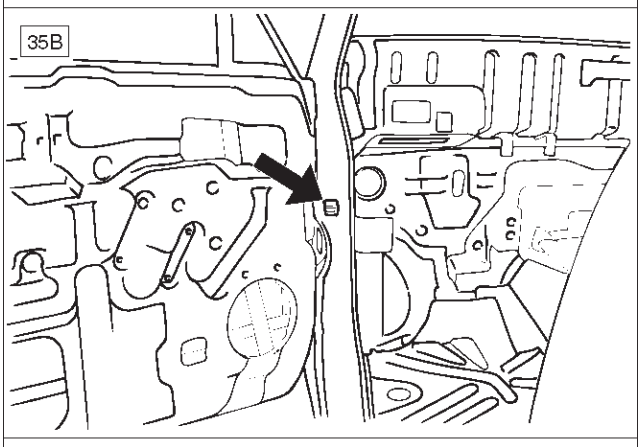

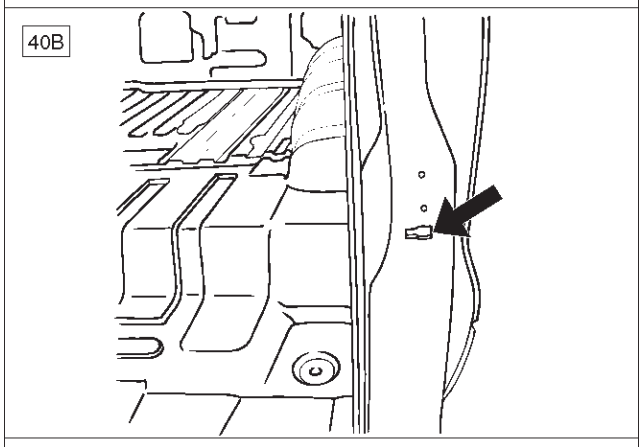

A10RW027

Window Glass

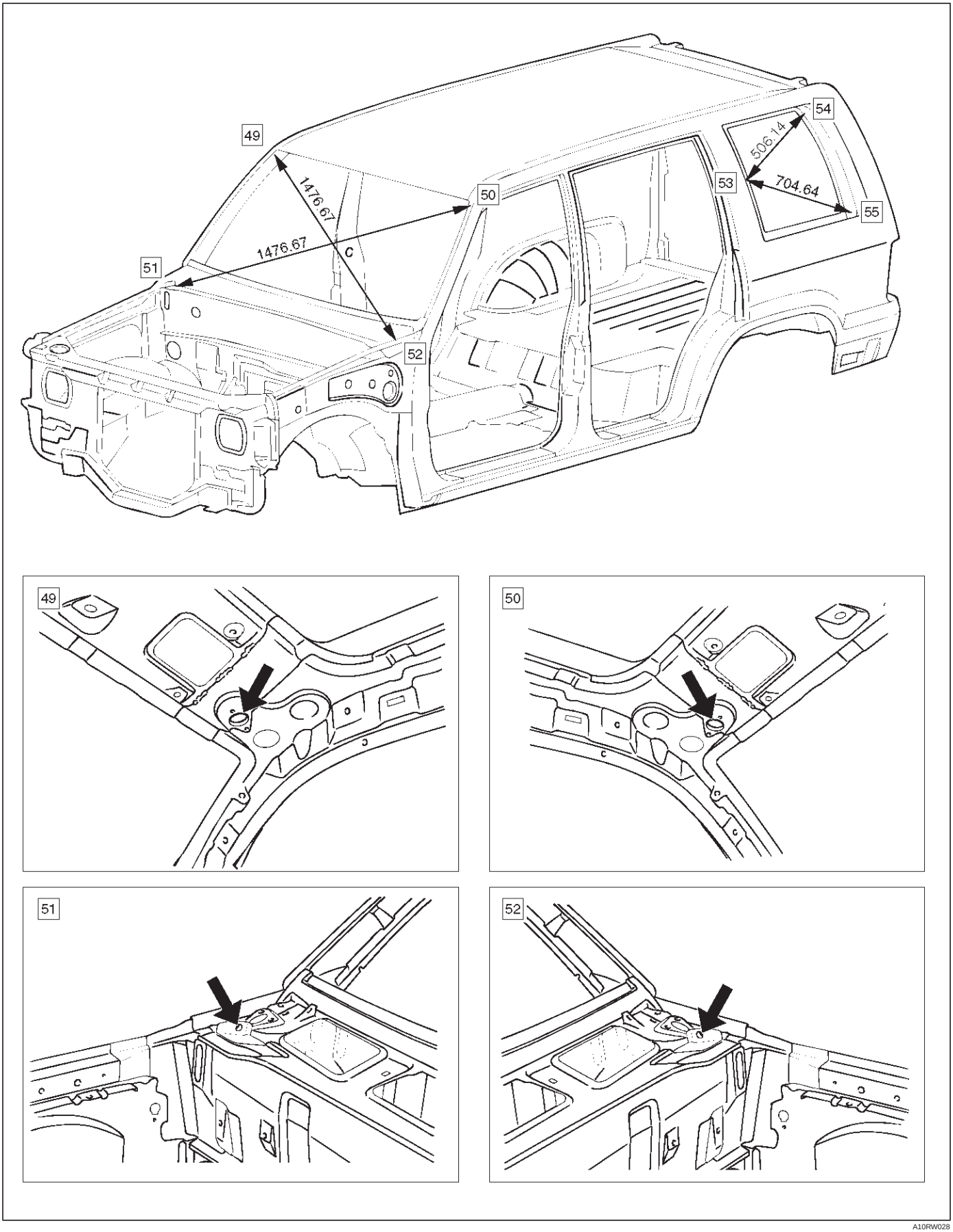

A10RW028

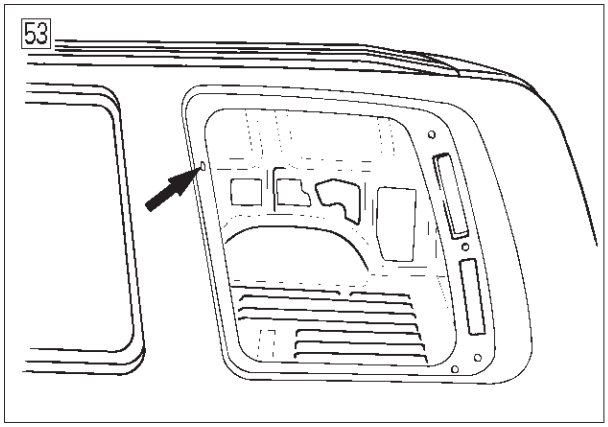

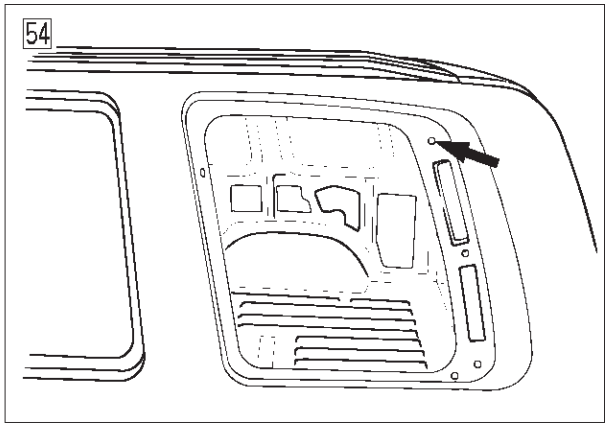

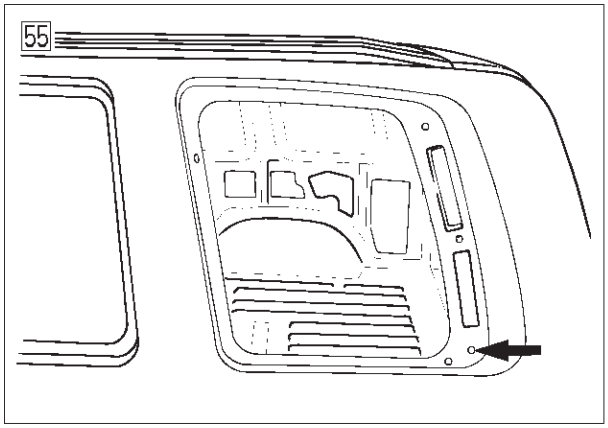

A10RW011

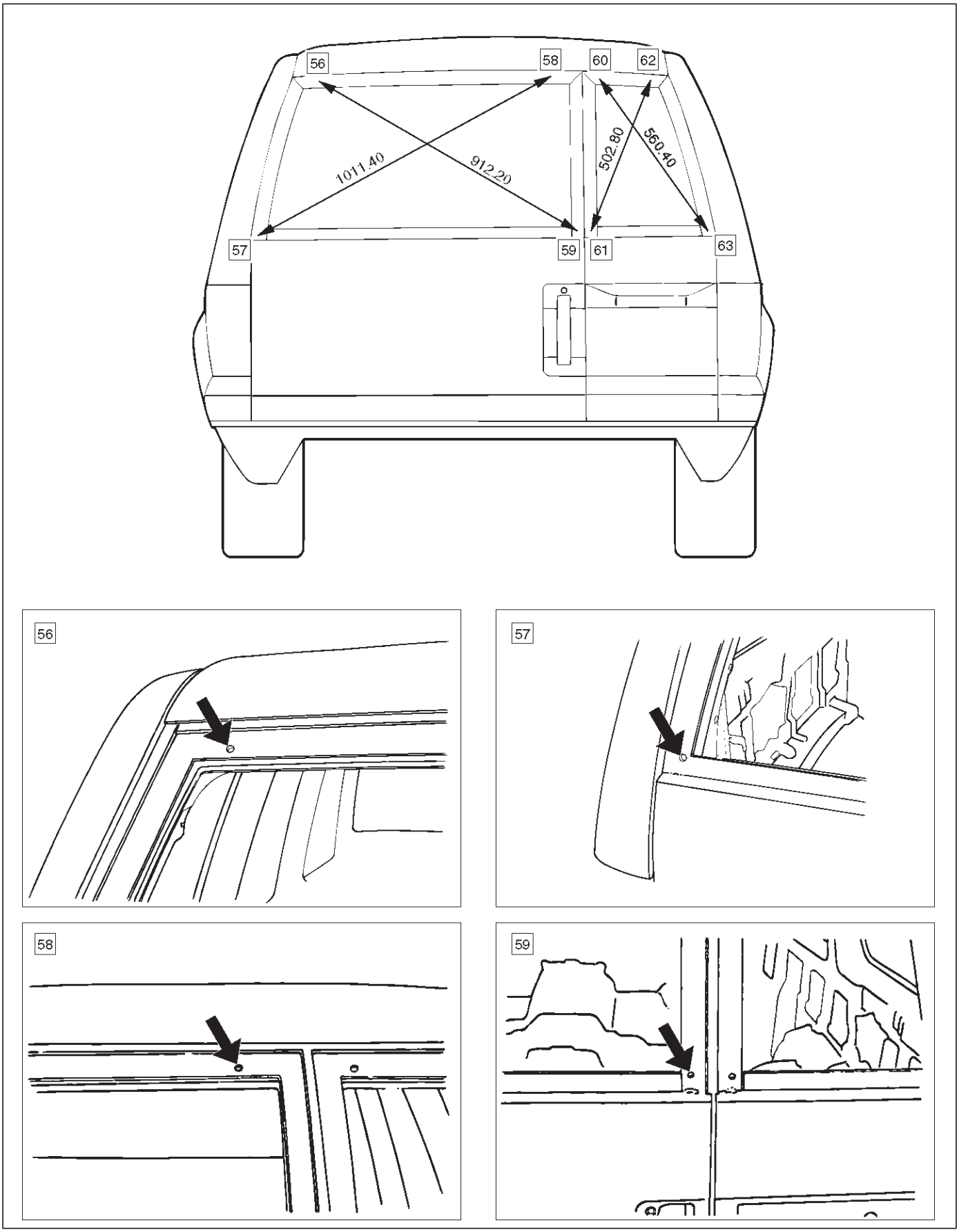

A10RW029

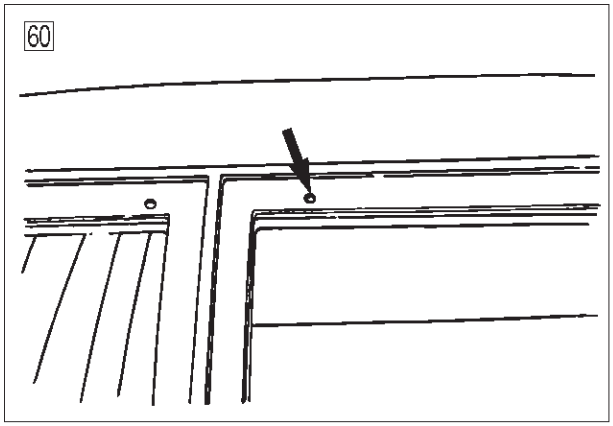

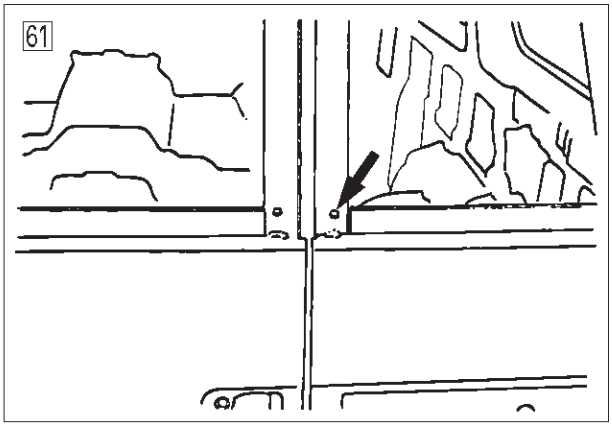

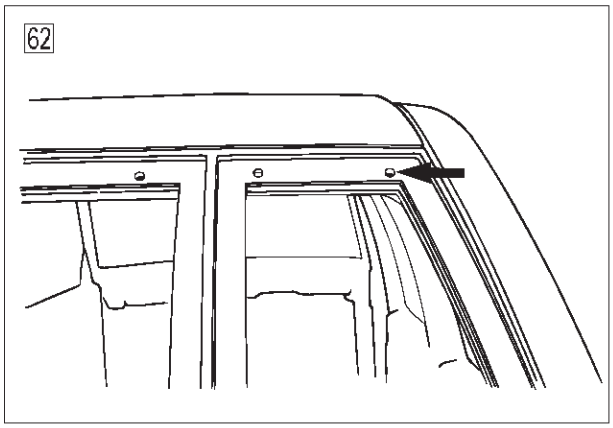

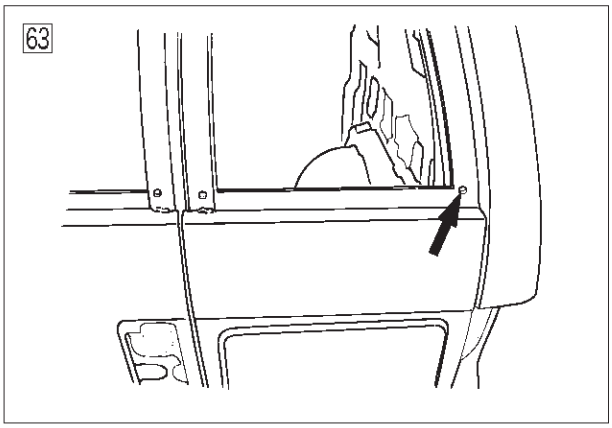

A10RW013

Instrument Panel Assembly

Parts Location

This illustration is based on RHD and W/SRS.

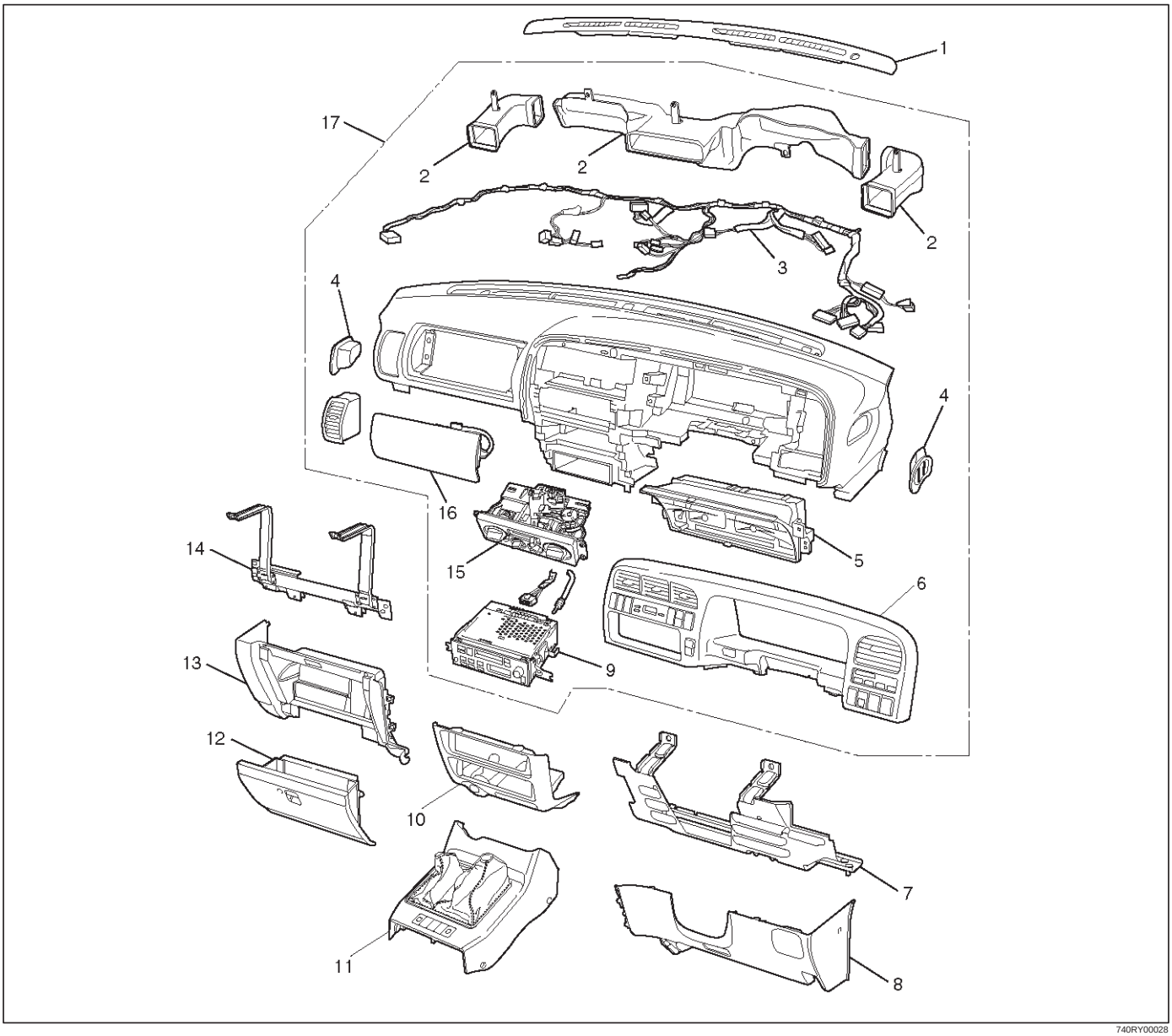

740RY00028

Legend

(1) Front Defroster Grille
(2) Vent Duct Assembly
(3) Instrument Harness Assembly
(4) Side Defroster Grille
(5) Meter Assembly
(6) Instrument Panel Cluster Assembly
(7) Driver Knee Bolster Assembly (W/SRS)
(8) Instrument Panel Driver Lower Cover Assembly
(9) Radio Assembly
(10) Lower Cluster Assembly
(11) Front Console Assembly
(12) Glove Box
(13) Instrument Panel Passenger Lower Cover Assembly
(14) Passenger Knee Bolster Reinforcement Assembly
(15) Control Lever Assembly
(16) Passenger Inflator Module (W/SRS)
(17) Instrument Panel Assembly

Removal

CAUTION: For precautions on installation or removal of SRS—air bag system, refer to Supplemental Restraint System (SRS) — AIR BAG in Restraint section.

1. Disconnect the battery ground cable.
2. Remove front console assembly.
   - Remove the 4 fixing screws and disconnect the switch connectors.
3. Remove lower cluster assembly.
   - Remove the 3 fixing screws (1) in order to disconnect the cigarette lighter (3) and the illumination (2) connectors.

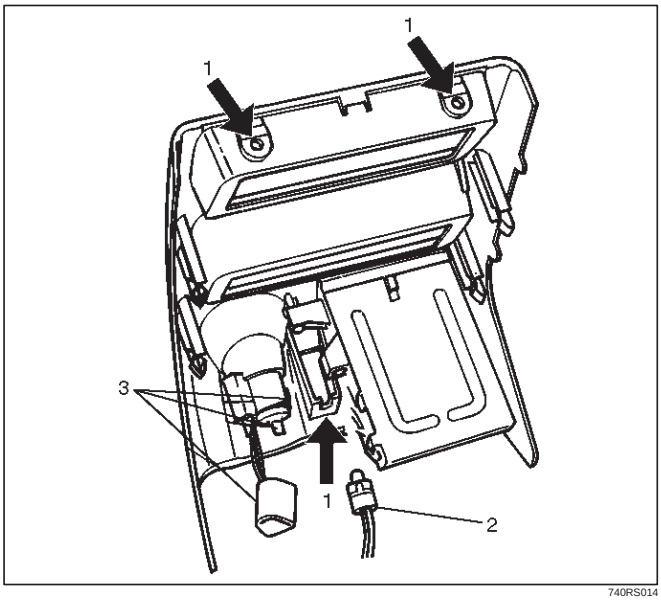

740RS014

4. Remove glove box.
   - Remove the 2 fixing screws.

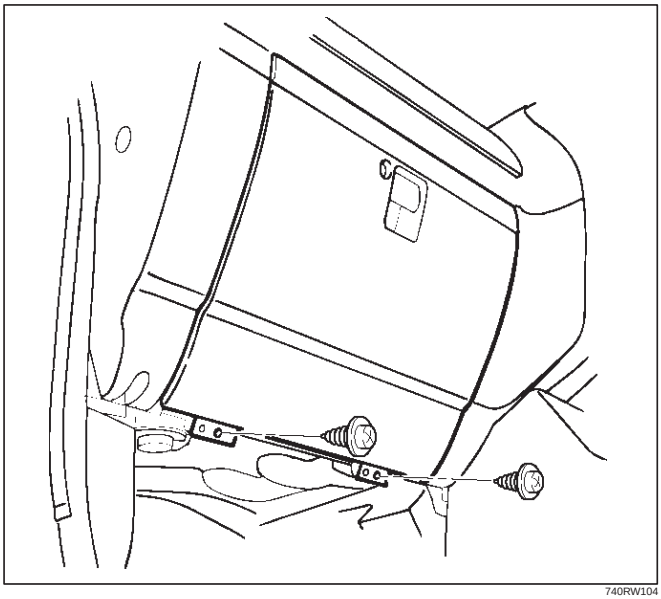

740RW104

5. Remove instrument panel passenger lower cover assembly.
   - Remove the 7 fixing screws (1) and 1 clip (2).

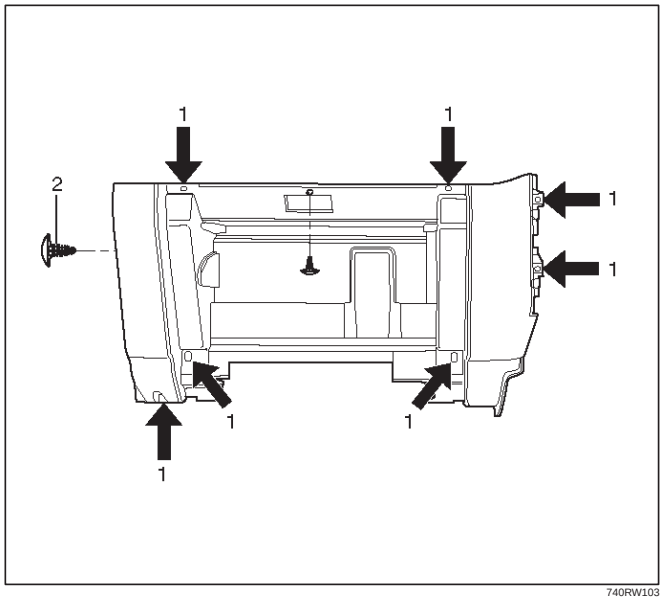

740RW103

6. Remove passenger knee bolster reinforcement assembly.
   - Remove the 4 fixing bolts (2) and 4 nuts (1).

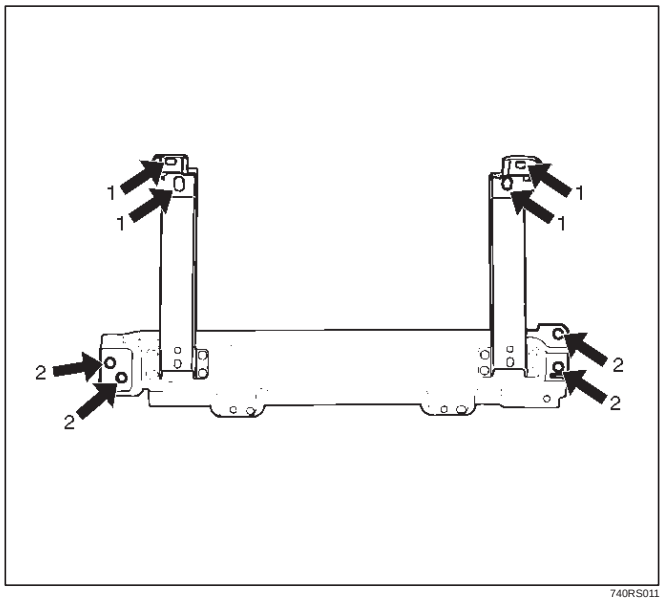

740RS011

7. Remove instrument panel driver lower cover assembly.
   - Remove the engine hood opener fixing screws.
   - Remove the 2 fixing screws (2), 1 fixing bolt (3), and 1 clip (4). Pull out the fasteners at the 4 positions (1).

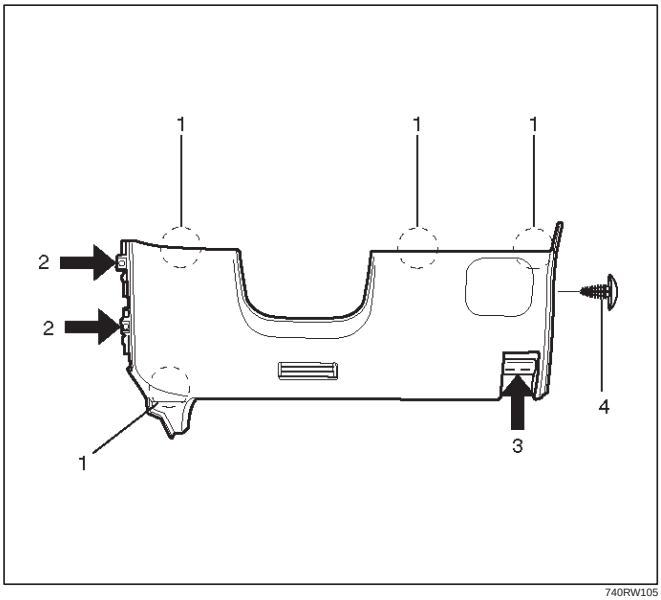

740RW105

8. Remove driver knee bolster assembly (W/SRS).
   - Remove the 6 fixing nuts.

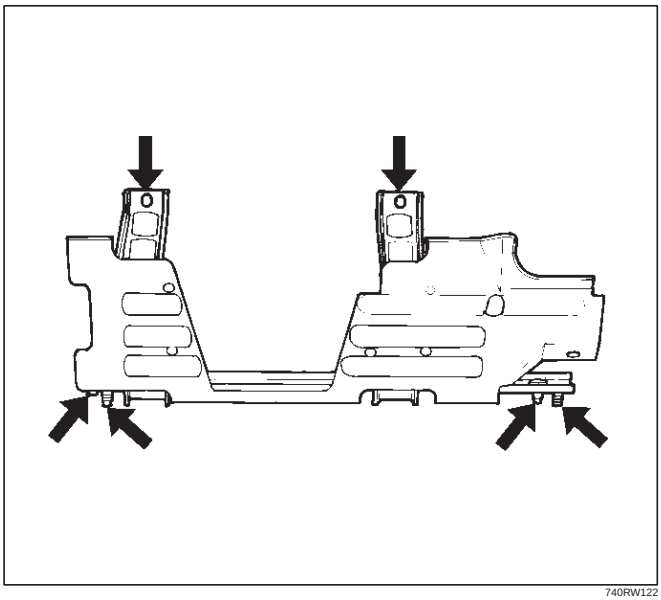

740RW122

9. Remove front defroster grille.
   - Pry 8 claws on the front side toward you side (room side) and raise the grille upward.
10. Remove instrument panel assembly.
   - Remove the 2 fixing bolts on the SRS adjust bracket and the cross beam under the passenger inflator module (W/SRS).

CAUTION: For precautions on installation or removal of SRS — air bag system, refer to Supplemental RestraintSystem (SRS) — AIR BAG in Restraint section.

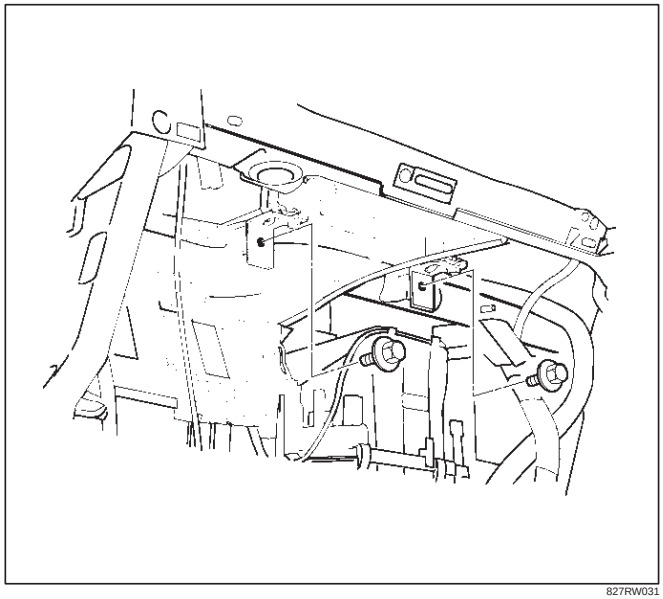

827RW031

- Disconnect the 3 air conditioner control cables on the unit side.
- Remove the instrument harness connectors (5 connectors on the drivers side and 3 connectors on the passenger side), the passenger inflator module connector, the radio antenna cable plug, and the ground cable fixing bolt on the center bracket.
- Remove the 4 bolts (4) and the 2 nuts (3) under the instrument panel assembly, and the upper left and the upper right bolts (2) and the center nut (1).

740RW106

11. Remove passenger inflator module (W/SRS).
    - From the back of the instrument panel, remove the 4 fixing nuts (2) on the passenger inflator module (3) and the 2 fixing nuts (1) and washers on the support bracket (4), then disengage the 2 clips in order to remove the passenger inflator module.

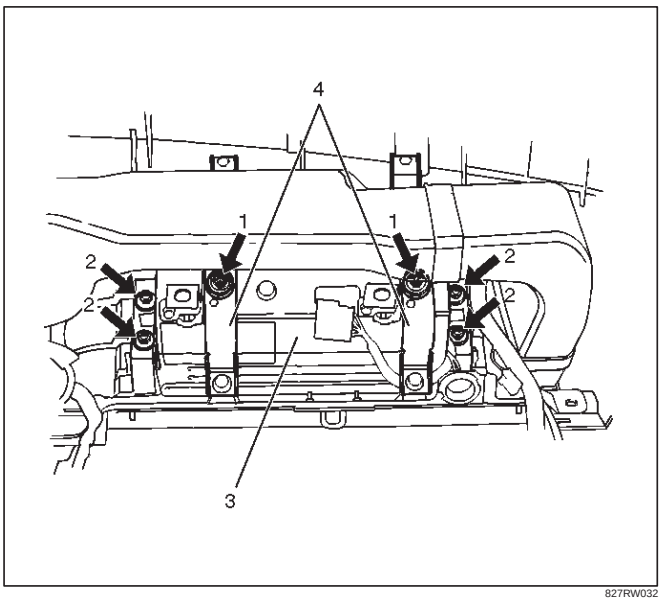

827RW032

12. Remove instrument panel cluster assembly.
    - Remove the 5 fixing screws (2) and pull the main unit toward you and remove the clips at the 4 positions (1). Disconnect the switch connectors.

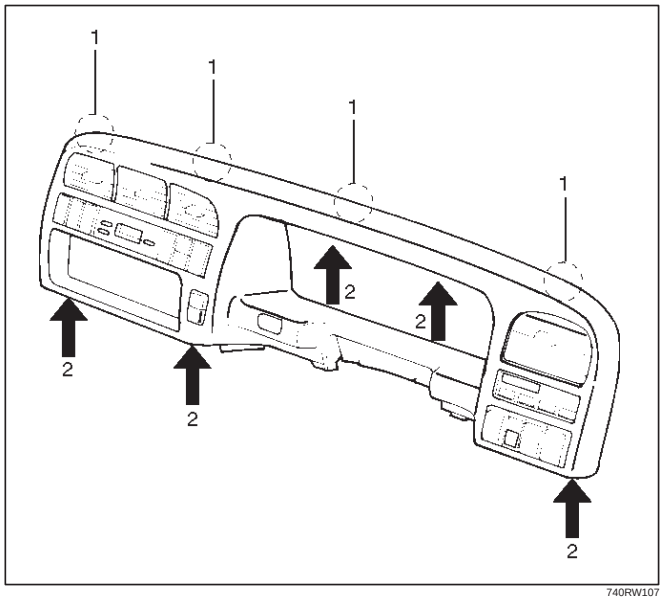

740RW107

13. Remove meter assembly.
    - Remove the 4 meter assembly fixing screws and disconnect the meter harness connectors.

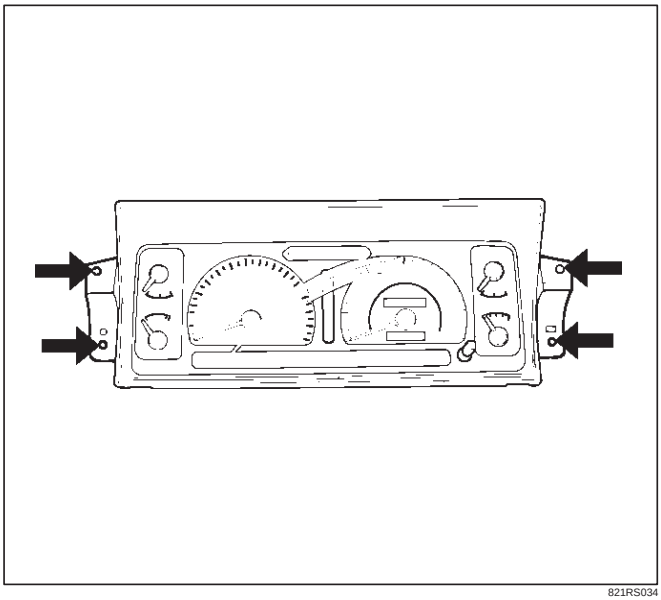

821RS034

14. Remove control lever assembly.
    - Refer to Control Lever Assembly And/Or Control Cables in Heating And Ventilation section.
15. Remove radio assembly.
    - Remove 2 fixing screws.
16. Remove vent duct assembly.
    - Remove 5 fixing screws.
17. Remove instrument harness assembly.
    - Remove the 4 fixing screws, fasteners at the 4 positions and the clips at the 7 positions.
18. Remove side defroster grille.

NOTE: For the order of removal steps in which each items contained in the instrument panel assembly are removed individually, refer to the chart.

Installation

To install, follow the removal steps in the reverse order.

Order Of Removal/Installation Steps For Each Item

Removal Item	Removal Procedure	Removal Step
Front console assembly	Shift knob (M/T), Power & Winter SW (A/T), Transfer knob, Seat heater/Miller SW conn. and 4 screws	1, 2
Lower cluster assembly	3 screws, Ciger lighter conn. and Ashtray illumination conn.	1~3
Glove box	2 screws	4
Instrument panel passenger lower cover	7 screws and 1 clip	1~5
Passenger knee bolster reinforcement	4 nuts and 4 bolts	1~6
Instrument panel driver lower cover	Engine hood opening fixing screw, 2 screws, 1 bolt, 1 clip and fasteners at 4 positions	1~3, 7
Driver knee bolster	6 nuts	1~3, 7, 8
Front defroster grille	Claws at 8 positions	9
Instrument panel assembly	2 bolts (SRS adjust bracket~ cross beam), A/C control cable (Unit side at 3 position), Instrument harness connector (Driver side 5 position, assist side 3 position), SRS module conn., Radio antenna jack, Earth cable, 9 bolts and 3 nuts	1~10
Passenger inflator module	4 nuts (SRS module~Instrument panel), 2 nuts 0 and 2 washers (SRS module~support bracket) and 2 clips	1~6, 11
Instrument panel cluster	5 Screws, fastener at 4 position and each SW conn.	1~3, 7, 12
Meter assembly	4 screws and connectors	1~3, 7, 12, 13
A/C control panel assembly	4 screws and connectors	1~3, 7, 12, 14
Radio assembly	2 screws	1~3, 15
Vent duct assembly	5 screws	1~10, 16
Instrument harness assembly	4 screws, fasteners at 4 position, and clips at 7 position	1~10, 17
Side defroster grille		18

M/T = Manual Transmission
A/T = Automatic Transmission
SRS = Supplemental Restraint System
A/C = Air Conditioning

Cross Beam Assembly

Parts Location

This illustration is based on RHD and W/SRS

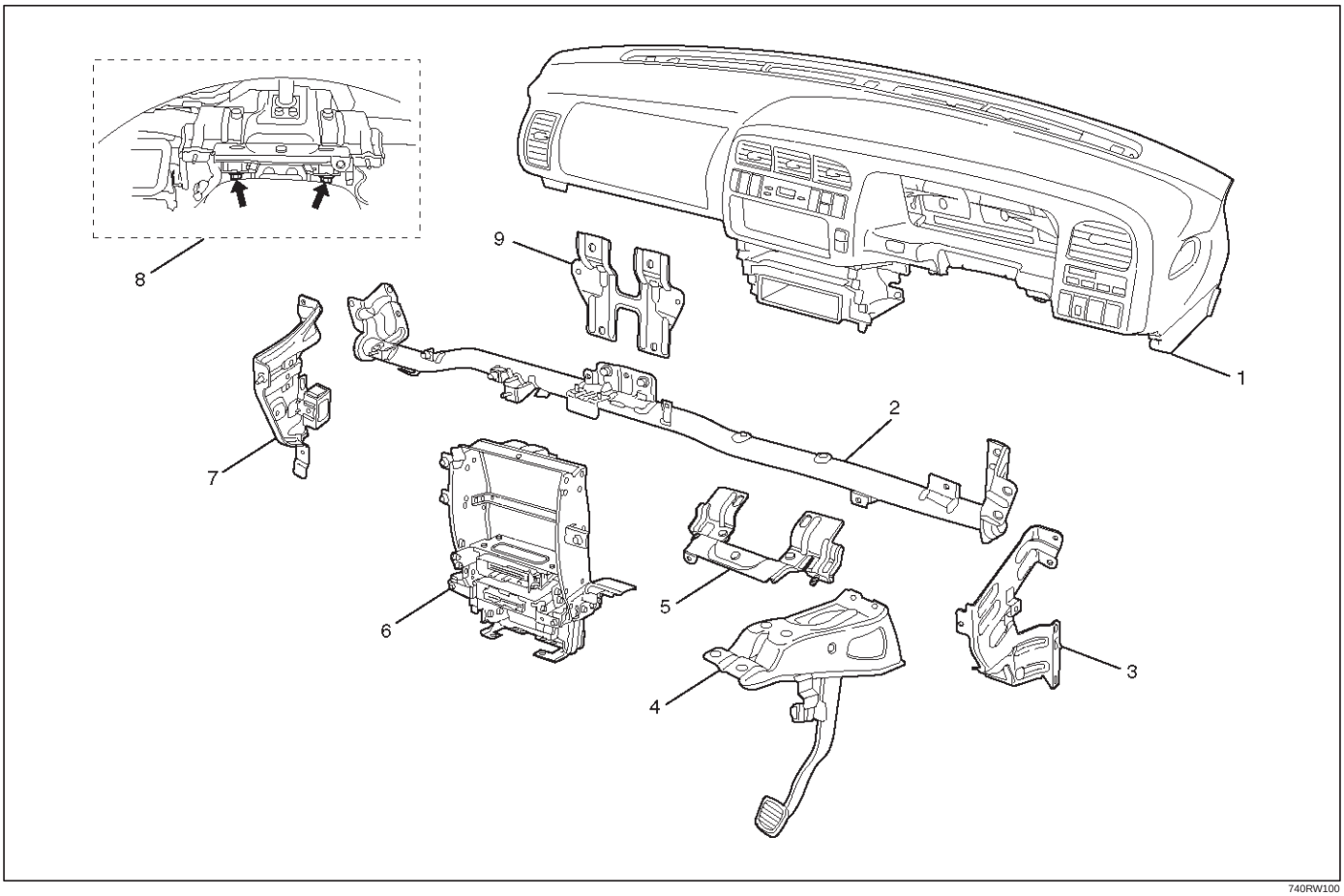

740RW100

Legend

(1) Instrument Panel Assembly
(2) Cross Beam Assembly
(3) Side Support Bracket Assembly (RH)
(4) Brake Pedal Mounting Bracket Assembly
(5) Steering Support Bracket Assembly
(6) Instrument Panel Center Bracket
(7) Side Support Bracket Assembly (LH)
(8) Steering Column Fixing Bolts
(9) Cross Beam Center Bracket

Removal

1. Disconnect battery ground cable.
2. Remove instrument panel assembly.
   - Refer to Instrument Panel Assembly in this section.
3. Remove side support bracket assembly (LH/RH).
   - Remove the 4 fixing bolts on both sides.
4. Remove cross beam center bracket
   - Remove 2 fixing nuts.
5. Remove instrument panel center bracket.
   - Disconnect the PCM and EBCM connector.
   - Remove the DERM (SRS) with 3 fixing nuts.

CAUTION: For precautions on installation or removal of SRS — air bag system, refer to Supplemental Restraint System (SRS) — AIR BAG in Restraint section.

- Remove the 2 fixing nuts (upper) and the 4 fixing bolts (lower).

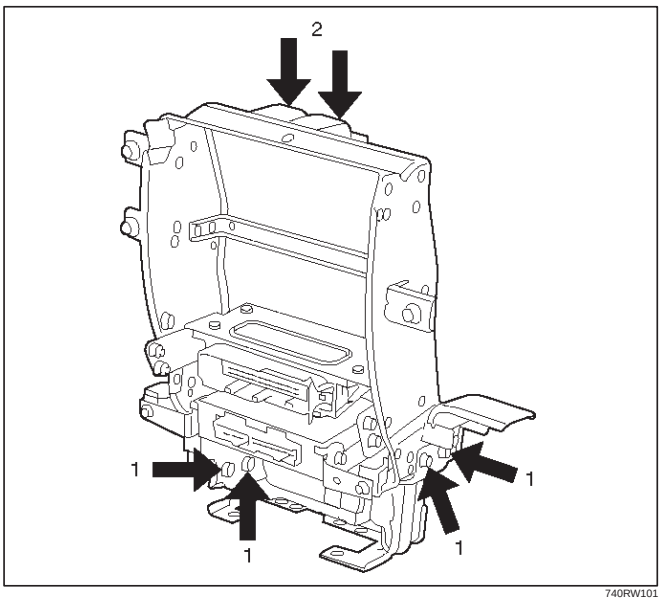

740RW101

6. Remove steering column fixing bolts.
   - Remove 2 fixing bolts.

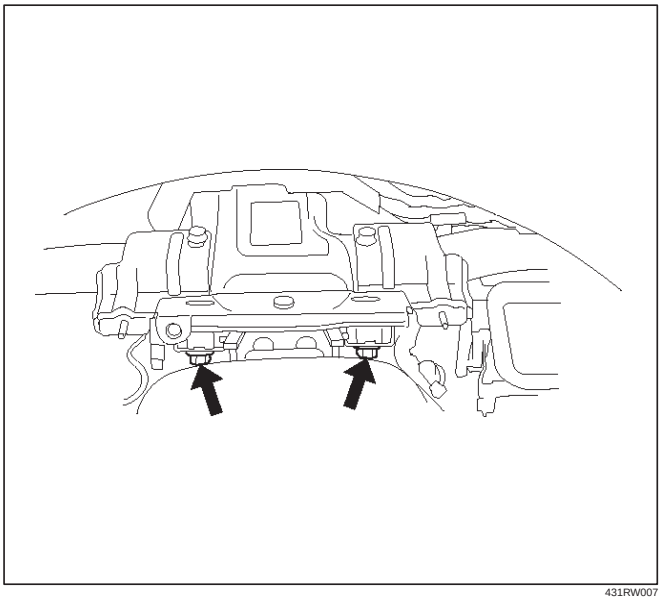

431RW007

7. Remove brake pedal mounting bracket assembly.
   - Disconnect the 2 brake pedal mounting bracket assembly fixing nuts, and remove the antitheft controller.
   - Disconnect the brake pedal link and the brake switch, and remove the 4 fixing bolts and the nuts on the bracket.

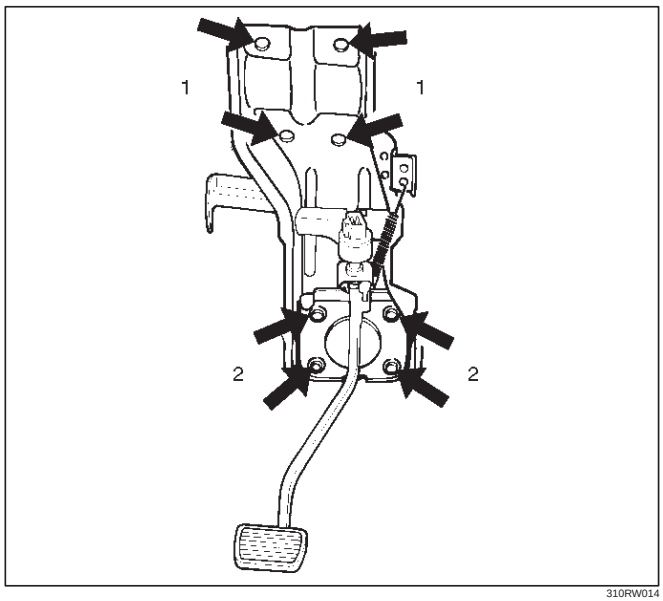

310RW014

8. Remove steering support bracket assembly.
   - Remove the 2 fixing bolts (upper side) (1) and the 3 fixing nuts (lower side) (2).

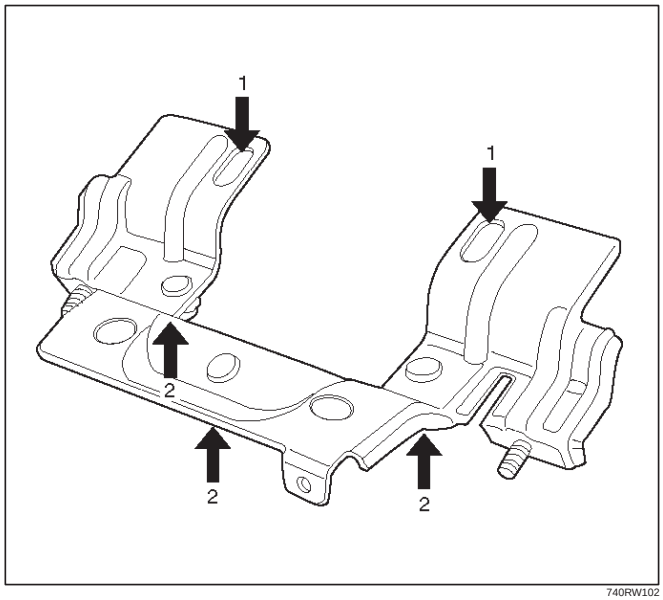

740RW102

9. Remove cross beam assembly.
   - Disconnect the harness clips from the crossbeam assembly, and remove 2 fixing bolts on both sides and 2 fixing nuts in the center.

Installation

To install, follow the removal steps in the reverse order.

Front Door Assembly

Parts Location

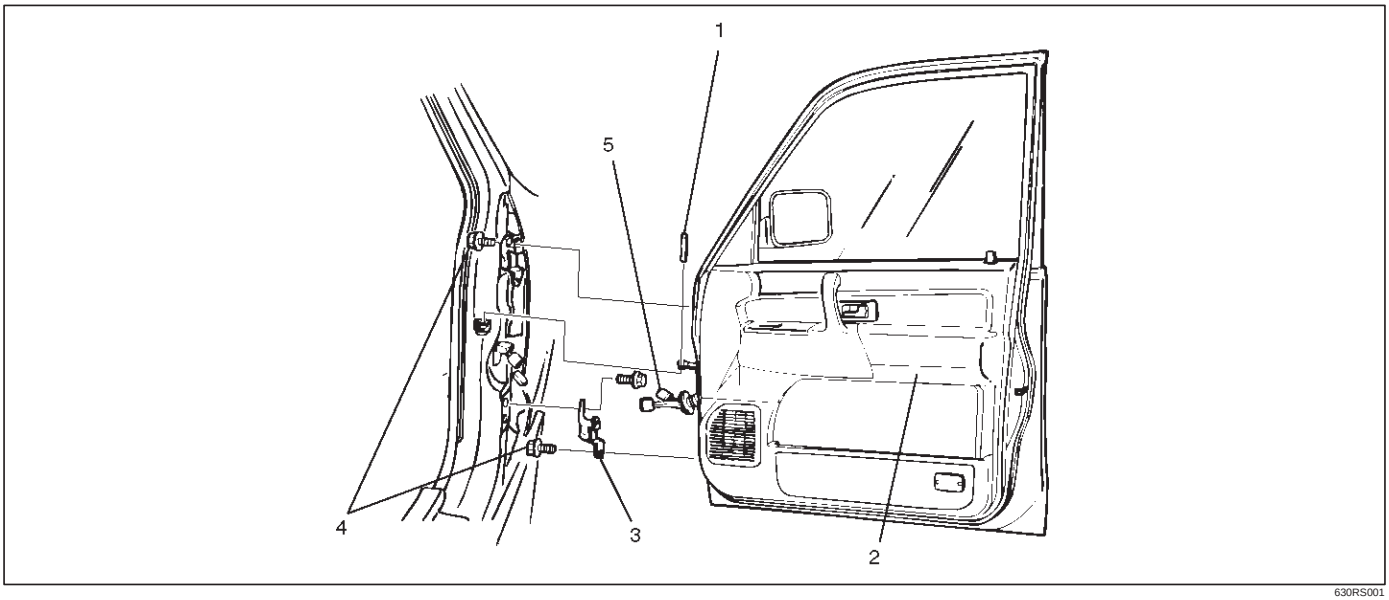

630RS001

Legend

(1) Door Check Arm Pin
(2) Front Door Assembly
(3) Door Hinge Assembly
(4) Hinge Bolt
(5) Door Harness Connection

Removal

1. Disconnect the battery ground cable.
2. Remove door check arm pin (1).

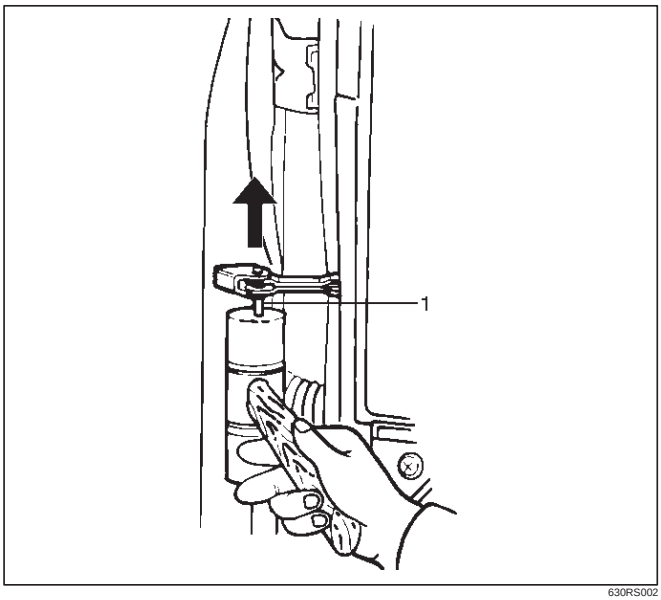

630RS002

3. Remove hinge bolt.
   - Align the hinge bolt to the door side hinge and put a marker on it.
4. Remove door harness connection (2).
   - Pull the door harness grommet out in order to disconnect the harness connection.

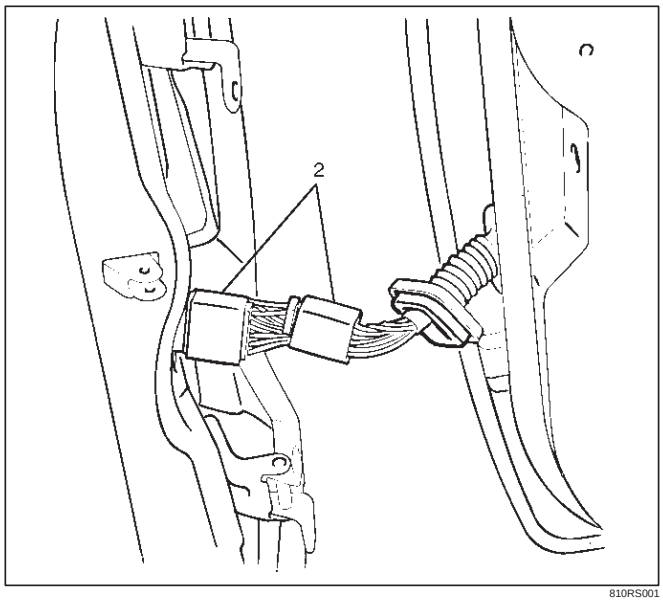

810RS001

5. Remove front door assembly.

Installation

To install, follow the removal steps in the reverse order, noting the following points:

1. Align the door fitting to the body by referring to Body Dimensions in this section.
2. Tighten the door hinge bolts to the specified torque.

   Torque : 34 N•m (3.5kg·m/25 lb ft)
3. Apply chassis grease to the door check arm pin and the door hinge moving surface.

Rear Door Assembly

Parts Location

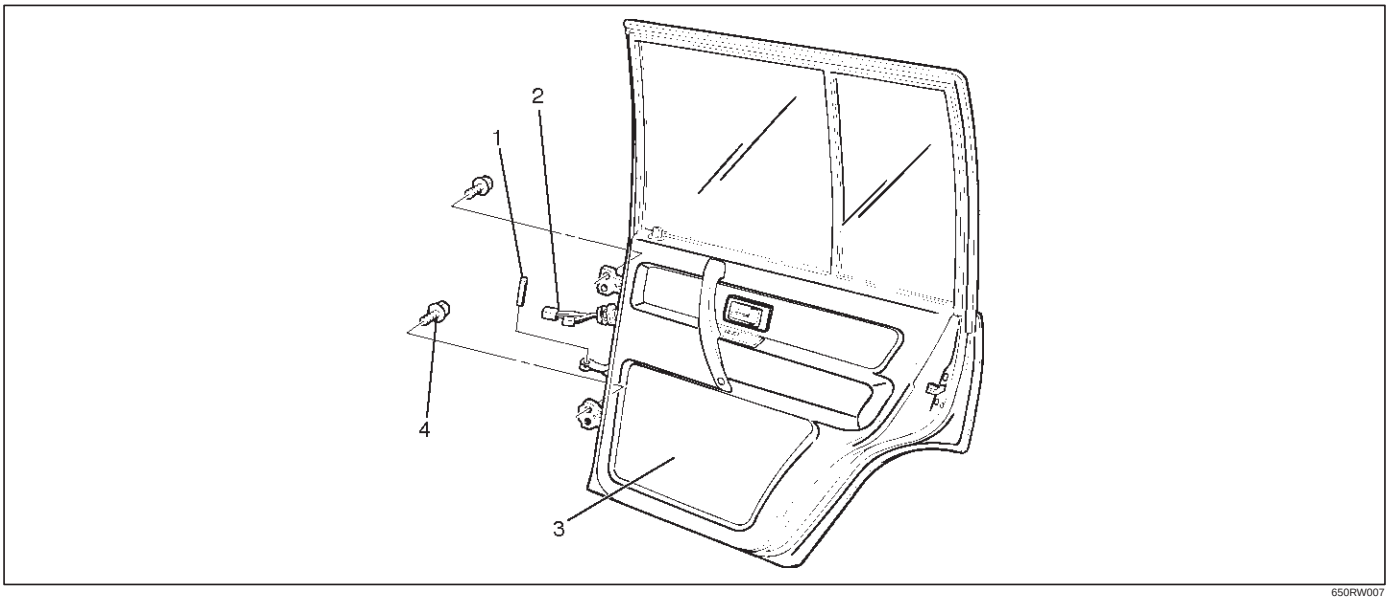

650RW007

Legend

(1) Door Check Arm Pin
(2) Door Harness Connection
(3) Rear Door Assembly
(4) Hinge Bolt

Removal

1. Disconnect the battery ground cable.
2. Apply a setting mark on the body side hinge.
3. Remove door check arm pin (1).

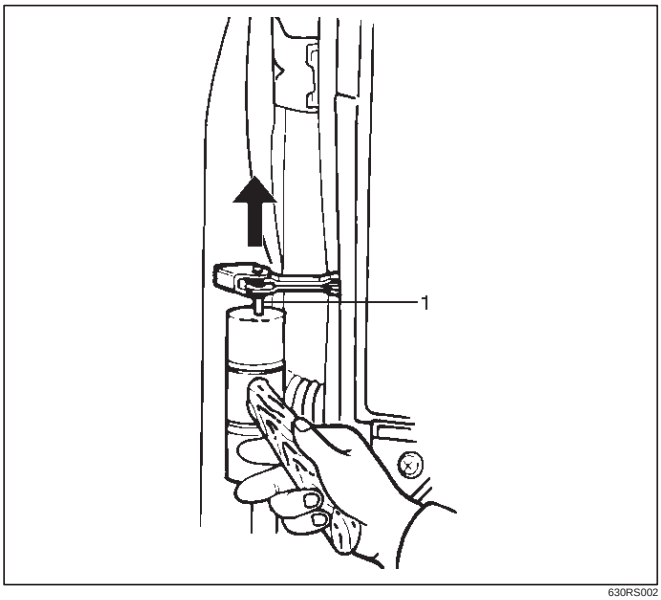

630RS002

4. Remove hinge bolt.
   - Open the front door and remove the body side hinge bolts (2).

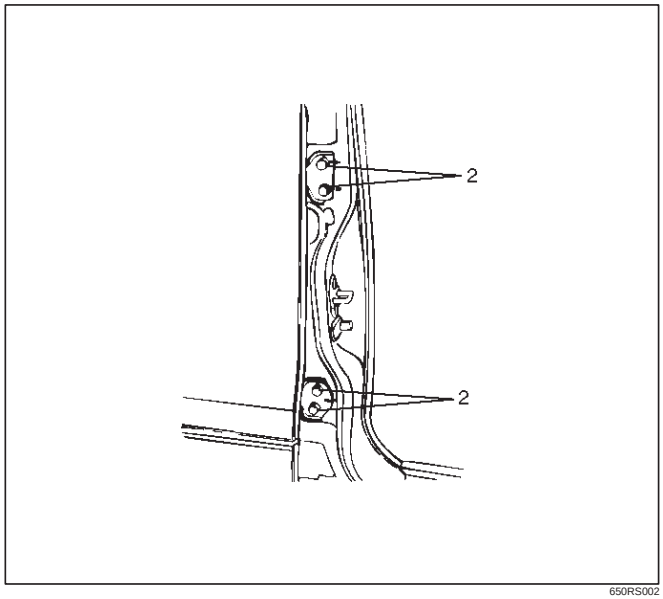

650RS002

5. Remove door harness connection (3).
   - Pull the door harness grommet out in order to disconnect the door harness connection.

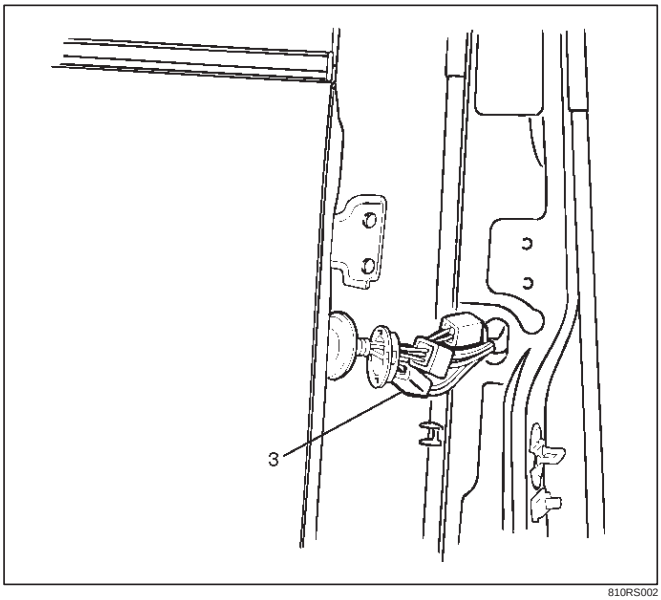

810RS002

6. Remove door assembly

Installation

To install, follow the removal steps in the reverse order, noting the following points.

1. Align the door fitting to the body by refer to Body Dimensions in this section.
2. Tighten the door hinge bolts to the specified torque.

   Torque : 34 N•m (3.5kg·m/25 lb ft)
3. Apply chassis grease to the check arm pin and the door hinge moving surface.

Door Strikers

Adjustment

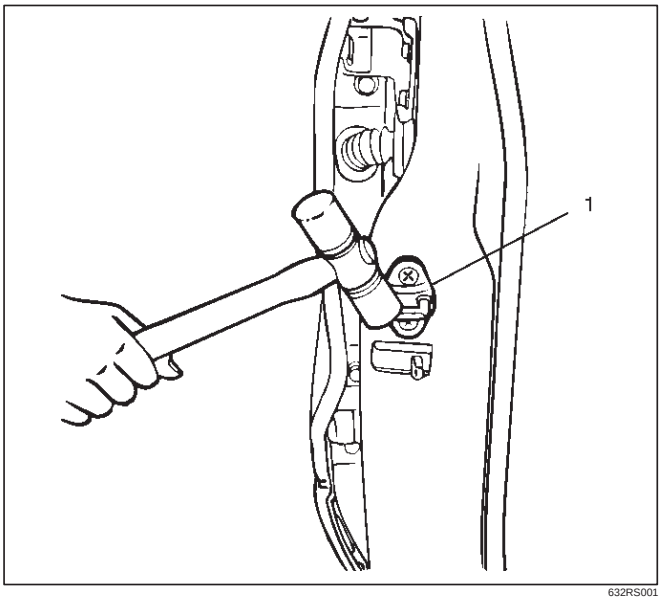

632RS001

1. Loosen the striker (1) screws.
2. Tap with a plastic hammer to align.
3. Tighten the striker screws.

   Torque : 15 N•m (1.5kg·m/11 lb ft)

Door Check Arm Assembly (Front & Rear)

Parts Location

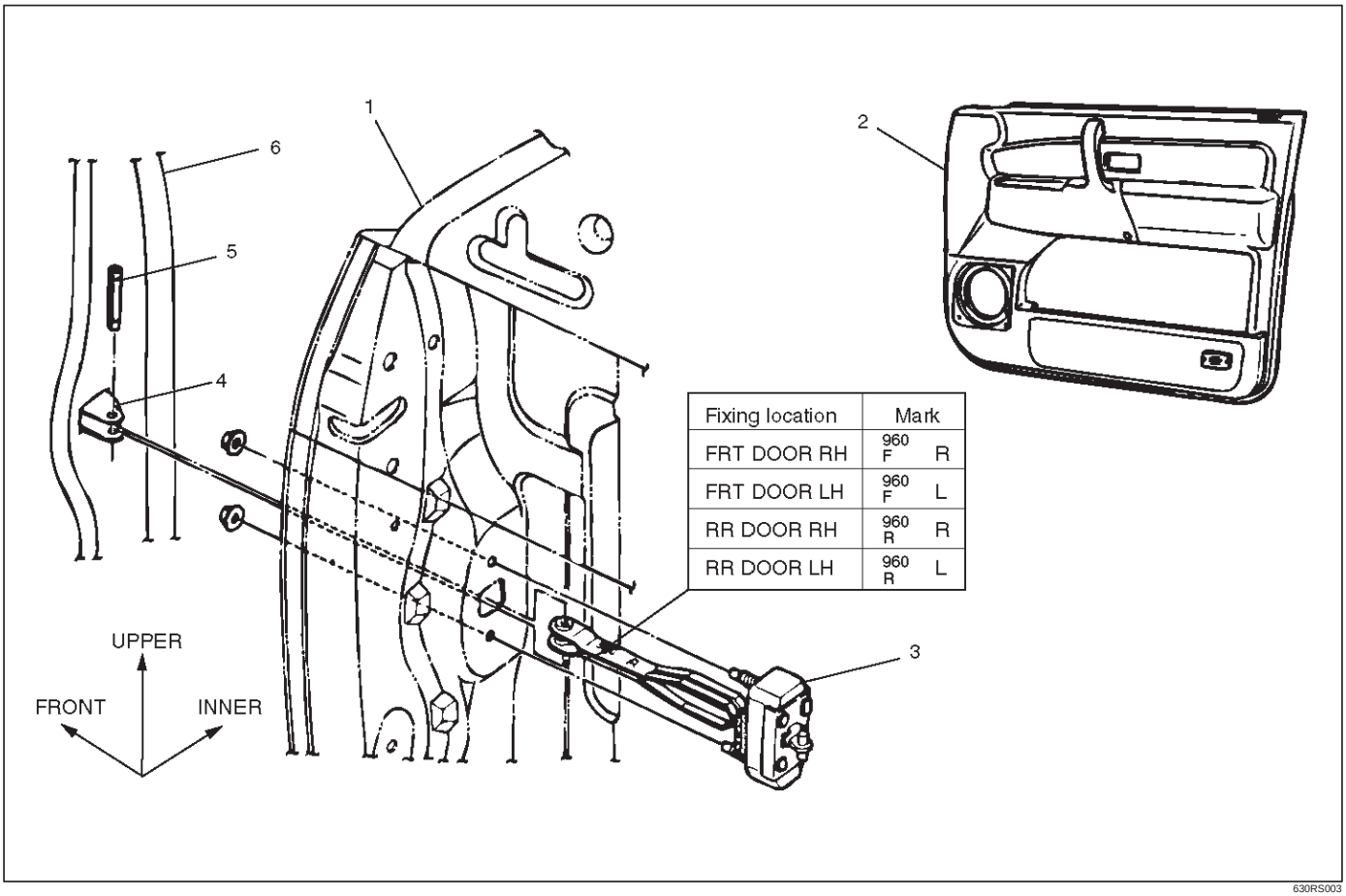

630RS003

Legend

(1) Front or Rear Door
(2) Door Trim Panel
(3) Check Arm Assembly
(4) Check Arm Pin Bracket
(5) Check Arm Pin
(6) Front or Center Pillar

Removal

1. Disconnect the battery ground cable.
2. Remove door trim panel.
   - Refer to Front Door Trim Panel in Exterior / Interior Trim section.
3. Remove check arm pin (1).

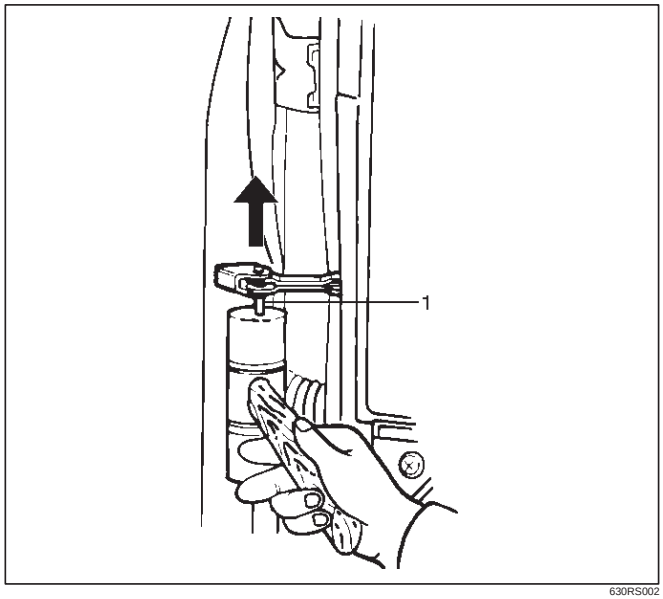

630RS002

4. Remove check arm assembly.
   - Carefully peel off the water proof sheet as much as necessary, for check arm removal.

Installation

To install, follow the removal steps in the reverse order, noting the following point.

1. When installing the check arm assembly, note its marking to ensure using the appropriate part.
2. Tighten the check arm fixing nuts to the specified torque.

   Torque : 13 N•m (1.3kg·m/113 lb in)
3. Apply chassis grease to the check arm pin moving surface.

Front Window Regulator, Glass And Glass Run

Parts Location

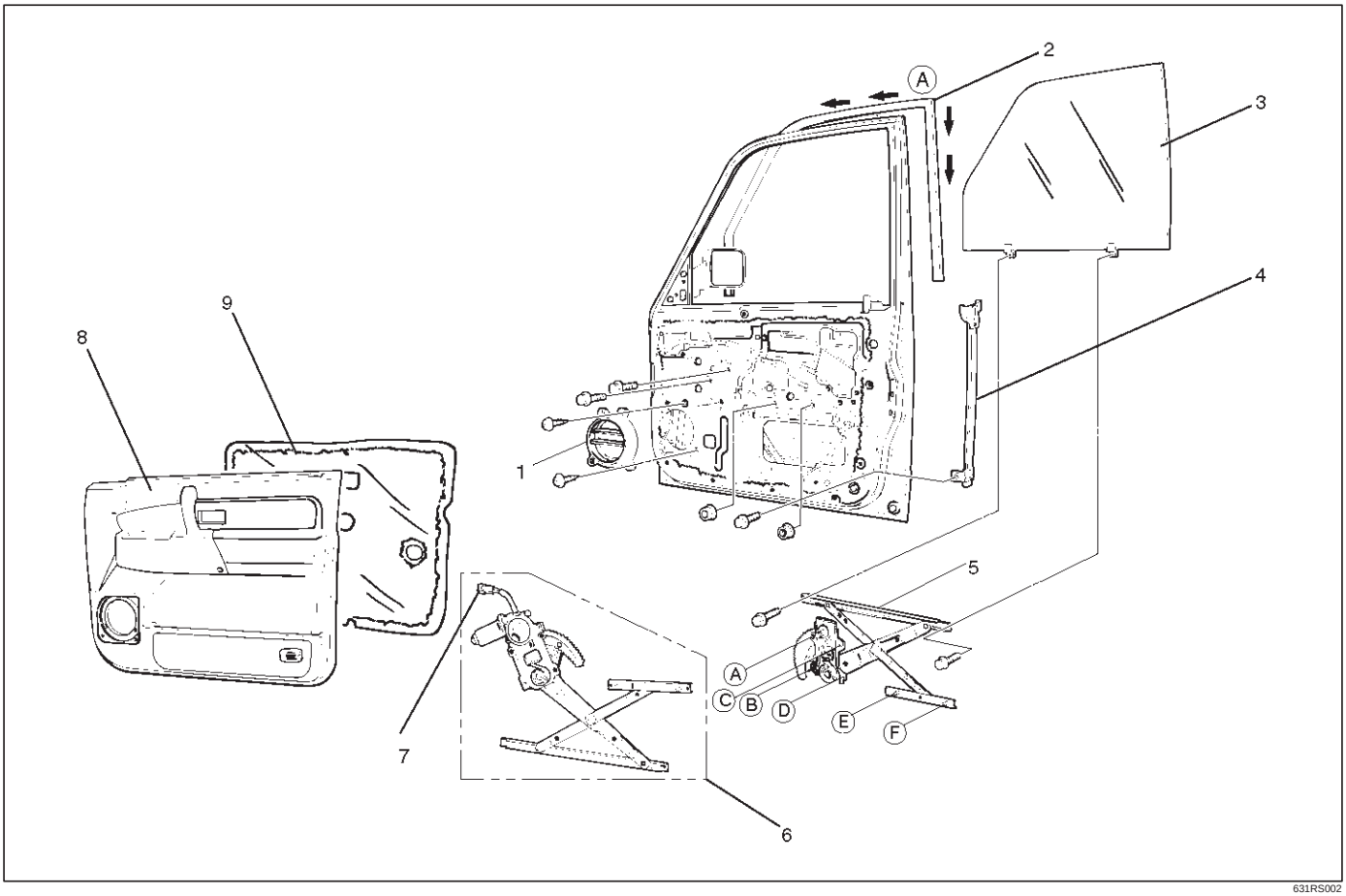

631RS002

Legend

(1) Speaker Box
(2) Glass Run
(3) Glass
(4) Rear Guide Rail
(5) Window Regulator
(6) Window Regulator with Power Window
(7) Window Regulator Motor Connector
(8) Door Trim Panel
(9) Waterproof Sheet

Removal

1. Disconnect the battery ground cable.
2. Remove door trim panel.
   - Refer to Front Door Trim Panel in Exterior / Interior section.
3. Remove speaker box.

4. Remove waterproof sheet.
   - Take notice of the door harness and the grommet, peel the waterproof sheet off the door panel carefully.

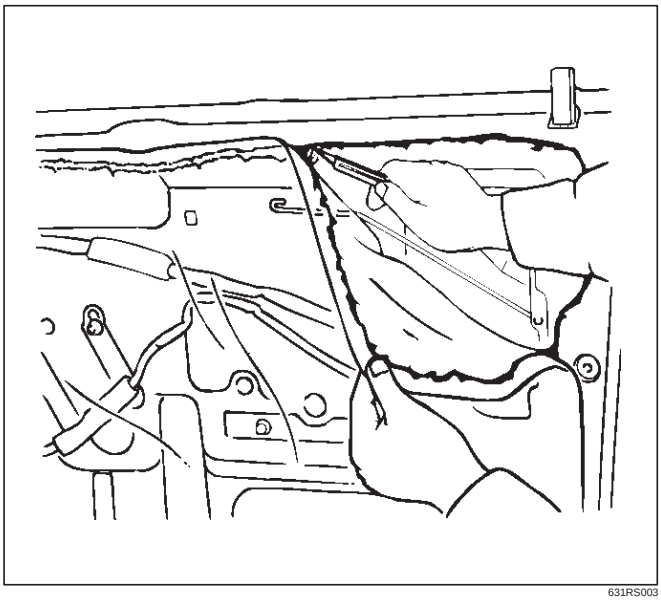

631RS003

5. Remove glass.
   - Bring the glass (1) down to the position where the fixing bolts can be seen.
   - Remove the glass fixing bolts from the window regulator (2) and lower the front side of the glass.

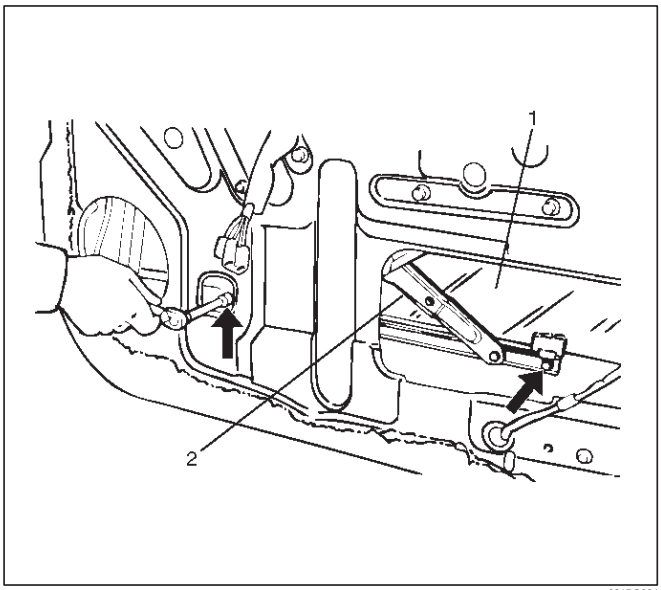

631RS004

   - When the front side of the glass comes off the glass run (3), turn the glass inside out and pull it up from its rear side.

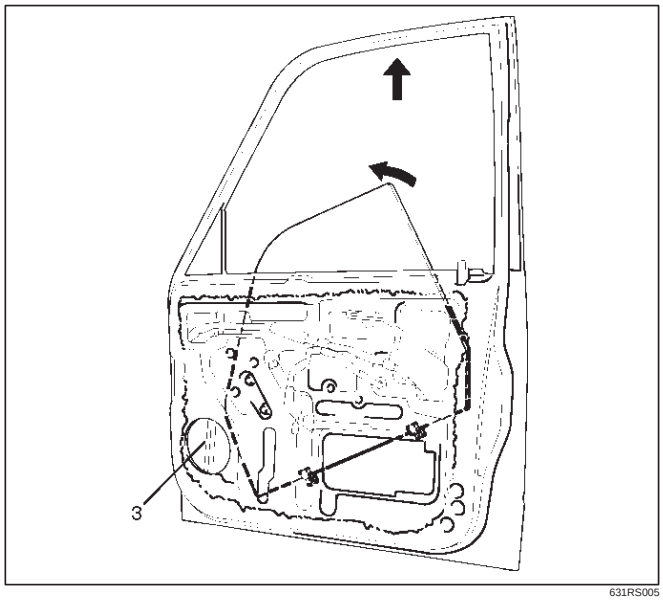

631RS005

6. Remove window regulator.
   - Remove the window regulator fixing bolts (4) and the rear guide rail fixing bolt (5).
   - Disconnect the window regulator motor harness connector, if equipped with power windows.

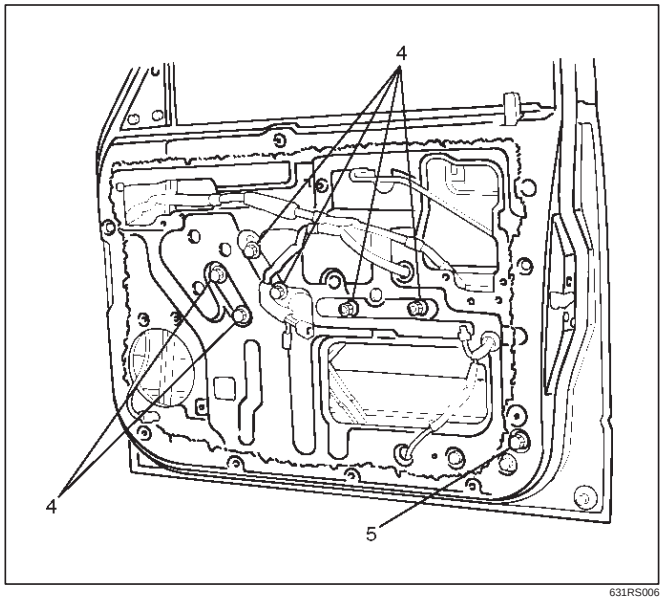

631RS006

7. Remove glass run.
   - Pull the glass run (6) out from the door frame groove.

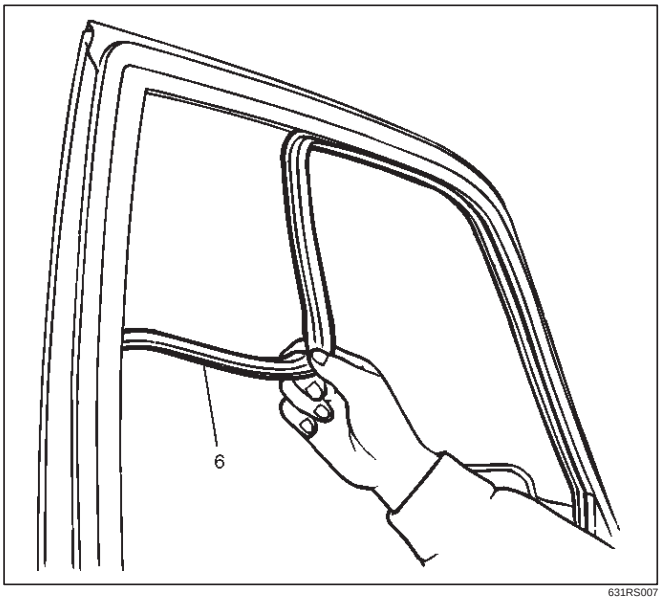

631RS007

8. Remove rear guide rail.

Installation

To install, follow the removal steps in the reverse order, noting the following points.

1. Apply soap and water to the door frame groove. Insert the glass run (1) to the door frame from the A corner in the arrow–marked directions.
   Install the glass run with its wider end pointed to the inside of the vehicle.

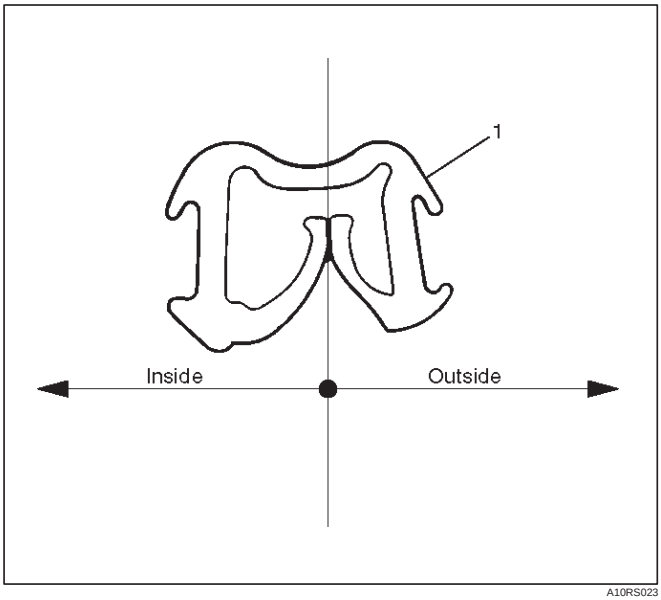

A10RS023

2. Set the glass into the door panel with the front side of the glass lowered and insert the rear side of the glass into the glass run (1). Then insert the front side of the glass into the glass run in order to install the glass to the glass run while raising it up along the glass run.
3. Tighten the window regulator and the glass fixing bolts and nuts to the specified torque.

   Torque : 8 N•m (0.8kg·m/69 lb in)

4. Check to see of the window regulator operates smoothly and the glass opens and closes properly. Install the waterproof sheet with no clearance between the door panel and the waterproof sheet.

Rear Window Regulator And Glass

Parts Location

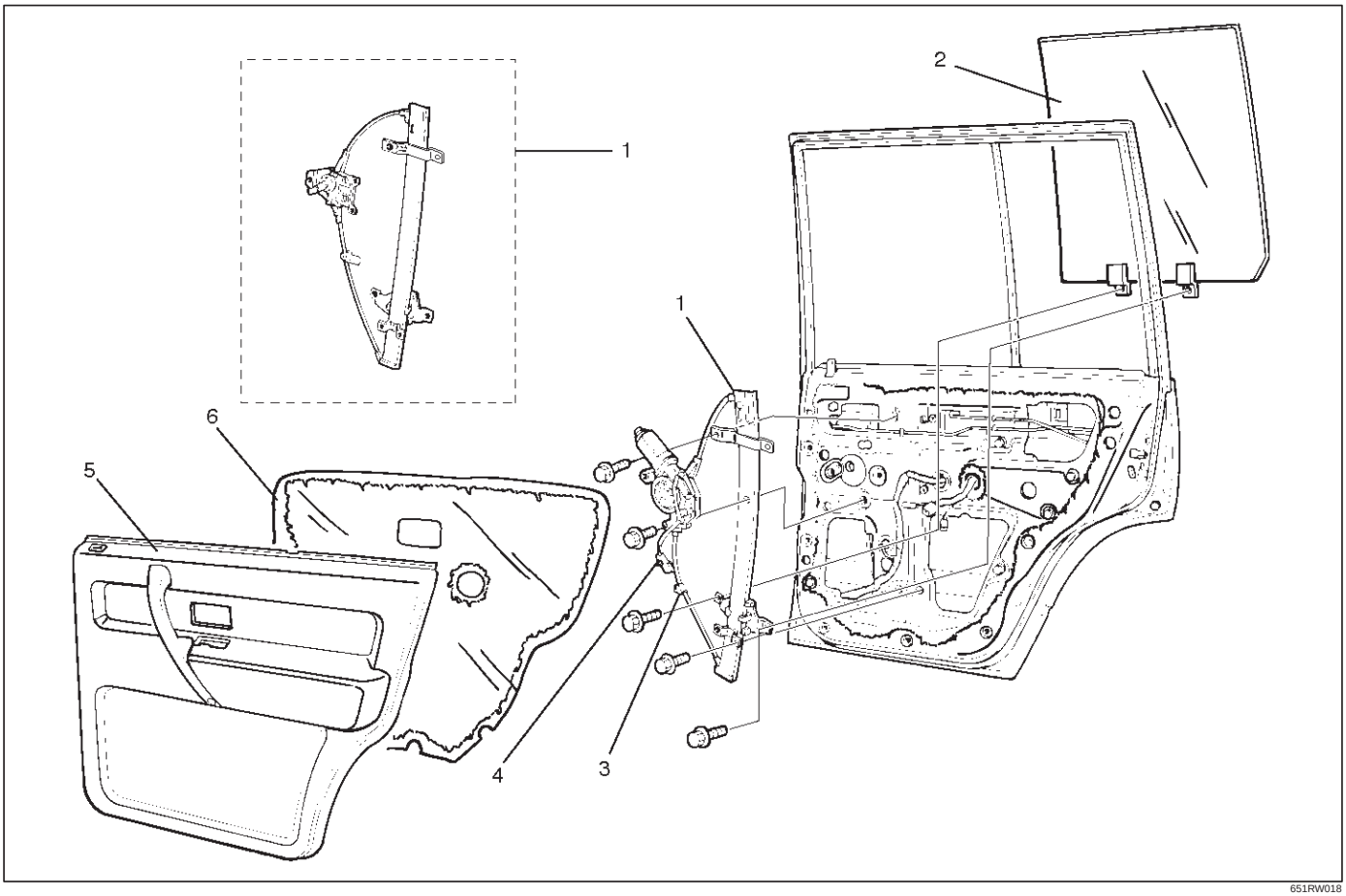

651RW018

Legend

(1) Window Regulator
(2) Glass
(3) Cable Fixing Clip
(4) Window Regulator Motor Connector
(5) Door Trim Panel
(6) Waterproof Sheet

Removal

1. Disconnect the battery ground cable.
2. Remove door trim panel.
   - Refer to Rear Door Trim Panel in Exterior / Interior Trim section.
3. Remove waterproof sheet (1).
   - Taking notice of the door harness, peel the waterproof sheet off the door panel carefully.

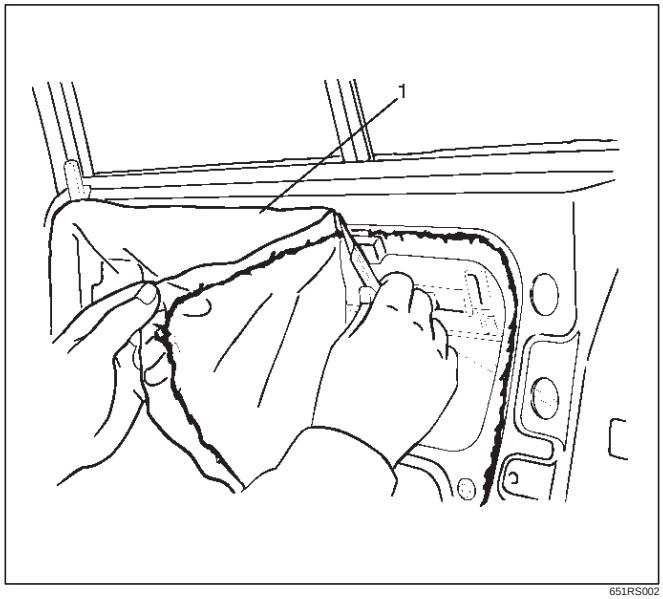

651RS002

4. Remove glass.
   - Bring the glass down to the position where the bolt can be seen.
   - Remove the sash division 2 fixing bolts (1) and then remove the glass fixing bolt to remove the glass upwards.

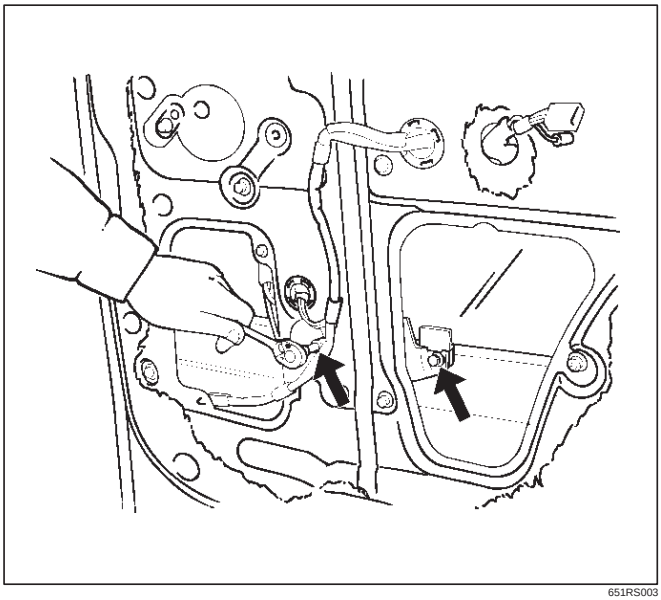

651RS003

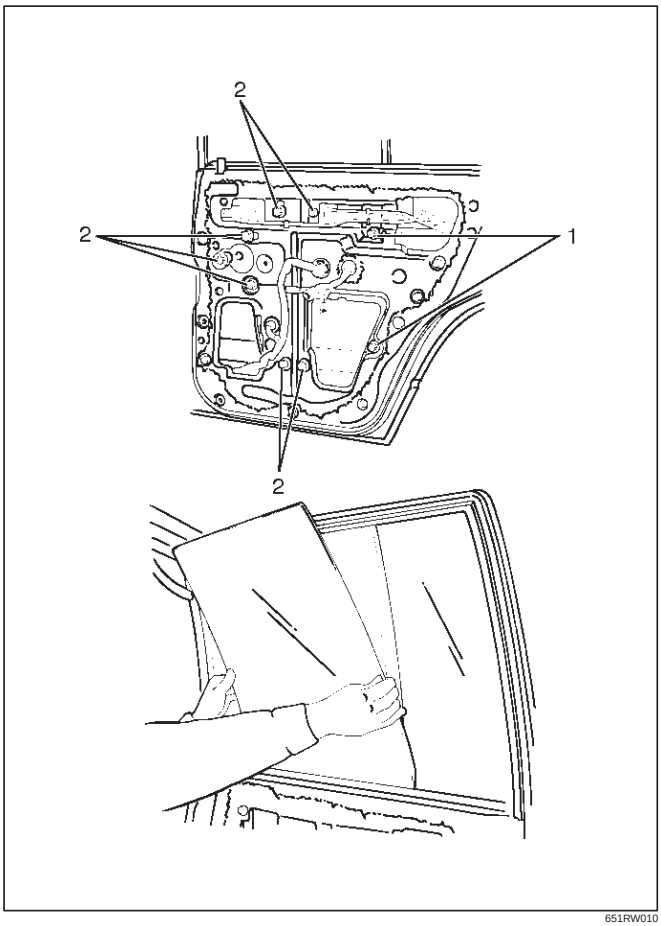

651RW010

5. Remove window regulator.
   - Disconnect the regulator motor connector (4) and remove the window regulator cable fixing clip (3) from the door panel, if model is equipped with power windows.
   - Remove the window regulator 7 fixing bolts (2) and pull the regulator out from the lower hole of the door panel.

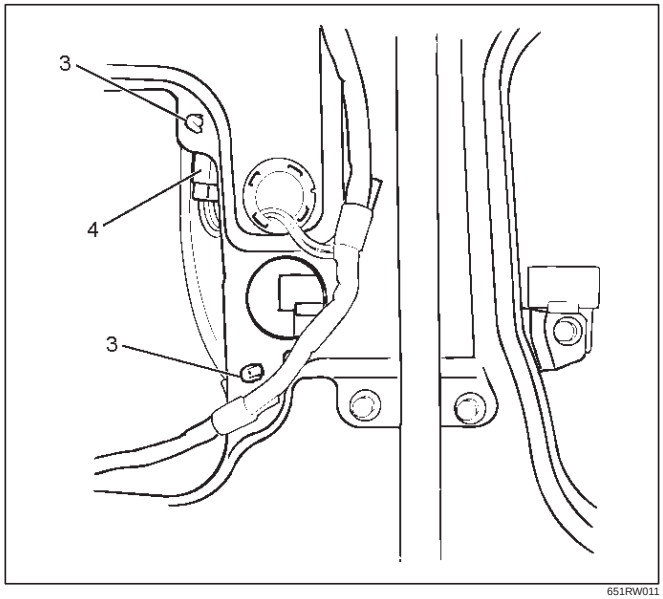

651RW011

Installation

To install, follow the removal steps in the reverse order, noting the following points.

1. Tighten the window regulator and the glass fixing bolts to the specified torque.

   Torque : 8 N•m (0.8kg·m/69 lb in)

2. Install the waterproof sheet with no clearance between the door panel and the waterproof sheet.

Rear Door Fixed Glass And Glass Run

Parts Location

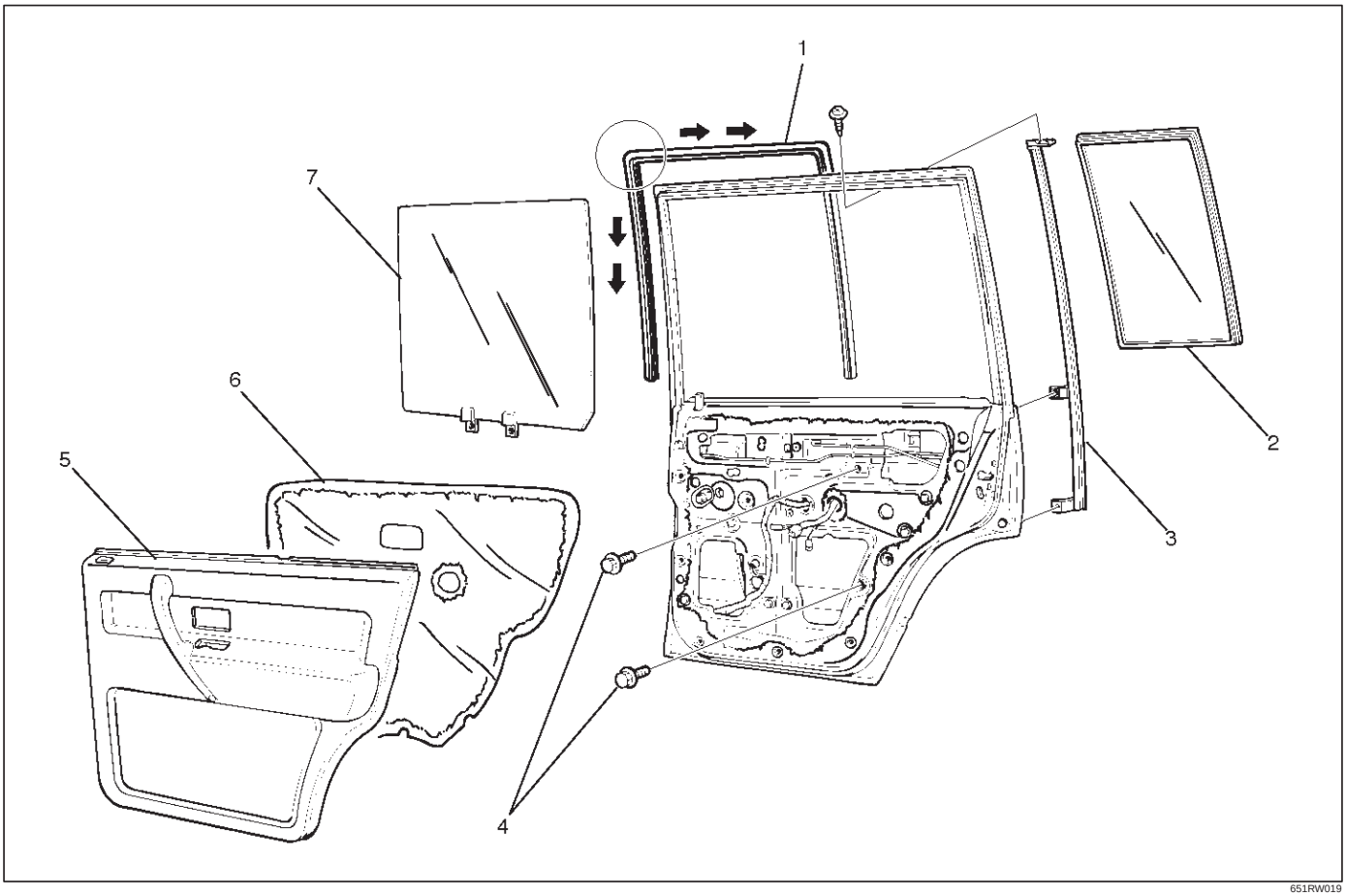

651RW019

Legend

(1) Glass Run
(2) Rear Fixed Glass
(3) Sash Division
(4) Sash Division Fixing Bolts
(5) Door Trim Panel
(6) Waterproof Sheet
(7) Glass

Removal

1. Disconnect the battery ground cable.
2. Remove door trim panel.
3. Remove waterproof sheet.
4. Remove glass.
   - Refer to Window Regulator and Glass in this section.
5. Remove glass run.
   - Pull the glass run (1) out from the door frame.

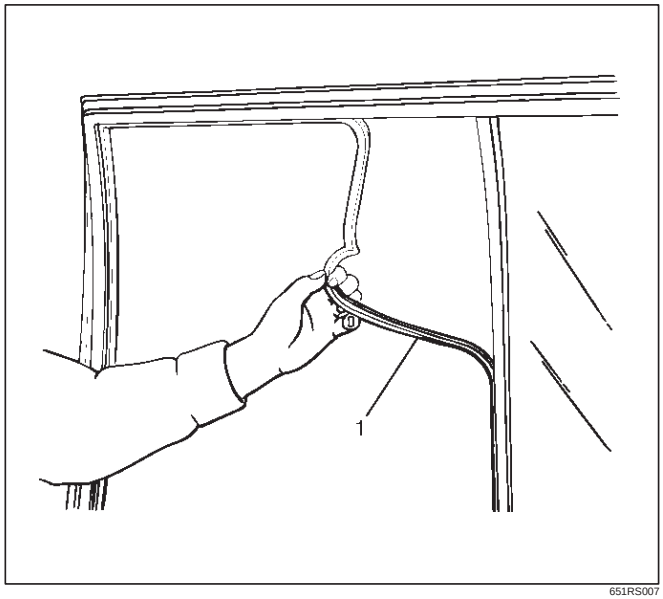

651RS007

6. Remove sash division (2).

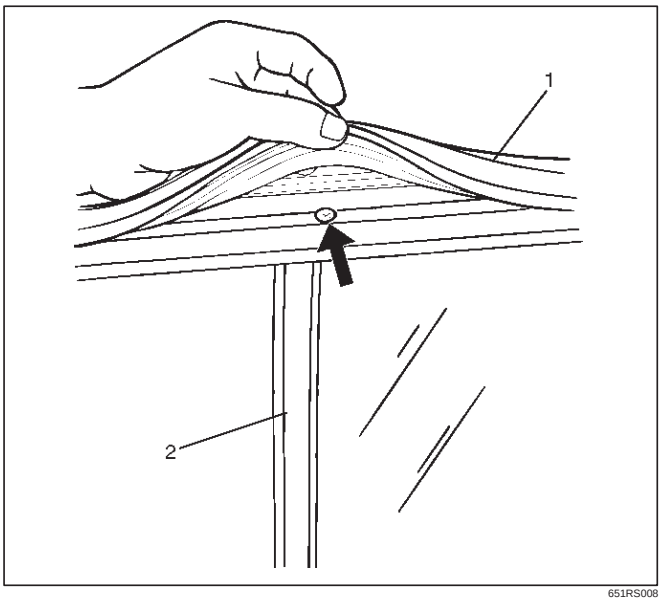

651RS008

7. Remove door fixed glass.

Installation

To install, follow the removal steps in the reverse order, noting the following points.

1. Apply soap and water to the fixed glass.
2. Apply soap and water to the door groove and insert the glass run (3) to the frame from the corner in the arrow-marked directions.
3. Be sure to install the glass run with its end pointed to the inside of the vehicle.

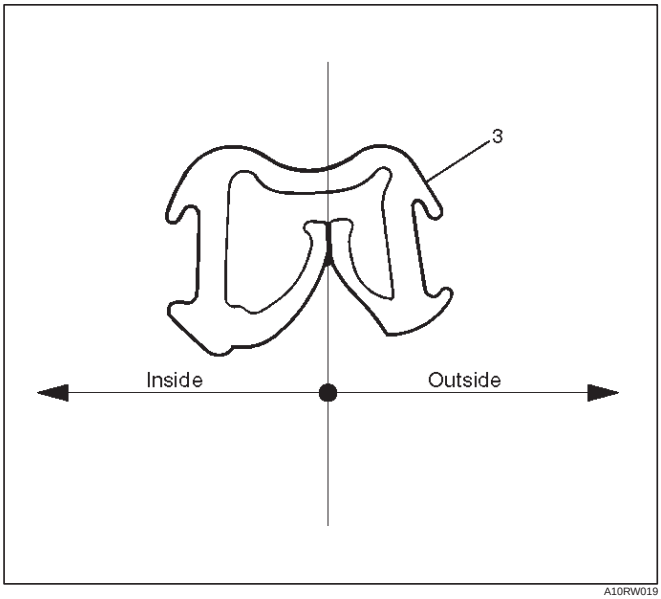

A10RW019

Front Door Sash Moulding

Parts Location

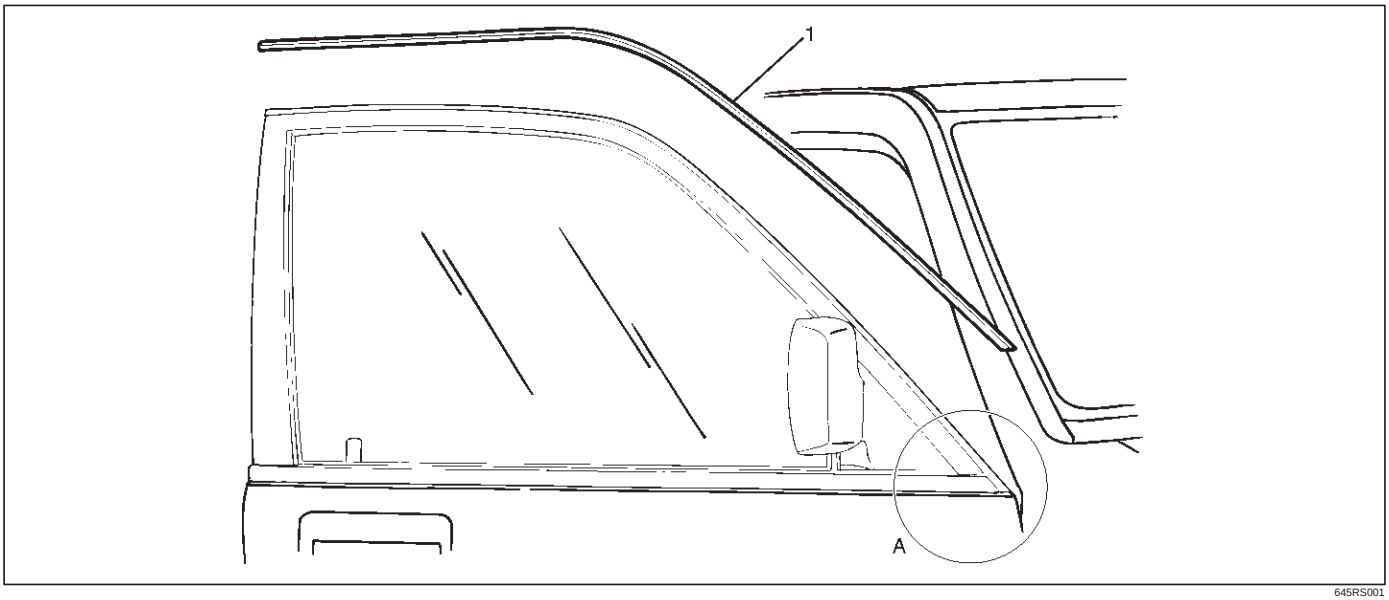

645RS001

Legend

(1) Front Door Sash Moulding

Removal

1. Remove front door slash moulding.
   - To avoid the weatherstrip (1) and pry the door sash moulding (2) out from the door panel.

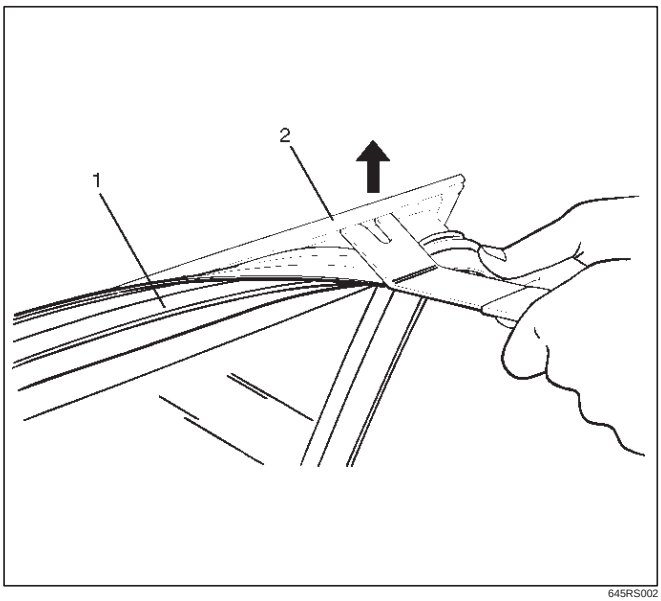

645RS002

Installation

1. Install the front door sash moulding.
   - Assemble the edge portion (A portion) of the moulding so that the clearance between the moulding and the waist seal becomes 1 mm (0.04 in).

Rear Door Moulding

Parts Location

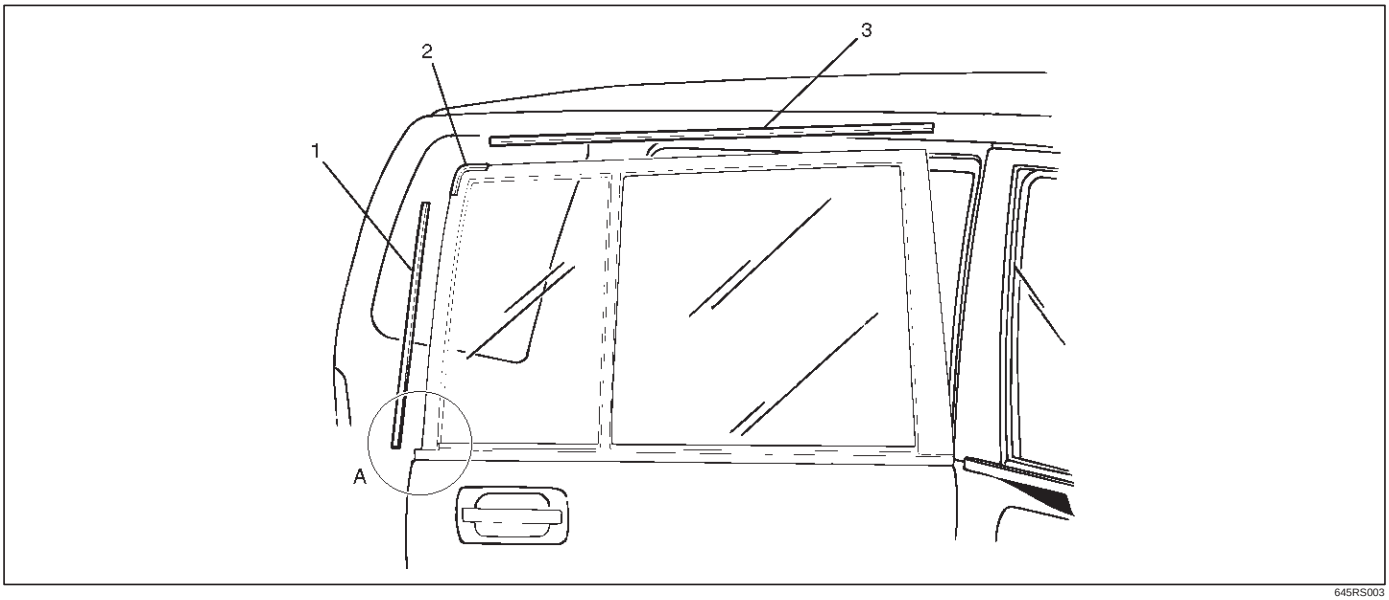

645RS003

Legend

(1) Rear Door Side Moulding
(2) Rear Door Corner Moulding
(3) Rear Door Upper Moulding

Removal

1. Disconnect the battery ground cable.
2. Remove rear door side moulding.
3. Remove rear door upper moulding.
4. Remove rear door corner moulding.
   - Avoiding the weatherstrip (3), pry the moulding (2) out from the door frame (1).

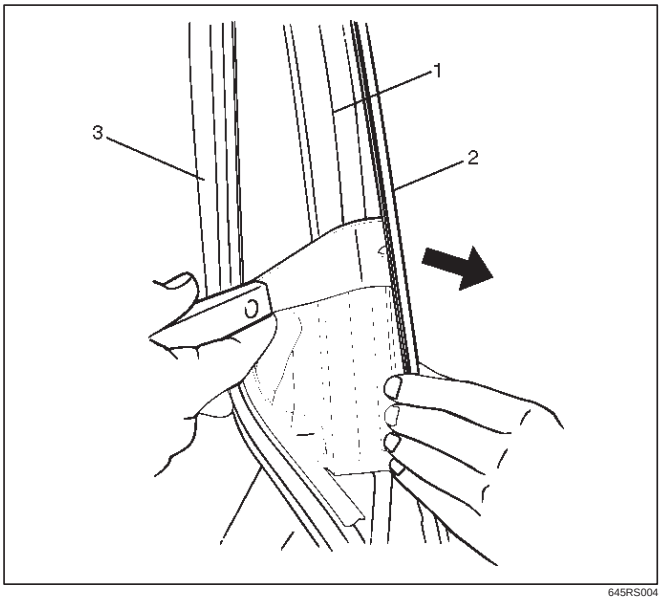

645RS004

Installation

To install, follow the removal steps in the reverse order, noting the following points.

1. Install each moulding with no clearance between each piece of moulding.
2. Assemble the edge portion (A portion) of the moulding so that the clearance between the rear side moulding and the waist seal is 1 mm (0.04 in).

Front Door Waist Seal

Parts Location

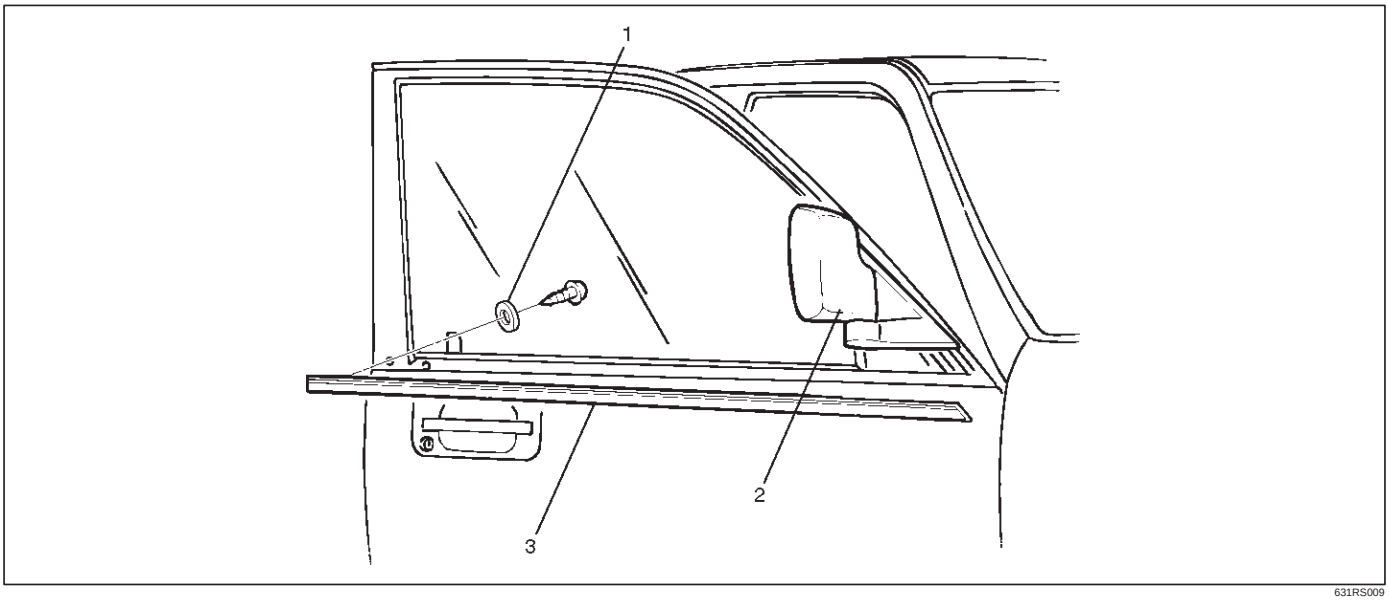

631RS009

Legend

(1) Nylon Washer
(2) Door Mirror
(3) Front Door Waist Seal

Removal

1. Disconnect the battery ground cable.
2. Remove door mirror.
   - Refer to Door Mirror in Exterior / Interior Trim section.
3. Remove front door waist seal.
   - Remove the fixing screw and pull out the waist seal (1) from the door frame while prying it up.

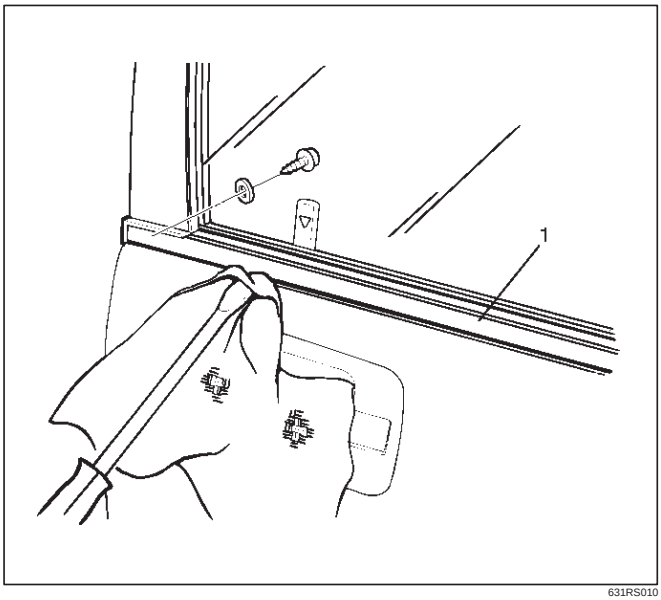

631RS010

Installation

To install, follow the removal steps in the reverse order, noting the following points.

1. Apply soap and water to the inside of the waist seal and align the screw hole of the waist seal to the door panel hole, and gently tap the seal with a rubber hammer.

   Be sure not to tap the seal hard. This may result in deforming the seal.

Rear Door Waist Seal

Parts Location

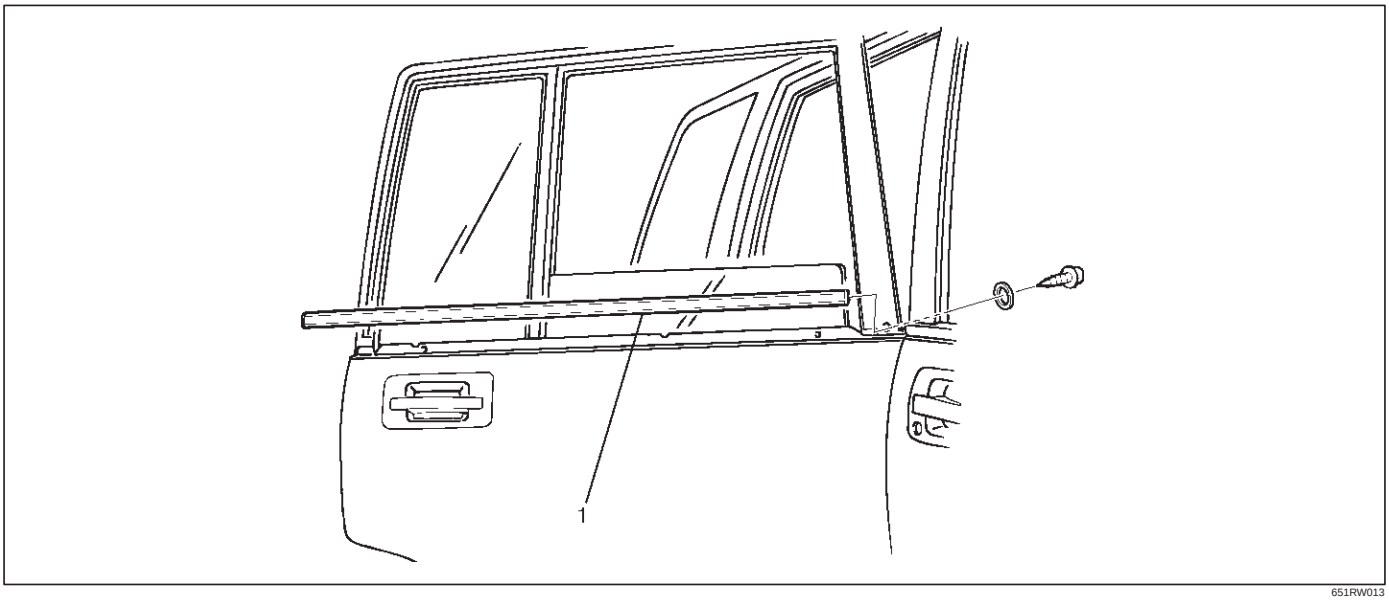

651RW013

Legend

(1) Rear Door Waist Seal

Removal and Installation

Refer to Front Door Waist Seal in this section.

Front Door Weatherstrip

Parts Location

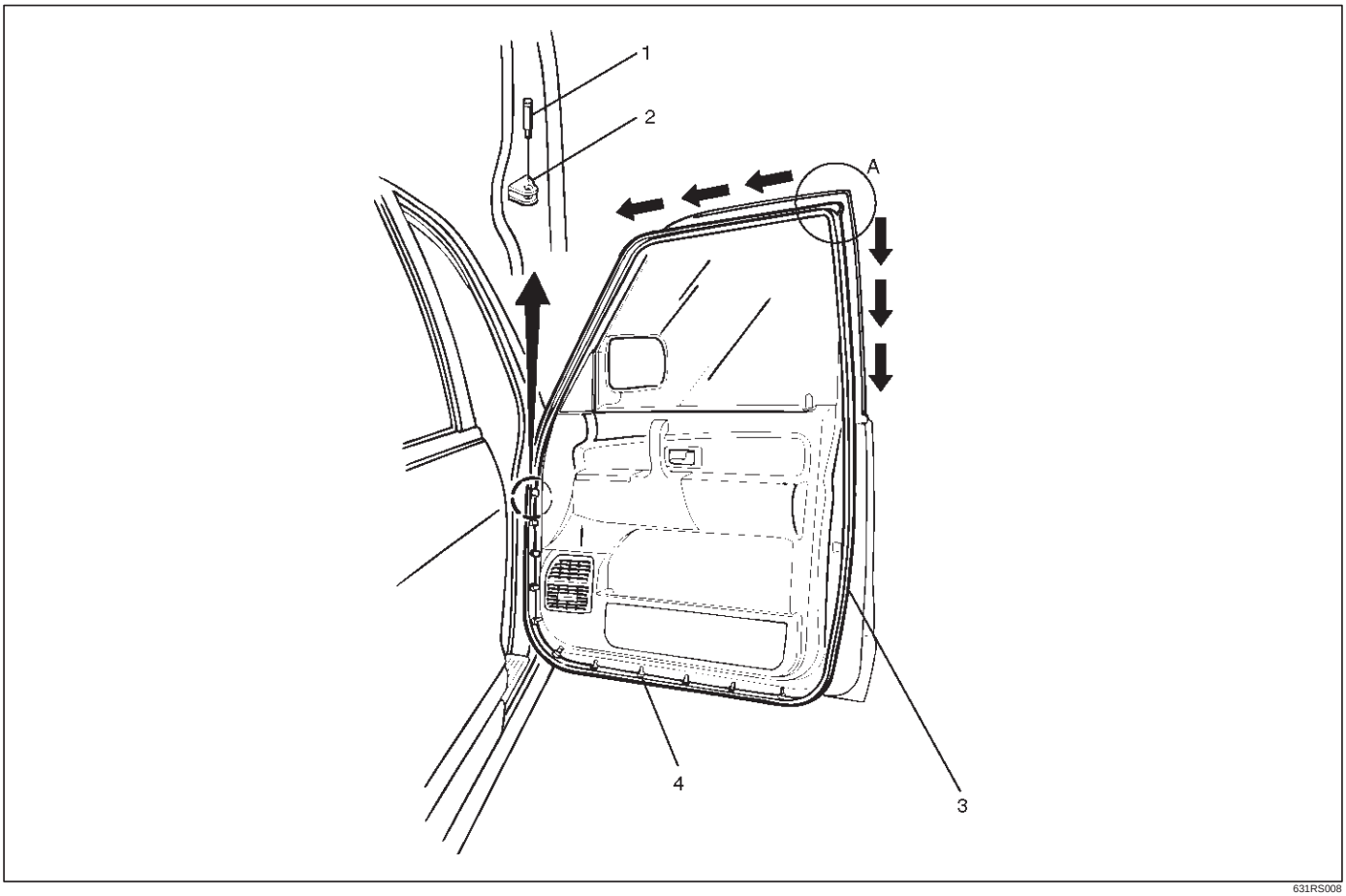

631RS008

Legend

(1) Check Arm Pin
(2) Bracket
(3) Weather Strip
(4) Clip

Removal

1. Remove check arm pin.
2. Remove front door weatherstrip.
   - Pull the weatherstrip (1) out from the door frame.

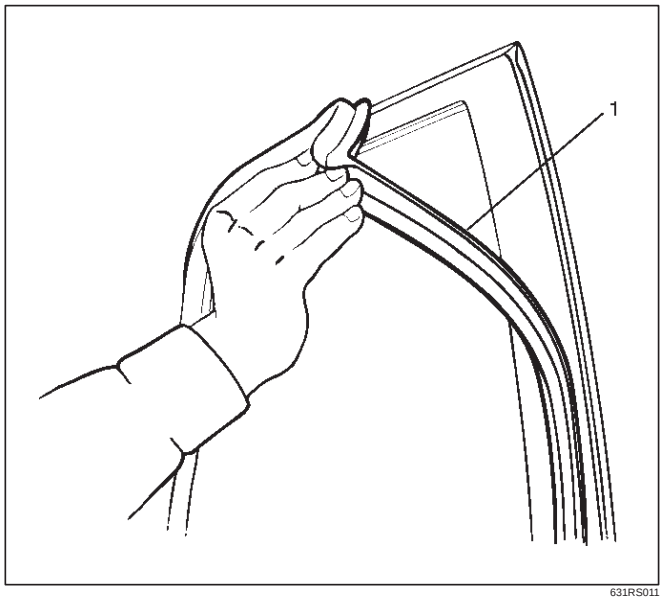

631RS011

- Carefully remove the weatherstrip (2) from the door panel.

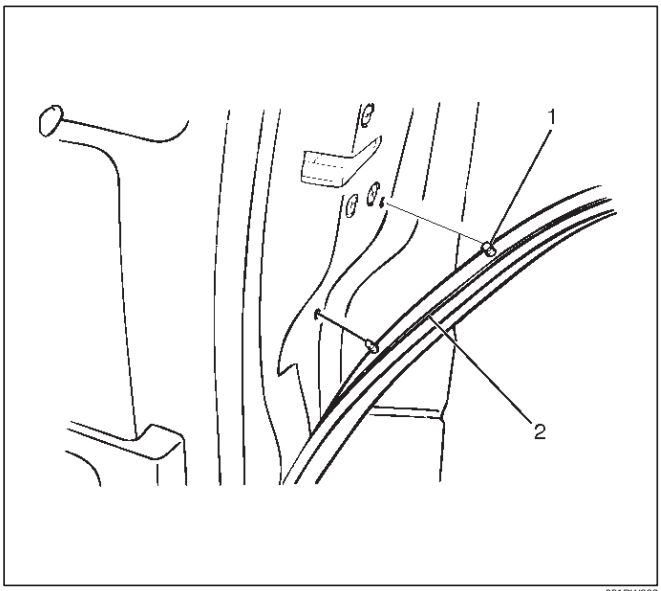

631RW003

Installation

To install, follow the removal steps in the reverse order, noting the following points.

1. Apply soapy water to the door frame groove when installing the front door weather strip (2).
2. Apply the sealing adhesive (3) to the upper A portion of the door frame (1) and press it for installation after assembling the weatherstrip (2).

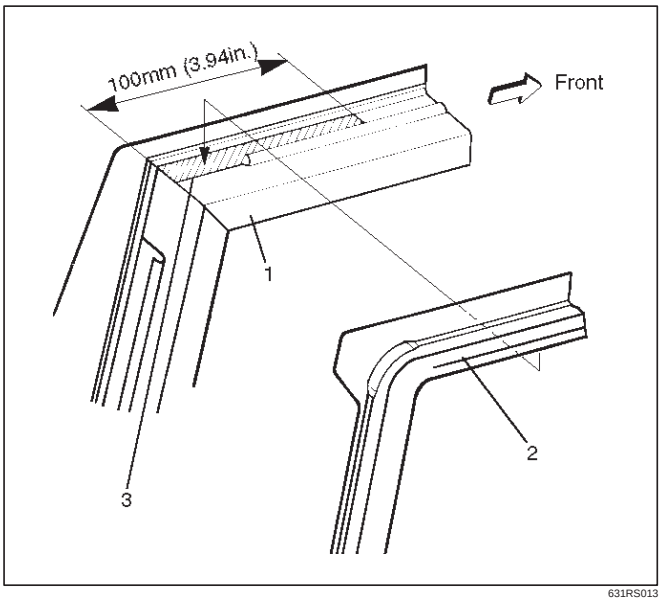

631RS013

3. After positioning the weatherstrip (4) corner, insert the weatherstrip into the door frame groove from A point in the arrow–marked direction.
4. Insert the weatherstrip clip (5) into the door panel up to its base.

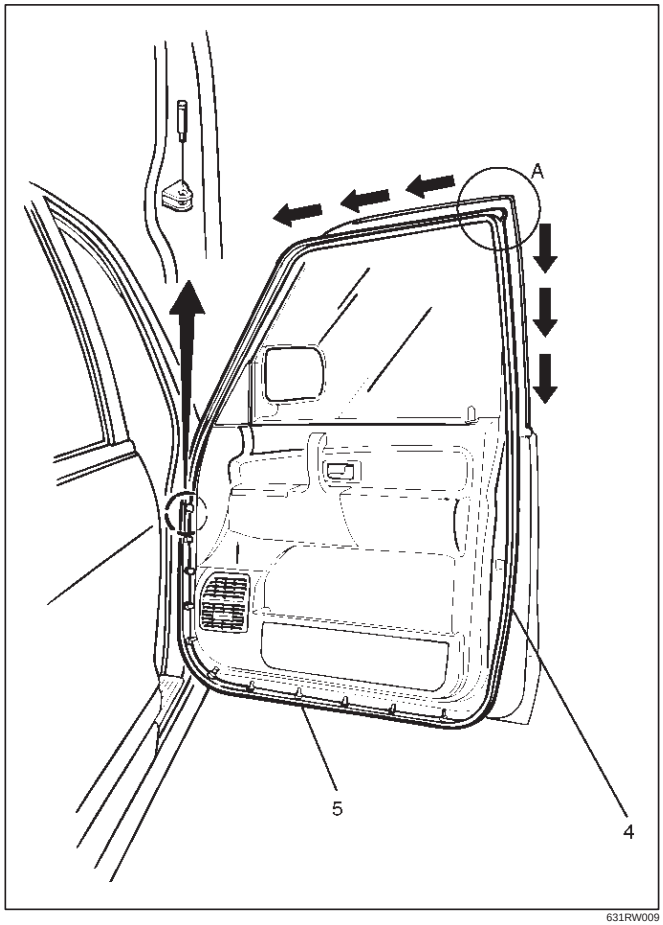

631RW009

Rear Door Weatherstrip

Parts Location

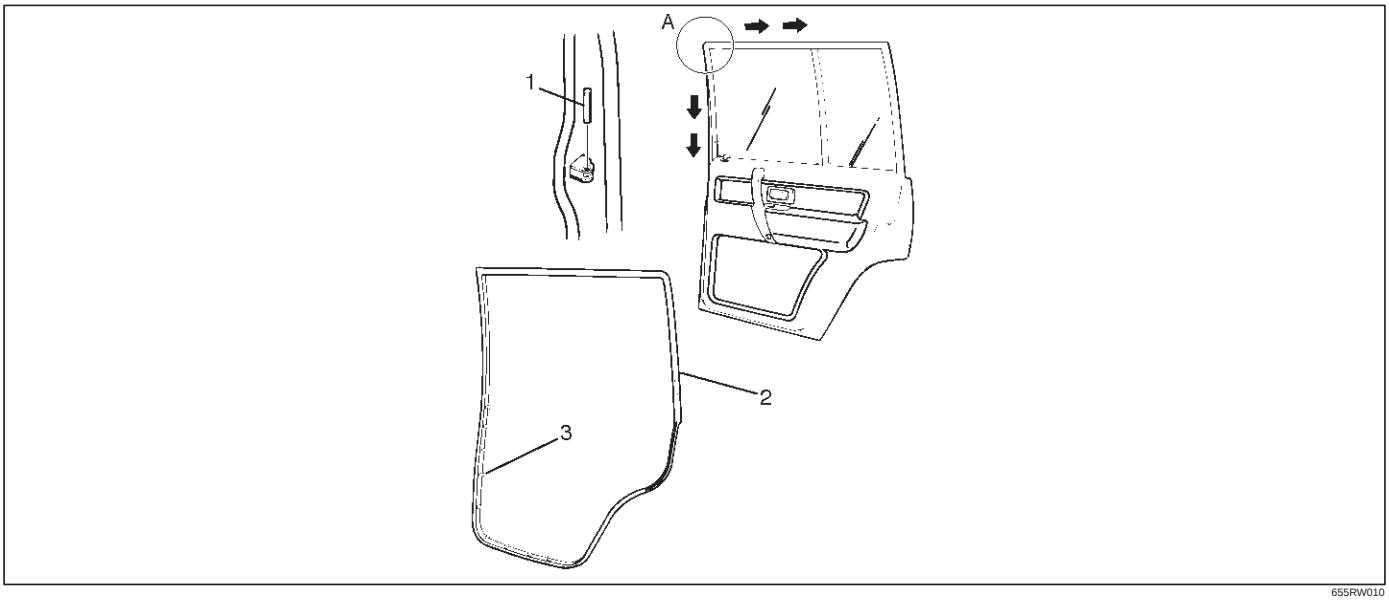

655RW010

Legend

(1) Check Arm Pin
(2) Rear Door Weather Strip
(3) Clip

Removal and Installation

Refer to Front Door Weatherstrip in this section.

Front Door Seal Finisher

Parts Location

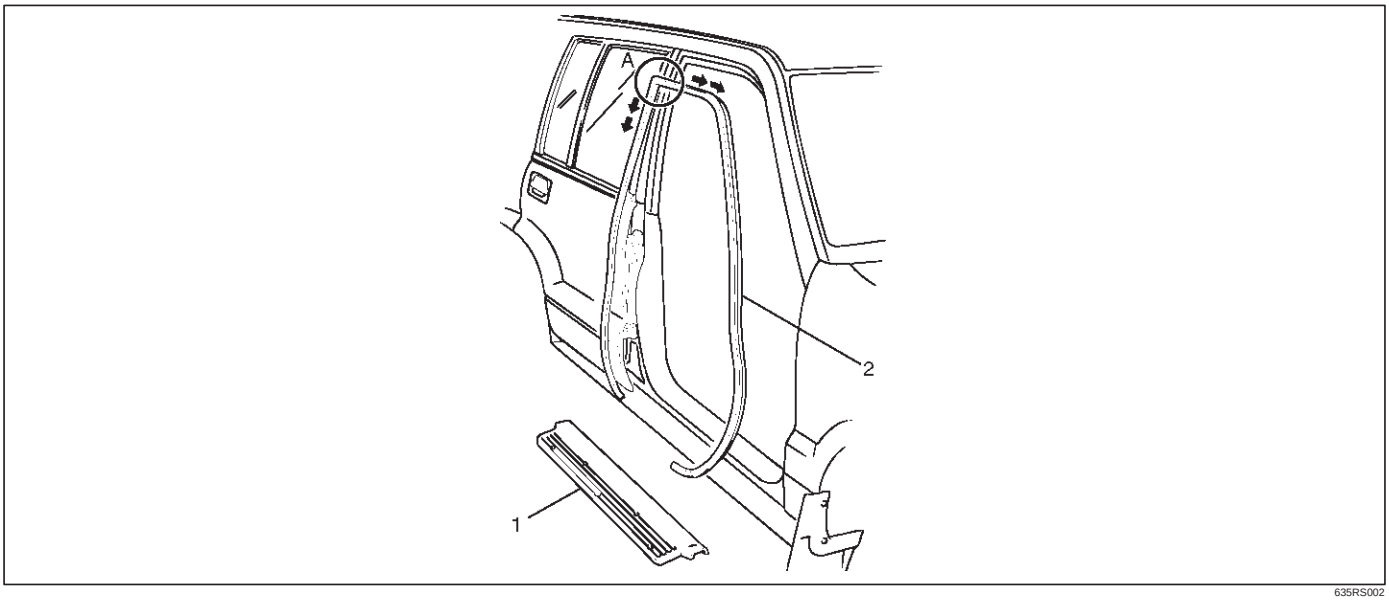

635RS002

Legend

(1) Front Door Sill Plate
(2) Front Door Seal Finisher

Removal

1. Disconnect the battery ground cable.
2. Remove front door sill plate.
3. Remove front door seal finisher (1).
   - Pull the finisher out from the body panel.

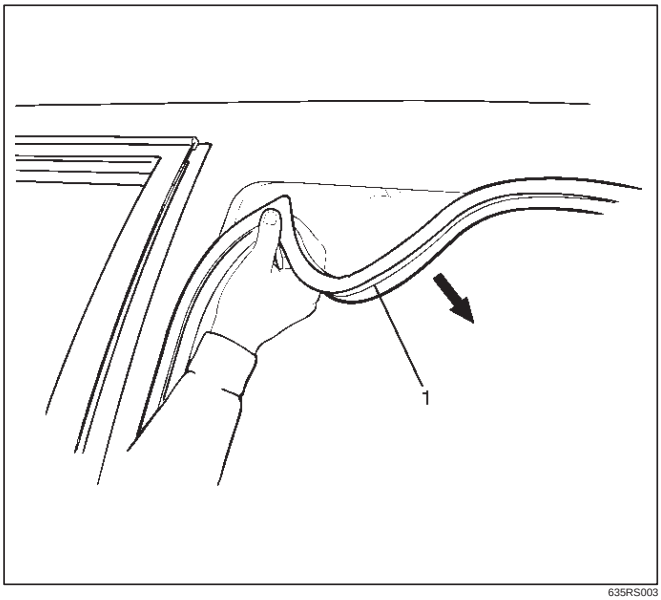

635RS003

Installation

To install, follow the removal steps in the reverse order, noting the following points.

1. Insert the finisher into the A corner and install the finisher (2) in the arrow–marked directions.
2. Take care not to allow the sill plate (1) to distort or twist the finisher.

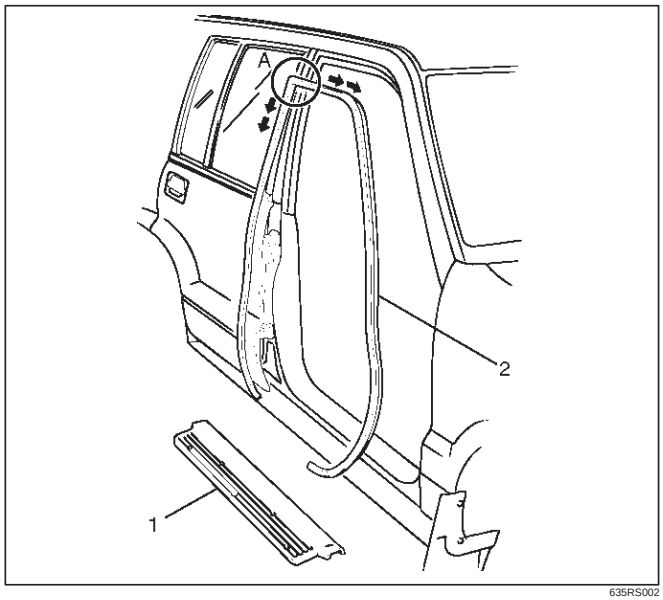

635RS002

Rear Door Seal Finisher

Parts Location

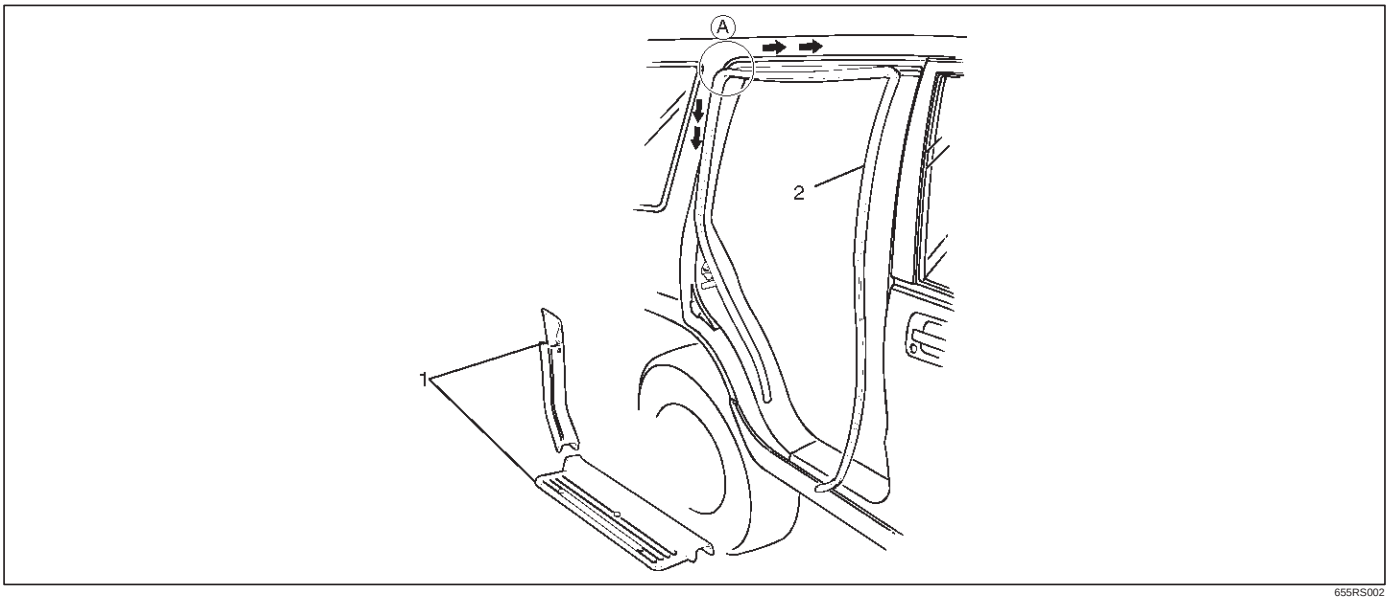

655RS002

Legend

(1) Rear Door Sill Plate and Luggage Side Lower Cover
(2) Rear Door Seal Finisher

Removal

1. Disconnect the battery ground cable.
2. Remove rear door sill plate and the luggage side lower cover.
3. Remove rear door seal finisher (1).
   - Pull the rear door seal finisher (1) out from the body panel.

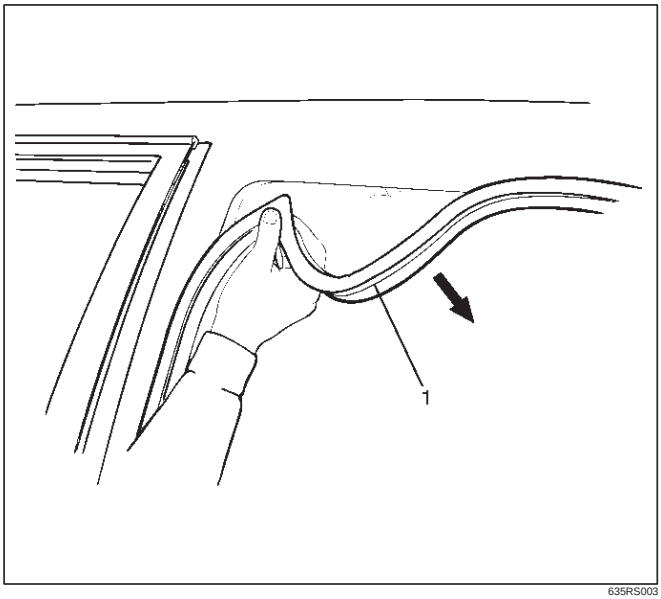

635RS003

Installation

To install, follow the removal steps in the reverse order, noting the following points.

1. Insert the rear door seal finisher (2) into the A corner and install the finisher in the arrow-marked directions.
2. Be careful not to allow the sill plate and cover (1) to distort or twist the finisher.

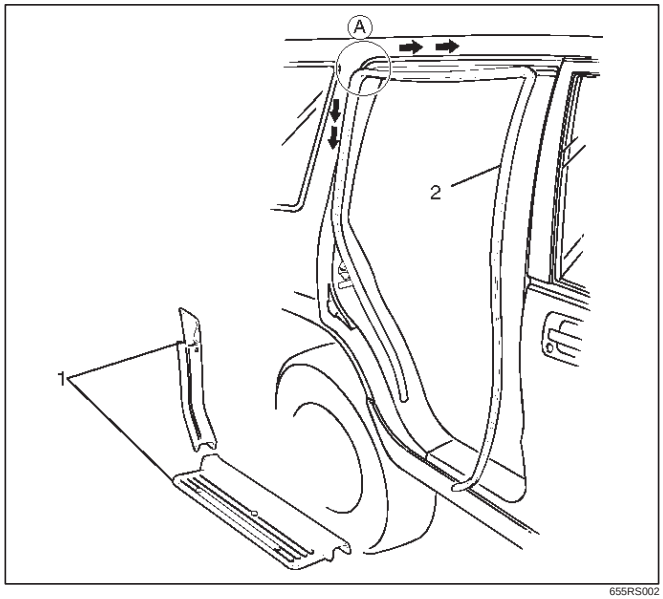

655RS002

Tailgate Assembly (LH)

Parts Location

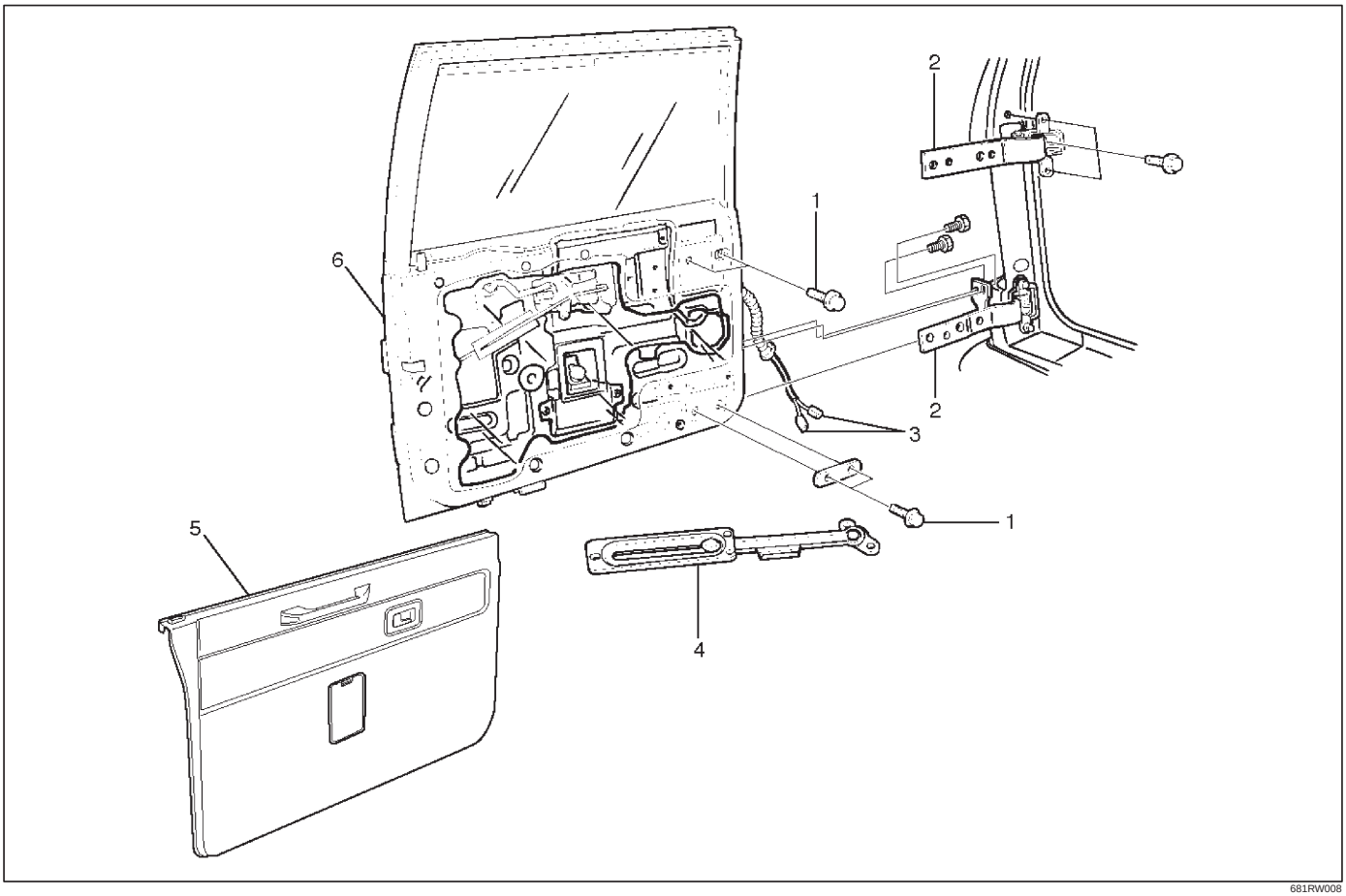

681RW008

Legend

(1) Tailgate Fixing Bolt
(2) Tailgate Hinge
(3) Tailgate Harness Connection
(4) Tailgate Stopper Assembly
(5) Tailgate Trim Panel (LH)
(6) Tailgate Assembly (LH)

Removal

1. Disconnect the battery ground cable.
2. Remove tailgate time panel (LH).
   - Refer to Tailgate Trim Panel (LH) in Exterior / Interior Trim section.
3. Remove tailgate stopper assembly
4. Remove tailgate harness connection.
   - Open the luggage trim panel lid and disconnect the tailgate harness connection.

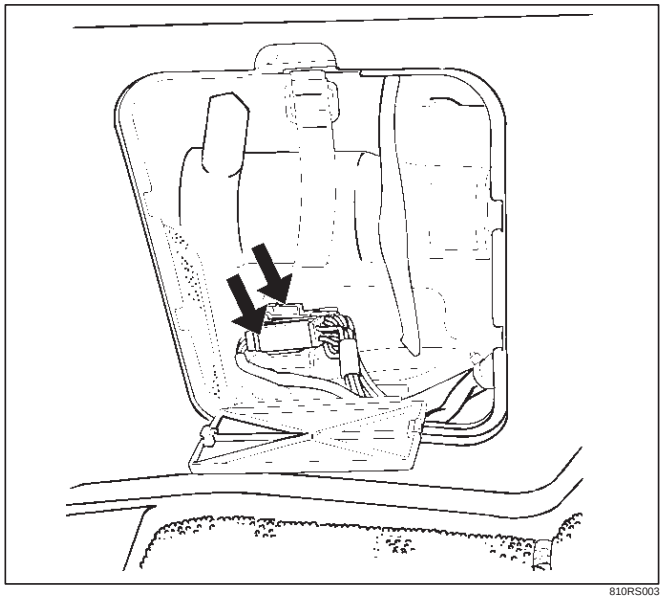

810RS003

5. Remove tailgate fixing bolts.

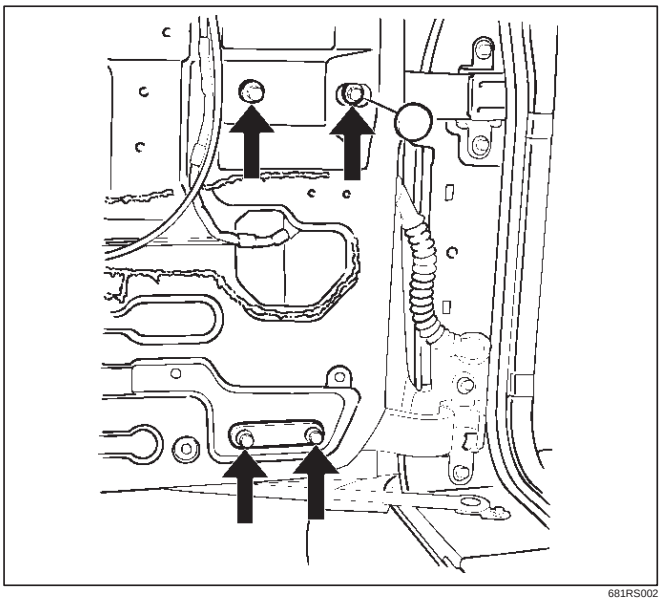

681RS002

6. Remove tailgate assembly (LH).
7. Remove tailgate hinge.
   - Apply a setting mark (1) on the body side hinge and remove the hinge fixing bolts.

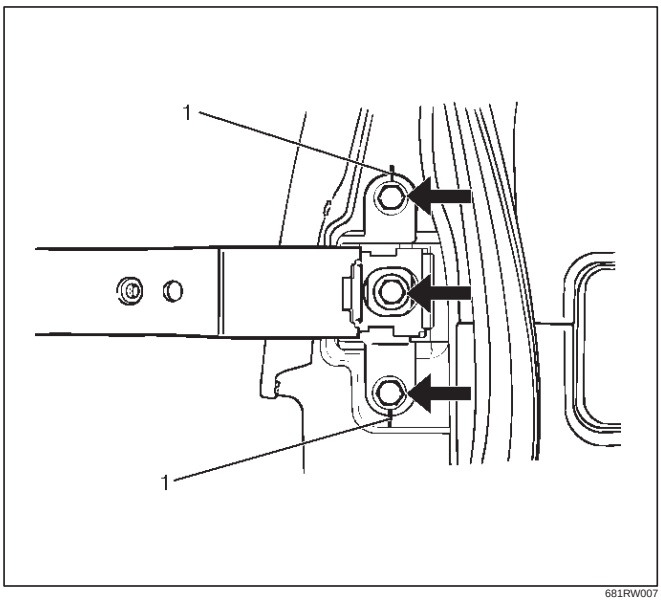

681RW007

Installation

To install, follow the removal steps in the reverse order, noting the following points.

1. Apply chassis grease to the tailgate hinge and the tailgate stopper moving surface.
2. Align the tailgate fitting to the body by referring to Body Dimension in this section.
3. Tighten the hinge bolts to the specified torque.

   Torque : 34 N•m (3.5kg·m/25 lb ft)

Tailgate Assembly (RH)

Parts Location

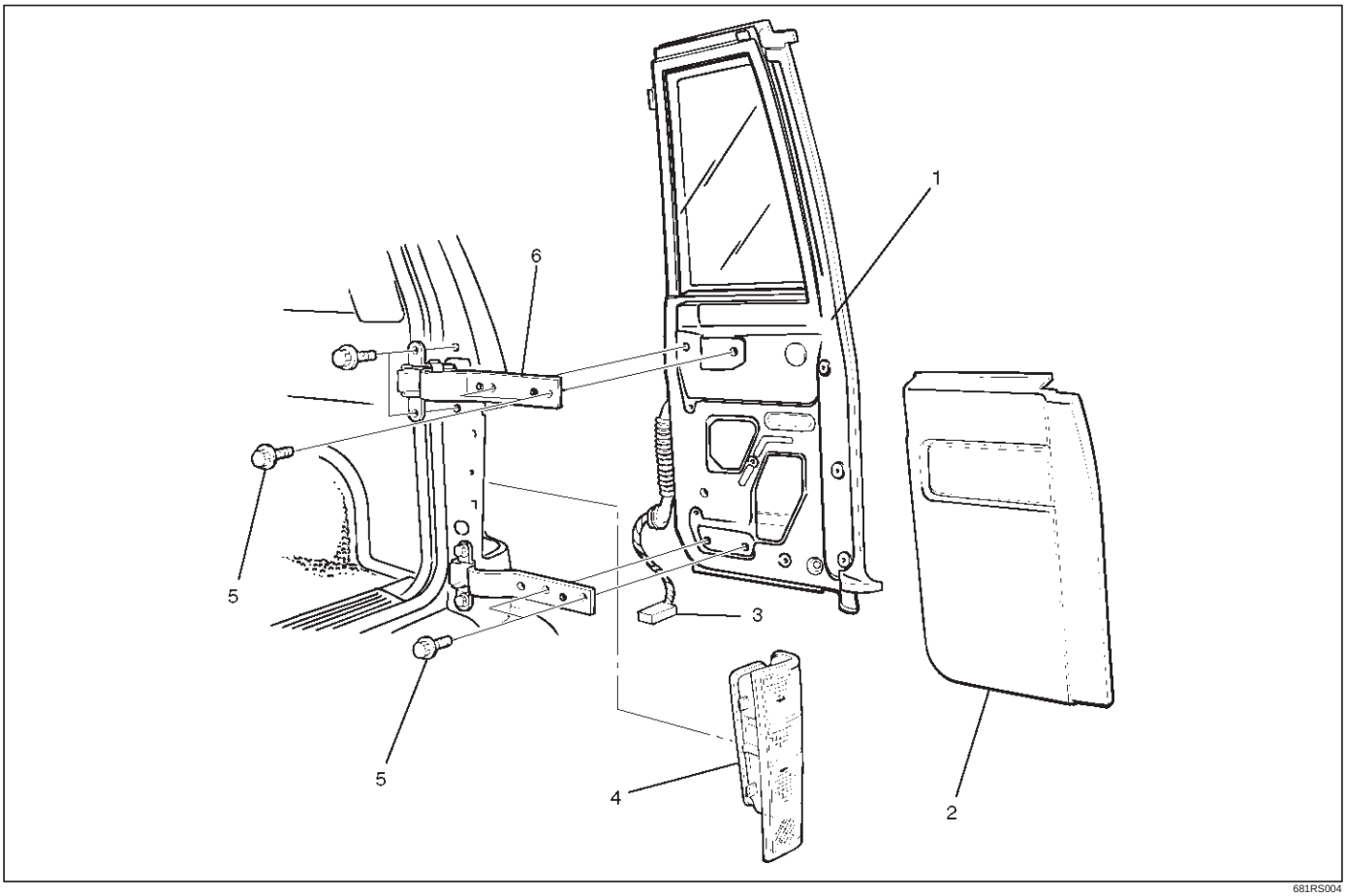

681RS004

Legend

(1) Tailgate Assembly (RH)
(2) Tailgate Trim Panel (RH)
(3) Tailgate Harness Connection
(4) Rear Combination Light (RH)
(5) Tailgate Fixing Bolt
(6) Tailgate Hinge

Removal

1. Disconnect the battery ground cable.
2. Remove rear combination light (RH).
3. Remove tailgate trim panel (RH).
   - Refer to Tailgate Trim Panel (RH) in Exterior / Interior section.
4. Remove tailgate harness connection.
   - Disconnect the tailgate harness connection.

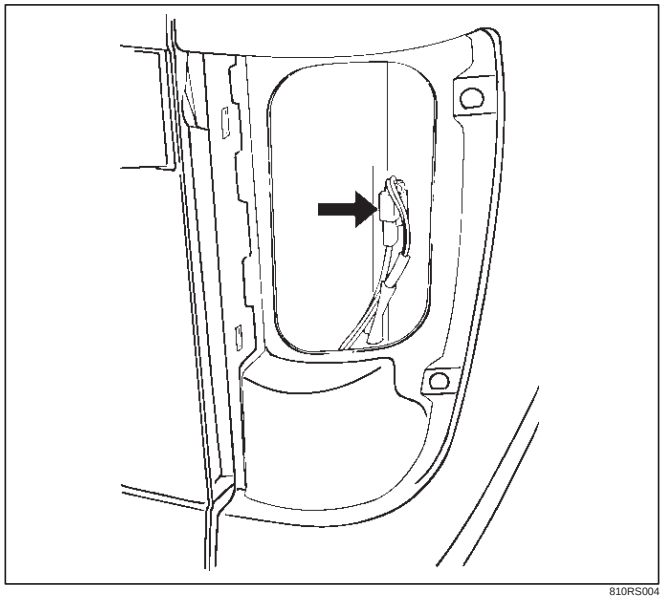

810RS004

5. Remove tailgate fixing bolt.

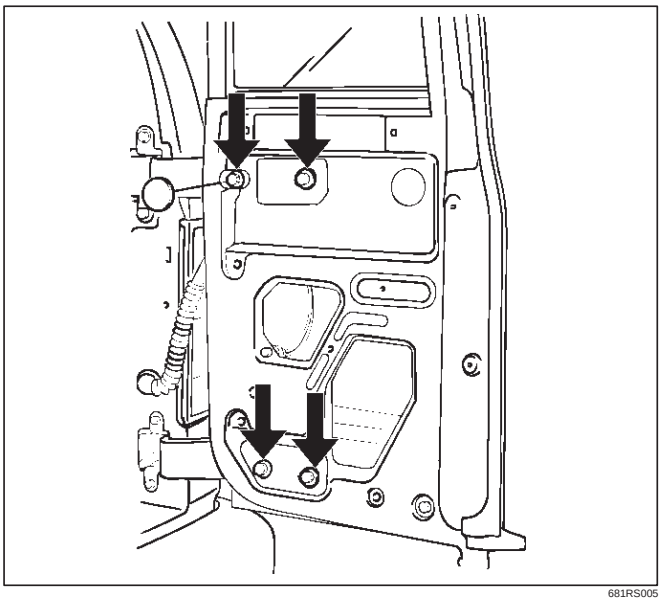

681RS005

6. Remove tailgate assembly (RH).
7. Remove tailgate hinge.
   - Apply a setting mark (1) on the body side hinge and remove the hinge fixing bolts.

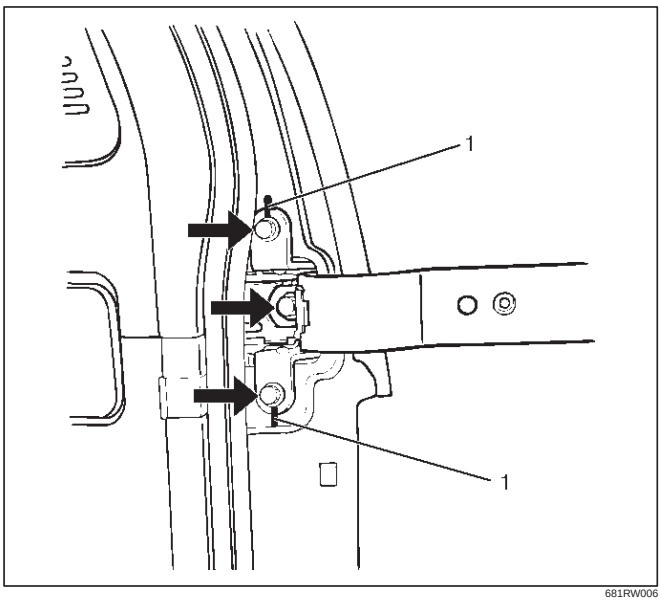

681RW006

Installation

To install, follow the removal steps in the reverse order, noting the following point.

1. Apply chassis grease to the tailgate hinge moving surface.
2. Align the tailgate fitting to the body. Refer to Body Dimension in this section.
3. Tighten the hinge bolts to the specified torque.

Torque : 34 N•m (3.5kg·m/25 lb ft)

Tailgate Strikers

Adjustment

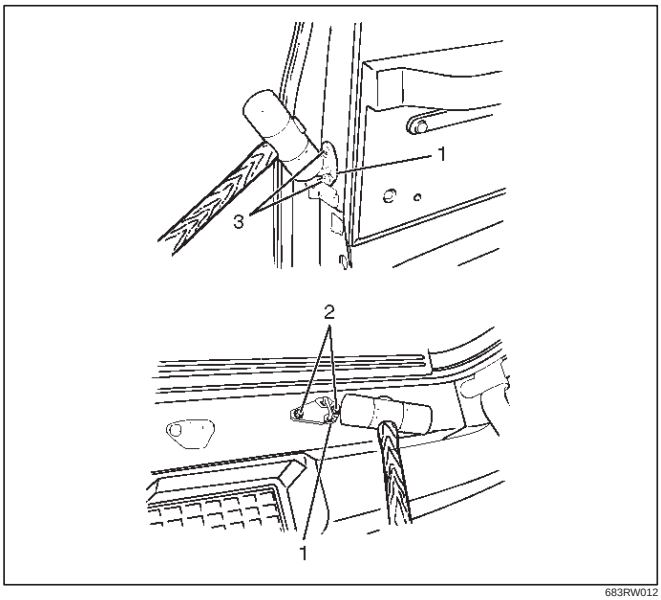

683RW012

1. Loosen the striker screws (3) (or bolts (2)).
2. Tap the striker (1) with a plastic hammer to align.
3. Tighten the striker screws (3) (or bolts (2)).

Screw Torque : 15 N•m (1.5kg·m/11 lb ft)

Bolt Torque : 12 N•m (1.2kg·m/104 lb in)

Tailgate Stopper Assembly

Parts Location

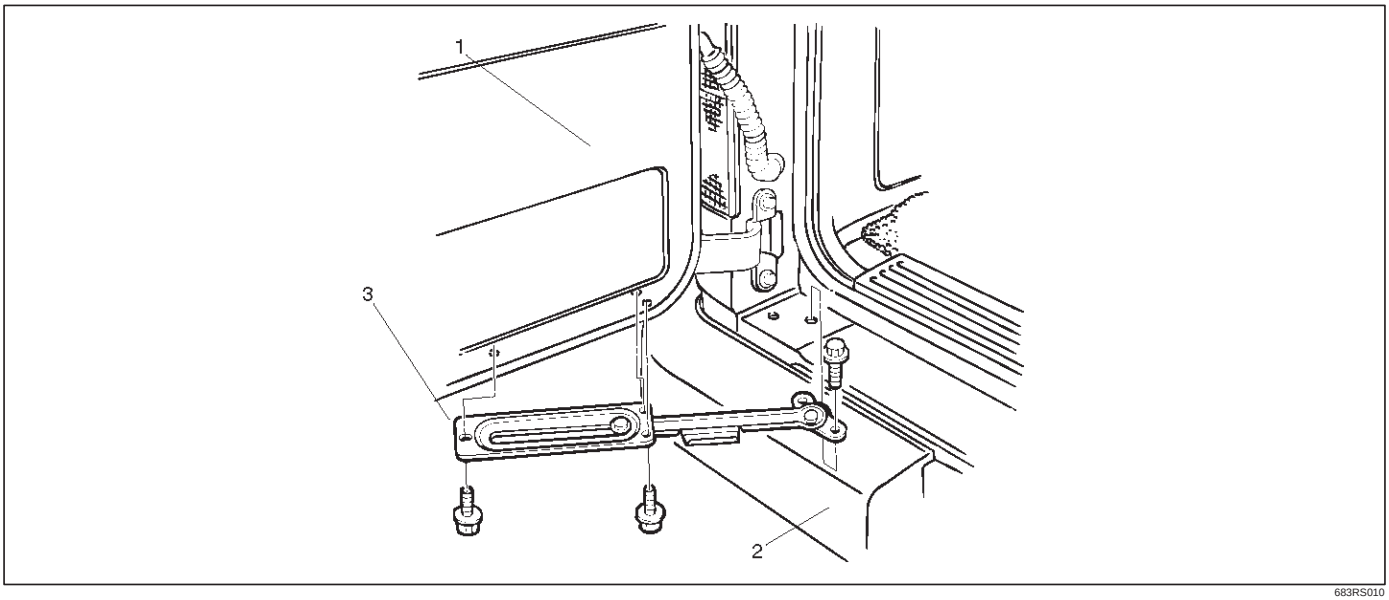

683RS010

Legend

(1) Tailgate
(2) Rear Bumper
(3) Tailgate Stopper Assembly

Removal

1. Remove tailgate stopper assembly.

Installation

To install, follow the removal steps in the reverse order, noting the following points.

1. Tighten the fixing bolts to the specified torque.

   Torque : 12 N•m (1.2kg·m/104 lb in)

2. Apply chassis grease to the stopper moving surface.

Tailgate Dove-Tail

Parts Location

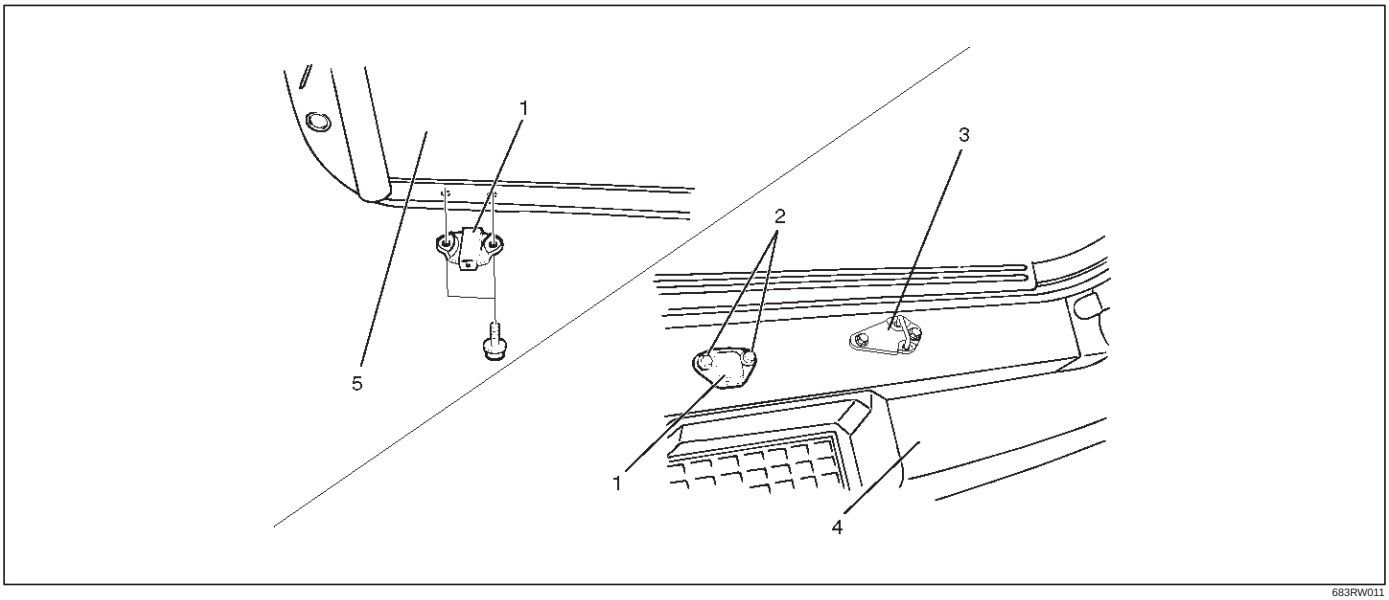

683RW011

Legend

(1) Dove-Tail
(2) Fixing Bolt
(3) Tailgate Striker
(4) Rear Bumper
(5) Tailgate (LH)

Removal

1. Remove tailgate dove-tail.

Installation

To install, follow the removal steps in the reverse order, noting the following points.

1. Apply chassis grease to the dove–tail (A) moving surface.
2. Tighten the fixing bolts to the specified torque.

   Torque : 12 N•m (1.2kg·m/104 lb in)

Tailgate Dove-Tail Striker

Adjustment

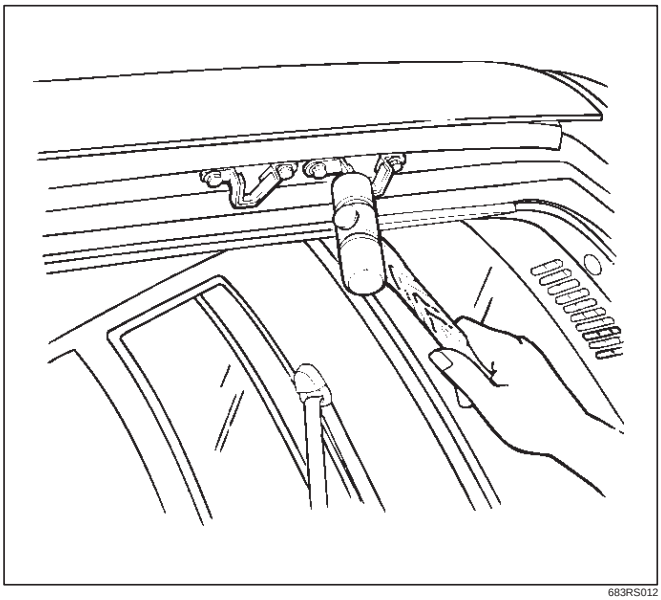

683RS012

1. Loosen the striker bolts.
2. Tap with a plastic hammer to align.
   - Gaps between Dove–Tail Striker (2) and bracket (1) are 0 mm (No clearance).

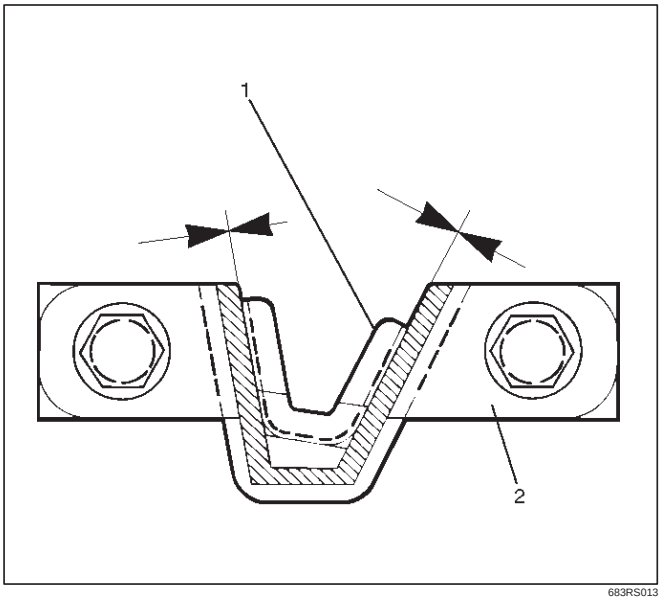

683RS013

3. Tighten striker bolts.

   Torque : 12 N•m (1.2kg·m/104 lb in)

Tailgate Frame Cover (LH)

Parts Location

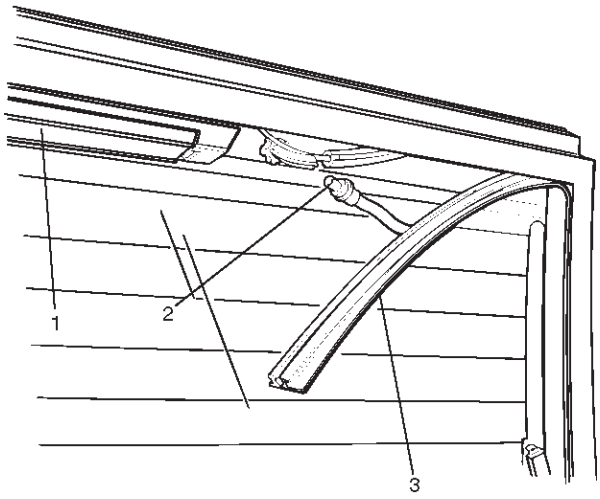

684RW001

Legend

(1) High Mount Stop Light
(2) Washer Tube
(3) Tailgate Frame Cover

Removal

1. Disconnect the battery ground cable.
2. Remove tailgate frame cover.
   - Pull the tailgate frame cover (2) out.
   - Disconnect the washer tube (1) at the nozzle and pull the washer tube out from the frame cover (2).
   - Disconnect the rear defogger and pull the harness from the cover.

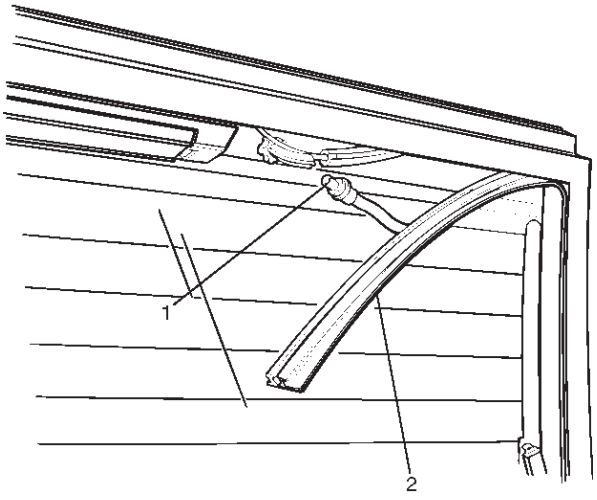

684RW002

Installation

To install, follow the removal steps in the reverse order, noting the following points.

1. Hit the lower A edge portion of the cover (1) to the tailgate flange.
2. Clearance between the frame cover and the tailgate panel (B portion) is 1 mm (0.04 in).

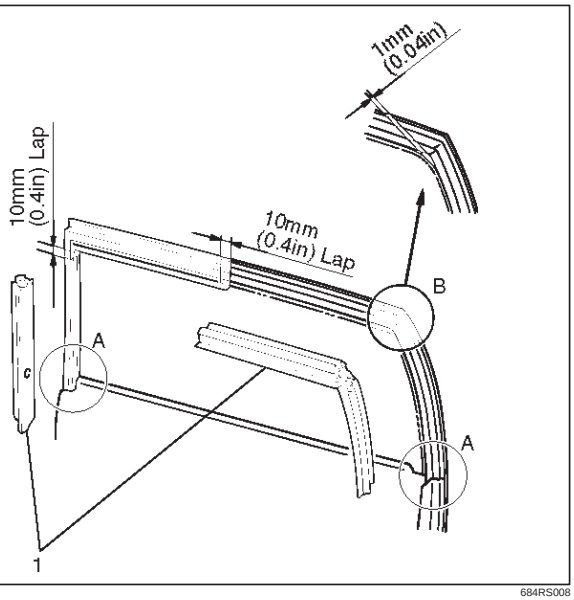

684RS008

Tailgate Frame Cover (RH)

Removal

1. Remove tailgate frame cover (RH).
   - Pull the frame cover out from the tailgate frame.

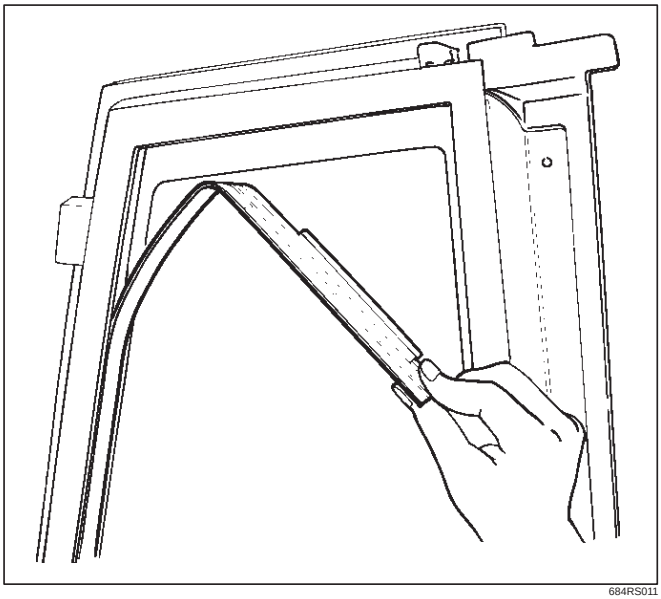

684RS011

Installation

To install, follow the removal steps in the reverse order, noting the following points.

1. Hit the lower A edge portion (2) of the tailgate frame cover (1).
2. Clearance between the frame cover and the tailgate panel (B portion) is 1 mm (0.04 in).

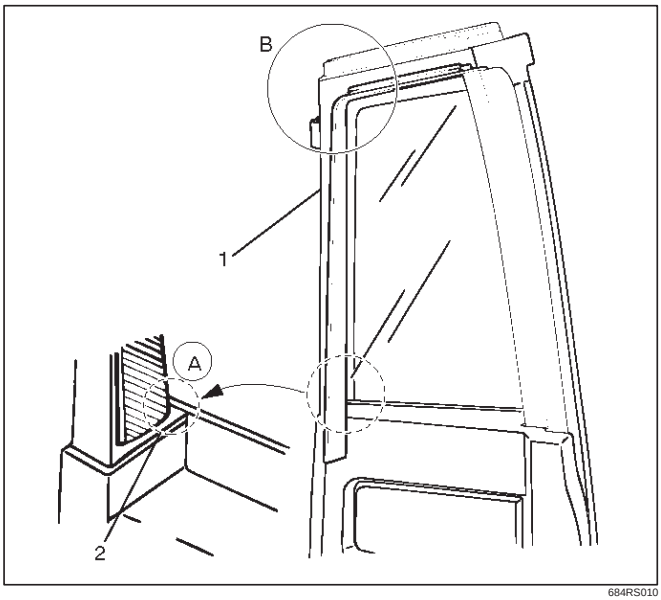

684RS010

Tailgate Sash Trim Cover

Parts Location

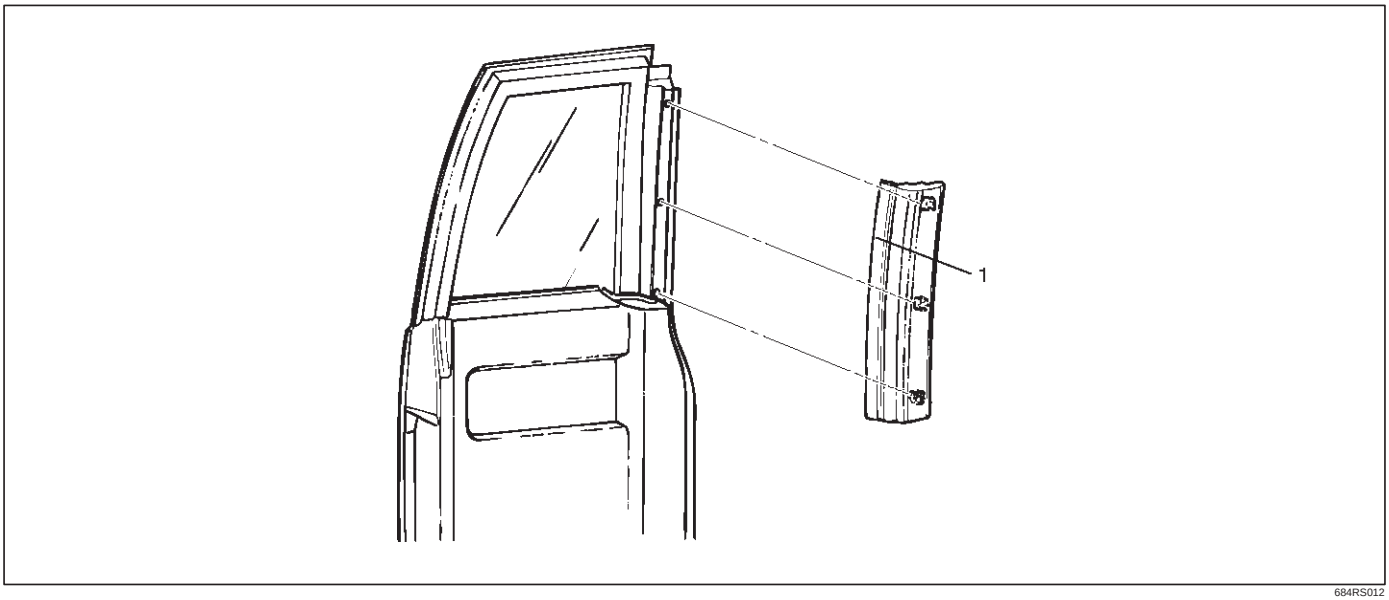

684RS012

Legend

(1) Tailgate Sash Trim Cover

Removal

1. Remove tailgate sash trim cover (1).
   - Pry the tailgate trim cover retainers free from the tailgate panel.

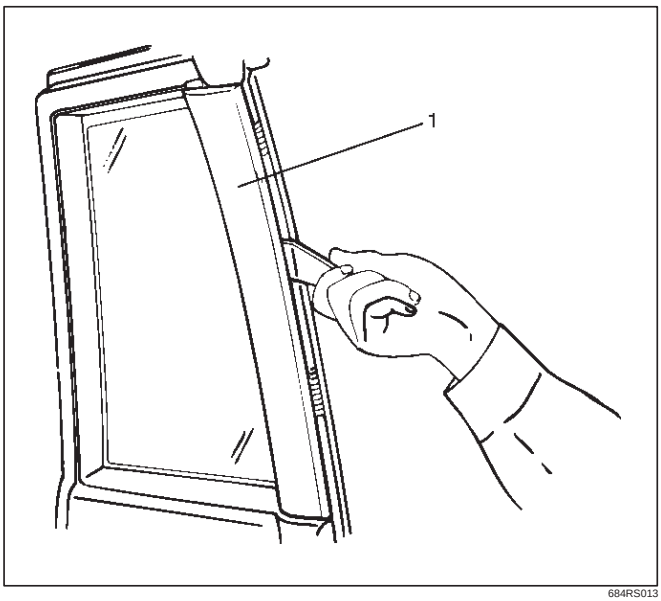

684RS013

Installation

1. Install the tailgate sash trim cover (1).
   - Insert the trim cover retainers into the tailgate hole securely so that there are no gaps between them.

Tailgate Outer Weatherstrip

Parts Location

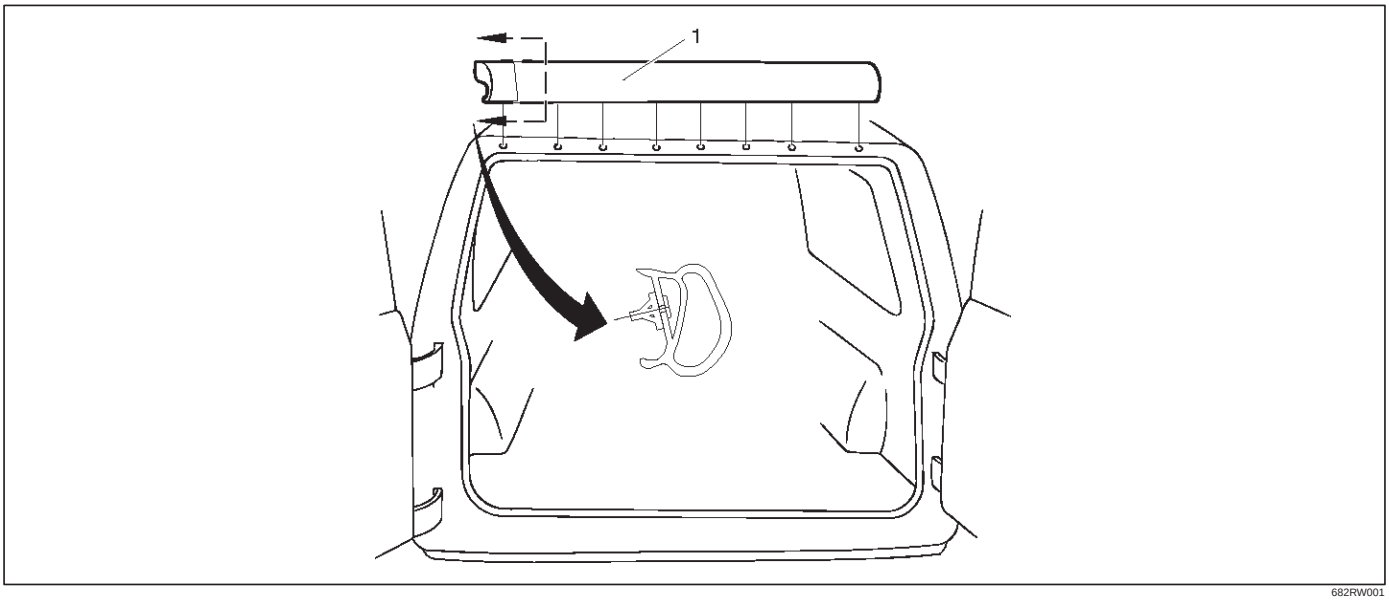

682RW001

Legend

(1) Tailgate Outer Weatherstrip

Removal

1. Disconnect the battery ground cable.
2. Remove tailgate outer weatherstrip (1).
   - Pry the tailgate outer weatherstrip clips (2) free from the body panel.

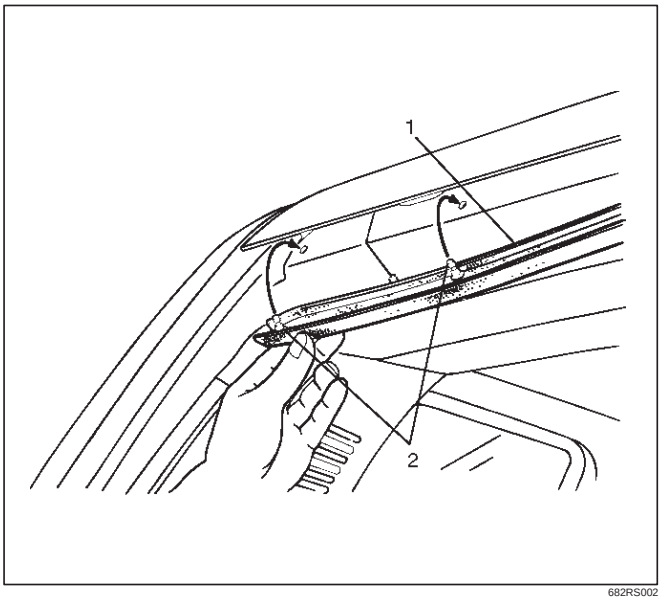

682RS002

Installation

To install, follow the removal steps in the reverse order, noting the following point.

1. Insert the tailgate outer weatherstrip clip into the body panel hole securely in order to install the tailgate outer weatherstrip with the gap between the body panel and the weatherstrip.

Tailgate Center Weatherstrip

Parts Location

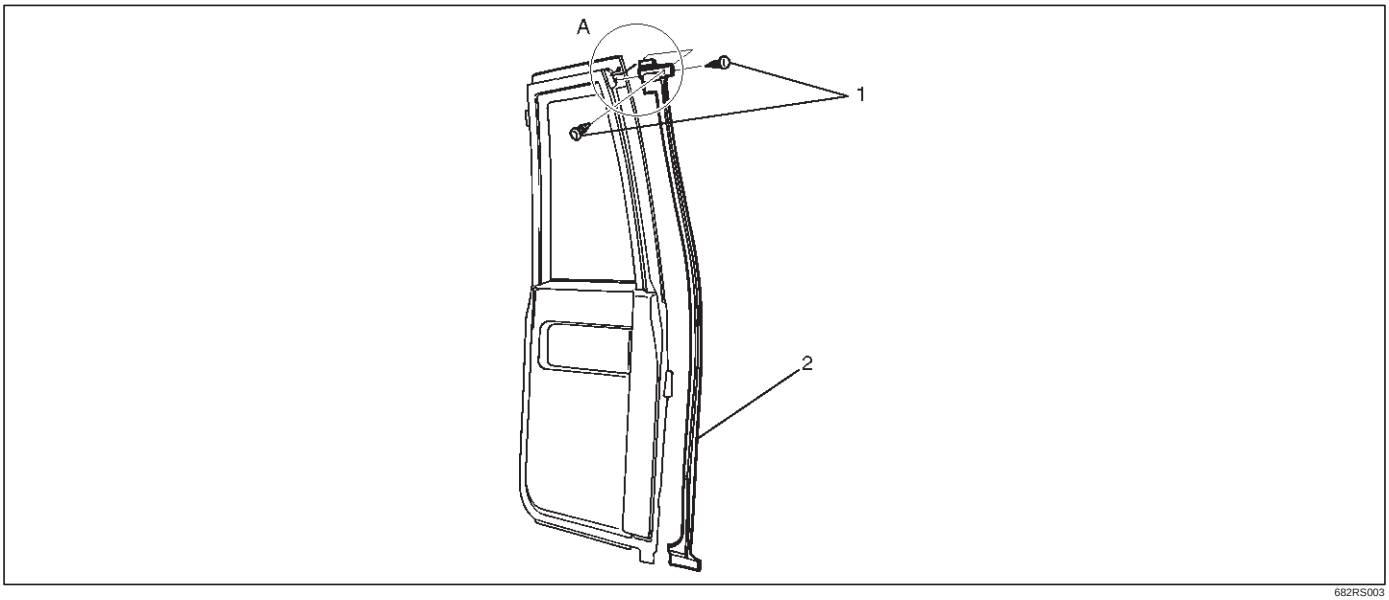

682RS003

Legend

(1) Clip
(2) Tailgate Center Weatherstrip

Removal

1. Remove tailgate center weatherstrip.
   - Remove the fixing clips in order to pull the tailgate center weatherstrip out from the tailgate panel.

Installation

1. Install the tailgate center weatherstrip (1).
   - Start assembling at the A portion.

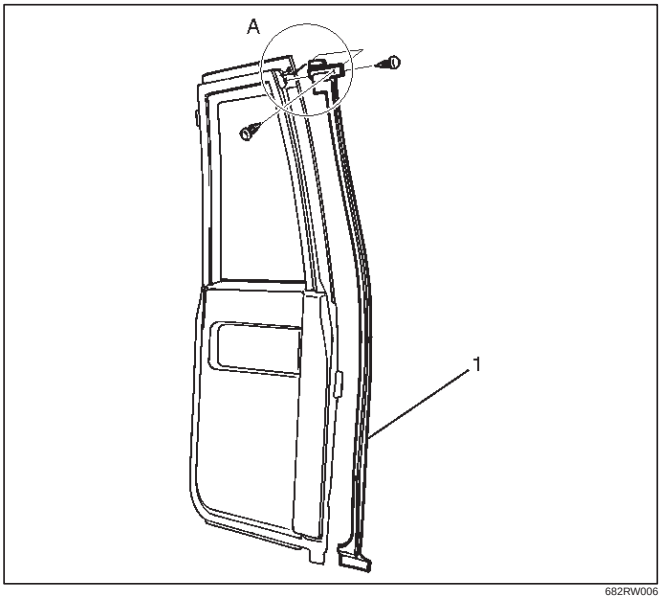

682RW006

- Clean the tailgate center weatherstrip (4) adhesive tape (2) and the butyl seal (3) fitting position of the tailgate panel.
- Affix new adhesive tape and the butyl seal to the weatherstrip (lower side) in order to install the tailgate center weatherstrip to the tailgate panel with no gap between them.

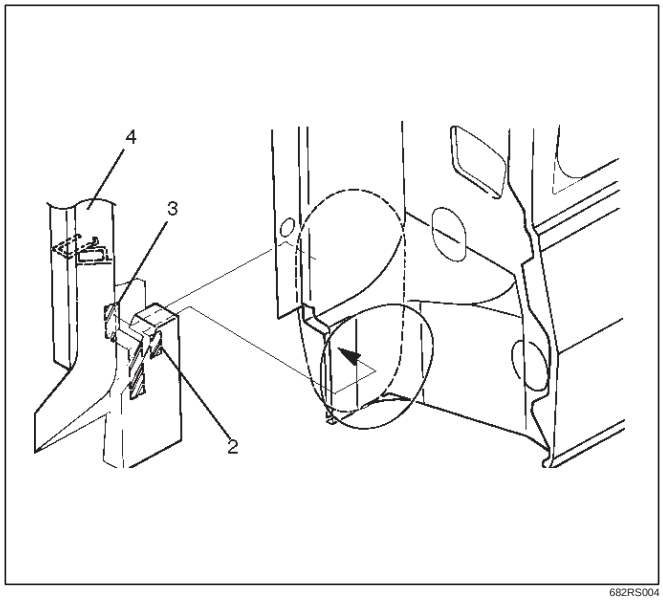

682RS004

Tailgate Main Weatherstrip

Parts Location

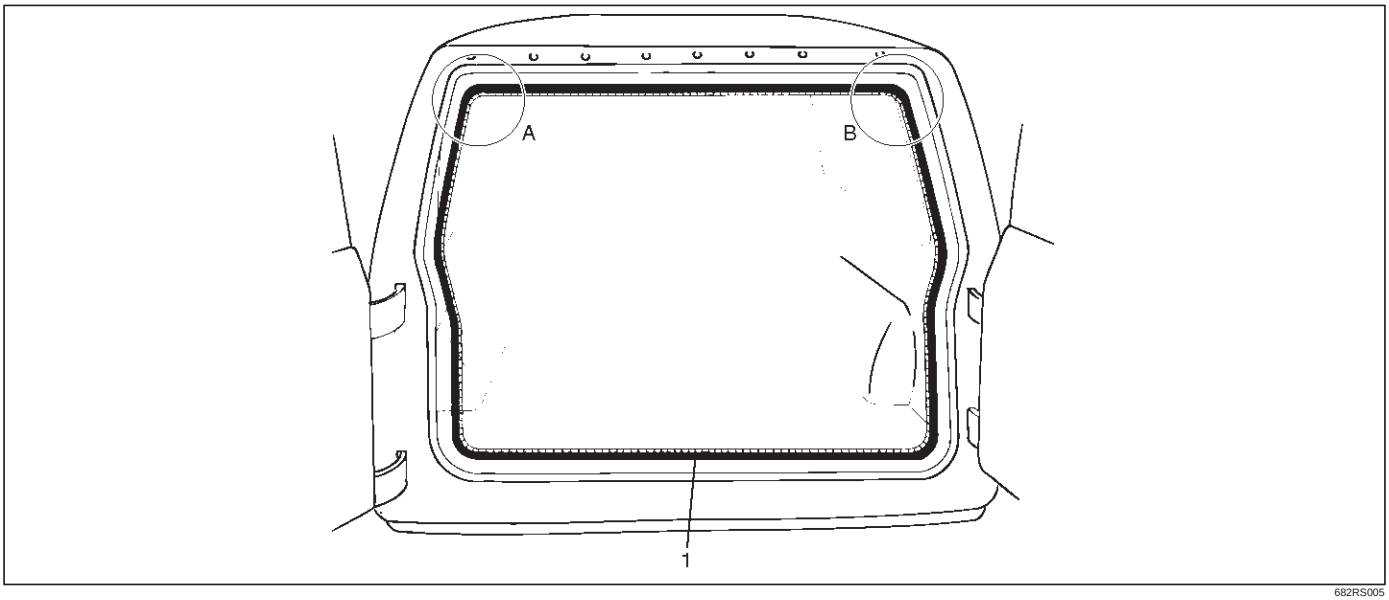

682RS005

Legend

(1) Tailgate Main Weatherstrip

Removal

1. Remove tailgate main weatherstrip.
   - Pull the tailgate main weatherstrip out from the body panel.

Installation

1. Install the tailgate main weatherstrip.
   - Align the A and B positions to the corners of the body panel. Install the tailgate main weatherstrip to the body panel by gently tapping with a plastic hammer. There should be not clearance between the body panel the tailgate main weatherstrip.

Spare Tire Carrier

Parts Location

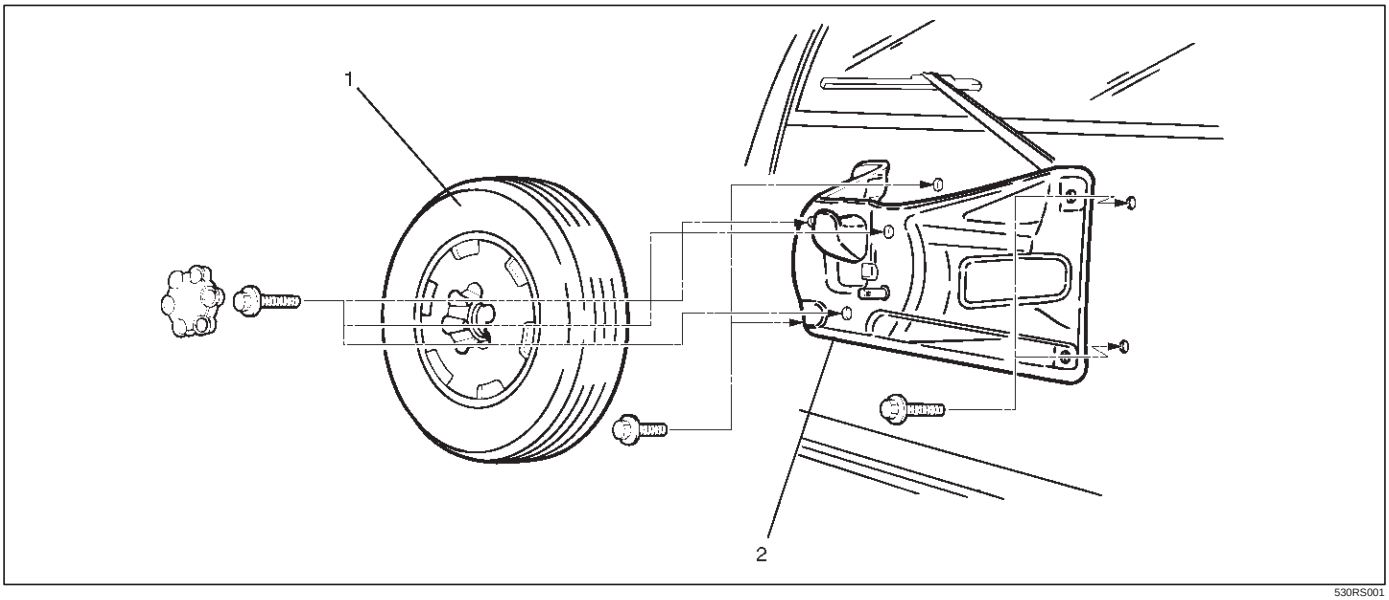

530RS001

Legend

(1) Spare Tire
(2) Spare Tire Carrier

Removal

1. Remove spare tire.
2. Remove spare tire carrier.
   - Remove the special bolts by using special tool (If so equipped).
   - Spare tire carrier bolt wrench 5–8840–2095–0 (J–34355).

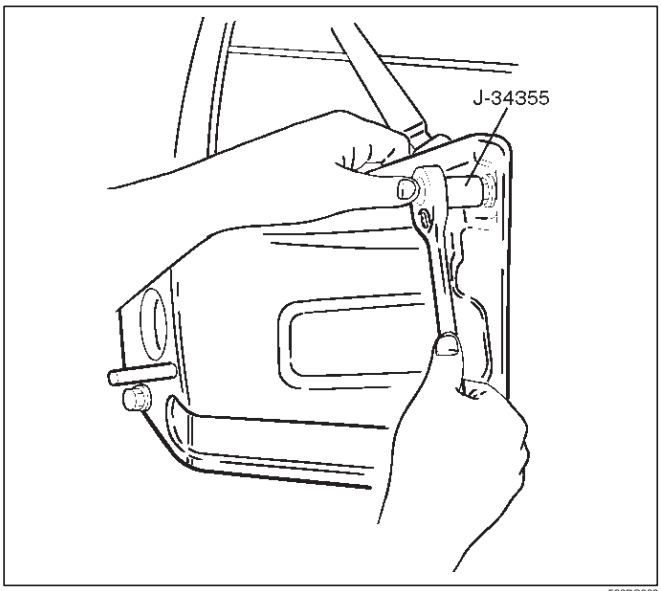

530RS002

Installation

1. Install the spare tire carrier.
   - Tighten the carrier fixing bolts to the specified torque.

   Torque : 31 N•m (3.2kg·m/23 lb ft)
2. Install the spare tire.
   - Tighten the spare tire fixing bolts to the specified torque.

   Torque : 118 N•m (12.0kg·m/87 lb ft)

Headlining

Parts Location

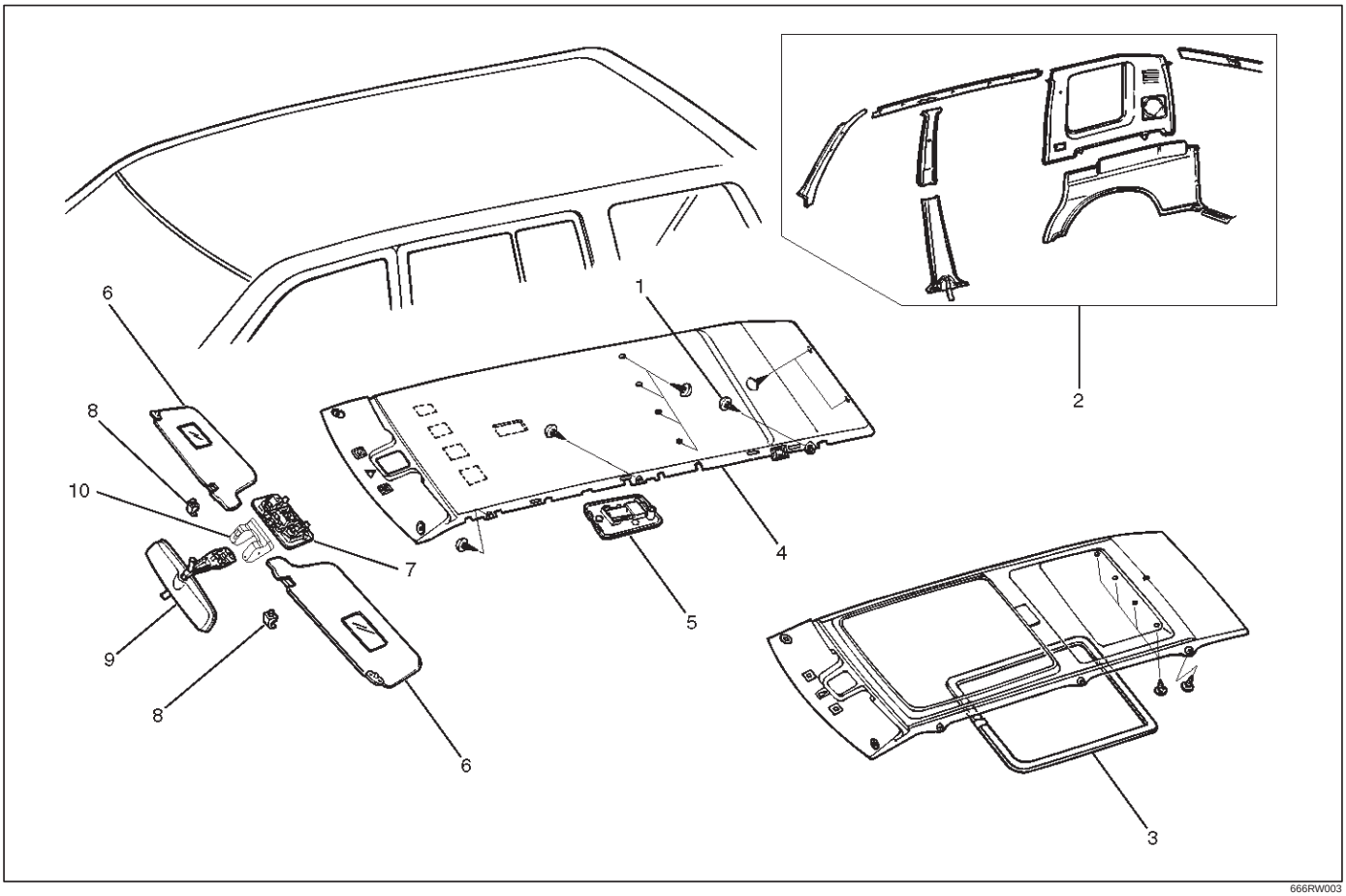

666RW003

Legend

(1) Clip
(2) Interior Trim Panels
(3) Sun Roof Finisher (W/Sun Roof)
(4) Headlining
(5) Dome Light
(6) Sunvisors
(7) Map Light
(8) Sunvisor Holder
(9) Rear View Mirror
(10) Multi Meter

Removal

1. Disconnect the battery ground cable.
2. Remove interior trim panels.
   - Refer to the Exterior / Interior Trim section.
3. Remove dome light.
   - Remove the dome light lens and the fixing screws.
   - Disconnect the dome light connectors.
4. Remove multi meter (4) (If so equipped).
   - Remove two caps (2), two screws (3) and disconnect the connector (1).

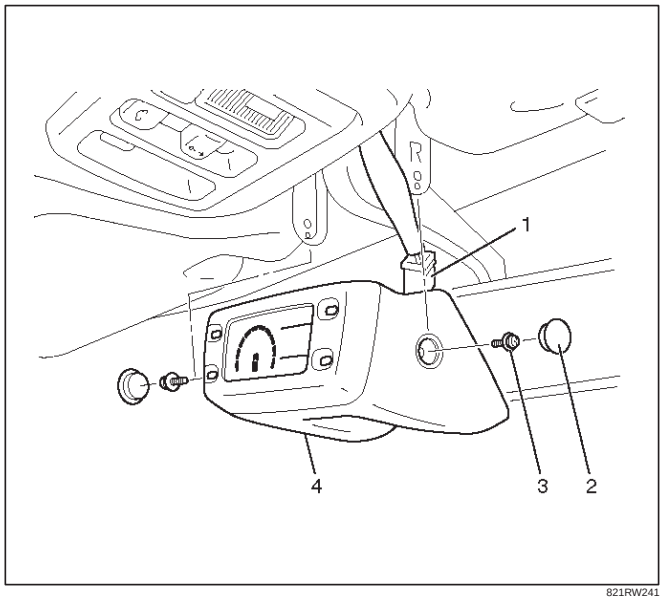

821RW241

5. Remove rear view mirror.
   - Remove the rubber stopper (1).
   - Pry off the mirror stay cover (2) and remove 3 screws.

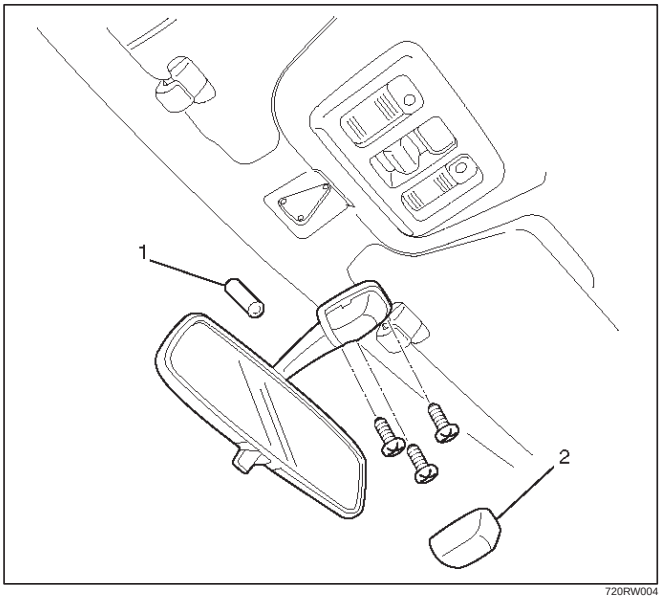

720RW004

6. Remove map light/sun roof switch.
   - Pry the map light clip free from the map light/sun roof switch bracket and disconnect the connector.

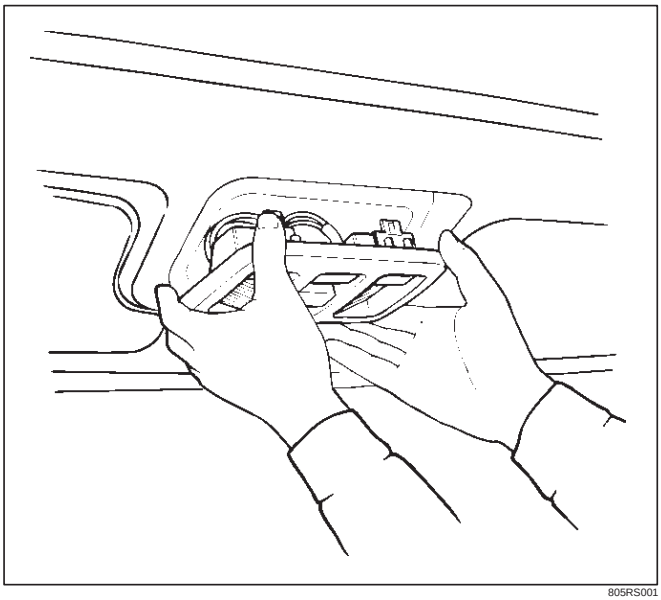

805RS001

7. Remove sunvisors.
   - Remove the fixing screw and turn the sunvisor holder (1) to remove it.
   - Disconnect the vanity mirror illumination connector.

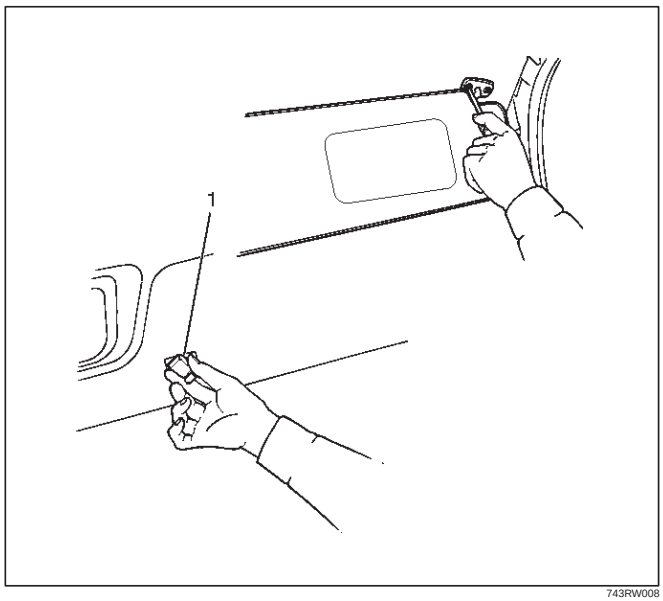

743RW008

8. Remove sun roof finisher (W/Sun roof).
9. Remove headlining.
   - Remove the headlining fixing clips.

Installation

To install, follow the removal steps in the reverse order, noting the following points.

1. Install the headlining so that the fixing clips will not come off.
2. To install the sun roof finisher (3), first fit in at one place with the head lining (2) close to the sun roof frame complete (1), then install the entire finisher tightly by hitting it with a plastic hammer, not allowing it to move up.

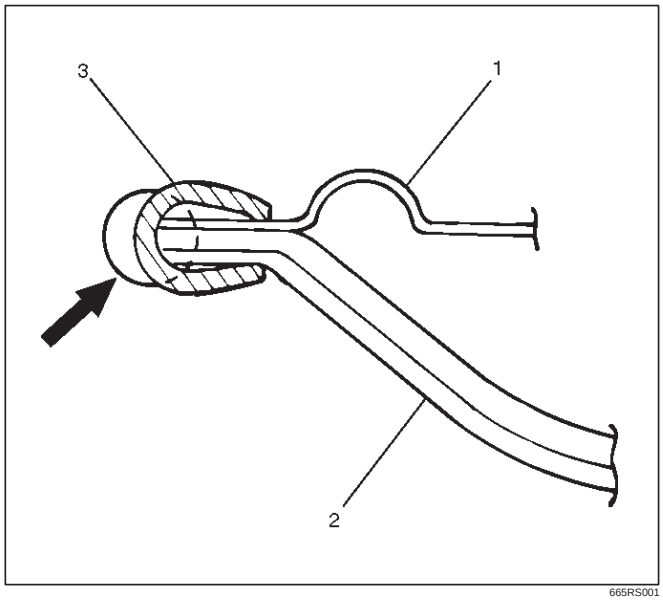

665RS001

Rear Air Deflector

Parts Location

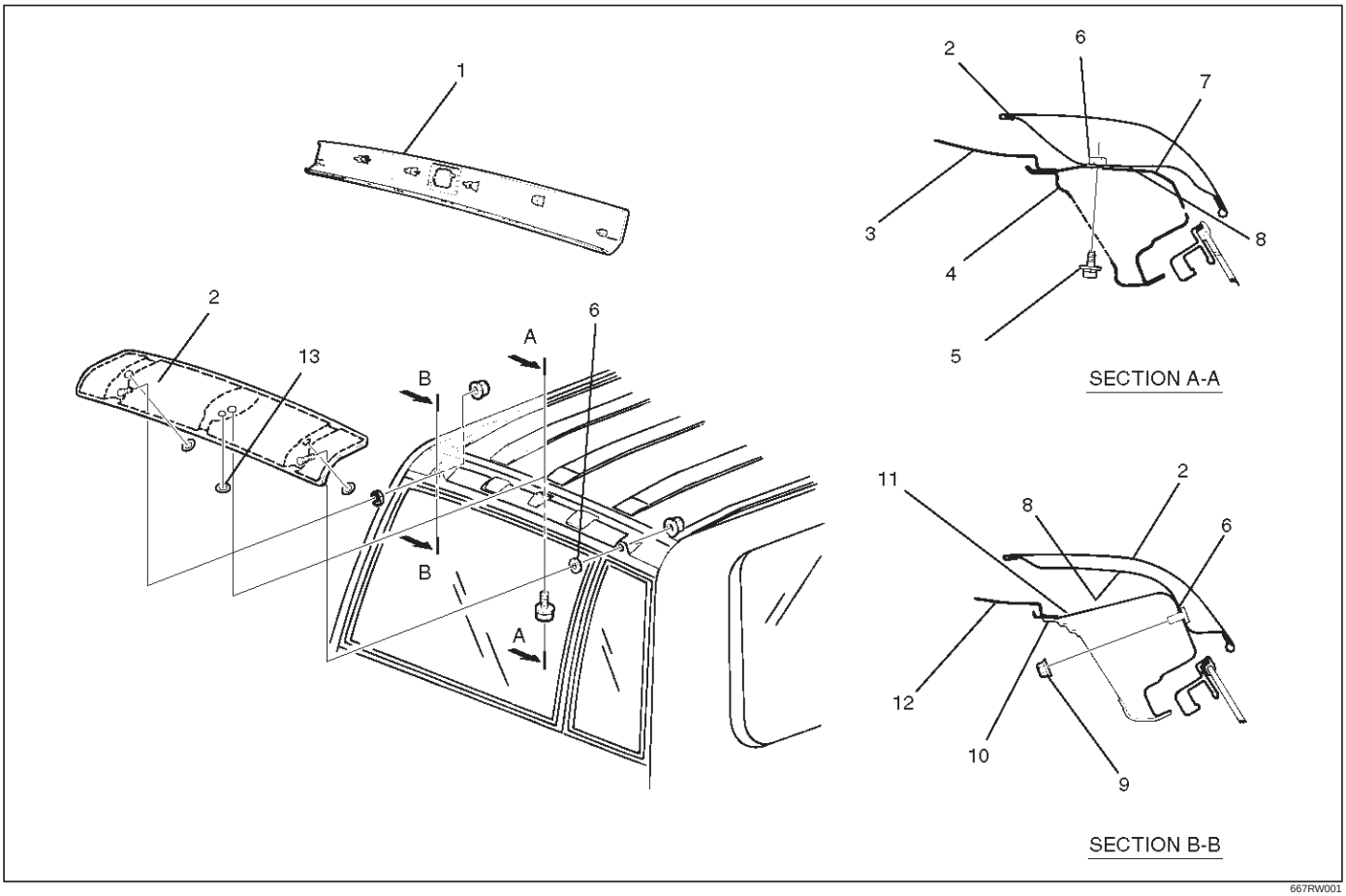

Legend

(1) Rear Roof Trim Cover
(2) Rear Air Deflector
(3) Roof Rail
(4) Rear Inner Roof Rail
(5) Fixing Bolt
(6) Nylon Washer
(7) Rear Outer Roof Panel
(8) Grommet
(9) Fixing Nut
(10) Rear Pillar Upper Reinforcement
(11) Rear Outer Roof Rail
(12) Roof Panel
(13) Grommet

Removal

1. Disconnect the battery ground cable
2. Remove rear roof trim cover.
   - Refer to Luggage Side and Quarter Upper Trim Cover in Exterior / Interior section.
3. Remove rear air deflector.
   - Take notice of the grommet and the nylon washer.

Installation

To install, follow the removal steps in the reverse order, noting the following points.

1. Install the grommet (1) to the air deflector (2) drain hole.

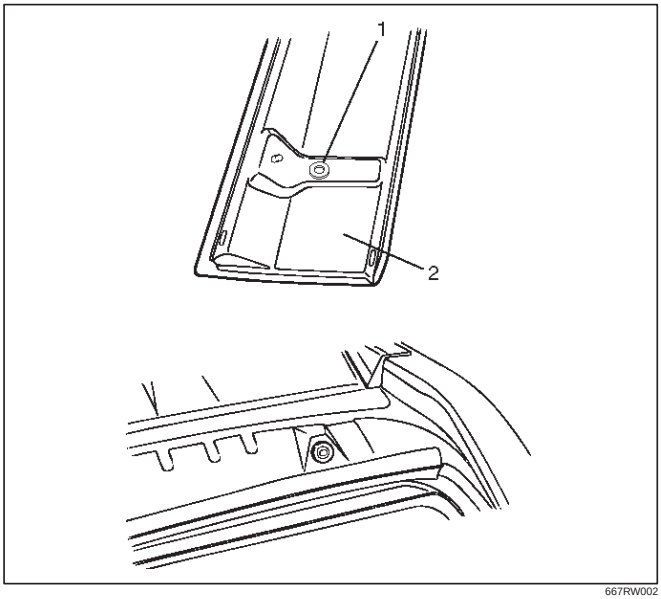

667RW002

2. Use a new nylon washer (4). Peel off the adhesive tape of the washer to install the nylon washer to the air deflector (3).

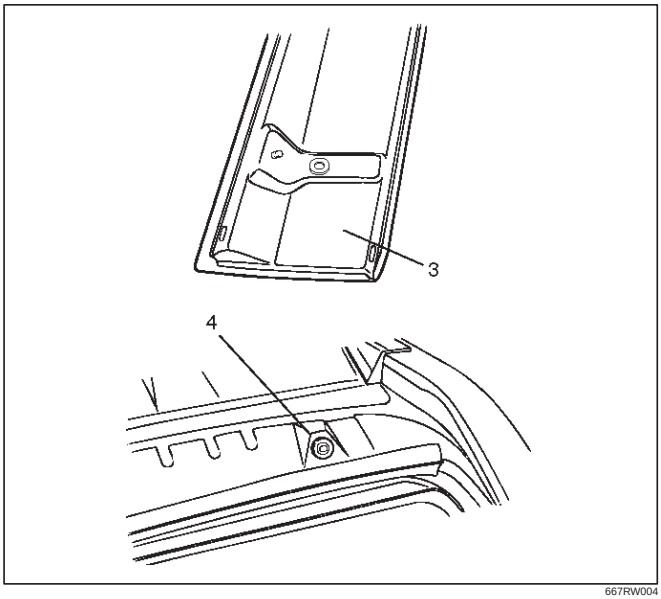

667RW004

3. Install the air deflector (5) to the roof by referring to the specified values shown in the illustration.

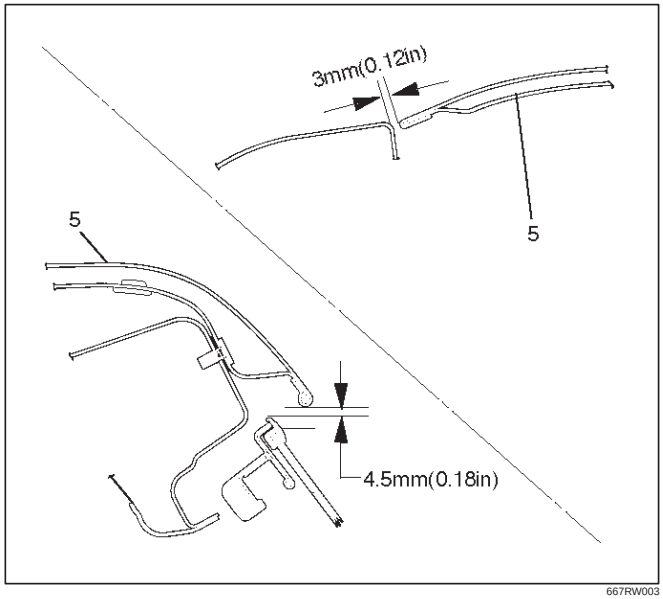

667RW003

4. Tighten the deflector fixing to the specified torque.

Bolt Torque : 6 N•m (0.6kg·m/52 lb in)

Nut Torque : 8 N•m (0.8kg·m/69 lb in)

Roof Moulding

Parts Location

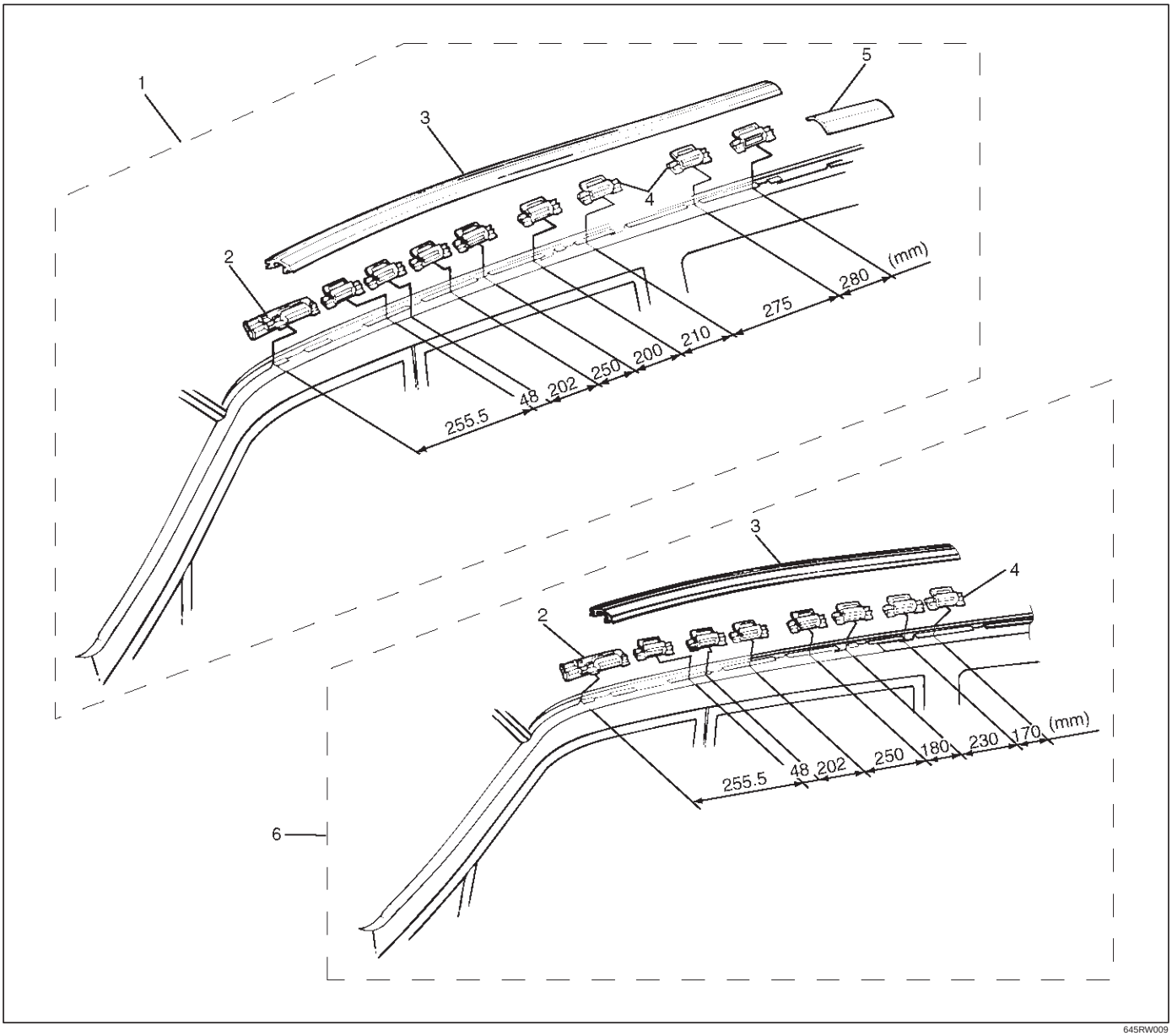

645RW009

Legend

(1) L·W·B
(2) Windshield Side Moulding Upper Clip
(3) Roof Moulding
(4) Roof Moulding Clip
(5) Roof End Moulding
(6) S·W·B

Removal

1. Disconnect the battery ground cable.
2. Remove roof moulding.
3. Remove roof end moulding.
   - Remove the sealing adhesive and the adhesive tape of the roof end moulding from the panel using a knife or scraper while you peel them off.
4. Remove roof moulding clips.

Installation

1. Install the moulding roof clips (1).
   - Install the clips on roof panel flange (2) to refer the illustration.

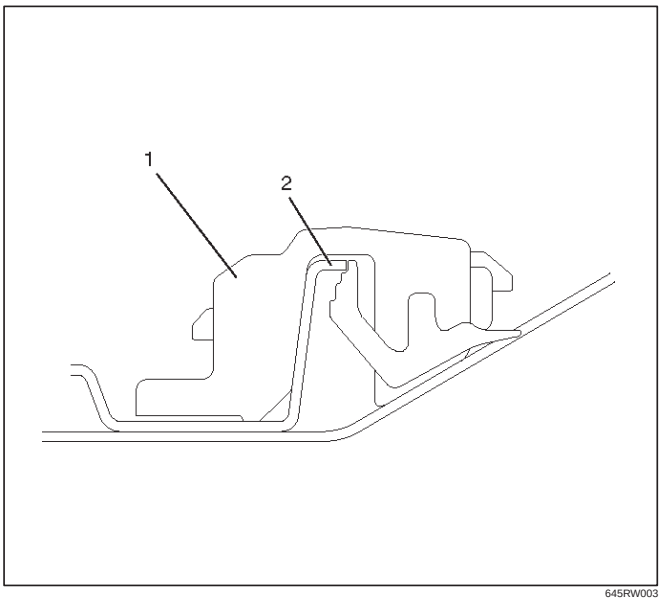

645RW003

2. Install the roof end moulding (3).
   - Clean the body panel where the roof end moulding is installed.
   - Install the roof end moulding and the rear air deflector (2) so that the installation clearance between them is within the specified values. Securely fix it with the adhesive tape (4) and sealing adhesive (5).

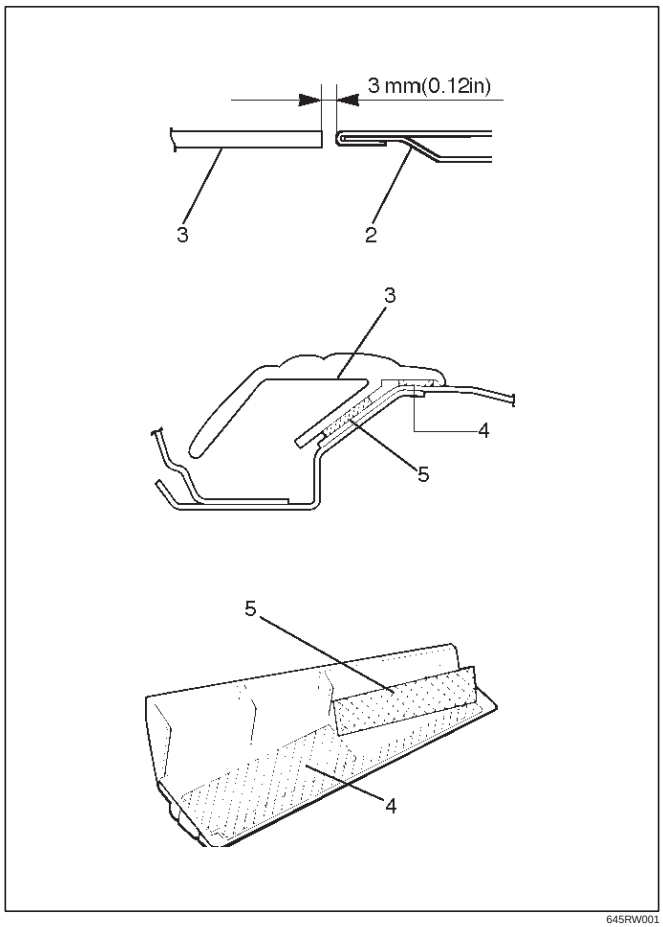

645RW001

3. Install the roof moulding (9).
   - Assemble the windshield side moulding upper clip (8) to the roof panel with the clip positioning rib (6) (oblique lines portion) attached to the roof panel flange (7). Assemble the roof moulding (9) while you attach the front edge portion of the roof molding to the windshield side moulding (10).

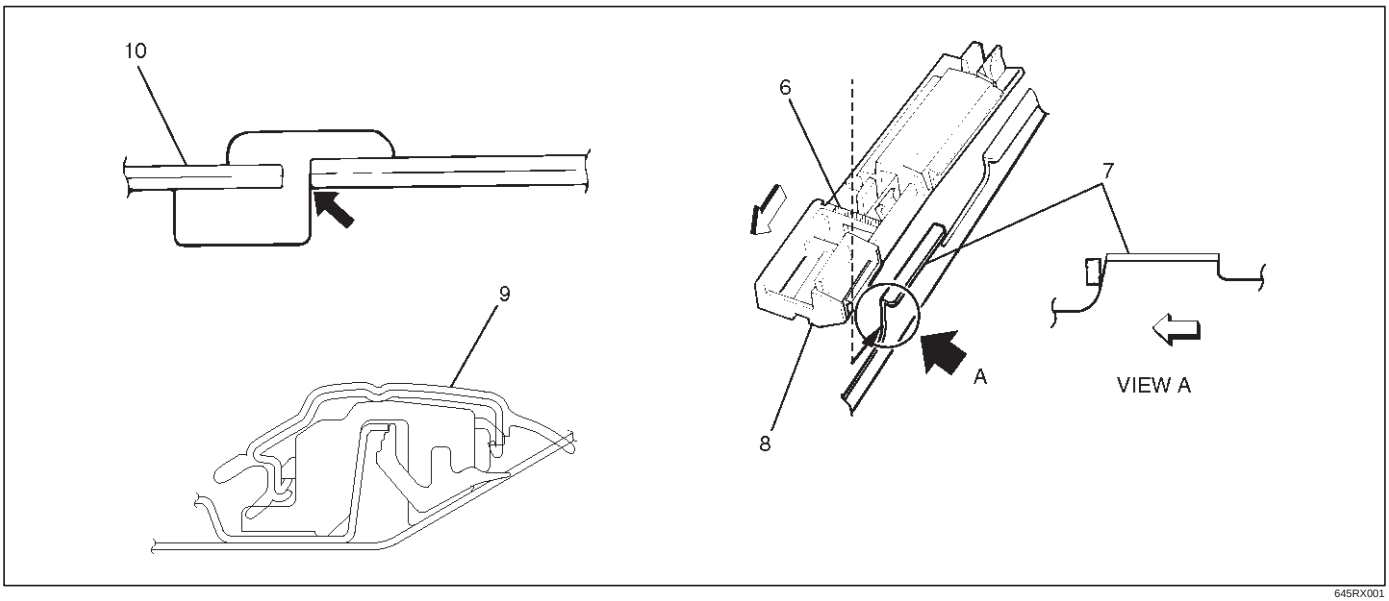

645RX001

Windshield

Parts Location

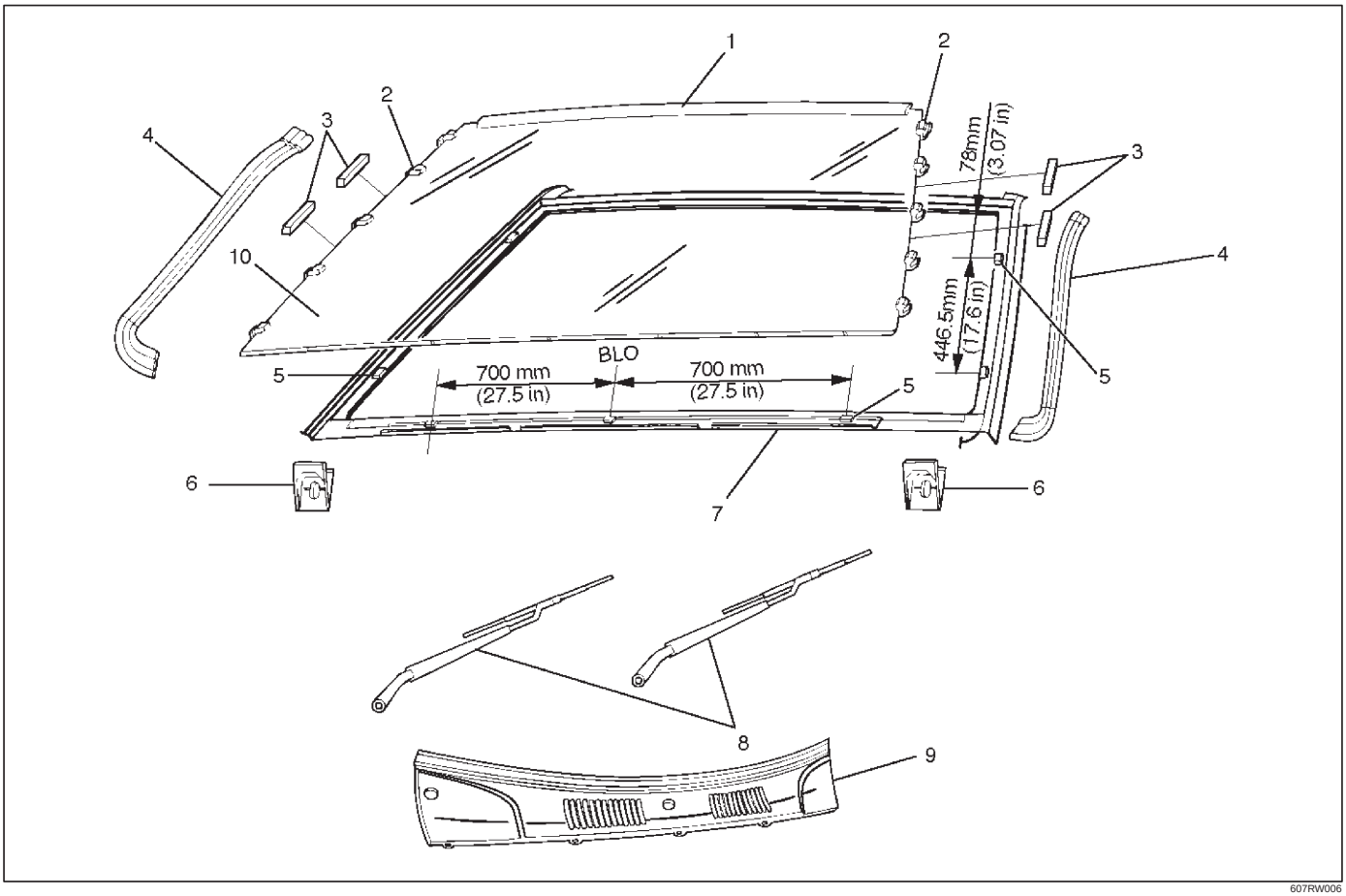

Legend

(1) Windshield Upper Moulding
(2) Moulding Clip
(3) Windshield Side Seal
(4) Windshield Side Moulding
(5) Spacer
(6) Windshield Support
(7) Cowl Upper Rail Flange
(8) Windshield Wiper
(9) Front Cowl Cover
(10) Windshield

Removal

1. Disconnect the battery ground cable.
2. Remove windshield wiper.
   - Refer to Windshield Wiper Arm/Blade in Wiper/Washer System section.
3. Remove front cowl cover.
   - Refer to Cowl Cover in this section.
4. Remove windshield side moulding.
   - Pull the moulding out from the windshield side moulding clip.
5. Remove windshield support.
6. Remove windshield side seal.
7. Remove windshield (2).
   - Use a knife or pick to make a hole in part of the adhesive caulking material.

- Secure one end of a piece of steel piano wire (1) (0.02 inches in diameter) to a piece of wood that can serve as a handle.

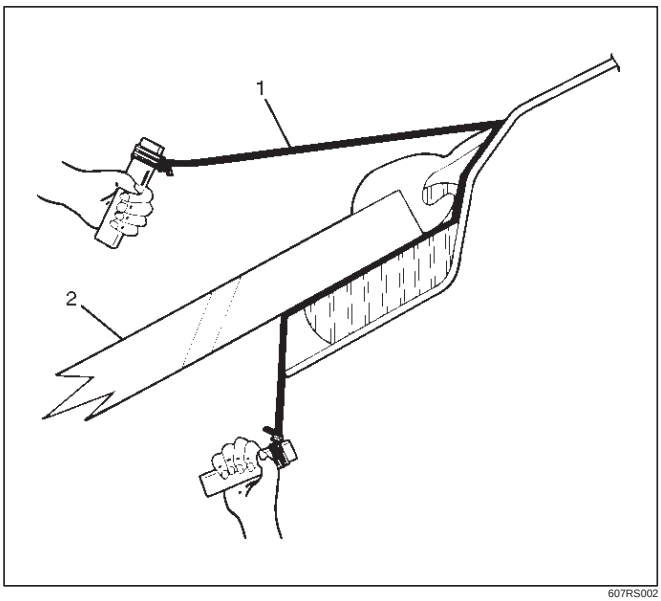

607RS002

- Use a pair of needle nose pliers to insert the other end of the piano wire through the adhesive caulking material at the edge of the windshield glass.
- Secure the other end of the piano wire to another piece of wood.
- With the aid of an assistant, carefully move the piano wire with a sawing motion to cut through the adhesive caulking material around the entire circumference of the windshield glass.
- Clean the remaining adhesive caulking material from the area of the body which holds the windshield.

8. Remove windshield upper moulding.
   - Taking notice of the adhesive tape, and peel the moulding off the windshield upper portion.
9. Remove moulding clip.
10. Remove spacer.

Installation

1. Install the spacer (1).
   - Clean the bonding surfaces of both the windshield and the body panel.
   - When installing the spacers, align the lower side spacer to the R stop of the body panel and the side spacer to the end of the body panel. Be sure to always use a new spacer.

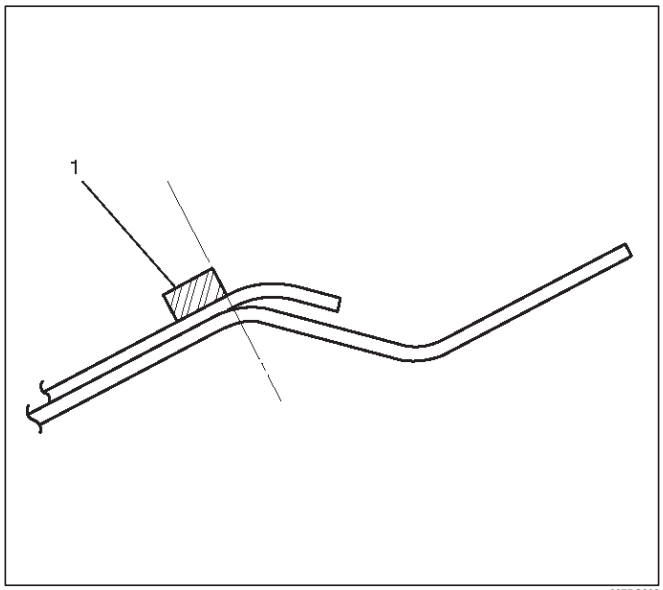

607RS003

- Be absolutely sure to apply glass primer and body primer to the body panel as shown in the illustration.

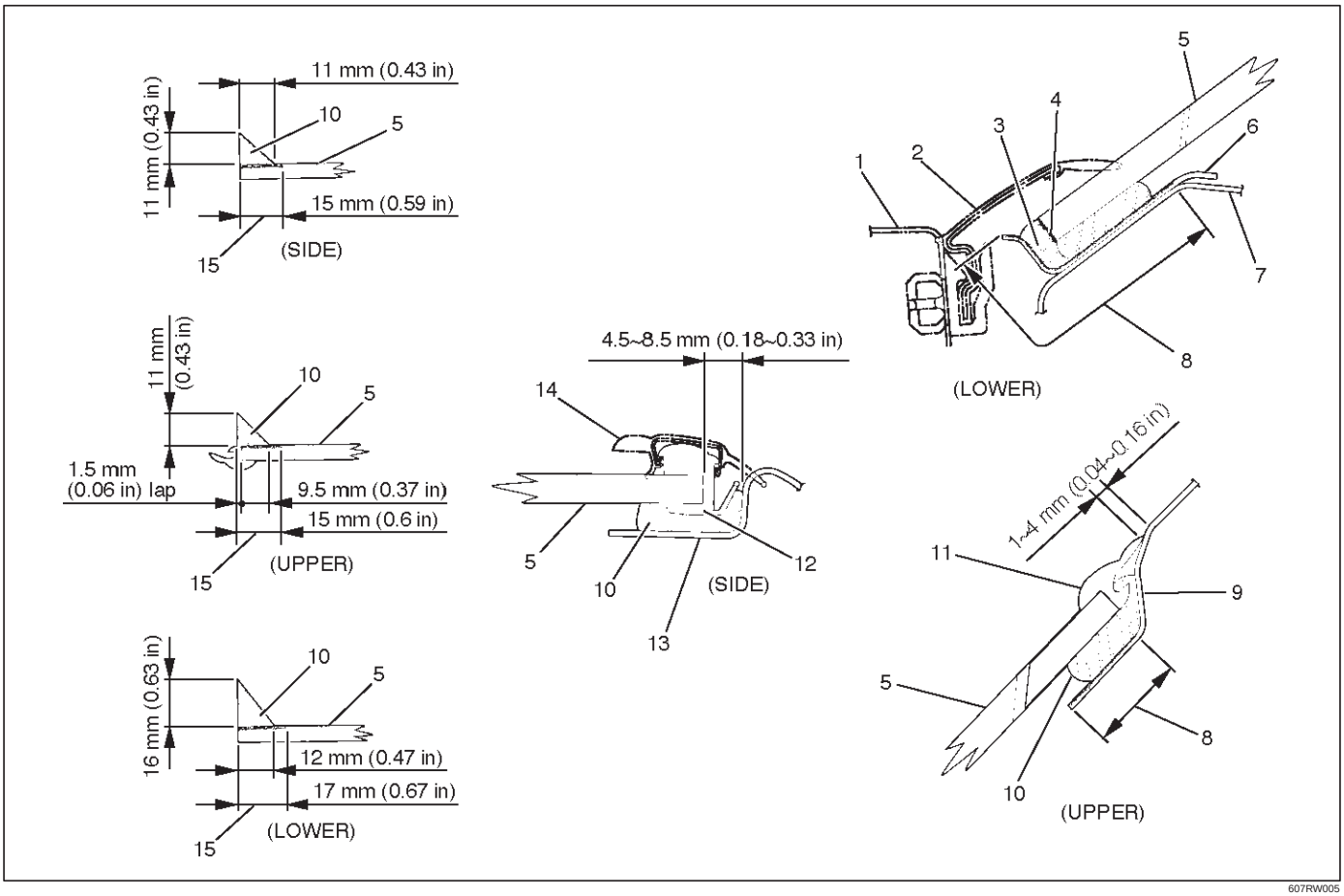

607RW005

Legend

(1) Front Cowl Cover
(2) Windshield Lower Moulding
(3) The portion of the cowl upper rail flange where sealing adhesive is additionally filled
(4) Apply primer to the glass and portion where sealing adhesive is additionally filled
(5) Windshield
(6) Cowl Upper Rail
(7) Cowl Upper Panel
(8) Body Primer
(9) Roof Panel
(10) Sealing Adhesive
(11) Windshield Upper Moulding
(12) Moulding Clip
(13) Front Pillar Outer Panel
(14) Windshield Side Moulding
(15) Sealing Adhesive

2. Install the moulding clip (2).
   - Install new moulding clips to the fixed position of the windshield (3).
   - Always use new moulding clips (4).

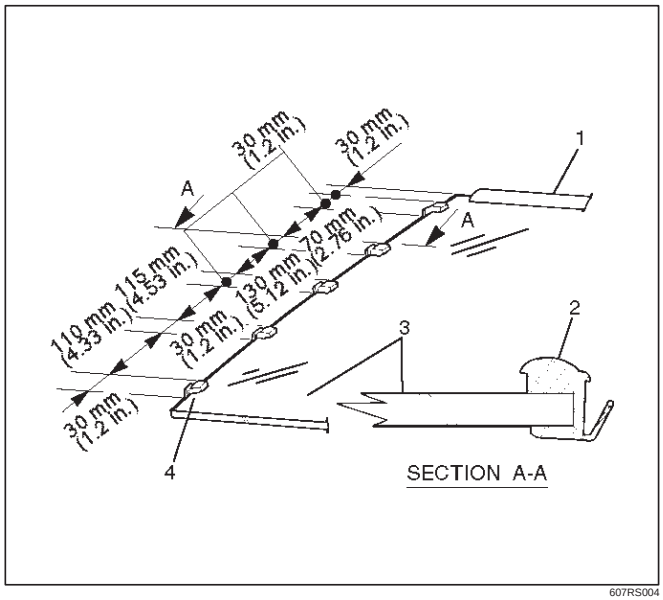

607RS004

3. Install the windshield upper moulding (1).
   - Peel off the adhesive tape (2) and install the moulding to the fixed position of the windshield (3).
   - Always use new upper moulding (1).

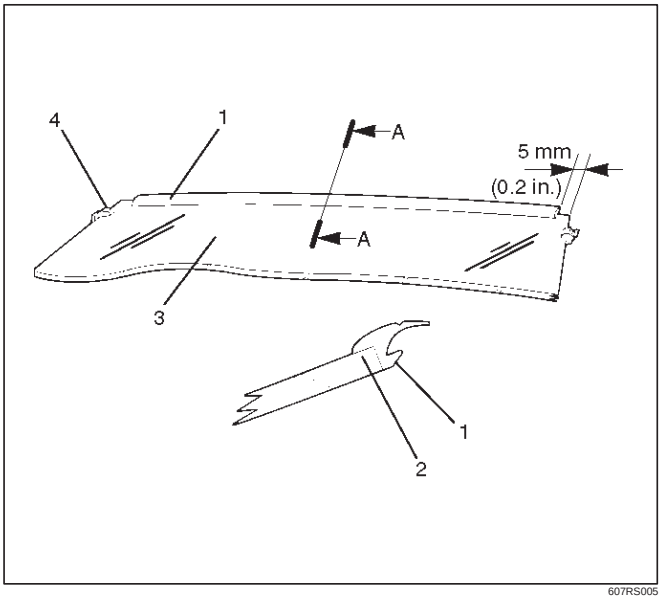

607RS005

4. Install the windshield.

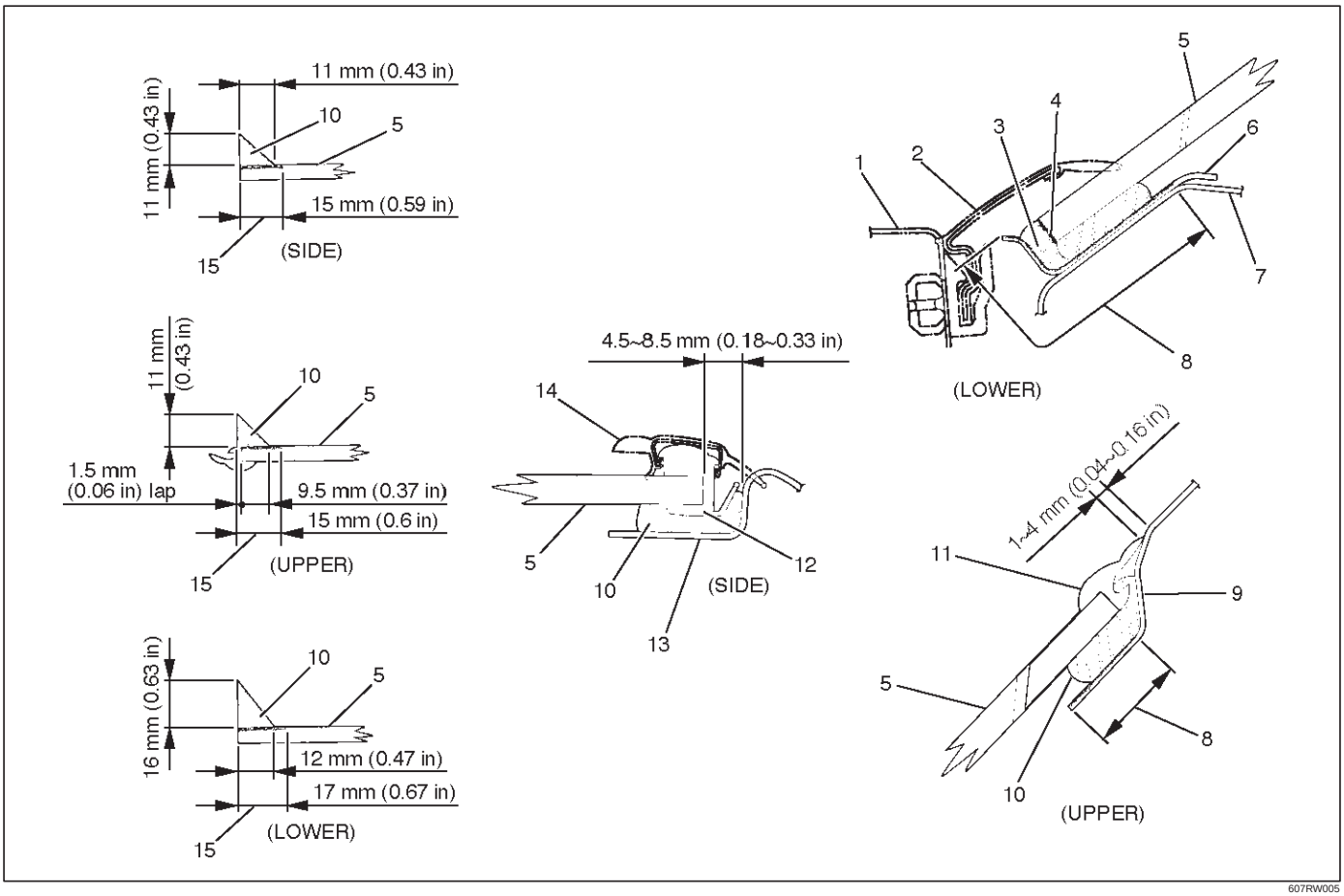

607RW005

Legend

(1) Front Cowl Cover
(2) Windshield Lower Moulding
(3) The portion of the cowl upper rail flange where sealing adhesive is additionally filled
(4) Apply primer to the glass and portion where sealing adhesive is additionally filled
(5) Windshield
(6) Cowl Upper Rail
(7) Cowl Upper Panel
(8) Body Primer
(9) Roof Panel
(10) Sealing Adhesive
(11) Windshield Upper Moulding
(12) Moulding Clip
(13) Front Pillar Outer Panel
(14) Windshield Side Moulding
(15) Sealing Adhesive

5. Install the windshield side seal.
6. Install the windshield support (2).

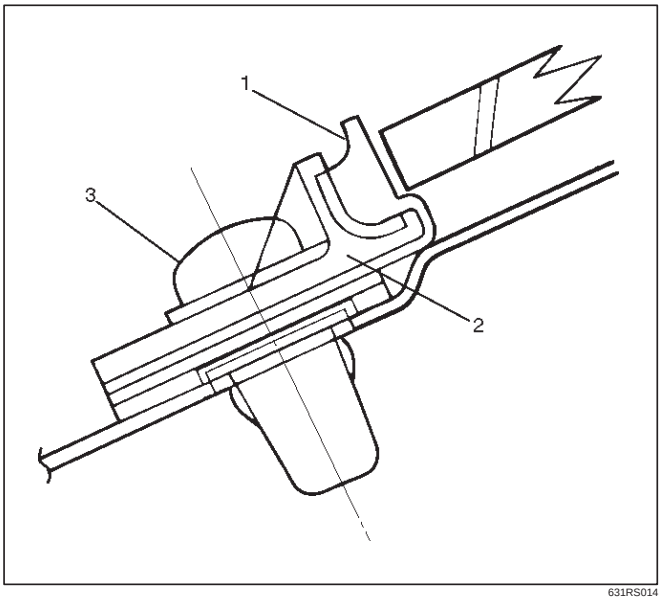

631RS014

- Apply a sealing adhesive to the circumference of the windshield.
- Apply the sealing adhesive to the frange portion of the cowl upper rail.
- Adjust the gap clearance of the windshield.
- Install the windshield to the body panel by applying pressure to the windshield.
- Cure the adhesive at a temperature of 20~30˚C (68~86˚F) for 24 hours.
- Check that the windshield does not leak water.

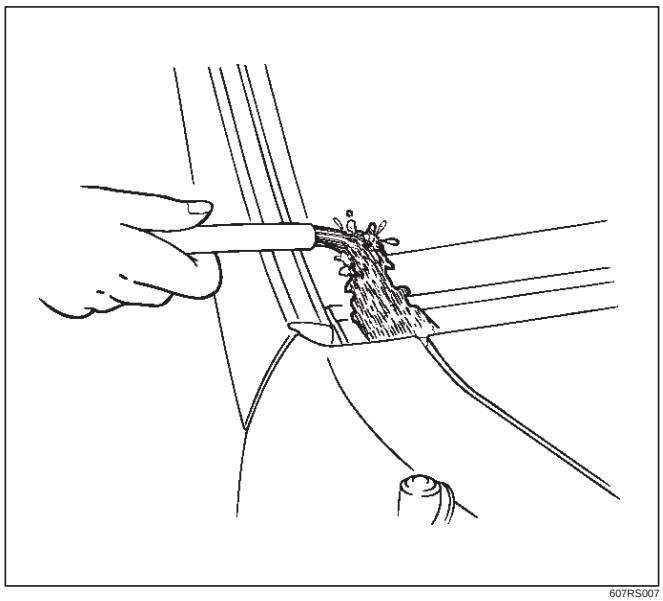
607RS007

7. Install the windshield side moulding.
   - Insert the windshield (5) side moulding (1) into the moulding clip (2).

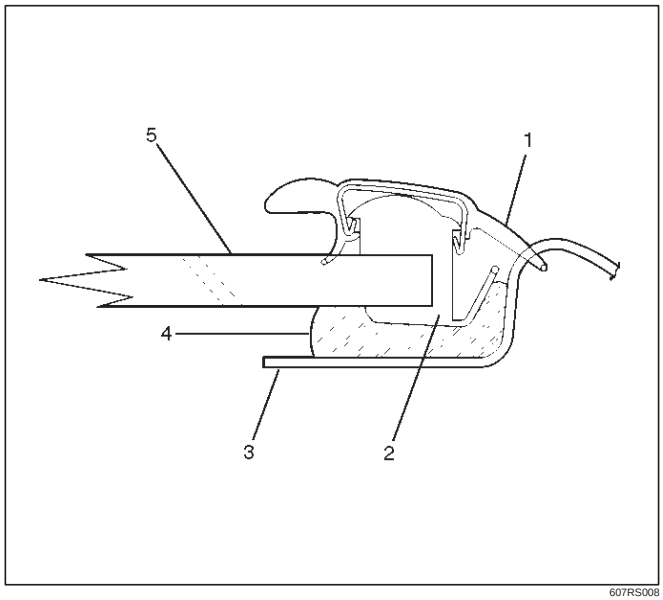

607RS008

   - Take care not to damage the side moulding when you install it.
8. Install the front cowl cover.
9. Install the windshield wiper.

Rear Quarter Side Glass

Parts Location

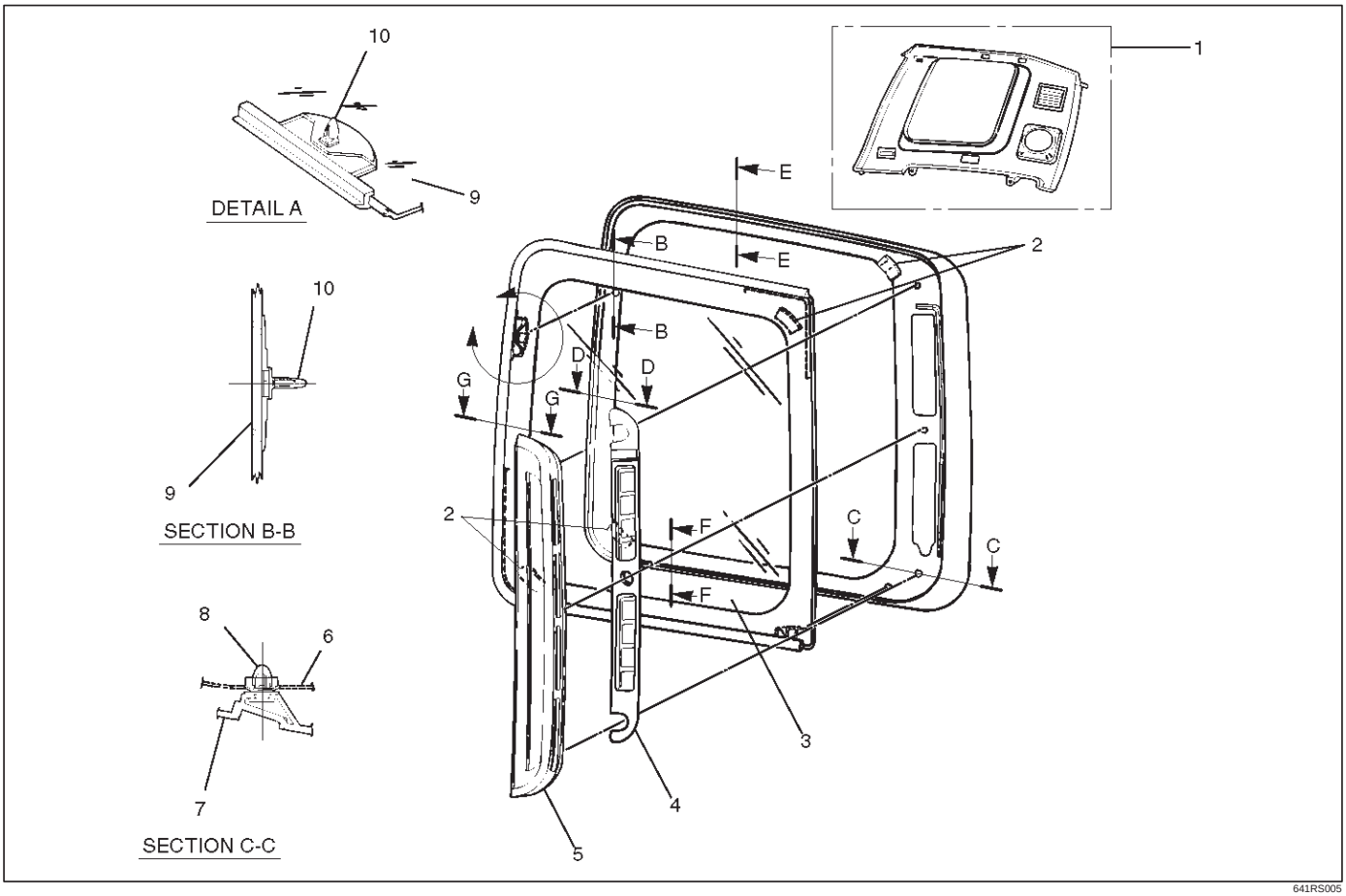

641RS005

Legend

(1) Rear Quarter Upper Trim Panel
(2) Fastener
(3) Rear Quarter Side Glass
(4) Valve Assembly
(5) Ventilation Assembly
(6) Side Outer Panel
(7) Ventilation Assembly
(8) Ventilation Fixing Clip
(9) Rear Quarter Side
(10) Glass Fixing Clip

Removal

1. Disconnect the battery ground cable.
2. Remove rear quarter upper trim panel.
   - Refer to Laggage Side and Quarter Upper Trim Cover in Exterior / Interior Trim section.
3. Remove ventilation assembly.
4. Remove valve assembly.
   - Refer to Ventilation Assembly in Exterior / Interior Trim section.
5. Remove rear quarter side glass.
   - Refer to Windshield in this section.

Installation

1. Install the rear quarter side glass.

- Clean the bonding surfaces of both the glass and the body panel.
- Install the fasteners (1) to the fixed positions of the glass and the body panel.

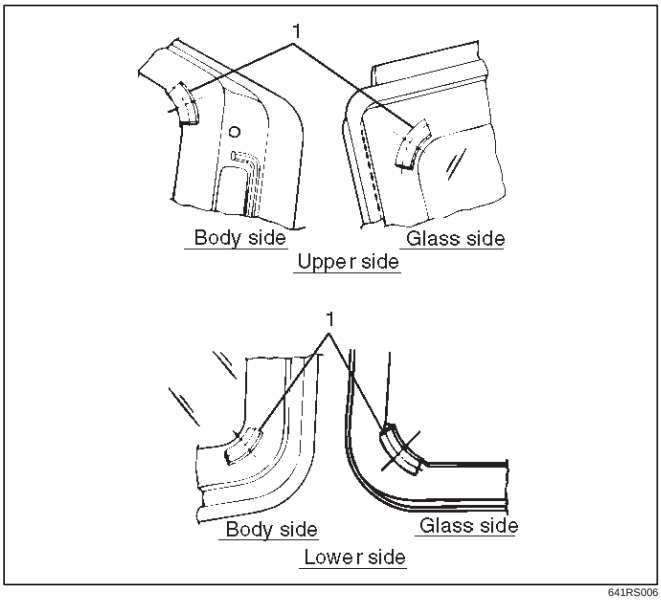

641RS006

- Always use new fasteners.
- Be absolutely sure to apply glass primer (2) to the side glass.
- Apply a sealing adhesive (1) to the glass circumference.

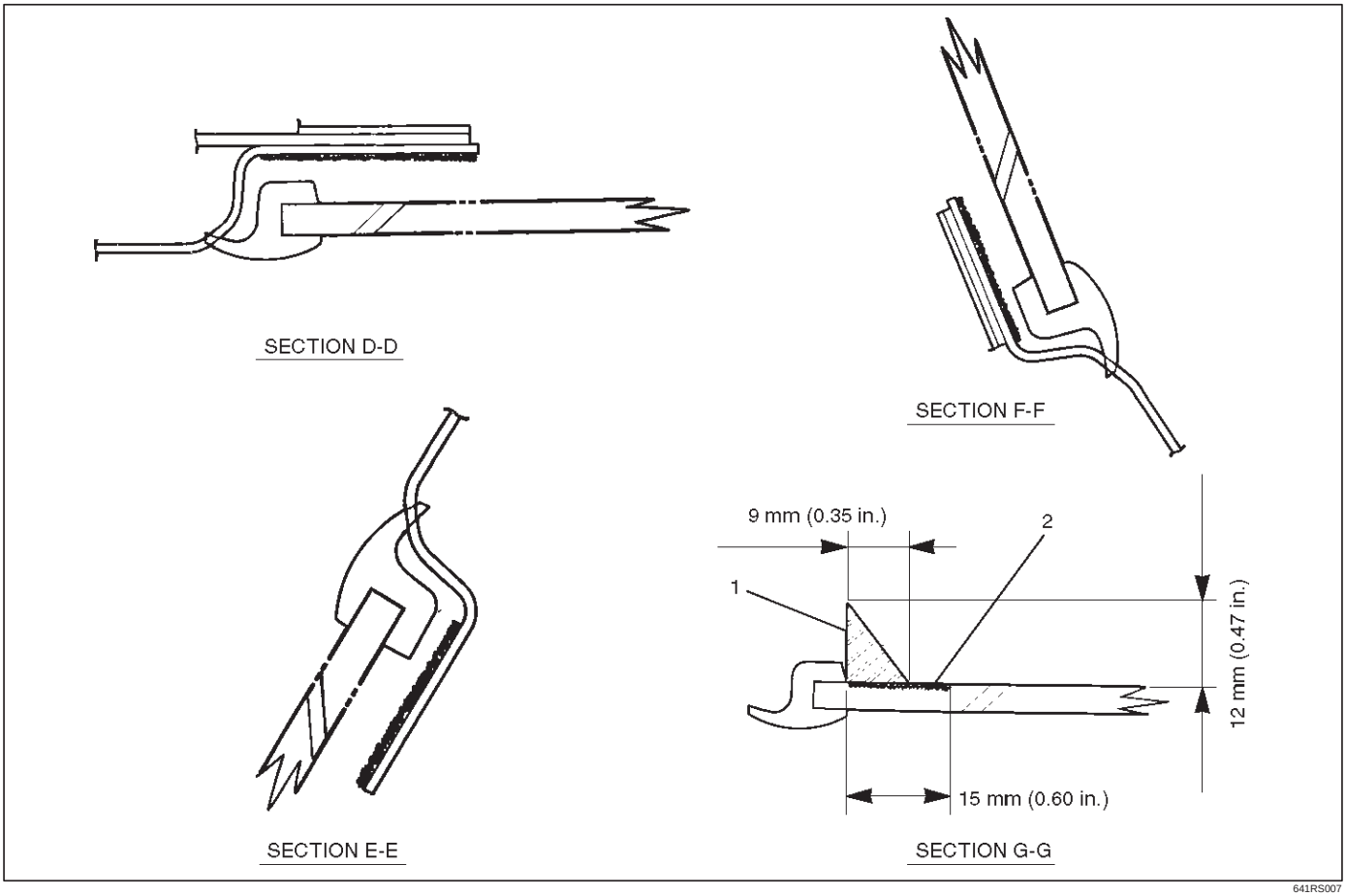

641RS007

- Apply PVC primer (4) to the A clip portion.

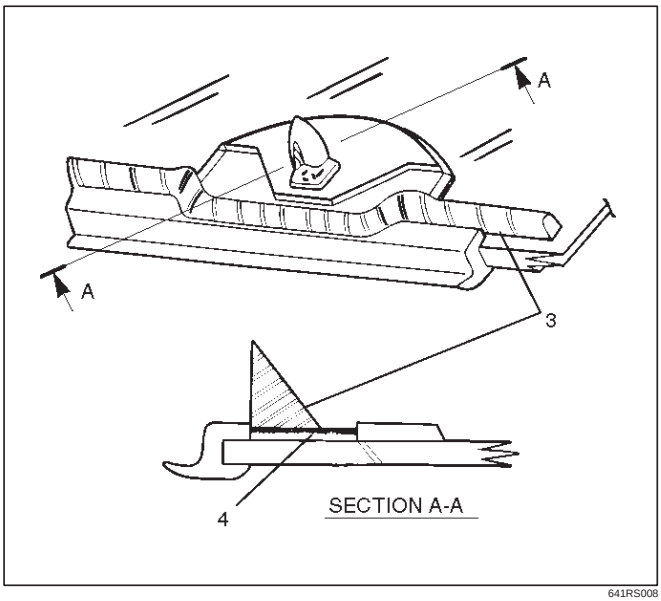

641RS008

- Insert the fixing clip on the side glass into the body panel.
- Push the side glass against the body panel and bond them.
- Cure the adhesive at a temperature of 20~30˚C (68~86˚F) for 24 hours.
- Check that the rear quarter side glass does not leak water.

2. Install the valve assembly.
3. Install the ventilation assembly.
4. Install the rear quarter upper trim panel.

Tailgate Glass

Parts Location

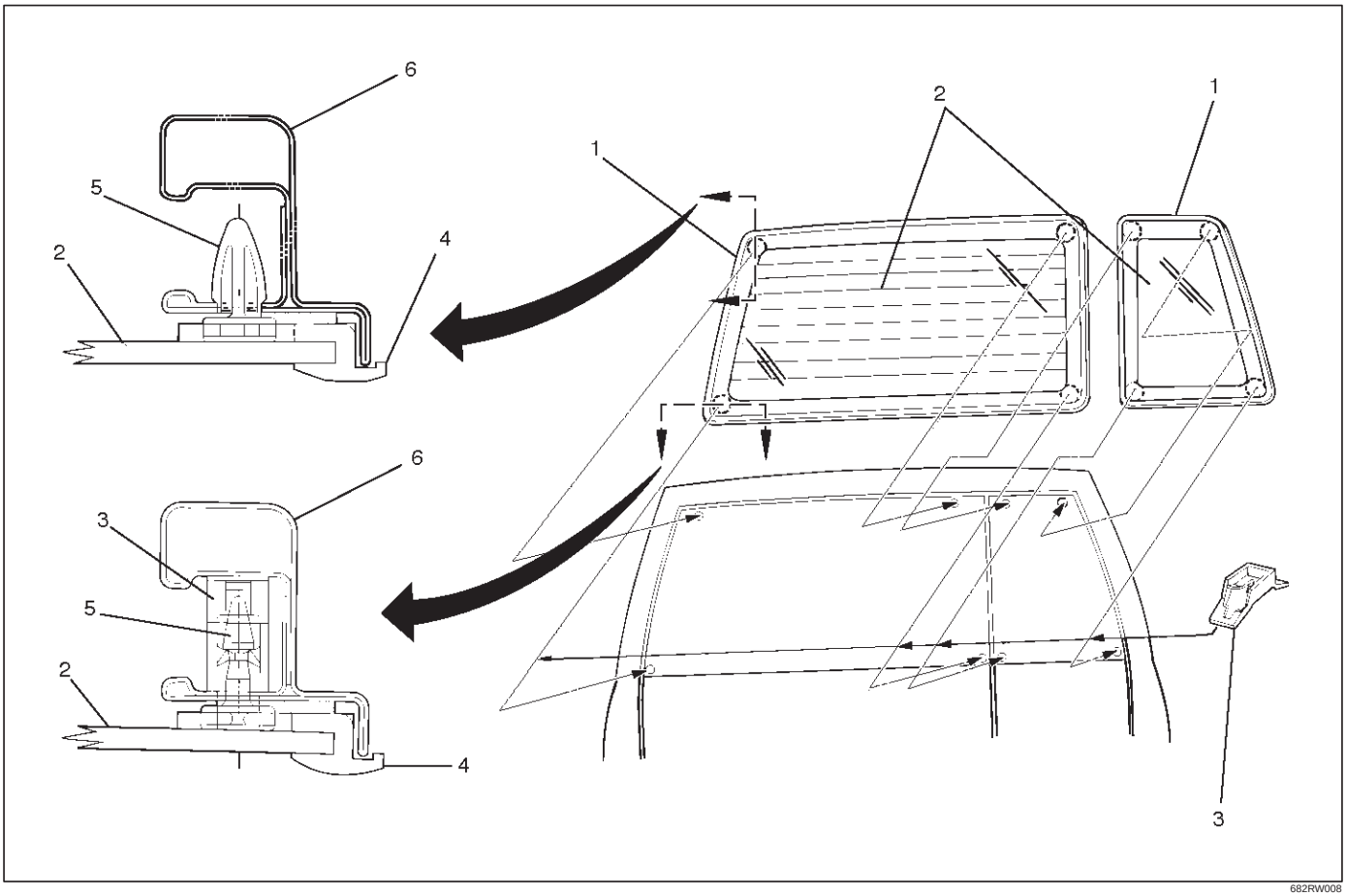

682RW008

Legend

(1) Tailgate Glass Moulding
(2) Tailgate Glass
(3) Tailgate Glass Clip
(4) Glass Moulding
(5) Clip
(6) Body Panel

Removal

1. Remove battery ground cable.
2. Remove tailgate trim panel.
3. Remove tailgate sash trim cover (RH only).
   - Refer to Tailgate Sash Trim Cover in this section.
4. Remove the tailgate frame cover (LH only).
   - Refer to Tailgate Frame Cover (LH) in this section.
5. Remove tailgate glass.
   - Refer to Windshield in this section.

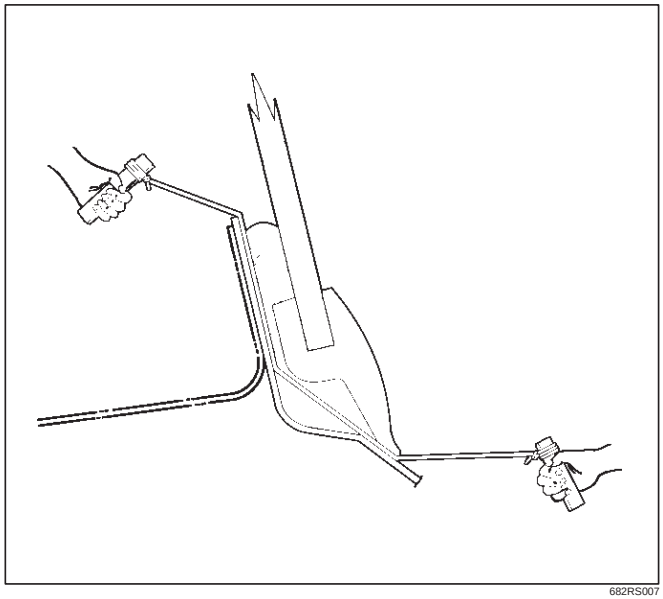

682RS007

6. Remove tailgate glass clip.

Installation

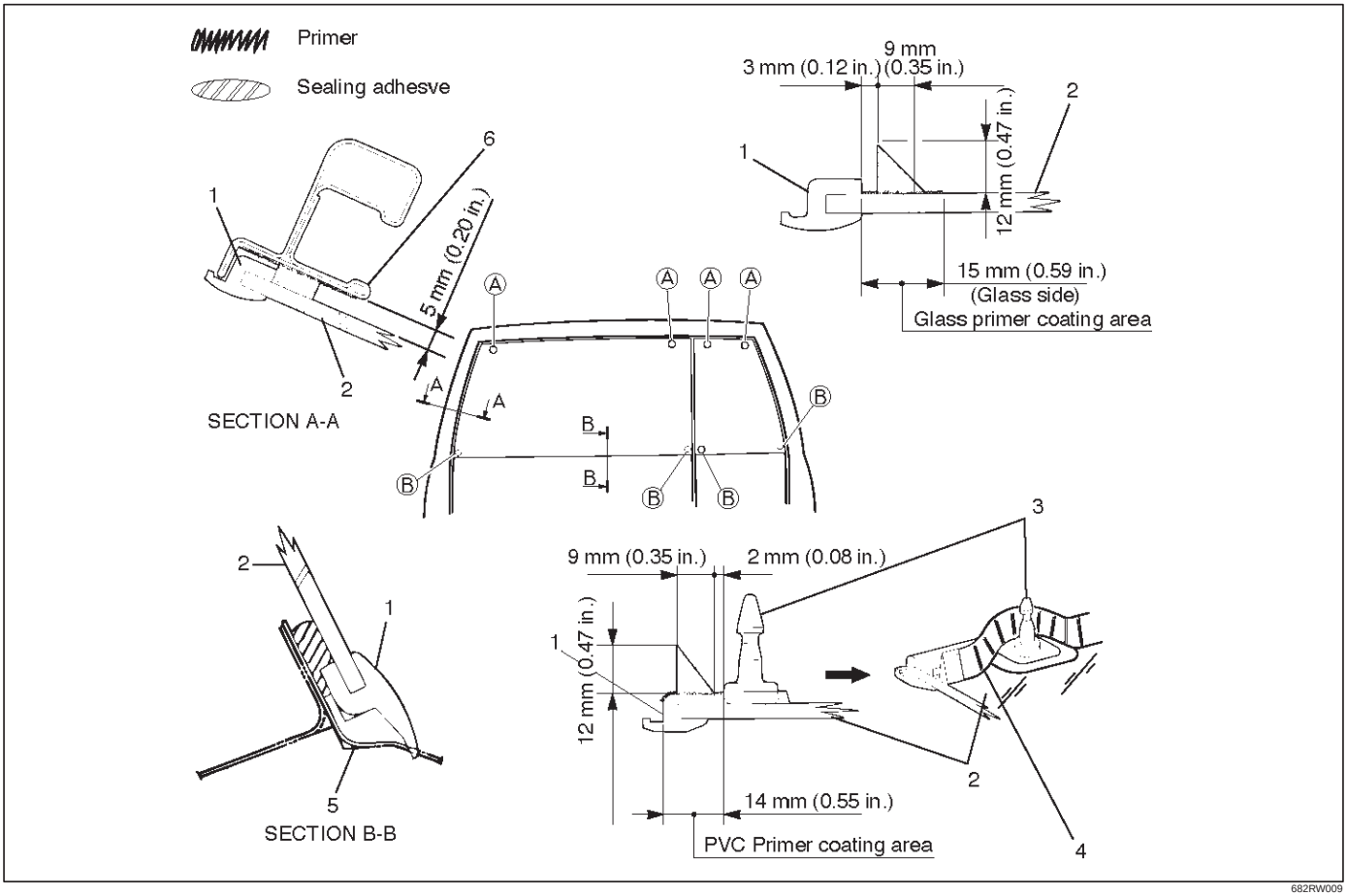

Legend

(1) Glass Moulding
(2) Tailgate Glass
(3) Clip
(4) Sealing Adhesive
(5) Body Panel
(6) Tailgate Frame

1. Install the tailgate glass clip.

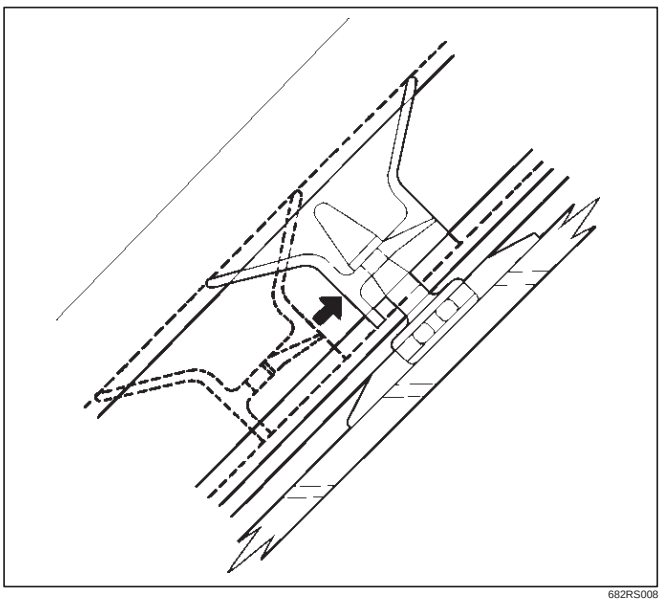

2. Install the tailgate glass (2).
   - Clean the bonding surfaces of both the tailgate glass and the tailgate panel.
   - Be absolutely sure to apply glass primer to the tailgate glass and PCV primer to the glass moulding (1).
   - Apply a sealing adhesive to the circumference of the tailgate glass as shown.
   - Insert the clip of the tailgate glass A portion into the tailgate panel hole to position the glass.
   - Install the new tailgate glass clip to the clip of the tailgate glass B portion while sliding it, and bond the glass to the tailgate panel by applying pressure.

     Always use new tailgate glass clips.
   - Cure the bonding at a temperature of 20~30˚C (68~86˚F) for 24 hours.
   - Check that the tailgate glass does not leak water.

Main Data and Specifications

Torque Specifications

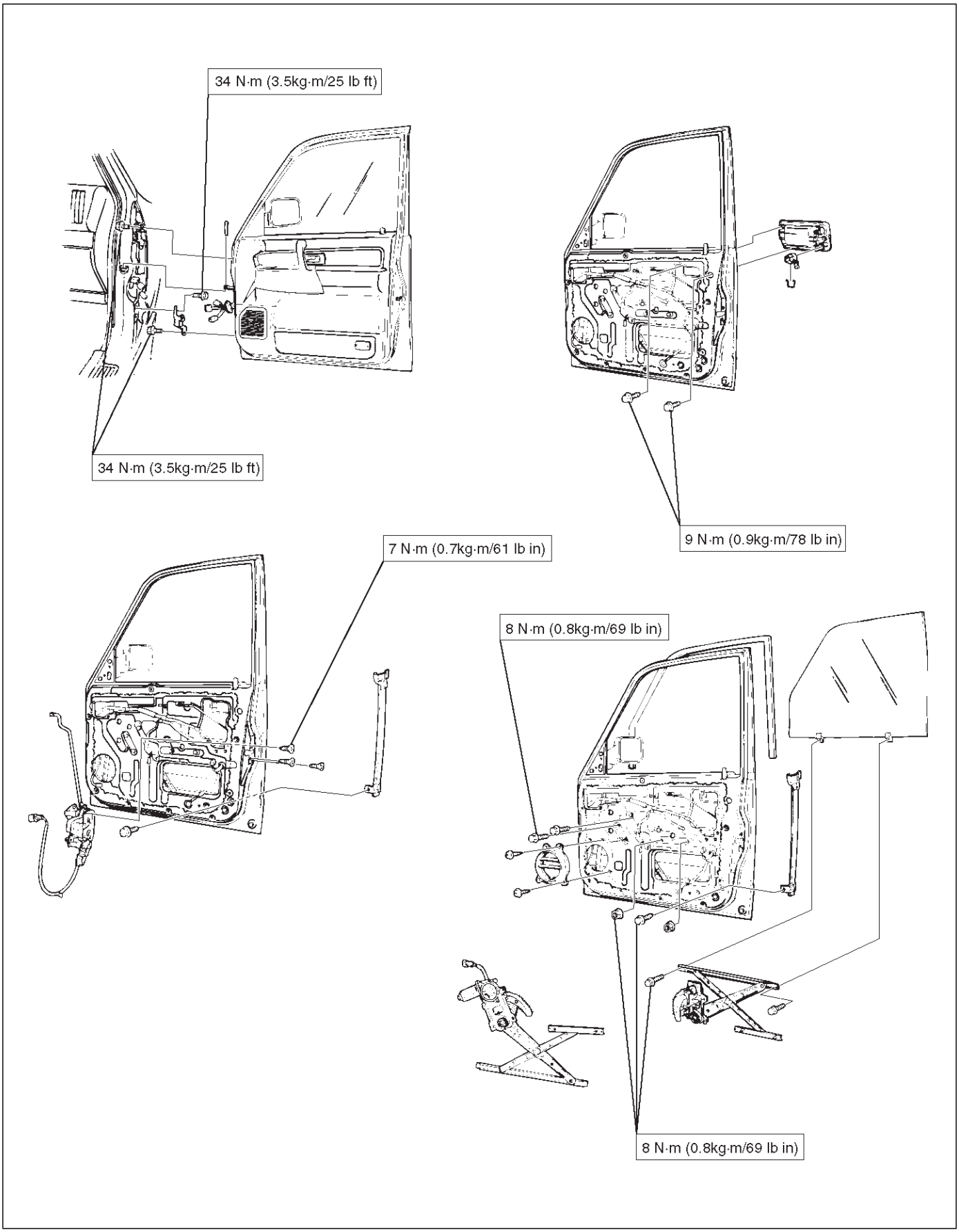

E10RW020

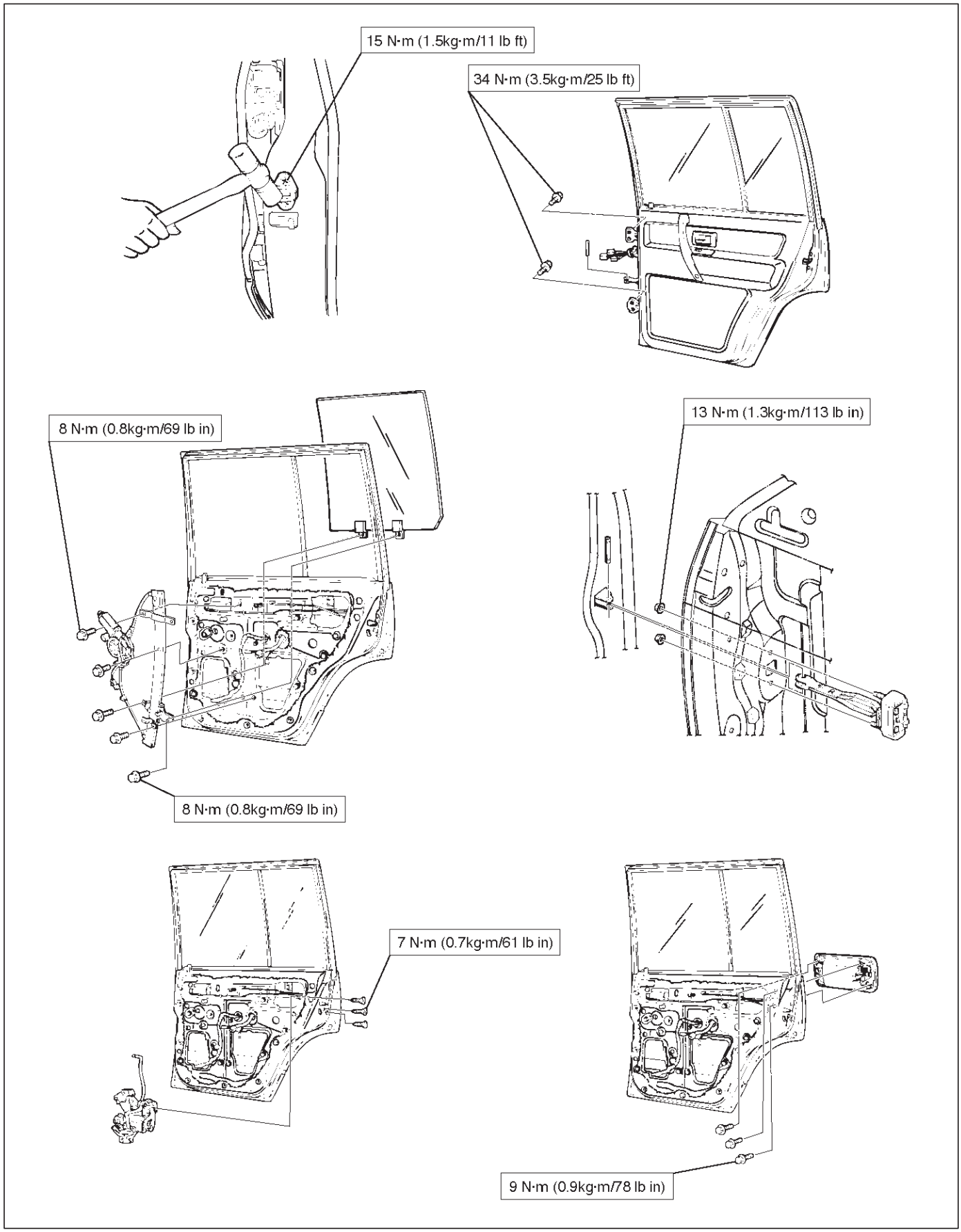
15 N·m (1.5kg·m/11 lb ft)
34 N·m (3.5kg·m/25 lb ft)
8 N·m (0.8kg·m/69 lb in)
13 N·m (1.3kg·m/113 lb in)
8 N·m (0.8kg·m/69 lb in)
7 N·m (0.7kg·m/61 lb in)
9 N·m (0.9kg·m/78 lb in)

E10RW019

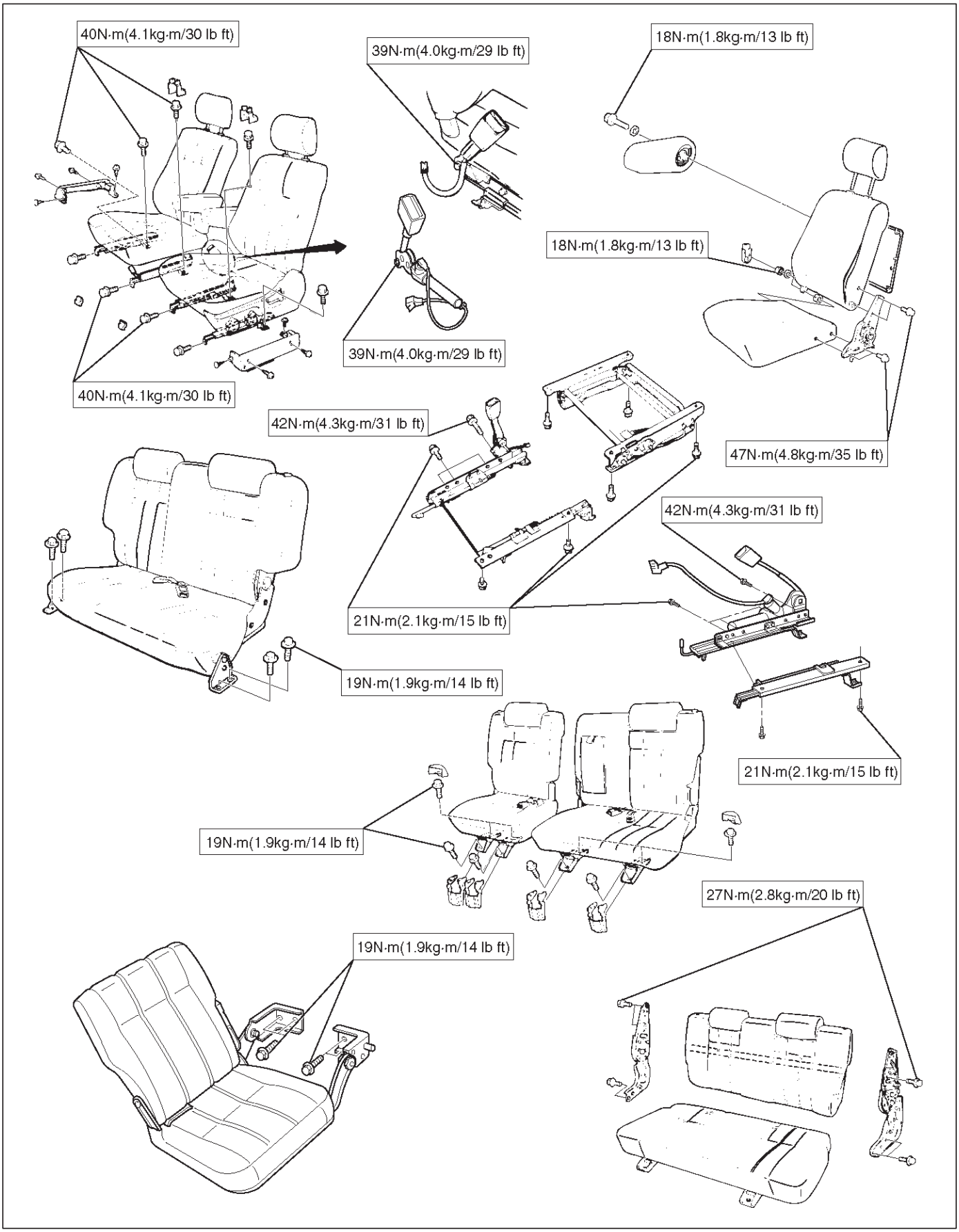
40N·m(4.1kg·m/30 lb ft)
39N·m(4.0kg·m/29 lb ft)
18N·m(1.8kg·m/13 lb ft)
18N·m(1.8kg·m/13 lb ft)
39N·m(4.0kg·m/29 lb ft)
40N·m(4.1kg·m/30 lb ft)
42N·m(4.3kg·m/31 lb ft)
47N·m(4.8kg·m/35 lb ft)
42N·m(4.3kg·m/31 lb ft)
21N·m(2.1kg·m/15 lb ft)
19N·m(1.9kg·m/14 lb ft)
21N·m(2.1kg·m/15 lb ft)
19N·m(1.9kg·m/14 lb ft)
27N·m(2.8kg·m/20 lb ft)
19N·m(1.9kg·m/14 lb ft)

E10RX007

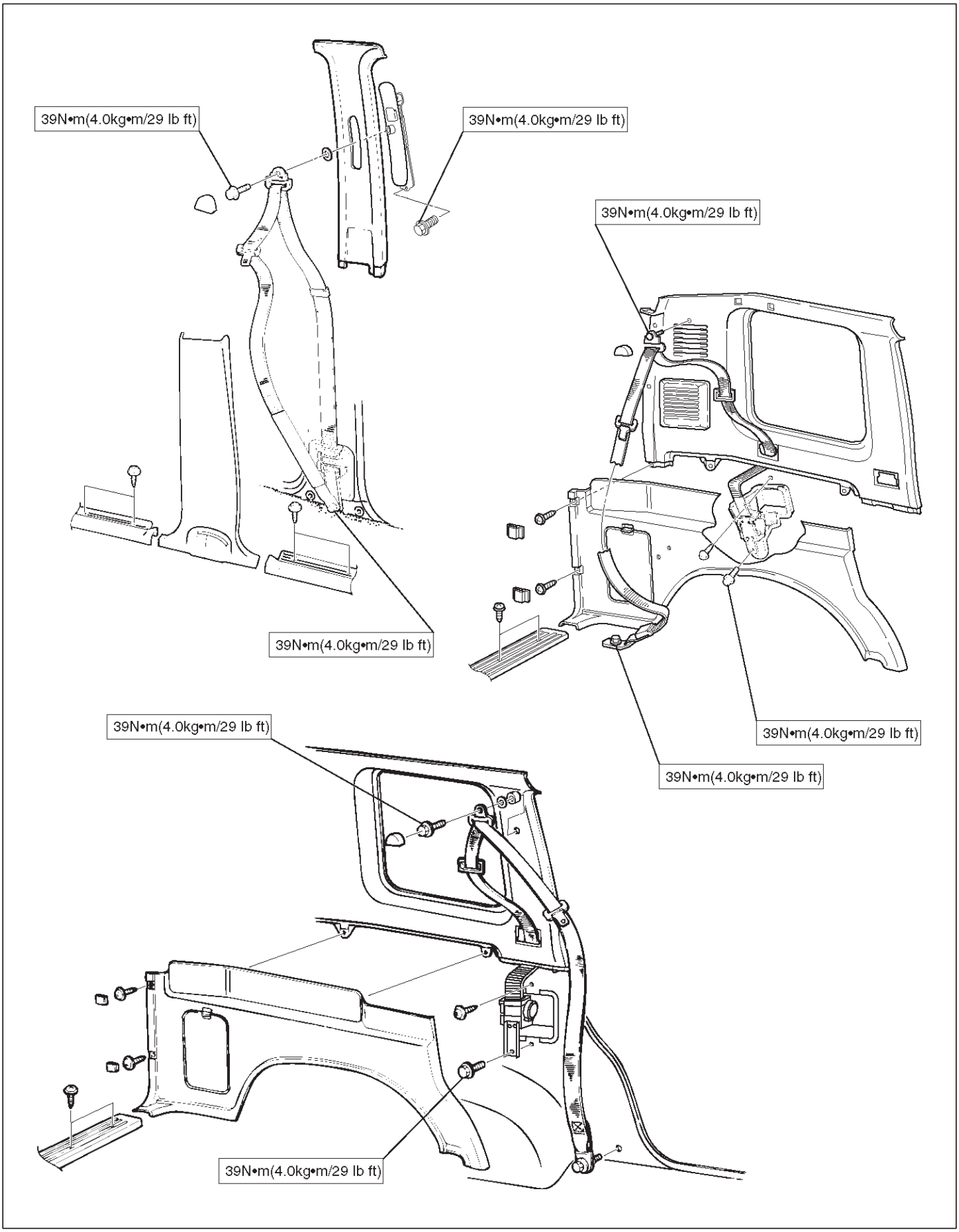
39N•m(4.0kg•m/29 lb ft)
39N•m(4.0kg•m/29 lb ft)
39N•m(4.0kg•m/29 lb ft)
39N•m(4.0kg•m/29 lb ft)
39N•m(4.0kg•m/29 lb ft)
39N•m(4.0kg•m/29 lb ft)
39N•m(4.0kg•m/29 lb ft)
39N•m(4.0kg•m/29 lb ft)

E10RW021

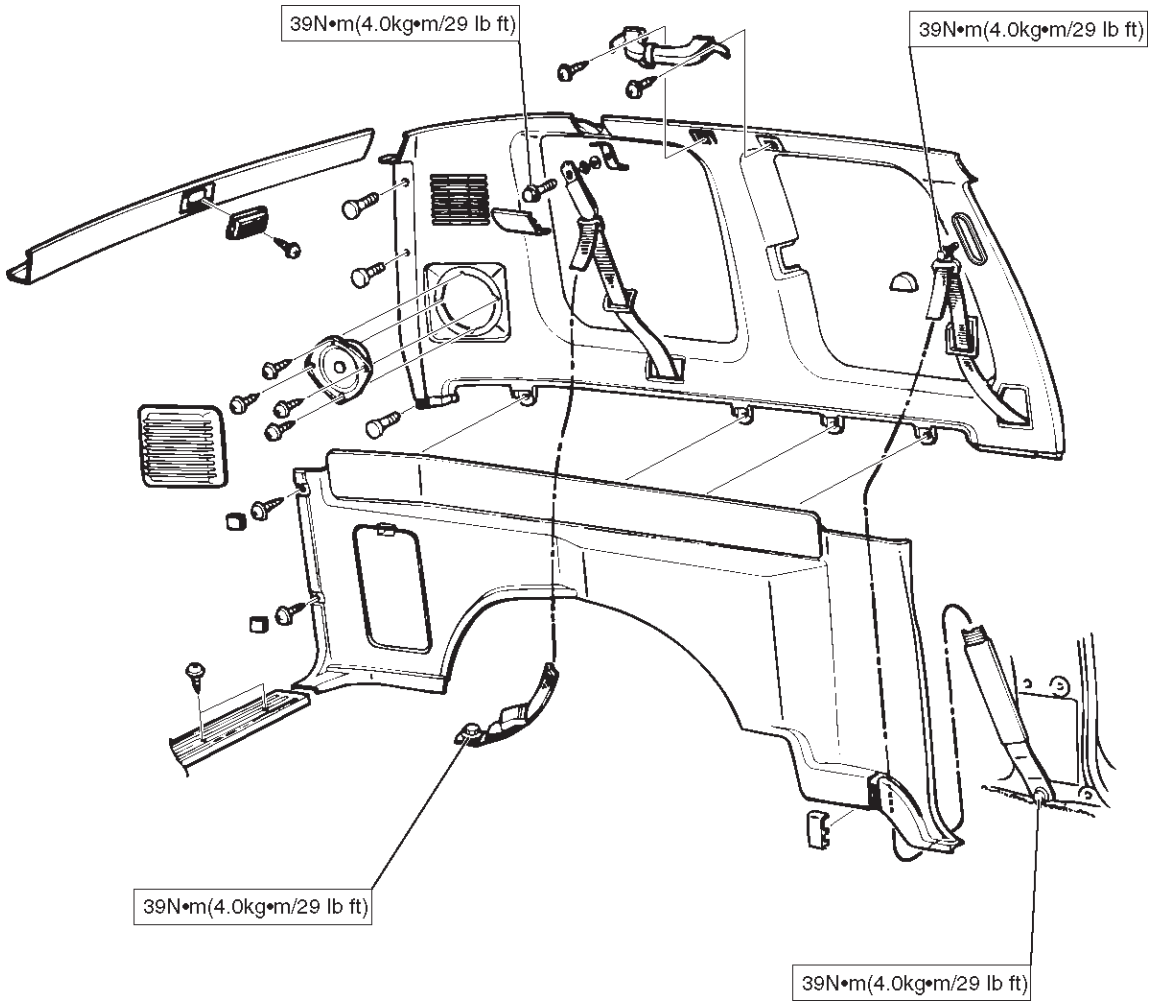
39N•m(4.0kg•m/29 lb ft)
39N•m(4.0kg•m/29 lb ft)
39N•m(4.0kg•m/29 lb ft)
39N•m(4.0kg•m/29 lb ft)

E10RW028

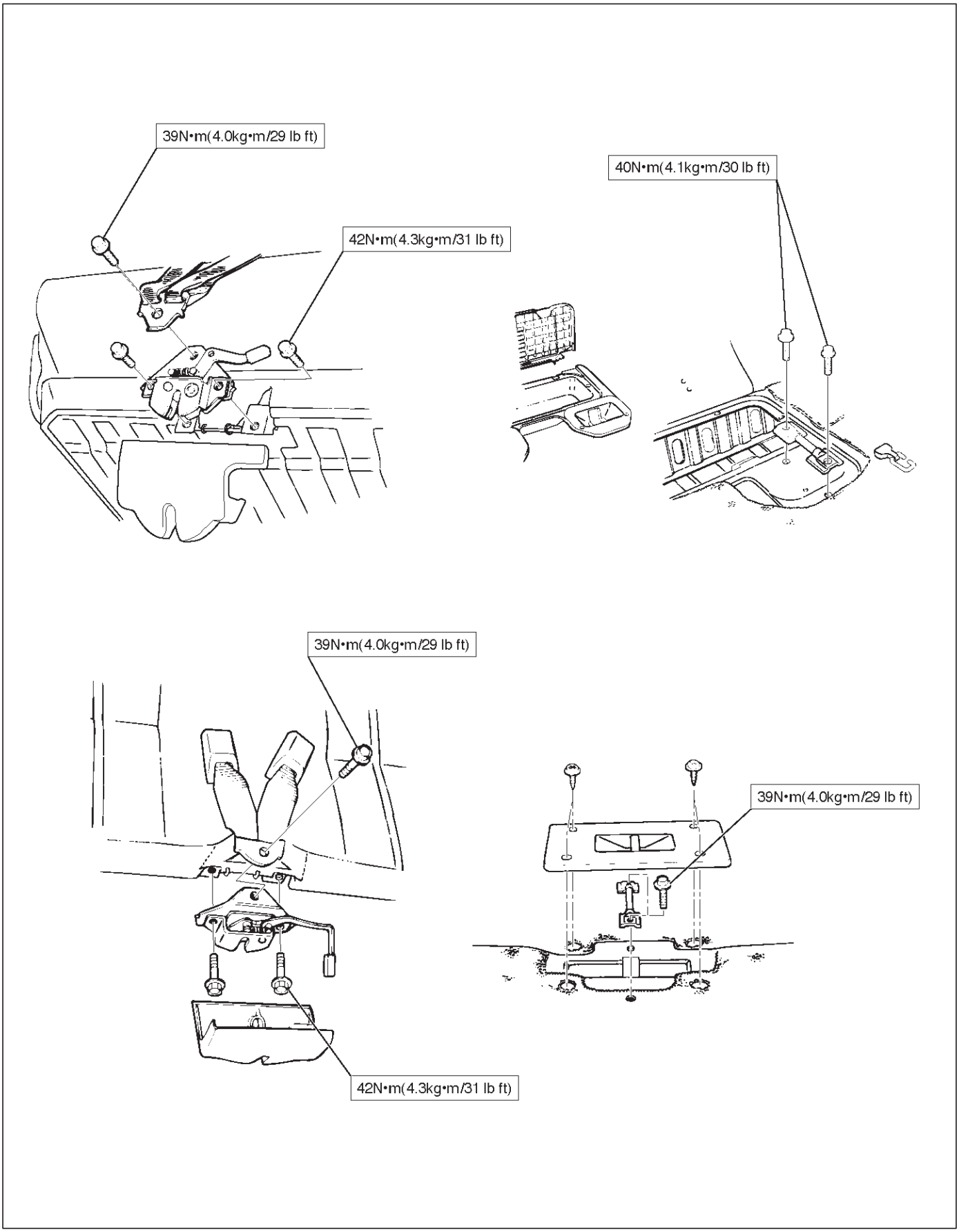
39N•m(4.0kg•m/29 lb ft)
42N•m(4.3kg•m/31 lb ft)
40N•m(4.1kg•m/30 lb ft)
39N•m(4.0kg•m/29 lb ft)
39N•m(4.0kg•m/29 lb ft)
42N•m(4.3kg•m/31 lb ft)

E10RW029

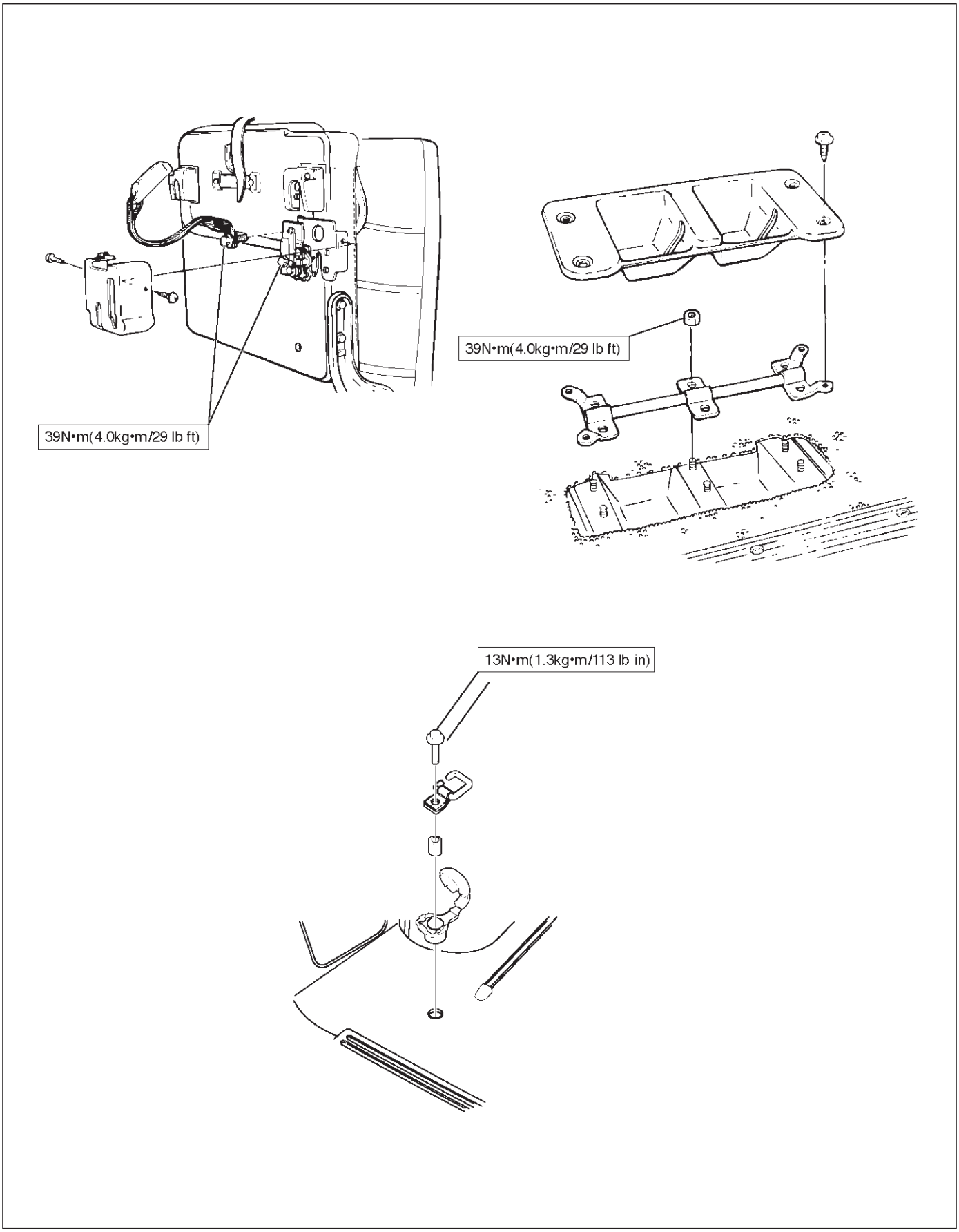

E10RW027

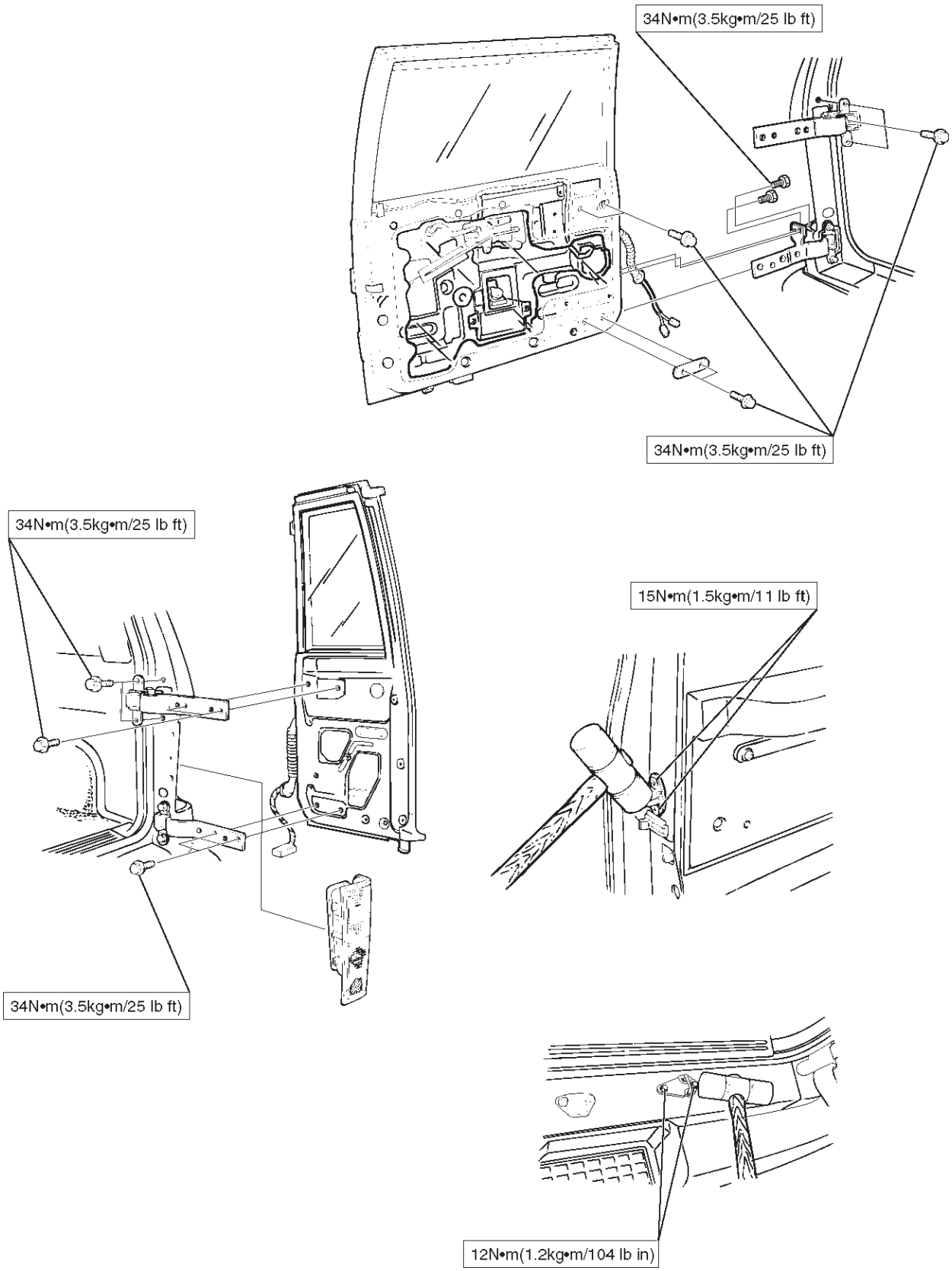
34N•m(3.5kg•m/25 lb ft)
34N•m(3.5kg•m/25 lb ft)
34N•m(3.5kg•m/25 lb ft)
15N•m(1.5kg•m/11 lb ft)
34N•m(3.5kg•m/25 lb ft)
12N•m(1.2kg•m/104 lb in)

E10RW024

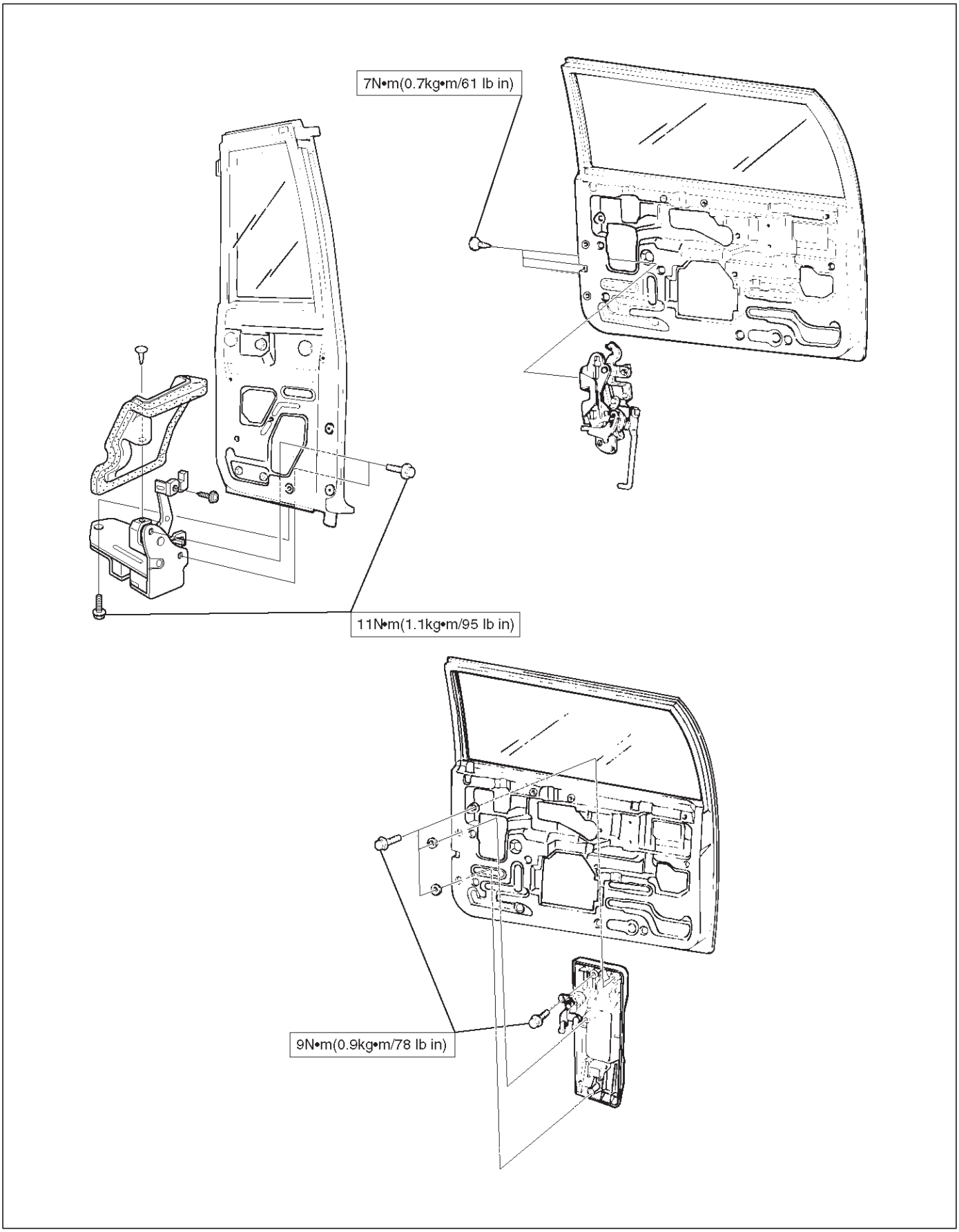

E10RW025

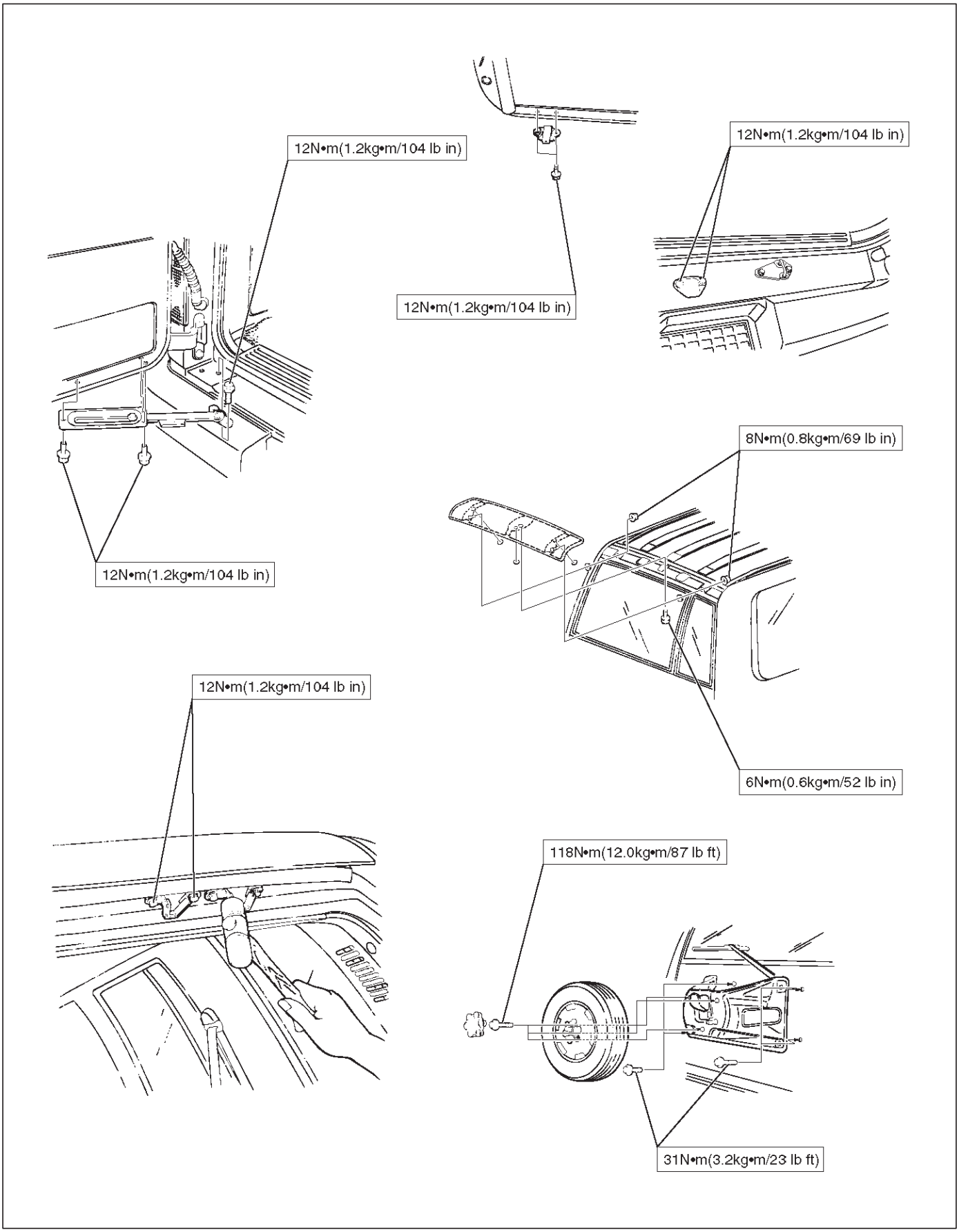
12N•m(1.2kg•m/104 lb in)
12N•m(1.2kg•m/104 lb in)
12N•m(1.2kg•m/104 lb in)
12N•m(1.2kg•m/104 lb in)
8N•m(0.8kg•m/69 lb in)
6N•m(0.6kg•m/52 lb in)
12N•m(1.2kg•m/104 lb in)
118N•m(12.0kg•m/87 lb ft)
31N•m(3.2kg•m/23 lb ft)

E10RW026

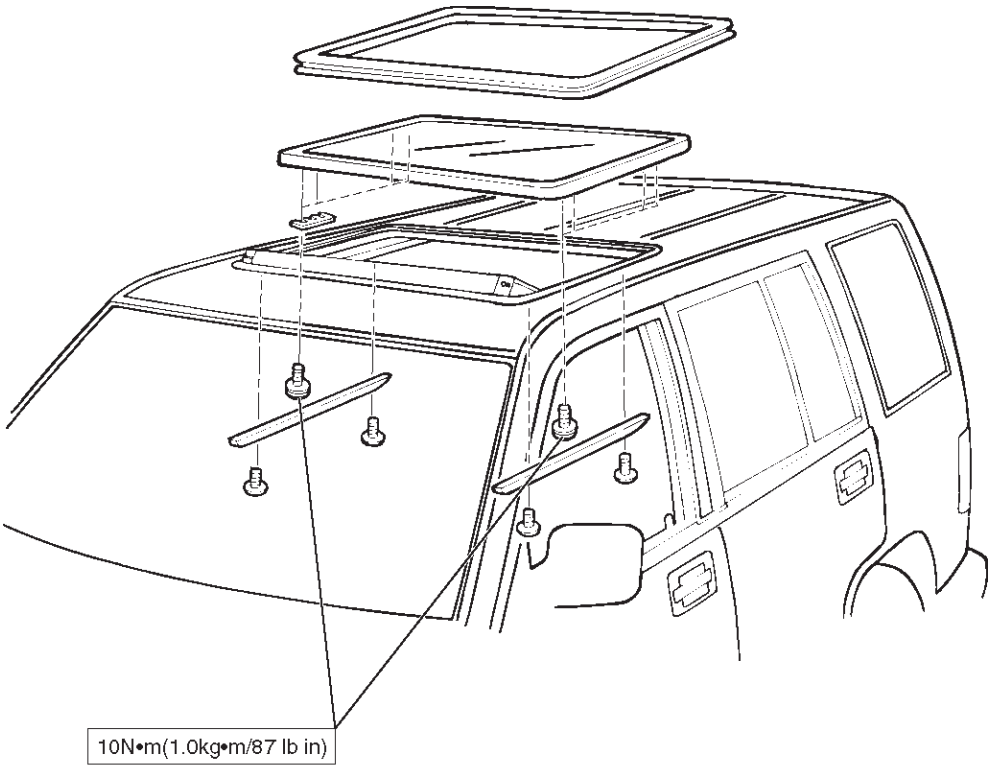

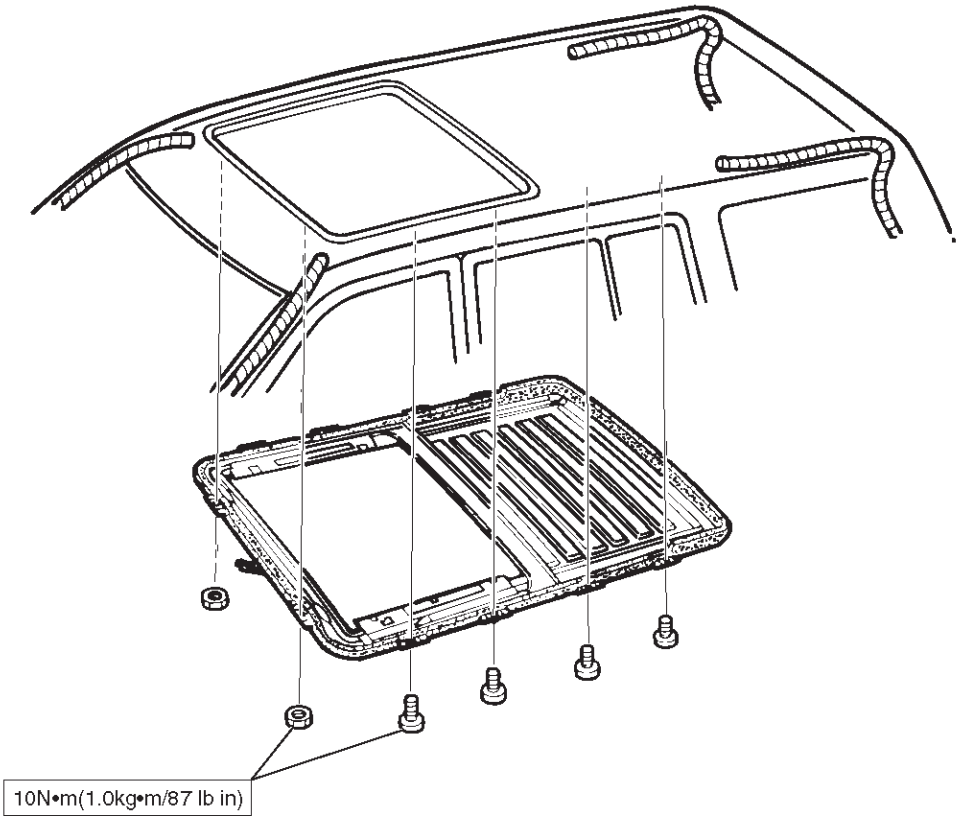

E10RW022

Special Tools

ILLUSTRATION	**TOOL NO.** TOOL NAME
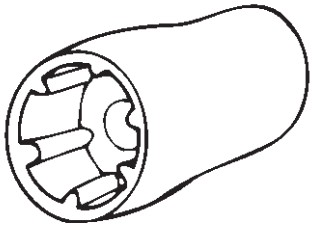	5–8840–2095–0 **(J–34355)** Spare Tire Carrior Bolt Wrench

BODY AND ACCESSORIES

SEATS

CONTENTS

Service Precaution 8G–1
Front Seat Assembly 8G–2
Front Seat Assembly and Associated Parts 8G–2
Removal 8G–2
Installation 8G–3
Disassembled View (LWB) 8G–3
Disassembly 8G–4
Reassembly 8G–5
Disassembled View (SWB) 8G–6
Disassembly 8G–6
Reassembly 8G–8
Power Seat Assembly 8G–9
General Description 8G–9
Disassembled View 8G–9
Disassembly 8G–10
Reassembly 8G–12
Power Seat Switch 8G–12
Removal 8G–12
Installation 8G–12
Front Tilt Motor / Rear Tilt Motor / Slide Motor / Recliner Motor 8G–13
Parts Location 8G–13
Removal and Installation 8G–13
Seat Heater System 8G–14
General Description 8G–14
Seat Heater Switch Removal and Installation 8G–14
Heat Unit Parts Location 8G–14
Heat Unit Removal and Installation 8G–14
Rear Seat Assembly 8G–15
Rear Seat Assembly and Associated Parts 8G–15
Removal 8G–15
Installation 8G–15
Disassembled View (Split Type) 8G–16
Disassembly (Split Type) 8G–17
Reassembly (Split Type) 8G–18
Disassembled View (SWB) 8G–19
Disassembly 8G–19
Reassembly 8G–20
Disassembled View (Bench Type) 8G–21
Disassembly (Bench Type) 8G–22
Reassembly (Bench Type) 8G–23
Third Seat Assembly 8G–23
Parts Location 8G–23
Removal 8G–23
Installation 8G–24
Disassembled View 8G–24
Disassembly 8G–25
Reassembly 8G–25
Rear Seat Foot Rest 8G–25
Rear Seat Foot Rest and Associated Parts 8G–25
Removal 8G–26
Installation 8G–26
Main Data and Specifications 8G–26

Service Precaution

WARNING: IF SO EQUIPPED WITH A SUPPLEMENTAL RESTRAINT SYSTEM (SRS), REFER TO THE SRS COMPONENT AND WIRING LOCATION VIEW IN ORDER TO DETERMINE WHETHER YOU ARE PERFORMING SERVICE ON OR NEAR THE SRS COMPONENTS OR THE SRS WIRING. WHEN YOU ARE PERFORMING SERVICE ON OR NEAR THE SRS COMPONENTS OR THE SRS WIRING, REFER TO THE SRS SERVICE INFORMATION. FAILURE TO FOLLOW WARNINGS COULD RESULT IN POSSIBLE AIR BAG DEPLOYMENT, PERSONAL INJURY, OR OTHERWISE UNNEEDED SRS SYSTEM REPAIRS.

CAUTION: Always use the correct fastener in the proper location. When you replace a fastener, use ONLY the exact part number for that application. ISUZU will call out those fasteners that require a replacement after removal. ISUZU will also call out the fasteners that require thread lockers or thread sealant. UNLESS OTHERWISE SPECIFIED, do not use supplemental coatings (Paints, greases, or other corrosion inhibitors) on threaded fasteners or fastener joint interfaces. Generally, such coatings adversely affect the fastener torque and the joint clamping force, and may damage the fastener. When you install fasteners, use the correct tightening sequence and specifications. Following these instructions can help you avoid damage to parts and systems.

Front Seat Assembly

Front Seat Assembly and Associated Parts

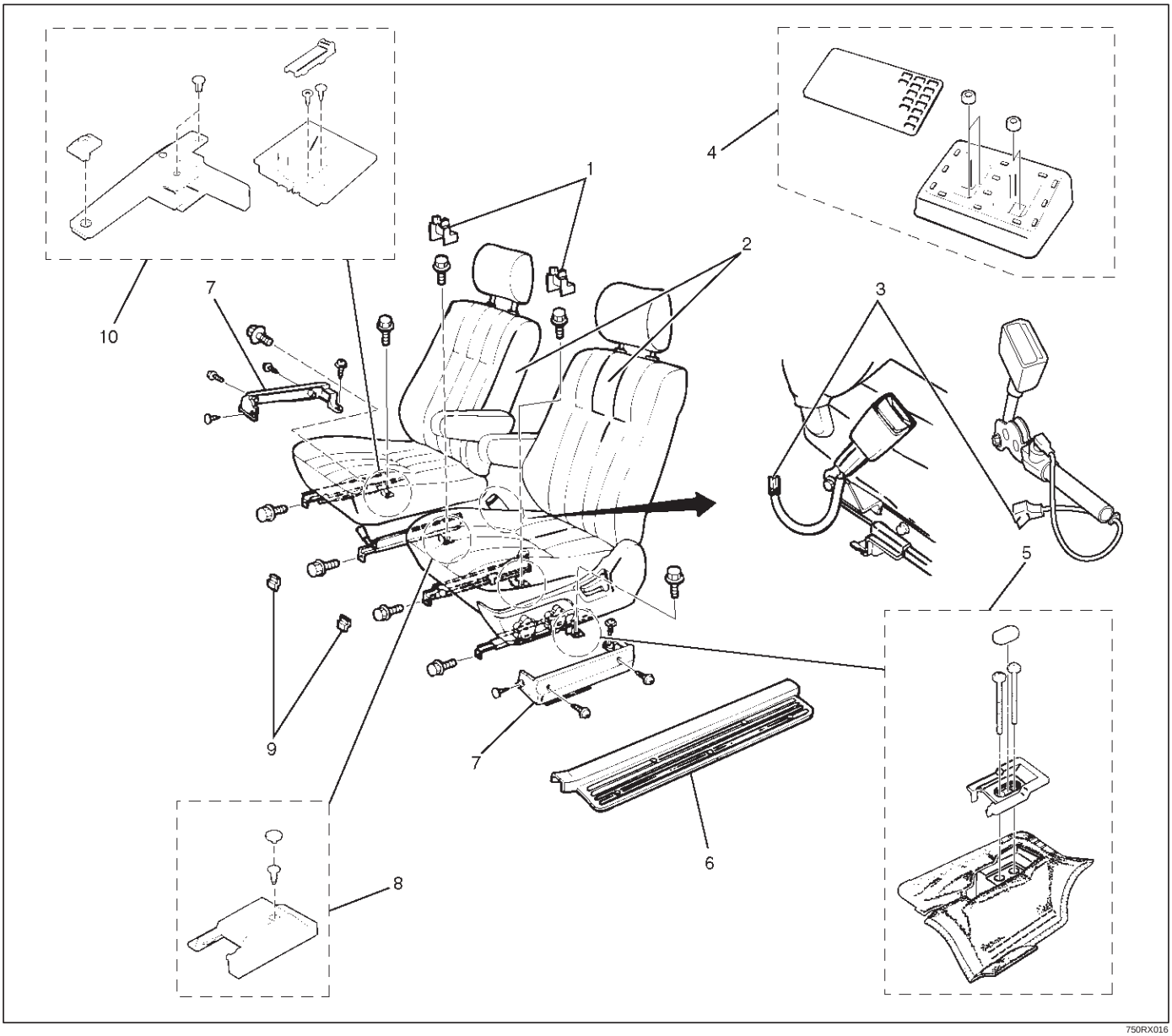

Legend

(1) Rear Cover
(2) Front Seat Assembly
(3) Seat Belt Warning Connector/Pretensioner Harness Connector
(4) Rear Seat Foot Rest (LWB)
(5) Seat Rail Cover (SWB)
(6) Door Sill Plate
(7) Riser Cover (LWB)
(8) Seat Slide Cover (SWB)
(9) Front Cover
(10) Seat Rail Cover and Hole Cover (SWB)

Removal

1. Disconnect the battery ground cable.
2. Remove the front cover.
3. Remove the rear cover.
   - Remove the cover fixing screw from the rear inner cover, if this model is equipped with the power seats.
4. Remove the door sill plate.
5. Remove the rear seat foot rest.
   - Refer to the Rear Seat Foot Rest in this section.
6. Remove the riser cover.
7. Remove the seat belt warning connector (Driver's side only) or pretensioner harness connector.
8. Remove the front seat assembly.
   - Disconnect the power seat connector, if this model is equipped with the power seats.

Installation

To install, follow the removal steps in the reverse order, noting the following points:

1. Tighten the front seat assembly fixing bolts to the specified torque.

   Torque: 40 N·m (4.1 kg·m/30 lb ft)

2. Install the longest bolt to the rear inner side fixing location, if this model is equipped with power seats.

Disassembled View (LWB)

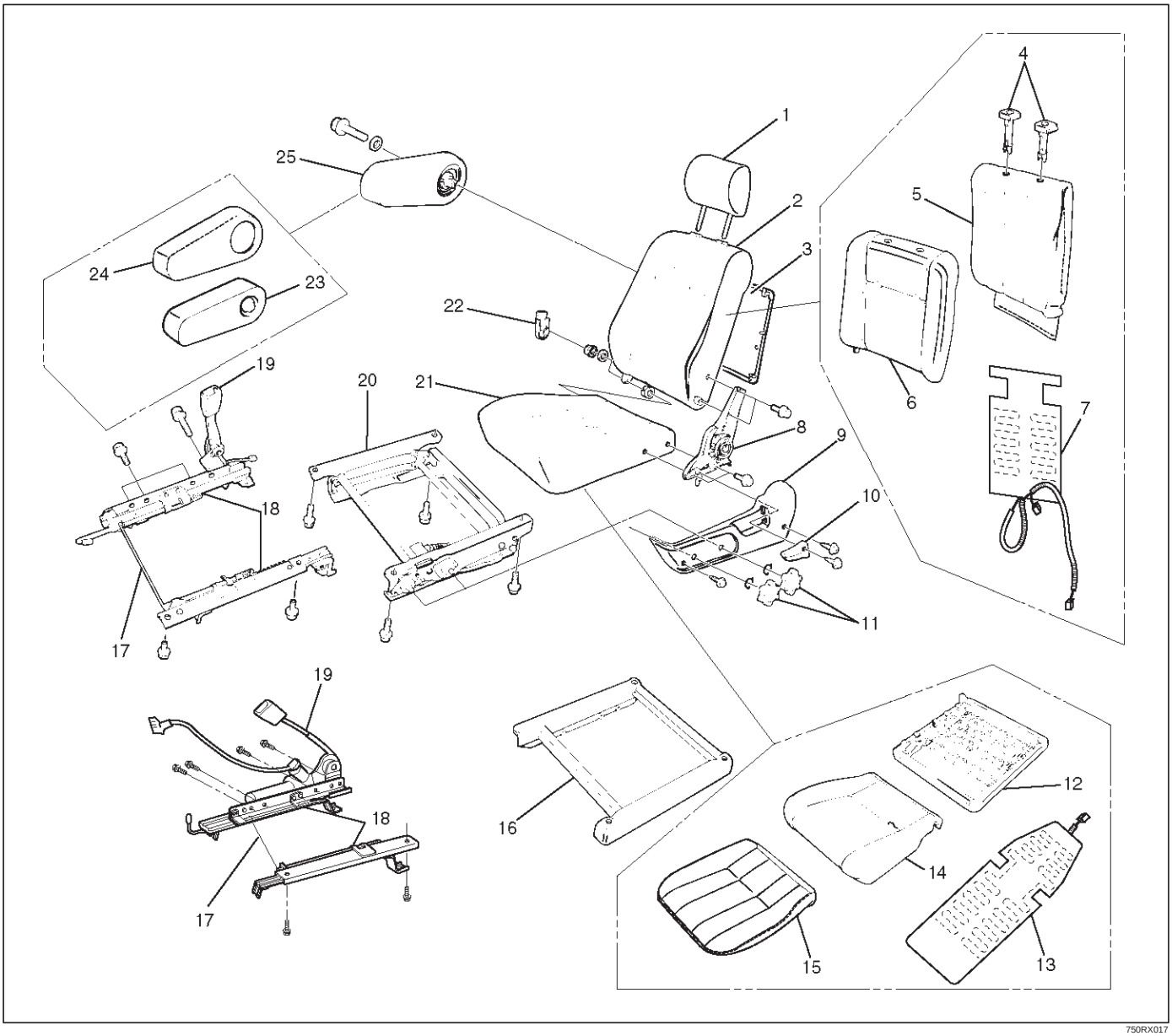

Legend

(1) Head Rest
(2) Seat Back Assembly
(3) Back Board Assembly
(4) Guide Holder
(5) Trim Cover
(6) Pad & Frame Assembly
(7) Seat Heater Assembly
(8) Reclining Device
(9) Slide Cover
(10) Reclining Knob
(11) Dial (W/Height Adjuster)
(12) Frame Assembly
(13) Seat Heater Assembly
(14) Pad Assembly
(15) Trim Cover
(16) Spacer (W/O Height Adjuster)
(17) Release Wire
(18) Seat Adjuster/Seat Adjuster (W/Pretensioner)
(19) Seat Belt Buckle Assembly
(20) Height Adjuster
(21) Seat Cushion Assembly
(22) Hinge Cover
(23) Pad & Frame Assembly
(24) Trim Cover
(25) Armrest Assembly

Disassembly

1. Remove the head rest.
2. Remove the reclining knob.
3. Remove the dial(1) (W/height adjuster).
   - Remove the side cover fixing screws and the dial lock spring(2).

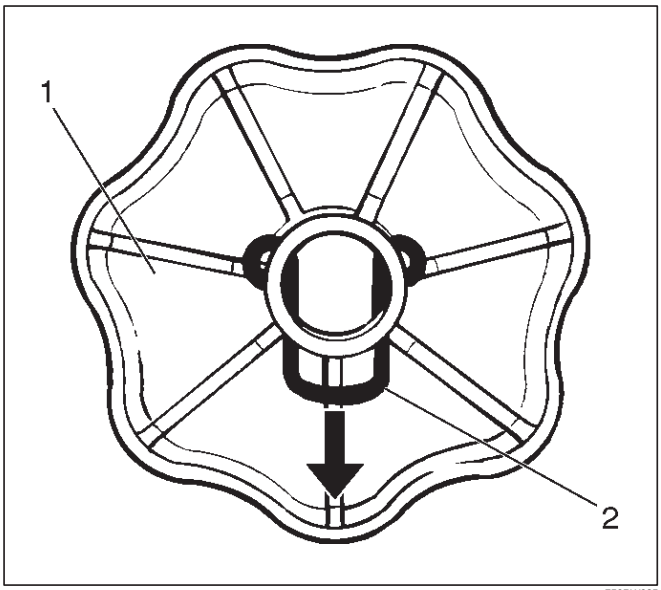

750RW025

4. Remove the side cover.
5. Remove the armrest assembly.
   - Open the armrest fastener and remove the armrest fixing bolt.

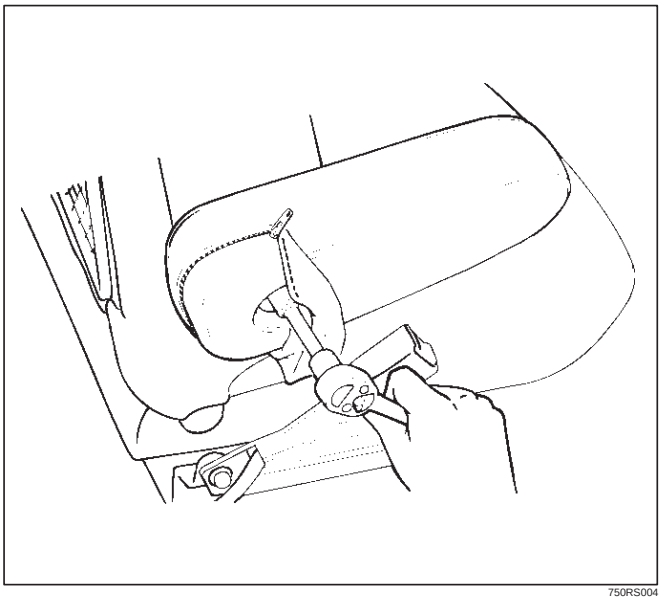

750RS004

6. Remove the trim cover.
7. Remove the pad and frame assembly.
8. Remove the hinge cover.
9. Remove the back board assembly(3).
   - Pull out the back board while prying the clip (4) of the back board free from the seat back assembly.

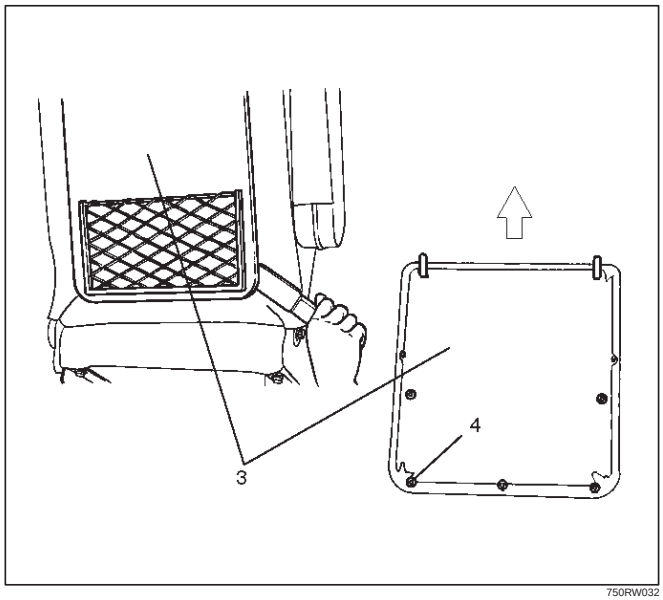

750RW032

10. Remove the reclining device.
    - Turn up the seat back trim cover in order to remove the reclining device fixing bolts.

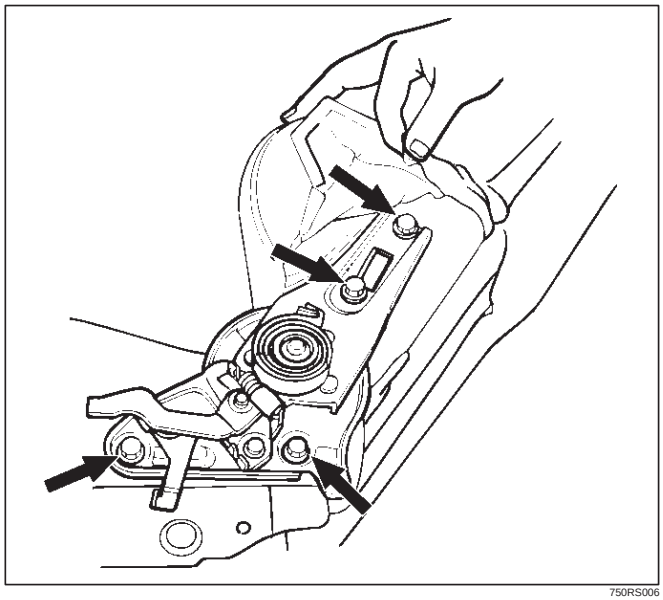

750RS006

11. Remove the seat back assembly.
    - Remove the clips (2) from the seat heater harness (1), and separate the seat heater connector (3) (models with the seat heater).

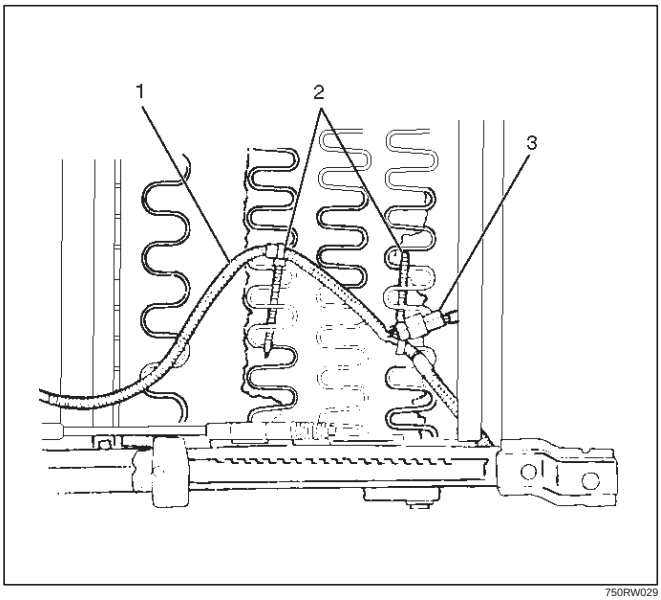

750RW029

    - Remove the seat back assembly fixing nut on the opposite side of the reclining device.

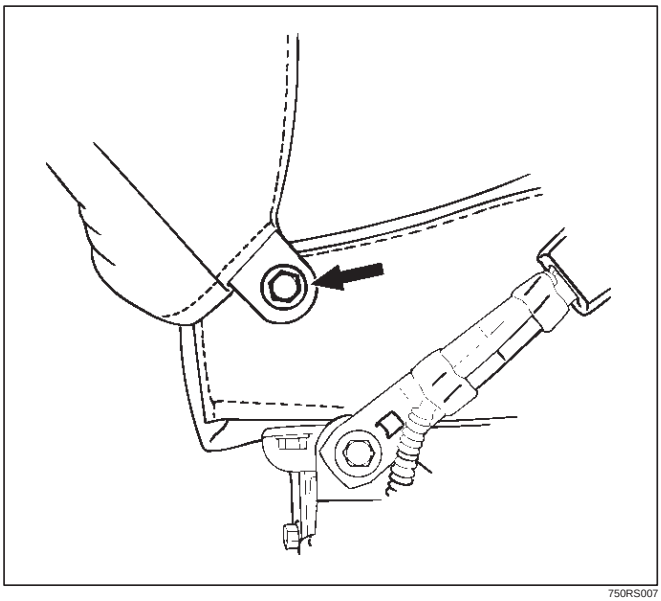

750RS007

12. Remove the guide holder.
    - Pull the guide holder out by holding the bottom end of it from the seat back assembly.
13. Remove the trim cover.
    - Remove the trim cover hog rings from the back side of the seat back.
    - With close attention paid to the hog rings and the wire which connect the trim cover and the pad and frame assembly, remove the trim cover while turning it up.
14. Remove the pad and frame assembly.
15. Remove the seat heater assembly.
16. Remove the seat adjuster.
    - Disconnect the release wire(4) and remove the fixing bolts.

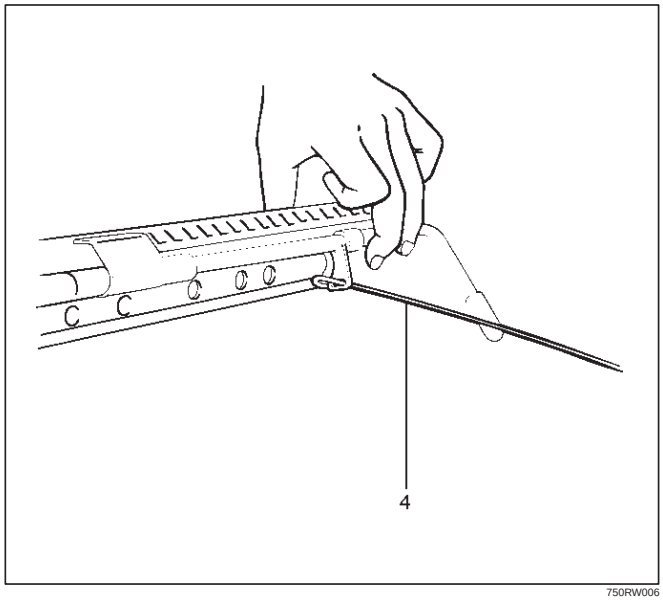

750RW006

    - Remove the seat belt buckle assembly.
17. Remove the height adjuster.
18. Remove the spacer (W/O height adjuster).
19. Remove the seat cushion assembly.
20. Remove the trim cover.
    - Remove the trim cover hog rings from the back side of the seat cushion assembly.
    - With close attention paid to the hog rings and the wire which connect the trim cover and the pad and frame assembly, remove the trim cover while turning it up.
21. Remove the frame assembly.
22. Remove the pad assembly.
23. Remove the seat heater assembly.

Reassembly

To reassembly, follow the disassembly steps in the reverse order, noting the following point.

1. Tighten the armrest assembly fixing bolts to the specified torque.

   Torque: 18 N·m (1.8 kg·m/13 lb ft)

2. Tighten the reclining device fixing bolts to the specified torque.

   Torque: 47 N·m (4.8kg·m/35 lb ft)

Disassembled View (SWB)

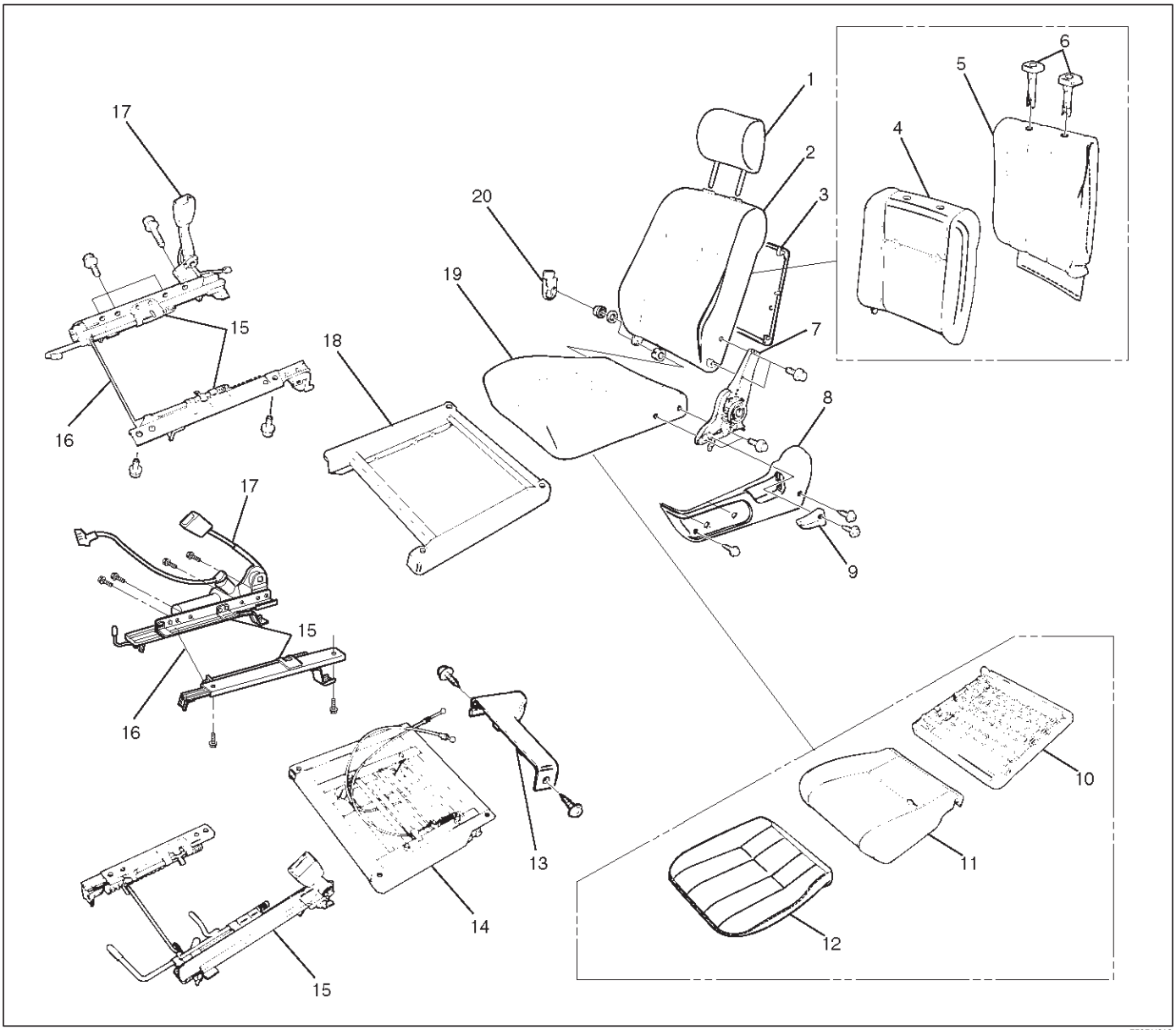

750RX018

Legend

(1) Head Rest
(2) Seat Back Assembly
(3) Back Board Assembly
(4) Pad & Frame Assembly
(5) Trim Cover
(6) Guide Holder
(7) Reclining Device
(8) Slide Cover
(9) Reclining Knob
(10) Frame Assembly
(11) Pad Assembly
(12) Trim Cover
(13) Walk–in Cover
(14) Walk–in Assembly
(15) Seat Adjuster/Seat Adjuster (W/Pretensioner)
(16) Release Wire
(17) Seat Belt Buckle Assembly
(18) Spacer
(19) Seat Cushion Assembly
(20) Hinge Cover

Disassembly

1. Remove the head rest.
2. Remove the reclining knob.
3. Remove the side cover.
4. Remove the hinge cover.
5. Remove the back board assembly.
   - Pull out the back board while prying the clip of the back board free from the seat back assembly.

6. Remove the reclining device.
   - Turn up the seat back trim cover in order to remove the reclining device fixing bolts.

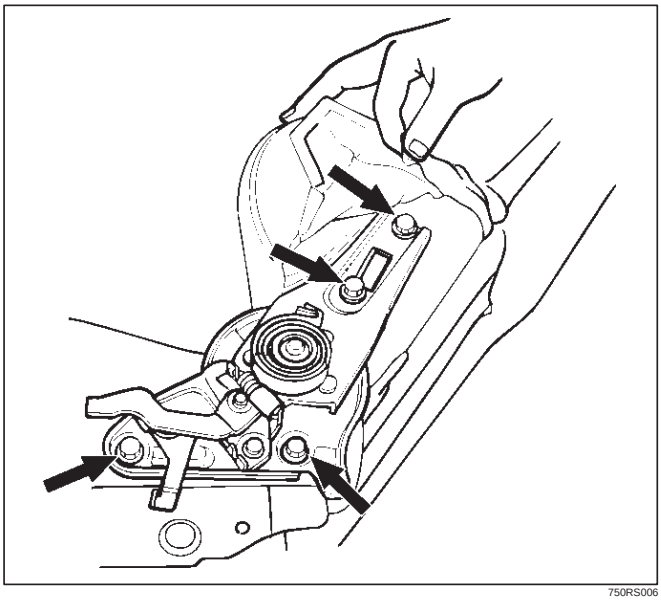

750RS006

   - Remove the push nut (2) and disconnect walk-in cable (3) from reclining device (1).

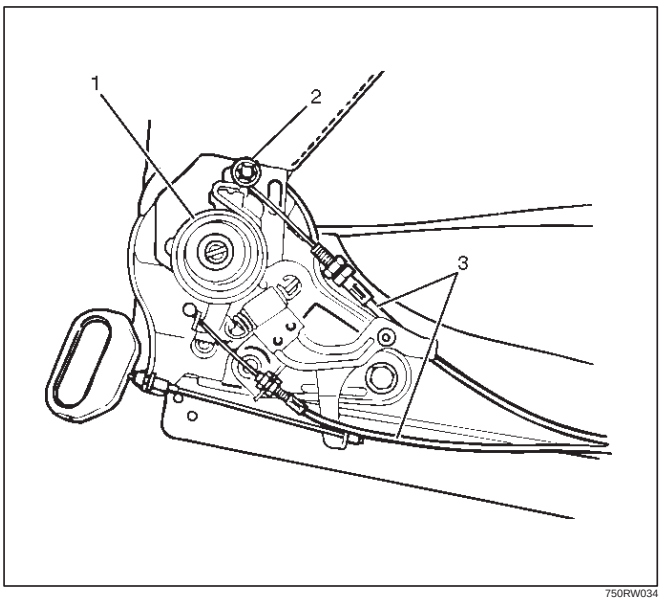

750RW034

7. Remove the seat back assembly.
   - Remove the seat back assembly fixing nut on the opposite side of the reclining device.

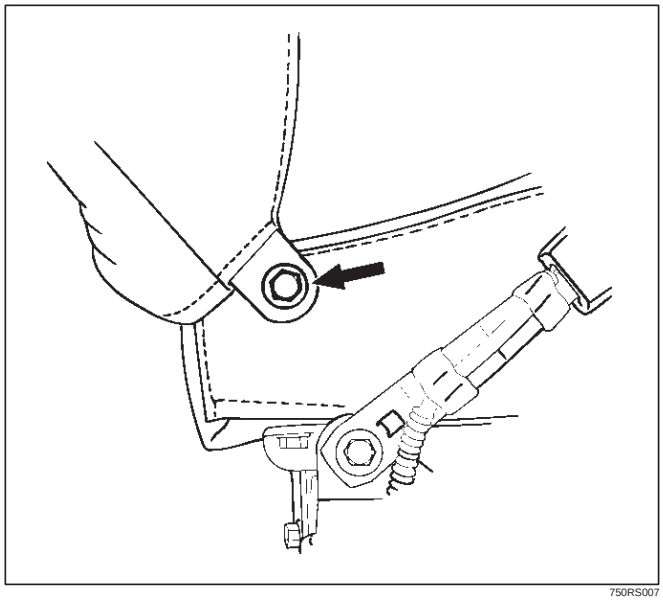

750RS007

8. Remove the guide holder.
   - Pull the guide holder out by holding the bottom end of it from the seat back assembly.
9. Remove the trim cover.
   - Remove the trim cover hog rings from the back side of the seat back.
   - With close attention paid to the hog rings and the wire which connect the trim cover and the pad and frame assembly, remove the trim cover while turning it up.
10. Remove the pad and frame assembly.
11. Remove the walk-in cover.
12. Remove the seat adjuster.
    - Disconnect the release wire (4) and remove the fixing bolts.

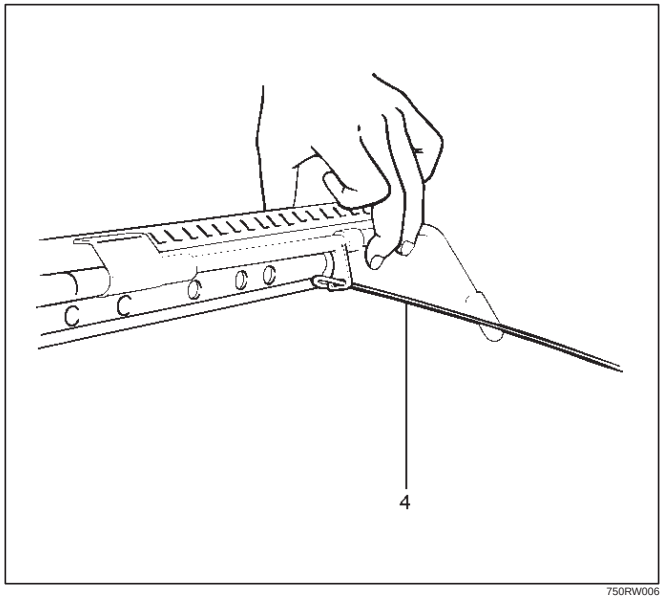

750RW006

    - Remove the seat belt buckle assembly.

13. Remove the walk-in assembly (passenger side).
14. Remove the spacer (driver side).
15. Remove the seat cushion assembly.
16. Remove the trim cover.
    - Remove the trim cover hog rings from the back side of the seat cushion assembly.
    - With close attention paid to the hog rings and the wire which connect the trim cover and the pad and frame assembly, remove the trim cover while turning it up.
17. Remove the frame assembly.
18. Remove the pad assembly.

Reassembly

To reassembly, follow the disassembly steps in the reverse order, noting the following point.

1. Tighten the armrest assembly fixing bolts to the specified torque.

   Torque: 18 N·m (1.8 kg·m/13 lb ft)

2. Tighten the reclining device fixing bolts to the specified torque.

   Torque: 47 N·m (4.8kg·m/35 lb ft)

Power Seat Assembly

General Description

The circuit consists of the power seat switch, front tilt motor (driver's seat only), rear tilt motor (driver's seat only), slide motor and the recliner motor.

The power seat switch has a tilt & slide switch and a recliner switch.
The motor built in the seat can be actuated by operating these switches to move the seat to desired position, independent of the position of the starter switch.

Disassembled View

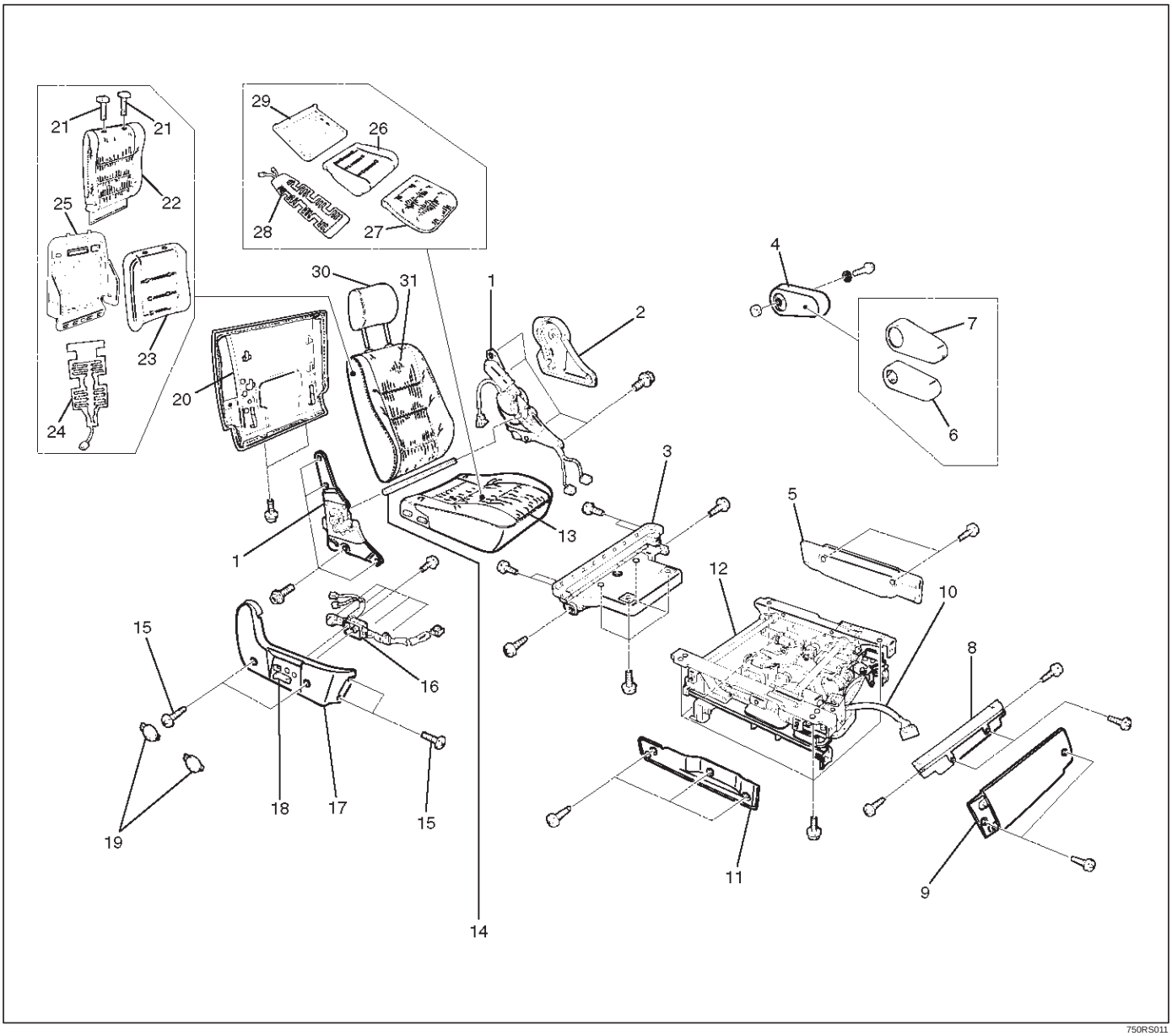

Legend

(1) Reclining Device
(2) Inner Cover
(3) Rear Cover
(4) Armrest Assembly
(5) Inner Lower Cover
(6) Pad & Frame Assembly
(7) Trim Cover
(8) Front Lower Cover
(9) Front Cover
(10) Power Seat Harness
(11) Outer Lower Cover
(12) Adjuster Assembly
(13) Seat Cushion Assembly
(14) Connecting Shaft
(15) Outer Cover Fixing Screws
(16) Switch Assembly
(17) Outer Cover
(18) Switch Knob
(19) Outer Cover Cap
(20) Back Board Assembly
(21) Guide Holder
(22) Trim Cover
(23) Pad Assembly

(24) Seat Heater
(25) Frame Assembly
(26) Pad Assembly
(27) Trim Cover
(28) Seat Heater
(29) Frame Assembly
(30) Head Rest
(31) Seat Back Assembly

Disassembly

1. Disconnect the battery ground cable.
2. Remove the head rest.
3. Remove the switch knob.
   - Pull the switch knob out.
4. Remove the outer cover cap.
5. Remove the outer cover fixing screws.
   - Pull up the outer cover(1) to remove the cover from the reclining device(2).

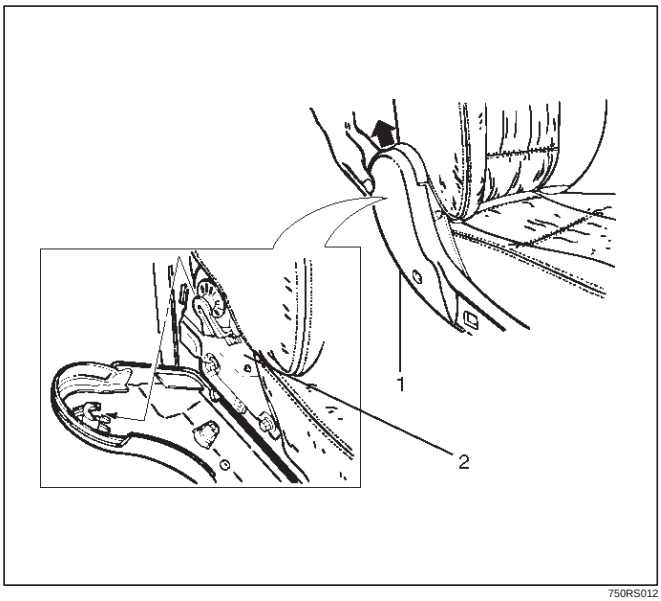

750RS012

6. Remove the front cover.
7. Remove the front lower cover.
8. Remove the rear cover.
9. Remove the outer cover.
   - Disconnect the switch connectors and remove the harness fixing clips.
10. Remove the switch assembly.
    - Remove the switch fixing screws from the outer cover.
11. Remove the armrest assembly.
    - Open the armrest fastener and remove the fixing bolt.

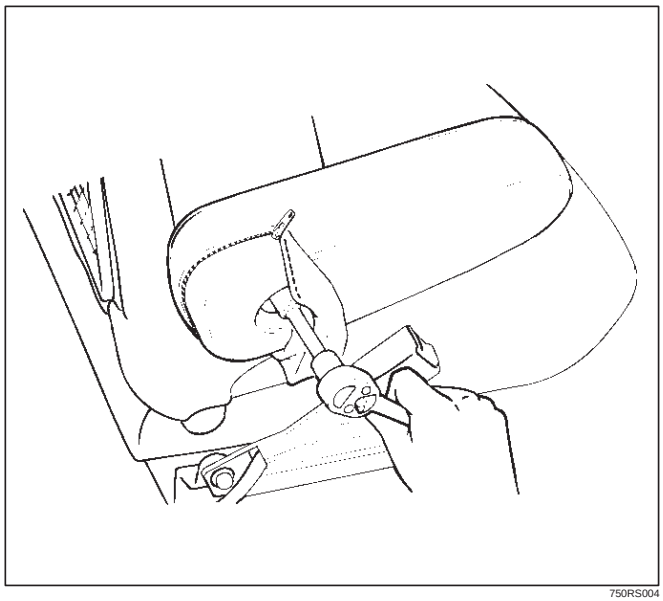

750RS004

12. Remove the trim cover.
13. Remove the pad & frame assembly.
14. Remove the inner cover
    - Remove the cover fixing screw.
    - Pull up the inner cover to remove the cover from the reclining device(3).

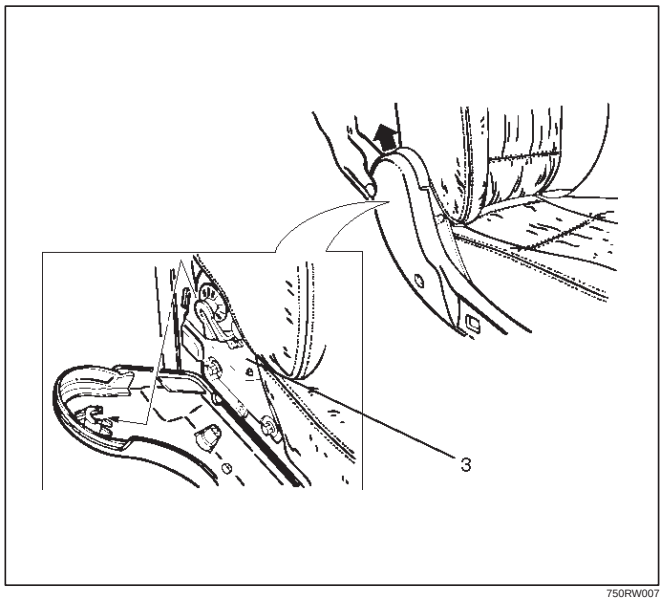

750RW007

15. Remove the back board assembly(4).
    - Remove the board fixing screws.
    - Pull the back board downward and remove the board from the seat back frame(5).

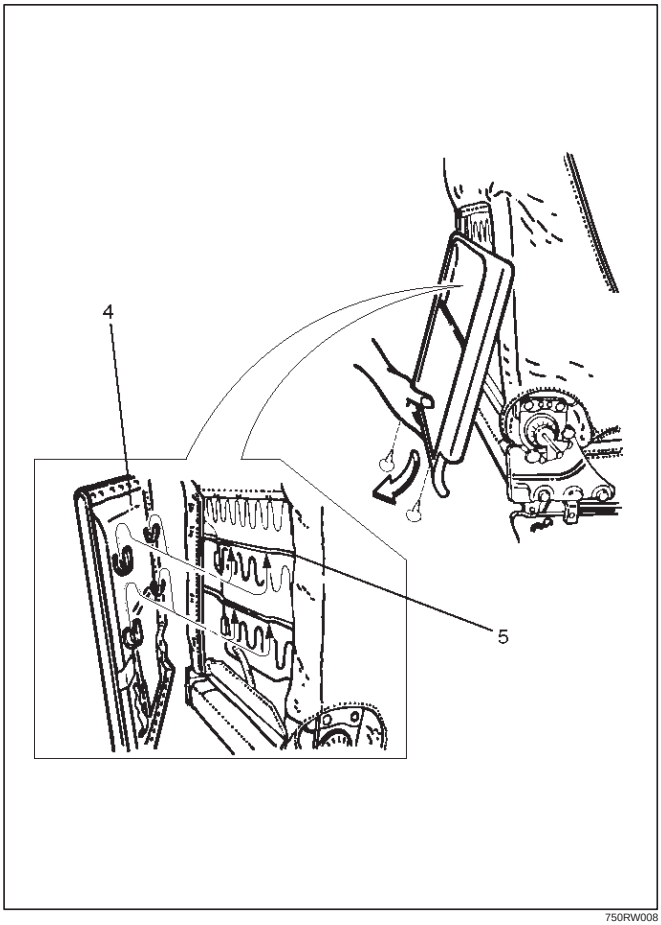

750RW008

16. Remove the reclining device(7).
    - Remove the device lower side fixing bolt in order to separate the seat back from the seat cushion.
    - Disconnect the seat heater connector.
    - Remove the trim cover(6) hog rings from the backside of the seat back assembly.
    - Turn up the seat back trim cover to remove the reclining device upper side fixing bolt.
    - Disconnect the connecting shaft and the reclining device connectors.

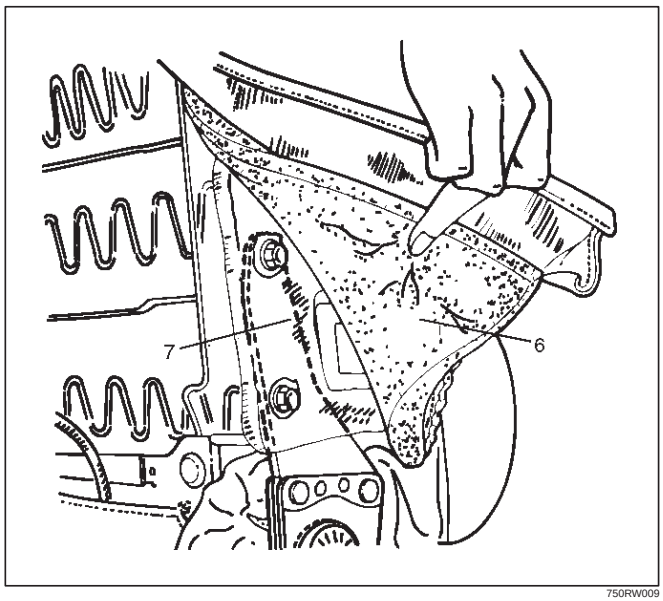

750RW009

17. Remove the seat back assembly.
18. Remove the guide holder(8).
    - Remove the trim cover fixing hog rings(9) from the backside of the seat back assembly.
    - Hold the tip end of the guide holder and pull the holder out from the seat back assembly.

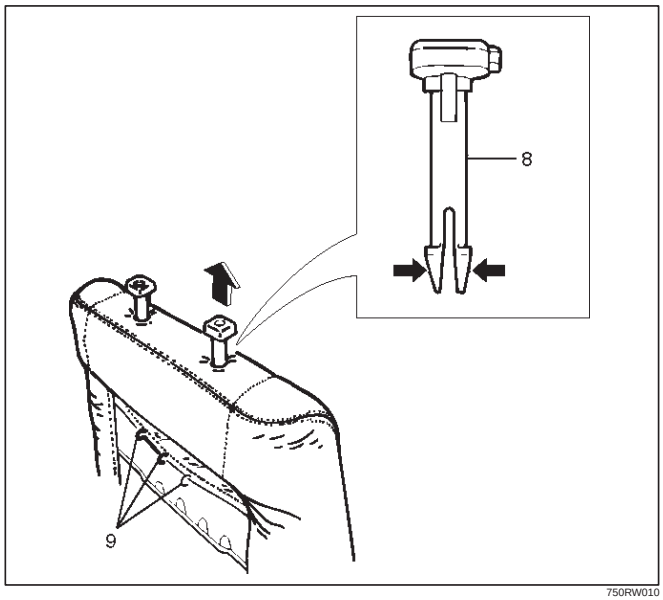

750RW010

19. Remove the trim cover.
    - Remove the trim cover hog rings from the backside of the seat back.
    - With close attention paid to the hog rings and the wire which connect the trim cover and pad & frame assembly, remove the trim cover while turning it up.
20. Remove the seat heater.
21. Remove the pad assembly.
22. Remove the frame assembly.
23. Remove the outer lower cover.
24. Remove the inner lower cover.
25. Remove the adjuster assembly.
    - Disconnect the connectors and remove the fixing bolts.

- Remove the power seat harness from the adjuster assembly.

26. Remove the seat cushion assembly.
27. Remove the trim cover.
    - Remove the trim cover hog rings from the backside of the seat cushion assembly.
    - With close attention paid to the hog rings and the wire which connect the trim cover and the pad & frame assembly, remove the trim cover while turning it up.
28. Remove the seat heater.
29. Remove the frame assembly.
30. Remove the pad assembly.

Reassembly

To reassemble, follow the disassembly steps in the reverse order, noting the following point.

1. Tighten the fixing bolts to the specified torque.
    - Refer to the Torque Specifications in this section.

Power Seat Switch

Removal

1. Remove the side cover(3).
    - Refer to the Power Seat Assembly disassembly steps in this section.
2. Remove the tilt & slide switch lever(4).
    - Hold the switch lever with your fingers and pull it toward you.
3. Remove the tilt & slide switch(2).
    - Remove two screws.
4. Remove the recliner switch(1).
    - Remove two screws.

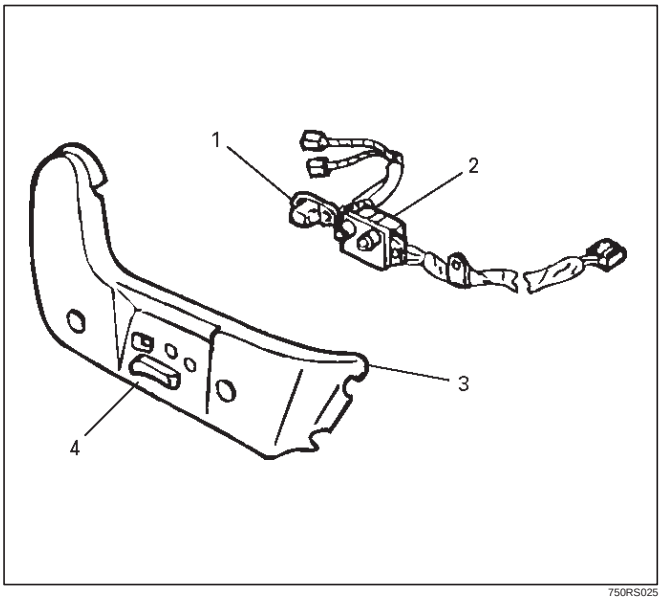

750RS025

Installation

To install, follow the removal steps in the reverse order.

Front Tilt Motor / Rear Tilt Motor / Slide Motor / Recliner Motor

Parts Location

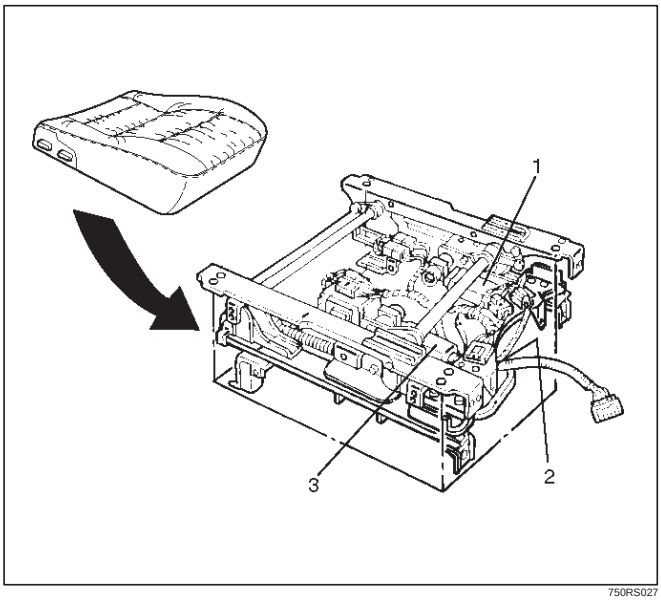

750RS027

Legend

(1) Tilt Motor
(2) Slide Motor
(3) Tilt Motor

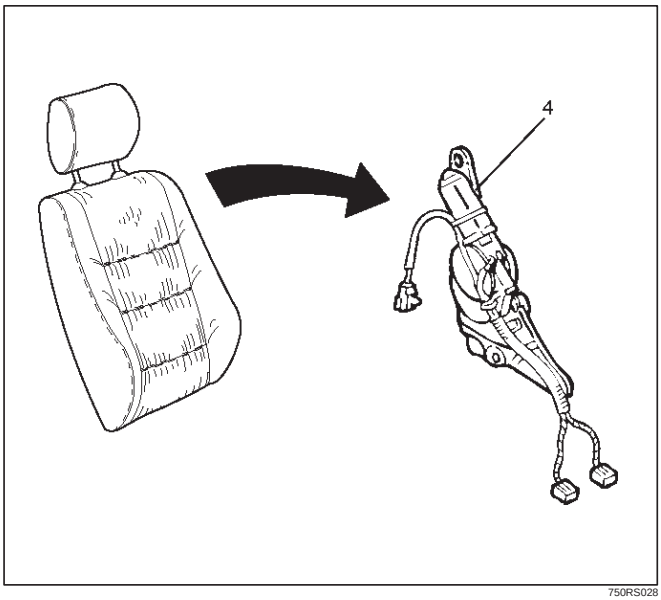

750RS028

Legend

(4) Recliner Motor

Removal and Installation

Refer to the Power Seat Assembly in this section.

Seat Heater System

General Description

The circuit consists of the starter switch, seat heater switch and the heat unit.
The seat heater is provided in driver's and front passenger seats (as option).
When the seat heater switch is ON, the seat heat built in the seat back and cushion is switched on to warm the seats.
To prevent the seats from being overheated, the circuit is fitted with a thermostat.

Seat Heater Switch Removal and Installation

Refer to the Seat Heater Switch in Lighting System section.

Heat Unit Parts Location

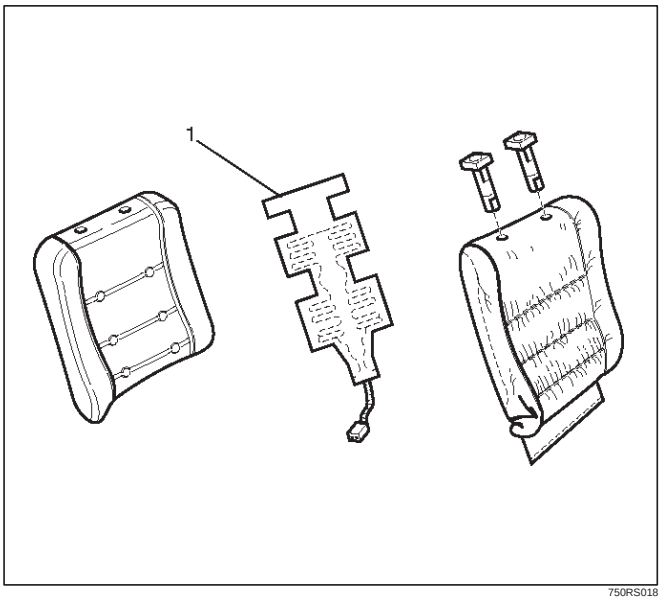

750RS018

Legend
(1) Heat Unit (Seat Back Side)

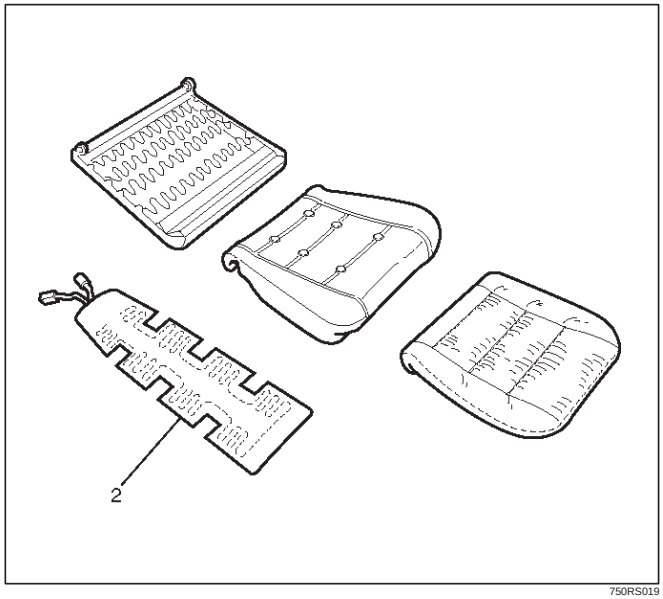

750RS019

Legend
(2) Heat Unit (Seat Cushion Side)

Heat Unit Removal and Installation

Refer to the Power Seat Assembly in this section.

Rear Seat Assembly

Rear Seat Assembly and Associated Parts

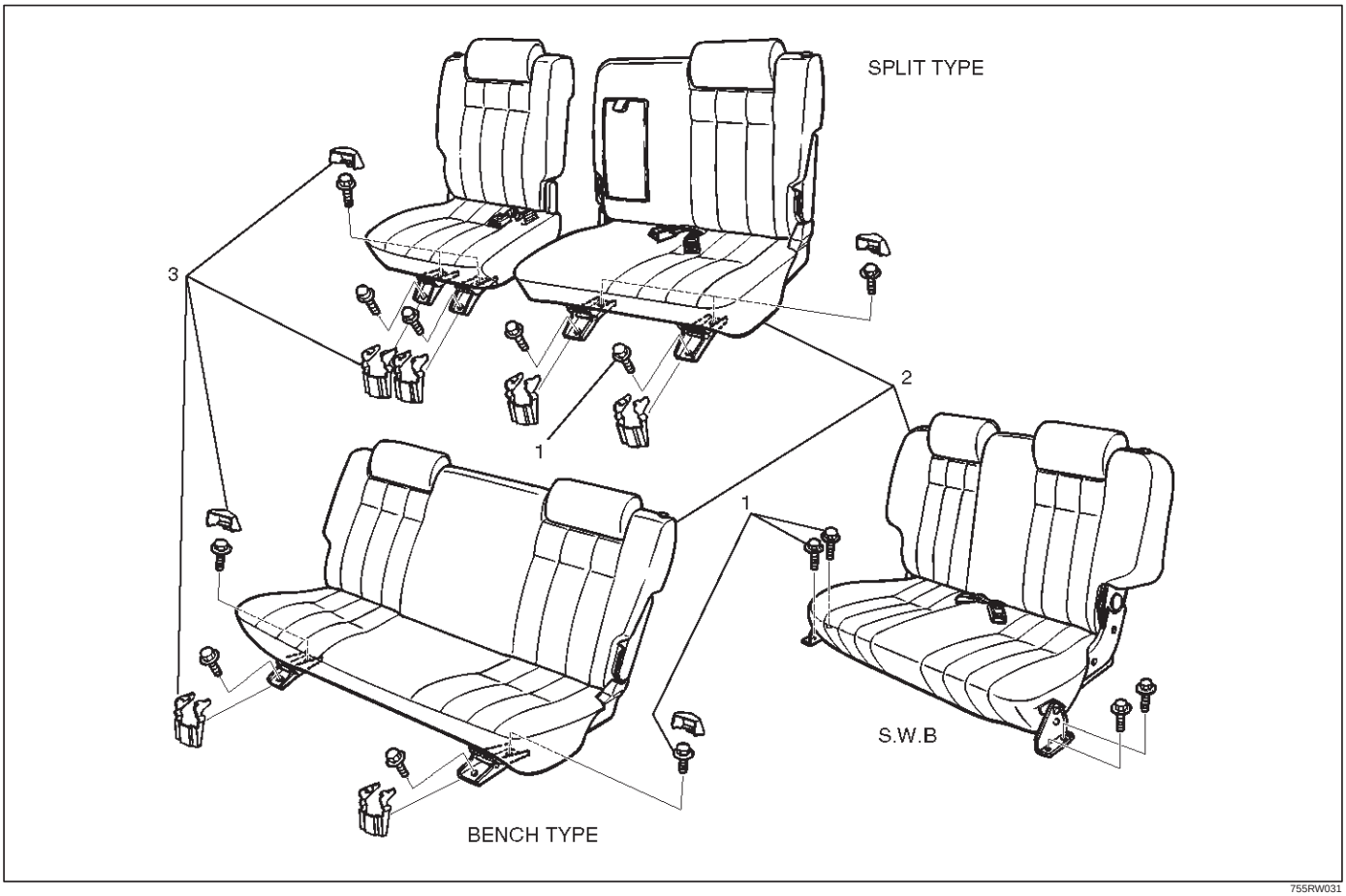

755RW031

Legend

(1) Fixing Bolts
(2) Rear Seat Assembly
(3) Mounting Bracket Cover

Removal

1. Unlock the rear seat(1) lock to remove it.
2. Remove the mounting bracket cover.
3. Remove the fixing bolts.

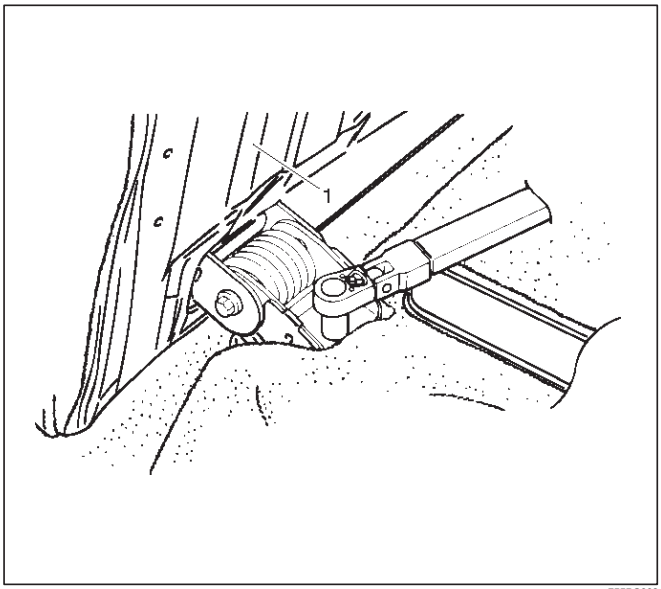

755RS002

4. Remove the rear seat assembly.

Installation

To install, follow the removal steps in the reverse order, noting the following point.

1. Tighten the rear seat fixing bolts to the specified torque.

   Torque: 19 N·m (1.9kg·m/14 lb ft)

Disassembled View (Split Type)

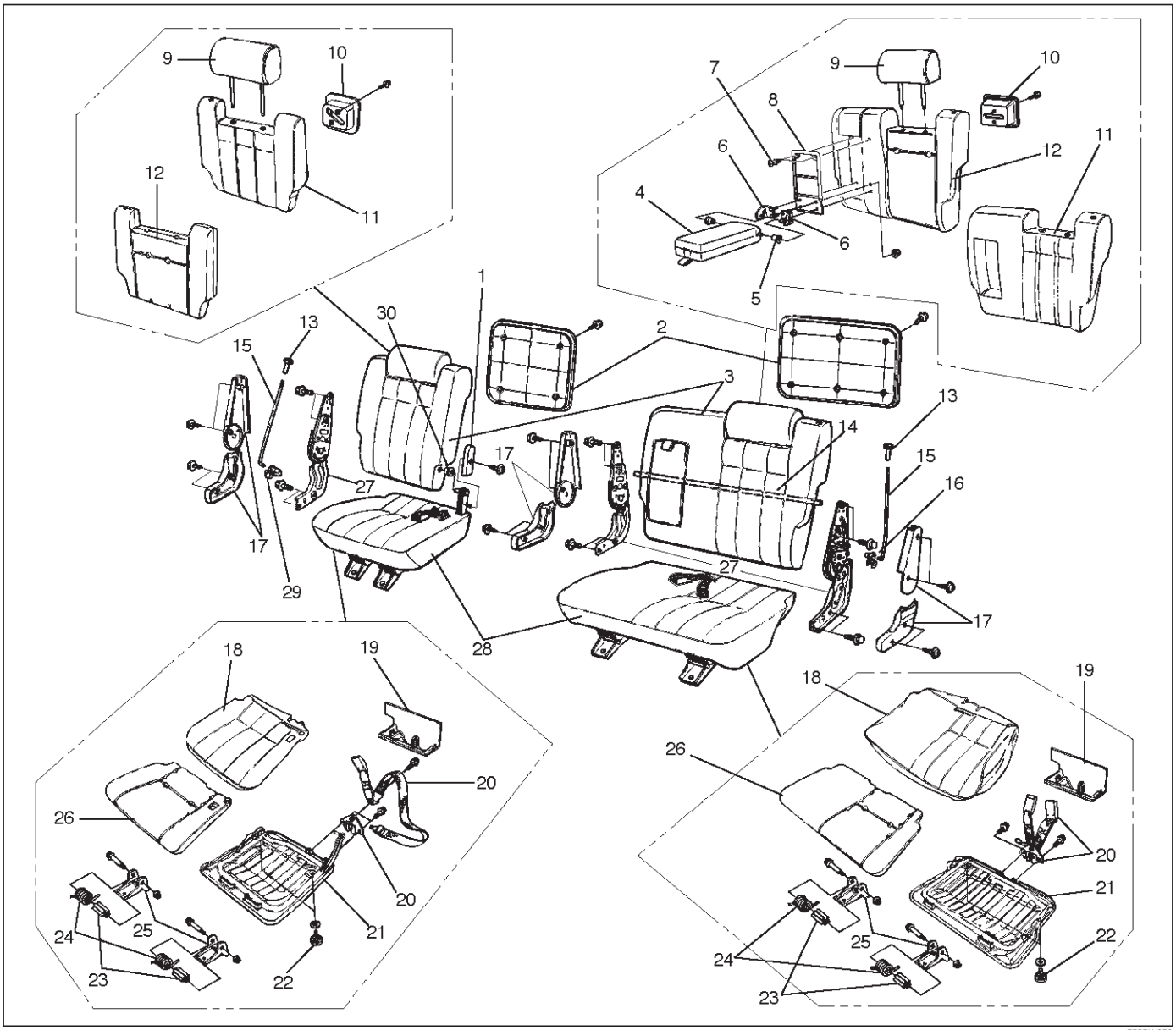

755RW056

Legend

(1) Free Hinge Cover
(2) Back Board
(3) Seat Back Assembly
(4) Armrest Assembly
(5) Bush
(6) Armrest Set Bracket
(7) Clip
(8) Armrest Board
(9) Pillow Assembly
(10) Band Hook Cover
(11) Trim Cover
(12) Pad & Frame Assembly
(13) Release Knob
(14) Connecting Shaft
(15) Release Rod
(16) Linkage Bush
(17) Device Cover
(18) Trim Cover
(19) Seat Lock Cover
(20) Rear Seat Belt Buckle and Lock Assembly
(21) Frame Assembly
(22) Stopper Rubber
(23) Spring Collar
(24) Return Spring
(25) Mounting Bracket
(26) Pad Assembly
(27) Reclining Device
(28) Seat Cushion Assembly
(29) Linkage Bush
(30) Bush

Disassembly (Split Type)

1. Remove the back board.
   - Remove the clips and the back board.
2. Remove the device cover.
3. Remove the release knob.
   - Turn the knob counterclockwise to remove it.
4. Remove the release rod.
   - Disconnect the rod from the linkage bush.
5. Remove the reclining device.

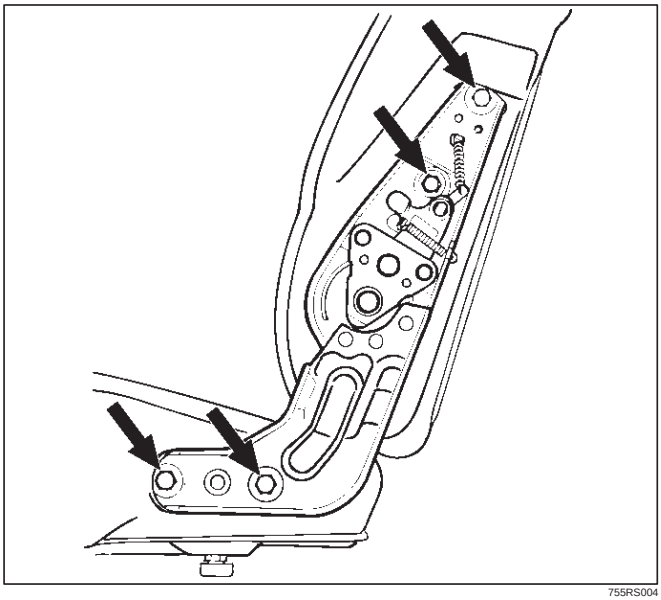

755RS004

6. Remove the connecting shaft.
7. Remove the seat back assembly.
8. Remove the pillow assembly.
   - Turn up the seat back trim cover and slit the pad from the back around to the place where the lock spring(2) of the guide bush(1) is.

   Then insert a finger through the slit and pull out the pillow while you are pressing down on the lock spring.

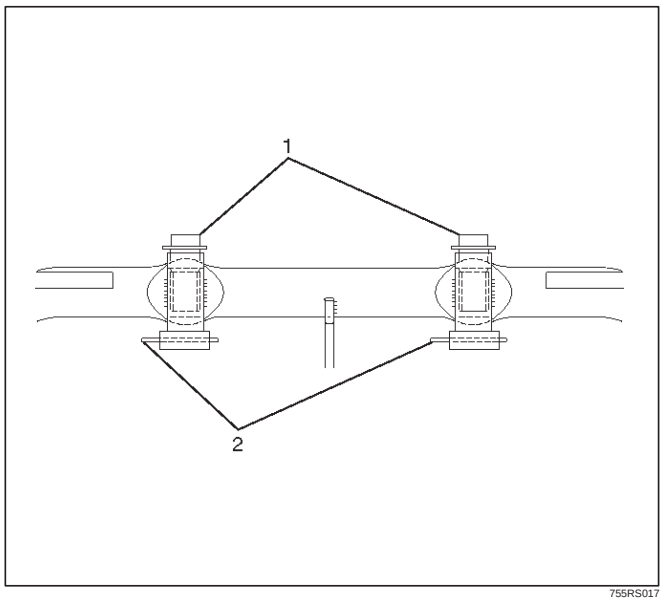

755RS017

9. Remove the band hook cover.
10. Remove the armrest assembly.
    - Turn up the seat back trim cover and remove the fixing nuts.
11. Remove the armrest set bracket.
12. Remove the armrest board.
13. Remove the trim cover.
    - Remove the trim cover fixing hog rings from the backside of the seat back.
    - With close attention paid to the hog rings and the wire which connect the trim cover and the pad and frame assembly, remove the trim cover while turning it up.
14. Remove the pad & frame assembly.
15. Remove the seat cushion assembly.
16. Remove the seat lock cover.
17. Remove the rear seat belt buckle and lock assembly.
18. Remove the mounting bracket.
19. Remove the return spring.
20. Remove the spring collar.
21. Remove the trim cover.
    - Remove the hog rings and pull the trim cover out from the frame assembly groove.
    - With close attention paid to the hog rings and the wire which connect the trim cover and the pad & frame assembly, remove the trim cover while turning it up.
22. Remove the frame assembly.
23. Remove the pad assembly.
24. Remove the stopper rubber.

Reassembly (Split Type)

To reassemble, follow the disassembly steps in the reverse order, noting the following point.

1. Tighten the reclining device fixing bolts to the specified torque.

   Torque: 27 N·m (2.8kg·m/20 lb ft)

2. Loosen the rubber stopper lock nut(1). Adjust the stopper(3) so there is no clearance between the bottom of the stopper and the carpet(2) while you make sure the rear seat is firmly locked.

   Then tighten the lock nut securely.

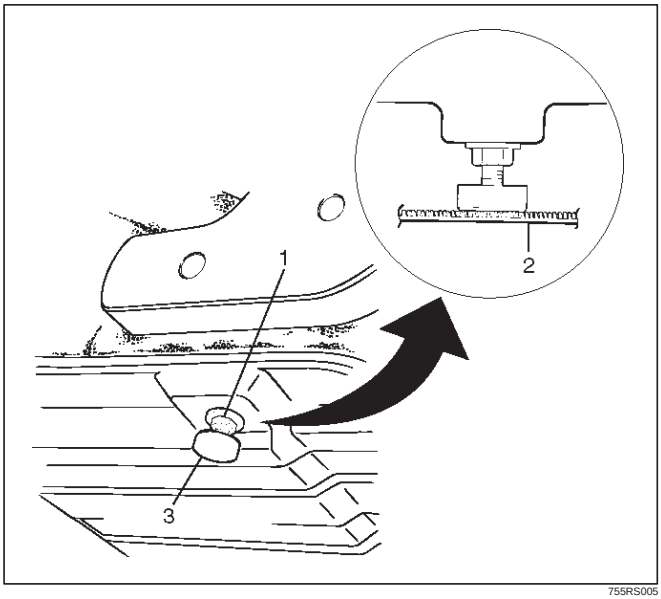

755RS005

Disassembled View (SWB)

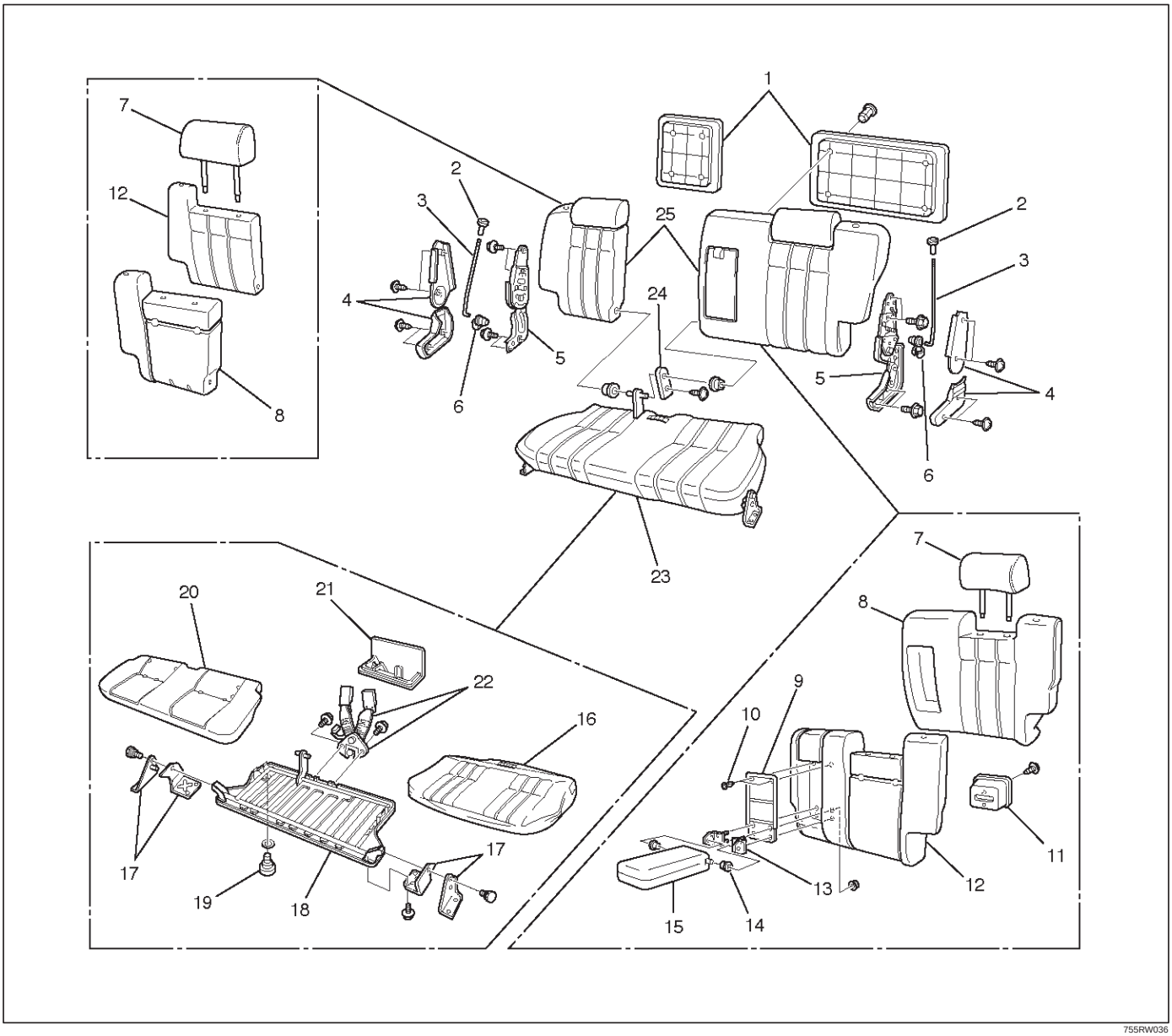

Legend

(1) Back Board
(2) Release Knob
(3) Release Rod
(4) Device Cover
(5) Reclining Device
(6) Linkage Bush
(7) Pillow Assembly
(8) Pad & Frame Assembly
(9) Armrest Board
(10) Clip
(11) Band Hook Cover
(12) Trim Cover
(13) Armrest Set Bracket
(14) Bush
(15) Armrest Assembly
(16) Trim Cover
(17) Mounting Bracket
(18) Frame Assembly
(19) Stopper Rubber
(20) Pad Assembly
(21) Seat Lock Cover
(22) Rear seat Belt Bukle and Lock Assembly
(23) Seat Cushion Assembly
(24) Free Hinge Cover
(25) Seat Back Assembly

Disassembly

1. Remove the back board.
   - Remove the clips and the back board.
2. Remove the device cover.
3. Remove the release knob.
   - Turn the knob counterclockwise to remove it.

4. Remove the release rod.
   - Disconnect the rod from the linkage bush.
5. Remove the reclining device.

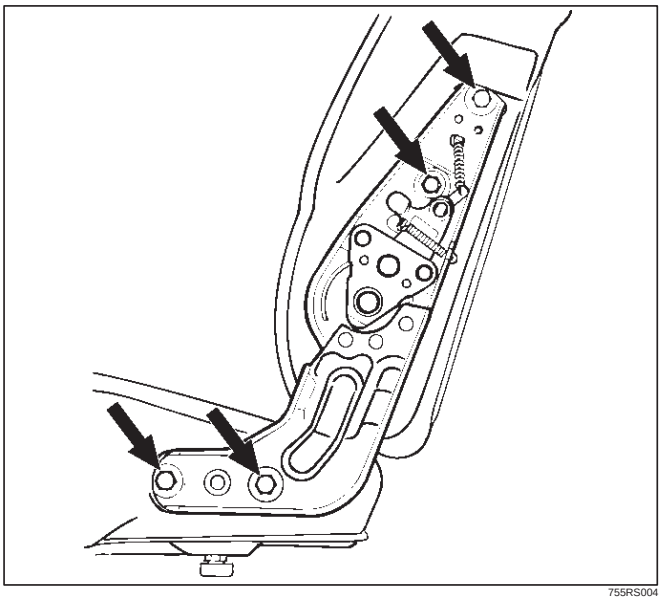

755RS004

6. Remove the seat back assembly.
7. Remove the pillow assembly.
   - Turn up the seat back trim cover and slit the pad from the back around to the place where the lock spring(2) of the guide bush(1) is.

   Then insert a finger through the slit and pull out the pillow while you are pressing down on the lock spring.

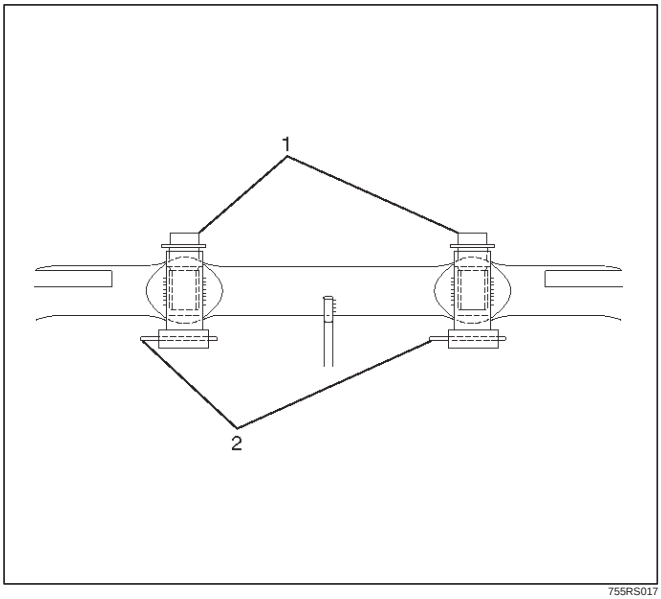

755RS017

8. Remove the band hook cover.
9. Remove the armrest assembly.
   - Turn up the seat back trim cover and remove the fixing nuts.
10. Remove the armrest set bracket.
11. Remove the armrest board.
12. Remove the trim cover.
    - Remove the trim cover fixing hog rings from the backside of the seat back.
    - With close attention paid to the hog rings and the wire which connect the trim cover and the pad and frame assembly, remove the trim cover while turning it up.
13. Remove the pad & frame assembly.
14. Remove the free hinge cover.
15. Remove the seat cushion assembly.
16. Remove the seat lock cover.
17. Remove the rear seat belt buckle and lock assembly.
18. Remove the mounting bracket.
19. Remove the trim cover.
    - Remove the hog rings and pull the trim cover out from the frame assembly groove.
    - With close attention paid to the hog rings and the wire which connect the trim cover and the pad & frame assembly, remove the trim cover while turning it up.
20. Remove the frame assembly.
21. Remove the pad assembly.
22. Remove the stopper rubber.

Reassembly

To reassemble, follow the disassembly steps in the reverse order, noting the following point.

1. Tighten the reclining device fixing bolts to the specified torque.

   Torque: 27 N·m (2.8kg·m/20 lb ft)
2. Loosen the rubber stopper lock nut(1). Adjust the stopper(3) so there is no clearance between the bottom of the stopper and the carpet(2) while you make sure the rear seat is firmly locked.

   Then tighten the lock nut securely.

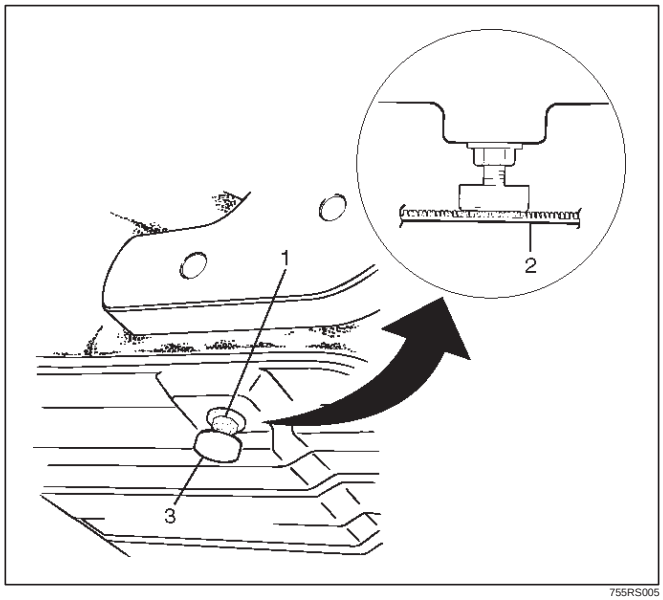

755RS005

Disassembled View (Bench Type)

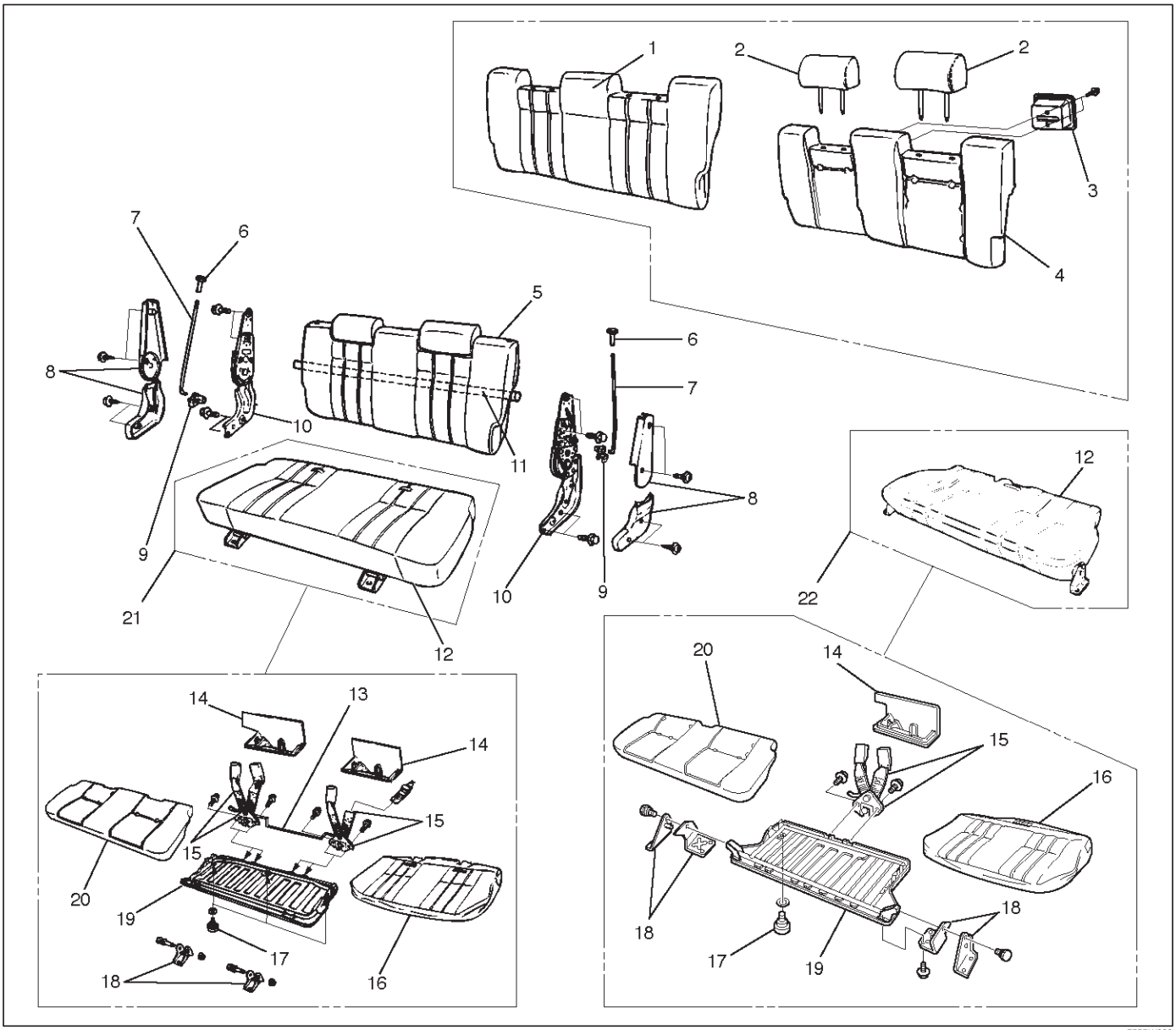

755RW033

Legend

(1) Trim Cover
(2) Pillow Assembly
(3) Band Hook Cover
(4) Pad & Frame Assembly
(5) Seat Back Assembly
(6) Release Knob
(7) Release Rod
(8) Device Cover
(9) Linkage Bush
(10) Reclining Device
(11) Connecting Shaft
(12) Seat Cushion Assembly
(13) Connecting Link
(14) Seat Lock Cover
(15) Rear Seat Belt Buckle and Lock Assembly
(16) Trim Cover
(17) Stopper Rubber
(18) Mounting Bracket
(19) Frame Assembly
(20) Pad Assembly
(21) L·W·B
(22) S·W·B

Disassembly (Bench Type)

1. Remove the device cover.
2. Remove the release knob.
   - Turn the knob to the counterclockwise to remove it.
3. Remove the release rod.
   - Disconnect the rod from the linkage bush.
4. Remove the reclining device.

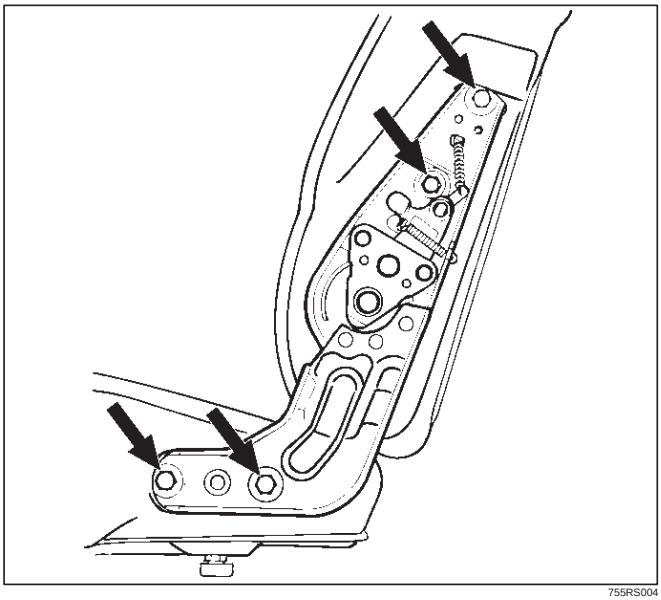

755RS004

5. Remove the connecting shaft.
6. Remove the seat back assembly.
7. Remove the band hook cover.
8. Remove the pillow assembly.
   - Refer to the Disassembly (Split Type) in this section.

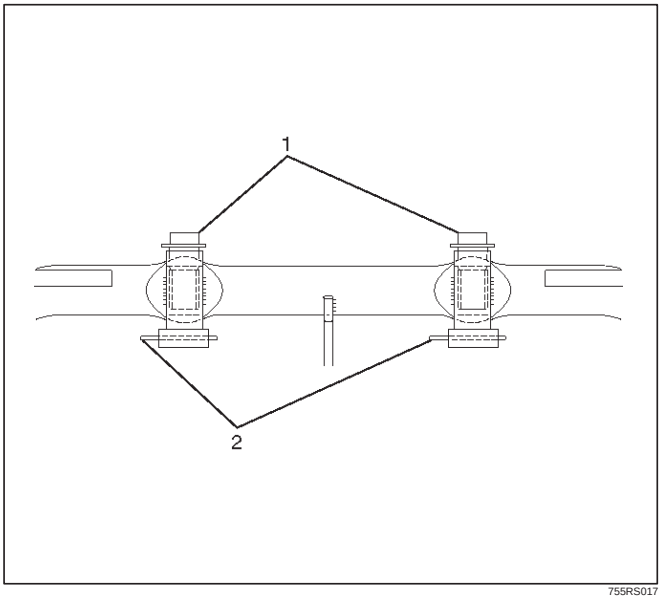

755RS017

9. Remove the trim cover.
   - Open the fastener(3), and with close attention paid to the hog rings and wire which connect the trim cover and the pad and frame assembly, remove the trim cover as you turn it up.

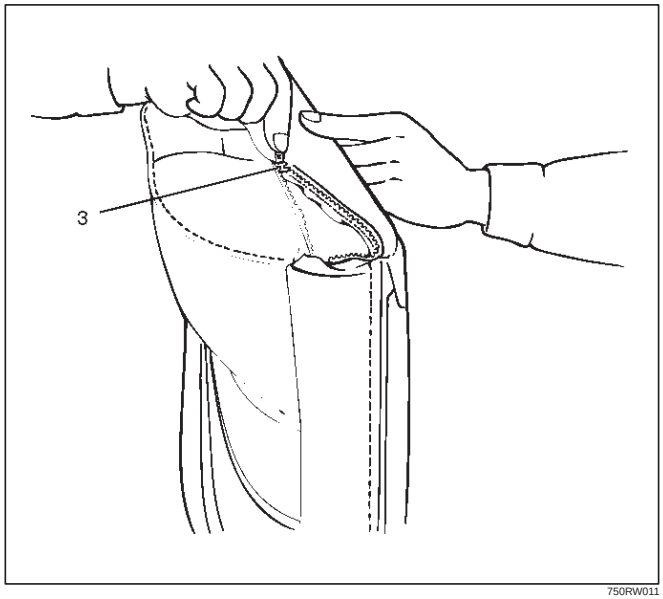

750RW011

10. Remove the pad & frame assembly.
11. Remove the seat cushion assembly.
12. Remove the seat lock cover.
13. Remove the rear seat belt buckle and lock assembly.
14. Remove the mounting bracket.
15. Remove the trim cover.
    - Remove the hog rings and pull the trim cover out from the frame assembly groove.
    - With close attention paid to the hog rings and the wire which connect the trim cover and the pad and frame assembly, remove the trim cover while turning it up.
16. Remove the frame assembly.
17. Remove the pad assembly.
18. Remove the stopper rubber.

Reassembly (Bench Type)

To reassemble, follow the disassembly steps in the reverse order, noting the following point.

1. Tighten the reclining device fixing bolts to the specified torque.

   Torque: 27 N·m (2.8kg·m/20 lb ft)

2. Loosen the rubber stopper lock nut(1) and adjust the stopper rubber(3) so there is no clearance between the bottom of the stopper and the carpet(2), while ensuring the rear seat is firmly locked.
   Tighten the lock nut securely.

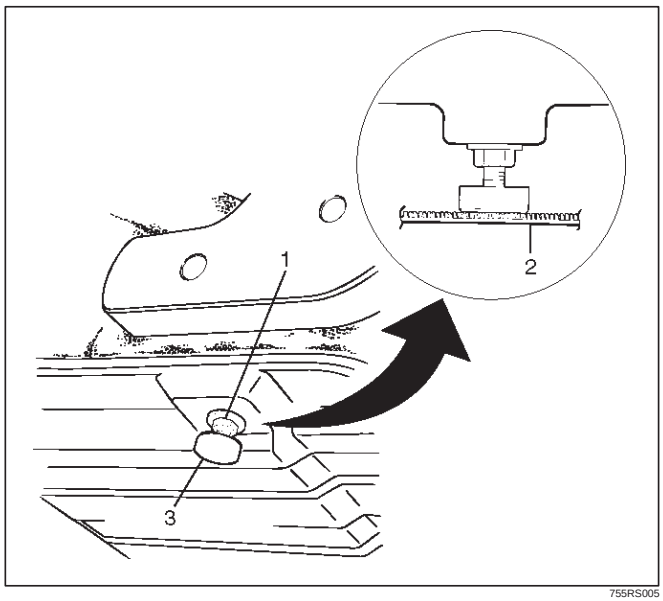

755RS005

Third Seat Assembly

Parts Location

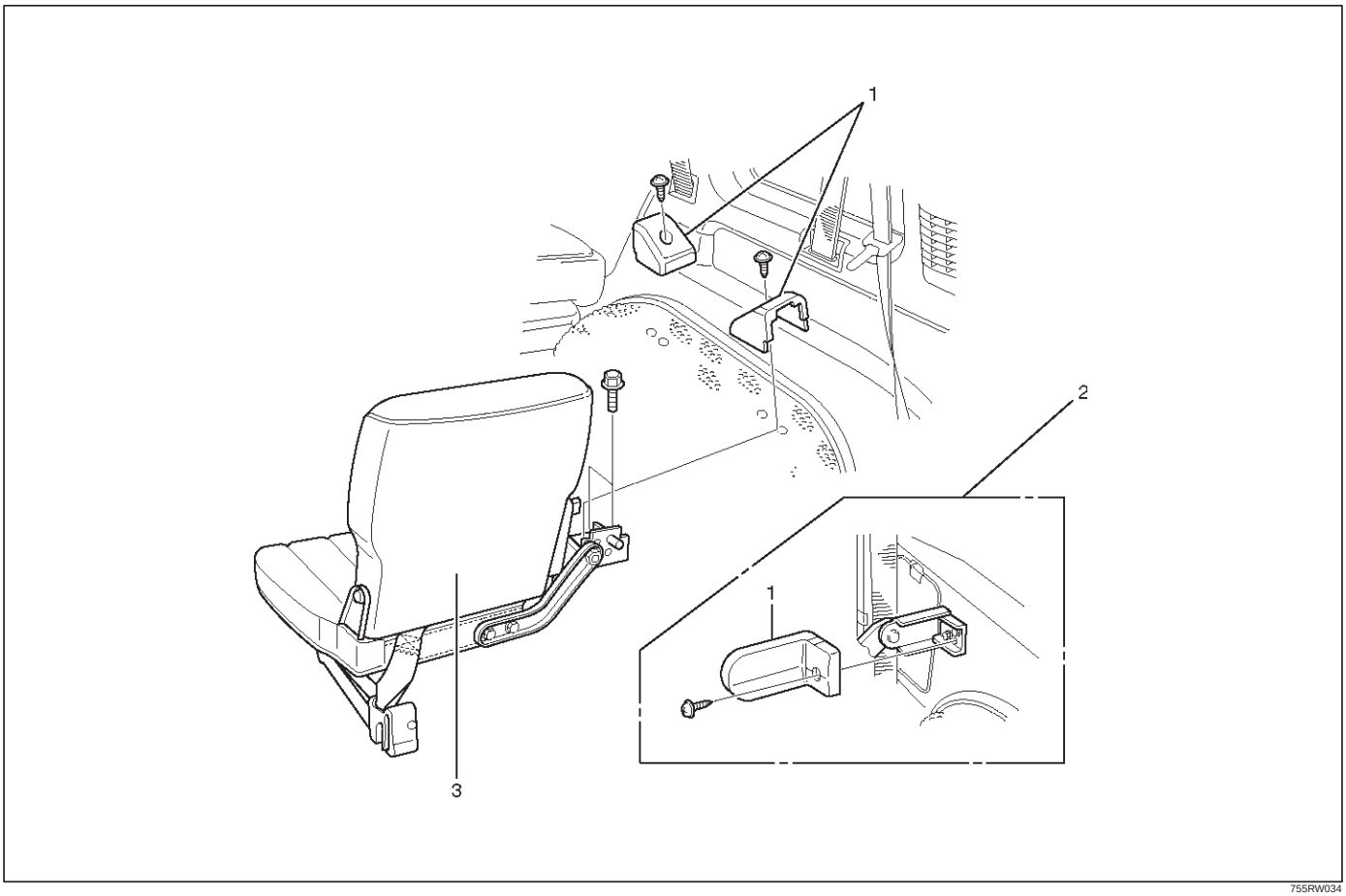

755RW034

Legend

(1) Cover
(2) Rear Side of LH
(3) Third Seat Assembly

Removal

1. Disconnect the battery ground cable.
2. Remove the cover.
3. Remove the third seat assembly.

Installation

To reassemble, follow the disassembly steps in the reverse order, noting the following point.

1. Tighten the reclining device fixing bolts to the specified torque.

Torque: 19 N·m (1.9kg·m/14 lb ft)

Disassembled View

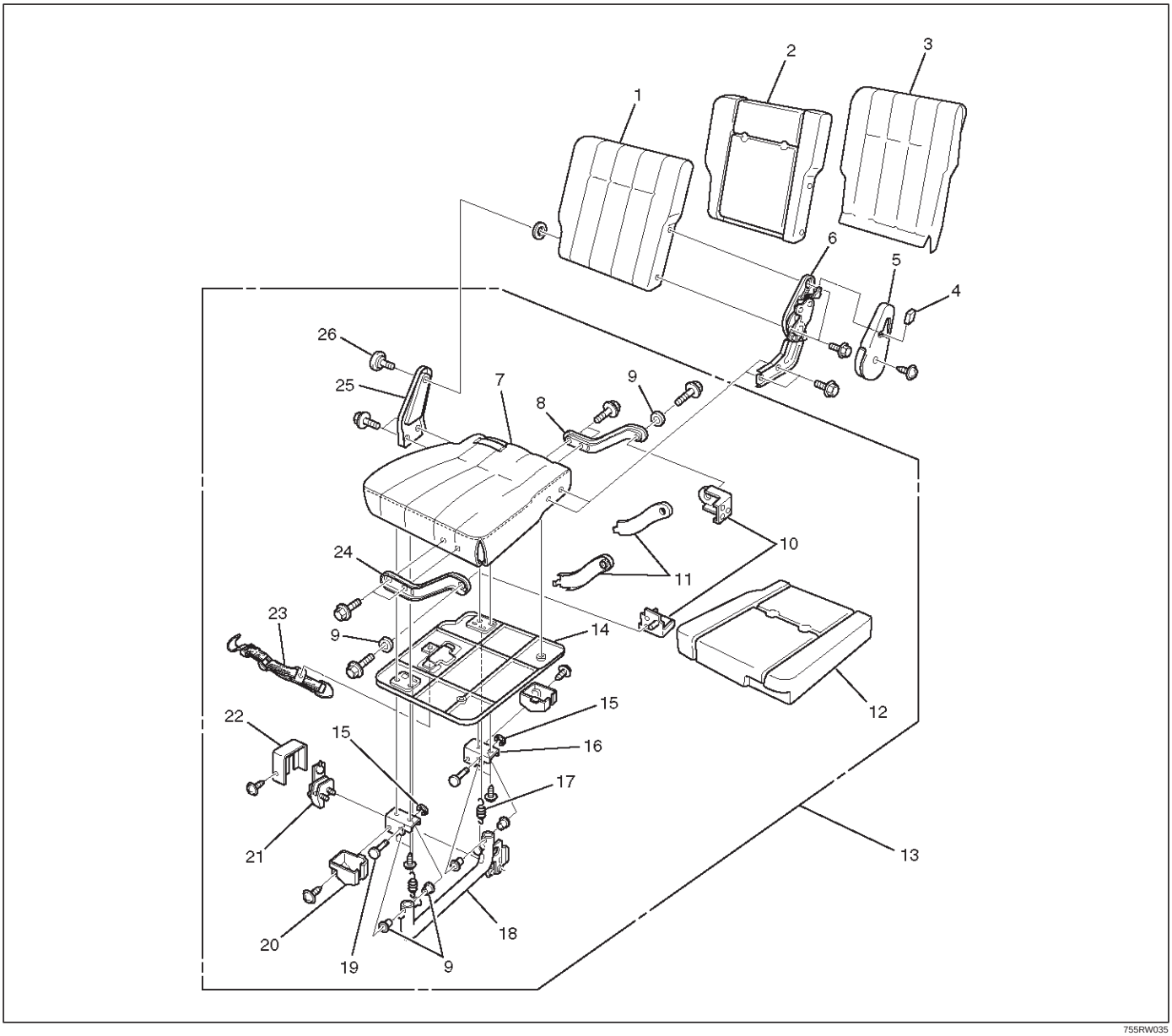

Legend

(1) Seat Back Assembly
(2) Pad & Frame Assembly
(3) Trim Cover
(4) Hinge Knob
(5) Hinge Cover
(6) Hinge Assembly
(7) Trim Cover
(8) Arm Bracket
(9) Bush
(10) Bracket
(11) Arm Bracket Cover
(12) Pad & Frame Assembly
(13) Seat Cushion Assembly
(14) Board Assembly
(15) E–Ring
(16) Cam Bracket
(17) Tension Spring
(18) Leg Pipe Assembly
(19) Hing Pin
(20) Lock Cover
(21) Floor Lock Assembly
(22) Lock Cover
(23) Band Assembly
(24) Arm Bracket
(25) Free Hinge
(26) Free Hinge Bolt

Disassembly

1. Remove the hinge knob.
   - Pull the knob out from hinge assembly.
2. Remove the hinge cover.
3. Remove the hinge assembly.
4. Remove the free hinge bolt.
5. Remove the seat back assembly.
6. Remove the trim cover.
   - Turn up the trim cover from under the seat back while taking notice of the hog ring and wire.

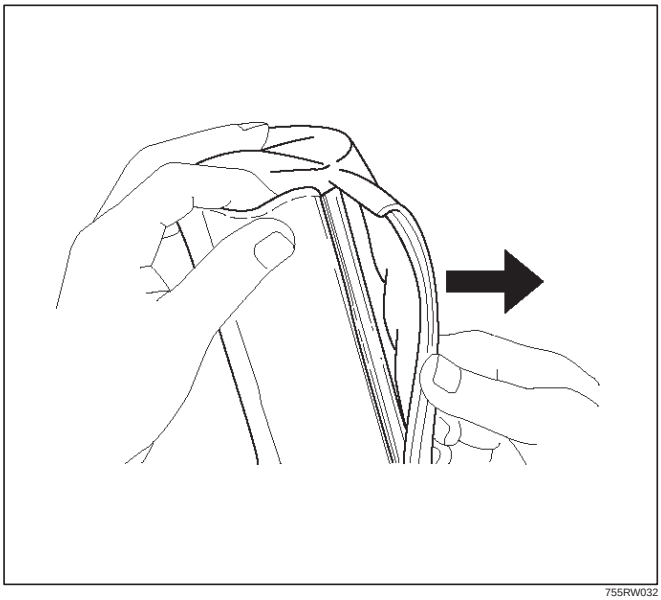

755RW032

7. Remove the pad & frame assembly.
8. Remove the seat cushion assembly.
9. Remove the free hinge.
10. Remove the lock cover.
11. Remove the floor lock assembly.
12. Remove the leg cover.
13. Remove the leg pipe assembly.
    - Remove the E-ring and pull the hinge pin from cam bracket.
14. Remove the cam bracket.
15. Remove the tension spring.
16. Remove the band assembly.
17. Remove the board assembly.
18. Remove trim cover.
    - Remove the hog ring from back side seat cushion.
    - Turn up the trim cover from under the seat back while taking notice of the hog ring.
19. Remove the arm bracket.
20. Remove the arm bracket cover.
21. Remove the pad & frame assembly.

Reassembly

To reassemble, follow the disassembly steps in the reverse order.

Rear Seat Foot Rest

Rear Seat Foot Rest and Associated Parts

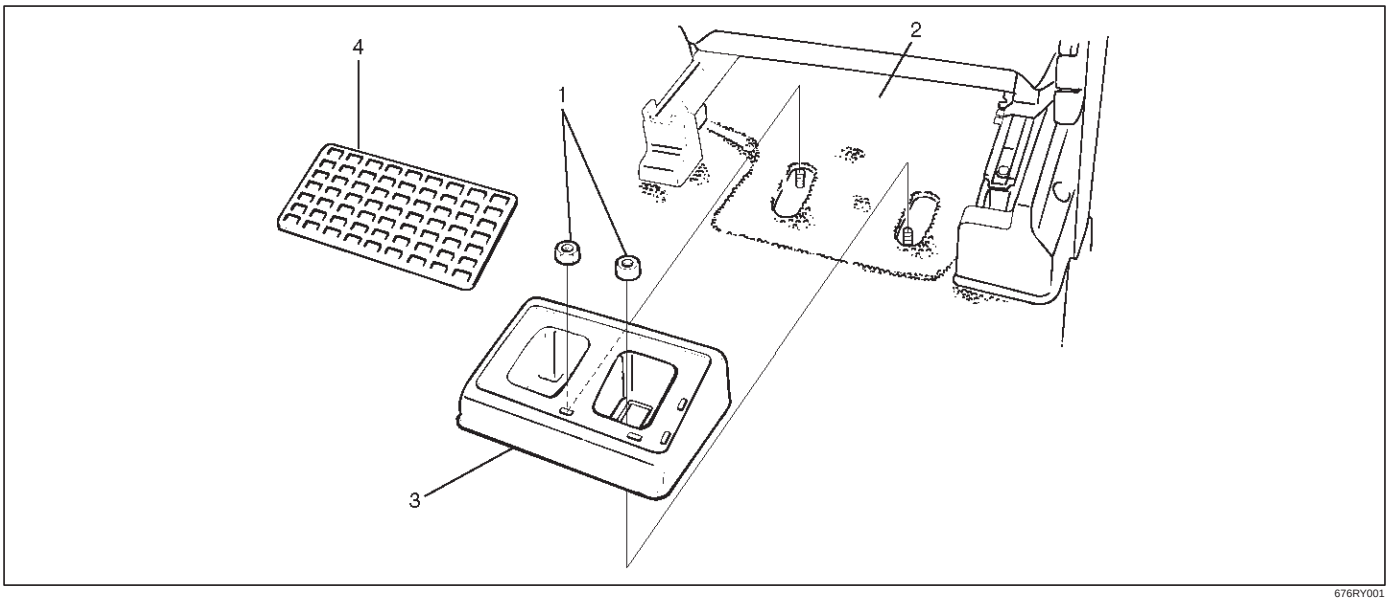

676RY001

Legend

(1) Fixing Nut
(2) Front Seat
(3) Rear Seat Foot Rest
(4) Foot Rest Pad

Removal

1. Remove the foot rest pad.

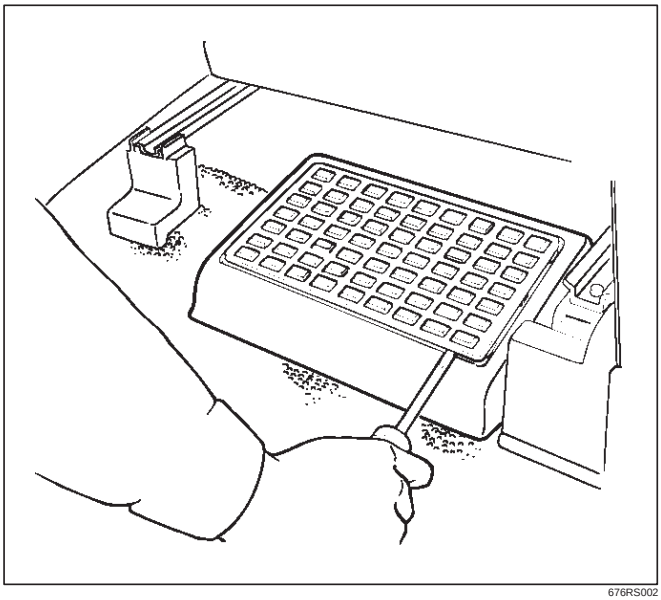

676RS002

2. Remove the fixing nuts.
3. Remove the rear seat foot rest.

Installation

To install, follow the removal steps in the reverse order.

Main Data and Specifications

Torque Specifications

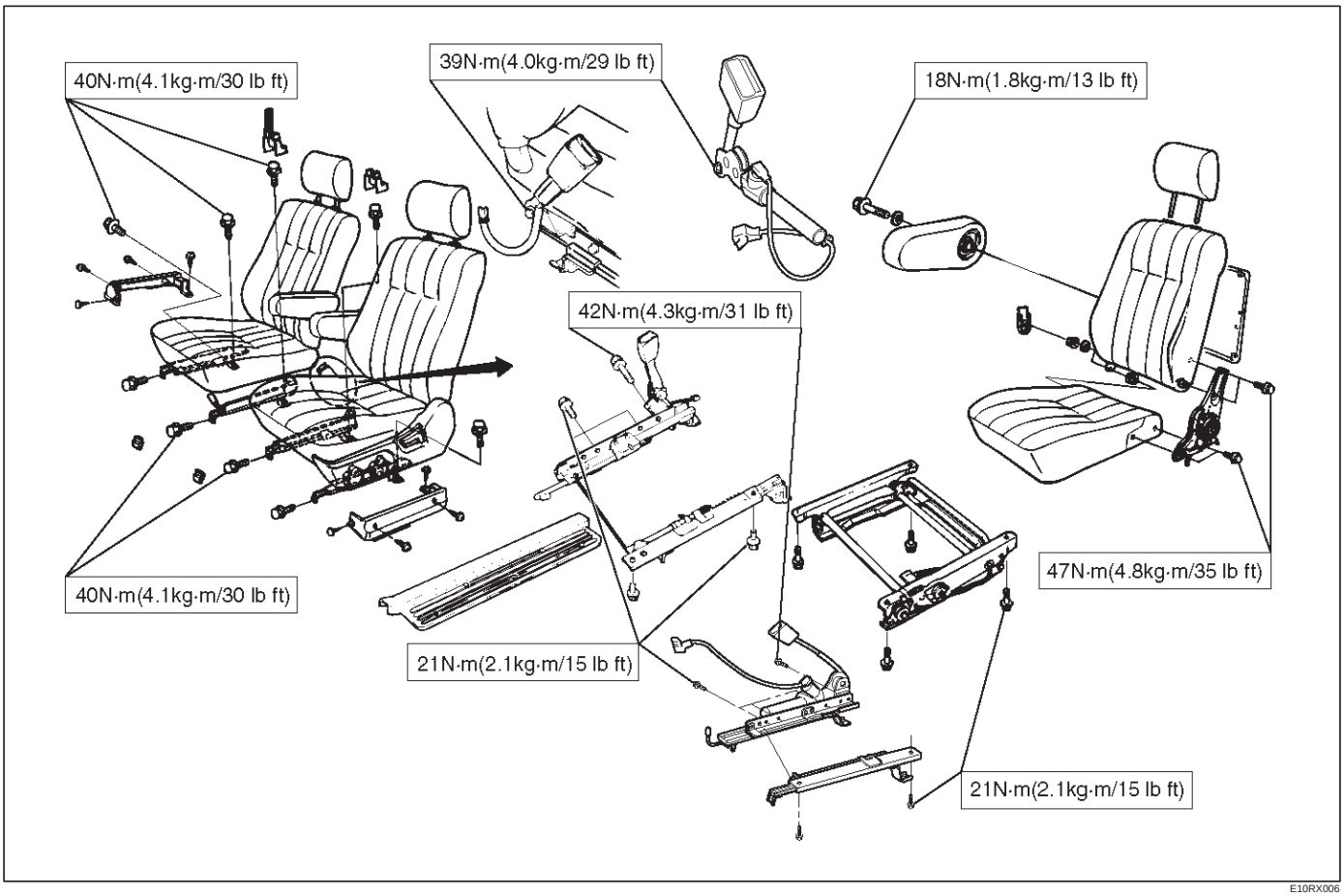

E10RX006

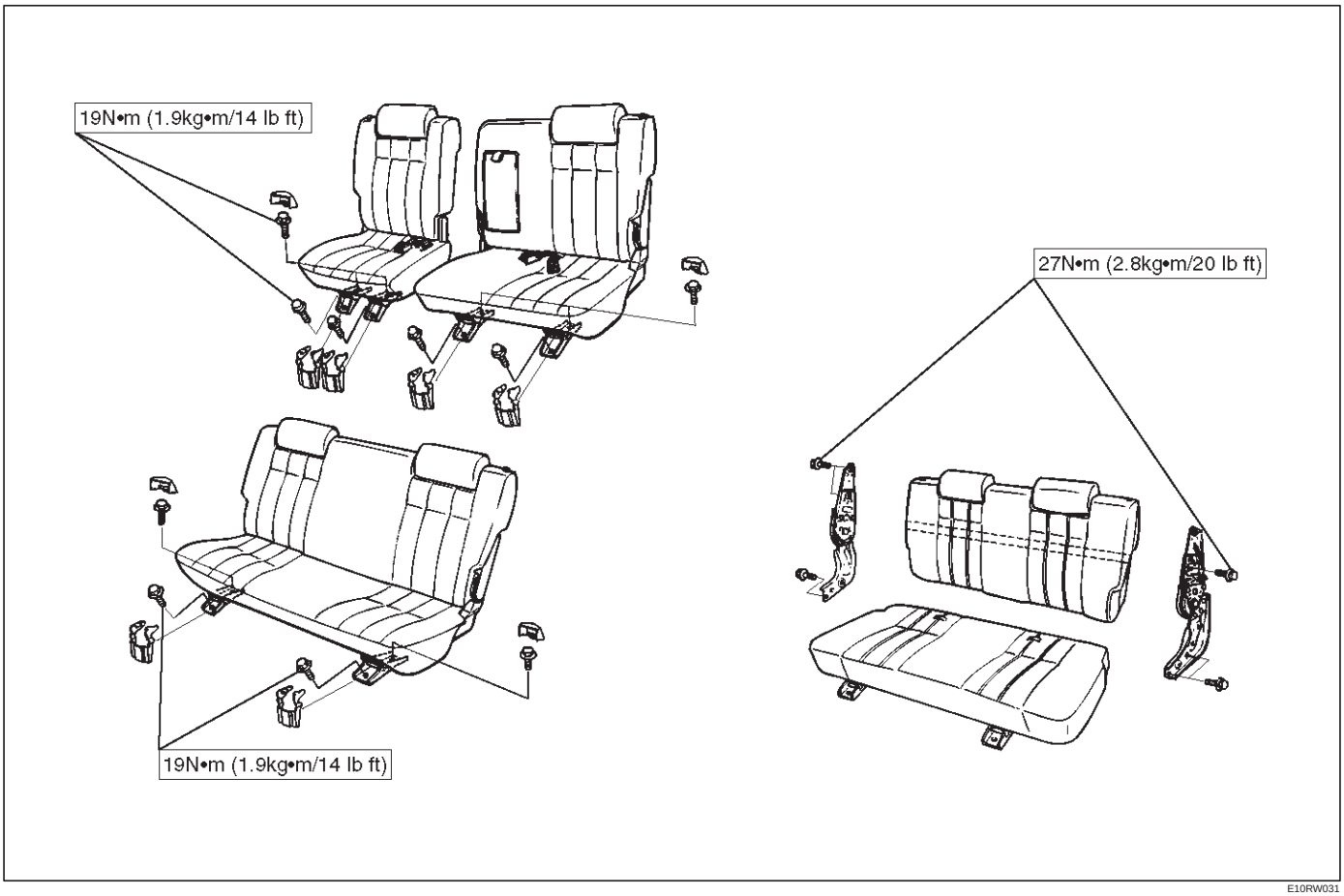

E10RW031

BODY AND ACCESSORIES

SECURITY AND LOCKS

CONTENTS

Service Precaution 8H–2
Front Door Lock Assembly 8H–2
Front Door Lock Assembly and Associated Parts 8H–2
Removal 8H–2
Installation 8H–3
Front Outside Handle and Door Lock Cylinder 8H–4
Front Outside Handle, Door Lock Cylinder and Associated Parts 8H–4
Removal 8H–4
Installation 8H–5
Rear Door Lock Assembly 8H–7
Rear Door Lock Assembly and Associated Parts 8H–7
Removal 8H–7
Installation 8H–8
Rear Outside Handle 8H–9
Rear Outside Handle and Associated Parts 8H–9
Removal 8H–9
Installation 8H–10
Rear Door Inside Lock Knob Link 8H–10
Removal 8H–10
Installation 8H–10
Door Inside Lock Knob 8H–11
Removal 8H–11
Installation 8H–11
Door Inside Handle 8H–11
Removal and Installation 8H–11
Tailgate Lock Assembly (LH) 8H–12
Tailgate Lock Assembly (LH) and Associated Parts 8H–12
Removal 8H–12
Installation 8H–13
Tailgate Lock Assembly (RH) 8H–14
Tailgate Lock Assembly (RH) and Associated Parts 8H–14
Removal 8H–14
Installation 8H–15
Tailgate Inside Lock Knob 8H–15
Removal 8H–15
Installation 8H–15
Tailgate Inside Handle 8H–16
Parts Location 8H–16
Removal and Installation 8H–16
Tailgate Outside Handle and/or Tailgate Lock Cylinder 8H–17
Tailgate Outside Handle and/or Tailgate Lock Cylinder and Associated Parts 8H–17
Removal 8H–17
Installation 8H–18
Key 8H–19
Key Coding 8H–19
Key Styles 8H–19
Power Door Lock System 8H–20
General Description 8H–20
Front Door Lock Actuator Removal 8H–20
Front Door Lock Actuator Installation 8H–20
Rear Door Lock Actuator Removal 8H–20
Rear Door Lock Actuator Installation 8H–21
Tailgate Lock Actuator Removal 8H–21
Tailgate Lock Actuator Installation 8H–21
Anti-theft System 8H–22
General Description 8H–22
Anti-theft & Keyless Entry Control Unit Removal 8H–22
Anti-theft & Keyless Entry Control Unit Installation 8H–22
Anti-theft Indicator Removal 8H–22
Anti-theft Indicator Installation 8H–23
Anti-theft Horn Removal 8H–23
Anti-Theft Horn Installation 8H–23
Engine Hood Switch Removal 8H–23
Engine Hood Switch Installation 8H–23
Keyless Entry System 8H–24
ID Code Registration (Except South Africa) 8H–24
Anti–theft & Keyless Entry Control Unit/Transmitter Replacement 8H–26
Programming With Tech 2 (For South Africa) 8H–27
Main Data and Specifications 8H–29

Service Precaution

WARNING: IF SO EQUIPPED WITH A SUPPLEMENTAL RESTRAINT SYSTEM (SRS), REFER TO THE SRS COMPONENT AND WIRING LOCATION VIEW IN ORDER TO DETERMINE WHETHER YOU ARE PERFORMING SERVICE ON OR NEAR THE SRS COMPONENTS OR THE SRS WIRING. WHEN YOU ARE PERFORMING SERVICE ON OR NEAR THE SRS COMPONENTS OR THE SRS WIRING, REFER TO THE SRS SERVICE INFORMATION. FAILURE TO FOLLOW WARNINGS COULD RESULT IN POSSIBLE AIR BAG DEPLOYMENT, PERSONAL INJURY, OR OTHERWISE UNNEEDED SRS SYSTEM REPAIRS.

CAUTION: Always use the correct fastener in the proper location. When you replace a fastener, use ONLY the exact part number for that application. ISUZU will call out those fasteners that require a replacement after removal. ISUZU will also call out the fasteners that require thread lockers or thread sealant. UNLESS OTHERWISE SPECIFIED, do not use supplemental coatings (Paints, greases, or other corrosion inhibitors) on threaded fasteners or fastener joint interfaces. Generally, such coatings adversely affect the fastener torque and the joint clamping force, and may damage the fastener. When you install fasteners, use the correct tightening sequence and specifications. Following these instructions can help you avoid damage to parts and systems.

Front Door Lock Assembly

Front Door Lock Assembly and Associated Parts

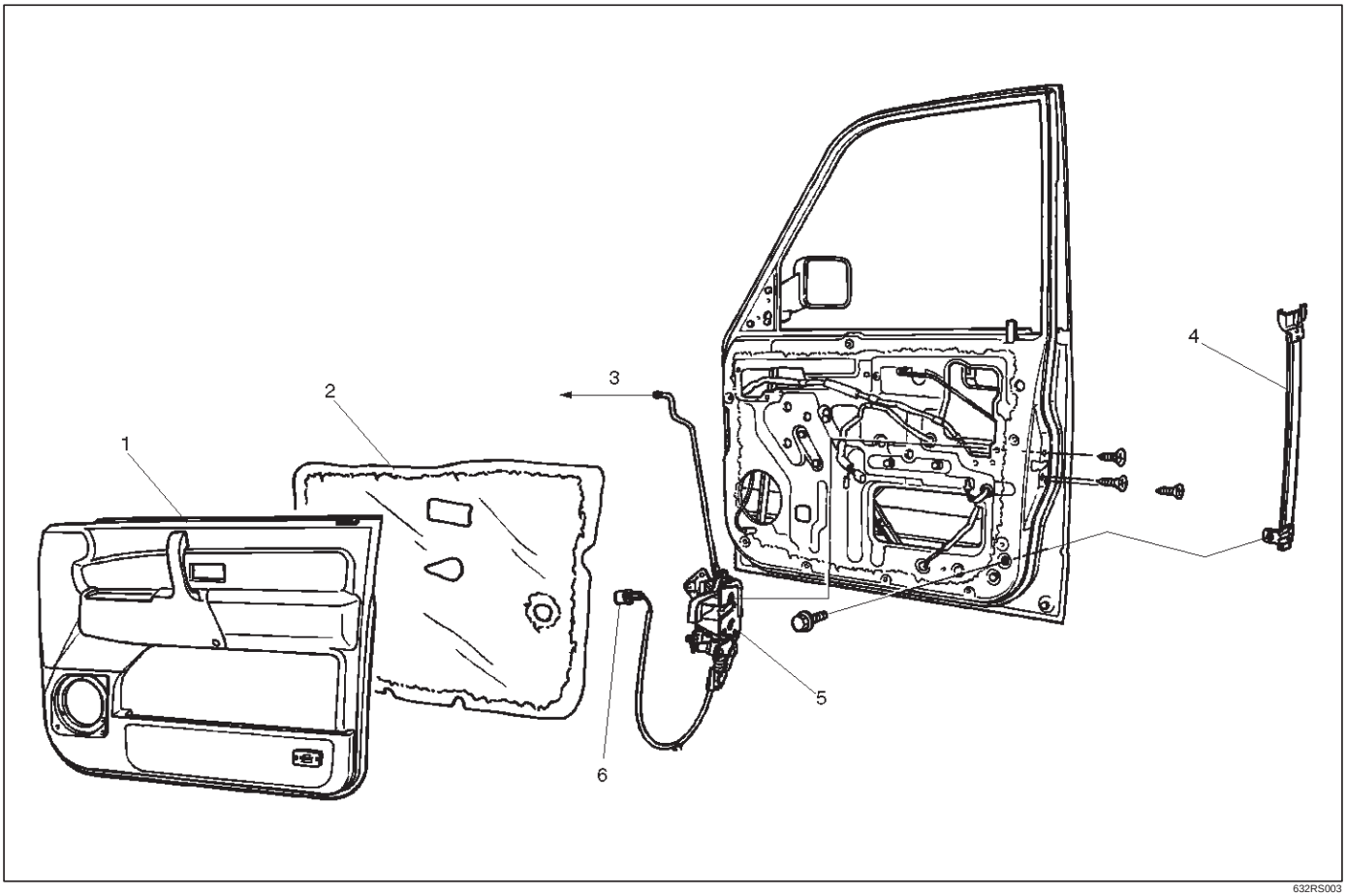

632RS003

Legend

(1) Door Trim Panel
(2) Waterproof Sheet
(3) To Outside Handle
(4) Rear Guide Rail
(5) Door Lock Assembly
(6) Door Lock Switch Connector (W/Power Door Lock)

Removal

1. Disconnect the battery ground cable.
2. Remove the door trim panel.
3. Remove the waterproof sheet.
   Refer to the Front Window Regulator, Glass And Glass Run in Body Structure section.

4. Raise the glass up to the uppermost position, and then remove the rear guide rail.
5. Disconnect the door lock switch connector (w/power door lock) and locking links (arrow marks positions), then remove the door lock assembly fixing screws and door lock assembly.

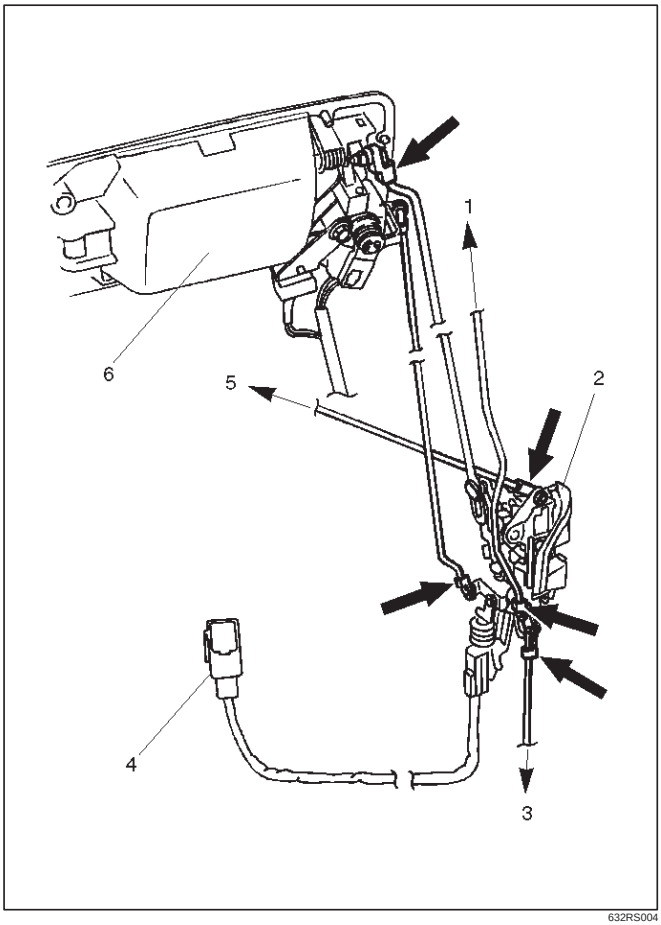

Legend

(1) To Inside Lock Knob
(2) Door Lock Assembly
(3) To Actuator
(4) Door Lock Switch Connector
(5) To Inside Handle
(6) Outside Handle

Installation

To install, follow the removal steps in the reverse order, noting the following points.

1. Apply chassis grease to the lock assembly and striker moving surface.
2. Tighten the door lock assembly fixing screws to the specified torque.

   Torque: 7 N·m (0.7kg·m/61 lb in)
3. Check that the door lock operates smoothly.

Front Outside Handle and Door Lock Cylinder

Front Outside Handle, Door Lock Cylinder and Associated Parts

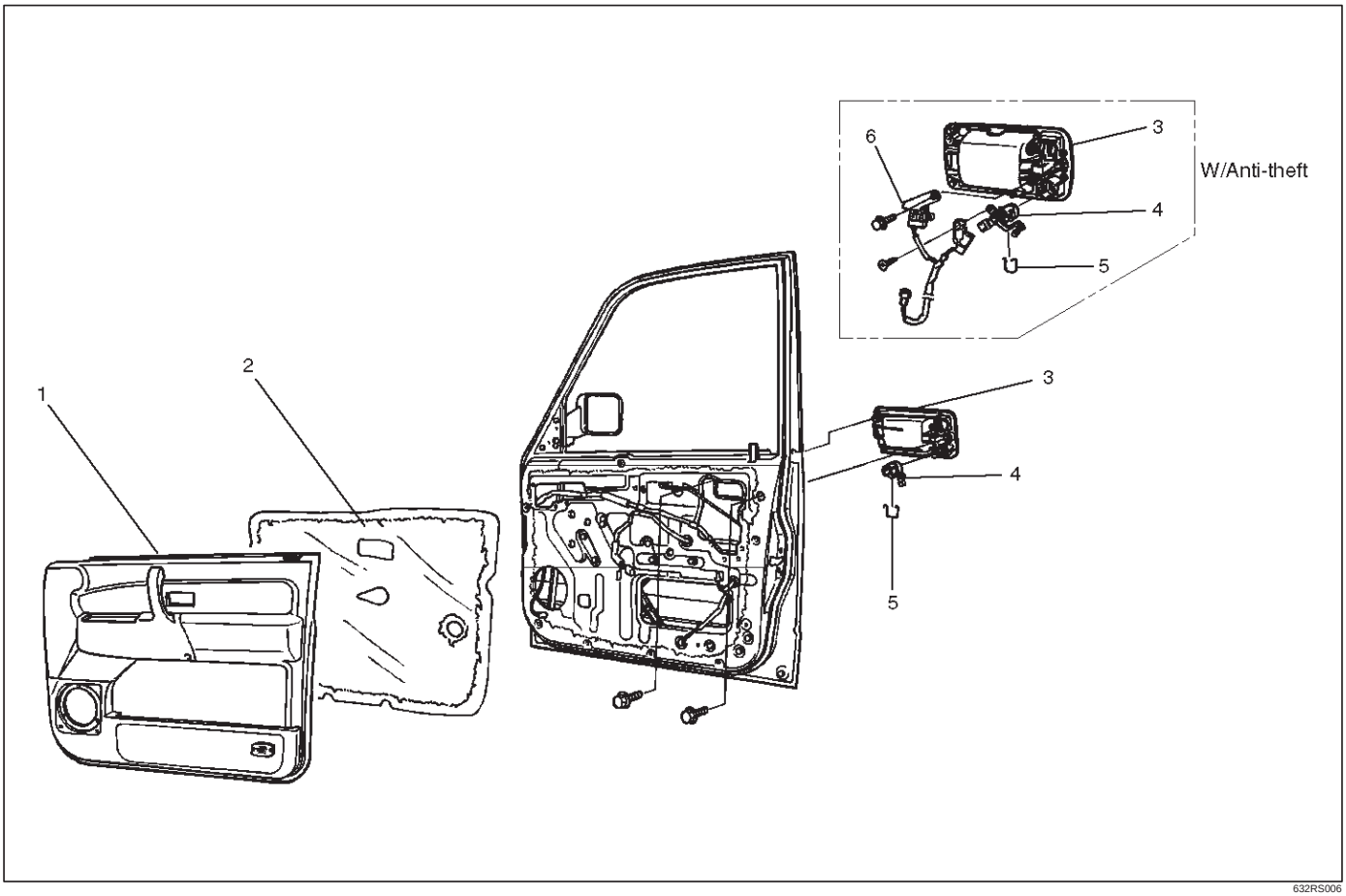

Legend

(1) Door Trim Panel
(2) Waterproof Sheet
(3) Outside Handle
(4) Door Lock Cylinder
(5) Clip
(6) Key Switch (W/Anti-Theft)

Removal

1. Disconnect the battery ground cable.
2. Remove the door trim panel.
3. Remove the waterproof sheet.
   - Refer to the Front Window Regulator, Glass And Glass Run in Body Structure section.

4. Disconnect the locking links (arrow marks positions) and key switch connector (w/anti-theft) to remove the outside handle.

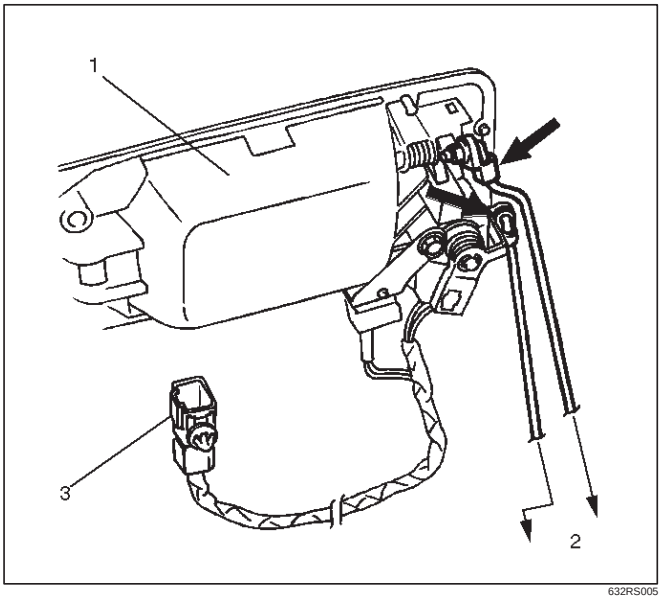

632RS005

Legend

(1) Outside Handle
(2) To Door Lock Assembly
(3) Key Switch Connector (W/Anti–Theft)

5. Remove the key Switch.

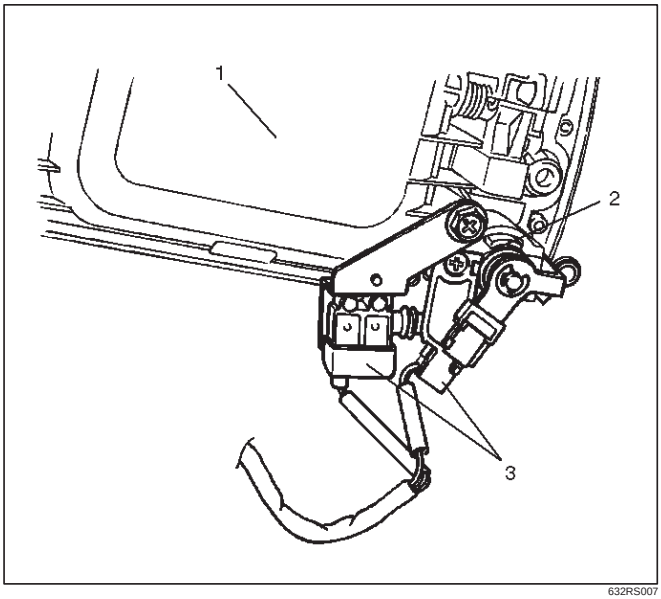

632RS007

Legend

(1) Outside Handle
(2) Lock Cylinder
(3) Key Switch

6. Remove the fixing clip(1) to remove the door lock cylinder(2).

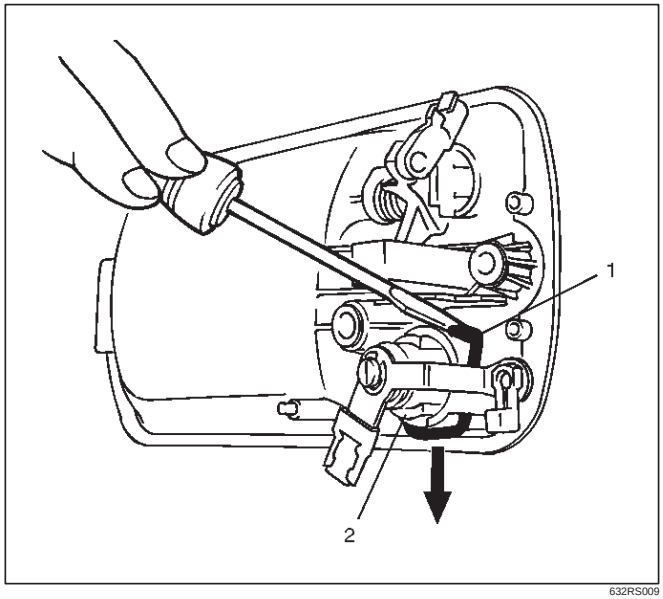

632RS009

Installation

To install, follow the removal steps in the reverse order, noting the following points.

1. Be sure to install the door lock cylinder(2) at a right angle to the outside handle(1).

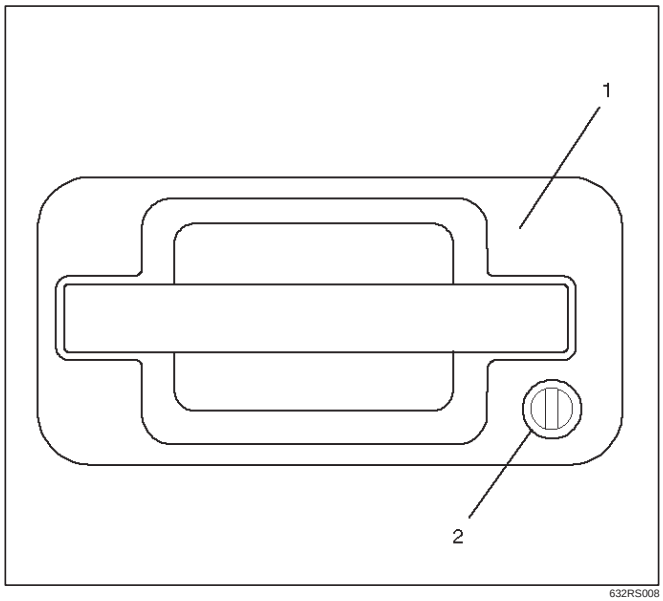

632RS008

2. For the anti-theft system, be sure to install the push rod(3) of key switch while pressing it to the door lock cylinder(5) so that there is no continuity between the key switch(4) side connector terminal No. D6–2 and D6–4 (No. D16–2 and D16–4: passenger side).

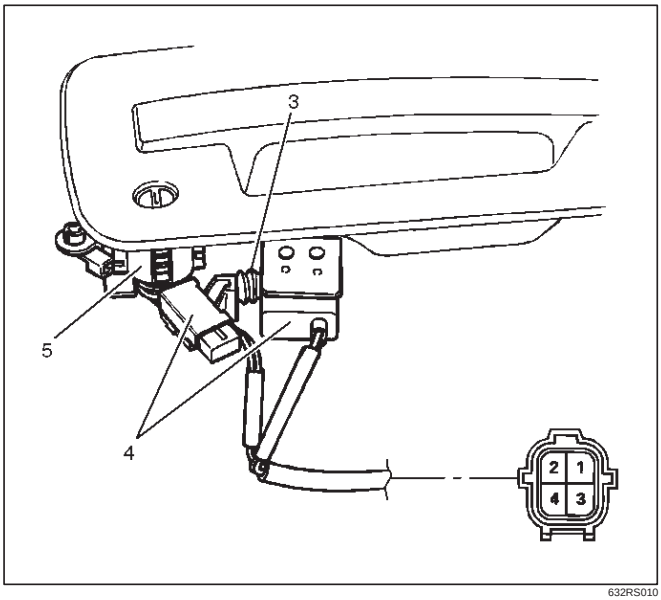

632RS010

3. Tighten the outside handle and key switch fixing bolts to the specified torque.

Torque: 9 N·m (0.9kg·m/78 lb in)

4. Check for smooth outside handle and lock cylinder operation.

Rear Door Lock Assembly

Rear Door Lock Assembly and Associated Parts

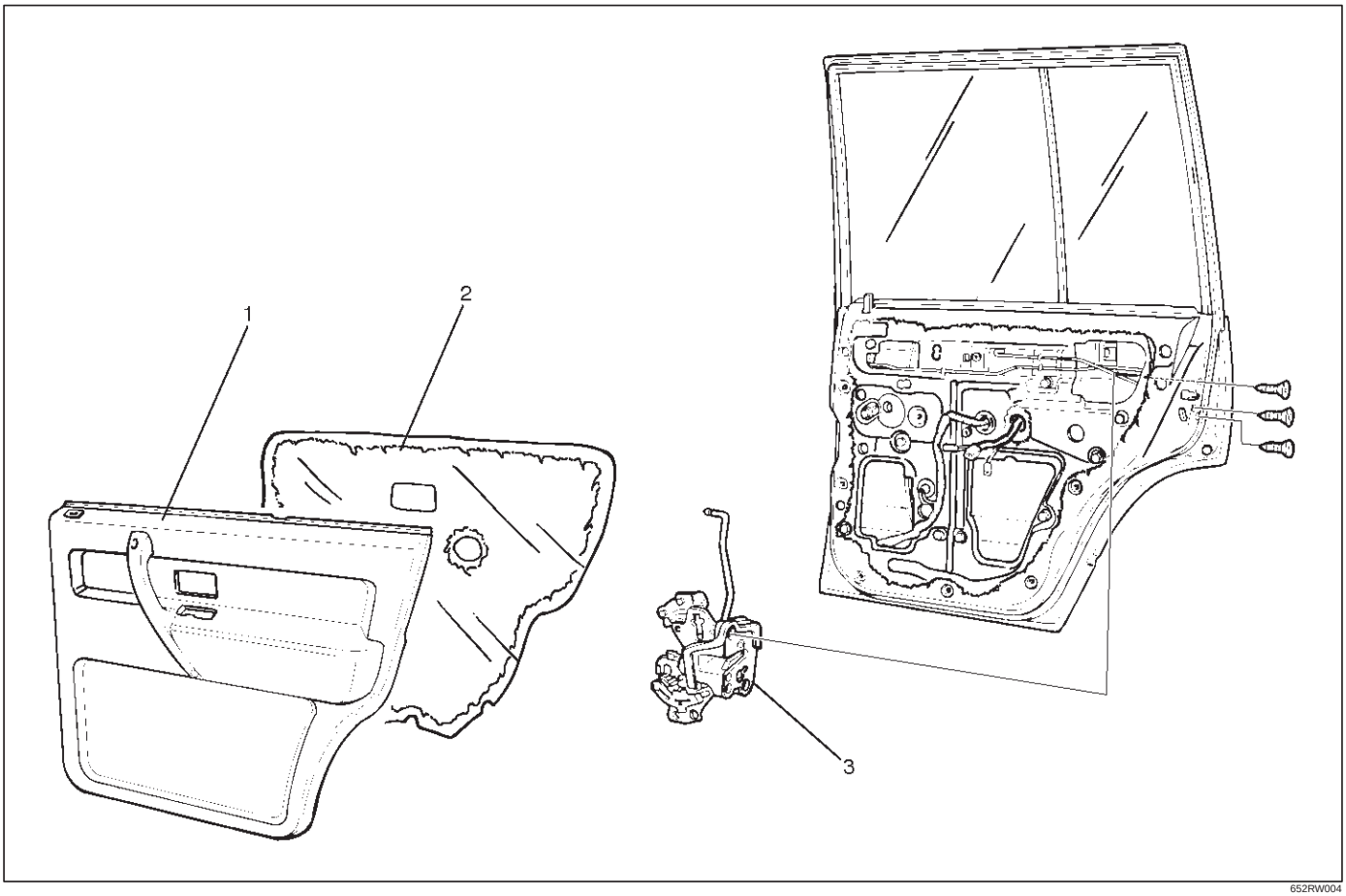

652RW004

Legend

(1) Door Trim Panel
(2) Waterproof Sheet
(3) Door Lock Assembly

Removal

1. Disconnect the battery ground cable.
2. Remove the door trim panel.
3. Remove the waterproof sheet.
   - Refer to the Rear Window Regulator And Glass in Body Structure section.

4. Disconnect the locking links (arrow marks positions) and remove the fixing screws to remove the door lock assembly.

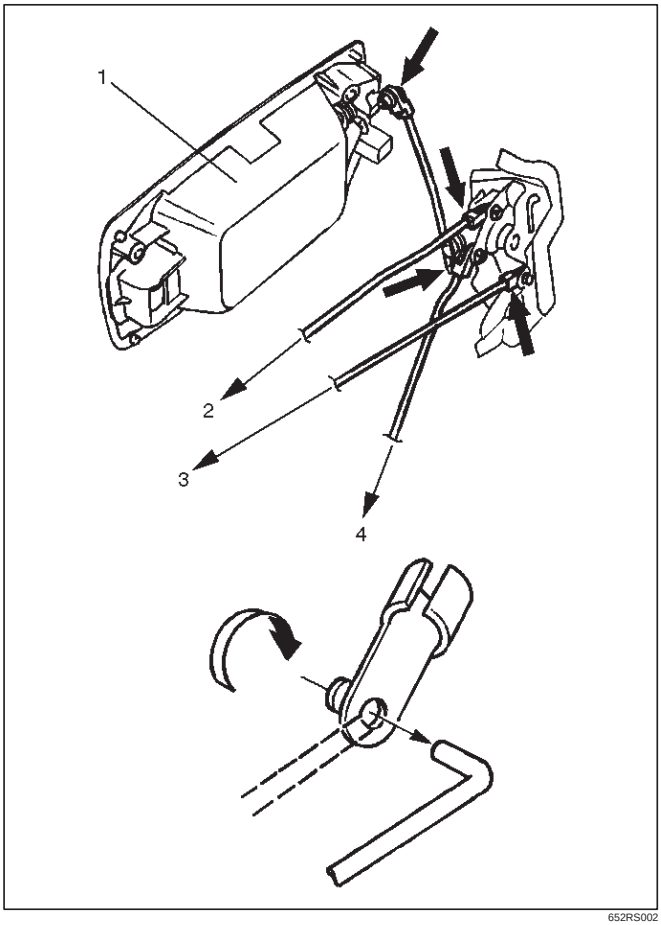

652RS002

Legend

(1) Outside Handle
(2) To Inside Lock Knob
(3) To Inside Handle
(4) To Actuator

Installation

To install, follow the removal steps in the reverse order, noting the following points.

1. Apply chassis grease to the lock assembly and striker moving surface.
2. Tighten the door lock assembly fixing screws to the specified torque.

   Torque: 7 N·m (0.7kg·m/61 lb in)

3. Check that the door lock operates smoothly.

Rear Outside Handle

Rear Outside Handle and Associated Parts

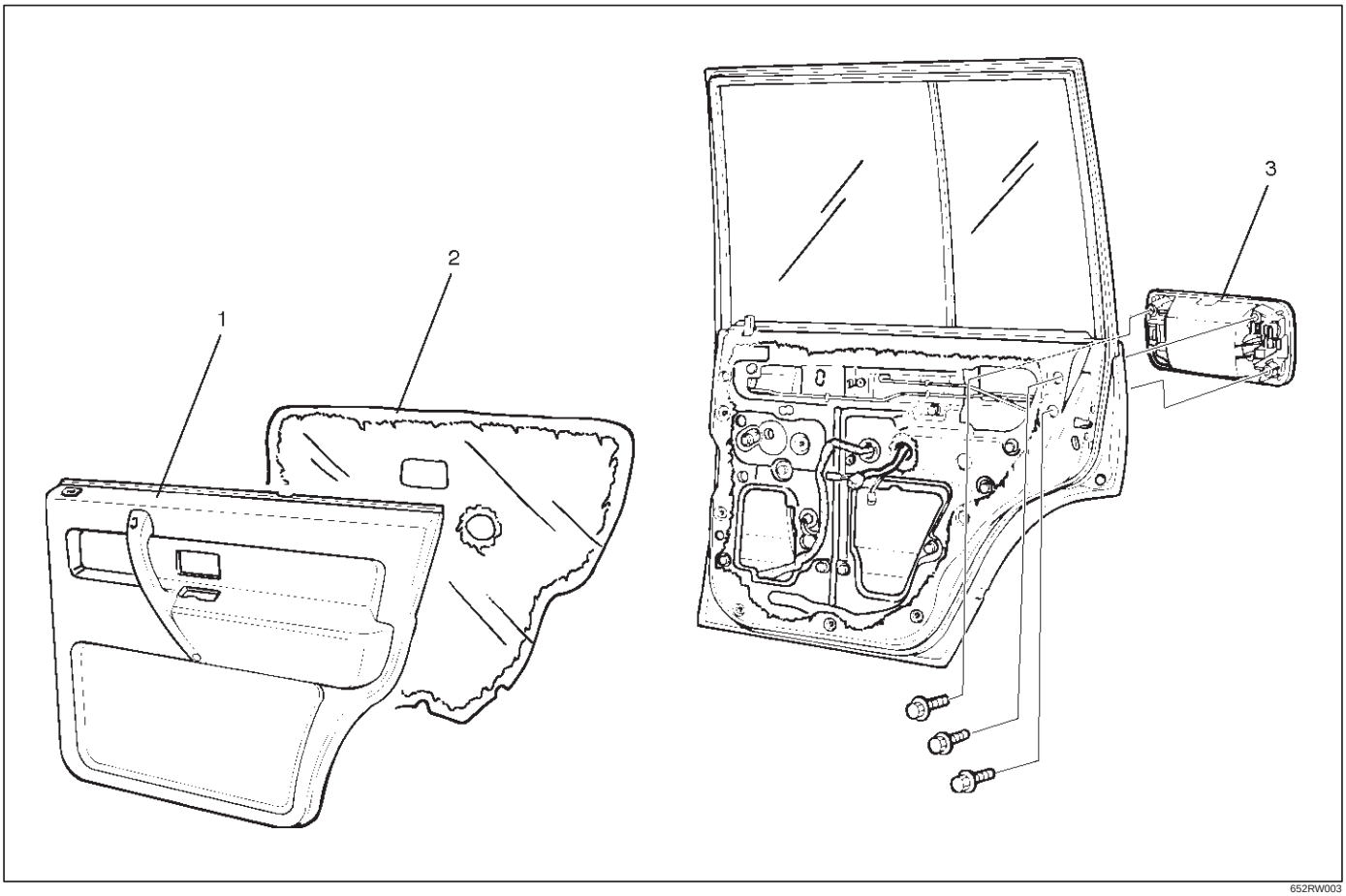

652RW003

Legend

(1) Door Trim Panel
(2) Waterproof Sheet
(3) Outside Handle

Removal

1. Disconnect the battery ground cable.
2. Remove the door trim panel.
3. Remove the waterproof sheet.
   - Refer to the Rear Window Regulator And Glass in Body Structure section.
4. Disconnect the locking link (arrow mark position) and remove three fixing bolts to remove the outside handle.

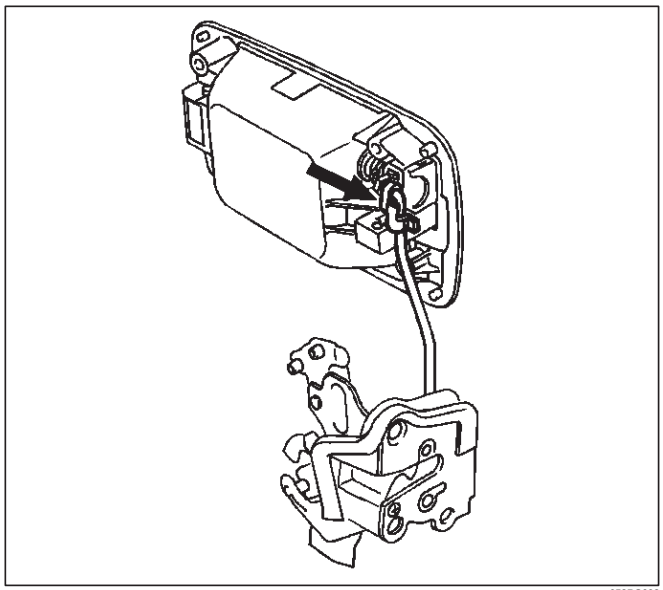

652RS003

Installation

To install, follow the removal steps in the reverse order, noting the following points.

1. Tighten the outside handle fixing bolts to the specified torque.

   Torque: 9 N·m (0.9kg·m/78 lb in)

2. Check that the outside handle operates smoothly.

Rear Door Inside Lock Knob Link

Removal

1. Disconnect the battery ground cable.
2. Remove the door trim panel(3).
3. Remove the waterproof sheet(2).
   - Refer to the Rear Window Regulator And Glass in Body Structure section.
4. Remove the fixing screw(4) and disconnect the locking link at the door lock assembly to remove the rear door inside lock knob link(1).

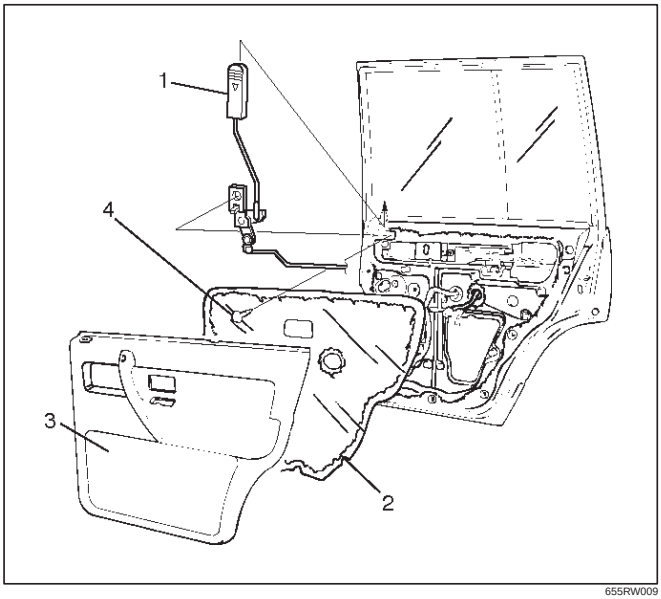

655RW009

Installation

To install, follow the removal steps in the reverse order.

Door Inside Lock Knob

Removal

1. Disconnect the battery ground cable.
2. Remove the door trim panel(1).
   - Refer to the Front & Rear Door Trim Panel in Exterior/Interior Trim section.
3. Turn the door inside lock knob counterclockwise and then remove the door inside lock knob (2).

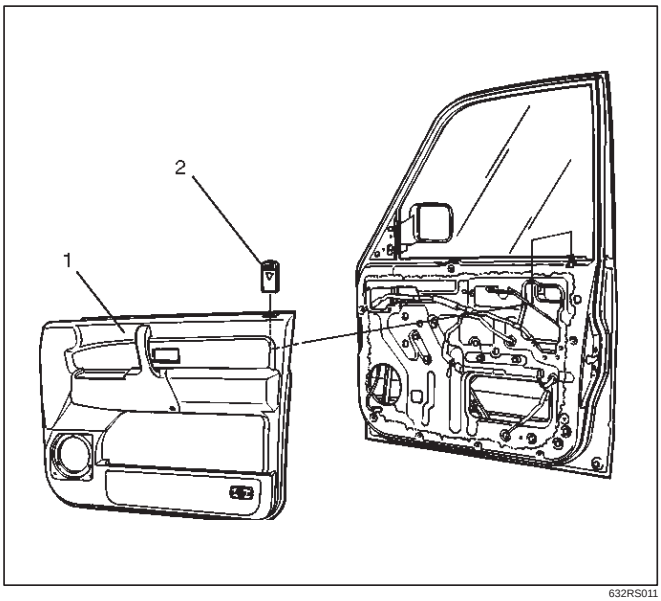

632RS011

Installation

To install, follow the removal steps in the reverse order.

Door Inside Handle

Removal and Installation

- Refer to the Front & Rear Door Trim Panel in Exterior/Interior Trim section.

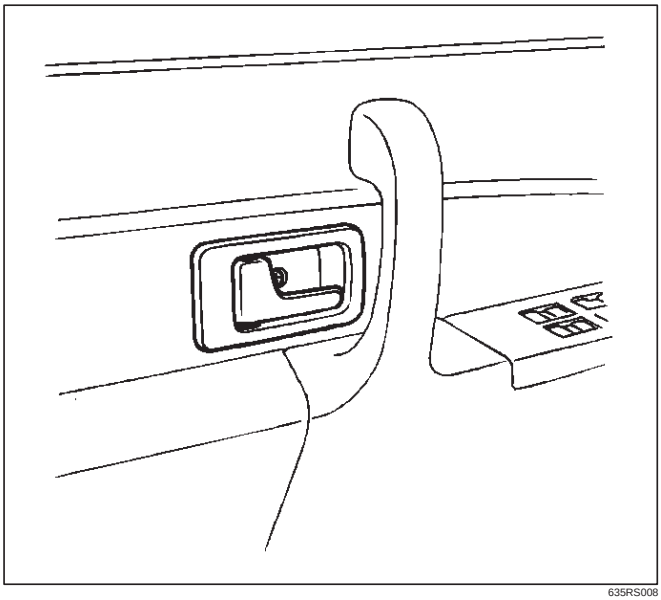

635RS008

Tailgate Lock Assembly (LH)

Tailgate Lock Assembly (LH) and Associated Parts

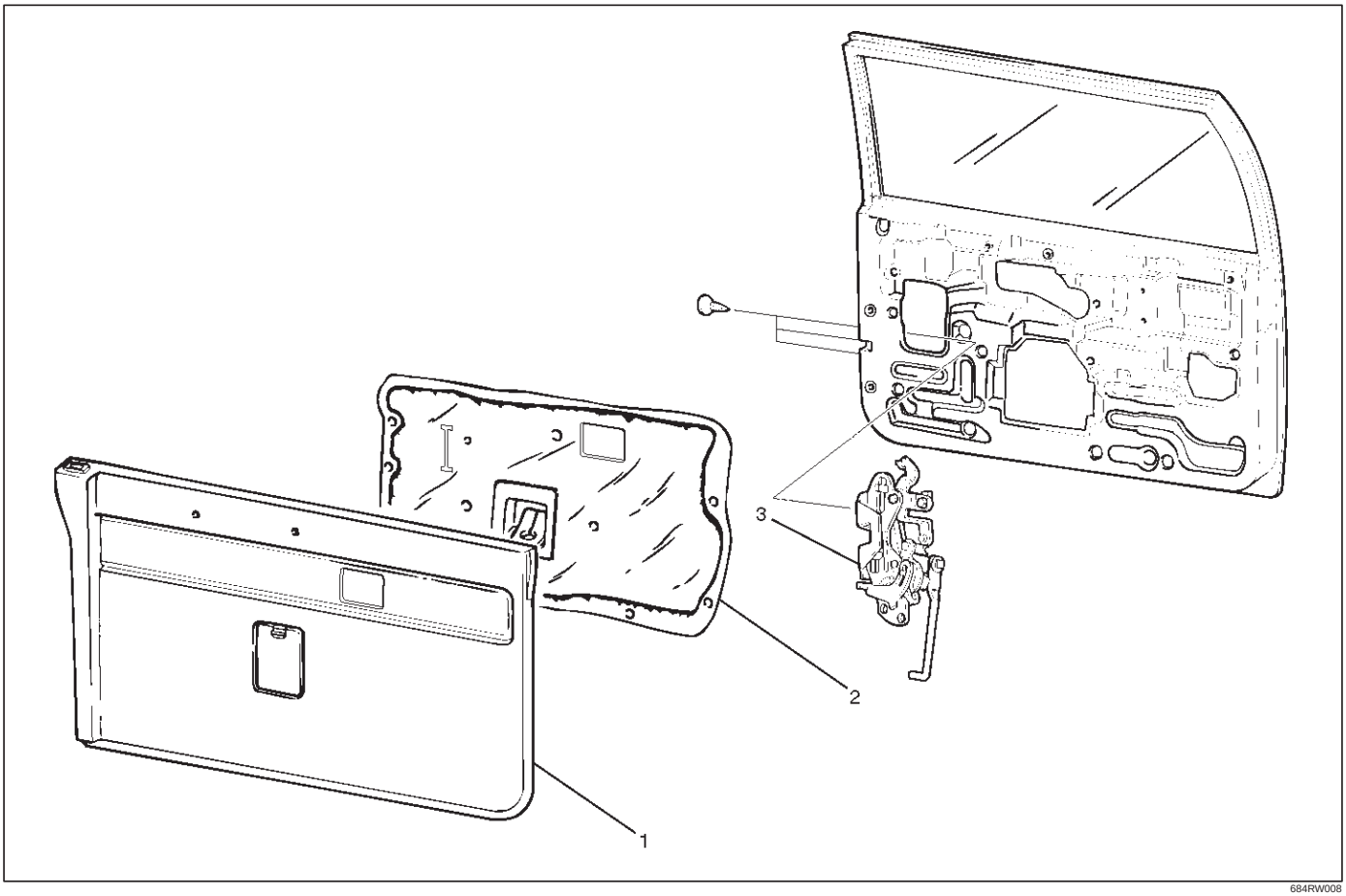

684RW008

Legend

(1) Tailgate Trim Panel(LH)
(2) Waterproof Sheet
(3) Tailgate Lock Assembly

Removal

1. Disconnect the battery ground cable.
2. Remove the tailgate trim panel (LH).
   - Refer to the Tailgate Trim Panel (LH) in Exterior/Interior Trim section.
3. Taking notice of the tailgate harness, peel the waterproof sheet off the tailgate panel carefully and then remove the waterproof sheet.

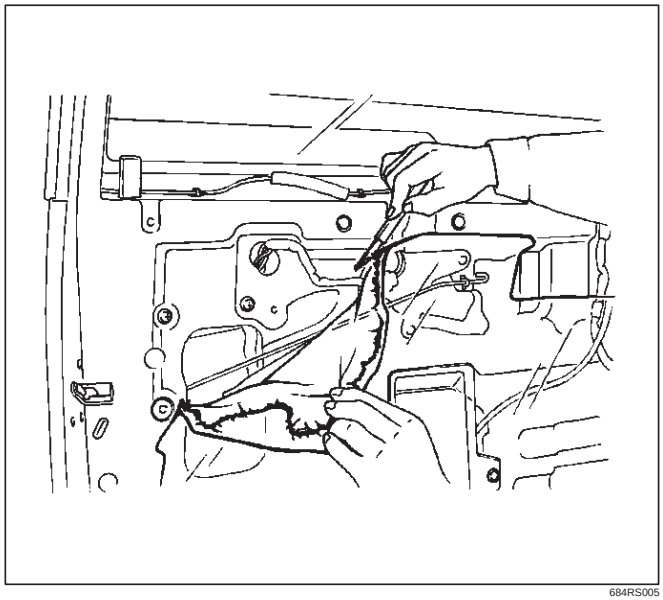

684RS005

4. Disconnect the locking links (arrow marks positions), remove three fixing screws and then remove the tailgate lock assembly (LH).

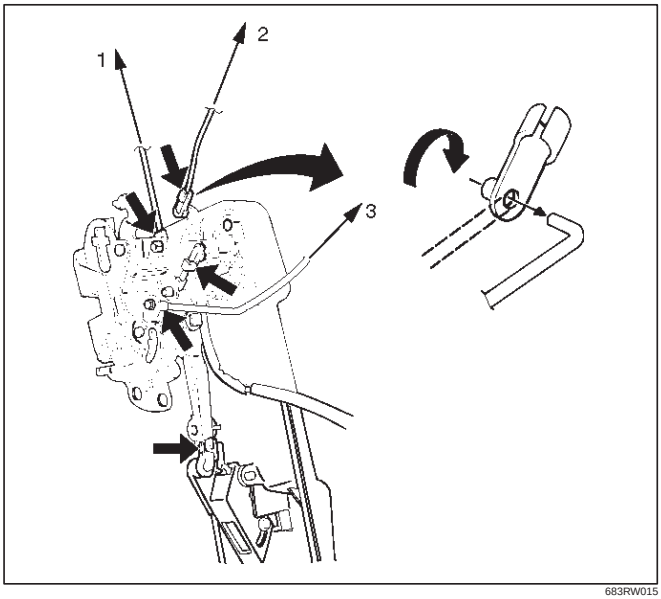

683RW015

Legend

(1) To Inside Lock Knob
(2) To Actuator
(3) To Inside Handle

Installation

To install, follow the removal steps in the reverse order, noting the following points.

1. Apply chassis grease to the lock assembly and striker moving surface.
2. Tighten the tailgate lock assembly fixing screws to the specified torque.

   Torque: 7 N·m (0.7kg·m/61 lb in)

3. Check that the tailgate lock operates correctly after installing it.

Tailgate Lock Assembly (RH)

Tailgate Lock Assembly (RH) and Associated Parts

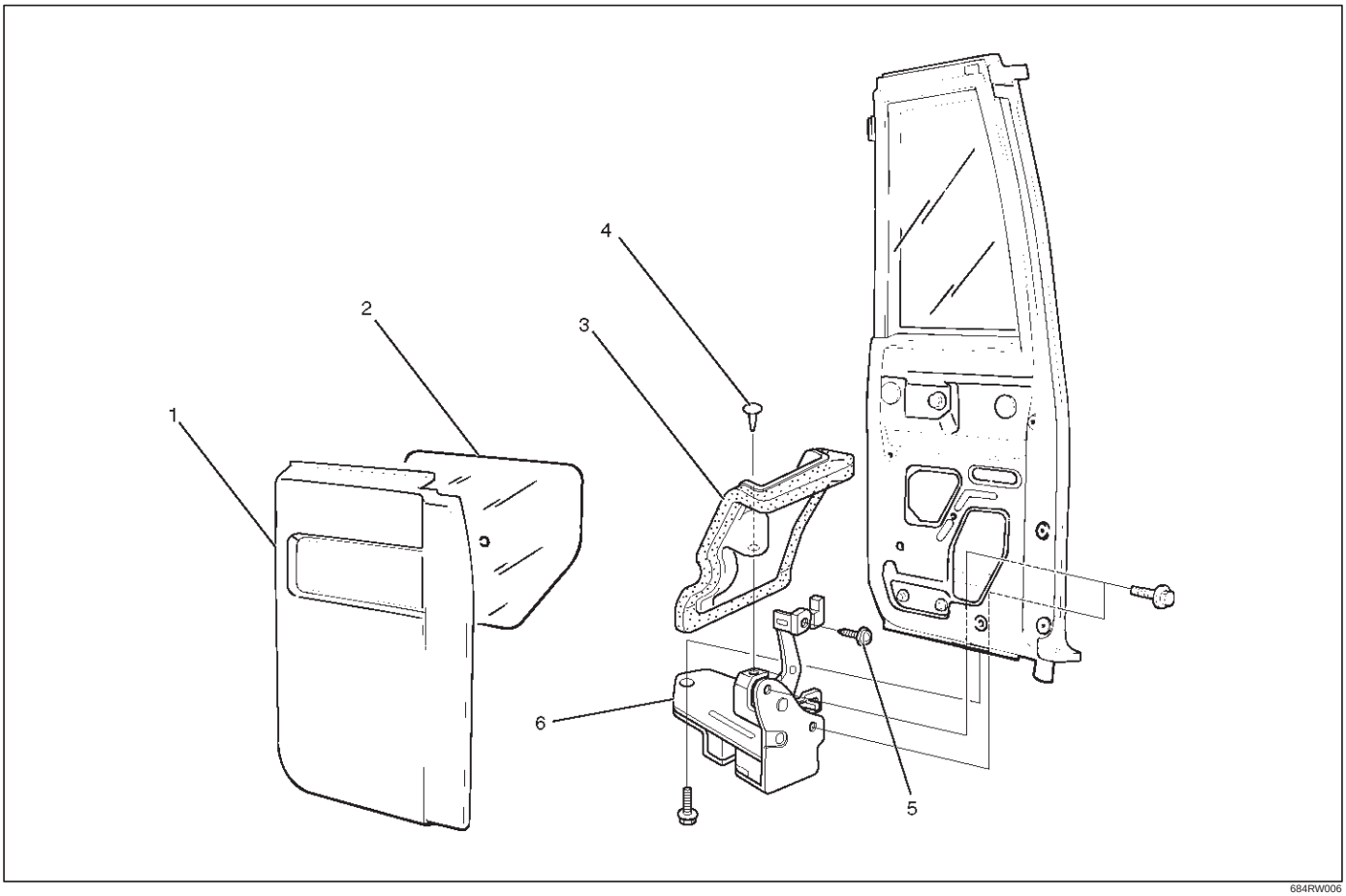

684RW006

Legend

(1) Tailgate Trim Panel (RH)
(2) Waterproof Sheet
(3) Tailgate Lock Seal
(4) Clip
(5) Screw
(6) Tailgate Lock Assembly (RH)

Removal

1. Disconnect the battery ground cable.
2. Remove the tailgate trim panel (RH).
   - Refer to the Tailgate Trim Panel (RH) in Exterior/Interior Trim section.
3. Peel the waterproof sheet off the tailgate panel carefully and then remove the waterproof sheet.
4. Remove three fixing bolts and then remove the tailgate lock assembly (RH).

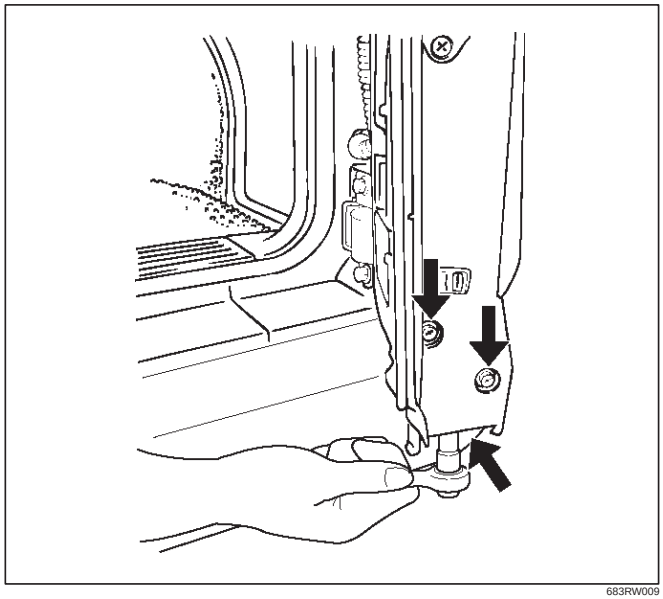

683RW009

5. Remove the tailgate lock seal fixing clip(1) and then remove the tailgate lock seal(2).

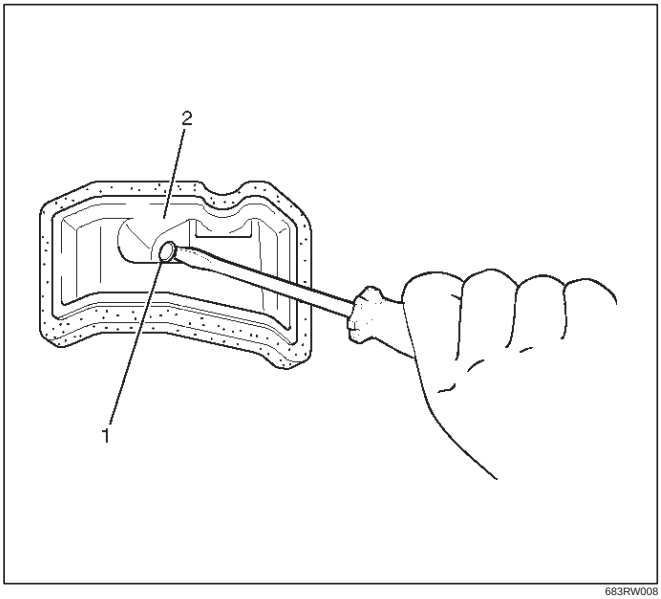

683RW008

Installation

To install, follow the removal steps in the reverse order, noting the following points.

1. Apply chassis grease to the lock assembly and striker moving surface.
2. Tighten the tailgate lock assembly fixing bolts to the specified torque.

   Torque: 11 N·m (1.1kg·m/95 lb in)
3. Check that the tailgate lock operates correctly after installing it.

Tailgate Inside Lock Knob

Removal

1. Disconnect the battery ground cable.
2. Remove the tailgate trim panel (LH)(2).
   - Refer to the Tailgate Trim Panel (LH) in Exterior/Interior Trim section.
3. Take care of cushion to turn the lock knob counterclockwise and then remove the tailgate inside lock knob(1).

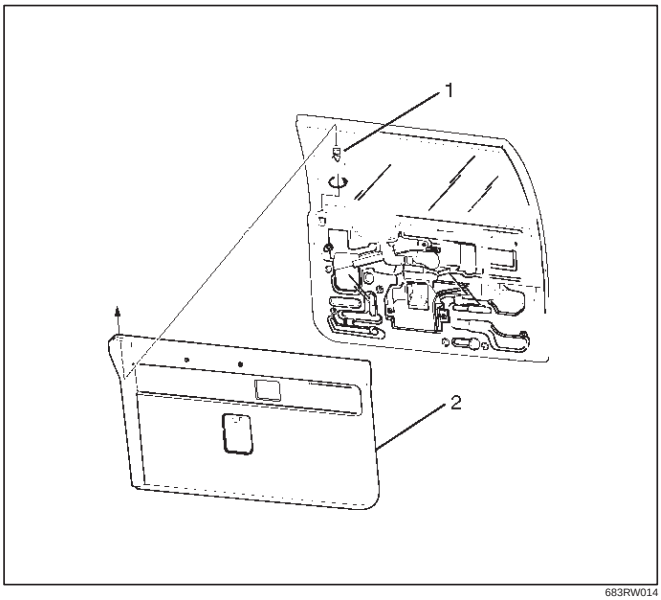

683RW014

Installation

To install, follow the removal steps in the reverse order.

Tailgate Inside Handle

Parts Location

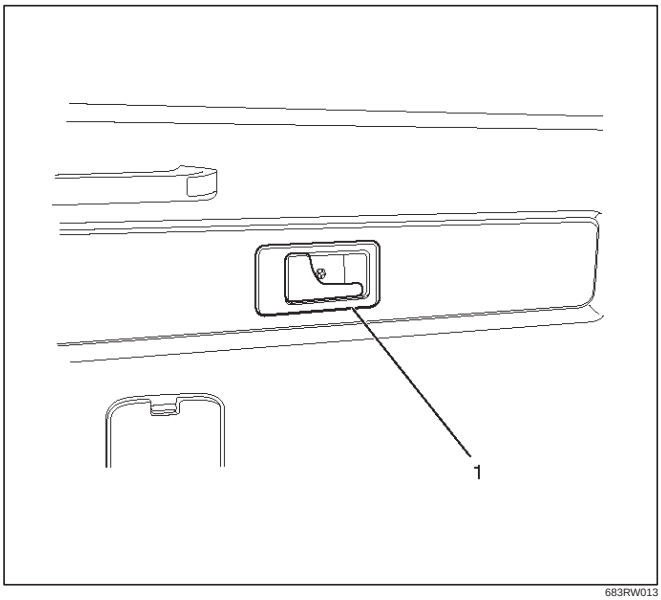

Legend

(1) Tailgate Inside Handle

Removal and Installation

- Refer to the Tailgate Trim Panel (LH) in Exterior/Interior Trim section.

Tailgate Outside Handle and/or Tailgate Lock Cylinder

Tailgate Outside Handle and/or Tailgate Lock Cylinder and Associated Parts

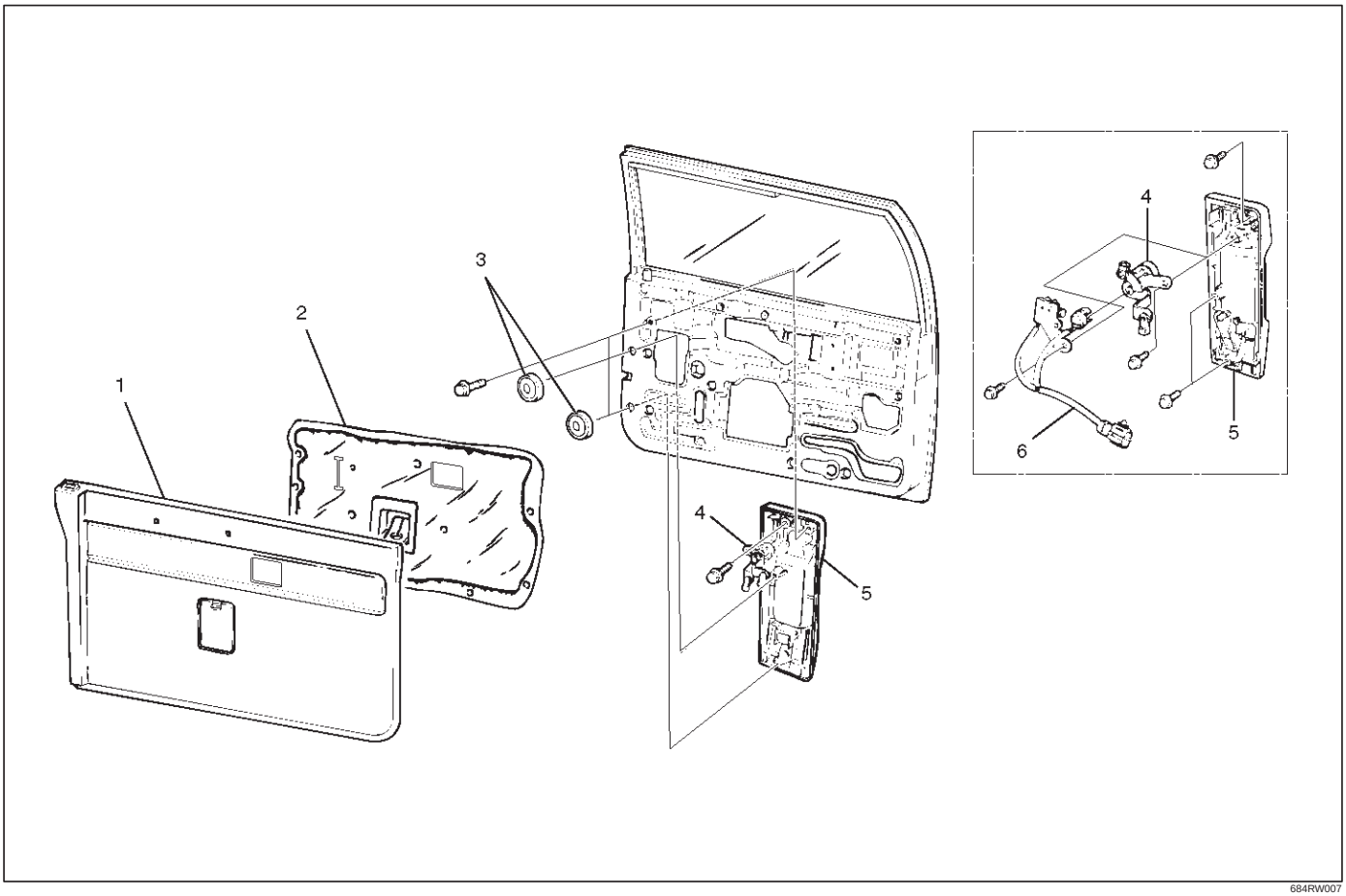

Legend

(1) Tailgate Trim Panel (LH)
(2) Waterproof Sheet
(3) Grommet
(4) Tailgate Lock Cylinder
(5) Tailgate Outside Handle
(6) Key Switch (W/Anti–Theft)

Removal

1. Disconnect the battery ground cable.
2. Remove the tailgate trim panel.
3. Remove the waterproof sheet.
   - Refer to the Tailgate Lock Assembly (LH) in this section.
4. Remove the grommet.

5. Disconnect the locking links (arrow marks positions), key switch connector (w/anti-theft) and remove three fixing bolts to remove the tailgate outside handle.

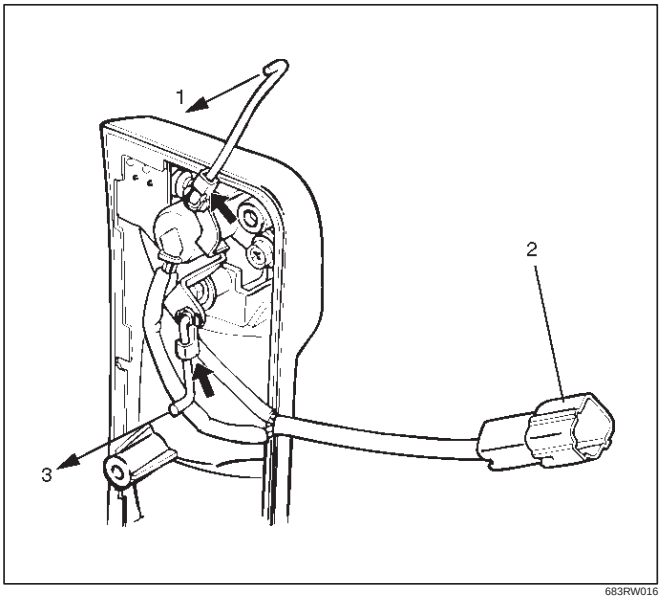

683RW016

Legend

(1) To Actuator
(2) Key Switch Connector (W/Anti–Theft)
(3) To Lock Assembly

6. Remove the key switch fixing bolt(3) to remove the key switch (w/anti-theft) (4) from the tailgate lock cylinder (1).
   And remove the tailgate lock cylinder fixing bolt(2) to remove the tailgate lock cylinder.

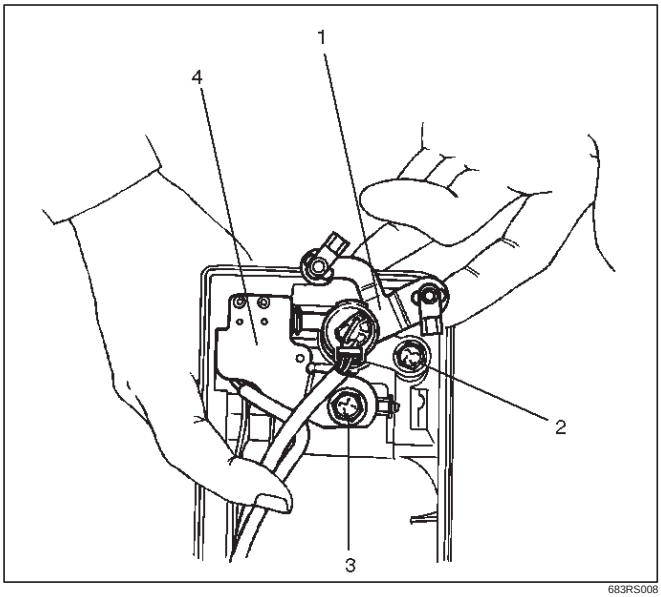

683RS008

Installation

To install, follow the removal steps in the reverse order, noting the following points.

1. For the anti-theft system, install the push rod(1) of the key switch(3) to the key cylinder(2) while pressing it so that there is not continuity between the key switch side connector terminals No. G5–2 and G5–4 as shown in the figure.

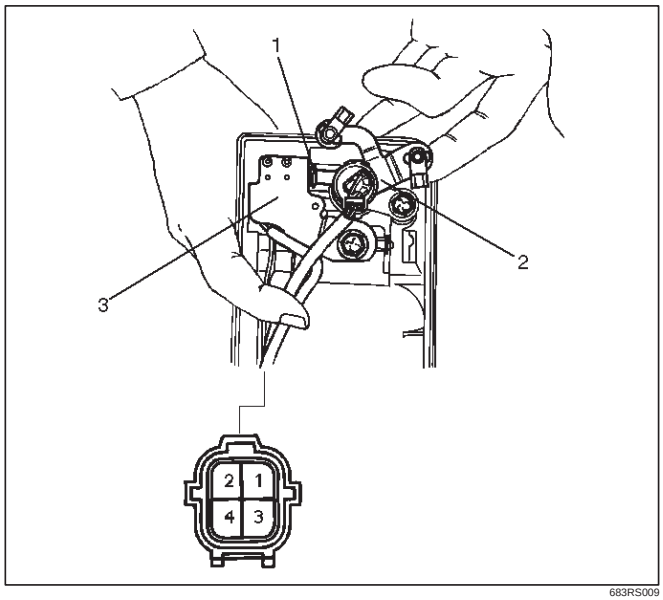

683RS009

2. Tighten the outside handle and key cylinder fixing bolts to the specified torque.

   Torque: 9 N·m (0.9kg·m/78 lb in)

3. Check that the outside handle and key cylinder operate correctly after installing them.

Key

Key Coding

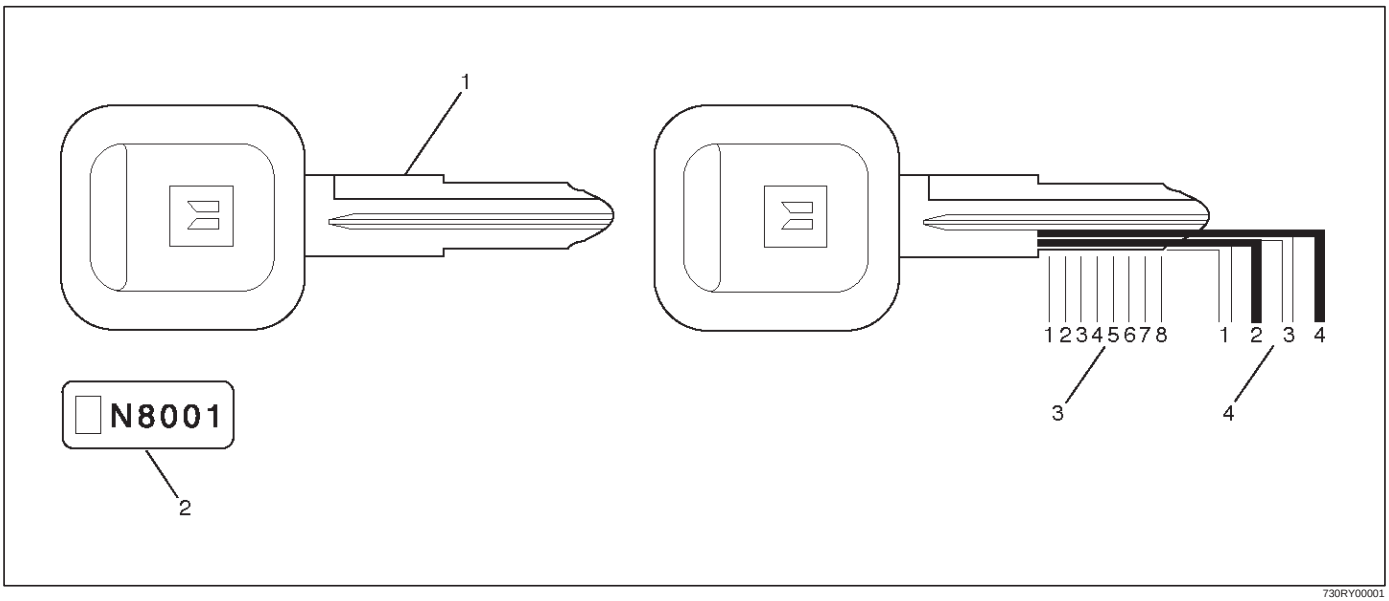

730RY00001

Legend
(1) Key(Actual Size)
(2) Key Code Tag
(3) Position
(4) Level

One key is used for the ignition, door, and tailgate lock cylinders. The keys are cut on both edges to make them reversible.
Key identification is obtained from the five character key code stamped on the key code tag. From this key code, the key code cutting combination can be determined from a code list (available to owners of key cutting equipment from suppliers).
If key codes are not available from records or tags, the key code can be obtained from the right hand door lock cylinder (if lock has not been replaced). Lock cylinders supplied by the factory as service parts are unmarked.
If the original key is available, the key code cutting combination can be determined by laying the key on the diagram shown in the figure.

Key Styles

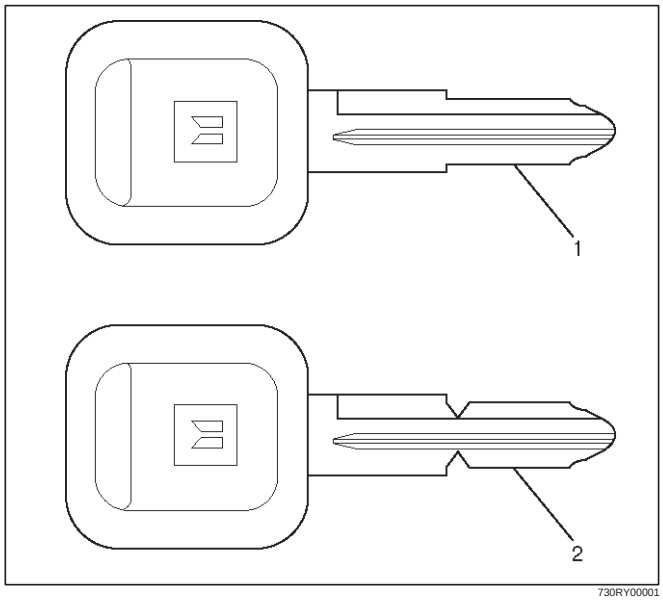

730RY00001

Legend
(1) Blank Key Style “A”
(2) Blank Key Style “B”

The keys come in styles A or B depending on the key code cutting combination. When the first position in the combination is a 1, 2 or 3, Style A is used. When the first position is a 4, Style B (factory pre-cut key) is used.

Power Door Lock System

General Description

The circuit consists of the door lock (& power window) switch, door lock actuator for the front and rear door, tailgate lock actuator and the door lock key switch. The front door lock switch –LH is always provided with battery voltage.
The key or the inside lock button on the both driver's and the front passenger's door can activate the lock mechanism of all the doors (including the tailgate).
When the driver's door lock switch or the front passenger's door lock switch is turned on, current flows for about one second to the door lock actuator of each door connected in parallel with the front door lock (& power window) switch –LH to activate the actuator to lock and unlock the doors.

Front Door Lock Actuator Removal

1. Refer to the Front Door Lock Assembly removal procedure in this section.
2. Remove the door lock actuator(1).

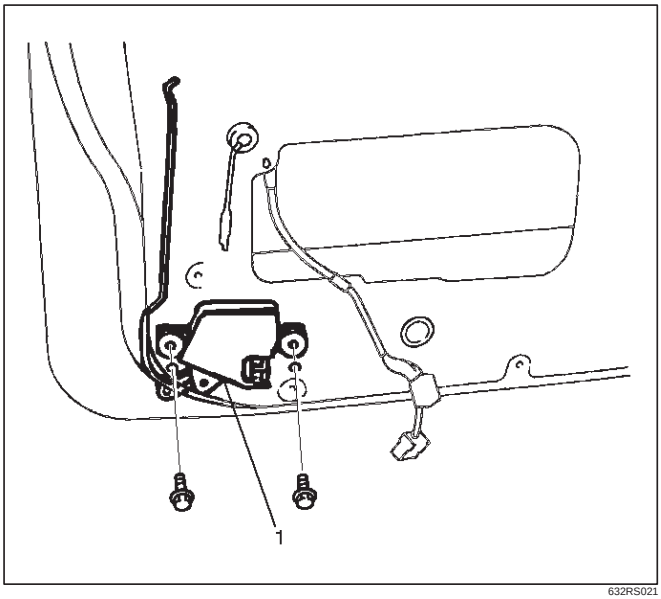

632RS021

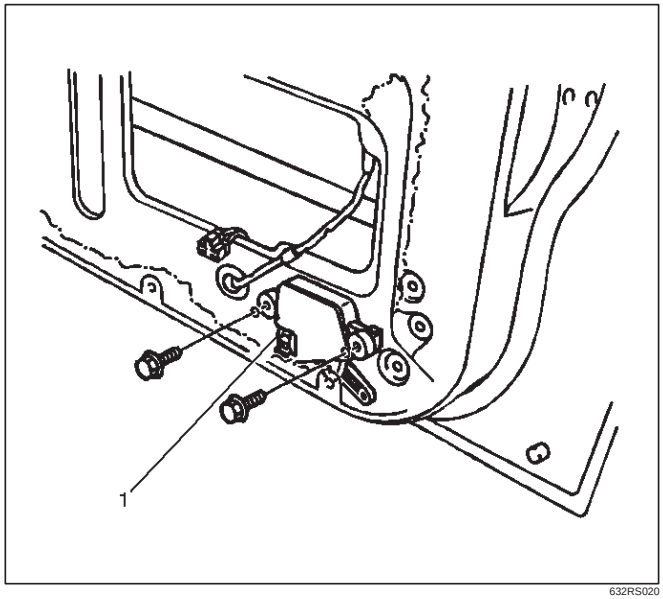

632RS020

Front Door Lock Actuator Installation

To install, follow the removal steps in the reverse order.

Rear Door Lock Actuator Removal

1. Refer to the Rear Door Lock Assembly removal procedure in this section.
2. Removal the door lock actuator(1).

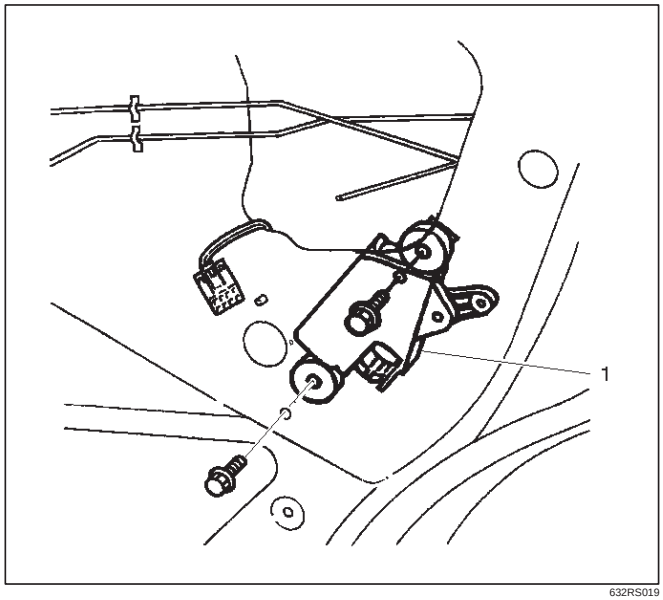

632RS019

Rear Door Lock Actuator Installation

To install, follow the removal steps in the reverse order.

Tailgate Lock Actuator Removal

1. Refer to the Tailgate Lock Assembly removal procedure in this section.
2. Remove the tailgate lock actuator(1).

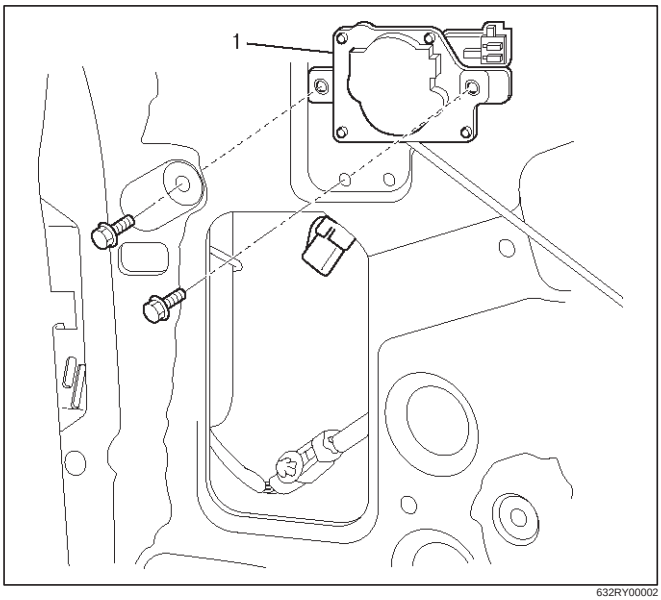

632RY00002

Tailgate Lock Actuator Installation

To install, follow the removal steps in the reverse order.

Anti-theft System

General Description

The circuit consists of the starter switch, anti-theft & keyless entry control unit, anti-theft horn, front door and tailgate key switch (detect and tamper switch), door lock (& power window) switch, door lock actuator for each door, engine hood switch, clutch start switch (M/T), ANTI-THEFT indicator light and mode switch (A/T).
The system operates as follows: After locking the starter switch and removing the starter key (this sets the alarm), if the door is unlocked in any way other than with the proper key, the headlights start flashing, the horn sounds, and the starter circuit is disabled. (However, the engine hood and all the doors must be locked and closed.)
Once the system has been placed in the warning or alarm condition, it can be released only when the starter switch is shifted from “OFF” to “ACC” by the starter key, or when the lock of the front door or the tailgate is released (to activate the detect switch) by the starter key.

Anti-theft & Keyless Entry Control Unit Removal

1. Disconnect the battery ground cable.
2. Remove the front console assembly.
   - Refer to the Instrument Panel Assembly in Body Structure section.
3. Remove the lower cluster assembly.
   - Refer to the Instrument Panel Assembly in Body Structure section.
4. Disconnect the connector(2).
5. Remove four screws to remove the anti-theft & keyless entry control unit with bracket(1).

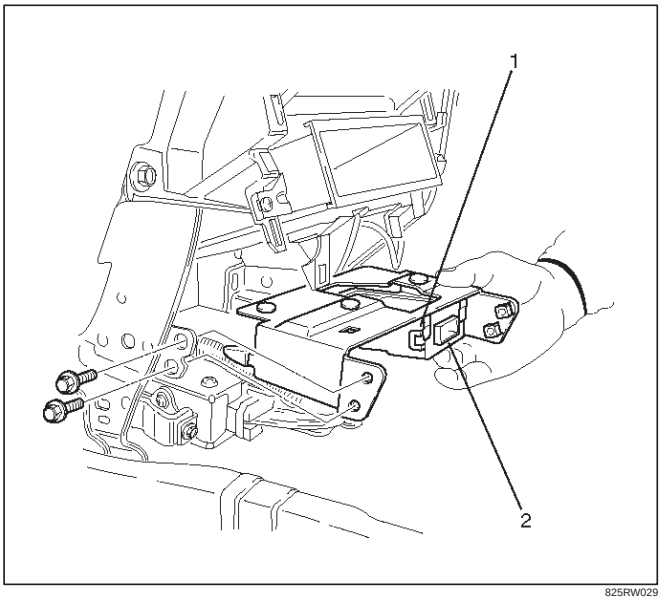

825RW029

6. Remove two nuts from the anti-theft & keyless entry control unit with bracket(3) to remove the anti-theft & keyless entry controller(4).

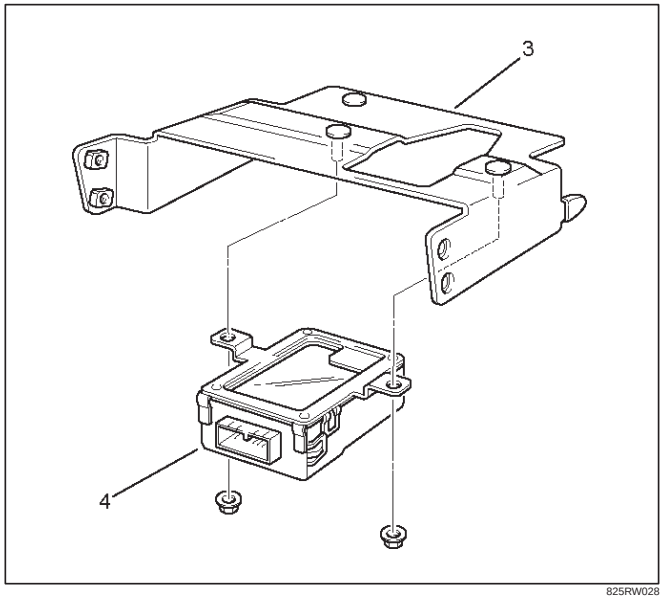

825RW028

Anti-theft & Keyless Entry Control Unit Installation

To install, follow the removal steps in the reverse order.

Anti-theft Indicator Removal

1. Disconnect the battery ground cable.
2. Remove the front console assembly(1).
   - Refer to the Instrument Panel Assembly in Body Structure section.
3. Remove the lower cluster assembly(2).
   - Refer to the Instrument Panel Assembly in Body Structure section.
4. Remove the instrument panel driver lower cover assembly(3).
   - Refer to the Instrument Panel Assembly in Body Structure section.

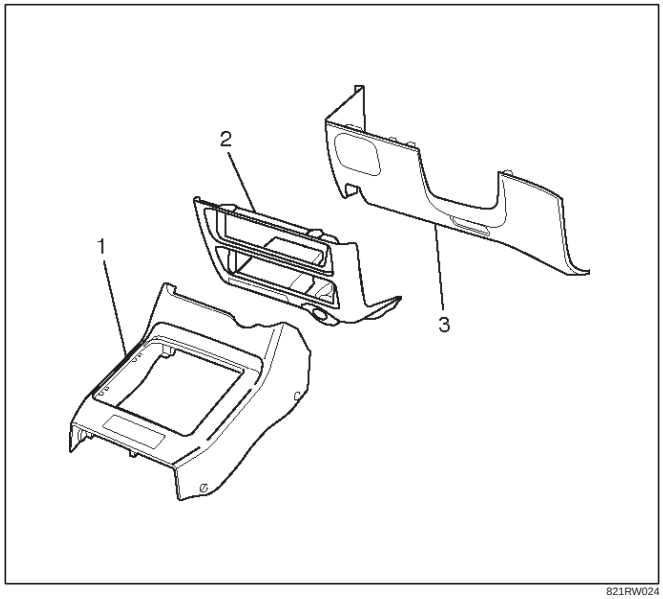

821RW024

5. Remove the instrument panel cluster assembly(4).
   - Refer to the Instrument Panel Assembly in Body Structure section.
6. Remove two screws and then remove the anti-theft indicator(5).

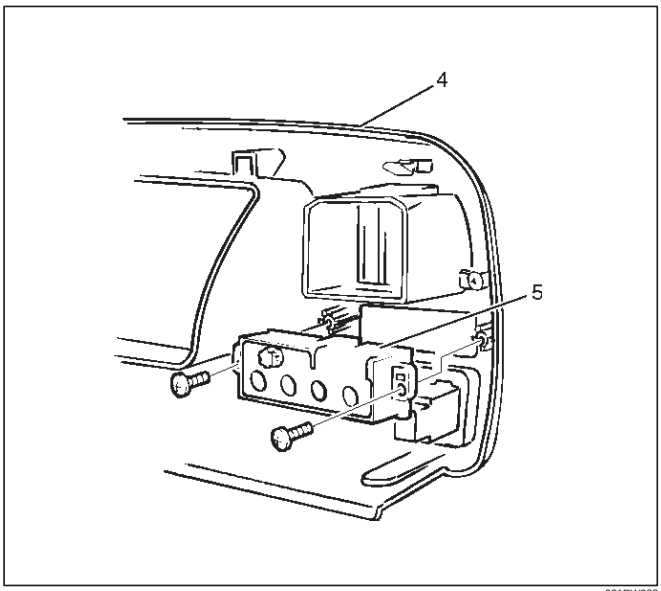

821RW032

Anti-theft Indicator Installation

To install, follow the removal steps in the reverse order.

Anti-theft Horn Removal

1. Disconnect the battery ground cable.
2. Disconnect the connector and remove the fixing bolt to remove the anti-theft horn(1).

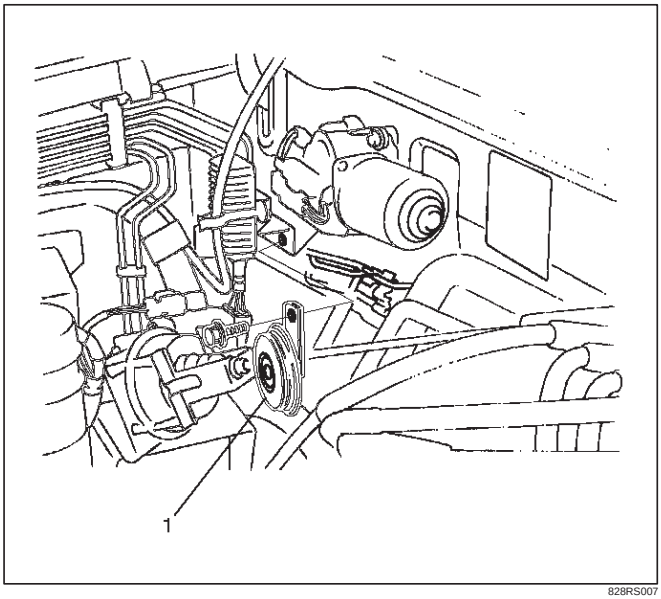

828RS007

Anti-Theft Horn Installation

To install, follow the removal steps in the reverse order.

Engine Hood Switch Removal

1. Disconnect the battery ground cable.
2. Remove the cap(1).
3. Remove the lock nut(2).
4. Disconnect the connector(4).
5. Remove the engine hood switch(3).

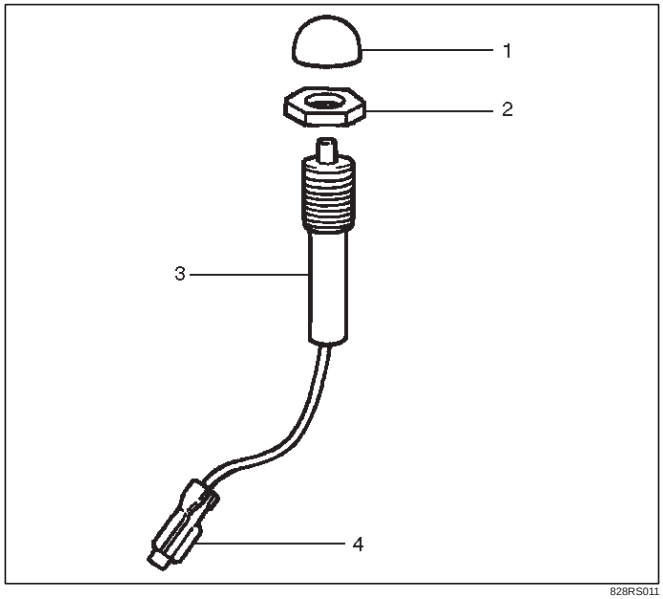

828RS011

Engine Hood Switch Installation

To install, follow the removal steps in the reverse order.

Keyless Entry System

ID Code Registration (Except South Africa)

There are four kinds of ID codes which can be registered, for which these two modes, ID code new registration and ID code additional registration, are available.

ID Code New Registration

This procedure erases all registered ID codes and registers a new received ID code instead.

Step	Action	Yes	No
1	1. Confirm that all the doors are closed and unlocked. 2. Open the driver's side door. 3. Insert the key into the starter switch. Is the action complete?	Go to Step 2	Go to Step 1
2	Turn the starter switch to ACC position and then to OFF position three times. **NOTE: This step must be carried out within five seconds after step 1.** Is the action complete?	Go to Step 3	Go to Step 1
3	Close the driver's side door and then open it two times. **NOTE: This step must be carried out within ten seconds after step 2.** Is the action complete?	Go to Step 4	Go to Step 1
4	1. Turn the starter switch to ACC position and then to OFF position five times. 2. Close the driver's side door and then open it. **NOTE: This step must be carried out within ten seconds after step 3.** Is the action complete?	Go to Step 5	Go to Step 1
5	The control unit locks and unlocks the doors one time. Does the control unit work normally?	Go to Step 6	Go to Step 1
6	Operate the lock or unlock button of the transmitter. **NOTE: This step must be carried out within twenty seconds after step 5.** Is the action complete?	Go to Step 7	Go to Step 1
7	The control unit locks and unlocks the doors one time. Does the control unit work normally?	Go to Step 8	Go to Step 1
8	Operate the lock or unlock button of the transmitter. **NOTE: This step must be carried out within twenty seconds after step 7.** Is the action complete?	Go to Step 9	Go to Step 1
9	The control unit compares the two codes sent from the transmitter. **If the code succeeds in registration,** the control unit locks and unlocks the doors one time. **If the two codes are different from each other or fails in registration,** the control unit locks and unlocks the doors three times. **NOTE: In any case, this procedure is finished.**	Go to Step 1	Go to Step 1

ID Code Additional Registration

This procedure additionally registers a new received ID code with holding registered ID codes. When total number of registered ID codes and newly registered ID code exceeds four, they are erased in order of older one.

Step	Action	Yes	No
1	1. Confirm that all the doors are closed and unlocked. 2. Open the driver's side door. 3. Insert the key into the starter switch. Is the action complete?	Go to Step 2	Go to Step 1
2	Turn the starter switch to ACC position and then to OFF position three times. **NOTE: This step must be carried out within five seconds after step 1.** Is the action complete?	Go to Step 3	Go to Step 1
3	Close the driver's side door and then open it two times. **NOTE: This step must be carried out within ten seconds after step 2.** Is the action complete?	Go to Step 4	Go to Step 1
4	1. Turn the starter switch to ACC position and then to OFF position three times. 2. Close the driver's side door and then open it. **NOTE: This step must be carried out within ten seconds after step 3.** Is the action complete?	Go to Step 5	Go to Step 1
5	The control unit locks and unlocks the doors two times. Does the control unit work normally?	Go to Step 6	Go to Step 1
6	Operate the lock or unlock button of the transmitter. **NOTE: This step must be carried out within twenty seconds after step 5.** Is the action complete?	Go to Step 7	Go to Step 1
7	The control unit locks and unlocks the doors one time. Does the control unit work normally?	Go to Step 8	Go to Step 1
8	Operate the lock or unlock button of the transmitter. **NOTE: This step must be carried out within twenty seconds after step 7.** Is the action complete?	Go to Step 9	Go to Step 1
9	The control unit compares the two codes sent from the transmitter. **If the code succeeds in registration,** the control unit locks and unlocks the doors one time. **If the two codes are different from each other or fails in registration,** the control unit locks and unlocks the doors three times. **NOTE: In any case, this procedure is finished.**	Go to Step 1	Go to Step 1

Anti–theft & Keyless Entry Control Unit/Transmitter Replacement

Anti–theft & Keyless Entry Control Unit Replacement

1. Remove and install the control unit.
   - Refer to Anti–theft & Keyless Entry Control Unit Removal and Installation in this section.
2. Register ID code.
   - Refer to ID Code Registration in this section.
3. Check that the keyless entry system works normally.

Transmitter Replacement

1. Prepare a new transmitter.
2. Regiter ID code.
   - Refer to ID Code Registration in this section.
3. Check that the keyless entry system works normally.

Transmitter Battery Replacement

1. Remove a screw to remove the cover.
2. Remove the batteries.
3. Set the new batteries into the transmitter.
4. Install the cover to the transmitter.
5. Check that the keyless entry system works normally.

Programming With Tech 2 (For South Africa)

General Description

When the anti-theft and keyless entry control unit and/or the transmitters (remote keys) are replaced, the security codes and/or transmitter ID codes must be programmed by using the Tech 2. The following pages show the procedures to program in regard to the anti-theft and keyless entry system. Please refer to Tech 2 scan tool user's guide in detail.

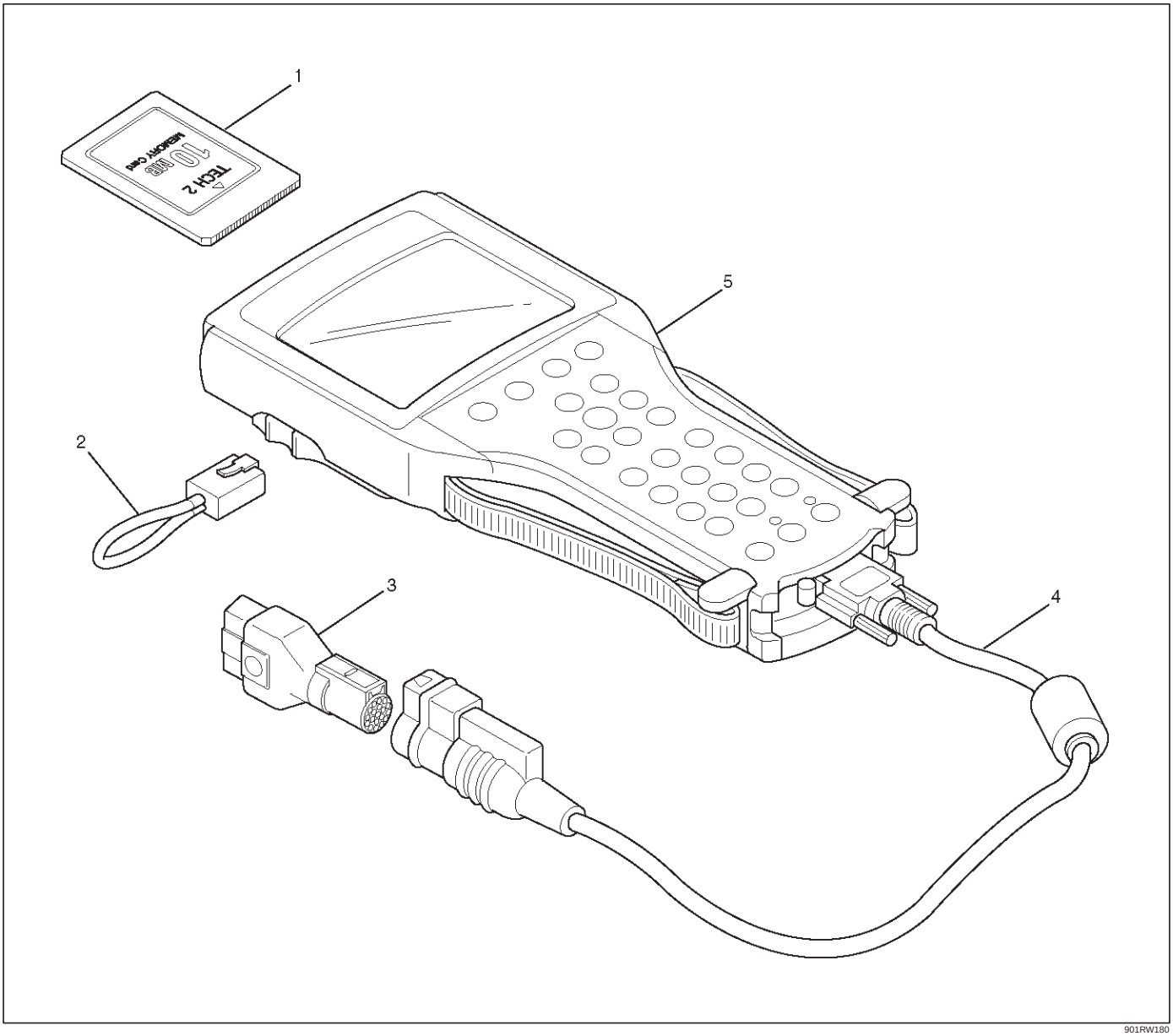

901RW180

Legend

(1) PCMCIA Card
(2) RS 232 Loop Back Connector
(3) SAE 16/19 Adaptor
(4) DLC Cable
(5) Tech 2

Programming Anti-Theft Warning

When the anti-theft and keyless entry control unit is replaced, the security code must be programmed after installation.

1. Insert the Isuzu system PCMCIA card into the Tech 2.
2. Connect the SAE 16/19 adaptor to the data link connector (DLC) cable.
3. Connect the DLC cable to the Tech 2.
4. Confirm that the starter switch is off.
5. Connect the Tech 2 SAE 16/19 adaptor to the vehicle DLC.
6. Verify the Tech 2 power up display.

060RW009

7. Press the enter key.
8. Select “F0 : Diagnostics” and press the enter key.
9. Select the model year and press the enter key.
10. Select the vehicle type and press the enter key.
11. Select “F2 : Body” and press the enter key.
12. Select “Anti Theft Warning” and press the enter key.
13. Turn the starter switch on and press the confirm key (soft key).
14. Confirm “Partnumber” , “Country Code” and “Production Date” and press the confirm key (soft key).
15. Select “F4 : Programming” and press the enter key.
16. Select “F2 : Program Anti Theft Warning” and press the enter key.
17. Press the confirm key (soft key).
18. Press the confirm key (soft key).
19. Enter the security code and press the enter key.
20. Press the okey key (soft key).
21. Enter the security code and press the enter key.
22. Press the okey key (soft key).
23. Press the soft key to select “Remote Key”.
24. Select country code and press the enter key.
25. Press the confirm key (soft key).

Programming Remote Key

When the anti-theft and keyless entry control unit is replaced and/or the new transmitter (remote key) is supplied, the ID code of the transmitter must be programmed by the following procedure.

1. Perform the step 1. to 15. of “Programming Anti Theft Warning”.
2. Select “F1: Program Remote Key” and press the enter key.
3. Press the confirm key (soft key).
4. Press the lock button of the transmitter until the display changes.
5. Press the confirm key (soft key).
6. Press the Yes or No key (soft key).

Erasing Remote Keys

All the ID code stored in the control unit can be erased by the following procedure.

1. Perform the step 1. to 15. of “Programming Anti Theft Warning”.
2. Select “F0: Erase Remote Keys” and press the enter key.
3. Press the confirm key (soft key).
4. Press the confirm key (soft key).
5. Press the confirm key (soft key).

Main Data and Specifications

Torque Specifications

Application	N·m	Kg·m	Lb Ft	Lb In
Front Door Lock Assembly Fixing Screws	7	0.7	—	61
Front Outside Handle and Key Switch Fixing Bolts	9	0.9	—	78
Rear Door Lock Assembly Fixing Screws	7	0.7	—	61
Rear Outside Handle Fixing Bolts	9	0.9	—	78
Tailgate Lock Assembly (LH) Fixing Screws	7	0.7	—	61
Tailgate Lock Assembly (RH) Fixing Bolts	11	1.1	—	95
Tailgate Outside Handle and Key Cylinder Fixing Bolts	9	0.9	—	78

BODY AND ACCESSORIES

SUN ROOF/CONVERTIBLE TOP

CONTENTS

Service Precaution 8I–1
Sun Roof Glass 8I–2
Sun Roof Glass and Associated Parts 8I–2
Removal 8I–2
Installation 8I–3
Sun Roof Deflector 8I–4
Removal 8I–4
Installation 8I–4
Sunshade 8I–4
Disassembled View 8I–4
Removal 8I–5
Installation 8I–5
Sun Roof Frame Complete Assembly 8I–6
Sun Roof Frame Complete Assembly and Associated Parts 8I–6
Removal 8I–6
Installation 8I–7
Disassembled View 8I–7
Disassembly 8I–7
Reassembly 8I–8
Sun Roof Drain Hose (Front Side) 8I–9
Sun Roof Drain Hose (Front Side) and Associated Parts 8I–9
Removal 8I–9
Installation 8I–9
Sun Roof Drain Hose (Rear Side) 8I–10
Sun Roof Drain Hose (Rear Side) and Associated Parts 8I–10
Removal 8I–10
Installation 8I–10
Sun Roof Switch 8I–11
General Description 8I–11
Removal 8I–11
Installation 8I–11
Sun Roof Motor 8I–12
Removal 8I–12
Installation 8I–12
Main Data and Specifications 8I–12

Service Precaution

WARNING: IF SO EQUIPPED WITH A SUPPLEMENTAL RESTRAINT SYSTEM (SRS), REFER TO THE SRS COMPONENT AND WIRING LOCATION VIEW IN ORDER TO DETERMINE WHETHER YOU ARE PERFORMING SERVICE ON OR NEAR THE SRS COMPONENTS OR THE SRS WIRING. WHEN YOU ARE PERFORMING SERVICE ON OR NEAR THE SRS COMPONENTS OR THE SRS WIRING, REFER TO THE SRS SERVICE INFORMATION. FAILURE TO FOLLOW WARNINGS COULD RESULT IN POSSIBLE AIR BAG DEPLOYMENT, PERSONAL INJURY, OR OTHERWISE UNNEEDED SRS SYSTEM REPAIRS.

CAUTION: Always use the correct fastener in the proper location. When you replace a fastener, use ONLY the exact part number for that application. ISUZU will call out those fasteners that require a replacement after removal. ISUZU will also call out the fasteners that require thread lockers or thread sealant. UNLESS OTHERWISE SPECIFIED, do not use supplemental coatings (Paints, greases, or other corrosion inhibitors) on threaded fasteners or fastener joint interfaces. Generally, such coatings adversely affect the fastener torque and the joint clamping force, and may damage the fastener. When you install fasteners, use the correct tightening sequence and specifications. Following these instructions can help you avoid damage to parts and systems.

Sun Roof Glass

Sun Roof Glass and Associated Parts

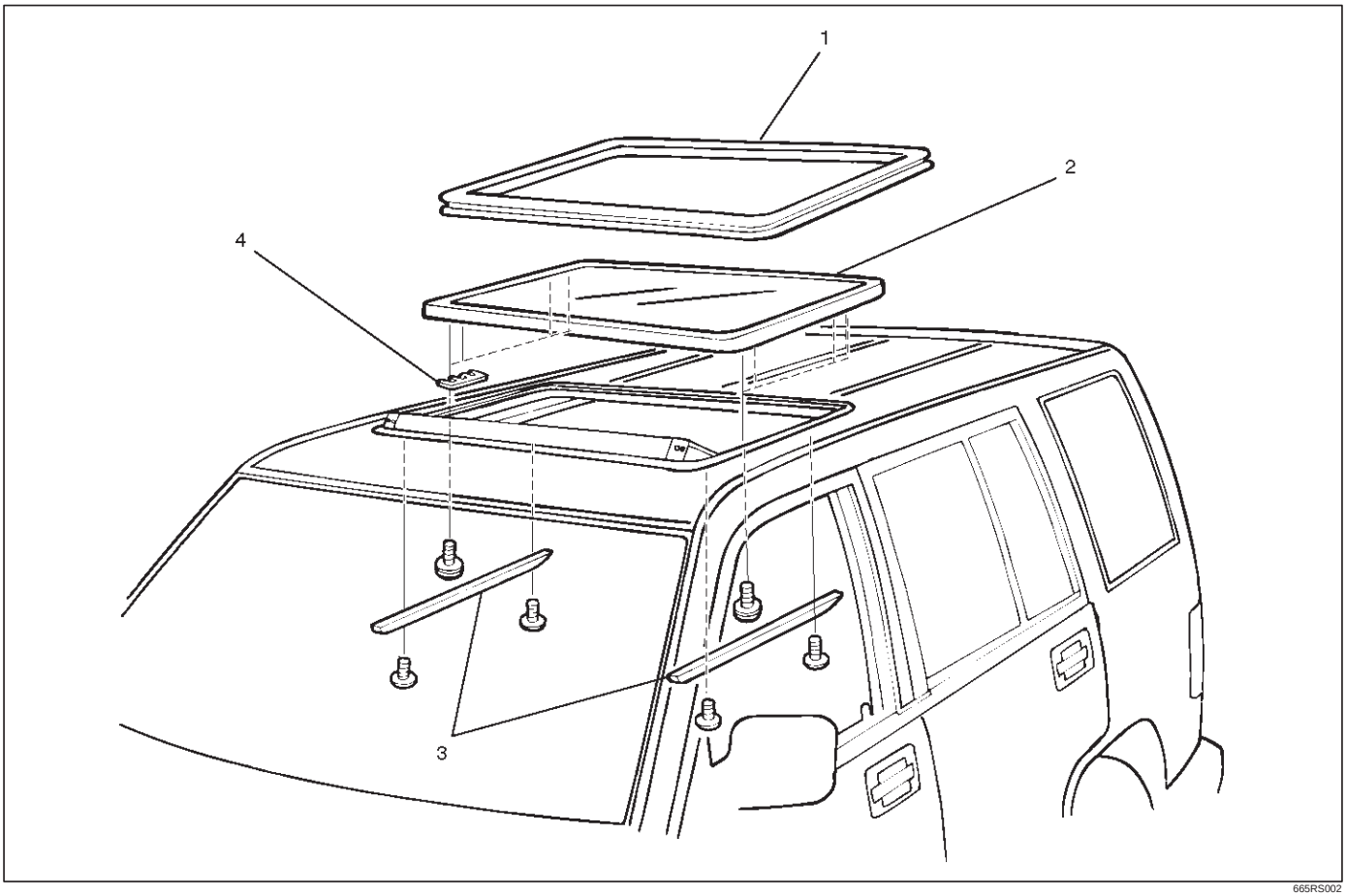

665RS002

Legend

(1) Sun Roof Weatherstrip
(2) Sun Roof Glass
(3) Decoration Cover
(4) Sun Roof Shim

Removal

1. Open the sun roof and pull the sun roof weatherstrip out from the roof panel.
2. Close the sun roof and open the sunshade(1). Then, remove the decoration cover fixing screws and decoration cover(2).

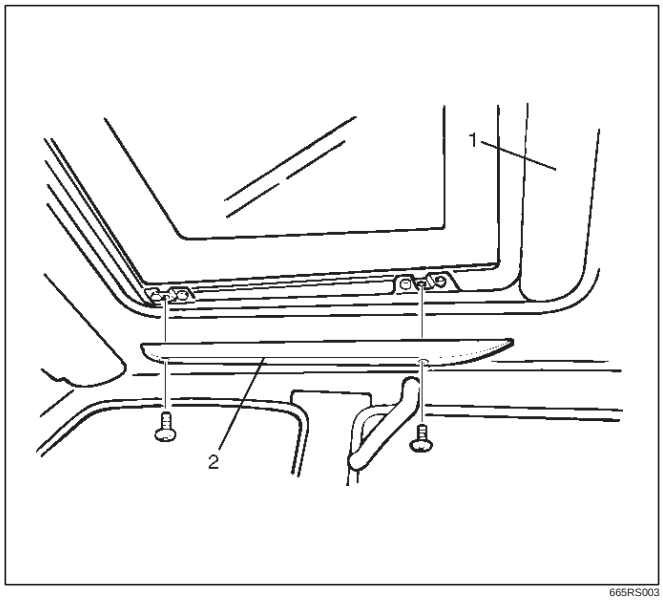

665RS003

3. Disconnect the battery ground cable.
4. Remove eight sun roof glass fixing screws to remove the sun roof glass(3).

NOTE: If shims are used between the sun roof set plate and the glass, note the number of shims used.

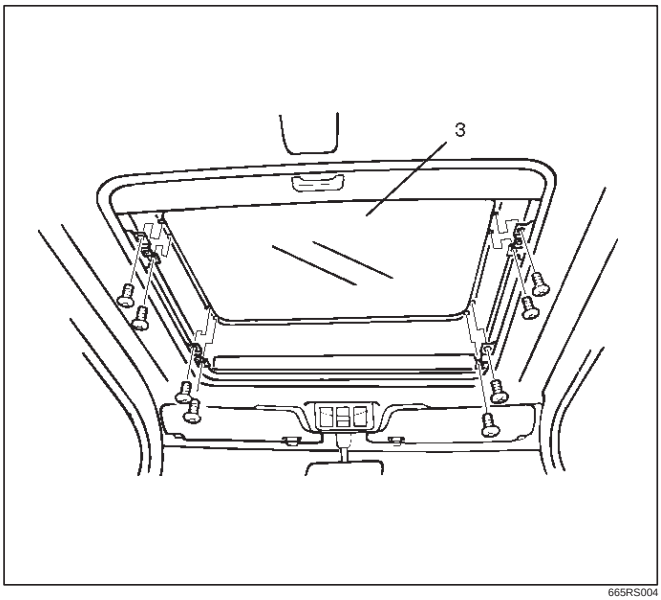

665RS004

Installation

To install, follow the removal steps in the reverse order, noting the following points.

1. Clean the body panel of the weatherstrip fixing portion.
   - If the protective film(1) of the body panel is peeled, it cannot be reused.
     Install the new protective film around the body panel(2).
2. Install the new weatherstrip(3).
   - Always replace with a new one.
   - Be sure to install the sun roof weatherstrip so that the white marking location(4) of the weatherstrip is on the front side of the vehicle.

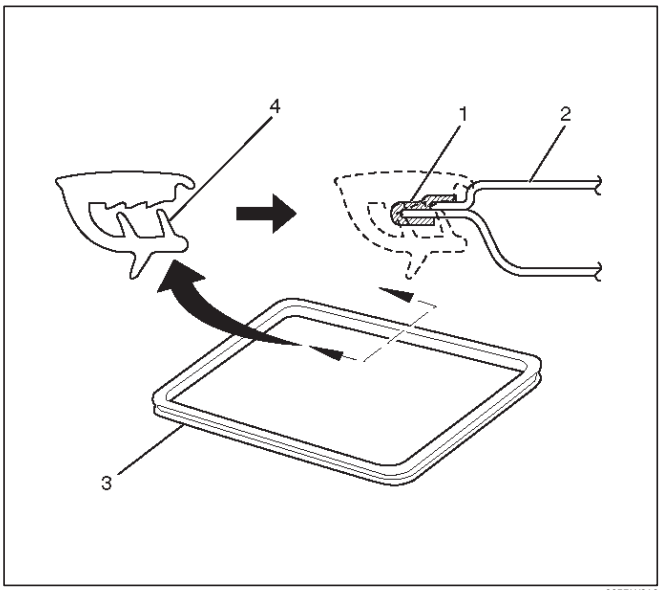

665RW016

3. Temporarily install the glass to the sun roof frame.
4. Open and shut the sun roof four to five times to position correctly the sun roof weatherstrip and the glass in the longitudinal and latitudinal setting positions.
5. Insert the original shims between the sun roof set plate and the glass.
6. Tighten the sun roof glass fixing screws to the specified torque.

   Torque: 10 N·m (1.0 kg·m/87 lb in)
7. After the sun roof glass is installed, check the roof panel and sun roof glass for vertical install position.
   If out of standard, adjust with shim.
   For the installation standard, refer to the Body Dimension in Body Structure section.
8. Install the decoration cover.

Sun Roof Deflector

Removal

1. Open the sun roof.
2. Remove the fixing screws(2) to remove the sun roof deflector(1).

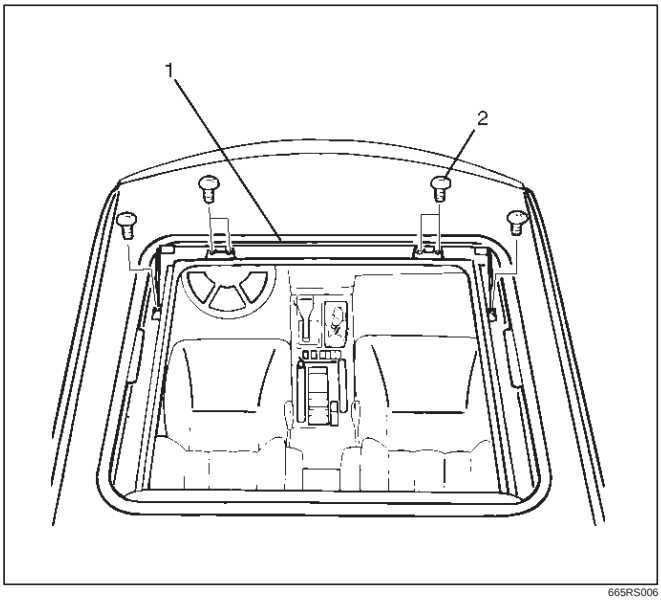

665RS006

Installation

To install, follow the removal steps in the reverse order.

Sunshade

Disassembled View

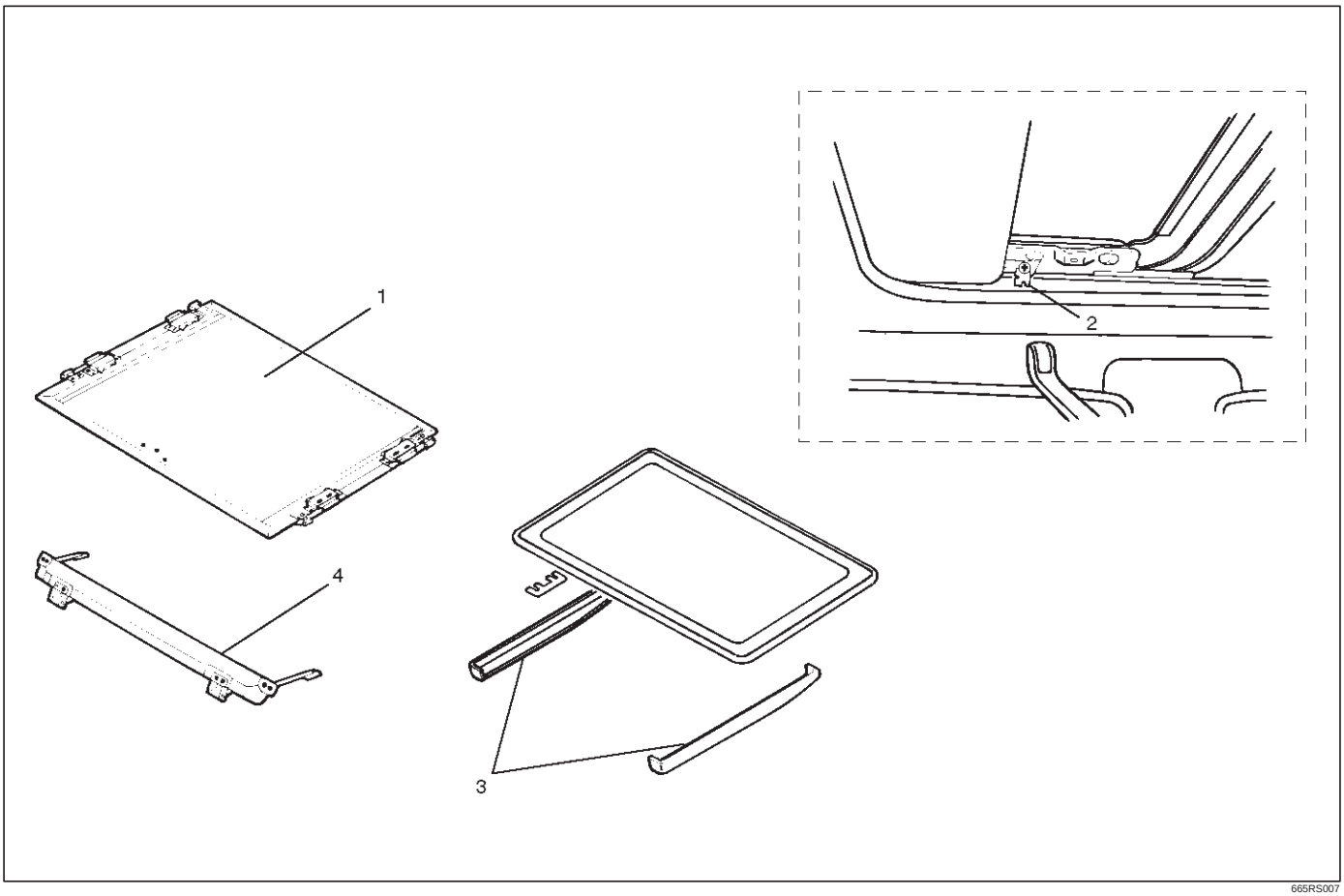

665RS007

Legend

(1) Sunshade
(2) Sunshade Stopper
(3) Decoration Cover
(4) Sun Roof Deflector

Removal

1. Remove the decoration cover.
2. Open the sun roof half position, remove the sunshade stopper screw and pull out the sunshade(6) until its front side protrudes a little from the sun roof glass(2) to remove the sunshade stopper.
3. Remove the sun roof deflector.
   - Refer to the Sun Roof Deflector in this section.
4. Open the sun roof completely.
5. Remove the sunshade guide rail stopper(5), and pull out the sunshade up to the rail edge.
6. Remove the guide pin(4) in the sunshade through the notch(7) of guide rail(1) and then draw the sunshade out of the roof by pushing inward the retaining clips(3) on both sides.

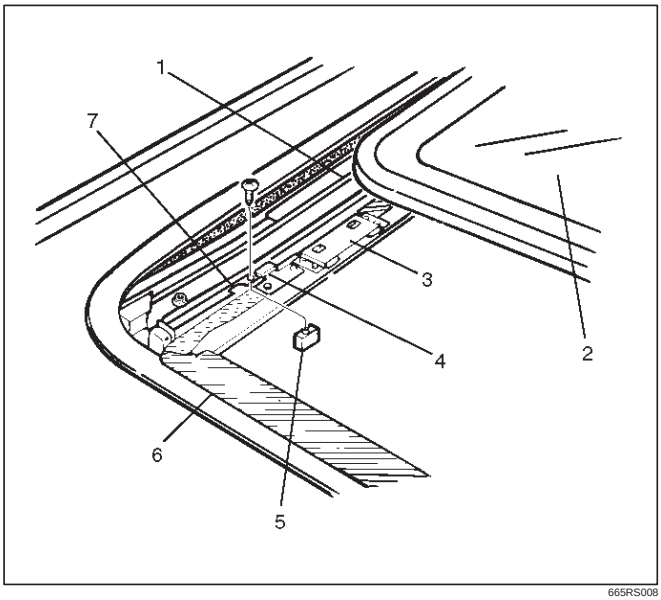

665RS008

Installation

To install, follow the removal steps in the reverse order.

Sun Roof Frame Complete Assembly

Sun Roof Frame Complete Assembly and Associated Parts

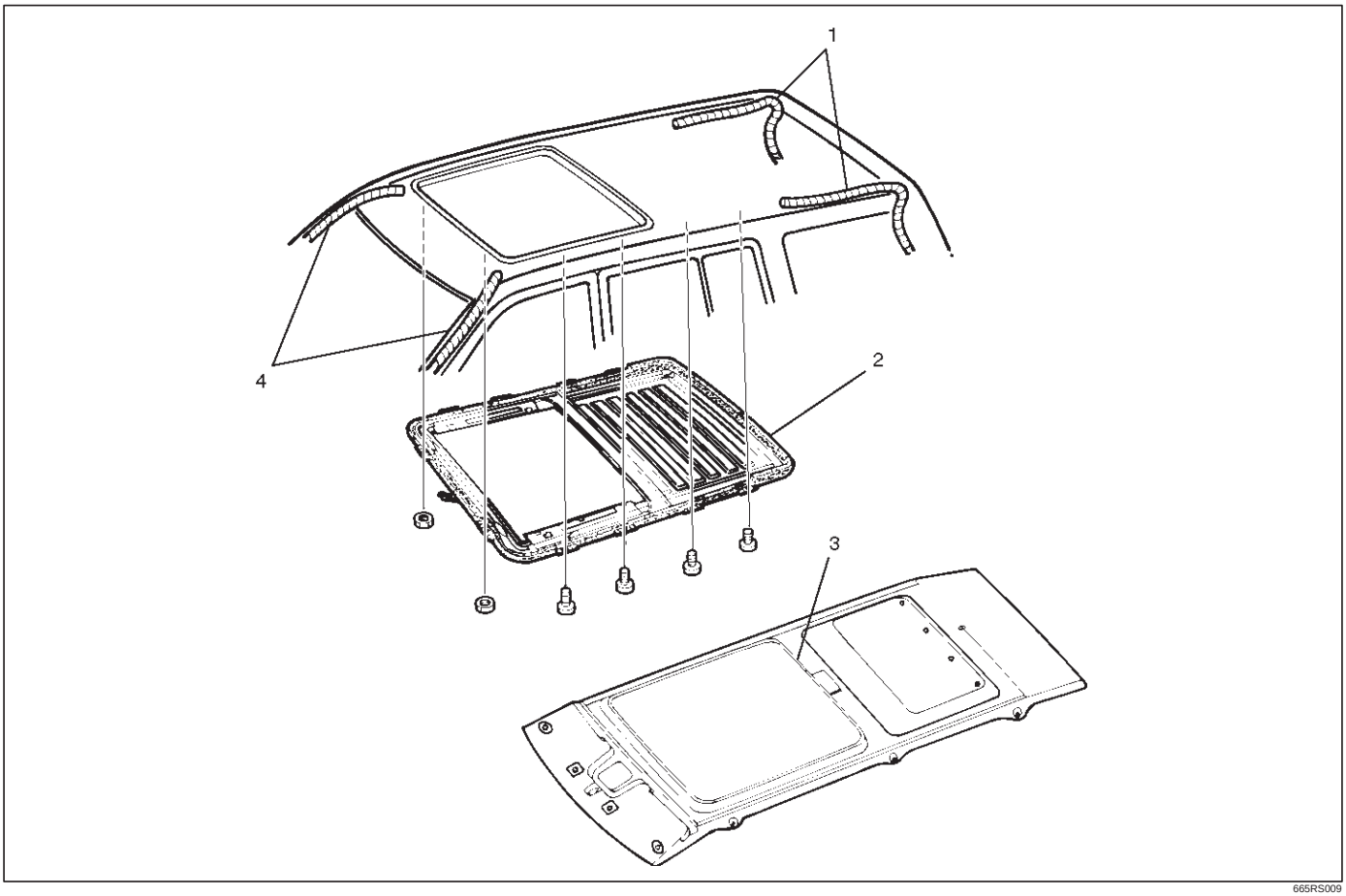

665RS009

Legend

(1) Sun Roof Drain Hose
(2) Sun Roof Frame Complete Assembly
(3) Headlining
(4) Sun Roof Drain Hose

Removal

1. Disconnect the battery ground cable.
2. Remove the headlining.
   - Refer to the Headlining in Body Structure section.
3. Disconnect the sun roof drain hose at the sun roof frame side as shown in the figure.

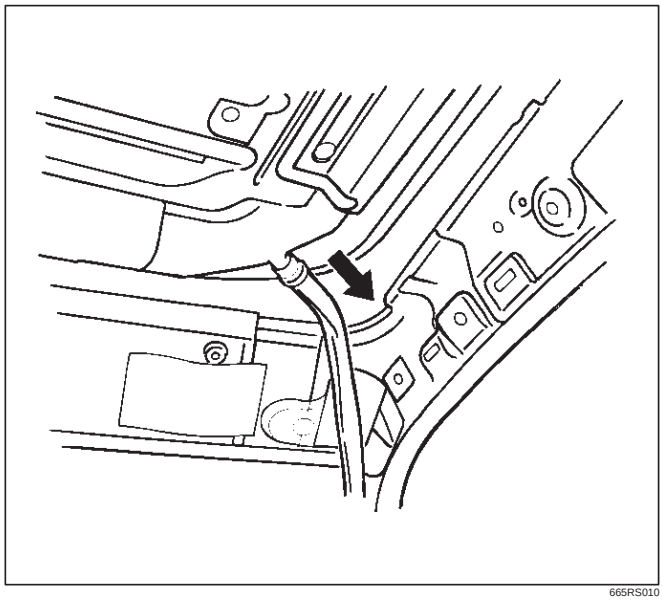

665RS010

4. Disconnect the sun roof harness connection.

5. Remove two sun roof frame complete assembly fixing nuts (front side) and four fixing bolts (each side) from the frame complete, and then remove the sun roof frame complete assembly.

NOTE: Be sure to remove the frame complete while supporting it.

Installation

To install, follow the removal steps in the reverse order, noting the following points.

1. Tighten the sun roof frame complete assembly fixing bolts and nuts to the specified torque.

Torque: 10 N·m(1.0 kg·m/87 lb in)

2. After installing the frame complete, loosen the sun roof glass fixing nuts and adjust the sun roof glass setting position.
   - Refer to the Sun Roof Glass in this section.

Disassembled View

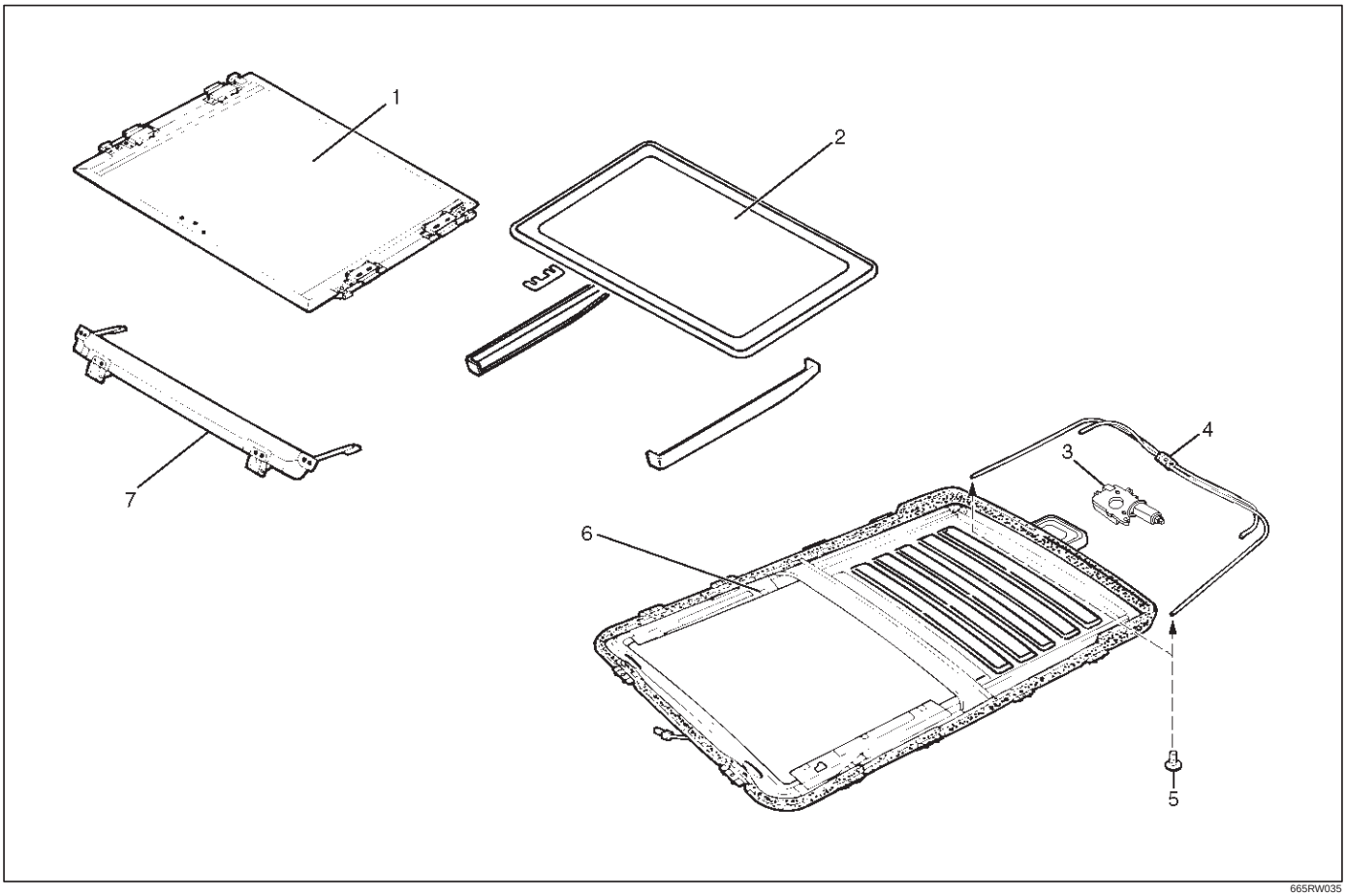

Legend

(1) Sunshade
(2) Sun Roof Glass
(3) Sun Roof Motor
(4) Sun Roof Drive Unit Assembly
(5) Outer Tube Fixing Screw
(6) Sun Roof Frame Assembly
(7) Sun Roof Deflector

Disassembly

1. Open the sun roof.
2. Remove the sun roof deflector fixing screws and then remove the sun roof deflector.
3. Remove the sunshade.
   - Refer to the Sunshade in this section.
4. Close the sun roof, remove the decoration cover and the fixing screws and then remove the sun roof glass.
5. If the shims are used between the sun roof set plate and the glass, note the number of the shims.
6. Disconnect the sun roof motor connector, remove the sun roof fixing nuts and screws, and then remove the sun roof motor.

7. Remove the cable outer tube(2) fixing screws.
8. Remove the cable outer tube fixing clamps(1) and guide rail fixing nuts(5).
9. Prying the guide rail a little with a screwdriver, draw the outer tube out of the grommet(3).
   - At this time, the inner cable(4) remains on the frame assembly.
10. Remove the sun roof frame assembly.

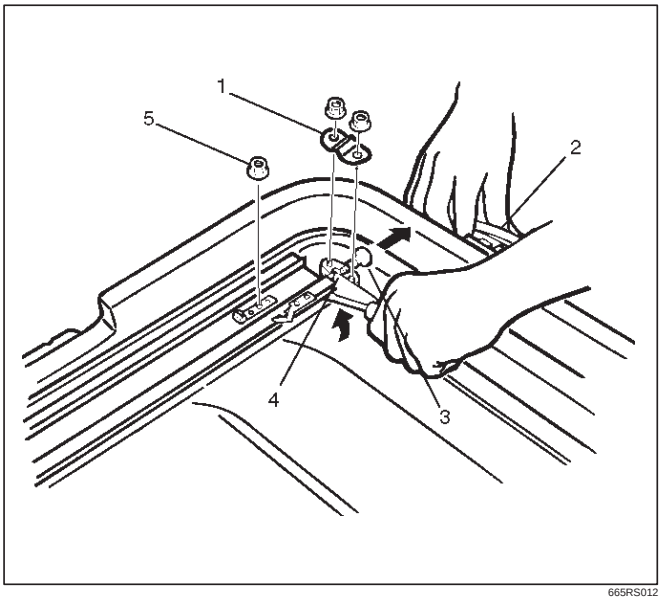

665RS012

Reassembly

To reassembly, follow the disassembly steps in the reverse order, noting the following points.

1. When installing the motor or drive unit, set the sun roof set plate in the full closed position by pushing the link(3) portion using the screwdriver(2).
2. When installing the sun roof glass(1) to the sun roof set plate, insert the original shims in the same position before removing the sun roof glass.

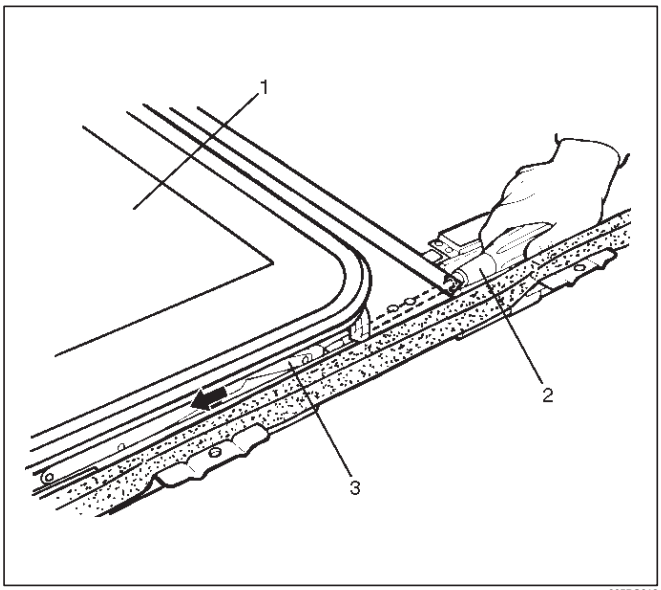

665RS013

Sun Roof Drain Hose (Front Side)

Sun Roof Drain Hose (Front Side) and Associated Parts

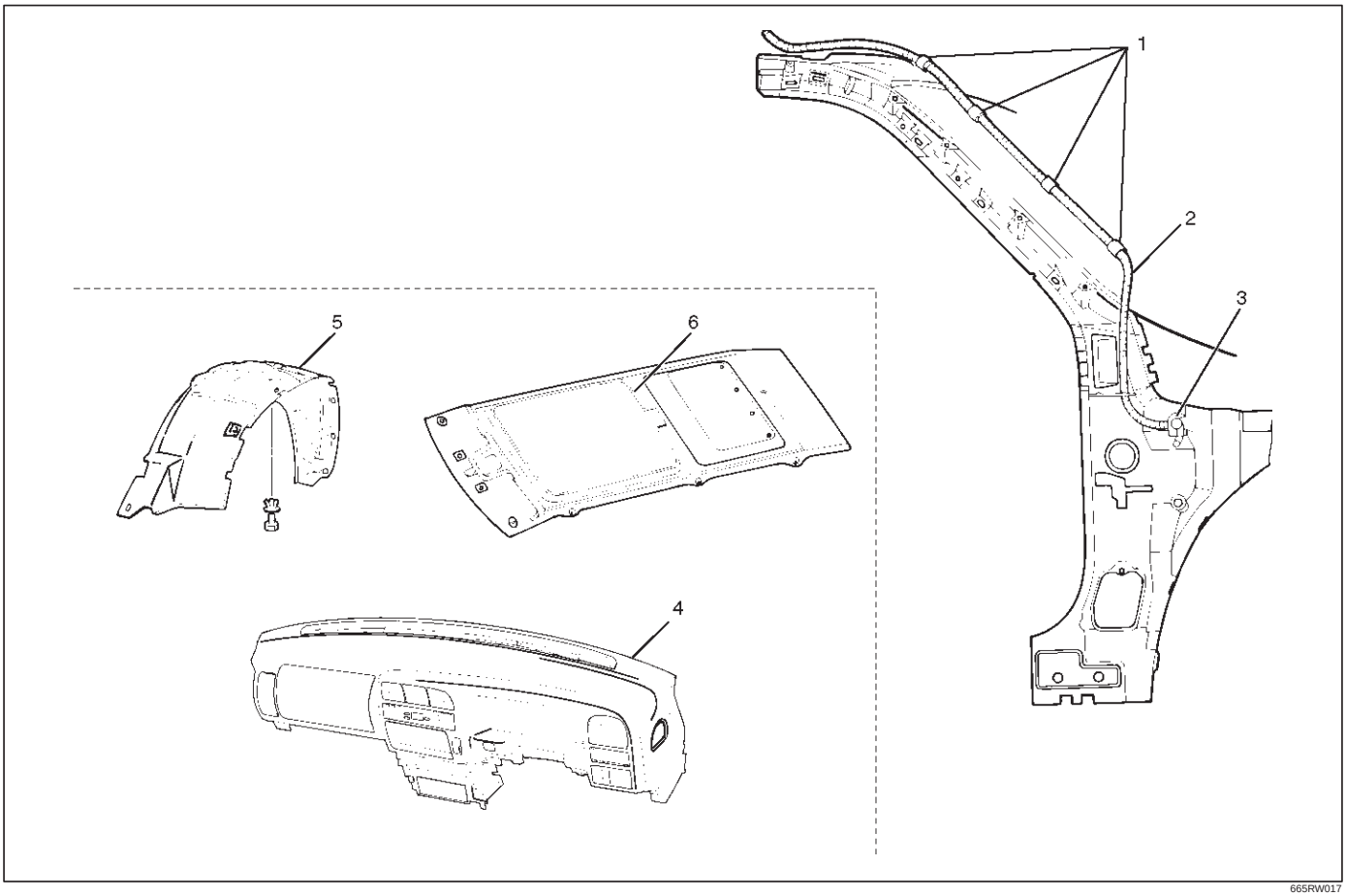

Legend

(1) Clip
(2) Sun Roof Drain Hose
(3) Grommet
(4) Instrument Panel Assembly
(5) Front Inner Liner
(6) Headlining

Removal

1. Disconnect the battery ground cable.
2. Remove the front inner liner.
3. Remove the headlining.
   - Refer to the Headlining in Body Structure section.
4. Remove the instrument panel assembly.
   - Refer to the Instrument Panel Assembly in Body Structure section.
5. Disconnect the drain hose at the frame complete side.
6. Apply the soap and water to the body panel grommet.
7. Pass the string from the sun roof frame side through the drain port side, and remove the drain hose from the hose fixing clips. Taking care not to allow the body panel grommet to be removed together with the hose, pull the drain hose only to the inside of the vehicle. (The string should be kept as it is.)

Installation

To install, follow the removal steps in the reverse order, noting the following points.

1. Apply the soap and water to the body panel grommet.
2. Install the drain hose from inside of the vehicle by utilizing, as a guide, the string passed during removal step.
3. The body panel grommet must not be twisted or caught in during installation.
4. Complete routing, avoiding extreme bends or curves.
5. After routing, install the trim with care not to allow the drain hose to be caught in.
6. Test the drain condition.
7. The protrusion of drain hose from the body panel must be within 50 mm (2.0 in). If it exceeds 50 mm (2.0 in) after correct routing, cut the leading edge so that the protrusion is within 50 mm (2.0 in).

Sun Roof Drain Hose (Rear Side)

Sun Roof Drain Hose (Rear Side) and Associated Parts

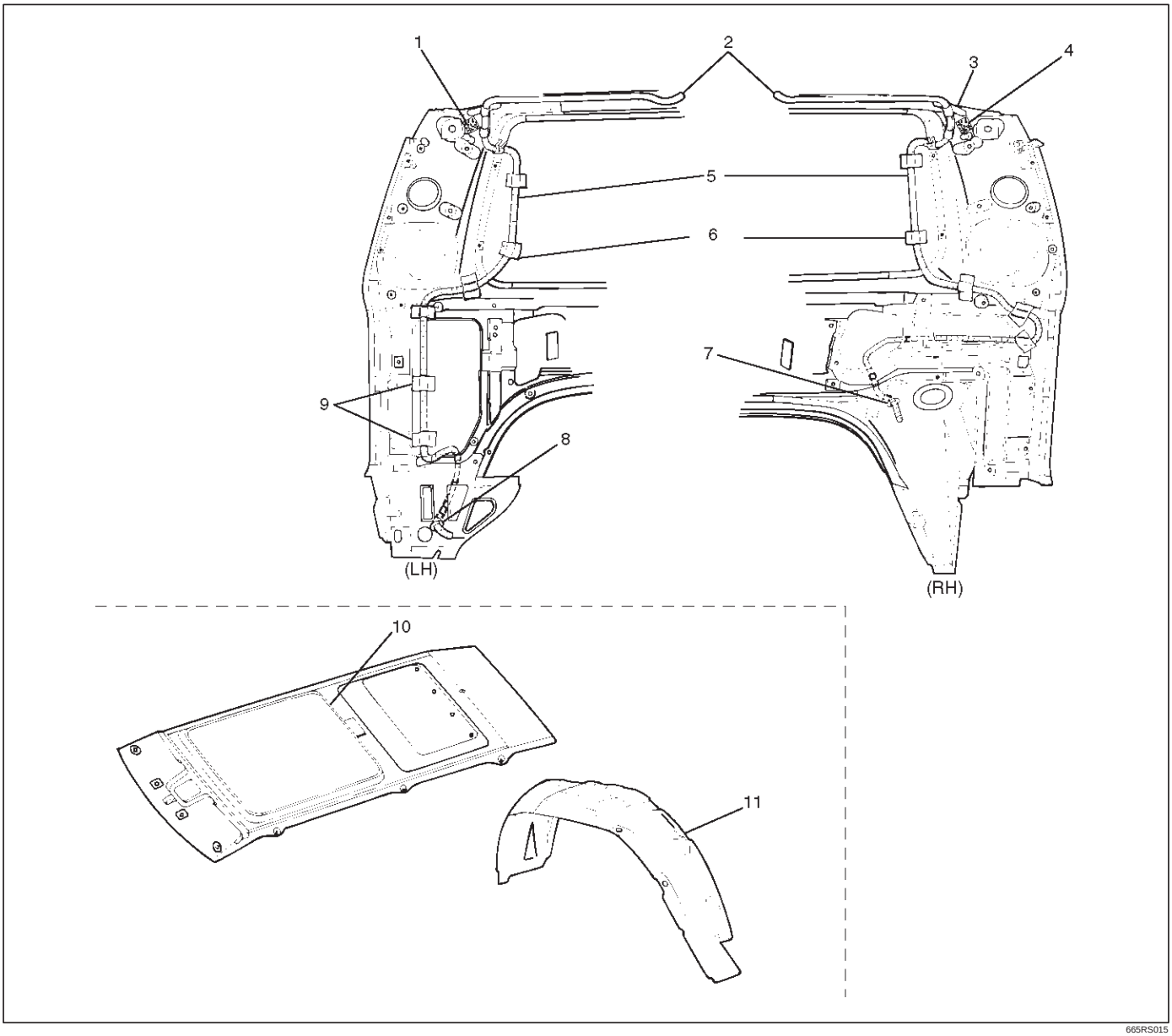

665RS015

Legend

(1) Soft Tape
(2) Pipe
(3) Clip
(4) Soft Tape
(5) Sun Roof Drain Hose
(6) Tape
(7) Grommet
(8) Grommet
(9) Clip
(10) Headlining
(11) Rear Fender Inner Liner

Removal

1. Disconnect the battery ground cable.
2. Remove the rear fender inner liner.
3. Remove the headlining.
   - Refer to the Headlining in Body Structure section.
4. Disconnect the drain hose at the frame complete side.
5. Apply the soap and water to the body panel grommet.
6. Remove the hose fixing tapes and clips.
7. Pull the drain hose to the inside of the vehicle.

Installation

To install, follow the removal steps in the reverse order, noting the following points.

1. Apply the soap and water to the body panel grommet.

2. Insert the drain hose from inside of vehicle, restore routing, and fix with new soft tape and clip.
   If the grommet is removed during removal of drain hose, insert the grommet into drain hose from outside of the vehicle, and install on the body panel, avoiding any twisting.
3. After installing the drain hose, install the trim while taking care not to crush the drain hose.
   Also, care should be taken not to allow the drain hose connected to the pipe to be caught in.
4. Test the drain condition.
5. The protrusion of the drain hose from the body panel must be within 50 mm (2.0 in). If it exceeds 50 mm (2.0 in) after correct routing, cut the leading edge so that the protrusion is within 50 mm (2.0 in).

Sun Roof Switch

General Description

Sun roof operation can be controlled by pushing continuously the sun roof switch to activate the sun roof control unit and sun roof motor.
While the switch is being pushed to the “OPEN” side, the sun roof stops about 165 mm (6.5 in) before fully open position. Push the switch again to the “OPEN” side to open it fully. When the switch is being continuously pushed to the “CLOSE” side, the sun roof stops about 180 mm (7.1 in) short of the fully closed position and remains in this state. Push the switch again to the “CLOSE” side to close it completely.

Removal

1. Disconnect the battery ground cable.
2. Pull down the switch housing(2) and disconnect the sun roof switch and map light connectors to remove the sun roof switch(1).

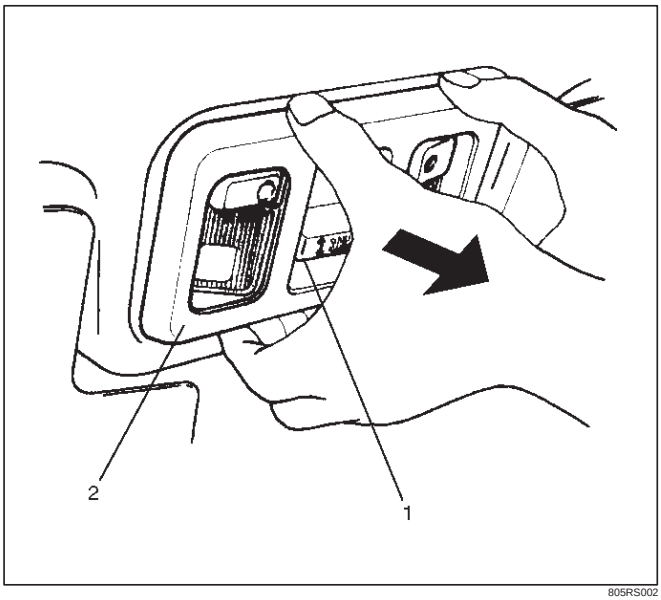

805RS002

Installation

To install, follow the removal steps in the reverse order.

Sun Roof Motor

Removal

1. Disconnect the battery ground cable.
2. Remove the headlining(2).
   - Refer to the Headlining removal steps in Body Structure section.
3. Disconnect the connector, and remove three nuts and two screws to remove the sun roof motor(1).

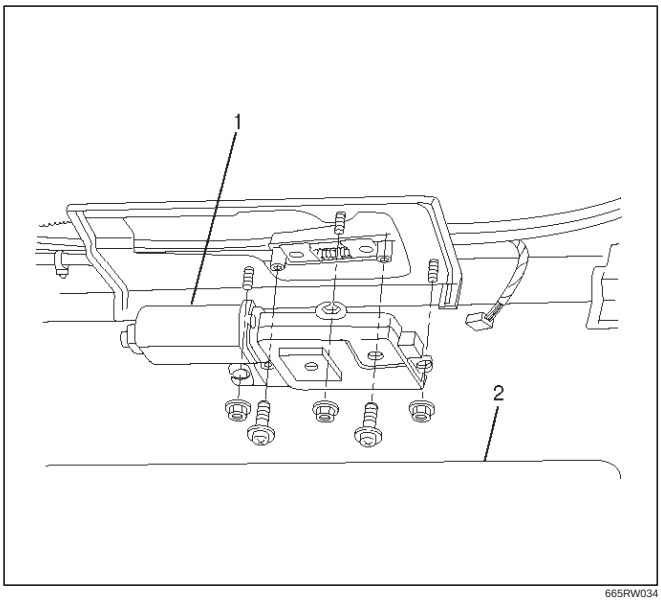

665RW034

Installation

To install, follow the removal steps in the reverse order, noting the following point.

1. When installing the sun roof motor, close the sun roof glass completely.

Main Data and Specifications

Torque Specifications

Application	N·m	kg·m	lb ft	lb in
Sun Roof Frame Complete Assembly Fixing Bolts	10	1.0	—	87
Sun Roof Glass Fixing Screws	10	1.0	—	87

BODY AND ACCESSORIES

EXTERIOR / INTERIOR TRIM

CONTENTS

Service Precaution 8J–2
Dash Side Trim Panel 8J–3
Removal 8J–3
Installation 8J–3
Assist Grip 8J–3
Parts Location 8J–3
Removal and Installation 8J–3
Consoles 8J–4
Consoles and Associated Parts 8J–4
Removal 8J–4
Installation 8J–5
Front Door Trim Panel 8J–6
Front Door Trim Panel and Associated Parts 8J–6
Removal 8J–6
Installation 8J–9
Rear Door Trim Panel 8J–10
Rear Door Trim Panel and Associated Parts 8J–10
Removal 8J–10
Installation 8J–11
Door Mirror 8J–13
Door Mirror and Associated Parts 8J–13
Removal 8J–13
Installation 8J–13
Luggage Side and Quarter Upper Trim Cover (LWB) 8J–14
Luggage Side, Quarter Upper Trim Cover and Associated Parts 8J–14
Removal 8J–14
Installation 8J–16
Luggage Side and Quarter Upper Trim Cover (SWB) 8J–17
Luggage Side, Quarter Upper Trim Cover and Associated Parts 8J–17
Removal 8J–17
Installation 8J–19
Center Pillar and Roof Side Trim Cover (LWB) 8J–20
Center Pillar, Roof Side Trim Cover and Associated Parts 8J–20
Removal 8J–20
Installation 8J–21
Roof Side Trim Cover (SWB) 8J–22
Roof Side Trim Cover and Associated Parts 8J–22
Removal 8J–22
Installation 8J–22
Front Pillar Trim Cover 8J–23
Front Pillar Trim Cover and Associated Parts 8J–23
Removal 8J–23
Installation 8J–23
Center Pillar Assist Grip 8J–24
Parts Location 8J–24
Removal and Installation 8J–24
Assist Grip 8J–24
Parts Location 8J–24
Removal and Installation 8J–24
Fuel Filler Lid Opener Cable 8J–25
Fuel Filler Lid Opener Cable and Associated Parts 8J–25
Removal 8J–25
Installation 8J–26
Fuel Filler Door 8J–26
Parts Location 8J–26
Removal 8J–26
Installation 8J–26
Rocker Protector (Without Wheel Opening Extension) 8J–27
Rocker Protector (Without Wheel Opening Extension) and Associated Parts 8J–27
Removal 8J–27
Installation 8J–27
Wheel Opening Extension and Rocker Protector Assembly 8J–28
Wheel Opening Extension, Rocker Protector Assembly and Associated Parts 8J–28
Removal 8J–28
Installation 8J–29
Mud Flaps (With Wheel Opening Extension) 8J–31
Mud Flaps (With Wheel Opening Extension) and Associated Parts 8J–31
Removal 8J–31
Installation 8J–31
Ventilation Assembly 8J–32
Ventilation Assembly and Associated Parts 8J–32
Removal 8J–32
Installation 8J–32

Quarter Flipper Glass Assembly (SWB) 8J–33
Quarter Flipper Glass Assembly and Associated Parts 8J–33
Removal 8J–33
Installation 8J–33
Tailgate Trim Panel (LH) 8J–34
Tailgate Trim Panel (LH) and Associated Parts 8J–34
Removal 8J–34
Installation 8J–35
Tailgate Trim Panel (RH) 8J–36
Parts Location 8J–36
Removal 8J–36
Installation 8J–36
Luggage Floor Box 8J–37
Luggage Floor Box and Associated Parts . 8J–37
Remove 8J–37
Installation 8J–37
Rope Hook Set 8J–37
Rope Hook Set and Associated Parts 8J–37
Removal 8J–37
Installation 8J–37
Power Door Mirror System 8J–38
General Description 8J–38
Door Mirror Switch Assembly (Control Switch, Folding Switch and Defogger Switch) Removal 8J–38
Installation 8J–38
Power Door Mirror 8J–38
General Description 8J–38
Removal and Installation 8J–38
Power Window System 8J–39
General Description 8J–39
Power Window Switch Removal and Installation 8J–39
Power Window Motor Removal and Installation 8J–40
Main Data and Specifications 8J–41

Service Precaution

WARNING: IF SO EQUIPPED WITH A SUPPLEMENTAL RESTRAINT SYSTEM (SRS), REFER TO THE SRS COMPONENT AND WIRING LOCATION VIEW IN ORDER TO DETERMINE WHETHER YOU ARE PERFORMING SERVICE ON OR NEAR THE SRS COMPONENTS OR THE SRS WIRING. WHEN YOU ARE PERFORMING SERVICE ON OR NEAR THE SRS COMPONENTS OR THE SRS WIRING, REFER TO THE SRS SERVICE INFORMATION. FAILURE TO FOLLOW WARNINGS COULD RESULT IN POSSIBLE AIR BAG DEPLOYMENT, PERSONAL INJURY, OR OTHERWISE UNNEEDED SRS SYSTEM REPAIRS.

CAUTION: Always use the correct fastener in the proper location. When you replace a fastener, use ONLY the exact part number for that application. ISUZU will call out those fasteners that require a replacement after removal. ISUZU will also call out the fasteners that require thread lockers or thread sealant. UNLESS OTHERWISE SPECIFIED, do not use supplemental coatings (Paints, greases, or other corrosion inhibitors) on threaded fasteners or fastener joint interfaces. Generally, such coatings adversely affect the fastener torque and the joint clamping force, and may damage the fastener. When you install fasteners, use the correct tightening sequence and specifications. Following these instructions can help you avoid damage to parts and systems.

Dash Side Trim Panel

Removal

1. Disconnect the battery ground cable.
2. Remove the front door sill plate(2).
3. Remove the dash side trim panel(3).
   - Turn up the door inner seal(1) of the body panel to remove the clips of the trim panel.
   - Take care not to damage the harness and the controller on the back of the trim panel.

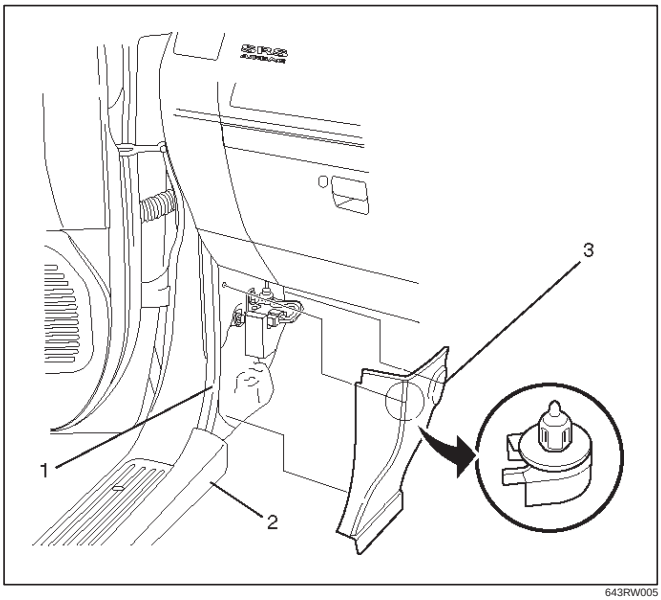

643RW005

Installation

To install, follow the removal steps in the reverse order, noting the following point.

1. Lap the door inner seal over the trim panel to install them securely to the body panel.

Assist Grip

Parts Location

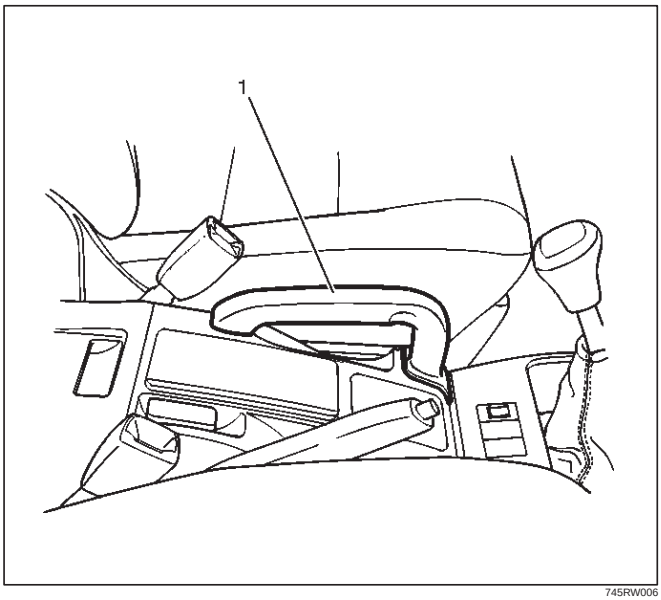

745RW006

Legend

(1) Assist Grip

Removal and Installation

- Refer to the Consoles in this section.

Consoles

Consoles and Associated Parts

This illustration is based on RHD

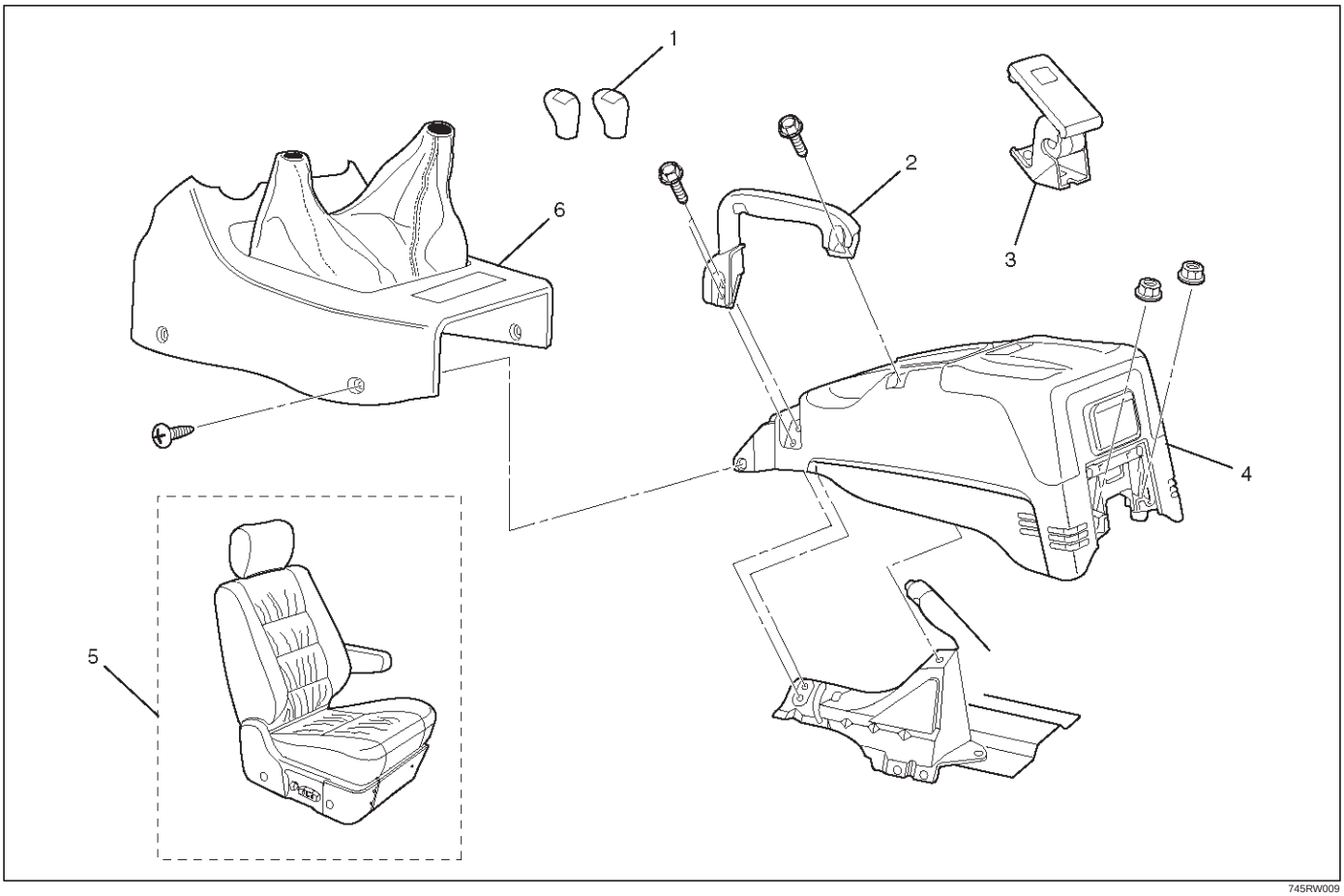

745RW009

Legend

(1) Shift Knob (M/T) / Transfer Knob (A/T)
(2) Assist Grip
(3) Fuel Filler Lid Opener
(4) Center Console Assembly
(5) Front Seat Assembly (RH)
(6) Front Console Assembly

Removal

1. Disconnect the battery ground cable.
2. Remove the shift knob (M/T) / transfer knob (A/T).
3. Remove the front console assembly.
   - Remove four fixing screws and disconnect the switch connectors.
4. Remove the front seat assembly(RH).
   - Refer to the Front Seat Assembly in Seats section.
5. Remove the assist grip.
   - Remove three bolts.
6. Remove the fuel filler lid opener.
   - Remove the fuel filter lid opener(1) and disconnect the cable(2).

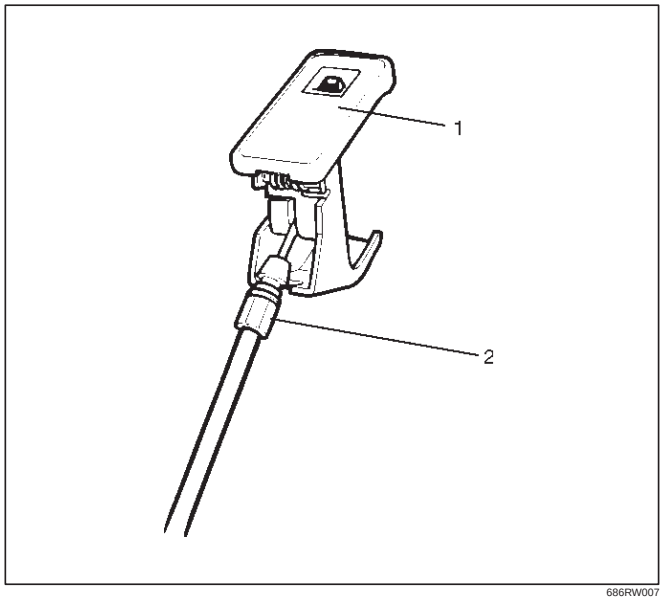

686RW007

7. Remove the center console assembly(2).
   - Remove two fixing screws on the front side.
     Open the rear cover, remove two nuts, then the center console assembly.
   - Remove the rear heater duct(1) from the center console.

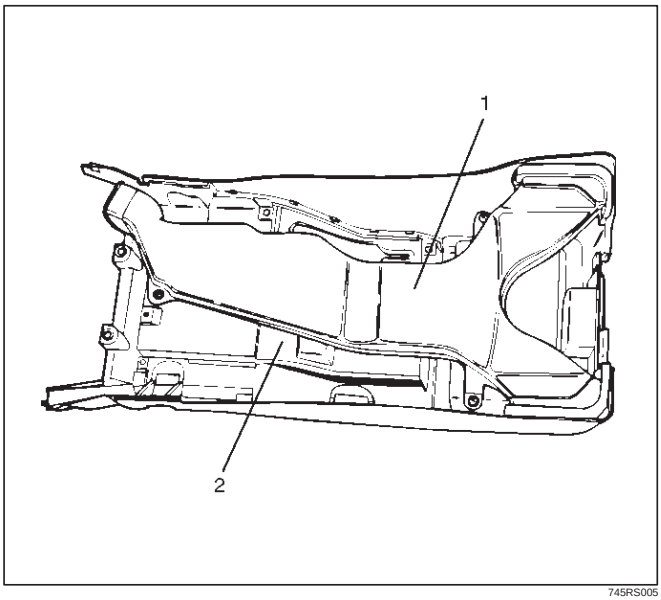

745RS005

Installation

To install, follow the removal steps in the reverse order.

Front Door Trim Panel

Front Door Trim Panel and Associated Parts

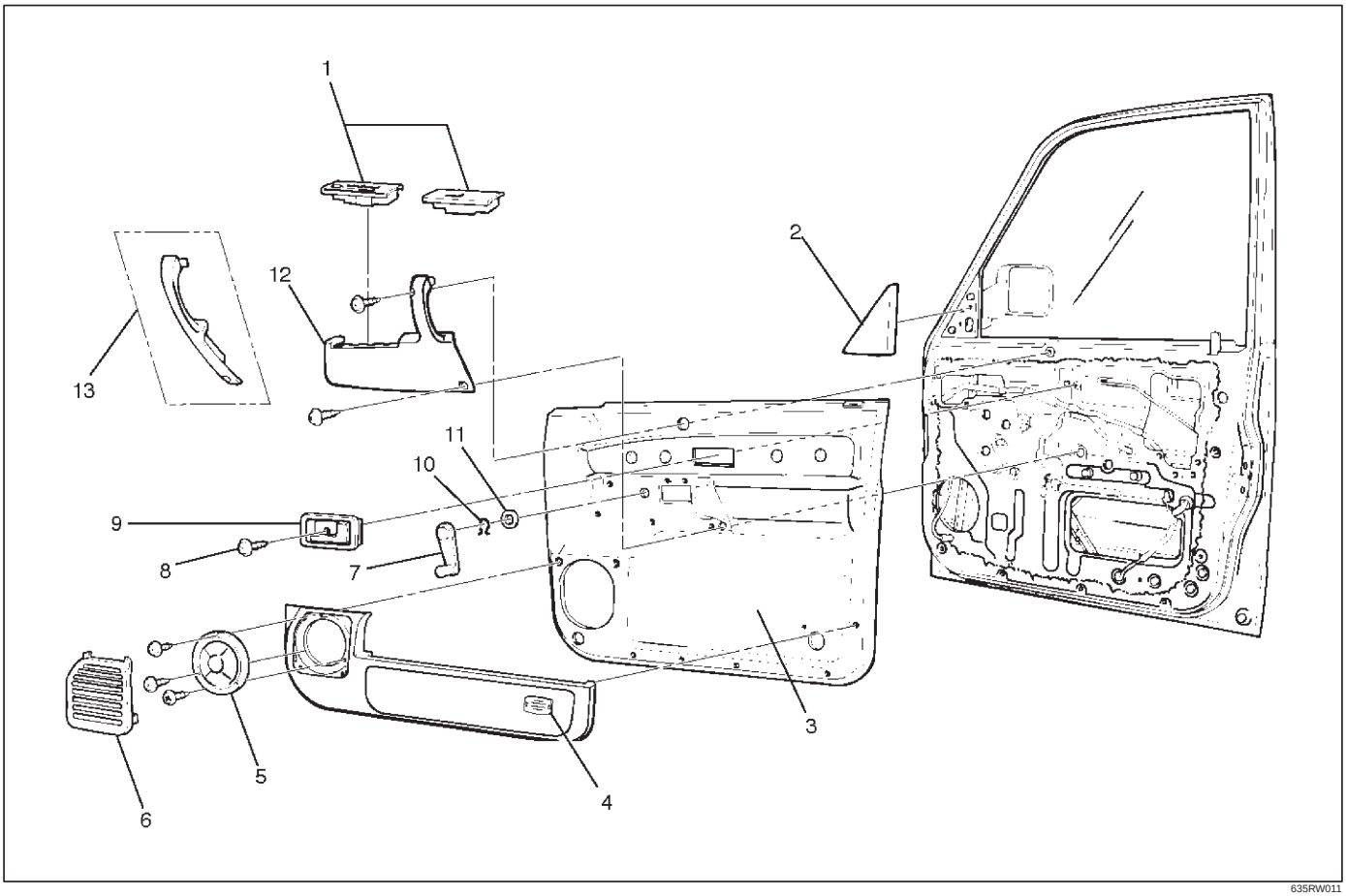

635RW011

Legend

(1) Power Window Switch
(2) Door Mirror Cover
(3) Door Trim Panel
(4) Courtesy Light
(5) Front Speaker
(6) Speaker Cover
(7) Regulator Handle
(8) Inside Handle Fixing Screw
(9) Inside Handle
(10) Hook
(11) Washer
(12) Inside Pull Handle
(13) Inside Pull Handle (W/O Power Window)

Removal

1. Disconnect the battery ground cable.

2. Remove the door mirror cover (1).

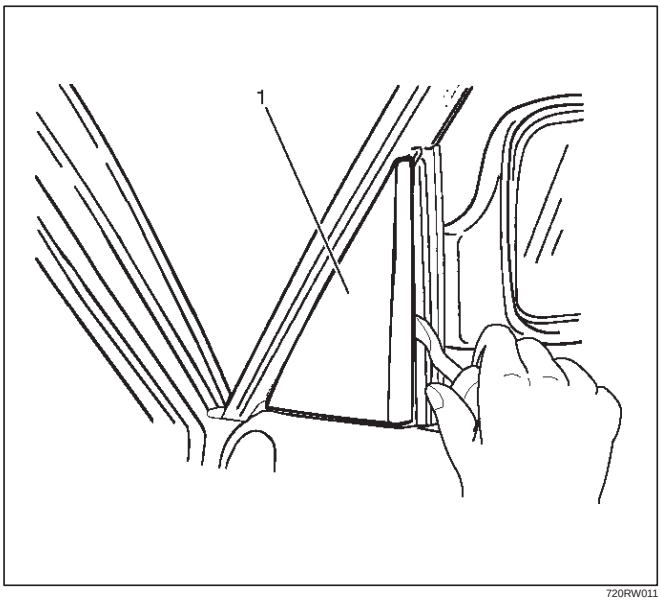

720RW011

3. Remove the regulator handle(3).
   - Pull the hook(4) out and remove the regulator handle.

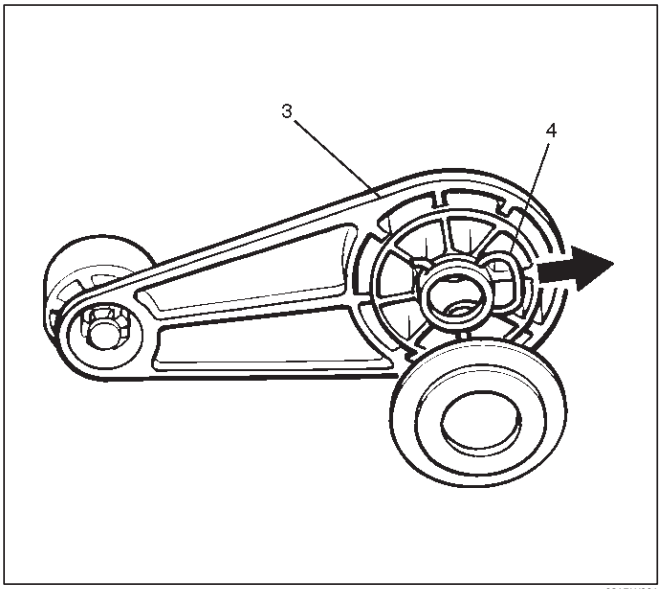

631RW001

4. Remove the power window switch(1).
   - Pry the power window switch out and disconnect the switch connector.

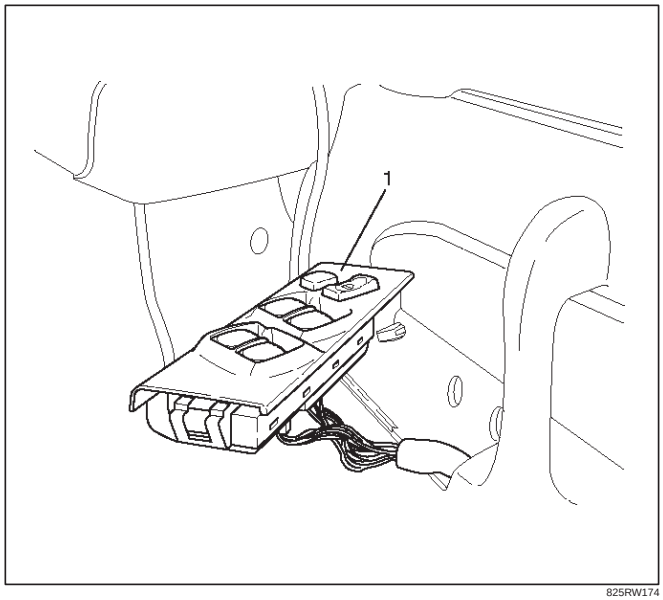

825RW174

5. Remove the speaker cover.
6. Remove the front speaker.
   - Remove the front speaker fixing screws in order to disconnect the speaker connector.
7. Remove the inside handle fixing screw.
   - Remove the screw that fixes the inside handle(7), slide the inside handle to the position illustrated, and leave it there for the moment.

CAUTION: Take care not to impose excessive force on the inside handle link(6), lest this link is elongated, which could make it impossible to operate the door with the inside handle.

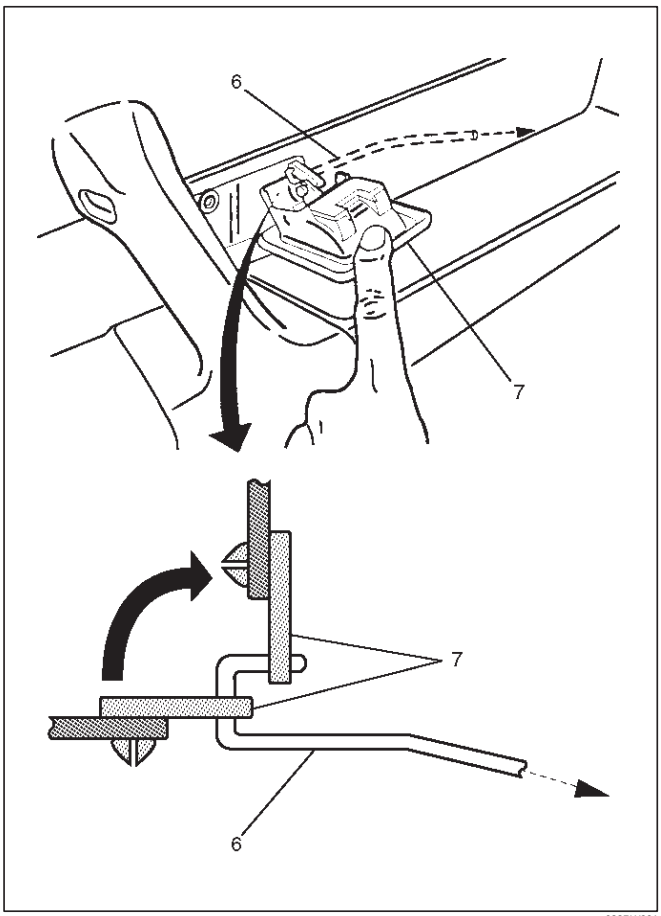

632RW001

8. Remove the door trim panel(9).
   - Remove two fixing screws(8) in order to take off seven clips(10) from the door panel.

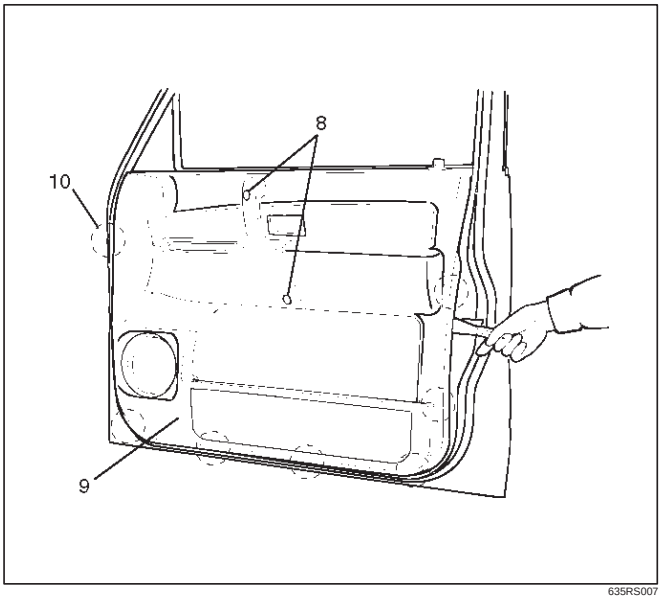

635RS007

- Disconnect the courtesy light connector(13) to lift the door trim panel(14) and unlock the engagement of the waist seal(12) section. Then, pass the inside handle(11) through the mounting hole of the trim panel, and detach the trim panel.

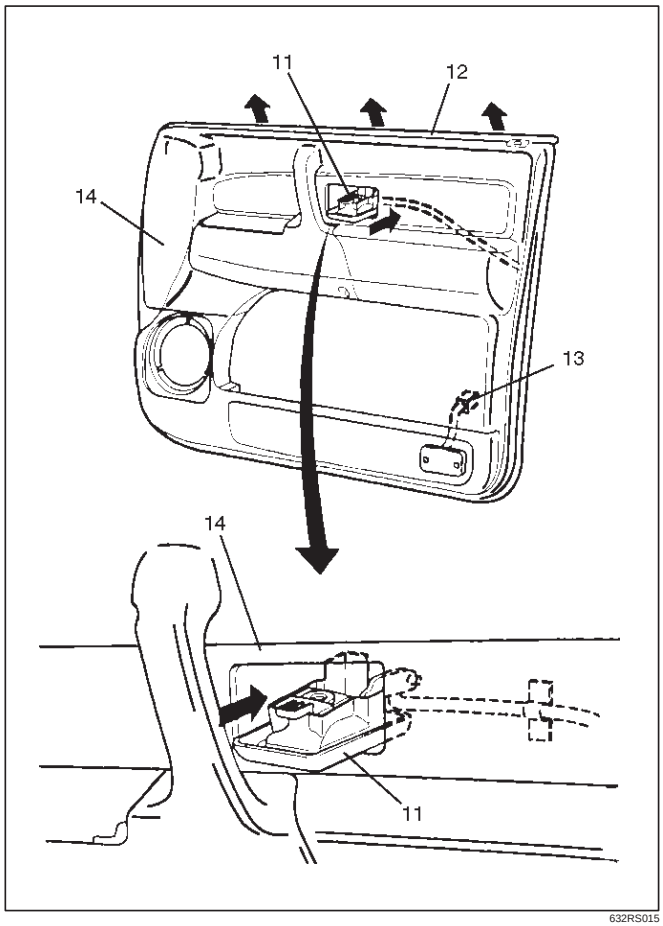

632RS015

9. Remove the inside handle.

Installation

To install, follow the removal steps in the reverse order, noting the following point.

1. When installing the inside handle(2), assemble it temporarily to the inside handle link(1).

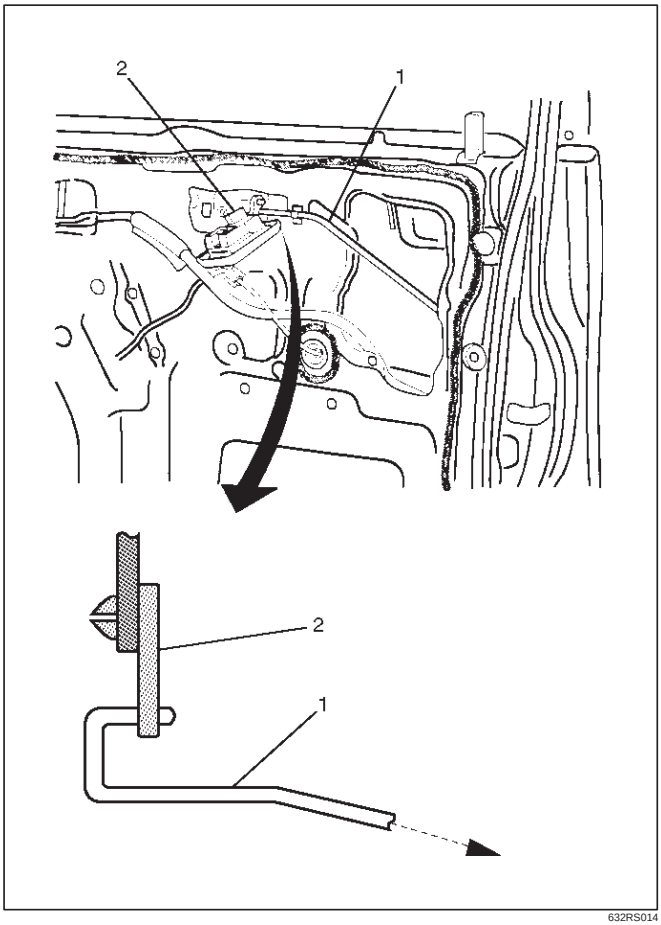

632RS014

2. Pass the inside handle(4) through the mounting hole of the trim panel and assemble the trim panel.

   Engage seven clips(8) into the door panel. Also, connect the courtesy light connector(5) and leave the connectors of the speaker(7), tweeter(9) and power window(3) drawn out to their prescribed positions, so that they will not be caught.

   Then, put the inside handle(4) to the normal position of the inside handle link(6).

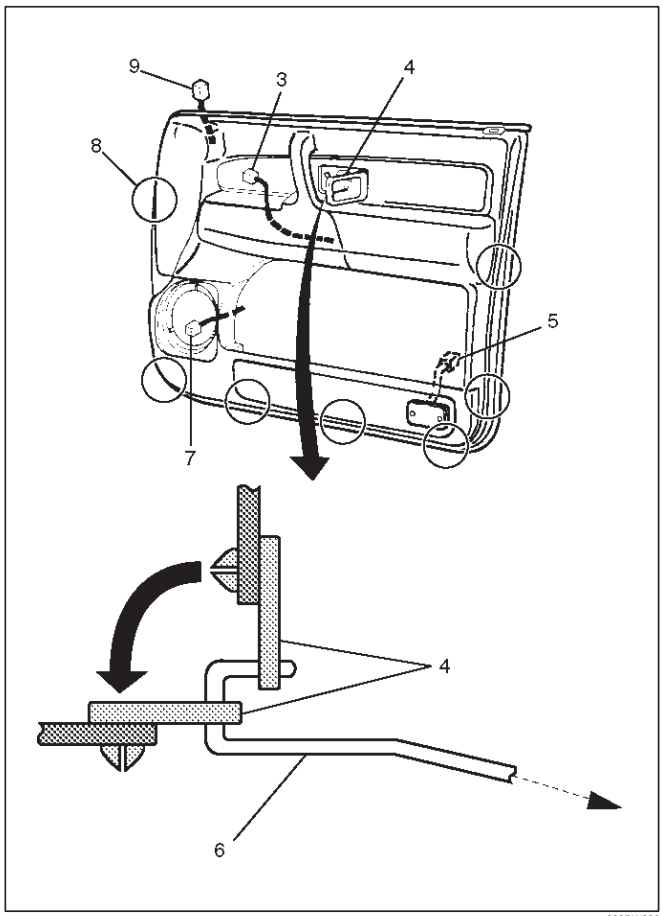

632RW006

3. Fit the claw(10) of the inside handle(11) securely into the hole of the door panel and fix the inside handle with the screw.

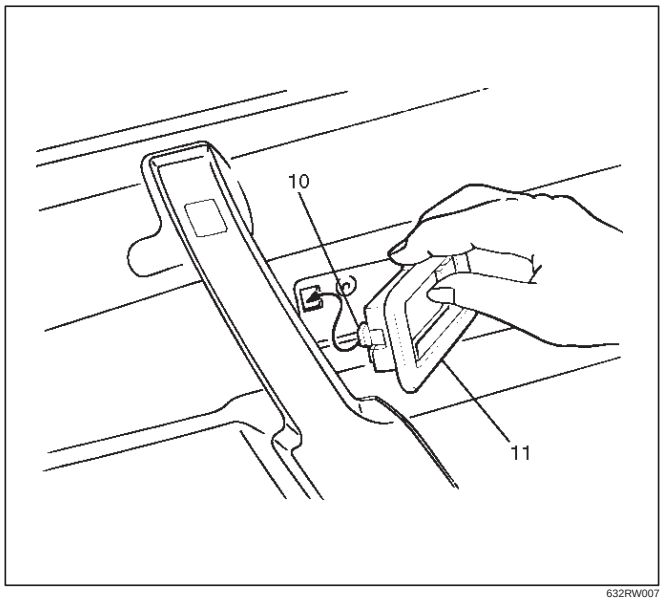

632RW007

Rear Door Trim Panel

Rear Door Trim Panel and Associated Parts

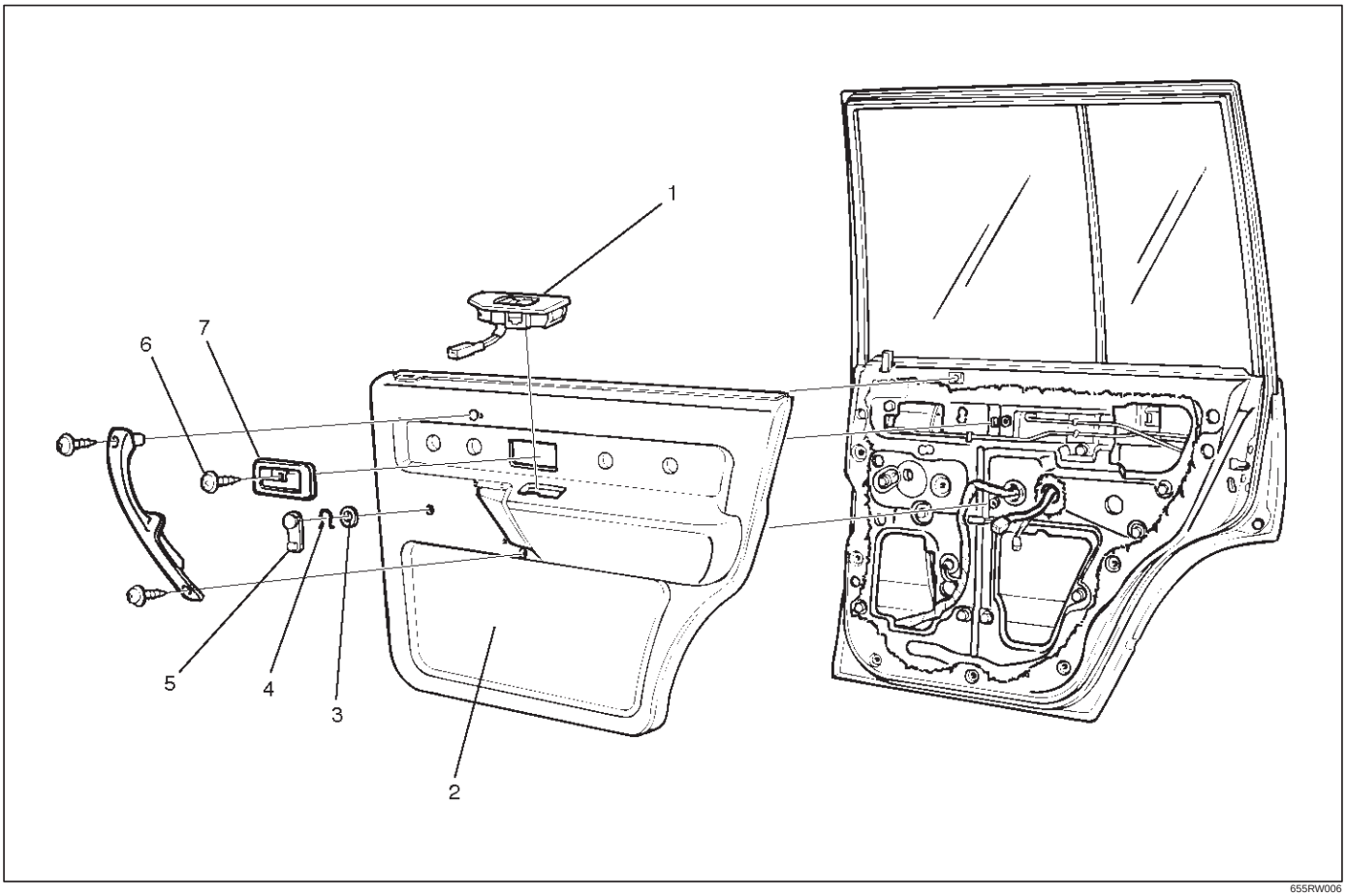

655RW006

Legend

(1) Power Window Switch
(2) Door Trim Panel
(3) Washer
(4) Clip
(5) Regulator Handle
(6) Inside Handle Fixing Screw
(7) Inside Handle

Removal

1. Disconnect the battery ground cable.
2. Remove the regulator handle(1).
   - Pull the hook(2) out and remove the regulator handle.

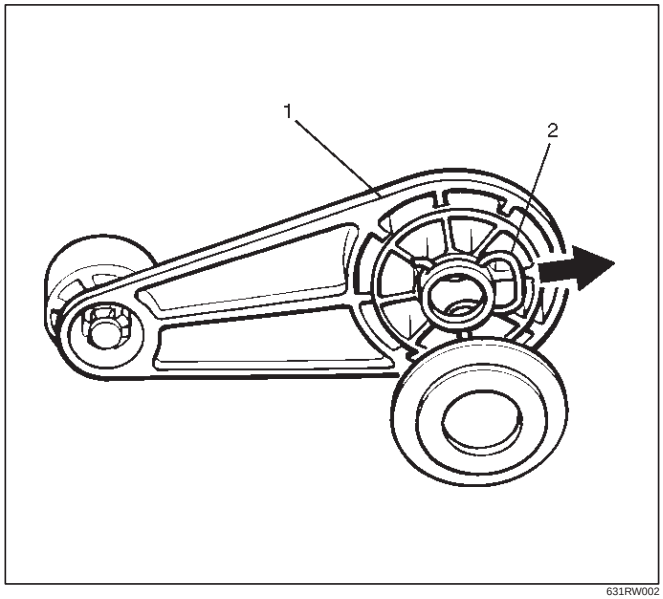

631RW002

3. Remove the power window switch(3).
   - Pry the power window switch out and disconnect the switch connector.

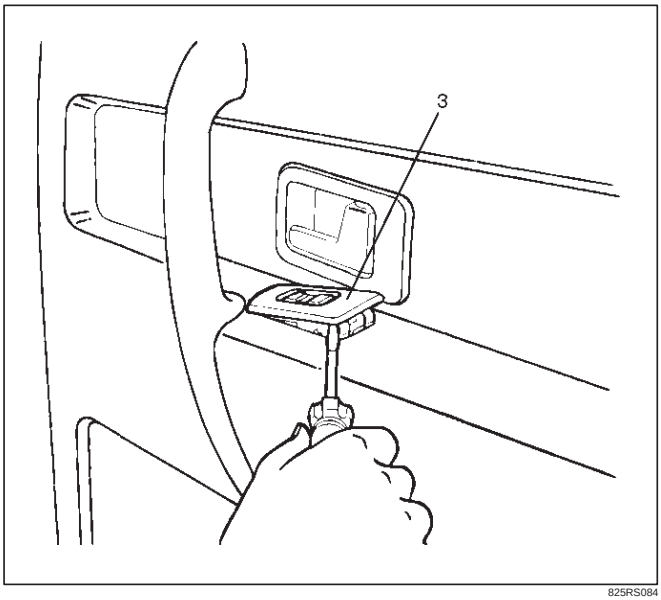

825RS084

4. Remove the inside handle fixing screw.
   - Remove the screw that fixes the inside handle(5), slide the inside handle to the position illustrated, and leave it there for the moment.

CAUTION: Take care not to impose excessive force on the inside handle link(4), lest this link be elongated, which could make it impossible to operate the door with the inside handle.

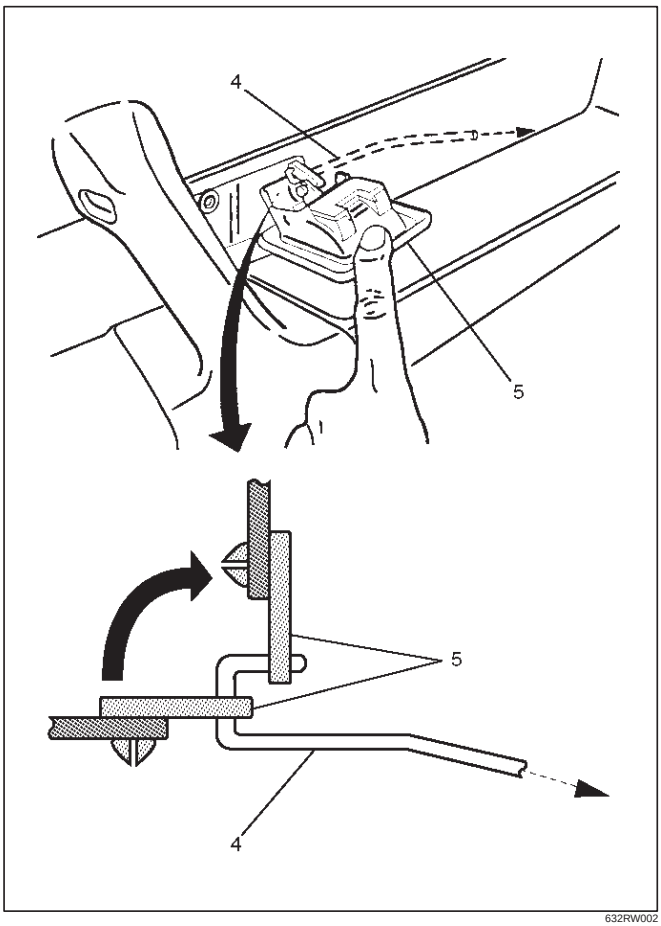

632RW002

5. Remove the door trim panel(6).
   - Remove two fixing screws(8) to take off seven clips(7) from the door panel.

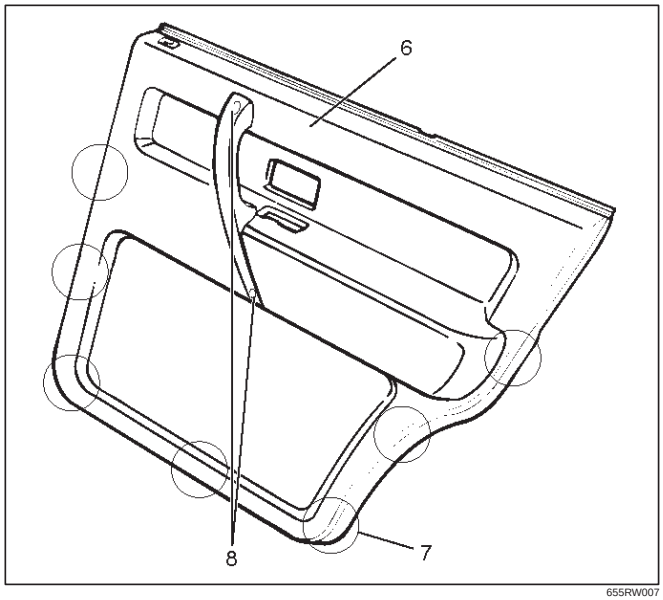

655RW007

   - Lift the trim panel and unlock the engagement of the waist seal section. Then, pass the inside lever through the mounting hole of the trim panel, and detach the trim panel.

6. Remove the inside handle.

Installation

To install, follow the removal steps in the reverse order, noting the following point.

1. When installing the inside handle(1), assemble temporarily to the inside handle link(2).

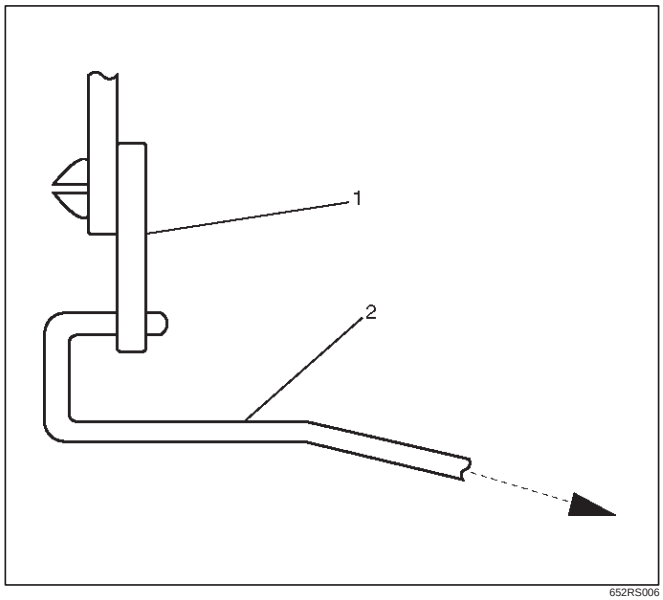

652RS006

2. Pass the inside handle through the mounting hole of the trim panel. Assemble the trim panel. Engage securely seven clips into the door panel. Also, leave the connector of the power window drawn out to its prescribed position, so that it will not caught.
3. Put back the inside handle(3) to the original position of the link(5). Fit the claw(4) of the inside handle securely into the hole of the door panel. Fix the handle with the screw.

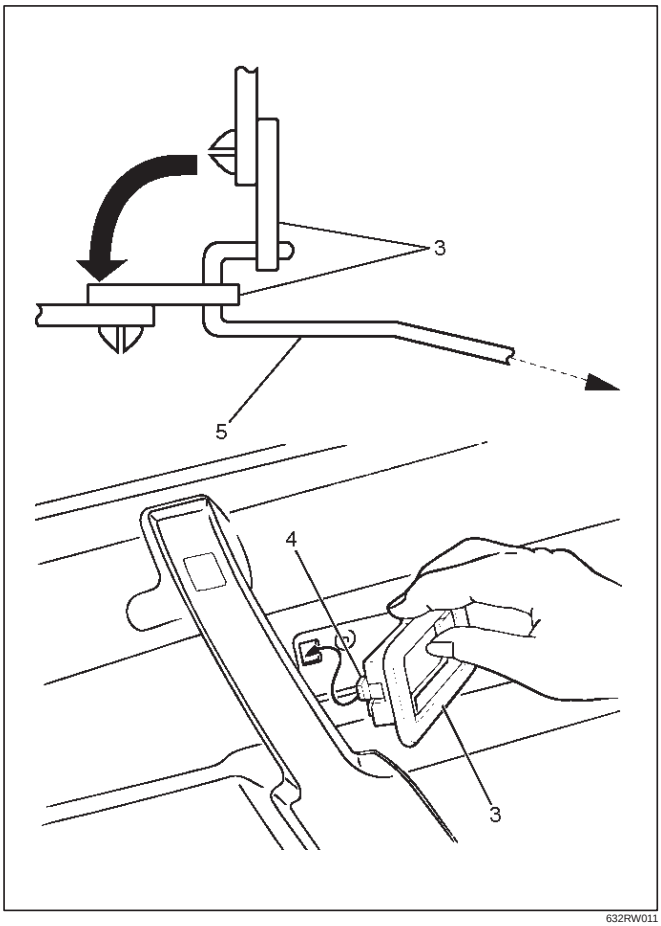

632RW011

Door Mirror

Door Mirror and Associated Parts

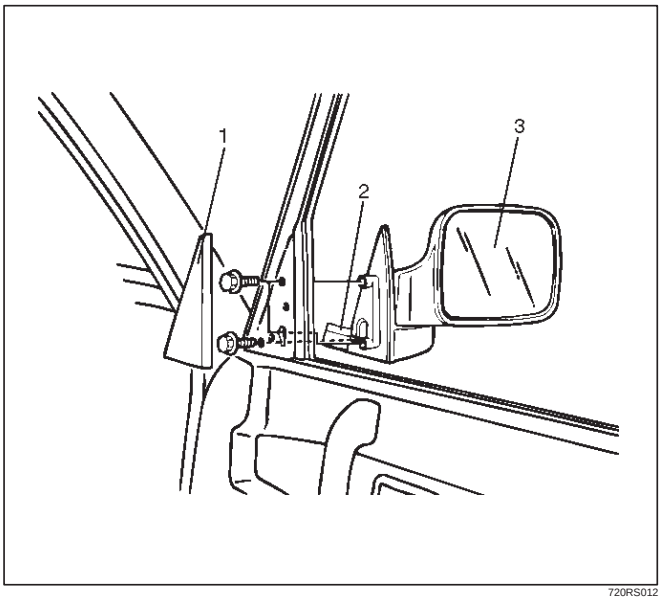

720RS012

Legend

(1) Door Mirror Cover
(2) Door Mirror Connector
(3) Door Mirror

Removal

1. Disconnect the battery ground cable.
2. Remove the door mirror cover(1).

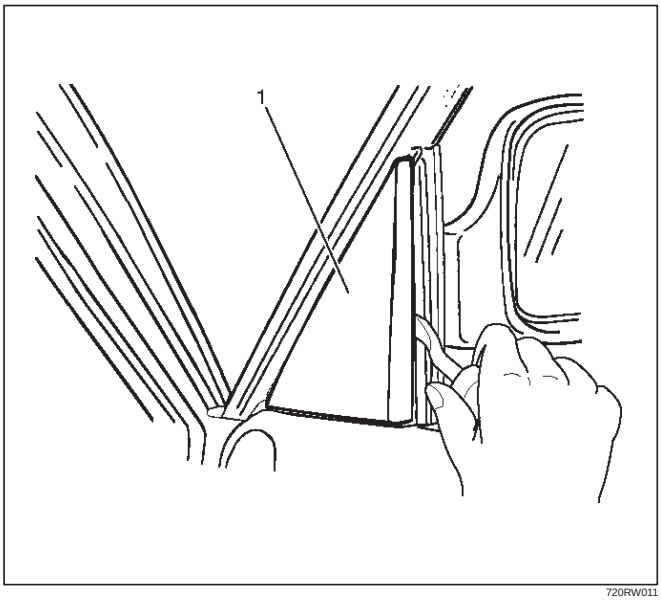

720RW011

3. Remove the door mirror connector.
4. Remove the door mirror.

Installation

To install, follow the removal steps in the reverse order, noting the following points.

1. When you install the door mirror, install the bolt(1) to the mirror temporarily, hook the bolt to the door side hole and tighten the bolt from the inside.

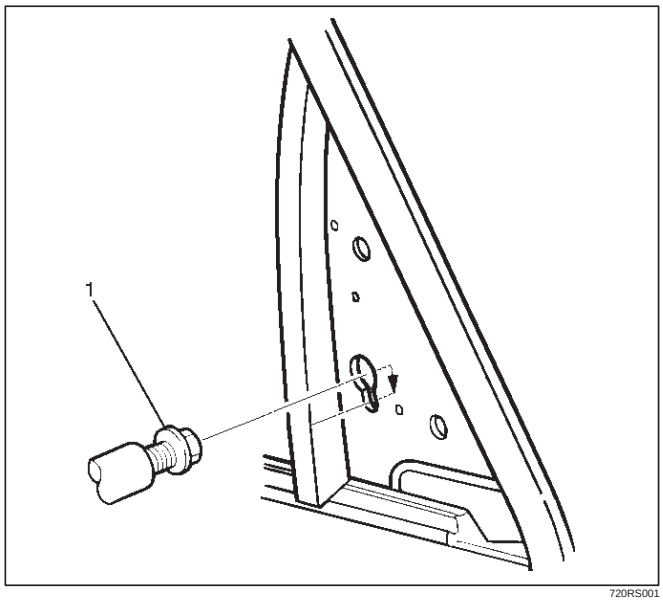

720RS001

2. When installing the door mirror, hold the glass run lip(2) between the door mirror base(3) and the center sash(4).

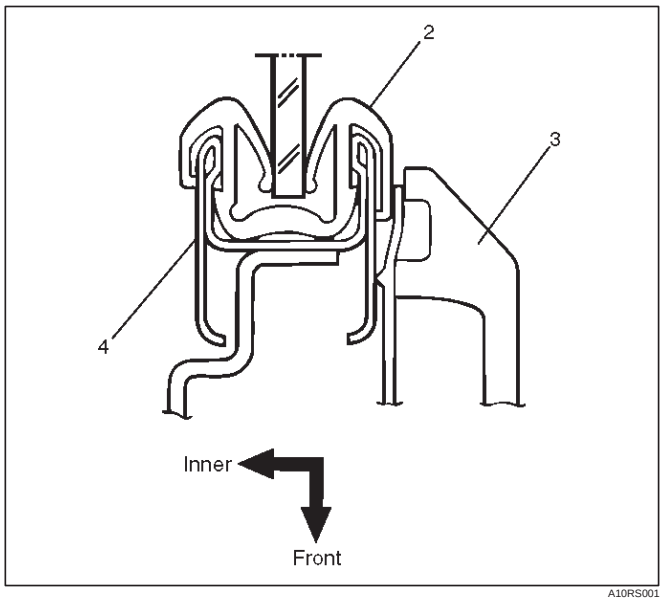

A10RS001

3. Tighten the door mirror fixing bolts to the specified torque.

Torque: 8 N·m (0.8kg·m/69 lb in)

Luggage Side and Quarter Upper Trim Cover (LWB)

Luggage Side, Quarter Upper Trim Cover and Associated Parts

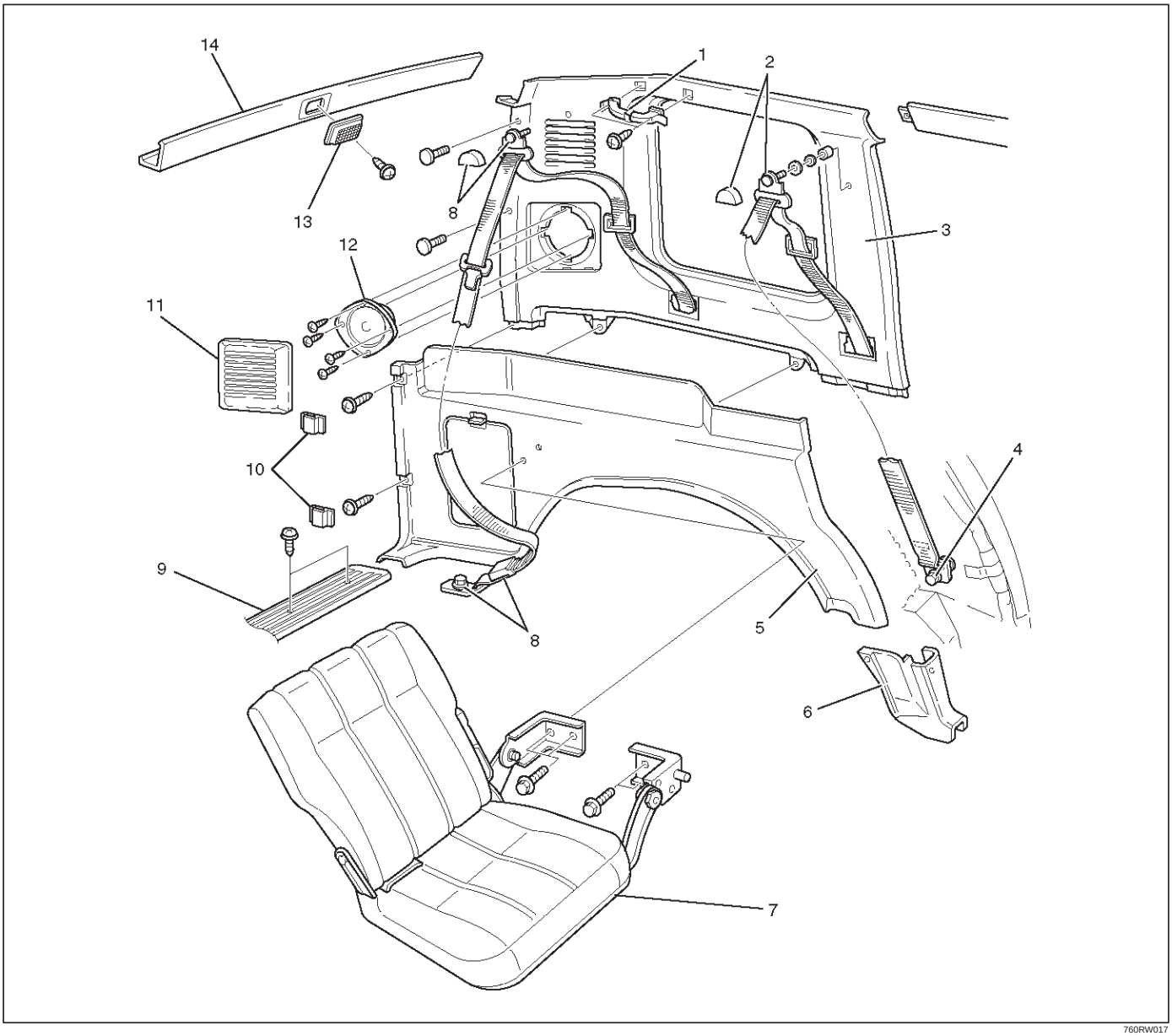

760RW017

Legend

(1) Assist Grip
(2) Rear Seat Belt Anchor Bolt Cover and Anchor Bolt
(3) Quarter Upper Trim Cover
(4) Anchor Bolt
(5) Luggage Side Trim Cover
(6) Luggage Side Lower Cover
(7) Third Seat Assembly and seat Bracket
(8) Third Seat Belt Anchor Bolt Cover and Anchor Bolt
(9) Rear End Floor Trim Cover
(10) Luggage Side Cap
(11) Speaker Grille
(12) Rear Speaker
(13) Luggage Room Light
(14) Rear Roof Trim Cover

Removal

1. Disconnect the battery ground cable.
2. Remove the third seat assembly and seat bracket.
3. Remove the rear end floor trim cover.
4. Remove the luggage side cap.
5. Remove the luggage side lower cover.

6. Remove the luggage side trim cover (1).
   - Remove the rear side fixing screws and pry the trim cover retainers free from the body panel and the upper trim cover.

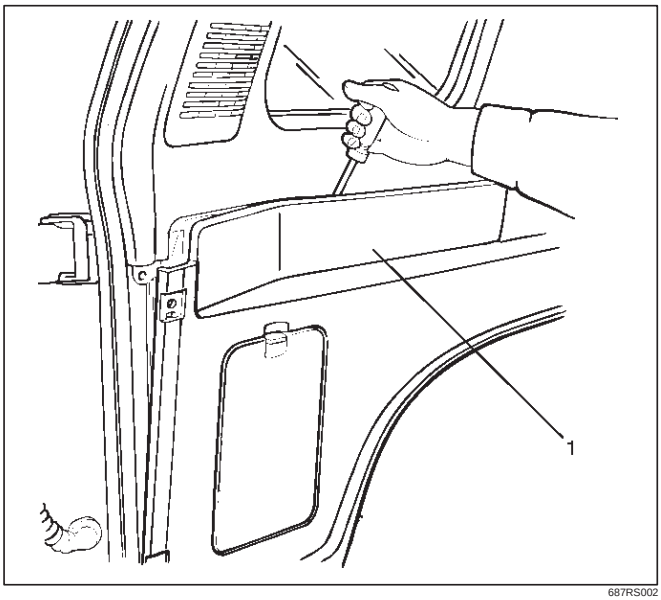

687RS002

7. Remove the luggage room light.
   - Remove the luggage room light lens and the fixing screws.
   - Disconnect the luggage room light connector.
8. Remove the rear roof trim cover.
   - Pry the trim cover retainers free from the body panel.

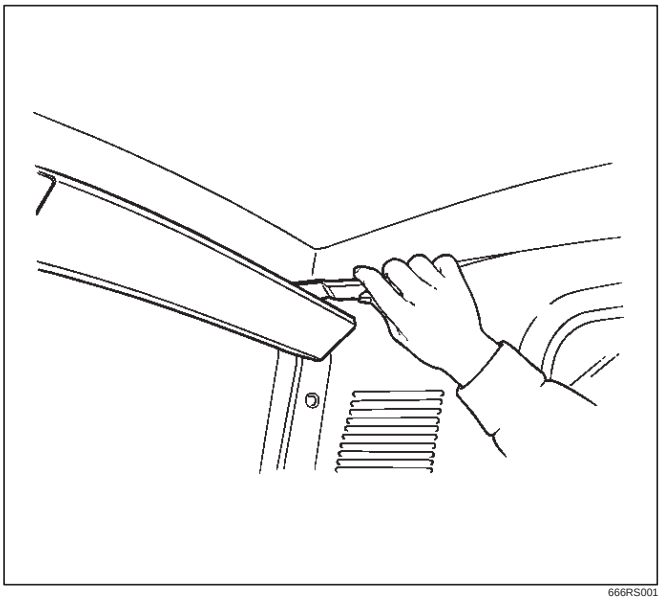

666RS001

9. Remove the speaker grille.

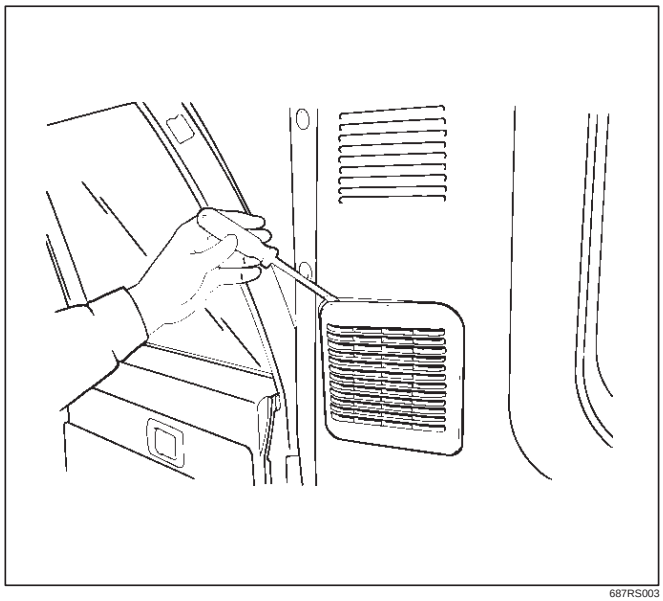

687RS003

10. Remove the rear speaker.
    - Remove the rear speaker fixing screws and disconnect the connector.
11. Remove the rear seat belt anchor bolt cover (2) and the anchor bolt (3).

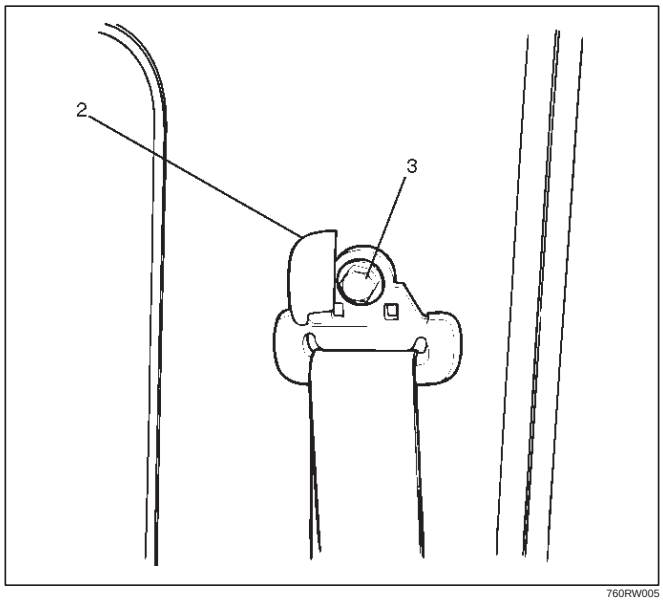

760RW005

12. Remove the third seat belt anchor bolt cover and anchor bolt.
    - Refer to the Third Seat Belt removal procedure in Seat Belt System section.
13. Remove the assist grip.

14. Remove the quarter upper trim cover.
    - Remove the rear side clips of the trim cover and pry the quarter upper trim cover retainers free from the body panel.

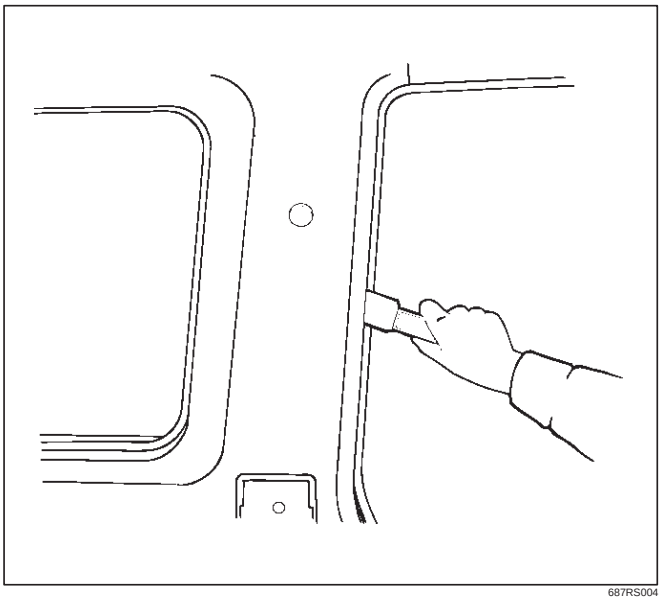

687RS004

Installation

To install, follow the removal steps in the reverse order, noting the following point.

1. Tighten the seat belt anchor bolt to the specified torque.

   Torque: 39 N·m (4.0kg·m/29 lb ft)

Luggage Side and Quarter Upper Trim Cover (SWB)

Luggage Side, Quarter Upper Trim Cover and Associated Parts

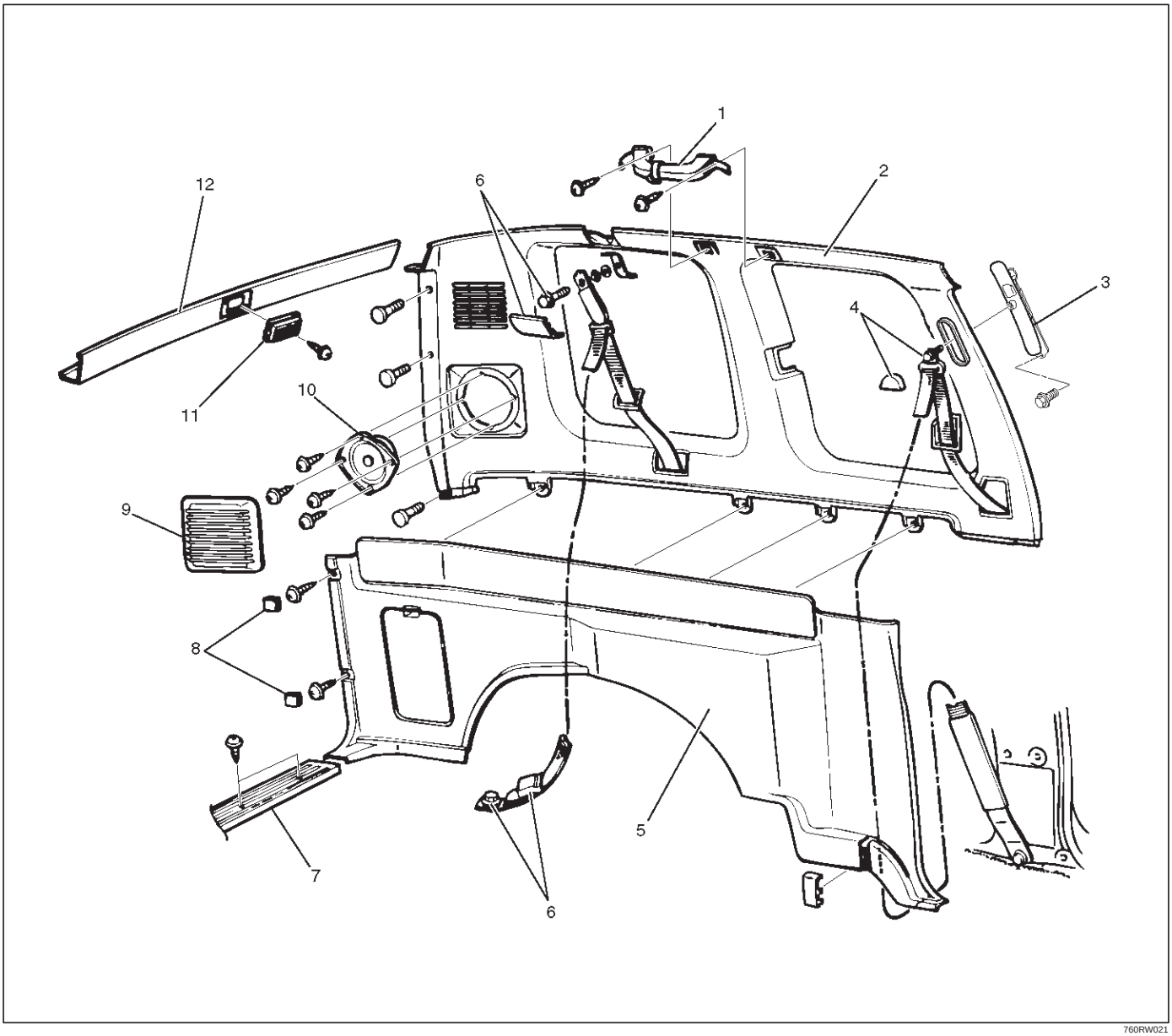

Legend

(1) Rear Assist Grip
(2) Quater Upper Trim Cover
(3) Seat belt adjust Shoulder Anchor Plate
(4) Front Seat Belt Anchor Bolt Cover and Anchor Bolt
(5) Luggage Side Trim Cover
(6) Rear Seat Belt Anchor Bolt Cover and Anchor Bolt
(7) Rear End Floor Trim Cover
(8) Luggage Side Cap
(9) Speaker Grill
(10) Rear Speaker
(11) Luggage Room Light
(12) Rear Roof Trim Cover

Removal

1. Disconnect the battery ground cable.
2. Remove the rear end floor trim cover.
3. Remove the luggage side cap.

4. Remove the luggage side trim cover (1).
   - Remove the rear side fixing screws and pry the trim cover retainers free from the body panel and the upper trim cover.
   - Remove the cover by pulling the front seat belt out of the slit on the lower side of the trim cover.

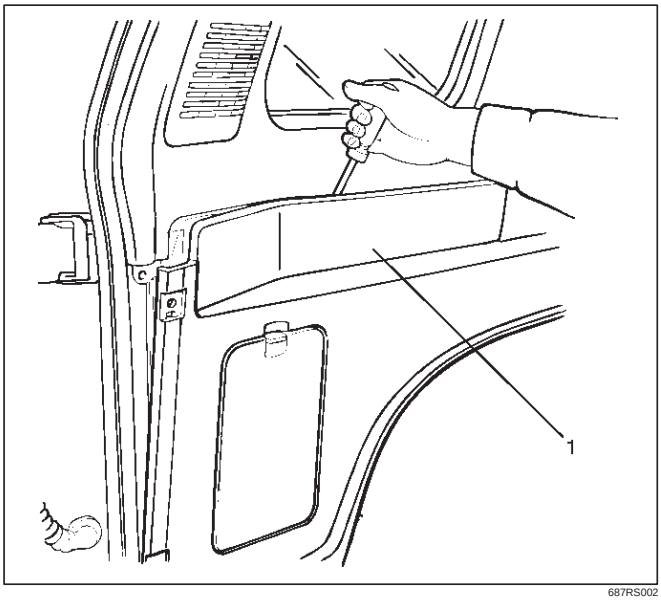

687RS002

5. Remove the luggage room light.
   - Remove the luggage room light lens and the fixing screws.
   - Disconnect the luggage room light connector.
6. Remove the rear roof trim cover.
   - Pry the trim cover retainers free from the body panel.

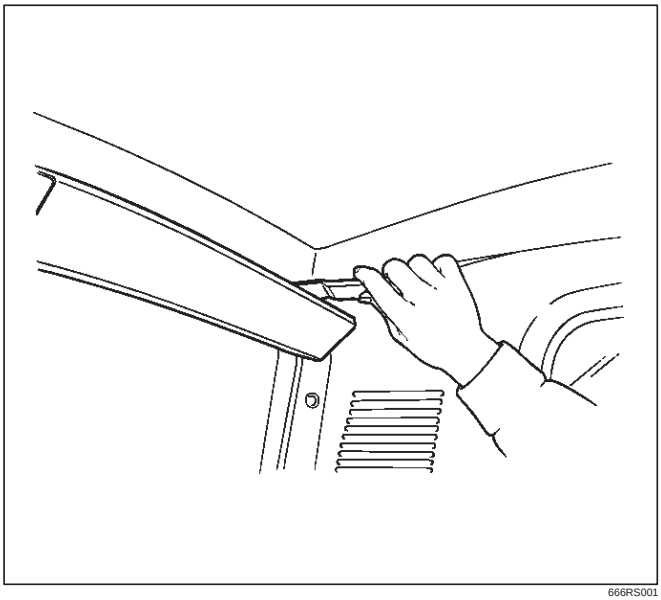

666RS001

7. Remove the speaker grille.

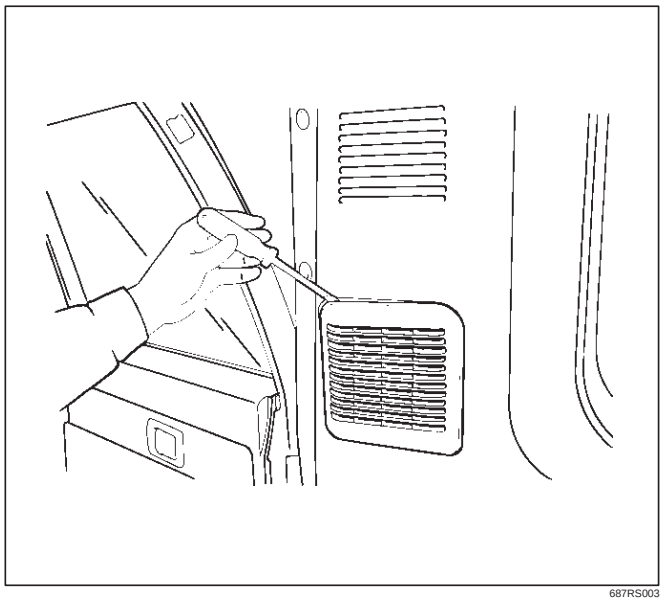

687RS003

8. Remove the rear speaker.
   - Remove the rear speaker fixing screws and disconnect the connector.
9. Remove the rear assist grip (7).
   - Open the both side of the assist grip cover (8) and remove two fixing screws.

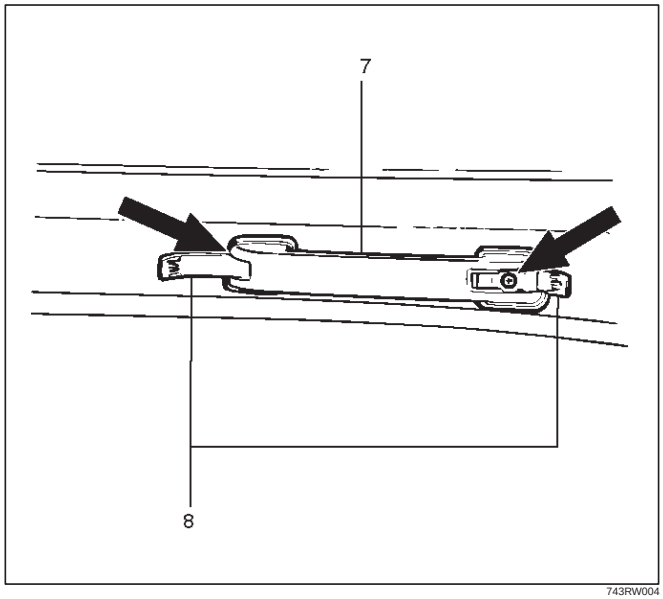

743RW004

10. Remove the rear seat belt anchor bolt cover (1) and the anchor bolt (2).

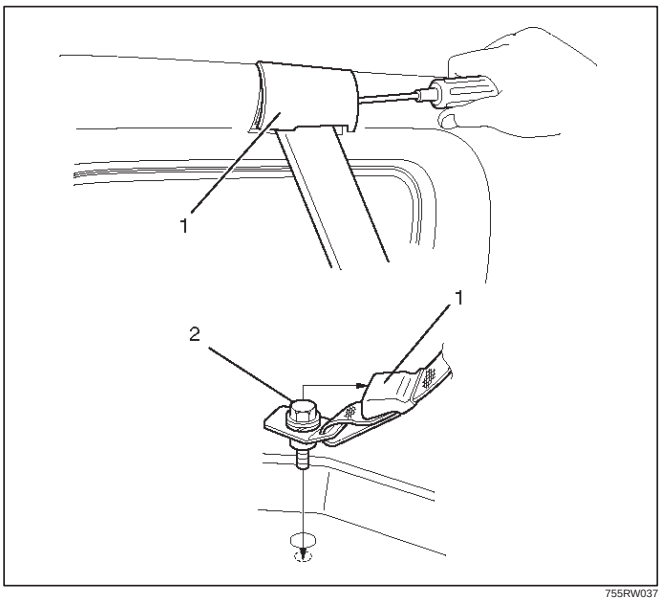

755RW037

11. Remove the front seat belt anchor bolt cover (3) and the anchor bolt (4).

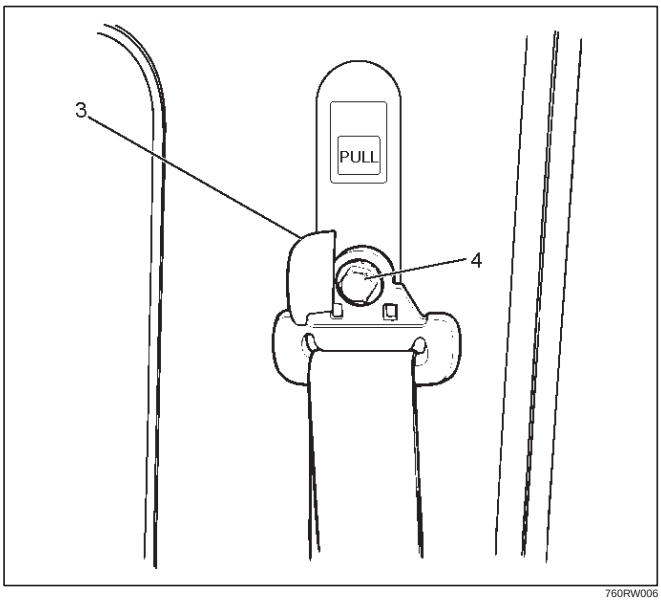

760RW006

12. Remove the quarter upper trim cover.
    - Remove the rear side clips of the trim cover and pry the quarter upper trim cover retainers free from the body panel.

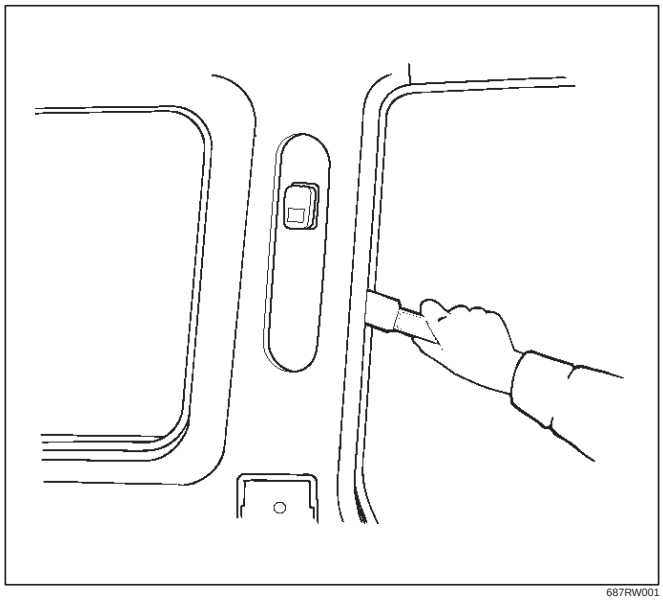

687RW001

13. Remove the seat belt adjust shoulder anchor plate.

Installation

To install, follow the removal steps in the reverse order, noting the following point.

1. Tighten the seat belt anchor bolts to the specified torque.

   Torque: 39 N·m (4.0kg·m/29 lb ft)

Center Pillar and Roof Side Trim Cover (LWB)

Center Pillar, Roof Side Trim Cover and Associated Parts

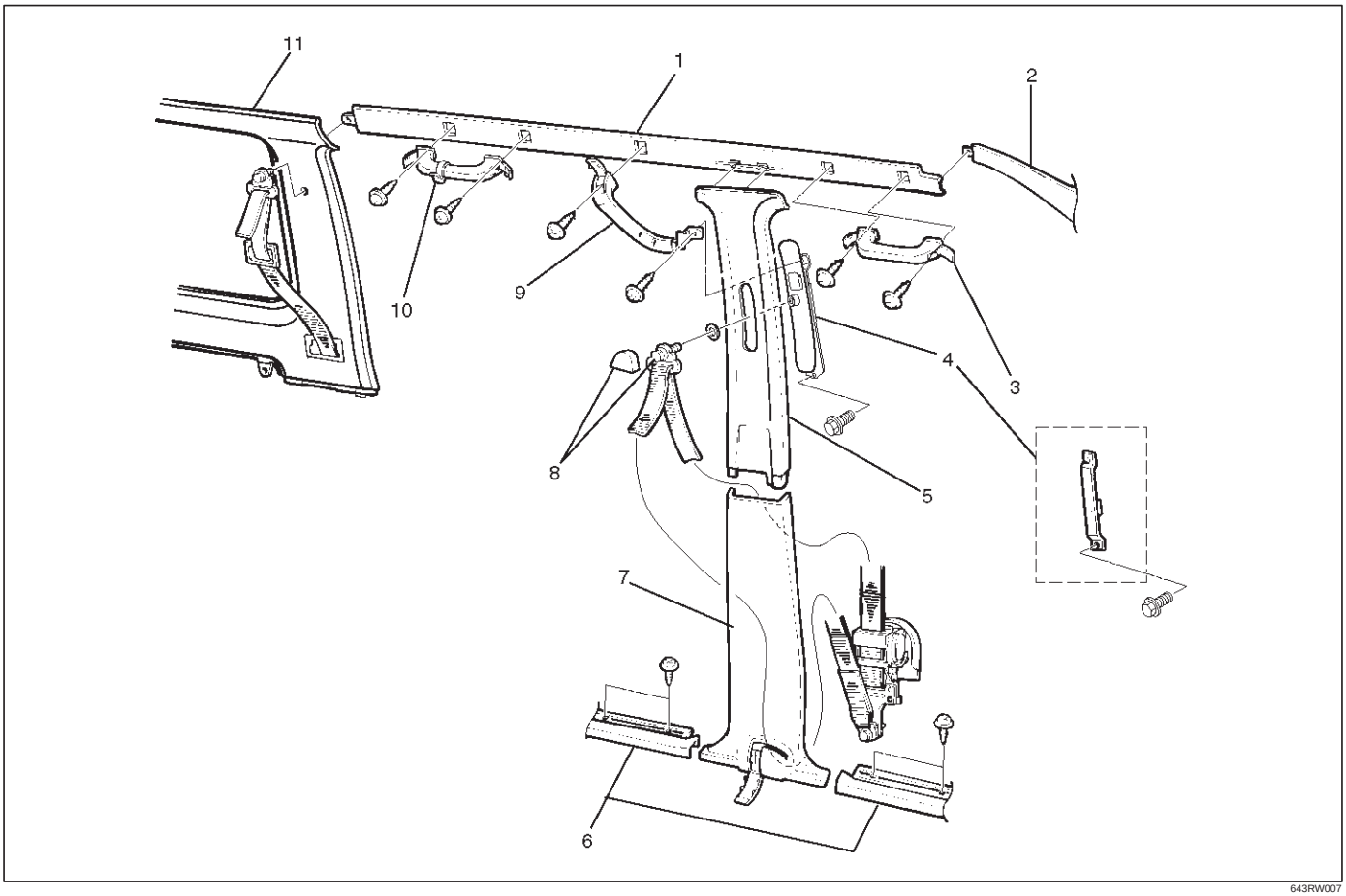

643RW007

Legend

(1) Roof Side Trim Cover
(2) Front Pillar Trim Cover
(3) Assist Grip (Passenger Seat Side)
(4) Adjust Shoulder Anchor Assembly/Seat Belt Anchor Plate
(5) Center Pillar Upper Trim Plate
(6) Door Sill Plate (Front and Rear)
(7) Center Pillar Lower Trim Cover
(8) Front Seat Anchor Bolt Cover and Anchor Bolt
(9) Center Pillar Assist Grip
(10) Assist Grip
(11) Rear Quarter Upper Trim Cover

Removal

1. Disconnect the battery ground cable.
2. Remove the door sill plate (front and rear).
3. Remove the center pillar lower trim cover (2).
   - Turn up the finisher (1) and pry the trim cover retainers free from the body panel, then slide the trim cover downward.

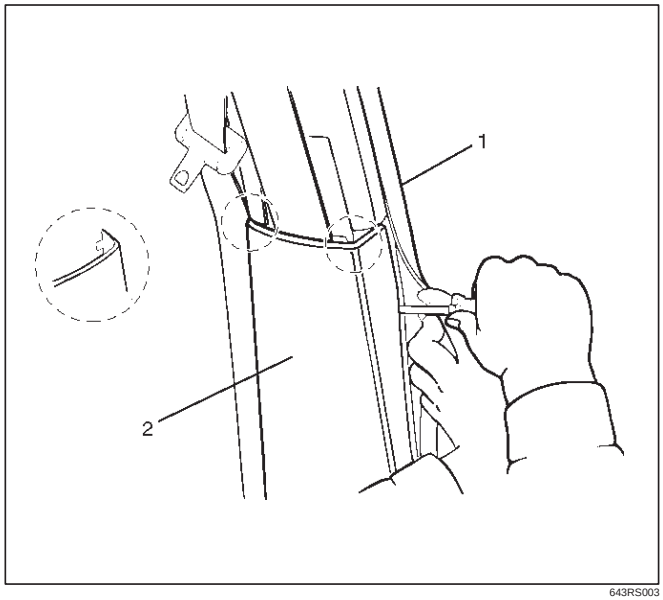

643RS003

4. Remove the front seat belt anchor bolt cover (3) and the anchor bolt (4).

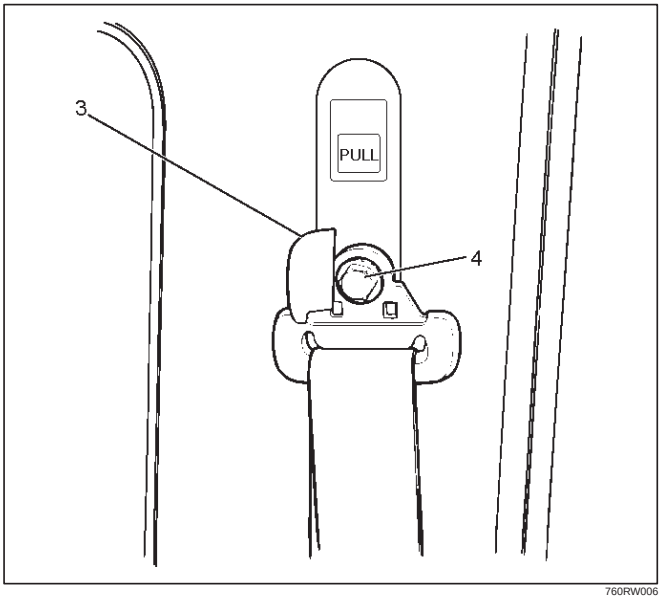

760RW006

5. Remove the center pillar upper trim cover (6).
   - Turn up the finisher (5) and pry the trim cover retainers free from the body panel.

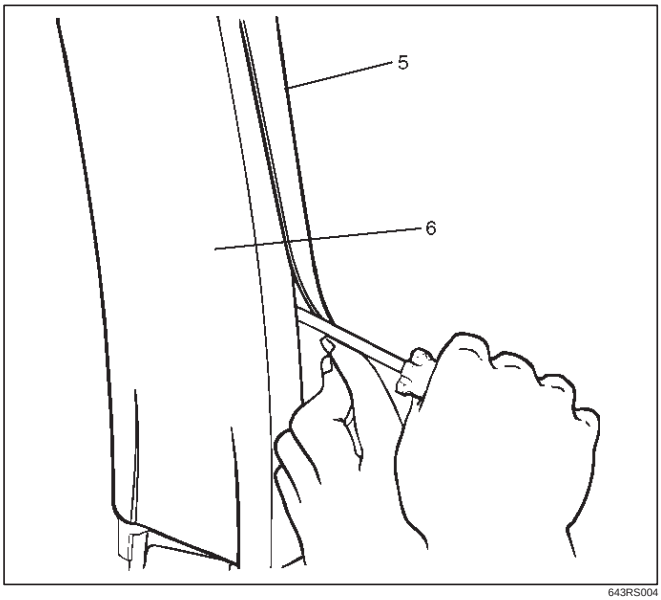

643RS004

6. Remove the center pillar assist grip.
7. Remove the seat belt anchor plate/adjusut shoulder anchor assembly.
8. Remove the assist grip (7).
   - Open the both side of the assist grip cover (8) and remove two fixing screws.

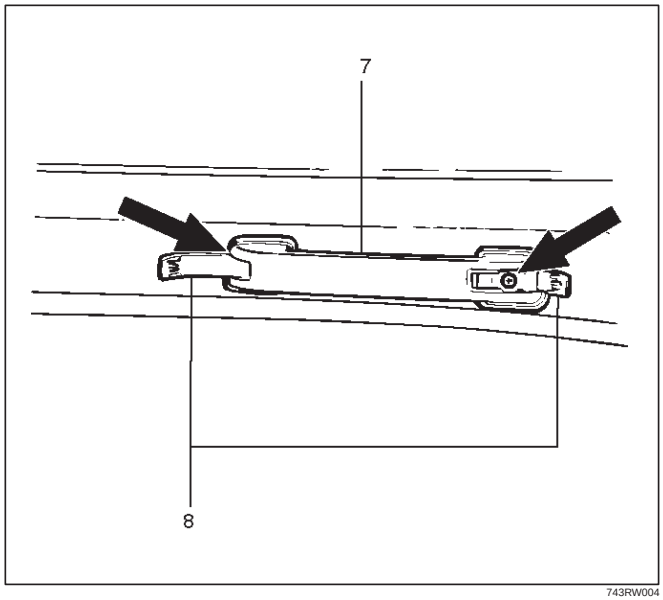

743RW004

9. Remove the roof side trim cover (9).
   - Turn up the finisher (10) and pry the trim cover retainers free from the body panel.

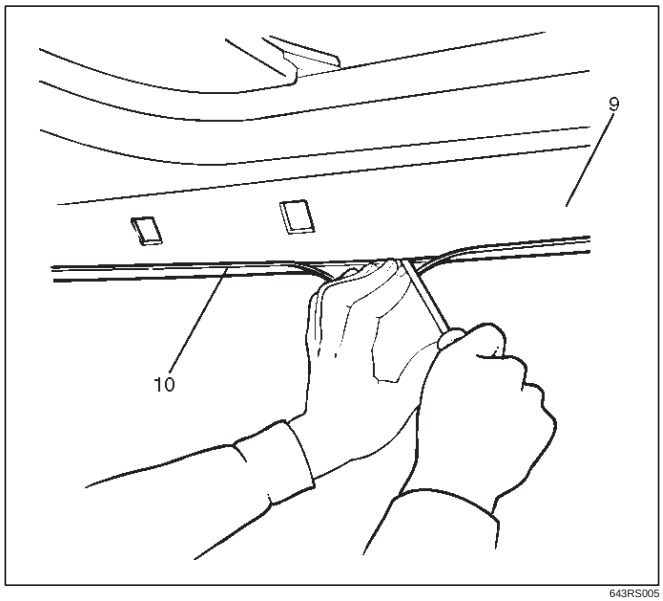

643RS005

Installation

To install, follow the removal steps in the reverse order, noting the following point.

1. Install the seat belt anchor bolts to the specified torque.

   Torque: 39 N·m (4.0kg·m/29 lb ft)

Roof Side Trim Cover (SWB)

Roof Side Trim Cover and Associated Parts

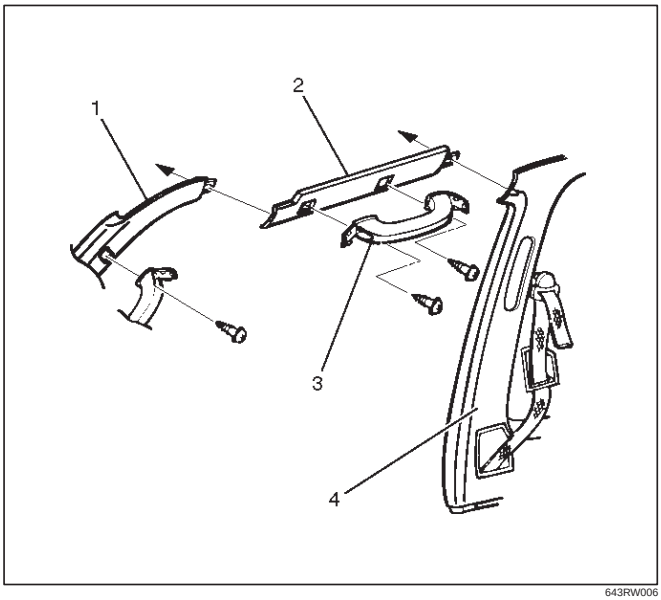

643RW006

Legend

(1) Front Pillar Trim Cover
(2) Roof Side Trim Cover
(3) Assist Grip (Passenger Seat Side)
(4) Rear Quarter Upper Trim Cover

Removal

1. Remove the assist grip.
2. Remove the roof side trim cover (9).
   - Turn up the finisher (10) and pry the trim cover retainers free from the body panel.

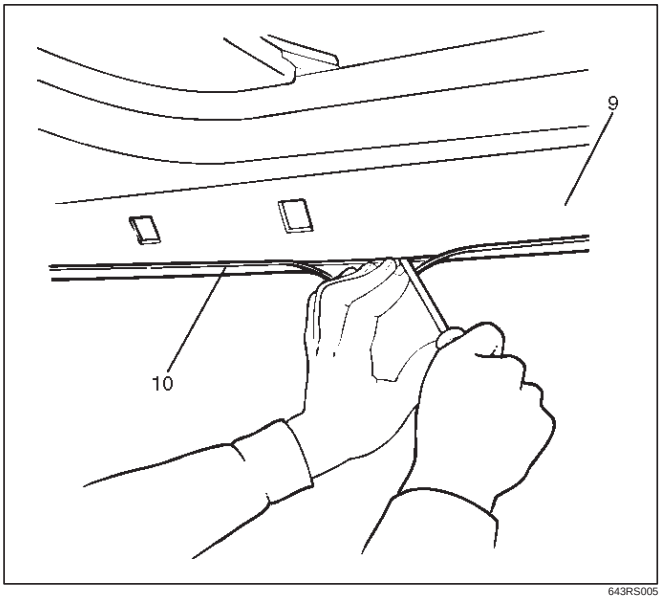

643RS005

Installation

To install, follow the removal steps in the reverse order.

Front Pillar Trim Cover

Front Pillar Trim Cover and Associated Parts

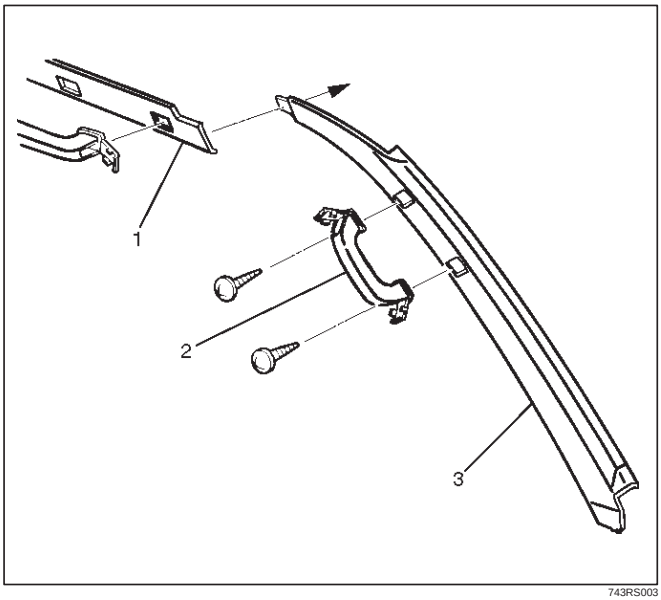

743RS003

Legend

(1) Roof Side Trim Panel
(2) Assist Grip
(3) Front Pillar Trim Panel

Removal

1. Remove the front pillar assist grip(1).
   - Open the both sides of the assist grip cover (2) and remove the fixing screws and the front pillar assist grip.

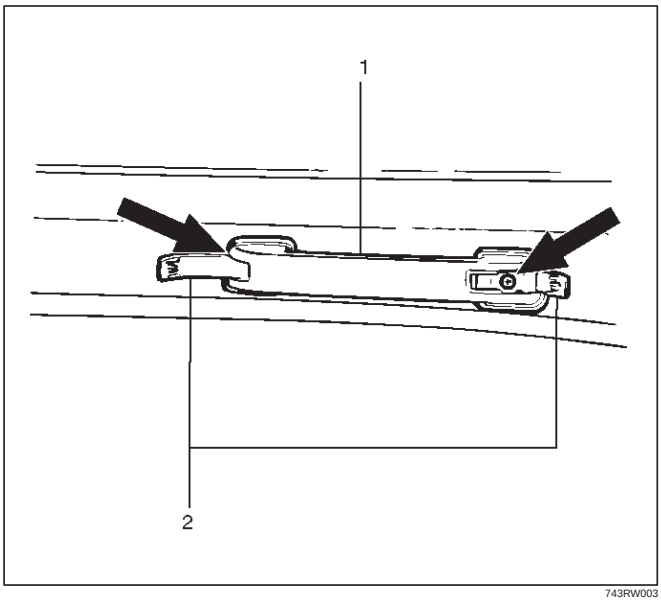

743RW003

2. Remove the front pillar trim cover (3).
   - Turn up the finisher (4) and pry the trim cover retainers free from the body panel.

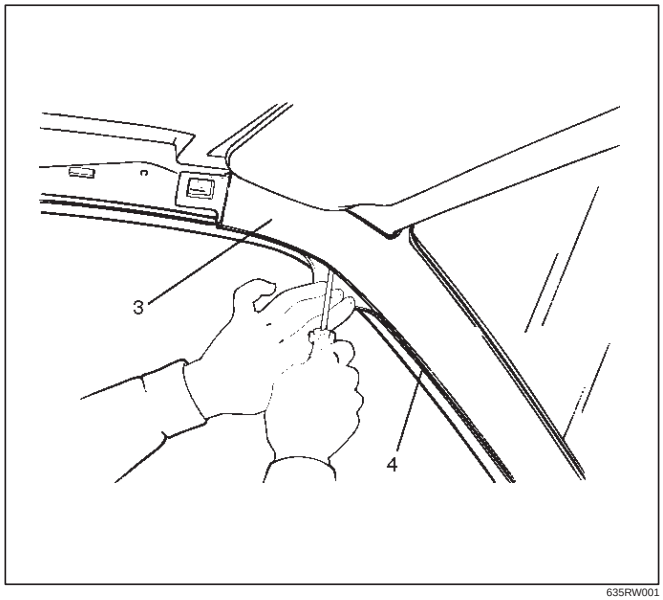

635RW001

Installation

To install, follow the removal steps in the reverse order.

Center Pillar Assist Grip

Parts Location

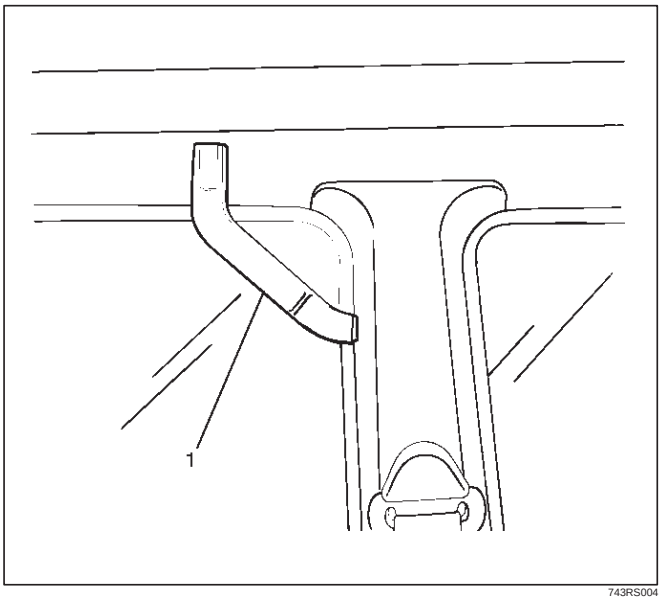

Legend
(1) Center Pillar Assist Grip

Removal and Installation

Refer to the Center Pillar and Roof Side Trim Cover in this section.

Assist Grip

Parts Location

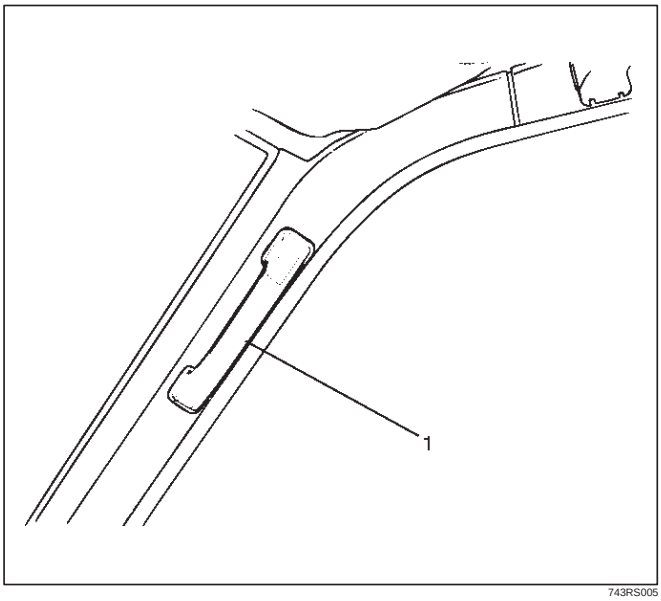

Legend
(1) Assist Grip

Removal and Installation

Refer to the Front Pillar Trim Cover in this section.

Fuel Filler Lid Opener Cable

Fuel Filler Lid Opener Cable and Associated Parts

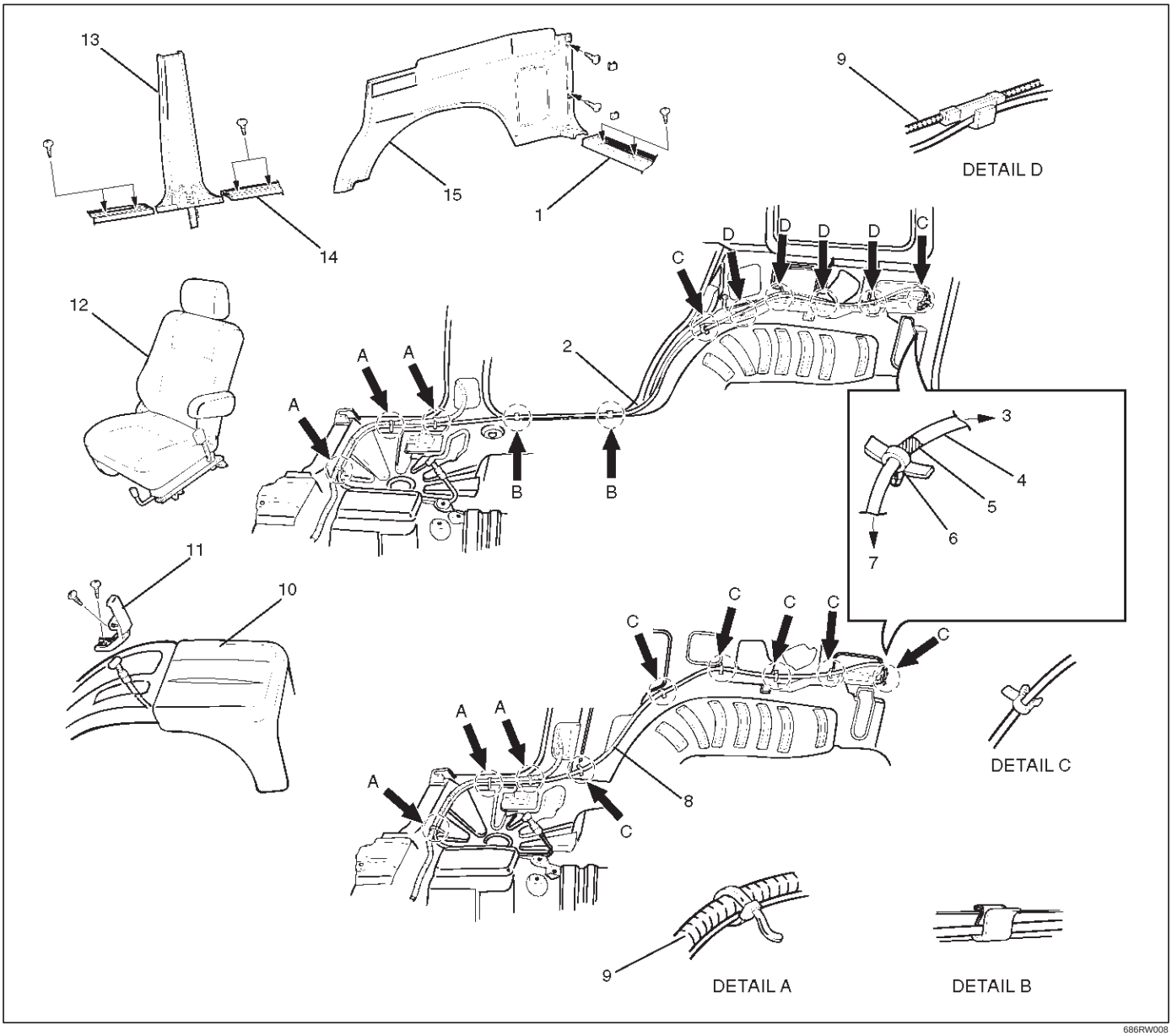

Legend

(1) Rear End Floor Trim Cover
(2) Fuel Filler Lid Opener Cable (LWB)
(3) To Lever
(4) Cable
(5) Marking
(6) Clip
(7) To Door
(8) Fuel Filler Lid Opener Cable (SWB)
(9) Chassis Harness
(10) Center Console Assembly
(11) Fuel Filler Lid Opener
(12) Front Seat (RH)
(13) Center Pillar Lower Trim Cover
(14) Rear Door Sill Plate (RH)
(15) Luggage Side Trim Panel (RH)

Removal

1. Disconnect the battery ground cable.
2. Remove the front seat (RH).
3. Remove the rear door sill plate (RH).
4. Remove the center pillar lower trim cover.
5. Remove the rear end floor trim panel.
6. Remove the luggage side trim panel (RH).
   - Refer to the Luggage Side and Quarter Upper Trim Cover in this section.

7. Remove the fuel filler lid opener(1).
   - Remove two opener fixing screws and disconnect the cable(2).

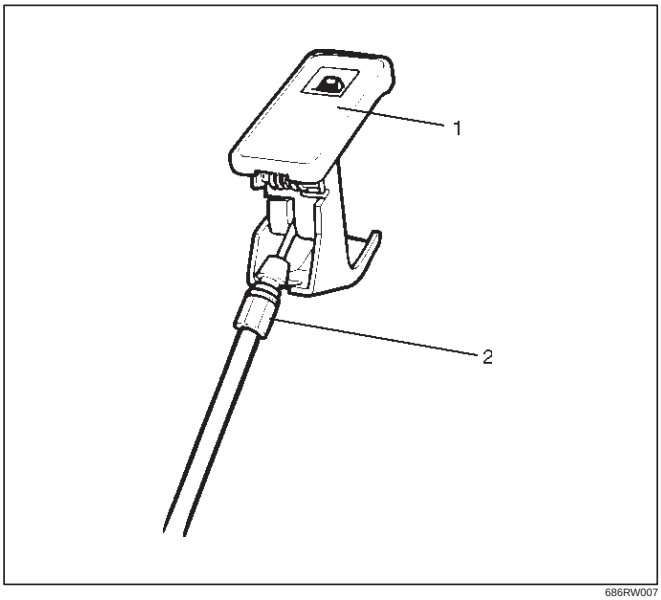

686RW007

8. Remove the center console assembly.
9. Remove the fuel filler lid opener cable.
   - Roll up the floor carpet and remove the clips of the chassis harness and body panel to pull out the cable toward the fuel filler lid.

Installation

To install, follow the removal steps in the reverse order, noting the following points.

1. Insert the opener cable(2) into the body panel(1) securely.

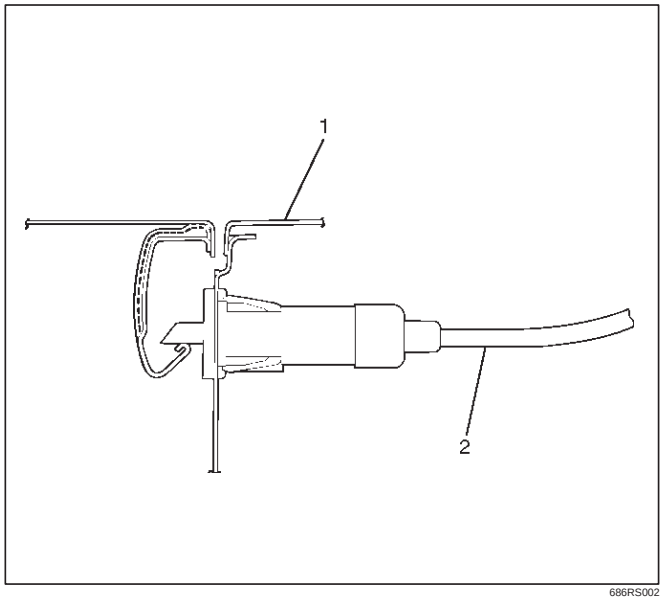

686RS002

2. Install the cable and clips to its original position to the chassis harness and the body panel.
3. Check that the opener operates smoothly.

Fuel Filler Door

Parts Location

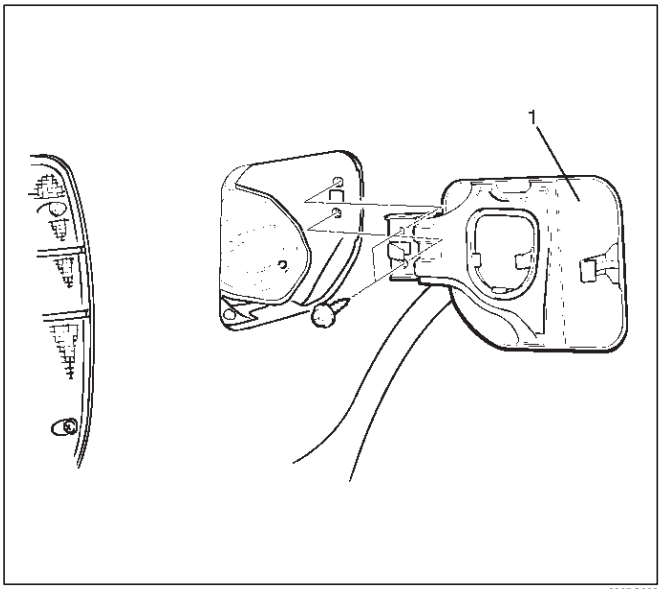

686RS003

Legend

(1) Fuel Filler Door

Removal

1. Remove the fuel filler door.

Installation

1. Install the fuel filler door.

Rocker Protector (Without Wheel Opening Extension)

Rocker Protector (Without Wheel Opening Extension) and Associated Parts

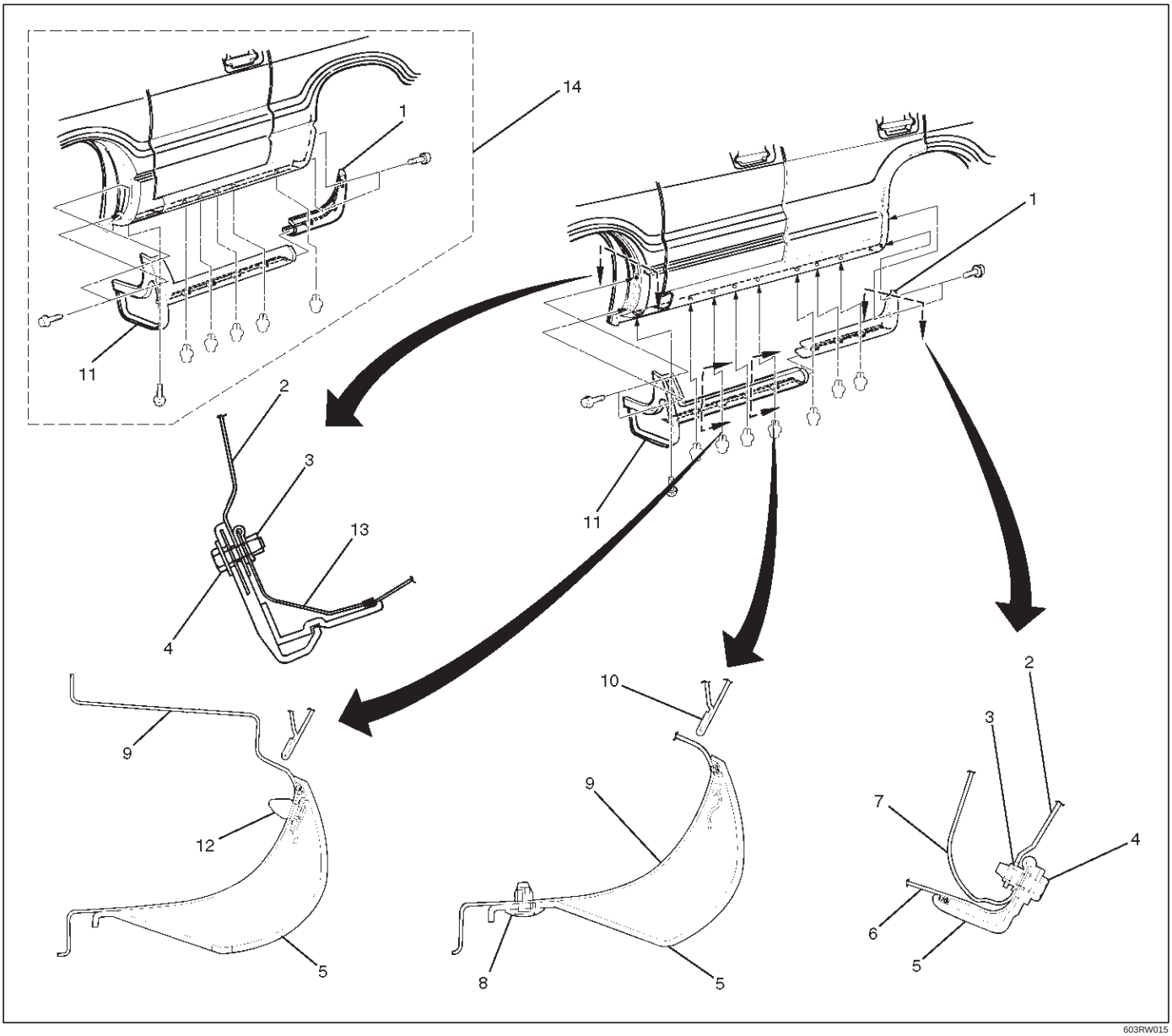

603RW015

Legend

(1) Rear Rocker Protector
(2) Inner Liner
(3) Spare Nut
(4) Fixing Screw
(5) Rocker Protector
(6) Outer Side Panel
(7) Outer Wheel House Panel
(8) Fixing Clip
(9) Outer Rocker Panel
(10) Door Panel
(11) Front Rocker Protector
(12) Clip (W/Rocker Protector)
(13) Fender Panel
(14) SWB

Removal

1. Remove the rear rocker protector.
2. Remove the front rocker protector.

Installation

To install, follow the remove steps in the reverse order.

Wheel Opening Extension and Rocker Protector Assembly

Wheel Opening Extension, Rocker Protector Assembly and Associated Parts

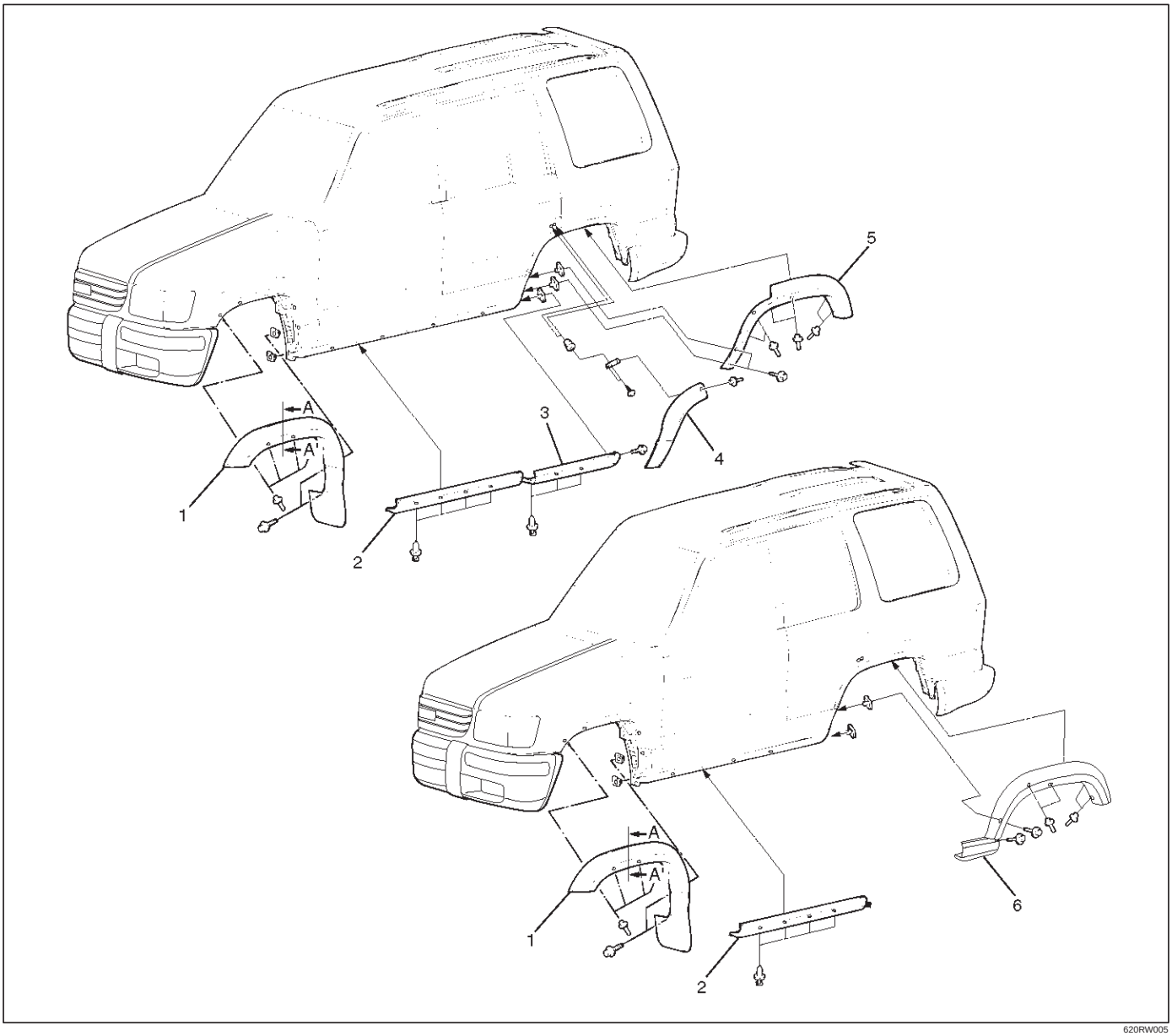

620RW005

Legend

(1) Front Wheel Opening Extension Assembly
(2) Front Rocker Protector Assembly
(3) Rear Rocker Protector Assembly (Only LWB)
(4) Rear Door Wheel Opening Extension Assembly (Only LWB)
(5) Rear Quarter Wheel Opening Extension Assembly (Only LWB)
(6) Rear Wheel Opening Extension Assembly (Only SWB)

Removal

1. Remove the front wheel opening extension(2).
   - Let a 5mm drill(3) go through four blind rivets(5) to disengaged riveted portions.
     Remove two screws and disengage five clips (6), then remove the front wheel opening extension assembly.

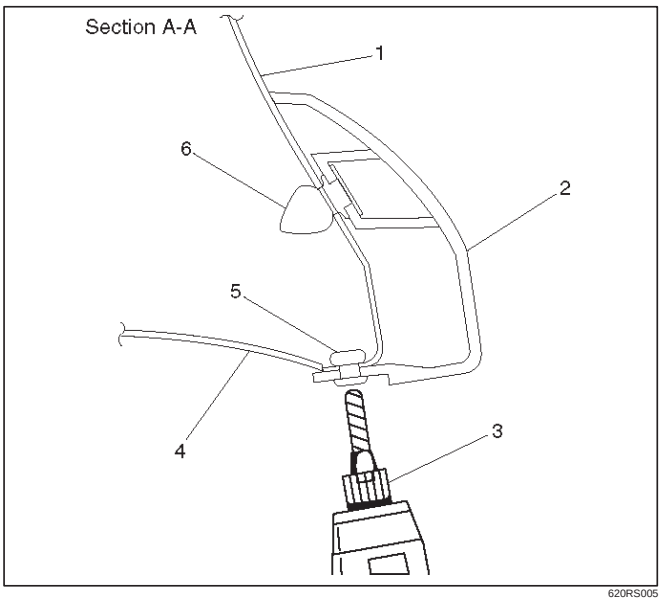

620RS005

2. Remove the rear quarter wheel opening extension assembly (Only LWB).
   - Let a 5mm drill go through six blind rivets to disengage riveted portions.

     Disengage four clips, remove two screws, and remove the rear quarter wheel opening extension assembly.
3. Remove the rear wheel opening extension assembly (Only SWB).
   - Let a 5mm drill go through four blind rivets to disengage riveted portions. Remove two screws, disengage eight clips, and remove the rear wheel opening extension assembly.
   - Remove two fixing nuts (upper) and four fixing bolts (lower).
4. Remove the rear door wheel opening extension assembly (Only LWB).
   - Let a 5mm drill go through a blind rivet to disengage riveted portions.

     Disengage three clips, peel off the bonded portions with two double surface adhesive tape and the rear door wheel opening extension assembly.
5. Remove the rear rocker protector assembly (Only LWB).
   - Loosen and pull three clips, remove a rear screw, and remove the rear rocker protector assembly.
6. Remove the front rocker protector assembly.
   - Loosen and pull four clips, and remove the front rocker protector assembly.

Installation

To install, follow the removal steps in the reverse order, noting the following points.

1. Use a new 2–sided adhesive tape whenever installing each wheel opening extension assembly and rocker protector assembly. Using a white gasoline, clean the places in advance where a 2–sided adhesive tape is affixed. Also, install the clips, screws and blind rivets in the order specified as shown in the figure.

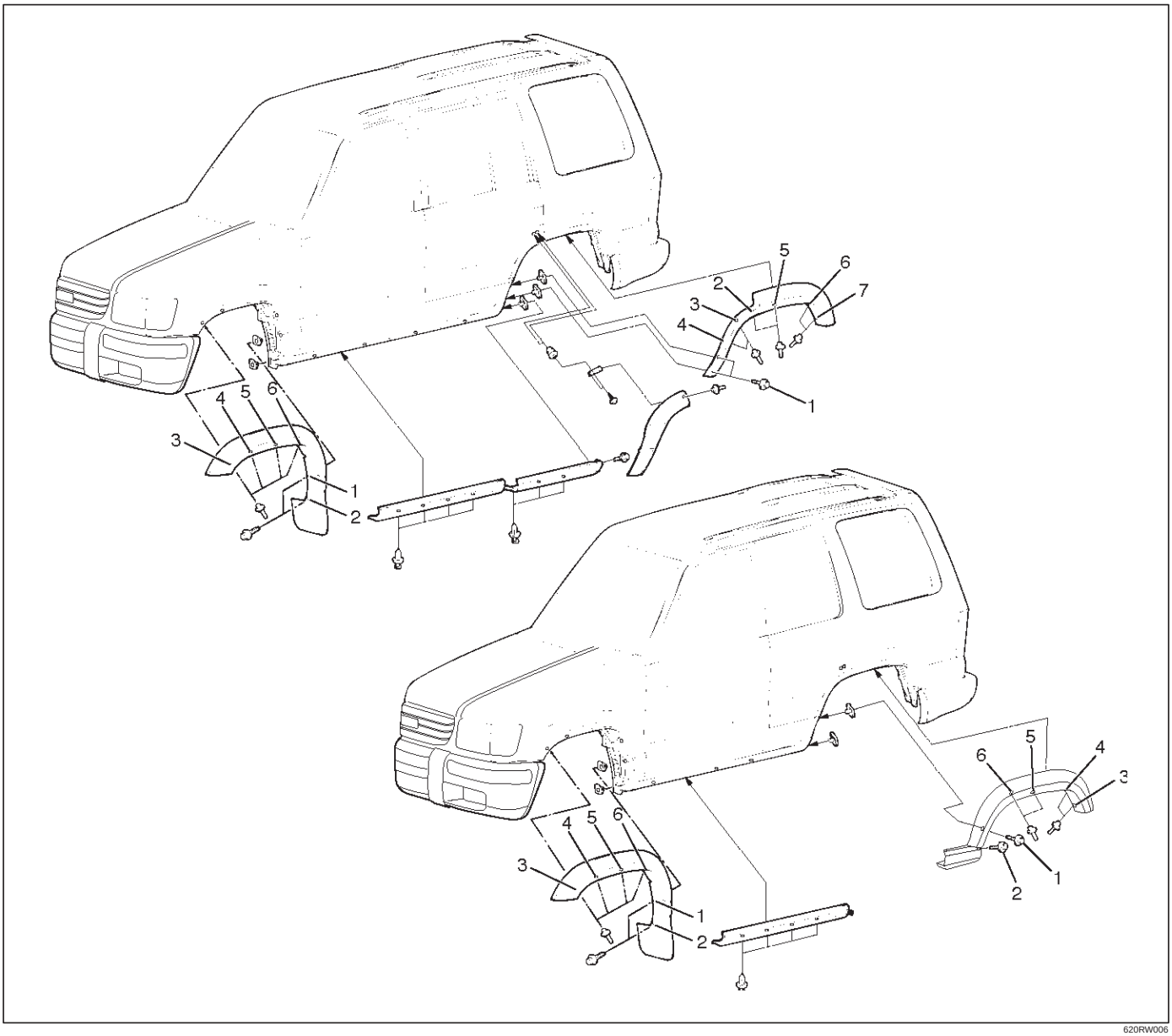
1
2
3
4
5
6
7
620RW006

Mud Flaps (With Wheel Opening Extension)

Mud Flaps (With Wheel Opening Extension) and Associated Parts

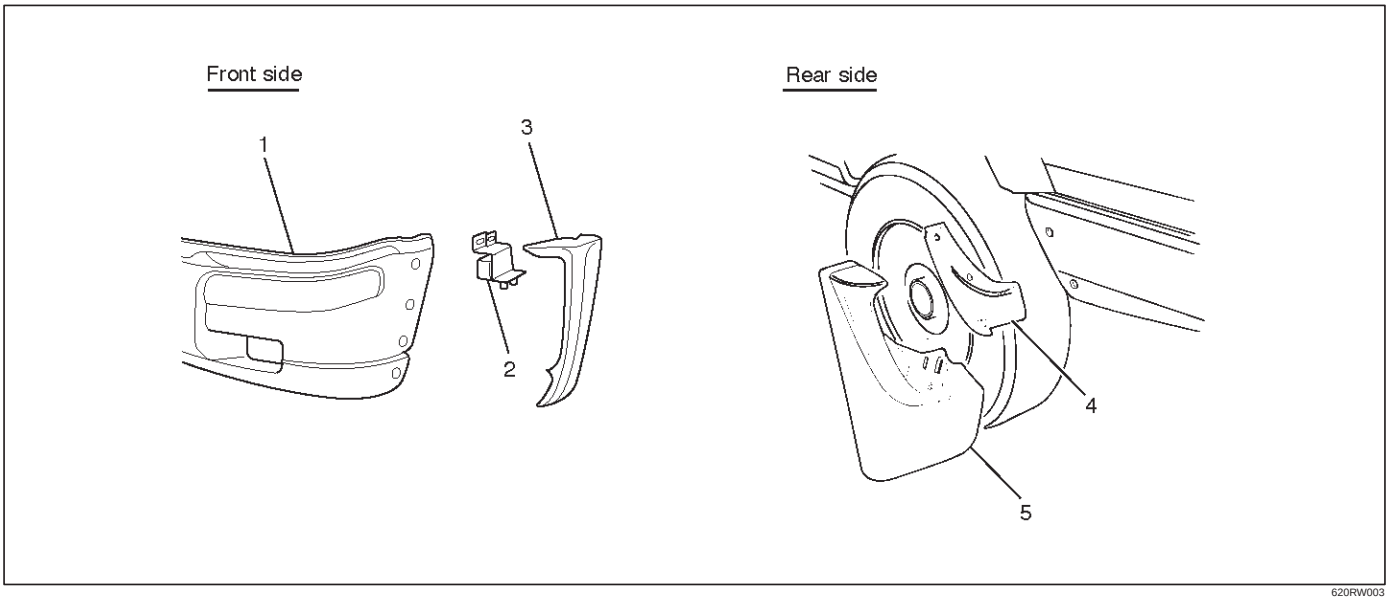

620RW003

Legend

(1) Front Bumper Assembly
(2) Front Bumper Slider
(3) Front Mud Flap
(4) Bumper Side Cover
(5) Rear Mud Flap

Removal

Front Side

1. Remove the front bumper assembly.
   - Disconnect the front fog light connector and remove two bolts from both sides of the front bumper.
2. Remove the front bumper slider(1).
   - Remove two clips(4) and two nuts(3), release the claw from the washer(2).

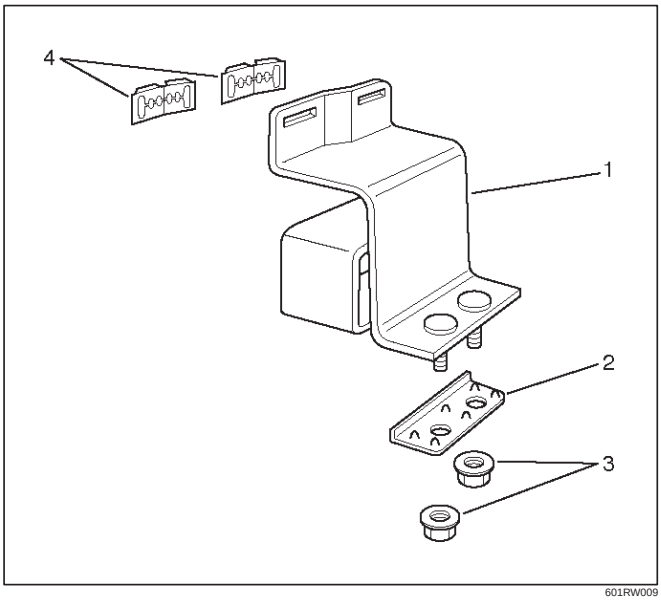

601RW009

3. Remove the front mud flap.
   - Remove four nuts and a clip.

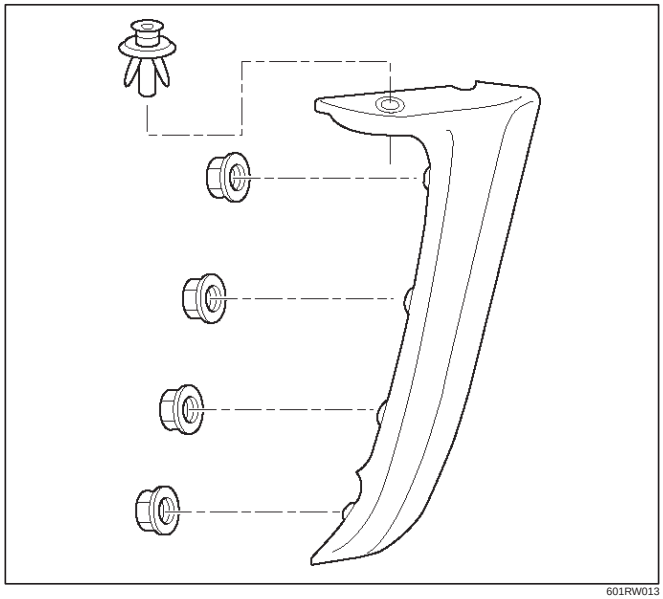

601RW013

Rear Side

1. Remove the bumper side cover.
2. Remove the rear mud flap.
   - Remove four bolts and two nuts.

Installation

To install, follow the removal steps in the reverse order.

Ventilation Assembly

Ventilation Assembly and Associated Parts

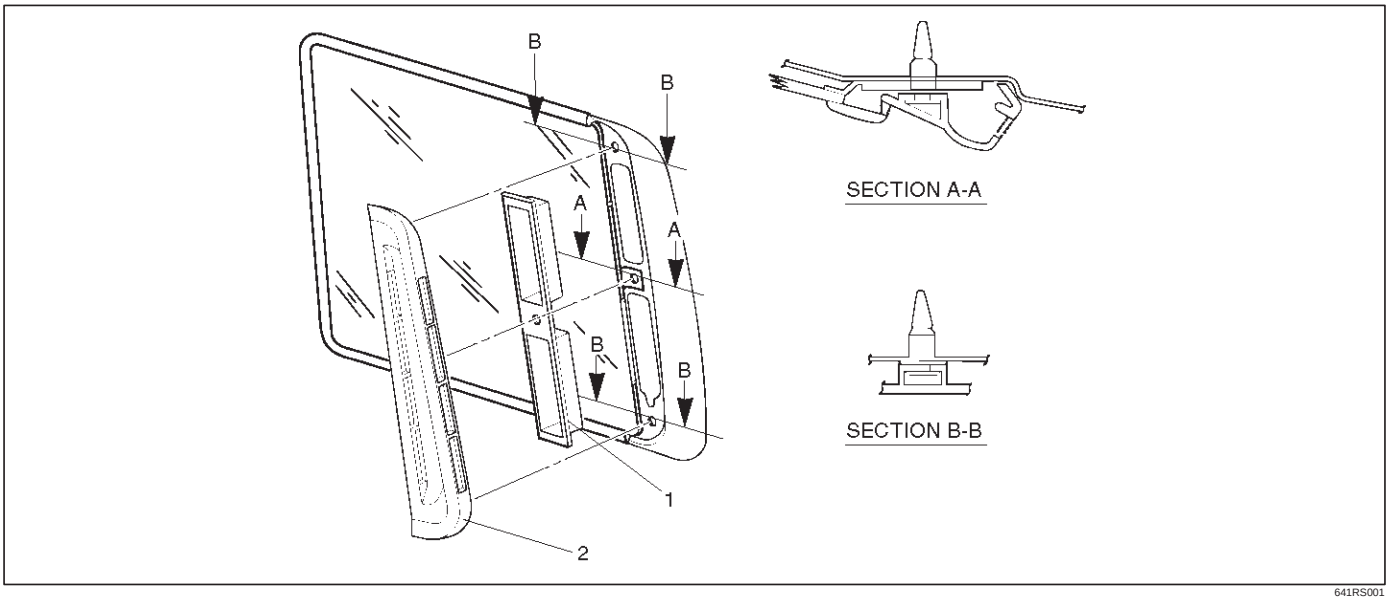

641RS001

Legend

(1) Outlet Valve Assembly
(2) Ventilation Assembly

Removal

1. Remove the ventilation assembly(1).
   - Pry the ventilation assembly retainers free from the body panel.

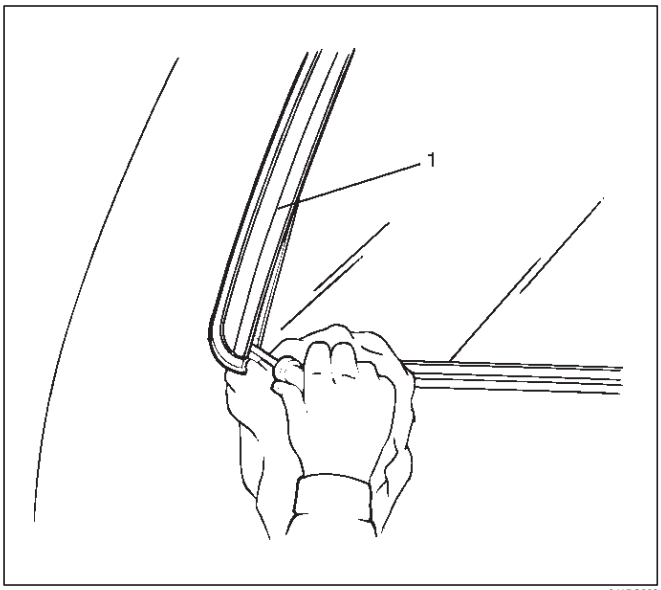

641RS002

2. Remove the outlet valve assembly.

Installation

1. Install the outlet valve assembly.
   - Insert the upper and lower catches of the outlet valve into the body panel flange and fix them securely.
2. Install the ventilation assembly.
   - Fix the clips to the body panel securely so that the ventilation assembly will not come off the body panel.

Quarter Flipper Glass Assembly (SWB)

Quarter Flipper Glass Assembly and Associated Parts

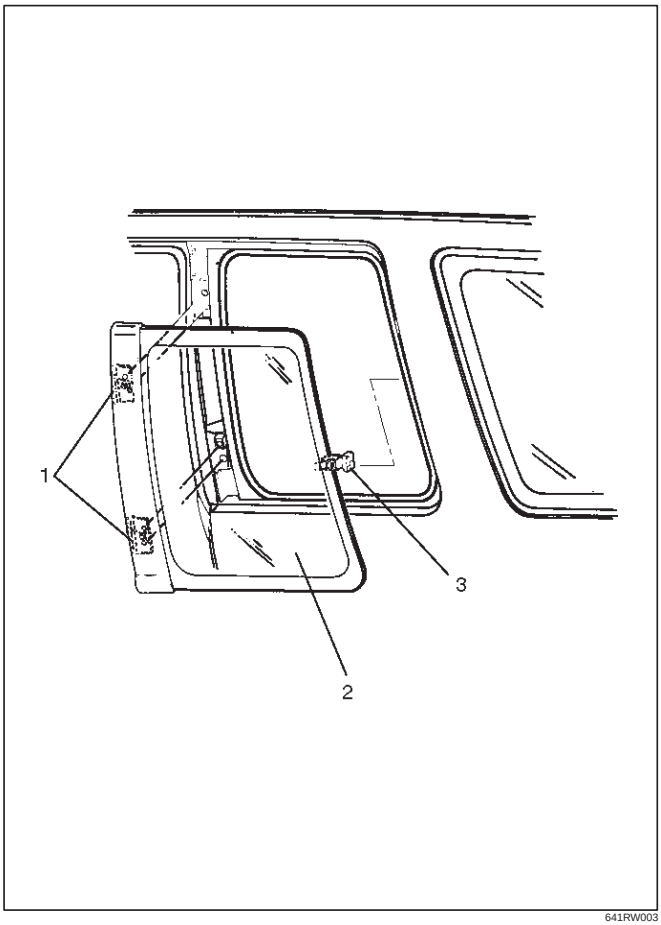

641RW003

Legend

(1) Hinge Assembly
(2) Quarter Flipper Glass Assembly
(3) Fastener

Removal

1. Remove the quarter flipper glass assembly (3).
   - Remove the fixing screws (2) and rivet (5).
2. Remove the fastener (1).
3. Remove the hinge assembly (4).

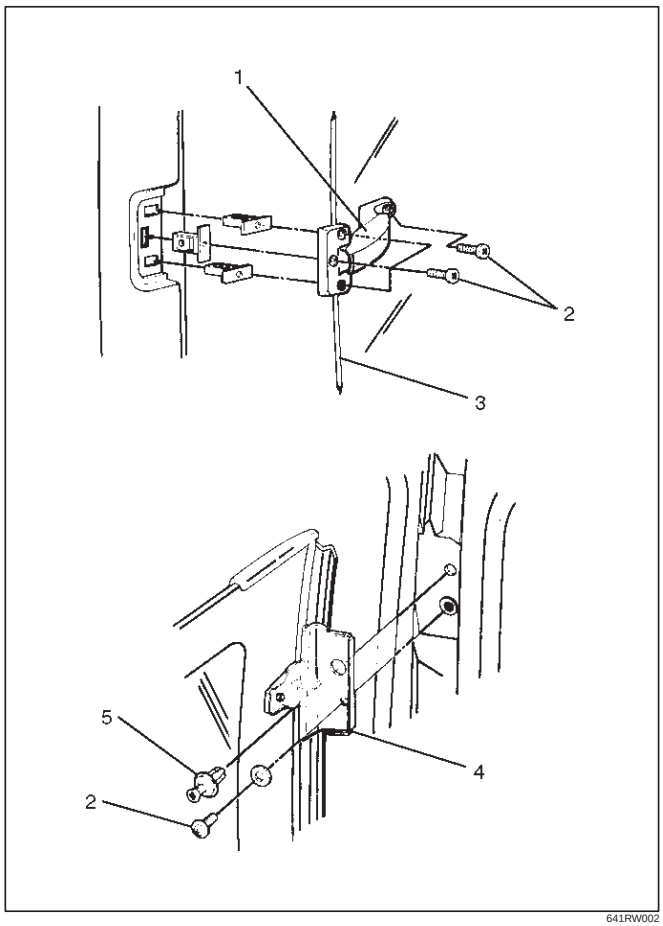

641RW002

Installation

To install, follow the removal steps in the reverse order.

Tailgate Trim Panel (LH)

Tailgate Trim Panel (LH) and Associated Parts

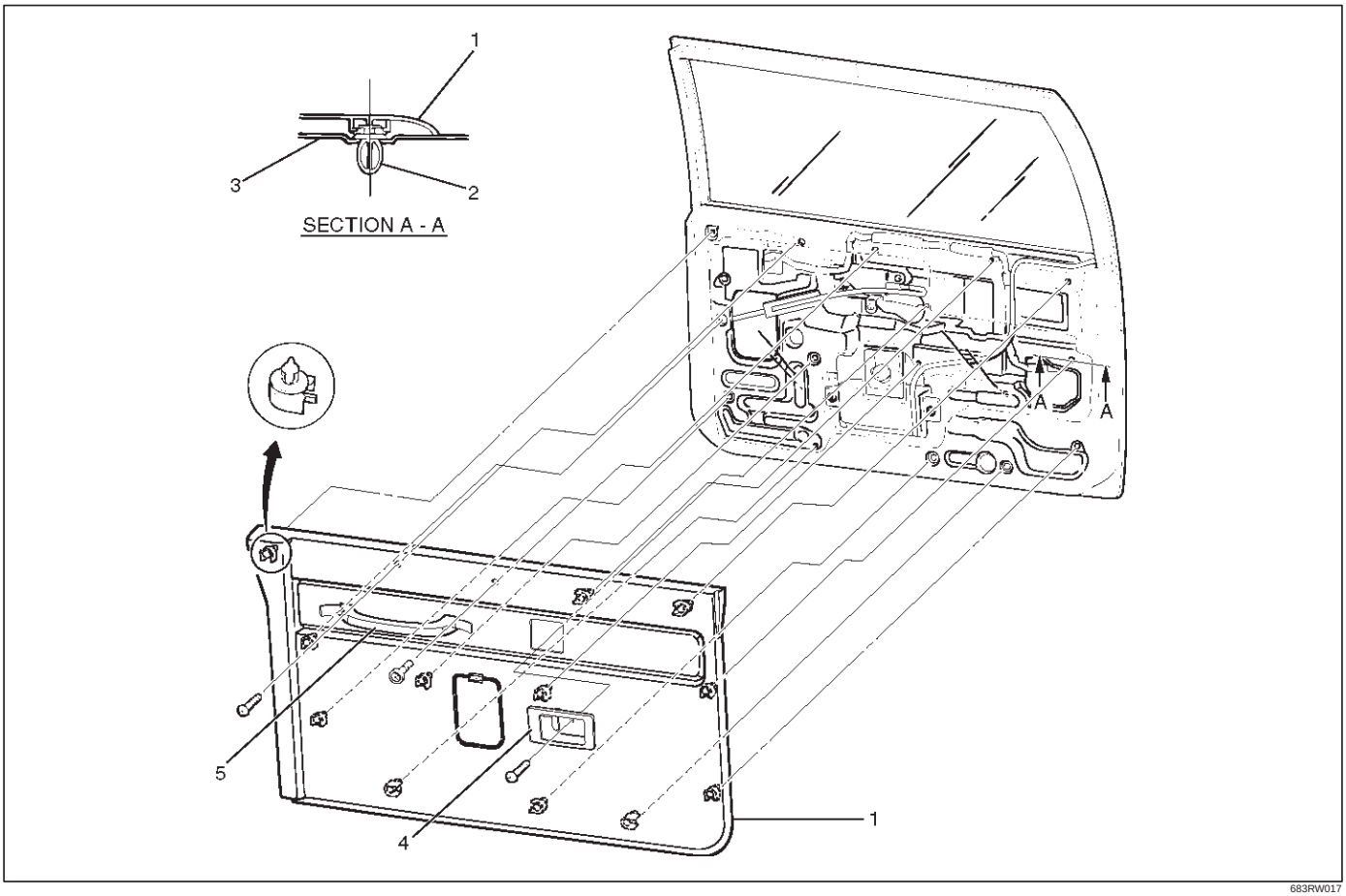

683RW017

Legend

(1) Tailgate Trim Panel (LH)
(2) Clip
(3) Tailgate Panel
(4) Inside Handle
(5) Tailgate Assist Grip

Removal

1. Disconnect the battery ground cable.
2. Remove the tailgate assist grip.
   - Open the assist covers (1) and remove two fixing screws.

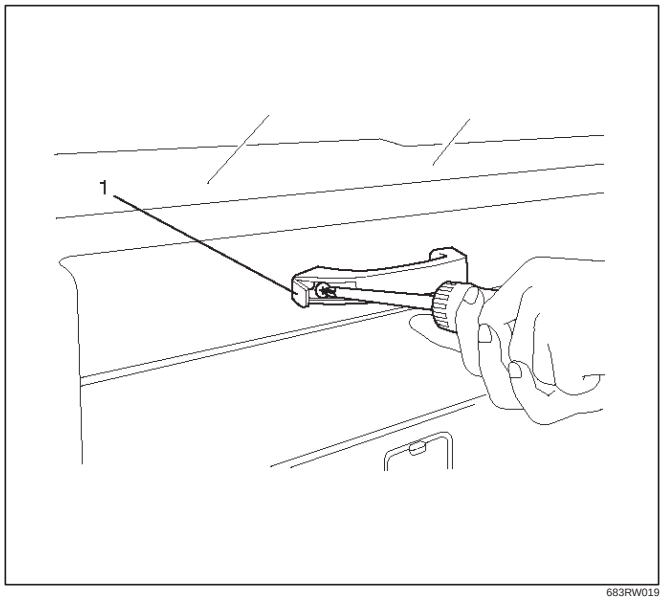

683RW019

3. Remove the inside handle (2).
   - Remove the fixing screw and disconnect the locking link (1).

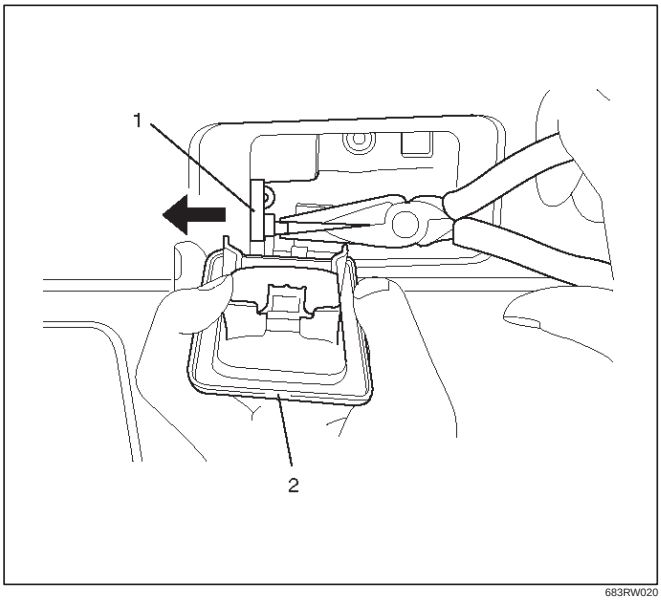

683RW020

4. Remove the tailgate trim panel (LH).
   - Pry the trim panel retainers free from the tailgate panel.

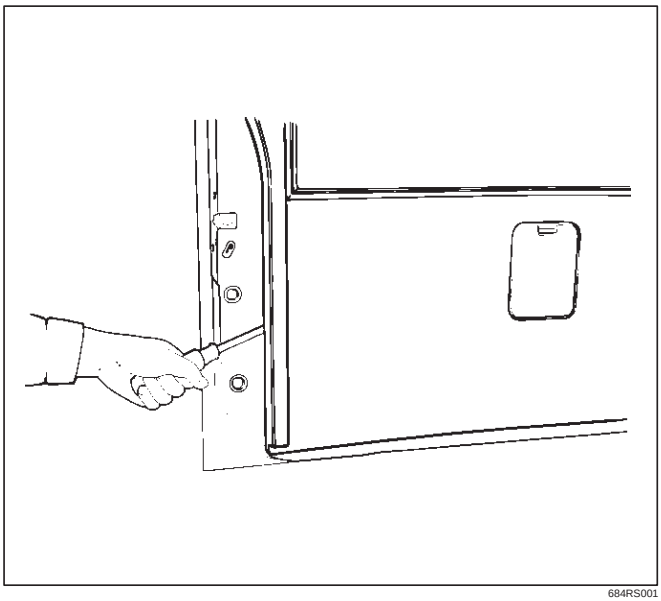

684RS001

Installation

To install, follow the removal steps in the reverse order, noting the following point.

1. Install the inside handle (1), connect the link to the handle, insert the catch portion of the handle into the tailgate side hole securely and fix it with a screw.

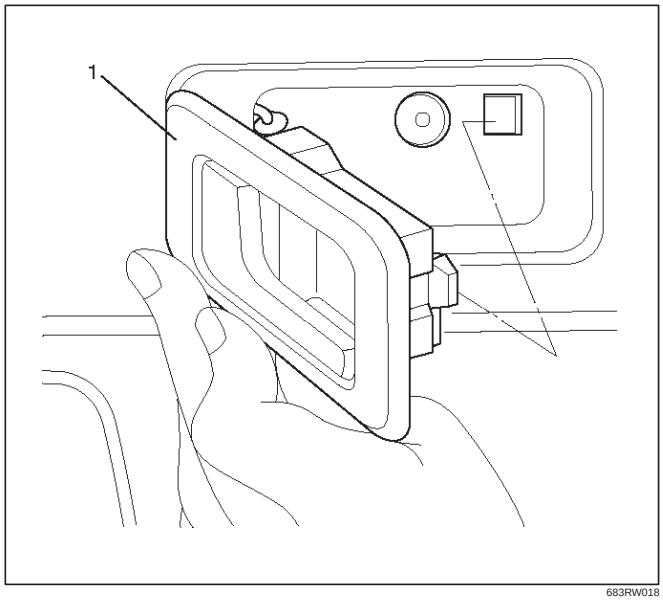

683RW018

Tailgate Trim Panel (RH)

Parts Location

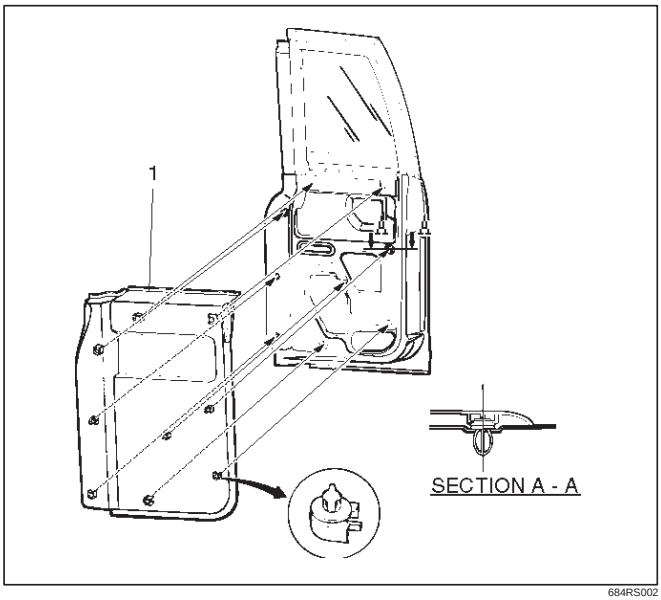

684RS002

Legend

(1) Tailgate Trim Panel

Removal

1. Disconnect the battery ground cable.
2. Remove the tailgate trim panel (RH).
   - Pry trim panel retainer free from the tailgate panel.

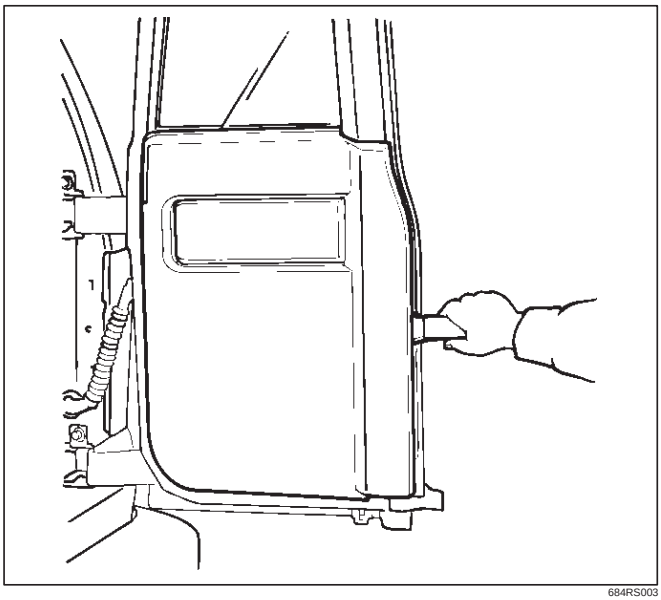

684RS003

Installation

To install, follow the removal steps in the reverse order, noting the following points.

1. Insert the retainer of the trim panel into the tailgate panel and fix it securely.

Luggage Floor Box

Luggage Floor Box and Associated Parts

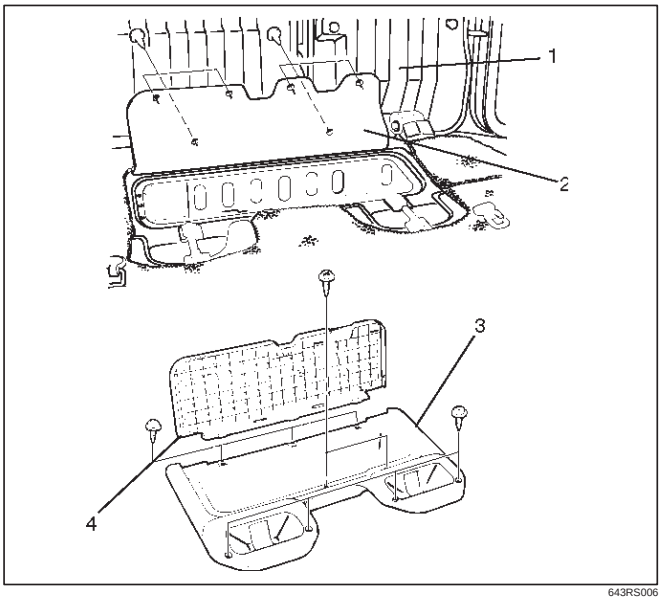

643RS006

Legend

(1) Rear Seat
(2) Floor Carpet
(3) Luggage Floor Box
(4) Luggage Floor Box Cover

Remove

1. Fold the rear seat assembly to the front direction.
2. Remove the luggage floor box cover.
   - Remove the clips which connect the floor carpet and the luggage floor box cover.
3. Remove the luggage floor box.

Installation

To install, follow the removal steps in the reverse order.

Rope Hook Set

Rope Hook Set and Associated Parts

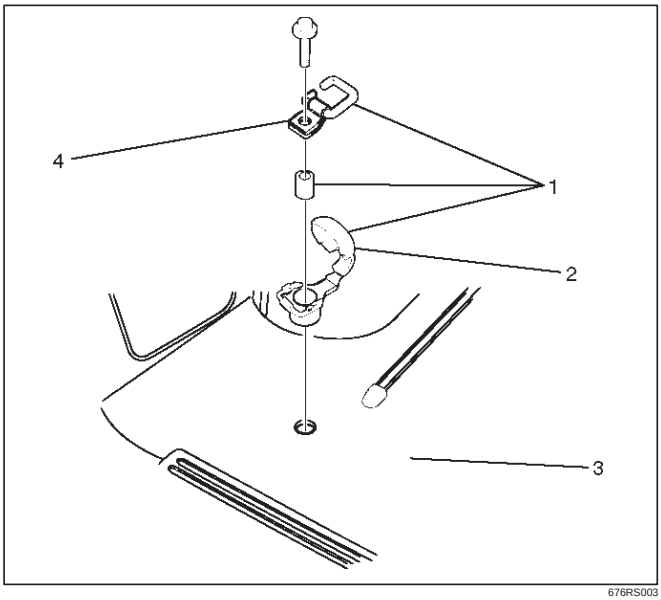

676RS003

Legend

(1) Rope Hook Set
(2) Cover
(3) Luggage Floor Carpet
(4) Hook

Removal

1. Remove the rope hook set.
   - Open the hook cover and hook fixing bolt.

Installation

1. Install the rope hook set.
   - Tighten the hook fixing bolt to the specified torque.

   Torque: 13 N·m (1.3kg·m/113 lb in)

Power Door Mirror System

General Description

The circuit consists of the starter switch, door mirror control switch, folding switch, defogger switch and door mirrors on both sides.
The door mirror switch consists of the control switch, folding switch and defogger switch.
When the control switch is operated with the starter switch at either “ACC” or “ON” position, the motors incorporated in the door mirrors on both sides rotates to allow the horizontal and vertical adjustment of mirror angles.
The folding switch can be used to fold the mirror and return it to its original position.
When turning on the door mirror defogger switch with the starter switch at “ON” position, built-in heater in the mirror is activated to perform the defogger function.

Door Mirror Switch Assembly (Control Switch, Folding Switch and Defogger Switch) Removal

1. Disconnect the battery ground cable.
2. Remove the front console assembly(2).
   - Remove four screws.
   - Remove the transmission shift lever knob.
   - Remove the transfer shift lever knob.
   - Disconnect the seat heater switch connectors (if so equipped).
   - Disconnect the door mirror switch connectors.
   - Disconnect the power & winter switch connectors. (A/T only)
3. Remove the door mirror switch assembly(1).
   - Push the lock from the back side of the front console.

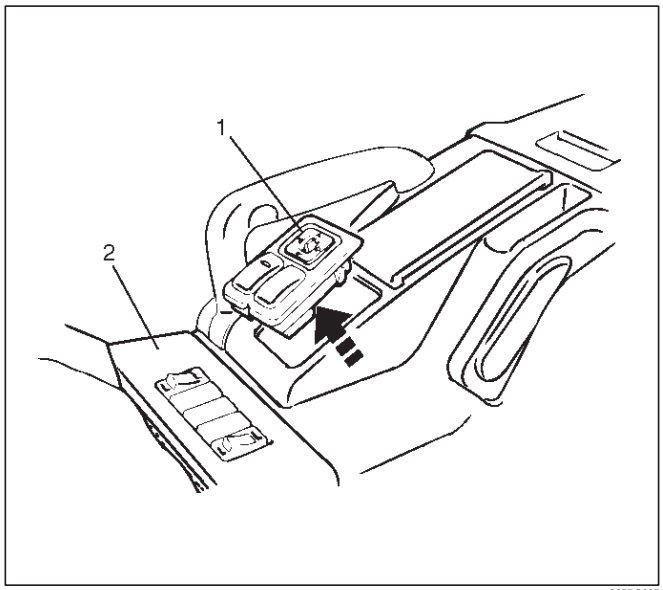

825RS005

Installation

To install, follow the removal steps in the reverse order, noting the following point.

1. Depress the switch with your fingers until it locks securely.

Power Door Mirror

General Description

Mirrors contain two driving motors for the horizontal and vertical movement of the mirror and one motor for folding the mirror.
The movement of the mirror is controlled by the direction of current running through these motors.
The housing portion of the mirror is provided with the auto-stop mechanism which is interlocked with the motor for folding the mirror. When the mirror moves to the stop position (with the mirror folded or returned to its original position), the current to the motor is shut off.
When the mirror cannot operate due to some obstacle and the motor stops its rotation, the resistor prevents current overflow.

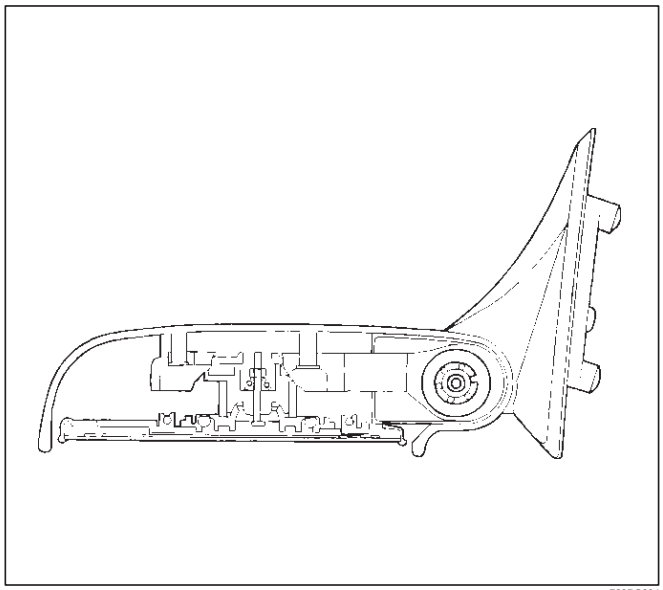
720RS004

Removal and Installation

Refer to the Door Mirror removal and installation steps in this section.

Power Window System

General Description

The circuit consists of the starter switch, (door lock &) power window switch for each of the front windows, power window switch for rear windows and power window motors.
When the starter switch is turned on, the battery voltage is applied to each of the power window switches through the circuit breaker and the power window relay on the circuit.
The “Down” switch of the driver’s power window switch has a built-in function which can be operated by just touching it.
Accordingly, the window will roll down automatically by just setting the switch to the “AUTO” position.
When the driver’s power lock switch at the driver side is depressed, the power source to the passenger’s power window switches are shut off. So, even if these switches are operated, the power window motor will not operate.

Power Window Switch Removal and Installation

Driver Seat Side

Removal

1. Disconnect the battery ground cable.
2. Remove the switch(1).
   - Pull out the switch by pushing the spring with the tip of a screwdriver.
   - Disconnect two connectors.

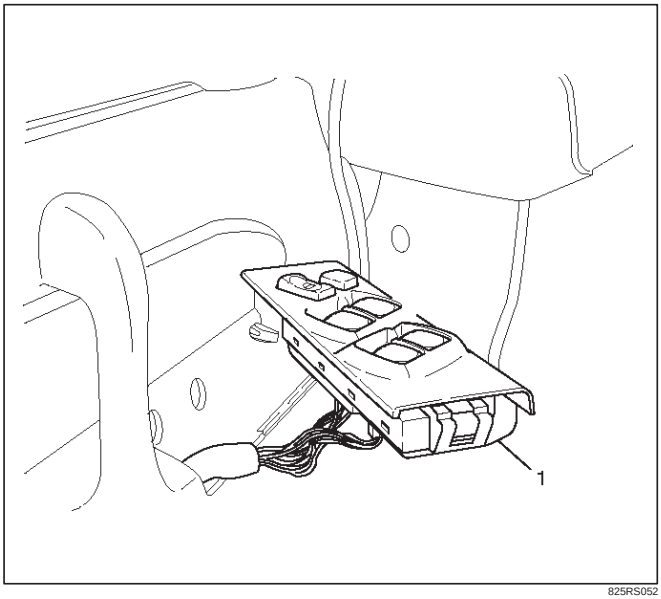

825RS052

Installation

To install, follow the removal steps in the reverse order.

Front Passenger Seat Side

Removal

1. Disconnect the battery ground cable.
2. Remove the switch(1).
   - Pull out the switch by pushing the spring with the tip of a screwdriver.
   - Disconnect the connector.

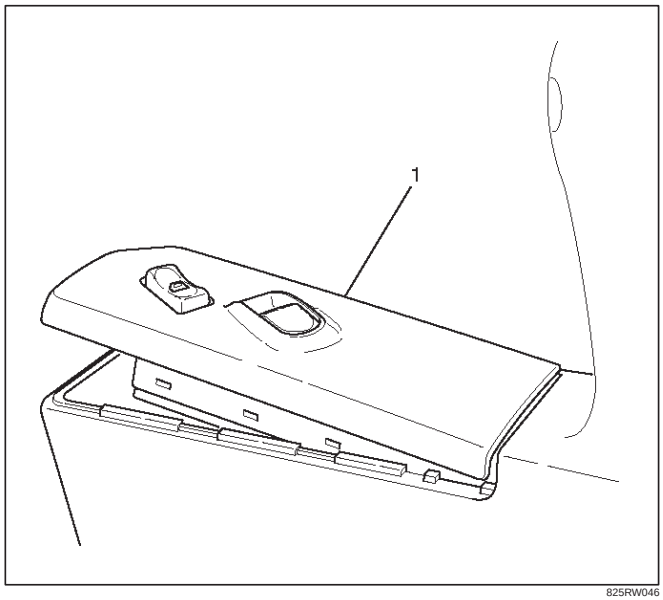

825RW046

Installation

To install, follow the removal steps in the reverse order.

Rear-Left and Right Sides

Removal

1. Disconnect the battery ground cable.
2. Remove the switch(1).
   - Pull out the switch by pushing the spring with the tip of a screwdriver.
   - Disconnect the connector.

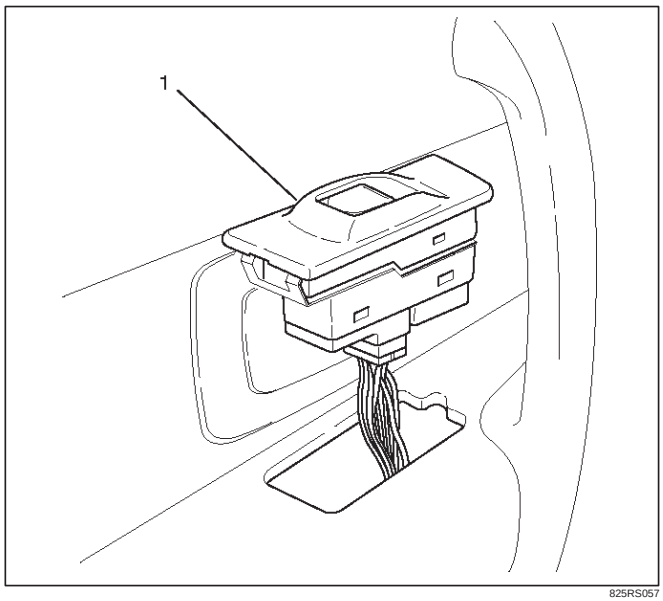

825RS057

Installation

To install, follow the removal steps in the reverse order.

Power Window Motor Removal and Installation

Driver Seat Side

Removal

1. Disconnect the battery ground cable.
2. Remove the window regulator assembly (1).
   - Refer to the Front Window Regulator, Glass And Glass Run in Body Structure section.
3. Remove the power window motor(2).
   - Remove three screws.

CAUTION: When removing the motor from the regulator(1), be careful not to get injured by the strong repellent force of the regulator spring.

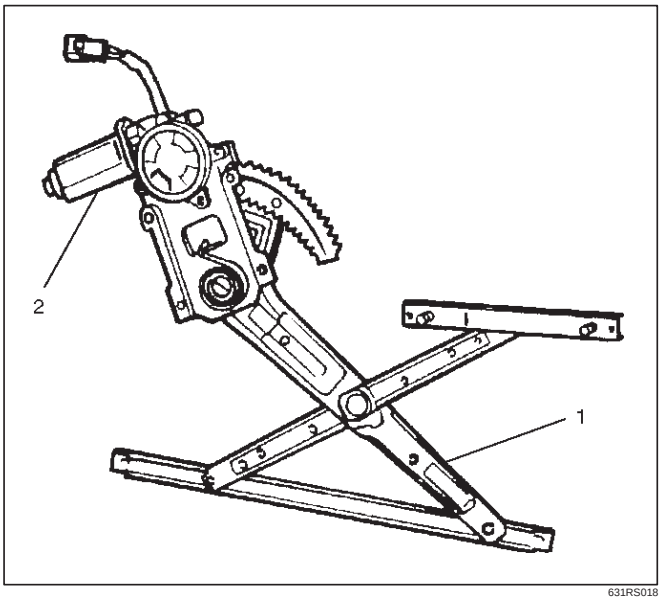

631RS018

Installation

To install, follow the removal steps in the reverse order.

Front Passenger Seat Side

Removal

1. Disconnect the battery ground cable.
2. Remove the window regulator assembly (1).
   - Refer to the Front Window Regulator, Glass And Glass Run in Body Structure section.
3. Remove the power window motor(2).
   - Remove three screws.

CAUTION: When removing the motor from the regulator(1), be careful not to get injured by the strong repellent force of the regulator spring.

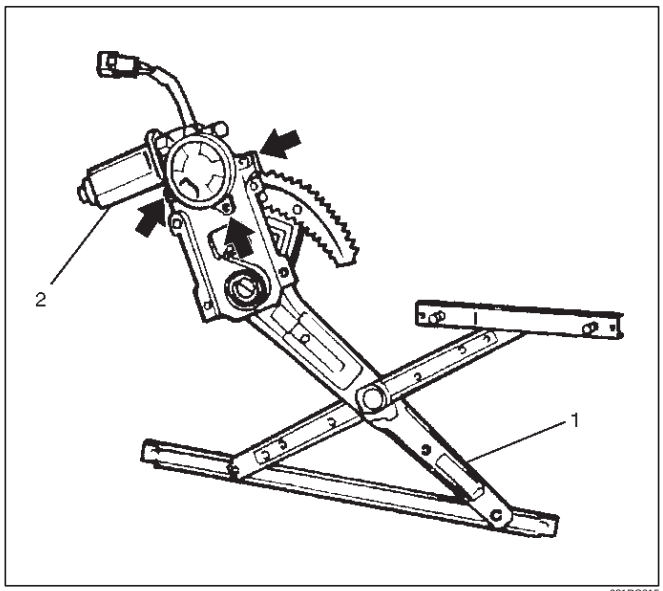

631RS015

Installation

To install, follow the removal steps in the reverse order.

Rear-Left Side

Removal

1. Disconnect the battery ground cable.
2. Remove the rear window regulator assembly.
   - Refer to the Rear Window Regulator And Glass in Body Structure section.
3. Remove the power window motor(1).
   - Remove four screws.

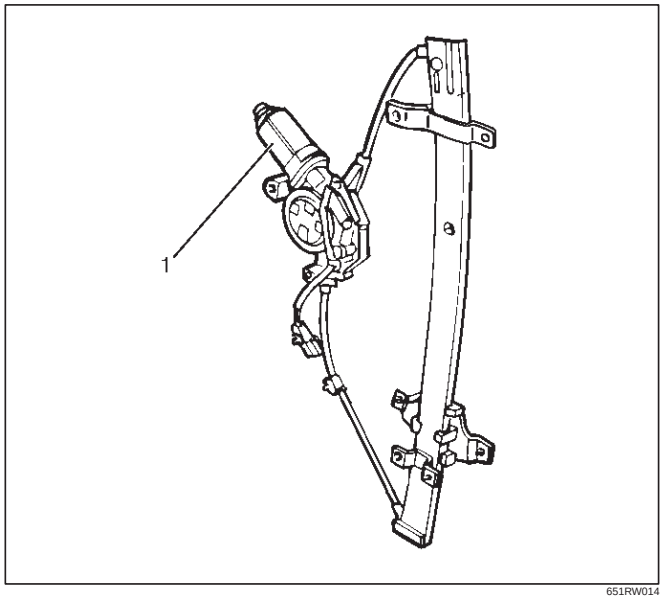

651RW014

Installation

To install, follow the removal steps in the reverse order.

Rear-Right Side

Removal and Installation

Refer to the Rear Power Window Motor-Left Side in this section.

Main Data and Specifications

Torque Specifications

Application	N·m	kg·m	lb ft	lb in
Door Mirror Fixing Bolts	8	0.8	—	69
Seat Belt Anchor Bolts	39	4.0	29	—
Hook Fixing Bolt	13	1.3	—	113

RESTRAINTS

CONTENTS

Seat Belt System 9A–1
Supplemental Restraint System (SRS) 9J–1
Restraint Control System 9J1–1

SEAT BELT SYSTEM

CONTENTS

Service Precaution 9A–1
Seat Belt 9A–2
Front Seat Belt and Associated Parts (Long Wheel Base) 9A–2
Removal 9A–2
Inspection 9A–2
Installation 9A–3
Front Seat Belt and Associated Parts (Short Wheel Base) 9A–4
Removal 9A–4
Inspection 9A–4
Installation 9A–5
Rear Seat Belt and Associated Parts (Long Wheel Base) 9A–6
Removal 9A–6
Inspection 9A–6
Installation 9A–7
Rear Seat Belt and Associated Parts (Short Wheel Base) 9A–8
Removal 9A–8
Inspection 9A–9
Installation 9A–9
Third Seat Belt and Associated Parts (Long Wheel Base) 9A–10
Removal 9A–10
Inspection 9A–11
Installation 9A–11
Front Seat Buckle Assembly 9A–12
Removal 9A–12
Installation 9A–12
Front Seat Buckle Assembly (W/Pretensioner) 9A–12
Removal 9A–12
Installation 9A–12
Rear Center Seat Belt Buckle Assembly . . . 9A–13
Rear Center Seat Belt Buckle Assembly and Associated Parts 9A–13
Removal 9A–13
Installation 9A–13
Third Seat Belt Buckle and Lock Assembly . 9A–14
Third Seat Belt Buckle and Lock Assembly and Associated Parts 9A–14
Removal 9A–14
Installation 9A–14
Rear Seat Lock Assembly 9A–15
Removal 9A–15
Installation 9A–15
Rear Seat Lock Assembly (Bench Type) . . . 9A–15
Removal 9A–15
Installation 9A–15
Rear Seat Strikers 9A–16
Removal 9A–16
Installation 9A–16
Third Seat Striker 9A–16
Removal 9A–16
Installation 9A–16
Main Data and Specifications 9A–17

Service Precaution

WARNING: THIS VEHICLE HAS A SUPPLEMENTAL RESTRAINT SYSTEM (SRS). REFER TO THE SRS COMPONENT AND WIRING LOCATION VIEW IN ORDER TO DETERMINE WHETHER YOU ARE PERFORMING SERVICE ON OR NEAR THE SRS COMPONENTS OR THE SRS WIRING. WHEN YOU ARE PERFORMING SERVICE ON OR NEAR THE SRS COMPONENTS OR THE SRS WIRING, REFER TO THE SRS SERVICE INFORMATION. FAILURE TO FOLLOW WARNINGS COULD RESULT IN POSSIBLE AIR BAG DEPLOYMENT, PERSONAL INJURY, OR OTHERWISE UNNEEDED SRS SYSTEM REPAIRS.

CAUTION: Always use the correct fastener in the proper location. When you replace a fastener, use ONLY the exact part number for that application. ISUZU will call out those fasteners that require a replacement after removal. ISUZU will also call out the fasteners that require thread lockers or thread sealant. UNLESS OTHERWISE SPECIFIED, do not use supplemental coatings (Paints, greases, or other corrosion inhibitors) on threaded fasteners or fasteners joint interfaces. Generally, such coatings adversely affect the fastener torque and the joint clamping force, and may damage the fasteners. When you install fasteners, use the correct tightening sequence and specifications. Following these instructions can help you avoid damage to parts and systems.

Seat Belt

Front Seat Belt and Associated Parts (Long Wheel Base)

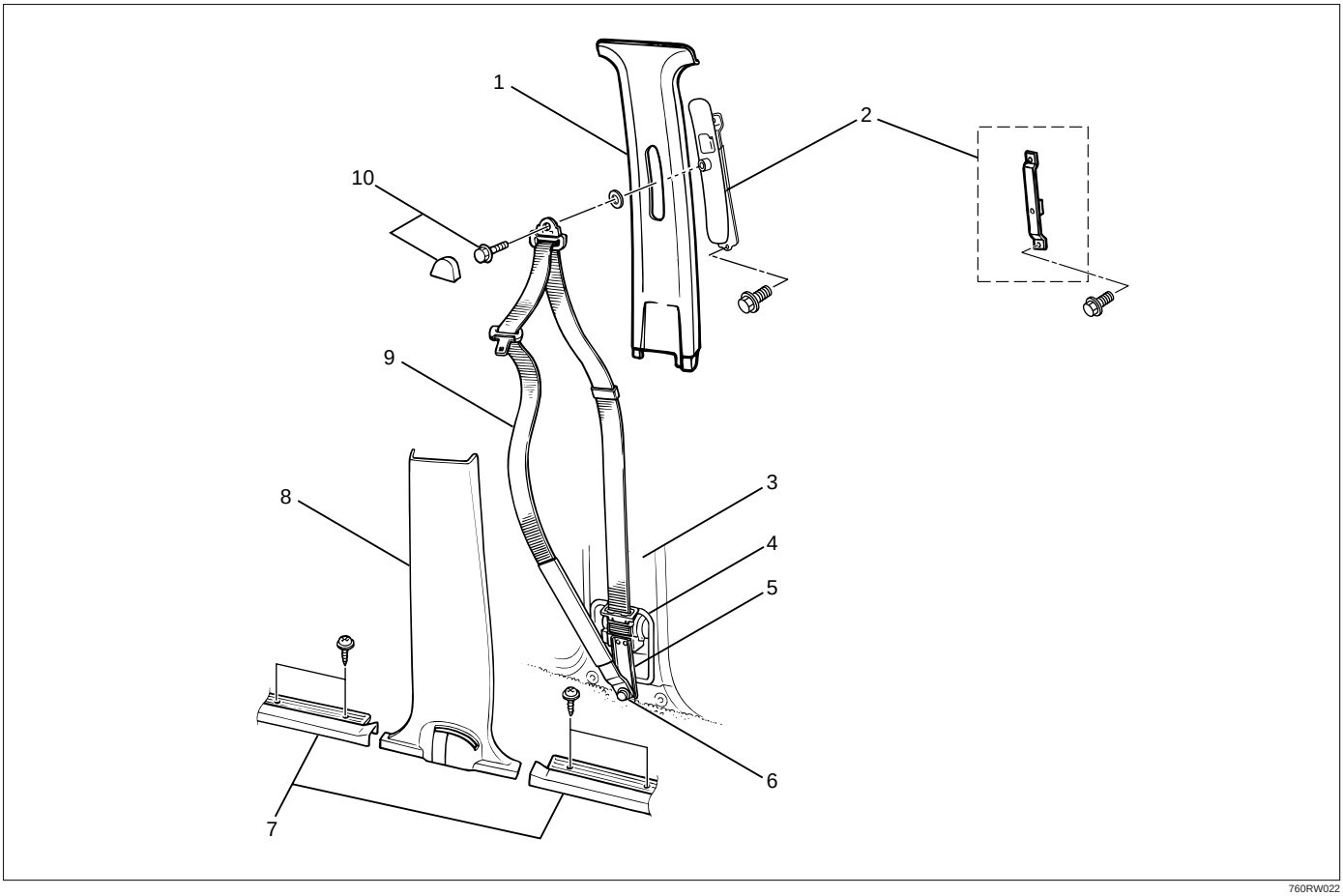

Legend

(1) Center Pillar Upper Trim Cover
(2) Adjust Shoulder Anchor Assembly/Seat Belt Anchor Plate
(3) Center Pillar
(4) Dust Cover
(5) Retractor
(6) Anchor Bolt (Lower)
(7) Door Sill Plate (Front & Rear)
(8) Center Pillar Lower Trim Cover
(9) Front Seat Belt Assembly
(10) Front Seat Belt Anchor Bolt Cover and Anchor Bolt

Removal

1. Disconnect the battery ground cable.
2. Remove the door sill plate (Front & Rear).
3. Remove the center pillar lower trim cover.
4. Remove the front seat belt anchor bolt cover and anchor bolt (Upper Side).
   - Refer to Center Pillar and Roof Side Trim Cover in Exterior/Interior Trim section.
5. Remove the seat belt lower anchor bolt and screw, and then remove the front seat belt.
6. Remove the adjust shoulder anchor assembly/seat belt anchor plate.
   - Refer to Center Pillar and Roof Side Trim Cover in Exterior/Interior Trim section.

Inspection

If any of the following abnormalities is found, replace on an assembly basis;

- Deform and malfunction of adjustable shoulder anchor/seat belt anchor plate.
- No smooth move of upper/lower anchors in the circumferential direction.
- Damaged and/or deformed through ring.
- Damaged and/or deformed tongue.
- Damaged and/or frayed of webbing.
- Deformed retractor bracket.
- Seat belt not rewound up.
- Resistance or abnormal sound when seat belt is wound out and rewound.
- Retractor abnormality.

Inspection of retractor

1. ELR (Emergency Locking Retractor) lock inclining angle check.
   - When the retractor is moved gently from its installing position, make sure it is not locked within 15° in any directions, and it remains locked at 45° or larger.
2. ELR lock check.
   - When the seat belt is drawn slowly with the retractor installed, make sure it is not locked. And when it is drawn quickly, make sure it is locked.
3. ALR (Automatic Locking Retractor)/ELR check (Except for driver's seat).
   - When rewound after winding out the seat belt, make sure the seat belt cannot be taken out. After rewinding, make sure it has returned to its normal operation.

CAUTION: Do not disassemble the retractor.

Installation

To install, follow the removal steps in the reverse order, noting the following points;

1. Pass the seat belt through the lower trim cover hole, and tighten the seat belt anchor bolts to the specified torque.

   Torque: 39 N·m (4.0 kg·m/29 lb ft)
2. After installing the trim cover to the body panel securely, close the lower trim cover.

Front Seat Belt and Associated Parts (Short Wheel Base)

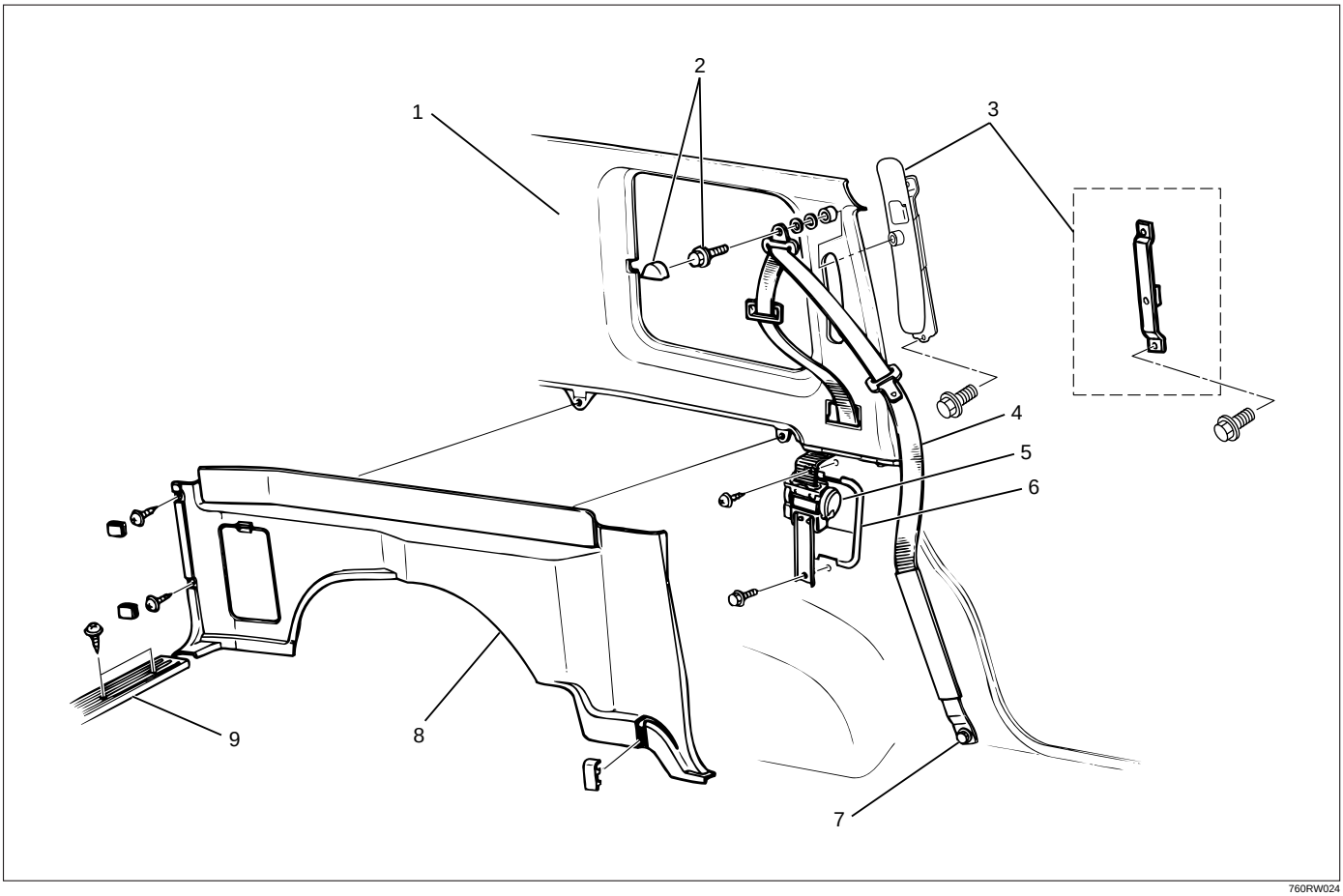

Legend

(1) Quarter Upper Trim Cover
(2) Front Seat Belt Anchor Bolt Cover and Anchor Bolt (Upper Side)
(3) Adjust Shoulder Anchor Assembly/Seat Belt Anchor Plate
(4) Front Seat Belt Assembly
(5) Retractor
(6) Dust Cover
(7) Anchor Bolt (Lower)
(8) Luggage Side Trim Cover
(9) Rear End Floor Trim Cover

Removal

1. Disconnect the battery ground cable.
2. Remove the rear end floor trim cover.
3. Remove the luggage side trim cover.
   - Refer to Luggage Side and Quarter Upper Trim Panel removal steps in Exterior/Interior Trim section.
4. Remove the front seat belt anchor bolt cover and anchor bolt (Upper Side).
5. Remove the seat belt lower anchor bolt and the retractor and then remove the front seat belt.
6. Remove the adjust shoulder anchor assembly/seat belt anchor plate.
   - Refer to Luggage Side and Quarter Upper Trim Cover remove steps in Exterior/Interior Trim section.

Inspection

If any of the following abnormalities is found, replace on an assembly basis;

- Deform and malfunction of adjustable shoulder anchor/seat belt anchor plate.
- No smooth move of upper/lower anchors in the circumferential direction.
- Damaged and/or deformed through ring.
- Damaged and/or deformed tongue.
- Damaged and/or frayed of webbing.
- Deformed retractor bracket.
- Seat belt not rewound up.
- Resistance or abnormal sound when seat belt is wound out and rewound.
- Retractor abnormality.

Inspection of retractor

1. ELR (Emergency Locking Retractor) lock inclining angle check.
   - When the retractor is moved gently from its installing position, make sure it is not locked within 15° in any directions, and it remains locked at 45° or larger.
2. ELR lock check.
   - When the seat belt is drawn slowly with the retractor installed, make sure it is not locked. And when it is drawn quickly, make sure it is locked.
3. ALR (Automatic Locking Retractor)/ELR check (Except for driver's seat).
   - When rewound after winding out the seat belt, make sure the seat belt cannot be taken out. After rewinding, make sure it has returned to its normal operation.

CAUTION: Do not disassemble the retractor.

Installation

To install, follow the removal steps in the reverse order, noting the following points;

1. Pass the seat belt through the lower trim cover hole, and tighten the seat belt anchor bolts to the specified torque.

   Torque: 39 N·m (4.0 kg·m/29 lb ft)
2. After installing the trim cover to the body panel securely, close the lower trim cover.

Rear Seat Belt and Associated Parts (Long Wheel Base)

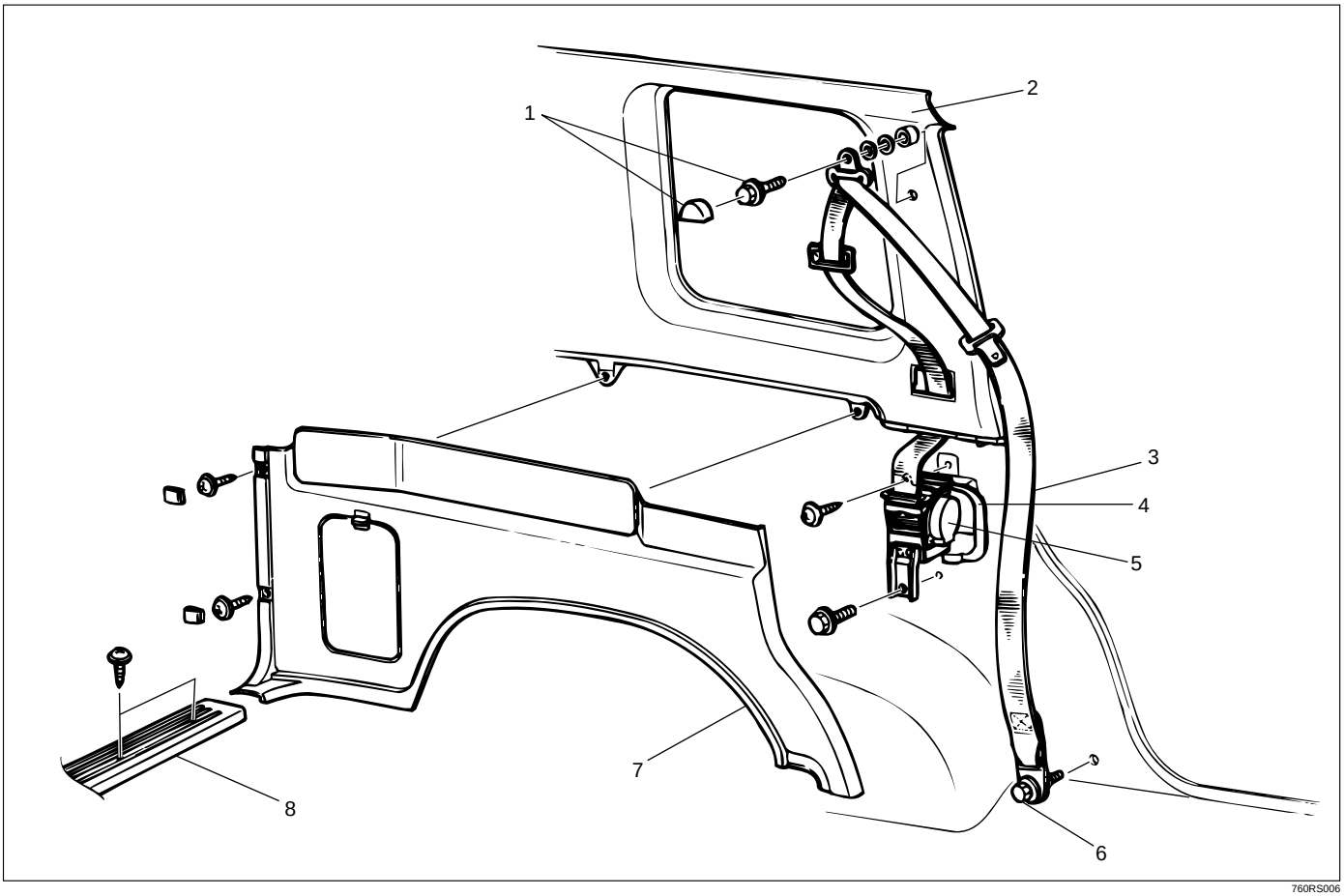

Legend

(1) Rear Seat Belt Anchor Bolt Cover and Anchor Bolt (Upper Side)
(2) Quarter Upper Trim Cover
(3) Rear Seat Belt Assembly
(4) Dust Cover
(5) Retractor
(6) Anchor Bolt (Lower Side)
(7) Luggage Side Trim Cover
(8) Rear End Floor Trim Cover

Removal

1. Disconnect the battery ground cable.
2. Remove the rear end floor trim cover.
3. Remove the luggage side trim cover.
   - Refer to Luggage Side and Quarter Upper Trim Panel removal steps in Exterior/Interior Trim section.
4. Remove the rear seat belt anchor bolt cover and anchor bolt (Upper Side).
5. Remove the seat belt lower anchor bolt and remove the retractor from dust cover slit to remove the rear seat belt.

Inspection

If any of the following abnormalities is found, replace on an assembly basis;

- No smooth move of upper/lower anchors in the circumferential direction.
- Damaged and/or deformed through ring.
- Damaged and/or deformed tongue.
- Damaged and/or frayed of webbing.
- Deformed retractor bracket.
- Seat belt not rewound up.
- Resistance or abnormal sound when seat belt is wound out and rewound.
- Retractor abnormality.

Inspection of retractor

1. ELR (Emergency Locking Retractor) lock inclining angle check.
   - When the retractor is moved gently from its installing position, make sure it is not locked within 15° in any directions, and it remains locked at 45° or larger.
2. ELR lock check.
   - When the seat belt is drawn slowly with the retractor installed, make sure it is not locked. And when it is drawn quickly, make sure it is locked.
3. ALR (Automatic Locking Retractor)/ELR check (Except for driver's seat).
   - When rewound after winding out the seat belt, make sure the seat belt cannot be taken out. After rewinding, make sure it has returned to its normal operation.

CAUTION: Do not disassemble the retractor.

Installation

To install, follow the removal steps in the reverse order, noting the following point.

1. Tighten the seat belt anchor bolts to the specified torque.

   Torque: 39 N·m (4.0 kg·m/29 lb ft)

Rear Seat Belt and Associated Parts (Short Wheel Base)

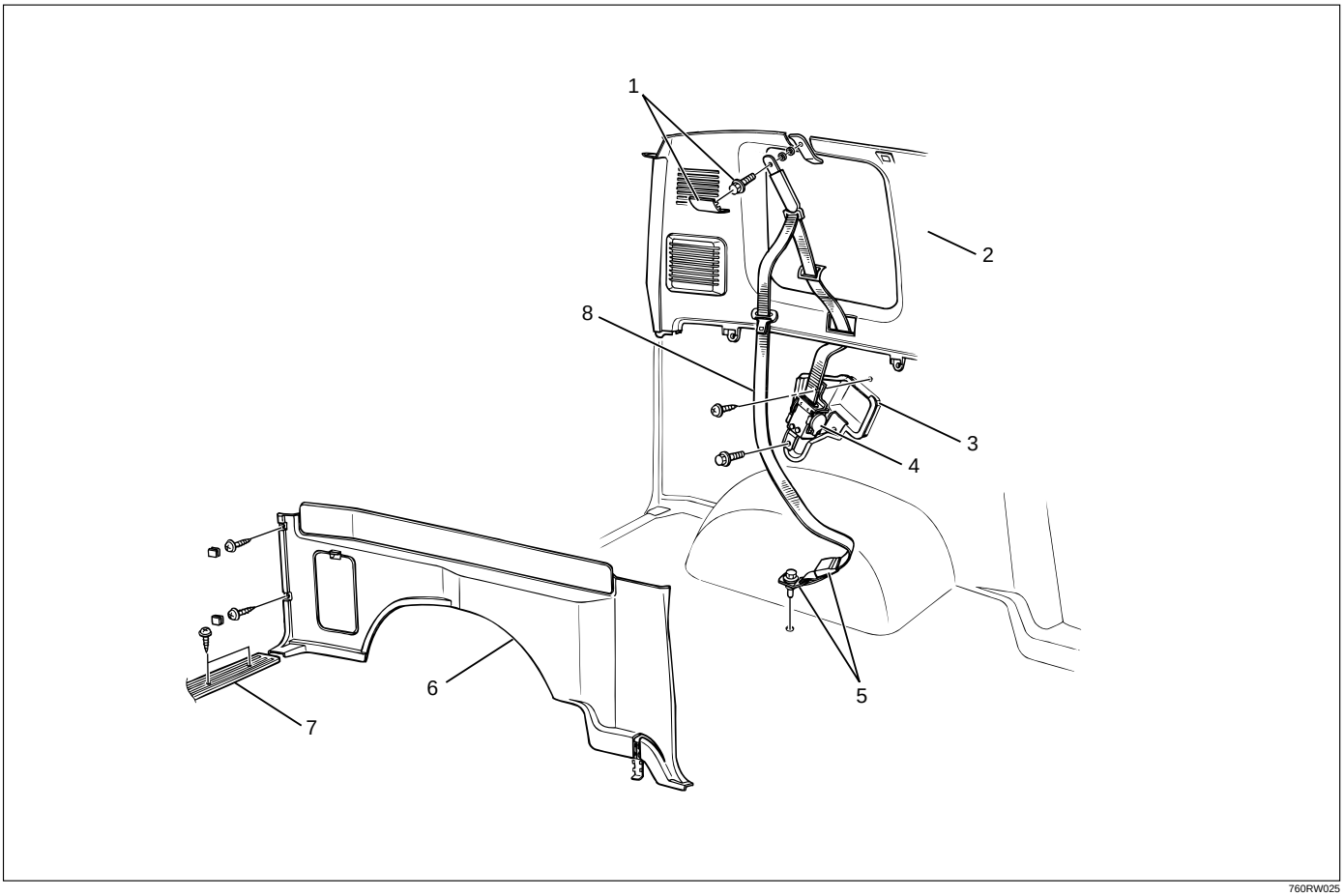

760RW025

Legend

(1) Rear Seat Belt Upper Anchor Bolt Cover and Anchor Bolt
(2) Quarter Upper Trim Cover
(3) Dust Cover
(4) Retractor
(5) Rear Seat Belt Lower Anchor Bolt Cover and Anchor Bolt
(6) Luggage Side Trim Cover
(7) Rear End Floor Trim Cover
(8) Rear Seat Belt Assembly

Removal

1. Disconnect the battery ground cable.
2. Remove the rear seat belt lower anchor bolt cover (1) and anchor bolt (2).

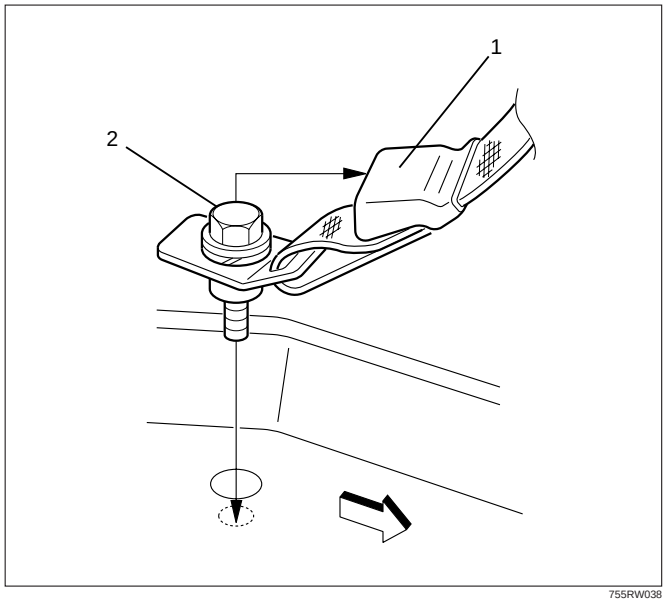

755RW038

3. Remove the rear end floor trim cover.
4. Remove the luggage side trim cover.
   - Refer to Luggage Side and Quarter Upper Trim Panel removal steps in Exterior/Interior Trim section.
5. Remove the rear seat belt upper anchor bolt cover (1) and anchor bolt.

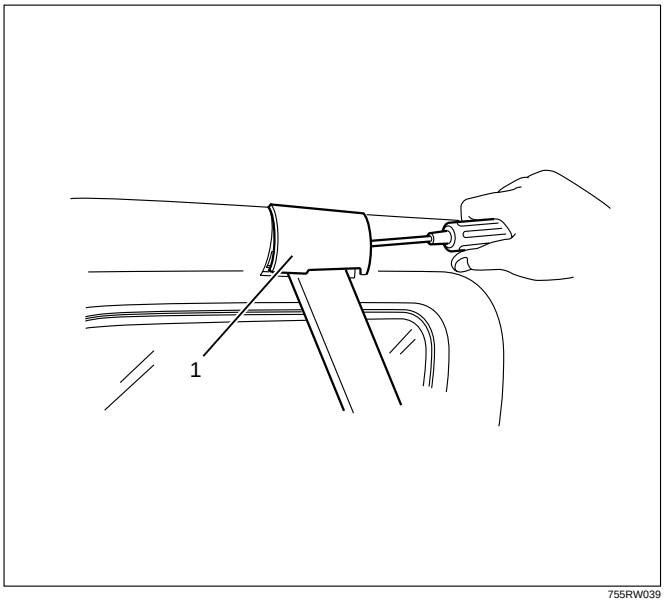

755RW039

6. Remove the rear seat belt assembly.
   - Remove the seat belt lower anchor bolt and screw.
   - Remove the retractor from the dust cover slit.

Inspection

If any of the following abnormalities is found, replace on an assembly basis;

- No smooth move of upper/lower anchors in the circumferential direction.
- Damaged and/or deformed through ring.
- Damaged and/or deformed tongue.
- Damaged and/or frayed of webbing.
- Deformed retractor bracket.
- Seat belt not rewound up.
- Resistance or abnormal sound when seat belt is wound out and rewound.
- Retractor abnormality.

Inspection of retractor

1. ELR (Emergency Locking Retractor) lock inclining angle check.
   - When the retractor is moved gently from its installing position, make sure it is not locked within 15° in any directions, and it remains locked at 45° or larger.
2. ELR lock check.
   - When the seat belt is drawn slowly with the retractor installed, make sure it is not locked. And when it is drawn quickly, make sure it is locked.
3. ALR (Automatic Locking Retractor)/ELR check (Except for driver's seat).
   - When rewound after winding out the seat belt, make sure the seat belt cannot be taken out. After rewinding, make sure it has returned to its normal operation.

CAUTION: Do not disassemble the retractor.

Installation

To install, follow the removal steps in the reverse order, noting the following point.

1. Be sure to install the lower side anchor plate straight horizontally, with mounting hole of the plate at the center.
2. Tighten the seat belt anchor bolts to the specified torque.

   Torque: 39 N·m (4.0 kg·m/29 lb ft)

Third Seat Belt and Associated Parts (Long Wheel Base)

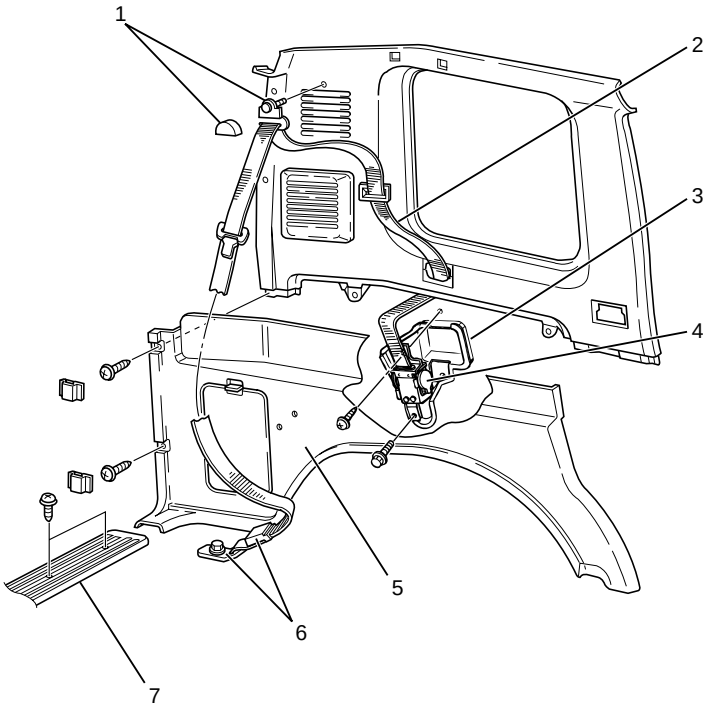

760RW027

Legend

(1) Third Seat Belt Upper Anchor Bolt Cover and Anchor Bolt
(2) Third Seat Belt Assembly
(3) Dust Cover
(4) Retractor
(5) Luggage Side Trim Cover
(6) Third Seat Belt Lower Anchor Bolt Cover and Anchor Bolt
(7) Rear End Floor Trim Cover

Removal

1. Disconnect the battery ground cable.
2. Remove the rear end floor trim cover.
3. Remove the luggage side trim cover.
   - Refer to Luggage Side and Quarter Upper Trim Panel removal steps in Exterior/Interior Trim section.
4. Remove the third seat belt anchor bolt cover and anchor bolt (Upper Side).
5. Remove the seat belt lower anchor bolt and remove the retractor from dust cover slit to remove the third seat belt.

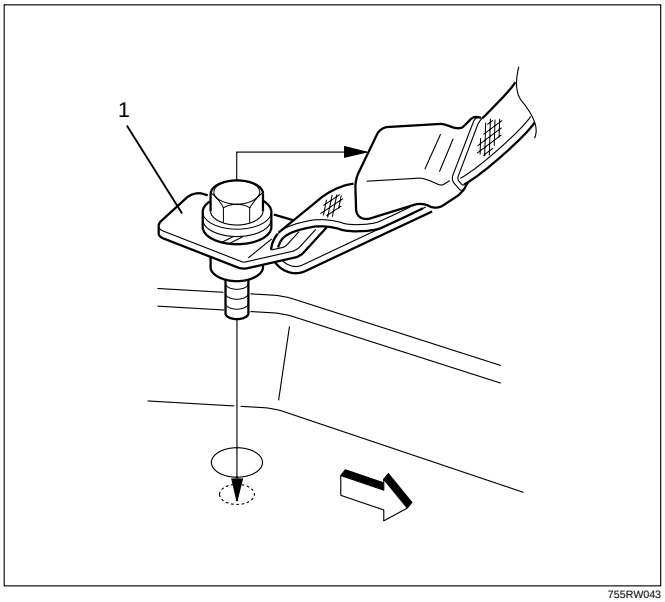

755RW043

Inspection

If any of the following abnormalities is found, replace on an assembly basis;

- No smooth move of upper/lower anchors in the circumferential direction.
- Damaged and/or deformed through ring.
- Damaged and/or deformed tongue.
- Damaged and/or frayed of webbing.
- Deformed retractor bracket.
- Seat belt not rewound up.
- Resistance or abnormal sound when seat belt is wound out and rewound.
- Retractor abnormality.

Inspection of retractor

1. ELR (Emergency Locking Retractor) lock inclining angle check.
   - When the retractor is moved gently from its installing position, make sure it is not locked within 15° in any directions, and it remains locked at 45° or larger.
2. ELR lock check.
   - When the seat belt is drawn slowly with the retractor installed, make sure it is not locked. And when it is drawn quickly, make sure it is locked.

CAUTION: Do not disassemble the retractor.

Installation

To install, follow the removal steps in the reverse order, noting the following point.

1. Be sure to install the lower side anchor plate (1) straight against the longitudinal direction of the vehicle with mounting hole of the plate at the center.
2. Tighten the seat belt anchor bolts to the specified torque.

   Torque: 39 N·m (4.0 kg·m/29 lb ft)

Front Seat Buckle Assembly

Removal

1. Disconnect the battery ground cable.
2. Disconnect the seat belt warning connector (If so equipped).
3. Remove the front seat buckle assembly(1).

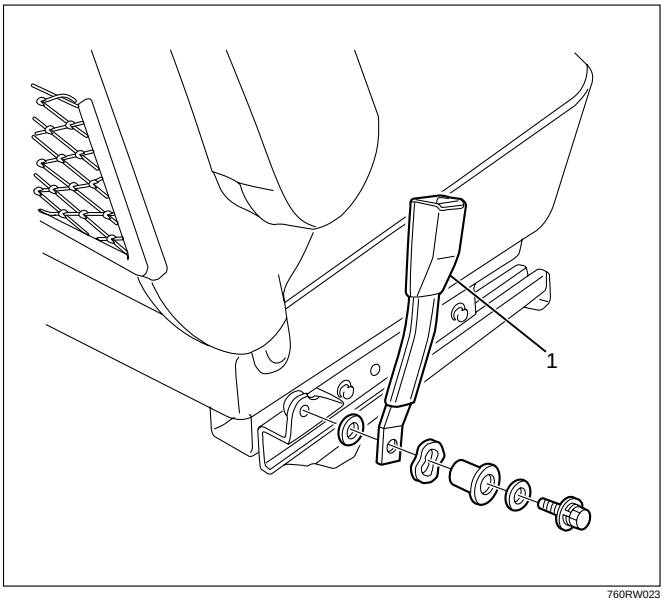

760RW023

Installation

To install, follow the removal steps in the reverse order, noting the following points.

1. Fix the buckle to the rotation – stop position(2) securely to install the front seat buckle assembly(1).

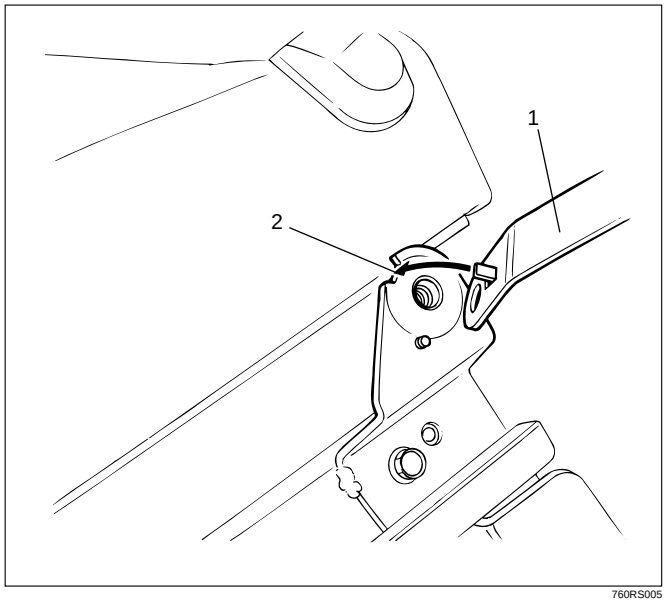

760RS005

2. Tighten the buckle anchor bolt to the specified torque.
   Torque: 39 N·m (4.0 kg·m/29 lb ft)

Front Seat Buckle Assembly (W/Pretensioner)

Removal

1. Disconnect the battery ground cable.
2. Disconnect the pretensioner harness connector(3).
3. Remove the pretensioner cover(1).
4. Remove the front seat buckle assembly(2).

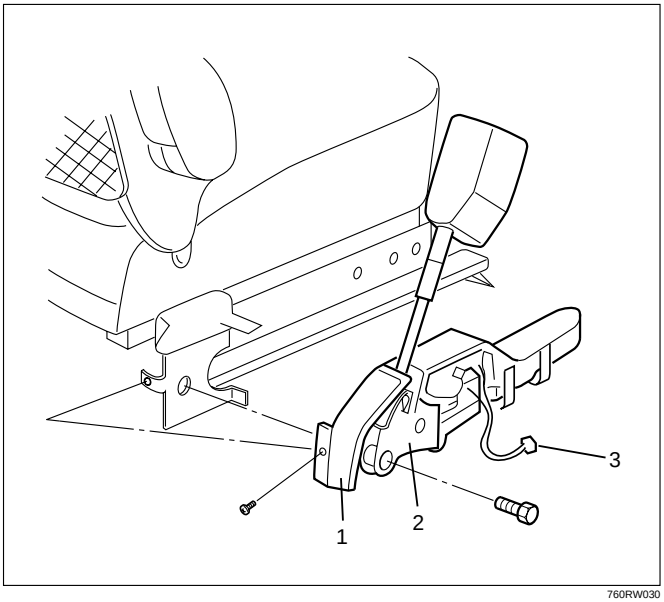

760RW030

Installation

To install, follow the removal steps in the reverse order, noting the following points.

1. Fix the buckle to the rotation – stop position securely to install the front seat buckle assembly.
2. Connect the pretensioner harness connector.

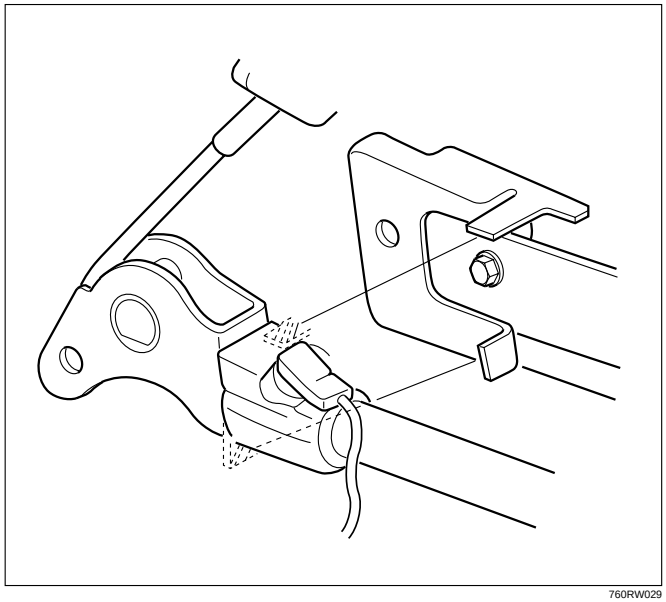

760RW029

3. Tighten the buckle anchor bolt to the specified torque.
   Torque: 39 N·m (4.0 kg·m/29 lb ft)

Rear Center Seat Belt Buckle Assembly

Rear Center Seat Belt Buckle Assembly and Associated Parts

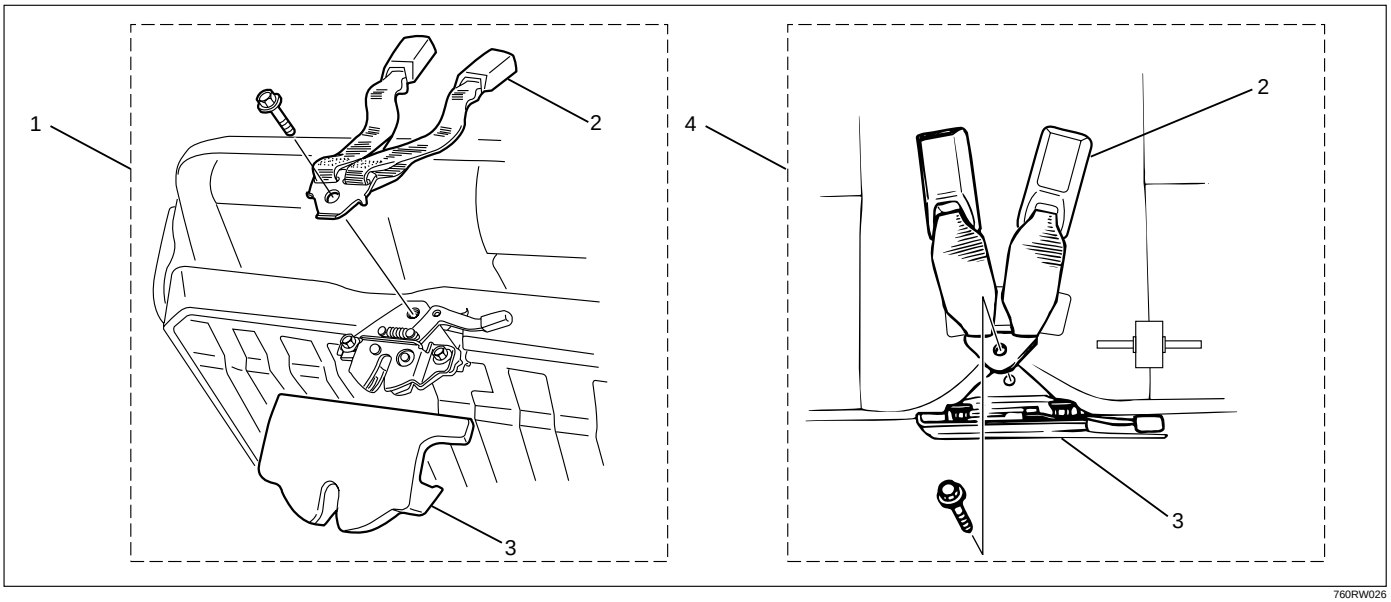

760RW026

Legend
(1) Long Wheel Base
(2) Rear Seat Belt Buckle Assembly
(3) Seat Lock Cover
(4) Short Wheel Base

Removal

1. Remove the catch portions(2) & (3) of the seat lock assembly(4) from the cover, and then remove the seat lock cover(1).

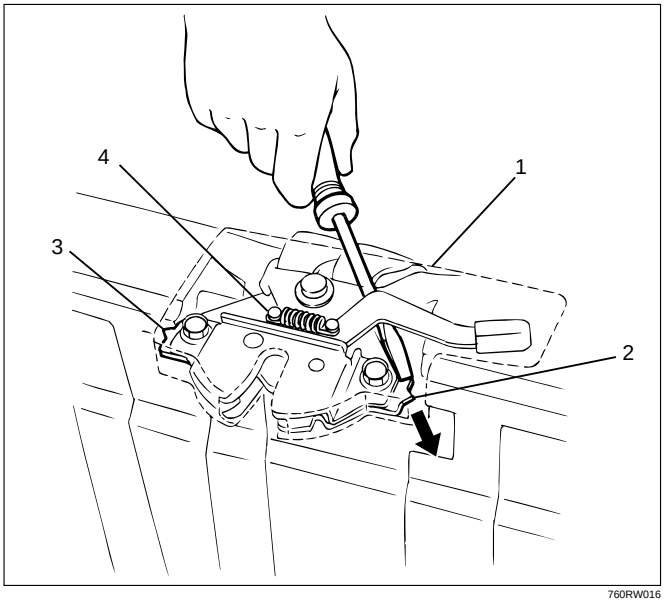

760RW016

2. Remove the rear seat buckle assembly.

Installation

1. Fix the rear seat belt buckle assembly(1) to the rotation stopper and tighten the anchor bolt to the specified torque.

Torque: 39 N·m (4.0 kg·m/29 lb ft)

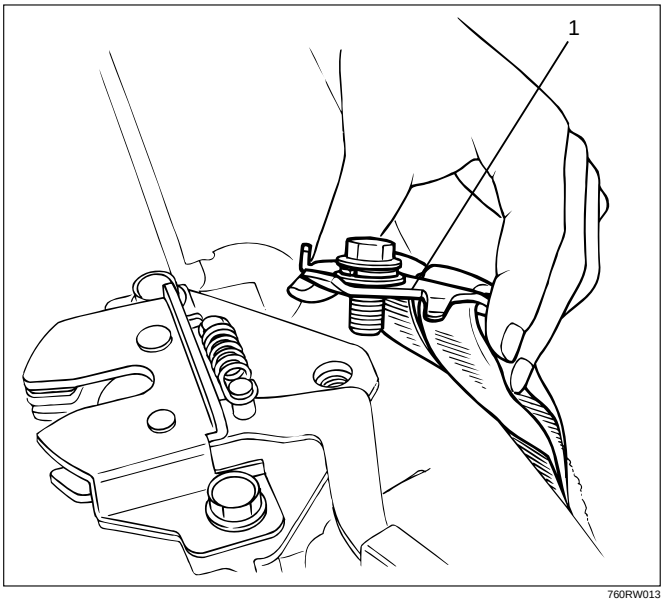

760RW013

2. Install the seat lock cover.

Third Seat Belt Buckle and Lock Assembly

Third Seat Belt Buckle and Lock Assembly and Associated Parts

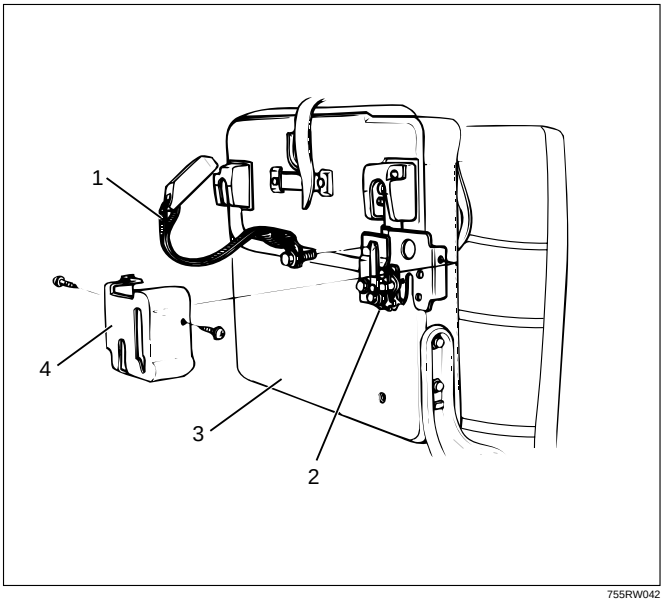

755RW042

Legend

(1) Third Seat Belt Buckle Assembly
(2) Third Seat Lock Assembly
(3) Third Seat
(4) Seat Lock Cover

Removal

1. Disconnect the battery ground cable.
2. Remove seat lock cover.
3. Remove third seat belt buckle assembly.
4. Remove third seat lock assembly.

Installation

To install, follow the removal steps in the reverse order, noting the following point.

1. Tighten the lock assembly fixing bolts to the specified torque.

   Torque: 39 N·m (4.0 kg·m/29 lb ft)

2. Tighten the buckle assembly fixing bolt to the specified torque.

   Torque: 39 N·m (4.0 kg·m/29 lb ft)

Rear Seat Lock Assembly

Removal

1. Remove the seat lock cover(3).
2. Remove the rear seat belt buckle assembly(1).
3. Remove the rear seat lock assembly(2).

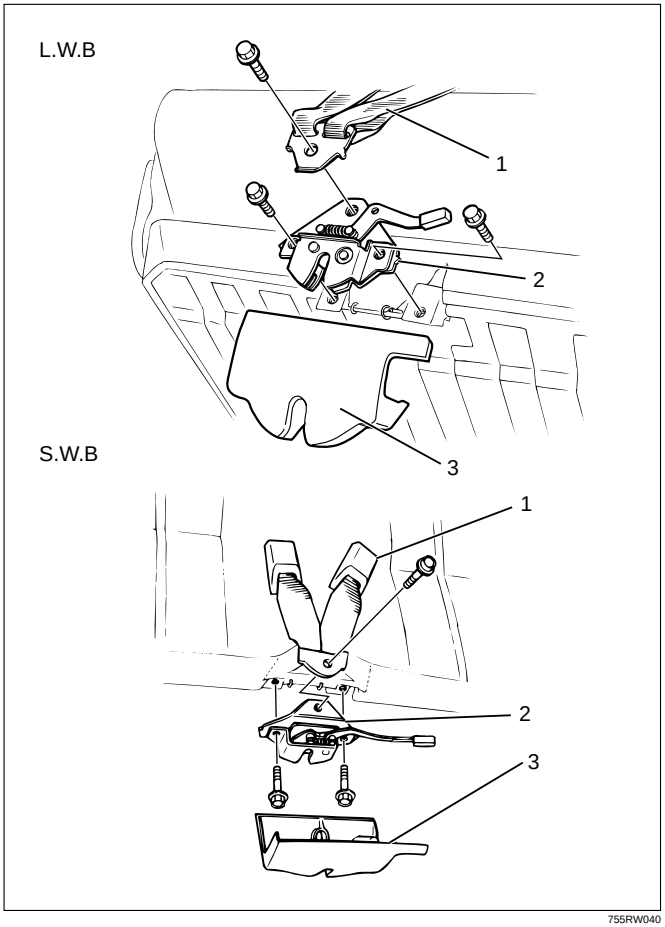

755RW040

Installation

To install, follow the removal steps in the reverse order, noting the following point.

1. Tighten the seat lock fixing bolts to the specified torque.

   Torque: 42 N·m (4.3 kg·m/31 lb ft)

Rear Seat Lock Assembly (Bench Type)

Removal

1. Remove the seat lock cover(3).
2. Remove the rear seat belt/buckle assembly(1).
3. Disconnect the link connecting the lock assemblies on the both sides, and then remove the rear seat lock assembly(2).

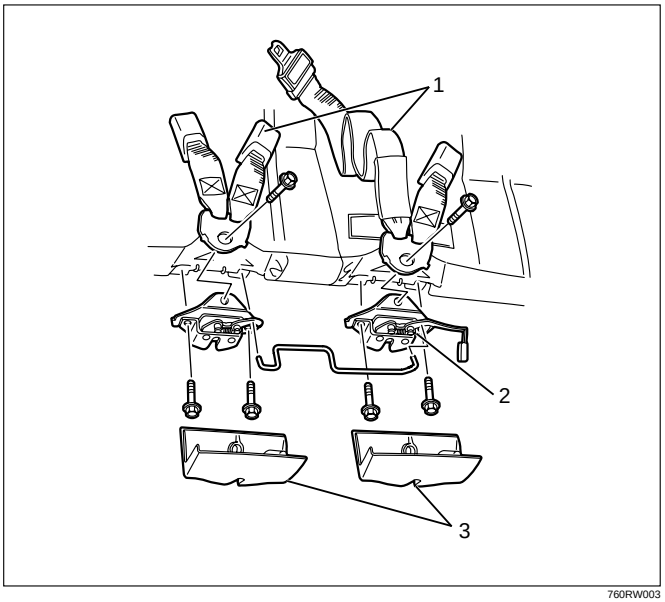

760RW003

Installation

To install, follow the removal steps in the reverse order, noting the following point.

1. Tighten the seat lock fixing bolts to the specified torque.

   Torque: 42 N·m (4.3 kg·m/31 lb ft)

Rear Seat Strikers

Removal

1. Fold the rear seat assembly to the front direction.
2. Remove the luggage floor box(1) (L·W·B).
   Remove the striker cover(3) (S·W·B).
3. Remove the rear seat striker(2).

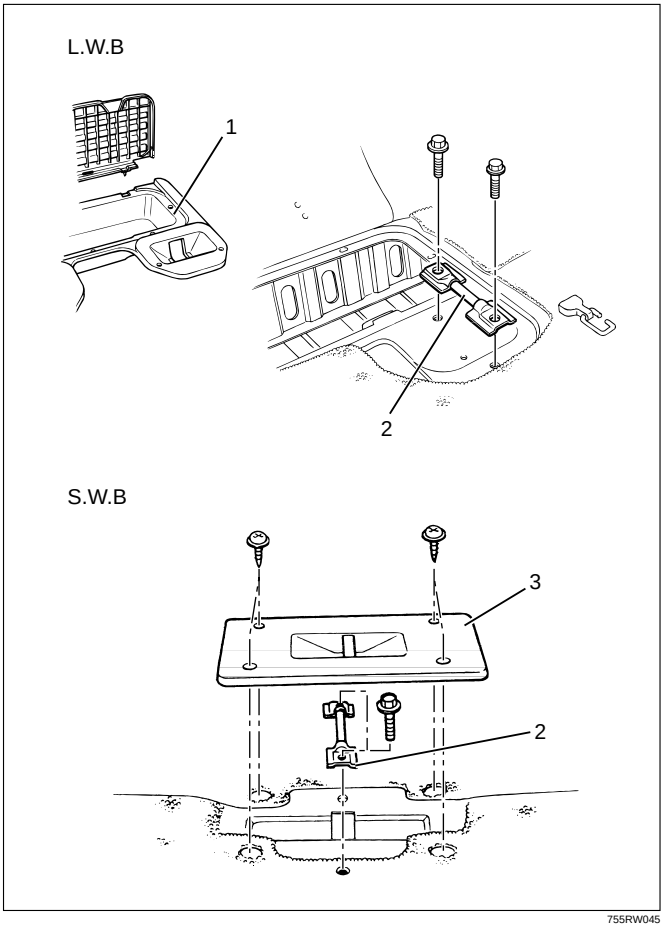

755RW045

Installation

To install, follow the removal steps in the reverse order, noting the following point.

1. Tighten the striker fixing bolts to the specified torque.
   Torque: 40 N·m (4.1 kg·m/30 lb ft)

Third Seat Striker

Removal

1. Disconnect the battery ground cable.
2. Remove the striker cover (1).
3. Remove the third seat striker (2).

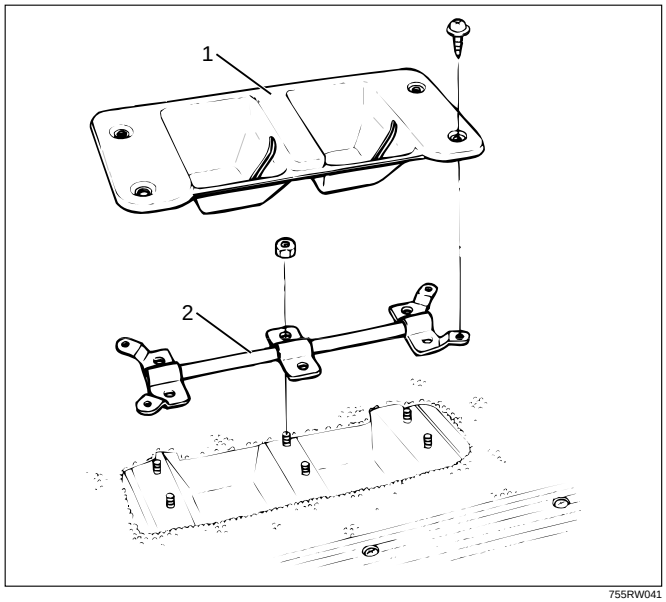

755RW041

Installation

To install, follow the removal steps in the reverse order, noting the following point.

1. Tighten the striker fixing nuts to the specified torque.
   Torque: 39 N·m (4.0 kg·m/29 lb ft)

Main Data and Specifications

Torque Specifications

Application	N·m	kg·m	Lb Ft
Front Seat Belt Anchor Bolts	39	4.0	29
Rear Seat Belt Anchor Bolts	39	4.0	29
Front Seat Buckle Anchor Bolt	39	4.0	29
Rear Seat Buckle Anchor Bolt	39	4.0	29
Rear Seat Lock Fixing Bolts	42	4.3	31
Third Seat Belt Anchor Bolts	39	4.0	29
Third Seat Lock Fixing Bolts	39	4.0	29
Third Seat Buckle Anchor Bolt	39	4.0	29
Third Seat Striker Fixing Nuts	39	4.0	29
Rear Seat Striker Fixing Bolts	40	4.1	30

RESTRAINTS

SUPPLEMENTAL RESTRAINT SYSTEM (SRS)

CONTENTS

Service Precaution 9J–1
General Description 9J–2
SRS Component And Wiring Location View . 9J–4
Component Description 9J–4
Definitions 9J–7
Diagnosis 9J–8
SRS Connector Body Face Views 9J–9
Repairs And Inspections Required After An Accident 9J–9
On–Vehicle Service 9J–10
Air Bag Assembly Handling / Shipping / Scrapping 9J–11
Pretensioner Seat Belt Handling / Shipping / Scrapping. 9J–11
Special Tools 9J–26
Service Precautions for SRS Component Service 9J–30
SRS Connectors 9J–31
Sensing And Diagnostic Module (SDM) 9J–33
Service Precautions 9J–33
Removal 9J–33
Installation 9J–33
Driver Air Bag Assembly 9J–35
Service Precautions 9J–35
Removal 9J–35
Installation 9J–36
Steering Wheel 9J–37
Service Precautions 9J–37
Removal 9J–37
Installation 9J–38
SRS Coil Assembly 9J–39
Service Precautions 9J–39
Removal 9J–39
Installation 9J–41
SRS Coil Replacement Procedure 9J–42
Removal 9J–42
How to Disconnect the horn terminal 9J–43
How to Connect Horn Terminal 9J–43
Installation 9J–44
Steering Column 9J–44
Service Precautions 9J–44
Removal 9J–44
Installation 9J–46
Passenger Air Bag Assembly 9J–48
Service Precautions 9J–48
Removal 9J–48
Installation 9J–48
Pretensioner Seat Belt (If so equipped) 9J–49
Service Precaution 9J–49
Parts Location 9J–49
Removal 9J–49
Installation 9J–49
Main Data and Specifications 9J–50

Service Precaution

WARNING: IF SO EQUIPPED WITH A SUPPLEMENTAL RESTRAINT SYSTEM (SRS), REFER TO THE SRS COMPONENT AND WIRING LOCATION VIEW IN ORDER TO DETERMINE WHETHER YOU ARE PERFORMING SERVICE ON OR NEAR THE SRS COMPONENTS OR THE SRS WIRING. WHEN YOU ARE PERFORMING SERVICE ON OR NEAR THE SRS COMPONENTS OR THE SRS WIRING, REFER TO THE SRS SERVICE INFORMATION. FAILURE TO FOLLOW WARNINGS COULD RESULT IN POSSIBLE AIR BAG DEPLOYMENT, PERSONAL INJURY, OR OTHERWISE UNNEEDED SRS SYSTEM REPAIRS.

CAUTION: Always use the correct fastener in the proper location. When you replace a fastener, use ONLY the exact part number for that application. ISUZU will call out those fasteners that require a replacement after removal. ISUZU will also call out the fasteners that require thread lockers or thread sealant. UNLESS OTHERWISE SPECIFIED, do not use supplemental coatings (Paints, greases, or other corrosion inhibitors) on threaded fasteners or fastener joint interfaces. Generally, such coatings adversely affect the fastener torque and the joint clamping force, and may damage the fastener. When you install fasteners, use the correct tightening sequence and specifications. Following these instructions can help you avoid damage to parts and systems.

General Description

CAUTION: When fasteners are removed, always reinstall them at the same location from which they were removed. If a fastener needs to be replaced, use the correct part number fastener for that application. If the correct part number fastener is not available, a fastener of equal size and strength (or stronger) may be used. Fasteners that are not reused, and those requiring thread locking compound will be called out. The correct torque value must be used when installing fasteners that require it. If the above conditions are not followed, parts or system damage could result.

Restraint Devices

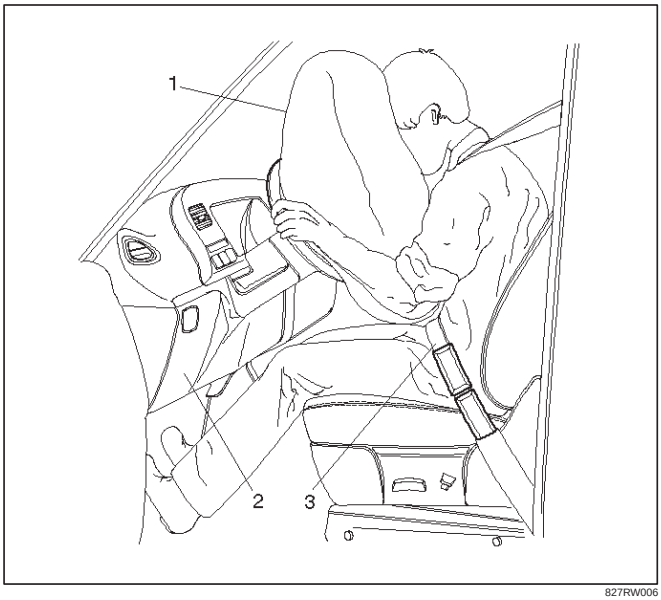

827RW006

Legend

(1) Deployed Air Bag
(2) Knee Bolster
(3) Seat Belt

The Supplemental Restraint System (SRS) helps supplement the protection offered by the driver and front passenger seat belts by deploying an air bag from the center of the steering wheel and from the top of the right side of the instrument panel.

The air bag deploys when the vehicle is involved in a frontal crash of sufficient force up to 30 degrees off the centerline of the vehicle. To further absorb the crash energy there is a knee bolster located beneath the instrument panel for both the driver and passenger, and the steering column is collapsible.

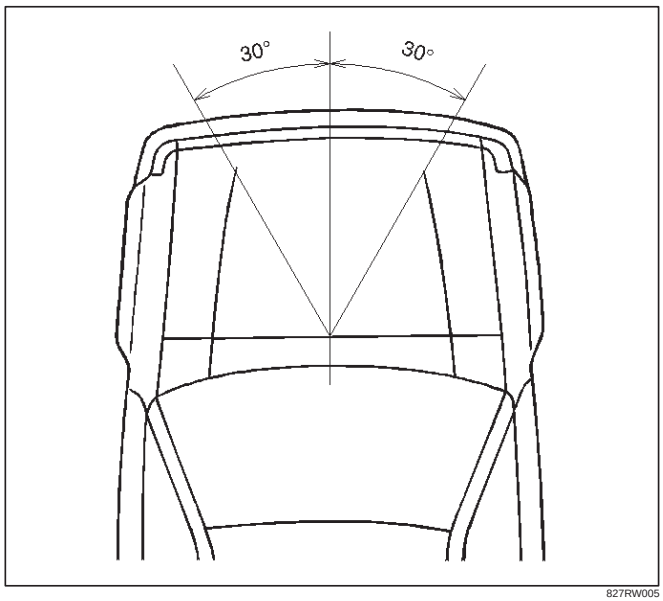

827RW005

System Description

The SRS consists of the Sensing and Diagnostic Module (SDM), the driver air bag assembly, the SRS coil assembly, the passenger air bag assembly and the “AIR BAG” warning lamp in the instrument cluster. The SDM, SRS coil assembly (driver side only), driver air bag assembly, passenger air bag assembly and connector wire make up the deployment loops. The function of the deployment loops is to supply current through air bag assembly, which will cause deployment of the air bags in the event of a frontal crash of sufficient force, up to 30 degrees off the centerline of the vehicle. The air bag assemblies are only supplied enough current to deploy when the SDM detects vehicle velocity changes severe enough to warrant deployment.

The SDM contains a sensing device which converts vehicle velocity change to an electrical signal. The electrical signal generated is processed by the SDM and then compared to a value stored in memory. When the generated signal exceeds the stored value, the SDM will cause current to flow through the air bag assembly deploying the air bags.

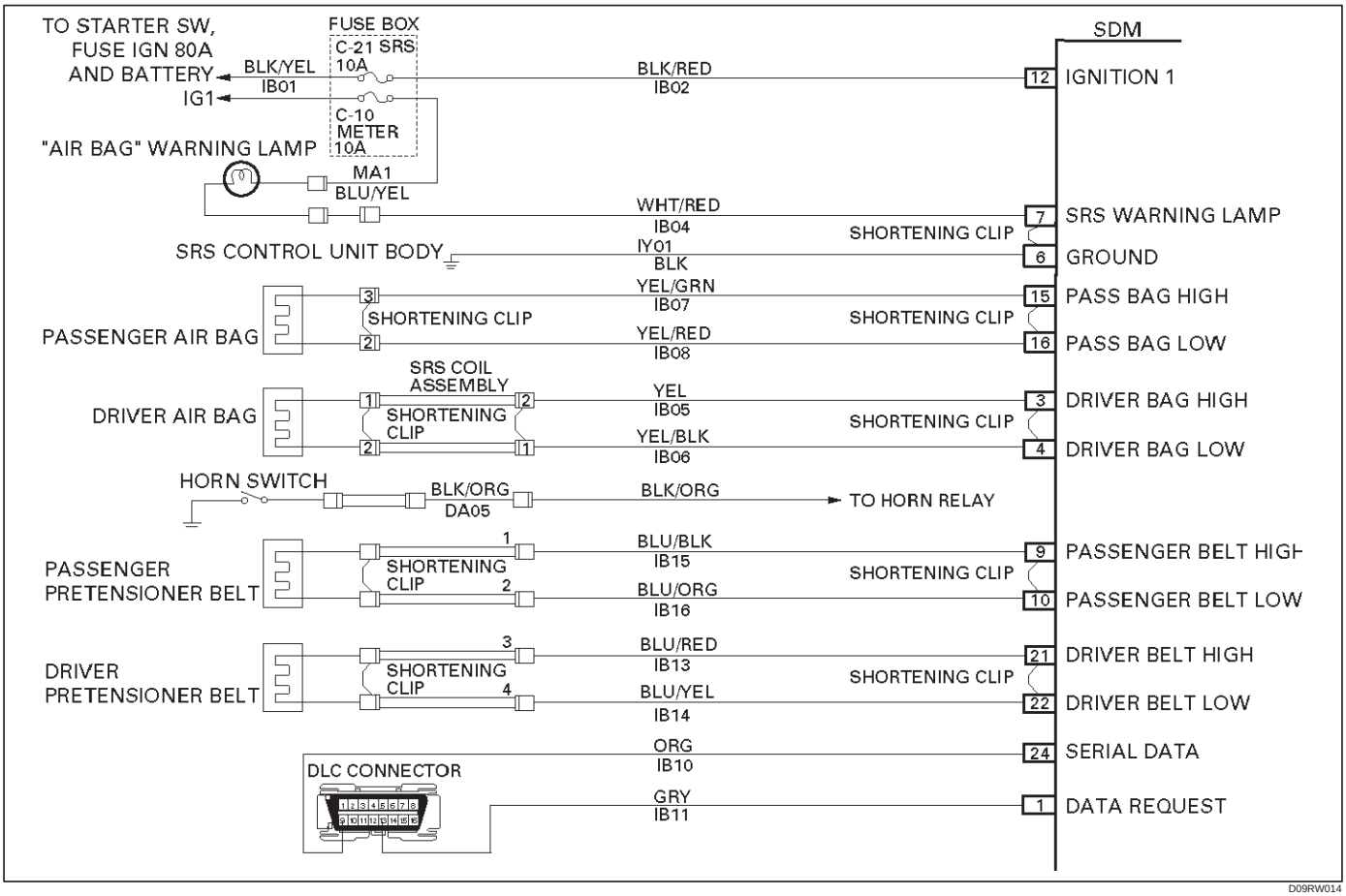

SRS Component And Wiring Location View

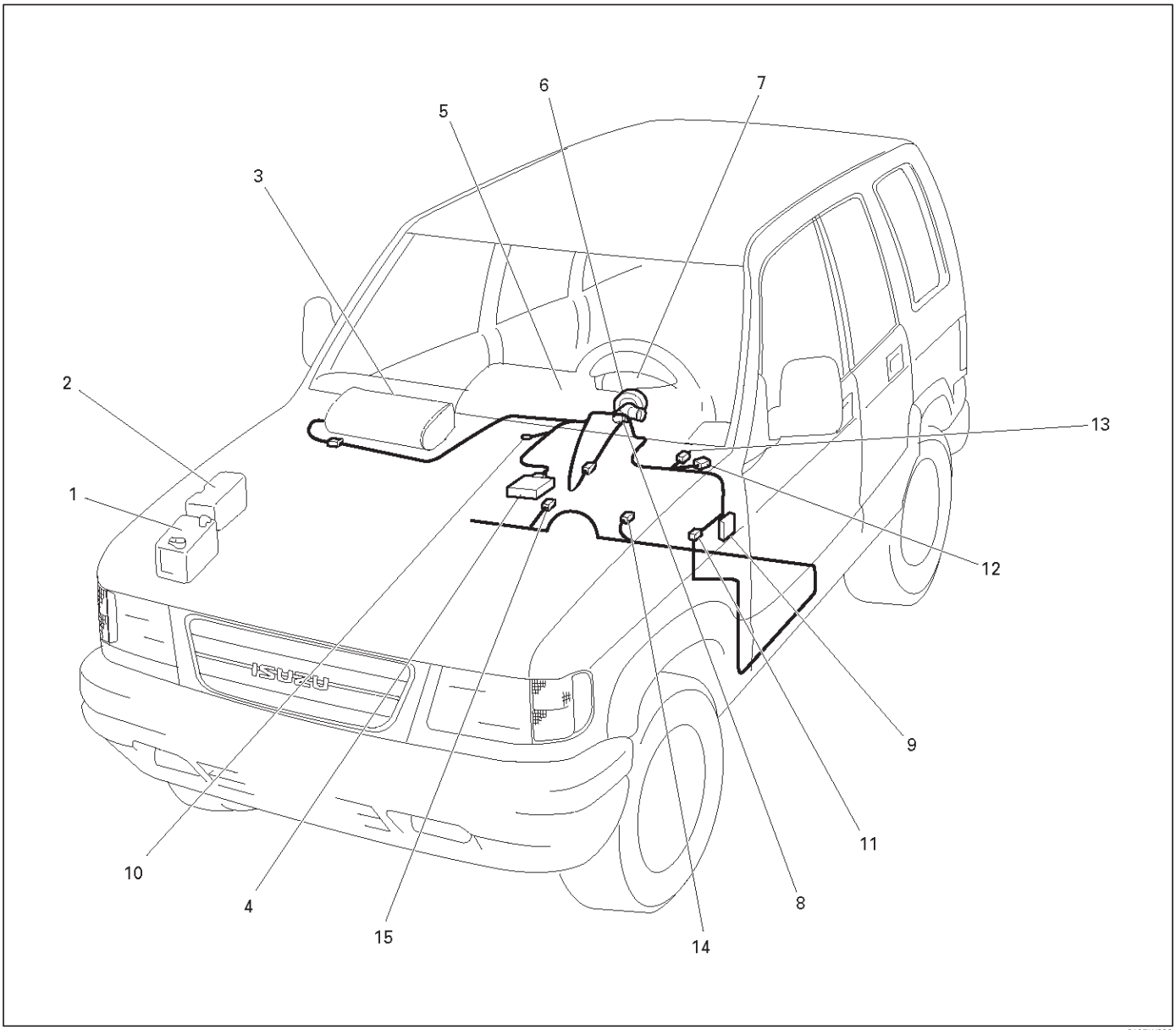

810RW298

Legend

(1) Battery
(2) Relay & Fuse Box
(3) Passenger Air Bag Assembly
(4) SDM
(5) Meter Assembly
(6) SRS Coil Assembly
(7) Driver Air Bag Assembly
(8) Starter Switch
(9) Fuse Box, C–21
(10) SRS Body Earth
(11) Body Harness Connector
(12) Instrument Harness Connector
(13) Engine Haness Connector
(14) Pretensioner, LH (If so equipped)
(15) Pretensioner, RH (If so equipped)

Component Description

SDM (Sensing and Diagnostic Module)

WARNING: DURING SERVICE PROCEDURES, BE VERY CAREFUL WHEN HANDLING A SENSING AND DIAGNOSTIC MODULE (SDM). NEVER STRIKE OR JAR THE SDM. NEVER POWER UP THE SRS WHEN THE SDM IS NOT RIGIDLY ATTACHED TO THE VEHICLE. ALL SDM AND MOUNTING BRACKET FASTENERS MUST BE CAREFULLY TORQUED AND THE ARROW MUST BE POINTED TOWARD THE FRONT OF THE VEHICLE TO ENSURE PROPER OPERATION OF THE SRS. THE SDM COULD BE ACTIVATED WHEN POWERED WHILE NOT RIGIDLY ATTACHED TO THE VEHICLE WHICH COULD CAUSE DEPLOYMENT AND RESULT IN PERSONAL INJURY.

The Sensing and Diagnostic Module (SDM) is designed to perform the following functions in the SRS:

1. Energy Reserve — The SDM maintains 24–Volt Loop Reserve (24VLR) energy supply to provide deployment energy when ignition voltage is lost in a frontal crash.
2. Frontal Crash Detection — The SDM monitors vehicle velocity changes to detect frontal crashes which are severe enough to warrant deployment.
3. Air Bag Deployment — When a frontal crash of sufficient force is detected, the SDM will cause enough current to flow through the air bag assembly to deploy the air bag.
4. Malfunction Detection — The SDM performs diagnostic monitoring of SRS electrical components and sets a diagnostic trouble code when a malfunction is detected.
5. Frontal Crash Recording — The SDM records information regarding SRS status during frontal crash.
6. Malfunction Diagnosis — The SDM displays SRS diagnostic trouble codes and system status information through the use of a scan tool.
7. Driver Notification — The SDM warns the vehicle driver of SRS malfunctions by controlling the “Air Bag” warning lamp.

The SDM is connected to the SRS wiring harness by a 24–pin connector. This harness connector uses a shorting clip across certain terminals in the contact area. This shorting clip connects the “AIR BAG” warning lamp to ground when the SDM harness connector is disconnected or CPA (Connector Position Assurance) is not inserted even if completely connected. This will cause the “AIR BAG” warning lamp to come “ON” steady whenever the ignition switch is at the ON or START positions with the SDM disconnected.

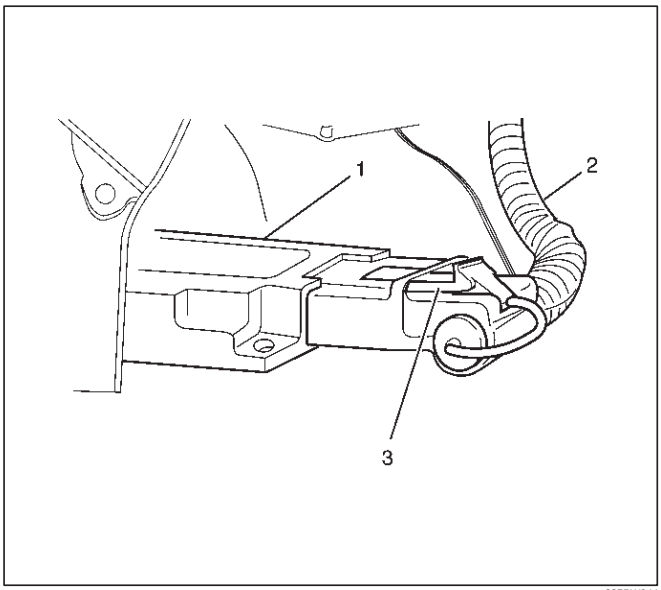

827RW044

Legend

(1) SDM
(2) SRS Harness
(3) Connector Position Assurance

“Air Bag” Warning Lamp

Ignition voltage is applied to the “AIR BAG” warning lamp when the ignition switch is at the ON or START positions. The SDM controls the lamp by providing ground with a lamp driver. The “AIR BAG” warning lamp is used in the SRS to do the following:

1. Verify lamp and SDM operation by turn on 3.5 seconds and then turns “OFF” when the ignition switch is first turned “ON”.
2. Warn the vehicle driver of SRS electrical system malfunctions which could potentially affect the operation of the SRS. These malfunctions could result in nondeployment in case of a frontal crash or deployment for conditions less severe than intended.

The “AIR BAG ” warning lamp is the key to driver notification of SRS malfunctions. For proper lamp operation, refer to the “SRS Diagnostic System Check” in this section.

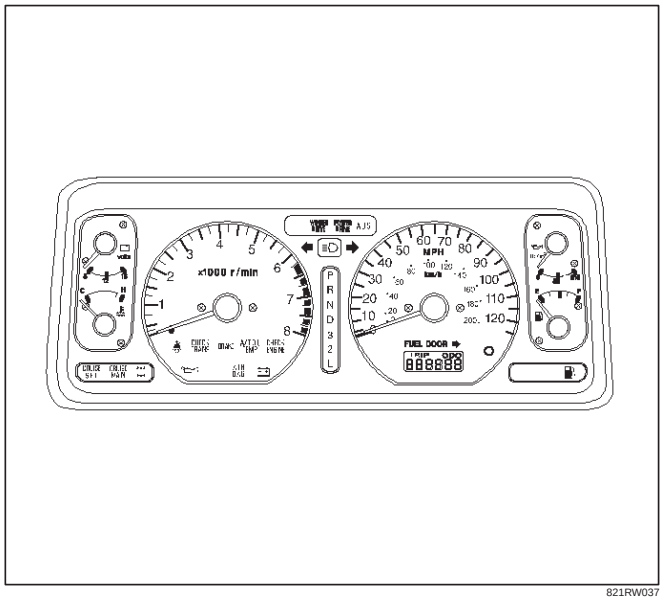

821RW037

SRS Coil Assembly

The SRS coil assembly consists of two current carrying coils. This is attached to the steering column and allow rotation of the steering wheel while maintaining continuous contact of the driver deployment loop to the driver air bag assembly.

There is a shorting clip on the yellow 2–pin connector near the base of steering column which connects the SRS coil to the SRS wiring harness.

The shorting clip shorts to the SRS coil and driver air bag assembly when the yellow 2–pin connector is disconnected. The circuit to the driver air bag assembly is shorted in this way to help prevent unwanted deployment of the air bag when servicing the steering column or other SRS components.

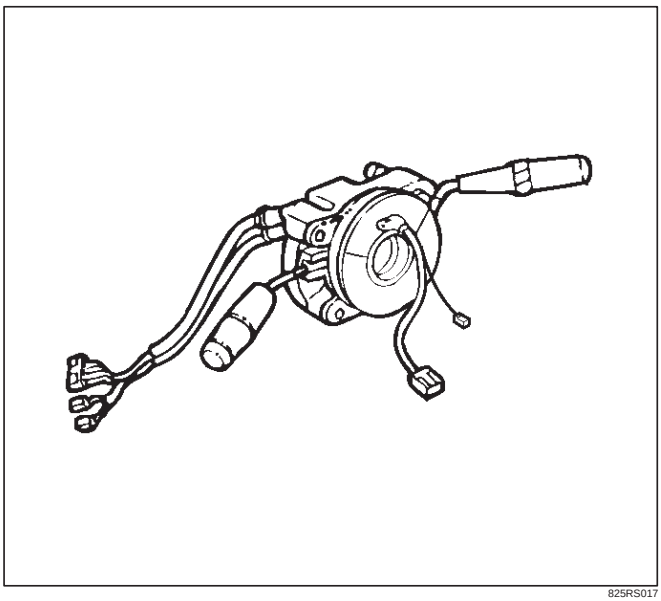

825RS017

Air Bag Assemblies

The air bag assembly consist of an inflatable air bag assembly and an inflator (a canister of gas–generating material and an initiating device). When the vehicle is in a frontal crash of sufficient force.

The SDM causes current flow through the deployment loops. Current passing through the inflator ignites the material in the air bag assembly. The gas produced from this reaction rapidly inflates the air bag assembly.

There is a shorting clip on the driver air bag assembly connector which connects the SRS coil assembly. The shorting clip shorts across the driver air bag assembly circuits when driver air bag assembly connector is disconnected.

The circuit to the driver air bag assembly is shorted in this way to help prevent unwanted deployment of the air bag when servicing the driver air bag assembly, the steering column or other SRS components.

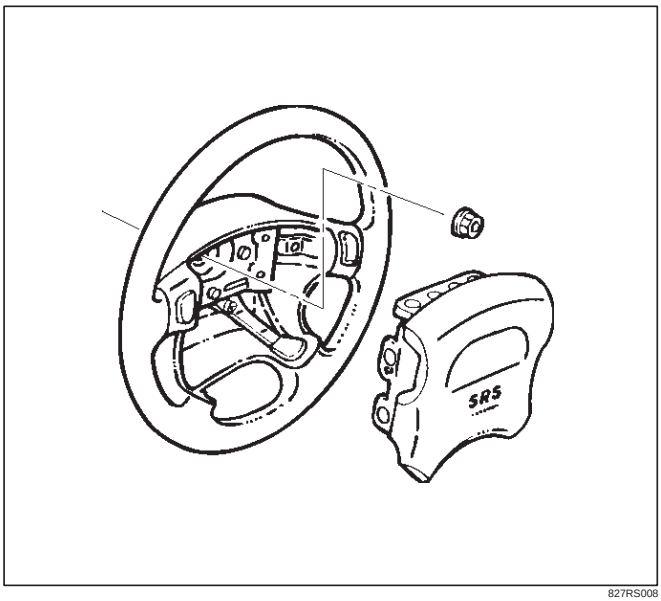

827RS008

There is a shorting clip on the passenger air bag assembly connector which connects to the SRS harness.

The shorting clip shorts across the passenger air bag assembly circuit when the passenger air bag assembly connector is disconnected. The circuit to the passenger air bag assembly is shorted in this way to help prevent unwanted deployment of the air bag when servicing the passenger air bag assembly, the instrument panel or other SRS components.

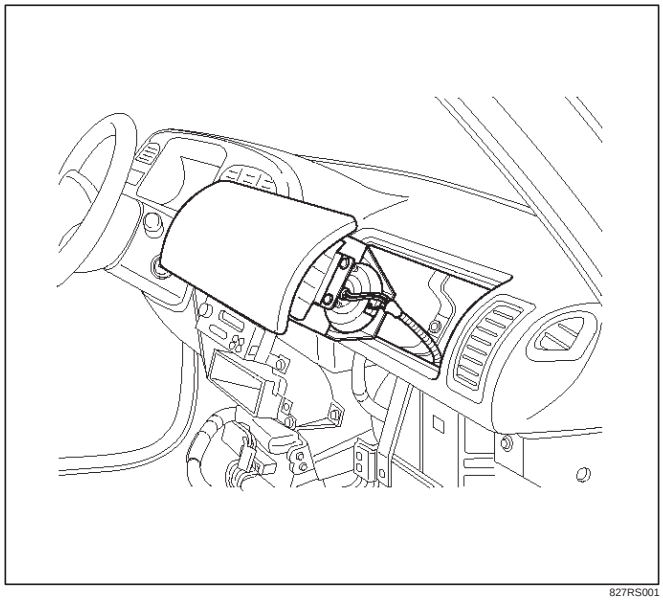

827RS001

Seat Belt with Pretensioner (If so equipped)

The seat belt comprises a seat belt and a cylinder (a cylinder filled with powder and an ignition device). In cases of frontal collision which cause a shock exceeding a specified level, the controller lets current flow to the inflation circuit. The current ignites the cylinder of the seat belt, producing gas. The gas helps tighten the seat belt to restrain firmly the driver's upper half in his seat.

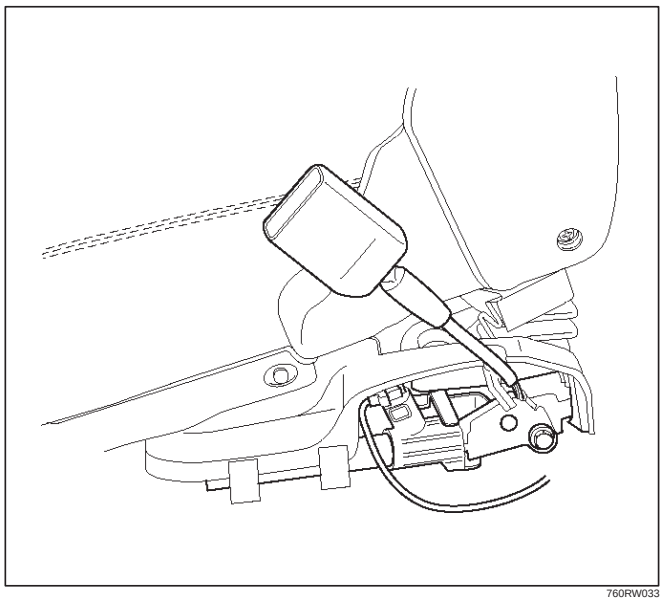

760RW033

Steering Column

The steering column absorbs energy and is designed to compress in a frontal crash to decrease the chance of injury to the driver.

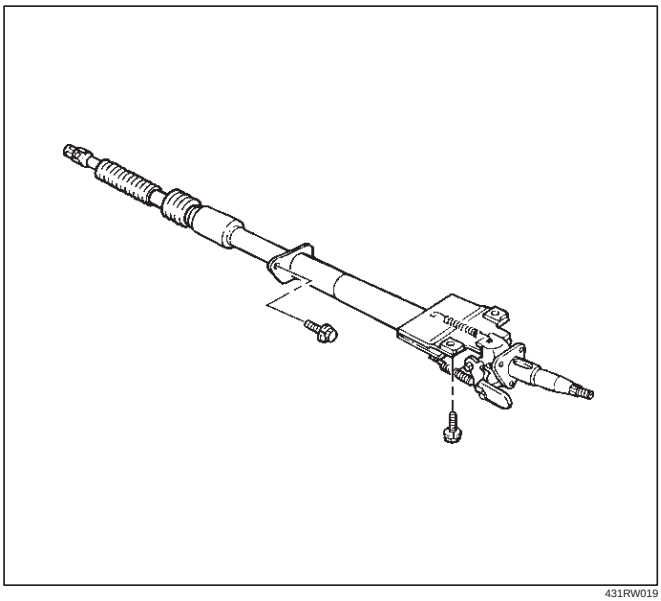

431RW019

Knee Bolster

The knee bolsters are used to absorb energy to protect knees and control the forward movement of the vehicle's front seat occupants during a frontal crash, by limiting leg movement.

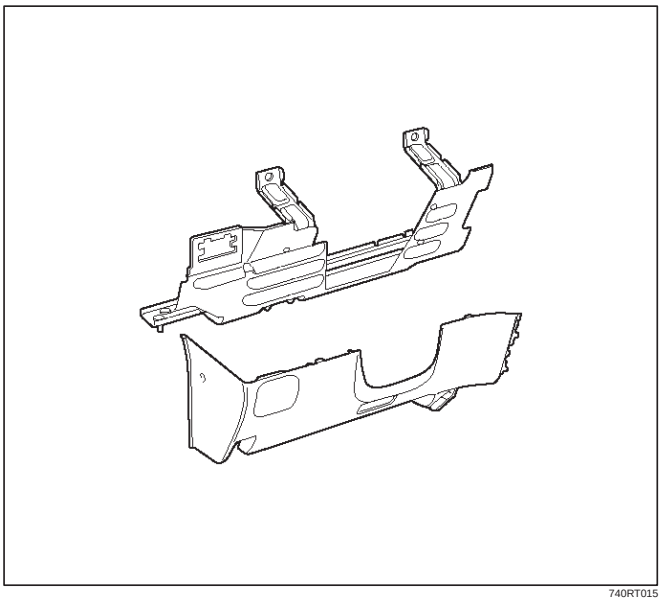

740RT015

Definitions

Air Bag
An inflatable cloth cushion designed to deploy in certain frontal crashes. It supplements the protection offered by the seat belts by distributing the impact load more evenly over the vehicle occupant's head and torso.

Asynchronous
Performed in a nonperiodic fashion, (i.e., no defined time or interval).

B+
Battery voltage, (B+) The voltage available at the battery at the time of the indicated measurement. With the key "ON" and the engine not running, the system voltage will likely be between 12 and 12.5 volts. At idle, the voltage may be 14 to 16 volts. The voltage could be as low as 10 volts during engine cranking.

Bulb Check
The SDM will cause the "AIR BAG" warning lamp to turn on 3.5 seconds and then go "OFF" whenever the ignition switch transitions to the ON position from any other ignition switch position and no malfunctions are detected.

"Continuous Monitoring"
Tests performed by the SDM on the SRS every 100 milliseconds while "Ignition 1" voltage is in the normal operating voltage range at the SDM.

Data Link Connector (DLC)
Formerly "DLC" a connector which allows communication with an external computer, such as a scan tool.

Datum Line
A base line parallel to the plane of the underbody or frame from which all vertical measurements originate.

Deploy
To inflate the air bag.

Deployment Loops
The circuits which supply current to the air bag assemblies to deploy the air bag.

Diagnostic Trouble Code (DTC)
Formerly "Code", a numerical designator used by the SDM to indicate specific SRS malfunctions.

Driver Current Source
An output of the SDM which applies current into the driver air bag assembly circuit during the "Initiator Assembly Resistance Test".

Driver Air Bag Assembly
An assembly located in the steering wheel hub consisting of an inflatable bag, an inflator and an initiator.

EEPROM
Electrically Erasable Programmable Read Only Memory. Memory which retains its contents when power is removed from the SDM.

Ignition Cycle
The voltage at the SDM "Ignition 1" inputs, with ignition switch "ON", is within the normal operating voltage range for at least ten seconds before turning ignition switch "OFF".

Ignition 1
A battery voltage (B+) circuit which is only powered with the ignition switch in the ON, or START positions.

Initiator
The electrical component inside the air bag assembly which, when sufficient current flows, sets off the chemical reaction that inflates the air bag.

"Initiator Assembly Resistance Test"
Tests performed once each ignition cycle when no malfunctions are detected during "Turn–ON" or "Continuous Monitoring". This test checks for the correct SDM configuration for the vehicle, shorts to "Ignition 1" in

the deployment loops, high resistance or opens in the "Driver Side High", "Driver Side Low", "Passenger Side High" and "Passenger Side Low" circuits and measures the resistance of the inflator assembly consisting of 1) Initiators, 2) SRS coil assembly (driver side only), 3) Connectors and associated wiring.

Normal Operating Voltage Range
The voltage measured between the SDM "Ignition 1" terminals and "Ground" terminals is between 9 and 16 volts.

Passenger Current Source
An output of the SDM which applies current into the passenger air bag assembly circuit during the "Initiator Assembly Resistance Test".

Passenger Air Bag Assembly
An assembly located in the right side of the instrument panel consisting of an inflatable bag, an inflator and an initiator.

Scan Tool
An external computer used to read diagnostic information from on–board computers via the data link connector.

SDM
Sensing and Diagnostic Module which provides reserve energy to the deployment loops, deploys the air bags when required and performs diagnostic monitoring of all SRS components.

Serial Data
Information representing the status of the SRS.

SRS
Supplemental Restraint System.

SRS Coil Assembly
An assembly of two current–carrying coils in the driver deployment loop that allows the rotation of the steering wheel while maintaining the continuous contact of the driver deployment loop to the driver air bag assembly.

SRS Wiring Harness
The wires and connectors that electrically connect the components in the SRS.

"Turn–ON"
Test which the SDM performs on the SRS once during each ignition cycle immediately after "Ignition 1" voltage is applied to the SDM and before "Continuous Monitoring".

Diagnosis

WARNING: TO AVOID DEPLOYMENT WHEN TROUBLESHOOTING THE SRS, DO NOT USE ELECTRICAL TEST EQUIPMENT SUCH AS A BATTERY–POWERED OR AC–POWERED VOLTMETER, OHMMETER, ETC., OR ANY TYPE OF ELECTRICAL EQUIPMENT OTHER THAN THAT SPECIFIED IN THIS MANUAL. DO NOT USE A NONPOWERED PROBE–TYPE TESTER. INSTRUCTIONS IN THIS MANUAL MUST BE FOLLOWED CAREFULLY, OTHERWISE PERSONAL INJURY MAY RESULT.

Diagnostic Trouble Codes

The "SRS Diagnostic System Check" must always be the starting point of any SRS diagnosis. The "SRS Diagnostic System Check" checks for proper "AIR BAG" warning lamp operation and checks for SRS diagnostic trouble codes using the scan tool.

1. Current diagnostic trouble codes – Malfunctions that are presently being detected. Current diagnostic trouble codes are stored in RAM (Random Access Memory).
2. History diagnostic trouble codes – All malfunctions detected since the last time the history memory was cleared. History diagnostic trouble codes are stored in EEPROM.

Scan Tool Diagnostics

A scan tool is used to read current and history diagnostic trouble codes and to clear all diagnostic trouble codes after a repair is completed. The scan tool must be updated to communicate with the SRS through a replaceable cartridge before it can be used for SRS diagnostics. To use the scan tool, connect it to the data link connector and turn the ignition switch "ON". The scan tool reads serial data from the SDM "Serial Data" line terminal "24" to the data link connector terminal "9".

Use Of Special Tools

WARNING: TO AVOID DEPLOYMENT WHEN TROUBLESHOOTING THE SRS, DO NOT USE ELECTRICAL TEST EQUIPMENT SUCH AS A BATTERY–POWERED OR AC–POWERED VOLTMETER, OHMMETER, ETC, OR ANY TYPE OF ELECTRICAL EQUIPMENT OTHER THAN THAT SPECIFIED IN THIS MANUAL. DO NOT USE A NON POWERED PROBE–TYPE TESTER. INSTRUCTIONS IN THIS MANUAL MUST BE FOLLOWED CAREFULLY, OTHERWISE PERSONAL INJURY MAY RESULT. YOU SHOULD BE FAMILIAR WITH THE TOOLS LISTED IN THIS SECTION UNDER THE HANDLING SRS SPECIAL TOOLS.

You should be able to measure voltage and resistance. You should be familiar with proper use of a scan tool such as the Tech 2 Diagnostic Computer, SRS Driver/Passenger Load Tool 5–8840–2421–0, Connector Test Adapter Kit 5–8840–0385–0, and the DVM (Digital Multimeter) 5–8840–0285–0.

SRS Connector Body Face Views

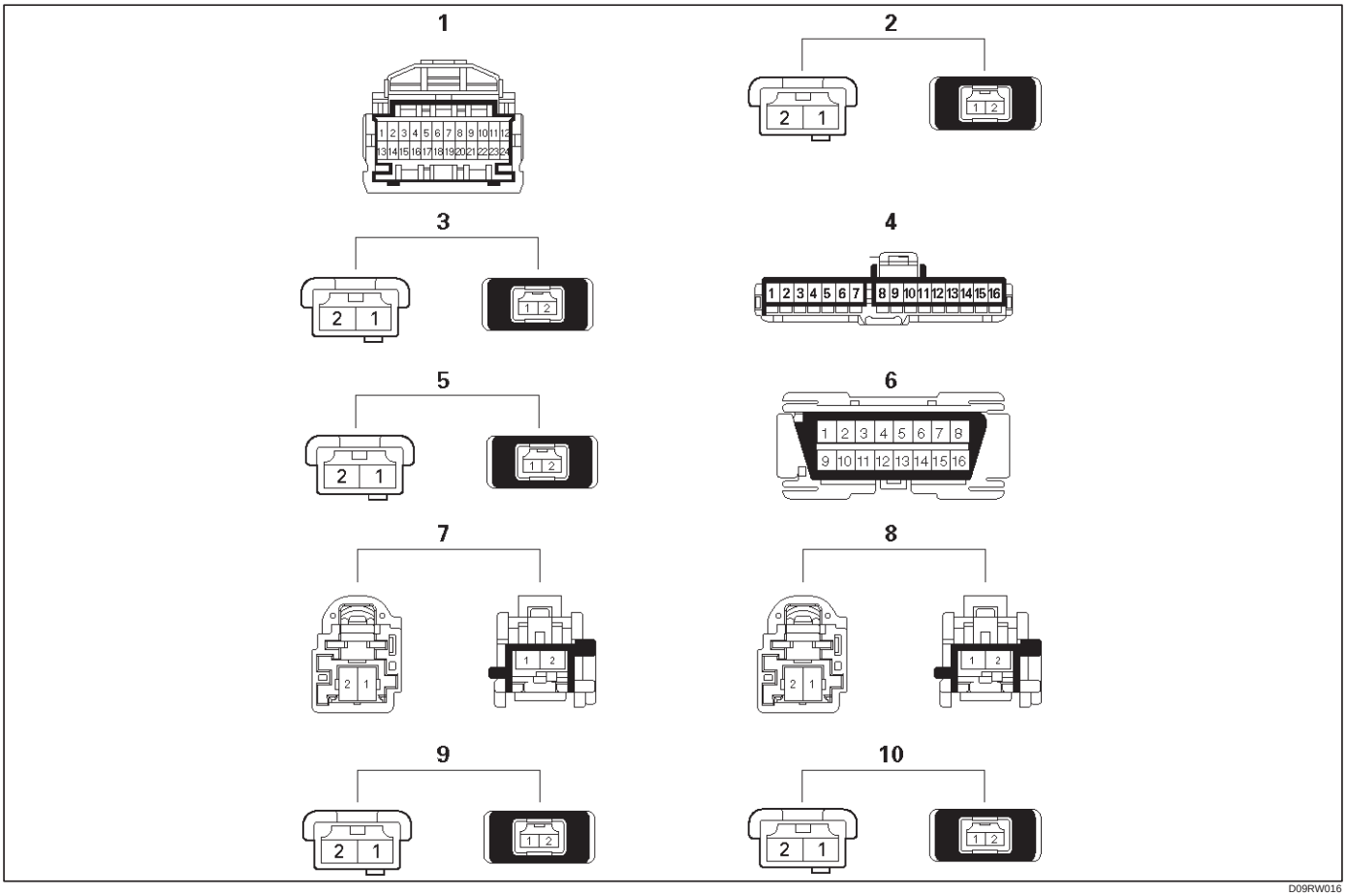

Legend

(1) SDM
(2) Driver Air Bag Assembly
(3) Passenger Air Bag Assembly
(4) “Air Bag” Warning Lamp
(5) SRS Coil Assembly
(6) DLC
(7) Connector between Chassis Harness and Pretensioner Harness for Driver Seat Belt (If so equipped)
(8) Connector between Chassis Harness and Pretensioner Harness for Passenger Seat Belt (If so equipped)
(9) Connector between Pretensioner Harness and driver side Pretensioner Seat Belt (If so equipped)
(10) Connector between Pretensioner Harness and passenger side Pretensioner Seat Belt (If so equipped)

Repairs And Inspections Required After An Accident

NOTE: If any SRS components are damaged, they must be replaced. If SRS component mounting points are damaged, they must be replaced.

- Never use SRS parts from another vehicle. This does not include remanufactured parts purchased from an authorized dealer; they may be used for SRS repairs.
- Do not attempt to service the SDM, the SRS coil assembly, or the air bag assembly. Service of these items is by replacement only.
- Verify the part number of replacement air bag assembly.

CAUTION: Never use the air bag assembly from another vehicle. Use only the air bag assembly for Trooper.

CAUTION: Proper operation of the sensors and supplemental restraint system (SRS) requires that any repairs to the vehicle structure return it to the original production configuration. Deployment requires, at a minimum, replacement of the SDM, air bag assembly and dimensional inspection of the steering column. Any visible damage to the SDM mounting bracket (s) requires replacement, and the steering column must be dimensionally inspected, whether deployment occurred or not.

Accident With Deployment – Component Replacement And Inspections

Certain SRS components must be replaced or inspected for damage after a frontal crash involving air bag deployment. Those components are:

- Air bag assembly
- SDM

CAUTION: Refer to "SDM Replacement Guidelines" below for important information on SDM replacement in both deployment and non deployment crashes.

- SRS coil assembly — Inspect wiring and connector for any signs of scorching, melting, or damage due to excessive heat. Replace if damaged. Refer to section "SRS Coil Assembly" in this manual.

Accident With or Without Deployment – Component Inspection

Certain SRS system components and rotation parts must be inspected after any crash, whether the air bag deployed or not. Those components are:

- Steering column — Refer to Inspection Required "After an Accident" in this manual.
- Knee bolsters and mounting points — Inspect for any distortion, bending, cracking, or other damage.
- I/P steering column reinforcement plate — Inspect for any distortion, bending, cracking, or other damage.
- I/P braces — Inspect for any distortion, bending, cracking, or other damage.
- Seat belts and mounting points — Refer to "Seat Belts" in Section "Seat Belt" of this workshop manual.

SDM Replacement Guidelines

SDM replacement policy requires replacement of SDM, after crash involving air bag deployment when "SRS Warning Lamp" turn "ON", "SRS Diagnosis" should be done according to Section "Restraint Control System."
If accident without deployment air bag, it is not necessary replacement of SDM when do not indicate to replace the SDM by scan tool after SRS system check.

Wiring Damage

If any SRS wire harness is damaged, it should be replaced. Don't repair SRS harness. It is replace only.

SRS Connector (Plastic Body And Terminal Metal Pin) Damage

If any connector or terminal in the SRS wire harness (except pigtails) is damaged, it should be replaced.

SRS Wire Pigtail Damage

If the wiring pigtail (a wire or wires attached directly to the device, not by a connector) is damaged, the entire component (with pigtail) must be replaced. Examples of "pigtail" components are the driver air bag assembly, the passenger air bag assembly, and the SRS coil assembly.

On–Vehicle Service

Service Precaution

WARNING: WHEN PERFORMING SERVICE ON OR AROUND SRS COMPONENTS OR SRS WIRING, FOLLOW THE PROCEDURES LISTED BELOW TO TEMPORARILY DISABLE THE SRS. FAILURE TO FOLLOW PROCEDURES COULD RESULT IN POSSIBLE AIR BAG DEPLOYMENT, PERSONAL INJURY OR OTHERWISE UNNEEDED SRS REPAIRS.

The SDM in Driver–Passenger SRS can maintain sufficient voltage to cause a deployment for up to 15 seconds after the ignition switch is turned "OFF," the battery is disconnected, or the fuse powering the SDM is removed.
Many of the service procedures require removal of the "C–21" fuse, and disconnection of the air bag assembly from the deployment loop to avoid an accidental deployment. If the air bag assembly is disconnected from the deployment loop as noted in the "Disabling the SRS" procedure that follows, service can begin immediately without waiting for the 15 second time period to expire.

Disabling The SRS

Removal

Turn the ignition switch to "LOCK" and remove key.

1. Remove SRS fuse C–21, from left dash side lower fuse block or disconnect battery.
2. Disconnect yellow 2–pin connector at the base of steering column.
3. Remove glove box assembly, refer to "Passenger Air Bag Assembly Replacement" in this manual.
4. Disconnect yellow 2–pin connector behind the glove box assembly.

CAUTION: With the "C–21" fuse removed and ignition switch "ON", the "AIR BAG" warning lamp will be "ON". This is normal operation and does not indicate an SRS malfunction.

Enabling The SRS

Installation

CAUTION: Never use the air bag assembly from another vehicle. Use only the air bag assembly for Trooper.

Turn ignition switch to "LOCK" and remove key.

1. Connect yellow 2–pin connector passenger air bag assembly.
2. Install glove box assembly. Refer to "Passenger air bag assembly replacement" in this manual.
3. Connect yellow 2–pin connector at the base of steering column.
4. Install "AIR BAG" fuse C–21 to left dash side lower fuse block or connect battery.

Turn ignition switch to "ON" and verify that the "AIR BAG" warning lamp turn on 3.5 seconds and then turns "OFF." If it does not operate as described, perform the "SRS Diagnostic System Check" in this manual.

Handling / Installation / Diagnosis

1. Air bag assembly should not be subjected to temperatures above 93˚C (200˚F).
2. Air bag assembly, and SDM should not be used if they have been dropped from a height of 100 centimeters (3.28 feet) or more.
3. When a SDM is replaced, it must be oriented with the arrow on the sensor pointing toward the front of the vehicle. It is very important for the SDM to be located flat on the mounting surface, parallel to the vehicle datum line. It is important that the SDM mounting surface is free of any dirt or other foreign material.
4. Do not apply power to the SRS unless all components are connected or a diagnostic chart requests it, as this will set a diagnostic trouble code.
5. The “SRS Diagnostic System Check” must be the starting point of any SRS diagnostics. The “SRS Diagnostic System Check” will verify proper “AIR BAG” warning lamp operation and will lead you to the correct chart to diagnose any SRS malfunctions. Bypassing these procedures may result in extended diagnostic time, incorrect diagnosis, and incorrect parts replacement.

Air Bag Assembly Handling / Shipping / Scrapping

Live (Undeployed) Air Bag Assembly

Special care is necessary when handling and storing a live (undeployed) air bag assembly. The rapid gas generation produced during deployment of the air bag could cause the air bag assembly, or an object in front of the air bag assembly, to be thrown through the air in the unlikely event of an accidental deployment.

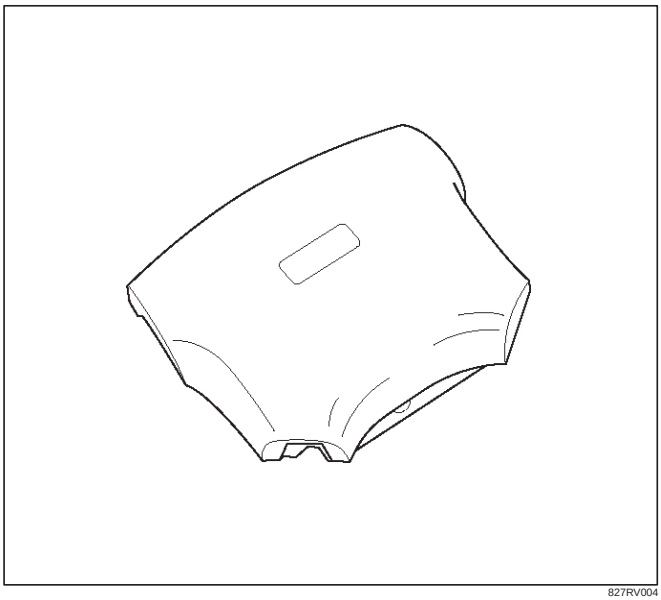

827RV004

WARNING: WHEN CARRYING A LIVE AIR BAG ASSEMBLY, MAKE SURE THE BAG OPENING IS POINTED AWAY FROM YOU. IN CASE OF AN ACCIDENTAL DEPLOYMENT, THE BAG WILL THEN DEPLOY WITH MINIMAL CHANCE OF INJURY. NEVER CARRY THE AIR BAG ASSEMBLY BY THE WIRES OR CONNECTOR ON THE UNDERSIDE OF THE MODULE.

Pretensioner Seat Belt Handling / Shipping / Scrapping.

Live (undeployed) pretensioner seat belt.

Special care is necessary when handling and storing a live (undeployed) pretensioner seat belt.
The rapid gas generation produced during deployment of the pretensioner seat belt (could cause the pretensioner seat belt), or an object around of pretensioner seat belt, to be thrown through the air in the unlikely event of an accidental deployment.

WARNING: WHEN CARRYING A LIVE PRETENSIONER SEAT BELT, MAKE SURE THE PRETENSIONER SEAT BELT CYLINDER IS POINTED AWAY FROM YOU. IN CASE OF AN ACCIDENTAL DEPLOYMENT, THE PRETENSIONER SEAT BELT WILL THEN DEPLOY WITH MINIMAL CHANCE OF INJURY. NEVER CARRY THE PRETENSIONER SEAT BELT BY THE CYLINDER OR WIRES ON THE UNDERSIDE OF THE MODULE.

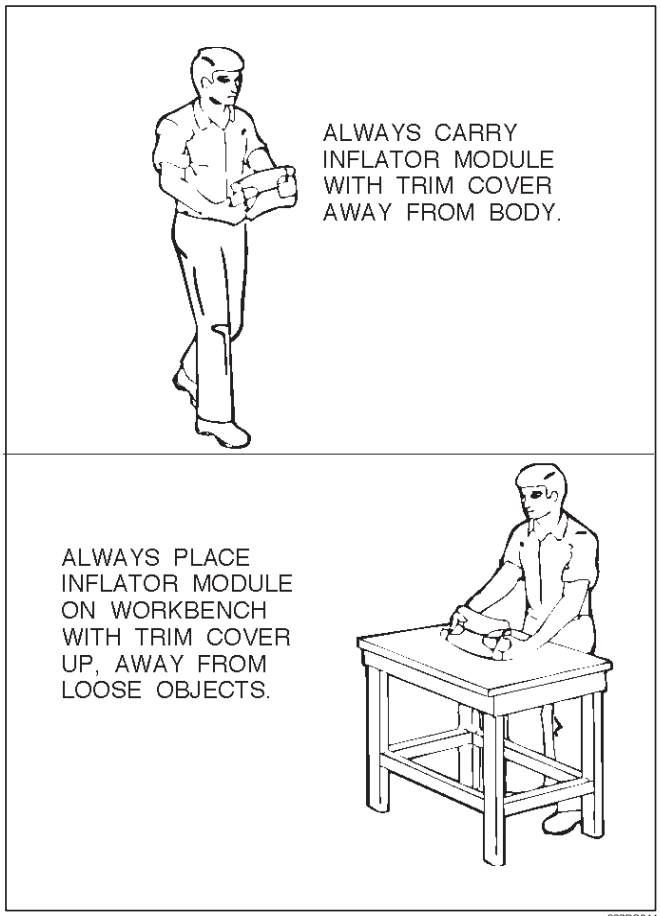

827RS044

Air Bag Assembly and/or Pretensioner Seat Belt Shipping Procedure For Live(Undeployed) Them.

Service personnel should refer to the Service Bulletins for proper SRS composition parts shipping procedures.

Deployed Air Bag Assembly (Driver Side)

"You should wear gloves and glasses. After the air bag assembly has been deployed, the surface of the air bag may contain solid particulate. This solid particulate consists primarily of by products of the chemical reaction, Potassium Chloride and copper metal dust. Compounds of Potassium Borate, Strontium Chloride, Copper Chloride, and Ammonium Chloride may be found in amounts of about 1% (each) of the total particulate."

Deployed Pretensioner Seat Belt.

You should wear gloves and safety glasses. After the pretensioner seat belt has been deployed, the surface of the pretensioner seat belt cylinder may heating up.

Air Bag Assembly and/or Pretensioner Seat Belt Scrapping Procedure.

During the cause of vehicle's useful life, certain situations may arise which will necessitate the disposal of a live air bag and/or pretensioner seat belt. (This information covers proper procedures for disposing of a live air bag assembly and/or pretensioner seat belt.)
Before a live air bag assembly can be dispose off, it must be deployed.
A live air bag assembly and/or pretensioner seat belt must not be disposed of though normal refuse channels.

WARNING: FAILURE TO FOLLOW PROPER SUPPLEMENTAL RESTRAINT SYSTEM (SRS) AIR BAG ASSEMBLY DISPOSAL PROCEDURES CAN RESULT IN AIR BAG DEPLOYMENT WHICH MAY CAUSE PERSONAL INJURY. AN UNDPLOYED AIR BAG ASSEMBLY MUST NOT BE DISPOSED OF THROUGH NORMAL REFUSE CHANNELS. THE UNDEPLOYED AIR BAG ASSEMBLY CONTAINS SUBSTANCES THAT CAN CAUSE SEVERE ILLNESS OR PERSONAL INJURY IF THE SEALED CONTAINER IS DAMAGED DURING DISPOSAL. DISPOSAL IN ANY MANNER INCONSISTENT WITH PROPER PROCEDURES MAY BE A VIOLATION OF LOCAL LAW.

In situations which require deployment of a live air bag assembly, deployment may be accomplished inside or outside the vehicle. The method employed depends upon the final disposition of the particular vehicle, as noted in "Deployment Outside Vehicle" and "Deployment Inside Vehicle" in this section.

Cautions About Air Bag Deployment And Disposal

Failure to follow proper procedures could result in erroneous air bag deployment which may cause personal injury be sure to follow proper procedures.

1. Turn off (Lock) the ignition switch and disconnect the minus terminal of the battery, then start the work 15 or more sec later. (Air bag is designed to work by the back-up power source even if the battery power source is cut off at vehicle collision).
2. Be sure not to disassemble the air bag.
3. Do not give an impact to the air bag and bring the air bag close to magnet. (The air bag could deploy unexpectedly).
4. Place the air bag with its trim cover up.
5. Do not let the air bag deploy directly on the floor. (The air bag may be blown off 2 ~ 3 m (6.5 or 10 feet)).
6. Be sure to install the air bag firmly to a deployment tool (fixing tool).
7. Set a battery 10 m (33 feet) or more away from the air bag.
8. Before disconnecting air bag harness, ground the worker by touching the vehicle outer panel with bare hand.
9. When connecting or disconnecting the harness, do not work just in front of the air bag.
10. As deployment gives rise to big sound, warn the people around against it. Further, try to reduce the sound by covering the steering wheel or tires, and shut the vehicle windows in case of deployment inside the vehicle.
11. As deployment generates smoke, select a well ventilated place. (In case of deployment indoors, avoid deployment just under a fire alarm, smoke sensor, and fluorescent lamps).
12. Be careful not to inhale the smoke after deployment.
13. If part of the vehicle glass is damaged, cover the vehicle with a car cover to prevent the glass from braking at the time of deployment.
14. Do not touch the air bag immediately after deployment, since it remains hot for 30 minutes.
15. Do not water the air bag immediately after deployment.
16. Wear safety glasses and gloves throughout the work and wash the glasses and gloves after the work.
17. Do not reuse the removed air bag for another vehicle. (Deployment characteristic is different with vehicle types).

Deployment Outside Vehicle (Driver Air Bag Assembly)

Deployment outside the vehicle is proper when the vehicle is to be returned to service. This includes, for example, situations in which the vehicle will be returned to useful service after a functionally or cosmetically deficient air bag assembly is replaced. Deployment and disposal of a malfunctioning air bag assembly is, of course, subject to any required retention period.
For deployment of a live (undeployed) air bag assembly outside the vehicle, the deployment procedure must be followed exactly. Always wear safety glasses during this deployment procedure until a deployed air bag assembly is scrapped or until an undeployed air bag assembly is shipped. Before performing the procedures you should be familiar with servicing the SRS and with proper handling of the air bag assembly. Procedures should be read fully before they are performed.
The following procedure requires use of 5–8840–2468–0 SRS deployment harness with appropriate pigtail adapter. Do not attempt procedure without 5–8840–2468–0 adapter.

WARNING: FAILURE TO FOLLOW PROCEDURES IN THE ORDER LISTED MAY RESULT IN PERSONAL INJURY. NEVER CONNECT DEPLOYMENT

HARNESS TO ANY POWER SOURCE BEFORE CONNECTING DEPLOYMENT HARNESS TO THE DRIVER AIR BAG ASSEMBLY. DEPLOYMENT HARNESS SHALL REMAIN SHORTED AND NOT BE CONNECTED TO A POWER SOURCE UNTIL THE AIR BAG IS TO BE DEPLOYED. THE AIR BAG ASSEMBLY WILL IMMEDIATELY DEPLOY THE AIR BAG WHEN A POWER SOURCE IS CONNECTED TO IT. WEAR SAFETY GLASSES THROUGHOUT THIS ENTIRE DEPLOYMENT AND DISPOSAL PROCEDURE.

NOTE: This information applies only to driver air bag assembly . Refer to “Deployment Outside Vehicle (Passenger Air Bag assembly)” in this section for information on passenger air bag assembly scrapping.

1. Turn ignition switch to “LOCK”, remove key.
2. Inspect 5–8840–2468–0 SRS Deployment Harness and appropriate pigtail adapter for damage. If harness or pigtail adapter is damaged, discard and obtain a replacement.
3. Short the two SRS deployment harness leads together by fully seating one banana plug into the other. SRS deployment harness shall remain shorted and not be connected to a power source until the air bag is to be deployed.

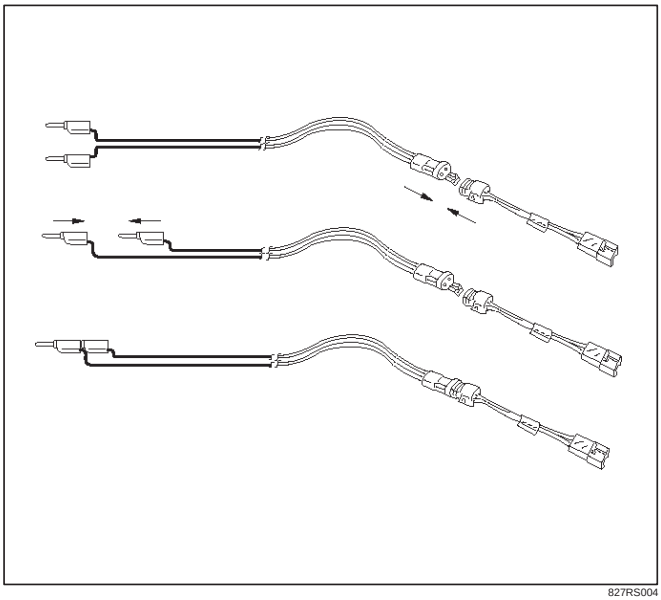

827RS004

4. Connect the appropriate pigtail adapter to the SRS deployment harness.
5. Remove the driver air bag assembly from vehicle. Refer to “Inflator Module Removal” in this manual.

WARNING: WHEN STORING A LIVE AIR BAG ASSEMBLY OR WHEN LEAVING A LIVE AIR BAG ASSEMBLY UNATTENDED ON A BENCH OR OTHER SURFACE, ALWAYS FACE THE AIR BAG AND TRIM COVER UP AND AWAY FROM THE SURFACE. THIS IS NECESSARY SO THAT A FREE SPACE IS PROVIDED TO ALLOW THE AIR BAG TO EXPAND IN THE UNLIKELY EVENT OF ACCIDENTAL DEPLOYMENT. FAILURE TO FOLLOW PROCEDURES MAY RESULT IN PERSONAL INJURY.

6. Place the driver air bag assembly on a work bench or other surface away from all loose or flammable objects with its trim cover facing up, away from the surface.

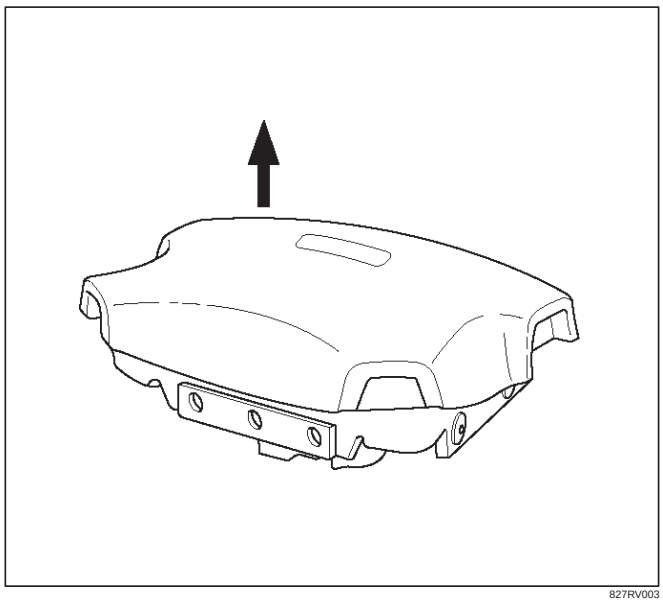

827RV003

7. Clear a space on the ground about 183 cm (six feet) in clearance where the driver air bag assembly is to be deployed. A paved, outdoor location where there is no activity is preferred. If an outdoor location is not available, a space on the shop floor where there is no activity and sufficient ventilation is recommended. Ensure no loose or flammable objects are within the deployment area.

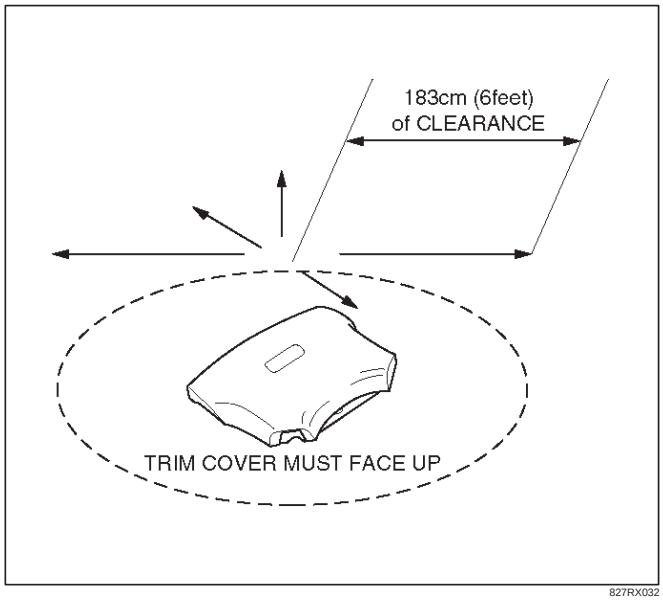

827RX032

8. Place the driver air bag assembly, with its trim cover facing up, on the ground in the space just cleared.
9. Stretch the SRS deployment harness and pigtail adapter from the driver air bag assembly to its full length.

10. Place a power source near the shorted end of the SRS deployment harness. Recommended application: 12 volts minimum, 2 amps minimum. A vehicle battery is suggested.
11. Connect the driver air bag assembly to the pigtail adapter on the SRS deployment harness. Deployment harness shall remain shorted and not be connected to a power source until the air bag is to be deployed. The driver air bag assembly will immediately deploy the air bag when a power source is connected to it.

NOTE: Ensure that the pigtail adapter is firmly seated into the driver air bag assembly connector. Failure to fully seat the connectors may leave the shorting bar located in the driver air bag assembly connector functioning (shorted) and may result in nondeployment of the driver air bag assembly.

12. Verify that the area around the driver air bag assembly is clear of all people and loose or flammable objects.
13. Verify that the driver air bag assembly is resting with its trim cover facing up.
14. Notify all people in the immediate area that you intend to deploy the driver air bag. The deployment will be accompanied by a substantial noise which may startle the uninformed.
15. Separate the two banana plugs on the SRS deployment harness.

NOTE: When the air bag deploys, the driver air bag assembly may jump about 3 m (ten feet) vertically. This is a normal reaction of the driver air bag to the force of the rapid gas expansion inside the air bag.

NOTE: When the air bag deploys, the rapid gas expansion will create a substantial noise. Notify all people in the immediate area that you intend to deploy the driver air bag.

WARNING: DEPLOYMENT HARNESS SHALL REMAIN SHORTED AND NOT BE CONNECTED TO A POWER SOURCE UNTIL THE AIR BAG IS TO BE DEPLOYED. THE AIR BAG ASSEMBLY WILL IMMEDIATELY DEPLOY THE AIR BAG WHEN A POWER SOURCE IS CONNECTED TO IT. CONNECTING THE DEPLOYMENT HARNESS TO THE POWER SOURCE SHOULD ALWAYS BE THE LAST STEP IN THE AIR BAG ASSEMBLY DEPLOYMENT PROCEDURE. FAILURE TO FOLLOW PROCEDURES IN THE ORDER LISTED MAY RESULT IN PERSONAL INJURY.

16. Connect the SRS deployment harness wires to the power source to immediately deploy the driver air bag. Recommended application: 12 volts minimum, 2 amps minimum. A vehicle battery is suggested.
17. Disconnect the SRS deployment harness from the power source.
18. Short the two SRS deployment harness leads together by fully seating one banana plug into the other.
19. In the unlikely event that the driver air bag assembly did not deploy after following these procedures, proceed immediately with Steps 24 through 26. If the driver air bag assembly did deploy, proceed with Steps 20 through 23.
20. Put on a pair of shop gloves and safety glasses to protect your hands and eyes from possible irritation and heat when handling the deployed driver air bag assembly. After the air bag assembly has been deployed, the surface of the air bag may contain a powdery residue. This solid particulate consists primarily of by products of the chemical reaction, Potassium Chloride and copper metal dust. Compounds of Potassium Borate, Strontium Chloride, Copper Chloride, and Ammonium Chloride may be found in amounts of about 1 % (each) of the total particulate.

WARNING: SAFETY PRECAUTIONS MUST BE OBSERVED WHEN HANDING A DEPLOYED AIR BAG ASSEMBLY. AFTER DEPLOYMENT, THE METAL SURFACES OF THE AIR BAG ASSEMBLY WILL BE VERY HOT. ALLOW THE INFLATOR MODULE TO COOL BEFORE HANDLING ANY METAL PORTION OF IT. DO NOT PLACE THE DEPLOYED AIR BAG ASSEMBLY NEAR ANY FLAMMABLE OBJECTS. FAILURE TO FOLLOW PROCEDURES MAY RESULT IN FIRE OR PERSONAL INJURY.

AFTER A DRIVER AIR BAG ASSEMBLY HAS BEEN DEPLOYED, THE METAL CANISTER AND SURROUNDING AREAS OF THE DRIVER AIR BAG ASSEMBLY WILL BE VERY HOT. DO NOT TOUCH THE METAL AREAS OF THE DRIVER AIR BAG ASSEMBLY FOR ABOUT TEN MINUTES AFTER DEPLOYMENT. IF THE DEPLOYED DRIVER AIR BAG ASSEMBLY MUST BE MOVED BEFORE IT IS COOL, WEAR GLOVES AND HANDLE BY THE AIR BAG OR TRIM COVER.

21. Disconnect the pigtail adapter from the driver air bag assembly as soon after deployment as possible. This will prevent damage to the pigtail adapter or SRS deployment harness due to possible contact with the hot driver air bag assembly canister. The pigtail adapter can be reused. They should, however, be inspected for damage after each deployment and replaced if necessary.
22. Dispose of the deployed driver air bag assembly through normal refuse channels after it has cooled for at least 30 minutes.
23. Wash your hands with mild soap and water afterward.

NOTE: The remaining steps are to be followed in the unlikely event that the driver air bag assembly did not deploy after following these procedures.

24. Ensure that the SRS deployment harness has been disconnected from the power source and that its two banana plugs have been shorted together by fully seating one banana plug into the other.
25. Disconnect the pigtail adapter from the driver air bag assembly.

WARNING: WHEN STORING A LIVE AIR BAG ASSEMBLY OR WHEN LEAVING A LIVE INFLATOR MODULE UNATTENDED ON A BENCH OR OTHER

SURFACE, ALWAYS FACE THE BAG AND TRIM COVER UP AND AWAY FROM THE SURFACE. THIS IS NECESSARY SO THAT A FREE SPACE IS PROVIDED TO ALLOW THE AIR BAG TO EXPAND IN THE UNLIKELY EVENT OF ACCIDENTAL DEPLOYMENT. FAILURE TO FOLLOW PROCEDURES MAY RESULT IN PERSONAL INJURY.

26. Temporarily store the driver air bag assembly with its trim cover facing up, away from the surface upon which it rests.

Deployment Outside Vehicle (Passenger Air Bag Assembly)

WARNING: FAILURE TO FOLLOW PROPER SRS AIR BAG ASSEMBLY DISPOSAL PROCEDURES CAN RESULT IN AIR BAG DEPLOYMENT WHICH MAY CAUSE PERSONAL INJURY. UNDEPLOYED AIR BAG ASSEMBLIES MUST NOT BE DISPOSED OF THROUGH NORMAL REFUSE CHANNELS. THE UNDEPLOYED AIR BAG ASSEMBLY CONTAINS SUBSTANCES THAT CAN CAUSE SEVERE ILLNESS OR PERSONAL INJURY IF THE SEALED CONTAINER IS DAMAGED DURING DISPOSAL. DISPOSAL IN ANY MANNER INCONSISTENT WITH PROPER PROCEDURES MAY BE A VIOLATION OF FEDERAL, STATE AND/OR LOCAL LAWS.

Deployment out of the vehicle is proper when the vehicle is to be returned to service. This includes, for example, situations in which a functionally or cosmetically deficient air bag assembly is replaced. Deployment and disposal of an air bag assembly is, of course, subject to any required retention period.

For deployment of a live air bag assembly out of the vehicle, the deployment procedure must be followed exactly. Always wear safety glasses during this deployment procedure until the deployed air bag assembly is scrapped. Before performing the procedures, you should be familiar with servicing the SRS system and with proper handling of the air bag assembly. Procedures should be read fully before they are performed.

The following procedure requires use of 5–8840–2468–0 SRS Deployment Harness with the appropriate pigtail adapter. The procedure also requires the use of 5–8840–2420–0 Passenger Side SRS Module Deployment Fixture. Do not attempt this procedure without 5–8840–2468–0 and adapter, and 5–8840–2420–0.

WARNING: FAILURE TO FOLLOW PROCEDURES IN THE ORDER LISTED MAY RESULT IN PERSONAL INJURY. NEVER CONNECT DEPLOYMENT HARNESS TO ANY POWER SOURCE BEFORE CONNECTING DEPLOYMENT HARNESS TO THE AIR BAG ASSEMBLY. DEPLOYMENT HARNESS SHALL REMAIN SHORTED AND NOT BE CONNECTED TO A POWER SOURCE UNTIL THE AIR BAG IS TO BE DEPLOYED. THE AIR BAG ASSEMBLY WILL IMMEDIATELY DEPLOY THE AIR BAG WHEN A POWER SOURCE IS CONNECTED TO IT. WEAR SAFETY GLASSES THROUGHOUT THIS ENTIRE DEPLOYMENT AND DISPOSAL PROCEDURE.

NOTE: This information applies only to passenger air bag assembly. Information for disposing of a live driver air bag assembly can be found in “Deployment Outside Vehicle” (Driver Air Bag Assembly) in this section.

1. Turn ignition switch to “LOCK” remove key, and put on safety glasses.
2. Inspect 5–8840–2468–0 SRS Deployment Harness and appropriate pigtail adapter for damage. If harness or pigtail is damaged, discard and obtain a replacement.
3. Short the two SRS Deployment Harness leads together by fully seating one banana plug into the other. The SRS Deployment Harness shall remain shorted and not be connected to a power source until the air bag is to be deployed.

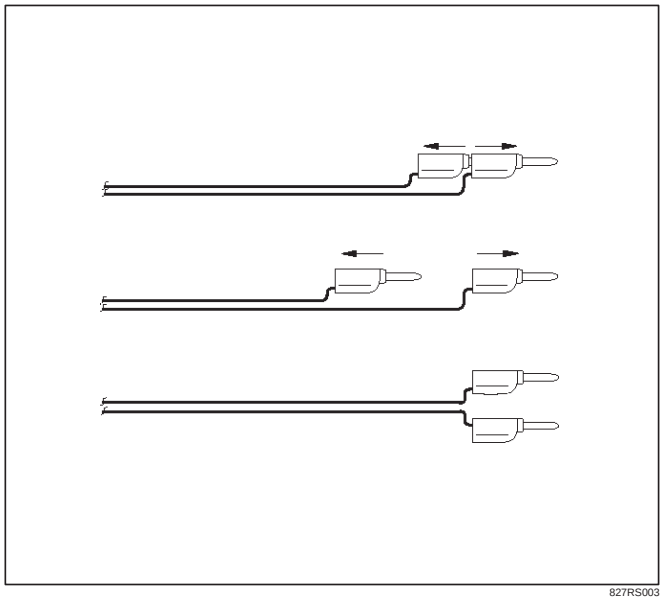

827RS003

4. Connect the appropriate pigtail adapter to the SRS Deployment Harness

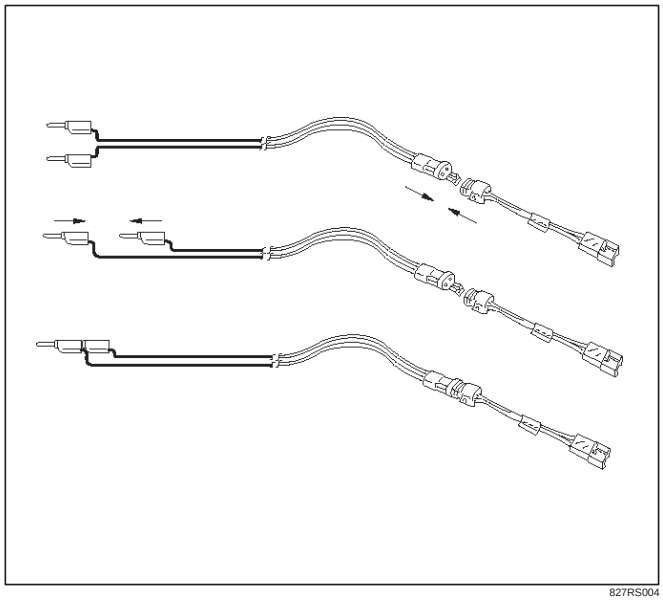

827RS004

5. Remove passenger air bag assembly from vehicle. Refer to “Passenger Air Bag Assembly Removal ” in this Section 9J–3.
6. Clear a space on the ground approximately 183 cm (six feet) in clearance where the fixture with attached air bag assembly is to be placed for deployment. A paved outdoor location where there is no activity is preferred. If an outdoor location is not available, a space on the shop floor where is no activity and sufficient ventilation is recommended. Ensure that no loose or flammable objects are within the deployment area.
7. Place the 5–8840–2420–0 on the bench vice. This is necessary to provide sufficient stabilization of the fixture during deployment.
8. Attach the passenger air bag assembly in the 5–8840–2420–0. An air bag assembly must be mounted such that the bag will deploy upward. SECURELY HAND–TIGHTEN ALL FASTENERS PRIOR TO DEPLOYMENT.

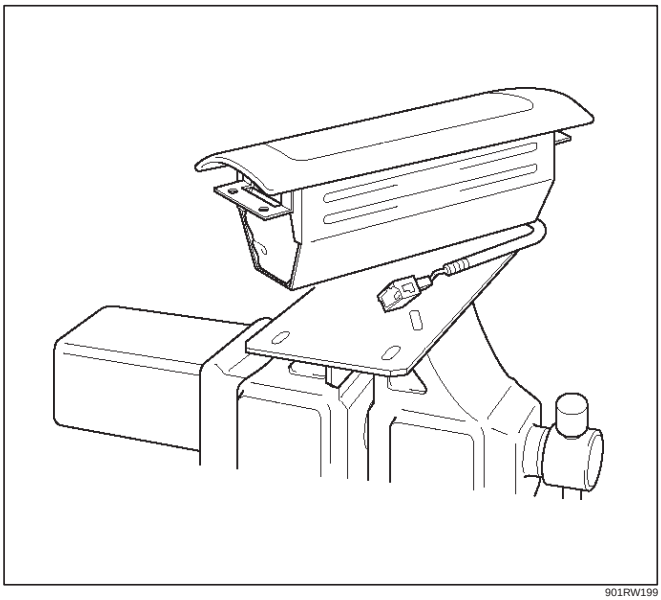

901RW199

9. Stretch the SRS Deployment Harness and pigtail adapter from the air bag assembly to its full length.
10. Place a power source near the shorted end of the SRS deployment harness. (Recommended application: 12 volts minimum, 2 amps minimum. A vehicle battery is suggested.)
11. Connect the air bag assembly to the pigtail adapter on the SRS deployment harness. The SRS Deployment Harness shall remain shorted and not be connected to a power source until the air bag is to be deployed. The air bag assembly will immediately deploy the air bag when a power source is connected to it.

NOTE: Ensure that the pigtail adapter is firmly seated into the air bag assembly connector. Failure to fully seat the connectors may leave the shorting bar located in the air bag assembly connector functioning (shorting the deployment circuit) and may result in nondeployment of the air bag assembly.

12. Verify that the area around the passenger air bag assembly is clear of all people and loose or flammable objects.
13. Verify that the passenger air bag assembly is firmly and properly in 5–8840–2420–0.
14. Notify all people in the immediate area of your intention to deploy the passenger air bag assembly. The deployment will be accompanied by a substantial noise which may startle the uninformed.
15. Separate the two banana plugs on the SRS deployment harness.

NOTE: When air bag deploys, the rapid gas expansion will create a substantial noise. Notify all people in the immediate area that you intend to deploy the air bag assembly.

WARNING: DEPLOYMENT HARNESS SHALL REMAIN SHORTED AND NOT BE CONNECTED TO A POWER SOURCE UNTIL THE AIR BAG IS TO BE DEPLOYED. THE AIR BAG ASSEMBLY WILL IMMEDIATELY DEPLOY THE AIR BAG WHEN A POWER SOURCE IS CONNECTED TO IT. CONNECTING THE DEPLOYMENT HARNESS TO THE POWER SOURCE SHOULD ALWAYS BE THE LAST STEP IN THE AIR BAG ASSEMBLY DEPLOYMENT PROCEDURE. FAILURE TO FOLLOW PROCEDURES IN THE ORDER LISTED MAY RESULT IN PERSONAL INJURY.

16. Connect the SRS deployment harness wires to the power source to immediately deploy the air bag assembly. Recommended application : 12 volts minimum, 2 amps minimum. A vehicle battery is suggested.
17. Disconnect the SRS deployment harness from the power source.
18. Short the two SRS deployment harness leads together by fully seating one banana plug into the other.
19. In the unlikely event that the passenger air bag assembly did not deploy after following these procedures, proceed immediately with Steps 24 through 26. If the passenger air bag assembly deployed as intended, proceed with Steps 20 through 23.
20. Put on a pair of shop gloves and safety glasses to protect your hands and eyes from possible irritation and heat when handling the deployed air bag assembly.

    After the air bag assembly has been deployed, the surface of the air bag may contain a powdery residue. This powder consists primarily of cornstarch (used to lubricate the bag as it inflates) and by products of the chemical reaction. Sodium hydroxide dust (similar to lye soap) is produced as a by product of the deployment reaction. The sodium hydroxide then quickly reacts with atmospheric moisture and is converted to sodium carbonate and sodium bicarbonate (baking soda). Therefore, it is unlikely that sodium hydroxide will be present after deployment.

WARNING: SAFETY PRECAUTIONS MUST BE OBSERVED WHEN HANDLING A DEPLOYED AIR BAG ASSEMBLY. AFTER DEPLOYMENT, THE METAL SURFACES OF THE AIR BAG ASSEMBLY WILL BE HOT. ALLOW THE AIR BAG ASSEMBLY TO

COOL BEFORE HANDLING ANY METAL PORTION OF IT. DO NOT PLACE THE DEPLOYED INFLATOR MODULE NEAR ANY FLAMMABLE OBJECTS. FAILURE TO FOLLOW PROCEDURES MAY RESULT IN FIRE OR PERSONAL INJURY. AFTER AN AIR BAG ASSEMBLY HAS BEEN DEPLOYED, THE METAL CANISTER AND SURROUNDING AREAS OF THE AIR BAG ASSEMBLY WILL BE HOT. DO NOT TOUCH THE METAL AREAS OF THE AIR BAG ASSEMBLY FOR ABOUT THIRTY MINUTES AFTER DEPLOYMENT. IF THE DEPLOYED AIR BAG ASSEMBLY MUST BE MOVED BEFORE IT IS COOL, WEAR GLOVES AND HANDLE BY THE AIR BAG ITSELF.

21. Disconnect the pigtail adapter from the air bag assembly as soon after deployment as possible to avoid damage to the pigtail adapter or SRS deployment harness from contacting the hot air bag assembly canister. The pigtail adapter and SRS deployment harness are designed to be reused. They should, however, be inspected for damage after each deployment and replaced if necessary.
22. Dispose of the deployed air bag assembly through normal refuse channels after it has cooled for at least 30 minutes.
23. Wash your hands with mild soap and water afterward.

NOTE: The remaining steps are to be followed in the unlikely event that the air bag assembly did not deploy after following the above procedures.

24. Ensure that the SRS deployment harness has been disconnected from the power source and that its two banana plugs have been shorted together by fully seating one banana plug into the other.
25. Disconnect the pigtail adapter from the air bag assembly.

WARNING: WHEN STORING A LIVE AIR BAG ASSEMBLY OR WHEN LEAVING A LIVE AIR BAG ASSEMBLY UNATTENDED ON A BENCH OR OTHER SURFACE, ALWAYS FACE THE BAG UP AND AWAY FROM THE SURFACE. THIS IS NECESSARY SO THAT A FREE SPACE IS PROVIDED TO ALLOW THE AIR BAG TO EXPAND IN THE UNLIKELY EVENT OF ACCIDENTAL DEPLOYMENT. FAILURE TO FOLLOW PROCEDURES MAY RESULT IN PERSONAL INJURY.

26. Temporarily store the air bag assembly with the bag facing up, away from the surface upon which it rests.

Deployment Outside Vehicle (Fixing Air Bag on Tire)

Read and understand the items of “CAUTIONS ABOUT AIR BAG DEPLOYMENT AND DISPOSAL PROCEDURES” and “Usage of Deployment Tool” for safe deployment of air bag.

1. Remove air bag assembly from vehicle. Refer to air bag assembly Removal “in this section”.
2. Inspect J–41434 Supplemental Restraint System (SRS) Deployment Harness and appropriate pigtail adapter for damage. If harness or pigtail is damaged, discard and obtain a replacement.
3. Extend double pole extension cord to a position far away 10 m (33 feet) from the air bag assembly.
4. Place a power source near the extended end of SRS air bag deployment harness. (Use of 12V battery is recommended).

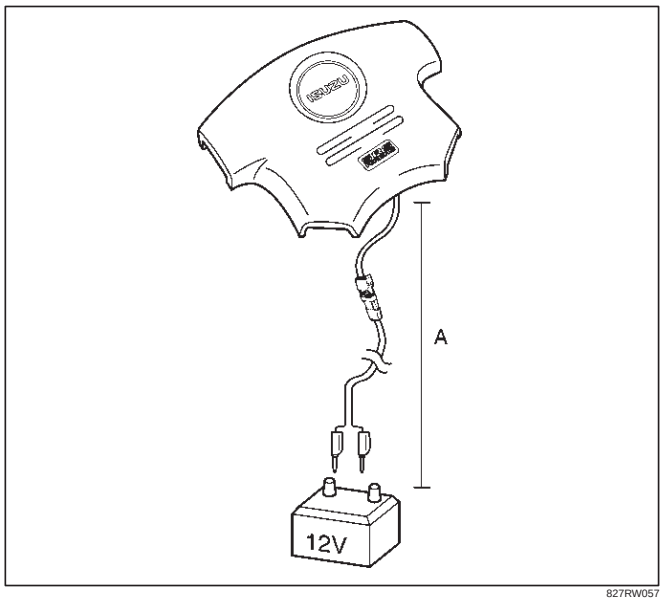

827RW057

Legend

(A) 10 m (33 feet) or more

5. Insert one of the banana plugs into the other banana plug to short the two SRS air bag deployment harness. Do not the harness to a power source until deployment.

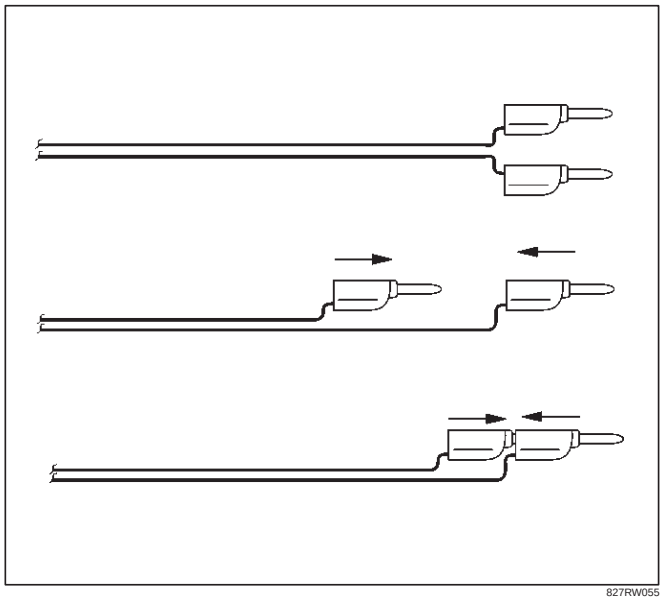

827RW055

6. Prepare four 15 inch or larger tires without wheel and two same size tires with wheels.

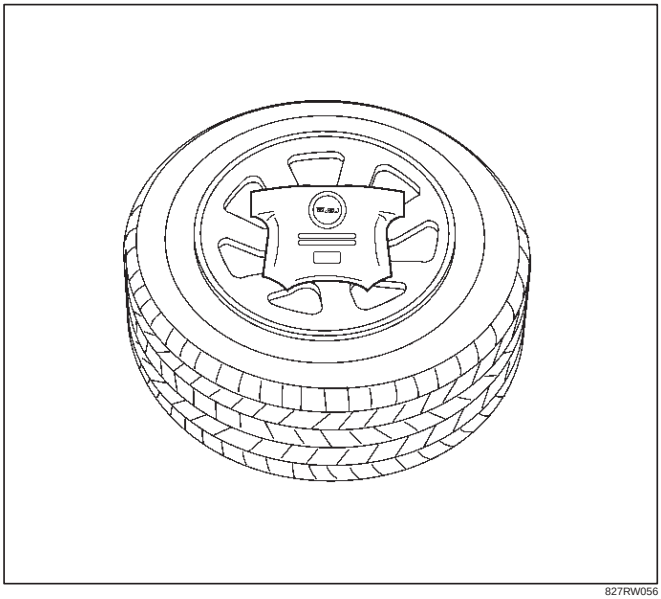

827RW056

7. How to fix Driver air bag.
   1. Fix the air bag with its trim cover up on a tire with a wheel using an automobile use wire harness, (core size: 0.05 inch) or a wire trebly at two or more points.
   2. Connect SRS air bag assembly to the double pole extension cord of the air bag deployment harness.

      Do not connect the deployment harness to a power source until air bag deployment.
      (If connected the SRS air bag assembly deploys immediately)

NOTE: Ensure that the pigtail adapter is firmly seated into the air bag assembly connector. Failure to fully seat the connectors may leave the shorting bar located in the air bag assembly connector functioning (shorting the deployment circuit) and may result in non deployment of the air bag assembly.

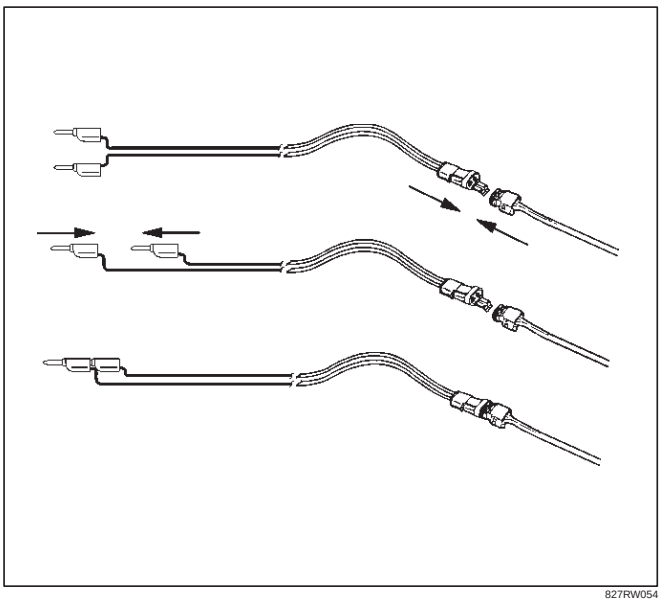

827RW054

3. Place three tires without wheel on the tire on which air bag is fixed and a tire with a wheel on top.

   Bind the five tires with a rope so that the tires may not collapse.

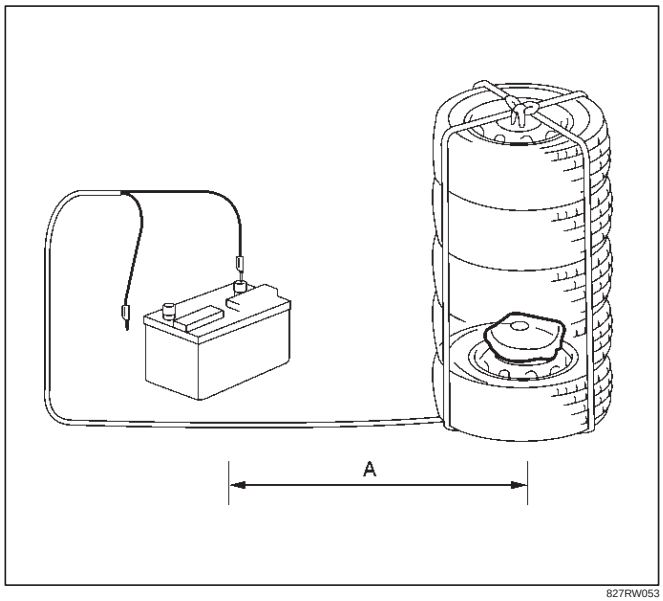

827RW053

Legend

(A) 10 m (33 feet) or more

8. How to fix Passenger air bag.
   1. Fix the air bag with its trim cover side fixing the center of a tire without a wheel using an automobile use wire harness, (core size: 0.05 inch) or a wire trebly at two or more points.

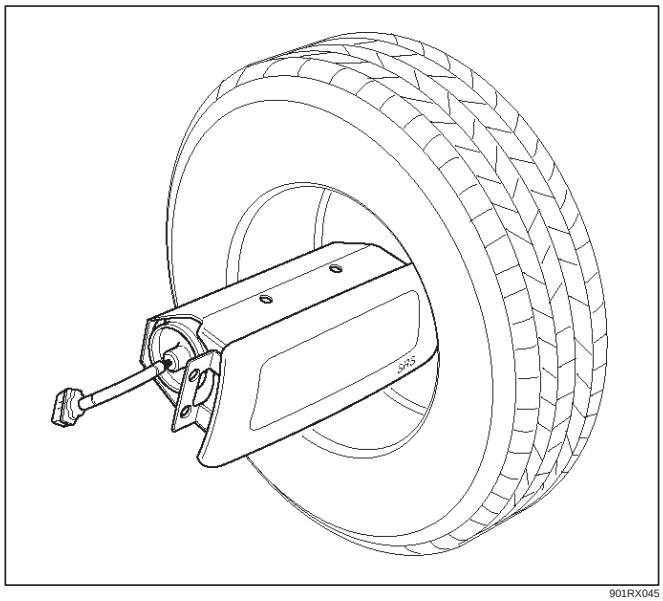

901RX045

   2. Connect Supplemental Restraint System (SRS) air bag assembly to the deployment harness double pole extension cord end. Be sure not to connect the deployment harness to a power source. (If connected the SRS air bag assembly deploys immediately).

NOTE: Ensure that the pigtail adapter is firmly seated into the air bag assembly connector. Failure to fully seat the connectors may leave the shorting bar located in the air bag assembly connector functioning (shorting the deployment circuit) and may result in non deployment of the air bag assembly.

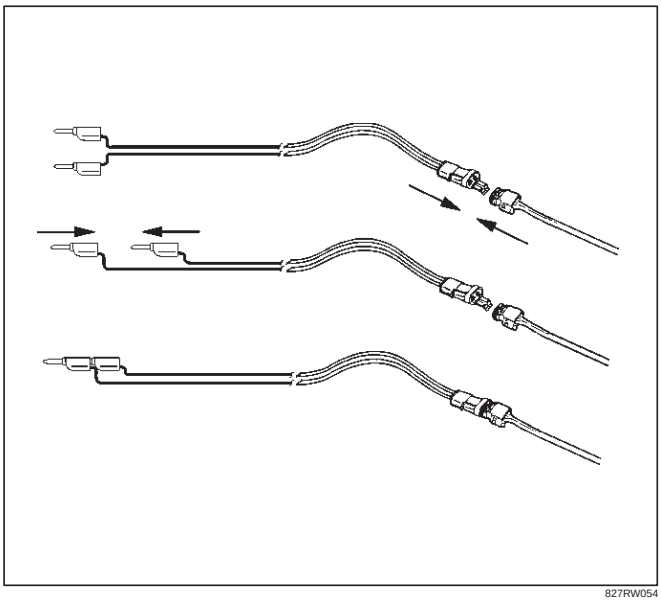

827RW054

3. Put a tire without wheel on another, put the tire on which the air bag is fixing, put a tire without a wheel, and finally put a tire with a wheel on top.

   Bind the tires with a rope so that the tires pile may not collapse.

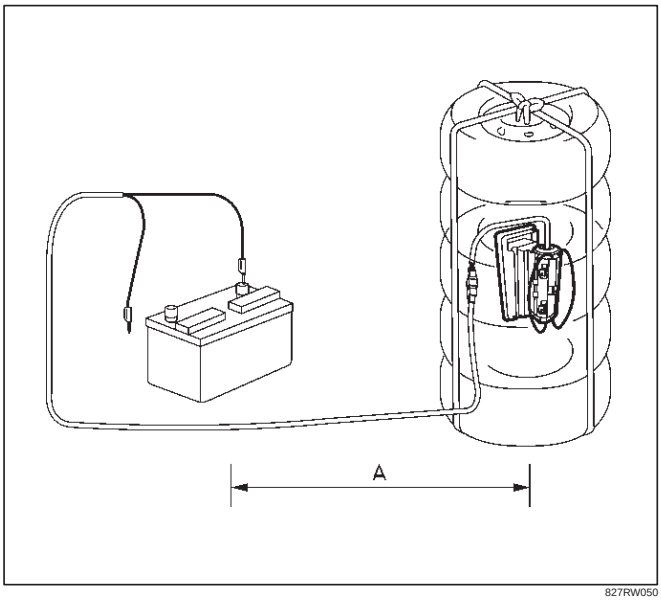

827RW050

Legend

(A) 10 m (33 feet) or more

9. Notify all people in the immediate area of your intention to deploy the passenger air bag assembly. The deployment will be accompanied by a substantial noise which may startle the uninformed.

WARNING: DEPLOYED HARNESS SHALL REMAIN SHORTED AND NOT BE CONNECTED TO A POWER SOURCE UNTIL THE AIR BAG IS TO BE DEPLOYED. THE AIR BAG ASSEMBLY WILL IMMEDIATELY DEPLOY THE AIR BAG WHEN A CONNECTING THE DEPLOYMENT HARNESS TO THE POWER SOURCE SHOULD ALWAYS BE THE LAST STEP IN THE AIR BAG ASSEMBLY DEPLOYMENT PROCEDURE. FAILURE TO FOLLOW PROCEDURES IN THE ORDER LISTED MAY RESULT IN PERSONAL INJURY.

10. Connect the Supplemental Restraint System (SRS) deployment harness wires to the power source to immediately deploy the air bag assembly. Recommended application : 12 volts minimum, 2 amps minimum. A vehicle battery is suggested.

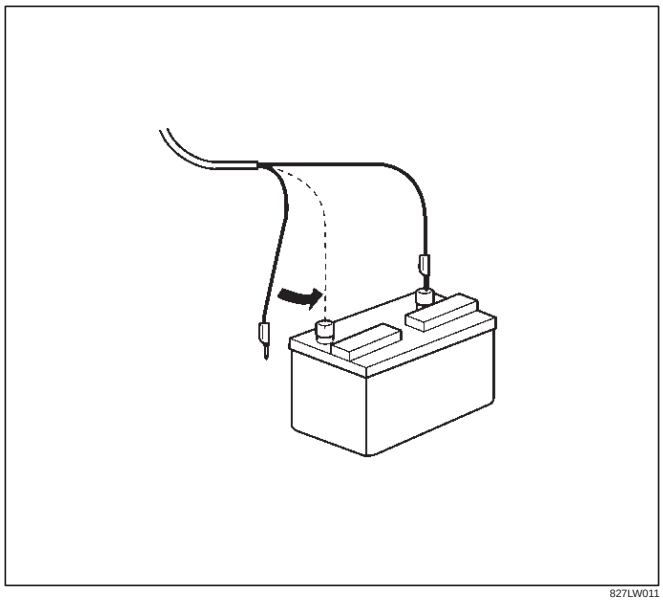

827LW011

WARNING: SAFETY PRECAUTIONS MUST BE OBSERVED WHEN HANDING A DEPLOYED AIR BAG ASSEMBLY. AFTER DEPLOYMENT, THE METAL SURFACES OF THE AIR BAG ASSEMBLY WILL BE VERY HOT. ALLOW THE AIR BAG ASSEMBLY TO COOL BEFORE HANDLING ANY METAL PORTION OF IT. DO NOT PLACE THE DEPLOYED INFLATOR MODULE NEAR ANY FLAMMABLE OBJECTS. FAILURE TO FOLLOW PROCEDURES MAY RESULT IN FIRE OR PERSONAL INJURY. AFTER AN AIR BAG ASSEMBLY HAS BEEN DEPLOYED, THE METAL CANISTER AND SURROUNDING AREAS OF THE AIR BAG ASSEMBLY WILL BE HOT. DO NOT TOUCH THE METAL AREAS OF THE AIR BAG ASSEMBLY FOR ABOUT THIRTY MINUTES AFTER DEPLOYMENT. IF THE DEPLOYED AIR BAG ASSEMBLY MUST BE MOVED BEFORE IT IS COOL, WEAR GLOVES AND HANDLE BY THE AIR BAG IT SELF.

11. Disconnect the pigtail adapter from the air bag assembly as soon after deployment as possible to avoid damage to the pigtail adapter or SRS deployment harness from contacting the hot air bag assembly canister. The pigtail adapter and SRS deployment harness are designed to be reused. They should, however, be inspected for damage after each deployment and replaced if necessary.
12. Dispose of the deployed air bag assembly through normal refuse channels after it has cooled for at least 30 minutes.

13. Wash your hands with mild soap and water afterward.

NOTE: The remaining steps are to be followed in the unlikely event that the air bag assembly did not deploy after following the above procedures.

14. Ensure that the SRS deployment harness has been disconnected from the power source and that its two banana plugs have been shorted together by fully seating one banana plug into the other.

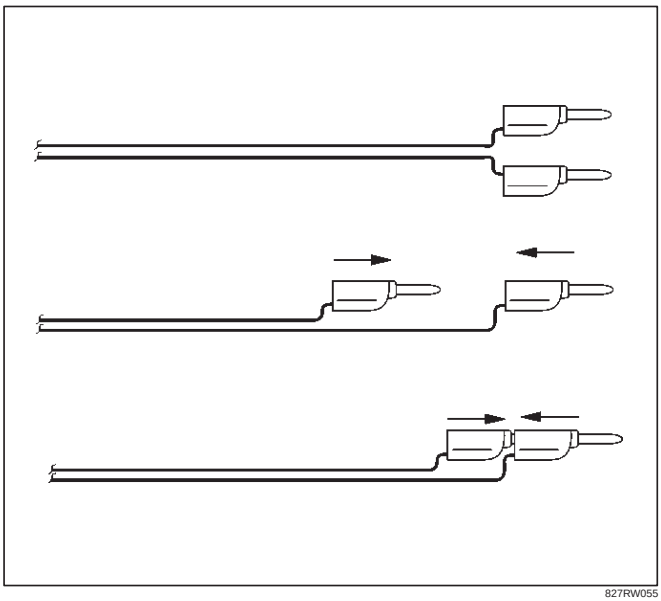

827RW055

15. Disconnect the pigtail adapter from the air bag assembly.

WARNING: WHEN STORING A LIVE AIR BAG ASSEMBLY OR WHEN LEAVING A LIVE AIR BAG ASSEMBLY UNATTENDED ON A BENCH OR OTHER SURFACE, ALWAYS FACE THE BAG UP AND AWAY FROM THE SURFACE. THIS IS NECESSARY SO THAT A FREE SPACE IS PROVIDED TO ALLOW THE AIR BAG TO EXPAND IN THE UNLIKELY EVENT OF ACCIDENTAL DEPLOYMENT. FAILURE TO FOLLOW PROCEDURES MAY RESULT IN PERSONAL INJURY.

16. Temporarily store the air bag assembly with the bag facing up, away from the surface upon which it rests.

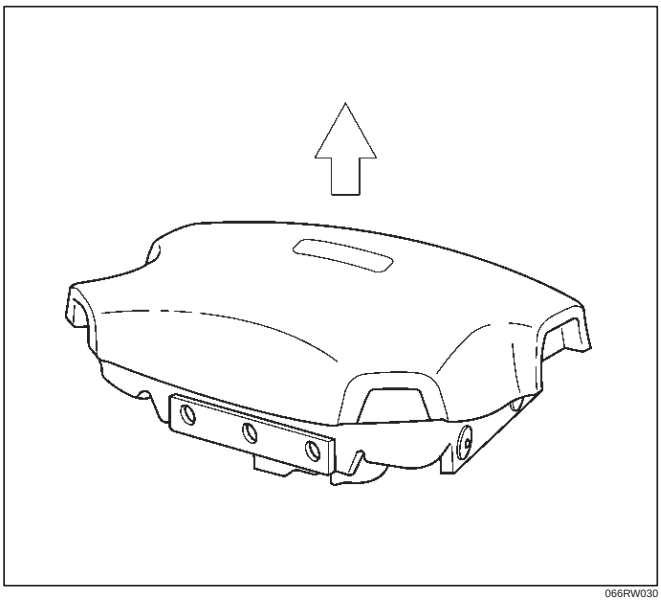

066RW030

Deployment Inside Vehicle (Vehicle Scrapping Procedure)

Deployment inside vehicle is proper when the vehicle is to be destroyed or salvaged for component parts. This includes, but is not limited to, the following situations:

1. The vehicle has completed its useful life.
2. The vehicle has been damaged beyond repair in a nondeployment type accident.
3. The vehicle has been stripped or damaged beyond repair in a theft.
4. The vehicle will be salvaged for component parts to be used on a vehicle with a different Vehicle Identification Number (VIN) as opposed to being rebuilt as same VIN. Never use SRS components from another vehicle.

WARNING: FAILURE TO FOLLOW PROPER SRS AIR BAG ASSEMBLY DISPOSAL PROCEDURES CAN RESULT IN AIR BAG DEPLOYMENT WHICH MAY CAUSE PERSONAL INJURY. UNDEPLOYED AIR BAG ASSEMBLIES MUST NOT BE DISPOSED OF THROUGH NORMAL REFUSE CHANNELS. THE UNDEPLOYED AIR BAG ASSEMBLY CONTAINS SUBSTANCES THAT CAN CAUSE SEVERE ILLNESS OR PERSONAL INJURY IF THE SEALED CONTAINER IS DAMAGED DURING DISPOSAL. DISPOSAL IN ANY MANNER INCONSISTENT WITH PROPER PROCEDURES MAY BE A VIOLATION OF FEDERAL, STATE AND/OR LOCAL LAWS.

1. Turn ignition switch to “LOCK,” remove key and put on safety glasses.
2. Remove all loose objects from front seats.
3. Disconnect driver air bag assembly, yellow 2–pin connector located at the base of the steering column.
4. Cut the driver air bag assembly yellow 2–pin harness connector from the vehicle leaving at least 15 cm (six inches) of wire at the connector.
5. Strip 13 mm (1/2 inch) of insulation from yellow – green and yellow – black wire lead of the connector.
6. Cut two 900 cm (30 feet) deployment wires from 0.8 mm^2 (18 gauge) or thicker multi–strand wire. These wires will be used to fabricate the driver deployment harness.
7. Strip 13 mm (1/2 inch) of insulation from both ends of the wires cut in the previous step.
8. Short the wires by twisting together one end from each. Deployment wires shall remain shorted and not be connected to a power source until the air bag is to be deployed.

WARNING: FAILURE TO FOLLOW PROCEDURES IN THE ORDER LISTED COULD RESULT IN PERSONAL INJURY. NEVER CONNECT DEPLOYMENT WIRES TO ANY POWER SOURCE BEFORE CONNECTING DEPLOYMENT WIRES TO THE AIR BAG ASSEMBLY LEADS. DEPLOYMENT WIRES SHALL REMAIN SHORTED AND BE NOT CONNECTED TO A POWER SOURCE UNTIL THE AIR BAG IS TO BE DEPLOYED. THE AIR BAG ASSEMBLY WILL IMMEDIATELY DEPLOY THE AIR BAG WHEN A POWER SOURCE IS CONNECTED TO IT. WEAR SAFETY GLASSES

THROUGHOUT THIS ENTIRE DEPLOYMENT AND DISPOSAL PROCEDURE.

9. Twist together one connector wire lead to one deployment wire. The connection should be mechanically secure.
10. Bend twisted connection made in the previous step flat and wrap tightly with electrical tape to insulate and secure.
11. Twist together, bend and tape the remaining connector wire lead to the remaining deployment wire.
12. Connect the deployment harness to the driver air bag assembly, yellow 2–pin connector at the base of the steering column. Route deployment harness out the driver side of the vehicle.

WARNING: DEPLOYMENT WIRES SHALL REMAIN SHORTED AND NOT BE CONNECTED TO A POWER SOURCE UNTIL THE AIR BAG IS TO BE DEPLOYED.

THE AIR BAG ASSEMBLY WILL IMMEDIATELY DEPLOY THE AIR BAG WHEN A POWER SOURCE IS CONNECTED TO IT.

CONNECTING THE DEPLOYMENT WIRES TO THE POWER SOURCE SHOULD ALWAYS BE THE FINAL STEP IN THE AIR BAG ASSEMBLY DEPLOYMENT PROCEDURE.

FAILURE TO FOLLOW PROCEDURES IN THE ORDER LISTED COULD RESULT IN PERSONAL INJURY.

13. Disconnect passenger air bag assembly, yellow 2–pin connector located behind glove box assembly.
14. Cut the passenger air bag assembly harness connector from the vehicle leaving at least 15 cm (six inches) of wire at the connector.
15. Strip 13 mm (1/2 inch) of insulation from blue–white and pink–blue wire lead of the connector.
16. Cut two 900 cm (30 feet) deployment wires from 0.8 mm^2 (18 gauge) or thicker multi–strand wire. These wires will be used to fabricate the passenger deployment harness.
17. Strip 13 mm (1/2 inch) of insulation from both ends of the wires cut in the previous step.
18. Short the wires by twisting together one end from each. Deployment wires shall remain shorted and not be connected to a power source until the air bag is to be deployed.

WARNING: FAILURE TO FOLLOW PROCEDURES IN THE ORDER LISTED COULD RESULT IN PERSONAL INJURY. NEVER CONNECT DEPLOYMENT WIRES TO ANY POWER SOURCE BEFORE CONNECTING DEPLOYMENT WIRES TO THE AIR BAG ASSEMBLY LEADS. DEPLOYMENT WIRES SHALL REMAIN SHORTED AND NOT BE CONNECTED TO A POWER SOURCE UNTIL THE AIR BAG IS TO BE DEPLOYED. THE AIR BAG ASSEMBLY WILL IMMEDIATELY DEPLOY THE AIR BAG WHEN A POWER SOURCE IS CONNECTED TO IT. WEAR SAFETY GLASSES THROUGHOUT THIS ENTIRE DEPLOYMENT AND DISPOSAL PROCEDURE.

19. Twist together one connector wire lead to one deployment wire. The connection should be mechanically secure.
20. Bend twisted connection made in the previous step flat and wrap tightly with electrical tape to insulate and secure.
21. Twist together, bend and tape the remaining connector wire lead to the remaining deployment wire.
22. Connect the deployment harness to the passenger air bag assembly, yellow 2–pin connector located behind the glove box assembly. Route deployment harness out the passenger side of the vehicle.

WARNING: DEPLOYMENT WIRES SHALL REMAIN SHORTED AND NOT BE CONNECTED TO A POWER SOURCE UNTIL THE AIR BAG IS TO BE DEPLOYED. THE AIR BAG ASSEMBLY WILL IMMEDIATELY DEPLOY THE AIR BAG WHEN A POWER SOURCE IS CONNECTED TO IT. CONNECTING THE DEPLOYMENT WIRES SHOULD ALWAYS BE THE FINAL STEP IN THE AIR BAG ASSEMBLY DEPLOYMENT PROCEDURE. FAILURE TO FOLLOW PROCEDURES IN THE ORDER LISTED COULD RESULT IN PERSONAL INJURY.

23. Verify that the inside of the vehicle and the area surrounding the vehicle are clear of all people and loose or flammable objects.
24. Stretch the driver and passenger deployment harness to their full length.
25. Completely cover windshield area and front door window openings with a drop cloth, blanket or similar item. This reduces the possibility of injury due to possible fragmentation of the vehicle's glass or interior.
26. Notify all people in the immediate area that you intend to deploy the air bags. The deployment will be accompanied by a substantial noise which may startle the uninformed.
27. Separate the two ends of the driver deployment harness wires.

WARNING: DEPLOYMENT WIRES SHALL REMAIN SHORTED AND NOT BE CONNECTED TO A POWER SOURCE UNTIL THE AIR BAG IS TO A POWER SOURCE UNTIL THE AIR BAG IS TO BE DEPLOYED. THE AIR BAG ASSEMBLY WILL IMMEDIATELY DEPLOY THE AIR BAG WHEN A POWER SOURCE IS CONNECTED TO IT. CONNECTING THE DEPLOYMENT WIRES TO THE POWER SOURCE SHOULD ALWAYS BE THE FINAL STEP IN THE AIR BAG ASSEMBLY DEPLOYMENT PROCEDURE. FAILURE TO FOLLOW PROCEDURES IN THE ORDER LISTED COULD RESULT IN PERSONAL INJURY.

NOTE: When the air bag deploys, the rapid gas expansion will create a substantial noise. Notify all people in the immediate area that you intend to deploy the air bags.

28. Connect the driver deployment harness wires to a power source to immediately deploy the driver air bag assembly. Recommended application: 12 volts minimum, 2 amps minimum. A vehicle battery is suggested.
29. Separate the two ends of the passenger deployment harness wires.

WARNING: DEPLOYMENT WIRES SHALL REMAIN SHORTED AND NOT BE CONNECTED TO A POWER SOURCE UNTIL THE AIR BAG IS TO A POWER SOURCE UNTIL THE AIR BAG IS TO BE DEPLOYED. THE AIR BAG ASSEMBLY WILL IMMEDIATELY DEPLOY THE AIR BAG WHEN A POWER SOURCE IS CONNECTED TO IT. CONNECTING THE DEPLOYMENT WIRES TO THE POWER SOURCE SHOULD ALWAYS BE THE FINAL STEP IN THE AIR BAG ASSEMBLY DEPLOYMENT PROCEDURE. FAILURE TO FOLLOW PROCEDURES IN THE ORDER LISTED COULD RESULT IN PERSONAL INJURY.

30. Connect the passenger deployment harness wires to a power source to immediately deploy the passenger air bag assembly. Recommended application: 12 volts minimum, 2 amps minimum. A vehicle battery is suggested.(Driver air bag assembly) Put on a pair of shop gloves and safety glasses to protect your hands and eyes from possible irritation and heat when handling the deployed air bag assembly. After the air bag assembly has been deployed, the surface of the air bag may contain solid particulate. This solid particulate consists primarily of by products of the chemical reaction, Potassium Chloride and copper metal dust. Compounds of Potassium Borate, Strontium Chloride, Copper Chloride, and Ammonium Chloride may be found in amounts of about 1 % (each) of the total particulate.

    (Passenger air bag assembly)

    Put on a pair of shop gloves and safety glasses to protect your hands and eyes from possible irritation and heat when handling the deployed air bag assembly.

    After the air bag assembly has been deployed, the surface of the air bag may contain a powdery residue. This powder consists primarily of cornstarch (used to lubricate the bag as it inflates) and by products of the chemical reaction. Sodium hydroxide dust (similar to lye soap) is produced as a by product of the deployment reaction. The sodium hydroxide then quickly reacts with atmospheric moisture and is converted to sodium carbonate and sodium bicarbonate (baking soda). Therefore, it is unlikely that sodium hydroxide will be present after deployment.

WARNING: SAFETY PRECAUTIONS MUST BE OBSERVED WHEN HANDLING A DEPLOYED AIR BAG ASSEMBLY. AFTER DEPLOYMENT, THE METAL SURFACES OF THE AIR BAG ASSEMBLY WILL BE VERY HOT. ALLOW THE AIR BAG ASSEMBLY TO COOL BEFORE HANDLING ANY METAL PORTION OF IT. DO NOT PLACE THE HOT DEPLOYED AIR BAG ASSEMBLY NEAR ANY FLAMMABLE OBJECTS. FAILURE TO FOLLOW PROCEDURES COULD RESULT IN FIRE OR PERSONAL INJURY.

After an air bag assembly has been deployed, the metal canister and surrounding areas of the air bag assembly will be very hot. Do not touch the metal areas of the air bag assembly for about 30 minutes after deployment. If the deployed air bag assembly must be moved before it is cool, wear gloves and handle by the air bag or trim cover.

31. Short the driver deployment harness wires by twisting together one end from each. Repeat this procedure for the passenger deployment harness.
32. Carefully remove drop cloth from vehicle and clean off any fragments or discard drop cloth entirely.
33. Disconnect driver deployment harness and passenger deployment harness from vehicle and discard.
34. In the unlikely event that either or both of the air bag assemblies did not deploy after following these procedures, proceed immediately with Steps 36 through 37. If the air bag assembly deployed, proceed to step 35.
35. With both air bags deployed, the vehicle may be scrapped in the same manner as a non–SRS equipped vehicle.

NOTE: The remaining steps are to be followed in the unlikely event that the air bag assembly did not deploy after following these procedures.

36. Remove the undeployed air bag assembly (s) from the vehicle. For driver air bag assembly refer to in the “Passenger Air Bag Assembly Removal” in this manual.

WARNING: WHEN STORING A LIVE AIR BAG ASSEMBLY OR WHEN LEAVING A LIVE AIR BAG ASSEMBLY UNATTENDED ON A BENCH OR OTHER SURFACE, ALWAYS FACE THE BAG AND TRIM COVER UP, AWAY FROM THE SURFACE. THIS IS NECESSARY SO THAT A FREE SPACE IS PROVIDED TO ALLOW THE AIR BAG TO EXPAND IN THE UNLIKELY EVENT OF ACCIDENTAL DEPLOYMENT. FAILURE TO FOLLOW PROCEDURES COULD RESULT IN PERSONAL INJURY.

37. Temporarily store the air bag assembly with the air bag opening facing up, away from the surface upon which it rests.

Deployed Air Bag Assembly Handling

Put on a pair of shop gloves and safety glasses to protect your hands and eyes from possible irritation and heat when handling the deployed air bag assembly.
After the air bag assembly has been deployed, the surface of the air bag may contain a powdery residue.
(Passenger air bag assembly)
After the air bag assembly has been deployed, the surface of the air bag may contain a powdery residue. This powder consists primarily of cornstarch (used to lubricate the bag as it inflates) and by products of the chemical reaction. Sodium hydroxide dust (similar to lye soap) is produced as a by product of the deployment reaction. The sodium hydroxide then quickly reacts with atmospheric moisture and is converted to sodium

carbonate and sodium bicarbonate (baking soda). Therefore, it is unlikely that sodium hydroxide will be present after deployment.
(Driver air bag assembly)
After the air bag assembly has been deployed, the surface of the air bag may contain solid particulate. This solid particulate consists primarily of by products of the chemical reaction, Potassium Chloride and copper metal dust. Compounds of Potassium Borate, Strontium Chloride, Copper Chloride, and Ammonium Chloride may be found in amounts of about 1 % (each) of the total particulate.

Deployment Outside Vehicle (Pretensioner Seat Belt Assembly)

Deployment outside the vehicle is proper when the vehicle is to be returned to service. This includes, for example, situations in which the vehicle will be returned to useful service after a functionally or cosmetically deficient pretensioner seat belt assembly is replaced. Deployment and disposal of a malfunctioning pretensioner seat belt assembly is, of course, subject to any required retention period.
For deployment of a live (undeployed) pretensioner seat belt assembly outside the vehicle, the deployment procedure must be followed exactly. Always wear gloves and safety glasses during this deployment procedure until a deployed pretensioner seat belt assembly is scrapped or until an undeployed pretensioner seat belt assembly is shipped. Before performing the procedures you should be familiar with servicing the system and with proper handling of the pretensioner seat belt assembly. Procedures should be read fully before they are performed.
The following procedure requires use of SRS deployment harness with appropriate pigtail adapter. Do not attempt procedure without adapter.

WARNING: FAILURE TO FOLLOW PROCEDURES IN THE ORDER LISTED MAY RESULT IN PERSONAL INJURY. NEVER CONNECT DEPLOYMENT HARNESS TO ANY POWER SOURCE BEFORE CONNECTING DEPLOYMENT HARNESS TO THE PRETENSIONER SEAT BELT ASSEMBLY. DEPLOYMENT HARNESS SHALL REMAIN SHORTED AND NOT BE CONNECTED TO A POWER SOURCE UNTIL THE PRETENSIONER SEAT BELT IS TO BE DEPLOYED. THE PRETENSIONER SEAT BELT ASSEMBLY WILL IMMEDIATELY DEPLOY THE PRETENSIONER SEAT BELT WHEN A POWER SOURCE IS CONNECTED TO IT. WEAR GLOVES AND SAFETY GLASSES THROUGHOUT THIS ENTIRE DEPLOYMENT AND DISPOSAL PROCEDURE.

1. Turn ignition switch to “LOCK”, remove key.
2. Remove the pretensioner seat belt assembly from vehicle. Refer to “Pretensioner Seat Belt Removal” in this manual.
3. Prepare SRS deployment harness.

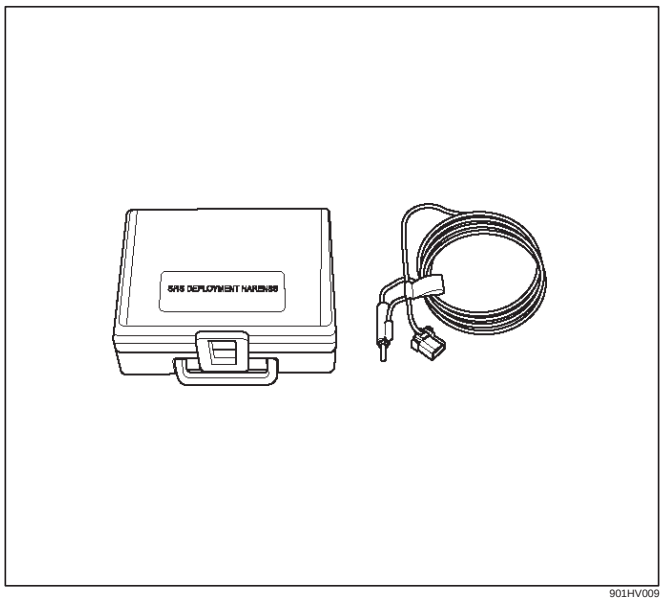

901HV009

4. Short the two SRS deployment harness leads together by fully seating one banana plug into the other. SRS deployment harness shall remain shorted and not be connected to a power source until the pretensioner seat belt is to be deployed.
5. Place the pretensioner seat belt assembly on a work bench or other surface away from all loose or flammable objects.

WARNING: WHEN FIXING THE DEPLOYMENT DEVICE OF PRETENSIONER SEAT BELT, THE DEPLOYMENT DEVICE SHOULD BE FIXED AWAY FROM OTHER PERSON

6. Clear a space on the ground about 183 cm (six feet) in diameter where the pretensioner seat belt assembly is to be deployed. A paved, outdoor location where there is no activity is preferred. If an outdoor location is not available, a space on the shop floor where there is no activity and sufficient ventilation is recommended. Ensure no loose or flammable objects are within the deployment area.
7. Stretch the SRS deployment harness and pigtail adapter from the pretensioner seat belt assembly to its full length.
8. Place a power source near the shorted end of the SRS deployment harness. Recommended application: 12 volts minimum, 2 amps minimum. A vehicle battery is suggested.
9. Deployment harness shall remain shorted and not be connected to a power source until the pretensioner seat belt is to be deployed. The pretensioner seat belt assembly will immediately deploy the pretensioner seat belt when a power source is connected to it.
10. Verify that the area around the pretensioner seat belt assembly is clear of all people and loose or flammable objects.
11. Notify all people in the immediate area that you intend to deploy the driver air bag. The deployment will be accompanied by a substantial noise which may startle the uninformed.
12. Connect the pretensioner seat belt to the pigtail adapter on the SRS deployment harness.

NOTE: Ensure that the pigtail adapter is firmly seated into the pretensioner seat belt assembly connector. Failure to fully seat the connectors may leave the shorting bar located in the pretensioner seat belt assembly connector functioning (shorted) and may result in nondeployment of the pretensioner seat belt assembly.

13. Separate the two banana plugs on the SRS deployment harness.

NOTE: When the pretensioner seat belt deploys, the rapid gas expansion will create a substantial noise. Notify all people in the immediate area that you intend to deploy the pretensioner seat belt.

WARNING: DEPLOYMENT HARNESS SHALL REMAIN SHORTED AND NOT BE CONNECTED TO A POWER SOURCE UNTIL THE PRETENSIONER SEAT BELT IS TO BE DEPLOYED. THE PRETENSIONER SEAT BELT ASSEMBLY WILL IMMEDIATELY DEPLOY THE PRETENSIONER SEAT BELT WHEN A POWER SOURCE IS CONNECTED TO IT. CONNECTING THE DEPLOYMENT HARNESS TO THE POWER SOURCE SHOULD ALWAYS BE THE LAST STEP IN THE PRETENSIONER SEAT BELT ASSEMBLY DEPLOYMENT PROCEDURE. FAILURE TO FOLLOW PROCEDURES IN THE ORDER LISTED MAY RESULT IN PERSONAL INJURY.

14. Connect the SRS deployment harness wires to the power source to immediately deploy the pretensioner seat belt. Recommended application: 12 volts minimum, 2 amps minimum. A vehicle battery is suggested.
15. Disconnect the SRS deployment harness from the power source.
16. Short the two SRS deployment harness leads together by fully seating one banana plug into the other.
17. In the unlikely event that the pretensioner seat belt assembly did not deploy after following these procedures, proceed immediately with Steps 21 through 24. If the pretensioner seat belt assembly did deploy, proceed with Steps 15 through 20.
18.

WARNING: SAFETY PRECAUTIONS MUST BE OBSERVED WHEN HANDING A DEPLOYED PRETENSIONER SEAT BELT ASSEMBLY. AFTER DEPLOYMENT, THE METAL SURFACES OF THE PRETENSIONER SEAT BELT ASSEMBLY WILL BE VERY HOT. ALLOW THE INFLATOR MODULE TO COOL BEFORE HANDLING ANY METAL PORTION OF IT. DO NOT PLACE THE DEPLOYED PRETENSIONER SEAT BELT ASSEMBLY NEAR ANY FLAMMABLE OBJECTS. FAILURE TO FOLLOW PROCEDURES MAY RESULT IN FIRE OR PERSONAL INJURY.

AFTER A DRIVER PRETENSIONER SEAT BELT ASSEMBLY HAS BEEN DEPLOYED, THE METAL CANISTER AND SURROUNDING AREAS OF THE DRIVER PRETENSIONER SEAT BELT ASSEMBLY WILL BE VERY HOT. DO NOT TOUCH THE METAL AREAS OF THE PRETENSIONER SEAT BELT ASSEMBLY FOR ABOUT TEN MINUTES AFTER DEPLOYMENT. IF THE DEPLOYED PRETENSIONER SEAT BELT ASSEMBLY MUST BE MOVED BEFORE IT IS COOL, WEAR GLOVES AND HANDLE BY THE PRETENSIONER SEAT BELT OR TRIM COVER.

19. Disconnect the pigtail adapter from the pretensioner seat belt assembly as soon after deployment as possible. This will prevent damage to the pigtail adapter or SRS deployment harness due to possible contact with the hot pretensioner seat belt assembly canister. The pigtail adapter can be reused. They should, however, be inspected for damage after each deployment and replaced if necessary.
20. Dispose of the deployed pretensioner seat belt assembly through normal refuse channels after it has cooled for at least 30 minutes.
21. Wash your hands with mild soap and water afterward.

NOTE: The remaining steps are to be followed in the unlikely event that the pretensioner seat belt assembly did not deploy after following these procedures.

22. Ensure that the SRS deployment harness has been disconnected from the power source and that its two banana plugs have been shorted together by fully seating one banana plug into the other.
23. Disconnect the pigtail adapter from the pretensioner seat belt assembly.
24. Remove the undeployed pretensioner seat belt from the special tool.

WARNING: WHEN STORING A LIVE PRETENSIONER SEAT BELT ASSEMBLY OR WHEN LEAVING A LIVE INFLATOR MODULE UNATTENDED ON A BENCH OR OTHER SURFACE, ALWAYS PUT THE PRETENSIONER SEAT BELT HORIZONTAL PLACE. THIS IS NECESSARY SO THAT A FREE SPACE IS PROVIDED TO ALLOW THE PRETENSIONER SEAT BELT TO SHRINK IN THE UNLIKELY EVENT OF ACCIDENTAL DEPLOYMENT. FAILURE TO FOLLOW PROCEDURES MAY RESULT IN PERSONAL INJURY.

25. Temporarily store the pretensioner seat belt assembly with its deployment device facing up, away from the surface upon which it rests.

Deployment Inside Vehicle (Pretensioner Seat Belt Vehicle Scrapping Procedure)

Deployment inside vehicle is proper when the vehicle is to be destroyed. This includes, but is not limited to, the following situations:

1. The vehicle has completed its useful life.
2. The vehicle has been damaged beyond repair in a nondeployment type accident.
3. The vehicle has been stripped or damaged beyond repair in a theft.

NOTE: The vehicle will be salvaged for component parts to be used on a vehicle with a different Vehicle Identification Number (VIN) as opposed to being rebuilt as same VIN. Never use pretensioner seat belt components from another vehicle.

WARNING: FAILURE TO FOLLOW PROCEDURES IN THE ORDER LISTED COULD RESULT IN PERSONAL INJURY. NEVER CONNECT DEPLOYMENT WIRES

TO ANY POWER SOURCE BEFORE CONNECTING DEPLOYMENT WIRES TO THE PRETENSIONER SEAT BELT ASSEMBLY LEADS. DEPLOYMENT WIRES SHALL REMAIN SHORTED AND NOT BE CONNECTED TO A POWER SOURCE UNTIL THE PRETENSIONER SEAT BELT IS TO BE DEPLOYED. THE PRETENSIONER SEAT BELT ASSEMBLY WILL IMMEDIATELY DEPLOY THE PRETENSIONER SEAT BELT WHEN A POWER SOURCE IS CONNECTED TO IT. WEAR SAFETY GLASSES THROUGHOUT THIS ENTIRE DEPLOYMENT AND DISPOSAL PROCEDURE.

1. Turn ignition switch to “LOCK,” remove key and put on safety glasses.
2. Remove all loose objects from front seats.
3. Disconnect pretensioner seat belt assembly, yellow 2–pin connector located at the base of the seat.
4. Prepare SRS deployment harness.
5. Short the two SRS deployment harness leads together by fully seating one banana plug into the other.
6. Deployment harness shall remain shorted and not be connected to a power source until the pretensioner seat belt is to be deployed.
7. Route deployment harness out the driver side of the vehicle.
8. Verify that the inside of the vehicle and the area surrounding the vehicle are clear of all people and loose or flammable objects.
9. Stretch the SRS deployment harness to their full length.
10. Connect the deployment harness to the pretensioner seat belt assembly, yellow 2-pin connector at the base of the seat.

WARNING: DEPLOYMENT WIRES SHALL REMAIN SHORTED AND NOT BE CONNECTED TO A POWER SOURCE UNTIL THE PRETENSIONER SEAT BELT IS TO BE DEPLOYED. THE PRETENSIONER SEAT BELT ASSEMBLY WILL IMMEDIATELY DEPLOY THE PRETENSIONER SEAT BELT WHEN A POWER SOURCE IS CONNECTED TO IT. CONNECTING THE DEPLOYMENT WIRES TO THE POWER SOURCE SHOULD ALWAYS BE THE FINAL STEP IN THE PRETENSIONER SEAT BELT ASSEMBLY DEPLOYMENT PROCEDURE. FAILURE TO FOLLOW PROCEDURES IN THE ORDER LISTED COULD RESULT IN PERSONAL INJURY.

11. Notify all people in the immediate area that you intend to deploy the pretensioner seat belt. The deployment will be accompanied by a substantial noise which may startle the uninformed.
12. Separate the two banana plugs on the SRS deployment harness.

NOTE: When the pretensioner seat belt deploys, the rapid gas expansion will create a substantial noise. Notify all people in the immediate area that you intend to deploy the pretensioner seat belt.

13. Connect the SRS deployment harness wires to a power source to immediately deploy the pretensioner seat belt assembly. Recommended application: 12 volts minimum, 2 amps minimum. A vehicle battery is suggested.

WARNING: DEPLOYMENT WIRES SHALL REMAIN SHORTED AND NOT BE CONNECTED TO A POWER SOURCE UNTIL THE PRETENSIONER SEAT BELT IS TO IS TO BE DEPLOYED. THE PRETENSIONER SEAT BELT ASSEMBLY WILL IMMEDIATELY DEPLOY THE PRETENSIONER SEAT BELT WHEN A POWER SOURCE IS CONNECTED TO IT. CONNECTING THE DEPLOYMENT WIRES SHOULD ALWAYS BE THE FINAL STEP IN THE PRETENSIONER SEAT BELT ASSEMBLY DEPLOYMENT PROCEDURE. FAILURE TO FOLLOW PROCEDURES IN THE ORDER LISTED COULD RESULT IN PERSONAL INJURY.

14. Short the two SRS deployment harness leads together by fully seating one banana plug into the other.
15. Disconnect the deployment harness to the pretensioner seat belt assembly, yellow 2-pin connector at the base of the seat.
16. In the unlikely event that the pretensioner seat belt assembly did not deploy after following these procedures, proceed immediately with Steps 18 through 19. If the pretensioner seat belt assembly deployed as intended, proceed with Steps 14 through 17.
17. With both air bags and pretensioner seat belt deployed, the vehicle may be scrapped in the same manner as a non–SRS equipped vehicle.

NOTE: The remaining steps are to be followed in the unlikely event that the pretensioner seat belt assembly did not deploy after following these procedures.

18. Remove the undeployed pretensioner seat belt assembly (s) from the vehicle. For pretensioner seat belt assembly refer to in the “Pretensioner Seat Belt Assembly Removal” in this manual.
19. Temporarily store the pretensioner seat belt assembly with the deployment device facing up, away from the surface upon which it rests.

Special Tools

WARNING: TO AVOID DEPLOYMENT WHEN TROUBLESHOOTING THE SRS, DO NOT USE ELECTRICAL TEST EQUIPMENT SUCH AS A BATTERY–POWERED OR AC–POWERED VOLTMETER, OHMMETER, ETC., OR ANY TYPE OF ELECTRICAL EQUIPMENT OTHER THAN THAT SPECIFIED IN THIS MANUAL. DO NOT USE A NONPOWERED PROBE–TYPE TESTER. INSTRUCTIONS IN THIS MANUAL MUST BE FOLLOWED CAREFULLY, OTHERWISE PERSONAL INJURY MAY RESULT.

5–8840–2421–0 SRS Driver/Passenger Load Tool

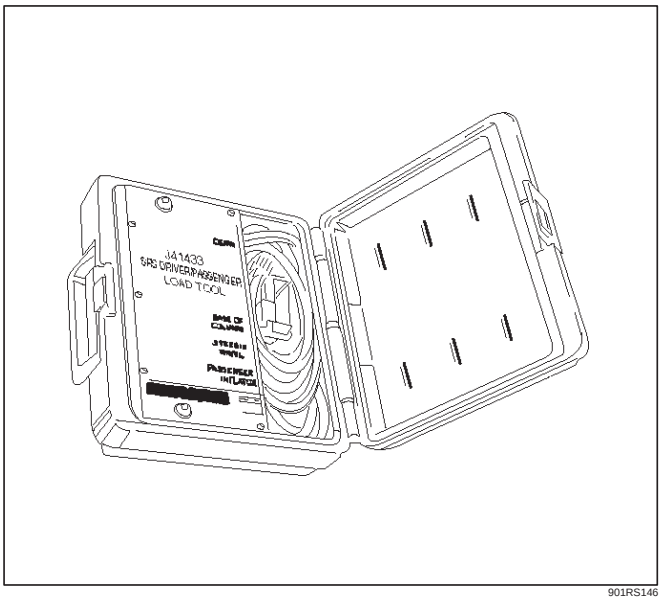

901RS146

The SRS Driver/Passenger Load Tool 5–8840–2421–0 is used only when called for in this section. It is used as a diagnostic aid and safety device to prevent inadvertent air bag assembly deployment.

The load tool has three yellow connectors attached to its case.

The three small connectors are electrically functional and serve as resistive load substitutions.

No more than two connectors are used at any time. One of the small connectors is used to substitute for the load of the driver air bag assembly when it is connected at the top of the column to the SRS coil assembly. Another small connector is used to substitute for the load of the driver air bag assembly and the SRS coil assembly when it is connected at the base of the column to the SRS wiring harness. The third small connector is used to substitute for the load of the passenger air bag assembly and pretensioner seat belt assembly when connected to the passenger air bag assembly and pretensioner seat belt assembly harness connector.

By substituting the resistance of the load tool when called for, a determination can be made as to whether an inflator circuit component is causing system malfunction and which component is causing the malfunction. The load tool should be used only when specifically called for in the diagnostic procedures.

NOTE: If comand to use 5–8840–2421–0 load tool when repair the pretensioner seat belt, connect load tool connector to use for driver air bag and/or passenger air bag connector.

5–8840–0285–0 DVM

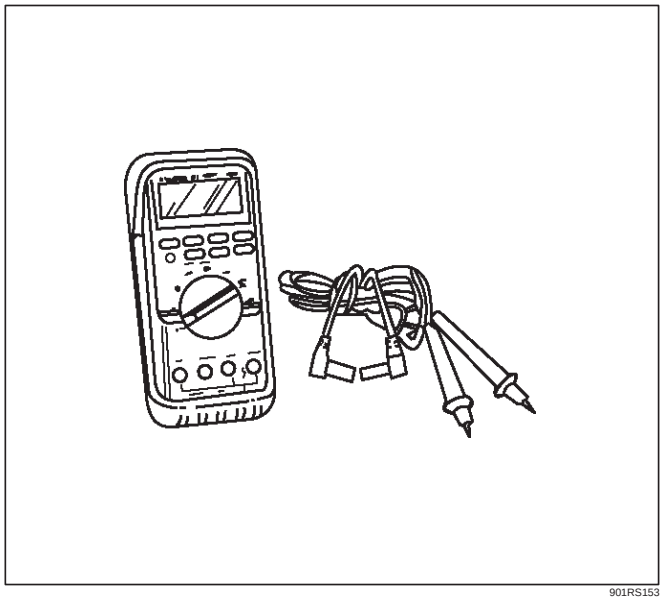

901RS153

The 5–8840–0285–0 DVM is the preferred DVM for use in SRS diagnosis and repair. However, 5–8840–0366–0 may be used if 5–8840–0285–0 is not available. No other DVMs are approved for SRS diagnosis and repair.

Scan Tool

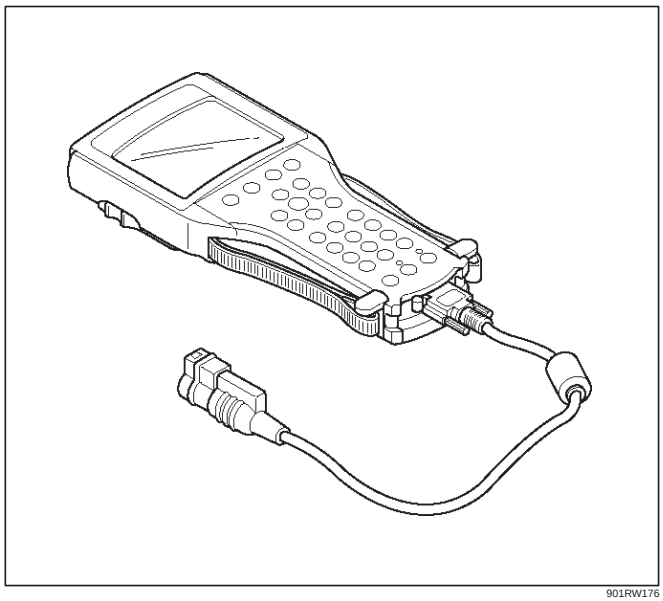

901RW176

The Tech 2 is used to read and clear SRS Diagnostic Trouble Codes (DTCs). Refer to the Tech 2 Operators, Manual for specific information on how to use the Tech 2.

5–8840–0385–0 Connector Test Adapter Kit

901RS151

The 5–8840–0385–0 Connector Test Adapter Kit must be used whenever a diagnostic procedure requests checking or probing a terminal. Using the appropriate adapter will ensure that no damage to the terminal will occur from the DVM prove, such as spreading or bending. The adapter will also give an idea of whether contact tension is sufficient, helping to find an open or intermittent open due to poor terminal contact.

5–8840–2468–0 SRS Deployment Tool

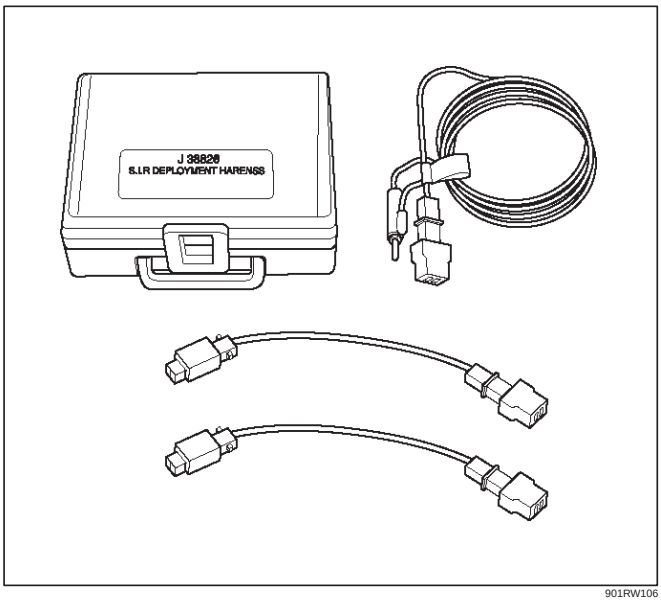

901RW106

The 5–8840–2468–0 SRS Deployment Tool must be used for deployment of the undeployed air bag, and/or pretensioner seat belt.

5–8840–2420–0 SRS Deployment Fixture

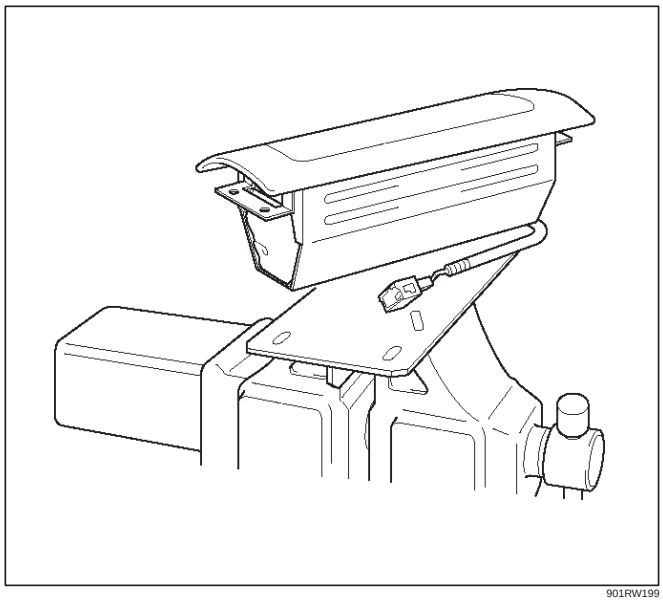

901RW199

The 5–8840–2420–0 SRS Deployment Fixture must be used for deployment of the undeployed passenger side air bag.

5–8840–2469–0 SRS Adapter for Load Tool.

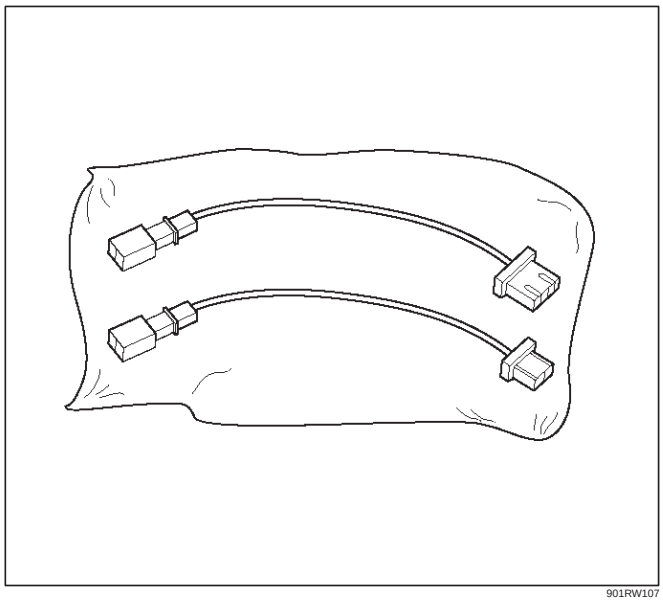

901RW107

The 5–8840–2469–0 SRS Adapter for Load Tool must be used with 5–8840–2421–0 SRS Driver/Passenger Load Tool.

Tech 2 Scan Tool

From 98 MY, Isuzu dealer service departments are recommended to use Tech 2. Please refer to Tech 2 scan tool user guide.

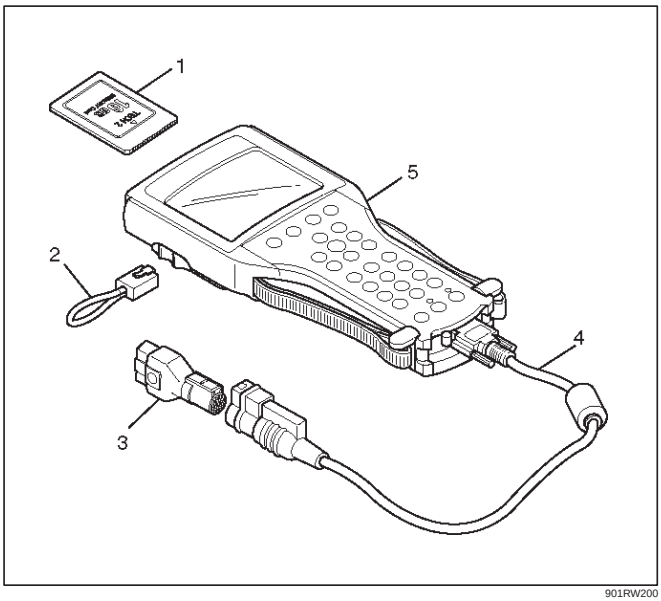

901RW200

Legend

(1) PCMCIA Card
(2) RS 232 Loop Back Connector
(3) SAE 16/19 Adaptor
(4) DLC Cable
(5) Tech–2

Getting Started

- Before operating the Isuzu PCMCIA card with the Tech 2, the following steps must be performed:

1. Insert the Isuzu 98 System PCMCIA card (1) into the Tech 2 (5).
2. Connect the SAE 16/19 adapter (3) to the DLC cable (4).
3. Connect the DLC cable to the Tech 2 (5)
4. Make sure of the vehicle ignition is off.
5. Connect the Tech 2 SAE 16/19 adapter to the vehicle ALDL/DLC connector.

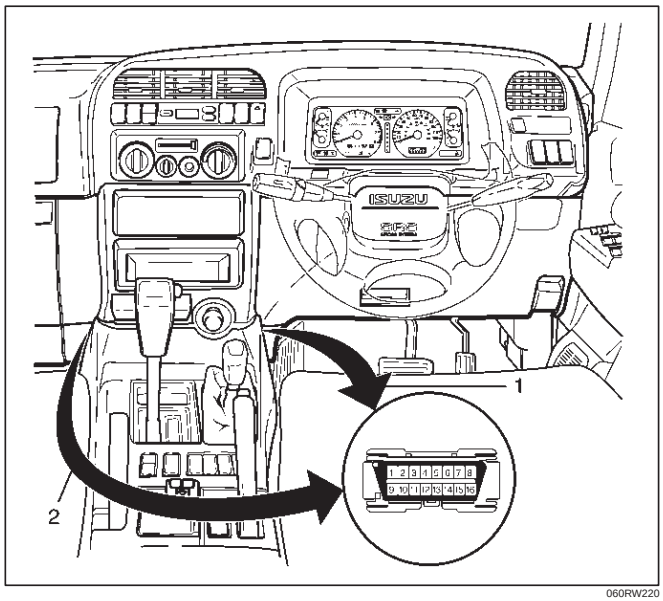

060RW220

Legend

(1) For RHD model
(2) For LHD model

6. Turn on the vehicle ignition switch.
7. Verify the Tech 2 power up display.

060RW009

NOTE: The RS232 Loop back connector is only used to diagnosis Tech 2. Refer to user guide of the Tech 2.

Operating Procedure

The power up screen is displayed when you power up the tester with the Isuzu systems PCMCIA card. Follow the operating procedure below.

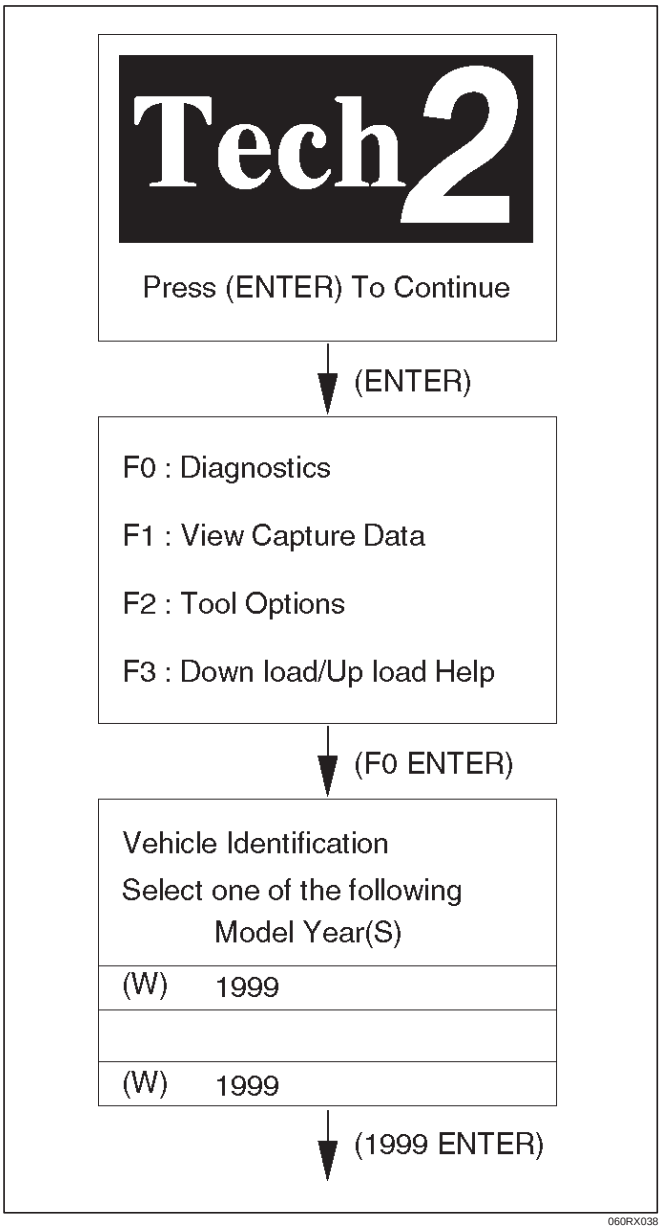

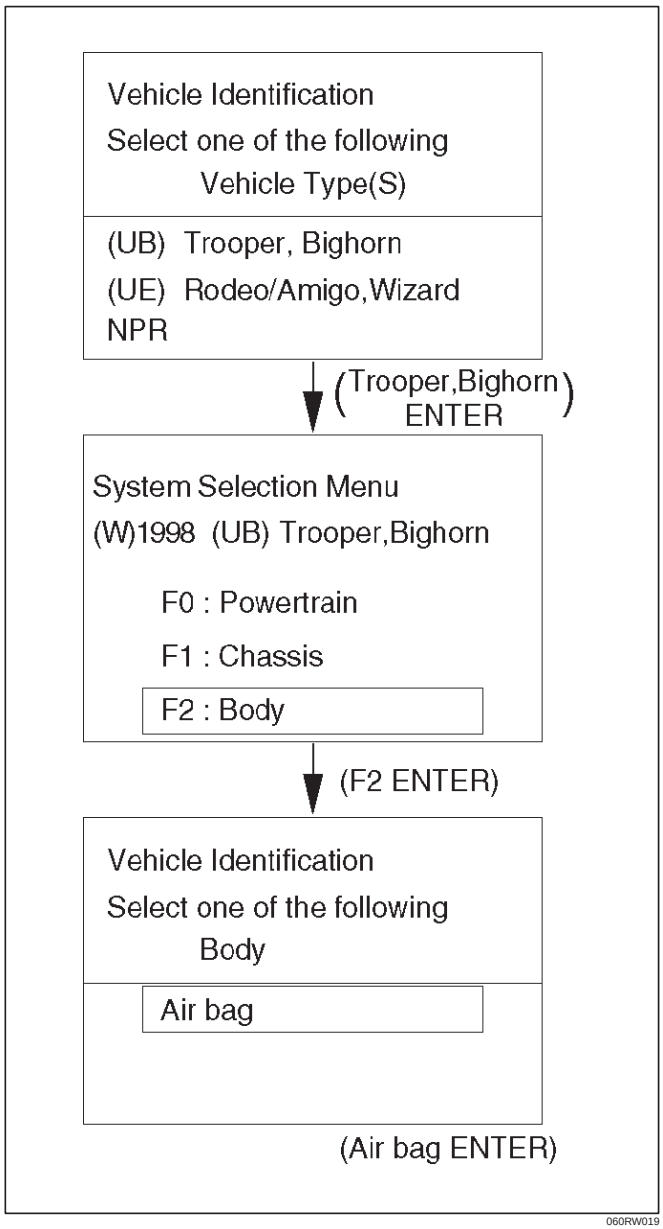

Service Precautions for SRS Component Service

CAUTION: When fasteners are removed, always reinstall them at the same location from which they were removed. If a fastener needs to be replaced, use the correct part number fastener for that application. If the correct part number fastener is not available, a fastener of equal size and strength (or stronger) may be used. fasteners that are not reused, and those requiring thread locking compound will be called out. The correct torque value must be used when installing fasteners that require it. If the above conditions are not followed, parts or system damage could result.

WARNING: WHEN PERFORMING SERVICE ON OR AROUND SRS COMPONENTS OR SRS WIRING, FOLLOW THE PROCEDURES LISTED BELOW TO TEMPORARILY DISABLE THE SRS. FAILURE TO FOLLOW PROCEDURES COULD RESULT IN POSSIBLE AIR BAG DEPLOYMENT, PERSONAL INJURY OR OTHERWISE UNNEEDED SRS REPAIRS.

The SDM in Driver–Passenger SRS can maintain sufficient voltage to cause a deployment for up to 15 seconds after the ignition switch is turned “OFF,” the battery is disconnected, or the fuse powering the SDM is removed.

Many of the service procedures require removal of the “C–21” fuse, and disconnection of the air bag assembly from the deployment loop to avoid an accidental deployment. If the air bag assembly is disconnected from the deployment loop as noted in the “Disabling the SRS” procedure that follows, service can begin immediately without waiting for the 15 second time period to expire.

Disabling The SRS

Removal

Turn the ignition switch to “OFF” and turn the steering wheel so that the vehicle’s wheels are pointing straight ahead.

1. Remove SRS fuse “C–21” from left dash side lower fuse block or disconnect battery.
2. Disconnect yellow 2–pin connector at the base of steering column.
3. Remove glove box assembly; Refer to “Passenger air bag assembly replacement” in this section.
4. Disconnect passenger air bag assembly yellow 2–pin connector behind the glove box assembly.

CAUTION: With the “C–21” fuse removed and ignition switch “ON,” the “AIR BAG” warning lamp will be “ON.” This is normal operation and does not indicate an SRS malfunction.

Enabling The SRS

Installation

Turn ignition switch to “LOCK” and remove key.

1. Connect yellow 2–pin connector passenger air bag assembly.
2. Install glove box assembly. Refer to “Passenger Air Bag Assembly Replacement” in this section.
3. Connect yellow 2–pin connector at the base of the steering column.
4. Install “AIR BAG” fuse “C–21” to left dash side lower fuse block or connect battery.

Turn ignition switch to “ON” and verify that the “AIR BAG” warning lamp turn on 3.5 seconds and then turns “OFF.” If it does not operate as described, perform the “SRS Diagnostic System Check” in this section.

Handling / Installation / Diagnosis

1. Air bag assembly should not be subjected to temperatures above 93˚C (200˚F).
2. Air bag assembly, and SDM should not be used if they have been dropped from a height of 100 centimeters (3.28 feet) or more.
3. When a SDM is replaced, it must be oriented with the arrow on the SDM pointing toward the front of the vehicle. It is very important for the SDM to be located flat on the mounting surface, parallel to the vehicle datum line. It is important that the SDM mounting surface is free of any dirt or other foreign material.
4. Do not apply power to the SRS unless all components are connected or a diagnostic chart requests it, as this will set a diagnostic trouble code.
5. The “SRS Diagnostic System Check” must be the starting point of any SRS diagnostics. The “SRS Diagnostic System Check” will verify proper “AIR BAG” warning lamp operation and will lead you to the correct chart to diagnose any SRS malfunctions. Bypassing these procedures may result in extended diagnostic time, incorrect diagnosis, and incorrect parts replacements.

Inspections Required After An Accident

CAUTION: Certain SRS components must be replaced after a frontal crash involving air bag deployment.

In all types of accidents regardless of “Air Bag” deployment, visually inspect all of the following components and replace as required:

— Driver air bag assembly
— Passenger air bag assembly
— Driver pretensioner assembly
— Passenger pretensioner assembly
— Steering wheel
— SRS coil assembly
— Steering column
— Knee bolster and instrument panel mounting attachments
— Driver seat and belt
— Passenger seat and belt
— SDM

SDM always should be checked according to “SDM Replacement Guidelines.”

CAUTION: Refer to "SDM Replacement Guidelines" below for important information on SDM replacement in both deployment and non–deployment crashes.

Inspect SRS coil assembly wiring and steering wheel for any sign of scorching, melting, or damage due to excessive heat. If coil assembly wire or steering wheel is damaged, replace them. The steering column and wheel must be dimensionally checked to determine if they are damaged. Refer to steering wheel of in this manual.

Never use SRS parts from another vehicle. This does not include remanufactured parts purchased from an authorized Isuzu Retailer; they may be used for SRS repairs.

Do not attempt to repair the SDM, the SRS harness, the SRS coil assembly, the air bag assembly, the steering wheel, or the steering column. Service of these items is replacement only. Verify replacement part numbers.

CAUTION: Proper operation of the SDM and supplemental restraint system (SRS) requires that any repairs to the vehicle structure return it to its original production configuration.

SRS Connectors

CAUTION: The special yellow color connectors are used for supplemental restraint system air bag circuit. When removing the oable harnese, do not pull the cables otherwile, cable disconnection may occur. When connect the SRS connector, insert the connector completely. Imperfect locking may cause malfunction of SRS circuit.

Removal

To remove the connector, hold the cover insulator (1) and pull it. The cover insulator slides and lock will be released. Do not hold the socket insulator (2).

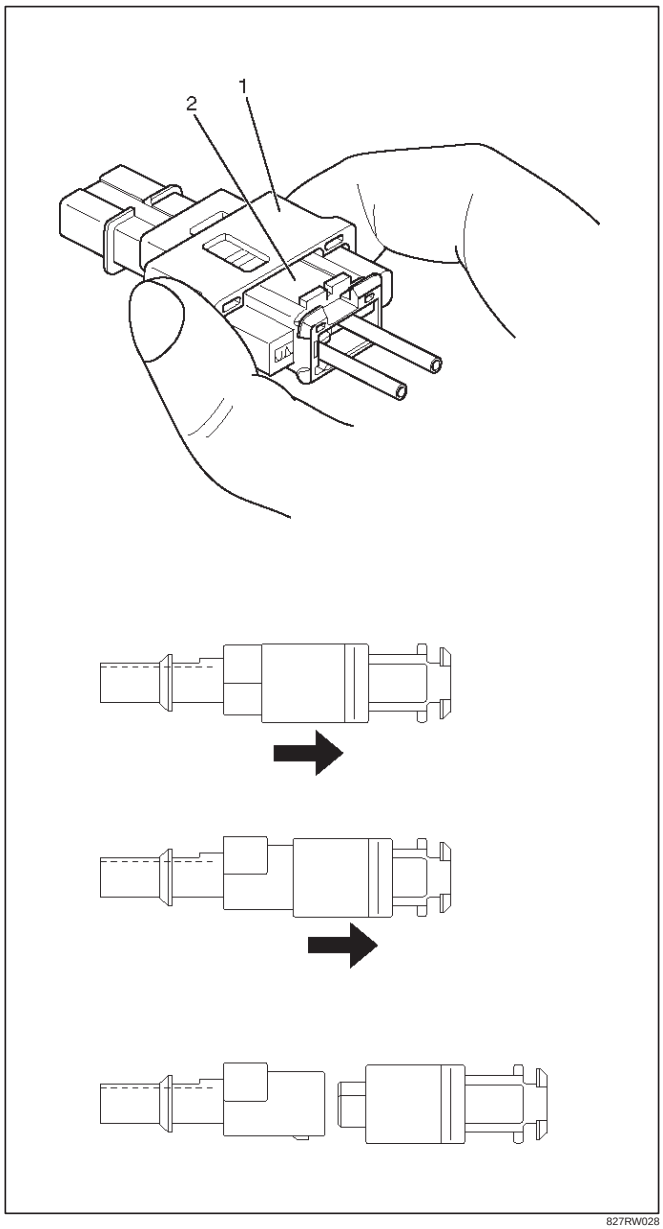

827RW028

Installation

To install the connector, hold the socket insulator (1) and insert it. The cover insulator slides and connector will be locked. Do not hold the cover insulator (2).

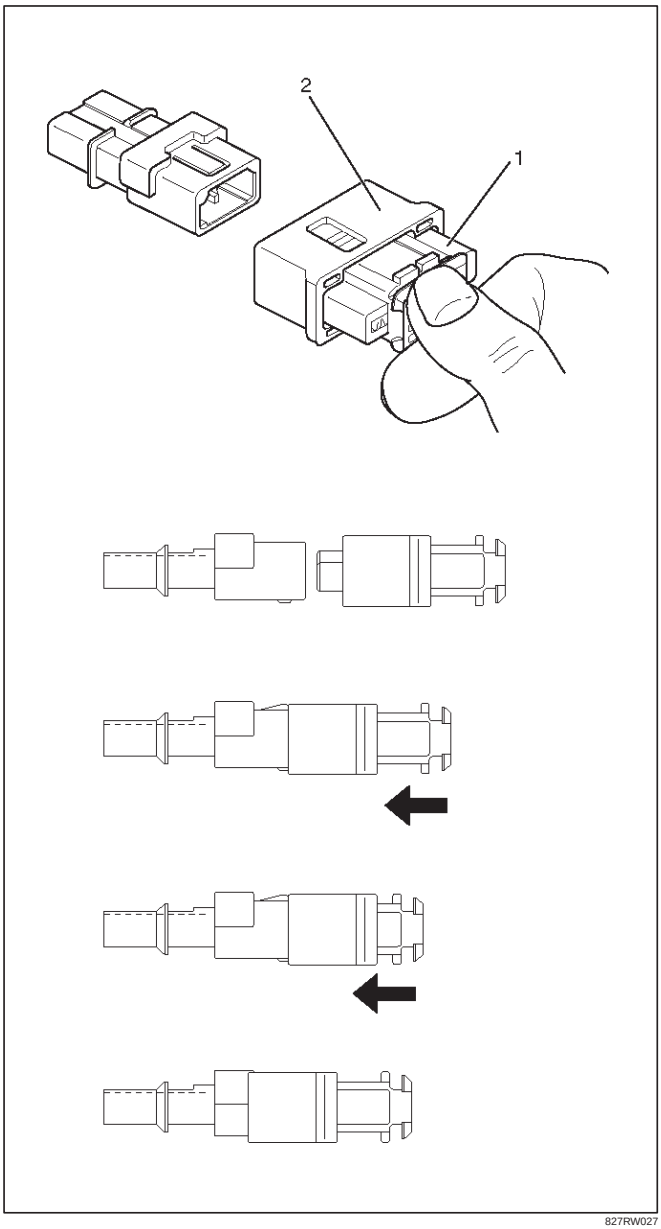

827RW027

Sensing And Diagnostic Module (SDM)

Service Precautions

WARNING: DURING SERVICE PROCEDURES, BE VERY CAREFUL WHEN HANDLING SDM. NEVER STRIKE OR JAR SDM. UNDER SOME CIRCUMSTANCES, IT COULD CAUSE DEPLOYMENT AND RESULT IN PERSONAL INJURY OR IMPROPER OPERATION OF THE SUPPLEMENTAL RESTRAINT SYSTEM (SRS) . SDM MOUNTING BRACKET BOLTS MUST BE CAREFULLY TORQUED TO ASSURE PROPER OPERATION. NEVER POWER UP THE SRS WHEN SDM IS NOT RIGIDLY ATTACHED TO THE VEHICLE. THE SDM COULD BE ACTIVATED WHEN POWERED WHILE NOT RIGIDLY ATTACHED TO THE VEHICLE WHICH COULD CAUSE DEPLOYMENT AND RESULT IN PERSONAL INJURY.

WARNING: PROPER OPERATION OF THE SENSING AND DIAGNOSTIC MODULE (SDM) REQUIRES THE SDM TO BE RIGIDLY ATTACHED TO THE VEHICLE STRUCTURE AND THAT THE ARROW ON THE SENSOR BE POINTING TOWARD THE FRONT OF THE VEHICLE.

SDM is specifically calibrated and is keyed to the SDM location SRS wiring harness. Caution should be used to ensure proper location of the SDM. The keying of the SDM to its location and wiring harness connectors should never be modified in the field.

Removal

1. Disable the SRS (Refer to “Disabling the SRS” in this section).
2. Remove the transmission knob (for M/T) and transfer lever knob.
3. Remove the front console assembly and disconnect wiring harness connector.
4. Pull CPA (Connector Position Assurance) out and push connector lock down to disconnect the SDM harness connector.
5. Remove the three SDM fixing bolts and remove SDM.

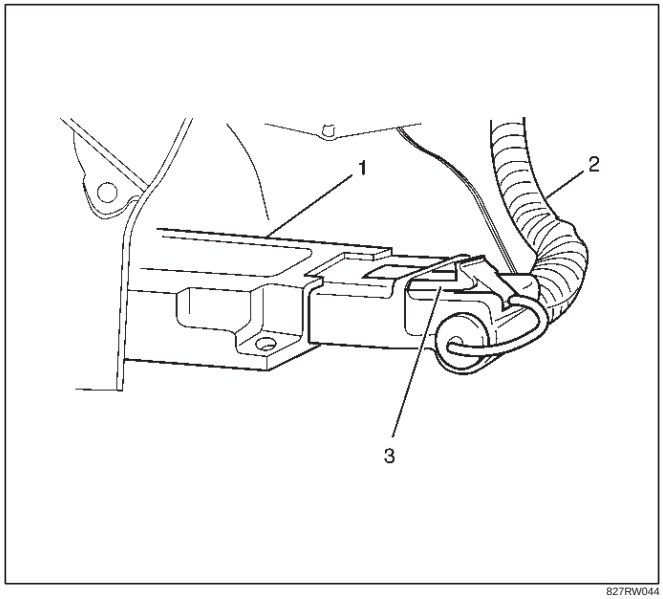

827RW044

Legend

(1) SDM
(2) SRS Harness
(3) Connector Position Assurance

Installation

1. Install the SDM on bracket and fixing bolts and tighten the fixing bolts to the specified torque.

   Torque: 10 N·m (1.0 Kg·m/87 lb in)
2. Connect the SDM harness connector and after that, put CPA into connector.
3. Install the front console.
4. Install the transmission knob (for M/T) and transfer lever knob.

5. Enable the SRS (Refer to “Enabling the SRS” in this section).

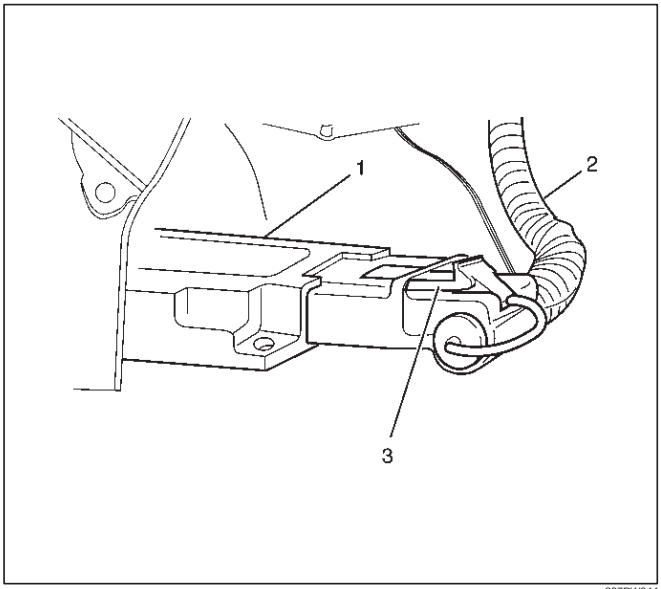

827RW044

Legend

(1) SDM
(2) SRS Harness
(3) Connector Position Assurance

Driver Air Bag Assembly

Service Precautions

WARNING: SAFETY PRECAUTIONS MUST BE FOLLOWED WHEN HANDLING A DEPLOYED AIR BAG ASSEMBLY. AFTER DEPLOYMENT, THE AIR BAG ASSEMBLY SURFACE MAY CONTAIN A SMALL AMOUNT OF SODIUM HYDROXIDE, A BY–PRODUCT OF THE DEPLOYMENT REACTION, THAT IS IRRITATING TO THE SKIN AND EYES. MOST OF THE POWER ON THE AIR BAG ASSEMBLY IS HARMLESS. AS A PRECAUTION, WEAR GLOVES AND SAFETY GLASSES WHEN HANDLING A DEPLOYED AIR BAG ASSEMBLY, AND WASH YOUR HANDS WITH MILD SOAP AND WATER AFTERWARDS.

WARNING: WHEN CARRYING A LIVE AIR BAG ASSEMBLY, MAKE SURE THE BAG AND TRIM COVER ARE POINTED AWAY FROM YOU. NEVER CARRY AIR BAG ASSEMBLY BY THE WIRES OR CONNECTOR ON THE UNDERSIDE OF MODULE. IN THE CASE OF AN ACCIDENTAL DEPLOYMENT, THE BAG WILL THEN DEPLOY WITH MINIMAL CHANCE OF INJURY. WHEN PLACING ALIVE AIR BAG ASSEMBLY ON A BENCH OR OTHER SURFACE, ALWAYS FACE BAG AND TRIM COVER UP, AWAY FROM THE SURFACE. NEVER REST A STEERING COLUMN ASSEMBLY ON THE STEERING WHEEL WITH THE AIR BAG ASSEMBLY FACE DOWN AND COLUMN VERTICAL. THIS IS NECESSARY SO THAT A FREE SPACE IS PROVIDED TO ALLOW THE AIR BAG ASSEMBLY TO EXPAND IN THE UNLIKELY EVENT OF ACCIDENTAL DEPLOYMENT. OTHERWISE, PERSONAL INJURY COULD RESULT.

NOTE: In the event deployment has occurred, inspect coil assembly wire for any signs of scorching, melting or any other damage due to excessive heat. If the coil has been damaged, replace it.

Removal

1. Disable the SRS (Refer to “Disabling the SRS” in this section).
2. Loosen the air bag assembly fixing bolts from behind the steering wheel assembly using a TORX® driver or equivalent until the air bag assembly can be released from steering wheel.

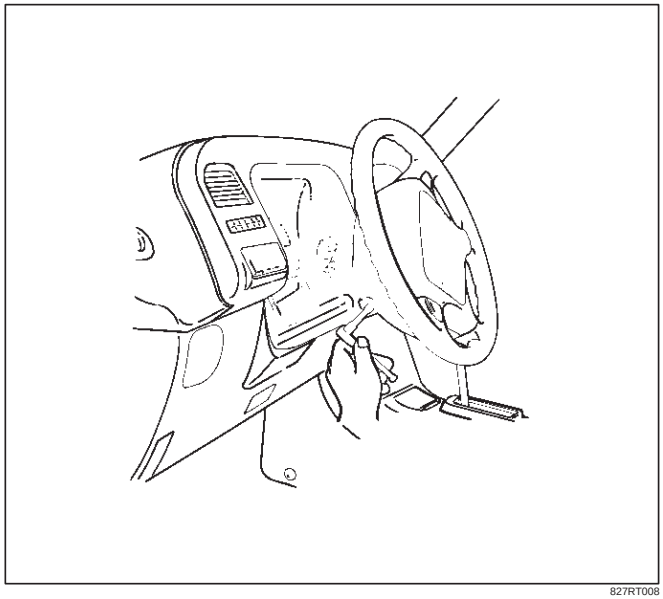

827RT008

3. Disconnect the yellow 2–pin connector located behind the air bag assembly and remove air bag assembly. Refer to “SRS Connectors” in this section for removal and installation.

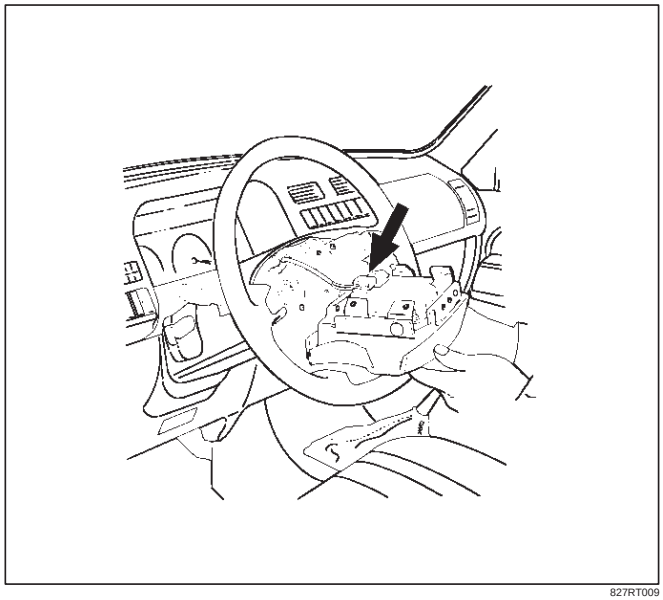

827RT009

Installation

1. Connect air bag to wiring harness connector.

NOTE: Pass the lead wire through the tabs on the plastic cover (wire protector) of air bag to prevent lead wire from being pinched.

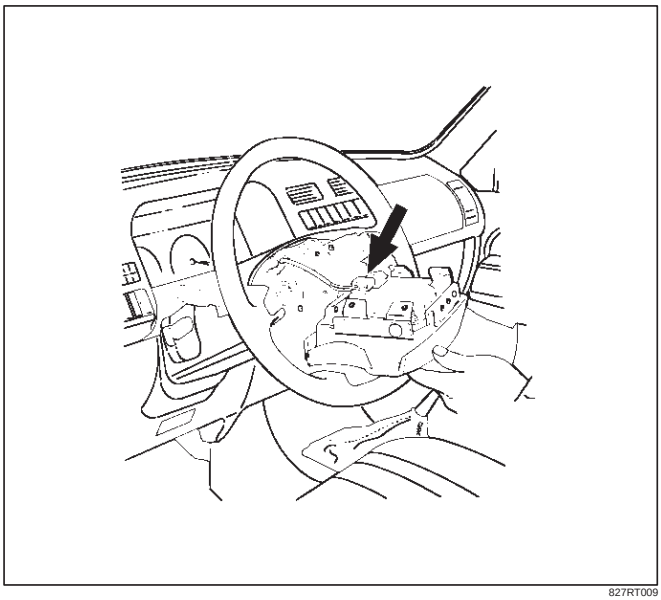

827RT009

2. Install air bag into steering wheel and tighten bolts to specified sequence as shown in figure.

Torque: 8.8 N·m (0.9 Kg·m/78 lb in)

CAUTION: Never use the air bag assembly from another vehicle. Use only new air bag assembly proper to the Trooper which is being repaired.

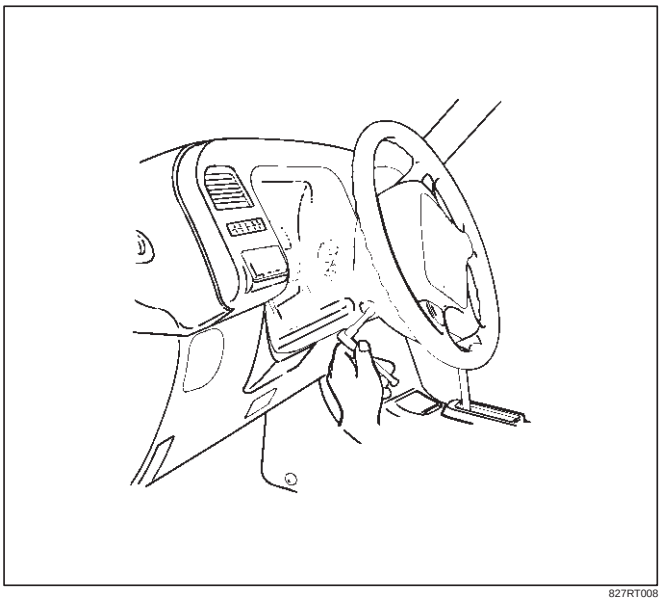

827RT008

3. Enable the SRS (Refer to “Enabling the SRS” in this section).

Steering Wheel

Service Precautions

WARNING: SAFETY PRECAUTIONS MUST BE FOLLOWED WHEN HANDLING A DEPLOYED AIR BAG ASSEMBLY. AFTER DEPLOYMENT, THE AIR BAG ASSEMBLY SURFACE MAY CONTAIN A SMALL AMOUNT OF SODIUM HYDROXIDE, A BY–PRODUCT OF THE DEPLOYMENT REACTION, THAT IS IRRITATING TO THE SKIN AND EYES. MOST OF THE POWER ON THE AIR BAG ASSEMBLY IS HARMLESS. AS A PRECAUTION, WEAR GLOVES AND SAFETY GLASSES WHEN HANDLING A DEPLOYED AIR BAG ASSEMBLY, AND WASH YOUR HANDS WITH MILD SOAP AND WATER AFTERWARDS.

WARNING: WHEN CARRYING A LIVE AIR BAG ASSEMBLY, MAKE SURE THE BAG AND TRIM COVER ARE POINTED AWAY FROM YOU. NEVER CARRY AIR BAG ASSEMBLY BY THE WIRES OR CONNECTOR ON THE UNDERSIDE OF MODULE. IN THE CASE OF AN ACCIDENTAL DEPLOYMENT, THE BAG WILL THEN DEPLOY WITH MINIMAL CHANCE OF INJURY. WHEN PLACING ALIVE AIR BAG ASSEMBLY ON A BENCH OR OTHER SURFACE, ALWAYS FACE BAG AND RIM COVER UP, AWAY FROM THE SURFACE. NEVER REST A STEERING COLUMN ASSEMBLY ON THE STEERING WHEEL WITH THE AIR BAG ASSEMBLY FACE DOWN AND COLUMN VERTICAL. THIS IS NECESSARY SO THAT A FREE SPACE IS PROVIDED TO ALLOW THE AIR BAG ASSEMBLY TO EXPAND IN THE UNLIKELY EVENT OF ACCIDENTAL DEPLOYMENT. OTHERWISE, PERSONAL INJURY COULD RESULT.

NOTE: In the event deployment has occurred, inspect coil assembly wire for any signs of scorching, melting or any other damage due to excessive heat. If the coil has been damaged, replace it.

Removal

1. Disable the SRS (Refer to “Disabling the SRS” in this section).
2. Loosen the air bag assembly fixing bolts from behind the steering wheel assembly using a TORX® driver or equivalent until the air bag assembly can be released from steering wheel.

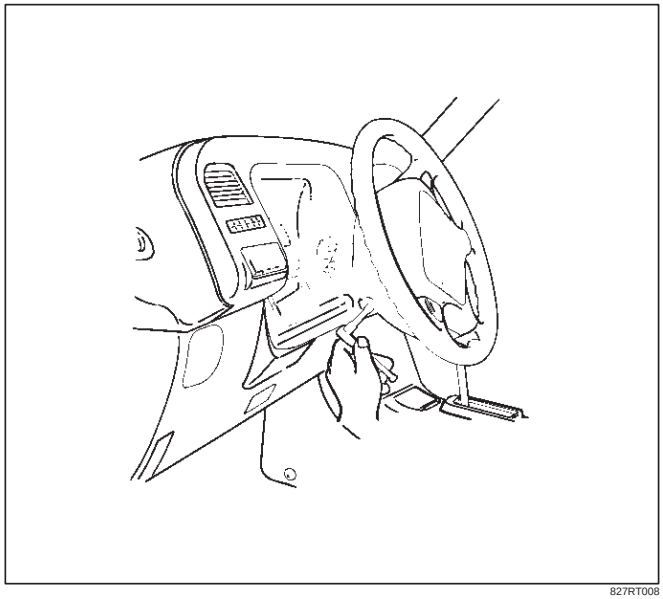

827RT008

3. Disconnect the yellow 2–pin connector located behind the air bag assembly and remove air bag assembly.Refer to “SRS Connectors” in this section for removal and installation.
4. Disconnect horn lead.

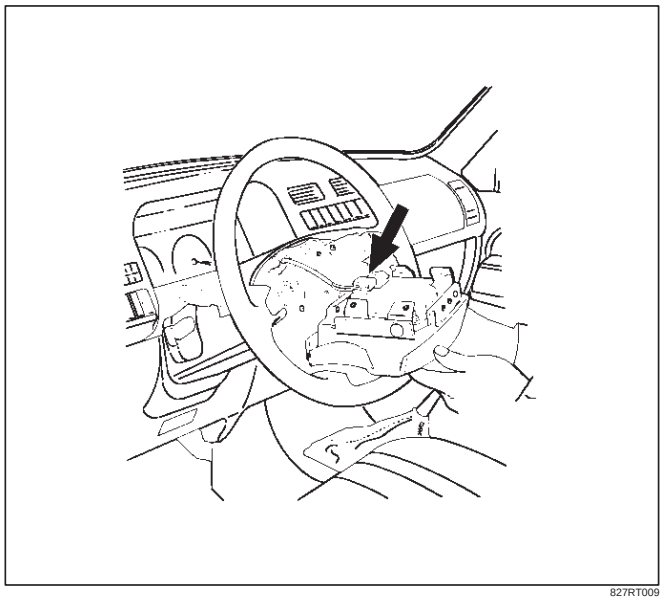

827RT009

5. Remove steering wheel attachment nut.

6. Apply a setting mark across the steering wheel and shaft so parts can be reassembled in their original position.

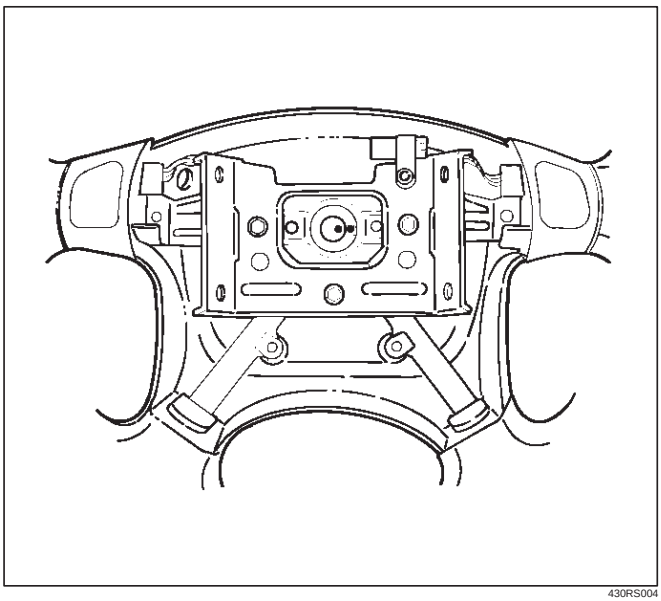

430RS004

7. Move the tires to the straight ahead position before removing the steering wheel. Install steering wheel puller onto steering wheel and remove steering wheel with 5–8521–0016–0.

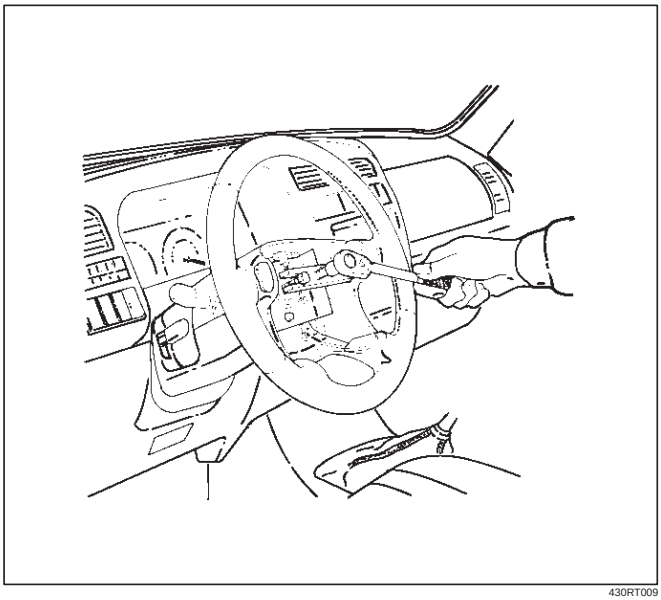

430RT009

8. Feed wiring through the wheel and remove wheel.

CAUTION: Never apply force to the steering wheel in direction of the shaft by using a hammer or other impact tools in an attempt to remove the steering wheel. The steering shaft is designed as an energy absorbing unit.

Installation

1. Install the steering wheel and align the setting marks.

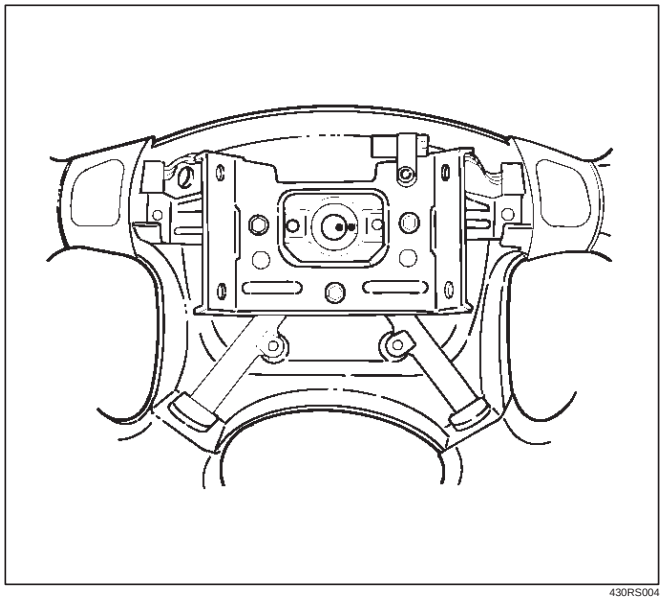

430RS004

2. Tighten the steering wheel fixing nut to the specified torque.

Torque : 34 N·m (3.5 Kg·m/25 lb ft)

3. Connect horn lead.
4. Connect air bag to wiring harness connector.

NOTE: Pass the lead wire through the tabs on the plastic cover (wire protector) of air bag to prevent lead wire from being pinched.

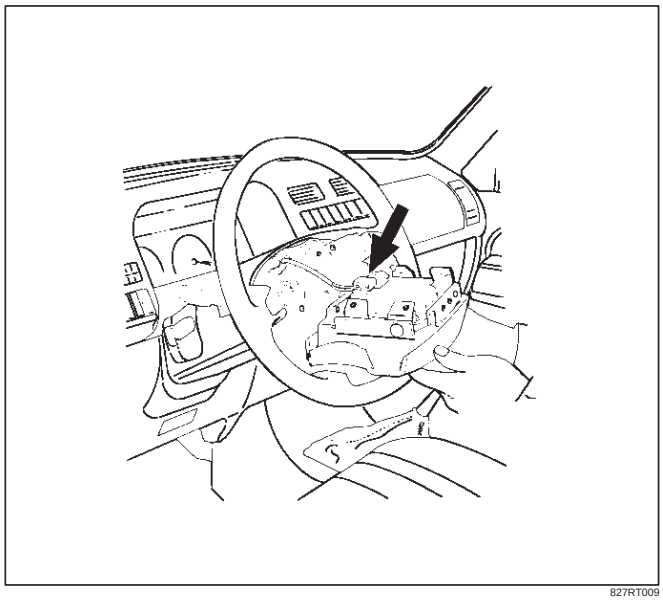

827RT009

5. Install air bag into steering wheel and tighten bolts to specified sequence as show in figure.

Torque: 8.8 N·m (0.9 Kg·m/78 lb in)

CAUTION: Never use the air bag assembly from another vehicle. Use only new air bag assembly proper to the Trooper which is being repaired.

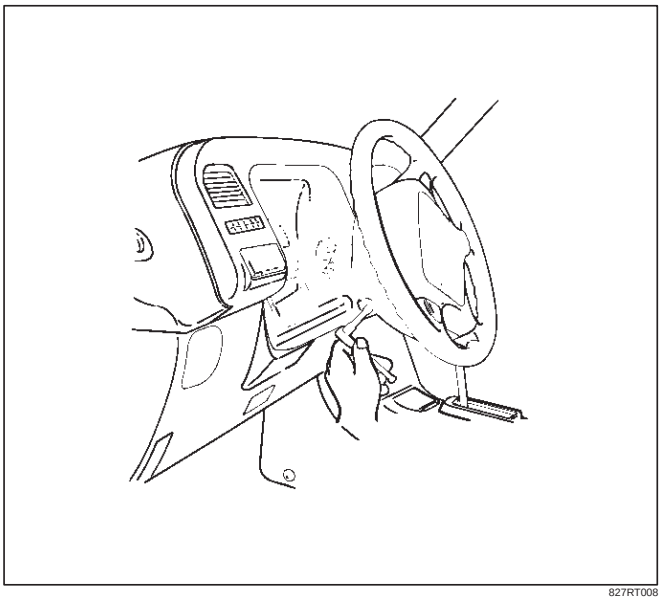

827RT008

6. Enable the SRS (Refer to “Enabling the SRS” in this section).

SRS Coil Assembly

Service Precautions

WARNING: SAFETY PRECAUTIONS MUST BE FOLLOWED WHEN HANDLING A DEPLOYED AIR BAG ASSEMBLY. AFTER DEPLOYMENT, THE AIR BAG ASSEMBLY SURFACE MAY CONTAIN A SMALL AMOUNT OF SODIUM HYDROXIDE, A BY–PRODUCT OF THE DEPLOYMENT REACTION, THAT IS IRRITATING TO THE SKIN AND EYES. MOST OF THE POWER ON THE AIR BAG ASSEMBLY IS HARMLESS. AS A PRECAUTION, WEAR GLOVES AND SAFETY GLASSES WHEN HANDLING A DEPLOYED AIR BAG ASSEMBLY, AND WASH YOUR HANDS WITH MILD SOAP AND WATER AFTERWARDS.

WARNING: WHEN CARRYING A LIVE AIR BAG ASSEMBLY, MAKE SURE THE BAG AND TRIM COVER ARE POINTED AWAY FROM YOU. NEVER CARRY AIR BAG ASSEMBLY BY THE WIRES OR CONNECTOR ON THE UNDERSIDE OF MODULE. IN THE CASE OF AN ACCIDENTAL DEPLOYMENT, THE BAG WILL THEN DEPLOY WITH MINIMAL CHANCE OF INJURY. WHEN PLACING ALIVE AIR BAG ASSEMBLY ON A BENCH OR OTHER SURFACE, ALWAYS FACE BAG AND RIM COVER UP, AWAY FROM THE SURFACE. NEVER REST A STEERING COLUMN ASSEMBLY ON THE STEERING WHEEL WITH THE AIR BAG ASSEMBLY FACE DOWN AND COLUMN VERTICAL. THIS IS NECESSARY SO THAT A FREE SPACE IS PROVIDED TO ALLOW THE AIR BAG ASSEMBLY TO EXPAND IN THE UNLIKELY EVENT OF ACCIDENTAL DEPLOYMENT. OTHERWISE, PERSONAL INJURY COULD RESULT.

NOTE: In the event deployment has occurred, inspect coil assembly wire for any signs of scorching, melting or any other damage due to excessive heat. If the coil has been damaged, replace it.

Removal

1. Disable the SRS (Refer to “Disabling the SRS” in this section).
2. Loosen the air bag assembly fixing bolts from behind the steering wheel assembly using a TORX® driver or equivalent until the air bag assembly can be released from steering wheel.

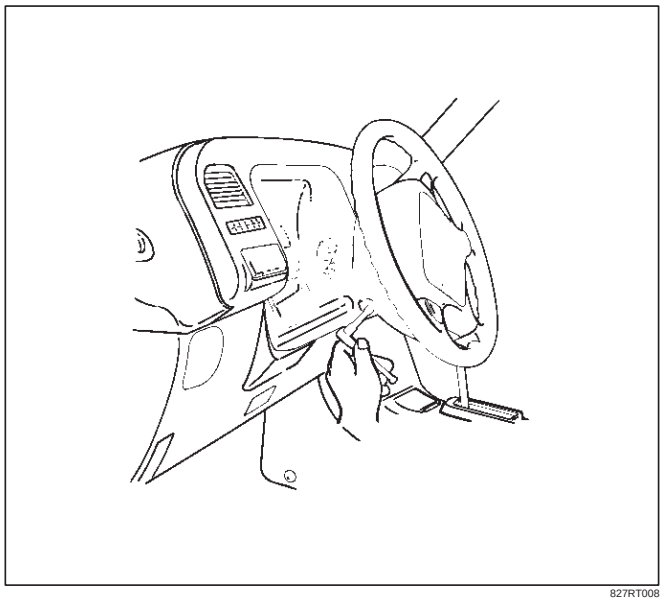

827RT008

3. Disconnect the yellow 2–pin connector located behind the air bag assembly and remove air bag assembly.Refer to “SRS Connectors” in this section for removal and installation.
4. Disconnect horn lead connector.

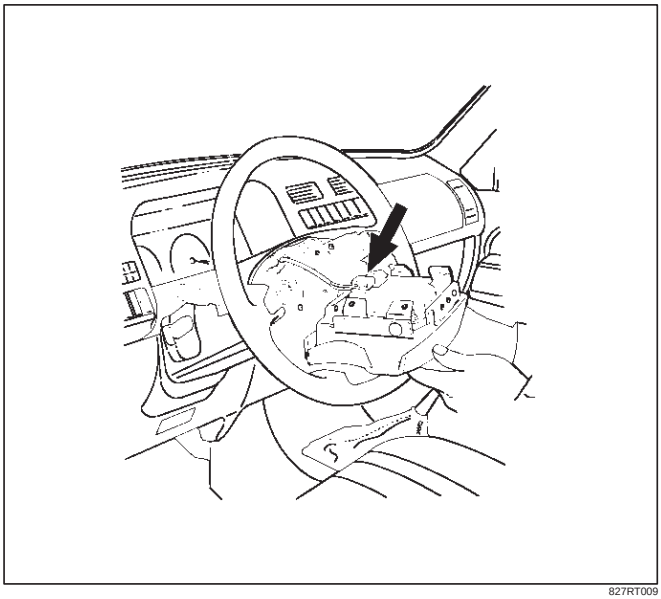

827RT009

5. Remove the steering wheel attachment nut.
6. Apply a setting mark across the steering wheel and shaft so parts can be reassembled in their original position.

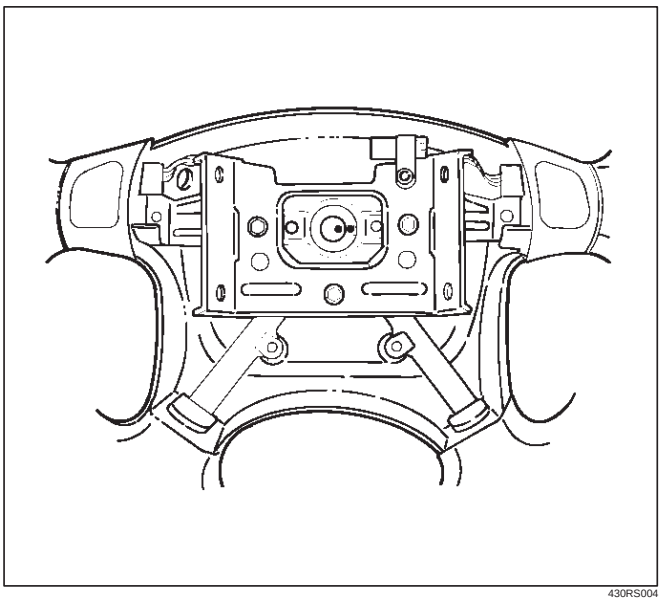

430RS004

7. Move the tires to the straight ahead position before removing the steering wheel and remove wheel with 5–8521–0016–0.

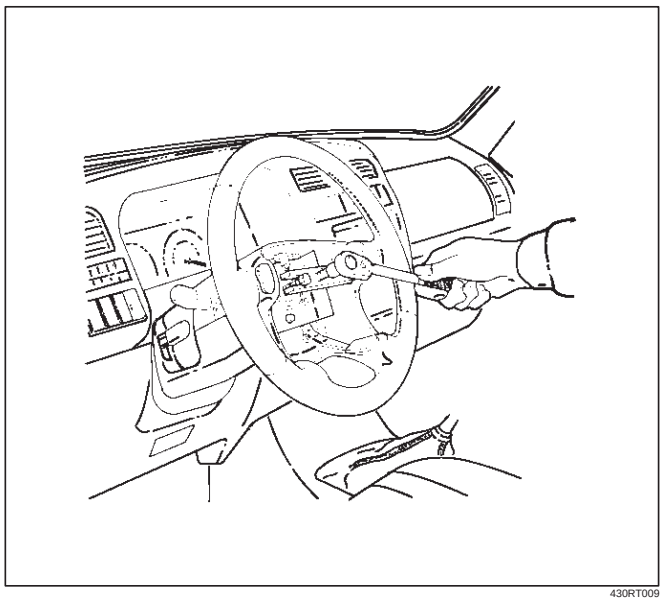

430RT009

8. Feed wiring though the wheel and remove wheel.
9. Remove the steering lower cover and engine hood opening lever.
10. Remove the driver knee bolster assembly.
11. Remove the steering column cover.
12. Remove air conditioning lower duct.
13. Disconnect the 12–pin wiring harness connectors located at the base of steering column.

CAUTION: Never apply force to the steering wheel in the direction of the shaft by using a hammer or other impact tools in an attempt to remove the steering wheel. The steering shaft is designed as an energy absorbing unit.

14. Remove the combination switch assembly with SRS coil.

Installation

1. Install the combination switch assembly with SRS coil.
2. Turn the SRS coil counterclockwise to full, return about 3 turns and align the neutral mark (1).

CAUTION: When turning the SRS coil counterclockwise to full, stop turning if resistance is felt. Forced further turning may damage the cable in the SRS coil.

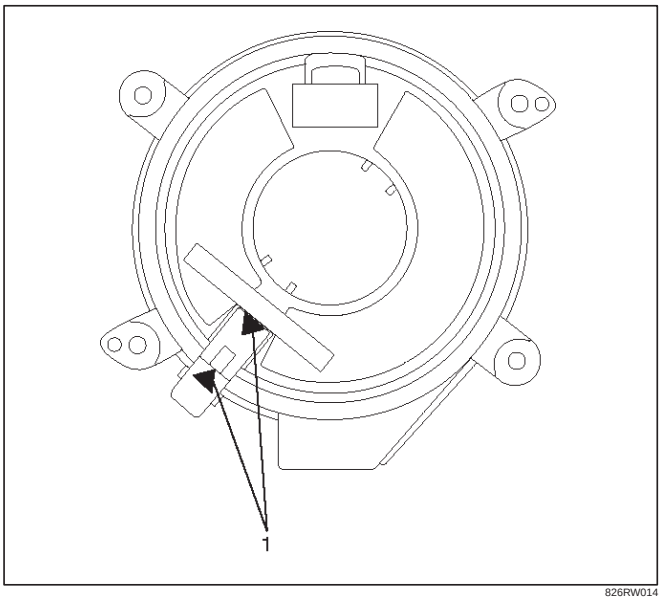

826RW014

3. Connect the wiring harness connectors located at the base of steering column.
4. Install the air conditioning lower duct.
5. Install the steering column cover.

CAUTION: When installing the steering column cover, be sure to wire (through each harness) as illustrated so that the harness starter switch, combination switch and SRS coil may not catch wiring.

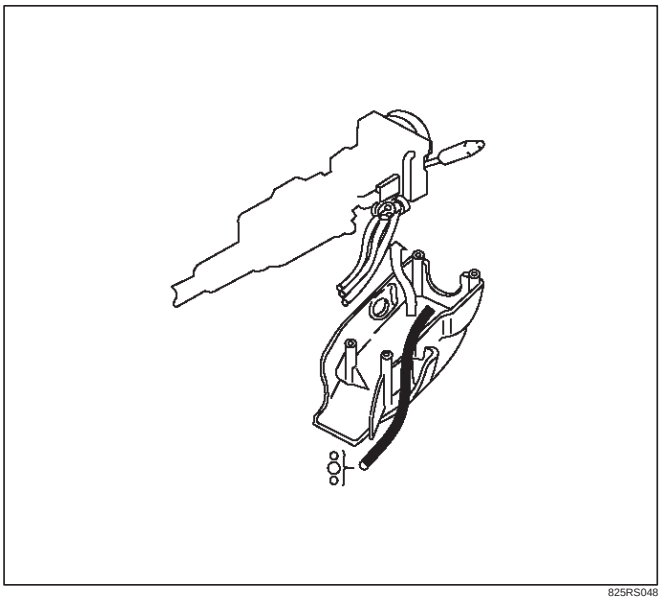

825RS048

6. Install the driver knee bolster assembly.
7. Install the steering lower cover and engine hood opening lever.
8. Install the steering wheel and align the setting marks.

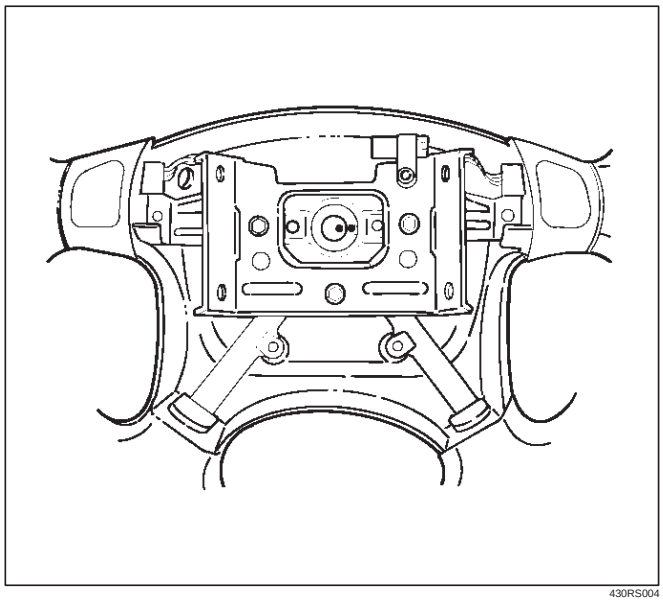

430RS004

9. Tighten the steering wheel fixing nut to the specified torque.

   Torque: 34 N·m (3.5 Kg·m/25 lb ft)

10. Connect horn lead.
11. Connect air bag to wiring harness connector.

NOTE: Pass the lead wire through the tabs on the plastic cover (wire protector) of air to prevent lead wire from being pinches.

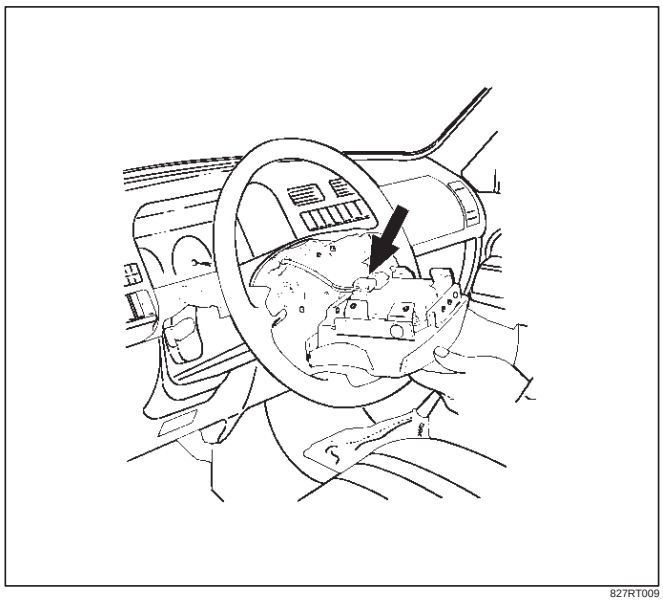

827RT009

12. Install air bag into steering wheel and tighten bolts to specified sequence as shown in figure.

    Torque: 8.8 N·m (0.9 Kg·m/78 lb in)

CAUTION: Never use the air bag assembly from another vehicle. Use only new air bag assembly proper to the Trooper which is being repaired.

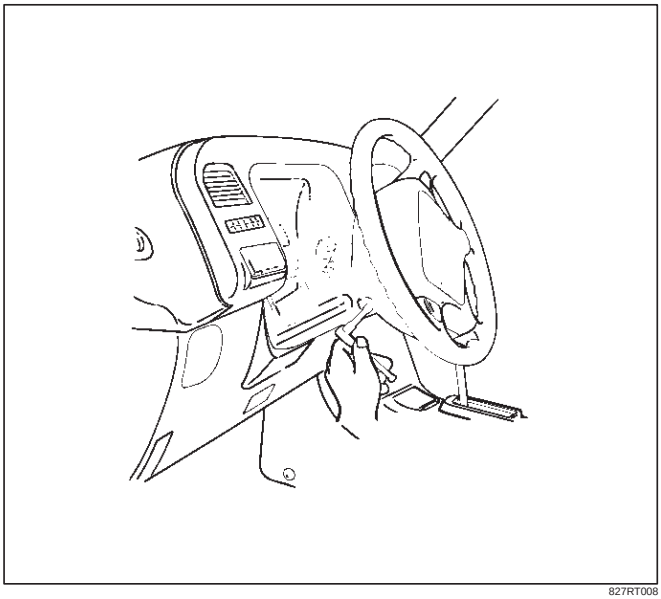

827RT008

13. Enable the SRS (Refer to “Enabling the SRS” in this section).

SRS Coil Replacement Procedure

Removal

1. Same removal steps until step 13 of SRS Coil Assembly Removal.
2. Disconnect the horn terminal NO.12 from connector and remove the tape binding harness. (Refer to How to Disconnect the horn terminal in this section.)

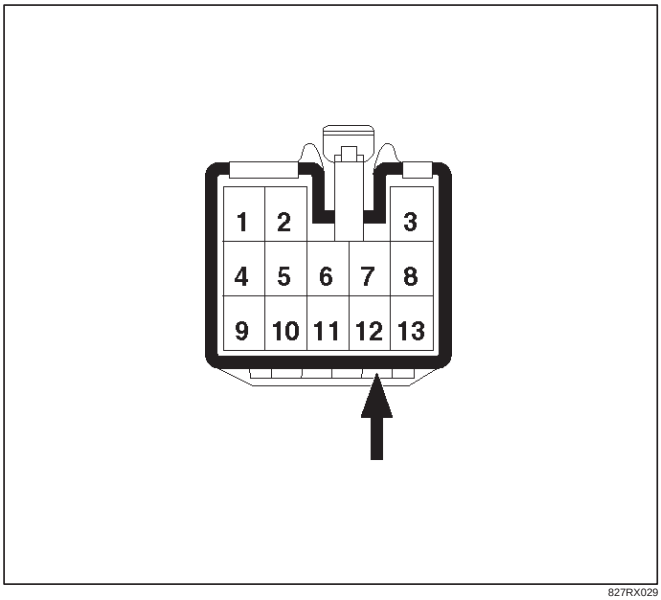

827RX029

3. Remove four bolts of SRS coil assembly and remove the SRS coil assembly from the combination switch.

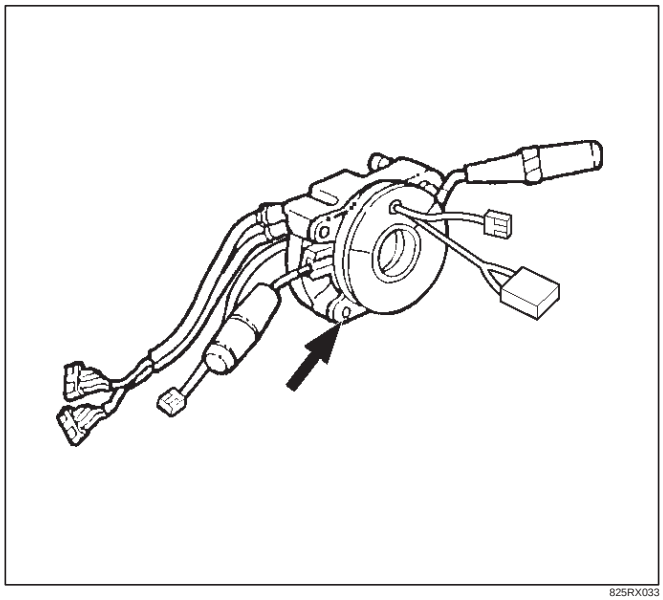

825RX033

How to Disconnect the horn terminal

1. Lift the terminal lock plate from upper portion of connector with a minitenes screw driver (-) and release connector terminal lock.

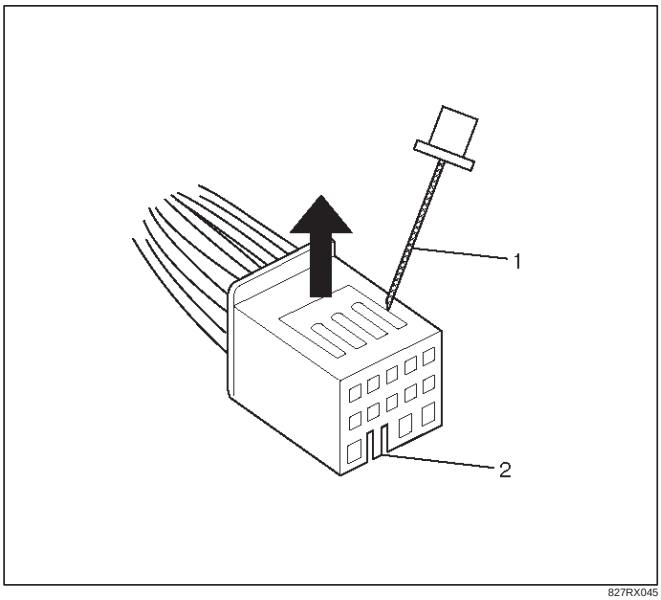

827RX045

Legend

(1) Minitenes screw driver (-)
(2) Connector lock knob

2. Pull out the terminal of lead wire coming to connector NO.12 while lifting the lock part with a minitenes screw driver (-).

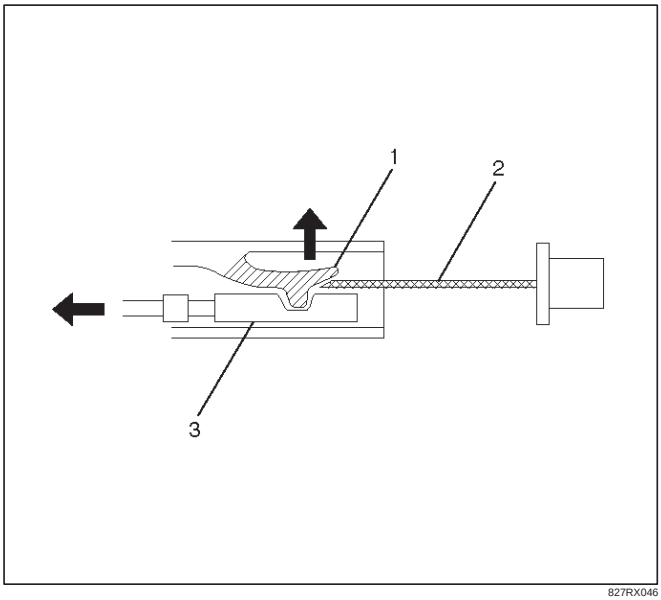

827RX046

Legend

(1) Lock
(2) Minitenes screw driver (-)
(3) Terminal

How to Connect Horn Terminal

1. Insert horn terminal from behind black connector NO.12 until connector lock works.

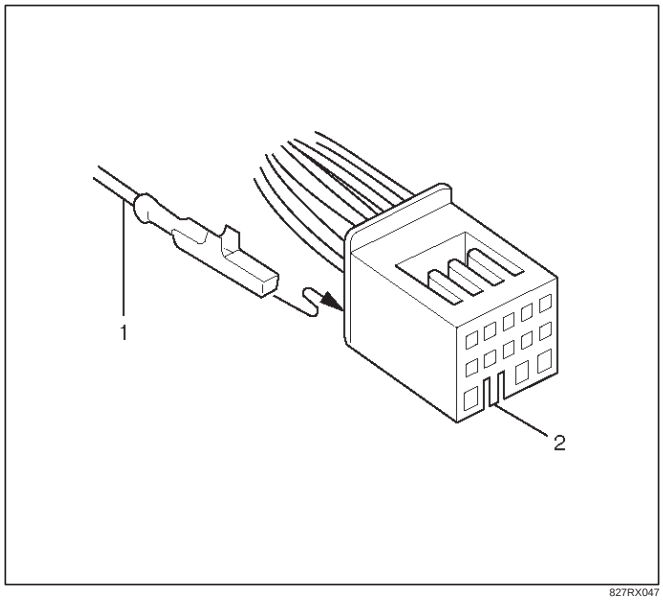

827RX047

Legend

(1) Terminal
(2) Connector lock knob

2. Push terminal lock plate into the connector for a duble lock.

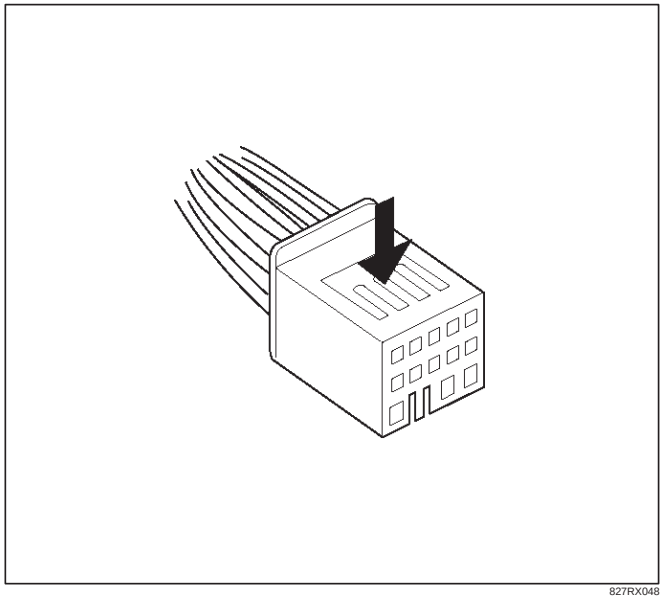

827RX048

Installation

1. Set cancel cam and SRS coil in position and install the SRS coil to combination switch by tightening the four bolts to a specified tightening torque with four bolts.

   Torque: 0.5 N·m (0.05 kg·m/4 lb ft)

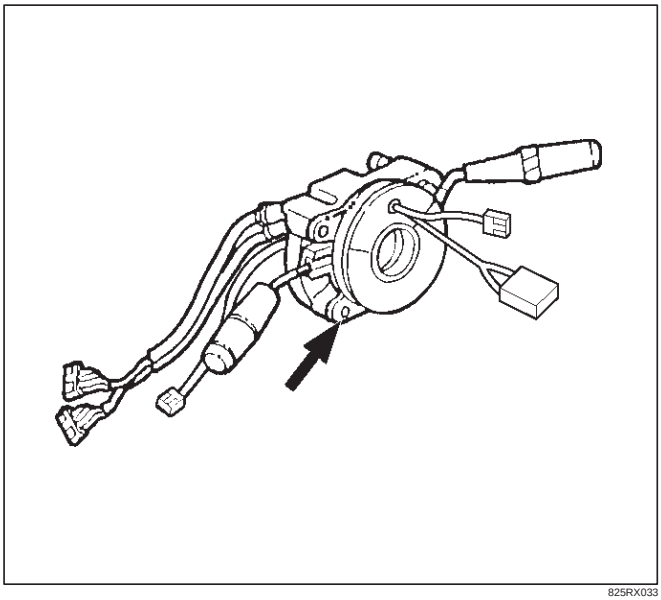

825RX033

2. Insert the horn terminal into the connector NO.12 and bind the combination switch harness and SRS coil harness with a tape. (Refer to How to Connect the Horn Terminal in this section.)
3. After installation steps above, same steps as SRS Coil Assembly installation step 2 to step 13.

Steering Column

Service Precautions

WARNING: SAFETY PRECAUTIONS MUST BE FOLLOWED WHEN HANDLING A DEPLOYED AIR BAG ASSEMBLY. AFTER DEPLOYMENT, THE AIR BAG ASSEMBLY SURFACE MAY CONTAIN A SMALL AMOUNT OF SODIUM HYDROXIDE, A BY–PRODUCT OF THE DEPLOYMENT REACTION, THAT IS IRRITATING TO THE SKIN AND EYES. MOST OF THE POWER ON THE AIR BAG ASSEMBLY IS HARMLESS. AS A PRECAUTION, WEAR GLOVES AND SAFETY GLASSES WHEN HANDLING A DEPLOYED AIR BAG ASSEMBLY, AND WASH YOUR HANDS WITH MILD SOAP AND WATER AFTERWARDS.

WARNING: WHEN CARRYING A LIVE AIR BAG ASSEMBLY, MAKE SURE THE BAG AND TRIM COVER ARE POINTED AWAY FROM YOU. NEVER CARRY AIR BAG ASSEMBLY BY THE WIRES OR CONNECTOR ON THE UNDERSIDE OF MODULE. IN THE CASE OF AN ACCIDENTAL DEPLOYMENT, THE BAG WILL THEN DEPLOY WITH MINIMAL CHANCE OF INJURY. WHEN PLACING ALIVE AIR BAG ASSEMBLY ON A BENCH OR OTHER SURFACE, ALWAYS FACE BAG AND RIM COVER UP, AWAY FROM THE SURFACE. NEVER REST A STEERING COLUMN ASSEMBLY ON THE STEERING WHEEL WITH THE AIR BAG ASSEMBLY FACE DOWN AND COLUMN VERTICAL. THIS IS NECESSARY SO THAT A FREE SPACE IS PROVIDED TO ALLOW THE AIR BAG ASSEMBLY TO EXPAND IN THE UNLIKELY EVENT OF ACCIDENTAL DEPLOYMENT. OTHERWISE, PERSONAL INJURY COULD RESULT.

NOTE: In the event deployment has occurred, inspect coil assembly wire for any signs of scorching, melting or any other damage due to excessive heat. If the coil has been damaged, replace it.

Removal

1. Disable the SRS (Refer to “Disabling the SRS ” in this section).
2. Loosen the air bag assembly fixing bolts from behind the steering wheel assembly using a TORX® driver or equivalent until the air bag assembly can be released from steering wheel.

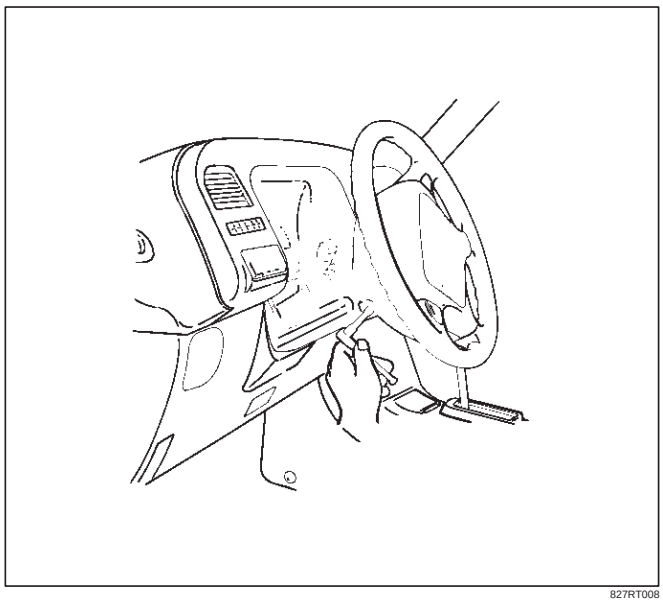

827RT008

3. Disconnect the yellow 2–pin connector located behind the air bag assembly and remove air bag assembly.Refer to “SRS Connectors” in this section for removal and installation.

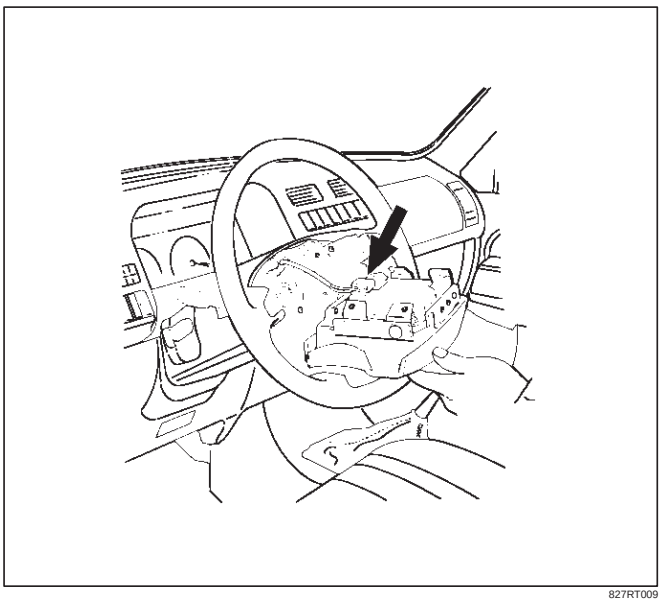

827RT009

4. Disconnect horn lead connector.
5. Remove the steering wheel attachment nut.
6. Apply a setting mark across the steering wheel and shaft so parts can be reassembled in their original position.

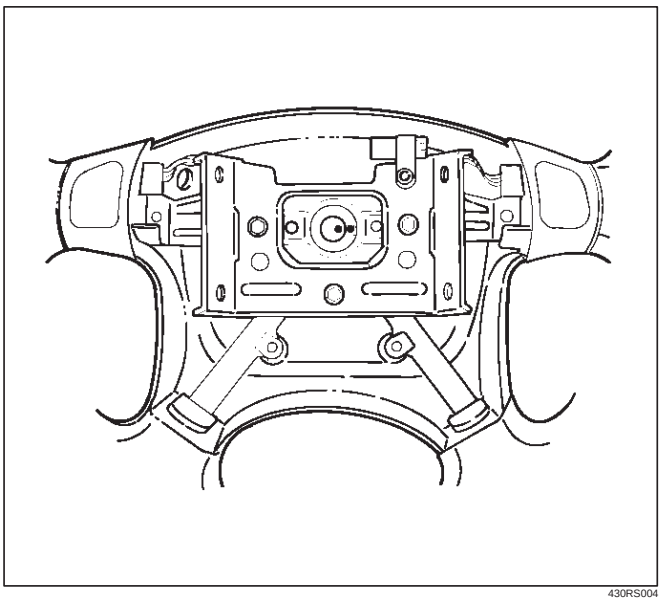

430RS004

7. Move the tires to the straight ahead position before removing the steering wheel and removing wheel with 5–8521–0016–0.

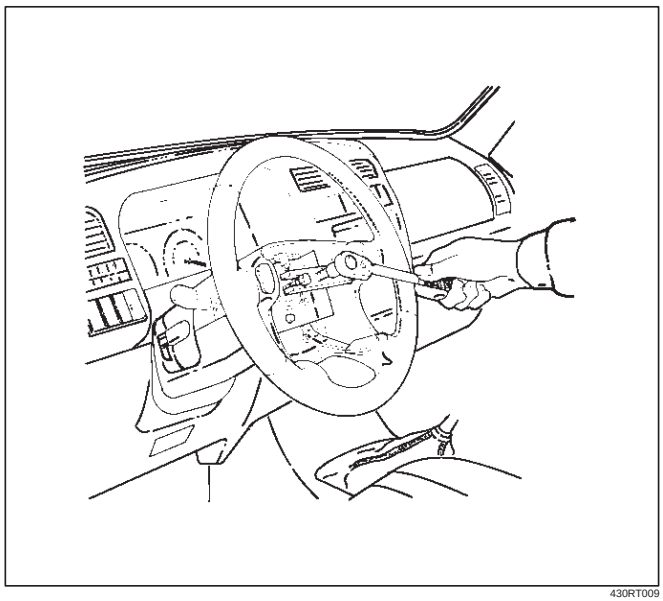

430RT009

8. Feed wiring though the wheel and remove wheel.
9. Remove the steering lower cover and engine hood opening lever.
10. Remove the driver knee bolster assembly.

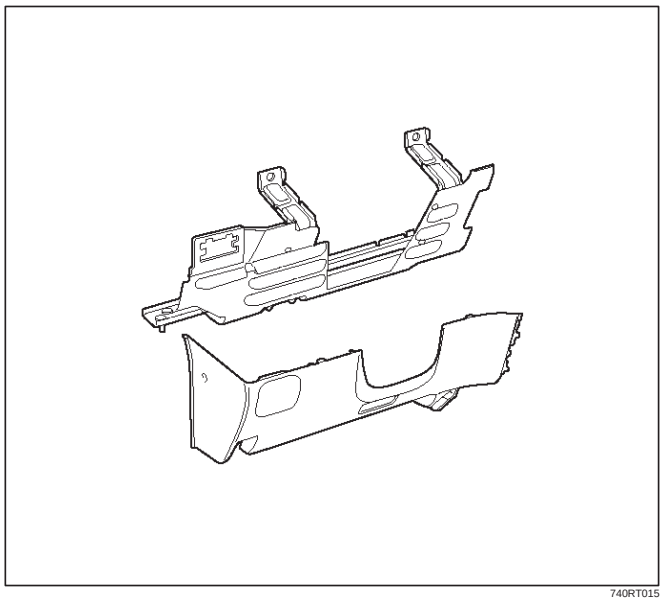

740RT015

11. Remove the steering column cover.
12. Remove air conditioning lower duct.
13. Disconnect the wiring harness connectors located at the base of steering column.

CAUTION: Never apply force to the steering wheel in direction of the shaft by using a hammer or other impact tools in an attempt to remove the steering wheel. The steering shaft is designed as an energy absorbing unit.

14. Remove the combination switch assembly with SRS coil.

NOTE: SRS coil is a part of combination switch assembly, which cannot be replaced separately. Therefore, be sure not to remove the SRS coil from the combination switch assembly.

15. Remove the snap ring.
16. Remove the cushion rubber.
17. Disconnect shift lock cable (A/T only).
18. Disconnect the starter switch harness connector located base of steering column.
19. Remove steering lock cylinder assembly.
20. Apply a setting mark across the universal joint and steering shaft to reassemble the parts in their original position.

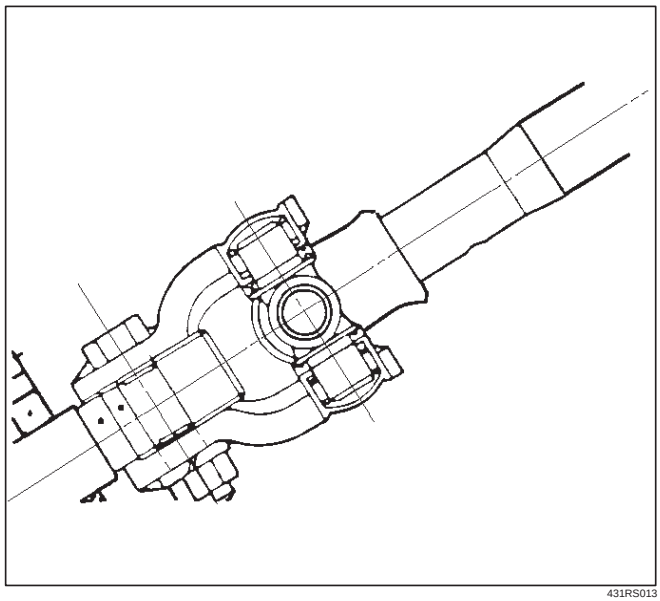

431RS013

21. Remove steering column assembly.

Installation

1. Install the steering column assembly and align the setting marks on the universal joint and steering shaft made during removal.

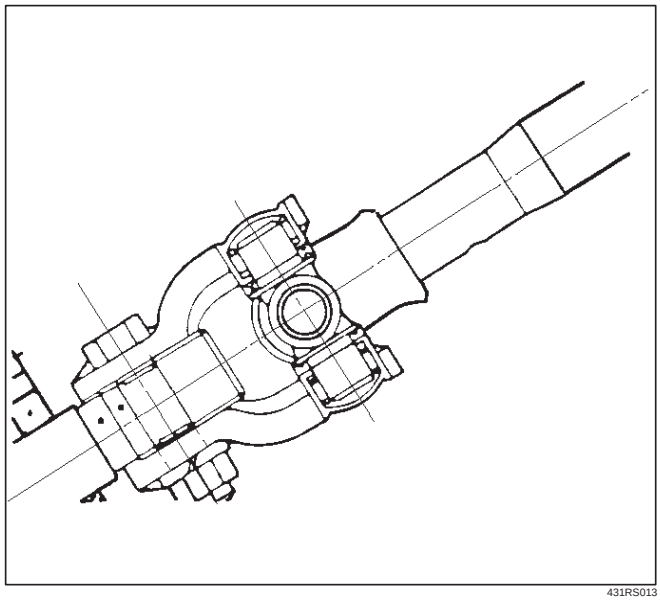

431RS013

2. Tighten the steering column fixing bolts (dash panel side) to the specified torque.

   Torque: 19 N·m (1.9 Kg·m/14 lb ft)

3. Tighten the steering column fixing bolts (Pedal bracket) to the specified torque.

   Torque: 17 N·m (1.7 Kg·m/13 lb ft)

4. Tighten the universal joint to the specified torque.

   Torque: 25 N·m (2.6 Kg·m/18 lb ft)

5. Install steering lock cylinder assembly.
6. Connect shift lock cable (For A/T)
7. Install cushion rubber.
8. Install snap ring.
9. Install the combination switch assembly with SRS coil.
10. Connect the wiring harness connector located on the base of steering column.
11. Turn the SRS coil counterclockwise to full, return about 3 turns and align the neutral mark (1).

CAUTION: When turning the SRS coil counterclockwise to full, stop turning if resistance is felt. Forced further turning may damage to the cable in the SRS coil.

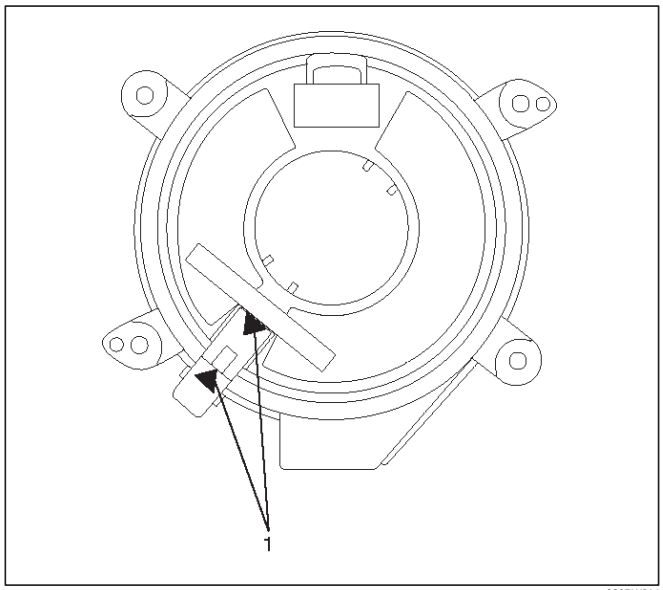

826RW014

12. Install steering column cover.

CAUTION: When installing the steering column cover, be sure to wire (through each harness) as illustrated so that the harness starter switch, combination switch and SRS coil may not catch wiring.

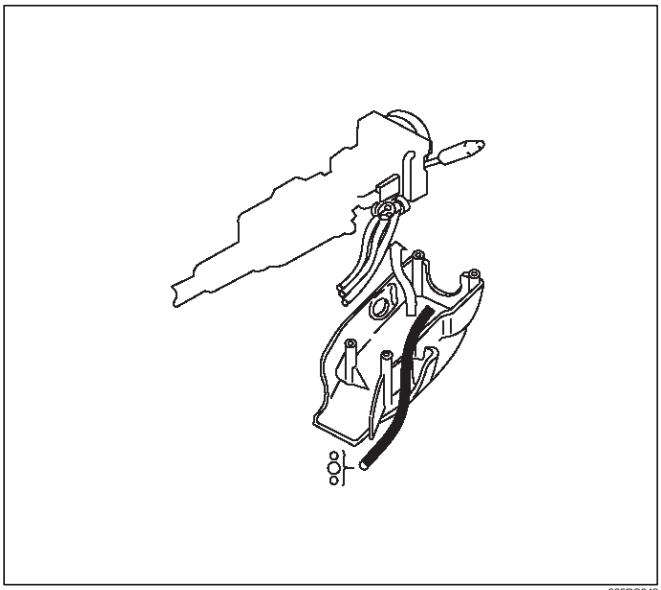

825RS048

13. Install the steering wheel and align the setting marks.

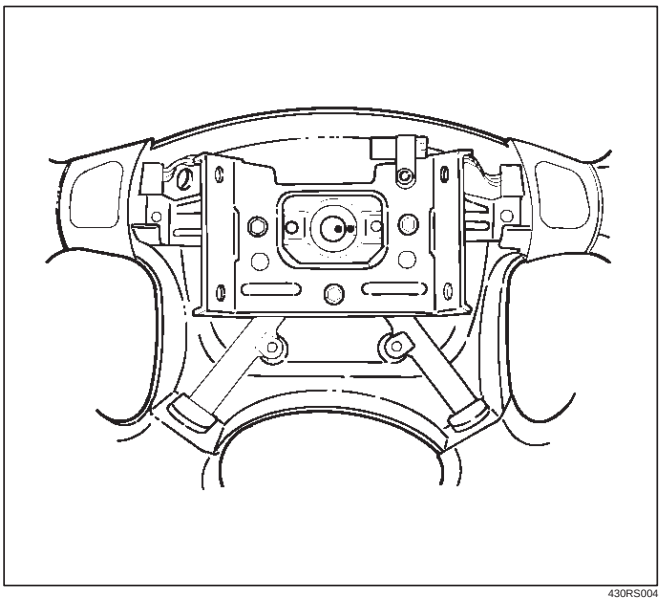

430RS004

14. Tighten the steering wheel fixing nut to the specified torque.

Torque: 34 N·m (3.5 Kg·m/25 lb ft)

15. Connect horn lead.
16. Connect air bag wiring harness connector.

NOTE: Pass the lead wire through the tabs on the plastic cover (wire protector) of air bag to prevent lead wire from being pinched.

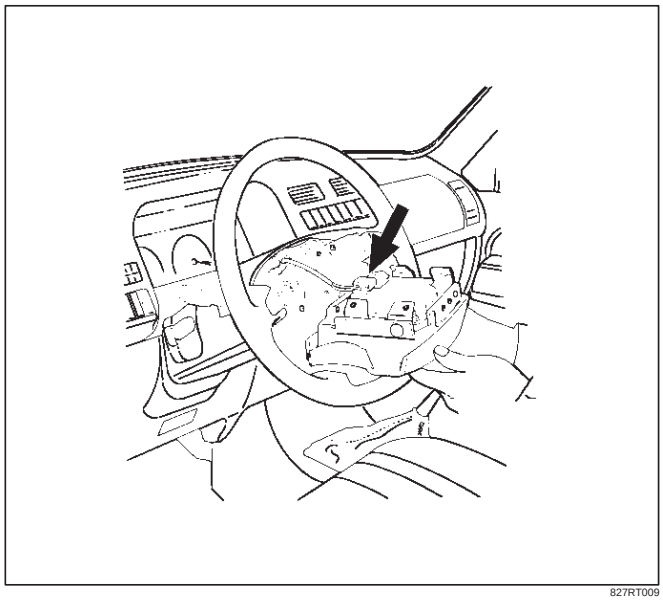

827RT009

17. Install air bag into steering wheel and tighten bolts to specified sequence as shown in figure.

Torque: 8 N·m (0.8 Kg·m/69 lb in)

CAUTION: Never use the air bag assembly from another vehicle. Use only the air bag assembly proper to the Trooper which is being repaired.

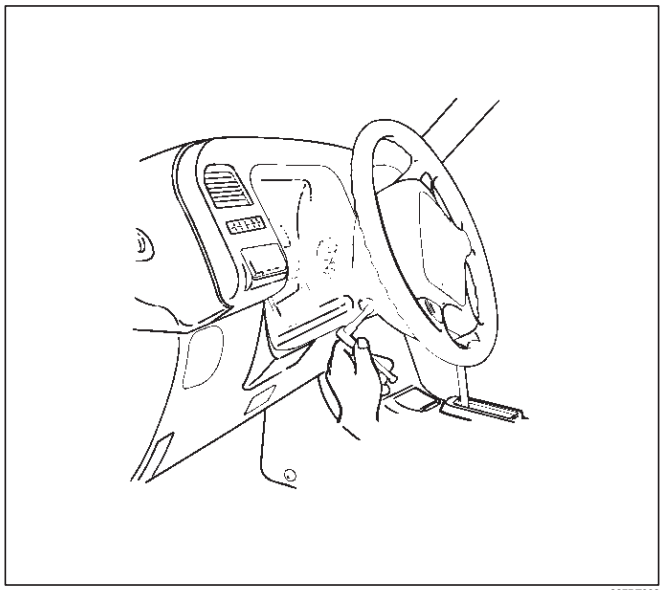

827RT008

18. Enable the SRS (Refer to “Enabling the SRS” in this section).

Passenger Air Bag Assembly

Service Precautions

WARNING: SAFETY PRECAUTIONS MUST BE FOLLOWED WHEN HANDLING A DEPLOYED AIR BAG ASSEMBLY. AFTER DEPLOYMENT, THE AIR BAG ASSEMBLY SURFACE MAY CONTAIN A SMALL AMOUNT OF SODIUM HYDROXIDE, A BY–PRODUCT OF THE DEPLOYMENT REACTION, THAT IS IRRITATING TO THE SKIN AND EYES. MOST OF THE POWER ON THE AIR BAG ASSEMBLY IS HARMLESS. AS A PRECAUTION, WEAR GLOVES AND SAFETY GLASSES WHEN HANDLING A DEPLOYED AIR BAG ASSEMBLY, AND WASH YOUR HANDS WITH MILD SOAP AND WATER AFTERWARDS.

WARNING: WHEN CARRYING A LIVE AIR BAG ASSEMBLY, MAKE SURE THE BAG AND TRIM COVER ARE POINTED AWAY FROM YOU. NEVER CARRY AIR BAG ASSEMBLY BY THE WIRES OR CONNECTOR ON THE UNDERSIDE OF MODULE. IN THE CASE OF AN ACCIDENTAL DEPLOYMENT, THE BAG WILL THEN DEPLOY WITH MINIMAL CHANCE OF INJURY. WHEN PLACING ALIVE AIR BAG ASSEMBLY ON A BENCH OR OTHER SURFACE, ALWAYS FACE BAG AND RIM COVER UP, AWAY FROM THE SURFACE. NEVER REST A STEERING COLUMN ASSEMBLY ON THE STEERING WHEEL WITH THE AIR BAG ASSEMBLY FACE DOWN AND COLUMN VERTICAL. THIS IS NECESSARY SO THAT A FREE SPACE IS PROVIDED TO ALLOW THE AIR BAG ASSEMBLY TO EXPAND IN THE UNLIKELY EVENT OF ACCIDENTAL DEPLOYMENT. OTHERWISE, PERSONAL INJURY COULD RESULT.

NOTE: **IN THE EVENT DEPLOYMENT HAS OCCURRED, INSPECT COIL ASSEMBLY WIRE FOR ANY SIGNS OF SCORCHING, MELTING OR ANY OTHER DAMAGE DUE TO EXCESSIVE HEAT. IF THE COIL HAS BEEN DAMAGED, REPLACE IT.**

Removal

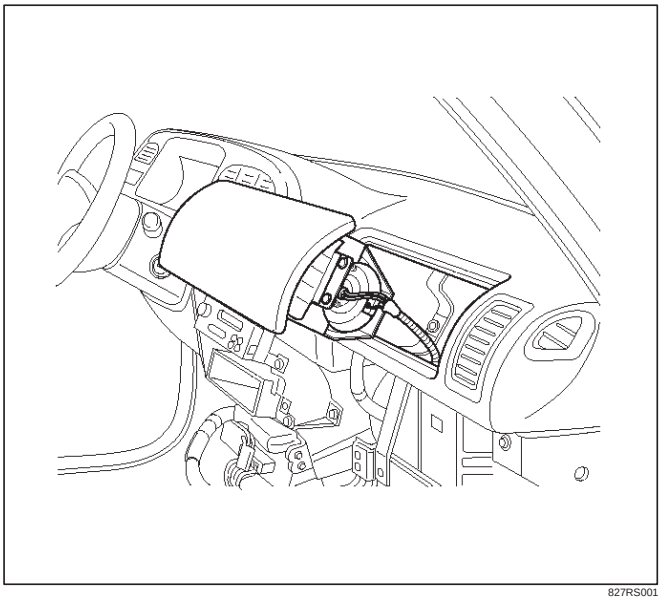

827RS001

1. Disable the SRS (Refer to “Disabling the SRS ” in this section).
2. Remove gear control knob.
3. Remove front console assembly.
4. Remove rear console assembly and disconnect harness connector.
5. Remove ECM and SDM cover.
6. Remove glove box assembly with lid.
7. Remove glove box cover.
8. Remove instrument panel assist side lower cover.
9. Disconnect engine hood opener lever.
10. Remove instrument panel door side lower cover.
11. Remove lower cluster with ashtray.
12. Remove meter cluster assembly and disconnect harness connector.
13. Remove instrument panel lower center cover.
14. Disconnect passenger air bag assembly harness connector.
15. Remove air bag assembly fixing bolts and nuts.
16. Remove passenger air bag assembly.

Installation

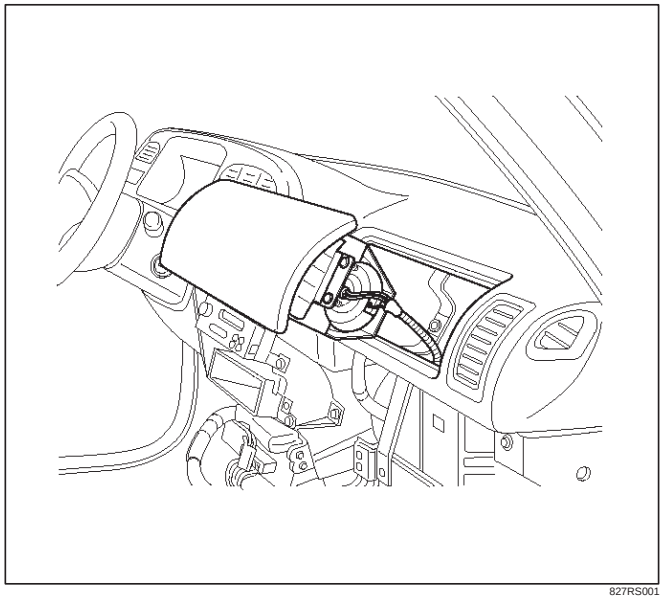

827RS001

1. Install passenger air bag assembly.
2. Install air bag assembly fixing bolts, nuts and tighten to specified torque.

   Torque: 6 N·m (0.6 Kg·m/52 lb in)
3. Connect air bag assembly harness connector.
4. Install instrument panel lower center cover.
5. Install meter cluster assembly and connect harness connector.
6. Install lower cluster with ashtray.
7. Install instrument panel door side lower cover.
8. Connect engine hood opener lever.
9. Install instrument panel assist side lower cover.

10. Install glove box cover.
11. Install glove box assembly with lid.
12. Install ECM and SDM cover.
13. Install rear console assembly and connect harness connector.
14. Install front console assembly.
15. Install gear control knob.
16. Enable the SRS (Refer to “Enabling the SRS” in this section).

Pretensioner Seat Belt (If so equipped)

Service Precaution

WARNING: WHEN PERFORMING SERVICE ON OR AROUND THE PRETENSIONER SEAT BELT OR THE PRETENSIONER SEAT BELT WIRING, FOLLOW THE PROCEDURES LISTED BELOW TO TEMPORARILY DISABLE THE PRETENSIONER SEAT BELT. FAILURE TO FOLLOW PROCEDURES COULD RESULT IN POSSIBLE THE PRETENSIONER SEAT BELT DEPLOYMENT, PERSONAL INJURY OR OTHERWISE UNNEEDED THE PRETENSIONER SEAT BELT REPAIR.

AS A PRECAUTION, WEAR GLOVES AND SAFETY GLASSES WHEN PERFORMING THE PRETENSIONER SEAT BELT. WHEN DEPLOY A LIVE PRETENSIONER SEAT BELT AT OUTSIDE THE VEHICLE, DEPLOYMENT HARNESS SHALL REMAIN SHORTED AND NOT BE CONNECTED TO A POWER SOURCE UNTIL THE PRETENSIONER SEAT BELT IS TO BE DEPLOYED. THE PRETENSIONER SEAT BELT WILL IMMEDIATELY DEPLOY WHEN A POWER SOURCE IS CONNECTED TO IT. CONNECTING THE DEPLOYMENT HARNESS SHOULED ALWAYS BE THE FINAL STEP IN THE PRETENSIONER SEAT BELT DEPLOYMENT PROCEDURE. FAILURE TO FOLLOW PROCEDURES IN THE ORDER LISTED COULD RESULT IN PERSONAL INJURY.

Parts Location

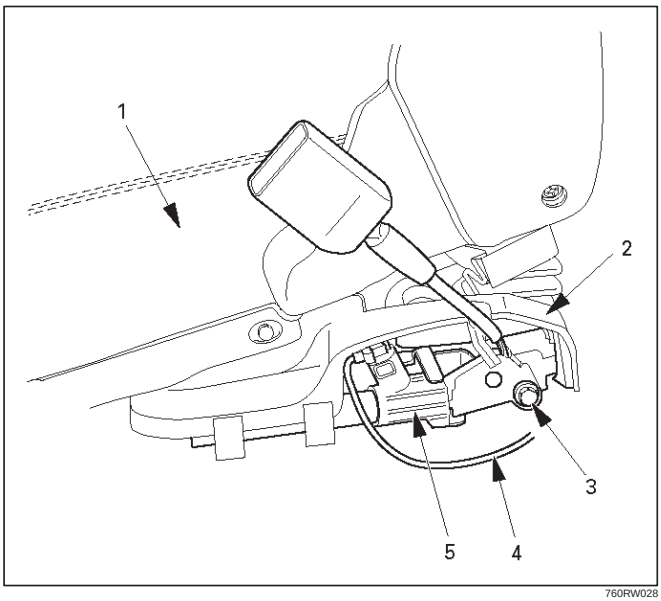

760RW028

Legend

(1) Seat
(2) Pretensioner Cover
(3) Bolt
(4) Pretensioner Harness
(5) Pretensioner

Removal

1. Turn ignition switch to “LOCK”, remove key.
2. Remove the foot rest located behind the seat.
3. Remove the cover on seat slide.
4. Disconnect the 2-pin connector at the base of the seat.
5. Remove four fixing bolts the seat slide and remove seat.
6. Remove the pretensioner seat belt cover.
7. Remove the pretensioner seat belt assembly.

Installation

1. Install the pretensioner seat belt assembly.
2. Install the pretensioner seat belt cover.
3. Install the seat on seat slide and four fixing bolts.
4. Connect the yellow 2-pin connector at the base of the seat.
5. Install the cover on seat slide.
6. Install the foot rest located behind the seat.

Main Data and Specifications

Fastener Tightening Specification

Application	N·m	Kg·m	Lb Ft	Lb In.
SDM	10	1.0	—	87
Driver air bag fixing bolt	8.8	0.9	—	78
Steering wheel fixing bolt	34	3.5	25	—
Steering column (dash panel side fixing bolts)	19	1.9	14	—
Steering column (Pedal bracket fixing bolt)	17	1.7	13	—
Steering column (Universal joint fixing bolt)	25	2.6	18	—
Passenger Air Bag fixing bolts and nuts	6	0.6	—	52

RESTRAINT CONTROL SYSTEM

CONTENTS

Service Precaution 9J1–1
Diagnostic Information 9J1–2
System Schematic 9J1–4
SRS Diagnostic System Check 9J1–4
Chart A SDM Integrity Check 9J1–6
Chart B "AIR BAG" Warning Lamp Comes "ON" Steady 9J1–8
Chart C "AIR BAG" Warning Lamp Does Not Come "ON" Steady 9J1–10
DTC 15 Passenger Deployment Loop Resistance High 9J1–13
DTC 16 Passenger Deployment loop Resistance Low 9J1–15
DTC 17 Passenger Deployment Loop Open 9J1–17
DTC 18 Passenger Deployment Loop Short To Ground 9J1–19
DTC 19 Passenger Deployment Loop Short To B+ 9J1–21
DTC 21 Driver Deployment Loop Resistance High 9J1–23
DTC 22 Driver Deployment Loop Resistance Low 9J1–26
DTC 24 Driver Deployment Loop Short To Ground 9J1–29
DTC 25 Driver Deployment Loop Short To B+ 9J1–31
DTC 26 Driver Deployment Loop Open 9J1–33
DTC 51 Air Bag Deployment Event Commanded 9J1–35
DTC 53 Deployment Commanded With Deployment Loop Fault Or Energy Reserves Out Of Range 9J1–37
DTC 61 Warning Lamp Circuit Failure 9J1–39
DTC 71 Internal SDM Fault 9J1–41
DTC 29 Passenger Pretensioner Loop Short To Ground 9J1–43
DTC 31 Passenger Pretensioner Loop Resistance High 9J1–45
DTC 32 Passenger Pretensioner loop Resistance Low 9J1–47
DTC 33 Passenger Pretensioner Loop Short To Voltage 9J1–49
DTC 34 Passenger Pretensioner Loop Open 9J1–51
DTC 41 Driver Pretensioner Loop Resistance High 9J1–53
DTC 42 Driver Pretensioner Loop Resistance Low 9J1–55
DTC 44 Driver Pretensioner Loop Open 9J1–57
DTC 45 Driver Pretensioner Loop Short To Ground 9J1–59
DTC 46 Driver Pretensioner Loop Short To Voltage 9J1–61
DTC 52 Pretensioner Deployment Event Commanded 9J1–63

Service Precaution

WARNING: IF SO EQUIPPED WITH A SUPPLEMENTAL RESTRAINT SYSTEM (SRS), REFER TO THE SRS COMPONENT AND WIRING LOCATION VIEW IN ORDER TO DETERMINE WHETHER YOU ARE PERFORMING SERVICE ON OR NEAR THE SRS COMPONENTS OR THE SRS WIRING. WHEN YOU ARE PERFORMING SERVICE ON OR NEAR THE SRS COMPONENTS OR THE SRS WIRING, REFER TO THE SRS SERVICE INFORMATION. FAILURE TO FOLLOW WARNINGS COULD RESULT IN POSSIBLE AIR BAG DEPLOYMENT, PERSONAL INJURY, OR OTHERWISE UNNEEDED SRS SYSTEM REPAIRS.

CAUTION: Always use the correct fastener in the proper location. When you replace a fastener, use ONLY the exact part number for that application. ISUZU will call out those fasteners that require a replacement after removal. ISUZU will also call out the fasteners that require thread lockers or thread sealant. UNLESS OTHERWISE SPECIFIED, do not use supplemental coatings (Paints, greases, or other corrosion inhibitors) on threaded fasteners or fastener joint interfaces. Generally, such coatings adversely affect the fastener torque and the joint clamping force, and may damage the fastener. When you install fasteners, use the correct tightening sequence and specifications. Following these instructions can help you avoid damage to parts and systems.

Diagnostic Information

CAUTION: When fasteners are removed, always reinstall them at the same location from which they were removed. if a fastener needs to be replaced, use the correct part number fastener for that application. if the correct part number fastener is not available, a fastener of equal size and strength (or stronger) may be used. fasteners that are not reused, and those requiring thread locking compound will be called out. the correct torque value must be used when installing fasteners that require it. if the above conditions are not followed, parts or system damage could result.

Diagnostic Procedures

WARNING: TO AVOID DEPLOYMENT WHEN TROUBLESHOOTING THE SRS, DO NOT USE ELECTRICAL TEST EQUIPMENT SUCH AS A BATTERY–POWERED OR AC–POWERED VOLTMETER, OHMMETER, ETC., OR ANY TYPE OF ELECTRICAL EQUIPMENT OTHER THAN THAT SPECIFIED IN THIS MANUAL. DO NOT USE A NON POWERED, PROBE–TYPE TESTER. INSTRUCTIONS IN THIS MANUAL MUST BE FOLLOWED CAREFULLY, OTHERWISE PERSONAL INJURY MAY RESULT.

The diagnostic procedures used in this section are designed to aid in finding and repairing SRS problems. Outlined below are the steps to find and repair SRS problems quickly and effectively. Failure to carefully follow these procedures may result in extended diagnostic time, incorrect diagnosis and incorrect parts replacement.

1. **Perform The “SRS Diagnostic System Check”.**
   The “SRS Diagnostic System Check” should always be the starting point of any SRS diagnostics. The “SRS Diagnostic System Check” checks for proper “AIR BAG” warning lamp operation and checks for SRS trouble codes using both “Flash Code” and “Scan Tool” Methods.
2. **Refer To The Proper Diagnostic Chart As Directed By The “SRS Diagnostic System Check”.**
   The “SRS Diagnostic System Check” will lead you to the correct chart to diagnose any SRS problems. Bypassing these procedures may result in extended diagnostic time, incorrect diagnosis and incorrect parts replacement.
3. **Repeat The “SRS Diagnostic System Check” After Any Repair Or Diagnostic Procedures Have Been Performed.**
   Preforming the “SRS Diagnostic System Check” after all repair or diagnostic procedures will assure that the repair has been made correctly and that no other conditions exist.

Diagnostic Codes

The Sensing and Diagnostic Module (SDM) maintains a history record of all diagnostic codes that have been detected since the SRS codes were last cleared during service.

1. Active Codes — Faults that are presently detected this ignition cycle. Active codes are stored in RAM (Random Access Memory).
2. History Codes — All faults detected since the last time the history fault memory was cleared. History codes are stored in EEPROM. (Electronically Erasable Programmable Read only Memory)

How To Read Trouble Codes

All codes (Active and history) can be read (or cleared) by using a scan tool or equivalent.
If a PDT is not available, have the vehicle serviced by ISUZU dealer.

How To Clear Trouble Codes

Trouble codes can only be cleared by using a Scan Tool. If a “scan tool” is not available then inform the owner of the stored codes and suggest that the codes are cleared upon the next visit to an Isuzu dealership.

Scan Tool Diagnostics

A scan tool can be used to read current and history codes and to clear all history codes after a repair is complete. The scan tool must be updated to communicate with the SRS through a memory card or a manufacturer’s update before it can be used for SRS diagnostics. To use the scan tool, connect it to the DLC connector and turn the ignition switch “ON”. Then follow the manufacturer’s directions for communication with the SRS. The scan tool reads serial data from the SDM “Serial Data” output (terminal 24) to the DLC connector (terminal 9).

Basic Knowledge Required

Before using this section of the Service Manual, there is some basic knowledge which will be required. Without this knowledge, you will have trouble using the diagnostic procedures in this section. Use care to prevent harm or unwanted deployment. Read all cautions in the service manual and on warning labels attached to SRS components.

Basic Electrical Circuits

You should understand the basic theory of electricity including series and parallel circuits, and understand the voltage drops across series resistors. You should know the meaning of voltage (volts), current (amps), and resistance (ohms). You should understand what happens in a circuit with an open or a shorted wire. You should be able to read and understand a wiring diagram.

“Flash Code” Diagnostics

Flash code diagnostics can be used to read active codes and to determine if history codes are present but cannot be used to clear codes or read history codes. Flash code diagnostics is enabled by grounding by terminal 4 shorting to terminal 13 of the DLC connector with the ignition switch “ON”. Grounding terminal 4 of the DLC connector pulls the “Diagnostics Request” input (Terminal 1) of the SDM low and signals the SDM to enter the flash code diagnostic display mode.

The SDM displays the trouble codes by flashing the warning lamp. Each code that is displayed will consist of a number of flashes which represents the tens digit, a 1.2 second pause, following by a number of flashes which represents the ones digit of the code. Each code is displayed one time before moving on to the next code. After all of the codes have been displayed, the entire code sequence will continually by repeated until ground is removed from terminal 4 of the DLC connector.

Two special codes exist when reading in the flash code mode (Flash Code 12 and Flash Code 13). “Flash Code 12“ will always be the first code displayed when the flash code mode is enable Code 12 is not an indication of a SRS problem but an indication that the flash code mode has been enabled. If there are no active or history codes present, the SDM will display code 12 until ground is removed from the DLC connector at terminal 4. “flash Code 13” will be displayed if history codes are present. To read the history codes a scan tool must be used.

System Schematic

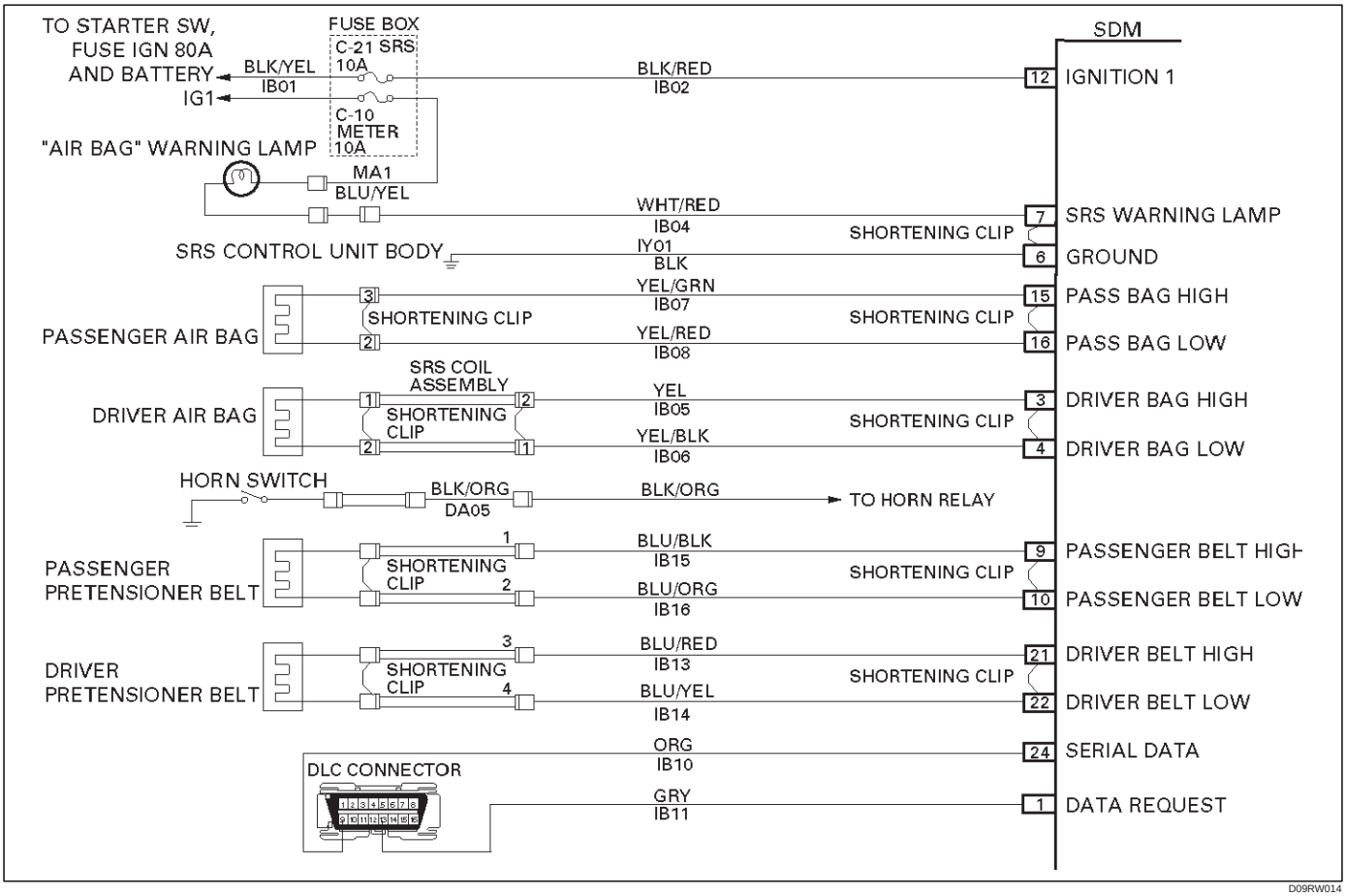

SRS Diagnostic System Check

The diagnostic procedures used in this section are designed to find and repair SRS malfunctions. To get the best results, it is important to use the diagnostic charts and follow the sequence listed below:

A. Perform the “SRS Diagnostic System Check.”
   The “SRS Diagnostic System Check” must be the starting point of any SRS diagnostics. The “SRS Diagnostic System Check” checks for proper “AIR BAG” warning lamp operation, the ability of the SDM to communicate through the “Serial Data” line and whether SRS diagnostic trouble codes exist.

B. Refer to the proper diagnostic chart as directed by the “SRS Diagnostic System Check.”
   The “SRS Diagnostic System Check” will lead you to the correct chart to diagnose any SRS malfunctions. Bypassing these procedures may result in extended diagnostic time, incorrect diagnosis and incorrect parts replacement.

C. Repeat the “SRS Diagnostic System Check” after any repair or diagnostic procedures have been preformed.
   Performing the “SRS Diagnostic System Check” after all repair or diagnostic procedures will ensure that the repair has been made correctly and that no other malfunctions exist

Circuit Description

When the ignition switch is first turned “ON”, “Ignition 1” voltage is applied from the “C–21” fuse to the SDM at the “Ignition 1” input terminals “12”. The SDM responds by flashing the “AIR BAG” warning lamp turn on 3.5 seconds, while performing tests on the SRS.

Notes On System Check Chart:

1. The “AIR BAG” warning lamp should turn on 3.5 seconds after ignition is first turned “ON”.
2. After the “AIR BAG” warning lamp turn on 3.5 seconds, it should turn “OFF”
3. This test checks for the proper operation of the “Serial Data” line. This test will also determine whether history diagnostic trouble codes are stored and, if so, identify them.
4. Improper operation of the “AIR BAG” warning lamp is indicated. This test differentiates a warning lamp stays “ON” condition from a warning lamp does not come “ON” condition.
5. This test checks for proper operation of the “Serial Data” line. This test will also identify the stored diagnostic trouble codes and whether they are current or history.

Diagnostic Aids:

The order in which diagnostic trouble codes are diagnosed is very important. Failure to diagnose the

diagnostic trouble codes in the order specified may result in extended diagnostic time, incorrect diagnosis and incorrect parts replacement.

SRS Diagnostic System Check

Step	Action	Yes	No
1	Note the “Air Bag” warning lamp as ignition switch is turned “ON.” Does the “AIR BAG” warning lamp turn on 3.5 seconds?	Go to Step 2	Go to Step 3
2	Note the “AIR BAG” warning lamp after it turn on 3.5 seconds. Does the “AIR BAG” warning lamp go “OFF”?	Go to Step 4	Go to Step 5
3	Note the “AIR BAG” warning lamp as ignition switch is turned “ON”. Does the “AIR BAG” warning lamp come “ON” steady?	Go to Chart B	Go to Chart C
4	1. Note the “AIR BAG” warning lamp as that ignition switch is turned “ON.” Ignition switch “OFF.” 2. Connect a scan tool to data link connector. 3. Follow direction given in the scan tool instruction manual. Ignition switch “ON.” 4. Request the SRS diagnostic trouble code display, recode all history diagnostic trouble code(s). specify as such, on repair order Is (are) diagnostic trouble code(s) displayed?	Ignition switch “OFF” When DTC 71 is set, go to DTC 71 Chart For all other history codes refer to “Diagnostic Aids” For that specific DTC A history DTC indicates the malfunction has been repaired or is intermittent	SRS is functional and free of malfuncitons, no further diagnosis is required If scan tool indicated “NO DATA RECEIVED,” refer to chassis electrical section8
5	1. Ignition switch “OFF.” 2. Connect a scan tool to data link connector. 3. Follow directions as given in the scan tool instruction manual. 4. Ignition switch “ON.” 5. Request the SRS diagnostic trouble code display, Recode all diagnostic trouble code(s), specifying as current or history on repair order. Is (are) diagnostic trouble code (s) displayed?	Ignition switch “OFF” When DTC 53 is set, go to DTC 53 chart When DTC 51 is set, go to DTC 51 chart When DTC 19 is set, go to DTC 19 chart When DTC 25 is set, go to DTC 25 chart Diagnose remaining current DTCs from lowest to highest When only history DTCs exist, refer to “Diagnostics Aids” for that specific DTC A history DTC indicates the malfunction has been repaired or is intermittent	If scan tool indicates “No Data Received,” refer to chassis electrical section8

Chart A SDM Integrity Check

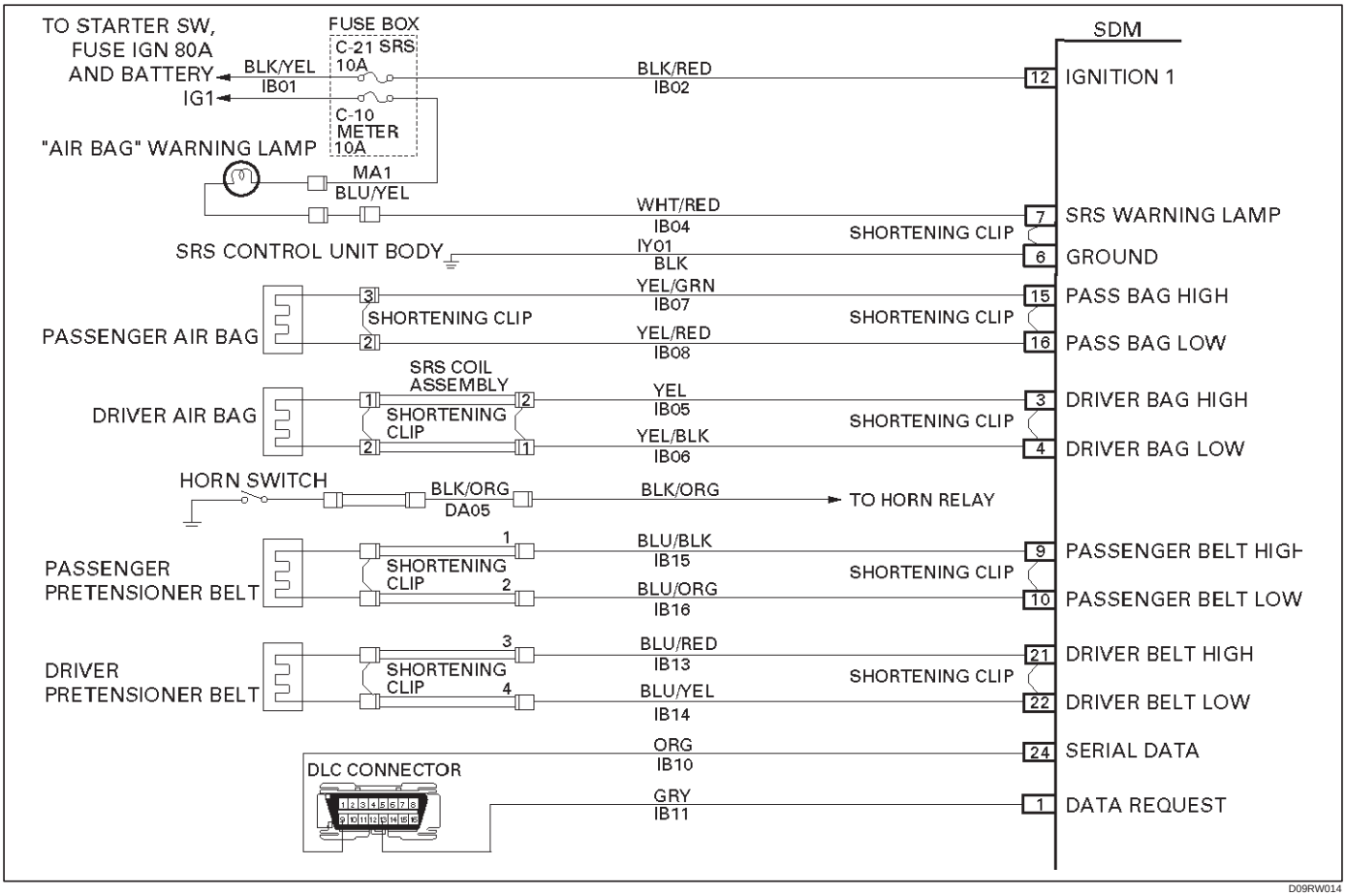

Circuit Description:

When the SDM recognizes “Ignition 1” voltage, applied to terminals “12”, is greater than 9 volts, the “AIR BAG” warning lamp is turned on 3.5 seconds to verify operation. At this time the SDM performs “Turn–ON” tests followed by “Continuous Monitoring” tests. When a malfunction is detected, the SDM sets a current diagnostic trouble code and illuminates the “AIR BAG” warning lamp. The SDM will clear current diagnostic trouble codes and move them to a history file when the malfunction is no longer detected and/or the ignition switch is cycled, except for DTCs 19, 25, 51, 53 and 71. DTC 71 can only be cleared using a scan tool “Clear Codes” command. If DTCs 51, 53 are not indicated then DTC 71 is not existing. DTCs 51, 53 and 71 can not be cleared after a “Clear Codes” command is issued.

Chart Test Description:

Number(s) below refer to step number(s) on the diagnostic chart:

1. This test confirms a current malfunction. If no current malfunction is occurring (history DTC set) the “Diagnostic Aids” for the appropriate diagnostic trouble code should be referenced. The SDM should not be replaced for a history diagnostic trouble code.
2. This test checks for a malfunction introduced into the SRS during the diagnostic process. It is extremely unlikely that a malfunctioning SDM would cause a new malfunction to occur during the diagnostic process.
3. When all circuitry outside the SDM has been found to operate properly, as indicated by the appropriate diagnostic chart, then and only then should the SDM be replaced.

Chart A SDM Integrity Check

WARNING: DURING SERVICE PROCEDURES. BE VERY CAREFUL WHEN HANDLING A SENSING AND DIAGNOSTIC MODULE (SDM). NEVER STRIKE OR JAR THE SDM. NEVER POWER UP THE SRS WHEN THE SDM IS NOT RIGIDLY ATTACHED TO THE VEHICLE. ALL SDM AND MOUNTING BRACKET FASTENERS MUST BE CAREFULLY TORQUED AND THE ARROW MUST BE POINTING TOWARD THE FRONT OF THE VEHICLE TO ENSURE PROPER OPERATION OF THE SRS. THE SDM COULD BE ACTIVATED WHEN POWERED WHILE NOT RIGIDLY ATTACHED TO THE VEHICLE WHICH COULD CAUSE DEPLOYMENT AND RESULT IN PERSONAL INJURY.

Step	Action	Yes	No
1	1. This chart assumes that the “SRS Diagnostic System Check” and either a symptom chart or a diagnostic trouble code chart diagnosis have been performed. When all circuitry outside the SDM has been found to operate properly, as indicated by the appropriate diagnostic chart, and the symptom or DTC remains current, the following 2. Diagnostic procedures must be performed to verify the need for SDM replacement. 3. Ignition switch “OFF”. 4. Reconnect all SRS components, ensure all components are properly mounted. 5. Ensure the ignition switch has been “OFF” for at least 15 seconds. 6. Note “AIR BAG” warning lamp as ignition switch is turned “ON.” Does warning lamp turn on 3.5 seconds then go “OFF”?	The symptom or DTC is no longer occurring Clear SRS diagnostic trouble codes Repeat “SRS Diagnostic System Check”	Go to Step 2
2	Using a scan tool request diagnostic trouble code display Is the same symptom or DTC occurring as was when the “SRS Diagnostic System Check ” was first performed?	Go to Step 3	Ignition switch “OFF” Go to the appropriate chart for the indicated malfunction
3	1. Clear “SRS Diagnostic Trouble Codes”. 2. Ignition switch “OFF” for at least two minutes. 3. Note “AIR BAG” warning lamp as ignition switch is turned “ON.” Does warning lamp turn on 3.5 seconds then go “OFF”?	SRS is functional and free of malfunctions No further diagnosis is required Go to Step 4	Ignition switch “OFF” Replace SDM Go to Step 4
4	Reconnect all SRS components, ensure all components are properly mounted. Was this step finished?	Repeat the “SRS Diagnostic System Check”	Go to Step 4

Chart B "AIR BAG" Warning Lamp Comes "ON" Steady

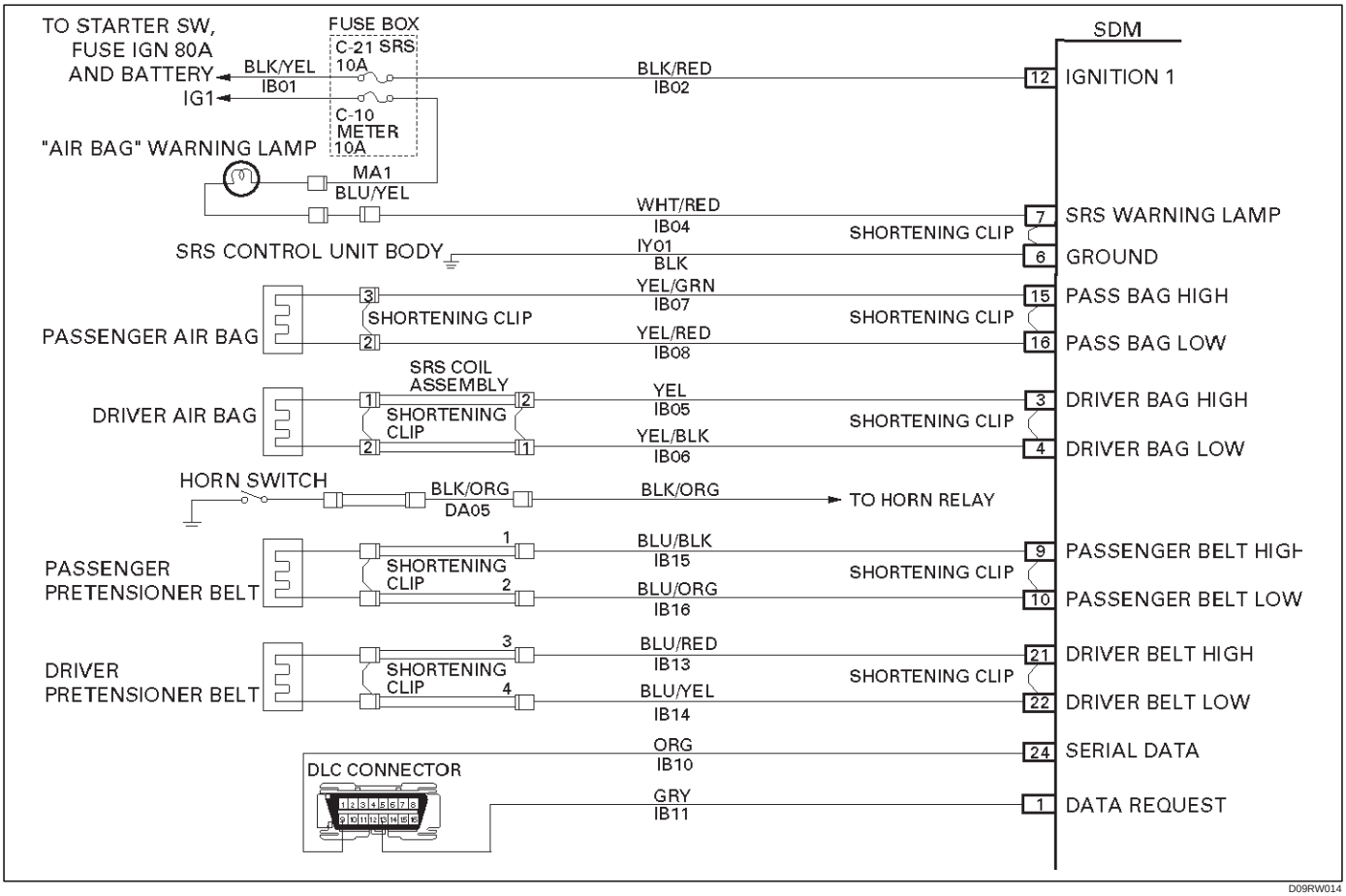

Circuit Description:

When the ignition switch is first turned "ON", "Ignition 1" voltage is applied from the "C–10" fuse to "AIR BAG", warning lamp which is connected to "SRS Warning Lamp", terminal "7". The "C–21" fuses apply system voltage to the "Ignition 1" inputs, terminals "12". The SDM responds by turning on the "AIR BAG" warning lamp 3.5 seconds. If "Ignition 1" is less than 9 volts, the "AIR BAG" warning lamp will come "ON" solid with no DTCs set.

Chart Test Description:

Number(s) below refer to step number(s) on the diagnostic chart.

2. This test checks for an open in the "Ignition 1" circuit to the SDM.
3. This test checks for the voltage of "IGNITION 1".
4. This test determines whether the malfunction is a short to ground in IB04–WHT/RED.

Chart B “AIR BAG” warning lamp comes “ON” Steady

Step	Action	Yes	No
1	1. When measurements are requested in this chart use 5–8840–0285–0 DVM with correct terminal adapter from 5–8840–0385–0. 2. Ignition switch “OFF.” 3. Connect scan tool to data link connector, follow directions as given in the scan tool instruction MANUAL. 4. Ignition switch “ON.” 5. Request SRS diagnostic trouble code display. Dose scan tool indicate “No Data Received”?	Go to Step 2	Go to Step 3
2	1. Ignition switch “OFF”. 2. Inspect SDM harness connector connection to SDM. Is it securely connected to the SDM?	Ignition switch “OFF” Replace SDM Go to Step 5	Connect SDM securely to de–activate shorting clip in SDM harness connector Go to Step 5
3	Using scan tool, request SRS data list. Is “ignition” less than 9 volts?	Go to Step 4	Ignition switch “OFF” Replace SDM Go to Step 5
4	1. Ignition switch “OFF.” 2. Disconnect SRS coil and passenger air bag assemblies. yellow 2–pin connector located at base of steering column and behind the glove box assembly. Disconnect SDM. 3. Disconnect the connector of “SRS Warning Lamp” of instrument cluster. 4. Measure resistance from SDM harness connector terminal “7” to ground “6”. Does 5–8840–0285–0 display “OL” (Infinite)?	Go to Chart A	Replace SRS harness Go to Step 5
5	Reconnect all SRS components, ensure all components are properly mounted. Was this step finished?	Repeat the “SRS Diagnostic System Check”	Go to Step 5

Chart C "AIR BAG" Warning Lamp Does Not Come "ON" Steady

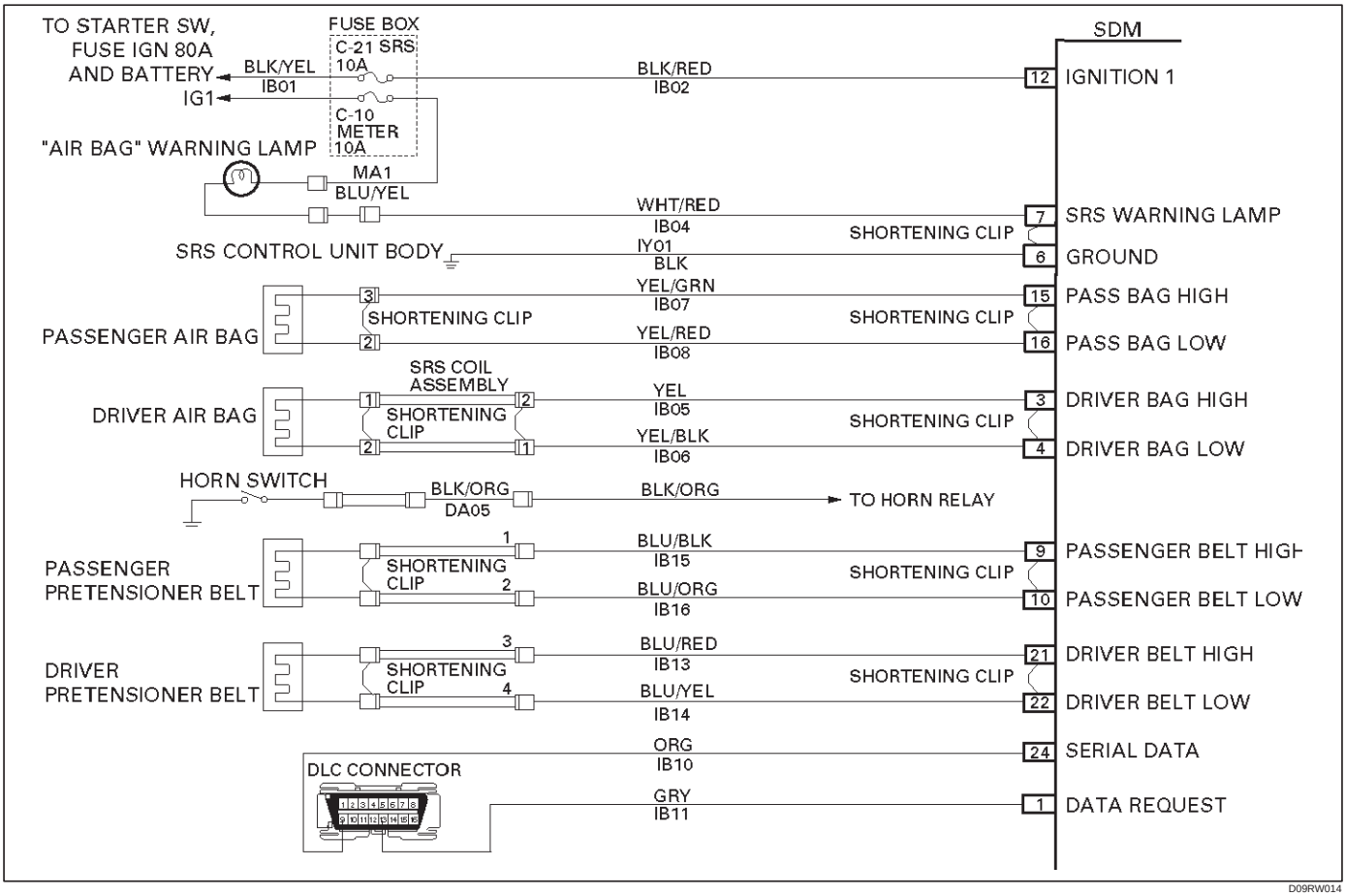

Circuit Description:

When the ignition switch is first turned "ON", "Ignition 1" voltage is applied from the "C–10" fuse to the "AIR BAG" warning lamp which is connected to "SRS Warning Lamp", terminal "7". The "C–21" fuse apply system voltage to the "Ignition 1" inputs, terminals "12". The SDM responds by turning on the "AIR BAG" warning lamp 3.5 seconds. If "Ignition 1" is more than 16 volts, the "AIR BAG" warning lamp will be still "OFF" solid with no DTCs set.

Chart Test description:

Number(s) below refer to step number(s) on the diagnostic chart:

1. This test decides whether power is available to SDM warning lamp power feed circuit.
2. This test determines whether the voltage is present in the warning lamp circuit.
3. This test determines if the malfunction is in the instrument cluster.
4. This test checks for open in the warning lamp circuitry.
5. This test isolates the IB04–WHT/RED circuit and checks for a short in the IB04–WHT/RED circuit to B+.
8. This test checks for a short from the SDM warning lamppower feed circuit to ground.
9. This test determines whether the short to ground is due to a short in the wiring.

Chart C “AIR BAG” Warning Lamp Does Not Come “ON” Steady

Step	Action	Yes	No
1	1. When measurements are requested in this chart,use 5–8840–0285–0 DVM with correct terminal adapter from 5–8840–0385–0. 2. Ignition switch “OFF.” 3. Remove and inspect “C–10” fuse (meter) to the “AIR BAG” warning lamp. Is fuse good?	Go to Step 2	Go to Step 7
2	1. Ignition switch “OFF.” 2. Disconnect SRS coil and passenger air bag assemblies. Yellow 2–pin connector located at base of steering column and behind the glove box assembly. 3. Disconnect SDM. 4. Ignition switch “ON.” 5. Measure voltage on SDM harness connector from terminal “7” to terminal “6” (ground). Is system voltage present on terminal “7”?	Go to Step 4	Go to Step 3
3	1. Ignition switch “OFF.” 2. Remove instrument meter cluster. 3. Check for proper connection to instrument cluster at IB04–WHT/RED terminal. 4. If ok, then remove and inspect “AIR BAG” bulb. Is bulb good?	Go to Step 5	Replace bulb Go to Step 6
4	1. Ignition switch “OFF.” 2. Disconnect instrument meter cluster harness connector. 3. Ignition switch “ON.” 4. Measure voltage on SDM harness connector from terminal “7” to terminal “6” (GROUND). Is voltage 1 volt or less?	Go to Chart A	Replace SRS harness Go to Step 6
5	1. Install bulb. 2. Measure resistance from instrument meter cluster harness connector IB04–WHT/RED terminal to SDM harness connector terminal “7”. Is resistance 5.0 ohms or less?	Service instrument meter cluster Install instrument meter cluster Go to Step 6	Replace SRS harness Go to Step 6
6	Reconnect all SRS components, ensure all components are properly mounted. Was this step finished?	Repeat the “SRS Diagnostic System Check”	Go to Step 6
7	Perform chart C. Was this step finished?	Go to Step 8	Go to Step 1
8	1. Replace “C–10” fuse. 2. Ignition switch “ON” wait 10 Seconds then ignition switch “Off.” 3. Remove and inspect “C–10” fuse. Is fuse good?	Install “C–10” fuse Go to Step 10	Go to Step 9

Chart C “AIR BAG” Warning Lamp Does Not Come “ON” Steady (Cont’d)

Step	Action	Yes	No
9	1. Disconnect SRS coil and passenger air bag assemblies. Yellow 2–pin connectors located at base of steering column and behind the glove box assembly. 2. Disconnect SDM. 3. Replace “C–10” fuse. 4. Ignition switch “ON” wait 10 seconds. 5. Ignition switch “OFF”. 6. Remove and inspection “C–10” fuse. Is fuse good?	Install“C–10” fuse Go to Chart A	Replace SRS harness Replace “C–10” fuse Go to Step 10
10	Reconnect all SRS components, ensure all components are properly mounted. Was this step finished?	Repeat the “SRS Diagnostic System Check”	Go to Step 10

DTC 15 Passenger Deployment Loop Resistance High

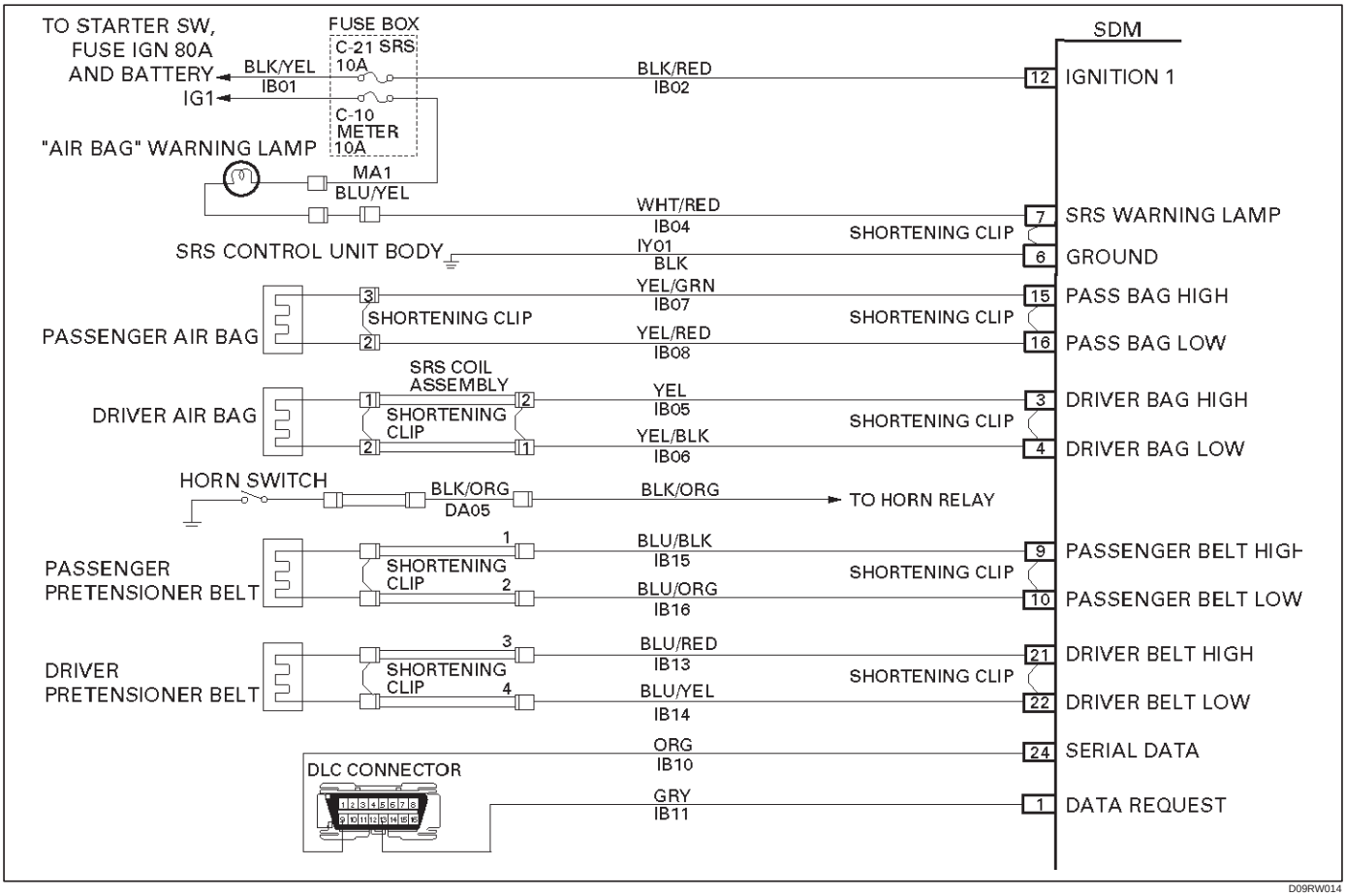

Circuit Description:

When the ignition switch is turned “ON”, the SDM will perform tests to diagnose critical malfunctions within itself. Upon passing these tests “Ignition 1”, and deployment loop voltages are measured to ensure they are within their respective normal voltage ranges. The SDM then proceeds with the “Resistance Measurement Test”. “Passenger Bag Low” terminal “16” is grounded through a resister and the passenger current source connected to “Passenger Bag High” terminal “15” allows a known amount of current to flow. By monitoring the voltage difference between “Passenger Bag High” and “Passenger Bag Low” the SDM calculates the combined resistance of the passenger air bag assembly, harness wiring IB07–YEL/GRN and IB08–YEL/RED connector terminal contact.

DTC Will Set When:

The combined resistance of the passenger air bag assembly, harness wiring IB07–YEL/GRN and IB08–YEL/RED, and connector terminal contact is above a specified value. This test is run once each ignition cycle during the “Resistance Measurement Test” when:

1. No “higher priority faults” are detected during “Turn–ON”,
2. “Ignition 1” voltage is in the specified value.

Action Taken:

SDM turns “ON” the “AIR BAG” warning lamp and sets a diagnostic trouble code.

DTC Will Clear When:

The ignition switch is turned “OFF.”

DTC Chart Test Description:

Number(s) below refer to step number(s) on the diagnostic chart:

2. This test determines whether the malfunction is in the SDM.
3. This test verifies proper connection of the yellow 2–pin connector.
4. This test checks for proper contact and/or corrosion of the yellow 2–pin connector terminals.
5. The test checks for a malfunctioning passenger air bag assembly.
6. This test determines whether the malfunction is due to high resistance in the wiring.

Diagnostic Aids:

An intermittent condition is likely to be caused by a poor connection at the passenger air bag assembly harness connector terminals “1” and “2”, SDM terminal “15” and “16”, or a poor wire to terminal connection in IB07–YEL/GRN and IB08–YEL/RED. This test for this diagnostic trouble code is only run while the “AIR BAG”

warning lamp is performing the bulb check, unless DTC 17 or DTC 26 is detected. When a scan tool “Clear Codes” command is issued and the malfunction is still present, the DTC will not reappear until the next ignition cycle.

DTC 15 Passenger Deployment loop Resistance High

Step	Action	Yes	No
1	Was the “SRS Diagnostic System Check” Performed?	Go to Step 2	Go to The “SRS Diagnostic System Check”
2	1. When measurements are requested in this chart use 5–8840–0285–0 DVM with correct terminal adapter from 5–8840–0385–0. 2. Use scan tool data list function, read and record the passenger deployment loop resistance. Is passenger resist. more than 2.9 ohms?	Go to Step 3	Go to Chart A
3	1. Ignition switch “Off.” 2. Make sure the passenger air bag assembly yellow 2–pin connector located behind the glove box assembly is seated properly. Is the yellow 2–pin connector connected properly?	Go to Step 4	Seat passenger Air Bag assembly yellow 2–pin connector properly Go to Step 7
4	1. Disconnect and inspect the passenger air bag assembly yellow 2–pin connector located behind the glove box assembly. 2. If ok, reconnect the passenger air bag assembly 2–pin connector. 3. Ignition switch “ON.” Is DTC 15 current?	Go to Step 5	Go to Step 7
5	1. Ignition switch “Off.” 2. Disconnect SRS coil and passenger air bag assembly, yellow 2–pin connector located at the base of the steering column and behind the glove box assembly. 3. Connect 5–8840–2421–0 SRS driver / passenger load tool and appropriate adapters to SRS coil and passenger air bag assembly harness connectors. 4. Ignition switch “ON.” Is DTC 15 Current?	Go to Step 6	Ignition switch “Off” Replace the passenger air bag assembly Go to Step 7
6	1. Ignition switch “Off.” 2. There has been an increase in the total circuit resistance of the passenger inflator deployment loop. 3. Use the high resolution ohmmeter mode of the DVM while checking IB07–YEL/GRN and IB08–YEL/RED, and SDM connector terminal “15” and “16” to locate the root cause. Was a fault found?	Replace SRS harness Go to Step 7	Go to Chart A
7	1. Reconnect all components ensure all component are properly mounted. 2. Clear diagnostic trouble codes. Was This step finished?	Repeat the “SRS Diagnostic System Check”	Go to Step 7

DTC 16 Passenger Deployment loop Resistance Low

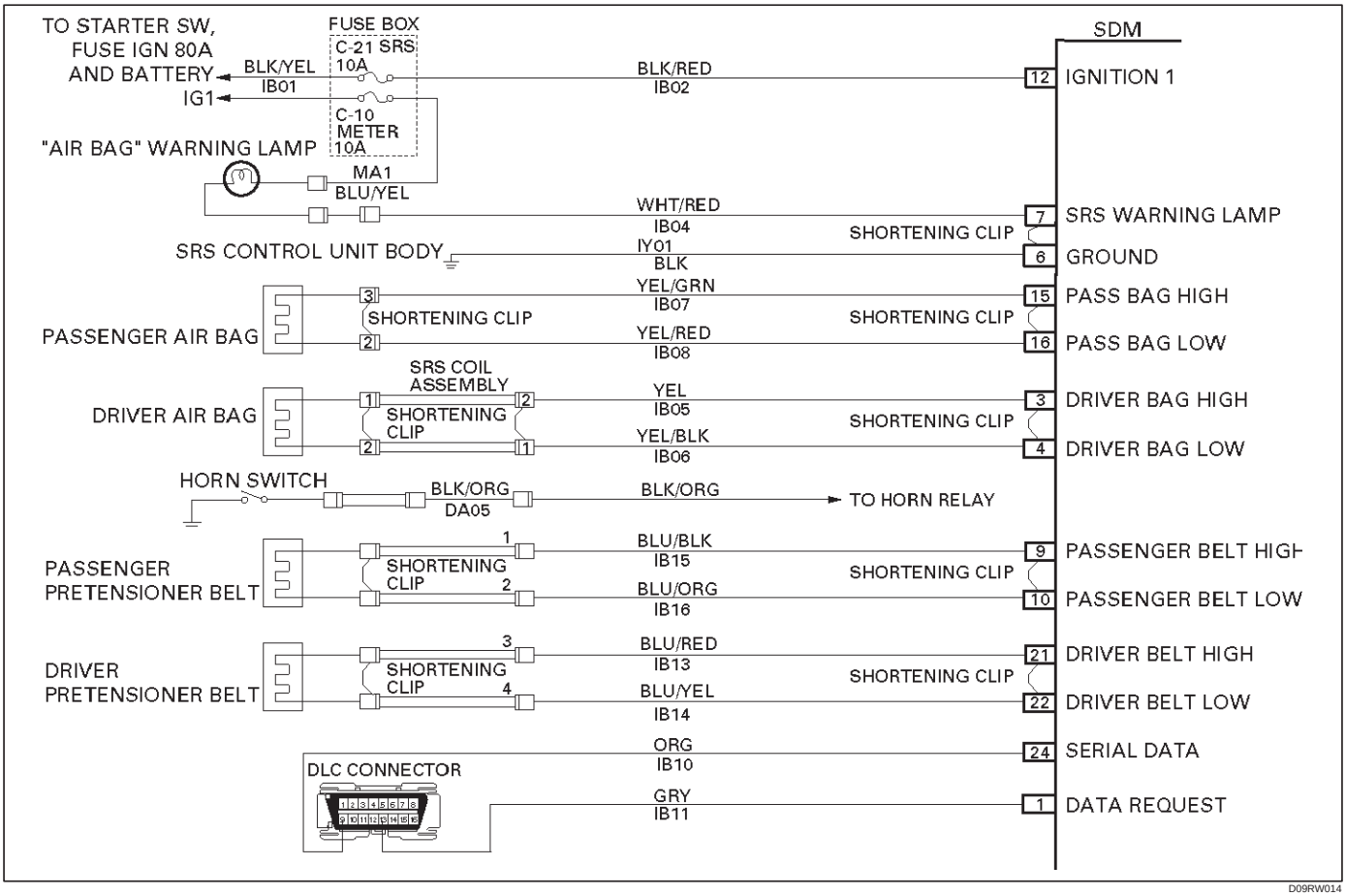

Circuit Description:

When the ignition switch is turned “ON”, the SDM will perform tests to diagnose critical malfunctions within itself. Upon passing these tests “Ignition 1”, and deployment loop voltages are measured to ensure they are within their respective normal voltage ranges. The SDM then proceeds with the “Resistance Measurement Test”. “Passenger Bag Low” terminal “16” is grounded through a resistor and the passenger current source connected to “Passenger Bag High” terminal “15” allows a known amount of current to flow. By monitoring the voltage difference between “Passenger Bag High” and “Passenger Bag Low”, the SDM calculates the combined resistance of the passenger air bag assembly, harness wiring IB07–YEL/GRN and IB08–YEL/RED connector terminal contact.

DTC Will Set When:

The combined resistance of the passenger air bag assembly, harness wiring IB07–YEL/GRN and IB08–YEL/RED, and connector terminal contact is above a specified value. This test is run once each ignition cycle during the “Resistance Measurement Test” when:

1. No “higher priority faults” are detected during “Turn–ON”,
2. “Ignition 1” voltage is in the specified value.

Action Taken:

SDM turns “ON” the “AIR BAG” warning lamp and sets a diagnostic trouble code.

DTC Will Clear When:

The ignition switch is turned “OFF.”

DTC Chart Test Description:

Number(s) below refer to step number(s) on the diagnostic chart:

2. This test determines whether the malfunction is in the SDM.
3. This test verifies connection of the yellow 2–pin connector.
4. This test cheeks for proper operation of the shorting clip in the yellow 2–pin connector.
5. The test checks for a malfunction passenger air bag assembly.
6. This test determines whether the malfunctioning is due to shortening in the wiring.

Diagnostic Aids:

An intermittent condition is likely to be caused by a short between IB07–YEL/GRN and IB08–YEL/RED, or a malfunctioning shorting clip on the passenger air bag assembly which would require replacement of the air bag assembly. The test for this diagnostic trouble code is only run while “AIR BAG” warning lamp is performing the bulb

check, unless DTC 17 or DTC 26 is detected. When a scan tool “Clear Codes” command is issued and the malfunction is still present, the DTC will not reappear until the next ignition cycle.

DTC 16 Passenger Deployment loop Resistance Low

Step	Action	Yes	No
1	Was the “SRS Diagnostic System Check” performed?	Go to Step 2	Repeat the “SRS Diagnostic System Check”
2	1. When measurements are requested in this chart use 5–8840–0285–0 DVM with correct terminal adapter from 5–8840–0385–0. 2. Using scan tool data list function, read and record the passenger deployment loop resistance. Is passenger resist. less than 1.4 ohms?	Go to Step 3	Go to Chart A
3	1. Ignition switch “Off.” 2. Make sure the passenger air bag assembly yellow 2–pin connector located behind the glove box assembly is seated properly. Is the yellow 2–pin connector connected properly?	Go to Step 4	Seat passenger air bag assembly yellow 2–pin connector properly Go to Step 7
4	1. Disconnect and inspect the passenger air bag assembly yellow 2–pin connector located behind the glove box assembly. 2. If ok, reconnect the passenger air bag assembly 2–pin connector. 3. Ignition switch “ON.” Is DTC 16 Current?	Go to Step 5	Go to Step 7
5	1. Ignition switch “Off.” 2. Disconnect SRS coil and passenger air bag assembly, yellow 2–pin connector located at the base of the steering column and behind the glove box assembly. 3. Connect 5–8840–2421–0 SRS driver/passenger load tool and appropriate adapters to SRS coil and passenger air bag assembly harness connectors. 4. Ignition switch “ON.” Is DTC 16 current?	Go to Step 6	Ignition switch “Off” Replace the passenger air bag assembly Go to Step 7
6	1. Ignition switch “Off.” 2. There has been a decrease in the total circuit resistance of the passenger inflator deployment loop. 3. Use the high resolution ohmmeter mode of the DVM while checking IB07–YEL/GRN and IB08–YEL/RED, and SDM connector terminal “15” and “16” to locate the root cause. Was a fault found?	Replace SRS harness Go to Step 7	Go to Chart A
7	1. Reconnect all components, ensure all component are properly mounted. 2. Clear diagnostic trouble codes. Was this step finished?	Repeat the “SRS Diagnostic System Check”	Go to Step 7

DTC 17 Passenger Deployment Loop Open

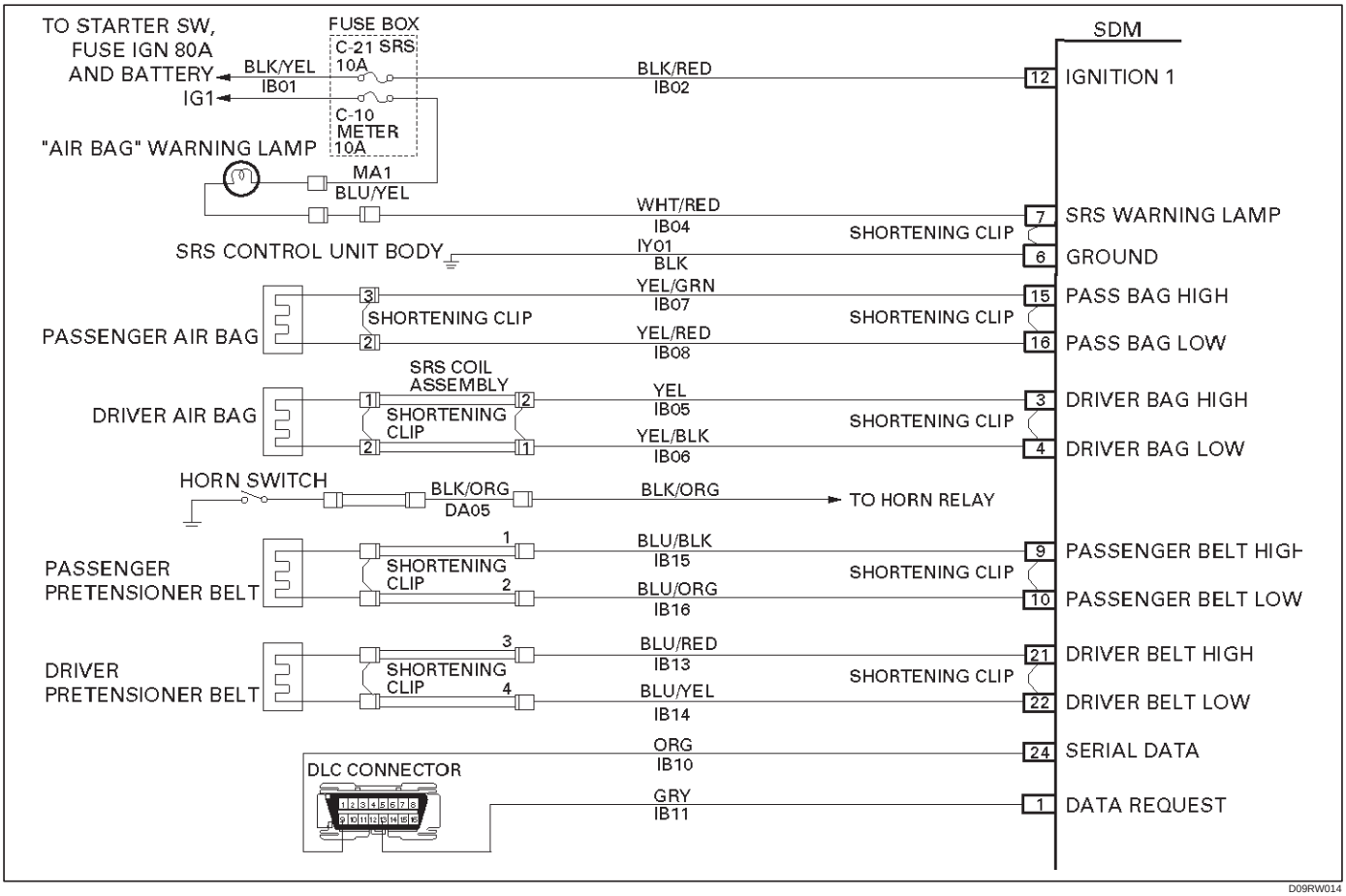

Circuit Description:

When the ignition switch is turned “ON”, the SDM will perform tests to diagnose critical malfunctions within itself. Upon passing these tests, “Ignition 1”, and deployment loop voltages are measured to ensure they are within their respective normal voltage ranges. During “Continuous Monitoring” diagnostics, a fixed amount of current is flowing in the deployment loop. This produces proportional voltage drops in the loop. By monitoring the voltage difference between “Passenger Bag High” and “Passenger Bag Low”, the SDM calculates the combined resistance of the passenger air bag assembly, harness wiring IB07–YEL/GRN AND IB08–YEL/RED, and connector terminal contact.

DTC Will Set When:

The voltage difference between “Passenger Bag High” terminal “15” and “Passenger Bag Low” terminal “16” is above or equal to a specified value for 500 milliseconds during “Continuous Monitoring”.

Action Taken:

SDM turns “ON” the “AIR BAG” warning lamp and sets a diagnostic trouble code.

DTC Will Clear When:

The voltage difference between “Passenger Bag High” terminal “15” and “Passenger Bag Low” terminal “16” is below a specified value for 500 milliseconds during “Continuous Monitoring”.

DTC Chart Test Description:

Number(s) below refer to step number(s) on the diagnostic chart:

2. This test determines whether the malfunction is in the SDM.
3. This test verifies proper connection of the yellow 2–pin connector.
4. This test cheeks for proper contact and/or corrosion of the shorting clip in the yellow 2–pin connector terminals.
5. The test checks for a malfunctioning passenger air bag assembly.
6. This test determines whether the open in the wiring.

Diagnostic Aids:

An intermittent condition is likely to be caused by a poor connection at the passenger air bag assembly harness connector terminals“2” and “3”, SDM terminals “15” and “16”, or an open in IB07–YEL/GRN and IB08–YEL/RED.

DTC 17 Passenger Deployment Loop Open

Step	Action	Yes	No
1	Was the “SRS Diagnostic System Check” performed?	Go to Step 2	Go to the “SRS Diagnostic System Check”
2	1. When measurements are requested in this chart use 5–8840–0285–0 DVM with correct terminal adapter from 5–8840–0385–0. 2. Using scan tool data list function, read and record the passenger differential voltage. Is passenger VDIF 0.425 volts or more?	Go to Step 3	Go to Chart A
3	1. Ignition switch “OFF”. 2. Make sure the passenger air bag assembly yellow 2–pin connector located behind the glove box assembly is seated properly. Is the yellow 2–pin connector connected properly?	Go to Step 4	Seat passenger air bag assembly yellow 2–pin connector properly Go to Step 7
4	1. Disconnect and inspect the passenger air bag assembly yellow 2–pin connector located behind the glove box assembly. 2. If ok, reconnect the passenger air bag assembly 2–pin connector. 3. Ignition switch “ON”. Is DTC 17 current?	Go to Step 5	Go to Step 7
5	1. Ignition switch “Off.” 2. Disconnect SRS coil and passenger air bag assembly, yellow 2–pin connector located at the base of the steering column and behind the glove box assembly. 3. Connect 5–8840–2421–0 SRS driver / passenger load tool and appropriate adapters to SRS coil and passenger air bag assembly harness connectors. 4. Ignition switch “ON.” Is DTC 17 current?	Go to Step 6	Ignition switch “Off” Replace the passenger air bag assembly Go to Step 7
6	1. Ignition switch “Off.” 2. There has been an open circuit resistance in the passenger deployment loop. 3. Use the high resolution ohmmeter mode of the DVM while checking IB07–YEL/GRN and IB08–YEL/RED, and SDM connector terminal “15” and “16” to locate the root cause. Was a fault found?	Replace SRS harness Go to Step 7	Go to Chart A
7	1. Reconnect all components ensure all component are properly mounted. 2. Clear diagnostic trouble codes. Was this step finished?	Go to the “SRS Diagnostic System Check”	Go to Step 7

DTC 18 Passenger Deployment Loop Short To Ground

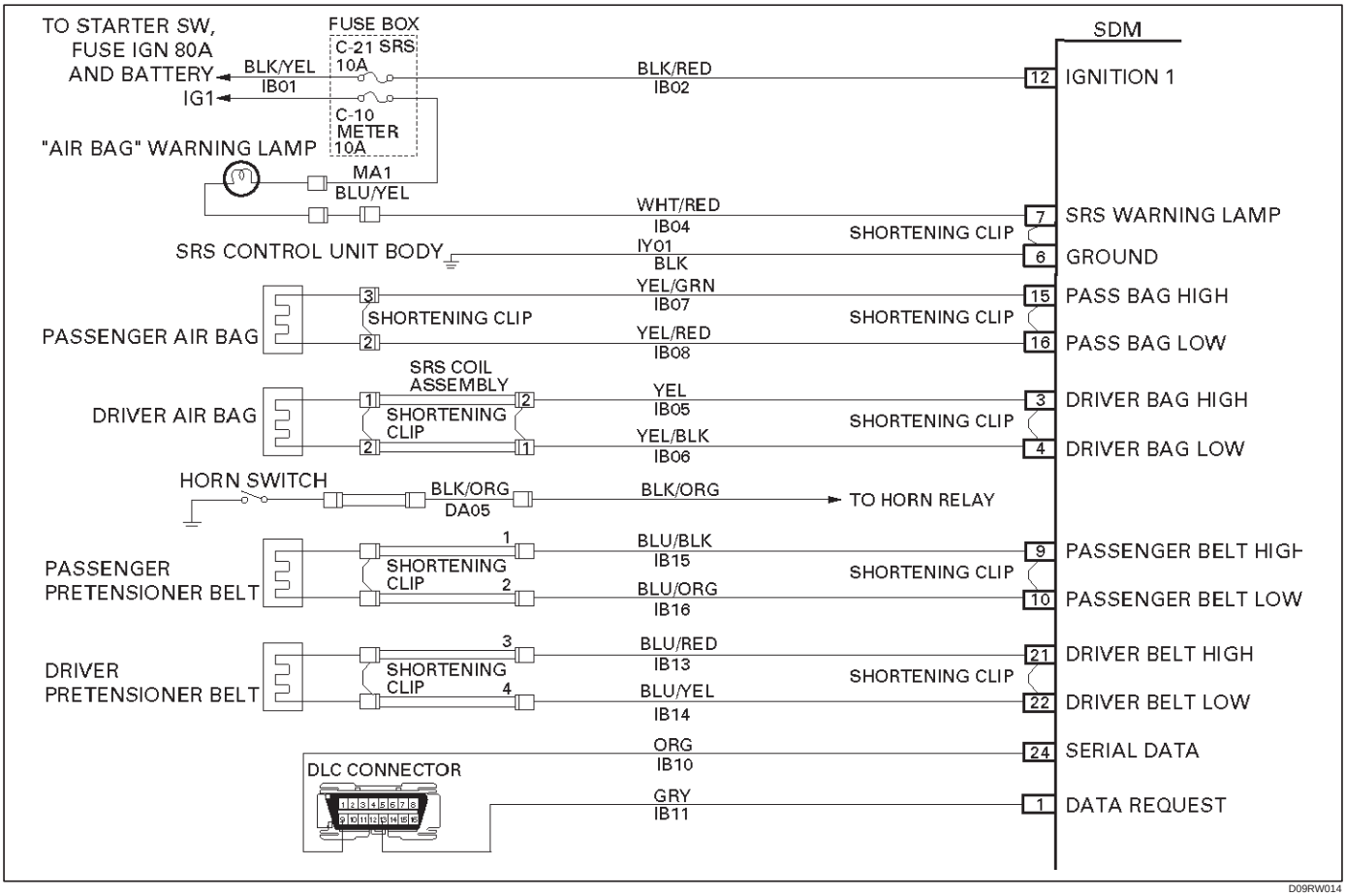

Circuit Description:

When the ignition switch is turned “ON”, the SDM will perform tests to diagnose critical malfunctions within itself. Upon passing these tests, “Ignition 1”, and deployment loop voltages are measured to ensure they are within their respective normal voltage ranges.
The SDM monitors the voltages at “Driver Bag Low” terminal “4” and “Passenger Bag Low” terminal “16” to detect short to ground in the air bag assembly circuits.

DTC Will Set When:

Neither of the two air bag assemblies is open.
“Ignition 1” is within the normal operating voltage range.
Once these conditions are met and the voltage at “Passenger Bag Low” is below a specified value, DTC 18 will set. This test is run once each ignition cycle and “Continuous Monitoring”.

Action Taken:

SDM turns “ON” the “AIR BAG” warning lamp and sets a diagnostic trouble code.

DTC Will Clear When:

This malfunction is no longer occurring and the ignition switch is turned “OFF”.

DTC Chart Test Description:

Number(s) below refer to circled number(s) on the diagnostic chart.

2. This test determines whether the SDM is malfunctioning.
3. This test isolates the malfunction to one side of the passenger air bag assembly yellow 2–pin connector behind glove box assembly.
4. This test determines whether the malfunction is in IB07–YEL/GRN.
5. This test determines whether the malfunction is in IB08–YEL/RED.

Diagnostic Aids:

An intermittent condition is likely to be caused by a short to ground in the passenger air bag assembly circuit. Inspect IB07–YEL/GRN and IB08–YEL/RED carefully for cutting or chafing. If the wiring pigtail of the passenger air bag assembly is damaged, the component must be replaced.

DTC 18 Passenger Deployment Loop Short To Ground

Step	Action	Yes	No
1	Was the “SRS Diagnostic System Check” performed?	Go to Step 2	Go to the “SRS Diagnostic System Check”
2	1. When measurements are requested in this chart use 5–8840–0285–0 DVM with correct terminal adapter from 5–8840–0385–0. 2. Ignition switch “OFF.” 3. Connect scan tool data link connector. follow directions as given in the scan tool operator’s MANUAL. 4. Ignition switch “ON.” 5. Read passenger bag sense LO. Is passenger bag sense LO less than 1.5 volts?	Go to Step 3	Go to Chart A
3	1. Ignition switch “OFF.” 2. Disconnect passenger air bag assembly yellow 2–pin connector behind the glove box assembly. 3. Leave driver air bag assembly connected. 4. Connect SRS driver / passenger load tool 5–8840–2421–0 and appropriate adapter to passenger air bag assembly harness connector. 5. Ignition switch “ON.” Is DTC 18 current?	Go to Step 4	Ignition switch “OFF” Replace passenger air bag assembly Go to Step 6
4	1. Ignition switch “OFF”. 2. Disconnect SRS driver / passenger load tool 3. Measure resistance on SDM harness connector from terminal “15” to terminal “16” (ground). Does 5–8840–0285–0 display “OL” (Infinite)?	Go to Step 5	Replace SRS Harness Go to Step 6
5	Measure resistance on SDM harness connector from terminal “16” to terminal “6” (ground). Does 5–8840–0285–0 display “OL” (Infinite)?	Go to Chart A	Replace SRS Harness. Go to Step 6
6	1. Reconnect all components and ensure all component are properly mounted. 2. Clear diagnostic trouble codes. Was this step finished?	Go to the “SRS Diagnostic system Check”	Go to Step 6

DTC 19 Passenger Deployment Loop Short To B+

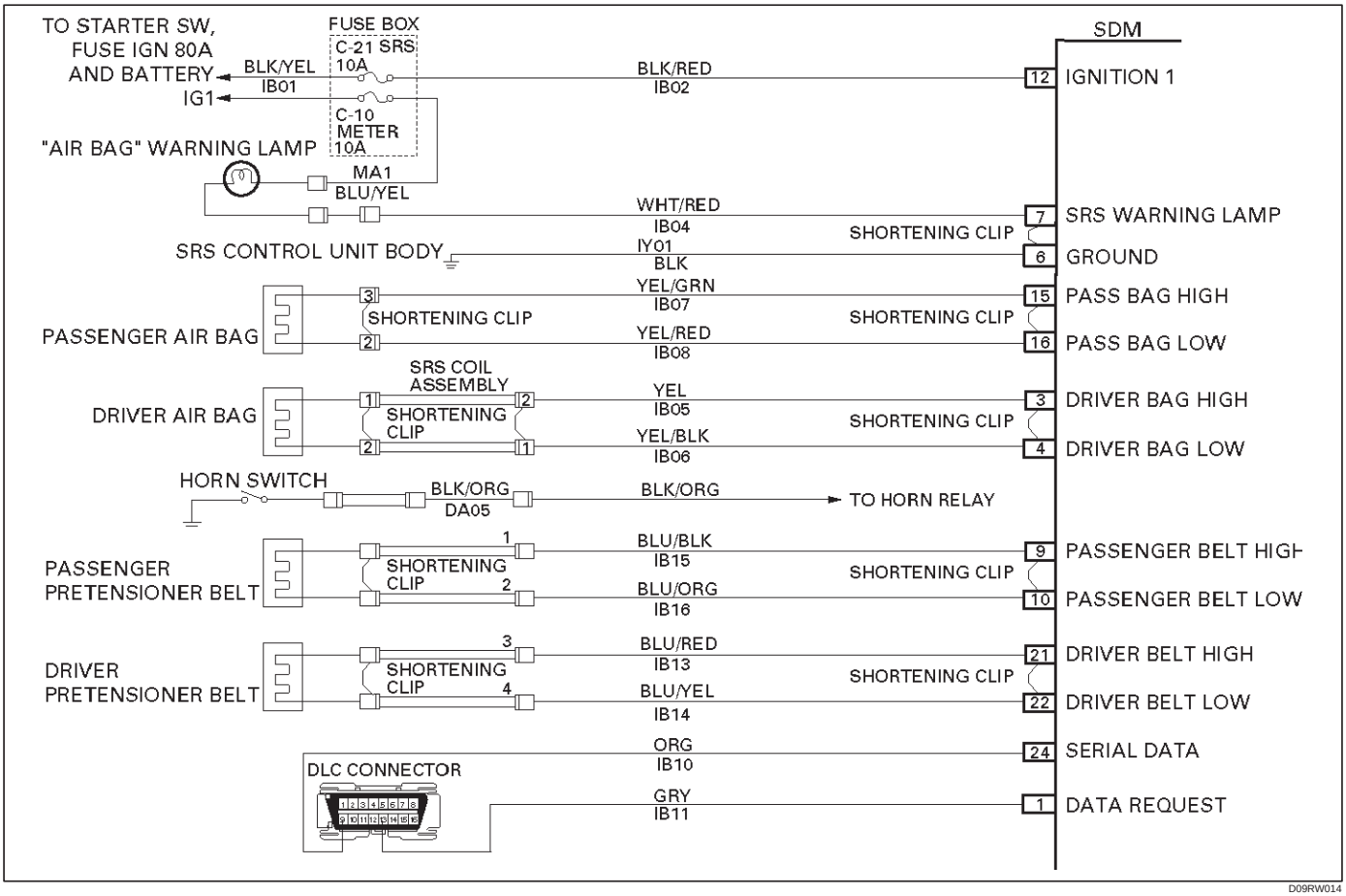

Circuit Description:

When the ignition switch is turned “ON”, the SDM will perform tests to diagnose critical malfunctions within itself. Upon passing these tests, “Ignition 1”, and deployment loop voltages are measured to ensure they are within their respective normal voltage ranges.
The SDM monitors the voltages at “Driver Bag Low” terminal “4” and “Passenger Bag Low” terminal “16” to detect short to B+ in the air bag assembly circuits.

DTC Will Set When:

“Ignition 1” is within the normal operating voltage range. Once these conditions are met and the voltage at “Passenger Bag Low” is above a specified value, DTC 19 will set. This test is run once each ignition cycle and “Continuous Monitoring”.

Action Taken:

SDM turns “ON” the “AIR BAG” warning lamp and sets DTC 19 and also DTC 71.

DTC Will Clear When:

The SDM is replaced.

DTC Chart Test Description:

Number(s) below refer to step number(s) on the diagnostic chart:

2. This test determines whether the malfunction is in the SDM.
3. This test isolates the malfunction to one side of the passenger air bag assembly yellow 2–pin connector behind glove box assembly.
4. This test determines whether the malfunction is in IB07–YEL/GRN.
5. This test determines whether the malfunction is in IB08–YEL/RED.

Diagnostic Aids:

An intermittent condition is likely to be caused by a short to B+ in the passenger air bag assembly circuit. Inspect IB07–YEL/GRN and IB08–YEL/RED carefully for cutting or chafing. If the wiring pigtail of the passenger air bag assembly is damaged, the component must be replaced. A careful inspection of IB07–YEL/GRN and IB08–YEL/RED, including the passenger air bag assembly pigtail is essential to ensure that the replacement SDM will not be damaged.

DTC 19 Passenger Deployment Loop Short To B+

CAUTION: When DTC 19 has been set, it is necessary to replace the SDM. Setting DTC 19 will also cause DTC 71 to set. When a scan tool "CLEAR CODES" command is issued and the malfunction is no longer present, DTC 71 will remain current. Ensure that the short to voltage condition is repaired prior to installing a replacement SDM to avoid damaging the SDM.

Step	Action	Yes	No
1	Perform the "SRS Diagnostic System Check" Was the "SRS Diagnostic System Check" performed?	Go to Step 2	Repeat the "SRS Diagnostic System Check"
2	1. When measurements are requested in this chart use 5–8840–0285–0 DVM With correct terminal adapter from 5–8840–0385–0. 2. Ignition switch "OFF." 3. Connect scan tool data link connector. follow directions as given in the scan tool operator's manual. 4. Ignition switch "ON." 5. Read passenger bag sense LO. Is passenger bag sense LO more than 3.5 volts?	Go to Step 3	Go to Chart A
3	1. Ignition switch "OFF". 2. Disconnect passenger air bag assembly yellow 2–pin connector behind the glove box assembly. 3. Leave driver air bag assembly connected. 4. Connect SRS driver / passenger load tool 5–8840–2421–0 and appropriate adapter to passenger air bag assembly harness connector. 5. Ignition switch "ON." Is passenger bag sense LO more than 3.5 volts?	Go to Step 4	Ignition switch "OFF" Replace passenger air bag assembly Go to Step 6
4	1. Ignition switch "OFF." 2. Disconnect SDM. 3. Disconnect SRS driver / passenger load tool. 4. Measure resistance on SDM harness connector from terminal "15" to terminal "12" (ignition). Does 5–8840–0285–0 display "OL" (infinite)?	Go to Step 5	Replace SRS harness Go to Step 6.
5	Measure resistance on SDM harness connector from terminal "16" and terminal "12" (ignition). Does 5–8840–0285–0 display "OL" (infinite)?	Go to Chart A	replace SRS harness Go to Step 6
6	1. Reconnect all components ensure all component are properly mounted. 2. Ignition switch "ON". Is passenger bag senslo less than 3.5 volts?	Ignition switch "OFF" Replace SDM Go to Step 7	Go to Chart A
7	1. Reconnect all components ensure all component are properly mounted. 2. Clear diagnostic trouble codes. Was this step finished?	Repeat the "SRS Diagnostic System Check"	Go to Step 7

DTC 21 Driver Deployment Loop Resistance High

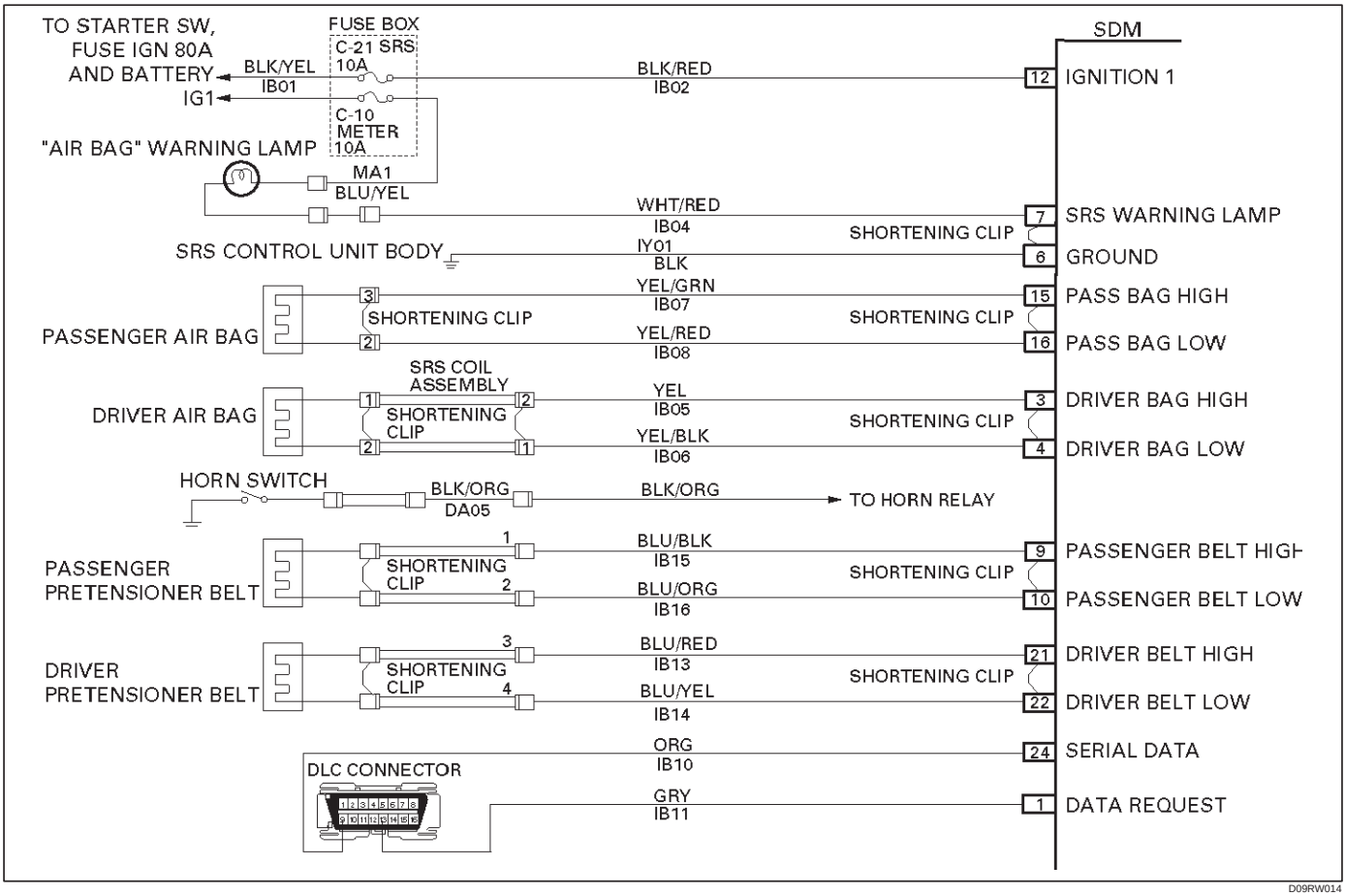

Circuit Description:

When the ignition switch is turned “ON”, the SDM will perform tests to diagnose critical malfunctions within itself. Upon passing these tests, “Ignition 1”, and deployment loop voltages are measured to ensure they are within their respective normal voltage ranges.

The SDM then proceeds with the “Resistance Measurement Test” “Driver Bag Low” terminal “4” is grounded through a current sink and the driver current source connected to “Driver Bag High” terminal “3” allows a known amount of current to flow. By monitoring the voltage difference between “Driver Bag High” and “Driver Bag Low”, the SDM calculates the combined resistance of the driver air bag assembly, SRS coil assembly, harness wiring IB05–YEL and IB06–YEL/BLK, and connector terminal contact.

DTC Will Set When:

The combined resistance of the driver air bag assembly, SRS Coil assembly, harness wiring IB05–YEL and IB06–YEL/BLK, and connector terminal contact is above a specified value. This test run once each ignition cycle during the “Resistance Measurement Test” when:

1. No “higher priority faults” are detected during “Turn–ON”
2. “Ignition 1” voltage is in the specified value.

Action Taken:

SDM turns “ON” the “AIR BAG” warning lamp and sets DTC 21.

DTC Will Clear When:

The ignition switch is turned “OFF”.

DTC Chart Test Description:

Number(s) below refer to step number(s) on the diagnostic chart:

2. This test determines whether the malfunction is in the SDM.
3. This test verifies proper connection of the yellow 2–pin connector at the base of the steering column.
4. This test checks for proper contact and/or corrosion of the 2–pin connector terminals at the base of steering column.
5. This test isolate the malfunction to one side of the SRS coil assembly yellow 2–pin connector located at the base of the steering column.
6. This test determines whether the malfunction is due to high resistance in the wiring.
7. This test determines whether the malfunction is in the SRS coil assembly or the driver air bag assembly.

Diagnostic Aids:

An intermittent condition is likely to be caused by a poor connection at terminals “1” and “2” of the SRS coil 2–pin connector at the base of the steering column, terminal “1” and “2” of the driver air bag assembly 2–pin connector at the top of the steering column, SDM terminals “3” and “4” or a poor wire to terminal connection in IB05–YEL or IB06–YEL/BLK. The test for this diagnostic trouble code is only run while the “AIR BAG” warning lamp is performing the bulb check, unless DTC 17 or DTC 26 is detected. When a scan tool “Clear Codes” command is issued and the malfunction is still present, the DTC will not reappear until the next ignition cycle.

DTC 21 Driver Deployment Loop Resistance High

Step	Action	Yes	No
1	Perform the “SRS Diagnostic System Check”. Was the “SRS Diagnostic System Check” performed?	Go to Step 2	Repeat the “SRS Diagnostic System Check”
2	1. When measurements are requested in this chart use 5–8840–0285–0 DVM with correct terminal adapter from 5–8840–0385–0. 2. Use scan tool data list function, read and record the driver deployment loop resistance. Is driver resistance more than 3.7 ohms?	Go to Step 3	Go to Chart A
3	1. Ignition switch “OFF.” 2. Disconnect SRS coil assembly yellow 2–pin connector located at base of steering column is seated properly. Is the 2–pin connector connected properly?	Go to Step 4	Seat SRS coil assembly 2–pin connector properly Go to Step 8
4	1. Disconnect and inspect the SRS coil assembly yellow 2–Pin connector located base of steering column. 2. If ok, reconnect the SRS coil assembly yellow 2–pin connector. 3. Ignition switch “ON.” Is DTC 21 current?	Go to Step 5	Go to Step 8
5	1. Ignition switch “OFF.” 2. Disconnect SRS coil and passenger air bag assembly, yellow 2–pin connector located at the base of steering column and behind the glove box assembly. 3. Connect SRS driver / passenger load tool 5–8840–2421–0 and appropriate adapter to SRS coil and passenger air bag assembly harness connectors. 4. Ignition switch “ON.” Is DTC 21 current?	Go to Step 6	Go to Step 7
6	1. Ignition switch “Off.” 2. There has been a increase in the total circuit resistance of the driver deployment loop. 3. Use the high resolution ohmmeter mode of the DVM while checking IB05–YEL and IB06–YEL/BLK, and SDM connector terminal “3” and “4” to locate the root cause. Was a fault found?	Replace SRS harness Go to Step 8	Go to Chart A

DTC 21 Driver Deployment Loop Resistance High (Cont'd)

Step	Action	Yes	No
7	1. Ignition switch "OFF." 2. Disconnect SRS driver / passenger load tool from SRS coil assembly harness connector. 3. Connect SRS driver / passenger load tool 5–8840–2421–0 on the top of steering column. 4. Reconnect SRS coil assembly harness connector as the base of steering column. 5. Ignition switch "ON." Is DTC 21 current?	Ignition switch "OFF" Replace SRS coil assembly Go to Step 8	Ignition switch "OFF" Replace driver air bag assembly Go to Step 8
8	1. Reconnect all components ensure all component are properly mounted. 2. Clear diagnostic trouble codes. Was this step finished?	Repeat the "SRS Diagnostic System Check"	Go to Step 8

DTC 22 Driver Deployment Loop Resistance Low

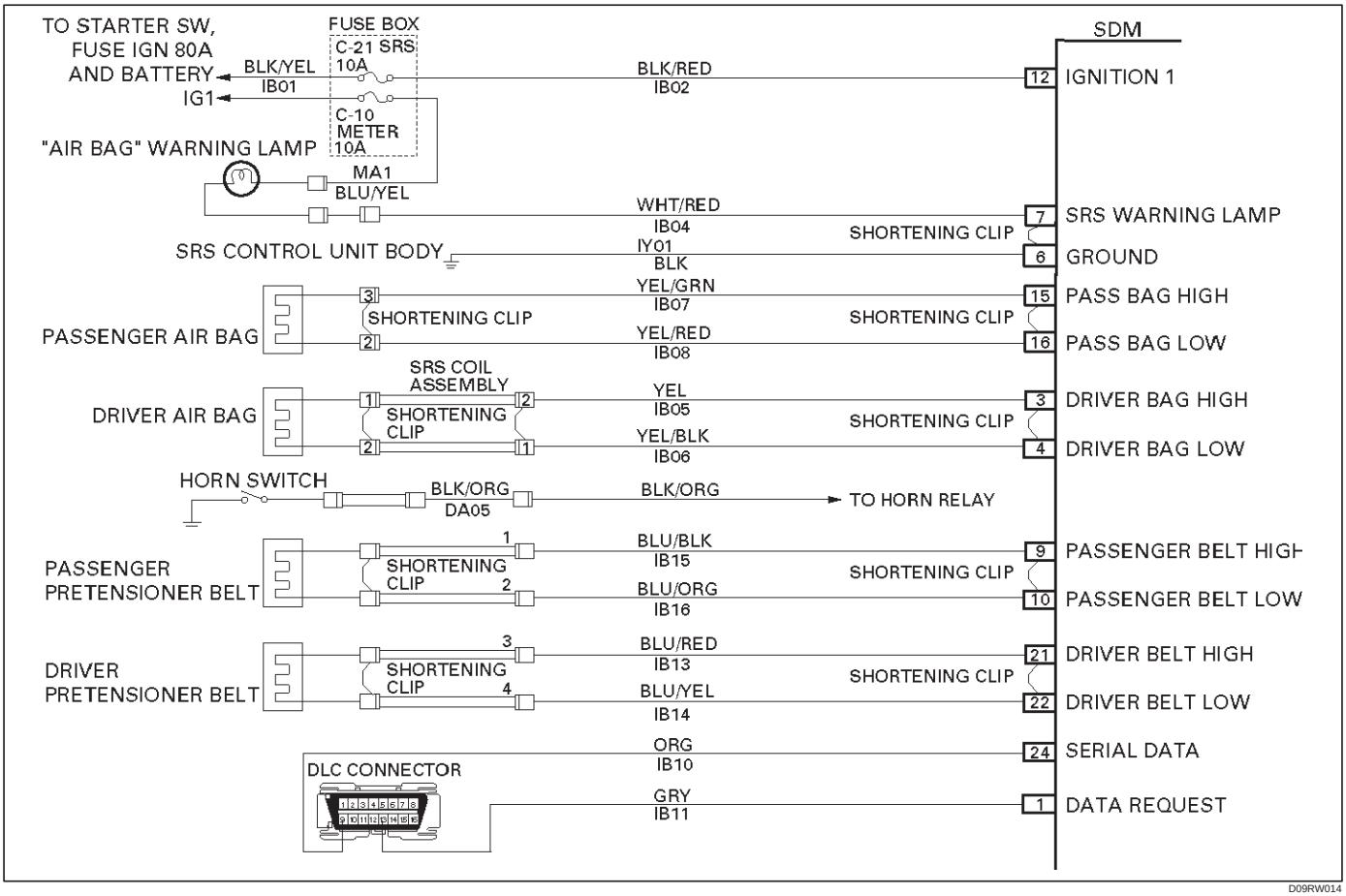

Circuit Description:

When the ignition switch is turned “ON”, the SDM will perform tests to diagnose critical malfunctions within itself. Upon passing these tests “Ignition 1”, and deployment loop voltages are measured to ensure they are within their respective normal voltage ranges.

The SDM then proceeds with the “Resistance Measurement Test” “Driver Bag Low” terminal “4” is grounded through a current sink and the driver current source connected to “Driver Bag High” terminal “3” allows a known amount of current to flow. By monitoring the voltage difference between “Driver Bag High” and “Driver Bag Low” the SDM calculates the combined resistance of the driver air bag assembly, SRS coil assembly, harness wiring IB05–YEL and IB06–YEL/BLK and connector terminal contact.

DTC Will Set When:

The combined resistance of the driver air bag assembly, SRS Coil assembly, harness wiring IB05–YEL and IB06–YEL/BLK and connector terminal contact is above a specified value. This test is run once each ignition cycle during the “Resistance Measurement Test” when:

1. No “higher priority faults” are detected during “Turn–ON”
2. “Ignition 1” voltage is in the specified value.

Action Taken:

SDM turns “ON” the “AIR BAG” warning lamp and sets DTC 22.

DTC Will Clear When:

The ignition switch is turned “OFF.”

DTC Chart Test Description:

Number(s) below refer to circled number(s) on the diagnostic chart:

2. This test determines whether the malfunction is in the SDM.
3. This test verifies proper connection of the yellow 2–pin connector at the base of the steering column.
4. This test checks for proper operation of the shorting clip in the yellow 2–pin connector.
5. This test isolate the malfunction to one side of the SRS coil assembly yellow 2–pin connector located at the base of steering column.
6. This test determines whether the malfunction is due to shortening in the wiring.
7. This test determines whether the malfunction is in the SRS coil assembly or the driver air bag assembly.

Diagnostic Aids:

An intermittent condition is likely to be caused by a short between IB05–YEL or IB06–YEL/BLK or a

malfunctioning shorting clip on the driver air bag assembly or SRS coil assembly which would require replacement of the component. The test for this diagnostic trouble code is only run while the “AIR BAG” warning lamp is performing the bulb check, unless DTC 17 or DTC 26 is detected. When a scan tool “Clear Codes” command is issued and the malfunction is still present, the DTC will not reappear until the next ignition cycle.

DTC 22 Driver Deployment Loop Resistance Low

Step	Action	Yes	No
1	Perform the “SRS Diagnostic System Check.” Was the “SRS Diagnostic System Check” performed?	Go to Step 2	Go to the “SRS Diagnostic System Check”
2	1. When measurements are requested in this chart use 5–8840–0285–0 DVM with correct terminal adapter from 5–8840–0385–0. 2. Use scan tool data list function, read and record the driver deployment loop resistance. Is driver deployment loop resistance less than 1.7 OHMS?	Go to Step 3	Go to Chart A
3	1. Ignition switch “OFF.” 2. Make sure the SRS coil assembly yellow 2–pin connector located at the base of steering column is seated properly. Is the 2–pin connector connected properly?	Go to Step 4	Seat driver air bag assembly 2–pin connector properly Go to Step 8
4	1. Disconnect and inspect the SRS coil assembly yellow 2–pin connector located base of steering column. 2. If ok, reconnect the SRS coil assembly yellow 2–pin connector. 3. Ignition switch “ON.” Is DTC 22 current?	Go to Step 5	Go to Step 8
5	1. Ignition switch “OFF.” 2. Disconnect SRS coil and passenger air bag assembly, yellow 2–pin connector located at the base of steering column and behind the glove box assembly. 3. Connect SRS driver / passenger load tool 5–8840–2421–0 and appropriate adapter to SRS coil and passenger air bag assembly harness connectors. 4. Ignition switch “ON.” Is DTC 22 current?	Go to Step 6	Go to Step 7
6	1. Ignition switch “OFF.” 2. There has been a decrease in the total circuit resistance of the driver deployment loop. 3. Use the high resolution ohmmeter mode of the DVM while checking IB05–YEL and IB06–YEL/BLK, and SDM connector terminal “3” and “4” to locate the root cause. Was a fault found?	Replace SRS harness Go to Step 8	Go to Chart A

DTC 22 Driver Deployment Loop Resistance Low (Cont'd)

Step	Action	Yes	No
7	1. Ignition switch "OFF." 2. Disconnect SRS driver / passenger load tool from driver air bag assembly harness connector. 3. Connect SRS driver / passenger load tool 5–8840–2421–0 to the top of steering column 2–pin connector. 4. Reconnect SRS coil assembly harness connector as the base of steering column. 5. Ignition switch "ON." Is DTC 22 current?	Ignition switch "off" Replace SRS coil assembly Go to Step 8	Ignition switch "OFF" Replace driver air bag assembly Go to Step 8
8	1. Reconnect all components, ensure all component are properly mounted. 2. Clear diagnostic trouble codes. Was this step finished?	Go to the "SRS Diagnostic System Check"	Go to Step 8

DTC 24 Driver Deployment Loop Short To Ground

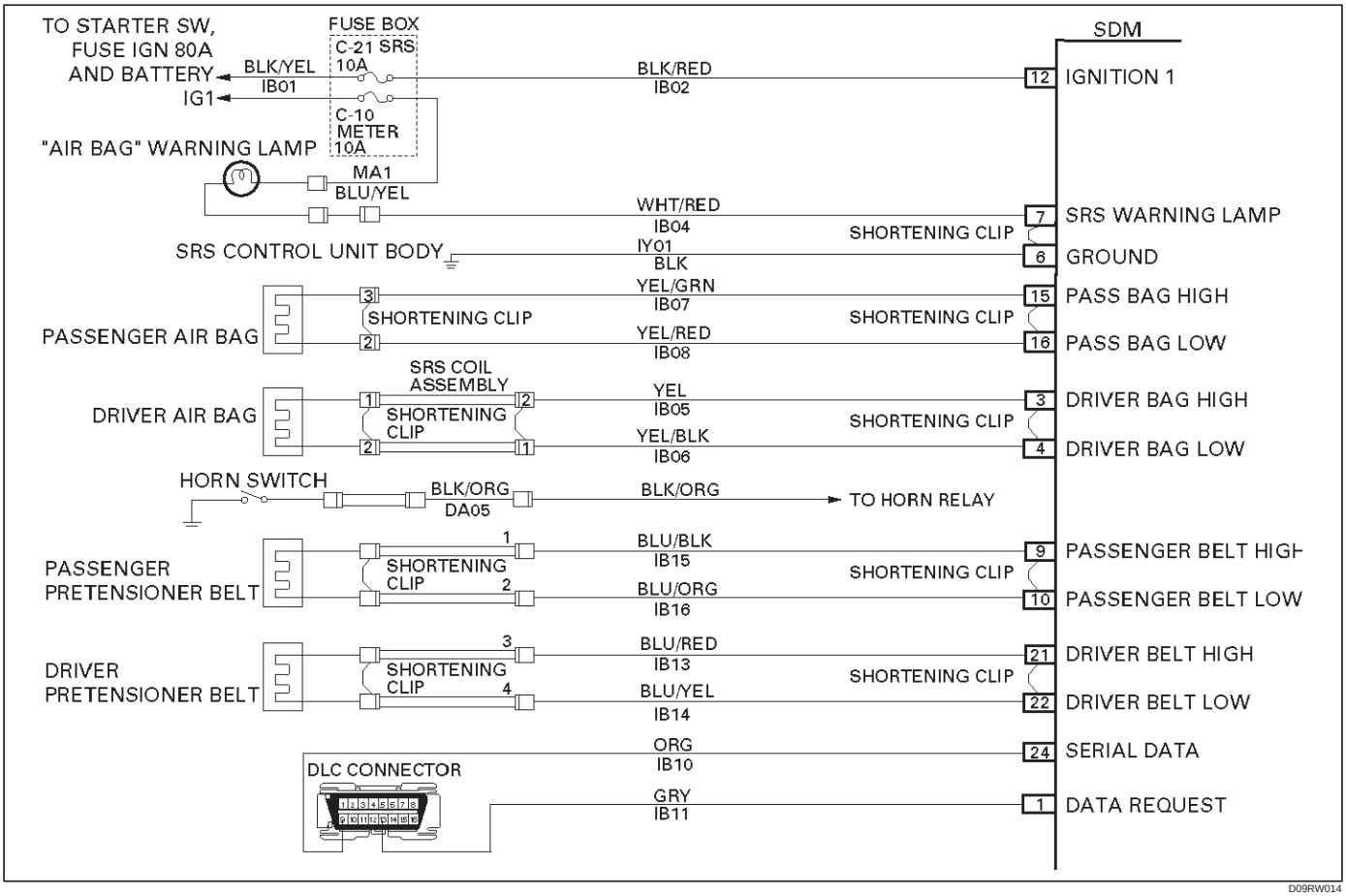

Circuit Description:

When the ignition switch is turned “ON”, the SDM will perform tests to diagnose critical malfunctions within itself. Upon passing these tests, “Ignition 1”, and deployment loop voltages are measured to ensure they are within their respective normal voltage ranges.
The SDM monitors the voltage at “Driver Bag Low” terminal “4” and “passenger Bag Low” terminal “16” to detect shorts to ground in the air bag assembly circuits.

DTC Will Set When:

Neither of the two air bag assemblies is open.
“Ignition 1” is within the normal operating voltage range.
This test is run once each ignition cycle and “Continuous Monitoring”. Once these conditions are met and the voltage at “Driver Bag Low” is below a specified value, DTC 24 will set.

Action Taken:

SDM turns “ON” the “AIR BAG” warning lamp and sets a diagnostic trouble code.

DTC Will Clear When:

The malfunction is no longer occurring and the ignition is turned “OFF”.

DTC Chart Test Description:

Number(s) below refer to step number(s) on the diagnostic chart:

2. This test determines whether the SDM is malfunctioning
3. This test isolates the malfunction to one side of the SRS coil assembly yellow 2–pin connector at the base of the steering column.
4. This test determines whether the malfunction is in IB05–YEL.
5. This test determines whether the malfunction is in IB06–YEL/BLK.
6. This test determines whether the malfunction is in the SRS coil assembly or the driver air bag assembly.

Diagnostic Aids:

An intermittent condition is likely to be caused by a short to ground in the driver air bag assembly circuit. Inspect IB05–YEL and IB06–YEL/BLK carefully for cutting or chafing.

DTC 24 Driver Deployment Loop Short To Ground

Step	Action	Yes	No
1	Was the “SRS Diagnostic System Check” performed?	Go to Step 2	Go to the “SRS Diagnostic System Check”
2	1. When measurements are requested in this chart use 5–8840–0285–0 DVM with correct terminal adapter from 5–8840–0385–0. 2. Ignition switch “OFF.” 3. Connect scan tool data link connector. follow directions as given in the scan tool operator’s manual. 4. Ignition switch “ON.” 5. Read driver bag sense LO. Is driver bag sense LO less than 1.5 volts?	Go to Step 3	Go to Chart A
3	1. Ignition switch “OFF.” 2. Disconnect SRS coil assembly yellow 2–pin connector located at base of the steering column. leave passenger air bag assembly connected. 3. Connect SRS driver / passenger load tool 5–8840–2421–0 and appropriate adapter to SRS coil assembly harness connector. 4. ignition switch “ON.” Is DTC 24 current?	Go to Step 4	Go to Step 6
4	1. Ignition switch “OFF.” 2. Disconnect SDM. 3. Disconnect SRS driver / passenger load tool. 4. Measure resistance on SDM harness connector “3” to terminal “6” (ground). Does 5–8840–0285–0 display “OL” (infinite)?	Go to Step 5	Replace SRS harness Go to Step 7
5	Measure resistance on SDM harness connector from terminal “4” to terminal “6” (ground). Does 5–8840–0285–0 display “OL” (infinite)?	Go to Chart A	Replace SRS harness Go to Step 7
6	1. Ignition switch “OFF.” 2. Disconnect SRS driver / passenger load tool 5–8840–2421–0 from SRS coil assembly harness connector. 3. Connect SRS driver / passenger load tool 5–8840–2421–0 and appropriate adapter 5–8840–0385–0 to driver air bag assembly harness connector. located top of the steering column 2–pin connector. 4. Reconnect SRS coil assembly harness connector as the base of steering column. 5. Ignition switch “ON.” Is DTC 24 current?	Ignition switch “OFF” Replace SRS coil assembly Go to Step 7	Ignition switch “OFF” Replace driver air bag assembly Go to Step 7
7	1. Reconnect all components ensure all component are properly mounted. 2. Clear diagnostic trouble codes. Was this step finished?	Go to the “SRS Diagnostic System Check”	Go to Step 7

DTC 25 Driver Deployment Loop Short To B+

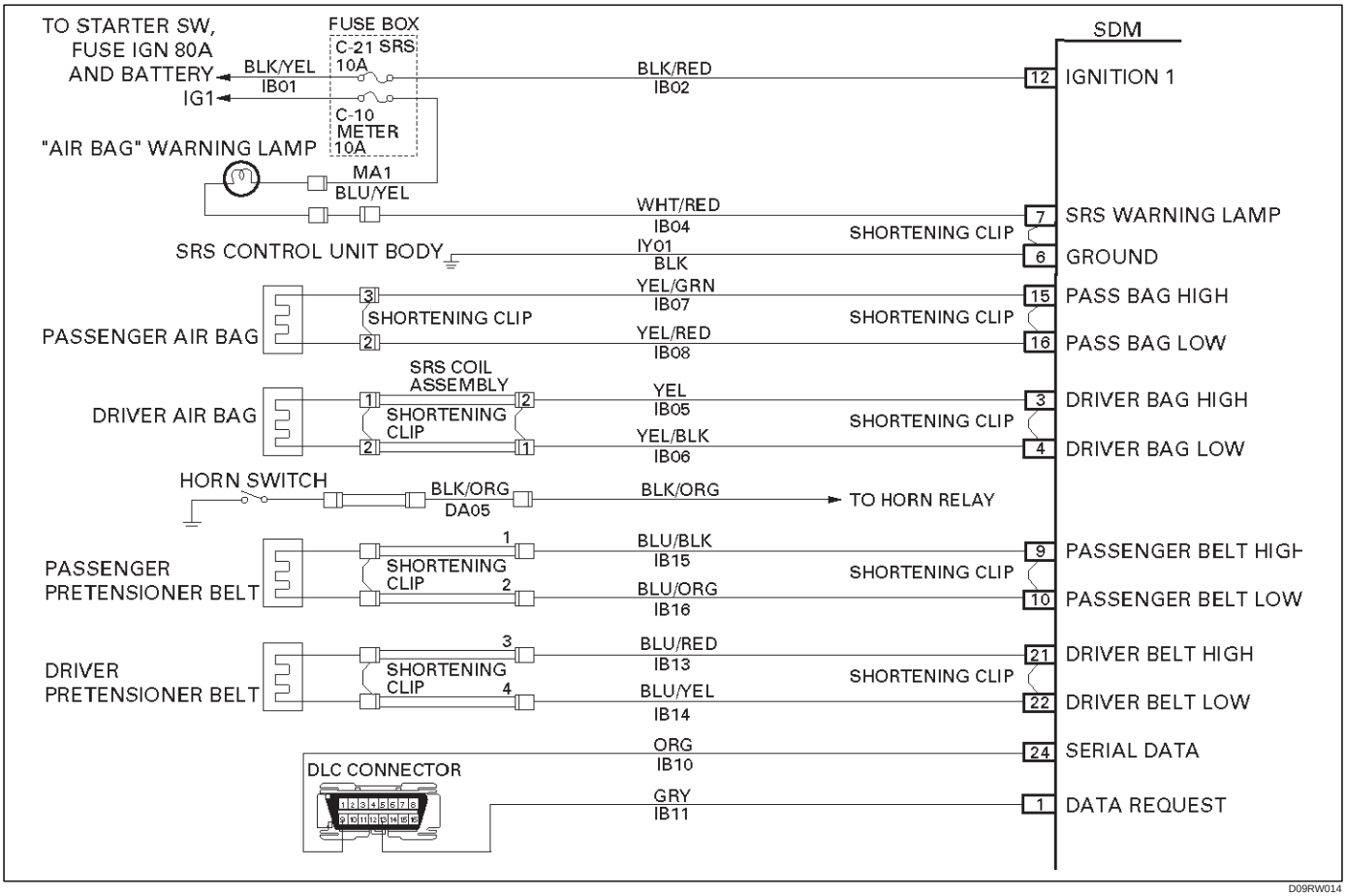

Circuit Description:

When the ignition switch is turned “ON”, the SDM will perform tests to diagnose critical malfunctions within itself. Upon passing these tests, “Ignition 1”, and deployment loop voltages are measured to ensure they are within their respective normal voltage ranges.
The SDM monitors the voltage at “Driver Bag Low” terminal “4” and “Passenger Bag Low” terminal “16” to detect shorts to B+ in the air bag assembly circuits.

DTC Will Set When:

“Ignition 1” is in the normal operating voltage range. This test is run once each ignition cycle and “Continuous monitoring”. Once these conditions are met and the voltage at “Driver Bag Low” is above a specified value, DTC 25 will set.

Action Taken:

SDM turns “ON” the “AIR BAG” warning lamp and sets DTC 25 and also DTC 71

DTC Will Clear When:

The SDM is replaced.

DTC Chart Test Description:

Number(s) below refer to step number(s) on the diagnostic chart:

2. This test determines whether the SDM is malfunctioning.
3. This test isolates the malfunction to one side of the driver air bag assembly yellow 2–pin connector at the base of steering column.
4. This test determines whether the malfunction is in IB05–YEL.
5. This test determines whether the malfunction is in IB06–YEL/BLK.
6. This test determines whether the malfunction is in the SRS coil assembly or the driver air bag assembly.

Diagnostic Aids:

An intermittent condition is likely to be caused by a short to B+ in the driver air bag assembly circuit. Inspect IB05–YEL and IB06–YEL/BLK carefully for cutting or chafing. If the wiring pigtail of the driver air bag assembly and SRS coil assembly is damaged, the components must be replaced. A careful inspection of IB05–YEL and IB06–YEL/BLK, including the SRS coil assembly and driver air bag assembly is essential to ensure that the replacement SDM will not be damaged.

DTC 25 Driver Deployment Loop Short To B+

CAUTION: When DTC 25 has been set, it is necessary to replace the SDM. Setting DTC 25 will also cause DTC 71 to set. When a scan tool "CLEAR CODES" command is issued and the malfunction is no longer present, DTC 71 will remain current. Ensure that the short to B+ condition is repaired prior to installing a replacement SDM to avoid damaging the SDM.

Step	Action	Yes	No
1	Was the "SRS Diagnostic System Check" performed?	Go to Step 2	Go to the "SRS Diagnostic System Check"
2	1. When measurements are requested in this chart use 5–8840–0285–0 DVM with correct terminal adapter from 5–8840–0385–0. 2. Ignition switch "OFF." 3. Connect scan tool data link connector. follow directions as given in the scan tool operator's manual. 4. Ignition switch "ON." 5. Read driver bag sense LO . Is driver bag sense LO more than 3.5 volts?	Go to Step 3	Go to Chart A
3	1. Ignition switch "OFF." 2. Disconnect SRS coil assembly yellow 2–pin connector at the base of the steering column. Leave passenger air bag assembly connected. 3. Connect SRS driver /passenger load tool 5–8840–2421–0 and appropriate adapter to SRS coil assembly harness connector. 4. Ignition switch "ON." Is driver bag sense LO more than 3.5 volts?	Go to Step 4	Go to Step 6
4	1. Ignition switch "OFF." 2. Disconnect SDM. 3. Disconnect SRS driver /passenger load tool. 4. Measure resistance on SDM harness connector "3" to terminal "12" (ignition). Does 5–8840–0285–0 display "OL" (infinite)?	Go to Step 5	Replace SRS harness Go to Step 7
5	Measure resistance on SDM harness connector from terminal "4" to terminal "12" (ignition). Does 5–8840–0285–0 display "OL" (infinite)?	Go to Chart A	Replace SRS harness Go to Step 7
6	1. Ignition switch "OFF" 2. Connect SRS driver / passenger load tool 5–8840–2421–0 and appropriate adapter 5–8840–0385–0 to driver air bag assembly harness 2-pin connector located at top of the steering column. 3. Reconnect SRS coil assembly harness connector as the base of steering column. 4. Ignition switch "ON." Is driver bag sense LO more than 3.5 volts?	Ignition switch "OFF" Replace SRS coil assembly Go to Step 7	Ignition switch "OFF" Replace driver air bag assembly Go to Step 7
7	1. Reconnect all components, ensure all component are properly mounted. 2. Ignition switch "ON." Is driver bag senslo less than 3.5 volts?	Ignition switch "OFF" Replace SDM Go to Step 8	Go to Chart A
8	1. Reconnect all components ensure all component are properly mounted. 2. Clear diagnostic trouble codes. Was this step finished?	Go to the "SRS Diagnostic System Check"	Go to Step 8

DTC 26 Driver Deployment Loop Open

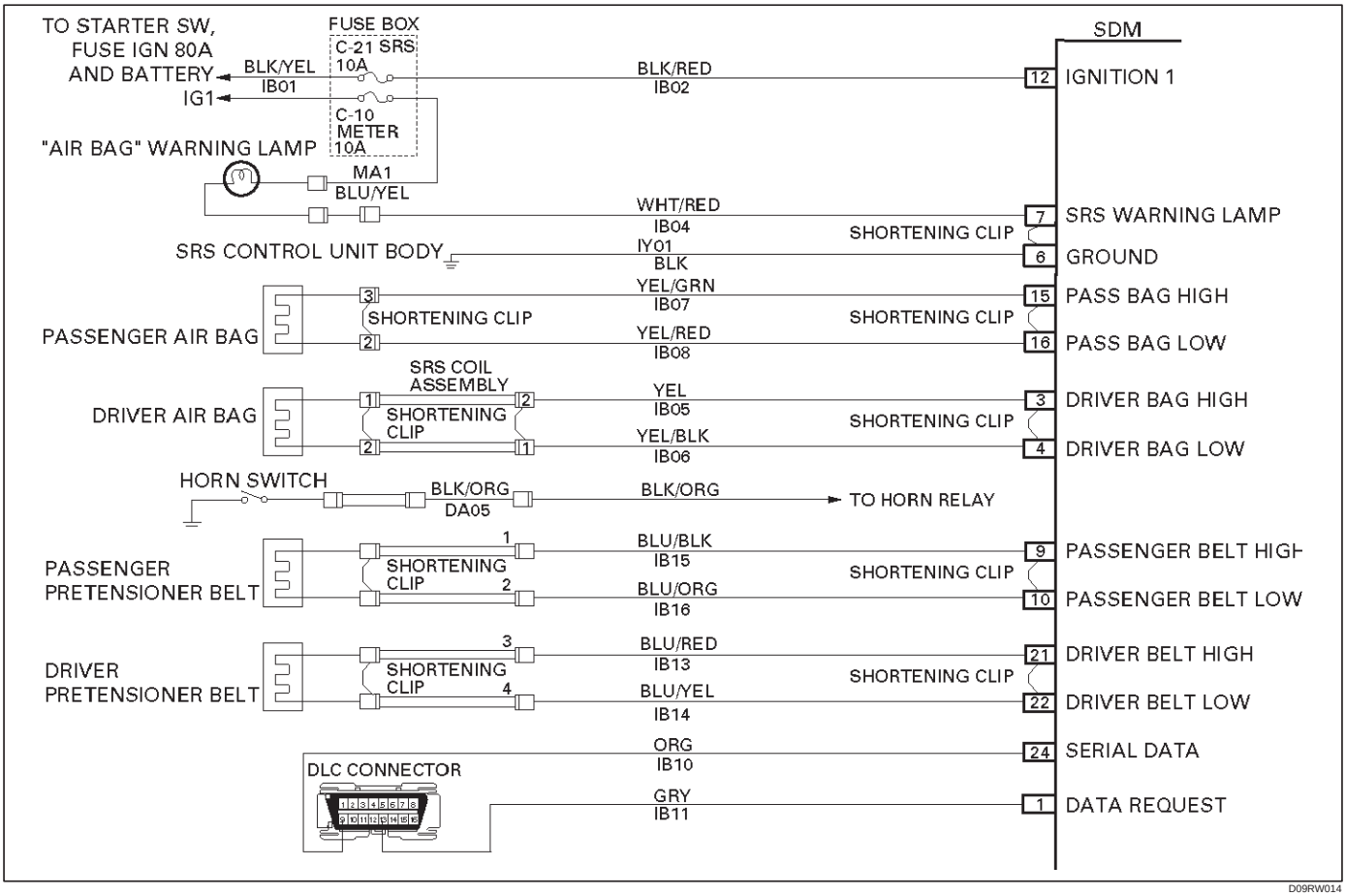

Circuit Description:

When the ignition switch is turned “ON”, the SDM will perform tests to diagnose critical malfunctions within itself. Upon passing these tests, “Ignition 1”, and deployment loop voltages are measured to ensure they are within their respective normal voltage ranges.

During “Continuous Monitoring” diagnostics, a fixed amount of current is following in the deployment loop. This produces proportional voltage drops in the loop. By monitoring the voltage difference between “Driver Bag High” and “Driver Bag Low”, the SDM calculates the combined resistance of the driver air bag assembly, SRS coil assembly, harness wiring IB05–YEL and IB06–YEL/BLK, and connector terminal contact.

DTC Will Set When:

The voltage difference between “Driver Bag High” terminal “3” and “Driver Bag Low” terminal “4” is above or equal to a specified value for 500 milliseconds during “Continuous Monitoring”.

Action Taken:

SDM turns “ON” the “AIR BAG” warning lamp and sets a diagnostic trouble code.

DTC Will Clear When:

The voltage difference between “Driver Bag High” terminal “3” and “Driver Bag Low” terminal “4” is below a specified value for 500 milliseconds during “Continuous Monitoring”.

DTC Chart Test Description:

Number(s) below refer to step number(s) on the diagnostic chart:

2. This test determines whether the malfunction is in the SDM.
3. This test verifies proper connection of the yellow 2–pin connector at the base of the steering column.
4. This test checks for proper contact and/or corrosion of the yellow 2–pin connector at the base of the steering column.
5. This test isolates the malfunction to one side of the SRS coil assembly yellow 2–pin connector located at the base of steering column.
6. This test determines whether the open is in the wiring.
7. This test determines whether the malfunction is in the SRS coil assembly or the driver air bag assembly.

Diagnostic Aids:

An intermittent condition is likely to be caused by a poor connection at the driver air bag assembly harness 2–pin connector terminals “1” and “2” at the top of the steering column, SRS coil assembly harness 2–pin connection terminals “1” and “2”, SDM terminals “3” and “4”, or an open in IB05–YEL and IB06–YEL/BLK.

DTC 26 Driver Deployment Loop Open

Step	Action	Yes	No
1	Was the “SRS Diagnostic System Check” performed?	Go to Step 2	Go to the “SRS Diagnostic System Check”
2	1. When measurements are requested in this chart use 5–8840–0285–0 DVM with correct terminal adapter from 5–8840–0385–0. 2. Use scan tool data list function, read and record the driver differential voltage. Is driver VDIF more than 4.25 volts?	Go to Step 3	Go to Chart A
3	1. Ignition switch “OFF.” 2. Make sure the SRS coil assembly yellow 2–pin connector located at the base of steering column is seated properly. Is the yellow 2–pin connector connected properly?	Go to Step 4	Seat driver air bag assembly 2–pin connector Go to Step 8
4	1. Disconnect and inspect the SRS coil assembly yellow 2–pin connector located base of steering column. 2. If ok, reconnect the SRS coil assembly yellow 2–pin connector. 3. Ignition switch “ON.” Is DTC 26 current?	Go to Step 5	Go to Step 8
5	1. Ignition switch “OFF”. 2. Disconnect SRS coil and passenger air bag assembly, yellow 2–pin connectors located at the base of steering column and behind the glove box assembly. 3. Connect SRS driver/passenger load tool 5–8840–2421–0 and appropriate adapter to SRS coil and passenger air bag assembly harness connectors. 4. Ignition switch “ON.” Is DTC 26 current?	Go to Step 6	Go to Step 7
6	1. Ignition switch “OFF.” 2. There has been an open circuit in the driver inflator deployment loop. 3. Use the high resolution ohmmeter mode of the DVM while checking IB05–YEL and IB06–YEL/BLK, and SDM connector terminal “3” and “4” to locate the root cause. Was a fault found?	Replace SRS harness Go to Step 8	Go to Chart A
7	1. Ignition switch “OFF.” 2. Disconnect SRS driver / passenger load tool from SRS coil assembly harness connector. 3. Connect SRS driver / passenger load tool 5–8840–2421–0 on steering column 2–pin connector. 4. Reconnect SRS coil assembly harness connector at the base of steering column. 5. Ignition switch “ON.” Is DTC 26 current?	Ignition switch “OFF” Replace SRS coil assembly Go to Step 8	Ignition switch “OFF” Replace driver air bag assembly Go to Step 8
8	1. Reconnect all components ensure all component are properly mounted. 2. Clear diagnostic trouble codes. Was this step finished?	Repeat the “SRS Diagnostic System Check”	Go to Step 8

DTC 51 Air Bag Deployment Event Commanded

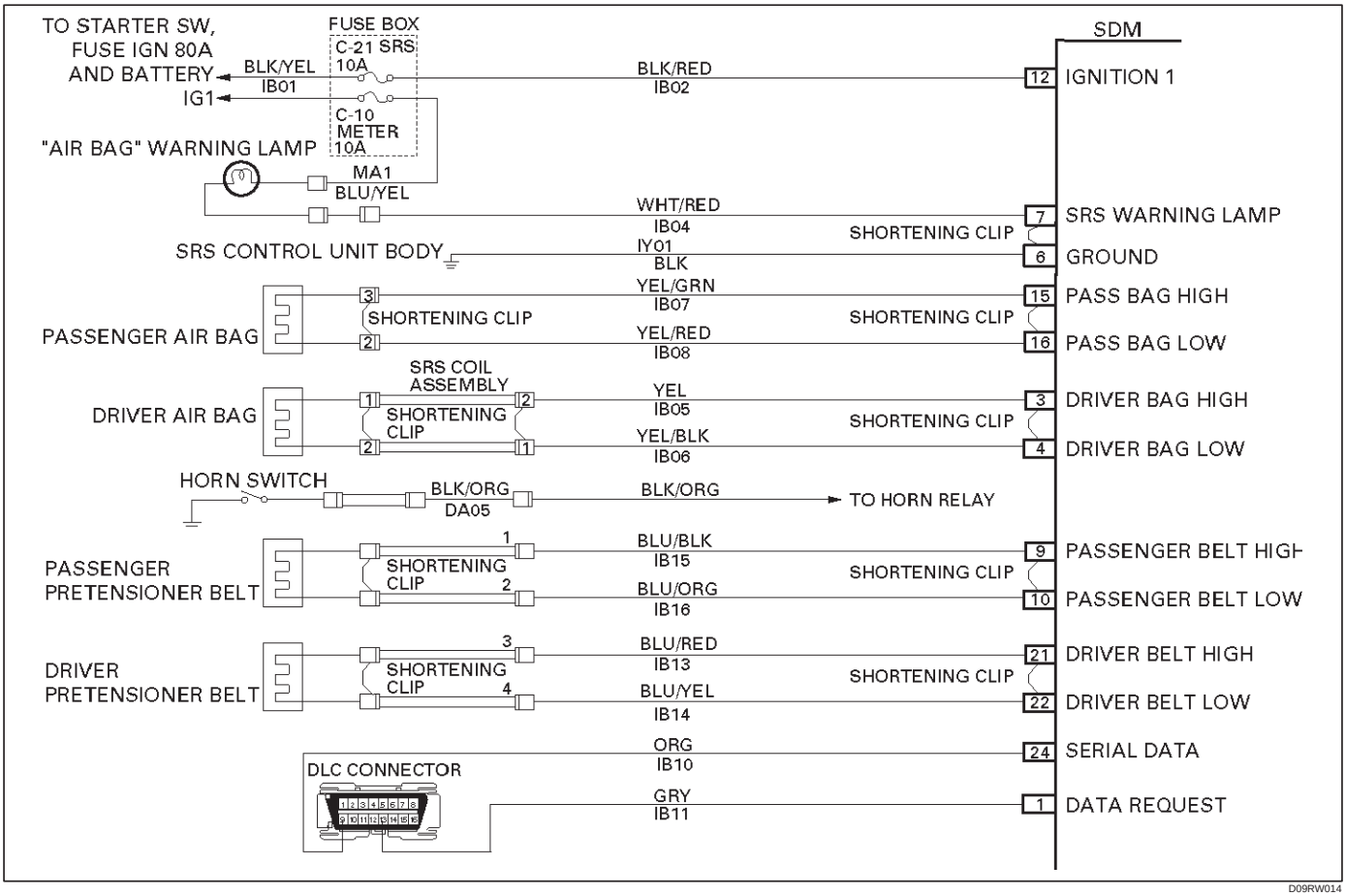

Circuit Description:

The SDM contains a sensing device which converts vehicle velocity changes to an electrical signal. The electrical signal generated is processed by the SDM and then compared to a value stored in memory. When the generated signal exceeds the stored value, the SDM will cause current to flow through the air bag assembly deploying the air bags and causing DTC 51 to set.

DTC Will Set When:

The SDM detects a frontal crash, up to 30 degrees off the centerline of the vehicle, of sufficient force to warrant deployment of the air bags.

Action Taken:

SDM turns “ON” the “AIR BAG” warning lamp records “Crash Data”, and sets a diagnostic trouble code.

DTC Will Clear When:

The SDM is replaced.

DTC Chart Test Description:

Number(s) below refer to step number(s) on the diagnostic chart:

2. If air bag assembly (s) has not deployed, DTC 51 may have falsely set.
3. If DTC 51 has set with no signs of frontal impact, the diagnostic trouble code has falsely set.

DTC 51 Air Bag Deployment Event Commanded

WARNING: DURING SERVICE PROCEDURES. BE VERY CAREFUL WHEN HANDLING A SENSING AND DIAGNOSTIC MODULE (SDM). NEVER STRIKE OR JAR THE SDM. NEVER POWER UP THE SRS WHEN THE SDM IS NOT RIGIDLY ATTACHED TO THE VEHICLE. ALL SDM AND MOUNTING BRACKET FASTENERS MUST BE CAREFULLY TORQUED AND THE ARROW MUST BE POINTING TOWARD THE FRONT OF THE VEHICLE TO ENSURE PROPER OPERATION OF THE SRS. THE SDM COULD BE ACTIVATED WHEN POWERED WHILE NOT RIGIDLY ATTACHED TO THE VEHICLE WHICH COULD CAUSE DEPLOYMENT AND RESULT IN PERSONAL INJURY.

Step	Action	Yes	No
1	Was the “SRS Diagnostic System Check” performed?	Go to Step 2	Go to the “SRS Diagnostic System Check”
2	Ignition switch “OFF.” Have air bag assemblies deployed?	Replace components and perform inspections as directed in “repairs and inspections required after an accident” in this section Clear diagnostic trouble codes Repeat “SRS Diagnostic System Check”	Go to Step 3
3	Inspect front of vehicle and undercarriage for sings of impact. Were signs of impact found?	Replace components and perform inspections as directed in “Repairs and Inspections Required After An Accident” in this section Clear diagnostic trouble codes Repeat “SRS Diagnostic System Check”	Ignition switch “OFF” Replace SDM Reconnect all SRS system components, ensure all components are properly mounted Repeat “SRS Diagnostic System Check”

DTC 53 Deployment Commanded With Deployment Loop Fault Or Energy Reserves Out Of Range

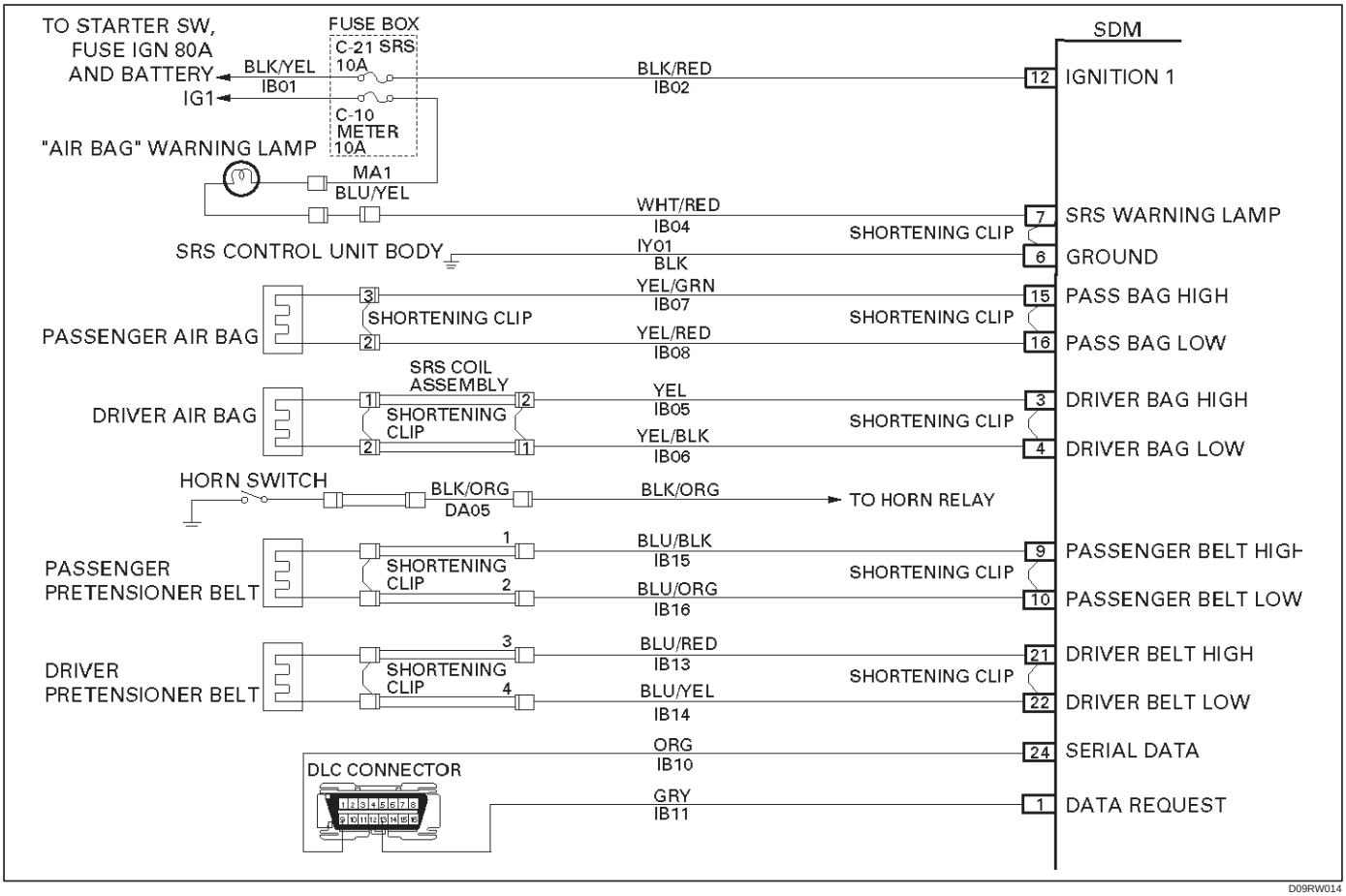

Circuit Description:

The SDM contains a sensing drive which converts vehicle velocity changes to an electrical signal. The electrical signal generated is processed by the SDM and then compared to a value stored in memory. When the generated signal exceeds the stored value, the SDM will cause current to flow through the air bag assembly deploying the air bags. DTC 53 is set accompanying with DTC 51 when a deployment occurs while an air bag assembly circuit fault is present that could possible result in a no deployment situation in one or both air bag assemblies.

DTC Will Set When:

The SDM detects a frontal crash, up to 30 degrees off the centerline of the vehicle, of sufficient force to warrant deployment of the air bags and an inflator circuit fault is present..

Action Taken:

SDM turns “ON” the “AIR BAG” warning lamp records “Crash Data”, and sets a diagnostic trouble code.

DTC Will Clear When:

The SDM is replaced. If DTC 53 is set, one or more DTCs will be set in addition to DTC 53. Malfunction(s) setting DTC(s) (other than DTC 71) must be repaired so that DTC(s) will not be set when a new SDM is installed.

DTC Chart Test Description:

Number(s) below refer to step number(s) on the diagnostic chart:

2. If air bag assembly have not deployed, DTC 53 may have falsely set.
3. If DTC 53 has set with no signs of frontal impact, the diagnostic trouble code has falsely set.

DTC 53 Deployment Commanded WITH Deployment Loop Fault Or Energy Reserves Out Of Range

WARNING: DURING SERVICE PROCEDURES. BE VERY CAREFUL WHEN HANDLING A SENSING AND DIAGNOSTIC MODULE (SDM). NEVER STRIKE OR JAR THE SDM. NEVER POWER UP THE SRS WHEN THE SDM IS NOT RIGIDLY ATTACHED TO THE VEHICLE. ALL SDM AND MOUNTING BRACKET FASTENERS MUST BE CAREFULLY TORQUED AND THE ARROW MUST BE POINTING TOWARD THE FRONT OF THE VEHICLE TO ENSURE PROPER OPERATION OF THE SRS. THE SDM COULD BE ACTIVATED WHEN POWERED WHILE NOT RIGIDLY ATTACHED TO THE VEHICLE WHICH COULD CAUSE DEPLOYMENT AND RESULT IN PERSONAL INJURY.

Step	Action	Yes	No
1	Was the “SRS Diagnostic System Check” performed?	Go to Step 2	Go to the “SRS Diagnostic System Check”
2	Ignition switch “OFF.” Have air bag assembles deployed?	Replace components and perform inspections as directed in “Repairs And Inspections Required After An Accident” in this section Clear diagnostic trouble codes Repeat the “SRS Diagnostic System Check”	Go to Step 3
3	Inspect front of vehicle and undercarriage for signs of impact. Were signs of impact found?	Replace components and perform inspections as directed in “Repairs And Inspections Required After An Accident” in this section Clear diagnostic trouble codes Repeat “SRS Diagnostic System Check”	Ignition switch “OFF” Replace SDM Reconnect all SRS system components, ensure all components are properly mounted Repeat the “SRS Diagnostic System Check”

DTC 61 Warning Lamp Circuit Failure

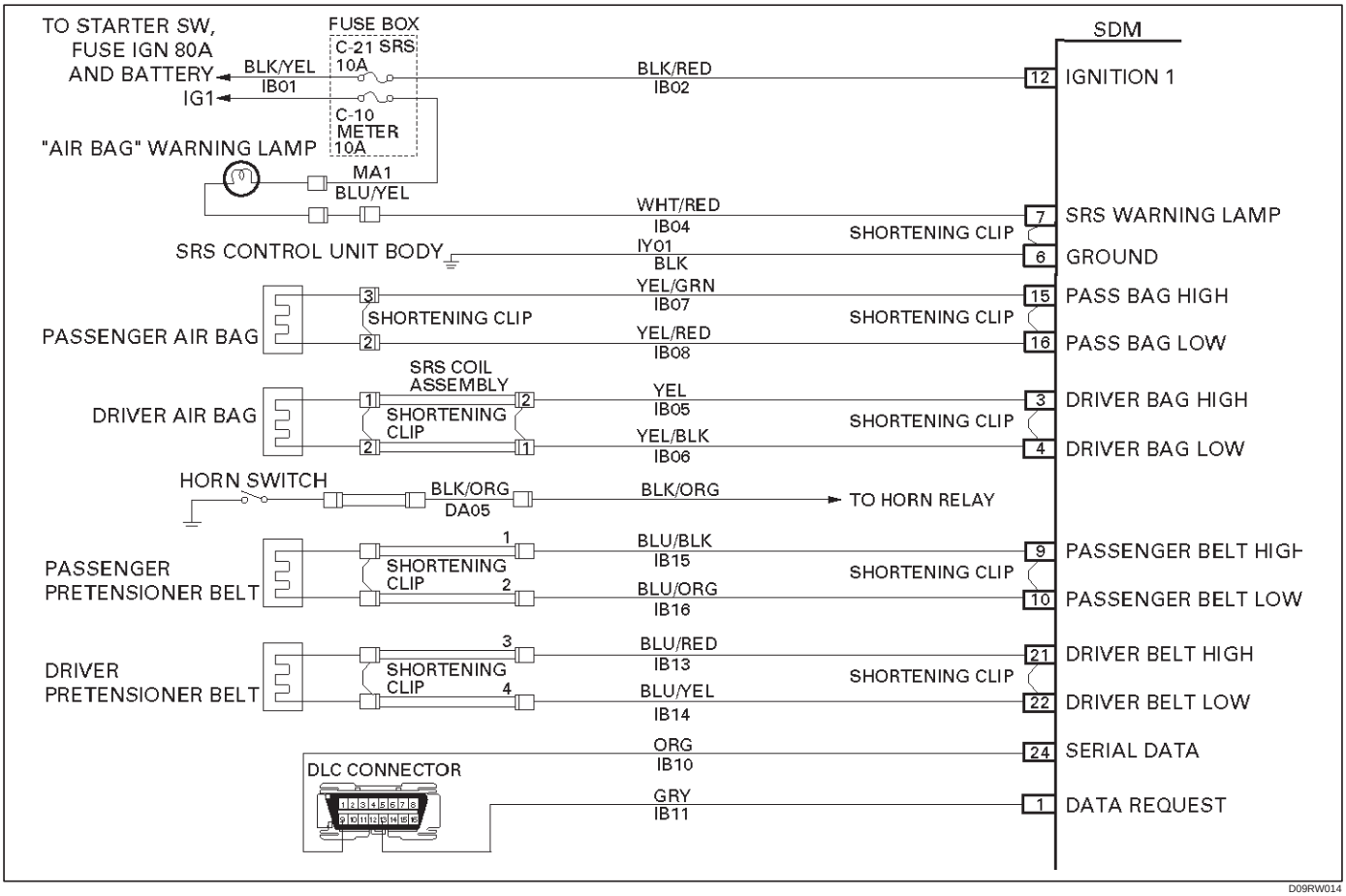

Circuit Description:

When the ignition switch is turned “ON”, battery voltage is applied to the “AIR BAG” warning lamp and to the “Ignition 1” input terminal “12”. The SDM responds by turning on the “AIR BAG” warning lamp 3.5 seconds. The SDM monitors the lamp driver output by comparing the output state at “SRS Warning Lamp” terminal “7” to the microprocessor commanded state. When “Ignition 1” is in the specified value, and the output state does not match the commanded state of the lamp driver for 500 milliseconds, DTC 61 is set.

DTC Will Set When:

“Ignition 1” voltage is in the specified value and the output state at the “SRS Warning Lamp” terminal does not match the commanded state of the lamp driver for 500 milliseconds. This test is run every 100 milliseconds during “Continuous Monitoring” tests and once per each ignition cycle at the beginning.

Action Taken:

SDM attempts to turn “ON” the “AIR BAG” warning lamp and sets a diagnostic trouble code.

DTC Will Clear When:

The ignition switch is turned “OFF.”

Diagnostic Aids:

Refer to Charts B and C to diagnose warning lamp circuit malfunctions.

DTC 61 Warning Lamp Circuit Failure

Step	Action	Yes	No
1	Was the “SRS Diagnostic System Check” performed?	Go to Step 2	Go to the “SRS Diagnostic System Check”
2	1. Malfunctions within the “AIR BAG” warning lamp circuitry will set this diagnostic trouble code. 2. These malfunctions are addressed in the “SRS Diagnostic System Check” via Chart B and Chart C. 3. Failure to properly perform the “SRS Diagnostic System Check” may result in misdiagnosis. 4. Ignition switch “ON.” 5. Clear SRS diagnostic trouble codes. IS DTC 61 set?	Ignition switch “OFF” Go to Chart A	Repeat the “SRS Diagnostic System Check”

DTC 71 Internal SDM Fault

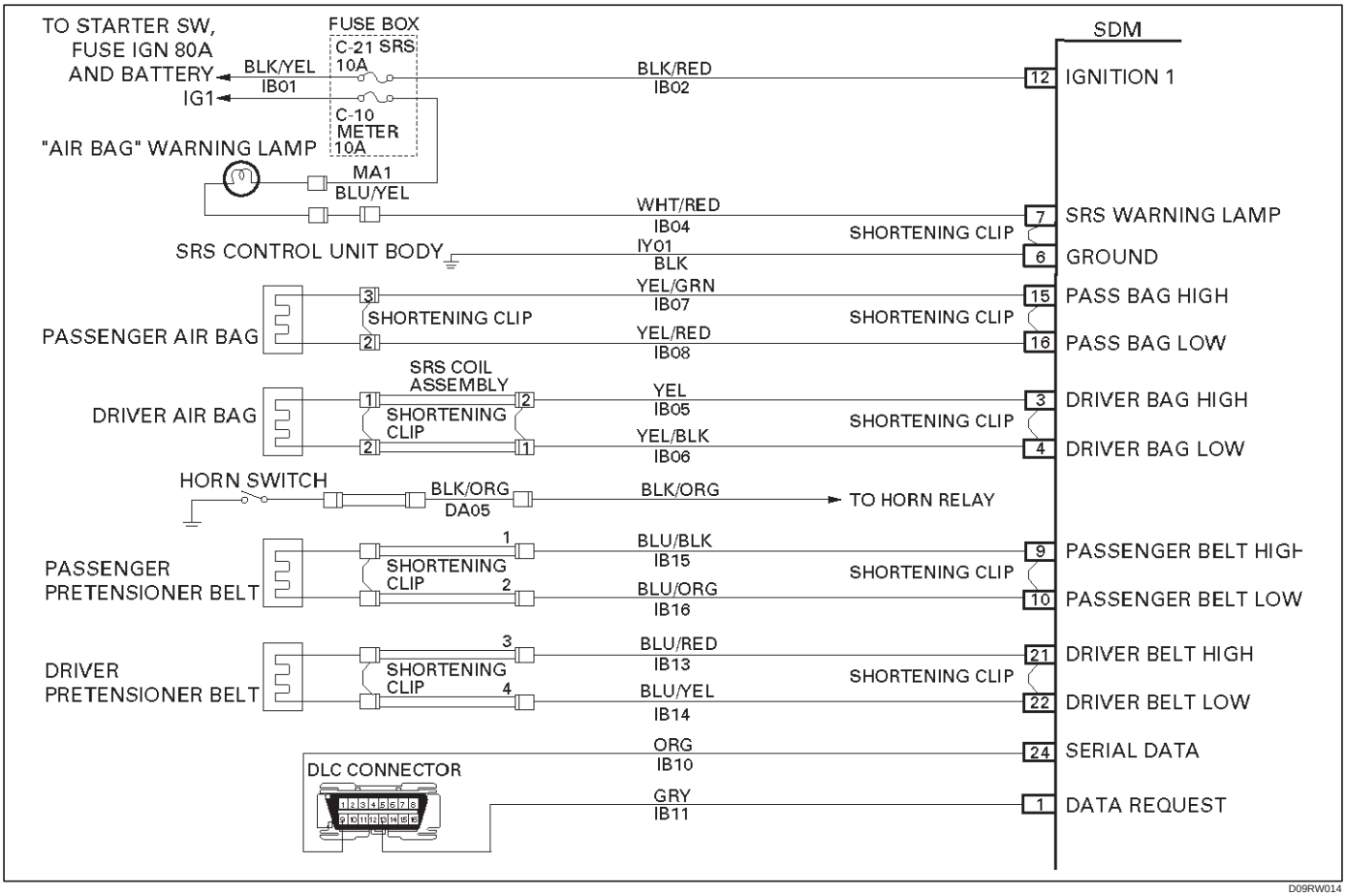

Circuit Description:

DTC 71 is an indication of a potential internal SDM malfunction and will set if any of the following conditions are detected:

1) Deployment or microprocessor energy reserve failure.
2) EEPROM failure.
3) ROM failure.
4) RAM failure.
5) Calibration check sum failure.
6) Deployment switch faults.
7) Accelerometer fault.
8) Arming sensor fault.
9) Diagnostic current faults.
10) DTC 19
11) DTC 25
12) DTC 51
13) DTC 53

DTC Will Set When:

Any of the above indicated malfunctions are detected by the SDM. The malfunctions described above are tested mainly during “Continuous Monitoring” and some ones run each ignition cycle.

Action Taken:

SDM turns “ON” the “AIR BAG” warning lamp and sets a diagnostic trouble code.

DTC Will Clear When:

A scan tool “Clear Codes” commanded is received by the SDM. Some of the indicated malfunctions will only allow the “AIR BAG” warning lamp to go out.
But when DTC 19, 25, 51, 53 are also set, SDM is replaced.

DTC 71 Internal SDM Fault

WARNING: DURING SERVICE PROCEDURES. BE VERY CAREFUL WHEN HANDLING A SENSING AND DIAGNOSTIC MODULE (SDM). NEVER STRIKE OR JAR THE SDM. NEVER POWER UP THE SRS WHEN THE SDM IS NOT RIGIDLY ATTACHED TO THE VEHICLE. ALL SDM AND MOUNTING BRACKET FASTENERS MUST BE CAREFULLY TORQUED AND THE ARROW MUST BE POINTING TOWARD THE FRONT OF THE VEHICLE TO ENSURE PROPER OPERATION OF THE SRS. THE SDM COULD BE ACTIVATED WHEN POWERED WHILE NOT RIGIDLY ATTACHED TO THE VEHICLE WHICH COULD CAUSE DEPLOYMENT AND RESULT IN PERSONAL INJURY.

CAUTION: When DTC 19 or 25 has been set, it is necessary to replace the SDM. Setting DTC 19 and 25 or 51 or 53 will also cause DTC 71 to set. When a scan tool "CLEAR CODES" command is issued and the malfunction is no longer present, DTC 51 or 53 and DTC 71 will remain current. Ensure that the short to voltage condition DTC 19, 25 is repaired prior to installing a replacement SDM to avoid damaging the SDM.

Step	Action	Yes	No
1	Was the "SRS Diagnostic System Check" performed?	Go to Step 2	Go to the "SRS Diagnostic System Check"
2	Note SRS "Diagnostic System Check." IS DTC 19 OR 25 OR 51 OR 53 ALSO SET (CURRENT OR HISTORY)? (REFER TO NOTICE ABOVE.)	Go to DTC 19 if DTC 19 is set Go to DTC 25 if DTC 25 is set Go to DTC 51 if DTC 51 is set Go to DTC 53 if DTC 53 is set	Ignition switch "OFF" Replace SDM Repeat the "SRS Diagnostic System Check"

DTC 29 Passenger Pretensioner Loop Short To Ground

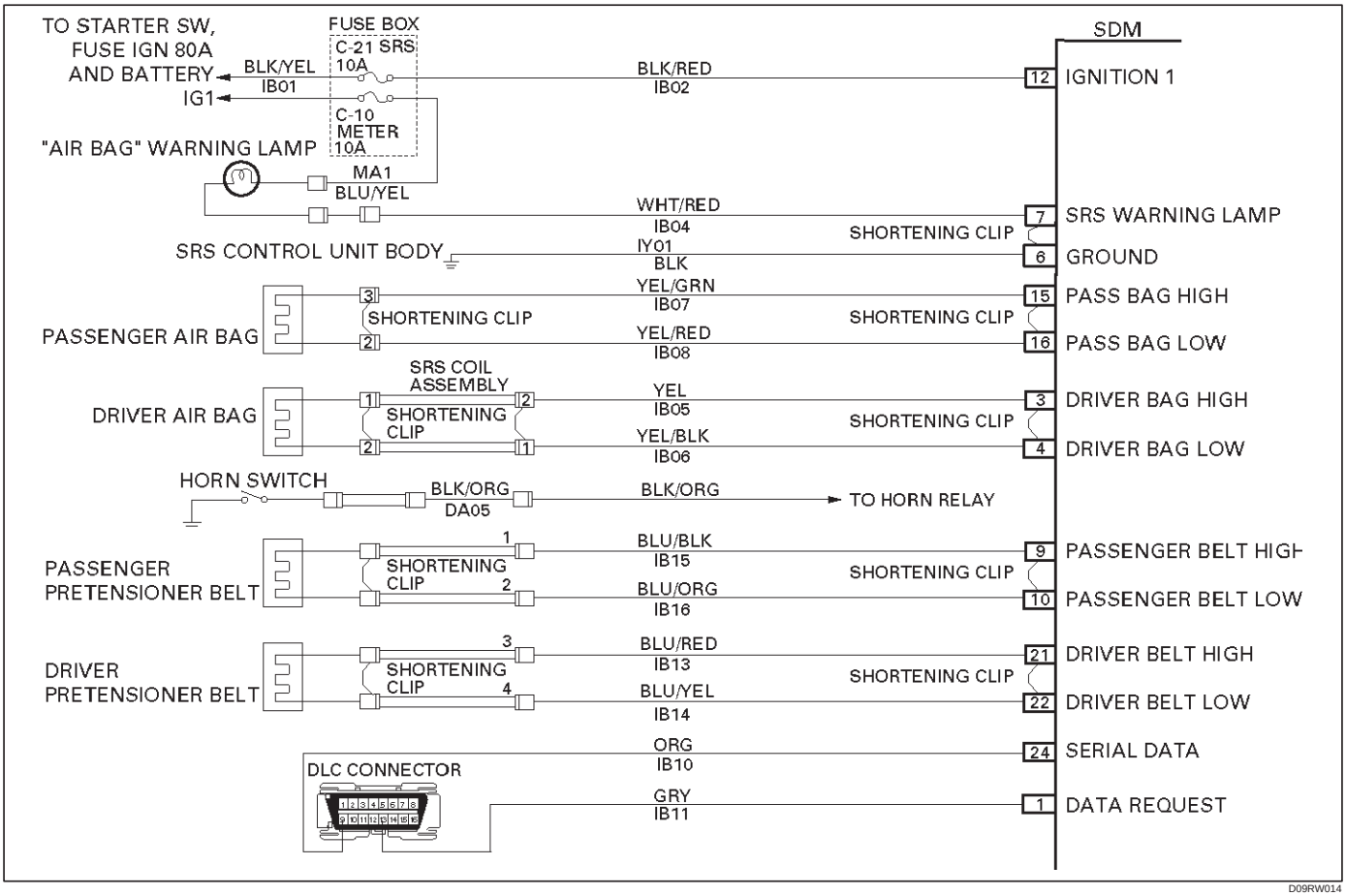

Circuit Description:

When the ignition switch is turned “ON”, the SDM will perform tests to diagnose critical malfunctions within itself. Upon passing these tests, “Ignition 1”, and pretensioner loop voltages are measured to ensure they are within their respective normal voltage ranges.
The SDM monitors the voltages at “Driver Belt Low” terminal “10” and “Passenger Belt Low” terminal “22” to detect short to ground in the pretensioner assembly circuits.

DTC Will Set When:

Neither of the air bag and the pretensioner belt are open. “Ignition 1” is within the normal operating voltage range. Once these conditions are met and the voltage at “Passenger Belt Low” is below a specified value, DTC 29 will set. This test is run once each ignition cycle and “Continuous Monitoring”.

Action Taken:

SDM turns “ON” the “AIR BAG” warning lamp and sets a diagnostic trouble code.

DTC Will Clear When:

This malfunction is no longer occurring and the ignition switch is turned “OFF”.

DTC Chart Test Description:

Number(s) below refer to circled number(s) on the diagnostic chart.

2. This test determines whether the SDM is malfunctioning.
3. This test isolates the malfunction to one side of the passenger pretensioner assembly yellow 2–pin connector at the base of the passenger seat.
4. This test determines whether the malfunction is in IB15–BLU/BLK.
5. This test determines whether the malfunction is in IB16–BLU/ORG.

Diagnostic Aids:

An intermittent condition is likely to be caused by a short to ground in the passenger pretensioner assembly circuit. Inspect IB15–BLU/BLK and IB16–BLU/ORG carefully for cutting or chafing. If the wiring pigtail of the passenger pretensioner assembly is damaged, the component must be replaced.

DTC 29 Passenger Pretensioner Loop Short To Ground

Step	Action	Yes	No
1	Was the “SRS Diagnostic System Check” performed?	Go to Step 2	Go to the “SRS Diagnostic System Check”
2	1. When measurements are requested in this chart use 5–8840–0285–0 DVM with correct terminal adapter from 5–8840–0385–0. 2. Ignition switch “OFF.” 3. Connect scan tool data link connector. follow directions as given in the scan tool operator’s MANUAL. 4. Ignition switch “ON.” 5. Read passenger sense LO. Is passenger sense LO less than 1.5 volts?	Go to Step 3	Go to Chart A
3	1. Ignition switch “OFF.” 2. Disconnect passenger pretensioner assembly yellow 2–pin connector at the base of the passenger seat. 3. Leave driver pretensioner assembly connected. 4. Connect SRS driver / passenger load tool 5–8840–2421–0 and appropriate adapter to passenger pretensioner assembly harness connector. 5. Ignition switch “ON.” Is DTC 29 current?	Go to Step 4	Ignition switch “OFF” Replace passenger pretensioner assembly Go to Step 6
4	1. Ignition switch “OFF”. 2. Disconnect SRS driver / passenger load tool 3. Measure resistance on SDM harness connector from terminal “9” to terminal “6” (ground). Does 5–8840–0285–0 display “OL” (Infinite)?	Go to Step 5	Replace SRS harness or repair chassis harness Go to Step 6
5	Measure resistance on SDM harness connector from terminal “10” to terminal “6” (ground). Does 5–8840–0285–0 display “OL” (Infinite)?	Go to Chart A	Replace SRS harness or repair chassis harness Go to Step 6
6	1. Reconnect all components and ensure all component are properly mounted. 2. Clear diagnostic trouble codes. Was this step finished?	Go to the “SRS Diagnostic system Check”	Go to Step 6

DTC 31 Passenger Pretensioner Loop Resistance High

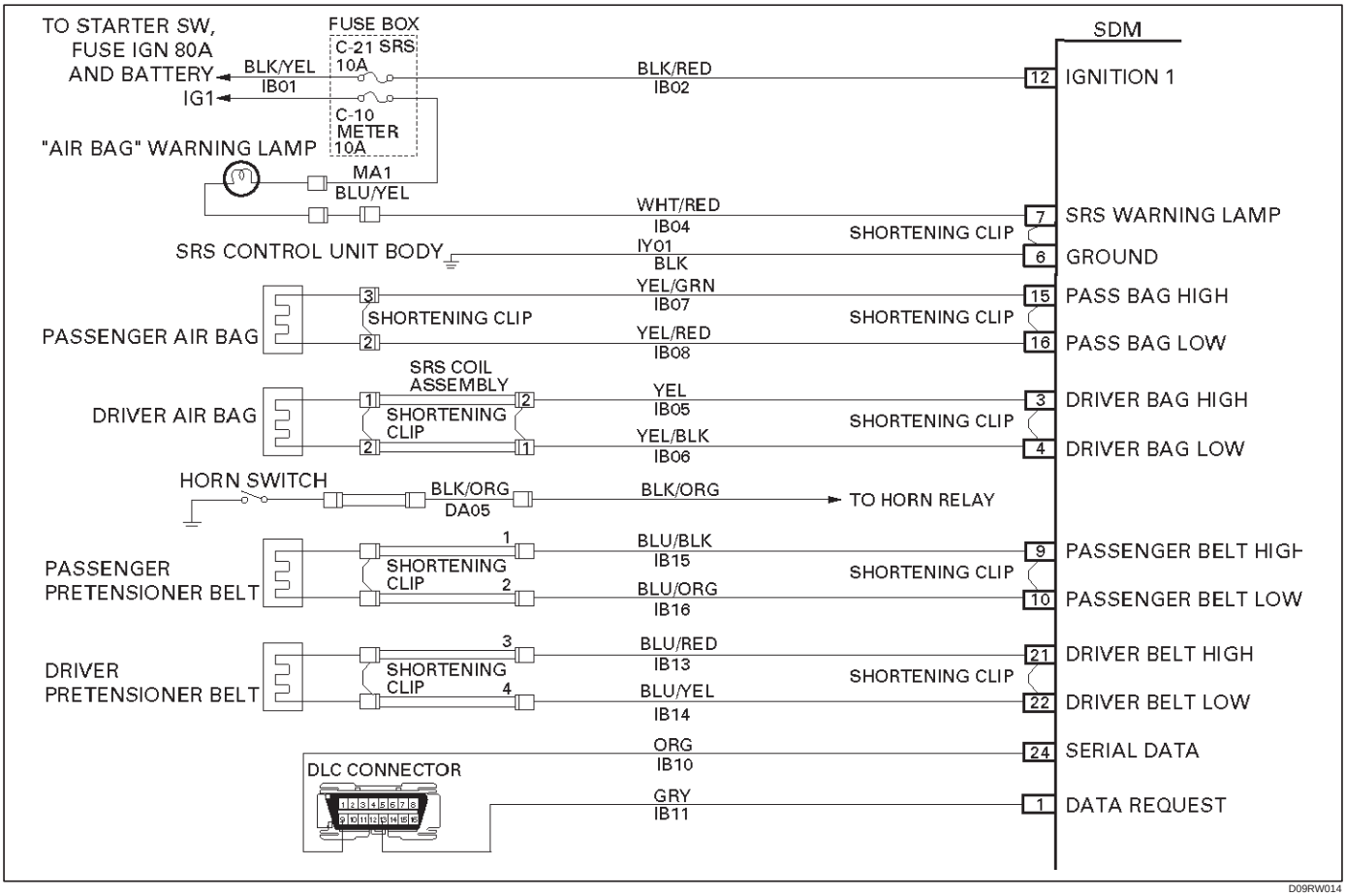

Circuit Description:

When the ignition switch is turned “ON”, the SDM will perform tests to diagnose critical malfunctions within itself. Upon passing these tests “Ignition 1”, and deployment loop voltages are measured to ensure they are within their respective normal voltage ranges. The SDM then proceeds with the “Resistance Measurement Test”. “Passenger Belt Low” terminal “10” is grounded through a resister and the passenger current source connected to “Passenger Belt High” terminal “9” allows a known amount of current to flow. By monitoring the voltage difference between “Passenger Belt High” and “Passenger Belt Low” the SDM calculates the combined resistance of the passenger air bag assembly, harness wiring IB15–BLU/BLK and IB16–BLU/ORG connector terminal contact.

DTC Will Set When:

The combined resistance of the passenger pretensioner assembly, harness wiring IB15–BLU/BLK and IB16–BLU/ORG, and connector terminal contact is above a specified value. This test is run once each ignition cycle during the “Resistance Measurement Test” when:

1. No “higher priority faults” are detected during “Turn–ON”,
2. “Ignition 1” voltage is in the specified value.

Action Taken:

SDM turns “ON” the “AIR BAG” warning lamp and sets a diagnostic trouble code.

DTC Will Clear When:

The ignition switch is turned “OFF.”

DTC Chart Test Description:

Number(s) below refer to step number(s) on the diagnostic chart:

2. This test determines whether the malfunction is in the SDM.
3. This test verifies proper connection of the yellow 2–pin connector.
4. This test checks for proper contact and/or corrosion of the yellow 2–pin connector terminals.
5. The test checks for a malfunctioning passenger pretensioner assembly.
6. This test determines whether the malfunction is due to high resistance in the wiring.

Diagnostic Aids:

An intermittent condition is likely to be caused by a poor connection at the passenger air bag assembly harness connector terminals “1” and “2”, SDM terminal “9” and “10”, or a poor wire to terminal connection in IB15–BLU/BLK and IB16–BLU/ORG. This test for this diagnostic trouble code is only run while the “AIR BAG”

warning lamp is performing the bulb check. When a scan tool "Clear Codes" command is issued and the malfunction is still present, the DTC will not reappear until the next ignition cycle.

DTC 31 Passenger Pretensioner loop Resistance High

Step	Action	Yes	No
1	Was the "SRS Diagnostic System Check" Performed?	Go to Step 2	Go to The "SRS Diagnostic System Check"
2	1. When measurements are requested in this chart use 5–8840–0285–0 DVM with correct terminal adapter from 5–8840–0385–0. 2. Use scan tool data list function, read and record the passenger pretensioner loop resistance. Is passenger resist. more than 3.7 ohms?	Go to Step 3	Go to Chart A
3	1. Ignition switch "Off." 2. Make sure the passenger pretensioner assembly yellow 2–pin connector located at the base of the passenger seat. Is the yellow 2–pin connector connected properly?	Go to Step 4	Seat passenger pretensioner assembly yellow 2–pin connector properly Go to Step 7
4	1. Disconnect and inspect the passenger pretensioner assembly yellow 2–pin connector located at the base of the passenger seat. 2. If ok, reconnect the passenger pretensioner assembly 2–pin connector. 3. Ignition switch "ON." Is DTC 31 current?	Go to Step 5	Go to Step 7
5	1. Ignition switch "Off." 2. Disconnect passenger pretensioner assembly, yellow 2–pin connector located at the base of the passenger seat. 3. Connect 5–8840–2421–0 SRS driver / passenger load tool and appropriate adapters to passenger pretensioner assembly harness connectors. 4. Ignition switch "ON." Is DTC 31 Current?	Go to Step 6	Ignition switch "Off" Replace the passenger pretensioner assembly Go to Step 7
6	1. Ignition switch "Off." 2. There has been an increase in the total circuit resistance of the passenger loop. 3. Use the high resolution ohmmeter mode of the DVM while checking IB15–BLU/BLK and IB16–BLU/ORG, and SDM connector terminal "9" and "10" to locate the root cause. Was a fault found?	Replace SRS harness or repair chassis harness Go to Step 7	Go to Chart A
7	1. Reconnect all components ensure all component are properly mounted. 2. Clear diagnostic trouble codes. Was This step finished?	Repeat the "SRS Diagnostic System Check"	Go to Step 7

DTC 32 Passenger Pretensioner loop Resistance Low

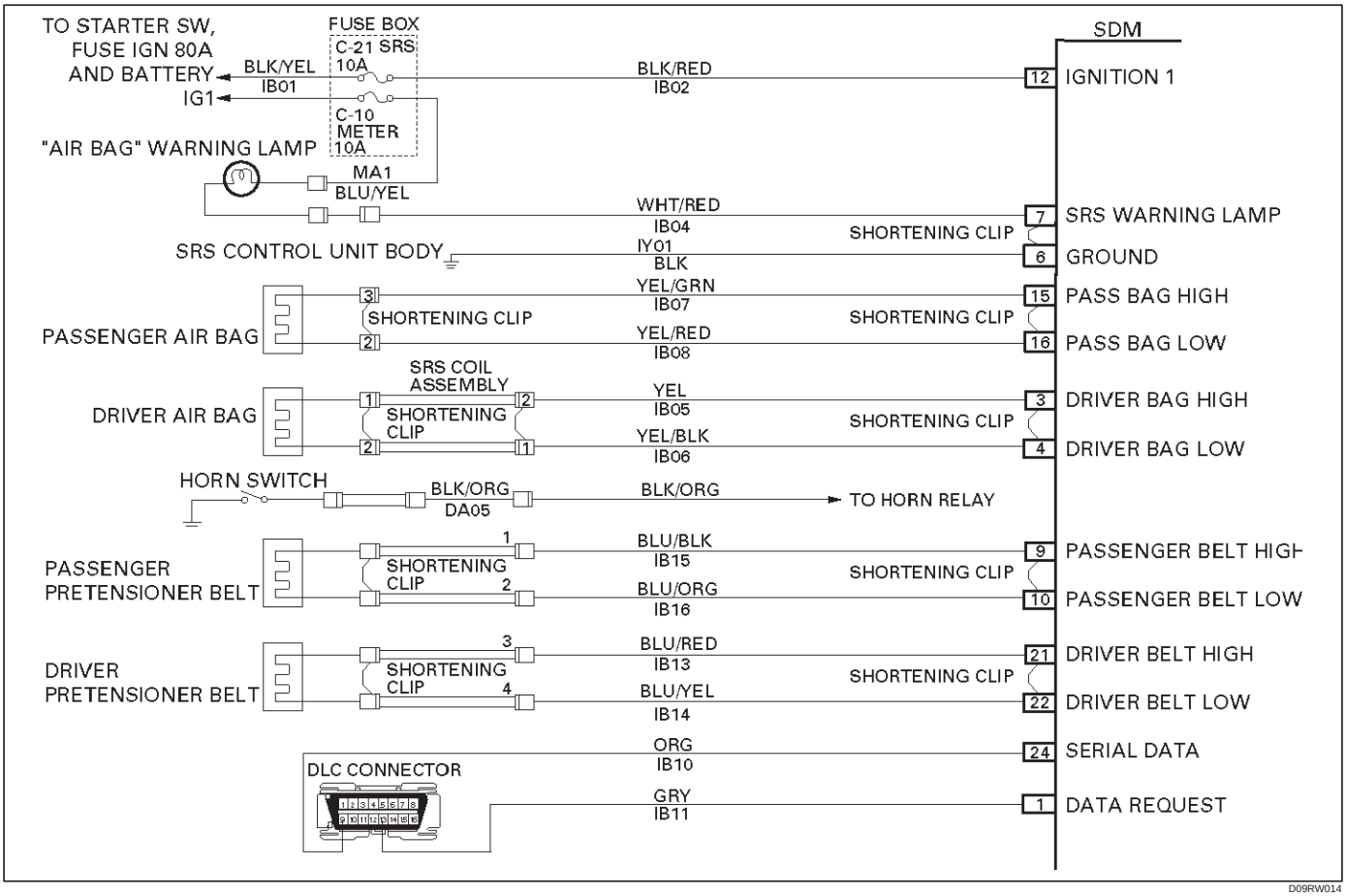

Circuit Description:

When the ignition switch is turned “ON”, the SDM will perform tests to diagnose critical malfunctions within itself. Upon passing these tests “Ignition 1”, and pretensioner loop voltages are measured to ensure they are within their respective normal voltage ranges. The SDM then proceeds with the “Resistance Measurement Test”. “Passenger Belt Low” terminal “10” is grounded through a resistor and the passenger current source connected to “Passenger Belt High” terminal “9” allows a known amount of current to flow. By monitoring the voltage difference between “Passenger Belt High” and “Passenger Belt Low”, the SDM calculates the combined resistance of the passenger air bag assembly, harness wiring IB15–BLU/BLK and IB16–BLU/ORG connector terminal contact.

DTC Will Set When:

The combined resistance of the passenger air bag assembly, harness wiring IB15–BLU/BLK and IB16–BLU/ORG, and connector terminal contact is above a specified value. This test is run once each ignition cycle during the “Resistance Measurement Test” when:

1. No “higher priority faults” are detected during “Turn–ON”,
2. “Ignition 1” voltage is in the specified value.

Action Taken:

SDM turns “ON” the “AIR BAG” warning lamp and sets a diagnostic trouble code.

DTC Will Clear When:

The ignition switch is turned “OFF.”

DTC Chart Test Description:

Number(s) below refer to step number(s) on the diagnostic chart:

2. This test determines whether the malfunction is in the SDM.
3. This test verifies connection of the yellow 2–pin connector.
4. This test cheeks for proper operation of the shorting clip in the yellow 2–pin connector.
5. The test checks for a malfunction passenger pretensioner assembly.
6. This test determines whether the malfunctioning is due to shortening in the wiring.

Diagnostic Aids:

An intermittent condition is likely to be caused by a short between IB15–BLU/BLK and IB16–BLU/ORG, or a malfunctioning shorting clip on the passenger pretensioner assembly which would require replacement of the pretensioner assembly. The test for this diagnostic trouble code is only run while “AIR BAG” warning lamp is

performing the bulb check. When a scan tool “Clear Codes” command is issued and the malfunction is still present, the DTC will not reappear until the next ignition cycle.

DTC 32 Passenger Pretensioner loop Resistance Low

Step	Action	Yes	No
1	Was the “SRS Diagnostic System Check” performed?	Go to Step 2	Repeat the “SRS Diagnostic System Check”
2	1. When measurements are requested in this chart use 5–8840–0285–0 DVM with correct terminal adapter from 5–8840–0385–0. 2. Using scan tool data list function, read and record the passenger pretensioner loop resistance. Is passenger resist. less than 1.4 ohms?	Go to Step 3	Go to Chart A
3	1. Ignition switch “Off.” 2. Make sure the passenger pretensioner assembly yellow 2–pin connector located at the base of the passenger seat. Is the yellow 2–pin connector connected properly?	Go to Step 4	Seat passenger pretensioner assembly yellow 2–pin connector properly Go to Step 7
4	1. Disconnect and inspect the passenger pretensioner assembly yellow 2–pin connector located at the base of the passenger seat. 2. If ok, reconnect the passenger pretensioner assembly 2–pin connector. 3. Ignition switch “ON.” Is DTC 32 Current?	Go to Step 5	Go to Step 7
5	1. Ignition switch “Off.” 2. Disconnect passenger pretensioner assembly, yellow 2–pin connector located at the base of the passenger seat. 3. Connect 5–8840–2421–0 SRS driver/passenger load tool and appropriate adapters to passenger pretensioner assembly harness connectors. 4. Ignition switch “ON.” Is DTC 32 current?	Go to Step 6	Ignition switch “Off” Replace the passenger pretensioner assembly Go to Step 7
6	1. Ignition switch “Off.” 2. There has been a decrease in the total circuit resistance of the passenger pretensioner loop. 3. Use the high resolution ohmmeter mode of the DVM while checking IB15–BLU/BLK and IB16–BLU/ORG, and SDM connector terminal “9” and “10” to locate the root cause. Was a fault found?	Replace SRS harness or repair chassis harness Go to Step 7	Go to Chart A
7	1. Reconnect all components, ensure all component are properly mounted. 2. Clear diagnostic trouble codes. Was this step finished?	Repeat the “SRS Diagnostic System Check”	Go to Step 7

DTC 33 Passenger Pretensioner Loop Short To Voltage

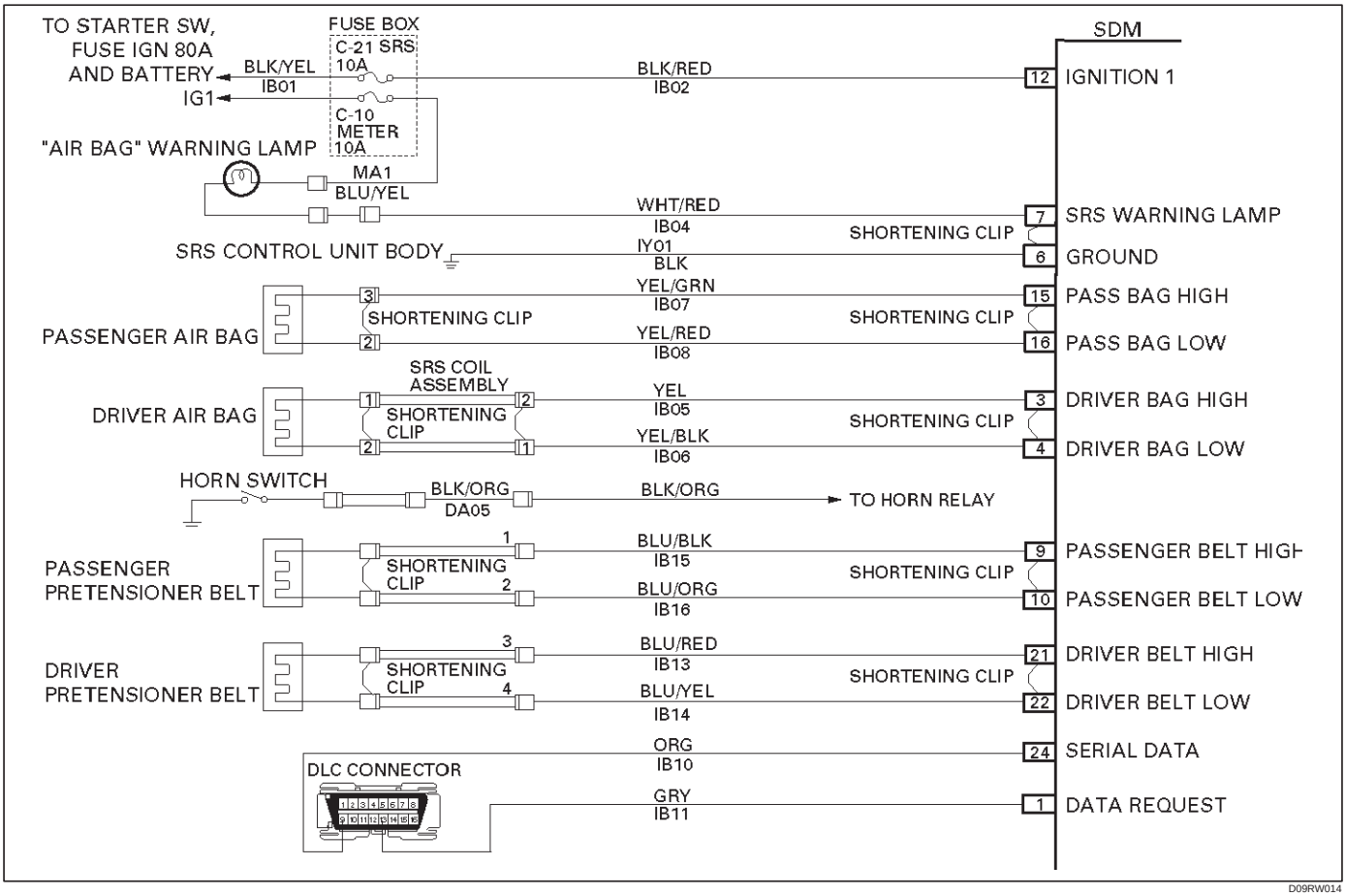

Circuit Description:

When the ignition switch is turned “ON”, the SDM will perform tests to diagnose critical malfunctions within itself. Upon passing these tests, “Ignition 1”, and pretensioner loop voltages are measured to ensure they are within their respective normal voltage ranges.
The SDM monitors the voltages at “Driver Belt Low” terminal “10” and “Passenger Belt Low” terminal “22” to detect short to B+ in the pretensioner assembly circuits.

DTC Will Set When:

“Ignition 1” is within the normal operating voltage range. Once these conditions are met and the voltage at “Passenger pretensioner Low” is above a specified value, DTC 33 will set. This test is run once each ignition cycle and “Continuous Monitoring”.

Action Taken:

SDM turns “ON” the “AIR BAG” warning lamp and sets DTC 33.

DTC Will Clear When:

The malfunction is no longer occurring and the ignition is turned “OFF”.

DTC Chart Test Description:

Number(s) below refer to step number(s) on the diagnostic chart:

2. This test determines whether the malfunction is in the SDM.
3. This test isolates the malfunction to one side of the passenger pretensioner assembly yellow 2–pin connector at the base of the passenger seat.
4. This test determines whether the malfunction is in IB15–BLU/BLK.
5. This test determines whether the malfunction is in IB16–BLU/ORG.

Diagnostic Aids:

An intermittent condition is likely to be caused by a short to B+ in the passenger pretensioner assembly circuit. Inspect IB15–BLU/BLK and IB16–BLU/ORG carefully for cutting or chafing. If the wiring pigtail of the passenger pretensioner assembly is damaged, the component must be replaced. A careful inspection of IB15–BLU/BLK and IB16–BLU/ORG, including the passenger pretensioner assembly pigtail is essential to ensure that the replacement SDM will not be damaged.

DTC 33 Passenger Pretensioner Loop Short To Voltage

Step	Action	Yes	No
1	Perform the “SRS Diagnostic System Check” Was the “SRS Diagnostic System Check” performed?	Go to Step 2	Repeat the “SRS Diagnostic System Check”
2	1. When measurements are requested in this chart use 5–8840–0285–0 DVM With correct terminal adapter from 5–8840–0385–0. 2. Ignition switch “OFF.” 3. Connect scan tool data link connector. follow directions as given in the scan tool operator’s manual. 4. Ignition switch “ON.” 5. Read passenger belt sense LO. Is passenger belt sense LO more than 3.5 volts?	Go to Step 3	Go to Chart A
3	1. Ignition switch “OFF”. 2. Disconnect passenger pretensioner assembly yellow 2–pin connector at the base of the passenger seat. 3. Leave driver pretensioner assembly connected. 4. Connect SRS driver / passenger load tool 5–8840–2421–0 and appropriate adapter to passenger air bag assembly harness connector. 5. Ignition switch “ON.” Is DTC 33 current?	Go to Step 4	Ignition switch “OFF” Replace passenger pretensioner assembly Go to Step 6
4	1. Ignition switch “OFF.” 2. Disconnect SRS driver / passenger load tool. 3. Measure resistance on SDM harness connector from terminal “9” to terminal “12” (ignition). Does 5–8840–0285–0 display “OL” (infinite)?	Go to Step 5	Replace SRS harness Go to Step 6.
5	Measure resistance on SDM harness connector from terminal “10” and terminal “12” (ignition). Does 5–8840–0285–0 display “OL” (infinite)?	Go to Chart A	Replace SRS harness Go to Step 6
6	1. Reconnect all components ensure all component are properly mounted. 2. Clear diagnostic trouble codes. Was this step finished?	Repeat the “SRS Diagnostic System Check”	Go to Step 6

DTC 34 Passenger Pretensioner Loop Open

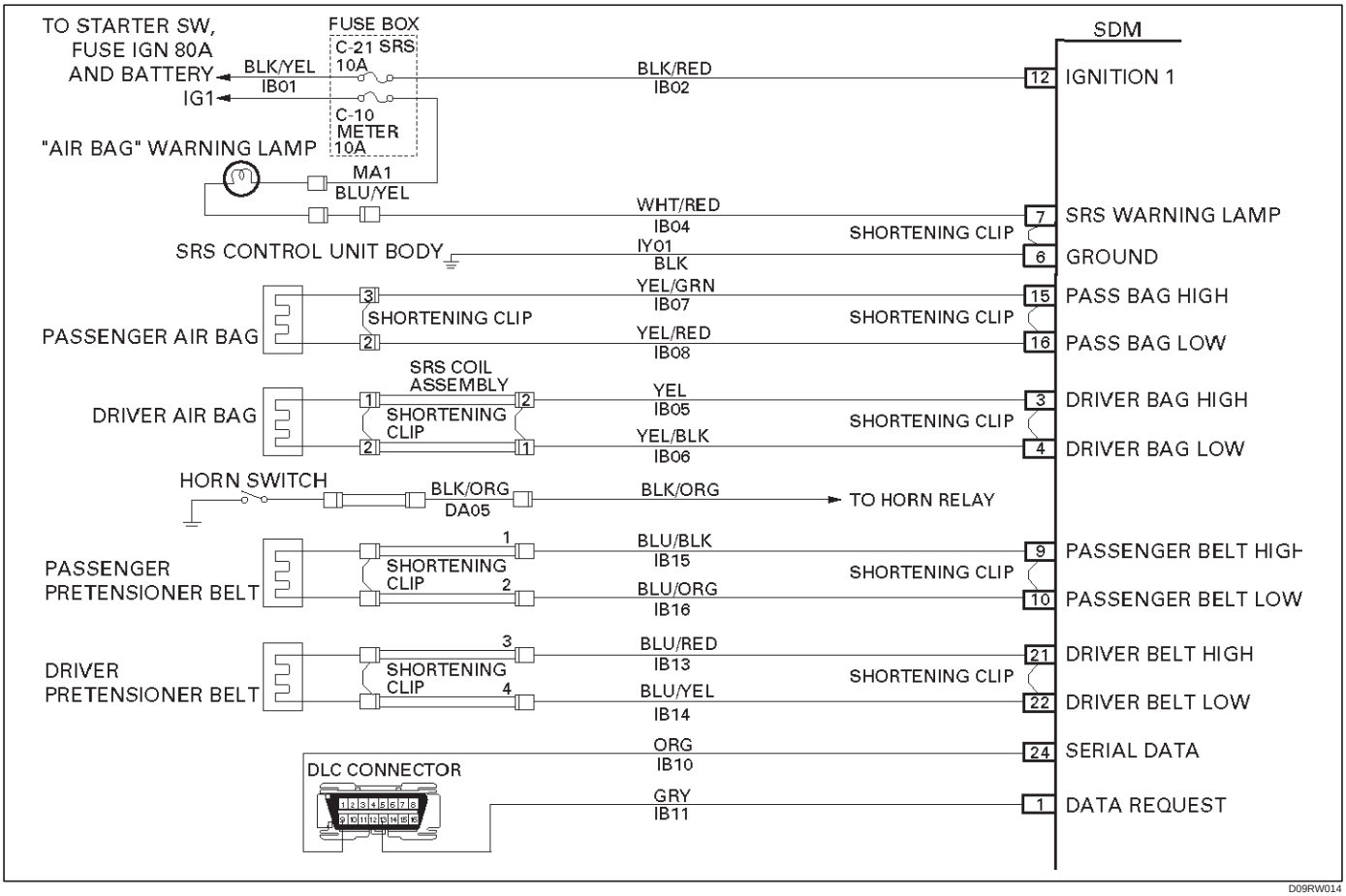

Circuit Description:

When the ignition switch is turned “ON”, the SDM will perform tests to diagnose critical malfunctions within itself. Upon passing these tests, “Ignition 1”, and pretensioner loop voltages are measured to ensure they are within their respective normal voltage ranges. During “Continuous Monitoring” diagnostics, a fixed amount of current is flowing in the deployment loop. This produces proportional voltage drops in the loop. By monitoring the voltage difference between “Passenger Belt High” and “Passenger Belt Low”, the SDM calculates the combined resistance of the passenger pretensioner assembly, harness wiring IB15–BLU/BLK AND IB16–BLU/ORG, and connector terminal contact.

DTC Will Set When:

The voltage difference between “Passenger pretensioner High” terminal “9” and “Passenger pretensioner Low” terminal “10” is above or equal to a specified value for 500 milliseconds during “Continuous Monitoring”.

Action Taken:

SDM turns “ON” the “AIR BAG” warning lamp and sets a diagnostic trouble code.

DTC Will Clear When:

The voltage difference between “Passenger Belt High” terminal “9” and “Passenger Belt Low” terminal “10” is below a specified value for 500 milliseconds during “Continuous Monitoring”.

DTC Chart Test Description:

Number(s) below refer to step number(s) on the diagnostic chart:

2. This test determines whether the malfunction is in the SDM.
3. This test verifies proper connection of the yellow 2–pin connector.
4. This test cheeks for proper contact and/or corrosion of the shorting clip in the yellow 2–pin connector terminals.
5. The test checks for a malfunctioning passenger pretensioner assembly.
6. This test determines whether the open in the wiring.

Diagnostic Aids:

An intermittent condition is likely to be caused by a poor connection at the passenger pretensioner assembly harness connector terminals“1” and “2”, SDM terminals “9” and “10”, or an open in IB15–BLU/BLK and IB16–BLU/ORG.

DTC 34 Passenger Pretensioner Loop Open

Step	Action	Yes	No
1	Was the “SRS Diagnostic System Check” performed?	Go to Step 2	Go to the “SRS Diagnostic System Check”
2	1. When measurements are requested in this chart use 5–8840–0285–0 DVM with correct terminal adapter from 5–8840–0385–0. 2. Using scan tool data list function, read and record the passenger pretensioner differential voltage. Is passenger pretensioner VDIF 0.425 volts or more?	Go to Step 3	Go to Chart A
3	1. Ignition switch “OFF”. 2. Make sure the passenger pretensioner assembly yellow 2–pin connector located at the base of the passenger seat. Is the yellow 2–pin connector connected properly?	Go to Step 4	Seat passenger pretensioner assembly yellow 2–pin connector properly Go to Step 7
4	1. Disconnect and inspect the passenger pretensioner assembly yellow 2–pin connector located at the base of the passenger seat. 2. If ok, reconnect the passenger pretensioner assembly 2–pin connector. 3. Ignition switch “ON”. Is DTC 34 current?	Go to Step 5	Go to Step 7
5	1. Ignition switch “Off.” 2. Disconnect the passenger pretensioner assembly, yellow 2–pin connector located at the base of the passenger seat. 3. Connect 5–8840–2421–0 SRS driver / passenger load tool and appropriate adapters to passenger pretensioner assembly harness connectors. 4. Ignition switch “ON.” Is DTC 34 current?	Go to Step 6	Ignition switch “Off” Replace the passenger pretensioner assembly Go to Step 7
6	1. Ignition switch “Off.” 2. There has been an open circuit resistance in the passenger pretensioner loop. 3. Use the high resolution ohmmeter mode of the DVM while checking IB15–BLU/BLK and IB16–BLU/ORG, and SDM connector terminal “9” and “10” to locate the root cause. Was a fault found?	Replace SRS harness or repair chassis harness Go to Step 7	Go to Chart A
7	1. Reconnect all components ensure all component are properly mounted. 2. Clear diagnostic trouble codes. Was this step finished?	Go to the “SRS Diagnostic System Check”	Go to Step 7

DTC 41 Driver Pretensioner Loop Resistance High

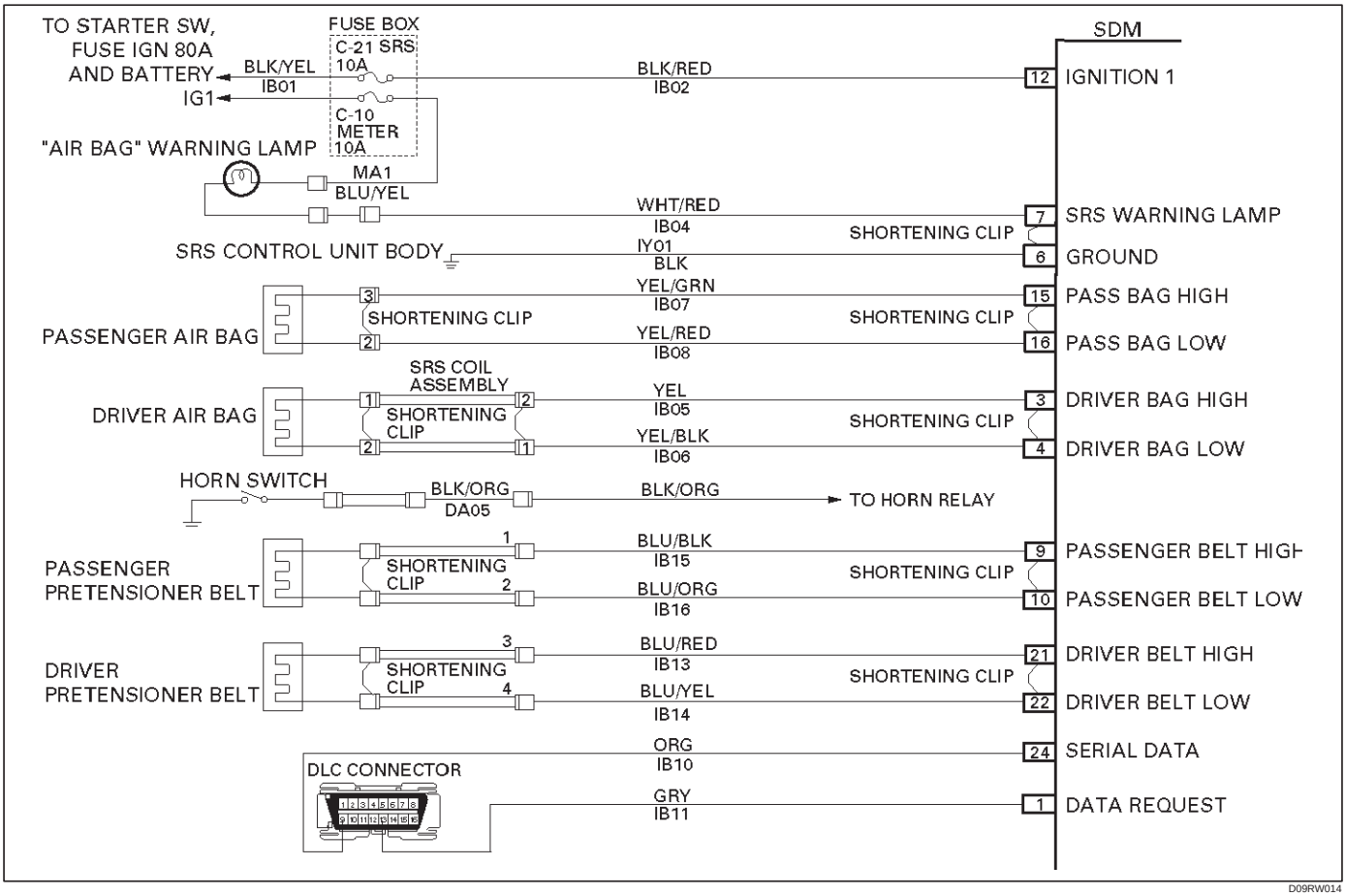

Circuit Description:

When the ignition switch is turned “ON”, the SDM will perform tests to diagnose critical malfunctions within itself. Upon passing these tests, “Ignition 1”, and pretensioner loop voltages are measured to ensure they are within their respective normal voltage ranges.

The SDM then proceeds with the “Resistance Measurement Test” “Driver Belt Low” terminal “22” is grounded through a current sink and the driver current source connected to “Driver Belt High” terminal “21” allows a known amount of current to flow. By monitoring the voltage difference between “Driver Belt High” and “Driver Belt Low”, the SDM calculates the combined resistance of the driver pretensioner assembly, harness wiring IB13–BLU/RED and IB14–BLU/YEL, and connector terminal contact.

DTC Will Set When:

The combined resistance of the driver pretensioner assembly, harness wiring IB13–BLU/RED and IB14–BLU/YEL, and connector terminal contact is above a specified value. This test run once each ignition cycle during the “Resistance Measurement Test” when:

1. No “higher priority faults” are detected during “Turn–ON”
2. “Ignition 1” voltage is in the specified value.

Action Taken:

SDM turns “ON” the “AIR BAG” warning lamp and sets DTC 41.

DTC Will Clear When:

The ignition switch is turned “OFF”.

DTC Chart Test Description:

Number(s) below refer to step number(s) on the diagnostic chart:

2. This test determines whether the malfunction is in the SDM.
3. This test verifies proper connection of the yellow 2–pin connector at the base of the driver seat.
4. This test checks for proper contact and/or corrosion of the 2–pin connector terminals at the base of the driver seat.
5. This test isolate the malfunction to one side of the pretensioner assembly yellow 2–pin connector located at the base of the driver seat.
6. This test determines whether the malfunction is due to high resistance in the wiring.

Diagnostic Aids:

An intermittent condition is likely to be caused by a poor connection at terminals “3” and “4” of the driver pretensioner assembly 2–pin connector at the base of the driver seat. SDM terminals “21” and “22” or a poor wire to terminal connection in IB13–BLU/RED or IB14–BLU/YEL. The test for this diagnostic trouble code is only run while the “AIR BAG” warning lamp is performing the bulb check. When a scan tool “Clear Codes” command is issued and the malfunction is still present, the DTC will not reappear until the next ignition cycle.

DTC 41 Driver Pretensioner Loop Resistance High

Step	Action	Yes	No
1	Perform the “SRS Diagnostic System Check”. Was the “SRS Diagnostic System Check” performed?	Go to Step 2	Repeat the “SRS Diagnostic System Check”
2	1. When measurements are requested in this chart use 5–8840–0285–0 DVM with correct terminal adapter from 5–8840–0385–0. 2. Use scan tool data list function, read and record the driver pretensioner loop resistance. Is driver resistance more than 3.7 ohms?	Go to Step 3	Go to Chart A
3	1. Ignition switch “OFF.” 2. Disconnect driver pretensioner assembly yellow 2–pin connector located at base of the driver seat. Is the 2–pin connector connected properly?	Go to Step 4	Driver pretensioner assembly 2–pin connector properly Go to Step 7
4	1. Disconnect and inspect the driver pretensioner assembly yellow 2–Pin connector located base of the driver seat. 2. If ok, reconnect the driver pretensioner assembly yellow 2–pin connector. 3. Ignition switch “ON.” Is DTC 41 current?	Go to Step 5	Go to Step 7
5	1. Ignition switch “OFF.” 2. Disconnect driver pretensioner assembly, yellow 2–pin connector located at the base of the driver seat. 3. Connect SRS driver / passenger load tool 5–8840–2421–0 and appropriate adapter to driver pretensioner assembly harness connectors. 4. Ignition switch “ON.” Is DTC 41 current?	Go to Step 6	Go to Step 7
6	1. Ignition switch “Off.” 2. There has been a increase in the total circuit resistance of the driver pretensioner loop. 3. Use the high resolution ohmmeter mode of the DVM while checking IB13–BLU/RED and IB14–BLU/YEL, and SDM connector terminal “21” and “22” to locate the root cause. Was a fault found?	Replace SRS harness or repair chassis harness Go to Step 7	Go to Chart A
7	1. Reconnect all components ensure all component are properly mounted. 2. Clear diagnostic trouble codes. Was this step finished?	Repeat the “SRS Diagnostic System Check”	Go to Step 7

DTC 42 Driver Pretensioner Loop Resistance Low

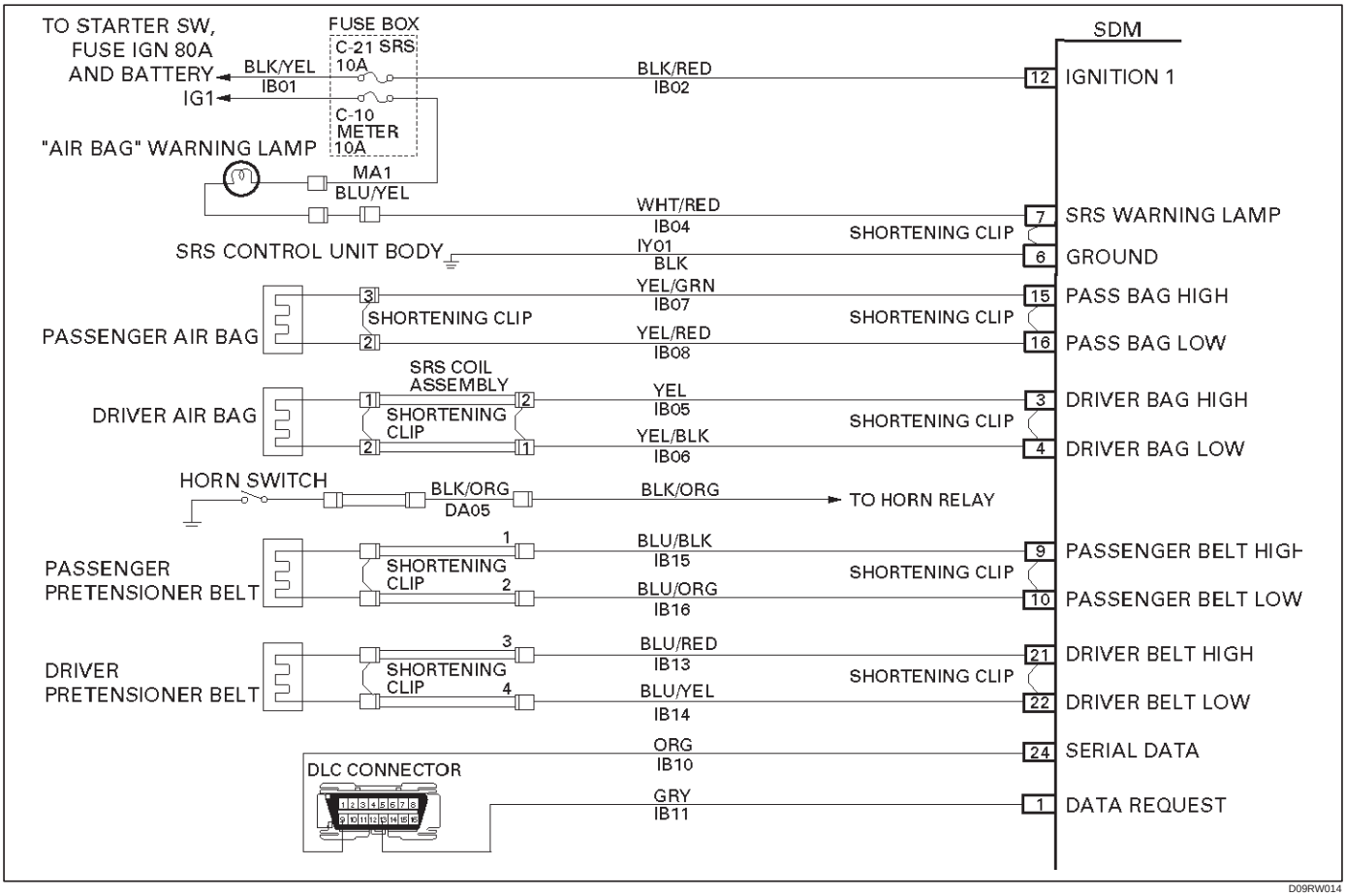

Circuit Description:

When the ignition switch is turned “ON”, the SDM will perform tests to diagnose critical malfunctions within itself. Upon passing these tests “Ignition 1”, and pretensioner loop voltages are measured to ensure they are within their respective normal voltage ranges.

The SDM then proceeds with the “Resistance Measurement Test” “Driver Belt Low” terminal “22” is grounded through a current sink and the driver current source connected to “Driver Belt High” terminal “21” allows a known amount of current to flow. By monitoring the voltage difference between “Driver Belt High” and “Driver Belt Low” the SDM calculates the combined resistance of the driver pretensioner assembly, harness wiring IB13–BLU/RED and IB14–BLU/YEL and connector terminal contact.

DTC Will Set When:

The combined resistance of the driver pretensioner assembly, harness wiring IB13–BLU/RED and IB14–BLU/YEL and connector terminal contact is above a specified value. This test is run once each ignition cycle during the “Resistance Measurement Test” when:

1. No “higher priority faults” are detected during “Turn–ON”
2. “Ignition 1” voltage is in the specified value.

Action Taken:

SDM turns “ON” the “AIR BAG” warning lamp and sets DTC 42.

DTC Will Clear When:

The ignition switch is turned “OFF.”

DTC Chart Test Description:

Number(s) below refer to circled number(s) on the diagnostic chart:

2. This test determines whether the malfunction is in the SDM.
3. This test verifies proper connection of the yellow 2–pin connector at the base of the driver seat.
4. This test checks for proper operation of the shorting clip in the yellow 2–pin connector.
5. This test isolate the malfunction to one side of the pretensioner assembly yellow 2–pin connector located at the base of driver seat.
6. This test determines whether the malfunction is due to shortening in the wiring.

Diagnostic Aids:

An intermittent condition is likely to be caused by a short between IB13–BLU/RED or IB14–BLU/YEL or a malfunctioning shorting clip on the driver pretensioner assembly which would require replacement of the component. The test for this diagnostic trouble code is

only run while the “AIR BAG” warning lamp is performing the bulb check. When a scan tool “Clear Codes” command is issued and the malfunction is still present, the DTC will not reappear until the next ignition cycle.

DTC 42 Driver Pretensioner Loop Resistance Low

Step	Action	Yes	No
1	Perform the “SRS Diagnostic System Check.” WAS THE “SRS Diagnostic System Check” performed?	Go to Step 2	Go to the “SRS Diagnostic System Check”
2	1. When measurements are requested in this chart use 5–8840–0285–0 DVM with correct terminal adapter from 5–8840–0385–0. 2. Use scan tool data list function, read and record the driver pretensioner loop resistance. Is driver pretensioner loop resistance less than 1.4 OHMS?	Go to Step 3	Go to Chart A
3	1. Ignition switch “OFF.” 2. Make sure the driver pretensioner assembly yellow 2–pin connector located at the base of the driver seat is connected properly. Is the 2–pin connector connected properly?	Go to Step 4	Seat driver pretensioner assembly 2–pin connector properly Go to Step 7
4	1. Disconnect and inspect the driver pretensioner assembly yellow 2–pin connector located base of the driver seat. 2. If ok, reconnect the driver pretensioner assembly yellow 2–pin connector. 3. Ignition switch “ON.” Is DTC 42 current?	Go to Step 5	Go to Step 7
5	1. Ignition switch “OFF.” 2. Disconnect driver pretensioner assembly, yellow 2–pin connector located at the base of driver seat. 3. Connect SRS driver / passenger load tool 5–8840–2421–0 and appropriate adapter to driver pretensioner assembly harness connectors. 4. Ignition switch “ON.” Is DTC 42 current?	Go to Step 6	Go to Step 7
6	1. Ignition switch “OFF.” 2. There has been a decrease in the total circuit resistance of the driver pretensioner loop. 3. Use the high resolution ohmmeter mode of the DVM while checking IB13–BLU/RED and IB14–BLU/YEL, and SDM connector terminal “21” and “22” to locate the root cause. Was a fault found?	Replace SRS harness or repair chassis harness Go to Step 7	Go to Chart A
7	1. Reconnect all components, ensure all component are properly mounted. 2. Clear diagnostic trouble codes. Was this step finished?	Go to the “SRS Diagnostic System Check”	Go to Step 7

DTC 44 Driver Pretensioner Loop Open

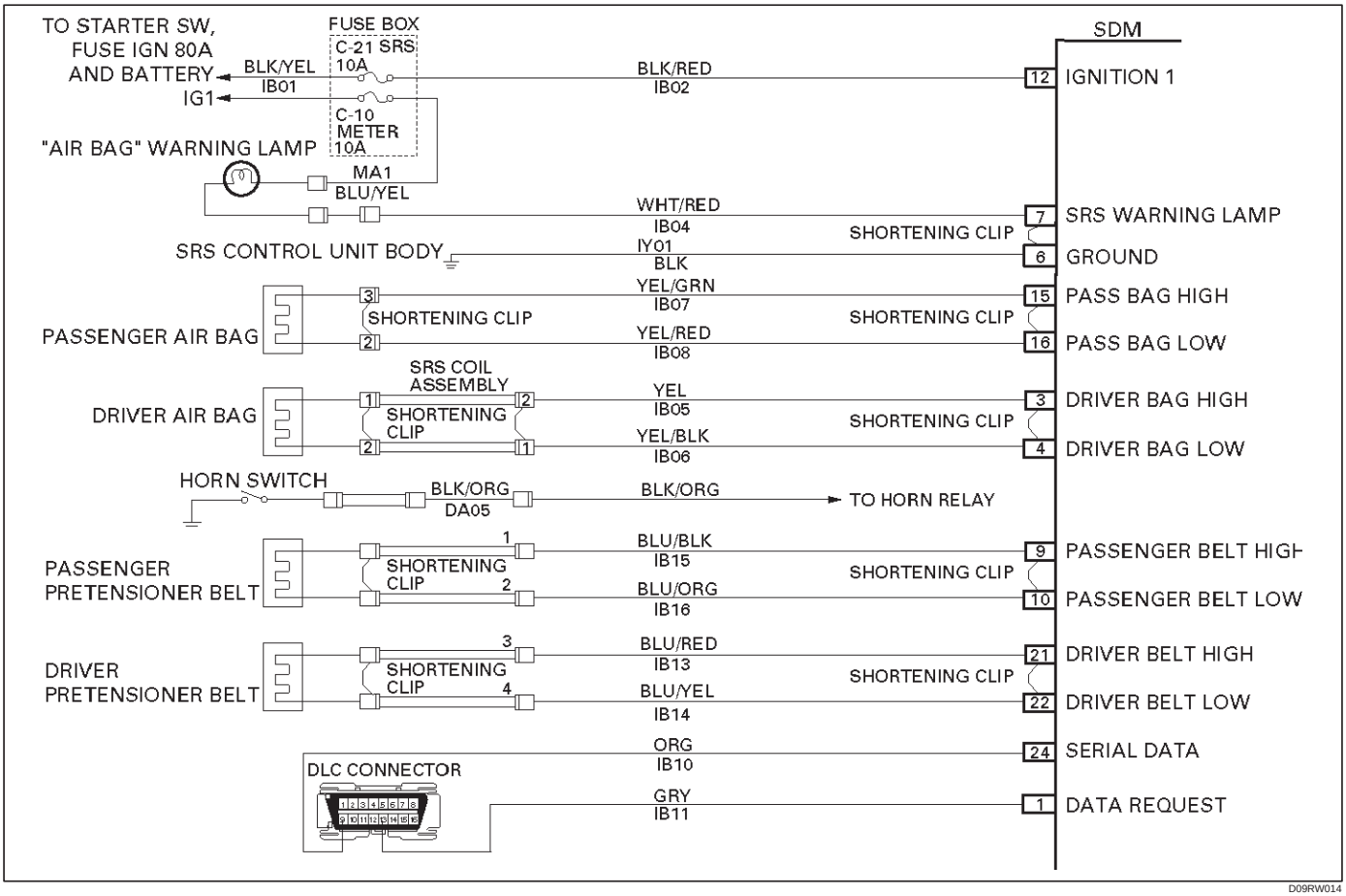

Circuit Description:

When the ignition switch is turned “ON”, the SDM will perform tests to diagnose critical malfunctions within itself. Upon passing these tests, “Ignition 1”, and pretensioner loop voltages are measured to ensure they are within their respective normal voltage ranges.

During “Continuous Monitoring” diagnostics, a fixed amount of current is following in the pretensioner loop. This produces proportional voltage drops in the loop. By monitoring the voltage difference between “Driver Belt High” and “Driver Belt Low”, the SDM calculates the combined resistance of the driver pretensioner assembly, harness wiring IB13–BLU/RED and IB14–BLU/YEL, and connector terminal contact.

DTC Will Set When:

The voltage difference between “Driver Belt High” terminal “21” and “Driver Belt Low” terminal “22” is above or equal to a specified value for 500 milliseconds during “Continuous Monitoring”.

Action Taken:

SDM turns “ON” the “AIR BAG” warning lamp and sets a diagnostic trouble code.

DTC Will Clear When:

The voltage difference between “Driver Belt High” terminal “21” and “Driver Belt Low” terminal “22” is below a specified value for 500 milliseconds during “Continuous Monitoring”.

DTC Chart Test Description:

Number(s) below refer to step number(s) on the diagnostic chart:

2. This test determines whether the malfunction is in the SDM.
3. This test verifies proper connection of the yellow 2–pin connector at the base of the driver seat.
4. This test checks for proper contact and/or corrosion of the yellow 2–pin connector at the base of the driver seat.
5. This test isolates the malfunction to one side of the driver pretensioner assembly yellow 2–pin connector located at the base of driver seat.
6. This test determines whether the open is in the wiring.

Diagnostic Aids:

An intermittent condition is likely to be caused by a poor connection at the driver pretensioner assembly harness 2–pin connector terminals “3” and “4” at the top of the steering column, SDM terminals “21” and “22”, or an open in IB13–BLU/RED and IB14–BLU/YEL.

DTC 44 Driver Pretensioner Loop Open

Step	Action	Yes	No
1	Was the “SRS Diagnostic System Check” performed?	Go to Step 2	Go to the “SRS Diagnostic System Check”
2	1. When measurements are requested in this chart use 5–8840–0285–0 DVM with correct terminal adapter from 5–8840–0385–0. 2. Use scan tool data list function, read and record the driver pretensioner circuit differential voltage. Is driver pretensioner VDIF more than 4.25 volts?	Go to Step 3	Go to Chart A
3	1. Ignition switch “OFF.” 2. Make sure the driver pretensioner assembly yellow 2–pin connector located at the base of the driver seat is seated properly. Is the yellow 2–pin connector connected properly?	Go to Step 4	Seat driver pretensioner assembly 2–pin connector Go to Step 7
4	1. Disconnect and inspect the driver pretensioner assembly yellow 2–pin connector located base of the driver seat. 2. If ok, reconnect the driver pretensioner assembly yellow 2–pin connector. 3. Ignition switch “ON.” Is DTC 44 current?	Go to Step 5	Go to Step 7
5	1. Ignition switch “OFF”. 2. Disconnect driver pretensioner assembly, yellow 2–pin connectors located at the base of the driver seat. 3. Connect SRS driver/passenger load tool 5–8840–2421–0 and appropriate adapter to driver pretensioner assembly harness connectors. 4. Ignition switch “ON.” Is DTC 44 current?	Go to Step 6	Go to Step 7
6	1. Ignition switch “OFF.” 2. There has been an open circuit in the driver pretensioner loop. 3. Use the high resolution ohmmeter mode of the DVM while checking IB13–BLU/RED and IB14–BLU/YEL, and SDM connector terminal “21” and “22” to locate the root cause. Was a fault found?	Replace SRS harness or repair chassis harness Go to Step 7	Go to Chart A
7	1. Reconnect all components ensure all component are properly mounted. 2. Clear diagnostic trouble codes. Was this step finished?	Repeat the “SRS Diagnostic System Check”	Go to Step 7

DTC 45 Driver Pretensioner Loop Short To Ground

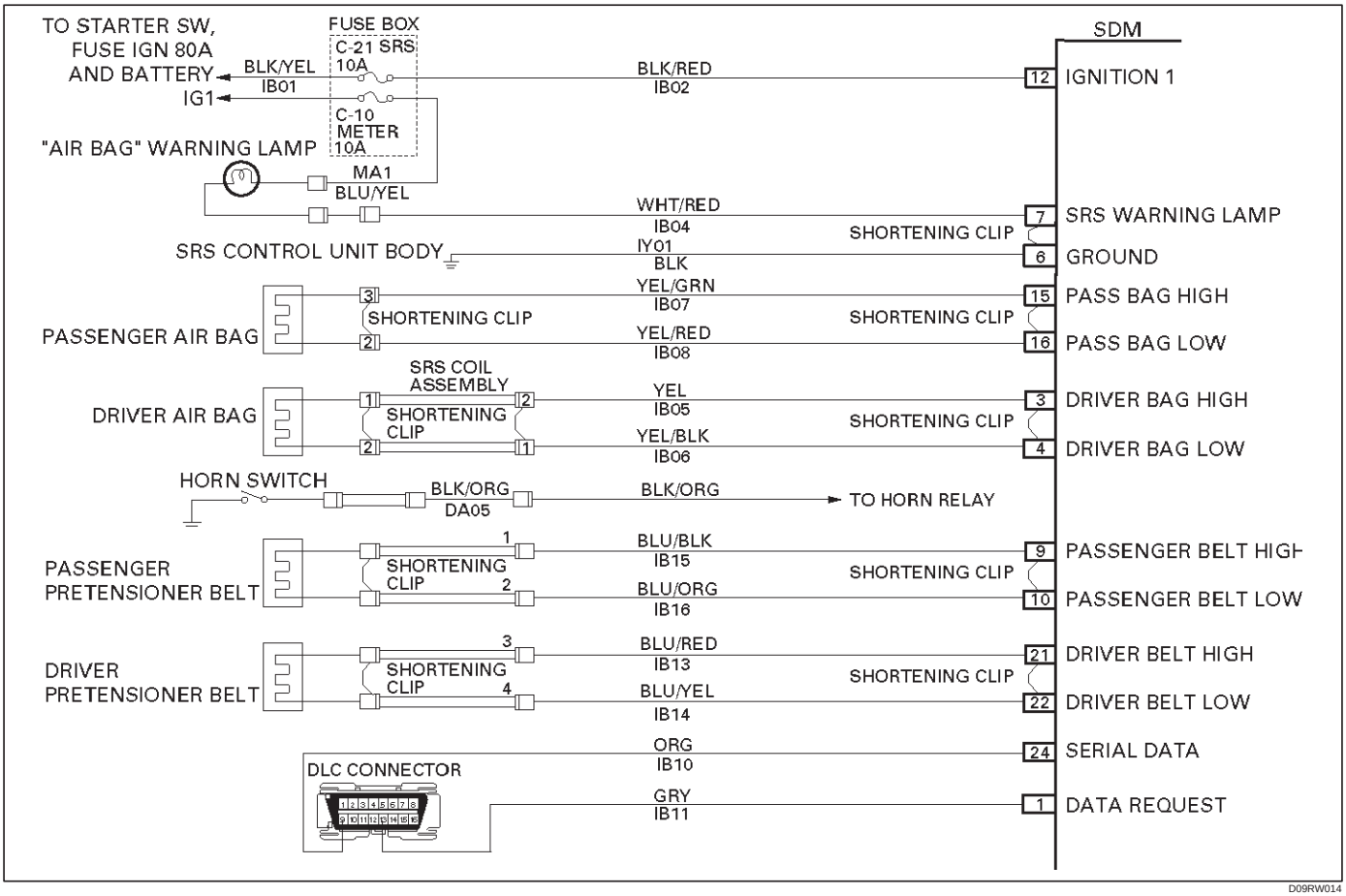

Circuit Description:

When the ignition switch is turned “ON”, the SDM will perform tests to diagnose critical malfunctions within itself. Upon passing these tests, “Ignition 1”, and pretensioner loop voltages are measured to ensure they are within their respective normal voltage ranges.
The SDM monitors the voltage at “Driver Belt Low” terminal “22” and “passenger Belt Low” terminal “10” to detect shorts to ground in the air bag assembly circuits.

DTC Will Set When:

Neither of the air bag and the pretensioner belt are open. “Ignition 1” is within the normal operating voltage range. This test is run once each ignition cycle and “Continuous Monitoring”. Once these conditions are met and the voltage at “Driver Belt Low” is below a specified value, DTC 45 will set.

Action Taken:

SDM turns “ON” the “AIR BAG” warning lamp and sets a diagnostic trouble code.

DTC Will Clear When:

The malfunction is no longer occurring and the ignition is turned “OFF”.

DTC Chart Test Description:

Number(s) below refer to step number(s) on the diagnostic chart:

2. This test determines whether the SDM is malfunctioning
3. This test isolates the malfunction to one side of the driver pretensioner assembly yellow 2–pin connector at the base of the driver seat.
4. This test determines whether the malfunction is in IB13–BLU/RED.
5. This test determines whether the malfunction is in IB14–BLU/YEL.

Diagnostic Aids:

An intermittent condition is likely to be caused by a short to ground in the driver pretensioner assembly circuit. Inspect IB13–BLU/RED and IB14–BLU/YEL carefully for cutting or chafing.

DTC 45 Driver Pretensioner Loop Short To Ground

Step	Action	Yes	No
1	Was the “SRS Diagnostic System Check” performed?	Go to Step 2	Go to the “SRS Diagnostic System Check”
2	1. When measurements are requested in this chart use 5–8840–0285–0 DVM with correct terminal adapter from 5–8840–0385–0. 2. Ignition switch “OFF.” 3. Connect scan tool data link connector. follow directions as given in the scan tool operator’s manual. 4. Ignition switch “ON.” 5. Read driver belt sense LO. Is driver belt sense LO less than 1.5 volts?	Go to Step 3	Go to Chart A
3	1. Ignition switch “OFF.” 2. Disconnect driver pretensioner assembly yellow 2–pin connector located at base of the driver seat, leave passenger pretensioner assembly connected. 3. Connect SRS driver / passenger load tool 5–8840–2421–0 and appropriate adapter to driver pretensioner assembly harness connector. 4. Ignition switch “ON.” Is DTC 45 current?	Go to Step 4	Go to Step 6
4	1. Ignition switch “OFF.” 2. Disconnect SDM. 3. Disconnect SRS driver / passenger load tool. 4. Measure resistance on SDM harness connector “21” to terminal “6” (ground). Does 5–8840–0285–0 display “OL” (infinite)?	Go to Step 5	Replace SRS harness or repair chassis harness Go to Step 6
5	Measure resistance on SDM harness connector from terminal “22” to terminal “6” (ground). Does 5–8840–0285–0 display “OL” (infinite)?	Go to Chart A	Replace SRS harness or repair chassis harness Go to Step 6
6	1. Reconnect all components ensure all component are properly mounted. 2. Clear diagnostic trouble codes. Was this step finished?	Go to the “SRS Diagnostic System Check”	Go to Step 6

DTC 46 Driver Pretensioner Loop Short To Voltage

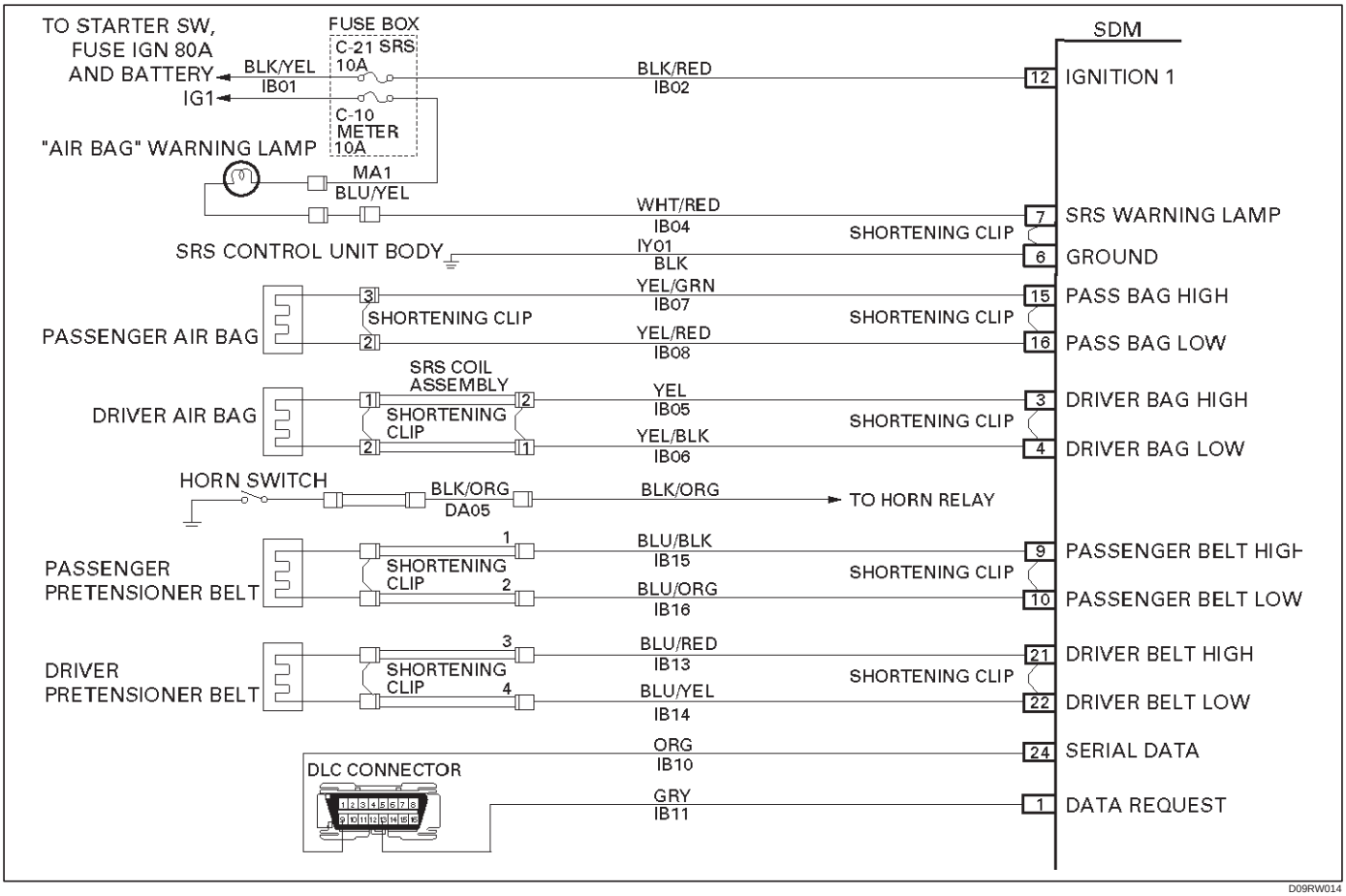

Circuit Description:

When the ignition switch is turned “ON”, the SDM will perform tests to diagnose critical malfunctions within itself. Upon passing these tests, “Ignition 1”, and pretensioner loop voltages are measured to ensure they are within their respective normal voltage ranges.
The SDM monitors the voltage at “Driver Belt Low” terminal “22” and “Passenger Belt Low” terminal “10” to detect shorts to B+ in the pretensioner assembly circuits.

DTC Will Set When:

“Ignition 1” is in the normal operating voltage range. This test is run once each ignition cycle and “Continuous monitoring”. Once these conditions are met and the voltage at “Driver Belt Low” is above a specified value, DTC 46 will set.

Action Taken:

SDM turns “ON” the “AIR BAG” warning lamp and sets DTC 46.

DTC Will Clear When:

The malfunction is no longer occurring and the ignition is turned “OFF”.

DTC Chart Test Description:

Number(s) below refer to step number(s) on the diagnostic chart:

2. This test determines whether the SDM is malfunctioning.
3. This test isolates the malfunction to one side of the driver pretensioner assembly yellow 2–pin connector at the base of the driver seat.
4. This test determines whether the malfunction is in IB13–BLU/RED.
5. This test determines whether the malfunction is in IB14–BLU/YEL.

Diagnostic Aids:

An intermittent condition is likely to be caused by a short to B+ in the driver pretensioner assembly circuit. Inspect IB13–BLU/RED and IB14–BLU/YEL carefully for cutting or chafing. If the wiring pigtail of the driver pretensioner assembly is damaged, the components must be replaced. A careful inspection of IB13–BLU/RED and IB14–BLU/YEL, including the driver pretensioner assembly is essential to ensure that the replacement SDM will not be damaged.

DTC 46 Driver Pretensioner Loop Short To Ignition

Step	Action	Yes	No
1	Was the “SRS Diagnostic System Check” performed?	Go to Step 2	Go to the “SRS Diagnostic System Check”
2	1. When measurements are requested in this chart use 5–8840–0285–0 DVM with correct terminal adapter from 5–8840–0385–0. Ignition switch “OFF.” Connect scan tool data link connector. follow directions as given in the scan tool operator’s manual. 2. Ignition switch “ON.” 3. Read driver belt sense LO . Is driver belt sense LO more than 3.5 volts?	Go to Step 3	Go to Chart A
3	1. Ignition switch “OFF.” 2. Disconnect driver pretensioner assembly yellow 2–pin connector at the base of the driver seat, leave passenger pretensioner assembly connected. 3. Connect SRS driver /passenger load tool 5–8840–2421–0 and appropriate adapter to driver pretensioner assembly harness connector. 4. Ignition switch “ON.” Is DTC 46 current?	Go to Step 4	Ignition switch “OFF” Replace driver pretensioner assembly Go to Step 6
4	1. Ignition switch “OFF.” 2. Disconnect SDM. 3. Disconnect SRS driver /passenger load tool. 4. Measure resistance on SDM harness connector “21” to terminal “12” (ignition). Does 5–8840–0285–0 display “OL” (infinite)?	Go to Step 5	Replace SRS harness or repair chassis harness Go to Step 6
5	Measure resistance on SDM harness connector from terminal “22” to terminal “12” (ignition). Does 5–8840–0285–0 display “OL” (infinite)?	Go to Chart A	Replace SRS harness or repair chassis harness Go to Step 6
6	1. Reconnect all components ensure all component are properly mounted. 2. Clear diagnostic trouble codes. Was this step finished?	Go to the “SRS Diagnostic System Check”	Go to Step 6

DTC 52 Pretensioner Deployment Event Commanded

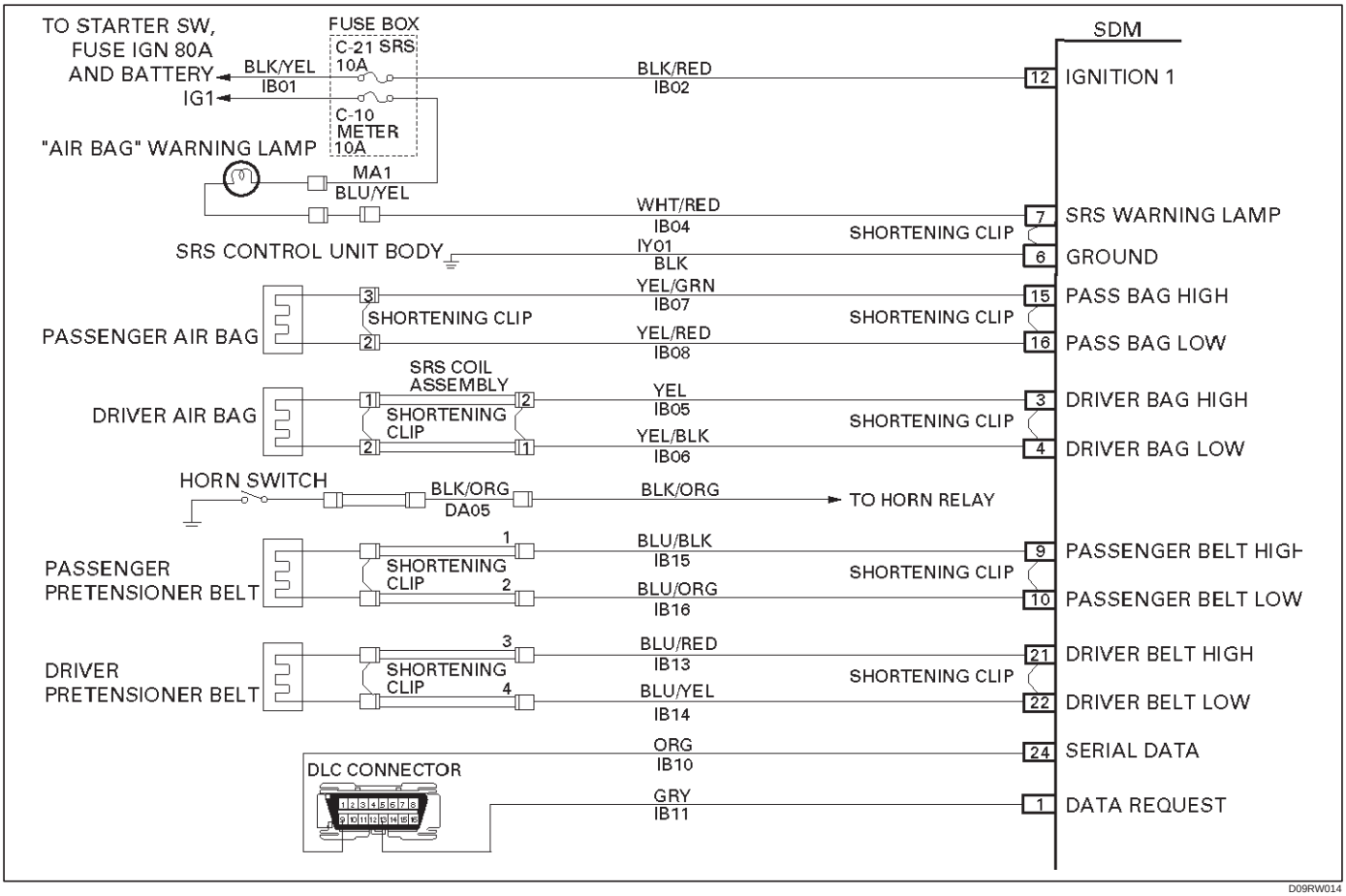

Circuit Description:

The SDM contains a sensing device which converts vehicle velocity changes to an electrical signal. The electrical signal generated is processed by the SDM and then compared to a value stored in memory. When the generated signal exceeds the stored value, the SDM will cause current to flow through the pretensioner assembly deploying the pretensioners and causing DTC 52 to set.

DTC Will Set When:

The SDM detects a frontal crash, up to 30 degrees off the centerline of the vehicle, of sufficient force to warrant deployment of the air bags and pretensioner seat belt.

Action Taken:

SDM turns “ON” the “AIR BAG” warning lamp records “Crash Data”, and sets a diagnostic trouble code.

DTC Will Clear When:

The SDM is replaced.

DTC Chart Test Description:

Number(s) below refer to step number(s) on the diagnostic chart:

2. If pretensioner assembly (s) has not deployed, DTC 52 may have falsely set.
3. If DTC 52 has set with no signs of frontal impact, the diagnostic trouble code has falsely set.

DTC 52 Deployment Event Commanded

WARNING: DURING SERVICE PROCEDURES. BE VERY CAREFUL WHEN HANDLING A SENSING AND DIAGNOSTIC MODULE (SDM). NEVER STRIKE OR JAR THE SDM. NEVER POWER UP THE PRETENSIONER WHEN THE SDM IS NOT RIGIDLY ATTACHED TO THE VEHICLE. ALL SDM AND MOUNTING BRACKET FASTENERS MUST BE CAREFULLY TORQUED AND THE ARROW MUST BE POINTING TOWARD THE FRONT OF THE VEHICLE TO ENSURE PROPER OPERATION OF THE PRETENSIONER. THE SDM COULD BE ACTIVATED WHEN POWERED WHILE NOT RIGIDLY ATTACHED TO THE VEHICLE WHICH COULD CAUSE DEPLOYMENT AND RESULT IN PERSONAL INJURY.

Step	Action	Yes	No
1	Was the “SRS Diagnostic System Check” performed?	Go to Step 2.	Go to the “SRS Diagnostic System Check”
2	Ignition switch “OFF.” Have pretensioner assemblies deployed?	Replace components and perform inspections as directed in “repairs and inspections required after an accident” in this section clear diagnostic trouble codes Repeat “SRS Diagnostic System Check”	Go to Step 3
3	Inspect front of vehicle and undercarriage for sings of impact. Were signs of impact found?	Replace components and perform inspections as directed in “Repairs and Inspections Required After An Accident” in this section Clear diagnostic trouble codes Repeat “SRS Diagnostic System Check”	Ignition switch “OFF” Replace SDM Reconnect all SRS system components, ensure all components are properly mounted Repeat “SRS Diagnostic System Check”

CONTROL SYSTEM

CRUISE CONTROL SYSTEM

CONTENTS

Service Precaution 10A–1
General Description 10A–1
Diagnosis 10A–2
Brake Switch 10A–2
Removal 10A–2
Installation 10A–2
Adjustment 10A–3
Clutch Switch 10A–3
Removal and Installation 10A–3
Adjustment 10A–3
Starter Switch 10A–4
Removal 10A–4
Installation 10A–4
Cruise Control Main Switch 10A–5
Removal 10A–5
Installation 10A–5
Cruise Control Switch (Combination Switch) 10A–5
Removal and Installation 10A–5
Cruise Control Unit 10A–6
Removal 10A–6
Installation 10A–6
Cruise Actuator 10A–7
Actuator Cable Diagram (LHD) 10A–7
Actuator Cable Diagram (RHD) 10A–7
Removal 10A–8
Installation 10A–8
Mode Switch 10A–8
Removal and Installation 10A–8

Service Precaution

WARNING: IF SO EQUIPPED WITH A SUPPLEMENTAL RESTRAINT SYSTEM (SRS), REFER TO THE SRS COMPONENT AND WIRING LOCATION VIEW IN ORDER TO DETERMINE WHETHER YOU ARE PERFORMING SERVICE ON OR NEAR THE SRS COMPONENTS OR THE SRS WIRING. WHEN YOU ARE PERFORMING SERVICE ON OR NEAR THE SRS COMPONENTS OR THE SRS WIRING, REFER TO THE SRS SERVICE INFORMATION. FAILURE TO FOLLOW WARNINGS COULD RESULT IN POSSIBLE AIR BAG DEPLOYMENT, PERSONAL INJURY, OR OTHERWISE UNNEEDED SRS SYSTEM REPAIRS.

CAUTION: Always use the correct fastener in the proper location. When you replace a fastener, use ONLY the exact part number for that application. ISUZU will call out those fasteners that require a replacement after removal. ISUZU will also call out the fasteners that require thread lockers or thread sealant. UNLESS OTHERWISE SPECIFIED, do not use supplemental coatings (Paints, greases, or other corrosion inhibitors) on threaded fasteners or fastener joint interfaces. Generally, such coatings adversely affect the fastener torque and the joint clamping force, and may damage the fastener. When you install fasteners, use the correct tightening sequence and specifications. Following these instructions can help you avoid damage to parts and systems.

General Description

The cruise control keeps the vehicle running at a fixed speed until a signal canceling this fixed speed is received . When the main switch “AUTO CRUISE” is turned on with the vehicle in the running mode, the battery voltage is applied to the control unit. When a signal from the control switch is input to the control unit while the vehicle is in this state, the cruise control actuator is activated to operate the system. Also, while the system is operating, the “AUTO CRUISE” indicator light in the meter assembly lights up.

1. SET/COAST Switch Function

1. **Set Function:** When the SET/COAST switch is pressed and released with the main switch on, the speed at which the vehicle is running at that moment is stored in the memory, and the vehicle automatically runs at the stored speed.
2. **Coast-down Function:** When the SET/COAST switch is kept on while the vehicle in running, the vehicle decelerates during that time. The speed at which vehicle is running when the control switch is turned off is stored in the memory, and the vehicle automatically returns to the stored speed.
3. **Tap-down Function:** When the SET/COAST switch is turned on and off instantaneously while the vehicle is running, the vehicle decelerates a mile for each on/off operation. The vehicle speed at which the vehicle was running when the SET/COAST was turned off last is stored in the memory, and the vehicle automatically returns to this stored speed.

2. RESUME/ACCEL Switch Function

1. **Resume Function:** When the RESUME/ACCEL switch is turned on/off after the system is temporarily deactivated by pressing the brake or clutch pedal while the vehicle is running, the vehicle resumes the speed stored before the system was released, and the vehicle automatically runs at the stored speed .
2. **Accelerate Function:** When the RESUME/ACCEL switch is kept on after the system is released completely, the vehicle accelerates its speed during that time. The vehicle speed at which the vehicle was running when the switch was turned off is stored in the memory, and the vehicle automatically returns to this speed.
3. **Tap-up Function:** When the RESUME/ACCEL switch is turned on and off instantaneously while the vehicle is running, the vehicle decelerates a mile for each on/off operation. The vehicle speed at which the vehicle was running when the switch was turned off last is stored in the memory, and the vehicle automatically returns to this stored speed.

3. CANCEL Function

1. **Temporary Cancellation:**
   - When the brake pedal is pressed.
   - When the clutch pedal is pressed. (M/T)
   - When the select lever is shifted to any position other than “D”, “3”, “2” or “L”. (A/T)
   - When the cancel switch is operated.
   - When the vehicle speed exceeds about 20 km/h over the vehicle speed stored in the memory.
   - Turning the RESUME/ACCEL switch will return the vehicle to the speed stored in the cruise control memory.
2. **Complete Cancellation:**
   - When the starter switch or the main switch is turned off.
   - When the fail-safe function is activated.
   - When the vehicle speed is about 38.5 km/h.

Diagnosis

Refer to the Cruise Control System Diagnosis in Wiring System section.

Brake Switch

Removal

1. Disconnect the battery ground cable.
2. Remove the brake switch (1).
   - Disconnect the connector.
   - Loosen the lock nuts of the switch.
   - Remove the switch by turning it.

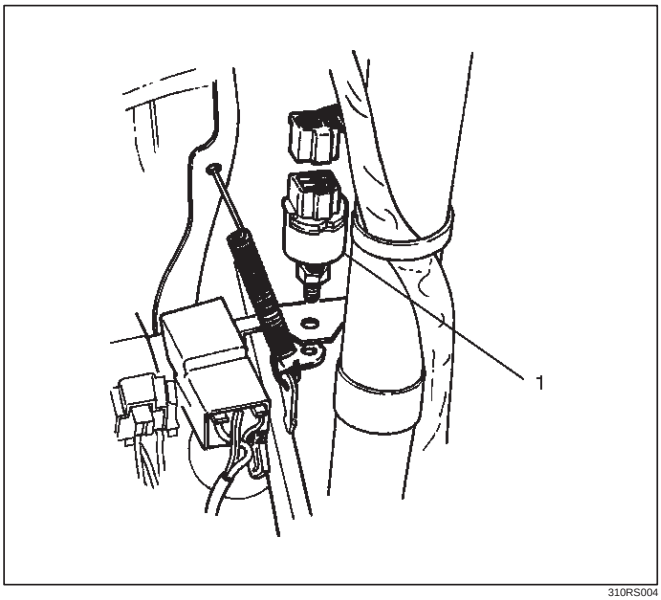

310RS004

Installation

To install, follow the removal steps in the reverse order, noting the following points.

1. Check to see if the brake pedal has been returned by the return spring to the specified position.
2. Turn the switch clockwise until the tip of the threaded portion of the brake switch contacts the pedal arm.
3. Turn the switch counterclockwise until the space between the tip of the threaded portion and the pedal arm is 0.5 to 1.0 mm (0.02-0.04 in.) as shown in the figure.

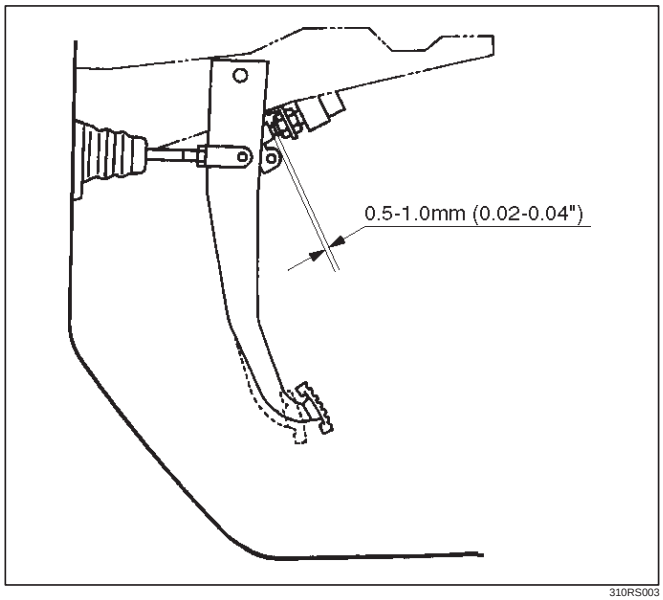

310RS003

Adjustment

1. Check to be sure that the brake pedal (3) has been completely returned by the return spring.
2. Disconnect the switch connector.
3. Loosen the lock nut (1) of the switch (2).
4. Turn the switch clockwise until the tip of screw portion of the brake pedal hits the pedal arm.
5. Turn the switch counterclockwise until the clearance between the tip of the screw portion and the pedal arm becomes 0.5 to 1.0 mm (0.02-0.04 in).
6. Tighten the lock nut.
7. Connect the switch connector.

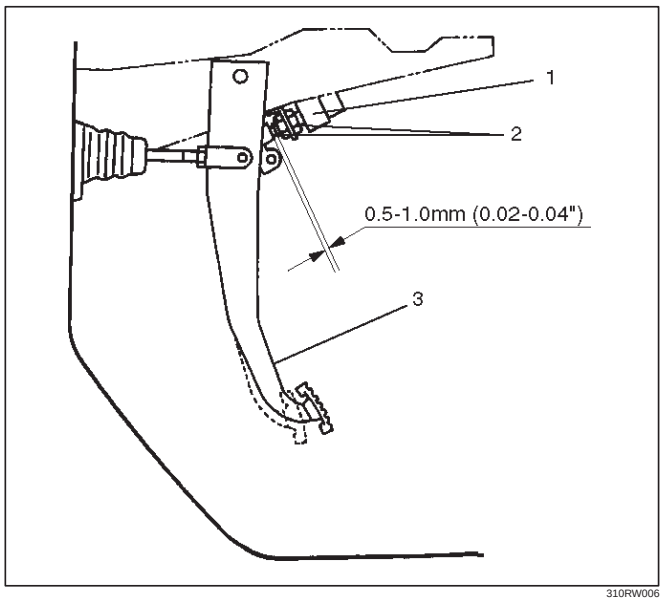

310RW006

Clutch Switch

Removal and Installation

Refer to the Clutch Control removal and installation steps in Clutch section.

Adjustment

1. Check to be sure that the clutch pedal (1) has been completely returned by the return spring.
2. Disconnect the switch connector.
3. Loosen the lock nut (2) of the switch (3).
4. Push the switch by hand until the push rod cannot be seen from the tip portion of the switch.
5. Give the switch one reverse rotation.
6. Tighten the lock nut.
7. Connect the switch connector.

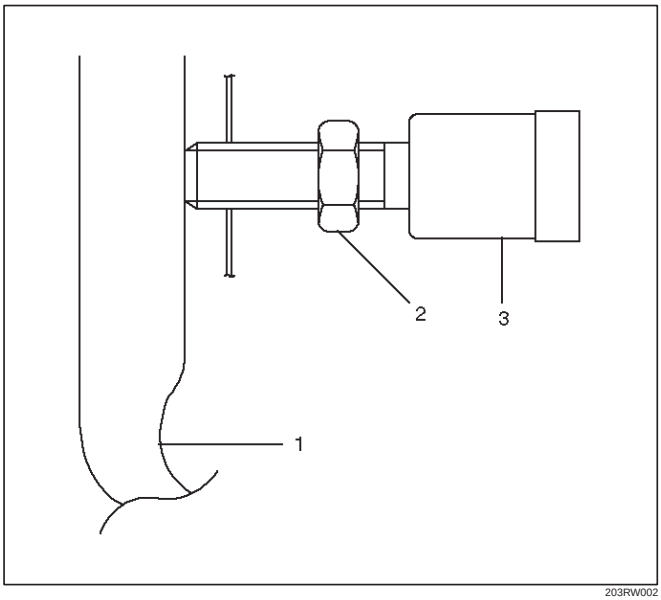

203RW002

Starter Switch

Removal

1. Disconnect the battery ground cable.
2. Remove the front console assembly (1). Refer to the Instrument Panel Assembly in Body Structure section.
3. Remove the lower cluster assembly (2). Refer to the Instrument Panel Assembly in Body Structure section.
4. Remove the instrument panel driver lower cover assembly (3). Refer to the Instrument Panel Assembly in Body Structure section.

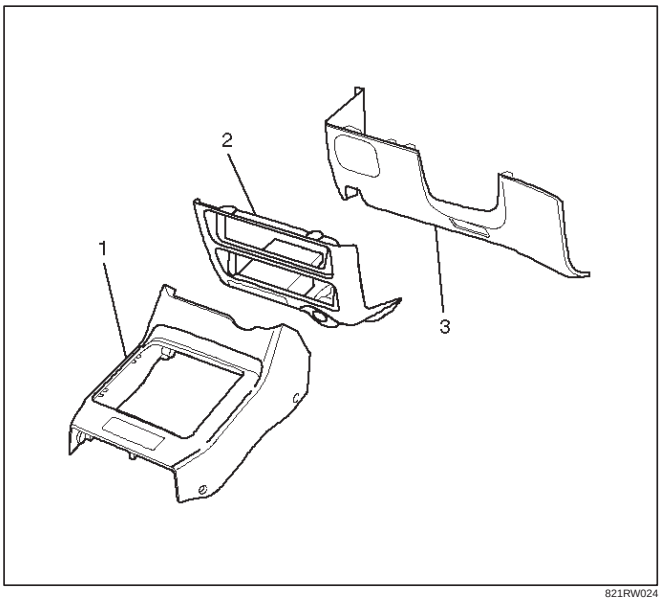

821RW024

5. Remove seven screws to remove the steering cowl (6).
6. Disconnect the connector, remove the screw (4) and then remove the starter switch (5).

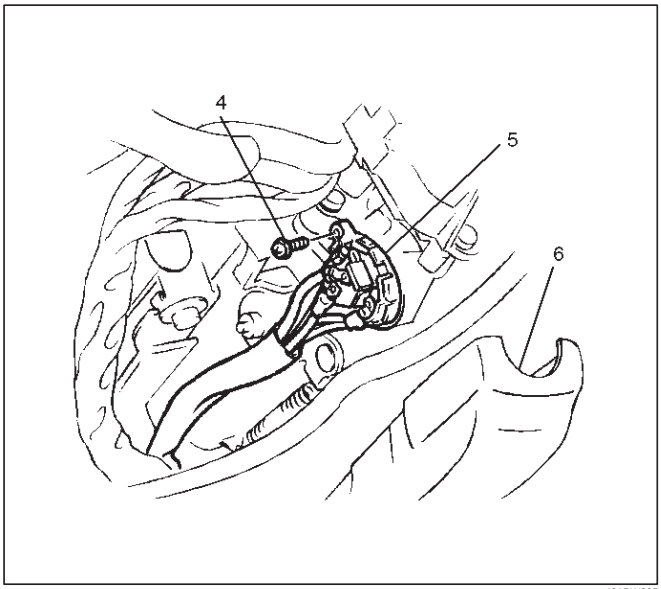

431RW005

Installation

To install, follow the removal steps in the reverse order, noting the following point.

1. When installing the steering cowl (10), be sure to pass the harnesses through the route as shown in the figure so that the starter switch harness (7), the combination switch harness (8) and the inflator module harness (9) will not catch.

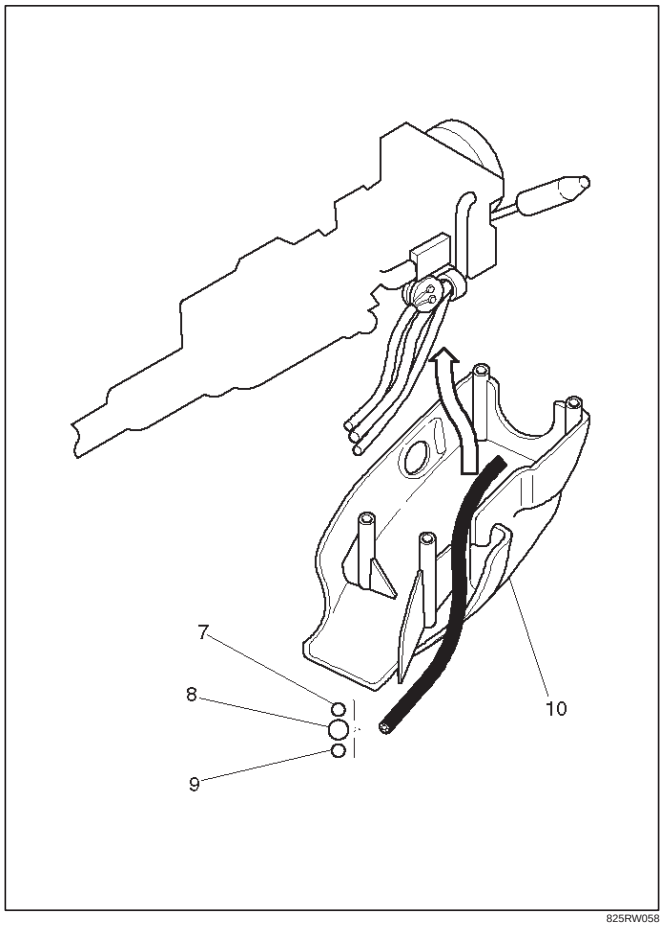

825RW058

Cruise Control Main Switch

Removal

1. Disconnect the battery ground cable.
2. Remove the front console assembly (1). Refer to the Instrument Panel Assembly in Body Structure section.
3. Remove the lower cluster assembly (2). Refer to the Instrument Panel Assembly in Body Structure section.
4. Remove the instrument panel driver lower cover assembly (3). Refer to the Instrument Panel Assembly in Body Structure section.

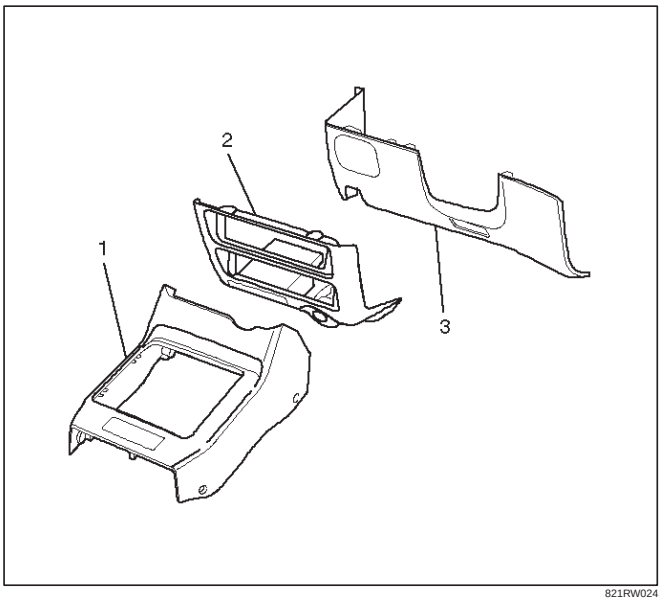

821RW024

5. Remove the instrument panel cluster assembly (5). Refer to the Instrument Panel Assembly in Body Structure section.
6. Disconnect the and push the lock from the side of the instrument panel cluster assembly to remove the cruise control main switch (4).

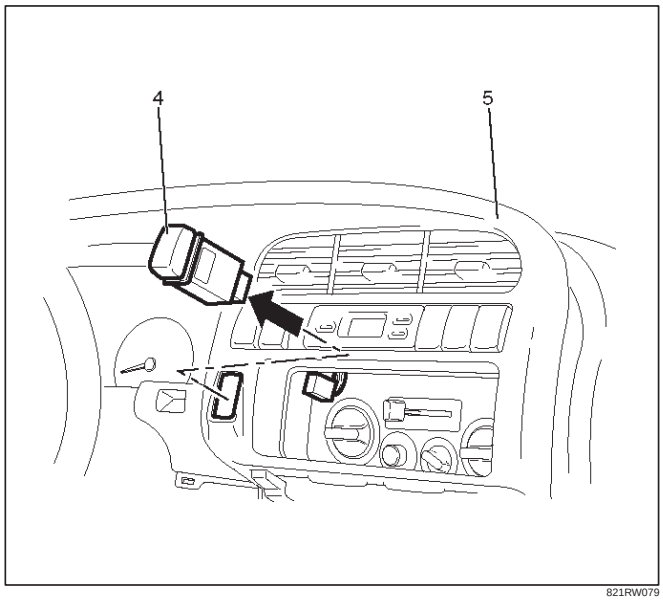

821RW079

Installation

To install, follow the removal steps in the reverse order, noting the following point.

1. Push in the switch with your fingers until the switch is locked securely.

Cruise Control Switch (Combination Switch)

Removal and Installation

Refer to the Lighting Switch (Combination Switch) removal and installation steps of Lighting System in Body and Accessories section.

Cruise Control Unit

Removal

1. Disconnect the battery ground cable.
2. Remove the dash side trim panel (RH)(2).
3. Disconnect the connector.
4. Remove a fixing nut to remove the cruise control unit (1).

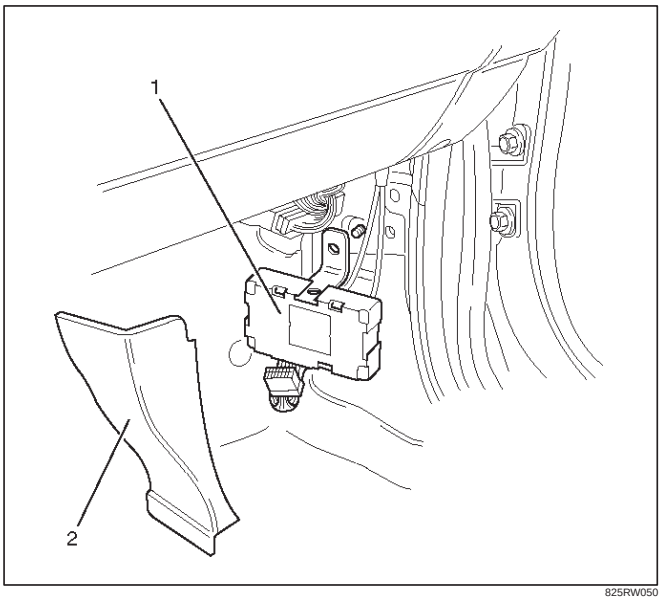

825RW050

Installation

To install, follow the removal steps in the reverse order.

Cruise Actuator

Actuator Cable Diagram (LHD)

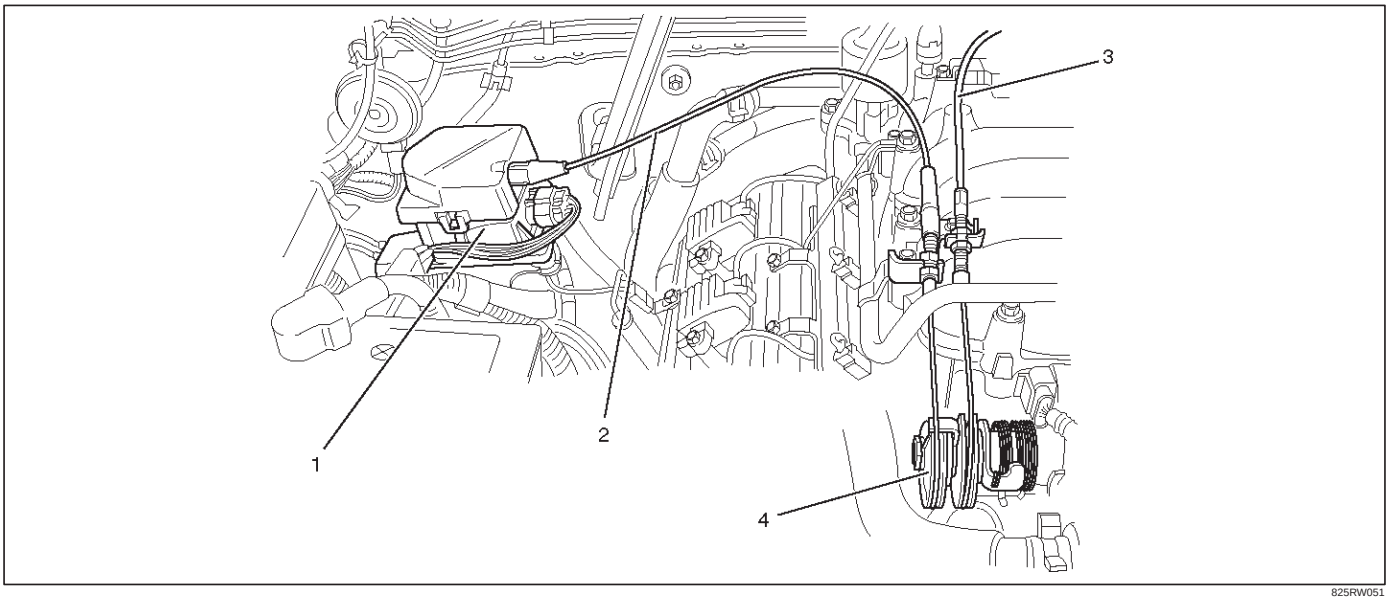

825RW051

Legend

(1) Cruise Actuator Assembly
(2) Cruise Control Cable
(3) Accel Control Cable
(4) Cam Link (Cruise Control Side)

Actuator Cable Diagram (RHD)

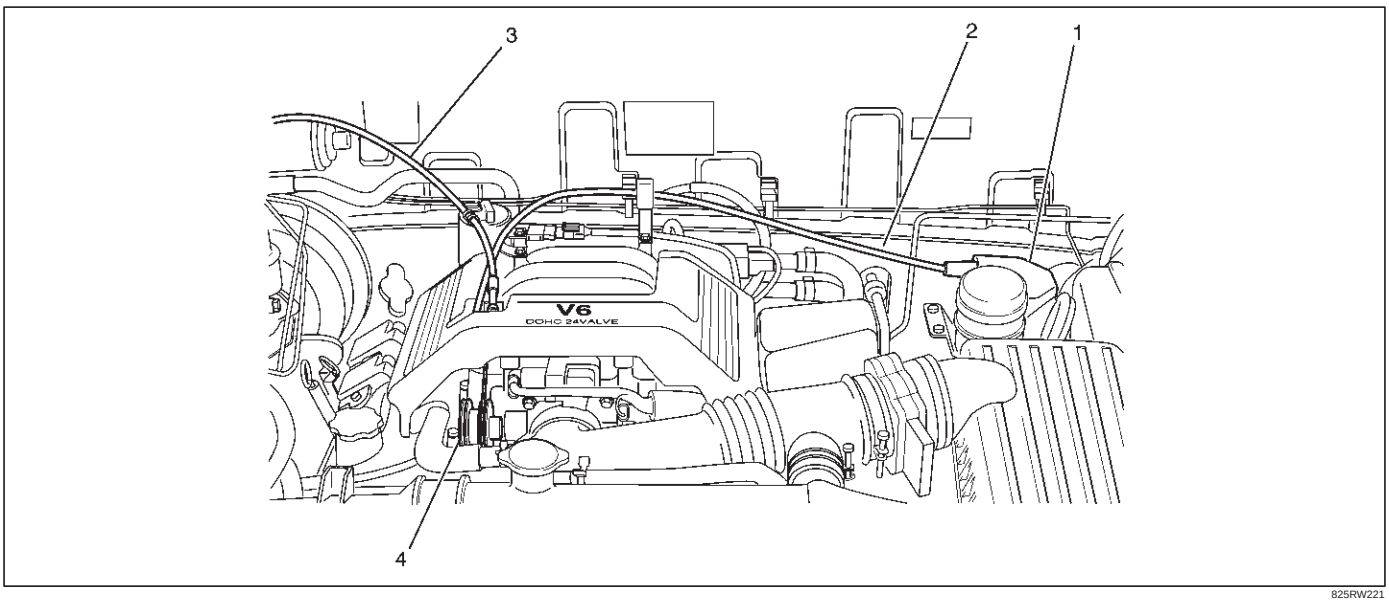

825RW221

Legend

(1) Cruise Actuator Assembly
(2) Cruise Control Cable
(3) Accel Control Cable
(4) Cam Link (Cruise Control Side)

Removal

1. Disconnect the battery ground cable.
2. Remove the cruise actuator Assembly (4).
   - Disconnect the connector (3).
   - Remove the cable end (1) from the cam link (cruise control side).
   - Loosen two fixing nuts (2).
   - Remove three actuator fixing screws.

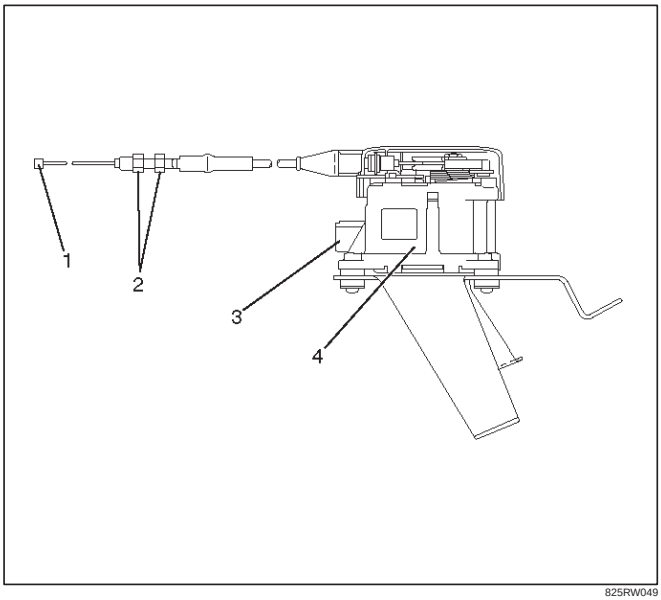

825RW049

Installation

To install, follow the removal steps in the reverse order, noting the following point.

1. Take care not to bend the cable excessively.

Mode Switch

Removal and Installation

Refer to the Mode Switch removal and installation steps in Automatic Transmission section.

CONTENTS

Isuzu UBS Immobilizer System Introduction 1

What your organization should provide for your customer 1

System outline 2

While the system is on 2
What happens without proper transponder operation? 2
No proper transponder is available, what should be done for the system? 2
Caution to the operation 3
Summary of operation 3
Illustration of Instrument pannel 3

Immobilizer system Gas Engine (6VE1 3.5L/6VD1 3.2L) 4

Immobilizer system Diesel Engine (4JX1 3.0L) 5

Immobilizer system Diesel Engine (4JG2 3.1L) 6

Electrical Equipment - Instruments 7

Location of Components 7
Connector 7

Electrical Equipment - Instruments 8

Terminal Assignment of Wiring Harness Connector, Immobilizer Controller(6VE1,6VD1,4JX1) 8
Terminal Assignment of Wiring Harness Connector, Immobilizer Controller(4JG2) 9

Electrical Equipment - Instruments 10

Function (Continued) Car Pass 10
Checking Component Required 11
Tech-II illustration 11

Important information on Programing 12

Security code 12

1. Entering a code 12

2. Getting started 13

3. Transponder 14

Transponder program 14

Erase transponder key 15

4. Reset Immobilizer ICU 16

5. Reset Function 17

6. Programing ICU, ECM 19

Important 23

Loss of car pass 24

Diagnostic procedure 26

1. 12 V power is not supplied to ICU. 27

2. Engine does not start after steering assembly is repaired. 27

3. If engine does not start after ICU replacement,

check part number 27

4. Immobilizer electrical wiring 33

Isuzu UBS Immobilizer System Introduction

This manual is an introduction of immobilizer system for service readiness view.

An electrical immobilizer is available as of Model Year 1998 UBS to prevent unauthorized persons from starting the engine. To support customers, there are some important items your organization needs to provide. If fails, your organization and Isuzu Motors may face severe customer complains.

What your organization should provide for your customer

- **Car Pass** For a new owner, your dealership must hand Car Pass card, which has identification numbers of new owner's vehicle immobilizer system. This imformation is very important in case of repair or lost of transponder.
  The followings are necessary items provided by your responsibility.
  1) Car Pass with Identification for a new owner
  2) Blank Car Pass Card when it is for reissue
  3) Instruction to dealers how to use Car Pass Card
- **Security code management** Your organization must keep security codes for all vehicles as confidential data. Once the security codes are lost, anybody who have the security code can access immobilizer system. Your organization has responsibility of any missing vehicles caused by stolen security code.
- **Customer support** Lost Car Pass may happen when customer needs security code. Your organization sets up release security code process with verification procedure.
  Sometimes customer needs security code in urgent manner. Therefore Isuzu recommends your organization organizes 24 hours support.
- **Essential tool** Your dealership must have Tech-II, and Tech-II updated software for immobilizer system.
- **Dealer training** Dealer technician must be trained how to diagnose, program, reprogram immobilizer system. Even though no problem happens, customer may request additional transponders when releases new vehicle to customer, or even afterward.
  Before Sales start, dealer training must be done.

System outline

The immobilizer system consists of the three major components, which are Engine Control Module (ECM), Immobilizer Control Unit (ICU), and transponder.
See page 4 for Gas engine, page 5,6 for Diesel Engine.

This system can be activated by a correctly programed transponder and starter switch is set to OFF. This system can be deactivated by a correctly programed Transponder Key connected with a correctly programed ECM and a correctly programed immobilizer ICU.

While the system is on
In case of Gas engine;
The starter cut off relay deactivates function of starter, and the fuel injector power source is deactivated also.

In case of Diesel engine;(4JX1)
The starter cut off relay deactivates function of starter, and the fuel injector power and rail pressure supply pump are deactivated also.

In case of Diesel engine;(4JG2)
The starter cut off relay deactivates function of starter, and the fuel injection system is deactivated also.

What happens without proper transponder operation?

One of the function of transponder is to deactivate or activate starter function. If the proper transponder is not used, starter cannot be operated. Because starter cut off relay stays on, cranking engine is not possible.

After the starter cut off relay is deactivated, transponder signal triggers to let immobilizer ICU calculate by transponder address signal and immobilizer algorithm.
When the result matches with necessary condition, it makes injector power source be activated. If transponder does not send correct signal, immobilizer ICU and ECM do not activate injector system on. Therefore the vehicle cannot be operated.

No proper transponder is available, what should be done for the system?
When any proper transponder is not available, a new transponder should be programed. Up to 5 transponders can be provided with Tech - II and by proper procedure. See pages 14.
In addition to the absence of proper transponder, it may happen particular secret code to the particular vehicle is missing. In this case, the secret code must be provided by your organization (refer to 'loss of car pass' on pages 24,25). Otherwise transponder cannot be programed in any way.

If the essential tool Tech - II for programing and proper software for Tech - II are not available, there is no permanent way to fix system. Temporary replace with new ECM, new ECU and new transponder without any secret code can make the system be deactivated, but it does not last long. Such a replacement does not solve any condition. Even after replacement, the system is activated automatically in short time and then no operation of the vehicle can be made in any way.
Tech - II should be provided in your organization. *See page 12.*

Caution to the operation
If an attempt is made to start the engine while the immobilizer system is activated, the CHECK ENGINE indicator flashes and the engine will not start. See the illustration at the bottom of this page.

Summary of operation
Set the ignition and starter cut off relay to OFF.
Activate

Set the ignition and starter cut off relay switch to ON by using the transponder key.
Deactivate

Illustration of Instrument pannel

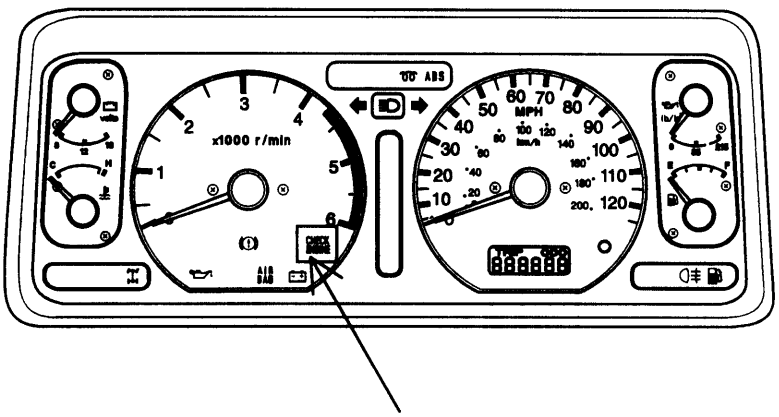

Check Engine light

Immobilizer system Gas Engine (6VE1 3.5L/6VD1 3.2L)

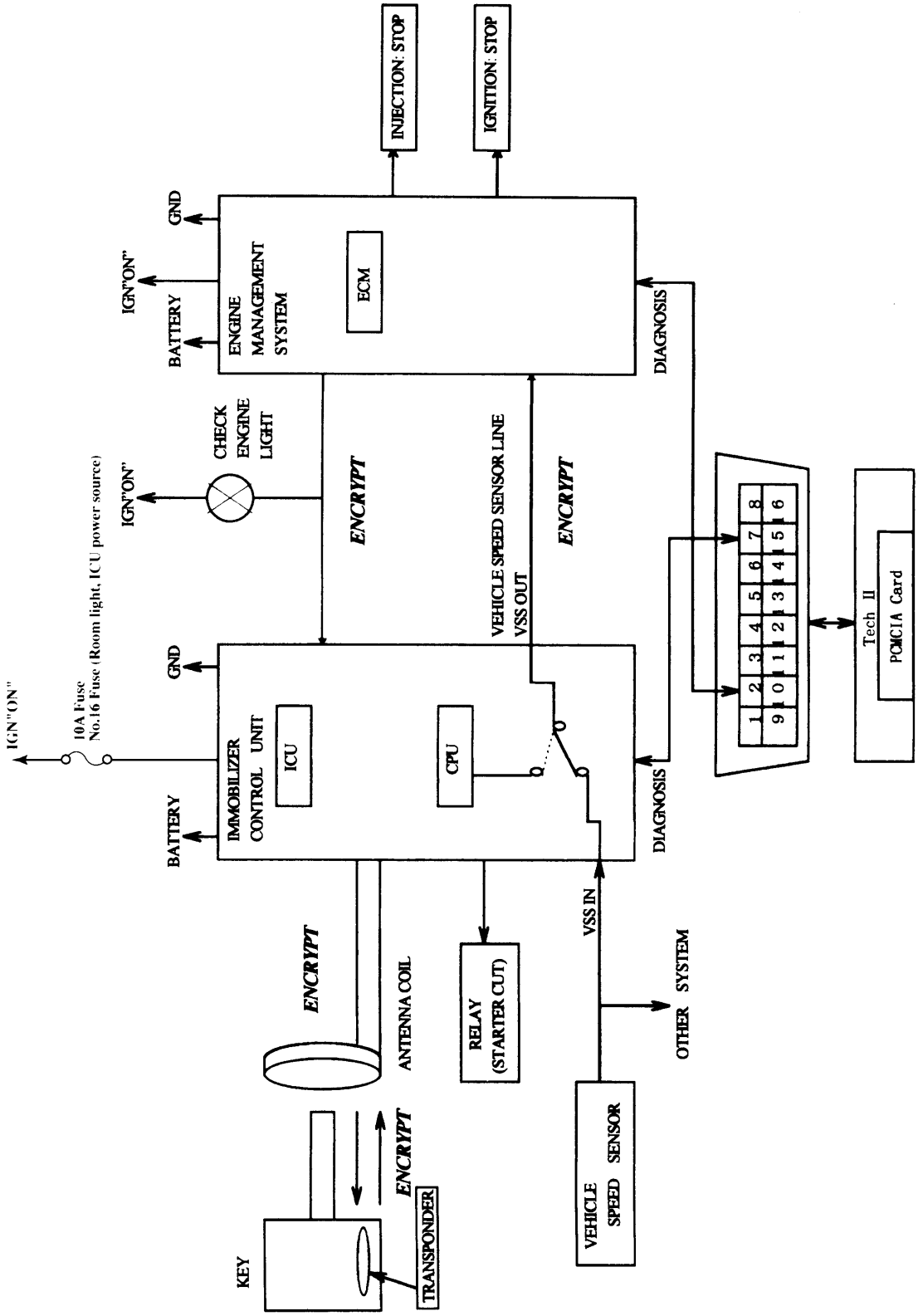

Immobilizer system Diesel Engine (4JX1 3.0L)

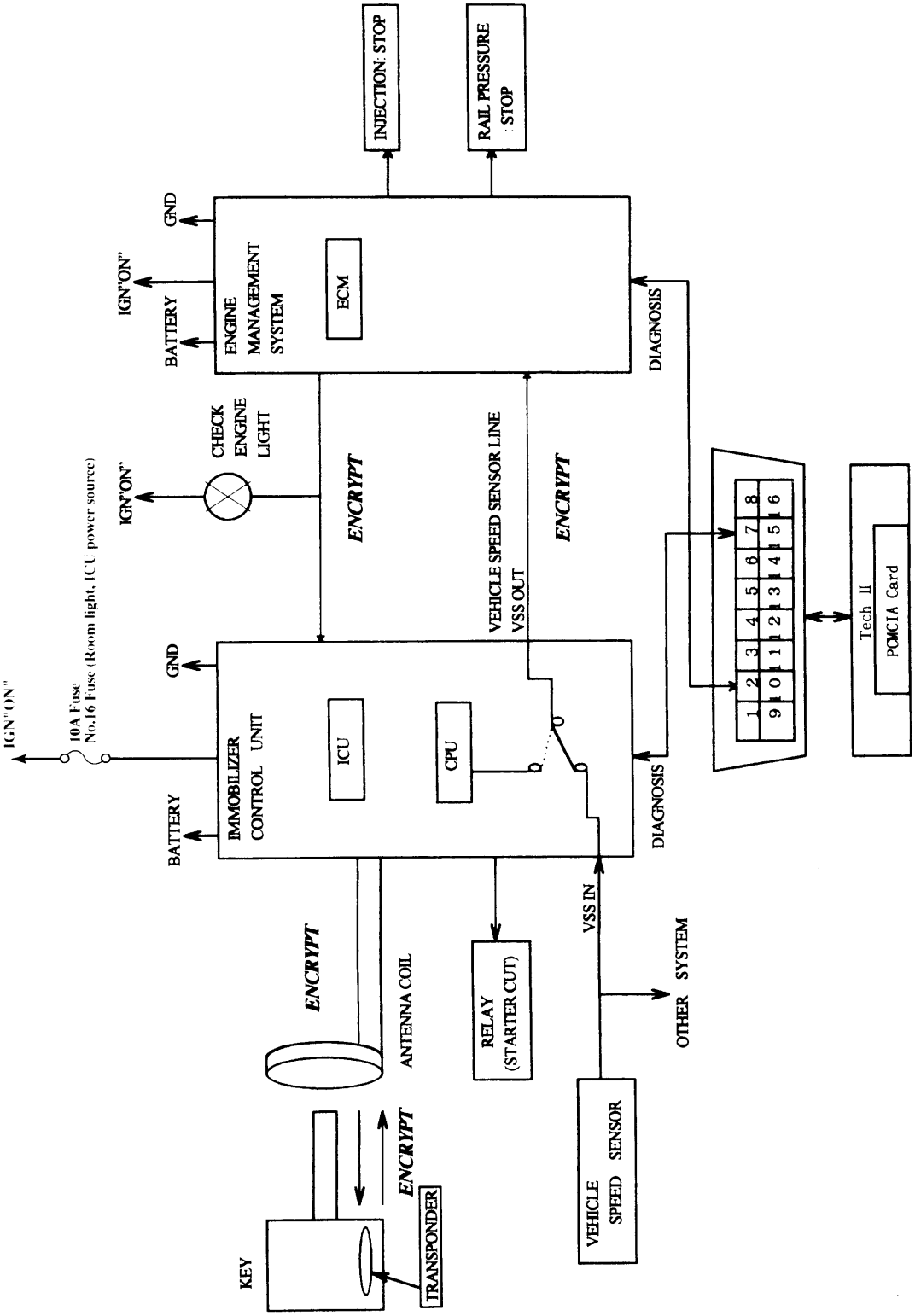

Immobilizer system Diesel Engine (4JG2 3.1L)

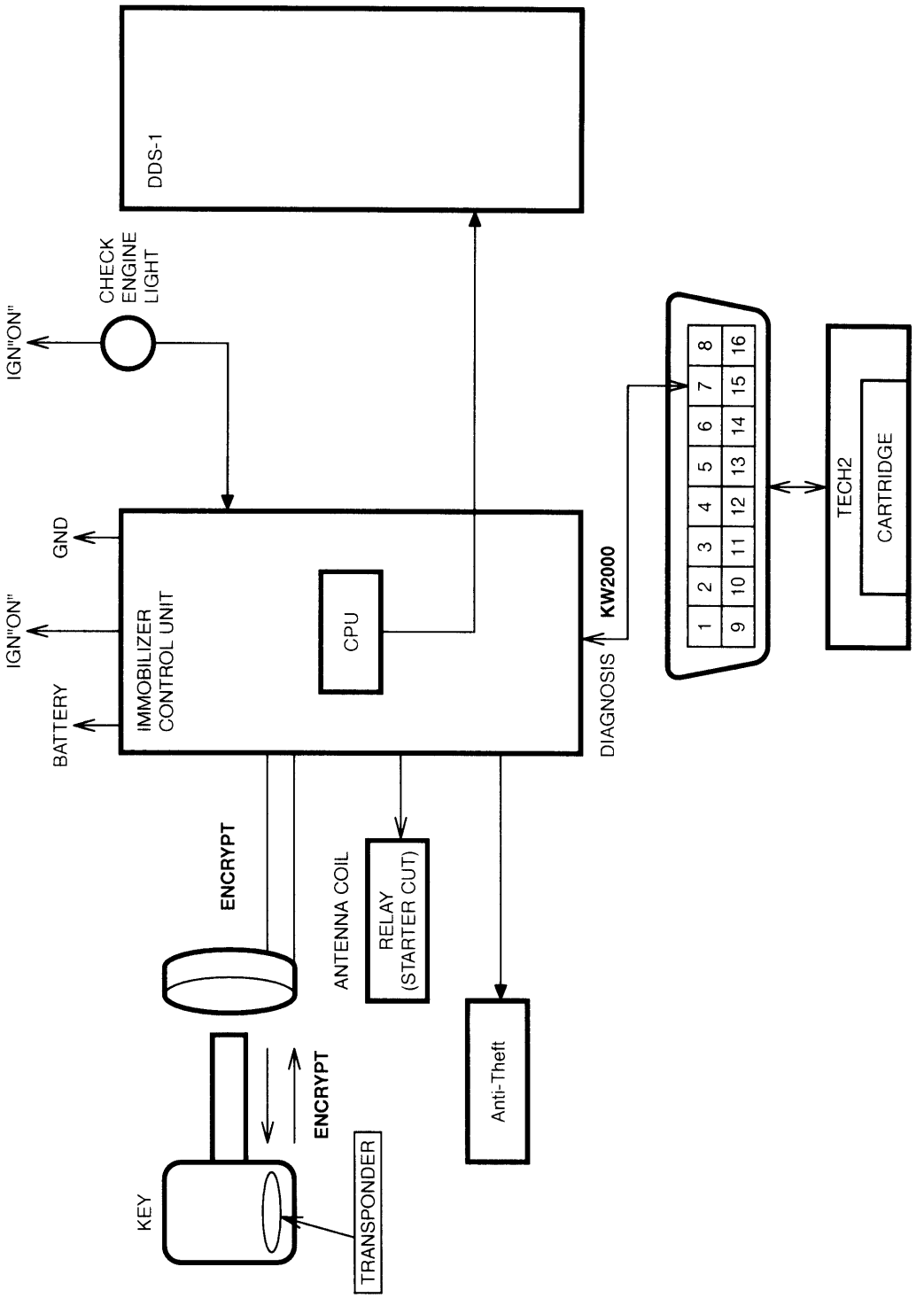

Electrical Equipment - Instruments

Location of Components

Connector

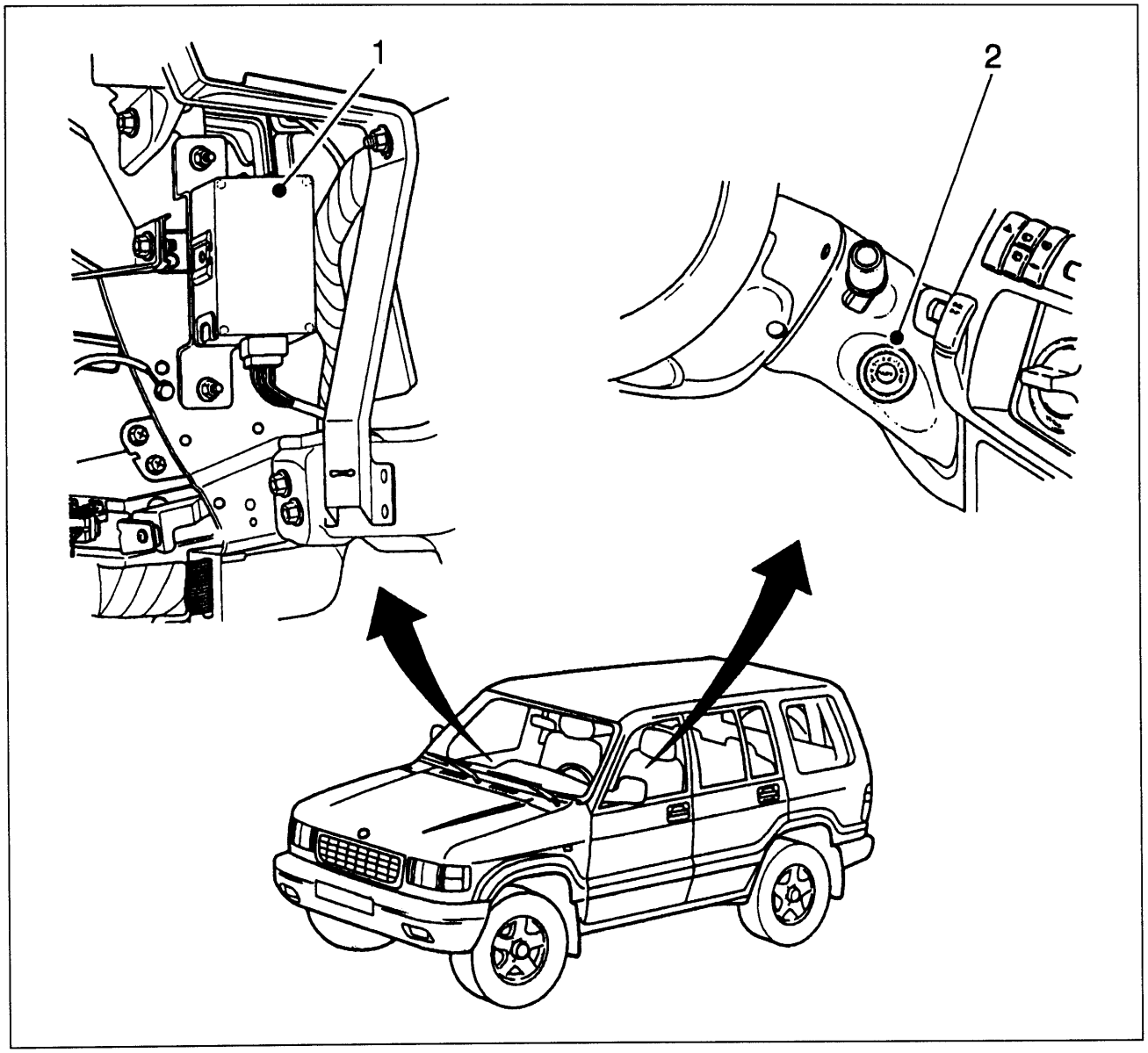

1 Control unit, electronic immobilizer (located at the lower instrument panel stay)
2 Antenna coil

Electrical Equipment - Instruments

Terminal Assignment of Wiring Harness Connector, Immobilizer Controller (6VE1,6VD1,4JX1)

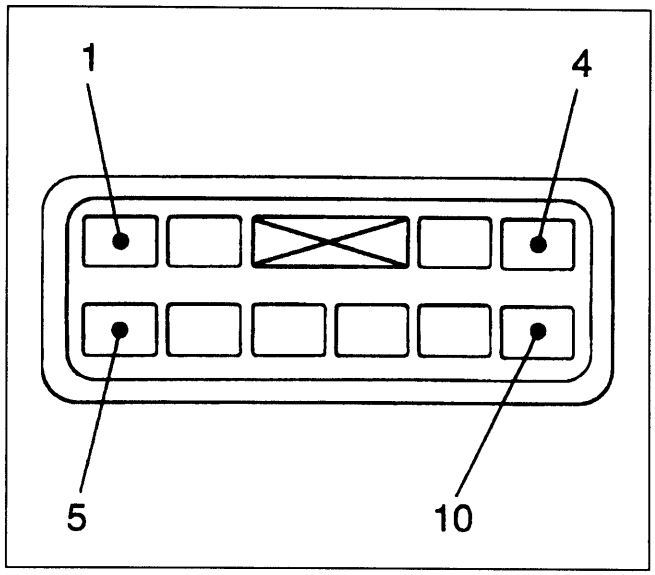

1 Voltage supply from fuse 16 in the instrument panel fuse box
2 Communication : carry on line from ECM to immobilizer
3 Antenna coil positive
4 Ground
5 Voltage from ignition switch ON
6 Communication : carry on line from immobilizer to ECM
7 To Tech-II
8 Speed sensor voltage
9 Antenna coil negative
10 Stater relay

Terminal Assignment of Wiring Harness Connector, Immobilizer Controller

(4JG2)

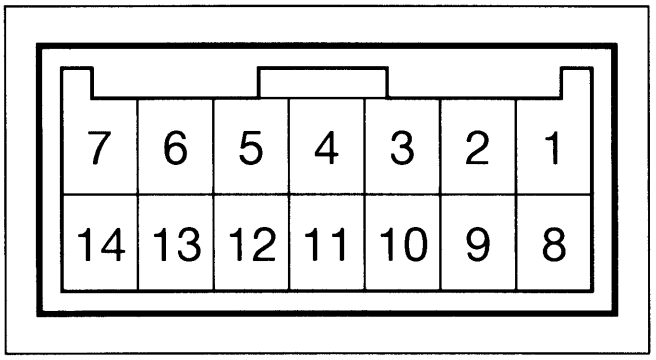

1 Back up Voltage supply
2 Voltage from ignition switch ON
3 Check Engine Lamp (Die Engine)
4 DWA
5 N.C
6 Antenna coil positive
7 Ground
8 Communication : carry on line from immobilizer to DDS- I
9 To Tech-II
10 N.C
11 N.C
12 N.C
13 Antenna coil negative

Electrical Equipment - Instruments

Function (Continued)

Car pass card

Each vehicle has a car pass, which is issued to the customer on delivery of the vehicle along with the other vehicle papers. For this, a card is used, similar to the conventional radio passes.

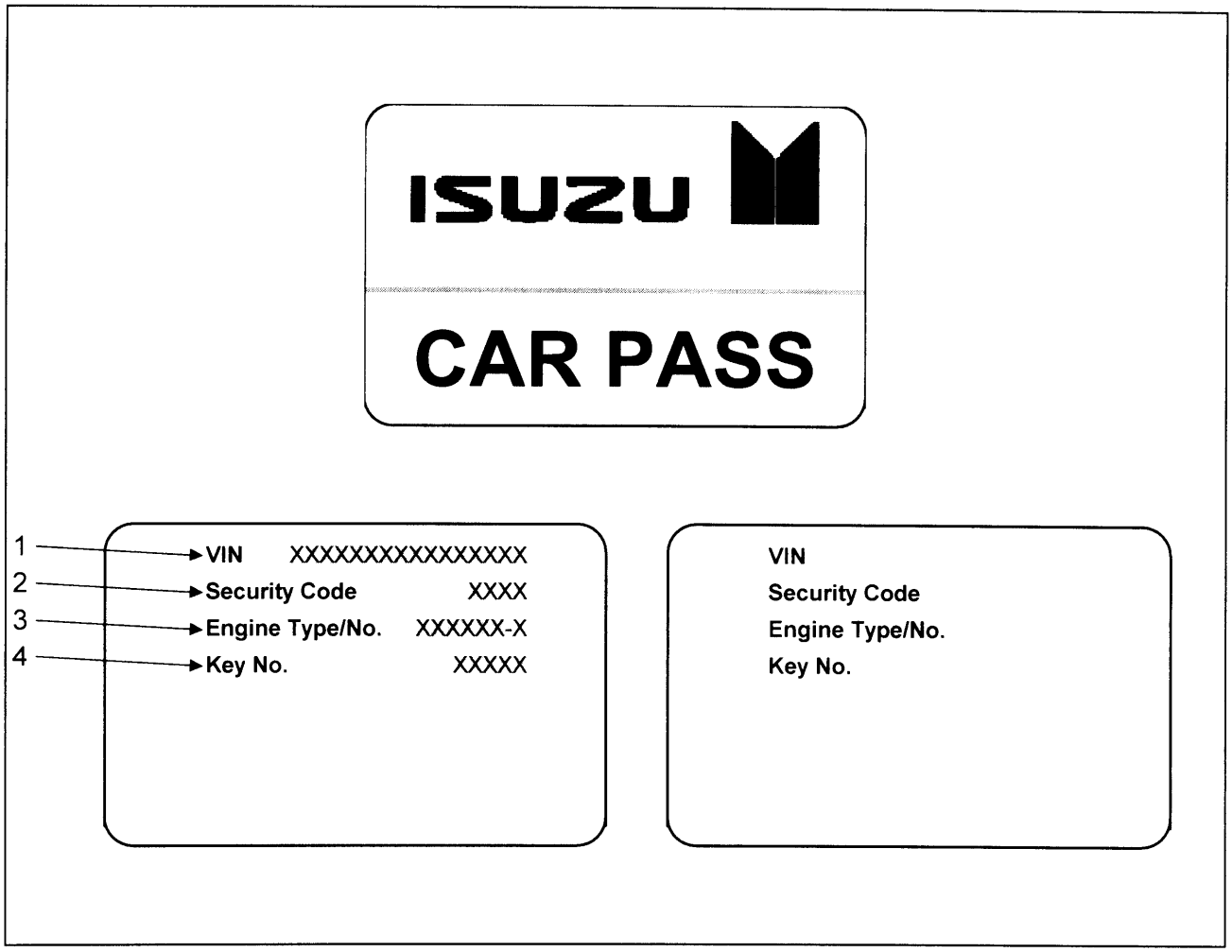

Note:

This car pass is an important document and must be treated with the same care as the vehicle papers. It must not be kept in the vehicle. The customer must present the car pass for operations involving the immobilizer or the engine control unit.

Checking Component Required

Tech-II
Tech-II software UBS immobilizer system
DLC kit for 16 pin diagnostic plug
Key cutter

Tech-II illustration

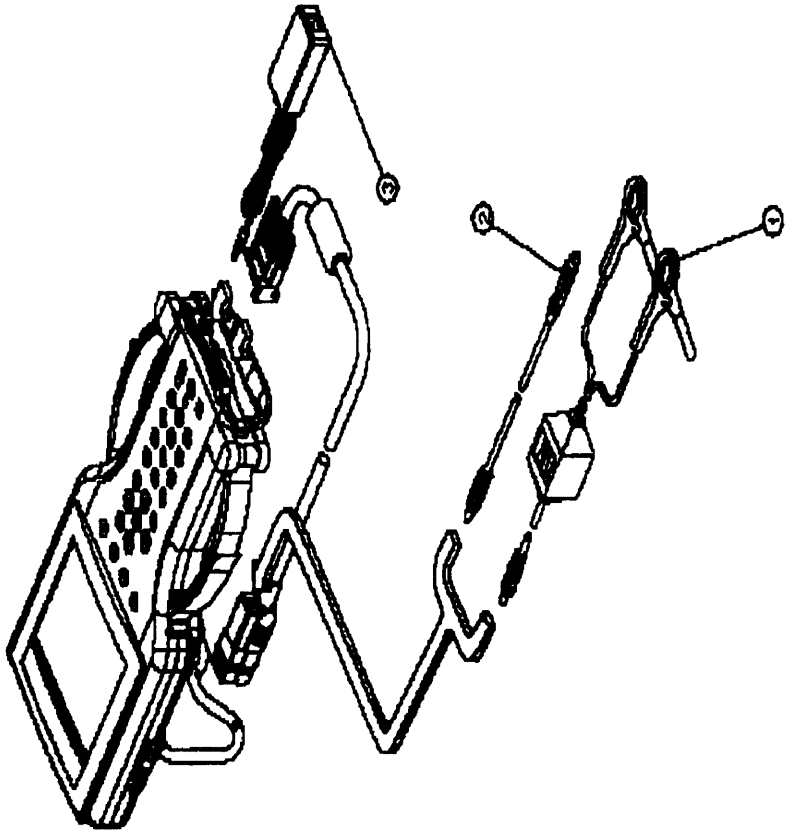

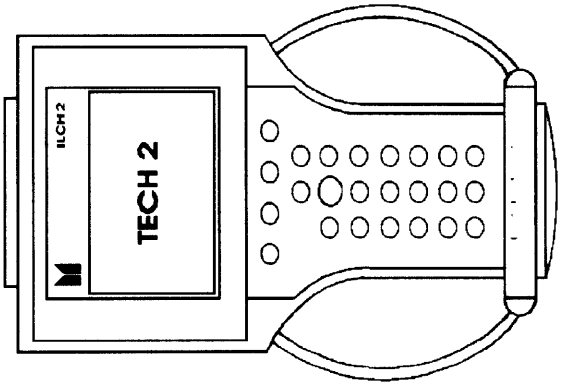

About Tech 2 (Power Supply)

Important information on Programing

Security code

The security code protects the immobilizer control unit against unauthorized programing and data access from Tech-II. The security code consists of a 4 digit code number and is programed into the immobilizer control unit and ECM (Engine Control Module) or PCM (Powertrain Control Module).

New control units are not programed with a security code. If the control units are replaced, the security code entered in the car pass, transponder ID, etc. must be programed into the new control unit with Tech-II.

The security code can only be programed with Tech-II once and must therefore be performed with great care. Once programed, the security code cannot be overwritten.
An already used immobilizer can be reused in a different car by initializing the immobilizer.
After that you can program the security code again. For initializing command you need the current security code.

If the immobilizer control unit is returned(e.g. warranty cases), always enclosed the security code that is allocated to that control unit. If this is not done, we can not process the case and the warranty will not be recognized.

1. Entering a code

If the Tech-II display requests that the

- security code
- mechanical key number
- Vehicle Identification No.

be entered, process as follows;

To input a digit you need to use the up and down buttons of the Tech-II. By using the numeric buttons the according digit will be displayed at the current position and the cursor will move to the next position.
For letters you need to use the up and down buttons of the Tech-II. The up and down key might be used for digits as well. By using the up and down buttons the displayed digit or letter will be increased or decreased.
To move to the next position you need to use the move-to-right-button.
With the two buttons, move-to-right and move-to-left you can select the position of number you want to change. This will allow you to correct a wrong number.
After the number is completed you need to press the Enter button to accept the number.
Correction is now no longer possible.
Use the OKAY soft key to program the number and the NOT OKAY soft key to abort the programing.

2. Getting started

Operate Tech-II to get the following screen menu as start.

- Select "Body" in System Selection Menu.
- The following table shows

F0 : Diagnostic Trouble Codes
  F0 : Read DTC Info Ordered By Priority
  F1 : Read DTC Info As Stored By ECU
  F2 : Clear DTC Information
F1 : Data Display
F2 : Snap shot
F3 : Actuator Test
  F0 : Immobilizer Relay Output Test
F4 : Additional Functions
  F0 : Read ECU identification
  F1 : Reset Immobilizer (Not available for 4JG2)
  F2 : Reset Engine Control Module (6VE1/6VD1,4JX1)
  F3 : Erase transponder-keys
F5 : Programing
  F0 : Program Immobilizer Function
  F1 : Program Transponder - keys
  F2 : Program Mechanical key Number
  F3 : Program Immobilizer Reset Solenoid (4JG2)

Note:

Before going to programing process, Tech-II indicates instruction as follows.

See checking procedure before programing

Confirm

3. Transponder

If a transponder key is lost;
If a transponder key is lost, all transponder keys in the immobilizer control system must be erased. Transponder keys can be ordered via the "Your proper organization name such as Parts and accessary department" as previously by providing the mechanical key number.
The mechanical key number is provided on the car pass.
Thereafter, existing and new transponder keys are programed consecutively using Tech-II. The vehicle can then no-longer be started using lost key.

5 transponder keys can be provided;
Each transponder has different Identifications. If a customer wants more than 2 transponder keys, maximum 5 transponder keys can be provided by additional programing by Tech-II.

If a new ignition key with different mechanical key number needs to be installed; If installation of an ignition lock with a different mechanism key number is necessary (an ignition lock which belongs to the mechanical key number has to be ordered first),all transponder keys must first be erased and the two transponder keys which belong to the ignition lock that is now installed must be programed.
The new mechanical key number must be programed now into the immobilizer. The mechanical key number in the car pass is to be changed as well.

Transponder program

1. Connect Tech-II, select "Body" and "Immobilizer".
2. Select program TP-Key mode.
3. See immobilizer status on Tech-II screen, and enter security code. If the status does not allow the programing, only immobilizer status is displayed.
4. Insert Non-programed Transponder-key and press soft key of "Confirm".

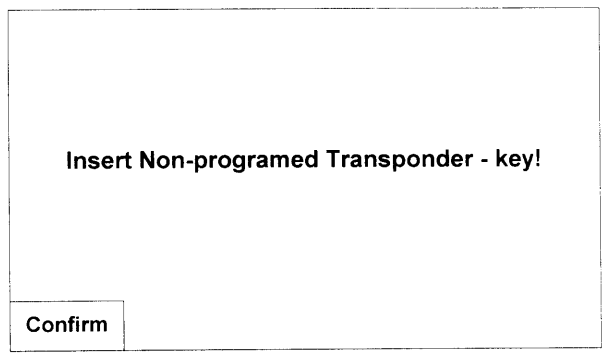

5. "Turn On ignition key", is displayed if the ignition is off.
6. The transponder status is displayed if the status does not allow the programing.
7. When programing starts "Programing Transponder - key!" is displayed.

8. Turn off Ignition key.
9. Turn ON Ignition.
10. If the programing was not successful, the transponder status is only displayed.
11. To program more illustrations, press soft key.

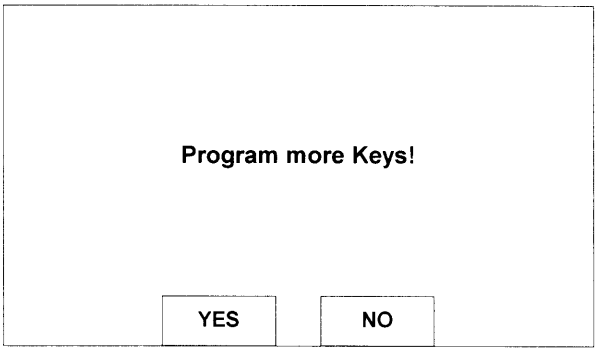

12. See programing result.

Erase transponder key

1. Select Erase TP-Key mode.
2. See immobilizer status on Tech - II screen and type security code. If the status does not allow the programing, only immobilizer status is displayed.
3. See illustration of caution.

CAUTION

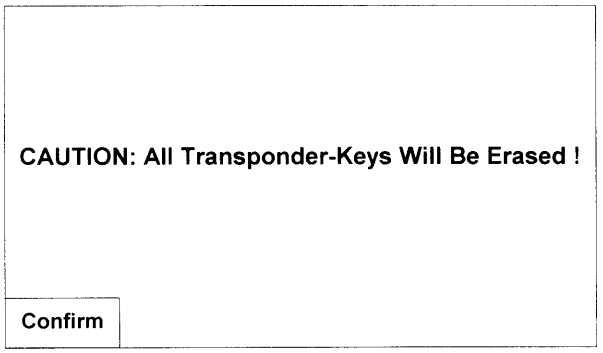

Erase

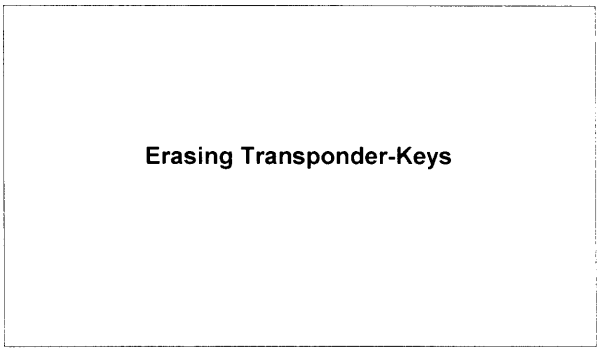

4. See programing result on display.

4. Reset Immobilizer ICU

1. Select “Body” and “Immobilizer”.
2. Select “Additional Functions” and “Reset Immobilizer”.
3. Enter the security code and press Confirm.
4. Reset Immobilizer screen shows up with warning. See the following screen.

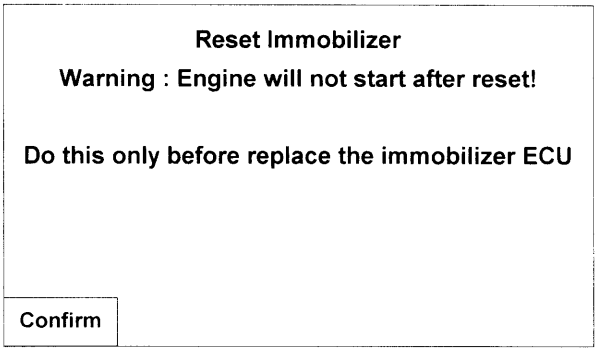

5. When reset is completed, the following screen shows up.

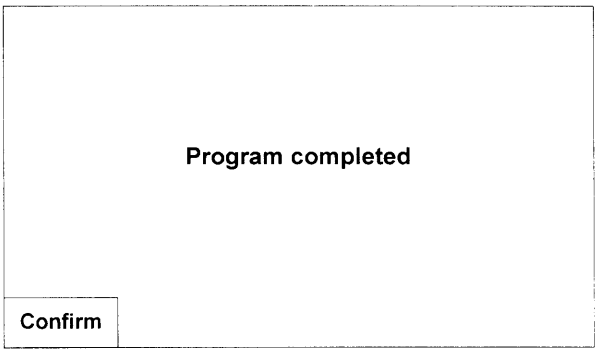

5. Reset Function

1. Select "Body" and F4"Additional Functions"
2. Select F2 "Reset Engine Control Module"
3. The following screen shows up.

Reset Engine Control Module
(Y) 2000 (UB) Trooper, Bighorn
Electronic System: Immobilizer

See Checking Procedure Before
Programming !

Confirm

4. Confirm the following screen shows up.
5. Input the security code, then press the soft key of "Not Okay" or "Okay".
6. The following screen shows up.

Reset Engine Control Module
(Y) 2000 (UB) Trooper, Bighorn
Electronic System: Immobilizer

Security Code

0000

Press ENTER key to continue

7. Program is completed.

Reset Engine Control Module
(Y) 2000 (UB) Trooper, Bighorn
Electronic System: Immobilizer

Programmimng Completed !

Confirm

8. When the procedure is completed wait 10 seconds and then turn the Key on. The fail lamp begins to flash.

9. Turn the ignition on, then engine does not run.
10. Reset is completed.

6. Programing ICU, ECM

- Program immobilizer ICU
  1. Select "Body" and "immobilizer".
  2. See immobilizer status on the display of Tech-II.
  3. Enter the security code.
  4. See ECM or PCM status.
  5. Input a program option, by moving the cursor on the selection, then press [Enter]

Input Program Options

Immobilizer installed
Engine Control Module installed
Immobilizer And ECM installed

Confirm

6. Input the security code, then press the soft key of "Okay" or " Not Okay".

CAUTION

Security Code
0000
Press ENTER Key to continue

Not OKay **OKay**

7. Enter VIN.

Enter VIN Input Screen

Vehicle Identification Number :
00000000000000000
Press ENTER Key to continue

Not OKay | **OKay**

8. Enter Mechanical key number.

Enter Key No. Input Screen

Mechanical Key Number :
N0000
Press ENTER Key to continue

Not Okay | **Okay**

9. Turn ON ignition.

Turn On Ignition

Ignition Status **Off 0V**

Turn Ignition On !

10. Select an engine system.

Select Engine System

3.5L V6 6VE1
3.2L V6 6VD1
3.0L L4 4JX1

Confirm

11. See the programing result.

    Tech - II displays the result of programing as the following
    Follow those instructions.

Selected Programing is not possible due to wrong System Status !
Immobilizer Not Programed !
Immobilizer Already Programed !
ECM Not Programed !
ECM Already Programed !

12. Transponder key must be reprogramed, because all transponder information is erased when ICU is programed. See Transponder programing.

- Program ECM
  1. Procedure is the same as program Immobilizer ICU procedure steps 1 through 5.
  6. Turn on the Ignition.
  7. Select an Engine system.
  8. See the display of programing result.

- Program ECM / Immobilizer ICU
  Caution ①Do not replace ICU and ECM at the same time.
  ②Change ICU at first or ECM and other one change follows.
  Follow Program Immobilizer ICU steps 1 through 6, procedure is the same as program Immobilizer ICU procedure steps 1 through 6.
  7. Input the security code.
  8. Enter VIN.

9. Enter Key No.
10. Select an engine system.
    See programing result display and follow instructions of the display.
11. Transponder key must be reprogramed, because all transponder information on ICU is erased when ICU is programed. See Transponder programing.
13. Follow program ECM steps 1 through 8.

Important

After successful programing, the engine control can only be used for vehicles with immobilizer and transponder. Faults that occur in connection with the immobilizer control unit are recognized by the engine control unit and as long as “IMMOBILIZER” is not programed, are indicated by a flashing of the engine check light.

If the immobilizer and engine control units are replaced at the same time, the immobilizer control unit must be programed first before the “immobilizer” function in the engine control unit can be activated.

Loss of car pass

If the car pass is lost, the data can be requested from your proper organization name. This request will only be processed if accompanied by the enclosed form and proof of ownership.
Once the data is received, it can be entered in a blank car pass and given to the customer. The unused car pass should be destroyed.

- Instructions on Filling Out the form " Data request, car pass"
  To be provided by the dealership
  The data requested under items 1-10 must be provided completely, including the authorized dealership number, the vehicle ident,number(VIN) and engine type/number (Engine type/No)

  Mark missing data / desired data with a cross:

  19. Security code (for diagnosis and programing with Tech-II)
  20. Mechanical key Number

  Complete the form by entering the data and signature/authorized dealership stamp and send it along with proof of ownership(vehicle ID or invoice) to address provided in the form. The requested data will be sent by Fax to the dealership that made the request after your organization has confirmed that the info is corrected.

  Important Instructions:
  Only data corresponding to the delivery status of the vehicle can be issued. Car pass data requests will only be processed if the first column is filled out completely, signed and sent to your organization along with proof of ownership.

  Information via telephone is only possible in exceptional circumstances via your service organization.

  As for the delivery of new vehicles, the customer must be informed about all features of the car pass that are relevant to vehicle security, for example, that the car pass should be kept in a safe place(not in the vehicle) and should be presented when an authorized your organization name workshop is visited. The exact phrasing can be found in the relevant Owner's Manual.

Data Request
Car Pass

Your organization name

To be filled out by authorized dealership:	Comment, plant security
1. Dealership name	.....
2. Name of contact partner	.....
3. Dealership number	.....
4. Address	.....
.....	.....
5. Tel: Fax:	.....
6. Name of registered keeper	
7. Reason for request (please mark with cross) .	
-Loss by customer ○	
-Loss by dealership ○	
-New delivery without Car Pass ○	
-Theft ○	
8. Vehicle type:.....	
9. VIN:.....	.....
10. Engine type/no.:	.....
	.....
Requested data (please mark with cross)	
11. Security Code: ○	
12. Key No.: ○	.....
13. Radio code (if lost, please supply radio unit number)	.....
	.....
14. CD-changer code (if lost, please supply CD-changer unit number) ○	.....

Important Instructions:
Only data corresponding to the delivery status of the vehicle Ex works can be Issued. Car pass data requests will only be processed if they are filled out completely, signed and sent to your organization along with proof of ownership (enclosure).
Information via telephone is only possible in exceptional circumstances via your service organization.

Comments from Plant Security:

○ No signature

○ Data/proof of ownership missing, please supply

○ Data/proof of ownership incomplete, please complete

○ Illegible due to poor fax communication, please resend

Date, signature/stamp (Dealership)

Date, signature (Plant Security)

Enclosure: Proof of ownership ○

Diagnostic procedure

System guidance

- Engine does not run when any Diagnostic Trouble Code (DTC) is flagged, starting from 00MY UBS.
- Once the cause of DTC is repaired or gone, engine can be operated normally, and present DTC becomes history code.
- History code is canceled by no repeat failure on 25 consequence ignition key on afterward.
- History code cannot be canceled by battery connector disconnected, starting from 00MY.
- UBS with Gas engine when DTC is flagged, ECM or PCM disfunctions Injectors. Immobilizer Control Unit (ICU) commands to cut starter cut relay.
- UBS with Diesel engine when DTC is flagged, ECM or PCM disfunctions 4JX1: Injector and command that common rail pressure becomes 0 kg/cm^2. 4JG2: Injection System ICU commands to cut starter cut relay.

Diagnostic Trouble Code (DTC) list

○-All engine ×-6VE1,6VD1,4JX1 △-4JG2

Code (BCD)	Applied engine	Item	Detecting Condition
B8011	○	TRANSPONDER KEY PROBLEM	Transponder code unsuccessfully read 5 consecutive times (Not completely read in 500 transponder code).
B8012	○	WRONG TRANSPONDER KEY	Transponder code read from the ignition key does not match the transponder code stored in the control unit.
B8013	○	IMMOBILIZER NOT PROGRAMED	Immobilizer program not executed.
B8014	○	NO TRANSPONDER KEY PROGRAMED	Processing to save the transponder key in the control unit not executed.
B8015	×	VEHICLE SPEED SIGNAL Lo	Lo level (2.5V or less) input during the Hi level was being output in the Immobilizer Signal.
	△	FREQUENCY SIGNAL Lo	Lo level (2.5V or less) input during the Hi level was being output to the communication line.
B8016	×	VEHICLE SPEED SIGNAL Hi	Hi level (more than 2.5V) input during the Lo level was being output in Immobilizer Signal.
	△	FREQUENCY SIGNAL Hi	Hi level (more than 2.5V) input during the Lo level was being output to the communication line.
B8017	×	NO ENGINE REQUEST RECEIVED	No request signal received from the engine control unit in a second after the ignition key has been placed at ON.
B8023	○	ANTENNA COIL OPEN	Antenna coil not connected.
B8024	○	WRONG TRANSPONDER RESPONSE	Transponder response signal with the challenge is wrong.
B8025	×	WRONG ENGINE REQUEST	The challenge signal from the engine control unit is invalid.
B8055	○	EEPROM ERROR	Write and read cannot be correctly made to and from the EEPROM in the control unit.

Diagnostic procedure

No DTC indicates

Engine does not start to run even though all engine and electrical system are OK, and no DTC appears.

1. 12 V power is not supplied to ICU.

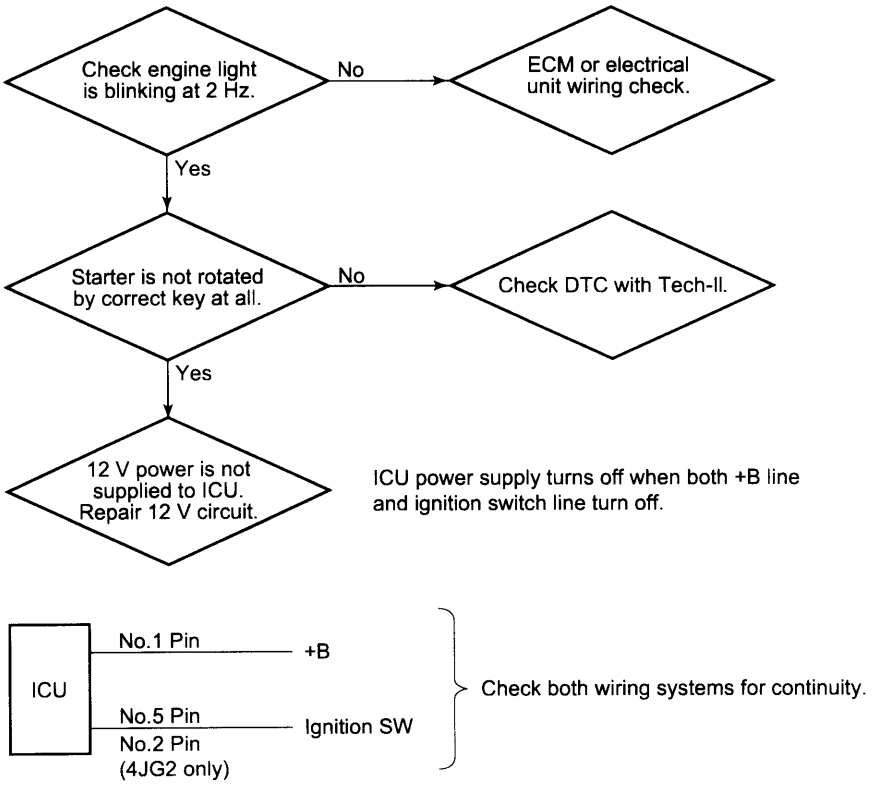

2. Engine does not start after steering assembly is repaired.

Check if connector for Antenna coil circuit at steering shaft is correct, or missing connection. If not correct, replace the steering assy with corrector.

3. If engine does not start after ICU replacement, check part number.

(6VE1, 6VD1, 4JX1)
Proper parts Numbers are following.
RH 891168412X
Suffix number
LH 891168413X
Suffix number

(4JG2)
Proper parts Numbers are following.
RH 897240479X
Suffix number
LH 891168413X
Suffix number

DTC appears

B8011 TRANSPONDER KEY PROBLEM

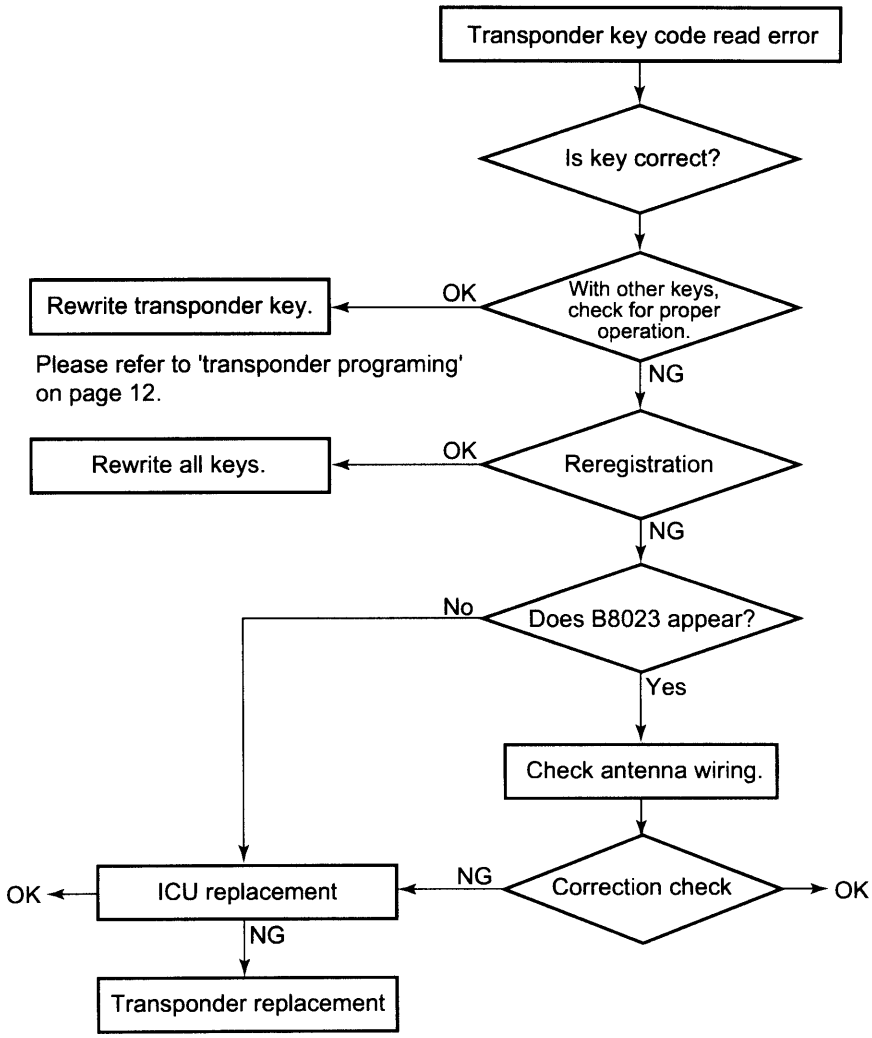

Note: B8011 means Body category Number 8011 Diagnostic Trouble code.

B8012 WRONG TRANSPONDER KEY

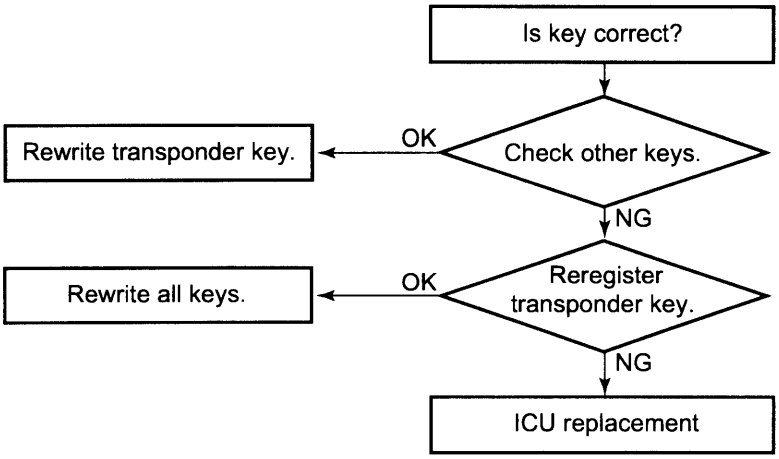

B8013 IMMOBILIZER NOT PROGRAMED

Replace ICU

B8014 NO TRANSPONDER KEY PROGRAMED

Replace ICU

B8055 EEPROM ERROR

Replace ICU

B8015 VEHICLE SPEED SIGNAL Lo (6VE1, 6VD1, 4JX1)

Speed sensor signal voltage lower than 2.5V.

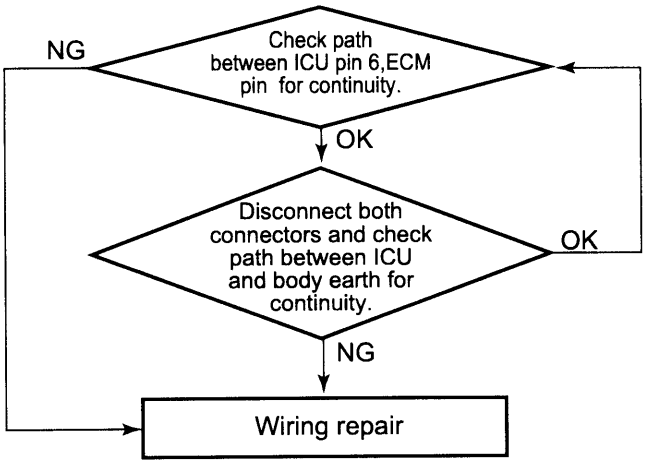

B8015 FREQUENCY SIGNAL Lo (4JG2)

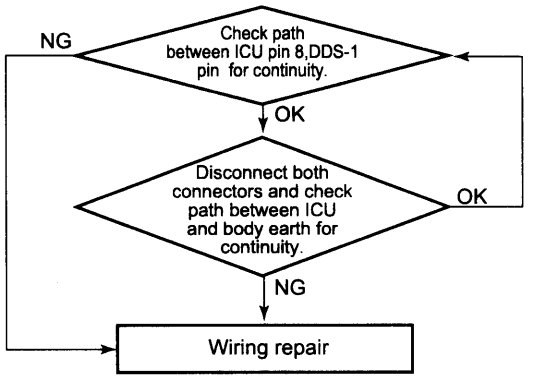

B8016 VEHICLE SPEED SIGNAL Hi (6VE1, 6VD1, 4JX1)

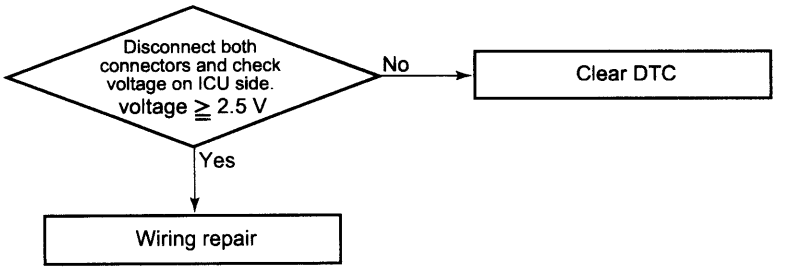

B8016 FREQUENCY SIGNAL Hi (4JG2)

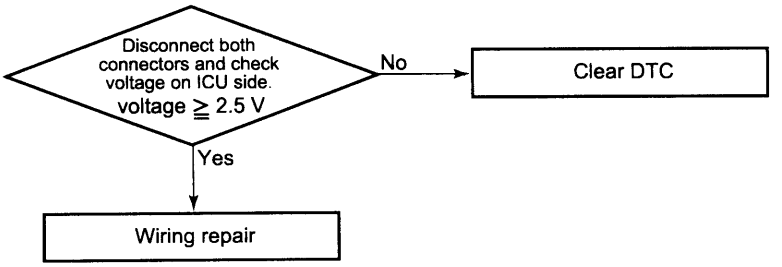

B8017 NO ENGINE REQUEST RECEIVED (6VE1, 6VD1, 4JX1)

No Engine Request

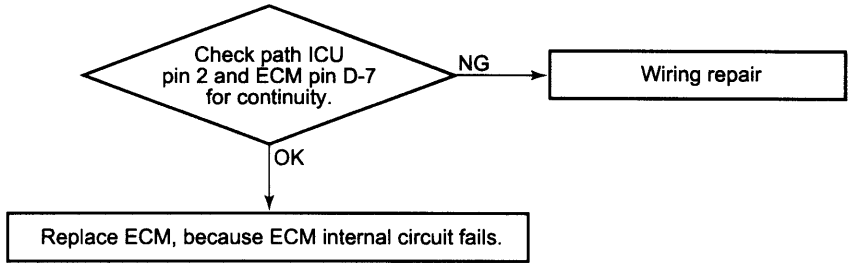

B8023 ANTENNA COIL OPEN

Antenna coil open

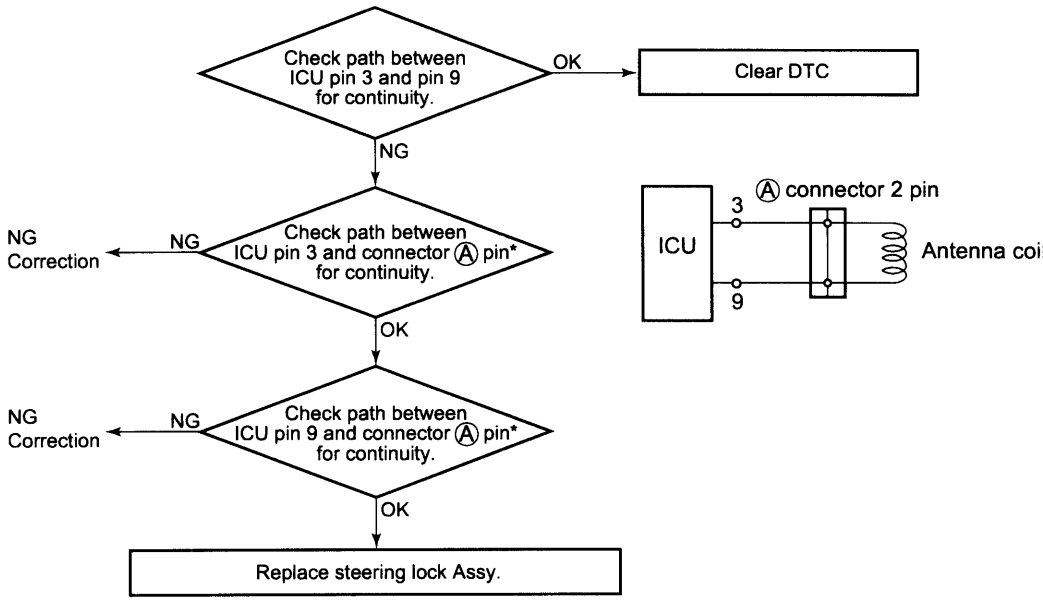

Need following repair
①Key replacement
②Rewrite transponder.
③Replace door key cylinder.

B8024 WRONG TRANSPONDER RESPONSE

Wrong Transponder code

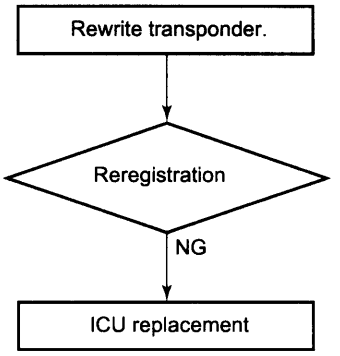

Immobilizer system Electrical wiring for Gas Engine (6VE1, 6VD1)

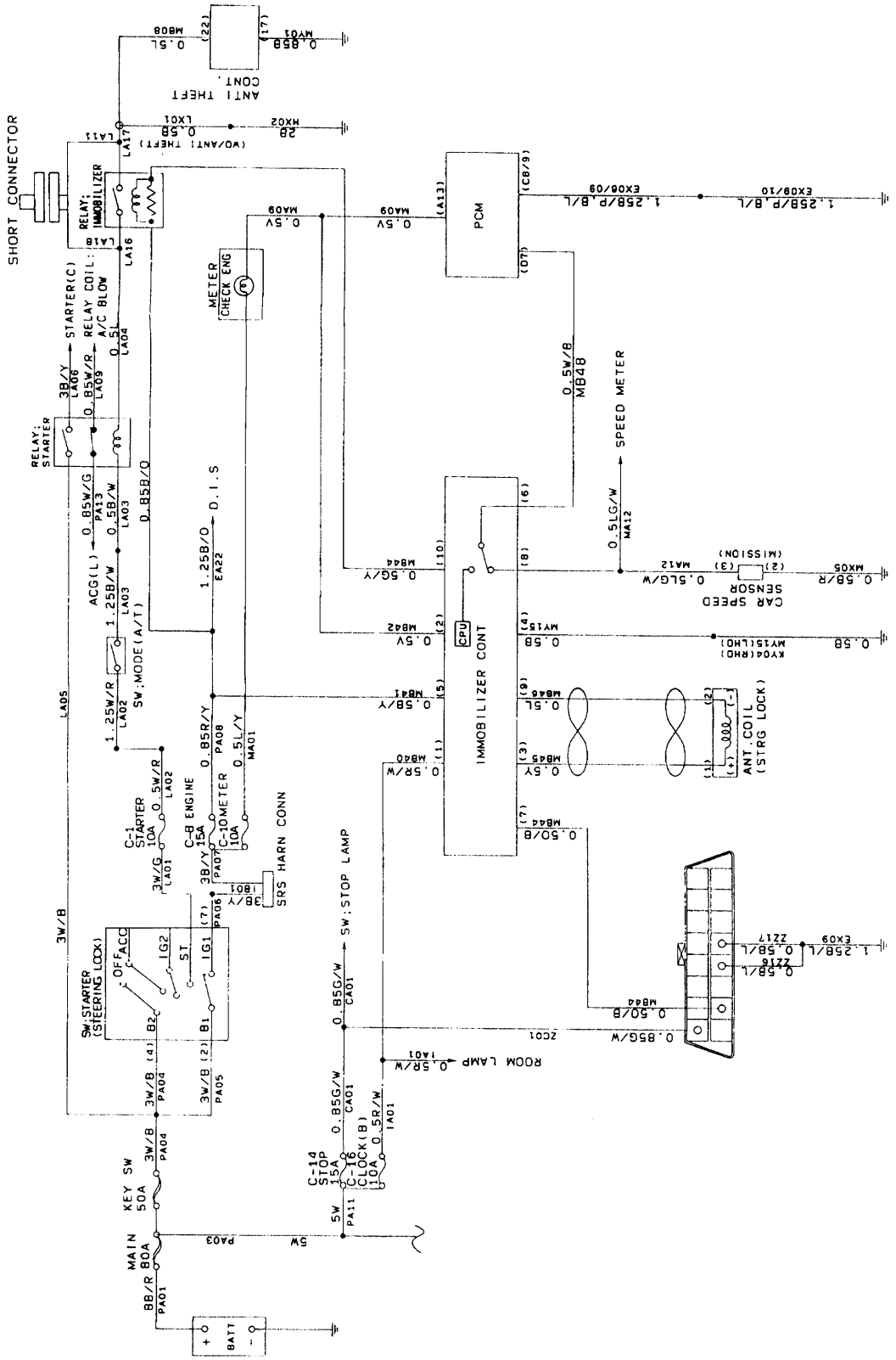

Immobilizer system Electrical wiring for Diesel Engine (4JX1)

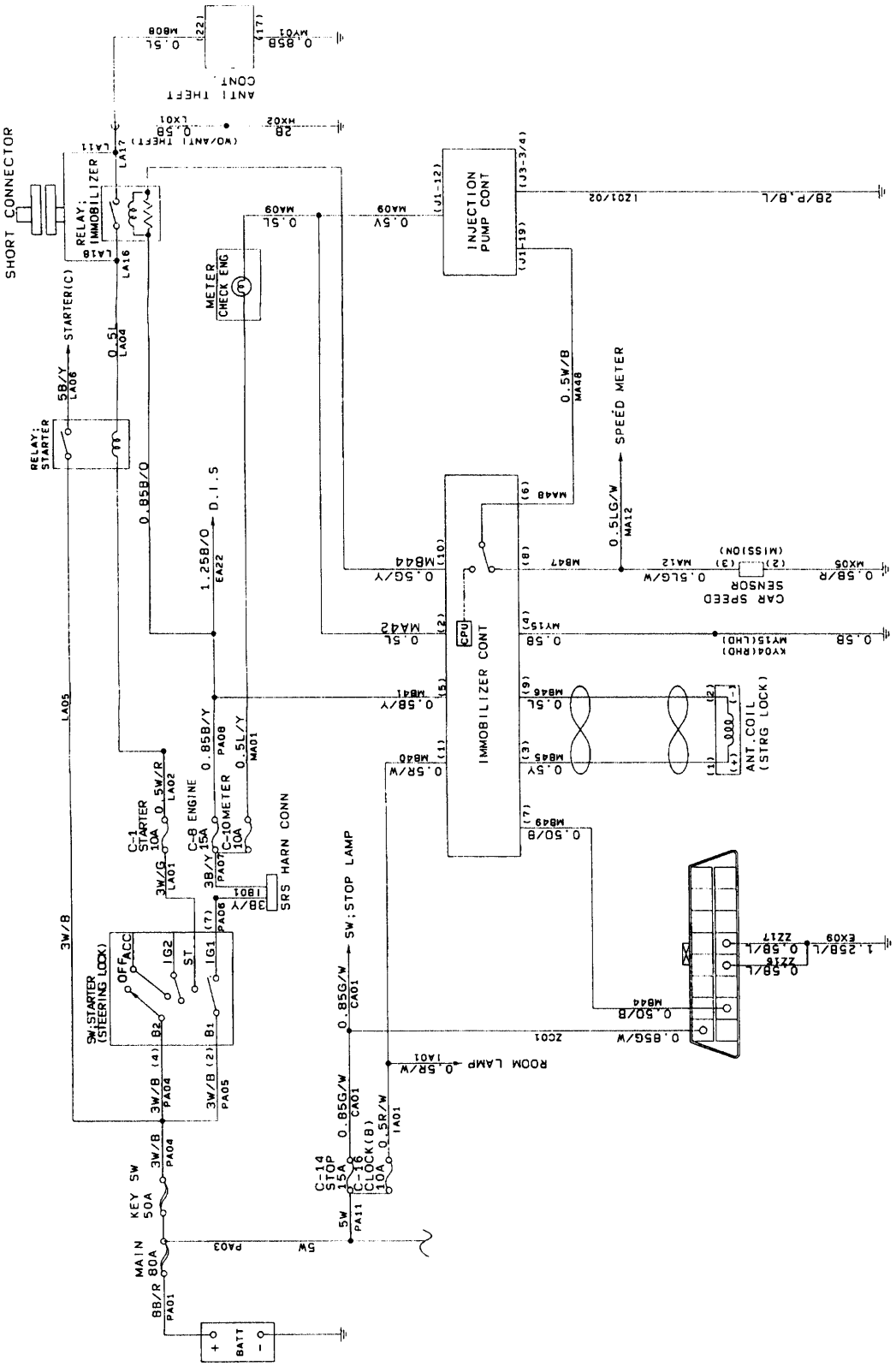

Immobilizer system Electrical wiring for Diesel Engine (4JG2)

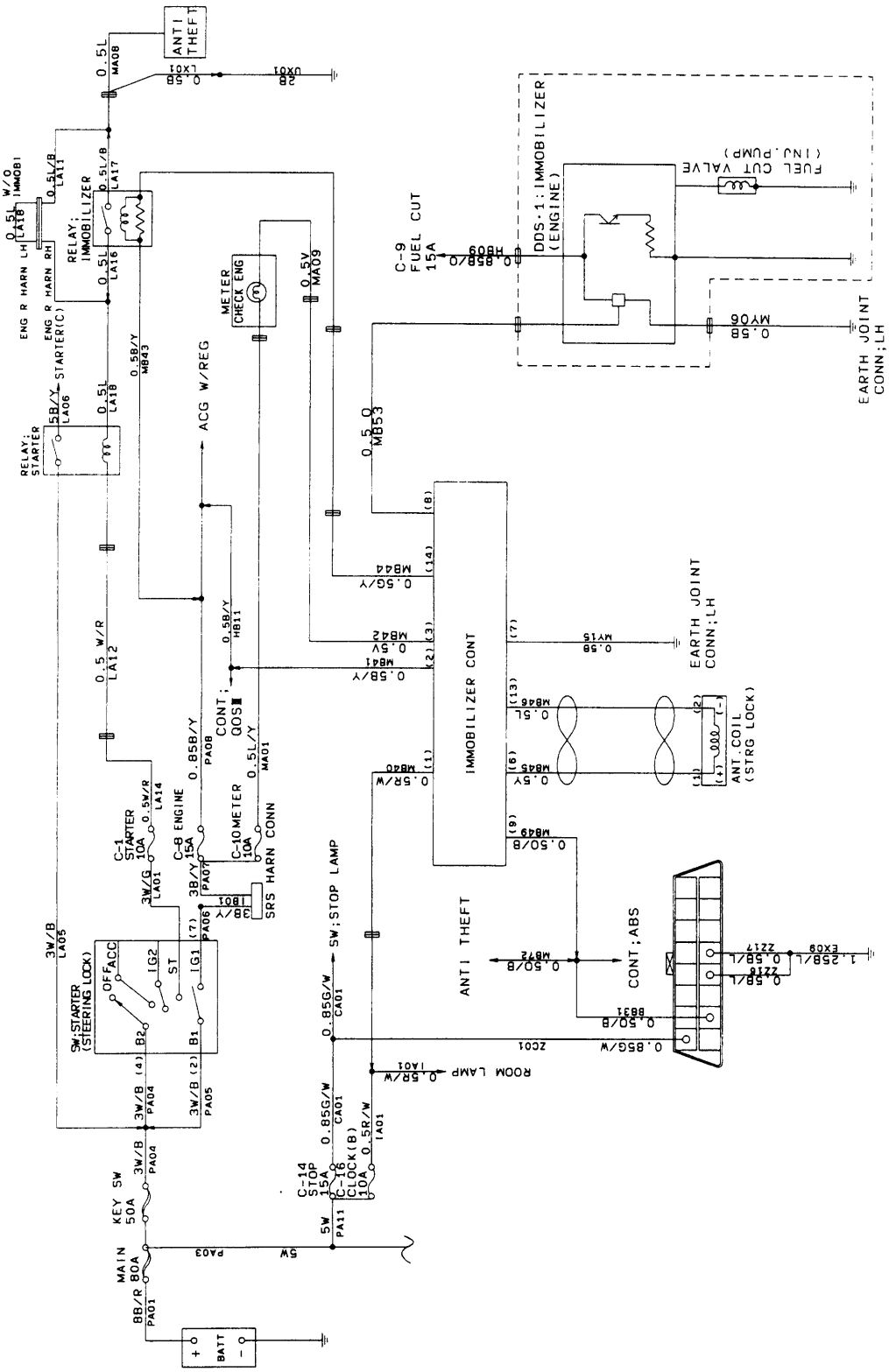

PAGE NEXT

THIS MALUAL INCLUDES THE FOLLOWING SECTIONS:

SECTION No.	CONTRNTS
0A	GENERAL INFORMATION
0B	MAINTENANCE AND LUBRICATION

THIS MALUAL INCLUDES THE FOLLOWING SECTIONS:

SECTION No.	CONTRNTS
1A	HEATING AND VENTILATION
1B	AIR CONDITIONING
1D	COMPRESSOR OVERHAUL

THIS MALUAL INCLUDES THE FOLLOWING SECTIONS:

SECTION No.	CONTRNTS
00	SERVICE INFORMATION
2A	FRONT END ALIGNMENT

THIS MALUAL INCLUDES THE FOLLOWING SECTIONS:

SECTION No.	CONTRNTS
3C	FRONT SUSPENSION
3D	REAR SUSPENSION; COIL SPRING
3E	WHEELS AND TIRES

THIS MALUAL INCLUDES THE FOLLOWING SECTIONS:

SECTION No.	CONTRNTS
4A1	DIFFERENTIAL (FRONT)
4A2A	DIFFERENTIAL (Rear 220mm)
4A2B	DIFFERENTIAL (REAR 244mm)
4B1	DRIVELINE CONTROL SYSTEM (SHIFT ON THE FLY)
4B2	DRIVELINE CONTROL SYSTEM (TOD)
4C	DRIVE SHAFT SYSTEM
4D1	TRANSFER CASE (STANDARD TYPE)
4D2	TRANSFER CASE (TOD)

THIS MALUAL INCLUDES THE FOLLOWING SECTIONS:

SECTION No.	CONTRNTS
5A	BRAKE CONTROL SYSTEM
5B	ANTI-LOCK BRAKE SYSTEM
5C	POWER ASSISTED BRAKE SYSTEM
5D	PARKING BRAKES

THIS MALUAL INCLUDES THE FOLLOWING SECTIONS:

8bit

SECTION No.	CONTRNTS
6A	ENGINE MECHANICAL
6B	ENGINE COOLING
6C	ENGINE FUEL
6D1	ENGINE ELECTRICAL
6D2	IGNITION SYSTEM
6D3	STARTING AND CHARGING SYSTEM
6E	ENGINE DRIVEABILITY AND EMISSIONS
6F	ENGINE EXHAUST
6G	ENGINE LUBRICATION
6H	ENGINE SPEED CONTROL SYSTEM
6J	INDUCTION

32bit

SECTION No.	CONTRNTS
6A	ENGINE MECHANICAL
6B	ENGINE COOLING
6C	ENGINE FUEL
6D1	ENGINE ELECTRICAL
6D2	IGNITION SYSTEM
6D3	STARTING AND CHARGING SYSTEM
6E	ENGINE DRIVEABILITY AND EMISSIONS
6F	ENGINE EXHAUST
6G	ENGINE LUBRICATION
6H	ENGINE SPEED CONTROL SYSTEM
6J	INDUCTION

4JX1

SECTION No.	CONTRNTS
6A	ENGINE MECHANICAL
6B	ENGINE COOLING
6C	ENGINE FUEL
6D	ENGINE ELECTRICAL
6E	ENGINE DRIVEABILITY AND EMISSIONS
6F	ENGINE EXHAUST
6G	ENGINE LUBRICATION
6H	ENGINE SPEED CONTROL
6J	INDUCTION

THIS MALUAL INCLUDES THE FOLLOWING SECTIONS:

SECTION No.	CONTRNTS
7A	AUTOMATIC TRANSMISSION (4L30-E, 8bit Type)
7A	AUTOMATIC TRANSMISSION (AW30-40LE, 32bit Type)
7A	AUTOMATIC TRANSMISSION (AW30-40LE, Semi Type)
7A1	TRANSMISSION CONTROL SYSTEM (4L30-E, 8bit Type)
7A1	TRANSMISSION CONTROL SYSTEM (4L30-E, 32bit Type)
7B	MANUAL TRANSMISSION (AR-5)
7B	MANUAL TRANSMISSION (MUA)
7C	CLUTCH

THIS MALUAL INCLUDES THE FOLLOWING SECTIONS:

SECTION No.	CONTRNTS
8A	LIGHTING SYSTEM
8B	WIPER / WASHER SYSTEM
8C	ENTERTAINMENT
8D	WIRING SYSTEM
8E	METER AND GAUGE
8F	BODY STRUCTURE
8G	SEATS
8H	SECURITY AND LOCKS
8I	SUN ROOF/CONVERTIBLE TOP
8J	EXTERIOR / INTERIOR TRIM

THIS MALUAL INCLUDES THE FOLLOWING SECTIONS:

SECTION No.	CONTRNTS
9A	SEAT BELT SYSTEM
9J	SUPPLEMENTAL RESTRAINT SYSTEM
9J1	RESTRAINT CONTROL SYSTEM

PAGE BACK

THIS MALUAL INCLUDES THE FOLLOWING SECTIONS:

SECTION No.	CONTRNTS
10A	CRUISE CONTROL SYSTEM

SECTION 0A

GENERAL INFORMATION

CONTENTS

PAGE

General Repair Instructions 0A– 2
How To Use This Manual 0A– 3
Identification 0A– 6
Lifting Instructions 0A– 8
Torque Specifications 0A–10
Recommended Liquid Gasket 0A–11
Recommended Thread Locking Agents 0A–11
Abbreviations Charts 0A–12

Service Precaution

WARNING: THIS VEHICLE HAS A SUPPLEMENTAL RESTRAINT SYSTEM (SRS). REFER TO THE SRS COMPONENT AND WIRING LOCATION VIEW IN ORDER TO DETERMINE WHETHER YOU ARE PERFORMING SERVICE ON OR NEAR THE SRS COMPONENTS OR THE SRS WIRING. WHEN YOU ARE PERFORMING SERVICE ON OR NEAR THE SRS COMPONENTS OR THE SRS WIRING, REFER TO THE SRS SERVICE INFORMATION. FAILURE TO FOLLOW WARNINGS COULD RESULT IN POSSIBLE AIR BAG DEPLOYMENT, PERSONAL INJURY, OR OTHERWISE UNNEEDED SRS SYSTEM REPAIRS.

CAUTION: Always use the correct fastener in the proper location. When you replace a fastener, use ONLY the exact part number for that application. ISUZU will call out those fasteners that require a replacement after removal. ISUZU will also call out the fasteners that require thread lockers or thread sealant. UNLESS OTHERWISE SPECIFIED, do not use supplemental coatings (Paints, greases, or other corrosion inhibitors) on threaded fasteners or fasteners joint interfaces. Generally, such coatings adversely affect the fastener torque and the joint clamping force, and may damage the fastener. When you install fasteners, use the correct tightening sequence and specification. Following these instructions can help you avoid damage to parts and systems.

GENERAL REPAIR INSTRUCTIONS

1. Park the vehicle on level ground and chock the front or rear wheels before lifting the vehicle.
2. Use covers on the vehicle body, seats, and floor to prevent damage and/or contaminations.
3. Disconnect the grounding cable from the battery before performing service operations. This will prevent cable damage or burning due to shortcircuiting.
4. Raise the vehicle with a jack set against the recommended lifting points (see “Lifting instructions” in this section).
5. Support the vehicle on chassis stands.
6. Handle brake fluid and antifreeze solution with great care.
   Spilling these liquids on painted surfaces will damage the paint.
7. The use of the proper tool(s) and special tool(s) where specified is essential to efficient, reliable, and safe service operations.
8. Always use genuine ISUZU replacement parts.
9. Discard used cotter pins, gasket, plastic clips, O-rings, oil seals, lock washers, and self-locking nuts at disassembly.
   Normal function of these parts cannot be guaranteed if they are reused.
10. Keep the disassembled parts neatly in groups. This will facilitate smooth and correct reassembly.
11. Keep fixing nuts and bolts separate.
    Fixing nuts and bolts vary in hardness and design according to installation positions.
12. Clean all parts before inspection or reassembly.
13. Clean the oil ports and other openings with compressed air to make certain that they are free of dirt and obstructions.
14. Lubricate the rotating and sliding faces of all moving parts with oil or grease before installation.
15. Use the recommended liquid gasket to prevent leakage.
16. Carefully observe all nut and bolt torque specifications.
17. When service operation is completed, make a final check to be sure service has been done properly and problem has been corrected.
18. When removing or replacing parts that require refrigerant to be discharged from the air conditioning system, be sure to use the following tools to recover and recycle the Refrigerant-134a (R-134a).

    For 134a:
    Use the R-134a Refrigerant Recovery/Recovery/Recycling/Recharging/System (ACR^4) or its equivalent to prevent the discharge of refrigerant into the air.

HOW TO USE THIS MANUAL

1. Find the applicable section by referring to the table of contents on the introduction page of each manual.
2. In “Service Information”, an opening section of each manual, the troubleshooting, maintenance servicing, service data and/or information on special tools required for the service operations described in the next subsequent sections are arranged and compiled so concisely that you can see at a first glance.
3. Each section except the Service Information section is basically arranged in the following order of headings:
   General description
   On-vehicle service
   Unit repair
4. The service operations are in two groups: one is the “On-vehicle service” where operations can be directly performed on the vehicle, and the other is the “Unit repair” where the operations are done on the work bench after removing the unit from the vehicle.
5. Each service operation section begins with a disassembled view of unit or equipment, which is useful to find relative components, service procedure, availability and contents of repair kits, etc.

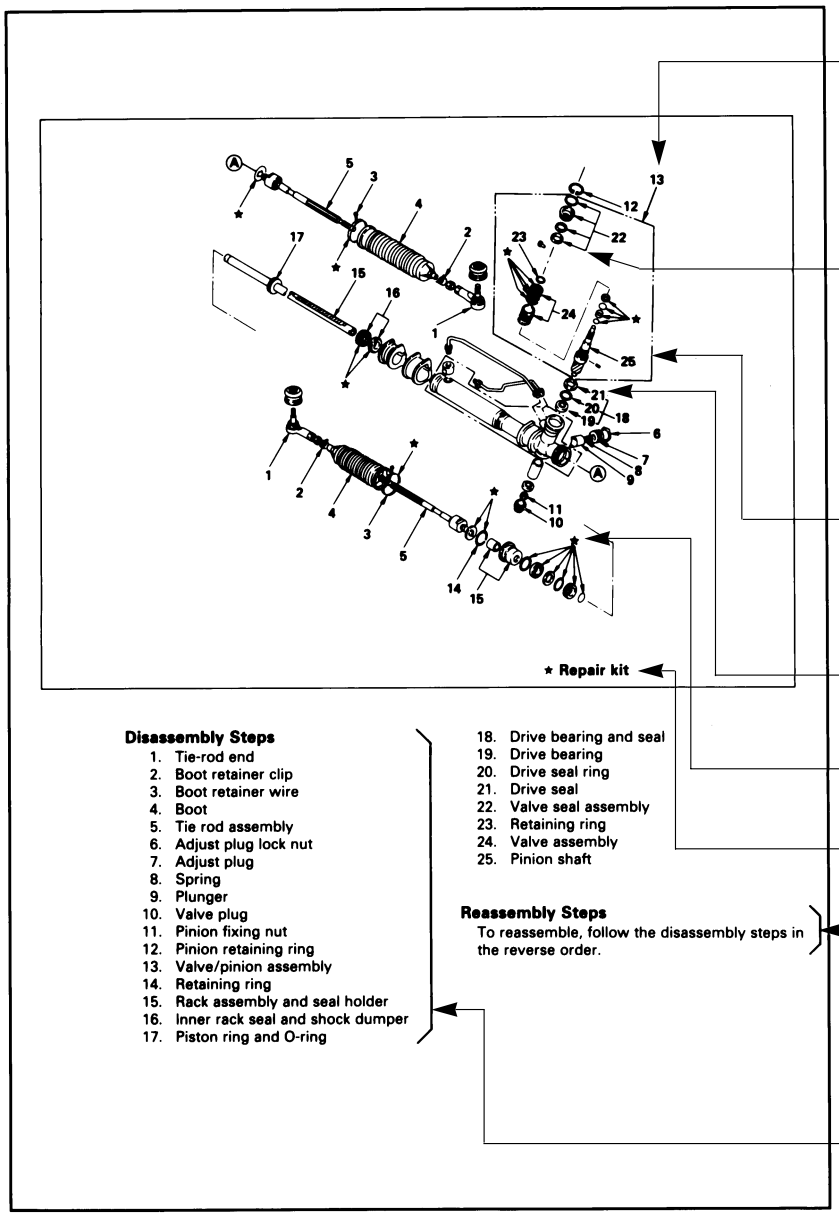

The number represents sequence of removal or disassembly
Removal of unnumbered the parts (excluding bolts, nuts, washers, gaskets, cotter pins, etc.) is unnecessary unless replacement is needed. Where parts replacement requires specific information, instructions are given in “Inspection and Repair”.
This frame is to be removed as a large disassembly with all the parts assembled in the frame. Each one of the parts in the frame is removed as a small disassembly.
Parts to be removed or installed as a unit.
★ Parts contained in repair kit.
★ Indicates repair kit availability.
When the installation (reassembly) procedure is the reverse order of the removal (disassembly) procedure, the sequence of service operation and the parts names will be omitted.
Name of parts listed in sequence of service operation.

For illustrations where there are few items to be performed:

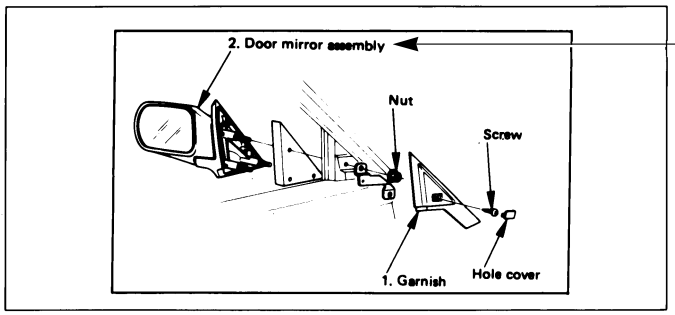

The sequence of removal (disassembly) and the parts names will be given.

6. After the illustration, the details of each operation are shown in the order the operations are carried out in the illustration. Refer to the explanations when checking important information such as the notes in each operation, and places where special tools are to be used and their usage, and the specified service data.

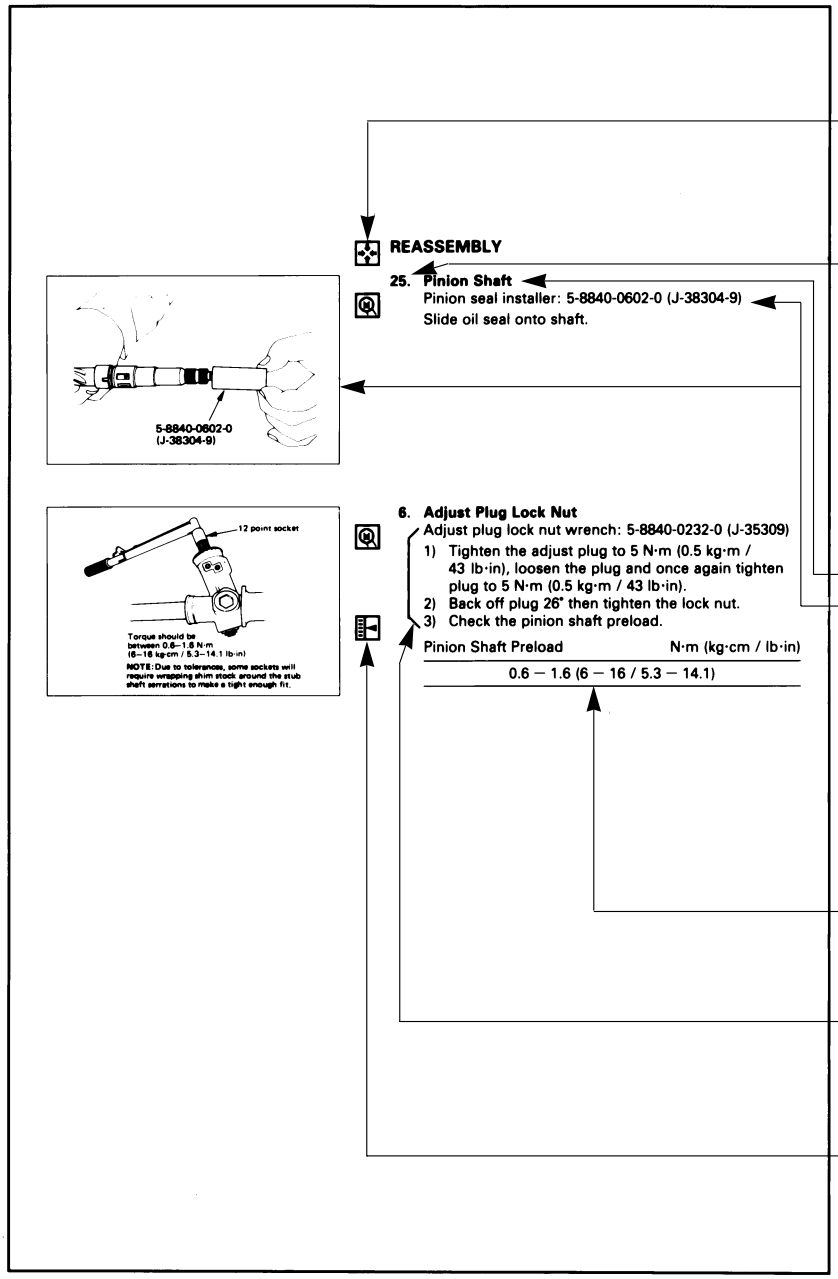

The symbol mark attached to the title indicates the action to be taken in the operations of each title.
Example for this case;
1st step – Reassemble pinion shaft

The numbers given to the installation (assembly) procedure are the same as those given in the removal (disassembly) procedure in the illustration. Therefore, start with the larger number during reassembly.

The titles of operations done in the illustration are given in bold letters. They are described in the order of the procedure of the operations.

Special tools are identified with tool name and/or tool number.
The drawing illustrates how the tool is used.

Service data and specifications are listed in table.

Important note.

The action symbol indicates the step of service to be followed.
Refer to the following paragraph for the meaning of each symbol.

7. In this manual, the following action symbols are used to indicate the type of service operations to be performed.

. . . Remove or disconnect

. . . Install or connect

. . . Disassemble

. . . Reassemble

. . . Align the marks

. . . Correct direction

. . . Inspect

. . . Take measurement

. . . Adjust

. . . Clean

. . . Pay close attention - Important

. . . Tighten to specified torque

. . . Use special tool(s)

. . . Lubricate with oil

. . . Lubricate with grease

. . . Use liquid gasket

8. The service standard is indicated in terms of “Standard” and “Limit”.
   The “Standard” means the assembly standard and standard range within which the parts are considered serviceable.
   “Limit” indicates the limit value (Correction or replacement is necessary when measurement is beyond this limit.)

IDENTIFICATION

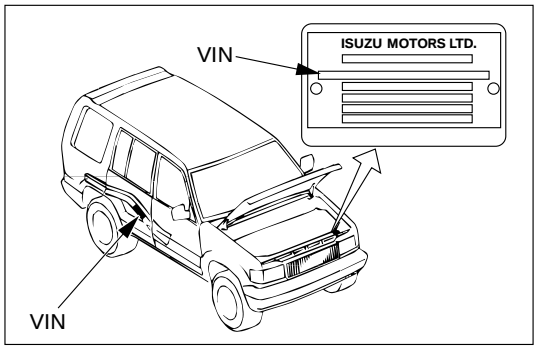

VEHICLE IDENTIFICATION NUMBER (VIN)

This is the legal identification of the vehicle.
It appears on the manufacturer's Plate attached to the left of the engine compartment front end. VIN number is also stamped on the rear right side of the frame.

JAC UBS 25 G Y 7 200001

- 200001 — Sequential Number
- 7 — Plant Code
- Y — Model Year (Y: 2000)
- G — Wheel Base (D: Short, G: Long)
- 25 — Engine Type (25: 6VD1, 26: 6VE1, 69: 4JG2, 73: 4JX1)
- UBS — Vehicle Model
- JAC — World Manufacturer Identifier

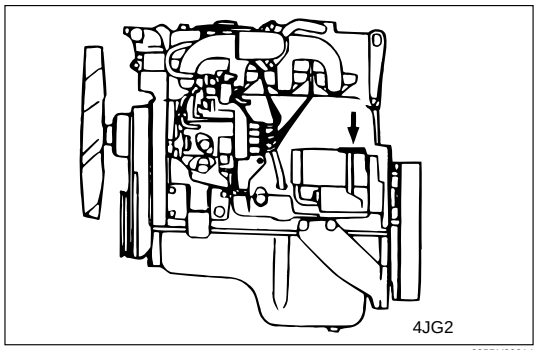

905RY00014

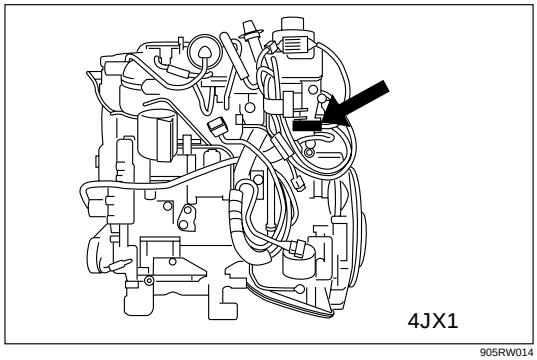

905RW014

ENGINE SERIAL NUMBER

The engine serial number is stamped on the left rear lower area of the cylinder block above the starter.

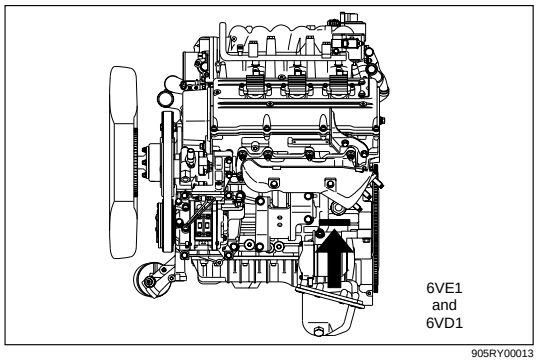

905RY00013

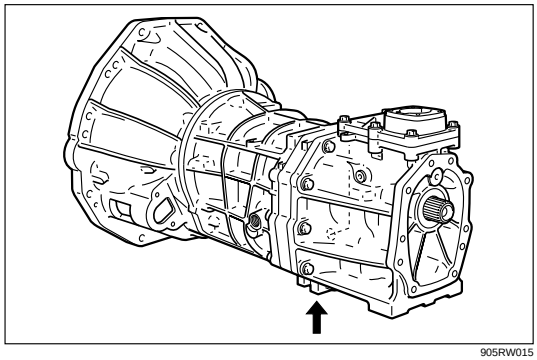

905RW015

TRANSMISSION SERIAL NUMBER

Manual: Stamped on the left side of the transmission intermediate plate.

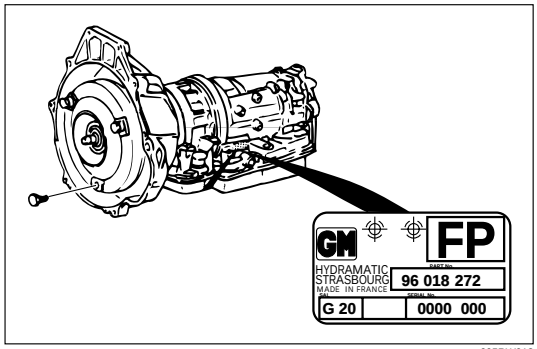

905RW018

Automatic: Stamped on the identification plate, located on the left side of the transmission above the mode switch.

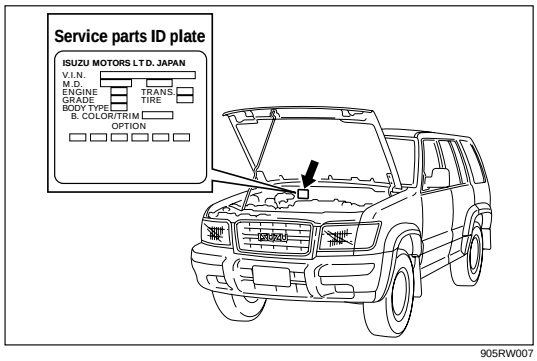

905RW007

SERVICE PARTS IDENTIFICATION PLATE

The Vehicle Information Plate (Service Parts ID plate) is provided on all vehicle models.
It is located on the center dash wall inside the engine compartment. The plate lists the VIN (Vehicle Identification Number), paint information and all production options and special equipment on the vehicle when it was shipped from the factory.

LIFTING INSTRUCTIONS

CAUTION:

- **If a lifting device other than the original jack is used, it is most important that the device be applied only to the correct lifting points. Raising the vehicle from any other point may result in serious damage.**
- **When jacking or lifting a vehicle at the frame side rail or other prescribed lift points, be certain that lift pads do not contact the catalytic converter, brake pipes or cables, or fuel lines. Such contact may result in damage or unsatisfactory vehicle performance.**

LIFTING POINTS AND SUPPORTABLE POINT LOCATIONS

Long wheel Base Model

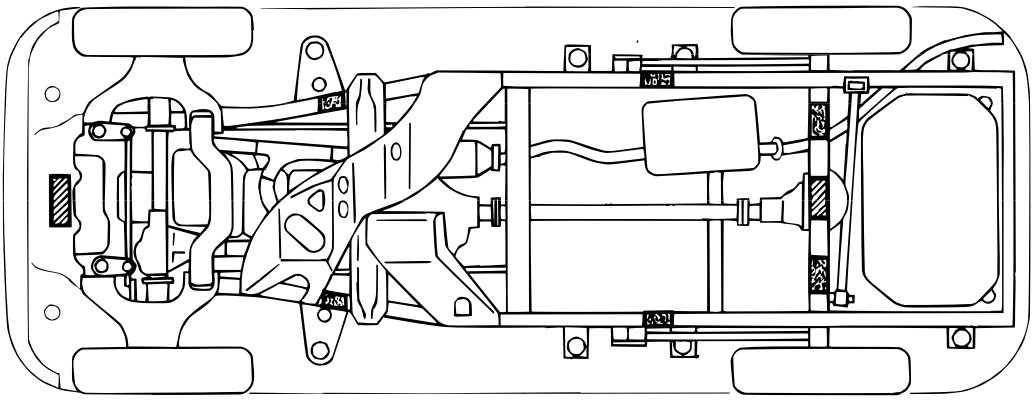

Short Wheel Base Model

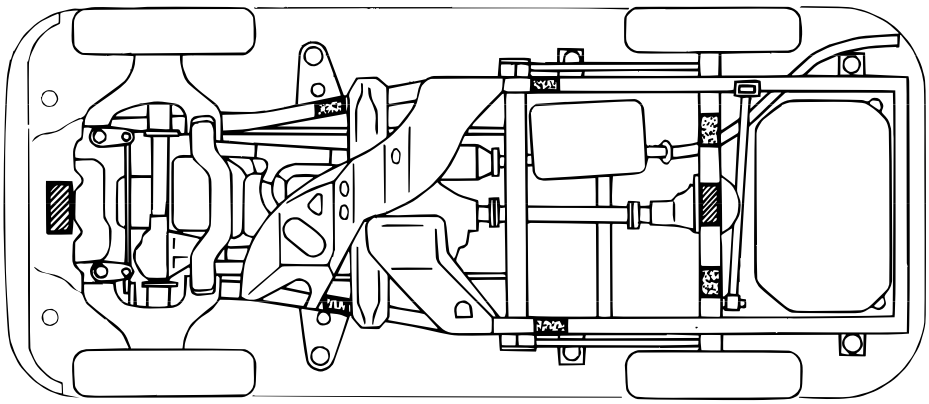

Lifting point

Supportable point

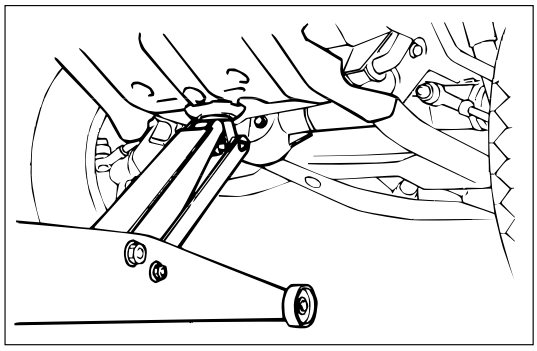

LIFTING POINT; FRONT

When using floor jack, lift on the center of the skid plate.

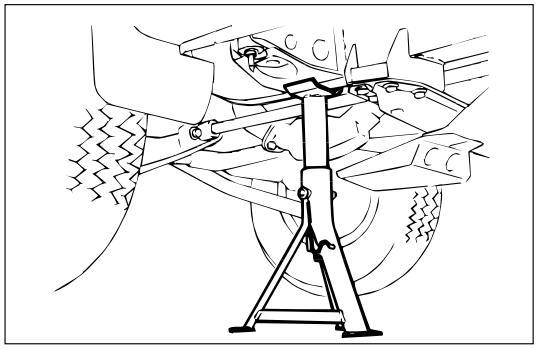

SUPPORTABLE POINT; FRONT

Position the chassis stands at the bottom of the frame sidemember, backward of front wheel.

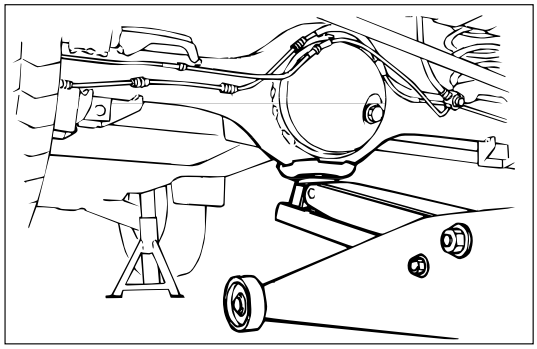

LIFTING POINT; REAR

Position the floor jack at the center of the rear axle case when lifting the vehicle.

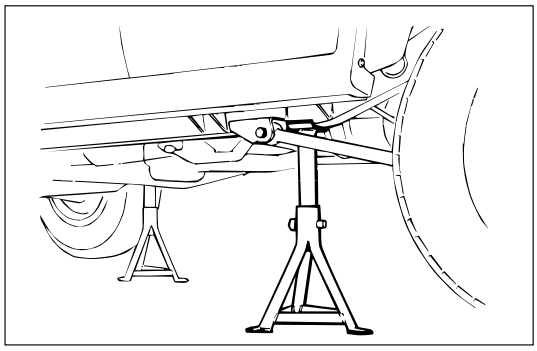

SUPPORTABLE POINT; REAR

Position the chassis stands at the bottom of the frame sidemember, just behind of the trailing link bracket.

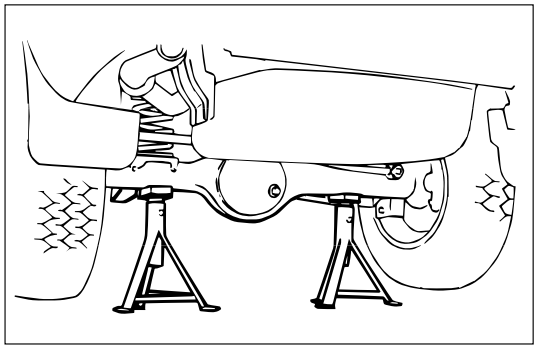

SUPPORTABLE POINT; REAR

Position the chassis stands at the bottom of the rear axle case.

TORQUE SPECIFICATIONS

STANDARD BOLTS

The torque values given in the following table should be applied where a particular torque is not specified.

N·m (kg·m / lb·ft)
N·m kg·cm / lb·in

Strength Class	4.8	8.8		9.8
		Refined	Non-Refined	
Bolt Identification	4	8	.8	9
Bolt Diameter x Pitch (mm)	No mark			
M 6x1.0	6 60 / 52	7 75 / 65		–
M 8x1.25	13 130 / 113	17 175 / 152		24 240 / 208
M10x1.25	27 (2.8 / 20)	37 (3.8 / 27)		50 (5.1 / 37)
M12x1.25	61 (6.3 / 45)	76 (7.8 / 56)		95 (9.7 / 70)
M14x1.5	96 (9.8 / 71)	116 (11.9 / 86)		142 (14.5 / 105)
M16x1.5	130 (13.3 / 96)	170 (17.3 / 125)		200 (20.4 / 148)
M18x1.5	188 (19.2 / 139)	244 (24.9 / 180)		287 (29.3 / 212)
M20x1.5	258 (26.3 / 190)	337 (34.4 / 249)		396 (40.4 / 292)
M22x1.5	332 (33.9 / 245)	453 (46.3 / 335)		530 (54.1 / 391)
M24x2.0	449 (45.8 / 331)	570 (58.2 / 421)		692 (70.6 / 511)
*M10x1.5	26 (2.7 / 20)	36 (3.7 / 27)		48 (4.9 / 35)
*M12x1.5	57 (5.8 / 42)	71 (7.2 / 52)		89 (9.1 / 66)
*M14x2.0	89 (9.1 / 66)	110 (11.2 / 81)		133 (13.6 / 98)
*M16x2.0	124 (12.7 / 92)	162 (16.5 / 119)		191 (19.5 / 141)

The asterisk * indicates that the bolts are used for female-threaded parts that are made of soft materials such as casting, etc.

FLARE NUTS

N·m (kg·m / lb·ft)

Pipe diameter mm (in)	Torque	Pipe diameter mm (in)	Torque
4.76 (0.187)	16 (1.6 / 12)	10.00 (0.394)	54 (5.5 / 40)
6.35 (0.250)	26 (2.7 / 20)	12.00 (0.472)	88 (9.0 / 65)
8.00 (0.315)	44 (4.5 / 33)	15.00 (0.591)	106 (10.8 / 78)

RECOMMENDED LIQUID GASKET

Type	Brand Name	Manufacturer	Remarks
RTV* Silicon Base	Three Bond 1207B Three Bond 1207C Three Bond 1215 Three Bond 1280	Three Bond Three Bond Three Bond Three Bond	For Engine Repairs For Axle Case Repairs. T/M
Water Base	Three Bond 1141E	Three Bond	For Engine Repairs
Solvent	Three Bond 1104 Belco Bond 4 Belco Bond 401 Belco Bond 402	Three Bond Isuzu Isuzu Isuzu	For Engine Repairs
Anaerobic	LOCTITE 515 LOCTITE 518	Loctite Loctite	All

* RTV: Room Temperature Vulcanizer

NOTE:

1. It is very important that the liquid gaskets listed above or their exact equivalent be used on the vehicle.
2. Be careful to use the specified amount of liquid gasket.
   Follow the manufacturer's instructions at all times.
3. Be absolutely sure to remove all lubricants and moisture from the connecting surfaces before applying the liquid gasket.
   The connecting surfaces must be perfectly dry.
4. Do not apply LOCTITE 515 and LOCTITE 518 between two metal surfaces having a clearance of greater than 0.25 mm (0.01 in). Poor adhesion will result.

RECOMMENDED THREAD LOCKING AGENTS

LOCTITE Type	LOCTITE Color	Application Steps
LOCTITE 242	Blue	1. Completely remove all lubricant and moisture from the bolts and the female threaded surfaces of the parts to be joined. The surfaces must be perfectly dry. 2. Apply LOCTITE to the bolts. 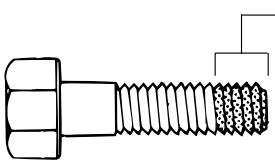 Apply LOCTITE to at least 1/3 of the bolt's threaded area
LOCTITE 262	Red	
LOCTITE 270	Green	
LOCTITE 271	Red	3. Tighten the bolts to the specified torque. After tightening, be sure to keep the bolts free from vibration and torque for at least an hour until LOCTITE hardens.

NOTE: When the application procedures are specified in this manual, follow them.

ABBREVIATIONS CHARTS

LIST OF AUTOMOTIVE ABBREVIATIONS WHICH MAY BE USED IN THIS MANUAL

A – Ampere(s)
ABS – Antilock Brake System
A/C – Air Conditioning
ACCEL – Accelerator
ACC – Accessary
Adj – Adjust
A/F – Air Fuel Ratio
AIR – Air Injection Reaction System
ALDL – Assembly Line Diagnostic Link
Alt – Altitude
AMP – Ampere(s)
ANT – Antenna
APS – Absolute Pressure Sensor
ASM – Assembly
A/T – Automatic Transmission/Transaxle
ATDC – After Top Dead Center
Auth – Authority
Auto – Automatic
BARO – Barometic
Bat – Battery
Bat+ – Battery Positive Terminal
Bbl – Barrel
BCM – Body Control Module
BHP – Brake Horsepower
BP – Back Pressure
BTDC – Before Top Dead Center
°C –Degrees Celsius
Cat. Conv. – Catalytic Converter
cc – Cubic Centimeter
CCC – Computer Command Control
CCOT – Cycling Clutch Orifice Tube
CCP – Controlled Canister Purge
CID – Cubic Inch Displacement
CL – Closed Loop
CLCC – Closed Loop Carburetor Control
CO – Carbon Monoxide
Coax – Coaxial
Conn – Connector
Conv – Converter
CP – Canister Purge
CPS – Central Power Supply
Crank – Crankshaft
CTS – Coolant Temperature Sensor
Cu.In. – Cubic Inch
CV – Constant Velocity
Cyl – Cylinder(s)
C^3I – Computer Controlled Coil Ignition
DBM – Dual Bed Monolith
Diff – Differential
DIS – Direct Ignition System
Dist –Distributor
DOHC – Double Overhead Camshaft
DVM – Digital Voltmeter (10 meg.)
DVOM – Digital Volt Ohmmeter
DVDV – Differential Vacuum Delay Valve
EAC –Electric Air Control
EAS – Electric Air Switching
EBCM – Electronic Brake Control Module
ECC – Electronic Climate Control
ECM – Electronic Control Module
ECU – Electronic Control Unit
– Engine Calibration Unit (PROM)
EECS – Evaporative Emission Control System
EFE – Early Fuel Evaporation
EFI – Electronic Fuel Injection
EGR – Exhaust Gas Recirculation
EGR/TVS – Exhaust Gas Recirculation/Thermostatic Vacuum Switch
ELC – Electronic Level Control
ESC – Electronic Spark Control
EST – Electronic Spark Control
ETR – Electronically Tuned Receiver
EVRV – Electronic Vacuum Regulator Valve (EGR)
Exh – Exhaust
°F – Degrees Fahrenheit
FF – Front Drive Front Engine
FL – Fusible Link
FLW – Fusible Link Wire
FRT –Front
FWD – Front Wheel Drive
4WD – Four Wheel Drive
4x4 – Four Wheel Drive
4 A/T – Four Speed Automatic Transmission/Transaxle
Gal – Gallon
Gen – Generator
Gov – Governor
g – Gram
Harn – Harness
HC – Hydrocarbons
HD –Heavy Duty
HEI – High Energy Ignition
Hg – Mercury
HiAlt – High Altitude
HVAC – Heater-Vent-Air Conditioning
IAC – Idle Air Control
IC – Integrated Circuit
ID – Identification
– Inside Diameter
IDI – Integrated Direct Ignition
IGN – Ignition
ILC – Idle Load Compensator
INJ –Injection
IP – Instrument Panel
IPC – Instrument Panel Cluster
INT – Intake
J/B – Junction Block
km – Kilometers
km/h – Kilometer per Hour
kPa – KiloPascals
KV – Kilovolts (thousands of volts)
KW – Kilowatts

L – Liter
lb·ft – Foot Pounds
lb·in – Inch Pounds
LF – Left Front
LH – Left Hand
LR – Left Rear
LS – Left Side
LWB – Long Wheel Base
L-4 – In-line Four Cylinder Engine
MAF – Mass Air Flow
MAN – Manual
MAP – Manifold Absolute Pressure
MAT – Manifold Air Temperature
MEM-CAL – Memory and Calibration Unit
Max – Maximum
M/C – Mixture Control
Min – Minimum
mm – Millimeter
MPFI – Multi-Port Fuel Injection
MPG – Miles per Gallon
MPH – Miles per Hour
M/T – Manual Transmission/Transaxle
MV – Millivolt
NA – Natural Aspirated
NC – Normally Closed
N·m – Newton Meters
NO – Normally Open
NOx – Nitrogen, Oxides of
OD – Outside Diameter
O/D – Over Drive
OHC – Overhead Camshaft
OL – Open Loop
O_2 – Oxygen
PAIR – Pulse Air Injection Reactor System
P/B – Power Brakes
PCV – Positive Crankcase Ventilation
PFI – Port Fuel Injection
PRESS – Pressure
PROM – Programmable Read Only Memory
P/N – Park/Neutral
P/S – Power Steering
PSI – Pounds per Square Inch
Pt. – Pint
Pri – Primary
PWM – Pulse Width Modulated
Qt – Quart
REF – Reference
RF – Right Front
RFI – Radio Frequency Interference
RH – Right Hand
RPM – Revolutions per Minute
RPO – Regular Production Option
RR – Right Rear
RS – Right Side
RTV – Room Temperature Vulcanizing
RVB – Rear Vacuum Brake
RVR – Response Vacuum Reducer
RWAL – Rear Wheel Antilock Brake
RWD - Rear Wheel Drive
SAE – Society of Automotive Engineers
Sec – Secondary
SFI – Sequential-port Fuel Injection
SI – System International
SIR – Supplemental Inflatable Restraint System
SOHC – Single Overhead Camshaft
Sol – Solenoid
SPEC – Specification
Speedo – Speedometer
SRS – Supplemental Restraint System
ST – Start
Sw – Switch
SWB – Short Wheel Base
SYN – Synchronize
TAC – Thermostatic Air Cleaner
Tach – Tachometer
TBI – Throttle Body Injection
TCC – Transmission/Transaxle Converter Clutch
TCM – Transmission/Transaxle Control Module
TDC – Top Dead Center
Term – Terminal
TEMP – Temperature
TPS – Throttle Position Sensor
TRANS – Transmission/Transaxle
TURBO – Turbocharger
TV – Throttle Valve
TVRS – Television & Radio Suppression
TVS – Thermal Vacuum Switch
3 A/T – Three Speed Automatic Transmission/ Transaxle
2WD – Two Wheel Drive
4x2 – Two wheel Drive
U-joint – Universal Joint
V – Volt(s)
VAC – Vacuum
VIN – Vehicle Identification Number
VRRRE – Vehicle Refrigerant Recovery and Recycling Equipment
V-ref – ECM Reference Voltage
VRV – Vacuum Reducer Valve
VSS – Vehicle Speed Sensor
VSV – Vacuum Switching Valve
V-6 – Six Cylinder “V” Engine
V-8 – Eight Cylinder “V” Engine
W – Watt(s)
w/ – With
w/b – Wheel Base
w/o – Without
WOT – Wide Open Throttle

SECTION 0B

MAINTENANCE AND LUBRICATION

CONTENTS

PAGE

Maintenance Schedule 0B– 2

Recommended Fluids, Lubricants and Fuels 0B– 7

Oil Viscosity Chart. 0B–10

Service Precaution

WARNING: THIS VEHICLE HAS A SUPPLEMENTAL RESTRAINT SYSTEM (SRS). REFER TO THE SRS COMPONENT AND WIRING LOCATION VIEW IN ORDER TO DETERMINE WHETHER YOU ARE PERFORMING SERVICE ON OR NEAR THE SRS COMPONENTS OR THE SRS WIRING. WHEN YOU ARE PERFORMING SERVICE ON OR NEAR THE SRS COMPONENTS OR THE SRS WIRING, REFER TO THE SRS SERVICE INFORMATION. FAILURE TO FOLLOW WARNINGS COULD RESULT IN POSSIBLE AIR BAG DEPLOYMENT, PERSONAL INJURY, OR OTHERWISE UNNEEDED SRS SYSTEM REPAIRS.

CAUTION: Always use the correct fastener in the proper location. When you replace a fastener, use ONLY the exact part number for that application. ISUZU will call out those fasteners that require a replacement after removal. ISUZU will also call out the fasteners that require thread lockers or thread sealant. UNLESS OTHERWISE SPECIFIED, do not use supplemental coatings (Paints, greases, or other corrosion inhibitors) on threaded fasteners or fasteners joint interfaces. Generally, such coatings adversely affect the fastener torque and the joint clamping force, and may damage the fastener. When you install fasteners, use the correct tightening sequence and specification. Following these instructions can help you avoid damage to parts and systems.

MAINTENANCE SCHEDULE

GASOLINE ENGINE MODEL

I: Inspect and correct or replace as necessary A: Adjust
R: Replace or change T: Tighten to specified torque L: Lubricate

SERVICE INTERVAL:	x 1,000 km	5	10	15	20	25	30	35	40	45	50	55	60	65	70	75	80	85	90	95	100
(Use odometer reading	x 1,000 miles	3	6	9	12	15	18	21	24	27	30	33	36	39	42	45	48	51	54	57	60
or months whichever comes first)	or months	6	12	18	24	30	36	42	48	54	60	66	72	78	84	90	96	102	108	114	120
GASOLINE ENGINE																					
* Engine oil		-	-	R	-	-	R	-	-	R	-	-	R	-	-	R	-	-	R	-	-
* Engine oil filter		-	-	R	-	-	R	-	-	R	-	-	R	-	-	R	-	-	R	-	-
Oil leakage and contamination		-	-	I	-	-	I	-	-	I	-	-	I	-	-	I	-	-	I	-	-
* Timing belt		(Replace every 165,000 km or 100,000 miles)																			
Spark plugs (For leaded fuel use)		-	-	-	-	-	-	-	R	-	-	-	-	-	-	-	R	-	-	-	-
Spark plugs (For unleaded fuel use)		(Replace every 165,000 km or 100,000 miles)																			
Exhaust system		-	-	I	-	-	I	-	-	I	-	-	I	-	-	I	-	-	I	-	-
Radiator coolant concentration		-	-	I	-	-	I	-	-	I	-	-	I	-	-	I	-	-	I	-	-
Cooling system for water leakage		-	-	I	-	-	I	-	-	I	-	-	I	-	-	I	-	-	I	-	-
All hoses and pipes in engine compartment for clog or damage		-	-	I	-	-	I	-	-	I	-	-	I	-	-	I	-	-	I	-	-
Fuel filter		-	-	-	-	-	R	-	-	-	-	-	R	-	-	-	-	-	R	-	-
Fuel leakage		-	-	I	-	-	I	-	-	I	-	-	I	-	-	I	-	-	I	-	-
Fuel tank		-	-	I	-	-	I	-	-	I	-	-	I	-	-	I	-	-	I	-	-
* Air cleaner element		-	-	I	-	-	I	-	-	R	-	-	I	-	-	I	-	-	R	-	-
[V] Pre air cleaner		-	-	I	-	-	I	-	-	I	-	-	I	-	-	I	-	-	I	-	-
Engine drive belt		-	-	-	-	-	I	-	-	-	-	-	I	-	-	-	-	-	I	-	-
Valve clearance		(Check and adjust if necessary every 100,000 km or 60,000 miles)																			
[V] O_2 Sensor (For leaded fuel use)		-	-	-	-	-	-	-	-	-	R	-	-	-	-	-	-	-	-	-	R
[V] O_2 Sensor (For unleaded fuel use)		(Replace every 150,000 km or 90,000 miles)																			
CLUTCH																					
Clutch fluid		-	-	I	-	-	I	-	-	I	-	-	I	-	-	I	-	-	I	-	-
Clutch pedal travel and free play		-	-	I	-	-	I	-	-	I	-	-	I	-	-	I	-	-	I	-	-
TRANSMISSION OR TRANSMISSION WITH TRANSFER CASE																					
* Manual transmission with transfer case oil		-	-	R	-	-	I	-	-	R	-	-	I	-	-	R	-	-	I	-	I
* [AT] Automatic transmission fluid leakage		-	-	I	-	-	I	-	-	I	-	-	I	-	-	I	-	-	I	-	-
*(1) [AT] Automatic transmission fluid		-	-	-	-	-	-	-	-	-	-	-	-	-	-	-	-	-	-	-	I
* [AT] Transfer case oil		-	-	R	-	-	I	-	-	R	-	-	I	-	-	R	-	-	I	-	I
PROPELLER SHAFT																					
Loose connections		-	-	I	-	-	I	-	-	I	-	-	I	-	-	I	-	-	I	-	-
* Universal joints and splines for wear		-	-	I	-	-	I	-	-	I	-	-	I	-	-	I	-	-	I	-	-
Universal joints and sliding sleeve (front and rear)		-	-	L	-	-	L	-	-	L	-	-	L	-	-	L	-	-	L	-	-
FRONT AND REAR AXLE																					
* Differential gear oil (Front and rear)		-	-	R	-	-	I	-	-	R	-	-	I	-	-	R	-	-	I	-	I
Shift on the fly system gear oil		-	-	I	-	-	I	-	-	I	-	-	I	-	-	I	-	-	I	-	-
Front axle shaft rubber boot for damage		-	-	I	-	-	I	-	-	I	-	-	I	-	-	I	-	-	I	-	-
Axle case for distortion or damage		-	-	I	-	-	I	-	-	I	-	-	I	-	-	I	-	-	I	-	-
Axle shafts for distortion or damage		-	-	I	-	-	I	-	-	I	-	-	I	-	-	I	-	-	I	-	-
STEERING																					
* Power steering fluid		-	-	I	-	-	I	-	-	R	-	-	I	-	-	I	-	-	R	-	-
Oil leakage		-	-	I	-	-	I	-	-	I	-	-	I	-	-	I	-	-	I	-	-
* Steering system for looseness or damage		-	-	I	-	-	I	-	-	I	-	-	I	-	-	I	-	-	I	-	-
Power steering hose		-	-	I	-	-	I	-	-	I	-	-	I	-	-	R	-	-	I	-	-
Steering wheel play		-	-	I	-	-	I	-	-	I	-	-	I	-	-	I	-	-	I	-	-
Steering function		-	-	I	-	-	I	-	-	I	-	-	I	-	-	I	-	-	I	-	-
Right and left turning radius		-	-	-	-	-	I	-	-	-	-	-	I	-	-	-	-	-	I	-	-
Wheel alignment		-	-	-	-	-	I	-	-	-	-	-	I	-	-	-	-	-	I	-	-
Joint ball for oil leakage or damage		-	-	I	-	-	I	-	-	I	-	-	I	-	-	I	-	-	I	-	-
Joint ball rubber boot for damage		-	-	I	-	-	I	-	-	I	-	-	I	-	-	I	-	-	I	-	-
SERVICE BRAKES																					
Brake fluid		-	-	I	-	-	I	-	-	R	-	-	I	-	-	I	-	-	R	-	-
Brake system for fluid leakage		-	-	I	-	-	I	-	-	I	-	-	I	-	-	I	-	-	I	-	-
Brake function		-	-	I	-	-	I	-	-	I	-	-	I	-	-	I	-	-	I	-	-
* Disc brake pads and discs wear		-	-	I	-	-	I	-	-	I	-	-	I	-	-	I	-	-	I	-	-
Brake pedal travel and free play		-	-	I	-	-	I	-	-	I	-	-	I	-	-	I	-	-	I	-	-
Pipes and hoses for loose connections or damage		-	-	I	-	-	I	-	-	I	-	-	I	-	-	I	-	-	I	-	-

(1): Adjust or change automatic transmission fluid.
*Marks: Under severe driving conditions, additional maintenance is required.
Refer to "Maintenance schedule under severe driving conditions".

GASOLINE ENGINE MODEL

I: Inspect and correct or replace as necessary A: Adjust
R: Replace or change T: Tighten to specified torque L: Lubricate

SERVICE INTERVAL:	x 1,000 km	5	10	15	20	25	30	35	40	45	50	55	60	65	70	75	80	85	90	95	100
(Use odometer reading	x 1,000 miles	3	6	9	12	15	18	21	24	27	30	33	36	39	42	45	48	51	54	57	60
or months whichever comes first)	or months	6	12	18	24	30	36	42	48	54	60	66	72	78	84	90	96	102	108	114	120
PARKING BRAKE																					
Parking brake function		-	-	I	-	-	I	-	-	I	-	-	I	-	-	I	-	-	I	-	-
Parking brake lever travel		-	-	I	-	-	I	-	-	I	-	-	I	-	-	I	-	-	I	-	-
Cables for looseness or damage and guide for damage		-	-	I	-	-	I	-	-	I	-	-	I	-	-	I	-	-	I	-	-
Ratchet for wear or damage		-	-	I	-	-	I	-	-	I	-	-	I	-	-	I	-	-	I	-	-
SUSPENSION																					
Spring leaves for damage		-	-	I	-	-	I	-	-	I	-	-	I	-	-	I	-	-	I	-	-
Mount for looseness or damage		-	-	I	-	-	I	-	-	I	-	-	I	-	-	I	-	-	I	-	-
Shock absorbers for oil leakage		-	-	I	-	-	I	-	-	I	-	-	I	-	-	I	-	-	I	-	-
Shock absorbers mount for looseness		-	-	I	-	-	I	-	-	I	-	-	I	-	-	I	-	-	I	-	-
Rubber bushes of suspension wear or damage		-	-	I	-	-	I	-	-	I	-	-	I	-	-	I	-	-	I	-	-
Spring action for loss of balance due to weakening		-	-	I	-	-	I	-	-	I	-	-	I	-	-	I	-	-	I	-	-
Joint ball rubber boot for damage		-	-	I	-	-	I	-	-	I	-	-	I	-	-	I	-	-	I	-	-
WHEELS																					
Wheel pins		-	-	T	-	-	T	-	-	T	-	-	T	-	-	T	-	-	T	-	-
Wheel disc for damage		-	-	I	-	-	I	-	-	I	-	-	I	-	-	I	-	-	I	-	-
Hub bearing grease		-	-	-	-	-	R	-	-	-	-	-	R	-	-	-	-	-	R	-	-
Front and rear hub bearings for looseness		-	-	I	-	-	I	-	-	I	-	-	I	-	-	I	-	-	I	-	-
Tire pressure and damage		-	-	I	-	-	I	-	-	I	-	-	I	-	-	I	-	-	I	-	-
Tire rotation		(Rotate as required)																			
OTHERS																					
Bolts and nuts on chassis and body		-	-	I	-	-	I	-	-	I	-	-	I	-	-	I	-	-	I	-	-
Lube front free-wheeling hubs		-	-	-	-	-	L	-	-	-	-	-	L	-	-	-	-	-	L	-	-

*Marks: Under severe driving conditions, additional maintenance is required.
Refer to "Maintenance schedule under severe driving conditions".

DIESEL ENGINE MODEL

I: Inspect and correct or replace as necessary A: Adjust
R: Replace or change T: Tighten to specified torque L: Lubricate

SERVICE INTERVAL:	x 1,000 km	5	10	15	20	25	30	35	40	45	50	55	60	65	70	75	80	85	90	95	100
(Use odometer reading	x 1,000 miles	3	6	9	12	15	18	21	24	27	30	33	36	39	42	45	48	51	54	57	60
or months whichever comes first)	or months	6	12	18	24	30	36	42	48	54	60	66	72	78	84	90	96	102	108	114	120
DIESEL ENGINE																					
* D DT Engine oil		R	R	R	R	R	R	R	R	R	R	R	R	R	R	R	R	R	R	R	R
* 4JX Engine oil		-	R	-	R	-	R	-	R	-	R	-	R	-	R	-	R	-	R	-	R
* D DT Engine oil filter		-	R	-	R	-	R	-	R	-	R	-	R	-	R	-	R	-	R	-	R
* 4JX Engine oil filter		-	R	-	R	-	R	-	R	-	R	-	R	-	R	-	R	-	R	-	R
Oil leakage and contamination		-	I	-	I	-	I	-	I	-	I	-	I	-	I	-	I	-	I	-	I
D DT Idling speed and acceleration		-	I	-	I	-	I	-	I	-	I	-	I	-	I	-	I	-	I	-	I
Fan belt tension and damage		-	I	-	I	-	I	-	I	-	I	-	I	-	I	-	I	-	I	-	I
4JX Timing belt		(Replace every 200,000 km or 125,000 miles)																			
Exhaust system		-	I	-	I	-	I	-	I	-	I	-	I	-	I	-	I	-	I	-	I
All hoses and pipes in engine compartment for clog or damage		-	I	-	I	-	I	-	I	-	I	-	I	-	I	-	I	-	I	-	I
Valve clearance		-	-	-	A	-	-	-	A	-	-	-	A	-	-	-	A	-	-	-	A
4JX Valve clearance		-	-	-	A	-	-	-	-	-	A	-	-	-	-	-	A	-	-	-	-
* D DT Air cleaner element		-	I	-	I	-	I	-	R	-	I	-	I	-	I	-	R	-	I	-	I
* 4JX Air cleaner element		-	-	-	-	-	-	-	-	-	-	-	-	-	-	-	R	-	-	-	-
D DT Fuel filter		-	-	-	R	-	-	-	R	-	-	-	R	-	-	-	R	-	-	-	R
4JX Fuel filter		-	-	-	-	-	-	-	-	-	-	-	-	-	-	-	R	-	-	-	-
Radiator coolant concentration		-	I	-	I	-	I	-	I	-	I	-	I	-	I	-	I	-	I	-	I
Cooling system for water leakage		-	I	-	I	-	I	-	I	-	I	-	I	-	I	-	I	-	I	-	I
CLUTCH																					
Clutch fluid		-	I	-	I	-	I	-	I	-	I	-	I	-	I	-	I	-	I	-	I
Clutch pedal travel and free play		-	I	-	I	-	I	-	I	-	I	-	I	-	I	-	I	-	I	-	I
TRANSMISSION OR TRANSMISSION WITH TRANSFER CASE																					
* Manual transmission with transfer case oil		-	R	-	I	-	-	-	R	-	-	-	I	-	-	-	R	-	-	-	I
* AT Automatic transmission fluid		-	-	-	I	-	-	-	I	-	-	-	I	-	-	-	I	-	-	-	I
* AT Transfer case oil		-	R	-	I	-	-	-	R	-	-	-	I	-	-	-	R	-	-	-	I
PROPELLER SHAFT																					
Loose connections		-	I	-	I	-	I	-	I	-	I	-	I	-	I	-	I	-	I	-	I
* Universal joints and splines for wear		-	I	-	I	-	I	-	I	-	I	-	I	-	I	-	I	-	I	-	I
Universal joints and sliding sleeve (front and rear)		-	L	-	L	-	L	-	L	-	L	-	L	-	L	-	L	-	L	-	L
FRONT AND REAR AXLE																					
* Differential gear oil (Front and rear)		-	R	-	I	-	-	-	R	-	-	-	I	-	-	-	R	-	-	-	I
Shift on the fly system gear oil		-	-	-	I	-	-	-	I	-	-	-	I	-	-	-	I	-	-	-	I
Front axle shaft rubber boot for damage		-	-	-	I	-	-	-	I	-	-	-	I	-	-	-	I	-	-	-	I
Axle case for distortion or damage		-	-	-	I	-	-	-	I	-	-	-	I	-	-	-	I	-	-	-	I
Axle shafts for distortion or damage		-	-	-	I	-	-	-	I	-	-	-	I	-	-	-	I	-	-	-	I
STEERING																					
* Power steering fluid		-	I	-	I	-	I	-	R	-	I	-	I	-	I	-	R	-	I	-	I
Oil leakage		-	I	-	I	-	I	-	I	-	I	-	I	-	I	-	I	-	I	-	I
* Steering system for looseness or damage		-	I	-	I	-	I	-	I	-	I	-	I	-	I	-	I	-	I	-	I
Power steering hose		-	I	-	I	-	I	-	I	-	I	-	I	-	R	-	I	-	I	-	I
Steering wheel play		-	I	-	I	-	I	-	I	-	I	-	I	-	I	-	I	-	I	-	I
Steering function		-	I	-	I	-	I	-	I	-	I	-	I	-	I	-	I	-	I	-	I
Right and left turning radius		-	-	-	I	-	-	-	I	-	-	-	I	-	-	-	I	-	-	-	I
Wheel alignment		-	-	-	I	-	-	-	I	-	-	-	I	-	-	-	I	-	-	-	I
Joint ball for oil leakage or damage		-	I	-	I	-	I	-	I	-	I	-	I	-	I	-	I	-	I	-	I
Joint ball rubber boot for damage		-	I	-	I	-	I	-	I	-	I	-	I	-	I	-	I	-	I	-	I
SERVICE BRAKES																					
Brake fluid		-	-	-	I	-	-	-	R	-	-	-	I	-	-	-	R	-	-	-	I
Brake system for fluid leakage		-	I	-	I	-	I	-	I	-	I	-	I	-	I	-	I	-	I	-	I
Brake function		-	I	-	I	-	I	-	I	-	I	-	I	-	I	-	I	-	I	-	I
* Disc brake pads and discs wear		-	I	-	I	-	I	-	I	-	I	-	I	-	I	-	I	-	I	-	I
Brake pedal travel and free play		-	I	-	I	-	I	-	I	-	I	-	I	-	I	-	I	-	I	-	I
Pipes and hoses for loose connections or damage		-	I	-	I	-	I	-	I	-	I	-	I	-	I	-	I	-	I	-	I

NOTE: In the 4JXI-TC diesel engine, there is provided sub (2nd) oil filter for fuel injection at the upper part of crank case on the left side of the engine. This oil filter maintenance-free and does not need a periodic replacement. See reverse side the (back) cover for installation location of the sub (2nd) oil filter.

*Marks: Under severe driving conditions, additional maintenance is required.
Refer to "Maintenance schedule under severe driving conditions".

DIESEL ENGINE MODEL

I: Inspect and correct or replace as necessary A: Adjust
R: Replace or change T: Tighten to specified torque L: Lubricate

SERVICE INTERVAL:	x 1,000 km	5	10	15	20	25	30	35	40	45	50	55	60	65	70	75	80	85	90	95	100
(Use odometer reading	x 1,000 miles	3	6	9	12	15	18	21	24	27	30	33	36	39	42	45	48	51	54	57	60
or months whichever comes first)	or months	6	12	18	24	30	36	42	48	54	60	66	72	78	84	90	96	102	108	114	120
PARKING BRAKE																					
Parking brake function		-	-	-	I	-	-	-	I	-	-	-	I	-	-	-	I	-	-	-	I
Parking brake lever travel		-	-	-	I	-	-	-	I	-	-	-	I	-	-	-	I	-	-	-	I
Cables for looseness or damage and guide for damage		-	-	-	I	-	-	-	I	-	-	-	I	-	-	-	I	-	-	-	I
Ratchet for wear or damage		-	-	-	I	-	-	-	I	-	-	-	I	-	-	-	I	-	-	-	I
SUSPENSION																					
Spring leaves for damage		-	I	-	I	-	I	-	I	-	I	-	I	-	I	-	I	-	I	-	I
Mount for looseness or damage		-	I	-	I	-	I	-	I	-	I	-	I	-	I	-	I	-	I	-	I
Shock absorbers for oil leakage		-	I	-	I	-	I	-	I	-	I	-	I	-	I	-	I	-	I	-	I
Shock absorbers mount for looseness		-	I	-	I	-	I	-	I	-	I	-	I	-	I	-	I	-	I	-	I
Rubber bushes of suspension wear or damage		-	I	-	I	-	I	-	I	-	I	-	I	-	I	-	I	-	I	-	I
Spring action for loss of balance due to weakening		-	-	-	I	-	-	-	I	-	-	-	I	-	-	-	I	-	-	-	I
Joint ball rubber boot for damage		-	I	-	I	-	I	-	I	-	I	-	I	-	I	-	I	-	I	-	I
WHEELS																					
Wheel pins		-	T	-	T	-	T	-	T	-	T	-	T	-	T	-	T	-	T	-	T
Wheel disc for damage		-	I	-	I	-	I	-	I	-	I	-	I	-	I	-	I	-	I	-	I
Hub bearing grease		-	-	-	-	-	R	-	-	-	-	-	R	-	-	-	-	-	R	-	-
Front and rear hub bearings for looseness		-	I	-	I	-	I	-	I	-	I	-	I	-	I	-	I	-	I	-	I
Tire pressure and damage		-	I	-	I	-	I	-	I	-	I	-	I	-	I	-	I	-	I	-	I
Tire rotation		(Rotate as required)																			
OTHERS																					
Bolts and nuts on chassis and body		-	I	-	I	-	I	-	I	-	I	-	I	-	I	-	I	-	I	-	I
Lube front free-wheeling hubs		-	-	-	-	-	L	-	-	-	-	-	L	-	-	-	-	-	L	-	-

*Marks: Under severe driving conditions, additional maintenance is required.
Refer to "Maintenance schedule under severe driving conditions".

MAINTENANCE SCHEDULE UNDER SEVERE DRIVING CONDITIONS

Severe driving conditions
- A: Repeated short trips
- B: Driving on rough roads
- C: Driving on dusty roads
- D: Driving in extremely cold weather and/or salted roads

G6 : 3.2L V6 Gasoline engine
4JX1 : 3.0L L4 Diesel engine
D DT : 3.1L L4 Diesel engine
MT : Manual Transmission
AT : Automatic Transmission
TF : Transfer

Item	Interval		Condition				
			A	B	C	D	A+D
Engine oil	G6 : Change every 5,000 km (3,000 miles) D DT : Change every 2,500 km (1,500 miles) 4JX : Change every 5,000 km (3,000 miles)				●		●
Engine oil filter	G6 : Replace every 10,000 km (6,000 miles) D DT 4JX : Replace every 5,000 km (3,000 miles)				●		●
Air cleaner element	Replace every 20,000 km (12,000 miles) 4JX : Replace every 40,000 km (25,000 miles)				●		
Power steering fluid	Replace every 50,000 km (30,000 miles)			●	●		
Steering system for looseness or damage	Inspect every 5,000 km (3,000 miles)			●			
Universal joints and sleeves	Inspect for wear and lubricate every 5,000 km (3,000 miles)			●	●		
Transmission with transfer case oil	MT	Change every 20,000 km (12,000 miles) After changing at initial 10,000 km (6,000 miles)		●			
	AT	Transmission : Change every 32,000 km (20,000 miles)	●	●	●		●
		Transfer: Change every 20,000 km (12,000 miles) After changing at initial 10,000 km (6,000 miles)		●			
Differential oil	Change every 20,000 km (12,000 miles) After changing at initial 5,000 km (3,000 miles)			●			
Disc brake pads and discs	Inspect every 5,000 km (3,000 miles)		●	●	●		
Timing belt	G6 : Replace every 120,000 km (75,000 miles)				●		●

EXPLANATION OF COMPLETE VEHICLE MAINTENANCE SCHEDULE

Explanations of the services listed in the proceeding Maintenance Scheduled are presented in “Service Information” section of each manual.

Replace all questionable parts and note any necessary repairs as you perform these maintenance procedures.

RECOMMENDED FLUIDS, LUBRICANTS AND FUELS

In order to obtain maximum performance and longest service life from your ISUZU vehicles, it is very important to select and use correctly best lubricants and diesel fuels.

When lubricating, be sure to use ISUZU genuine lubricants or recommended lubricants listed below, according to the maintenance schedule for each vehicle model.

The lubrication intervals in the maintenance schedule and the coverage and period of new vehicle warranty are based on the use of ISUZU genuine lubricants or recommended lubricants as given in the chart which will serve as a guide for selecting lubricants of proper brand name.

LUBRICATION	MAKE	BRAND / TYPE	GRADE	
			API	ACEA
Diesel engine crankcase	**ISUZU GENUINE**	**BESCO MULTI – Z TYPE CE (10W-30)**	**CE**	
	ISUZU GENUINE	**BESCO MULTI – Z (10W-30)**	**CD**	
	ISUZU GENUINE	**BESCO MULTI – Z SUV (5W-30)**	**CD**	
	ISUZU GENUINE	**BESCO S – 3 (10W, 20W, 30, 40)**	**CD**	
	EXXON / ESSO	ESSOLUBE XD-3+ (15W-40)	CG4/CF	E2/B2
	EXXON / ESSO	ESSOLUBE XT 331 (15W-40)	CG-4/CF	E2/B2
	MOBIL	DELVAC HP (15W-40, 20, 30, 40)	CF/CE	
	CALTEX / CHEVRON	DELO CXJ (15W-40, 30, 40)	CF	
	SHELL	RIMURA D (15W-40, 30, 40	CD/CF	
	ELF	PERFORMANCE TROPHY (15W-40)	CE	E3
	TOTAL	RUBIA XT (15W-40)	CF-4	E2
	CASTROL	RX SUPER PLUS (15W-40)	CD/CE/CF	
Gasoline engine crankcase	**ISUZU GENUINE**	**BESCO RACING ACE TYPE SJ (5W-30)**	**SJ**	
	ISUZU GENUINE	**BESCO RACING ACE (7.5W-30)**	**SG**	
	EXXON / ESSO	ESSO SUPERFLO (15W-40, 15W-50, 20W-50)	SJ	A2
	EXXON / ESSO	ESSO UNIFLO (15W-40, 15W-50, 20W-50)	SJ	A2
	MOBIL	MOBIL SUPER XHP (15W-40, 15W-50, 20W-50)	SJ	A3
	CALTEX / TEXACO	HAVOLINE FORMULA-3 (15W-40, 20W-50)	SJ	
	SHELL	HELIX SUPER (10W-30)	SJ	
	ELF	SUPER SPORTI S (15W-40)	SG	
	TOTAL	QUARTZ 5000 (15W-40, 20W-50)	SJ	A2
	CASTROL	GTX-2 (15W-40)	SG/SH	
Manual transmission Transfer case	**ISUZU GENUINE**	**BESCO GEAR OIL TRANSAXLE (5W-30)**	**SG**	
	EXXON / ESSO	ESSOLUBE XD-3+ (15W-40)	CG-4/CF	E2/B2
	EXXON / ESSO	ESSOLUBE XT 331 (15W-40)	CG-4/CF	E2/B2
	MOBIL	MOBIL SUPER (10W-30)	SH	
	CALTEX / TEXACO	HAVOLINE FORMULA-3 (15W-40, 20W-50)	SH	
	SHELL	RIMURA D (15W-40)	CD/CF	
	ELF	SUPER SPORTI S (15W-40)	SG/CD	
	TOTAL	QUARTZ 5000 (15W-40, 20W-50)	SJ/CF	A2/B2
	CASTROL	RX SUPER PLUS (15W-40)	CD/CE/CF	
Differential Shift on the fly system (GL-5 only)	**ISUZU GENUINE**	**BESCO GEAR OIL SH (80W-90, 90, 140)**	**GL-5**	
	ISUZU GENUINE	**BESCO SHIFT ON THE FLY (75W-90)**	**GL-5**	
	EXXON / ESSO	GEAR OIL GX (85W-90)	GL-5	
	MOBIL	MOBILUBE HD (80W-90, 85W-140)	GL-5	
	CALTEX	THURBAN GL-5 EP (80W-90, 85W-140)	GL-5	
	SHELL	SPIRAX HD (90, 140)	GL-5	
	ELF	TRANSELF TYPE B (80W-90, 85W-140)	GL-5	
	TOTAL	TRANSMISSION TM (80W-90, 85W-140)	GL-5	
	CASTROL	EPX 90 (90)	GL-5	
	CASTROL	DYNADRIVE (80W-90)	GL-5	

LUBRICATION	MAKE	BRAND / TYPE	GRADE	
			API	ACEA
Differential (Limited Slip Differential)	**ISUZU GENUINE** EXXON / ESSO MOBIL CALTEX ELF TOTAL CASTROL	**BESCO GEAR OIL LSD (140)** GEAR OIL LSA (90) MOBILUBE HD LS (80W-90) GEAR OIL LSD (90) TRANSELF TYPE BLS (90) TRANSMISSION DA (85W-90) HYPOY LS (90)	**GL-5** GL-5 GL-5 GL-5 GL-5 GL-5 GL-5	
Automatic transmission Power steering	**ISUZU GENUINE** EXXON / ESSO MOBIL CALTEX SHELL ELF TOTAL CASTROL CASTROL	**BESCO ATF II, ATF III** ESSO ATF D (DEXRON® II-D) MOBIL ATF (DEXRON® III) ATF HD (DEXRON® II) SHELL DONAX TA (DEXRON® II-D) ELFMATIC G3 (DEXRON® III) TOTAL FLUID IID (DEXRON® II-D) TQ-D (DEXRON® II) TQ DEXRON III (DEXRON® III)		
Grease fitting (Multi purpose grease)	**ISUZU GENUINE** EXXON / ESSO MOBIL CALTEX / TEXACO SHELL TOTAL CASTROL	**BESCO L-2 GREASE (No.2), L-3 GREASE (No.3)** RONEX MP (No.2) MOBILGREASE HP 222 (No.2) STARPLEX-2 (No.2) RETINAX A (No.2) MULTIS EP2, EP3 (No.2, No.3) LM GREASE (No.2, No.3)		
Propeller shaft sliding yoke Universal joint (Multi purpose grease containing molybdenum disulfide)	**ISUZU GENUINE** EXXON / ESSO EXXON / ESSO CALTEX TOTAL	**ONE LUBER MO GREASE** BEACON Q2 (No.2) MULTIPURPOSE GREASE (Moly) (No.2) MOLYTEX GREASE EP2 (No.2) TOTAL MULTIS MS2 (No.2)		
Engine cooling system	**ISUZU GENUINE** TEXACO / CALTEX	**BESCO LLC SUPER TYPE E** HAVOLINE EXTENDED LIFE ANTIFREEZE COOLANT HAVOLINE XLC EXTENDED LIFE COOLANT 6280		

FLUID	TYPE
Clutch and brake fluid reservoir	**Besco brake fluid (For light duty)** Hydraulic brake fluid SAE J1703 FMVSS 116 DOT.3 grade

NOTE:
When the recommended lubricants are specified in the workshop manual, follow them.

DIESEL FUEL/APPLICABLE STANDARD	
JIS (JAPANESE INDUSTRIAL STANDARD)	Based on K2204 GAS OIL
DIN (DEUTSCHE INDUSTRIE NORMEN)	Based on EN590 : 1997
SAE (SOCIETY OF AUTOMOTIVE ENGINEERS)	Based on SAE J-313C
BS (BRITISH STANDARD)	Based on BS EN590 : 1997

NOTE:
Use the applicable standard or equivalent for diesel fuels.

OIL VISCOSITY CHART

Lubricants should be carefully selected according to the lubrication chart. It is also important to select viscosity of lubricants according to the ambient temperature by referring to the following table.

OIL VISCOSITY CHART FOR GASOLINE ENGINE

APPLY GASOLINE ENGINE OIL

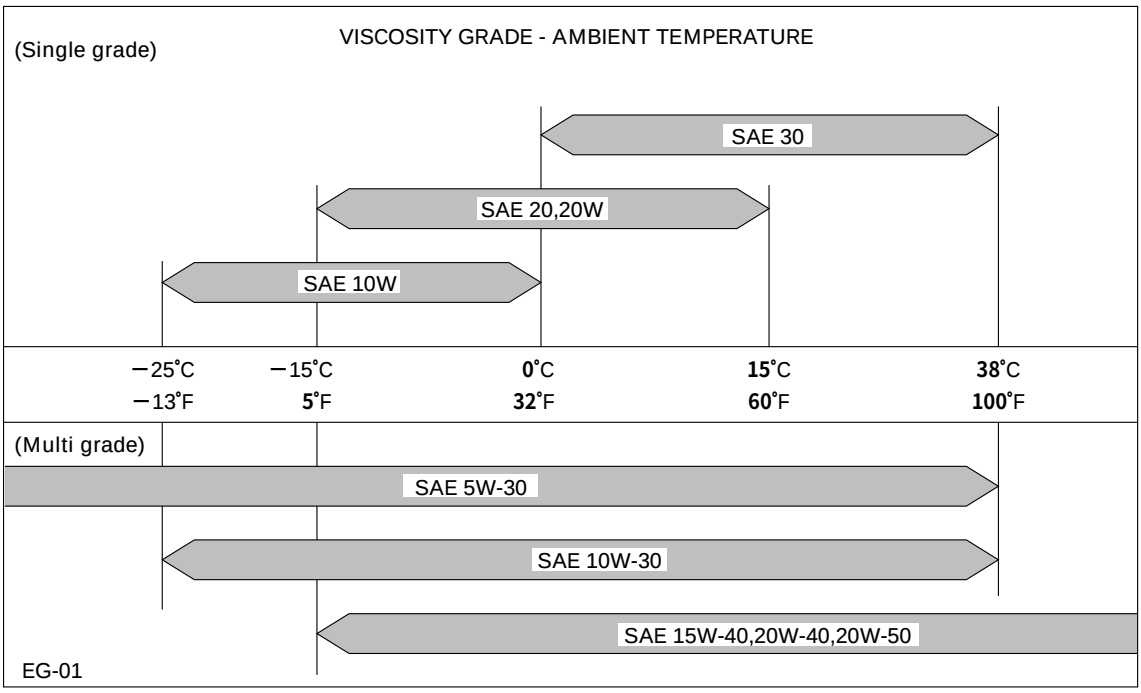

OIL VISCOSITY CHART FOR DIESEL ENGINE

APPLY DIESEL ENGINE OIL

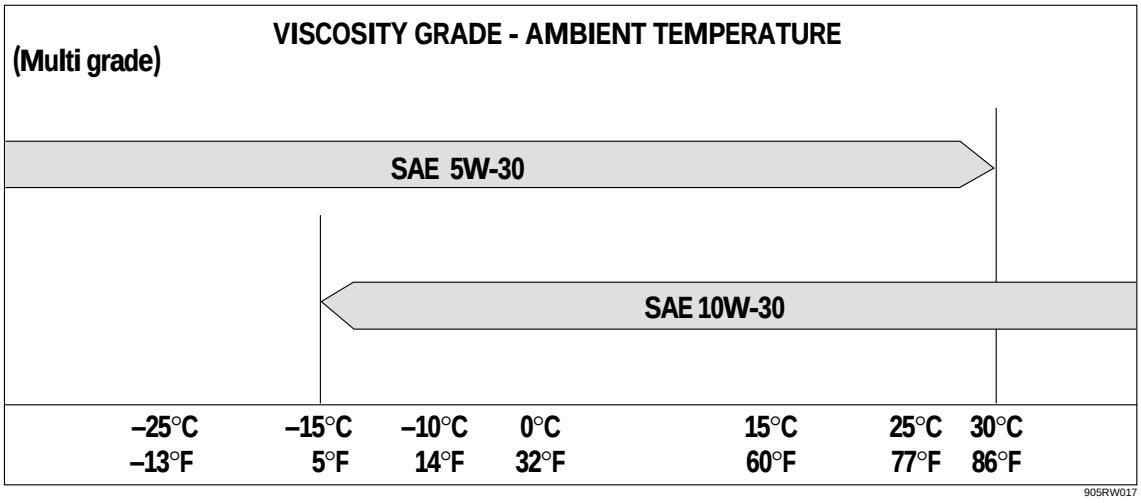

OIL VISCOSITY CHART FOR MANUAL TRANSMISSION AND TRANSFER CASE

APPLY ENGINE OIL

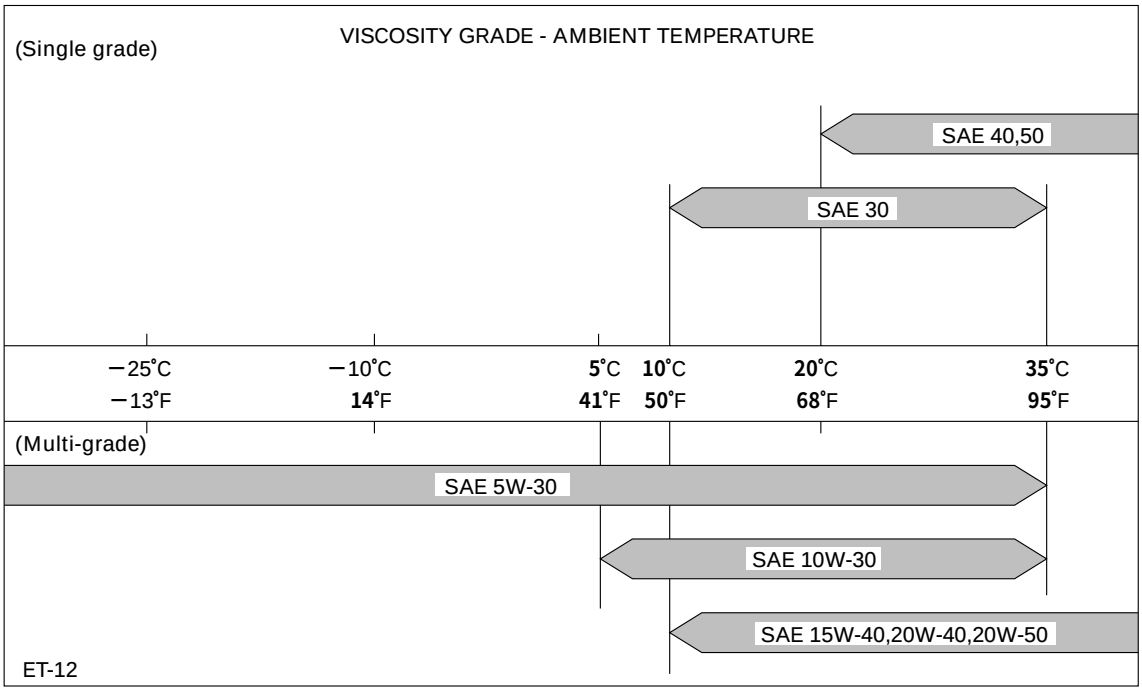

OIL VISCOSITY CHART FOR FRONT AXLE (Manual and Auto locking hub model) AND REAR AXLE

APPLY GEAR OIL

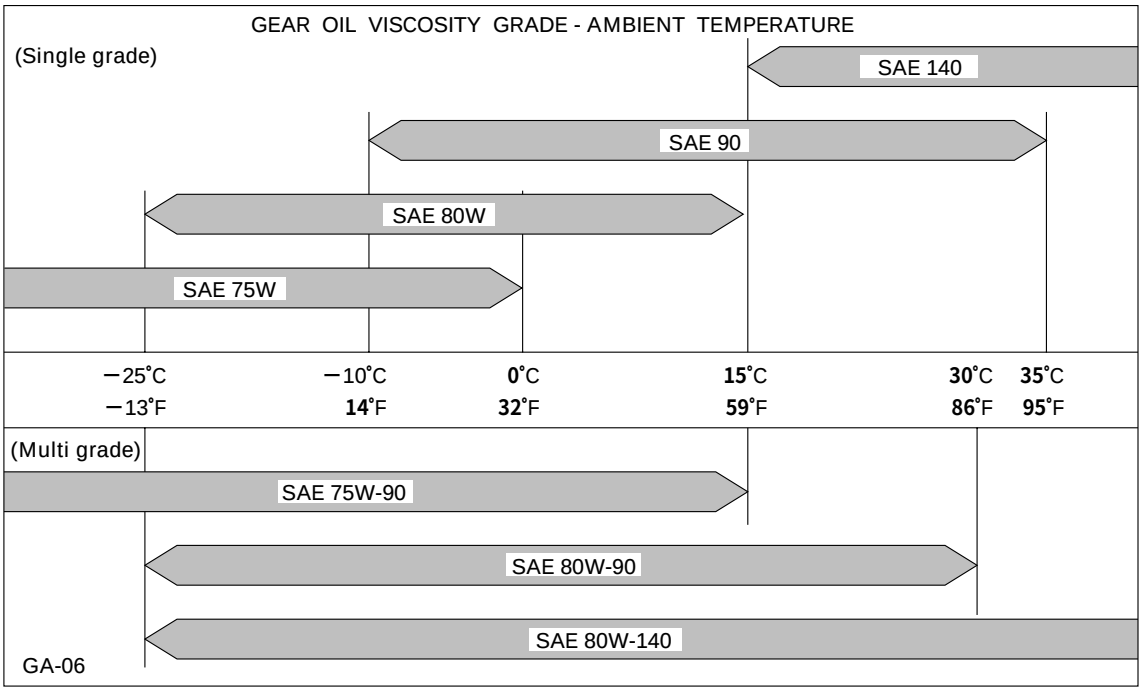

OIL VISCOSITY CHART FOR FRONT AXLE (Shift on the fly model)

APPLY GEAR OIL

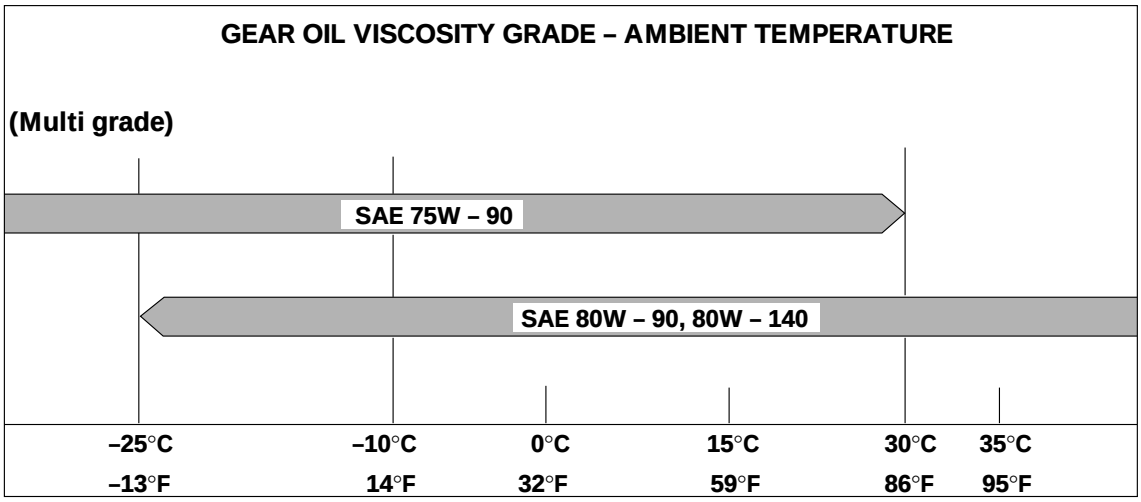

SECTION 1A

HEATING AND VENTILATION

CAUTION
When fasteners are removed, always reinstall them at the same location from which they were removed. If a fastener needs to be replaced, use the correct part number fastener for that application. If the correct part number fastener is not available, a fastener of equal size and strength (or stronger) may be used.

Fasteners that are not reused, and those requiring thread locking compound, will be called out. The correct torque values must be used when installing fasteners that require it. If the above conditions are not followed, parts or system damage could result.

CONTENTS

PAGE

General Description 1A– 2
Heater 1A– 2
Control Lever Assembly 1A– 3
Ventilation 1A– 3
Air Select Knob 1A– 4
Air Source Select Lever 1A– 4
Fan Control Knob 1A– 4
Temperature Control Knob 1A– 4
Ceramic Heater 1A– 5
On-Vehicle Service 1A– 6
Heater Unit 1A– 6
Heater Core and/or Mode Door 1A– 8
Heater Mode Control Link Unit 1A–10
Heater Temperature Control Link Unit 1A–12
Blower Assembly 1A–14
Blower Link Unit and/or Mode Door 1A–16
Blower Motor 1A–18
Rear Heater Duct, Defroster Nozzle and Ventilation Duct 1A–20
Center and/or Side Vent 1A–22
Control Lever Assembly and/or Control Cables 1A–24
Control Panel Illumination Bulb 1A–27
Resistor 1A–28
Ceramic Heater and/or Full Hot Switch 1A–30

GENERAL DESCRIPTION

HEATER

When the engine warming up, the warmed engine coolant is sent out into the heater core. The heater system supplies warm air into the passenger compartment to warm it up.
Outside air is circulated through the heater core of the heater unit and then back into the passenger compartment. By controlling the mixture of outside air and heater core air, the most comfortable passenger compartment temperature can be selected and maintained.
The temperature of warm air sent to the passenger compartment is controlled by the temperature control knob. This knob acts to open and close the air mix door, thus controlling the amount of air passed through the heater core.

The air select knob, with its different modes, also allows you to select and maintain the most comfortable passenger compartment temperature. The air source select lever is used to select either “FRESH” for the introduction of the outside air, or “CIRC” for the circulation of the inside air. When the lever is set to “FRESH”, the outside air is always taken into the passenger compartment. When setting the lever to “CIRC” position, the circulation of air is restricted only to the inside air with no introduction of the outside air and the air in the passenger compartment gets warm quickened. However, the lever is normally set to “FRESH” to prevent the windshield from clouding.

This illustration is based on LHD

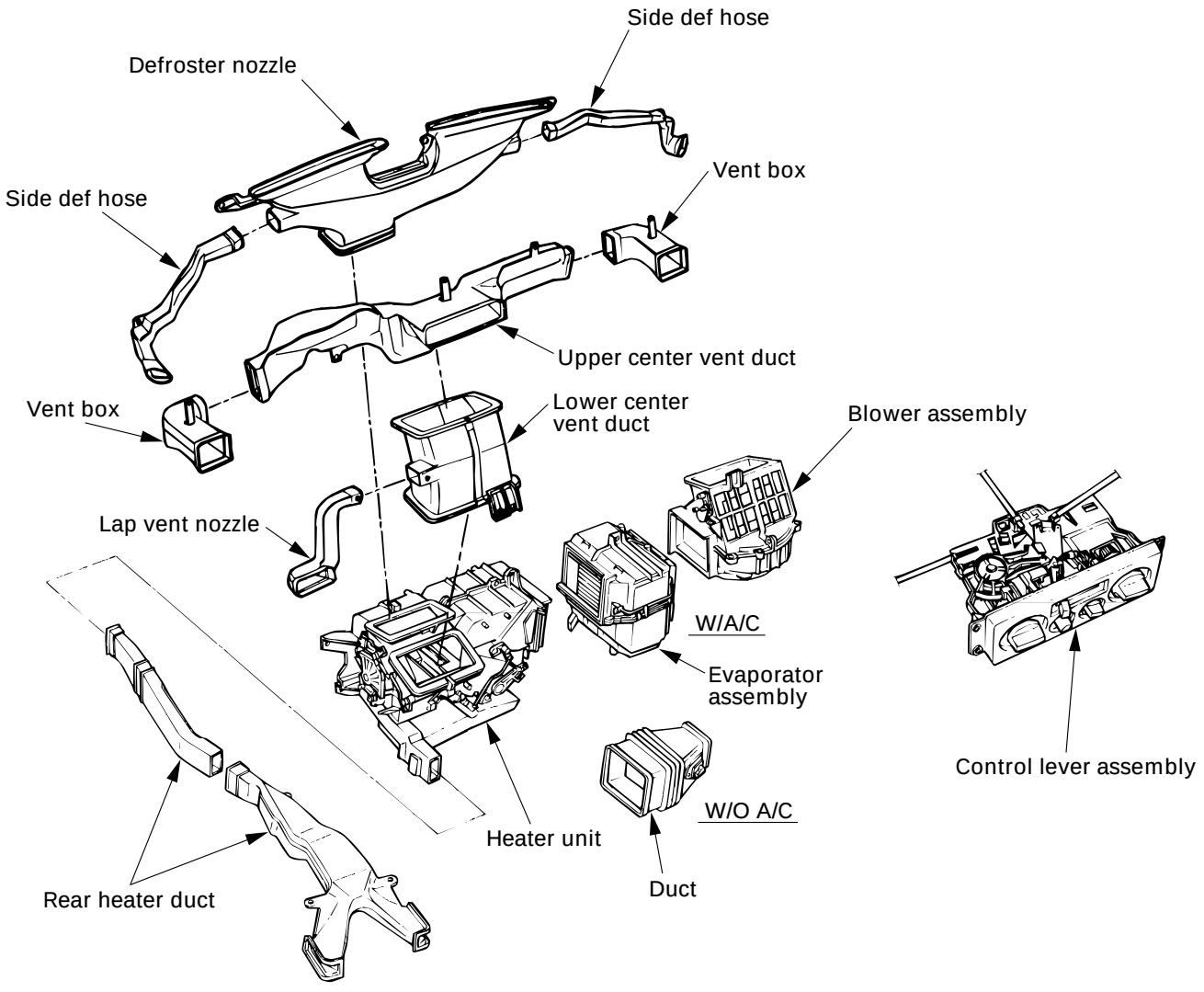

A/C - Air Conditioning

CONTROL LEVER ASSEMBLY

The vehicle has cable-control-type to control by cable the mode and temperature of the heater unit and the mode door for the air source of the blower assembly.

The fan control is used to control the amount of air sent out by the resistor at four levels from “LOW” to “HIGH”.

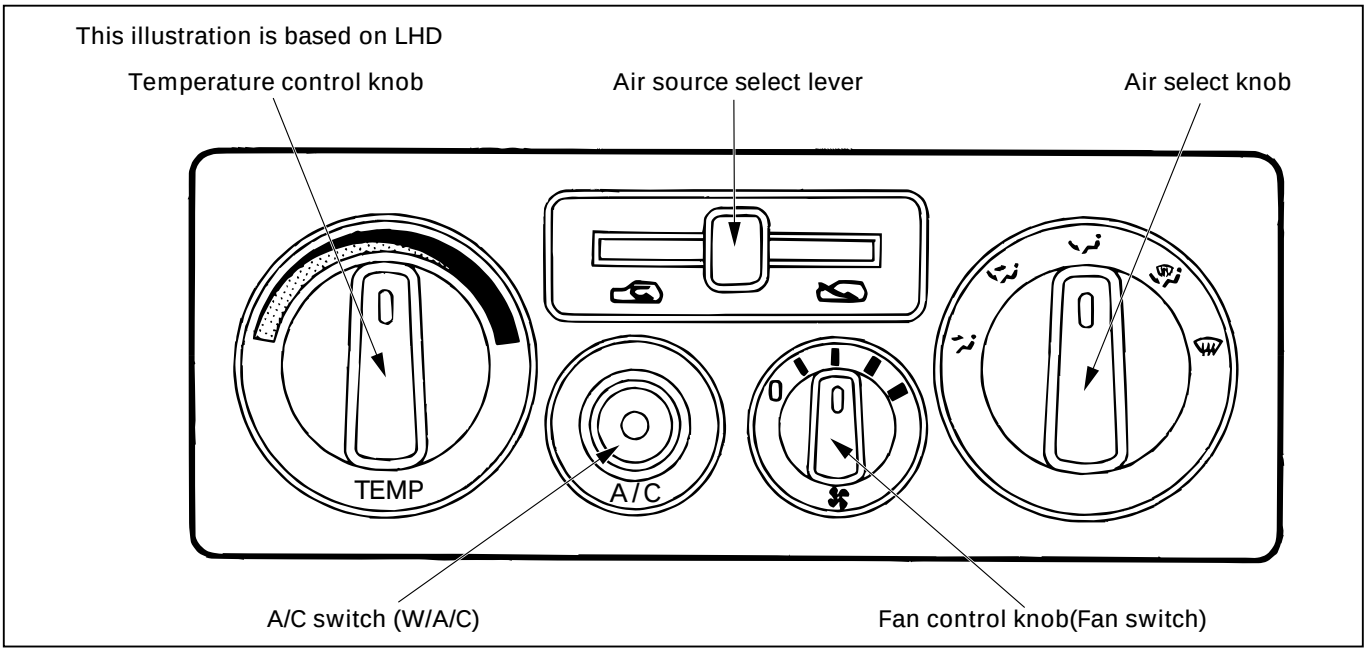

VENTILATION

Set “AIR SOURCE SELECT LEVER” to “FRESH” position and turn on the blower fan. Heating can be done in this lever position, sending in fresh air from outside.

The blower fan also serves to deliver fresh outside air to the vehicle interior to assure adequate ventilation.

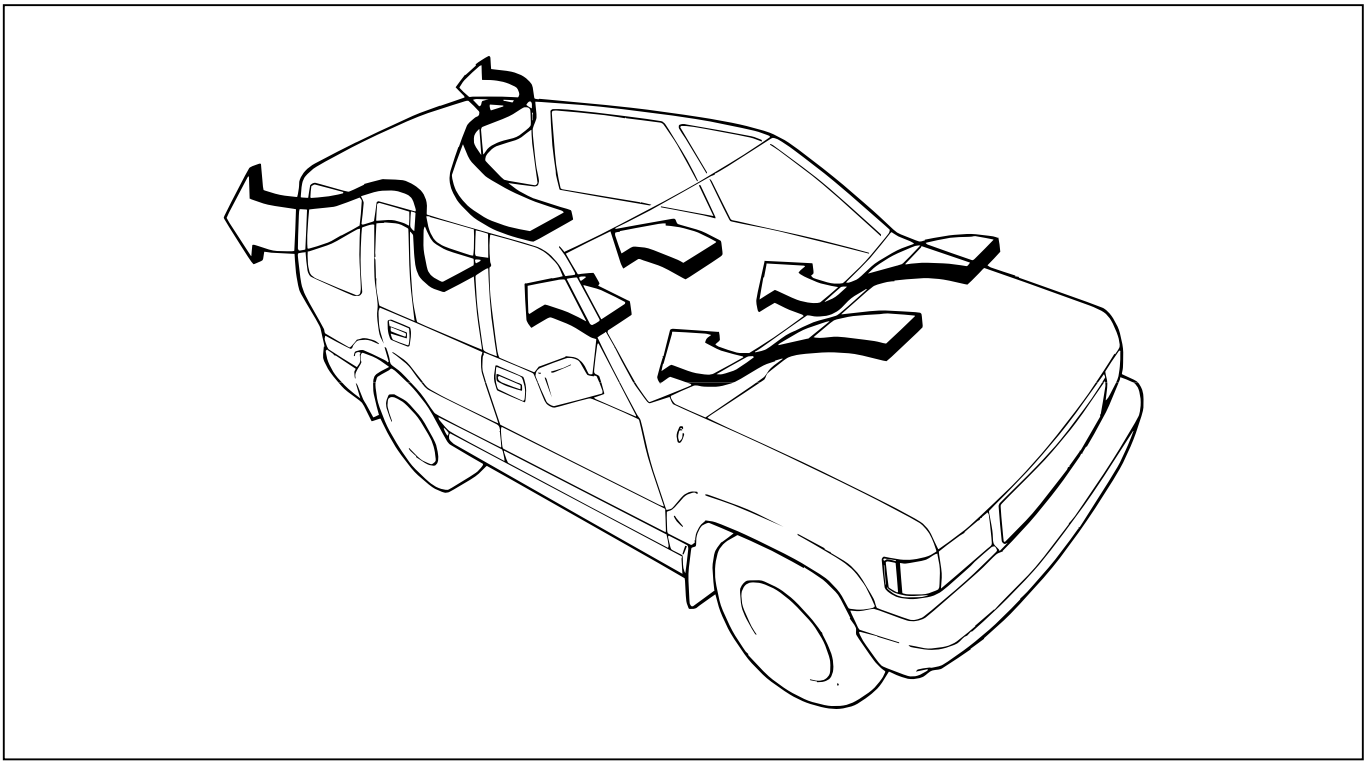

AIR SELECT KNOB

The air selector knob allows you to direct heated air into the passenger compartment through different outlets.

1. **Vent** - In this position, air is discharged from the upper air outlet. Air quantity is controlled by the fan control knob.
2. **Bi-Level** - In this position, air flow is divided between the upper air outlets and the foot air outlets, with warmer air delivered to the floor outlets than the air delivered to the upper air outlets.
3. **Foot** - In this position, air flow is delivered to the foot while sending approx. 30% of total amount of air to the windshield
4. **Def/Foot** - In this position, air flow is delivered to the foot, while sending approx. 40% of total amount of air to the windshield.
5. **Defrost** - In this position, most of the air is delivered to the windshield and a small amount is delivered to the side windows.

Moving the air source select lever to the “CIRC” position provides quickest heat delivery by closing the blower assembly mode door. In this position, outside air is not delivered to the passenger compartment.

AIR SOURCE SELECT LEVER

The intake of outside air and the circulation of inside air are controlled by sliding this lever left or right.

FAN CONTROL KNOB

This knob controls the blower motor speed to regulate the amount of air delivered to the defrost, foot, and ventilation ducts:

1. Low
2. Medium Low
3. Medium High
4. High

TEMPERATURE CONTROL KNOB

When the temperature control knob is in the “COLD” position, the air mix door closes to block the flow of air to the heater core.

When the temperature control knob is in the “HOT” position, the air mix door opens to allow air to pass through the heater core and heat the passenger compartment.

Placing the knob in an intermediate position will cause a lesser or greater amount of air to reach the heater core. In this mode the passenger compartment temperature can be regulated.

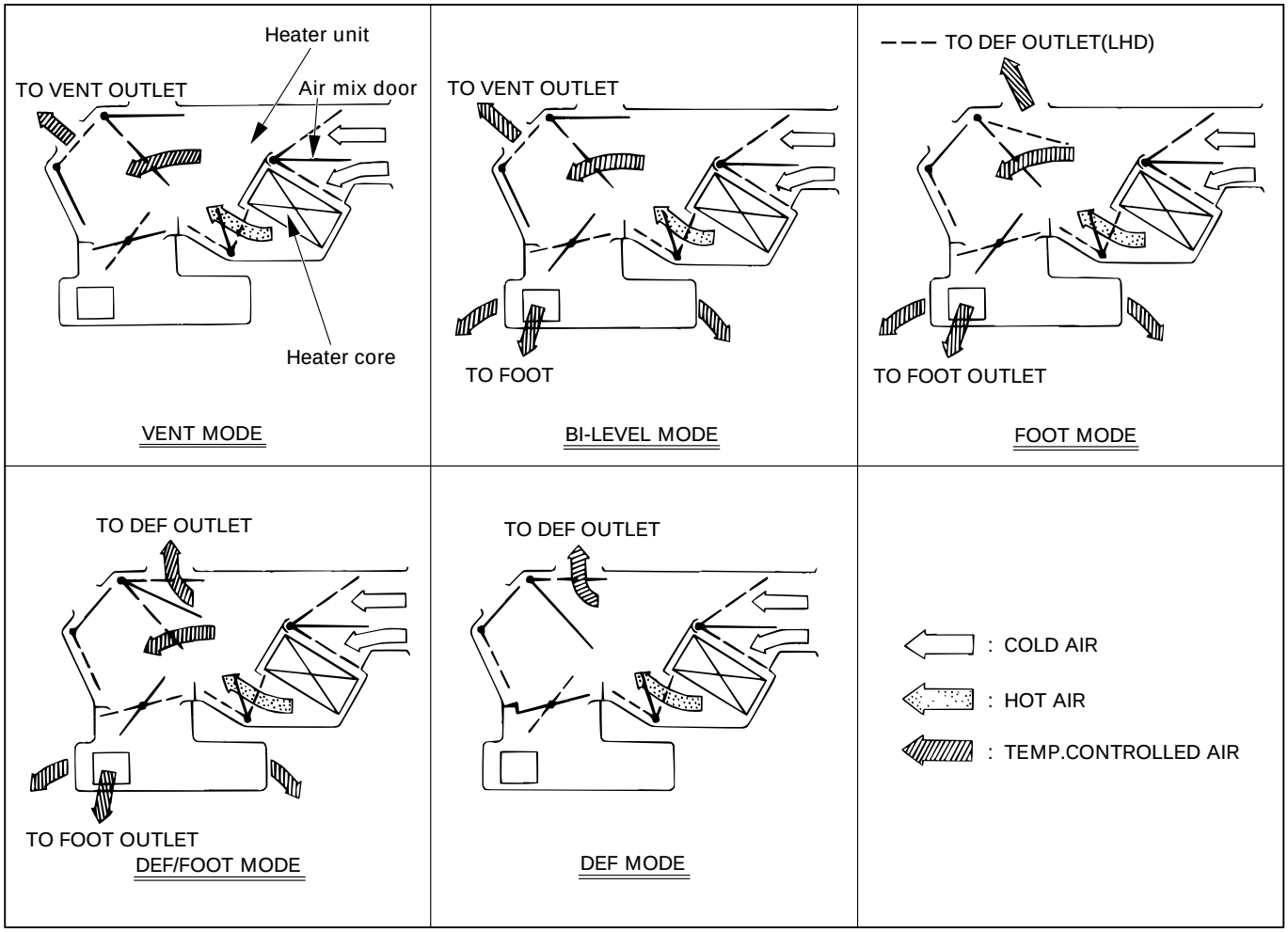

CERAMIC HEATER

When the fan control knob (fan switch) turns on with the temperature control knob set to “FULL HOT” (full hot switch “ON”), the ceramic heater in the heater unit gets hot, thus causing the heater blow temperature of diesel vehicle to get high to improve the heating performance (Since the engine coolant temperature of diesel vehicle is low, its blow temperature is also low.).

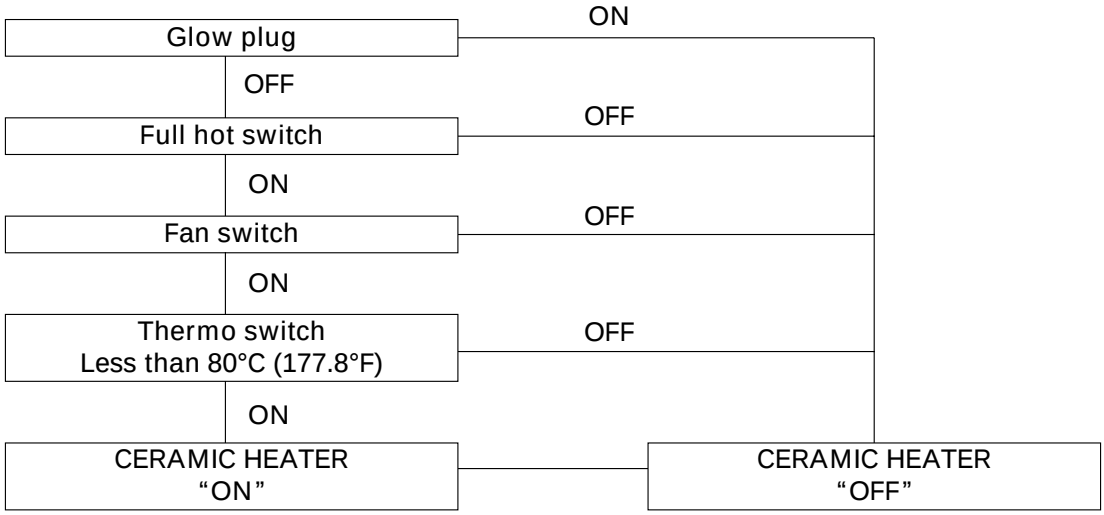

This illustration is based on RHD

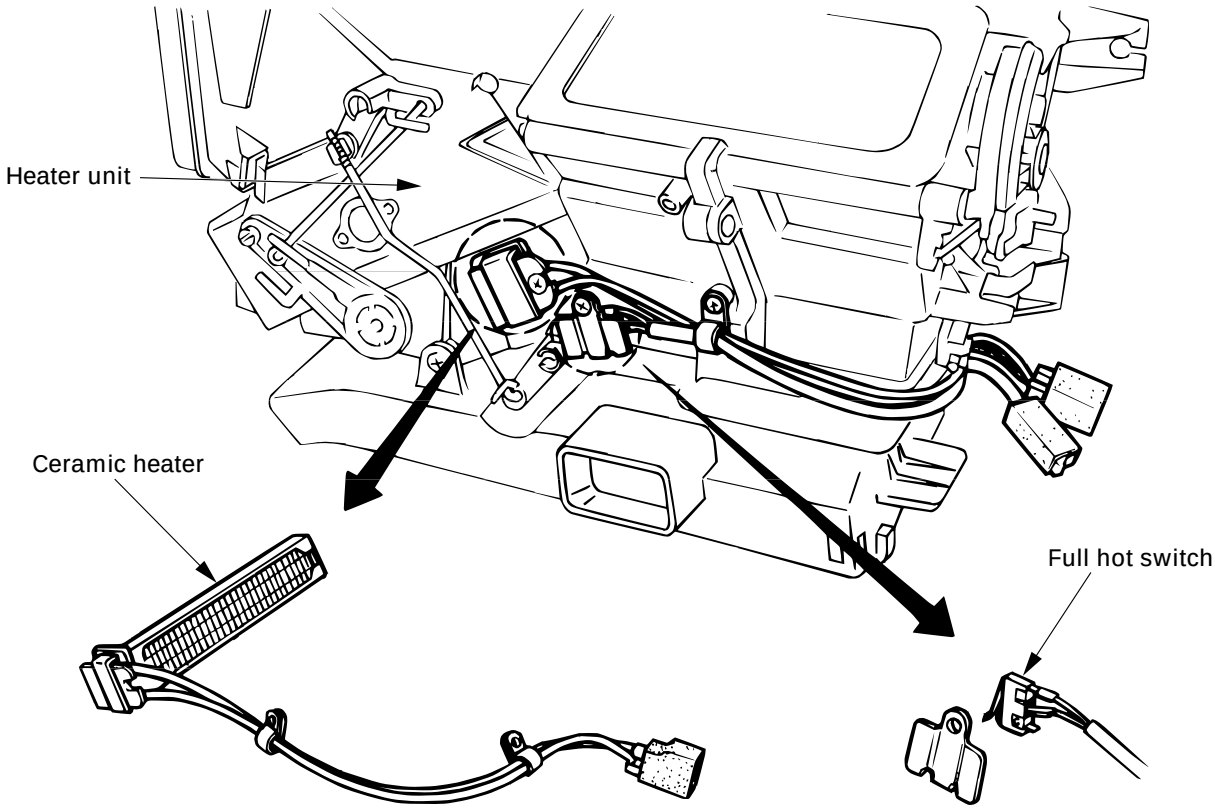

ON-VEHICLE SERVICE

HEATER UNIT

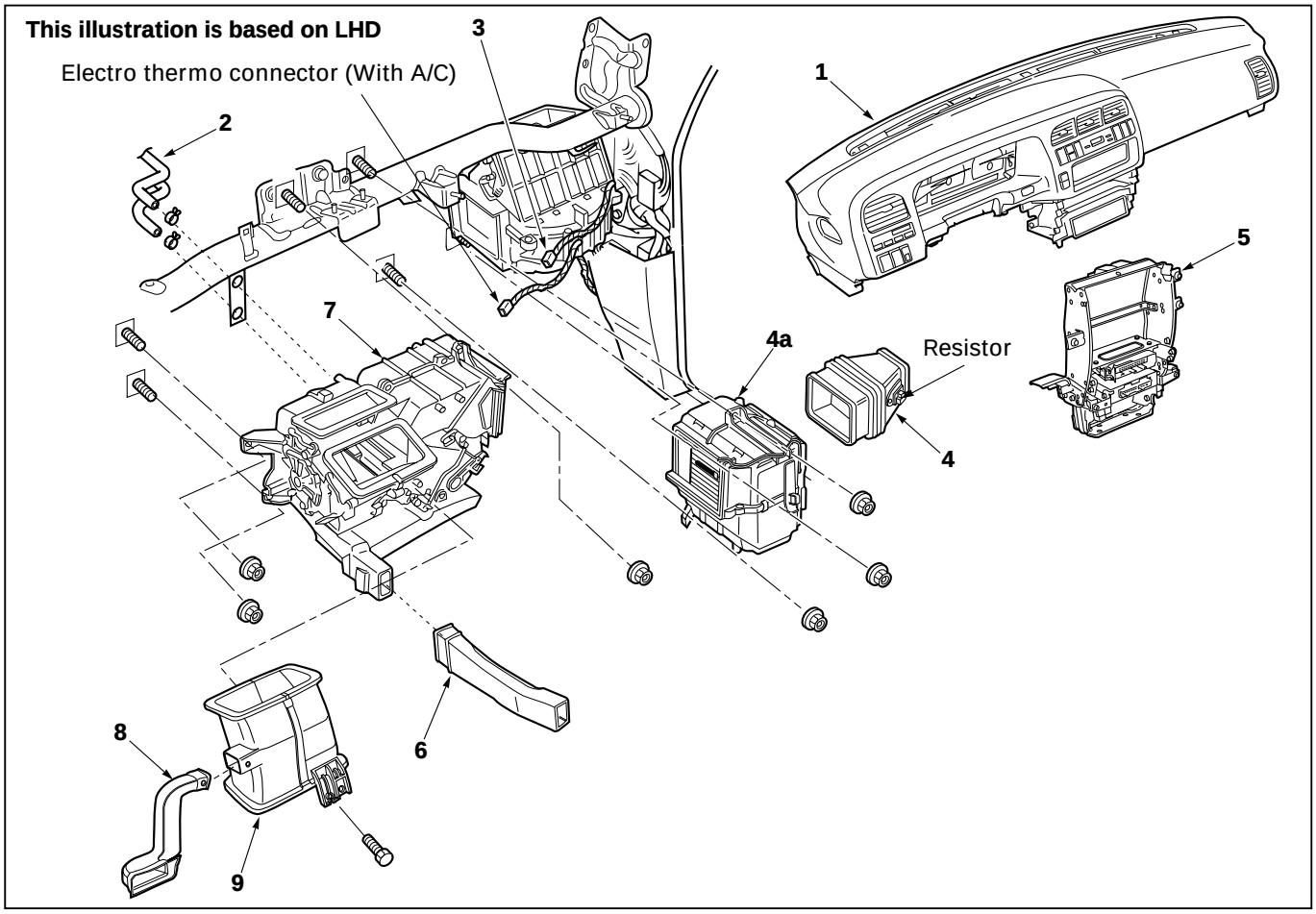

Removal Steps

1. Instrument panel assembly
2. Water hose
3. Resistor connector
4. Duct

4a. Evaporator assembly (A/C only)

5. Instrument panel center bracket
6. Rear heater duct
7. Heater unit
8. Lap vent nozzle
9. Center ventilation lower duct

Installation Steps

To install, follow the removal steps in the reverse order

REMOVAL

Preparation:

- Disconnect the battery ground cable
- Drain engine coolant
- Discharge and recover refrigerant (W/A/C)
  (Refer to Section 1B "REFRIGERANT RECOVERY")

1. **Instrument Panel Assembly**
   Refer to Section 10 "BODY" for INSTRUMENT PANEL ASSEMBLY removal procedure.
2. **Water Hose**
   Disconnect water hoses at heater unit.
3. **Resistor Connector**
4. **Duct**

4a. **Evaporator Assembly**
   Refer to Section 1B "AIR CONDITIONING" for Evaporator Assembly removal procedure.

5. **Instrument panel center bracket**
6. **Rear Heater Duct**
7. **Heater Unit**
8. **Lap vent nozzle**
9. **Center ventilation lower duct**

INSTALLATION

To install, follow the removal steps in the reverse order, noting the following points:

1. When handling the ECM and the control unit, be careful not to make any improper connection of the connectors.
2. Adjust control lever assembly cables.
   Refer to "CONTROL LEVER ASSEMBLY" installation steps in this section.
3. When installing the heater unit, defroster nozzle and center vent duct, be sure that proper seal is made, without any gap between then.

HEATER CORE AND/OR MODE DOOR

This illustration is based on LHD

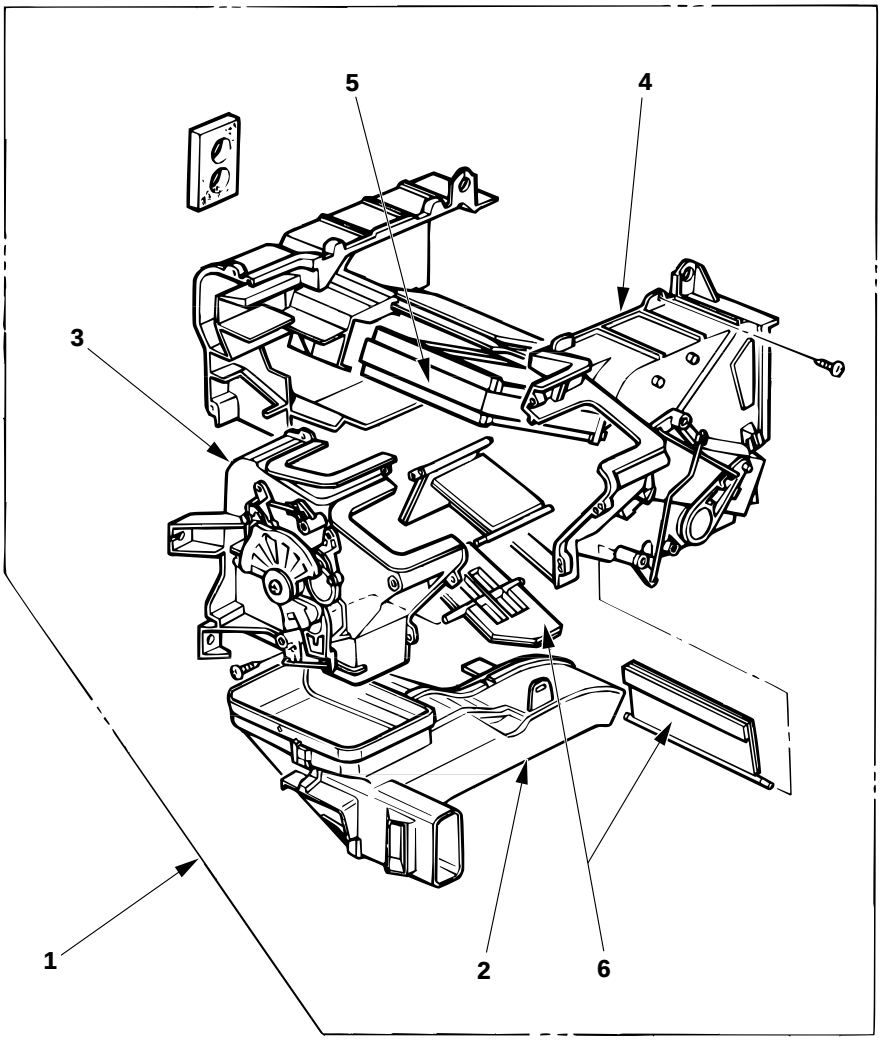

Removal Steps

1. Heater unit
2. Duct
3. Case (Mode control)
4. Case (Temperature control)
5. Heater core
6. Mode door

Installation Steps

To install, follow the removal steps in the reverse order.

REMOVAL

Preparation:

- Disconnect the battery ground cable
- Drain engine coolant

1. **Heater Unit**
   Refer to “HEATER UNIT” removal procedure in this section.
2. **Duct**
3. **Case (Mode Control)**
   Do not remove link unit at this step.
4. **Case (Temperature Control)**
   Separate two halves of core case.

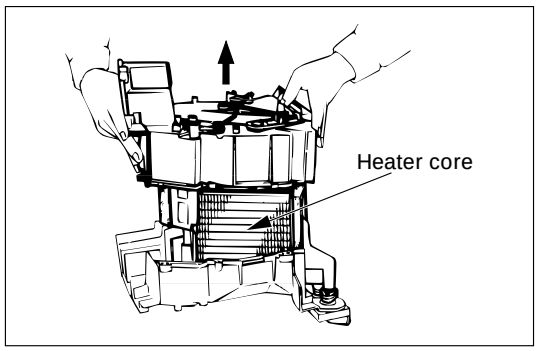

5. **Heater Core**

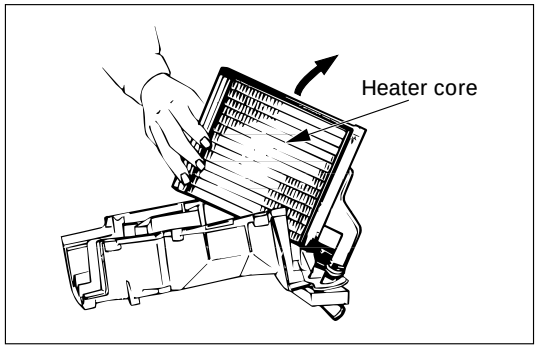

6. **Mode Door**
   Pull out the mode door while raising up the catch of the door lever.

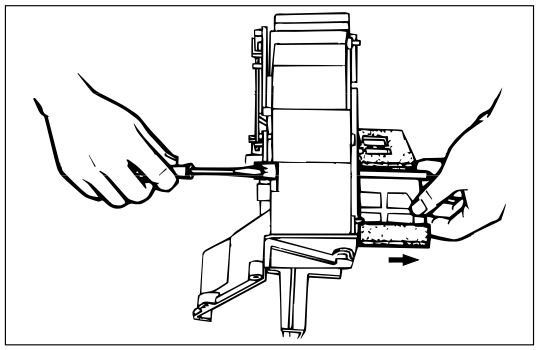

INSTALLATION

To install, follow the removal steps in the reverse order, noting the following point:

1. Check that each mode door operates properly.

HEATER MODE CONTROL LINK UNIT

This illustration is based on LHD

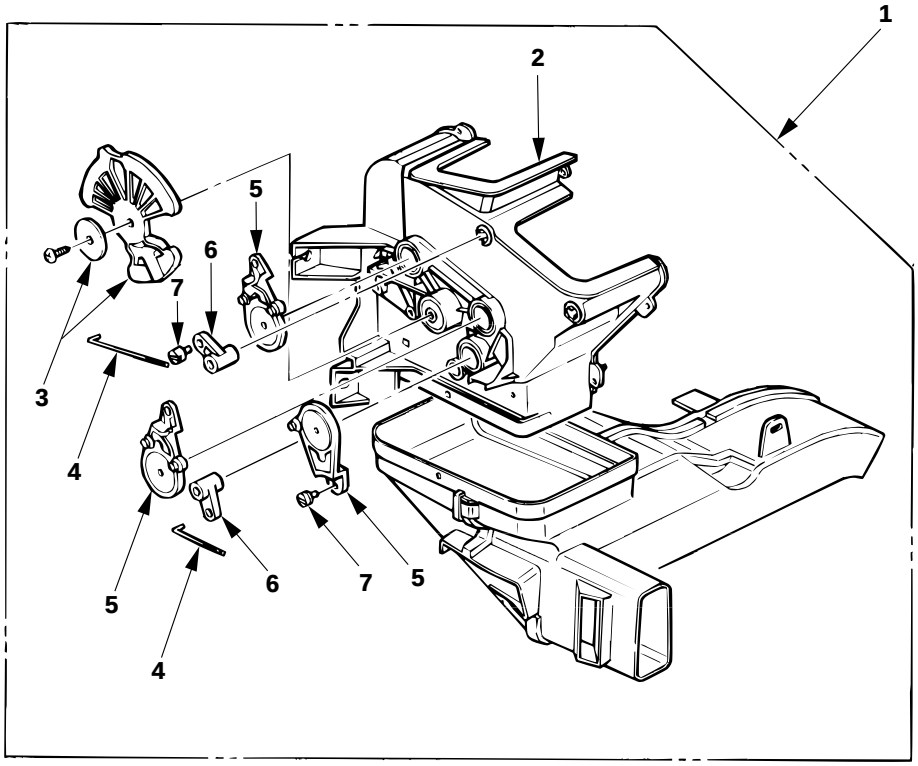

Removal Steps

1. Heater unit
2. Case (Mode control)
3. Washer and mode main lever
4. Rod
5. Mode sub-lever
6. Door lever
7. Clip

Installation Steps

To install, follow the removal steps in the reverse order.

REMOVAL

Preparation:

- Disconnect the battery ground cable
- Drain engine coolant

1. **Heater Unit**
   Refer to “HEATER UNIT” removal procedure in this section.
2. **Case (Mode Control)**
   Remove the case (Mode control) from heater unit.
3. **Washer and Mode Main Lever**
4. **Rod**
5. **Mode Sub-Lever**
   Press the tab of the sub-lever inward, and take out the sub-lever.

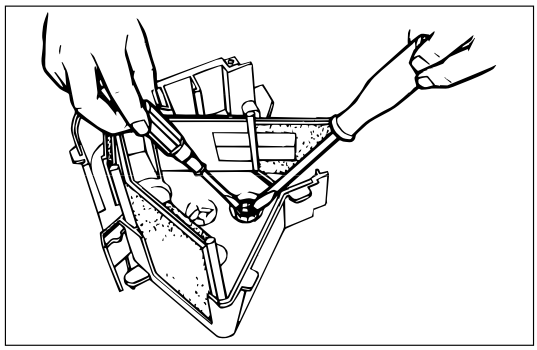

6. **Door Lever**
   Pull out the door lever while raising up the catch of the door lever.

INSTALLATION

To install, follow the removal steps in the reverse order, noting the following points:

1. Apply grease to mode sub-lever and to the abrasive surface of the heater unit.
2. After installing the link unit, check to see if the link unit operates correctly.

HEATER TEMPERATURE CONTROL LINK UNIT

This illustration is based on LHD

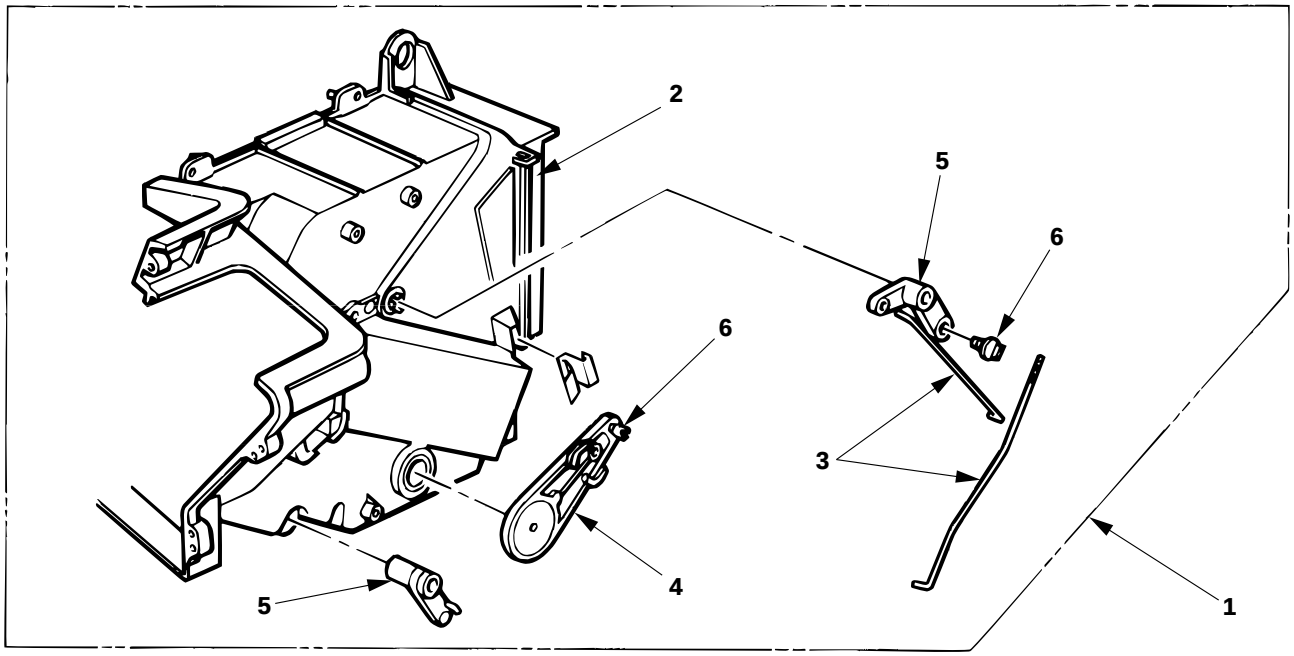

Removal Steps

1. Heater unit
2. Case (Temperature control)
3. Rod
4. Sub-lever
5. Door lever
6. Clip

Installation Steps

To install, follow the removal steps in the reverse order.

REMOVAL

Preparation:

- Disconnect the battery ground cable
- Drain engine coolant

1. **Heater Unit**
   Refer to “HEATER UNIT” removal procedure in this section.
2. **Case (Temperature Control)**
   Remove the case (Temperature control) from the heater unit.
3. **Rod**
4. **Sub-Lever**
5. **Door Lever**
   Pull out the door lever while raising up the catch of the door lever.
6. **Clip**

INSTALLATION

To install, follow the removal steps in the reverse order, noting the following points:

1. Apply grease to sub-lever and to the abrasive surface of the heater unit.
2. After installing the link unit, check to see if the link unit operates correctly.

BLOWER ASSEMBLY

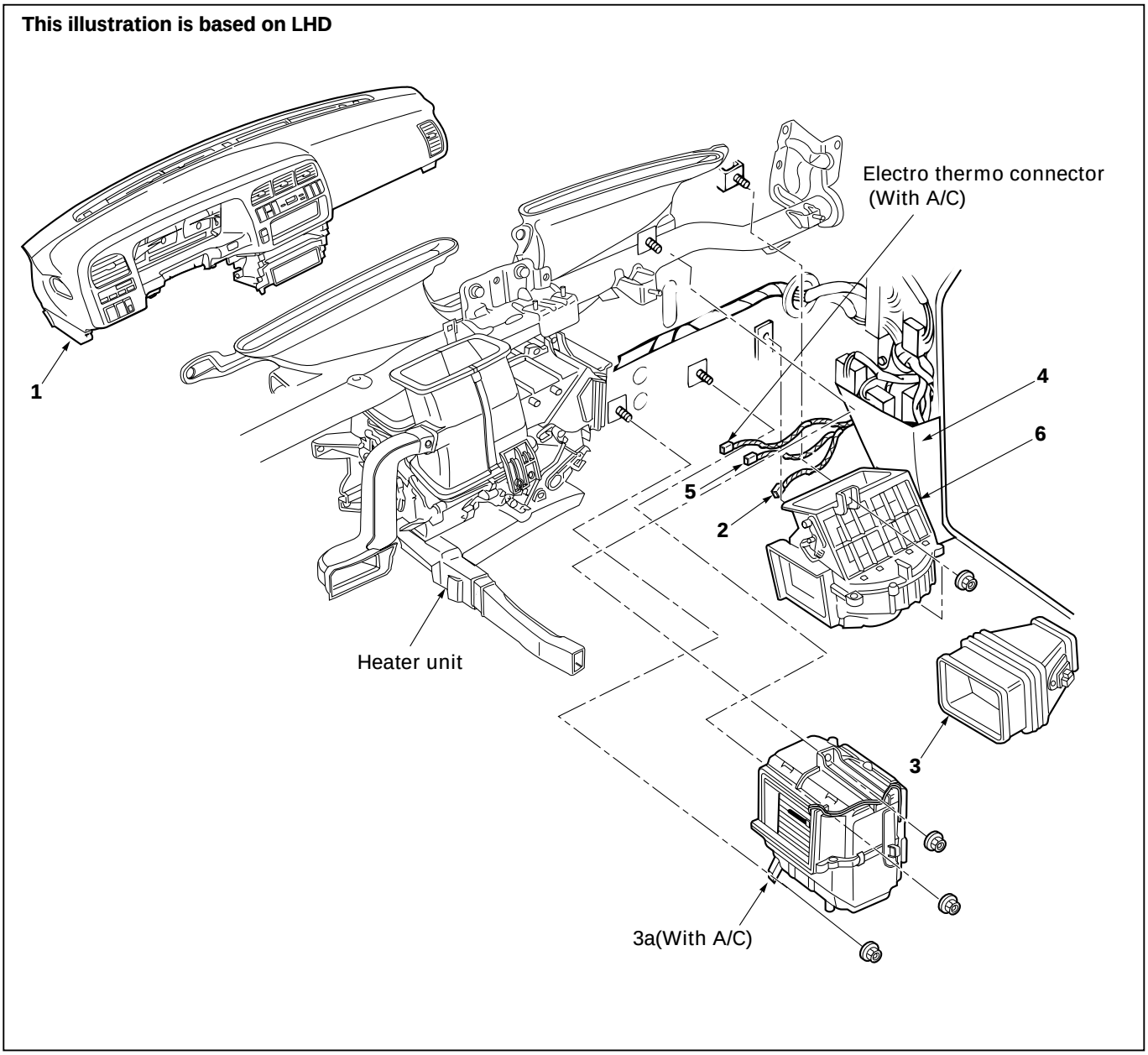

Removal Steps

1. Instrument panel assembly
2. Resistor connector
3. Duct

3a. Evaporator assembly (A/C only)

4. Kick panel
5. Blower motor connector
6. Blower assembly

Installation Steps

To install, follow the removal steps in the reverse order.

REMOVAL

Preparation:

- Disconnect the battery ground cable
- Discharge and recover refrigerant (W/A/C)
  (Refer to Section 1B "REFRIGERANT RECOVERY")

1. **Instrument Panel Assembly**
   Refer to Section 10 "BODY" for INSTRUMENT PANEL ASSEMBLY removal procedure.
2. **Resistor Connector**
3. **Duct**

3a. **Evaporator Assembly (A/C only)**
   Refer to Section 1B "AIR CONDITIONING" for EVAPORATOR ASSEMBLY removal procedure.

4. **Kick panel**
5. **Blower Motor Connector**
6. **Blower Assembly**

INSTALLATION

To install, follow the removal steps in the reverse order, noting the following point:

1. **Adjust Control Lever Assembly Cables**
   Refer to "CONTROL LEVER ASSEMBLY" installation procedure in this section.

BLOWER LINK UNIT AND/OR MODE DOOR

This illustration is based on LHD

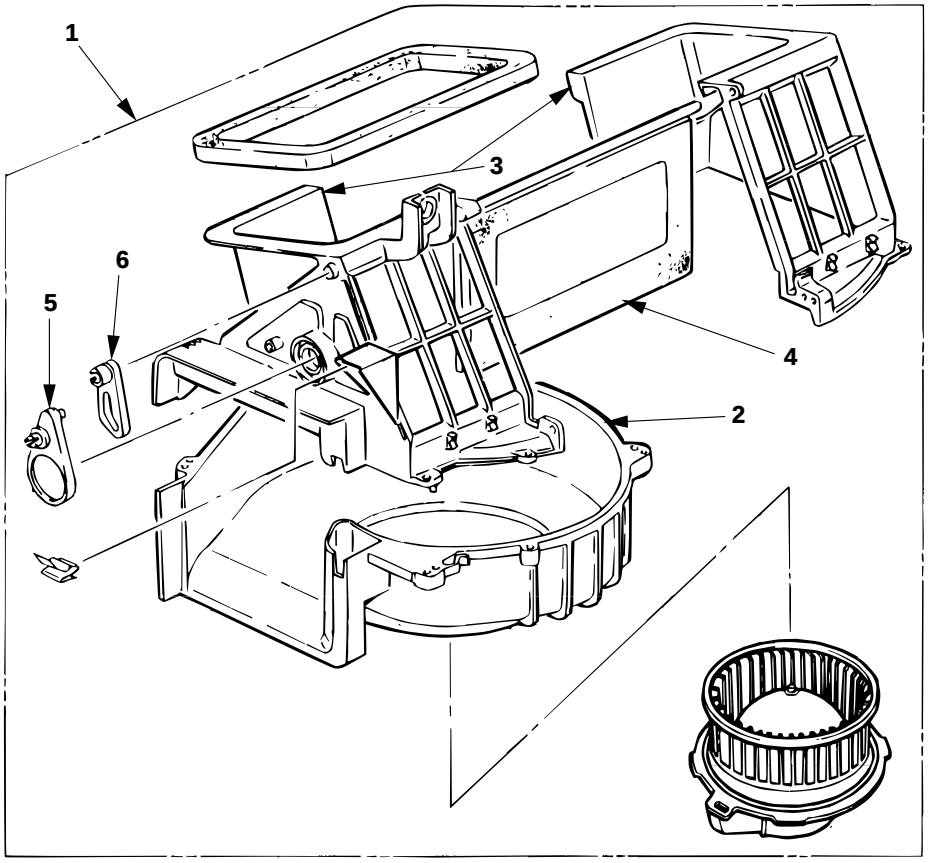

Removal Steps

1. Blower assembly
2. Lower case
3. Upper case
4. Mode door
5. Sub-lever
6. Door lever

Installation Steps

To install, follow the removal steps in the reverse order.

REMOVAL

Preparation:

Disconnect the battery ground cable

1. **Blower Assembly**
   Refer to “BLOWER ASSEMBLY” removal procedure in this section.
2. **Lower Case**
3. **Upper Case**
   Separate upper case and slit the lining parting face with a knife.

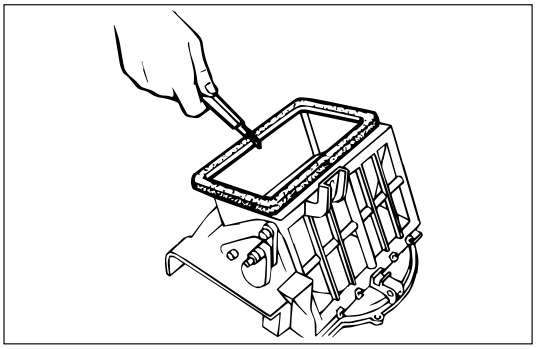

INSTALLATION

To install, follow the removal steps in the reverse order, noting the following points:

1. Apply grease to the door lever and to the abrasive surface of the upper case.
2. Apply an adhesive to parting face of lining when assembling upper case.

BLOWER MOTOR

This illustration is based on LHD

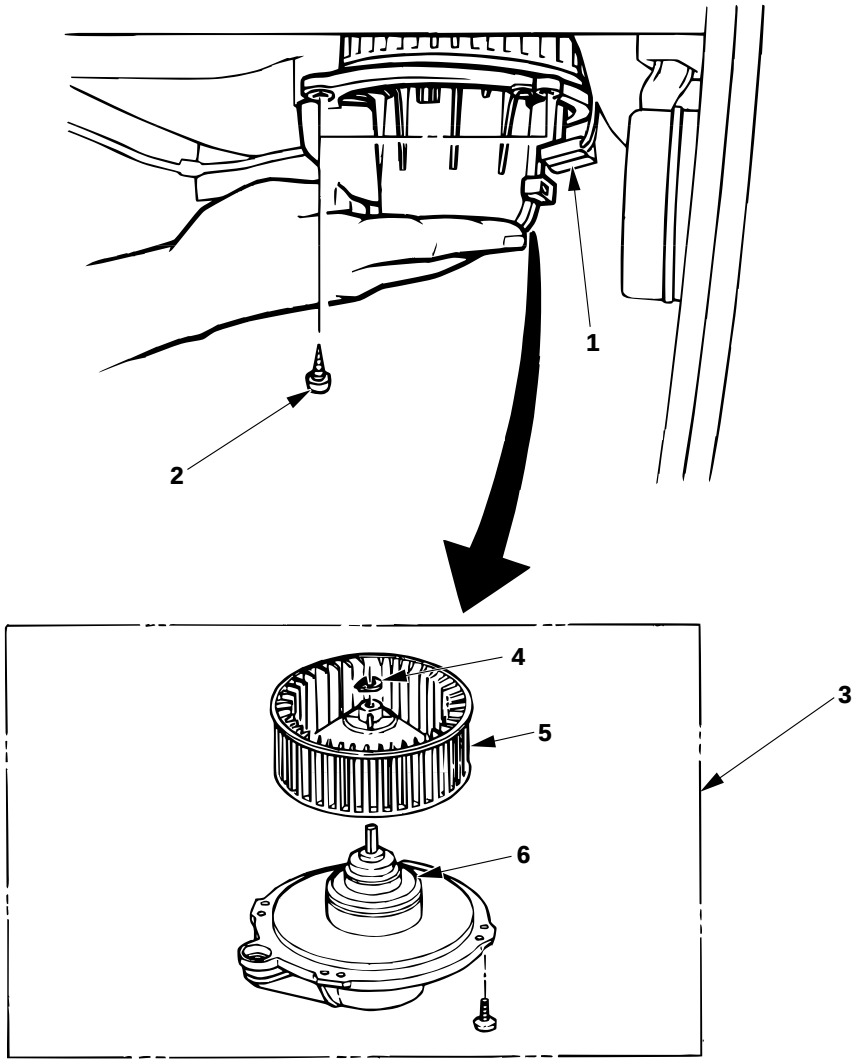

Removal Steps

1. Blower motor connector
2. Attaching screw
3. Blower motor assembly
4. Clip
5. Fan
6. Blower motor

Installation Steps

To install, follow the removal steps in the reverse order.

REMOVAL

Preparation:

Disconnect the battery ground cable

1. **Blower Motor Connector**
2. **Attaching Screw**
3. **Blower Motor Assembly**
4. **Clip**
5. **Fan**
6. **Blower Motor**

INSTALLATION

To install, follow the removal steps in the reverse order.

REAR HEATER DUCT, DEFROSTER NOZZLE AND VENTILATION DUCT

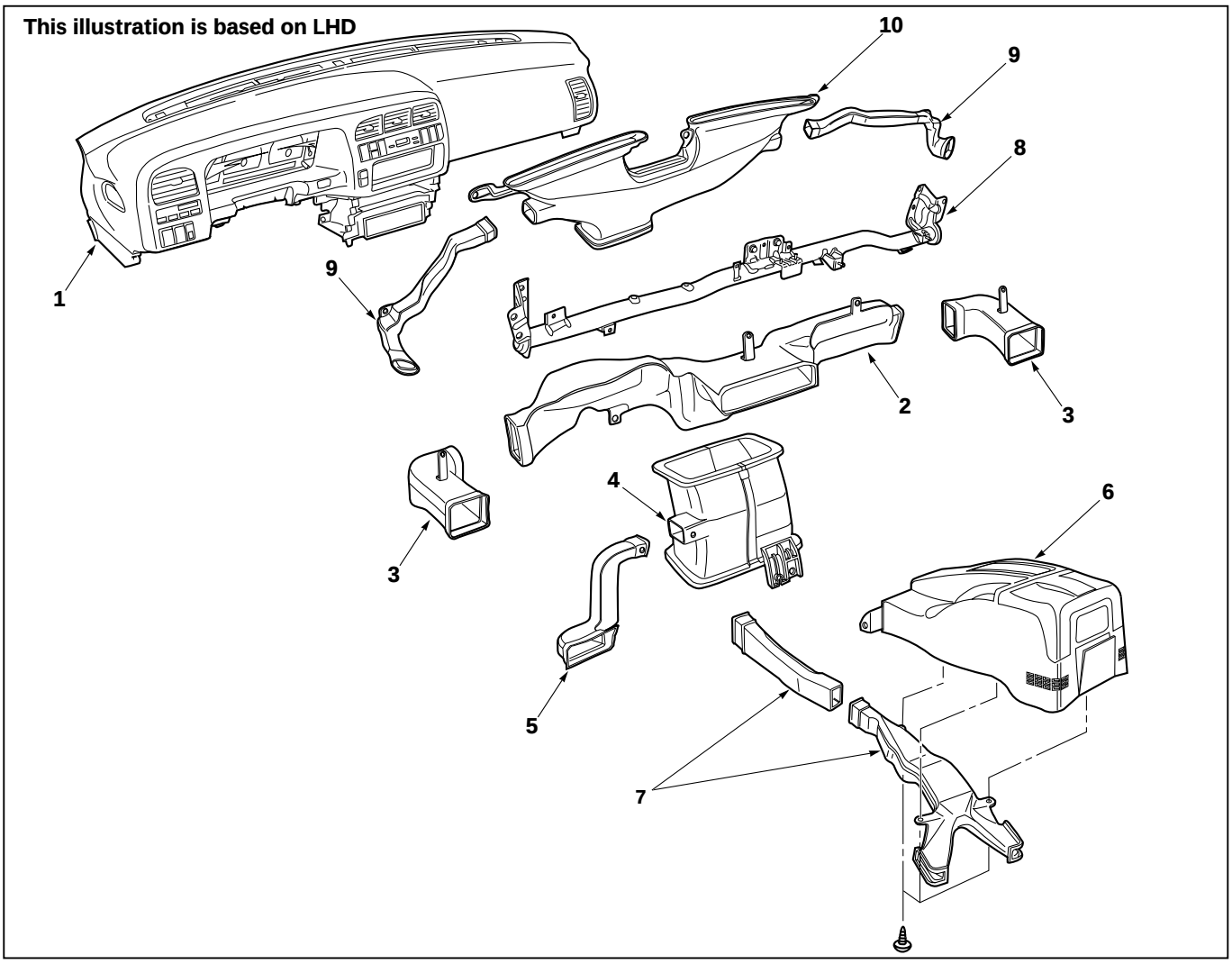

Removal Steps

1. Instrument panel assembly
2. Center ventilation upper duct
3. Side ventilation duct
4. Center ventilation lower duct
5. Driver lap duct
6. Center console
7. Rear heater duct
8. Cross beam assembly
9. Side defroster nozzle
10. Center defroster nozzle

Installation Steps

To install, follow the removal steps in the reverse order.

REMOVAL

Preparation:

Disconnect the battery ground cable

1. **Instrument panel assembly**
   - Refer to Section 10 “BODY” for INSTRUMENT PANEL ASSEMBLY removal procedure.
2. **Center ventilation upper duct**
3. **Side ventilation duct**
4. **Center ventilation lower duct**
5. **Driver lap duct**
6. **Center console**
7. **Rear heater duct**
   - Refer to Section 10 “BODY” for CONSOLES removal procedure.
8. **Cross beam assembly**
   - Refer to Section 10 “BODY” for CROSS BEAM ASSEMBLY removal procedure.
9. **Side defroster nozzle**
10. **Center defroster nozzle**

INSTALLATION

To install, follow the removal steps in the reverse order, noting the following point:

1. Connect each duct and nozzle securely leaving no clearance between them and making no improper matching.

CENTER AND/OR SIDE VENT

This illustration is based on LHD

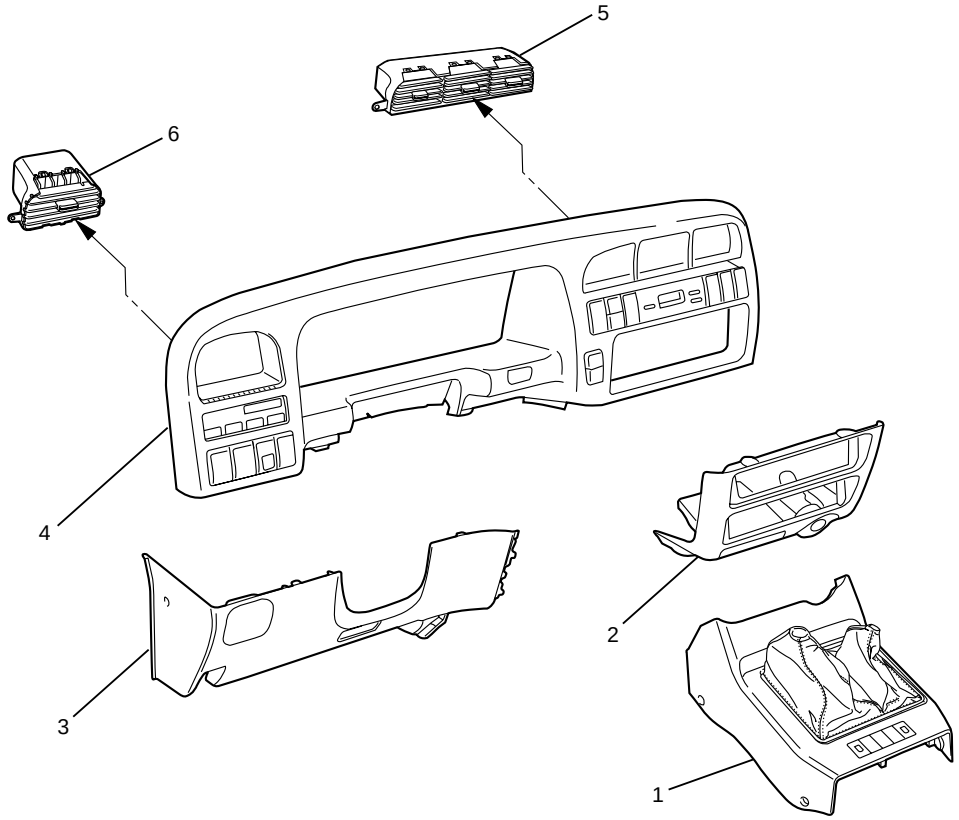

740RW168

Removal Steps

1. Front console assembly
2. Lower cluster assembly
3. Instrument panel driver lower cover assembly
4. Meter cluster assembly
5. Center vent
6. Side vent

Installation Steps

To install, follow the removal steps in the reverse order.

REMOVAL

1. **Front console assembly**
2. **Lower cluster assembly**
3. **Instrument panel driver lower cover assembly**
4. **Meter cluster assembly**
   - Refer to Section 10 “BODY” for INSTRUMENT PANEL ASSEMBLY removal procedure.
5. **Center vent**
   - Remove screws and the center vent from center cluster while prying up the center vent catch portions.
6. **Side vent**
   - Remove screws and the side vent from center cluster while prying up the side vent catch portions.

INSTALLATION

To install, follow the removal steps in the reverse order.

CONTROL LEVER ASSEMBLY AND/OR CONTROL CABLES

This illustration is based on LHD

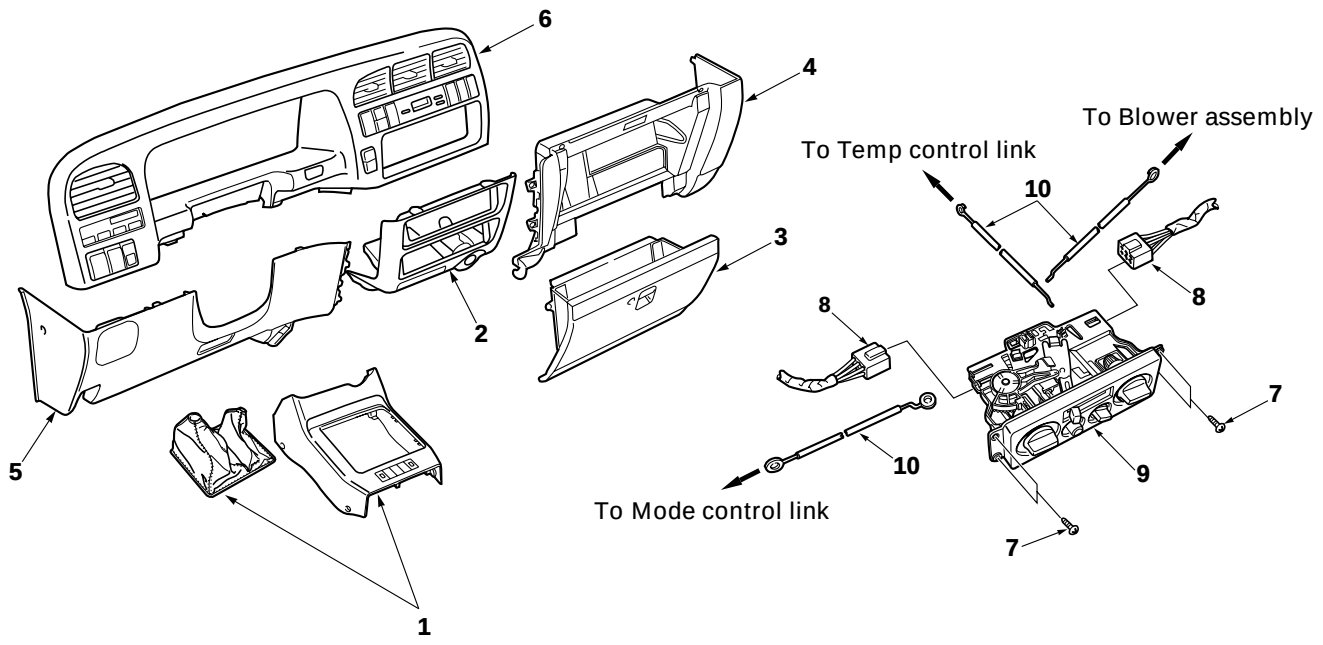

Removal Steps

1. Center console assembly
2. Lower cluster assembly
3. Glove box
4. Instrument panel passenger lower cover assembly
5. Instrument panel driver lower cover assembly
6. Meter cluster assembly
7. Attaching screws
8. Fan switch and air conditioning switch connector
9. Control lever assembly
10. Control cable

Installation Steps

To install, follow the removal steps in the reverse order.

REMOVAL

Preparation:

Disconnect the battery ground cable

1. **Front console assembly**
2. **Lower cluster assembly**
3. **Glove box**
4. **Instrument panel passenger lower cover**
5. **Instrument panel driver lower cover**
6. **Meter cluster assembly**
   Refer to Section 10 “BODY” for INSTRUMENT PANEL ASSEMBLY removal procedure.
7. **Attaching Screws**
   Remove the 4 attaching screws and disconnect the control lever cables at heater unit and blower assembly.

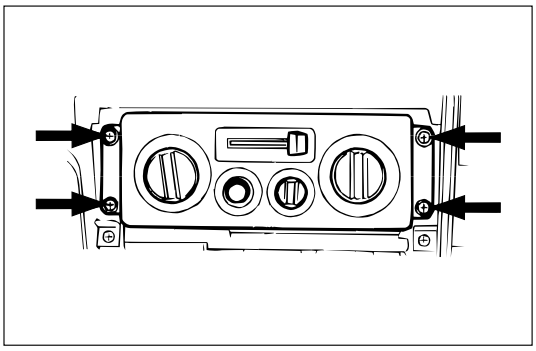

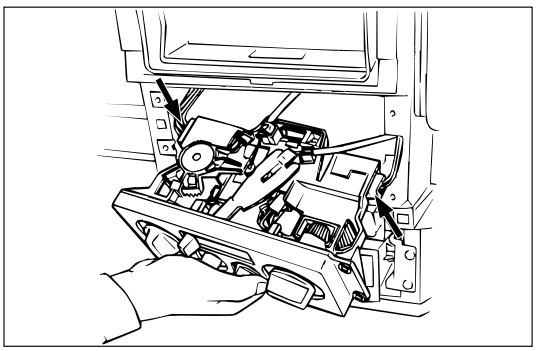

8. **Fan Switch and A/C Switch Connector**
   Pull the control lever assembly out and disconnect the connectors.
9. **Control Lever Assembly**
10. **Control Cable**

INSTALLATION

To install, follow the removal steps in the reverse order, noting the following points:

1. Adjust the control cables
   Air source control cable
   1) Slide the control lever to the left (“CIRC” position).
   2) Connect the control cable at the “CIRC” position of the link unit of blower assembly and fix it with the clip.
   Temperature control cable
   1) Turn the control knob to the left (“MAX COLD” position).
   2) Connect the control cable at the “COLD” position of the temperature control link of the heater unit and fix it with the clip.
   Air select control cable
   1) Turn the control knob to the right (“DEFROST” position).
   2) Connect the control cable at the “DEFROST” position of the mode control link of the heater unit and fix it with the clip.
2. Check control cable operation.

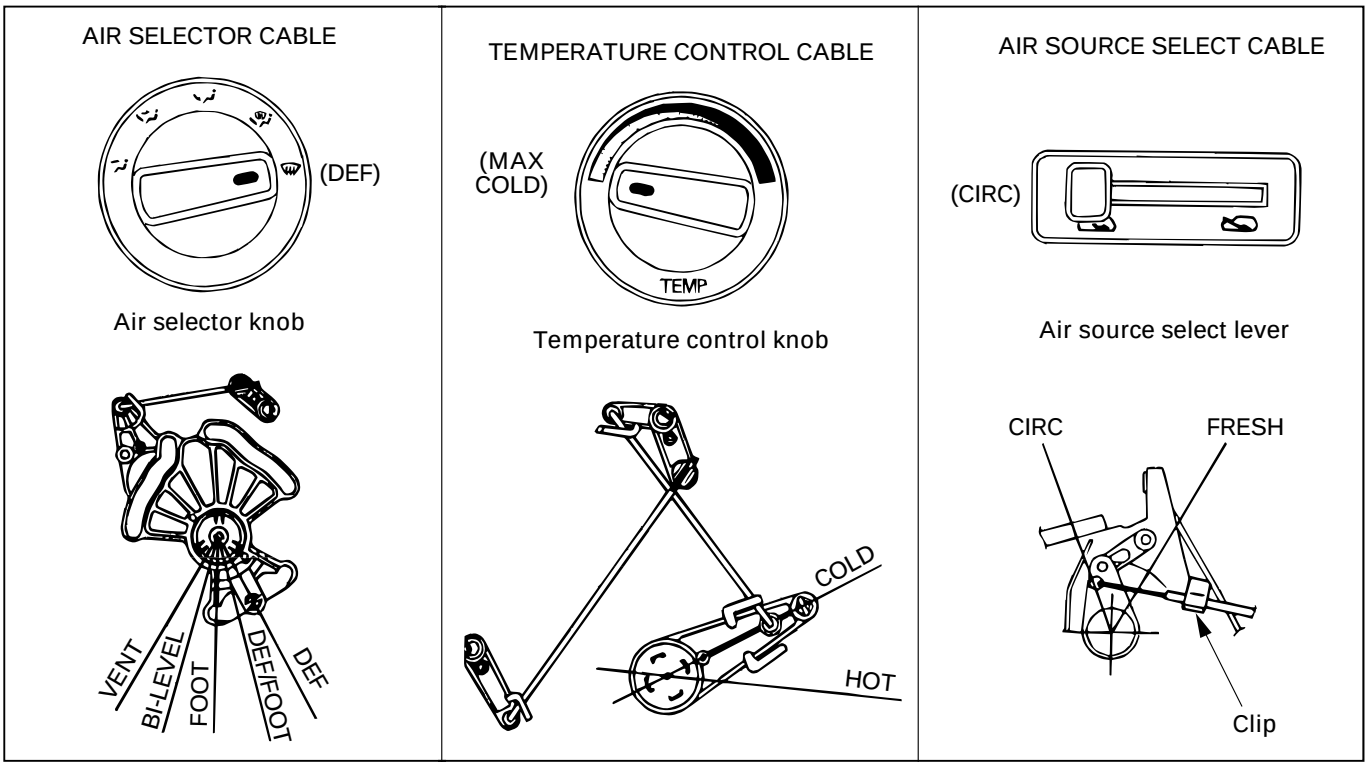

CONTROL PANEL ILLUMINATION BULB

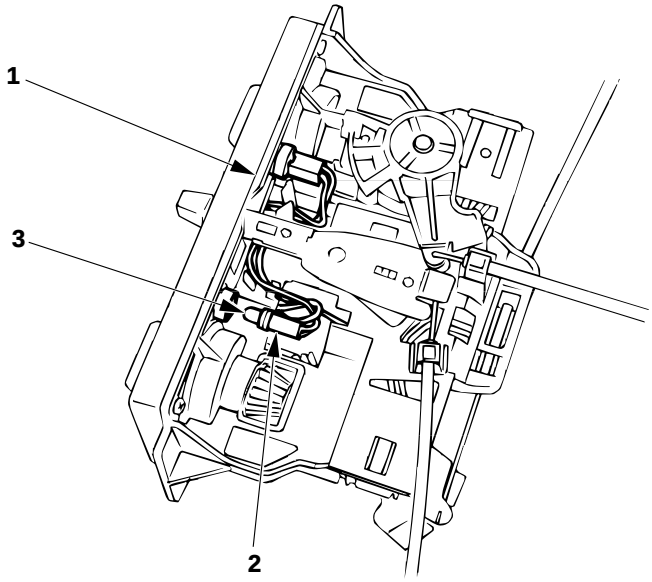

Removal Steps

1. Control lever assembly
2. Bulb socket
3. Illumination bulb

Installation Steps

To install, follow the removal steps in the reverse order.

REMOVAL

Preparation:

Disconnect the battery ground cable

1. **Control Lever Assembly**
   Refer to “CONTROL LEVER ASSEMBLY” removal procedure in this section.
2. **Bulb Socket**
   Pull out the socket from the panel by turning it counterclockwise.
3. **Illumination Bulb**
   Pull the illumination bulb from socket.

INSTALLATION

To install, follow the removal steps in the reverse order.

RESISTOR

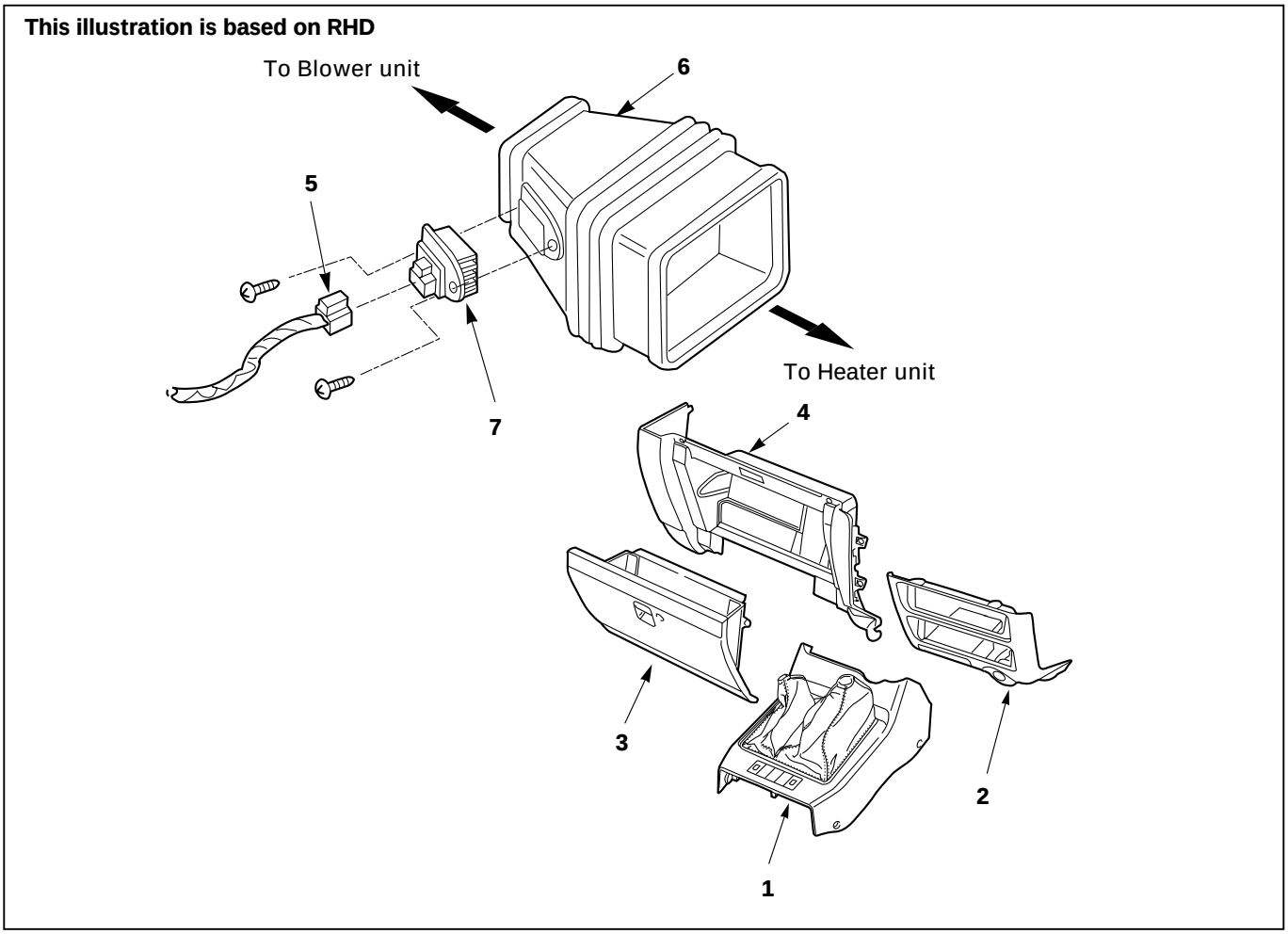

Removal Steps

1. Front console assembly
2. Lower cluster assembly
3. Glove box
4. Instrument panel passenger lower cover
5. Resistor connector
6. Duct (Heater only)
7. Resistor

Installation Steps

To install, follow the removal steps in the reverse order.

REMOVAL

Preparation:

Disconnect the battery ground cable

1. **Front console assembly**
2. **Lower cluster assembly**
3. **Glove box**
4. **Instrument panel passenger lower cover**
   Refer to Section 10 “BODY” for INSTRUMENT PANEL ASSEMBLY removal procedure.
5. **Resistor connector**
6. **Duct (Heater only)**
7. **Resistor**

INSTALLATION

To install, follow the removal steps in the reverse order.

CERAMIC HEATER AND/OR FULL HOT SWITCH

This illustration is based on RHD

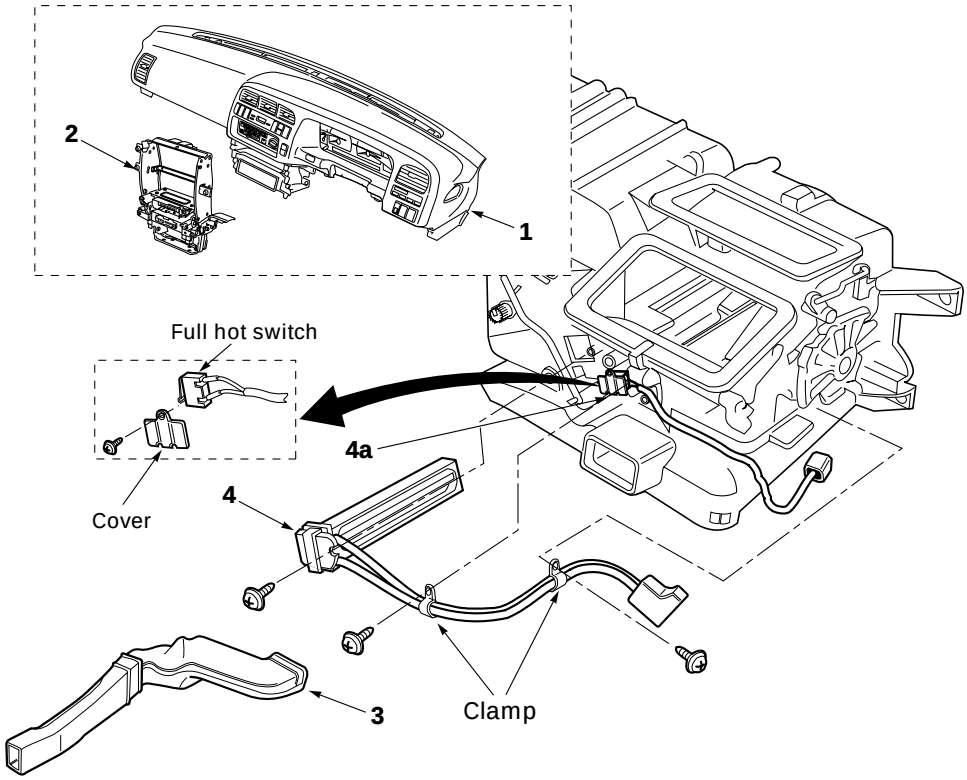

Removal Steps

1. Instrument panel assembly
2. Instrument panel center bracket
3. Rear heater duct
4. Ceramic heater assembly

4a. Full hot switch

Installation Steps

To install, follow the removal steps in the reverse order.

REMOVAL

Preparation:

Disconnect the battery ground cable

1. **Instrument panel assembly**
   Refer to Section 10 “BODY” for “INSTRUMENT PANEL ASSEMBLY” removal procedure.
2. **Instrument panel center bracket**
   Refer to Section 10 “CROSS BEAM ASSEMBLY” removal procedure.
3. **Rear heater duct**
4. **Ceramic heater**
   1) Disconnect the connector and remove the heater fixing screw and heater harness fixing clamps.
   2) Pull the ceramic heater out from heater unit.

4a. **Full hot switch**
   Disconnect the switch connector and remove the switch fixing screw and switch harness fixing clamp.

INSTALLATION

To install, follow the removal steps in the reverse order, noting the following points.

1. The installation should be made with care so that there is continuity between the switch side connector terminals when the knob is set to the “Full Hot” position.
2. Be sure to handle the EGR and the ABS control unit with care to avoid the disengagement of connectors.

MEMO

SECTION 1B

AIR CONDITIONING

CAUTION
When fasteners are removed, always reinstall them at the same location from which they were removed. If a fastener needs to be replaced, use the correct part number fastener for that application. If the correct part number fastener is not available, a fastener of equal size and strength (or stronger) may be used.

Fasteners that are not reused, and those requiring thread locking compound, will be called out. The correct torque values must be used when installing fasteners that require it. If the above conditions are not followed, parts or system damage could result.

CONTENTS

PAGE

General Description 1B– 3
Air Conditioning Refrigerant Cycle Construction 1B– 3
Compressor 1B– 4
Magnetic Clutch 1B– 5
Receiver/Drier 1B– 5
Dual Pressure Switch 1B– 6
Triple Pressure Switch 1B– 6
Expansion Valve 1B– 6
Evaporator 1B– 7
Electronic Thermostat 1B– 7
Refrigerant Line 1B– 7
Service Charge Valve 1B– 7
Air Conditioning Parts 1B– 8
On-Vehicle Service 1B– 13
Precautions For Replacement or Repair of Air Conditioning Parts 1B– 13
Compressor Assembly and Associated Parts 1B– 23
Condenser Assembly (LHD V6 without Condenser Fan) 1B– 33
Condenser Fan Motor 1B– 35
Receiver/Drier 1B– 37
Pressure Switch 1B– 39
Evaporator Assembly 1B– 42
Evaporator Core and/or Expansion Valve 1B– 44
Electronic Thermostat 1B– 47
A/C Switch and Illumination Bulb 1B– 48
Refrigerant Line 1B– 49
Rear Cooler Parts 1B– 51

Full Automatic Air Conditioning System 1B– 60
General Description 1B– 60
Full Automatic Air Conditioner Part Configuration 1B– 60
Circuit Diagram 1B– 62
Function and Features 1B– 74
Full Automatic Air Conditioner Block Diagram 1B– 75
Air Conditioning Parts 1B– 76
Control Panel Layout 1B– 80
Air Control Functions 1B– 81
Operation and Function of Control Panel Switches 1B– 82
Overview of Construction, Movement and Control of Major Parts of Full Automatic Air Conditioner System 1B– 84
Overview of Automatic Control of Full Automatic Air Conditioner 1B– 88
Troubleshooting 1B– 92
Troubleshooting, Its Overview and Procedures 1B– 92
Performance and Movement Checklist for Automatic Air Conditioner Related Parts 1B– 95
Troubleshooting with Self-Diagnosis Function 1B– 97
Inspection by Failed Location 1B–100
Inspection of the Sensors 1B–100
Inspection of the Intake Actuator System 1B–104
Inspection of the Mix Actuator System 1B–107
Inspection of the Mode Actuator System 1B–110
Inspection of the Fan Motor System 1B–113
Inspection of the Magnet Clutch System 1B–118
Inspection of the Air Conditioner Room Temperature Setup System 1B–123
Individual Inspection 1B–124
On-Vehicle Service 1B–126
Power Transistor 1B–126
Automatic Air Conditioner Control Unit 1B–126
In Car Sensor 1B–127
Ambient Sensor 1B–127
Sun Sensor 1B–128
Electronic Thermostat 1B–128
Mode Actuator 1B–129
Mix Actuator 1B–129
Intake Actuator 1B–130

GENERAL DESCRIPTION

AIR CONDITIONING REFRIGERANT CYCLE CONSTRUCTION

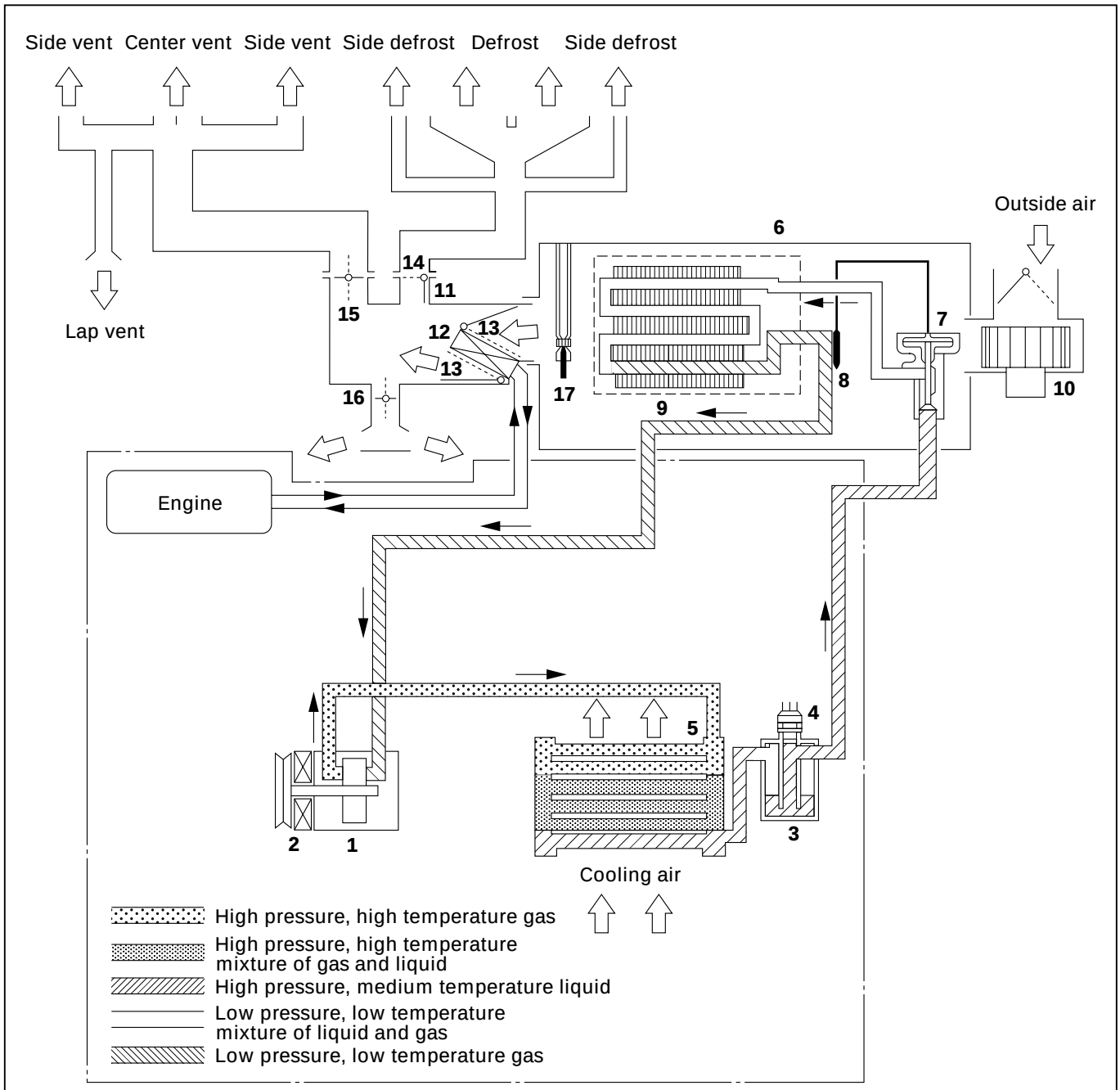

1. Compressor
2. Magnetic clutch
3. Receiver/Drier
4. Dual pressure switch
5. Condenser
6. Evaporator assembly
7. Expansion valve
8. Temperature sensor
9. Evaporator core
10. Blower motor
11. Heater unit
12. Heater core
13. Temp. control door (Air mix door)
14. Mode (DEF) control door
15. Mode (VENT) control door
16. Mode (HEAT) control door
17. Electronic thermostat

The refrigeration cycle includes the following four processes as the refrigerant changes repeatedly from liquid to gas and back to liquid while circulating.

EVAPORATION

The refrigerant is changed from a liquid to a gas inside the evaporator. The refrigerant mist that enters the evaporator vaporizes readily. The liquid refrigerant removes the required quantity of heat (latent heat of vaporization) from the air around the evaporator core cooling fins and rapidly vaporizes. Removing the heat cools the air, which is then radiated from the fins and lowers the temperature of the air inside the vehicle.
The refrigerant liquid sent from the expansion valve and the vaporized refrigerant gas are both present inside the evaporator and the liquid is converted to gas.
With this change from liquid to gas, the pressure inside the evaporator must be kept low enough for vaporization to occur at a lower temperature. Because of that, the vaporized refrigerant is sucked into the compressor.

COMPRESSION

The refrigerant is compressed by the compressor until it is easily liquefied at normal temperature. The vaporized refrigerant in the evaporator is sucked into the compressor. This action maintains the refrigerant inside the evaporator at a low pressure so that it can easily vaporize, even at low temperatures close to 0°C (32°F).
Also, the refrigerant sucked into the compressor is compressed inside the cylinder to increase the pressure and temperature to values such that the refrigerant can easily liquefy at normal ambient temperatures.

CONDENSATION

The refrigerant inside the condenser is cooled by the outside air and changes from gas to liquid. The high temperature, high pressure gas coming from the compressor is cooled and liquefied by the condenser with outside air and accumulated in the receiver/drier. The heat radiated to the outside air by the high temperature, high pressure gas in the compressor is called heat of condensation. This is the total quantity of heat (heat of vaporization) the refrigerant removes from the vehicle interior via the evaporator and the work (calculated as the quantity of heat) performed for compression.

EXPANSION

The expansion valve lowers the pressure of the refrigerant liquid so that it can easily vaporize. The process of lowering the pressure to encourage vaporization before the liquefied refrigerant is sent to the evaporator is called expansion. In addition, the expansion valve controls the flow rate of the refrigerant liquid while decreasing the pressure. That is, the quantity of refrigerant liquid vaporized inside the evaporator is determined by the quantity of heat which must be removed at a prescribed vaporization temperature. It is important that the quantity of refrigerant be controlled to exactly the right value.

COMPRESSOR

The compressor performs two main functions:
It compresses low-pressure and low-temperature refrigerant vapor from the evaporator into high-pressure and high-temperature refrigerant vapor to the condenser. And it pumps refrigerant and refrigerant oil through the A/C system.
6VD1/6VE1 engine on RHD model is equipped with an invariable capacity five-vane rotary compressor (DKV-14D Type).
The compressor sucks and compresses refrigerant by the rotation of the vane installed to the shaft, and always discharges a fixed amount of refrigerant independent of the load of refrigerant.
The thermo sensor is installed to the front head of the compressor to protect it by stopping its operation when the refrigerant gas is insufficient or when the temperature is abnormally high.

- OFF ..... 160 ± 5°C (320.0 ± 41°F)
- ON ..... 135 ± 5°C (275.0 ± 41°F)

Diesel Engine models and 6VD1/6VE1 engine on LHD model are equipped with a swash plate type compressor
Swash plate compressors have a swash (slanted) plate mounted on the shaft. When the shaft turns, the rotation of the swash plate is converted to reciprocating piston motion which sucks in and compresses the refrigerant gas.
Shaft seal (Lip type) is installed between the valve plate and shaft & cylinder head to prevent refrigerant gas leaks. A specified amount of compressor oil is contained in the oil pan.
This oil is supplied to the cylinders, bearings, etc., by an oil pump which is connected to the swash plate shaft.

With some compressors the differential between the intake pressure and discharge pressure generated while the compressor is operating is used for lubrication instead of an oil pump.
The specified amount of the DKV-14D, DKS-15CH and HD6 compressors oil is 150cc (4.2 Imp fl oz). Also, compressor oil to be used varies according to the compressor model. Be sure to avoid mixing two or more different types of oil.
If the wrong oil is used, lubrication will be poor and the compressor will seize or malfunction.
The magnetic clutch connector is a waterproof type.

MAGNETIC CLUTCH

The compressor is driven by the drive belt from the crank pulley of the engine. If the compressor is activated each time the engine is started, this causes too much load to the engine. The magnetic clutch transmits the power from the engine to the compressor and activates it when the air conditioning is “ON”. Also, it cuts off the power from the engine to the compressor when the air conditioning is “OFF”. (Magnetic clutch repair procedure can be found in Section 1D.)

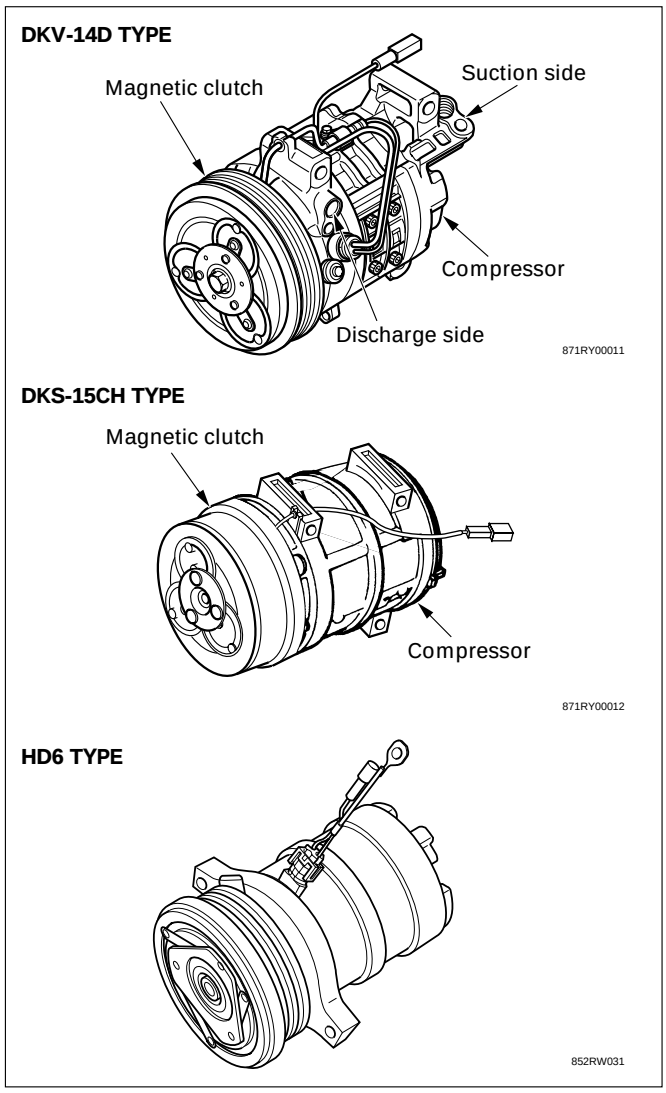

CONDENSER

The condenser assembly in front of the radiator, which carry the refrigerant and cooling fins to provide rapid transfer of heat.
Also, it functions to cool and liquefy the high-pressure and high-temperature vapor sent from the compressor by the radiator fan or outside air.
A condenser may malfunction in two ways: it may leak, or it may be restricted. A condenser restriction will result in excessive compressor discharge pressure. If a partial restriction is present, the refrigerant expands after passing through the restriction.
Thus, ice or frost may from immediately after the restriction. If air flow through the condenser or radiator is blocked, high discharge pressures will result. During normal condenser operation, the refrigerant outlet line will be slightly cooler than the inlet line.
The vehicle is equipped with the condenser of the parallel flow type condenser. A larger thermal transmission area on the inner surface of the tube allows the radiant heat to increase and the ventilation resistance to decrease.
The refrigerant line connection has a bolt at the block joint, for easy servicing.

RECEIVER/DRIER

The receiver/drier performs four functions;

- As the quantity of refrigerant circulated varies depending on the refrigeration cycle conditions, sufficient refrigerant is stored for the refrigeration cycle to operate smoothly in accordance with fluctuations in the quantity circulated.
- The liquefied refrigerant from the condenser is mixed with refrigerant gas containing air bubbles. If refrigerant containing air bubbles is sent to the expansion valve, the cooling capacity will decrease considerably. Therefore, the liquid and air bubbles are separated and only the liquid is sent to the expansion valve.
- The receiver/drier utilizes a filter and dryer to remove the dirt and water mixed in the cycling refrigerant.
- The sight glass, installed atop the receiver/drier, show the state of the refrigerant.

A receiver/drier may fail due to a restriction inside the body of the unit. A restriction at the inlet to the receiver/drier will cause high pressures.
Outlet restrictions will be indicated by low pressure and little or no cooling. An excessively cold receiver/ drier outlet may indicate a restriction.
The receiver/drier of this vehicle is made of aluminum with a smaller tank. It has 300 cc (8.5 Imp fl oz) refrigerant capacity.
The refrigerant line connection has a bolt at the block joint, for easy servicing.

DUAL PRESSURE SWITCH

The dual pressure switch is installed on the upper part of the receiver/drier, to detect excessively high pressure (high pressure switch) and prevent compressor seizure due to the refrigerant leaking (low pressure switch), switching the compressor "ON" or "OFF" as required.
The pressure switch connector is waterproof type.

- Low-pressure control kpa (kg·cm^2 / PSI)
  Compressor
  ON: 205.9 ± 30 (2.1 ± 0.3 / 30 ± 4)
  (Except 6VD1 / 6VE1, LHD model)
  186 ± 30 (1.9 ± 0.3 / 27 ± 4)
  (only for 6VD1 / 6VE1, LHD model)
  OFF: 176 ± 20 (1.8 ± 0.2 / 26 ± 3)
- High-pressure control
  Compressor
  ON: 2354 ± 196 (24.0 ± 2.0 / 341 ± 28)
  OFF: 2942 ± 196 (30.0 ± 2.0 / 427 ± 28)

TRIPLE PRESSURE SWITCH

Triple pressure switch is installed atop the receiver/drier. This switch is constructed with a unitized type of two switches. One of them is a low and high pressure switch (Dual pressure switch) to switch "ON" or "OFF" the magnetic clutch as a result of irregularly high-pressure or low-pressure of the refrigerant. The other one is a medium pressure switch (Cycling switch) to switch "ON" or "OFF" the condenser fan sensing the condenser high side pressure.

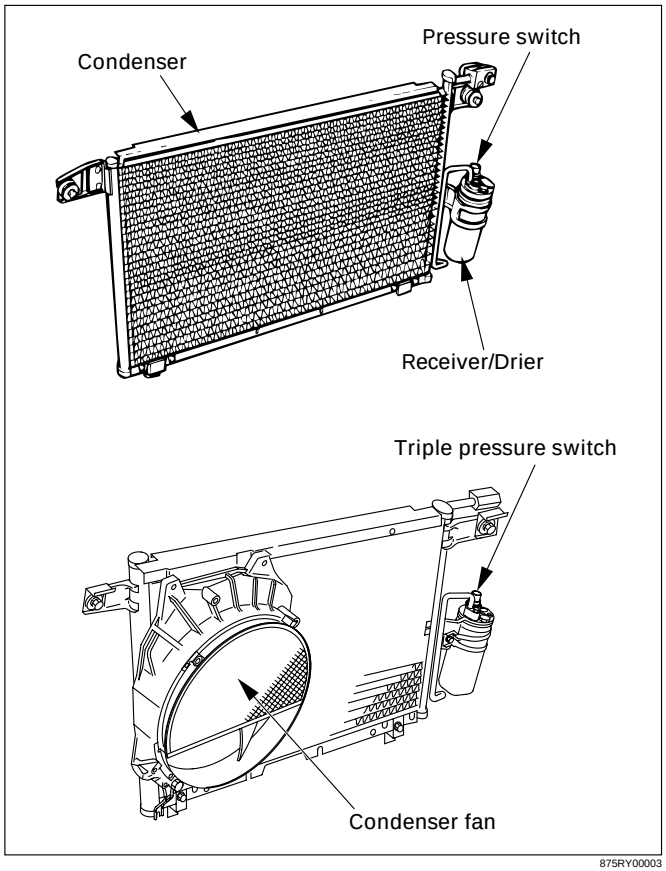

875RY00003

- Low-pressure control kpa (kg·cm^2/PSI)
  Compressor
  ON: 186 ± 30 (1.9 ± 0.3 / 27 ± 4)
  OFF: 176 ± 20 (1.8 ± 0.2 / 26 ± 3)
- Medium-pressure control
  Condenser fan
  ON: 1471 ± 98 (15.0 ± 1.0 / 213 ± 14)
  OFF: 1079 ± 98 (11.0 ± 1.0 / 156 ± 14)
- High-pressure control
  Compressor
  ON: 2354 ± 196 (24.0 ± 2.0 / 341 ± 28)
  OFF: 2942 ± 196 (30.0 ± 2.0 / 427 ± 28)

EXPANSION VALVE

This expansion valve (1) is internal pressure type and it is installed at the evaporator intake port.
The expansion valve converts the high pressure liquid refrigerant sent from the receiver/drier to a low pressure liquid refrigerant by forcing it through a tiny port before sending it to the evaporator (2).
This type of expansion valve consists of a temperature sensor, diaphragm, ball valve, ball seat, spring adjustment screw, etc.
The temperature sensor contacts the evaporator outlet pipe, and converts changes in temperature to pressure. It then transmits these to the top chamber of the diaphragm.
The refrigerant pressure is transmitted to the diaphragms bottom chamber through the external equalizing pressure tube.
The ball valve is connected to the diaphragm. The opening angle of the expansion valve is determined by the force acting on the diaphragm and the spring pressure.
The expansion valve regulates the flow rate of the refrigerant. Accordingly, when a malfunction occurs to this expansion valve, both discharge and suction pressures get low, resulting in insufficient cooling capacity of the evaporator.

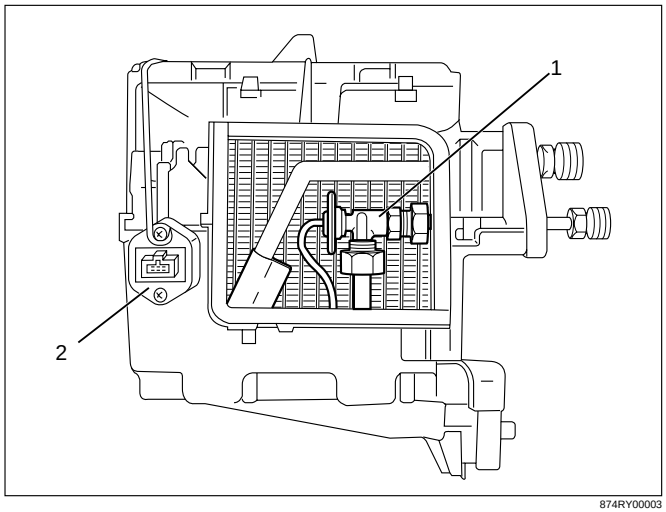

874RY00003

EVAPORATOR

The evaporator cools and dehumidifies the air before the air enters the vehicle. High-pressure liquid refrigerant flows through the expansion valve (1) into the low-pressure area of the evaporator (2). The heat in the air passing through the evaporator core is lost to the cooler surface of the core, thereby cooling the air.
As heat is lost between the air and the evaporator core surface, moisture in the vehicle condenses on the outside surface of the evaporator core and is drained off as water.
When the evaporator malfunctions, the trouble will show up as inadequate supply of cool air. The cause is typically a partially plugged core due to dirt, or a malfunctioning blower motor.
The evaporator core with a laminate louver fin is a single-sided tank type where only one tank is provided under the core.

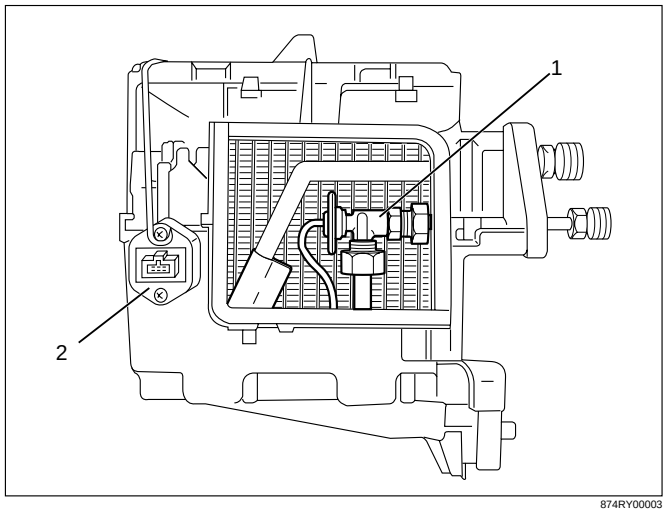

874RY00003

ELECTRONIC THERMOSTAT

The thermostat consists of the thermosensor (1) and thermostat unit (4) which functions electrically to reduce the noises being generated while the system is in operation.
The electronic thermosensor (1) is mounted at the evaporator core (2) outlet and senses the temperature of the cool air from the evaporator (3). Temperature signals are input to the thermostat unit. This information is compared by the thermo unit and the results in output to operate the A/C Thermostat relay and turn the magnetic clutch “ON” or “OFF” to prevent evaporator freeze-up.
A characteristic of the sensor is that the resistance decreases as the temperature increases and the resistance increases as the temperature decreases.

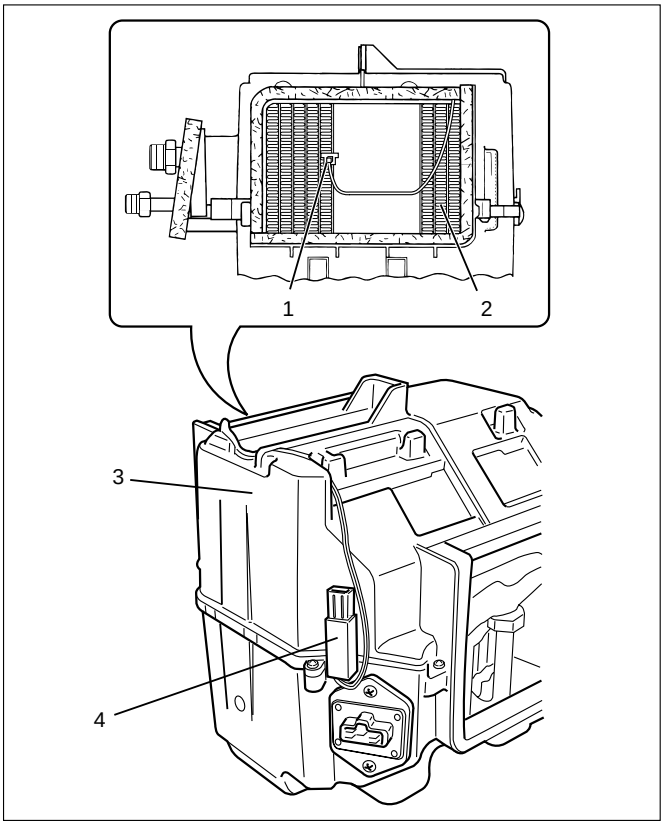

874RX022

REFRIGERANT LINE

Restrictions in the refrigerant line will be indicated by:

1. Suction line; A restricted suction line will cause low suction pressure at the compressor, low discharge pressure and little or not cooling.
2. Discharge line; A restriction in the discharge line generally will cause the discharge line to leak.
3. Liquid line; A liquid line restriction will be evidenced by low discharge and suction pressure and insufficient cooling.

Refrigerant flexible hoses that have a low permeability to refrigerant and moisture are used. These low permeability hoses have a special nylon layer on the inside.

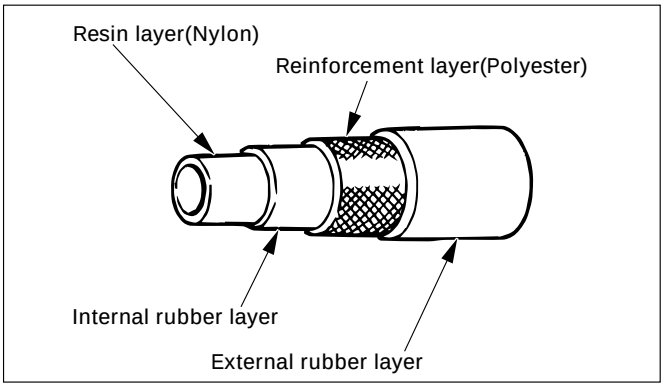

SERVICE CHARGE VALVES

The charging hoses have a quick-joint type fitting, to reduce refrigerant loss during removal and installation.

AIR CONDITIONING PARTS

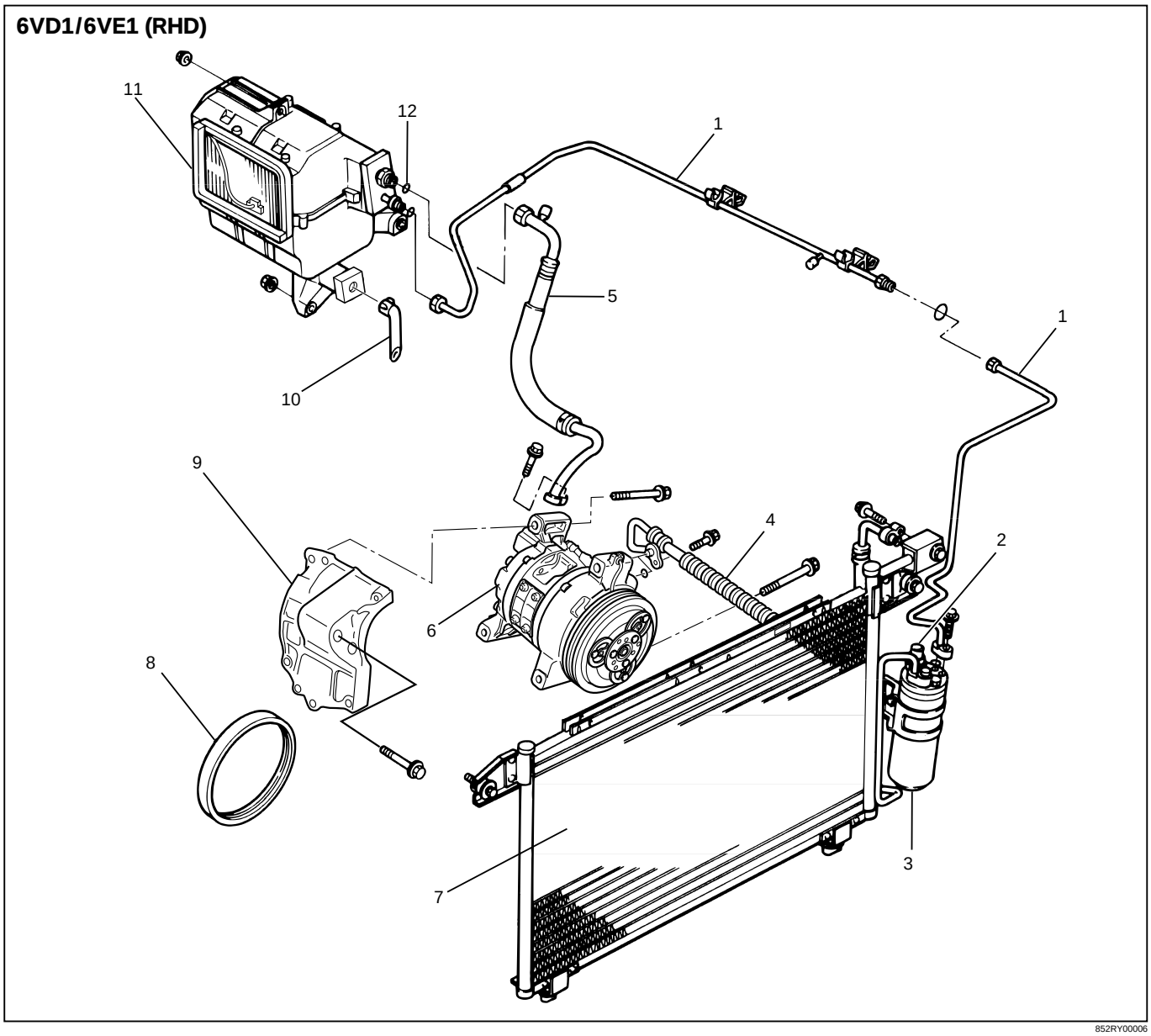

Legend

(1) Liquid Line (High-Pressure Pipe)
(2) Pressure Switch
(3) Receiver Drier
(4) Discharge Line (High-Pressure Hose)
(5) Suction Line (Low-Pressure Hose)
(6) Compressor
(7) Condenser Assembly
(8) Serpentine Belt
(9) Compressor Bracket
(10) Drain Hose
(11) Evaporator Assembly
(12) O-ring

4JG2 (R/LHD)

This illustration is based on RHD

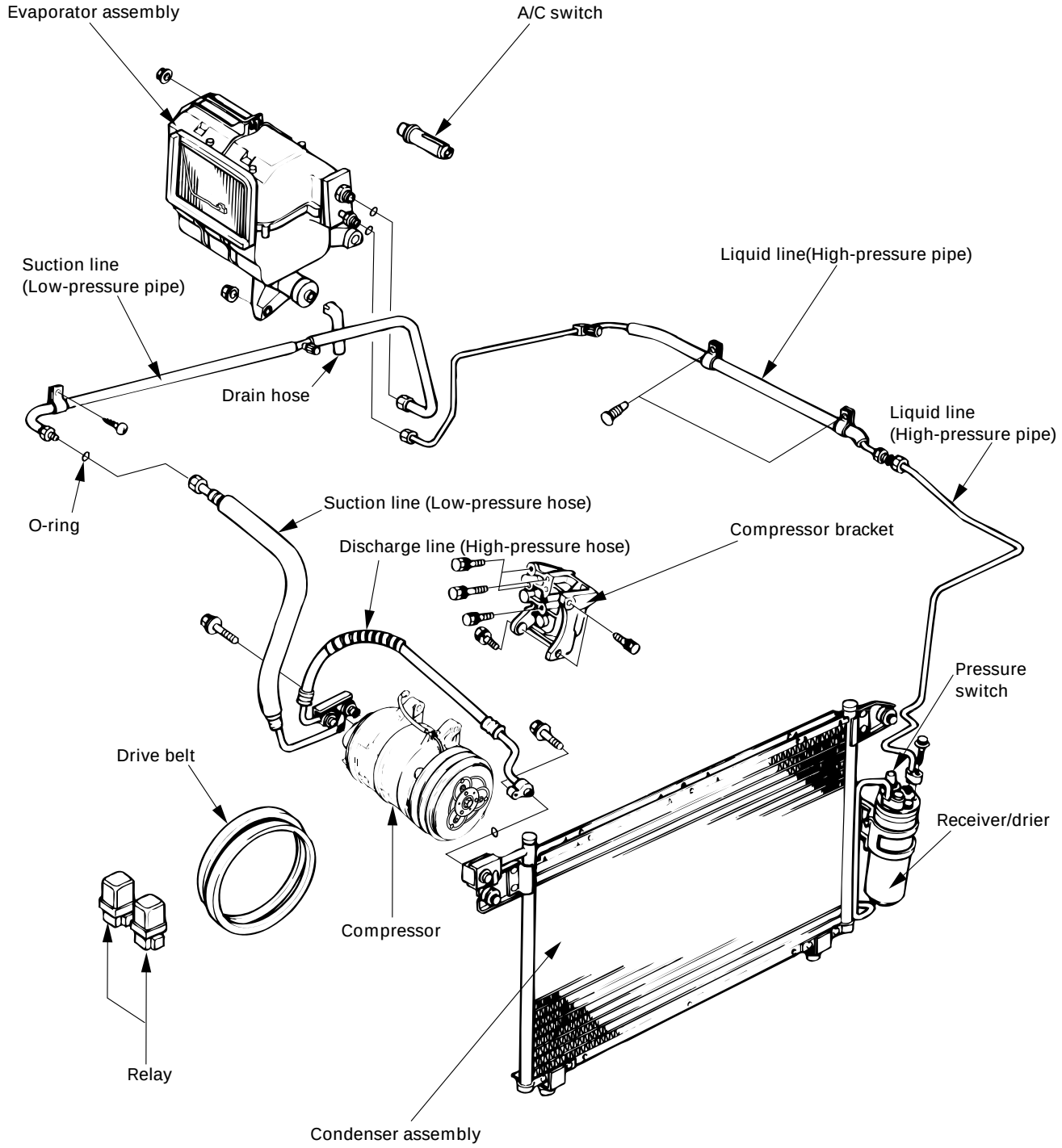

852RY00008

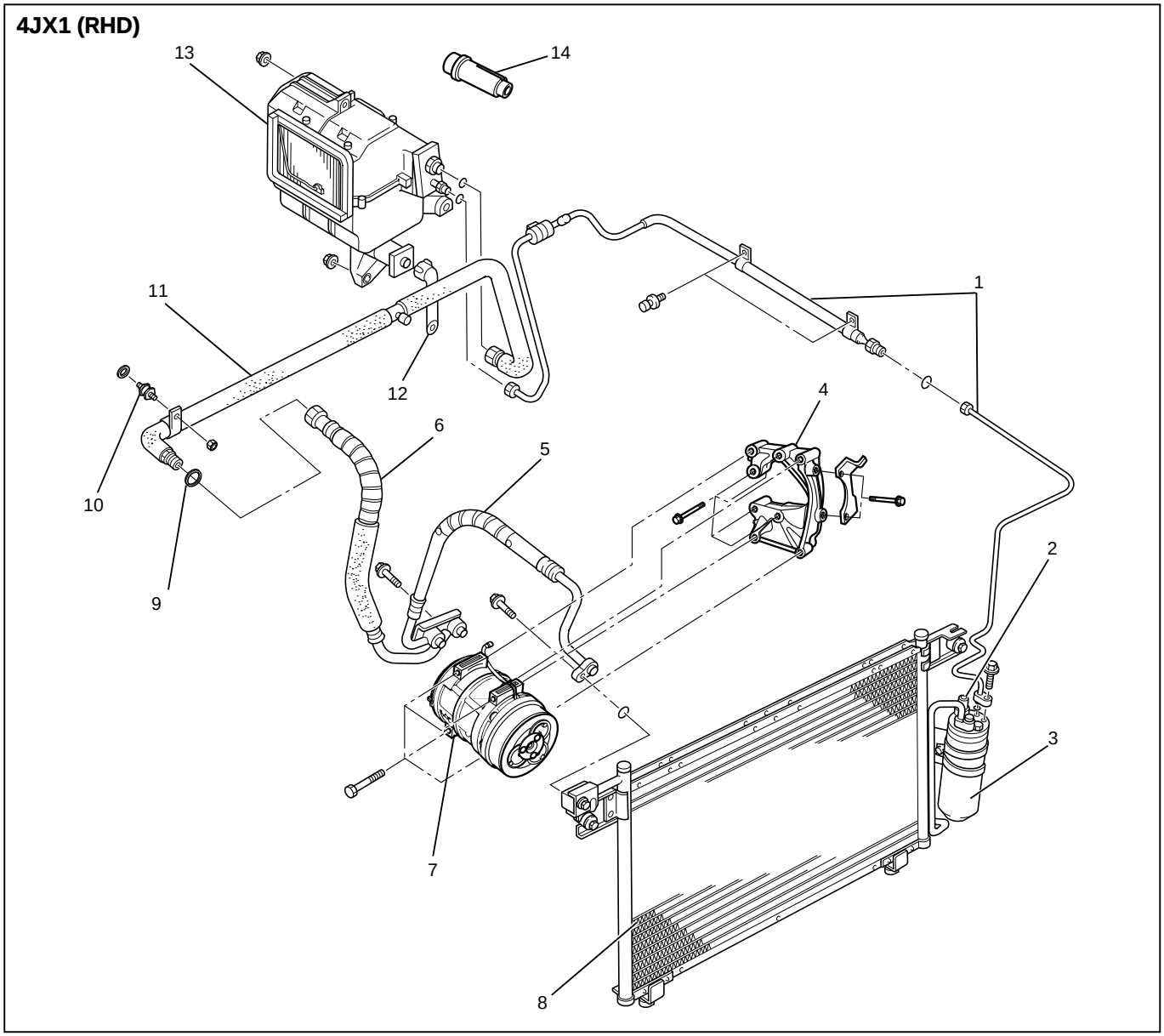

Legend

(1) Liquid Line (High- Pressure Pipe)
(2) Pressure Switch
(3) Receiver Drier
(4) Compressor Bracket
(5) Discharge Line (High-Pressure Hose)
(6) Suction Line (Low-Pressure Hose)
(7) Compressor
(8) Condenser Assembly
(9) O-ring
(10) Insulator Pipe
(11) Suction Line (Low Pressure Pipe)
(12) Drain Hose
(13) Evaporator Assembly
(14) A/C Switch

6VD1/6VE1 (LHD)

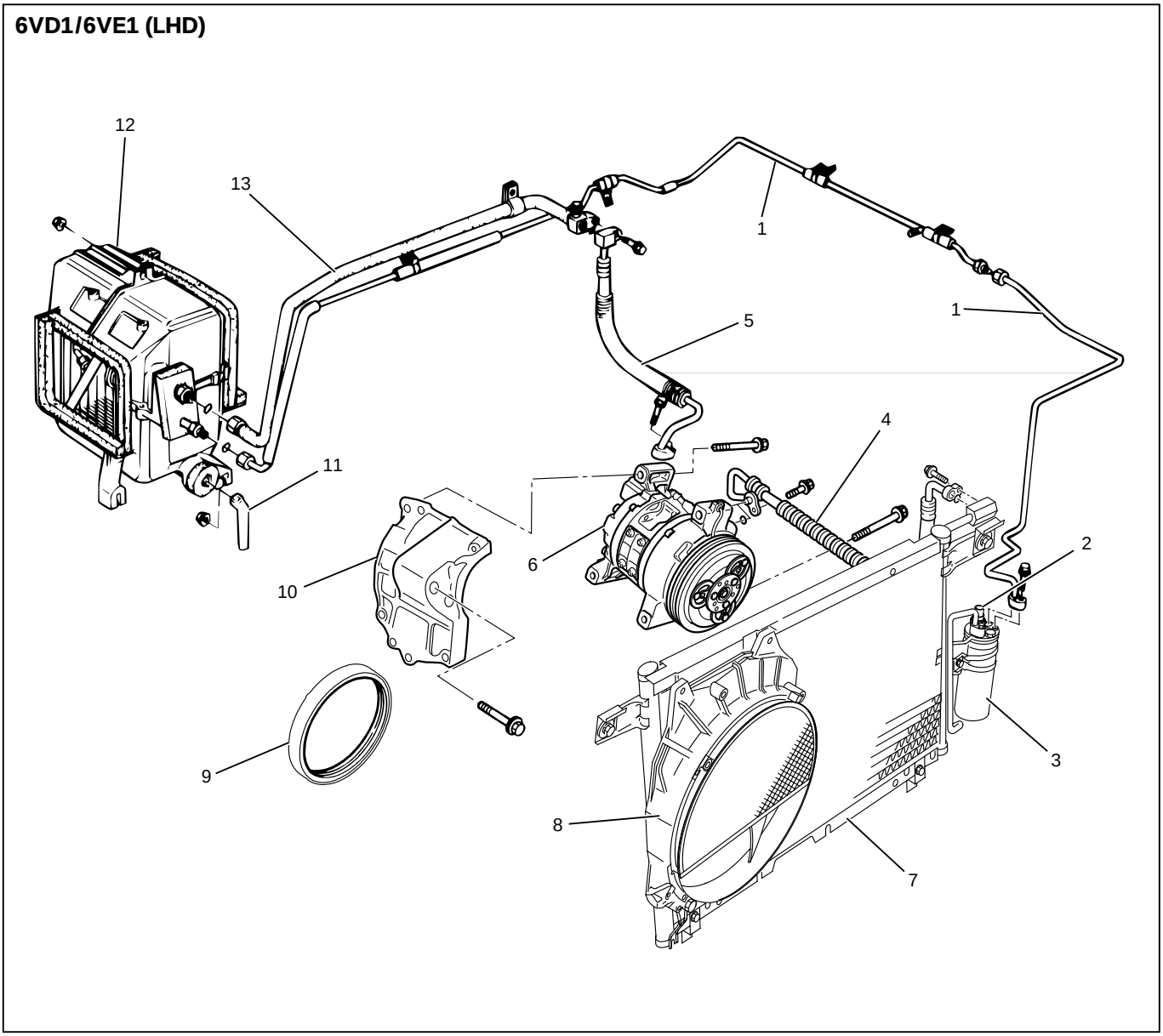

852RY00012

Legend

(1) Liquid Line (High-Pressure Pipe)
(2) Pressure Switch
(3) Receiver Drier
(4) Discharge line (High-Pressure Hose)
(5) Suction Line (Low-Pressure Hose)
(6) Compressor
(7) Condenser Assembly
(8) Condenser Fan
(9) Serpentine Belt
(10) Compressor Bracket
(11) Drain Hose
(12) Evaporator Assembly
(13) Suction Line (Low-Pressure Pipe)

Delphi Harrison (LHD·V6)

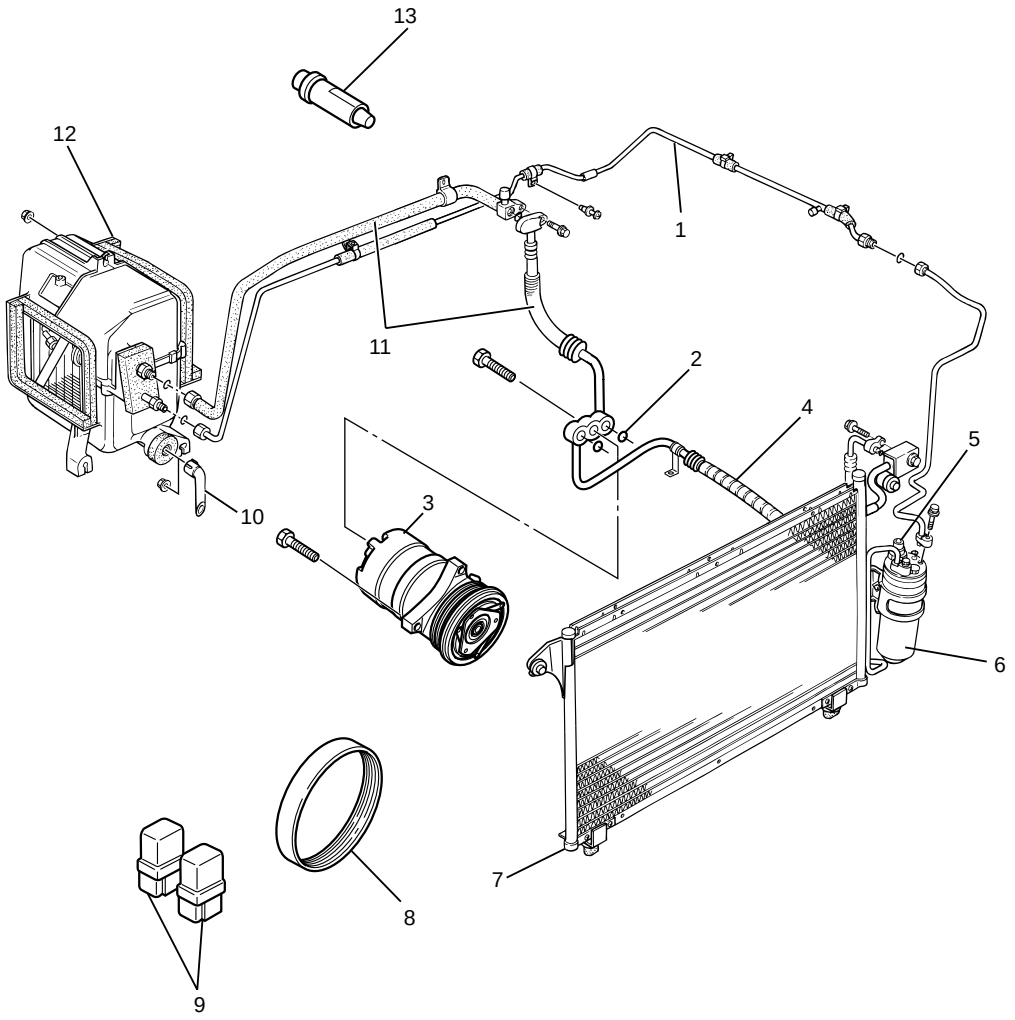

852RW009

Legend

(1) Liquid Line (High-Pressure Pipe)
(2) O-ring
(3) Compressor
(4) Discharge line (High-Pressure Hose)
(5) Pressure Switch
(6) Receiver Drier
(7) Condenser Assembly
(8) Serpentine Belt
(9) Relay
(10) Drain Hose
(11) Suction Line (Low-pressure Hose)
(12) Evaporator Assembly
(13) A/C Switch

ON-VEHICLE SERVICE

PRECAUTIONS FOR REPLACEMENT OR REPAIR OF AIR CONDITIONING PARTS

There are certain procedure, practices and precautions that should be followed when servicing air conditioning systems:

- Keep your work area clean.
- Always wear safety goggle and protective gloves when working on refrigerant systems.
- Beware of the danger of carbon monoxide fumes caused by running the engine.
- Beware of discharged refrigerant in enclosed or improperly ventilated garages.
- Always disconnect the negative battery cable and discharge and recover the refrigerant whenever repairing the air conditioning system.
- When discharging and recovering the refrigerant, do not allow refrigerant to discharge too fast; it will draw compressor oil out of the system.
- Keep moisture and contaminants out of the system. When disconnecting or removing any lines or parts, use plugs or caps to close the fittings immediately. Never remove the caps or plugs until the lines or parts are reconnected or installed.
- When disconnecting or reconnecting the lines, use two wrenches to support the line fitting, to prevent from twisting or other damage.
- Always install new O-rings whenever a connection is disassembled.
- Before connecting any hoses or lines, apply new specified compressor oil to the O-rings.
- When removing and replacing any parts which require discharging the refrigerant circuit, the operations described in this section must be performed in the following sequence:

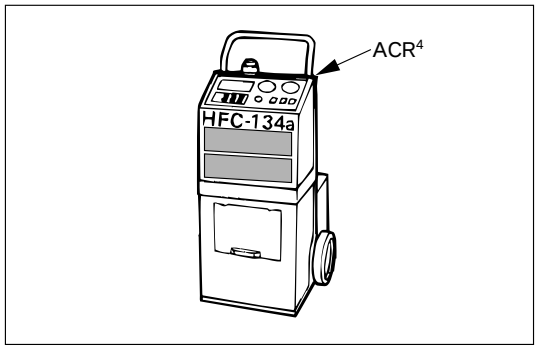

1) Using the ACR^4 (HFC-134a Refrigerant Recovery/ Recycling/ Recharging/ System) or equivalent to thoroughly discharge and recover the refrigerant.

ACR^4 (115V 60Hz) : 5-8840-0629-0 (J-39500-A)
ACR^4 (220-240V 50/60Hz)
: 5-8840-0630-0 (J-39500-220A)
ACR^4 (220-240V 50/60Hz Australian model)
: 5-8840-0631-0 (J-39500-220ANZ)

2) Remove and replace the defective part.

3) After evacuation, charge the air conditioning system and check for leaks.

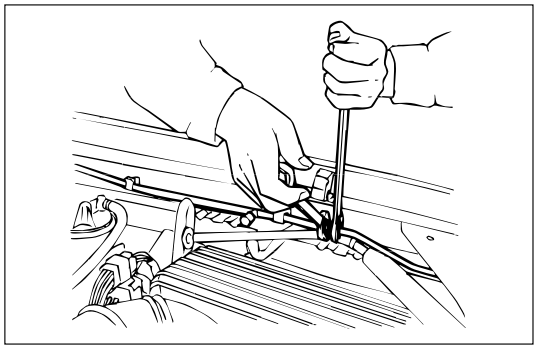

REPAIR OF REFRIGERANT LEAKS

Refrigerant Line Connections
Install new O-rings, if required. When disconnecting or connecting lines, use two wrenches to prevent the connecting portion from twisting or becoming damaged.

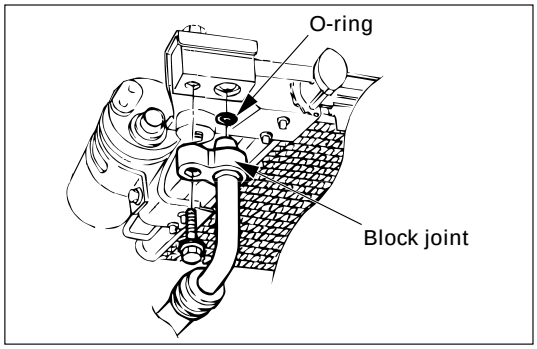

When connecting the refrigerant line at the block joint, securely insert the projecting portion of the joint portion into the connecting hole on the unit side and secure with a bolt.

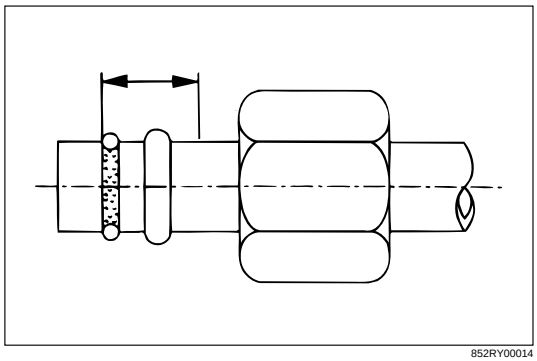

852RY00014

Apply specified compressor oil to the O-rings prior to connecting.

CAUTION:

Compressor (PAG) oil to be used varies according to compressor model. Be sure to apply oil specified for the model of compressor.

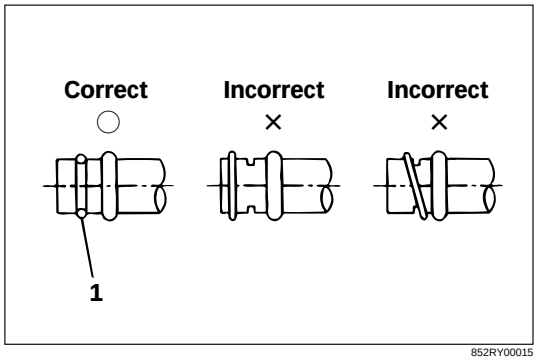

852RY00015

O-rings must be closely aligned with raised portion of refrigerant line.

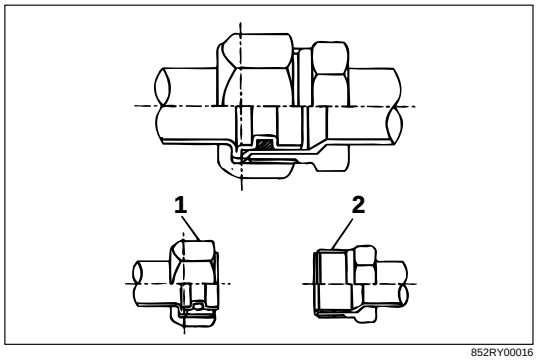

852RY00016

Insert nut into union. First tighten nut by hand as much as possible. Then, tighten nut to specified torque.

(Refer to “SERVICE INFORMATION” for Fixing Torque in section 00)

LEAK AT REFRIGERANT LINE CONNECTIONS

1) Check the torque on the refrigerant line fitting and, if too loose, tighten to the specified torque.
   - Use two wrenches to prevent twisting and damage to the Line.
   - Do not over tighten.
2) Perform a leak test on the refrigerant line fitting.
3) If the leak is still present, discharge and recover the refrigerant from the system.
4) Replace the O-rings.
   - O-rings cannot be reused. Always replace with new ones.
   - Be sure to apply specified compressor oil to the new O-rings.
5) Retighten the refrigerant line fitting to the specified torque.
   - Use two wrenches to prevent twisting and damage to the line.
6) Evacuate, charge and retest the system.

LEAK IN THE HOSE

If the compressor inlet or outlet hose is leaking, the entire hose must be replaced. Refrigerant hose must not be cut or spliced for repair.

1) Locate the leak.
2) Discharge and recover the refrigerant.
3) Remove the hose assembly.
   - Cap the open connections at once.
4) Connect the new hose assembly.
   - Use two wrenches to prevent twisting or damage to the hose fitting.
   - Tighten the hose fitting to the specified torque.
5) Evacuate, charge and test the system.

COMPRESSOR LEAKS

If leaks are located around the compressor shaft seal or shell, replace or repair the compressor.

RECOVERY, RECYCLING, EVACUATION AND CHARGING

Handling Refrigerant-134a (HFC-134a)

Air conditioning systems contain HFC-134a.
This is a chemical mixture which requires special handling procedures to avoid personal injury.

- Always wear safety goggles and protective gloves.
- Always work in a well-ventilated area. Do not weld or steam clean on or near any vehicle-installed air conditioning lines or components.
- If HFC-134a should come in contact with any part of the body, flush the exposed area with cold water and immediately seek medical help.
- If it is necessary to transport or carry any container of HFC-134a in a vehicle, do not carry it in the passenger compartment.
- If it is necessary to fill a small HFC-134a container from a large one, never fill the container completely. Space should always be allowed above the liquid for expansion.
- Keep HFC-134a containers stored below 40 °C (104°F).

WARNING

- **SHOULD HFC-134a CONTACT YOUR EYE(S), CONSULT A DOCTOR IMMEDIATELY.**
- **DO NOT RUB THE AFFECTED EYE(S). INSTEAD, SPLASH QUANTITIES OF FRESH COLD WATER OVER THE AFFECTED AREA TO GRADUALLY RAISE THE TEMPERATURE OF THE REFRIGERANT ABOVE THE FREEZING POINT.**
- **OBTAIN PROPER MEDICAL TREATMENT AS SOON AS POSSIBLE. SHOULD THE HFC-134a TOUCH THE SKIN, THE INJURY MUST BE TREATED THE SAME AS SKIN WHICH HAS BEEN FROSTBITTEN OR FROZEN.**

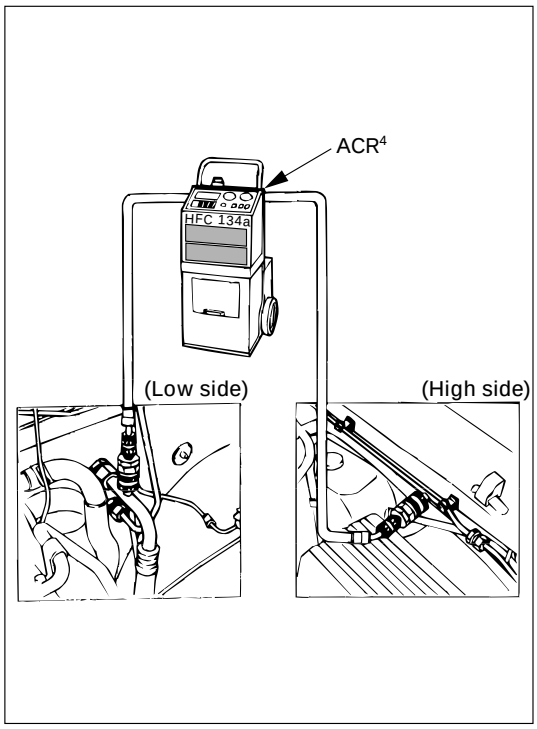

REFRIGERANT RECOVERY

The refrigerant must be discharged and recovered by using ACR4 (HFC-134a Refrigerant Recovery/ Recycling/ Recharging/ System) or equivalent before removing or mounting air conditioning parts.

ACR4 (115V 60Hz) : 5-8840-0629-0 (J-39500-A)
ACR4 (220-240V 50/60Hz)
: 5-8840-0630-0 (J-39500-220A)
ACR4 (220-240V 50/60Hz Australian model)
: 5-8840-0631-0 (J-39500-220ANZ)

1) Connect the high and low charging hoses of the ACR4 (or equivalent) as shown
2) Recover the refrigerant by following the ACR4 Manufacture's Instructions.
3) When a part is removed, put a cap or a plug on the connecting portion so that dust, dirt or moisture cannot get into it.

REFRIGERANT RECYCLING

Recycle the refrigerant recovered by ACR4 or equivalent. For the details of the actual operation, follow the steps in the ACR4 Manufacture's Instructions.

ACR4 (115V 60Hz) : 5-8840-0629-0 (J-39500-A)
ACR4 (220-240V 50/60Hz)
: 5-8840-0630-0 (J-39500-220A)
ACR4 (220-240V 50/60Hz Australian model)
: 5-8840-0631-0 (J-39500-220ANZ)

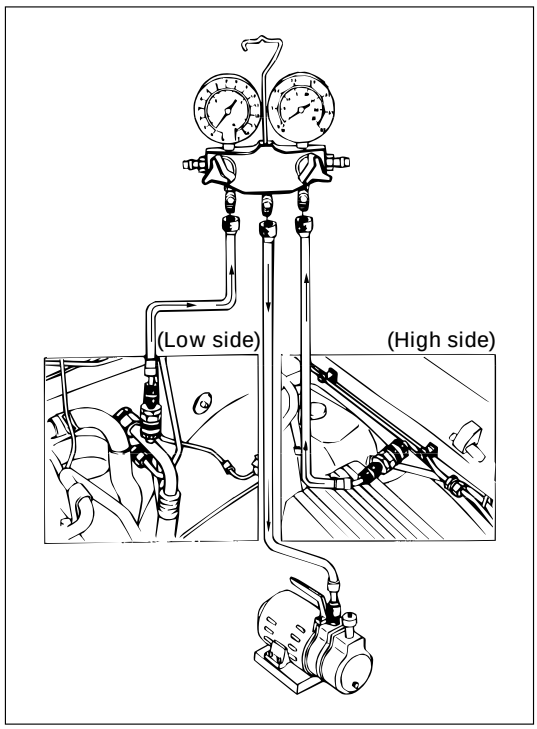

EVACUATION OF THE REFRIGERANT SYSTEM

NOTE:

Explained below is a method using a vacuum pump. Refer to ACR^4 (or equivalent) manufacture's instructions when evacuating the system with ACR^4 (or equivalent)

Air and moisture in the refrigerant will cause problems in the air conditioning system.
Therefore, before charging the refrigerant, be sure to evacuate air and moisture thoroughly from the system.

1) Connect the gauge manifold.
   - High-pressure valve (HI) – Discharge-side
   - Low-pressure valve (LOW) – Suction-side
2) Discharge and recover the refrigerant.
3) Connect the center hose of the gauge manifold set to the vacuum pump inlet.
4) Operate the vacuum pump, open shutoff valve and then open both hand valves.
5) When the low-pressure gauge indicates approx. 750 mmHg (30 inHg), continue the evacuation for 5 minutes or more.
6) Close both hand valves and stop the vacuum pump.
7) Check to ensure that the pressure does not change after 10 minutes or more.
   - If the pressure changes, check the system for leaks.
   - If leaks occur, retighten the refrigerant line connections and repeat the evacuation steps.
8) If no leaks are found, again operate the vacuum pump for 20 minutes or more, After confirming that the gauge manifold pressure is at 750 mmHg(30 inHg), close both hand valves.
9) Close positive shutoff valve.
   Stop the vacuum pump and disconnect the center hose from the vacuum pump.

CHARGING THE REFRIGERANT SYSTEM

There are various methods of charging refrigerant into the air conditioning system.
These include using ACR^4 (HFC-134a Refrigerant Recovery/ Recycling/ Recharging/ System) or equivalent and direct charging with a manifold gauge charging station.

ACR^4 (115V 60Hz) : 5-8840-0629-0 (J-39500-A)
ACR^4 (220-240V 50/60Hz)
: 5-8840-0630-0 (J-39500-220A)
ACR^4 (220-240V 50/60Hz Australian model)
: 5-8840-0631-0 (J-39500-220ANZ)

Charging procedure

- **ACR^4 (or equivalent) method**

For the charging of refrigerant recovery by ACR^4, follow the manufacture's instruction.

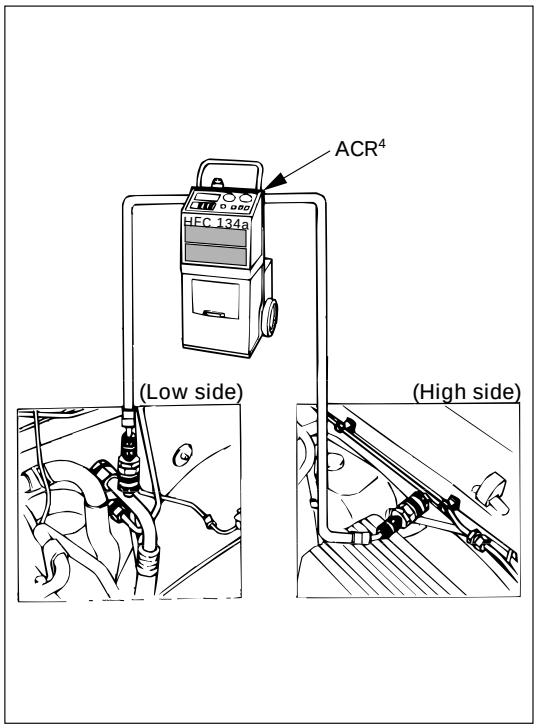

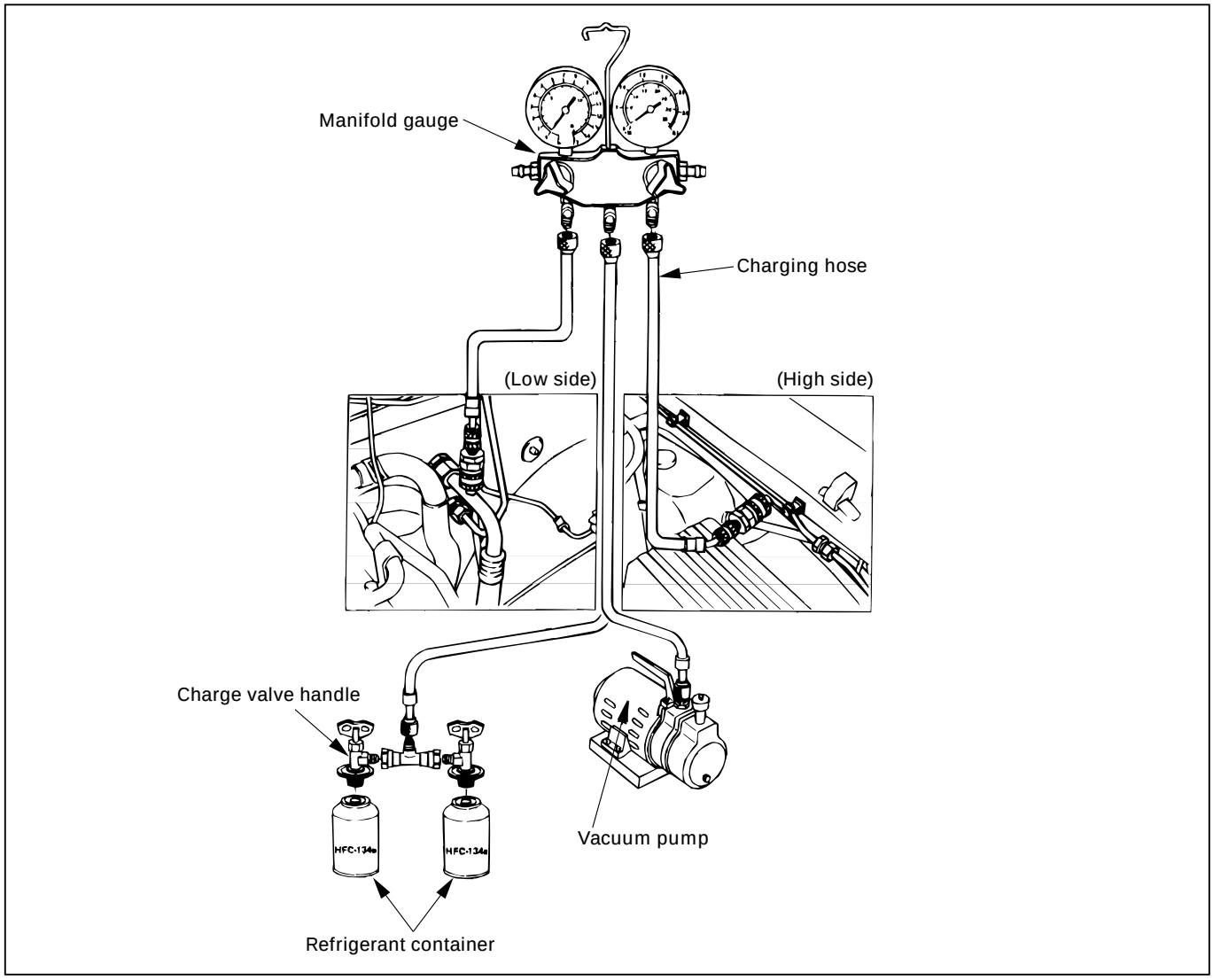

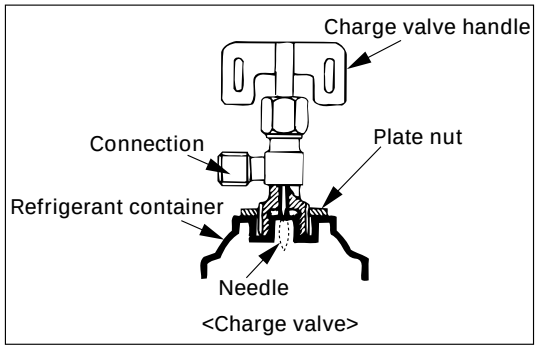

<Charge valve>

- **Direct charging with a manifold gauge charging station method**

Handling the charging valve handle when installing refrigerant container.

1) Before attaching the charge valve to the refrigerant container, turn the charge valve handle counterclockwise until the needle is fully retracted.
2) Turn the plate nut counterclockwise until it reaches its highest position relative to the charge valve.
3) Install the charge valve onto the refrigerant container.
4) Turn the plate nut clockwise and connect the center hose of the manifold gauge to the charge valve.
5) Tighten the plate nut sufficiently by hand. Then turn the charge valve handle clockwise to lower the needle and bore a hole in the refrigerant container.
6) Turn the charge valve handle counterclockwise to raise the needle. The refrigerant in the refrigerant container is charged into the air conditioning system by the operation of the manifold gauge.
   - Be absolutely sure not to reuse the emptied refrigerant container.

1) Make sure the evacuation process is correctly completed.
2) Connect the center-hose of the manifold gauge to the refrigerant container.
   - Turn the charge valve handle counterclockwise to purge the charging line and purge any air existing in the center-hose of the manifold gauge.
3) Open the low-pressure hand valve and charge the refrigerant about 200 g(0.44 lbs.).
   - Make sure the high-pressure hand valve is closed.
   - Avoid charging the refrigerant by turning the refrigerant container upside down.
4) Close the low-pressure hand valve of the manifold gauge.
   - Check to ensure that the degree of pressure does not charge.
5) Check the refrigerant leaks by using a HFC-134a leak detector.
   - If a leak occurs, repair the leak connection, and start all over again from the first step of evacuation.
6) If no leaks are found, open the low-pressure hand valve of the manifold gauge.Then continue charging refrigerant to the system.
   - When charging the system becomes difficult:
     (1) Run the engine at Idling and close the all vehicle doors.
     (2) A/C switch is “ON”.
     (3) Set the fan control knob (fan switch) to its highest position.

WARNING

BE ABSOLUTELY SURE NOT TO OPEN THE HIGH-PRESSURE HAND VALVE. SHOULD THE HIGH-PRESSURE HAND VALVE BE OPENED, THE HIGH-PRESSURE REFRIGERANT GAS WOULD FLOW BACKWARD, AND THIS MAY CAUSE THE REFRIGERANT CONTAINER TO BURST.

7) When the refrigerant container is emptied, use the following procedure to replace it with a new refrigerant container.
   (1) Close the low pressure hand valve.
   (2) Raise the needle upward and remove the charge valve.
   (3) Reinstall the charge valve to the new refrigerant container.
   (4) Purge any air existing in the center hose of the manifold gauge.

8) Charge the system to the specified amount and then close the low-pressure hand valve.

Refrigerant Amount	g(lbs.)
750 (1.65)	

DELPH1HD6/HT6	g(lbs.)
600 (1.32)	

- A fully charged system is indicated by the sight glass on the receiver/driver being free of any bubbles(Refer to “Reading Sight Glass”).
- Check the high and low pressure value of the manifold gauge.
- Check for refrigerant leaks by using a HFC-134a leak detector.

Immediately after charging refrigerant, both high and low pressures are slightly high and to the left of the gauge, but they settle down to the guide pressure valves as shown below:

- Ambient temperature; 25 ~ 30°C (77 ~ 86°F)
- Guide pressure
  High-pressure side;
  Approx. 1373 – 1863 kPa (14 – 19 kg·cm^2 / 199 – 270 PSI)
  Low-pressure side;
  Approx. 147 – 294 kPa (1.4 – 3.0 kg·cm^2 / 21 – 43 PSI)

9) Close the low pressure hand valve and charge valve of the refrigerant container.
10) Stop the air conditioning and the engine.
11) Disconnect the high and low pressure hoses from the manifold gauge fittings.

Reading Sight Glass

High and low pressure pipe temperature	The high pressure pipe is hot and the low pressure pipe is cold. There is a distinct difference in temperature between them.	The high pressure pipe is warm and the low pressure pipe is cool. There is no great difference in temperature between them.	There is little difference in temperature between the high pressure pipe and the low pressure pipe.	The high pressure pipe is hot and the low pressure pipe is slightly warm. There is a difference in temperature between them.
Sight glass condition	Almost transparent. A flow of bubbles can be seen, but they disappear when the throttle is opened. 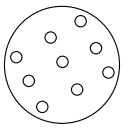	A flow of bubbles always can be seen. It appears sometimes transparent, and sometimes frothy. 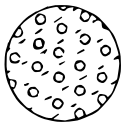	Something like fog faintly can be seen. 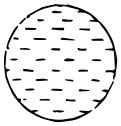	Even at idle with the fan at “HI” (with the window fully open), the bubbles cannot be seen. 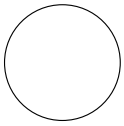
Air conditioner cycle condition	OK	NG (Not enough refrigerant)	NG (Almost no refrigerant)	NG (Too much refrigerant)

The sight glass provides accurate diagnosis only under the following conditions.
If the vehicle can be tested under these conditions, check the sight glass appearance and compare to the chart.

* Engine speed Idling
* A/C switch “ON”
* Blower fan operating at highest speed
* Air source selector lever at “RECIRC”
* Temperature control knob at coldest position
* Ambient temperature below 30°C (86°F) and humidity below 70% (See NOTE 1)
* High side pressure less than 1863 kPa (19 kg·cm^2 / 270 PSI) (See NOTE 2)

NOTE 1

If the vehicle cannot be moved to a testing location that meets these specifications, then the sight glass cannot be used for diagnosis. You must discharge and recover the refrigerant, then recharge the system with the specified amount of refrigerant. Then continue checking the system performance.

NOTE 2

If the high side pressure is greater than stated, the sight glass cannot be used for diagnosis. You must discharge and recover the refrigerant, then recharge the system with the specified amount of refrigerant. Then continue checking system performance.

Compressor Assembly and Associated Parts

6VD1/6VE1 (LHD)

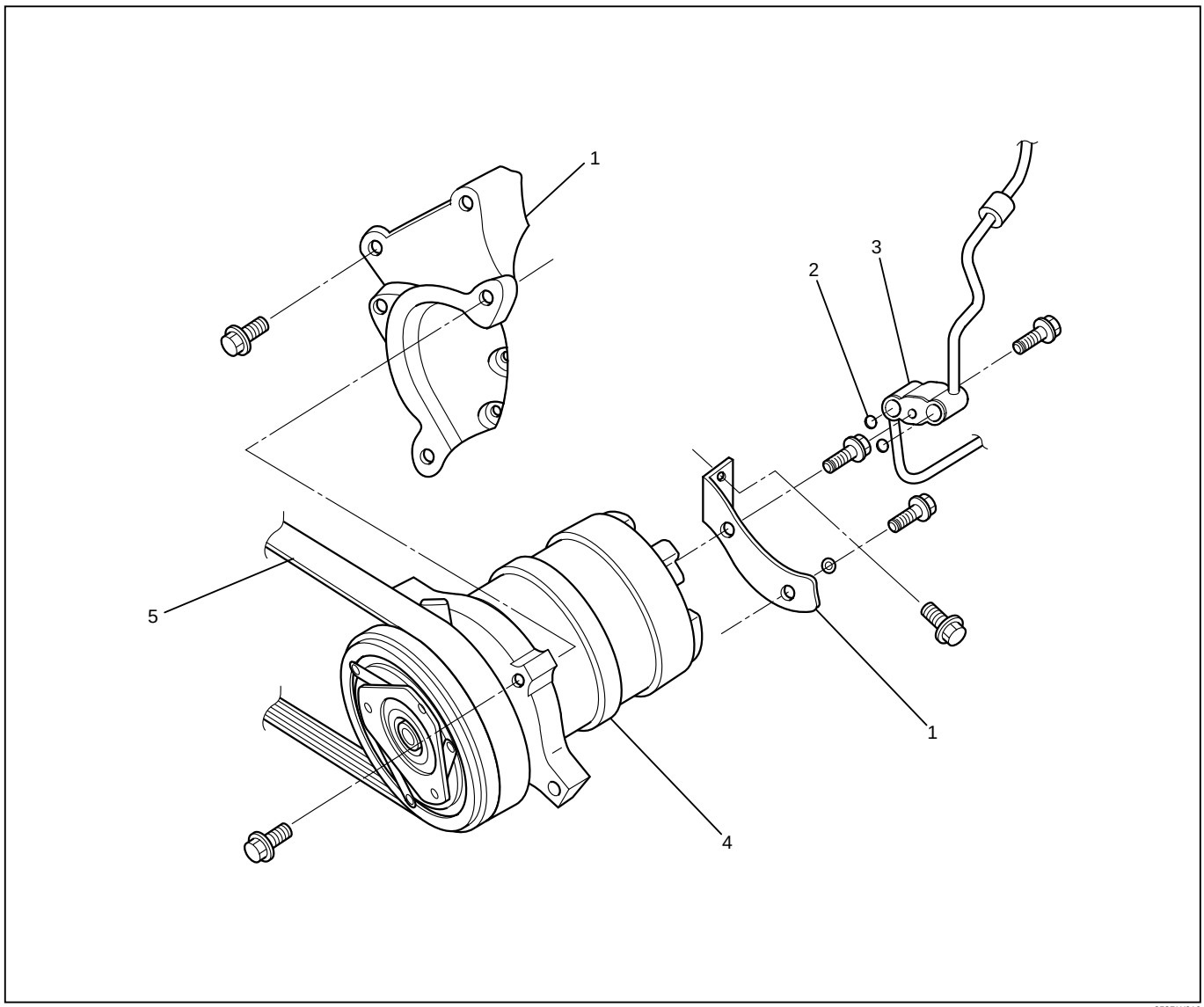

852RW010

Legend

1. Compressor Bracket
2. Seal Washer
3. Refrigerant Line Connector
4. Compressor
5. Serpentine Belt

Removal

1. Disconnect the battery ground cable.
2. Discharge and recover refrigerant
   - Refer to Refrigerant Recovery in this section.
3. Disconnect magnetic clutch harness connector.

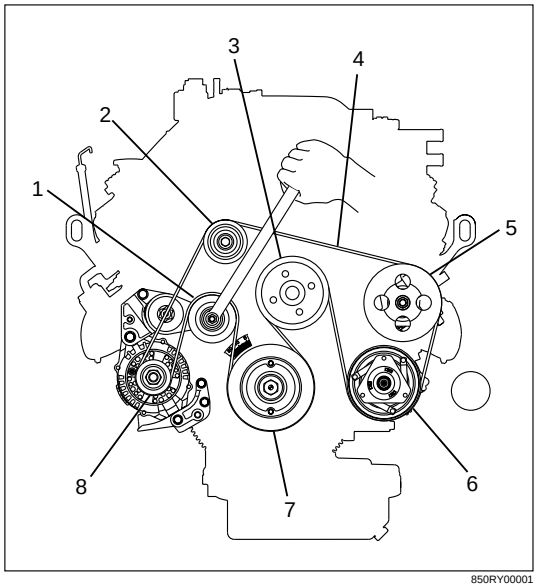

850RY00001

Legend

(1) Tensioner
(2) Idle Pulley
(3) Cooling Fun Pulley
(4) Serpentine Belt
(5) Power Steering Oil Pump
(6) Air Conditioner Compressor
(7) Crankshaft Pulley
(8) Generator

4. Remove serpentine belt.
   - Move serpentine belt tensioner to loose side using wrench then remove serpentine belt.
5. Disconnect refrigerant line connector.
   - When removing the line connector, the connecting part should immediately be plugged or capped to prevent foreign matter from being mixed into the line
6. Remove compressor.

Installation

1) Install compressor.
   - Tighten the compressor fixing bolts to the specified torque.

Compressor Fixing Torque	N·m (kg·m / lb·ft)
19 (1.9 / 14)	

2) Connect refrigerant line connector.
   - Tighten the refrigerant line connector fixing bolts to the specified torque

Refrigerant Line Bolt Torque	N·m (kg·m / lb·ft)
15 (1.5 / 11)	

   - O-rings cannot be reused. Always replace with new ones.
   - Be sure to apply new compressor oil to the O-rings when connecting refrigerant lines.
3) Install serpentine belt.
   - Move serpentine belt tensioner to loose side using wrench, then install serpentine belt to normal position.

COMPRESSOR

6VD1/6VE1 (RHD) & 6VD1 (LHD SAUDI/PHILIPPIN)

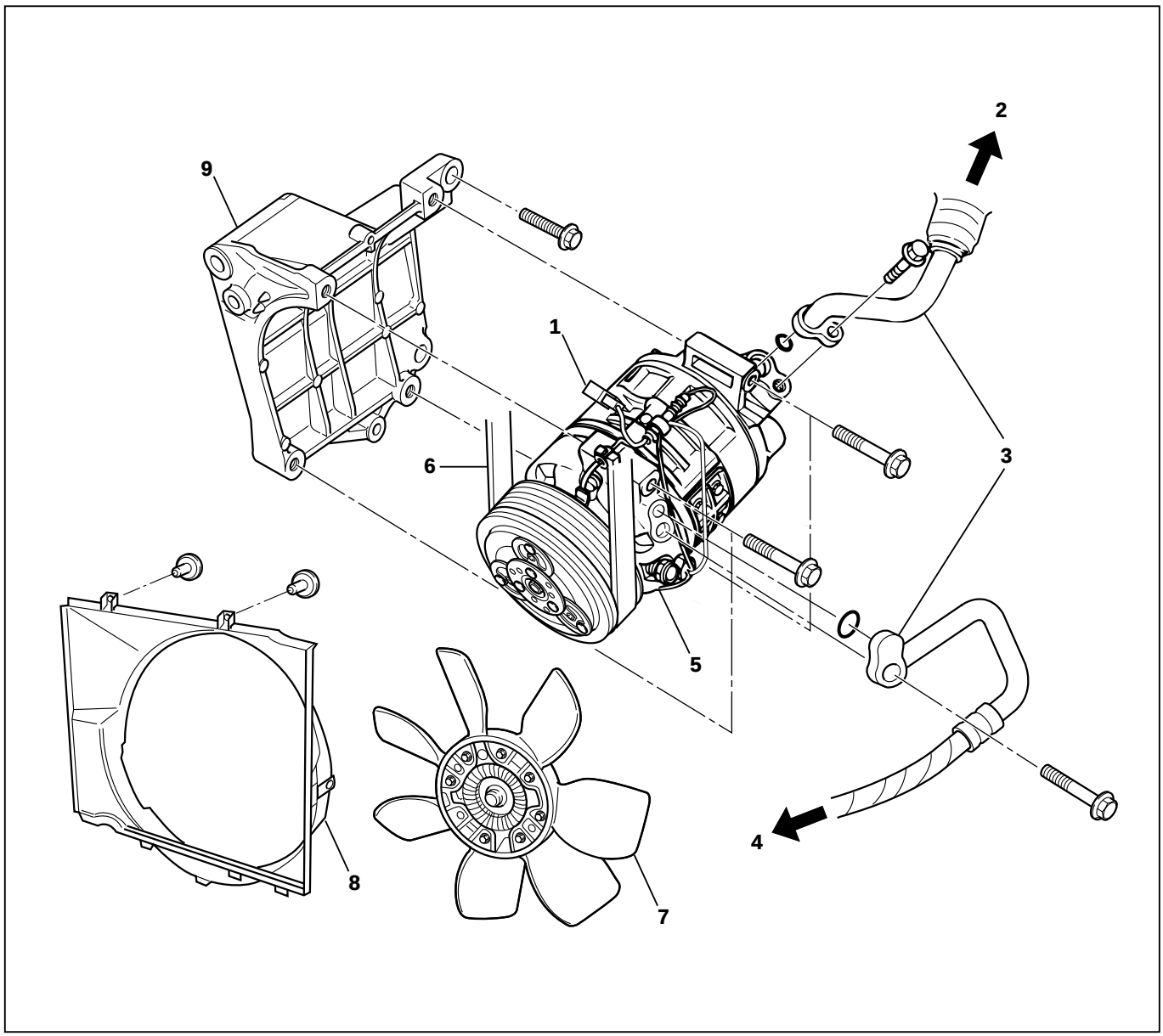

852RY00007

Legend

(1) Magnetic Clutch Harness Connector
(2) To Evaporator
(3) Refrigerant Line Connector
(4) To Condenser
(5) Compressor
(6) Serpentine Belt
(7) Radiator Fan
(8) Radiator Fan Shroud
(9) Compressor Bracket

Removal

1. Disconnect the battery ground cable.
2. Discharge and recover refrigerant.
   - Refer to Refrigerant Recovery in this section.
3. Disconnect magnetic clutch harness connector.
4. Remove radiator fan shroud.
5. Remove radiator fan.
   - When the fan is removed, be sure to tighten the fan fixing nuts temporarily to their original positions.
6. Remove serpentine belt.
   - Move serpentine belt tensioner to loose side using wrench, then remove serpentine belt.

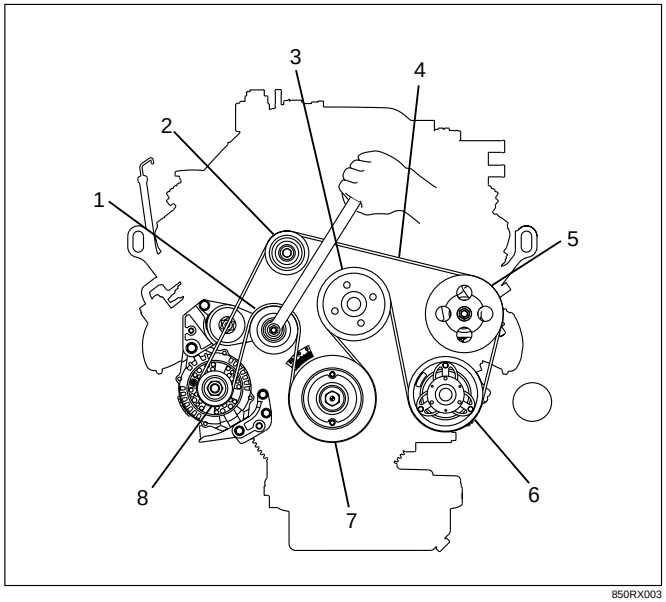

850RX003

Legend

(1) Tensioner
(2) Idle Pulley
(3) Cooling Fan Pulley
(4) Serpentine Belt
(5) Power Steering Oil Pump
(6) Air Conditioner Compressor
(7) Crankshaft Pulley
(8) Generator

7. Disconnect refrigerant line connector.
   - When removing the line connector, the connecting part should immediately be plugged or capped to prevent foreign matter from being mixed into the line.
8. Remove compressor.

Installation

1. Install compressor.
   - Tighten the compressor fixing bolts to the specified torque.

Compressor Fixing Torque	N·m (kg·m / lb·ft)
	19 (1.9 / 14)

2. Connect refrigerant line connector.
   - Tighten the refrigerant line connector fixing bolts to the specified torque.

Refrigerant Line Bolt Torque	N·m (kg·m / lb·ft)
	15 (1.5 / 11)

   - O-rings cannot be reused. Always replace with new ones.
   - Be sure to apply new compressor oil to the O-rings when connecting refrigerant lines.
3. Install serpentine belt.
   - Move serpentine belt tensioner to loose side using wrench, then install serpentine belt to normal position.
4. Install radiator fan.
5. Install radiator fan shroud.
6. Connect magnetic clutch harness connector.

4JG2 ENGINE

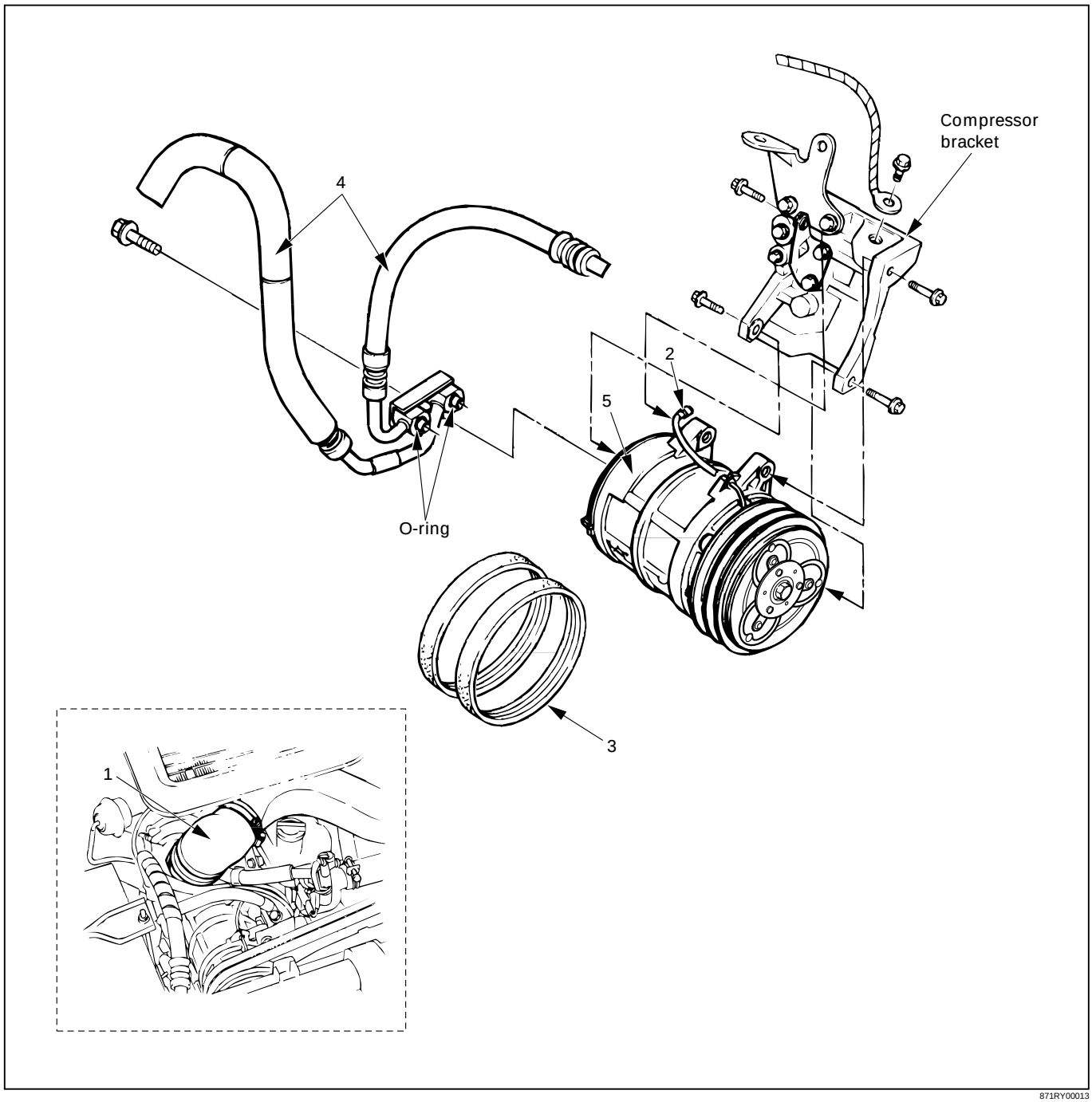

871RY00013

Removal Steps

1. Air duct
2. Magnetic clutch harness connector
3. Drive belt
4. Refrigerant line connector
5. Compressor

Installation Steps

To install, follow the removal steps in the reverse order.

REMOVAL

Preparation:

- Battery ground cable
- Discharge and recover refrigerant (Refer to "REFRIGERANT RECOVERY" in this section)

1. **Air Duct (Turbo to air cleaner)**
   Cover up the air duct connecting portion to prevent foreign materials from getting into the turbo and the air cleaner.
2. **Magnetic Clutch Harness Connector**
3. **Drive Belt**
   Loosen the power steering pump unit fixing bolts, then loosen the drive belt adjustment bolt and remove the drive belt.

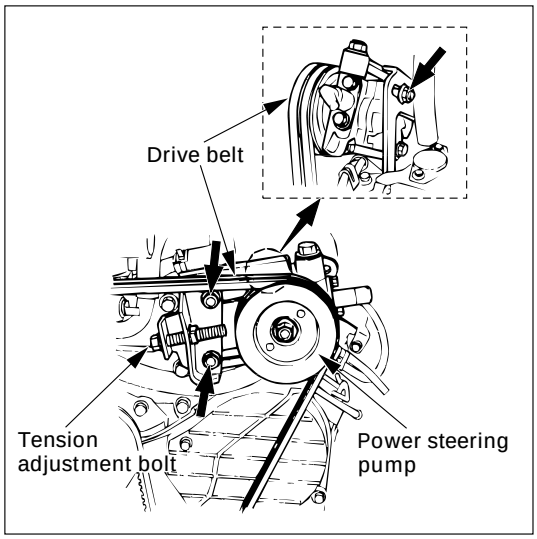

4. **Refrigerant Line Connector**
5. **Compressor**

INSTALLATION

5. **Compressor**
   Tighten the compressor fixing bolts to the specified torque.

Compressor Bolt Torque	N·m (kg·m / lb·ft)
	40 (4.1 / 30)

4. **Refrigerant Line Connector**
   - O-rings cannot be reused. Always replace with new ones.
   - Be sure to apply new compressor oil to the O-rings when connecting refrigerant lines.
   - Tighten the refrigerant line connector to the specified torque.

Refrigerant Line Bolt Torque	N·m (kg·m / lb·ft)
	27 (2.8 / 20)

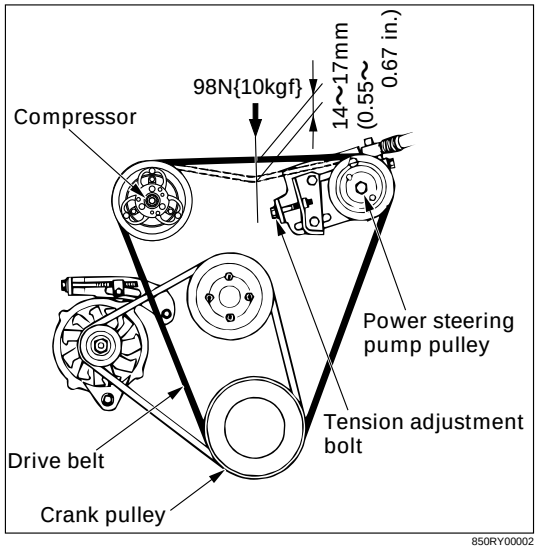

3. Drive Belt

1) Temporary tighten the power steering pump unit fixing bolts.
2) Push the drive belt when the force of 98N {10kgf}., and adjust the drive belt tension by tightening drive belt tension adjustment bolt, till the 14 ~ 17 mm (0.55 ~ 0.67 in) of deflection of the belt is obtained. Then tighten the power steering pump fixing bolts.

2. Magnetic Clutch Harness Connector

1. Air Duct (Turbo to air cleaner)

4JX1 ENGINE

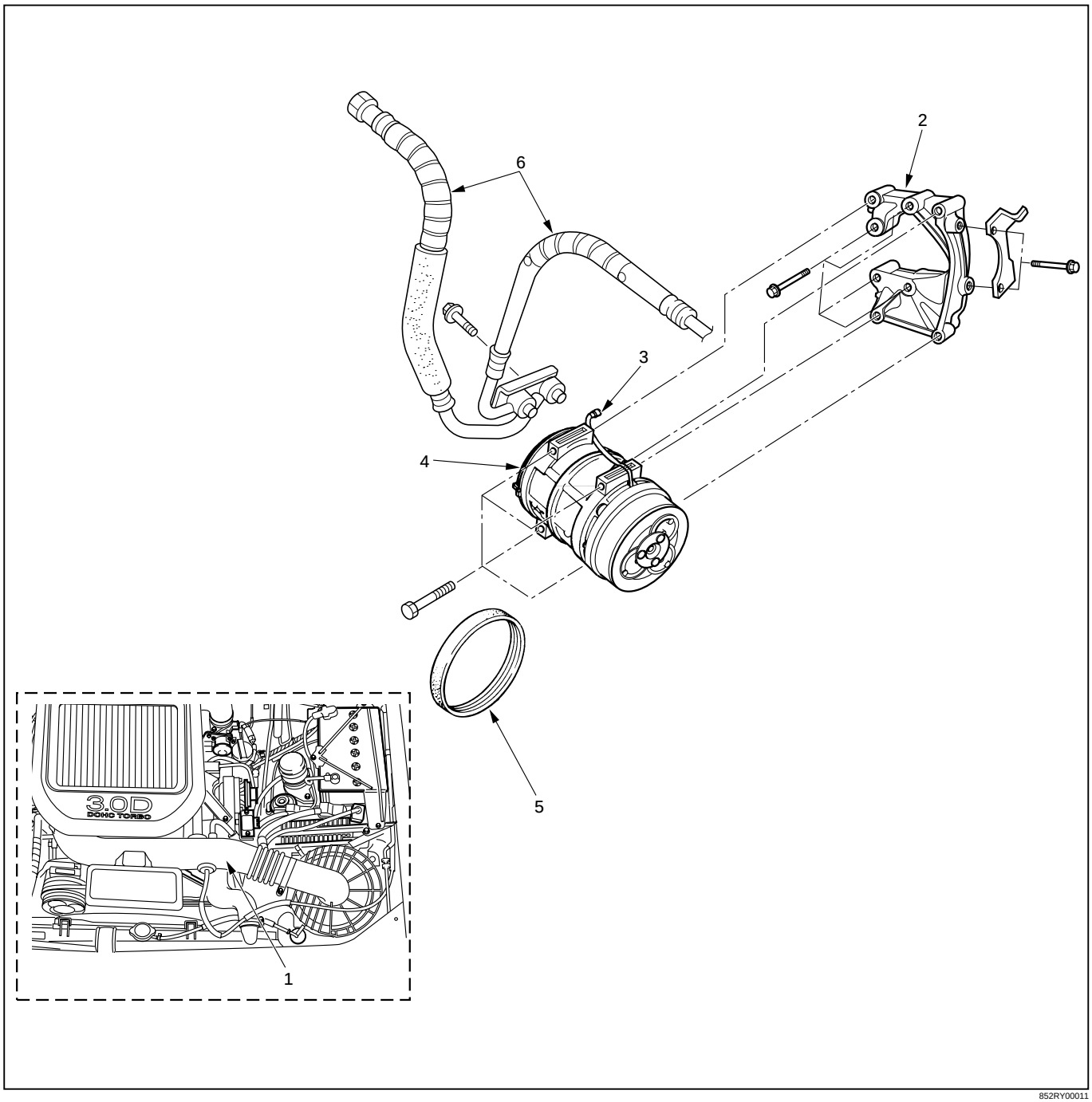

852RY00011

Removal Steps

1. Air duct
2. Compressor bracket
3. Magnetic clutch harness connector
4. Compressor
5. Drive belt
6. Refrigerant line connector

Installation Steps

To install, follow the removal steps in the reverse order.

REMOVAL

Preparation:

- Battery ground cable
- Discharge and recover refrigerant (Refer to "REFRIGERANT RECOVERY" in this section)

1. **Air Duct (Turbo to air cleaner)**
   Cover up the air duct connecting portion to prevent foreign materials from getting into the turbo and the air cleaner.
2. **Magnetic Clutch Harness Connector**
3. **Drive Belt**
   Loosen the power steering pump unit fixing bolts, then loosen the drive belt adjustment bolt and remove the drive belt.

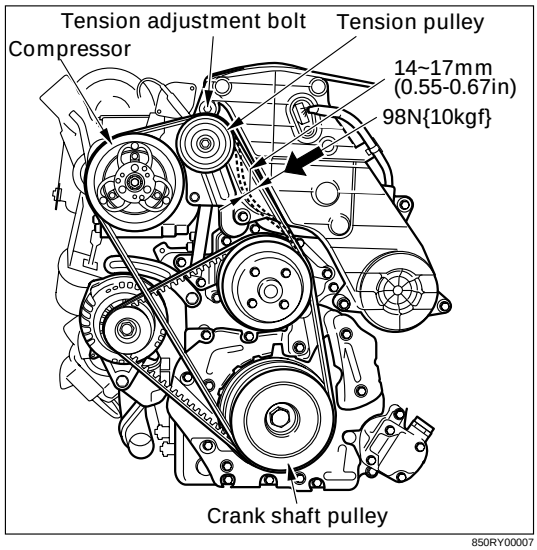

4. **Refrigerant Line Connector**
5. **Compressor**

INSTALLATION

5. **Compressor**
   Tighten the compressor fixing bolts to the specified torque.

Compressor Bolt Torque	N·m (kg·m / lb·ft)
	40 (4.1 / 30)

4. **Refrigerant Line Connector**
   - O-rings cannot be reused. Always replace with new ones.
   - Be sure to apply new compressor oil to the O-rings when connecting refrigerant lines.
   - Tighten the refrigerant line connector to the specified torque.

Refrigerant Line Bolt Torque	N·m (kg·m / lb·ft)
	27 (2.8 / 20)

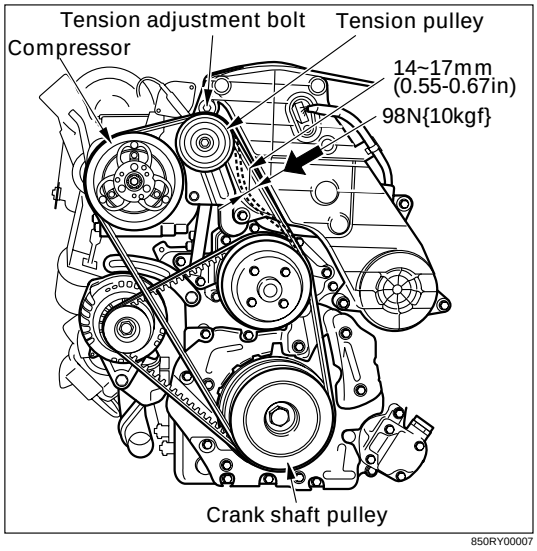

3. Drive Belt

1) Temporary tighten the power steering pump unit fixing bolts.
2) Push the drive belt when the force of 98N {10kgf}., and adjust the drive belt tension by tightening drive belt tension adjustment bolt, till the 14 ~ 17 mm (0.55 ~ 0.67 in) of deflection of the belt is obtained. Then tighten the power steering pump fixing bolts.

2. Magnetic Clutch Harness Connector

1. Air Duct (Turbo to air cleaner)

CONDENSER ASSEMBLY (LHD V6 WITHOUT CONDENSER FAN)

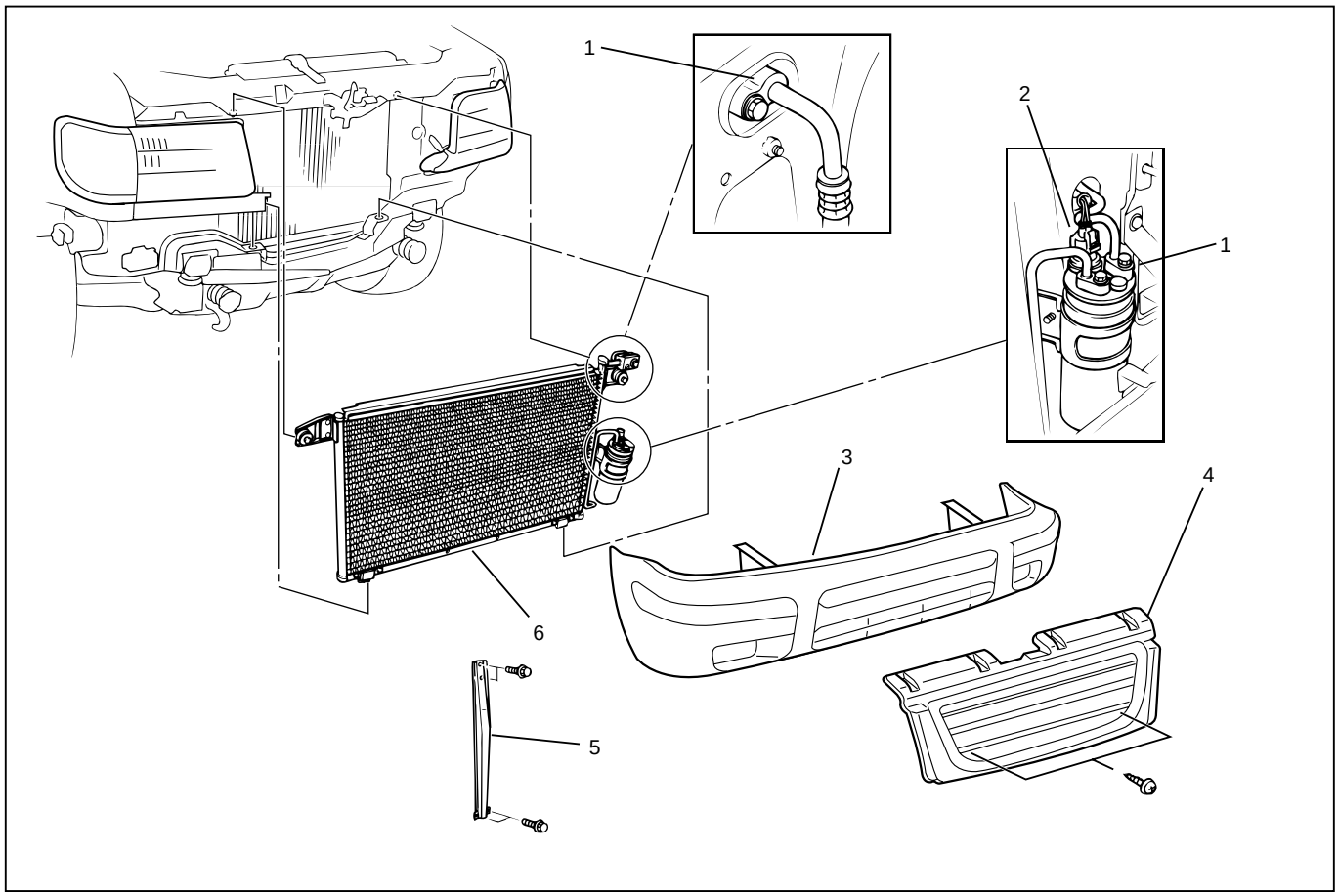

875RW001

Legend

(1) Refrigerant Line
(2) Pressure Switch Connector
(3) Front Bumper Assembly
(4) Radiator Grille
(5) Engine Hood Front End Stay
(6) Condenser Assembly

REMOVAL

1. Disconnect the battery ground cable.
2. Discharge and recover refrigerant.
   - Refer to Refrigerant Recovery in this section.
3. Remove radiator grille.
4. Remove front bumper assembly.
   - Refer to Bumpers in Body and Accessories section.
5. Remove engine hood front end stay.
6. Disconnect pressure switch connector.
7. Disconnect refrigerant line.
   - When removing the line connector, the connecting part should immediately be plugged or capped to prevent foreign matter from being mixed into the line.
8. Remove condenser assembly.
   - Handle with care to prevent damaging the condenser or radiator fin.
   - Be sure to apply new compressor oil to the O-rings when connecting the refrigerant line.

INSTALLATION

1. Install condenser assembly.
   - If installing a new condenser, be sure to add 30cc (1.0 fl. oz.) of new compressor oil to a new one.
   - Tighten the condenser fixing bolts to the specified torque.

Condenser Fixing Torque	N·m (kg·m / lb·in)
6 (0.6 / 52)	

2. Connect refrigerant line.
   - Tighten the inlet line connector fixing bolt to the specified torque.

Inlet Line Torque	N·m (kg·m / lb·ft)
15 (1.5 / 11)	

- Tighten the outlet line connector fixing bolt to the specified torque.

Outlet Line Torque	N·m (kg·m / lb·in)
6 (0.6 / 52)	

- O-rings cannot be reused. Always replace with new ones.
  - Be sure to apply new compressor oil to the O-rings when connecting the refrigerant line..
3. Connect pressure switch connector.
4. Install engine hood front end stay.
5. Install front bumper assembly.
6. Install radiator grille.

CONDENSER FAN MOTOR

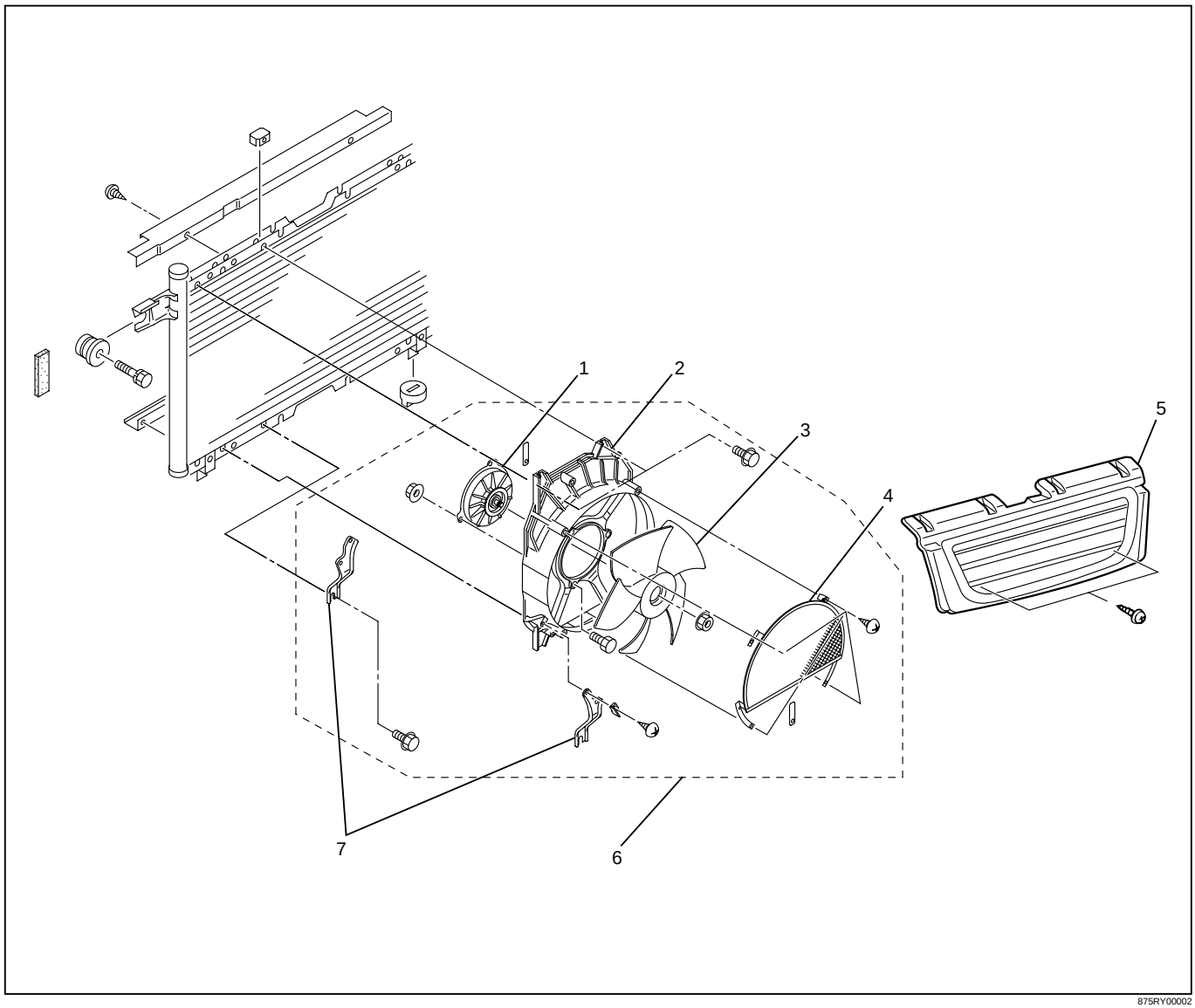

875RY00002

Removal Steps

(1) Condenser Fan Motor
(2) Fan Motor Shroud
(3) Motor Fan
(4) Condenser Unit Net
(5) Radiator Grille
(6) Condenser Fan Assembly
(7) Shroud Bracket

Removal

1. Disconnect the battery ground cable.
2. Discharge and recover refrigerant.
   - Refer to Refrigerant Recovery in this section.
3. Remove radiator grille.
4. Remove condenser fan assembly.
   - Disconnect the fan motor connector and remove the 4 fixing bolts.
5. Remove condenser unit net.
   - Remove the 4 fixing screws.
6. Remove motor fan.
7. Remove condenser fan motor.

Installation

To install, follow the removal steps in the reverse order, noting the following point.

1. Route the fan motor harness in its previous position and fix it securely with clip and bracket.

RECEIVER/DRIER

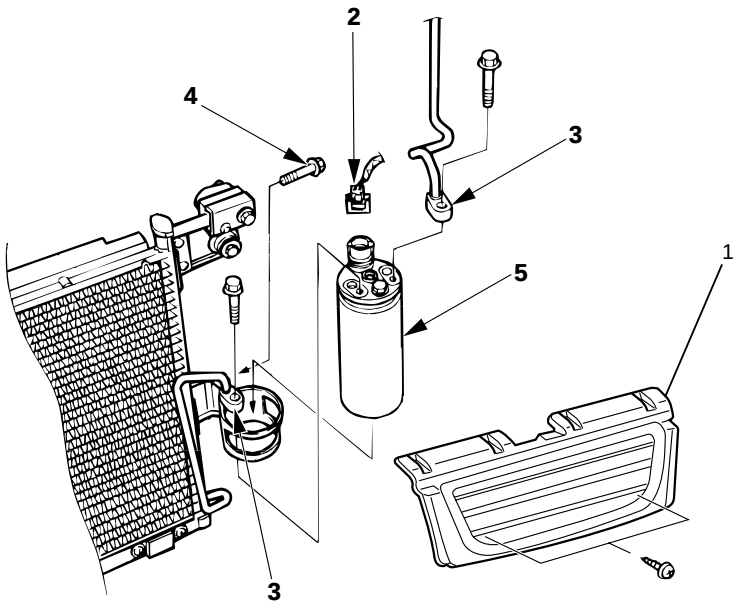

Removal Steps

1. Radiator grille
2. Pressure switch connector
3. Refrigerant line
4. Bracket bolt
5. Receiver/drier

Installation Steps

To install, follow the removal steps in the reverse order.

REMOVAL

Preparation:

- Disconnect the battery ground cable
- Discharge and recover refrigerant (Refer to "REFRIGERANT RECOVERY" in this section.)

1. **Radiator Grille**
2. **Pressure Switch Connector**
3. **Refrigerant Line**
   When removing the line connected part, the connecting part should immediately be plugged or capped to prevent foreign matter from being mixed into the line.
4. **Bracket Bolt**
5. **Receiver/Drier**
   Loosen the bolt, then, using care not to touch or bend the refrigerant line, carefully pull out the receiver/drier.

INSTALLATION

To install, follow the removal steps in the reverse order, noting the following points:

1. If installing a new receiver/drier, be sure to add 30 cc (0.8 Imp fl oz) of new compressor oil to a new one.
2. Put the receiver/drier in the bracket, and connect with the refrigerant line. Check that no excessive force is imposed on the line. Fasten the bracket bolt to the receiver/drier.
3. Tighten the line to the specified torque.

Refrigerant Line Bolt Torque	N·m (kg·m / lb·in)
6 (0.6 / 52)	

4. O-rings cannot be reused. Always replace with new ones.
5. Be sure to apply new compressor oil to the O-rings when connecting refrigerant line.

PRESSURE SWITCH

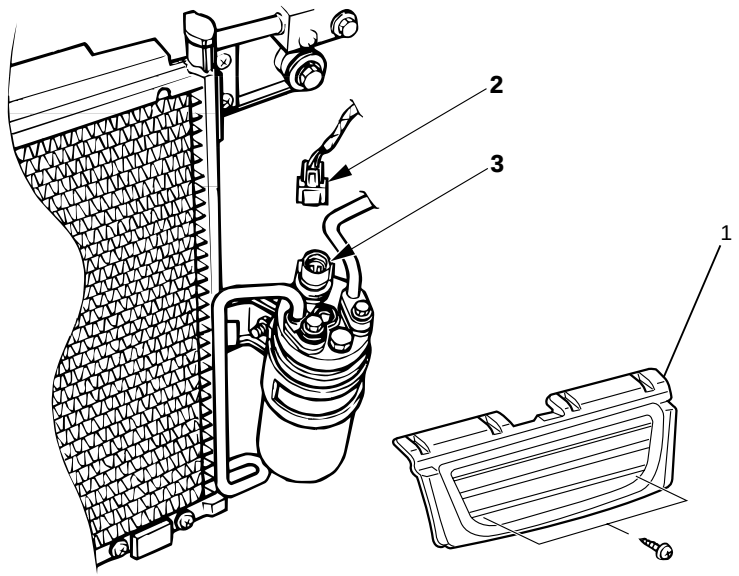

Removal Steps

1. Radiator grille
2. Pressure switch connector
3. Pressure switch

Installation Steps

To install, follow the removal steps in the reverse order.

REMOVAL

Preparation:

- Disconnect the battery ground cable
- Discharge and recover refrigerant (Refer to "REFRIGERANT RECOVERY" in this section.)

1. **Radiator Grille**
2. **Pressure Switch Connector**
3. **Pressure Switch**
   When removing the switch connected part, the connecting part should immediately be plugged or capped to prevent foreign matter from being mixed into the line.

INSTALLATION

To install, follow the removal steps in the reverse order, noting the following points:

1. O-ring cannot be reused. Always replace with a new one.
2. Be sure to apply new compressor oil to the O-ring when connecting pressure switch.
3. Tighten the pressure switch to the specified torque.

Pressure Switch Torque	N·m (kg·m / lb·in)
	13 (1.3 / 113)

Receiver/Drier and Associated Parts (LHD V6 without Condenser Fan)

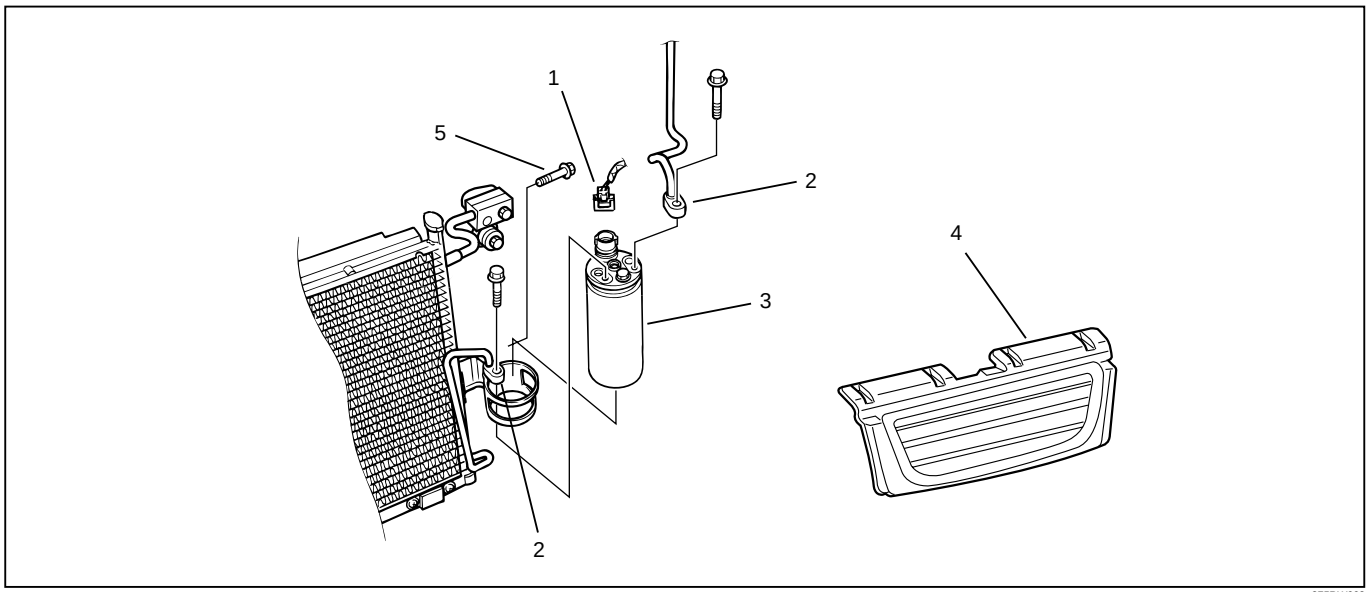

875RW002

Legend

1. Pressure Switch Connector
2. Refrigerant Line
3. Receiver / Drier
4. Radiator Grille
5. Bracket Bolt

REMOVAL

1. Disconnect the battery ground cable
2. Discharge and recover refrigerant
   - Refer to “REFRIGERANT RECOVERY” in this section.
3. Remove radiator grille.
4. Disconnect pressure switch connector.
5. Disconnect refrigerant line.
   - When removing the line connected part, the connecting part should immediately be plugged or capped to prevent foreign matter form being mixed in to line.
6. Remove bracket bolt.
7. Remove receiver/drier.
   - Loosen the bolt, then, using care not to touch or bend the refrigerant line, carefully pull out the receiver/drier.

INSTALLATION

To install, follow the removal steps in the reverse order, noting the following points:

1. If installing a new receiver/drier, be sure to add 30cc(1.0 fl. oz.) of new compressor oil to a new one.
2. Put the receiver/drier in the bracket and connect with the refrigerant line. Check that no excessive force is imposed on the line. Fasten the bracket bolt to the receiver/drier.
3. Tighten the refrigerant line to the specified torque.

Refrigerant Line Blot Torque	N·m (kg·m / lb·in)
6 (0.6 / 52)	

4. O-rings cannot be reused. Always replace with new ones.
5. Be sure to apply new compressor oil to the O-rings when connecting the refrigerant line.

Pressure Switch and Associated Parts

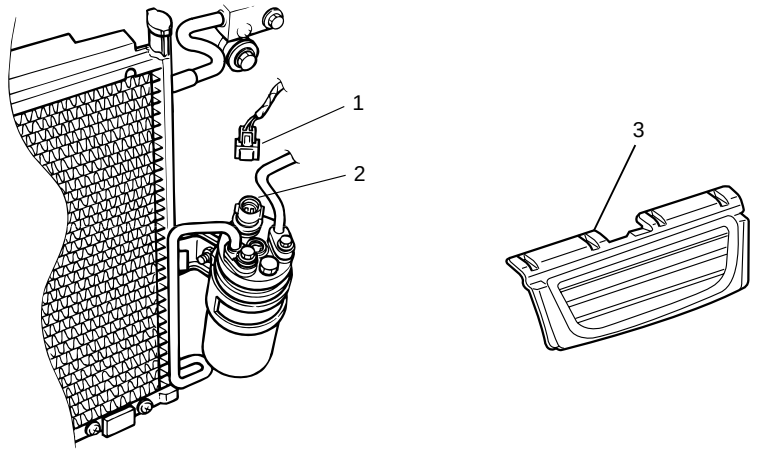

875RW005

Legend

1. Pressure switch connector
2. Pressure switch
3. Radiator Grille

REMOVAL

Preparation:

- Disconnect the battery ground cable
- Discharge and recover refrigerant (Refer to "REFRIGERANT RECOVERY" in this section.)

1. **Radiator Grille**
2. **Pressure Switch Connector**
3. **Pressure Switch**
   When removing the switch connected part, the connecting part should immediately be plugged or capped to prevent foreign matter from being mixed into the line.

INSTALLATION

To install, follow the removal steps in the reverse order, noting the following points:

1. O-ring cannot be reused. Always replace with a new one.
2. Be sure to apply new compressor oil to the O-ring when connecting pressure switch.
3. Tighten the pressure switch to the specified torque.

Pressure Switch Torque	N·m (kg·m / lb·in)
13 (1.3 / 113)	

EVAPORATOR ASSEMBLY

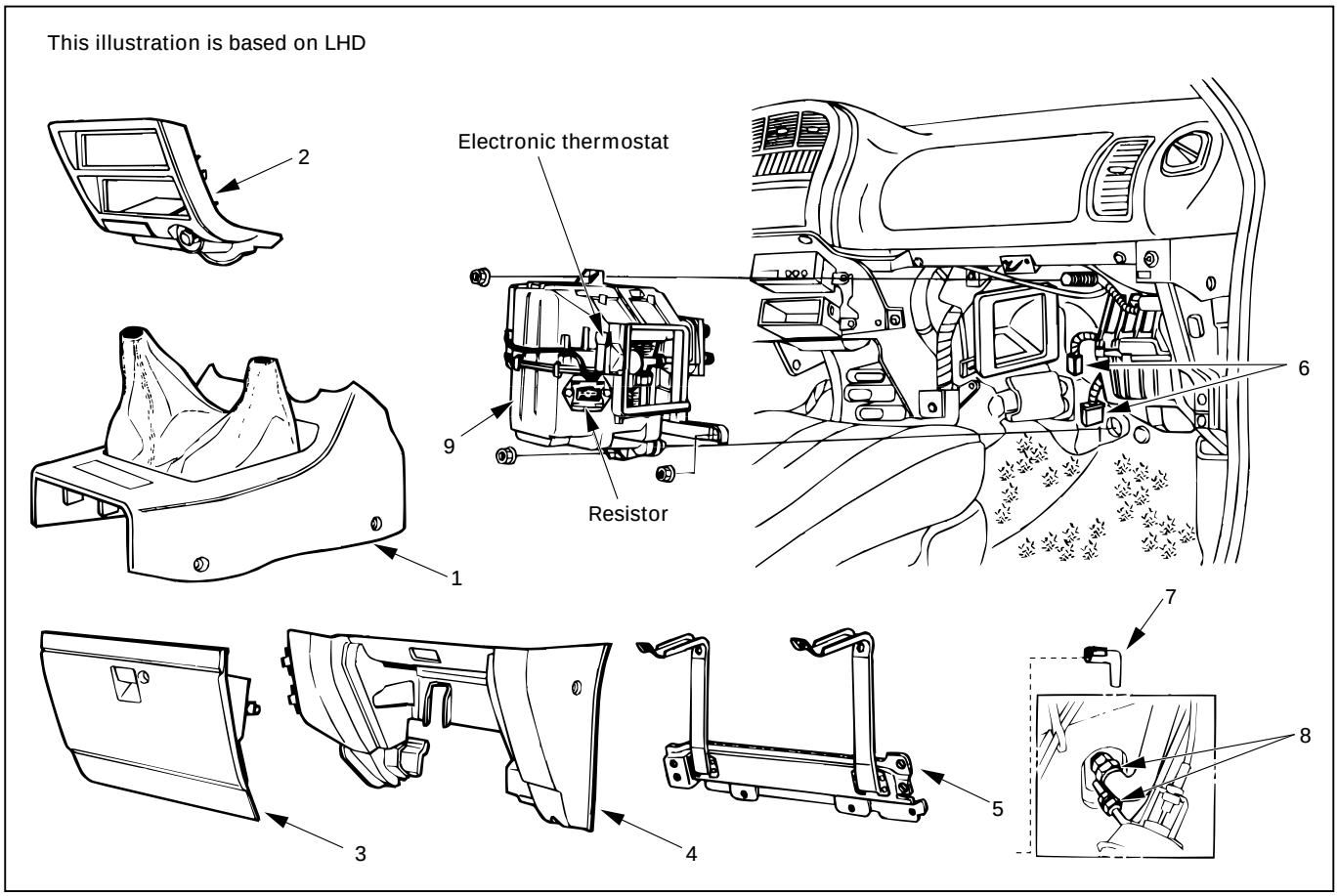

850RW00001

Removal Steps

1. Front console assembly
2. Lower cluster assembly
3. Glove box
4. Instrument panel passenger lower cover assembly
5. Passenger knee bolster reinforcement assembly
6. Resistor and electronic thermostat connector
7. Drain hose
8. Refrigerant line
9. Evaporator assembly

Installation Steps

To install, follow the removal steps in the reverse order.

REMOVAL

Preparation:

- Disconnect the battery ground cable
- Discharge and recover refrigerant (Refer to "REFRIGERANT RECOVERY" in this section.)

1. **Front Console Assembly**
2. **Lower Cluster Assembly**
3. **Glove Box**
4. **Instrument Panel Passenger Lower Cover Assembly**
5. **Passenger Knee Bolster Reinforcement Assembly**
   - Refer to Section 10 "BODY" for INSTRUMENT PANEL ASSEMBLY removal procedure.
6. **Resistor and Electronic Thermostat Connector**

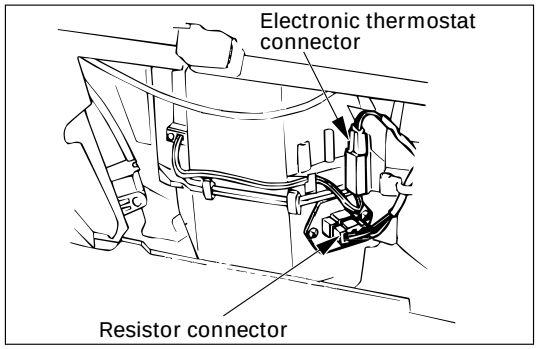

7. **Drain Hose**
8. **Refrigerant Line**
   - Use a back-up wrench when disconnecting and reconnecting the refrigerant lines.
   - When removing the refrigerant line connected part, the connecting part should immediately be plugged or capped to prevent foreign matter from being mixed into the line.
9. **Evaporator Assembly**

INSTALLATION

To install, follow the removal steps in the reverse order, noting the following points:

1. To install a new evaporator assembly, add 50cc (1.4 Imp fl oz) of new compressor oil to a new core.
2. Tighten the refrigerant outlet line to the specified torque.

Outlet Line Torque	N·m (kg·m / lb·ft)
25 (2.5 / 18)	

3. Tighten the refrigerant inlet line to the specified torque.

Inlet Line Torque	N·m (kg·m / lb·ft)
15 (1.5 / 11)	

4. O-rings cannot be reused. Always replace with new ones.
5. Be sure to apply new compressor oil to the O-rings when connecting lines.

EVAPORATOR CORE AND/OR EXPANSION VALVE

This illustration is based on LHD

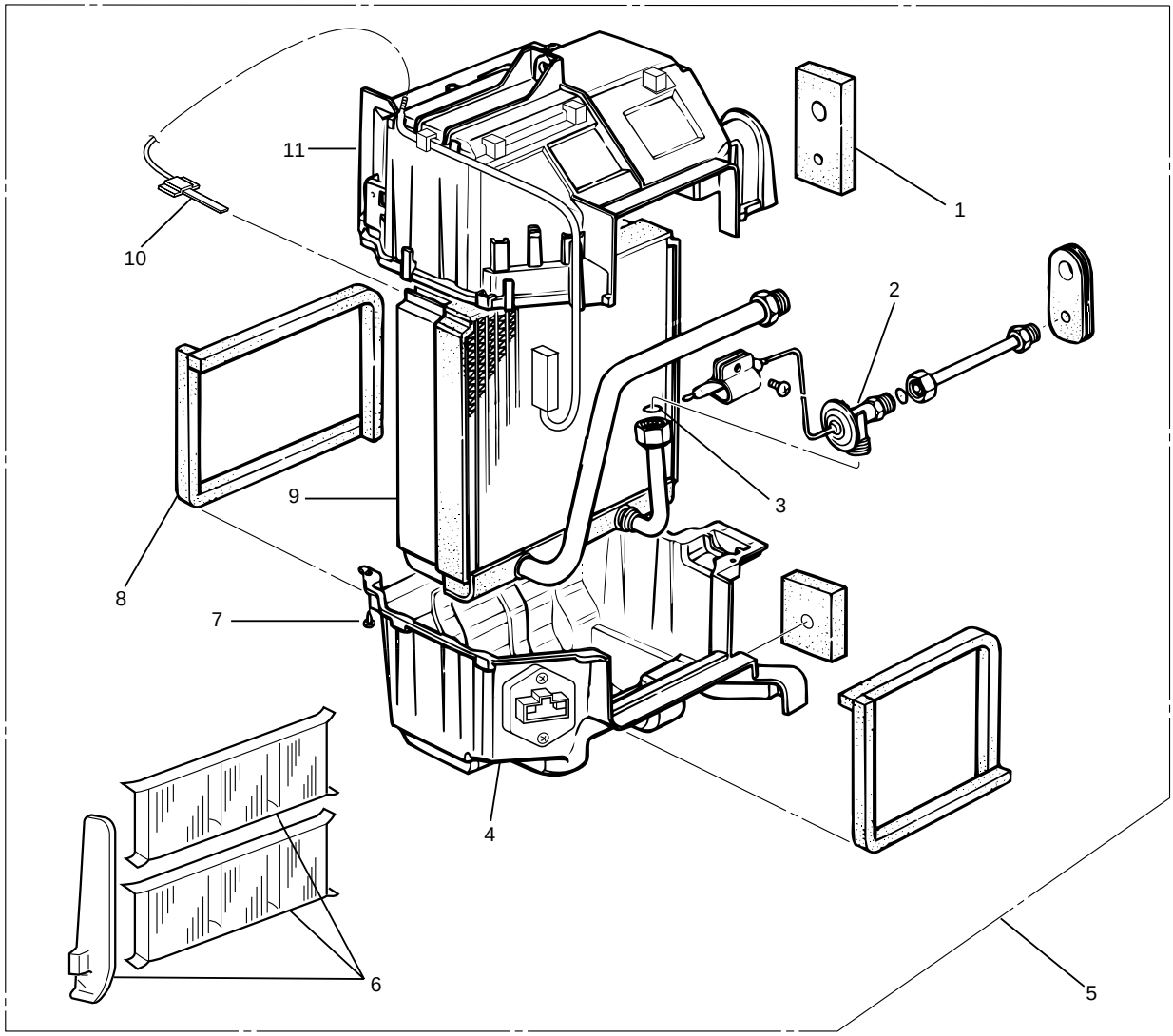

874RY00012

Legend

(1) Lining
(2) Expansion Valve
(3) O-ring
(4) Lower Case
(5) Evaporator Assembly
(6) Pollen Filter
(7) Attaching Screw
(8) Lining
(9) Evaporator Core
(10) Electronic Thermostat
(11) Upper Case

Removal

1. Disconnect the battery ground cable.
2. Discharge and recover refrigerant.
   - Refer to Refrigerant Recovery in this section.
3. Remove evaporator assembly.
   - Refer to Evaporator Assembly in this section.
4. Remove pollen filter.
5. Pull the sensor from the evaporator assembly.
6. Remove attaching screw.
7. Remove upper case.
8. Remove lower case.
   - Slit the case parting face with a knife since the lining is separated when removing the evaporator.

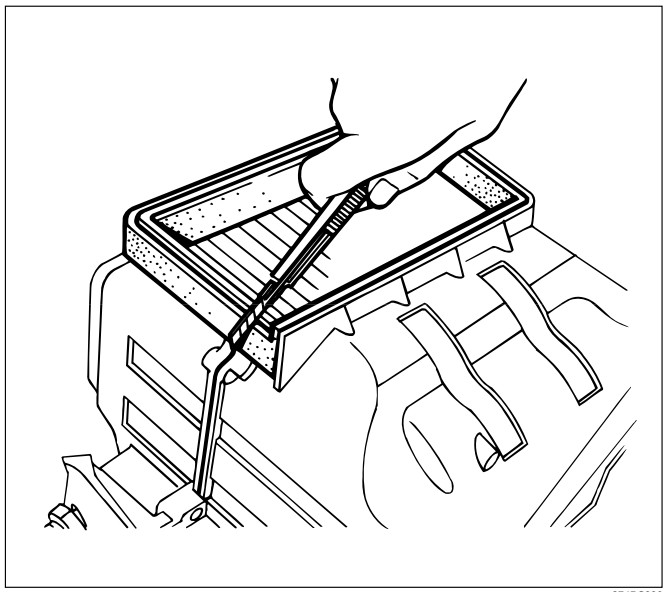

874RS006

- Lift to remove the upper case.

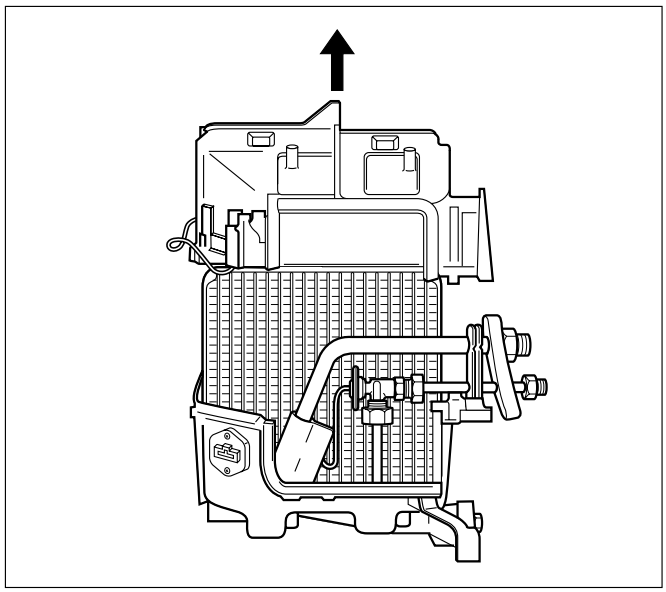

874RY00005

9. Remove evaporator core.

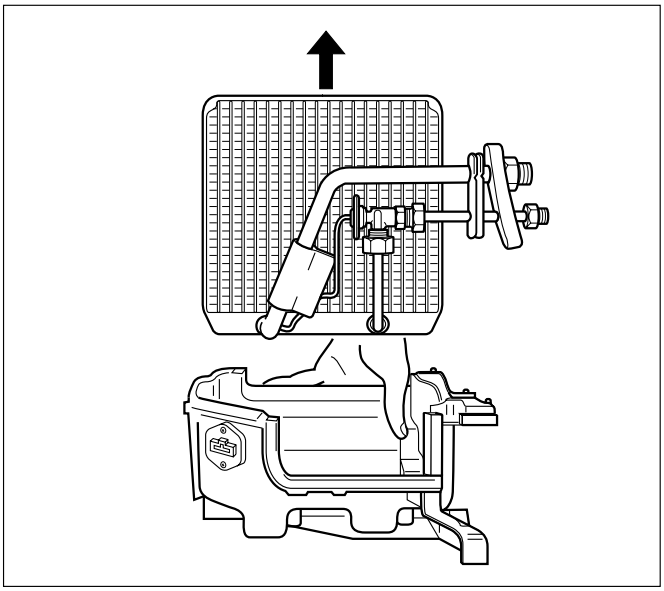

874RY00006

10. Remove expansion valve.
    - Tear off the insulator carefully.
    - Use a back-up wrench when disconnecting all refrigerant pipes.

Installation

To install, follow the removal steps in the reverse order, noting the following points:

1. The sensor is installed on the core with the clip.
2. The sensor must not interfere with the evaporator core.
3. When installing the new evaporator core, install the thermo sensor (2) to the evaporator core (1) specified position with the clip in the illustration.

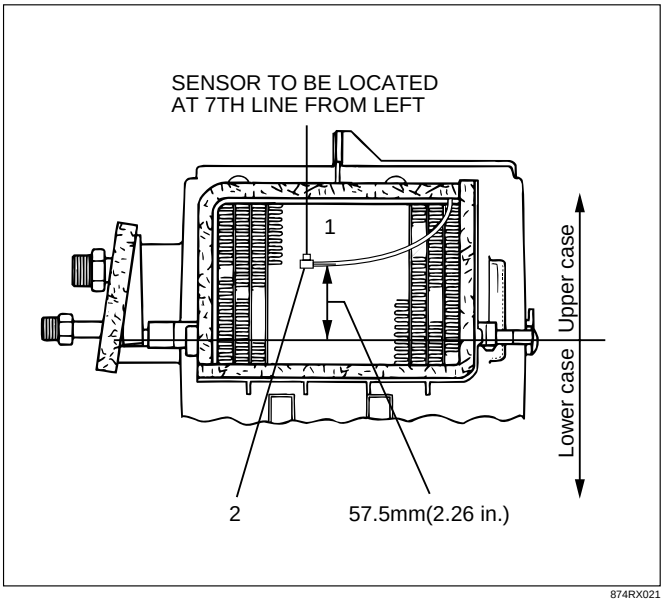

874RX021

4. O-rings cannot be reused, Always replace with new ones.
5. Be sure to apply new compressor oil to the O-rings when connecting lines.
6. Be sure to install the sensor and the insulator on the place where they were before.
7. To install a new evaporator core, add 50cc (1.7 fl. oz.) of new compressor oil to the new core.
8. Tighten the refrigerant lines to the specified torque. Refer to Main Data and Specifications for Torque Specifications in this section.
9. Apply an adhesive to the parting face of the lining when assembling the evaporator assembly.

ELECTRONIC THERMOSTAT

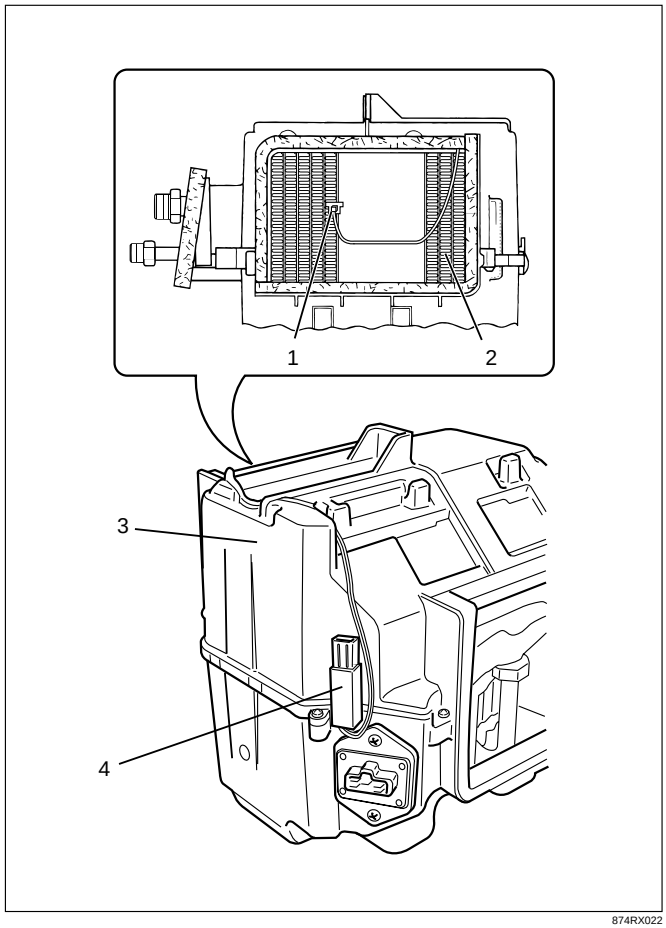

874RX022

Legend

(1) Thermo Sensor
(2) Evaporator Core
(3) Evaporator
(4) Thermostat Unit

Removal

1. Disconnect the battery ground cable.
2. Discharge and recover refrigerant.
   - Refer to Refrigerant Recovery in this section.
3. Remove evaporator assembly.
   - Refer to Evaporator Assembly removal procedure in this section.
4. Remove electronic thermostat.
   - Pull the sensor from the evaporator assembly.

Installation

To install, follow the removal steps in the reverse order, noting the following points.

1. Install the thermostat sensor to the evaporator core specified position with the clip.
2. The sensor is installed on the core with the clip and it must not interfere with the core.

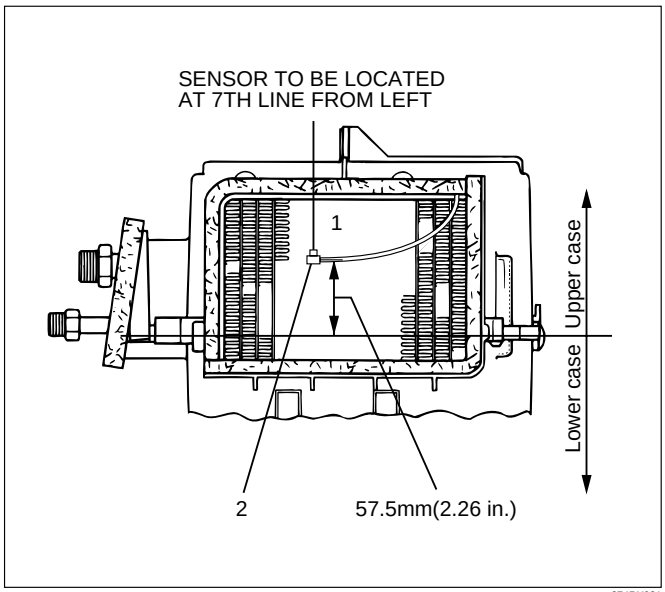

874RX021

A/C SWITCH AND ILLUMINATION BULB

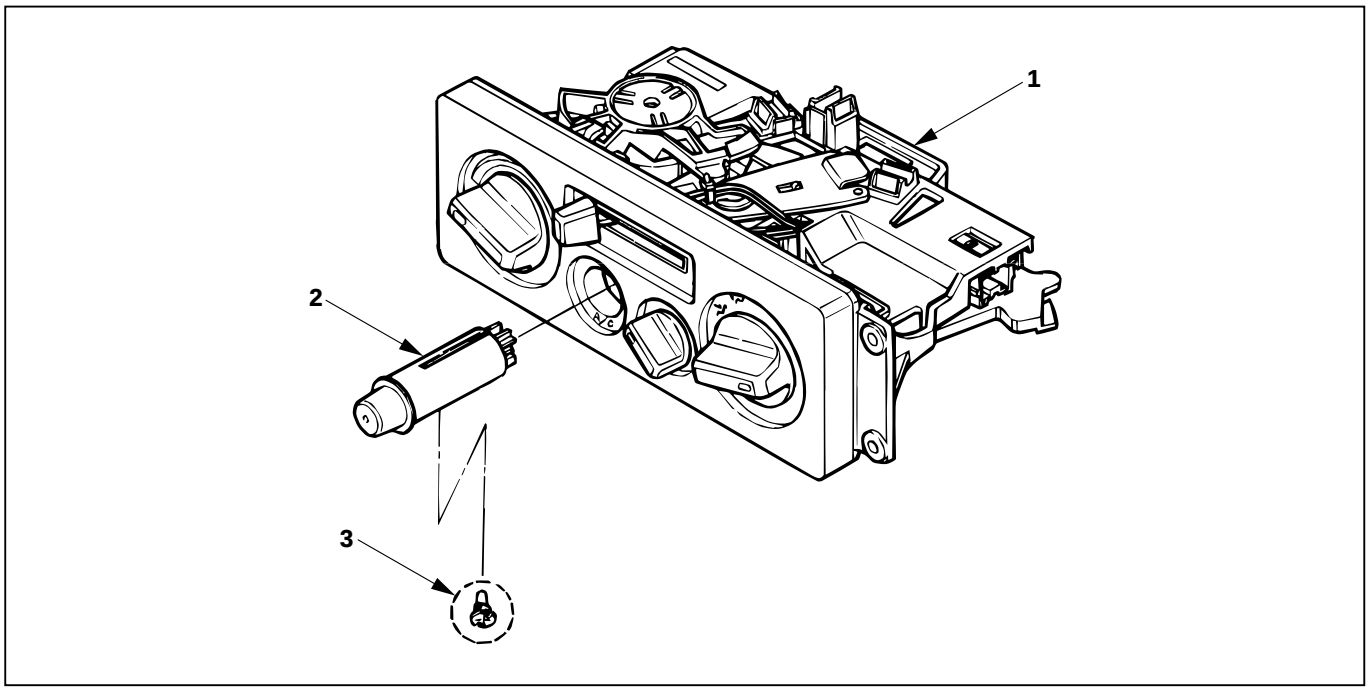

Removal Steps

1. Control lever assembly
2. A/C switch
3. Illumination bulb

Installation Steps

To install, follow the removal steps in the reverse order.

REMOVAL

Preparation:

Disconnect the battery ground cable

1. **Control Lever Assembly**
   Refer to Section 1A "CONTROL LEVER ASSEMBLY" removal procedure.
2. **A/C Switch**
   Raise up the catch portion of the switch and remove the switch while pushing it toward the outside.

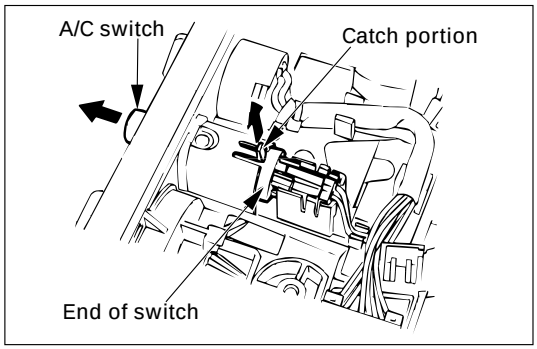

3. **Illumination Bulb**
   Turn the illumination bulb counterclockwise to remove.

INSTALLATION

To install, follow the removal steps in the reverse order.

REFRIGERANT LINE

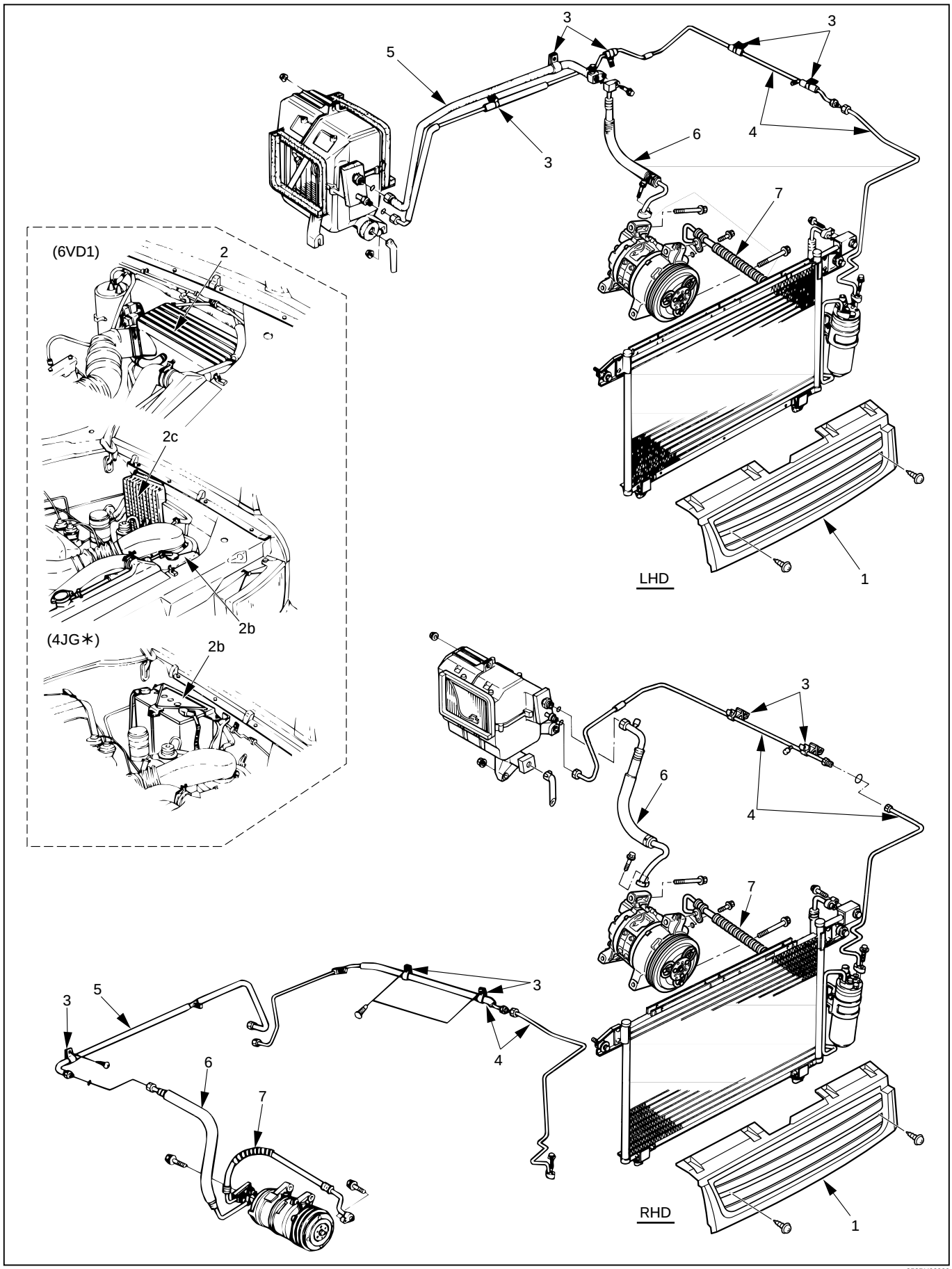

Removal Steps

1. Radiator grille
2. Air cleaner
2a. Dust
2b. Battery and reserver tank
2c. Air cleaner cover
3. Clip and clamp
4. Liquid line (High-pressure pipe)
5. Suction line (Low-pressure pipe)
6. Suction line (Low-pressure hose)
7. Discharge line (High-pressure hose)

Installation Steps

To install, follow the removal steps in the reverse order.

REMOVAL

Preparation:

- Disconnect the battery ground cable
- Discharge and recover refrigerant (Refer to "REFRIGERANT RECOVERY" in this section.)

1. Radiator Grille

2. Air Cleaner

2a. Duct

2b. Battery and Reserver Tank

2c. Air Cleaner Cover

3. Clip and Clamp

4. Liquid Line (High-pressure pipe)

5. Suction Line (Low-pressure pipe)

6. Suction Line (Low-pressure hose)

7. Discharge Line (High-pressure hose)

- Use a back-up wrench when disconnecting and reconnecting the refrigerant lines.
- When removing the refrigerant line connecting part, the connecting part should immediately be plugged or capped to prevent foreign matter from being mixed into the line.

INSTALLATION

To install, follow the removal steps in the reverse order, noting the following points:

1. O-rings cannot be reused. Always replace new ones.
2. Be sure to apply compressor oil to the O-rings when connecting refrigerant lines.
3. Tighten the refrigerant line to the specified torque. (Refer to "SERVICE INFORMATION" for FIXING TORQUE in section 00.)

REAR COOLER PARTS

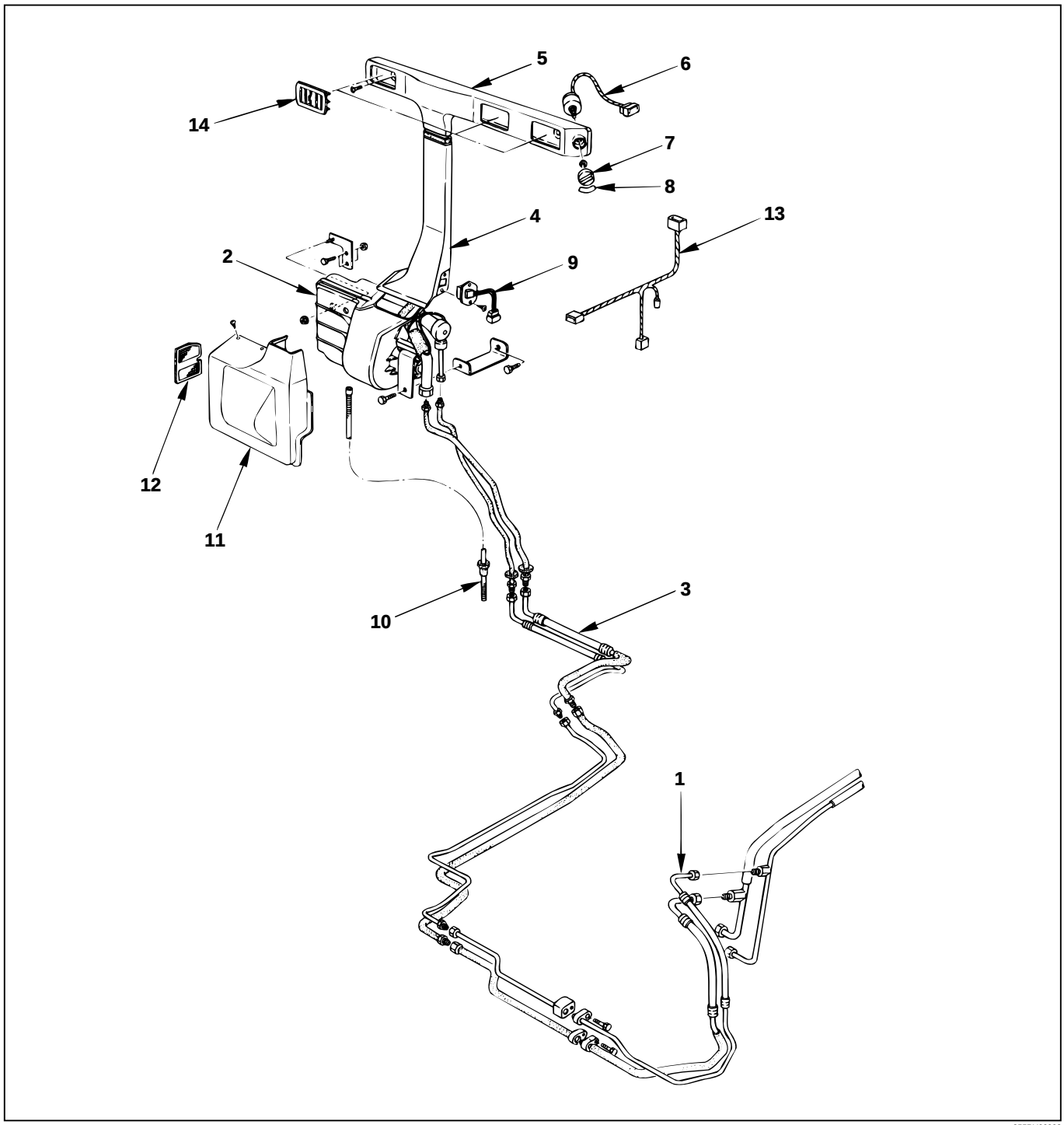

855RY00002

Legend

(1) Liquid Line (high pressure pipe)
(2) Cooling Unit
(3) Suction Line (low pressure pipe)
(4) Duct Assembly
(5) Duct Assembly
(6) Switch
(7) Knob
(8) Panel
(9) Resistor
(10) Drain Hose
(11) Cover Assembly
(12) Filter
(13) Wire Harness
(14) Grille Assembly

REAR COOLER PARTS (ROOF DUCT TYPE)

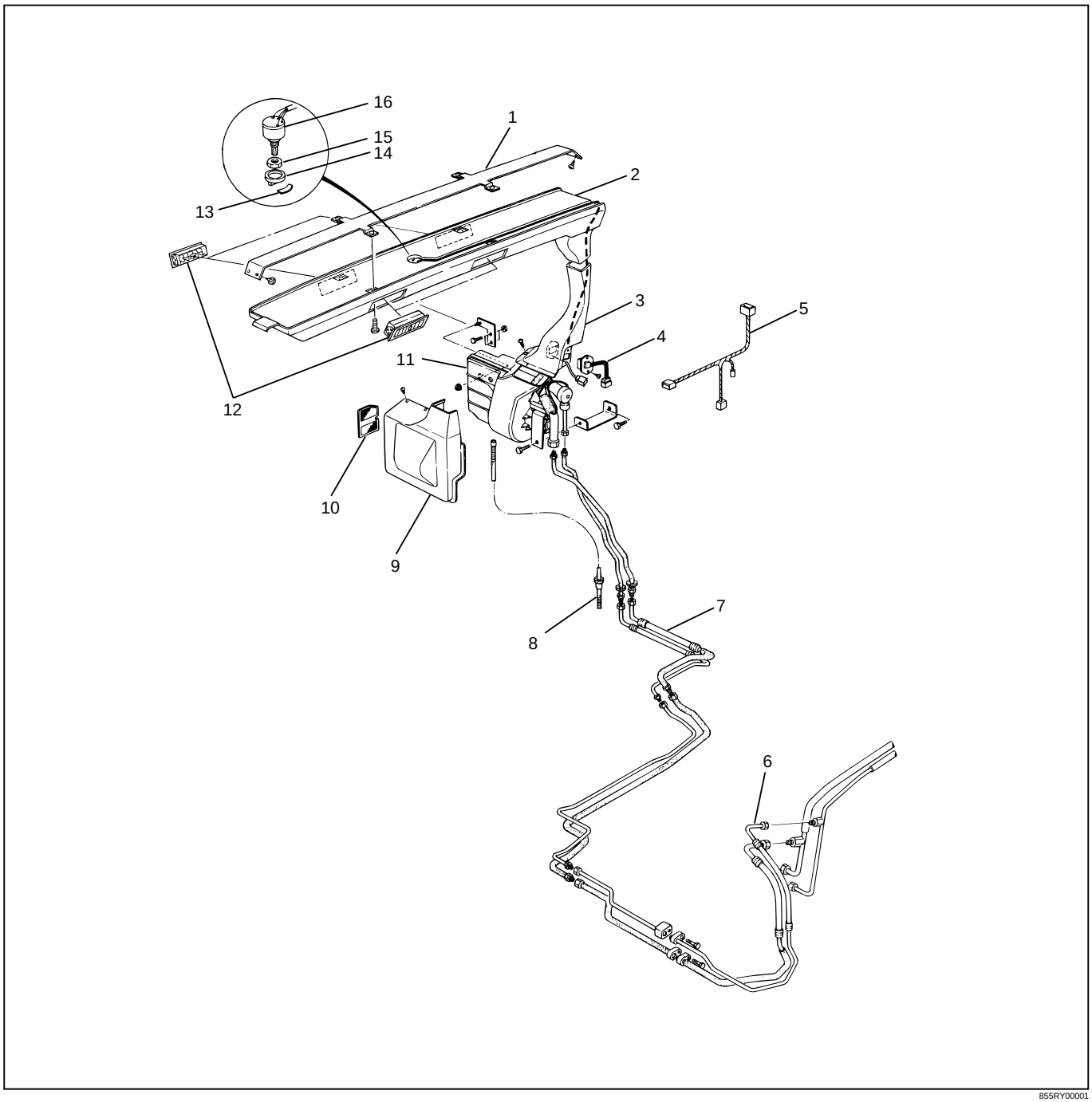

855RY00001

Legend

(1) Roof Duct Bracket
(2) Roof Duct
(3) Lower Duct
(4) Resistor
(5) Wire Harness
(6) Liquid Line (high pressure pipe)
(7) Suction Line (low pressure pipe)
(8) Drain Hose
(9) Cover Assembly
(10) Filter
(11) Cooling Unit
(12) Grille Assembly
(13) Panel
(14) Knob
(15) Nut
(16) Fan Control Switch

WIRING DIAGRAM

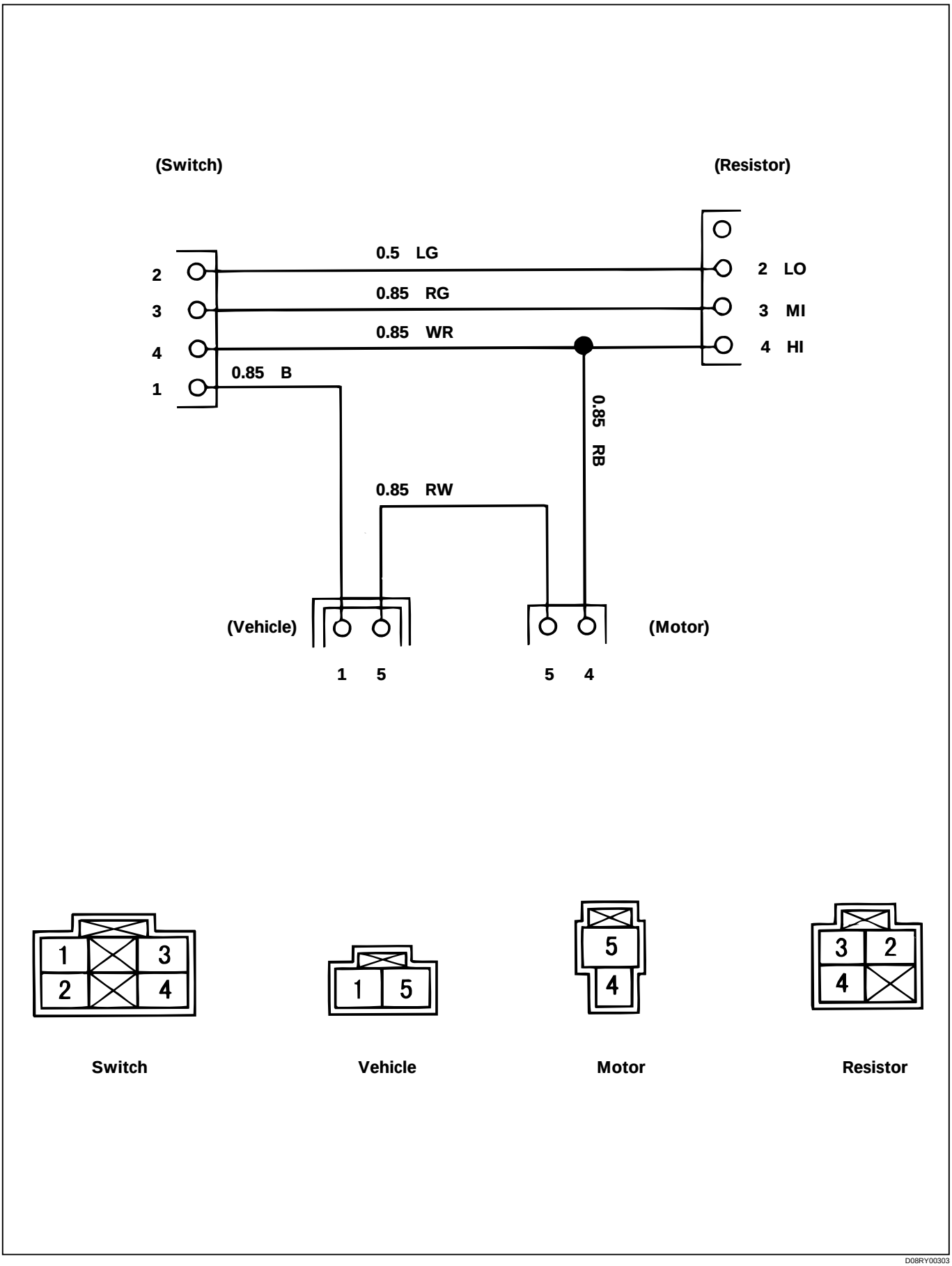

D08RY00303

TORQUE SPECIFICATIONS

N·m (kg·m/ib·ft)

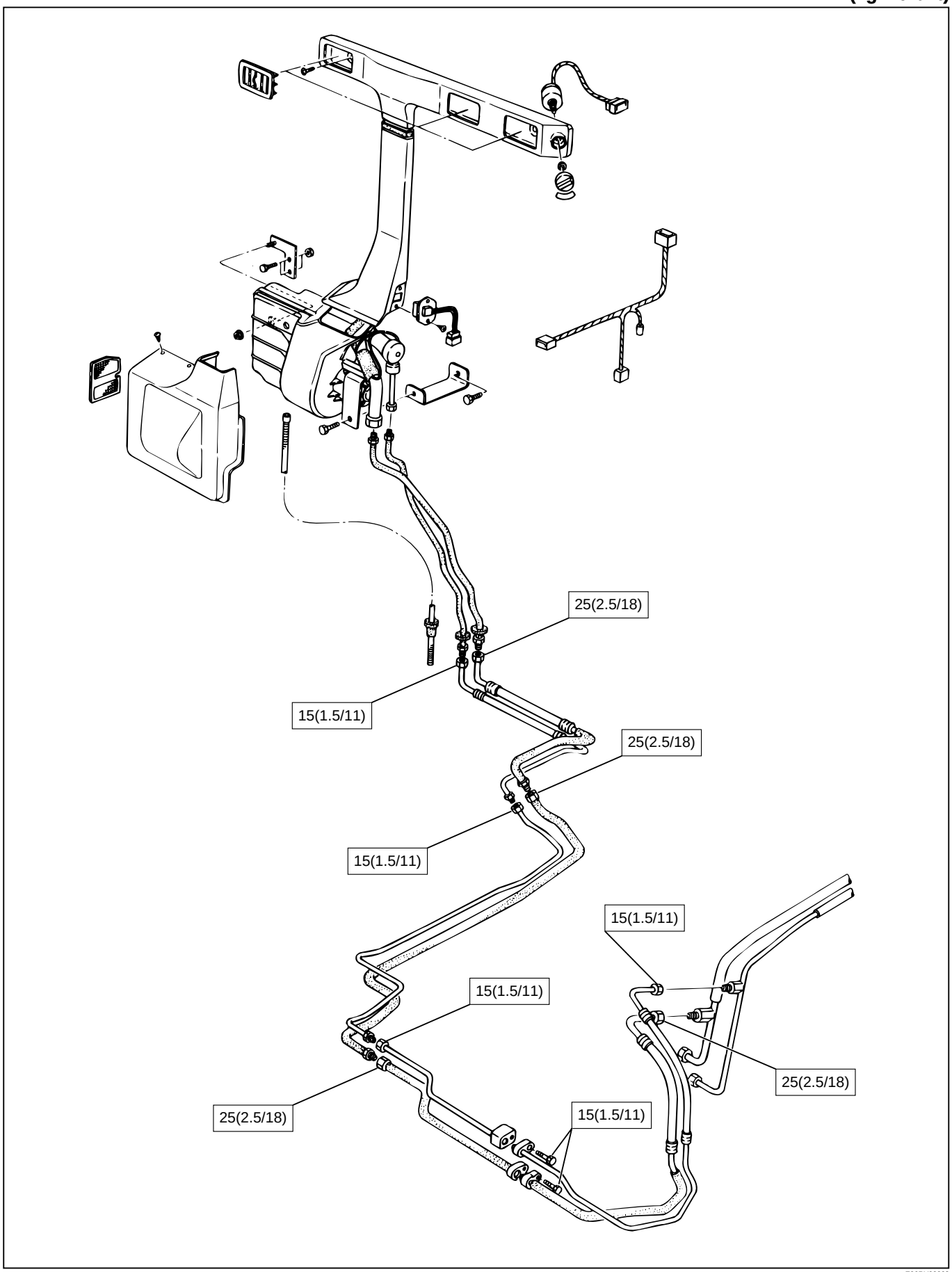

E06RY00003

TORQUE SPECIFICATIONS (ROOF DUCT TYPE)

N·m (kg·m/ib·ft)

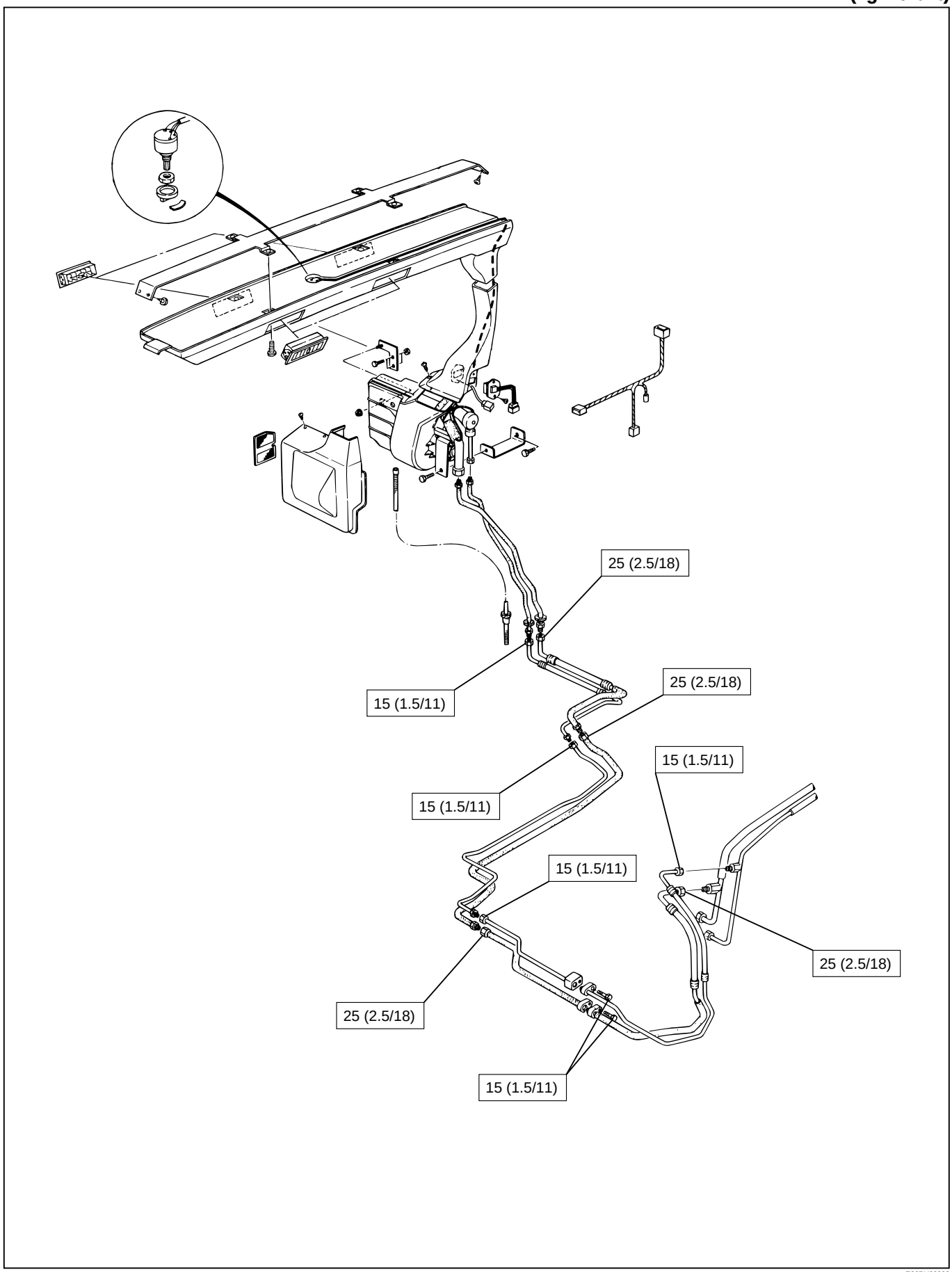

E06RY00002

DIAGNOSIS

Rear Air Conditioning Cycle Diagnosis

Condition	Possible Cause	Correction
No cooling or insufficient cooling	Front air conditioner not switched on.	Switch front A/C switch ON.
	Other	See front air conditioner workshop manual.
Insufficient velocity of cooling air	Clogged filter	Clean or replace cooling unit filter.
	Other	See front air conditioner workshop manual.

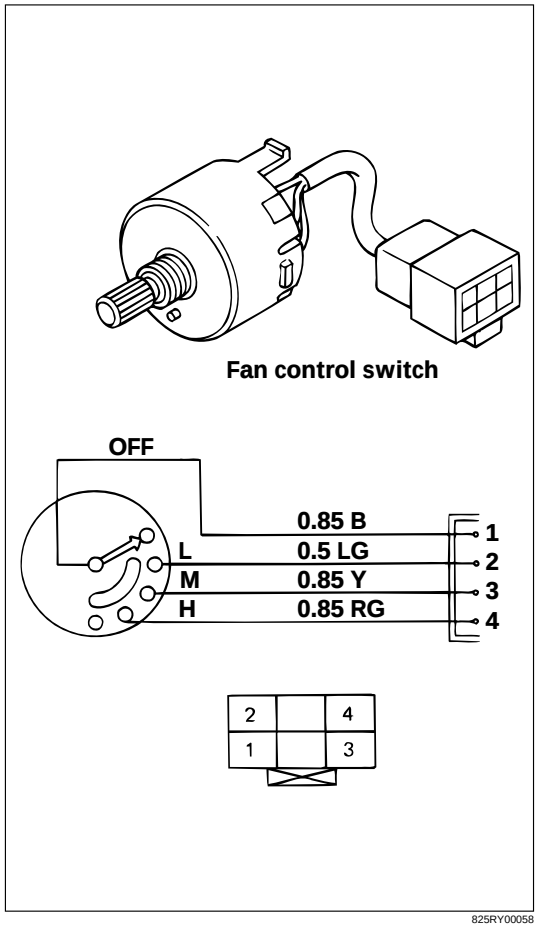

825RY00058

FAN CONTROL SWITCH

Inspection

Using an electric circuit tester, check continuity between terminals.
If not as specified, replace the switch.

	1	2	3	4
OFF				
LOW	○	○		
MEDIUM	○		○	
HIGH	○			○

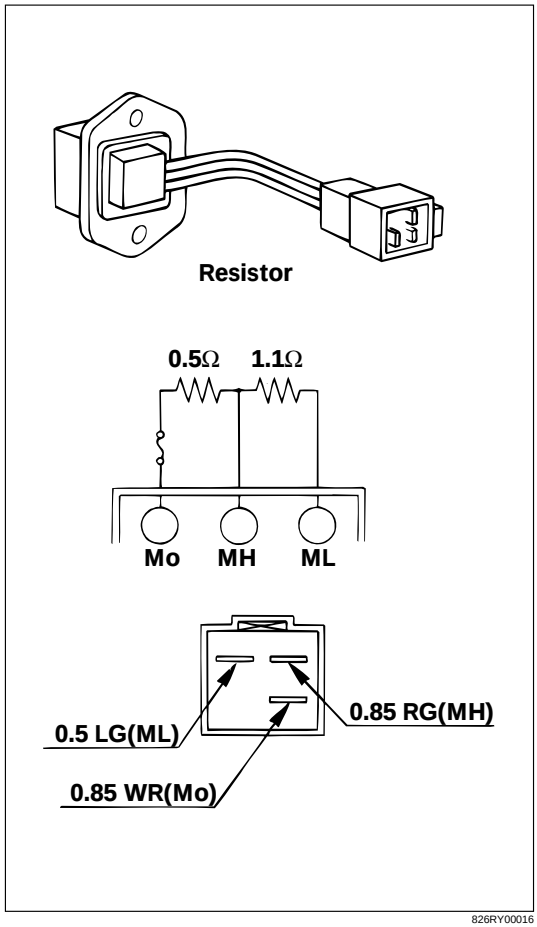

826RY00016

RESISTOR

Inspection

Using an electric circuit tester, check the resistance between the terminals specified below.
If the resistances are not as specified, replace the resistor.

Terminal	Resistance (Ω)
Mo ~ MH	0.5
Mo ~ ML	1.6

COOLING UNIT

Main Components

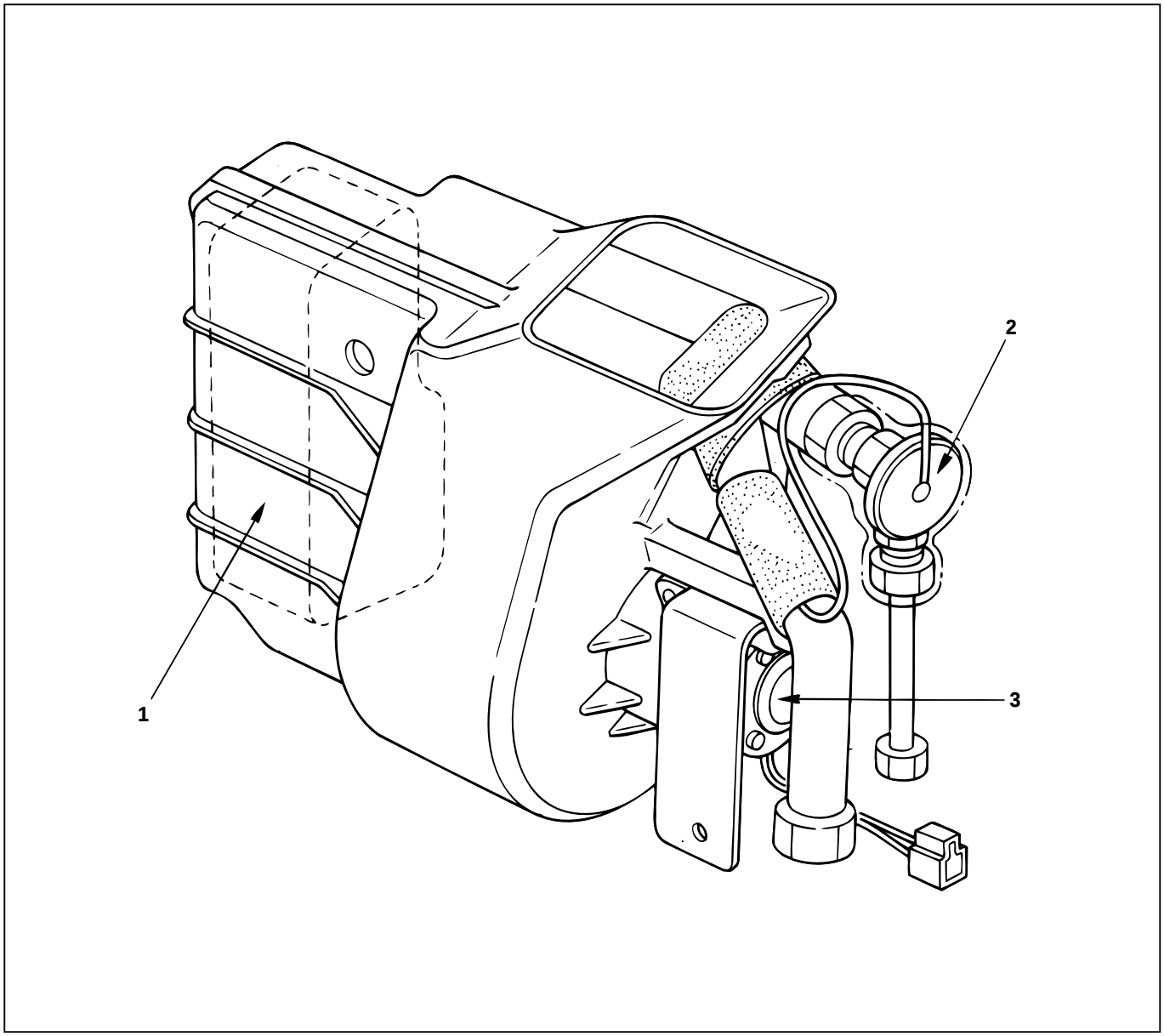

872RY00001

Legend

(1) Evaporator Assembly
(2) Expansion Valve
(3) Fan Motor

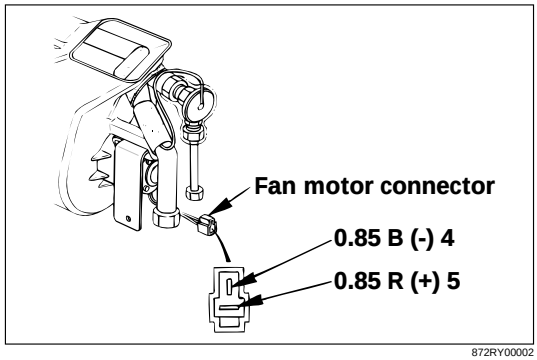

872RY00002

FAN MOTOR

Inspection

1. Disconnect the fan motor connector from the A/C harness.
2. Connect the battery's positive terminal to the No.5 terminal of the fan motor and the negative terminal to the No.4 terminal.
3. Check that the fan motor operates correctly.

FULL AUTOMATIC AIR CONDITIONING SYSTEM

GENERAL DESCRIPTION

Using a variety of sensors, this full automatic heater and air conditioner accurately senses outside air temperature, solar radiation quantity, evaporator's blowing temperature, heater core coolant temperature and interior temperature, then enters these data to the automatic heater/air conditioner control unit (equipped with the built-in micro-computer). The data provided to the control unit enables to automatically control blow temperature and blow air quantity, turn on or off the compressor and switch the blow port as well as switching between the fresh air intake and interior air circulation.
Resetting the automatic function allows you to switch to the manual control mode.
The self-diagnosis function of the automatic heater and air conditioner control unit (with the built-in micro-computer) allows the unit to access and diagnose a failed part easier and quicker.

Full Automatic Air Conditioner Parts Configuration

This illustration is based on RHD

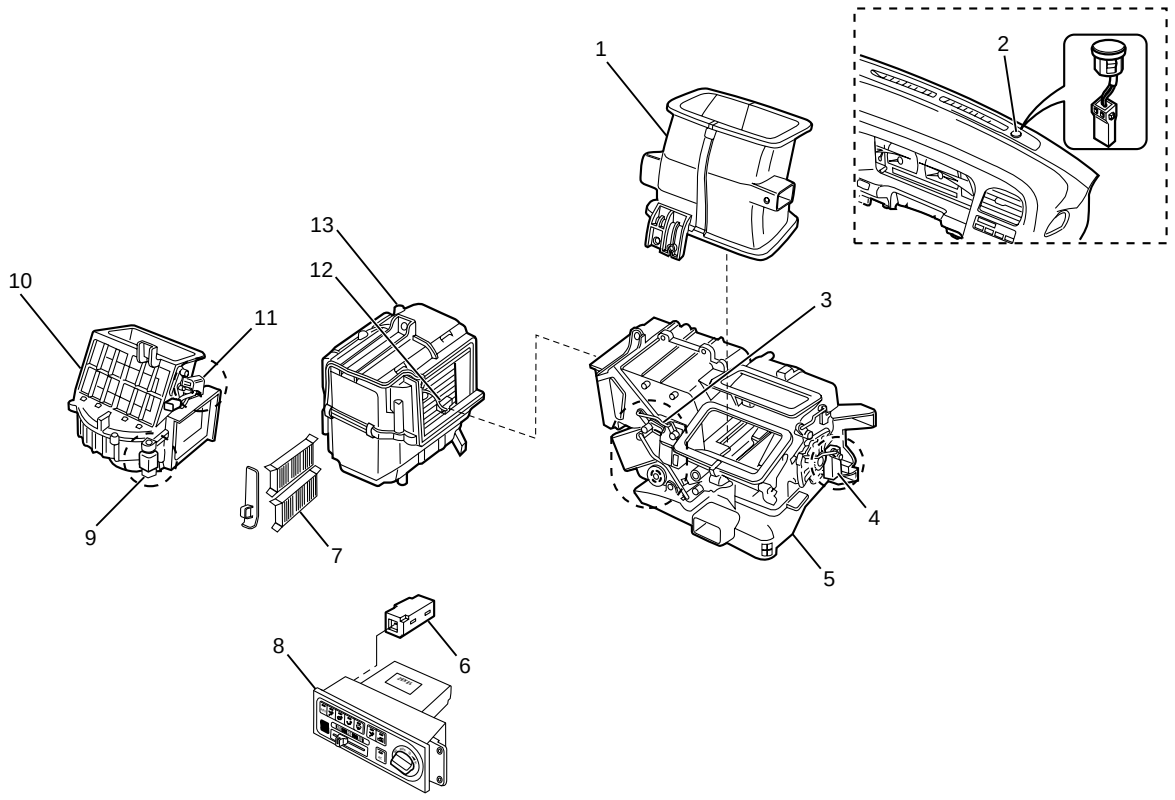

865RY0004

Legend

(1) Lower Center Vent Box
(2) Sun Sensor
(3) Mix Actuator
(4) Mode Actuator
(5) Heater Unit
(6) In Car Sensor
(7) Pollen Filter
(8) Automatic Air Conditioner Control Unit
(9) Max-High Relay
(10) Blower Unit
(11) Intake Actuator
(12) Duct Sensor
(13) Evaporator Assembly

MEMO

CIRCUIT DIAGRAM

6VE1 (RHD)

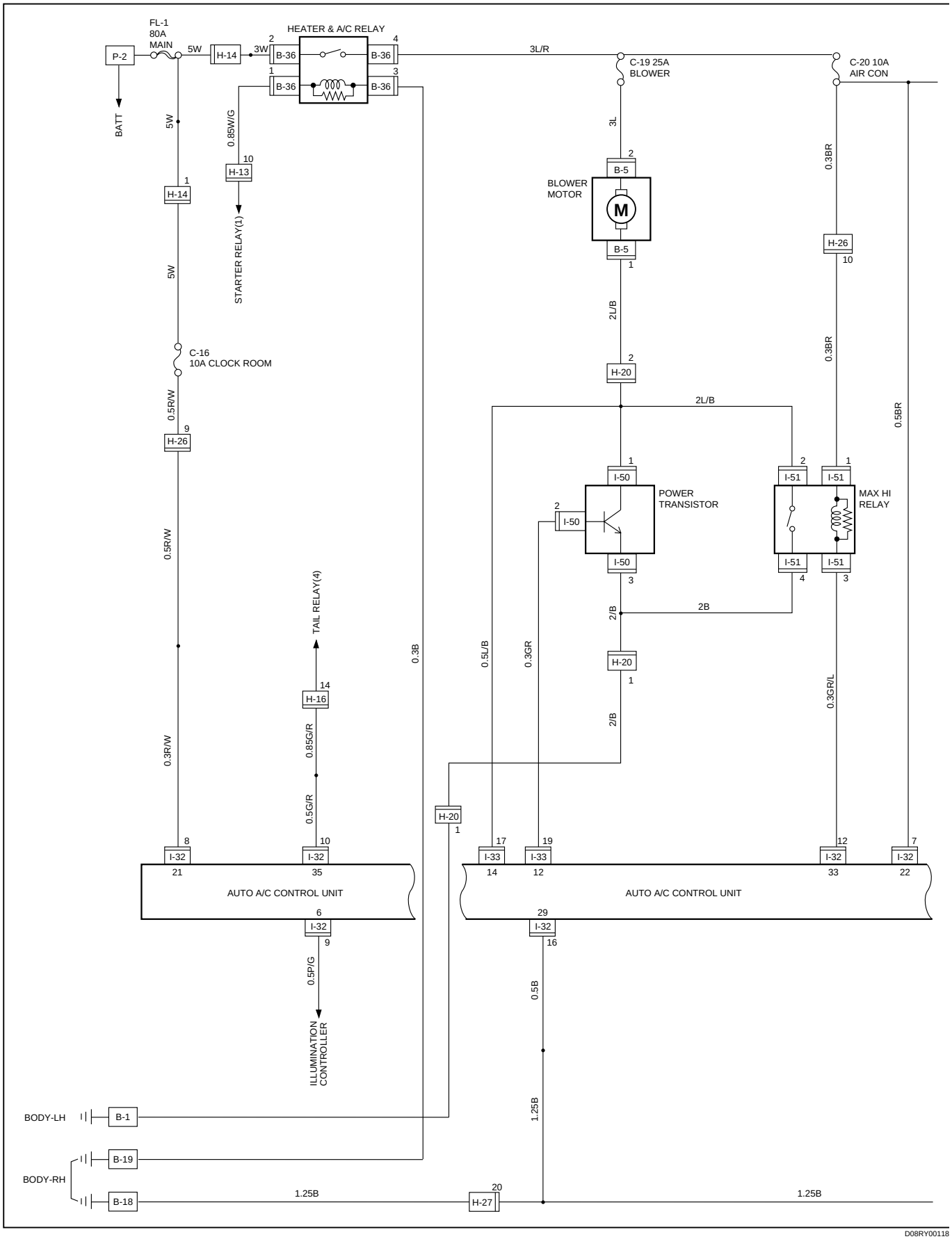

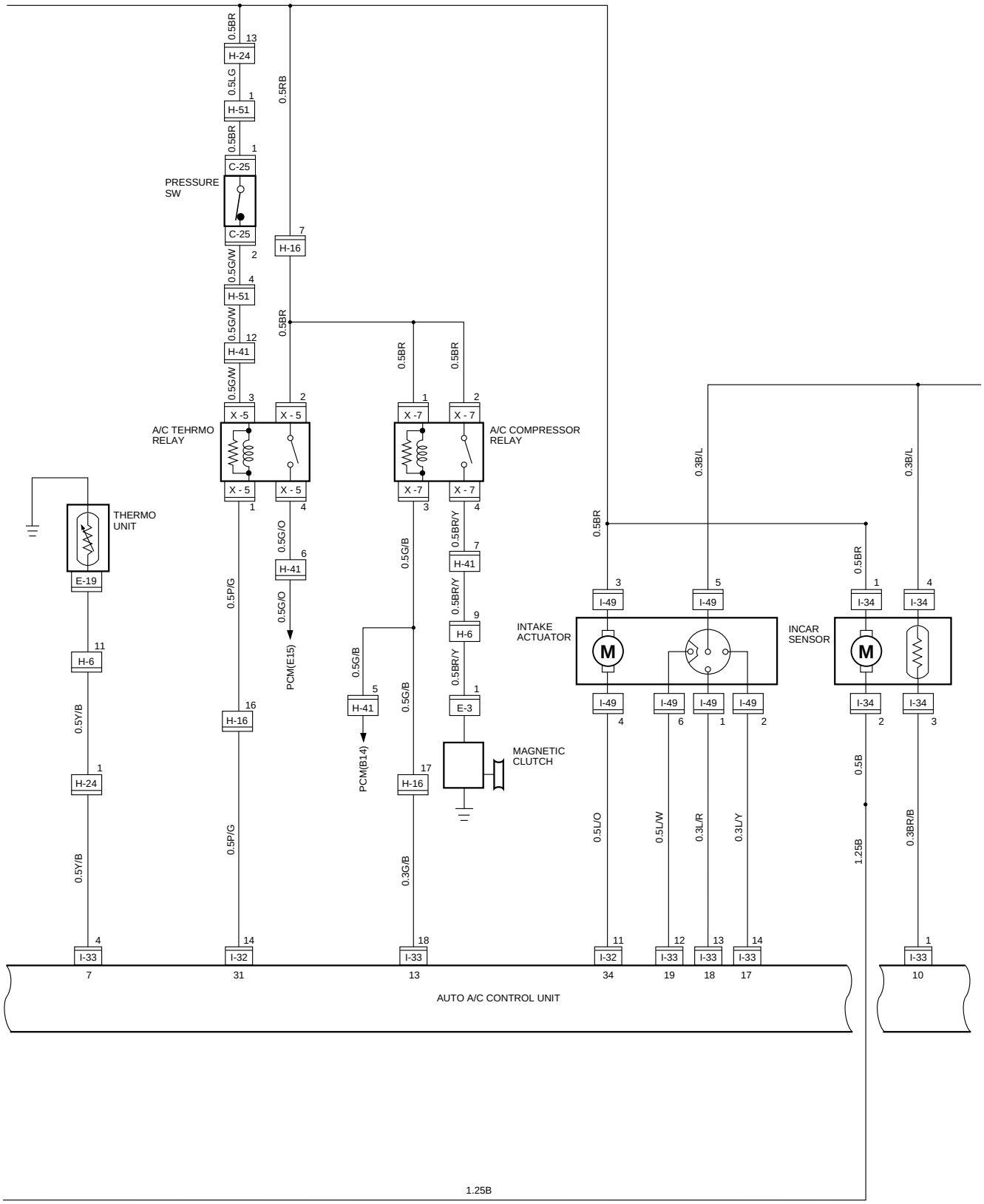
0.5BR
13
H-24
0.5LG
1
H-51
0.5BR
1
C-25
PRESSURE
SW
C-25
0.5G/W
2
4
H-51
0.5G/W
12
H-41
0.5G/W
3
X -5
A/C TEHRMO
RELAY
X - 5
1
4
THERMO
UNIT
E-19
11
H-6
0.5Y/B
1
H-24
0.5Y/B
4
I-33
7
0.5P/G
16
H-16
0.5P/G
14
I-32
31
0.5RB
7
H-16
0.5BR
2
X - 5
0.5G/O
6
H-41
0.5G/O
PCM(E15)
0.5BR
0.5BR
1
X -7
3
0.5G/B
5
H-41
PCM(B14)
0.5G/B
17
H-16
0.5G/B
18
I-33
13
2
X - 7
A/C COMPRESSOR
RELAY
X - 7
4
0.5BR/Y
7
H-41
0.5BR/Y
9
H-6
0.5BR/Y
1
E-3
MAGNETIC
CLUTCH
0.3B/L
0.3B/L
0.5BR
0.5BR
3
I-49
5
I-49
1
I-34
4
I-34
INTAKE
ACTUATOR
M
INCAR
SENSOR
M
I-49
4
I-49
6
I-49
1
I-49
2
I-34
2
I-34
3
0.5B
0.5L/O
0.5L/W
0.3L/R
0.3L/Y
1.25B
0.3BR/B
11
I-32
34
12
I-33
19
13
I-33
18
14
I-33
17
1
I-33
10
AUTO A/C CONTROL UNIT
1.25B

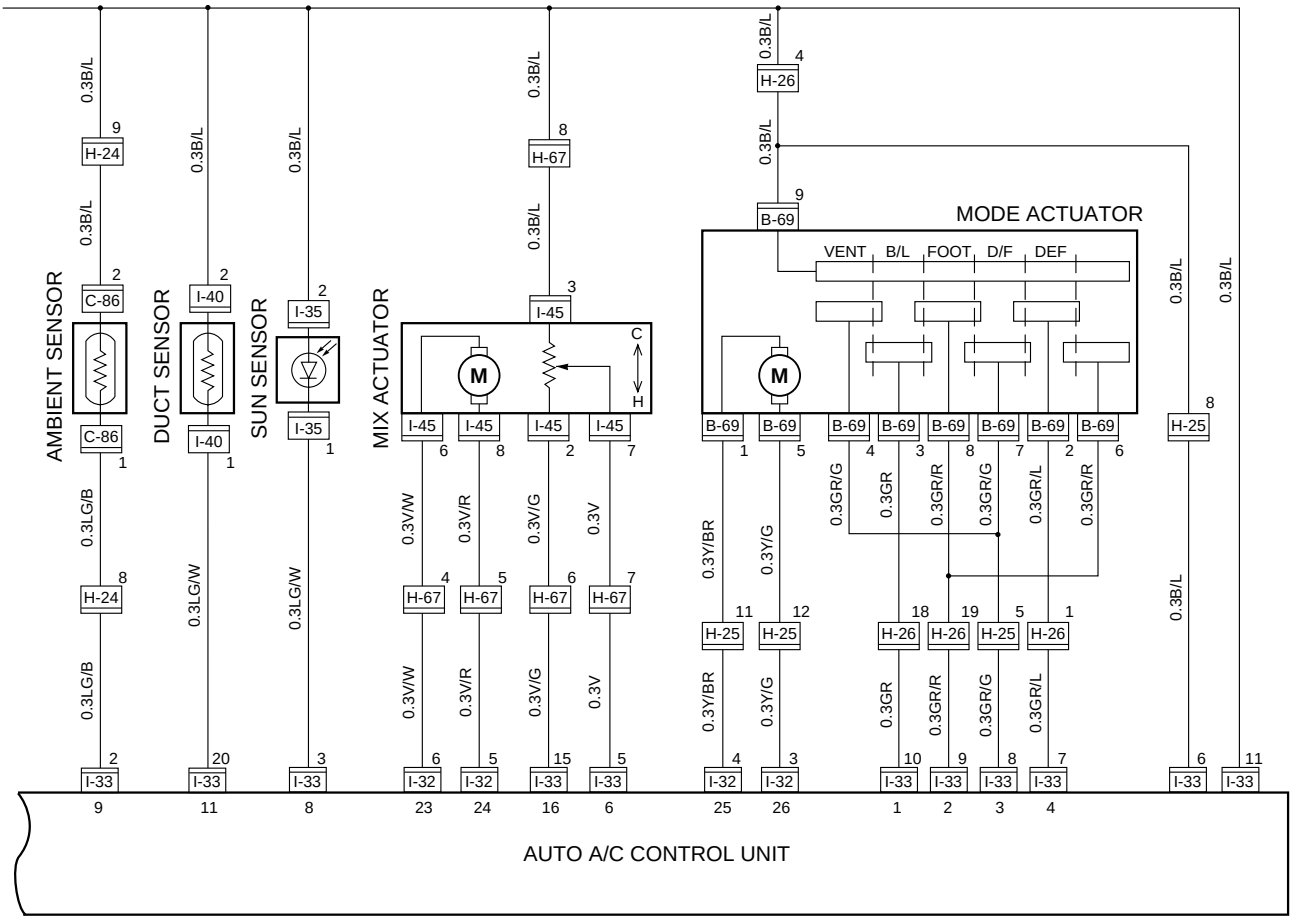
AMBIENT SENSOR
DUCT SENSOR
SUN SENSOR
MIX ACTUATOR
MODE ACTUATOR
VENT
B/L
FOOT
D/F
DEF
M
C
H
0.3B/L
0.3LG/B
0.3LG/W
0.3V/W
0.3V/R
0.3V/G
0.3V
0.3Y/BR
0.3Y/G
0.3GR/G
0.3GR
0.3GR/R
0.3GR/L
C-86
I-40
I-35
I-45
H-67
H-24
H-26
H-25
B-69
I-33
I-32
AUTO A/C CONTROL UNIT

MEMO

6VE1 (LHD)

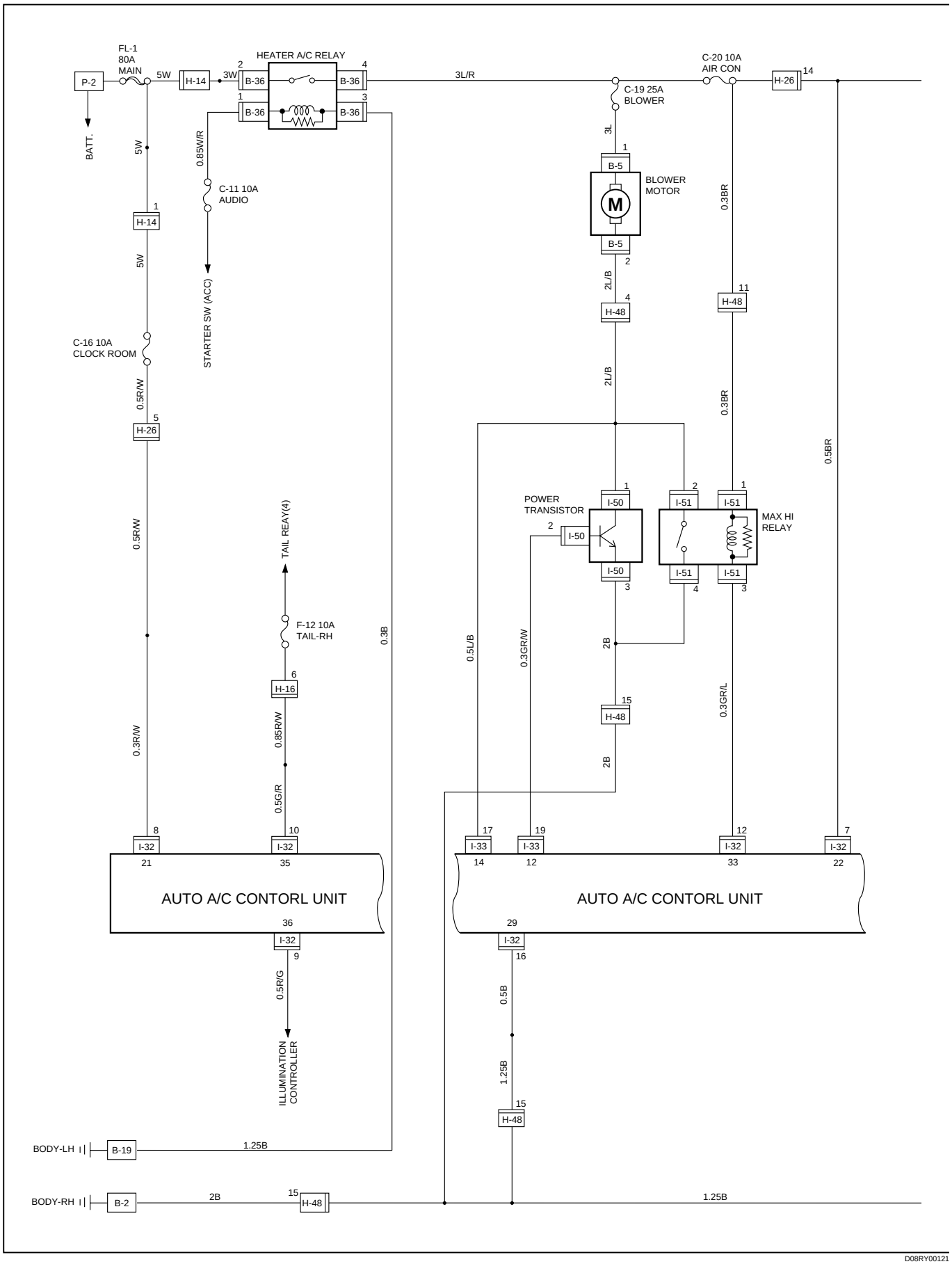
FL-1
80A
MAIN
HEATER A/C RELAY
C-20 10A
AIR CON
C-19 25A
BLOWER
BLOWER
MOTOR
BATT.
C-11 10A
AUDIO
STARTER SW (ACC)
C-16 10A
CLOCK ROOM
POWER
TRANSISTOR
MAX HI
RELAY
TAIL REAY(4)
F-12 10A
TAIL-RH
ILLUMINATION
CONTROLLER
AUTO A/C CONTORL UNIT
AUTO A/C CONTORL UNIT
BODY-LH
BODY-RH
P-2
H-14
B-36
3L/R
H-26
B-5
M
H-48
I-50
I-51
I-32
I-33
H-16
B-19
B-2
5W
3W
0.85W/R
3L
2L/B
0.3BR
0.5BR
0.5R/W
0.3R/W
0.85R/W
0.5G/R
0.3B
0.5U/B
0.3GR/W
2B
0.3GR/L
0.5R/G
0.5B
1.25B
D08RY00121

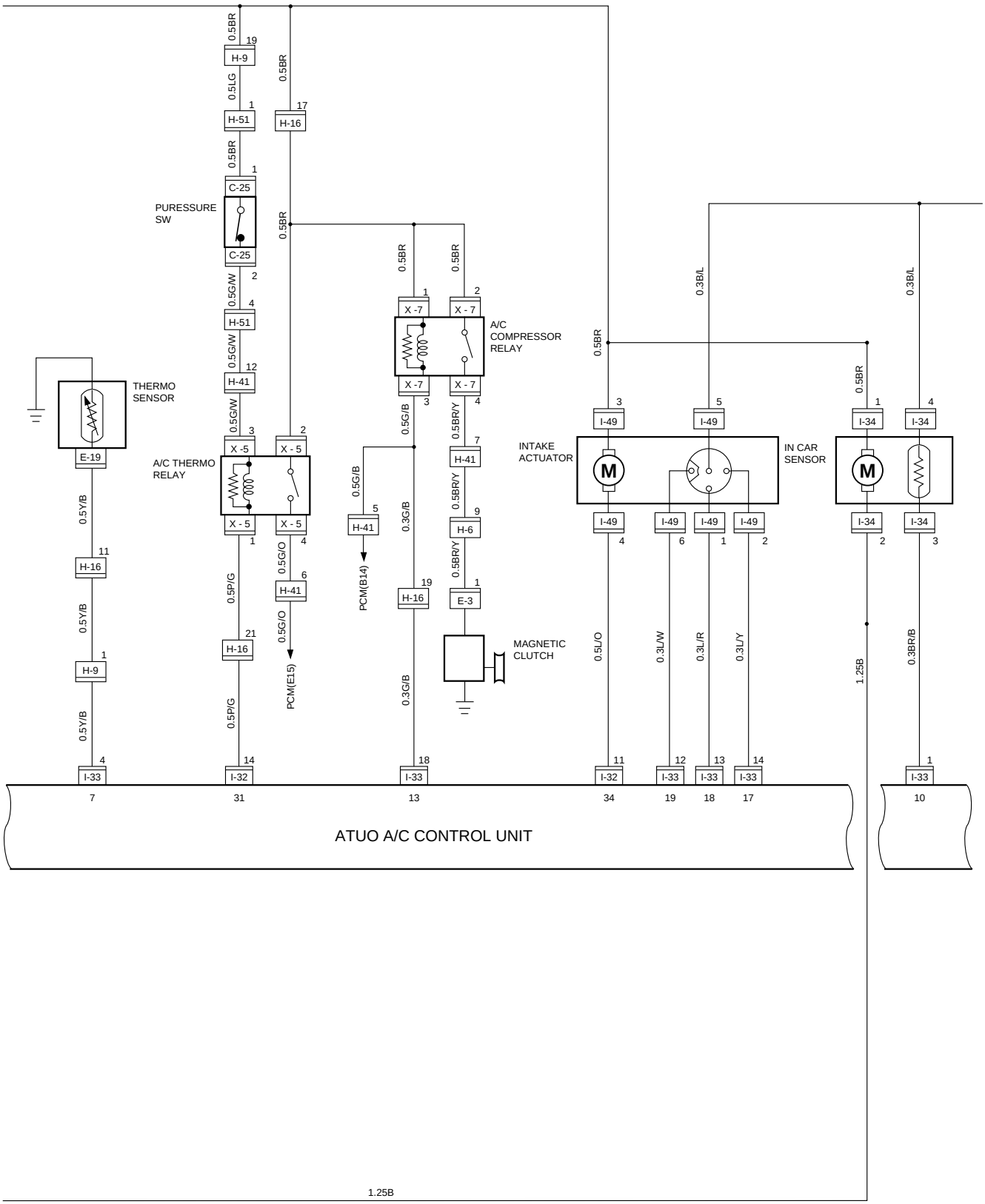
PURESSURE SW
THERMO SENSOR
A/C THERMO RELAY
A/C COMPRESSOR RELAY
INTAKE ACTUATOR
IN CAR SENSOR
MAGNETIC CLUTCH
PCM(E15)
PCM(B14)
ATUO A/C CONTROL UNIT
0.5BR
0.5LG
0.5G/W
0.5Y/B
0.5P/G
0.5G/O
0.5G/B
0.3G/B
0.5BR/Y
0.5L/O
0.3L/W
0.3L/R
0.3L/Y
0.3B/L
0.3BR/B
1.25B
H-9
H-51
H-16
C-25
H-41
X -7
X - 7
X -5
X - 5
E-19
H-6
E-3
I-49
I-34
I-33
I-32
M

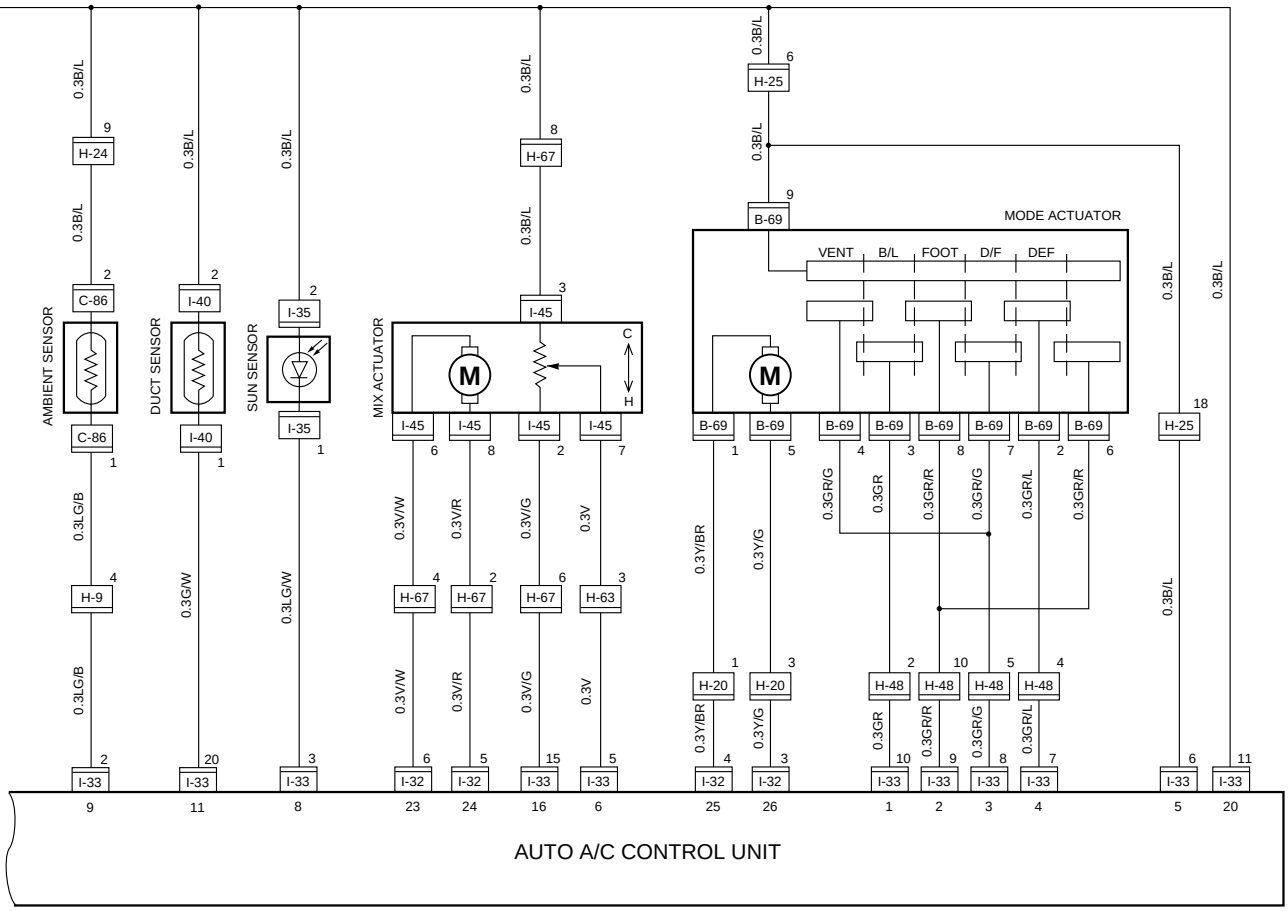
AMBIENT SENSOR
DUCT SENSOR
SUN SENSOR
MIX ACTUATOR
MODE ACTUATOR
VENT
B/L
FOOT
D/F
DEF
C
H
M
AUTO A/C CONTROL UNIT

D08RY00123

MEMO

4JX1 (RHD)

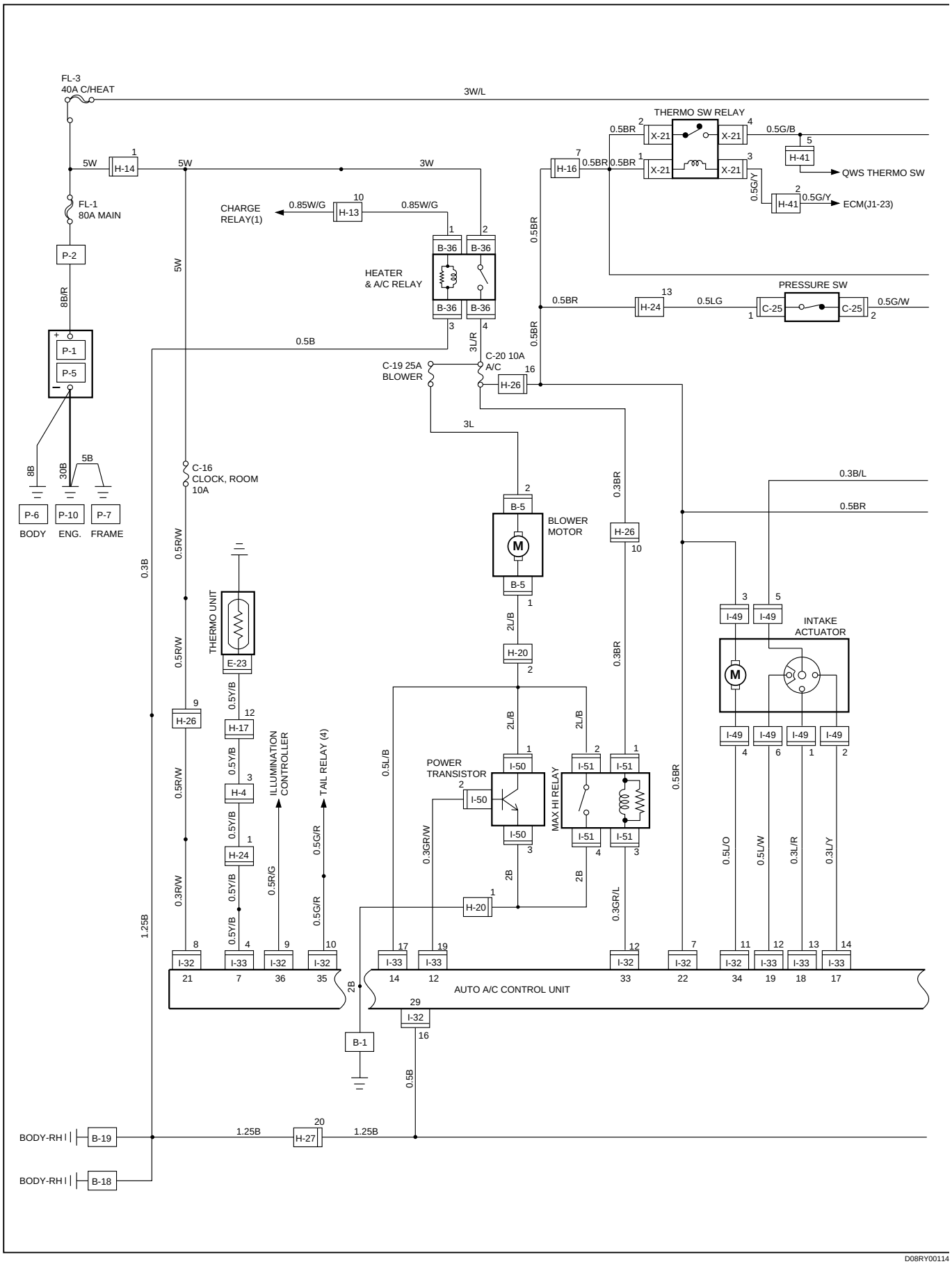

D08RY00114

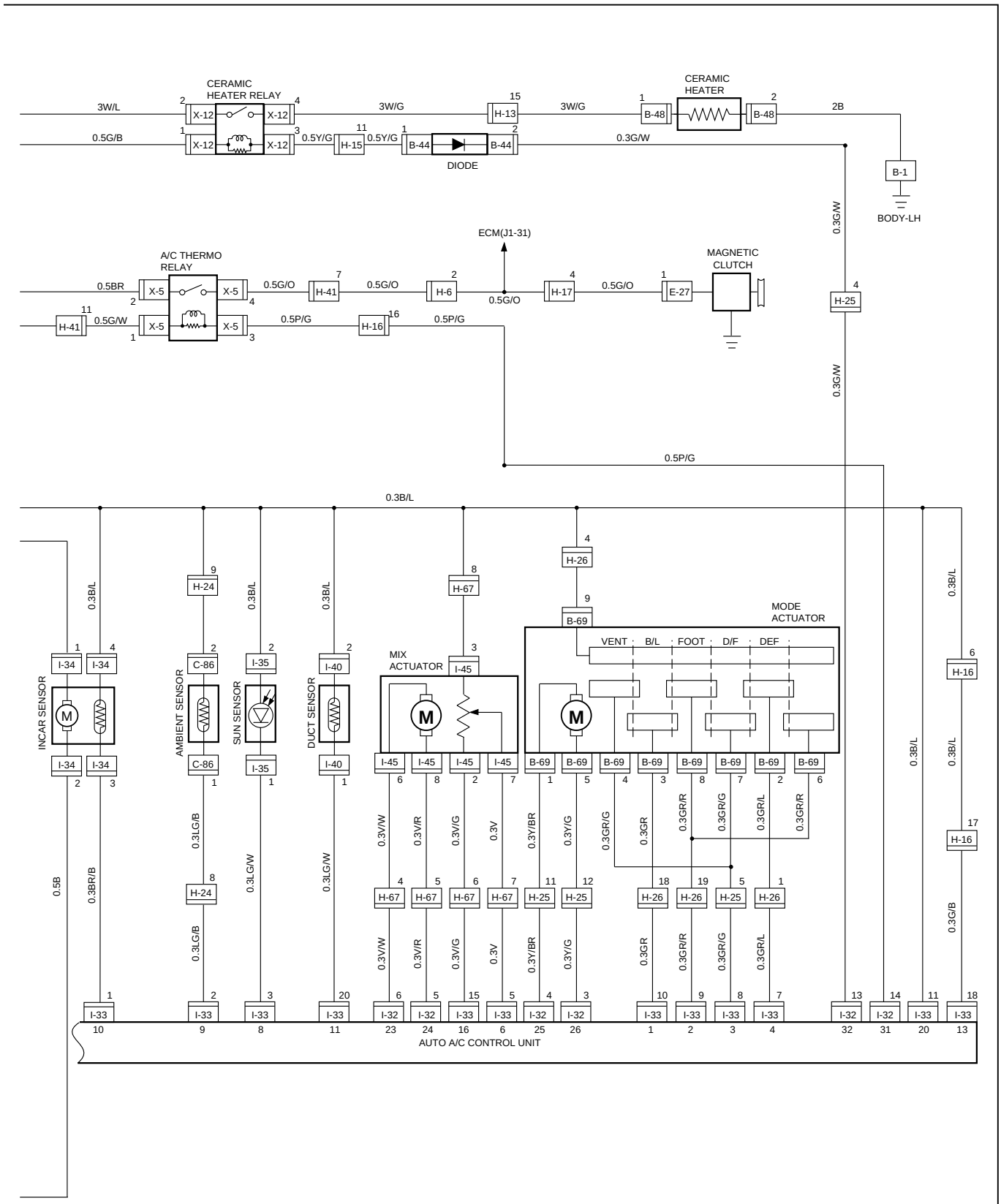
CERAMIC HEATER RELAY
CERAMIC HEATER
DIODE
BODY-LH
ECM(J1-31)
A/C THERMO RELAY
MAGNETIC CLUTCH
MIX ACTUATOR
MODE ACTUATOR
VENT
B/L
FOOT
D/F
DEF
INCAR SENSOR
AMBIENT SENSOR
SUN SENSOR
DUCT SENSOR
AUTO A/C CONTROL UNIT
3W/L
0.5G/B
3W/G
0.5Y/G
0.3G/W
2B
0.5BR
0.5G/W
0.5G/O
0.5P/G
0.3B/L
0.3G/W
0.5B
0.3BR/B
0.3LG/B
0.3LG/W
0.3V/W
0.3V/R
0.3V/G
0.3V
0.3Y/BR
0.3Y/G
0.3GR/G
0.3GR
0.3GR/R
0.3GR/L
0.3G/B

D08RY00115

4JX1 (LHD)

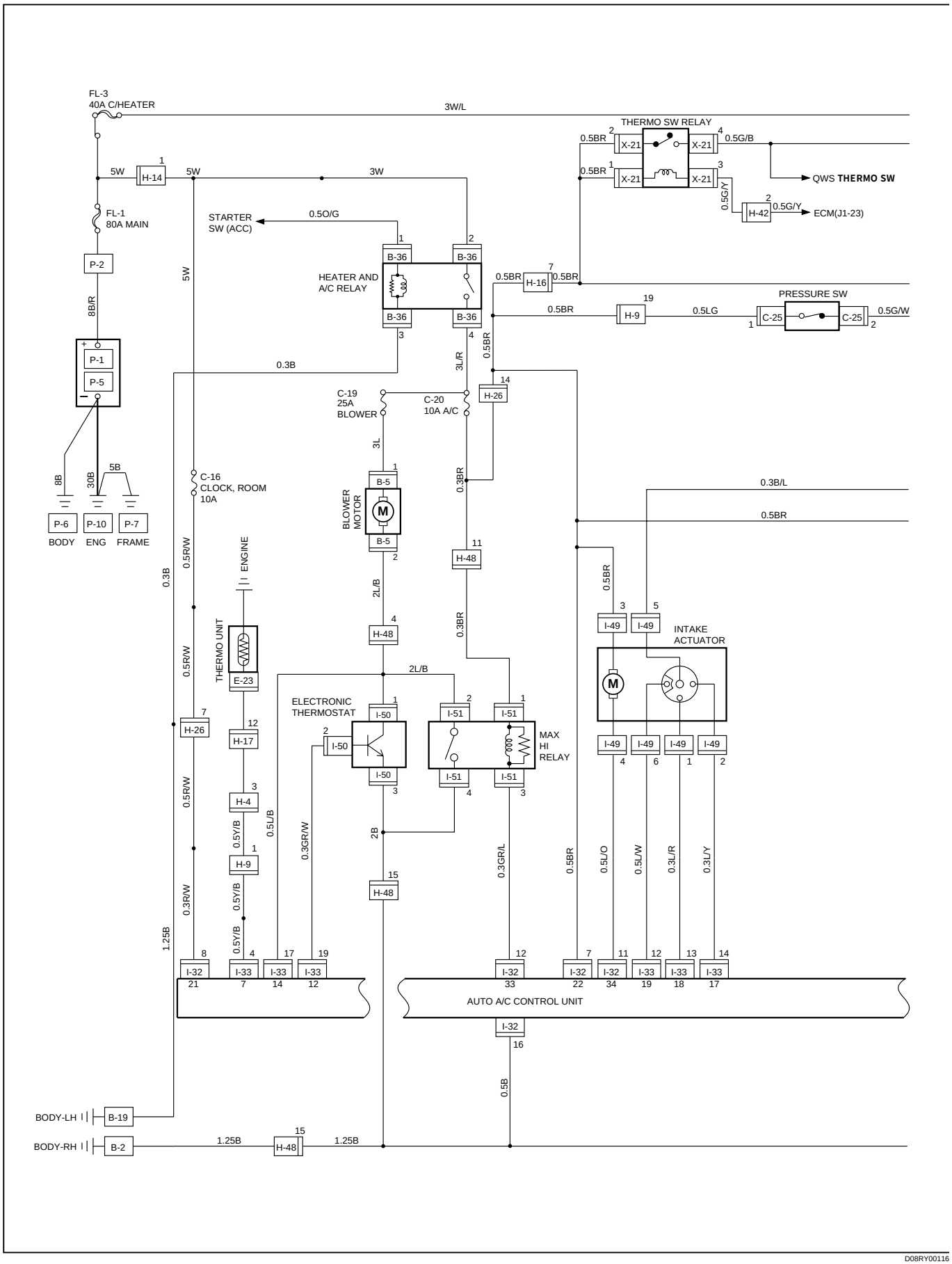

D08RY00116

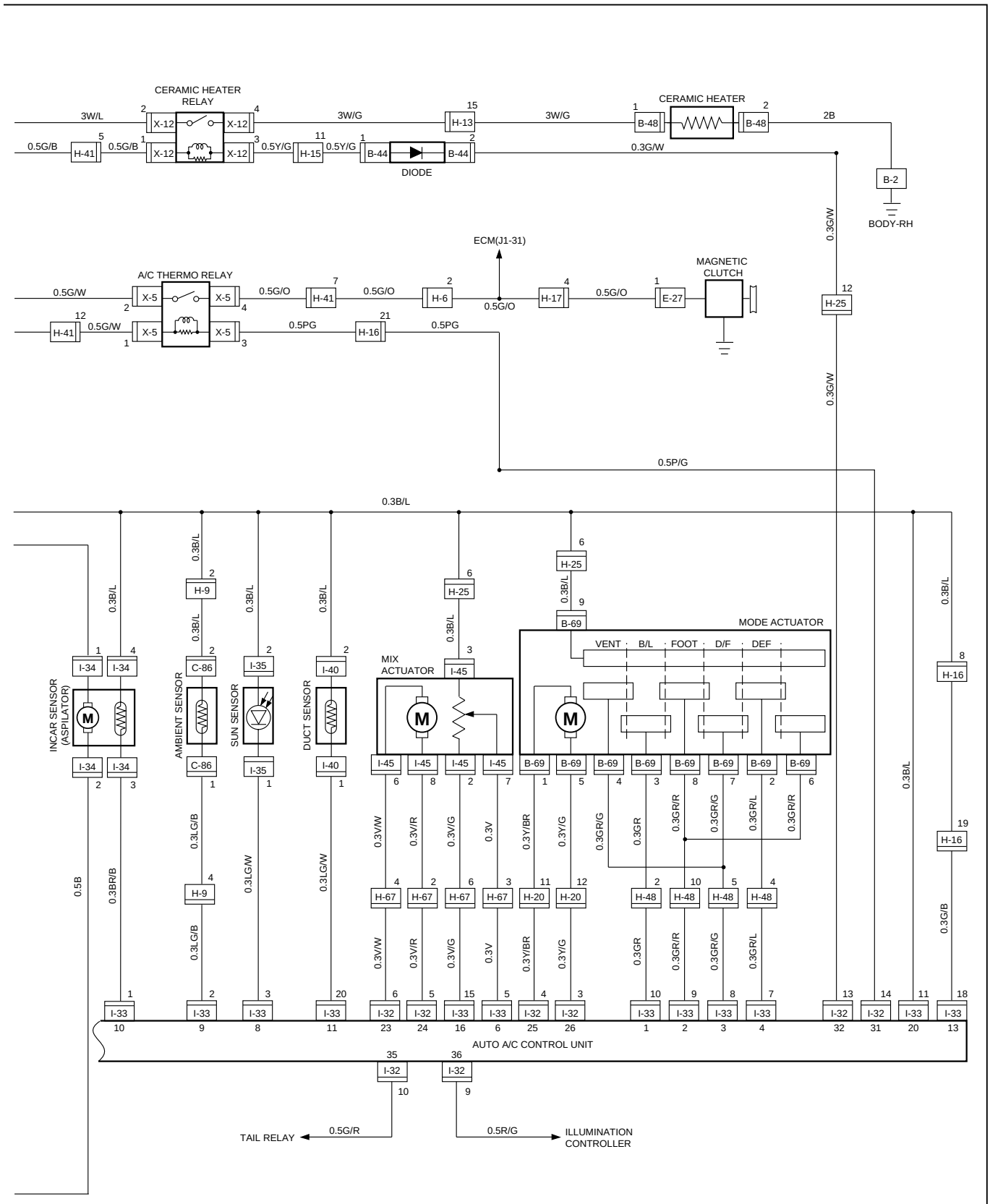
CERAMIC HEATER RELAY
CERAMIC HEATER
DIODE
BODY-RH
ECM(J1-31)
A/C THERMO RELAY
MAGNETIC CLUTCH
MODE ACTUATOR
VENT
B/L
FOOT
D/F
DEF
MIX ACTUATOR
INCAR SENSOR (ASPILATOR)
AMBIENT SENSOR
SUN SENSOR
DUCT SENSOR
AUTO A/C CONTROL UNIT
TAIL RELAY
ILLUMINATION CONTROLLER

D08RY00117

FUNCTIONS AND FEATURES

- Automatic interior temperature control

  This function enables to maintain the interior temperature at the level specified from the temperature control switch despite of changes in factors such as vehicle speeds, outside air temperature and number of passengers.

- Maximum cooling and heating function

  You can select FC (Full cool, namely maximum cooling temperature) or FH (Full heat, maximum heating temperature) from the temperature control lever.

- Automatic air flow control

  Air flow is automatically and consecutively fine tuned according to the specified interior temperature and changes in aperture of the heater unit mix door.

- Mode (blow port) control

  This function automatically selects either one of the VENT, BI-LEVEL, FOOT or DEP mode for the blow port according to changes of temperature on the blow port. Using the mode switch allows you to select a desired blow port manually.

- Intake (switching between the fresh air intake and circulation of interior air) control

  The intake (switching between fresh air intake and circulation of interior air) mode automatically selects either FRESH (fresh air intake), MIX or RECIRC (interior air circulation) according to changes of the blow port temperature. Using the intake switch allows you to select a desired intake port manually (in the manual operation, FRESH and RECIRC modes alone are available). Pressing the DEF (defrost) mode switch selects the FRESH (fresh air intake).

- Cooler start-up timing control

  This function is used for maintaining the air flow at "LOW" level until the evaporator is sufficiently cooled down. It is intended to prevent a large volume of hot air being blowing into inside of a vehicle when the cooler is turned on in hot summer season.

- Heater start-up timing control

  This function is used for maintained the air flow at "LOW" level and also for maintaining the defrost mode until temperature of coolant in the heater core is sufficiently heated. It is intended to prevent a large volume of cool air being blown into inside of a vehicle when the heater is turned on in cold winter season.

- Solar radiation quantity offset control

  The photodiode on the solar radiation sensor determines solar radiation quantity accurately to offset interior temperature quickly.

- Switch position storing function

  This function is used for storing switch positions being selected in the immediately preceding operation, namely the last time the ignition has been turned off. It simplifies the setup procedures when restarting the system.

- Self-diagnosis function

  The self-diagnosis function turned on from the panel switch makes your troubleshooting easier (for detail of this function, refer to the section titled "Self-Diagnosis").

FULL AUTOMATIC AIR CONDITIONER BLOCK DIAGRAM

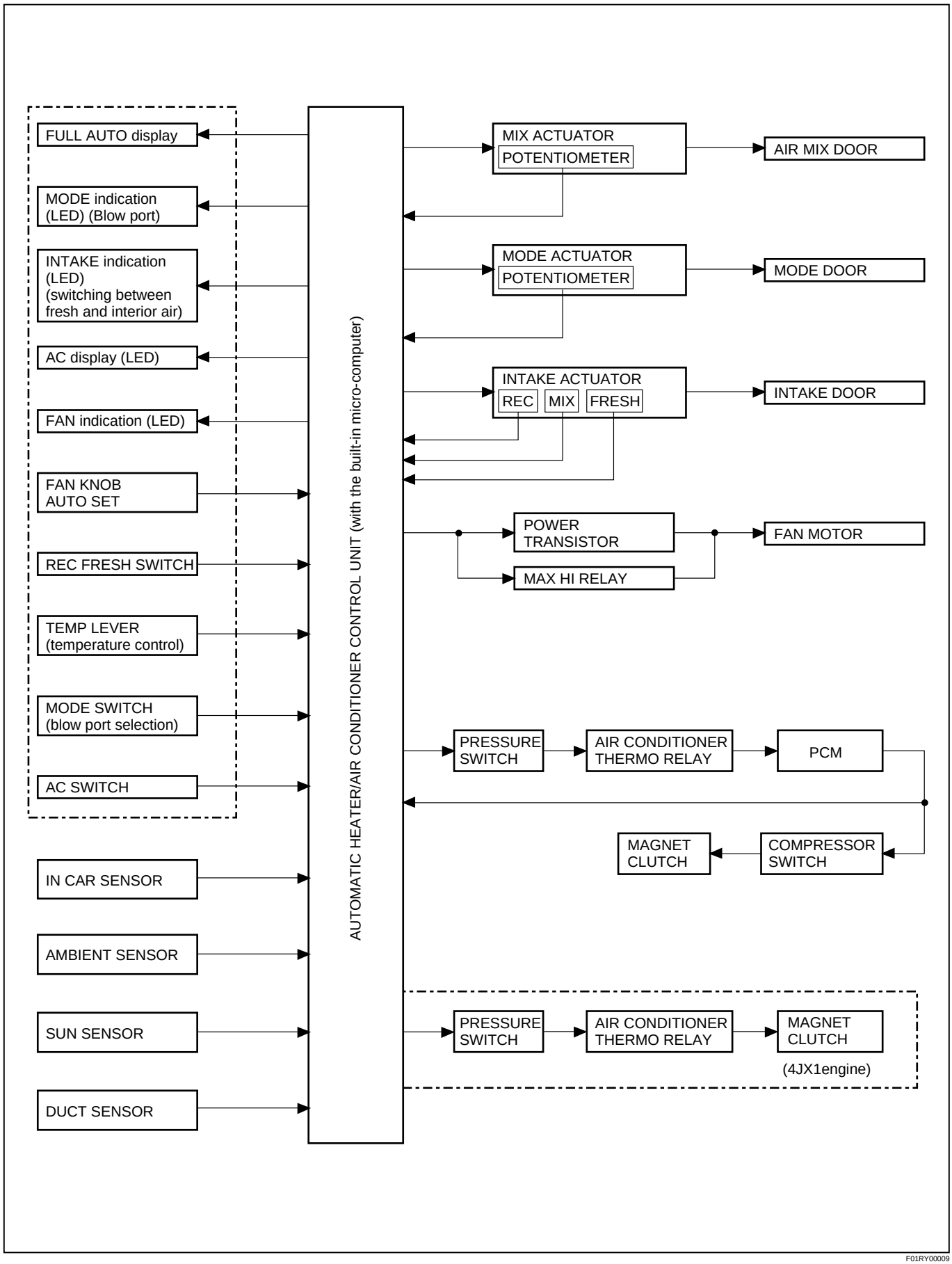

F01RY00009

AIR CONDITIONING PARTS

6VE1 (RHD)

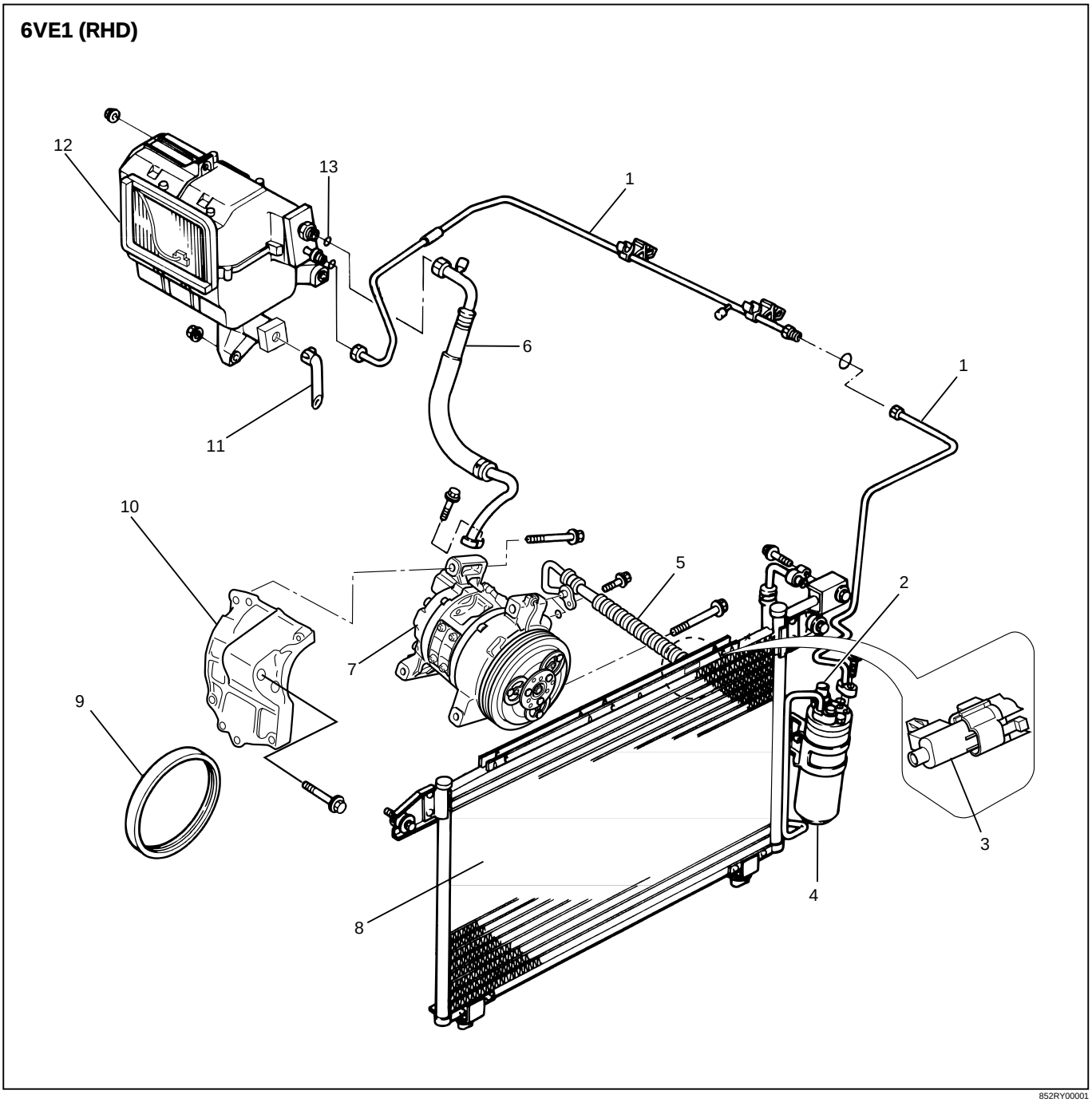

852RY00001

Legend

(1) Liquid Line (High Pressure Pipe)
(2) Pressure Switch
(3) Ambient Sensor
(4) Receiver Drier
(5) Discharge Line (High Pressure Hose)
(6) Suction Line (Low Pressure Hose)
(7) Compressor
(8) Condenser Assembly
(9) Drive Belt
(10) Compressor Bracket
(11) Drain Hose
(12) Evaporator Assembly
(13) O-ring

6VE1 (LHD)

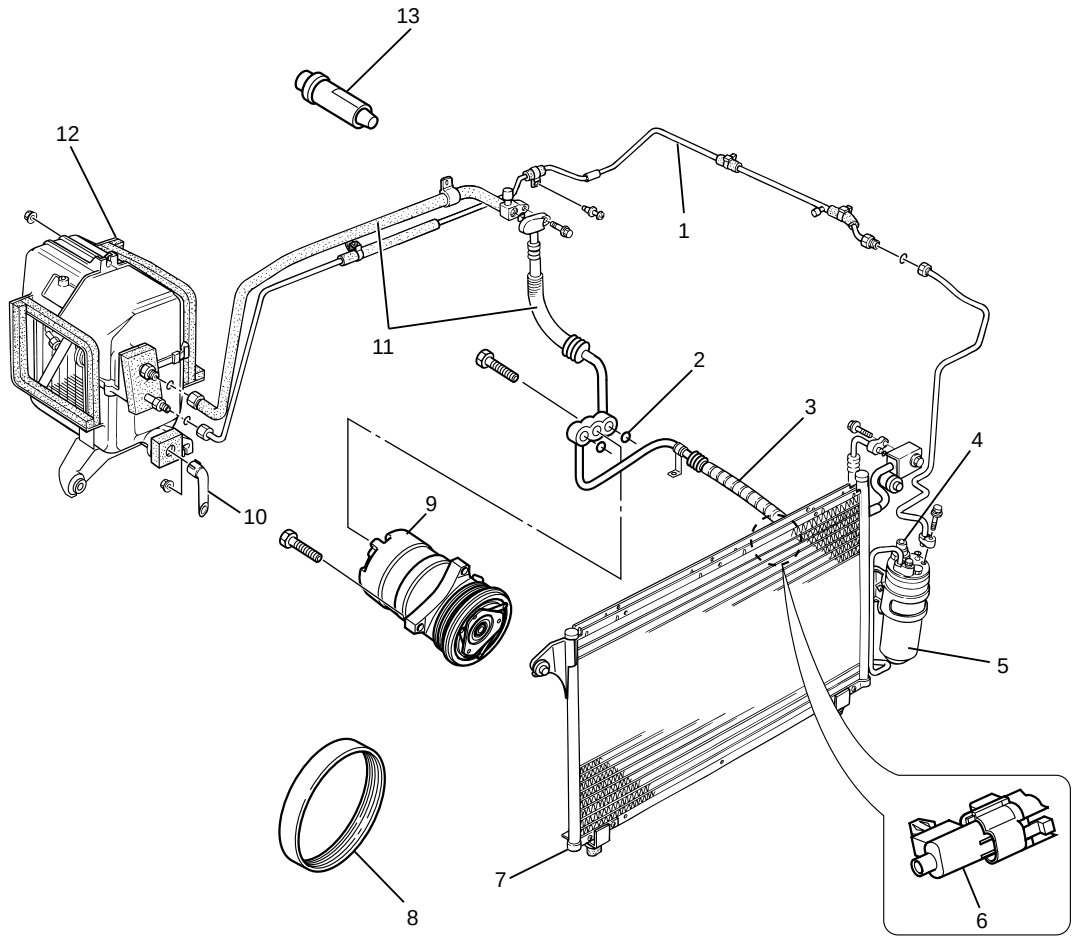

852RY00002

Legend

(1) Liquid Line (High-Pressure Pipe)
(2) O-ring
(3) Discharge Line (High-Pressure Hose)
(4) Pressure Switch
(5) Receiver Drier
(6) Ambient Sensor
(7) Condenser Assembly
(8) Drive Belt
(9) Compressor
(10) Drain Hose
(11) Suction Line (Low-Pressure Hose)
(12) Evaporator Assembly
(13) A/C Switch

4JX1 (RHD)

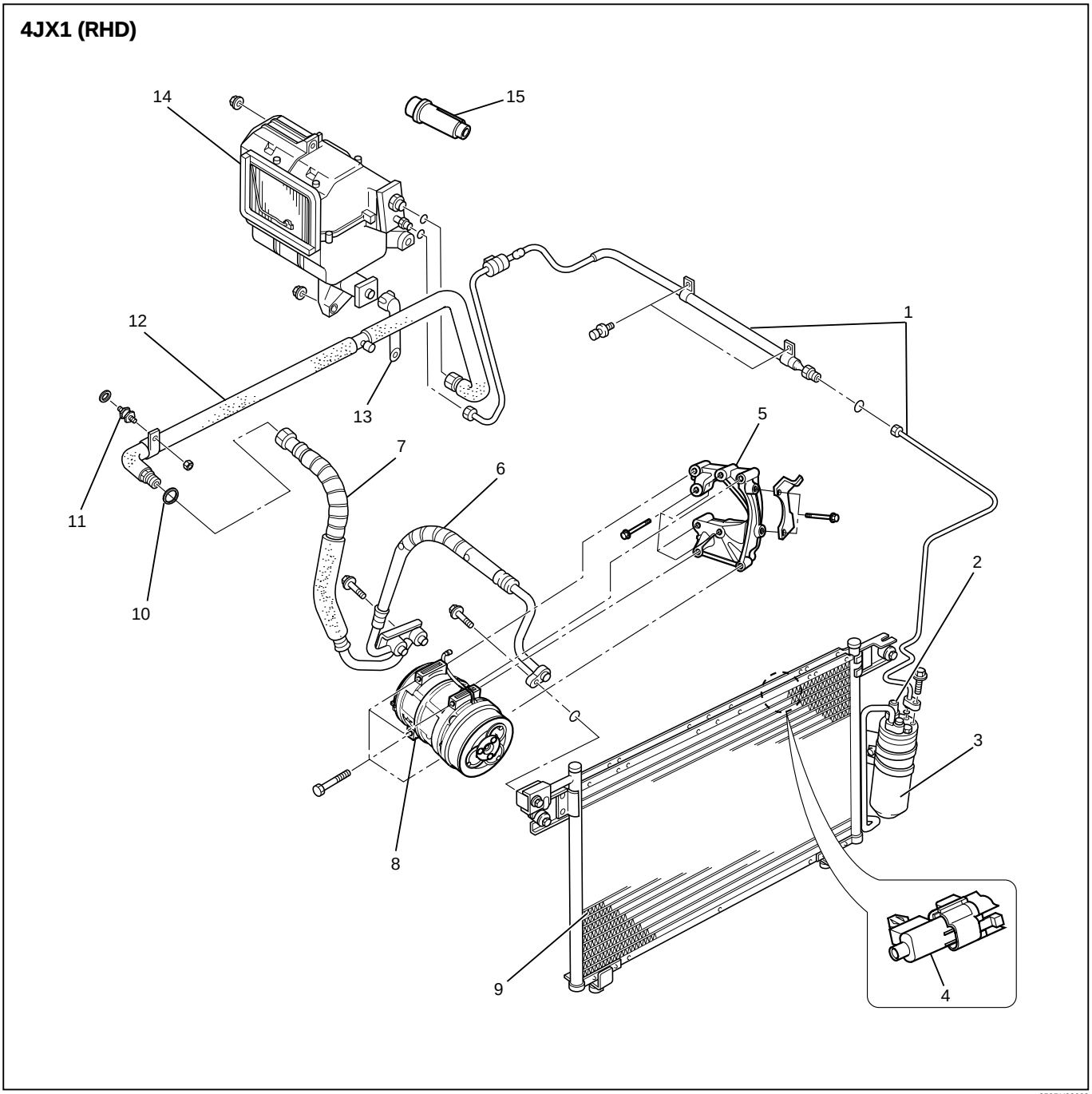

852RY00003

Legend

(1) Liquid Line (High-Pressure Pipe)
(2) Pressure Switch
(3) Receiver Drier
(4) Ambient Sensor
(5) Compressor Bracket
(6) Discharge Line (High-Pressure Hose)
(7) Suction Line (Low-Pressure Hose)
(8) Compressor
(9) Condenser Assembly
(10) O-ring
(11) Insulator Pipe
(12) Suction Line (Low-Pressure Pipe)
(13) Drain Hose
(14) Evaporator Assembly
(15) A/C Switch

4JX1 (LHD)

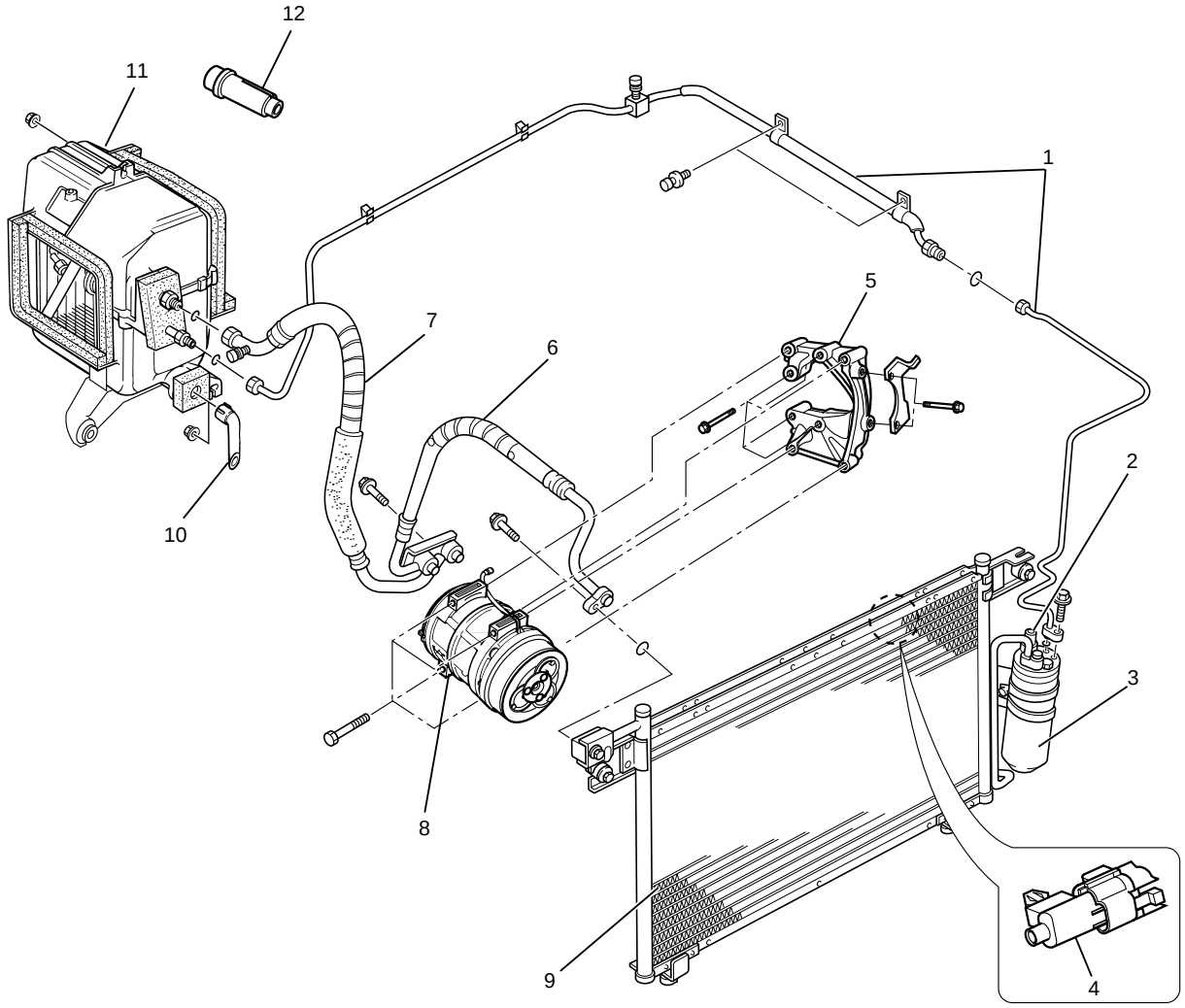

852RY00004

Legend

(1) Liquid Line (High-Pressure Pipe)
(2) Pressure Switch
(3) Receiver Drier
(4) Ambient Sensor
(5) Compressor Bracket
(6) Discharge Line (High-Pressure Hose)
(7) Suction Line (Low-Pressure Hose)
(8) Compressor
(9) Condenser Assembly
(10) Drain Hose
(11) Evaporator Assembly
(12) A/C Switch

Control Panel Layout

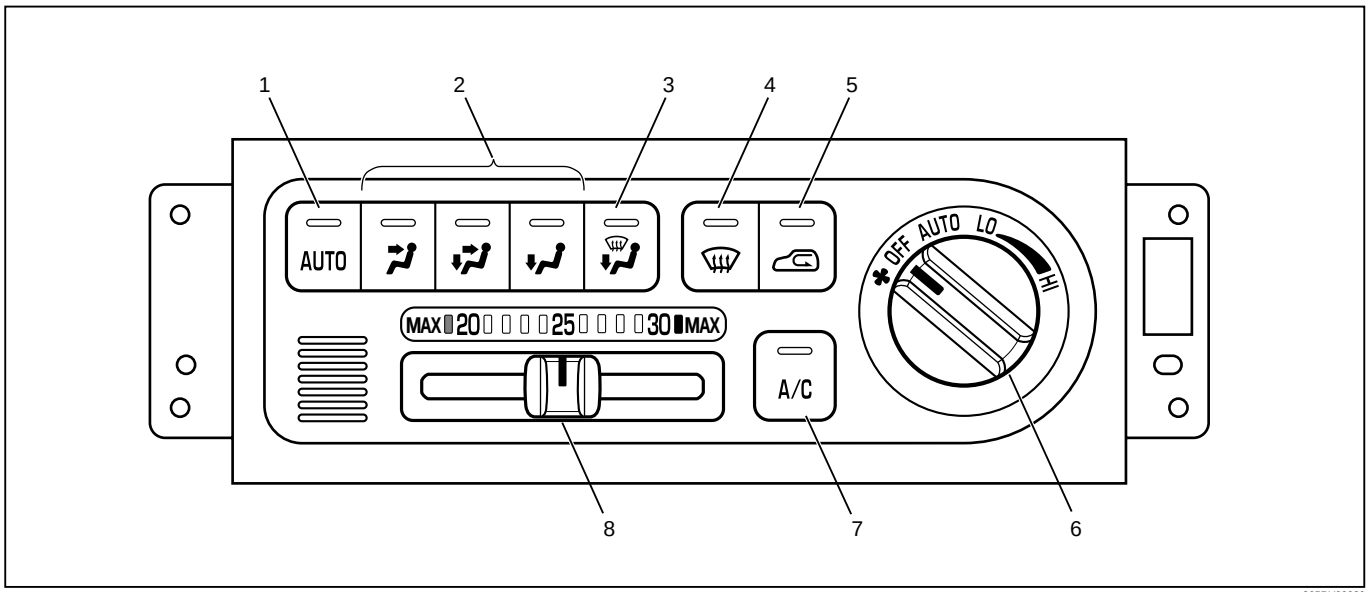

865RY00026

Legend

(1) Auto Switch
(2) Mode Switch
(3) DEF/FOOT Switch
(4) DEF Switch
(5) Intake Switch
(6) Fan Switch
(7) Air Conditioning Switch
(8) Temperature Control Knob

Air Control Functions

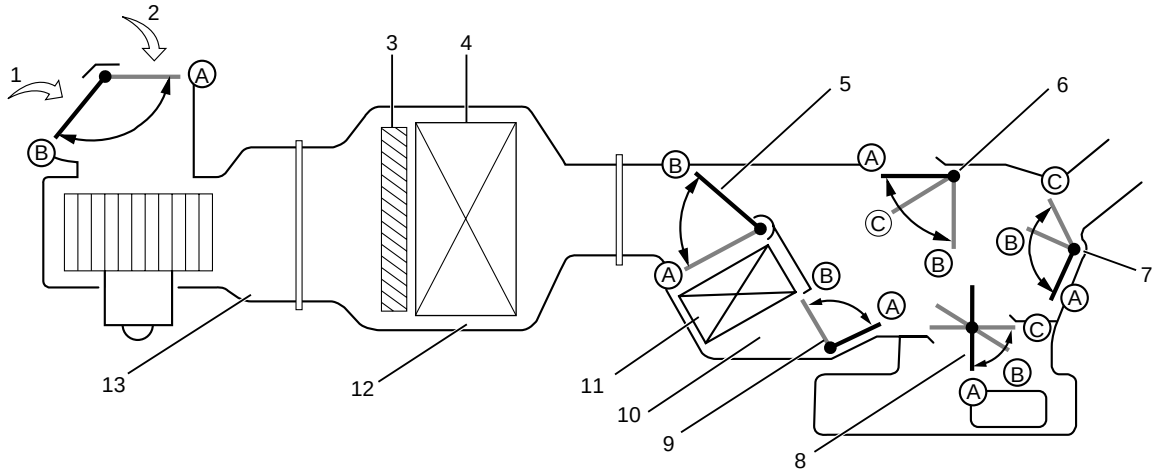

	Mode Position					Display of Intake Status		Set Temperature		
	VENT	BI-LEVEL	FOOT	DEF/FOOT	DEF	ON	OFF	Blue FULL COLD	White 20~30℃	Red FULL HOT
Vent Door	Ⓐ	Ⓑ	Ⓒ	Ⓒ	Ⓒ	—	—	—	—	—
Foot Door	Ⓒ	Ⓑ	Ⓐ	Ⓑ	Ⓒ	—	—	—	—	—
DEF Door	Ⓐ	Ⓐ	Ⓐ	Ⓒ	Ⓑ	—	—	—	—	—
Intake Door	—	—	—	—	—	Ⓐ	Ⓑ	—	—	—
Air Mix Door	—	—	—	—	—	—	—	Ⓐ	Ⓐ～Ⓑ	Ⓑ
Sub Air Mix Door	—	—	—	—	—	—	—	Ⓑ	Ⓑ～Ⓐ	Ⓐ

C01RY00001

Legend

(1) Interior Air Intake
(2) Fresh Air Intake
(3) Pollen Filter
(4) Evaporator Core
(5) Air Mix Door
(6) DEF Door
(7) Vent Door
(8) Foot Door
(9) Sub Air Mix Door
(10) Heater Unit
(11) Heater Core
(12) Evaporator Unit
(13) Blower Unit

OPERATION AND FUNCTIONS OF CONTROL PANEL SWITCHES

1. Auto Switch

(1) Pressing this switch turns on the automatic control mode. It resets all manual switches except that for the fan control. However, when the Manual REC is selected for the intake or the Manual Open is selected for the C/V, these modes are maintained.

(2) It causes the A/C (air conditioner) to the ON mode (this function, however, available only when the fan is turned on and also the compressor is turned on because of the given outside air temperature level).

<Indication>

- The AUTO LED comes on.
- Currently selected mode for the Mode and Intake are respectively indicated.

2. Mode Switch

<Indication>

(1) Pressing the VENT, B/L or FOOT switch selects the corresponding mode.

(2) When the Auto is selected for the Mode and Intake, pressing the mode switch fixes the Intake to the immediately preceding status.

<Indication>

- Turns off the Auto LED.
- Currently selected blow port is indicated.

3. DEF Switch

Press this switch to select the DEF mode.

Blow port	Intake port	A/C	MIX
DEF	Auto FRESH *1	ON mode *2	Auto

<Indication>

*1: When the manual REC is selected for the Intake, the manual REC is maintained.

*2: The ON mode is enabled only when the fun is turned on, and also the compressor is turned on because of the given outside air temperature level.

<Indication>

- The Auto LED is turned off.
- DEF is indicated for the blow port, A/C LED comes on (only when the fan is turned on), and status display is provided for the Intake.

Example 1:

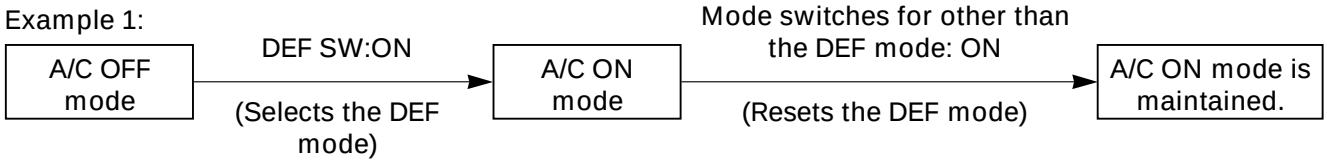

4. Intake Switch

Pressing this switch sequentially selects a different intake port in the following order.

Example 1:

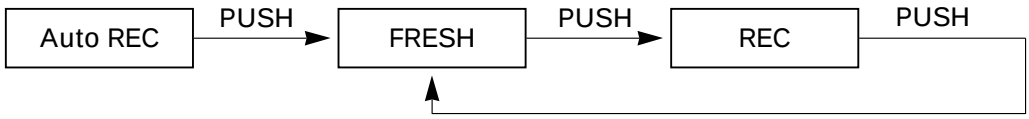

Example 2:

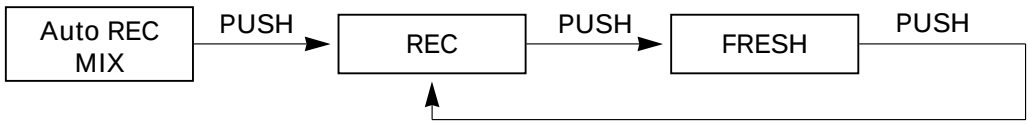

<Indication>

- The Auto LED maintains unaffected.
- Currently selected intake port is indicated.

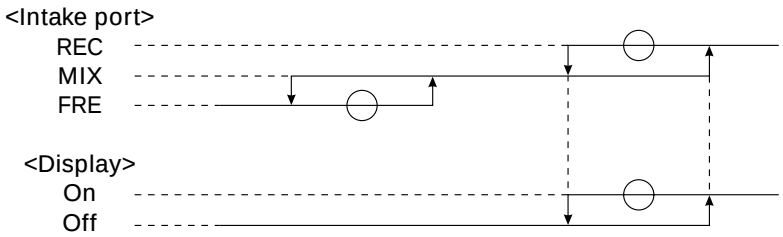

5. Fan Switch

(1) Sets the fan to the specified mode.
(2) Even when the fan switch is turned off, status display for the Model and Intake is maintained.

6. Temperature Control Knob

(1) This knob is operable only when the fan is turned on. It may be used for the MAX control of each block except the fan.
(2) When the manual mode is selected for the fan control, this manual mode is maintained.

<MAX Control>

	Mix	Fan	Mode	Intake	A/C
MAX/COOL	Full cool	MAX/HI	VENT	REC*1	ON mode*2
MAX/HEAT	Full hot	AUTO/HI	FOOT*3	FRESH	Current status is maintained

*1: In the A/C: OFF mode, FRESH shall be selected.
*2: The ON mode is available only when ON is selected for the fan as well as for the cold outside air ON/OFF selection.
*3: When the MAX control is selected from the DEF mode, this DEF mode shall be maintained.

Example 1:

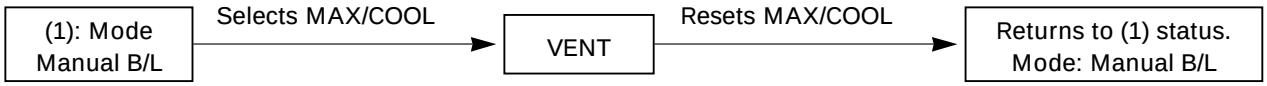

Example 2:

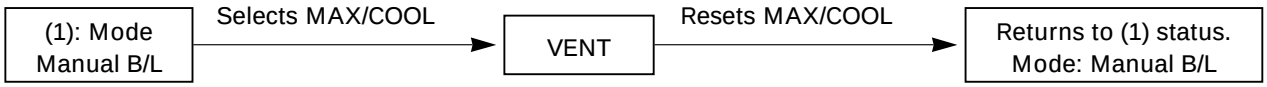

<Indication>

- As long as the MAX control is selected, the immediately preceding indication shall be maintained for the AUTO.
- Status display is provided for others.

7. Air Conditioning Switch

Pressing this switch turns on or off the A/C (air conditioning) control. (The compressor remains turned off if the fan is turned off and also the compressor has been turned off because of the given outside air temperature level.)

<Indication>

(1) The A/C LED remains turned on even if the compressor has been turned off because of the given outside air temperature level. In this case, however, the AUTO or DEF switch must be turned on and the A/C ON mode must also be turned on (by the MAX/C mode).
(2) Pressing the A/C switch from the above state (1) turns off the A/C LED.

OVERVIEW OF CONSTRUCTION, MOVEMENT AND CONTROL OF MAJOR PARTS OF FULL AUTOMATIC AIR CONDITIONER SYSTEM

Automatic Heater/Air Conditioner Control Unit

Equipped with the built-in micro-computer, this control unit operates on signals from sensors and input signals from switches to offer total control of the blower fan, and actuators used for the mode door, intake door and air mix door.
Its self-diagnosis function enables quicker access to a failed part and its more accurate troubleshooting.

In Car Sensor

It is a sensor used for detecting room temperature of a vehicle. This sensor converts a given room temperature into a resistance value before entering the data to the automatic heater/air conditioner control unit.
This in car sensor unites the power driven aspirator and the motor fan so that a small amount of room air may be constantly fed to the sensor.
This sensor is provided on the control panel.

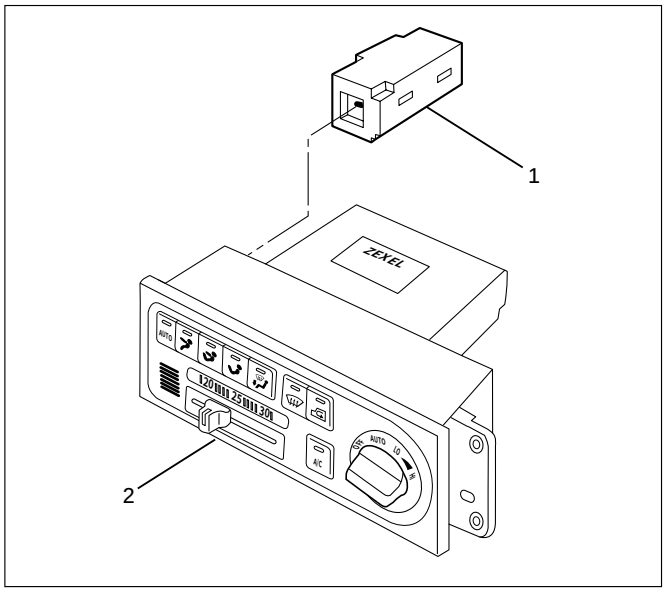

865RY00006

Legend
(1) In Car Sensor
(2) Full Automatic Air Conditioner Control Unit

Ambient Sensor

This sensor is used for detecting temperature outside the vehicle. It converts a given outside air temperature into a resistance value before entering the data to the automatic heater/air conditioner control unit.
Thermal effects from the condenser and radiator during idling after a run can be measured and offset the automatic amplifier.
This sensor is provided on the side plate situated at upper right side of the condenser.

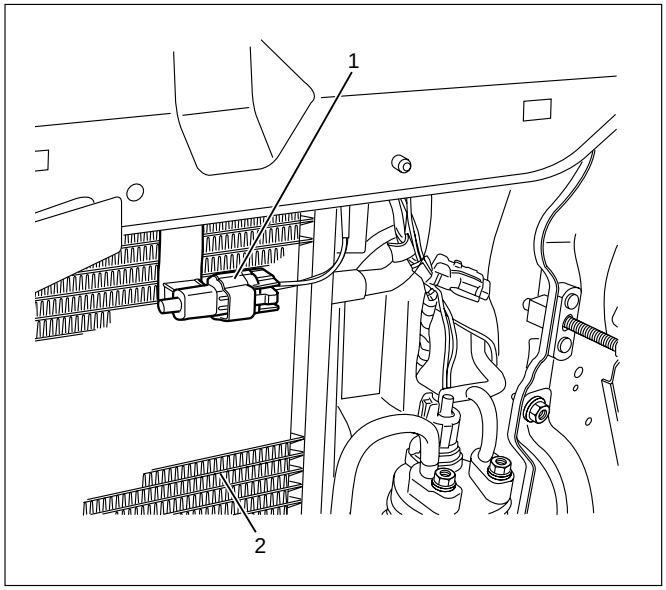

845RY00001

Legend
(1) Ambient Sensor
(2) Condenser Assembly

- **Duct Sensor**
  The sensor is the sensor to detect temperature change of the side of evaporator blower coming by fresh recirculation of intake door or "on" "off" of compressor.
  The temperature is converted to resistant rate.
  And it works as thermostat to control to prevent freezing of evaporator.
  This sensor is installed in the upper case of evaporator.

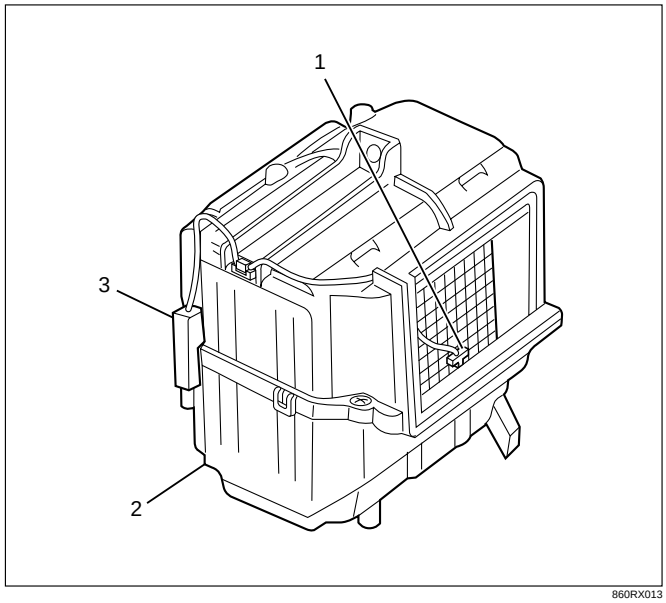

860RX013

Legend
(1) Duct Sensor
(2) Evaporator Assembly
(3) Amplifierblock

In Car Sensor

It is a photodiode used for detecting quantity of solar radiation. This sensor converts the offset signal generated by changes in the interior temperature (which results from fluctuations in solar radiation) into photoelectric current to enter into the automatic heater/air conditioner control unit.
This sensor is provided at top of the defroster grill.

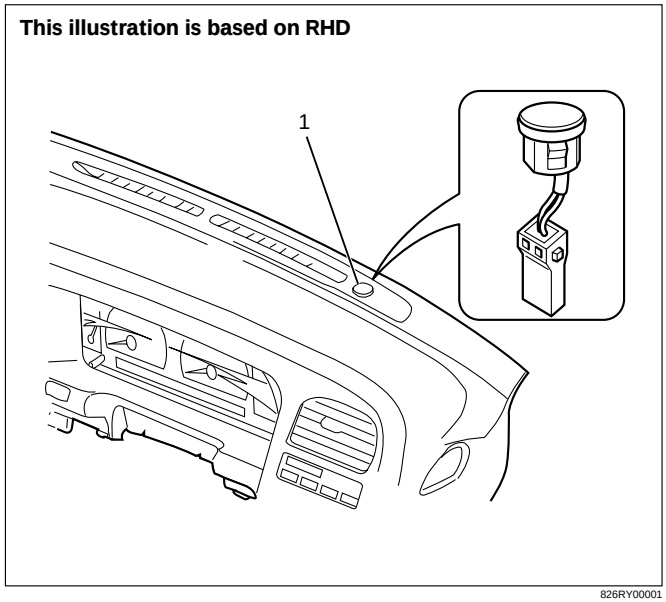

826RY00001

Legend
(1) Sun Sensor

Actuator

The actuators are power driven type containing a small motor. Receiving output current from the automatic heater/air conditioner control unit, actuators drive the heater and blower unit mode doors.
Actuators consist of the mode actuator used for switching the mode (blow port selection), the mix actuator used for changing aperture of the air mix door, the intake actuator used for switching the intake mode(fresh air/interior air).

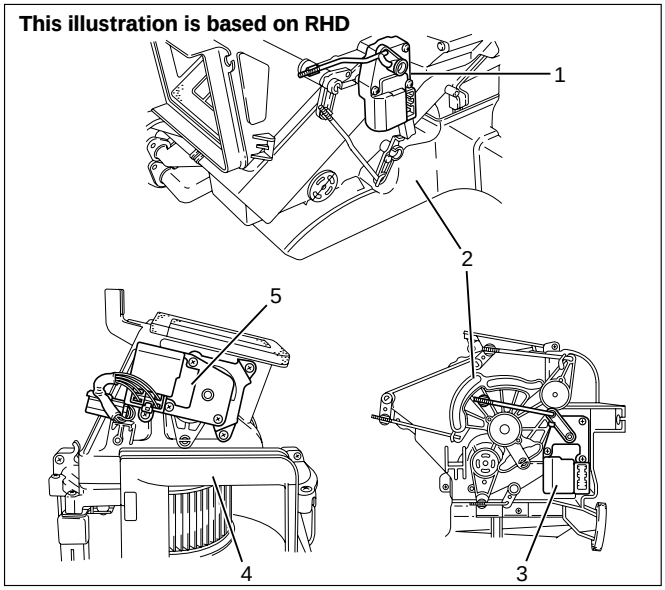

860RX012

Legend
(1) Mix Actuator
(2) Heater Unit
(3) Mode Actuator
(4) Blower Unit
(5) Intake Actuator

The actuator changes the motor speed using the gear and drives each door rotating the output axis united with the sliding contact.

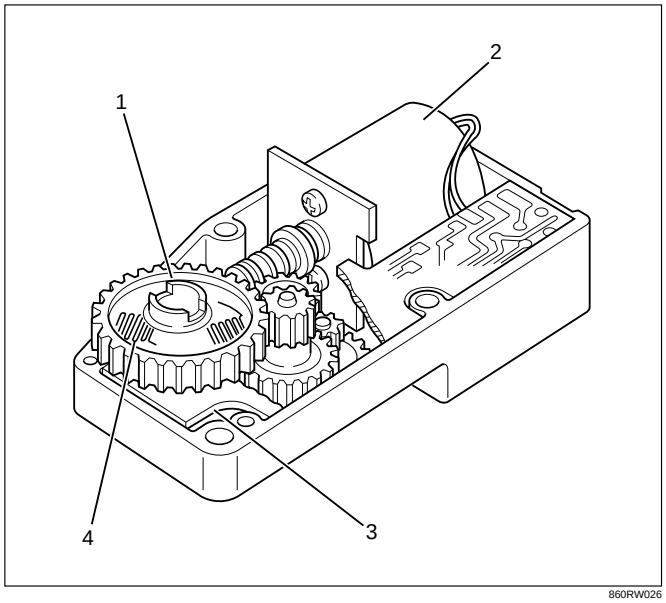

860RW026

Legend

(1) Out put Axis
(2) Motor
(3) Printed Circuit Board
(4) Sliding Contact

The mode and mix actuators are common actuators with the built-in potentiometer. For the intake actuator, the contact switch type is selected.
The potentiometer is a register assembled to the printed circuit board of the mix and mode actuators. It detects the air mix door position specified by rotation of the output axis as a ratio of the variable terminal (VM) voltage against the reference voltage (VDD: 5V), then signals the value to the automatic heater/air conditioner control unit.

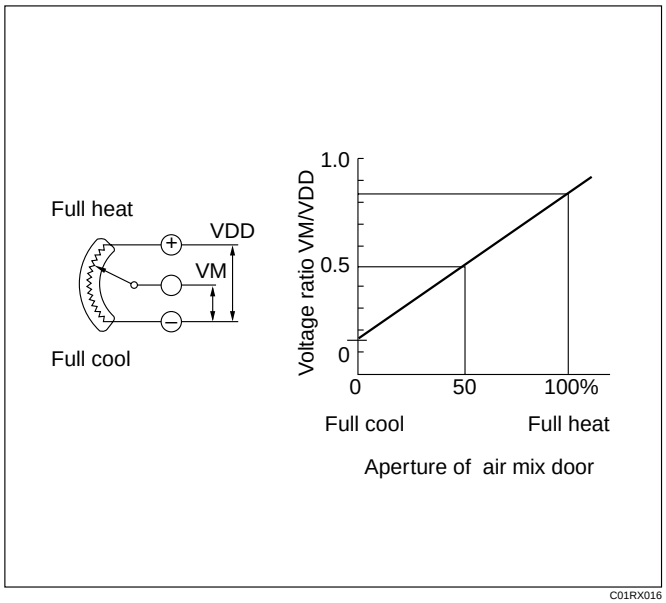

C01RX016

- **Movement of Mix Actuator**

  Position of the air mix door is determined by the controller on the automatic heater/air conditioner control unit.
  As the heat or cool side of the controller is grounded, the transistor on the driver is activated and, thus, the motor rotation is turned on. The sliding contact connected to the motor sends the position detection signal from the potentiometer to the automatic heater/air conditioner control unit. As the set temperature and interior temperature are balanced, the controller returns to the neutral and the motor rotation is stopped.

I-45		Rotation direction	Remarks
(+) side	(–) side		
8	6	Clockwise	Full heat side
6	8	Counter clockwise	Full cool side

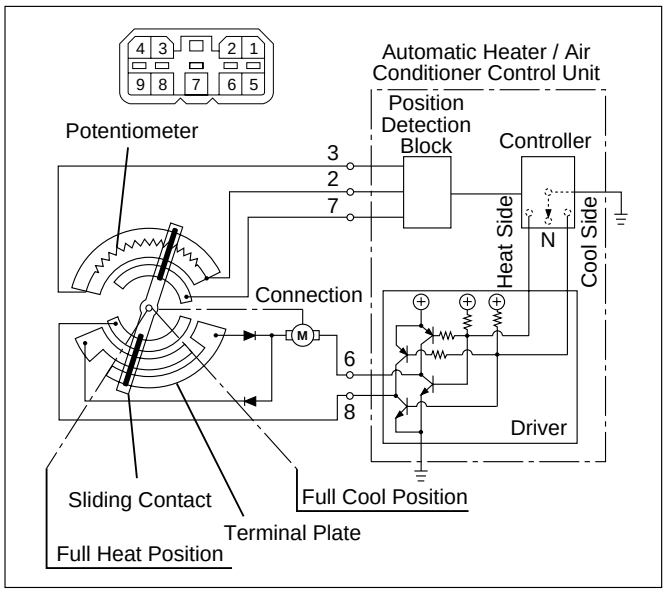

C01RY00016

- **Movement of Mode Actuator**

  As target position of the mode door is decided on the controller of the control unit, the control unit reads the position detection signal from the actuator to select the clockwise or counter clockwise motor rotation direction.
  Grounding the controller VENT or DEF side after the direction selection activates the transistor on the driver, thus turning on the motor rotation. Accompanying the motor rotation, the sliding contact rotates, too. When the target position is reached, the controller on the control unit returns to the neutral and the motor stops.

Conducting pin		Rotation direction	Remarks
(+) side	(–) side		
5	1	Clockwise	VENT to DEF direction
1	5	Counter clockwise	DEF to VENT diction

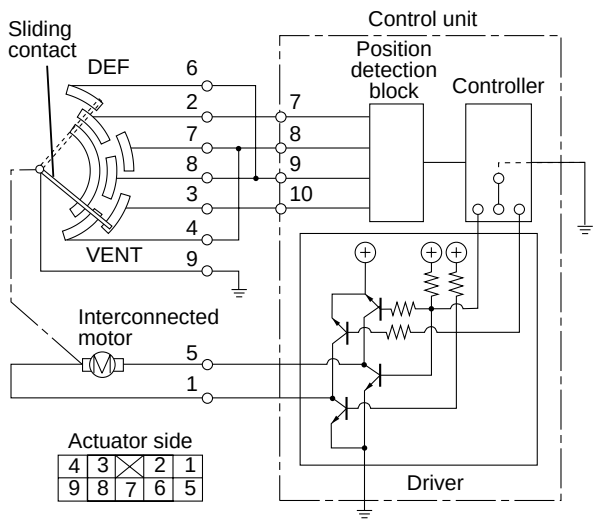

	7	8	9	10
VENT	H	L	H	L
Mid point between VENT - B/L	H	H	H	L
B/L	H	H	L	L
Mid point between B/L - FOOT	H	H	L	H
FOOT	H	L	L	H
Mid point between FOOT - D/F	H	L	H	H
D/F	L	L	H	H
Mid point between D/F - DEF	L	H	H	H
DEF	L	H	L	H

C01RX017

- **Movement of Intake Actuator**

  The controller on the automatic heater/air conditioner control unit selects an intake mode to be used.
  As the Terminal No.5 I-49 is grounded via the sliding contact on the terminal plate, the transistor on the driver is activated, thus turning on the motor rotation. Then, accompanying move of the motor, the sliding contact rotates until grounding of the Terminal No.5 I-49 is removed, thus stopping the motor.

Grounding terminal	Rotation direction	Remarks
No.5 I-49	Clockwise	RE-CIRCULATION→MIX →FRESH

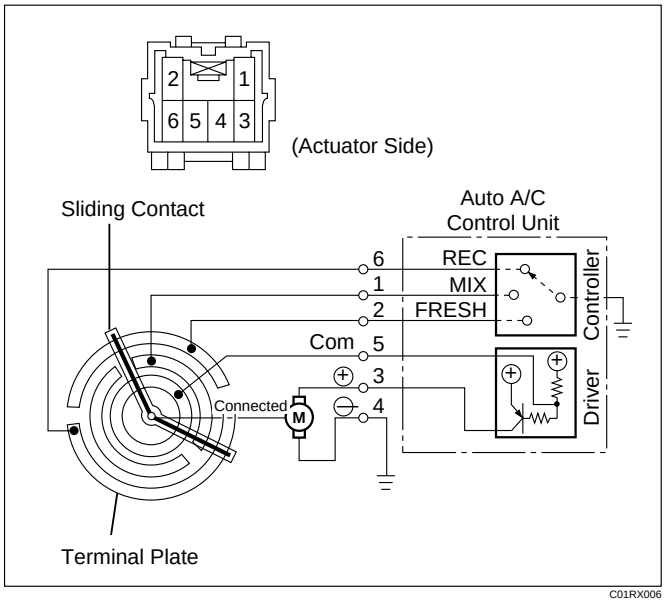

C01RX006

OVERVIEW OF AUTOMATIC CONTROL OF FULL AUTOMATIC AIR CONDITIONER

The full automatic heater and air conditioner on this vehicle has the following features:

- Interior temperature control.
- Air flow control.
- Mode (blow port) control.
- Intake (switching between fresh air and interior air) control.
- Heater start timing control.
- Cooler start timing control.
- Evaporator anti-freeze control.

1. Interior Temperature Control

The automatic heater/air conditioner control unit operates on the setup temperature signal from the temperature control switch and other sensor signals to derive the total signal. Then, the control unit compares this signal against the signal from the potentiometer to determine rotation direction of the mix actuator. The mix actuator moves the air mix door to the aperture specified by the total signal so that the specified interior temperature is achieved.

If the compressor is turned off in the A/C (air conditioning) mode, aperture of the air mix door is offset according to the outside air temperature or the specified interior temperature. This function removes the difference in the blowing temperature in this state and that of when the compressor is turned on.

When FH or FC is selected for the setup temperature, the air mix door is accordingly fixed to the Full Heat or Full Cool mode.

When the VENT mode is selected, aperture of the air mix door is controlled so that excessively heated air may not be blown from the VENT blow port.

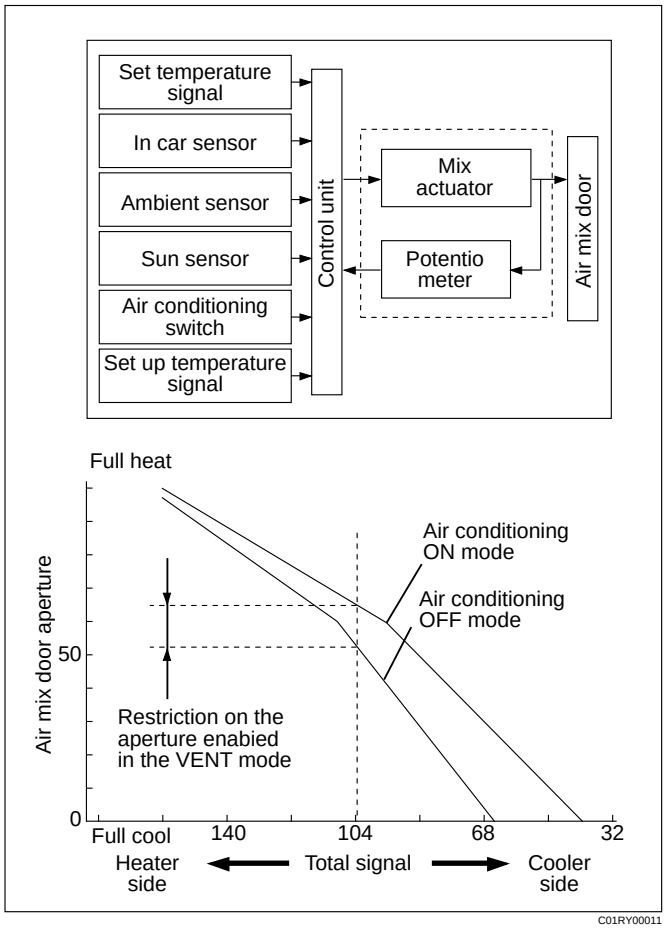

2. Air Flow Control

- In the Auto Mode
  The automatic heater/air conditioner control unit operates on the setup temperature signal and other sensor signals to derive the total signal. Then, the control unit adjusts base potential of the power transistor to match it to the voltage pattern of the target fan so that stage-less fan speed control can be achieved.
  When solar radiation quantity is detected in the VENT or B/L mode, the control unit increases the minimum fan voltage to offset.
  When FH or FC is selected from the temperature control switch, air flow is accordingly fixed to MAX HI or AUTO HI.
- In the Manual Mode
  Air flow specified from the fan switch is entered to the automatic heater/air conditioner control unit as the manual signal. The signal modifies the air flow to the level specified from the fan switch so that the required fan voltage is attained.

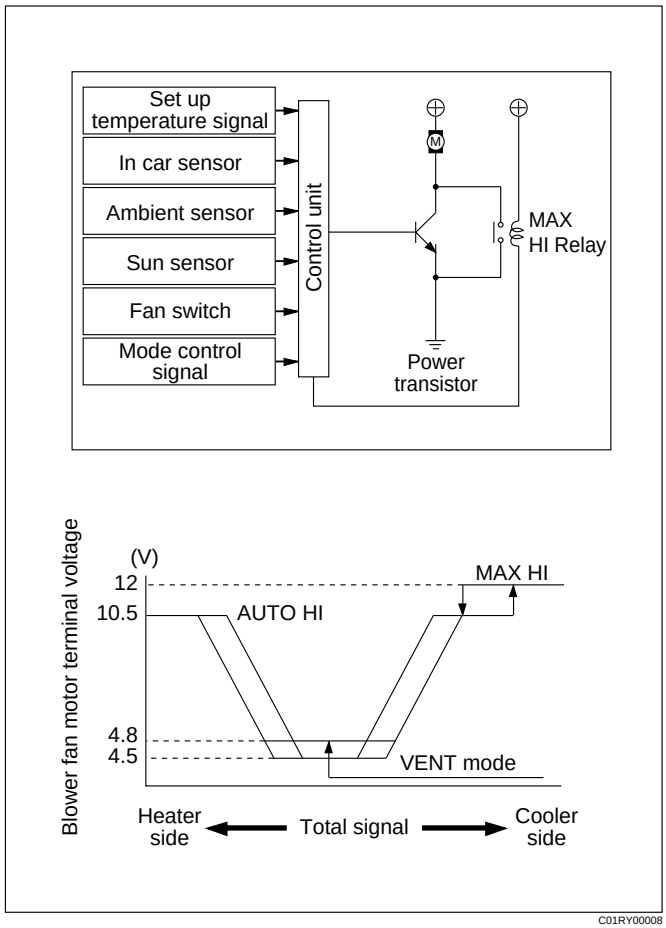

C01RY00008

3. Mode (Blow Port) Control

The automatic heater/air conditioner control unit operates on the setup temperature from the control switch, and temperature and solar radiation quantify from the sensors to determine the total mode control signal. According to the pattern specified by this signal, the control unit selects either one of the VENT, BI-LEVEL, FOOT or DEF/FOOT mode.
The mode actuator determines the rotation direction comparing the target position against the current position being determined by the position detection signal.
When FH or FC is selected for the temperature from the temperature control switch, mode is accordingly fixed to the VENT or FOOT.

- In the manual operation of the mode switch, you can select a desired blow port mode pressing the corresponding mode switch.
- Operating the DEF mode switch selects the DEF for the blow port mode.

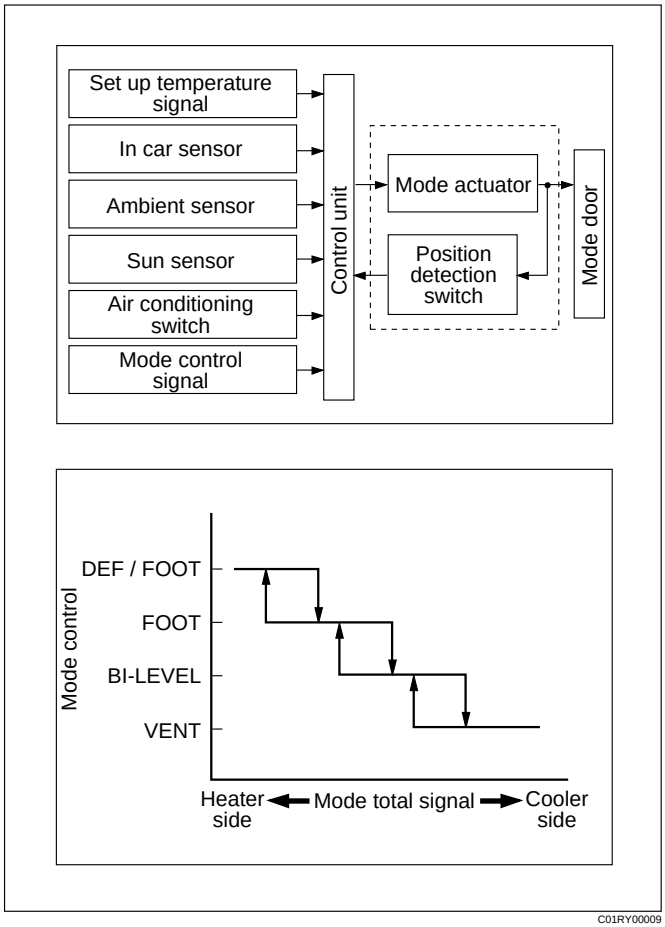

C01RY00009

4. Intake (Fresh air/interior air switching) Control

In the Full Auto mode, the automatic heater/air conditioner control unit operates on the setup temperature signal and other sensor input signals to derive the total signal. According to the pattern specified by this signal, the control unit provides the intake control.

When the fan is turned off or the A/C (air conditioning) is turned off, the intake is fixed to the FRESH mode.

When FC or FH is selected from the control switch, the intake mode is accordingly fixed to the RECIRC or FRESH.

- In the Manual Operation
  Pressing the FRESH (fresh air intake) or the RECIRC (room air circulation) accordingly selects the FRESH or RECIRC mode.
- When the DEF Mode Switch is depressed
  The intake mode is fixed to the FRESH. When the MANU REC is selected, however, the mode is fixed the RECIRC.
- When the Mode Switch is depressed
  If the automatic intake control is selected, the intake is fixed to the currently selected mode.

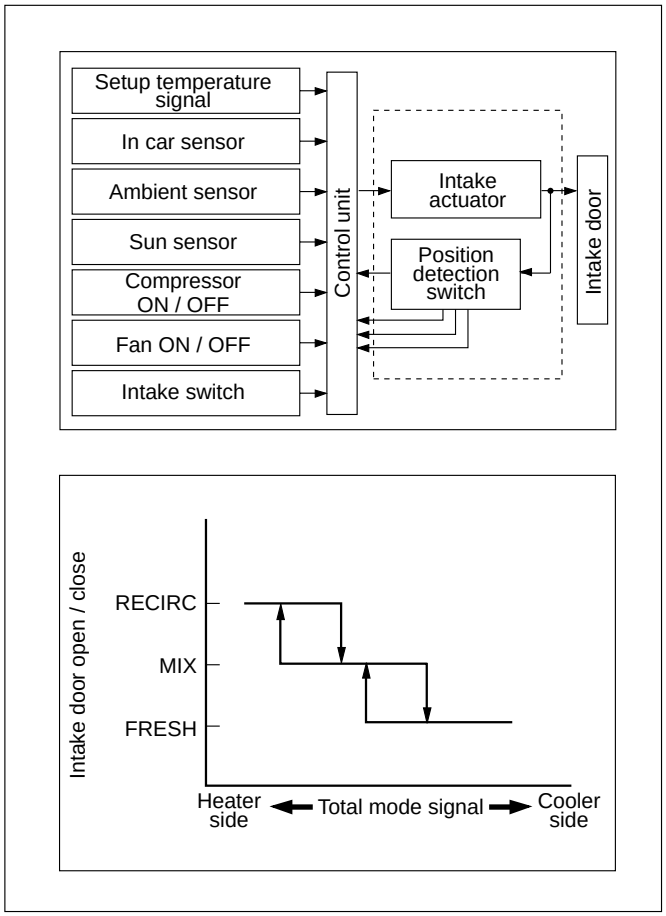

C01RY00012

5. Compressor Control

In the automatic control mode, the automatic heater/air conditioner control unit turns on or off the compressor with the evaporator anti-freeze mechanism using the duct sensor. And, when outside air is detected to be low through the ambient sensor signal, the control unit turns off the compressor using the compressor control function.

- Manual Control
  In the automatic control mode, pressing the A/C (air conditioning) switch turns off the compressor.
- Pressing the DEF mode switch automatically turns on the compressor.

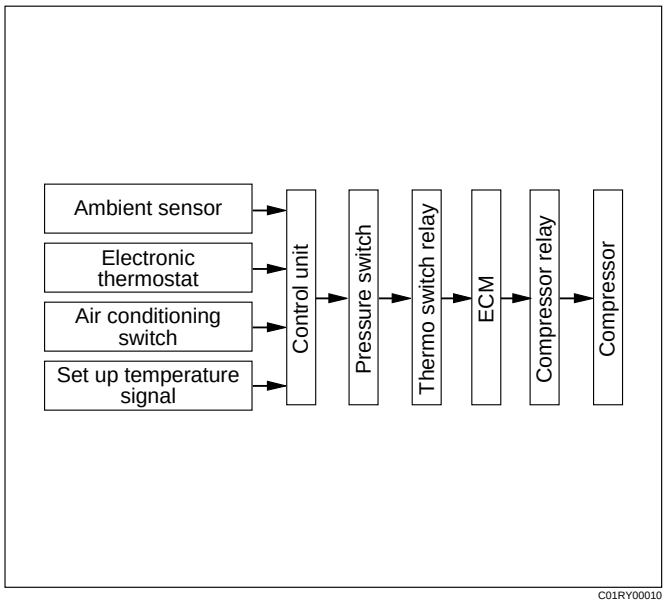

C01RY00010

6. Heating Start Timing Control

When the automatic heater/air conditioner is started, heating is turned on under following conditions.

- The detected temperature of thermo unit is 136°F or less.
- The temperature setting signal and the total signal by each sensor meet the condition of heating.

When the detected temperature by the coolant temperature sensor is 136°F or less the blower fan motor is set to work at low speed and the "DEF" mode is selected.

When the detected temperature by the coolant temperature sensor is 77°F or more, the blow mode changes automatic control. And the blower fan speed is controlled to be lineally up from "LO" to "MAX HI".

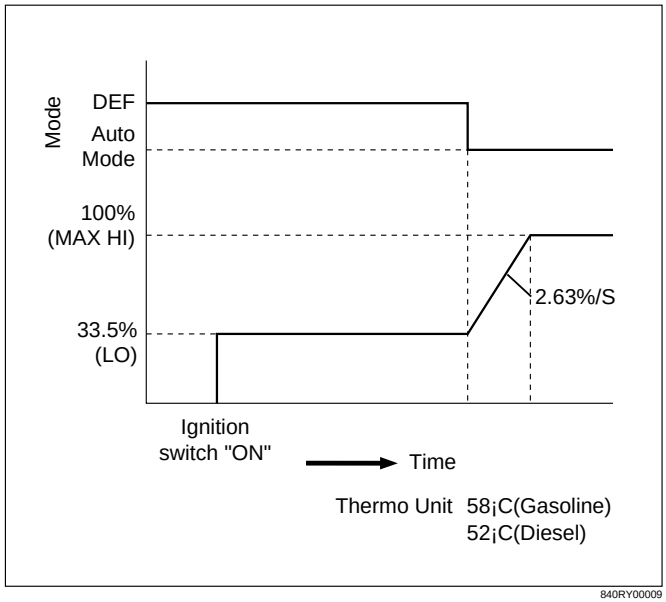

7. Cooling Start Timing Control

When the automatic heater/air conditioner is started, cooling is turned on under following conditions.

- The in car sensor is 86°F or more.
- The temperature setting signal and the signals from each sensor meet the specified condition.

The blower fan speed is set to "LO" for maximum 7 seconds when cooling start conditions meet, and then, is controlled to be lineally up to "MAX HI" by 5.32%/S.

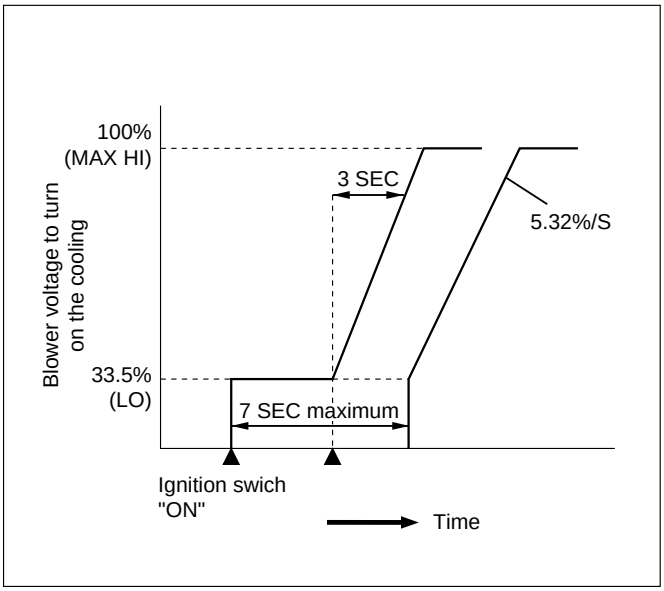

TROUBLESHOOTING

Troubleshooting, Its Overview and Procedures

The full automatic heater and air conditioner equips with the "Self-Diagnosis Function" to check its major components.
This function makes access to the sensors, actuators and blower fan motor system easier when checking them up and, when a failed part is located, this function restores its original performance.
When implementing the troubleshooting, this self-diagnosis function narrows the range to be searched at the first step, then check relevant parts one by one according to the "Checking Procedures by Failed Location" As for a location this function is unappreciable, the system accurately determines characteristics of a given trouble and checks relevant parts according to the "Checking Procedures by Failed Location".
The following illustrates basic troubleshooting flow.

1. Basic Troubleshooting Flow

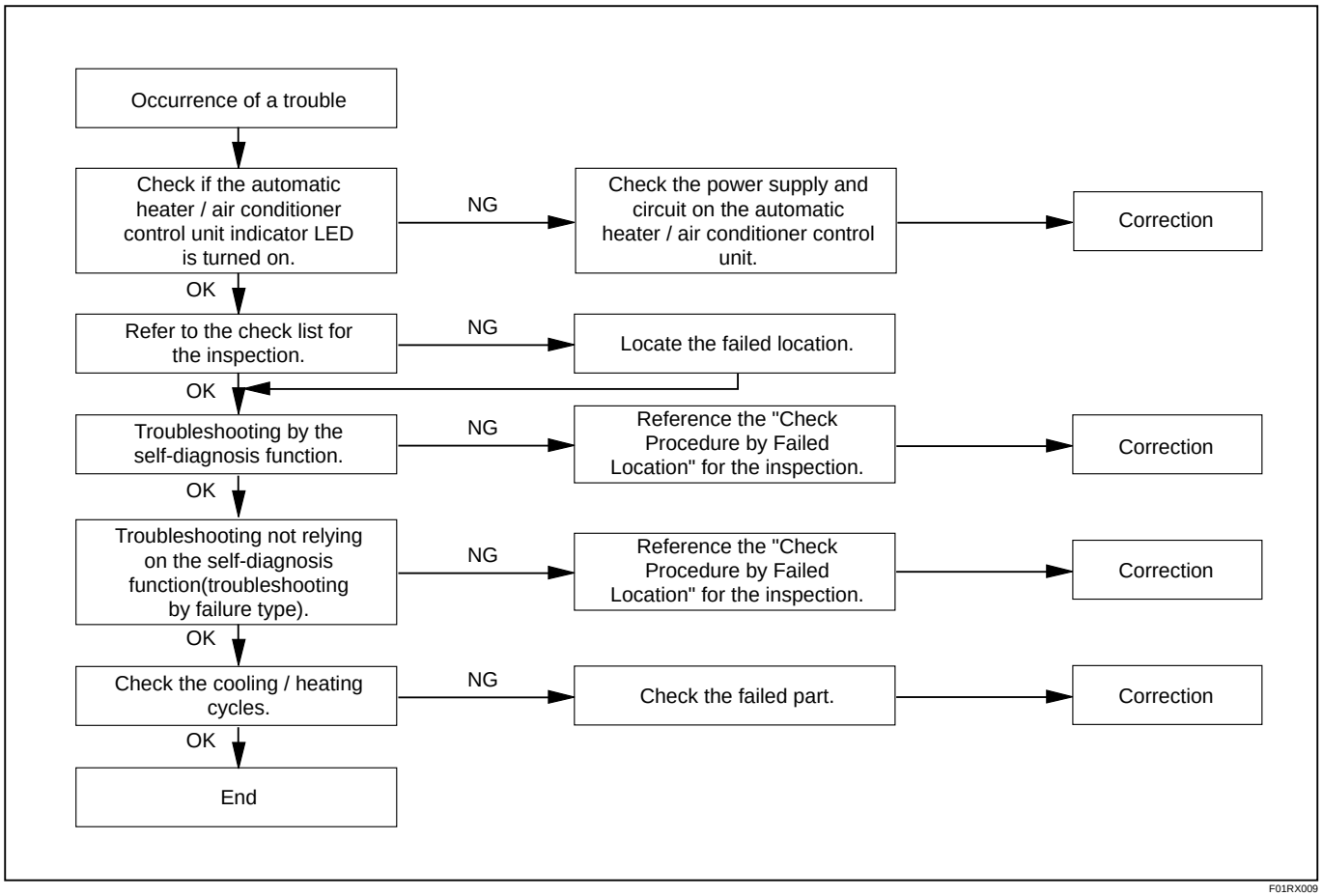

F01RX009

Check of Auto Amplifier (Automatic air conditioner control unit) Power Supply System

- This check is required because a trouble on the auto amplifier (control unit) power supply circuit or grounding circuit prevents accurate troubleshooting.

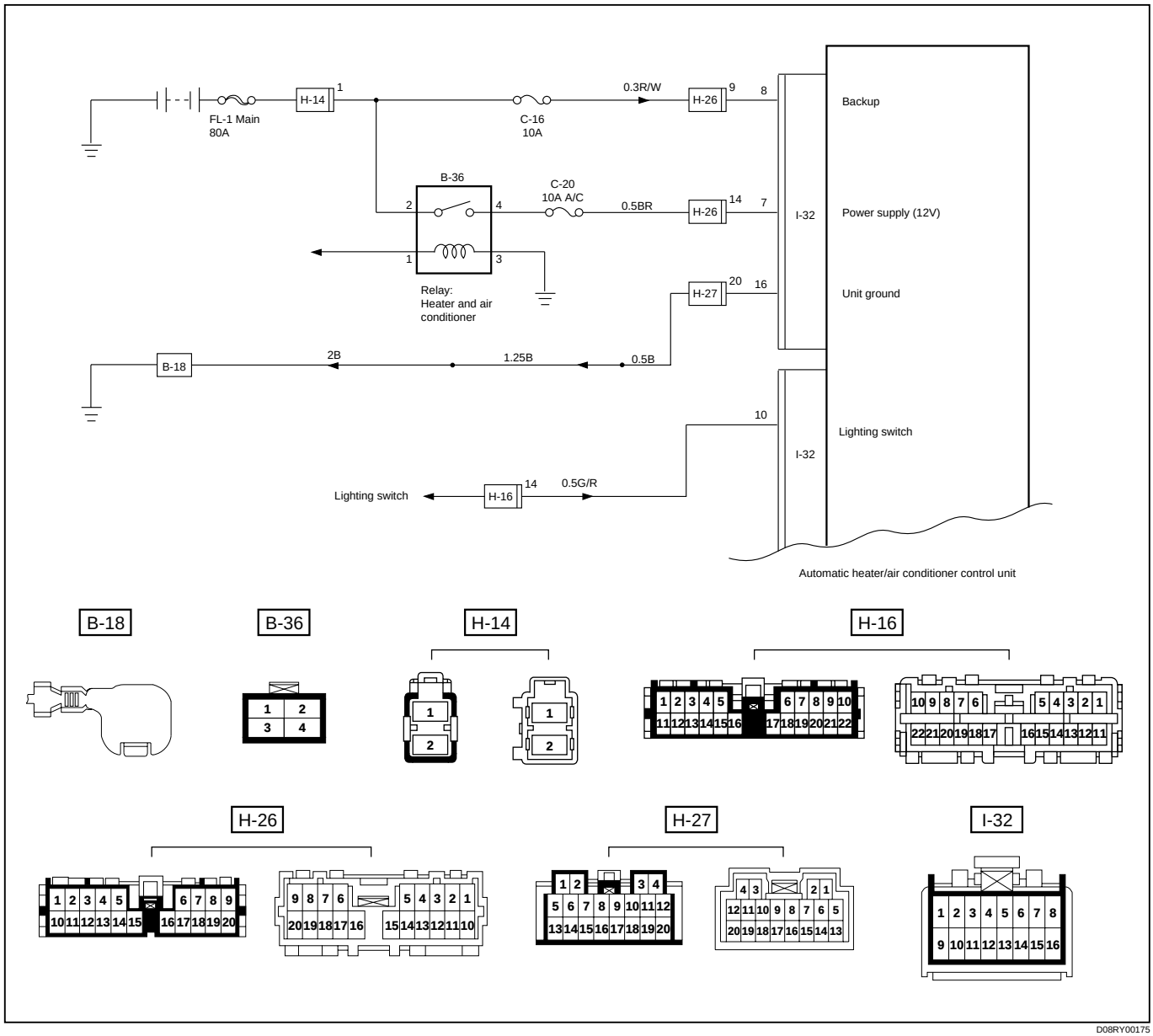

D08RY00175

Check of auto amplifier power supply circuit and grounding circuit.

Chart A

Chart "A" : Check of Auto Amplifier Power Supply System

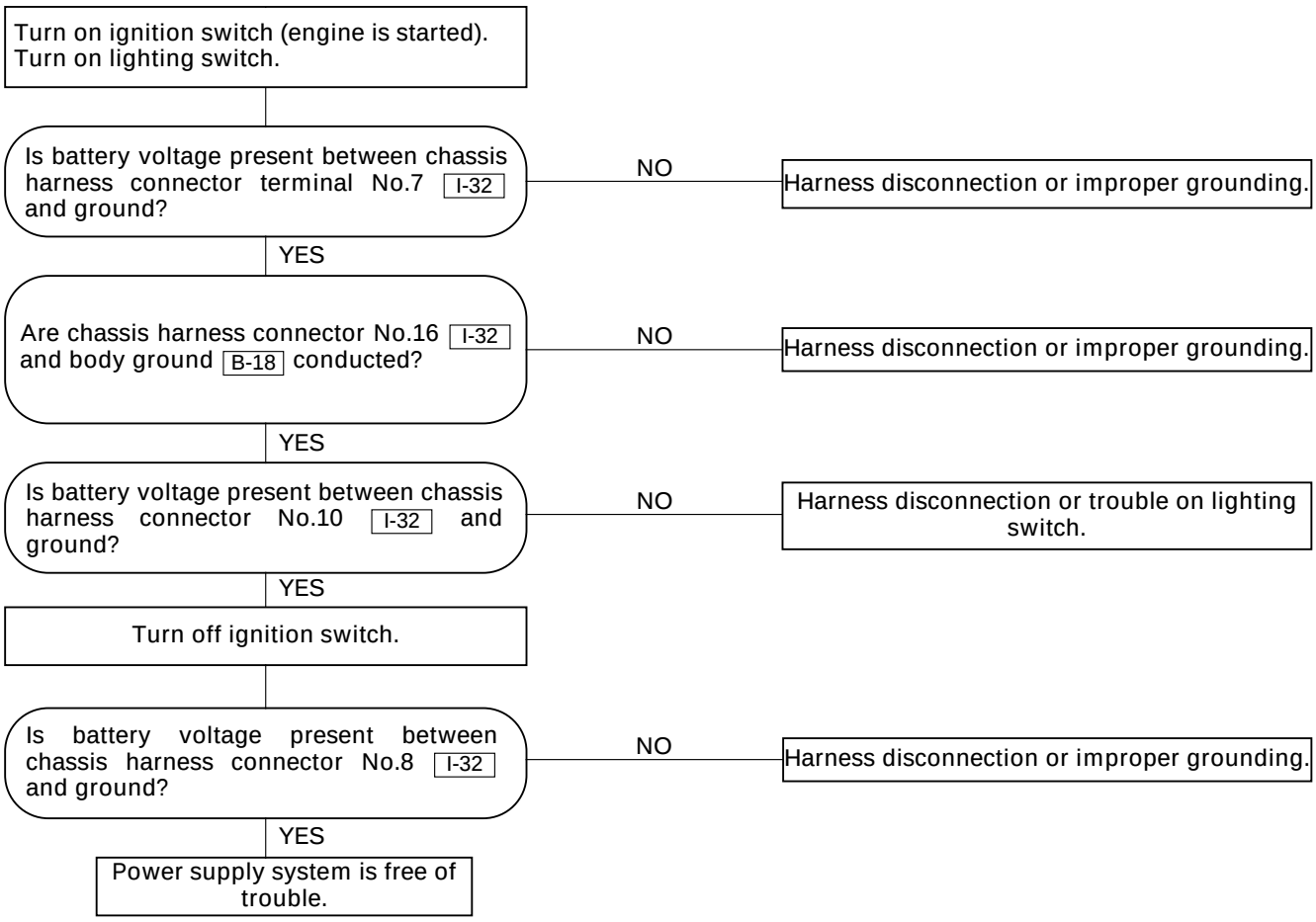

Performance and Movement checklist for Automatic Air Conditioner Related Parts

Start the engine, and when the engine coolant reached 60°C check performance and movement of the related parts according the following checklist.

1. Performance Check Using the Manual Switch

No.	Item	Checking Approach		Acceptance criteria
		Condition	Operation	
1	Blowing temperature (check movement of air mix door)	Auto switch must be turned on (FAN-AUTO MODE-AUTO)	(1) Select FC for the setup temperature. (2) Select FH for the setup temperature. → Then, select the MAX Control.	(1) Cold air shall be blown out. (2) Hot air shall be blown out.
2	Airflow volume (check movement of the mode door)	Set temperature to 25.0°C.	(1) Turn the fan knob off. (2) Turn the fan knob from LOW to HI.	(1) The fan shall be stopped, thus stopping air blow, too. (2) Airflow volume shall change from LOW to HI.
3	Blowing temperature (check movement of the mode door)	Set temperature to 25.0°C. Set the fan knob to HI.	Press the mode switch to change the blow port mode sequentially from the VENT through BI-LEVEL, FOOT up to DEF.	LED corresponding to each mode shall be turned on and the blow port mode shall be switched smoothly.
4	The interior/outside air switching mode (check movement of intake door)	Set temperature to 25.0°C.	Turn the LED off using the interior/outside air switch (this introduces the outside air intake mode). Then, the set fan knob to HI and press the interior/outside switch to turn on the LED.	The LED indication shall be switched from OFF to ON accompanying a change in air blowing sound.
5	Compressor	Set the temperature to FC. (Outside air temperature is 0C or above and interior temperature at ordinary temperature.)	Press the "OFF" switch. (1) Press the Auto switch. (2) Press the Air Conditioner switch.	(1) As the fan knob is set to the Auto position, the A/C switch LED shall come on and the compressor shall be turned on. (2) As the A/C LED comes off, the compressor shall be turned off.

2. Check of Full Auto Function

No.	Item	Checking Approach		Acceptance criteria
		Condition	Operation	
1	Full Auto function	FAN KNOB “AUTO” MODE SW “AUTO”	Select FC for the temperature.	The LED shall come on. Cold air shall be blown out. The following LEDs shall come on: • Blow port mode : F01RX002 • Intake mode • Fan speed : MAX Hi • A/C
			Change the temperature gradually starting with 20°C up to 30°C.	The following phenomena shall be recognized. • Temperature of blown air: Cold air is changed to hot air. • Change in the air flow volume. • The blow port mode LED indication changes in the following sequence: (VENT) (BI-LEVEL) (FOOT) F01RX003
			Select FH for the temperature.	Cold air shall be blown out. The following LEDs shall come on. • Blow port mode : F01RX004 • Fan speed: Max Hi

TROUBLESHOOTING WITH SELF-DIAGNOSIS FUNCTION

1. Overview of Self-Diagnosis Function

The self-diagnosis is implemented in 3 steps for each target. For detail of check procedure contained in each step, refer to the relevant section of "Check Procedure by Failed Location" listed in the Self-Diagnosis Operation Procedure.
For turning on the self-diagnosis function and switching of the check step, refer to the flow chart given below. You can reset the self-diagnosis function by turning the ignition switch off or turning the DEF switch on for 3 seconds.

2. Self-Diagnosis Operation Procedure

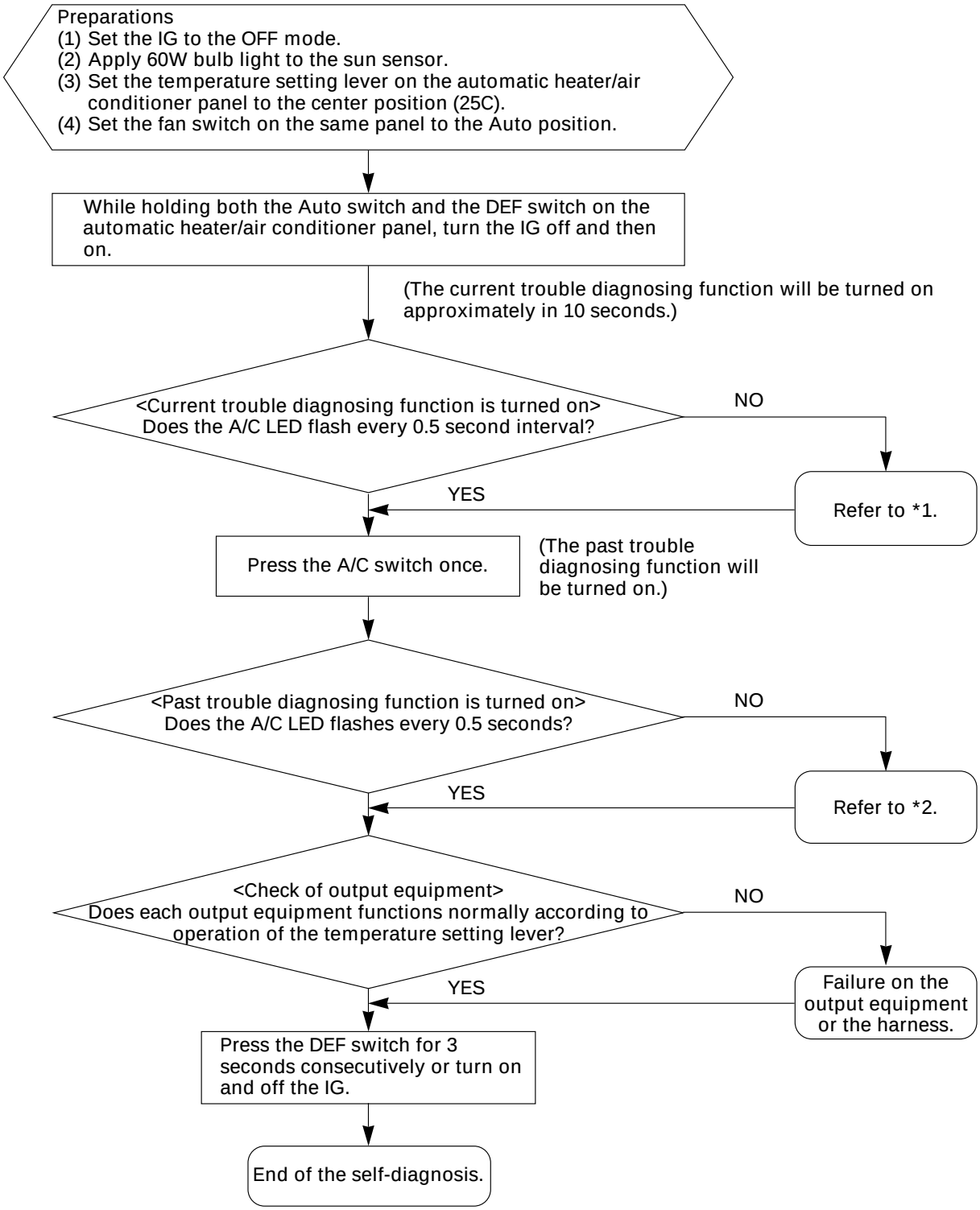

*1. Displaying the Current Trouble Diagnosing Table

Start the engine while holding down both the Auto switch and the DEF switch on the control panel, and the table will appear in approximately 10 seconds to the indicator lamp (LED) of the air conditioning switch. Result of the diagnosis along the following 9 items will be shown one by one in 0.5 second interval irrespective of presence or absence of a trouble for a given item. When the display 9 items is completed, it is repeated with 3 seconds of interval in between. A failed item is indicated by flashing of the LED that is repeated 3 times within 0.5 seconds. If a trouble is indicated, you can locate the failed section by knowing when in the total sequence it has been displayed.

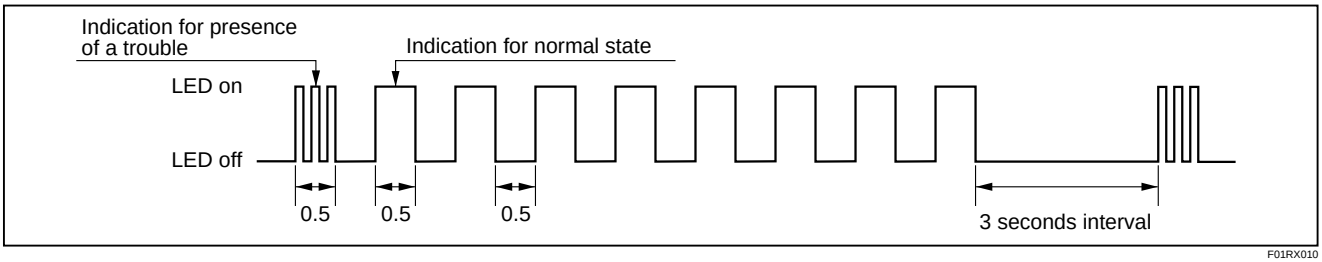

F01RX010

Items for Current Trouble Diagnosis

Display pattern	Failed part
ON / OFF	Normal pattern
	In car sensor
	Ambient sensor
	Sun sensor (Note 1)
	Duct sensor
	Temperature control lever (Note 2)
	Fan switch (Note 3)
	Mix actuator
	Mode (blow port) control
	Intake (fresh air/interior air switching) control

F01RY00008

As shown above, display of result along nine items is repeated with 3-second interval in between.

Note 1: When checking the solar radiation sensor, apply sufficient light using a 60W bulb. Otherwise, it can be diagnosed as failed.

Note 2: If the temperature setting lever is set on both ends (one set to 18°C, blue scale = Full cool and the other to 31°C, red scale = Full hot), they can be diagnosed as failed.

Note 3: Likewise, the fan switch can be diagnosed as failed if set on both ends.

*2. Displaying the Past Trouble Diagnosing Table

The past trouble diagnosis displays only the items on which trouble has recurred 16 times in the past. If you press the air conditioning switch once while the current trouble diagnosis is taking place, display of the past trouble diagnosis will appear on the indicator lamp (LED) of the air conditioning switch. Results of the diagnosis along the following five items are displayed one by one in 0.5 second interval irrespective of presence or absence of a trouble. A failed item is indicated by flashing of the LED that is repeated 3 times within 0.5 seconds. You can locate the failed section by counting in what sequence it has been displayed.

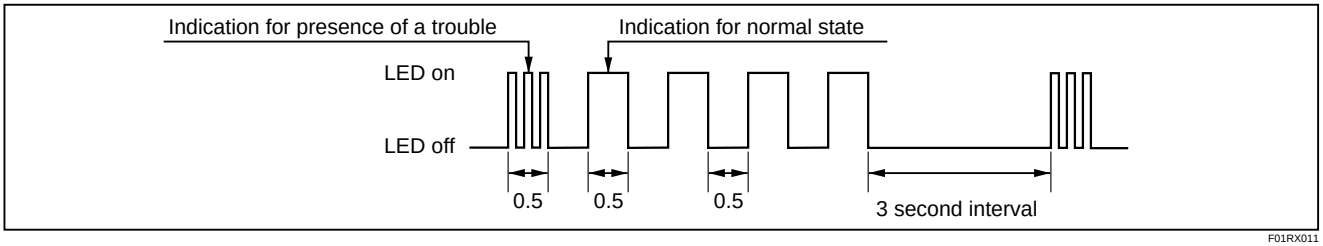

F01RX011

Items for Past Trouble Diagnosis

Display pattern	Failed part
ON / OFF	Normal pattern
	In car sensor
	Ambient sensor
	Sun sensor
	Duct sensor
	Mix actuator

F01RY00007

*3. Check of Output Equipment

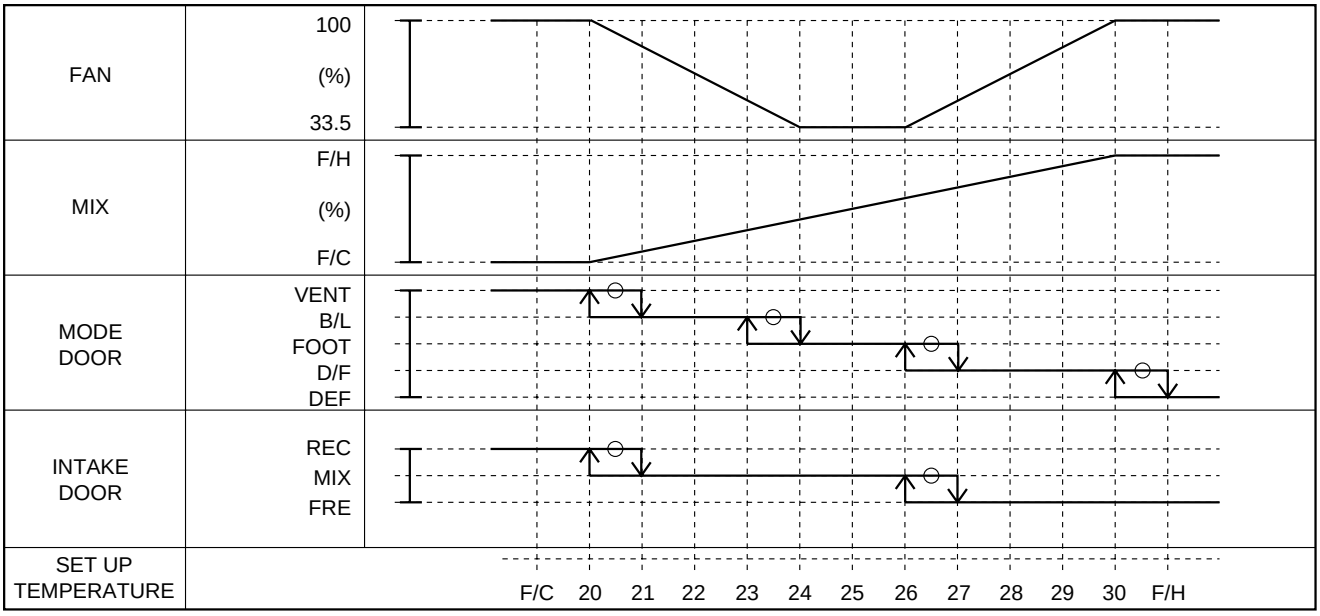

F01RY00001

INSPECTION BY FAILED LOCATION

Inspection of the Sensors

When the self-diagnosis function has determined that trouble is present on the sensors, check them according to the following flow chart.

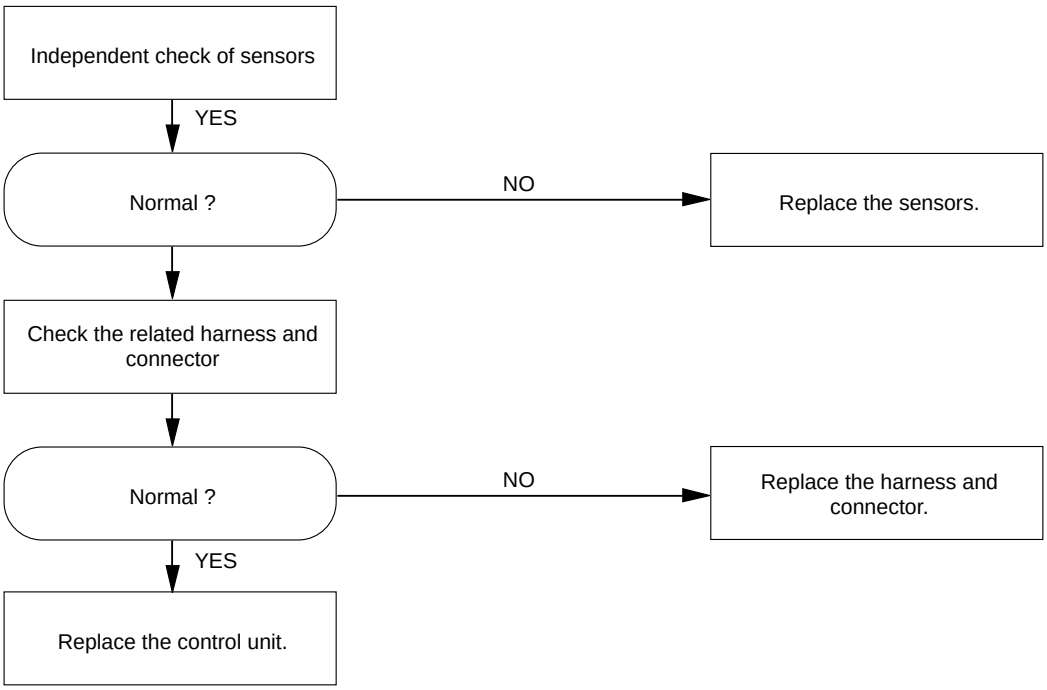

Sensors	Allowable range	Check method
In car sensor	Refer to the sensor resistance curve.	Chart 1
Ambient sensor	Refer to the sensor resistance curve.	Chart 2
Sun sensor	100 ohms maximum in forward and 0.02 mA minimum when exposed to 60W incandescent lamp.	Chart 3

F01RY00005

Chart 1: In Car Sensor

Disconnect the in car sensor connector (I-34).

Is the sensor performance normal? (refer to the later section on "Check Up")

NO → Replace the sensor.

YES

Are conduction provided between the following connector terminals on chassis harness side?:
No.3 I-34 and No.1 I-33.
No.4 I-34 and No.11 I-33.

NO → Disconnection of the harness.

YES

Failure on the automatic heater/air conditioner control unit.

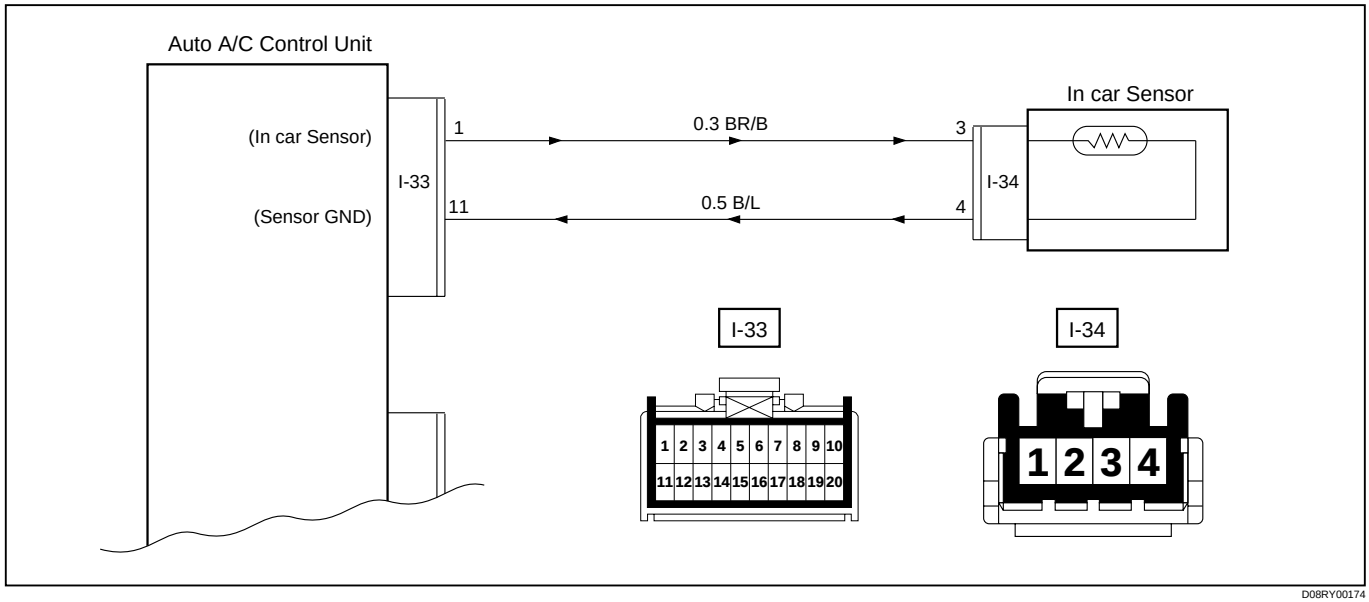

D08RY00174

Chart 2: Ambient Sensor

Disconnect the Ambient sensor connector (C-86).

Is performance of the ambient sensor normal? (Refer to the later section on "Check Up".)

NO → Replace the ambient sensor.

YES

Connect the ambient sensor connector.

Is resistance between the following connectors normal?
No.2 I-33 and No.11 I-33.

NO → Failure on the harness.

YES

Replace the automatic heater/air conditioner control unit.

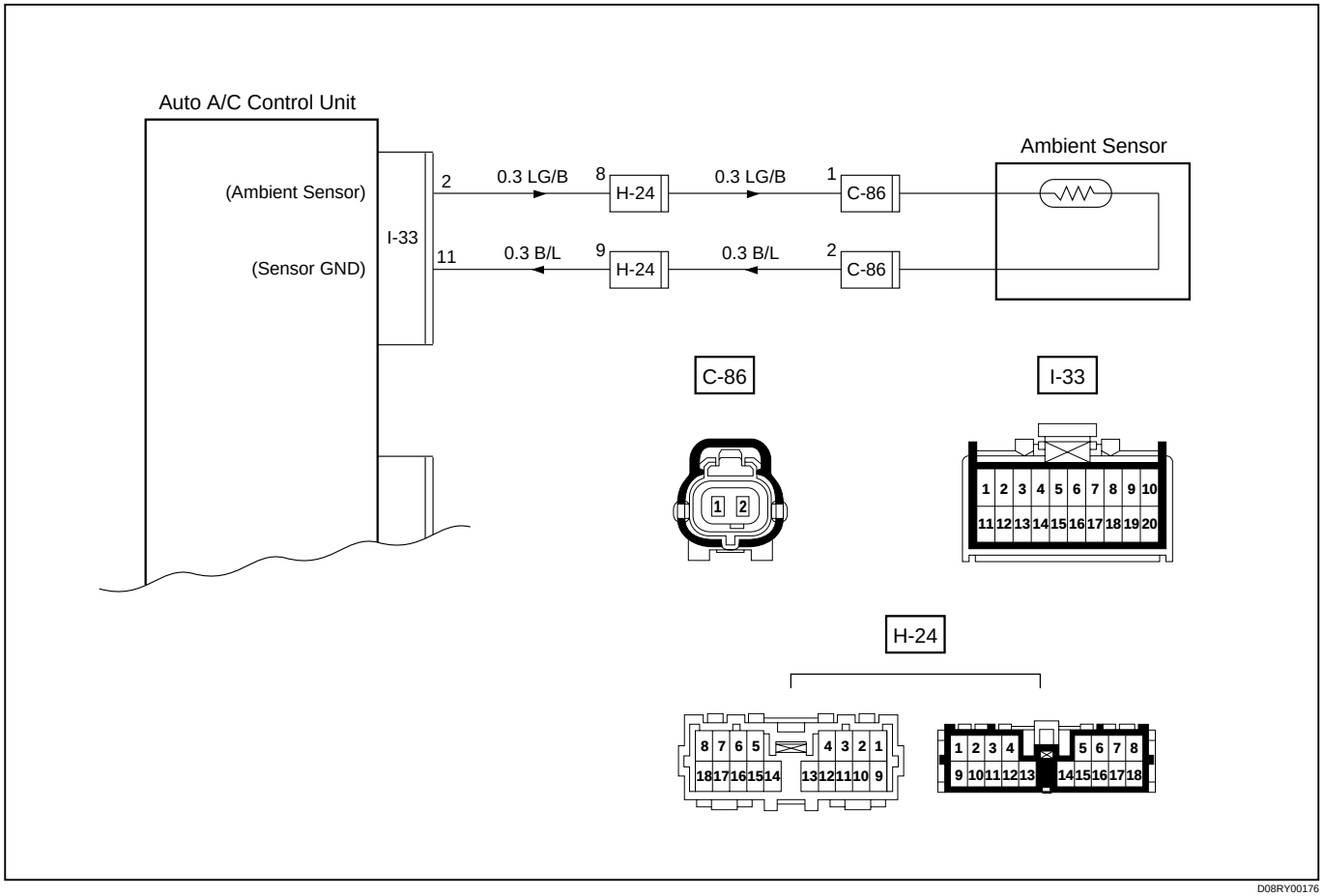

D08RY00176

Chart 3: Sun Sensor

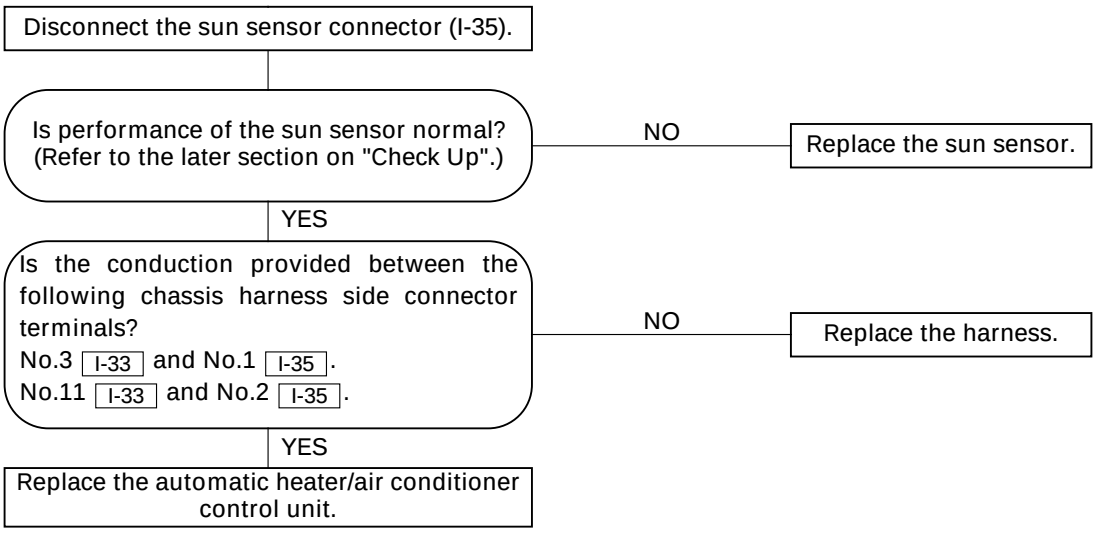

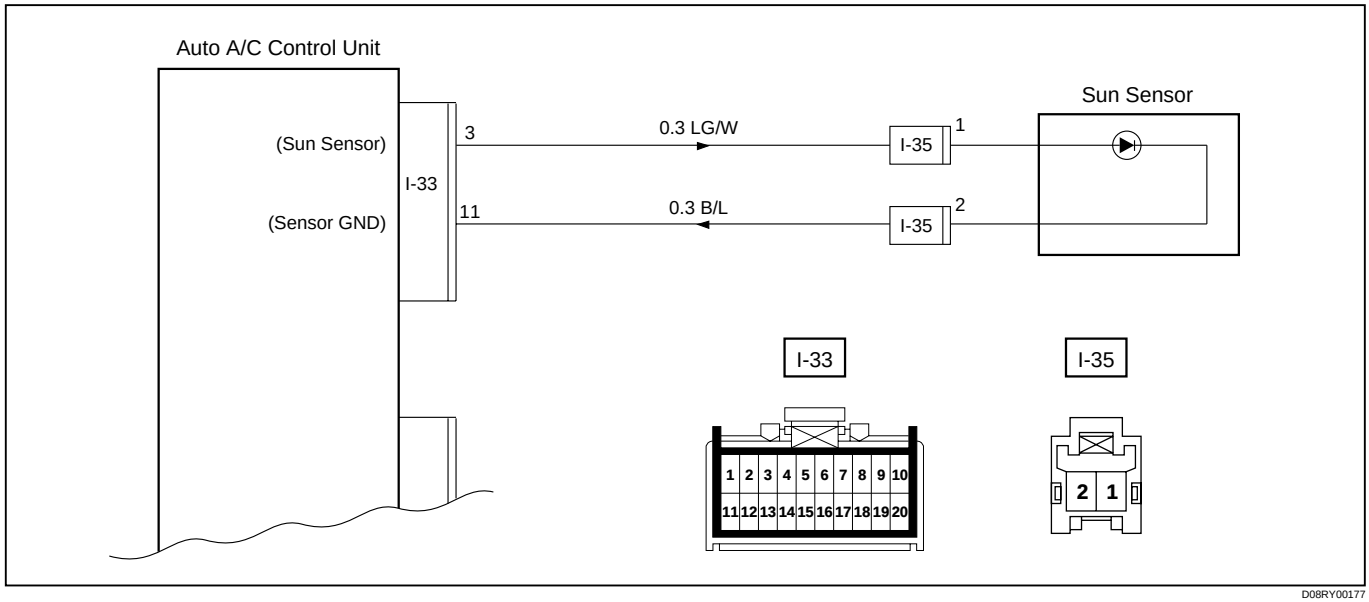

D08RY00177

Inspection of the Intake Actuator System

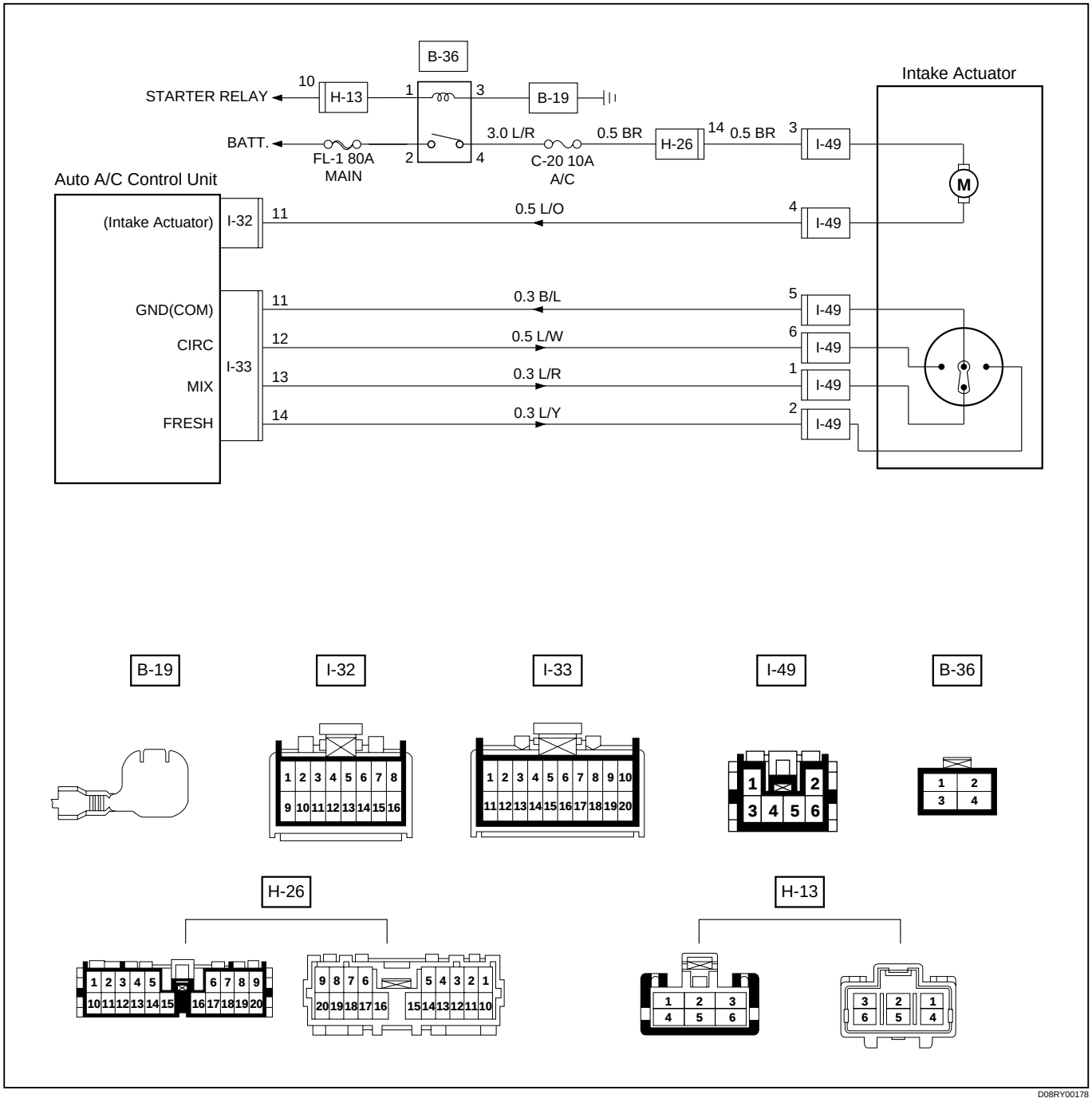

D08RY00178

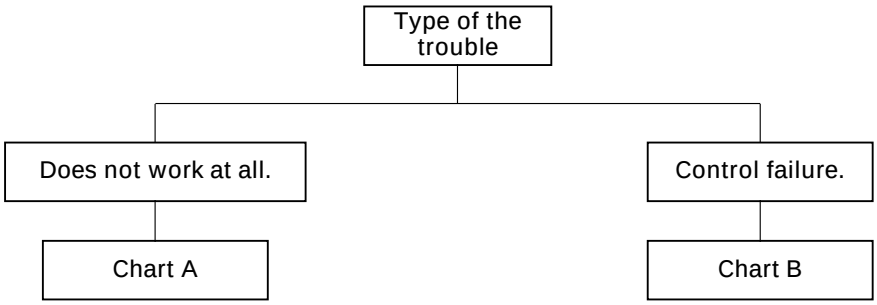

Chart A: Does Not Work At All

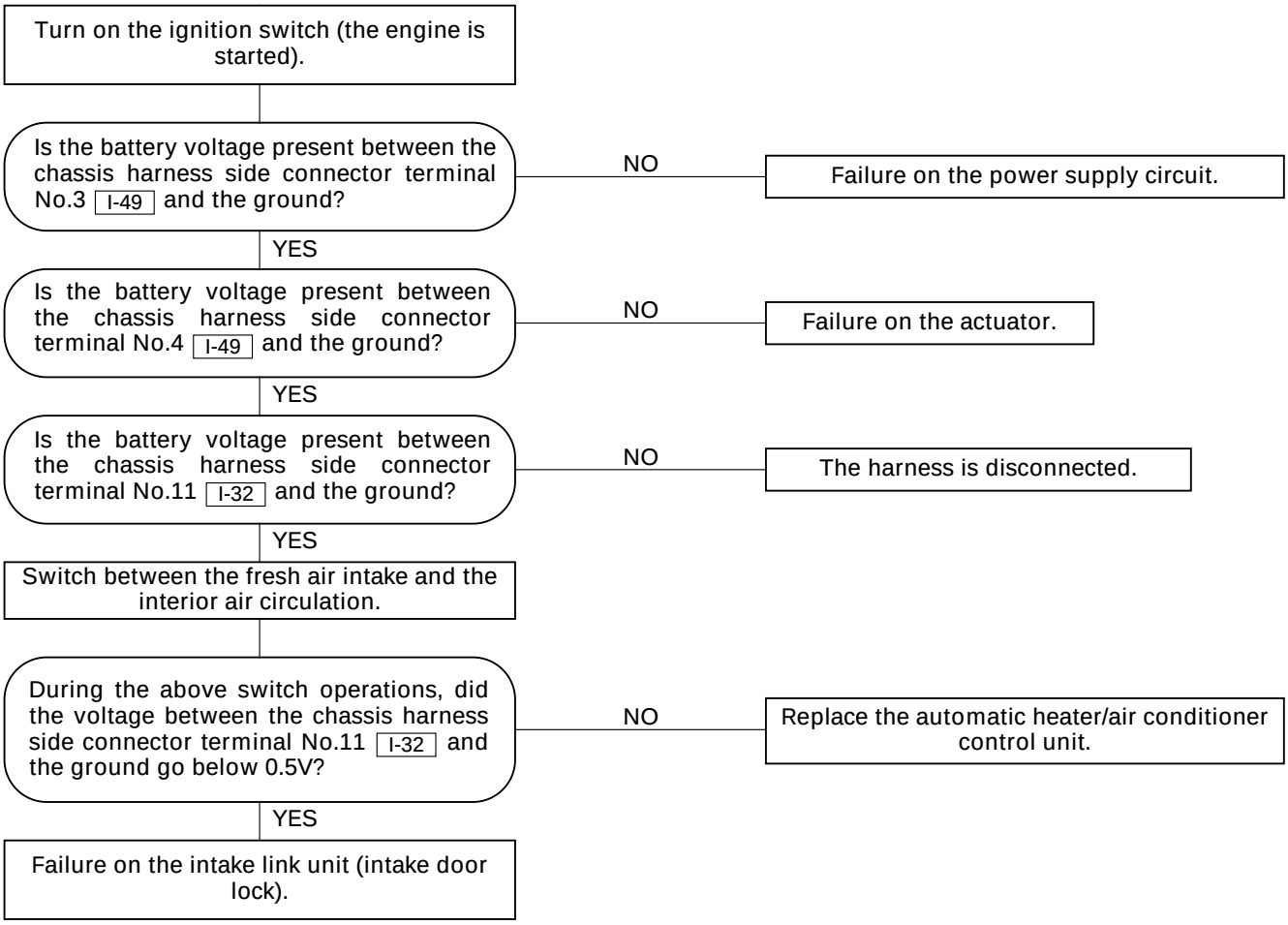

Chart B: Failure on the Intake Control

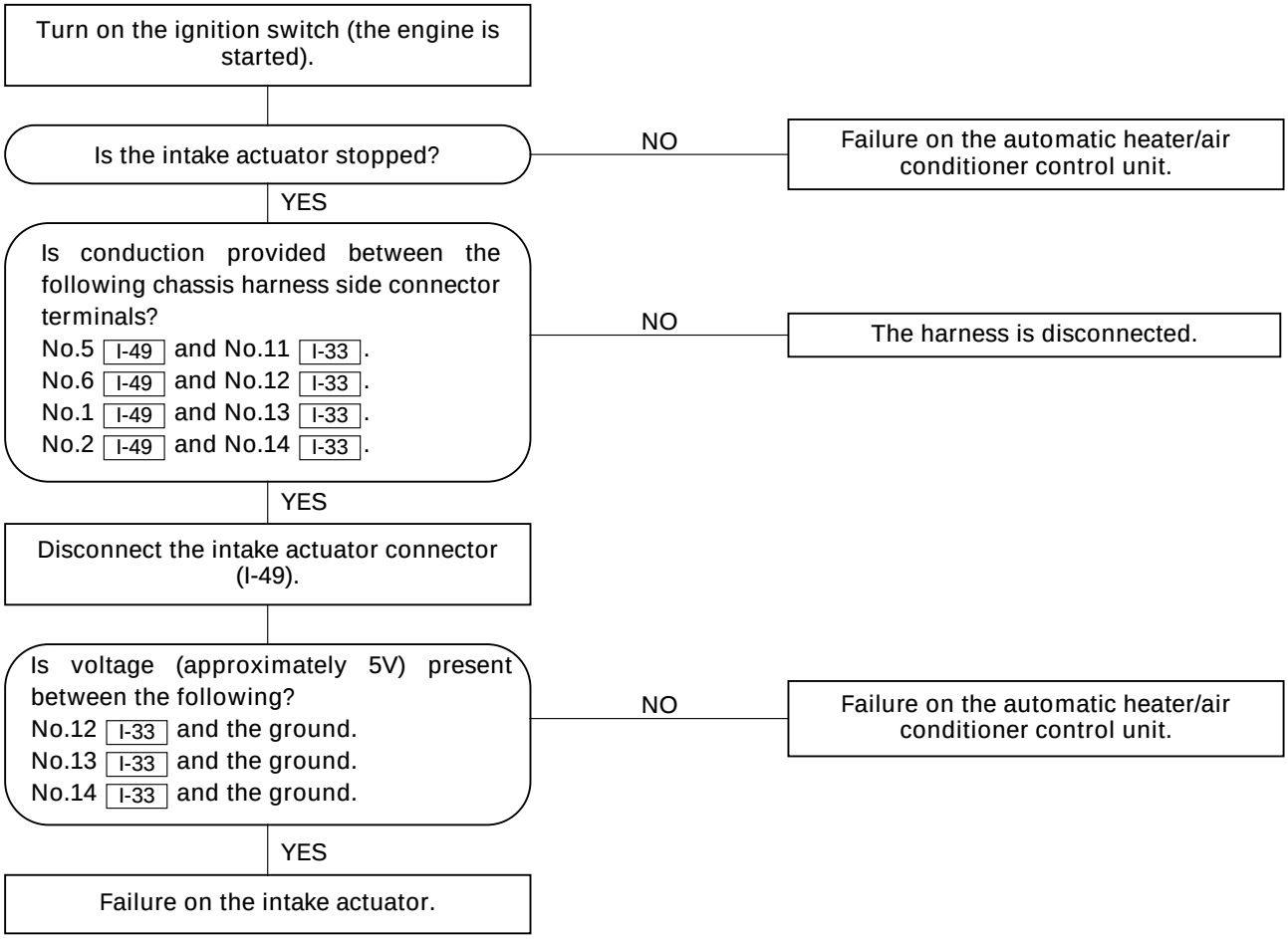

Inspection of the Mix Actuator System

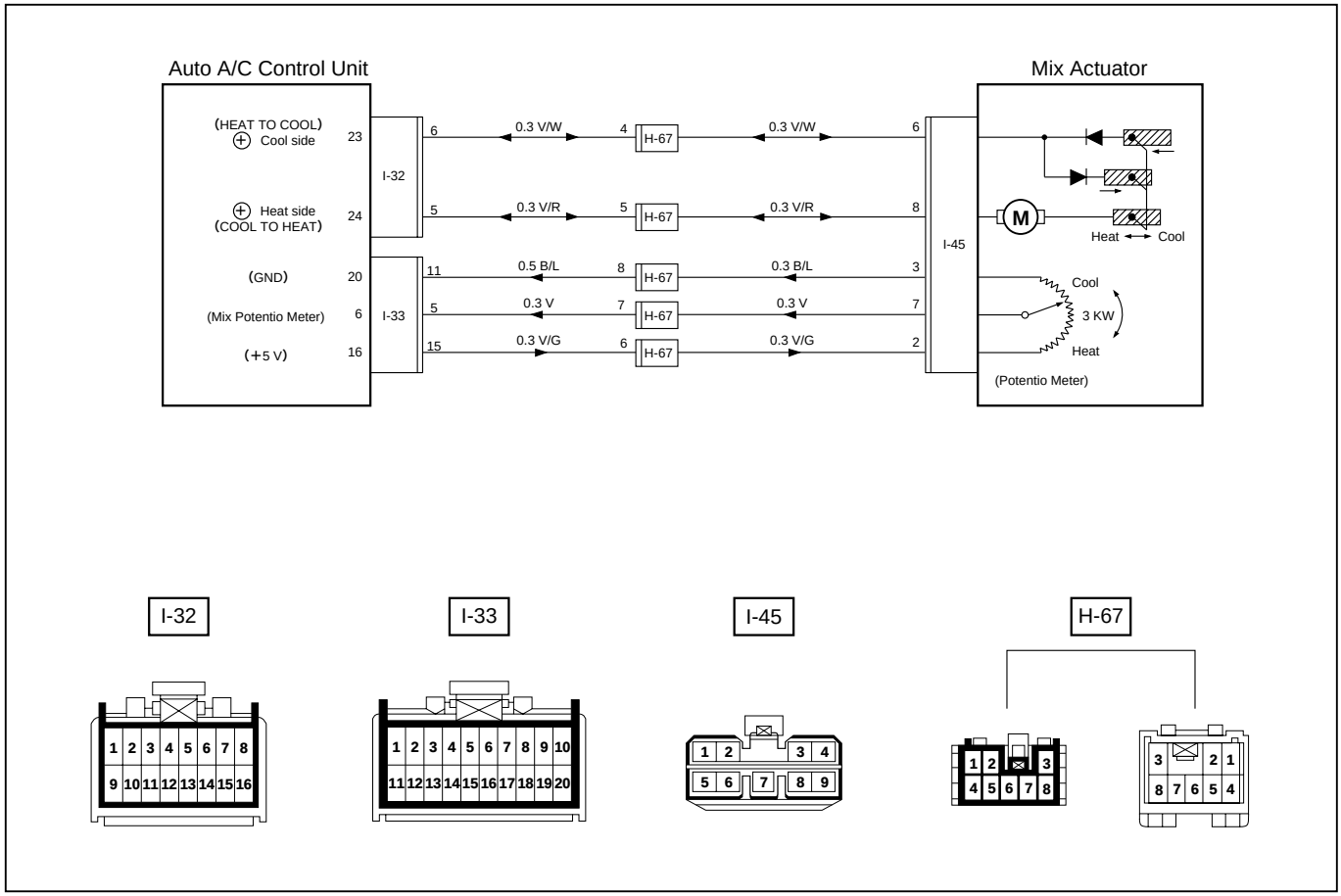

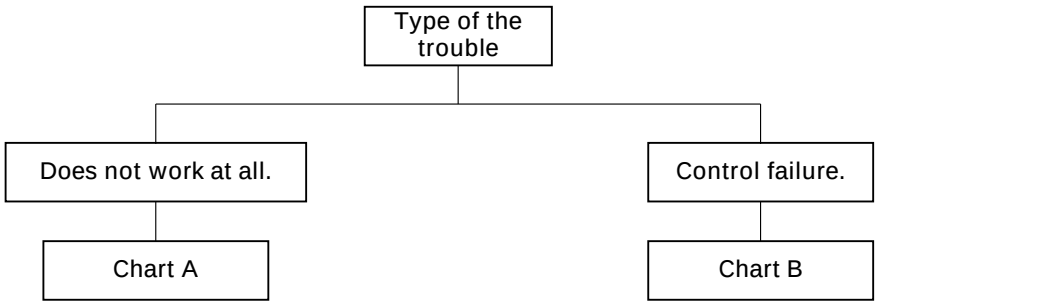

Chart A: Does Not work At All

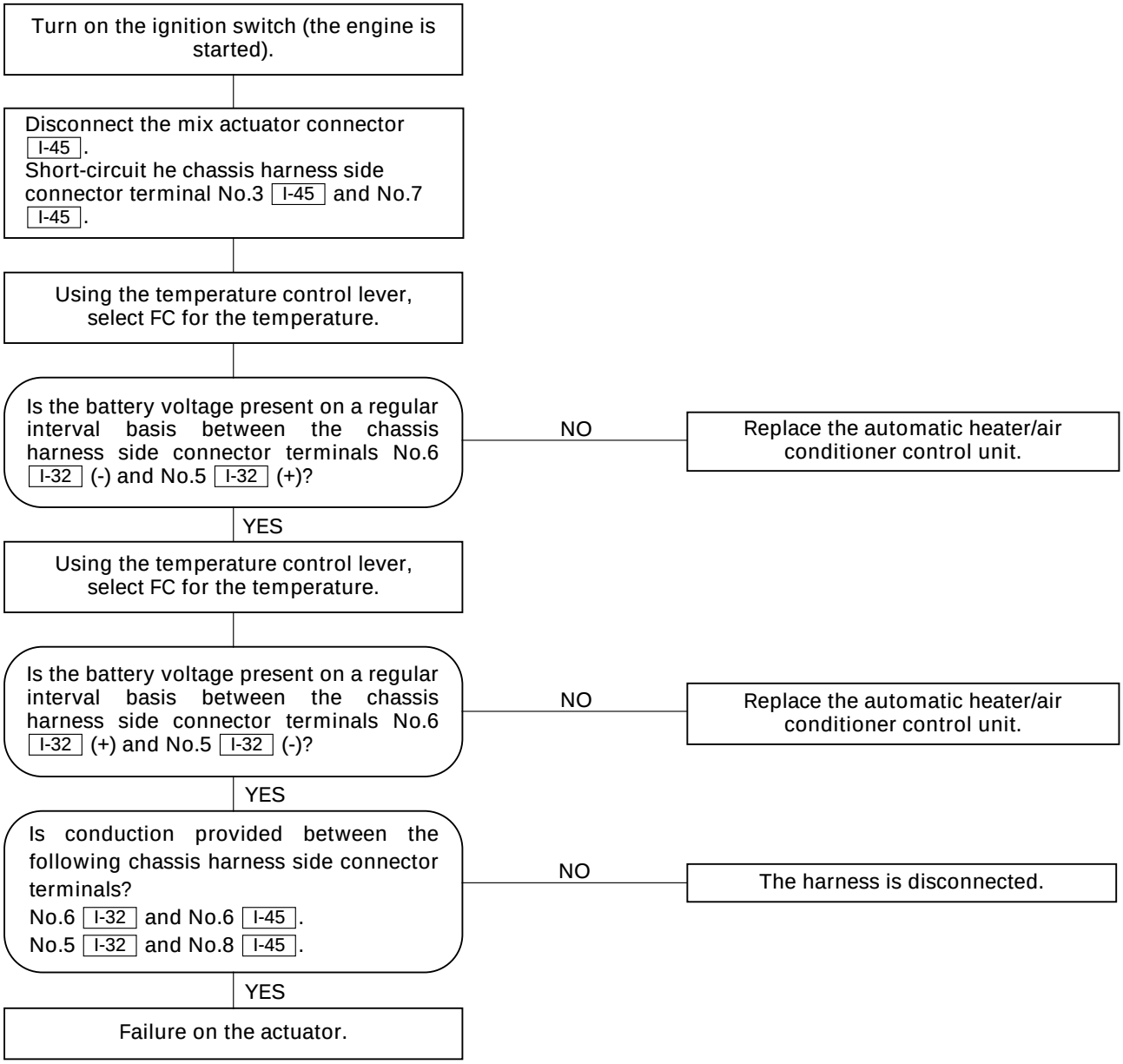

Chart B: Mix Actuator Control Failure

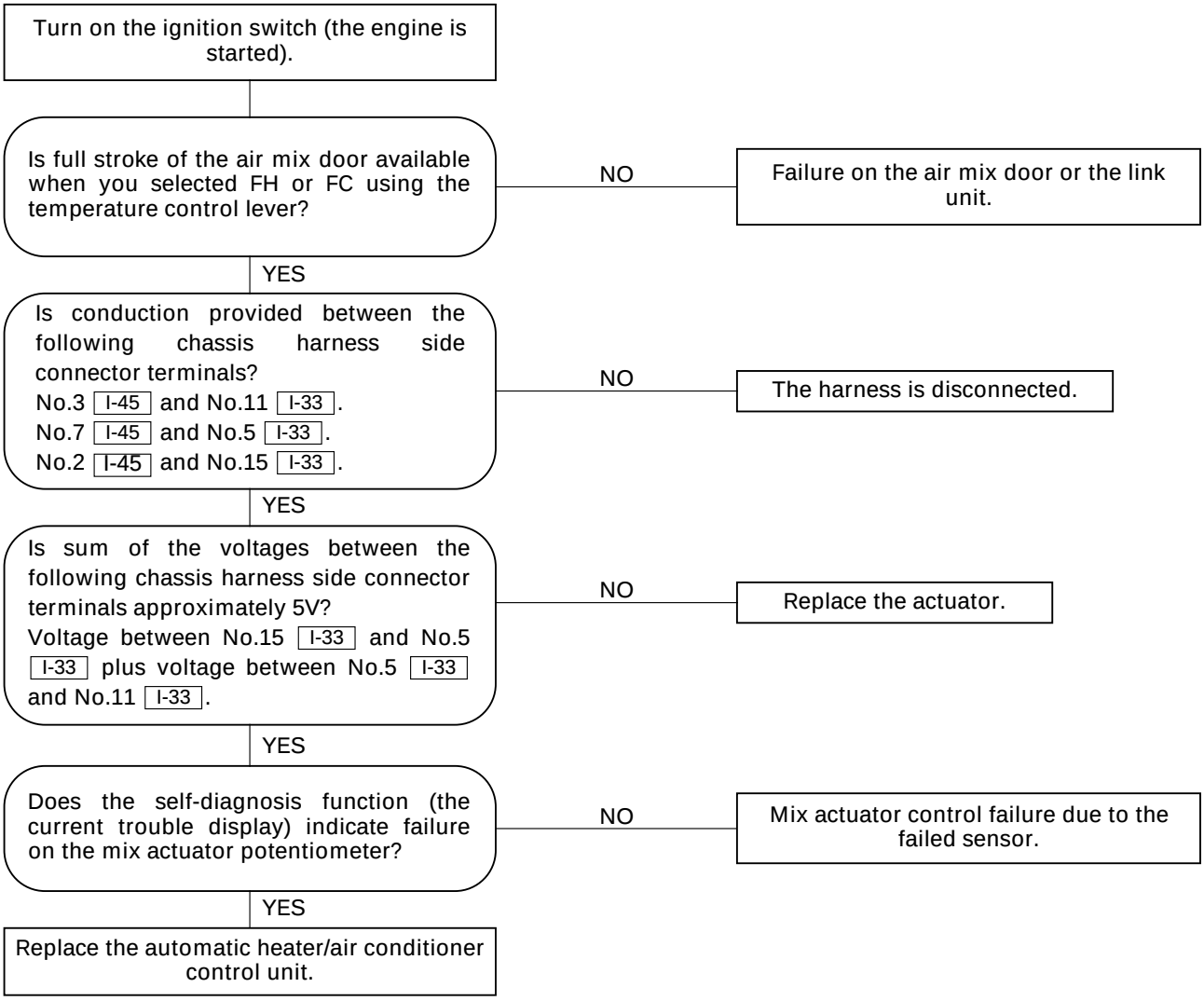

Inspection of the Mode Actuator System

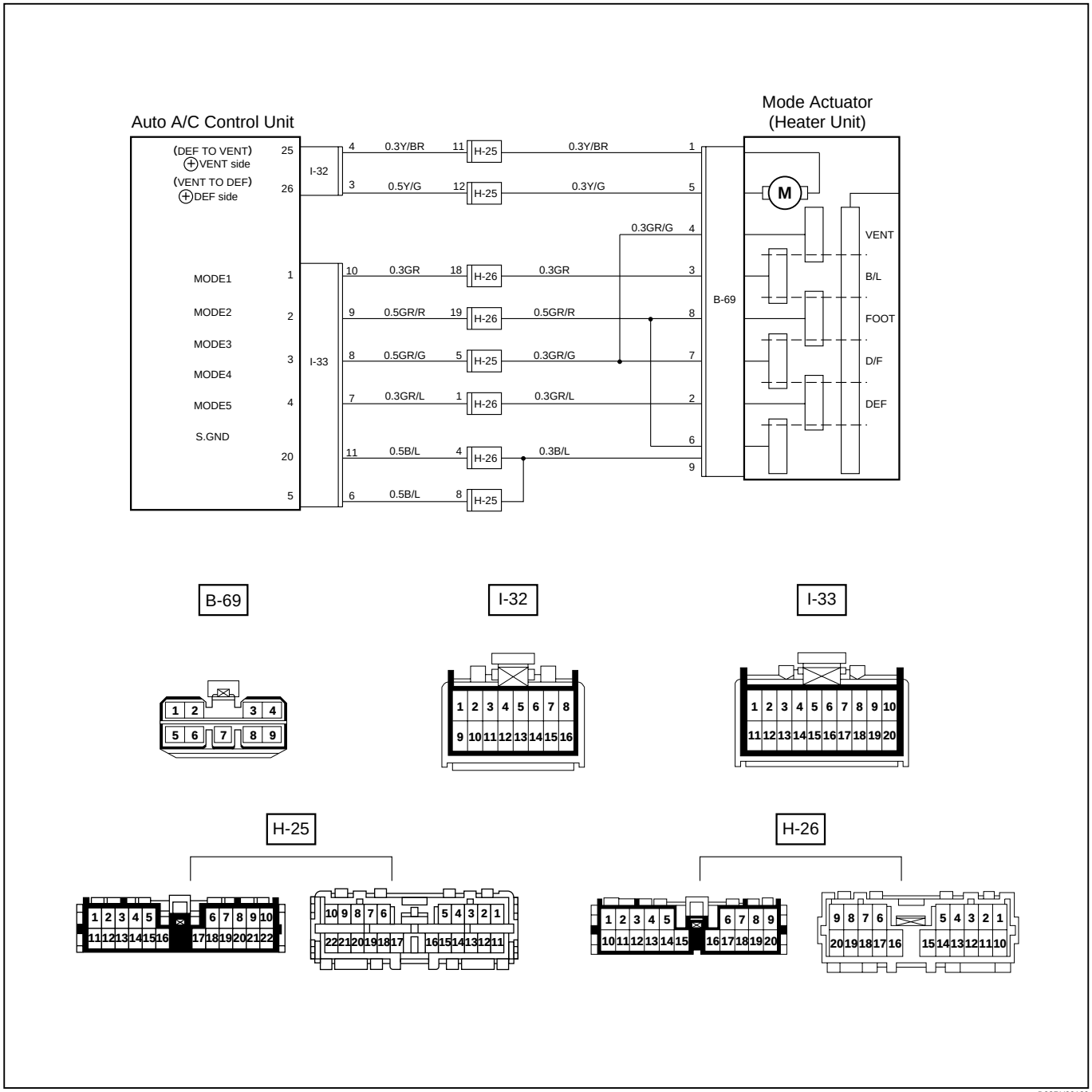

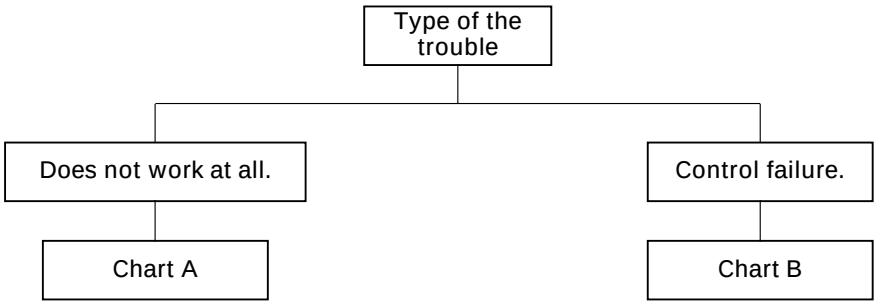

Chart A: Does Not Work At All

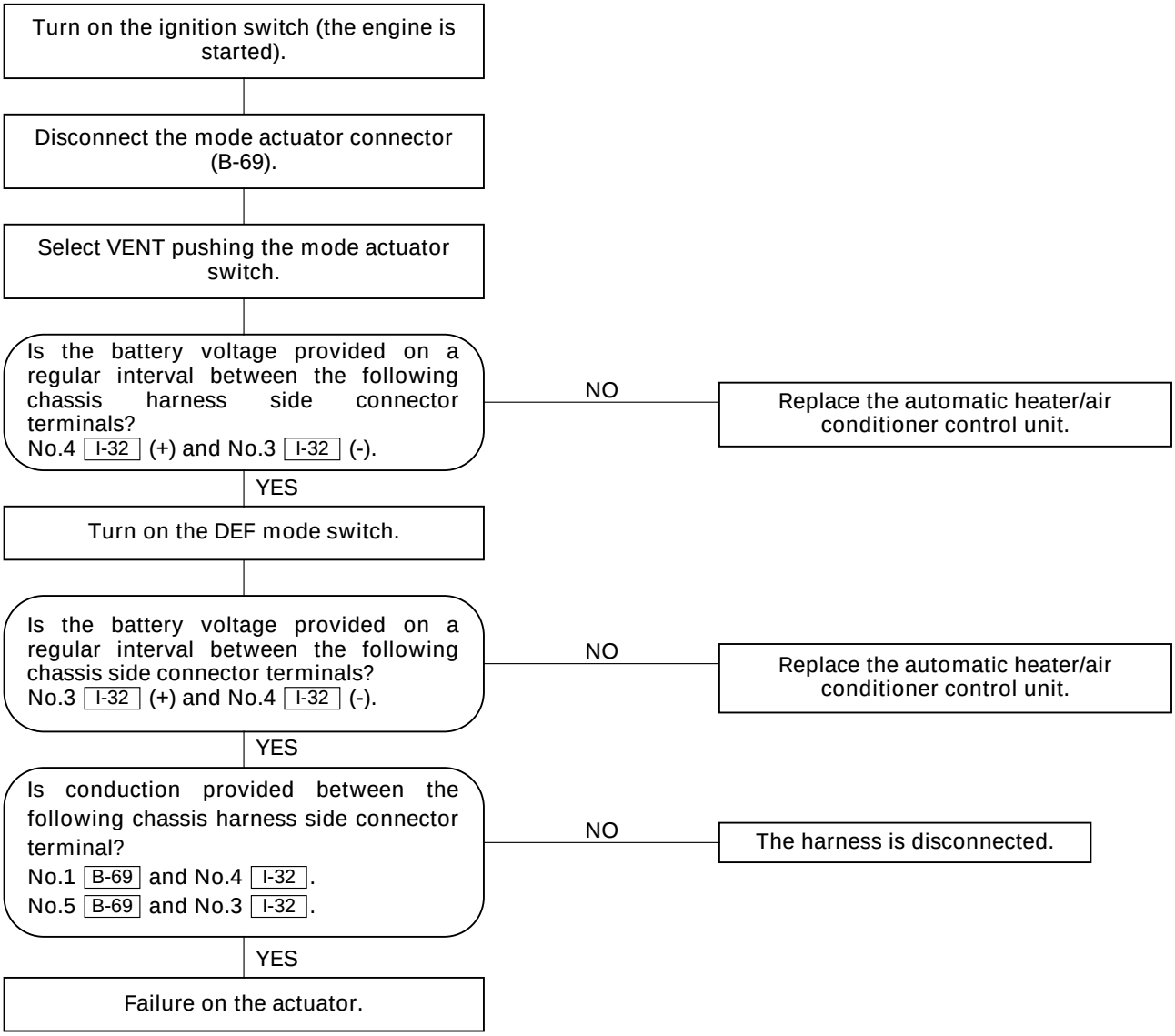

Chart B: Mode Actuator Control Failure

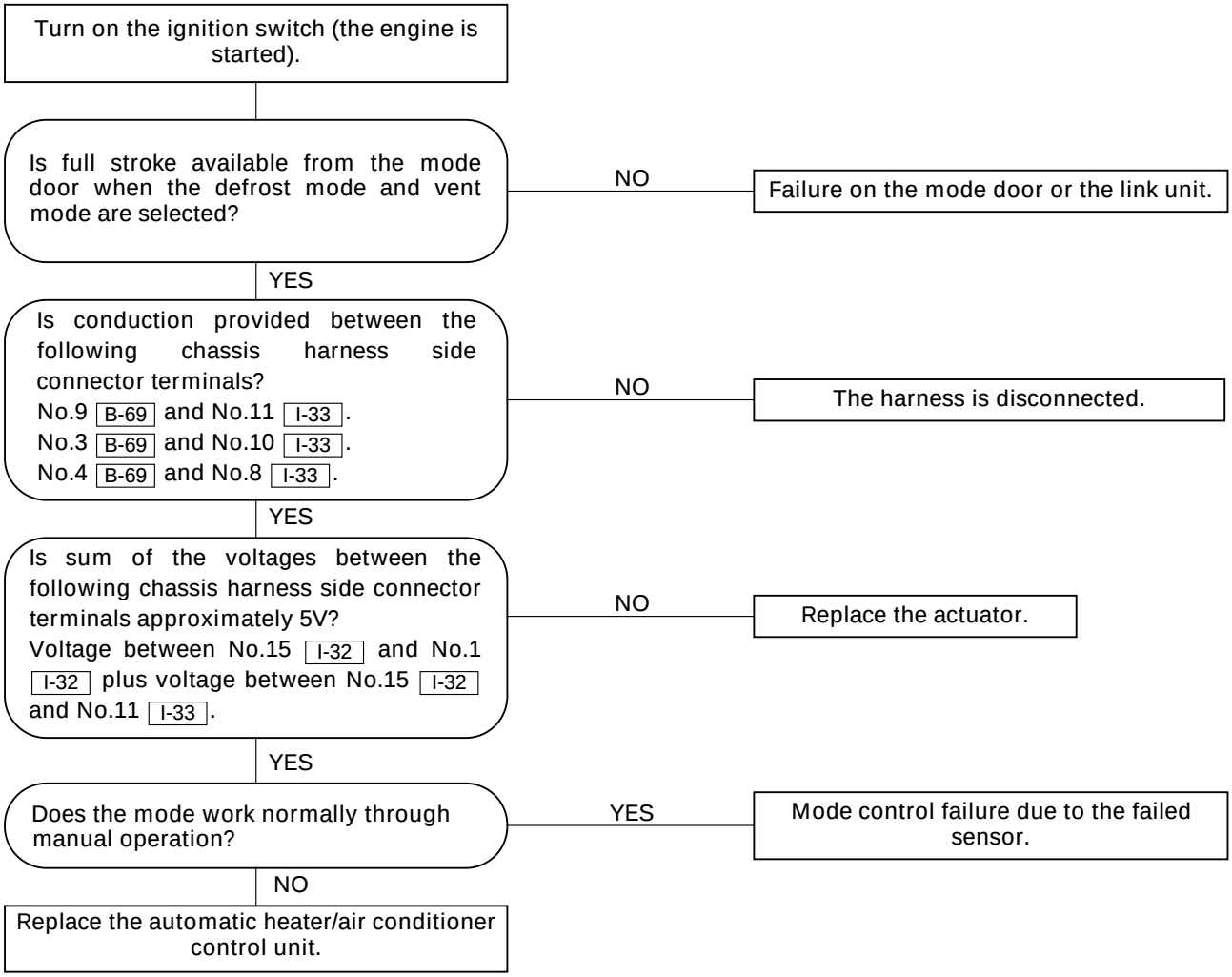

Inspection of the Fan Motor System

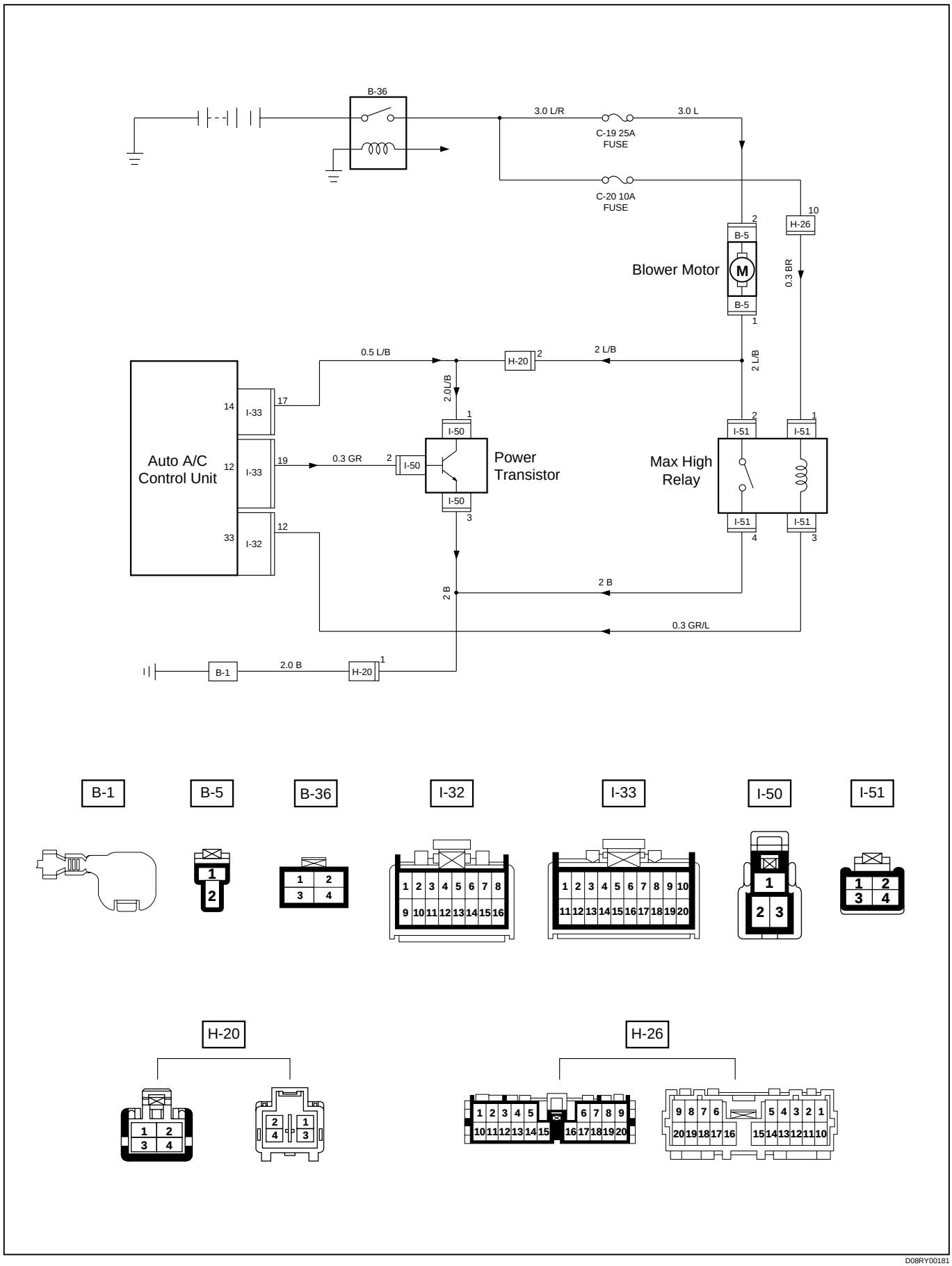

D08RY00181

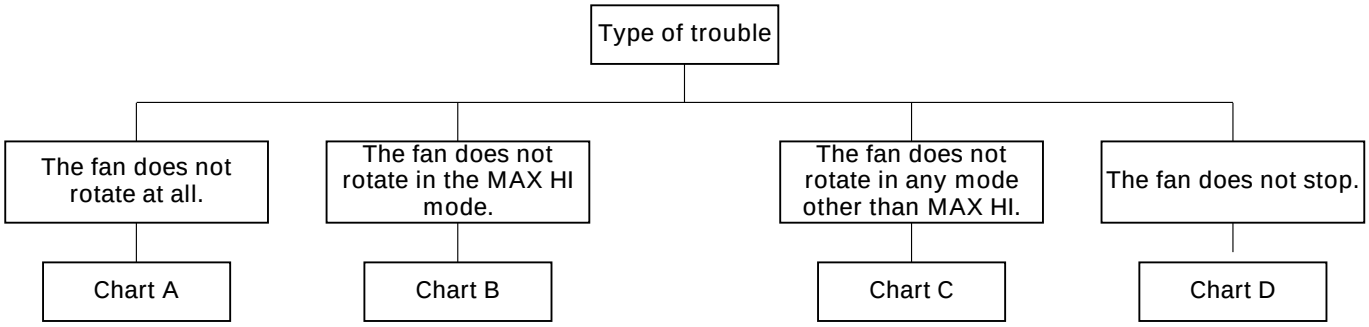

Chart A: Fan Does Not Rotate At All

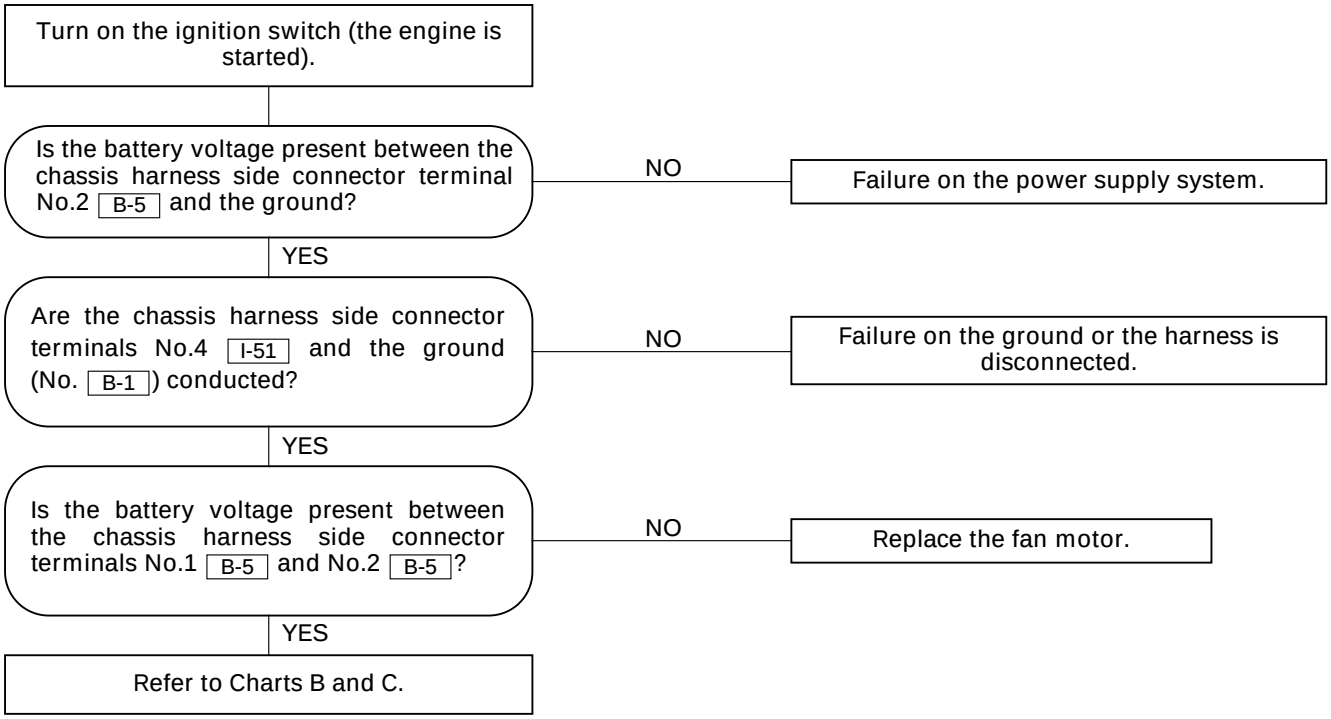

Chart B: Fan Does Not Rotate in MAX HI Mode

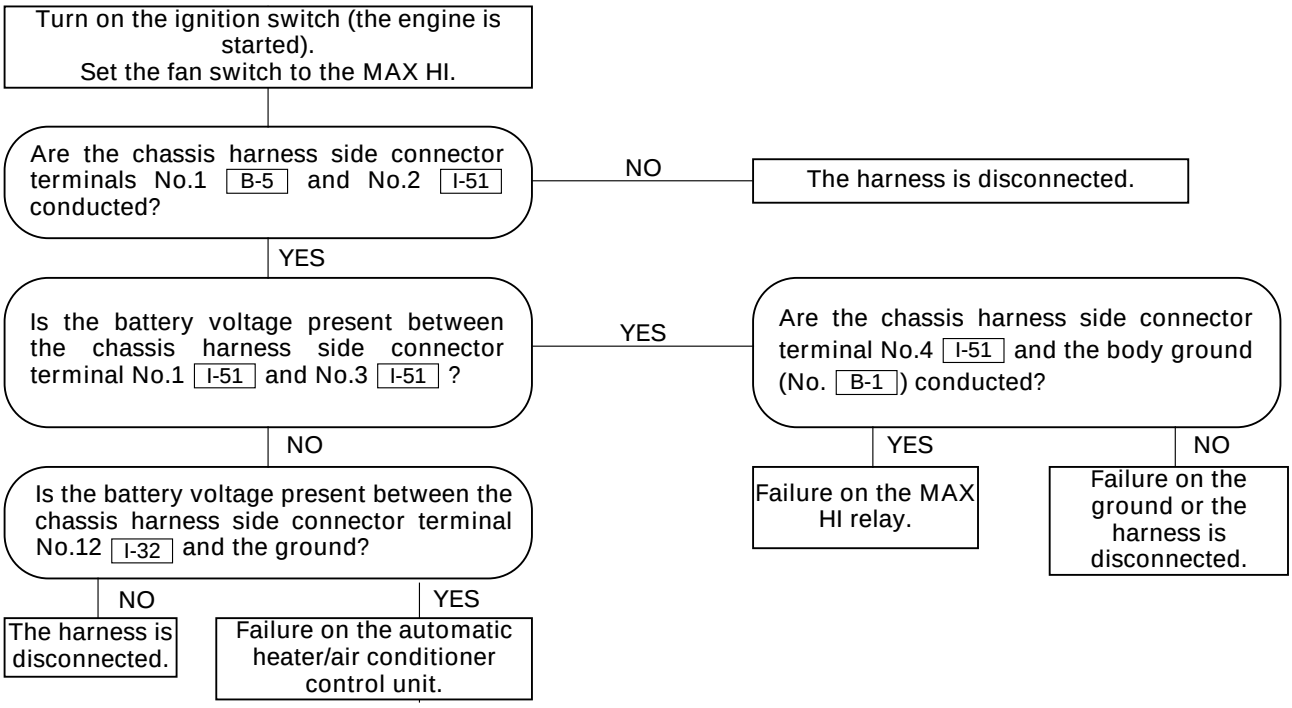

Chart C: Fan Does Not Rotate In Any Mode Other Than MAX HI

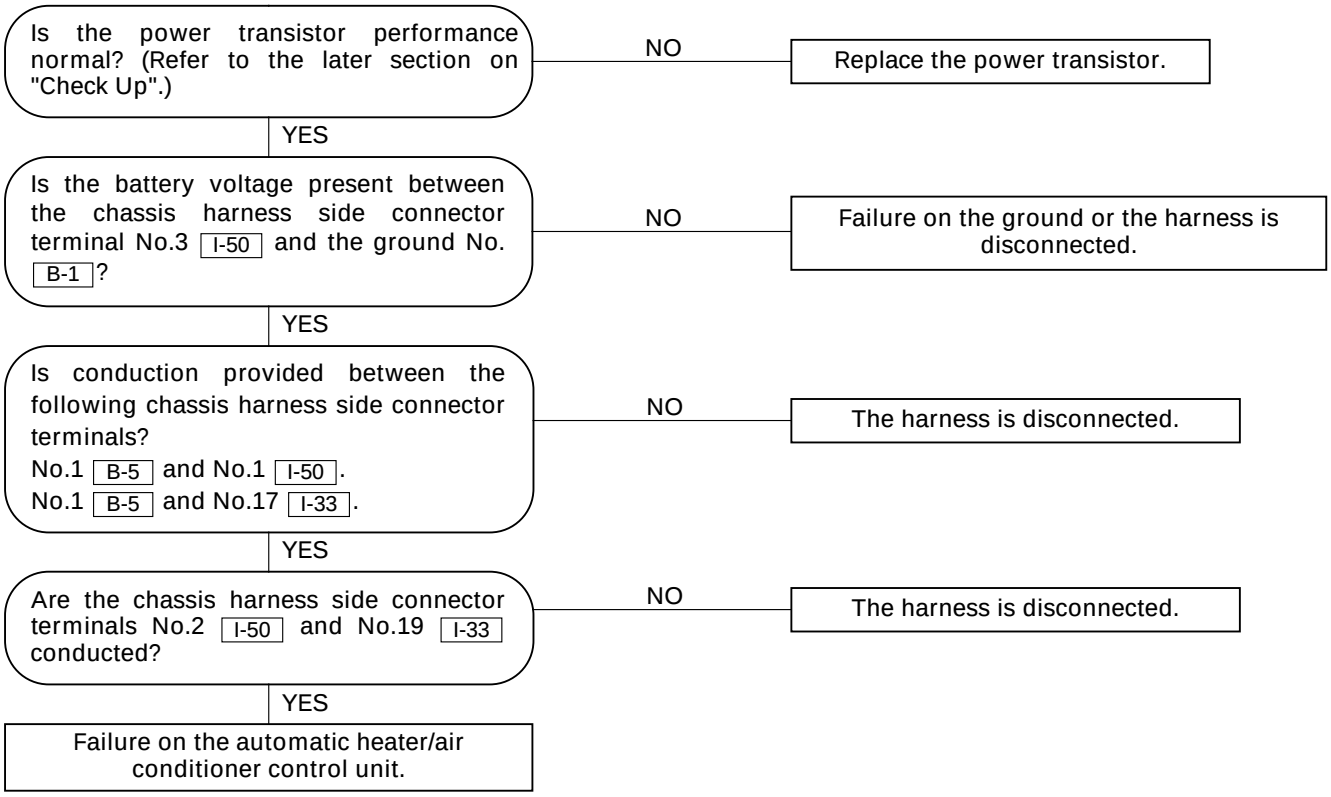

Chart D: Fan Does Not Stop

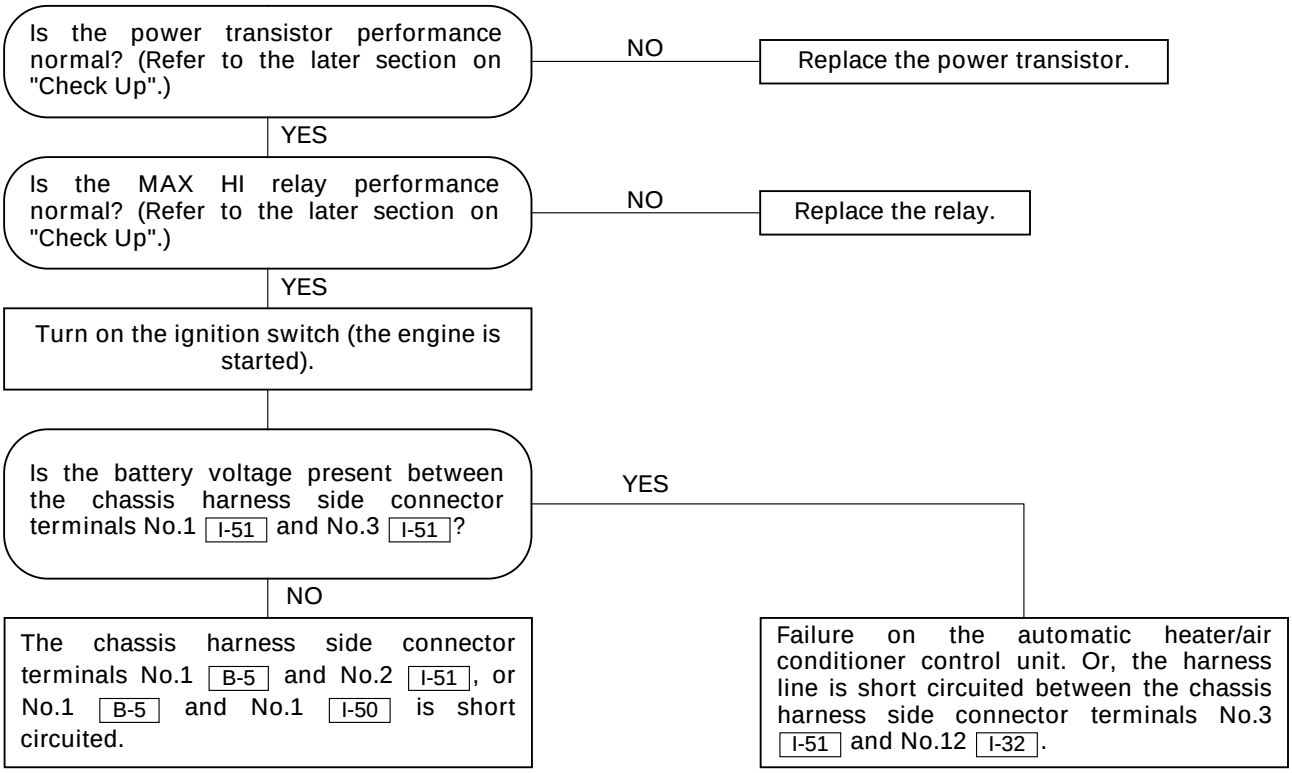

Inspection of the Magnet Clutch System

6VE1 Engine

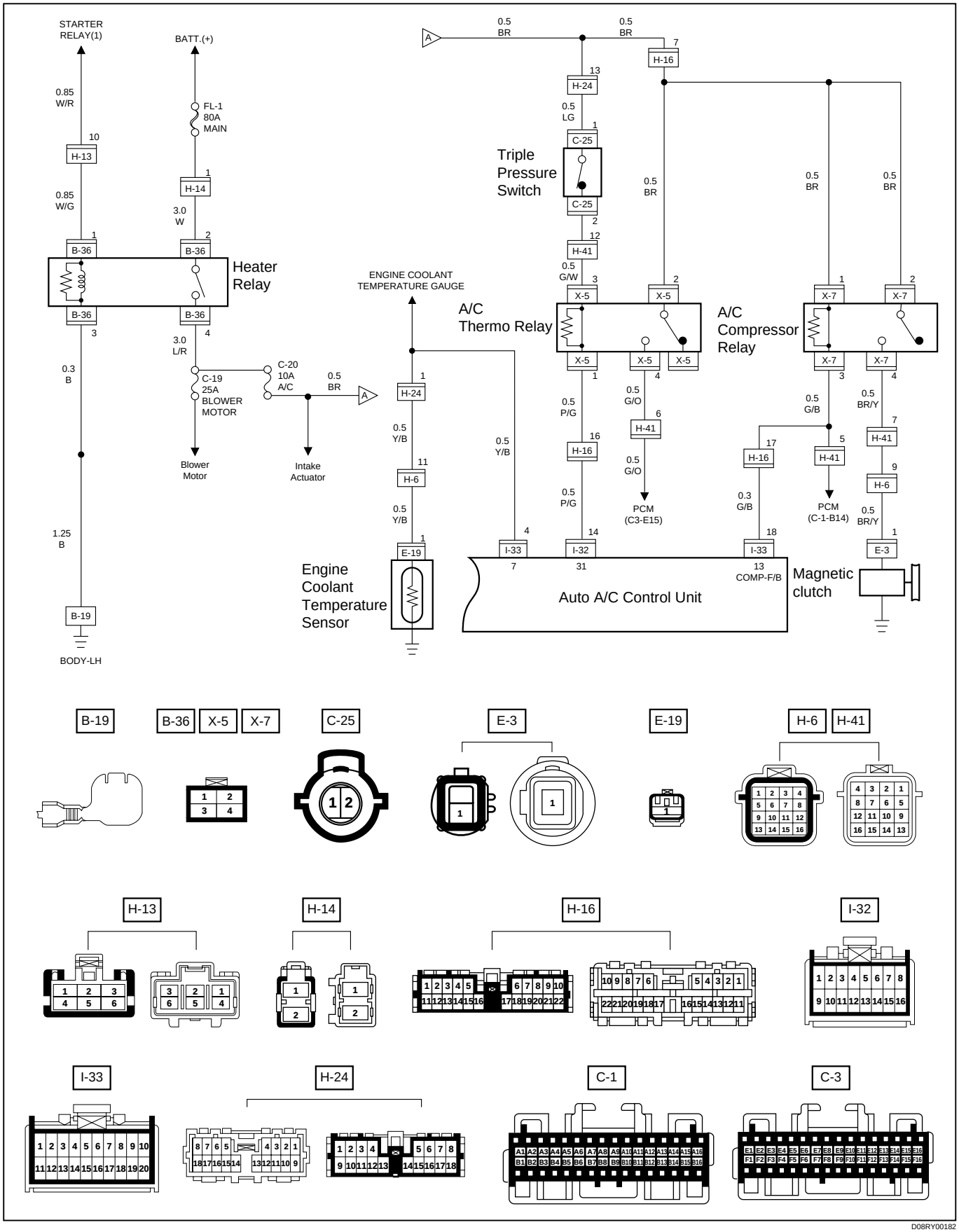

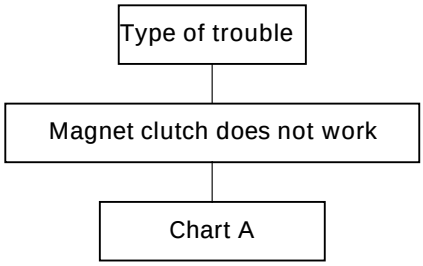

Chart A: Magnet Clutch Does Not work

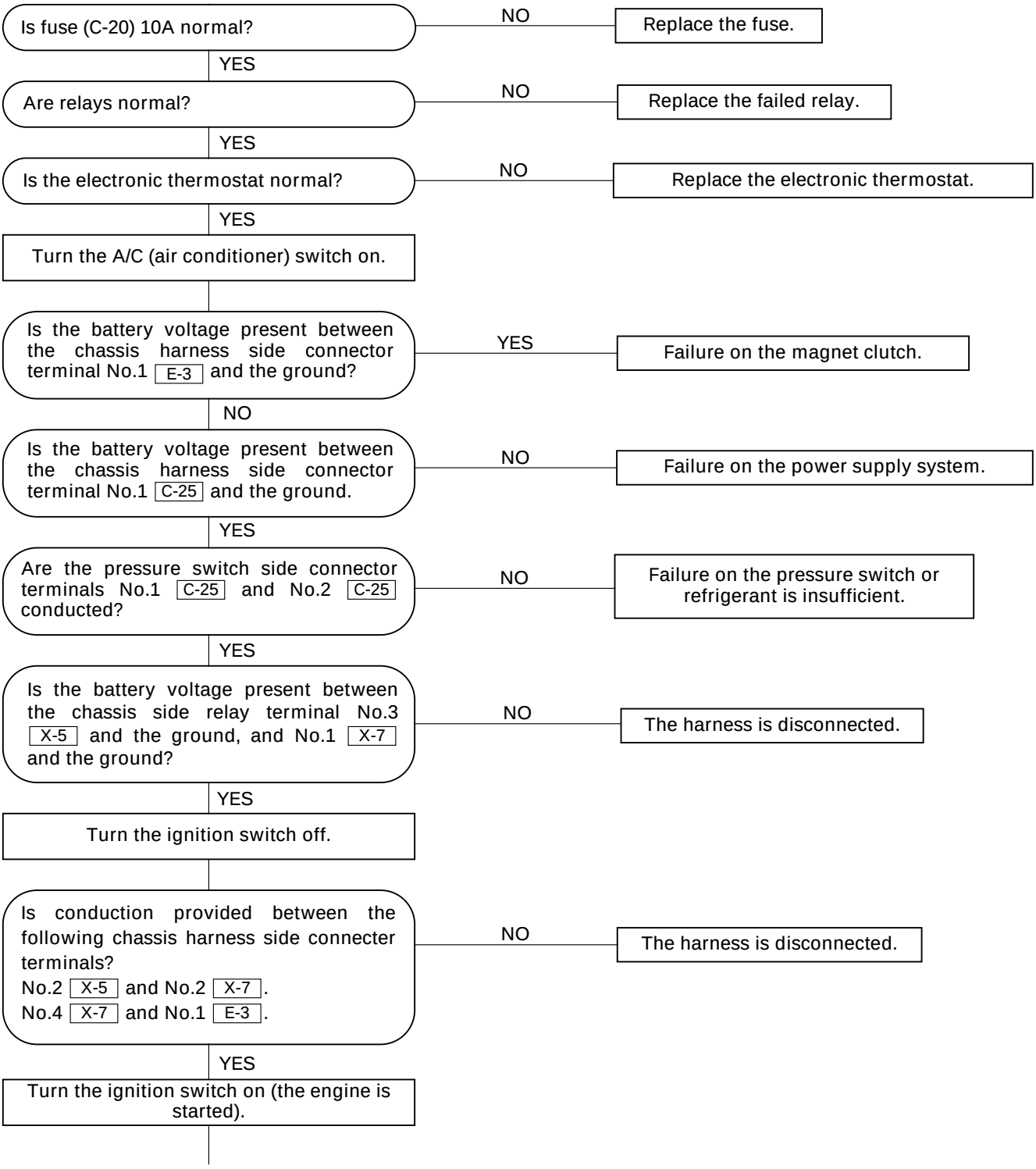

When you turned on the "Auto" switch, does the battery voltage appear between the chassis harness connector terminal No.14 [I-32] and the ground?

- YES → Failure on the automatic heater/air conditioner control unit.
- NO ↓

Disconnect the connector [I-32] on the automatic heater/air conditioner control unit.

Is the battery voltage present between the chassis harness side connector terminal No.14 [I-32] and the ground?

- NO → The harness is disconnected between No.1 [X-5] and No.14 [I-32].
- YES ↓

Is conduction provided between the following chassis harness side connector terminals?
No.B14 [C-1] and No.3 [X-7].
No.E15 [C-3] and No.4 [X-5].

- NO → The harness is disconnected.
- YES ↓

Failure on PCM (see Chapter 6E for A/C control with PCM).

4JX1 Engine

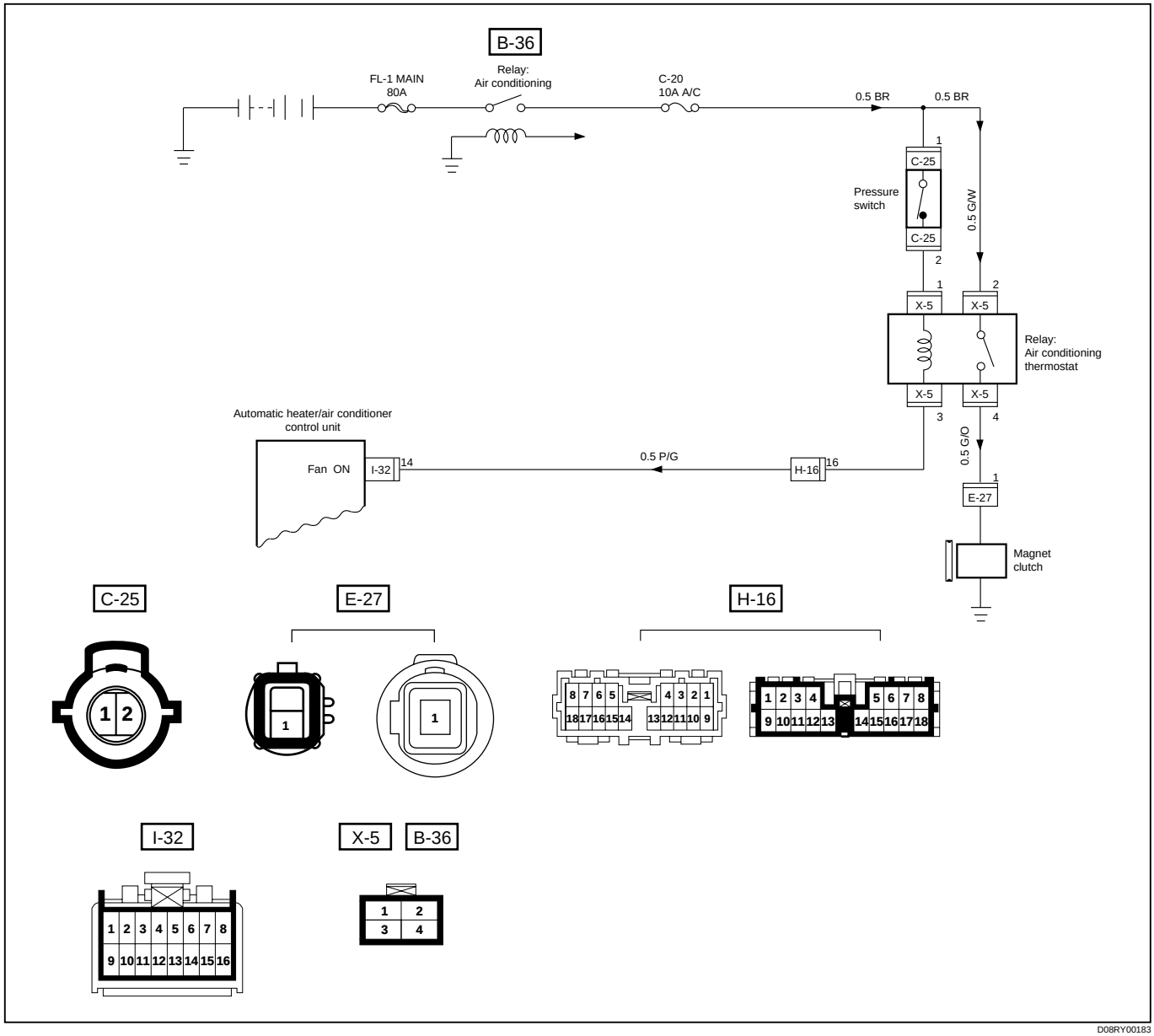

D08RY00183

Type of trouble

Magnet clutch does not work.

Chart A

Chart A: Magnet Clutch Does Not Work

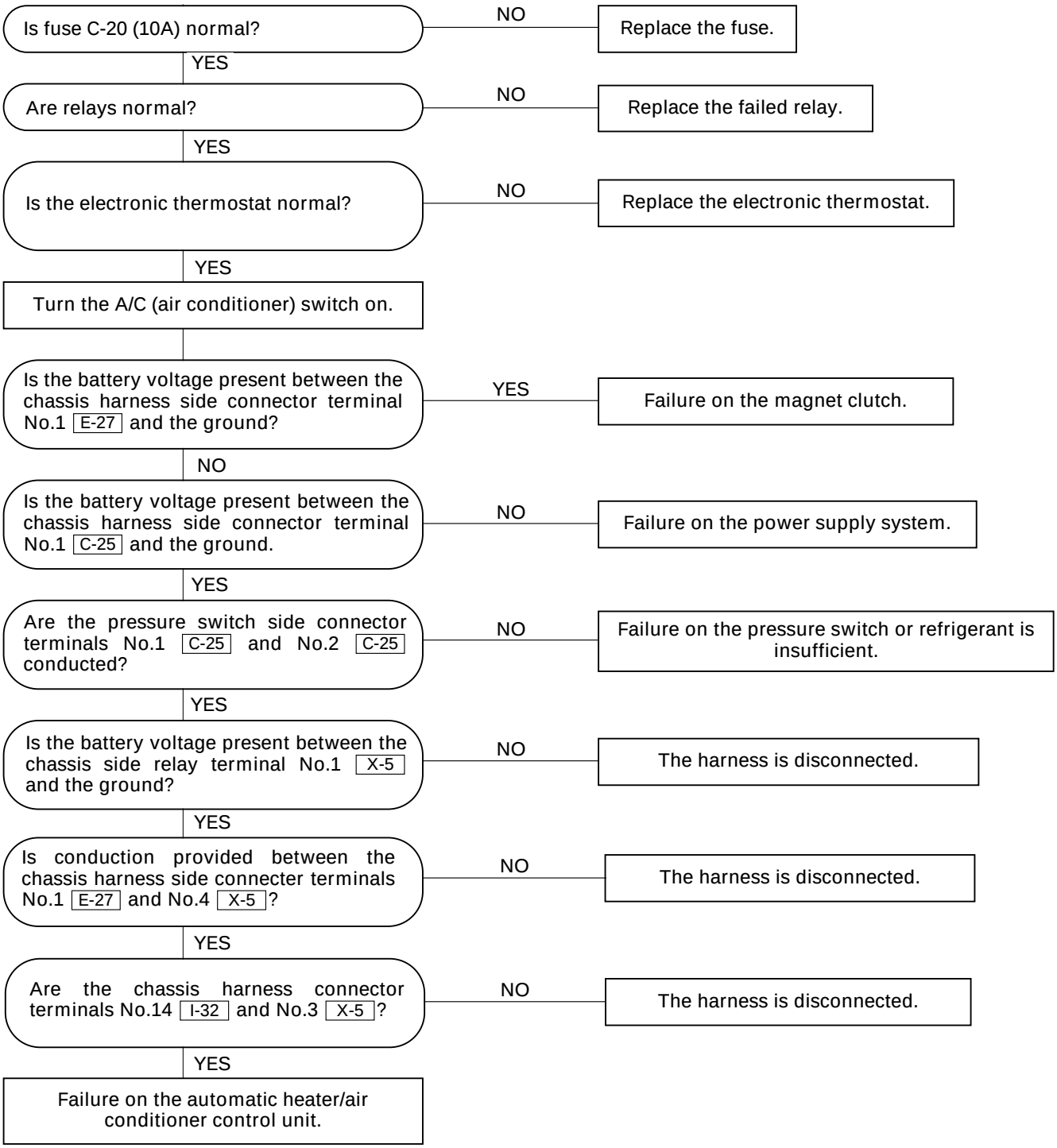

Inspection of the Air Conditioner Room Temperature Setup System

• Conflicts Between the Set Temperature and Actual Room Temperature

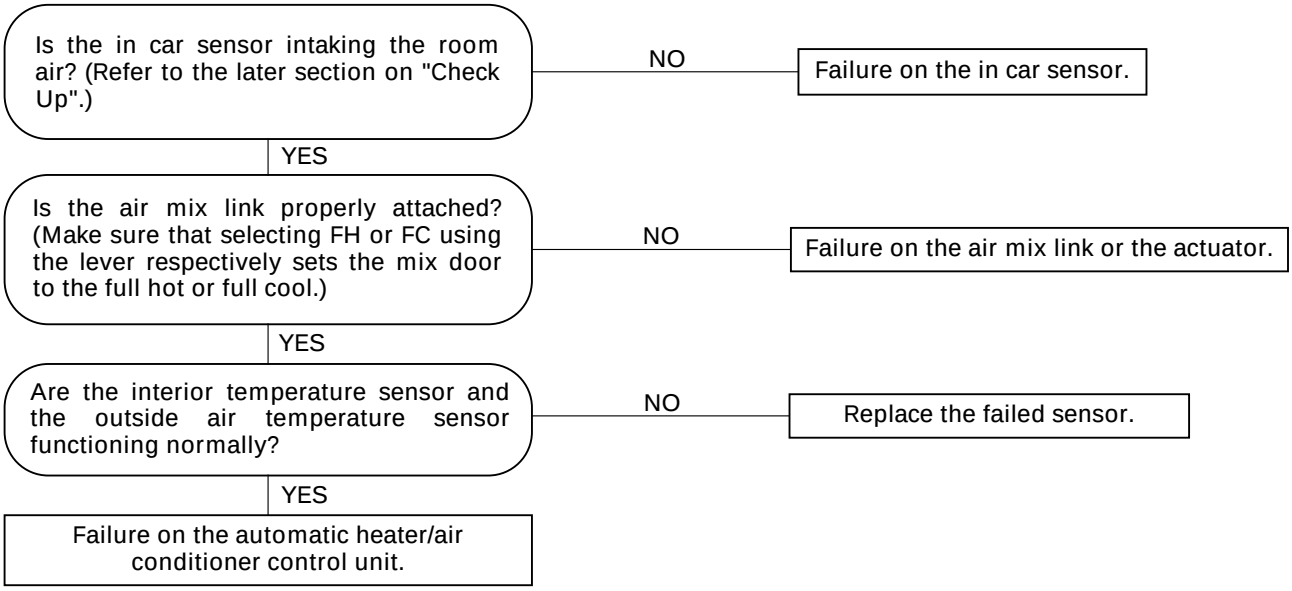

INDIVIDUAL INSPECTION

In Car Sensor

1. Disconnect the in car sensor connector (I-34).
2. Measure resistance between the in car sensor side terminal No.3 I-34 and No.4 I-34.

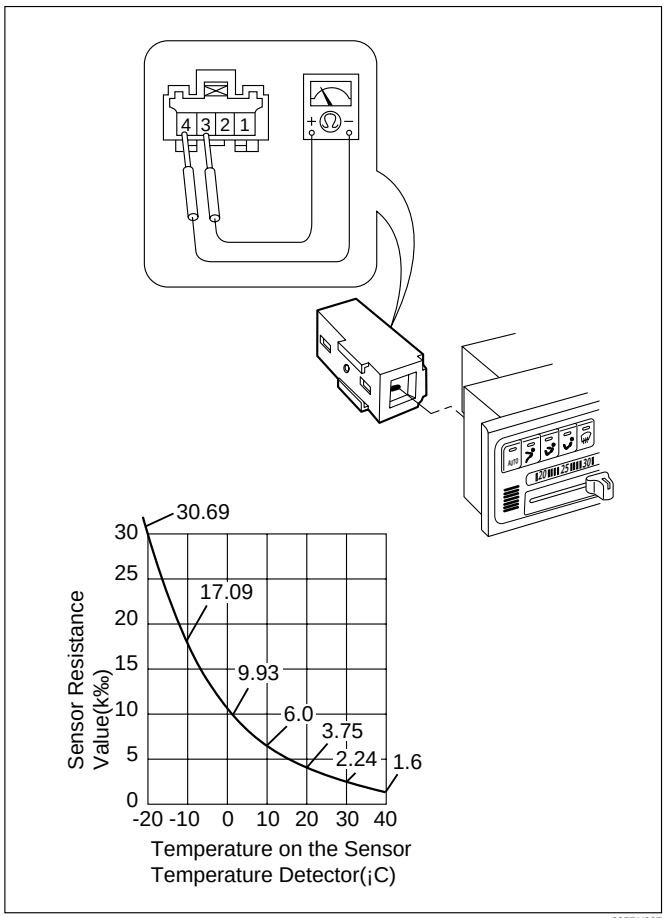

865RX007

Sun Sensor

1. Disconnect the sun sensor connector (I-35).
2. Measure the current value on the sun sensor when placed it approximately 15 cm away from 60W incandescent lamp.

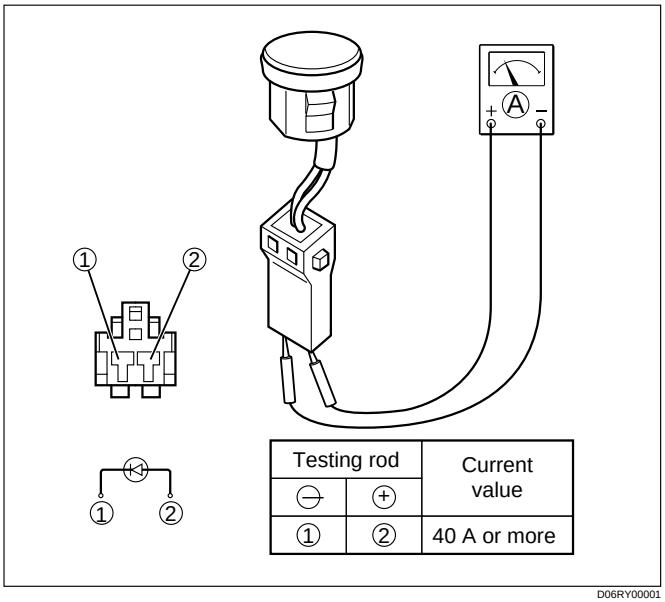

Testing rod		Current value
⊖	⊕	
①	②	40 A or more

D06RY00001

Ambient Sensor

1. Disconnect the connector (C-86) on the ambient sensor.
2. Measure resistance between the ambient sensor side terminals.

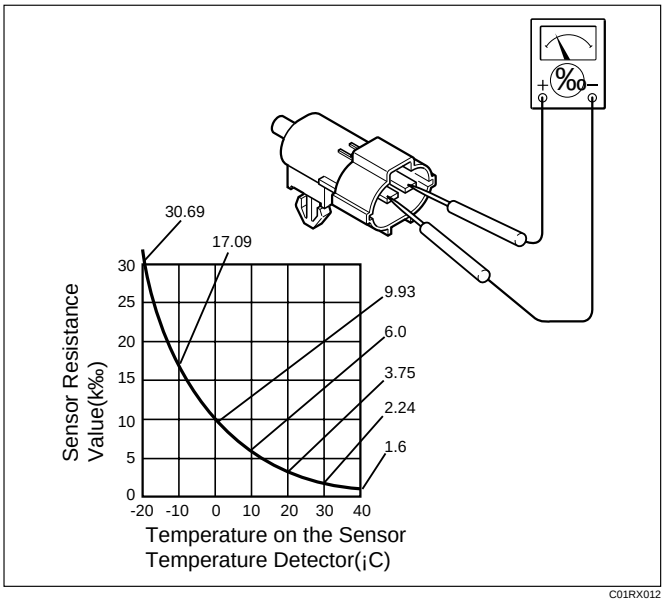

C01RX012

Power Transistor

1. Remove the power transistor connector (I-47) from the evaporator assembly.
2. Check the conduction between the power transistor side terminals.

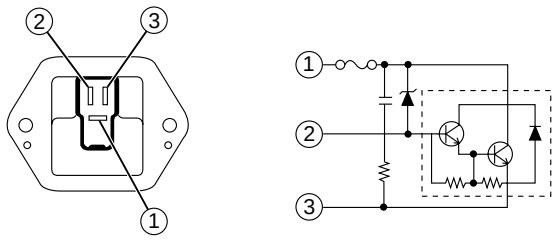

Terminal No.	1	2	3	Conduction
Testing rod	⊖	⊕		Conducted (50‰ maximum)
	⊖		⊕	Conducted (100‰ maximum)
	⊕	⊖		Not conducted
	⊕	⊖		Conducted (220‰ maximum)
		⊖	⊕	Not conducted

C01RY00002

MAX HI Relay

1. Remove the MAX HI relay connector (B-64) from the blower assembly.
2. Check the conduction between the MAX HI relay side terminals.

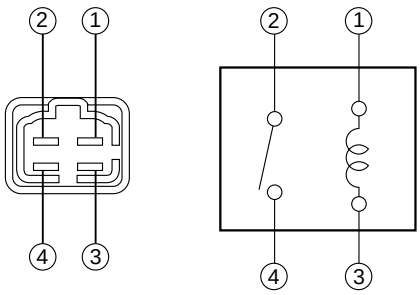

No continuity between terminals (2) and (4).
Continuity between terminal (2) and (4) when battery voltage is applied between (1) and (3).

C01RY00003

In Car Sensor

1. Turn on the ignition switch (the engine is started). Start the air conditioner in "Full Auto".
2. Make sure that the in car sensor suctions cigarette smokes and such.
3. Dismount the in car sensor from the automatic heater/air conditioner control unit. Connect (+) end and (-) end of the battery to the aspirator motor side terminals No.1 I-34 and No.2 I-34, respectively, then check if the motor runs normally.

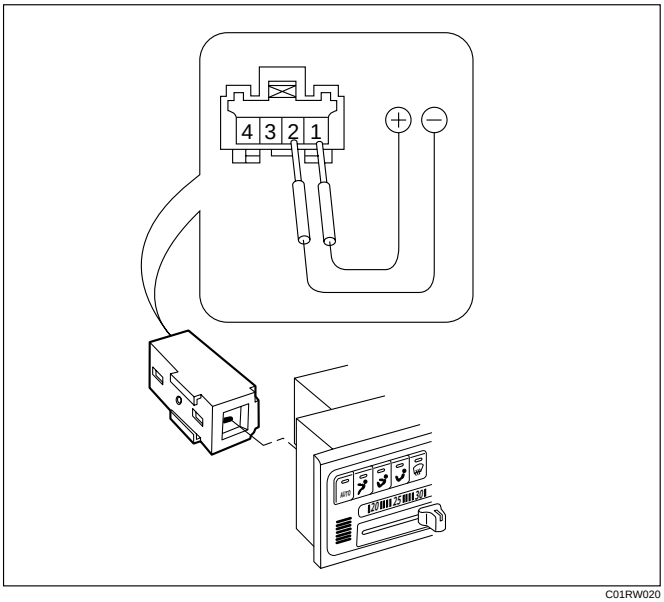

C01RW020

ON-VEHICLE SERVICE

Power Transistor

This illustration is based on RHD

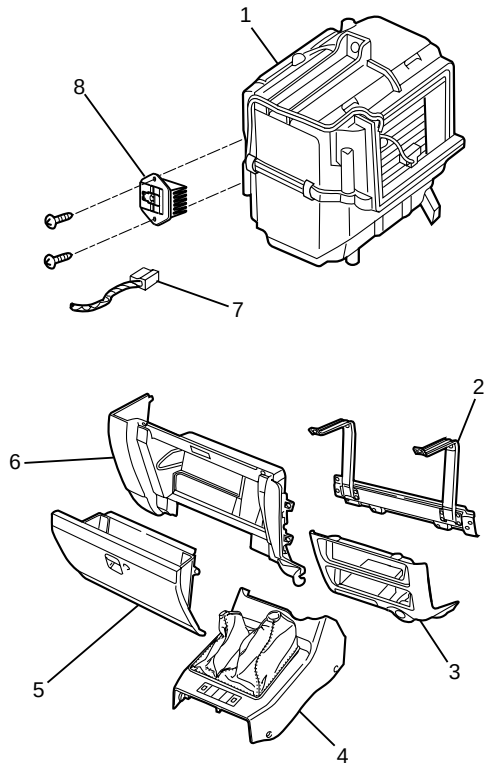

874RY00001

Legend

(1) Evaporator Assembly
(2) Passenger Knee Bolster Reinforcement
(3) Lower Cluster
(4) Front Console
(5) Glove Box
(6) Instrument Panel Passenger Lower Cover
(7) Power Transistor Connector
(8) Power Transistor

Removal

1. Remove front console.
2. Remove lower cluster.
3. Remove glove box.
4. Remove instrument panel passenger lower cover.
5. Remove passenger knee bolster reinforcement.
6. Disconnect the power transistor connector.
7. Remove power transistor.

Installation

To install, follow the removal step in the reverse order.

Automatic Heater/Air Conditioner Control Unit

This illustration is based on RHD

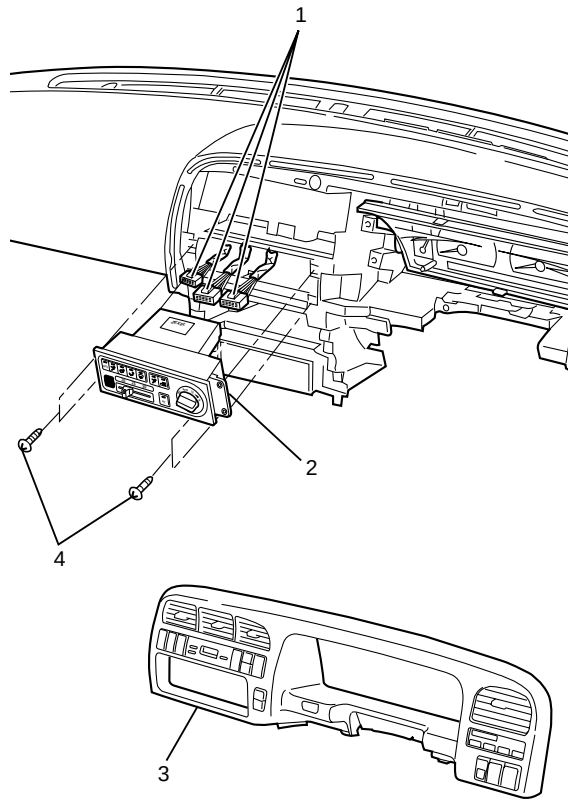

865RY00007

Legend

(1) Connector
(2) Automatic Heater / Air Conditioner Control Unit
(3) Instrument Panel Cluster
(4) Set Screw

Removal

1. Disconnect the battery ground cable.
2. Remove instrument panel cluster.
   - Refer to Instrument Panel Assembly in Body Structure section.
3. Disconnect the automatic heater / air conditioner control unit connector.
4. Remove automatic heater/ air conditioner control unit.

Installation

To install, follow the removal step in the reverse order.

In Car Sensor

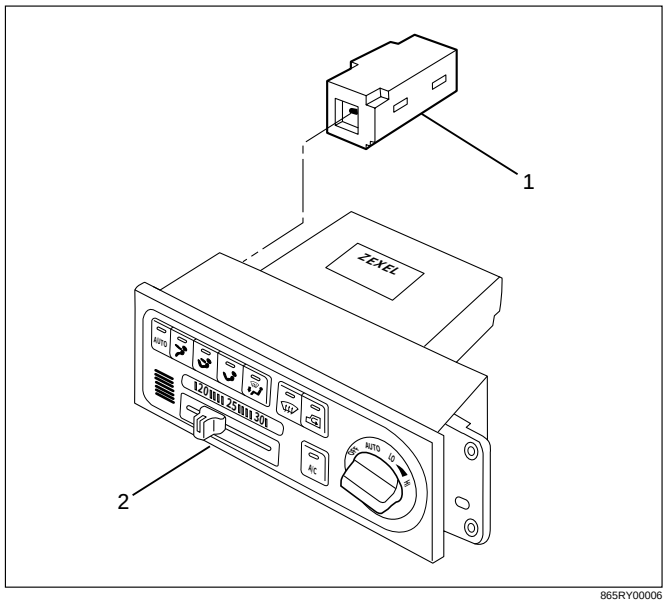

865RY00006

Legend

(1) In Car Sensor
(2) Automatic Heater / Air Conditioner Control Unit

Removal

1. Disconnect the battery ground cable.
2. Remove the automatic heater / air conditioner control unit.
   - Refer to the automatic heater / air conditioner control unit section.
3. Remove in car sensor.

Installation

To install, follow the removal step in the reverse order.

Ambient Sensor

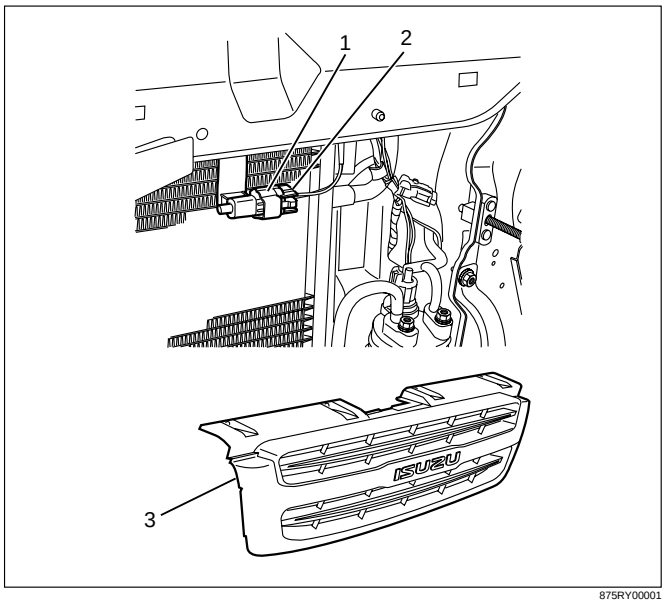

875RY00001

Legend

(1) Ambient Sensor
(2) Sensor Connector
(3) Radiator Grill

Removal

1. Disconnect the battery ground cable.
2. Remove radiator grille.
   - Refer to Radiator Grille in Body Structure section.
3. Disconnect the ambient sensor connector.
4. Remove the ambient sensor.

Installation

To install, follow the removal step in the reverse order.

Sun Sensor

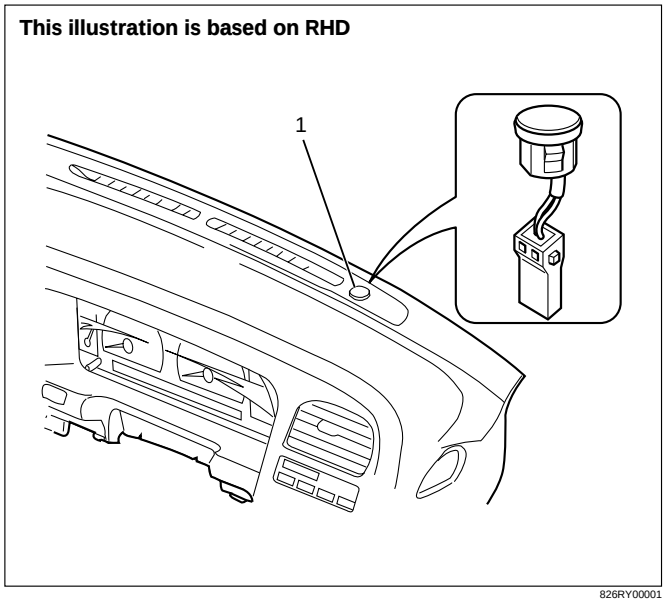

Legend
(1) Sun Sensor

Removal

1. Disconnect the battery ground cable.
2. Remove the sun sensor.
3. Disconnect the sun sensor connector.

Installation

To install, follow the removal step in the reverse order.

Electronic Thermostat

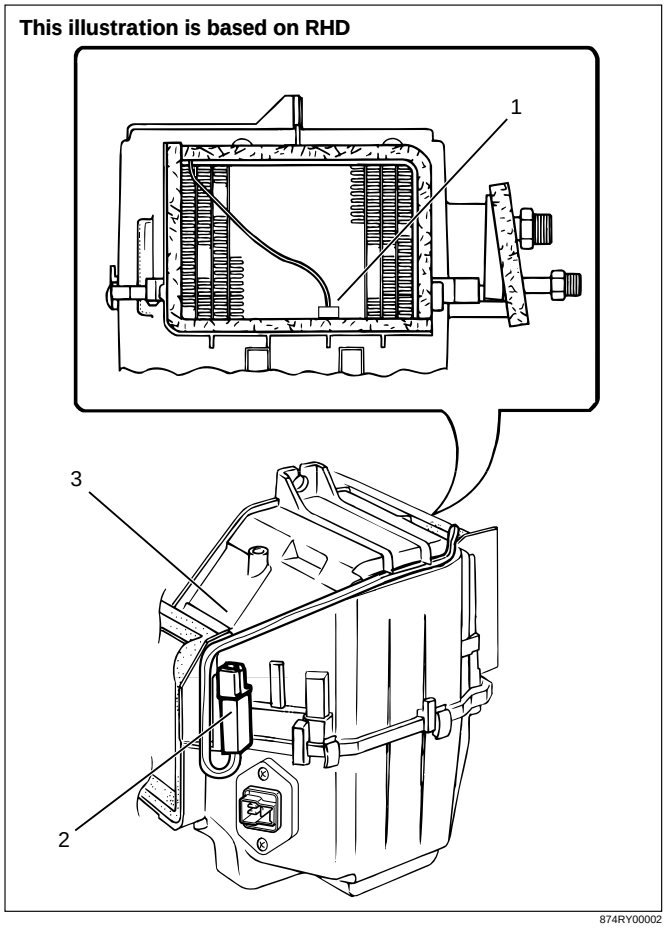

Legend
(1) Duct Sensor
(2) Thermostat Assembly
(3) Evaporator Assembly

Removal

1. Disconnect the battery ground cable.
2. Remove evaporator assembly.
   - Refer to Evaporator Assembly section.
3. Remove electronic thermostat.

Installation

To install, follow the removal step in the reverse order.

Mode Actuator

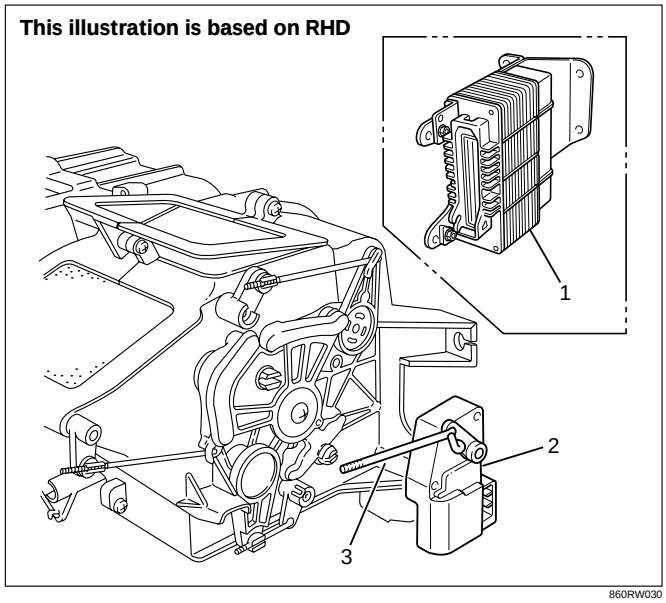

Legend

(1) A/T Control Unit
(2) Mode Actuator
(3) Actuator Rod

Removal

1. Disconnect the battery ground cable.
2. Remove the A/T control unit.
   - The connector shall remain connected.
3. Remove the actuator rod.
4. Remove the mode actuator.

Installation

To install, follow the removal step in the reverse order.

MIX Actuator

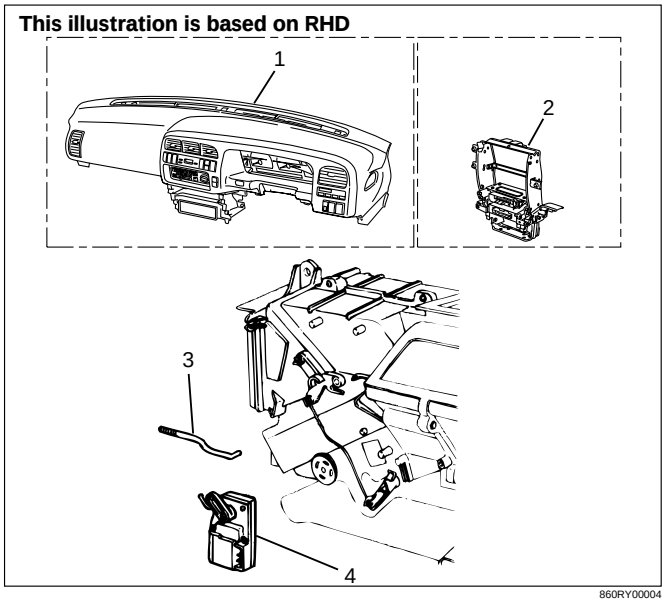

Legend

(1) Instrument Panel Assembly
(2) Instrument Panel Center Bracket
(3) Actuator Rod
(4) Mix Actuator

Removal

1. Disconnect the battery ground cable.
2. Remove the instrument panel assembly.
   - Refer to the Instrument Panel Assembly in Body Structure section.
3. Remove the instrument panel center bracket.
4. Remove the actuator rod.
5. Remove the mix actuator.

Installation

To install, follow the removal step in the reverse order.

Intake Actuator

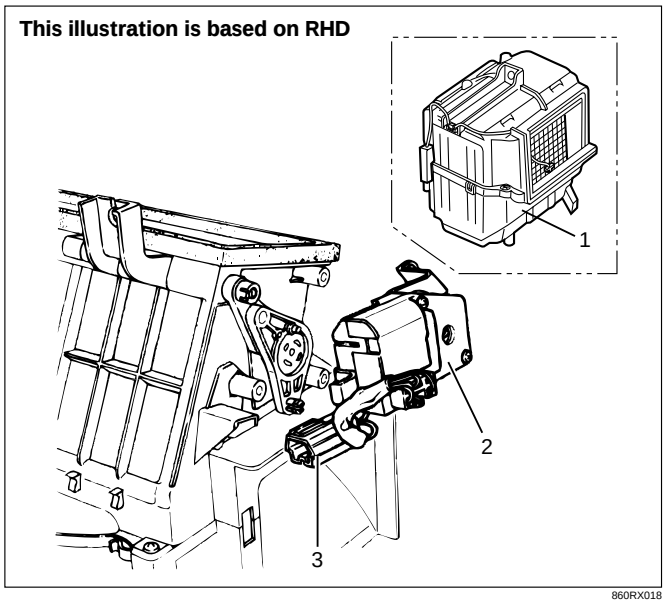

Legend

(1) Evaporator Assembly
(2) Intake Actuator
(3) Intake Actuator Connector

Removal

1. Disconnect the battery ground cable.
2. Discharge and recover refrigerant.
   - Refer to Refrigerant Recovery in this section.
3. Remove the evaporator assembly.
   - Refer to Eevaporator Assembly section.
4. Disconnect the intake actuator connector.
5. Remove the intake actuator.

Installation

To install, follow the removal step in the reverse order.

SECTION 1D

COMPRESSOR OVERHAUL

CAUTION
When fasteners are removed, always reinstall them at the same location from which they were removed. If a fastener needs to be replaced, use the correct part number fastener for that application. If the correct part number fastener is not available, a fastener of equal size and strength (or stronger) may be used.

Fasteners that are not reused, and those requiring thread locking compound, will be called out. The correct torque values must be used when installing fasteners that require it. If the above conditions are not followed, parts or system damage could result.

CONTENTS

PAGE

General Description 1D– 2
General Information 1D– 4
Compressor Oil 1D– 4
Service Procedures 1D– 6
DKV-14D Type Compressor 1D– 6
DKS-15CH Type Compressor 1D–10
HD6 Type Compressor 1D–18

GENERAL DESCRIPTION

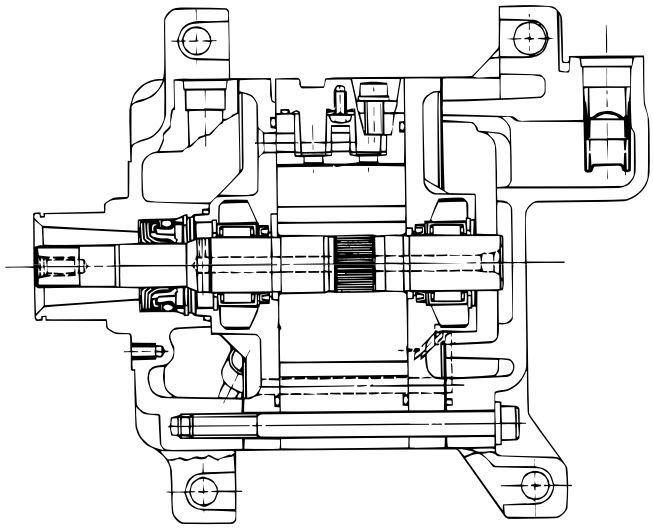

DKV-14D TYPE

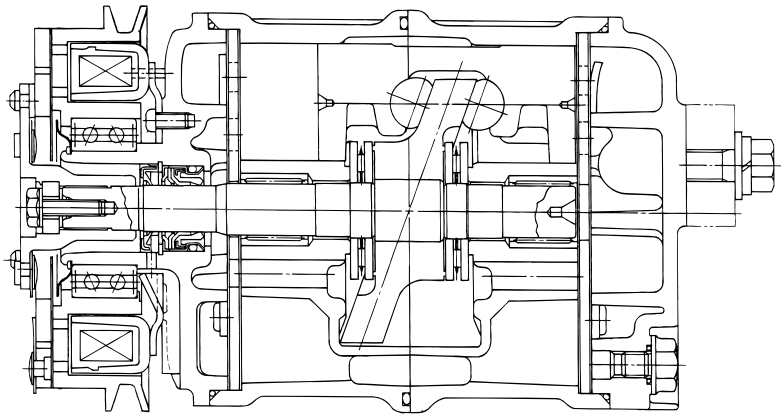

DKS-15CH TYPE

871RY00014

When servicing the compressor, keep dirt or foreign material from getting on or into the compressor parts and system. Clean tools and a clean work area are important for proper service. The compressor connections and the outside of the compressor should be cleaned before any “On-Vehicle” repair, or before removal of the compressor. The parts must be kept clean at all times and any parts to be reassembled should be cleaned with Trichloroethane, naphtha, kerosene, or equivalent

solvent, and dried with dry air. Use only lint free cloths to wipe parts.
The operations described below are based on bench overhaul with compressor removed from the car, except as noted. They have been prepared in order of accessibility of the components. When the compressor is removed from the car for servicing, the oil remaining in the compressor should be discarded and new refrigerant oil added to the compressor.
Magnetic clutch assembly repair procedures require that the system be discharged of refrigerant. (Refer to Section 1B for "REFRIGERANT RECOVERY".)
Compressor malfunction will appear in one of four ways: noise, seizure, leakage or low discharge pressure. Resonant compressor noises are not cause for alarm; however, irregular noise or rattles may indicate broken parts or excessive clearances due to wear. To check seizure, de-energize the magnetic clutch and check to see if the drive plate can be rotated. If rotation is impossible, the compressor is seized. Low discharge pressure may be due to a faulty internal seal of the compressor, or a restriction in the compressor. Low discharge pressure may also be due to an insufficient refrigerant charge or a restriction elsewhere in the system. These possibilities should be checked prior to servicing the compressor. If the compressor is inoperative, but is not seized, check to see if current is being supplied to the magnetic clutch coil terminals.
The compressor has vanes built into a rotor which is mounted on a shaft.
When the shaft rotates, the vanes built into the cylinder block assembly are opened by centrifugal force.
This changes the volume of the space formed by the rotor and cylinder, resulting in the intake and compression of the refrigerant gas. The discharge valve and the valve stopper, which protects the discharge valve, are built into the cylinder block assembly. There is no suction valve but a shaft seal is installed between the shaft and head; a trigger valve, which applies back pressure to the vanes, is installed in the cylinder block and a refrigerant gas temperature sensor is installed in the front head.
The specified quantity of compressor oil is contained in the compressor to lubricate the various parts using the refrigerant gas discharge pressure.
6VD1 engine is equipped with an invariable capacity five-vane rotary compressor (DKV-14D Type).
The compressor sucks and compresses refrigerant by the rotation of the vane installed to the shaft, and always discharges a fixed amount of refrigerant independent of the load of refrigerant.
The thermo sensor is installed to the front head of the compressor to protect it by stopping its operation when the refrigerant gas is insufficient or when the temperature get abnormally high.

- OFF..... 160 ± 5°C (320.0 ± 9.0°F)
- ON ..... 135 ± 5°C (275.0 ± 9.0°F)

4JG2 Engine are provided with a swash plate type compressor (DKS-15CH Type)
Swash plate compressors have a swash (slanted) plate mounted on the shaft. When the shaft turns, the rotation of the swash plate is converted to reciprocating piston motion which sucks in and compresses the refrigerant gas.
Shaft seal (Lip type) is installed between the valve plate and shaft & cylinder head to prevent refrigerant gas leaks. A specified amount of compressor oil is contained in the oil pan.
This oil is supplied to the cylinders, bearings, etc., by an oil pump which is connected to the swash plate shaft.
With some compressors the differential between the intake pressure and discharge pressure generated while the compressor is operating is used for lubrication instead of an oil pump.
Three pistons are arranged at 120g intervals around the center of the swash plate shaft. These pistons are connected to the ends of the swash plate through shoe disks and balls.
The rotation of the swash plate causes reciprocating movement of the piston inside the cylinders, with each piston operating as two cylinders. Because of that, the compressor operates as though it has 6 cylinders.
The specified amount of the compressors oil is 150cc (4.2 Imp fl oz).
Also, compressor oil to be used varies according to the compressor model. Be sure to avoid mixing two or more different types of oil.
If the wrong oil is used, lubrication will be poor and the compressor will seize or malfunction.

GENERAL INFORMATION

COMPRESSOR OIL

OIL SPECIFICATION

- The HFC-134a system requires a synthetic (PAG) compressor oil.
- Compressor (PAG) oil varies according to compressor model. Be sure to use oil specified for the model of compressor.

DKV-14D : ZXL-200PG (ISUZU PART NO. 8-97101-336-0)

DKS-15CH : ZXL-100PG (ISUZU PART NO. 8-97101-338-0)

HANDLING OF OIL

- The oil should be free from moisture, dust, metal powder, etc.
- Do not mix with other oil
- The water content in the oil increases when exposed to the air. After use, seal oil from air immediately.
- The compressor oil must be stored in steel containers, not in plastic containers.

COMPRESSOR OIL CHECK

The oil used to lubricate the compressor is circulating with the refrigerant.
Whenever replacing any component of the system or a large amount of gas leakage occurs, add oil to maintain the original amount of oil.

Oil Capacity

Capacity total in system	150cc (4.2 Imp fl oz)
Compressor (Service parts) charging amount	150cc (4.2 Imp fl oz)

Checking and Adjusting for Used Compressor

1) Perform Oil return operation.
   (Refer to “Oil Return Operation” in this section.)
2) Discharge refrigerant and remove the compressor.
3) Drain the compressor oil and measure the extracted oil with a measuring cylinder.
4) If the amount of oil drained is much less than 90cc (2.5 Imp fl oz), some refrigerant may have leaked out. Conduct leak tests on connections of each system, and if necessary, repair or replace faulty parts.
5) Check the compressor oil for contamination.
   (Refer to “Contamination of Compressor Oil” in this section.)

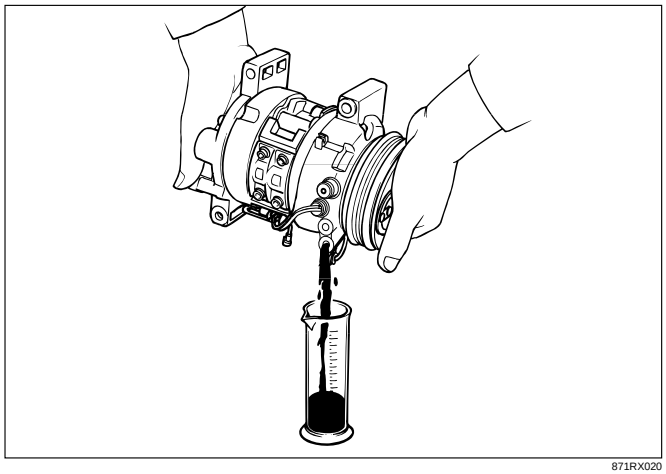

871RX020

6) Adjust oil level following the procedure below.

Collected Amount	Charging Amount
more than 90cc (2.5 Imp fl oz)	same as collected amount
less than 90cc (2.5 Imp fl oz)	90cc (2.5 Imp fl oz)

7) Install the compressor, then evacuate, charge and perform oil return operation.
8) Check system operation.

When it is impossible to perform oil return operation, the compressor oil should be checked in the following order:

1) Discharge refrigerant and remove the compressor.
2) Drain the compressor oil and measure the extracted oil with a measuring cylinder.
3) Check the oil for contamination.
4) If more than 90cc (2.5 Imp fl oz) of oil is extracted from the compressor, supply same amount of oil to the compressor to be installed. If the amount of oil extracted is less than 90cc (2.5 Imp fl oz), recheck the compressor oil in the following order:
5) Supply 90cc (2.5 Imp fl oz) of oil to the compressor and install it onto the vehicle.
6) Perform oil return operation.
7) Remove the compressor and recheck the amount of oil.
8) Adjust the compressor oil, if necessary.

Collected Amount	Charging Amount
more than 90cc (2.5 Imp fl oz)	same as collected amount
less than 90cc (2.5 Imp fl oz)	90cc (2.5 Imp fl oz)

Checking and Adjusting for Compressor Replacement

150cc (4.2 Imp fl oz) of oil is charged in compressor (service parts). So it is necessary to drain the proper amount of oil from the new compressor.

1) Perform oil return operation.
2) Discharge refrigerant and remove the compressor.
3) Drain the compressor oil and measure the extracted oil.
4) Check the compressor oil for contamination.
5) Adjust oil level as required.

Amount of oil drained from used compressor	Draining amount of oil from new compressor
less than 90cc (2.5 Imp fl oz)	Same as drained amount
more than 90cc (2.5 Imp fl oz)	90cc (2.5 Imp fl oz)

6) Evacuate, charge and perform oil return operation.
7) Check system operation.

CONTAMINATION OF COMPRESSOR OIL

Unlike engine oil, no cleaning agent is added to the compressor oil. Even if the compressor runs for a long period of time (approximately 1 season), the oil never becomes contaminated as long as there is nothing wrong with the compressor or its method of use.

Inspect the extracted oil for any of the following conditions:

- The capacity of the oil has increased.
- The oil has changed color to red.
- Foreign substances, metal powder, etc., are present in the oil.

If any of these conditions exists, compressor oil is contaminated. Whenever contaminated compressor oil is discovered, the receiver/drier must be replaced.

OIL RETURN OPERATION

There is close affinity between the oil and the refrigerant. During normal operation, part of the oil recirculates with the refrigerant in the system.

When checking the amount of oil in the system, or replacing any component of the system, the compressor must be run in advance for oil return operation. The procedure is as follows:

1) Open the all doors and engine hood.
2) Start the engine and A/C switch is “ON” and Set the fan control knob at its highest position.
3) Run the compressor for more than 20 minutes between 800 and 1,000 rpm in order to operate the system.
4) Stop the engine.

REPLACEMENT OF COMPONENT PARTS

When replacing system component parts, supply the following amount of oil to the component parts to be installed.

Component parts to be installed	Amount of oil
Evaporator	50cc (1.4 Imp fl oz)
Condenser	30cc (0.8 Imp fl oz)
Receiver/drier	30cc (0.8 Imp fl oz)

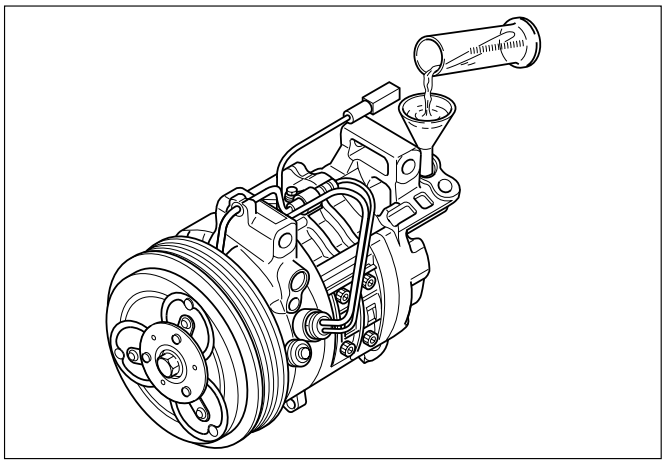

871RX013

SERVICE PROCEDURE

DKV-14D TYPE COMPRESSOR

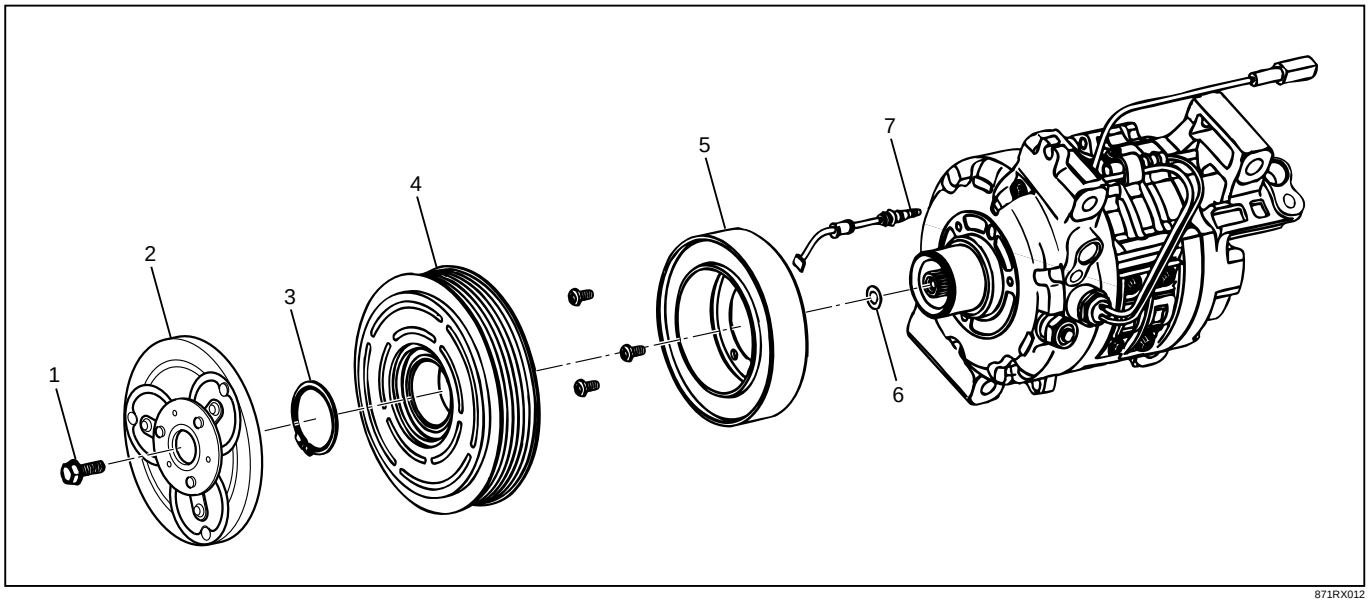

871RX012

Legend

(1) Drive Plate Bolt
(2) Drive Plate
(3) Snap Ring
(4) Pulley Assembly
(5) Field Coil
(6) Shim(s)
(7) Lead Wire

Removal

1. Remove drive plate bolt by using drive plate holder J-7624 (1) to prevent the drive plate from rotating.

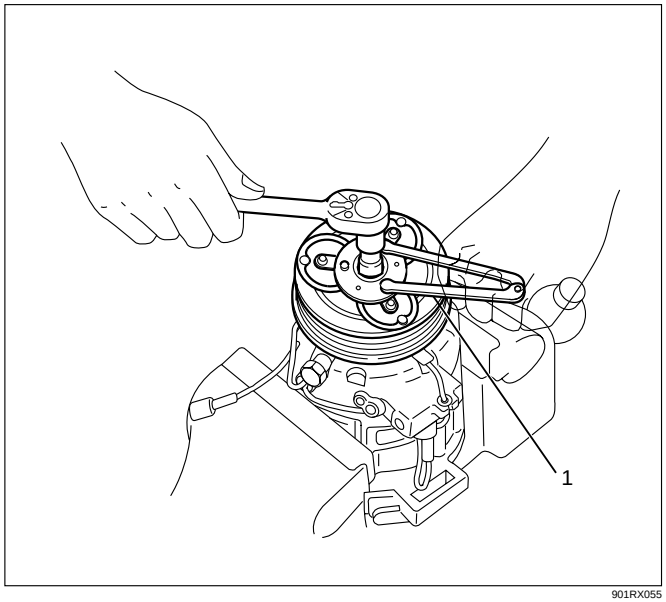

901RX055

2. Remove drive plate by using drive plate puller J-33944-A (2) and forcing screw J-33944-4 (1).

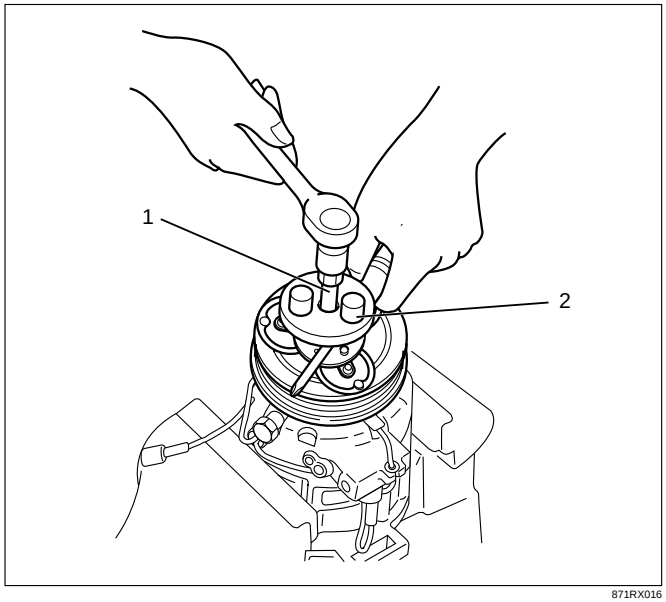

871RX016

3. Remove shim(s).
4. Remove snap ring (1) by using snap ring pliers.

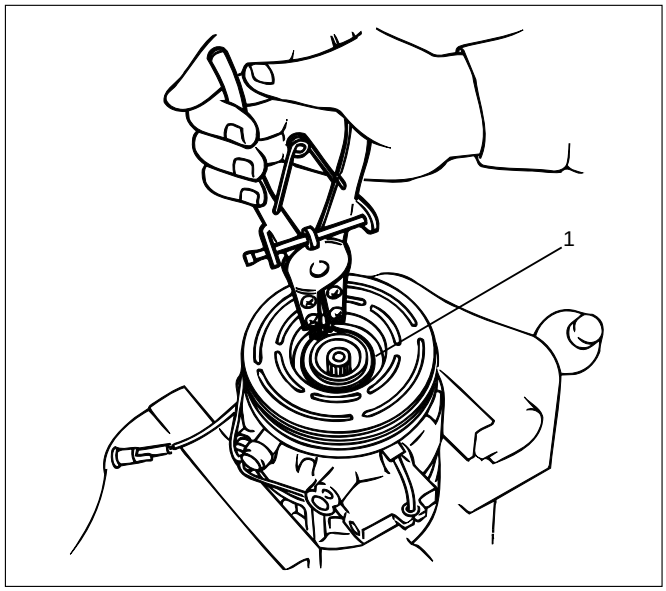

871RW016

5. Remove pulley assembly by using pulley puller pilot J-38424 (2), pulley puller J-8433 (1) and pulley puller leg J-24092-2 (3).

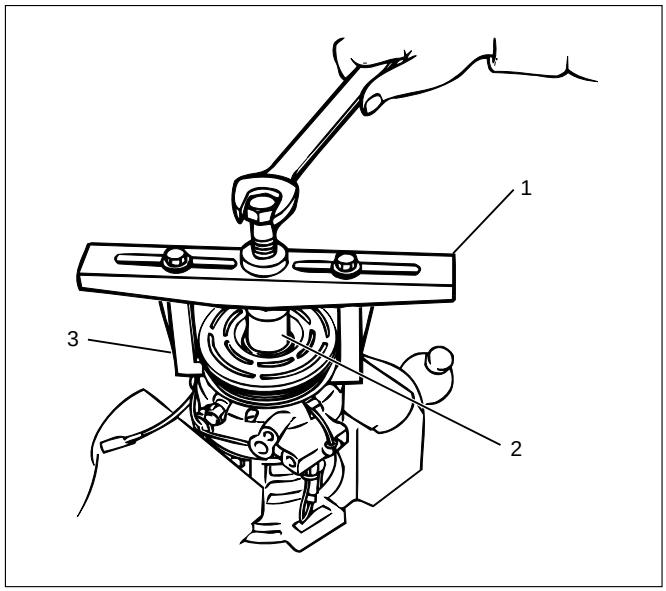

871RX031

6. Loosen screw and disconnect the coil lead wire connector.

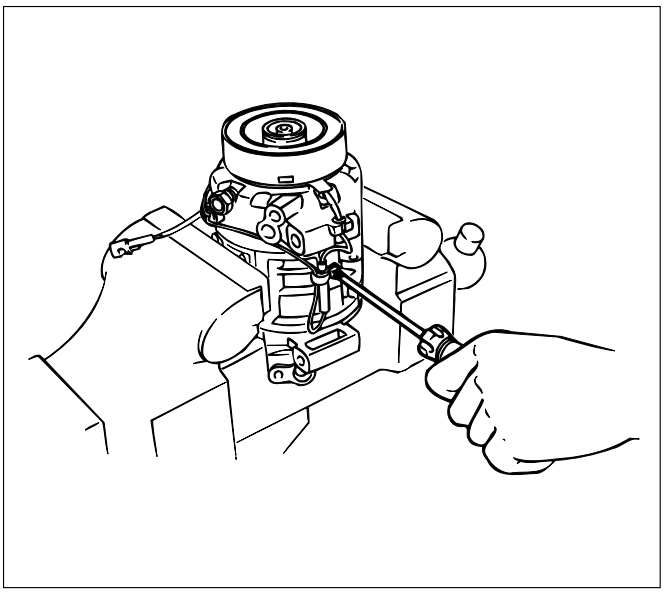

871RS010

7. Loosen three screws and remove the field coil.

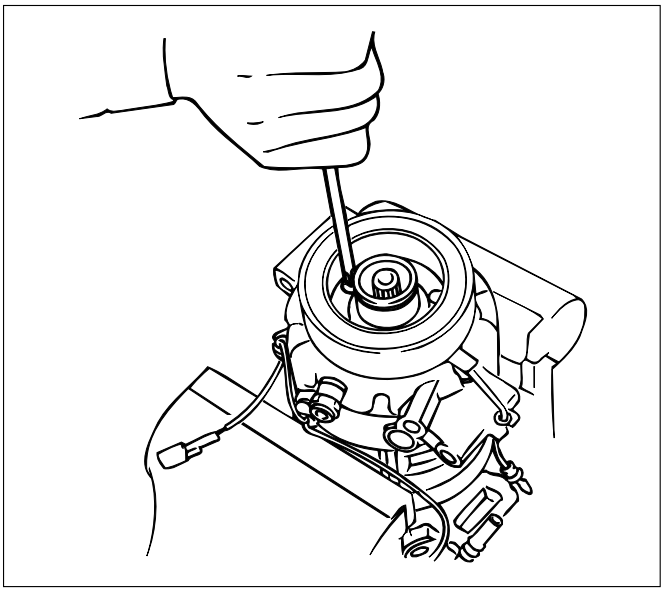

871RS011

Inspection and Repair

Drive Plate

If the frictional surface shows signs of damage due to excessive heat, the drive plate and pulley should be replaced.

Pulley Assembly

Check the appearance of the pulley assembly. If the frictional surface of the pulley shows signs of excessive grooving due to slippage, both the pulley and drive plate should be replaced. The frictional surfaces of the pulley assembly should be cleaned with a suitable solvent before reinstallation.

Coil

Check coil for loose connector or cracked insulation.

Installation

1. Install field coil.
   - Align the located portion (1) of the field coil and compressor.

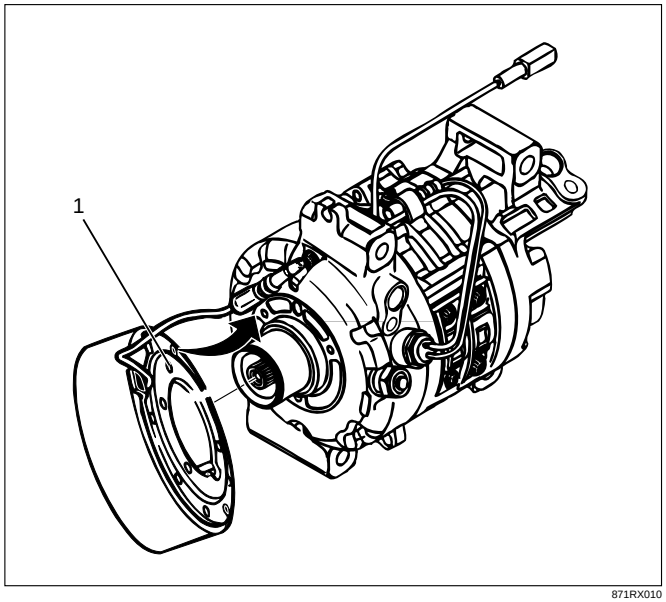

871RX010

   - Tighten the mounting screw to the specified torque.
   Torque: 5N·m (44 lb in)
2. Connect the lead wire connector with the rubber hold and tighten the screw.
3. Install pulley assembly by using pulley installer J-33940-A (2) and drive handle J-8092 (1).

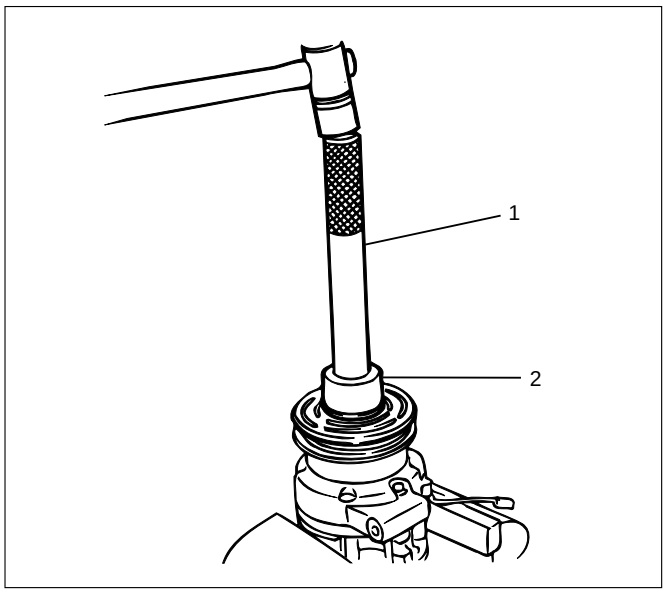

871RX032

4. Install snap ring.
5. Install shim(s).
6. Install the drive plate to the compressor drive shaft together with the original shim(s)(1). Press the drive plate by hand.

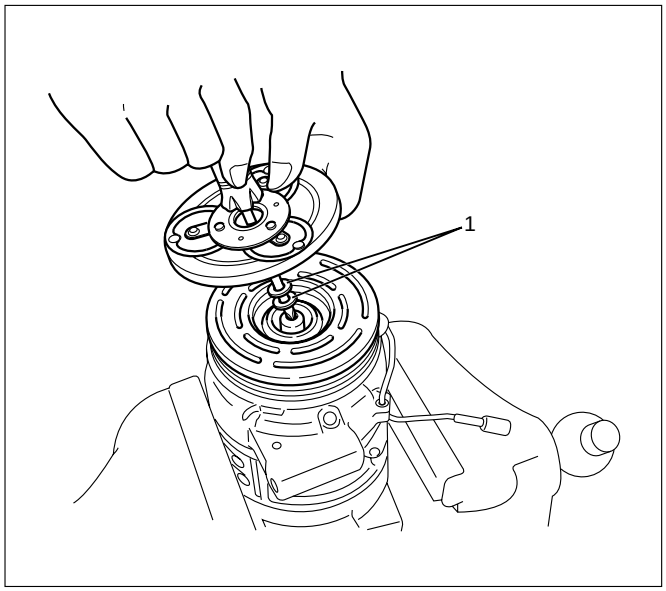

871RX015

7. Install drive plate bolt by using drive plate holder J-7624 (1) to prevent the drive plate from rotating.

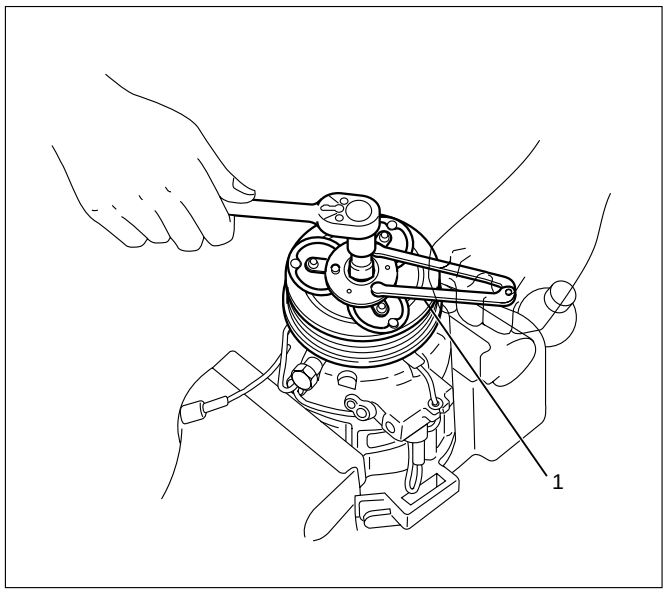

901RX055

- Tighten the drive plate bolt to the specified torque.

Torque: 13 N·m (113 lb in)

- After tightening the drive plate bolt, check to be sure the pulley rotates smoothly.
- Check to be sure that the clutch clearance is between 0.3-0.6 mm (0.01-0.02 in.)

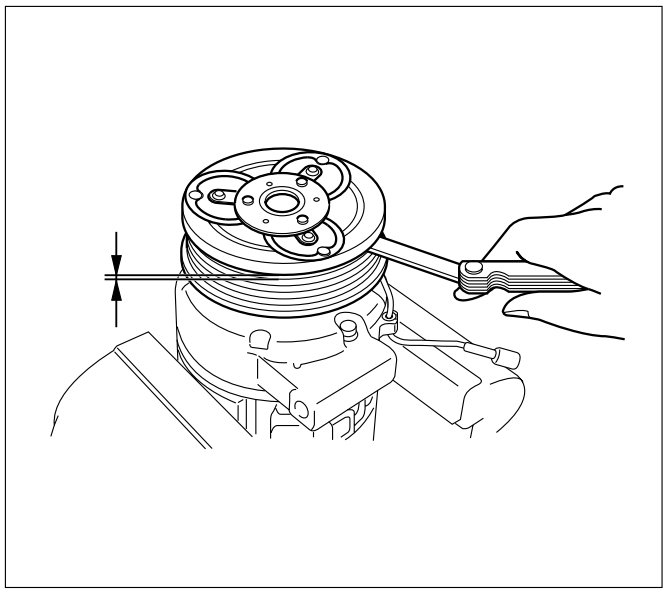

871RX014

- If necessary, install adjusting shim(s).
- Adjusting shims are available in the following thickness.

Thickness

- **0.1 mm (0.0039 in.)**
- **0.3 mm (0.0118 in.)**
- **0.5 mm (0.0197 in.)**

DKS-15CH TYPE COMPRESSOR

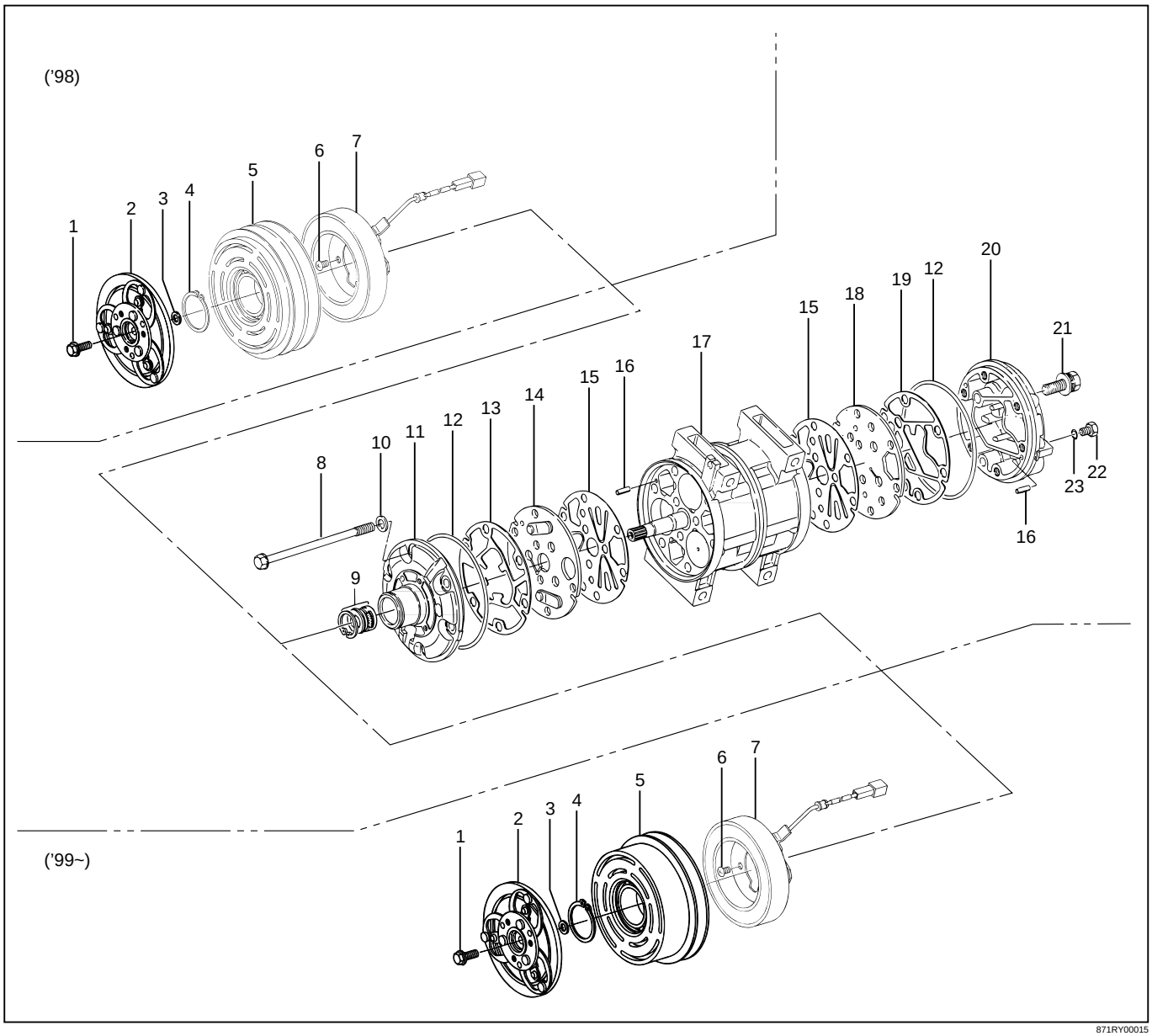

871RY00015

Legend

(1) Drive Plate Bolt
(2) Drive Plate
(3) Shim
(4) Snap Ring
(5) Pulley Assembly
(6) Screw
(7) Field Coil
(8) Through Bolt
(9) Shaft Seal Assembly
(10) Gasket
(11) Front Cylinder Head
(12) O-Ring
(13) Gasket
(14) Front Valve Plate
(15) Front Suction Valve
(16) Pin
(17) Cylinder and Shaft Assembly
(18) Rear Valve Plate
(19) Gasket
(20) Rear Cylinder Head
(21) Bolt
(22) Oil Drain Plug
(23) O-Ring

Removal

1. Remove drive plate bolt by using drive plate holder J-7624 (1) to prevent the drive plate from rotating.

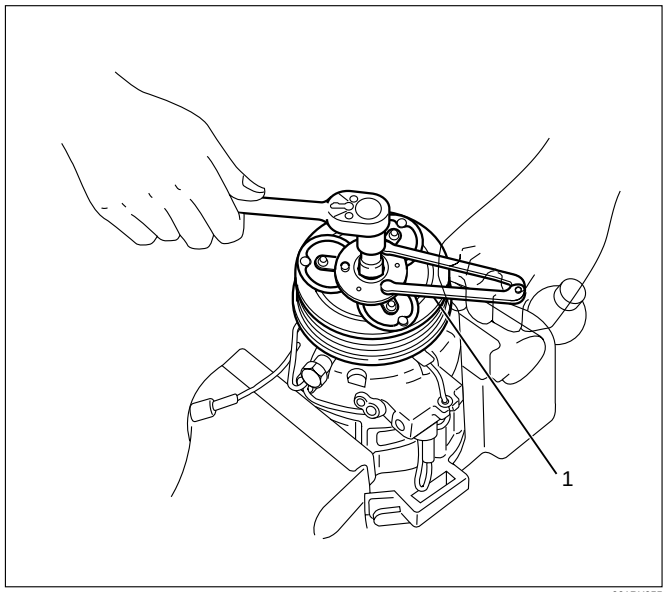

901RX055

2. Remove drive plate by using drive plate puller J-33944-A (2) and forcing screw J-33944-4 (1).

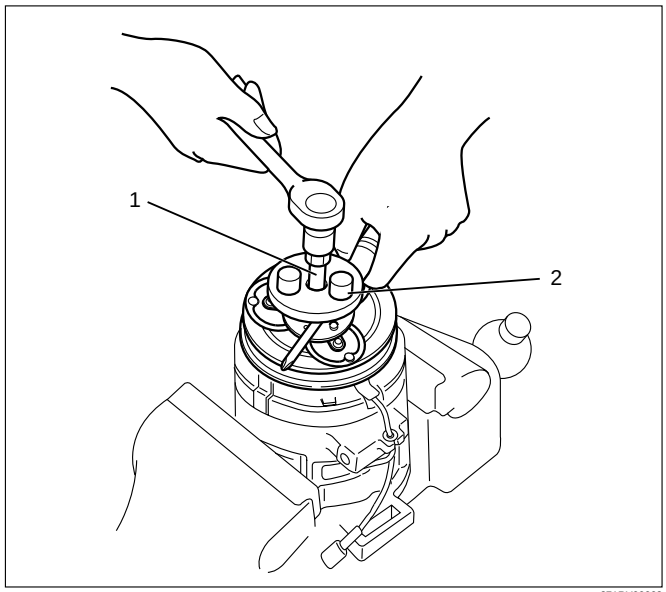

871RY00003

3. Remove shim(s).
4. Remove snap ring (1) by using snap ring pliers.

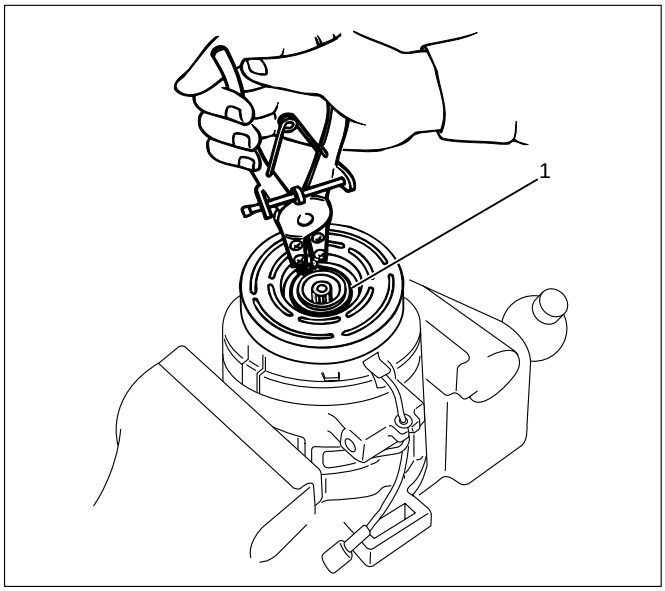

871RY00004

5. Remove pulley assembly by using pulley puller pilot J-38424 (2), pulley puller J-8433 (1) and pulley puller leg J-24092-2 (3).

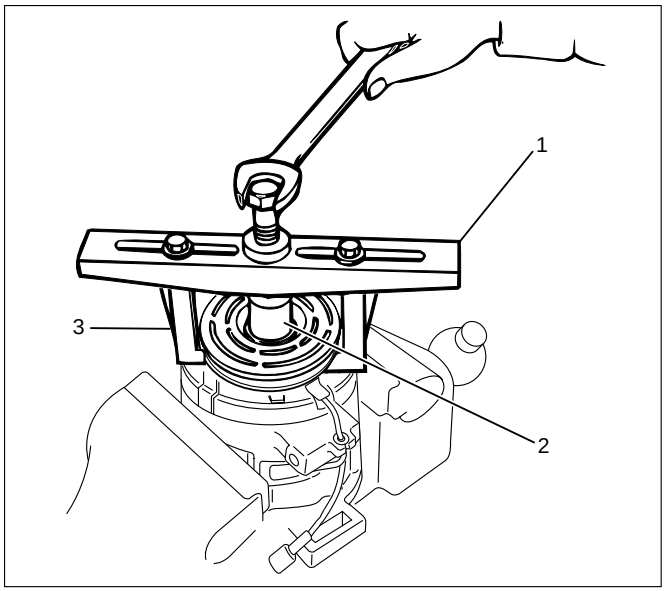

871RY00005

6. Loosen three screws and remove the field coil.

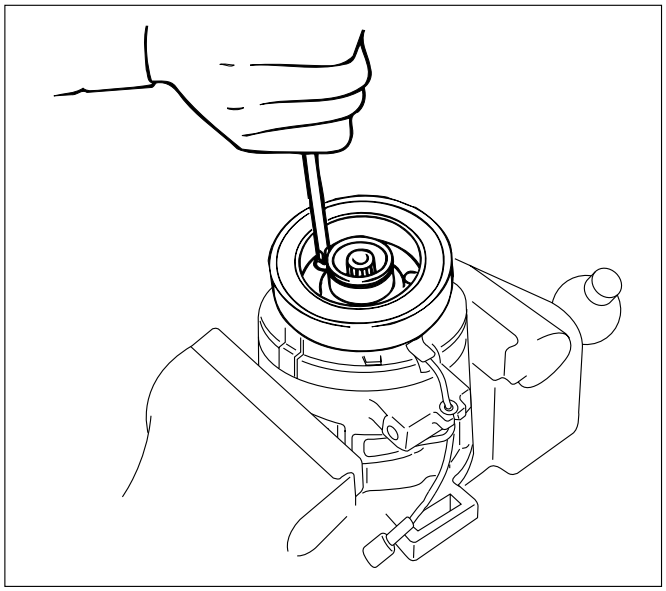

871RY00006

7. Remove snap ring by using snap ring pliers.

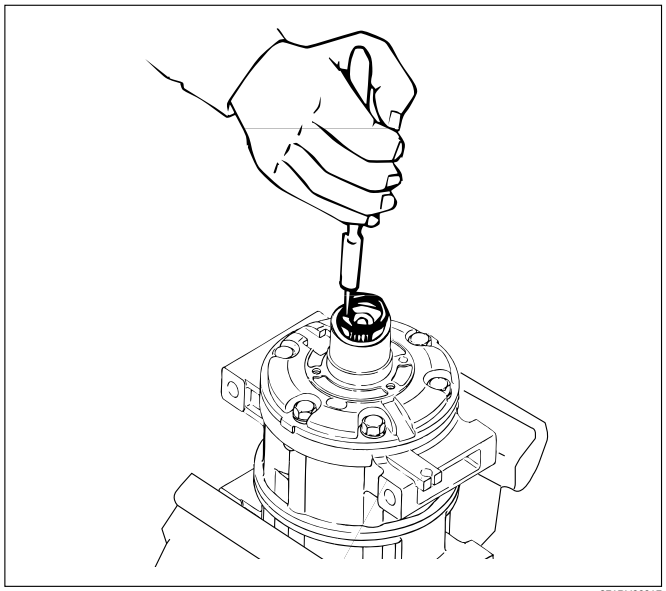

871RY00017

8. Remove shaft seal assembly (2) by using shaft seal remover J-33942 (1).

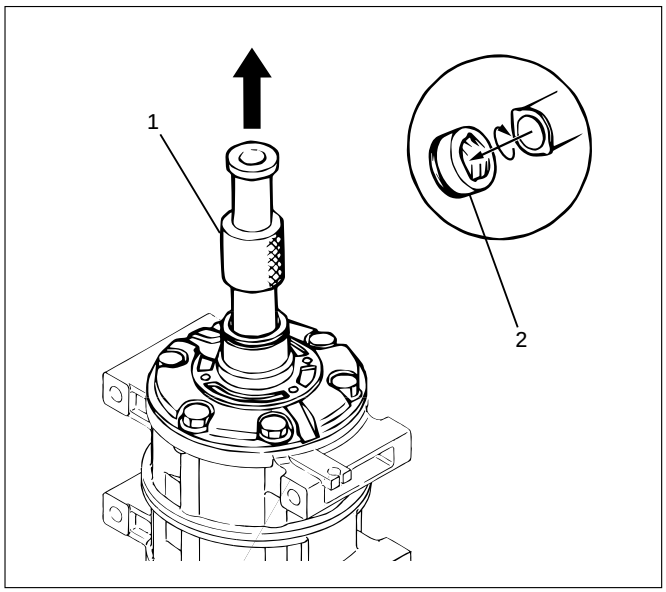

871RY00018

- Engage the remover hook with the shaft seal assembly groove and slowly draw the shaft seal assembly out.

NOTE
The shaft seal is precision-machined and its critical parts are finished to extremely close tolerances. The assembly must be handled with great care, it slips face demanding particularly careful handling.
The shaft seal can not be reused. Install a new shaft seal at reassembly.
Take care not to scratch or otherwise damage the shaft seal face.
Keep the shaft seal free from lint and dirt.

9. Remove through bolt.

10. Remove front cylinder head.

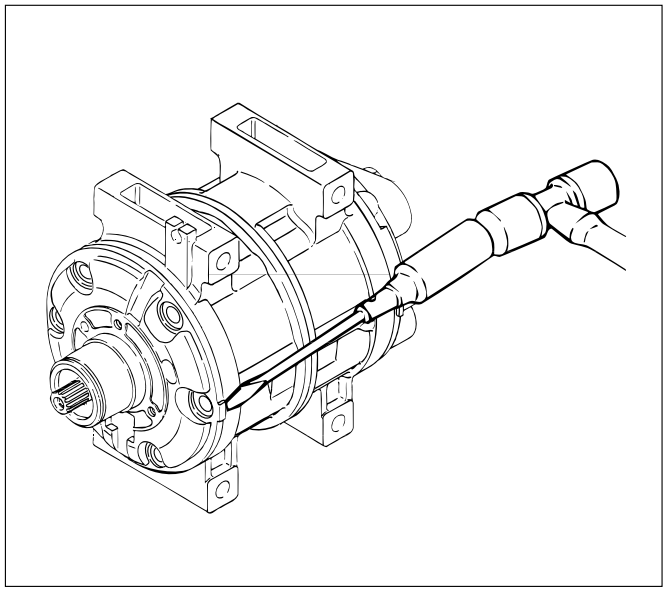

871RY00019

11. Remove o-ring.
    - Alternately tap the projections on the circumference of the front cylinder head with a screwdriver and a plastic hammer to remove the front cylinder head.
12. Remove gasket.
13. Remove front valve plate.
14. Remove front suction valve.

NOTE
Check the front valve plate for scratching and bending.
Check the front valve plate and the front cylinder head for nicks and burrs on the sealing surface.
Buff or replace the valve plate and cylinder head if nicks and burrs are present.
Check that the front valve plate passage is free from obstructions.
Check the front valve plate and the cylinder head for cracks.
Replace the valve plate and cylinder head if cracks are present.

15. Remove rear cylinder head.

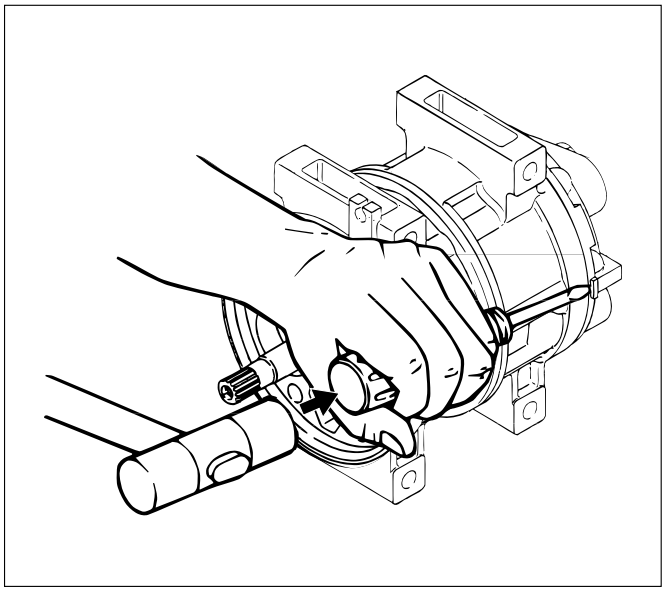

871RY00020

16. Remove o-ring.
    - Alternately tap the projections on the circumference of the rear cylinder head with a screwdriver and a plastic hammer to remove the rear cylinder head.
17. Remove gasket.
18. Remove rear valve plate.
19. Remove rear suction valve.
20. Remove cylinder and shaft assembly.

NOTE
Check the rear valve plate for scratching and bending.
Check the rear valve plate and the rear cylinder head for nicks and burrs on the sealing surface.
Buff or replace the valve plate and cylinder head if nicks and burrs are present.
Check that the rear valve plate passage is free from obstructions.
Check the rear valve plate and the cylinder head for cracks.
Replace the valve plate and cylinder head if cracks are present.

Installation

1. Install cylinder and shaft assembly.
   - Clamp the cylinder shaft assembly in a vise.
     The rear side of the cylinder shaft assembly must be facing up.
2. Install rear suction valve.
   - Apply a coat of new compressor oil to the new suction valve (2).
     Install the suction valve by aligning it with the spring pin and the cylinder valve relief grooves.

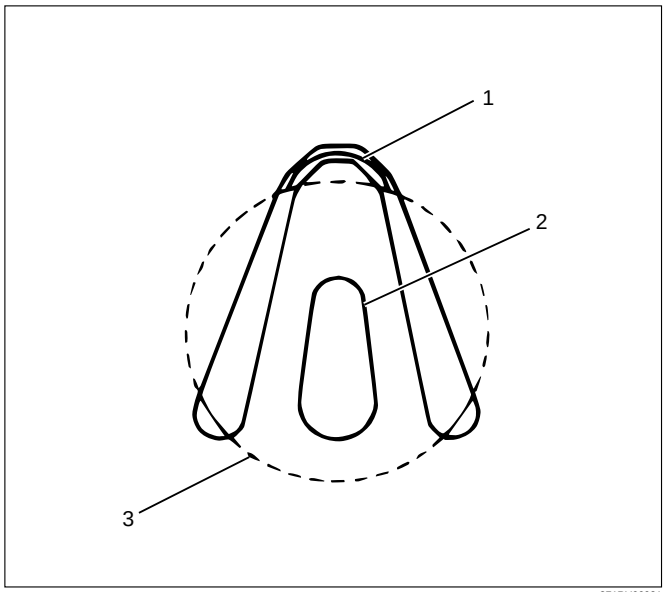

871RY00021

Legend
(1) Escape Groove
(2) Suction Valve
(3) Piston

3. Install rear valve plate.
   - Apply a coat of new compressor oil to the new valve plate.
     Install the valve plate to the suction valve by aligning it with the spring pin.

   NOTE
   Do not mix up the front and rear valve plate.
4. Install gasket.
   - Apply a coat of new compressor oil to the new gasket.
     Install the gasket (3) to the valve plate (4).
5. Install o-ring (2).
6. Install rear cylinder head (1).
   - Apply a coat of new compressor oil to the new o-ring (2).
     Install the o-ring (2) to the rear cylinder head (1).
     Install the rear cylinder head.
     Top the rear cylinder head (1) into place with a plastic hammer.

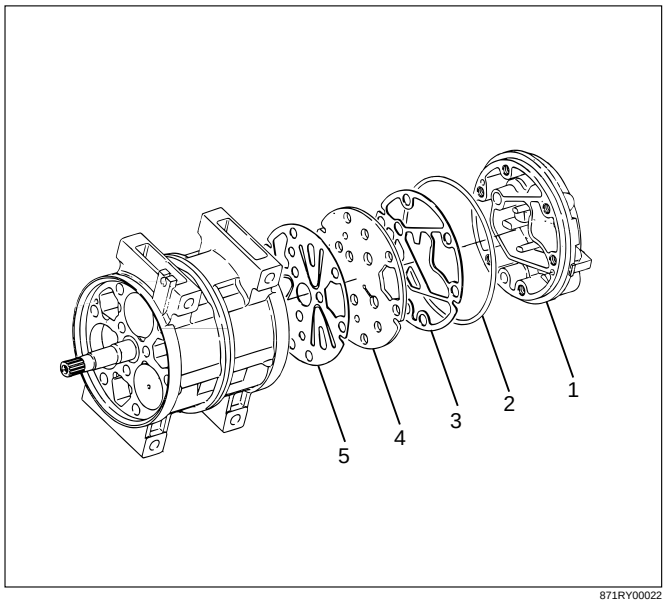

871RY00022

7. Install front suction valve.
   - Set the cylinder shaft assembly with the front side facing up.
     Apply a coat of new compressor oil to the new suction valve (2).
     Install the suction valve (2) by aligning it with the spring pin and the cylinder valve relief grooves.

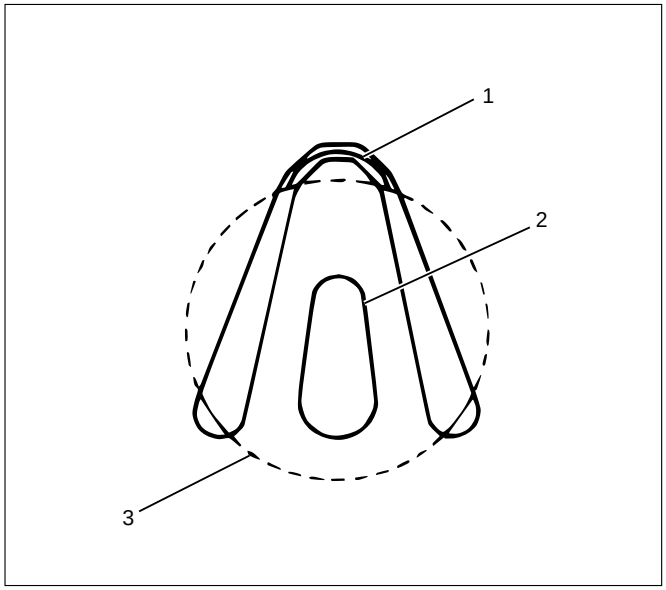

871RY00021

Legend
(1) Escape Groove
(2) Suction Valve
(3) Piston

8. Install front valve plate.
   - Apply a coat of new compressor oil to the new valve plate.
     Install the valve plate to the suction valve by aligning it with the spring pin.

   NOTE
   Do not mix up the front and rear valve plates.
9. Install gasket
   - Apply new compressor oil to the new gasket.
   - Install the gasket to the valve plate by a aligning it with the spring pin.
10. Install o-ring.
11. Install front cylinder head.
   - Apply a coat of new compressor oil to the new O-ring.
     Install the O-ring to the front cylinder head.
     Install the front cylinder head.
     Tap the front cylinder head into place with a plastic hammer.

   NOTE
   When installing the cylinder head, be careful that the end of the drive shaft does not damage the shaft seal assembly surface in the cylinder head.

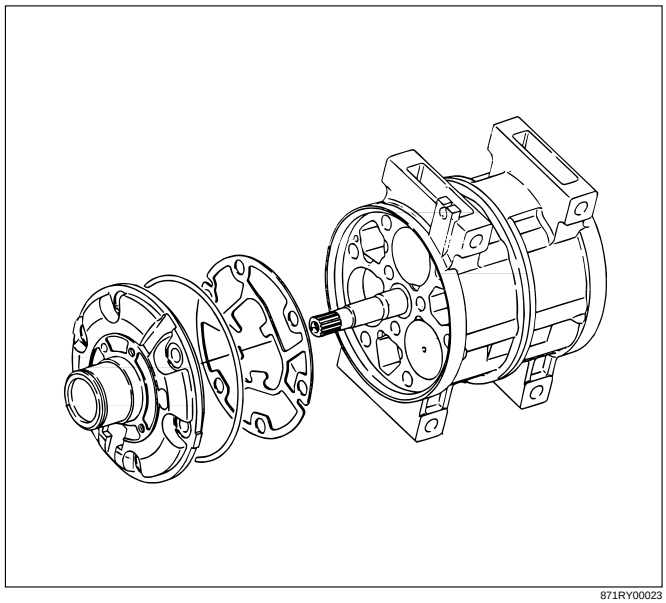

871RY00023

12. Install through bolt.
   - Gaskets cannot reused. Always replace new ones. Tighten the bolts to the specified torque a little at a time in the sequence shown in the illustration.

   Torque: 22N·m (16 lb·ft)

   NOTE
   Rotate the compressor drive shaft two or three times to make sure that it moves smoothly.

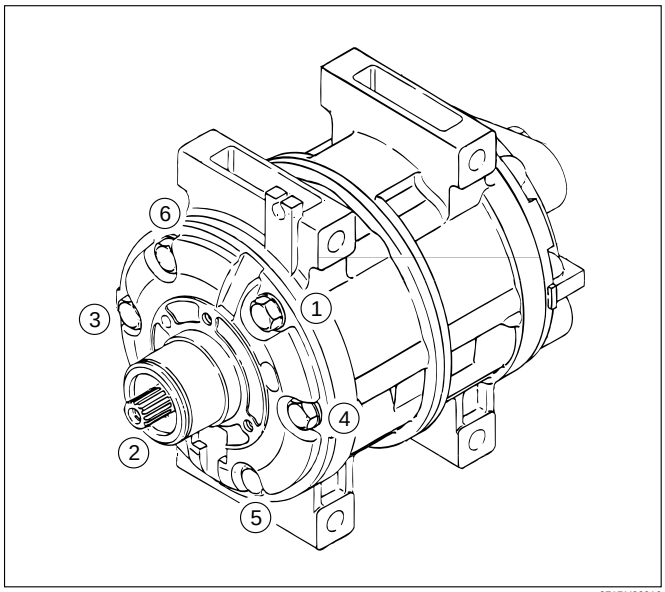

871RY00016

13. Install shaft seal assembly.
    - Clean the sealing portion of the compressor and shaft seal (2).
      Install the shaft seal guide J-34614 (1) onto the end of the drive shaft.
      Apply new compressor oil to the shaft seal guide.
      Install the shaft seal (2) onto the compressor drive shaft head by using shaft seal installer J-33942 (3).

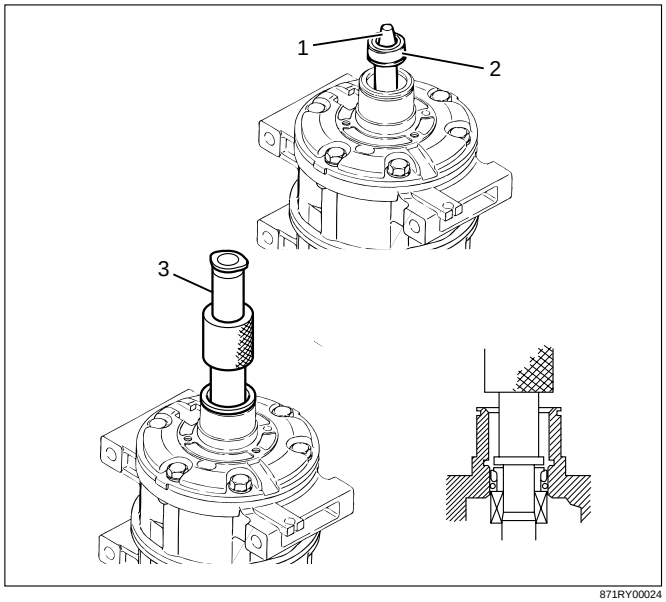

871RY00024

14. Install snap ring.
15. Install field coil.
16. Install lead wire connector.
    - Install the field coil to the compressor.
      Lead wire must be facing up.
      Tighten the field coil fixing screws to the specified torque.

Torque: 5N·m (44 lb·in)

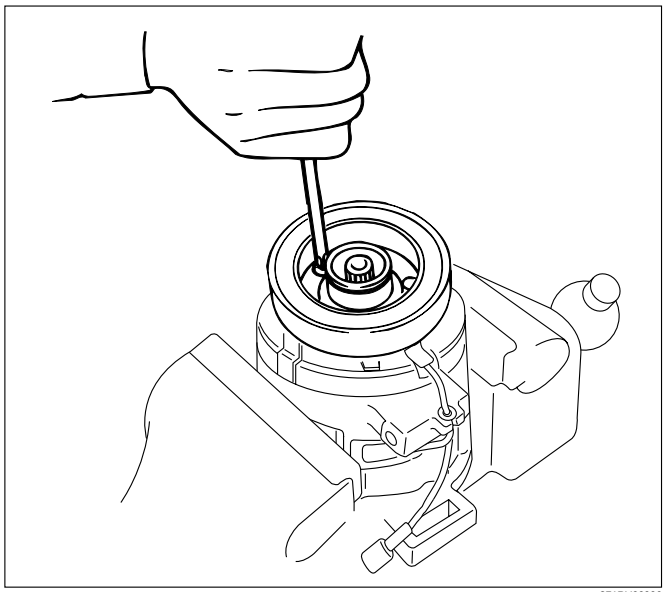
871RY00006

17. Install pulley assembly.
    - Using pulley installer J-33940 (2) and drive handle J-8092 (1) to install the pulley assembly.

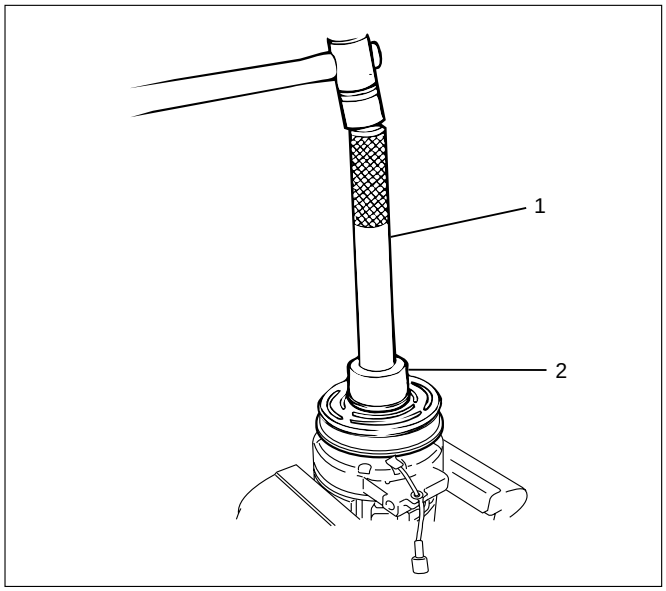

871RY00008

18. Install snap ring.
    - Install the snap ring with the inside indented portion facing out.

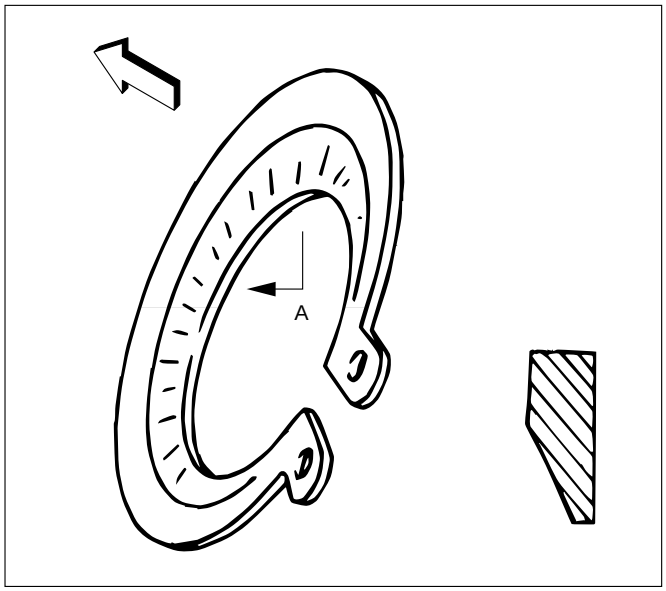

871RY00025

19. Install shim(s).
20. Install drive plate.
    - Install the drive plate to the compressor drive shaft together with the original shim(s)(1) press the drive plate by hand.

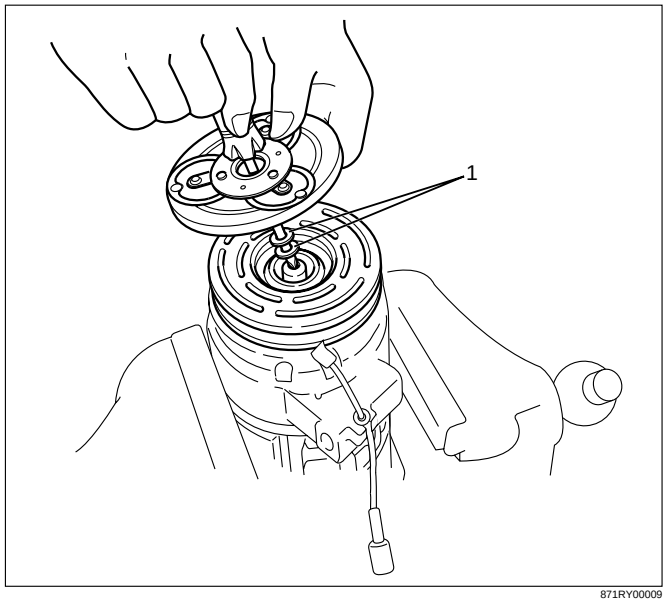

871RY00009

21. Install drive plate bolt by using drive plate holder J-7624 (1) to prevent the drive plate from rotating.
    - Tighten the bolt to the specified torque.

    Torque: 15N·m (11 lb·in)

    NOTE
    After tightening the bolt, check to be sure the pulley rotates smoothly.

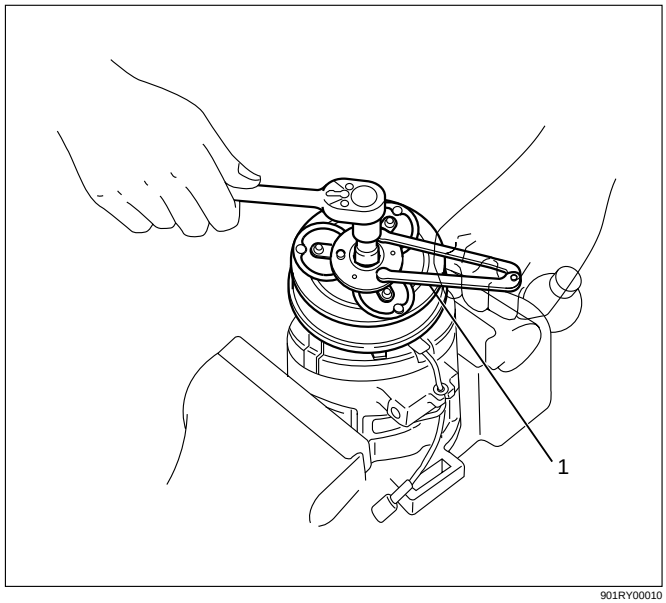

901RY00010

- Check to be sure that the clutch clearance is between 0.3–0.6 mm (0.01–0.02 in.)

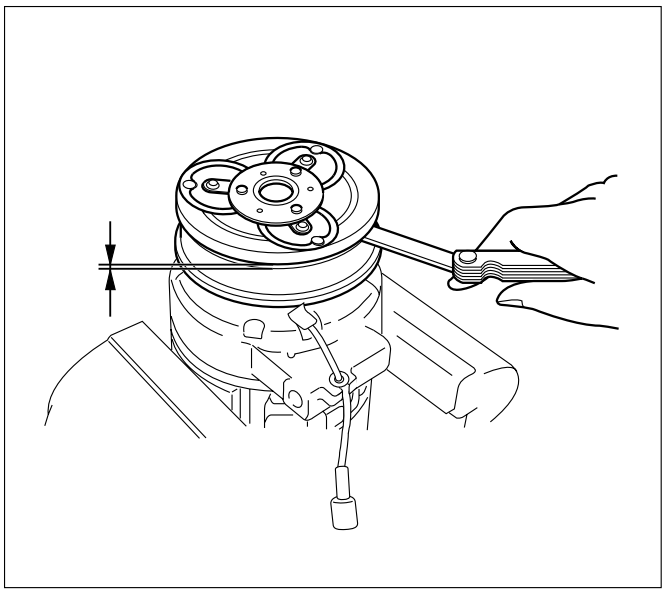

871RY00007

- If necessary, install adjusting shim(s).
- Adjusting shims are available in the following thickness.

Thickness
- **0.1 mm (0.0039 in.)**
- **0.3 mm (0.0118 in.)**
- **0.5 mm (0.0197 in.)**

HD6 TYPE COMPRESSOR

Metric Thread Size Information

Compressor to mounting bracket bolts (Front)
M10 × 1.5 – 6H
Compressor to mounting bracket bolts (Rear)
M8 × 1.25 – 6H
Suction-discharge port screw
M10 × 1.5 – 6H
Compressor shaft
M9 × 1.25 – 6H
Internal hub-clutch drive assembly
M22 × 1.5 – 6H

COMPRESSOR CLUTCH PLATE AND HUB ASSEMBLY

Removal

1. Clamp the holding fixture J-33026 in a vise and attach compressor to holding fixture with thumb screws J-33026-1.
2. With center screw forcing tip in place to thrust against the end of the shaft, thread the Clutch Plate and Hub Assembly Installer-Remover J-33013-B into the hub. Hold the body of the remover with a wrench and turn the center screw into the remover body to remove the clutch plate and hub assembly (1).

CAUTION: Do not drive or pound on the clutch hub or shaft. Internal damage to compressor may result. The forcing tip on J-33013-B remover-installer center screw must be flat or the end of the shaft/axial plate assembly will be damaged.

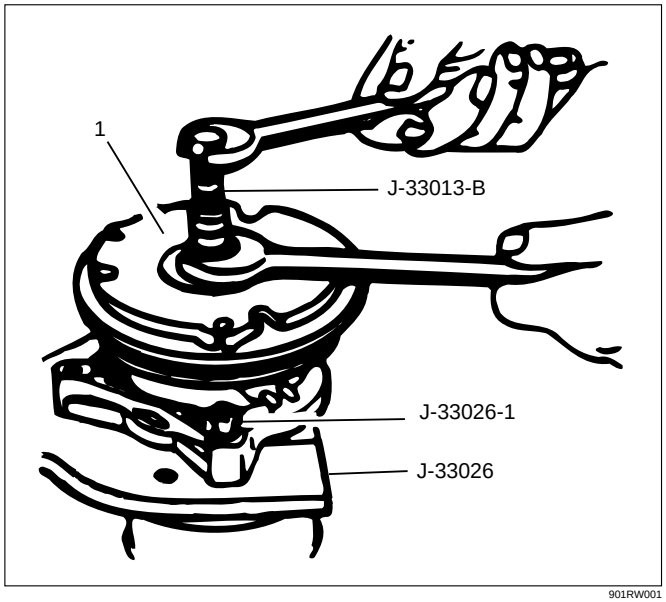

901RW001

3. Remove the shaft key and retain for reassembly.

Installation

1. Install the shaft key into the hub key groove. Allow the key to project approximately 3.2 mm (1/8 in) out of the keyway. The shaft key is curved slightly to provide an interference fit in the hub key groove.
2. Be sure the frictional surface of the clutch plate and the clutch rotor (2) are clean before installing the clutch plate and hub assembly (1).
3. Align the shaft key (4) with the shaft keyway (3) and place the clutch plate and the hub assembly onto the compressor shaft.

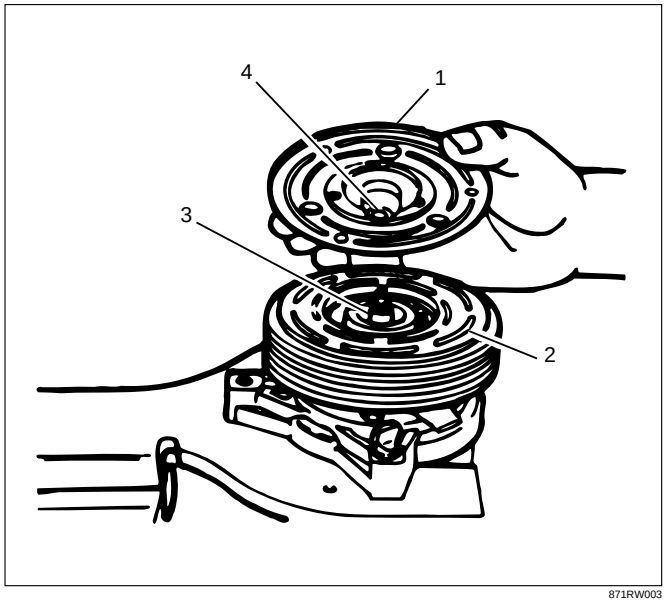

871RW003

4. Remove the forcing tip on J-33013-B clutch plate and hub assembly installer-remover center screw and reverse the body direction on the center screw, as shown in Figure.
5. Install the clutch plate and hub installer-remover J-33013-B with bearing as shown in Figure.
   The body of the J-33013-B installer-remover should be backed off sufficiently to allow the center screw to be threaded onto the end of the compressor shaft.
6. Hold the center screw with a wrench. Tighten the hex portion of the installer-remover J-33013-B body to press the hub onto the shaft. Tighten the body several turns, remove the installer and **check to see that the shaft key is still in place in the keyway before installing the clutch plate and hub assembly to its finial position.** The air gap (2) between frictional surfaces of the clutch plate and clutch rotor should be 0.50–0.76 mm (.020–.030 in).

CAUTION: If the center screw is threaded fully onto the end of the compressor shaft. or if the body of the installer is held and the center screw is rotated, the key will wedge and will break the clutch hub.

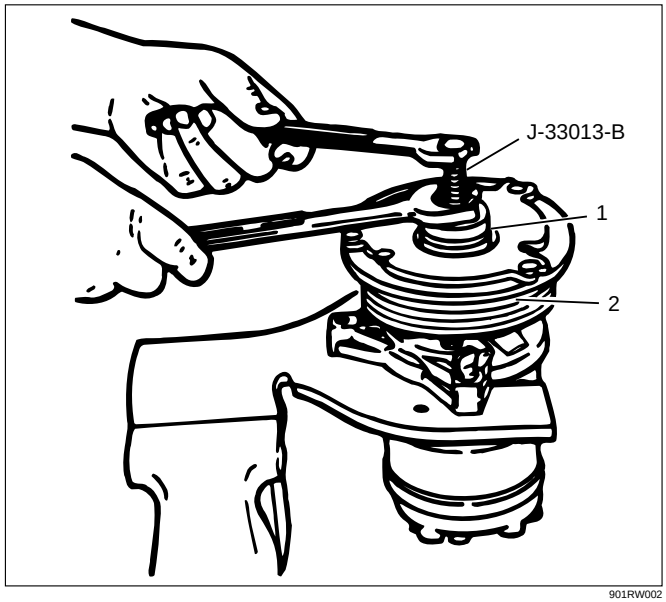

901RW002

COMPRESSOR CLUTCH ROTOR AND/OR BEARING

Removal

1. Remove the clutch plate and hub assembly as described previously.
2. Remove rotor (1) and bearing assembly retaining ring (2), using snap ring pliers.

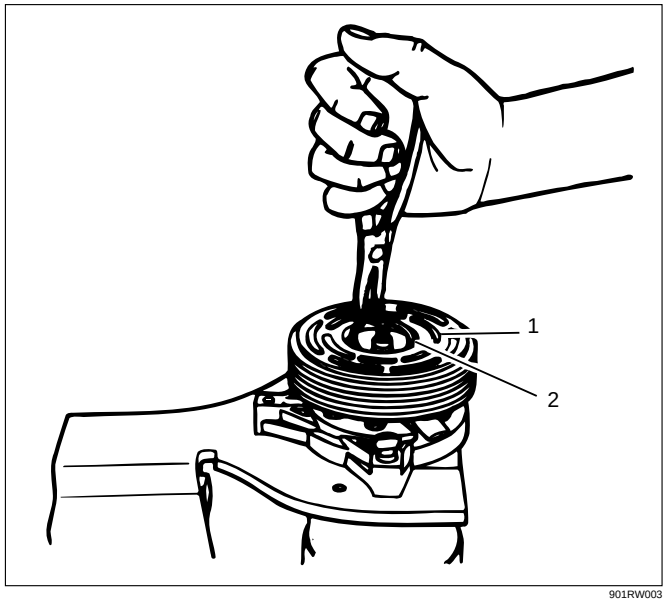

901RW003

3. Install pulley rotor and bearing puller guide J-33023-A to the front head and install J-41552 pulley rotor and bearing puller down into the inner circle of slots (1) in the rotor. Turn the J-41552 puller clockwise in the slots in the rotor.
7. Remove installer J-33013-B, check for proper positioning of the shaft key (even or slightly above the clutch hub).
8. Spin the pulley rotor by hand to see that the rotor is not rubbing the clutch drive plate.
4. Hold the J-41552 puller in place and tighten the puller screw against the puller guide to remove the pulley rotor and bearing assembly.

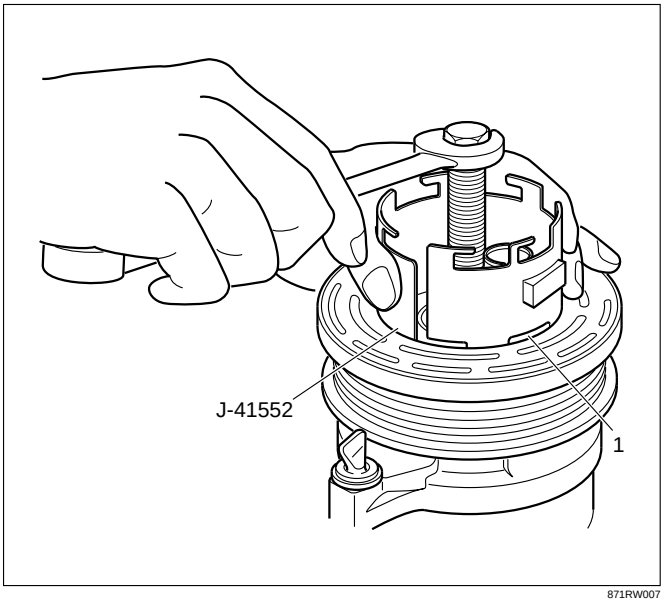

871RW007

Installation

1. With the compressor mounted to the J-34992 holding fixture, position the rotor and bearing assembly on the front head.
2. Position the J-33017 pulley, rotor and bearing installer and J-33023-A puller pilot directly over the inner race of the bearing.

3. Position puller crossbar J-8433-1 on the puller pilot J-33023-A and assemble the two J-33026 through bolts and washers through the puller bar slots and thread them into the J-33026 holding fixture. The thread of the through bolts should engage the full thickness of the holding fixture.
4. Tighten the center screw in the J-8433-1 puller crossbar to force the pulley rotor (1) and bearing assembly onto the compressor front head. Should the J-33017 pulley rotor and bearing installer slip off direct in-line contact with the inner race of the bearing, loosen the J-8433-1 center forcing screw and realign the installer and pilot so that the J-33017 installer will properly clear the front head.

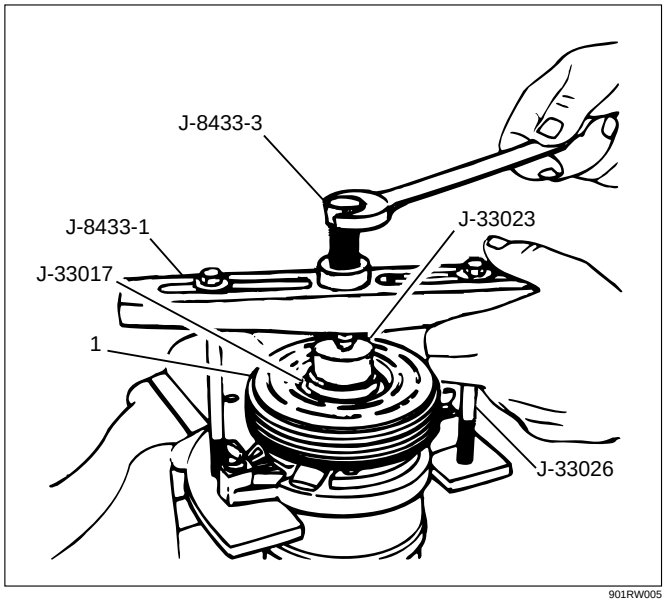

901RW005

5. Install rotor and bearing assembly retainer ring, using snap ring pliers.
6. Reinstall clutch plate and hub assembly as described previously.

COMPRESSOR CLUTCH COIL

Removal

1. Perform Steps 1 through 4 of "Clutch Rotor and/or Bearings" removal procedure. **Mark clutch coil terminal location (1) on compressor front head.**
2. Install J-33023-A puller pilot on front head of compressor. Also install J-8433-1 puller crossbar with J-33025 puller legs as shown in figure.
3. Tighten J-8433-3 forcing screw against the puller pilot to remove the clutch coil (2).

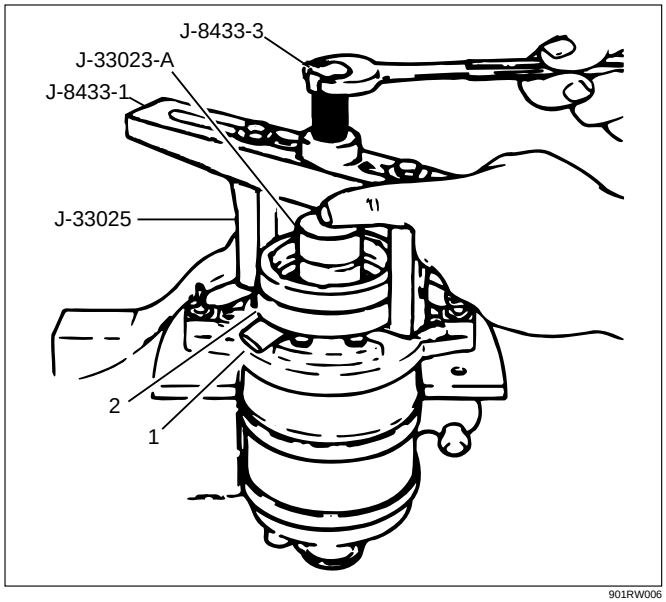

901RW006

Installation

1. Place the clutch coil assembly (1) on the front head with the terminals positioned at the "marked" location.
2. Place the J-33024 clutch coil installer over the internal opening of the clutch coil housing and align installer with the compressor front head.
3. Center the J-8433-1 puller crossbar in the counter-sunk center hole of the J-33024 clutch coil installer. Install the J-33026 through bolts and washers through the crossbar slots and thread them into the holding fixture J-33026 to full fixture thickness.

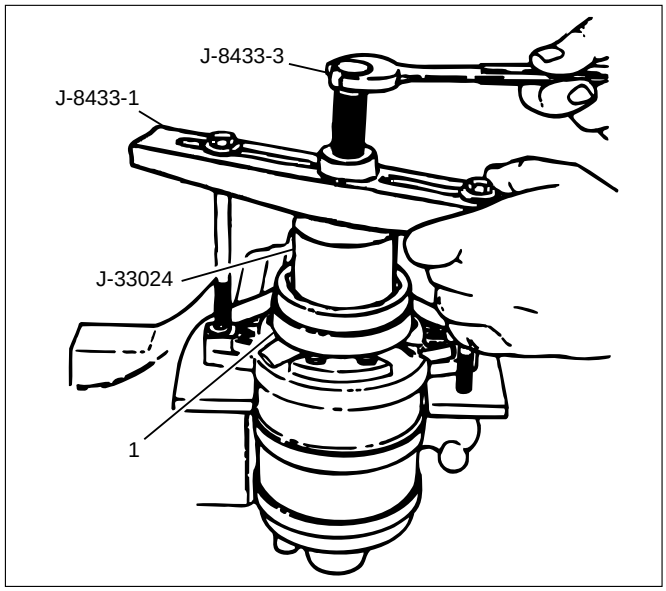

901RW007

4. Turn the center forcing screw of J-8433-1 puller crossbar to force the clutch coil onto the front head. Be sure clutch coil and J-33024 installer stay "in-line" during installation.
5. When coil is fully seated on the front head, use a 1/8 in diameter drift punch (2) and stake the front head at three places 120 degrees apart, to ensure clutch coil (3) remains in position.

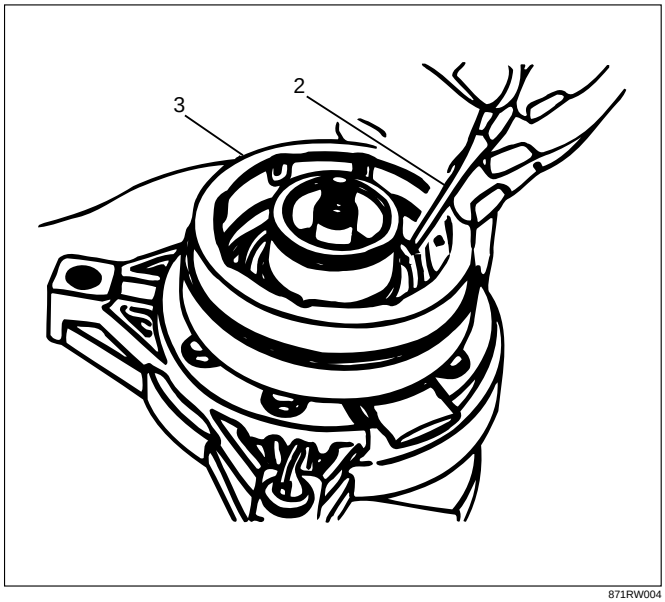

871RW004

- Stake size should be only one-half the area of the punch tip and be only approximately 0.28–0.35 mm (.010–.015 in) deep.

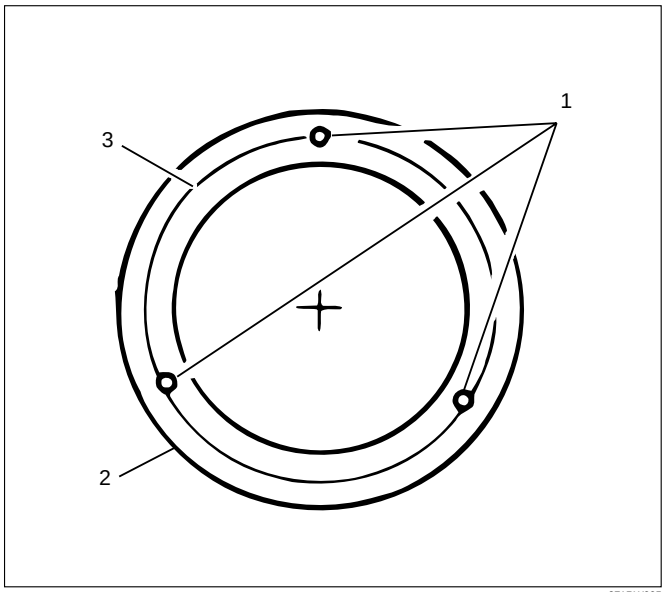

871RW005

Legend

(1) Stake Front Head 0.28–0.35 mm Deep (0.10–015 in)
(2) Clutch Coil Housing
(3) Front Head Surface

6. Install rotor and bearing assembly and the clutch plate and hub assembly as described previously.

COMPRESSOR SHAFT SEAL

Service Precaution

When replacing the shaft seal assembly, pressure relief valve or control switches, it will be necessary to recover the refrigerant. Other than clutch repair procedures, the same holds true for any disassembly of the compressor.

A clean workbench covered with a sheet of clean paper, and a place (clean trays, etc) for all parts being removed and replaced is important, as is the use of proper clean service tools.

CAUTION: Any attempt to use makeshift or inadequate service tools or equipment may result in damage and/or improper compressor operation.

All parts required for servicing the internal compressor are protected by a preservative process and packaged in a manner which will eliminate the necessity of cleaning, washing or flushing of the parts. The parts can be used in the internal assembly just as they are removed from the service package. **Seals and protective packaging should be left intact until just prior to installation.**

If the compressor rear head, front head or cylinder and shaft assembly is to be serviced or replaced, the oil in the compressor must be drained, measured, recorded and replaced.

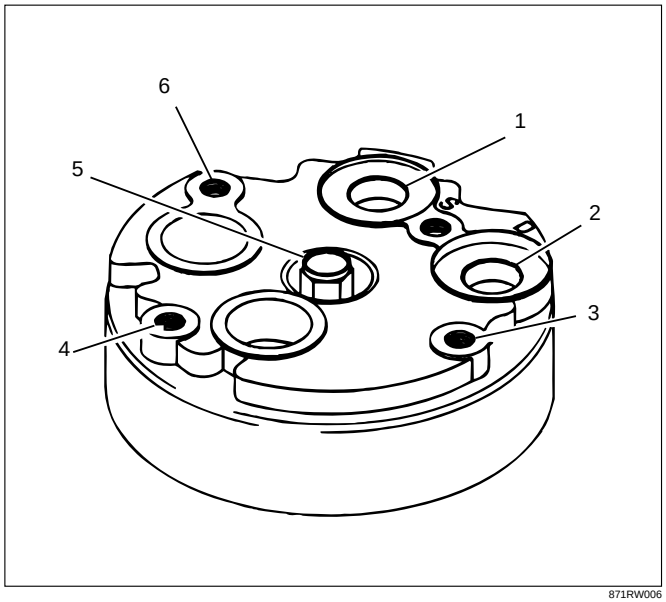

871RW006

Legend

(1) Suction Port
(2) Discharge Port
(3) Mounting Boss
(4) Mounting Boss
(5) Pressure Relief Valve
(6) Mounting Boss

Seal Leak Detection

A shaft seal should not be changed because of small amounts of oil found on an adjacent surface but only after actual refrigerant leakage is found using an approved leak detector.

CAUTION: Handling and care of seal protector is important. If seal protector is nicked or the bottom flared, the new seal may be damaged during installation.

Removal

1. Recover the refrigerant using Refrigerant Recovery System.
2. Loosen and reposition compressor in mounting brackets, if necessary.
3. Remove clutch plate and hub assembly from compressor as described previously.
4. Remove the shaft seal retainer ring, using snap ring pliers.
5. Thoroughly clean inside of compressor neck area surrounding the shaft, the exposed portion of the seal, the retainer ring groove and the shaft itself. Any dirt or foreign material getting into compressor may cause damage.
6. Fully engage the knurled tangs of Seal Remover-Installer J-23128-A into the recessed portion of the Seal (1) by turning the handle clockwise. Remove the Seal from the compressor with a rotary-pulling motion.
   Discard the seal. The handle must be hand-tightened securely. Do not use a wrench or pliers.

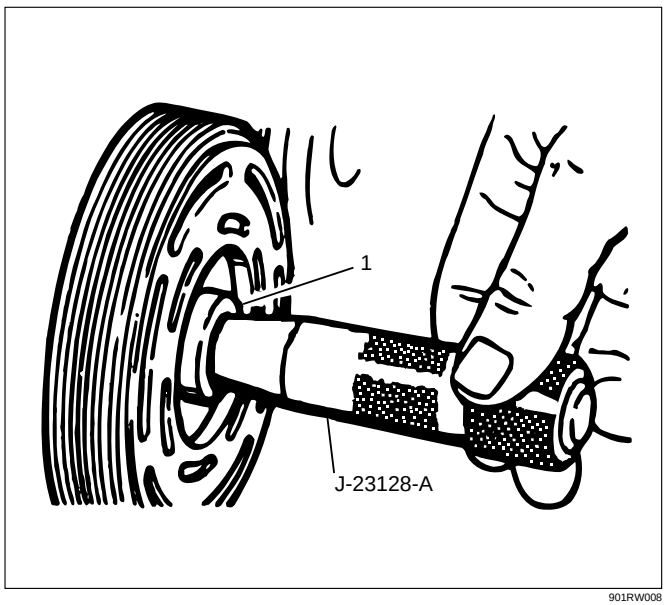

901RW008

7. Remove and discard the seal seat O-ring (2) from the compressor neck using O-ring remover J-9553-01.

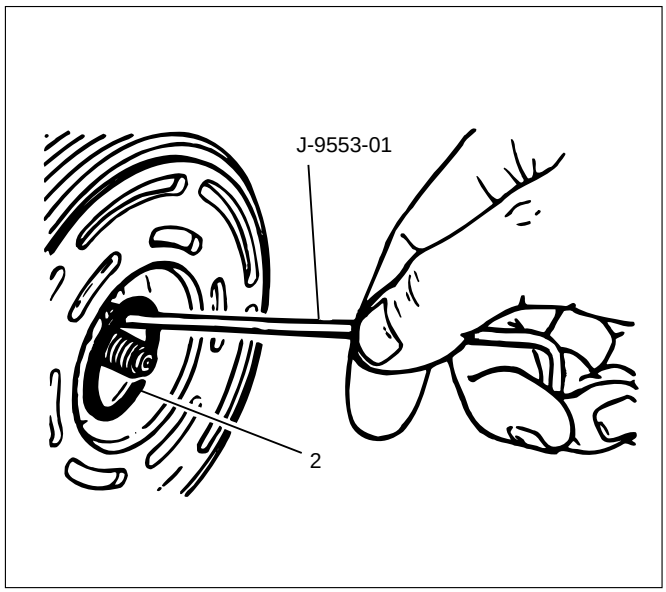

901RW009

8. Recheck the shaft and inside of the compressor neck for dirt or foreign material and be sure these areas are perfectly clean before installing new parts.

Cleaning

Thoroughly clean O-ring seal groove in front head.

CAUTION: Seals should not be re-used. Always use a new specification service seal on rebuild. Be sure that the seal to be installed is not scratched or damaged in anyway. Make sure that the seal seat and seal are free of lint and dirt that could damage the seal surface or prevent sealing.

Installation

1. Dip the new seal seat O-ring (1) in clean 525 viscosity refrigerant oil and assemble onto O-ring installer J-33011.

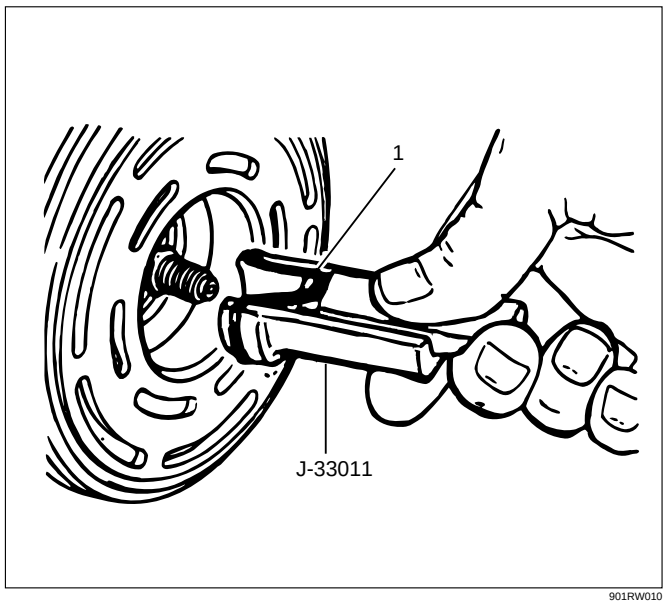

901RW010

2. Insert the O-ring installer J-33011 into the compressor neck until the installer "bottoms". Lower the moveable slide of the O-ring installer to release the O-ring into the seal O-ring lower groove (The compressor neck top groove is for the shaft seal retainer ring.) Rotate the installer to seat the O-ring and remove the installer.
3. Dip the new seal in clean 525 viscosity refrigerant oil and assemble seal to Seal Installer J-23128-A, by turning handle clockwise. The stamped steel case side of the lip seal must be engaged with knurled tangs of installer so that flared-out side of lip seal is facing and installed towards the compressor. Install seal protector J-34614, in the seal lip and place over the compressor shaft, and push the seal in place with a rotary motion or place the seal protector J-34614 over end of compressor shaft, and slide the new seal onto the shaft with a rotary motion until it stops. Take care not to dislodge the O-ring. Be sure the seal (2) makes good contact with the O-ring. Disengage the installer from the seal and remove the installer J-23128-A and the seal protector J-34614.

CAUTION: Handling and care of seal protector is important. If seal protector is nicked or the bottom flared, the new seal may be damaged during installation.

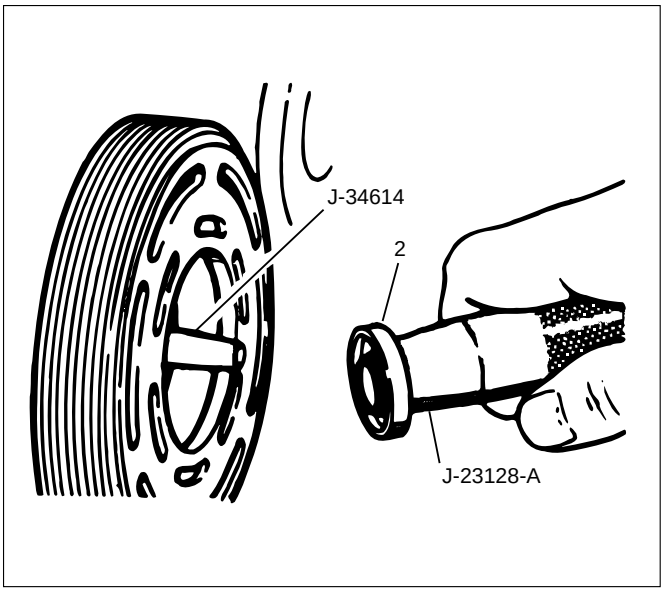

901RW011

4. Install the new seal retainer ring with its flat side against the Seal, using Snap-Ring Pliers. Use the sleeve from O-ring installer J-33011 to press in on the seal retainer ring so that it snaps into its groove.
5. To leak test, install compressor leak test fixture J-39893 on rear head of compressor and connect gage charging lines and Refrigerant Recovery System. Pressurize suction and high-side of compressor with R-134a Refrigerant. Temporarily install (M9 × 1.25 thread on shaft) nut and, with the compressor in horizontal position, rotate the compressor shaft in normal direction of rotation several times by hand. Leak test the seal area and correct and leak found. Recover the refrigerant. Remove shaft nut.

6. Remove any excess oil resulting from installing the new seal parts from the shaft and inside the compressor neck.
7. Install the clutch plate and hub assembly as described previously.
8. Reinstall compressor belt and tighten bracket.
9. Evacuate and charge the refrigerant system.

COMPRESSOR PRESSURE RELIEF VALVE

Removal

1. Recover the refrigerant using Refrigerant Recovery System.
2. Remove old pressure relief valve.

Installation

1. Clean valve seat area on rear head.
2. Lubricate O-ring of new pressure relief valve and O-ring assembly with new 525 viscosity refrigerant oil. Install new valve and torque in place, 9.0 N·m (6.1 ft lbs)
3. Evacuate and recharge the system.
4. Leak test system.

COMPRESSOR OIL

Compressor Oil Check

The oil used to lubricate the compressor is circulating with the refrigerant.
Whenever replacing any component of the system or a large amount of gas leakage occurs, add oil to maintain the original amount of oil.

(Oil Capacity)	
Capacity total in system	150 cc (5.0 fl.oz)
Compressor (Service parts) charging amount	150 cc (5.0 fl.oz)

Checking and Adjusting Oil Quantity for Used Compressor

1. Perform oil return operation. Refer to Oil Return Operation in this section.
2. Discharge and recover refrigerant and remove the compressor.
3. Drain the compressor oil and measure the extracted oil with a measuring cylinder.
4. If the amount of oil drained is much less than 90 cc (3.0 fl. oz.), some refrigerant may have leaked out. Conduct a leak tests on the connections of each system, and if necessary, repair or replace faulty parts.
5. Check the compressor oil contamination. (Refer to Contamination of Compressor Oil in this section.)
6. Adjust the oil level following the next procedure below.

(Collected Amount)	(Charging Amount)
more than 90 cc (3.0 fl.oz)	same as collected amount
less than 90 cc (3.0 fl.oz)	90 cc (3.0 fl.oz)

7. Install the compressor, then evacuate, charge and perform the oil return operation.
8. Check system operation.

When it is impossible to preform oil return operation, the compressor oil should be checked in the following order:

1. Discharge and recover refrigerant and remove the compressor.
2. Drain the compressor oil and measure the extracted oil with a measuring cylinder.
3. Check the oil for contamination.
4. If more than 90 cc (3.0 fl. oz.) of oil is extracted from the compressor, supply the same amount of oil to the compressor to be installed. If the amount of oil extracted is less than 90 cc (3.0 fl. oz.), recheck the compressor oil in the following order:
5. Supply 90 cc (3.0 fl. oz.) of oil to the compressor and install it onto the vehicle.
6. Evacuate and recharge with the proper amount of refrigerant.
7. Perform the oil return operation.
8. Remove the compressor and recheck the amount of oil.
9. Adjust the compressor oil, if necessary.

(Collected Amount)	(Charging Amount)
more than 90 cc (3.0 fl.oz)	same as collected amount
less than 90 cc (3.0 fl.oz)	90 cc (3.0 fl.oz)

Checking and Adjusting for Compressor Replacement

The oil is not charged in compressor (service parts). So it is necessary to charge the proper amount of oil to the new compressor.

1. Perform oil return operation.
2. Discharge and recover the refrigerant and remove the compressor.
3. Drain the compressor oil and measure the extracted oil.
4. Check the compressor oil for contamination.
5. Adjust the oil level as required.

(Amount of oil drained from used compressor)	(Charging amount of oil to new compressor)
more than 90 cc (3.0 fl.oz)	same as drained amount
less than 90 cc (3.0 fl.oz)	90 cc (3.0 fl.oz)

6. Evacuate, charge and perform the oil return operation.
7. Check the system operation.

Contamination of Compressor Oil

Unlike engine oil, no cleaning agent is added to the compressor oil. Even if the compressor runs for a long period of time (approximately one season), the oil never becomes contaminated as long as there is nothing wrong with the compressor or its method of use.

Inspect the extracted oil for any of the following conditions:

- The capacity of the oil has increased.
- The oil has changed to red.
- Foreign substances, metal powder, etc., are present in the oil.

If any of these conditions exists, the compressor oil is contaminated. Whenever contaminated compressor oil is discovered, the receiver/drier must be replaced.

Oil Return Operation

There is close affinity between the oil and the refrigerant. During normal operation, part of the oil recirculates with the refrigerant in the system. When checking the amount of oil in the system, or replacing any component of the system, the compressor must be run in advance for oil return operation. The procedure is as follows:

1. Open all the doors and the engine hood.
2. Start the engine and air conditioning switch to "ON" and set the fan control knob at its highest position.
3. Run the compressor for more than 20 minutes between 800 and 1,000 rpm in order to operate the system.
4. Stop the engine.

Replacement of Component Parts

When replacing the system component parts, supply the following amount of oil to the component parts to be installed.

(Component parts to be installed)	(Amount of Oil)
Evaporator	50 cc (1.7 fl. oz.)
Condenser	30 cc (1.0 fl. oz.)
Receiver/dryer	30 cc (1.0 fl. oz.)
Refrigerant line (one piece)	10 cc (0.3 fl. oz.)

Compressor Leak Testing (External and Internal)

Bench-Check Procedure

1. Install test plate J-39893 on rear head of compressor.
2. Using Refrigerant Recovery System, attach center hose of manifold gage set on charging station to a refrigerant drum standing in an upright drum.
3. Connect charging station high and low pressure lines to corresponding fittings on test plate J-39893. Suction port (low-side) of compressor has large internal opening. Discharge port (high-side) has smaller internal opening into compressor and deeper recess.
4. Open low pressure control, high pressure control and refrigerant control on charging station to allow refrigerant vapor to flow into compressor.
5. Using a leak detector, check for leaks at pressure relief valve, rear head switch location, compressor front and rear head seals, center cylinder seal, through bolt head gaskets and compressor shaft seal. After checking, shut off low pressure control and high-pressure control on charging station.
6. If an external leak is present, perform the necessary corrective measures and recheck for leaks to make certain the leak has been connected.
7. Recover the refrigerant.
8. Disconnect both hoses from the test plate J-39893.
9. Add 90 ml (3 oz.) new PAG lubricant to the compressor assembly. Rotate the complete compressor assembly (not the crankshaft or drive plate hub) slowly several turns to distribute oil to all cylinder and piston areas.
10. Install a M9 × 1.25 threaded nut on the compressor crankshaft if the drive plate and clutch assembly are not installed.
11. Using a box-end wrench or socket and handle, rotate the compressor crankshaft or clutch drive plate on the crankshaft several turns to insure piston assembly to cylinder wall lubrication.
12. Using Refrigerant Recovery System, connect the charging station high-pressure line to the test plate J-39893 high-side connector.
13. Using Refrigerant Recovery System, connect the charging station low-pressure line to the low pressure port of the test plate J-39893. Oil will drain out of the compressor suction port if the compressor is positioned with the suction port downward.

14. Attach the compressor to the J-34992 holding fixture and mount the compressor in a vise so that the compressor will be in a horizontal position and the shaft can be turned with a wrench.
15. Using a wrench, rotate the compressor crankshaft or drive plate hub ten complete revolutions at a speed of approximately one-revolution per second turning the compressor at less than one-revolution per second can result in a lower pump-up pressure and disqualify a good pumping compressor.
16. Observe the reading on high-pressure gauge at the completion of the tenth revolution of the compressor. The pressure reading for a good pumping compressor should be 690 kPa (100 psi) or above. A pressure reading of less than 620 kPa (90 psi) would indicate one or more suction and/or discharge valves leaking an internal leak, or an inoperative valve, and the refrigerant must be recovered and the compressor disassembled and checked for cause of leak. Repair as needed, reassemble and repeat the pump-up test. Externally leak test.
17. When the pressure pump-up test is completed, recover the refrigerant from the high-side and remove the test plate J-39893.
18. Tilt the compressor so that the compressor suction and discharge ports are down. Drain the PAG lubricant from the compressor.
19. Allow the compressor to drain for 10 minutes, then refill with the proper amount of PAG lubricant, per oil balance procedure described previously. The PAG lubricant may be poured into the suction port. If further assembly or processing is required, a shipping plate or test plate J-39893 should be installed to keep out air, dirt and moisture until the compressor is installed.

SECTION 00

SERVICE INFORMATION

CONTENTS

PAGE

Troubleshooting ..... 00 – 3
Main Data and Specifications ..... 00 – 11
Service Standard ..... 00 – 12
Servicing ..... 00 – 13
Fixing Torque ..... 00 – 15
Special Tools ..... 00 – 19

MEMO

TROUBLESHOOTING

CONTENTS

PAGE

General Information ..... 00 – 4
General Troubleshooting ..... 00 – 4
Power Steering System ..... 00 – 7
Power Steering Pump ..... 00 – 8
Steering Column ..... 00 – 9

GENERAL INFORMATION

Since the problems in steering, suspension, wheels and tires involve several systems, they must all be considered when diagnosing a complaint. To identify the symptom, always road test the vehicle first.
Proceed with the following preliminary inspections and correct any defects which are found.

1. Inspect tires for proper pressure and uneven wear.
2. Raise vehicle on a hoist and inspect front and rear suspension and steering linkage for loose or damaged parts.
3. Spin front wheels. Inspect for out-of-round tires, out-of-balance tires, loose and/or rough wheel bearings.

GENERAL TROUBLESHOOTING

Problem	Possible Cause	Correction
Vehicle Pulls	1. Mismatched or uneven tires. 2. Tires not adequately inflated. 3. Broken or sagging springs. 4. Radial tire lateral force. 5. Improper wheel alignment. 6. Brake dragging in one wheel. 7. Loose, bent or broken front or rear suspension parts. 8. Faulty shock absorbers.	Replace tire. Adjust tire pressure. Replace spring. Replace tire. Adjust wheel alignment. Repair brake. Tighten or replace the appropriate suspension part(s). Replace shock absorber.
Abnormal or Excessive Tire Wear	1. Sagging or broken spring. 2. Tire out of balance. 3. Improper wheel alignment. 4. Faulty shock absorber. 5. Hard driving. 6. Overloaded vehicle. 7. Tires not rotated periodically. 8. Worn or loose road wheel bearings. 9. Wobbly wheel or tires. 10. Tires not adequately inflated.	Replace spring. Balance or replace tire. Check front end alignment. Replace shock absorber. Replace tire. Replace tire and reduce load. Replace or rotate tire. Replace wheel bearing. Replace wheel or tire. Adjust the pressure.
Shimmy, Shake or Vibration	1. Tire or wheel out of balance. 2. Loose wheel bearings. 3. Worn steering linkage ball joints. 4. Worn upper or lower end ball joints. 5. Excessively upper wheel runout. 6. Blister or bump on tire. 7. Excessive loaded radial run out of tire/wheel assembly. 8. Improper wheel alignment. 9. Loose or worn steering linkage. 10. Loose steering gear. 11. Tires not adequately inflated. 12. Loose, bent or broken front or rear suspension parts. 13. Faulty shock absorber. 14. Hub bearing preload misadjustment.	Balance wheels or replace tire/or wheel. Replace wheel bearing. Replace ball joints. Replace ball joints. Repair or replace wheel and/or tire. Replace tire. Replace tire or wheel. Check wheel alignment. Tighten or replace steering linkage. Tighten housing bolts. Adjust tire pressure. Tighten or replace the appropriate suspension parts. Replace shock absorber. Adjust preload.

GENERAL TROUBLESHOOTING (CONT.)

Problem	Possible Cause	Correction
Wheel Tramp or Hop	1. Blister or bump on tire. 2. Improper shock absorber operation	Replace tire. Replace shock absorber.
Hard Steering	1. Bind in steering linkage ball studs, upper or lower end ball joint. 2. Improper wheel alignment. 3. Steering gear misadjustment. 4. Tire not adequately inflated. 5. Bind in steering column or shaft. 6. Improper power steering system operation.	Replace ball joints. Check wheel alignment. Check and adjust steering gear preload. Inflate tires to proper pressure. Repair or replace. Repair or replace. Refer to "Power steering system troubleshooting."
Too Much Play In Steering	1. Wheel bearings worn. 2. Loose steering gear or linkage. 3. Steering gear misadjustment. 4. Worn or loose steering shaft universal joint. 5. Worn steering linkage ball joints. 6. Worn upper or lower end ball joints.	Replace wheel bearings. Retighten or repair. Inspect and adjust steering gear preload. Retighten or replace steering shaft. Replace ball joints. Replace ball joints.
Poor Steering Wheel Returnability	1. Bind in steering linkage ball joints. 2. Bind in upper or lower end ball joints. 3. Bind in steering column and shaft. 4. Bind in steering gear. 5. Improper wheel alignment. 6. Tires not adequately inflated. 7. Loose steering wheel nut. 8. Worn wheel bearing.	Replace ball joints. Replace ball joints. Repair or replace. Check and repair steering gear. Adjust wheel alignment. Adjust tire pressure. Retighten. Replace.
Abnormal Noise	1. Worn, sticky or loose upper or lower end ball joint, steering linkage ball joints or drive axle joints. 2. Faulty shock absorbers. 3. Worn upper or lower control arm bushing. 4. Loose stabilizer bar. 5. Loose wheel nuts. 6. Loose suspension bolts or nuts. 7. Broken or otherwise damaged wheel bearings. 8. Broken suspension springs. 9. Loose steering gear. 10. Faulty steering gear.	Replace. Replace or repair. Replace. Retighten bolts. Tighten nuts. Check for elongated wheel nut holes. Replace wheel if required. Retighten suspension bolts or nuts. Replace wheel bearing. Replace spring. Retighten mounting bolt. Check and adjust steering gear.

GENERAL TROUBLESHOOTING (CONT.)

Problem	Possible Cause	Correction
Wandering or Poor Steering Stability	1. Mismatched or unevenly worn tires. 2. Loose steering linkage ball joints. 3. Faulty shock absorbers. 4. Loose stabilizer bar. 5. Broken or sagging springs. 6. Steering gear misadjustment. 7. Improper wheel alignment.	Replace tire or inflate tires to proper pressure. Replace ball joints. Replace shock absorber. Tighten or replace stabilizer bar or bushings. Replace spring (pairs). Check or adjust steering gear. Adjust wheel alignment.
Erratic Steering When Bracking	1. Worn wheel bearings. 2. Broken or sagging springs. 3. Leaking caliper. 4. Warped discs. 5. Badly worn brake pads. 6. Tires are inflated unequally.	Replace wheel bearings. Replace spring (pairs). Repair or replace caliper. Replace brake disc. Replace brake pads. Inflate tires to proper pressure.
Low or Uneven Trim Height	1. Broken or sagging springs. 2. Vehicle overloaded. 3. Incorrect springs.	Replace springs (In pairs) Reduce load. Adjust or replace torsion bar.
Suspension Bottoms	1. Vehicle overloaded. 2. Faulty shock absorber. 3. Incorrect, broken or sagging springs.	Reduce load. Replace shock absorber. Replace springs.
Body Leans	1. Loose stabilizer bar. 2. Faulty shock absorbers, struts or mounting. 3. Broken or sagging springs. 4. Vehicle overloaded.	Tighten stabilizer bar bolts or replace bushings. Replace shock absorber. Replace springs (In pairs) Reduce load.
Cupped Tires	1. Worn wheel bearings. 2. Excessive tire or wheel runout. 3. Worn ball joints. 4. Tire out of balance.	Replace wheel bearings. Replace tire or wheel. Replace ball joints. Adjust tire balance.

POWER STEERING SYSTEM

HISSING NOISE

There is some noise in all power steering systems. One of the most common is a hissing sound when the steering wheel is fully turned and the car is not moving. This noise will be most evident when the wheel is operated while the brakes are applied. There is no relationship between this noise and steering performance. Do not replace the valve unless the "hissing" noise is extremely objectionable. A replacement valve will also have a slight noise, and is not always a cure for the condition.

Problem	Possible Cause	Correction
Rattle or Chucking Noise	1. Pressure hose touching other parts of vehicle. 2. Tie rod ends loose. 3. Loose steering gear mounting. 4. Steering gear misadjustment.	Adjust hose position. Do not bend tubing by hand. Tighten or replace tie rod end. Tighten steering gear mounting. Check and adjust steering gear preload.
Poor Return of Steering Wheel to Center	1. Improper front wheel alignment. 2. Wheel bearing worn. 3. Tie rod end binding. 4. Ball joint binding. 5. Tight or frozen steering shaft bearing. 6. Steering gear misadjustment. 7. Sticky or plugged steering gear valve. 8. Entry of air in the power steering system.	Adjust front wheel alignment. Replace front wheel bearing. Replace tie rod end. Replace ball joint. Replace steering assembly. Adjust the steering gear. Repair or replace steering gear valve. Bleed the system.
Momentary Increase in Effort When Turning Wheel Fast to Right or Left	1. High internal leakage. 2. Power steering fluid level low.	Repair steering gear. Replenish fluid.
Steering Wheel Surges or Jerks When Turning Especially During Parking	1. Insufficient pump pressure. 2. Sticky steering gear valve. 3. Power steering fluid level low.	Repair pump assembly. Repair or replace steering gear. Replenish fluid.
Excessive Wheel Kick Back or Loose Steering	1. Air in system. 2. Tie rod end loose. 3. Wheel bearing worn.	Bleed hydraulic system. Tighten tie rod end. Replace wheel bearing.
Hard Steering or Lack of Power Assist	1. Sticky steering gear valve. 2. Insufficient pump pressure. 3. Excessive internal pump leakage. 4. Excessive internal steering gear leakage. 5. Power steering fluid level low.	Repair or replace steering gear valve. Repair pump assembly. Repair pump assembly. Repair steering gear. Replenish fluid.

POWER STEERING PUMP

Foaming milky power steering fluid, low fluid level, and possible low pressure can be caused by air in the fluid, or loss of fluid due to internal pump leakage. Check for leak and correct. Bleed the system. Extremely cold temperatures will cause air bubbles in the system if the fluid level is low. If the fluid level is correct and pump still foams, remove pump from vehicle and check housing for cracks. If housing is cracked, replace pump housing.

Problem	Possible Cause	Correction
Low Pressure Due to Steering Pump	1. Relief valve sticking or inoperative. 2. Side plate not flat against cam ring. 3. Extreme wear of cam ring. 4. Scored side plate or rotor. 5. Vanes sticking in rotor slots. 6. Cracked or broken side plate. 7. High internal leakage.	Replace relief valve. Replace side plate. Replace cam ring. Replace side plate or rotor. Repair or replace vanes and rotor. Replace side plate. Repair internal leakage.
Low Pressure Due to Steering Gear	1. Scored housing bore. 2. Damaged O-ring or seal ring in the ball nut.	Replace housing. Replace O-ring or seal ring.
Growling Noise in Steering Pump	1. Excessive back pressure in hoses or steering unit caused by restriction. 2. Scored side plate or rotor. 3. Worn cam ring.	Repair steering unit or pump. Replace side plate or rotor. Replace cam ring.
Groaning Noise in Steering Pump	1. Air in the fluid. 2. Low fluid level. 3. Pump mounting loose.	Bleed hydraulic system. Replenish fluid. Tighten mounting bolt.
Rattling Noise in Steering Pump	1. Vanes sticking in rotor slots. 2. Vane improperly installed.	Repair or replace vanes and rotor. Repair rotor and vane.
Swishing Noise in Steering Pump	1. Damaged relief valve.	Replace relief valve.
Whining Noise in Steering Pump	1. Scored side plate and vanes. 2. Damaged relief valve.	Replace side plate and vanes. Replace relief valve.

STEERING COLUMN

LOCK SYSTEM

Problem	Possible Cause	Correction
Will Not Unlock	1. Damaged lock cylinder. 2. Damaged sector. 3. Damaged park lock cable.	Replace lock cylinder. Replace lock cylinder. Replace park lock cable.
Will Not Lock	1. Lock spring broken or worn. 2. Damaged lock cylinder. 3. Ignition switch stuck. 4. Park lock cable damaged.	Replace lock cylinder. Replace lock cylinder. Repair or replace ignition switch. Replace park lock cable.
Key Cannot Be Removed in "OFF-LOCK"	1. Ignition switch is not set correctly. 2. Damaged lock cylinder. 3. Faulty shift lock mechanism.	Correct ignition switch. Replace lock cylinder. Repair or replace the shift lock mechanism.

COLUMN

Problem	Possible Cause	Correction
Noise in Column	1. Universal joint loose. 2. Shaft lock snap ring not seated.	Tighten joint. Place snap ring in proper position.

STEERING COLUMN (CONT.)

TURN SIGNAL SWITCH

This troubleshooting covers mechanical problems only. See Section 8 for turn signal switch electrical diagnosis.

Problem	Possible Cause	Correction
Turn Signal Will Not Stay in Turn Position	1. Foreign material or loose parts preventing movement of yoke. 2. Broken or missing detent or canceling spring.	Repair or replace signal switch. Replace signal switch.
Turn Signal Will Not Cancel	1. Loose switch mounting screws. 2. Switch or anchor bosses broken. 3. Broken, missing or out of position detent, return or canceling spring. 4. Worn canceling cam.	Tighten mounting screws. Replace turn signal switch. Replace turn signal switch. Replace turn signal switch.
Turn Signal Difficult to Operate	1. Turn signal switch arm loose. 2. Yoke broken or distorted. 3. Loose or misplaced springs. 4. Foreign parts and/or material. 5. Loose turn signal switch mounting screws.	Tighten arm screw. Replace turn signal switch. Replace turn signal switch. Repair turn signal switch. Tighten mounting screws.
Turn Signal Will Not Indicate Lane Change	1. Broken lane change pressure pad or spring hanger. 2. Broken, missing or misplaced lane change spring. 3. Base of wire damaged.	Replace turn signal switch. Replace turn signal switch. Replace turn signal switch.
Hezard Switch Cannot Be Turned Off	1. Foreign material between hazard switch to turn signal switch body.	Repair or replace hazard switch.
No Turn Signal Lights	1. Electrical failure in chassis harness. 2. Inoperative turn signal flasher unit. 3. Loose chassis harness connector.	Refer to Section 8 “Electrical Troubleshooting”. Replace flasher unit. Repair loose connector.
Front or Rear Turn Signal Lights Not Flashing	1. Burned-out damaged turn signal bulb. 2. High resistance connection to ground at bulb socket. 3. Loose chassis harness connector.	Replace bulb. Repair bulb socket. Repair loose connector.

MAIN DATA AND SPECIFICATIONS

FRONT END ALIGNMENT

Caster		2° 10' ± 45'
Camber		0° ± 30'
King pin inclination		12° 30' ± 30'
Toe-in	mm (in)	0 ± 2 (0 ± 0.08)
Max. steering angle	(inside)	$34°^{+0°}_{-2°}$
	(outside)	32°

POWER STEERING

Steering gear	
Type	Integral, ball screw
Gear ratio	16.3 : 1
Oil pump	
Type	Vane
Operating fluid	ATF DEXRON® - II E or III

SERVICE STANDARD

Items	Service Standard	Service Limit
POWER STEERING GEAR Sector shaft outside diameter mm (in)	32.0 (1.26)	31.7 (1.25)
POWER STEERING PUMP Fluid pressure (When the engine is normal operating temperature, increase engine speed to 1500rpm.) kpa (kg/cm^2/psi)	9300 – 9800 (95 – 100 / 1350 – 1420) (6VD1 6VE1) 9800 – 10300 (100 – 105 / 1420 – 1490) (4JG2 4JX1)	———
STEERING WHEEL Free play mm (in)	0 – 30 (0 – 1.18)	———

SERVICING

STEERING

INSPECTION

Visual check

Check the following parts:

- Oil leakage.
- Steering system for looseness or damage.
- Steering function
- Joint ball for oil leakage or damage.
- Joint ball rubber boot for damage.

MAINTENANCE

The hydraulic system should be kept clean and fluid level in the reservoir should be checked at regular intervals and fluid added when required. Refer to "MAINTENANCE AND LUBRICATION" in section 0B of the manual for type of fluid to be used and intervals for filling.

If the system contains some dirt, flush it as detailed later in this section. If it is exceptionally dirty, both the pump and the gear must be completely disassembled before further usage.

All tubes, hoses, and fittings should be inspected for leakage at regular intervals. Fittings must be tight. Make sure the clips, clamps and supporting tubes and hoses are in place and properly secured.

Power steering hoses and lines must not be twisted, kinked or tightly bent. Air in the system will cause spongy action and noisy operation. When a hose is disconnected or when fluid is lost, for any reason, the system must be bled after refilling. Refer to "Bleeding the Power Steering System" in this section.

FLUID LEVEL

1. Run the engine until the power steering fluid reaches normal operating temperature, about 55°C (130°F), then shut the engine off.
2. Check the level of fluid in the reservoir.
3. If the fluid level is low, add power steering fluid as specified in "MAINTENANCE AND LUBRICATION" in section 0B to the proper level and install the receiver cap.
4. When checking the fluid level after the steering system has been serviced, air must be bled from the system. Refer to "Bleeding the Power Steering System" in this section.

STEERING WHEEL FREE PLAY ADJUSTMENT

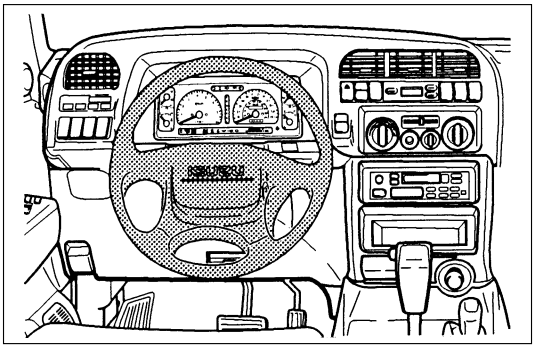

INSPECTION

1. Check the amount of steering wheel play by turning the wheel in both directions until the tires begin to move with the front wheels properly in the straight ahead position.

NOTE:
The wheel free play should be checked with the engine running.

Steering Wheel Free Play	mm (in)
0 – 30 (0 – 1.18)	

2. Also check the steering wheel for play and looseness in mount by moving it back and froth and sideways. While driving, check for hard-steering, steering shimmy and tendency to pull to one side.

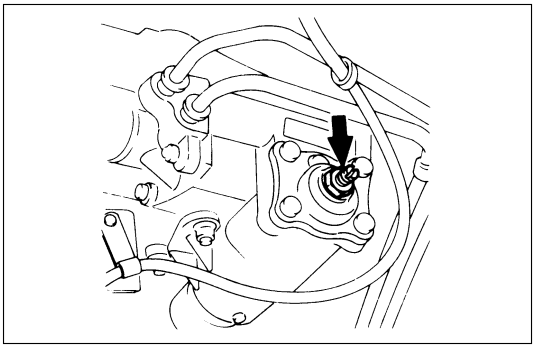

ADJUSTMENT

1. Align the front wheels properly in the straight ahead position.
2. Loosen the lock nut on the adjusting screw of the steering gear.
3. Turn the adjust screw clockwise to decrease free play or counter-clockwise to increase.
4. After check of specified free play, tighten the lock nut to specified torque.

Lock Nut Torque	N·m (kg·m/lb·ft)
41 (4.2 / 30)	

FIXING TORQUE

Power Steering

N·m (kg·m/lb·ft)

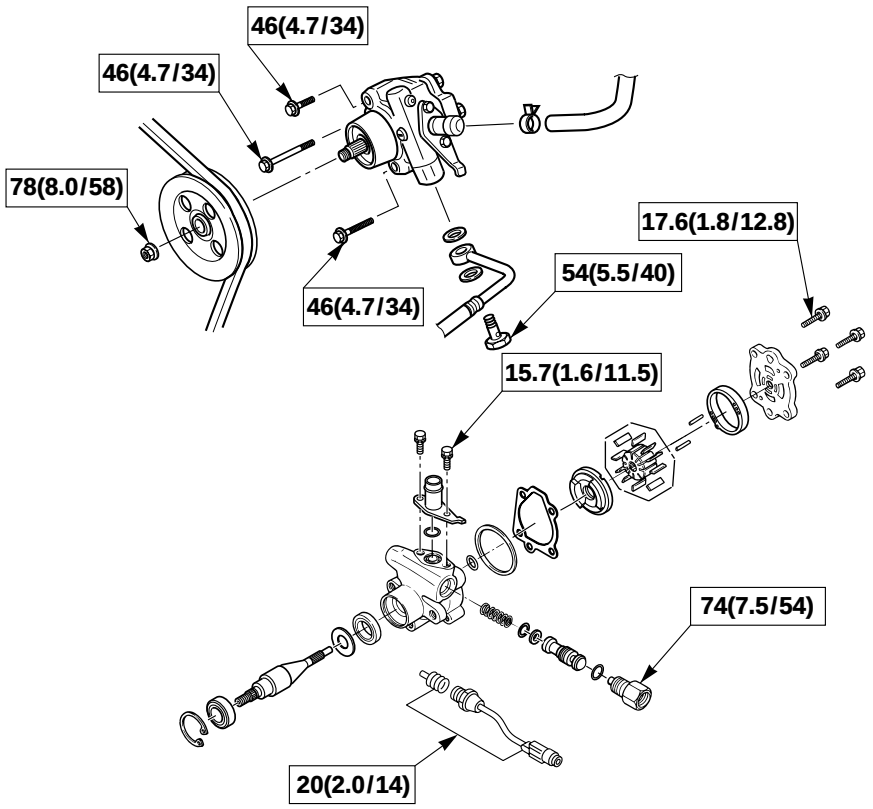

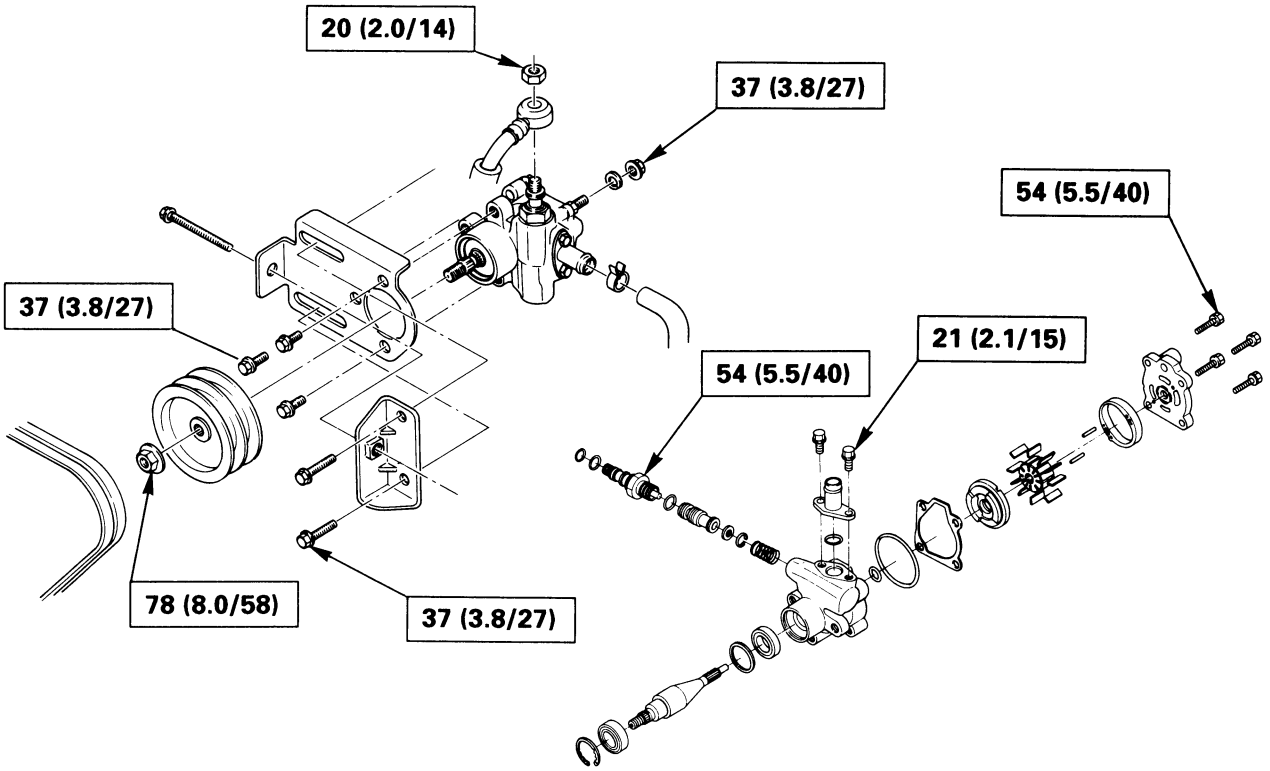

Power Steering (Cont.)

N·m (kg·m/lb·ft)

These illustrations are based on the LHD model.

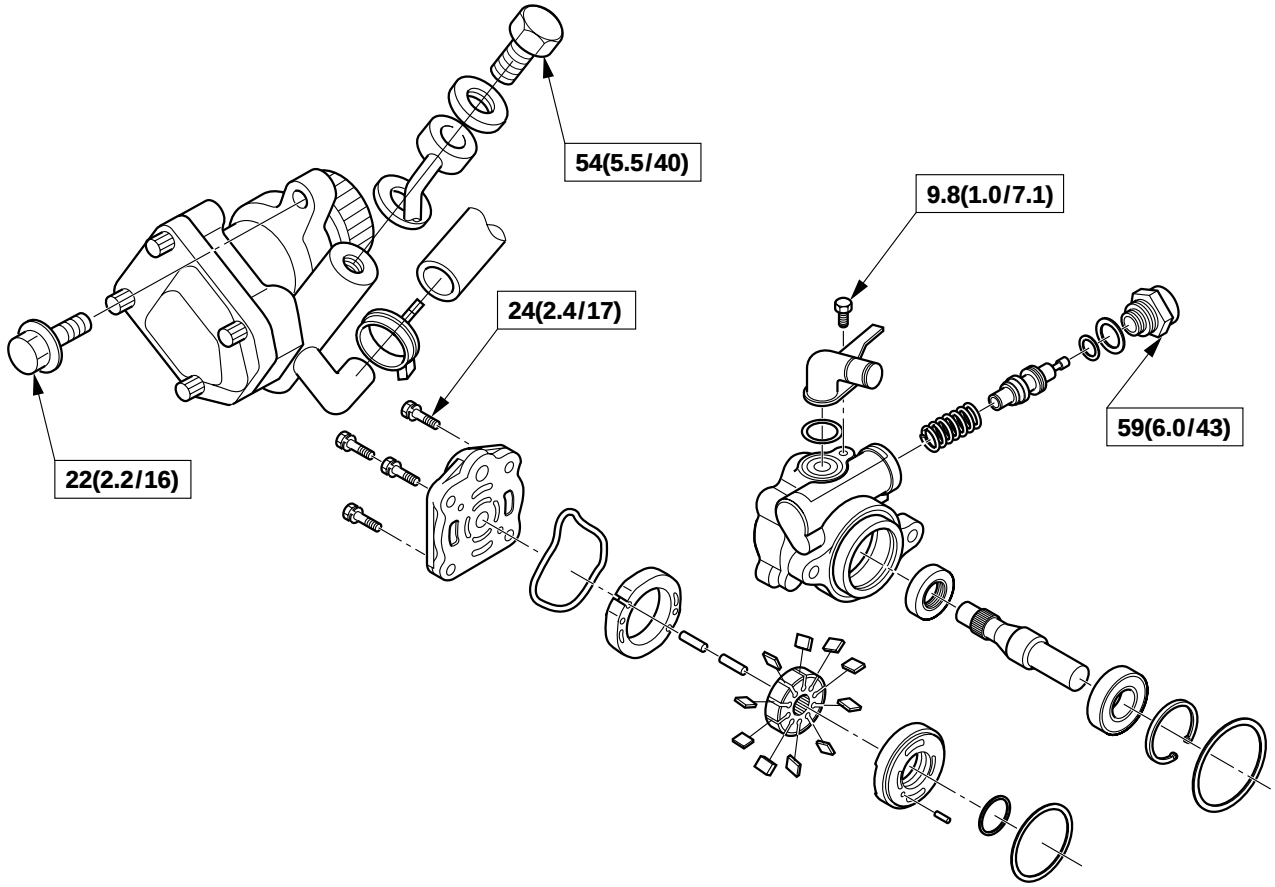

E03RW011

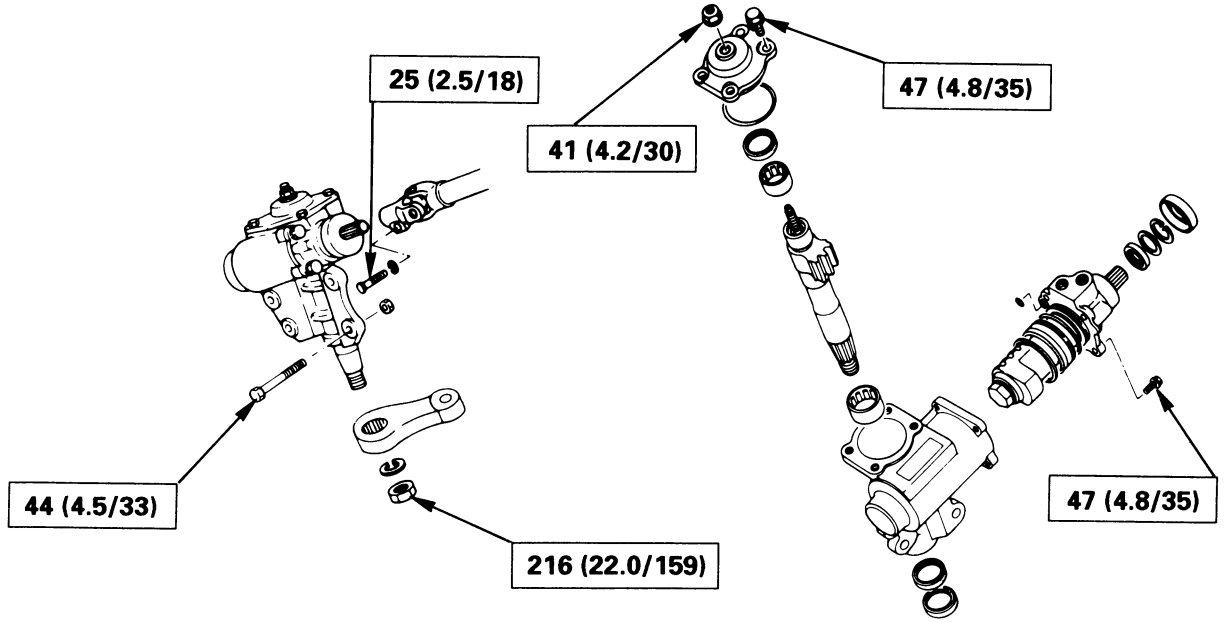

Steering Linkage

N·m (kg·m/lb·ft)

These illustrations are based on the LHD model.

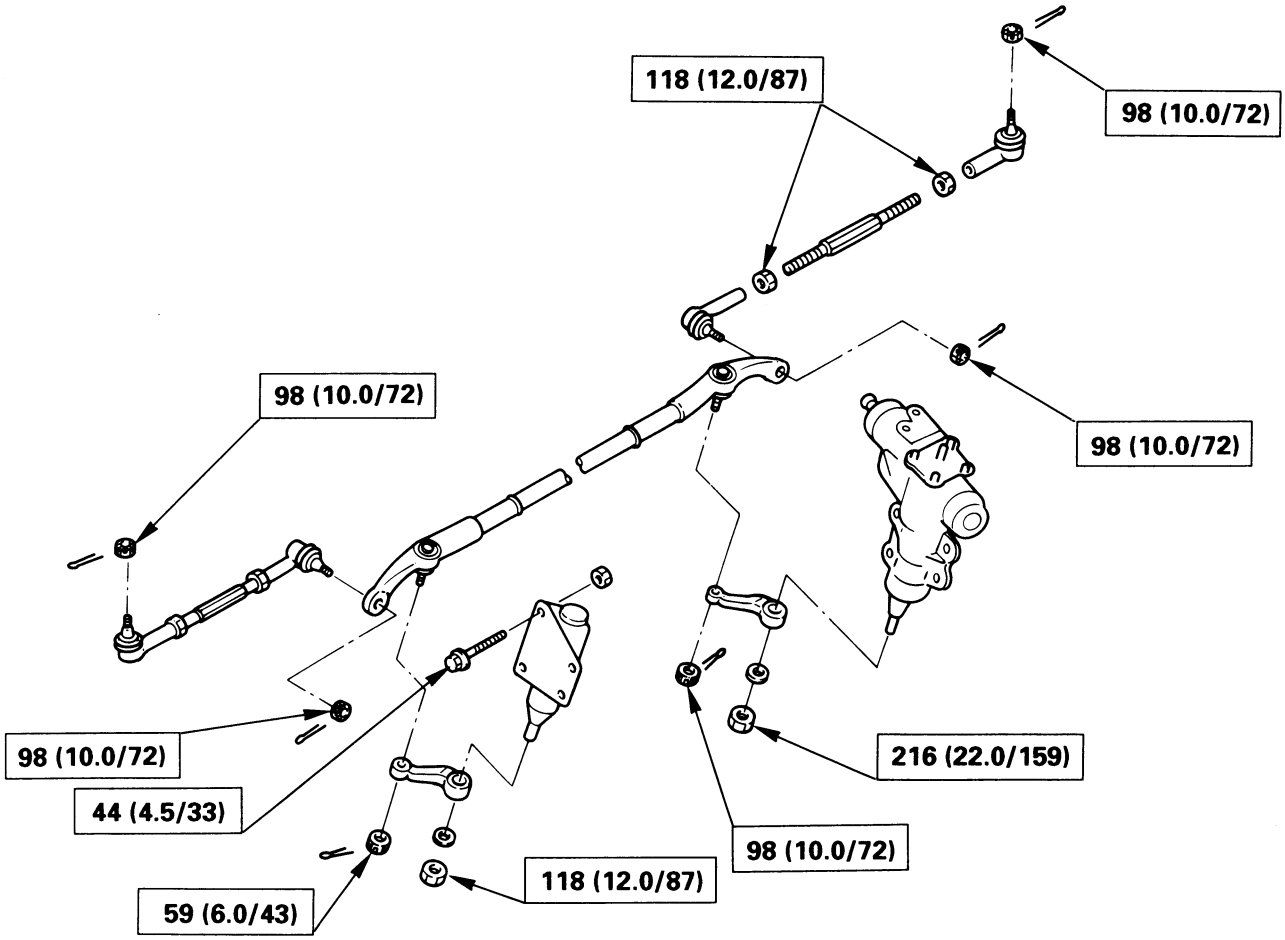

Steering Column

N·m (kg·m/lb·ft)

This illustration is based on the LHD model.

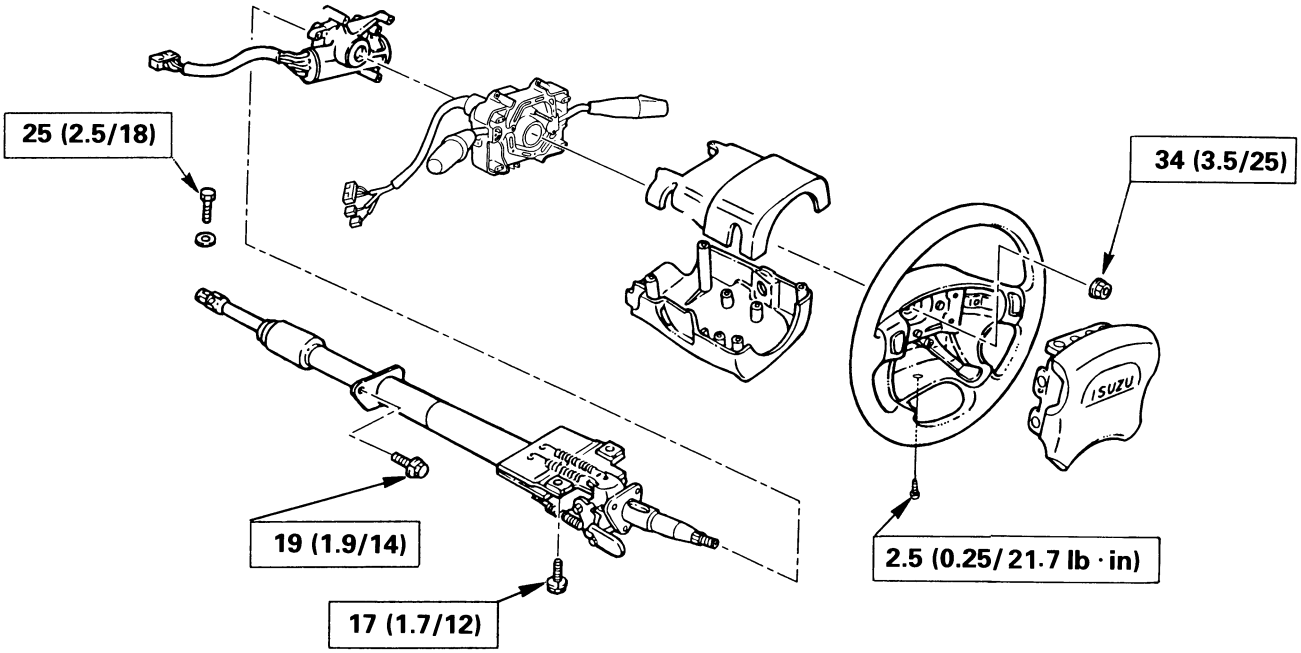

This illustration is based on the LHD model.

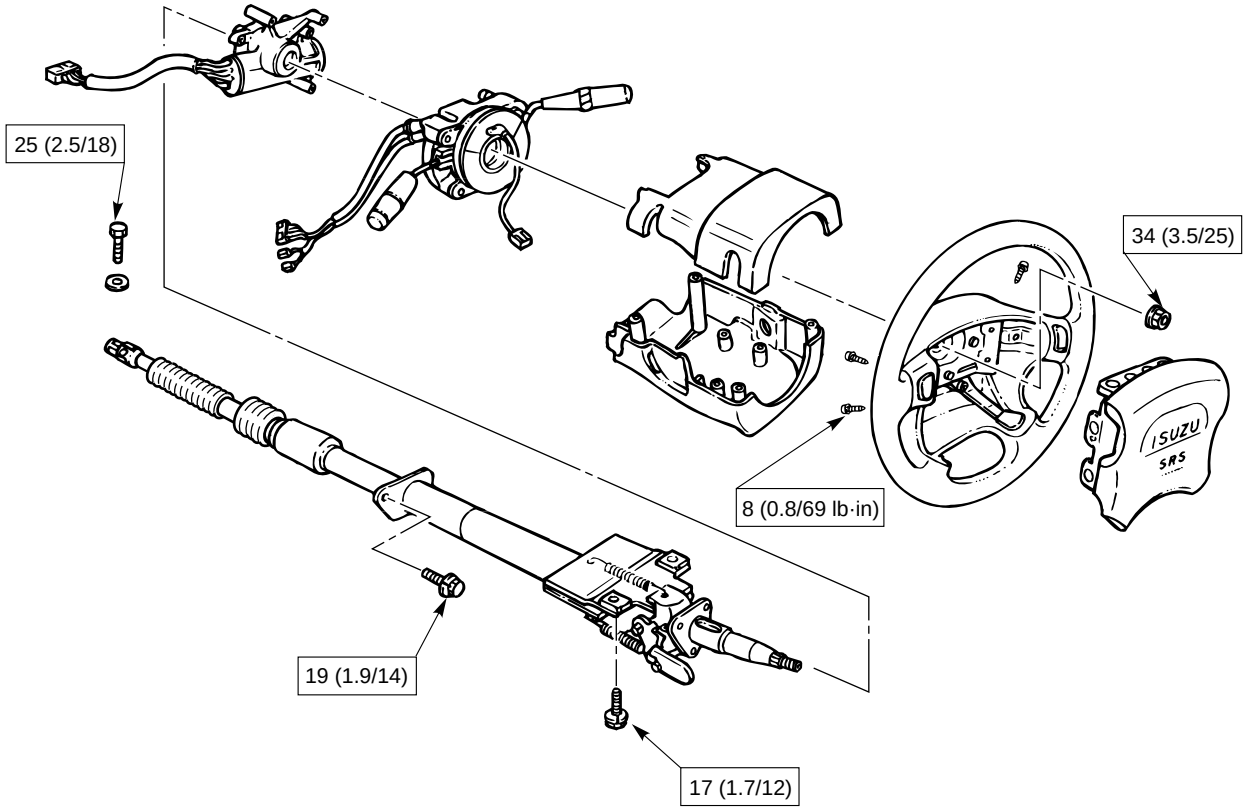

E03RW010

SPECIAL TOOLS

Illustration	Part No.	Part Name
	5–8840–0135–0 (J–29877–A)	Tester: Power steering
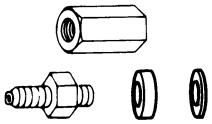	5–8840–2297–0 (J–39213)	Adapter: Power steering tester For 6VD1, 6VE1, 4JX1
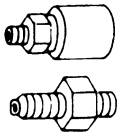	5–8840–0136–0 (J–33996)	Adapter: Power steering tester For 4JG2
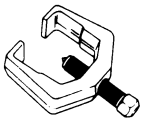	5–8840–2005–0 (J–29107)	Remover: Pitman arm
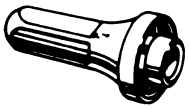	5–8522–0026–0 (J–26508)	Installer: Extension housing oil sael
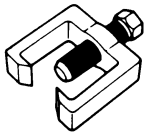	5–8840–2121–0 (J–36831)	Remover: Tie rod end
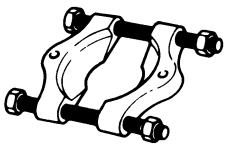	5–8840–0015–0 (J–22912–01)	Remover: Relay lever
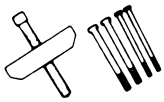	5–8521–0016–0 (J–29752)	Remover: Steering wheel

MEMO

SECTION 2A

FRONT END ALIGNMENT

CONTENTS

PAGE

General Description ..... 2A – 2
Definition of Terms ..... 2A – 2
On-Vehicle Service ..... 2A – 3
Inspection ..... 2A – 3
Trim Height Adjustment ..... 2A – 3
Caster Adjustment ..... 2A – 4
Camber Adjustment ..... 2A – 4
Toe-in Adjustment ..... 2A – 5
Maximum Steering Angle Adjustment ..... 2A – 5

GENERAL DESCRIPTION

"Front End Alignment" refers to the angular relationship between the front wheels, the front suspension attaching parts and the ground.
Proper front end alignment must be maintained in order to insure efficient steering, good directional stability and to prevent abnormal tire wear.
The most important factors of front end alignment are wheel toe-in, wheel camber and axle caster.

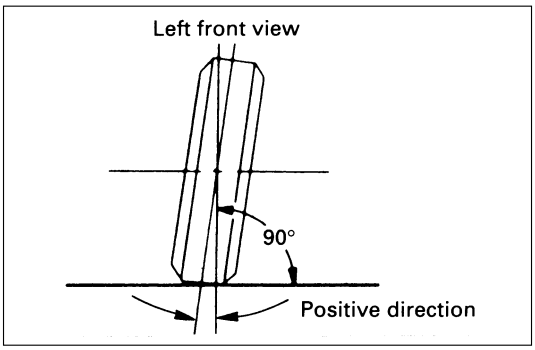

DEFINITION OF TERMS

CAMBER

Camber is the inward or outward tilting of the front wheels from the vertical. When the wheels tilt outward at the top, the camber is positive (+). When the wheels tilt inward at the top, the camber is negative (–). The amount of tilt measured in degrees from the vertical is called the camber angle.
If camber is extreme or unequal between the wheels, improper steering and excessive tire wear will result. Negative camber causes wear on the inside tire, while positive camber causes wear to the outside.

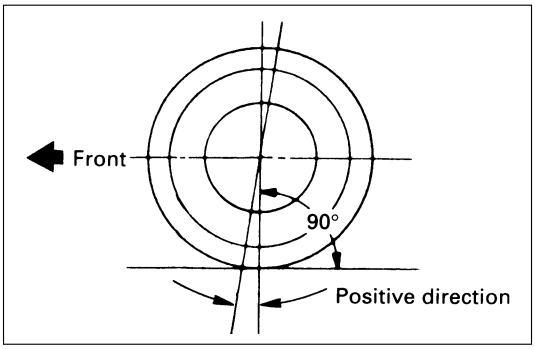

CASTER

Caster is the tilting of the wheel axis either forward or backward from the vertical (when viewed from the side of the vehicle). A backward tilt is positive(+) and a forward tilt is negative(–).
On the short and long arm type suspension you cannot see a caster angle without a special instrument, but if you look straight down from the top of the upper control arm to the ground, the ball joints do not line up (fore and aft) when a caster angle other than 0 degree is present. With a positive angle, the lower ball joint would be slightly ahead (toward the front of the vehicle) of the upper ball joint center line.

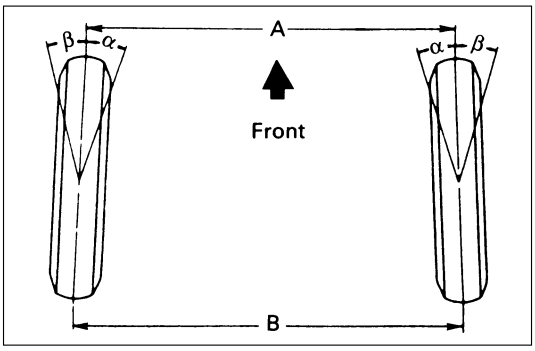

TOE-IN

Toe-in is the turning of the front wheels. The actual amount of toe-in is normally a fraction of a degree. Toe-in is measured from the center of the tire treads or from the inside of the tires. The purpose of toe-in is to insure parallel rolling of the front wheels and to offset any small deflections of the wheel support system which occurs when the vehicle is rolling forward. Incorrect toe-in results in excessive toe-in and unstable steering. Toe-in is the last alignment to be set in the front end alignment procedure.

ON-VEHICLE SERVICE

INSPECTION

Before making any adjustments affecting caster, camber or toe-in, the following front end inspection should be made.

INSPECT

1. Tires for proper inflation pressure. Refer to “Wheels and Tires” in section 3E.
2. Front wheel bearings for proper adjustment. Refer to “Front Wheel Drive” in section 4C.
3. Ball joints, tie rod ends and relay rods. If excessive looseness is noted, correct before adjusting. Refer to “Steering Linkage” in section 2A.
4. Wheel and tires for run-out. Refer to “Wheels and Tires”in section 3E.
5. Trim height. If not within specifications, the correction must be made before adjusting caster.
6. Steering gear for looseness at the frame.
7. Shock absorbers for leaks or any noticeable noise. Refer to “Front Suspension” in section 3C.
8. Control arms or stabilizer bar attachment for looseness. Refer to “Front Suspension“ in section 3C.
9. Alignment equipment. Follow the manufacturer’s instructions.
10. Level of the vehicle. The vehicle must be on a level surface.

TRIM HEIGHT ADJUSTMENT

Adjust the trim height by means of the adjusting bolt on the height control arms.

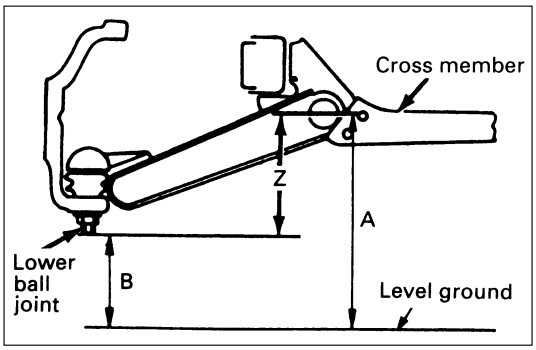

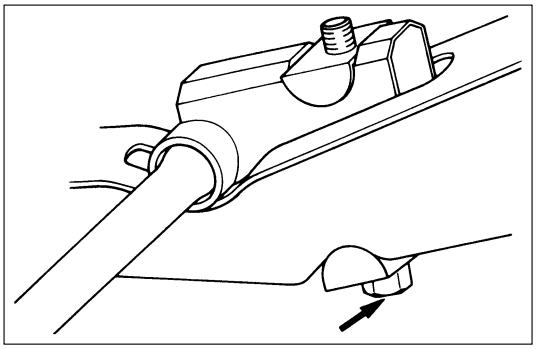

CAUTION:
When adjusting front end alignment, be sure to begin with trim height as trim height adjustment may change other adjusted alignments.

1. Check and adjust the tire inflation pressures.
2. Park the vehicle on a level ground and move the front of the vehicle up and down several times to settle the suspension.
3. Make necessary adjustment with the adjusting bolt on the height control arms.

Trim Height(Z)	mm(in)
139 ± 5 (5.47 ± 0.2)	

CASTER ADJUSTMENT

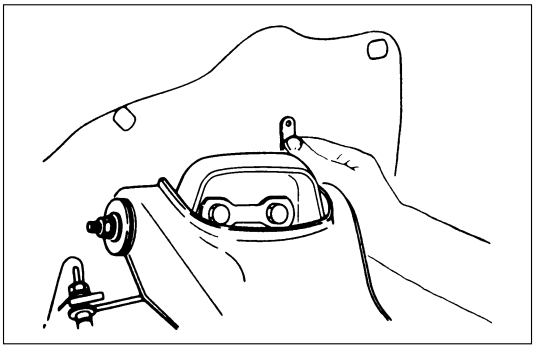

The caster angle can be adjusted by means of the caster shims installed between the chassis frame and fulcrum pins.

Caster Angle
1998 model

2° 10‘ ± 45‘	

2000 model and later

RH	2° 22‘ ± 45‘
LH	2° 10‘ ± 45‘

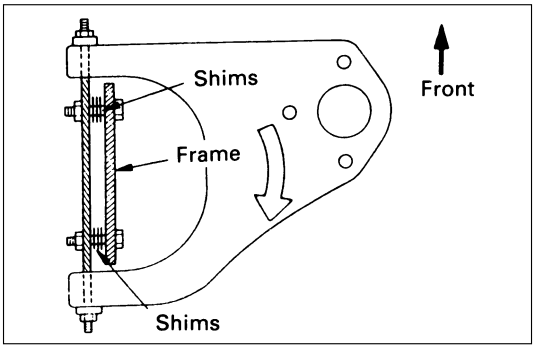

CAUTION:
Left and right side to be equal within 30’

NOTE:
Difference of the caster shim front/rear thickness shall be 3.2 mm (0.126 in) or less. Overall thickness of caster shim and camber shim shall be 10.8 mm (0.425 in) or less.

Tighten the fulcrum pin bolt to the specified torque.

Fulcrum Pin Bolt Torque	N·m (kg·m/lb·ft)
152 (15.5 / 112)	

CAMBER ADJUSTMENT

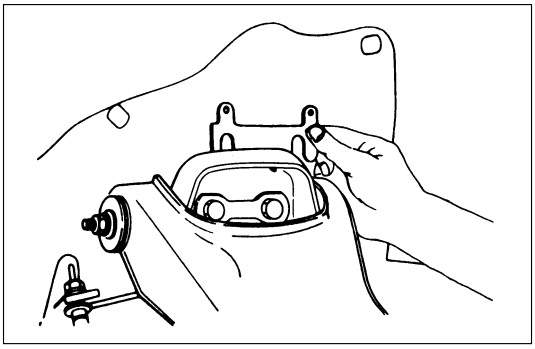

The camber angle can be adjusted by means of the camber shims installed in position between the chassis frame and fulcrum pins.

Wheel Alignment Specification

Camber Angle	0° ± 30‘
King pin inclination	12° 30‘ ± 30‘

CAUTION:
Left and right side to be equal within 30’

NOTE:
Overall thickness of caster shim and camber shim shall be 10.8 mm (0.425 in) or less.

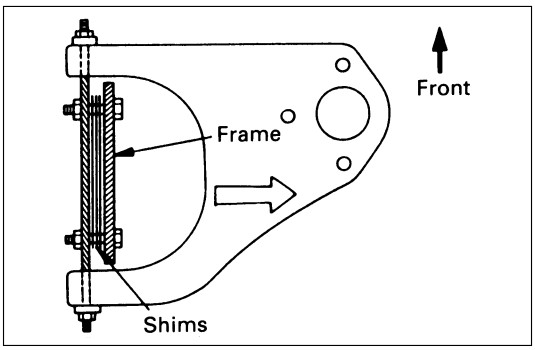

Tighten the fulcrum pin bolt to the specified torque.

Fulcrum Pin Bolt Torque	N·m (kg·m/lb·ft)
152 (15.5 / 112)	

	Position of shim		Camber angle	Caster angle
	Front side	Rear side		
Caster shim	When added	When removed	Decreases	Decreases
	When removed	When added	Increases	Increases
	———	When removed	Unchanged	Decreases
	———	When added	Unchanged	Increases
Camber shim	When added		Decreases	Unchanged
	When removed		Increases	Unchanged

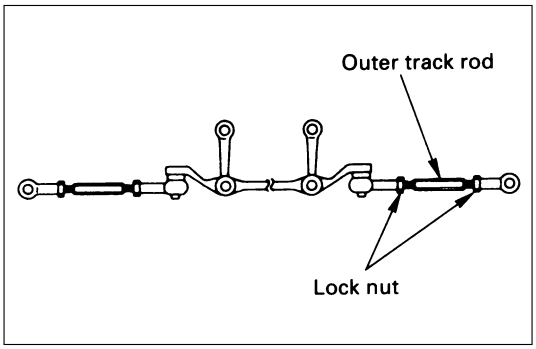

TOE-IN ADJUSTMENT

1. To adjust the toe-in angle, loosen the lock nuts on the outer track rods and turn the outer track rods. Turn both rods the same amount, to keep the steering wheel centered.

Toe-in	mm(in)
0 ± 2 (0 ± 0.08)	

2. Tighten the lock nut to the specified torque.

Lock Nut Torque	N·m (kg·m/lb·ft)
118 (12.0 / 87)	

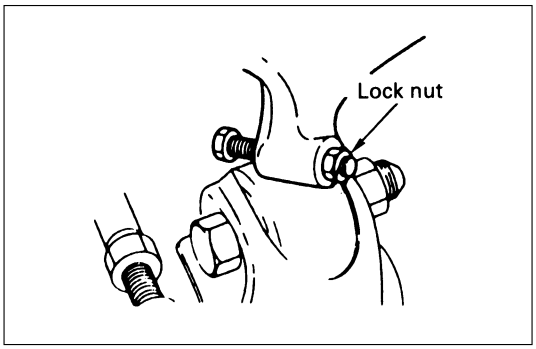

MAXIMUM STEERING ANGLE ADJUSTMENT

The maximum steering angle of the front wheels can be adjusted with the stopper bolts under the frame side members.

1. Position each front wheel on the turning radius gauge in a straight-ahead position.
2. Set the parking brake firmly.
3. Adjust the inside wheel angle of each side with the stopper bolts.

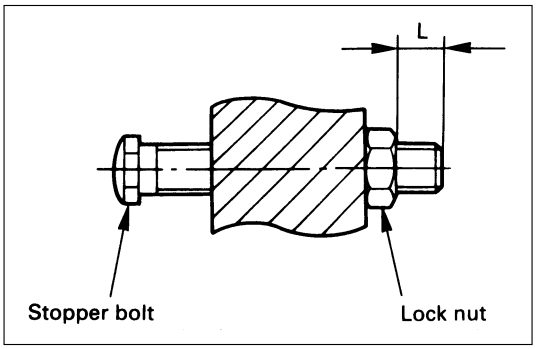

NOTE:
The maximum protruding length (L) of stopper bolt from the lock nut should be 10 mm (0.4 in) or less.

4. Similarly adjust the inside wheel angle of the other side with stopper bolt.

Maximum Steering Angle

Inside wheel	34° $^{+0°}_{-2°}$
Outside wheel	32°

NOTE:
Maximum steering angles should be set after adjusting front wheel alignment.

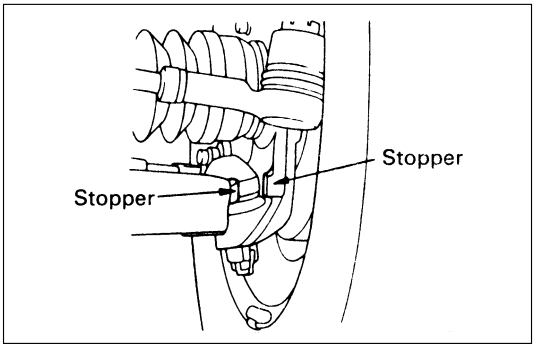

5. If the stop between the lower link end and the knuckle comes ahead of the stopper bolt, adjust the stopper bolt so that inner stopper bolt touches the drop arm (relay lever).

6. Tighten the lock nut to the specified torque.

Lock Nut Torque	N·m (kg·m/lb·ft)
23 (2.3 / 17)	

SECTION 2A
POWER STEERING

CONTENTS

PAGE

General Description ..... 2A – 8
Power Steering Gear ..... 2A – 9
Hydraulic Pump ..... 2A – 9
Pressure Switch (6VD1, 6VE1 Engine) ..... 2A – 9
Power Steering System Test ..... 2A – 10
On-Vehicle Service ..... 2A – 12
Bleeding The Power Steering System ..... 2A – 12
Flushing The Power Steering System ..... 2A – 12
Steering Gear ..... 2A – 13
Power Steering Pump (6VD1, 6VE1 Engine Models) ..... 2A – 16
Power Steering Pump (4JG2 Engine Model) ..... 2A – 18
Power Steering Pump (4JX1 Engine Model) ..... 2A – 20
Unit Repair ..... 2A – 22
Steering Gear ..... 2A – 22
Power Steering Pump (6VD1, 6VE1 Engine Models) ..... 2A – 28
Power Steering Pump (4JG2 Engine Model) ..... 2A – 32
Power Steering Pump (4JX1 Engine Model) ..... 2A – 36

GENERAL DESCRIPTION

This illustration is based on the LHD model.

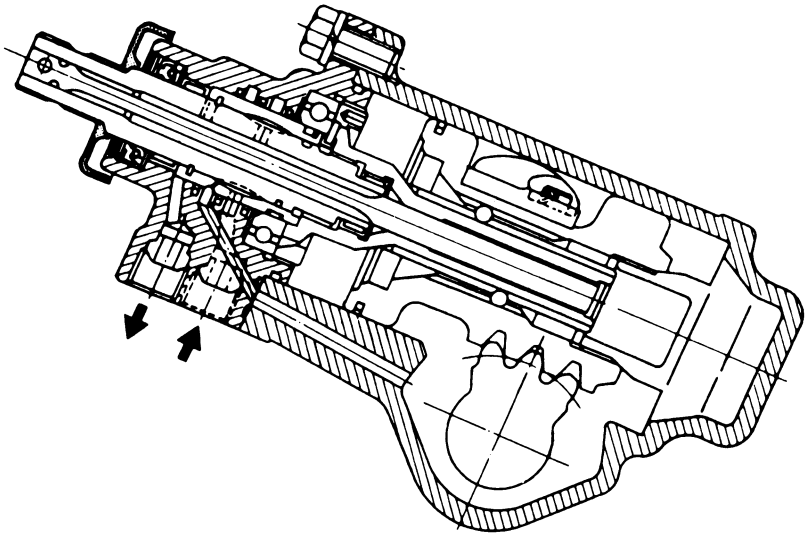

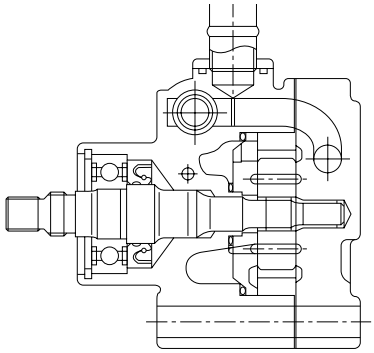

6VD1, 6VE1 Engine Models

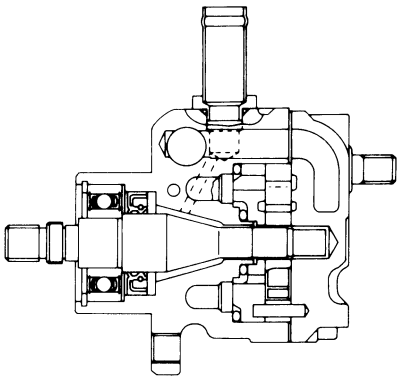

4JG2 Engine Model

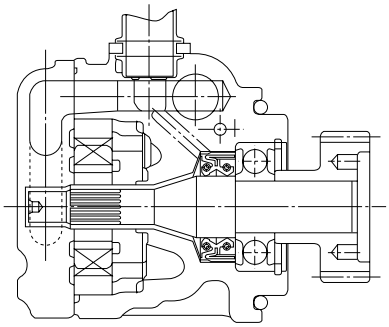

4JX1 Engine Model

The hydraulic power steering system consists of a pump, an oil reservoir, a steering gear, a pressure hose and a return hose.

POWER STEERING GEAR

The power steering gear has a recirculating ball system which acts as a rolling thread between the worm shaft and the rack piston. When the worm shaft is turned right, the rack piston moves up in gear. Turning the worm shaft left moves the rack piston down in gear. The rack piston teeth mesh with the sector, which is part of the sector shaft. Turning the worm shaft turns the sector shaft, which turns the wheels through the steering linkage.

The control valve in the steering gear directs the power steering fluid to either side of the rack piston. The rack piston converts the hydraulic pressure into a mechanical force. If the steering system becomes damaged and loses hydraulic pressure, the vehicle can be controlled manually.

HYDRAULIC PUMP

The hydraulic pump is vane-type design.

There are two bore openings at the rear of the pump housing. The smaller opening contains the pressure line union and flow control valve.

PRESSURE SWITCH (6VD1, 6VE1 Engine)

When hydraulic pressure reaches 3650 ± 350 kPa (530 ± 50 PSI), the pressure switch closes causing ECM to actuate the idle air control valve to prevent the overload-induced engine speed down. The switch opens when hydraulic pressure drops to 3150 ± 350 kPa (460 ± 50PSI).

POWER STEERING SYSTEM TEST

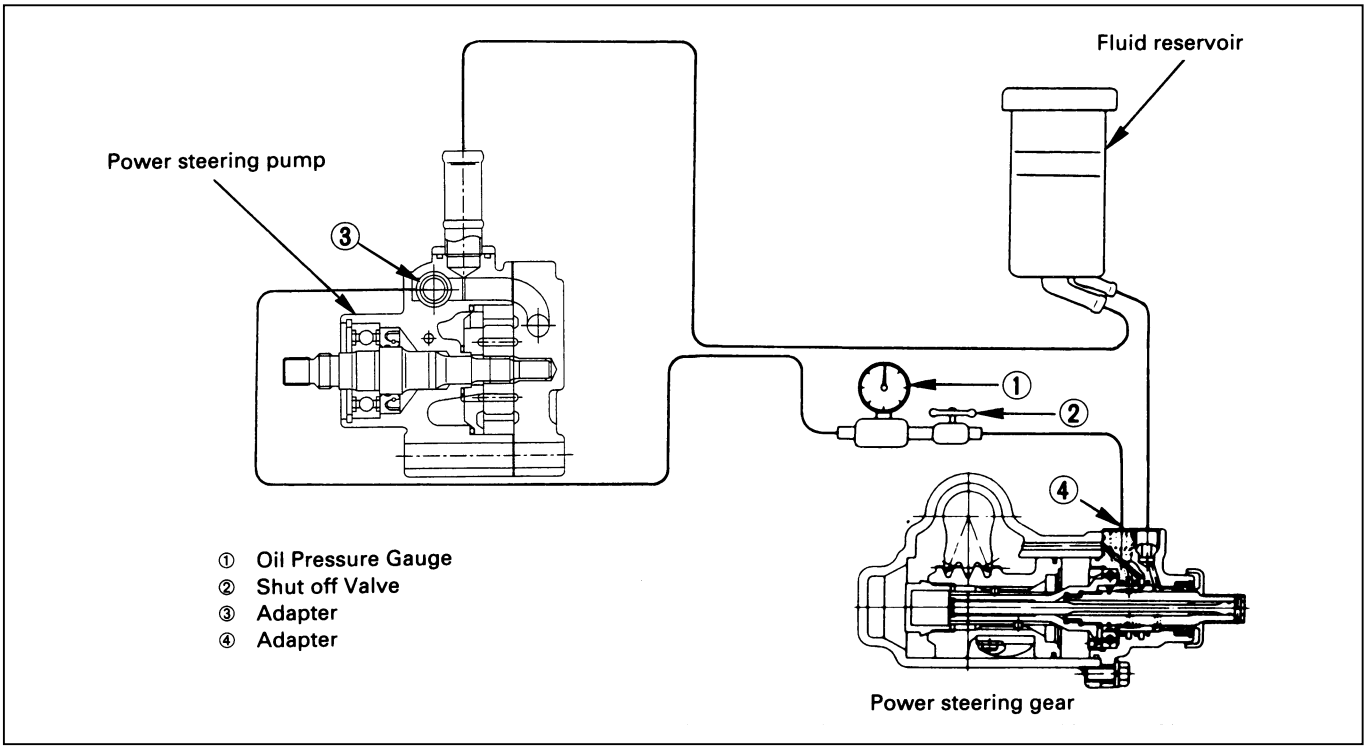

TEST PROCEDURE

Test of fluid pressure in the power steering system is performed to determine whether or not the oil pump and power steering unit are functioning normally.
The power steering system test is method used to identify and isolate hydraulic circuit difficulties.
Prior to performing this test, the following inspections and corrections, if necessary, must be made.

INSPECT

- Pump reservoir for proper fluid level.
- Pump belt for proper tension.
- Pump driver pulley condition.

1. Place a container under the pump to catch the fluid when disconnecting or connecting the hoses.
2. With the engine NOT running , disconnect the pressure hose at the power steering pump and install Power Steering tester.
   The gage must be between the shutoff valve and pump. Open the shutoff valve.

   Tester: 5-8840-0135-0 (J-29877-A)
   Adapter: 5-8840-2297-0 (For 6VD1, 6VE1, 4JX1)
   5-8840-0136-0 (For 4JG2)
3. Check the fluid level. Fill the reservoir with power steering fluid, to the “Full” mark. Start the engine then turn the steering wheel and momentarily hold it against a stop. Turn off and check the connections at tester for leakage.
4. Bleed the system. Refer to “Bleeding the Power Steering System” in this section.
5. Start the engine and check the pump fluid level. Add power steering fluid if required. When the engine is at normal operating temperature, increase engine speed to 1500 rpm.

CAUTION:
Do not leave shutoff valve fully closed for more than 5 seconds, as the pump could become damaged internally.

6. Fully close the shutoff valve. Record the highest pressures.
   - If the pressure recorded is within 9300-9800 kPa (1350-1420 psi) For 6VD1, 6VE1, and 9800-10300 kPa (100-105 kg/cm^2 / 1420-1490 psi) For 4JG2, 4JX1, the pump is functioning within its specifications.
   - If the pressure recorded is higher than 9800 kPa (1420 psi) For 6VD1, 6VE1, and 10300 kPa (105 kg/cm^2 / 1490 psi) For 4JG2, 4JX1, the valve in the pump is defective.

- If the pressure recorded is lower than 9300 kPa (1350 psi) For 6VD1, 6VE1, and 9800 kPa (100 kg/cm^2 / 1420 psi) For 4JG2, 4JX1, the valve or the rotating group in the pump is defective.

7. If the pump pressure are within specifications, leave the valve open and turn (or have someone else turn) the steering wheel fully in both directions. Record the highest pressures and compare with the maximum pump pressure recorded in step 6. If this pressure cannot be built in either (or one) side of the power steering gear, the power steering gear is leaking internally and must be disassembled and repaired.
8. Shut the engine off, remove the testing gage, reconnect the pressure hose, check the fluid level and make the needed repairs.
9. If the problem still exists, the steering and front suspension must be thoroughly examined.

ON-VEHICLE SERVICE

BLEEDING THE POWER STEERING SYSTEM

When a power steering pump or gear has been installed, or an oil line has been disconnected, the air that has entered the system must be bled out before the vehicle is operated. If air is allowed to remain in the power steering fluid system, noisy and unsatisfactory operation of the system may result.

BLEEDING PROCEDURE

When bleeding the system, and any time fluid is added to the power steering system, be sure to use only power steering fluid as specified in "MAINTENANCE AND LUBRICATION" in section 0B.

1. Fill the pump fluid reservoir to the proper level and let the fluid settle for at least two minutes.
2. Start the engine and let it run for a few seconds.
   Do not turn the steering wheel. Then turn the engine off.
3. Add fluid if necessary.
4. Repeat the above procedure until the fluid level remains constant after running the engine.
5. Raise the front end of the vehicle so that the wheels are off the ground.
6. Start the engine. Slowly turn the steering wheel right and left, lightly contacting the wheel stops.
7. Add power steering fluid if necessary.
8. Bring down the vehicle, set the steering wheel at the straight forward position after turning it to its full steer positions 2 or 3 times, and stop the engine.
9. Stop the engine. Check the fluid level and refill as required.
10. If the fluid is extremely foamy, allow the vehicle to stand a few minutes and repeat the above procedure.

INSPECT

- Belt for tightness.
- Pulley for looseness or damage. The pulley should not wobble with the engine running.
- Make sure that hose and pipes are properly fitted.
- Fluid level and fill to the proper level.

FLUSHING THE POWER STEERING SYSTEM

1. Raise the front end of the vehicle off the ground until the wheels are free to turn.
2. Remove the fluid return line at the reservoir inlet connector and plug the connector. Position the line toward a large container to catch the draining fluid.
3. While running the engine at idle, fill the reservoir with new power steering fluid. Turn the steering wheel in both directions. Do not contact wheel stops or hold the wheel in a corner, or fluid will stop and the pump will be in pressure relief mode. A sudden overflow from the reservoir may develop if the wheel is held at a stop.
4. While refilling the reservoir, check the draining fluid for contamination. If foreign material is still evident, replace all lines, disassemble and clean or replace the power steering system components. Do not re-use any drained power steering fluid.
5. Install all the lines and hoses. Fill the system with new power steering fluid and bleed the system as described in "Bleeding The Power Steering System". Operate the engine for about 15 minutes.

STEERING GEAR

These steps are based on the LHD model.

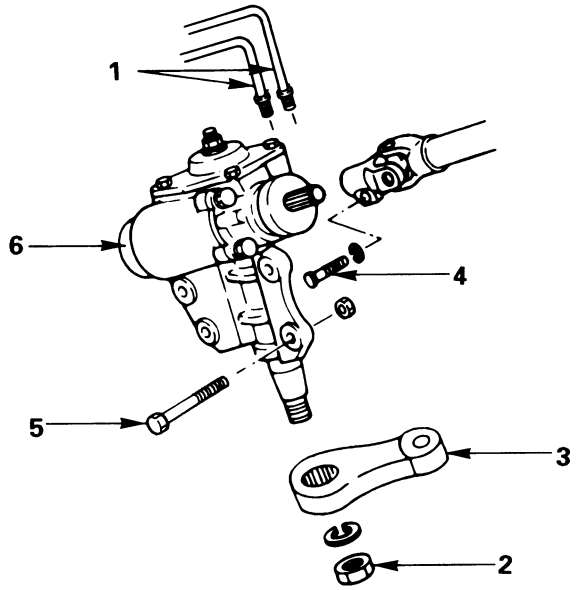

Removal Steps

1. Pipe
2. Nut
3. Pitman arm
4. Universal joint bolt
5. Gear box mounting bolt and nut
6. Gear box

Installation Steps

6. Gear box
5. Gear box mounting bolt and nut
4. Universal joint bolt
3. Pitman arm
2. Nut
1. Pipe

REMOVAL

Preparation:

1) Remove the stone guard.
2) Remove the lower fan shroud. Refer to “Engine cooling” in section 6B1.
3) Disconnect stabilizer bar at the stabilizer links. Loosen stabilizer bracket fixing nuts.

1. Pipe

2. Nut

3. Pitman Arm

Pitman arm remover: 5-8840-2005-0 (J-29107)

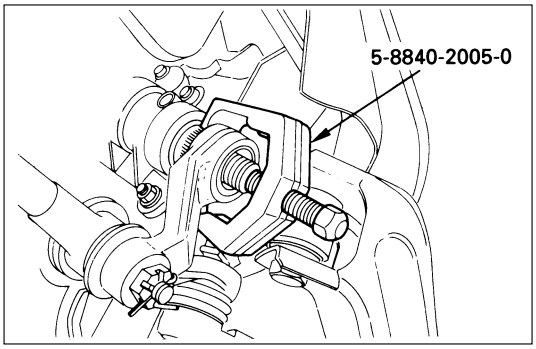

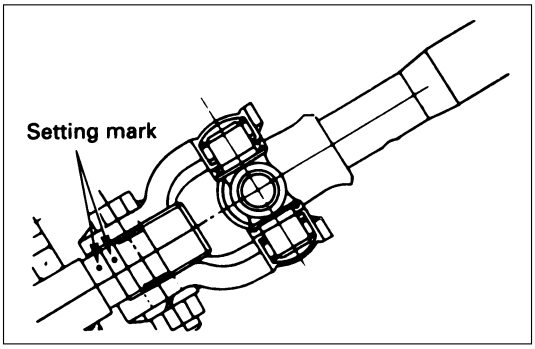

4. Universal Joint Bolt

Make a setting mark across the coupling flange and worm shaft to ensure reassembly of the parts in the original position.

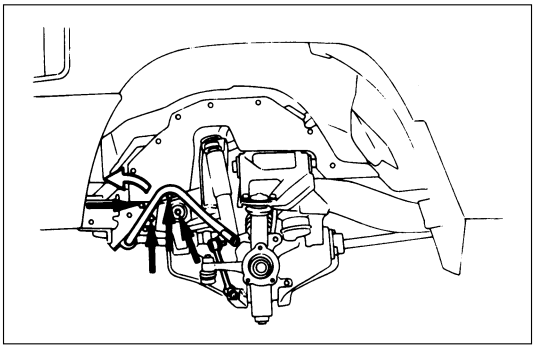

5. Gear Box Mounting Bolt and Nut

Push the stabilizer bar aside and remove the bolts and nuts.

6. Gear Box

INSTALLATION

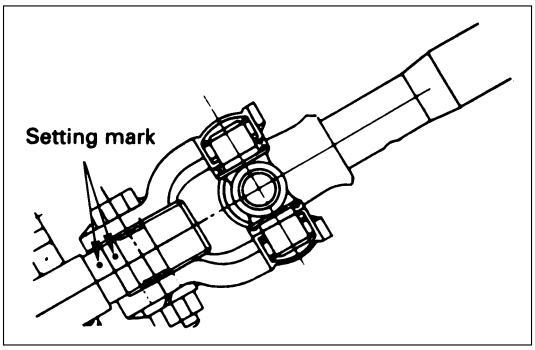

6. Gear Box

Align the setting marks made at removal.

5. Gear Box Mounting Bolt and Nut

Gear Box Mounting

Bolt and Nut Torque	N·m (kg·m/lb·ft)
44 (4.5 / 33)	

4. Universal Joint Bolt

Coupling Clamp Bolt Torque	N·m (kg·m/lb·ft)
25 (2.5 / 18)	

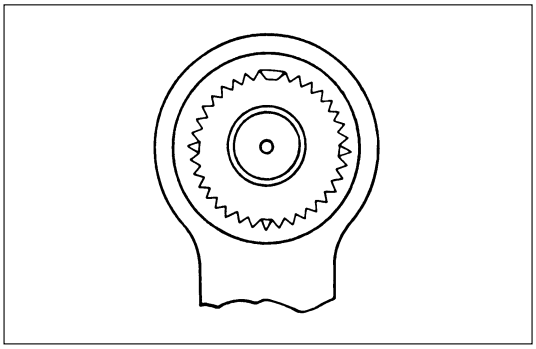

3. Pitman Arm

Align the notched tooth.

2 Nut

Pitman Arm Nut Torque	N·m (kg·m/lb·ft)
216 (22.0 / 159)	

1. Pipe

Pipe Nut Torque	N·m (kg·m/lb·ft)
44 (4.5 / 33)	

POWER STEERING PUMP (6VD1, 6VE1 Engine Models)

436RW006

Removal Steps

1. Drive belt
2. Pulley
3. Hose, suction
4. Hose, flexible
5. Bolt
6. Pump assembly

Installation Steps

6. Pump assembly
5. Bolt
4. Hose, flexible
3. Hose, suction
2. Pulley
1. Drive belt

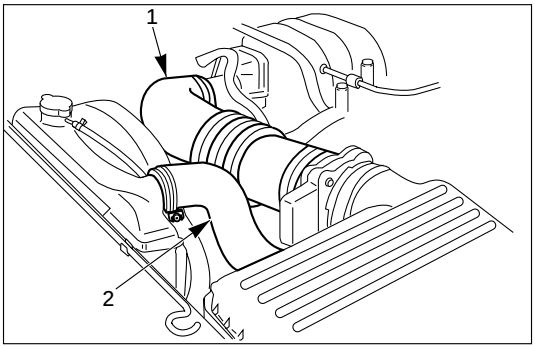

436RW005

REMOVAL

Preparation:

- Drain the engine coolant.
- Place a drain pan below the pump.
- Remove the air cleaner duct (1) and the radiator upper hose (2).

1. **Drive Belt**
2. **Pulley**
3. **Hose, Suction**
4. **Hose, Flexible**
5. **Bolt**
6. **Pump Assembly**

CAUTION:
When removing the pump assembly, be careful not to damage the wiring harness under the pump housing.

INSTALLATION

6. **Pump Assembly**

   Connect the harness under the pump housing.

5. **Bolt**

Pump Bolt Torque	N·m(kg·m/lb·ft)
46 (4.7 / 34)	

4. **Hose, Flexible**

Eye Bolt Torque	N·m (kg·m/lb·ft)
54 (5.5 / 40)	

3. **Hose, Suction**
2. **Pulley**

   Install the pulley onto the power steering pump and tighten the nut to specified torque.

Pulley Nut Torque	N·m (kg·m/lb·ft)
78 (8.0 / 58)	

1. **Drive Belt**
   - Install the air cleaner duct and the radiator upper hose.
   - Refill the engine coolant.
   - Fill and bleed the system. Refer to “Bleeding the Power Steering System” in this section.

POWER STEERING PUMP (4JG2 Engine Model)

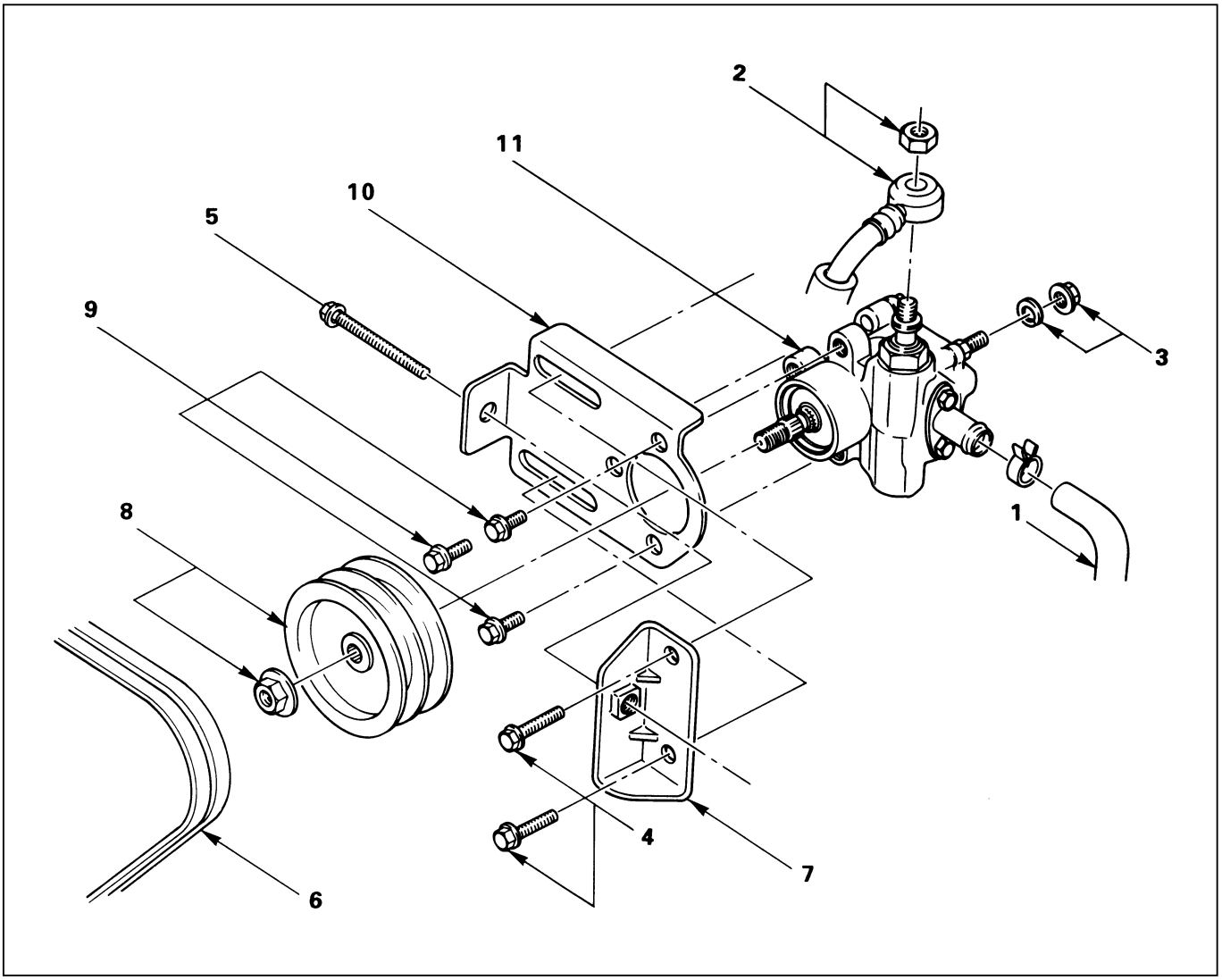

Removal Steps

1. Hose, suction
2. Hose, flexible
3. Adjust nut
4. Bolt
5. Adjust bolt
6. Belt
7. Bracket
8. Pulley
9. Bolt
10. Bracket
11. Pump assembly

Installation Steps

11. Pump assembly
10. Bracket
9. Bolt
8. Pulley
7. Bracket
6. Belt
5. Adjust bolt
4. Bolt
3. Adjust nut
2. Hose, flexible
1. Hose, suction

REMOVAL

Preparation:

- Place a drain pan below the pump.

1. **Hose, Suction**
2. **Hose, Flexible**
3. **Adjust Nut**
4. **Bolt**
5. **Adjust Bolt**
6. **Belt**
7. **Bracket**
8. **Pulley**
9. **Bolt**
10. **Bracket**
11. **Pump Assembly**

INSTALLATION

11. **Pump Assembly**
10. **Bracket**
9. **Bolt**

Pump Bolt Torque	N·m (kg·m/lb·ft)
37 (3.8 / 27)	

8. **Pulley**

Pulley Nut Torque	N·m (kg·m/lb·ft)
78 (8.0 / 58)	

7. **Bracket**
6. **Belt**
5. **Adjust Bolt**
4. **Bolt**
   After adjusting drive belt tension, tighten bolt to specified toque.

Bracket Bolt Torque	N·m (kg·m/lb·ft)
37 (3.8 / 27)	

3. **Adjust Nut**
   After adjusting drive belt tension, tighten bolt to specified toque.

Adjust Nut Torque	N·m (kg·m/lb·ft)
37 (3.8 / 27)	

2. **Hose, Flexible**

Hose Nut Torque	N·m (kg·m/lb·ft)
20 (2.0 / 14)	

1. **Hose, Suction**
   Fill and bleed the system. Refer to “Bleeding the Power Steering System” in this section.

POWER STEERING PUMP (4JX1 Engine Model)

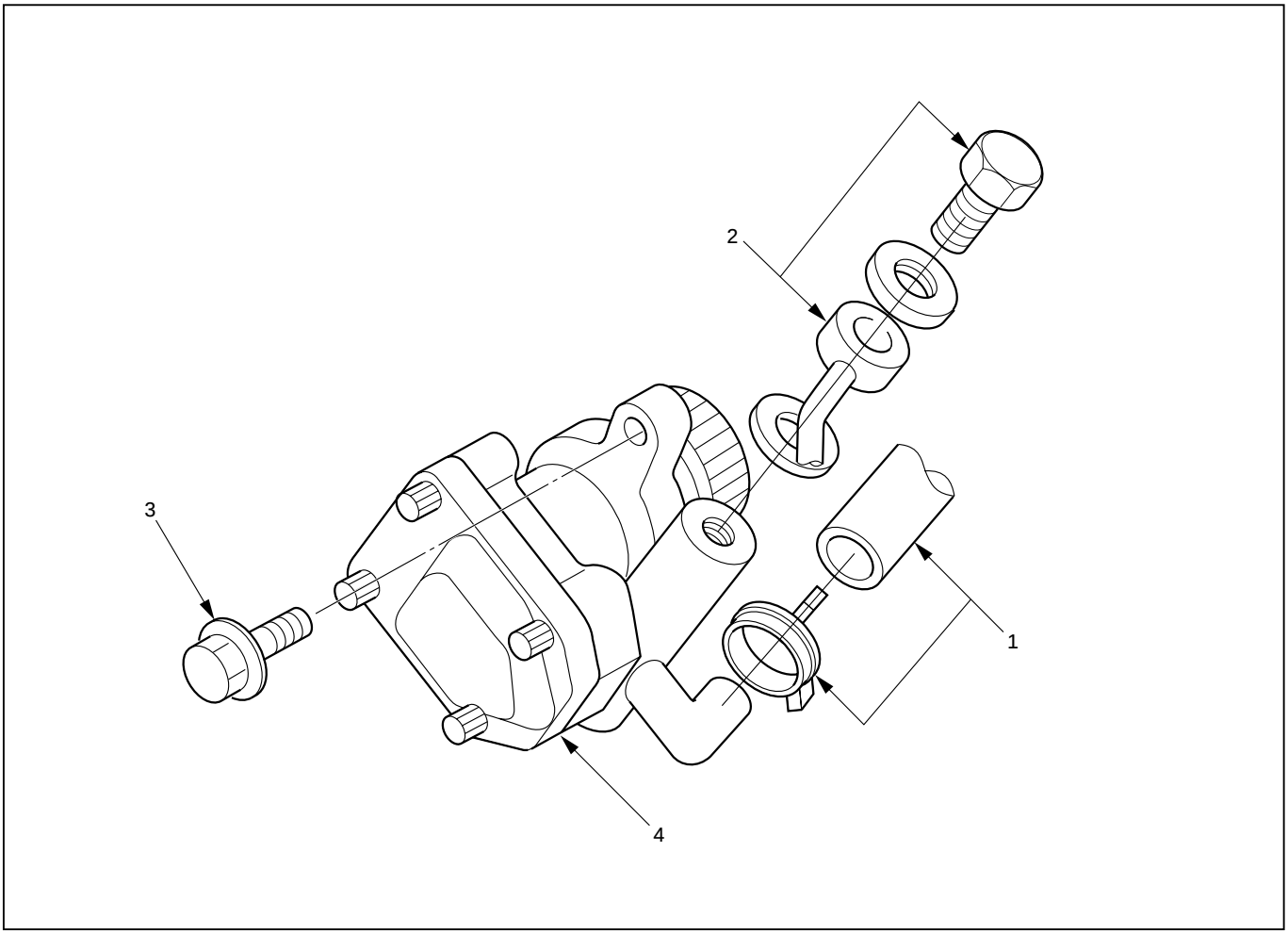

436RW009

Removal Steps

1. Hose, suction
2. Hose, flexible
3. Bolt
4. Pump assembly

Installation Steps

4. Pump assembly
3. Bolt
2. Hose, flexible
1. Hose, suction

REMOVAL

Preparation:

- Place a drain pan below the pump.

1. **Hose, Suction**
2. **Hose, Flexible**
3. **Bolt**
4. **Pump Assembly**

INSTALLATION

4. **Pump Assembly**
3. **Bolt**

Bolt Torque	N·m (kg·m/lb·ft)
22 (2.2 / 16)	

2. **Hose, Flexible**

Hose, Bolt Torque	N·m (kg·m/lb·ft)
54 (5.5 / 40)	

1. **Hose, Suction**
   Fill and bleed the system. Refer to “Bleeding the Power Steering System” in this section.

UNIT REPAIR

STEERING GEAR

These steps are based on the LHD model.

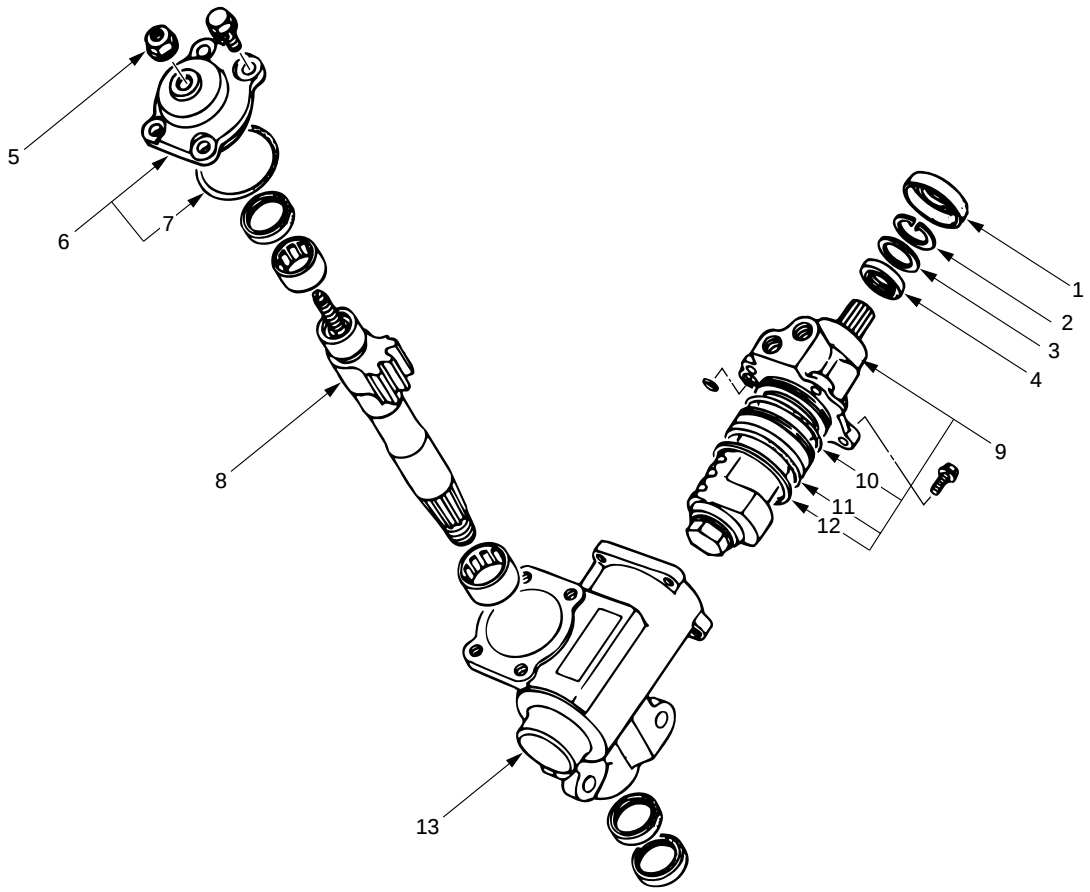

440RW004

Disassembly Steps

1. Dust cover
2. Retaining ring
3. Back up ring
4. Oil seal
5. Lock nut
6. Top cover assembly
7. O-ring
8. Sector shaft
9. Ball-nut and valve housing assembly
10. O-ring
11. Seal ring
12. O-ring
13. Gear box

Reassembly Steps

13. Gear box
12. O-ring
11. Seal ring
10. O-ring
9. Ball-nut and valve housing assembly
8. Sector shaft
7. O-ring
6. Top cover assembly
5. Lock nut
4. Oil seal
3. Back up ring
2. Retaining ring
1. Dust cover

DISASSEMBLY

CAUTION:
Do not clamp the steering gear assembly in a vise by the power cylinder housing.

1. **Dust Cover**
2. **Retaining Ring**
3. **Back up RIng**
4. **Oil Seal**
   1) Clean the faces of the extended stub shaft.
   2) Plug the hose fitting on the inlet side.
   3) Remove the oil seal by blowing compressed air through the hole in the outlet side.

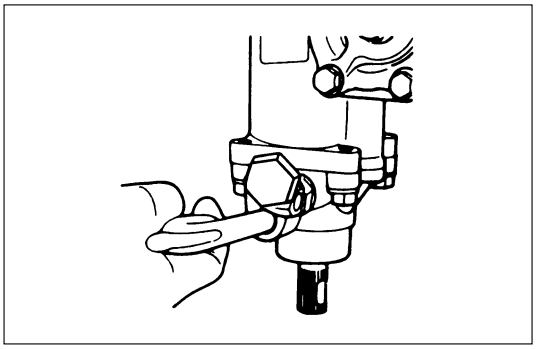

5. **Lock Nut**
   Remove the adjusting screw lock nut and turn the adjusting screw counterclockwise to remove the preload between the sector gear and the rack piston, then remove the top cover bolts.

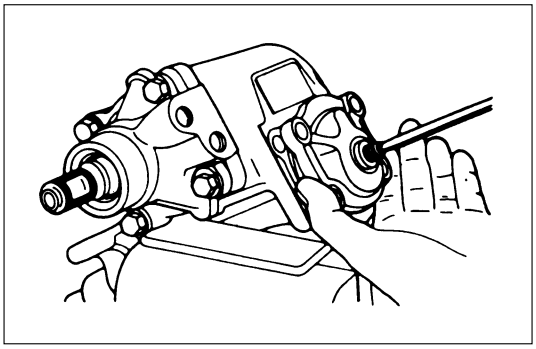

6. **Top Cover Assembly**
   Holding the top cover stationary, turn the adjusting screw clockwise to raise and free to cover, then remove the cover.

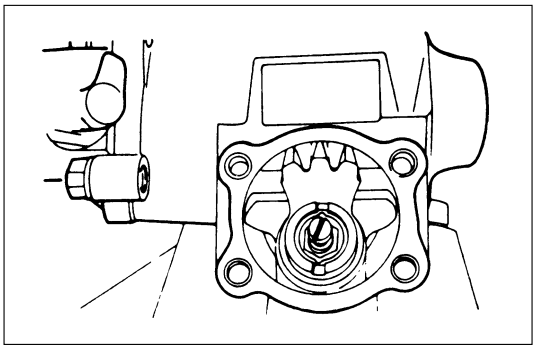

7. **O-ring**
8. **Sector Shaft**
   Bring the stub shaft into straight-ahead position. Do not force the sector shaft off the gear box with a hammer or other impact tools.

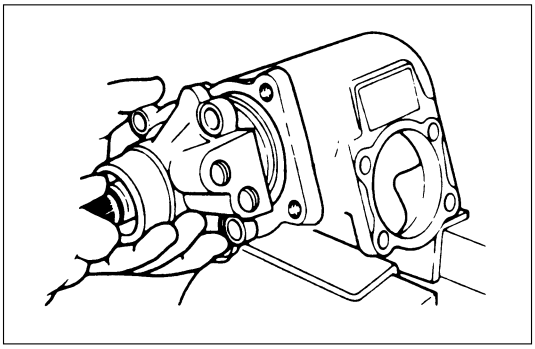

9. Ball-nut and Valve Housing Assembly
It is strongly advisable to always keep the ball nut and valve housing assembly in a horizontal position, or the rack piston will fall off onto the end of the worm, causing the rack piston to slip out of the worm shaft and the balls to fall out.

10. O-ring
11. Seal Ring
12. O-ring
13. Gear Box

INSPECTION AND REPAIR

Inspect the following parts for wear, damage or any other abnormal conditions.

- Bearing
- Ball-nut and valve housing
- Sector shaft
- Top cover
- Gear box
- Needle bearing
- Dust seal
- Seal ring
- Gasket

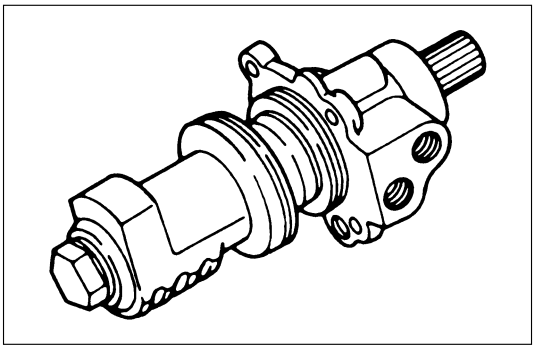

Ball-nut Rotation

Hold the ball nut and valve housing assembly vertically and see if the ball-nut lower by turning smoothly. If the ball-nut does not lower smoothly, check the worm shaft for bending and foreign matter.

NOTE:
When testing the ball nut and valve housing assembly, do not let it travel all the way to the end of worm shaft, or damage to the ball tubes will result.

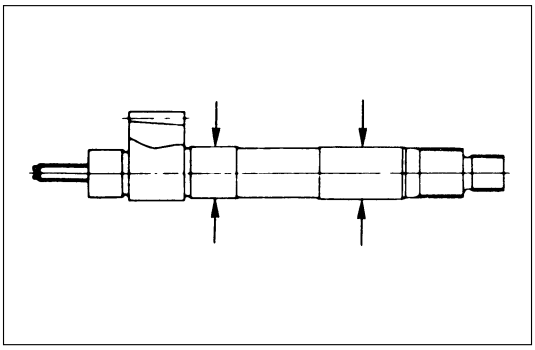

Check sector shaft outside diameter.

Sector Shaft Outside Diameter mm(in)

Standard	Limit
32.0 (1.260)	31.7 (1.248)

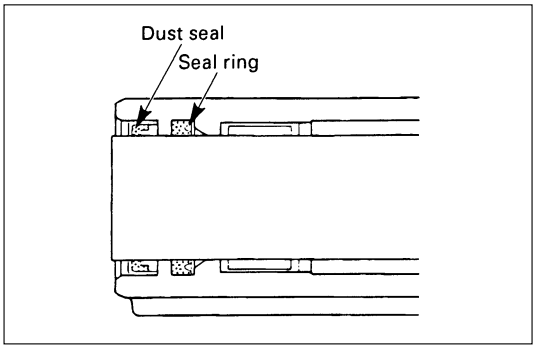

Seal Ring Setting

Note the setting direction. Always install a new part.

Apply a thin coat of power steering fluid to lip of each part.

Dust Seal Setting

Note the setting direction. Always install a new part.

Apply a thin coat of power steering fluid to lip of each part.

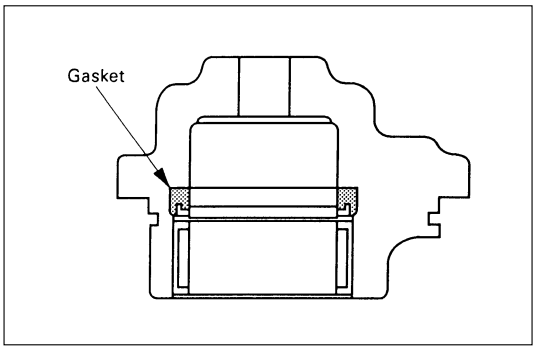

Gasket Setting

Note the setting direction. Always install a new part.

Apply a thin coat of power steering fluid to lip of each part.

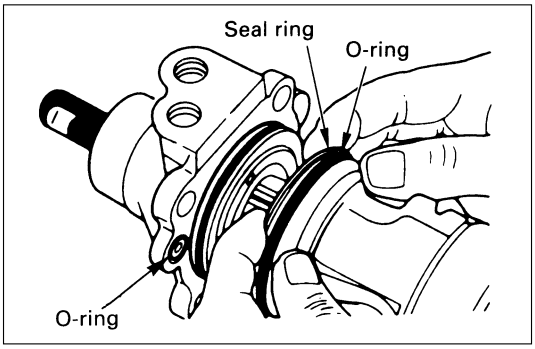

REASSEMBLY

13. Gear Box

12. O-ring
Apply a thin coat of grease.

11. Seal Ring
Apply a thin coat of grease.

10. O-ring
Apply a thin coat of grease.

9. Ball-nut and Valve Housing Assembly

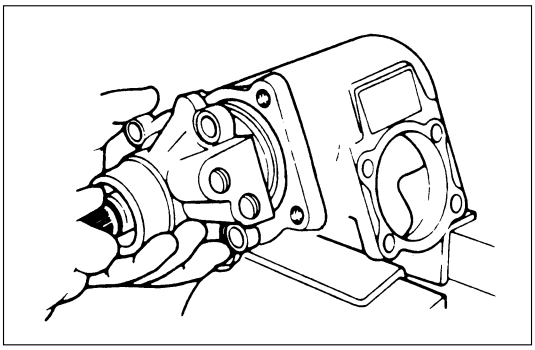

1) It is strongly advisable to always keep the ball screw and valve housing assembly in a horizontal position (avoid holding it vertically), or the rack piston will fall off onto the end of the worm, causing the rack piston to slip out of the worm shaft and ball to fall out.
2) Be careful not to drop the O-ring into the valve housing.
3) Tighten the valve housing bolts to the specified torque.

Valve Housing Bolt Torque	N·m (kg·m/lb·ft)
47 (4.8 / 35)	

8. Sector Shaft

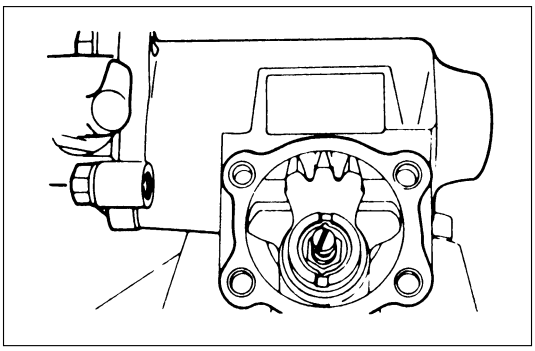

1) Tape the sector shaft serrations to protect the seal ring from damage.
2) Align the center tooth of ball nut with that of the sector shaft.

7. **O-ring**

6. **Top Cover Assembly**

Top Cover Bolt Torque	N·m (kg·m/lb·ft)
47 (4.8 / 35)	

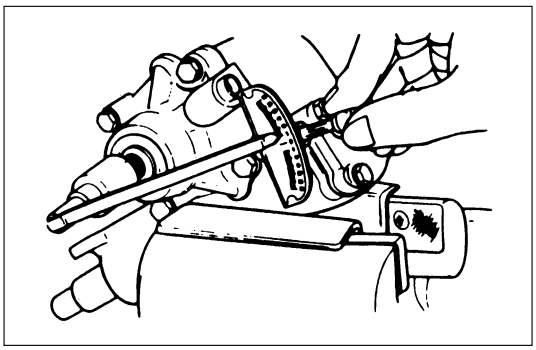

5. **Lock Nut**
Adjust the backlash between the worm gear and the ball nut.

1) With the worm gear rotating, set it to the straight ahead position.
2) Set the worm shaft preload to below 1N·m (10kg·cm / 9 lb·in) with the sector shaft adjusting screw.
3) Measure the worm shaft preload with the worm gear turned 450° both to the right and to the left. The worm gear preload in these positions should be 0.4 - 0.6 N·m (4 - 6 kg·cm / 3.5 - 5.2 lb·in) lower than in the straight ahead position.
4) Lock the sector shaft adjusting screw with the lock nut.

Lock Nut Torque	N·m (kg·m/lb·ft)
41 (4.2 / 30)	

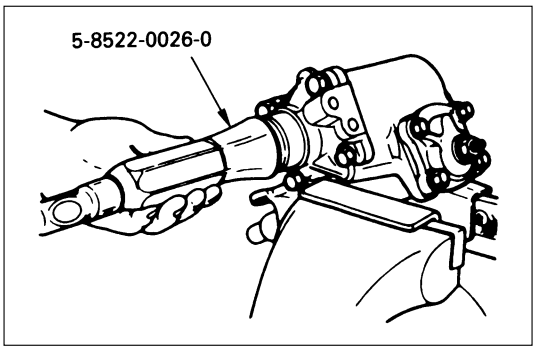

4. **Oil Seal**
Installer: 5-8522-0026-0 (J-26508)

3. **Back up Ring**
Position the chamfered face (outer circumference) towards the oil seal.

2. **Retaining Ring**
position the chamfered face (outer circumference) toward the oil seal.

1. **Dust Cover**

POWER STEERING PUMP (6VD1, 6VE1 Engine Models)

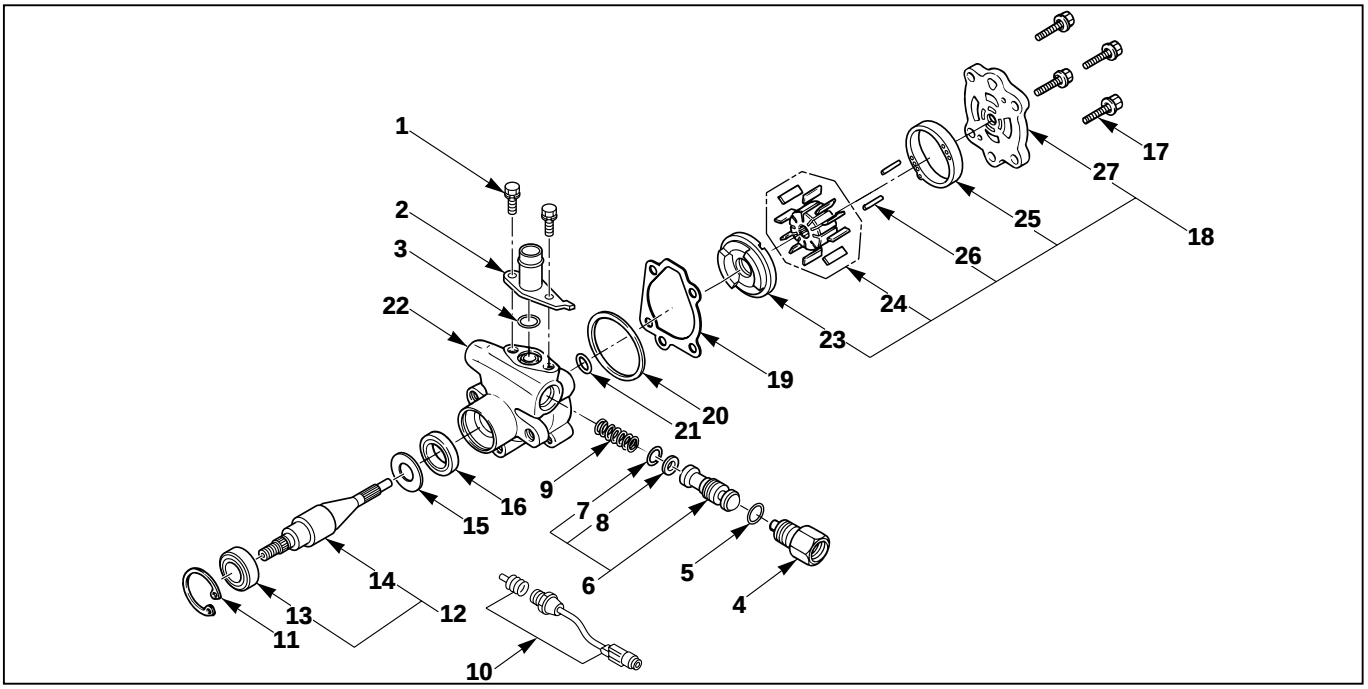

412RW055

Disassembly Steps

1. Bolt
2. Pipe, suction
3. O-ring
4. Connector
5. O-ring
6. Valve
7. Retaining ring
8. Filter
9. Spring
10. Pressure switch
11. Retaining ring
12. Shaft assembly
13. Bearing
14. Shaft
15. Retaining ring
16. Oil seal
17. Bolt
18. Rear housing assembly and pump cartridge
19. Gasket
20. O-ring
21. O-ring
22. Front housing
23. Pressure plate
24. Rotor and vane
25. Cam
26. Pin
27. Rear housing

Reassembly Steps

27. Rear housing
26. Pin
25. Cam
24. Rotor and vane
23. Pressure plate
22. Front housing
21. O-ring
20. O-ring
19. Gasket
18. Rear housing assembly and pump cartridge
17. Bolt
16. Oil seal
15. Retaining ring
14. Shaft
13. Bearing
12. Shaft assembly
11. Retaining ring
10. Pressure switch
9. Spring
8. Filter
7. Retaining ring
6. Valve
5. O-ring
4. Connector
3. O-ring
2. Pipe, suction
1. Bolt

DISASSEMBLY

Preparation:
Clean oil pump with solvent (plug the discharge and suction port, to prevent the entry of solvent). Be careful not to expose the oil seal of shaft assembly to solvent.

1. **Bolt**
2. **Pipe, Suction**
3. **O-ring**
4. **Connector**
5. **O-ring**
6. **Valve Assembly**
7. **Retaining Ring**
8. **Filter**
9. **Spring**
10. **Pressure switch**
11. **Retaining Ring**
12. **Shaft Assembly**
13. **Bearing**
14. **Shaft**
15. **Retaining Ring**
16. **Oil Seal**

CAUTION:
When removing the oil seal, be careful not to damage the housing.

17. **Bolt**
18. **Rear Housing Assembly and Pump Cartridge**
19. **Gasket**
20. **O-ring**
21. **O-ring**
22. **Front Housing**
23. **Pressure Plate**
24. **Rotor and Vane**
25. **Cam**
26. **Pin**
27. **Rear Housing**

INSPECTION AND REPAIR

Make all necessary adjustments, repairs, and part replacements if wear, damage, or other problems are discovered during inspection.

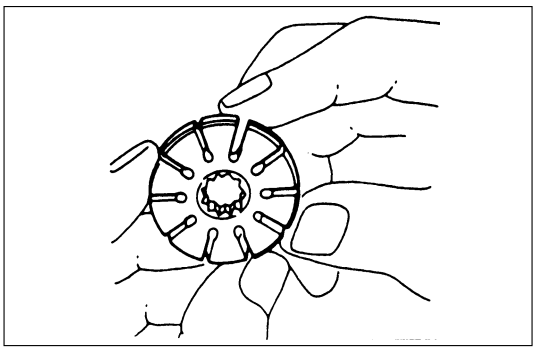

Rotor

Check that the groove in the vane is free from excessive wear and that the vane slides smoothly.
When part replacement becomes necessary, the pump cartridge should be replaced as a subassembly.

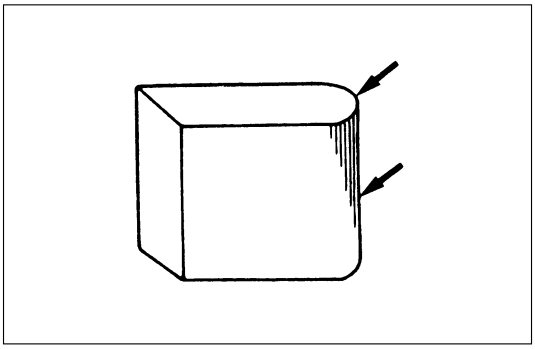

Vane

Sliding faces of the vane should be free from wear. (Particularly the curved face at the tip in contact with the cam should be free from wear and distortion).
When part replacement becomes necessary, the pump cartridge should be replaced as a subassembly.

Cam

The inner face of the arm should have a uniform contact pattern without a sign of step wear.
When part replacement becomes necessary, the pump cartridge should be replaced as a subassembly.

Side plate

The sliding faces of parts must be free from step wear (more than 0.01 mm), which can be felt by the finger nail. The parts with minor scores may be reused after lapping the face.

Valve

The sliding face of the valve must be free from burrs and damage.
The parts with minor scores may be reused after smoothing with emery cloth (#800 or finer).

Shaft

Oil seal sliding faces must be free from a step wear which can be felt by the finger nail.
Bushing face must be free from damage and wear.

O-ring, oil seal, retaining ring

Be sure to discard used parts, and always use new parts for installation. Prior to installation, lubricate all seals and rings with power steering fluid.

REASSEMBLY

27. Rear Housing

26. Pin

25. Cam

24. Rotor and Vane

1. Install the rotor with its punch mark facing the front housing.
2. Install the vanes with curved face in contact with the inner wall of the cam.

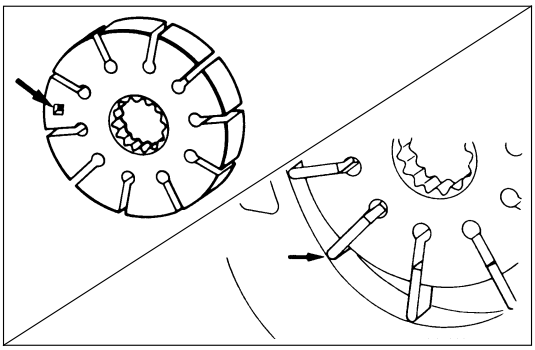

23. Pressure Plate

CAUTION:
When installing side plate, be careful not to damage its inner surface. Damaged side plate may cause poor pump performance, pump seizure or oil leakage.

22. Front Housing
21. O-ring
20. O-ring
Be sure to discard used O-rings, and always use new parts for installation.

19. Gasket
Be sure to discard used parts, and always use new parts for installation.

18. Rear Housing Assembly and Pump Cartridge
17. Bolt

Rear Housing Bolt Torque	N·m (kg·m/lb·ft)
17.6 (1.8 / 12.8)	

16. Oil Seal
Be sure to discard used parts, and always use new parts for installation.

CAUTION:
When installing the oil seal, be careful not to damage the oil seal contacting surface of the housing.

15. Retaining Ring
14. Shaft
13. Bearing
12. Shaft Assembly
11. Retaining Ring
10. Pressure switch

Pressure Switch Torque	N·m (kg·m/lb·ft)
20 (2.0 / 14)	

9. Spring
8. Filter
7. Retaining Ring
6. Valve
5. O-ring
Be sure to discard used parts, and always use new parts for installation.

4. Connector

Connector Torque	N·m (kg·m/lb·ft)
74 (7.5 / 54)	

3. O-ring
Be sure to discard used parts, and always use new parts for installation.

2. Pipe, Suction
1. Bolt

Suction Pipe Bolt Torque	N·m (kg·m/lb·ft)
15.7 (1.6 / 11.5)	

POWER STEERING PUMP (4JG2 Engine Model)

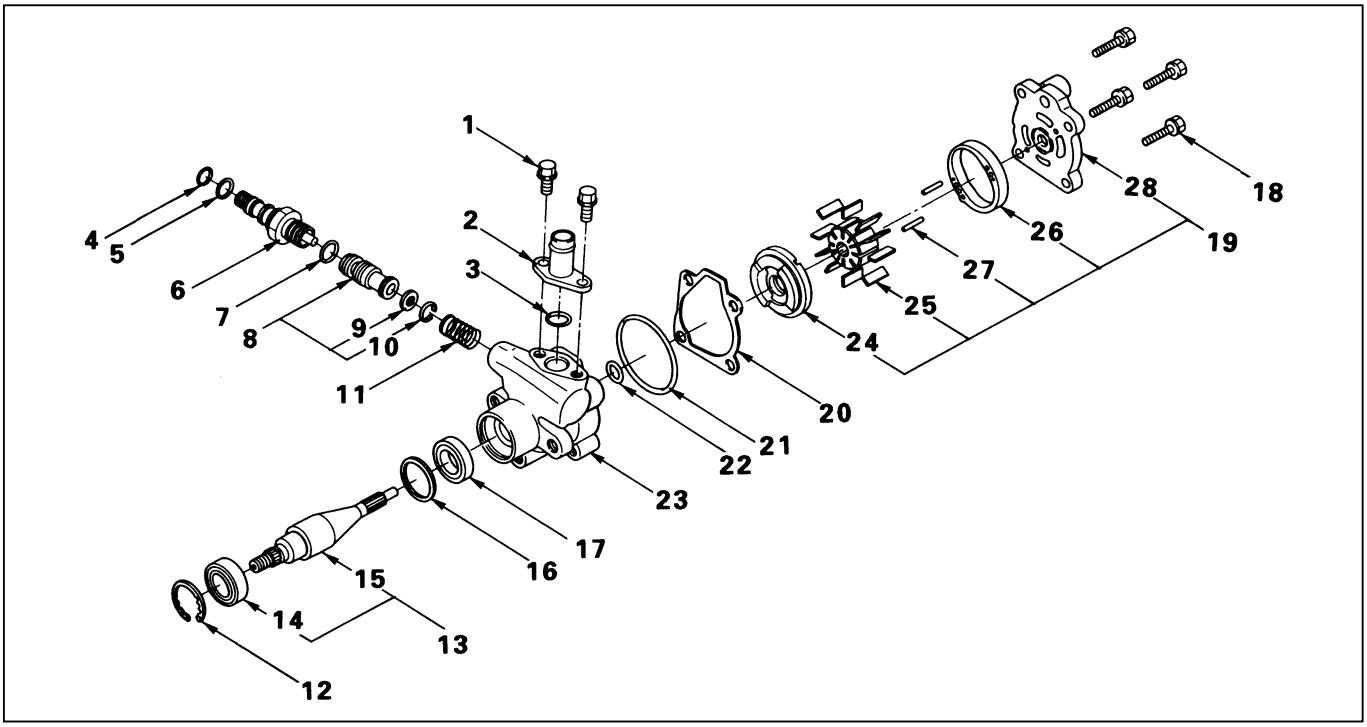

Disassembly Steps

1. Bolt
2. Pipe, suction
3. O-ring
4. O-ring
5. O-ring
6. Connector
7. O-ring
8. Valve
9. Retaining ring
10. Filter
11. Spring
12. Retaining ring
13. Shaft assembly
14. Bearing
15. Shaft
16. Retaining ring
17. Oil seal
18. Bolt
19. Rear housing assembly and pump cartridge
20. Gasket
21. O-ring
22. O-ring
23. Front housing
24. Pressure plate
25. Rotor and vane
26. Cam
27. Pin
28. Rear housing

Reassembly Steps

28. Rear housing
27. Pin
26. Cam
25. Rotor and vane
24. Pressure plate
23. Front housing
22. O-ring
21. O-ring
20. Gasket
19. Rear housing assembly and pump cartridge
18. Bolt
17. Oil seal
16. Retaining ring
15. Shaft
14. Bearing
13. Shaft assembly
12. Retaining ring
11. Spring
10. Filter
9. Retaining ring
8. Valve
7. O-ring
6. Connector
5. O-ring
4. O-ring
3. O-ring
2. Pipe, suction
1. Bolt

DISASSEMBLY

Preparation:
Clean oil pump with solvent (its plug discharge and suction port to prevent the entry of solvent). Be careful not to expose the oil seal of shaft assembly to solvent.

1. **Bolt**
2. **Pipe, Suction**
3. **O-ring**
4. **O-ring**
5. **O-ring**
6. **Connector**
7. **O-ring**
8. **Valve**
9. **Retaining Ring**
10. **Filter**
11. **Spring**
12. **Retaining Ring**
13. **Shaft Assembly**
14. **Bearing**
15. **Shaft**
16. **Retaining Ring**
17. **Oil Seal**

CAUTION:
When removing the oil seal, be careful not to damage the housing.

18. **Bolt**
19. **Rear Housing Assembly and Pump Cartridge**
20. **Gasket**
21. **O-ring**
22. **O-ring**
23. **Front Housing**
24. **Pressure Plate**
25. **Rotor and Vane**
26. **Cam**
27. **Pin**
28. **Rear Housing**

REASSEMBLY

28. Rear Housing

27. Pin

26. Cam

25. Rotor and Vane

Install the rotor with its punch mark facing the front housing.

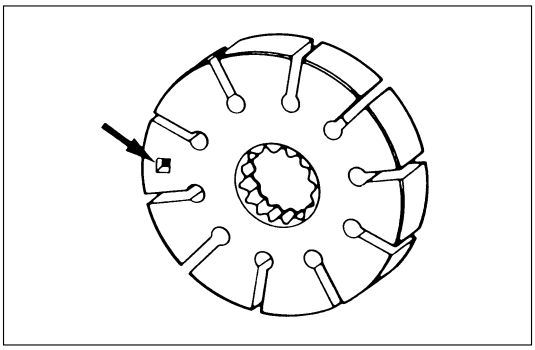

Install the vane with curved face in contact with the inner wall of the cam.

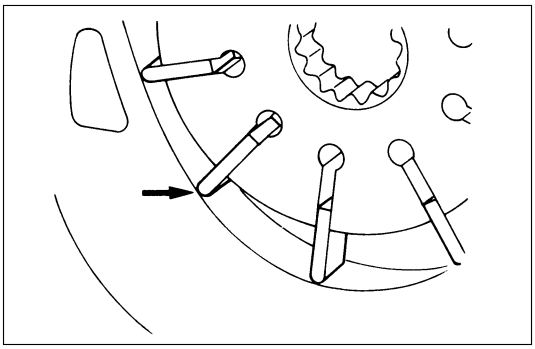

24. Pressure Plate

CAUTION:
When install pressure plate, be careful not to damage its inner surface. Damaged pressure plate may cause poor pump performance, pump seizure or oil leakage.

23. Front Housing

22. O-ring

Be sure to discard used parts, and always used new parts for installation.

21. O-ring

Be sure to discard used parts, and always used new parts for installation.

20. Gasket

Be sure to discard used parts, and always used new parts for installation.

19. Rear Housing Assemble and Pump Cartridge

18. Bolt

Rear Housing Bolt Torque	N·m (kg·m/lb·ft)
54 (5.5 / 40)	

17. O-ring

Be sure to discard used parts, and always used new parts for installation.

CAUTION:
When install pressure plate, be careful not to damage its inner surface. Damaged pressure plate may cause poor pump performance, pump seizure or oil leakage.

16. **Retaining Ring**
15. **Shaft**
14. **Bearing**
13. **Shaft Assembly**
12. **Retaining Ring**
11. **Spring**
10. **Filter**
9. **Retaining Ring**
8. **Valve**
7. **O-ring**
   Be sure to discard used parts, and always used new parts for installation.
6. **Connector**

Connector Torque	N·m (kg·m/lb·ft)
54 (5.5 / 40)	

5. **O-ring**
   Be sure to discard used parts, and always used new parts for installation.
4. **O-ring**
   Be sure to discard used parts, and always used new parts for installation.
3. **O-ring**
   Be sure to discard used parts, and always used new parts for installation.
2. **Pipe, Suction**
1. **Bolt**

Suction Pipe Bolt Torque	N·m (kg·m/lb·ft)
21 (2.1 / 15)	

POWER STEERING PUMP (4JX1 Engine Model)

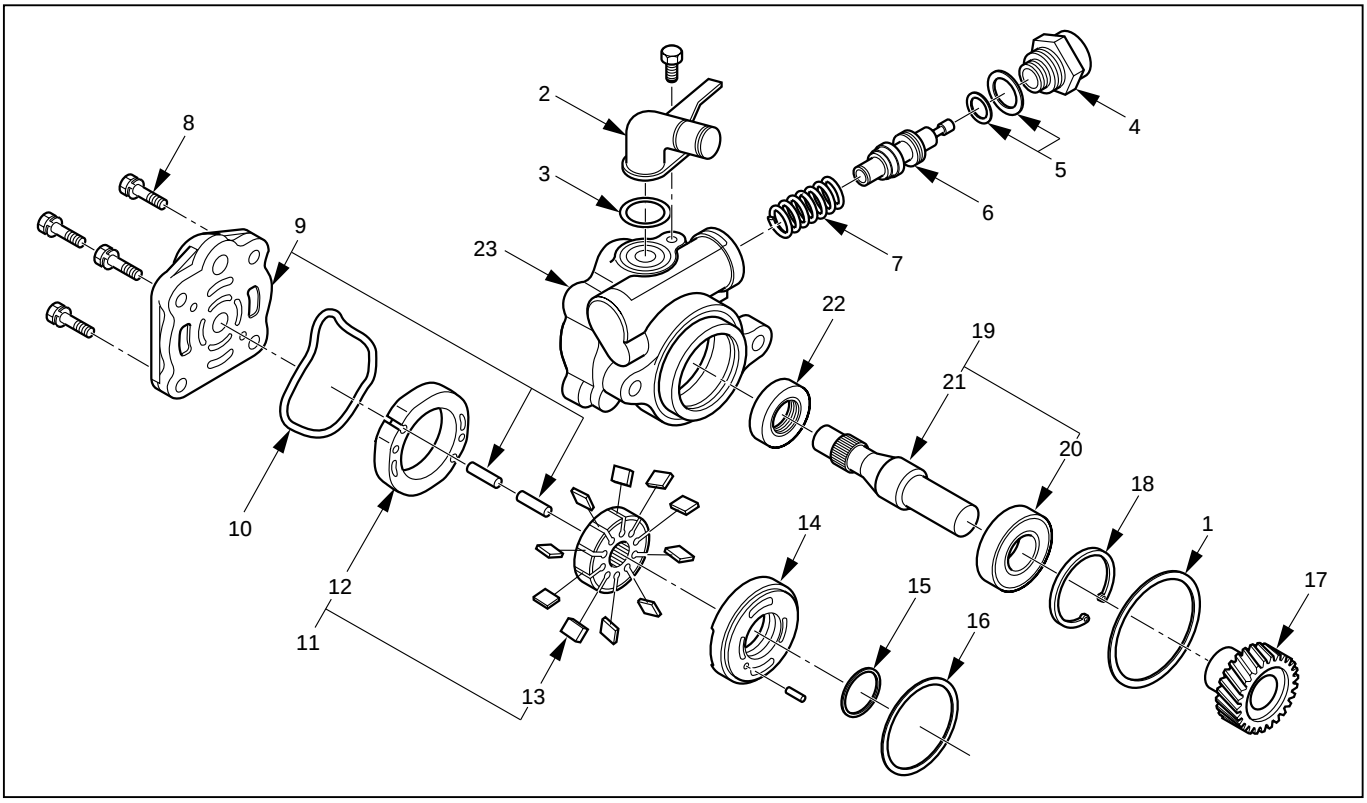

412RW048

Disassembly Steps

1. O-ring
2. Pipe, suction
3. O-ring
4. Connector
5. O-ring
6. Valve
7. Spring
8. Bolt
9. Rear housing assembly
10. O-ring
11. Pump cartridge
12. Cam
13. Rotor and vane
14. Pressure plate
15. O-ring
16. O-ring
17. Gear
18. Retaining ring
19. Shaft assembly
20. Bearing
21. Shaft
22. Oil seal
23. Front housing

Reassembly Steps

23. Front housing
22. Oil seal
21. Shaft
20. Bearing
19. Shaft assembly
18. Retaining ring
17. Gear
16. O-ring
15. O-ring
14. Pressure plate
13. Rotor and vane
12. Cam
11. Pump cartridge
10. O-ring
9. Rear housing assembly
8. Bolt
7. Spring
6. Valve
5. O-ring
4. Connector
3. O-ring
2. Pipe, suction
1. O-ring

DISASSEMBLY

Preparation:
Clean oil pump with solvent (plug the discharge and suction port to prevent the entry of solvent). Be careful not to expose the oil seal of shaft assembly to solvent.

1. **O-ring**
2. **Pipe, Suction**
3. **O-ring**
4. **Connector**
5. **O-ring**
6. **Valve**
7. **Spring**
8. **Bolt**
9. **Rear Housing Assembly**
10. **O-ring**
11. **Pump Cartridge**
12. **Cam**
13. **Rotor and Vane**
14. **Pressure Plate**
15. **O-ring**
16. **O-ring**
17. **Gear**
18. **Retaining Ring**
19. **Shaft Assembly**
20. **Bearing**
21. **Shaft**
22. **Oil seal**

CAUTION:
When removing the oil seal, be careful not to damage the housing.

23. **Front Housing**

REASSEMBLY

23. **Front Housing**
22. **Oil Seal**
    Be sure to discard used parts, and always used new parts for installation.
21. **Shaft**
20. **Bearing**
19. **Shaft Assembly**
18. **Retaining Ring**
17. **Gear**
16. **O-ring**
    Be sure to discard used parts, and always used new parts for installation.
15. **O-ring**
    Be sure to discard used parts, and always used new parts for installation.
14. **Pressure Plate**

CAUTION:
When install pressure plate, be careful not to damage its inner surface. Damaged pressure plate may cause poor pump performance, pump seizure or oil leakage.

13. **Rotor and Vane**
    Install the vane with curved face in contact with the inner wall of the cam.

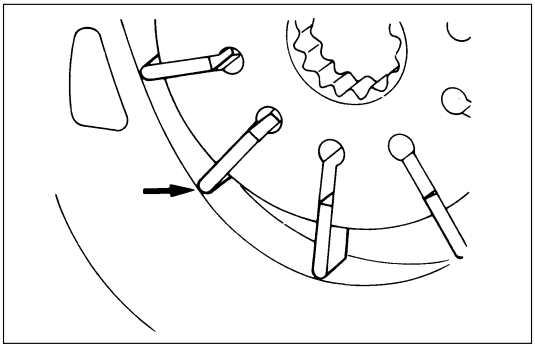

12. **Cam**
11. **Pump Cartridge**
10. **O-ring**
    Be sure to discard used parts, and always used new parts for installation.
9. **Rear Housing Assembly**
8. **Bolt**

Rear Housing Bolt Torque	N·m (kg·m/lb·ft)
24 (2.4 / 17)	

7. **Spring**
6. **Valve**
5. **O-ring**
   Be sure to discard used parts, and always used new parts for installation.
4. **Connector**

Connector Torque	N·m (kg·m/lb·ft)
59 (6.0 / 43)	

3. **O-ring**
   Be sure to discard used parts, and always used new parts for installation.
2. **Pipe, Suction**

Suction Pipe Bolt Torque	N·m (kg·m/lb·ft)
9.8 (1.0 / 7.1)	

1. **O-ring**
   Be sure to discard used parts, and always used new parts for installation.

MEMO

SECTION 2A

STEERING LINKAGE

CONTENTS

PAGE

General Description ..... 2A – 42
On-Vehicle Service ..... 2A – 43
Center Track Rod Assembly ..... 2A – 43
Outer Track Rod Assembly ..... 2A – 46
Relay Lever ..... 2A – 49

GENERAL DESCRIPTION

This illustration is based on the LHD model.

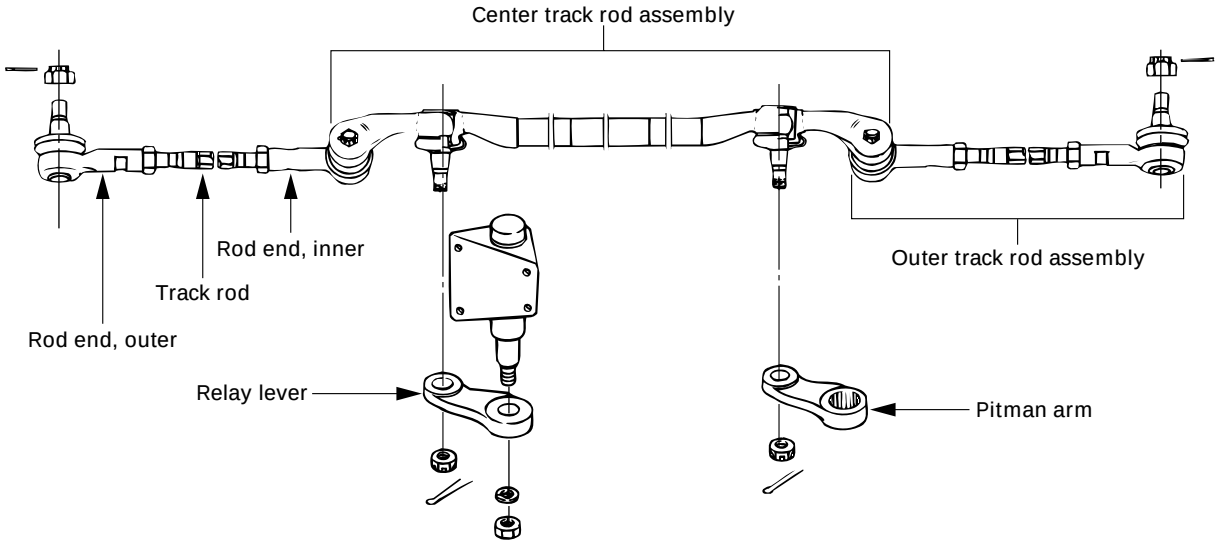

433RW004

The steering linkage consists of a pitman arm, relay lever, center track rod and two adjustable outer track rods.
When the steering wheel is turned, the gear rotates the pitman arm which forces the center track rod to one side. The outer track rods, connected to the center track rod by ball studs, transfer the steering force to the wheels. The outer track rods are adjustable and are used for toe-in adjustments.
The center track rod is supported by the pitman arm and relay lever. The relaylever pivots on a support attached to the frame.

The overall condition of the steering linkage affects steering performance. If parts are bent, damaged, worn or poorly lubricated, improper and possibly dangerous steering action will result.
Whenever any steering linkage components are repaired or replaced, check the steering geometry and front end alignment. Refer to Front End Alignment (Sec. 3A).

ON-VEHICLED SERVICE

CENTER TRACK ROD ASSEMBLY

These steps are based on the LHD model.

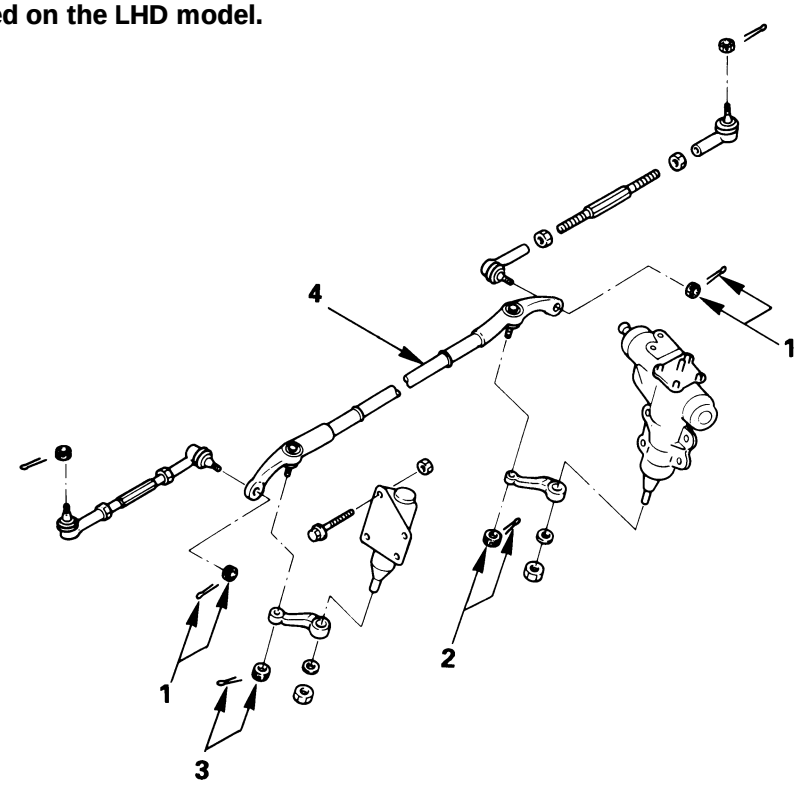

Removal Steps

1. Nut and cotter pin
2. Nut and cotter pin, pitman arm
3. Nut and cotter pin relay lever
4. Center track rod assembly

Installation Steps

4. Center track rod assembly
3. Nut and cotter pin relay lever
2. Nut and cotter pin, pitman arm
1. Nut and cotter pin

REMOVAL

Preparation:
Raise the vehicle and support the frame with suitable safety stands.

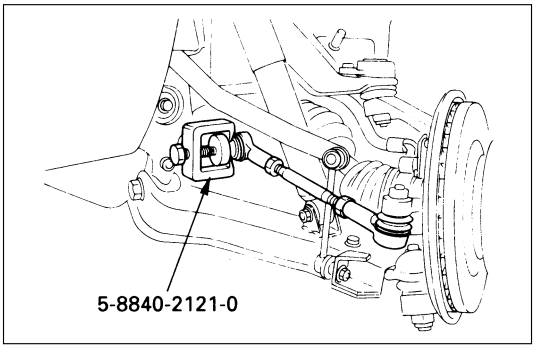

1. **Nut and Cotter Pin**
   Disconnect outer track rod assembly from the center track rod.
   Remover: 5-8840-2121-0 (J-36831)

   CAUTION:
   Be careful not to break the ball joint boot.

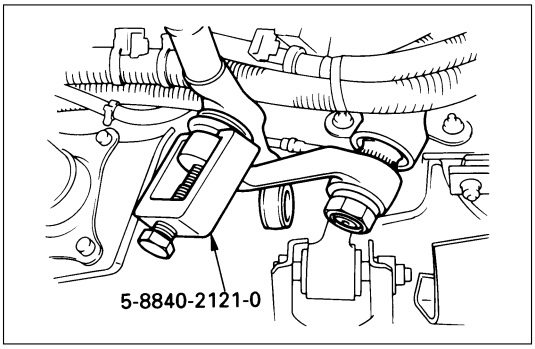

2. **Nut and Cotter Pin, Pitman Arm**
   Remove pitman arm from the center track rod (Fig. 3B3-4)
   Remover: 5-8840-2121-0 (J-36831)

   CAUTION:
   Be careful not to break the ball joint boot.

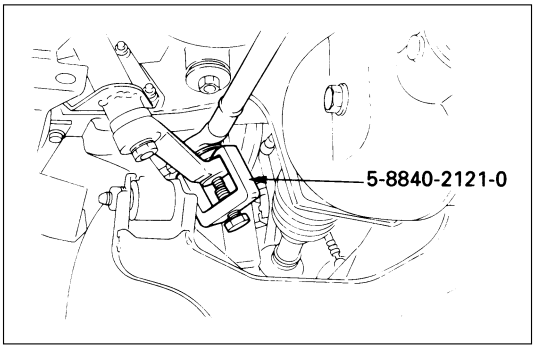

3. **Nut and Cotter Pin, Relay Lever**
   Remove relay lever from the center track rod.
   Remover: 5-8840-2121-0 (J-36831)

   CAUTION:
   Be careful not to break the ball joint boot.

4. **Center Track Rod Assembly**

INSPECTION AND REPAIR

Make necessary correction or parts replacement if wear, damage, corrosion, bending, deteriorations or any other abnormal condition are found through inspection.
Check the following parts.

- Ball joint (Boot, screws and tapered surfaces)

INSTALLATION

4. **Center Track Rod Assembly**

3. **Nut and Cotter Pin, Relay Lever**
Tighten the nut to the specified torque, with just enough additional torque to align cotter pin holes. Install new cotter pin.

Relay Lever Nut Torque	N·m (kg·m/lb·ft)
59 (6.0 / 43)	

2. **Nut and Cotter Pin, Pitman Arm**
Tighten the nut to the specified torque, with just enough additional torque to align cotter pin hole. Install new cotter pin.

Pitman Arm Nut Torque	N·m (kg·m/lb·ft)
98 (10.0 / 72)	

1. **Nut and Cotter Pins**
Tighten the nut to the specified torque, with just enough additional torque to align cotter pin holes. Install new cotter pin.

Center Track Rod Nut Torque	N·m (kg·m/lb·ft)
98 (10.0 / 72)	

OUTER TRACK ROD ASSEMBLY

These steps are based on the LHD model.

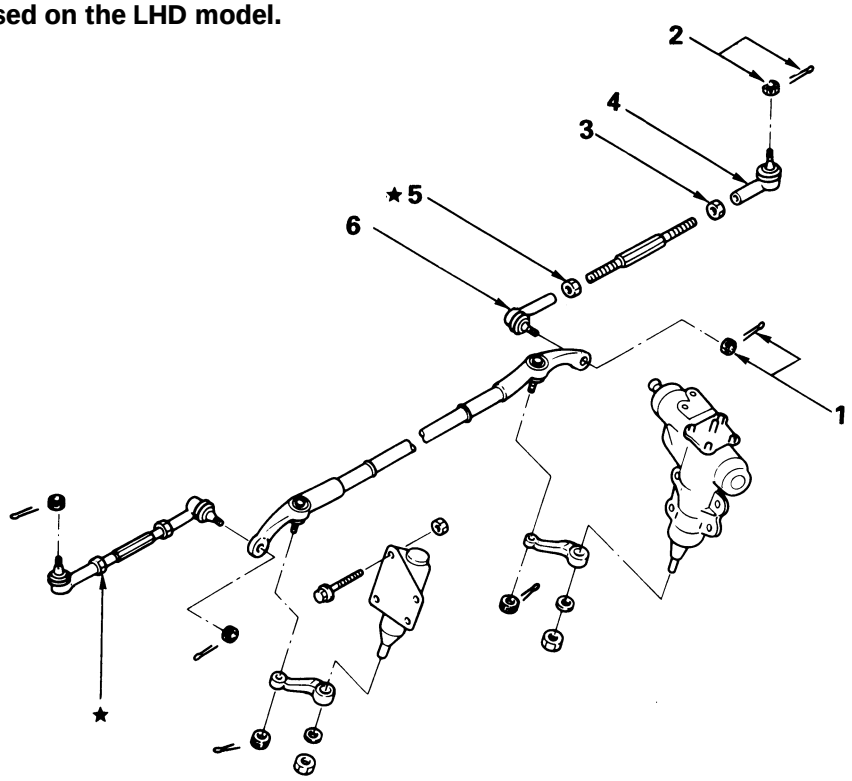

Removal Steps

1. Nut and cotter pin, center track rod
2. Nut and cotter pin, knuckle arm
3. Lock nut, outer
4. Rod end assembly outer
5. Lock nut, inner
6. Rod end assembly, inner

★ The screw is threaded counterclockwise.

Installation Steps

6. Rod end assembly, inner
5. Lock nut, inner
4. Rod end assembly outer
3. Lock nut, outer
2. Nut and cotter pin, knuckle arm
1. Nut and cotter pin, center track rod

REMOVAL

Preparation:
Remove wheel and tire assembly.
Refer to "Wheels and Tires" in section 3E.

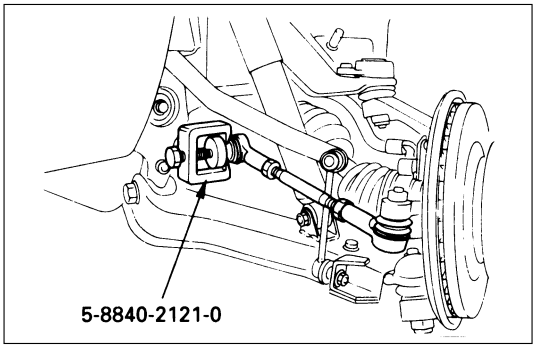

1. **Nut and Cotter Pin, Center Track Rod**
   Disconnect outer track rod assembly at the center track rod.

   Remover: 5-8840-2121-0 (J-36831)

   CAUTION:
   Be careful not to break the ball joint boot.

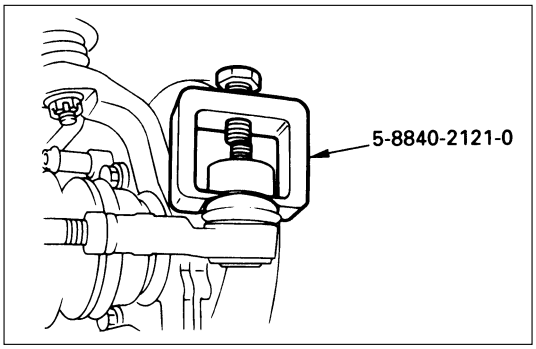

2. **Nut and Cotter Pin, Knuckle Arm**
   Remove outer track rod assembly from the knuckle arm.

   Remover: 5-8840-2121-0 (J-36831)

   CAUTION:
   Be careful not to break the ball joint boot.

3. **Lock Nut, Outer**

   NOTE:
   In either outer rod, the screw on the right side of the vehicle is threaded counterclockwise.

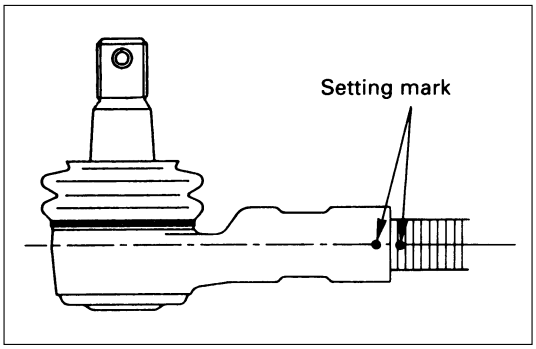

4. **Rod End Assembly, Outer**
   Apply setting marks to ensure reassembly of the parts in their original position.

5. **Lock Nut, Inner**

   NOTE:
   In either outer rod, the screw on the right side of the vehicle is threaded counterclockwise.

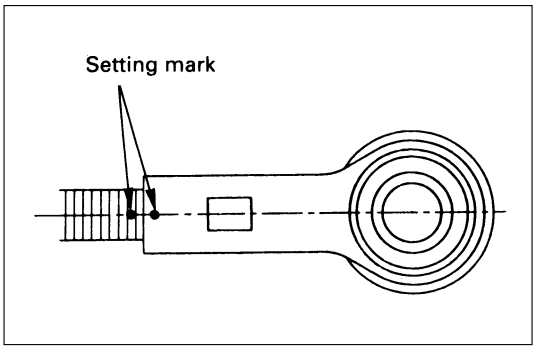

6. **Rod End, Inner**
   Apply setting marks to ensure reassembly of the parts in their original position.

INSPECTION AND REPAIR

Make necessary correction or parts replacement if wear, damage, corrosion, bending, deteriorations or any other abnormal condition are found through inspection.
Check the following parts.

- Rod end assembly
- Ball joint (Boot, screws and tapered surfaces)

INSTALLATION

6. Rod End, Inner
Align the setting marks applied during desassembly.

5. Lock Nut, Inner

Lock Nut Torque	N·m (kg·m/lb·ft)
118 (12.0 / 87)	

NOTE:
In either outer rod, the screw on the right side of the vehicle is threaded counterclockwise.

4. Rod End Assembly, Outer
Align the setting marks applied during disassembly.

3 Lock Nut, Outer

Lock Nut Torque	N·m (kg·m/lb·ft)
118 (12.0 / 87)	

2. Nut and Cotter pin, Knuckle Arm
Tighten the nut to the specified torque, with just enough additional torque to align cotter pin holes. Install new cotter pin.

Knuckle Arm Nut Torque	N·m (kg·m/lb·ft)
98 (10.0 / 72)	

1. Nut and Cotter Pin, Center Track Rod
Tighten the nut to the specified torque, with just enough additional torque to align cotter pin holes. Install new cotter pin.

Track Rod Nut Torque	N·m (kg·m/lb·ft)
98 (10.0 / 72)	

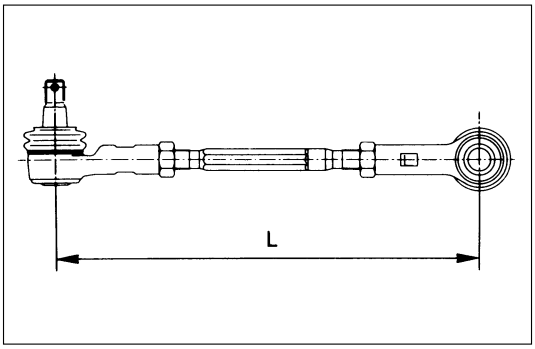

NOTE:
If replacing the track rod, adjust the new track rod length.

Rod Length (L)	mm (in)
328.3 (12.93) : Wide Tread 299 (11.77) : Narrow Tread	

NOTE:
Adjust the toe-in. Refer to “Front End Alignment” in section 3A.

RELAY LEVER

These steps are based on the LHD model.

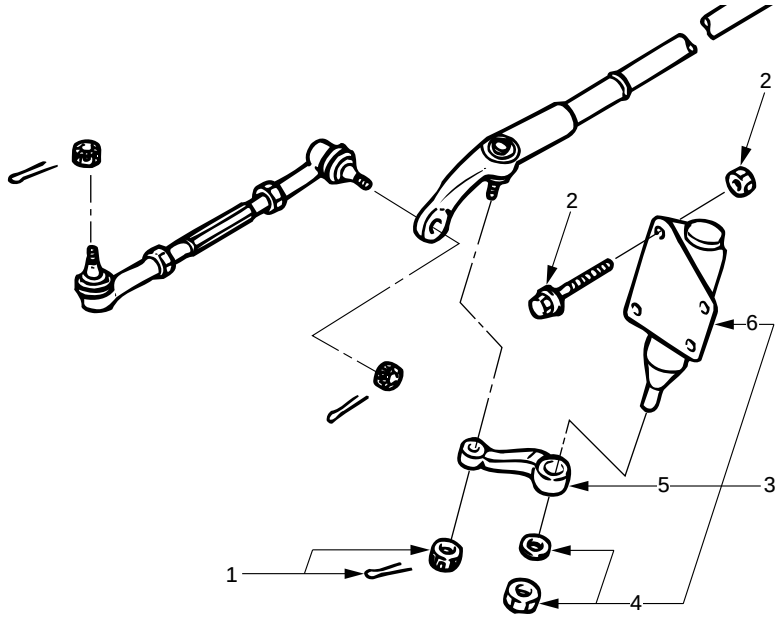

433RW005

Removal Steps

1. Nut and cotter pin
2. Bolt and nut
3. Relay lever and Bracket
4. Nut and washer
5. Relay lever
6. Bracket

Installation Steps

6. Bracket
5. Relay lever
4. Nut and washer
3. Relay lever and bracket
2. Bolt and nut
1. Nut and cotter pin

REMOVAL

Preparation:
Raise the vehicle and support the frame with suitable safety stands.

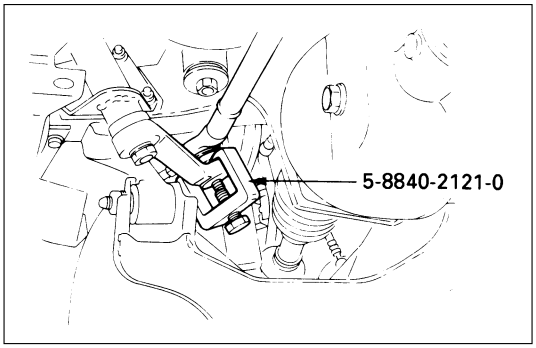

1. **Nut and Cotter pin**
   Disconnect relay lever at the center track rod.
   Remover: 5-8840-2121-0 (J-36831)

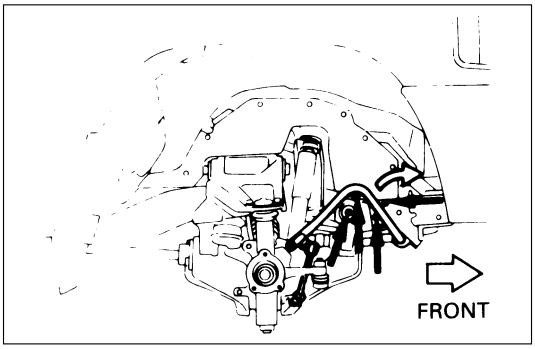

2. **Bolt and Nut**
   Remove stabilizer bar bolts and nuts and push the stabilizer bar aside and remove the bolts and nuts.

3. **Relay Lever and Bracket**
4. **Nut and Washer**
5. **Relay Lever**
   Remove relay lever from the bracket.
   Remover: 5-8840-0015-0 (J-22912-01)

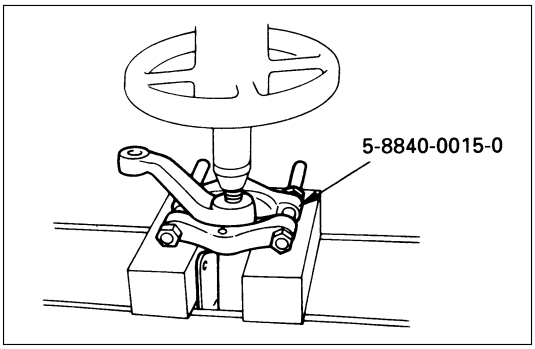

6. **Bracket**

INSTALLATION

6. **Bracket**
5. **Relay Lever**
4. **Nut and Washer**

Relay Lever Nut Torque	N·m (kg·m/lb·ft)
118 (12.0 / 87)	

3. **Relay Lever and Bracket**
2. **Bolt and Nut**

Bracket Nut Torque	N·m (kg·m/lb·ft)
44 (4.5 / 33)	

1. **Nut and Cotter Pin**
   Tighten the nut to the specified torque, with just enough additional torque to align cotter pin holes. Install new cotter pin.

Relay Lever Nut Torque	N·m (kg·m/lb·ft)
59 (6.0 / 43)	

SECTION 2A

SUPPLEMENTAL RESTRAINT SYSTEM STEERING WHEEL & COLUMN

CAUTION:
When fasteners are removed, always reinstall them at the same location from which they were removed. If a fastener needs to be replaced, use the correct part number fastener for that application. If the correct part number fastener is not available, a fastener of equal size and strength (or stronger) may be used. Fasteners that are not reused, and those requiring thread locking compound, will be called out. The correct torque value must be used when installing fasteners that require it. If the above conditions are not followed, parts or system damage could result.

CONTENTS

PAGE

General Description ..... 2A – 52
On-Vehicle Service ..... 2A – 53
SRS Connectors ..... 2A – 53
Inflator Module Replacement ..... 2A – 54
Steering Wheel Replacement ..... 2A – 57
Combination Switch Replacement ..... 2A – 60
Lock Cylinder Replacement ..... 2A – 64
Steering Column Replacement ..... 2A – 69

GENERAL DESCRIPTION

This steering wheel and column repair section covers the Supplemental Restraint System (SRS) steering column. The following repair procedures are specific to SRS Components. When servicing a vehicle equipped with Supplemental Restraint System, pay close attention to all WARNINGS and CAUTIONS.

For detailed explanation about SRS, refer to Section 9J "SUPPLEMENTAL RESTRAINT SYSTEM (SRS)" of manual.

The steering column has three important features in addition to the steering function:

1. The column is energy absorbing, designed to compress in a front-end collision to minimize the possibility of injury to the driver of the vehicle.
2. The ignition switch and lock are mounted conveniently on the column.
3. With the column mounted lock, the ignition and steering operation can be locked to prevent theft of the vehicle.

The column may be disassembled and reassembled. To insure the energy absorbing action, it is important that the specified screws, bolts and nuts be used only as designated and that they are tightened to the specified torque.

When the column is removed from the vehicle, a sharp blow on the end of steering shaft or shift lever, leaning on the column assembly, or dropping the assembly could shear or loosen the fasteners that maintain column rigidity.

WARNING

THIS VEHICLE HAS A SUPPLEMENTAL RESTRAINT SYSTEM (SRS). REFER TO THE SRS COMPONENT AND WIRING LOCATION VIEW IN ORDER TO DETERMINE WHETHER YOU ARE PERFORMING SERVICE ON OR NEAR THE SRS COMPONENTS OR THE SRS WIRING. WHEN YOU ARE PERFORMING SERVICE ON OR NEAR THE SRS COMPONENTS OR THE SRS WIRING, REFER TO THE SRS SERVICE INFORMATION. FAILURE TO FOLLOW WARNINGS COULD RESULT IN POSSIBLE AIR BAG DEPLOYMENT, PERSONAL INJURY, OR OTHERWISE UNNEEDED SRS SYSTEM REPAIRS.

SAFE HANDLING OF INFLATOR MODULES REQUIRES FOLLOWING THE PROCEDURES DESCRIBED BELOW FOR BOTH LIVE AND DEPLOYED MODULES.

SAFETY PRECAUTIONS MUST BE FOLLOWED WHEN HANDLING A DEPLOYED AIR BAG ASSEMBLY (AIR BAG). AFTER DEPLOYMENT, THE AIR BAG ASSEMBLY (AIR BAG) SURFACE MAY CONTAIN A SMALL AMOUNT OF SODIUM HYDROXIDE, A BY-PRODUCT OF THE DEPLOYMENT REACTION, THAT IS IRRITATING TO THE SKIN AND EYES. MOST OF THE POWDER ON THE AIR BAG ASSEMBLY (AIR BAG) IS HARMLESS. AS A PRECAUTION, WEAR GLOVES AND SAFETY GLASSES WHEN HANDLING A DEPLOYED AIR BAG ASSEMBLY, AND WASH YOUR HANDS WITH MILD SOAP AND WATER AFTERWARDS.

WHEN CARRYING A LIVE AIR BAG ASSEMBLY, MAKE SURE THE BAG AND TRIM COVER ARE POINTED AWAY FROM YOU. NEVER CARRY AN AIR BAG ASSEMBLY BY THE WIRES OR CONNECTOR ON THE UNDERSIDE OF MODULE. IN THE CASE OF AN ACCIDENTAL DEPLOYMENT, THE BAG WILL THEN DEPLOY WITH MINIMAL CHANCE OF INJURY. WHEN PLACING A LIVE AIR BAG ASSEMBLY ON A BENCH OR OTHER SURFACE, ALWAYS FACE THE BAG AND TRIM COVER UP, AWAY FROM THE SURFACE. NEVER REST A STEERING COLUMN ASSEMBLY ON THE STEERING WHEEL WITH THE AIR BAG ASSEMBLY FACE DOWN AND COLUMN VERTICAL. THIS IS NECESSARY SO THAT A FREE SPACE IS PROVIDED TO ALLOW THE AIR BAG ASSEMBLY TO EXPAND IN THE UNLIKELY EVENT OF ACCIDENTAL DEPLOYMENT. OTHERWISE, PERSONAL INJURY COULD RESULT.

TO AVOID DEPLOYMENT WHEN TROUBLE SHOOTING THE SRS SYSTEM, DO NOT USE ELECTRICAL TEST EQUIPMENT, SUCH AS BATTERY-POWERED OR A/C-POWERED VOLTMETER, OHMMETER, ETC., OR ANY TYPE OF ELECTRICAL EQUIPMENT OTHER THAN SPECIFIED IN THIS MANUAL. DO NOT USE A NON-POWERED PROBE-TYPE TESTER.

INSTRUCTIONS IN THIS MANUAL MUST BE FOLLOWED CAREFULLY, OTHERWISE PERSONAL INJURY MAY RESULT.

ON-VEHICLE SERVICE

SRS CONNECTORS

CAUTION:
The special yellow color connectors are used for supplemental restraint system-air bag circuit.
When removing the cable harness, do not pull the cables. Otherwise, cable disconnection may occur.
When connect the SRS connector, insert the connector completely. Imperfect locking may cause malfunction of SRS circuit.

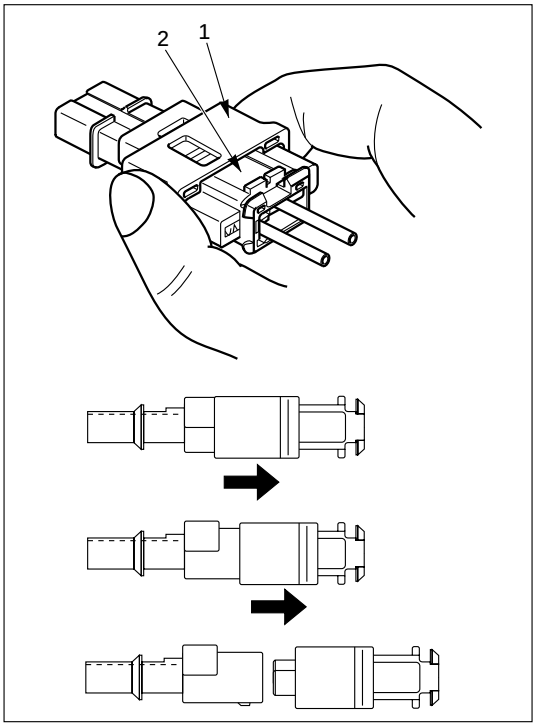

827RW035

REMOVAL

To remove the connector, hold the cover insulator(1) and pull it. The cover insulator slides and lock will be released.

Do not hold the socket insulator(2).

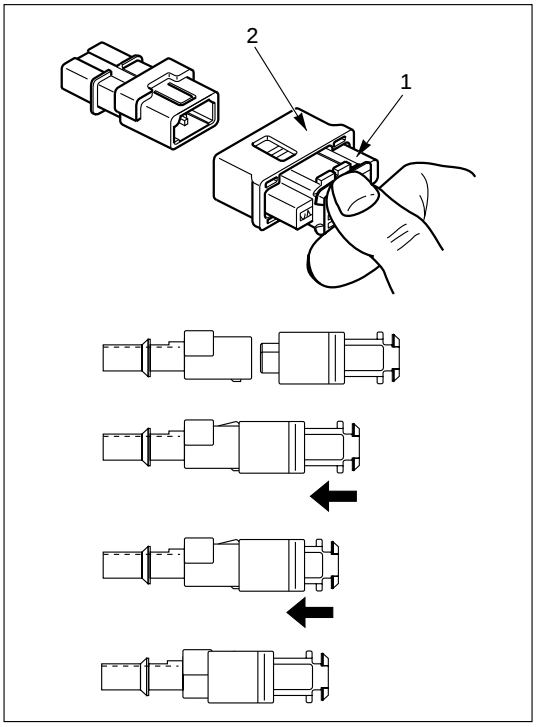

827RW034

INSTALLATION

To install the connector, hold the socket insulator(1) and insert it. The cover insulator slides and connector will be locked.

Do not hold the cover insulator(2).

INFLATOR MODULE REPLACEMENT

These steps are based on the LHD model.

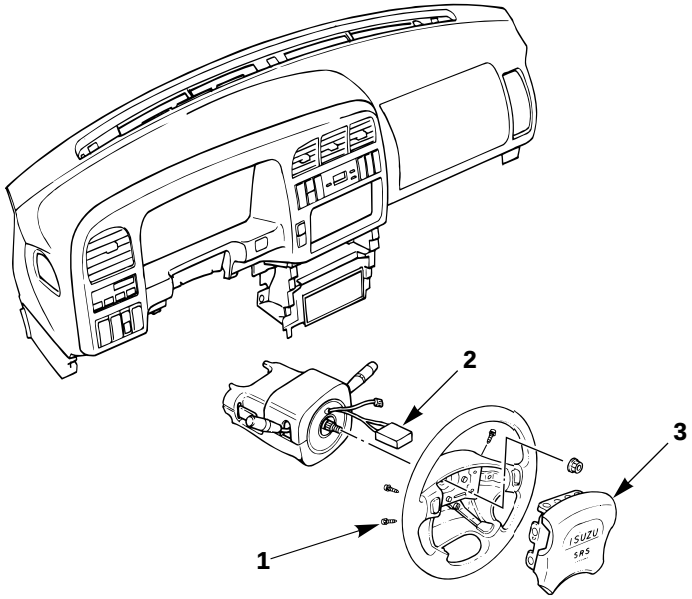

827RS049

Removal Steps

1. Fixing bolt
2. Module connector
3. Inflator module

Installation Steps

3. Inflator module
2. Module connector
1. Fixing bolt

REMOVAL

Preparation:

1) Turn the steering wheel so that the vehicle's wheels are pointing straight ahead.
2) Turn the ignition switch to "LOCK".
3) Disconnect the battery ground cable, and wait at least 5 minutes.
4) Disconnect the yellow 2way SRS connector located under the steering column.

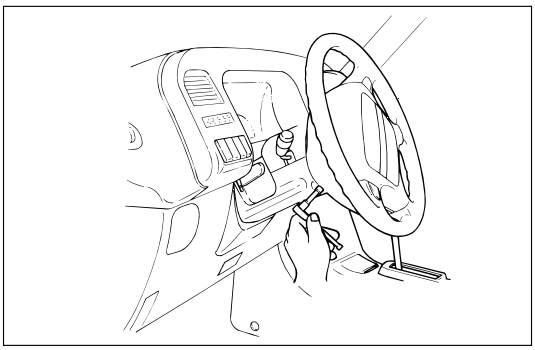

827RS014

1. Fixing Bolt

Loosen the inflator module fixing bolt from behind the steering wheel assembly using a TORX, driver or equivalent until the inflator module can be released from steering assembly.

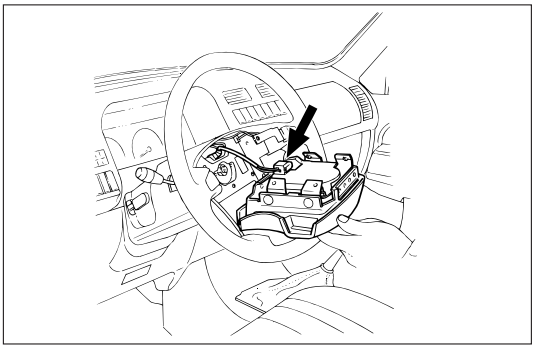

827RS015

2. **Module Connector**

   Disconnect the yellow 2way SRS connector located behind the inflator module.

3. **Inflator Module**

INSPECTION AND REPAIR

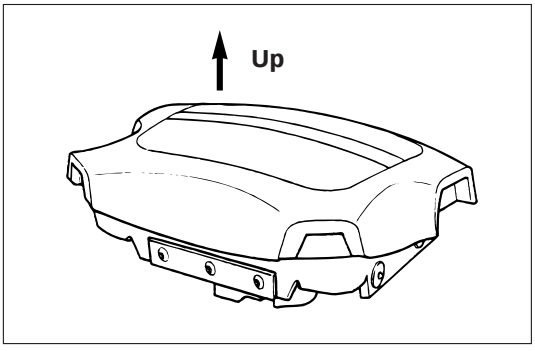

827RS016

WARNING
THE INFLATOR MODULE SHOULD ALWAYS BE CARRIED WITH THE URETHANE COVER AWAY FROM YOUR BODY AND SHOULD ALWAYS BE LAID ON A FLAT SURFACE WITH THE URETHANE SIDE UP. THIS IS NECESSARY BECAUSE A FREE SPACE IS PROVIDED TO ALLOW THE AIR CUSHION TO EXPAND IN THE UNLIKELY EVENT OF ACCIDENTAL DEPLOYMENT. OTHERWISE, PERSONAL INJURY MAY BE RESULT.

The Inflator module consists of a cover, air bag, inflator, and retainer. Inspect the Inflator module mainly for the following:

1) Check for holes, cracks, severe blemishes and deformation on the cover.
2) Check that the retainer is not deformed.
3) Check for defects such as damage and breakage in the lead wire of the squib.

If an abnormality is found as the result of the inspection, replace the Inflator module with a new one.

INSTALLATION

3. **Inflator Module**

CAUTION:
- **Never use the air bag assembly from another vehicle. Use only the air bag assembly for "UBS".**
- **When replace the inflator module, use only same parts number assembly. If different parts number assembly is installed, the air bag system can not function correctly because it has different characteristic.**

2. **Module Connector**

   Support the module and carefully connect the module connector.

   NOTE:
   Pass the lead wire through the tabs on the plastic cover (wire protector) of inflator to prevent lead wire from being pinched.

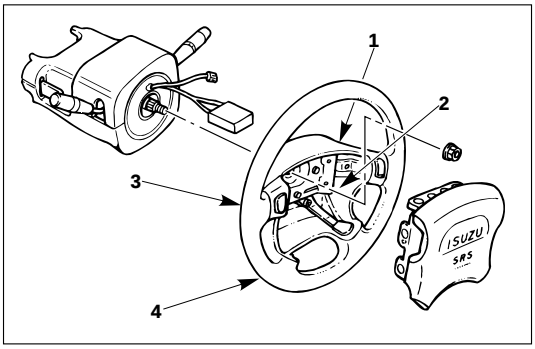

827RS017

1. Fixing Bolt

1) Secure the module with one bolt to relieve weight on the connector wire.
2) Tighten bolts to specified sequence as figure.

N·m (kg·m/lb·in)
8 (0.8 / 69)

3) Connect the yellow 2way SRS connector located under the steering column.
4) Connect the battery ground cable.
5) Set ignition to "ON" while watching warning light. Light should flash 7 times and then go off. If lamp does not operate correctly, refer to Section 9J.

STEERING WHEEL REPLACEMENT

CAUTION:
Once the steering column is removed from the vehicle, the column is extremely suspectible to damage. Dropping the column assembly on its end could collapse the steering shaft or loosen the slide block which maintains column rigidity. Leaning on the column assembly could cause the jacket to bend or deform. Any of the above damage could impair the column's collapsible design. If it is necessary to remove the steering wheel, use only the specified steering wheel puller. Under no conditions should the end of the shaft be hammered upon, as hammering could loosen slide block which maintains column rigidity.

These steps are based on the LHD model.

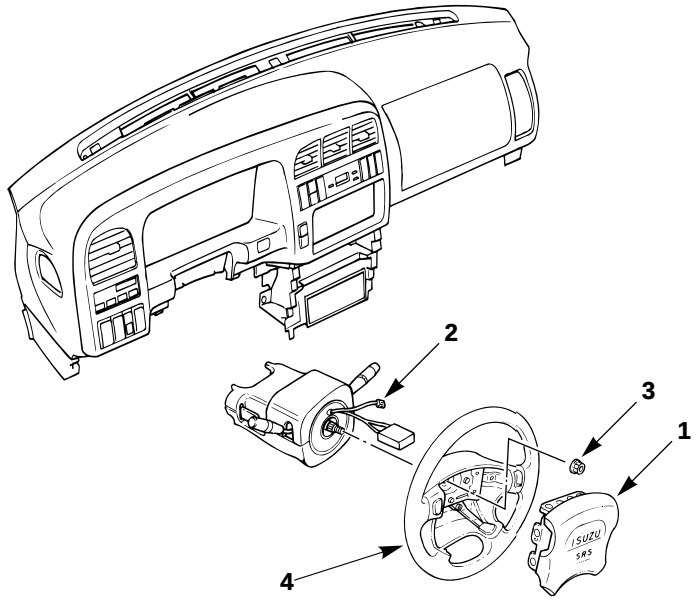

430RS016

Removal Steps

1. Inflator module
2. Horn lead
3. Steering wheel fixing nut
4. Steering wheel

Installation Steps

4. Steering wheel
3. Steering wheel fixing nut
2. Horn lead
1. Inflator module

REMOVAL

Preparation:

1) Turn the steering wheel so that the vehicle's wheels are pointing straight ahead.
2) Turn the ignition switch to "LOCK".
3) Disconnect the battery ground cable, and wait at least 5 minutes.
4) Disconnect the yellow 2way SRS connector located under the steering column.

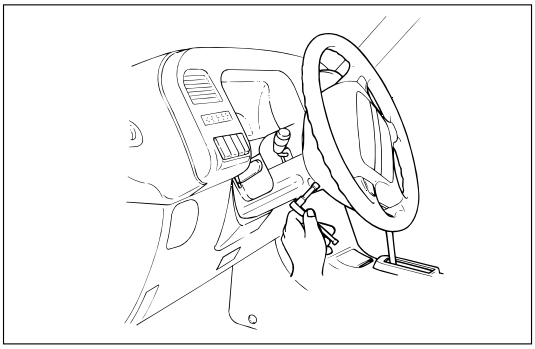

827RS014

1. **Inflator Module**
   1) Loosen the inflator module fixing bolt from behind the steering wheel assembly using a TORX® driver or equivalent until the inflator module can be released from steering assembly.
   2) Disconnect the yellow 2way SRS connector located behind the inflator module.

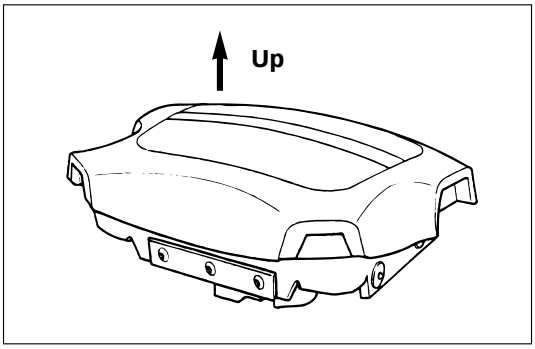

827RS016

WARNING
THE INFLATOR MODULE SHOULD ALWAYS BE CARRIED WITH THE URETHANE COVER AWAY FROM YOUR BODY AND SHOULD ALWAYS BE LAID ON A FLAT SURFACE WITH THE URETHANE SIDE UP. THIS IS NECESSARY BECAUSE A FREE SPACE IS PROVIDED TO ALLOW THE AIR CUSHION TO EXPAND IN THE UNLIKELY EVENT OF ACCIDENTAL DEPLOYMENT. OTHERWISE, PERSONAL INJURY MAY RESULT.

2. **Horn Lead**
3. **Steering Wheel Fixing Nut**
4. **Steering Wheel**
   1) Apply a setting mark across the steering wheel and shaft so parts can be reassembled in their original position.

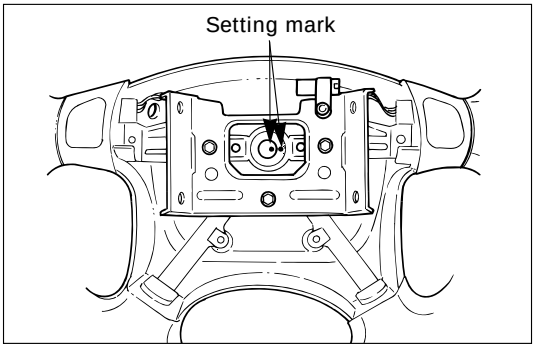

430RS004

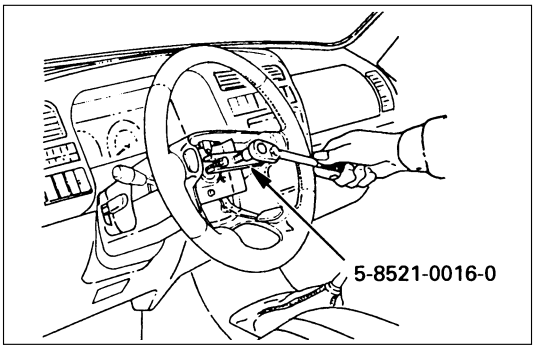

2) Move the front wheels to the straight ahead position and use special tool.

Steering wheel remover: 5-8840-0016-0 (J-29752)

NOTE:
Never apply force to the steering wheel in direction of the shaft by using a hammer or other impact tools in an attempt to remove the steering wheel. The steering shaft is designed as an energy absorbing unit.

INSTALLATION

4. Steering Wheel

Align the setting marks made when removing.

CAUTION:
Never apply force to the setting wheel in direction of the shaft by using a hammer or other impact tools in an attempt to install the steering wheel. The setting shaft is designed as an energy absorbing unit.

3. Steering Wheel Fixing Nut

Steering Wheel Nut Torque	N·m (kg·m/lb·ft)
34 (3.5 / 25)	

2. Horn Lead

1. Inflator Module

1) Support the module and carefully connect the module connector.

CAUTION:
- **Never use the air bag assembly from another vehicle. Use only the air bag assembly for "UBS".**
- **When replace the inflator module, use only same parts number assembly. If different parts number assembly is installed, the air bag system can not function correctly because it has different characteristic.**

NOTE:
Pass the lead wire through the tabs on the plastic cover (wire protector) of inflator to prevent lead wire from being pinches.

2) Secure the module with one bolt to relieve weight on the connector wire.
3) Tighten bolts to specified sequence as figure.

Inflator module Bolt Torque	N·m (kg·m/lb·in)
8 (0.8 / 69)	

4) Connect the yellow 2way SRS connector located under the steering column.
5) Connect the battery ground cable.
6) Set ignition to "ON" while watching warning light. Light should flash 7 times and then go off. If lamp does not operate correctly, refer to Section 9J.

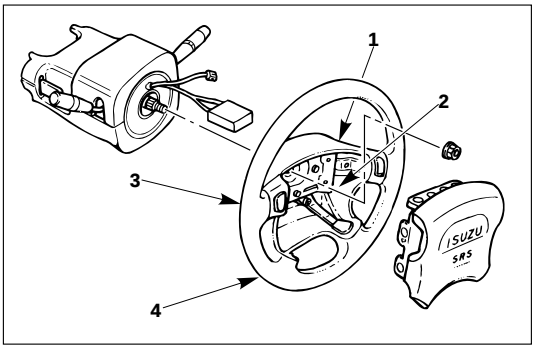

827RS017

COMBINATION SWITCH REPLACEMENT

These steps are based on the LHD model.

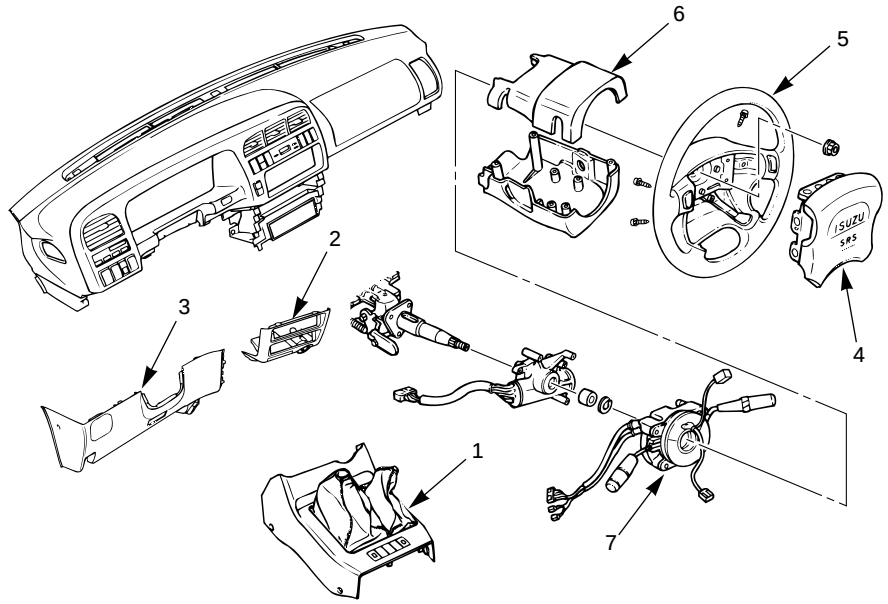

431RT001

Removal Steps

1. Front console assembly
2. Lower cluster assembly
3. Steering lower cover
4. Inflator module
5. Steering wheel
6. Steering column cover
7. Combination switch and SRS coil assembly

Installation Steps

7. Combination switch and SRS coil assembly
6. Steering column cover
5. Steering wheel
4. Inflator module
3. Steering lower cover
2. Lower cluster assembly
1. Front console assembly

REMOVAL

Preparation:

1) Turn the steering wheel so that the vehicle's wheels are pointing straight ahead.
2) Turn the ignition switch to "LOCK".
3) Disconnect the battery ground cable, and wait at least 5 minutes.
4) Disconnect the yellow 2way SRS connector located under the steering column.

CAUTION:
The wheels of the vehicle must be straight ahead and the steering column in the "LOCK" position before disconnecting the steering wheel. Failure to do so will cause the coil assembly to become uncentered which will cause damage to the coil assembly.

1. **Front Console Assembly**
   1) Remove the transmission (for M/T) and transfer control lever knob.
   2) Disconnect the wiring harness connectors.
2. **Lower Cluster Assembly**
3. **Steering Lower Cover**

   Remove the engine hood opening lever.
4. **Inflator Module**
   1) Loosen the inflator module fixing bolt from behind the steering wheel assembly using a TORX® driver or equivalent until the inflator module can be released from steering assembly.

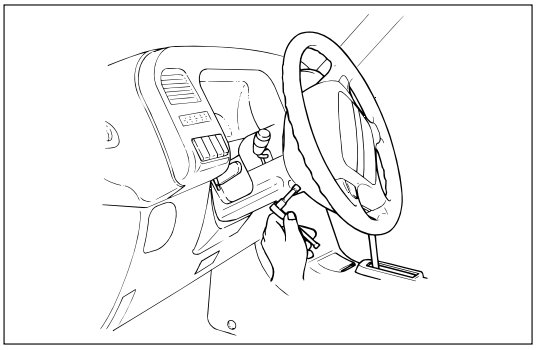

827RS014

   2) Disconnect the yellow 2way SRS connector located behind the inflator module.

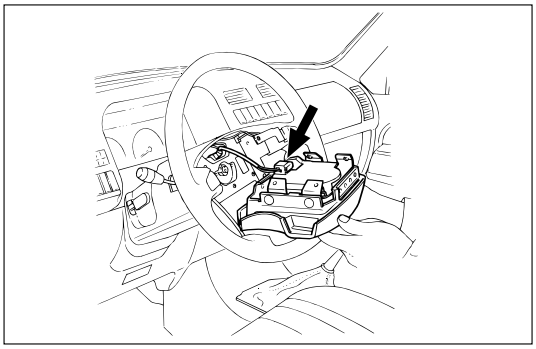

827RS015

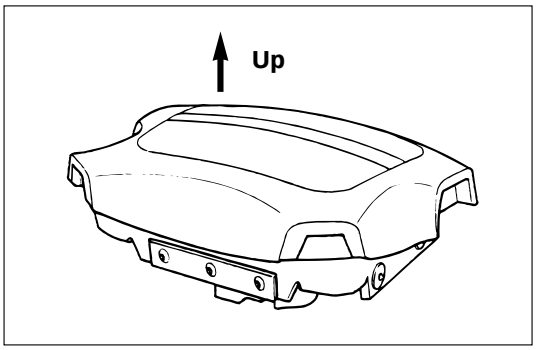

827RS016

WARNING
THE INFLATOR MODULE SHOULD ALWAYS BE CARRIED WITH THE URETHANE COVER AWAY FROM YOUR BODY AND SHOULD ALWAYS BE LAID ON A FLAT SURFACE WITH THE URETHANE SIDE UP. THIS IS NECESSARY BECAUSE A FREE SPACE IS PROVIDED TO ALLOW THE AIR CUSHION TO EXPAND IN THE UNLIKELY EVENT OF A ACCIDENTAL DEPLOYMENT. OTHERWISE, PERSONAL INJURY MAY RESULT.

5. **Steering Wheel**

   Apply a setting mark across the steering wheel and shaft so parts can be reassembled in their original position.

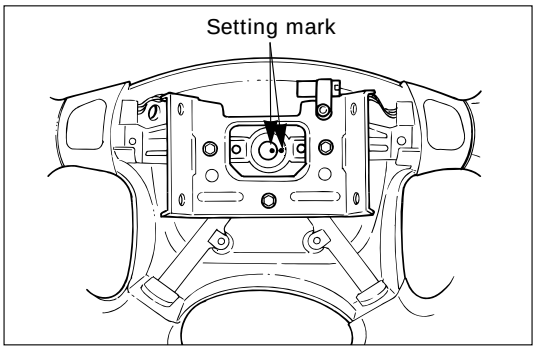

430RS004

Use special tool. Remove the steering wheel. Move the tires to the straight ahead position before removing the steering wheel.

Steering wheel remover: 5-8840-0016-0 (J-29752)

CAUTION:
Never apply force to the steering wheel in direction of the shaft by using a hammer or other impact tools in an attempt to remove the steering wheel. The steering shaft is designed as an energy absorbing unit.

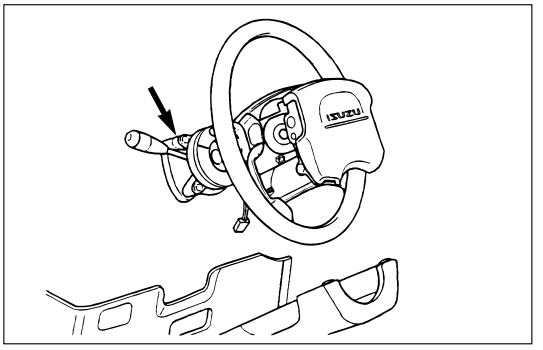

825RS046

6. **Steering Column Cover**
7. **Combination Switch and SRS Coil Assembly**
   1) Disconnect the wiring harness connectors located under the steering column.
   2) Remove the combination switch assembly with SRS coil.

NOTE:
The SRS coil is a part of the combination switch assembly, which can not be replaced separately. Therefore, be sure not to remove the SRS coil from the combination switch assembly.

INSTALLATION

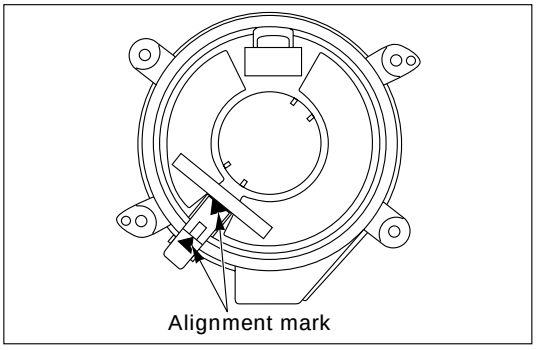

826RW027

7. **Combination Switch and SRS Coil Assembly**
   1) After installation of combination switch assembly, connect the combination switch wiring harness connector and the SRS 2way connector located under the steering column.
   2) Turn the SRS coil counterclockwise to full, return about 3 turns and align the neutral mark.

CAUTION:
When turning the SRS coil counterclockwise to full, stop turning if resistance is felt. Forced further turning may damage to the cable in the SRS coil.

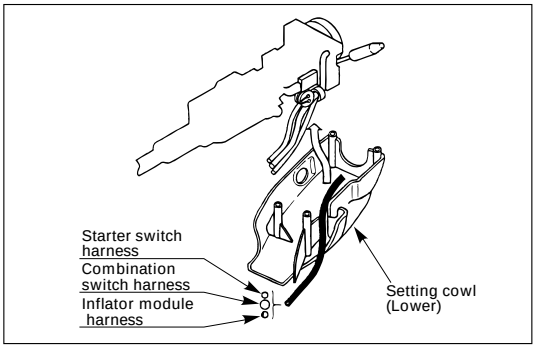

825RS048

6. **Steering Column Cover**

   When installing the steering column cover, be sure to route each wire harness as illustrated so that the harnesses do not catch on any moving parts.

5. Steering Wheel

Align the setting marks made when removing.

CAUTION:
Never apply force to the steering wheel in direction of the shaft by using a hammer or other impact tools in an attempt to remove the steering wheel. The steering shaft is designed as an energy absorbing unit.

Tighten the steering wheel fixing nut to the specified torque.

Steering Wheel Nut Torque	N·m (kg·m/lb·ft)
34 (3.5 / 25)	

4. Inflator Module

1) Support the module and carefully connect the module connector.

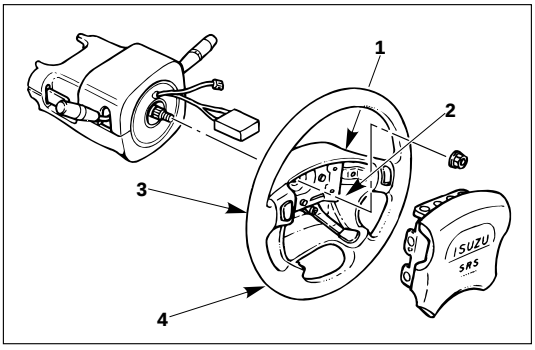

827RS017

CAUTION:
- **Never use the air bag assembly from another vehicle. Use only the air bag assembly for "UBS".**
- **When replace the inflator module, use only same parts number assembly. If different parts number assembly is installed, the air bag system can not function correctly because it has different characteristic.**

NOTE:
Pass the lead wire through the tabs on the plastic cover (wire protector) of inflator to prevent lead wire from being pinched.

2) Secure the module with one bolt to relieve weight on the connector wire.
3) Tighten bolts to specified sequence as figure.

Inflator Module Bolt Torque	N·m (kg·m/lb·in)
8 (0.8 / 69)	

3. Steering Lower Cover

Install the engine hood opening lever.

2. Lower Cluster Assembly

1. Front Console Assembly

1) Install the transmission (for M/T) and transfer control lever knob.
2) Install the wiring harness connectors.

Connect the battery ground cable.

Turn the ignition to "ON" while watching warning light.

Light should flash 7 times and then go off. If lamp does not operate correctly, refer to Section 9J.

LOCK CYLINDER REPLACEMENT

These steps are based on the LHD model.

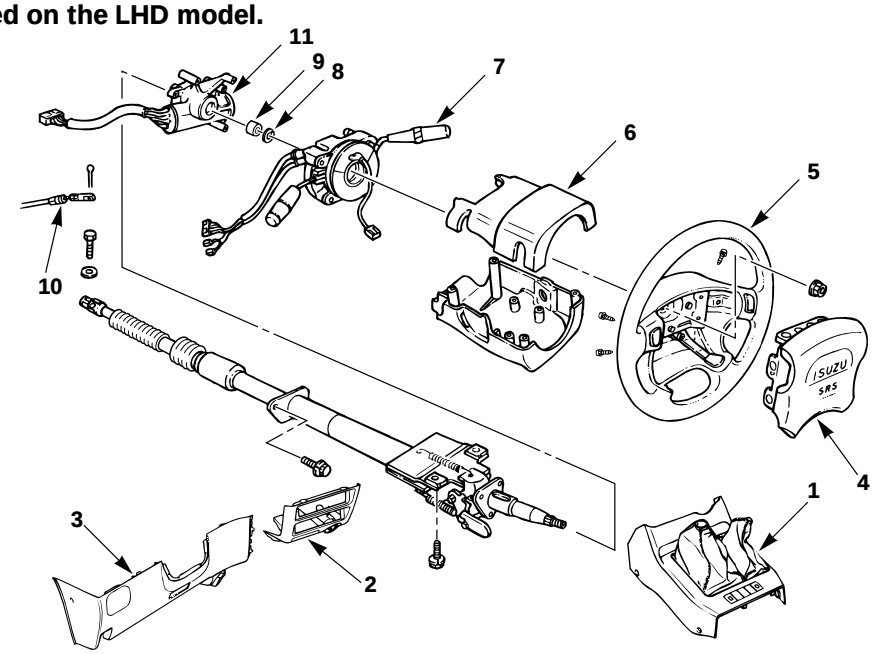

431RT003

Removal Steps

1. Front console assembly
2. Lower cluster assembly
3. Steering lower cover
4. Inflator module
5. Steering wheel
6. Steering column cover
7. Combination switch and SRS coil assembly
8. Snap ring
9. Cushion rubber
10. Shift lock cable (for A/T)
11. Lock cylinder assembly

Installation Steps

11. Lock cylinder assembly
10. Shift lock cable (for A/T)
9. Cushion rubber
8. Snap ring
7. Combination switch and SRS coil assembly
6. Steering column cover
5. Steering wheel
4. Inflator module
3. Steering lower cover
2. Lower cluster assembly
1. Front console assembly

REMOVAL

Preparation:

1) Turn the steering wheel so that the vehicle's wheels are pointing straight ahead.
2) Turn the ignition switch to "LOCK".
3) Disconnect the battery ground cable, and wait at least 5 minutes.
4) Disconnect the yellow 2way SRS connector located under the steering column.

CAUTION:
The wheels of the vehicle must be straight ahead and the steering column in the "LOCK" position before disconnecting the steering wheel. Failure to do so will cause the coil assembly to become uncentered which will cause damage to the coil assembly.

1. **Front Console Assembly**
   1) Remove the transmission (for M/T) and transfer control lever knob.
   2) Disconnect the wiring harness connectors.
2. **Lower Cluster Assembly**
3. **Steering Lower Cover**

   Remove the engine hood opening lever.
4. **Inflator Module**
   1) Loosen the inflator module fixing bolt from behind the steering wheel assembly using a TORX® driver or equivalent until the inflator module can be released from steering assembly.

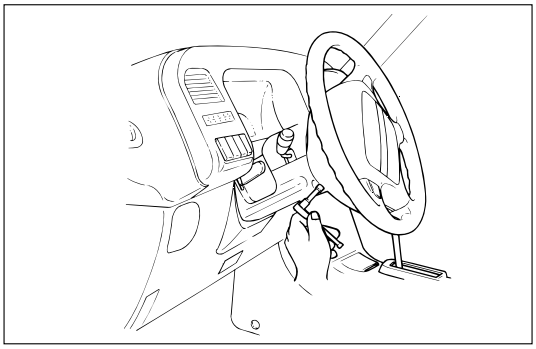

827RS014

   2) Disconnect the yellow 2way SRS connector located behind the inflator module.

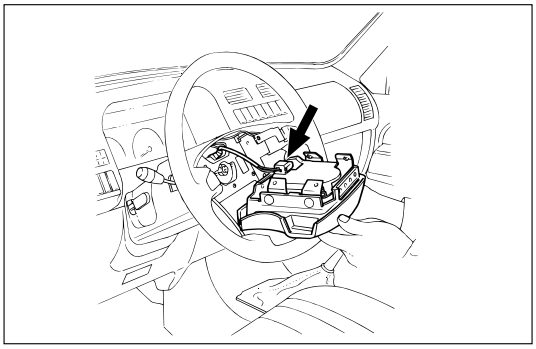

827RS015

WARNING
THE INFLATOR MODULE SHOULD ALWAYS BE CARRIED WITH THE URETHANE COVER AWAY FROM YOUR BODY AND SHOULD ALWAYS BE LAID ON A FLAT SURFACE WITH THE URETHANE SIDE UP. THIS IS NECESSARY BECAUSE A FREE SPACE IS PROVIDED TO ALLOW THE AIR CUSHION TO EXPAND IN THE UNLIKELY EVENT OF A ACCIDENTAL DEPLOYMENT. OTHERWISE, PERSONAL INJURY MAY RESULT.

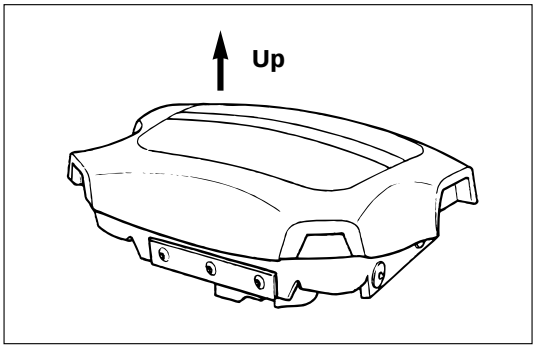

827RS016

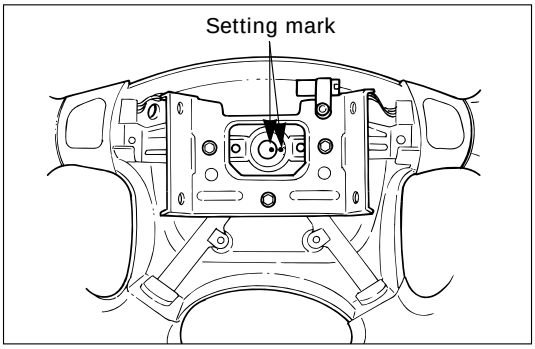

430RS004

5. Steering Wheel

Apply a setting mark across the steering wheel and shaft so parts can be reassembled in their original position.

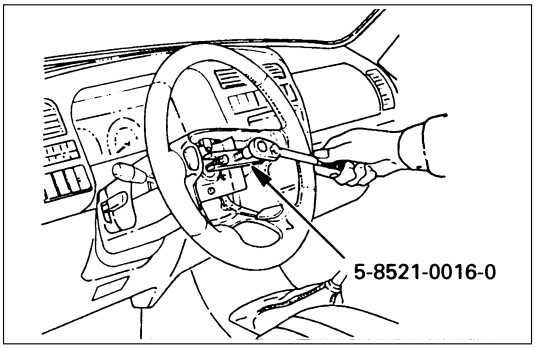

Use special tool. Remove the steering wheel. Move the tires to the straight ahead position before removing the steering wheel.

Steering wheel remover: 5-8840-0016-0 (J-29752)

CAUTION:
Never apply force to the steering wheel in direction of the shaft by using a hammer or other impact tools in an attempt to remove the steering wheel. The steering shaft is designed as an energy absorbing unit.

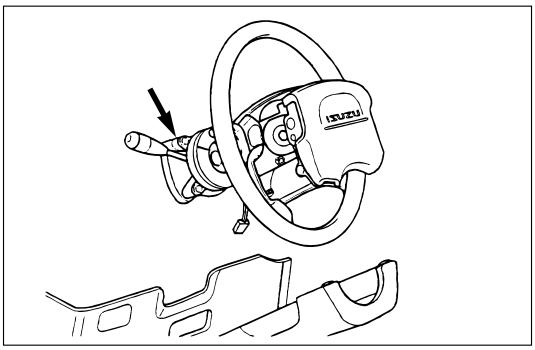

825RS046

6. Steering Column Cover

7. Combination Switch and SRS Coil Assembly

1) Disconnect the wiring harness connectors located under the steering column.
2) Remove the combination switch assembly with SRS coil.

NOTE:
The SRS coil is a part of the combination switch assembly, which can not be replaced separately. Therefore, be sure not to remove the SRS coil from the combination switch assembly.

8. Snap Ring

9. Cushion Rubber

10. Shift Lock Cable (for A/T)

11. Lock Cylinder Assembly

Disconnect the starter switch harness connector located under the steering column.

INSTALLATION

11. **Lock Cylinder Assembly**
10. **Shift Lock Cable (for A/T)**
9. **Cushion rubber**
8. **Snap ring**
7. **Combination Switch and SRS Coil Assembly**
   1) After installation of combination switch assembly, connect the combination switch wiring harness connector and the SRS 2way connector located under the steering column.
   2) Turn the SRS coil counterclockwise to full, return about 3 turns and align the neutral mark.

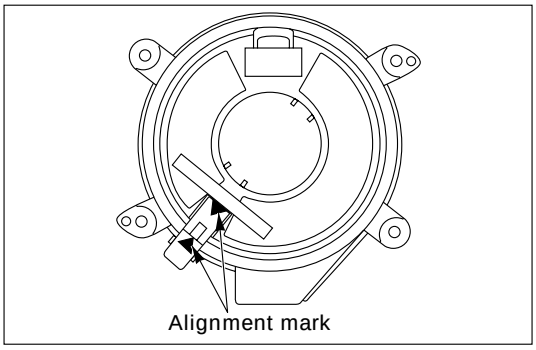

826RW027

CAUTION:
When turning the SRS coil counterclockwise to full, stop turning if resistance is felt. Forced further turning may damage to the cable in the SRS coil.

6. **Steering Column Cover**

   When installing the steering column cover, be sure to route each wire harness as illustrated so that the harnesses do not catch on any moving parts.

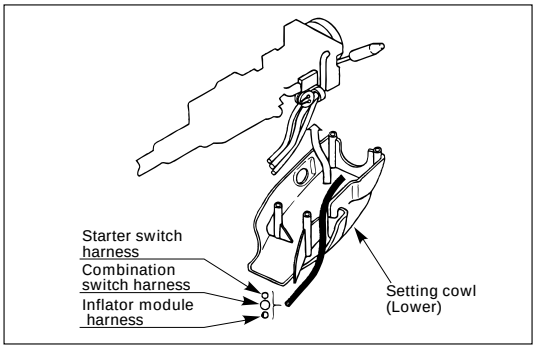

825RS048

5. **Steering Wheel**

   Align the setting marks made when removing.

CAUTION:
Never apply force to the setting wheel in direction of the shaft by using a hammer or other impact tools in an attempt to remove the steering wheel. The steering shaft is designed as an energy absorbing unit.

Tighten the steering wheel fixing nut to the specified torque.

Steering Wheel Nut Torque	N·m (kg·m/lb·ft)
34 (3.5 / 25)	

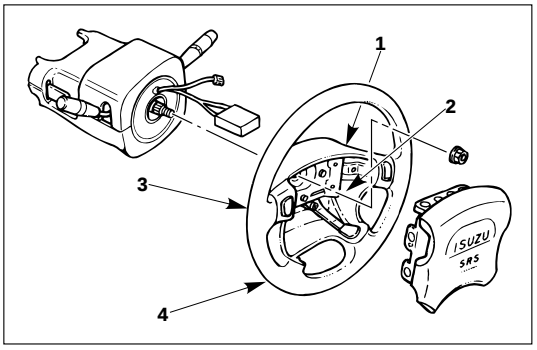

827RS017

4. **Inflator Module**
   1) Support the module and carefully connect the module connector.

CAUTION:
- **Never use the air bag assembly from another vehicle. Use only the air bag assembly for "UBS".**
- **When replace the inflator module, use only same parts number assembly. If different parts number assembly is installed, the air bag system can not function correctly because it has different characteristic.**

NOTE:
Pass the lead wire through the tabs on the plastic cover (wire protector) of inflator to prevent lead wire from being pinched.

   2) Secure the module with one bolt to relieve weight on the connector wire.
   3) Tighten bolts to specified sequence as figure.

Inflator Module Bolt Torque	N·m (kg·m/lb·in)
8 (0.8 / 69)	

3. **Steering Lower Cover**
   Install the engine hood opening lever.
2. **Lower Cluster Assembly**
1. **Front Console Assembly**
   Connect the wiring harness connectors.
   Install the transmission (for M/T) and transfer control lever knob.
   Connect the yellow 2way SRS connector located under the steering column.
   Connect the battery ground cable.

SYSTEM INSPECTION

- Turn the ignition to "ON" while watching warning light.
- Light should flash 7 times and then go off. If lamp does not operate correctly, refer to Section 9J.

STEERING COLUMN REPLACEMENT

These steps are based on the LHD model.

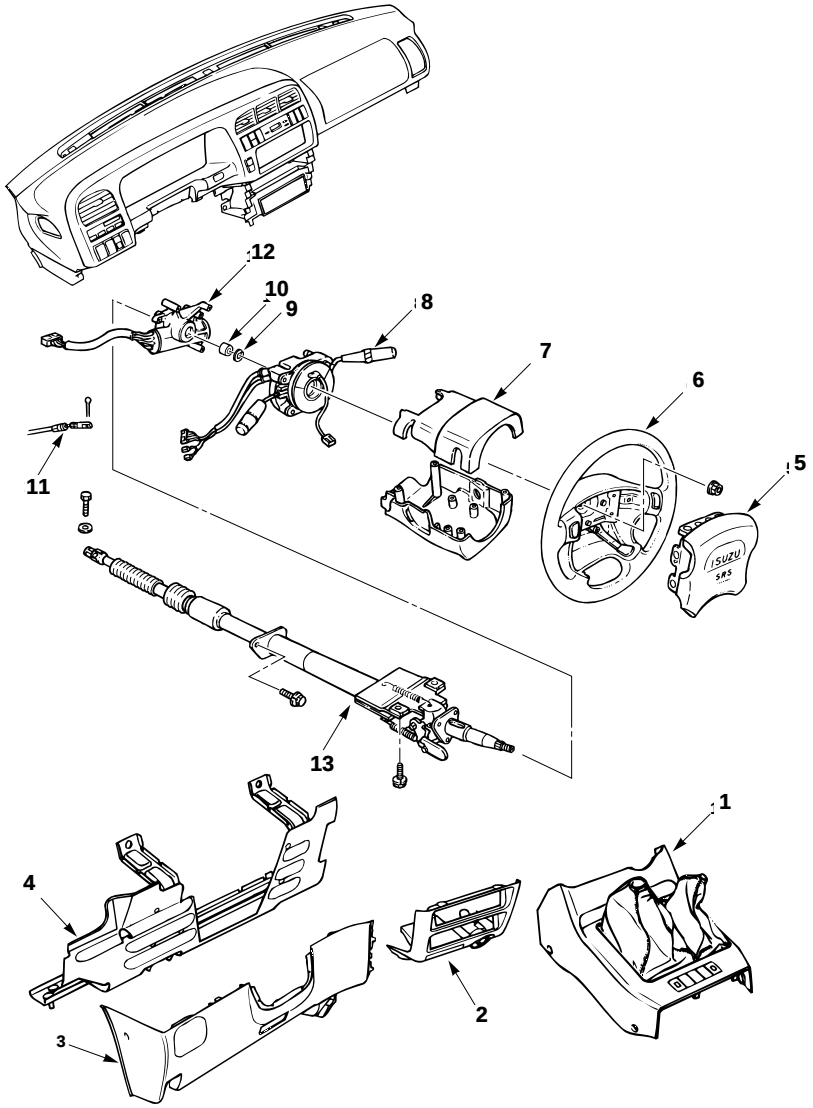

431RT002

Removal Steps

1. Front console assembly
2. Lower cluster assembly
3. Steering lower cover
4. Driver knee bolster (reinforcement)
5. Inflator module
6. Steering wheel
7. Steering column cover
8. Combination switch and SRS coil assembly
9. Snap ring
10. Cushion rubber
11. Shift lock cable (for A/T)
12. Lock cylinder assembly
13. Steering column assembly

Installation Steps

13. Steering column assembly
12. Lock cylinder assembly
11. Shift lock cable (for A/T)
10. Cushion rubber
9. Snap ring
8. Combination switch and SRS coil assembly
7. Steering column cover
6. Steering wheel
5. Inflator module
4. Driver knee bolster (reinforcement)
3. Steering lower cover
2. Lower cluster assembly
1. Front console assembly

REMOVAL

Preparation:

1) Turn the steering wheel so that the vehicle's wheels are pointing straight ahead.
2) Turn the ignition switch to "LOCK".
3) Disconnect the battery ground cable, and wait at least 5 minutes.
4) Disconnect the yellow 2way SRS connector located under the steering column.

CAUTION:
The wheels of the vehicle must be straight ahead and the steering column in the "LOCK" position before disconnecting the steering wheel.
Failure to do so will cause the SRS coil assembly to become uncentered which will cause damage to the SRS coil assembly.

1. **Front Console Assembly**

   Disconnect the transmission (for M/T) and transfer control lever knob.

   Disconnect the wiring harness connectors.
2. **Lower Cluster Assembly**
3. **Steering Lower Cover**

   Remove the engine hood opening lever.
4. **Driver Knee Bolster (Reinforcement)**
5. **Inflator Module**
   1) Loosen the inflator module fixing bolt from behind the steering wheel assembly using a TORX® driver or equivalent until the inflator module can be released from steering assembly.

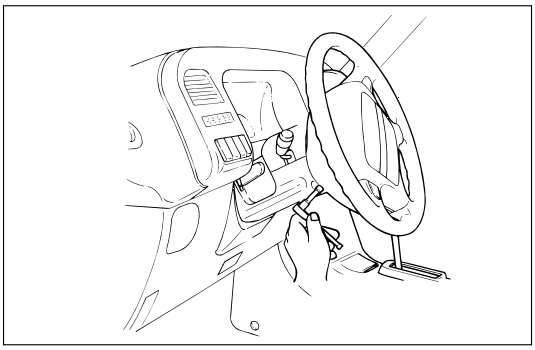

827RS014

   2) Disconnect the yellow 2way SRS connector located behind the inflator module.

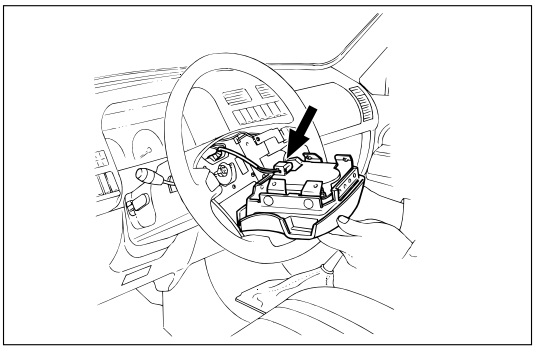

827RS015

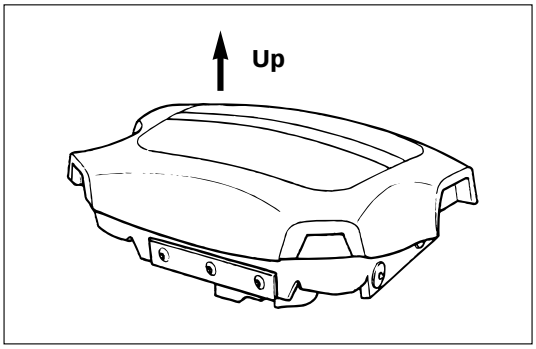

827RS016

WARNING
THE INFLATOR MODULE SHOULD ALWAYS BE CARRIED WITH THE URETHANE COVER AWAY FROM YOUR BODY AND SHOULD ALWAYS BE LAID ON A FLAT SURFACE WITH THE URETHANE SIDE UP. THIS IS NECESSARY BECAUSE A FREE SPACE IS PROVIDED TO ALLOW THE AIR CUSHION TO EXPAND IN THE UNLIKELY EVENT OF A ACCIDENTAL DEPLOYMENT. OTHERWISE, PERSONAL INJURY MAY RESULT.

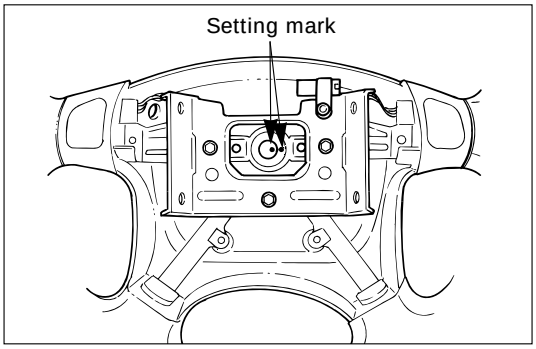

430RS004

6. **Steering Wheel**

   Apply a setting mark across the steering wheel and shaft so parts can be reassembled in their original position.

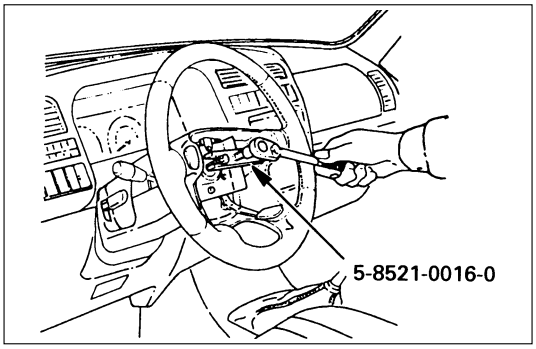

Use special tool. Remove the steering wheel. Move the tires to the straight ahead position before removing the steering wheel.

Steering wheel remover: 5-8840-0016-0 (J-29752)

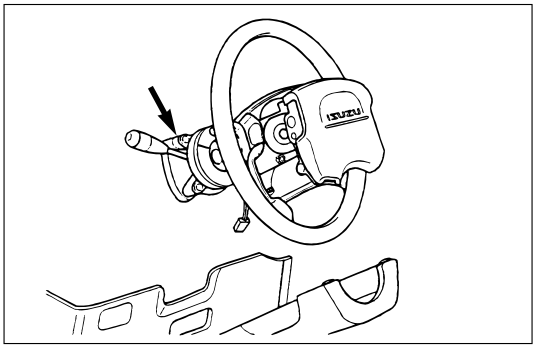

825RS046

7. **Steering Column Cover**
8. **Combination Switch and SRS Coil Assembly**
   1) Disconnect the wiring harness connectors located under the steering column.
   2) Remove the combination switch assembly with SRS coil.

   NOTE:
   The SRS coil is a part of the combination switch assembly, which can not be replaced separately. Therefore, be sure not to remove the SRS coil from the combination switch assembly.

9. **Snap Ring**
10. **Cushion Rubber**
11. **Shift Lock Cable (for A/T)**
12. **Lock Cylinder Assembly**

    Disconnect the starter switch harness connector located under the steering column.

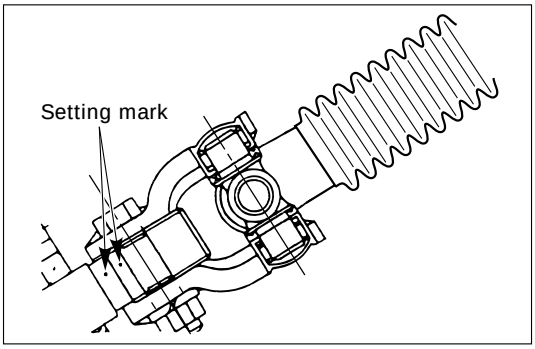

431RV003

13. Steering Column Assembly

Apply a setting mark across the universal joint and steering shaft to reassemble the parts in their original position.

NOTE:
A setting mark can be easily made if the shaft is withdrawn a little by loosening the steering shaft universal joint.

INSTALLATION

13. Steering Column Assembly

Align the setting marks on the universal joint and steering shaft made during removal.

Tighten the steering column fixing bolt (dash panel) to the specified torque.

Steering Column Bolt Torque	N·m (kg·m/lb·ft)
19 (1.9 / 14)	

Tighten the steering column fixing bolt (pedal bracket) to the specified torque.

Steering Column Bolt Torque	N·m (kg·m/lb·ft)
17 (1.7 / 13)	

Tighten the universal joint to the specified torque.

Universal Joint Torque	N·m (kg·m/lb·ft)
25 (2.5 / 18)	

12. Lock Cylinder Assembly

11. Shift Lock Cable (for A/T)

10. Cushion Rubber

9. Snap Ring

8. Combination Switch

1) After installation of combination switch assembly, connect the combination switch wiring harness connector and the SRS 2way connector located under the steering column.
2) Turn the SRS coil counterclockwise to full, return about 3 turns and align the neutral mark.

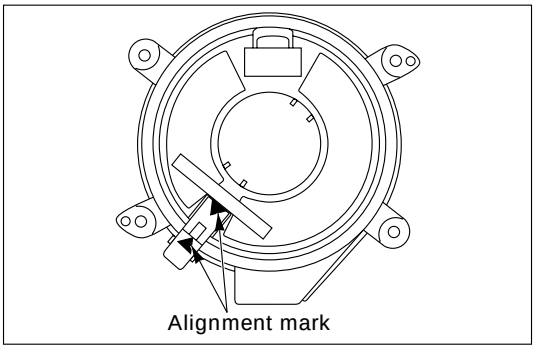

826RW027

CAUTION:
When turning the SRS coil counterclockwise to full, stop turning if resistance is felt. Forced further turning may damage to the cable in the SRS coil.

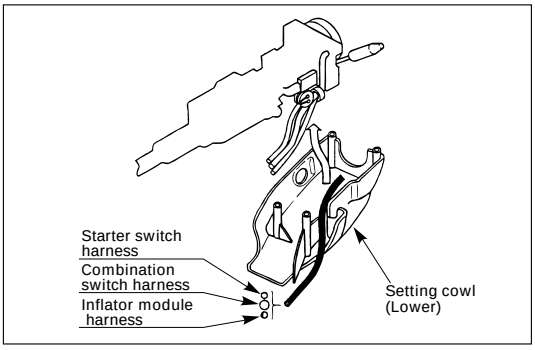

825RS048

7. **Steering Column Cover**

   When installing the steering column cover, be sure to route each wire harness as illustrated so that the harnesses do not catch on any moving parts.

6. **Steering Wheel**

   Align the setting marks made when removing.

CAUTION:
Never apply force to the steering wheel in direction of the shaft by using a hammer or other impact tools in an attempt to remove the steering wheel. The steering shaft if designed as an energy absorbing unit.

Tighten the steering wheel fixing nut to the specified torque.

Steering Wheel Nut Torque	N·m (kg·m/lb·ft)
34 (3.5 / 25)	

5. **Inflator Module**

   1) Support the module and carefully connect the module connector.

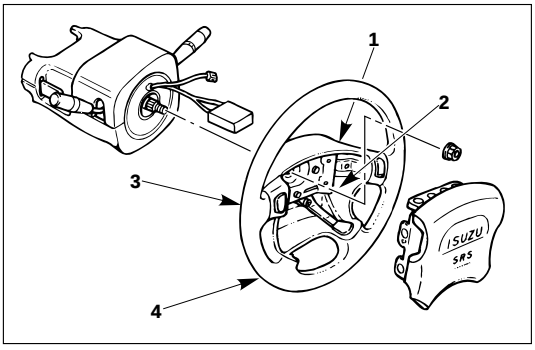

827RS017

CAUTION:
- **Never use the air bag assembly from another vehicle. Use only the air bag assembly for "UBS".**
- **When replace the inflator module, use only same parts number assembly. If different parts number assembly is installed, the air bag system can not function correctly because it has different characteristic.**

NOTE:
Pass the lead wire through the tabs on the plastic cover (wire protector) of inflator to prevent lead wire from being pinched.

   2) Secure the module with one bolt to relieve weight on the connector wire.
   3) Tighten bolts to specified sequence as figure.

Inflator Module Bolt Torque	N·m (kg·m/lb·in)
8 (0.8 / 69)	

4 **Driver Knee Bolster (Reinforcement)**

3. **Steering Lower Cover**

   Install the engine hood opening lever.

2. **Lower Cluster Assembly**

1. **Front Console Assembly**

   Connect the wiring harness connectors.
   Install the transmission (for M/T) and transfer control lever knob.

   Connect the yellow 2way SRS connector located under the steering column.

   Connect the battery ground cable.

SYSTEM INSPECTION

Turn the ignition to "ON" while watching warning light.

Light should flash 7 times and then go off. If lamp does not operate correctly, refer to Section 9J.

SECTION 2A

STEERING COLUMN

CONTENTS

PAGE

General Description ..... 2A – 76
On-Vehicle Service ..... 2A – 77
Steering Wheel Replacement ..... 2A – 77
Combination Switch Replacement ..... 2A – 79
Lock Cylinder Replacement ..... 2A – 81
Steering Column Replacement ..... 2A – 84

GENERAL DESCRIPTION

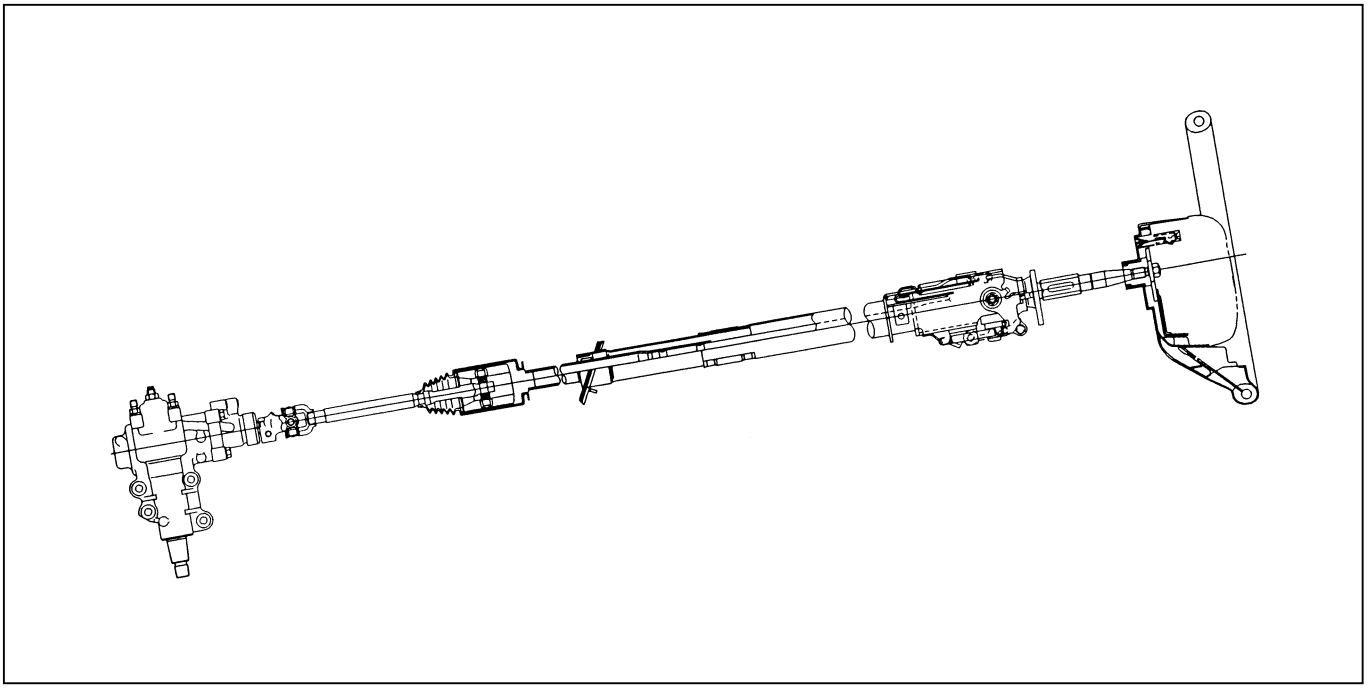

The steering column has three important features in addition to the steering function:

1. The column is energy absorbing, designed to compress in a front-end collision to minimize the possibility of injury to the driver of the vehicle.
2. The ignition switch and lock are mounted conveniently on the column.
3. With the column mounted lock, the ignition and steering operation can be locked to prevent theft of the vehicle.

The column may be disassembled and reassembled. To insure the energy absorbing action, it is important that the specified screws, bolts and nuts be used only as designated and that they are tightened to the specified torque.

When the column is removed from the vehicle, a sharp blow on the end of steering shaft leaning on the column assembly, or dropping the assembly could shear or loosen the fasteners that maintain column rigidity.

ON-VEHICLE SERVICE

STEERING WHEEL REPLACEMENT

These steps are based on the LHD model.

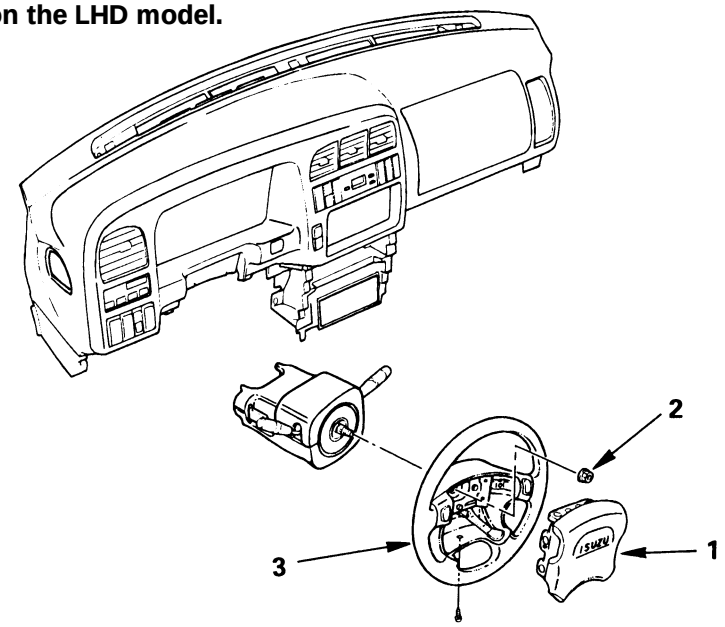

Removal Steps

1. Center pad
2. Nut
3. Steering wheel

Installation Steps

3. Steering wheel
2. Nut
1. Center pad

REMOVAL

1. Center Pad

1) Remove the center pad attaching screw from the steering wheel under side.
2) Disconnect the harness.
3) Remove the center pad from the center of the steering wheel.

2. Nut

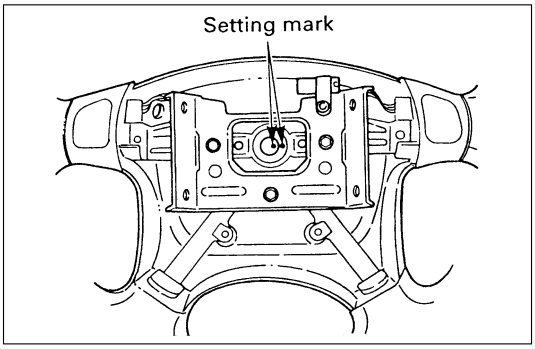

3. Steering Wheel

1) Apply a setting mark across the steering wheel and shaft so parts can be reassembled in their original position.

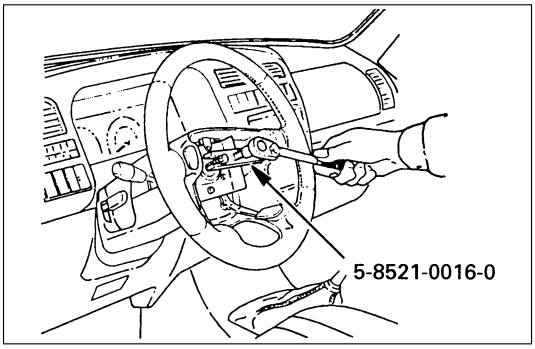

2) Use special tool.

Steering wheel remover:5-8840-0016-0(J-29752)

NOTE:
Never apply force to the steering wheel in direction of the shaft by using a hammer or other impact tools in an attempt to remove the steering wheel. The steering shaft is designed as an energy absorbing unit.

INSTALLATION

3. Steering Wheel

Align the setting marks made when removing.

CAUTION:
Never apply force to the setting wheel in direction of the shaft by using a hammer or other impact tools in an attempt to install the steering wheel. The steering shaft is designed as an energy absorbing unit.

2. Nut

Steering Wheel Nut Torque	N·m (kg·m/lb·ft)
34 (3.5 / 25)	

1. Center pad

Fit four projections of pad in holes on the steering wheel side.
Tighten the screws on the lower side of the pad.

Center Pad Nut Torque	N·m (kg·m/lb·in)
2.5 (0.25 / 21.7)	

COMBINATIONS SWITCH REPLACEMENT

These steps are based on the LHD model.

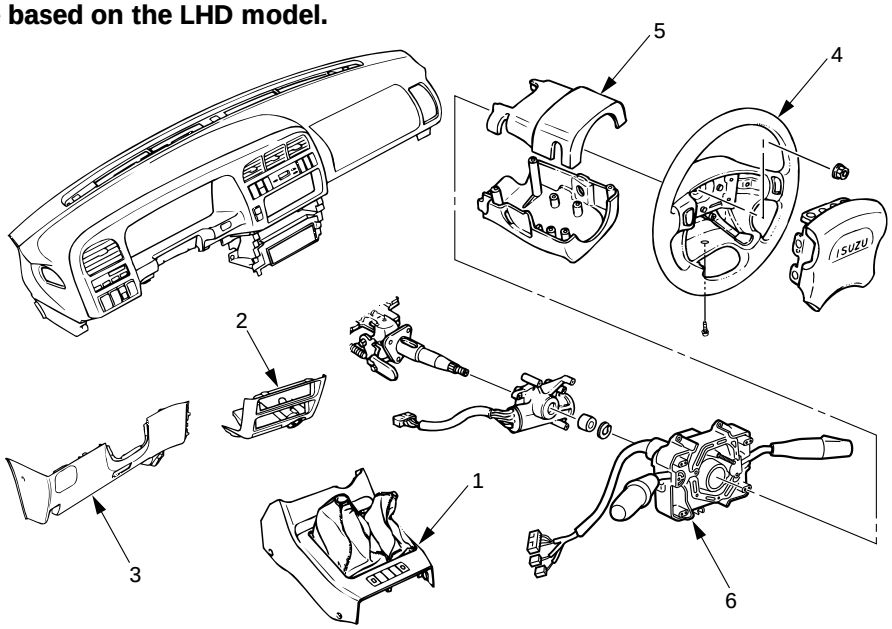

431RW021

Removal Steps

1. Front console assembly
2. Lower cluster assembly
3. Steering lower cover
4. Steering wheel
5. Steering column cover
6. Combination switch

Installation Steps

6. Combination switch
5. Steering column cover
4. Steering wheel
3. Steering lower cover
2. Lower cluster assembly
1. Front console assembly

REMOVAL

1. Front console assembly

1) Remove the transmission (for M/T) and transfer control lever knob.
2) Disconnect the wiring harness connectors.

2. Lower cluster assembly

3. Steering lower cover

Remove the engine hood opening lever.

4. Steering wheel

Apply a setting mark across the steering wheel and shaft so parts can be reassembled in their original position.

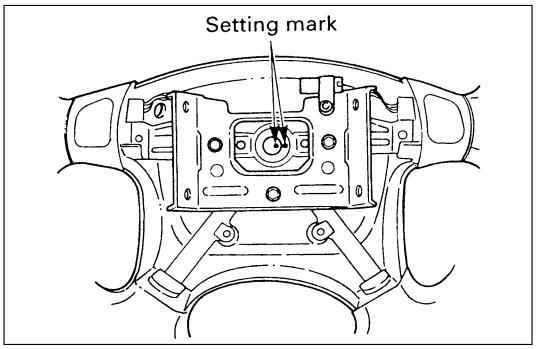

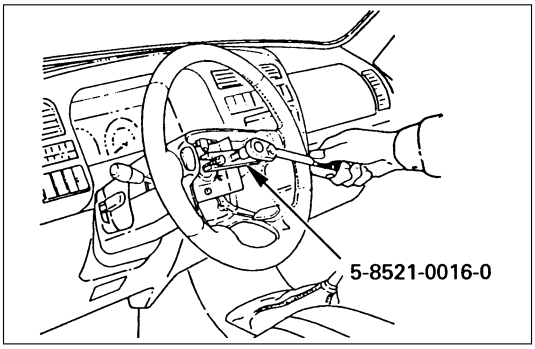

Use special tool. Remove the steering wheel.
Move the tires to the straight ahead positions before removing the steering wheel.

Steering wheel remover:5-8840-0016-0(J-29752)

CAUTION:
Never apply force to the steering wheel in direction of the shaft by using a hammer or other impact tools in an attempt to remove the steering wheel. The steering shaft is designed as an energy absorbing unit.

5. **Steering column cover**
6. **Combination switch**

   Disconnect the wiring harness connector.

INSTALLATION

6. **Combination switch**

   After installations of combinations switch assembly, connect the combination switch wiring harness connector.
5. **Steering column cover**
4. **Steering wheel**

   Align the setting marks made when removing.

CAUTION:
Never apply force to the setting wheel in direction of the shaft by using a hammer or other impact tools in an attempt to remove the steering wheel. The steering shaft is designed as an energy absorbing unit.

Tighten the steering wheel fixing nut to the specified torque.

Steering wheel Nut Torque	N·m (kg·m/lb·ft)
34 (3.5 / 25)	

3. **Steering lower cover**

   Install the engine hood opening lever.
2. **Lower cluster assembly**
1. **Front console assembly**

   Install the transmission (for M/T) and transfer control lever knob.

   Install the wiring harness connectors.

LOCK CYLINDER REPLACEMENT

These steps are based on the LHD model.

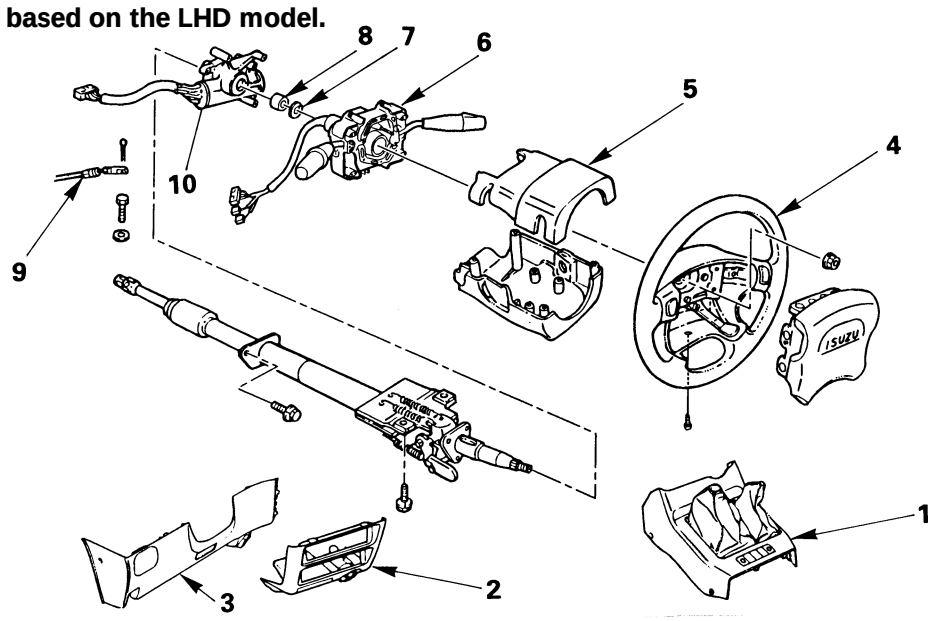

Removal Steps

1. Front console assembly
2. Lower cluster assembly
3. Steering lower cover
4. Steering wheel
5. Steering column cover
6. Combination switch
7. Snap ring
8. Cushion rubber
9. Shift lock cable (for A/T)
10. Lock cylinder assembly

Installation Steps

10. Lock cylinder assembly
9. Shift lock cable (for A/T)
8. Cushion rubber
7. Snap ring
6. Combination switch
5. Steering column cover
4. Steering wheel
3. Steering lower cover
2. Lower cluster assembly
1. Front console assembly

REMOVAL

1. **Front console assembly**
   1) Remove the transmission (for M/T) and transfer control lever knob.
   2) Disconnect the wiring harness connectors.
2. **Lower cluster assembly**
3. **Steering lower cover**

   Remove the engine hood opening lever.

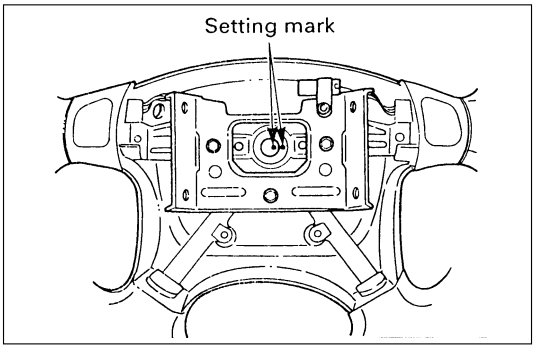

4. **Steering wheel**

   Apply a setting mark across the steering wheel and shaft so parts can be reassembled in their original position.

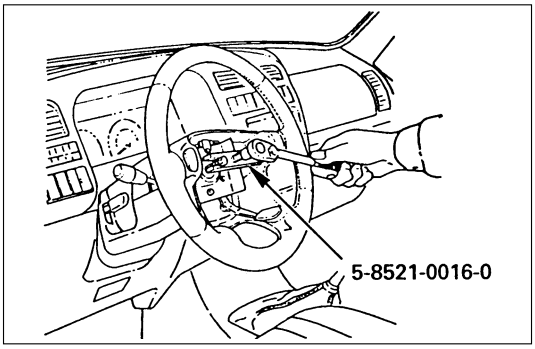

Use special tool. Remove the steering wheel.
Move the tires to the straight ahead positions before removing the steering wheel.

Steering wheel remover:5-8840-0016-0(J-29752)

5. **Steering column cover**
6. **Combination switch**

   Disconnect the wiring harness connectors.
7. **Snap ring**
8. **Cushion rubber**
9. **Shift lock cable (for A/T)**
10. **Lock cylinder assembly**

    Disconnect the starter switch harness connector located under the steering column.

INSTALLATION

10. **Lock cylinder assembly**
9. **Shift lock cable (for A/T)**
8. **Cushion rubber**
7. **Snap ring**
6. **Combination switch**

   After installations of combinations switch assembly, connect the combination switch wiring harness connector.
5. **Steering column cover**
4. **Steering wheel**

   Align the setting marks made when removing.

CAUTION:
Never apply force to the steering wheel in direction of the shaft by using a hammer or other impact tools in an attempt to remove the steering wheel. The steering shaft is designed as an energy absorbing unit.

Tighten the steering wheel fixing nut to the specified torque.

Steering wheel Nut Torque	N·m (kg·m/lb·ft)
34 (3.5 / 25)	

3. **Steering lower cover**

   Install the engine hood opening lever.

2. **Lower cluster assembly**

1. **Front console assembly**

   Connect the wiring harness connectors.

   Install the transmission (for M/T) and transfer control lever knob.

STEERING COLUMN REPLACEMENT

These steps are based on the LHD model.

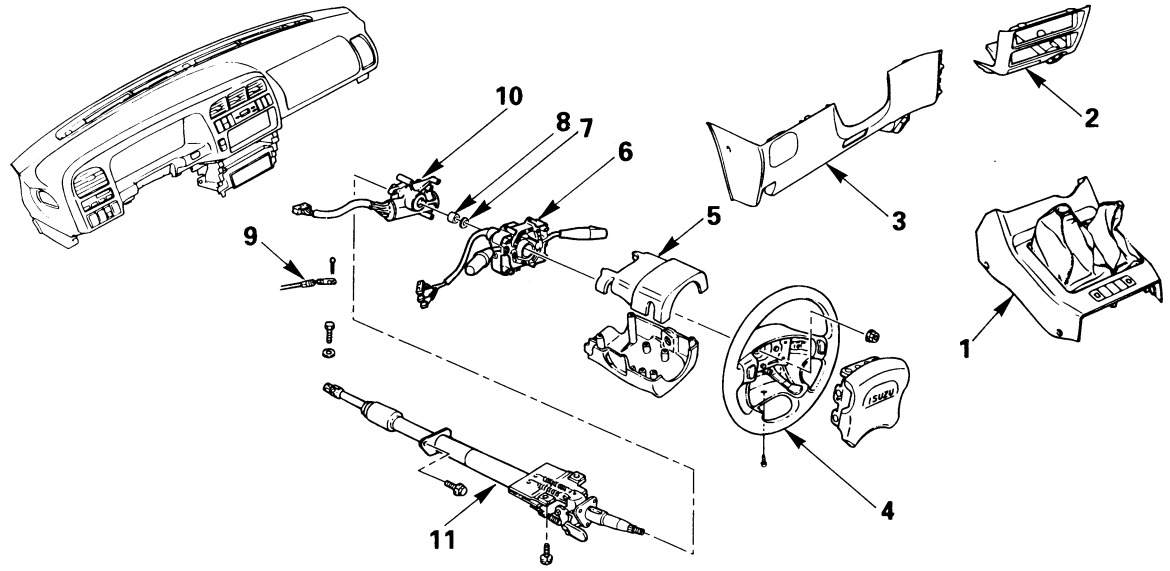

Removal Steps

1. Front console assembly
2. Lower cluster assembly
3. Steering lower cover
4. Steering wheel
5. Steering column cover
6. Combination switch
7. Snap ring
8. Cushion rubber
9. Shift lock cable (for A/T)
10. Lock cylinder assembly
11. Steering column assembly

Installation Steps

11. Steering column assembly
10. Lock cylinder assembly
9. Shift lock cable (for A/T)
8. Cushion rubber
7. Snap ring
6. Combination switch
5. Steering column cover
4. Steering wheel
3. Steering lower cover
2. Lower cluster assembly
1. Front console assembly

REMOVAL

1. **Front console assembly**

   Disconnect the transmission (for M/T) and transfer control lever knob.

   Disconnect the wiring harness connectors.

2. **Lower cluster assembly**

3. **Steering lower cover**

   Remove the engine hood opening lever.

4. **Steering wheel**

   Apply a setting mark across the steering wheel and shaft so parts can be reassembled in their original position.

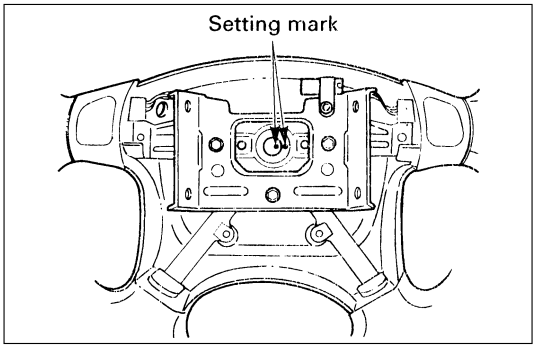

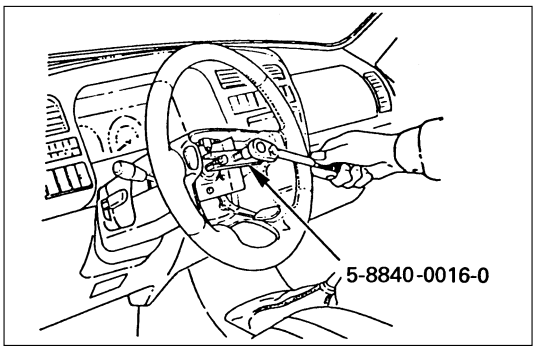

Use special tool. Remove the steering wheel.

Move the tires to the straight ahead positions before removing the steering wheel.

Steering wheel remover:5-8840-0016-0(J-29752)

5. **Steering column cover**
6. **Combination switch**

   Disconnect the wiring harness connectors.

7. **Snap ring**
8. **Cushion rubber**
9. **Shift lock cable (for A/T)**
10. **Lock cylinder assembly**

    Disconnect the starter switch harness connector located under the steering column.

11. **Steering column assembly**

    Apply a setting mark across the universal joint and steering shaft to reassembly the parts in their original position.

    NOTE:
    A setting mark can be easily made if the shaft is withdrawn a little by loosening the steering shaft universal joint.

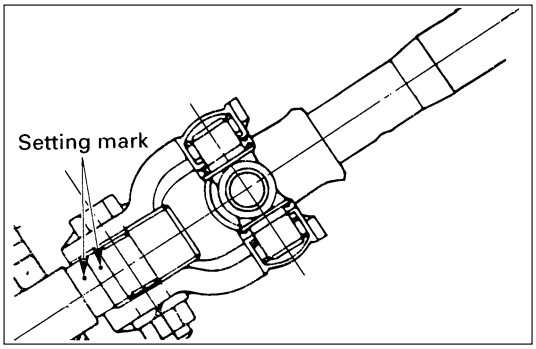

INSTALLATION

11. Steering column assembly

Align the setting marks on the universal joint and steering shaft made during removal.

Tighten the steering column fixing bolt (dash panel) to the specified torque.

Steering Column Bolt Torque	N·m (kg·m/lb·ft)
19 (1.9 / 14)	

Tighten the steering column fixing bolt (pedal bracket) to the specified torque.

Steering Column Bolt Torque	N·m (kg·m/lb·ft)
17 (1.7 / 13)	

Tighten the universal joint to the specified torque.

Universal Joint Torque	N·m (kg·m/lb·ft)
25 (2.5 / 18)	

10. Lock cylinder assembly

9. Shift lock cable (for A/T)

8. Cushion rubber

7. Snap ring

6. Combination switch

After installation of combination switch assembly, connect the combination switch wiring harness connector.

5. Steering column cover

4. Steering wheel

Align the setting marks made when removing.

CAUTION:
Never apply force to the steering wheel in direction of the shaft by using a hammer or other impact tools in an attempt to remove the steering wheel. The steering shaft is designed as an energy absorbing unit.

Tighten the steering wheel fixing nut to the specified torque.

Steering wheel Nut Torque	N·m (kg·m/lb·ft)
34 (3.5 / 25)	

3. Steering lower cover

Install the engine hood opening lever.

2. Lower cluster assembly

1. Front console assembly

Connect the wiring harness connectors.

Install the transmission (for M/T) and transfer control

SECTION 3C
FRONT SUSPENSION

CONTENTS

PAGE
General Description ..... 3C – 2
On-Vehicle Service ..... 3C – 3
Shock Absorber ..... 3C – 3
Stabilizer Bar ..... 3C – 5
Torsion Bar ..... 3C – 7
Knuckle ..... 3C – 10
Upper Control Arm ..... 3C – 14
Lower Control Arm ..... 3C – 18
Upper Ball Joint ..... 3C – 22
Lower Ball Joint ..... 3C – 25

GENERAL DESCRIPTION

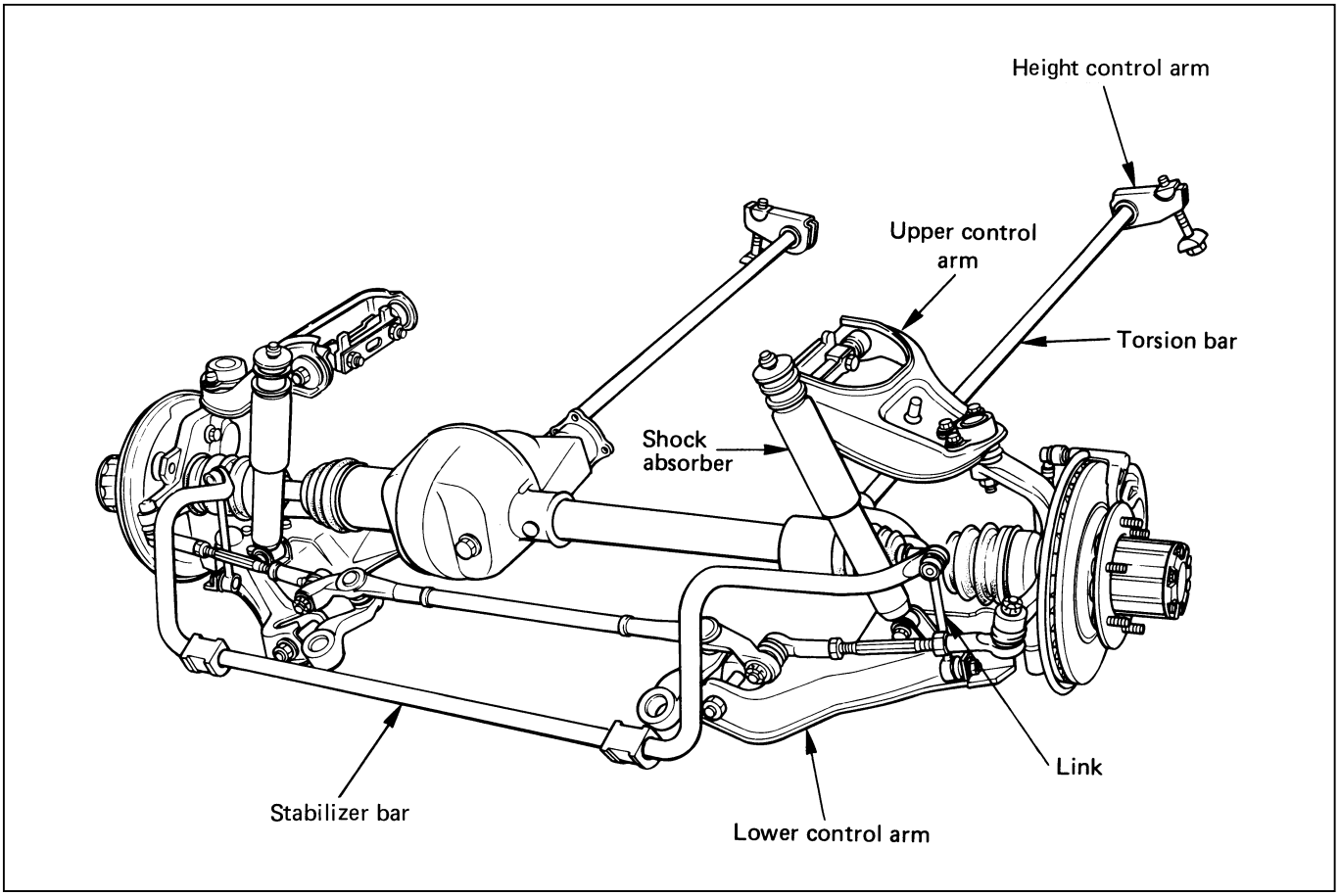

The front suspension is designed to allow each wheel to compensate for changes in the road surface level without greatly affecting the opposite wheel. Each wheel is independently connected to the frame by a steering knuckle, ball joint assemblies, and upper and lower control arms.
The front wheels are held in proper relationship to each other by two outer track rods which are connected to steering arms on the knuckles and to a center track rod.
All models have a front suspension system consisting of control arms, stabilizer bar, shock absorber and a torsion bar. The front end of the torsion bar is attached to the lower control arm.
The rear of the torsion bar is mounted into a height control arm at the crossmember. Vehicle trim height is controlled by adjusting this arm.
Shock absorbers are mounted between the brackets on the frame and the lower control arms.
The lower portion of each shock absorber is attached to the lower control arm by a bolt and nut.
The upper portion of each shock absorber extends through a frame bracket and is secured with two rubber bushings, three retainers and a nut.
Ball joint assemblies are bolted to the outer end of the upper and lower control arm and are attached to the steering knuckle by nuts and cotter pins.
The inner ends of the upper control arm have pressed in bushings. Bolts passing through the bushing, attach the control arm to the frame. The inner ends of the lower control arm are attached to the frame by bolts passing through the bushings, which are pressed in the frame.
Side roll of the front suspension is controlled by a spring steel stabilizer bar. It is mounted in rubber bushings, which are held to the crossmember by brackets. The ends of the stabilizer are connected to the lower control arms by link bolts isolated by rubber bushings.

ON-VEHICLE SERVICE

SHOCK ABSORBER

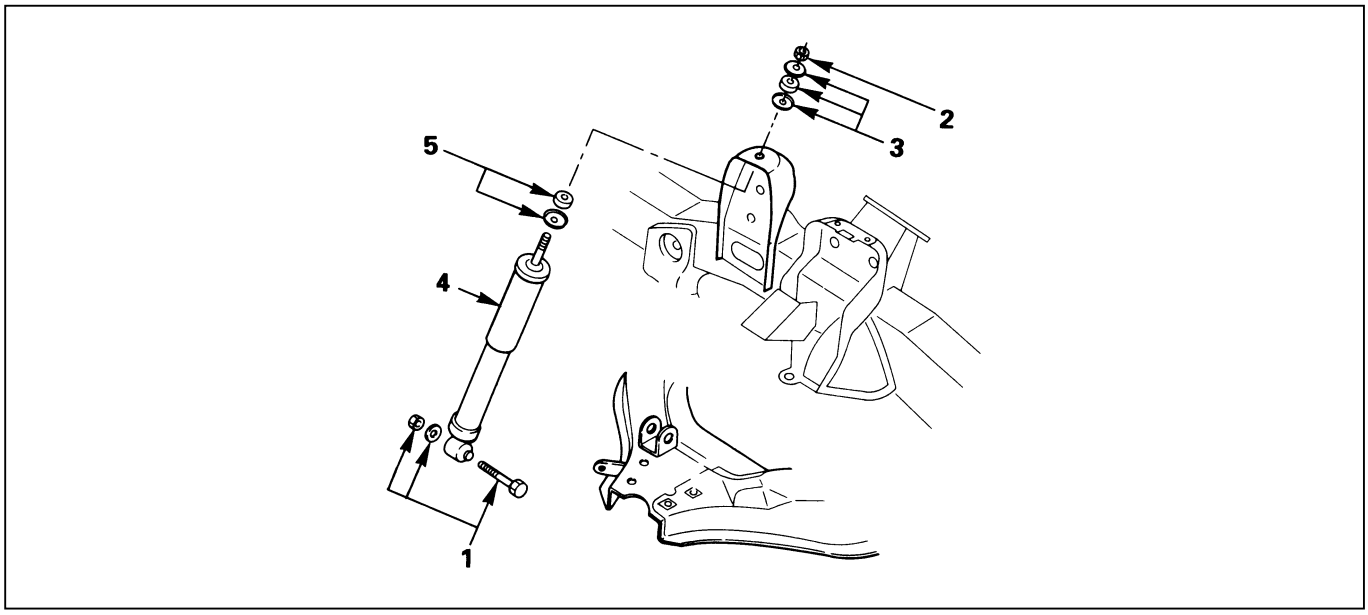

Removal Steps

1. Bolt, nut and washer
2. Nut
3. Rubber bushing and washer
4. Shock absorber
5. Rubber bushing and washer

Installation Steps

5. Rubber bushing and washer
4. Shock absorber
3. Rubber bushing and washer
2. Nut
1. Bolt, nut and washer

REMOVAL

Preparation:

1) Raise the vehicle and support it with suitable safety stands.
2) Remove wheel and tire assembly. Refer to "Wheels and Tires" in section 3E.

1. Bolt, Nut and Washer

2. Nut

3. Rubber Bushing and Washer

4. Shock Absorber

5. Rubber Bushing and Washer

INSPECTION AND REPAIR

Make necessary correction or parts replacement if wear, damage, corrosion or any other abnormal condition are found through inspection.

- Shock absorber
- Rubber bushing

INSTALLATION

5. **Rubber Bushing and Washer**
4. **Shock Absorber**
3. **Rubber Bushing and Washer**
2. **Nut**

Shock Absorber Nut Torque	N·m (kg·m/lb·ft)
20 (2.0 / 14)	

1. **Bolt, Nut and Washer**

Shock Absorber Nut Torque	N·m (kg·m/lb·ft)
82 (8.4 / 61)	

STABILIZER BAR

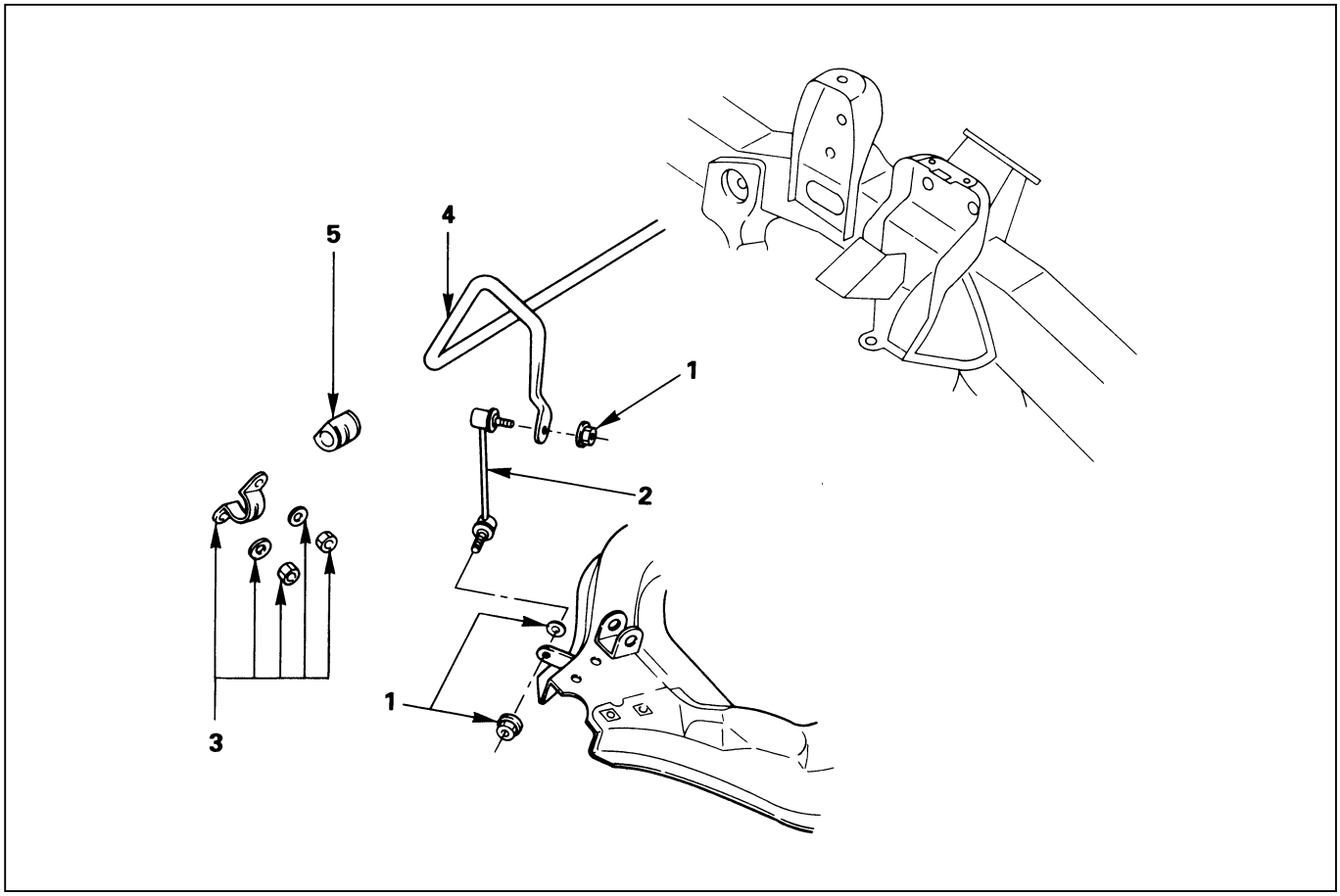

Removal Steps

1. Nut and washer
2. Link
3. Bracket
4. Stabilizer bar
5. Rubber bushing

Installation Steps

5. Rubber bushing
4. Stabilizer bar
3. Bracket
2. Link
1. Nut and washer

REMOVAL

Preparation:

1) Raise the vehicle and support the frame with suitable safety stands.
2) Remove the stone guard.
3) Remove wheel and tire assembly. Refer to “Wheels and Tires” in section 3E.

1. Nut and Washer

CAUTION:
Be careful not to break the ball joint boot.

2. Link

3. Bracket

4. Stabilizer Bar

5. Rubber Bushing

INSPECTION AND REPAIR

Make necessary correction or parts replacement if wear, damage, corrosion or any other abnormal condition are found through inspection.

- Stabilizer bar
- Rubber bushing
- Link ball joint

INSTALLATION

5. **Rubber Bushing**
4. **Stabilizer Bar**
3. **Bracket**

Bracket Nut Torque	N·m (kg·m/lb·ft)
22 (2.2 / 16)	

2. **Link**
1. **Nut and Washer**

Link Nut Torque	N·m (kg·m/lb·ft)
50 (5.1 / 37)	

TORSION BAR

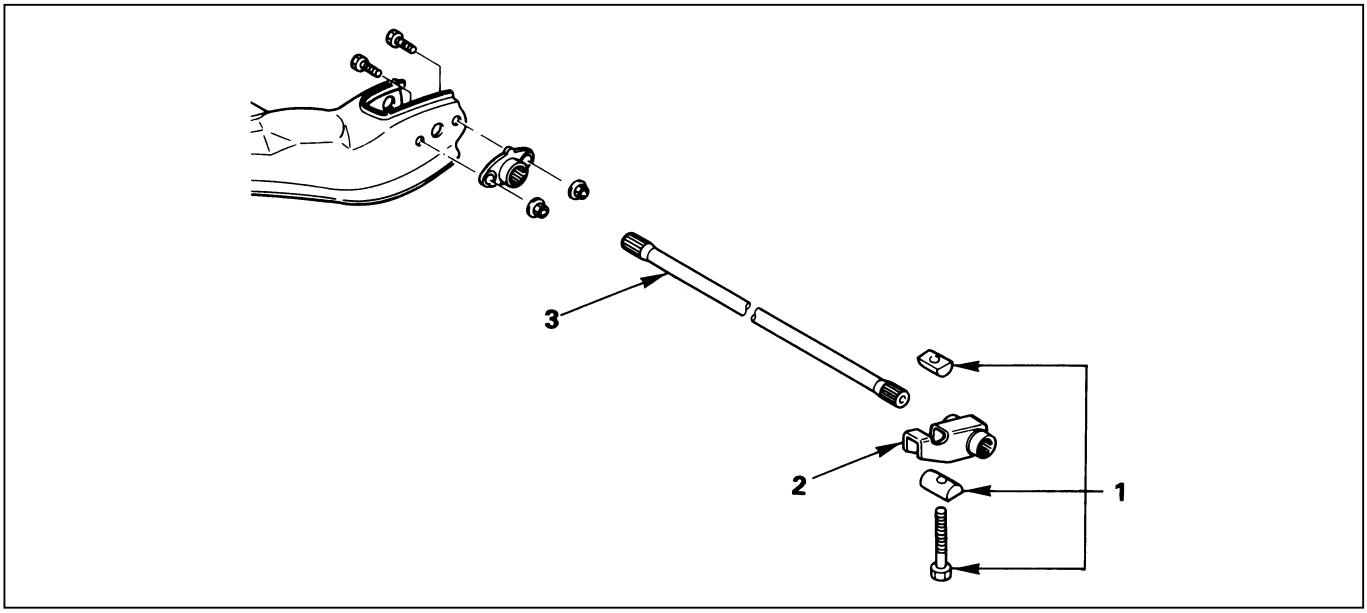

Removal Steps

1. Adjust bolt, end piece and seat
2. Height control arm
3. Torsion bar

Installation Steps

3. Torsion bar
2. Height control arm
1. Adjust bolt, end piece and seat

REMOVAL

Preparation:

Raise the vehicle and support the frame with suitable safety stands.

1. **Adjust Bolt, End Piece and Seat**
   Apply the setting marks to the adjust bolt and end piece.

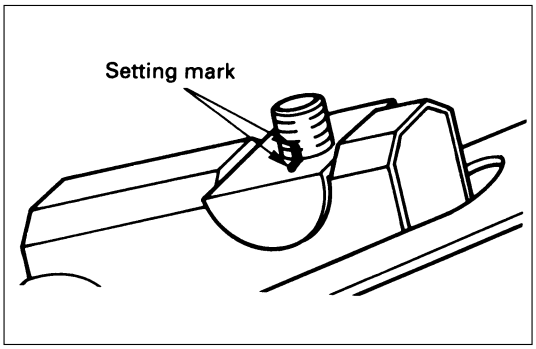

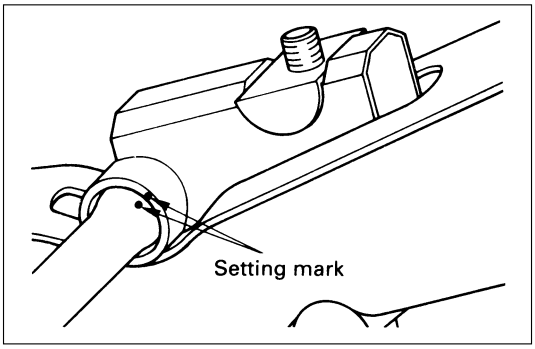

2. Height Control Arm
Apply the setting marks to the height control arm and torsion bar.

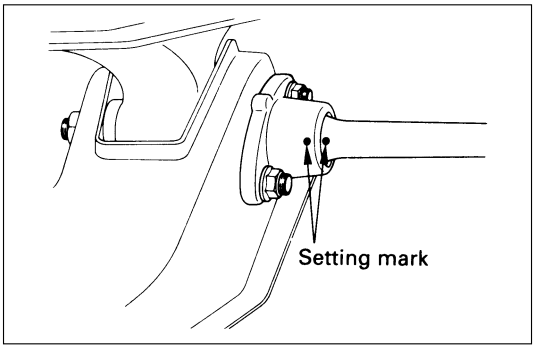

3. Torsion Bar
Apply the setting marks to the torsion bar and lower control arm.

INSPECTION AND REPAIR

Make necessary correction or parts replacement if wear, damage, corrosion or any other abnormal condition are found through inspection.
Check the following parts:

- Torsion bar
- Height control arm
- Adjust bolt
- Rubber seat

INSTALLATION

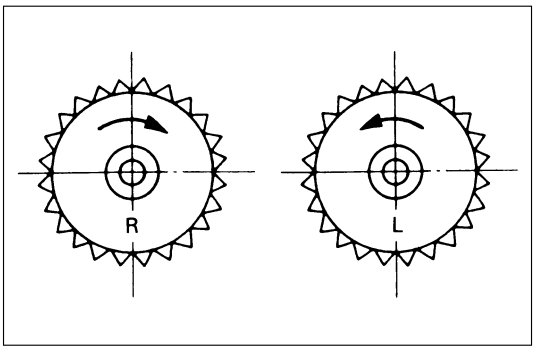

3. Torsion Bar
Make sure the bars are on their correct respective sides.

Apply grease to the serrated portions.

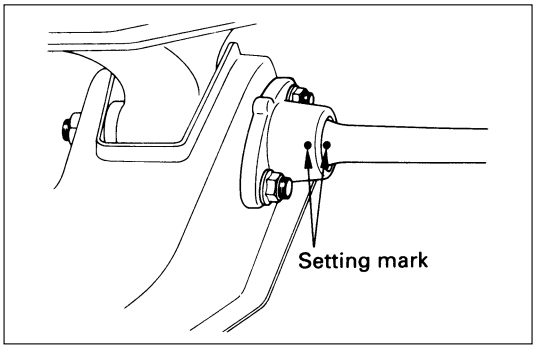

Align the setting marks.

2. Height Control Arm
Apply grease to the portion that fits into the bracket.

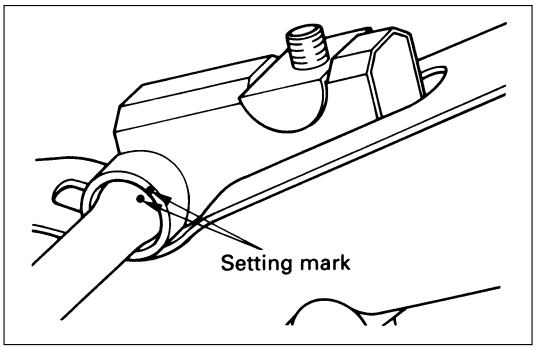

Align the setting marks.

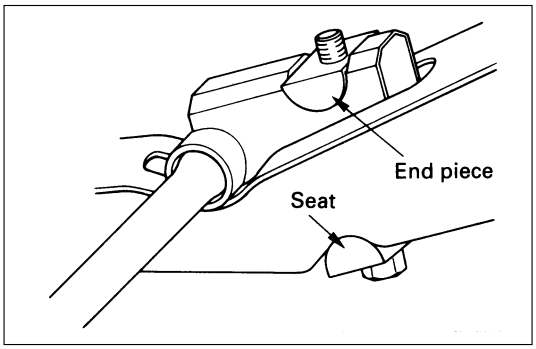

Apply grease to the bolt portion of the end piece.

Apply grease to the portion of the seat that fits into the bracket.

Apply grease to the serrated portions.

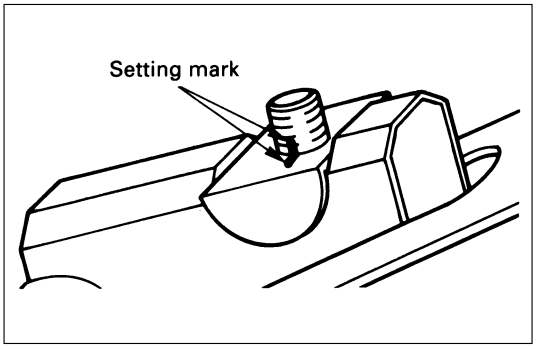

1. Adjust Bolt and Seat
Turn ther adjust bolt to the setting mark applied during disassembly.

NOTE:
Adjust the trim height. Refer to “Front End Alignment” in section 3A.

KNUCKLE

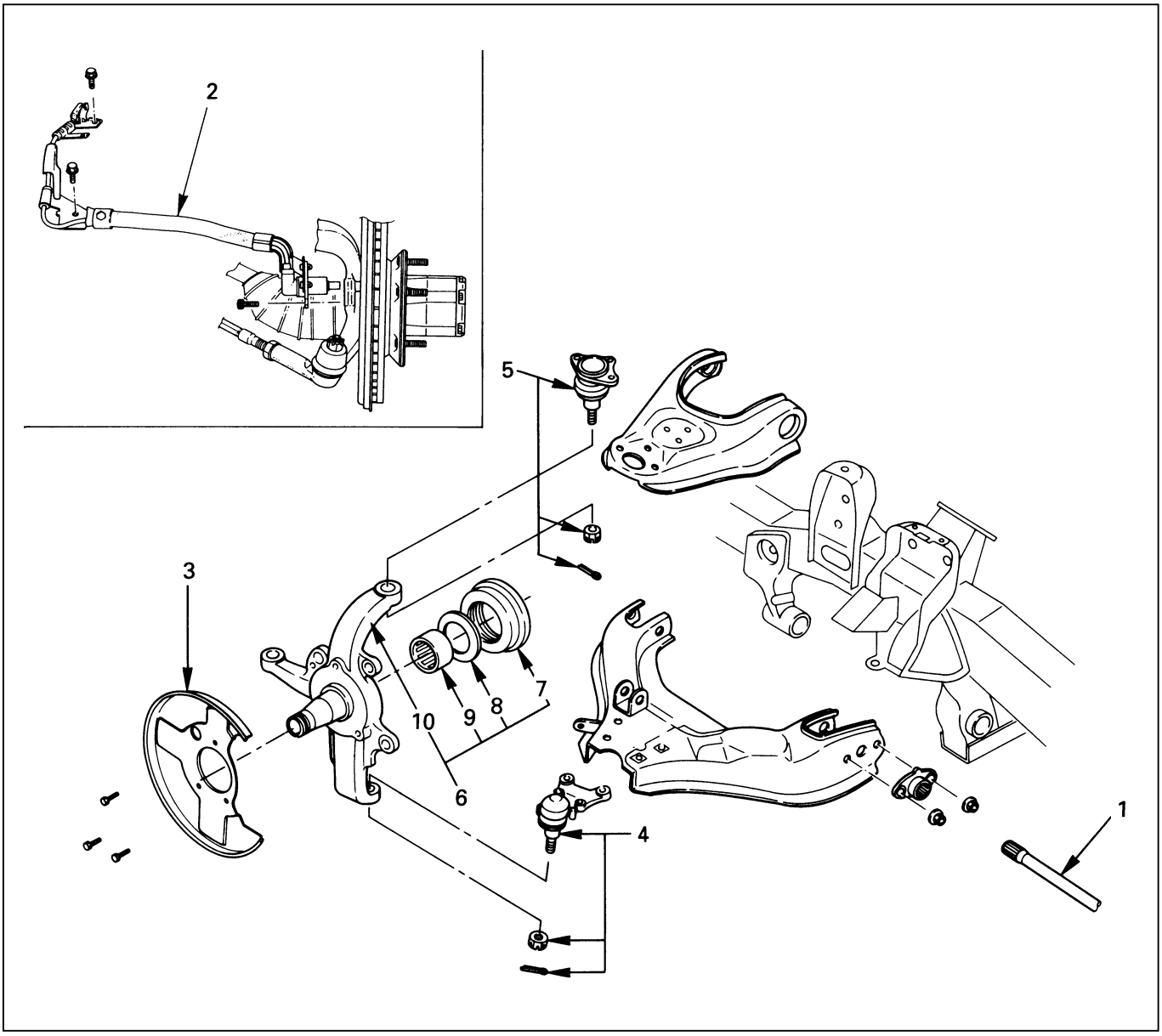

Removal Steps

1. Torsion bar
2. Wheel speed sensor (if equipped with ABS)
3. Back plate
4. Lower ball joint
5. Upper ball joint
6. Knuckle assembly
7. Oil seal
8. Thrust washer
9. Needle bearing
10. Knuckle

Installation Steps

10. Knuckle
9. Needle bearing
8. Thrust washer
7. Oil seal
6. Knuckle assembly
5. Upper ball joint
4. Lower ball joint
3. Back plate
2. Wheel speed sensor (if equipped with ABS)
1. Torsion bar

REMOVAL

Preparation:

1) Raise the vehicle and support the frame with suitable safety stands.
2) Remove wheel and tire assembly. Refer to “Wheels and Tires” in section 3E.
3) Remove the brake caliper. Refer to “Brakes” in section 5.
4) Remove the hub assembly. Refer to “Hub and Disk” in section 4C.
5) Remove outer track rod from the knuckle. Refer to “Steering Linkage” in section 2A.

1. **Torsion Bar**
   Loosen torsion bar by height control arm adjust bolt. Refer to “Torsion bar” in this section.
2. **Wheel speed sensor (if equipped with ABS)**
3. **Back Plate**
4. **Lower Ball Joint**
   Remover: 5-8840-2005-0 (J-29107)

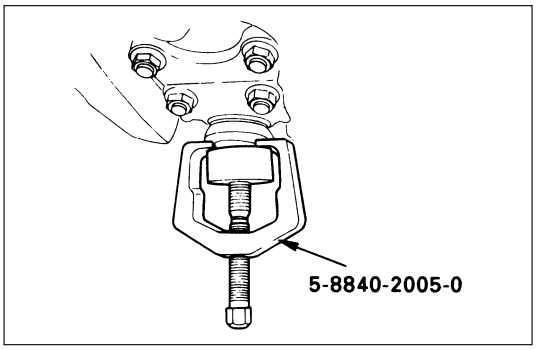

CAUTION:
Be careful not to break the ball joint boot.

5. **Upper Ball Joint**
   Remover: 5-8840-2121-0 (J-36831)

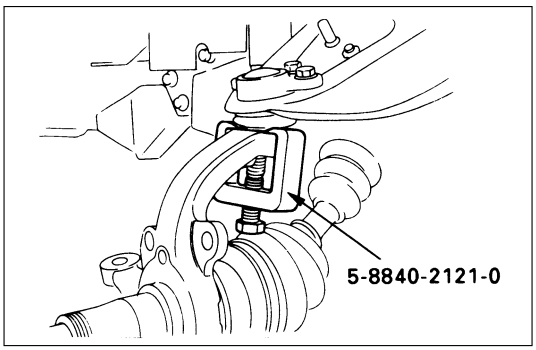

CAUTION:
Be careful not to break the ball joint boot.

6. **Knuckle Assembly**
7. **Oil Seal**
8. **Washer**
9. **Needle Bearing**
   Remover: 5-8840-0019-0 (J-23907)

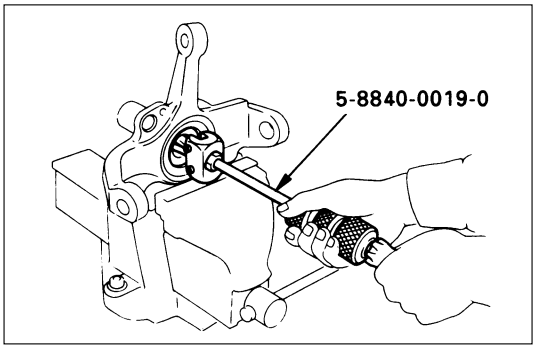

10. Knuckle

INSPECTION AND REPAIR

Make necessary correction or parts replacement if wear, damage, corrosion or any other abnormal condition are found through inspection.
Check the following parts:

- Knuckle
- Needle bearing
- Thrust washer

INSTALLATION

10. Knuckle

9. Needle Bearing

Before installation, apply appropriate amount of multipurpose type grease to the new bearing (Approx. 5 g).
Installer: 5-8840-2128-0 (J-36838) and
5-8840-0007-0 (J-8092)

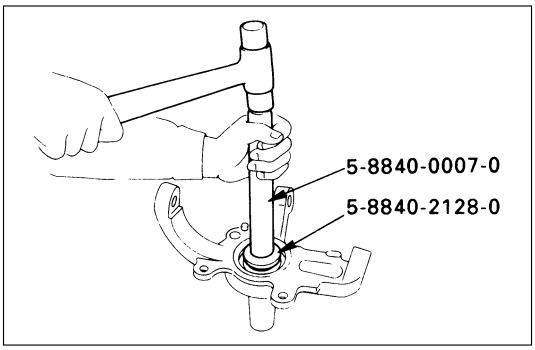

8. Washer

Apply multipurpose type grease to the thrust washer, and install it with chamfered side facing knuckle.

7. Oil Seal

Use a new oil seal, and apply multipurpose type grease to the area surrounded by the lip (approx. 2 g).

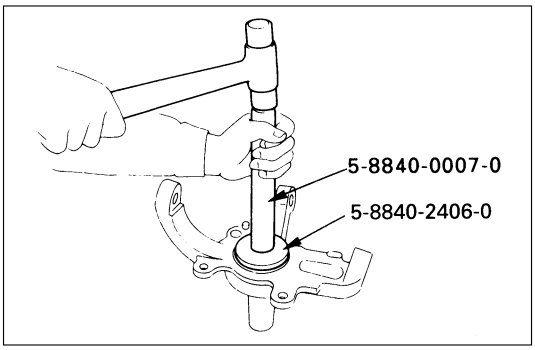

After fitting the oil seal to the installer, drive it to the knuckle using a hammer or bench press until the tool front face contacts with the thrust washer.
Installer: 5-8840-2406-0 (J-41468)and
5-8840-0007-0 (J-8092)

6. Knuckle Assembly

5. Upper Ball Joint

Tighten the nut to the specified torque, with just enough additional torque to align cotter pin holes.
Install new cotter pin.

Upper Ball Joint Nut Torque	N·m (kg·m/lb·ft)
98 (10.0 / 72)	

4. **Lower Ball Joint**
   Tighten the nut to the specified torque, with just enough additional torque to align cotter pin holes. Install new cotter pin.

Lower Ball Joint Nut Torque	N·m (kg·m/lb·ft)
147 (15.0 / 108)	

3. **Back Plate**
2. **Wheel Speed Sensor (if equipped with ABS)**
   Tighten the bolt to the specified torque.

Wheel Speed Sensor Bolt Torque	N·m (kg·m/lb·in)
8 (0.8 / 69)	

1. **Torsion Bar**
   Refer to “Torsion Bar” in this section.

   NOTE:
   Adjust the trim height. Refer to “Front End Alignment” in section 2A.

UPPER CONTROL ARM

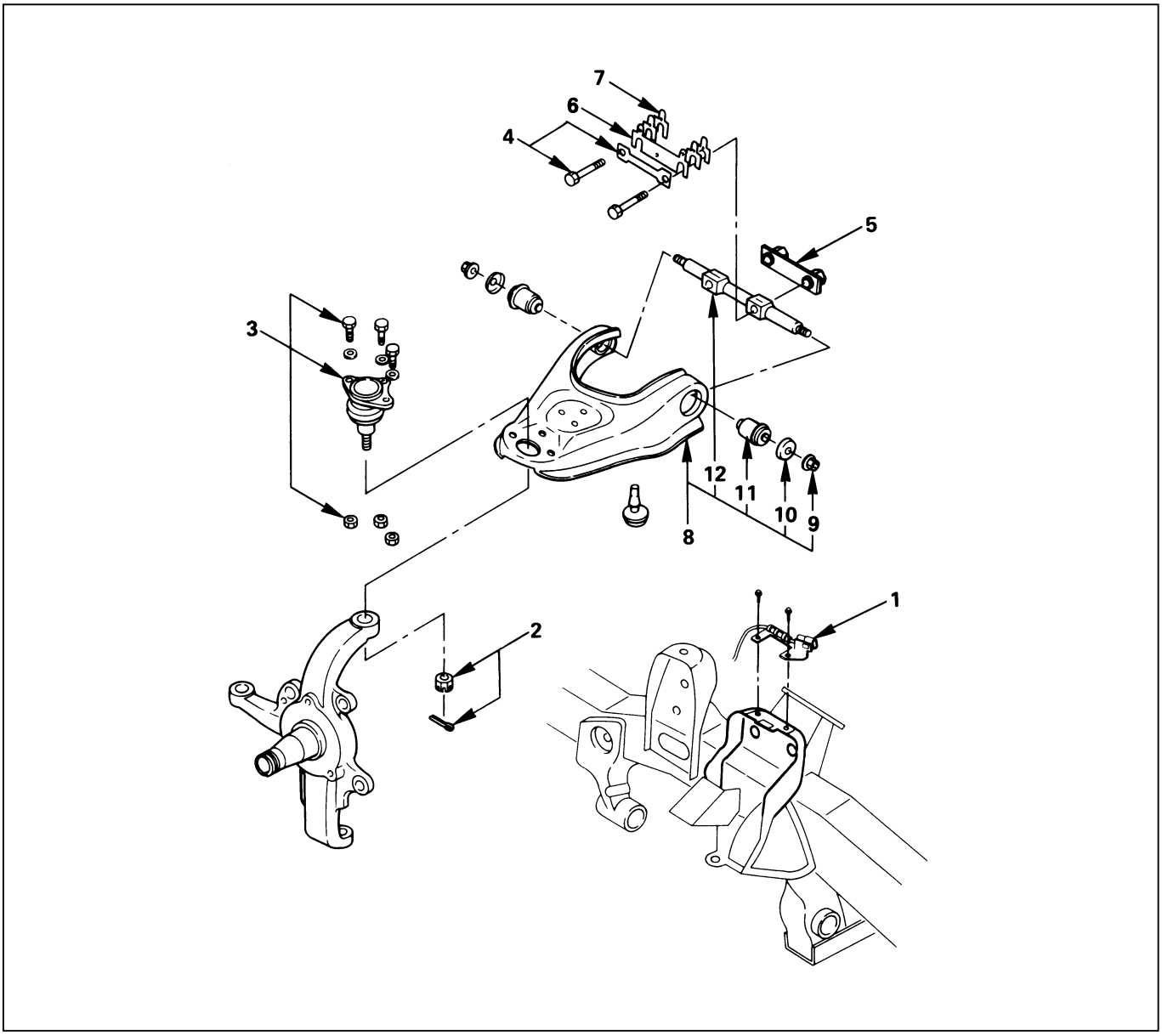

Removal Steps

1. Speed sensor cable (if equipped with ABS)
2. Nut and cotter pin
3. Upper ball joint
4. Bolt and plate
5. Nut assembly
6. Camber shims
7. Caster shims
8. Upper control arm assembly
9. Nut
10. Plate
11. Bushing
12. Fulcrum pin

Installation Steps

12. Fulcrum pin
11. Bushing
10. Plate
9. Nut
8. Upper control arm assembly
7. Caster shims
6. Camber shims
5. Nut assembly
4. Bolt and plate
3. Upper ball joint
2. Nut and cotter pin
1. Speed sensor cable (if equipped with ABS)

REMOVAL

Preparation:

1) Raise the vehicle and support the frame with suitable safety stands.
2) Remove wheel and tire assembly. Refer to “Wheels and Tires” in section 3E.
3) Remove the brake caliper and disconnect flexible hose. Refer to “Brakes” in section 5.
4) Support lower control arm with a jack.

1. **Speed Sensor Cable (if equipped with ABS)**
2. **Nut and Cotter Pin**
   Remove the upper ball joint from the knuckle.
   Remover: 5-8840-2121-0 (J-36831)

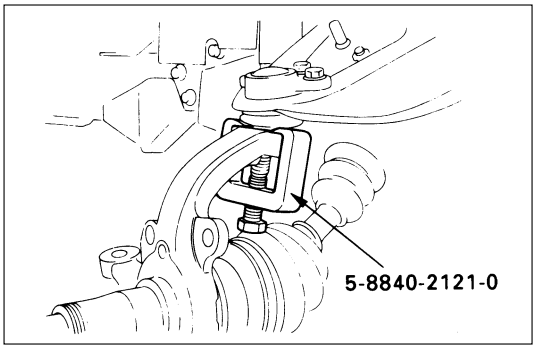

CAUTION:
Be careful not to break the ball joint boot.

3. **Upper Ball Joint**
4. **Bolt and Plate**
5. **Nut Assembly**
6. **Camber Shims**
   Note the positions and number of shims.
7. **Caster Shims**
   Note the positions and number of shims.
8. **Upper Control Arm Assembly**
9. **Nut**
10. **Plate**
11. **Bushing**
    Remover: 5-8840-0256-0 (J-29755)

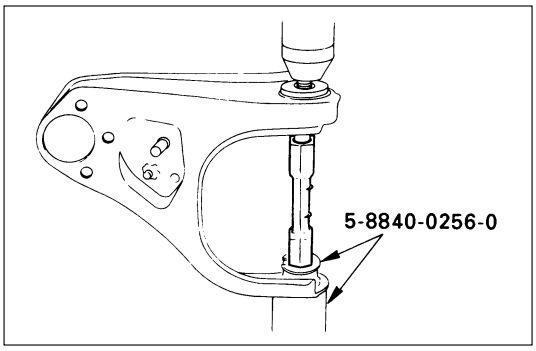

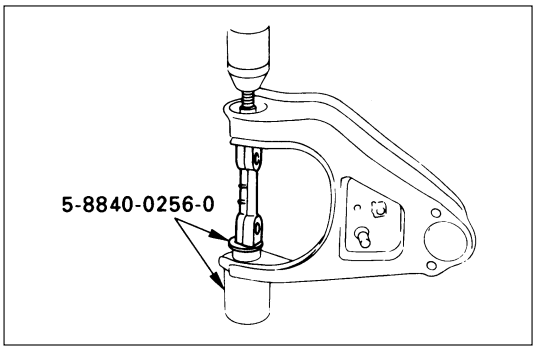

12. **Fulcrum Pin**

INSPECTION AND REPAIR

Make necessary parts replacement if wear, damage, corrosion or any other abnormal conditions are found through inspection.
Check the following parts:

- Upper control arm
- Bushing
- Fulcrum pin

INSTALLATION

12. Fulcrum Pin

11. Bushing

Installer: 5-8840-0256-0 (J-29755) and
5-8840-2307-0 (J-39376)

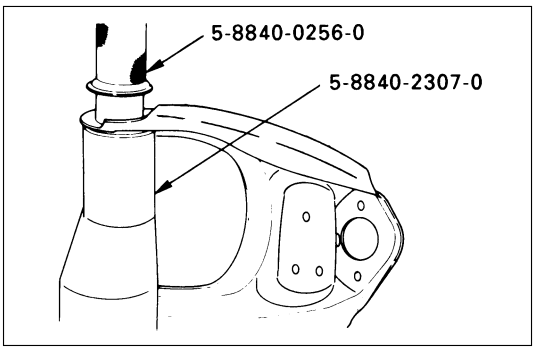

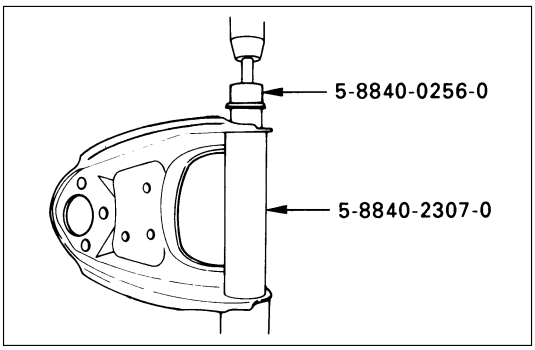

10. Plate

9. Nut

Tighten fulcrum pin nut finger-tight.

NOTE:
Torque fulcrum pin nut after adjusting buffer clearance.

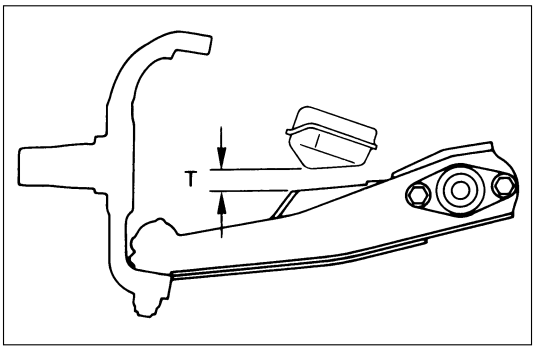

Buffer Clearance (T)	mm (in)
23 (0.91) Wide Tread 24 (0.94) Narrow Tread	

Fulcrum Pin Nut Torque	N·m (kg·m/lb·ft)
108 (11.0 / 80)	

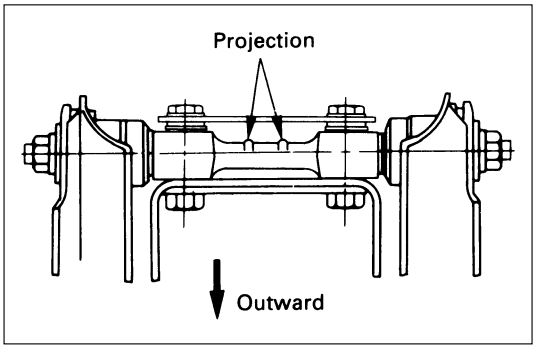

8. Upper Control Arm Assembly
Install upper control arm assembly with the fulcrum pin projections turned inward.

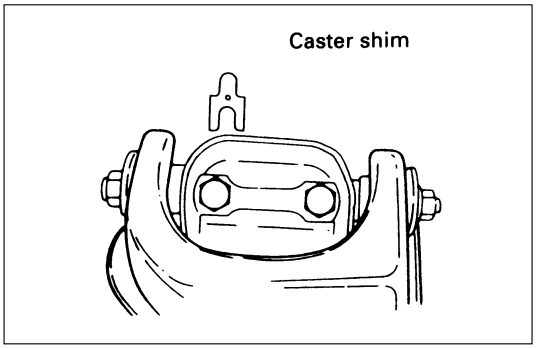

7. Caster Shims
Install the caster shims between the chassis frame and fulcrum pin.

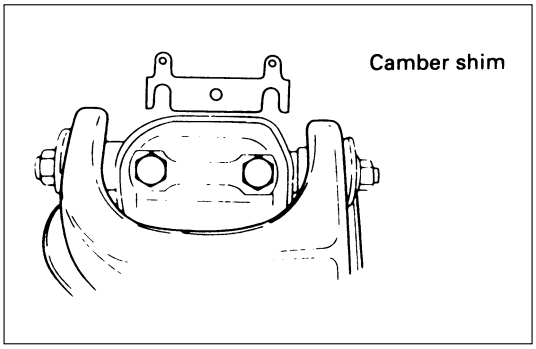

6. Camber Shims
Install the camber shims between the chassis frame and fulcrum pin.

5. Nut Assembly

4. Bolt and Plate

Fulcrum Pin Bolt Torque	N·m (kg·m/lb·ft)
152 (15.2 / 112)	

3. Upper Ball Joint

Upper Ball Joint Nut Torque	N·m (kg·m/lb·ft)
57 (5.8 / 42)	

2. Nut and Cotter Pin
Tighten the nut to the specified torque, with just enough additional torque to align cotter pin holes. Install new cotter pin.

Upper Ball Joint Nut Torque	N·m (kg·m/lb·ft)
98 (10.0 / 72)	

1. Speed Sensor Cable (if equipped with ABS)

LOWER CONTROL ARM

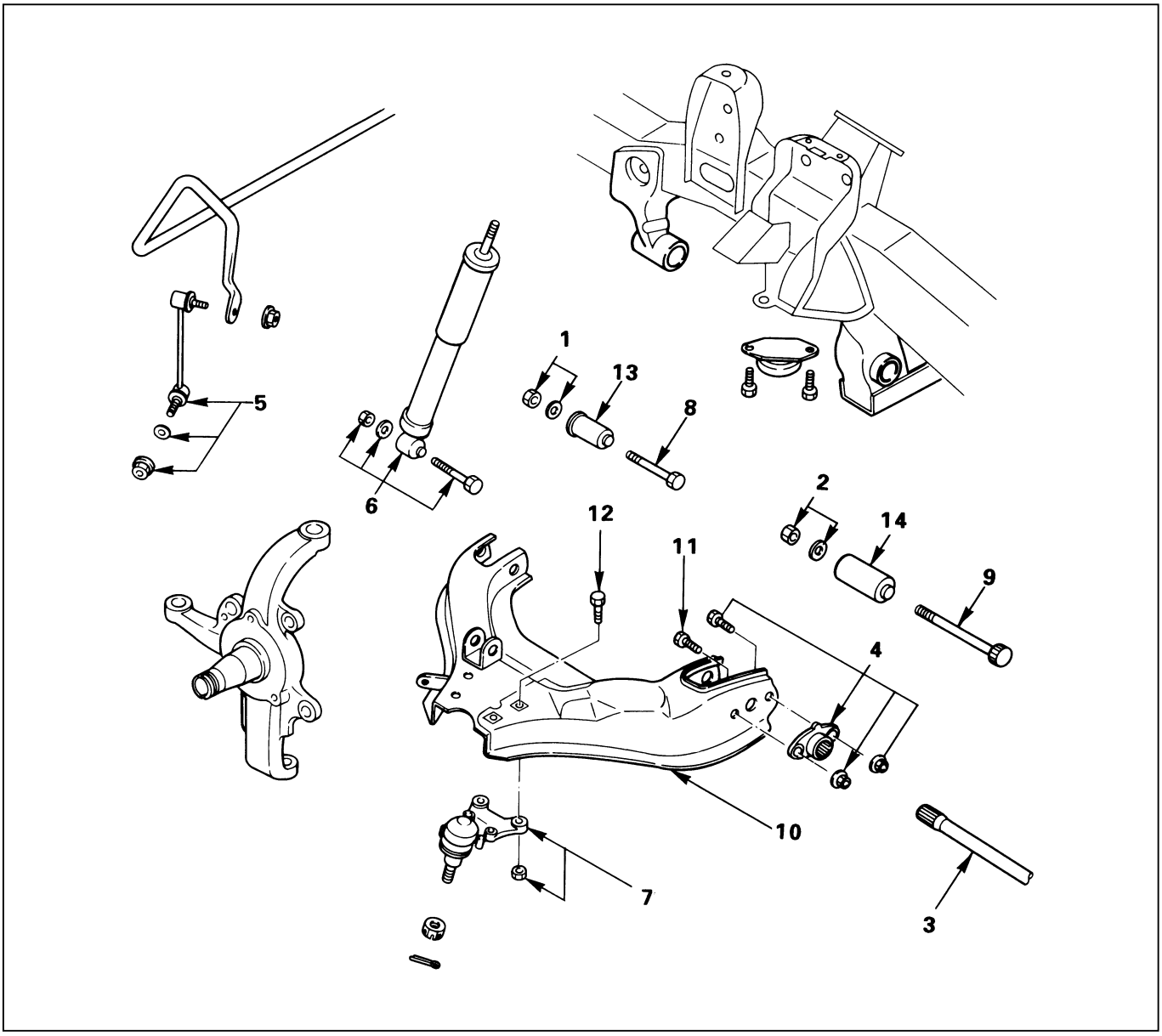

Removal Steps

1. Nut and washer, front
2. Nut and washer, rear
3. Torsion bar
4. Torsion bar arm
5. Stabilizer link
6. Shock absorber
7. Lower ball joint
8. Bolt, front
9. Bolt, rear
10. Lower control arm
11. Bolt, torsion bar arm
12. Bolt, lower ball joint
13. Bushing, front
14. Bushing, rear

Installation Steps

14. Bushing, rear
13. Bushing, front
12. Bolt, lower ball joint
11. Bolt, torsion bar arm
10. Lower control arm
9. Bolt, rear
8. Bolt, front
7. Lower ball joint
6. Shock absorber
5. Stabilizer link
4. Torsion bar arm
3. Torsion bar
2. Nut and washer, rear
1. Nut and washer, front

REMOVAL

Preparation:

1) Raise the vehicle and support the frame with suitable safety stands.
2) Remove wheel and tire assembly. Refer to “Wheels and Tires” in section 3E.
3) Remove the outer track rod from the knuckle. Refer to “Steering Linkage” in section 2A.
4) Remove the retaining ring from the front axle driving shaft to release the shaft from hub. Refer to “Front Axle” in section 4C.
5) Support lower control arm with a jack.

1. **Nut and Washer, Front**
2. **Nut and Washer, Rear**
3. **Torsion Bar**
   Refer to “Torsion Bar” in this section.
4. **Torsion Bar Arm Bracket**
5. **Stabilizer Link**
   Disconnect the link at the lower control arm.
6. **Shock Absorber**
   Remove the shock absorber lower end from the lower control arm.
7. **Lower Ball Joint**
   Remove the lower ball joint from the lower control arm.
8. **Bolt, Front**
9. **Bolt, Rear**
10. **Lower Control Arm**
11. **Bolt, Torsion Bar Arm**
12. **Bolt, Lower Ball Joint**
13. **Bushing, Front**
    Remover: 5-8840-2123-0 (J-36833)

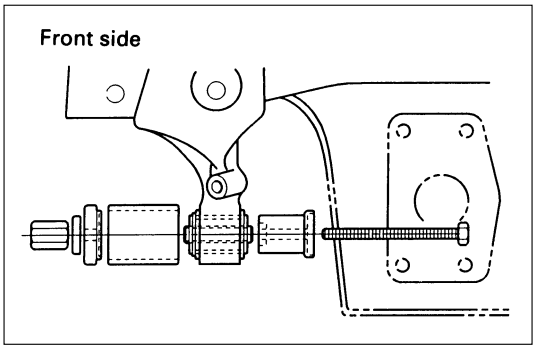

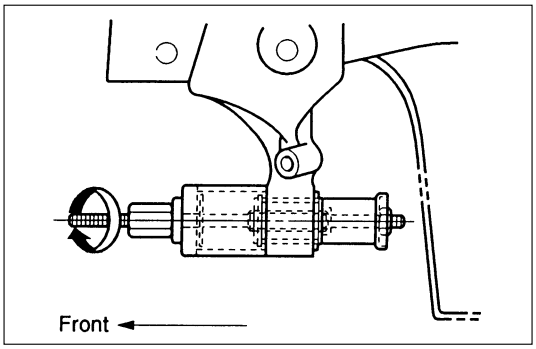

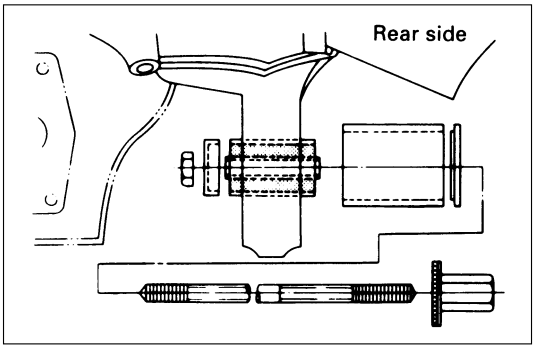

14. Bushing, Rear
Remover: 5-8840-2124-0 (J-36834)

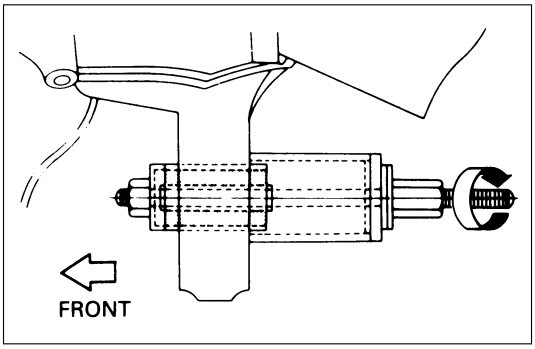

INSPECTION AND REPAIR

Make necessary correction or parts replacement if wear, damage, corrosion or any other abnormal condition are found through inspection.
Check the following parts:

- Lower control arm
- Bushing

INSTALLATION

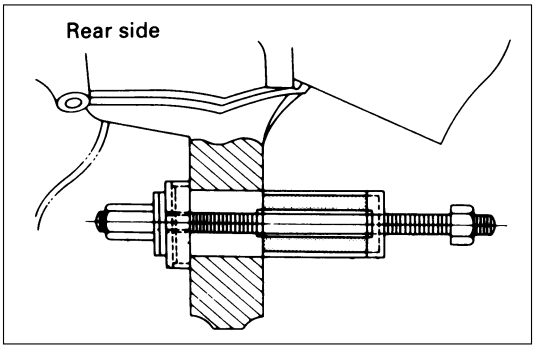

14. Bushing, Rear
Installer: 5-8840-2124-0 (J-36834)

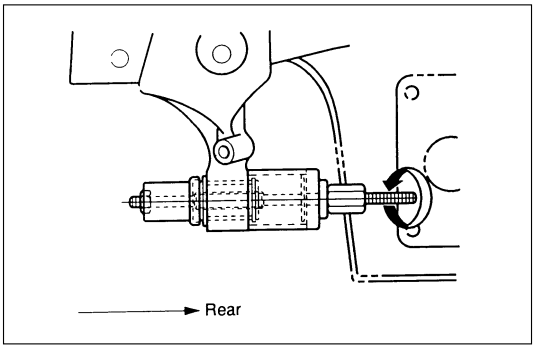

13. Bushing, Front
Installer: 5-8840-2123-0 (J-36833)

12. **Bolt, Lower Ball Joint**
11. **Bolt, Torsion Bar Arm**
10. **Lower Control Arm**
9. **Bolt, Rear**
8. **Bolt, Front**
7. **Lower Ball Joint**

Lower Ball Joint Nut Torque	N·m (kg·m/lb·ft)
103 (10.5 / 76)	

6. **Shock Absorber**

Shock Absorber Nut Torque	N·m (kg·m/lb·ft)
82 (8.4 / 61)	

5. **Stabilizer Link**

Link Nut Torque	N·m (kg·m/lb·ft)
50 (5.1 / 37)	

4. **Torsion Bar Arm Bracket**

Torsion Bar Arm Bracket Nut Torque	N·m (kg·m/lb·ft)
116 (11.8 / 85)	

3. **Torsion Bar**
   Refer to "Torsion Bar" in this section.
2. **Nut and Washer, Rear**
   Tighten lower link nut finger-tight.

NOTE:
Torque lower control arm nut after adjusting buffer clearance.

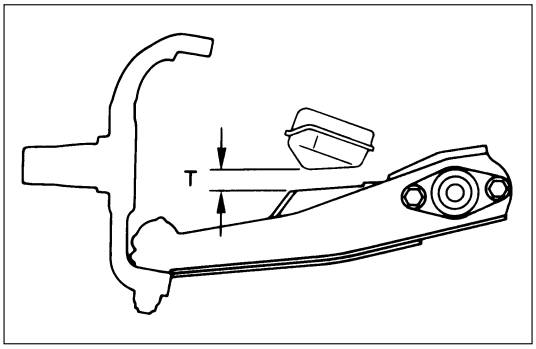

Buffer Clearance (T)	mm (in)
23 (0.91) Wide Tread 24 (0.94) Narrow Tread	

Lower Arm Rear Nut Torque	N·m (kg·m/lb·ft)
196 (20.0 / 145)	

1. **Nut and Washer, Front**
   Tighten lower link nut finger-tight.

NOTE:
Torque lower control arm nut after adjusting buffer clearance.

Buffer Clearance (T)	mm (in)
23 (0.91) Wide Tread 24 (0.94) Narrow Tread	

Lower Arm Front Nut Torque	N·m (kg·m/lb·ft)
157 (16.0 / 116)	

NOTE:
Adjust the trim height. Refer to "Front End Alignment" in section 2A.

UPPER BALL JOINT

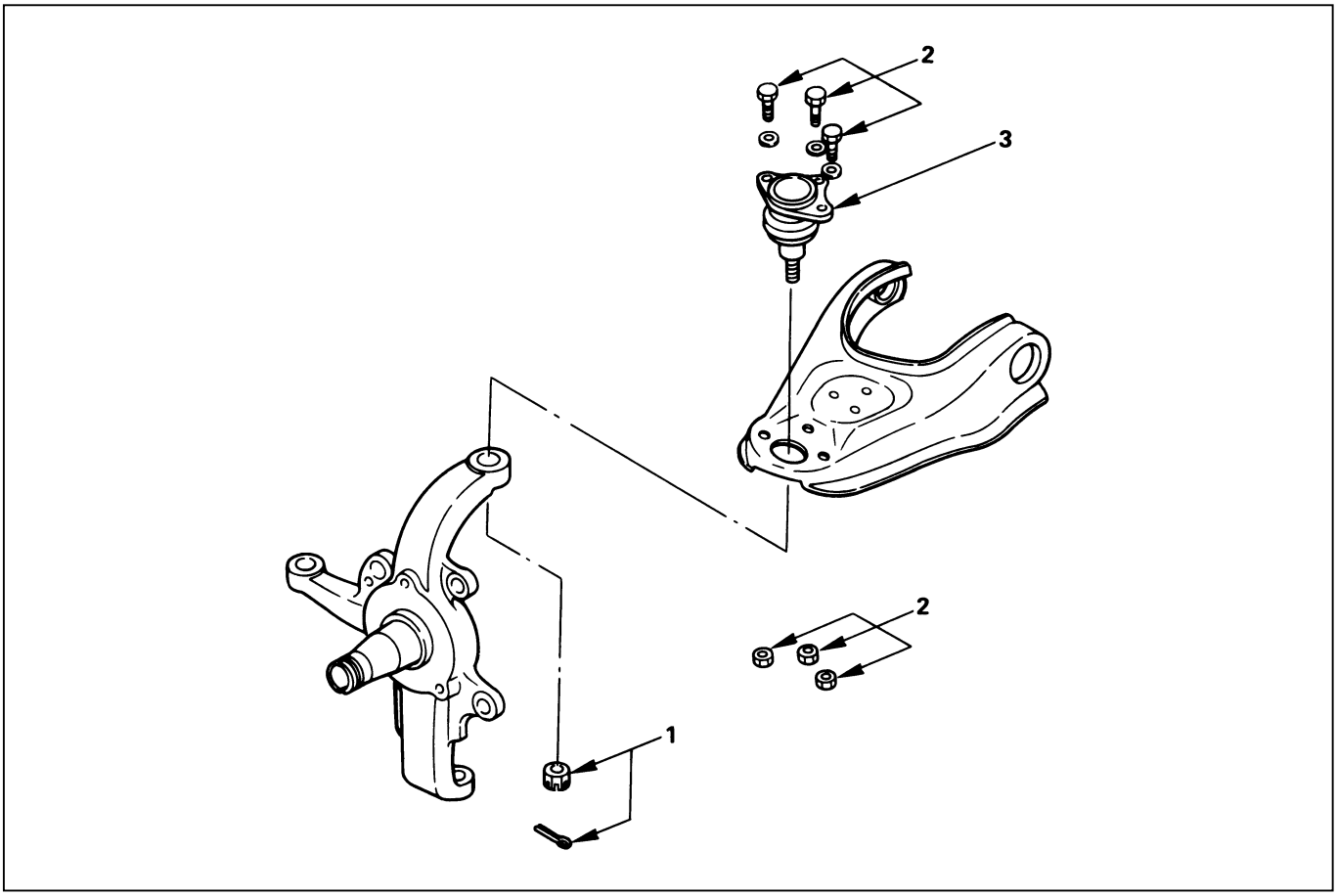

Removal Steps

1. Nut and cotter pin
2. Bolt, nut and washer
3. Upper ball joint

Installation Steps

3. Upper ball joint
2. Bolt, nut and washer
1. Nut and cotter pin

REMOVAL

Preparation:

1) Raise the vehicle and support the frame with suitable safety stands.
2) Remove the speed sensor from the knuckle (If equipped with ABS).

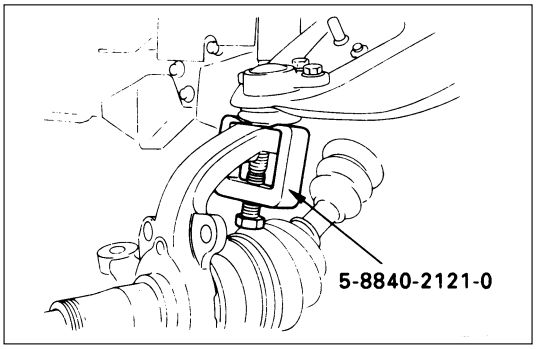

1. **Nut and Cotter Pin**
   Remove the upper ball joint from the knuckle.
   Remover: 5-8840-2121-0 (J-36831)

CAUTION:
Be careful not t o break the ball joint boot.

2. **Bolt, Nut and Washer**
3. **Upper Ball Joint**

INSPECTION AND REPAIR

Make necessary parts replacement if wear, damage, corrosion or any other abnormal conditions are found through inspection.
Inspect the lower end boot for damage or grease leak.
Move the ball joint as shown in the figure to confirm its normal movement.

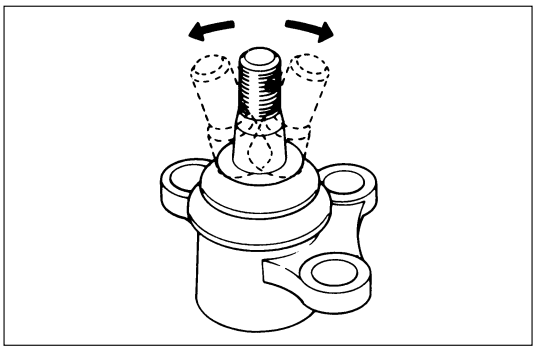

Inspect screw/taper area of ball for flaws.
If any defects are found by the above inspections, replace the ball joint assembly with new one.
After moving the ball joint 4 or 5 times, attach nut then measure the preload.

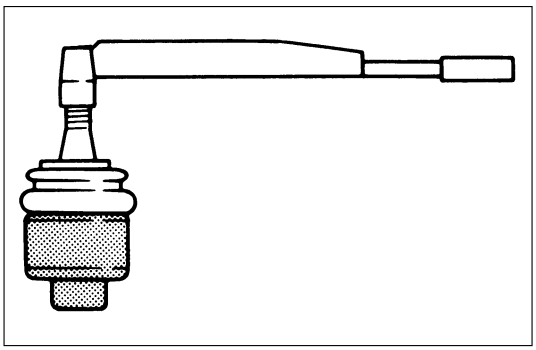

Upper Ball Joint Preload	N·m (kg·m/lb·in)
0.5 – 3.2 (0.05 – 0.33 / 4.3 – 28.6)	

If the above limits specified are exceeded, replace the ball joint assembly.

INSTALLATION

3. **Upper Ball Joint**
2. **Bolt, Nut and Washer**

Upper Ball Joint Bracket Nut Torque	N·m (kg·m/lb·ft)
57 (5.8 / 42)	

1. **Nut and Cotter Pin**
Tighten the nut to the specified torque with just enough additional torque to align cotter pin holes. Install new cotter pin.

Upper Ball Joint Nut Torque	N·m (kg·m/lb·ft)
98 (10.0 / 72)	

LOWER BALL JOINT

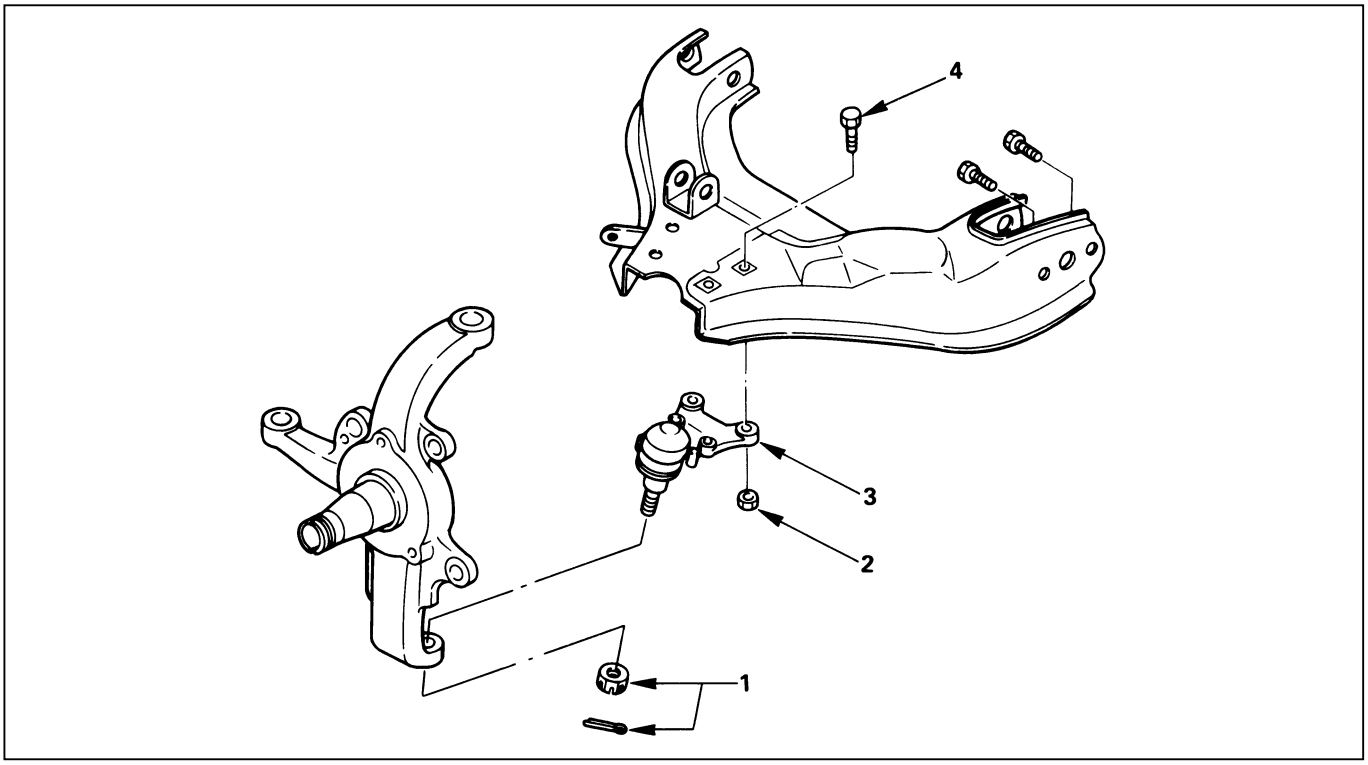

Removal Steps

1. Nut and cotter pin
2. Nut
3. Lower ball joint
4. Bolt

Installation Steps

4. Bolt
3. Lower ball joint
2. Nut
1. Nut and cotter pin

REMOVAL

Preparation:

1) Raise the vehicle and support the frame with suitable safety stands.
2) Remove wheel and tire assembly. Refer to “Wheels and Tires” in section 3E.
3) Remove the outer track rod from the knuckle. Refer to “Steering Linkage” in section 2A.
4) Remove the retaining ring from the front axle driving shaft to release the shaft from hub. Refer to “Front Axle” in section 4C.
5) Support lower control arm with a jack.

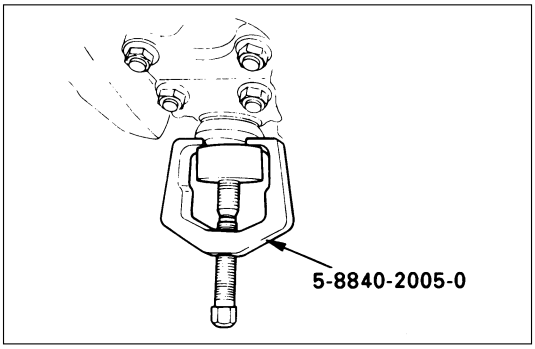

1. **Nut and Cotter Pin**
   Remove the upper ball joint from the knuckle.
   Remover: 5-8840-2005-0 (J-29107)

CAUTION:
Be careful not to break the ball joint boot.

2. **Nut**
3. **Lower Ball Joint**
4. **Bolt**

INSPECTION AND REPAIR

Make necessary parts replacement if wear, damage, corrosion or any other abnormal conditions are found through inspection.
Inspect the lower end boot for damage or grease leak.
Move the ball joint as shown in the figure to confirm its normal movement.

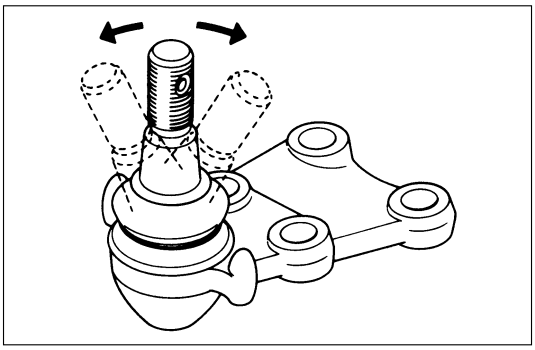

Inspect screw/taper area of ball for flaws.
If any defects are found by the above inspections, replace the ball joint assembly with new one.
After moving the ball joint 4 or 5 times, attach nut then measure the preload.

Lower Ball Joint Preload	N·m (kg·m/lb·in)
0.5 – 6.4 (0.05 – 0.65 / 4.3 – 56.4)	

If the above limits specified are exceeded, replace the ball joint assembly.

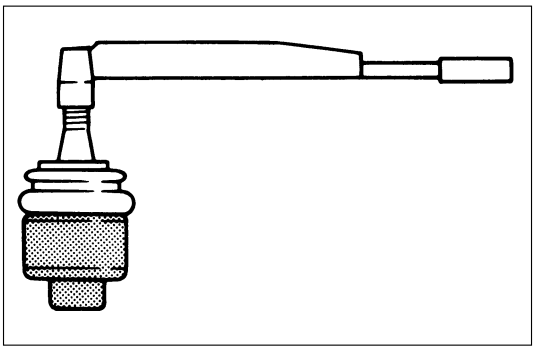

INSTALLATION

4. **Bolt**
3. **Lower Ball Joint**
2. **Nut**

Lower Ball Joint Bracket Nut Torque	N·m (kg·m/lb·ft)
103 (10.5 / 76)	

1. **Nut and Cotter Pin**
   Tighten the nut to the specified torque with just enough additional torque to align cotter pin holes. Install new cotter pin.

Lower Ball Joint Nut Torque	N·m (kg·m/lb·ft)
147 (15.0 / 108)	

SECTION 3D

REAR SUSPENSION; COIL SPRING

CONTENTS

PAGE

General Description ..... 3D – 2
On-Vehicle Service ..... 3D – 3
Coil Spring ..... 3D – 3
Shock Absorber ..... 3D – 6
Trailing Link ..... 3D – 8
Center Link ..... 3D – 10
Lateral Rod ..... 3D – 12
Stabilizer Bar ..... 3D – 15

GENERAL DESCRIPTION

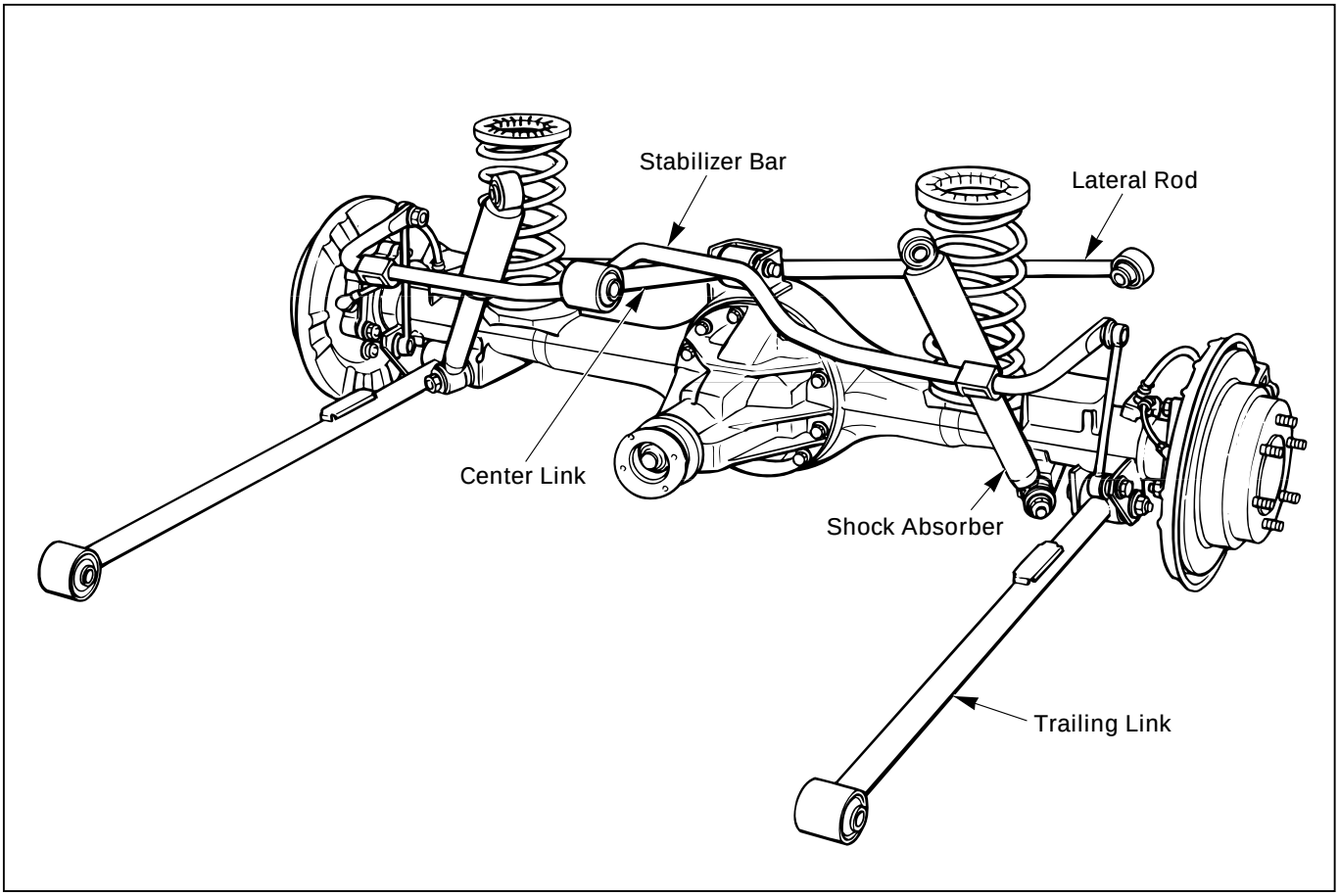

C03RW003

The rear suspension is a 4-link, coil spring type suspension with a stabilizer, consisting of two trailing links, center link, lateral rod, shock absorber, and stabilizer. In this suspension, the links are specially arranged to enable the rear axle to move freely, thereby expanding suspension stroke, reducing friction, and improving lateral rigidity and roll control. All these result in improved stability, riding comfort, and rough road maneuverability.

Each link connects the axle housing with the frame through a rubber bushing. The axle housing is supported by the trailing links and center link longitudinally and by the lateral rod latitudinally.

ON-VEHICLE SERVICE

COIL SPRING

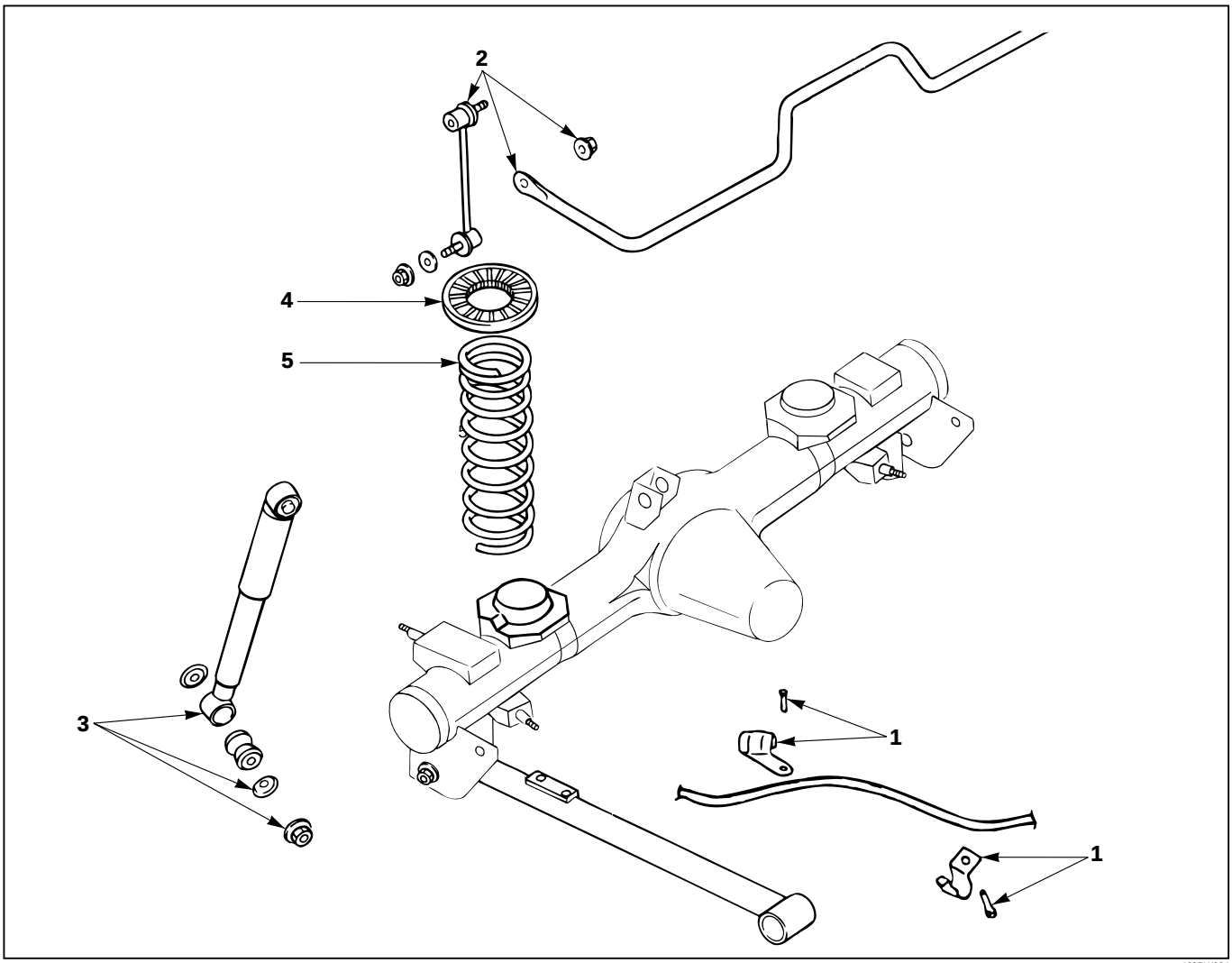

460RW024

Removal Steps

1. Parking brake cable bracket
2. Stabilizer bar
3. Shock absorber
4. Insulator
5. Coil spring

Installation Steps

5. Coil spring
4. Insulator
3. Shock absorber
2. Stabilizer bar
1. Parking brake cable bracket

REMOVAL

Preparation:

1) Raise the vehicle and support the frame with suitable safety stands.
2) Support the rear axle case with a jack.

1. **Parking Brake Cable Bracket**
   Remove the parking brake cable from the trailing link.
2. **Stabilizer Bar**
   Disconnect the stabilizer bar at the stabilizer link.
3. **Shock Absorber**
   Remove the shock absorber from the axle case.
4. **Insulator**
5. **Coil Spring**
   Remove the insulator and coil spring while lowering the rear axle case.

CAUTION:
Be sure not to let the brake hose, parking brake cable, and breather hose extend to their full length.

INSPECTION AND REPAIR

Make necessary correction or parts replacement if wear, damage, corrosion or any other abnormal condition are found through inspection.

- Coil spring
- Insulator

INSTALLATION

5. **Coil Spring**
   Make sure that the coil spring is installed in the proper position.

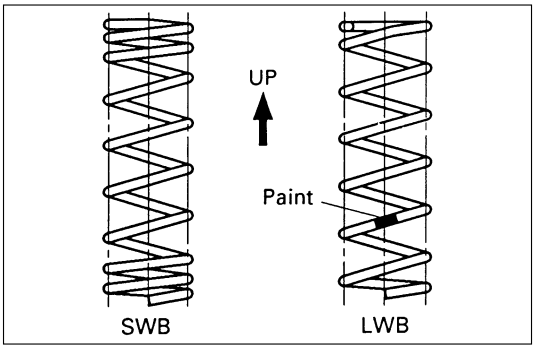

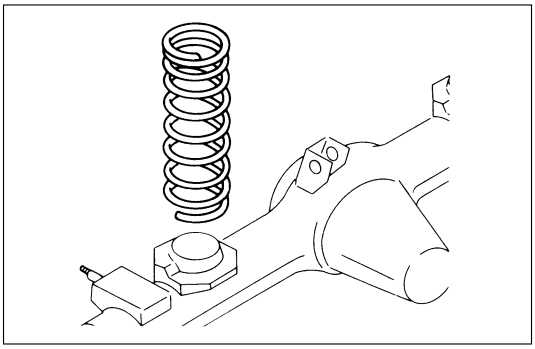

Fit the end of the coil spring to the coil spring seat and mount the coil spring on the rear axle case.

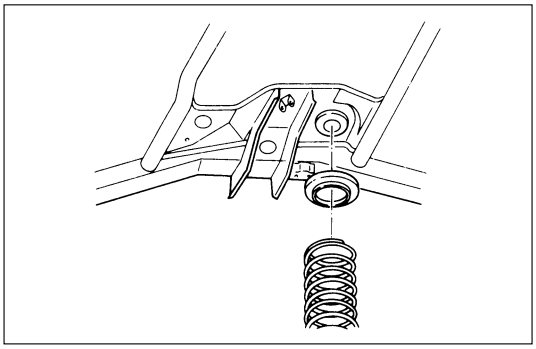

4. Insulator

Install the insulator on the coil spring. Jack up the axle case gently with the top of the coil spring to set the spring seat on the frame side.

3. Shock Absorber

Tighten the nut lightly, and retighten to the specified torque after the vehicle is at curb height.

NOTE:
When mounting shock absorber, be sure not to use grease on bushings or any other nearby part.

Shock Absorber Nut Torque	N·m (kg·m/lb·ft)
78 (8.0 / 58)	

2. Stabilizer Bar

Stabilizer Bar Nut Torque	N·m (kg·m/lb·ft)
50 (5.1 / 37)	

1. Parking Brake Cable Bracket

SHOCK ABSORBER

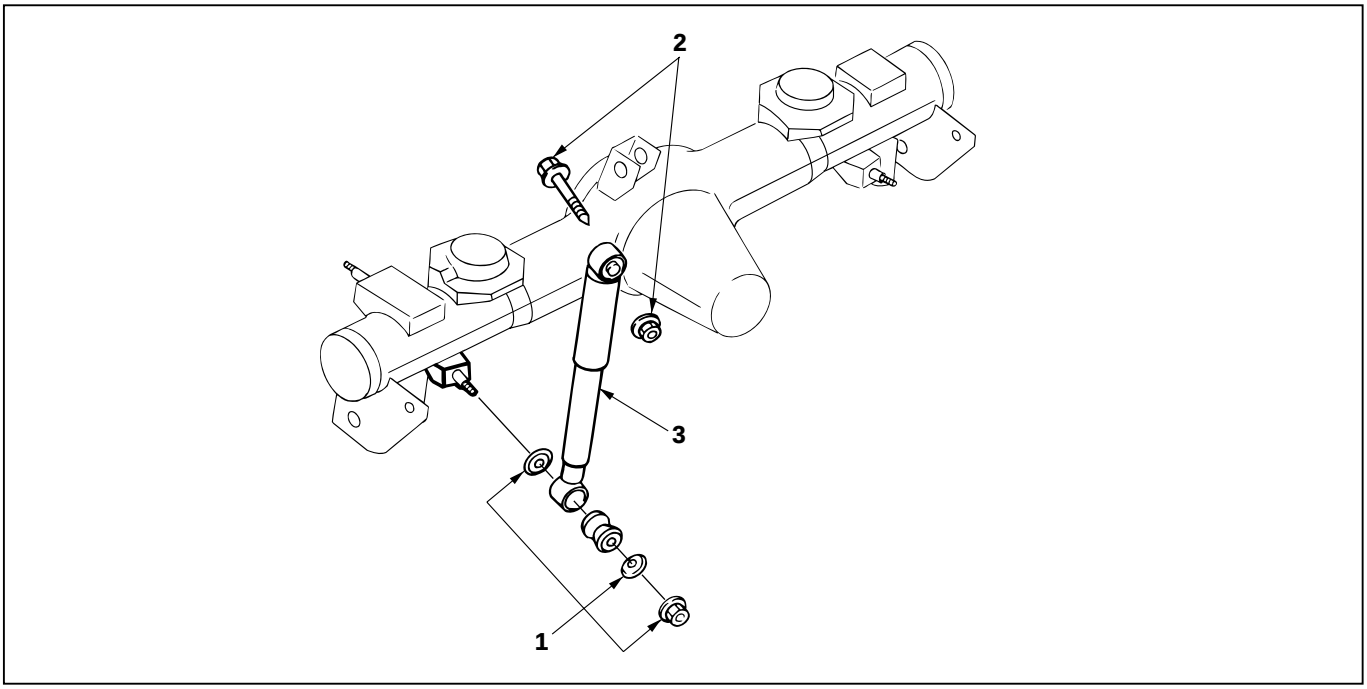

461RW003

Removal Steps

1. Nut and washer
2. Bolt, nut and washer
3. Shock absorber

Installation Steps

3. Shock absorber
2. Bolt, nut and washer
1. Nut and washer

REMOVAL

1. **Nut and Washer**
2. **Bolt, Nut and Washer**
3. **Shock Absorber**

INSPECTION AND REPAIR

Make necessary correction or parts replacement if wear, damage, corrosion or any other abnormal condition are found through inspection.

- Shock absorber
- Rubber bushing (Axle side)

INSTALLATION

3. **Shock Absorber**

   NOTE:
   When mounting rubber bushings, be sure not to use grease on bushings or any other nearby part.

2. **Bolt, Nut and Washer**

   NOTE:
   Tighten the bolt and nut lightly, and retighten to the specified torque after the vehicle is at curb height.

Shock Absorber Nut Torque	N·m (kg·m/lb·ft)
95 (9.7 / 70)	

1. **Nut and Washer**

   NOTE:
   Tighten the bolt and nut lightly, and retighten to the specified torque after the vehicle is at curb height.

Shock Absorber Nut Torque	N·m (kg·m/lb·ft)
78 (8.0 / 58)	

TRAILING LINK

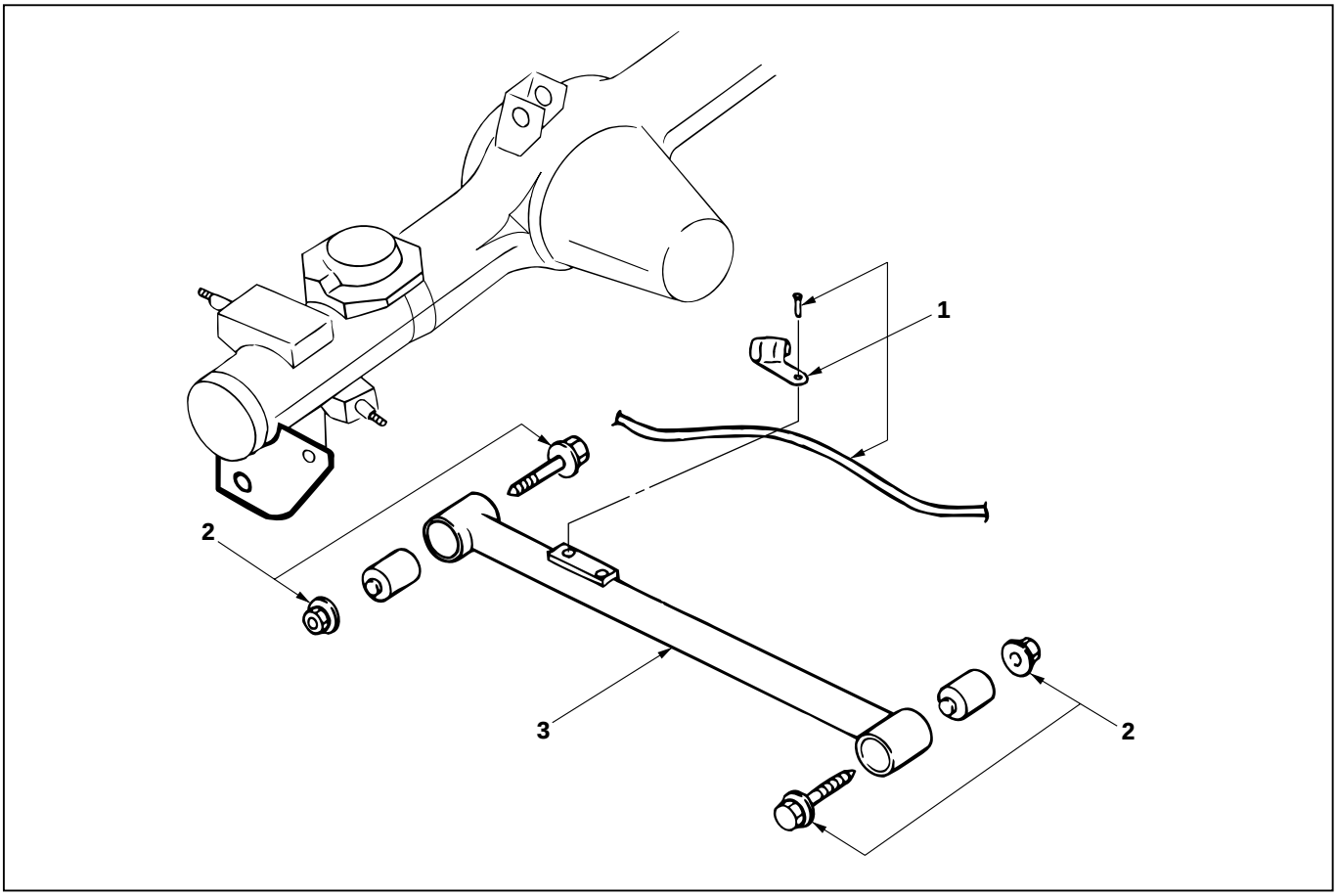

460RW025

Removal Steps

1. Parking brake cable
2. Bolt and nut
3. Trailing link

Installation Steps

3. Trailing link
2. Bolt and nut
1. Parking brake cable

REMOVAL

1. **Parking Brake Cable**
   Remove the parking brake cable from the trailing link.
2. **Bolt and Nut**
3. **Trailing Link**

INSPECTION AND REPAIR

Make necessary correction or parts replacement if wear, damage, corrosion or any other abnormal condition are found through inspection.

1. **Trailing Link**
2. **Rubber Bushing**
   Remove the rubber bushing.
   Remover: 5-8840-2298-0 (J-39214)

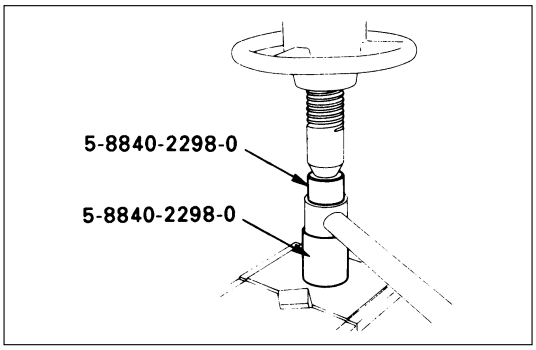

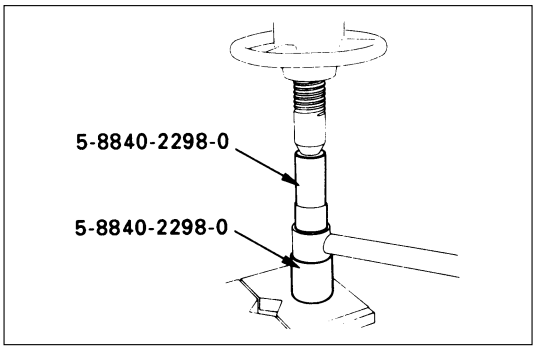

Install the rubber bushing.
Installer: 5-8840-2298-0 (J-39214)

NOTE:
When mounting rubber bushings, be sure not to use grease on bushings or any other nearby part.

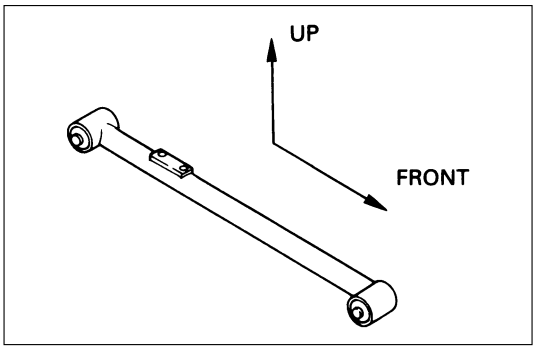

INSTALLATION

3. **Trailing Link**
   Make sure that the trailing link is in its correct position.

   NOTE:
   When mounting trailing link, be sure not to use grease on bushings or any other nearby part.

2. **Bolt and Nut**

   NOTE:
   Tighten the bolts and nuts lightly, and retighten to the specified torque after the vehicle is at curb height.

Trailing Link Nut Torque	N·m (kg·m/lb·ft)
137 (14.0 / 101)	

1. **Parking Brake Cable**

   CAUTION:
   The parking brake cable should not be overstrained or slackened.

CENTER LINK

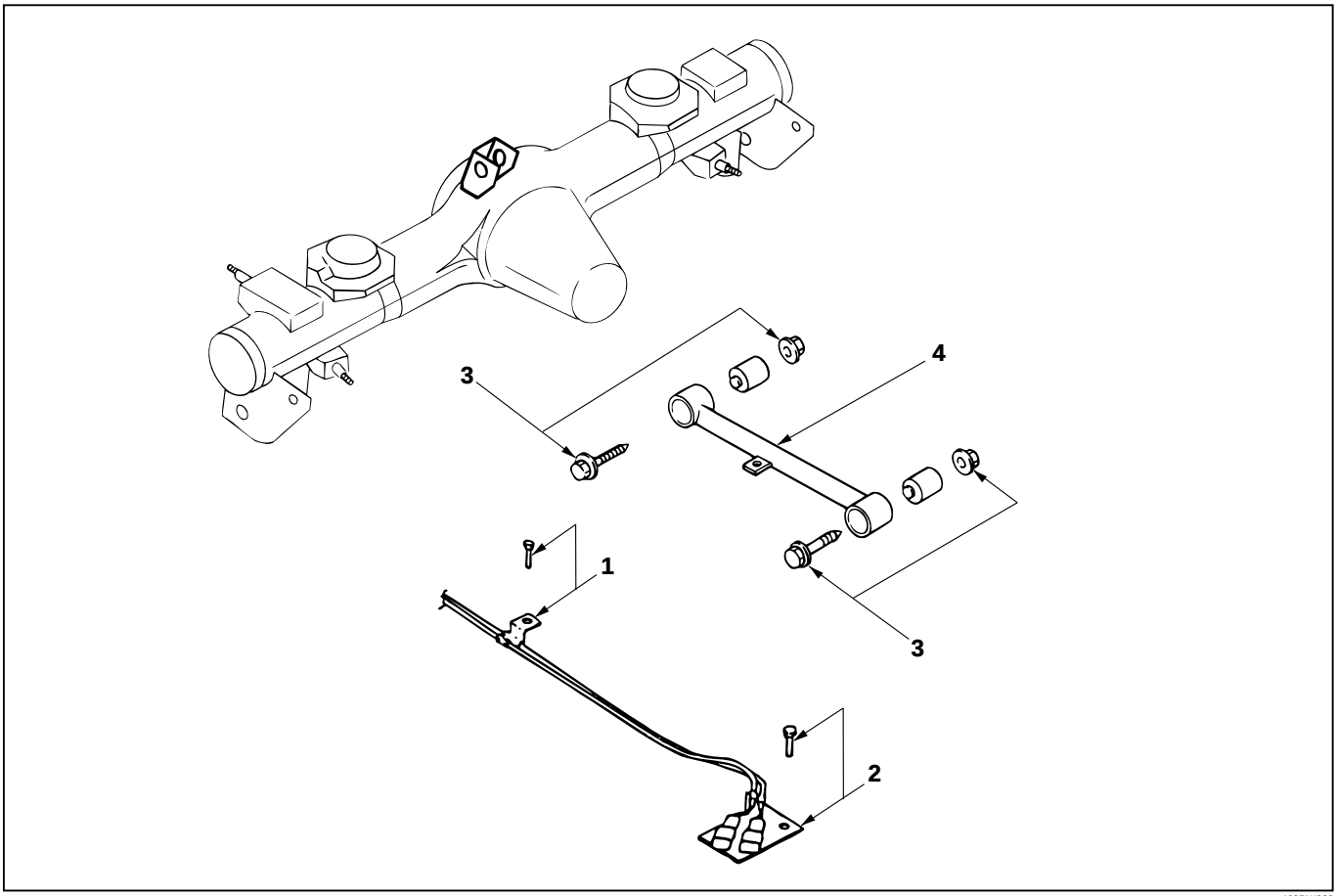

460RW026

Removal Steps

1. Speed sensor cable (If equipped with ABS)
2. Speed sensor cable bracket (If equipped with ABS)
3. Bolt and nut
4. Center link

Installation Steps

4. Center link
3. Bolt and nut
2. Speed sensor cable bracket (If equipped with ABS)
1. Speed sensor cable (If equipped with ABS)

REMOVAL

1. **Speed Sensor Cable (If equipped with ABS)**
   Remove the speed sensor cable from the center link.
2. **Speed Sensor Cable Bracket (If equipped with ABS)**
   Remove the speed sensor cable bracket from the frame.
3. **Bolt and Nut**
4. **Center Link**

INSPECTION AND REPAIR

Make necessary correction or parts replacement if wear, damage, corrosion or any other abnormal condition are found through inspection.

1. **Center Link**
2. **Rubber Bushing**
   Remove the rubber bushing.
   Remover: 5-8840-2298-0 (J-39214)

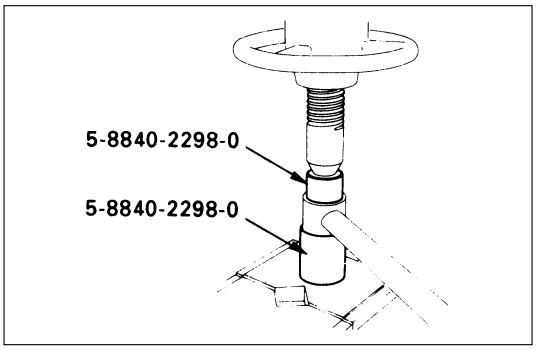

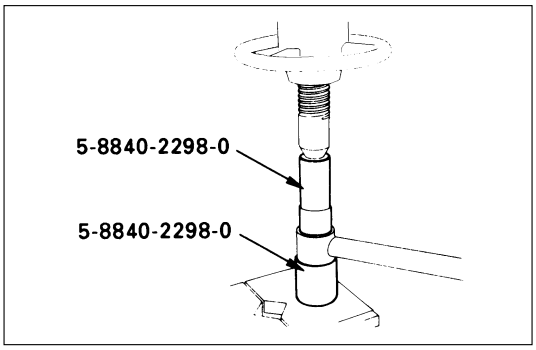

Install the rubber bushing.
Installer: 5-8840-2298-0 (J-39214)

NOTE:
When mounting rubber bushings, be sure not to use grease on bushings or any other nearby part.

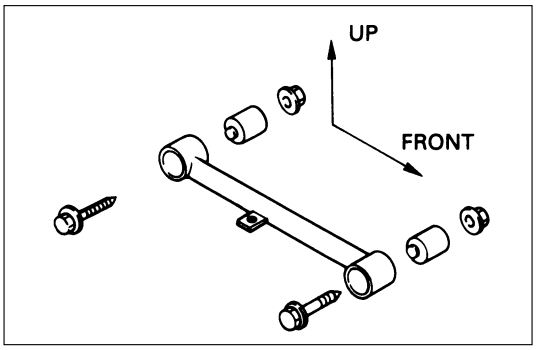

INSTALLATION

4. **Center Link**
   Make sure that the center link is in its correct position.

   NOTE:
   When mounting center link, be sure not to use grease on bushings or any other nearby part.

3. **Bolt and Nut**

   NOTE:
   Tighten the bolts and nuts lightly, and retighten to the specified torque after the vehicle is at curb height.

Center Link Nut Torque	N·m (kg·m/lb·ft)
137 (14.0 / 101)	

2. **Speed Sensor Cable Bracket**
1. **Speed Sensor Cable**

LATERAL ROD

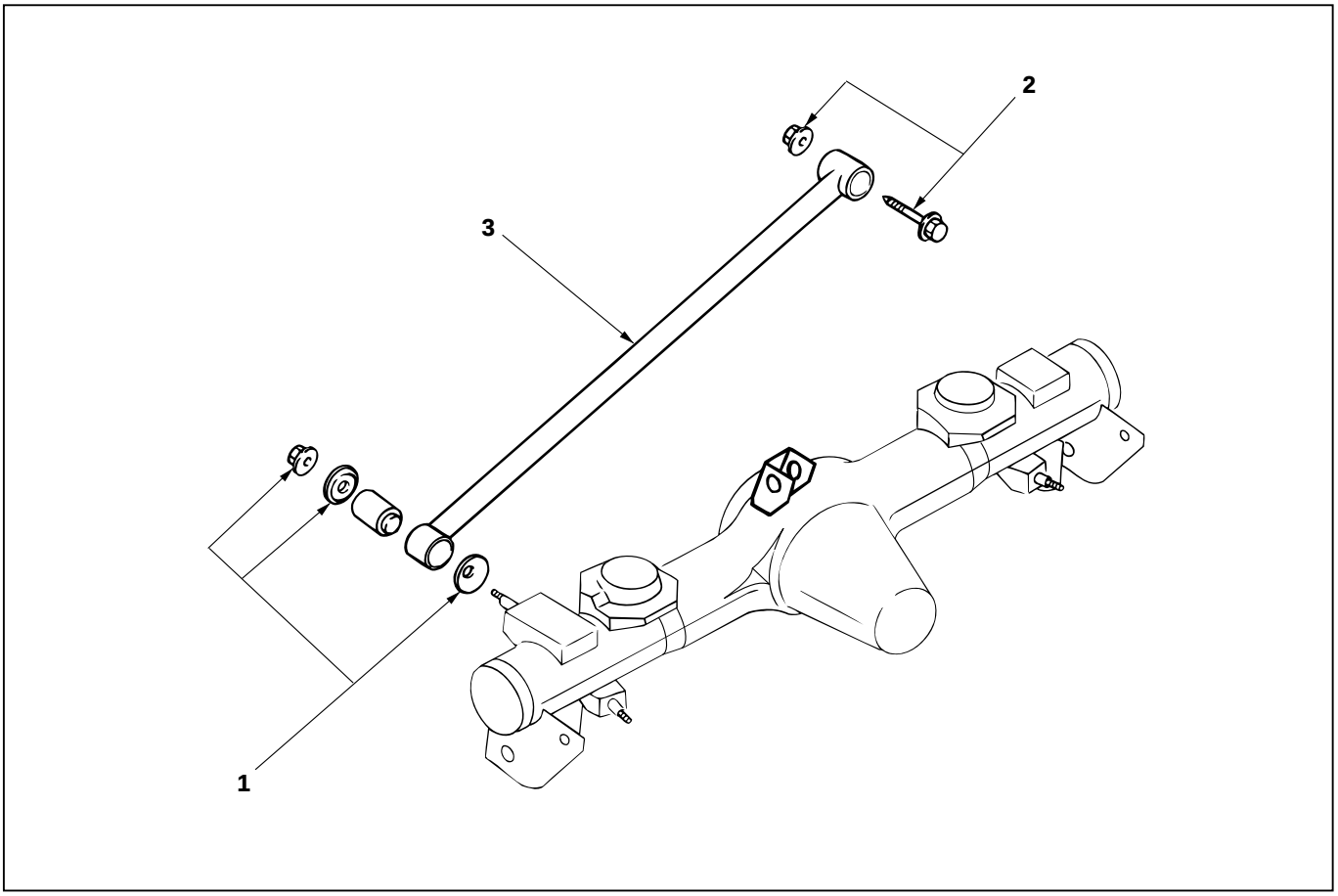

460RW027

Removal Steps

1. Nut and washer
2. Bolt and nut
3. Lateral rod

Installation Steps

3. Lateral rod
2. Bolt and nut
1. Nut and washer

REMOVAL

1. **Nut and Washer**
2. **Bolt and Nut**
3. **Lateral Rod**

INSPECTION AND REPAIR

Make necessary correction or parts replacement if wear, damage, corrosion or any other abnormal condition are found through inspection.

1. **Lateral Rod**

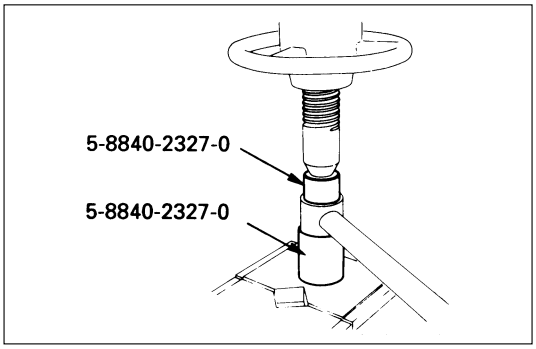

2. Rubber Bushing (Axle side)
Remove the rubber bushing (Axle side).
Remover: 5-8840-2327-0 (J-39792)

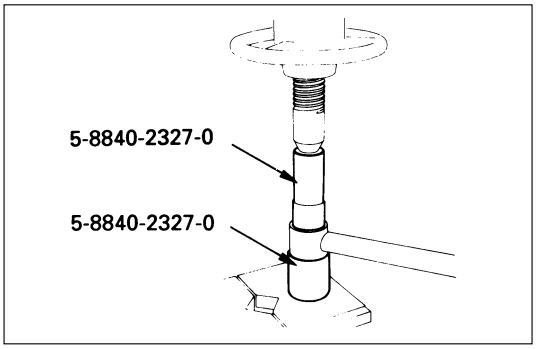

Install the rubber bushing (Axle side).
Installer: 5-8840-2327-0 (J-39792)

NOTE:
When mounting rubber bushings, do not use grease on bushings or any other nearby parts.

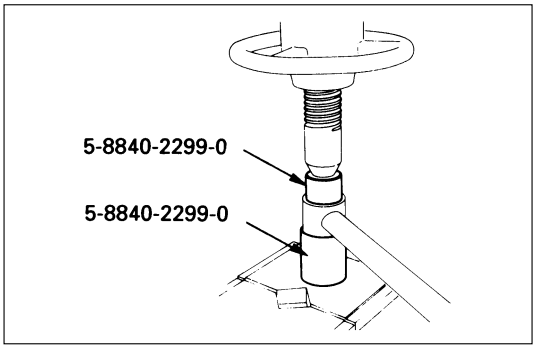

3. Rubber Bushing (Frame side)
Remove the rubber bushing (Frame side).
Remover: 5-8840-2299-0 (J-39215)

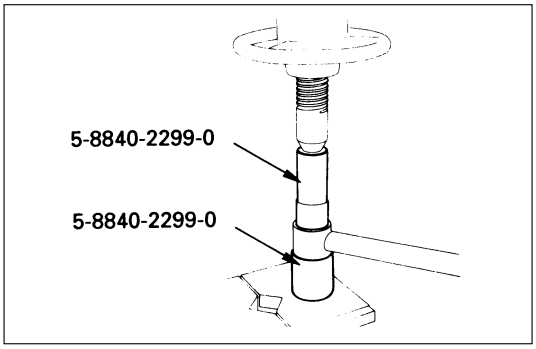

Install the rubber bushing (Frame side).
Installer: 5-8840-2299-0 (J-39215)

NOTE:
When mounting rubber bushings, do not use grease on bushings or any other nearby parts.

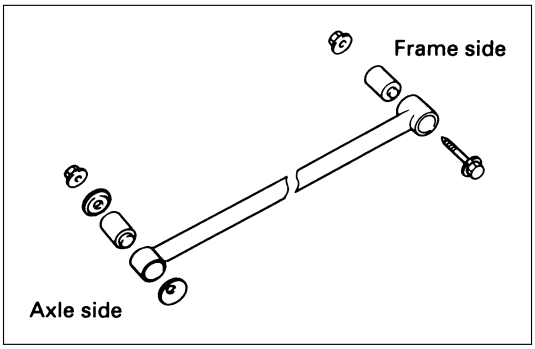

INSTALLATION

3. Lateral Rod

Make sure that the lateral rod is in its correct position.

NOTE:
When mounting lateral rod, be sure not to use grease on bushings or any other nearby part.

2. Bolt and Nut

NOTE:
Tighten the bolt and nut lightly, and retighten to the specified torque after the vehicle is at curb height.

Lateral Rod Nut Torque	N·m (kg·m/lb·ft)
137 (14.0 / 101)	

1. Nut and Washer

NOTE:
Tighten the nut lightly, and retighten to the specified torque after the vehicle is at curb height.

Lateral Rod Nut Torque	N·m (kg·m/lb·ft)
78 (8.0 / 58)	

STABILIZER BAR

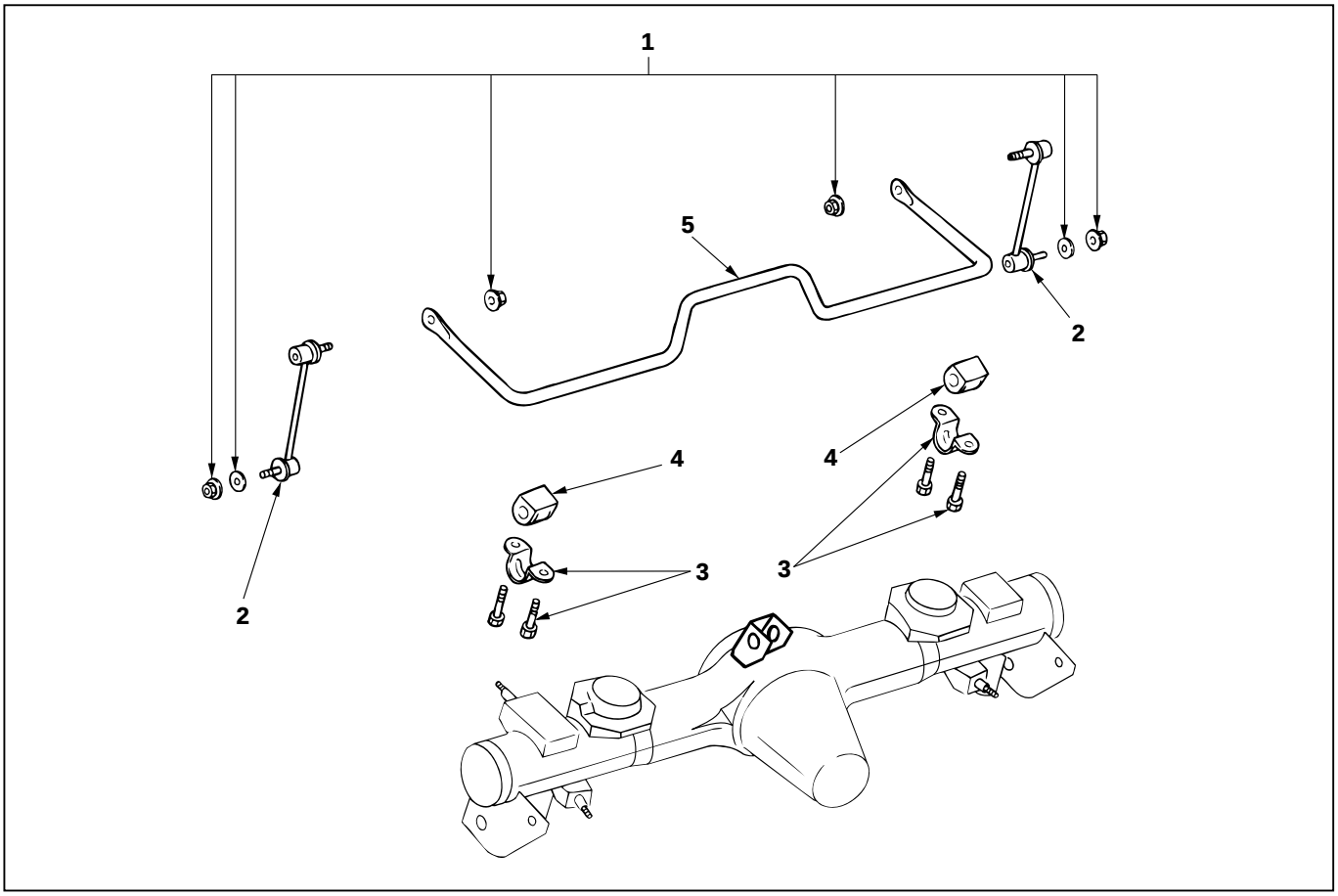

460RW028

Removal Steps

1. Nut and washer
2. Link
3. Bracket
4. Rubber bushing
5. Stabilizer bar

Installation Steps

5. Stabilizer bar
4. Rubber bushing
3. Bracket
2. Link
1. Nut and washer

REMOVAL

Preparation:

1) Raise the vehicle and support the frame with suitable safety stands.
2) Remove wheel and tire assembly.
   Refer to “Wheels and Tires” in section 3E.

1. Nut and Washer

CAUTION:
Be careful not to break the ball joint boot.

2. Link
3. Bracket
4. Rubber Bushing
5. Stabilizer Bar

INSPECTION AND REPAIR

Make necessary correction or parts replacement if wear, damage, corrosion or any other abnormal condition are found through inspection.

- Stabilizer bar
- Rubber bushing
- Link ball joint

INSTALLATION

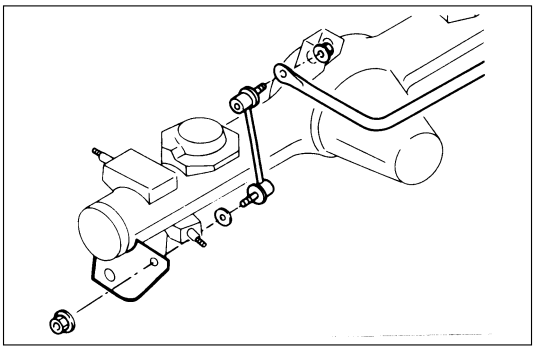

5. Stabilizer Bar

4 Rubber Bushing

3. Bracket

Bracket Bolt Torque	N·m (kg·m/lb·ft)
22 (2.2 / 16)	

2. Link

1. Nut and Washer

Link Nut Torque	N·m (kg·m/lb·ft)
50 (5.1 / 37)	

SECTION 3E

WHEELS AND TIRES

CONTENTS

PAGE

General Description ..... 3E – 2
On-Vehicle Service ..... 3E – 3
Wheels ..... 3E – 3
Unit Repair ..... 3E – 4
Tires ..... 3E – 4
Wheels ..... 3E – 5
General Balance Procedure ..... 3E – 5
Balancing Wheel and Tire ..... 3E – 6

GENERAL DESCRIPTION

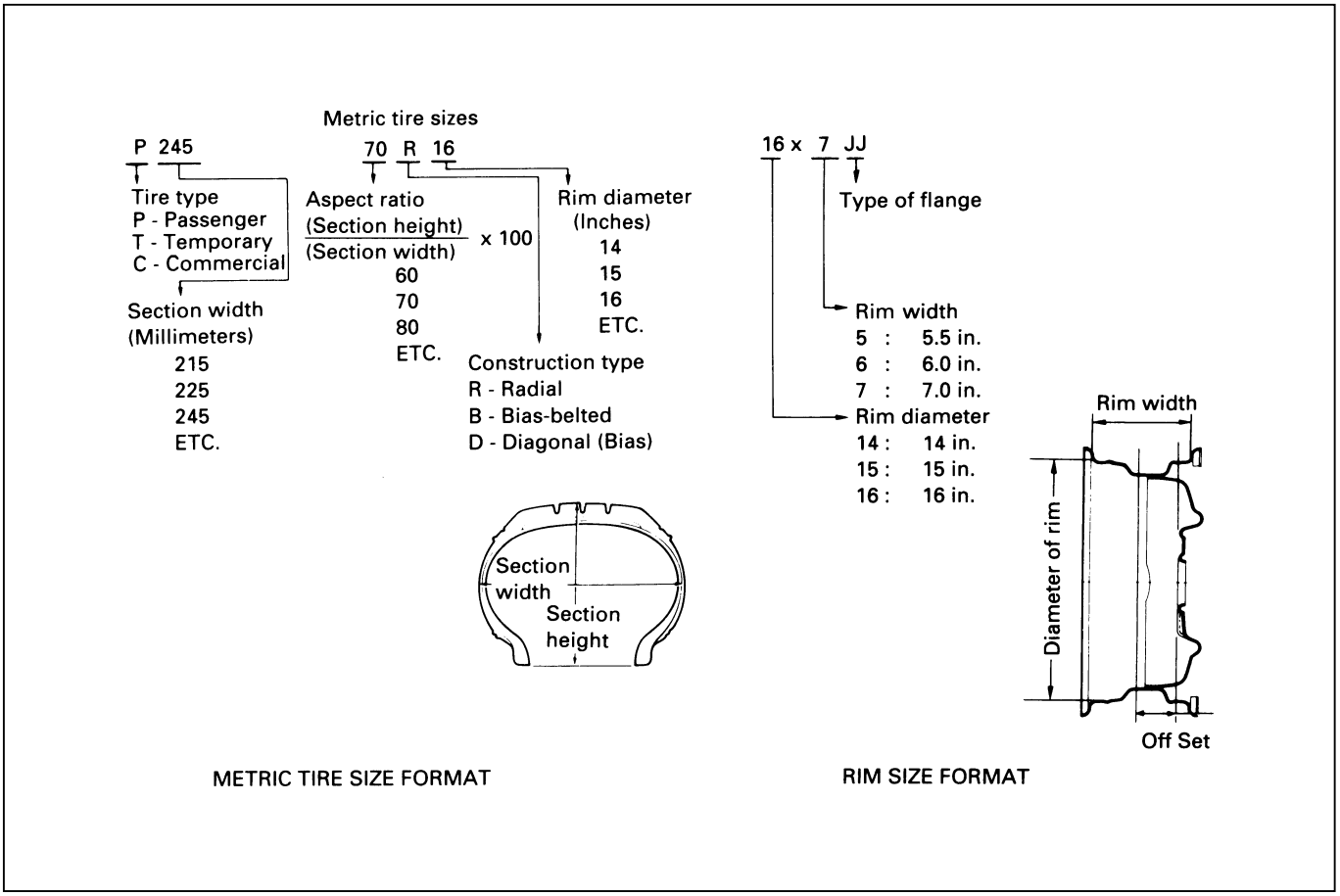

Replacement wheels or tires must be equivalent to the originals in load capacity, specified dimension and mounting configuration. Improper size or type may affect bearing life, brake performance, speedometer/odometer calibration, vehicle ground clearance and tire clearance to the body and chassis.

All models are equipped with metric sized steel belted radial tires. Correct tire pressures and driving habits have an important influence on tire life. Heavy cornering, excessively rapid acceleration and unnecessary sharp braking increase premature and uneven wear.

ON-VEHICLE SERVICE

WHEELS

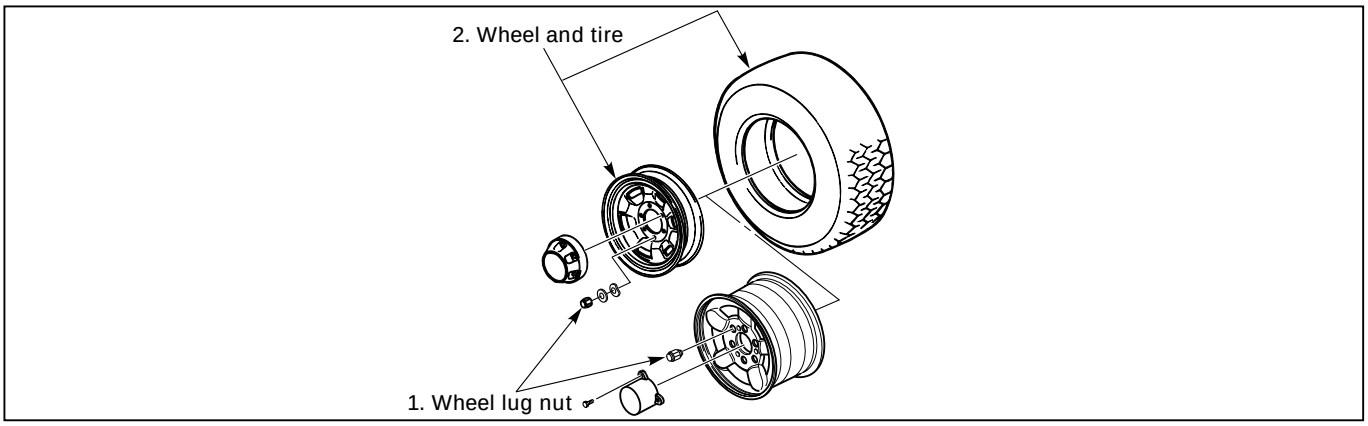

480RV004

Removal Steps

1. Wheel lug nut
2. Wheel and tire

Installation Steps

2. Wheel and tire
1. Wheel lug nut

REMOVAL

1. **Wheel Lug Nut**
   Loosen wheel nut by approximately 180° (half a rotation) and raise the vehicle. Then remove the nuts.
2. **Wheel and Tire**

   NOTE:
   Never use heat to loosen a tight wheel lug nut. The application of heat to the hub can shorten the life of the wheel and may cause damage to wheel bearings.

INSTALLATION

1. **Wheel and Tire**
2. **Wheel Lug Nut**
   Tighten the wheel lug nuts to the specified torque in numerical order.

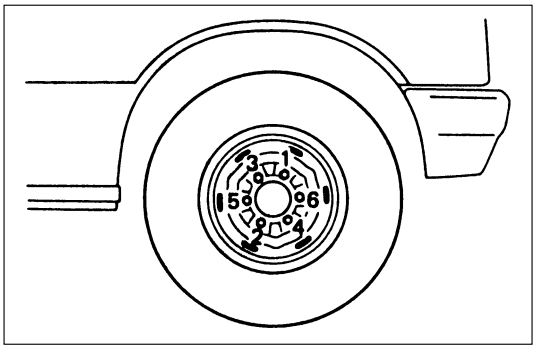

Wheel Lug Nut Torque	N·m (kg·m/lb·ft)
118 (12.0 / 87)	

CAUTION:
Before installing wheels, remove any build-up of corrosion on the wheel mounting surface and brake disc mounting surface by scraping and wire brushing. Installing wheels without good metal-to-metal contact at mounting surfaces can cause wheel nuts to loosen, which can later allow a wheel to come off while the vehicle is moving.

NOTE:
Valve caps should be on the valve stems to keep dust and water out.

UNIT REPAIR

TIRES

REPLACEMENT

When replacement is necessary, the original metric size should be used. Most metric tire sizes do not have exact corresponding alphanumeric tire sizes. It is recommended that new tires be installed in pairs on the same axle. If necessary to replace only one tire, it should be paired with tire having the most tread, to equalize braking traction.

CAUTION:
Do not mix different types of tires such as radial, bias and bias-belted tires except in emergencies, because vehicle handling may be seriously affected and may result in loss of control.

TIRE MOUNTING

Remove valve cap on valve stem and deflate the tire.
Then use a tire changing machine to mount or dismount tires.
Follow the equipment manufacturer's instruction. Do not use hand tools or tire lever alone to change tires as they may damage the tire beads or wheel rim.

TIRE DISMOUNTING

Rim bead seats should be cleaned with a wire brush or coarse steel wool to remove lubricants, and light rust.
Before mounting a tire, the bead area should be well lubricated with an approved tire lubricant.
After mounting, inflate the tire to 196 kPa (28 psi) so that beads are completely seated. Inflate the air to specified pressure and install valve cap to the stem

WARNING:
NEVER STAND OVER TIRE WHEN INFLATING. BEAD MAY BREAK WHEN BEAD SNAPS OVER RIM'S SAFETY HUMP AND CAUSE SERIOUS PERSONAL INJURY.
NEVER EXCEED 240 kPa (35 psi) PRESSURE WHEN INFLATING. IF 240 kPa (35 psi) PRESSURE WILL NOT SEAT BEADS, DEFLATE, RE-LUBRICATE AND RE-INFLATE. OVER INFLATION MAY CAUSE THE BEAD TO BREAK AND CAUSE SERIOUS PERSONAL INJURY.

TIRE REPAIR

There are many different materials on the market used to repair tires.
Manufacturers have published detailed instructions on how and when to repair tires. These instructions can be obtained from the tire manufacturer if they are not included with the repair kit.

WHEELS

REPLACEMENT

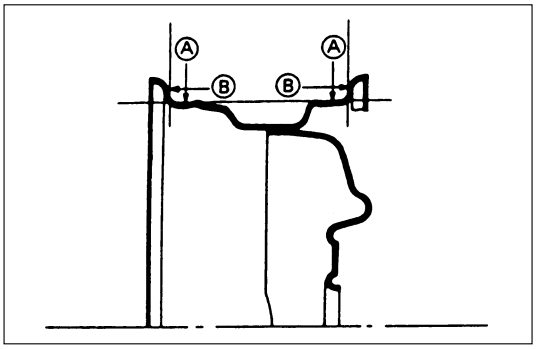

Damaged wheels and wheels with excessive runout must be replaced.
Wheel Runout at Rim (Based on Hub bore.)

	Steel	Aluminum
Ⓐ Vertical play: Less than mm(in)	1.5 (0.059)	0.7 (0.028)
Ⓑ Horizontal play: Less than mm(in)	1.5 (0.059)	0.7 (0.028)

GENERAL BALANCE PROCEDURE

Deposits of mud, etc. must be cleaned from the inside of the rim.
The tire should be inspected for the following: match mount paint marks, bent rims, bulges, irregular tire wear, proper wheel size and inflation pressure. Then balance according to the equipment manufacturer's recommendations.
There are two types of wheel and tire balance.
Static balance is the equal distribution of weight around the wheel.
Assemblies that are statically unbalanced cause a bouncing action called tramp. This condition will eventually cause uneven tire wear.

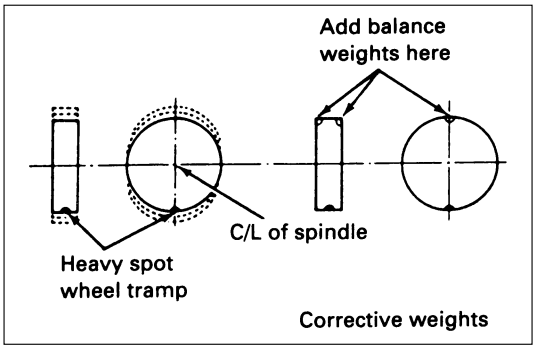

Dynamic balance is the equal distribution of weight on each side of the wheel center-line so that when the tire spins there is not tendency for the assembly to move from side to side. Assemblies that are dynamically unbalanced may cause shimmy.

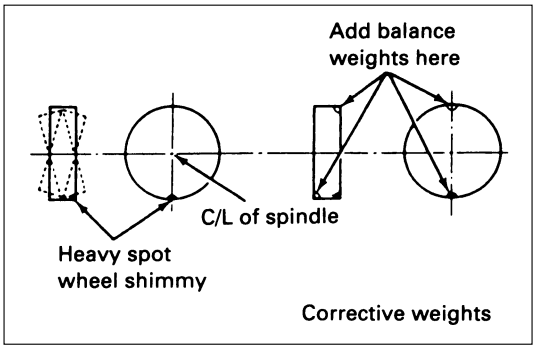

WARNING:
STONES SHOULD BE REMOVED FROM THE TREAD TO AVOID OPERATOR INJURY DURING SPIN BALANCING AND TO OBTAIN A GOOD BALANCE.

BALANCING WHEEL AND TIRE

ON-VEHICLE BALANCING

On-Vehicle balancing methods vary with equipment and tool manufacturers. Be sure to follow each manufacturer's instructions during balancing operation.

OFF-VEHICLE BALANCING

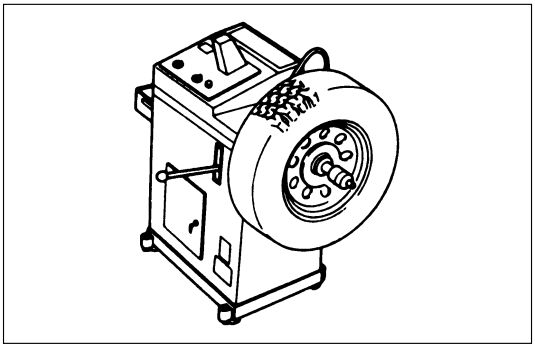

Most electronic off-vehicle balancers are more accurate than the on-vehicle spin balancers. They are easy to use and give a dynamic balance. Although they do not correct for drum or disc unbalance (as on-vehicle spin balancing does), they are very accurate.

DRIVELINE/AXLE

CONTENTS

Differential (Front) 4A1
Differential (Rear/220mm) 4A2A
Differential (Rear/244mm) 4A2B
Driveline Control System (Shift on the Fly) . . 4B1
Driveline Control System (TOD) 4B2
Driveshaft System 4C
Transfer Case (Standard Type) 4D1
Transfer Case (TOD) 4D2

DIFFERENTIAL (FRONT)

CONTENTS

Service Precaution 4A1–1
Front Drive Axle 4A1–2
Diagnosis 4A1–2
Pinion Shaft Oil Seal 4A1–3
Pinion Shaft Oil Seal and Associated Parts 4A1–3
Removal 4A1–3
Inspection and Repair 4A1–4
Installation 4A1–4
Front Drive Axle Assembly 4A1–5
Front Drive Axle Assembly and Associated Parts 4A1–5
Removal 4A1–5
Installation 4A1–7
Differential Assembly 4A1–9
Disassembled View 4A1–9
Disassembly 4A1–10
Reassembly 4A1–12
Differential Cage Assembly 4A1–21
Disassembled View 4A1–21
Disassembly 4A1–21
Inspection and Repair 4A1–22
Reassembly 4A1–23
Main Data and Specifications 4A1–25
Special Tools 4A1–28

Service Precaution

WARNING: IF SO EQUIPPED WITH A SUPPLEMENTAL RESTRAINT SYSTEM (SRS), REFER TO THE SRS COMPONENT AND WIRING LOCATION VIEW IN ORDER TO DETERMINE WHETHER YOU ARE PERFORMING SERVICE ON OR NEAR THE SRS COMPONENTS OR THE SRS WIRING. WHEN YOU ARE REFORMING SERVICE ON OR NEAR THE SRS COMPONENTS OR THE SRS WIRING, REFER TO THE SRS SERVICE INFORMATION. FAILURE TO FOLLOW WARNINGS COULD RESULT IN POSSIBLE AIR BAG DEPLOYMENT, PERSONAL INJURY, OR OTHERWISE UNNEEDED SRS SYSTEM REPAIRS.

CAUTION: Always use the correct fastener in the proper location. When you replace a fastener, use ONLY the exact part number for that application. ISUZU will call out those fasteners that require a replacement after removal. ISUZU will also call out the fasteners that require thread lockers or thread sealant. UNLESS OTHERWISE SPECIFIED , do not use supplemental coatings (Paints, greases, or other corrosion inhibitors) on threaded fasteners or fastener joint interfaces. Generally,such coatings adversely affect the fastener torque and the joint clamping force, and may damage the fastener. When you install fasteners, use the correct tightening sequence and specification. Following these instructions can help you avoid damage to parts and systems.

Front Drive Axle

Diagnosis

Condition	Possible cause	Correction
Oil Leak At Front Axle	Worn or defective oil seal.	Replace the oil seal.
	Front axle housing cracked.	Repair or replace.
Oil Leak At Pinion Shaft	Too much gear oil.	Correct the oil level.
	Oil seal worn or defective.	Replace the oil seal.
	Pinion flange loose or damaged.	Tighten or replace.
Noises In Front Axle Drive Shaft Joint	Broken or worn drive shaft joints and bellows (BJ and DOJ).	Replace the drive shaft joints and bellows.
“Clank” When Accelerating From “Coast”	Loose drive shaft joint to output shaft bolts.	Tighten.
	Damaged inner drive shaft joint.	Replace.
Shudder or Vibration During Acceleration	Excessive drive shaft joint angle.	Repair.
	Worn or damaged drive shaft joints.	Replace.
	Sticking spider assembly (inner drive shaft joint).	Lubricate or replace.
	Sticking joint assembly (outer drive shaft joint).	Lubricate or replace.
Vibration At Highway Speeds	Out of balance or out of round tires.	Balance or replace.
	Front end out of alignment.	Align.
Noises in Front Axle	Insufficient gear oil.	Replenish the gear oil.
	Wrong or poor grade gear oil.	Replace the gear oil.
	Drive pinion to ring gear backlash incorrect.	Adjust the backlash.
	Worn or chipped ring gear, pinion gear or side gear.	Replace the ring gear, pinion gear or side gear.
	Pinion shaft bearing worn.	Replace the pinion shaft bearing.
	Wheel bearing worn.	Replace the wheel bearing.
	Differential bearing loose or worn.	Tighten or replace.
Wanders and Pulls	Wheel bearing preload too tight.	Adjust the wheel bearing preload.
	Incorrect front alignment.	Adjust the front alignment.
	Steering linkage loose or worn.	Tighten or replace.
	Steering gear out of adjustment.	Adjust or replace the steering gear.
	Tire worn or improperly inflated.	Adjust the inflation or replace.
	Front or rear suspension parts loose or broken.	Tighten or replace.
Front Wheel Shimmy	Wheel bearing worn or improperly adjusted.	Adjust or replace.
	Incorrect front alignment.	Adjust the front alignment.
	Worn ball joint or bush.	Replace the ball joint or bush.
	Steering linkage loose or worn.	Tighten or replace.
	Steering gear out of adjustment.	Tighten or replace.
	Tire worn or improperly inflated.	Replace or adjust the inflation.
	Shock absorber worn.	Replace the shock absorber.

Pinion Shaft Oil Seal

Pinion Shaft Oil Seal and Associated Parts

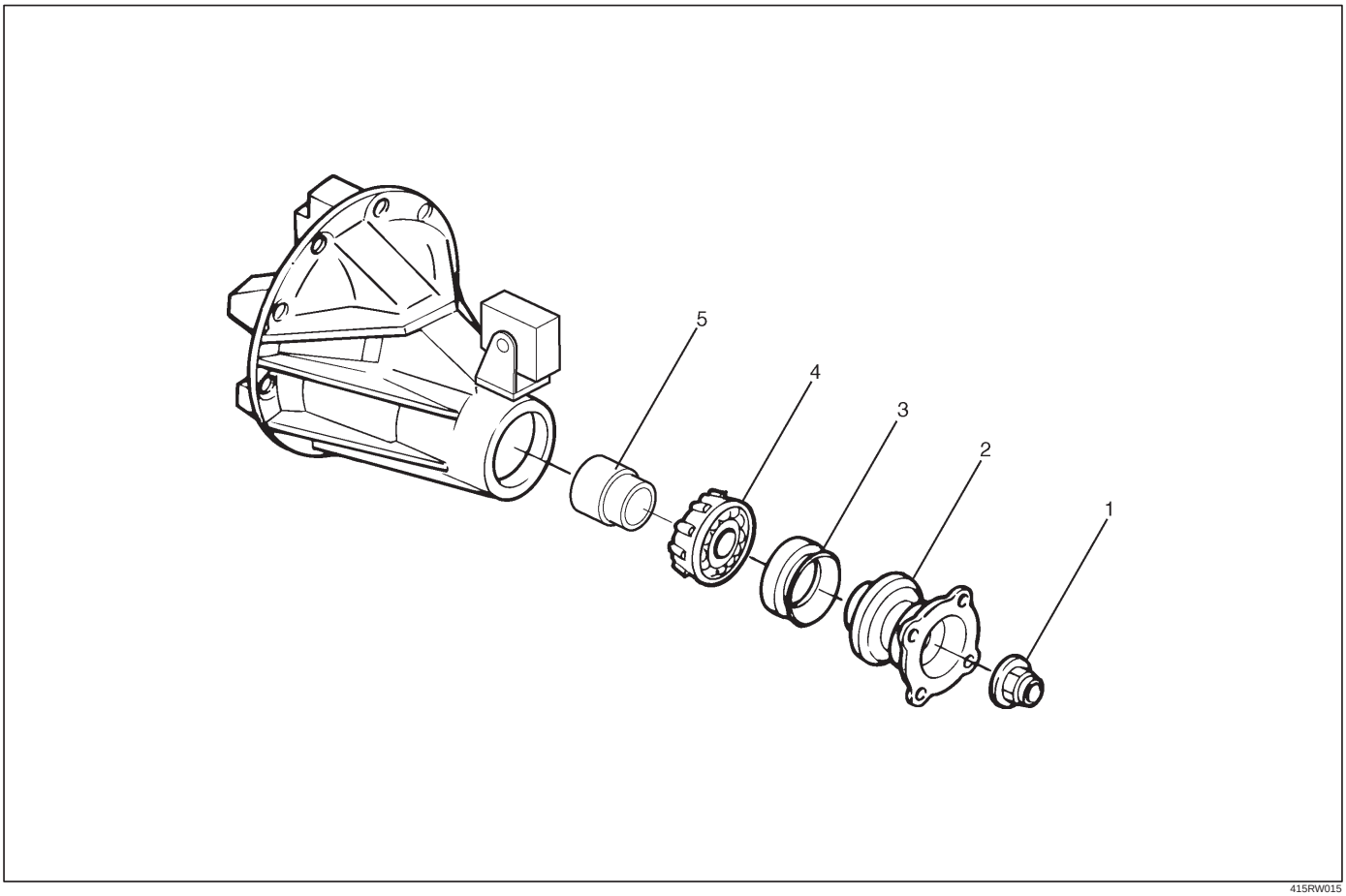

415RW015

Legend

(1) Flange Nut
(2) Flange
(3) Oil Seal
(4) Outer Bearing
(5) Collapsible Spacer

Removal

1. Raise the vehicle and support it at the frame.
   The hoist must remain under the front axle housing.
2. Drain the front axle oil by loosening the drain plug(1).

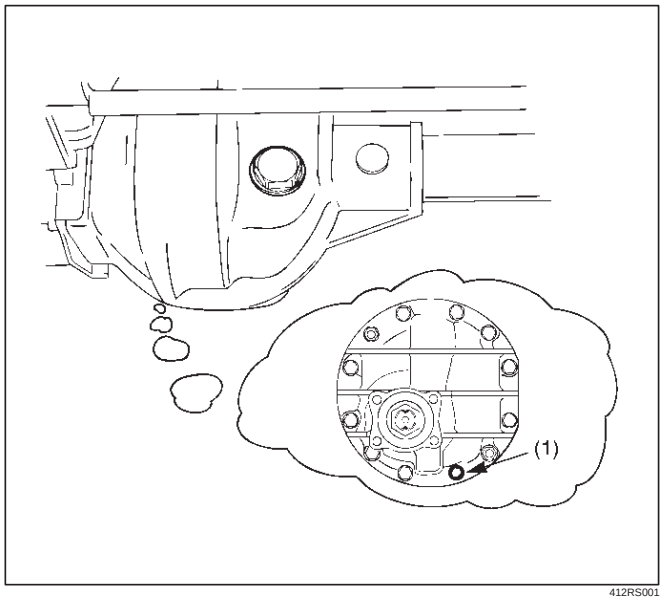

412RS001

3. Remove the front propeller shaft. Refer to Front Propeller Shaft in this section.
4. Remove flange nut by using pinion flange holder 5–8840–2157–0.

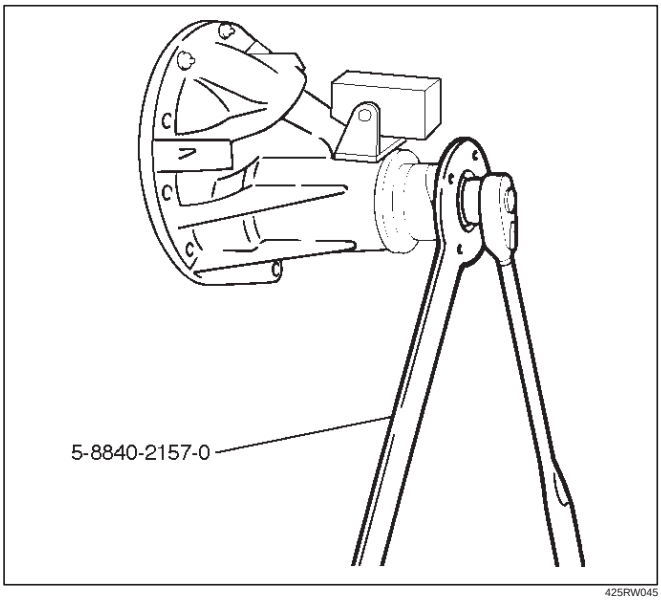

425RW045

5. Remove flange.
6. Remove oil seal.
7. Remove outer bearing by using remover 5–8840–2323–0.

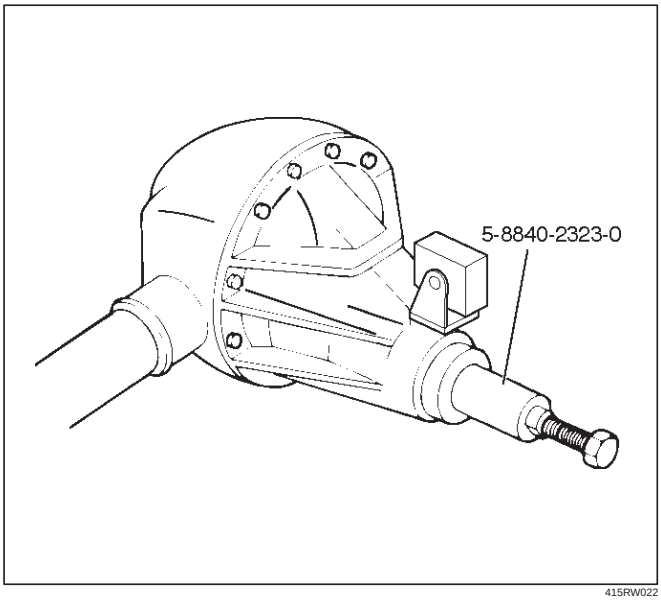

415RW022

8. Remove collapsible spacer.

Inspection and Repair

Make necessary correction or parts replacement if wear, damage, corrosion or any other abnormal conditions are found through inspection.
Check the following parts:

1. Seal surface of the pinion.
2. Cage bore for burns.

Installation

1. Install collapsible spacer. Discard the used collapsible spacer and install a new one.
2. Install outer bearing.

NOTE: Do not drive in, but just temporarily set in the outer bearing by hand, which should be indirectly pressed in finally by tightening the flange nut.

3. Install oil seal, use oil seal installer 9–8522–1275–0 to install a new oil seal that has been soaked in axle lubricant.

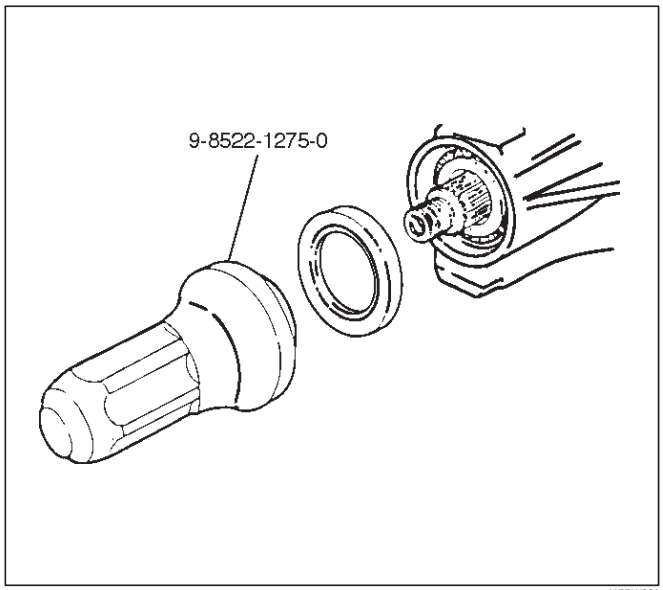

415RW021

4. Install flange.
5. Install flange nut, refer to Differential Assembly for flange nut reassembly in this section.

NOTE: Discard the used nut and install a new one.

Front Drive Axle Assembly

Front Drive Axle Assembly and Associated Parts

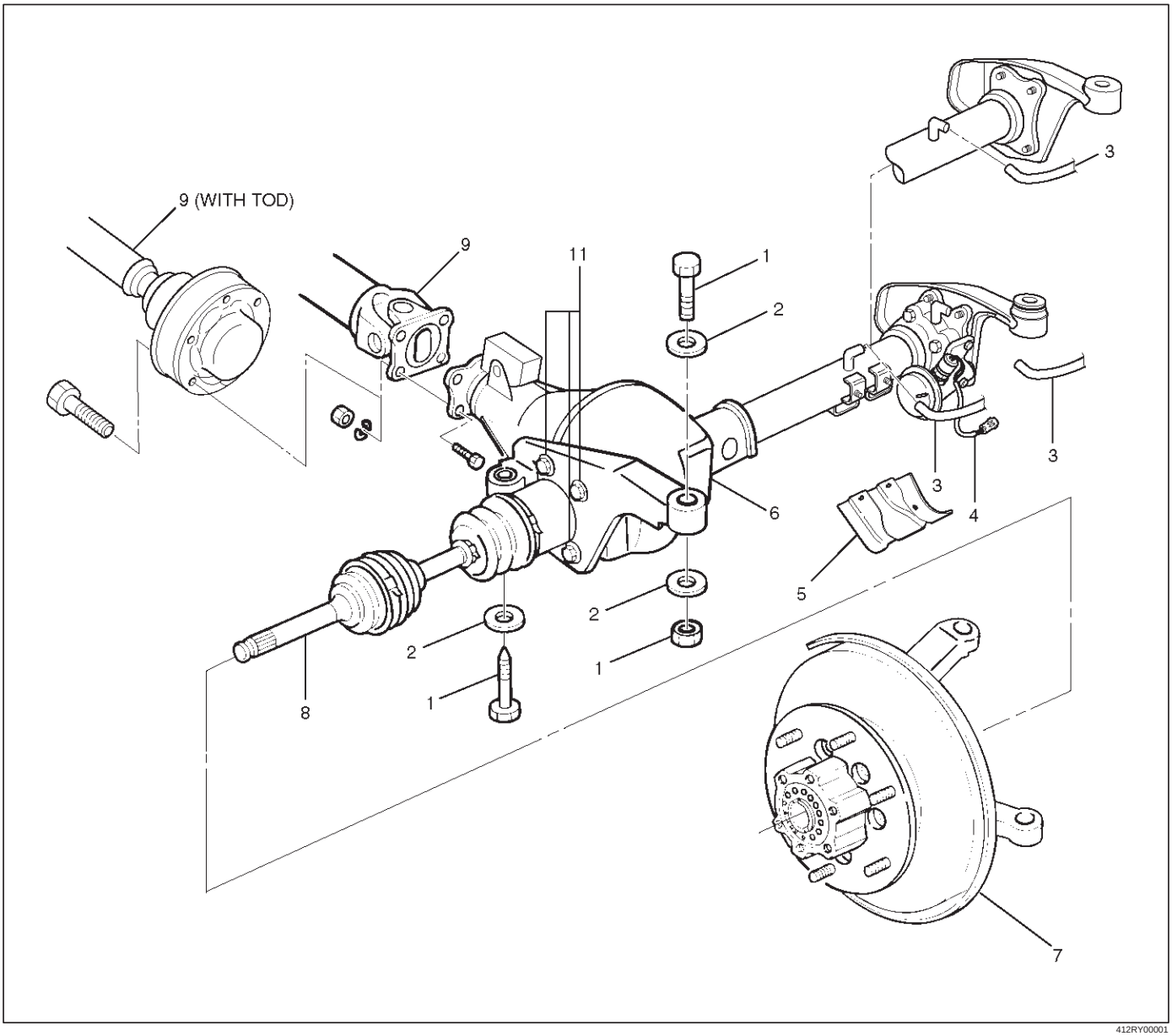

412RY00001

Legend

(1) Mounting Bolt and Nut
(2) Washer and Spacer
(3) Breather Hose
(4) Shift Switch Connector (with Shift on the Fly)
(5) Protector (with Shift on the Fly)
(6) Front Axle Case Assembly and Front Drive Shaft Assembly (LH side)
(7) Hub Assembly (Disc, Back Plate and Knuckle)
(8) Front Drive Shaft Assembly (RH side)
(9) Propeller Shaft
(10) Bolt

Removal

1. Jack up the vehicle and support it using jack stands.
2. Remove the tire and wheel.

3. Remove the drain bolt to drain differential oil.

NOTE:

a. During the work, be sure that the diff case is supported by the jack.

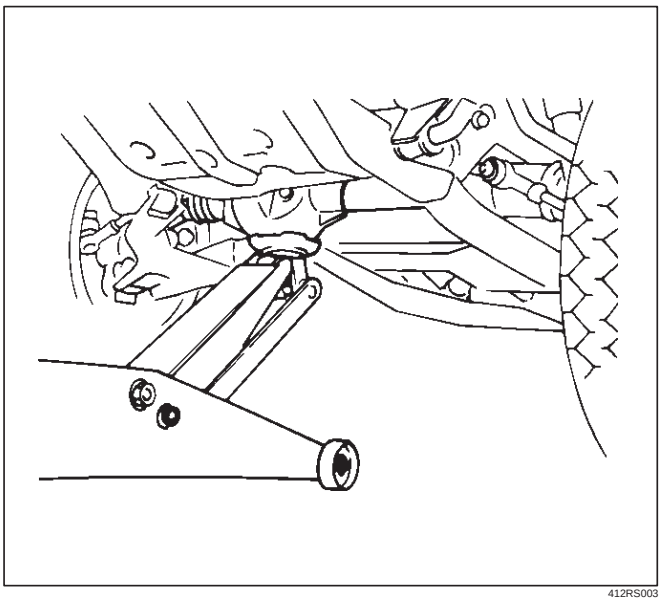

412RS003

b. Remove the brake caliper fixing bolt and hang the caliper. Refer to Front Disc Brake Caliper Assembly in Brake section.

c. Remove the antilock brake system speed sensor (if equipped). Refer to Front Wheel Speed Sensor in Brakes section.

4. Remove the hub assembly (Disc, back plate and knuckle), refer to Front Hub and Disc in this section.
5. Disconnect the knuckle and the suspension arm. Refer to Suspension section.
6. Remove steering link and arm assembly, refer to Steering Linkage in Steering section.
7. Remove suspension crossmember.
8. Remove propeller shaft, refer to Front Propeller Shaft in this section.
9. Remove protector (Shift on the fly model).
10. Remove the hose clip.
11. Disconnect breather hose from front drive axle tube. (and disconnect housing : Shift on the fly model).
12. Disconnect vacuum hose from actuator (Shift on the fly model).
13. Disconnect shift switch connector (Shift on the fly model).

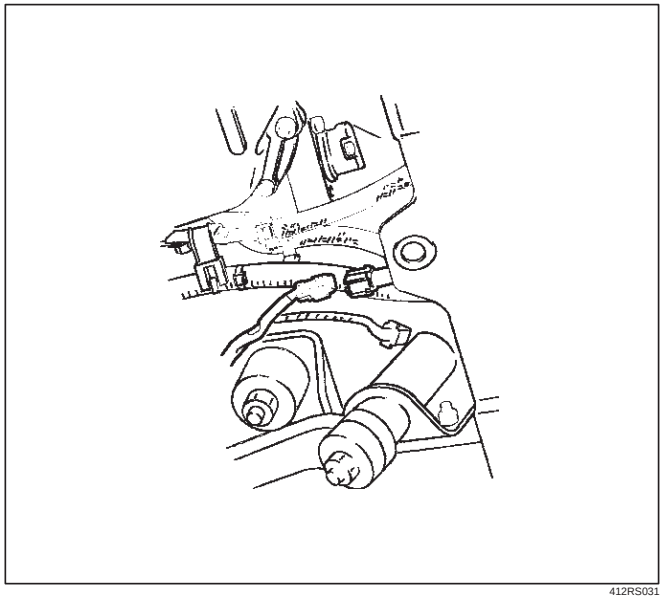

412RS031

14. Remove VSV assembly (1) (Shift on the fly model).

NOTE: Be sure not to remove hose and connector from VSV asm.

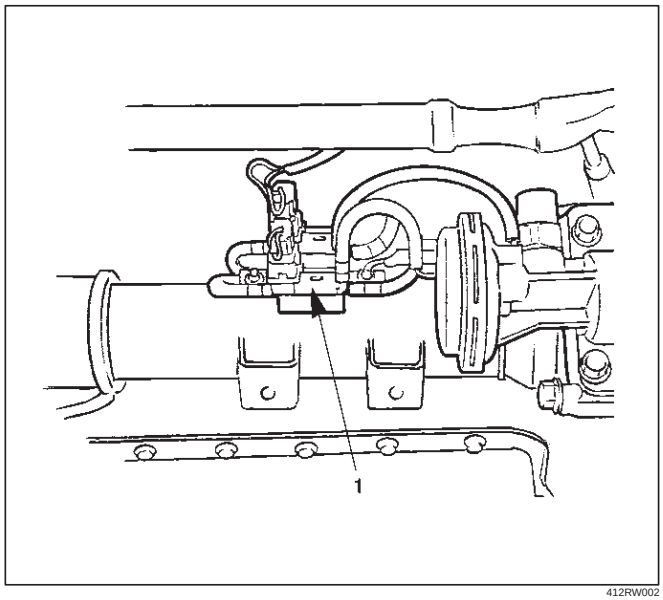

412RW002

15. Remove mounting bolt and nut.

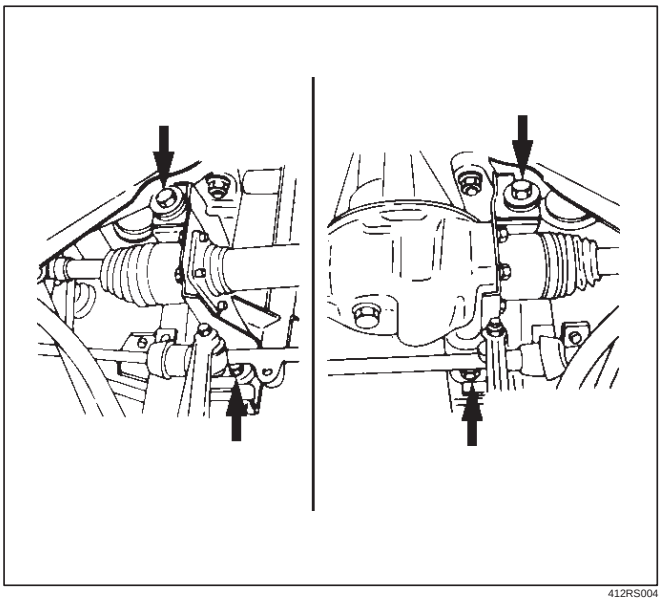

412RS004

16. Remove washer and spacer.
17. Remove the mounting bracket fixing bolt.

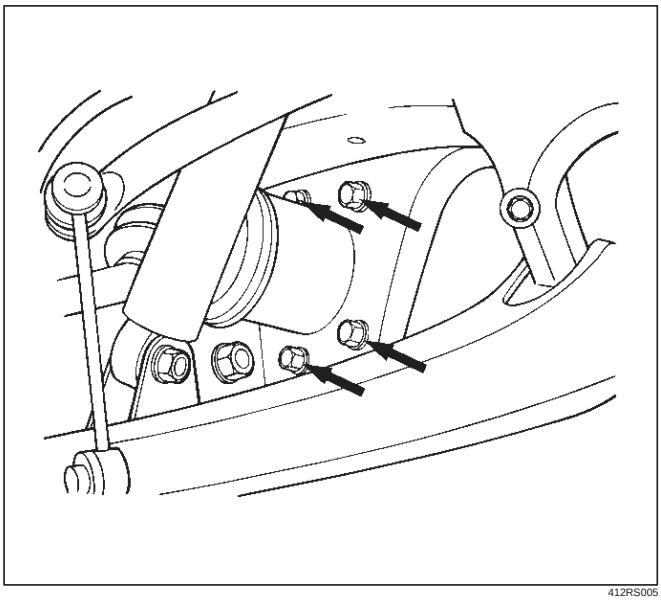

412RS005

18. Lower the vehicle and disconnect the RH front drive shaft assembly, then remove the front axle case assembly and front drive shaft assembly (LH).

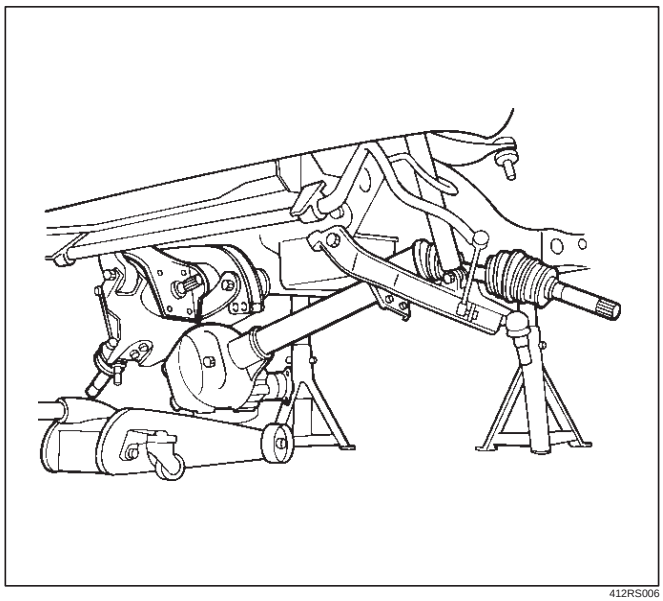

412RS006

19. Remove front drive shaft assembly (RH).

Installation

1. Install front drive shaft assembly (RH) and lay the assembly on the lower arm.
2. Install front axle case assembly and front drive shaft assembly (LH) and place the axle case on the jack, connect to the front drive shaft assembly (RH) before installing to the vehicle.
3. Install bolt and tighten the mounting bracket fixing bolt to the specified torque.

   Torque: 116 N·m (11.8kg·m/85 lb ft)

4. Install washer and spacer.

5. Tighten the mounting bolt and nut to the specified torque.

Torque: 152 N·m (15.5kg·m/112 lb ft)

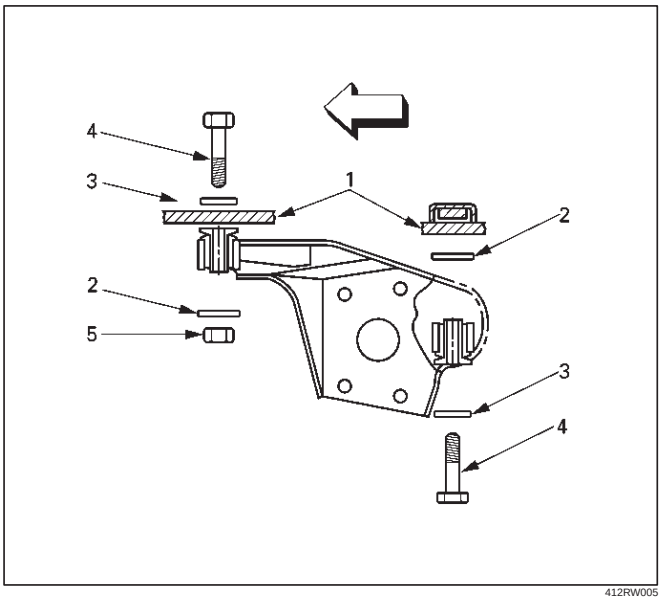

412RW005

Legend

(1) Frame
(2) Spacer
(3) Washer
(4) Bolt
(5) Nut

6. Install VSV assembly and tighten nuts to specified torque (Shift on the fly model).

Torque: 8 N·m (0.8kg·m/69 lb in)

7. Install the shift switch connector (Shift on the fly model).

NOTE: Be careful not to permit the entry of dust into the connector.

8. Install the actuator side of vacuum hose (Shift on the fly model).

NOTE: Be careful not to permit the entry of dust into the hose.

9. Connect breather hose and install the hose clip.
10. Install protector and tighten bolts to specified torque (Shift on the fly model).

Torque: 26 N·m (2.7kg·m/20 lb ft)

11. Install propeller shaft, refer to Front Propeller Shaft in this section.
12. Install suspension crossmember.
13. Steering link and arm assembly, refer to Steering Linkage in Steering section.
14. Install hub assembly (Disc, back plate and knuckle), refer to Front Hub and Disc in this section.

Differential Assembly

Disassembled View

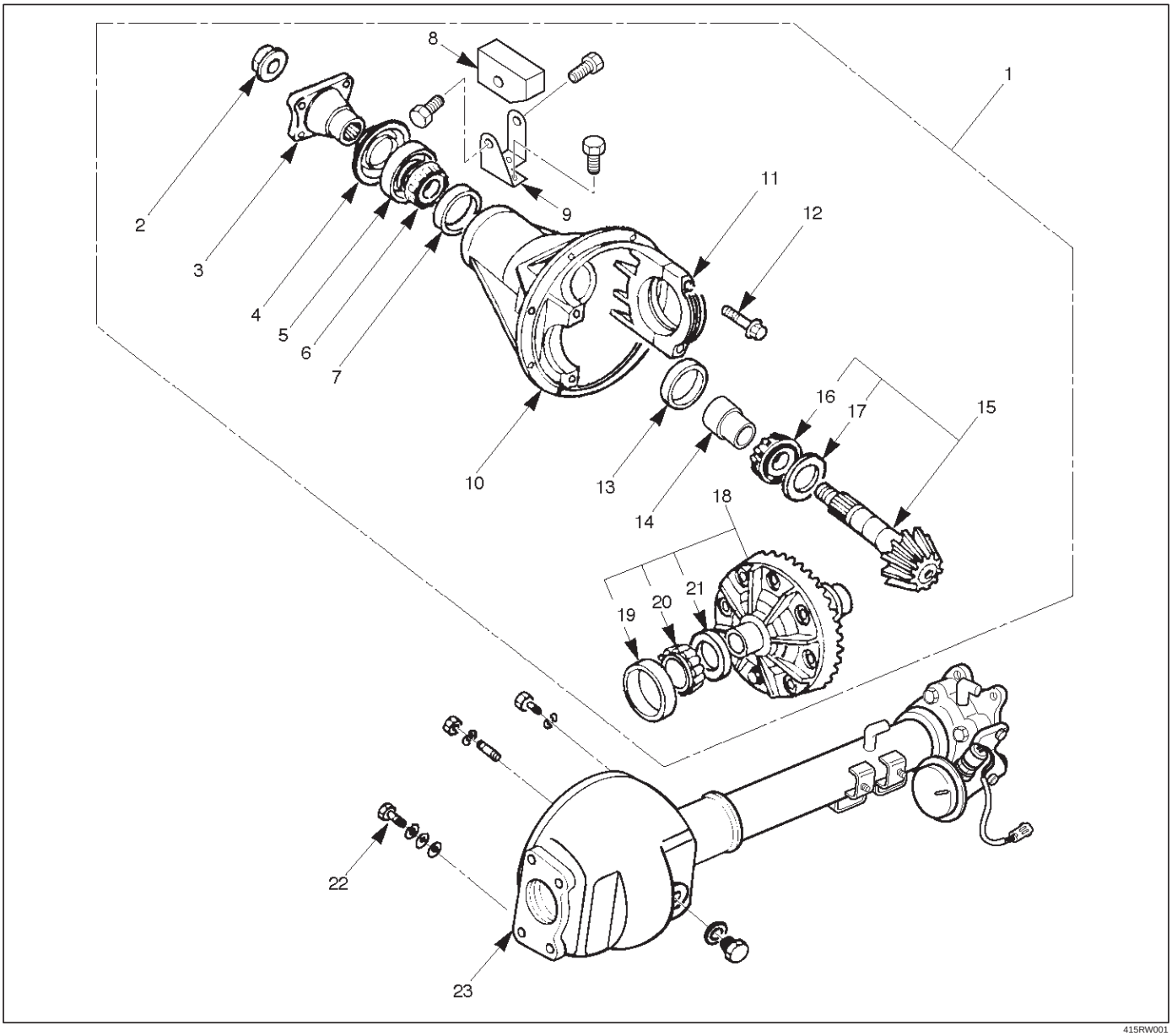

415RW001

Legend

(1) Differential Assembly
(2) Flange Nut
(3) Flange
(4) Dust Cover
(5) Oil Seal
(6) Outer Bearing
(7) Outer Bearing Outer Race
(8) Damper
(9) Bracket
(10) Differential Carrier
(11) Bearing Cap
(12) Bolt
(13) Inner Bearing Outer Race
(14) Collapsible Spacer
(15) Pinion Gear
(16) Inner Bearing
(17) Adjust Shim
(18) Diff Cage Assembly
(19) Side Bearing Outer Race
(20) Side Bearing
(21) Adjust Shim
(22) Bolt
(23) Axle Case

Disassembly

1. Remove differential carrier fixing bolt.
2. Remove differential assembly.
3. Using holding fixture 5–8840–0275–0 and holding fixture base 5–8840–0003–0, fix the differential assembly to the bench.

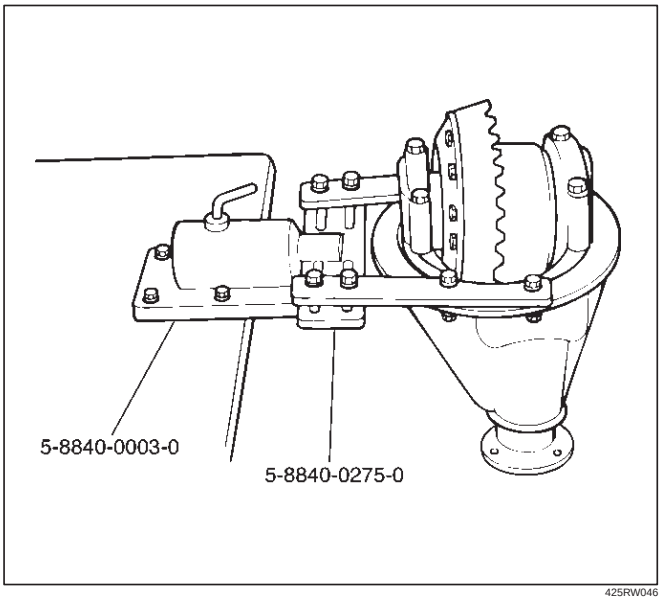

425RW046

4. Remove bearing cap bolt.
5. Apply a setting mark to the side bearing cap and the differential carrier then remove bearing cap.

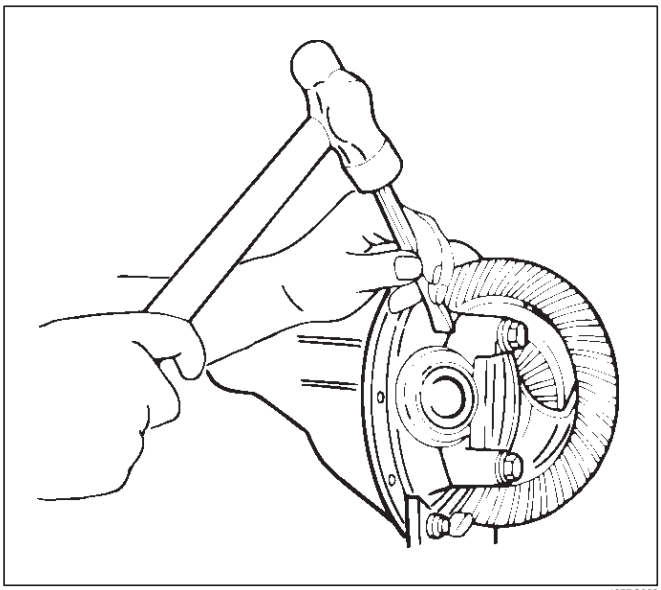

425RS009

6. Remove differential cage assembly.
7. Remove side bearing outer race, after removal, keep the right and left hand side bearing assemblies separate to maintain inner and outer race combinations.
8. Remove side bearing, using remover 5–8840–0013–0, 5–8840–0014–0 and adapter 9–8521–1743–0.

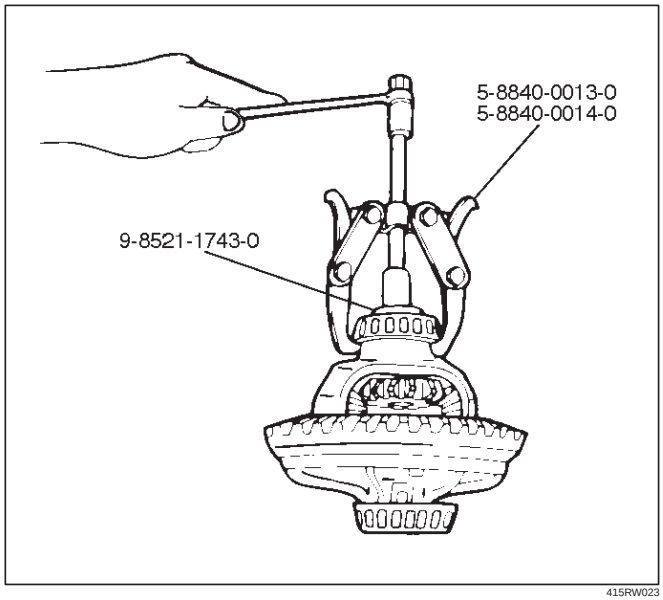

415RW023

9. Remove adjust shim, note the thickness and position of the shims removed.
10. Remove the flange nut using holding wrench 5–8840–2157–0 after raising up its staked parts completely.

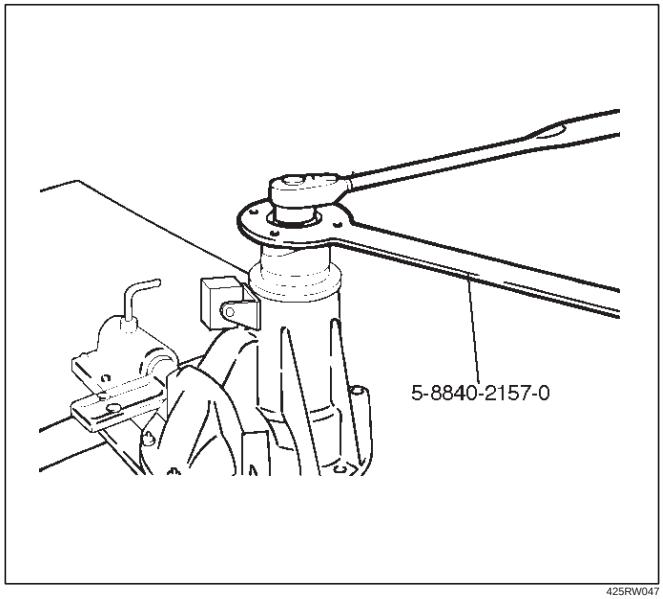

425RW047

11. Remove flange.

12. Remove dust cover.
13. Remove the drive pinion assembly using a soft metal rod and a hammer.

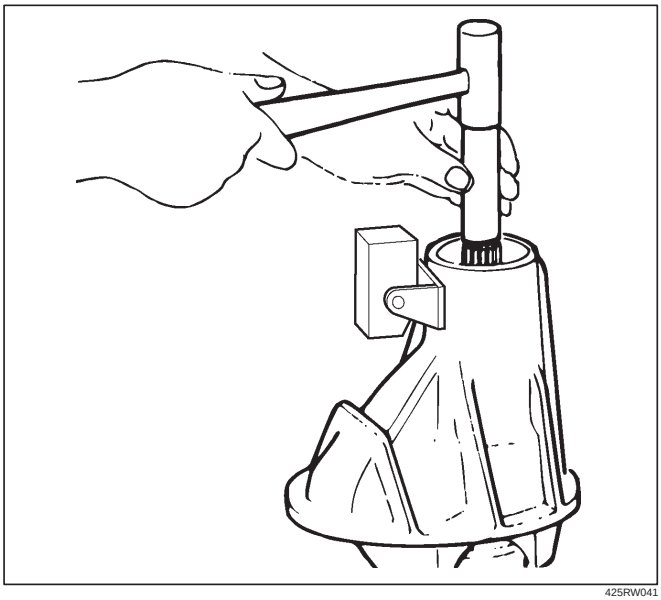

425RW041

14. Remove collapsible spacer.
15. Remove the inner bearing using a separator 5–8840–0015–0 and a press.

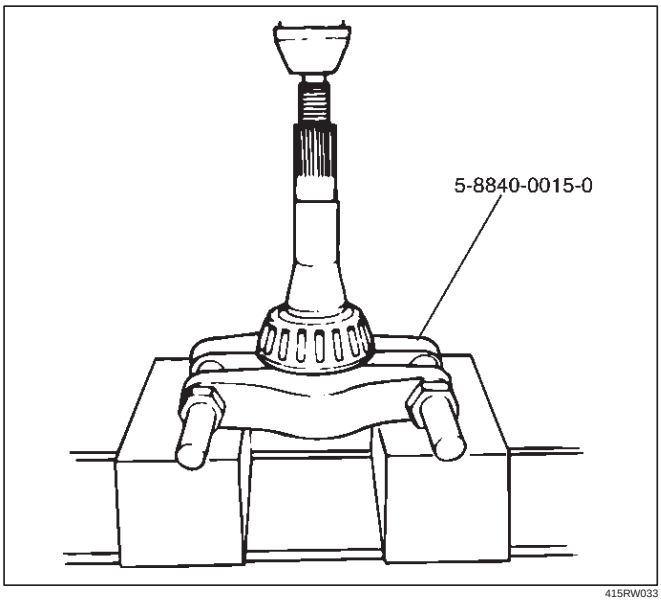

415RW033

16. Remove adjust shim.
17. Remove inner bearing outer race.
18. Remove oil seal.
19. Remove outer bearing.
20. Remove the inner bearing outer race (1) and the outer bearing outer race (2) by using a brass bar and a hammer.

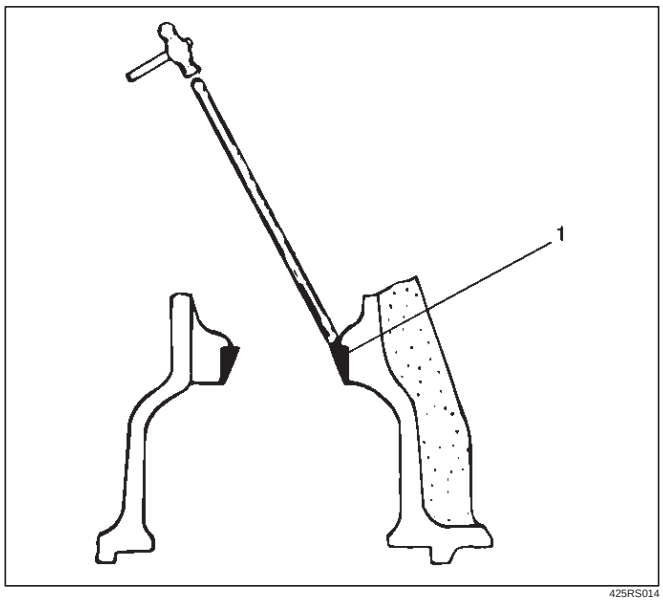

425RS014

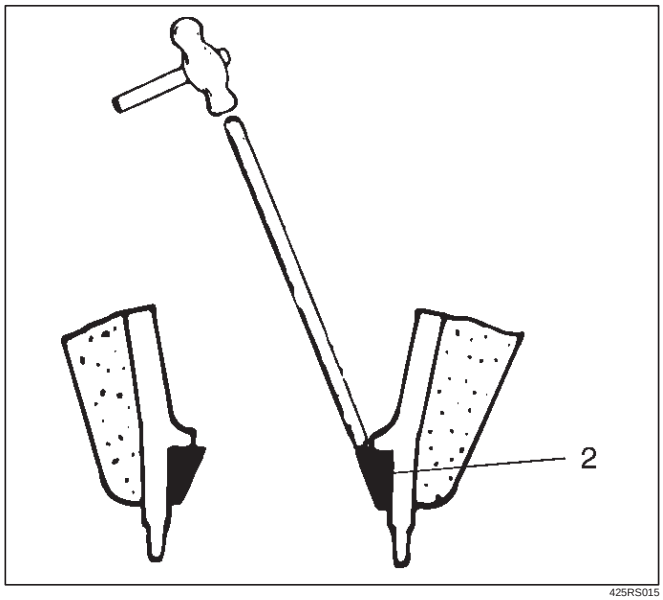

425RS015

21. Remove damper and bracket.

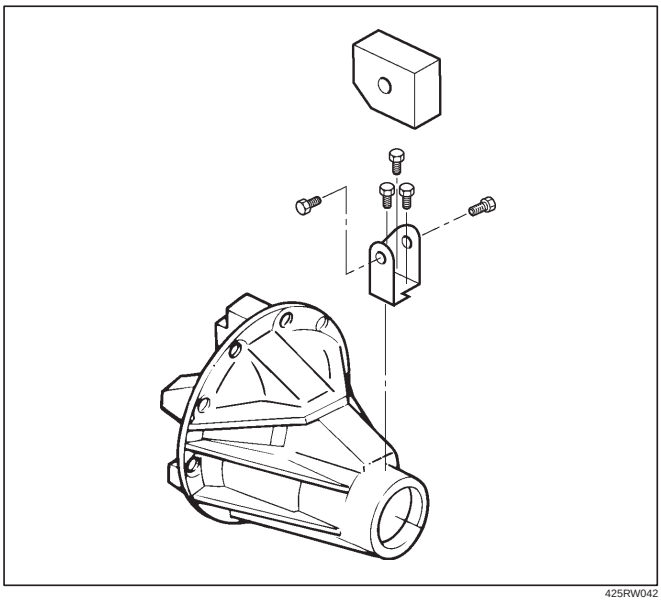

425RW042

Reassembly

1. Using installer 9–8522–1141–0 and grip 5–8840–0007–0, install outer bearing outer race.

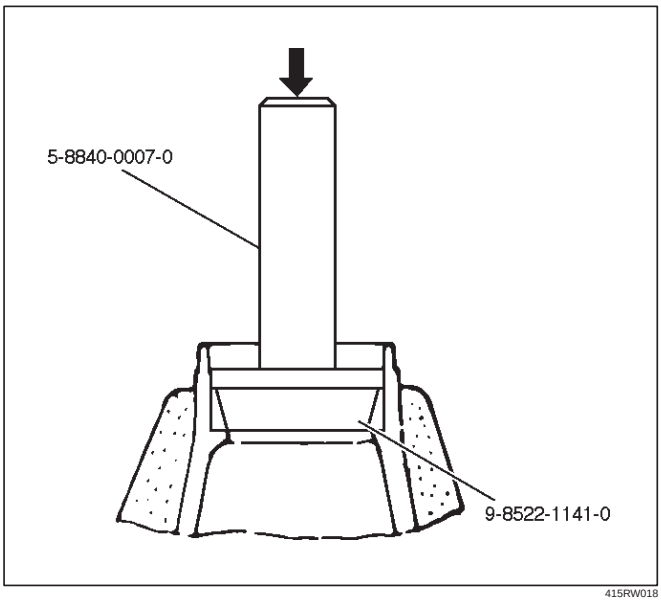

415RW018

2. Using installer 9–8522–1274–0 and grip 5–8840–0007–0, install Inner bearing outer race.

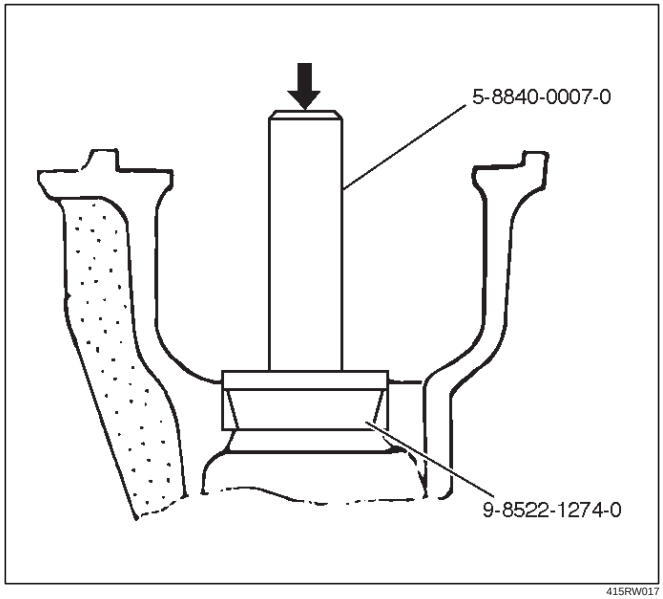

415RW017

3. Install adjust shim and adjust drive pinion mounting distance
   1. Apply gear oil to the inner and outer drive pinion bearing.
      Clean the pinion setting gauge set.
      Then install the gauge set together with the inner and outer bearings.
   2. Tighten the nut to the specified torque.

Torque: 2.3 N·m (0.23kg·m/20 lb in)

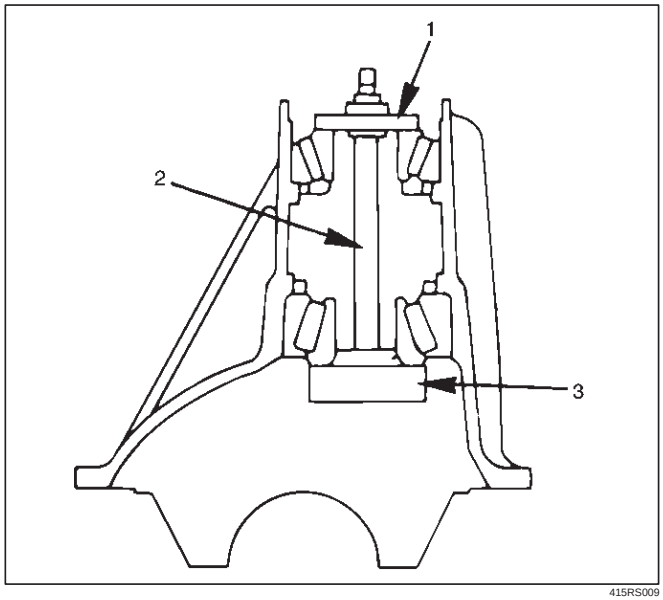

415RS009

Legend

(1) Pilot : 5–8840–2085–0
(2) Nut and Bolt : 5–8840–2089–0
(3) Gauge Plate : 5–8840–2087–0

3. Clean the side bearing bores. Install the dial indicator with the discs and arbor. Install and tighten the bearing caps to the specified torque.

Torque: 98 N·m (10kg·m/72 lb ft)

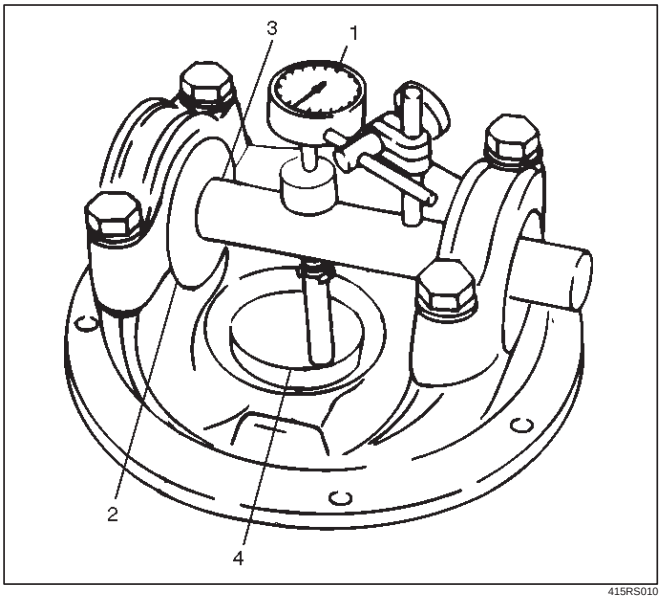

415RS010

Legend

(1) Dial Indicator: 5–8840–0126–0
(2) Disc (2 pcs.): 5-8840-2088-0
(3) Arbor: 5–8840–0128–0
(4) Gauge Plate: 5–8840–2087–0

4. Set the dial indicator to “0”. Place it on the mounting post of the gauging arbor with the contact button touching the indicator pad. Force the dial indicator downward until the needle has made a half turn clockwise. Tighten down the dial indicator in this position.

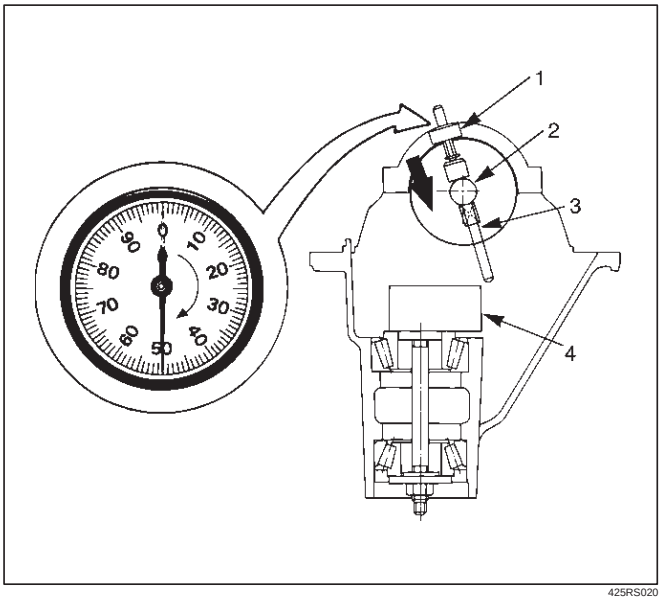

425RS020

Legend

(1) Dial Indicator
(2) Gauging Arbor
(3) Plunger
(4) Gauge Plate

5. Position the plunger on the gauge plate. Move the gauging arbor slowly back and forth and locate the position at which the dial indicator shows the greatest defection. At this point, once again set the dial indicator to “0”.

   Repeat the procedure to verify the “0” setting.

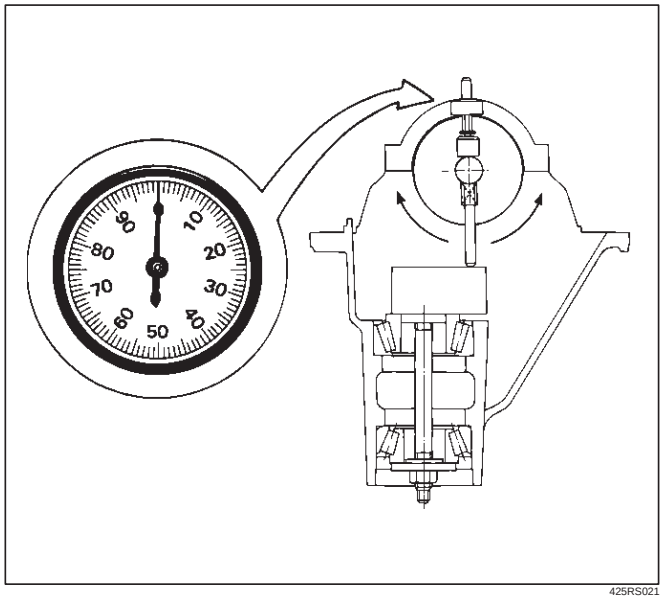

425RS021

6. After the ZERO setting is obtained, rotate the gauging arbor until the dial indicator rod does not touch the gauging plate.

   Record the number the dial indicator needle points to.

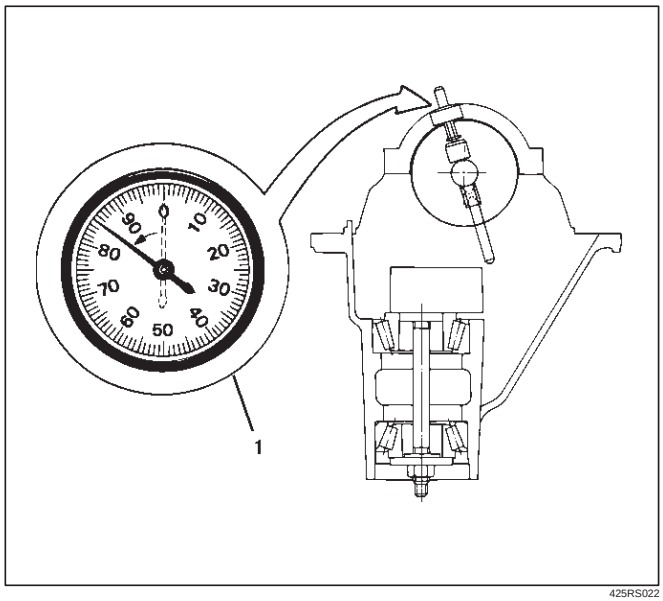

425RS022

Legend

(1) Example=Dial indicator reading of 0.085

7. Record the pinion depth code on the head of the drive pinion.

   The number indicates a necessary change in the pinion mounting distance. A plus number indicates the need for a greater mounting distance (which can be achieved by decreasing the shim thickness). A minus number indicates the need for a smaller mounting distance (which can be achieved by increasing the shim thickness). If examination reveals pinion depth code “0”, the pinion is “nominal”.

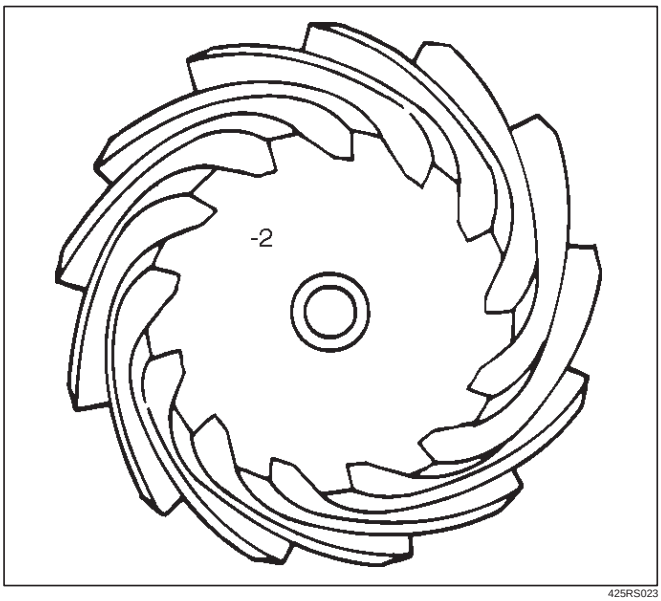

425RS023

8. Select the shim using the chart;

Pinion marking	+10	+8	+6	+4	+2	0	–2	–4	–6	–8	–10
Dial indicator reading (Inches)	mm (Inches)	mm (Inches)	mm (Inches)	mm (Inches)	mm (Inches)	mm (Inches)	mm (Inches)	mm (Inches)	mm (Inches)	mm (Inches)	mm (Inches)
0.081											2.18 (0.0858)
0.082										2.18 (0.0858)	2.20 (0.0866)
0.083									2.18 (0.0858)	2.20 (0.0866)	2.23 (0.0882)
0.084								2.18 (0.0858)	2.20 (0.0866)	2.24 (0.0882)	2.26 (0.0890)
0.085							2.18 (0.0858)	2.20 (0.0866)	2.24 (0.0882)	2.26 (0.0890)	2.28 (0.0898)
0.086						2.18 (0.0858)	2.20 (0.0866)	2.24 (0.0882)	2.26 (0.0890)	2.28 (0.0898)	2.32 (0.0914)
0.087					2.18 (0.0858)	2.20 (0.0866)	2.24 (0.0882)	2.26 (0.0890)	2.28 (0.0898)	2.32 (0.0914)	2.34 (0.0921)
0.088				2.18 (0.0858)	2.20 (0.0866)	2.24 (0.0882)	2.26 (0.0890)	2.28 (0.0898)	2.32 (0.0914)	2.34 (0.0921)	2.36 (0.0929)
0.089			2.18 (0.0858)	2.20 (0.0866)	2.24 (0.0882)	2.26 (0.0890)	2.28 (0.0898)	2.32 (0.0914)	2.34 (0.0921)	2.36 (0.0929)	2.38 (0.0937)
0.090		2.18 (0.0858)	2.20 (0.0866)	2.24 (0.0882)	2.26 (0.0890)	2.28 (0.0898)	2.32 (0.0914)	2.34 (0.0921)	2.36 (0.0929)	2.38 (0.0937)	2.42 (0.0953)
0.091	2.18 (0.0858)	2.20 (0.0866)	2.24 (0.0882)	2.26 (0.0890)	2.28 (0.0898)	2.32 (0.0914)	2.34 (0.0921)	2.36 (0.0929)	2.38 (0.0937)	2.42 (0.0953)	2.44 (0.0961)
0.092	2.20 (0.0866)	2.24 (0.0882)	2.26 (0.0890)	2.28 (0.0898)	2.32 (0.0914)	2.34 (0.0921)	2.36 (0.0929)	2.38 (0.0937)	2.42 (0.0953)	2.44 (0.0961)	2.46 (0.0969)
0.093	2.24 (0.0882)	2.26 (0.0890)	2.28 (0.0898)	2.32 (0.0914)	2.34 (0.0921)	2.36 (0.0929)	2.38 (0.0937)	2.42 (0.0953)	2.44 (0.0961)	2.46 (0.0969)	2.48 (0.0977)
0.094	2.26 (0.0890)	2.28 (0.0898)	2.32 (0.0914)	2.34 (0.0921)	2.36 (0.0929)	2.38 (0.0937)	2.42 (0.0953)	2.44 (0.0961)	2.46 (0.0969)	2.48 (0.0977)	2.52 (0.0992)
0.095	2.28 (0.0898)	2.32 (0.0914)	2.34 (0.0921)	2.36 (0.0929)	2.38 (0.0937)	2.42 (0.0953)	2.44 (0.0961)	2.46 (0.0969)	2.48 (0.0977)	2.52 (0.0992)	2.54 (0.1000)
0.096	2.32 (0.0914)	2.34 (0.0921)	2.36 (0.0929)	2.38 (0.0937)	2.42 (0.0953)	2.44 (0.0961)	2.46 (0.0969)	2.48 (0.0977)	2.52 (0.0992)	2.54 (0.1000)	2.56 (0.1008)
0.097	2.34 (0.0921)	2.36 (0.0929)	2.38 (0.0937)	2.42 (0.0953)	2.44 (0.0961)	2.46 (0.0969)	2.48 (0.0977)	2.52 (0.0992)	2.54 (0.1000)	2.56 (0.1008)	
0.098	2.36 (0.0929)	2.38 (0.0937)	2.42 (0.0953)	2.44 (0.0961)	2.46 (0.0969)	2.48 (0.0977)	2.52 (0.0992)	2.54 (0.1000)	2.56 (0.1008)		
0.099	2.38 (0.0937)	2.42 (0.0953)	2.44 (0.0961)	2.46 (0.0969)	2.48 (0.0977)	2.52 (0.0992)	2.54 (0.1000)	2.56 (0.1008)			
0	2.42 (0.0953)	2.44 (0.0961)	2.46 (0.0969)	2.48 (0.0977)	2.52 (0.0992)	2.54 (0.1000)	2.56 (0.1008)				
0.001	2.44 (0.0961)	2.46 (0.0969)	2.48 (0.0977)	2.52 (0.0992)	2.54 (0.1000)	2.56 (0.1008)					
0.002	2.46 (0.0969)	2.48 (0.0977)	2.52 (0.0992)	2.54 (0.1000)	2.56 (0.1008)						
0.003	2.48 (0.0977)	2.52 (0.0992)	2.54 (0.1000)	2.56 (0.1008)							
0.004	2.52 (0.0992)	2.54 (0.1000)	2.56 (0.1008)								
0.005	2.54 (0.1000)	2.56 (0.1008)									
0.006	2.56 (0.1008)										

NOTE: When ordering shims, find the part number in the parts catalog by using the thickness of shims listed in the above table.

4. Place the shim on the drive pinion, with the chamfered side turned towards the pinion head then install the inner bearing onto the pinion using an installer 9–8522–1165–0 and a press.

NOTE: Do not apply pressure to the roller cage and apply pressure only to the inner race.

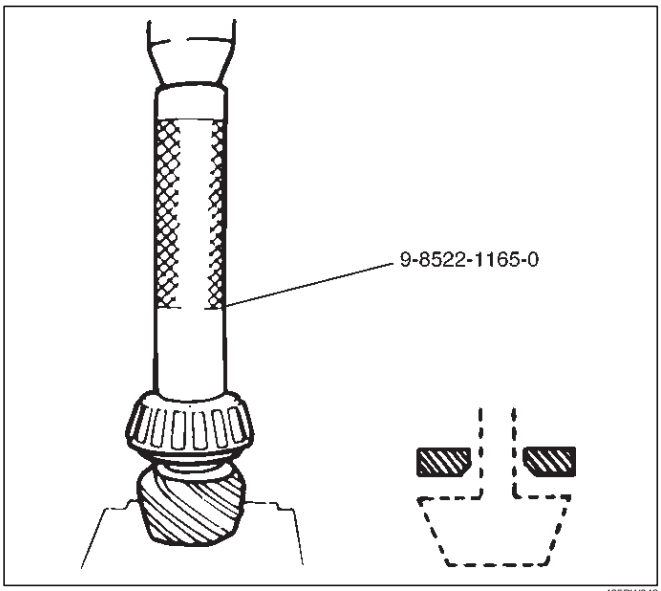

425RW048

5. Discard the used collapsible spacer and install a new one.
6. Install pinion gear.
7. Install outer bearing.
8. Use oil seal installer 9–8522–1275–0 to install a new oil seal that has been soaked in rear axle lubricant.

NOTE: Take care to use a front differential oil seal, NOT the rear differential oil seal.

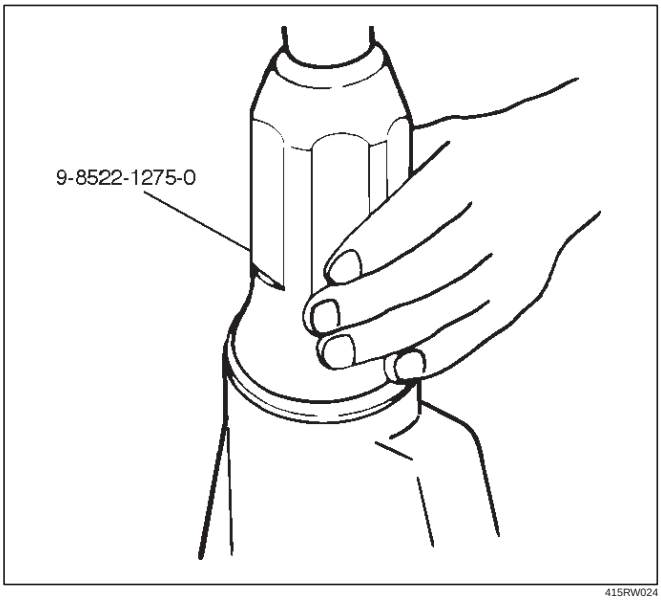

415RW024

9. Install dust cover.
10. Install flange.
11. Install flange nut.
    1. Apply lubricant to the pinion threads.
    2. Tighten the nut to the specified torque using the pinion flange holder 5–8840–2157–0.

Torque: 177–275N·m (18–28kg·m/130–203 lb ft)

NOTE: Discard used flange nut and install new one and do not over tighten the flange nut.

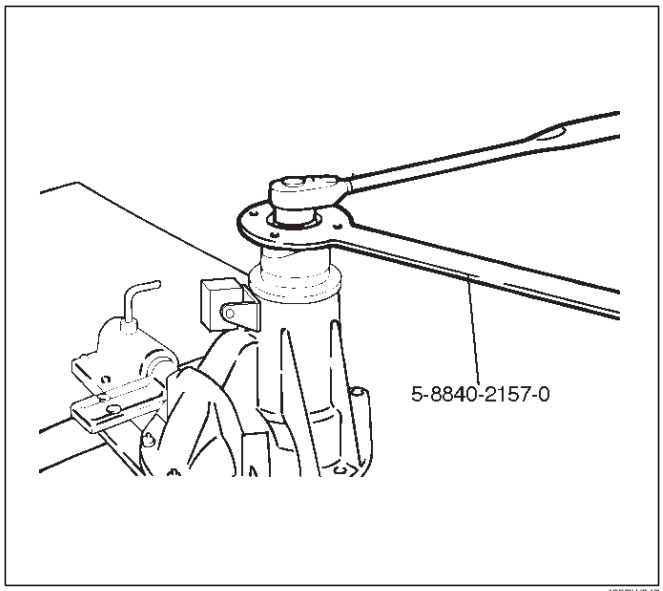

425RW047

3. Adjust pinion bearing preload.
    a. Measure the bearing preload by using a torque meter. Note the scale reading required to rotate the flange.
    b. Continue tightening flange nut until the specified starting torque is obtained.

Starting torque:

New bearing
0.7–1.1 N·m(0.065–0.115kg·m/5.64–9.98 lb in)

Used bearing
0.4–0.5N·m(0.033–0.057kg·m/2.86–4.94 lb in)

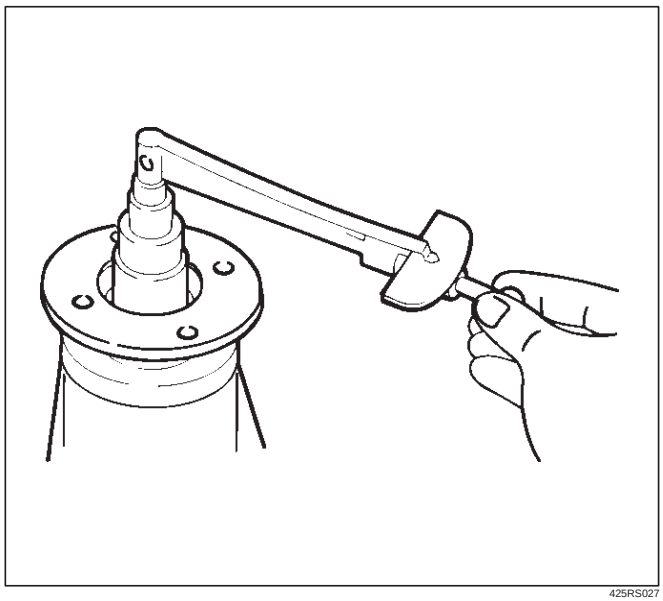

425RS027

4. Using punch 5-8840-2293-0, stake the flange nut at two points.

NOTE: When staking, be sure to turn the nut to insure that there is no change in bearing preload. Make sure of preload again as instructed in 3).

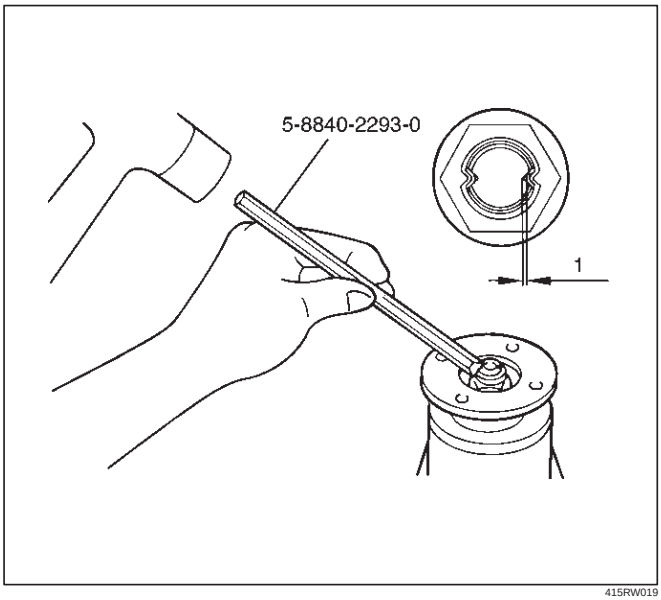

415RW019

Legend

(1) 1.3mm or less

12. Install adjust shim.
    1. Attach the side bearing to the differential assembly without shims. Support the opposite side using a pilot to prevent bearing damage.

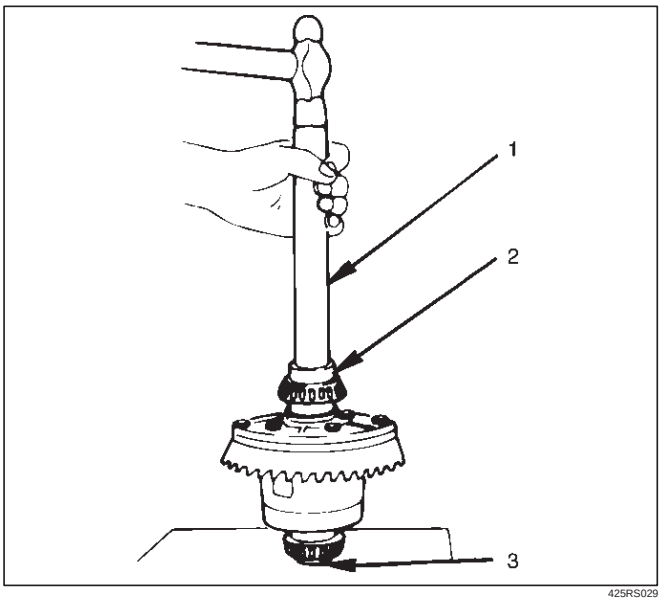

425RS029

Legend

(1) Drive handle:5–8840–0007–0
(2) Installer:9–8522–1164–0
(3) Pilot:9–8521–1743–0

2. Insert the differential cage assembly with bearing outer races into the side bearing bores of the carrier.

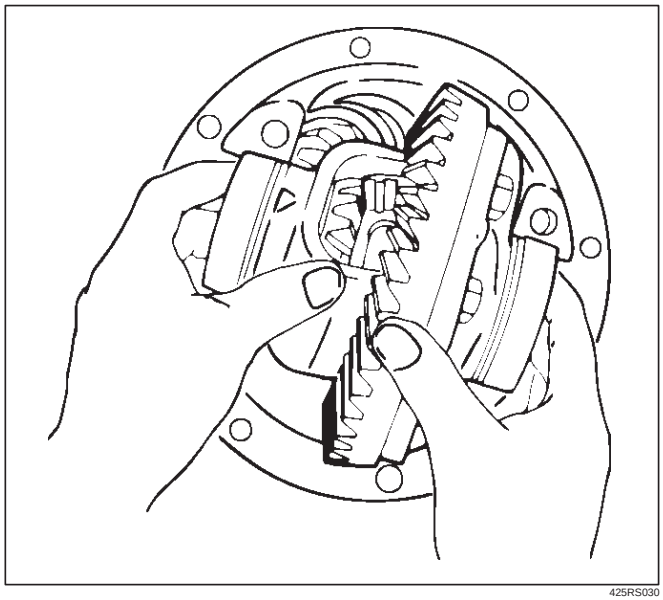

425RS030

3. Using two sets of feeler gauges, insert a feeler stock of sufficient thickness between each bearing outer race and the carrier to remove all end play. Make certain the feeler stock is pushed to the bottom of the bearing bores.

   Mount the dial indicator 5–8840–0126–0 on the carrier so that the indicator stem is at right angles to a tooth on the ring gear.

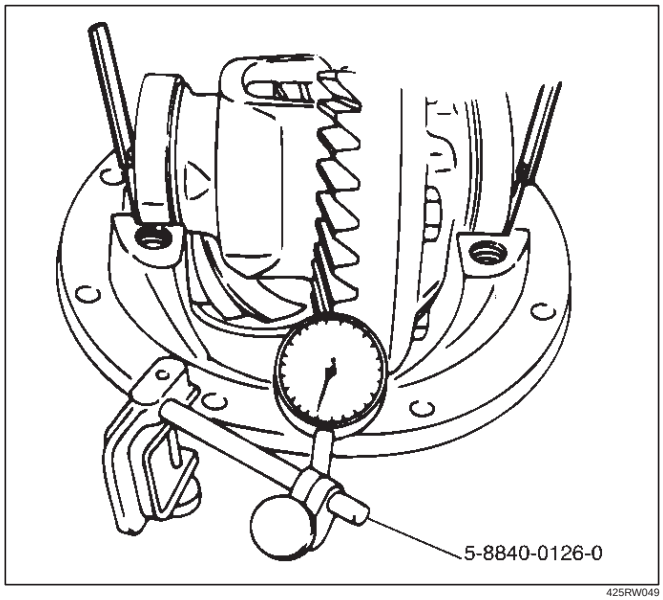

425RW049

4. Adjust feeler gauge thickness from side to side until ring gear backlash is in the specified range.

Backlash: 0.13–0.18 mm(0.005 –0.007 in)

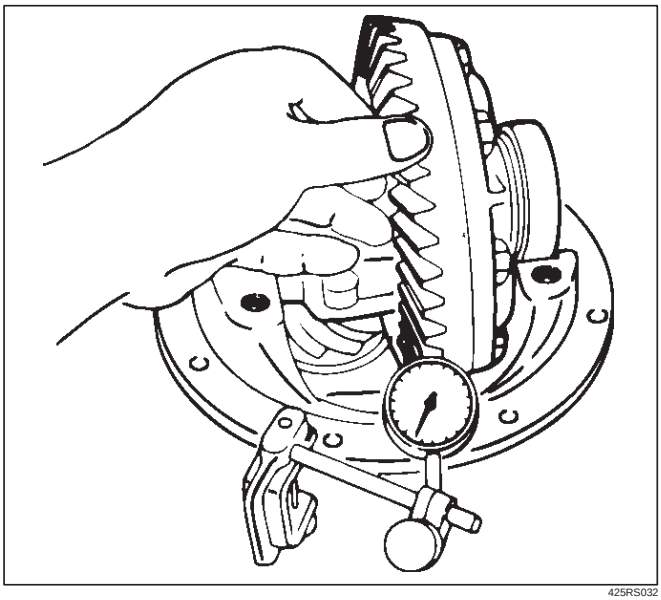

425RS032

With zero end play and correct backlash established, remove the feeler gauge packs, determine the thickness of the shims required and add 0.05 mm (0.002 in) to each shim pack to provide side bearing preload. Always use new shims.

5. Use bearing remover 5–8840–0013–0 and 5–8840–0014–0 and pilot 9–8521–1743–0 to remove side bearing.

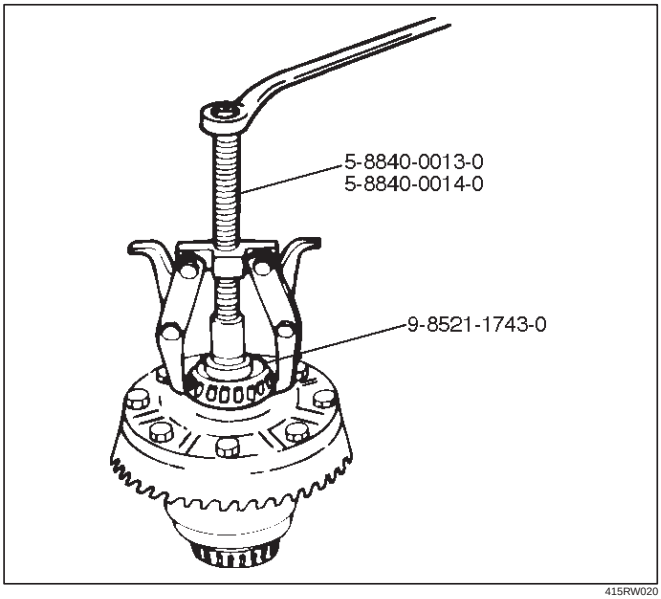

415RW020

13. Install the side bearings together with the selected shims.

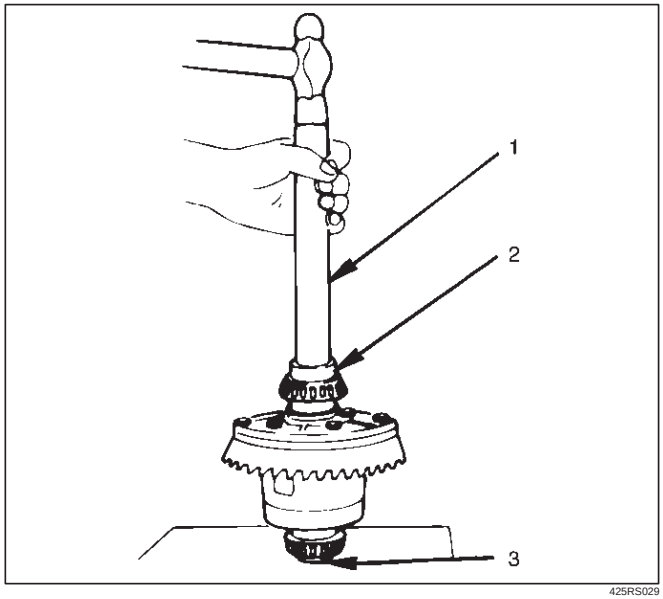

425RS029

Legend

(1) Drive Handle:5–8840–0007–0
(2) Installer: 9–8522–1164–0
(3) Pilot: 9–8521–1743–0

14. Install side bearing outer race.
15. Install differential cage assembly.
16. Install bearing cap then align the setting marks(1) applied at disassembly.

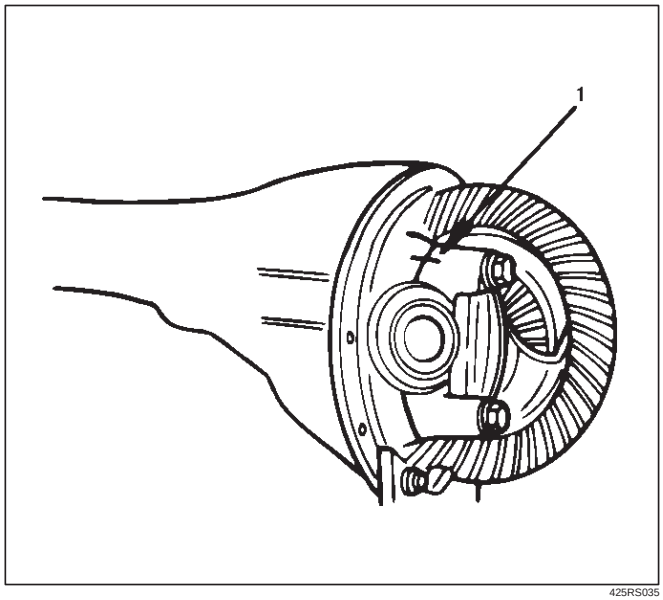

425RS035

17. Tighten the cap bolt to the specified torque.

Torque: 98 N·m (10kg·m/72 lb ft)

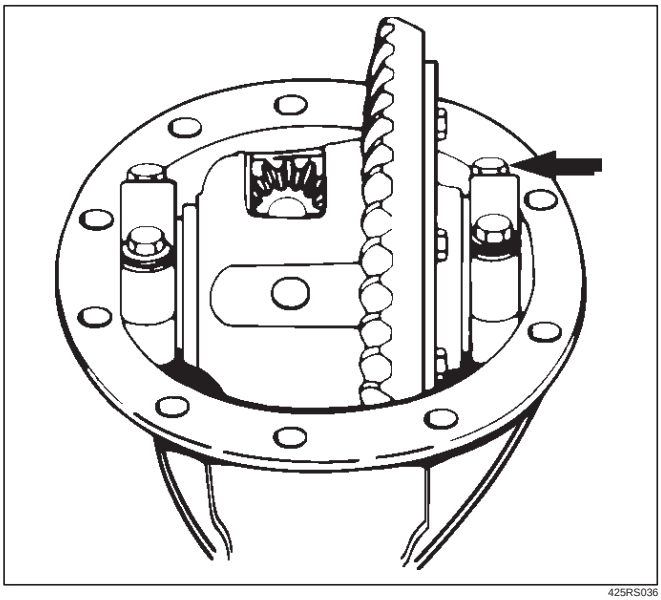

425RS036

1. Measure the amount of run–out of the ring gear at its rear face.

Standard: 0.02 mm (0.001 in)

Limit: 0.05 mm (0.002 in)

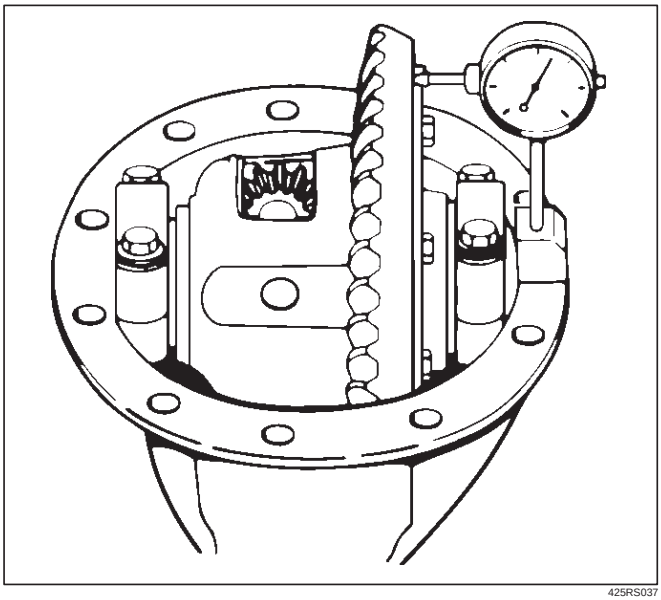

425RS037

Gear Tooth Contact Pattern Check and Adjustment

1. Apply a thin coat of prussian blue or equivalent to the faces of the 7–8 teeth of the ring gear. Check the impression of contact on the ring gear teeth and make necessary adjustment as described in illustration if the contact is abnormal.

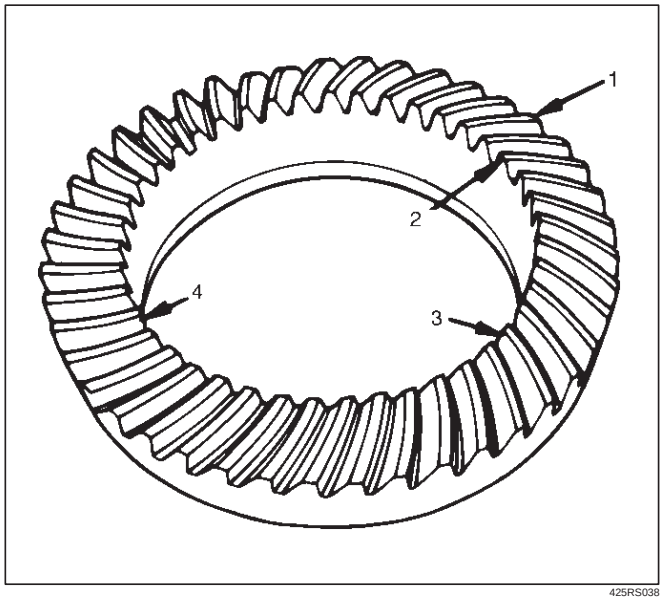

425RS038

Legend

(1) Heel
(2) Toe
(3) Concave Side(Coast)
(4) Convex Side(Drive)

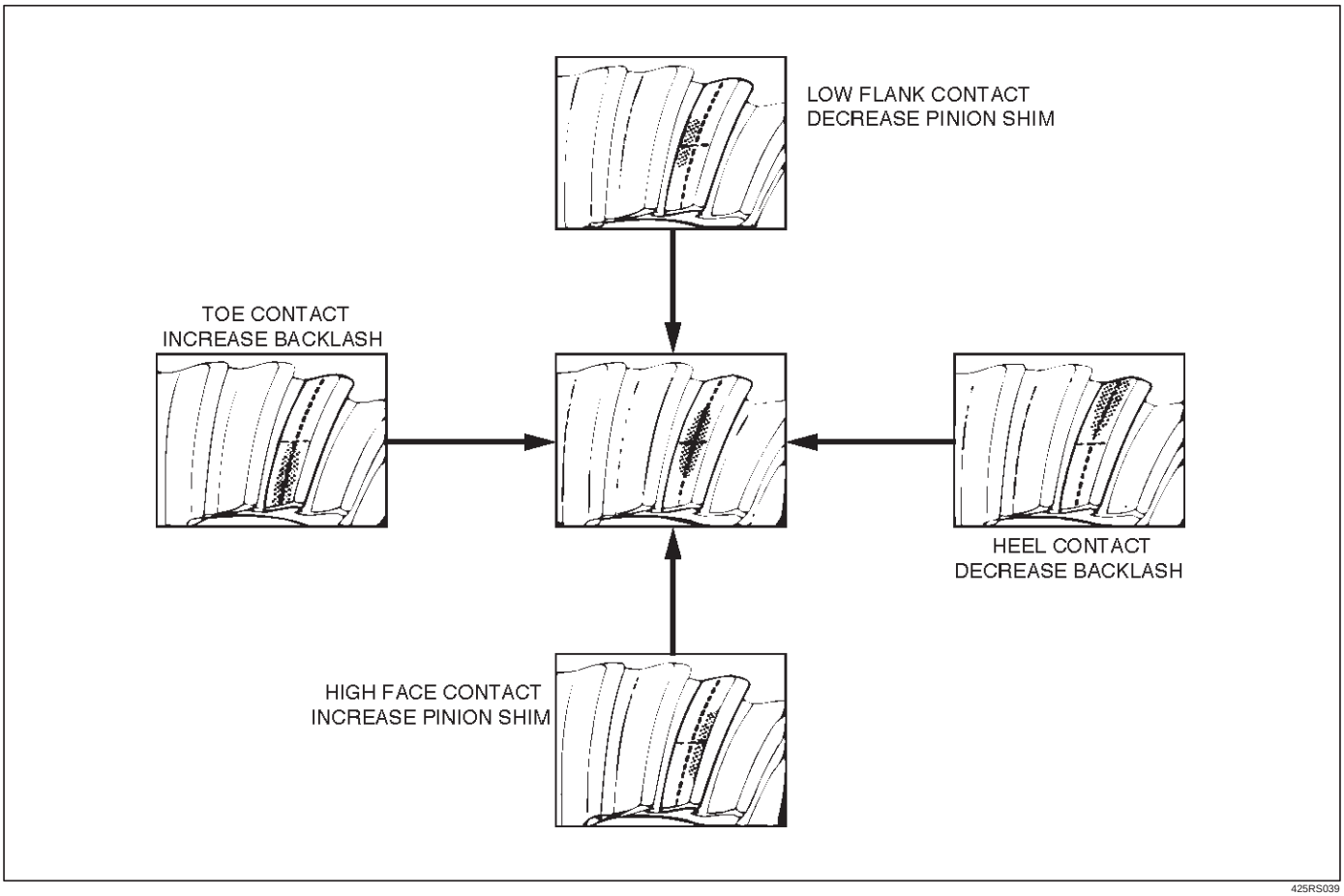

425RS039

18. Install differential assembly.
    1. Clean the faces of the front axle case and differential carrier.
       Apply Three Bond TB1215 or equivalent to the sealing side of the axle case and the carrier.
    2. Attach the differential case and the carrier assembly to the front axle case and tighten the nuts and bolts.

    Torque: 25 N·m (2.5kg·m/19 lb ft)

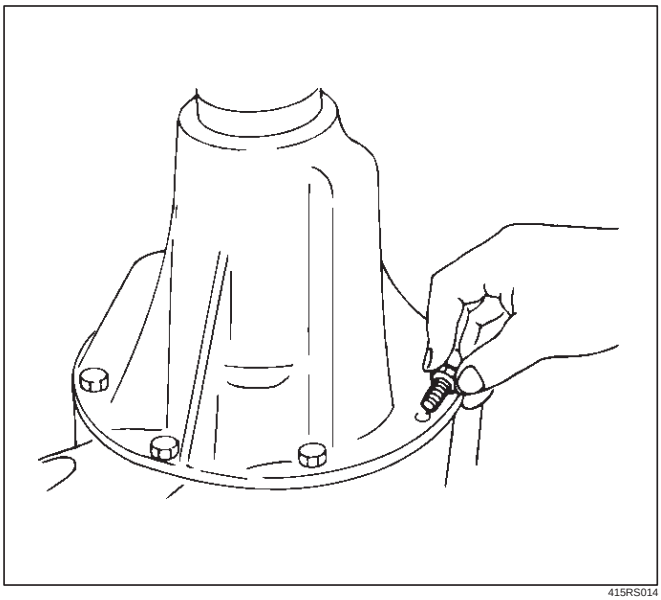

415RS014

    3. Fill the axle case with hypoid gear lubricant, to just below the filler hole.

    Lubricant capacity: 1.4 liter(1.2 Imp qt/1.5 US qt)

19. Install damper.
    1. Clean the faces and bolt thread hole of differential carrier.
    2. Install the bracket with new bolts.
    3. Install the damper to the bracket with new bolts.

    Torque: 25 N·m (2.5kg·m/19 lb ft)

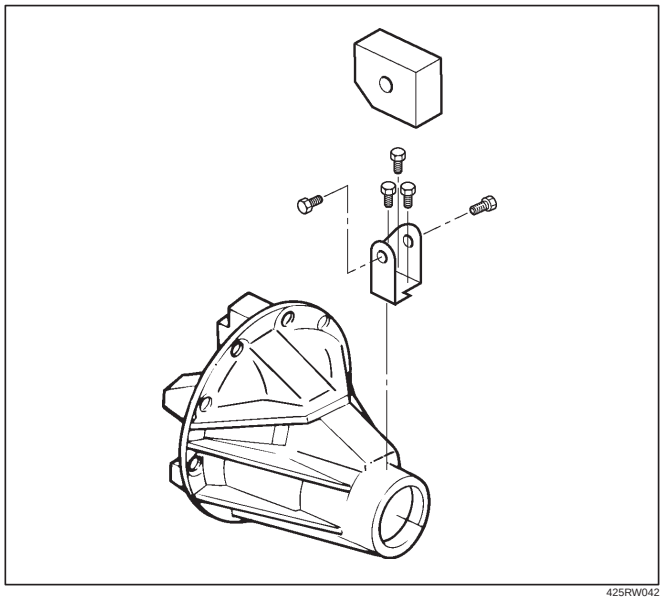

425RW042

Differential Cage Assembly

Disassembled View

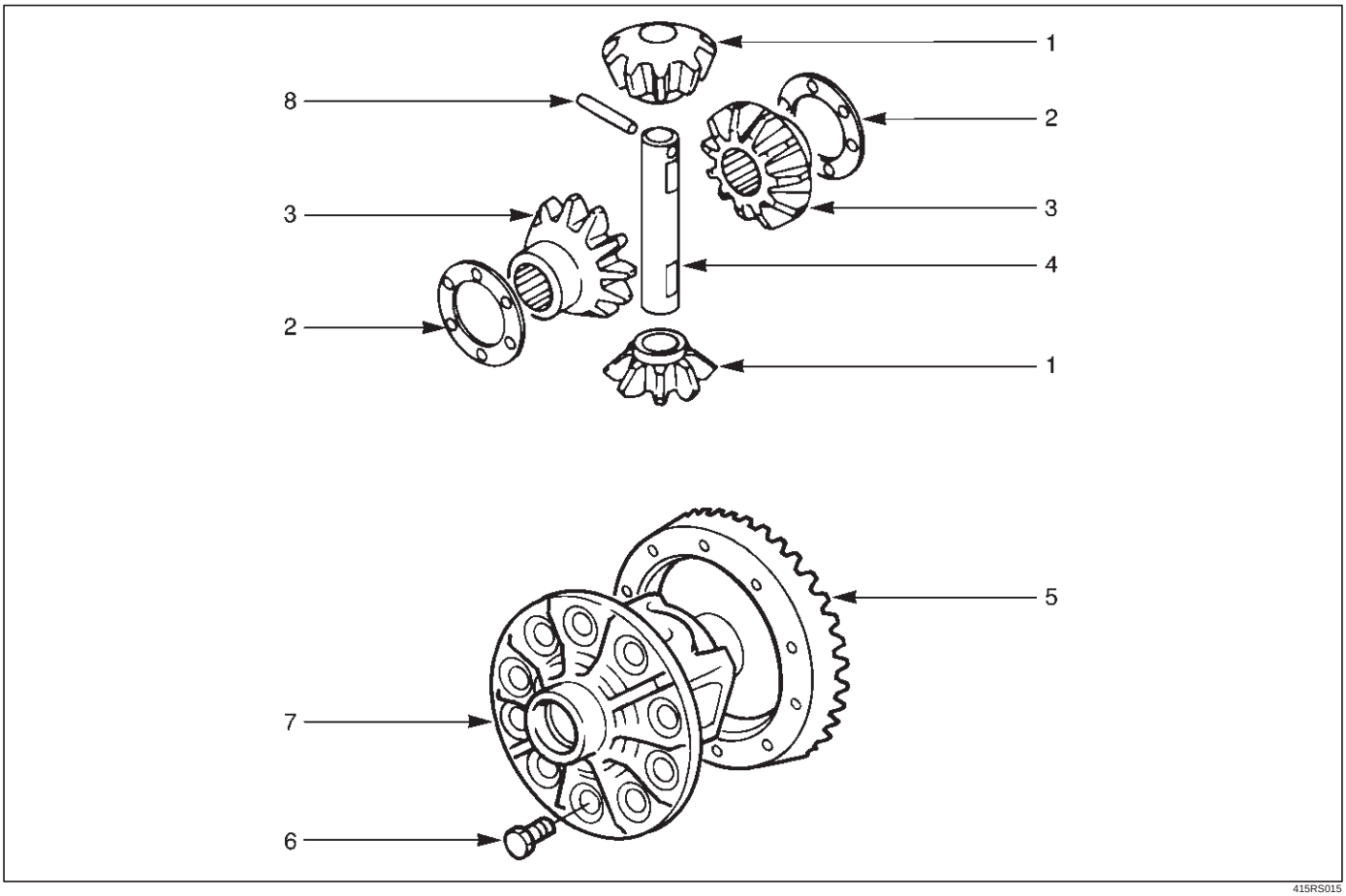

415RS015

Legend

(1) Pinion Gear
(2) Thrust Washer
(3) Side Gear
(4) Cross Pin
(5) Ring Gear
(6) Bolt
(7) Differential Cage
(8) Lock Pin

Disassembly

1. Remove bolt.
2. Remove ring gear.
3. Remove lock pin, break staking on the lock pin, using a 5 mm (0.20 in) diameter drill.

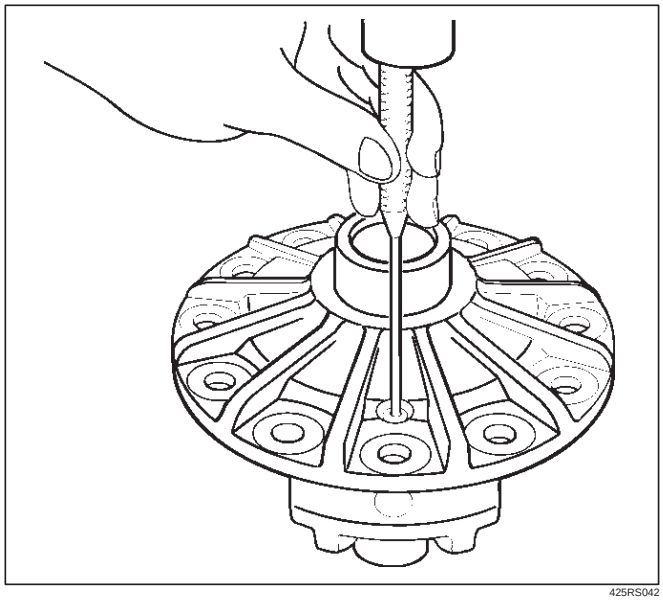

425RS042

4. Remove the cross pin, using a soft metal rod and a hammer.

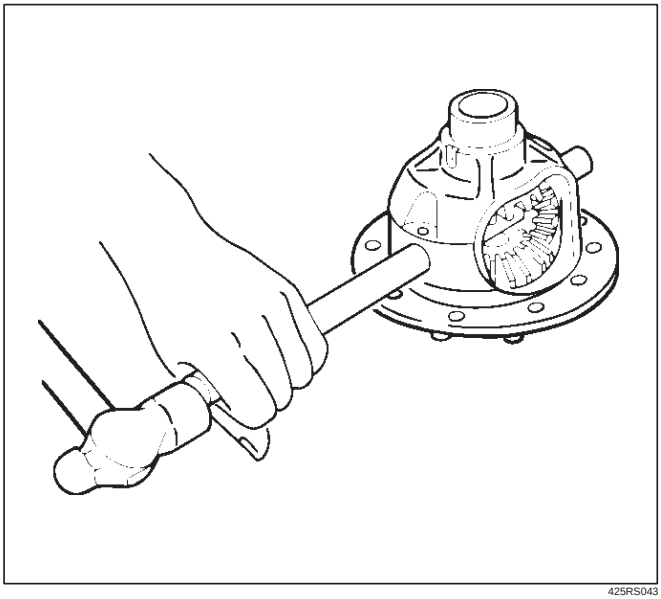

425RS043

5. Remove pinion gear.
6. Remove side gear.
7. Remove thrust washer.

Inspection and Repair

Make necessary correction or parts replacement if wear, damage, corrosion or any other abnormal conditions are found through inspection.
Check the following parts:

1. Ring gear, pinion gear
2. Bearing
3. Side gear, pinion gear, cross pin
4. Differential cage, carrier
5. Thrust washer
6. Oil seal

Ring gear replacement:

1. The ring gear should always be replaced with the drive pinion as a set.
2. Clean the ring gear threaded holes to remove the locking agent.
3. When installing the ring gear, apply LOCTITE 271 or equivalent to all the threaded area and half of the unthreaded area of the bolt.
4. Discard used bolts and install new ones.

Torque: 108 N·m (11kg·m/80 lb ft)

5. Tighten the fixing bolts in a diagonal sequence as illustrated.

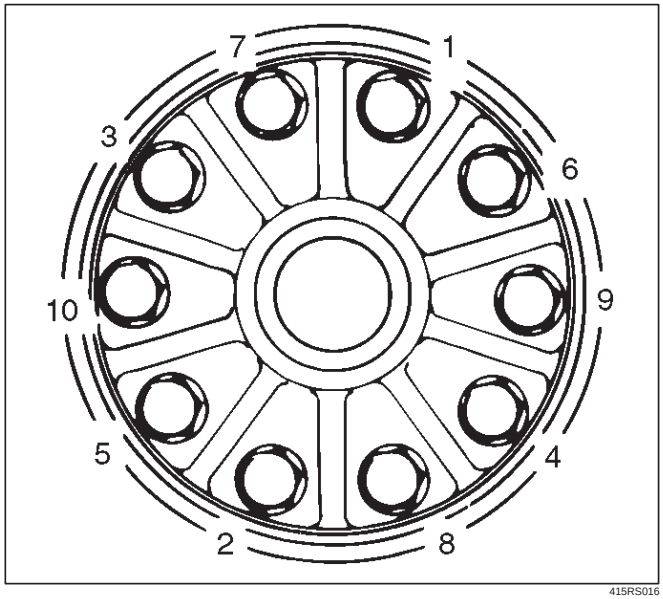

415RS016

Clearance between the differential pinion and the cross pin measurement:

Standard: 0.06 – 0.12 mm (0.002–0.005 in)

Limit: 0.2 mm (0.008 in)

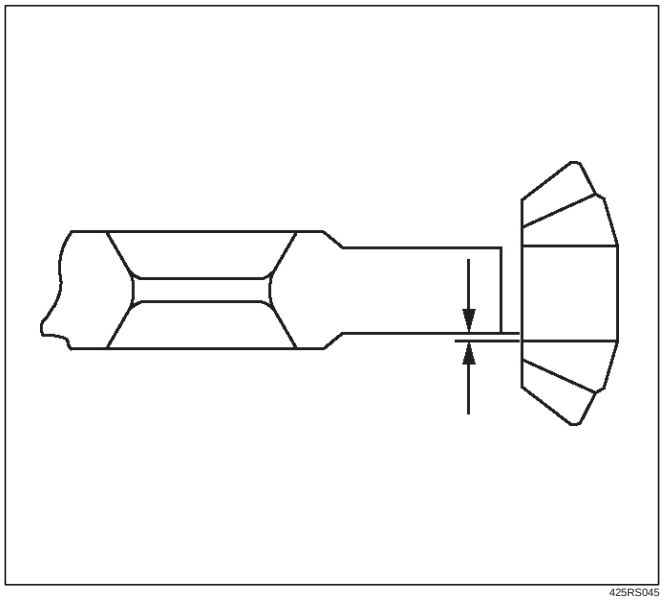

425RS045

Clearance between the side gear and the differential box:

Standard: 0.03–0.10 mm (0.001–0.004 in)

Limit: 0.15 mm(0.006 in)

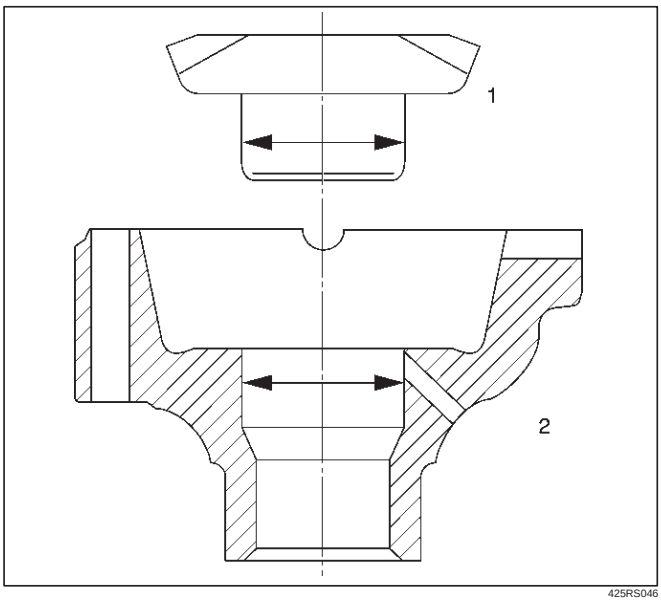

425RS046

Legend

(1) Side Gear
(2) Differential Box

Play in splines between the side gear and the axle shaft:

Standard: 0.08–0.36 mm(0.003 –0.014 in)

Limit:0.5m (0.02 in)

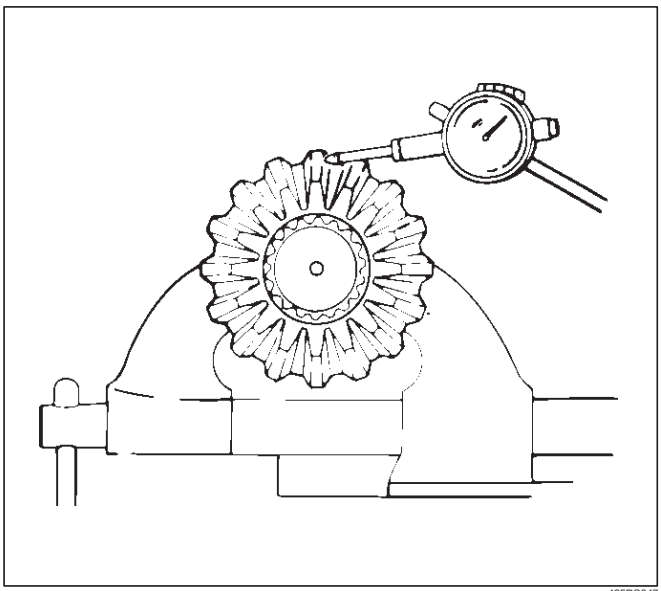

425RS047

Reassembly

1. Install thrust washer.
2. Install side gear.
3. Install the pinion gear by engaging it with the side gears while turning both pinion gears simultaneously in the same direction.

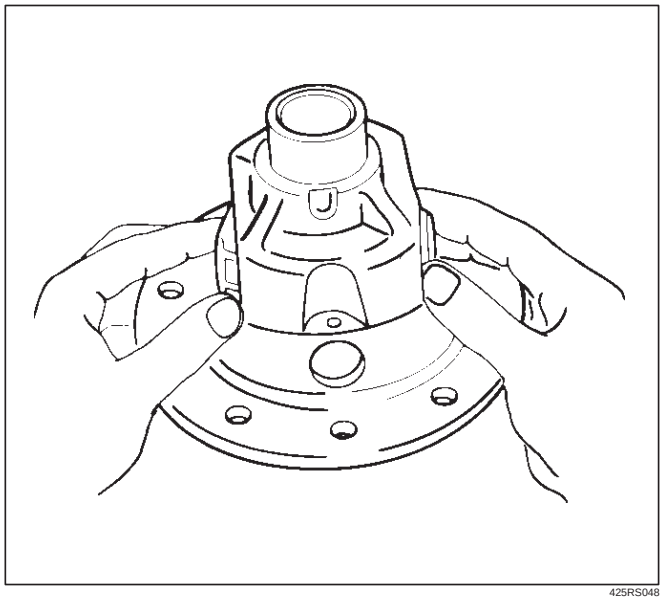

425RS048

4. Install cross pin.
   1. Be sure to install the cross pin so that it is in alignment with the lock pin hole in the differential cage.

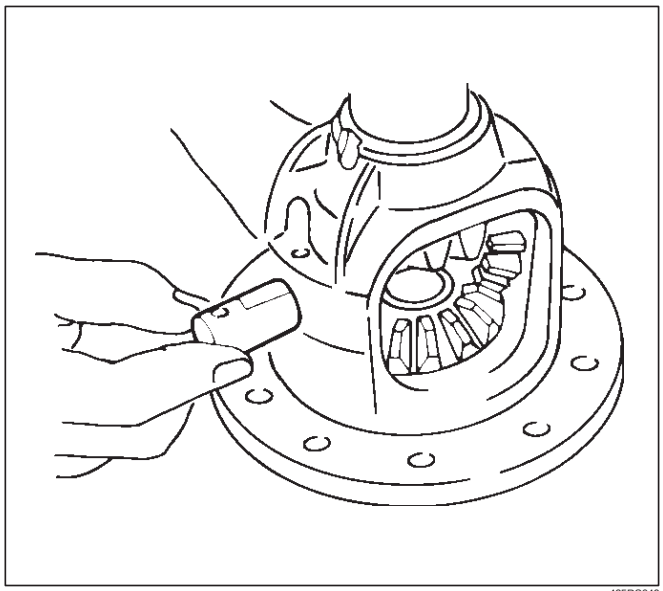

425RS049

   2. Adjust the backlash between the side gear and the pinion gear.

Backlash:0.03 – 0.08 mm (0.001– 0.003 in)

Thickness of thrust washers available:

1.00 mm, 1.05 mm, 1.10 mm (0.039 in, 0.041 in, 0.043 in)

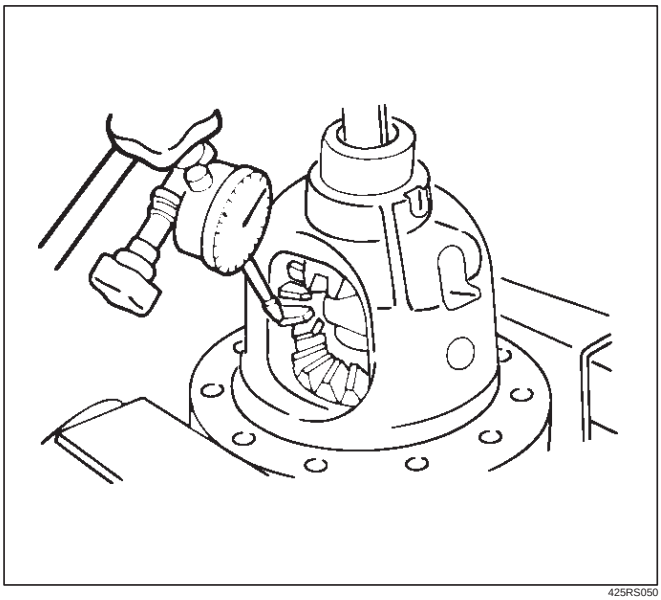

425RS050

5. Install lock pin. After lock pin installation, stake the cage to secure the lock pin.

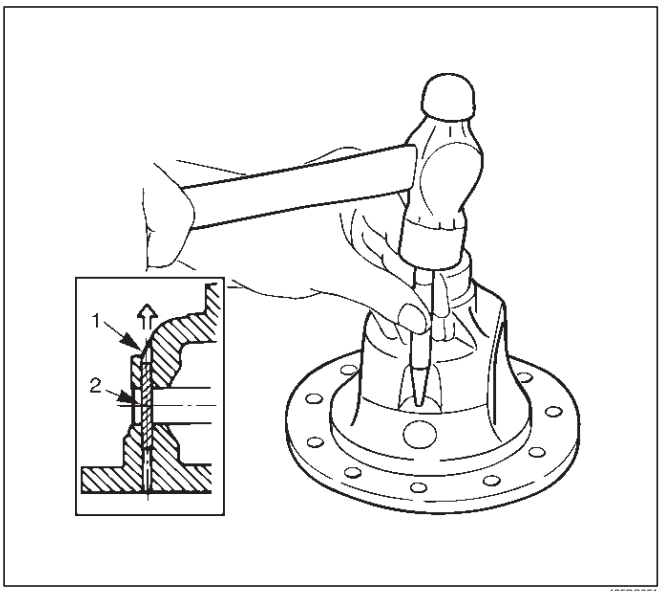

425RS051

Legend

(1) Staked Portion

(2) Lock Pin

6. Clean the ring gear threaded holes to remove the locking agent. When installing the ring gear, apply LOCTITE 271 or equivalent to all the threaded area and half of the unthreaded area of the bolt.

7. Tighten the bolts in diagonal sequence as illustrated.

Torque: 108 N·m (11kg·m/80 lb ft)

NOTE: Discard used bolts and install new ones.

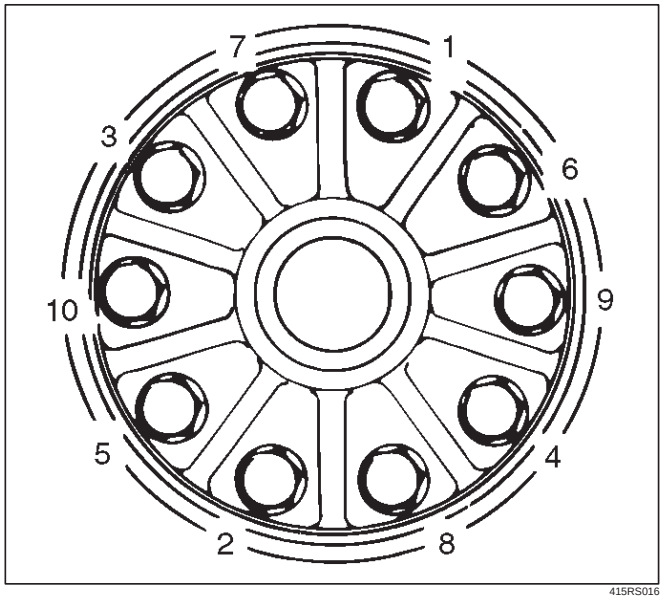

415RS016

Main Data and Specifications

General Specifications

Axle tube Type		It consists of the duct, a cast iron housing and the axle tube.
Gear type		Hypoid
Gear ratio	(to 1)	4.100(6VE1) 4.300(4JX1, 6VE1) 4.555(4JG2–TC, 6VD1) 4.777(4JG2)
Differential type		Two pinion
Oil capacity	liter (Imp qt/US qt)	1.4 (1.2/1.5) (Differential) 0.12 (0.11/0.13) (Actuator Housing: Shift on the fly)
Type of lubricant		75W–90 GL–5 (Multi grade type) Refer to General Information
Axle shaft type		Constant velocity joint (Birfield joint type and double offset joint)

Torque Specifications

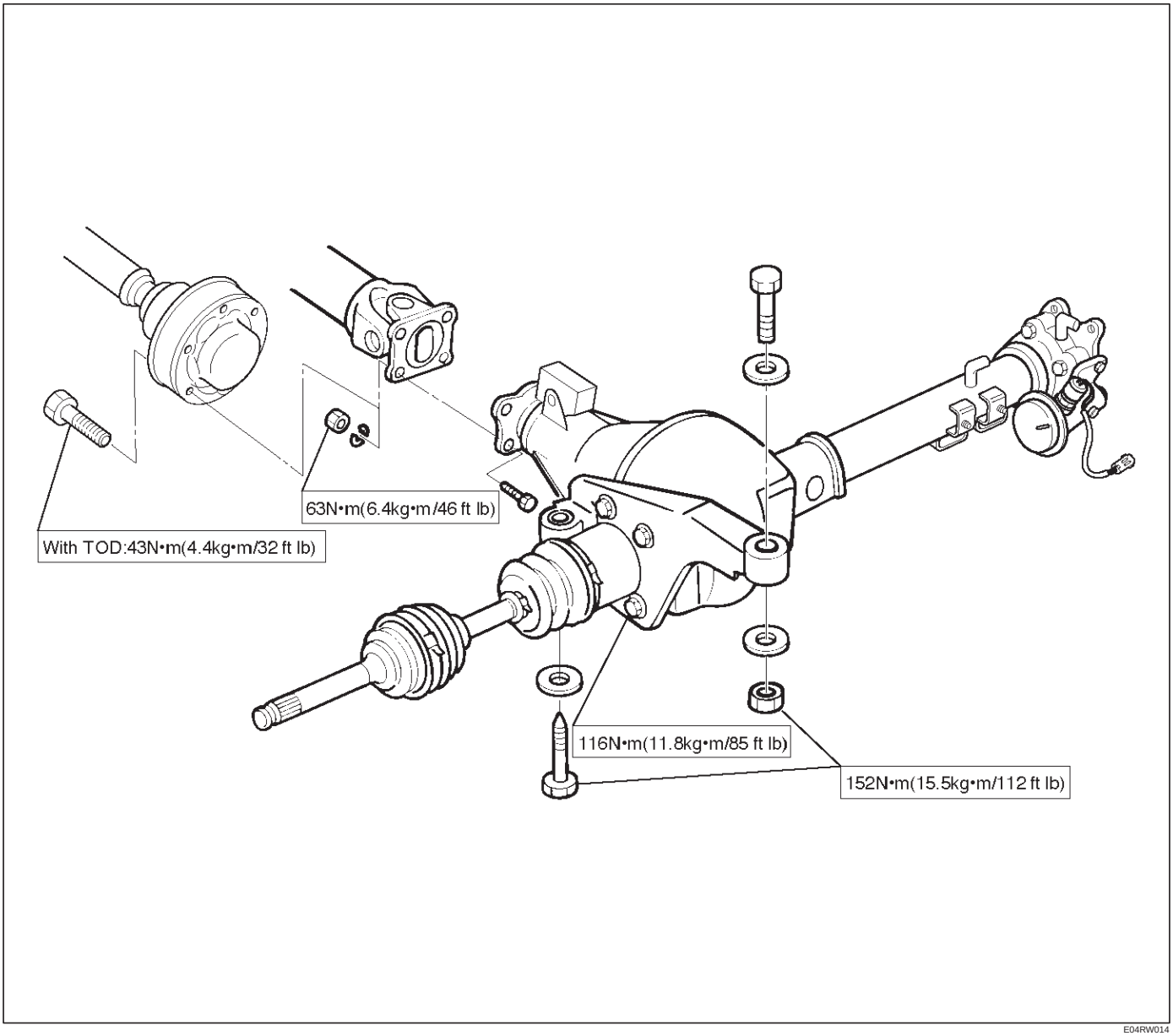

E04RW014

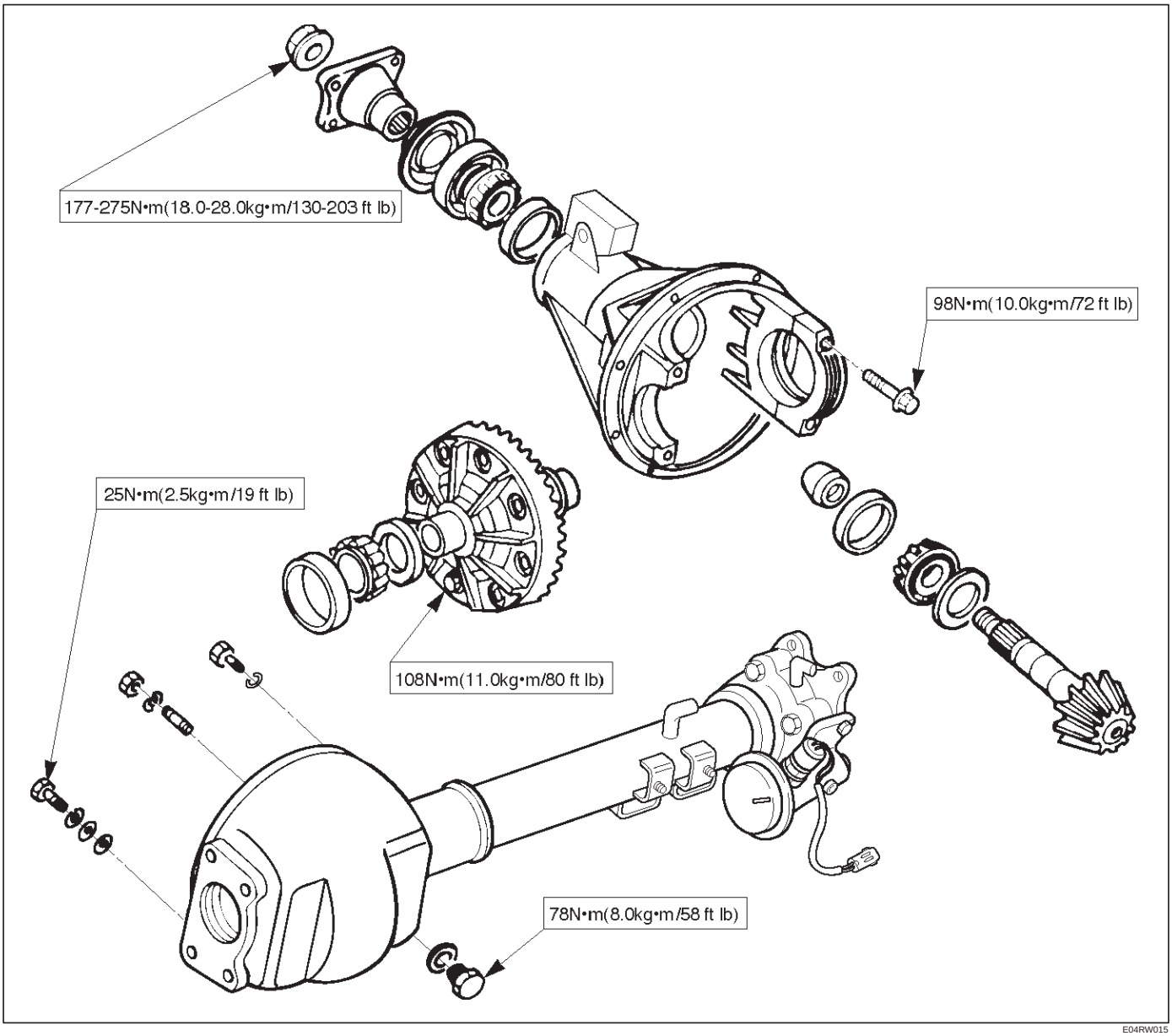
177-275N•m(18.0-28.0kg•m/130-203 ft lb)
98N•m(10.0kg•m/72 ft lb)
25N•m(2.5kg•m/19 ft lb)
108N•m(11.0kg•m/80 ft lb)
78N•m(8.0kg•m/58 ft lb)

E04RW015

Special Tools

ILLUSTRATION	TOOL NO. TOOL NAME
	5–8840–2157–0 **(J–37221)** Holder; Pinion flange
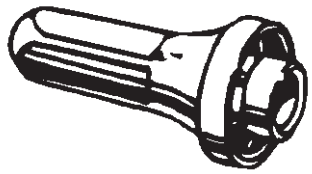	**9–8522–1275–0** **(J–24250)** Installer; Oil seal
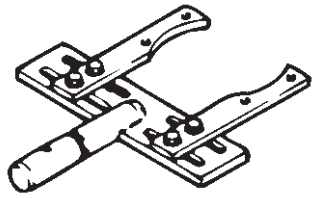	**5–8840–0275–0** **(J–37264)** Differential holding fixture (Use with 5–8840–0003–0 base)
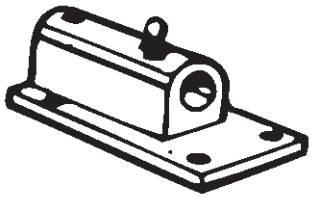	**5–8840–0003–0** **(J–3289–20)** Holding fixture base
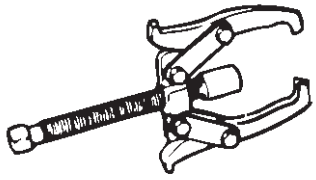	**5–8840–0013–0** **5–8840–0014–0** **(J–22888)** Puller; Side bearing
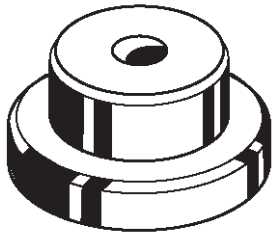	**9–8521–1743–0** **(J–8107–2)** Adapter; Side bearing plug

ILLUSTRATION	TOOL NO. TOOL NAME
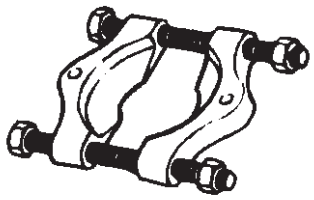	**5–8840–0015–0** **(J–22912–01)** Separator
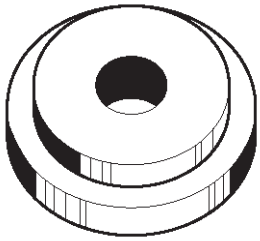	**9–8522–1141–0** **(J–24256)** Installer; Outer bearing outer race
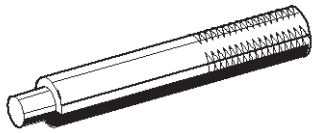	**5–8840–0007–0** **(J–8092)** Driver handle
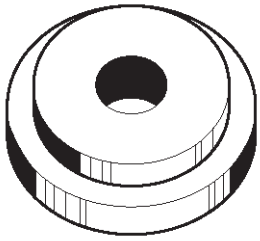	**9–8522–1274–0** **(J–24252)** Installer; Inner bearing outer race
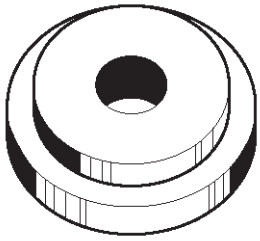	**5–8840–2085–0** **(J–21777–42)** Pilot
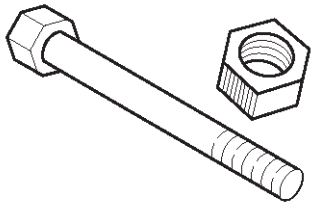	**5–8840–2089–0** **(J–23597–9)** Nut and bolt

ILLUSTRATION	**TOOL NO.** TOOL NAME
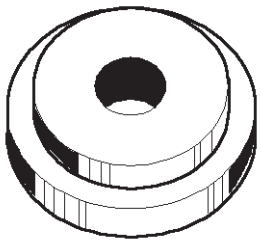 901RS243	**5–8840–2087–0** **(J–23597–7)** Gauge plate
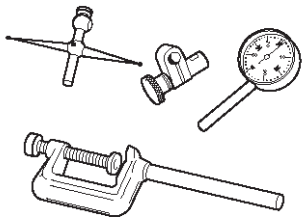 901RS224	**5–8840–0126–0** **(J–8001)** Dial indicator
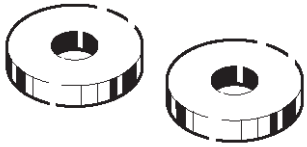 901RS244	**5–8840–2088–0** **(J–23597–8)** Disc
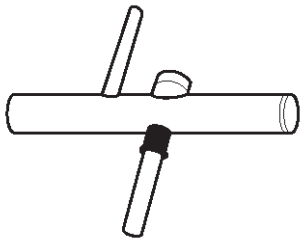 901RS226	**5–8840–0128–0** **(J–23597–1)** Arbor
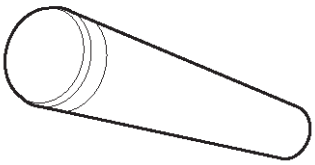 901RS227	**9–8522–1165–0** **(J–6133–01)** Installer; Pinion bearing
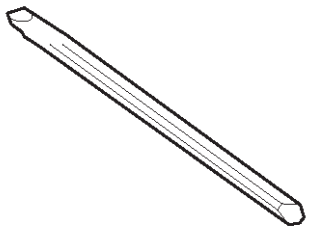 901RS228	**5–8840–2293–0** **(J–39209)** Punch; End nut lock

ILLUSTRATION	**TOOL NO.** TOOL NAME
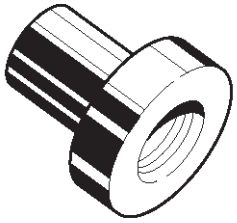 901RS245	**9–8522–1164–0** **(J–24244)** Installer; Side bearing
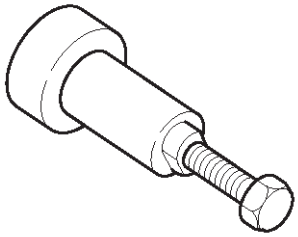 901RS230	**5–8840–2323–0** **(J–39602)** Remover; Outer bearing

DRIVELINE/AXLE

DIFFERENTIAL (Rear 220mm)

CONTENTS

Service Precaution 4A2A–1
General Description 4A2A–2
Diagnosis 4A2A–3
Axle Housing 4A2A–4
Axle Housing and Associated Parts 4A2A–4
Removal 4A2A–4
Oil Seal Replacement 4A2A–5
Installation 4A2A–5
Axle Shaft 4A2A–6
Axle Shaft and Associated Parts 4A2A–6
Removal 4A2A–6
Inspection and Repair 4A2A–7
Oil Seal Replacement 4A2A–8
Installation 4A2A–8
Pinion Oil Seal 4A2A–9
Pinion Oil Seal and Associated Parts 4A2A–9
Removal 4A2A–9
Inspection and Repair 4A2A–10
Installation 4A2A–10
Differential Assembly 4A2A–11
Differential Assembly and Associated Parts 4A2A–11
Removal 4A2A–11
Installation 4A2A–12
Disassembled View 4A2A–13
Disassembly 4A2A–14
Reassembly 4A2A–16
Differential Cage Assembly 4A2A–24
Disassembled View 4A2A–24
Disassembly 4A2A–24
Inspection and Repair 4A2A–25
Reassembly 4A2A–26
Limited Slip Differential 4A2A–28
Disassembled View 4A2A–28
Disassembly 4A2A–29
Inspection and Repair 4A2A–29
Reassembly 4A2A–31
Main Data and Specifications 4A2A–35
Special Tools 4A2A–37

Service Precaution

WARNING: IF SO EQUIPPED WITH A SUPPLEMENTAL RESTRAINT SYSTEM (SRS), REFER TO THE SRS COMPONENT AND WIRING LOCATION VIEW IN ORDER TO DETERMINE WHETHER YOU ARE PERFORMING SERVICE ON OR NEAR THE SRS COMPONENTS OR THE SRS WIRING. WHEN YOU ARE REFORMING SERVICE ON OR NEAR THE SRS COMPONENTS OR THE SRS WIRING, REFER TO THE SRS SERVICE INFORMATION. FAILURE TO FOLLOW WARNINGS COULD RESULT IN POSSIBLE AIR BAG DEPLOYMENT, PERSONAL INJURY, OR OTHERWISE UNNEEDED SRS SYSTEM REPAIRS.

CAUTION: Always use the correct fastener in the proper location. When you replace a fastener, use ONLY the exact part number for that application. ISUZU will call out those fasteners that require a replacement after removal. ISUZU will also call out the fasteners that require thread lockers or thread sealant. UNLESS OTHERWISE SPECIFIED , do not use supplemental coatings (Paints, greases, or other corrosion inhibitors) on threaded fasteners or fastener joint interfaces. Generally,such coatings adversely affect the fastener torque and the joint clamping force, and may damage the fastener. When you install fasteners, use the correct tightening sequence and specification. Following these instructions can help you avoid damage to parts and systems.

General Description

The rear axle assembly is of the semi–floating type in which the vehicle weight is carried on the axle housing . The center line of the pinion gear is below the center line of the ring gear (hypoid drive).
All parts necessary to transmit power from the propeller shaft to the rear wheels are enclosed in a banjo type axle housing.
The 8.7 inch ring gear rear axle uses a conventional ring and pinion gear set to transmit the driving force of the engine to the rear wheels. This gear set transfers this driving force at a 90 degree angle from the propeller shaft to the drive shafts.
The axle shafts are supported at the wheel end of the shaft by a roller bearing.
The pinion gear is supported by two tapered roller bearings. The pinion depth is set by a shim pack located between the gear end of the pinion and the roller bearing that is pressed onto the pinion. The pinion bearing preload is set by crushing a collapsible spacer between the bearings in the axle housing.

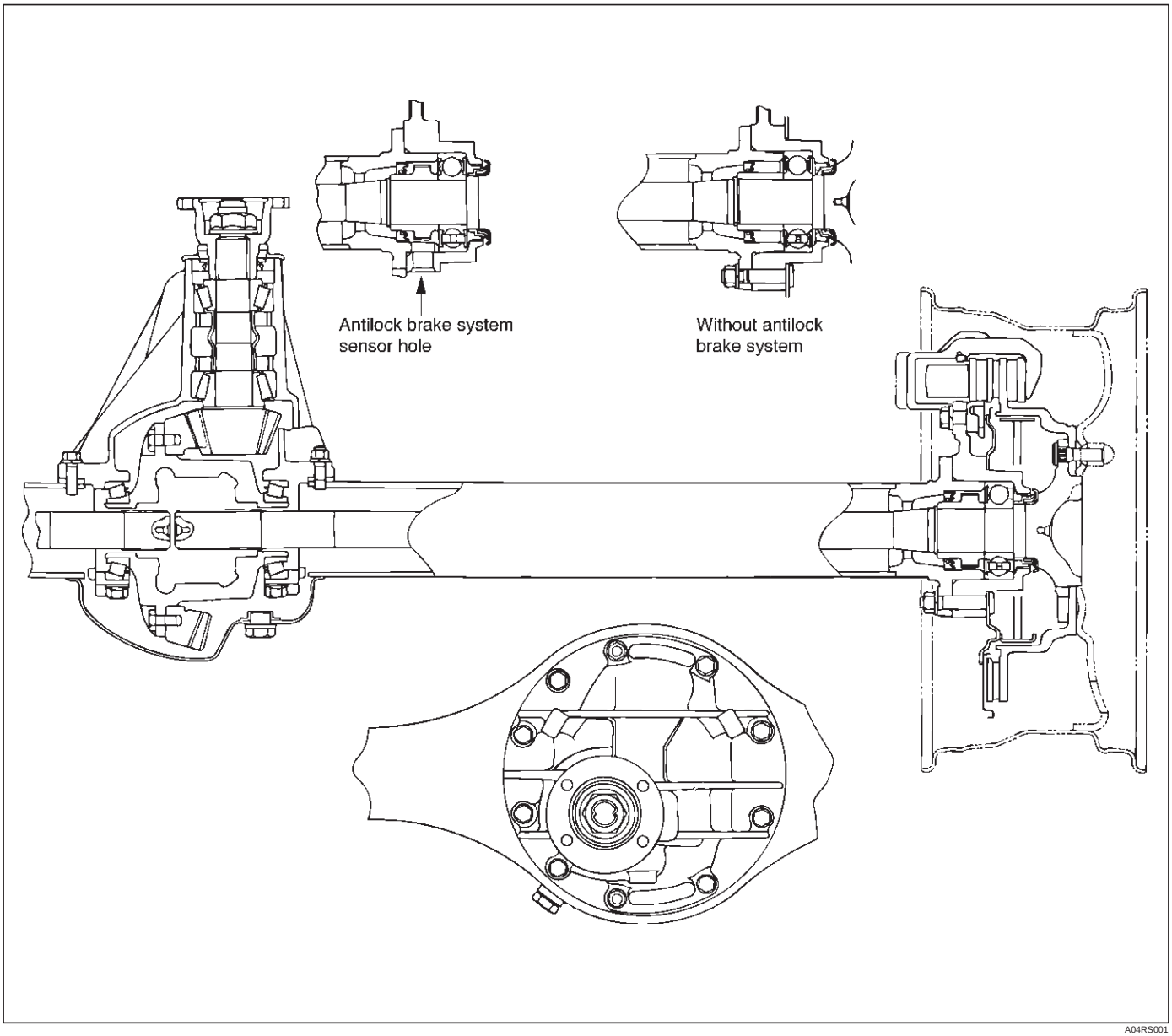

A04RS001

The ring gear is bolted onto the differential cage with 12 bolts.
The differential cage is supported in the axle housing by two tapered roller bearings. The differential and ring gear are located in relationship to the pinion by using selective shims and spacers between the bearing and the axle housing. To move the ring gear, shims are deleted from one side and an equal amount are added to the other side. These shims are also used to preload the bearings which are pressed onto the differential cage. Two bearing caps are used to hold the differential into the rear axle housing.
The differential is used to allow the wheels to turn at different rates of speed while the rear axle continues to transmit the driving force. This prevents tire scuffing when going around corners and prevents premature wear on internal axle parts.
The rear axle is sealed with a pinion seal, a seal at each axle shaft end, and by a liquid gasket between the differential carrier and the axle housing.

Diagnosis

Many noises that seem to come from the rear axle actually originate from other sources such as tires, road surface, wheel bearings, engine, transmission, muffler, or body drumming. Investigate to find the source of the noise before disassembling the rear axle. Rear axles, like any other mechanical device, are not absolutely quiet but should be considered quiet unless some abnormal noise is present.

To make a systematic check for axle noise, observe the following:

1. Select a level asphalt road to reduce tire noise and body drumming.
2. Check rear axle lubricant level to assure correct level, and then drive the vehicle far enough to thoroughly warm up the rear axle lubricant.
3. Note the speed at which noise occurs. Stop the vehicle and put the transmission in neutral. Run the engine speed slowly up and down to determine if the noise is caused by exhaust, muffler noise, or other engine conditions.
4. Tire noise changes with different road surfaces; axle noises do not. Temporarily inflate all tires to 344 kPa (3.5kg/cm^2, 50 psi) (for test purposes only). This will change noise caused by tires but will not affect noise caused by the rear axle.

   Rear axle noise usually stops when coasting at speeds under 48 km/h (30 mph); however, tire noise continues with a lower tone. Rear axle noise usually changes when comparing pull and coast, but tire noise stays about the same.

   Distinguish between tire noise and rear axle noise by noting if the noise changes with various speeds or sudden acceleration and deceleration. Exhaust and axle noise vary under these conditions, while tire noise remains constant and is more pronounced at speeds of 32 to 48 km/h (20 to 30 mph). Further check for tire noise by driving the vehicle over smooth pavements or dirt roads (not gravel) with the tires at normal pressure. If the noise is caused by tires, it will change noticeably with changes in road surface.
5. Loose or rough front wheel bearings will cause noise which may be confused with rear axle noise; however, front wheel bearing noise does not change when comparing drive and coast. Light application of the brake while holding vehicle speed steady will often cause wheel bearing noise to diminish. Front wheel bearings may be checked for noise by jacking up the wheels and spinning them or by shaking the wheels to determine if bearings are loose.
6. Rear suspension rubber bushings and spring insulators dampen out rear axle noise when correctly installed. Check to see that there is no link or rod loosened or metal–to–metal contact.
7. Make sure that there is no metal–to–metal contact between the floor and the frame.

After the noise has been determined to be in the axle, the type of axle noise should be determined, in order to make any necessary repairs.

Gear Noise

Gear noise (whine) is audible from 32 to 89 km/h (20 to 55 mph) under four driving conditions.

1. Driving under acceleration or heavy pull.
2. Driving under load or under constant speed.
3. When using enough throttle to keep the vehicle from driving the engine while the vehicle slows down gradually (engine still pulls slightly).
4. When coasting with the vehicle in gear and the throttle closed. The gear noise is usually more noticeable between 48 and 64 km/h (30 and 40 mph) and 80 and 89 km/h (50 and 55 mph).

Bearing Noise

Bad bearings generally produce a rough growl or grating sound, rather than the whine typical of gear noise. Bearing noise frequently “wow–wows” at bearing rpm, indicating a bad pinion or rear axle side bearing. This noise can be confused with rear wheel bearing noise.

Rear Wheel Bearing Noise

Rear wheel bearing noise continues to be heard while coasting at low speed with transmission in neutral. Noise may diminish by gentle braking. Jack up the rear wheels, spin them by hand and listen for noise at the hubs. Replace any faulty wheel bearings.

Knock At Low Speeds

Low speed knock can be caused by worn universal joints or a side gear hub counter bore in the cage that is worn oversize. Inspect and replace universal joints or cage and side gears as required.

Backlash Clunk

Excessive clunk on acceleration and deceleration can be caused by a worn rear axle pinion shaft, a worn cage, excessive clearance between the axle and the side gear splines, excessive clearance between the side gear hub and the counterbore in the cage, worn pinion and side gear teeth, worn thrust washers, or excessive drive pinion and ring gear backlash. Remove worn parts and replace as required. Select close–fitting parts when possible. Adjust pinion and ring gear backlash.

Axle Housing

Axle Housing and Associated Parts

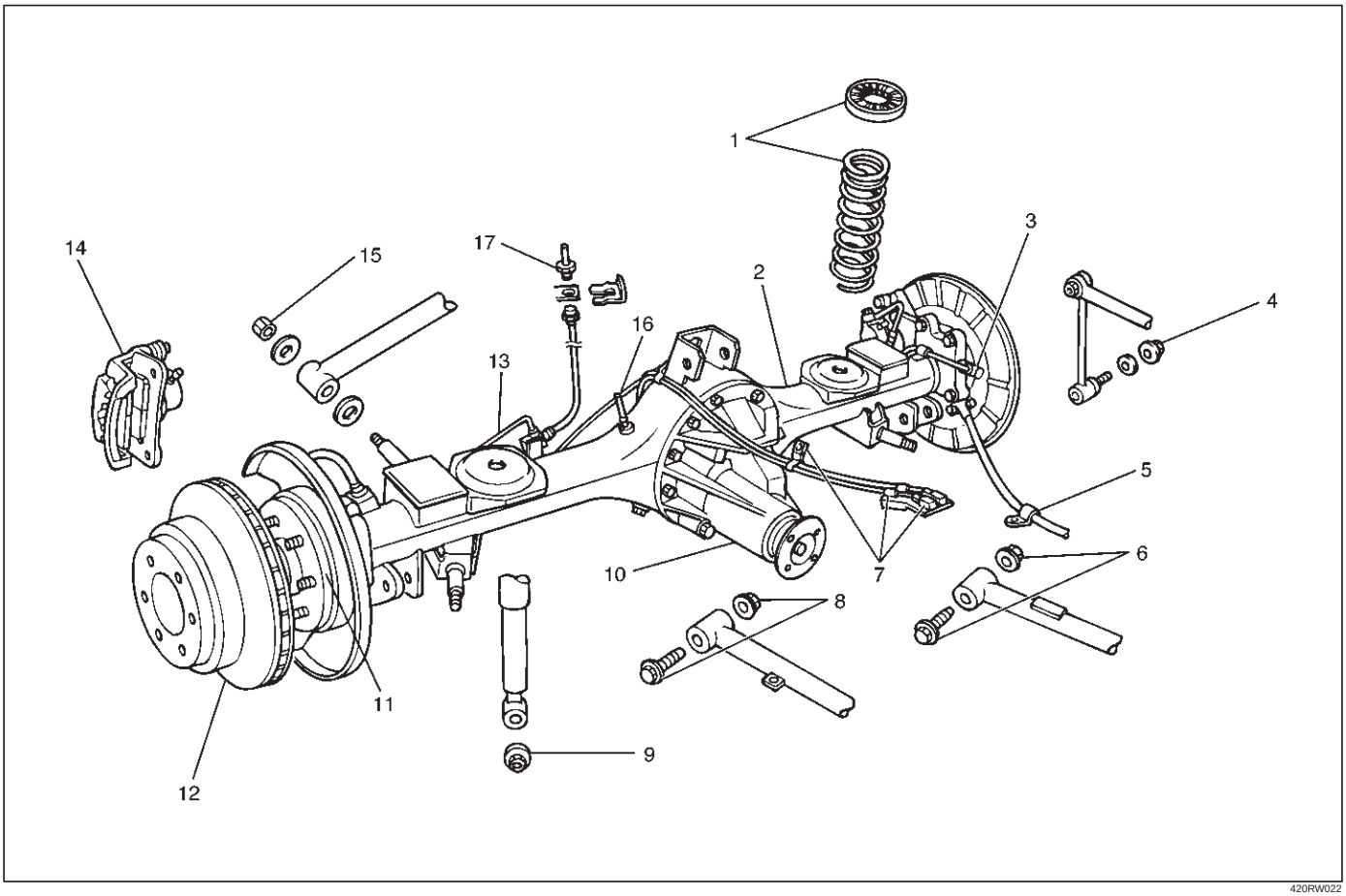

Legend

(1) Coil Spring and Insulator
(2) Axle Housing Assembly
(3) ABS Speed Sensor and Harness(if equipped)
(4) Nut
(5) Parking Brake Cable
(6) Bolt and Nut
(7) Antilock Brake System (ABS) Connector and Bracket (if equipped)
(8) Bolt and Nut
(9) Nut
(10) Differential Assembly
(11) Axle Shaft Assembly
(12) Brake Disc
(13) Brake Pipe
(14) Brake Caliper
(15) Nut
(16) Breather Hose
(17) Flare Nut

Removal

1. Raise the vehicle and support it with suitable safety stands.
   The hoist must remain under the rear axle housing.
2. Drain brake fluid. Refer to Hydraulic Brakes in Brake section.
3. Remove rear wheels and tires. Refer to Wheel in Suspension section.
4. Remove propeller shaft. Refer to Rear Propeller Shaft in this section.
5. Drain the rear axle oil into a proper container.
6. Remove parking brake cable, release the connection between the cable fixing clip equalizer. Refer to Parking Brakes in Brake section.
7. Move the clip aside and pull out the breather hose.

8. Disconnect the ABS connectors (1) and remove the brackets (2) attached to the frame and center link (ABS model only).

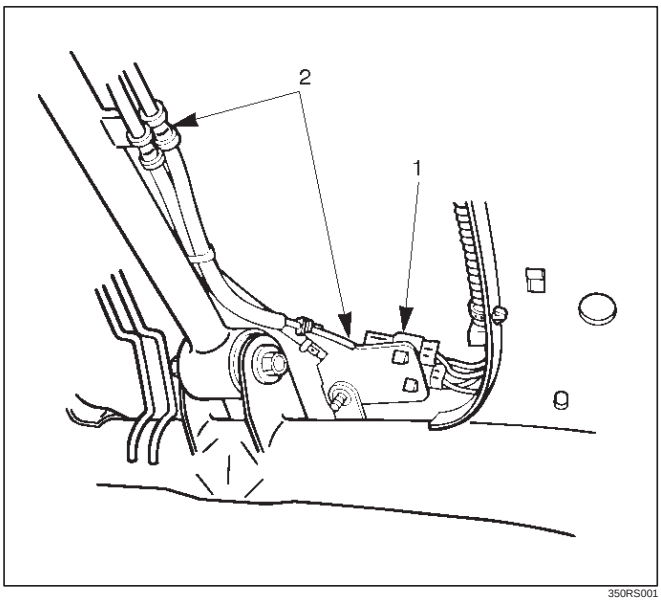

350RS001

9. Loosen the brake tube flare nut, remove the clip and take out the brake tube.
10. Remove the shock absorber fixing nut from the axle housing.
11. Remove the stabilizer linkage mounting nut from the axle housing.
12. Remove the lateral rod fixing nut from the axle housing.
13. Remove the center link mounting bolt and nut from the axle housing.
14. Remove the trailing link fixing bolt and nut from the axle housing.
15. Jack down and remove the coil spring and insulator.
16. Axle housing assembly can be separated from the vehicle on completion of steps 1 – 11.
17. Remove the brake caliper fixing bolt (3), loosen the flare nut (1), release the clip (2) and take out the brake caliper together with the flexible hose.

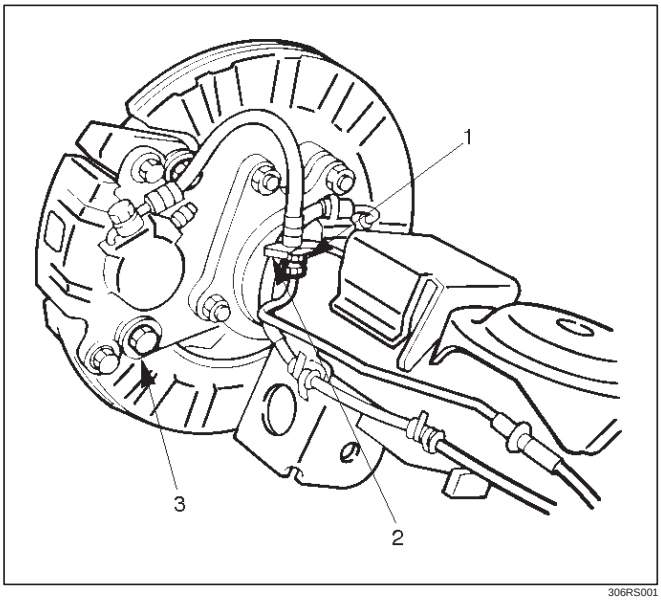

306RS001

18. Remove brake disc.
19. Remove antilock brake system speed sensor fixing bolt and the clip and bracket on the axle housing (ABS model only).
20. Remove the brake pipe clip and fixing bolt on the axle housing and take out the brake pipe.
21. Remove the bearing holder fixing nut and take out the axle shaft assembly, be sure not to damage the oil seal by the spline of the shaft, Refer to Axle Shaft in this section.
22. Remove differential assembly, refer to Differential Assembly in this section.

Oil Seal Replacement

Remove the oil seal, carefully not to damage the housing, and mount new oil seal using oil seal installer 5–8840–2294–0.

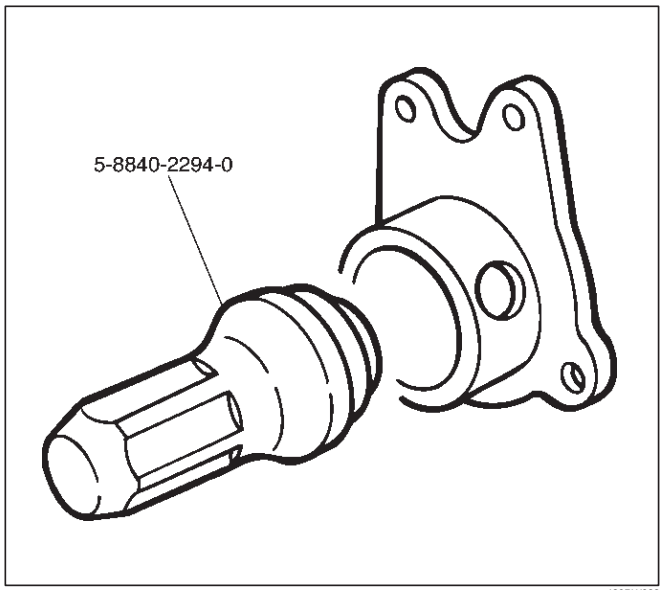

420RW028

Installation

1. Install differential assembly, refer to Differential Assembly in this section.
2. Install axle shaft assembly then tighten the bearing holder mounting nut to the specified torque. Be sure not to damage the oil seal by the spline of the shaft.

   Torque: 74N·m (7.5kg·m/54lb ft)
3. Install brake pipe.
4. Connect antilock brake system (ABS) speed sensor and harness, refer to 4–Wheel Anti–Lock Brake System (ABS) in Brake section (ABS model only).
5. Install brake disc.
6. Install brake caliper. Refer to Disk Brakes in Brake section.
7. Install axle housing assembly.
8. Install coil spring and insulator.
9. Install the trailing link fixing bolt and nut to the axle housing. For the procedures in items 9–13, refer to Suspension section.
10. Install the center link bolt and nut to the axle housing.

11. Install the lateral rod fixing nut to the axle housing.
12. Install the stabilizer linkage mounting nut to the axle housing.
13. Install the shock absorber fixing nut to the axle housing.
14. Install brake tube flare nut, Refer to Disk Brakes in Brake section.
15. Install ABS connector and bracket (ABS model only).
16. Connect breather hose.
17. Install parking brake cable, Refer to Parking Brakes in Brake section.
18. Bleed brakes. Refer to Hydraulic Brakes in Brake section.

Axle Shaft

Axle Shaft and Associated Parts

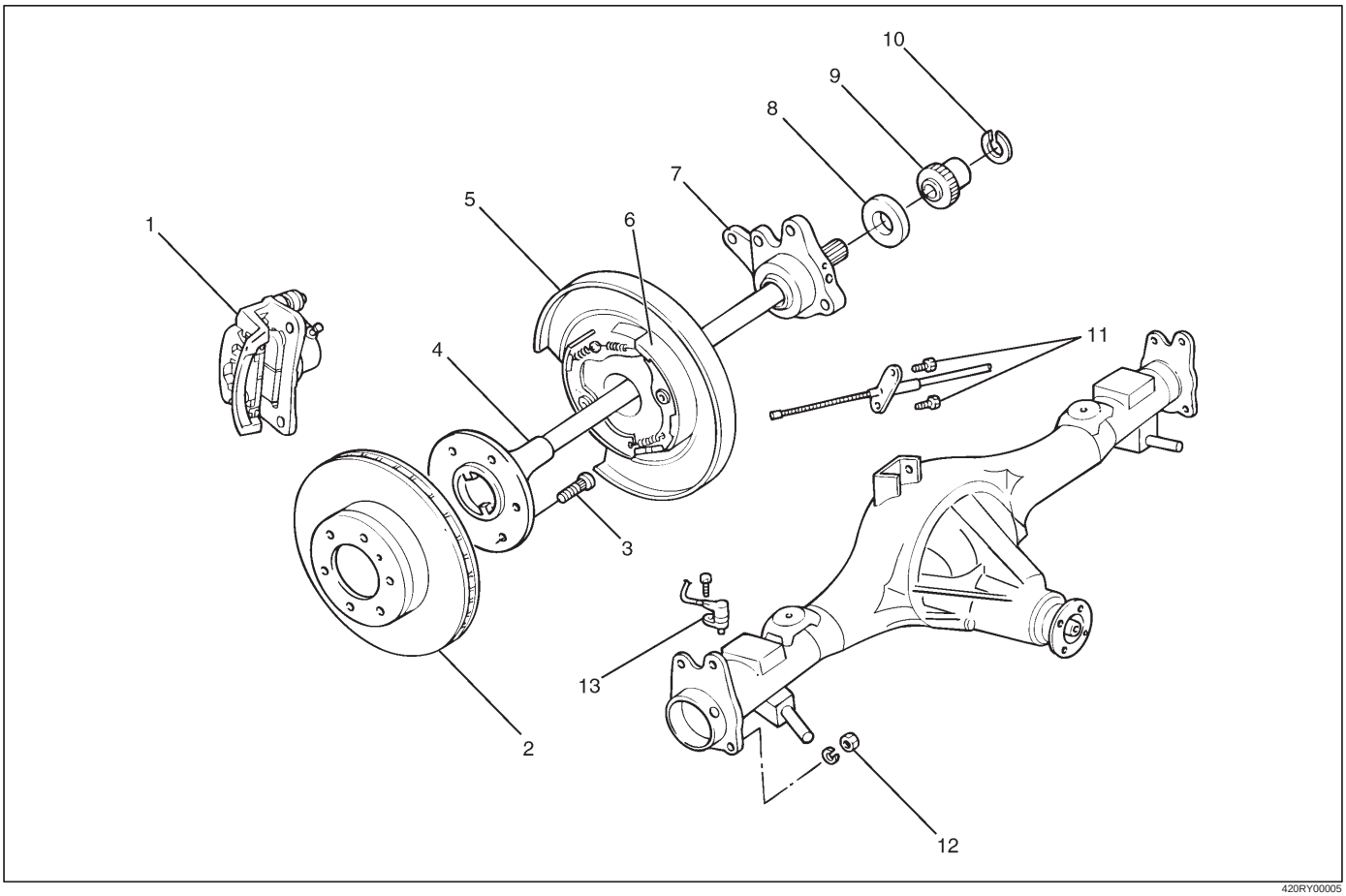

420RY00005

Legend

(1) Brake Caliper
(2) Brake Disc
(3) Wheel Pin
(4) Axle Shaft Assembly
(5) Back Plate
(6) Parking Brake Assembly
(7) Bearing Holder
(8) Bearing
(9) Retainer
(10) Snap Ring
(11) Bolt
(12) Nut
(13) Antilock Brake System (ABS) Speed Sensor

Removal

1. Raise the vehicle.
2. Remove tires and wheels. Refer to Wheel in Steering section.
3. Remove brake caliper. Use a wire to attach the brake caliper to the frame. Refer to Disk Brakes in Brake section.
4. Remove brake disc.
5. Remove ABS sensor.
6. Remove Parking brake assembly. Refer to Parking Brakes in Brake section.

7. Remove the parking brake cable mounting bolts(Behind the back plate)(1).

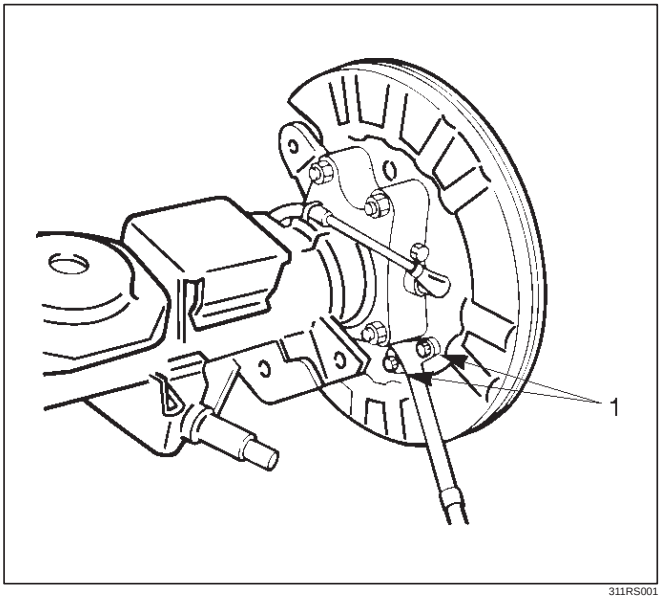

311RS001

8. Remove the bearing holder mounting nuts.
9. Remove axle shaft assembly.

NOTE: Be sure not to damage the oil seal.

10. Remove snap ring.
11. Using a bearing remover 5–8840–2295–0 and press, remove retainer together with the bearing holder.

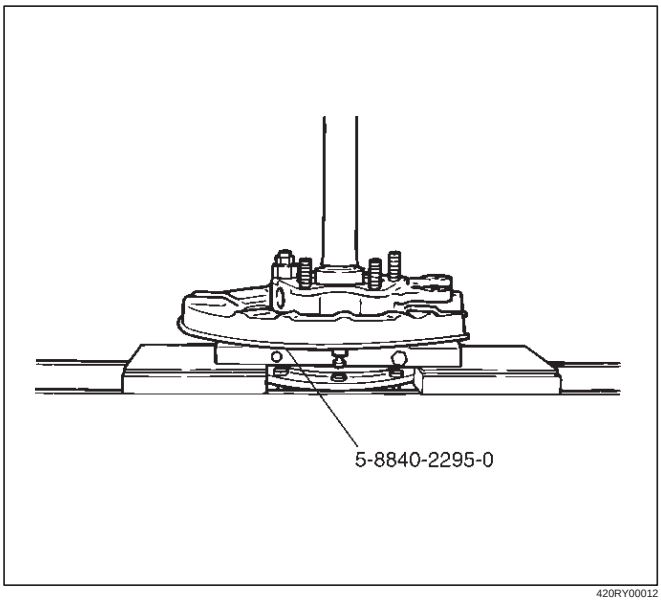

420RY00012

12. Remove bearing.
13. Remove bearing holder.
14. Remove back plate.
15. Remove the wheel pins using a remover 5–8840–0029–0.

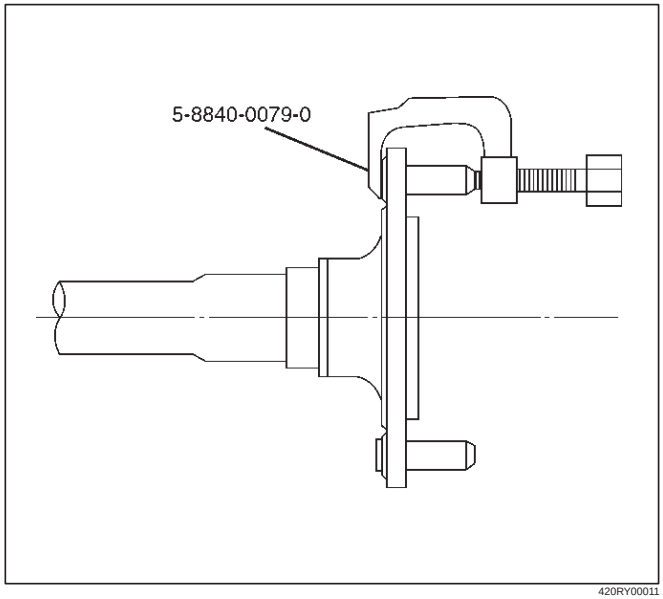

420RY00011

Inspection and Repair

Make necessary correction or parts replacement if wear, corrosion or any other abnormal conditions are found through inspection.

Visual Check:

Check the following parts for wear, damage, noise or any other abnormal conditions:

1. Axle shaft
2. Bearing

When checking the axle shaft, pay special attention to the splined portions and replace the shaft if distortion or step wear is noticeable. Correct slight step wear with a grinder.

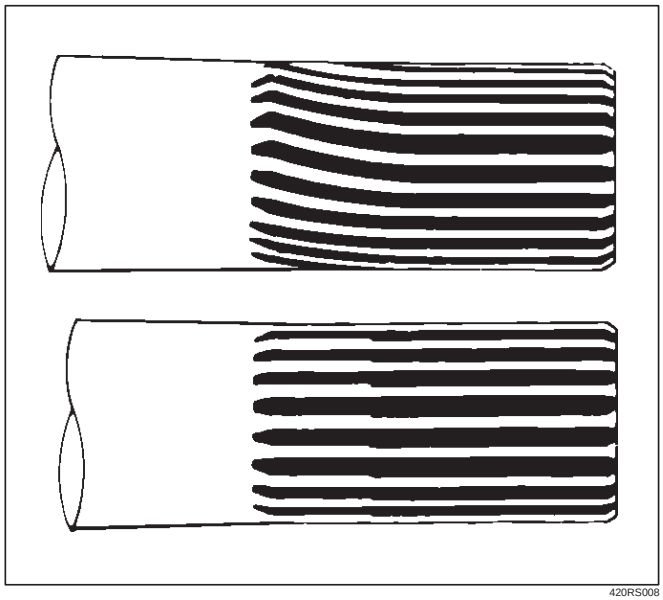

420RS008

Axle Shaft Run–out

Limit: 1.0 mm (0.039 in)

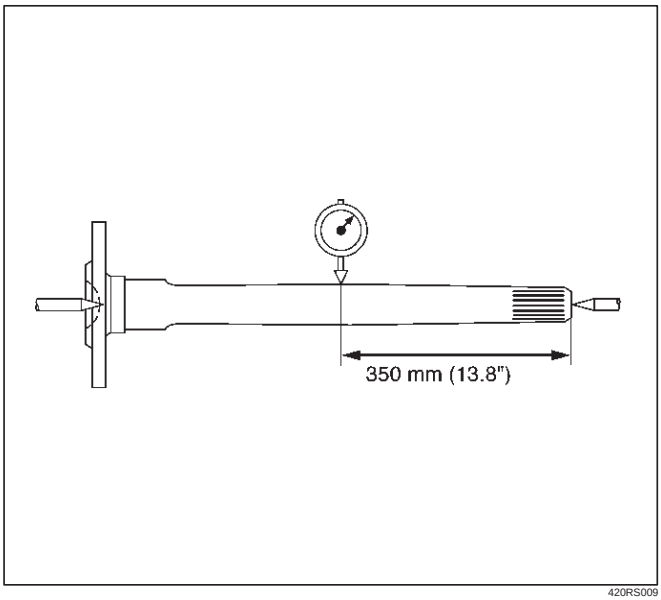

420RS009

Axle Shaft Flange Run–out

Limit: 0.08 mm (0.003 in)

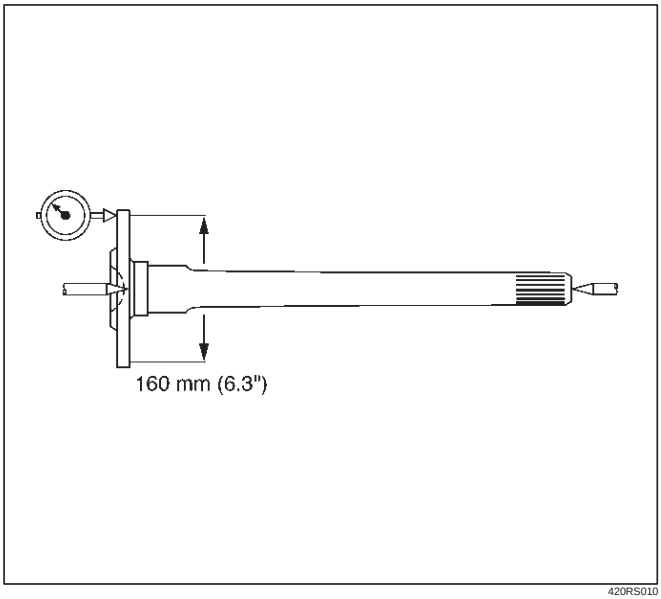

420RS010

Oil Seal Replacement

Remove the oil seal carefully not to damage the bearing holder bore .
When installing, use oil seal installer 5–8840–2310–0.

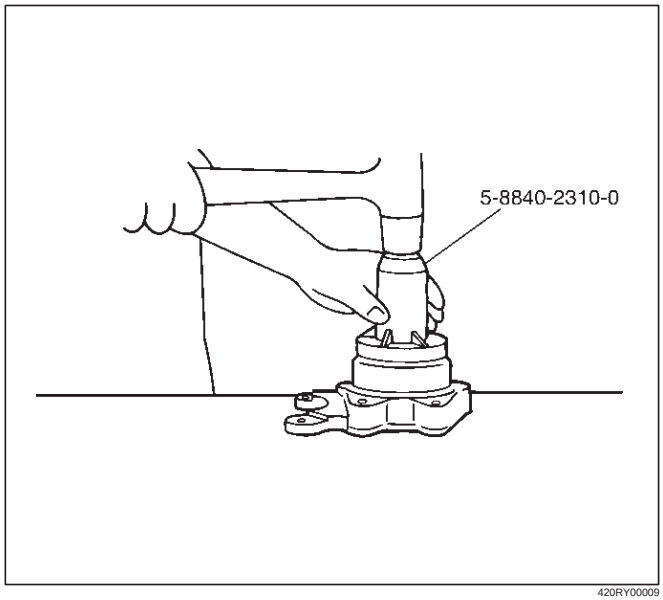

420RY00009

Installation

1. Install wheel pin.
2. Install back plate.
3. Install bearing holder.
4. Install bearing.
5. Install retainer by using a bearing installer 5–8840–2296–0, press fit together with the bearing.

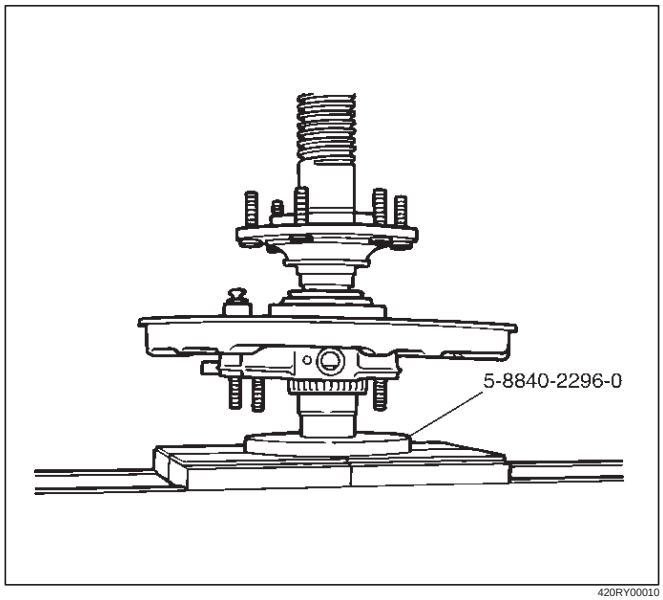

420RY00010

6. Install snap ring.
7. Install axle shaft assembly.

NOTE: Be sure not to damage the oil seal.

8. Tighten the bearing holder mounting nut to the specified torque.

   Torque: 74N·m (54 lb ft)

9. Fix the parking brake cable mounting bolt (Behind the back plate).
10. Install parking brake assembly, refer to Parking Brakes in Brake section.
11. Install antilock brake system sensor.
12. Install brake disc.
13. Install brake caliper, refer to Disk Brakes in Brake section.

Pinion Oil Seal

Pinion Oil Seal and Associated Parts

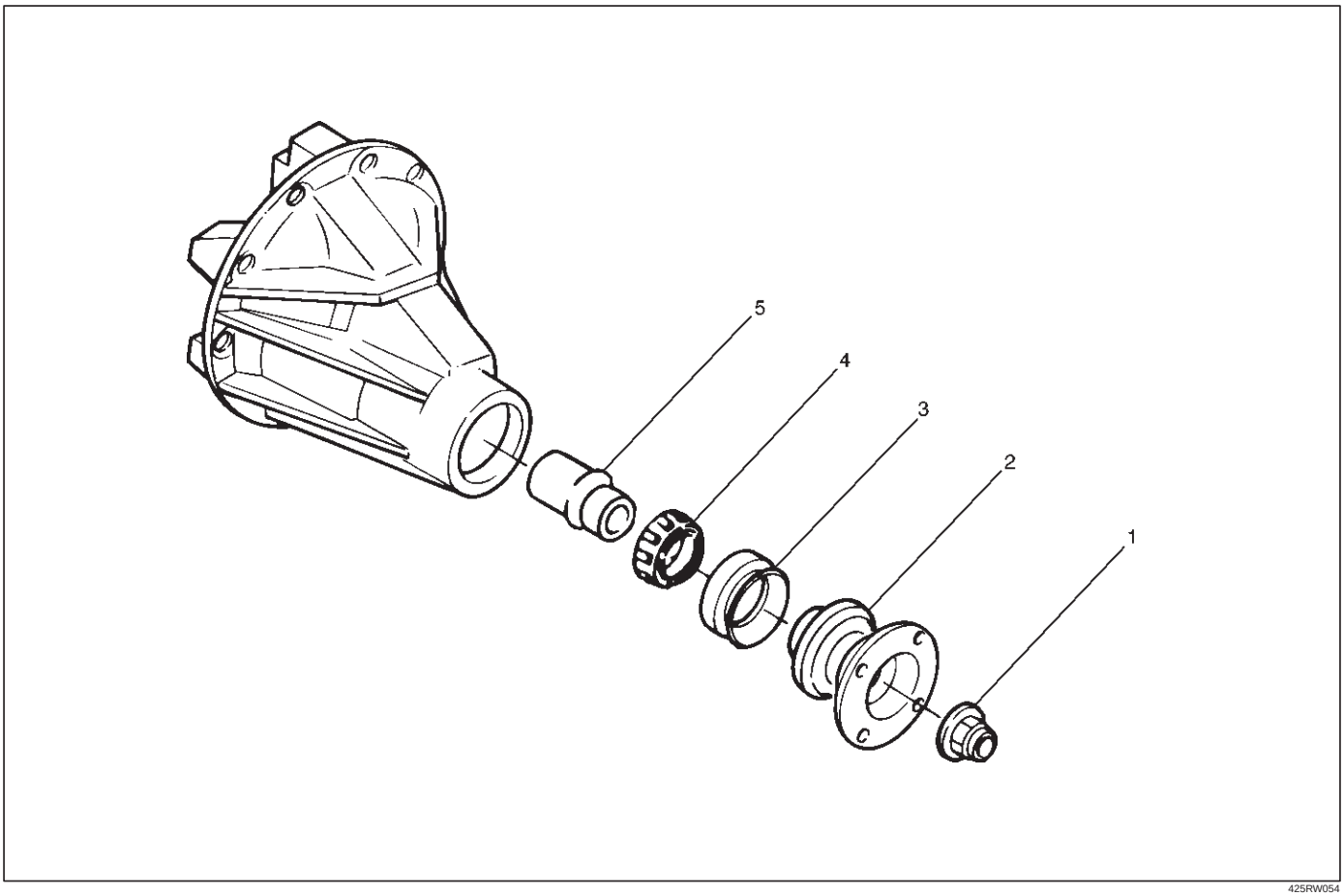

425RW054

Legend

(1) Flange Nut and Washer
(2) Flange
(3) Oil Seal
(4) Outer Bearing
(5) Collapsible Spacer

Removal

1. Remove the rear propeller shaft. Refer to Rear Propeller Shaft in this section.
2. Drain the rear axle oil.

3. Remove flange nut and washer by using pinion flange holder 5–8840–2157–0 after raising up its staked parts completely.

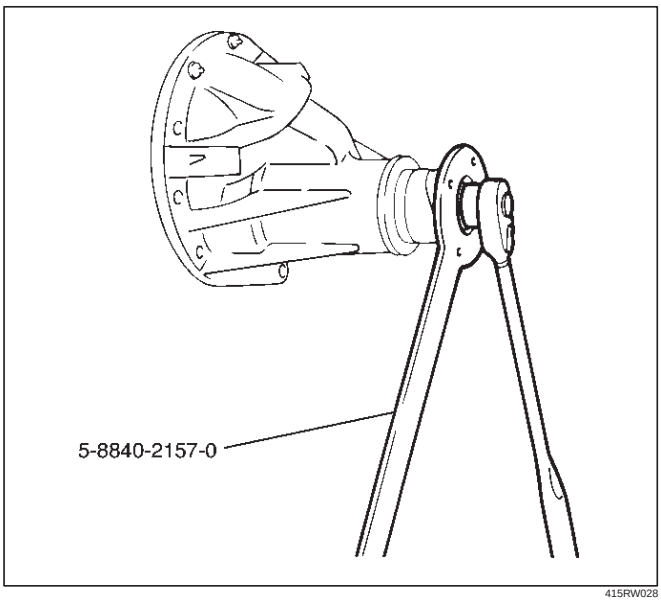

415RW028

4. Remove flange.
5. Remove oil seal.
6. Remove outer bearing by using remover 5–8840–2323–0.

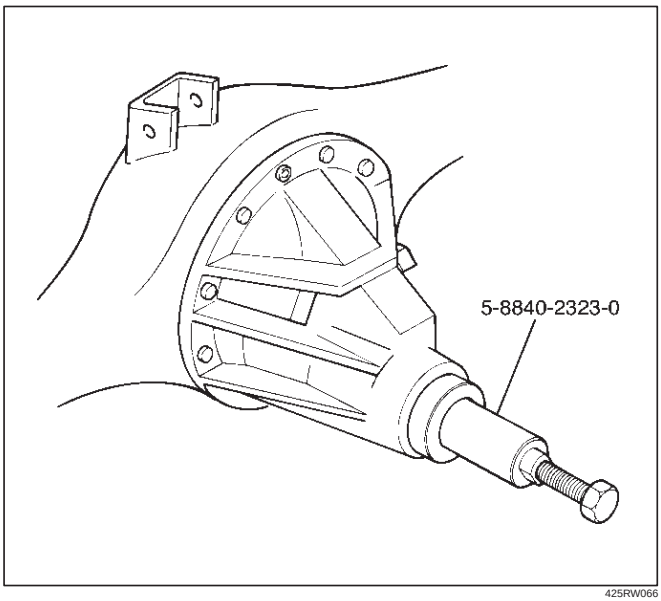

425RW066

7. Remove collapsible spacer.

Inspection and Repair

Make necessary correction or parts replacement if wear, damage, corrosion or any other abnormal conditions are found through inspection.
Check the following parts:

1. Seal surface of the pinion.
2. Cage bore for burns.

Installation

1. Install collapsible spacer, discard the used collapsible spacer and install a new one.
2. Install outer bearing.

NOTE: Do not drive in, but just temporarily set in the outer bearing by hand, which should be indirectly pressed in finally by tightening the flange nut.

3. By using the seal installer 5–8840–2165–0, install a new oil seal (1) that has grease on seal lip.

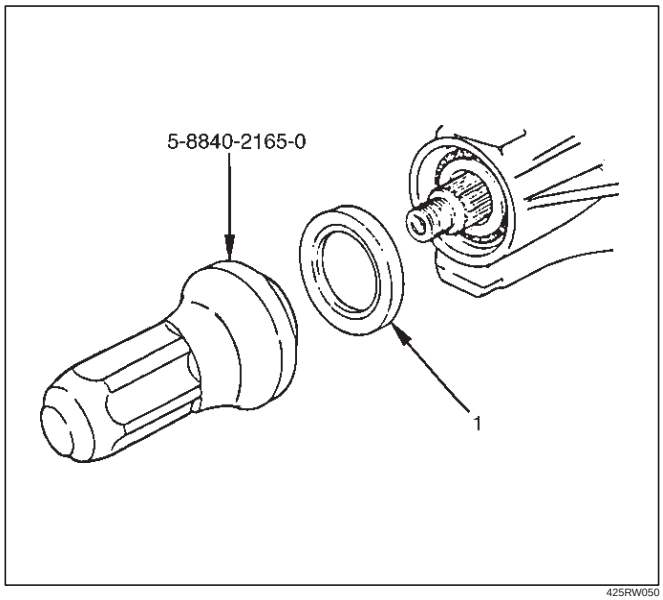

425RW050

4. Install flange.
5. Install flange nut and washer. Refer to Differential Assembly in this section for flange nut reassembly.

NOTE: Discard the used nut and install a new one.

Differential Assembly

Differential Assembly and Associated Parts

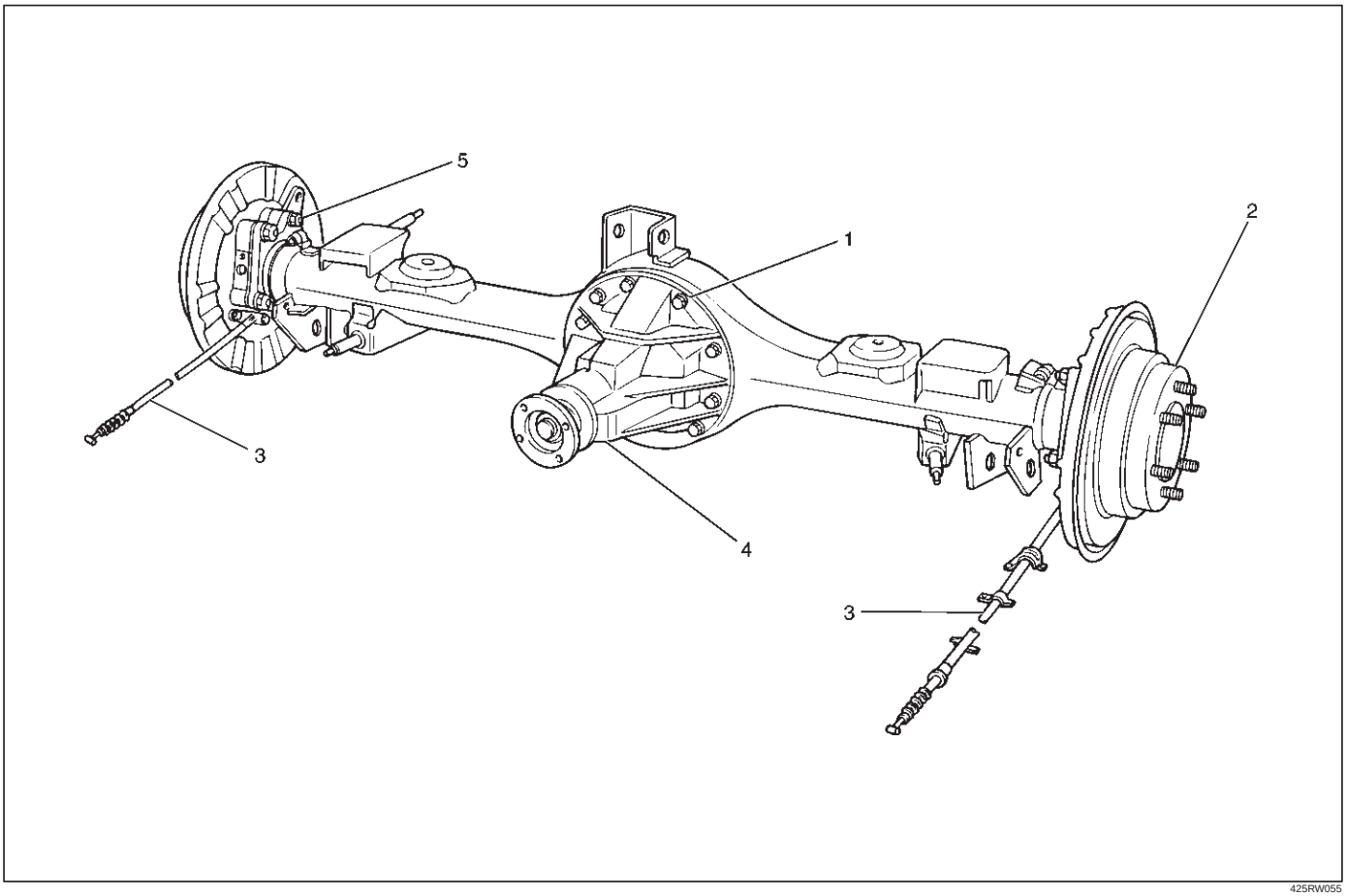

425RW055

Legend

(1) Bolt and Nut
(2) Axle Shaft Assembly
(3) Parking Brake Cable
(4) Differential Assembly
(5) Nut

Removal

1. Jack up and support the frame with stands.
2. Remove the wheel and tire. Refer to Wheel in Steering section.
3. Drain the differential oil.
4. Remove the propeller shaft. Refer to Rear Propeller Shaft in this section.
5. Remove the ABS speed sensor(ABS model only). Refer to 4–Wheel Anti–lock Brake System (ABS) in Brake section.
6. Remove the parking brake cable fastening clip and disconnect the equalizer section. Refer to Parking Brakes in Brake section.
7. Remove the bearing holder fixing nuts.
8. Remove axle shaft assembly, be sure not to damage the oil seal by axle shaft.
9. Remove differential carrier mounting bolts and nuts.
10. Remove differential assembly.

Installation

1. Clean the contact surfaces of the axle and differential carrier. As shown in the drawing, apply Three Bond TB1215 or equivalent then install differential assembly.

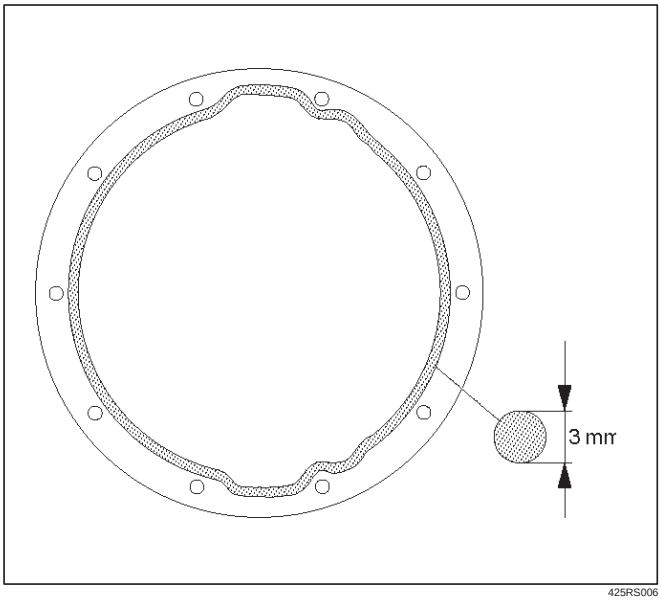

2. Install bolt and nut. Tighten the differential carrier mounting bolts and nuts to the specified torque.

   Torque:Nuts 44N·m (4.5kg·m/33lb ft)

   Bolts 64N·m (6.5kg·m/47lb ft)

3. Install axle shaft assembly. Be sure not to damage the oil seal by axle shaft.
4. Install nut, refer to Axle Shaft in this section.
5. Install parking brake cable, refer to Parking Brakes in Brake section.

NOTE: After completing the assembling work, fill the prescribed gear oil to the filler hole.

Lubricant capacity: 1.8 liter (1.6 Imp qt/1.9US qt)

6. Tighten the oil filler plug to the specified torque.

   Torque: 78N·m (8.0kg·m/58lb ft)

Disassembled View

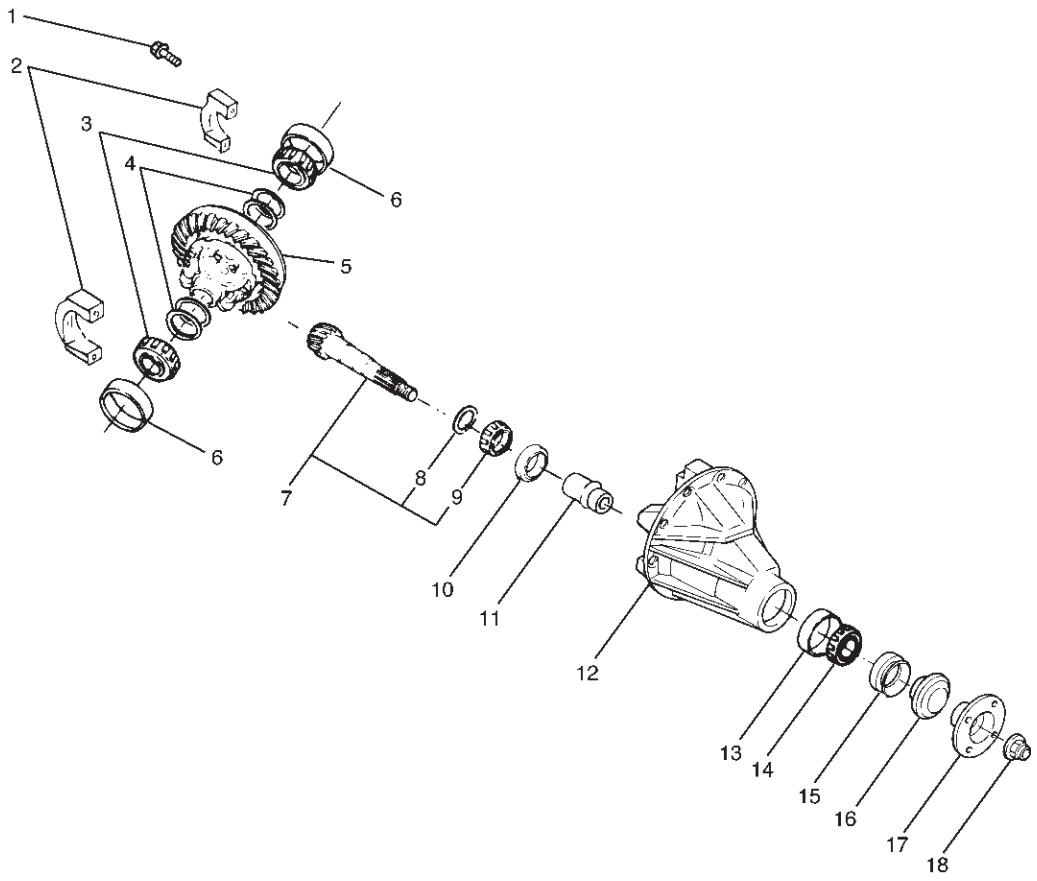

415RW035

Legend

(1) Bolt
(2) Bearing Cap
(3) Side Bearing
(4) Adjust Shim
(5) Diff Cage Assembly
(6) Side Bearing Outer Race
(7) Pinion Gear
(8) Adjust Shim
(9) Inner Bearing
(10) Inner Bearing Outer Race
(11) Collapsible Spacer
(12) Differential Carrier
(13) Outer Bearing Outer Race
(14) Outer Bearing
(15) Oil Seal
(16) Dust Cover
(17) Flange
(18) Flange Nut

Disassembly

1. Using holding fixture 5–8840–0275–0 and holding fixture base 5–8840–0003–0, fix the differential assembly to the bench.

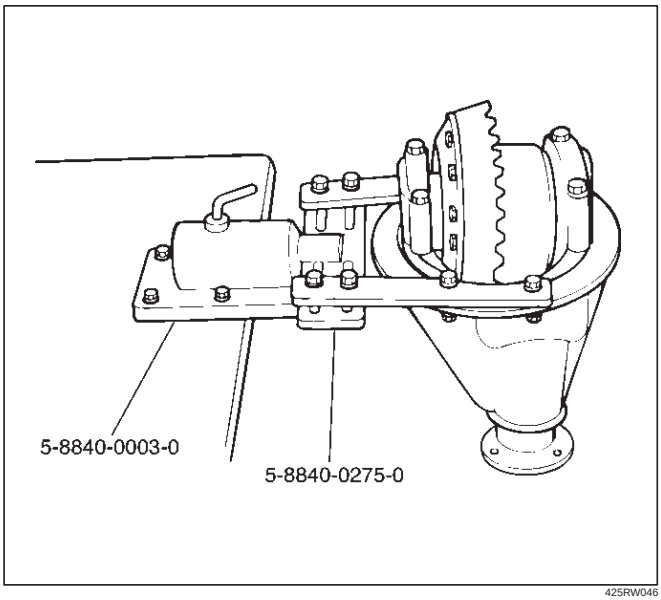

425RW046

2. Remove bearing cap bolt.
3. Apply a setting mark to the side bearing cap and the differential carrier then remove bearing cap.

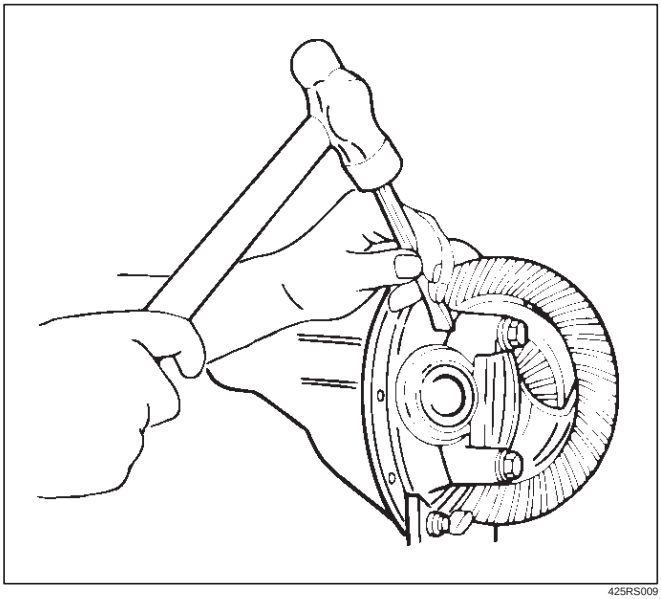

425RS009

4. Remove differential cage assembly.
5. Remove side bearing outer race, after removal, keep the right and left hand side bearing assemblies separate to maintain inner and outer race combinations.
6. Remove side bearing, using remover 5–8840–0013/0014–0 and adapter 5–8840–2196–0.

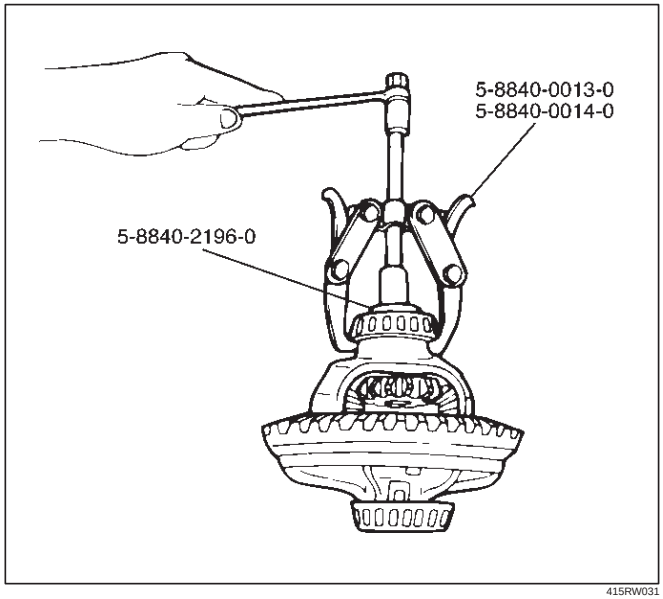

415RW031

7. Remove adjust shim, note the thickness and position of the shims removed.
8. Remove the flange nut using holding wrench 5–8840–2157–0 after raising up its staked parts completely.

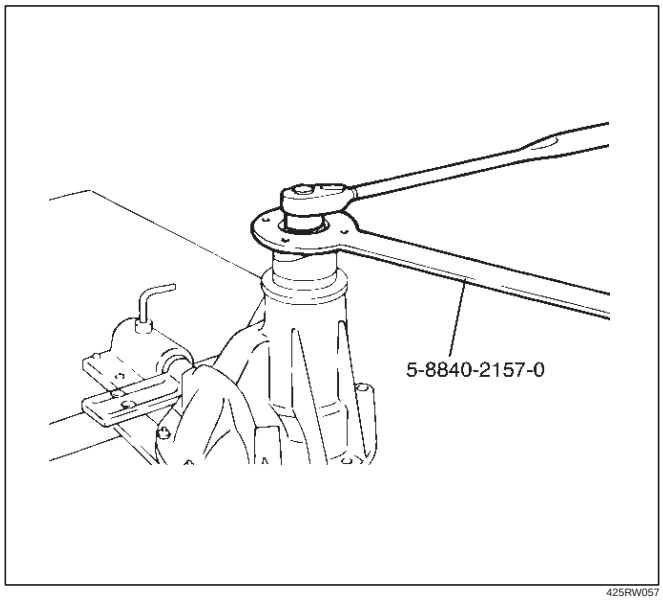

425RW057

9. Remove flange.
10. Remove dust cover.

11. Remove the drive pinion assembly using a soft metal rod and a hammer.

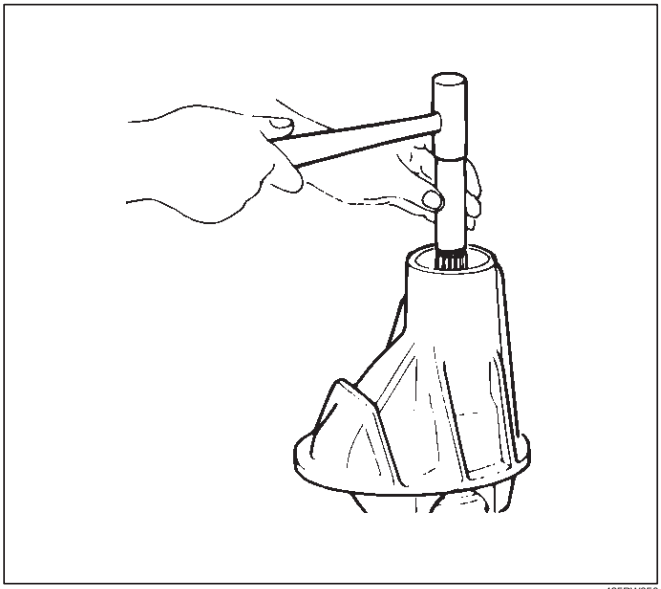

425RW056

12. Remove collapsible spacer.
13. Remove the inner bearing using a separator 5–8840–2197–0 and a press.

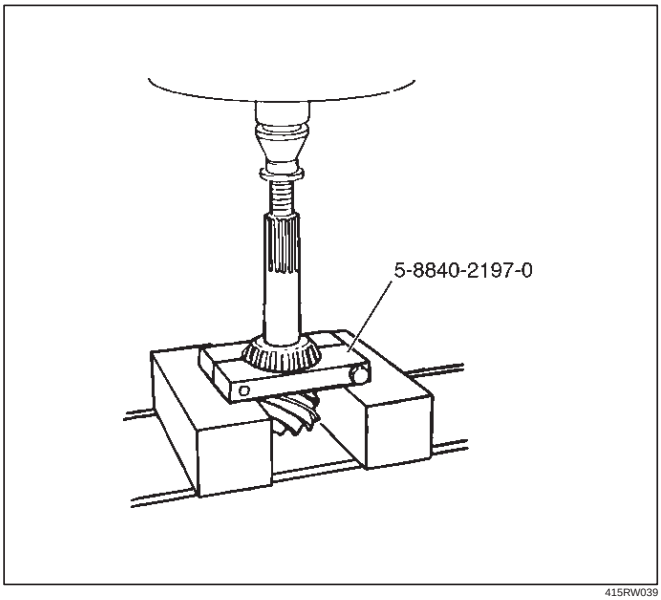

415RW039

14. Remove adjust shim.
15. Remove inner bearing outer race.
16. Remove oil seal.
17. Remove outer bearing.
18. Remove the inner bearing outer race (1) and the outer bearing outer race (2) by using a brass bar and a hammer.

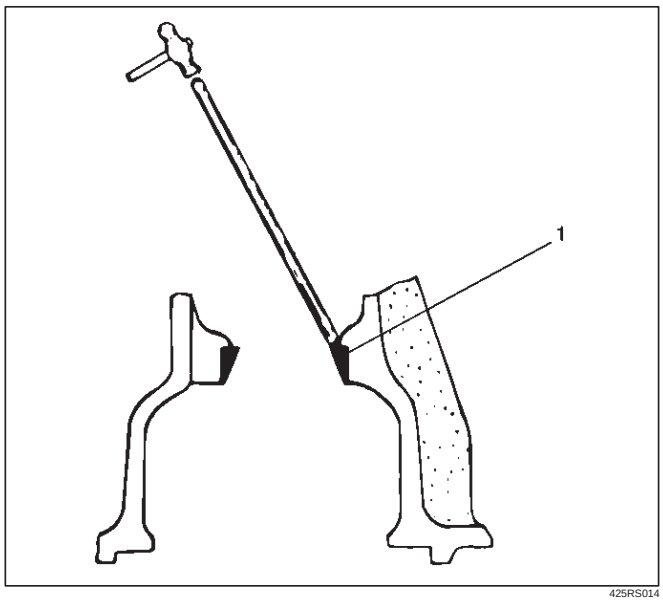

425RS014

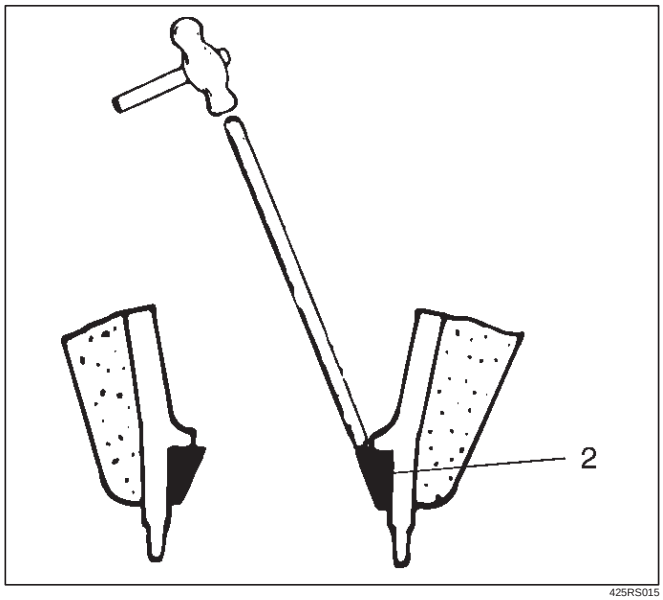

425RS015

Reassembly

1. Using installer 5–8840–2164–0 and grip 5–8840–0007–0, install outer bearing outer race.

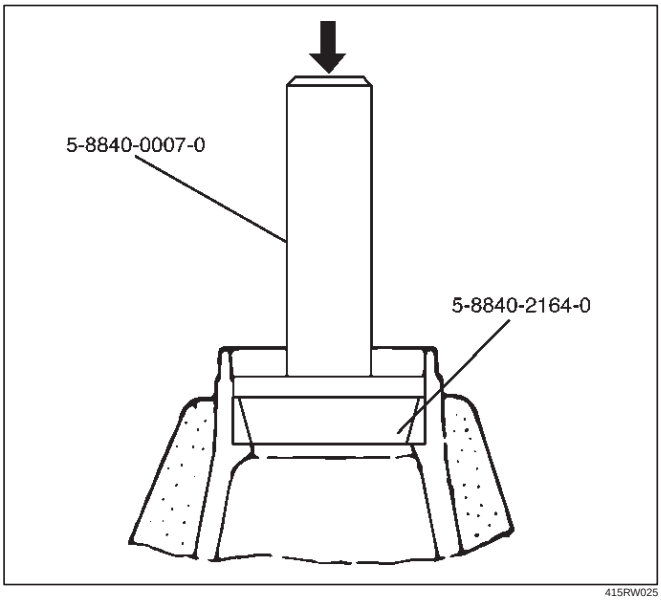

415RW025

2. Using installer 5–8840–2163–0 and grip 5–8840–0007–0, install Inner bearing outer race.

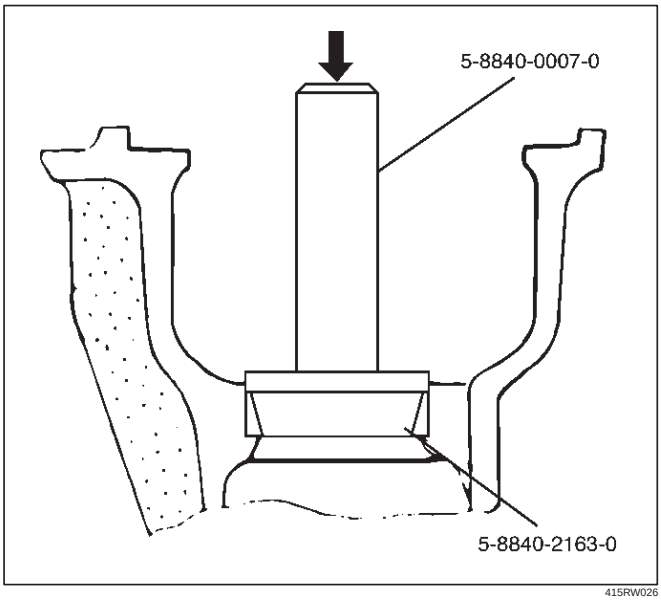

415RW026

3. Install adjust shim and adjust drive pinion mounting distance
   1. Apply gear oil to the inner and outer drive pinion bearing.
      Clean the pinion setting gauge set.
      Then install the gauge set together with the inner and outer bearings.
   2. Tighten the nut to the specified torque.

Torque: 2.3 N·m (0.23kg·m/20 lb in)

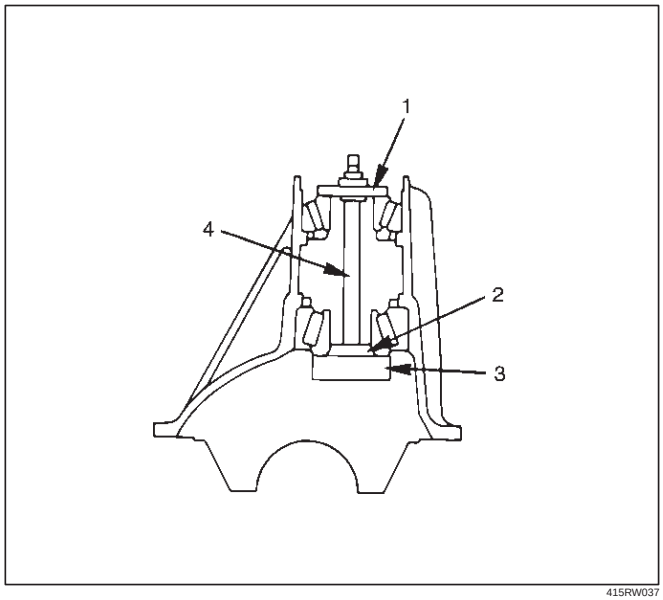

415RW037

Legend

(1) Front Pilot: 5–8840–2085–0
(2) Rear Pilot: 5–8840–0129–0
(3) Gauge Plate: 5–8840–2166–0
(4) Bolt and Nut: 5–8840–0127–0

3. Clean the side bearing bores. Install the dial indicator with the discs and arbor. Install and tighten the bearing caps to the specified torque.

Torque: 108 N·m (11.0kg·m/80 lb ft)

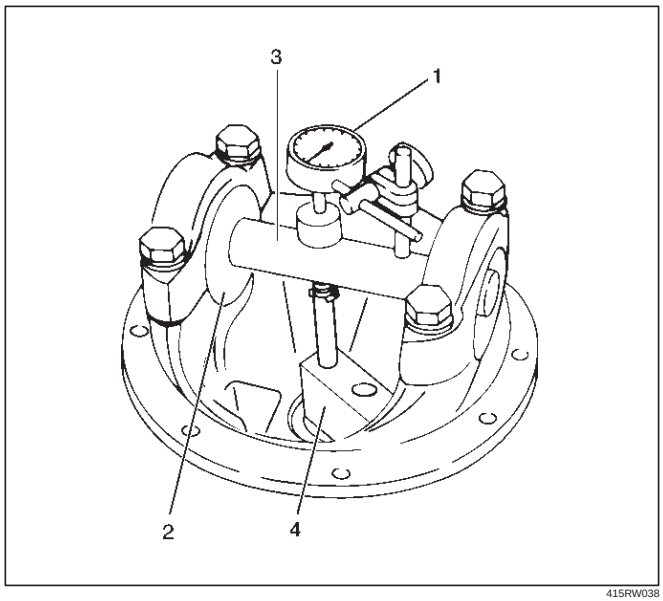

415RW038

Legend

(1) Dial Indicator: 5–8840–0126–0
(2) Disc (2 pcs.): 5–8840–2167–0
(3) Arbor: 5–8840–0128–0
(4) Gauge Plate: 5–8840–2166–0

4. Set the dial indicator to “0”. Place it on the mounting post of the gauging arbor with the contact button touching the indicator pad. Force the dial indicator downward until the needle has made a half turn clockwise. Tighten down the dial indicator in this position.

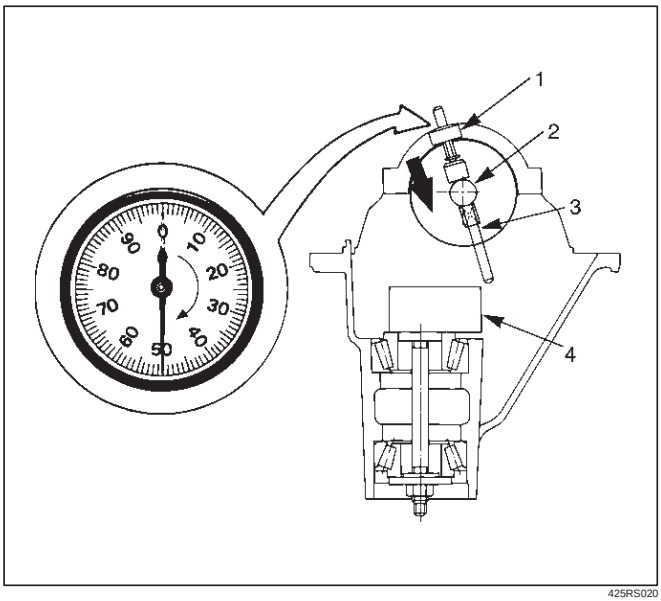

425RS020

Legend

(1) Dial Indicator
(2) Ganging Arbor
(3) Plunger
(4) Gauge Plate

5. Position the plunger on the gauge plate. Move the gauging arbor slowly back and forth and locate the position at which the dial indicator shows the greatest defection. At this point, once again set the dial indicator to “0”.

   Repeat the procedure to verify the “0” setting.

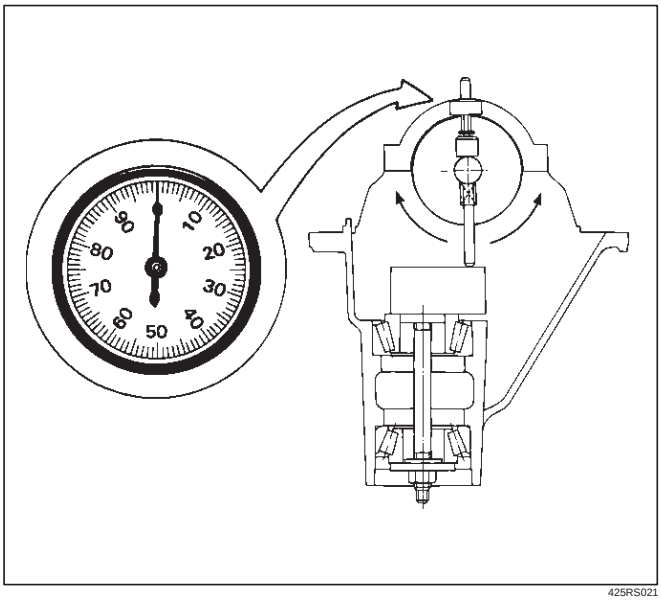

425RS021

6. After the ZERO setting is obtained, rotate the gauging arbor until the dial indicator rod does not touch the gauging plate.

   Record the number the dial indicator needle points to.

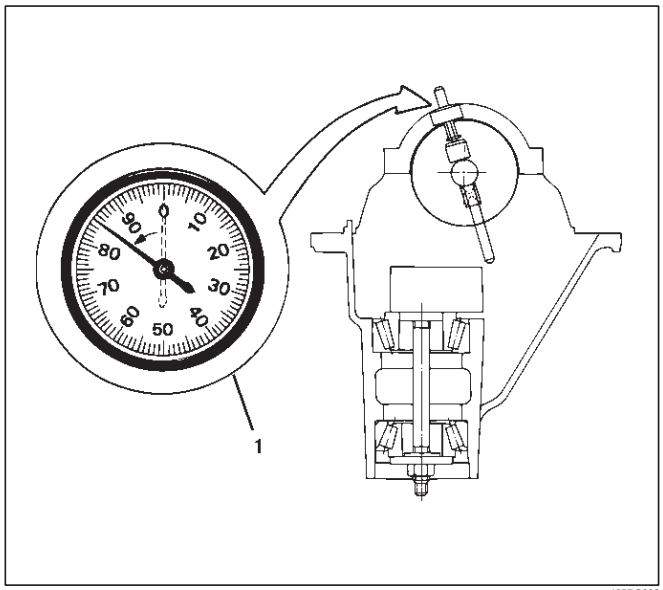

425RS022

Legend

(1) Example=Dial indicator reading of 0.085

7. Record the pinion depth code on the head of the drive pinion.

   The number indicates a necessary change in the pinion mounting distance. A plus number indicates the need for a greater mounting distance (which can be achieved by decreasing the shim thickness). A minus number indicates the need for a smaller mounting distance (which can be achieved by increasing the shim thickness). If examination reveals pinion depth code “0”, the pinion is “nominal”.

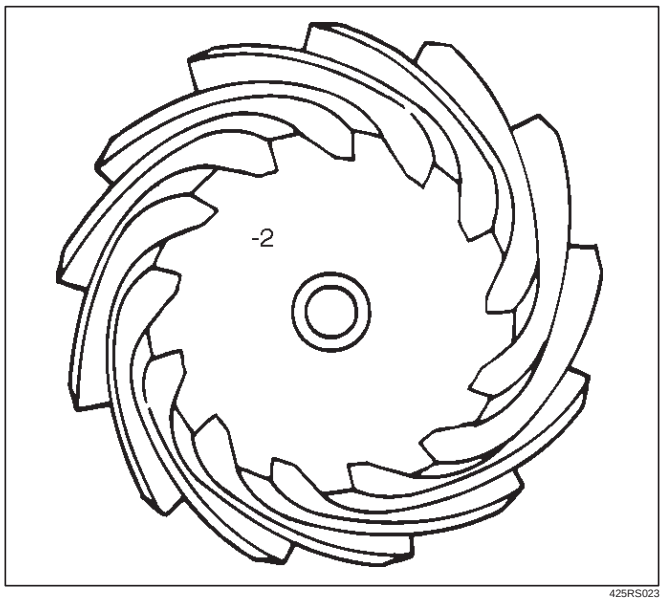

425RS023

8. Select the shim using the chart;

Pinion marking Dial indicator reading (Inches)	+10	+8	+6	+4	+2	0	–2	–4	–6	–8	–10
0.073										1.94 (0.0764)	1.96 (0.0772)
0.074									1.94 (0.0764)	1.96 (0.0772)	1.98 (0.0779)
0.075								1.94 (0.0764)	1.96 (0.0772)	1.98 (0.0779)	2.00 (0.0787)
0.076						1.94 (0.0764)	1.96 (0.0772)	1.98 (0.0779)	2.00 (0.0787)	2.02 (0.0795)	2.04 (0.0803)
0.077						1.96 (0.0772)	1.98 (0.0779)	2.00 (0.0787)	2.02 (0.0795)	2.04 (0.0803)	2.06 (0.0811)
0.078				1.94 (0.0764)	1.96 (0.0772)	1.98 (0.0779)	2.00 (0.0787)	2.02 (0.0795)	2.04 (0.0803)	2.06 (0.0811)	2.08 (0.0819)
0.079			1.94 (0.0764)	1.96 (0.0772)	1.98 (0.0779)	2.00 (0.0787)	2.02 (0.0795)	2.04 (0.0803)	2.06 (0.0811)	2.08 (0.0819)	2.10 (0.0827)
0.080	1.94 (0.0764)	1.96 (0.0772)	1.98 (0.0779)	2.00 (0.0787)	2.02 (0.0795)	2.04 (0.0803)	2.06 (0.0811)	2.08 (0.0819)	2.10 (0.0827)	2.12 (0.0835)	2.14 (0.0842)
0.081	1.96 (0.0772)	1.98 (0.0779)	2.00 (0.0787)	2.02 (0.0795)	2.04 (0.0803)	2.06 (0.0811)	2.08 (0.0819)	2.10 (0.0827)	2.12 (0.0835)	2.14 (0.0842)	2.16 (0.0850)
0.082	1.98 (0.0779)	2.00 (0.0787)	2.02 (0.0795)	2.04 (0.0803)	2.06 (0.0811)	2.08 (0.0819)	2.10 (0.0827)	2.12 (0.0835)	2.14 (0.0842)	2.16 (0.0850)	2.18 (0.0858)
0.083	2.00 (0.0787)	2.02 (0.0795)	2.04 (0.0803)	2.06 (0.0811)	2.08 (0.0819)	2.10 (0.0827)	2.12 (0.0835)	2.14 (0.0842)	2.16 (0.0850)	2.18 (0.0858)	2.20 (0.0866)
0.084	2.04 (0.0803)	2.06 (0.0811)	2.08 (0.0819)	2.10 (0.0827)	2.12 (0.0835)	2.14 (0.0842)	2.16 (0.0850)	2.18 (0.0858)	2.20 (0.0866)	2.22 (0.0874)	2.24 (0.0882)
0.085	2.06 (0.0811)	2.08 (0.0819)	2.10 (0.0827)	2.12 (0.0835)	2.14 (0.0842)	2.16 (0.0850)	2.18 (0.0858)	2.20 (0.0866)	2.22 (0.0874)	2.24 (0.0882)	2.26 (0.0890)
0.086	2.08 (0.0819)	2.10 (0.0827)	2.12 (0.0835)	2.14 (0.0842)	2.16 (0.0850)	2.18 (0.0858)	2.20 (0.0866)	2.22 (0.0874)	2.24 (0.0882)	2.26 (0.0890)	2.28 (0.0898)
0.087	2.12 (0.0835)	2.14 (0.0842)	2.16 (0.0850)	2.18 (0.0858)	2.20 (0.0866)	2.22 (0.0874)	2.24 (0.0882)	2.26 (0.0890)	2.28 (0.0898)	2.30 (0.0906)	2.32 (0.0913)
0.088	2.14 (0.0842)	2.16 (0.0850)	2.18 (0.0858)	2.20 (0.0866)	2.22 (0.0874)	2.24 (0.0882)	2.26 (0.0890)	2.28 (0.0898)	2.30 (0.0906)	2.32 (0.0913)	2.34 (0.0921)
0.089	2.16 (0.0850)	2.18 (0.0858)	2.20 (0.0866)	2.22 (0.0874)	2.24 (0.0882)	2.26 (0.0890)	2.28 (0.0898)	2.30 (0.0906)	2.32 (0.0913)	2.34 (0.0921)	2.36 (0.0929)
0.090	2.18 (0.0858)	2.20 (0.0866)	2.22 (0.0874)	2.24 (0.0882)	2.26 (0.0890)	2.28 (0.0898)	2.30 (0.0906)	2.32 (0.0913)	2.34 (0.0921)	2.36 (0.0929)	
0.091	2.22 (0.0874)	2.24 (0.0882)	2.26 (0.0890)	2.28 (0.0898)	2.30 (0.0906)	2.32 (0.0913)	2.34 (0.0921)	2.36 (0.0929)			
0.092	2.24 (0.0882)	2.26 (0.0890)	2.28 (0.0898)	2.30 (0.0906)	2.32 (0.0913)	2.34 (0.0921)	2.36 (0.0929)				
0.093	2.26 (0.0890)	2.28 (0.0898)	2.30 (0.0906)	2.32 (0.0913)	2.34 (0.0921)	2.36 (0.0929)					
0.094	2.28 (0.0898)	2.30 (0.0906)	2.32 (0.0913)	2.34 (0.0921)	2.36 (0.0929)						
0.095	2.32 (0.0913)	2.34 (0.0921)	2.36 (0.0929)								
0.096	2.34 (0.0921)	2.36 (0.0929)									
0.097	2.36 (0.0929)										

NOTE: When ordering shims, find the part number in the parts catalog by using the thickness of shims listed in the above table.

4. Place the shim on the drive pinion, with the chamfered side turned towards the pinion head then install the inner bearing onto the pinion using an installer 9–8522–1165–0 and a press.

NOTE: Do not apply pressure to the roller cage and apply pressure only to the inner race.

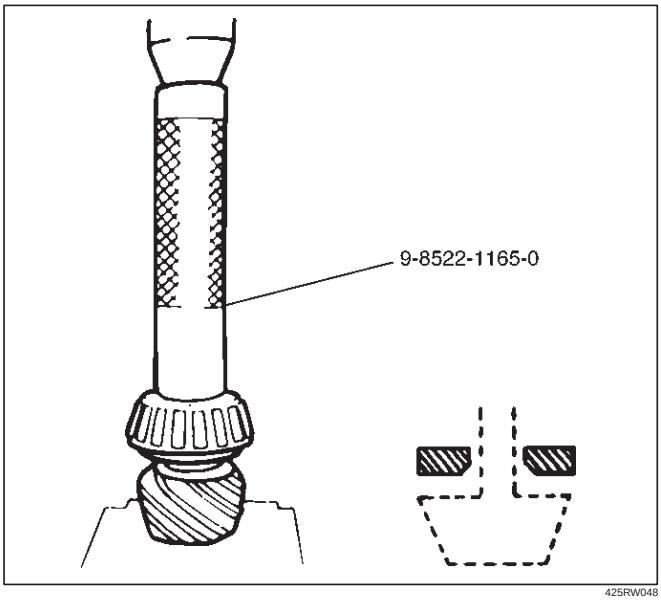

425RW048

5. Discard the used collapsible spacer and install a new one.
6. Install pinion gear.
7. Install outer bearing.
8. Use oil seal installer 5–8840–2165–0 to install a new oil seal that has been soaked in rear axle lubricant.

NOTE: Take care to use a front differential oil seal, NOT the rear differential oil seal.

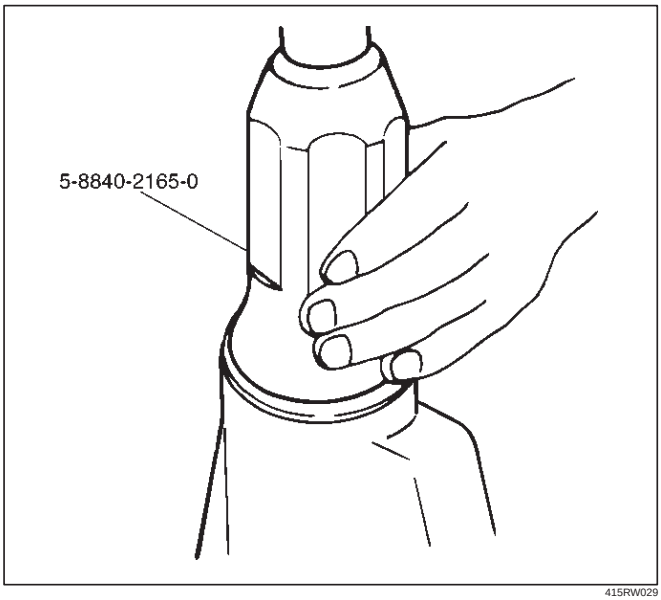

415RW029

9. Install dust cover.
10. Install flange.
11. Install flange nut.
    1. Apply lubricant to the pinion threads.
    2. Tighten the nut to the specified torque using the pinion flange holder 5–8840–2157–0.

Torque: 245–294N·m (25.0–28.0kg·m/181–217 lb f t)

NOTE: Discard used flange nut and install new one and do not over tighten the flange nut.

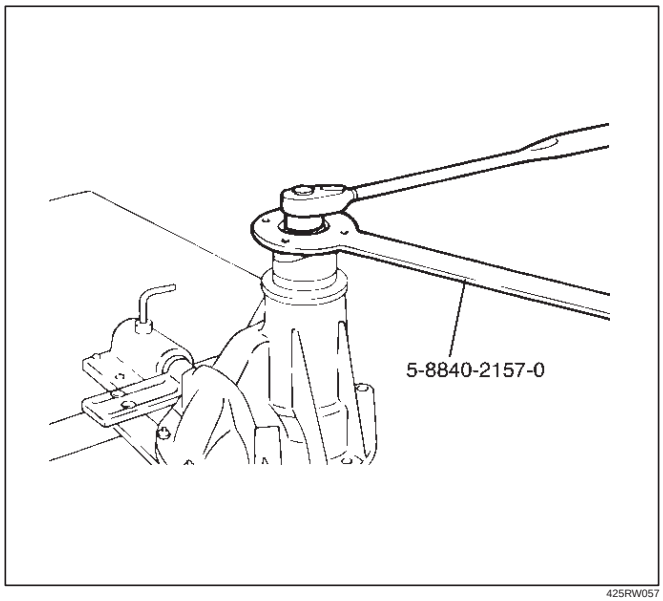

425RW057

3. Adjust pinion bearing preload.
    a. Measure the bearing preload by using a torque meter. Note the scale reading required to rotate the flange.
    b. Continue tightening flange nut until the specified starting torque is obtained.

Starting torque:

New bearing 0.7–1.3 N·m(0.07-0.13kg·m/6.08–11.28 lb in)

Used bearing 0.4–0.6N·m(0.04–0.06kg·m/3.04-5.64 lb in)

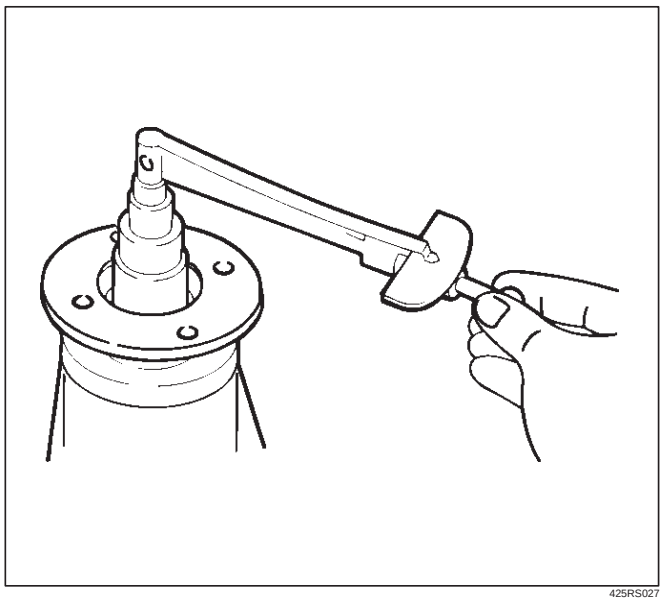

425RS027

4. Using punch 5–8840–2293–0, stake the flange nut at two points.

NOTE: When staking, be sure to turn the nut to insure that there is no change in bearing preload. Make sure of preload again as instructed in 3).

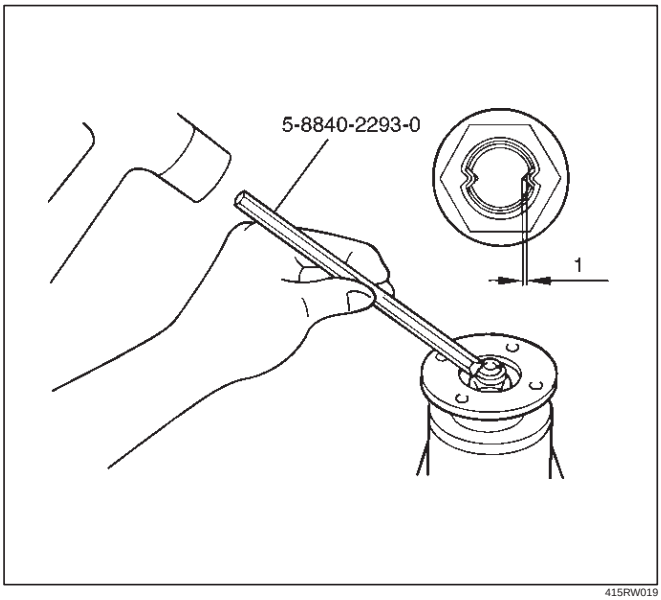

415RW019

Legend

(1) 1.5mm or less

12. Install adjust shim.
    1. Attach the side bearing to the differential assembly without shims. Support the opposite side using a pilot to prevent bearing damage.

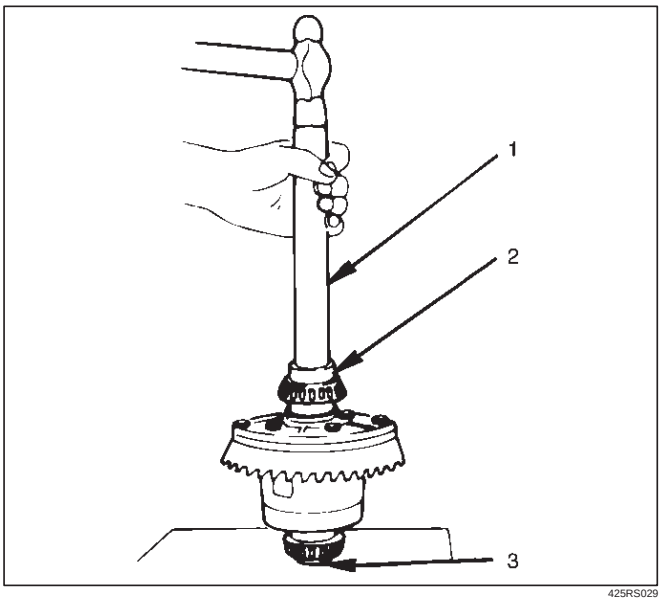

425RS029

Legend

(1) Drive handle: 5–8840–0007–0
(2) Installer: 5–8840–2162–0
(3) Pilot: 5–8840–2196–0

2. Insert the differential cage assembly with bearing outer races into the side bearing bores of the carrier.

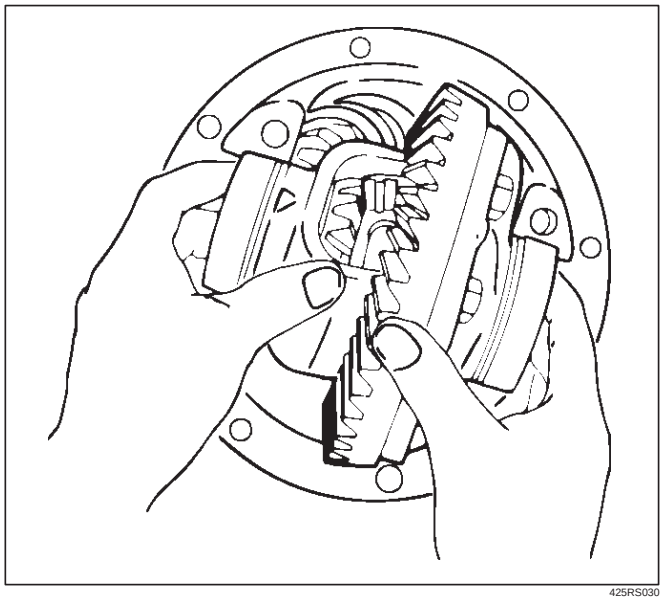

425RS030

3. Using two sets of feeler gauges, insert a feeler stock of sufficient thickness between each bearing outer race and the carrier to remove all end play. Make certain the feeler stock is pushed to the bottom of the bearing bores.

   Mount the dial indicator 5–8840–0126–0 on the carrier so that the indicator stem is at right angles to a tooth on the ring gear.

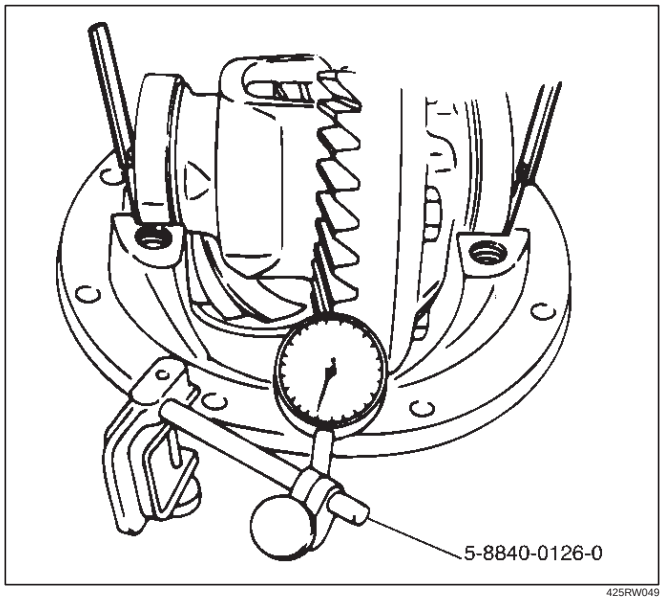

425RW049

4. Adjust feeler gauge thickness from side to side until ring gear backlash is in the specified range.

Backlash: 0.15–0.2 mm(0.006 –0.008 in)

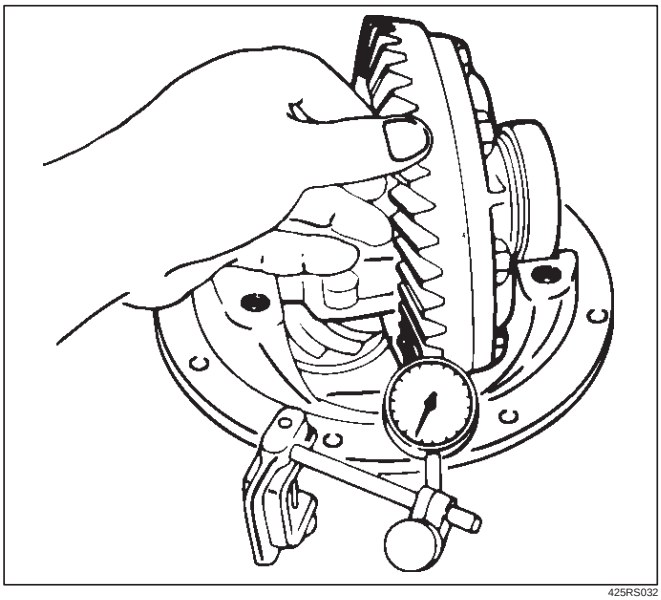

425RS032

With zero end play and correct backlash established, remove the feeler gauge packs, determine the thickness of the shims required and add 0.05 mm (0.002 in) to each shim pack to provide side bearing preload. Always use new shims.

5. Use bearing remover 5–8840–0013/0014–0 and pilot 5–8840–2196–0 to remove side bearing.

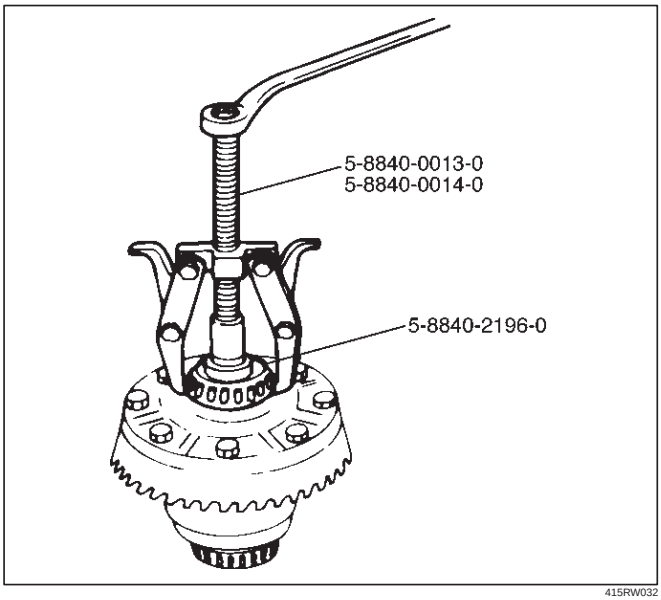

415RW032

13. Install the side bearings together with the selected shims.

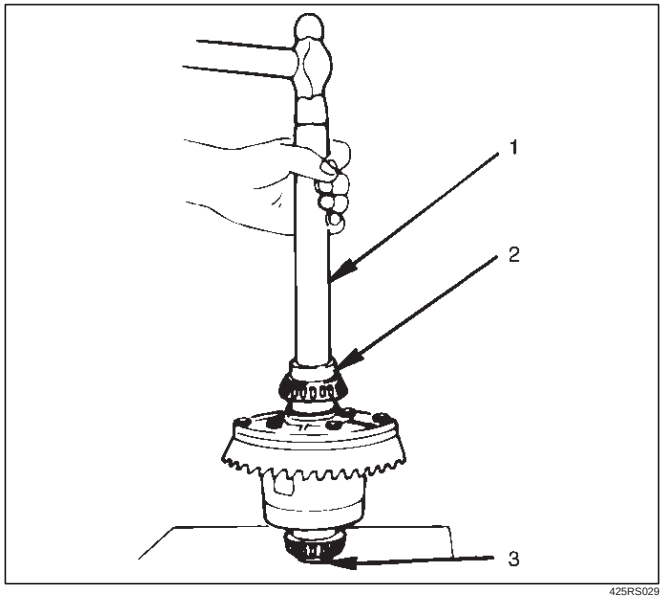

425RS029

Legend

(1) Drive Handle: 5–8840–0007–0
(2) Installer: 5–8840–2162–0
(3) Pilot: 5–8840–2196–0

14. Install side bearing outer race.
15. Install differential cage assembly.
16. Install bearing cap then align the setting marks(1) applied at disassembly.

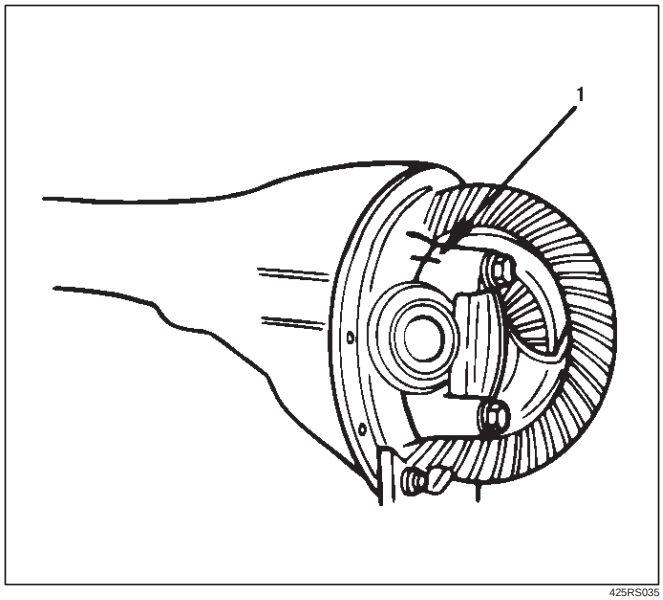

425RS035

17. Tighten the cap bolt to the specified torque.

Torque: 108 N·m (11.0kg·m/80 lb ft)

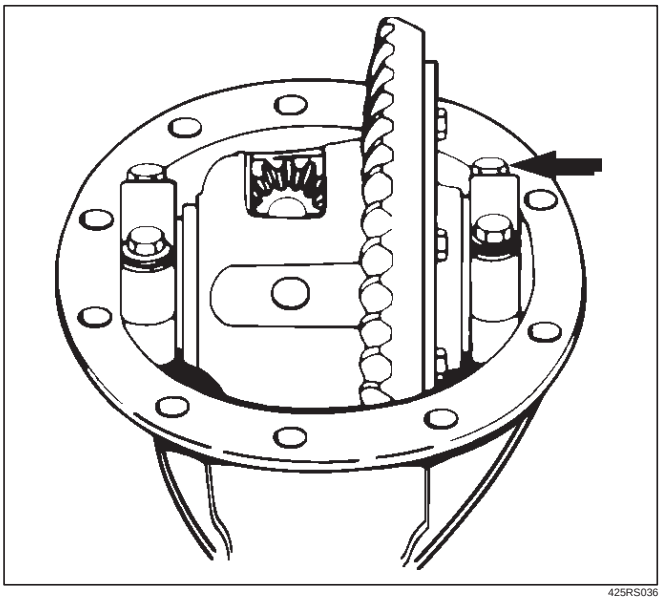

425RS036

1. Measure the amount of run–out of the ring gear at its rear face.

Standard: 0.02 mm (0.001 in)

Limit: 0.05 mm (0.002 in)

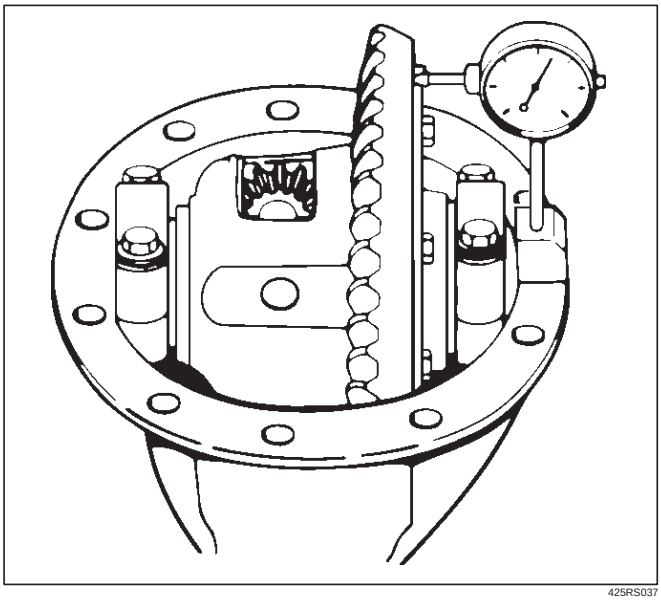

425RS037

Gear Tooth Contact Pattern Check and Adjustment

1. Apply a thin coat of prussian blue or equivalent to the faces of the 7–8 teeth of the ring gear. Check the impression of contact on the ring gear teeth and make necessary adjustment as described in illustration if the contact is abnormal.

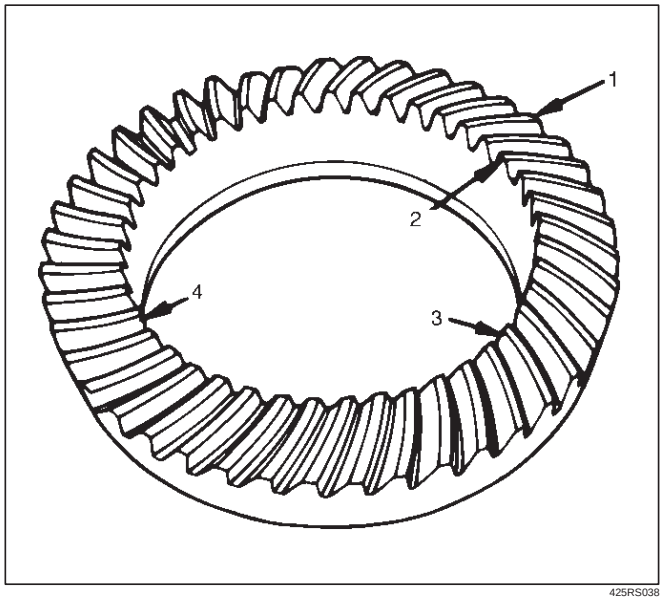

425RS038

Legend

(1) Heel
(2) Toe
(3) Concave Side(Coast)
(4) Convex Side(Drive)

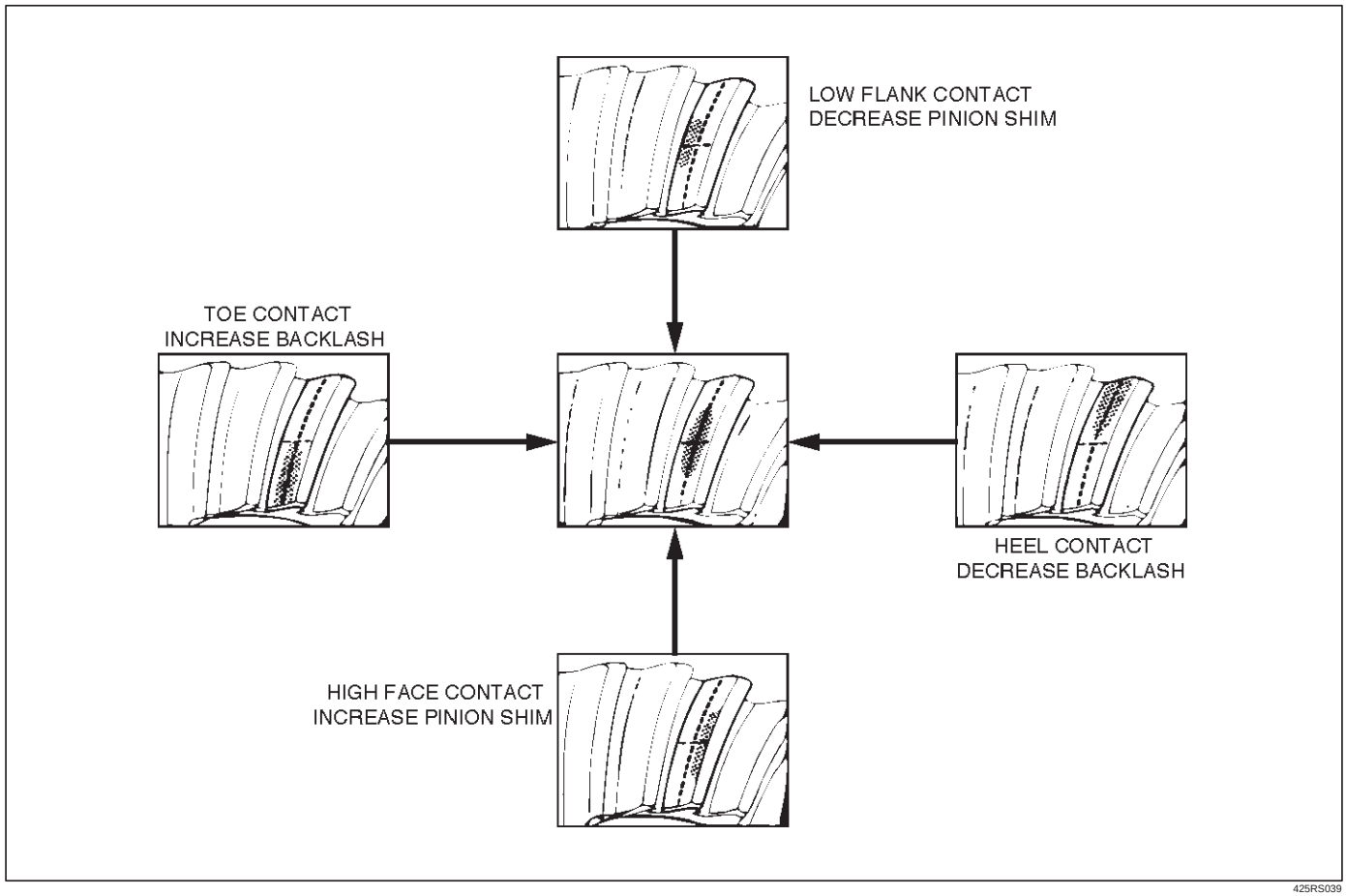
LOW FLANK CONTACT
DECREASE PINION SHIM
TOE CONTACT
INCREASE BACKLASH
HEEL CONTACT
DECREASE BACKLASH
HIGH FACE CONTACT
INCREASE PINION SHIM

425RS039

Differential Cage Assembly

Disassembled View

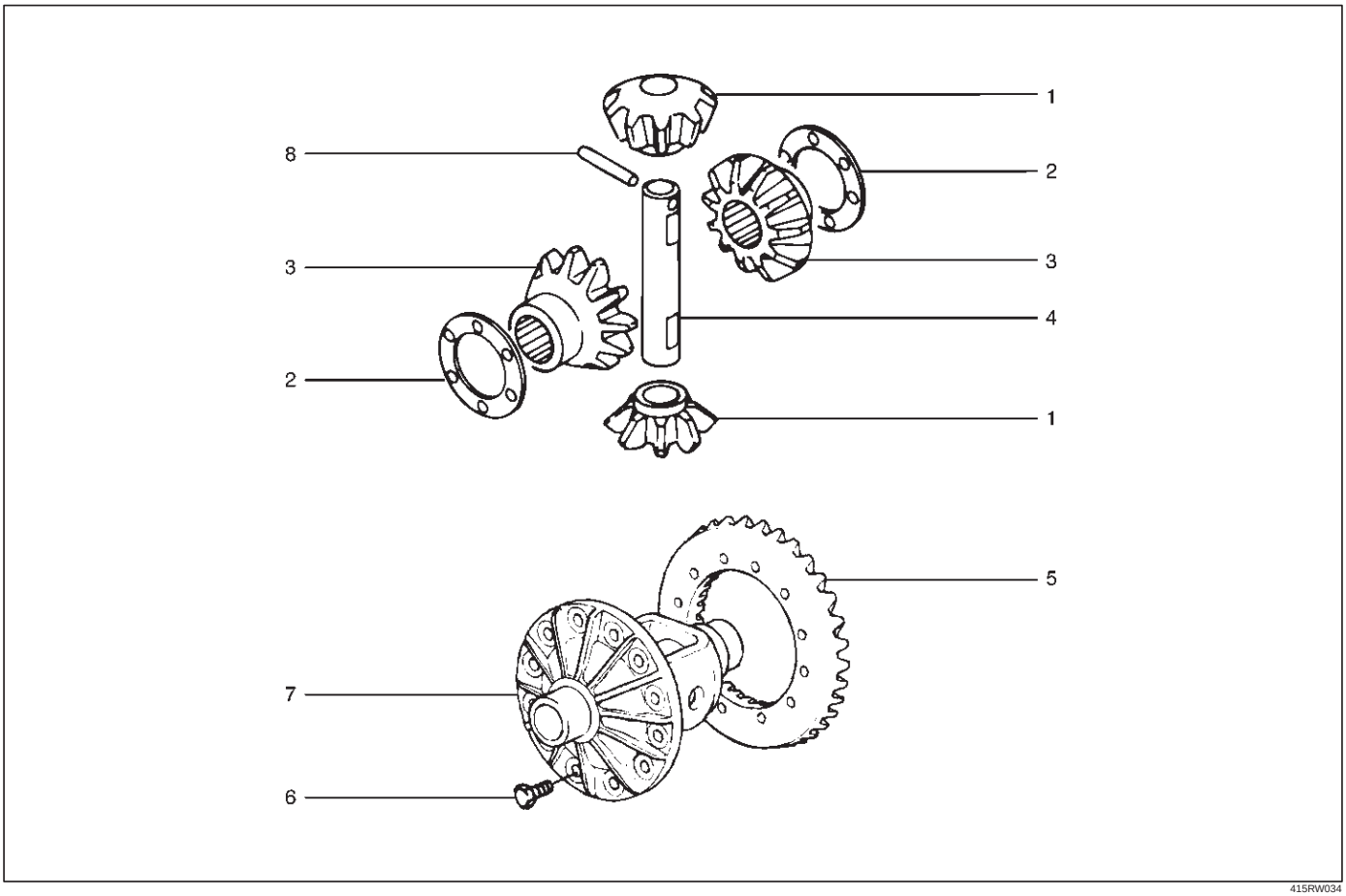

415RW034

Legend

(1) Pinion Gear
(2) Thrust Washer
(3) Side Gear
(4) Cross Pin
(5) Ring Gear
(6) Bolt
(7) Differential Cage
(8) Lock Pin

Disassembly

1. Remove bolt.
2. Remove ring gear.
3. Remove lock pin, break staking on the lock pin, using a 5 mm (0.20 in) diameter drill.

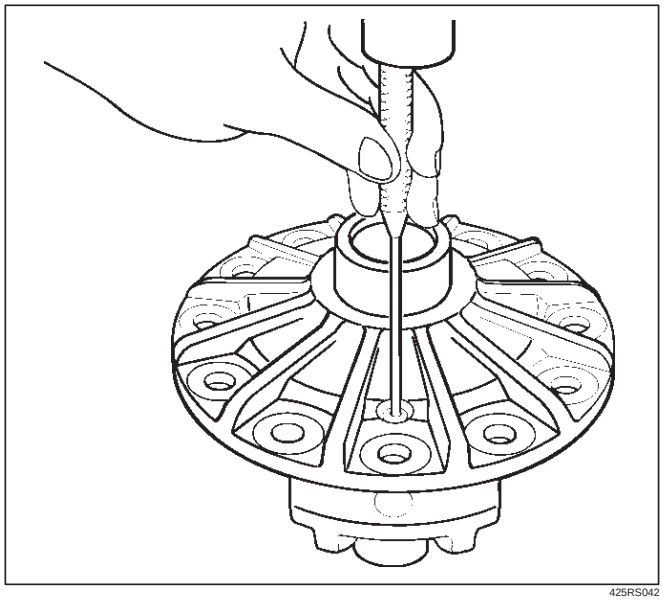

425RS042

4. Remove the cross pin, using a soft metal rod and a hammer.

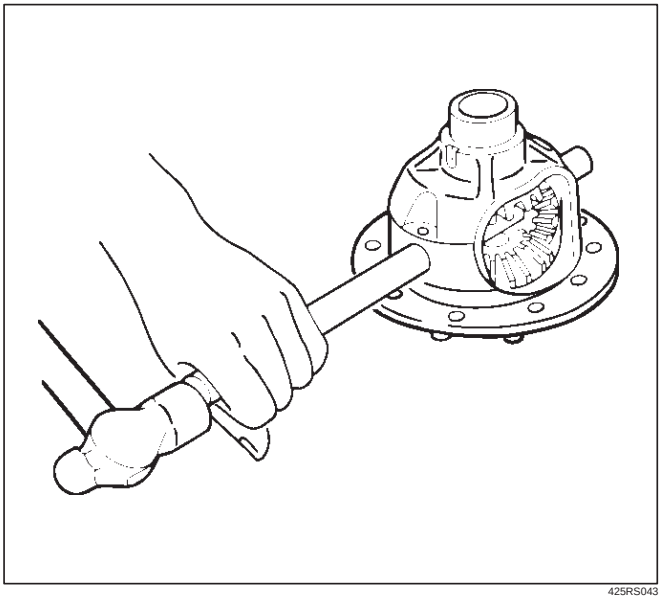

425RS043

5. Remove pinion gear.
6. Remove side gear.
7. Remove thrust washer.

Inspection and Repair

Make necessary correction or parts replacement if wear, damage, corrosion or any other abnormal conditions are found through inspection.
Check the following parts:

1. Ring gear, pinion gear
2. Bearing
3. Side gear, pinion gear, cross pin
4. Differential cage, carrier
5. Thrust washer
6. Oil seal

Ring gear replacement:

1. The ring gear should always be replaced with the drive pinion as a set.
2. Clean the ring gear threaded holes to remove the locking agent.
3. When installing the ring gear, apply LOCTITE 271 or equivalent to all the threaded area and half of the unthreaded area of the bolt.
4. Discard used bolts and install new ones.

Torque: 108 N·m (11.0kg·m/80 lb ft)

5. Tighten the fixing bolts in a diagonal sequence as illustrated.

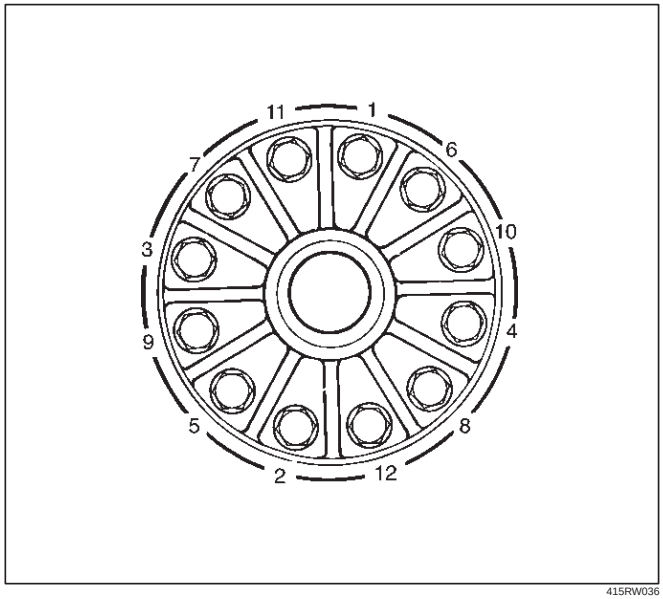

415RW036

Clearance between the differential pinion and the cross pin measurement:

Standard: 0.06 – 0.12 mm (0.002–0.005 in)

Limit: 0.2 mm (0.008 in)

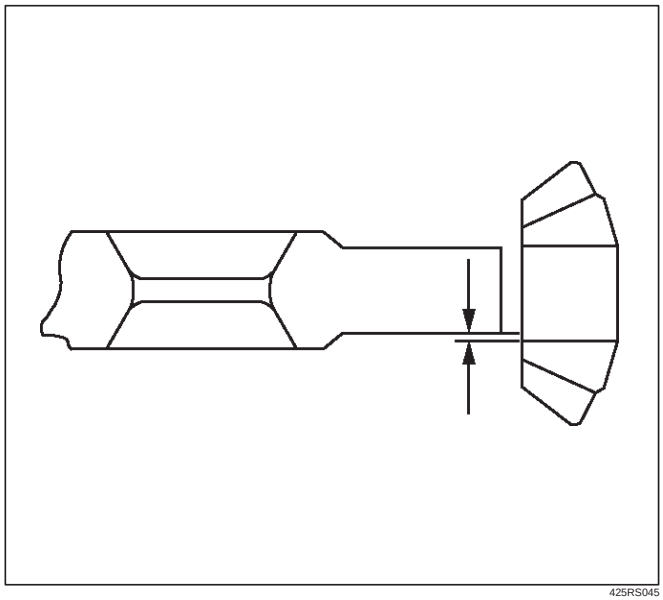

425RS045

Clearance between the side gear and the differential box:

Standard: 0.05–0.12 mm (0.002–0.005 in)

Limit: 0.15 mm(0.006 in)

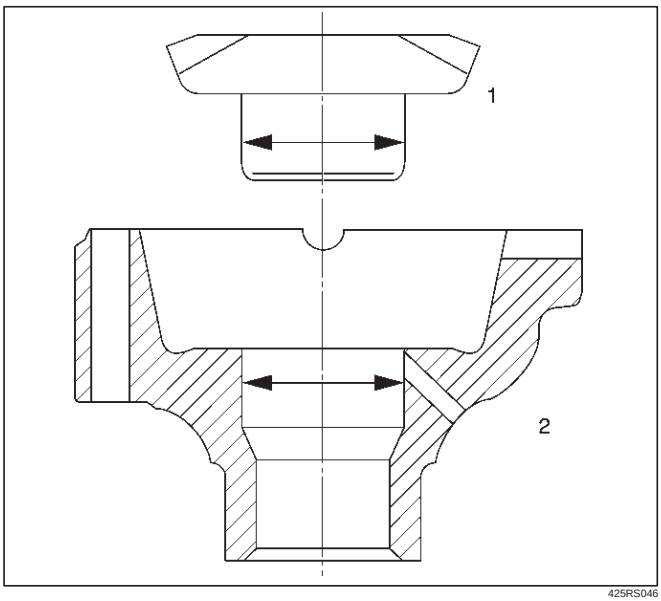

425RS046

Legend

(1) Side Gear
(2) Differential Box

Play in splines between the side gear and the axle shaft:

Standard: 0.07–0.38 mm(0.003 –0.014 in)

Limit:0.5m (0.02 in)

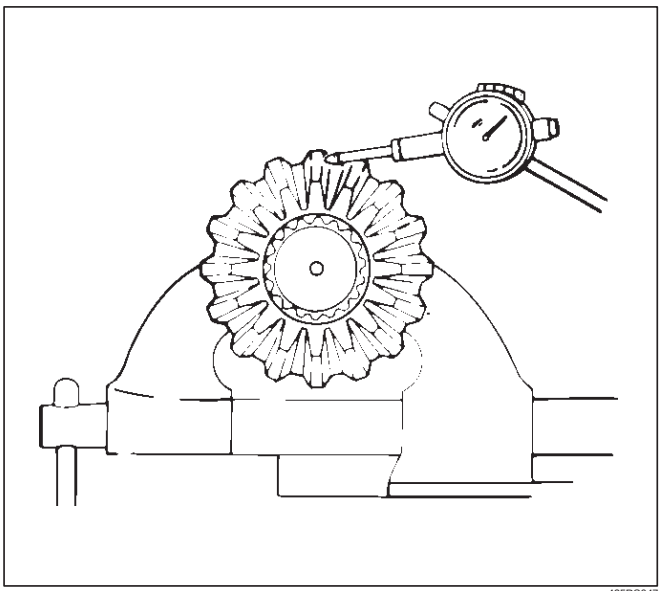

425RS047

Reassembly

1. Install thrust washer.
2. Install side gear.
3. Install the pinion gear by engaging it with the side gears while turning both pinion gears simultaneously in the same direction.

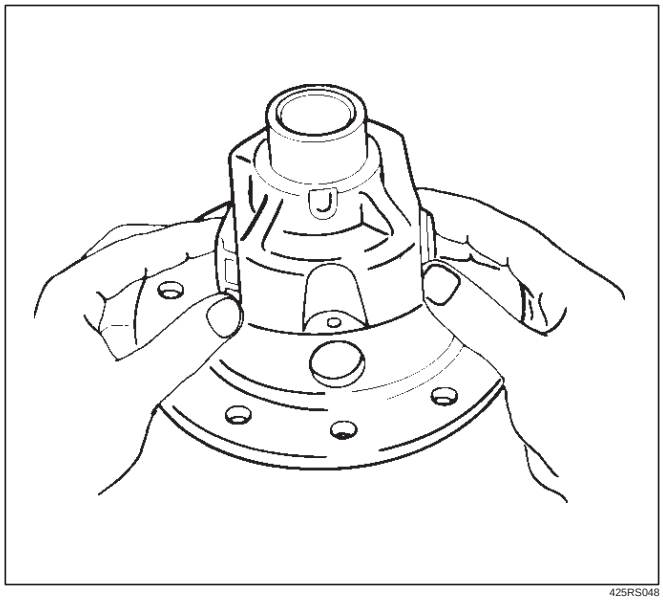

425RS048

4. Install cross pin.
   1. Be sure to install the cross pin so that it is in alignment with the lock pin hole in the differential cage.

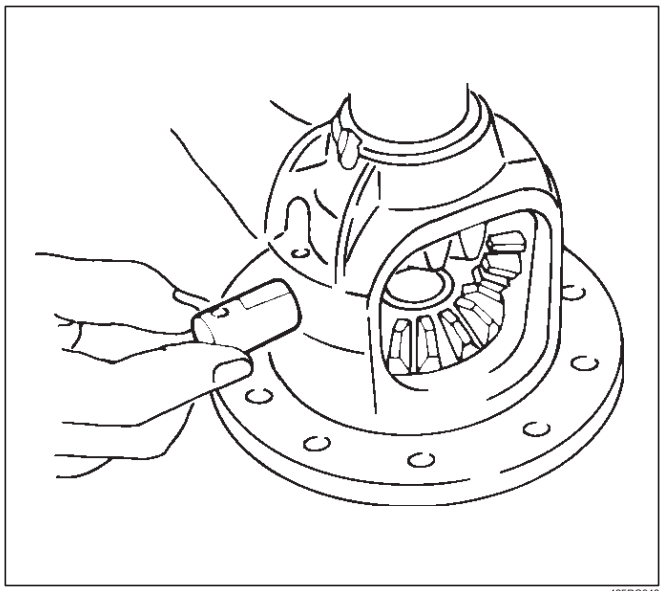

425RS049

   2. Adjust the backlash between the side gear and the pinion gear.

Backlash:0.13 – 0.18 mm (0.005– 0.007 in)

Thickness of thrust washers available:

0.80 mm, 0.90 mm, 1.00 mm 1.10 mm, 1.20 mm, 1.30 mm (0.031 in, 0.035 in, 0.039 in,0.043 in, 0.047 in, 0.051 in)

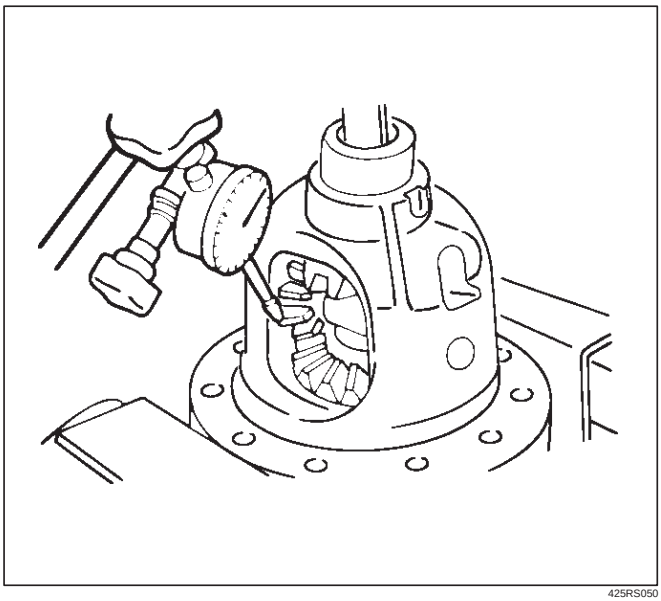

425RS050

5. Install lock pin. After lock pin installation, stake the cage to secure the lock pin.

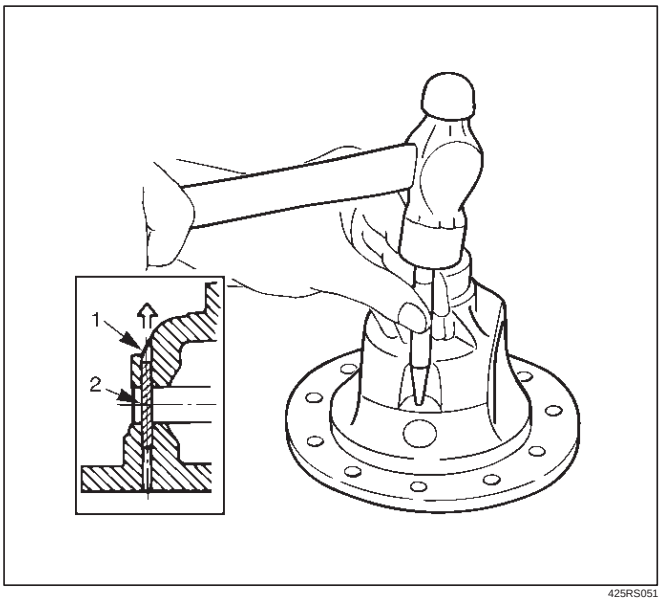

425RS051

Legend

(1) Staked Portion
(2) Lock Pin

6. Clean the ring gear threaded holes to remove the locking agent. When installing the ring gear, apply LOCTITE 271 or equivalent to all the threaded area and half of the unthreaded area of the bolt.

7. Tighten the bolts in diagonal sequence as illustrated.

Torque: 108 N·m (11.0kg·m/80 lb ft)

NOTE: Discard used bolts and install new ones.

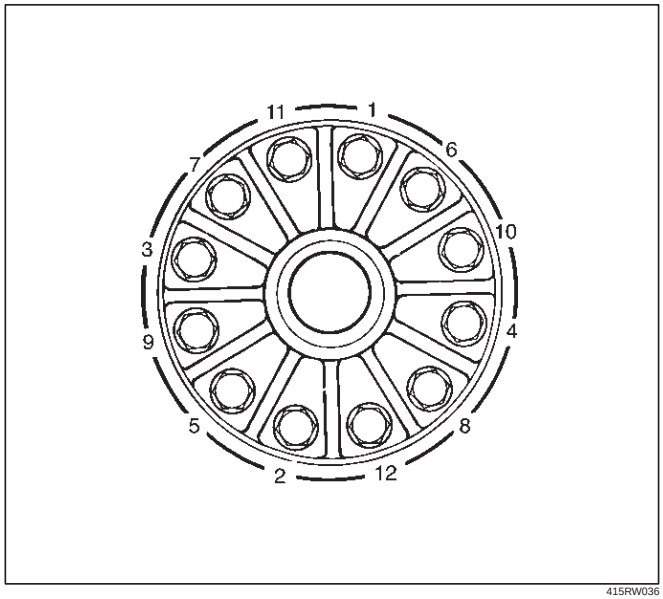

415RW036

Limited Slip Differential

Disassembled View

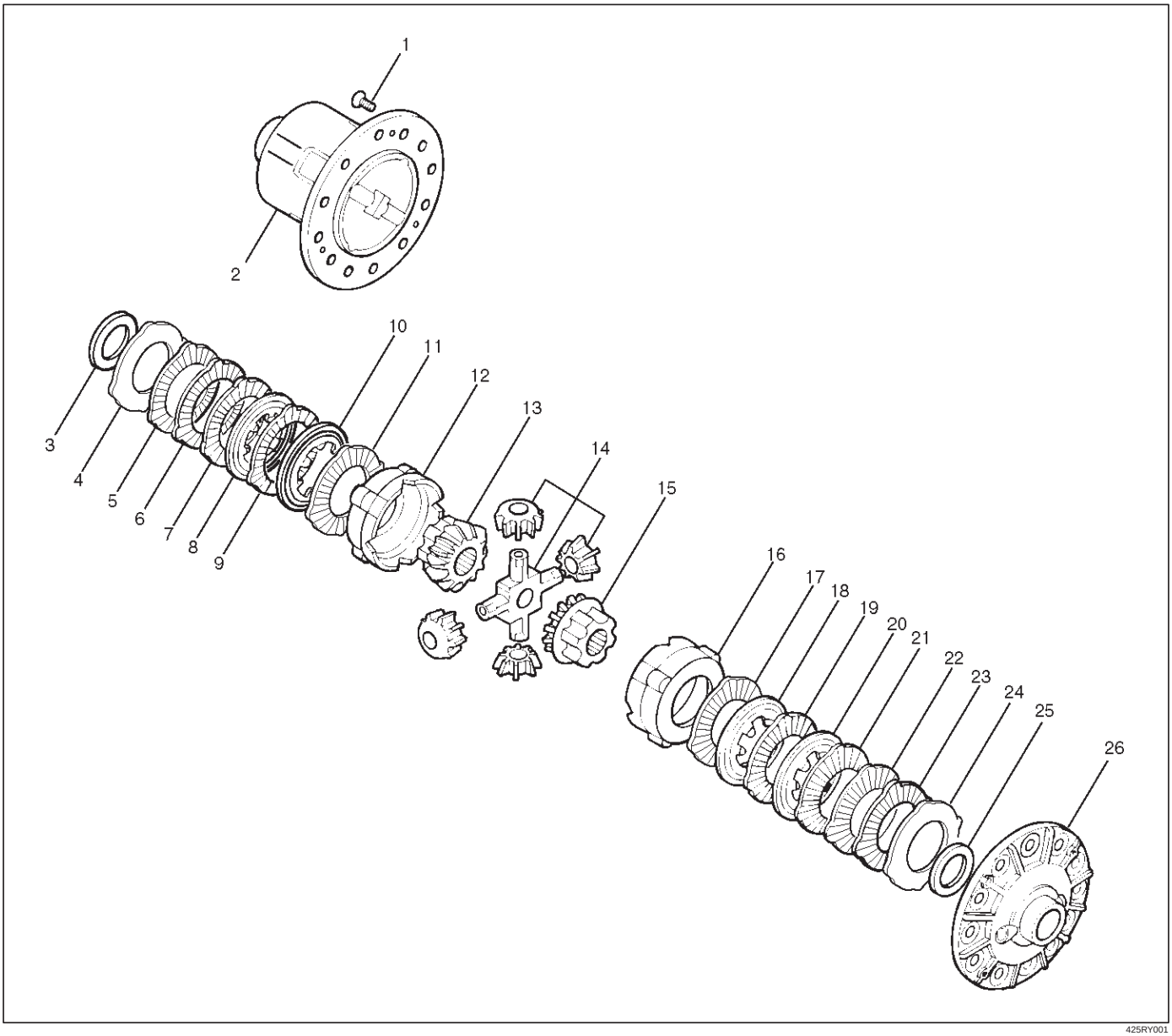

425RY001

Legend

(1) Screw
(2) Differential cage A
(3) Thrust washer
(4) Spring disc
(5) Friction Plate
(6) Friction plate
(7) Friction Plate
(8) Friction disc
(9) Friction Plate
(10) Friction disc
(11) Friction Plate
(12) Pressure ring
(13) Side gear
(14) Pinion and Pinion shaft
(15) Side gear
(16) Pressure ring
(17) Friction Plate
(18) Friction disc
(19) Friction Plate
(20) Friction disc
(21) Friction Plate
(22) Friction Plate
(23) Friction Plate
(24) Spring disc
(25) Thrust washer
(26) Differential cage B

Disassembly

Differential Cages A and B

1. To ensure installation of the parts in original position apply a setting mark before removing the differential cages A and B.
2. Using special tool, 5–8840–2682–0, grip it with a vice, and set the differential.

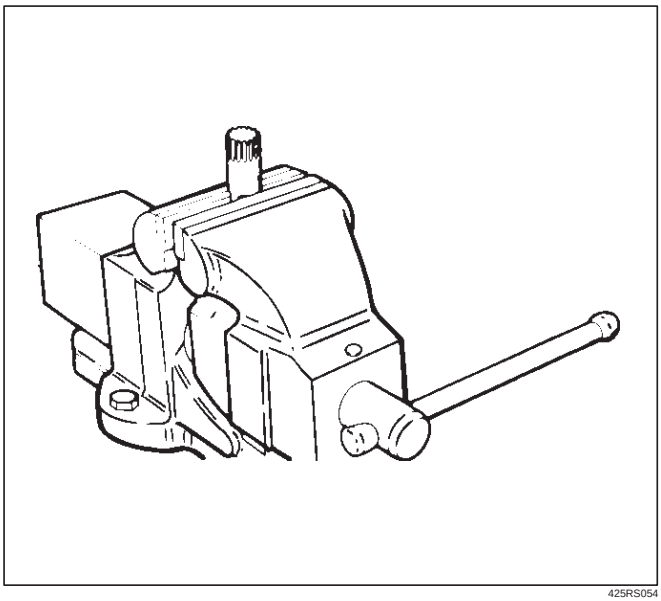

425RS054

3. Gradually and evenly loosen the 3 fixing screws of the differential cages A and B.

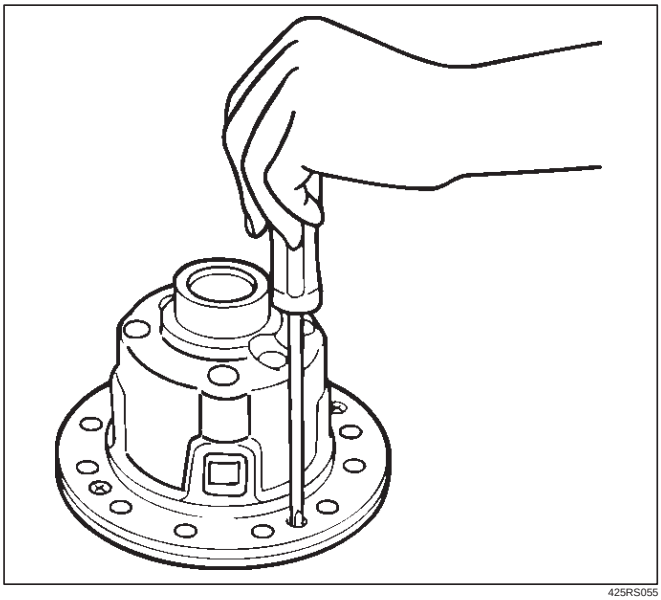

425RS055

4. Remove Differential cage A.
5. Remove Thrust washer.
6. Remove Spring disc.

NOTE: When removing the spring disc, friction disc, and friction plate, place them in order for clear distinction of left and right use.

7. Remove Spring disc.
8. Remove Friction plate.
9. Remove Friction plate.
10. Remove Friction disc.
11. Remove Friction plate.
12. Remove Friction disc.
13. Remove Friction plate.
14. Remove Pressure ring.
15. Remove Side gear.
16. Remove Pinion and pinion shaft.
17. Remove Side gear.
18. Remove Pressure ring.
19. Remove Friction plate.
20. Remove Friction disc.
21. Remove Friction plate.
22. Remove Friction disc.
23. Remove Friction plate.
24. Remove Friction plate.
25. Remove Friction plate.
26. Remove Friction disc.
27. Remove Thrust washer.
28. Remove Differential cage B.

Inspection and Repair

Make necessary correction or parts replacement if wear, damage, corrosion or any other abnormal condition is found through inspection.

Visual check

Check the following parts for wear, damage, noise or any other abnormal conditions.

- **Friction disc, friction plate and spring disc**

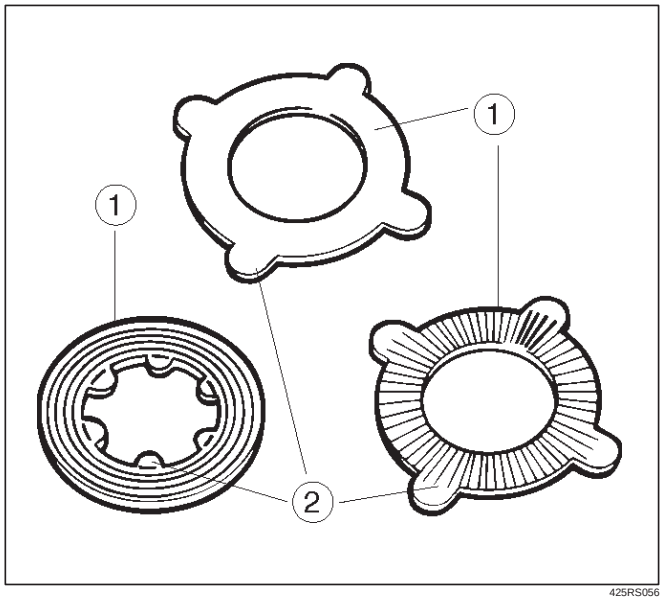

425RS056

Legend

(1) Sliding surfaces
(2) Projections

- **Pressure ring**

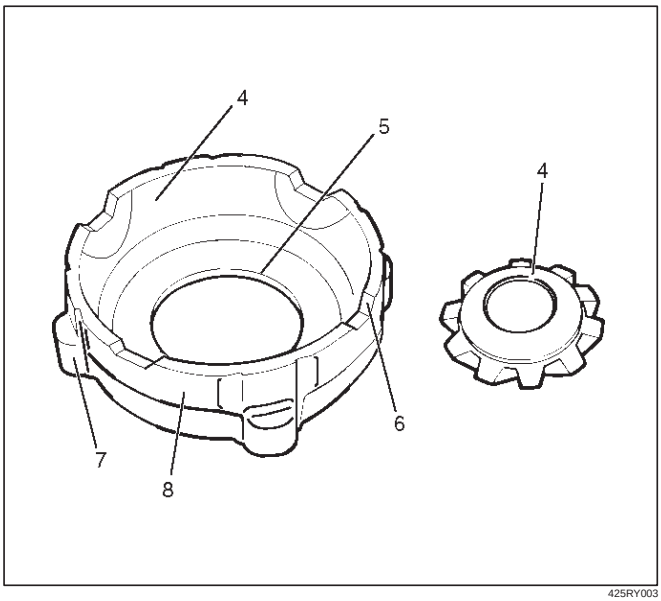

425RY003

Legend

(3) Sliding surface with the friction disc. When nicks or scratches are found, polish with an oil stone and repair on a level block using a compound.
(4) Sliding spherical surface with the pinion gear.
(5) Sliding surface with the side gear.
(6) V–shaped groove of the pressure ring and V –shaped section of the pinion shaft.
(7) Fitting section with the case.
(8) Face contacting the inner surface of the differential case. Repair burrs and nicks using an oil stone.

- **Thrust washer**

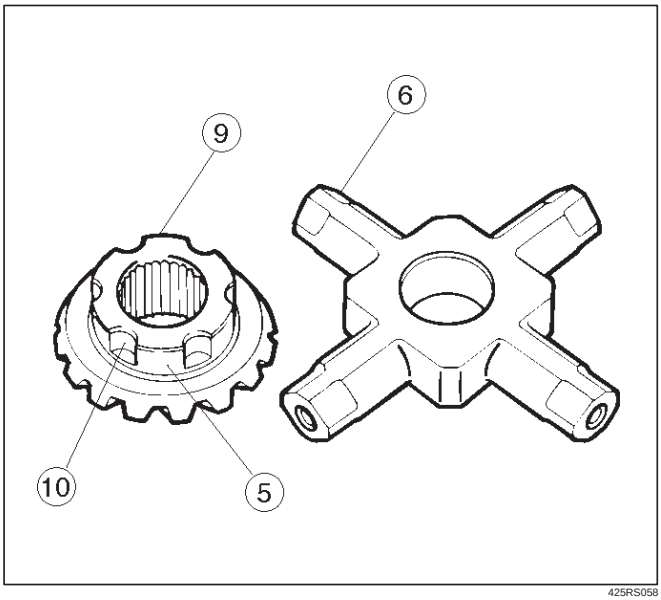

425RS058

Legend

(9) Sliding surface with the side gear or case.
(10) Peripheral groove of the side gear.
Repair light nicks and burrs using an oil stone.

- **Case**

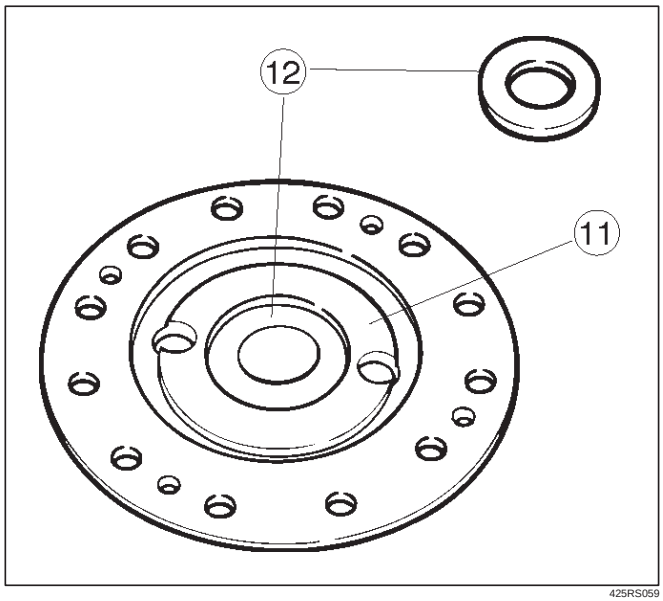

425RS059

Legend

(11) Contact surface with the spring disc.
(12) Inner groove of the differential cage B.
Repair light nicks and burrs using an oil stone.

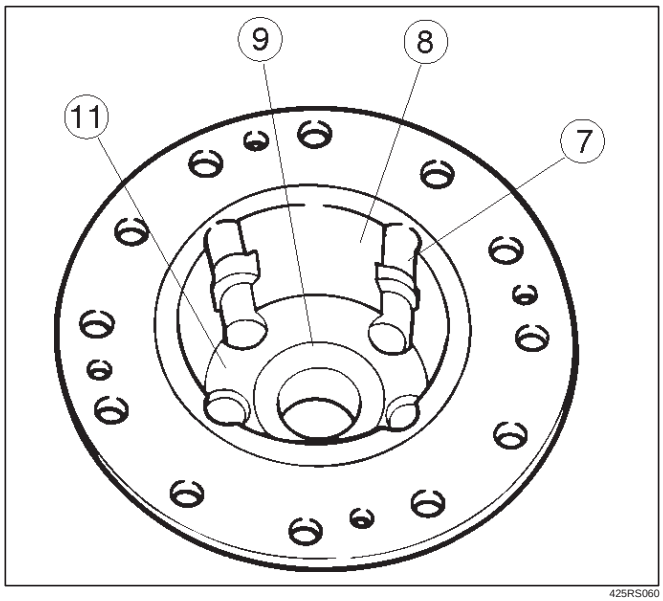

425RS060

Legend

(7) Fitting section with the case.
(8) Face contacting the inner surface of the differential case.
Repair burrs and nicks using an oil stone.
(9) Sliding surface with the side gear or case.
(11) Contact surface with spring disc.

Measure the Deformation of the friction disc & plate.

Limit: 0.1 mm (0.004 in)

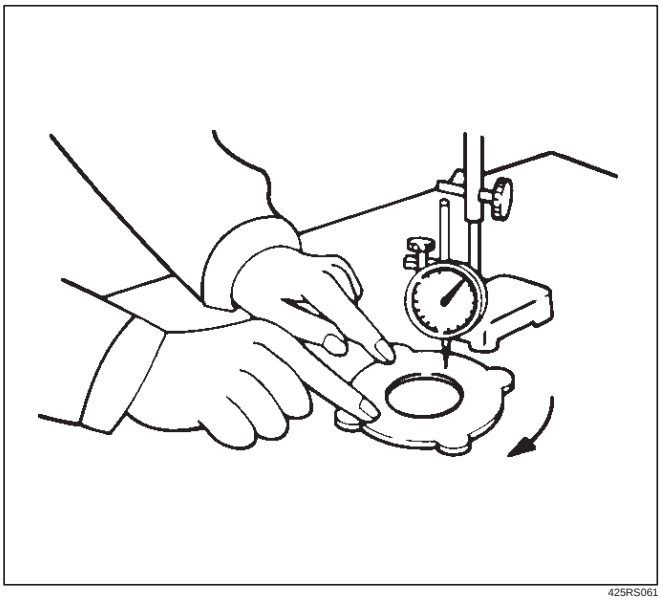

425RS061

Measure the wear of the friction plate & disc

Limit(A–B): 0.1 mm (0.004 in)

Remarks:

A=Inner or outer projections

B=Sliding surface subjected to abrasion

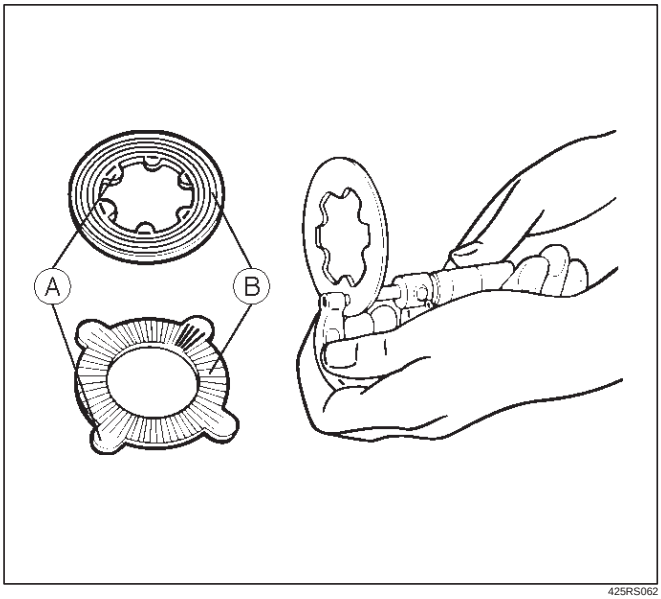

425RS062

Measure the wear of the thrust washer

Limit: 1.3 mm (0.05 in)

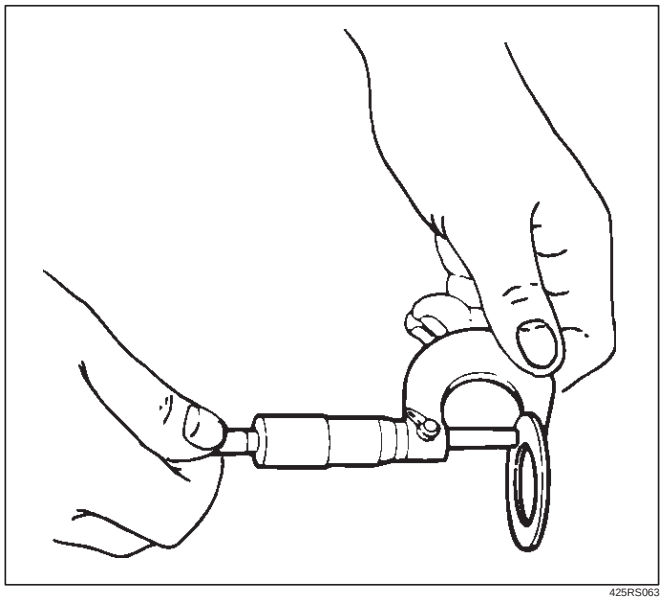

425RS063

Reassembly

Adjust the clearance between the friction disc and plate.

1. Measuring the depth of the differential cage.

Standard (A–B): 89.13 mm (3.51 in)

(C): 9.13 mm (0.36 in)

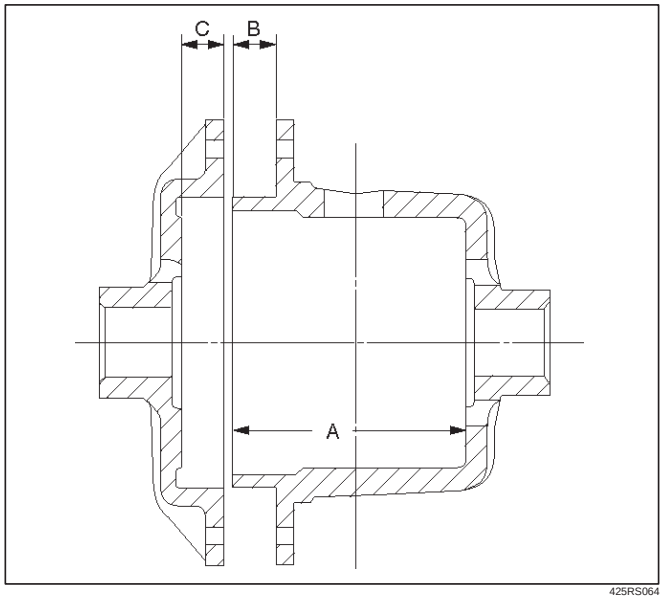

425RS064

2. Measuring the overall length of the pressurering, friction disc and friction plate.
   - Mount the pinion shaft in the pressurering and then install the friction disc & plate.
   - Measure the length between the plates over the V–groove. (D)

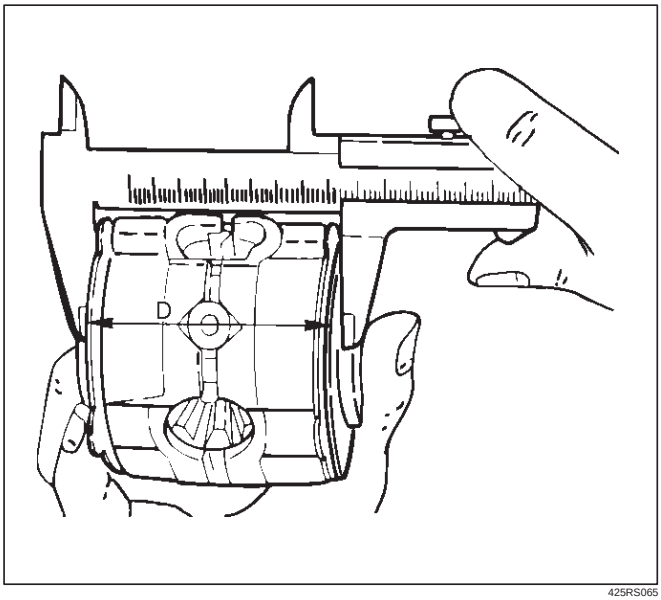

425RS065

3. After measuring dimensions A,B,C and D, make adjustment in the following manner:
   - Measure the thickness (E) of the spring disc.
     1.75mm (0.069in) ×2 discs
4. Select the friction disc & plate so as to satisfy the following equation:
   {(A-B)+C}-(D+E)=0.06-0.20mm (0.002-0.008in)
   Also, the total size difference of the friction disc & plate and spring disc should be 0.05mm (0.02in) or less.

Thickness
:1.65–1.75–1.85mm(0.065–0.069–0.073 in)

Backlash adjustment of the side gear in the direction of the shaft

1. Measuring the depth of the differential cage.

   (F–B): 95.63 mm (3.76 in)

   (G): 15.63 mm (0.62 in)

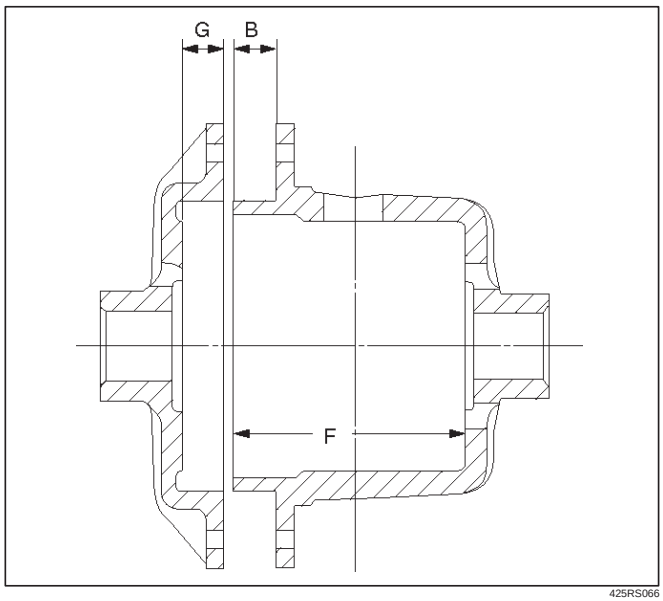

425RS066

2. Measuring the dimension between the thrust washers at both ends.
   - Assemble the side gear, pinion, pinion shaft, pressure ring and thrust washer, and pressing the pressure ring to–the pinion shaft in the direction of the shaft to make the clearance 0.
   - Have the side gear contact to the pinion to make the backlash 0.
   - Measure the dimension (H) between thrust washers at both ends.

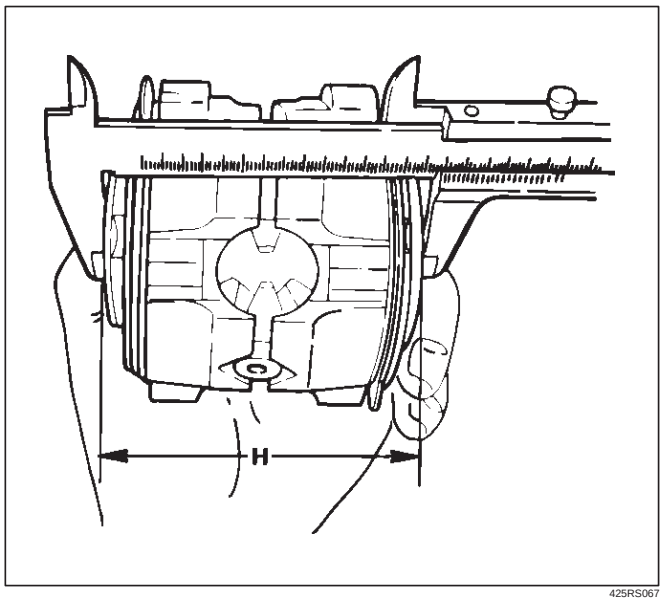

425RS067

3. After measuring dimensions of each of the above sections, proceed with the adjustment in the following manner:
   Adjust the clearance to satisfy the equation below.
   {(F – B) + G – H}=0.05 – 0.20 mm
   Also, select the thrust washers so that the dimensional difference between the back surfaces of the left and right pressure rings to the thrust washers is 0.05mm or less.

Thickness : 1.5mm (0.059 in)
1.6 mm(0.063 in)
1.7 mm(0.067 in)

NOTE: When assembling the parts, apply recommended gear oil sufficiently to each of the parts, especially, to the contact surfaces and sliding surfaces.

1. Install Differential cage B.
2. Install Thrust washer.
3. Install Spring disc.
   - When assembling the spring disc, make sure the mounting direction is correct as shown in figure.

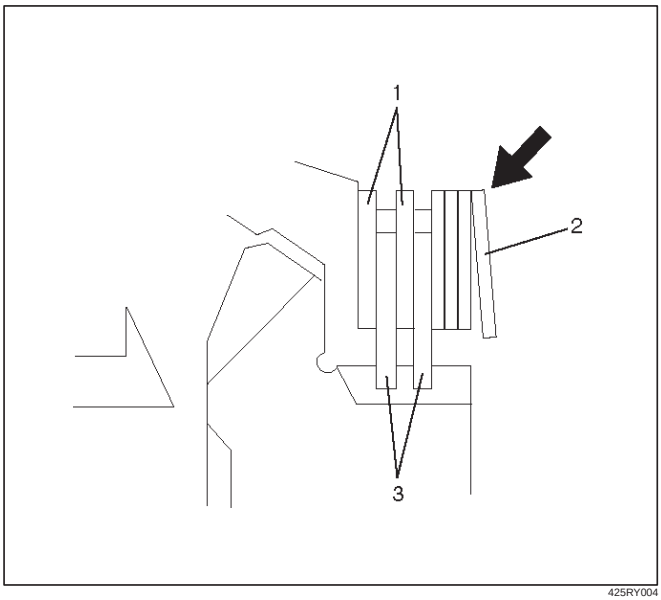

425RY004

Legend
(1) Friction Plate
(2) Spring Disc
(3) Friction Disc

4. Install Friction disc.
5. Install Friction plate.
6. Install Friction plate.
7. Install Friction disc.
8. Install Friction plate.
9. Install Friction disc.
10. Install Friction plate.
11. Install Pressure ring.
12. Install Side gear.
13. Install Pinion and pinion shaft.
14. Install Side gear.
15. Install Pressure ring.
16. Install Friction plate.
17. Install Friction disc.
18. Install Friction plate.
19. Install Friction disc.
20. Install Friction plate.
21. Install Friction plate.
22. Install Friction plate.
23. Install Spring disc.
    - When assembling the spring disc, make sure the mounting direction is correct.
24. Install Spring disc.
25. Install Thrust washer.
26. Install Differential cage A.
27. Install Screw.
    - Matching the guide marks of the differential cages A and B, tighten the screws evenly in the diagonal order.

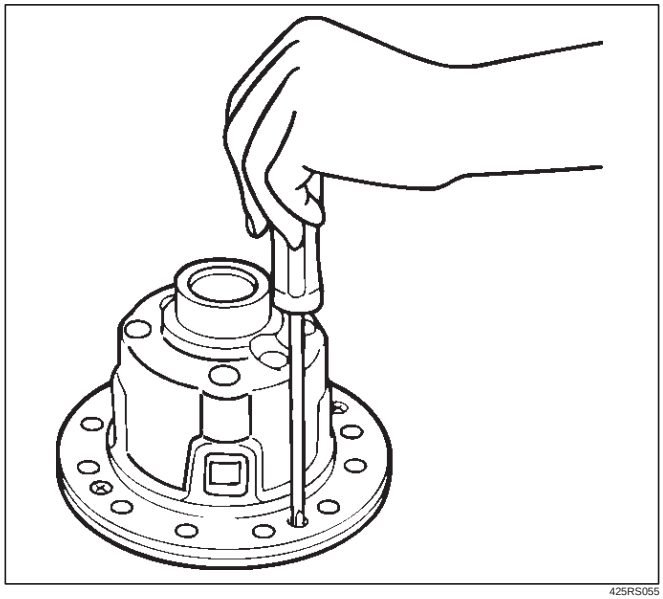
425RS055

28. Check the operation.
    - Measure the starting torque using the side gear holder.

    Starting torque:

    29 – 45 N·m (3.0 – 4.6 kg·m/ 22 – 33lb ft)

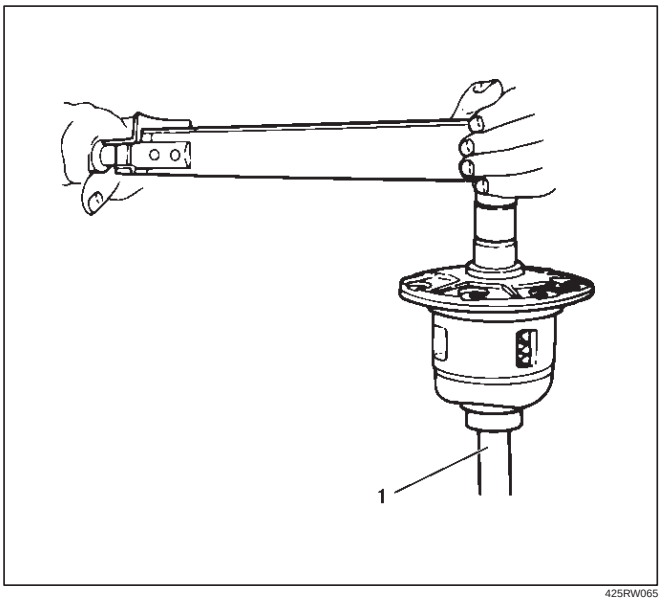

425RW065

Legend

(1) Side Gear Holder : 5–8840–2381–0

Main Data and Specifications

General Specifications

Rear axle	
Type	Banjo, Semi–floating
Rear axle Size	220mm(8.66in)
Gear type	Hypoid
Gear ratio (to 1)	4.555(6VD1,4JG2–TC) 4.777(4JG2)
Differential type	Pinion (STD), Four pinion (LSD)
Lubricant Grade	GL–5: (Standard differential)
	GL–5, LSD: (Limited slip differential)
Locking Differential Lubricant	80W90 GL–5 Limited Slip Differential Gear Lubricant together with Limited Slip Differential Lubricant Additive (Part No. 8–01052–358–0) or equivalent.
Capacity	1.8liter(1.6 Imp qt/1.9 US qt)

Torque Specifications

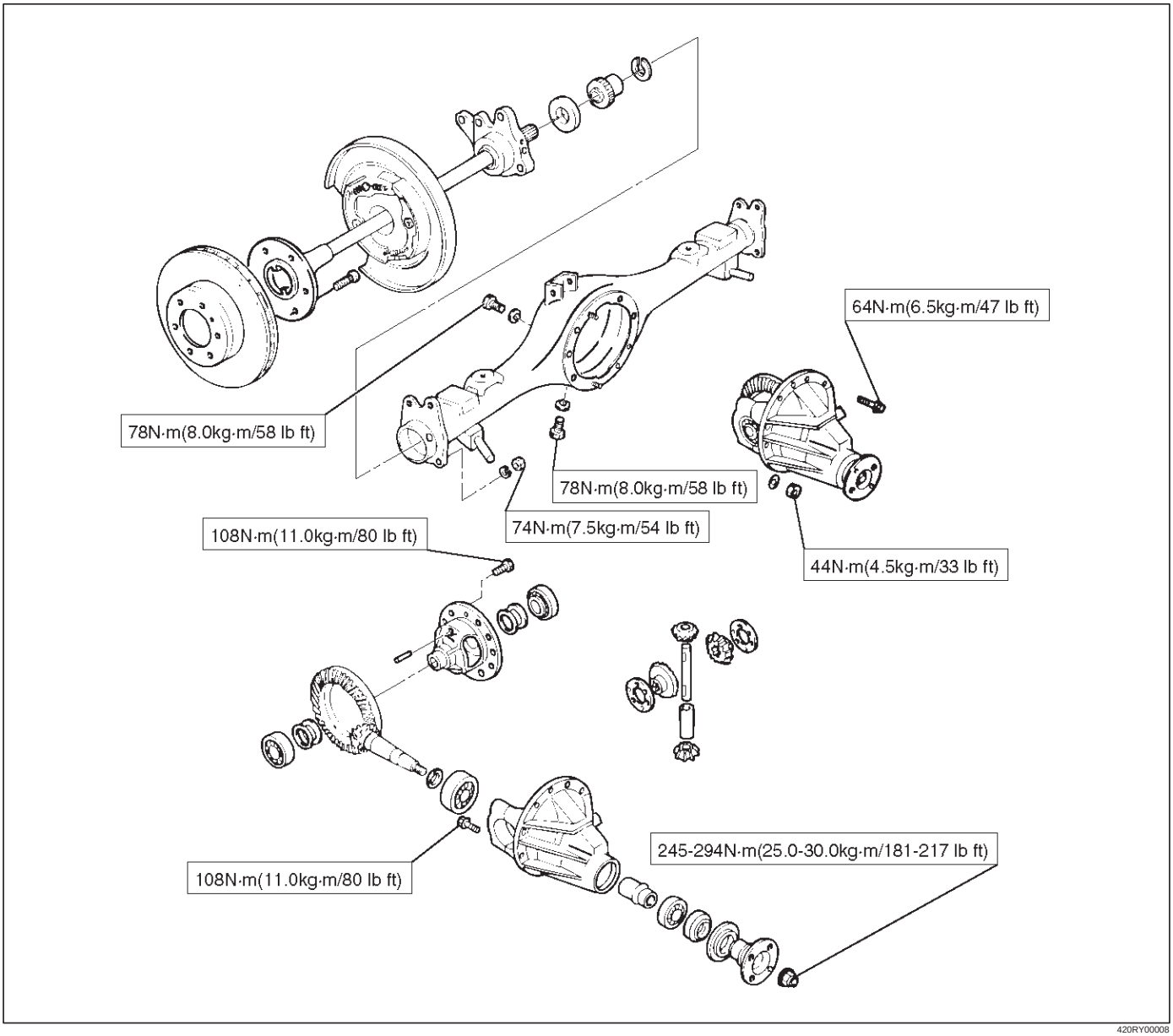

420RY00008

Special Tools

ILLUSTRATION	TOOL NO. TOOL NAME
	5–8840–2157–0 **(J–37221)** Holder; Pinion flange
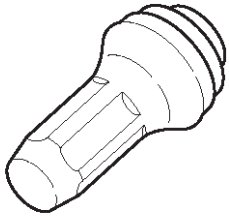	**5–8840–2294–0** **(J–24250)** Installer; Oil seal
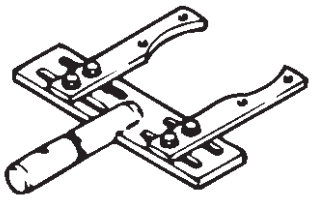	**5–8840–0275–0** **(J–37264)** Differential holding fixture (Use with 5–8840–0003–0)
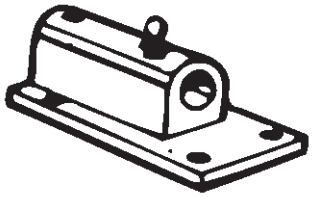	**5–8840–0003–0** **(J–3289–20)** Holding fixture base
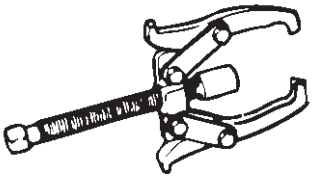	**5–8840–0013–0** **5–8840–0014–0** **(J–22888)** Puller; Side bearing
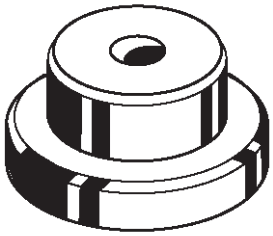	**5–8840–2196–0** **(J–8107–2)** Adapter; Side bearing plug

ILLUSTRATION	TOOL NO. TOOL NAME
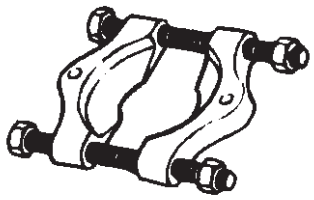	**5–8840–2197–0** **(J–22912–01)** Separator
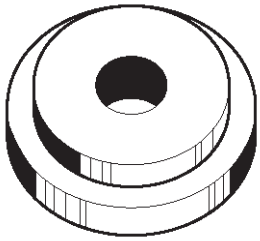	**5–8840–2164–0** **(J–24256)** Installer; Outer bearing outer race
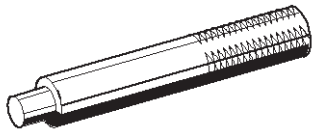	**5–8840–0007–0** **(J–8092)** Driver handle
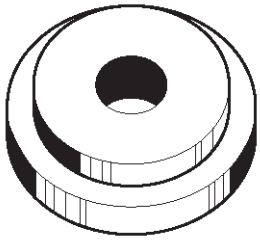	**5–8840–2163–0** **(J–24252)** Installer; Inner bearing outer race
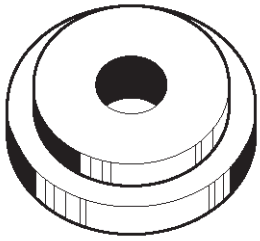	**5–8840–2085–0** **(J–21777–42)** Front Pilot
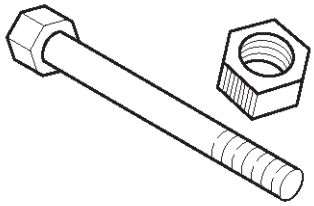	**5–8840–0127–0** **(J–23597–9)** Nut and bolt

ILLUSTRATION	**TOOL NO.** TOOL NAME
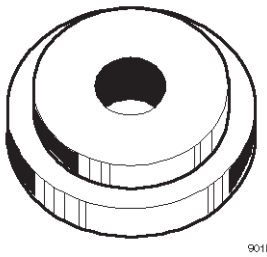 901RS243	**5–8840–2166–0** **(J–23597–7)** Gauge plate
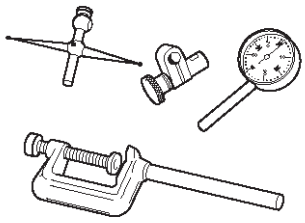 901RS224	**5–8840–0126–0** **(J–8001)** Dial indicator
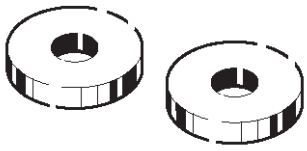 901RS244	**5–8840–2167–0** **(J–23597–8)** Disc
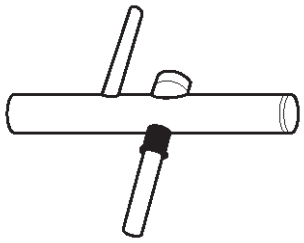 901RS226	**5–8840–0128–0** **(J–23597–1)** Arbor
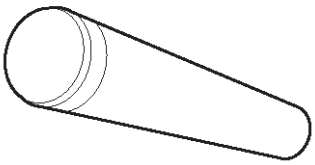 901RS227	**9–8522–1165–0** **(J–6133–01)** Installer; Pinion bearing
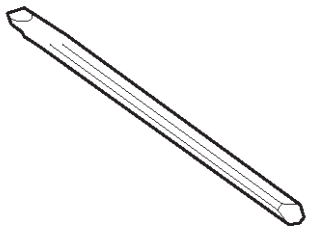 901RS228	**5–8840–2293–0** **(J–39209)** Punch; End nut lock

ILLUSTRATION	**TOOL NO.** TOOL NAME
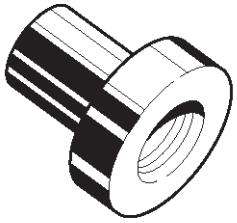 901RS245	**5–8840–2162–0** **(J–24244)** Installer; Side bearing
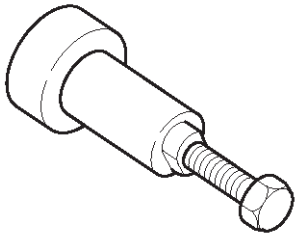 901RS230	**5–8840–2323–0** **(J–39602)** Remover; Outer bearing
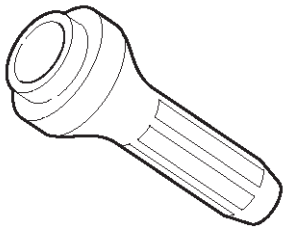 901RS211	**5–8840–2165–0** **(J–37263)** Installer; Pinion oil seal
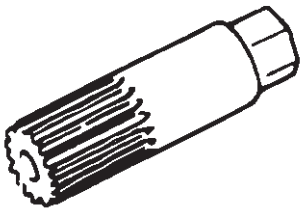 901RW250	**5–8840–2682–0** **(J–44450)** Holder; Side gear
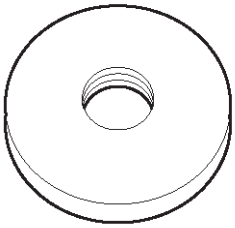 901RS222	**5–8840–0129–0** **(J–23597–12)** Rear pilot

DRIVELINE/AXLE

DIFFERENTIAL (REAR 244mm)

CONTENTS

Service Precaution 4A2B–1
General Description 4A2B–3
Diagnosis 4A2B–4
Axle Housing 4A2B–5
Axle Housing and Associated Parts 4A2B–5
Removal 4A2B–5
Oil Seal Replacement 4A2B–6
Installation 4A2B–6
Axle Shaft 4A2B–7
Axle Shaft and Associated Parts 4A2B–7
Removal 4A2B–7
Inspection and Repair 4A2B–8
Oil Seal Replacement 4A2B–9
Installation 4A2B–9
Pinion Oil Seal 4A2B–10
Pinion Oil Seal and Associated Parts 4A2B–10
Removal 4A2B–10
Inspection and Repair 4A2B–11
Installation 4A2B–11
Differential Assembly 4A2B–12
Differential Assembly and Associated Parts 4A2B–12
Removal 4A2B–12
Installation 4A2B–13
Disassembled View 4A2B–14
Disassembly 4A2B–15
Reassembly 4A2B–17
Differential Cage Assembly 4A2B–24
Disassembled View 4A2B–24
Disassembly 4A2B–25
Inspection and Repair 4A2B–25
Reassembly 4A2B–26
Limited Slip Differential 4A2B–28
Disassembled View 4A2B–28
Disassembly 4A2B–29
Inspection and Repair 4A2B–29
Reassembly 4A2B–31
Main Data and Specifications 4A2B–35
Special Tools 4A2B–37

Service Precaution

WARNING: IF SO EQUIPPED WITH A SUPPLEMENTAL RESTRAINT SYSTEM (SRS), REFER TO THE SRS COMPONENT AND WIRING LOCATION VIEW IN ORDER TO DETERMINE WHETHER YOU ARE PERFORMING SERVICE ON OR NEAR THE SRS COMPONENTS OR THE SRS WIRING. WHEN YOU ARE REFORMING SERVICE ON OR NEAR THE SRS COMPONENTS OR THE SRS WIRING, REFER TO THE SRS SERVICE INFORMATION. FAILURE TO FOLLOW WARNINGS COULD RESULT IN POSSIBLE AIR BAG DEPLOYMENT, PERSONAL INJURY, OR OTHERWISE UNNEEDED SRS SYSTEM REPAIRS.

CAUTION: Always use the correct fastener in the proper location. When you replace a fastener, use ONLY the exact part number for that application. ISUZU will call out those fasteners that require a replacement after removal. ISUZU will also call out the fasteners that require thread lockers or thread sealant. UNLESS OTHERWISE SPECIFIED , do not use supplemental coatings (Paints, greases, or other corrosion inhibitors) on threaded fasteners or fastener joint interfaces. Generally,such coatings adversely affect the fastener torque and the joint clamping force, and may damage the fastener. When you install fasteners, use the correct tightening sequence and specification. Following these instructions can help you avoid damage to parts and systems.

The ϕ244 differential has two N types A-type and B-type.

A-type: the sticker with bar code is attached.

B-type: the sticker with no bar code on the lower part of carrier is attached.

In case of Work Shop Manual;

A-type: Refer to ’98 UBS Work Shop Manual.
B-type: Described in ’00UBS Work Shop Manual.

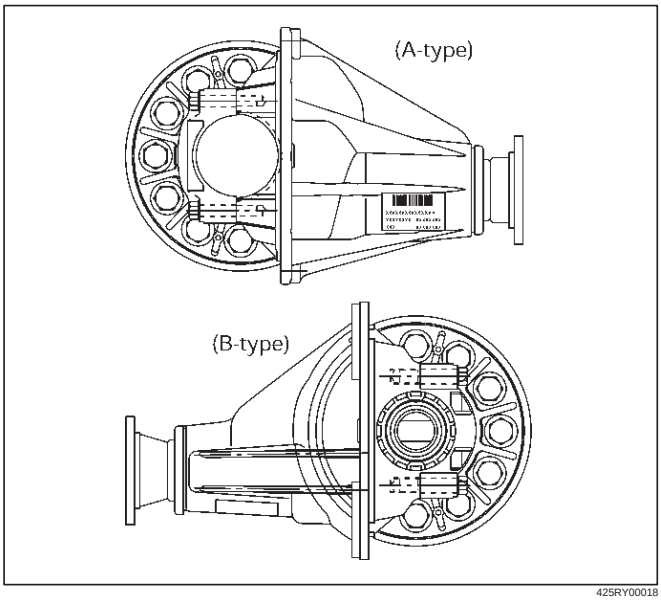

425RY00018

General Description

The rear axle assembly is of the semi–floating type in which the vehicle weight is carried on the axle housing . The center line of the pinion gear is below the center line of the ring gear (hypoid drive).
All parts necessary to transmit power from the propeller shaft to the rear wheels are enclosed in a banjo type axle housing.
The 9.61 inch ring gear rear axle uses a conventional ring and pinion gear set to transmit the driving force of the engine to the rear wheels. This gear set transfers this driving force at a 90 degree angle from the propeller shaft to the drive shafts.
The axle shafts are supported at the wheel end of the shaft by a roller bearing.
The pinion gear is supported by two tapered roller bearings. The pinion depth is set by a shim pack located between the gear end of the pinion and the roller bearing that is pressed onto the pinion. The pinion bearing preload is set by crushing a collapsible spacer between the bearings in the axle housing.

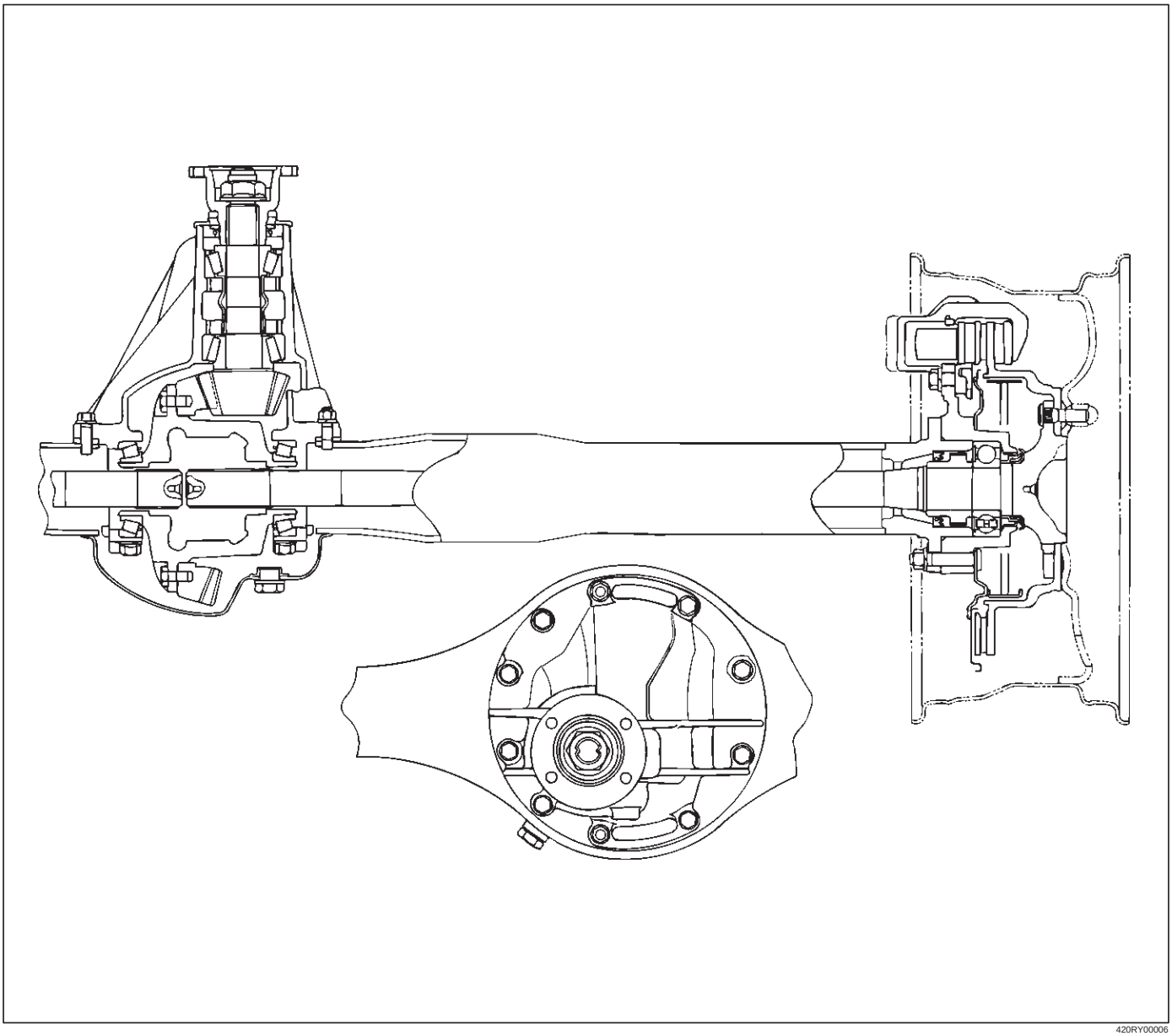

420RY00006

The ring gear is bolted onto the differential cage with 12 bolts.
The differential cage is supported in the axle housing by two tapered roller bearings. The differential and ring gear are located in relationship to the pinion by using selective shims and spacers between the bearing and the axle housing. To move the ring gear, shims are deleted from one side and an equal amount are added to the other side. These shims are also used to preload the bearings which are pressed onto the differential cage. Two bearing caps are used to hold the differential into the rear axle housing.
The differential is used to allow the wheels to turn at different rates of speed while the rear axle continues to transmit the driving force. This prevents tire scuffing when going around corners and prevents premature wear on internal axle parts.
The rear axle is sealed with a pinion seal, a seal at each axle shaft end, and by a liquid gasket between the differential carrier and the axle housing.

Diagnosis

Many noises that seem to come from the rear axle actually originate from other sources such as tires, road surface, wheel bearings, engine, transmission, muffler, or body drumming. Investigate to find the source of the noise before disassembling the rear axle. Rear axles, like any other mechanical device, are not absolutely quiet but should be considered quiet unless some abnormal noise is present.

To make a systematic check for axle noise, observe the following:

1. Select a level asphalt road to reduce tire noise and body drumming.
2. Check rear axle lubricant level to assure correct level, and then drive the vehicle far enough to thoroughly warm up the rear axle lubricant.
3. Note the speed at which noise occurs. Stop the vehicle and put the transmission in neutral. Run the engine speed slowly up and down to determine if the noise is caused by exhaust, muffler noise, or other engine conditions.
4. Tire noise changes with different road surfaces; axle noises do not. Temporarily inflate all tires to 344 kPa (3.5kg/cm^2, 50 psi) (for test purposes only). This will change noise caused by tires but will not affect noise caused by the rear axle.

   Rear axle noise usually stops when coasting at speeds under 48 km/h (30 mph); however, tire noise continues with a lower tone. Rear axle noise usually changes when comparing pull and coast, but tire noise stays about the same.

   Distinguish between tire noise and rear axle noise by noting if the noise changes with various speeds or sudden acceleration and deceleration. Exhaust and axle noise vary under these conditions, while tire noise remains constant and is more pronounced at speeds of 32 to 48 km/h (20 to 30 mph). Further check for tire noise by driving the vehicle over smooth pavements or dirt roads (not gravel) with the tires at normal pressure. If the noise is caused by tires, it will change noticeably with changes in road surface.
5. Loose or rough front wheel bearings will cause noise which may be confused with rear axle noise; however, front wheel bearing noise does not change when comparing drive and coast. Light application of the brake while holding vehicle speed steady will often cause wheel bearing noise to diminish. Front wheel bearings may be checked for noise by jacking up the wheels and spinning them or by shaking the wheels to determine if bearings are loose.
6. Rear suspension rubber bushings and spring insulators dampen out rear axle noise when correctly installed. Check to see that there is no link or rod loosened or metal–to–metal contact.
7. Make sure that there is no metal–to–metal contact between the floor and the frame.

After the noise has been determined to be in the axle, the type of axle noise should be determined, in order to make any necessary repairs.

Gear Noise

Gear noise (whine) is audible from 32 to 89 km/h (20 to 55 mph) under four driving conditions.

1. Driving under acceleration or heavy pull.
2. Driving under load or under constant speed.
3. When using enough throttle to keep the vehicle from driving the engine while the vehicle slows down gradually (engine still pulls slightly).
4. When coasting with the vehicle in gear and the throttle closed. The gear noise is usually more noticeable between 48 and 64 km/h (30 and 40 mph) and 80 and 89 km/h (50 and 55 mph).

Bearing Noise

Bad bearings generally produce a rough growl or grating sound, rather than the whine typical of gear noise. Bearing noise frequently “wow–wows” at bearing rpm, indicating a bad pinion or rear axle side bearing. This noise can be confused with rear wheel bearing noise.

Rear Wheel Bearing Noise

Rear wheel bearing noise continues to be heard while coasting at low speed with transmission in neutral. Noise may diminish by gentle braking. Jack up the rear wheels, spin them by hand and listen for noise at the hubs. Replace any faulty wheel bearings.

Knock At Low Speeds

Low speed knock can be caused by worn universal joints or a side gear hub counter bore in the cage that is worn oversize. Inspect and replace universal joints or cage and side gears as required.

Backlash Clunk

Excessive clunk on acceleration and deceleration can be caused by a worn rear axle pinion shaft, a worn cage, excessive clearance between the axle and the side gear splines, excessive clearance between the side gear hub and the counterbore in the cage, worn pinion and side gear teeth, worn thrust washers, or excessive drive pinion and ring gear backlash. Remove worn parts and replace as required. Select close–fitting parts when possible. Adjust pinion and ring gear backlash.

Axle Housing

Axle Housing and Associated Parts

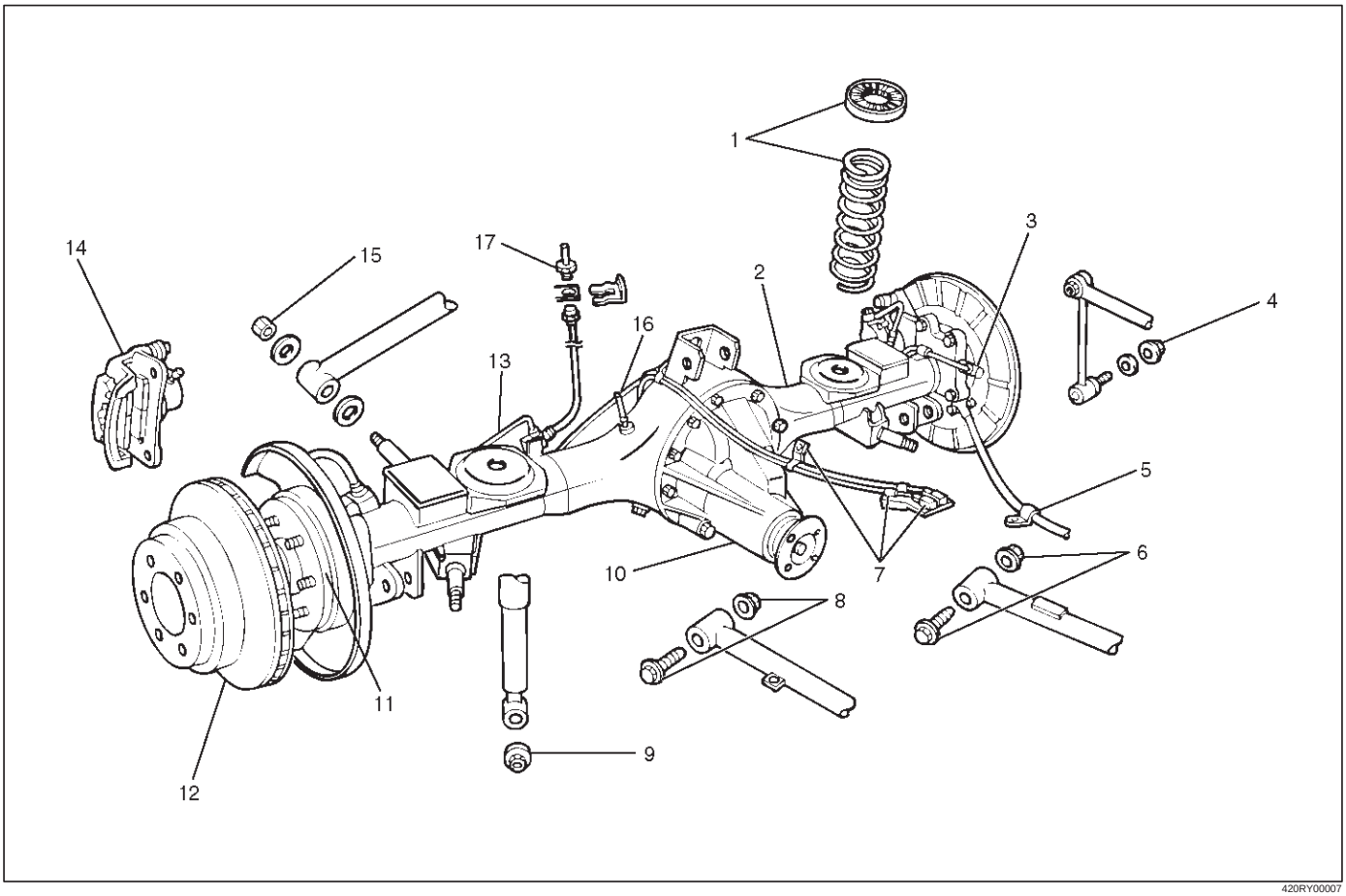

Legend

(1) Coil Spring and Insulator
(2) Axle Housing Assembly
(3) ABS Speed Sensor and Harness (if so equipped)
(4) Nut
(5) Parking Brake Cable
(6) Bolt and Nut
(7) Antilock Brake System (ABS) Connector and Bracket (if so equipped)
(8) Bolt and Nut
(9) Nut
(10) Differential Assembly
(11) Axle Shaft Assembly
(12) Brake Disc
(13) Brake Pipe
(14) Brake Caliper
(15) Nut
(16) Breather Hose
(17) Flare Nut

Removal

1. Raise the vehicle and support it with suitable safety stands.
   The hoist must remain under the rear axle housing.
2. Drain brake fluid. Refer to Hydraulic Brakes in Brakes section.
3. Remove rear wheels and tires. Refer to Wheel in Suspension section.
4. Remove propeller shaft. Refer to Rear Propeller Shaft in this section.
5. Drain the rear axle oil into a proper container.
6. Remove parking brake cable, release the connection between the cable fixing clip equalizer. Refer to Parking Brakes in Brakes section.
7. Move the clip aside and pull out the breather hose.

8. Disconnect the ABS connectors (1) and remove the brackets (2) (if so equipped) attached to the frame and center link.

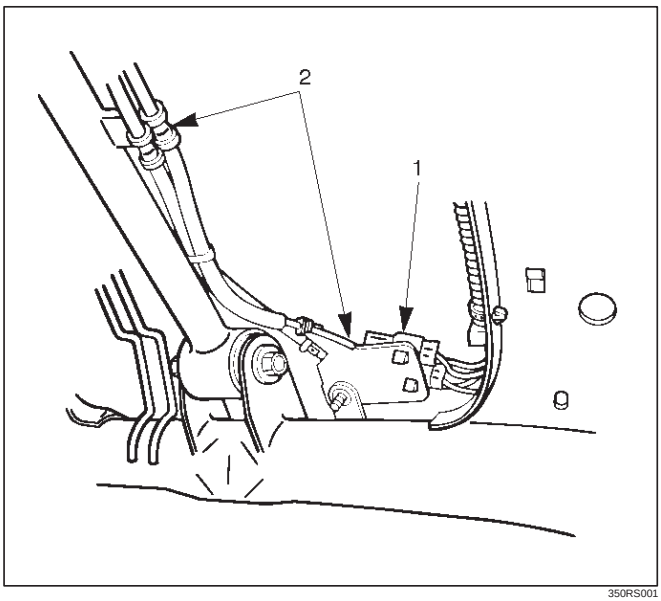

350RS001

9. Loosen the brake tube flare nut, remove the clip and take out the brake tube.
10. Remove the shock absorber fixing nut from the axle housing.
11. Remove the stabilizer linkage mounting nut from the axle housing.
12. Remove the lateral rod fixing nut from the axle housing.
13. Remove the center link mounting bolt and nut from the axle housing.
14. Remove the trailing link fixing bolt and nut from the axle housing.
15. Jack down and remove the coil spring and insulator.
16. Axle housing assembly can be separated from the vehicle on completion of steps 1 – 11.
17. Remove the brake caliper fixing bolt (3), loosen the flare nut (1), release the clip (2) and take out the brake caliper together with the flexible hose.

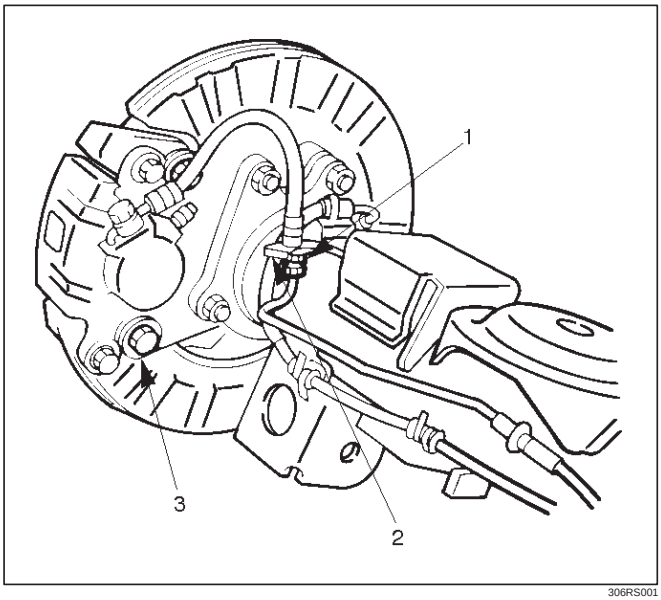

306RS001

18. Remove brake disc.
19. Remove antilock brake system speed sensor fixing bolt and the clip and bracket (if so equipped) on the axle housing.
20. Remove the brake pipe clip and fixing bolt on the axle housing and take out the brake pipe.
21. Remove the bearing holder fixing nut and take out the axle shaft assembly, be sure not to damage the oil seal by the spline of the shaft, Refer to Axle Shaft in this section.
22. Remove differential assembly, refer to Differential Assembly in this section.

Oil Seal Replacement

Remove the oil seal, carefully not to damage the housing, and mount new oil seal using oil seal installer 5–8840–2294–0

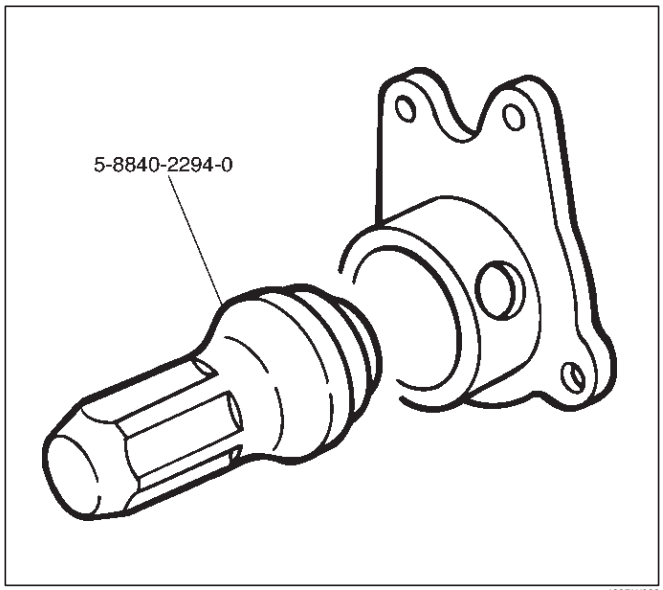

420RW028

Installation

1. Install differential assembly, refer to Differential Assembly in this section.
2. Install axle shaft assembly then tighten the bearing holder mounting nut to the specified torque. Be sure not to damage the oil seal by the spline of the shaft.

   Torque: 74N·m (7.5kg·m/54 lb ft)
3. Install brake pipe.
4. Connect antilock brake system (ABS) speed sensor and harness (if so equipped), refer to Anti–Lock Brake System in Brake section.
5. Install brake disc.
6. Install brake caliper. Refer to Disk Brakes in Brake section.
7. Install axle housing assembly.
8. Install coil spring and insulator.
9. Install the trailing link fixing bolt and nut to the axle housing. For the procedures in items 9–13, refer to Suspension section.
10. Install the center link bolt and nut to the axle housing.

11. Install the lateral rod fixing nut to the axle housing.
12. Install the stabilizer linkage mounting nut to the axle housing.
13. Install the shock absorber fixing nut to the axle housing.
14. Install brake tube flare nut, Refer to Disk Brakes in Brake section.
15. Install ABS connector and bracket (if so equipped).
16. Connect breather hose.
17. Install parking brake cable, Refer to Parking Brakes in Brake section.
18. Bleed brakes. Refer to Hydraulic Brakes in Brake section.

Axle Shaft

Axle Shaft and Associated Parts

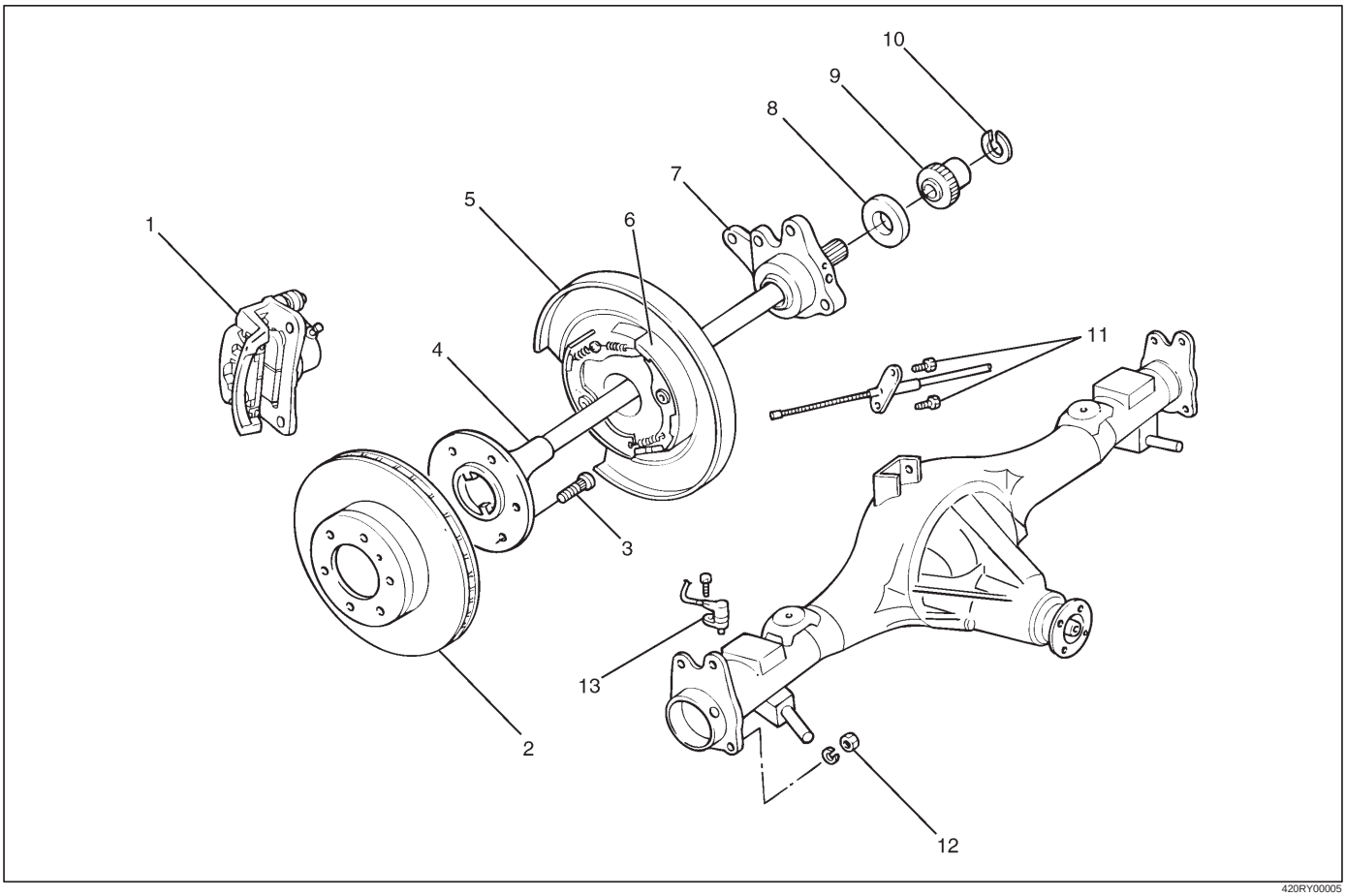

420RY00005

Legend

(1) Brake Caliper
(2) Brake Disc
(3) Wheel Pin
(4) Axle Shaft Assembly
(5) Back Plate
(6) Parking Brake Assembly
(7) Bearing Holder
(8) Bearing
(9) Retainer
(10) Snap Ring
(11) Bolt
(12) Nut
(13) Antilock Brake System (ABS) Speed Sensor

Removal

1. Raise the vehicle.
2. Remove tires and wheels. Refer to Wheel in Steering section.
3. Remove brake caliper. Use a wire to attach the brake caliper to the frame. Refer to Disk Brakes in Brake section.
4. Remove brake disc.
5. Remove ABS sensor.
6. Remove Parking brake assembly. Refer to Parking Brakes in Brake section.

7. Remove the parking brake cable mounting bolts(Behind the back plate)(1).

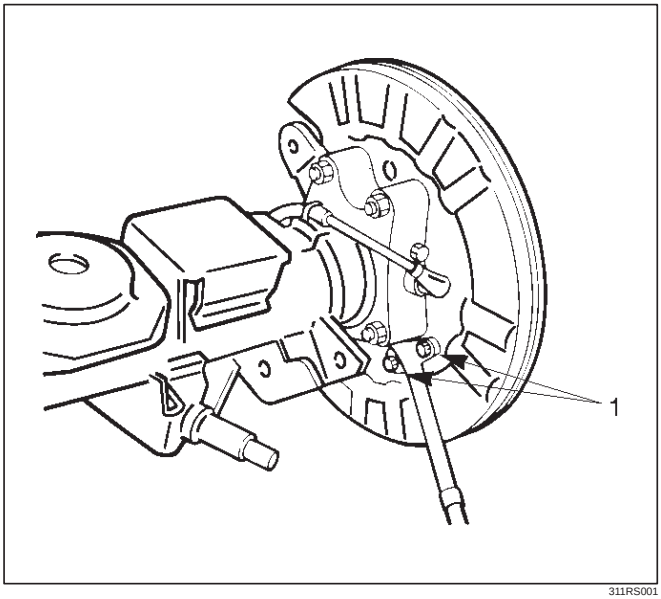

311RS001

8. Remove the bearing holder mounting nuts.
9. Remove axle shaft assembly.

NOTE: Be sure not to damage the oil seal.

10. Remove snap ring.
11. Using a bearing remover 5–8840–2295–0 and press, remove retainer together with the bearing holder.

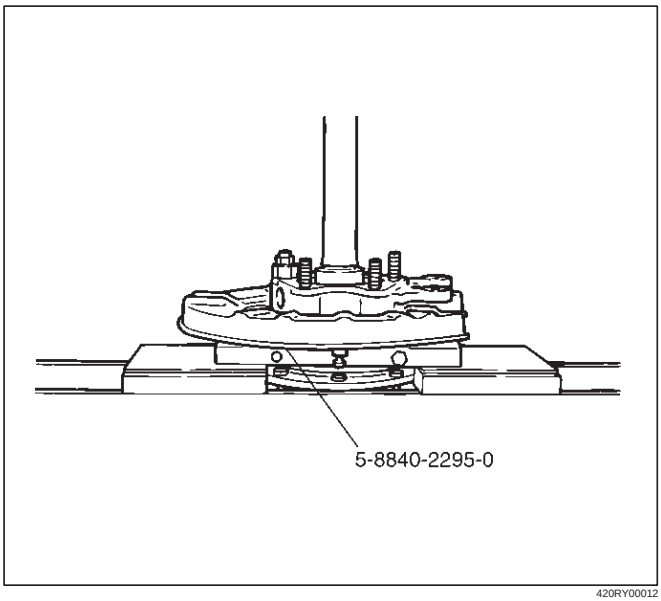

420RY00012

12. Remove bearing.
13. Remove bearing holder.
14. Remove back plate.
15. Remove the wheel pins using a remover 5–8840–0029–0.

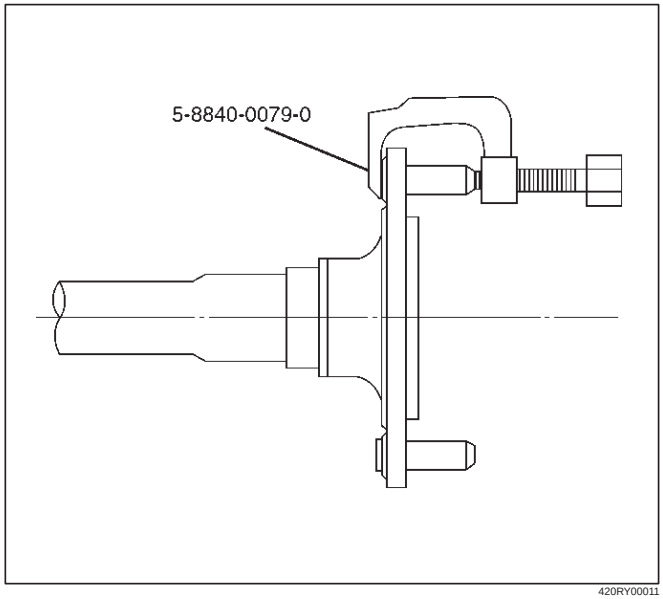

420RY00011

Inspection and Repair

Make necessary correction or parts replacement if wear, corrosion or any other abnormal conditions are found through inspection.

Visual Check:

Check the following parts for wear, damage, noise or any other abnormal conditions:

1. Axle shaft
2. Bearing

When checking the axle shaft, pay special attention to the splined portions and replace the shaft if distortion or step wear is noticeable. Correct slight step wear with a grinder.

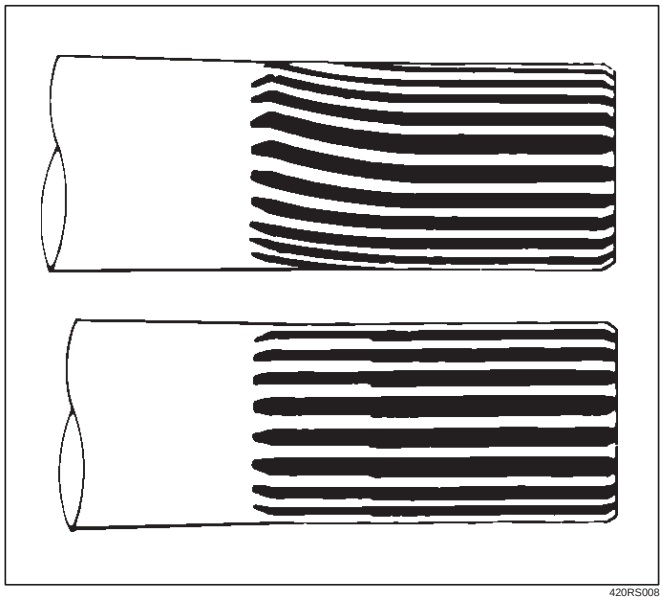

420RS008

Axle Shaft Run–out

Limit: 1.0 mm (0.039 in)

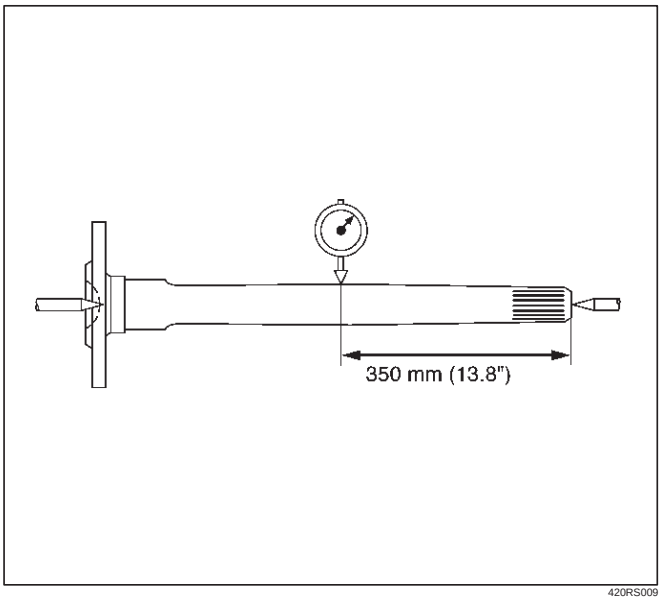

420RS009

Axle Shaft Flange Run–out

Limit: 0.08 mm (0.003 in)

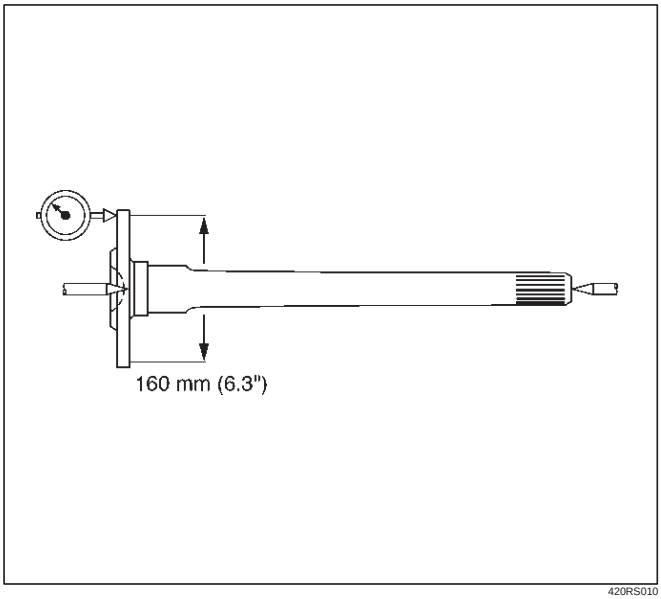

420RS010

Oil Seal Replacement

Remove the oil seal carefully not to damage the bearing holder bore .
When installing, use oil seal installer 5–8840–2310–0.

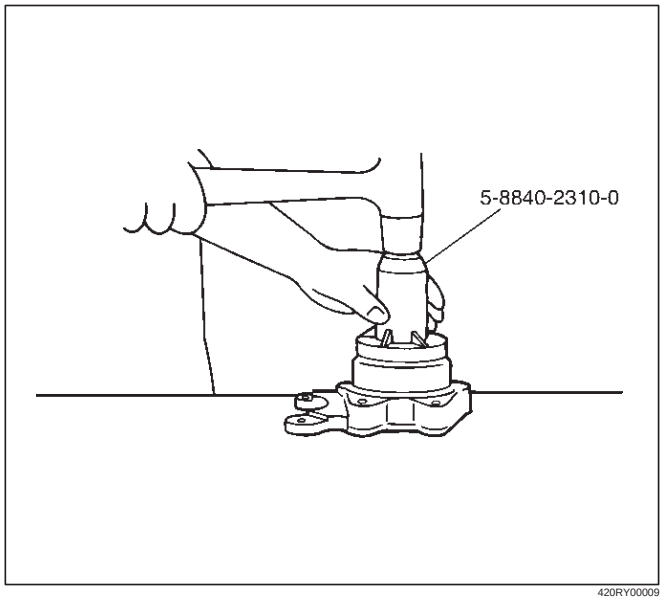

420RY00009

Installation

1. Install wheel pin.
2. Install back plate.
3. Install bearing holder.
4. Install bearing.
5. Install retainer by using a bearing installer 5–8840–2296–0, press fit together with the bearing.

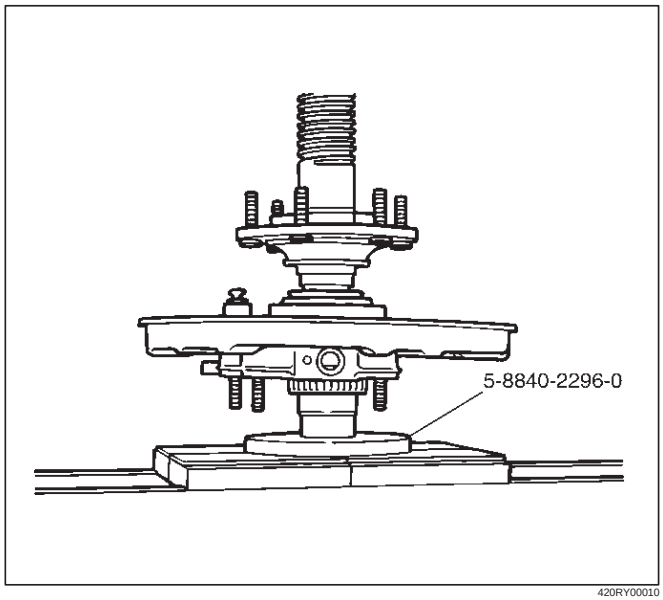

420RY00010

6. Install snap ring.
7. Install axle shaft assembly.

NOTE: Be sure not to damage the oil seal.

8. Tighten the bearing holder mounting nut to the specified torque.

   Torque: 74N·m (54 lb ft)

9. Fix the parking brake cable mounting bolt (Behind the back plate).
10. Install parking brake assembly, refer to Parking Brakes in Brake section.
11. Install antilock brake system sensor.
12. Install brake disc.
13. Install brake caliper, refer to Disk Brakes in Brake section.

Pinion Oil Seal

Pinion Oil Seal and Associated Parts

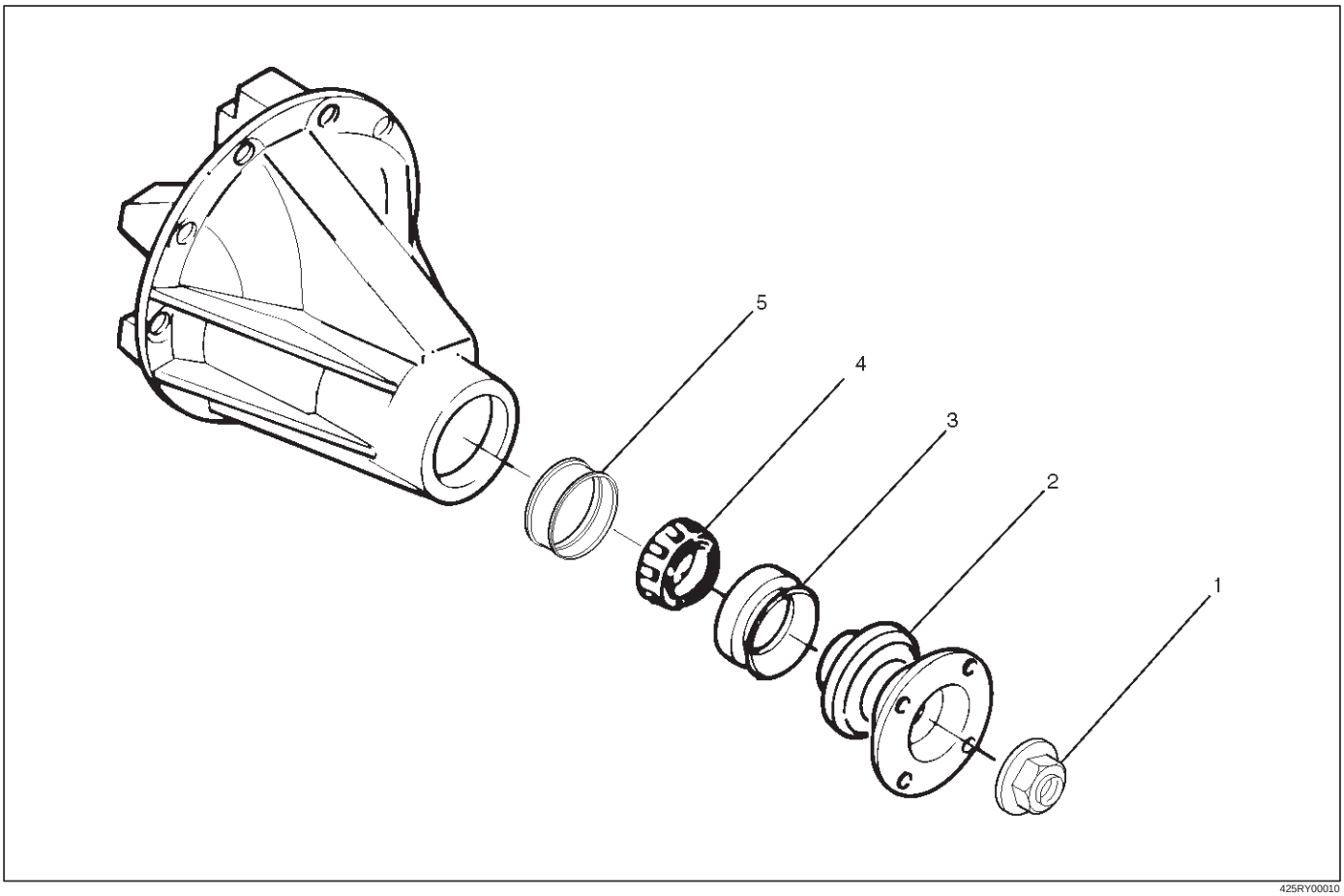

425RY00010

Legend

(1) Flange Nut and Washer
(2) Flange
(3) Oil Seal
(4) Outer Bearing
(5) Collapsible Spacer

Removal

1. Remove the rear propeller shaft. Refer to Rear Propeller Shaft in this section.
2. Drain the rear axle oil.

3. Remove flange nut and washer by using pinion flange holder 5–8840–0133–0 after raising up its staked parts completely.

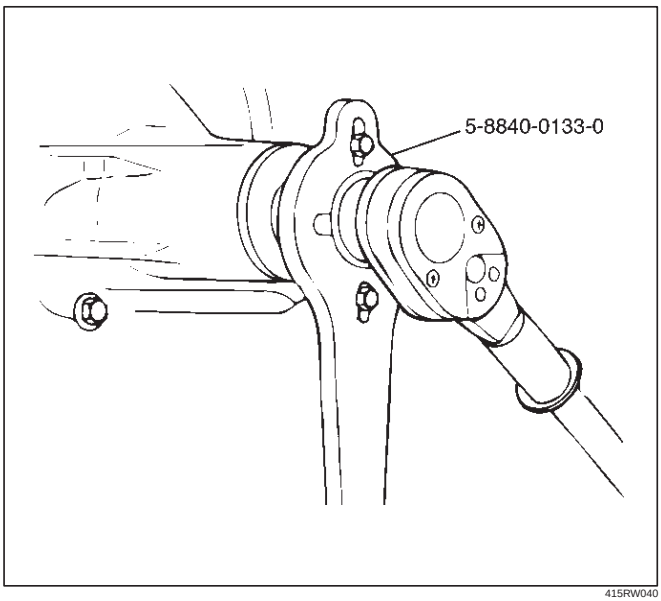

415RW040

4. Remove flange.
5. Remove oil seal.
6. Remove outer bearing by using remover 5–8840–2323–0.

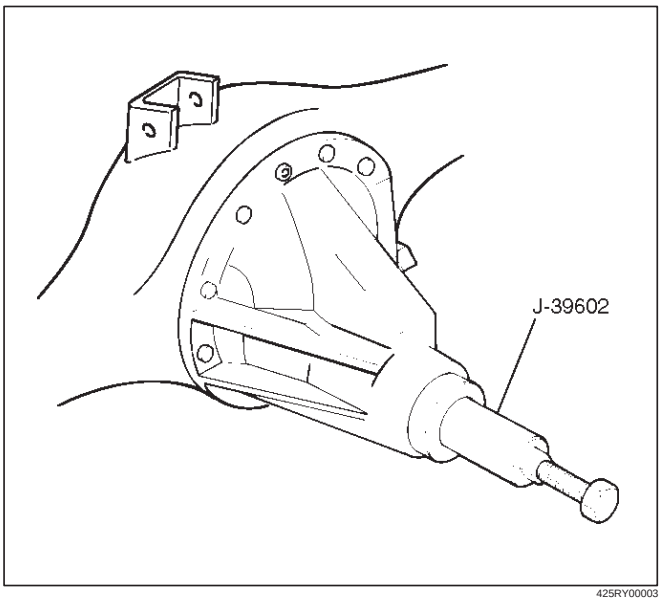

425RY00003

7. Remove collapsible spacer.

Inspection and Repair

Make necessary correction or parts replacement if wear, damage, corrosion or any other abnormal conditions are found through inspection.
Check the following parts:

1. Seal surface of the pinion.
2. Cage bore for burns.

Installation

1. Install collapsible spacer, discard the used collapsible spacer and install a new one.
2. Install outer bearing.

NOTE: Do not drive in, but just temporarily set in the outer bearing by hand, which should be indirectly pressed in finally by tightening the flange nut.

3. By using the seal installer 5–8840–2165–0, install a new oil seal (1) that has grease on seal lip.

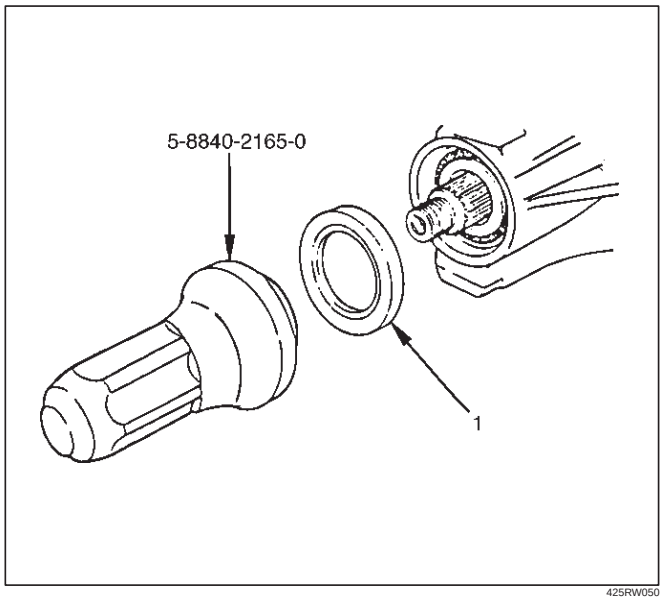

425RW050

4. Install flange.
5. Install flange nut and washer. Refer to Differential Assembly in this section for flange nut reassembly.

NOTE: Discard the used nut and install a new one.

Differential Assembly

Differential Assembly and Associated Parts

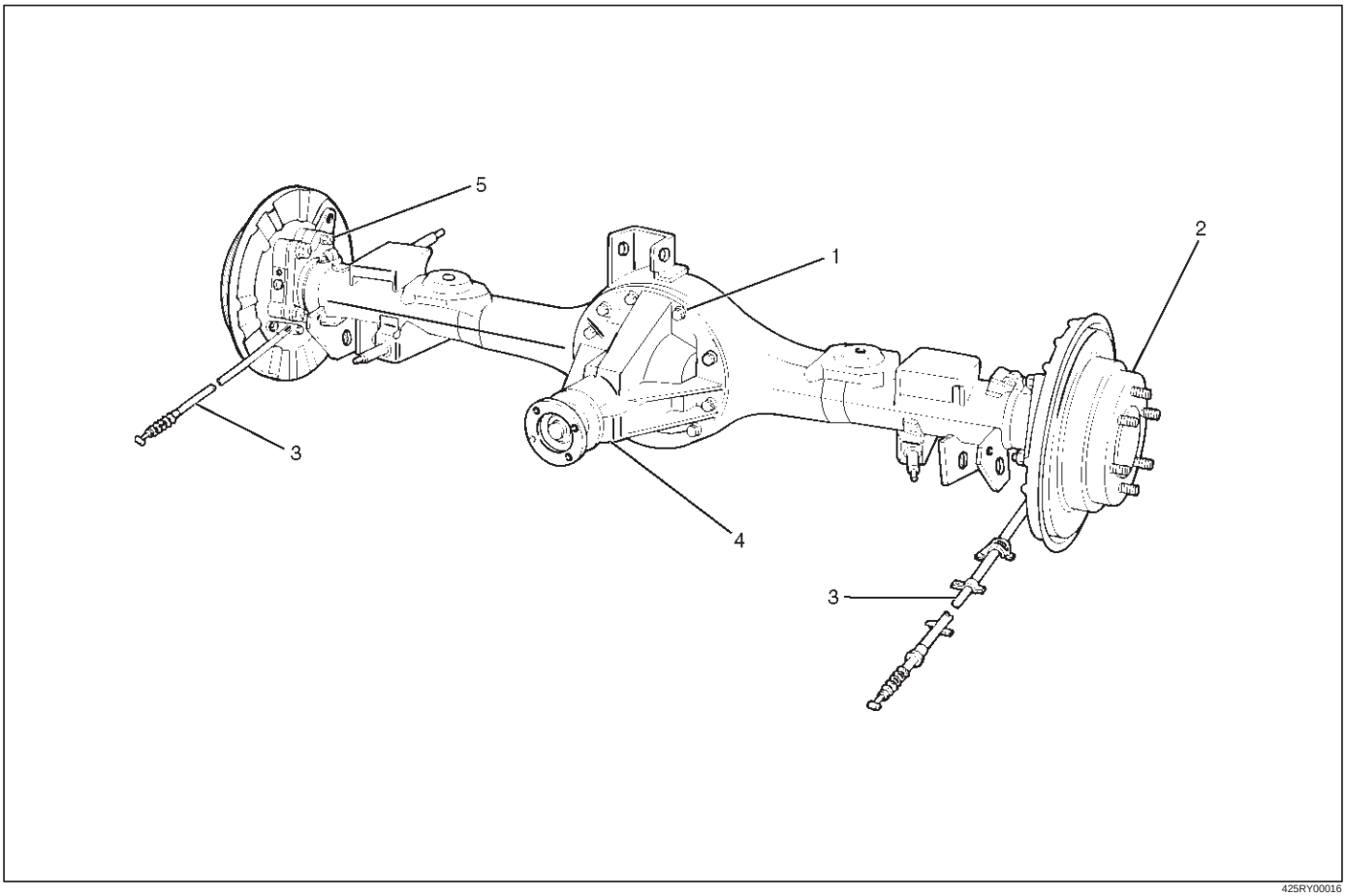

Legend

(1) Bolt and Nut
(2) Axle Shaft Assembly
(3) Parking Brake Cable
(4) Differential Assembly
(5) Nut

Removal

1. Jack up and support the frame with stands.
2. Remove the wheel and tire. Refer to Wheel in Steering section.
3. Drain the differential oil.
4. Remove the propeller shaft. Refer to Rear Propeller Shaft in this section.
5. Remove the ABS speed sensor. Refer to Anti–lock Brake System in Brakes section.
6. Remove the parking brake cable fastening clip and disconnect the equalizer section. Refer to Parking Brakes in Brake section.
7. Remove the bearing holder fixing nuts.
8. Remove axle shaft assembly, be sure not to damage the oil seal by axle shaft.
9. Remove differential carrier mounting bolts and nuts.
10. Remove differential assembly.

Installation

1. Clean the contact surfaces of the axle and differential carrier. As shown in the drawing, apply Three Bond TB1215 or equivalent then install differential assembly.

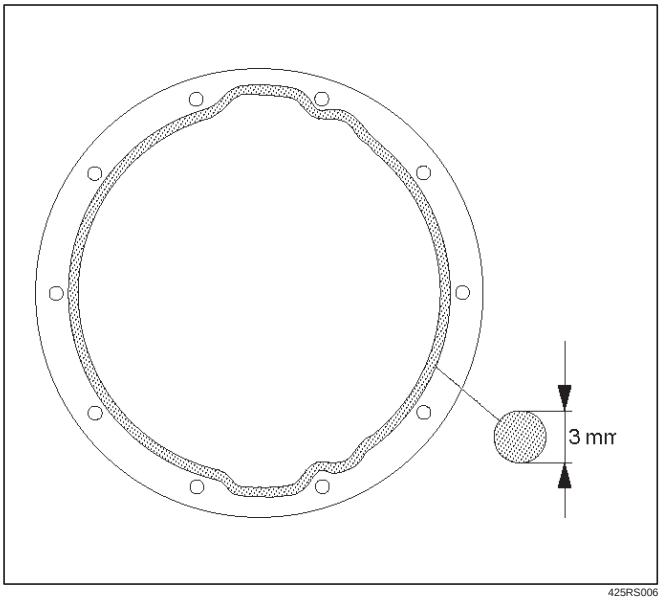

2. Install bolt and nut. Tighten the differential carrier mounting bolts and nuts to the specified torque.

   Torque:Nuts 44N·m (4.5kg·m/33 lb ft)

   Bolts 64N·m (6.5kg·m/47 lb ft)

3. Install axle shaft assembly. Be sure not to damage the oil seal by axle shaft.
4. Install nut, refer to Axle Shaft in this section.
5. Install parking brake cable, refer to Parking Brakes in Brake section.

NOTE: After completing the assembling work, fill the prescribed gear oil to the filler hole.

Lubricant capacity: 3.0 liter (2.6 Imp qt/3.2 US qt)

6. Tighten the oil filler plug to the specified torque.

   Torque: 78N·m (8.0kg·m/58 lb ft)

Disassembled View

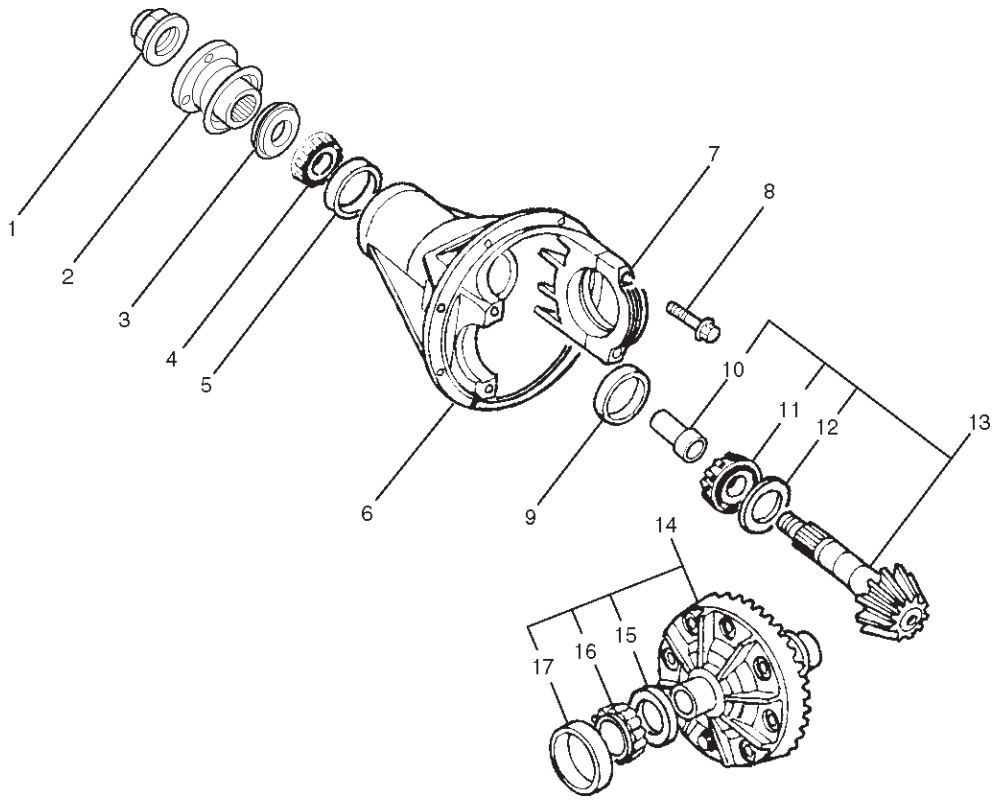

415RY00002

Legend

(1) Flange Nut and Washer
(2) Flange
(3) Oil Seal
(4) Outer Bearing
(5) Outer Bearing Outer Race
(6) Diff Carrier
(7) Bearing Cap
(8) Bolt
(9) Inner Bearing Outer Race
(10) Collapsible Spacer
(11) Inner Bearing
(12) Adjust Shim (Pinion Position)
(13) Drive Pinion Shaft
(14) Adjust Shim (Diff Cage Assembly)
(15) Diff Preload/Backlash
(16) Side Bearing
(17) Side Bearing Outer Race

Disassembly

1. Using holding fixture 5–8840–2029–0 and holding fixture base 5–8840–0003–0, fix the differential assembly to the bench.

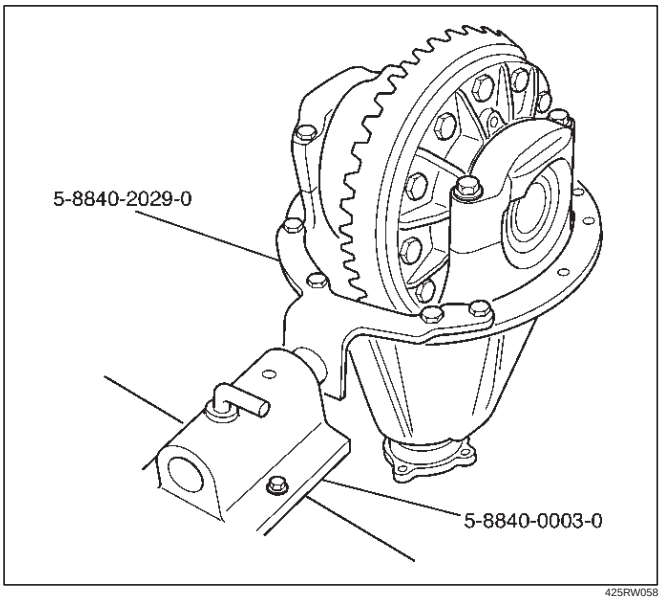

425RW058

2. Apply a setting mark to the side bearing cap and the differential carrier then remove bearing cap.

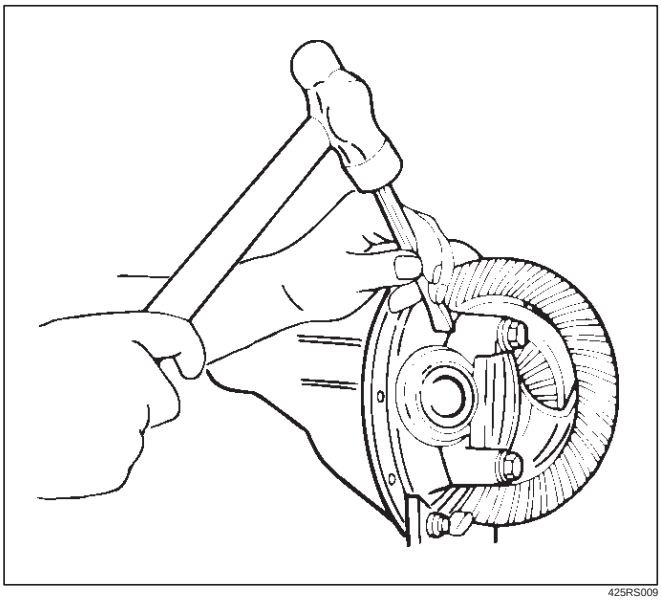

425RS009

3. Remove differential cage assembly.
4. Remove side bearing outer race. After removal, keep the right and left hand side bearing assemblies separate to maintain inner and outer race combinations.
5. Remove side bearing by using remover 5–8840–2587–0 and adapter 5–8840–2576–0. Select collet halves 44803 in remover kit 5–8840–2587–0 for side bearing removal and insert is not required for this operation.

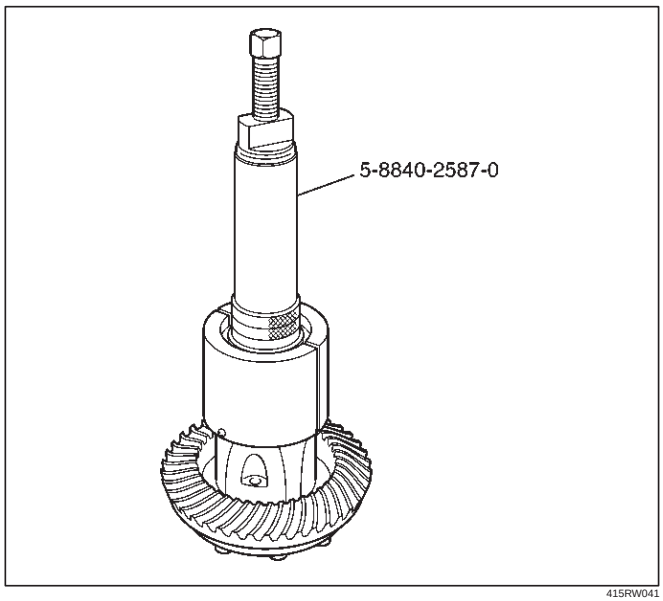

415RW041

6. Note the thickness and position of the shims then remove adjust shim.
7. Remove the flange nut and washer by using pinion flange holder 5–8840–0133–0 after raising up its staked parts completely.

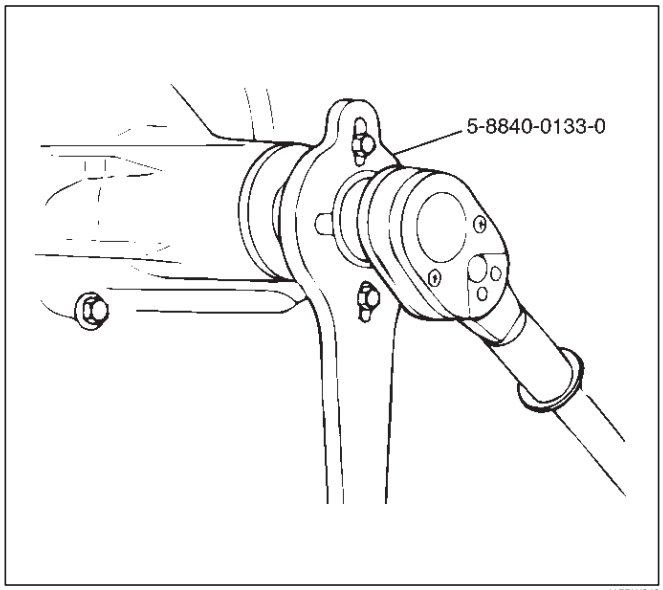

415RW040

8. Removed flange assembly.
9. Remove the drive pinion assembly using a soft metal rod and a hammer.

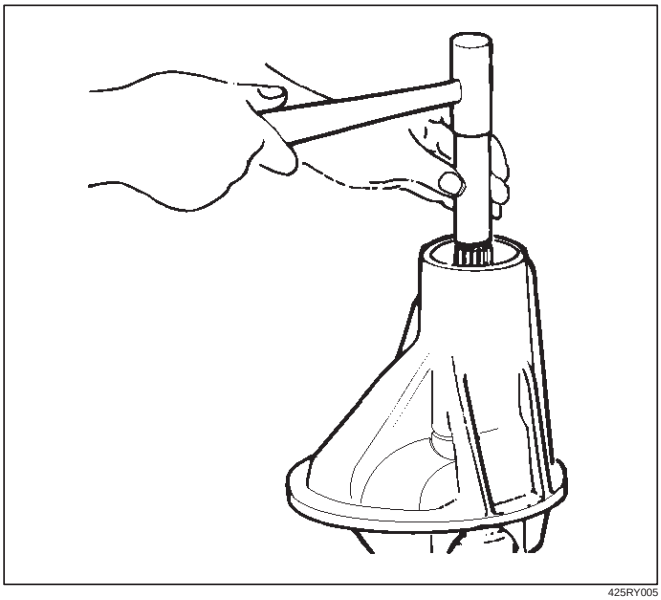

425RY005

10. Remove collapsible spacer.
11. Remove the inner bearing by using remover 5–8840–2587–0. Select insert 303174 and collet halves 44803 in remover kit 5–8840–2587–0 for inner bearing removal.

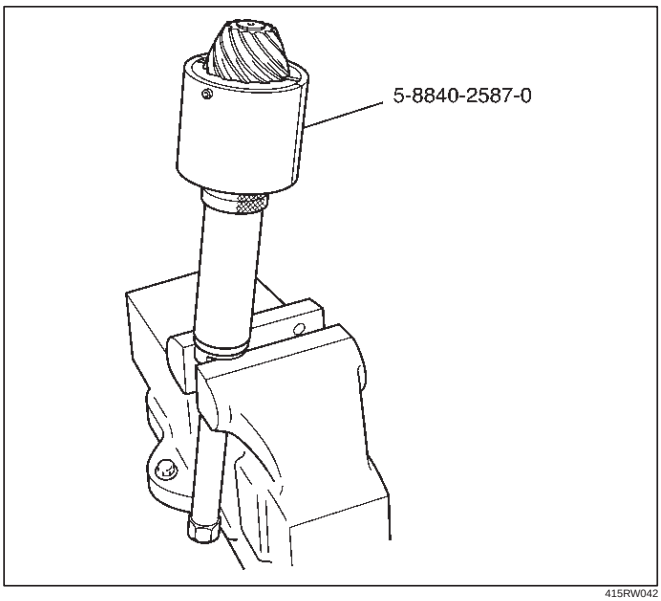

415RW042

12. Remove adjust shim.
13. Remove oil seal.
14. Remove oil seal slinger.
15. Remove outer bearing.
16. Remove the inner bearing outer race (1) and the outer bearing outer race (2) by using a brass bar and a hammer.

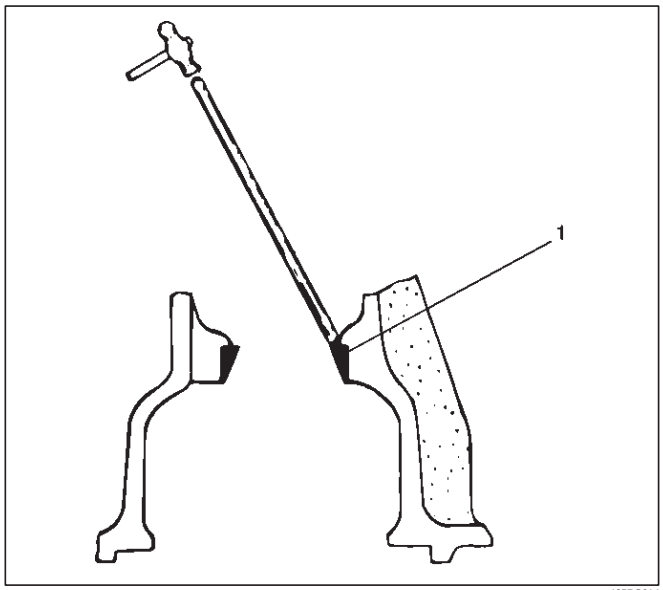

425RS014

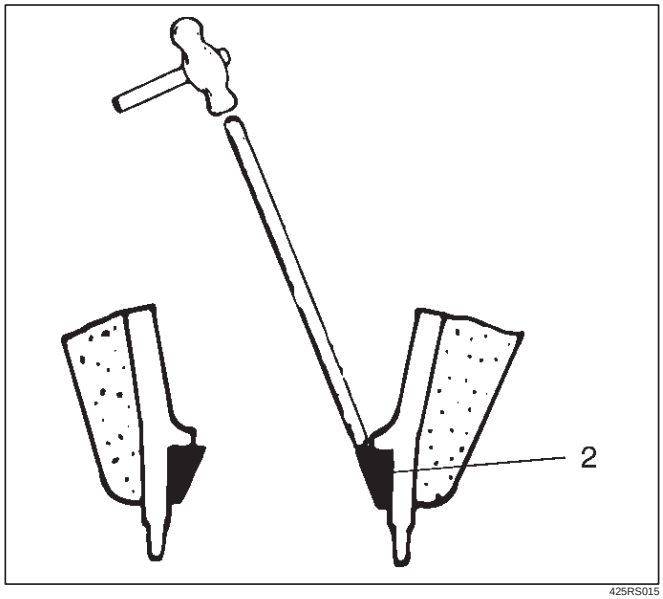

425RS015

Reassembly

1. Install outer bearing outer race by using installer 5–8840–2689–0 and grip 5–8840–0007–0.

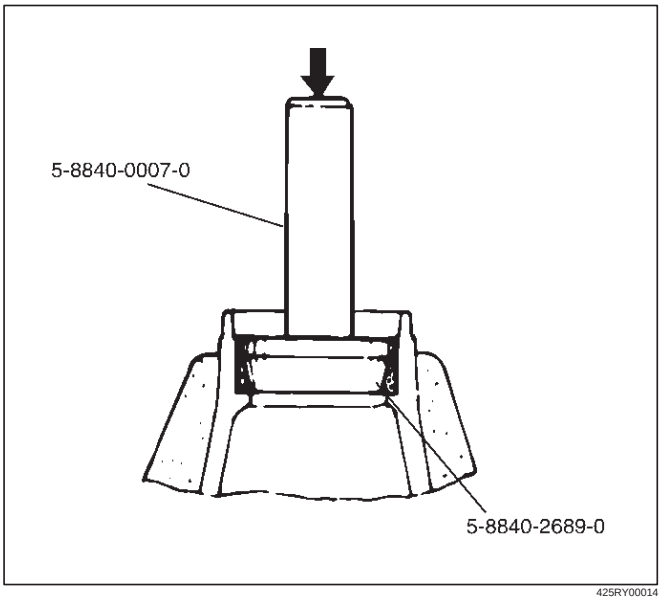

425RY00014

2. Install inner bearing outer race by using installer 5–8840–2690–0 and grip 5–8840–0007–0.

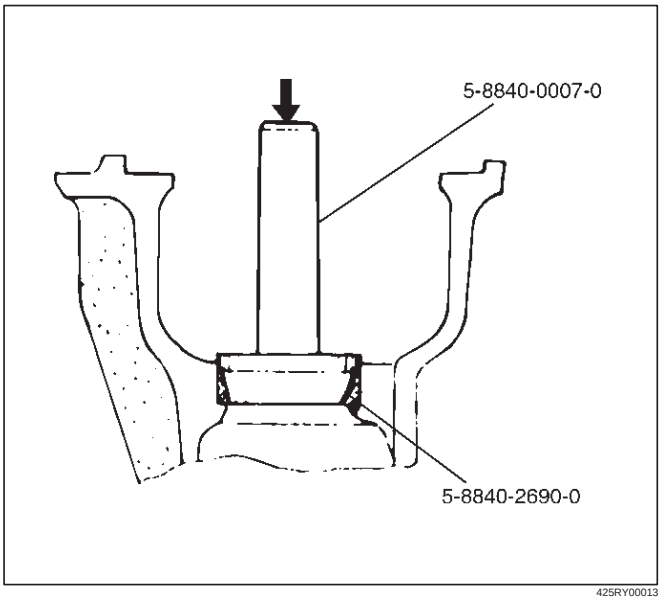

425RY00013

3. Adjust the drive pinion mounting distance as follows:
   1. Apply gear oil to the inner and outer drive pinion bearing. Clean the pinion setting gauge set. Then install the gauge set together with the inner and outer bearings.

   Install gauge plate 5–8840–2678–0 (3), inner pilot 5–8840–2680–0 (2) ,bolt and nut 5–8840–0127–0 (4) and outer pilot 5–8840–2681–0 (1) through inner and outer bearings.

   2. Tighten the nut to the specified torque.

   Torque: 2.3 N·m (23kg·cm/20 lb in)

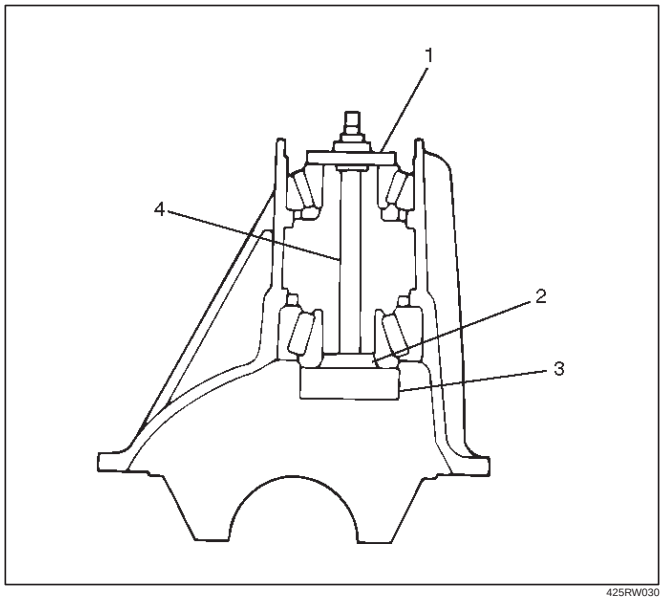

425RW030

   3. Clean the side bearing bores. Place discs and dial indicator on to arbor, and place tool into position in side bearing bores. Install and tighten the bearing caps to the specified torque.

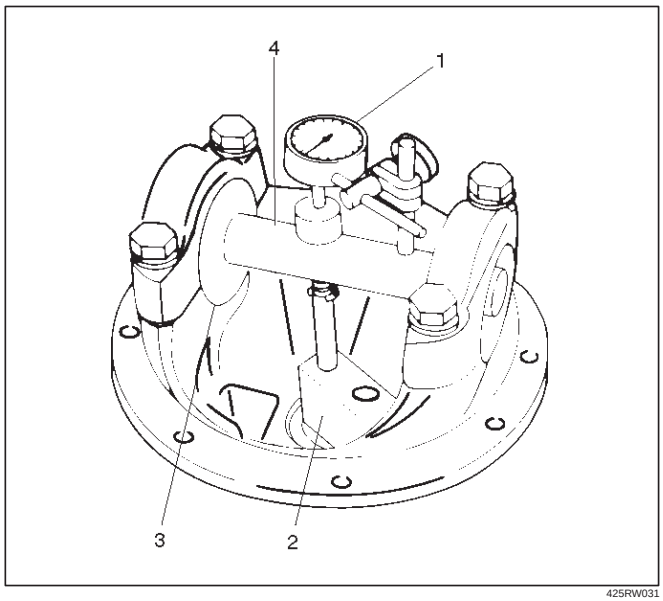

425RW031

Legend

(1) Dial Indicator: 5–8840–0126–0
(2) Gauge Plate: 5–8840–2678–0
(3) Disc (2 pcs.): 5–8840–2679–0
(4) Arbor: 5–8840–0128–0

4. Set the dial indicator 5–8840–0126–0 to “0”. Place it on the mounting post of the gauging arbor with the contact button touching the indicator pad. Force the dial indicator downward until the needle has made a half turn clockwise. Tighten down the dial indicator in this position.

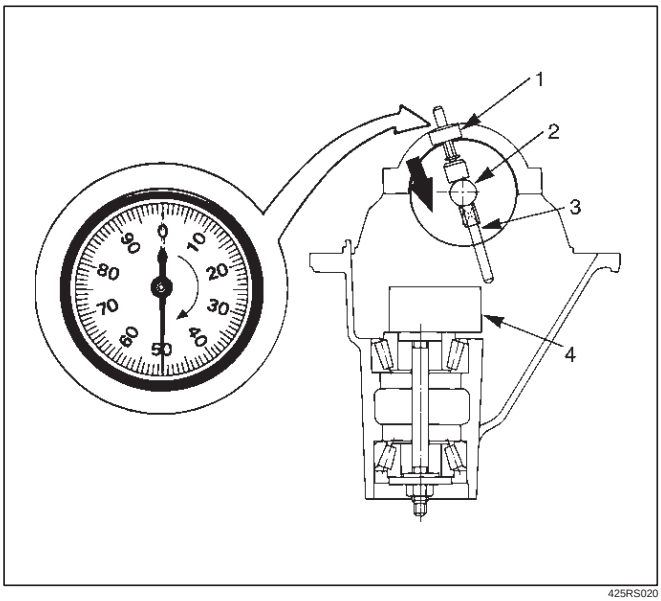

425RS020

Legend

(1) Dial Indicator
(2) Ganging Arbor
(3) Plunger
(4) Gauge Plate

5. Position the plunger on the gauge plate. Move the gauging arbor slowly back and forth and locate the position at which the dial indicator shows the greatest defection. At this point, once again set the dial indicator to “0”. Repeat the procedure to verify the “0” setting.

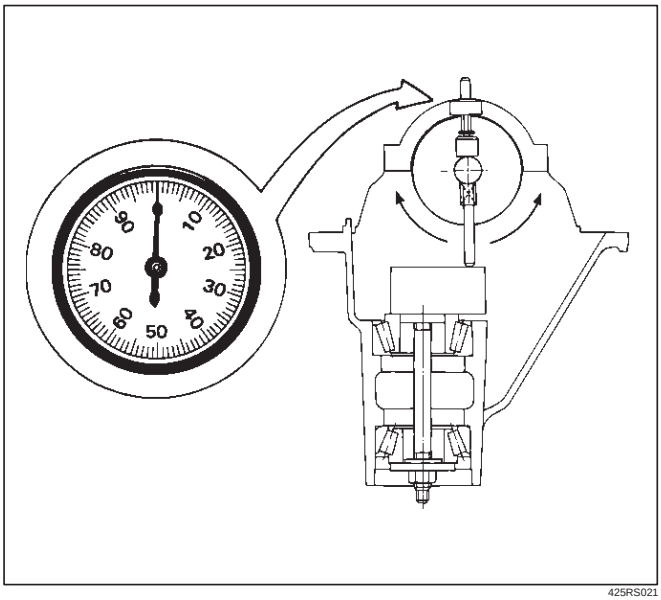

425RS021

6. After the ZERO setting is obtained, rotate the gauging arbor until the dial indicator rod does not touch the gauging plate. Record the number the dial indicator needle points to.

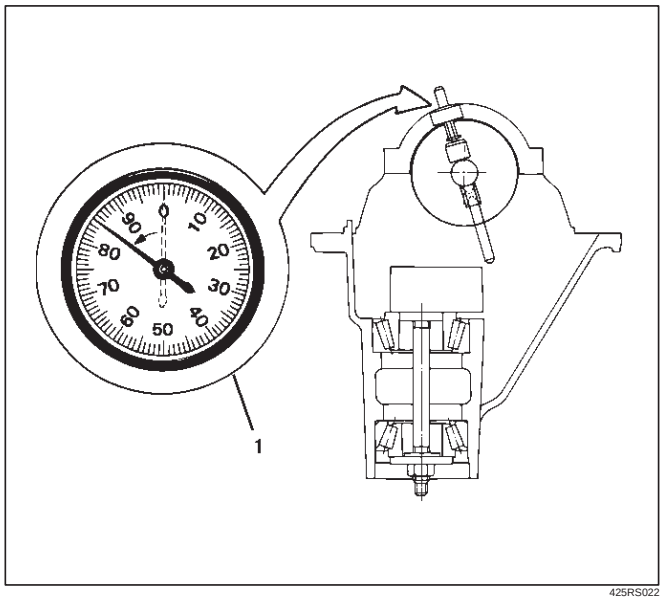

425RS022

Legend

(1) Example=Dial indicator reading od 0.085

7. Record the pinion depth code on the head of the drive pinion. The number indicates a necessary change in the pinion mounting distance. A plus number indicates the need for a greater mounting distance (which can be achieved by decreasing the shim thickness). A minus number indicates the need for a smaller mounting distance (which can be achieved by increasing the shim thickness). If examination reveals pinion depth code “0”, the pinion is “nominal”.

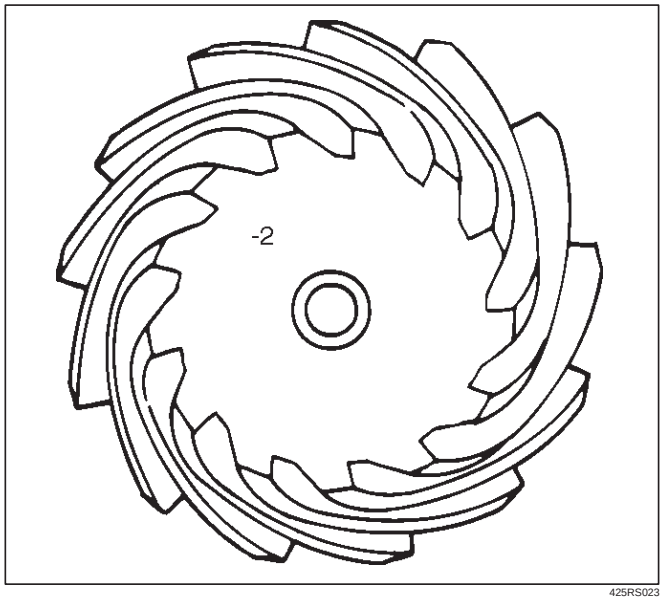

425RS023

8. Select the shim thickness using the chart;

Pinion marking Dial indicator reading (inches)	+10	+9	+8	+7	+6	+5	+4	+3	+2	+1	0	–1	–2	–3	–4	–5	–6	–7	–8	–9	–10
0.080																				2.12 (0.0835)	2.12 (0.0835)
0.081																	2.12 (0.0835)	2.12 (0.0835)	2.14 (0.0843)	2.14 (0.0843)	2.16 (0.0850)
0.082														2.12 (0.0835)	2.12 (0.0835)	2.14 (0.0843)	2.14 (0.0843)	2.16 (0.0850)	2.16 (0.0850)	2.18 (0.0858)	2.18 (0.0858)
0.083												2.12 (0.0835)	2.12 (0.0835)	2.14 (0.0843)	2.14 (0.0843)	2.16 (0.0850)	2.16 (0.0850)	2.18 (0.0858)	2.18 (0.0858)	2.20 (0.0866)	2.20 (0.0866)
0.084										2.12 (0.0835)	2.12 (0.0835)	2.14 (0.0843)	2.14 (0.0843)	2.16 (0.0850)	2.16 (0.0850)	2.18 (0.0858)	2.18 (0.0858)	2.20 (0.0866)	2.20 (0.0866)	2.22 (0.0874)	2.22 (0.0874)
0.085							2.12 (0.0835)	2.12 (0.0835)	2.14 (0.0843)	2.14 (0.0843)	2.16 (0.0850)	2.16 (0.0850)	2.18 (0.0858)	2.18 (0.0858)	2.20 (0.0866)	2.20 (0.0866)	2.22 (0.0874)	2.22 (0.0874)	2.24 (0.0822)	2.24 (0.0822)	2.26 (0.0890)
0.086				2.12 (0.0835)	2.12 (0.0835)	2.14 (0.0843)	2.14 (0.0843)	2.16 (0.0850)	2.16 (0.0850)	2.18 (0.0858)	2.18 (0.0858)	2.20 (0.0866)	2.20 (0.0866)	2.22 (0.0874)	2.22 (0.0874)	2.24 (0.0882)	2.24 (0.0882)	2.26 (0.0890)	2.26 (0.0890)	2.28 (0.0898)	2.28 (0.0898)
0.087		2.12 (0.0835)	2.12 (0.0835)	2.14 (0.0843)	2.14 (0.0843)	2.16 (0.0850)	2.16 (0.0850)	2.18 (0.0858)	2.18 (0.0858)	2.20 (0.0866)	2.20 (0.0866)	2.22 (0.0874)	2.22 (0.0874)	2.24 (0.0882)	2.24 (0.0882)	2.26 (0.0890)	2.26 (0.0890)	2.28 (0.0898)	2.28 (0.0898)	2.30 (0.0905)	2.30 (0.0905)
0.088	2.14 (0.0843)	2.14 (0.0843)	2.16 (0.0850)	2.16 (0.0850)	2.18 (0.0858)	2.18 (0.0858)	2.20 (0.0866)	2.20 (0.0866)	2.22 (0.0874)	2.22 (0.0874)	2.24 (0.0882)	2.24 (0.0882)	2.26 (0.0890)	2.26 (0.0890)	2.28 (0.0898)	2.28 (0.0898)	2.30 (0.0905)	2.30 (0.0905)	2.32 (0.0914)	2.32 (0.0914)	2.34 (0.0921)
0.089	2.16 (0.0850)	2.18 (0.0858)	2.18 (0.0858)	2.20 (0.0866)	2.20 (0.0866)	2.22 (0.0874)	2.22 (0.0874)	2.24 (0.0882)	2.24 (0.0882)	2.26 (0.0890)	2.26 (0.0890)	2.28 (0.0898)	2.28 (0.0898)	2.30 (0.0905)	2.30 (0.0905)	2.32 (0.0914)	2.32 (0.0914)	2.34 (0.0921)	2.34 (0.0921)	2.36 (0.0929)	2.36 (0.0929)
0.090	2.18 (0.0858)	2.20 (0.0866)	2.20 (0.0866)	2.22 (0.0874)	2.22 (0.0874)	2.24 (0.0882)	2.24 (0.0882)	2.26 (0.0890)	2.26 (0.0890)	2.28 (0.0898)	2.28 (0.0898)	2.30 (0.0905)	2.30 (0.0905)	2.32 (0.0914)	2.32 (0.0914)	2.34 (0.0921)	2.34 (0.0921)	2.36 (0.0929)	2.36 (0.0929)	2.38 (0.0937)	2.38 (0.0937)
0.091	2.20 (0.0866)	2.22 (0.0874)	2.22 (0.0874)	2.24 (0.0882)	2.24 (0.0882)	2.26 (0.0890)	2.26 (0.0890)	2.28 (0.0898)	2.28 (0.0898)	2.30 (0.0905)	2.30 (0.0905)	2.32 (0.0914)	2.32 (0.0914)	2.34 (0.0921)	2.34 (0.0921)	2.36 (0.0929)	2.36 (0.0929)	2.38 (0.0937)	2.38 (0.0937)	2.40 (0.0945)	2.40 (0.0945)
0.092	2.24 (0.0882)	2.24 (0.0882)	2.26 (0.0890)	2.26 (0.0890)	2.28 (0.0898)	2.28 (0.0898)	2.30 (0.0905)	2.30 (0.0905)	2.32 (0.0914)	2.32 (0.0914)	2.34 (0.0921)	2.34 (0.0921)	2.36 (0.0929)	2.36 (0.0929)	2.38 (0.0937)	2.38 (0.0937)	2.40 (0.0945)	2.40 (0.0945)	2.42 (0.0953)	2.42 (0.0953)	2.44 (0.0961)
0.093	2.26 (0.0890)	2.28 (0.0898)	2.28 (0.0898)	2.30 (0.0905)	2.30 (0.0905)	2.32 (0.0914)	2.32 (0.0914)	2.34 (0.0921)	2.34 (0.0921)	2.36 (0.0929)	2.36 (0.0929)	2.38 (0.0937)	2.38 (0.0937)	2.40 (0.0945)	2.40 (0.0945)	2.42 (0.0953)	2.42 (0.0953)	2.44 (0.0961)	2.44 (0.0961)	2.46 (0.0969)	2.46 (0.0969)
0.094	2.28 (0.0898)	2.30 (0.0905)	2.30 (0.0905)	2.32 (0.0914)	2.32 (0.0914)	2.34 (0.0921)	2.34 (0.0921)	2.36 (0.0929)	2.36 (0.0929)	2.38 (0.0937)	2.38 (0.0937)	2.40 (0.0945)	2.40 (0.0945)	2.42 (0.0953)	2.42 (0.0953)	2.44 (0.0961)	2.44 (0.0961)	2.46 (0.0969)	2.46 (0.0969)	2.48 (0.0977)	2.48 (0.0977)
0.095	2.30 (0.0905)	2.32 (0.0914)	2.32 (0.0914)	2.34 (0.0921)	2.34 (0.0921)	2.36 (0.0929)	2.36 (0.0929)	2.38 (0.0937)	2.38 (0.0937)	2.40 (0.0945)	2.40 (0.0945)	2.42 (0.0953)	2.42 (0.0953)	2.44 (0.0961)	2.44 (0.0961)	2.46 (0.0969)	2.46 (0.0969)	2.48 (0.0977)	2.48 (0.0977)	2.50 (0.0987)	2.50 (0.0987)
0.096	2.34 (0.0921)	2.34 (0.0921)	2.36 (0.0929)	2.36 (0.0929)	2.38 (0.0937)	2.38 (0.0937)	2.40 (0.0945)	2.40 (0.0945)	2.42 (0.0953)	2.42 (0.0953)	2.44 (0.0961)	2.44 (0.0961)	2.46 (0.0969)	2.46 (0.0969)	2.48 (0.0977)	2.48 (0.0977)	2.50 (0.0987)	2.50 (0.0987)	2.52 (0.0992)	2.52 (0.0992)	2.54 (0.1000)
0.097	2.36 (0.0929)	2.38 (0.0937)	2.38 (0.0937)	2.40 (0.0945)	2.40 (0.0945)	2.42 (0.0953)	2.42 (0.0953)	2.44 (0.0961)	2.44 (0.0961)	2.46 (0.0969)	2.46 (0.0969)	2.48 (0.0977)	2.48 (0.0977)	2.50 (0.0984)	2.50 (0.0984)	2.52 (0.0992)	2.52 (0.0922)	2.54 (0.1000)	2.54 (0.1000)	2.56 (0.1008)	2.56 (0.1008)
0.098	2.38 (0.0937)	2.40 (0.0945)	2.40 (0.0945)	2.42 (0.0953)	2.42 (0.0953)	2.44 (0.0961)	2.44 (0.0961)	2.46 (0.0969)	2.46 (0.0969)	2.48 (0.0977)	2.48 (0.0977)	2.50 (0.0984)	2.50 (0.0984)	2.52 (0.0992)	2.52 (0.0922)	2.54 (0.1000)	2.54 (0.1000)	2.56 (0.1008)	2.56 (0.1008)	2.58 (0.1016)	2.58 (0.1016)
0.099	2.42 (0.0953)	2.42 (0.0953)	2.44 (0.0961)	2.44 (0.0961)	2.46 (0.0969)	2.46 (0.0969)	2.48 (0.0977)	2.48 (0.0977)	2.50 (0.0984)	2.50 (0.0984)	2.52 (0.0992)	2.52 (0.0922)	2.54 (0.1000)	2.54 (0.1000)	2.56 (0.1008)	2.56 (0.1008)	2.58 (0.1016)	2.58 (0.1016)			
0.000	2.44 (0.0961)	2.46 (0.0969)	2.46 (0.0969)	2.48 (0.0977)	2.48 (0.0977)	2.50 (0.0984)	2.50 (0.0984)	2.52 (0.0992)	2.52 (0.0922)	2.54 (0.1000)	2.54 (0.1000)	2.56 (0.1008)	2.56 (0.1008)	2.58 (0.1016)	2.58 (0.1016)						
0.001	2.46 (0.0969)	2.48 (0.0977)	2.48 (0.0977)	2.50 (0.0984)	2.50 (0.0984)	2.52 (0.0992)	2.52 (0.0922)	2.54 (0.1000)	2.54 (0.1000)	2.56 (0.1008)	2.56 (0.1008)	2.58 (0.1016)	2.58 (0.1016)								
0.002	2.48 (0.0977)	2.50 (0.0984)	2.50 (0.0984)	2.52 (0.0992)	2.52 (0.0922)	2.54 (0.1000)	2.54 (0.1000)	2.56 (0.1008)	2.56 (0.1008)	2.58 (0.1016)	2.58 (0.1016)										
0.003	2.52 (0.0992)	2.52 (0.0922)	2.54 (0.1000)	2.54 (0.1000)	2.56 (0.1008)	2.56 (0.1008)	2.58 (0.1016)	2.58 (0.1016)													
0.004	2.54 (0.1000)	2.56 (0.1008)	2.56 (0.1008)	2.58 (0.1016)	2.58 (0.1016)																
0.005	2.56 (0.1008)	2.58 (0.1016)	2.58 (0.1016)																		
0.006	2.58 (0.1016)																				

4. Place the shim (1) on the drive pinion, then install the inner bearing (2) onto the pinion by using installer 5–8840–2574–0 and a press .

NOTE: Do not apply pressure to the roller cage. Apply pressure only to the inner race.

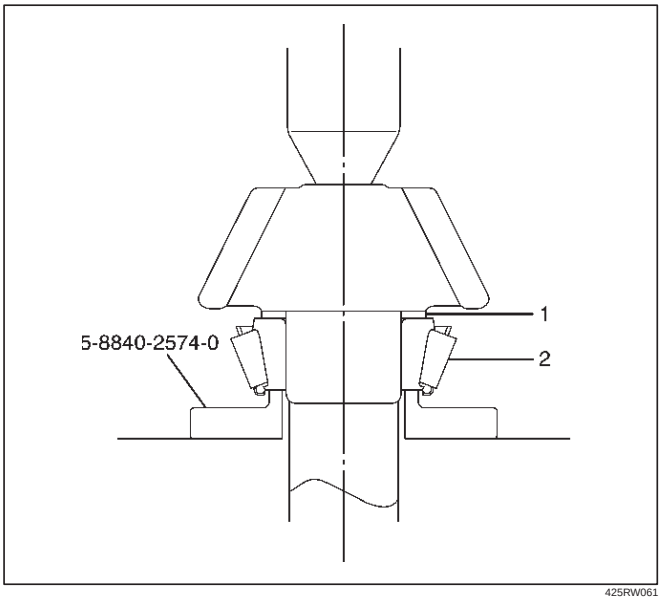

425RW061

5. Install collapsible spacer. Discard the used collapsible spacer and install a new one.
6. Install drive pinion shaft assembly.
7. Install outer bearing and oil seal slinger.
8. Use oil seal installer 5–8840–2165–0 to install a new oil seal that has grease on seal lip.

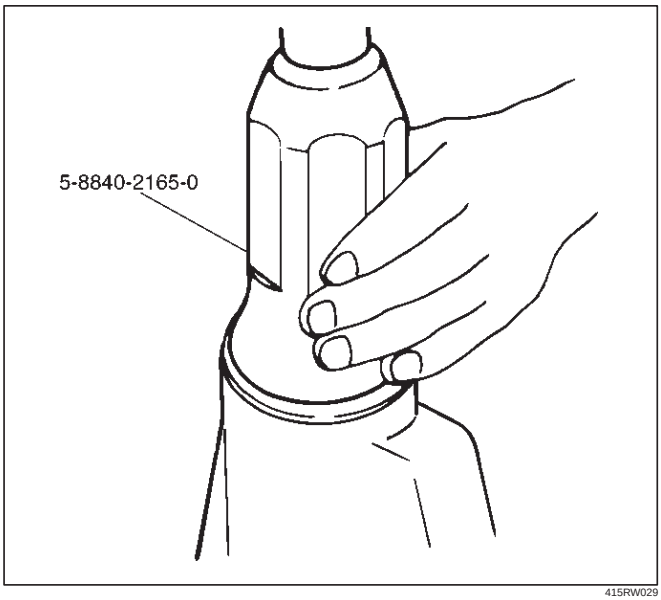

415RW029

9. Install flange assembly.
10. Install flange nut and washer.
    1. Apply lubricant to the pinion threads.
    2. Using the pinion flange holder 5–8840–0133–0, tighten the nut only enough to remove the shaft end play.

NOTE: Discard used flange nut and install new one.

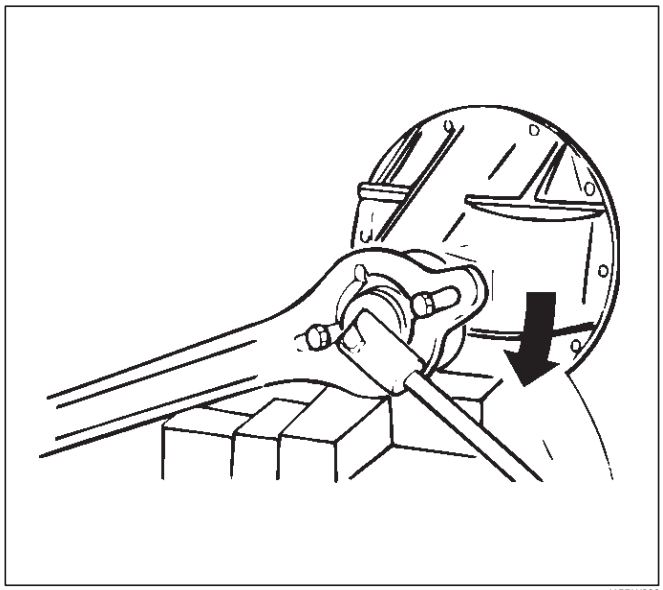

415RW006

3. Adjust pinion bearing preload.
   a. Measure the bearing preload by using a torque meter and note the scale reading required to rotate the flange.
   b. Continue tightening flange nut until the specified starting torque is obtained.

Starting torque: 1.1–1.6 N·m (11–16kg·cm/10–14 lb in)

NOTE:

a. Do not overtighten or loosen and then retighten the nut.
b. Pinion nut torque should be in the range of 298–380 N·m (30.4–38.8kg·m/220–281 lb ft).

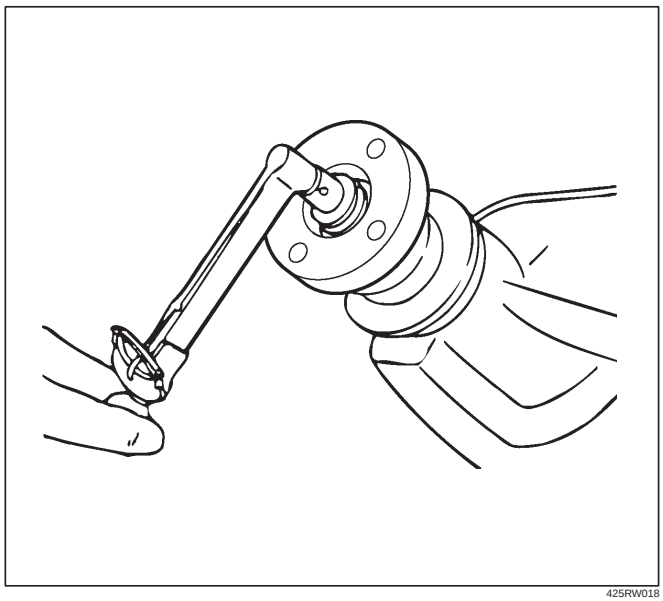

425RW018

4. Using punch 5–8840–2293–0, stake the flange nut at two points.

NOTE: When staking, be sure to turn the nut to ensure that there is no change in bearing preload. Make sure of preload again as instructed in 3).

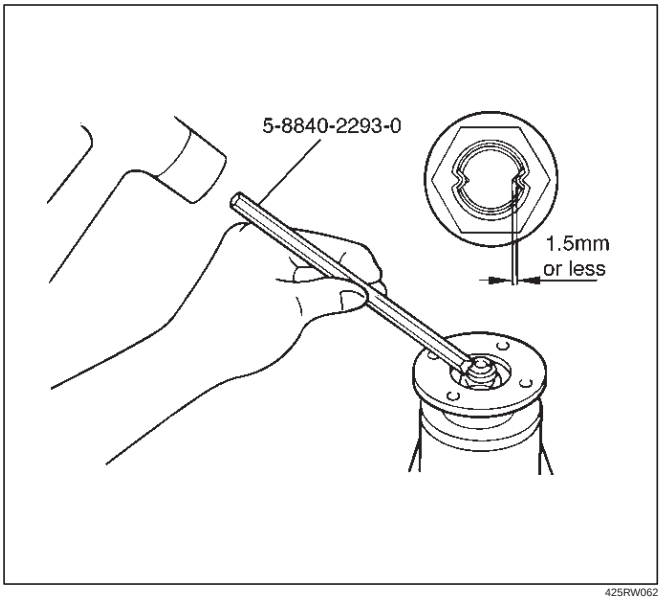

425RW062

11. Adjust ring gear backlash.
    1. Attach the side bearing to the differential assembly without shims by using installer 5–8840–2050–0 and grip 5–8840–0007–0.

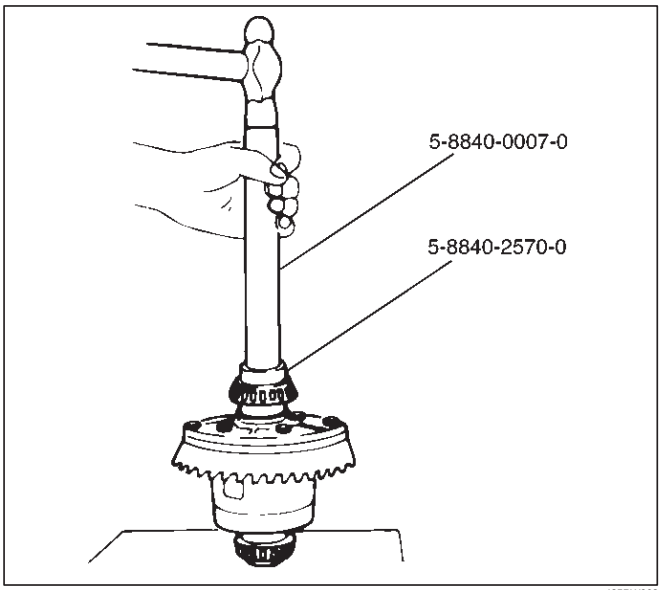

425RW063

2. Insert the differential cage assembly with bearing outer races into the side bearing bores of the carrier.

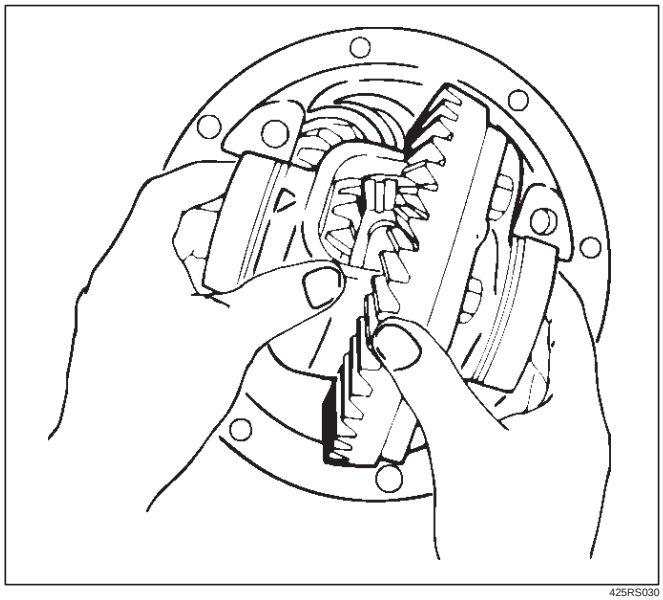

425RS030

3. Using two sets of feeler gauges, insert a feeler stock of sufficient thickness between each bearing outer race and the carrier to remove all end play. Make certain the feeler stock is pushed to the bottom of the bearing bores.

Mount the dial indicator 5–8840–0126–0 on the carrier so that the indicator stem is at right angles to a tooth on the ring gear.

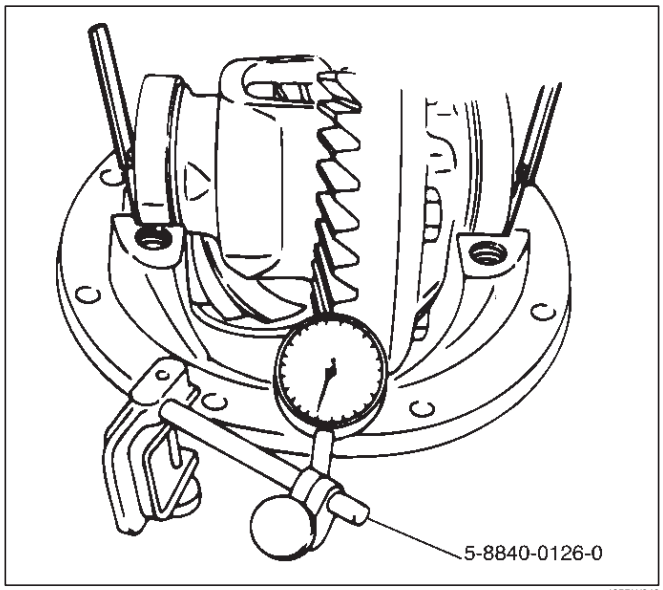

425RW049

4. Adjust feeler gauge thickness from side to side until ring gear backlash is in the specified range.

Backlash: 0.13– 0.2mm (0.005– 0.008in)

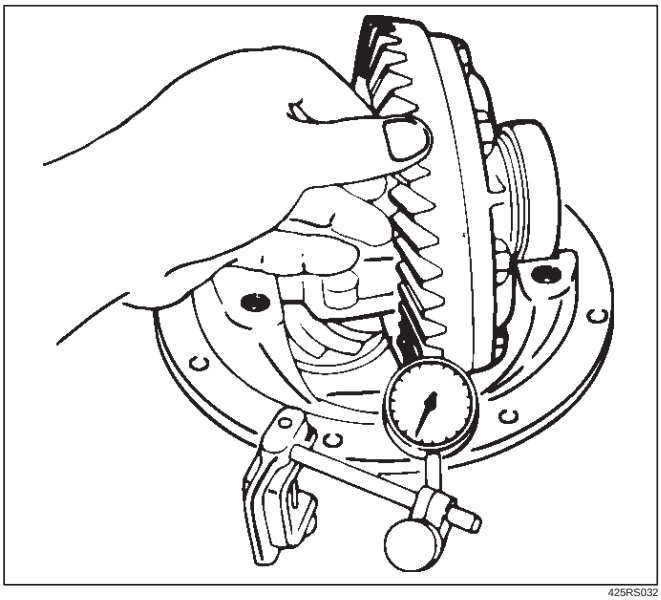

425RS032

With zero end play and correct backlash established, remove the feeler gauge packs, determine the thickness of the shims required and add 0.05 mm (0.002 in) to each shim pack to provide side bearing preload. Always use new shims.

5. Remove side bearing by using remover 5–8840–2587–0 and adapter 5–8840–2576–0.

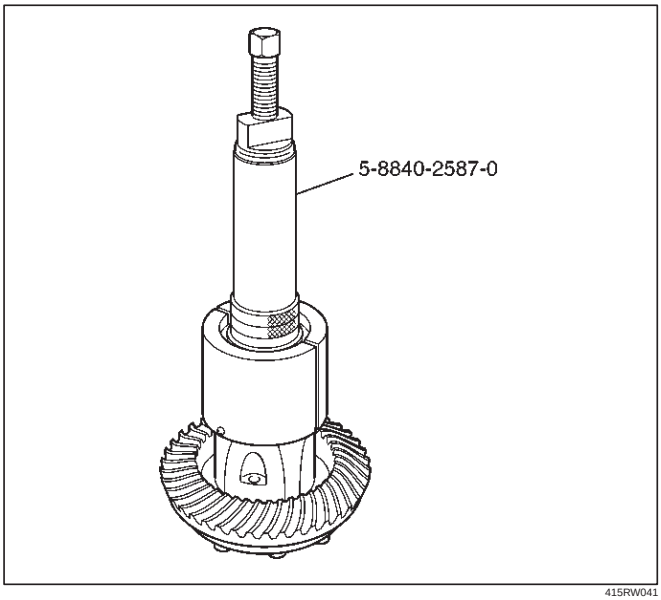

415RW041

12. Install the side bearings together with the selected shims by using installer 5–8840–2050–0 (2) and grip 5–8840–0007–0 (1).

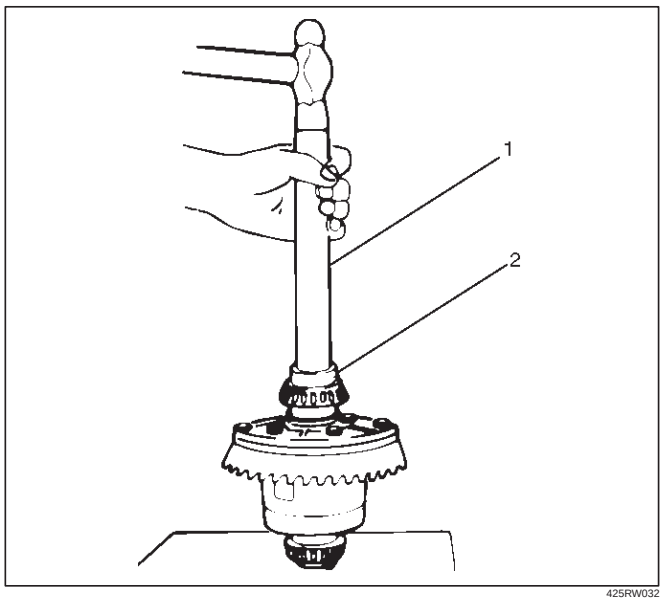

425RW032

13. Install side bearing outer race.
14. Install differential cage assembly.
15. Align the setting marks (1) applied at disassembly then install the bearing cap.

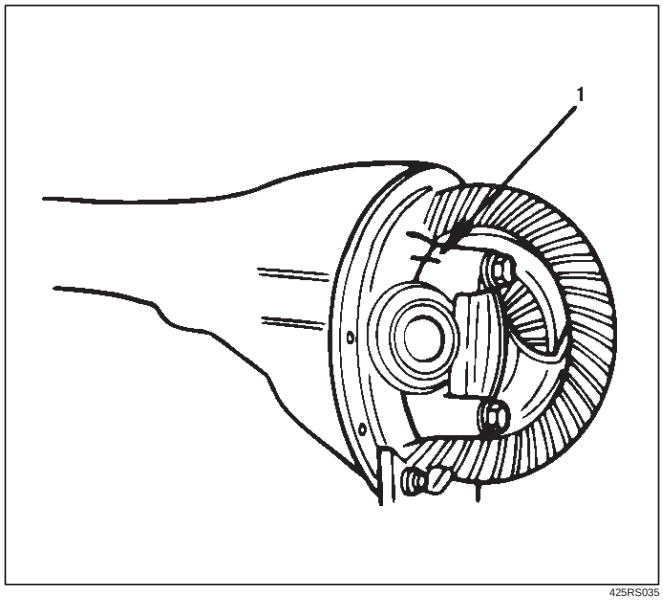

425RS035

16. Tighten the bolt to the specified torque.

Torque:108N·m (11.0kg·m/80 lb ft)

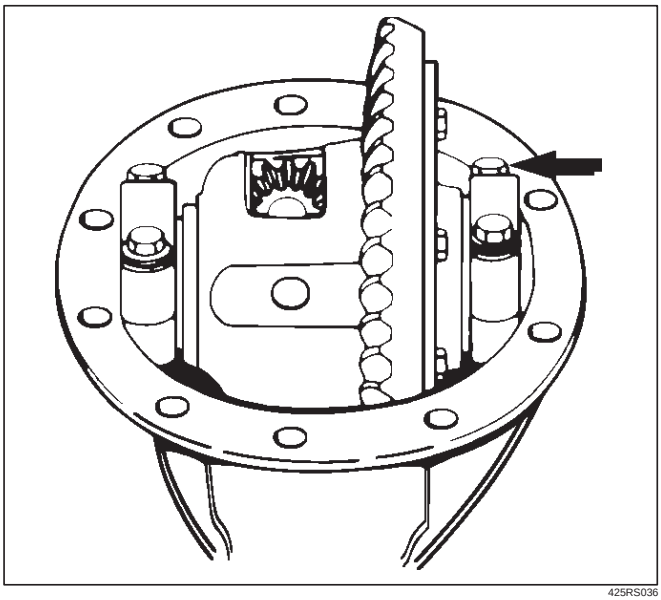

425RS036

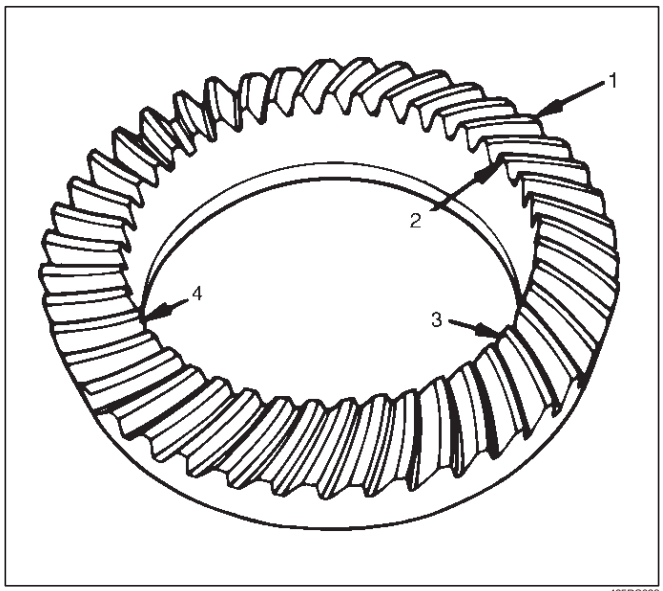

425RS038

Legend

(1) Heel
(2) Toe
(3) Concave Side(Coast)
(4) Convex Side(Drive)

Gear Tooth Contact Pattern Check and Adjustment

1. Apply a thin coat of Prussian blue or equivalent to the faces of the 7–8 teeth of the ring gear. Check the impression of contact on the ring gear teeth and make necessary adjustment as described in illustration if the contact is abnormal.

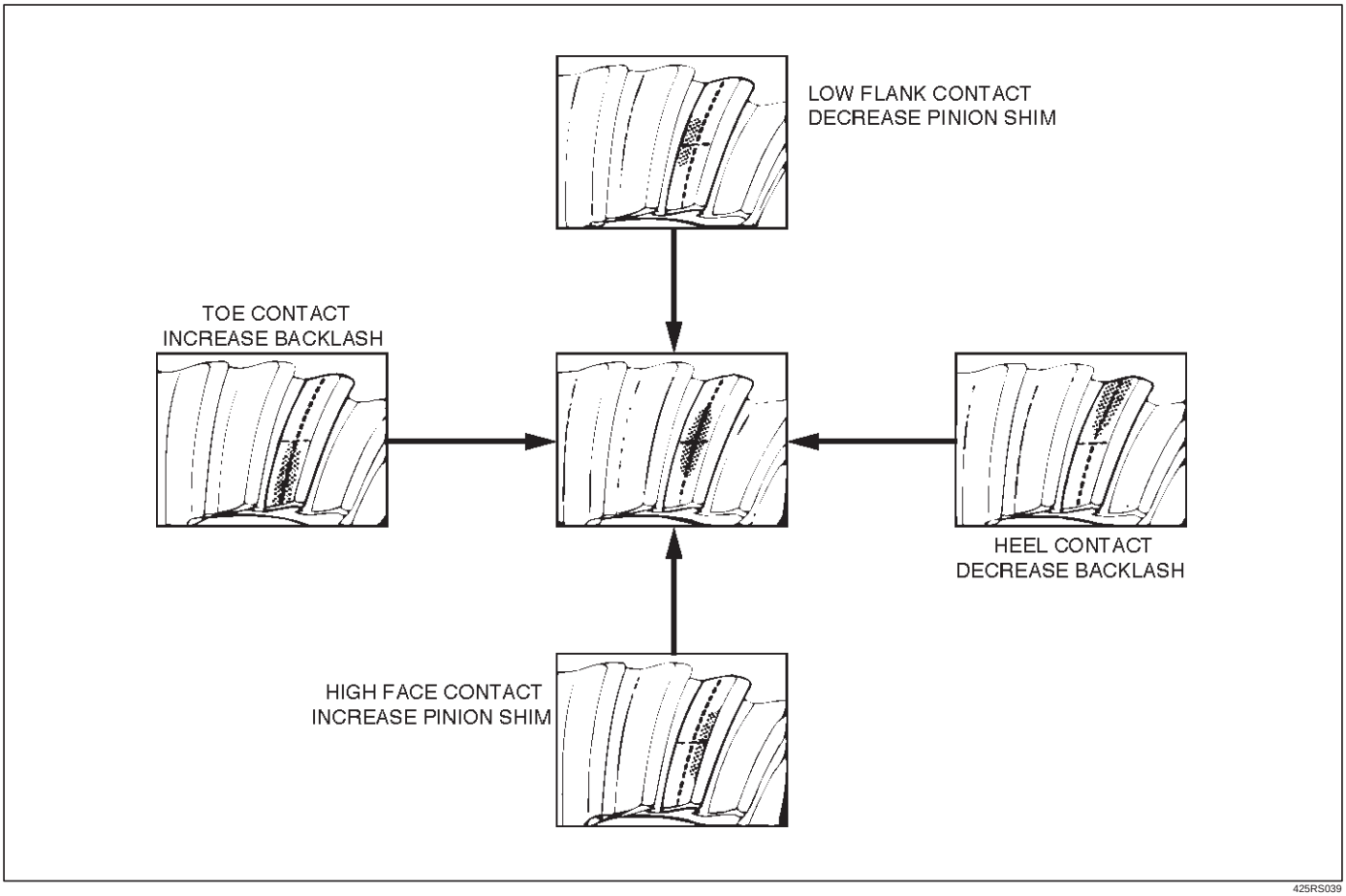

425RS039

Differential Cage Assembly

Disassembled View

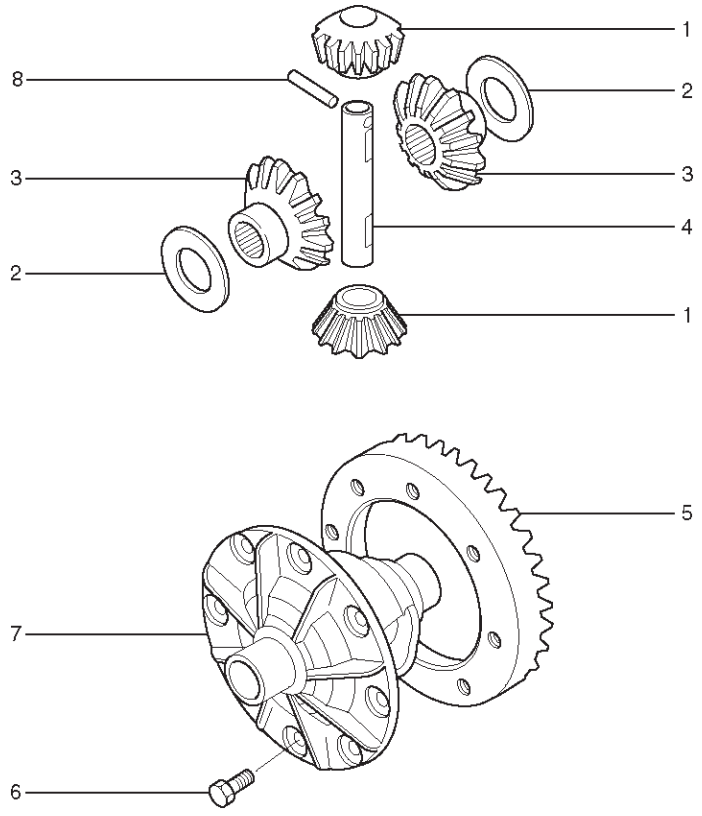

415RY00001

Legend

(1) Pinion Mate Gear
(2) Thrust Washer(for Side Gear)
(3) Side Gear
(4) Differential Shaft
(5) Ring Gear
(6) Bolt
(7) Differention Cage
(8) Lock Pin

Disassembly

1. Remove bolt.
2. Remove ring gear.
3. Remove lock pin using a small drift.

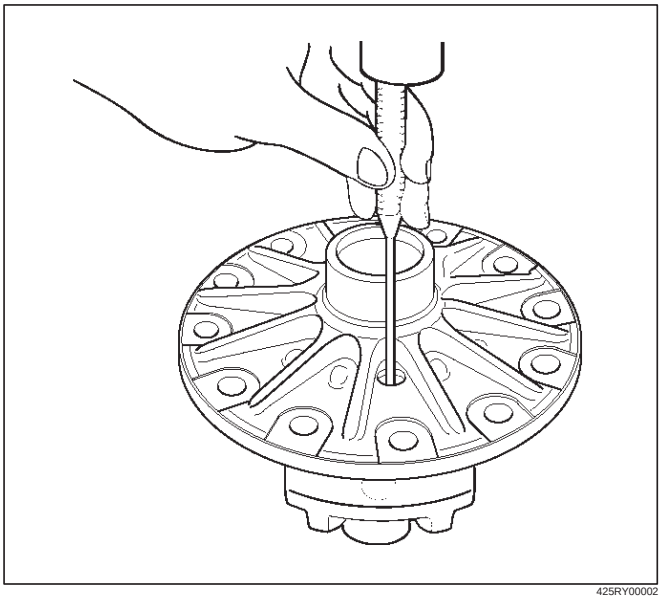

425RY00002

4. Remove the differential shaft by using a hard metal rod and a hammer.

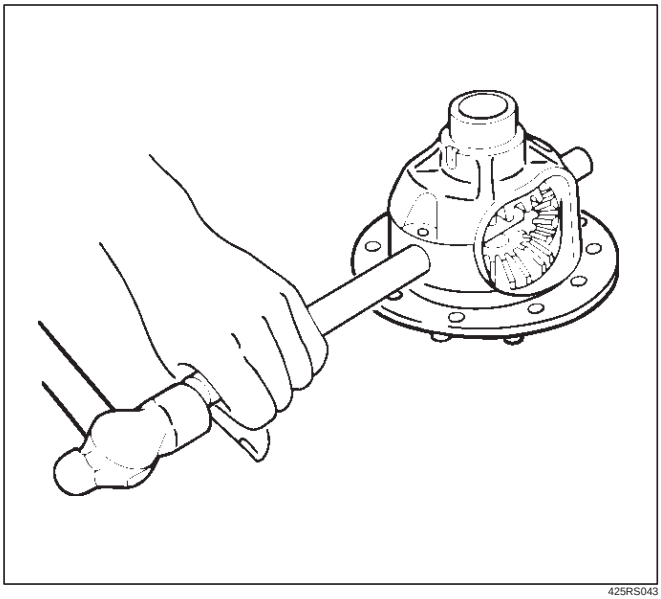

425RS043

5. Remove pinion mate gear and thrust washer.
6. Remove side gear and thrust washer.

Inspection and Repair

Make necessary correction or parts replacement if wear, damage, corrosion or any other abnormal conditions are found through inspection.
Check the following parts:

- Ring gear, pinion gear
- Bearing
- Side gear, pinion mate gear, differential shaft
- Differential cage, carrier
- Thrust washer
- Oil seal

Ring gear replacement:

1. The ring gear should always be replaced with the drive pinion as a set.
2. Clean the ring gear threaded holes to remove the locking argent.
3. Discard used bolts and install new ones.
4. When installing the ring gear, apply LOCTITE 271 or equivalent to all the threaded area and ha of the unthreaded area of the bolt.

   Torque: 127N·m (13.0kg·m/94 lb ft)

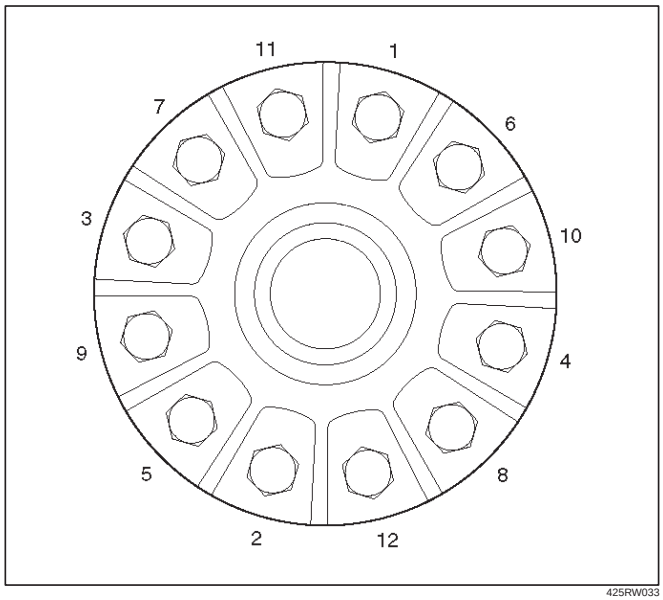

425RW033

Clearance between the differential pinion and the pinion shaft measurement.

Standard: 0.07 – 0.13 mm (0.003 – 0.005 in)

Limit: 0.2 mm (0.008 in)

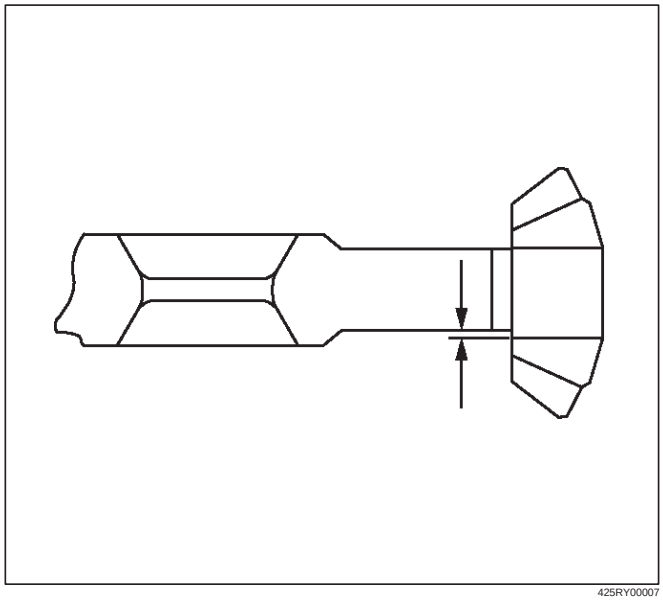

425RY00007

Clearance between the side gear and the differential box.

Standard: 0.032 – 0.105 mm (0.001 – 0.004 in)

Limit: 0.105 mm (0.004 in)

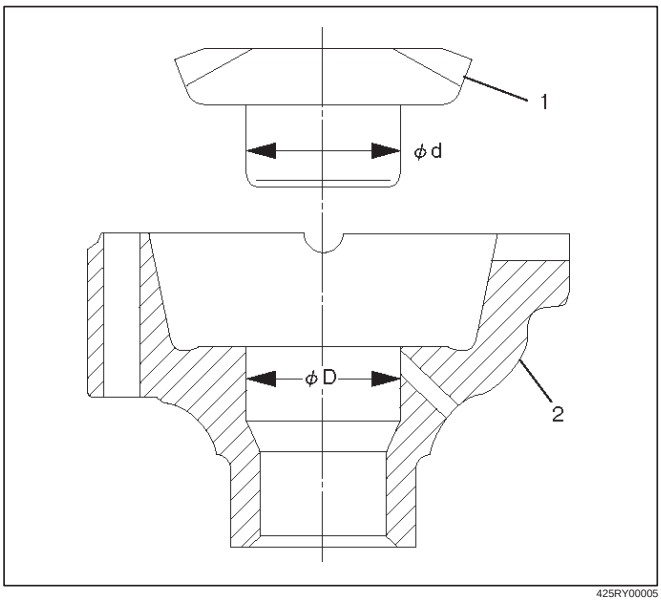

425RY00005

Legend

(1) Side gear
(2) Differential box

Play in splines between the side gear and the axle shaft.

Standard: 0.07 – 0.38 mm (0.003 – 0.014 in)

Limit: 0.5 mm (0.02 in)

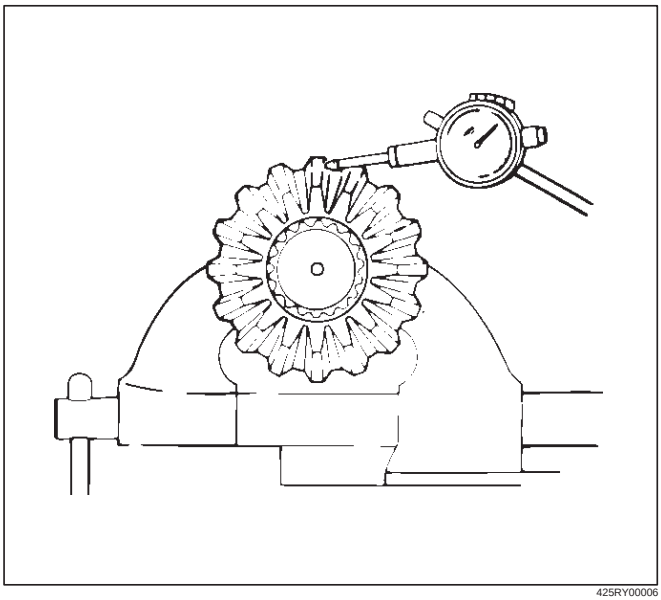

425RY00006

Reassembly

Differential cage
Thrust washer
Side gear
Pinion gear

1. Install the pinion gear by engaging it with the side gears while turning both pinion gears simultaneously in the same direction.
2. Install the pinion mate gear with thrust washer by engaging it with the side gears while turning both pinion mate gears simultaneously in the same direction.

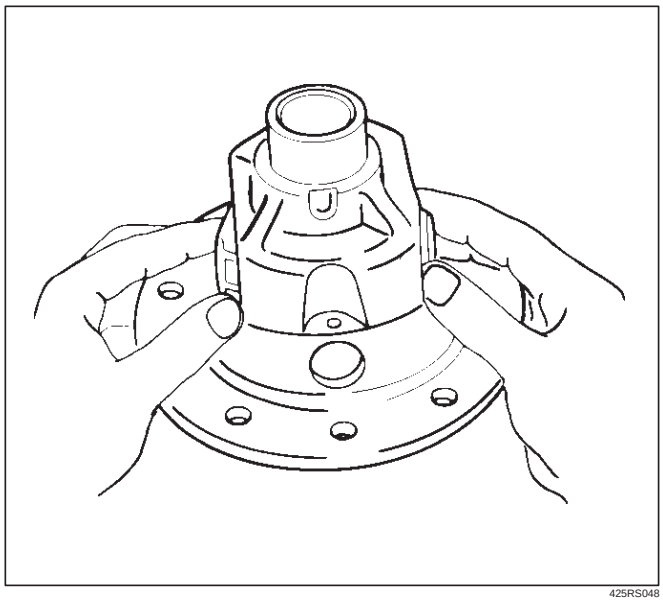

425RS048

3. Install differential shaft.
   1. Be sure to install the differential shaft so that it is in alignment with the lock pin hole in the differential cage.

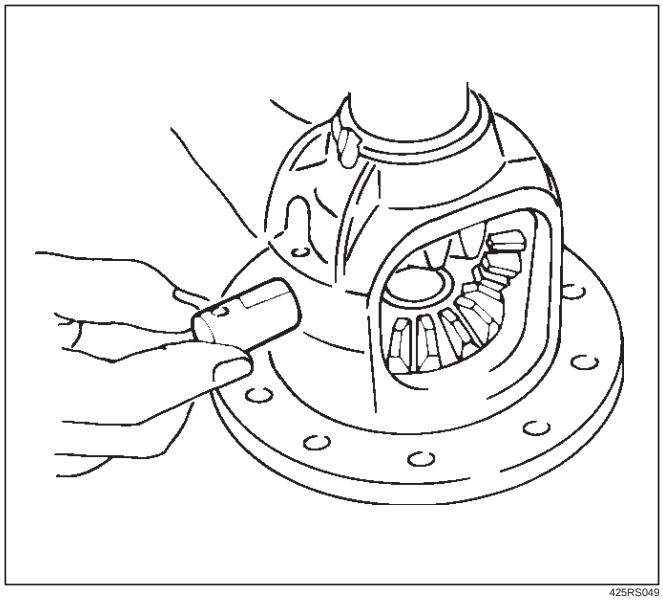

425RS049

2. Adjust the backlash between the side gear and the pinion gear.

Backlash: 0.15 – 0.20 mm (0.006 – 0.008 in)

Thickness of thrust washers available

mm	0.80	0.90	1.00	1.10	1.20	1.30
in	0.031	0.035	0.039	0.043	0.047	0.051

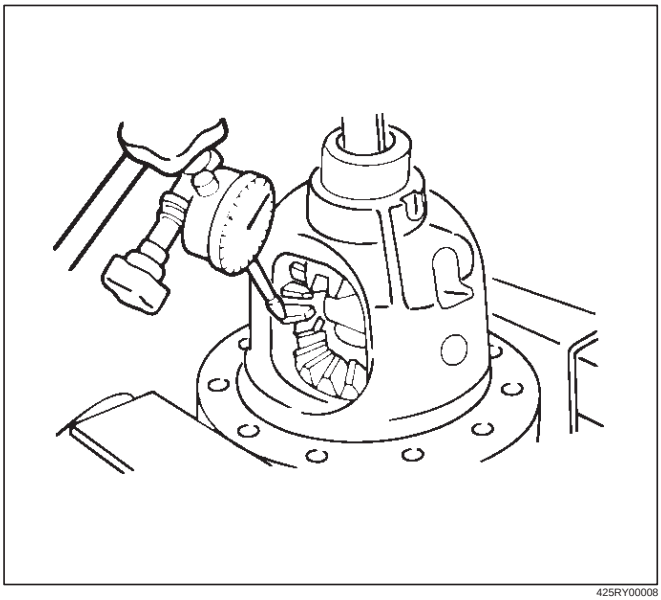

425RY00008

4. Install lock pin.
   - Install the lock pin using small drift.

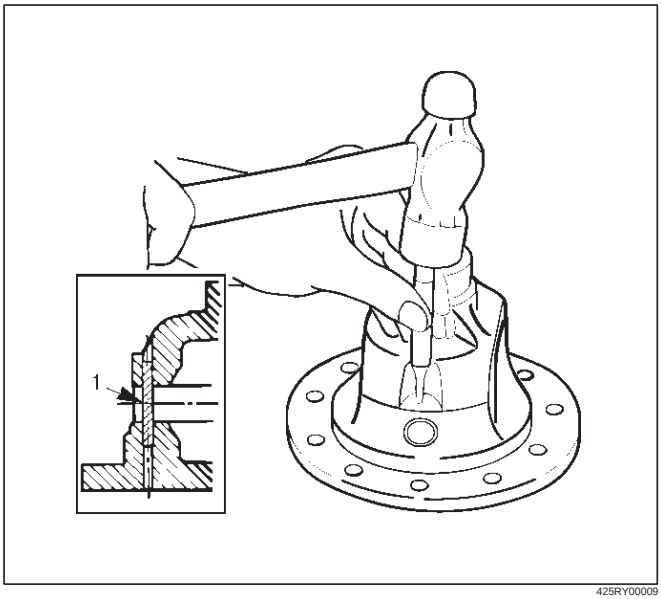

425RY00009

5. Install exciter ring (If equipped with rear wheel antilock).
   - Press the exciter ring on the differential cage using the ring gear as a pilot.

NOTE: Discard used exciter ring and install new one.

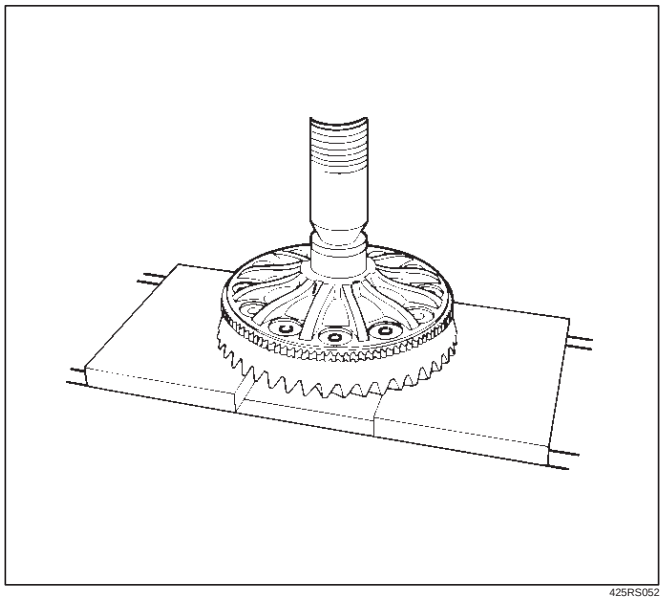

425RS052

6. Tighten the bolts in diagonal sequence as illustrated.

Torque: 127N·m (13.0kg·m/94 lb ft)

NOTE: Discard used bolts and install new ones.

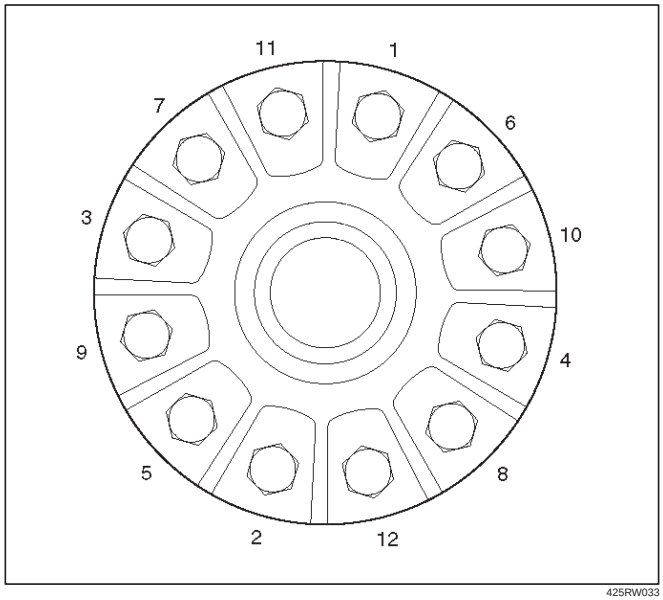

425RW033

Limited Slip Differential

Disassembled View

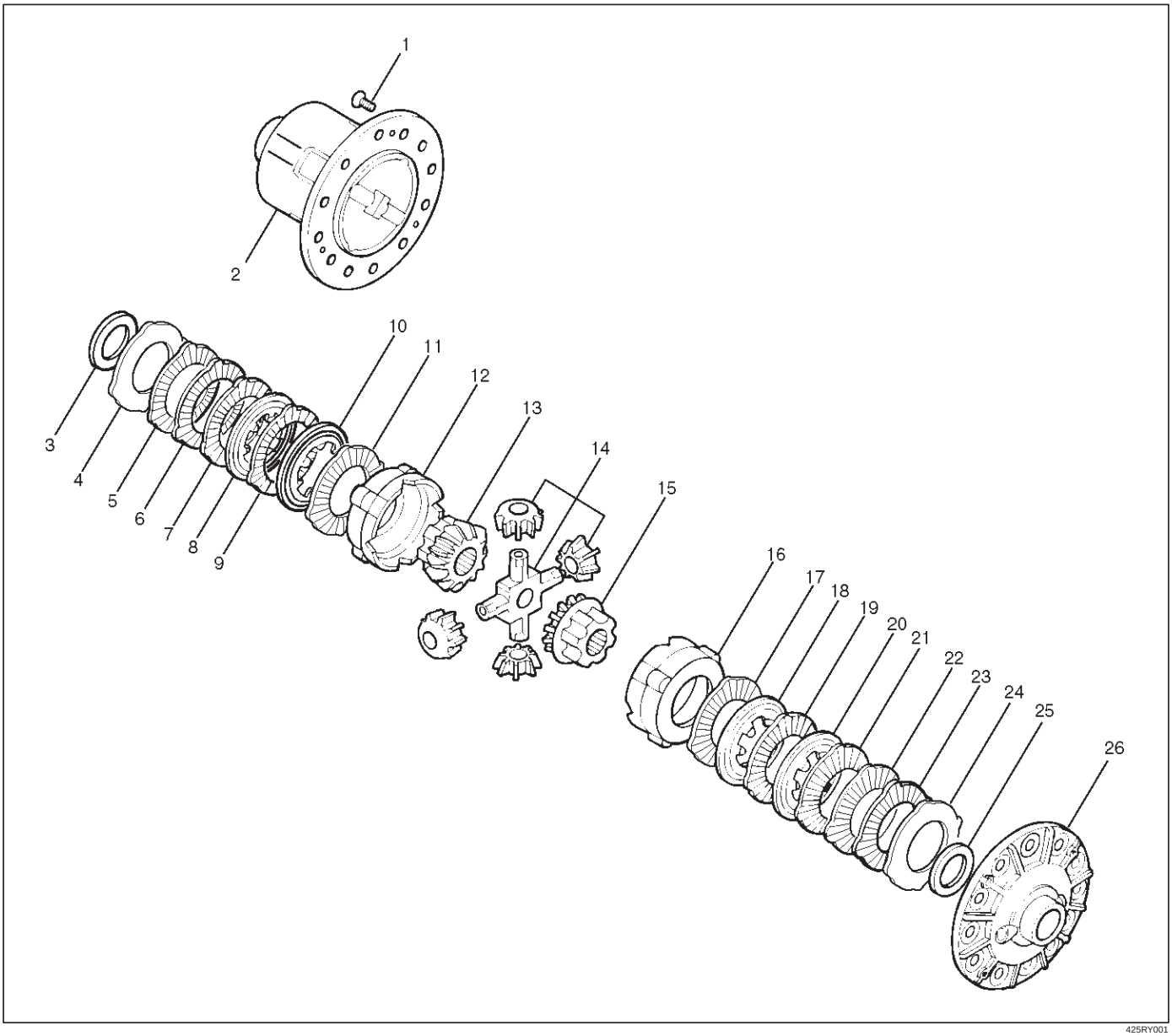

425RY001

Legend

(1) Screw
(2) Differential cage A
(3) Thrust washer
(4) Spring disc
(5) Friction Plate
(6) Friction plate
(7) Friction Plate
(8) Friction disc
(9) Friction Plate
(10) Friction disc
(11) Friction Plate
(12) Pressure ring
(13) Side gear
(14) Pinion and Pinion shaft
(15) Side gear
(16) Pressure ring
(17) Friction Plate
(18) Friction disc
(19) Friction Plate
(20) Friction disc
(21) Friction Plate
(22) Friction Plate
(23) Friction Plate
(24) Spring disc
(25) Thrust washer
(26) Differential cage B

Disassembly

Differential Cages A and B

1. To ensure installation of the parts in original position apply a setting mark before removing the differential cages A and B.
2. Using special tool, 5–8840–2682–0, grip it with a vice, and set the differential.

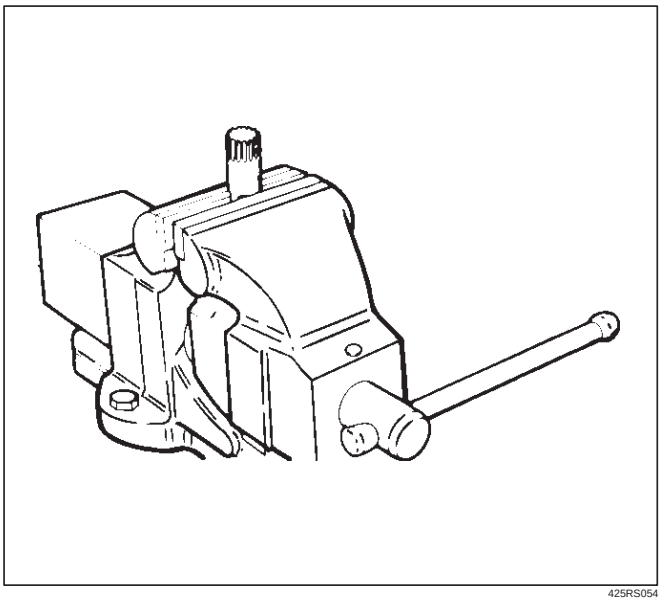

425RS054

3. Gradually and evenly loosen the 3 fixing screws of the differential cages A and B.

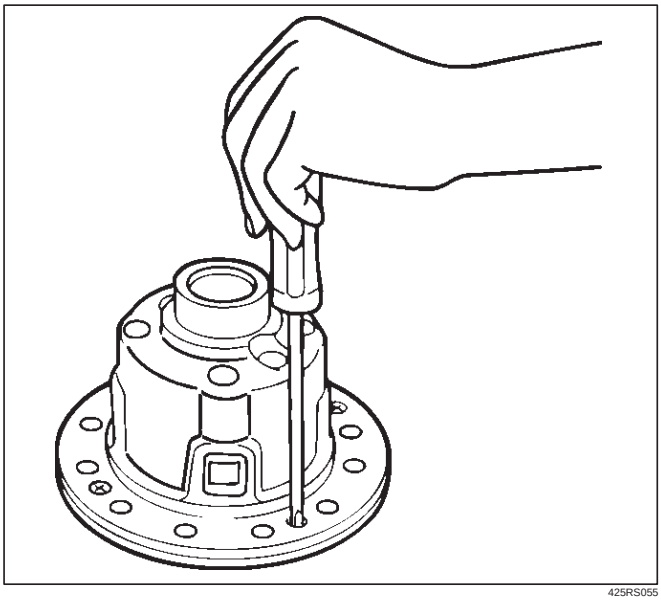

425RS055

4. Remove Differential cage A.
5. Remove Thrust washer.
6. Remove Spring disc.

NOTE: When removing the spring disc, friction disc, and friction plate, place them in order for clear distinction of left and right use.

7. Remove Spring disc.
8. Remove Friction plate.
9. Remove Friction plate.
10. Remove Friction disc.
11. Remove Friction plate.
12. Remove Friction disc.
13. Remove Friction plate.
14. Remove Pressure ring.
15. Remove Side gear.
16. Remove Pinion and pinion shaft.
17. Remove Side gear.
18. Remove Pressure ring.
19. Remove Friction plate.
20. Remove Friction disc.
21. Remove Friction plate.
22. Remove Friction disc.
23. Remove Friction plate.
24. Remove Friction plate.
25. Remove Friction plate.
26. Remove Friction disc.
27. Remove Thrust washer.
28. Remove Differential cage B.

Inspection and Repair

Make necessary correction or parts replacement if wear, damage, corrosion or any other abnormal condition is found through inspection.

Visual check

Check the following parts for wear, damage, noise or any other abnormal conditions.

- **Friction disc, friction plate and spring disc**

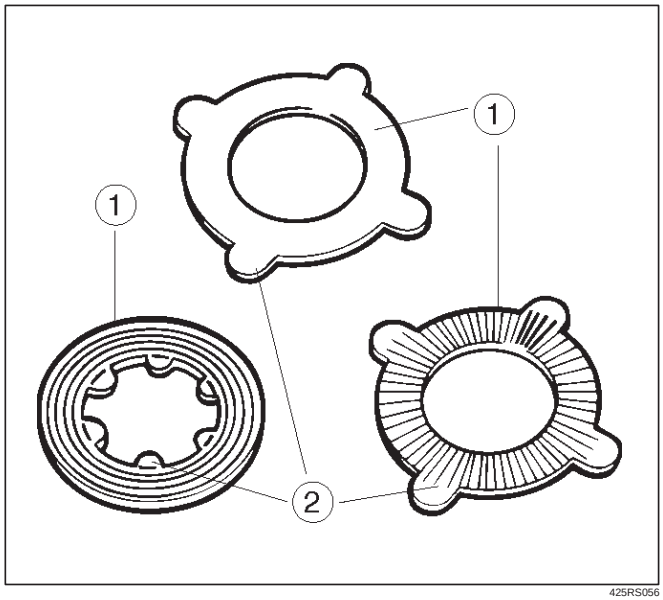

425RS056

Legend

(1) Sliding surfaces
(2) Projections

- **Pressure ring**

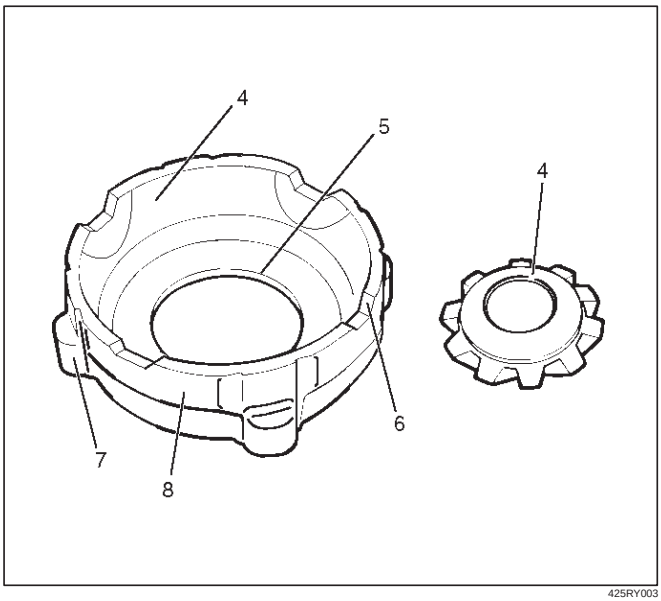

425RY003

Legend

(3) Sliding surface with the friction disc. When nicks or scratches are found, polish with an oil stone and repair on a level block using a compound.
(4) Sliding spherical surface with the pinion gear.
(5) Sliding surface with the side gear.
(6) V–shaped groove of the pressure ring and V –shaped section of the pinion shaft.
(7) Fitting section with the case.
(8) Face contacting the inner surface of the differential case. Repair burrs and nicks using an oil stone.

- **Thrust washer**

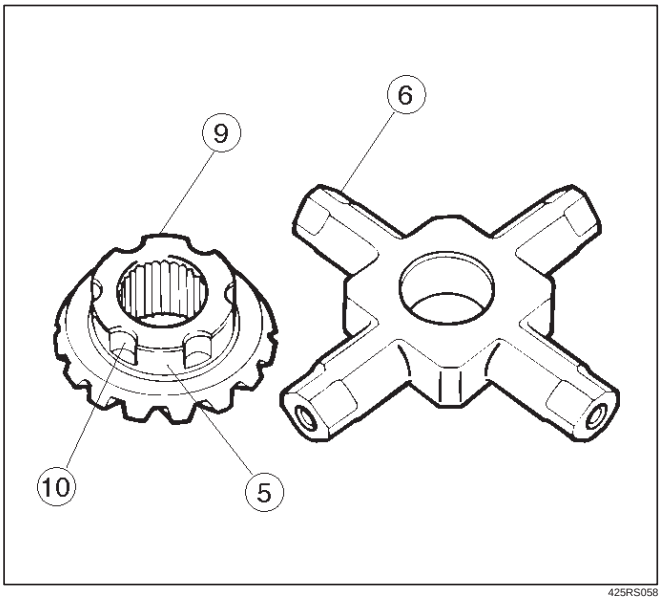

425RS058

Legend

(9) Sliding surface with the side gear or case.
(10) Peripheral groove of the side gear.
Repair light nicks and burrs using an oil stone.

- **Case**

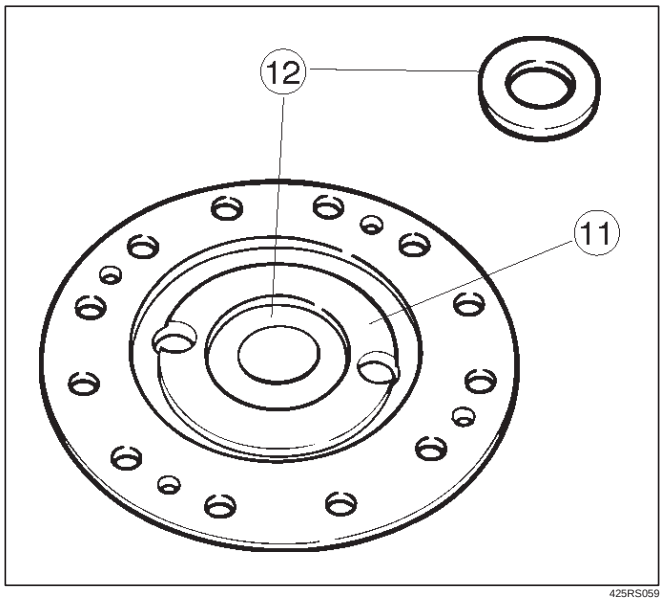

425RS059

Legend

(11) Contact surface with the spring disc.
(12) Inner groove of the differential cage B.
Repair light nicks and burrs using an oil stone.

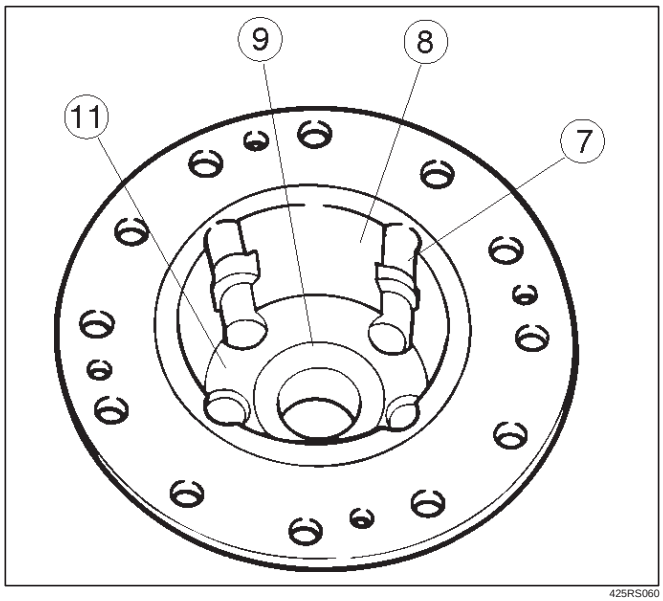

425RS060

Legend

(7) Fitting section with the case.
(8) Face contacting the inner surface of the differential case.
Repair burrs and nicks using an oil stone.
(9) Sliding surface with the side gear or case.
(11) Contact surface with spring disc.

Measure the Deformation of the friction disc & plate.

Limit: 0.1 mm (0.004 in)

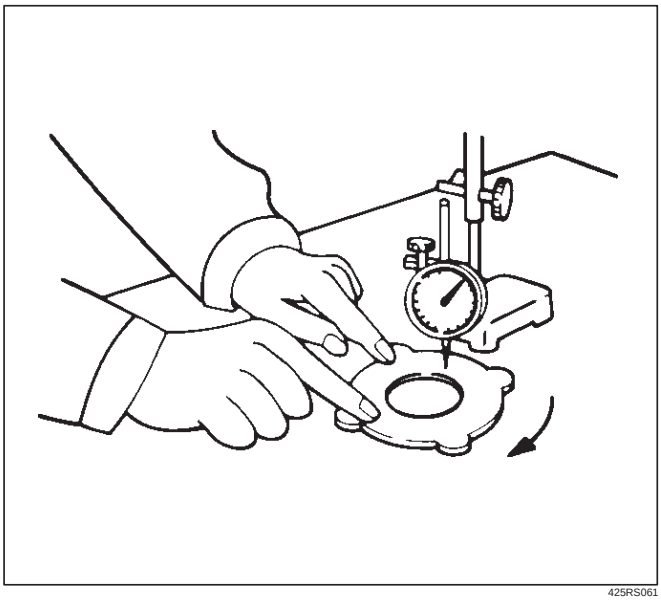

425RS061

Measure the wear of the friction plate & disc

Limit(A–B): 0.1 mm (0.004 in)

Remarks:

A=Inner or outer projections

B=Sliding surface subjected to abrasion

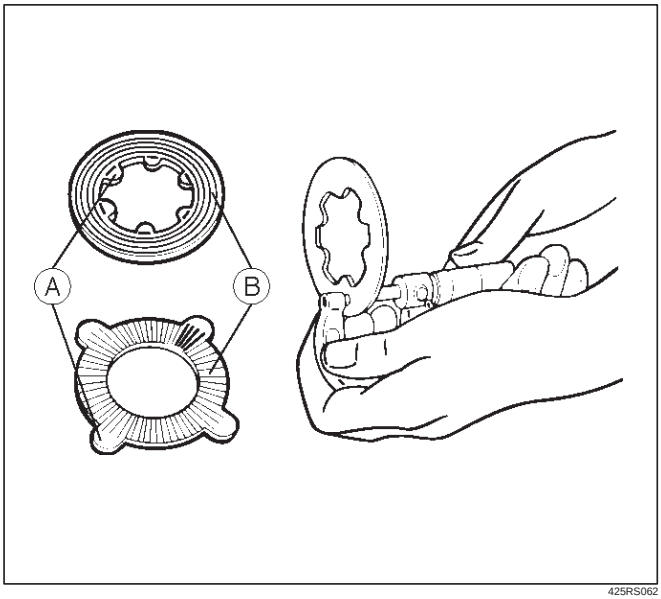

425RS062

Measure the wear of the thrust washer

Limit: 1.3 mm (0.05 in)

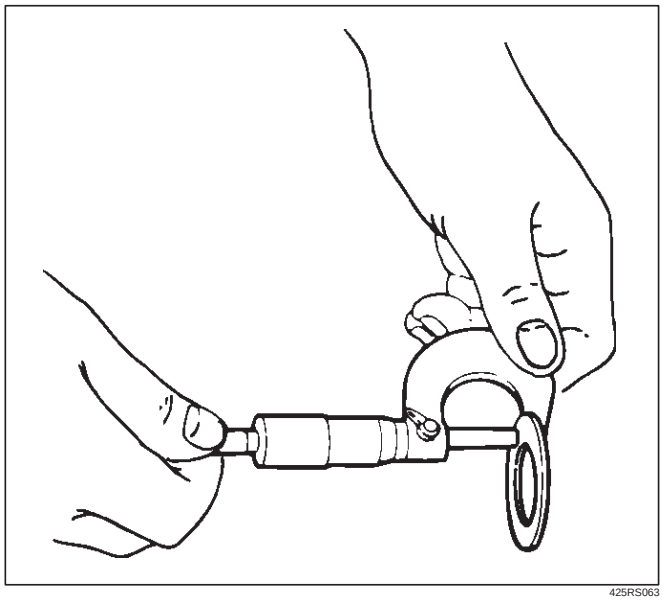

425RS063

Reassembly

Adjust the clearance between the friction disc and plate.

1. Measuring the depth of the differential cage.

Standard (A–B): 89.13 mm (3.51 in)

(C): 9.13 mm (0.36 in)

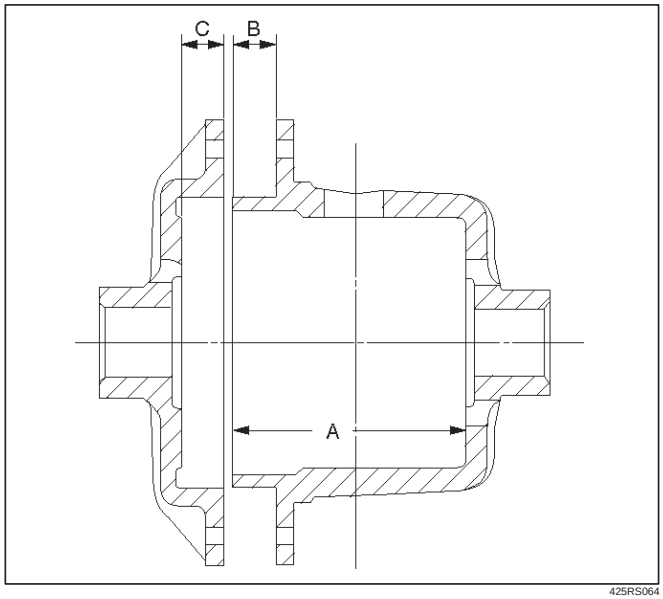

425RS064

2. Measuring the overall length of the pressurering, friction disc and friction plate.
   - Mount the pinion shaft in the pressurering and then install the friction disc & plate.
   - Measure the length between the plates over the V–groove. (D)

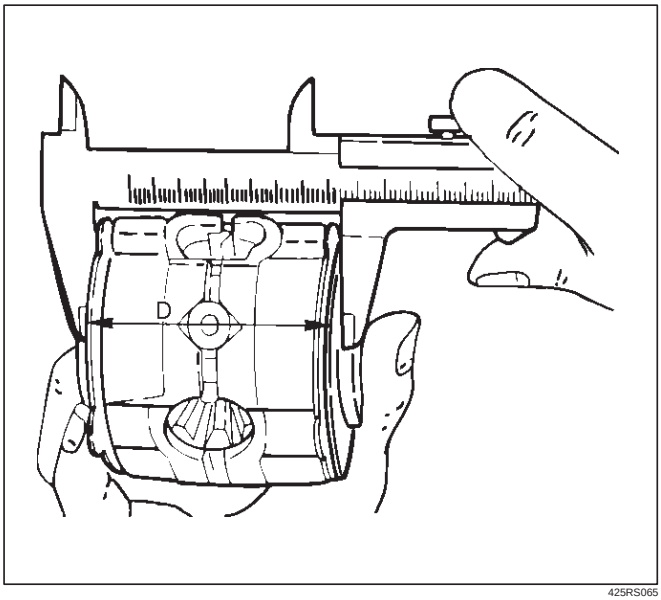

425RS065

3. After measuring dimensions A,B,C and D, make adjustment in the following manner:
   - Measure the thickness (E) of the spring disc.
     1.75mm (0.069in) ×2 discs
4. Select the friction disc & plate so as to satisfy the following equation:
   {(A-B)+C}-(D+E)=0.06-0.20mm (0.002-0.008in)
   Also, the total size difference of the friction disc & plate and spring disc should be 0.05mm (0.02in) or less.

Thickness
:1.65–1.75–1.85mm(0.065–0.069–0.073 in)

Backlash adjustment of the side gear in the direction of the shaft

1. Measuring the depth of the differential cage.

   (F–B): 95.63 mm (3.76 in)

   (G): 15.63 mm (0.62 in)

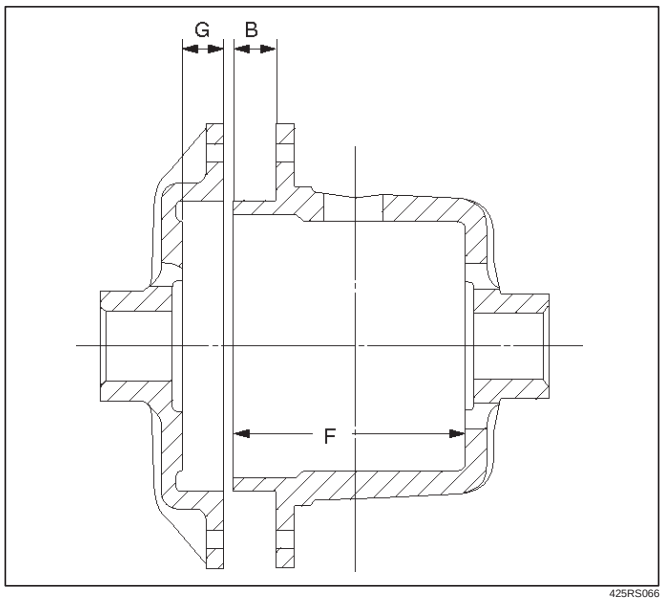

425RS066

2. Measuring the dimension between the thrust washers at both ends.
   - Assemble the side gear, pinion, pinion shaft, pressure ring and thrust washer, and pressing the pressure ring to–the pinion shaft in the direction of the shaft to make the clearance 0.
   - Have the side gear contact to the pinion to make the backlash 0.
   - Measure the dimension (H) between thrust washers at both ends.

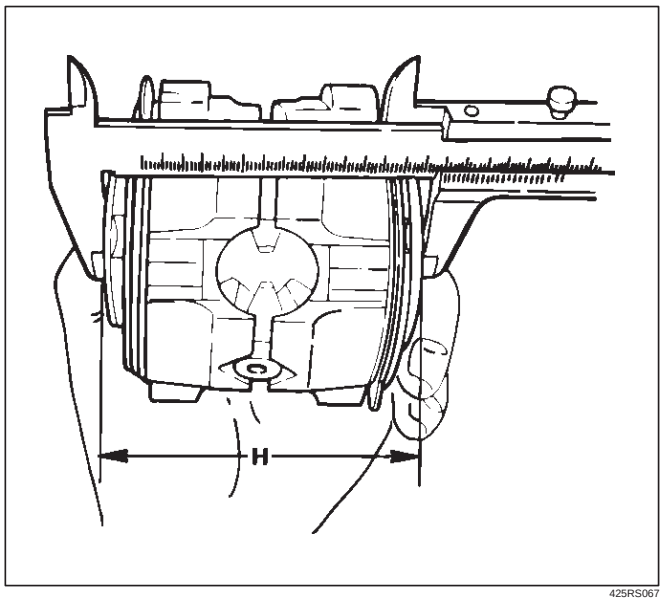

425RS067

3. After measuring dimensions of each of the above sections, proceed with the adjustment in the following manner:
   Adjust the clearance to satisfy the equation below.
   {(F – B) + G – H}=0.05 – 0.20 mm
   Also, select the thrust washers so that the dimensional difference between the back surfaces of the left and right pressure rings to the thrust washers is 0.05mm or less.

Thickness : 1.5mm (0.059 in)
1.6 mm(0.063 in)
1.7 mm(0.067 in)

NOTE: When assembling the parts, apply recommended gear oil sufficiently to each of the parts, especially, to the contact surfaces and sliding surfaces.

1. Install Differential cage B.
2. Install Thrust washer.
3. Install Spring disc.
   - When assembling the spring disc, make sure the mounting direction is correct as shown in figure.

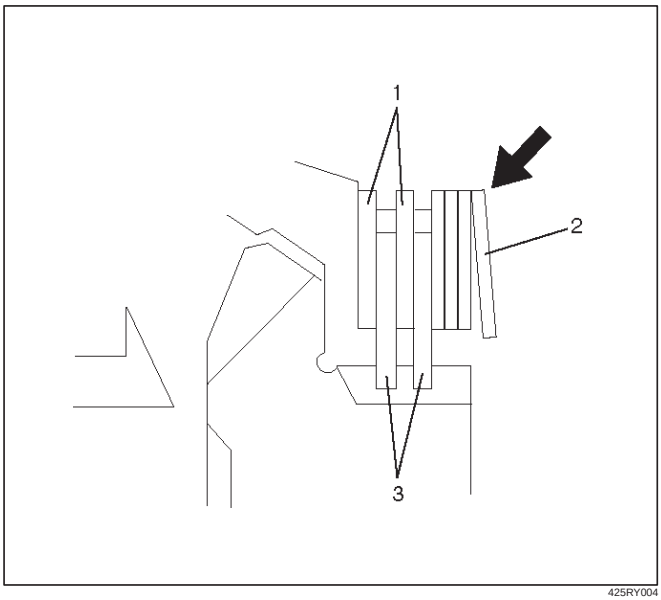

425RY004

Legend
(1) Friction Plate
(2) Spring Disc
(3) Friction Disc

4. Install Friction disc.
5. Install Friction plate.
6. Install Friction plate.
7. Install Friction disc.
8. Install Friction plate.
9. Install Friction disc.
10. Install Friction plate.
11. Install Pressure ring.
12. Install Side gear.
13. Install Pinion and pinion shaft.
14. Install Side gear.
15. Install Pressure ring.
16. Install Friction plate.
17. Install Friction disc.
18. Install Friction plate.
19. Install Friction disc.
20. Install Friction plate.
21. Install Friction plate.
22. Install Friction plate.
23. Install Spring disc.
    - When assembling the spring disc, make sure the mounting direction is correct.
24. Install Spring disc.
25. Install Thrust washer.
26. Install Differential cage A.
27. Install Screw.
    - Matching the guide marks of the differential cages A and B, tighten the screws evenly in the diagonal order.

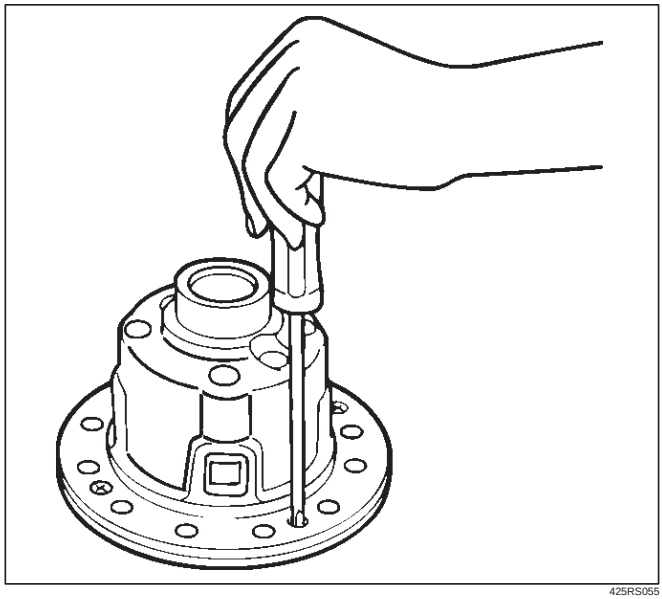
425RS055

28. Check the operation.
    - Measure the starting torque using the side gear holder.

    Starting torque:

    29 – 45 N·m (3.0 – 4.6 kg·m/ 22 – 33lb ft)

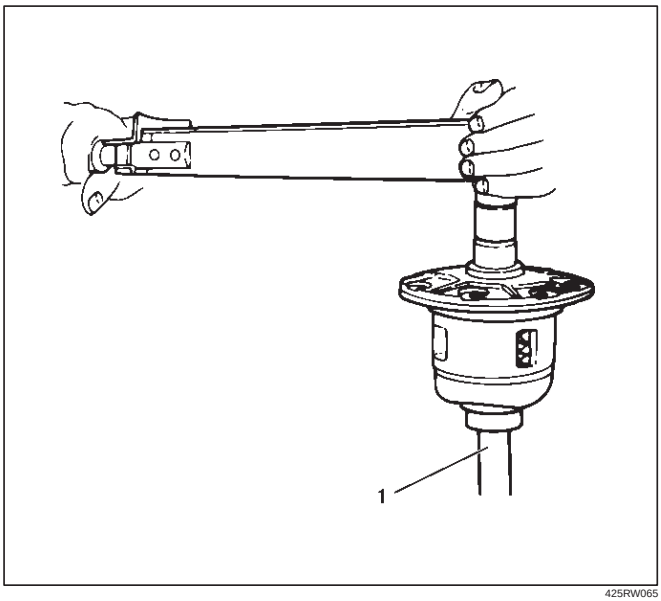

425RW065

Legend

(1) Side Gear Holder : 5–8840–2381–0

Main Data and Specifications

General Specifications

Rear axle	
Type	Banjo, Semi–floating
Rear axle Size	244 mm (9.61 in)
Gear type	Hypoid
Gear ratio (to 1)	4.100(6VE1 with A/T) 4.300(6VE1 with M/T,4JX1)
Differential type	Pinion (STD), Four pinion (LSD)
Lubricant Grade	GL–5: (Standard differential)
	GL–5, LSD: (Limited slip differential)
Locking Differential Lubricant	80W90 GL–5 Limited Slip Differential Gear Lubricant together with Limited Slip Differential Lubricant Additive (Part No. 8–01052–358–0) or equivalent.
Capacity	3.0 liter (2.6 Imp qt/3.2 US qt)

Torque Specifications

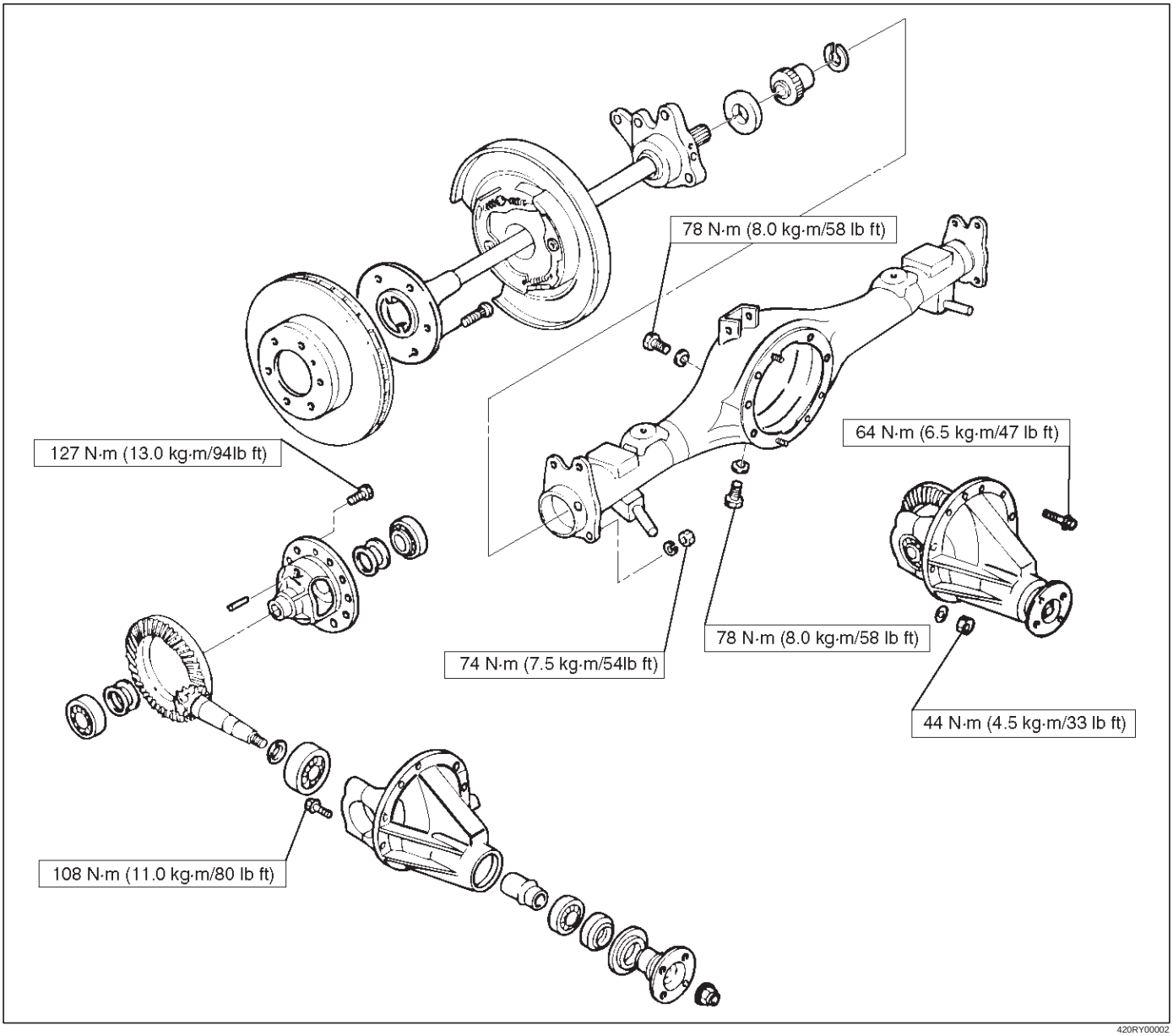

420RY00002

Special Tools

ILLUSTRATION	TOOL NO. TOOL NAME
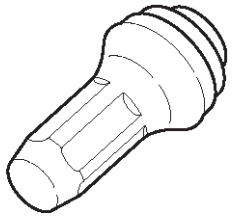 901RS205	**5–8840–2294–0** **(J–39210)** Installer; Axle shaft inner seal
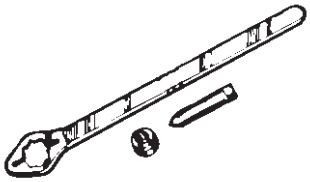 901RW037	**5–8840–0133–0** **(J–8614–01)** Pinion flange holder
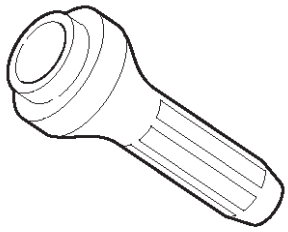 901RS211	**5–8840–2165–0** **(J–37263)** Installer; Pinion oil seal
901RW038	**5–8840–2029–0** **(J–42832)** Holding fixture
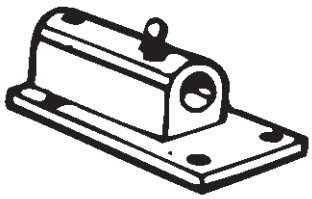 901RS212	**5–8840–0003–0** **(J–3289–20)** Holding fixture base
901RW039	**5–8840–2587–0** **(J–42379)** Remover; Bearing

ILLUSTRATION	TOOL NO. TOOL NAME
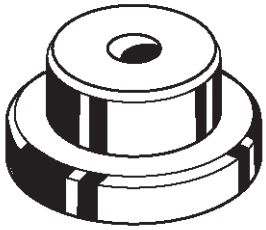 901RS215	**5–8840–2576–0** **(J–8107–3)** Adapter; Side bearing plug
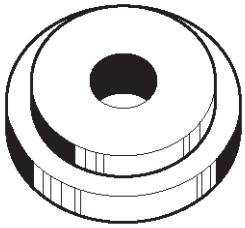 901RS217	**5–8840–2689–0** **(J–44461)** Installer; Outer bearing outer race
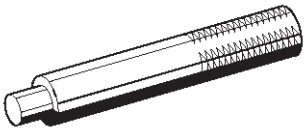 901RS218	**5–8840–0007–0** **(J–8092)** Grip
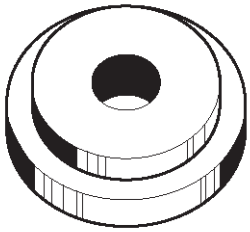 901RS219	**5–8840–2690–0** **(J–44462)** Installer; Inner bearing outer race
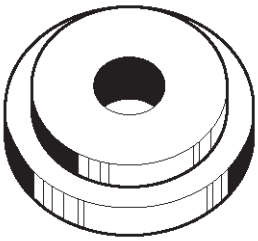 901RS220	**5–8840–2681–0** **(J–42824)** Pilot;Outer
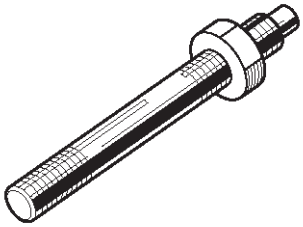 901RS221	**5–8840–0127–0** **(J–21777–43)** Nut & Bolt

ILLUSTRATION	**TOOL NO.** TOOL NAME
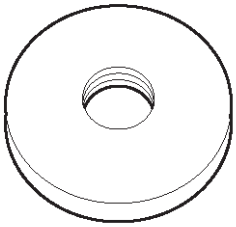 901RS222	**5–8840–2680–0** **(J–44453)** Pilot; Inner
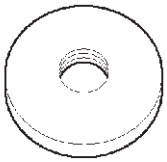	**5–8840–2681** **(J–44449)** Pilot; Outer bearing
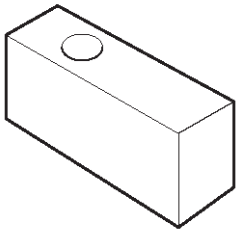 901RS223	**5–8840–2678–0** **(J–44451)** Gage plate
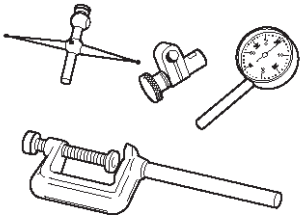 901RS224	**5–8840–0126–0** **(J–8001)** Dial indicator
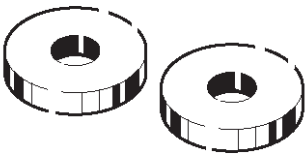 901RS225	**5–8840–2679–0** **(J–44452)** Disc (2 required)
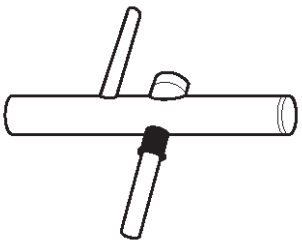 901RS226	**5–8840–0128–0** **(J–23597–1)** Arbor

ILLUSTRATION	**TOOL NO.** TOOL NAME
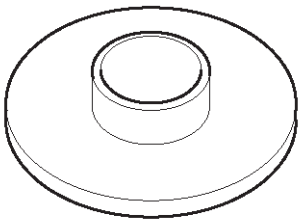 901RS208	**5–8840–2574–0** **(J–42828)** Installer; Pinion bearing
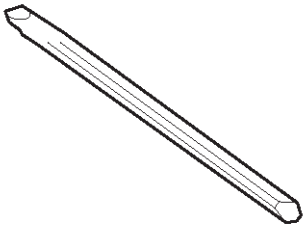 901RS228	**5–8840–2293–0** **(J–39209)** Punch; End nut lock
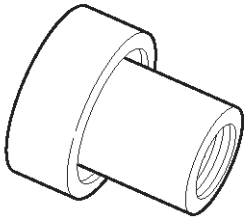 901RS229	**5–8840–2570–0** **(J–42829)** Installer; Side bearing
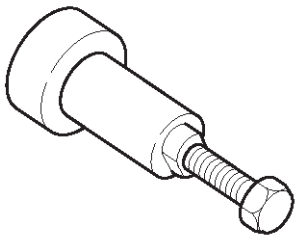 901RS230	**5–8840–2323–0** **(J–39602)** Remover; Outer bearing
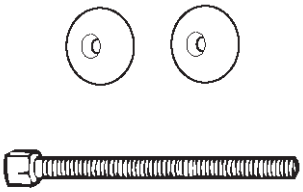 901RW064	**5–8840–2586–0** **(J–39858)** Clutch pack unloading tool kit Includes Screw cap, Cap and Forcing screw

DRIVELINE/AXLE

DRIVELINE CONTROL SYSTEM (SHIFT ON THE FLY)

CONTENTS

Service Precaution 4B1–1
Shift on the Fly System (Lever Type) 4B1–2
Outline of Shift on the Fly System (Lever Type) 4B1–2
Shift on the Fly Vacuum Piping and Electric Equipment (For Lever Control Type) 4B1–3
Vacuum Piping Diagram 4B1–3
Inspection and Repair 4B1–4
Shift on the Fly System (Push Button Type) . 4B1–7
Outline of Shift on the Fly System (Push Button Type) 4B1–7
Functions of Indicator Lamp 4B1–11
Diagnosis 4B1–11
Front Axle Diagnosis 4B1–30
Shift on the Fly Vacuum Piping and Electric Equipment (For Push Button Type) 4B1–32
Vacuum Piping Diagram 4B1–32
Inspection and Repair 4B1–33
4WD Control Unit (For Push Button Type) . . 4B1–36
4WD Control Unit Associated Parts 4B1–36
Removal 4B1–37
Installation 4B1–37

Service Precaution

WARNING: IF SO EQUIPPED WITH A SUPPLEMENTAL RESTRAINT SYSTEM (SRS), REFER TO THE SRS COMPONENT AND WIRING LOCATION VIEW IN ORDER TO DETERMINE WHETHER YOU ARE PERFORMING SERVICE ON OR NEAR THE SRS COMPONENTS OR THE SRS WIRING. WHEN YOU ARE PERFORMING SERVICE ON OR NEAR THE SRS COMPONENTS OR THE SRS WIRING, REFER TO THE SRS SERVICE INFORMATION. FAILURE TO FOLLOW WARNINGS COULD RESULT IN POSSIBLE AIR BAG DEPLOYMENT, PERSONAL INJURY, OR OTHERWISE UNNEEDED SRS SYSTEM REPAIRS.

CAUTION: Always use the correct fastener in the proper location. When you replace a fastener, use ONLY the exact part number for that application. ISUZU will call out those fasteners that require a replacement after removal. ISUZU will also call out the fasteners that require thread lockers or thread sealant. UNLESS OTHERWISE SPECIFIED, do not use supplemental coatings (Paints, greases, or other corrosion inhibitors) on threaded fasteners or fastener joint interfaces. Generally, such coatings adversely affect the fastener torque and the joint clamping force, and may damage the fastener. When you install fasteners, use the correct tightening sequence and specifications. Following these instructions can help you avoid damage to parts and systems.

Shift on the Fly System (Lever Type)

Outline of Shift on the Fly System (Lever Type)

The shift on the fly system (Lever type) switches between 2 wheel drive (2WD) and 4 wheel drive (4WD) by driver's shifting the transfer control lever on the floor.
This system controls below operations.

1. Connecting front wheels to, and disconnecting them from, the front axles by vacuum actuator.
2. Indicator on instrument panel.
3. 4WD signal to Electronic Hydraulic Control Unit for brake system (If anti–lock brake system is equipped).

Shift on the Fly Vacuum Piping and Electric Equipment (For Lever Control Type)

Vacuum Piping Diagram

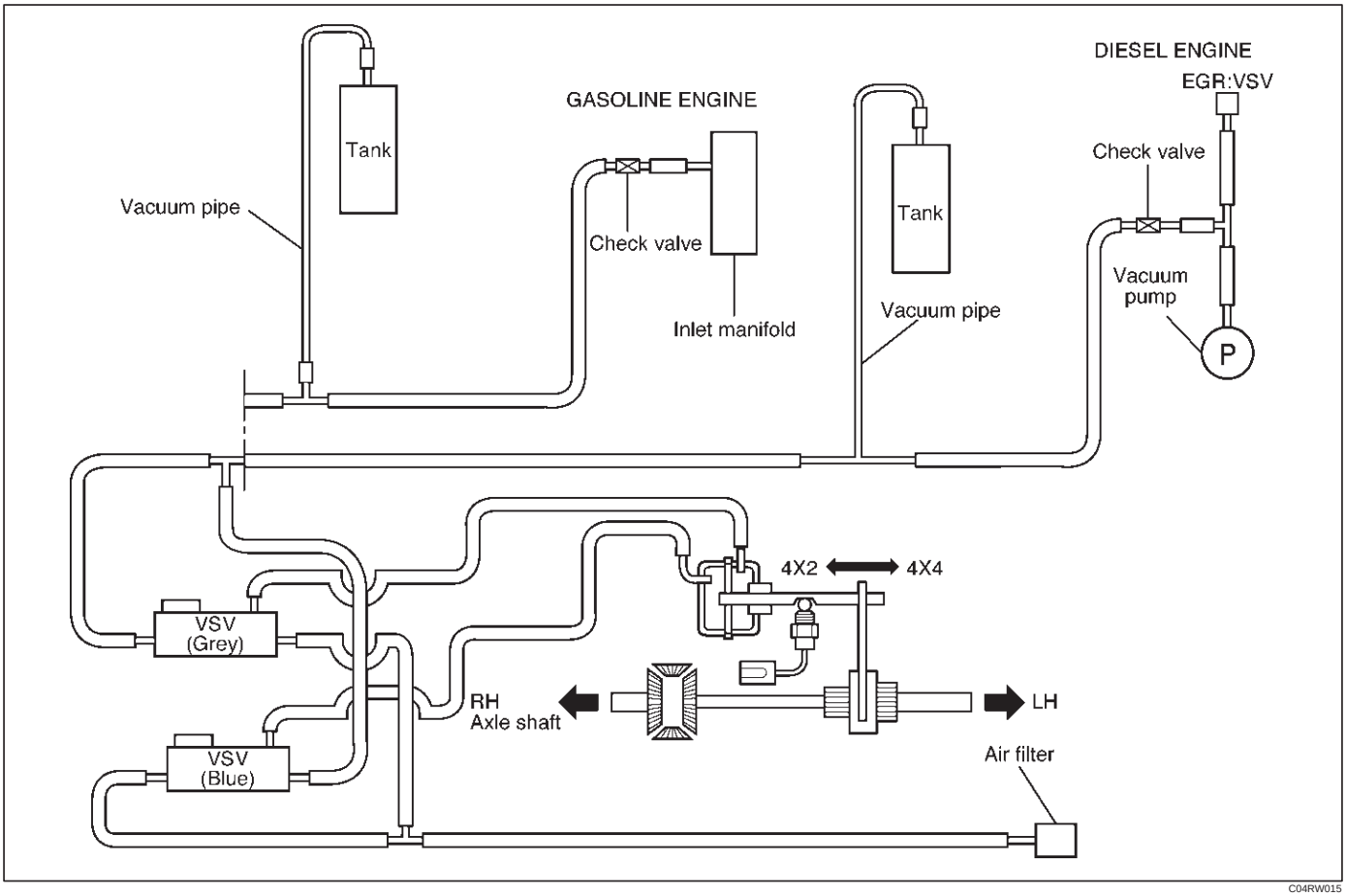

C04RW015

VSV Assembly, Actuator Assembly

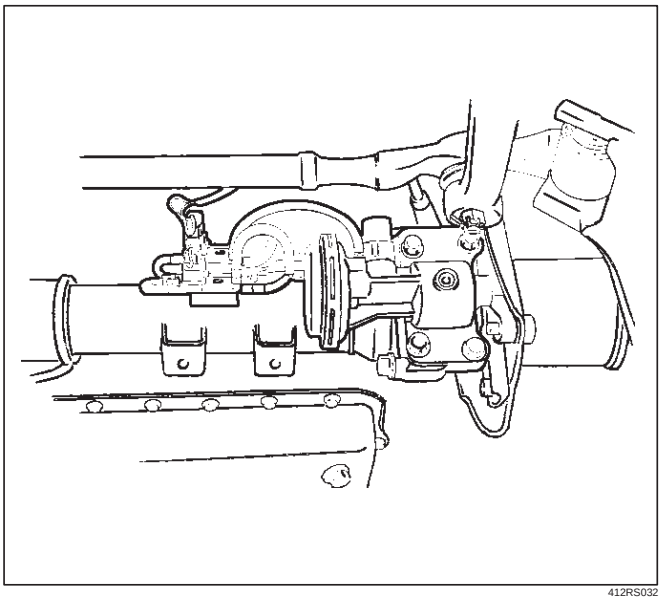

412RS032

Vacuum Tank

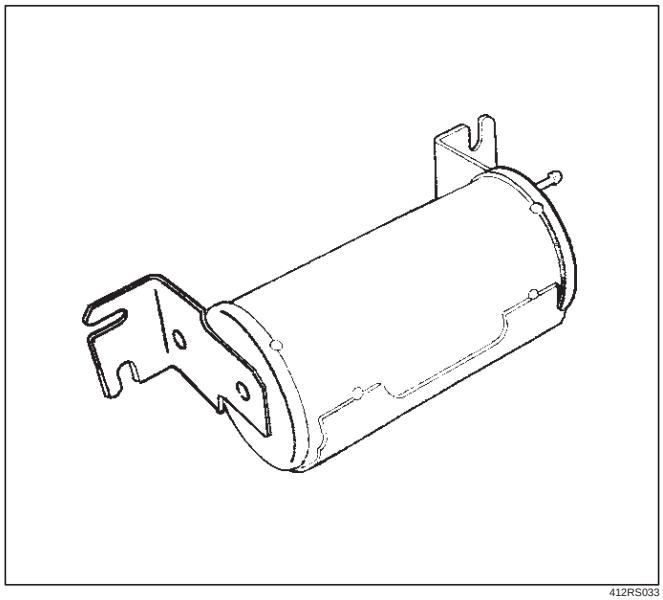

412RS033

Inspection and Repair

Vacuum Piping

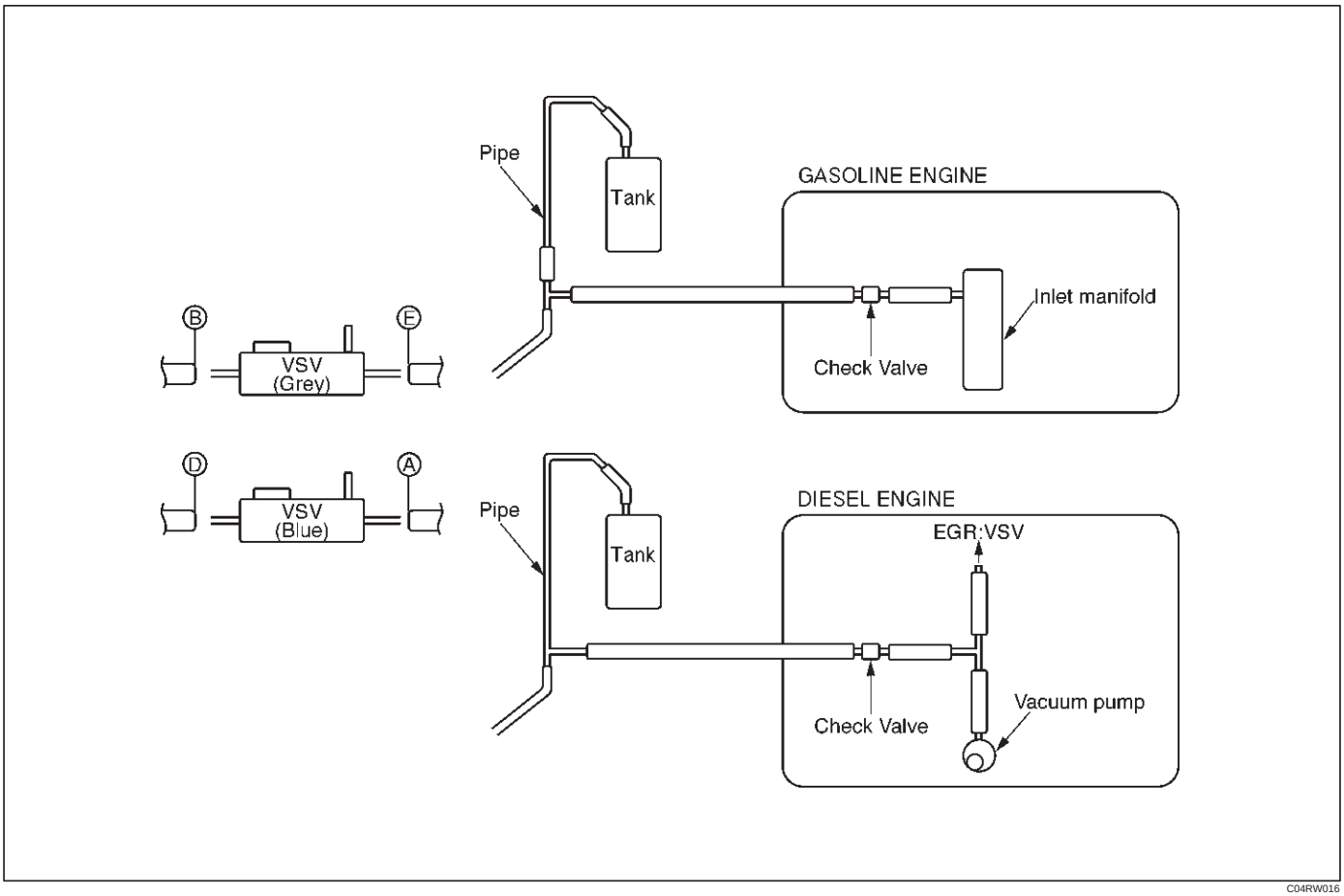

C04RW016

1. Pull out the Hose A in figure and install a vacuum gauge.
2. Plug up Hose B in figure to prevent the leak of vacuum.
3. Start the engine and measure vacuum 2 or 3 minutes afterward.
4. Repeat 1) and 2) but with Hose A plugged and Hose B pulled out.
5. If vacuum measures –400mmHg, or if it shows a sudden drop immediately after engine stop, inspect the hose, tank, and pipe for damage.

NOTE: Be careful not to permit the entry of dust and water during inspection.

6. Pull out Hose D in above illustration.
7. Plug Hose E in above illustration.
8. Make sure that Hose D in above illustration is under atmospheric pressure.
9. Pull out Hose E and plug Hose D, and make sure that Hose E is under atmospheric pressure.
10. If Check 8) or 9) has revealed stoppage, check and see that there is no bend, foreign matter in the hose or in the filter. If there is trouble, repair or replace.

Check Valve

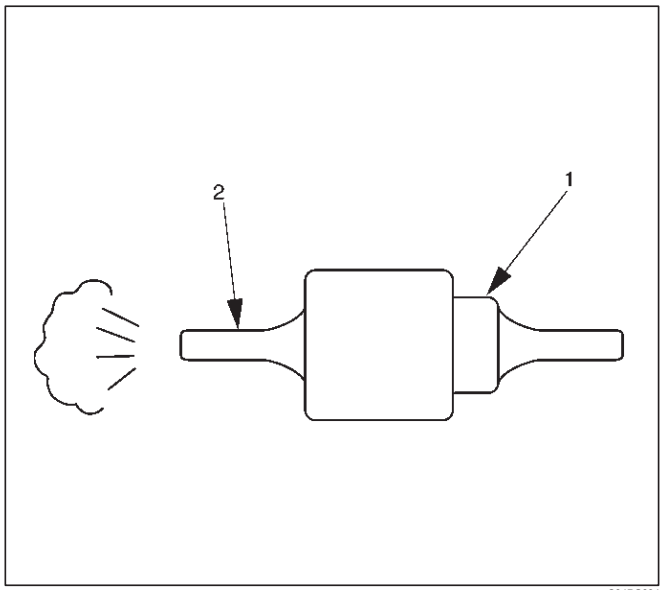

C04RS004

1. Apply vacuum from the orange colored side(1).

   Vacuum:–400mmHg
2. Check leakage of vacuum.
3. Make sure that vacuum cannot be applied from the black colored side(2).

4. If vacuum is not applicable as much as –400mmHg, and if there is resistance on the intake side, replace with a new check valve.

VSV Assembly

Inspect the vehicle side harness as follows:

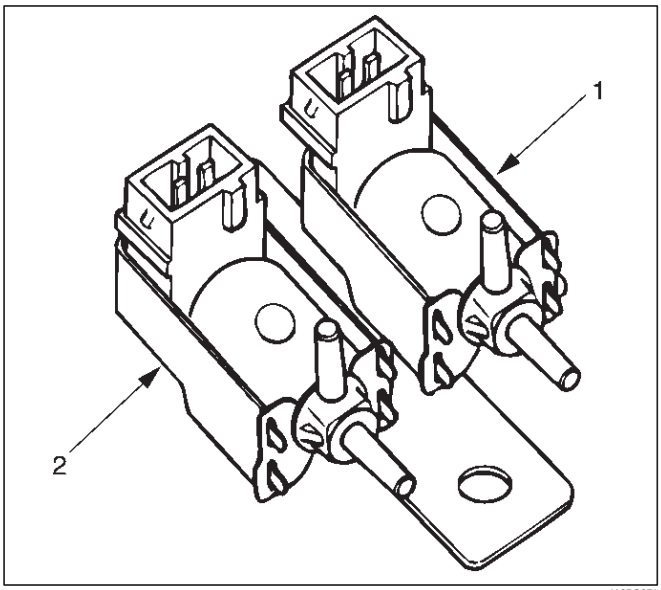

412RS071

Legend
(1) Grey
(2) Blue

1. Remove connector.
2. Shift transfer lever to 2H and start the engine.

NOTE: Do not move the vehicle while inspection.

3. Make sure that there is continuity in the vehicle side of harness. If there is no continuity, check transfer shift switch and wiring.

Inspect both VSVs as follows:

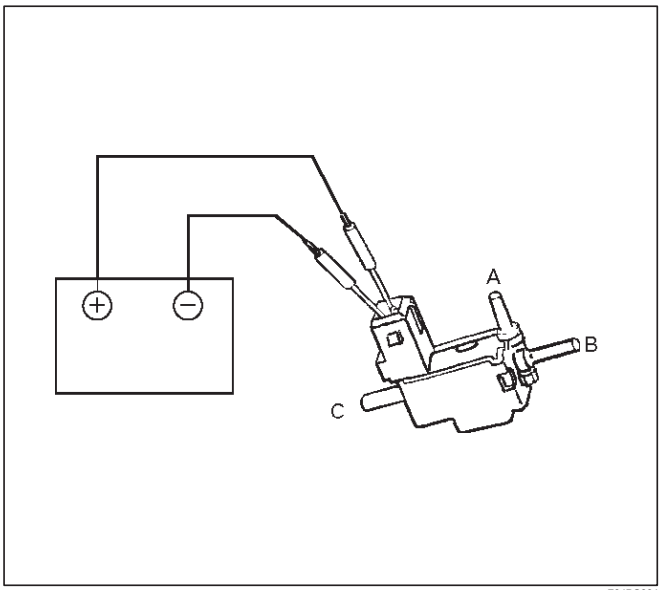

F04RS004

1. With battery not connected (Usual).
   A–C:There is continuity
   B:Closed
2. With battery connected
   A – B:There is continuity
   C:Closed
3. If 1) and 2) fail, replace with a new VSV.

Axle Position Switch

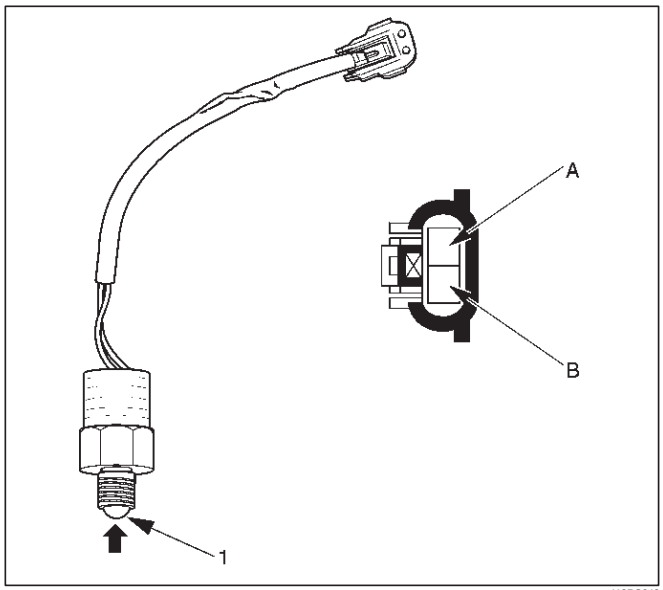

412RS048

1. With ball (1) being free
   A – B:There is continuity
2. With ball forced into the switch
   A – B:No continuity
3. If 1) and 2) fail, replace with a new switch.

Transfer Position Switch

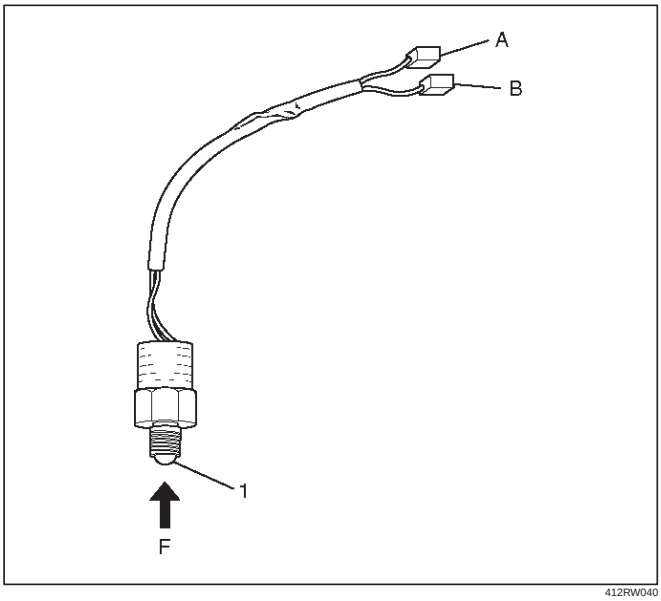

Legend

(1) Ball

1. With ball being free.
   A–B : There is continuity.
2. With ball forced into the switch.
   A–B : No continuity.
3. If 1) and 2) fail, replace with a new switch.

Shift on the Fly System (Push Button Type)

Outline of Shift on the Fly System (Push Button Type)

The shift on the fly system switches between 2 wheel drive (2WD) and 4 wheel drive (4WD) electrically by driver's pressing the 4WD switch (push button type) on instrument panel.
This system controls below operations. (Shifting between "4H" and "4L" must be performed by transfer control lever on the floor.)

1. Shifting the transfer front output gear (Connecting to, and disconnecting from, front propeller shaft by motor actuator).
2. Retrial of shifting the transfer front output gear.
3. Connecting front wheels to, and disconnecting them from, the front axles by vacuum actuator.
4. Indicator on instrument panel.
5. 4WD out signal to other Electronic Hydraulic Control Unit (If anti–lock brake system is equipped).

System Diagrams

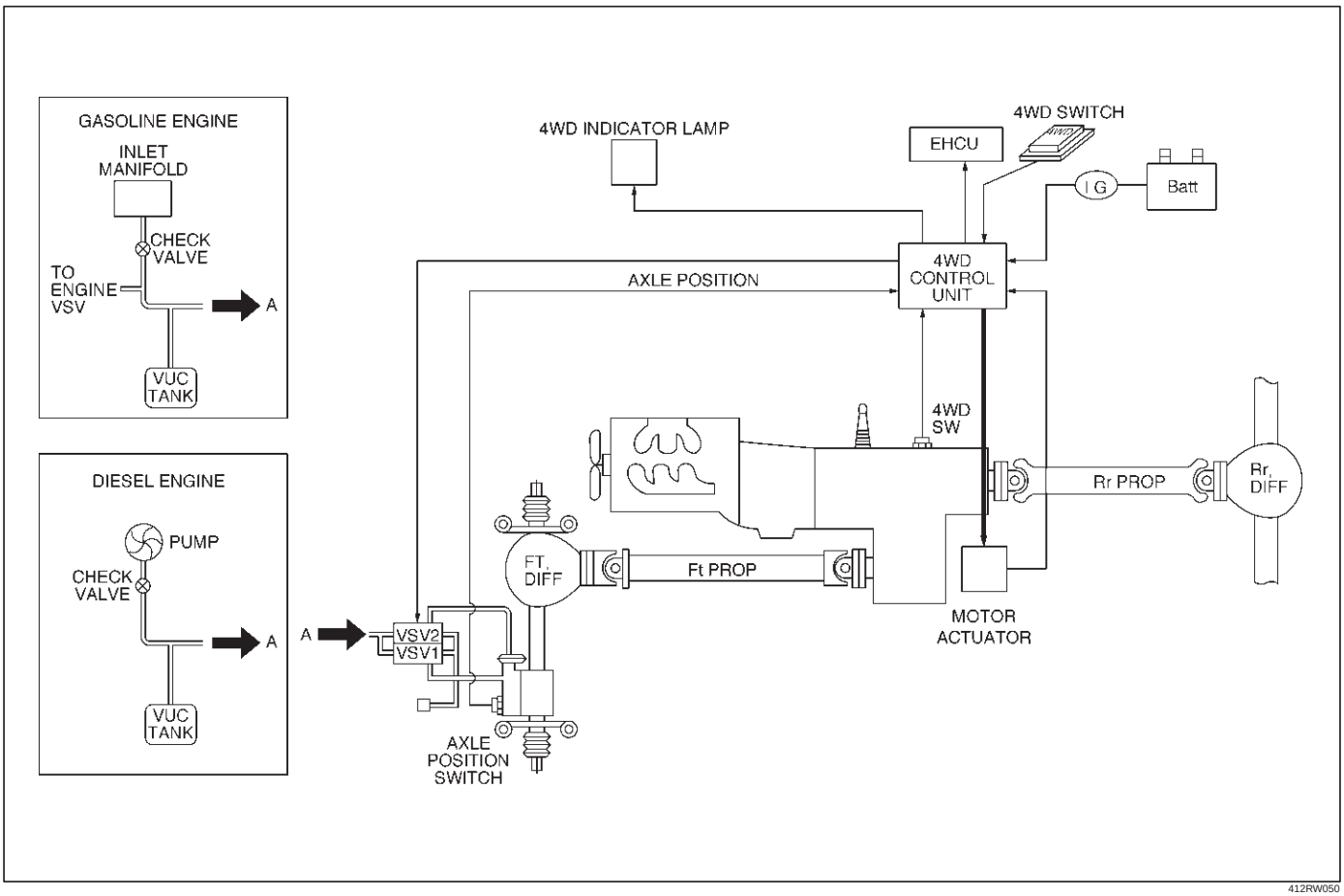

412RW050

Normal Operation

The motor actuator mounted on transfer rear case is driven by signal from 4WD switch on instrument panel. After complete the connecting transfer front output gear to, or disconnecting it from, front propeller shaft, condition of the transfer position switch changes. The vacuum solenoid valve (VSV) is driven by the signal from transfer position switch and the vacuum actuator connects front wheels to, or disconnect them from, front axles.

Time Chart of Shifting Under Normal Condition

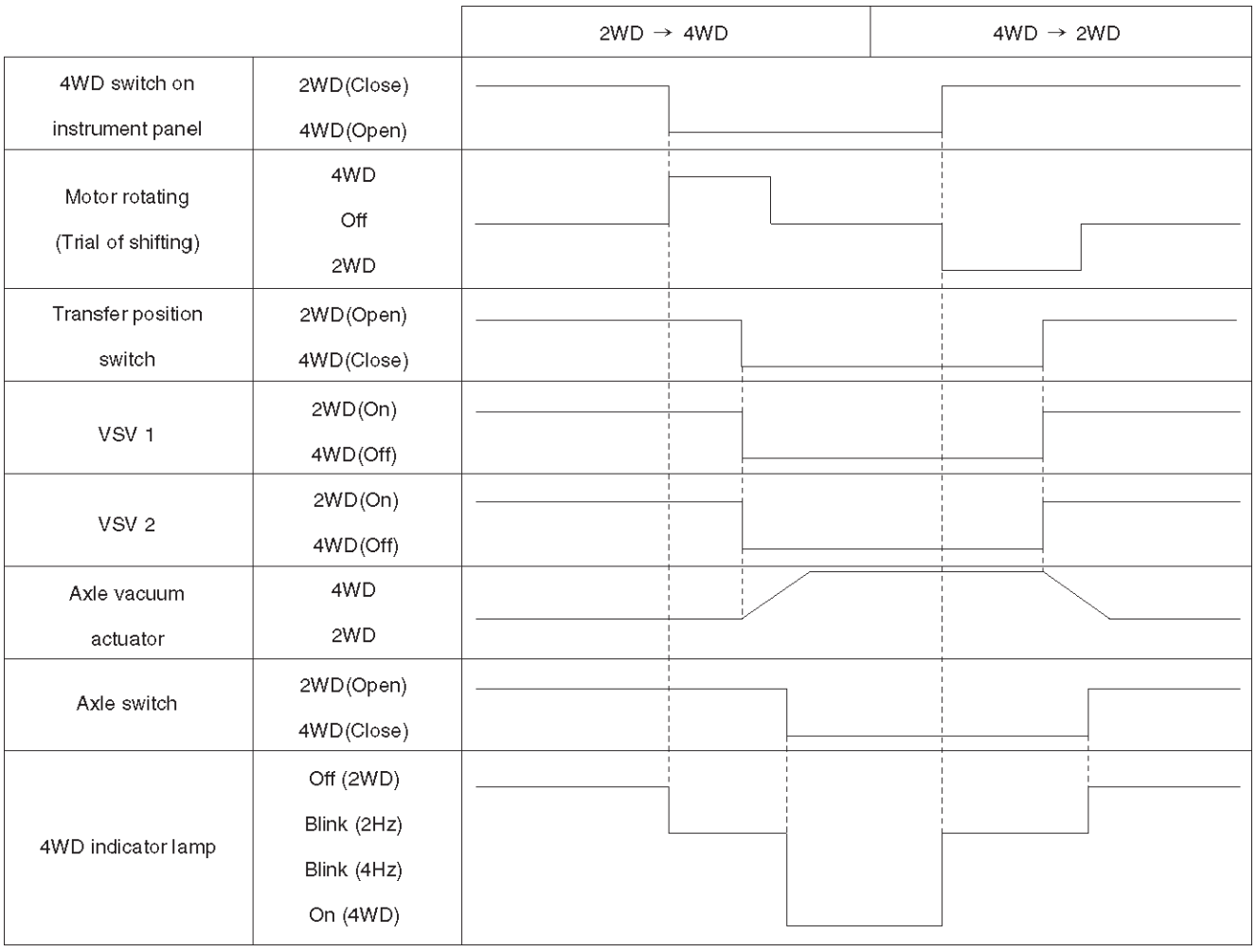

F04RW002

Retrial

The motor actuator starts transfer gear shifting after signal from 4WD switch on instrument panel has been received. But the shifting may be impossible in cold weather or under high speed condition. When 2 seconds have passed since transfer gear shifting started and the transfer position switch dose not turn on (the gear engagement is not completed), the motor reverses its rotation for 1.2 seconds and tries again to shift transfer gear. This procedure is repeated 3 times in maximum. While this procedure, 4WD indicator lamp blinks by 2 Hz. If the transfer position switch does not turn on after aforementioned procedure has been repeated 3 times, the gear shifting is stopped and 4WD indicator lamp's blinking changes from 2Hz to 4Hz to notify driver that the gear shifting is stopped. This blinking of indicator lamp continues until 4WD switch is returned from 4WD to 2WD.

Time Chart of Shifting Under Severe Condition (re-trial)

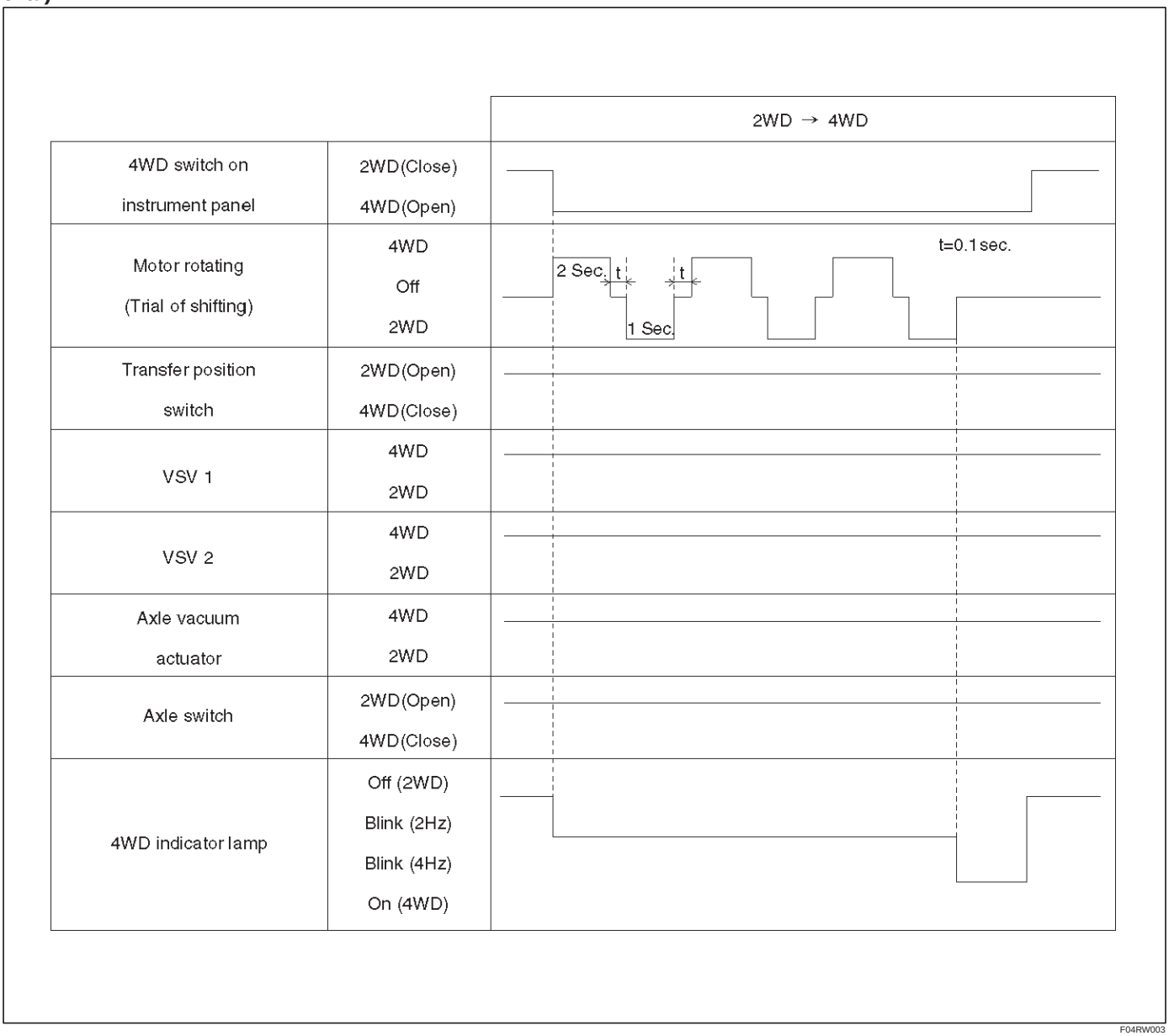

F04RW003

Warning at "4L" position : In view of the shifting mechanism of transfer, the gear shifting from 4WD to 2WD at "4L" condition is impossible. Therefore, the transfer position switch can not be turned off by 4WD switch when vehicle is in "4L" condition. In the case this condition continues for 2 seconds, the shifting to 2WD is stopped and the indicator lamp's blinking changes from 2Hz to 4Hz to notify driver of wrong operation.

Time Chart of Shifting from 4WD to 2WD at "4L" Condition

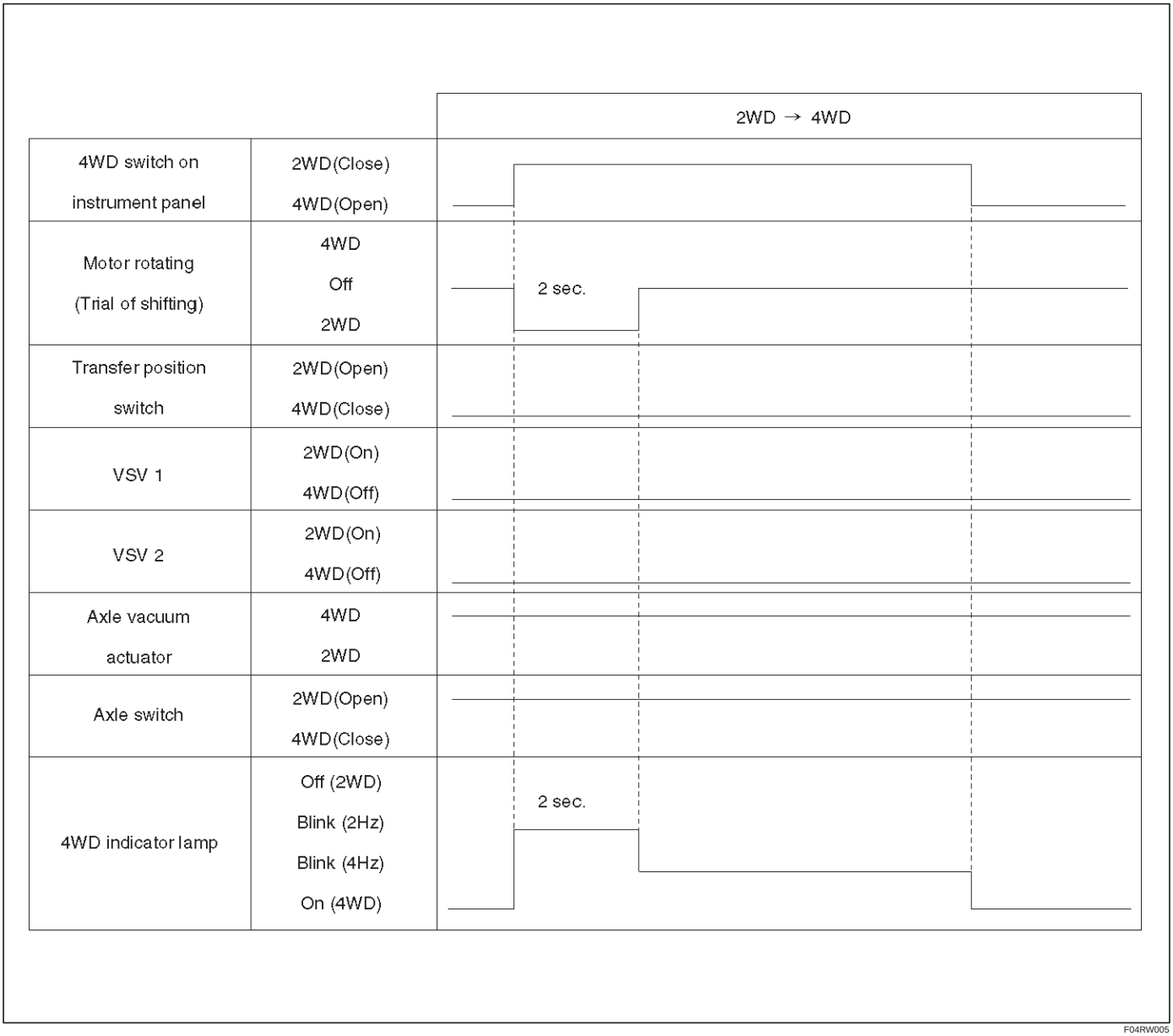

F04RW005

4WD out signal to other Electronic Hydraulic Control Unit : 4WDcontrol unit sends 4WD out signal to other Electronic Hydraulic Control Unit as below.

4WD out signal (Period)	Vehicle Condition	Transfer position switch	Front axle switch
120 ms	2WD	2WD (Open)	2WD (Open)
240 ms	4WD	4WD (Close)	4WD (Close)

Functions of Indicator Lamp

Indication of vehicle condition : Indicator lamp is controlled by 4WD control unit and shows vehicle conditions as below.

Indicator	Vehicle condition	4WD switch	Transfer position switch	Front axle switch
Off	2WD	Off (Close)	2WD (Open)	2WD (Open)
On	4WD	On (Open)	4WD (Close)	4WD (Close)
Blink (2Hz)	Operating	On (Open)	4WD (Close)	2WD (Open)
		Off (Close)	2WD (Open)	4WD (Close)
Blink (4Hz)	Stop operating	On (Open)	2WD (Open)	2WD (Open)
		Off (Close)	4WD (Close)	4WD (Close)

Bulb check : To check the bulb of indicator lamp, the indicator lamp comes on when ignition key is turned on, and goes off when the engine is started.
Retrials from 2WD to 4WD : In cold weather or under high speed condition, the gear shifting (engagement) sometimes does not complete by 3 trials. In such case, the indicator lamp inform driver of this incident as aforementioned chart (shown at Retrial in Outline of shift on the fly system).

Diagnosis

Before Judging That Troubles Occur (Unfaulty mode)

When Switching from 2WD to 4WD

1. **In case that blinking frequency of the 4WD indicator changes from 2Hz to 4Hz.**
   When heavy synchronization load is needed, the motor actuator tries the shifting transfer gear three times including the activation shifting. While the motor actuator tries shifting, the indicator blinks by 2Hz. If the third shifting fails, the indicator's blinking changes from 2Hz to 4Hz at the same time that the motor actuator shifted back to 2WD.
   Heavy synchronization load occurs by:
   - extremely lower temperature.
   - higher speed, rotation difference of wheels during cornering.

   Solution 1: Operate again after stop the vehicle or slow down.
2. **In case that the 4WD indicator continues blinking by 2Hz for more than 11.5 seconds.**
   When there is rotation difference of wheels or there is phase difference between front wheels and axles, it is difficult to connect front wheels to front axles. The blinking by 2Hz shows that shifting the transfer gear or connecting the front wheels is in the middle of operating. In above case, the indicator's blinking by 2Hz shows that connecting the front wheels is not completed (because the indicator's blinking changes to 4Hz when the shifting transfer gear is impossible.). And removal of rotation or phase difference make connecting the front wheels possible.

   Solution 2: When vehicle is running, drive straight ahead while accelerating and decelerating. When vehicle is at a stop, move the vehicle forward and backward from 2 to 3 meters.

When switching from 4WD to 2WD

1. **In case that the 4WD indicator continues blinking by 2Hz .**
   The 4WD indicator continues blinking by 2Hz until both shifting the transfer gear and disconnecting the front wheels are completed when switching 4WD to 2WD. When driveline is loaded with torsional torque, the shifting transfer gear and disconnecting front wheels are impossible. In this case, removal of torsional torque on driveline make the shifting transfer gear and disconnecting front wheels possible.

   Solution 3: When vehicle is running, drive straight ahead while accelerating and decelerating. When vehicle is at a stop, move the vehicle forward and backward from 2 to 3 meters.
2. **In case that the 4WD indicator's blinking changes from 2Hz to 4Hz.**
   Check the position of transfer lever. Is it at "4L" position? In view of the shifting mechanism of transfer, the gear shifting from 4WD to 2WD at "4L" condition is impossible.

   Solution 4: Push the 4WD switch to 4WD, shift the transfer lever to "High" position and re–operate the 4WD switch to 2WD.

Parts Location (LHD / Diesel Engine Model)

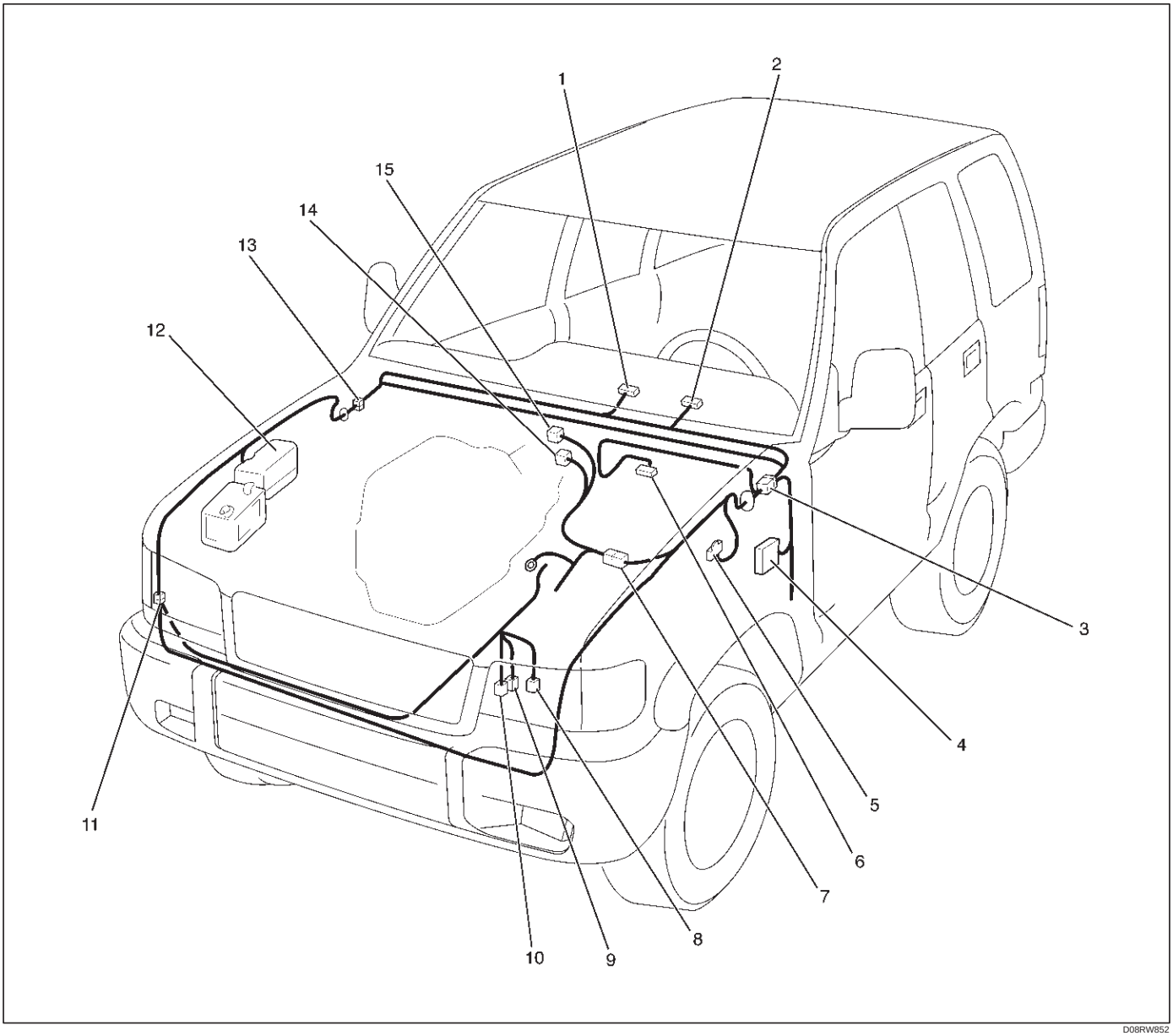

Legend

(1) I–12
(2) I–9
(3) H–7, H–8, H–24, H–25
(4) Fuse Box
(5) C–16
(6) C–94
(7) H–4, H–5
(8) P–17
(9) P–18
(10) P–19
(11) H–60
(12) Relay & Fuse Box
(13) H–12, H–16
(14) E–21
(15) E–45

Parts Location (LHD / Gasoline Engine Model)

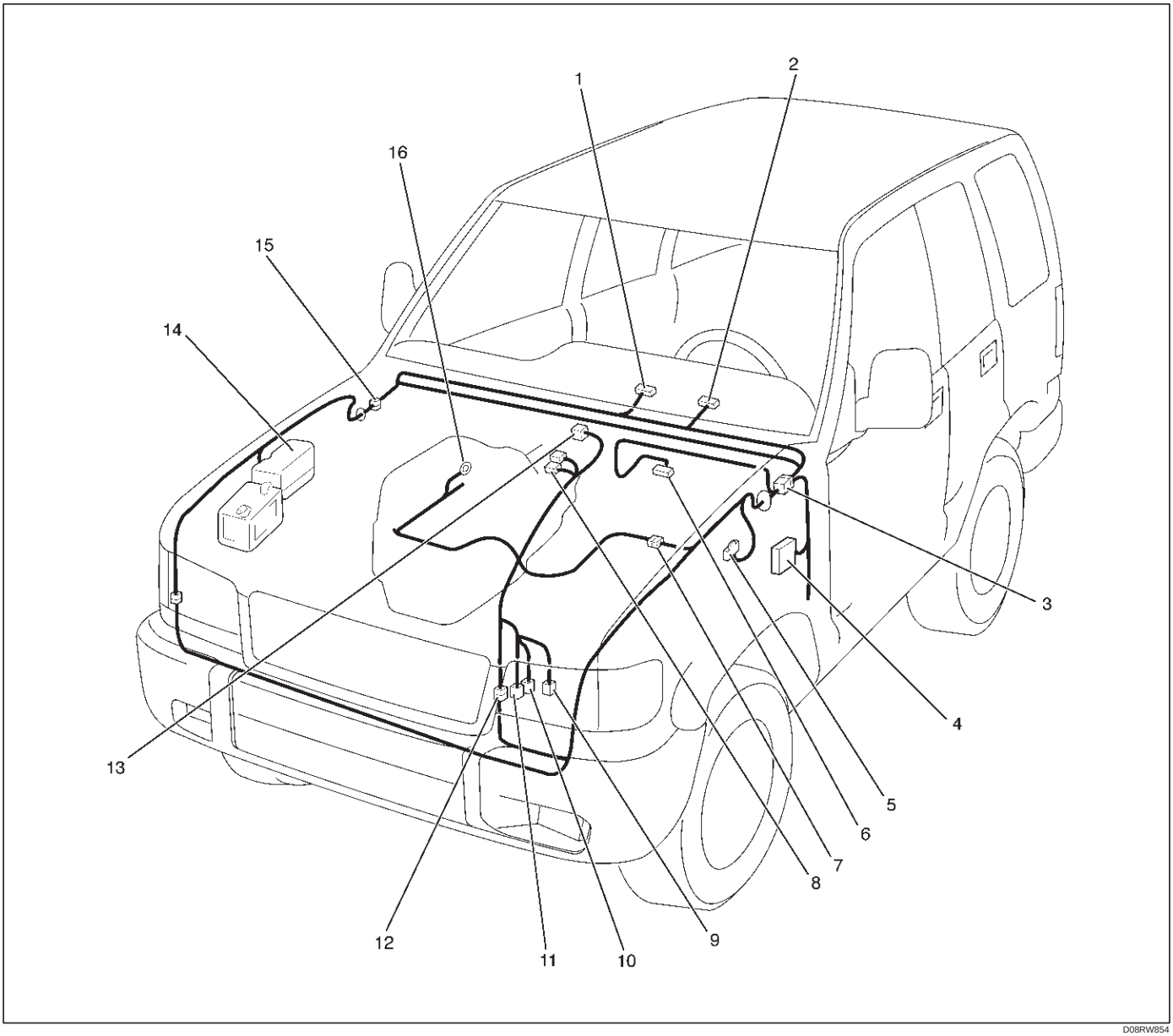

Legend

(1) I–12
(2) I–9
(3) H–7, H–8, H–24, H–25
(4) Fuse Box
(5) C–16
(6) C–94
(7) H–5
(8) M–11, M–12
(9) M–22
(10) M–23
(11) M–24
(12) H–10
(13) M–26
(14) Relay & Fuse Box
(15) H–12, H–16
(16) E–30

Parts Location (RHD / Diesel Engine Model)

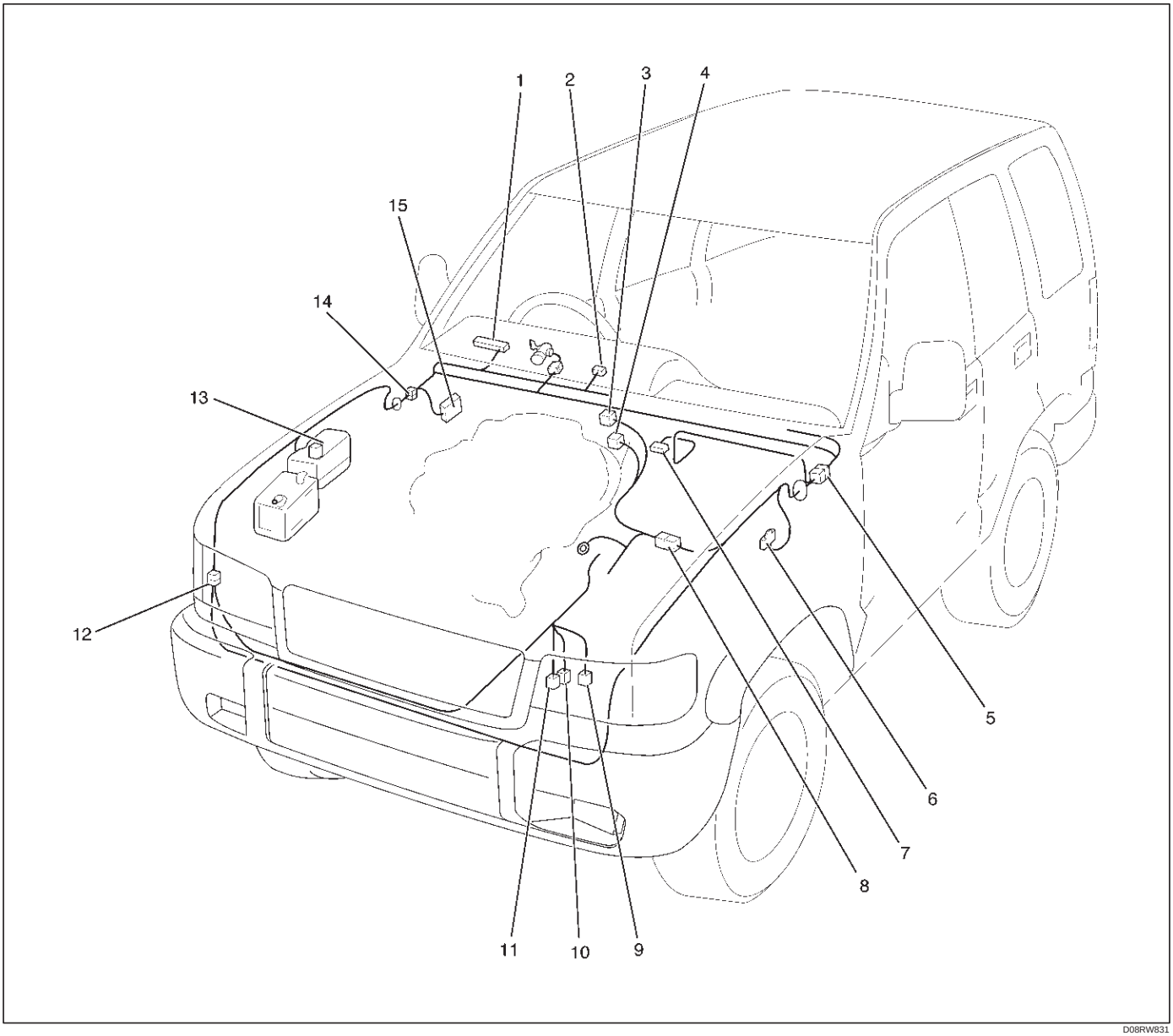

D08RW831

Legend

(1) I–9
(2) I–12
(3) E–45
(4) E–21
(5) H–7, H–9
(6) C–16
(7) C–94
(8) H–4, H–5
(9) P–17
(10) P–18
(11) P–19
(12) H–60
(13) Relay & Fuse Box
(14) H–15, H–16, H–25, H–26, H–27
(15) Fuse Box

Parts Location (RHD / Gasoline Engine Model)

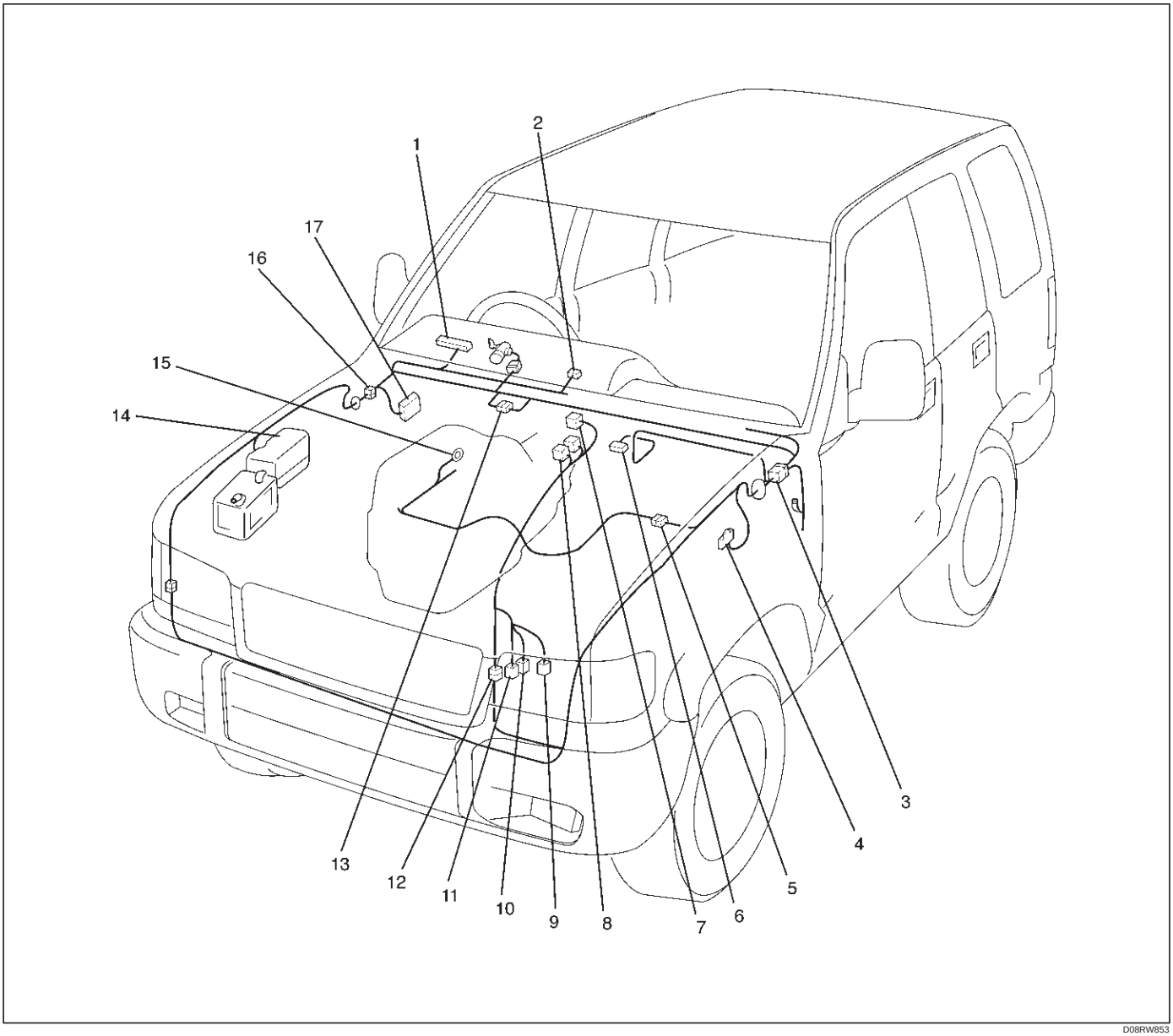

D08RW853

Legend

(1) I–9
(2) I–12
(3) H–7, H–9
(4) C–16
(5) H–5
(6) C–94
(7) M–26
(8) M–11, M–12
(9) M–22
(10) M–23
(11) M–24
(12) H–10
(13) H–12
(14) Relay & Fuse Box
(15) E–30
(16) H–15, H–16, H–25, H–26, H–27
(17) Fuse Box

Wiring Diagram (LHD Model)

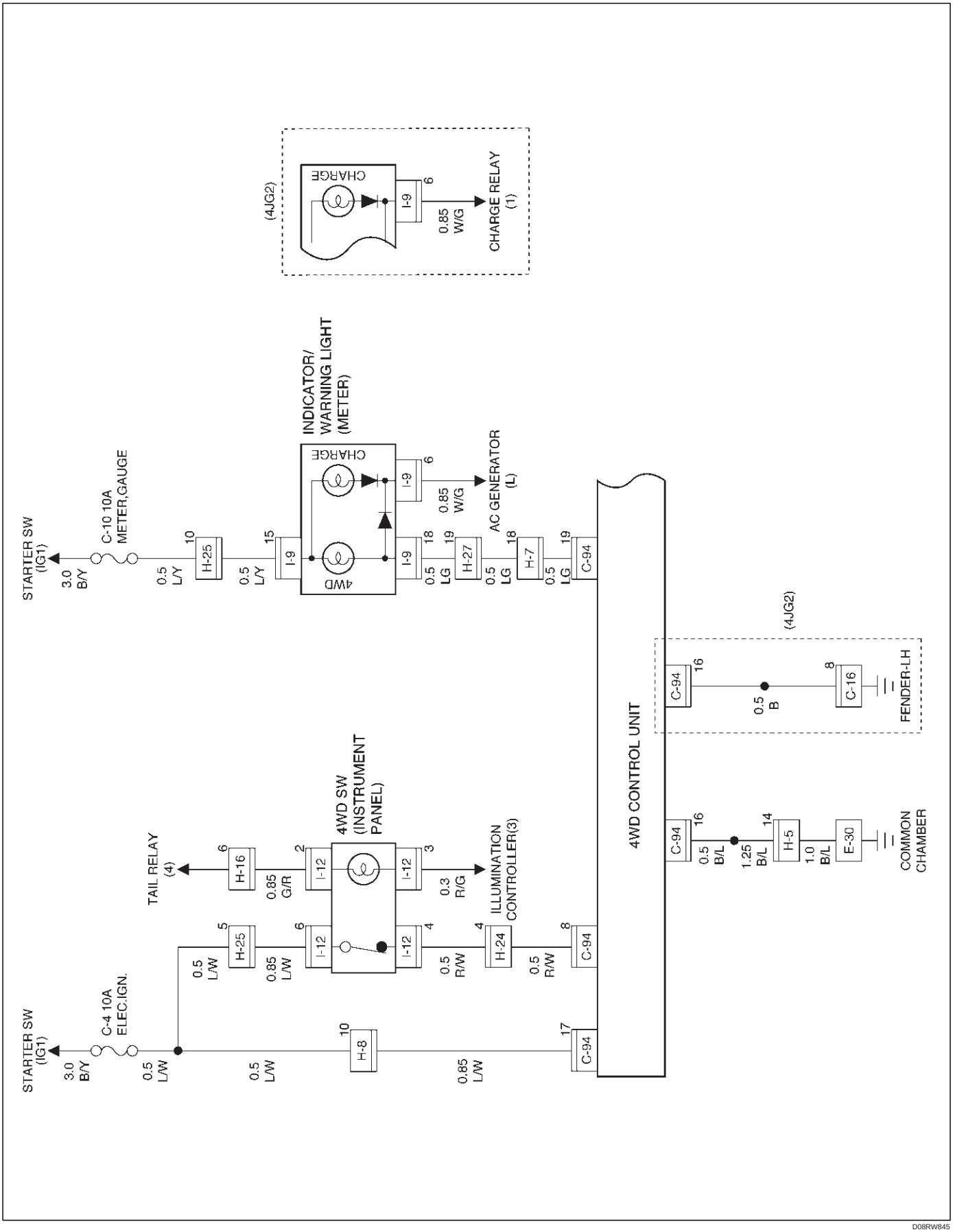

D08RW845

Wiring Diagram (LHD / Diesel Engine Model)

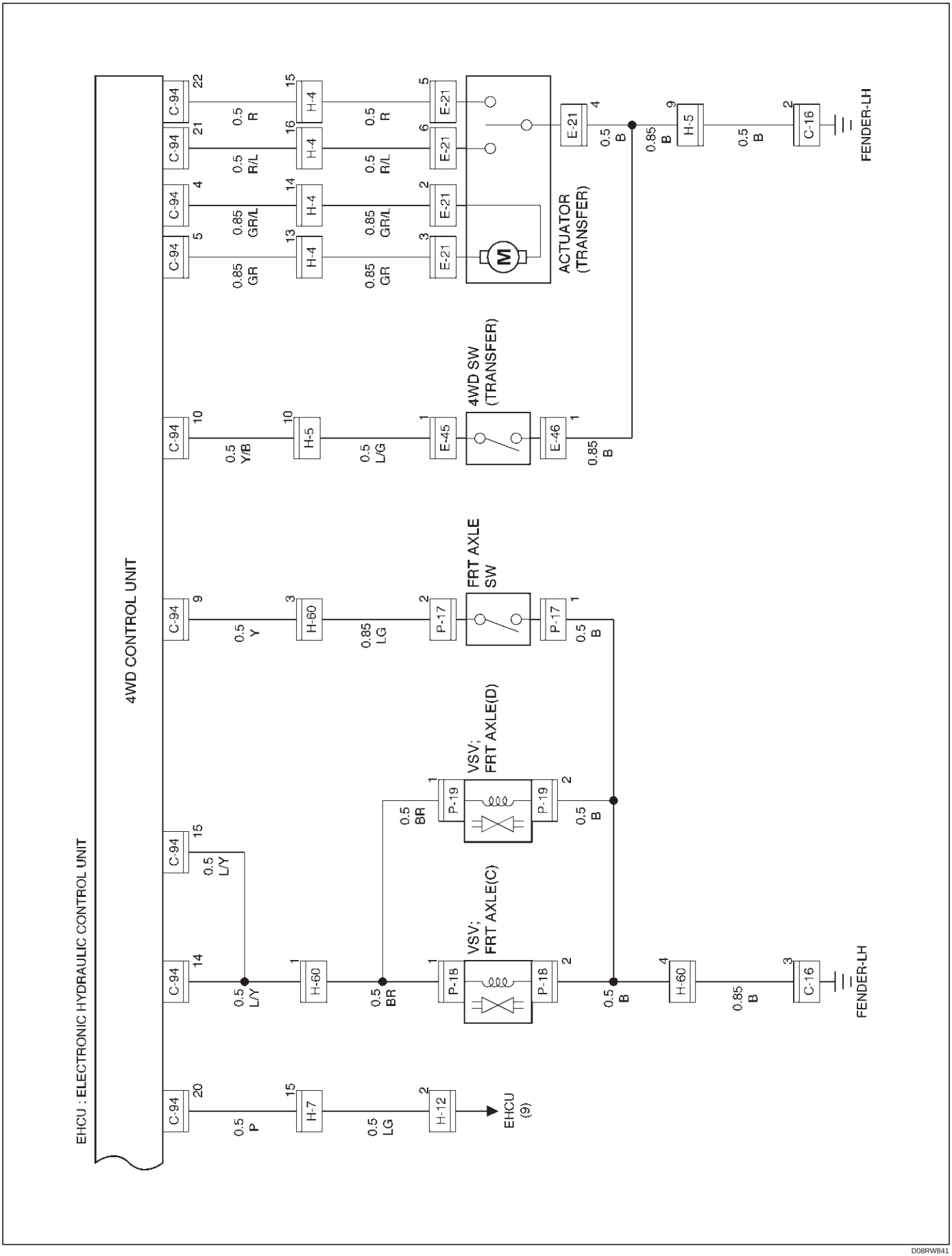

D08RW841

Wiring Diagram (LHD / Gasoline Engine Model)

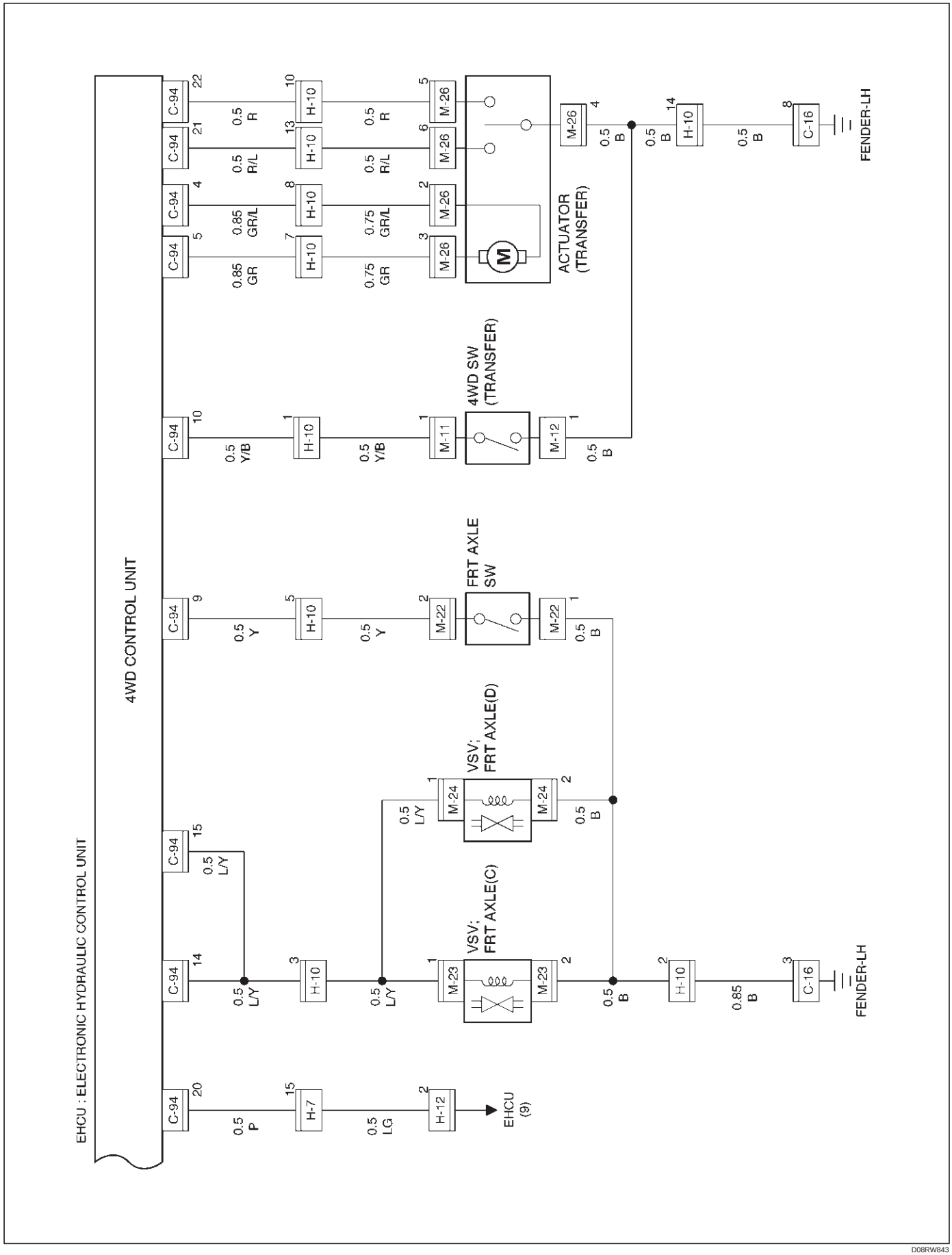

D08RW843

Wiring Diagram (RHD Model)

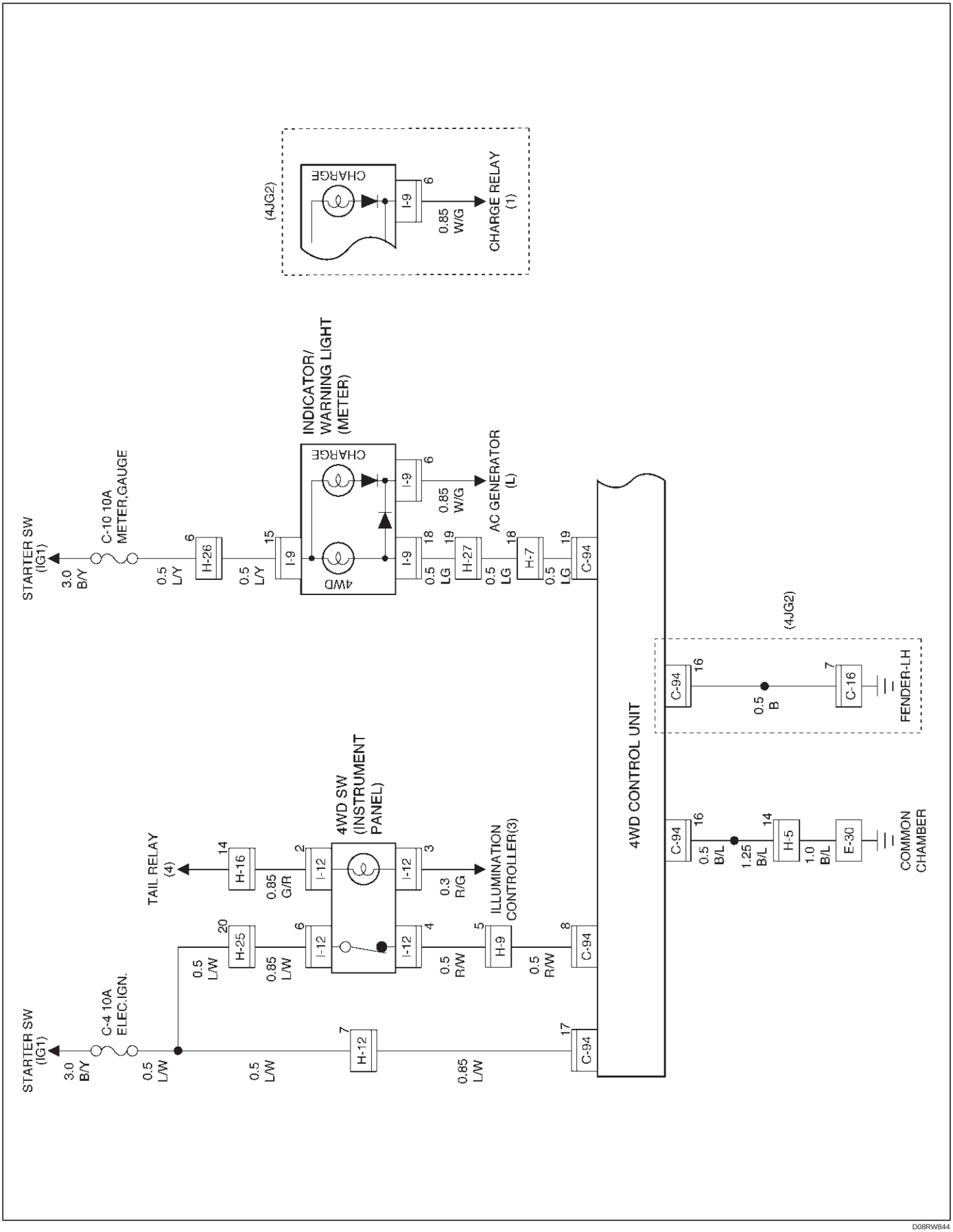

D08RW844

Wiring Diagram (RHD / Diesel Engine Model)

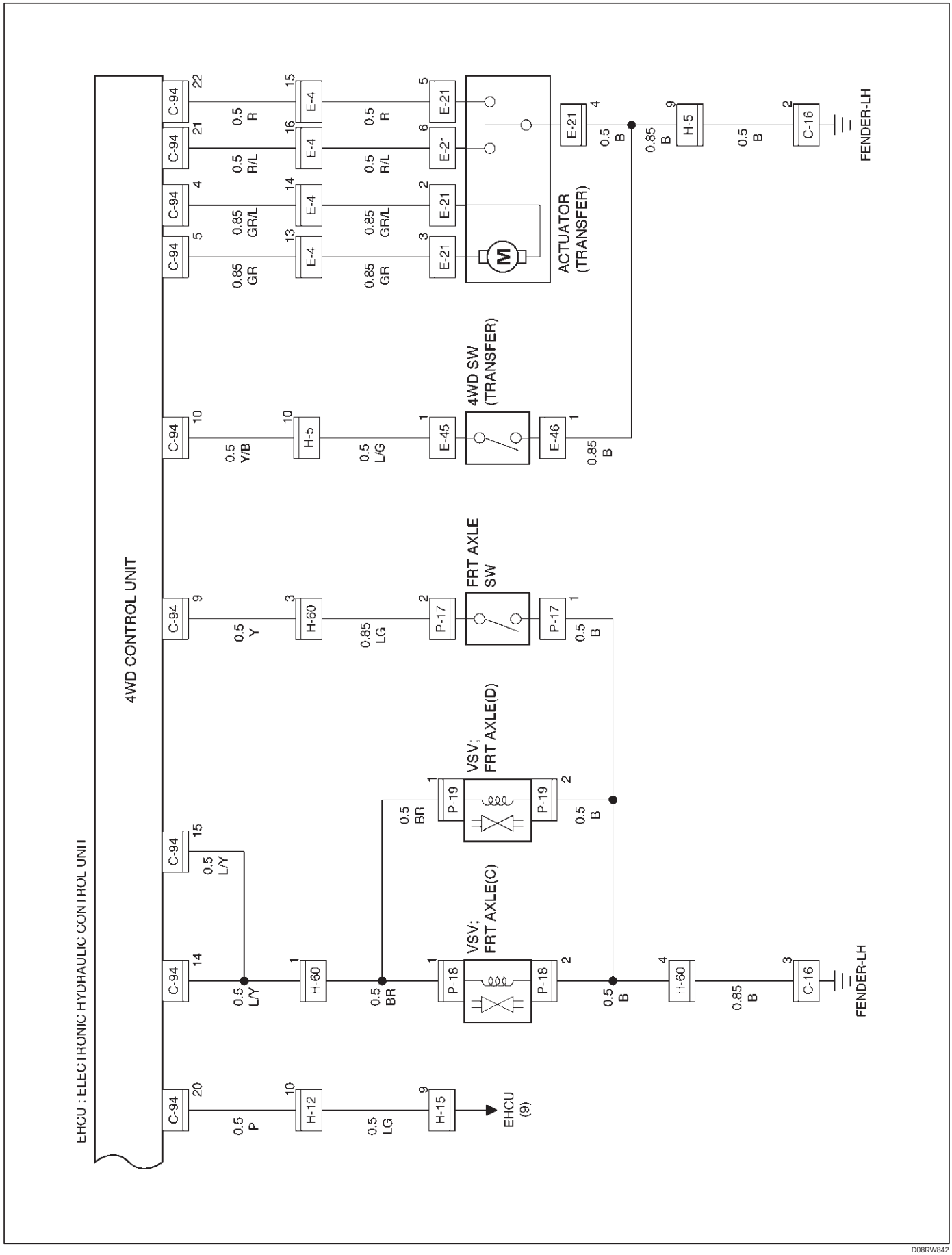

Wiring Diagram (RHD / Gasoline Engine Model)

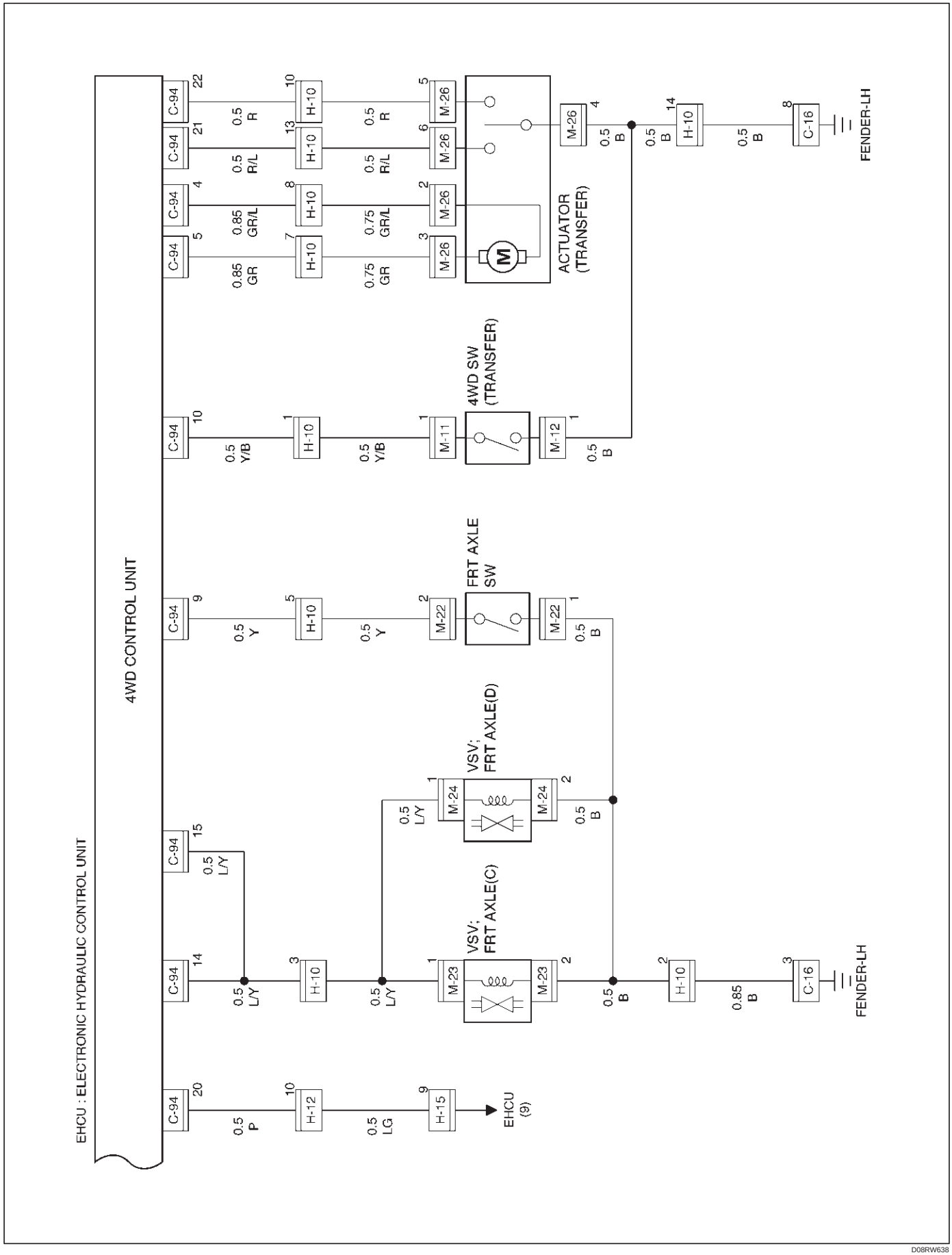

D08RW638

Connector List

No.	Connector face	No.	Connector face
C-16	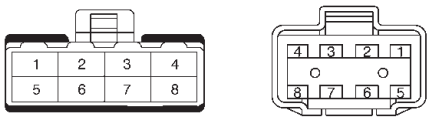	H-8 (LHD)	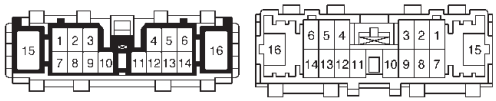
C-94	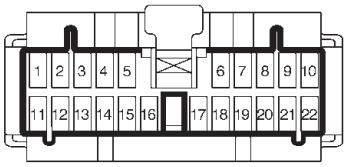	H-8 (RHD)	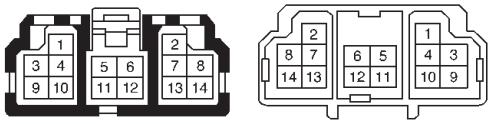
E-21		H-9 (LHD)	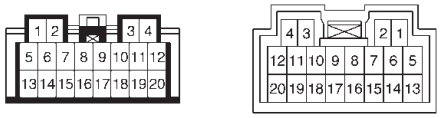
E-30	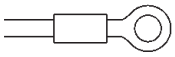	H-9 (RHD)	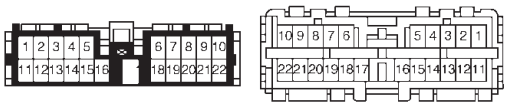
E-45		H-10	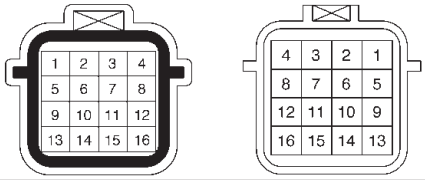
H-4	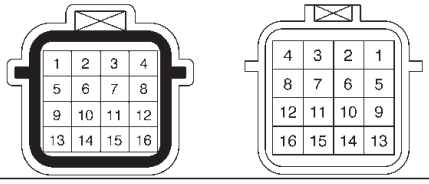	H-12 (LHD)	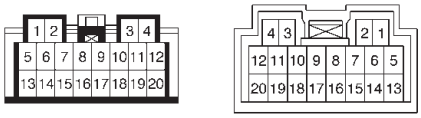
H-5	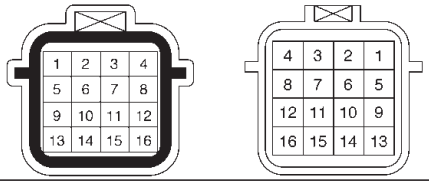	H-12 (RHD)	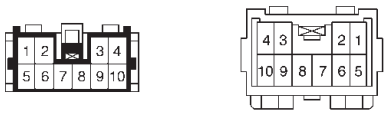
H-7	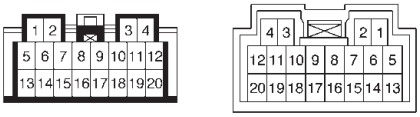	H-15 (LHD)	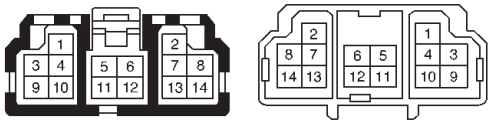

No.	Connector face	No.	Connector face
H-15 (RHD)	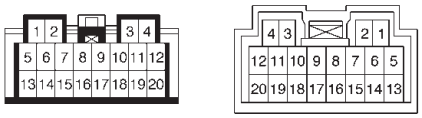	H-60	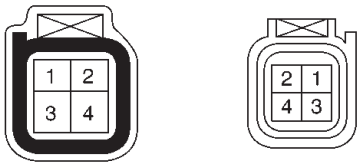
H-16 (LHD)	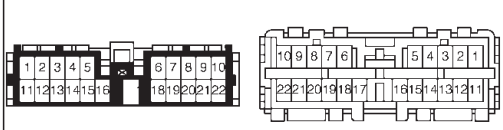	I-9	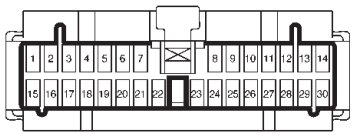
H-16 (RHD)	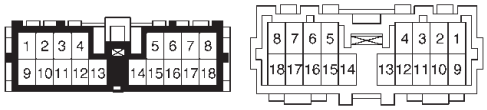	I-12	
H-24 (LHD)	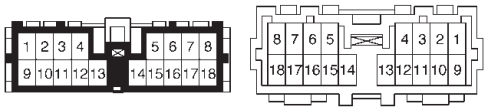	M-11	
H-24 (RHD)	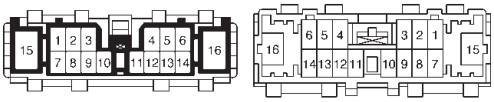	M-12	
H-25	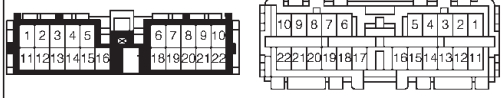	M-22	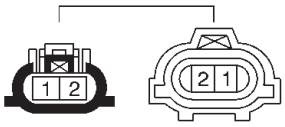
H-26	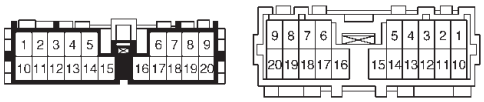	M-23	
H-27	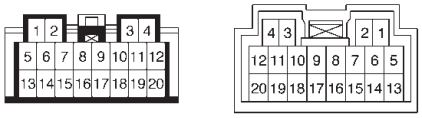	M-24	

No.		No.	Connector face
M-26			
P-17	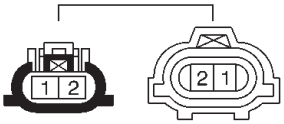		
P-18			
P-19			

Diagnosis of the Faults Based on the Status of 4WD Indicator Lamp, 4WD Switch and T/F Change Lever

Diagnosis charts are shown on below. If troubles can not be solved after every chart was traced, troubles may occur in the 4WD control unit. In this case, replace the 4WD control unit and trace every chart again.

Fault on switching from 2WD to 4WD

1. **In case that 4WD indicator's blinking changes from 2Hz to 4Hz after Solution 1 is carried out.**
   Faults occur in the motor actuator or the transfer case assembly. Remove the motor actuator and check function. If problem was found and it was repaired, try **Solution 1** again. After that, disassemble the transfer case assembly for check and repair or replace. If incident is not improved after above mentioned actions were taken, replace the 4WD control unit.
2. **In case that 4WD indicator does not blink nor light, when switching from 2WD to 4WD.**

Step	Action	Yes	No
1	Is ignition turned on?	Go to Step 2	Turn on the ignition and trace this chart from start.
2	Does the indicator light comes on when the engine is not started?	Go to Step 3	Burning out of indicator lamp or disconnection of harness wire. Trace this chart from the start after repair or replace.
3	Start the engine. Is the 4WD switch turned from 2WD to 4WD?	Short-circuit (body short) on harness of the 4WD switch. Fault of the 4WD switch (holding the closed condition). Trace this chart from the start after repair or replace.	Push the 4WD switch to 4WD.

3. **Case that the indicator keeps blinking by 2Hz after aforementioned Solution 2 is carried out.**

Step	Action	Yes	No
1	Check the air pressure and wear of all tires. Were problems found?	Try **Solution 2** after adjust the air pressure and replace worn tires.	Go to Step 2
2	Can the transfer lever be operated from High to 4L or vice versa?	Go to Step 3	Disconnection of the motor actuator harness wiring. Trace this chart from the start after repair or replace. Faults on the motor actuator. Trace this chart from the start after replace. Internal faults of transfer case. Disassemble the transfer case for check. Trace this chart from the start after repair or replace.
3	Pull out the hoses from vacuum actuator and operate 4WD switch. Is there negative pressure on either of hoses?	Go to Step 4	Faults on the transfer position switch or its harness. Trace this chart from the start after repair or replace. Faults on the VSV main body, its harness or vacuuming system. Trace the front axle diagnosis chart in this section. After that, trace this chart from the start.
4	Check the axle switch. Were problems found?	Internal faults on axle switch. Trace this chart from the start after replace.	Disconnection on the axle harness. Trace this chart from the start after repair or replace. Faults on Front Axle ASM. Trace the front axle diagnosis chart in this section. After that, trace this chart from the start.

Fault on switching from 4WD to 2WD

1. **Case that indicator does not blink nor turn out.**

Step	Action	Yes	No
1	Does the indicator turn out by ignition off?	Go to Step 2	Short circuit of the indicator harness.
2	Is the 4WD switch on 2WD position?	Disconnection on the 4WD switch harness or breakdown of the 4WD switch in open state. Trace this chart from the start after repair or replace.	Turn the 4WD switch to 2WD position. Trace this chart from the start.

2. **Case that indicator keeps 2Hz blinking after aforementioned Solution 3 is carried out.**

Step	Action	Yes	No
1	Check the air pressure and wear of all tires. Were problems found?	Try **Solution 3** after adjust the air pressure and replace worn tires.	Go to Step 2
2	Can the transfer lever be operated from High to 4L or vice versa?	Faults on the harness wiring of motor actuator. Trace this chart from the start after repair or replace. Internal faults on transfer case. Disassemble the transfer case for check. Trace this chart from the start after repair or replace. Faults on the motor actuator. Trace this chart from the start after or replace.	Go to Step 3
3	Pull out the hoses from vacuum actuator and operate 4WD switch. Is there negative pressure on either of hoses?	Go to Step 4	Faults on the transfer position switch or its harness. Trace this chart from the start after repair or replace. Faults on the VSV main body, its harness or vacuuming system. Trace the front axle diagnosis chart in this section. After that, trace this chart from the start.
4	Check the axle switch. Were problems found?	Internal faults on axle switch. Trace this chart from the start after replace. Faults on Front Axle ASM. Trace the front axle diagnosis chart in this section. After that, trace this chart from the start.	Short circuit (body short) or disconnection of the axle harness. Trace this chart from the start after repair or replace.

3. **Case that indicator's blinking changes to 4Hz after aforementioned Solution 4 is carried out.**

Step	Action	Yes	No
1	Can the transfer lever be operated from High to 4L or vice versa?	Faults on the harness wiring of motor actuator. Trace this chart from the start after repair or replace. Faults on the motor actuator. Trace this chart from the start after replace. Internal faults on transfer case. Disassemble the transfer case for check. Trace this chart from the start after repair or replace.	Faults on the 4WD control unit. Trace this chart from the start after replace.

Front Axle Diagnosis

- When the 4WD switch is operated from 4H to 2H, indicator light does not go out.

Step	Action	Yes	No
1	Drive slow 100 — 200m after a few minutes” idling. Has indicator light gone out?	All right.	Go to Step 2
2	Jack up front tires. Does the right side of front wheel rotate when the left side of front wheel is rotated?	Go to Step 4	Go to Step 3
3	1. Check the actuator switch. 2. Check the circuit to indicator. Was a problem found?	Trace this chart from the start after repair or replace.	Disassemble axle ASM for check. Trace this chart from the start after repair or replace.
4	1. Check the VSV valve. 2. Check the circuit to VSV valve. Was a problem found?	Trace this chart from the start after repair or replace.	Go to Step 5
5	Is vacuum piping all right? (tank, hose, & pipe damage or trouble)	Go to Step 6	Trace this chart from the start after repair or replace.
6	Does actuator work all right?	Trace this chart from the start.	Disassemble axle ASM for check. Trace this chart from the start after repair or replace.

- When the 4WD switch is operated from 2H to 4H, indicator light is not actuated.

Step	Action	Yes	No
1	Drive slow 100 — 200m after a few minutes" idling. Has indicator light actuated?	All right.	Go to Step 2
2	Jack up front tires. Does not the right side of front wheel rotate when the left side of front wheel is rotated?	Go to Step 4	Go to Step 3
3	1. Check the actuator switch. 2. Check the circuit to indicator. Was a problem found?	Trace this chart from the start after repair or replace.	Disassemble axle ASM for check. Trace this chart from the start after repair or replace.
4	1. Check the VSV valve. 2. Check the circuit to VSV valve. Was a problem found?	Trace this chart from the start after repair or replace.	Go to Step 5
5	Is vacuum piping all right? (tank, hose, & pipe damage or trouble)	Go to Step 6	Trace this chart from the start after repair or replace.
6	Does actuator work all right?	Trace this chart from the start.	Disassemble axle ASM for check. Trace this chart from the start after repair or replace.

Shift on the Fly Vacuum Piping and Electric Equipment (For Push Button Type)

Vacuum Piping Diagram

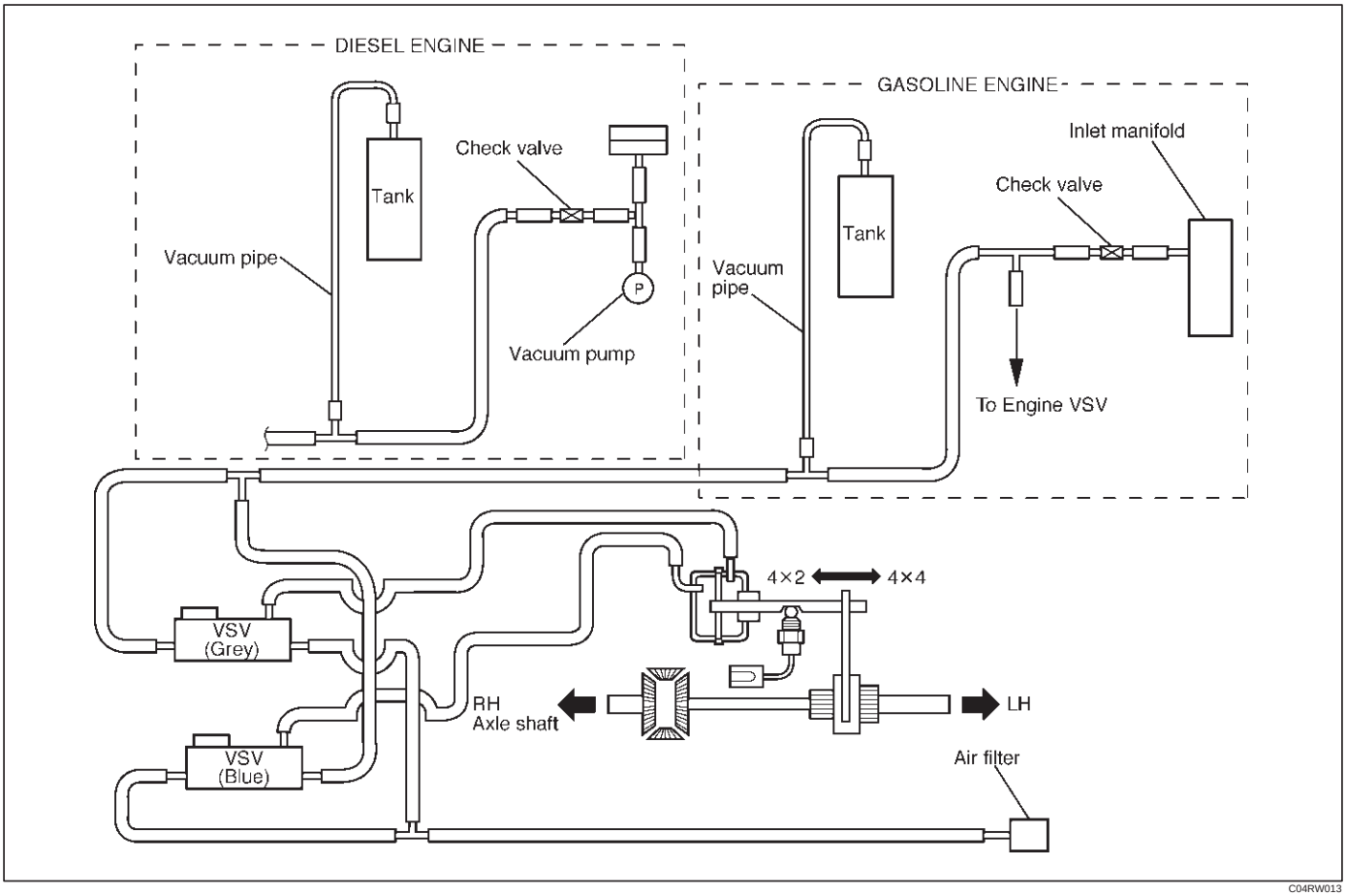

C04RW013

VSV Assembly, Actuator Assembly

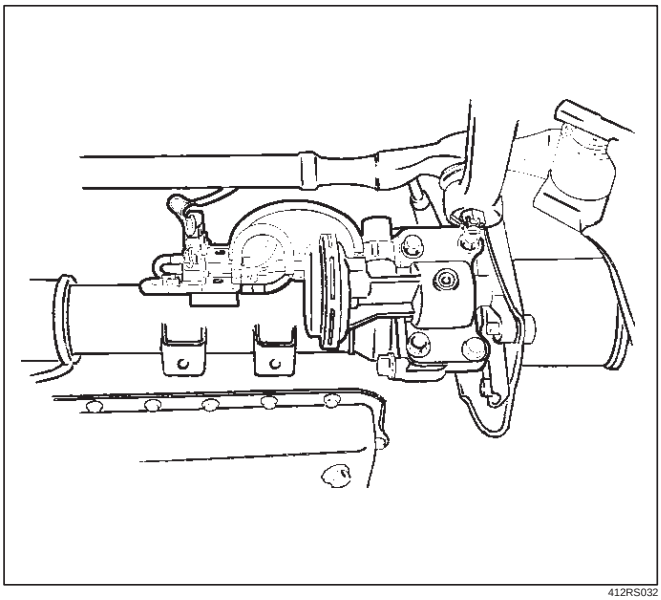

412RS032

Vacuum Tank

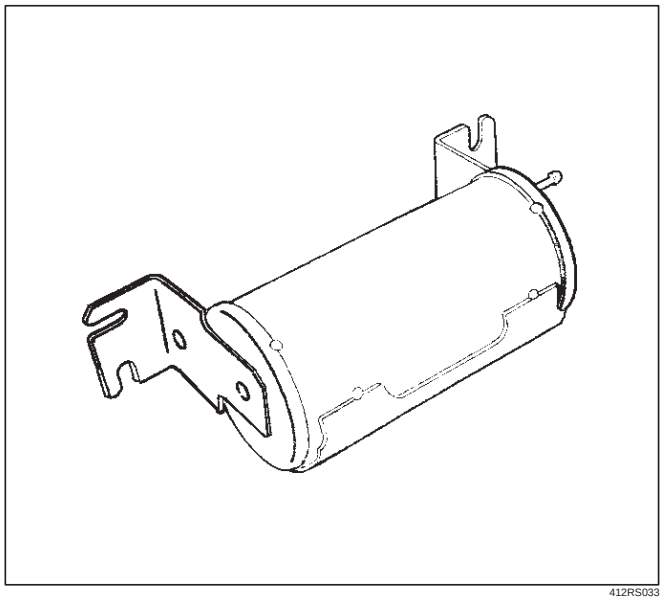

412RS033

Inspection and Repair

Vacuum Piping

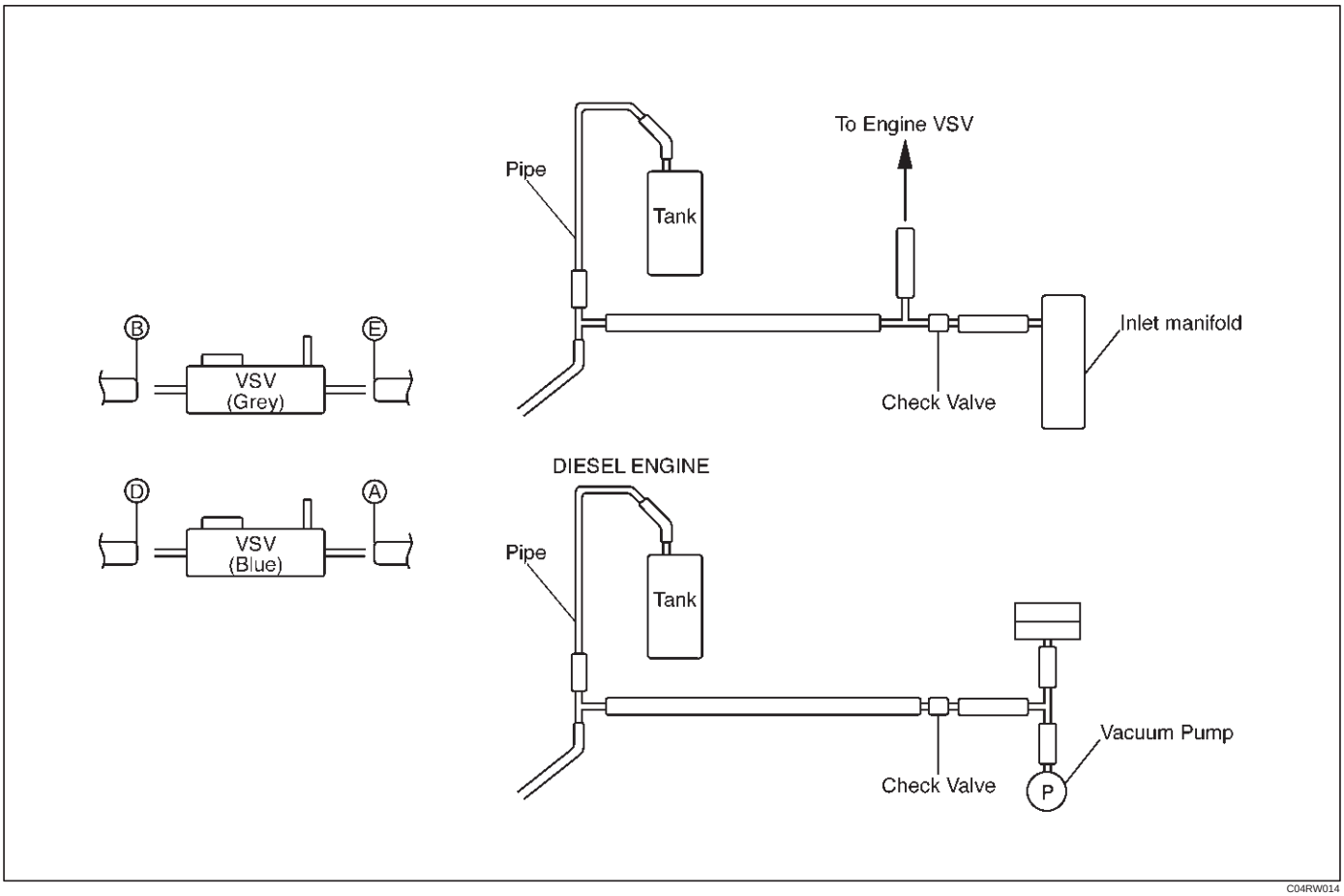

C04RW014

1. Pull out the Hose A in figure and install a vacuum gauge.
2. Plug up Hose B in figure to prevent the leak of vacuum.
3. Start the engine and measure vacuum 2 or 3 minutes afterward.
4. Repeat 1) and 2) but with Hose A plugged and Hose B pulled out.
5. If vacuum measures –400mmHg, or if it shows a sudden drop immediately after engine stop, inspect the hose, tank, and pipe for damage.

NOTE: Be careful not to permit the entry of dust and water during inspection.

6. Pull out Hose D in above illustration.
7. Plug Hose E in above illustration.
8. Make sure that Hose D in above illustration is under atmospheric pressure.
9. Pull out Hose E and plug Hose D, and make sure that Hose E is under atmospheric pressure.
10. If Check 8) or 9) has revealed stoppage, check and see that there is no bend, foreign matter in the hose or in the filter. If there is trouble, repair or replace.

Check Valve

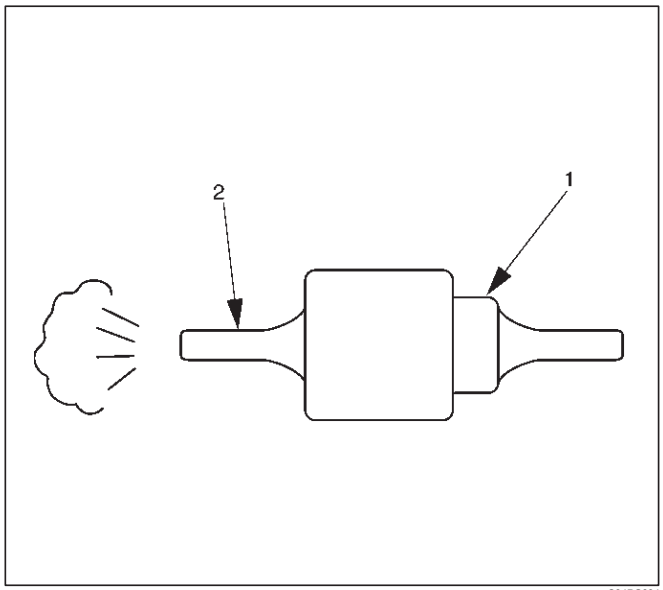

C04RS004

1. Apply vacuum from the orange colored side(1).

   Vacuum:–400mmHg
2. Check leakage of vacuum.
3. Make sure that vacuum cannot be applied from the black colored side(2).

4. If vacuum is not applicable as much as –400mmHg, and if there is resistance on the intake side, replace with a new check valve.

VSV Assembly

Inspect the vehicle side harness as follows:

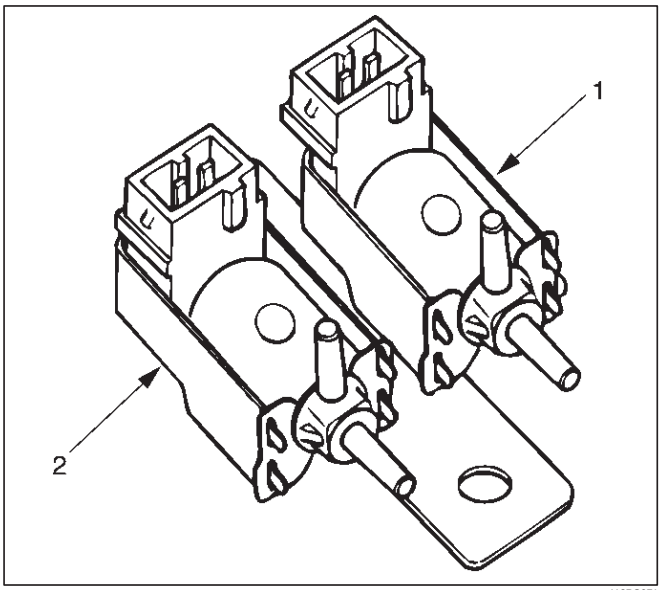

412RS071

Legend
(1) Grey
(2) Blue

1. Remove connector.
2. Shift transfer lever to 2H and start the engine.

NOTE: Do not move the vehicle while inspection.

3. Make sure that there is continuity in the vehicle side of harness. If there is no continuity, check transfer shift switch and wiring.

Inspect both VSVs as follows:

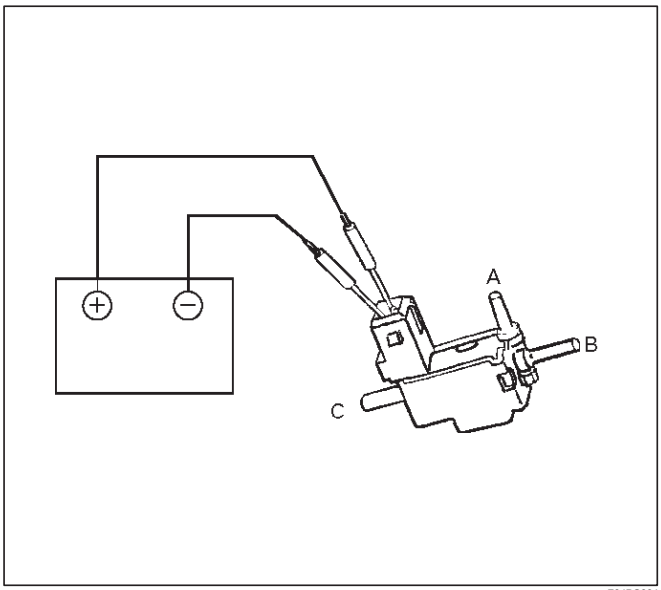

F04RS004

1. With battery not connected (Usual).
   A–C:There is continuity
   B:Closed
2. With battery connected
   A – B:There is continuity
   C:Closed
3. If 1) and 2) fail, replace with a new VSV.

Axle Position Switch

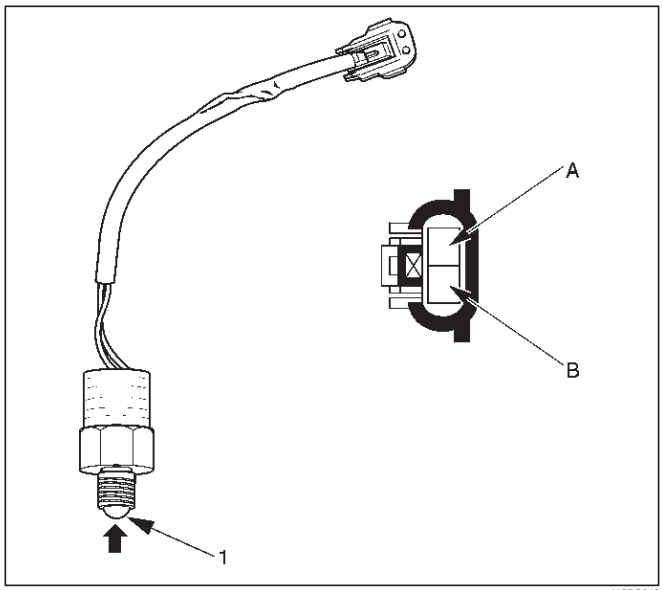

412RS048

1. With ball (1) being free
   A – B:There is continuity
2. With ball forced into the switch
   A – B:No continuity
3. If 1) and 2) fail, replace with a new switch.

Motor Actuator Assembly

Inspect the function of the motor actuator assembly as follows:

1. Disassemble the motor actuator from transfer rear case.

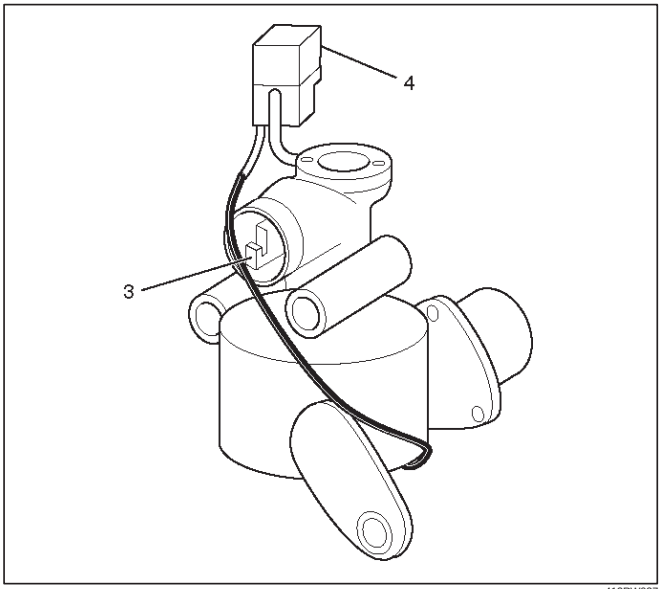

412RW037

Legend
(3) Shift Rod
(4) Connector

2. Connect the terminals as shown in figure.

Shift rod of the motor actuator moves and stops at 4WD position.

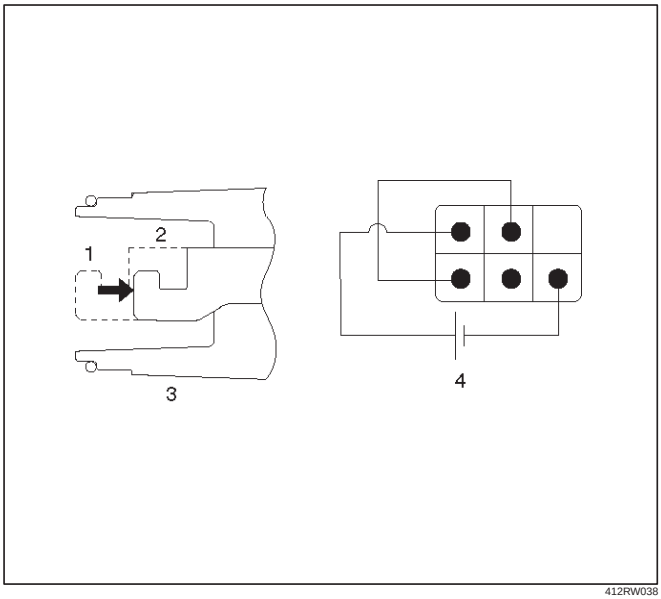

412RW038

Legend
(1) 2WD
(2) 4WD
(3) Shift Rod
(4) Connector

3. Connect the terminals as shown in figure.

Shift rod of the motor actuator moves and stops at 2WD position.

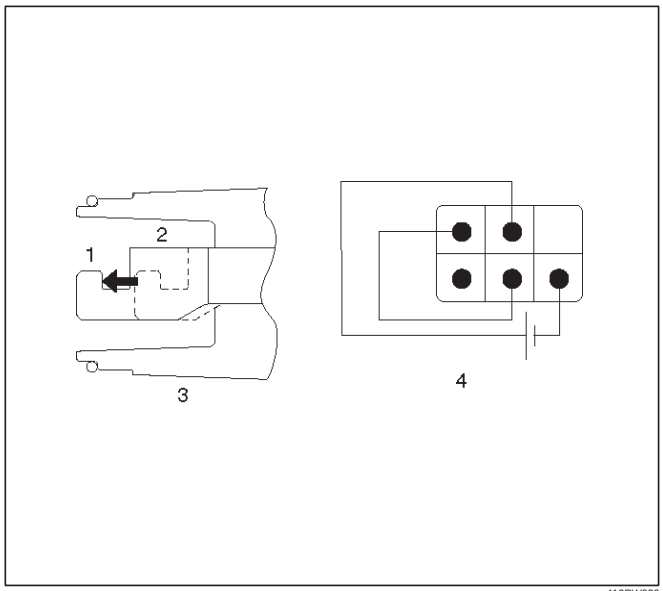

412RW039

Legend
(1) 2WD
(2) 4WD
(3) Shift Rod
(4) Connector

4. If 2) and 3) fail, replace with a new motor actuator.

Transfer Position Switch

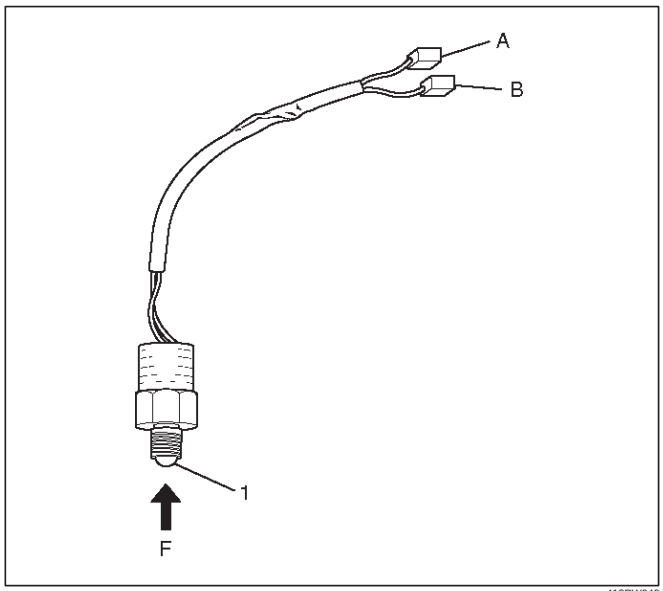

412RW040

Legend
(1) Ball

1. With ball being free.

A–B : There is continuity.

2. With ball forced into the switch.

A–B : No continuity.

3. If 1) and 2) fail, replace with a new switch.

4WD Control Unit (For Push Button Type)

4WD Control Unit Associated Parts

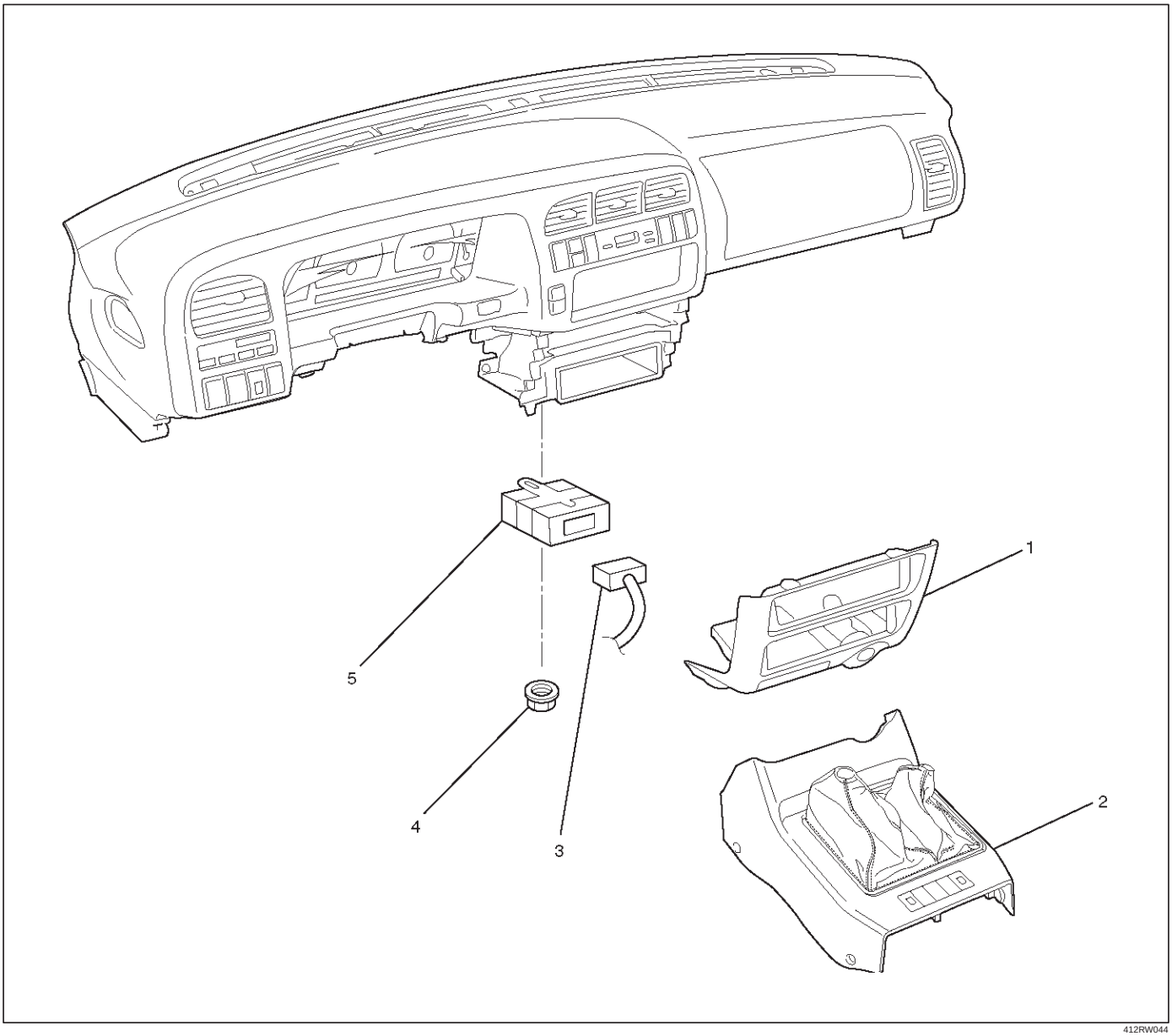

412RW044

Legend

(1) Lower Cluster Assembly
(2) Front Console Assembly
(3) Harness Connector
(4) Nut
(5) 4WD Control Unit

Removal

1. Remove lower cluster assembly and front console assembly.
   Refer to Interior Trim in Body and Accessories section.
2. Remove nut.
3. Remove 4WD control unit.
4. Disconnect harness connector (1).

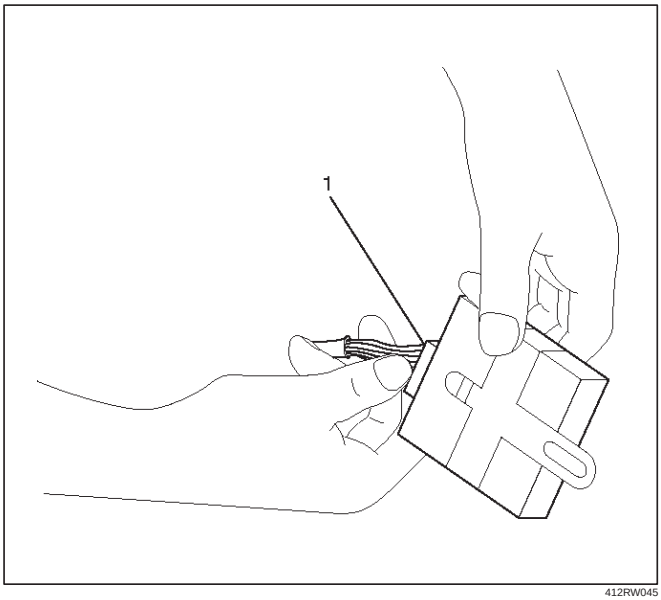

412RW045

Legend

(1) Harness Connector

Installation

1. Connect harness connector, then install 4WD control unit.
2. Install lower cluster assembly and front console assembly.

MEMO

DRIVELINE/AXLE

DRIVELINE CONTROL SYSTEM (TOD)

CONTENTS

Service Precaution 4B2–1
General Description 4B2–2
System Components 4B2–4
Parts Location 4B2–4
Functions of Indicator Lamp 4B2–8
Diagnosis 4B2–13
Basic Diagnostic Flow Chart 4B2–17
Parts Location 4B2–18
Circuit Diagram 4B2–22
Connector List 4B2–34
Checking Failed Pin 4B2–36
Checking Failed TOD Control Unit Pin 4B2–39
Diagnostic Trouble Codes 4B2–43
Diagnosis from Trouble Codes 4B2–44
Trouble Diagnosis Depending on The Status of TOD Indicator 4B2–74
Diagnosis from Symptom 4B2–114

Service Precaution

WARNING: IF SO EQUIPPED WITH A SUPPLEMENTAL RESTRAINT SYSTEM (SRS), REFER TO THE SRS COMPONENT AND WIRING LOCATION VIEW IN ORDER TO DETERMINE WHETHER YOU ARE PERFORMING SERVICE ON OR NEAR THE SRS COMPONENTS OR THE SRS WIRING. WHEN YOU ARE PERFORMING SERVICE ON OR NEAR THE SRS COMPONENTS OR THE SRS WIRING, REFER TO THE SRS SERVICE INFORMATION. FAILURE TO FOLLOW WARNINGS COULD RESULT IN POSSIBLE AIR BAG DEPLOYMENT, PERSONAL INJURY, OR OTHERWISE UNNEEDED SRS SYSTEM REPAIRS.

CAUTION: Always use the correct fastener in the proper location. When you replace a fastener, use ONLY the exact part number for that application. ISUZU will call out those fasteners that require a replacement after removal. ISUZU will also call out the fasteners that require thread lockers or thread sealant. UNLESS OTHERWISE SPECIFIED, do not use supplemental coatings (Paints, greases, or other corrosion inhibitors) on threaded fasteners or fastener joint interfaces. Generally, such coatings adversely affect the fastener torque and the joint clamping force, and may damage the fastener. When you install fasteners, use the correct tightening sequence and specifications. Following these instructions can help you avoid damage to parts and systems.

General Description

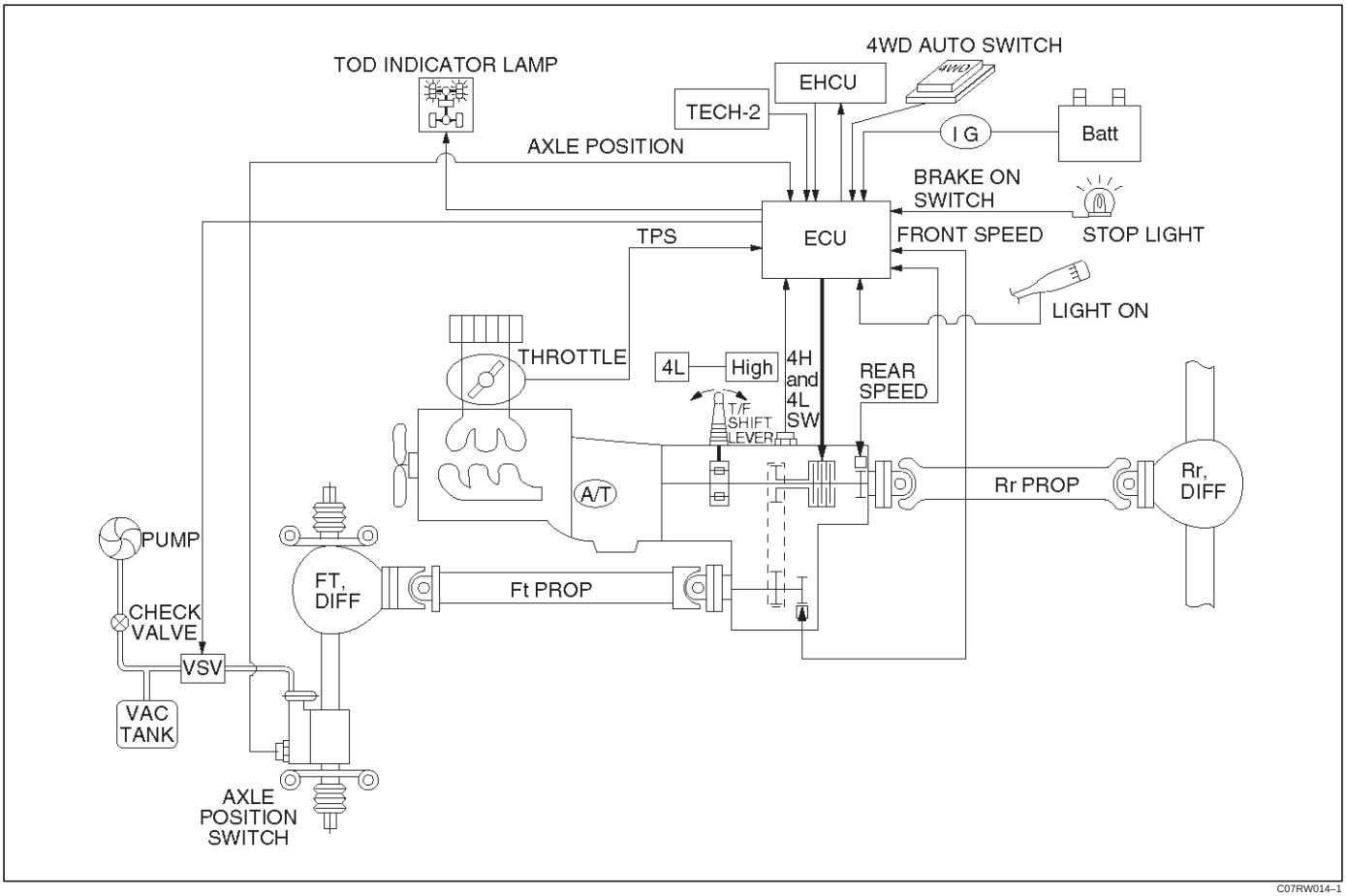

TOD (Torque on Demand) system is traction state control system to vehicle.

Transfer Position and Drive Mode

Three drive modes can be selected through operation of 4WD AUTO switch and transfer lever.

Transfer Position	4WD AUTO SW	Mode	Drive mode
HIGH	ON (NORMAL)	2H	Rear wheel drive
	OFF (PUSHED)	TOD	Electronically controlled torque split four wheel drive
4L	ON/OFF	4L	Low-speed mechanical lock-up four wheel drive

The electronic control unit (ECU) judges the signals from the transfer lever and 4WD AUTO switch, and controls the transfer drive mode and shift-on-the-fly system status.

TOD Control

The TOD position usually drives the rear wheels, and transmits the torque to the front wheels with the help of electronically controlled torque split mechanism according to running conditions encountered. The driving force is directly transmitted to the rear wheels. This force is split by the transfer and delivered to the front wheels. The magnitude of the torque transmitted to the front wheels is controlled by changing the pressing force of the multi plate disk clutch built in the transfer unit. The pressing force of the clutch is controlled by changing the duty cycle to the electromagnetic coil mounted to the rear of the clutch. When the clutch is completely disengaged, the rear wheels are driven. When the clutch is completely engaged, a rigid four wheel drive mode is obtained. The torque split status is controlled continuously between the rear wheel and four wheel drive modes. This system includes front and rear speed sensors, and receives throttle position sensor information from ECM.

The control unit receives signals sent from these sensors and changes the pressing force of the multi plate disk clutch to determine the torque distribution on the front and rear wheels. Therefore, when the slip of the rear wheels is increased against the current torque level in the normal rear wheel drive mode, the control unit detects the slip

condition, determines the optimum torque based on the feedback control logic, and increases the torque to the front wheels.

The control unit uses the signal from the throttle position sensor to predict the future vehicle condition and the intention of the driver with respect to acceleration and deceleration, and determines the initial torque distribution using these data and the information from the speed sensors.

In case of small circle turning in the parking lot, for example, the control unit minimizes the clutch pressing force to restrict a braking phenomenon. When the ABS becomes active, the control unit optimizes the clutch pressing force to ensure stable braking.

TOD Indicator Control

The TOD indicator on the instrument panel informs the driver of the current working status of the transfer unit. The information consists of two items: the drive mode (2H, TOD, 4L, transition) and the torque split status of the TOD (torque distribution level). The indicator can display occasional errors and corresponding error codes.

System Components

Parts Location

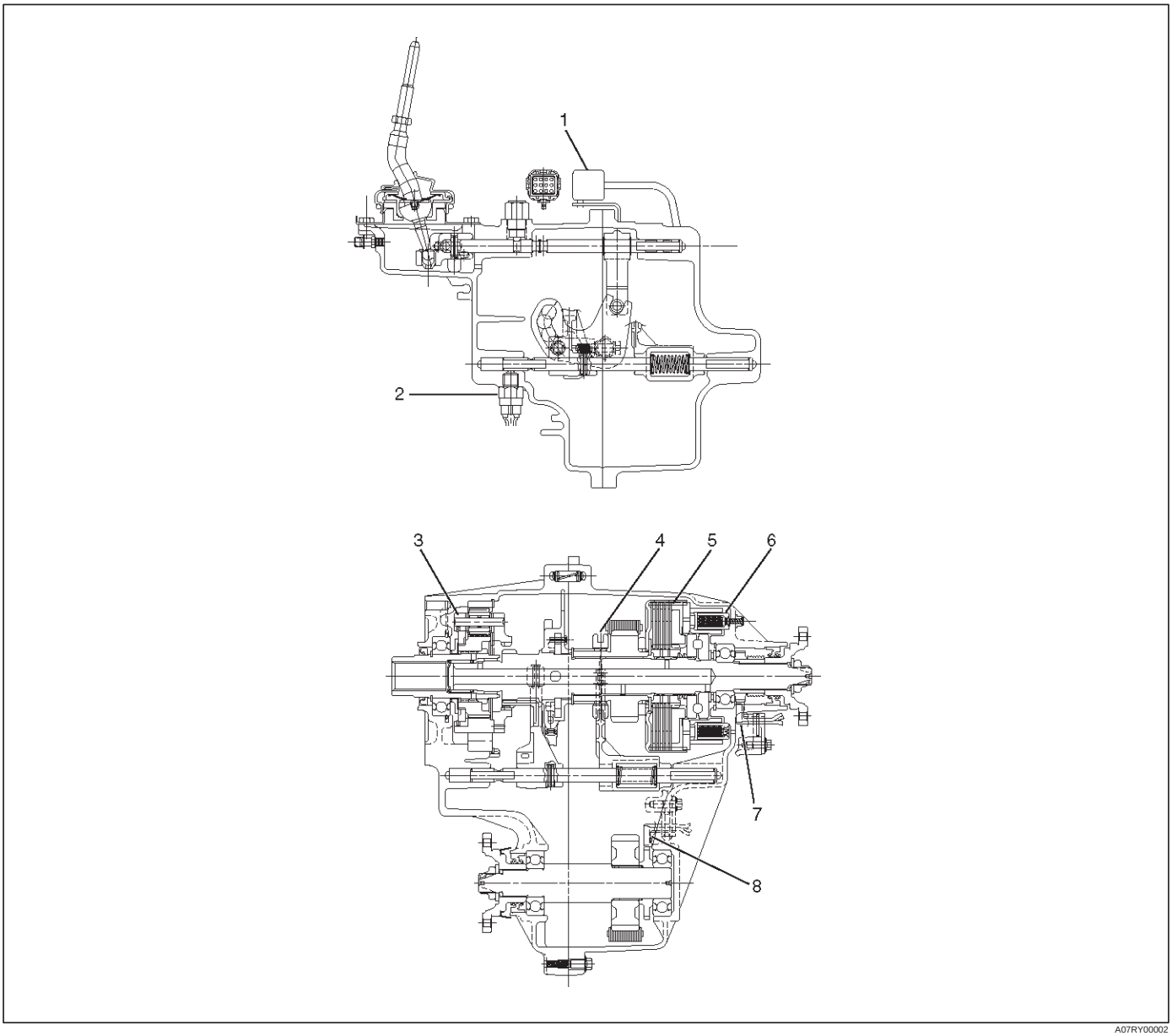

A07RY00002

Legend

(1) T/F Connector
(2) 4H and 4L Switch
(3) High-Low Planetary Gear Set
(4) Mechanical Lock
(5) Multi Plate Disk Clutch Pack
(6) Electromagnetic Coil
(7) Rear Speed Sensor
(8) Front Speed Sensor

Front and Rear Speed Sensors

The sensors are built in the transfer case, detect the rotation of rotors directly coupled to the propeller shafts. Thirty rectangular pulses are output per one rotation of the propeller shaft.

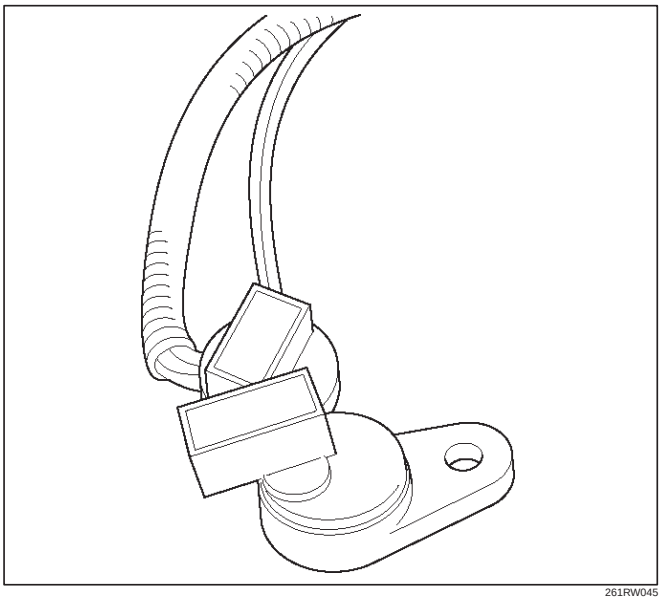

261RW045

Electromagnetic Coil

Receives the duty signals from the TOD control unit and controls the pressing force of the clutch pressure cam.

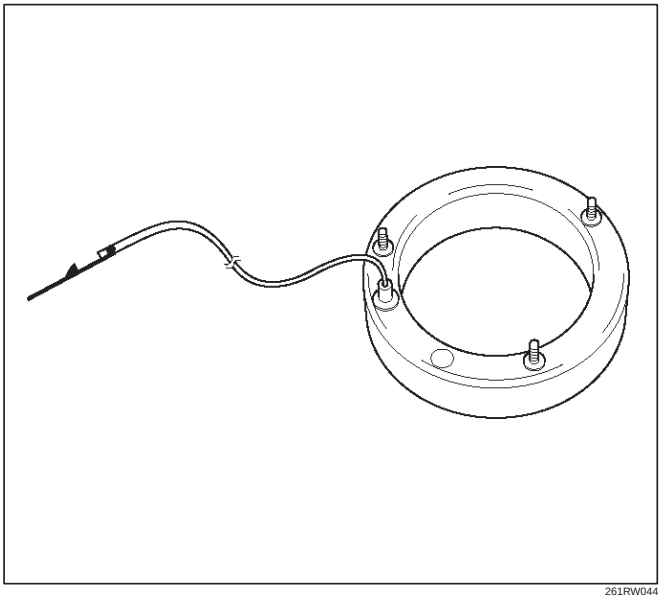

261RW044

Multi Plate Disk Clutch Pack

Transmits the torque determined by the clutch pressing force to the front propeller shaft via the front drive chain.

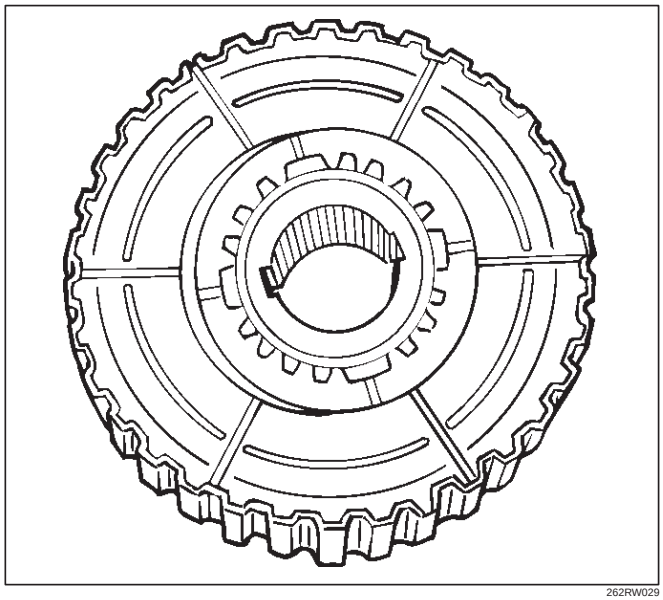

262RW029

Mechanical Lock Sleeve

Couples the front and rear propeller shaft mechanically when the transfer shaft is in the 4L position.

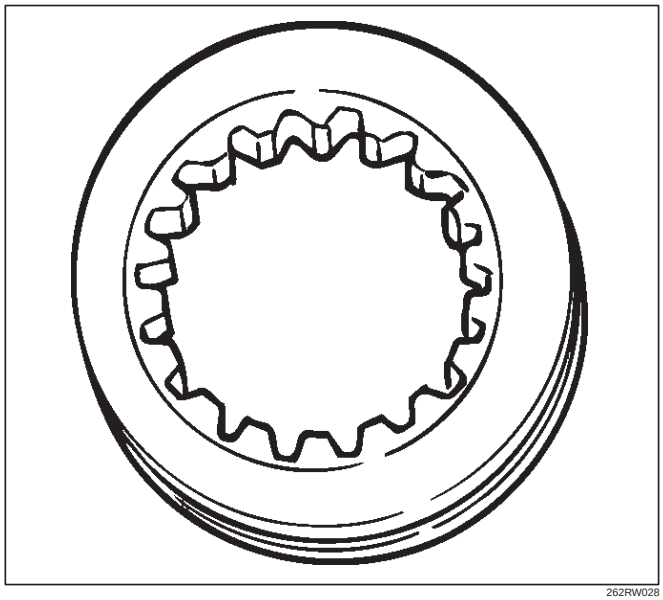

262RW028

High-Low Planetary Gear Set

Establishes an auxiliary transmission mechanism. When the transfer shift lever is set to the 2H or TOD position, the reduction gear ratio is 1.000 and the corresponding driving force is generated. When the transfer shift lever is set to the 4L position, the reduction gear ratio is 2.480 and the corresponding driving force is generated.

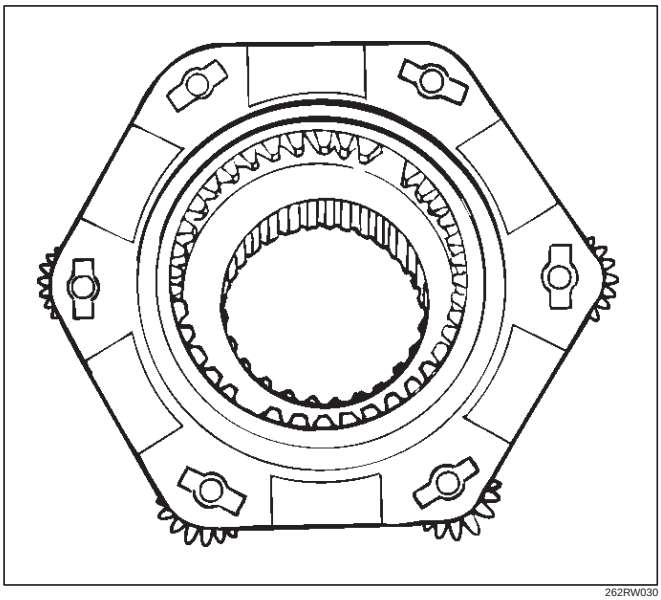

262RW030

4H and 4L Switch

Detects the shift position of the transfer from the movement of the transfer lever and outputs signals to the TOD control unit.

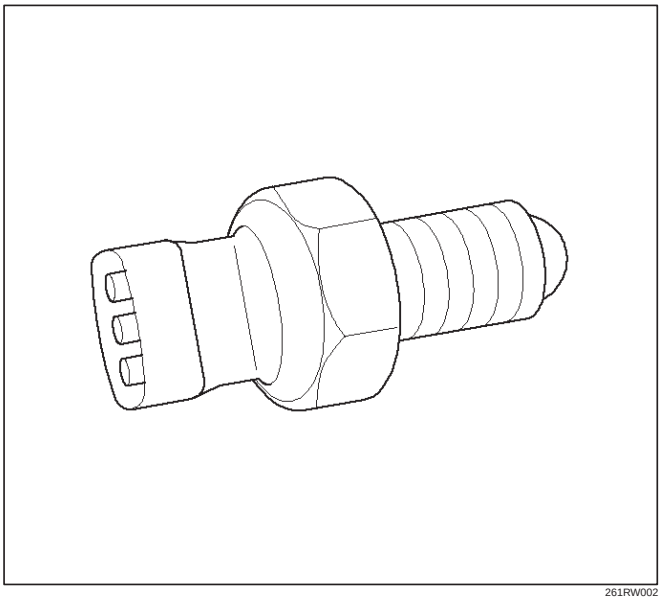

261RW002

Transfer Connector

Transmits the input and output signals of the speed sensors, electromagnetic coil, and 4H and 4L switche to the vehicle harness. A waterproof 12-pin type is used.

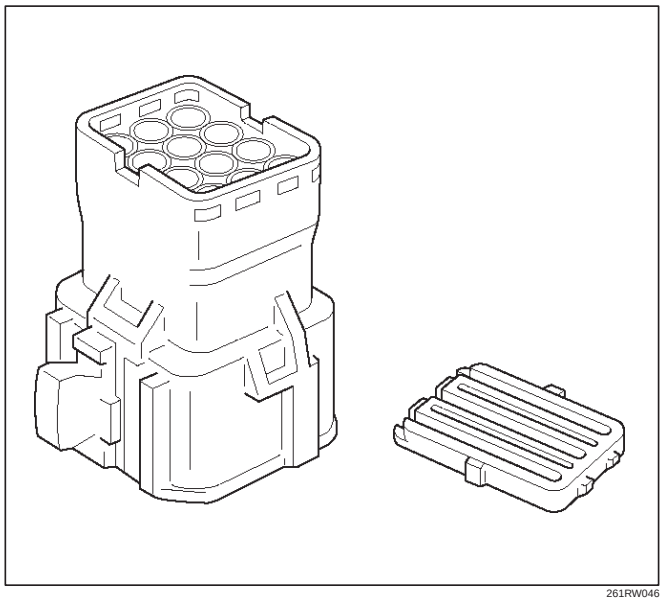

261RW046

TOD Indicator Lamps (on the instrument panel)

Inform the following items.

- Bulb check
- Drive mode
- ABS IN status
- BRAKE ON status

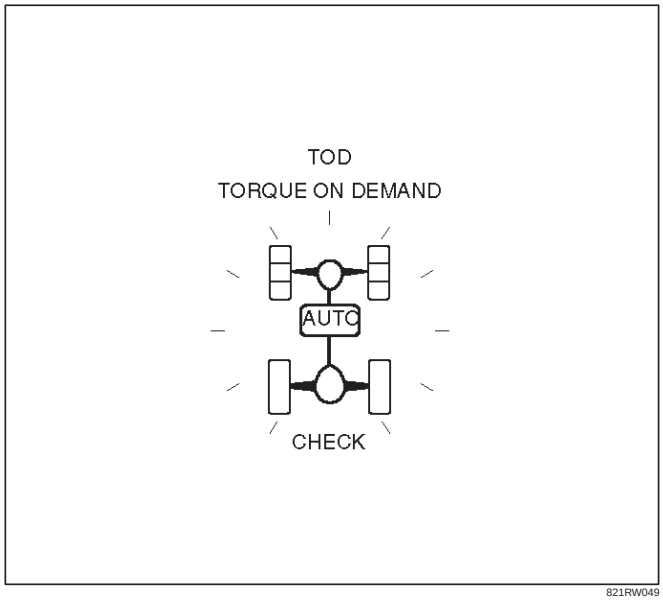

821RW049

Check Lamp

Inform the following items.

- Bulb check
- Fail (fail alarm)
- Trouble code
- Diesel/gasoline MAP

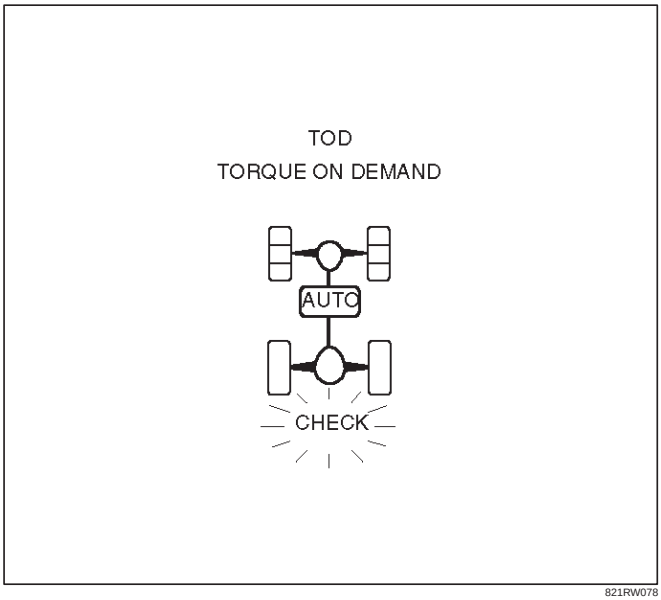

821RW078

TOD ECU

This control unit is mounted to the front right hand seat via a special bracket.

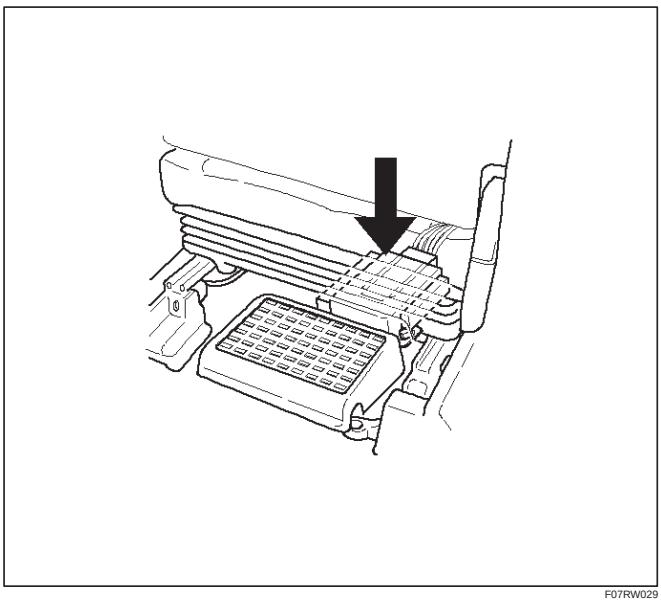

F07RW029

Functions of Indicator Lamp

TOD Indicator Lamps

Output condition					Indicator indicate state	Remark	4WD Auto sw state	Each sw state			
ECU Terminal No.								4WD AUTO SW point of contact	4H SW	4L SW	AXLE SW
25	26	27	28	29							
1	1	1	1	0	2H Mode			ON	OFF	OFF	OFF
0	0	0	1	0	4L Mode		ON / OFF	OFF	ON	ON
1	1	1	1	1	N Mode		ON / OFF	ON	ON	OFF
1	1	1	0	0	TOD Mode1	Traction distribution about 0:100					
1	1	0	0	0	TOD Mode2	Traction distribution about 15:85					
1	0	0	0	0	TOD Mode3	Traction distribution about 30:70		OFF	OFF	OFF	ON
0	0	0	0	0	TOD Mode4	Traction distribution about 50:50					

1=12V 0=GND

NOTE : Traction distribution is about a standard.

C04RY00014

Indication During Transition of Transfer Lever

When the 4WD AUTO SW is selected or the transfer lever is shifted, and the signals from the AXLE switch do not comply with the signal conditions of the 4H and 4L switch, the transfer lever position signals generated by the 4H and 4L switch and the N position signals are repeatedly output at an interval of 0.8 second.

NOTE: After the 4WD AUTO SW and the transfer lever is set to the specified position and the AXLE switch generates compliant signals, the normal output status is returned.

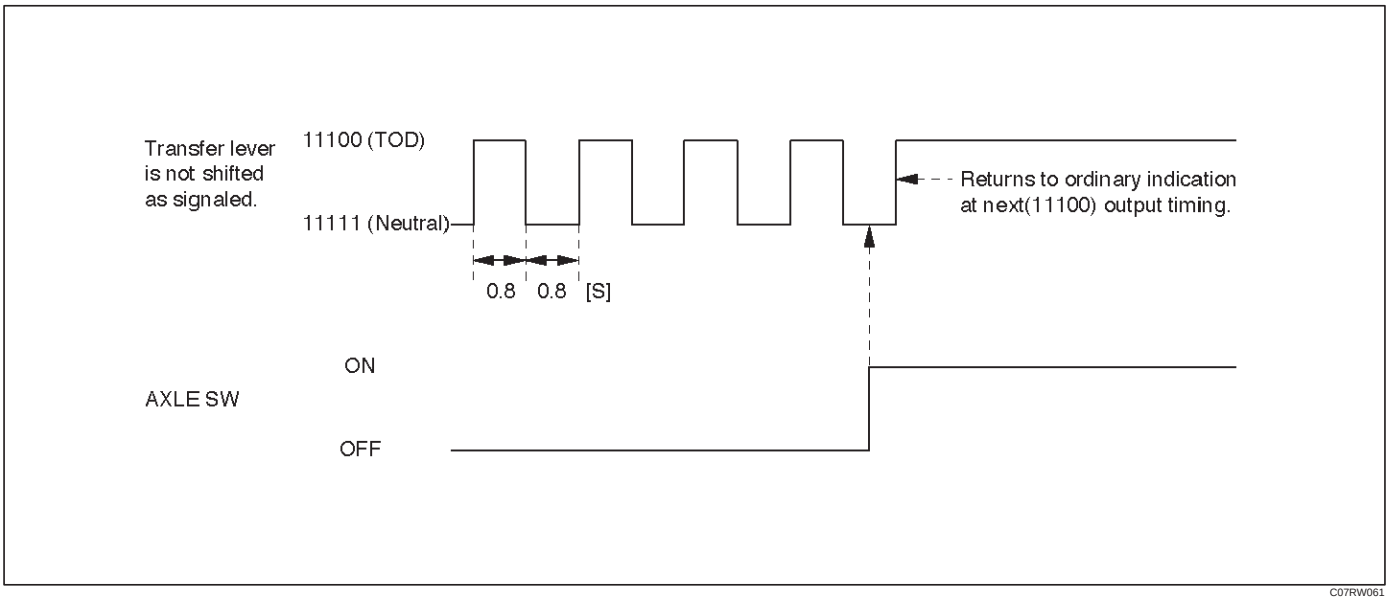

C07RW061

Bulb Check

When the starter switch is turned on, the TOD indicator lamps go on as shown below.

NOTE: Once the starter switch is turned on, all the TOD indicator lamps are lit for two seconds even if the transfer lever is in any position.

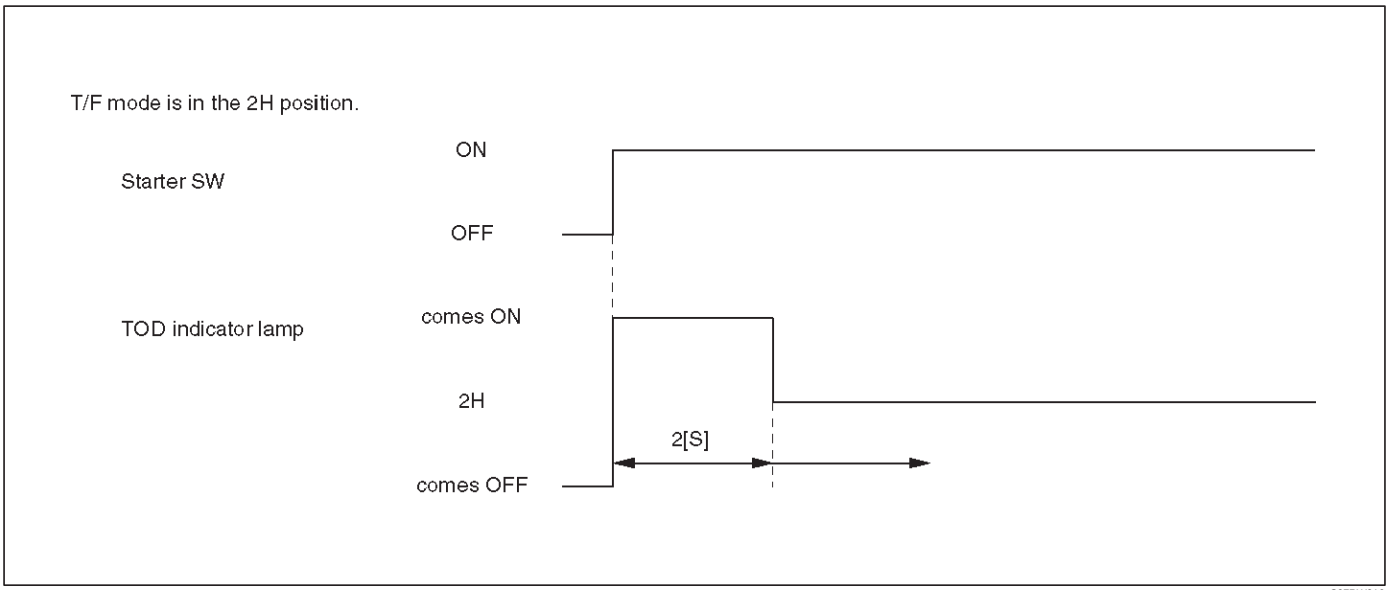

C07RW016

Simplified checking method of ABS IN and BRAKE ON signals:

In the event that any of the signal inputs listed below are observed while the self-diagnostic code is being displayed (the self-diagnostic connector is short-circuited to GND), you can simply check the ABS IN and BRAKE ON signals as shown in the figures below.

1	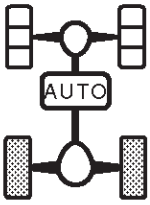	• In case of ABS IN signal being inputted, TOD indicator light is on as illustrated while the signal is inputted.
2	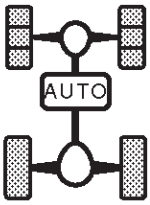	• In case of BRAKE ON signal being inputted, TOD indicator light is on as illustrated while the signal is inputted.
3	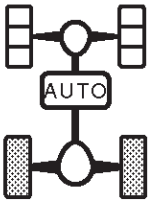	• When “1, 2” signals are inputted simultaneously, signal “1” (ABS IN) is indicated preferentially.
4	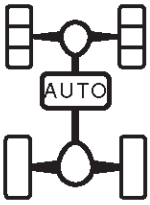	• In cases other than “1, 2, 3”, the indication is always as illustrated. (This is light-off mode) • TOD indicator light returns to usual control (mode) at 12 km/h or more.

C07RW017

Check Lamp

Check Lamp Bulb Check

When the starter switch is turned on in the normal state, the control unit turns on the CHECK lamp to check the bulb.

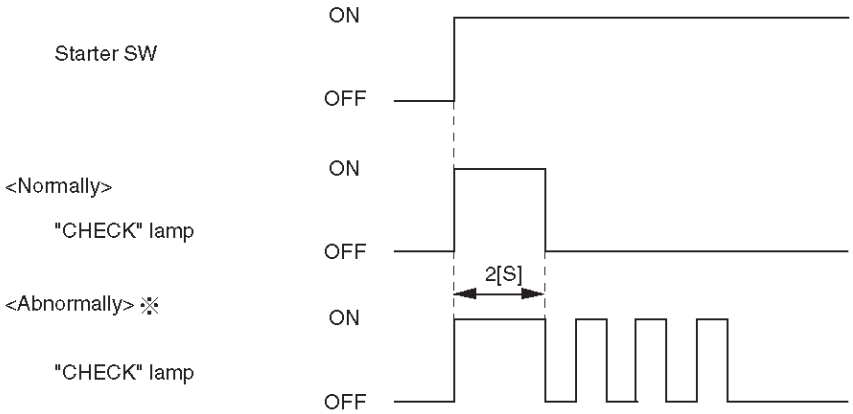

C07RW019

The CHECK lamp also has the following functions.

D-G MAP recognition and display (The control unit displays what type of vehicle, diesel or gasoline vehicle, it recognizes.)

1. Short-circuit the self-diagnostic connector.
2. Turn on the starter switch. (Displays with respect to the self-diagnosis begin to appear.)

NOTE: Do not start the engine.

3. Shift the transfer lever to the neutral position between HIGH and 4L.
4. After all the conditions in 1 through 3 above are met, set the throttle to the WOT (wide open throttle) position (i.e., full open position). The display of the self-diagnosis is temporarily suspended, and the CHECK lamp begins to display that MAP is recognized by the TPS (throttle position sensor) according to the current conditions.

NOTE: If the TPS has failed, this function might not work.

1. When the control unit recognizes the vehicle as gasoline type, the CHECK lamp is turned on for five seconds and this mode is repeated at an interval of 0.3 second.
2. When the control unit recognizes the vehicle as diesel type, the CHECK lamp is turned off for five seconds and this mode is repeated at an interval of 0.3 seconds.
3. Upon completion of step 4, the system resumes the self-diagnosis. (The self-diagnosis is executed from the beginning.)
5. Turn off the starter switch once. When above conditions are met again in the future, the TPS MAP control can be started.

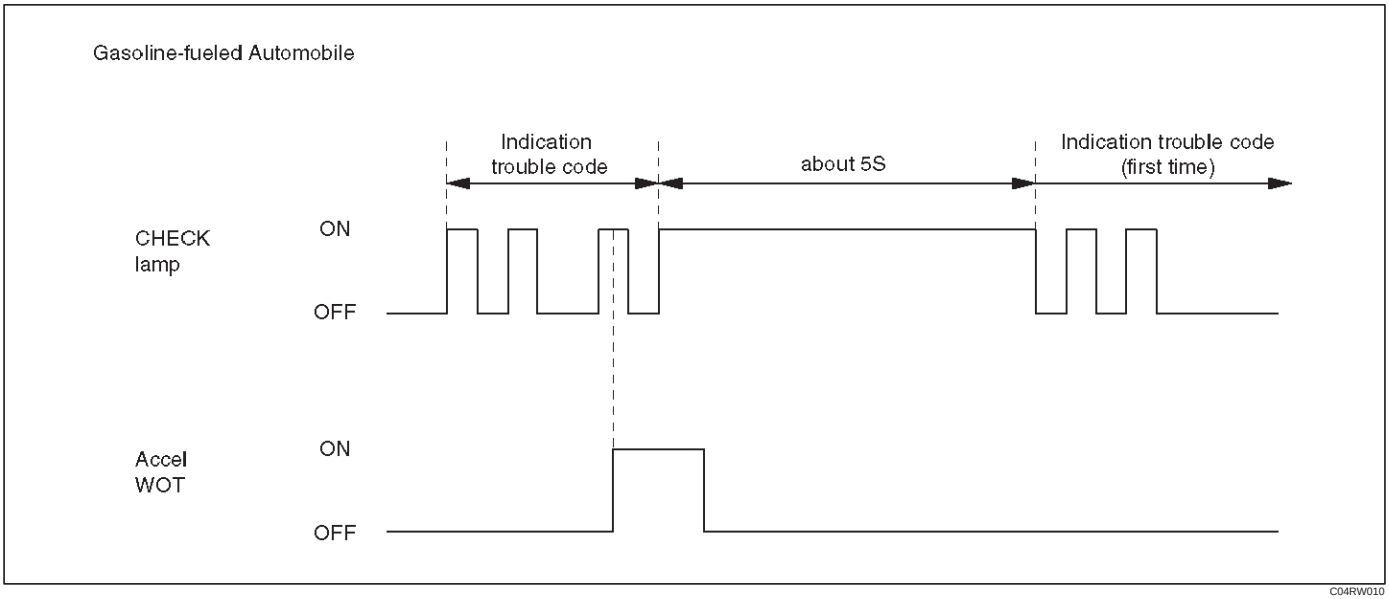

If the accelerator wide–open–throttle(WOT) timing check lamp is on, the subsequent timing will display immediately after the WOT timing check lamp turns off. If the WOT timing check lamp is off, the subsequent lamp timing will display immediately.

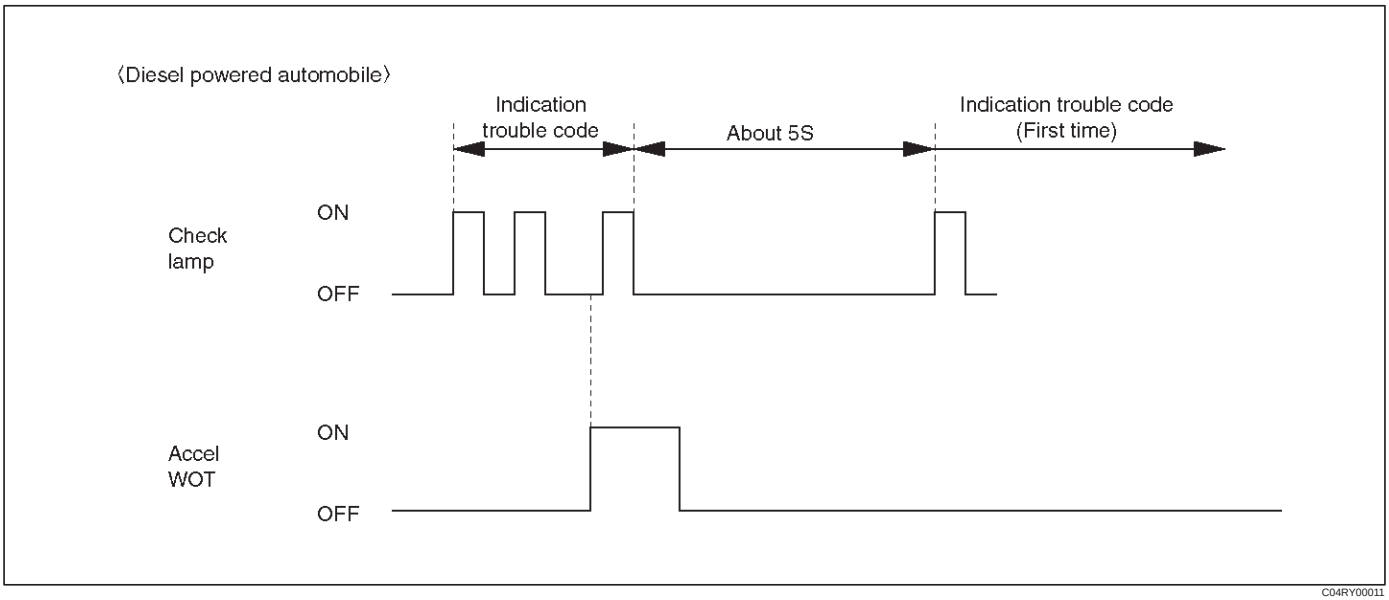

If the WOT timing check lamp is off, the subsequent timing will display immediately after the WOT timing check lamp turns on.
If the WOT timing check lamp is on, the subsequent lamp timing will display immediately.

Diagnosis

General Information Diagnosis

The troubles on TOD are classified into the group that can be identified by the lighting status of the TOD indicator lamps and those that can be recognized as abnormal phenomena of the vehicle by the driver.
The troubles that can be identified by the lighting status of the TOD indicator lamps are examined by the procedures “Diagnosis from Trouble Codes” and “Trouble Diagnosis Depending on The Status of TOD indicator”. The troubles that can be recognized as abnormal phenomena of the vehicle by the driver are examined by the procedure “Diagnosis from symptom”.

Self-diagnosis

The control unit has a function of self-diagnosis. If a trouble occurs in the course of system startup, the control unit blinks the CHECK lamp and saves the trouble code.

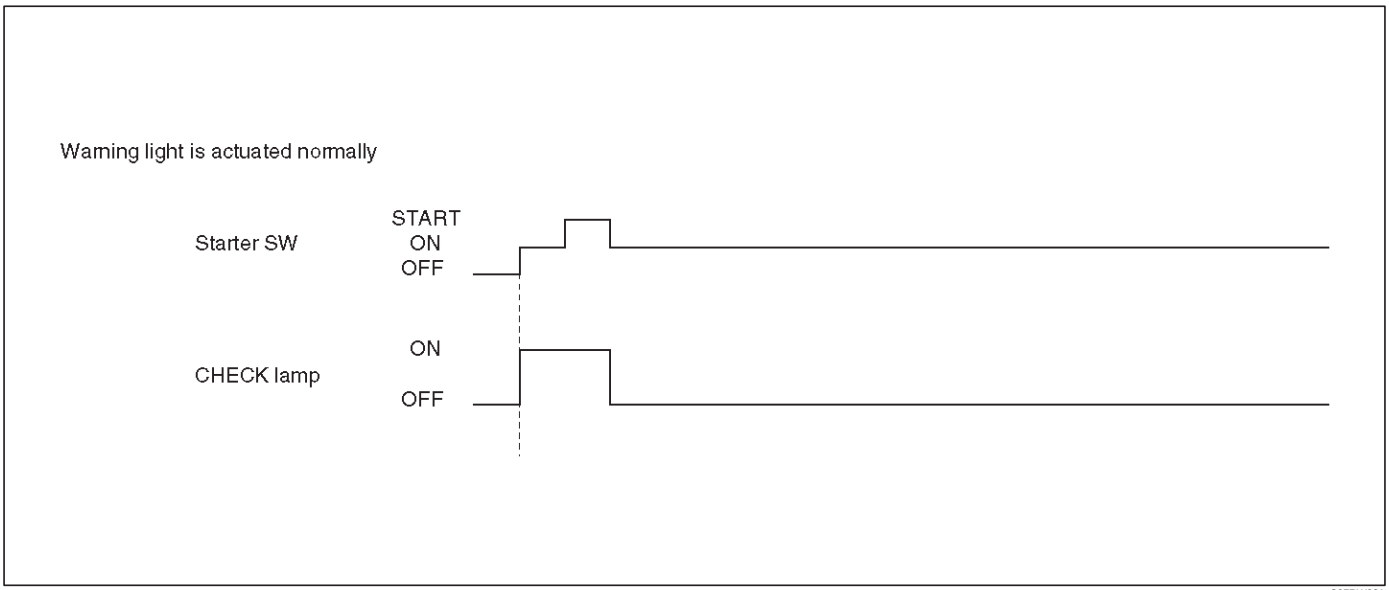

NOTE: If an intermittent fault occurs, the control unit stops blinking upon removal of the fault. The trouble code is saved to the control unit.

Indication Method of Trouble Code

- Short-circuit terminal 8 of the self-diagnostic connector to GND to display the trouble code on the CHECK lamp.

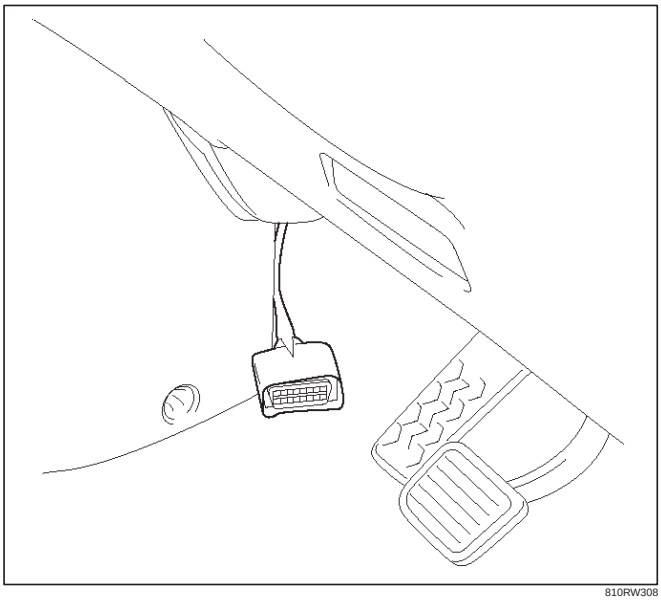

810RW308

- If no trouble codes exist, code “12” is displayed continuously.
- If trouble codes exist, code “12” is displayed three times, and the trouble codes, starting from the smaller code number, are displayed three times respectively.

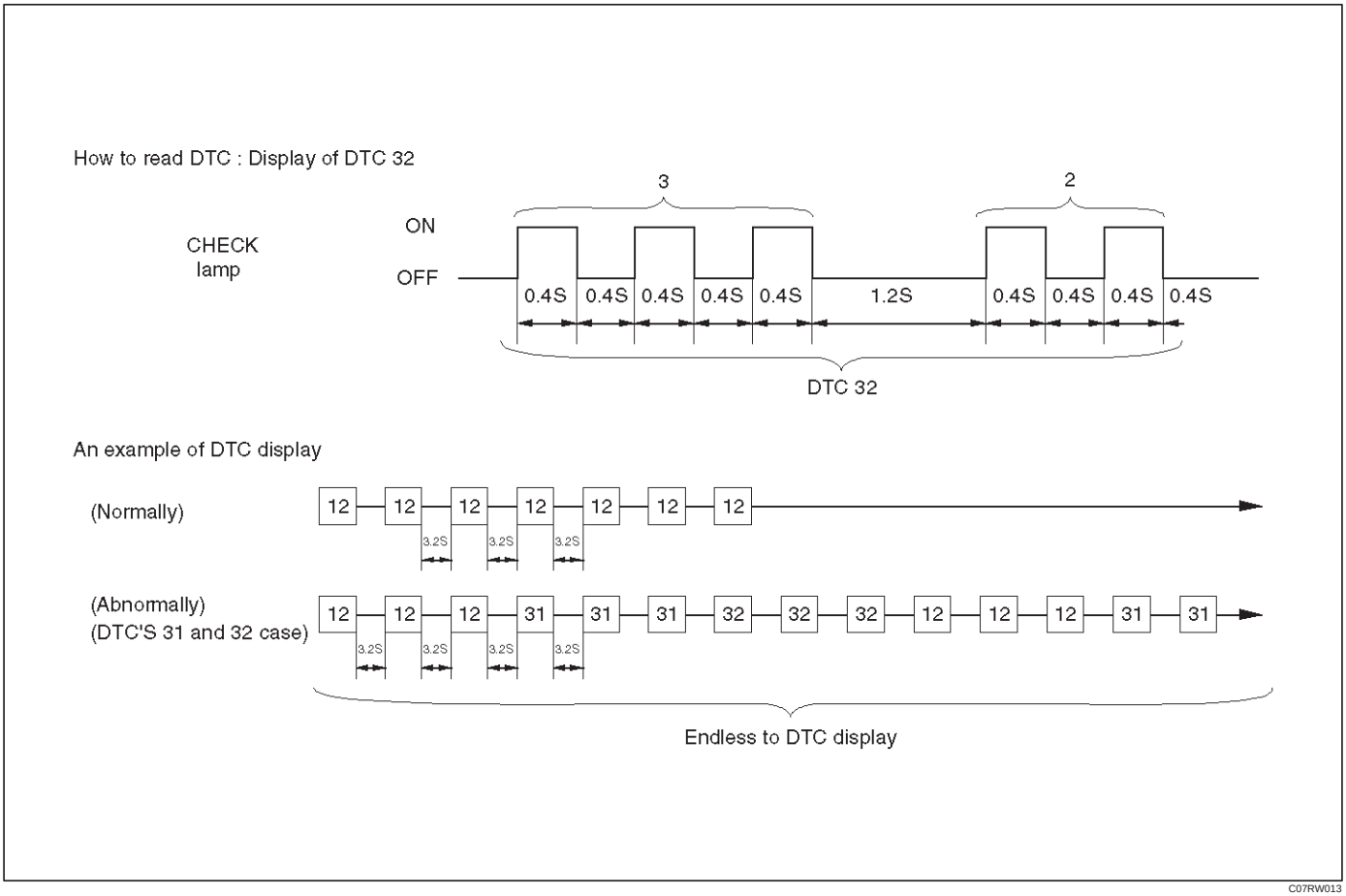

C07RW013

How to Clear The Trouble Code

The trouble codes saved to the control unit can be deleted by the following procedure if the starter switch is being in the OFF position.

1. Shift the transfer lever to the neutral position between HIGH and 4L, and short-circuit the self-diagnostic connector.

NOTE: The neutral position between HIGH and 4L refers to the point that turns off the TOD indicator lamps. (However, be sure to check the position before short-circuiting the self-diagnostic connector.)

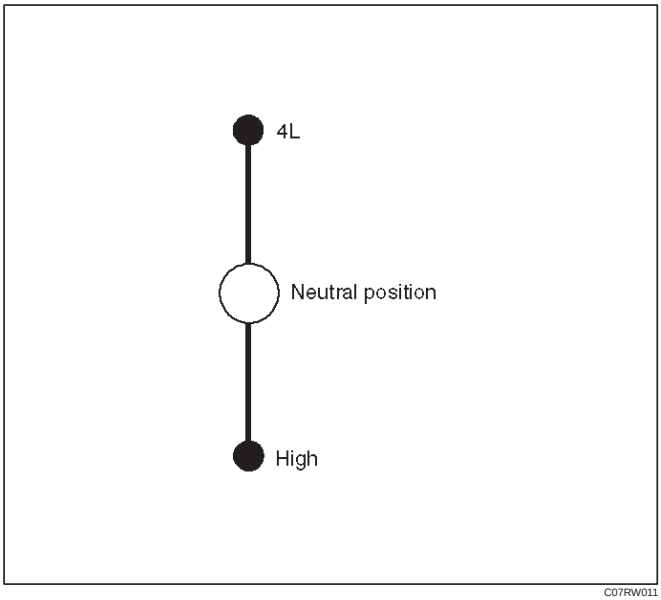

C07RW011

2. Turn on the starter switch while maintaining the state of step 1, and step on the brake pedal five times within five seconds from the first step on. (Note that “five times” includes the first step on). (The TOD indicator lamps display the 4L mode whenever the brake pedal is stepped on.)
3. If the conditions shown in steps 1 and 2 are met, the trouble codes saved to the control unit are cleared. (After the codes are completely deleted, the code 12 that indicates the normal condition is continuously displayed.)

Precautions on Diagnosis

Replacement of Control Unit

The control unit itself rarely fails. In most cases, the harnesses have failed (i.e. short-circuit) to cause secondary troubles. Other cases include that the cause has been unknown due to intermittent occurrence of troubles and the troubles are removed accidentally along with replacement of control unit, resulting in misjudgment of cause. Therefore, before replacing the control unit, check the connector joints and whether the unspecified current flows in the control unit due to short-circuit between harnesses.

Trouble Intermittently Observed

Troubles intermittently observed are mostly attributable to temporary imperfect connection of harnesses and connectors.

When such troubles are found, check the associated circuit according to the following procedure.

1. Check whether improper connectors are plugged in or connector terminals are completely engaged.
2. Check whether the terminals are deformed or damaged. If yes, remove the deformation or damage and connect the terminals securely.
3. It is likely that wires in the harness are falsely broken. Therefore, in examination of failed harness circuit, shake the harness for check to such extent that the harness will not be damaged.

Test Run of Failed TOD Vehicle

If the TOD indicator lamps experienced faulty operation even once in the past, the failed portion can be identified by use of the procedure “Diagnosis from Trouble Codes” or “Trouble Diagnosis Depending on The Status of TOD Indicator”. If the troubles that are only recognized as abnormal phenomena of the vehicle by the driver are observed, conduct the test run in the following procedure to reproduce the faulty phenomena and diagnose the fault for each phenomenon.

1. Start the engine, and check that the TOD indicator lamps are turned on for about two seconds for initial check; the CHECK lamp goes off; and the TOD indicator lamps display the specified drive mode. (If the CHECK lamp starts blinking, read the trouble codes and identify the failed portion.)
2. While keeping the vehicle standstill, operate the 4WD switch and shift the transfer lever to change the modes: 2H mode→TOD mode→4L mode→TOD mode→2H mode. Check that the TOD indicator lamps correctly display the status whenever the mode is changed. If the transition status is displayed during the shift operation, run the vehicle a little to complete shifting.
3. Slowly start the vehicle in the TOD mode, and add the power to accelerate to at least 40 km/h and maintain the speed for about two minutes. Apply the brake to completely stop the vehicle. Repeat this test pattern at least three times.
4. Turn the steering to the right end (or left end) in the TOD mode, and slowly start the vehicle and make a circle five times. Next, conduct the same test in the 2H mode.
5. Slowly start the vehicle in the TOD mode, and accelerate to at least 40 km/h. Keep the established speed, carefully change the mode in the sequence “TOD mode→2H mode →TOD mode” while checking that the shift is complete in each mode change. After the test, apply the brake to completely stop the vehicle.
6. Slowly start the vehicle in the TOD mode, and accelerate to at least 40 km/h. Apply the brake strongly so that the ABS works, and completely stop the vehicle.

7. Slowly start the vehicle in the 4L mode, and accelerate to at least 20 km/h. Apply the brake to completely stop the vehicle.

If the CHECK lamp starts blinking during the test run, read the trouble codes and give appropriate maintenance according to the diagnostic procedure. If the TOD indicator lamps are lit abnormally during the run, check the lighting condition and give appropriate maintenance according to the diagnostic procedure. Even if the phenomena are not observed, try to reproduce the abnormal state reported by the customer to the possible extent.

Post-Repair Check

As long as the starter is not turned off, the TOD indicator lamps continue blinking even after the failed portion repaired. Therefore, upon completion of repair, be sure to turn off the starter switch once and then turn on it to conduct the test run sequence specified in steps 1 through 7 above and check that the TOD indicator lamps no longer show any faulty status.

Basic Diagnostic Flow Chart

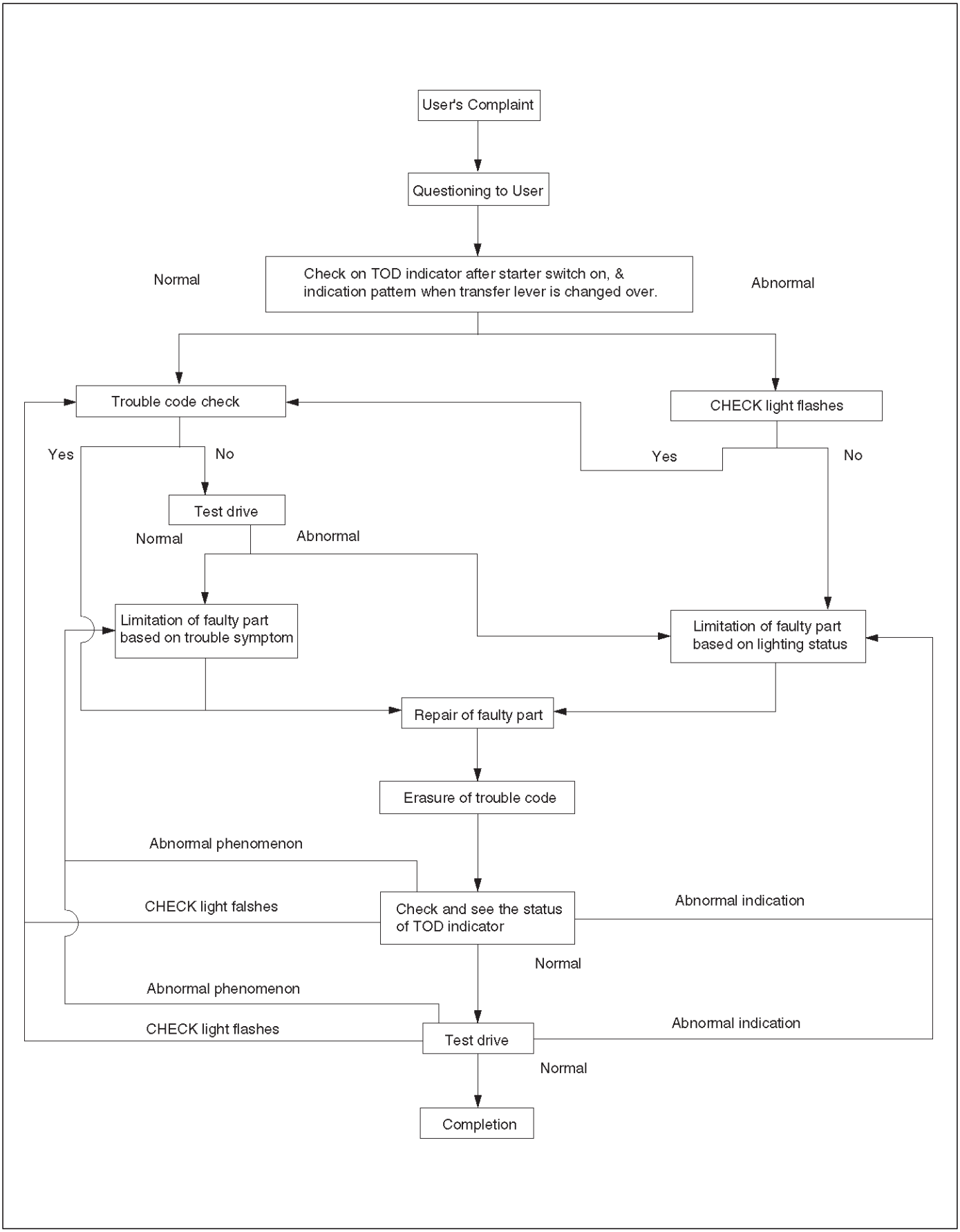

C04RY00015

Parts Location (RHD 6VE1)

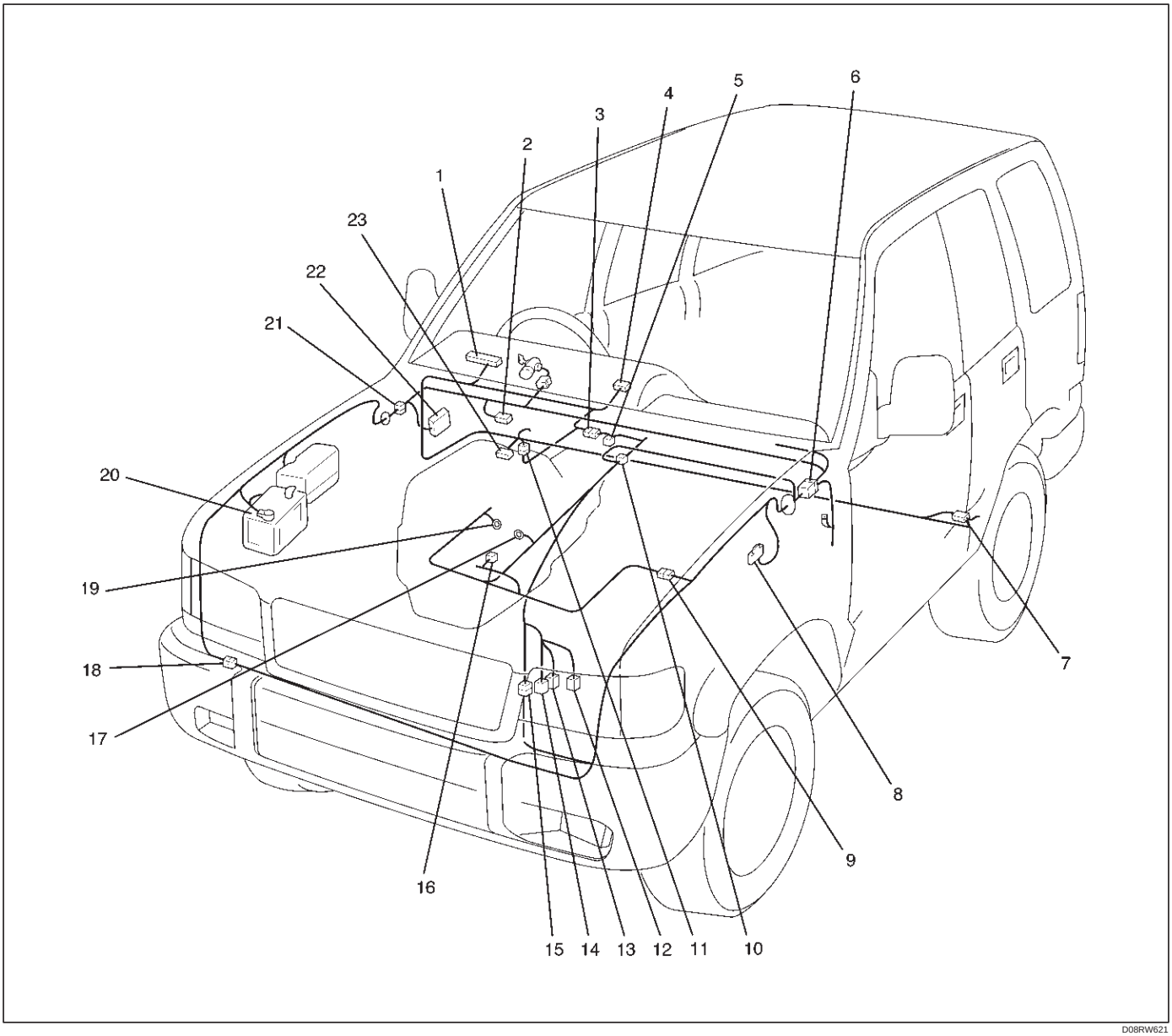

D08RW621

Legend

(1) I–9
(2) B–13 or B–14
(3) H–12
(4) I–12
(5) A–3
(6) H–7, H–8
(7) H–32
(8) C–16
(9) H–5, H–6
(10) C–63
(11) H–49
(12) M–22
(13) M–23
(14) M–24
(15) H–10
(16) E–5
(17) E–29
(18) H–42
(19) E–30
(20) Battery
(21) H–13, H–15, H–25, H–26, H–27
(22) Fuse Box
(23) B–67, B–68

Parts Location (RHD 4JX1)

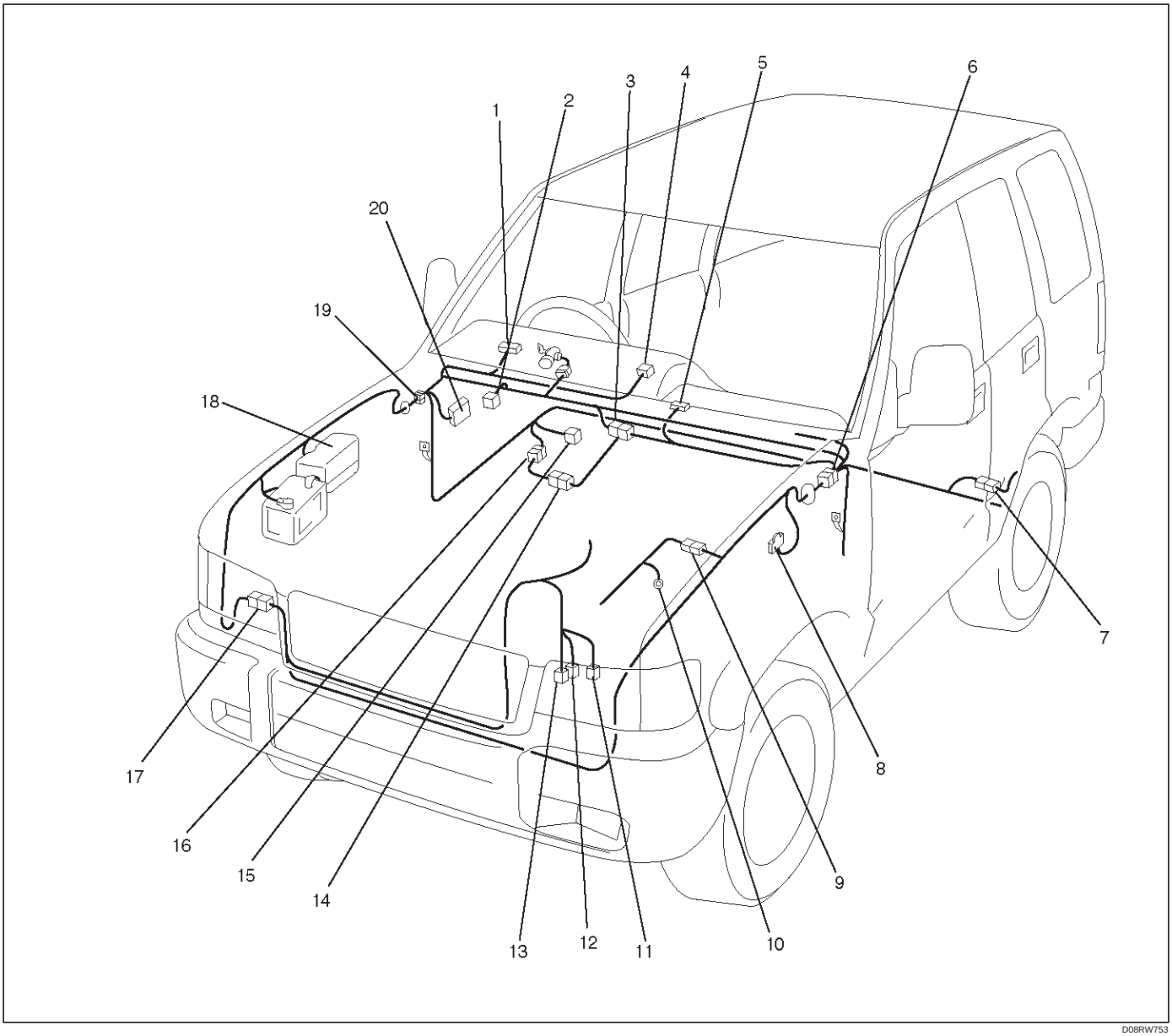

D08RW753

Legend

(1) I–9
(2) B–13 or B–14
(3) H–12
(4) I–12
(5) C–63
(6) H–7, H–8
(7) H–32
(8) C–16
(9) H–5, H–6
(10) E–4
(11) P–17
(12) P–18
(13) P–19
(14) A–3
(15) B–67, B–68
(16) H–49
(17) H–60
(18) Relay and Fuse Box
(19) H–15, H–25, H–26, H–27
(20) Fuse Box

Parts Location (LHD 6VE1)

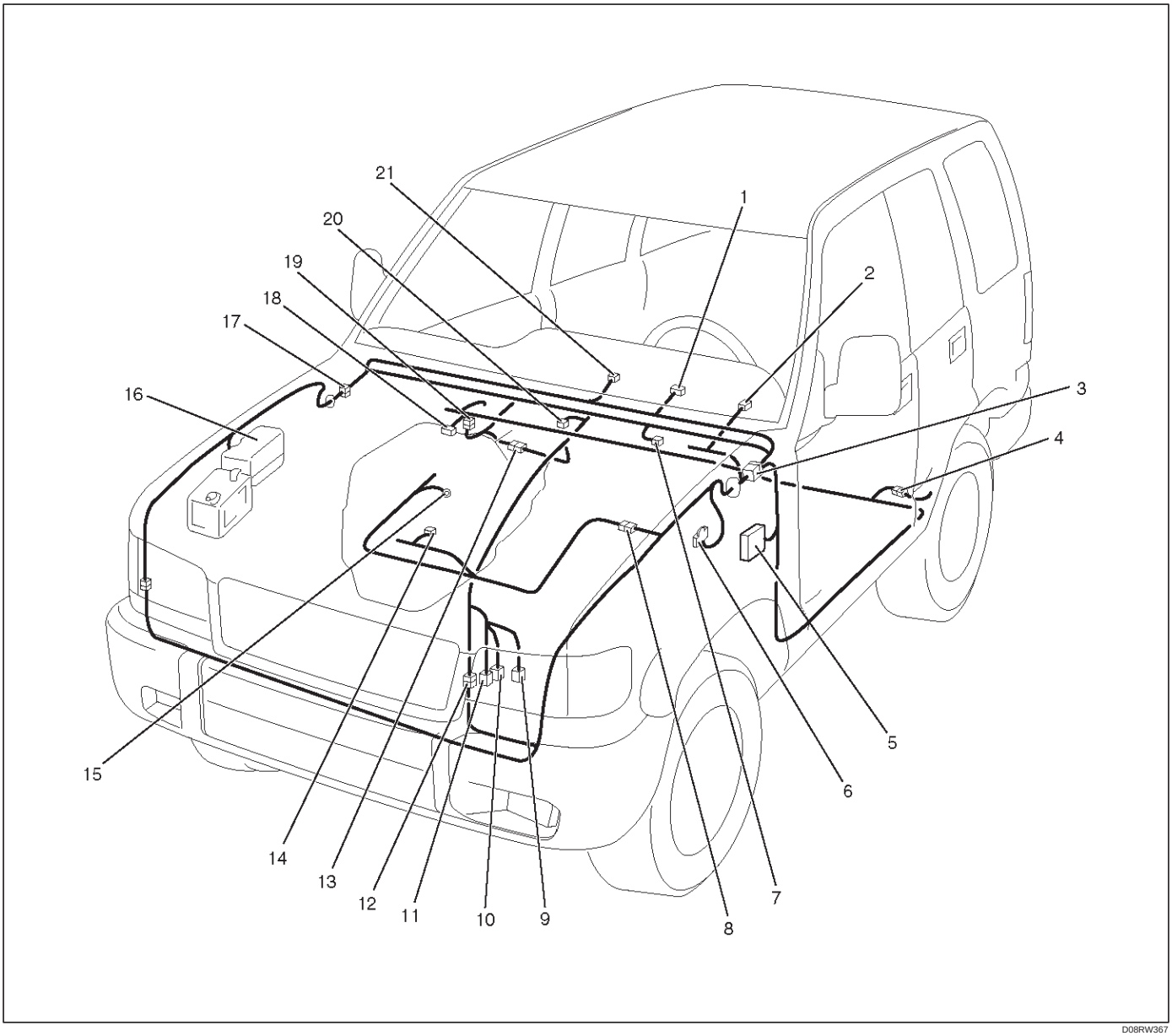

D08RW367

Legend

(1) I–9
(2) C–63
(3) H–7, H–8, H–25, H–26
(4) H–32
(5) Fuse Box
(6) C–6
(7) B–13 or B–14
(8) H–5, H–6
(9) M–22
(10) M–23
(11) M–24
(12) H–10
(13) H–49
(14) E–5
(15) E–30
(16) Relay and Fuse Box
(17) H–12, H–15
(18) B–67, B–68
(19) Not Used
(20) A–3
(21) I–12

Parts Location (LHD 4JX1)

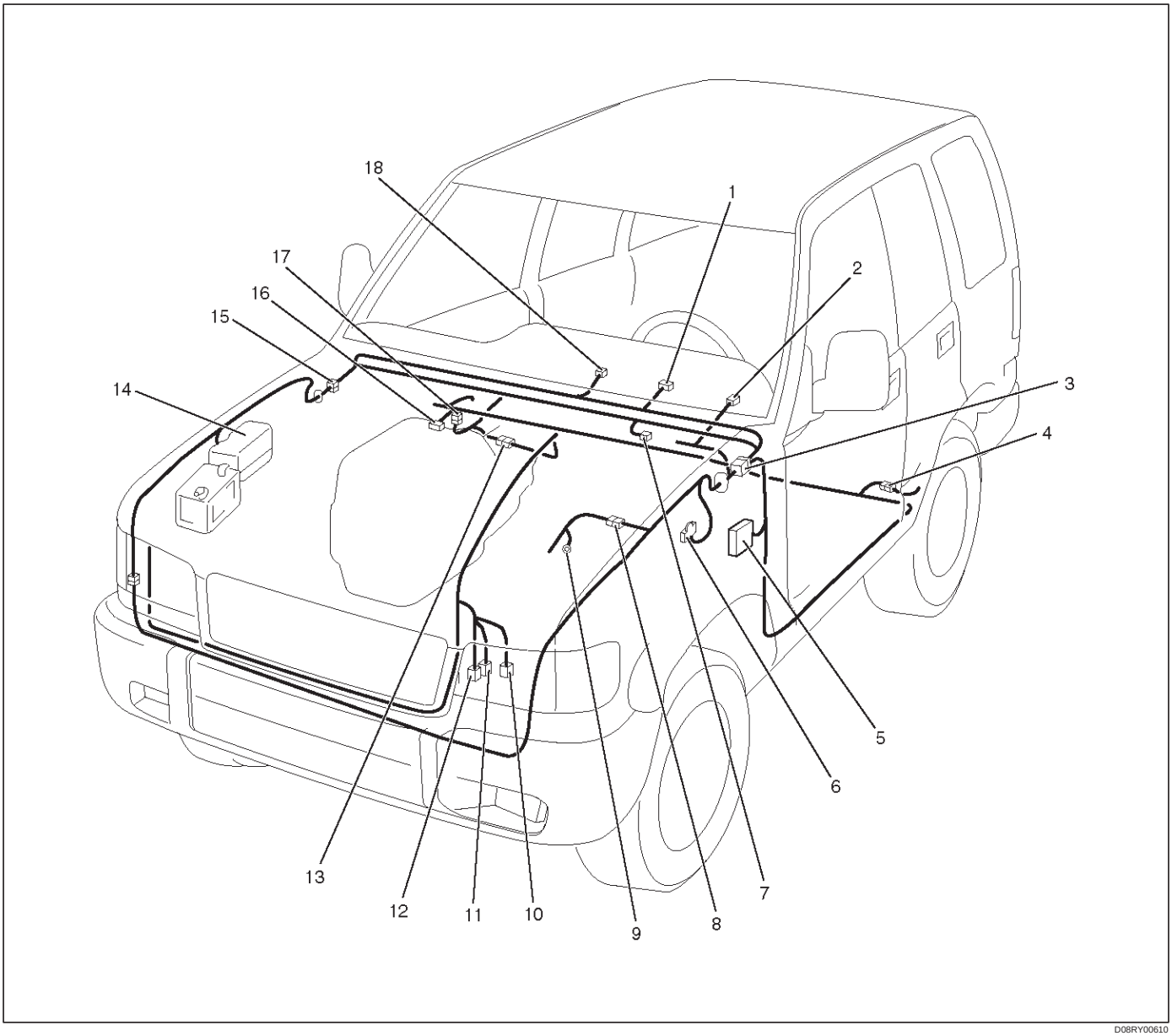

D08RY00610

Legend

(1) I–9
(2) C–63
(3) H–15, H–25, H–26
(4) H–32
(5) Fuse Box
(6) C–16
(7) B–14
(8) H–5, H–6
(9) E–4
(10) P–17
(11) P–18
(12) P–19
(13) A–3
(14) Relay and Fuse Box
(15) H–7, H–8
(16) B–67, B–68
(17) H–49
(18) I–12

Circuit Diagram–1 (RHD 6VE1)

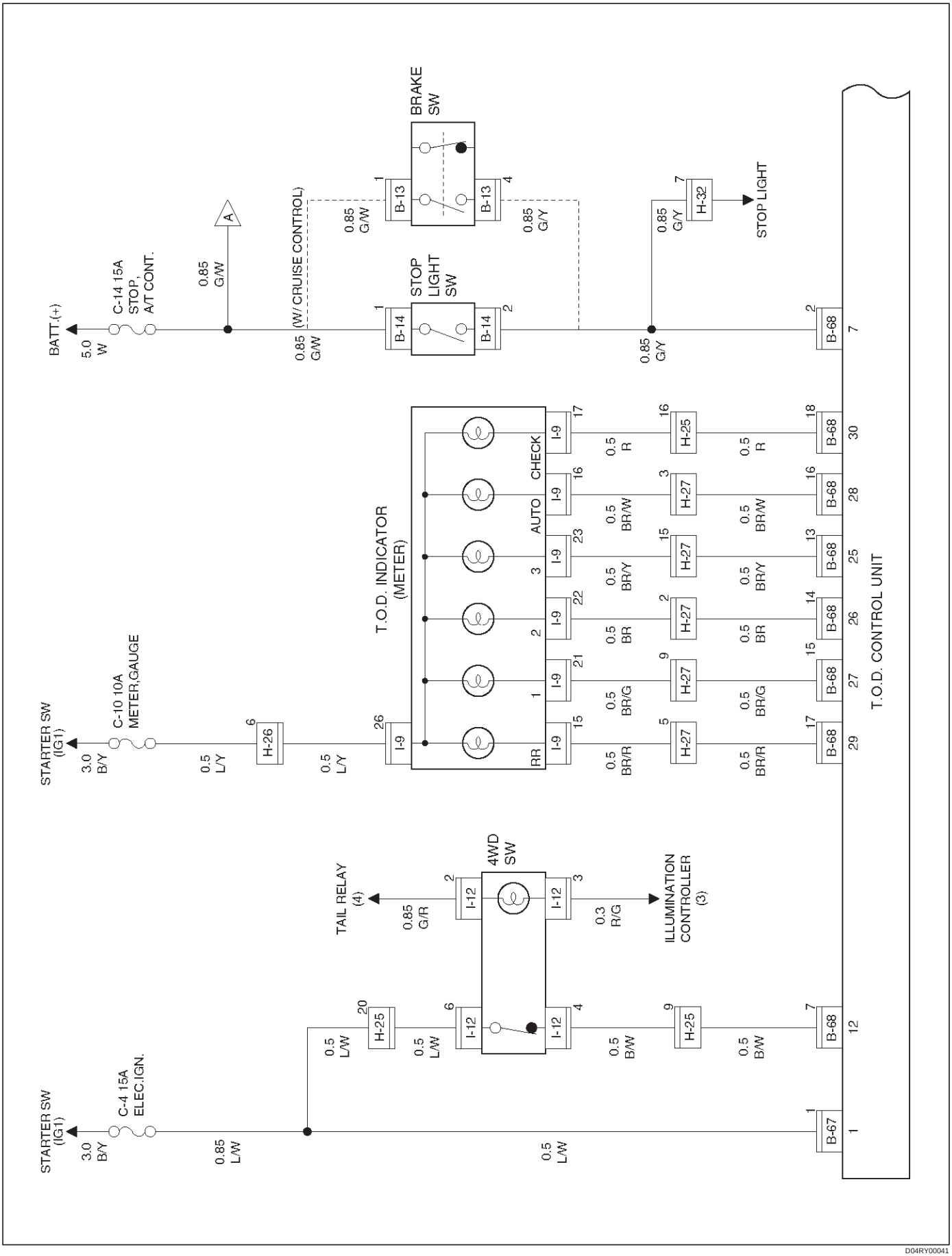

D04RY00041

Circuit Diagram–2 (RHD 6VE1)

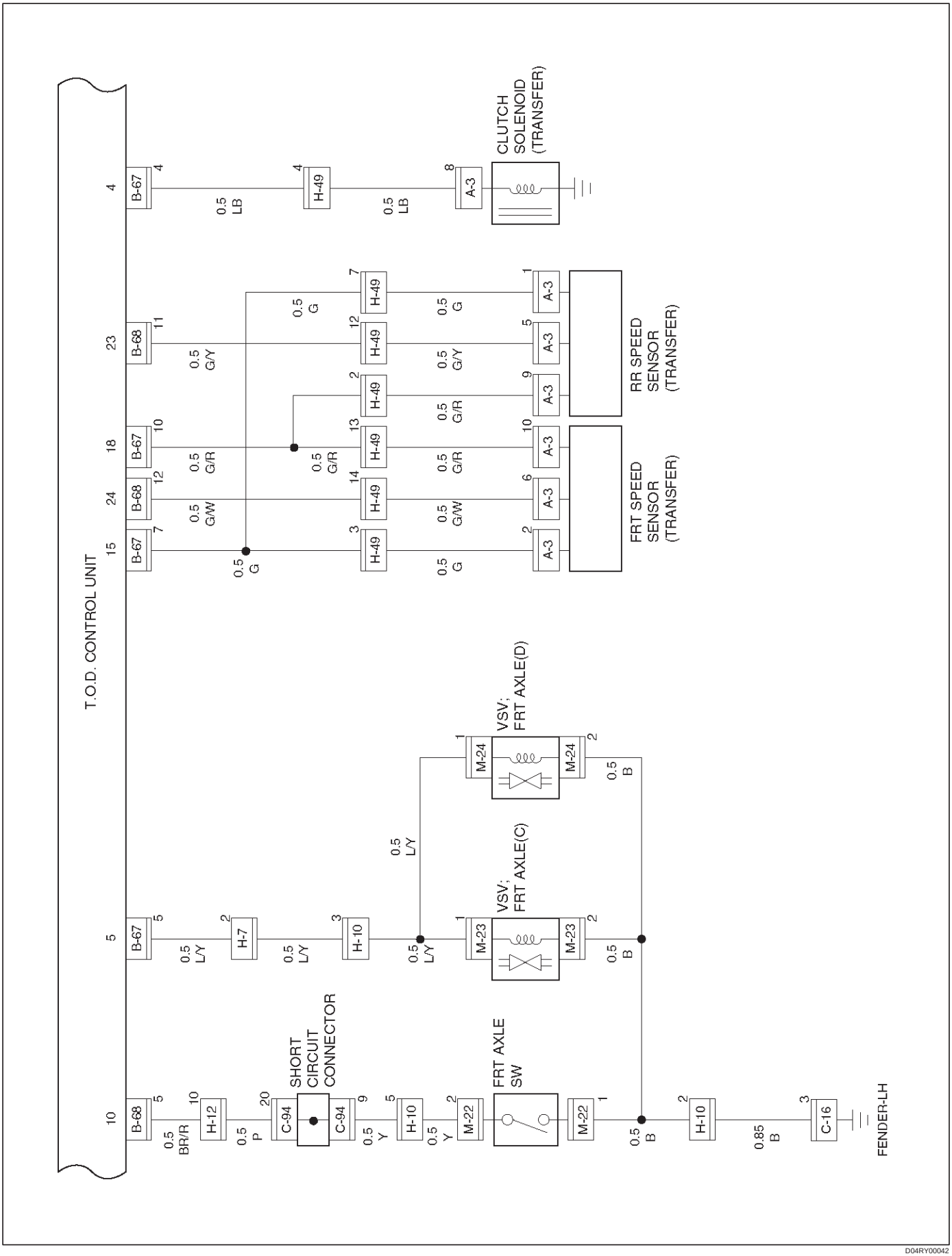

D04RY00042

Circuit Diagram–3 (RHD 6VE1)

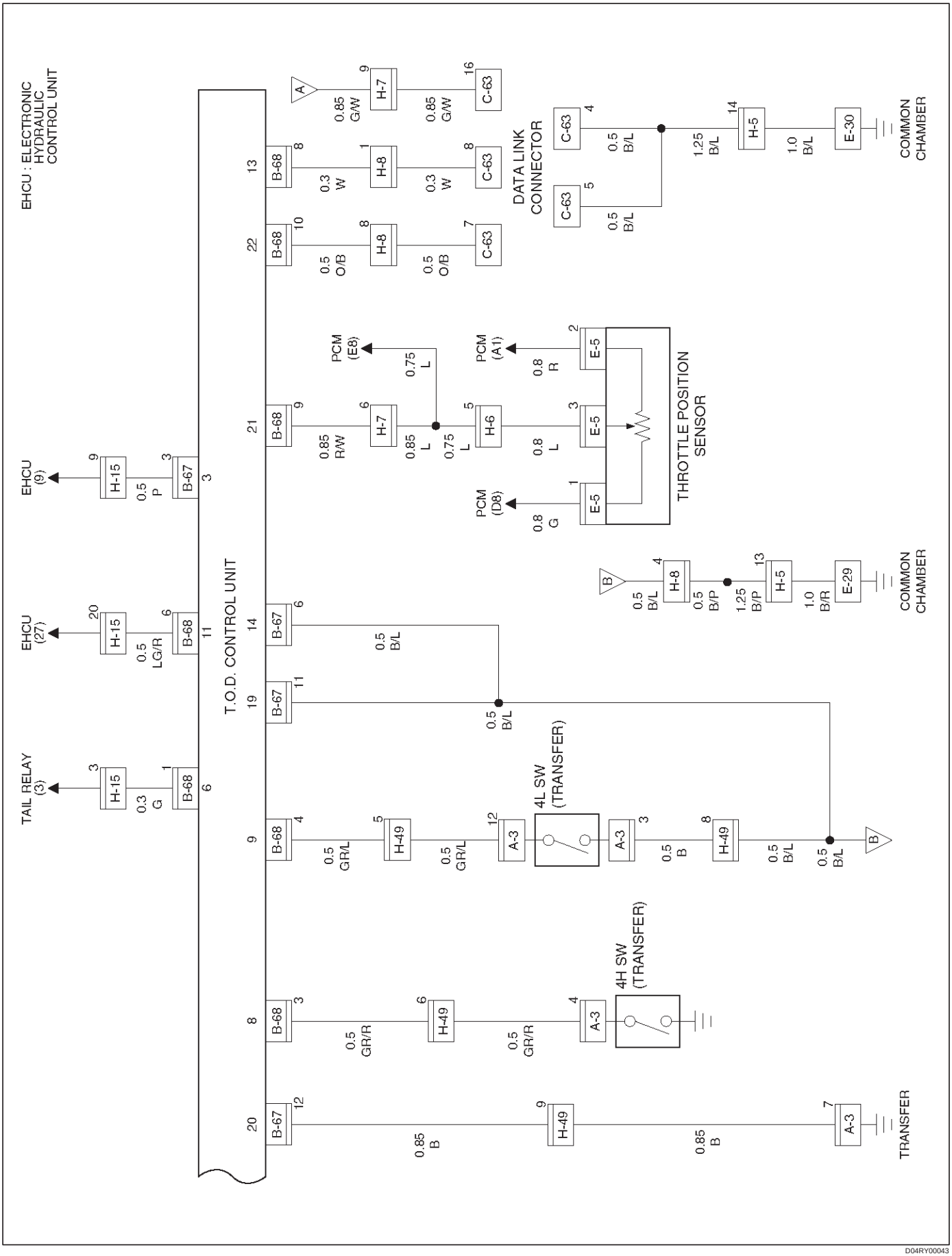

D04RY00043

Circuit Diagram–1 (RHD 4JX1)

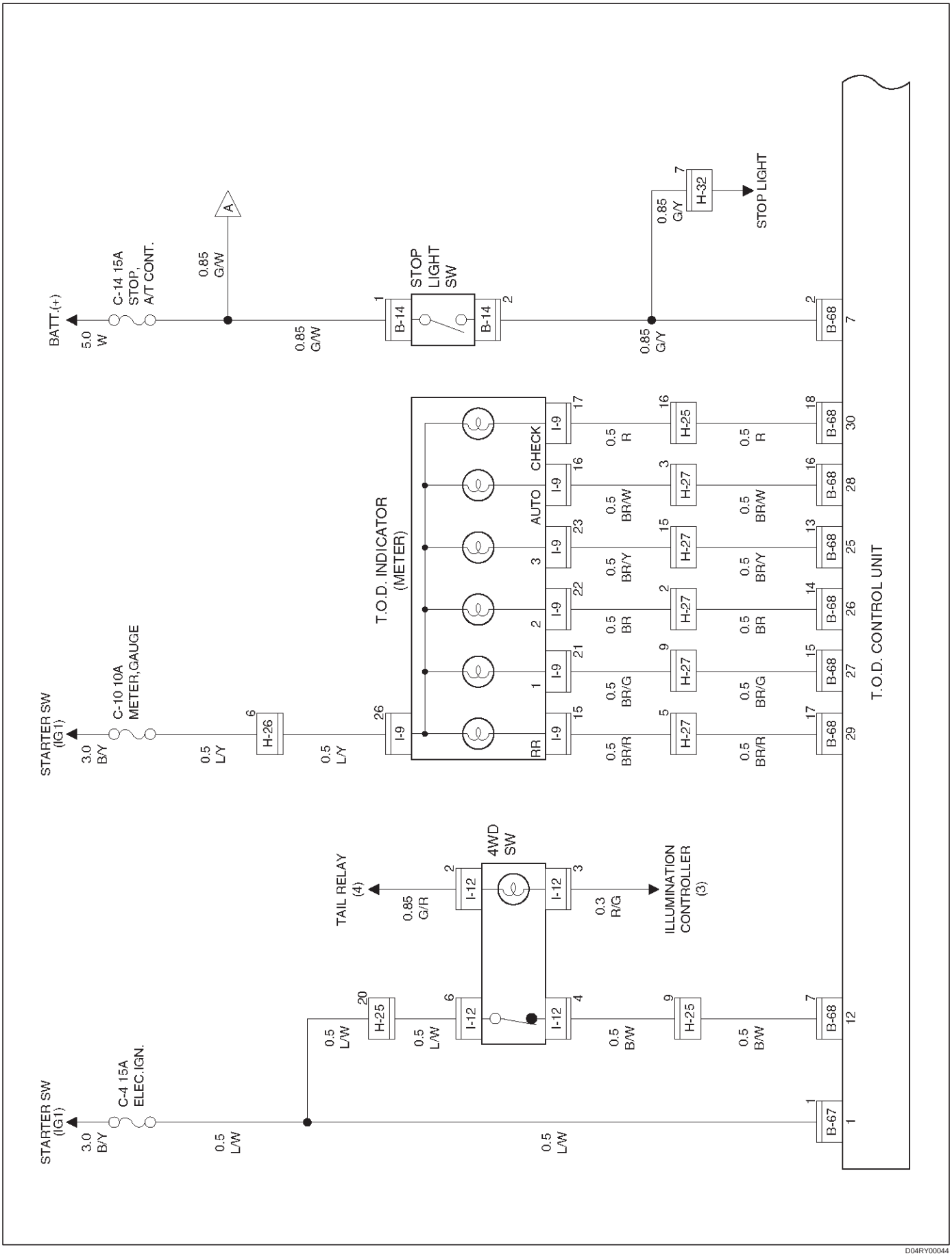

D04RY00044

Circuit Diagram–2 (RHD 4JX1)

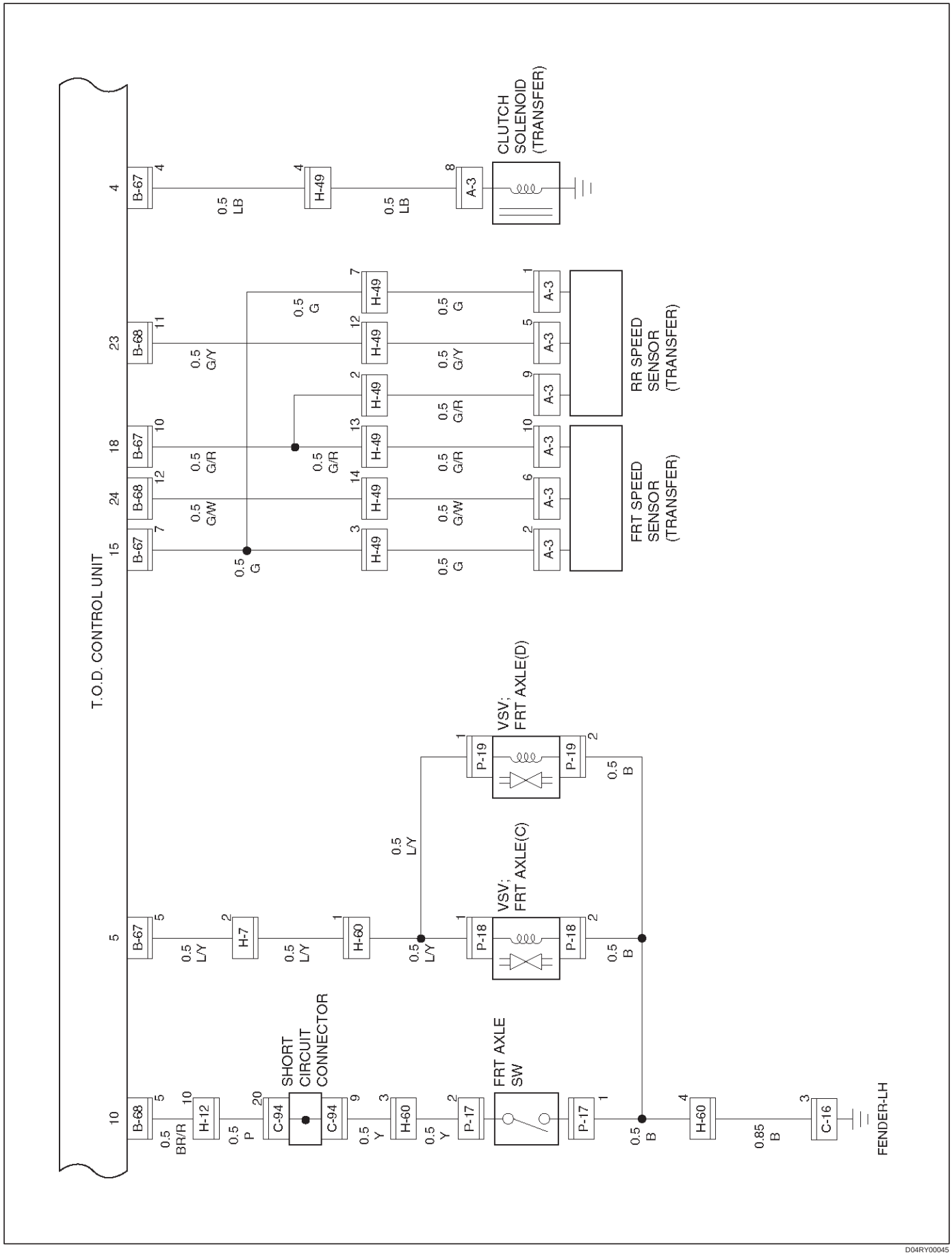

D04RY00045

Circuit Diagram–3 (RHD 4JX1)

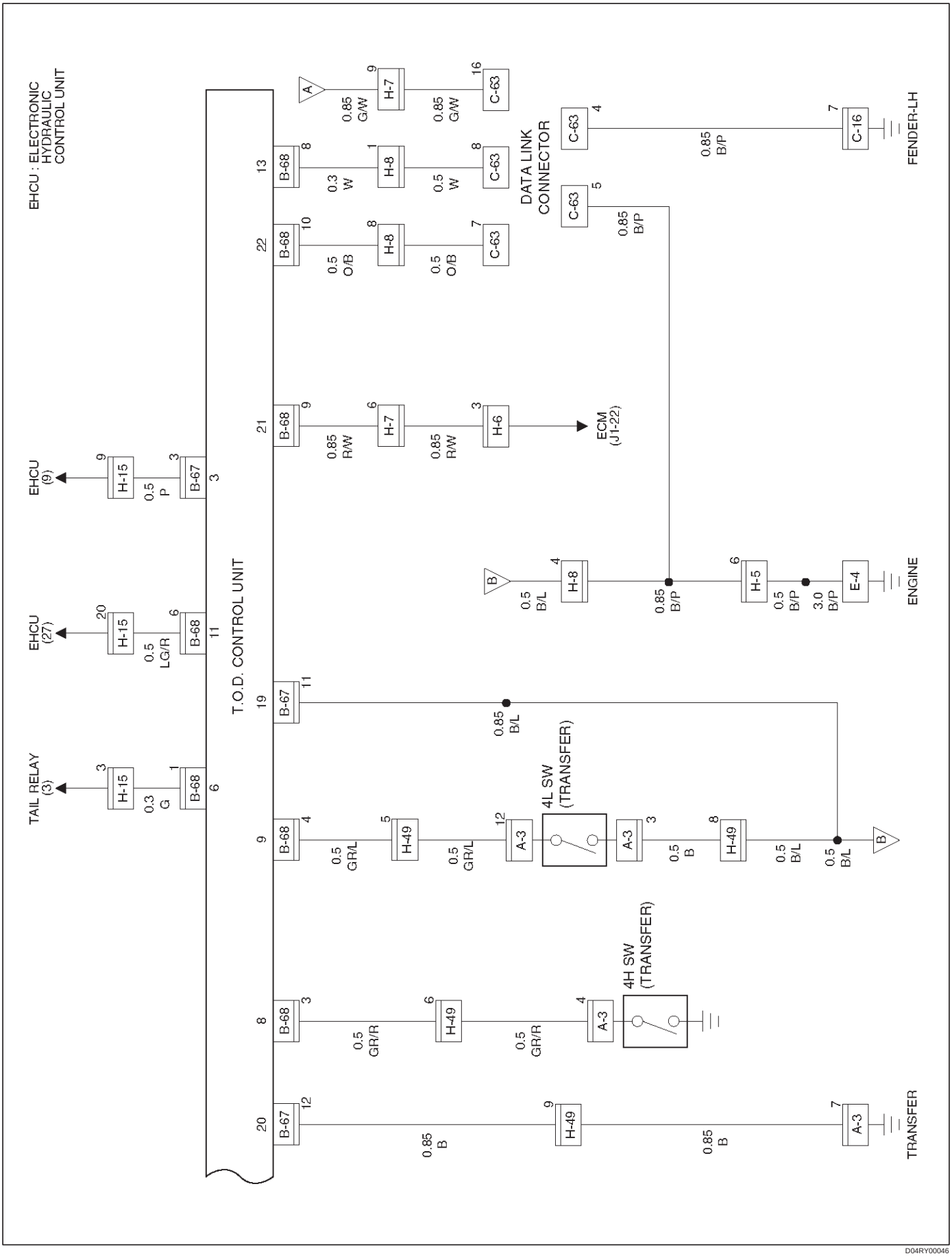

D04RY00046

Circuit Diagram–1 (LHD 6VE1)

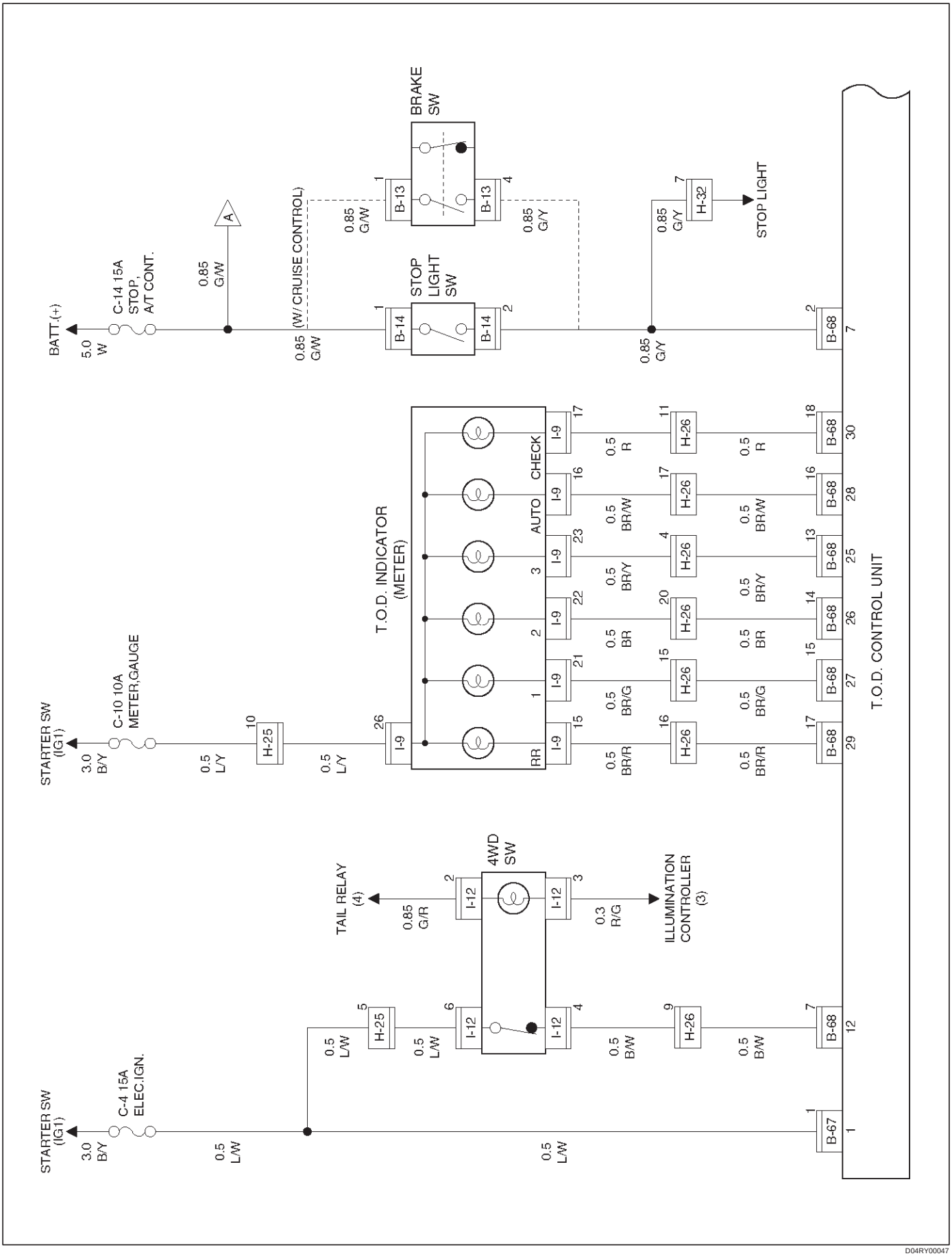

D04RY00047

Circuit Diagram–2 (LHD 6VE1)

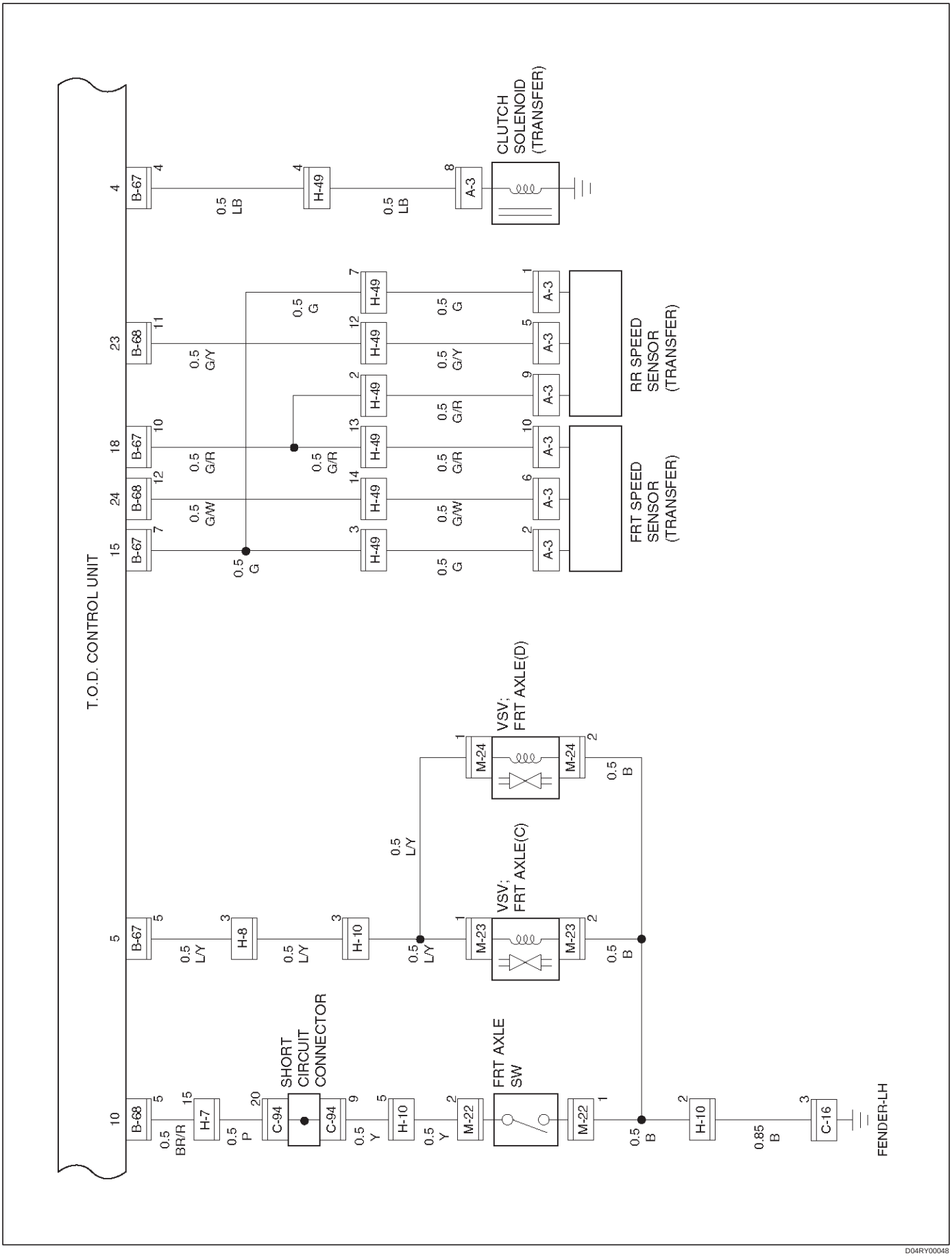

D04RY00048

Circuit Diagram–3 (LHD 6VE1)

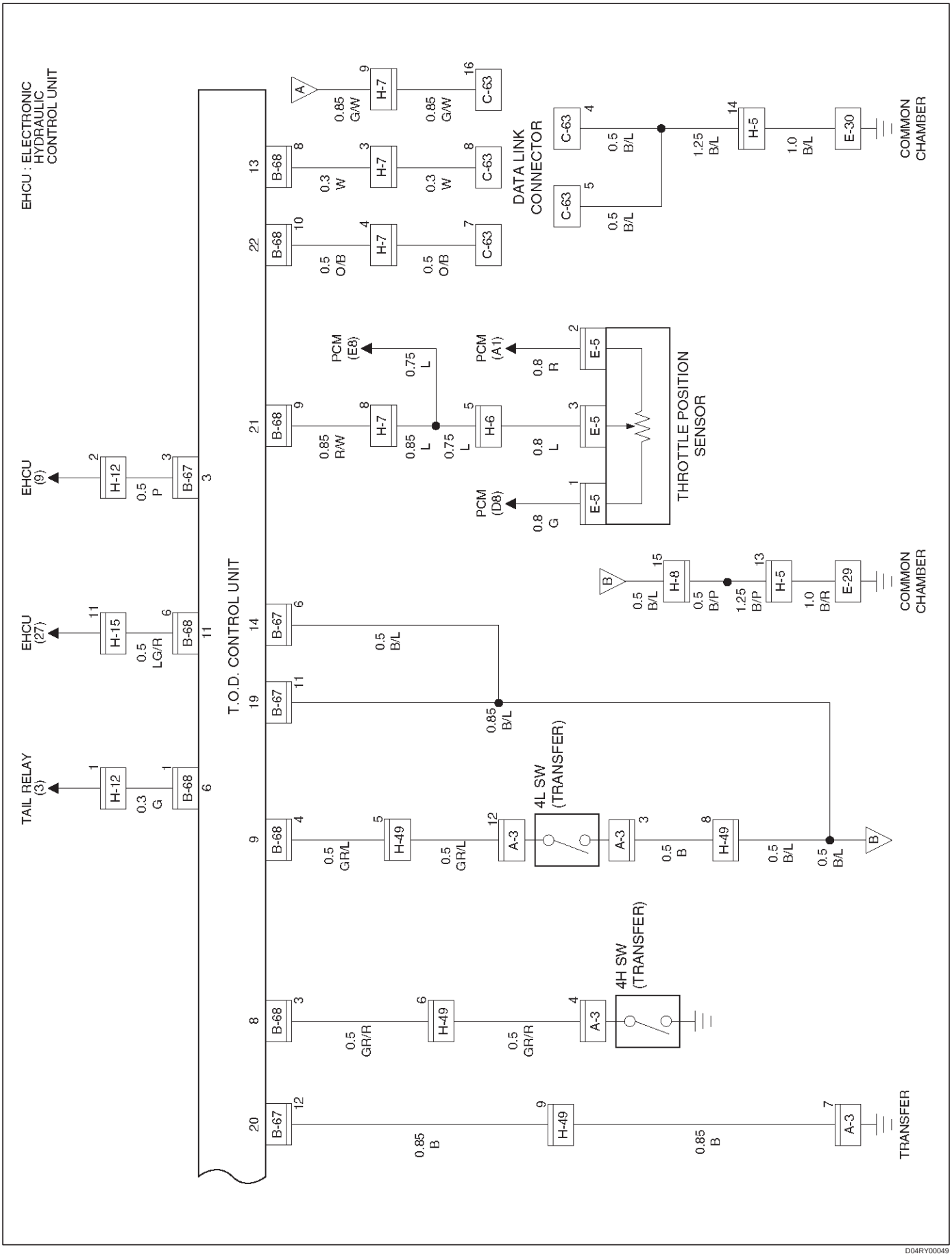

Circuit Diagram–1 (LHD 4JX1)

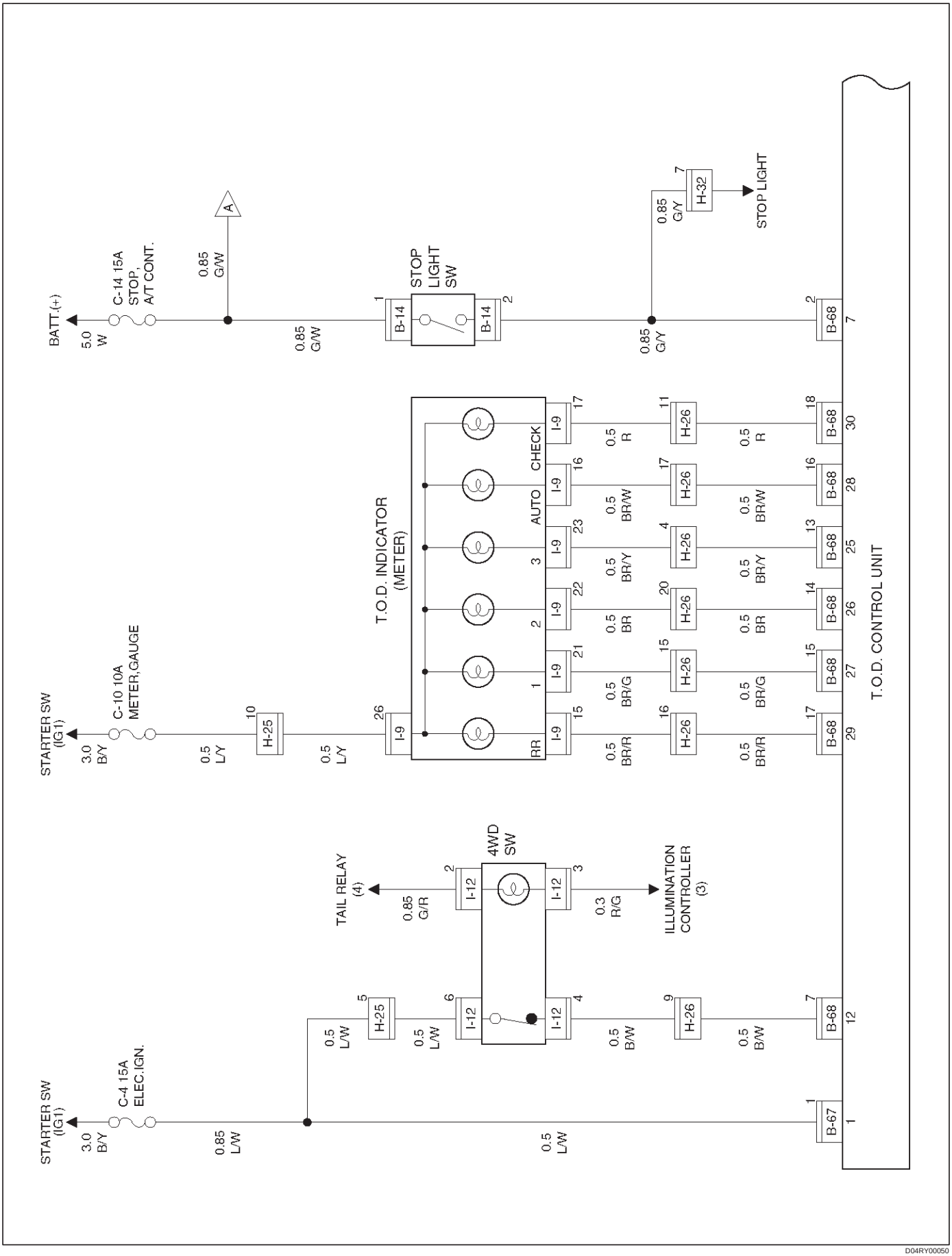

D04RY00050

Circuit Diagram–2 (LHD 4JX1)

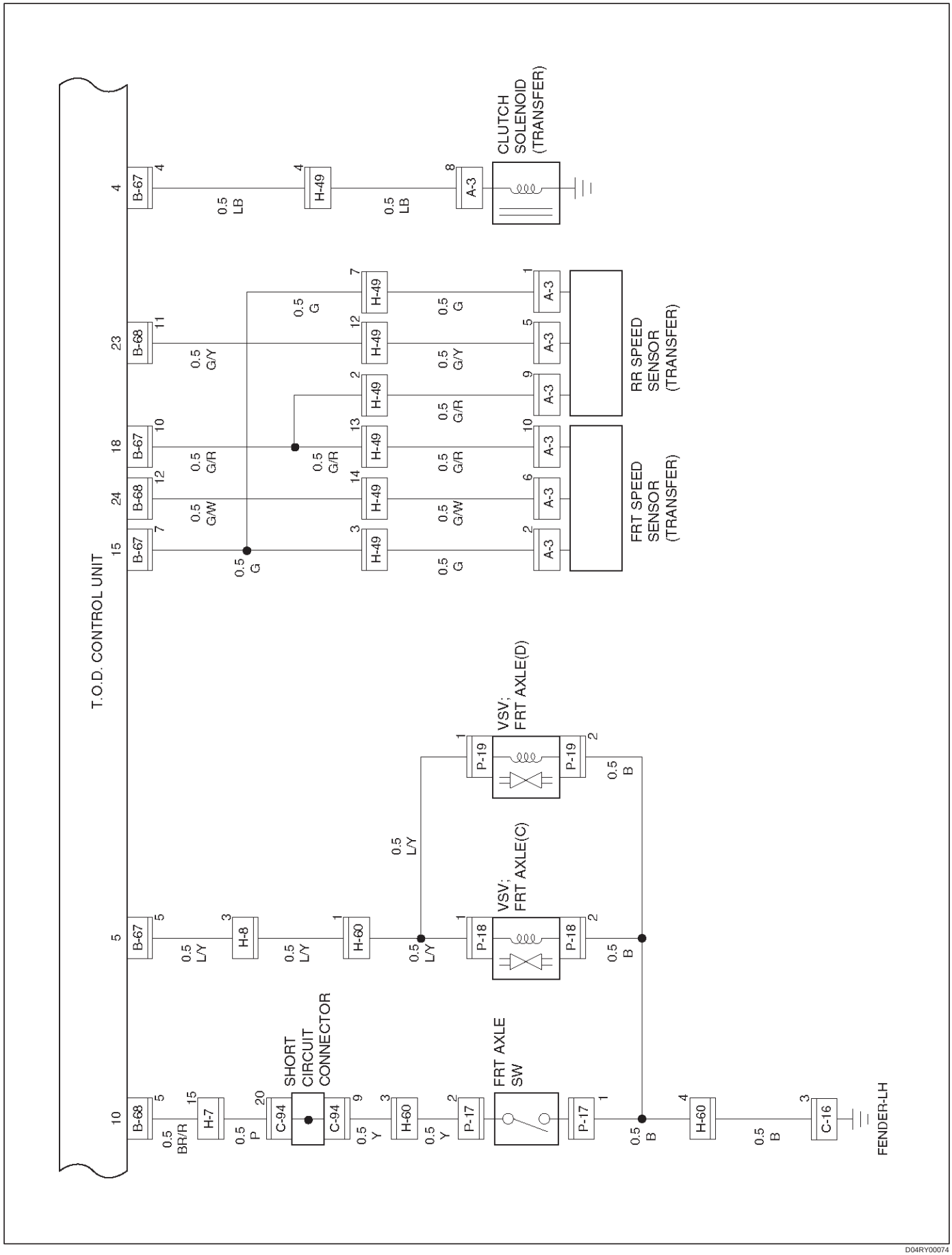

D04RY00074

Circuit Diagram–3 (LHD 4JX1)

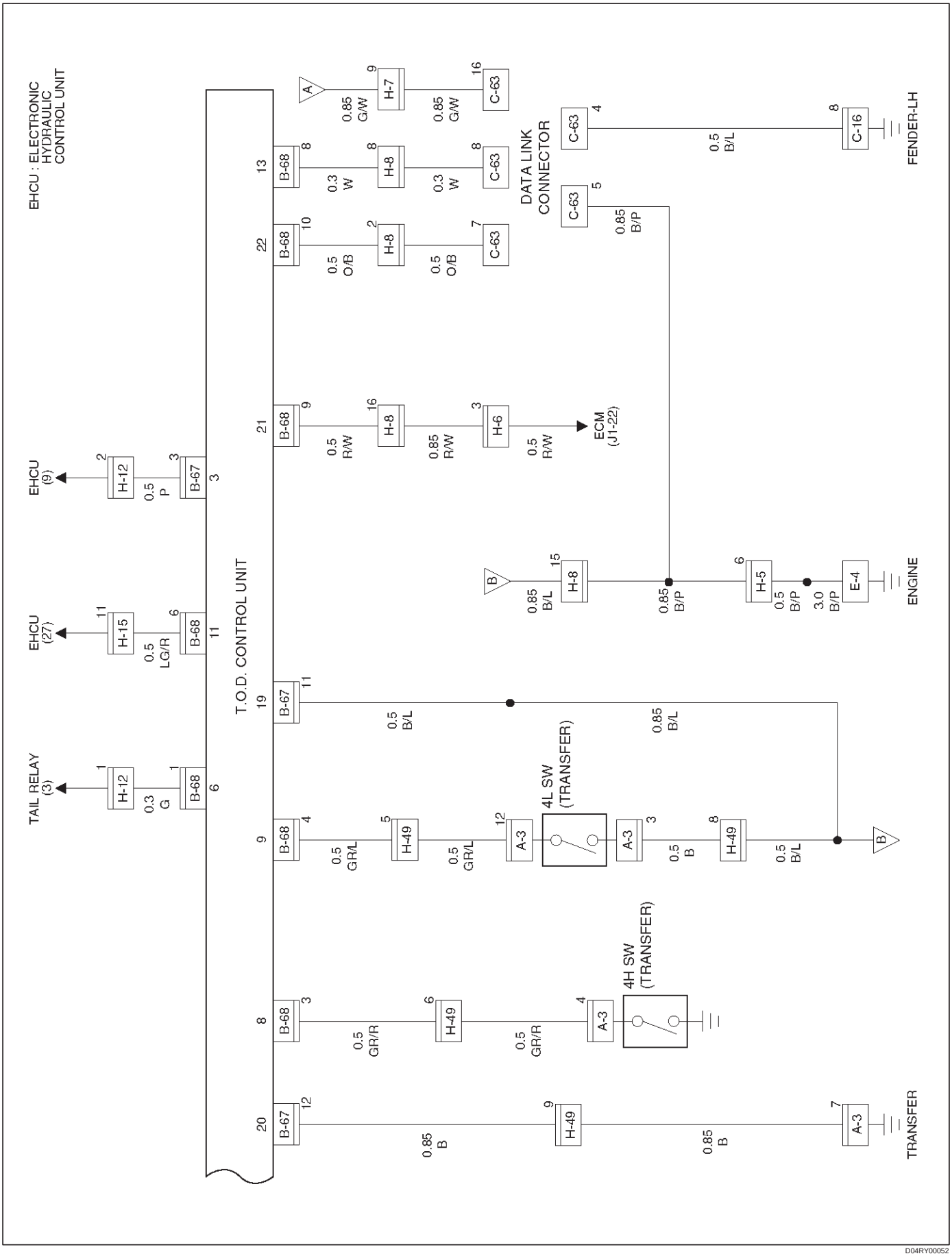

D04RY00052

Connector List

No.	Connector face
A-3	
B-13	
B-14	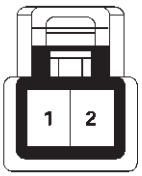
B-67	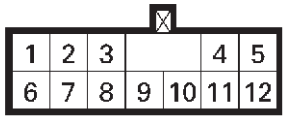
B-68	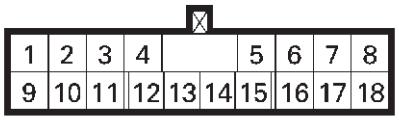
C-16	
C-63	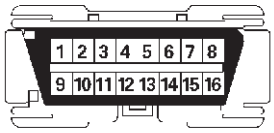
E-4 (6VE1)	
E-4 (4JX1)	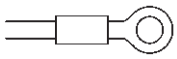

No.	Connector face
E-5 (6VE1)	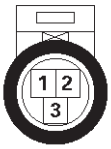
E-29 (6VE1)	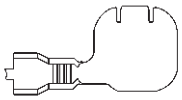
E-30 (6VE1)	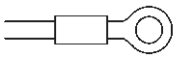
H-5 (6VE1) (4JX1 –A/T)	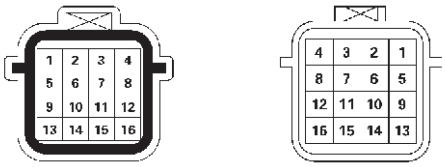
H-6	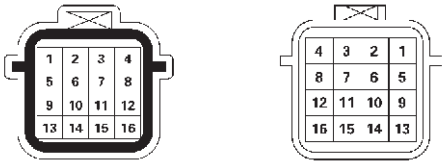
H-7	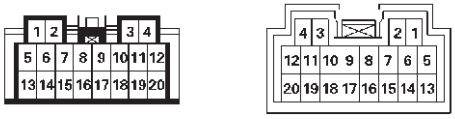
H-8	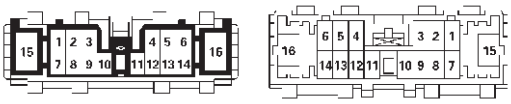
H-10	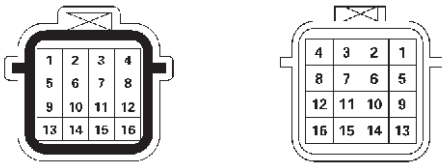
H-12	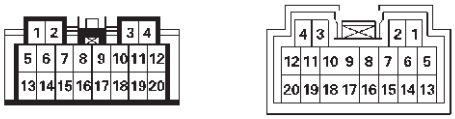

No.	Connector face
H-13	
H-15	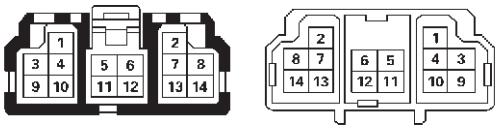
H-25	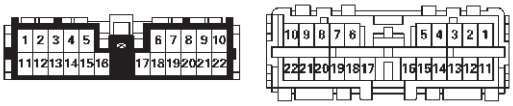
H-26	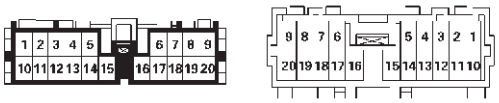
H-27	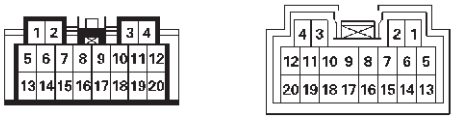
H-32	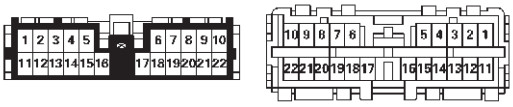
H-42	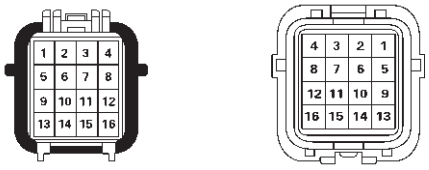
H-49	
H-60	

No.	Connector face
I-9	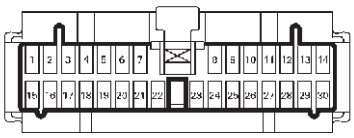
I-12	
M-22	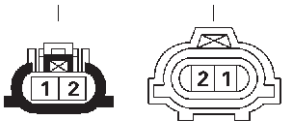
M-23	
M-24	
P-17 (4JX1)	
P-18 (4JX1)	
P-19 (4JX1)	

Checking Failed Pin

Connector Pin Assignment

- ECU pin assignment

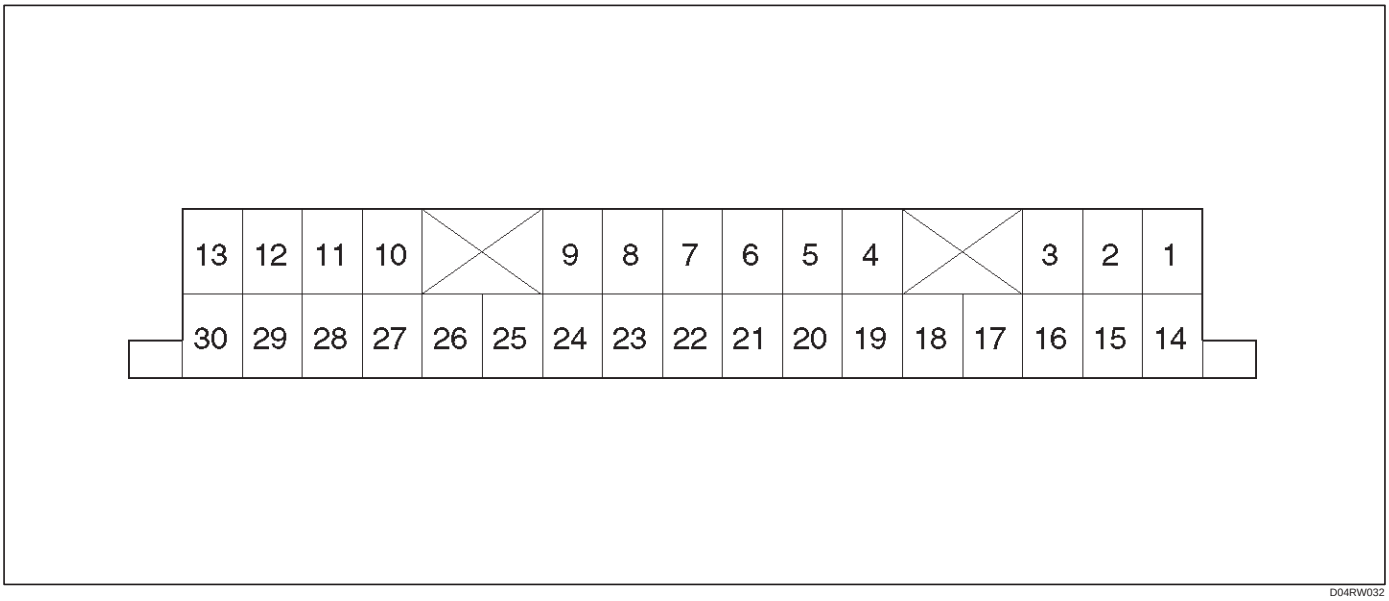

No.	NAME	CONTENTS
1	VIG	Power supply (IG)
2	N.C	Not used
3	4WD OUT	4WD signal output
4	SOL (+)	Electromagnetic solenoid
5	ADC (+)	Axle disconnect output
6	LIGHTING SW	Lighting SW input
7	BRAKE	Brake SW input
8	4H SW	4H SW input
9	4L SW	4L SW input
10	AXEL SW	AXEL SW input
11	ABS IN	Operation signal input
12	TOD SW	TOD SW input
13	DIAG	Self-diagnosis input
14	D-G MAP	D-G MAP recognition input (Only V6 engine)
15	Ref.	Vehicle speed sensor supply
16	N.C	Not used
17	N.C	Not used
18	COM (–)	Vehicle speed sensor GND
19	S-GND	Sensor GND
20	P-GND	Power GND
21	TPS	Throttle position sensor
22	TECH 2	TECH 2 output
23	Rer. Sig	Rear vehicle speed sensor input
24	Frt. Sig	Front vehicle speed sensor input
25	IND.a	4WD display signal a
26	IND.b	4WD display signal b
27	IND.c	4WD display signal c
28	IND.AUTO	AUTO display output
29	IND Rr	Rear display output
30	CHECK	TOD warning lamp

Reference

- Transfer connector pin assignment (connector on the transfer case)
  for inspection of transfer pins.

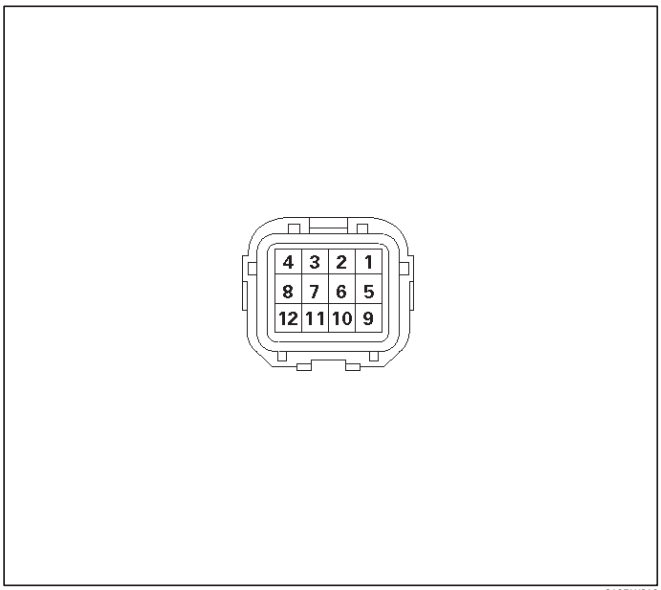

810RW310

No.	NAME	CONTENTS
1	Ref. (Rer.)	Rear speed sensor reference output
2	Ref. (Frt.)	Front speed sensor reference output
3	SW GND	SW GND
4	4H SW (+)	4H SW plus terminal
5	Rer. (+)	Rear speed sensor plus
6	Frt. (+)	Front speed sensor plus
7	POWER GND	Power GND
8	SOL (+)	Electromagnetic solenoid
9	COM (–) (Rer.)	Rear speed sensor GND
10	COM (–) (Frt.)	Front speed sensor GND
11	NC	Not used
12	4L SW (+)	4L SW plus terminal

Checking Failed TOD Control Unit Pin

NOTE:

1. Unplug the ECU connector and the pins, unless otherwise specified.
2. Before removing the ECU, turn off the ignition switch.
3. If the standard values are not observed, check the pins with other testers.

Check Pin No.	Circuit to be tested	Ignition Switch Position	Engine State	Multimeter Scale/ Range	Measure between Pin Number	Standard Valve	Note
14	D-G MAP	OFF	STOP	Ω	14, 19	Continuity : OK (Gasoline) No continuity : OK (Diesel)	
20	P-GND	OFF	STOP	Ω	20, 19	Continuity : OK	
19	GND	OFF	STOP	Ω	19, GND	Continuity : OK	
8	4H SW	OFF	STOP	Ω	8, 19	No continuity (high, 4L) and continuity (N) : OK	
9	4L SW	OFF	STOP	Ω	9, 19	No continuity (high) and continuity (4L, N) : OK	
10	AXLE SW	ON	RUN	Ω	10, 19	Continuity : OK	Remove ECU and start the engine. Move the vehicle forth and back to connect axle surely.
13	DIAG	OFF	STOP	Ω	13 (TOD), 8 (DLC Connector)	Continuity : OK	DLC connector terminal 8
25	IND.a	ON	STOP	DCV	25 (+), 19 (–)	8.0 ~14.5 V	When the indicator lamp is turned off.
26	IND.b	ON	STOP	DCV	26 (+), 19 (–)	8.0 ~14.5 V	When the indicator lamp is turned off.
27	IND.c	ON	STOP	DCV	27 (+), 19 (–)	8.0 ~14.5 V	When the indicator lamp is turned off.
30	CHECK LAMP	ON	STOP	DCV	30 (+), 19 (–)	8.0 ~14.5 V	When the indicator lamp is turned off.
11	ABS IN	ON	STOP	DCV	11 (+), 19 (–)	11.5 ~14.5 V	
15	Ref.	ON	STOP	DCV	15 (+), 19 (–)	5 ~9 V	Connect ECU
24	Ft.(+)	ON	STOP	DCV	24 (+), 19 (–)	0.7 ~6 V	Connect ECU (off one tooth of speed sensor ring) and move the vehicle making sure of voltage change.
23	Rr.(+)	ON	STOP	DCV	23 (+), 19 (–)	0.7 ~6 V	Connect ECU (off one tooth of speed sensor ring) and move the vehicle making sure of voltage change.
18	COM(-)	ON	STOP	DCV	18 (+), 19 (–)	0V	Connect ECU
1	Vig	ON	STOP	DCV	1 (+), 19 (–)	8 ~14.5 V	
7	BRAKE	OFF	STOP	DCV	7 (+), 19 (–)	8 ~14.5 V	Press brake pedal
21	TPS	ON	STOP	DCV	21 (+), 19 (–)	0.2 ~4.6 V	Step on the accelerator pedal and make sure that voltage changes.
3	4WD OUT	OFF	STOP	Ω	3, 19	7 ~12 kΩ	Disconnect battery GND terminal
5	ADC(+)	OFF	STOP	Ω	5, 19	10 ~30 Ω	Disconnect battery GND terminal
4	SOL(+)	OFF	STOP	Ω	4, 19	1.0 ~5.0 Ω	Disconnect battery GND terminal
12	4WD SW	ON	STOP	DCV	12 (+), 19 (–)	SW OFF : 0 V SW ON : 8.0 ~14.5 V	SW OFF : Contact point open SW ON : Contact point close
6	LIGHTING	ON	STOP	DCV	6 (+), 19 (–)	SW OFF : 8.0 ~14.5 V SW ON : 0 V	
28	AUTO INDI	ON	STOP	DCV	28 (+), 19 (–)	TOD : 0 V 2H & 4L : 8.0 ~14.5 V	Connect ECU
29	RR INDI	ON	STOP	DCV	29 (+), 19 (–)	0 V	Connect ECU. When the indicator lamp is turned on.

Tech 2 Scan Tool

From 98 MY, Isuzu dealer service departments are recommended to use Tech 2. Please refer to Tech 2 scan tool user guide.

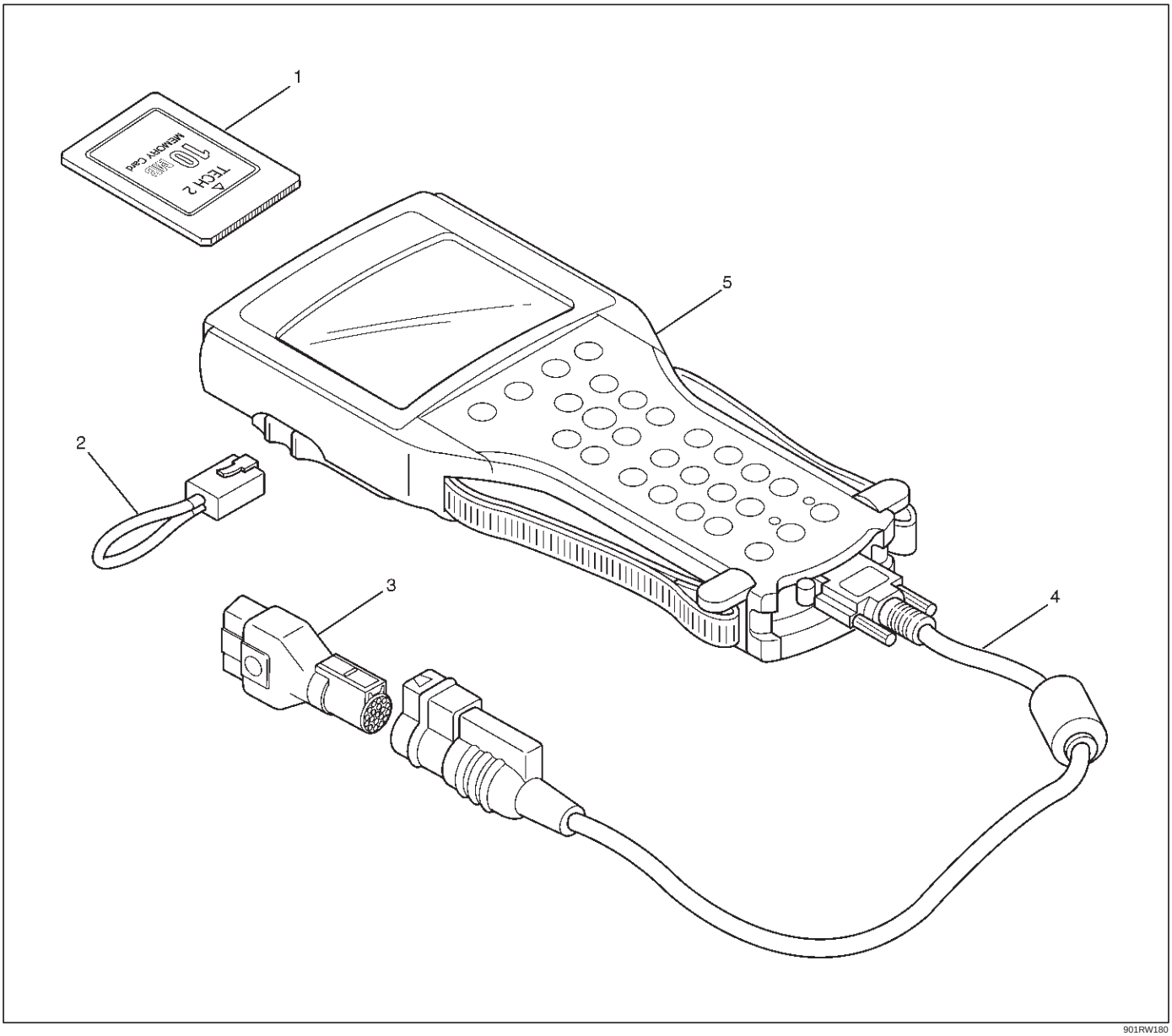

901RW180

Legend

(1) PCMCIA Card
(2) RS 232 Loop Back Connector
(3) SAE 16/19 Adaptor
(4) DLC Cable
(5) Tech–2

Getting Started

- Before operating the Isuzu PCMCIA card with the Tech 2, the following steps must be performed:

1. The Isuzu 00 System PCMCIA card (1) inserts into the Tech 2 (5).
2. Connect the SAE 16/19 adapter (3) to the DLC cable (4).
3. Connect the DLC cable to the Tech 2 (5)
4. Mark sure the vehicle ignition is off.
5. Connect the Tech 2 SAE 16/19 adapter to the vehicle ALDL/DLC connector.

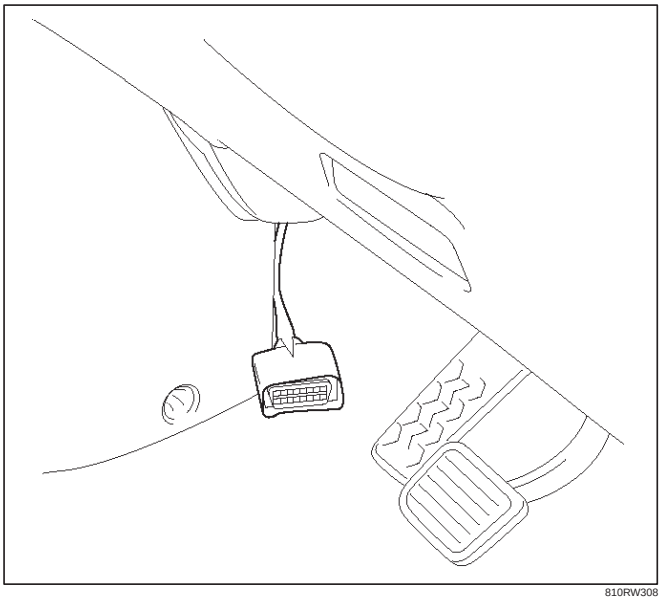

810RW308

6. The vehicle ignition turns on.
7. Verify the Tech 2 power up display.

060RW009

NOTE: The RS232 Loop back connector is only to use for diagnosis of Tech 2 and refer to user guide of the Tech 2.

Operating Procedure

The power up screen is displayed when you power up the tester with the Isuzu systems PCMCIA card. Follow the operating procedure below.

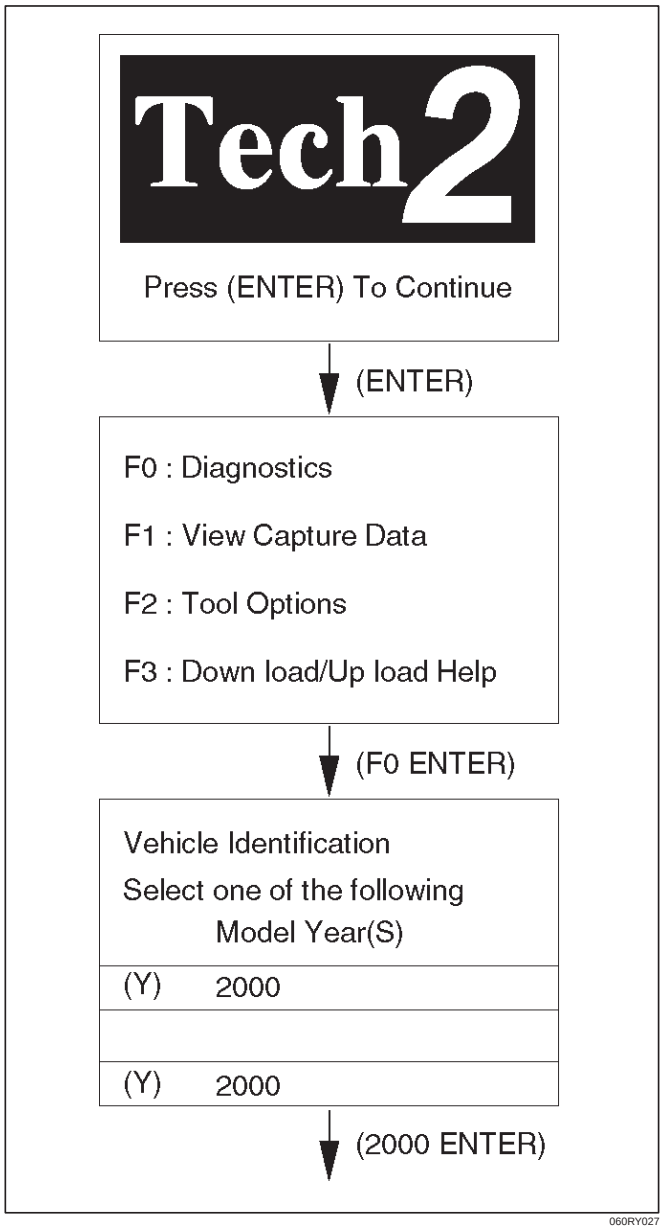

060RY027

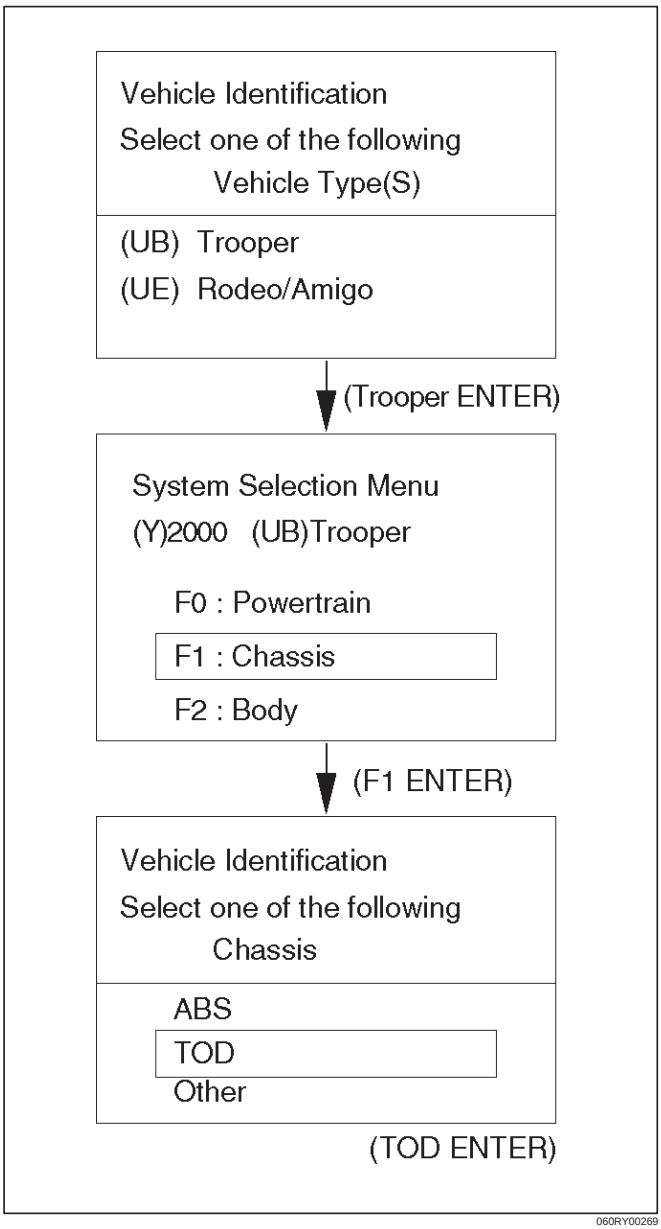
Vehicle Identification
Select one of the following
Vehicle Type(S)
(UB) Trooper
(UE) Rodeo/Amigo
(Trooper ENTER)
System Selection Menu
(Y)2000 (UB)Trooper
F0 : Powertrain
F1 : Chassis
F2 : Body
(F1 ENTER)
Vehicle Identification
Select one of the following
Chassis
ABS
TOD
Other
(TOD ENTER)
060RY00269

Diagnostic Trouble Codes

Code	Tech 2 code (P code)	Item	Diagnosis	Check flow No.
12	—	Start code	Normal	—
13	P1735	Ref	Shorted GND	6
14	P1731	Front speed sensor	Input abnormality (open, sig or com)	2
15	P1736	Ref	Shorted V_B	6
16	P1737	Front speed sensor	Input abnormality	3
21	P1716	TPS	Shorted or disconnected wiring, abnormality in input	7
23	—	ECU	CPU abnormality	1
24	P1733	Rear speed sensor	Input abnormality (open, sig or com)	5
25	—	CHECK lamp	Shorted	14
26	—	EMC (+)	Shorted GND	10
27	P1738	Rear speed sensor	Input abnormality	4
28	P1760	ADC (+) & AXLE SW	Output abnormality	11
31	P1721	EMC (+)	Shorted or disconnected coil/wiring	9
32	P1761	ADC (+)	Shorted or disconnected coil/wiring	12
33	P1762	ADC (+)	Shorted GND	13
34	—	D-G MAP	Input abnormality	8
35	—	CHECK lamp	Shorted or disconnected wiring	14
36	—	ECU	CPU abnormality	1
37	P1712	ECU	CPU abnormality	1
38	P1714	ECU	CPU abnormality	1

TPS : Throttle Position Sensor
EMC : Electromagnetic coil
ADC : Shift on the fly (Axle Dis Connect)
D-G MAP : Discrimination engine type

Diagnosis from Trouble Codes

- Diagnose the TOD based on the fault that has been saved to the control unit according to the system self-diagnostic function.

Check flow	Trouble code	Phenomenon	Standard
1	23, 36, 37(P1712), 38(P1714)	The ECU has failed.	—

Step	Action	Yes	No
1	Turn on the starter switch. Is the trouble reproduced?	Replace the ECU and conduct the test run. Go to Step 3	Go to Step 2
2	1. Clear the trouble codes. 2. Conduct the test run. Is the trouble reproduced during the test run?	Replace the ECU and conduct the test run. Go to Step 3	The trouble is not reproduced. Refer to “Troubles intermittently observed”.
3	1. Check that all the parts are mounted. 2. Clear the trouble codes. Is this step complete?	Repeat the “Diagnosis Flow”.	Return to Step 3

Check flow	Trouble code	Phenomenon	Standard
2	14 (P1733)	Front speed sensor signal open or GND short, speed sensor com open.	0.3V > sensor voltage

NOTE: The following procedure shows the case that the front or rear sensor reference or common grounding line is broken.

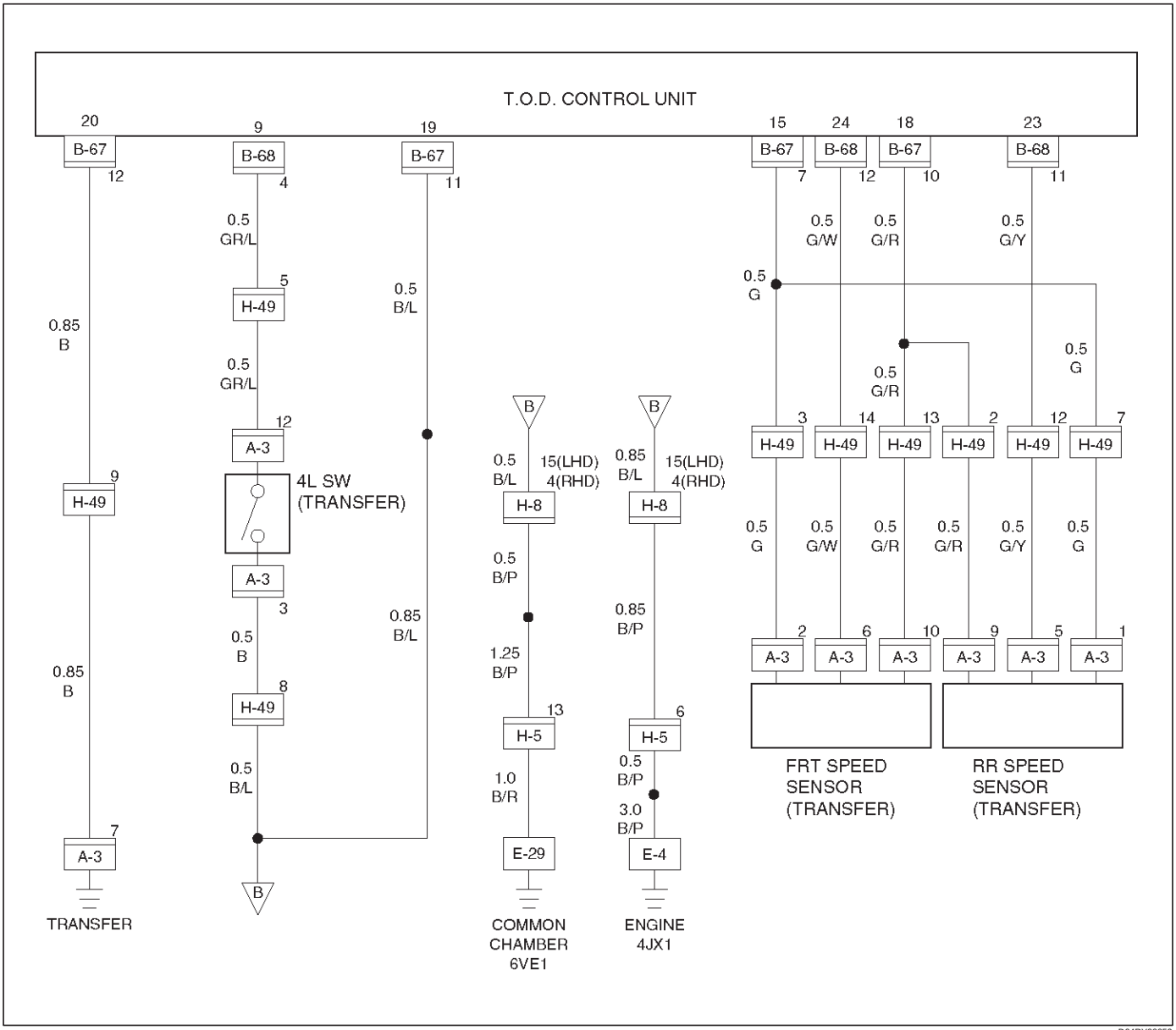

Step	Action	Yes	No
1	1. Start the engine. 2. Select TOD mode. Is there the memory except DTC 14(P1731)?	Go to *Step 4*	Go to *Step 2*
2	1. Turn off the starter switch. 2. Disconnect the ECU connector (B–67) and (B–68). Is there the continuity between the connector (B–68) terminal 12 and connector (B–67) terminal 11?	Repair the circuit. Go to *Step 7*	Go to *Step 3*
3	1. Disconnect the transfer connector (A–3). Is there the continuity between the connector (B–68) terminal 12 and the connector (A–3) terminal 6, the connector (B–67) terminal 7 and connector (A–3) terminal 2, and the connector (B–67) terminal 10 and connector (A–3) terminal 10?	Replace the front speed sensor. Go to *Step 7*	Repair the circuit. Go to *Step 7*
4	Is the memory DTC 24(P1733)?	Go to *Step 5*	Refer to *other trouble check flow.*
5	Is there the continuity between harnesses of terminal 24 and 23 (vehicle side terminal of the front and rear speed sensor)?	Go to *Step 6*	Repair the circuit. Go to *Step 7*
6	Is there the continuity between harnesses of terminal 18 and 15 (vehicle side terminal of the speed sensor COM(–) and ref)?	Replace front and rear speed sensor. Go to *Step 7*	Repair the circuit. Go to *Step 7*
7	1. Check that all the parts are mounted. 2. Clear the trouble code. Is the step complete?	Verify the repair.	Return to *Step 7*

Check flow	Trouble code	Phenomenon	Standard
3	16 (P1737)	The front speed sensor no pulse.	Hi level : 4.5 ~ 6.0 V Lo level : 0.7 ~ 2.0 V Frequency (F) = 700–850 Hz (at 50 km/h)

NOTE: Find the trouble in which the pulse corresponding to the running speed is not input.

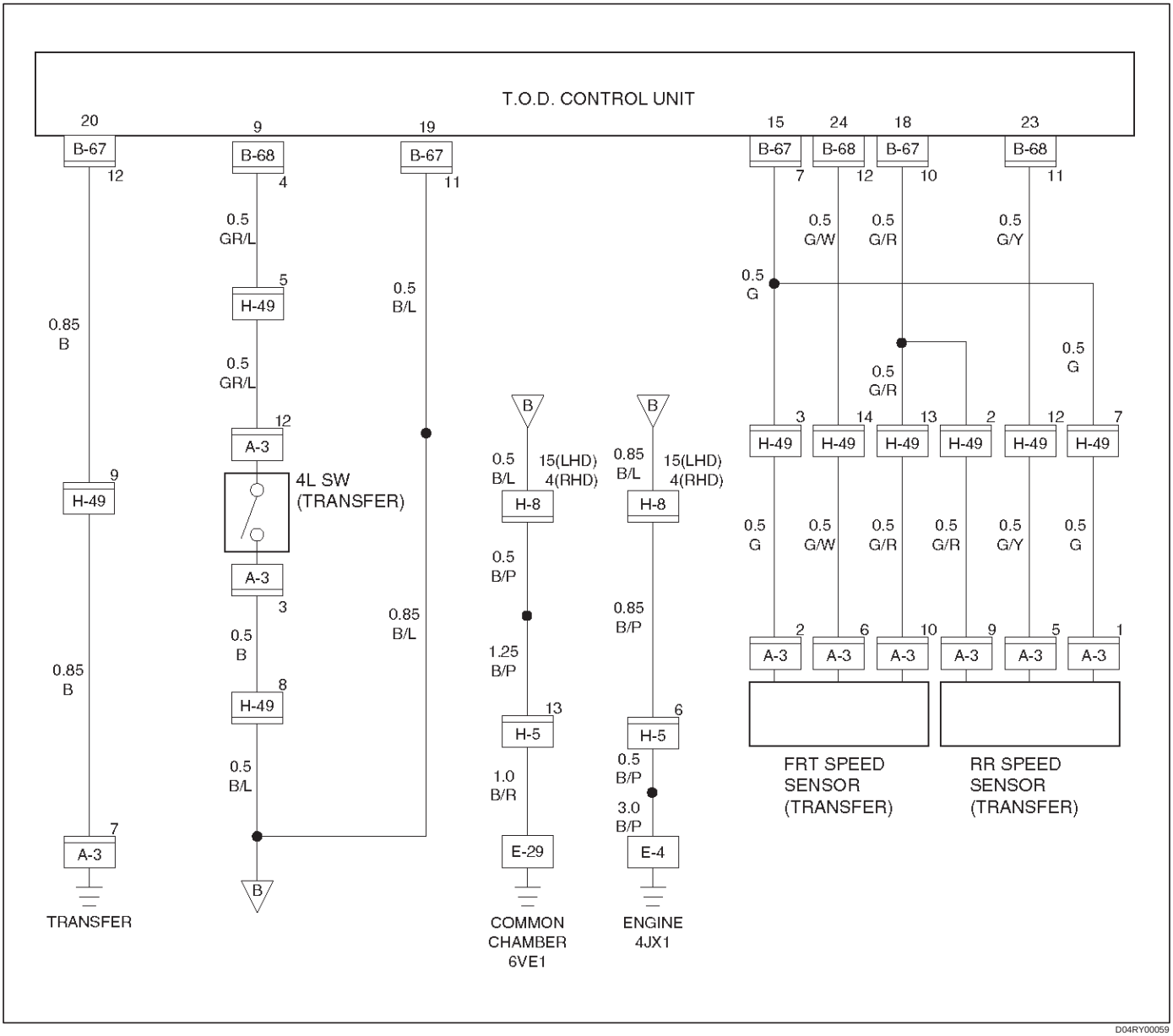

Step	Action	Yes	No
1	1. Connect TECH 2. While running in TOD mode, does TECH–2's front speed sensor indication change with vehicle speed?	Go to *Step 2*	Repair and inspection front speed sensor tone wheel. Go to *Step 6*
2	1. Clear the trouble code. While running at 40 km/h or 25 mph in TOD mode for 30 consecutive sec, is the trouble code reissued?	Go to *Step 3*	The trouble is not reproduced. Refer to *"Troubles intermittently observed".*
3	1. Turn off the starter switch. 2. Disconnect the ECU connector (B–67) and (B–68). Is there the continuity between the connector (B–68) terminal 12 and connector (B–67) terminal 11?	Repair the circuit. Go to *Step 6*	Go to *Step 4*
4	1. Disconnect the transfer connector (A–3). Is there the continuity between the connector (B–68) terminal 12 and the connector (A–3) terminal 6, the connector (B–67) terminal 7 and connector (A–3) terminal 2, and the connector (B–67) terminal 10 and connector (A–3) terminal 10?	Replace the front speed sensor. Go to *Step 5*	Repair the circuit. Go to *Step 5*
5	1. Clear the trouble code. While running at 40 km/h or 25 mph in TOD mode for 30 consecutive sec, is the trouble code reissued?	Replace ECU. Go to *Step 6*	Go to *Step 6*
6	1. Check that all the parts are mounted. 2. Clear the trouble code. Is this step complete?	Repeat the "Diagnosis Flow".	Return to Step 6

Check flow	Trouble code	Phenomenon	Standard
4	27 (P1738)	The rear speed sensor no pulse.	Hi level : 4.5 ~ 6.0 V Lo level : 0.7 ~ 2.0 V Frequency (F) = 700–850 Hz (at 50 km/h)

NOTE: Find the trouble in which the pulse corresponding to the running speed is not input.

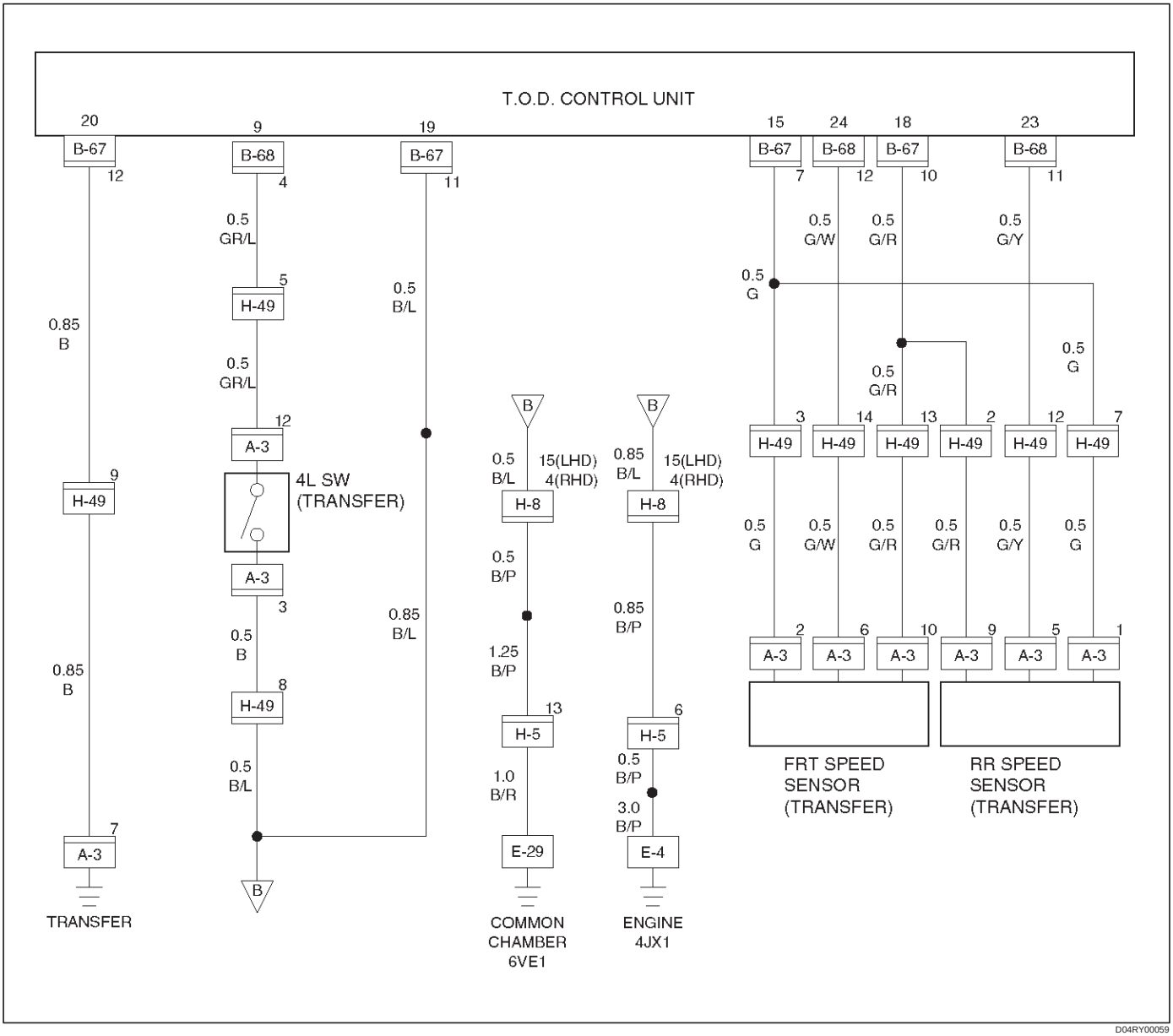

D04RY00059

Step	Action	Yes	No
1	1. Connect TECH 2. While running in TOD mode, does TECH–2's rear speed sensor indication change with vehicle speed?	Go to *Step 2*	Repair and inspection front speed sensor tone wheel. Go to *Step 6*
2	1. Clear the trouble code. While running at 40 km/h or 25 mph in TOD mode for 30 consecutive sec, is the trouble code reissued?	Go to *Step 3*	The trouble is not reproduced. Refer to *"Troubles intermittently observed".*
3	1. Turn off the starter switch. 2. Disconnect the ECU connector (B–67) and (B–68). Is there the continuity between the connector (B–68) terminal 11 and connector (B–67) terminal 11?	Repair the circuit. Go to *Step 5*	Go to *Step 4*
4	1. Disconnect the transfer connector (A–3). Is there the continuity between the connector (B–68) terminal 11 and the connector (A–3) terminal 5, the connector (B–67) terminal 7 and connector (A–3) terminal 1, and the connector (B–67) terminal 10 and connector (A–3) terminal 9?	Replace the rear speed sensor. Go to *Step 5*	Repair the circuit. Go to *Step 5*
5	1. Clear the trouble code. While running at 40 km/h or 25 mph in TOD mode for 30 consecutive sec, is the trouble code reissued?	Replace ECU. Go to *Step 6*	Go to *Step 6*
6	1. Check that all the parts are mounted. 2. Clear the trouble code. Is this step complete?	Repeat the "Diagnosis Flow".	Return to *Step 6*

Check flow	Trouble code	Phenomenon	Standard
5	24 (P1733)	Rear speed sensor signal open or GND short, speed sensor COM open.	0.3V > sensor voltage

NOTE: The following procedure shows the case that the front or rear sensor reference or common grounding line is broken.

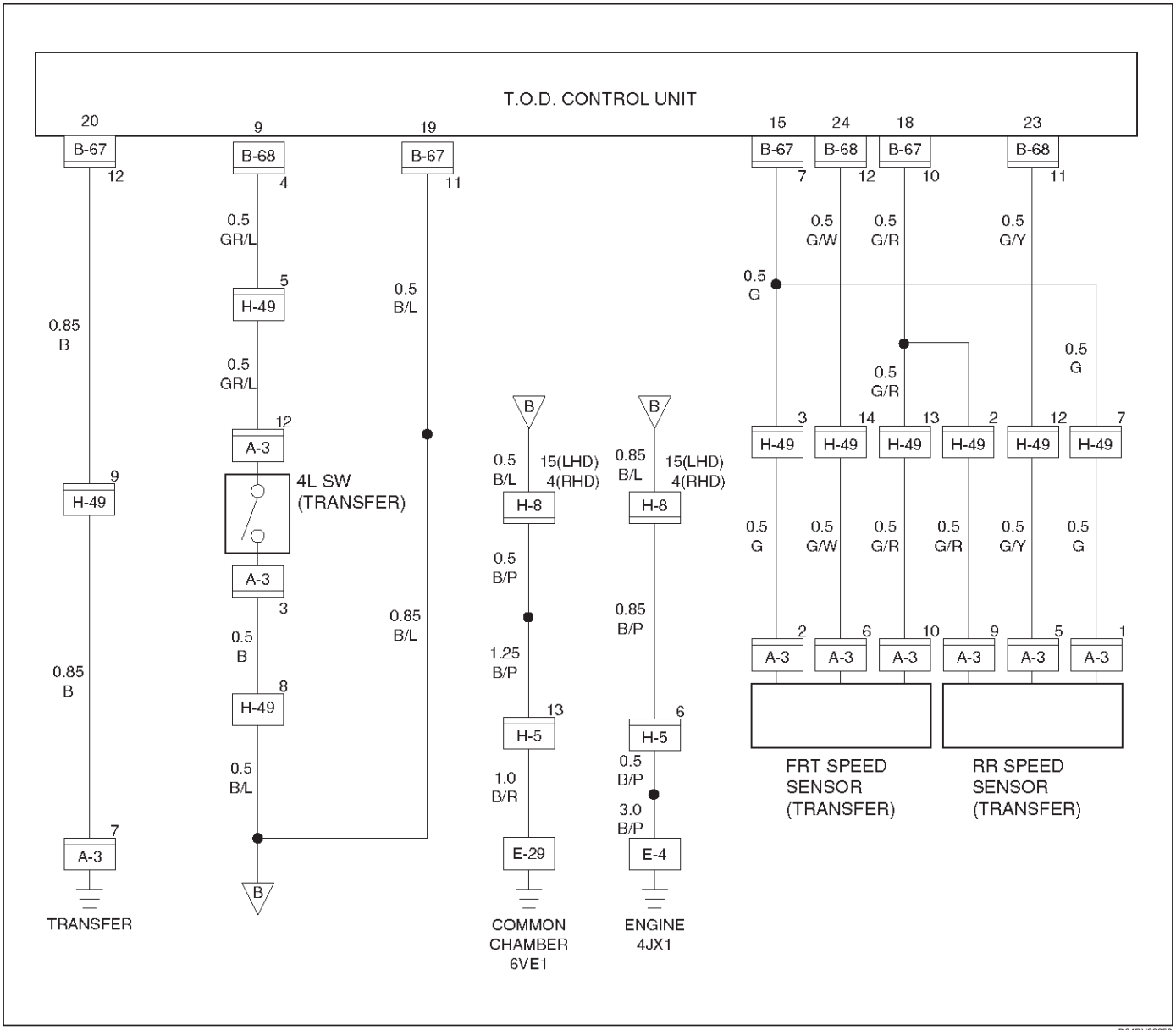

Step	Action	Yes	No
1	1. Start the engine. 2. Select TOD mode. Is there the memory except DTC 24(P1733)?	Go to *Step 4*	Go to *Step 2*
2	1. Turn off the starter switch. 2. Disconnect the ECU connector (B–67) and (B–68). Is there the continuity between the connector (B–68) terminal 11 and connector (B–67) terminal 11?	Repair the circuit. Go to *Step 7*	Go to *Step 3*
3	1. Disconnect the transfer connector (A–3). Is there the continuity between the connector (B–68) terminal 11 and the connector (A–3) terminal 5, the connector (B–67) terminal 7 and connector (A–3) terminal 1, and the connector (B–67) terminal 10 and connector (A–3) terminal 9?	Replace the rear speed sensor. Go to *Step 7*	Repair the circuit. Go to *Step 7*
4	Is the memory DTC 14(P1731)?	Go to *Step 5*	Refer to *other trouble cheek flow.*
5	Is there the continuity between harnesses of terminal 24 and 23 (vehicle side terminal of the front and rear speed sensor)?	Go to *Step 6*	Repair the circuit Go to *Step 7*
6	Is there the continuity between harnesses of terminal 18 and 15 (vehicle side terminal of the speed sensor COM(–) and ref)?	Replace front and rear speed sensor. Go to *Step 7*	Repair the circuit. Go to *Step 7*
7	1. Check that all the parts are mounted. 2. Clear the trouble code. Is the step complete?	Verify the repair	Return to *Step 7*

Check flow	Trouble code	Phenomenon	Standard
6	13 (P1735)	The reference is short-circuited to GND.	Reference ≃ 5 V
	15 (P1736)	The reference is short-circuited to Vb.	

If the reference wire (15) is short-circuited to GND, the speed signal is not generated. If the wire is short-circuited to the battery voltage, the signal level becomes faulty.

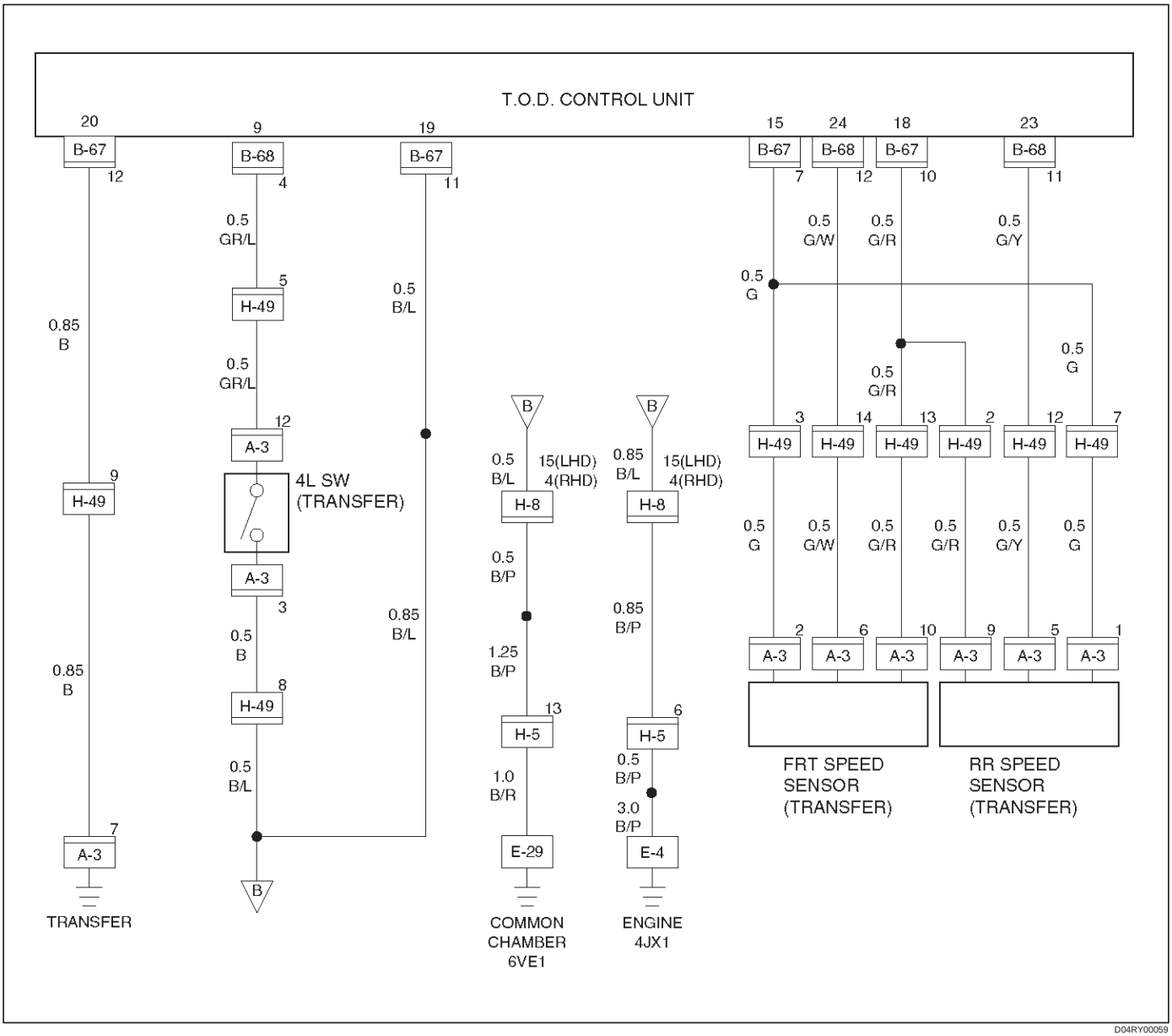

Step	Action	Yes	No
1	1. Start the engine. Does the voltage between terminals 15 and 19 meet the standard 5V?	The trouble is not reproduced. Refer to “Trouble intermittently boserved”. Or verify repair.	Go to Step 2
2	Is the voltage below the standard?	Go to Step 3	Go to Step 7
3	1. Turn off the starter switch. 2. Disconnect the ECU connector. Is the continuity established between vehicle harness terminals (B–67)7 and (B–67)11?	Go to Step 4	The ECU is failed. Replace the ECU. Go to Step 8
4	1. Disconnect the H-49 connector. Is the continuity established between floor harness connector terminals (H-49)3 and (H-49)9?	Go to Step 5	Short to GND between (B–67)7 and (H–49)3. Repair the circuit. Go to Step 8
5	1. Disconnect the A–3 connector. Is the continuity established between transfer harness connector terminals (A–3)2 and (A–3)7?	Replace the front speed sensor. Go to Step 8	The reference harness for the front speed sensor is short–circuited to GND. Repair the circuit. Go to Step 6
6	1. Disconnect the A–3 connector. Is the continuity established between transfer harness connector terminals (A–3)1 and (A–3)7?	Replace the rear speed sensor. Go to Step 8	The reference harness for the rear speed sensor is short–circuited to GND. Repair the circuit. Go to Step 8
7	1. Turn off the starter switch. 2. Disconnect the ECU connector. 3. Turn on the starter switch. Is the battery voltage observed between harness connector terminals (B–67)7 and (B–67)11?	Repair the harness circuit. Go to Step 8	The ECU has failed. Replace the ECU. Go to Step 8
8	1. Check that all the parts are mounted. 2. Clear the trouble code. Is this step complete?	Repeat the “Diagnosis Flow”	Go to Step 8

Check flow	Trouble code	Phenomenon	Standard
7	21 (P1716)	The voltage of the throttle position sensor (TPS) is faulty.	V 6VE1 / 4JX1 Idling: 0.44 ~ 0.87 / 0.2 ~ 0.5 Wide open throttle (WOT): 3.7 ~ 4.6 / 3.69 ~ 4.51

The signal voltage from the TPS deviates from the standard range.

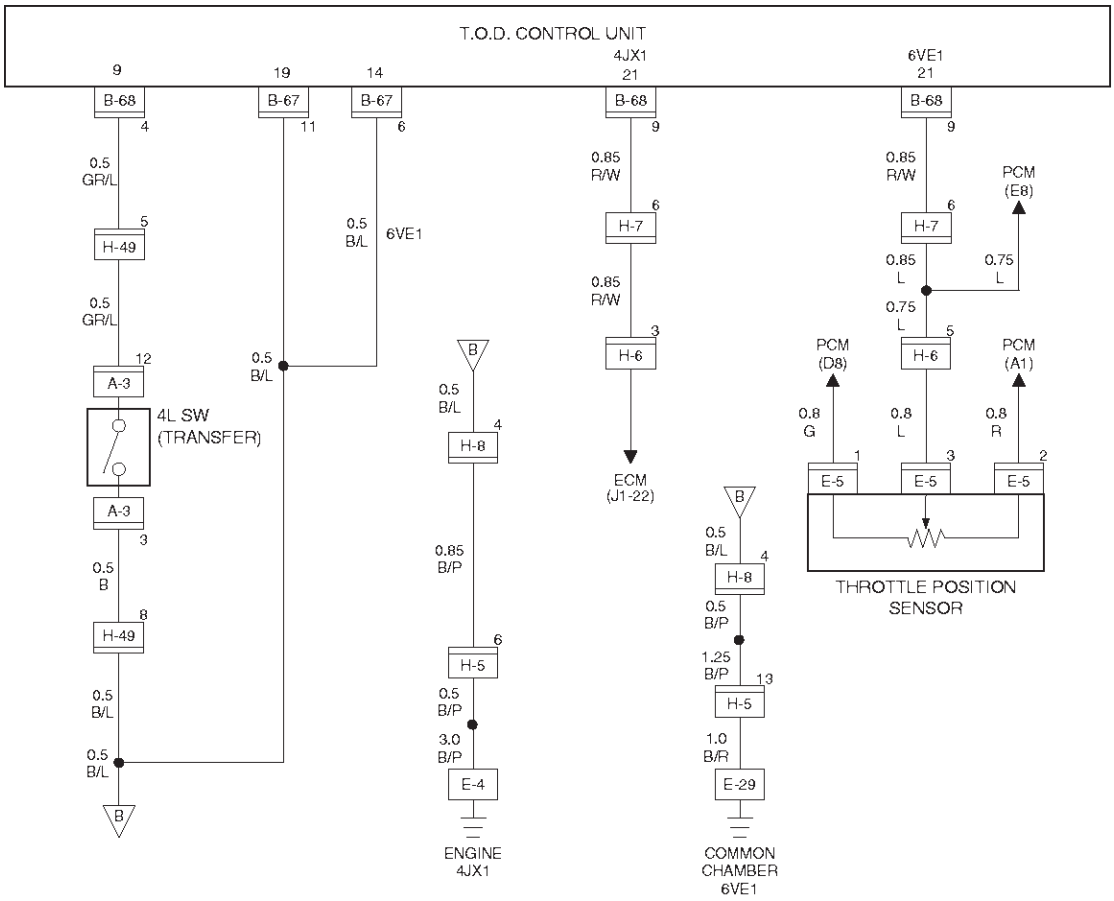

D04RY00053

Step	Action	Yes	No
1	1. Turn off the starter switch. Is the battery voltage normal?	Go to Step 2	Charge or replace the battery. Go to Step 6
2	1. Turn on the starter switch. Does the voltage between terminals 21 and 19 fall within the standard range above?	Go to Step 3	Go to Step 3
3	1. Turn off the starter switch. 2. Disconnect the ECU connector. 3. Turn on the starter switch. Does the voltage between terminals (B–68)9 and (B–67)11 fall within the standard range above?	The ECU has failed. Replace the ECU. Go to Step 6	Go to Step 4
4	Is the harness healthy?	Go to Step 5	Repair the harness. Go to Step 6
5	Is the TPS healthy?	Go to Step 6	Replace the TPS. Go to Step 6
6	1. Check that all the parts are mounted. 2. Clear the trouble code. Is this step complete?	Repeat the “Diagnosis Flow”.	Go to Step 6

Check flow	Trouble code	Phenomenon	Standard
8	34	The diesel/gasoline engine identification signal is faulty.	6VE1: Continuity established 4JX1: No continuity

The engine identification signals of 6VE1 and 4JX1 are changed each other.

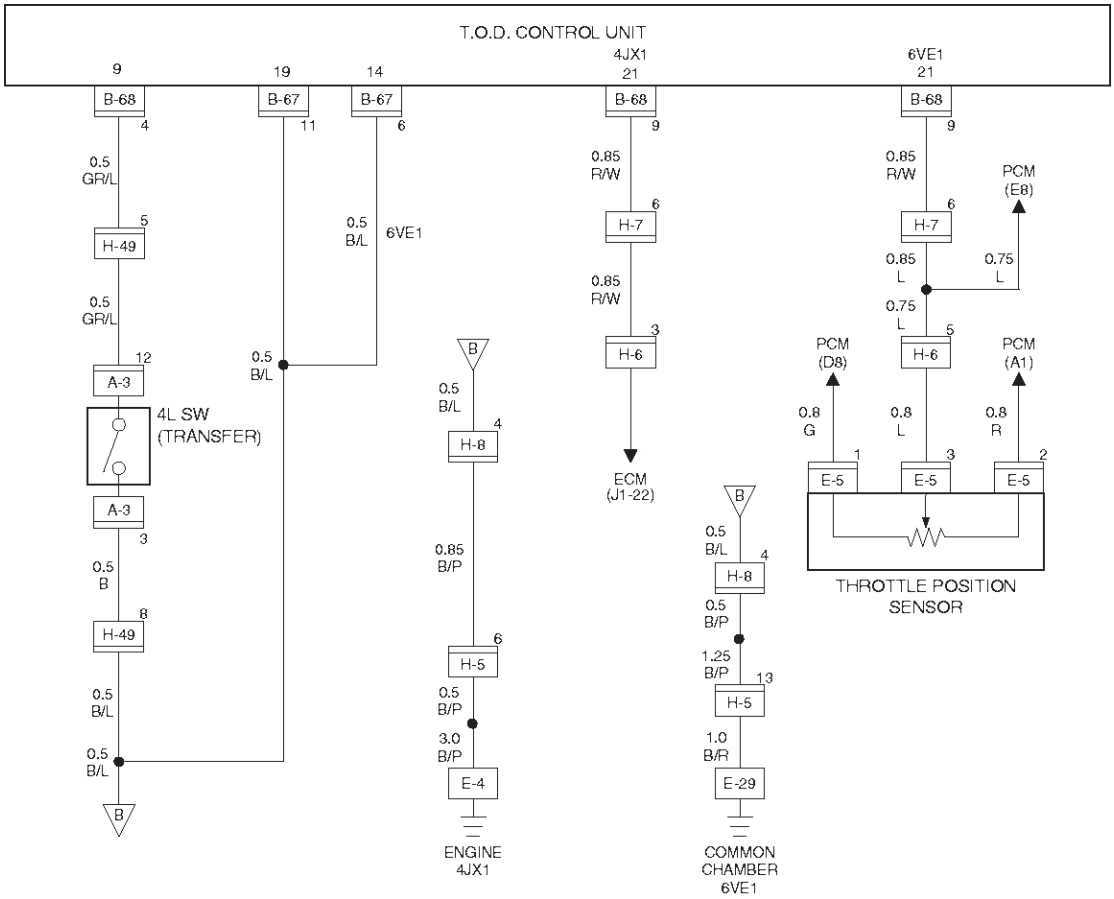

D04RY00053

6VE1

Step	Action	Yes	No
1	1. Turn off the starter switch. Is the continuity established between terminals 14 and 19?	Go to Step 2	The harness is broken. Repair the circuit. Go to Step 3
2	1. Turn on the starter switch. Does the voltage between terminals 14 and 19 indicate 0V?	The phenomenon is not reproduced. Refer to “Troubles intermittently observed”	The ECU has failed. Replace the ECU. Go to Step 3
3	1. Check that all the parts are mounted. 2. Clear the trouble code. Is this step complete?	Repeat the “Diagnosis Flow”.	Return to Step 3

4JX1

Step	Action	Yes	No
1	1. Turn off the starter switch. Is the continuity established between terminals 14 and 19?	The harness for terminal 14 is short–circuited to GND. Repair the circuit. Go to Step 3	Go to Step 2
2	1. Turn on the starter switch. Does the voltage between terminals 14 and 19 indicate 5V?	The phenomenon is not reproduced. Refer to “Troubles intermittently observed”	The ECU has failed. Replace the ECU. Go to Step 3
3	1. Check that all the parts are mounted. 2. Clear the trouble code. Is this step complete?	Repeat the “Diagnosis Flow”.	Return to Step 3

Check flow	Trouble code	Phenomenon	Standard
9	31 (P1721)	The electromagnetic coil is broken or shorted to the battery or GND.	—

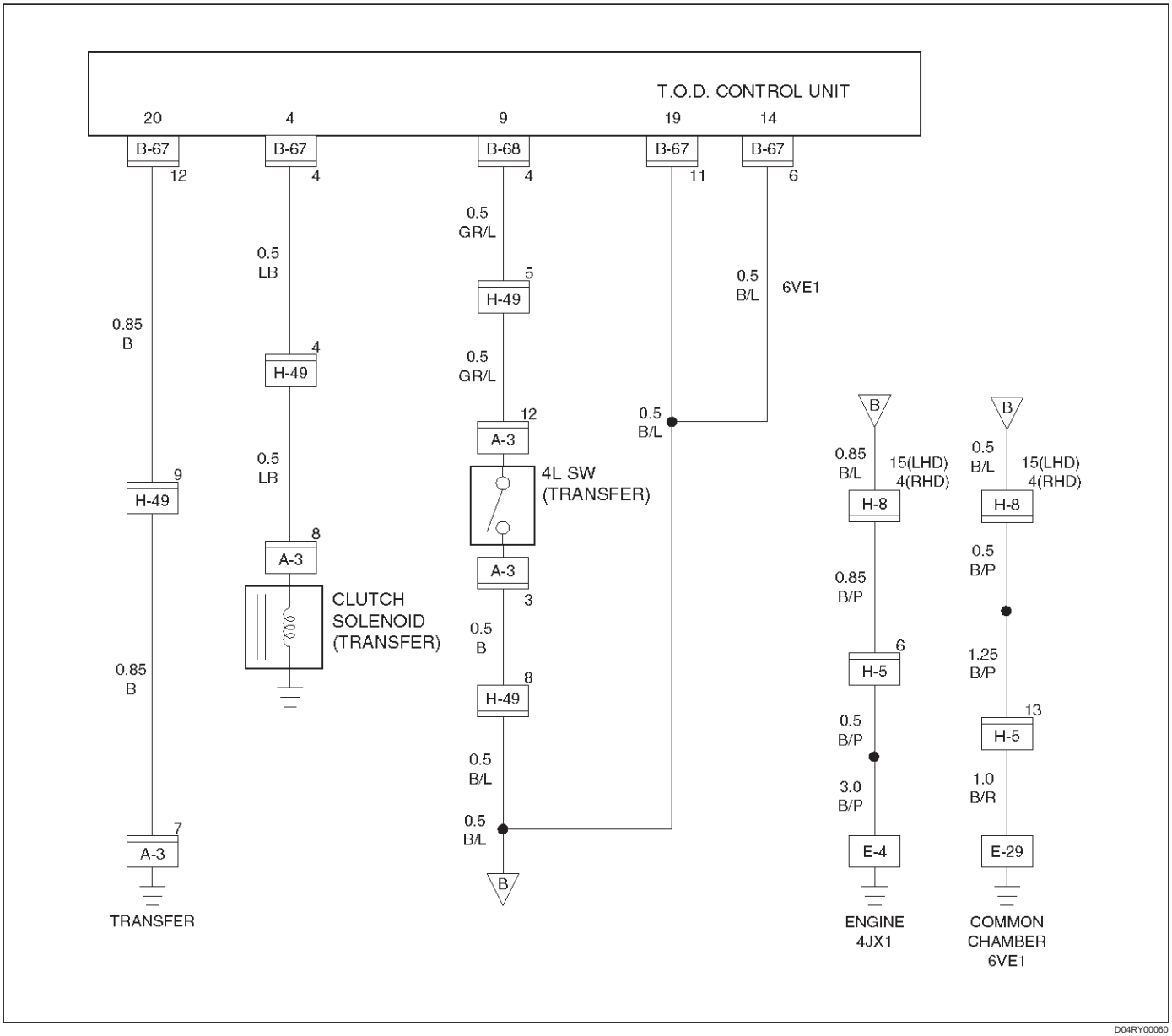

D04RY00060

Step	Action	Yes	No
1	1. Clear the trouble code. 2. Start the engine 3. Set the TOD mode. Is there DTC31 (P1721)?	Go to *Step 2*	Refer to *"Trouble intermittently observed".*
2	1. Turn off the starter switch. 2. Disconnect the ECU connector from ECU. Is the continuity established between terminals (B–67)4 and (B–67)12?	Go to *Step 3*	Go to *Step 5*
3	1. Connect the ECU connector. 2. Start the engine. 3. Set the TOD mode. Does the voltage between terminals 4 and 20 indicate at least 0.4V?	Go to *Step 4*	Go to *Step 6*
4	Is the battery voltage always observed between terminals 4 and 20?	The harness is short–circuited on the battery. Repair the circuit. Go to *Step 8*	Go to *Step 6*
5	1. Disconnect the A–3 connector. Is the continuity established between transfer connector terminals (A–3)8 and (A–3)7?	The harness is broken. Repair the circuit. Go to *Step 8*	Replace the transfer electromagnetic coil (solenoid clutch). Go to *Step 8*
6	1. Turn off the starter switch. 2. Disconnect the ECU connector from ECU. Is the resistance between the connector (B–67) terminal 4 and 12 1.0 ~ 5.0Ω?	The ECU has failed. Replace the ECU Go to *Step 8*	Go to *Step 7*
7	Is the resistance between the transfer connector (A–3) terminal 8 and 7 1.0 ~ 5.0Ω?	The harness is disconnection or short to GND. Repair the circuit. Go to *Step 8*	Replace the transfer electromagnetic coil (solenoid clutch). Go to *Step 8*
8	1. Check that all the parts are mounted. 2. Clear the trouble code. Is this step complete?	Repeat the "Diagnosis Flow".	Return to Step 8

Check flow	Trouble code	Phenomenon	Standard
10	26	The electromagnetic coil is short-circuited to GND.	Resistance: 1.0 to 5.0 ohm (at ordinary temperature)

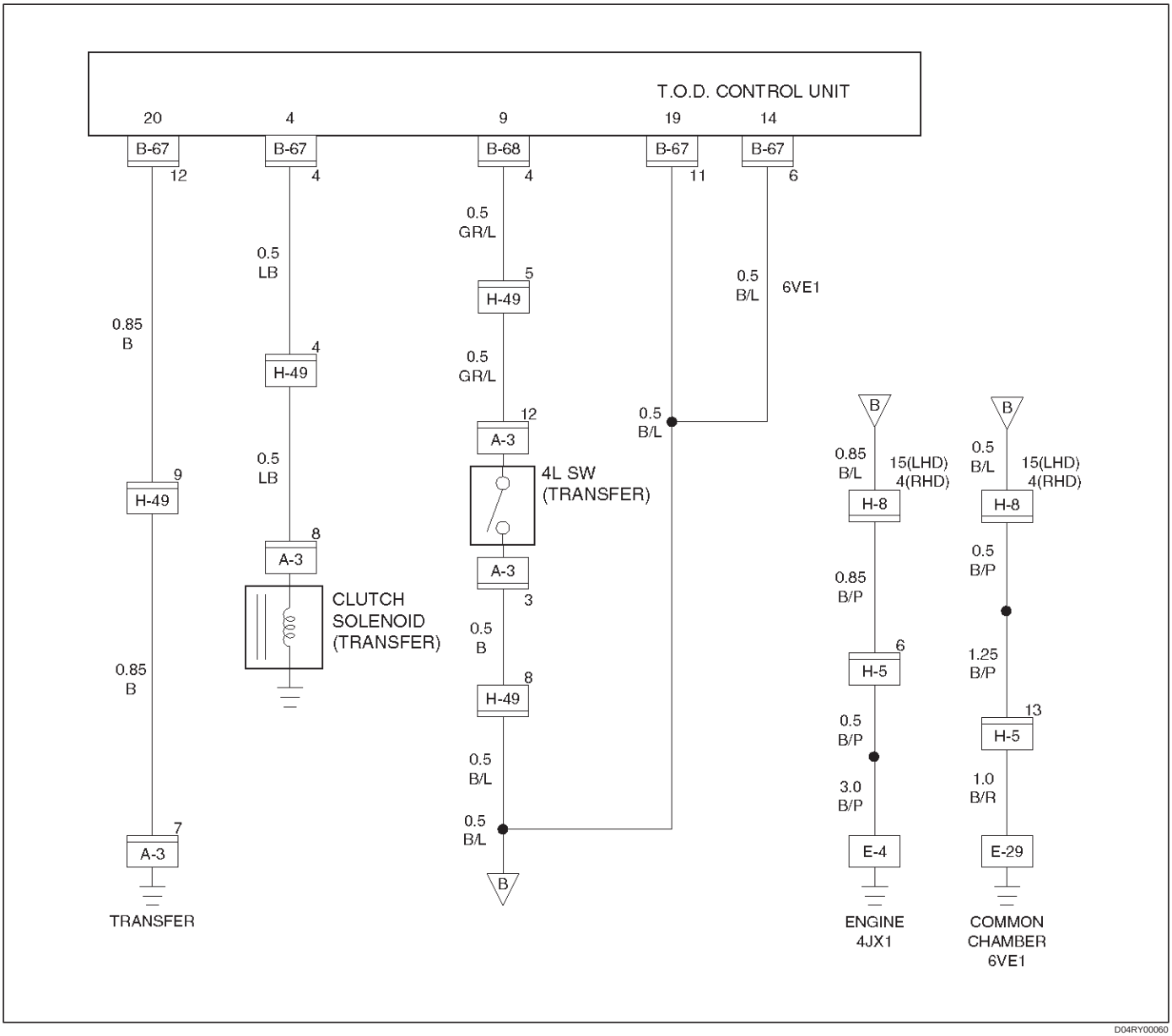

D04RY00060

Step	Action	Yes	No
1	1. Turn off the starter switch. 2. Disconnect the ECU connector from ECU. Does the resistance between terminals (B–67)4 and (B–67)12? indicate 1.0 to 5.0 ohm?	Go to Step 2	Go to Step 3
2	1. Connect the ECU connector. 2. Start the engine. 3. Set the TOD mode. When the throttle is operated between full close and full open positions, does the voltage between terminals 4 and 20 indicate 0.1 to 1.0 V?	The phenomenon is not reproduced. Refer to “Troubles intermittently observed”.	The ECU has failed. Replace the ECU. Go to Step 4
3	Does the resistance between transfer connector terminals (A–3)8 and (A–3)7 indicate 1.0 to 5.0ohm?	The harness is broken. Repair the circuit. Go to Step 4	Replace the transfer electromagnetic coil. Go to Step 4
4	1. Check that all the parts are mounted. 2. Clear the trouble code. Is this step complete?	Repeat the “Diagnosis Flow”.	Return to Step 4

Check flow	Trouble code	Phenomenon	Standard
11	28 (P1760)	The shift on the fly system (front axle disconnect) works incorrectly.	—

NOTE: The shift on the fly system is not changed between 2WD and 4WD modes normally.

CAUTION: If code 32 or 33 is also observed, remove the trouble associated with code 32 or 33 first.

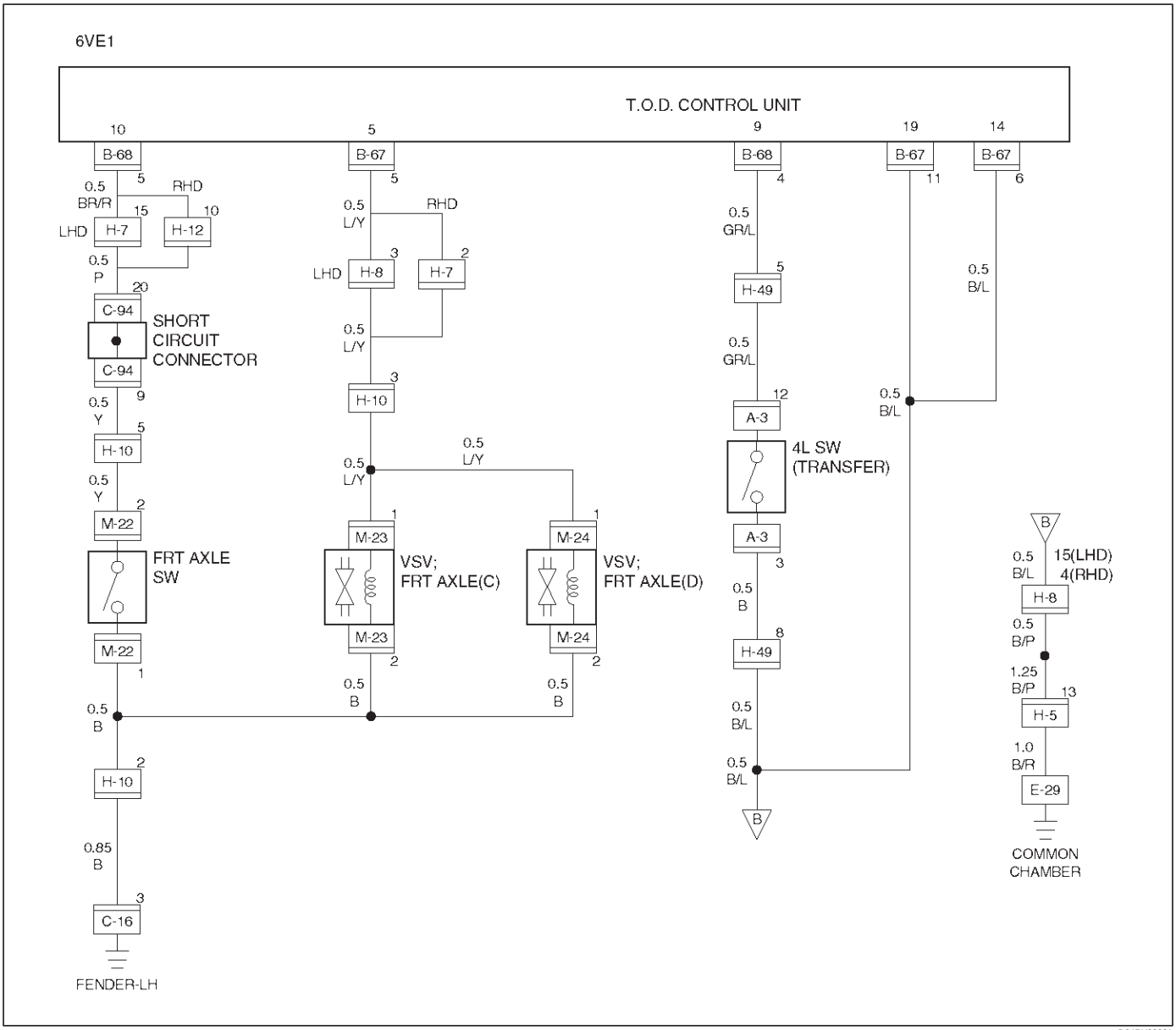

D04RY00061

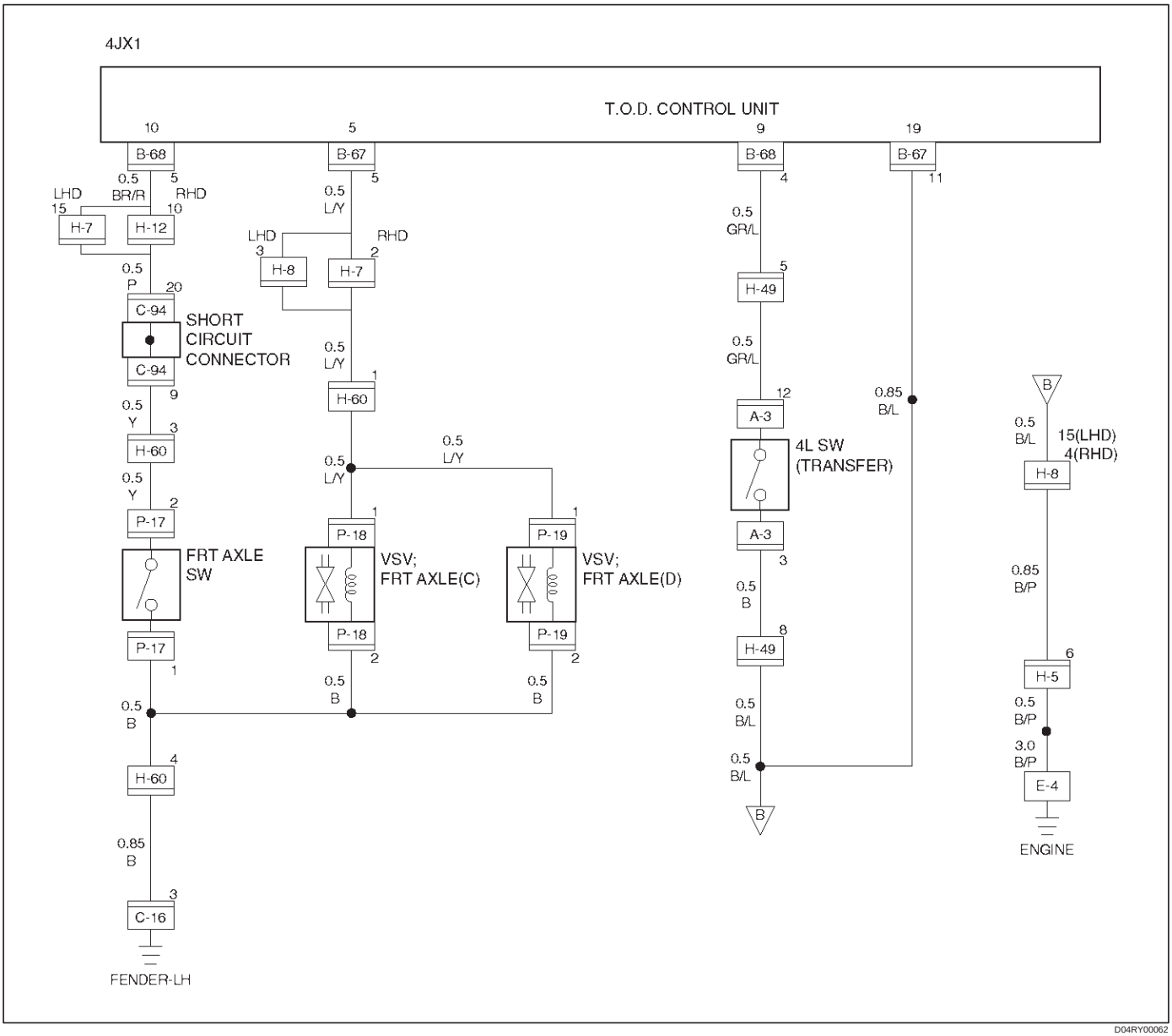
4JX1
T.O.D. CONTROL UNIT
10
5
9
19
B-68
B-67
B-68
B-67
0.5
BR/R
5
LHD
15
RHD
10
H-7
H-12
0.5
P
20
C-94
SHORT
CIRCUIT
CONNECTOR
C-94
9
0.5
Y
3
H-60
0.5
Y
2
P-17
FRT AXLE
SW
P-17
1
0.5
B
4
H-60
0.85
B
3
C-16
FENDER-LH
0.5
L/Y
LHD
3
RHD
2
H-8
H-7
0.5
L/Y
1
H-60
0.5
L/Y
0.5
L/Y
1
P-18
VSV;
FRT AXLE(C)
P-18
2
1
P-19
VSV;
FRT AXLE(D)
P-19
2
0.5
B
0.5
B
0.5
GR/L
5
H-49
0.5
GR/L
12
A-3
4L SW
(TRANSFER)
A-3
3
0.5
B
8
H-49
0.5
B/L
0.5
B/L
B
0.85
B/L
B
0.5
B/L
15(LHD)
4(RHD)
H-8
0.85
B/P
6
H-5
0.5
B/P
3.0
B/P
E-4
ENGINE
D04RY00062

Step	Action	Yes	No
1	1. Turn on the starter switch. 2. Set the transfer to the 2H mode. Is the battery voltage observed between terminals 5 and 19?	Go to Step 2	Go to Step 5
2	Is 5V observed between terminals 10 and 19?	Go to Step 3	Go to Step 6
3	1. Set the transfer to the high (TOD) mode. Does the voltage between terminals 5 and 19 indicate 0V?	Go to Step 4	The ECU has failed. Replace the ECU. Go to Step 7
4	Does the voltage between terminals 10 and 19 indicate 0V?	The phenomenon is not reproduced. Refer to “Troubles intermittently observed”.	The shift on the fly system is failed (refer to Section 4B and 4C of Chassis Repair Manual).
5	Does the TOD indicator show the 2H mode?	The ECU has failed. Replace the ECU. Go to Step 7	See “Trouble Diagnosis Depending on The Status of TOD Indicator”.
6	Set the transfer to the high (TOD) mode. Does the voltage between terminals 5 and 19 indicate 0V?	The shift on the fly system has failed (refer to Section 4B1 and 4C of Chassis Repair Manual).	The ECU has failed. Replace the ECU. Go to Step 7
7	1. Check that all the parts are mounted. 2. Clear the trouble code. Is this step complete?	Repeat the “Diagnosis Flow”.	Return to Step 7

Check flow	Trouble code	Phenomenon	Standard
12	32 (P1761)	The on/off signal (ADC) line of the shift on the fly system (front axle disconnect) is broken, or the line is short-circuited to the battery.	—

NOTE: The on/off signal line of the shift on the fly system is broken, or the line is short–circuited to the battery.

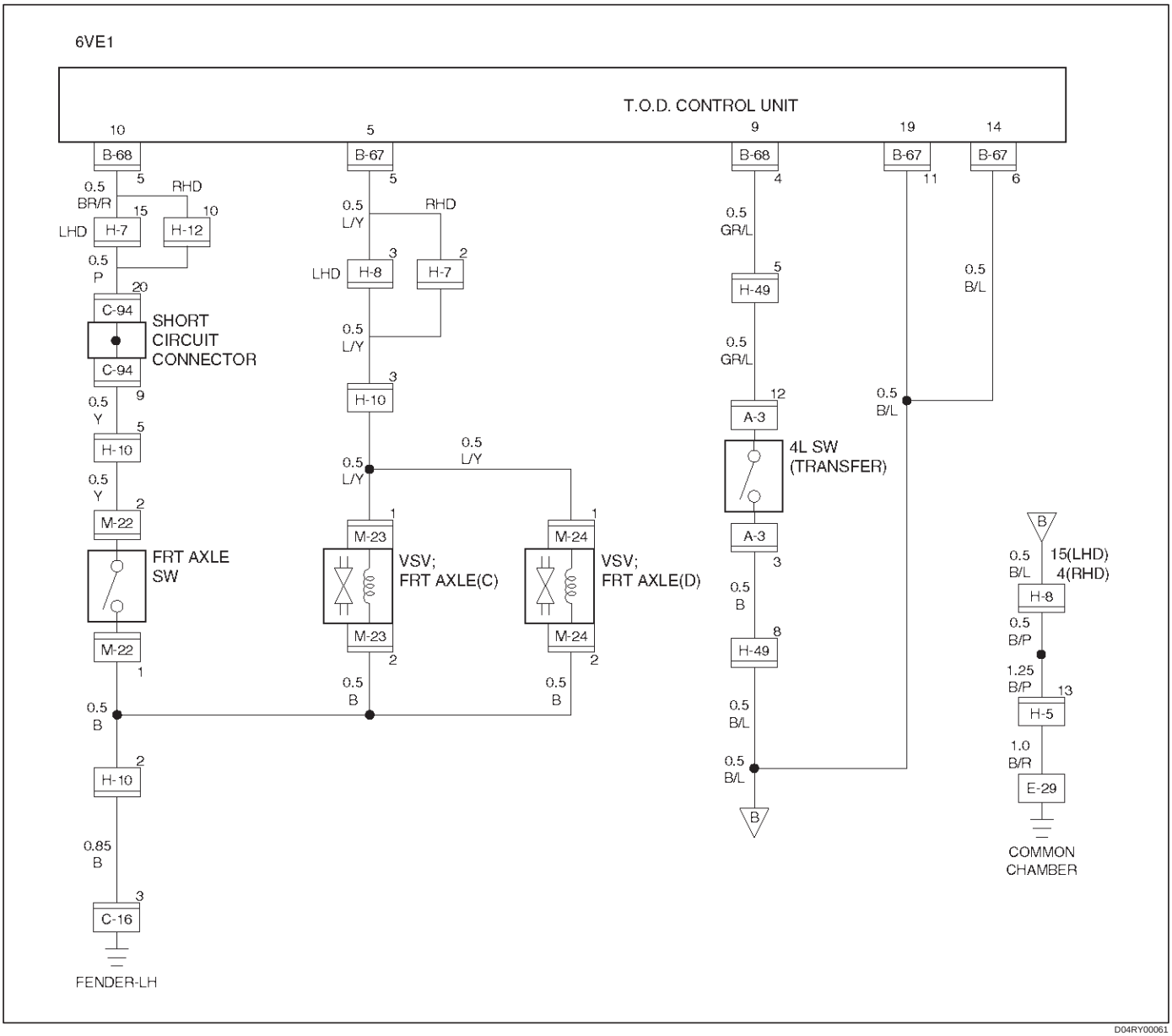

D04RY00061

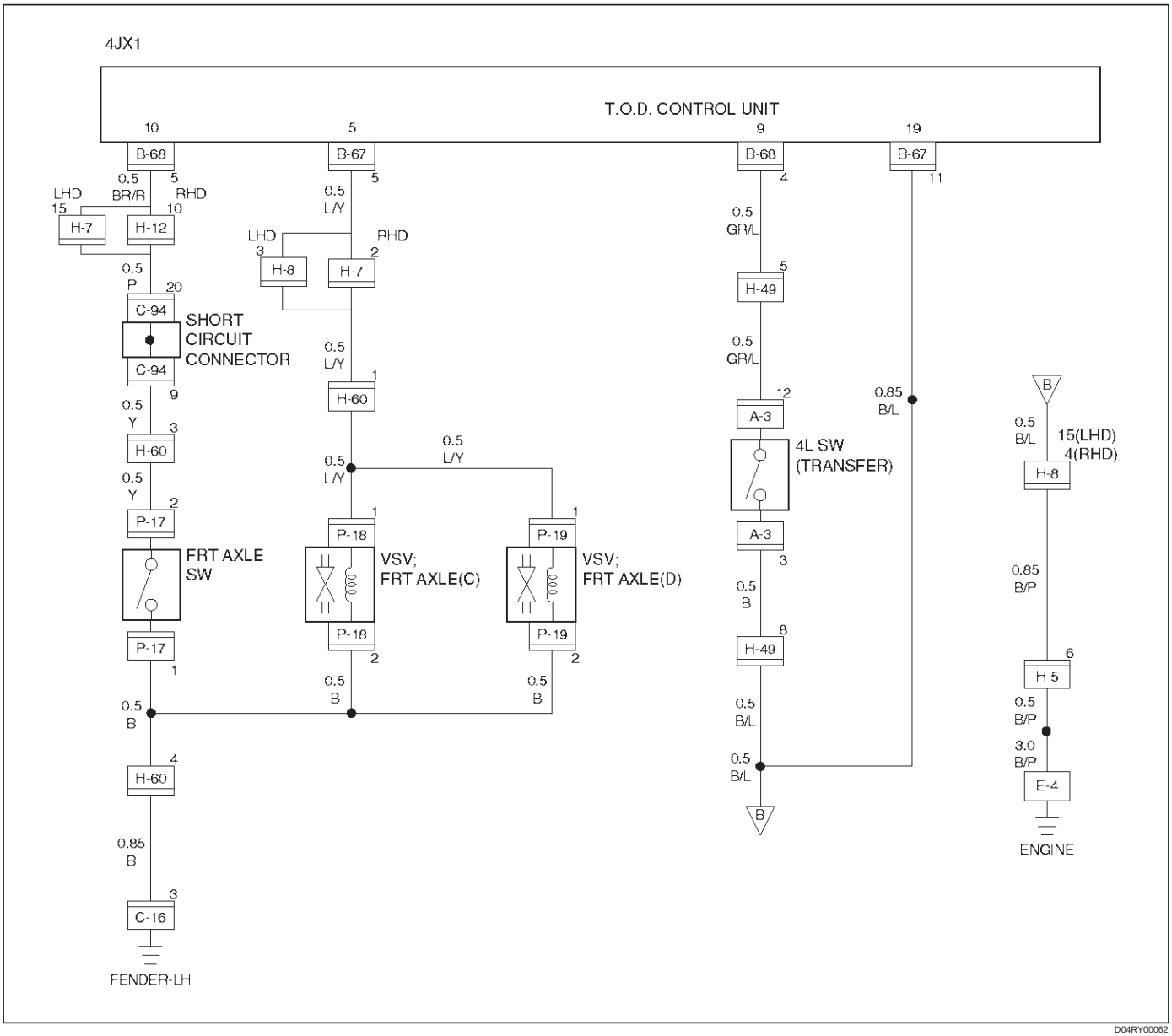
4JX1
T.O.D. CONTROL UNIT
10
5
9
19
B-68
B-67
B-68
B-67
0.5
BR/R
LHD
RHD
15
10
H-7
H-12
0.5
P
20
C-94
SHORT
CIRCUIT
CONNECTOR
C-94
9
0.5
Y
3
H-60
0.5
Y
2
P-17
FRT AXLE
SW
P-17
1
0.5
B
4
H-60
0.85
B
3
C-16
FENDER-LH
0.5
L/Y
LHD
3
RHD
2
H-8
H-7
0.5
L/Y
1
H-60
0.5
L/Y
0.5
L/Y
1
P-18
VSV;
FRT AXLE(C)
P-18
2
1
P-19
VSV;
FRT AXLE(D)
P-19
2
0.5
B
0.5
B
0.5
GR/L
5
H-49
0.5
GR/L
12
A-3
4L SW
(TRANSFER)
A-3
3
0.5
B
8
H-49
0.5
B/L
0.5
B/L
B
0.85
B/L
B
0.5
B/L
15(LHD)
4(RHD)
H-8
0.85
B/P
6
H-5
0.5
B/P
3.0
B/P
E-4
ENGINE

D04RY00062

Step	Action	Yes	No
1	1. Turn off the starter switch. 2. Disconnect the ECU connector from ECU. Is the continuity established between terminals (B–67)5 and (B–67)11?	Go to Step 2	The harness is broken. Repair the circuit. Go to Step 3
2	Does the voltage between terminals (B–67) 5 and (B–67) 11 indicate 0V?	Go to Step 3	The battery is short-circuited. Repair the circuit. Go to Step 4
3	1. Turn off the starter switch. 2. Connect ECU connector. 3. Turn on the starter switch. 4. Set the transfer to the 2H mode. Is the battery voltage observed between terminals 5 and 19?	The phenomenon is not reproduced Refer to “Troubles intermittently observed”.	The ECU has failed. Replace the ECU. Go to Step 4
4	1. Check that all the parts are mounted. 2. Clear the trouble code. Is this step complete?	Repeat the “Diagnosis Flow”.	Return to Step 4

Check flow	Trouble code	Phenomenon	Standard
13	33 (P1762)	The ADC line is short-circuited to GND.	—

NOTE:

- The on/off signal line of the shift on the fly system is short–circuited to GND.
- The system enters into the fail-safe mode because of fusing or system protection.

  (If a short–circuit is observed on GND, the output to the on/off signal line becomes 0V.)

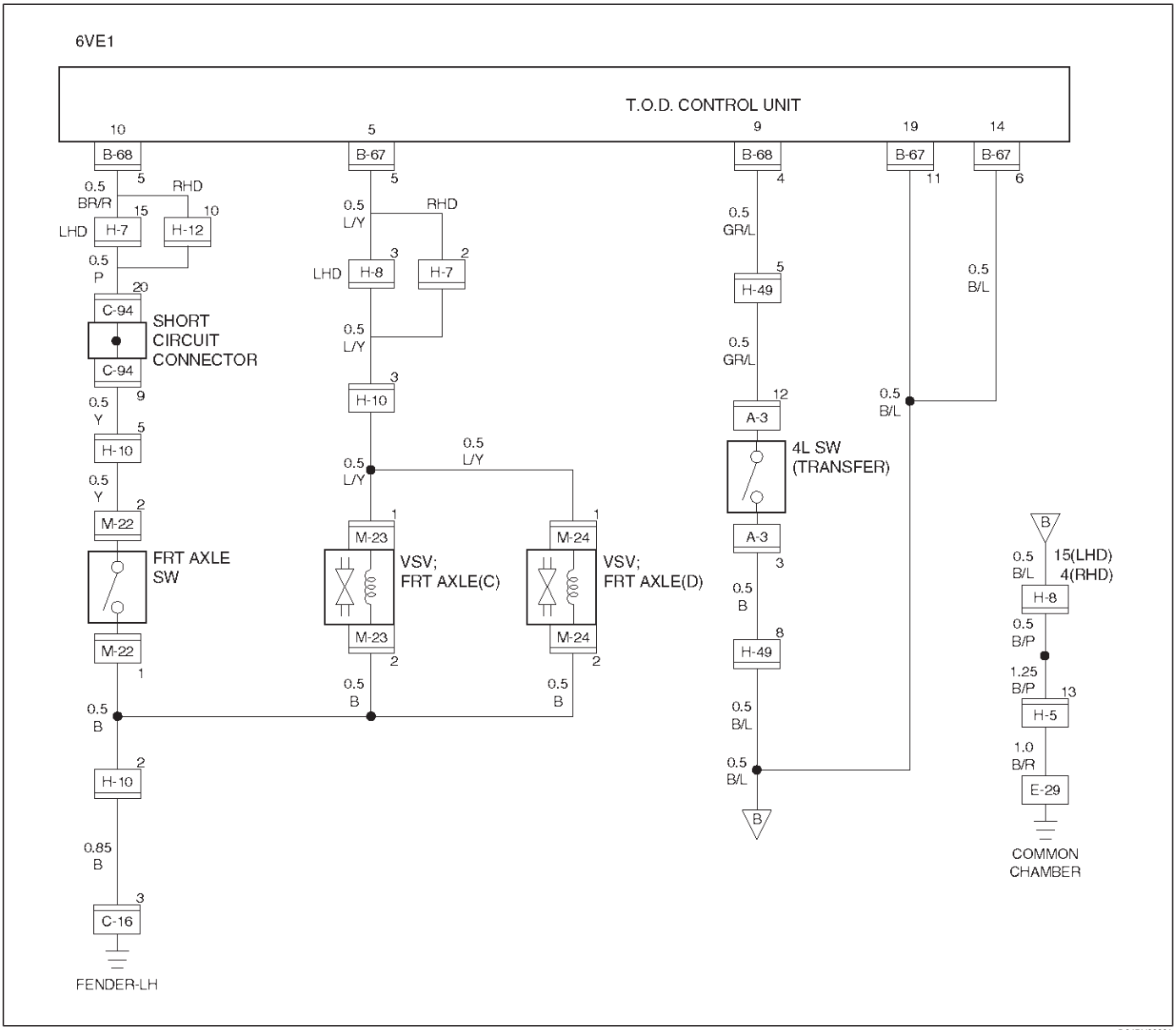

D04RY00061

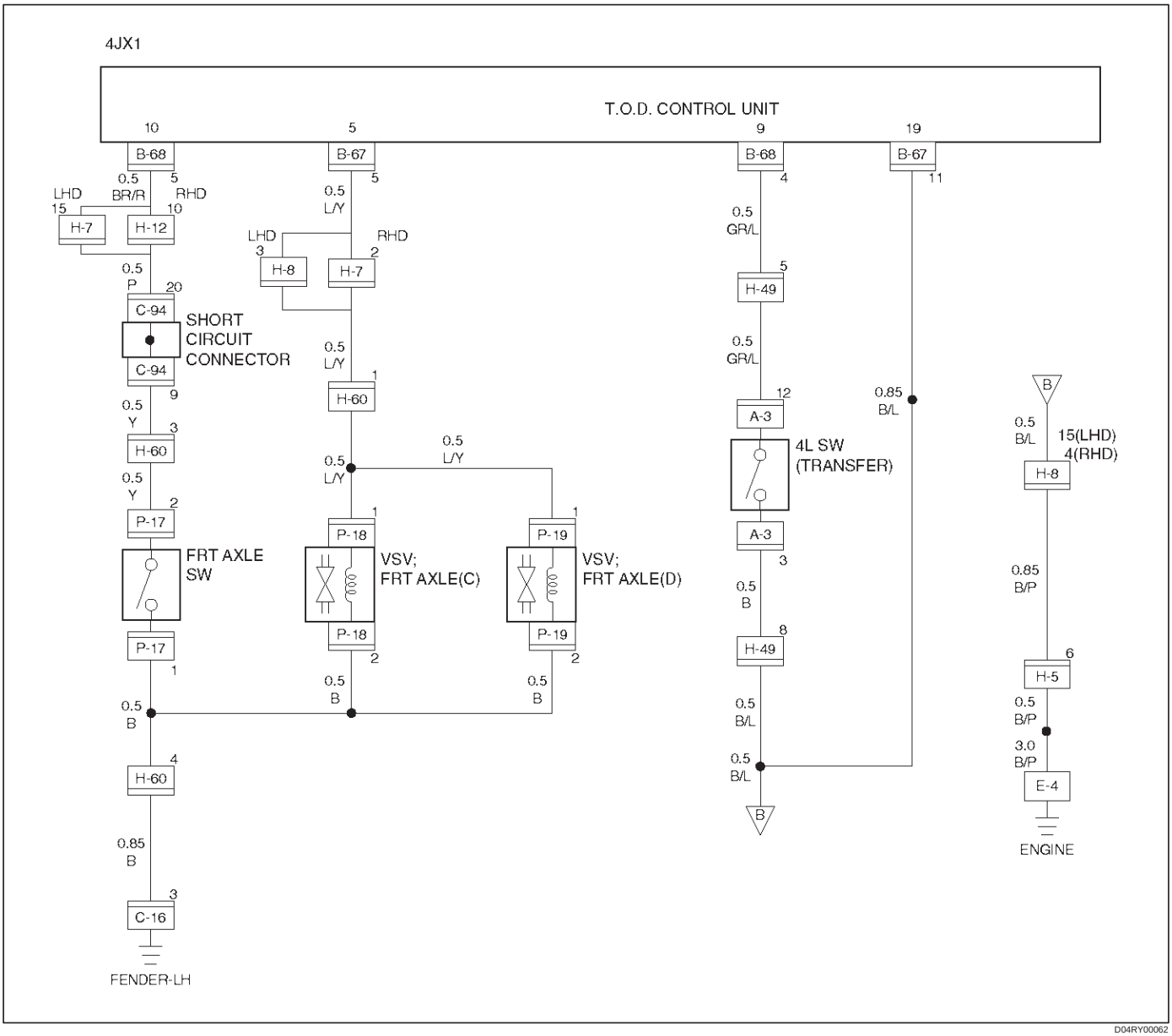
4JX1
T.O.D. CONTROL UNIT
10
5
9
19
B-68
B-67
B-68
B-67
0.5
BR/R
5
LHD
15
RHD
10
H-7
H-12
0.5
P
20
C-94
SHORT
CIRCUIT
CONNECTOR
C-94
9
0.5
Y
3
H-60
0.5
Y
2
P-17
FRT AXLE
SW
P-17
1
0.5
B
4
H-60
0.85
B
3
C-16
FENDER-LH
0.5
L/Y
LHD
3
RHD
2
H-8
H-7
0.5
L/Y
1
H-60
0.5
L/Y
0.5
L/Y
1
P-18
VSV;
FRT AXLE(C)
P-18
2
1
P-19
VSV;
FRT AXLE(D)
P-19
2
0.5
B
0.5
B
0.5
GR/L
5
H-49
0.5
GR/L
12
A-3
4L SW
(TRANSFER)
A-3
3
0.5
B
8
H-49
0.5
B/L
0.5
B/L
B
0.85
B/L
B
0.5
B/L
15(LHD)
4(RHD)
H-8
0.85
B/P
6
H-5
0.5
B/P
3.0
B/P
E-4
ENGINE
D04RY00062

Step	Action	Yes	No
1	1. Turn off the starter switch. 2. Disconnect the ECU connector from ECU. Does the resistance between terminals (B–67) 5 and (B–67) 11 meet the standard, 17<R<25 ohms?	The phenomenon is not reproduced. Refer to “Troubles intermittently observed”.	Go to Step 2
2	Is the resistance between terminals (B–67) 5 and (B–67) 11 R<2 ohms?	The signal line circuit of the shift on the fly system is short-circuited to GND. Repair the circuit. Go to Step 4	Go to Step 3
3	Is the resistance between terminals (B–67) 5 and (B–67) 11 R= 9±7ohms?	The signal line circuit of the shift on the fly system is layer short-circuited*. Replace the valve (VSV). Go to Step 4	Go to Step 4
4	1. Check that all the parts are mounted. 2. Clear the trouble code. Is this step complete?	Repeat the “Diagnosis Flow”.	Return to Step 4

*Layer short-circuit : The coil is damaged by overcurrent.

Check flow	Trouble code	Phenomenon	Standard
14	25	The CHECK lamp indicator line is short–circuited to the battery.	—
	35	The line is broken or short–circuited to GND.	—

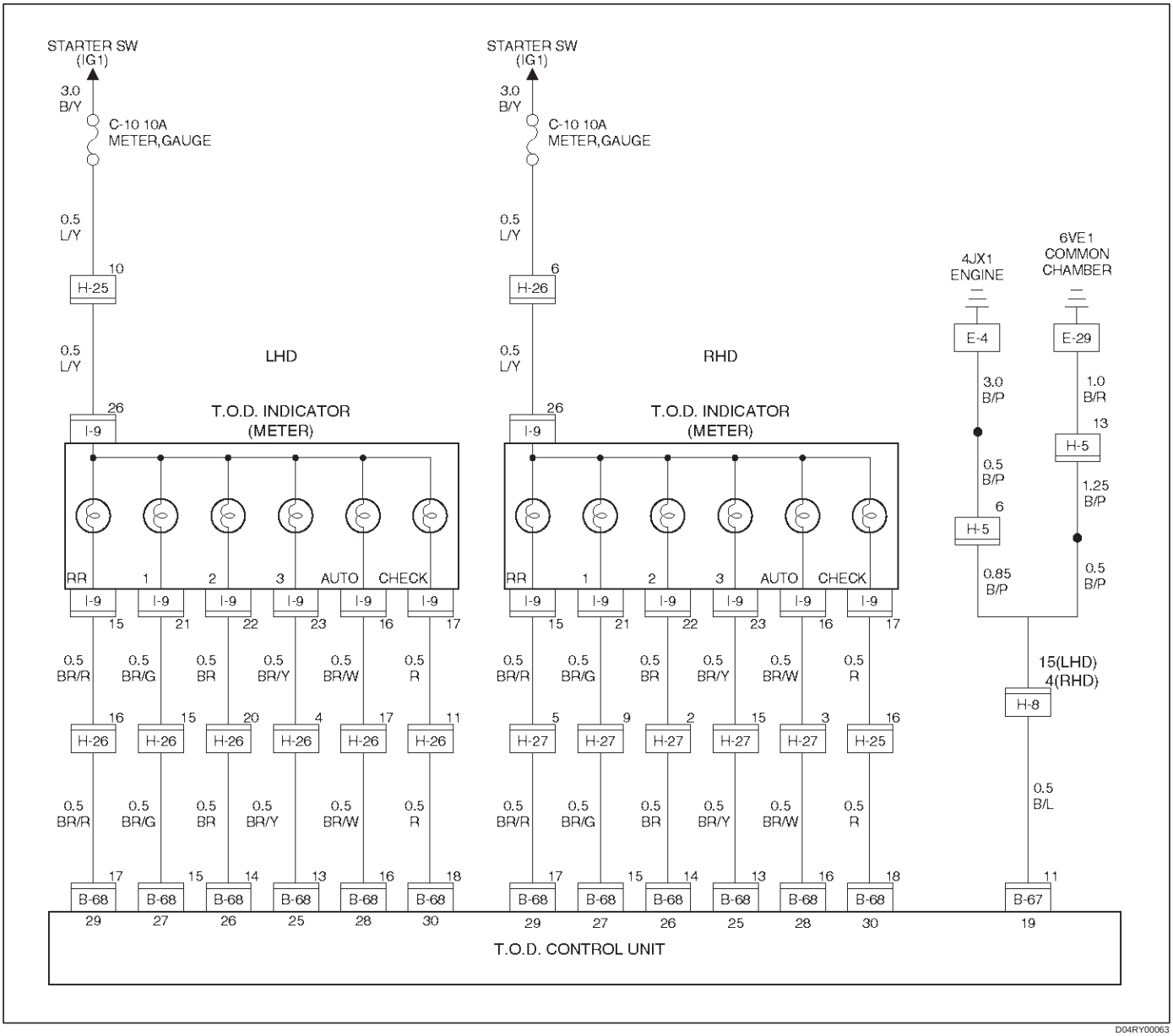

Step	Action	Yes	No
1	1. Turn on the starter switch. Is the CHECK lamp always turned on?	Go to Step 2	Go to Step 3
2	1. Turn off the starter switch. 2. Disconnect the ECU connector. 3. Turn on the starter switch. Is the CHECK lamp always turned on?	The CHECK circuit is short-circuited to GND. Repair the circuit. Go to Step 7	The ECU has failed. Replace the ECU. Go to Step 7
3	Turn on the starter switch. Is the CHECK lamp always turned off?	Go to Step 4	Go to Step 6
4	Turn on the starter switch. Is the battery voltage observed between terminals 30 and 19?	Go to Step 5	The CHECK circuit wires are broken or the CHECK lamp is failed. Repair the circuit. Go to Step 7
5	Turn off the starter switch. Is the battery voltage observed between terminals 30 and 19?	The battery is short–circuited. Repair the CHECK lamp circuit. Go to Step 7	The ECU has failed. Replace the ECU. Go to Step 7
6	Turn on the starter switch. Does the CHECK lamp go off two seconds after?	The phenomenon is not reproduced.Refer to “Troubles intermittently observed”.	Go to Step 7
7	1. Check that all the parts are mounted. 2. Clear the trouble code. Is this step complete?	Repeat the “Diagnosis Flow”.	Return to Step 7

Trouble Diagnosis Depending on The Status of TOD Indicator

Functional check with TOD indicator light is conducted prior to check on Charts A–H.

- After the starter is switched on, check and see if the status has become as tabulated below.

Is the continuity established between ECU terminal :					TOD Indicator indicate state
25 and 20	26 and 20	27 and 20	28 and 20	29 and 20	
Yes	Yes	Yes	Yes	Yes	CHECK
No	No	No	No	No	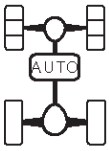 CHECK

C07RW012–1

- If the status is as tabulated above, there is no problem. If not as tabulated above, inspect the harness.

Chart A	Indicator drive circuit	
Function of circuit	The circuit informs the indicator of the working condition of the ECU.	
Fail condition	All the TOD indicator lamps and CHECK lamp are lit, and go off momentarily at an interval of about two seconds.	
Indicator lamp status	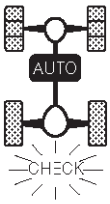	—
Transfer position	2H, TOD, 4L	—

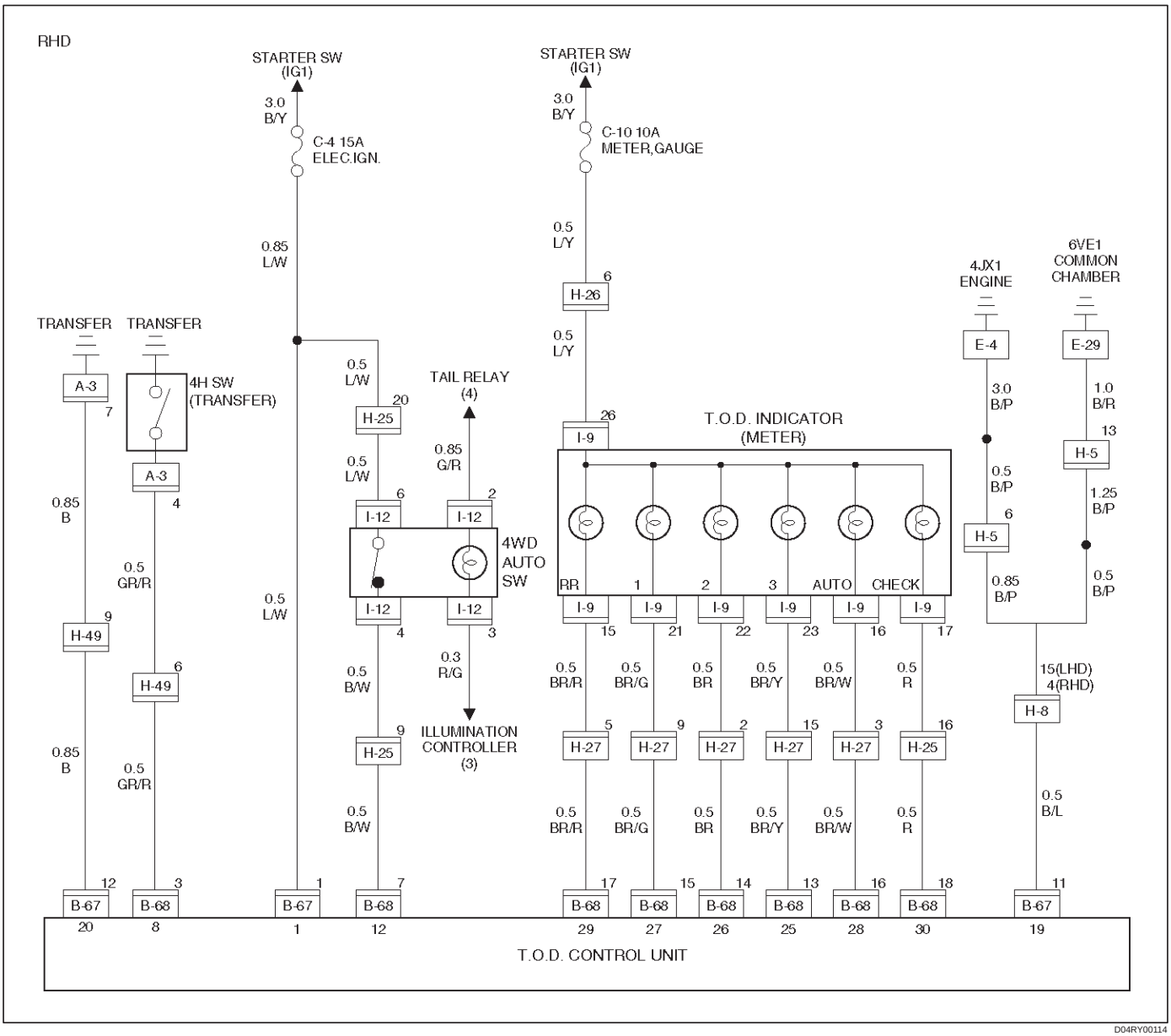

D04RY00114

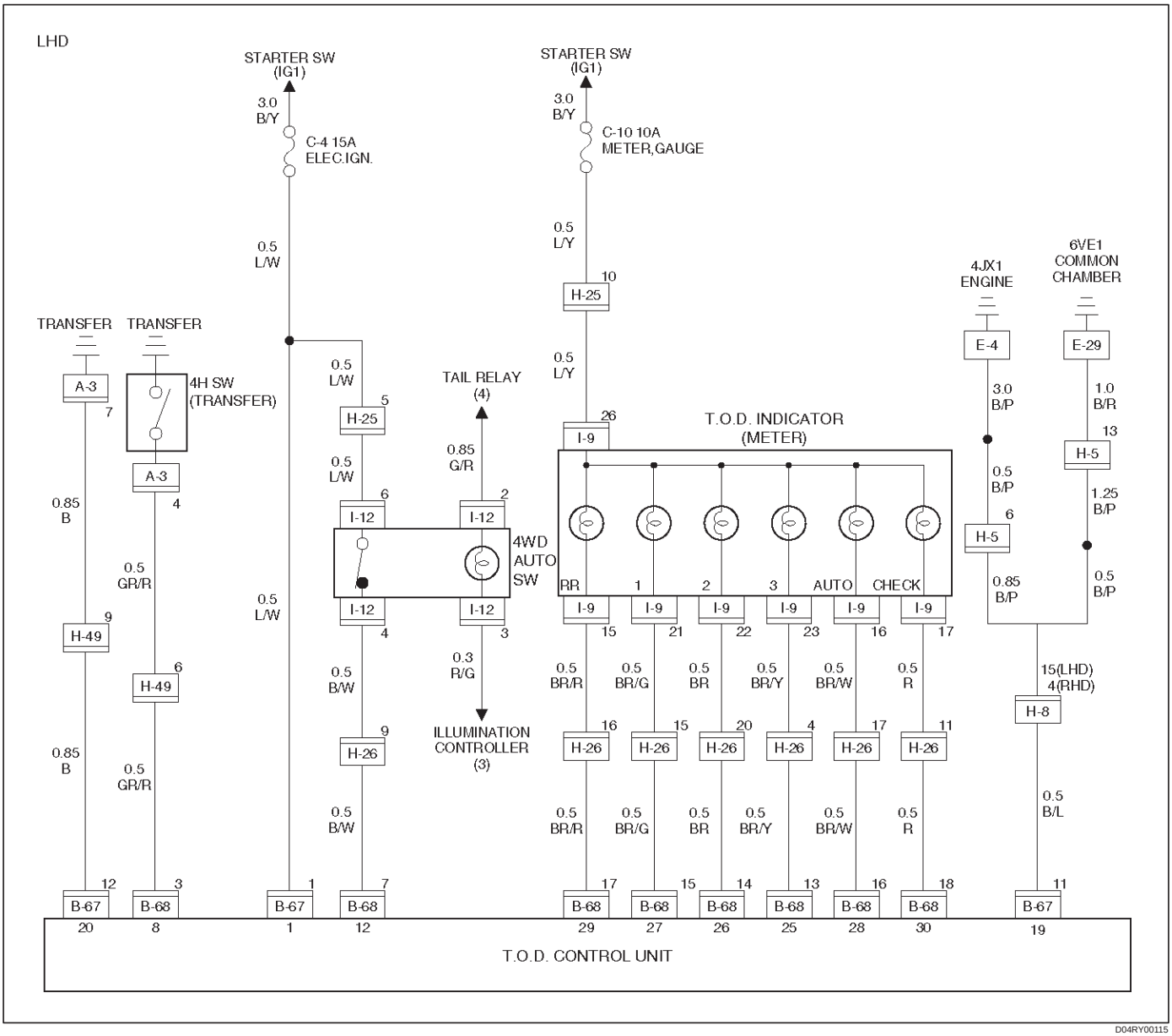

Step	Action	Yes	No
1	Turn on the starter switch. Is the battery voltage observed between terminals 1 and 19?	The ECU has failed. Replace the ECU. Go to Step 2	Check the battery circuit. Go to Step 2
2	Check that all the parts are mounted. Is this step complete?	Repeat the “Diagnosis Flow”.	Return to Step 2

Chart B–1	The 4WD AUTO switch circuit wires are broken or short-circuited to the GND	
Function of circuit	—	
Fail condition	Even after the transfer mode is selected from TOD to 2H, the indicator lamp status is not changed.	
Indicator lamp status	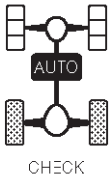	—
Transfer position	2H	—

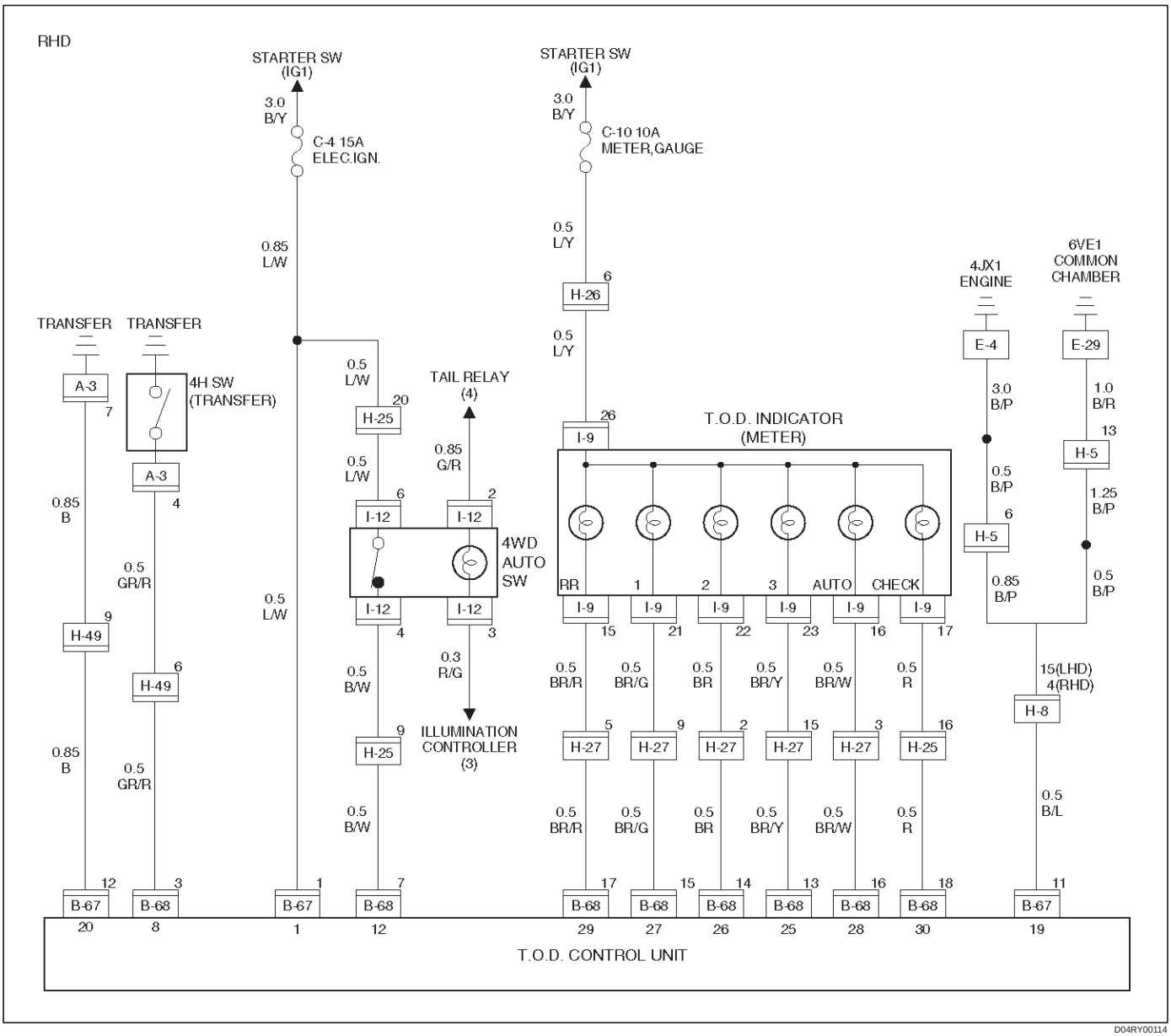

D04RY00114

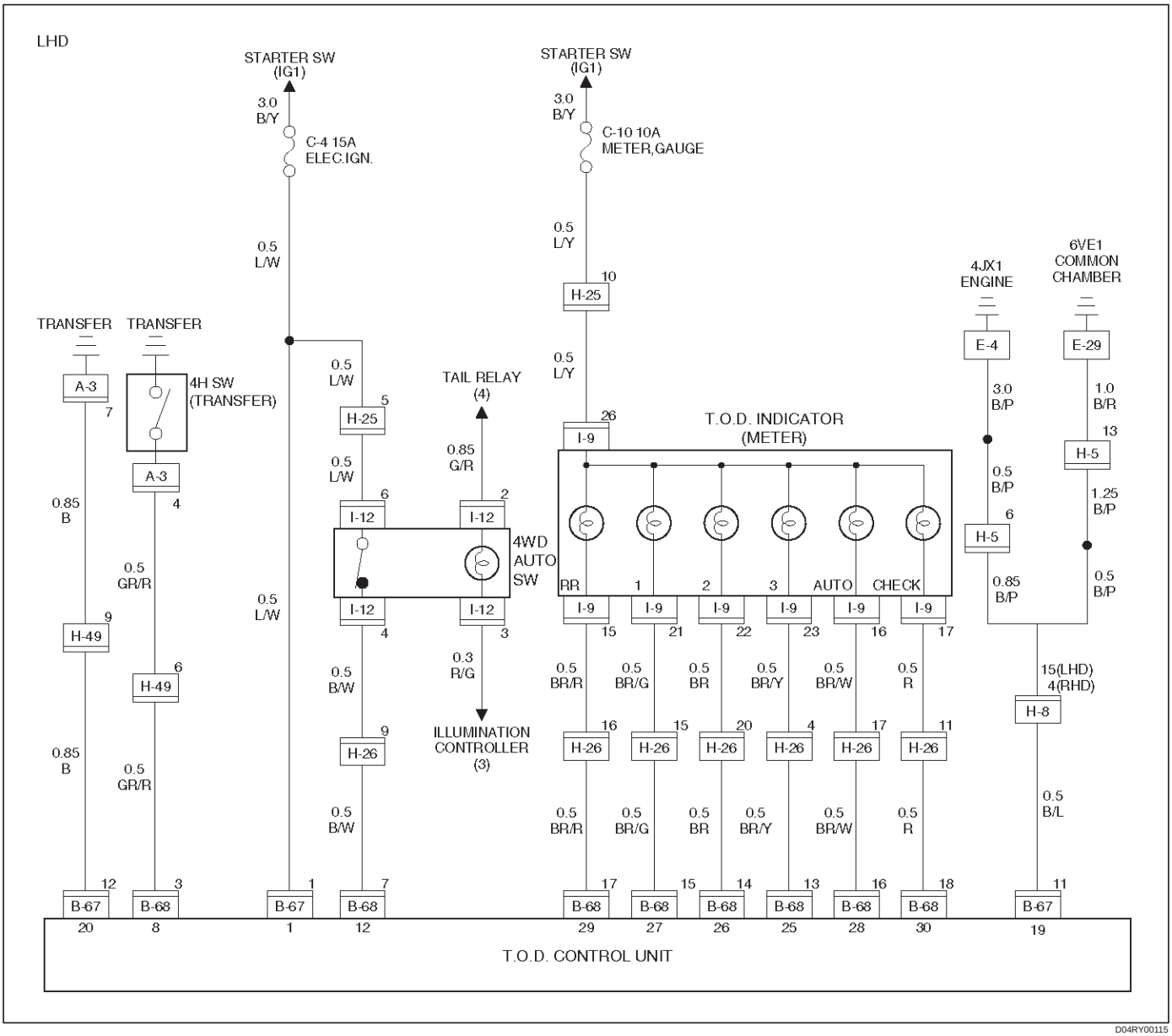
LHD
STARTER SW (IG1)
3.0 B/Y
C-4 15A ELEC.IGN.
0.5 L/W
STARTER SW (IG1)
3.0 B/Y
C-10 10A METER,GAUGE
0.5 L/Y
H-25
10
TRANSFER
TRANSFER
A-3
7
4H SW (TRANSFER)
A-3
4
0.85 B
0.5 GR/R
H-49
9
H-49
6
0.85 B
0.5 GR/R
0.5 L/W
H-25
5
0.5 L/W
I-12
6
I-12
4
0.5 B/W
H-26
9
0.5 B/W
TAIL RELAY (4)
0.85 G/R
I-12
2
I-12
3
0.3 R/G
ILLUMINATION CONTROLLER (3)
4WD AUTO SW
0.5 L/Y
H-25
26
I-9
T.O.D. INDICATOR (METER)
RR
1
2
3
AUTO
CHECK
I-9
15
I-9
21
I-9
22
I-9
23
I-9
16
I-9
17
0.5 BR/R
0.5 BR/G
0.5 BR
0.5 BR/Y
0.5 BR/W
0.5 R
H-26
16
H-26
15
H-26
20
H-26
4
H-26
17
H-26
11
0.5 BR/R
0.5 BR/G
0.5 BR
0.5 BR/Y
0.5 BR/W
0.5 R
4JX1 ENGINE
E-4
3.0 B/P
0.5 B/P
H-5
6
0.85 B/P
6VE1 COMMON CHAMBER
E-29
1.0 B/R
13
H-5
1.25 B/P
0.5 B/P
15(LHD) 4(RHD)
H-8
0.5 B/L
B-67
12
B-68
3
B-67
1
B-68
7
B-68
17
B-68
15
B-68
14
B-68
13
B-68
16
B-68
18
B-67
11
20
8
1
12
29
27
26
25
28
30
19
T.O.D. CONTROL UNIT

D04RY00115

Step	Action	Yes	No
1	1. Turn on the starter switch. When the 4WD SW is selected to the 4WD position, is 0 V observed between terminal 12 and 19?	Go to Step 2	Repair the 4WD AUTO SW circuit. Go to Step 4
2	When the 4WD AUTO SW is selected to the 2WD position, is 12 V observed between terminals 12 and 19?	Go to Step 3	Repair the 4WD AUTO SW circuit. Go to Step 4
3	When the transfer lever is shifted to the 4L position, is battery voltage observed between terminals 28 and 19?	The phenomenon is not reproduced. Refer to “Troubles intermittently observed”.	Replace the ECU. Go to Step 4
4	Check that all the parts are mounted. Is this step complete?	Repeat the “Diagnosis Flow”.	Return to Step 4

Chart B–2	The 4WD AUTO switch circuit is short to battery.
Function of circuit	—
Fail condition	Even after the transfer mode is selected from 2H to TOD, the indicator lamp status dose not change.
Indicator lamp status	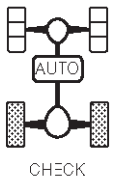
Transfer position	TOD

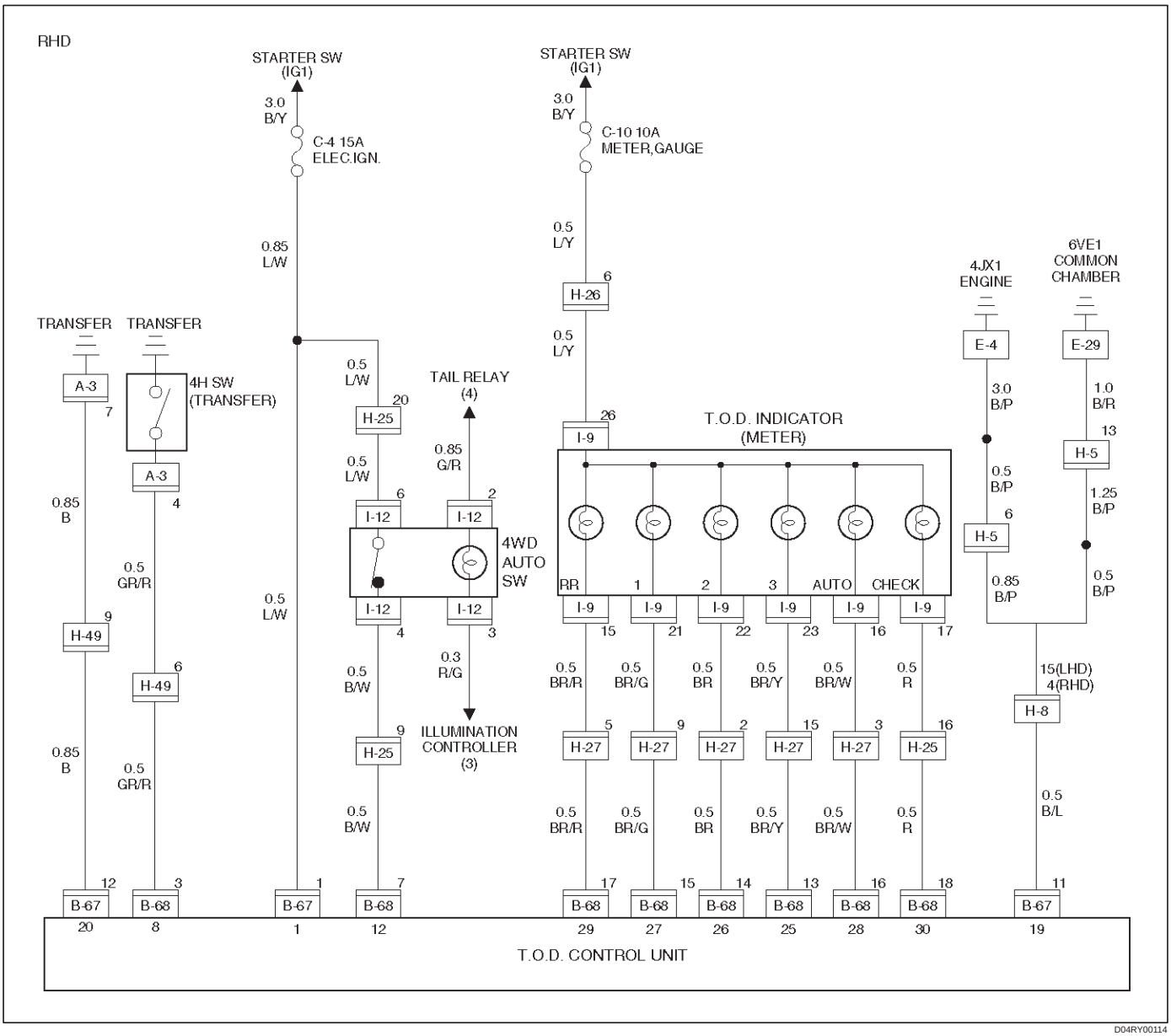

D04RY00114

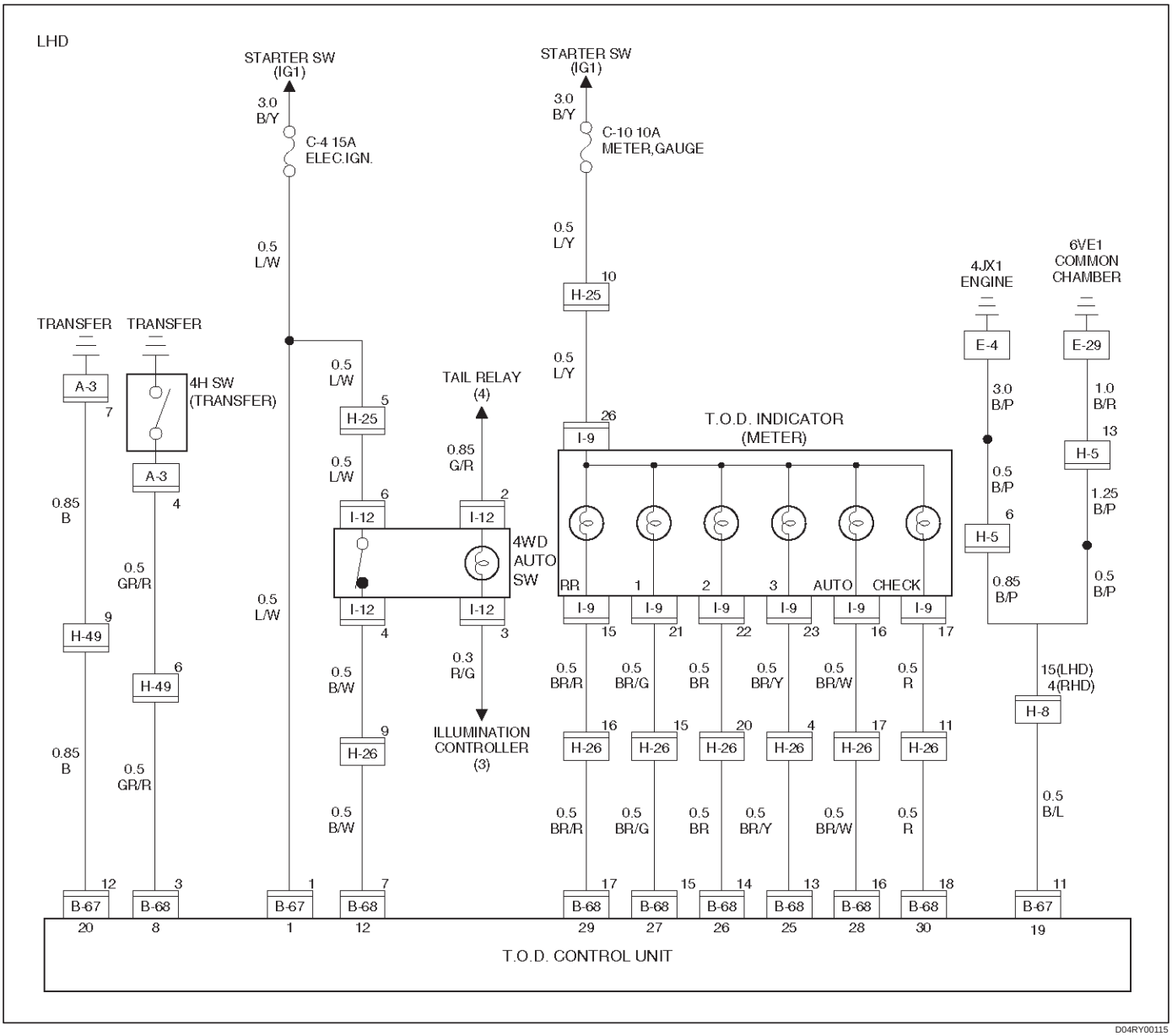
LHD
STARTER SW (IG1)
3.0 B/Y
C-4 15A ELEC.IGN.
0.5 L/W
STARTER SW (IG1)
3.0 B/Y
C-10 10A METER,GAUGE
0.5 L/Y
10
H-25
TRANSFER
TRANSFER
A-3
7
4H SW (TRANSFER)
A-3
4
0.85 B
0.5 GR/R
9
H-49
6
H-49
0.85 B
0.5 GR/R
0.5 L/W
5
H-25
0.5 L/W
6
I-12
I-12
4
0.5 B/W
9
H-26
0.5 B/W
TAIL RELAY (4)
0.85 G/R
2
I-12
4WD AUTO SW
I-12
3
0.3 R/G
ILLUMINATION CONTROLLER (3)
0.5 L/Y
26
I-9
T.O.D. INDICATOR (METER)
RR
1
2
3
AUTO
CHECK
I-9
15
I-9
21
I-9
22
I-9
23
I-9
16
I-9
17
0.5 BR/R
0.5 BR/G
0.5 BR
0.5 BR/Y
0.5 BR/W
0.5 R
16
H-26
15
H-26
20
H-26
4
H-26
17
H-26
11
H-26
0.5 BR/R
0.5 BR/G
0.5 BR
0.5 BR/Y
0.5 BR/W
0.5 R
4JX1 ENGINE
E-4
3.0 B/P
0.5 B/P
6
H-5
0.85 B/P
6VE1 COMMON CHAMBER
E-29
1.0 B/R
13
H-5
1.25 B/P
0.5 B/P
15(LHD) 4(RHD)
H-8
0.5 B/L
12
B-67
20
3
B-68
8
1
B-67
1
7
B-68
12
17
B-68
29
15
B-68
27
14
B-68
26
13
B-68
25
16
B-68
28
18
B-68
30
11
B-67
19
T.O.D. CONTROL UNIT

D04RY00115

Step	Action	Yes	No
1	When the 4WD AUTO SW is selected to the 4WD position, is 0 V observed between terminal 12 and 19?	Go to Step 2	Repair the 4WD AUTO SW circuit. Go to Step 7
2	When the 4WD AUTO SW is selected to the 2WD position, is 12 V observed between terminals 12 and 19?	Go to Step 3	Repair the 4WD AUTO SW circuit. Go to Step 7
3	1. Disconnect the ECU connector. Is the continuity established between terminals (B–67)1 and (B–68)13?	Go to Step 4	Replace TOD indicator lamp bulb. Go to Step 7
4	Is the continuity established between terminals (B–67)1 and (B–68)14?	Go to Step 5	Replace TOD indicator lamp bulb. Go to Step 7
5	Is the continuity established between terminals (B–67)1 and (B–68)15?	Go to Step 6	Replace TOD indicator lamp bulb. Go to Step 7
6	Is the continuity established between terminals (B–67)1 and (B–68)16?	Replace ECU. Go to Step 7	Replace TOD indicator lamp bulb. Go to Step 7
7	Check that all the parts are mounted. Is this step complete?	Repeat the “Diagnosis Flow”.	Return to Step 7

Chart C–1	4H switch circuit wires are broken or the battery is short-circuited.
Function of circuit	—
Fail condition	When the 4WD AUTO SW is 4WD mode. When the lever is shifted from 4L to HIGH, the 4L mode remains on the indicator and the TOD mode is displayed without turning off the previous mode.
Indicator lamp status	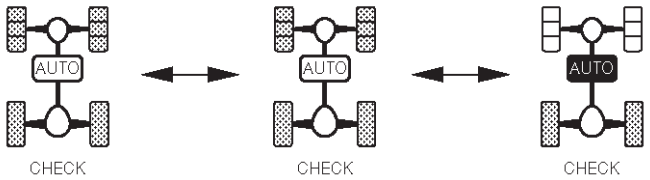
Transfer position	4L <——> Neutral <——> TOD

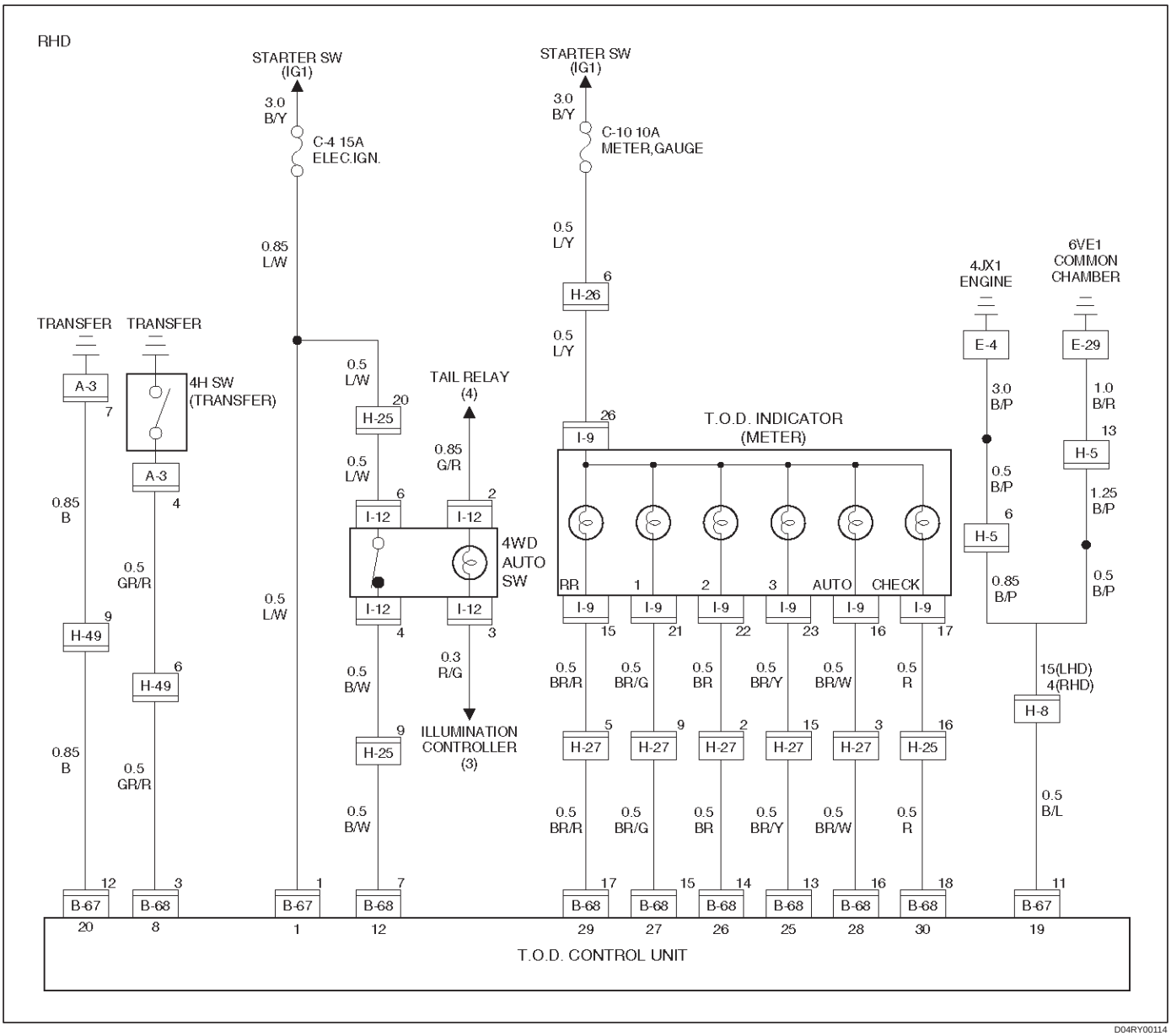

D04RY00114

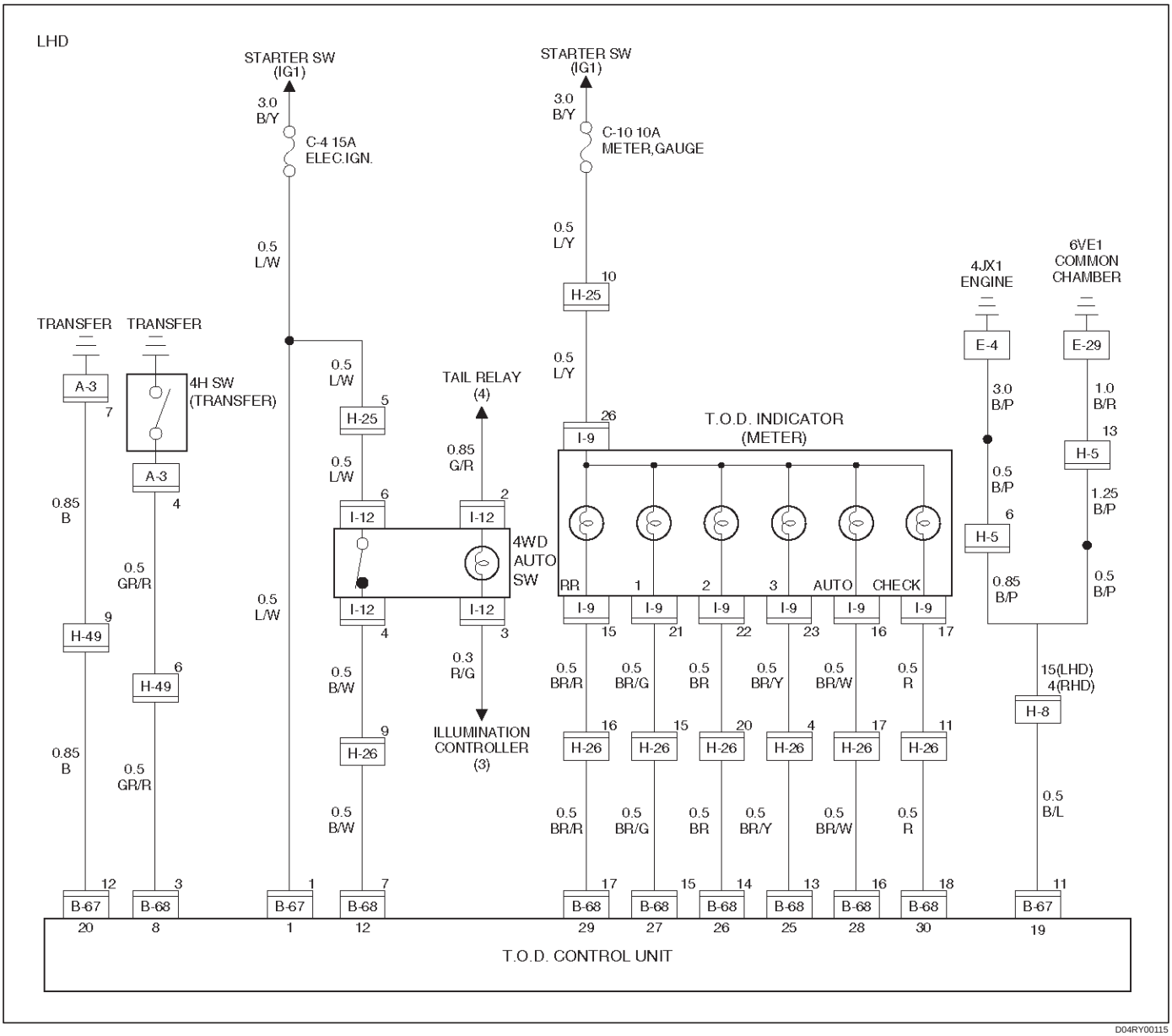
LHD
STARTER SW (IG1)
3.0 B/Y
C-4 15A ELEC.IGN.
0.5 L/W
STARTER SW (IG1)
3.0 B/Y
C-10 10A METER,GAUGE
0.5 L/Y
H-25
10
TRANSFER
TRANSFER
A-3
7
4H SW (TRANSFER)
A-3
4
0.85 B
0.5 GR/R
H-49
9
H-49
6
0.85 B
0.5 GR/R
0.5 L/W
H-25
5
0.5 L/W
I-12
6
I-12
4
0.5 B/W
H-26
9
0.5 B/W
TAIL RELAY (4)
0.85 G/R
I-12
2
I-12
3
0.3 R/G
ILLUMINATION CONTROLLER (3)
0.5 L/Y
H-25
26
I-9
T.O.D. INDICATOR (METER)
4WD AUTO SW
RR
1
2
3
AUTO
CHECK
I-9
15
I-9
21
I-9
22
I-9
23
I-9
16
I-9
17
0.5 BR/R
0.5 BR/G
0.5 BR
0.5 BR/Y
0.5 BR/W
0.5 R
H-26
16
H-26
15
H-26
20
H-26
4
H-26
17
H-26
11
0.5 BR/R
0.5 BR/G
0.5 BR
0.5 BR/Y
0.5 BR/W
0.5 R
4JX1 ENGINE
E-4
3.0 B/P
0.5 B/P
H-5
6
0.85 B/P
6VE1 COMMON CHAMBER
E-29
1.0 B/R
13
H-5
1.25 B/P
0.5 B/P
15(LHD) 4(RHD)
H-8
0.5 B/L
B-67
12
B-68
3
B-67
1
B-68
7
B-68
17
B-68
15
B-68
14
B-68
13
B-68
16
B-68
18
B-67
11
20
8
1
12
29
27
26
25
28
30
19
T.O.D. CONTROL UNIT

D04RY00115

Step	Action	Yes	No
1	1. Turn on the starter switch. When the transfer lever is shifted to the high position, is 5V observed between terminals 8 and 19 (4H switch)?	Go to Step 2	Go to Step 4
2	When the transfer lever is shifted to the 4L position, is 5V observed between terminals 8 and 19 (4H switch)?	Go to Step 3	Go to Step 4
3	When the transfer lever is shifted to the neutral position, is 0V observed between terminals 8 and 19 (4H switch)?	Replace the ECU. Go to Step 13	Go to Step 4
4	1. Turn off the starter switch. 2. Disconnect the ECU connector. 3. Turn on the starter switch. When the transfer lever is shifted to the high position, is 12V observed between terminals 8 and 19 (4H switch)?	Go to Step 5	Go to Step 7
5	When the transfer lever is shifted to the neutral position, is 0V observed between terminals 8 and 19 (4H switch)?	Go to Step 6	Go to Step 7
6	When the transfer lever is shifted to the 4L position, is 12V observed between terminals 8 and 19 (4H switch)?	The 4H switch circuit is short-circuited between ECU and transfer on battery.Repair the circuit. Go to Step 13	Go to Step 7
7	Turn off the starter switch. When the transfer lever is shifted to the neutral position, is the continuity established between terminals 8 and 19 (4H switch)?	Go to Step 8	Go to Step 10
8	When the transfer lever is shifted to the high position, is the continuity established between terminals 8 and 19?	Go to Step 11	Go to Step 9
9	When the transfer lever is shifted to the 4L position, is the continuity established between terminals 8 and 19?	Go to Step 12	The ECU has failed. Replace the ECU. Go to Step 13
10	When the transfer lever is shifted to the neutral position, is the continuity established between terminals (A–3)4 and (A–3)7?	The 4H switch circuit is broken between ECU and transfer.Repair the circuit. Go to Step 13	Repair the transfer assembly. Go to Step 13
11	When the transfer lever is shifted to the high position, is the continuity established between transfer connector terminals (A–3)4 and (A–3)7?	Repair the transfer assembly. Go to Step 13	Repair the 4HSW circuit. Go to Step 13
12	When the transfer lever is shifted to the 4L position, is the continuity established between transfer connector terminals (A–3)7 and (A–3)4?	Repair the transfer assembly. Go to Step 13	Repair the 4H SW circuit. Go to Step 13

Step	Action	Yes	No
13	Check that all the parts are mounted. Is this step complete?	Repeat the “Diagnosis Flow”.	Return to Step 13

Chart C–2	The 4H switch circuit is short-circuited to GND.
Function of circuit	—
Fail condition	When the transfer lever is shifted to 4L, the indicator lamp status is not changed.
Indicator lamp status	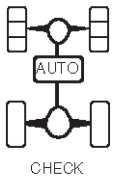
Transfer position	4L

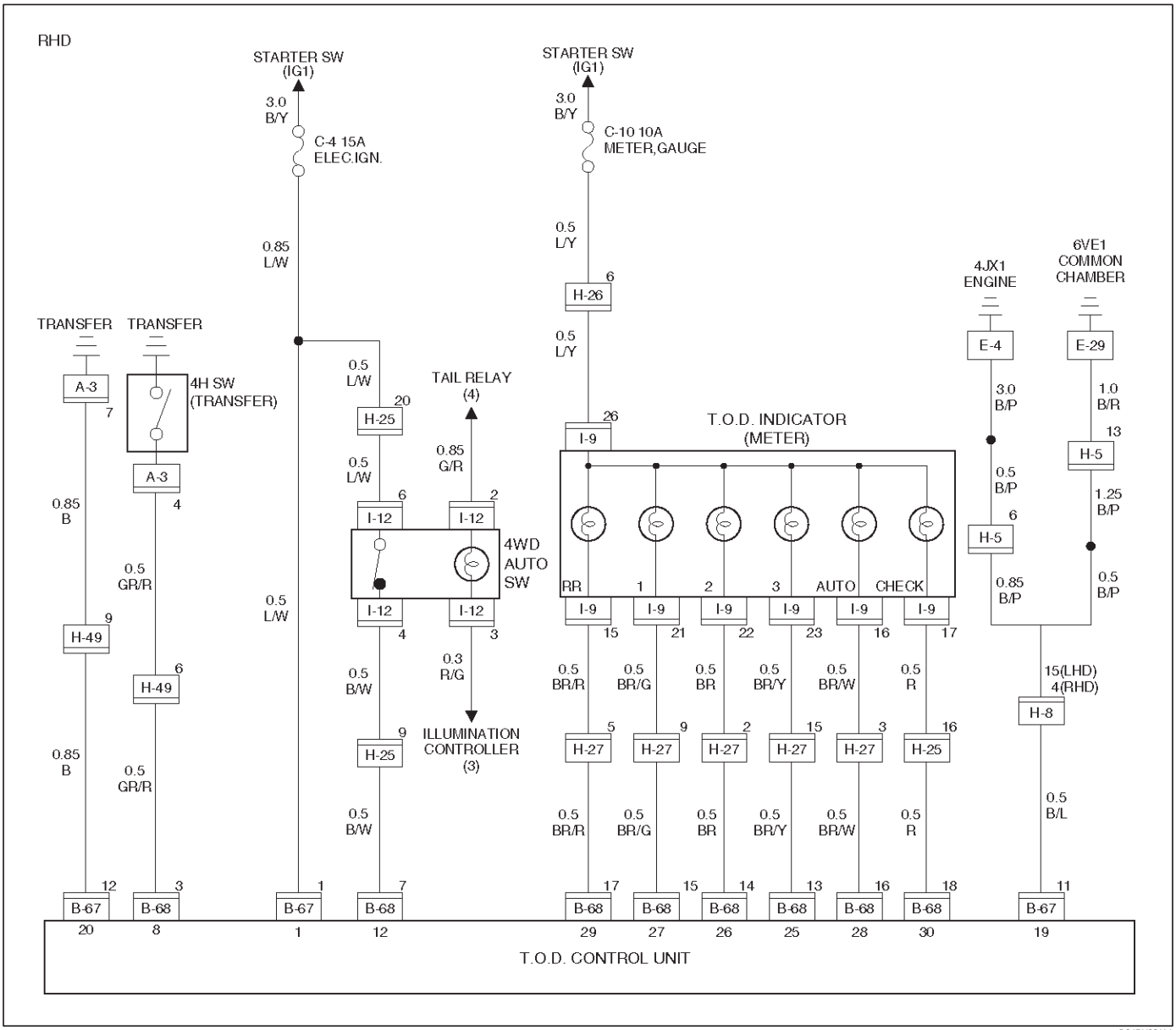

D04RY00114

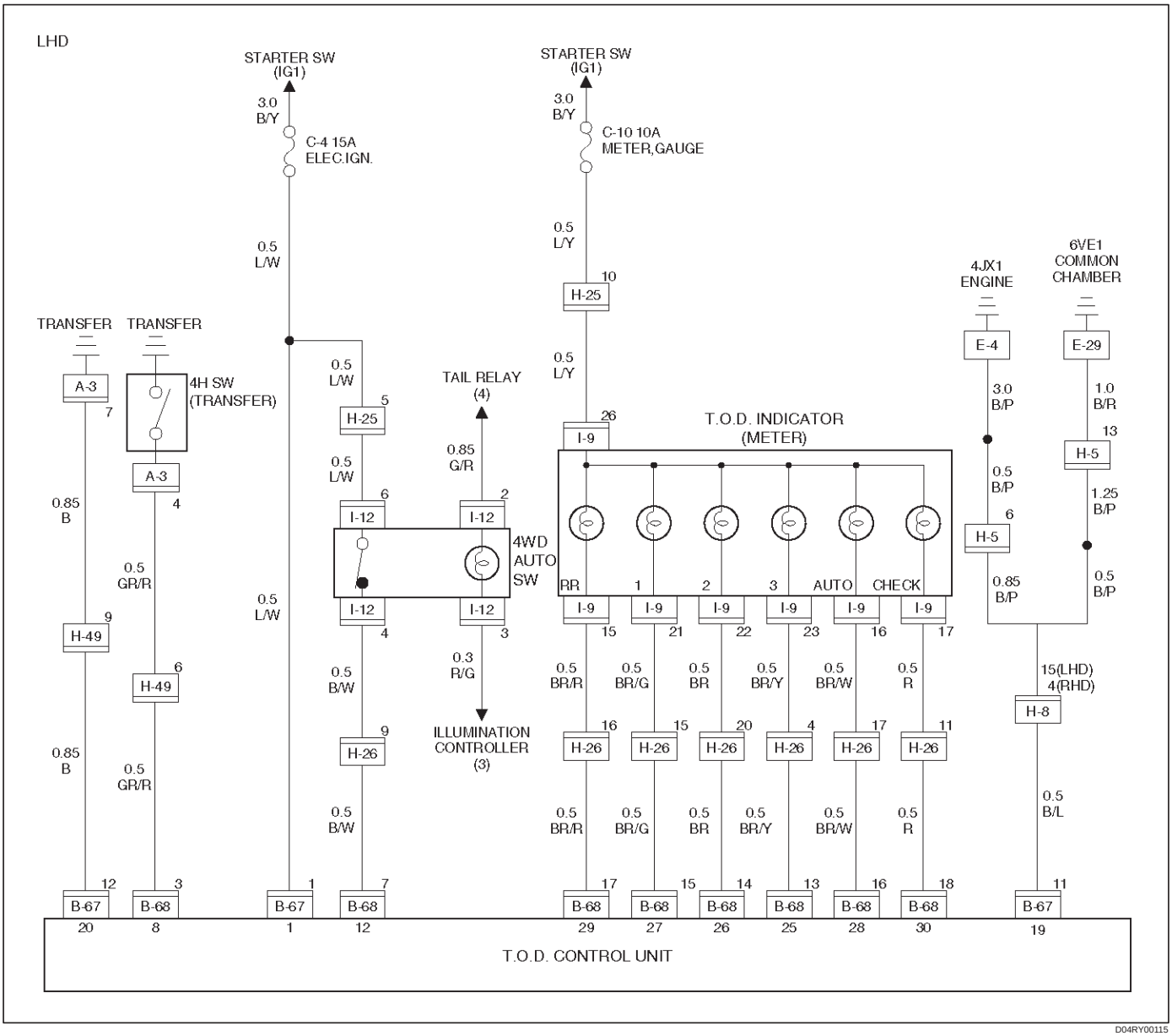
LHD
STARTER SW (IG1)
3.0 B/Y
C-4 15A ELEC.IGN.
0.5 L/W
STARTER SW (IG1)
3.0 B/Y
C-10 10A METER,GAUGE
0.5 L/Y
10
H-25
TRANSFER
TRANSFER
A-3
7
4H SW (TRANSFER)
A-3
4
0.85 B
0.5 GR/R
9
H-49
6
H-49
0.85 B
0.5 GR/R
0.5 L/W
5
H-25
0.5 L/W
6
I-12
I-12
4
0.5 B/W
9
H-26
0.5 B/W
TAIL RELAY (4)
0.85 G/R
2
I-12
4WD AUTO SW
I-12
3
0.3 R/G
ILLUMINATION CONTROLLER (3)
0.5 L/Y
26
I-9
T.O.D. INDICATOR (METER)
RR
1
2
3
AUTO
CHECK
I-9
15
I-9
21
I-9
22
I-9
23
I-9
16
I-9
17
0.5 BR/R
0.5 BR/G
0.5 BR
0.5 BR/Y
0.5 BR/W
0.5 R
16
H-26
15
H-26
20
H-26
4
H-26
17
H-26
11
H-26
0.5 BR/R
0.5 BR/G
0.5 BR
0.5 BR/Y
0.5 BR/W
0.5 R
4JX1 ENGINE
E-4
3.0 B/P
0.5 B/P
6
H-5
0.85 B/P
6VE1 COMMON CHAMBER
E-29
1.0 B/R
13
H-5
1.25 B/P
0.5 B/P
15(LHD) 4(RHD)
H-8
0.5 B/L
12
B-67
20
3
B-68
8
1
B-67
1
7
B-68
12
17
B-68
29
15
B-68
27
14
B-68
26
13
B-68
25
16
B-68
28
18
B-68
30
11
B-67
19
T.O.D. CONTROL UNIT

D04RY00115

Step	Action	Yes	No
1	When the transfer lever is shifted to the High position, is 5V observed between terminals 8 and 19 (4H switch)?	Go to Step 2	Go to Step 14
2	When the transfer lever is shifted to the neutral position, is 0V observed between terminals 8 and 19 (4H switch)?	Go to Step 3	Go to Step 14
3	When the transfer lever is shifted to the 4L position, is 5V observed between terminals 8 and 19 (4H switch)?	Go to Step 4	Go to Step 14
4	1. Turn off the starter switch. Is the continuity established between terminals 1 and 25?	Go to Step 5	Replace TOD indicator lamp bulb, or repair the circuit. Go to Step 23
5	Is the continuity established between terminals 1 and 26?	Go to Step 6	Replace TOD indicator lamp bulb, or repair the circuit. Go to Step 23
6	Is the continuity established between terminals 1 and 27?	Go to Step 7	Replace TOD indicator lamp bulb, or repair the circuit. Go to Step 23
7	Is the continuity established between terminals 1 and 28?	Go to Step 8	Replace TOD indicator lamp bulb, or repair the circuit. Go to Step 23
8	Is the continuity established between terminals 1 and 29?	Go to Step 9	Replace TOD indicator lamp bulb, or repair the circuit. Go to Step 23
9	1. Turn on the starter switch. 2. Shift the transfer lever is shifted to the 4L position. Is 0 V observed between terminals 25 and 20?	Go to Step 10	The ECU has failed. Replace the ECU. Go to Step 23
10	Is 0 V observed between terminals 26 and 20?	Go to Step 11	The ECU has failed. Replace the ECU. Go to Step 23
11	Is 0 V observed between terminals 27 and 20?	Go to Step 12	The ECU has failed. Replace the ECU. Go to Step 23
12	Is 12 V observed between terminals 28 and 20?	Go to Step 13	The ECU has failed. Replace the ECU. Go to Step 23
13	Is 0 V observed between terminals 29 and 20?	The phenomenon is not reproduced. Refer to “Troubles intermittently observed”.	The ECU has failed. Replace the ECU. Go to Step 23

Step	Action	Yes	No
14	1. Turn off the starter switch. 2. Disconnect the ECU connector. When the transfer lever is shifted to the neutral position, is the continuity established between terminals (B–68)3 and (B–67)11 (4H switch)?	Go to Step 15	Go to Step 17
15	When the transfer lever is shifted to the high position, is the continuity established between terminals (B–68)3 and (B–67)11?	Go to Step 17	Go to Step 16
16	When the transfer lever is shifted to the 4L position, is the continuity established between terminals (B–68)3 and (B–67)11?	Go to Step 17	The ECU has failed. Replace the ECU. Go to Step 23
17	1. Disconnect the H–49 connector. When the transfer lever is shifted to the neutral position between high and 4L, is the continuity established between terminals (H-49)6 and (B-67)11?	Go to Step 18	Go to Step 20
18	When the transfer lever is shifted to the high position, is the continuity established between transfer connector terminals (H-49)6 and (B-67)11?	Go to Step 20	Go to Step 19
19	When the transfer lever is shifted to the 4L position, is the continuity established between transfer connector terminals (H-49)6 and (B-67)11?	Go to Step 20	GND is short-circuited between terminals (B-68)3 and (H-49)6. Repair the circuit. Go to Step 23
20	1. Disconnect the A–3 connector. When the transfer lever is shifted to the neutral position between high and 4L, is the continuity established between terminals (A-3)4 and (A-3)7?	Go to Step 21	Repair the transfer assembly. Go to Step 23
21	When the transfer lever is shifted to the high position, is the continuity established between terminals (A-3)4 and (A-3)7?	Repair the transfer assembly. Go to Step 23	Go to Step 22
22	When the transfer lever is shifted to the 4L position, is the continuity established between terminals (A-3)4 and (A-3)7?	Repair the transfer assembly. Go to Step 23	GND is short-circuited between terminals (B-68)3 and (A–3)4. Repair the circuit. Go to Step 23
23	Check that all the parts are mounted. Is this step complete?	Repeat the “Diagnosis Flow”.	Return to Step 23

Chart D–1	4L switch circuit wires are broken or the battery is short-circuited.	
Function of circuit	—	
Fail condition	The TOD mode is displayed in the neutral position between high and 4L. When the lever is shifted to the 4L position, the TOD mode is displayed.	
Indicator lamp status	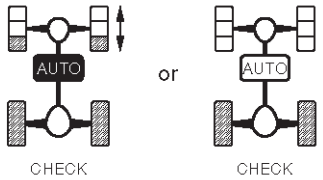	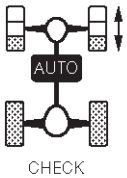
Transfer position	4L	Neutral

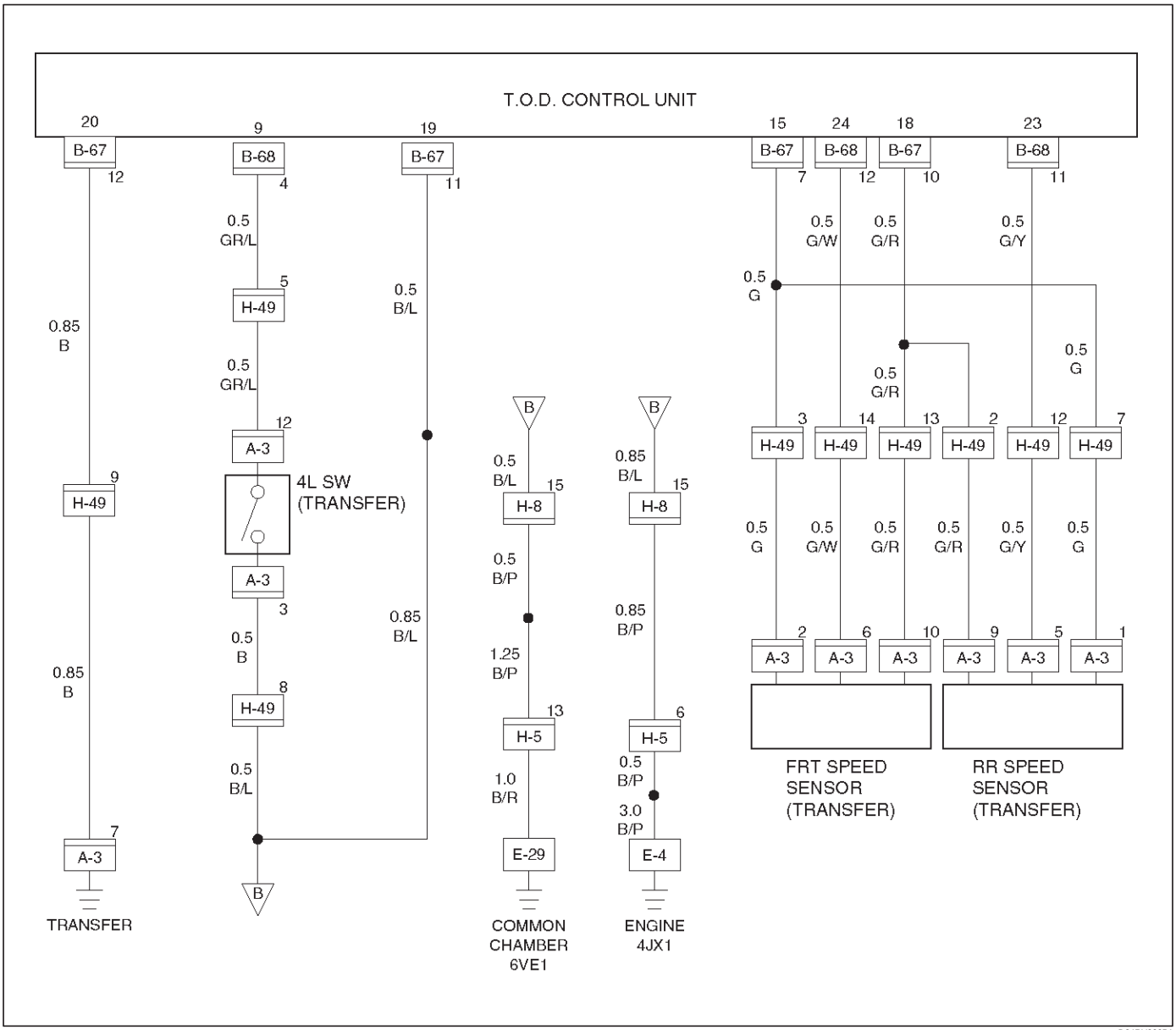

D04RY00054

Step	Action	Yes	No
1	Turn on the starter switch. When the transfer lever is shifted to the high position, is 5V observed between terminals 9 and 19 (4L switch)?	Go to Step 2	Go to Step 4
2	When the transfer lever is shifted to the neutral position, is 0V observed between terminals 9 and 19 (4L switch)?	Go to Step 3	Go to Step 4
3	When the transfer lever is shifted to the 4L position, is 0V observed between terminals 9 and 19 (4L switch)?	The ECU has failed. Replace the ECU. Go to Step 13	Go to Step 4
4	1. Turn off the starter switch. 2. Disconnect the ECU connector. 3. Turn on the starter switch. When the transfer lever is shifted to the high position, is 12V observed between terminals (B–68)4 and (B–67)11?	Go to Step 5	Go to Step 7
5	When the transfer lever is shifted to the neutral position, is 0V observed between terminals (B–68)4 and (B–67)11?	Go to Step 6	Go to Step 7
6	When the transfer lever is shifted to the 4L position, is 0V observed between terminals (B–68)4 and (B–67)11?	The 4L switch circuit is short-circuited on battery between ECU and transfer.Repair the circuit. Go to Step 13	Go to Step 7
7	Turn off the starter switch. When the transfer lever is shifted to the high position, is the continuity established between terminals (B–68)4 and (B–67)11?	Go to Step 12	Go to Step 8
8	When the transfer lever is shifted to the neutral position between high and 4L, is the continuity established between terminals (B–68)4 and (B–67)11?	Go to Step 9	Go to Step 10
9	When the transfer lever is shifted to the 4L position, is the continuity established between terminals (B–68)4 and (B–67)11?	The phenomenon is not reproduced. Refer to “Troubles intermittently observed”.	Go to Step 11
10	1. Disconnect the A–3 connector. When the transfer lever is shifted to the neutral position between high and 4L, is the continuity established between transfer connector terminals (A–3)12 and GND?	Wires are broken between transfer connector (A–3)12 and connector (B-68)4.Repair the circuit. Go to Step 13	Repair the transfer assembly. Go to Step 13
11	When the transfer lever is shifted to the 4L position, is the continuity established between transfer connector terminals (A–3)12 and GND?	Wires are broken between transfer connector (A–3)12 and connector (B-68)4.Repair the circuit. Go to Step 13	Repair the transfer assembly. Go to Step 13

Step	Action	Yes	No
12	When the transfer lever is shifted to the high position, is the continuity established between transfer connector terminals (A–3)12 and GND?	Repair the transfer assembly. Go to Step 13	Wires are broken between transfer connector (A–3)12 and connector (B-68)4.Repair the circuit. Go to Step 13
13	Check that all the parts are mounted. Is this step complete?	Repeat the “Diagnosis Flow”.	Return to Step 13

Chart D–2	The 4L switch circuit is short-circuited to GND.
Function of circuit	—
Fail condition	The 4L mode is displayed even in the 2H or TOD.
Indicator lamp status	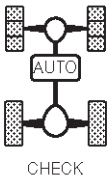
Transfer position	HIGH (2H or TOD)

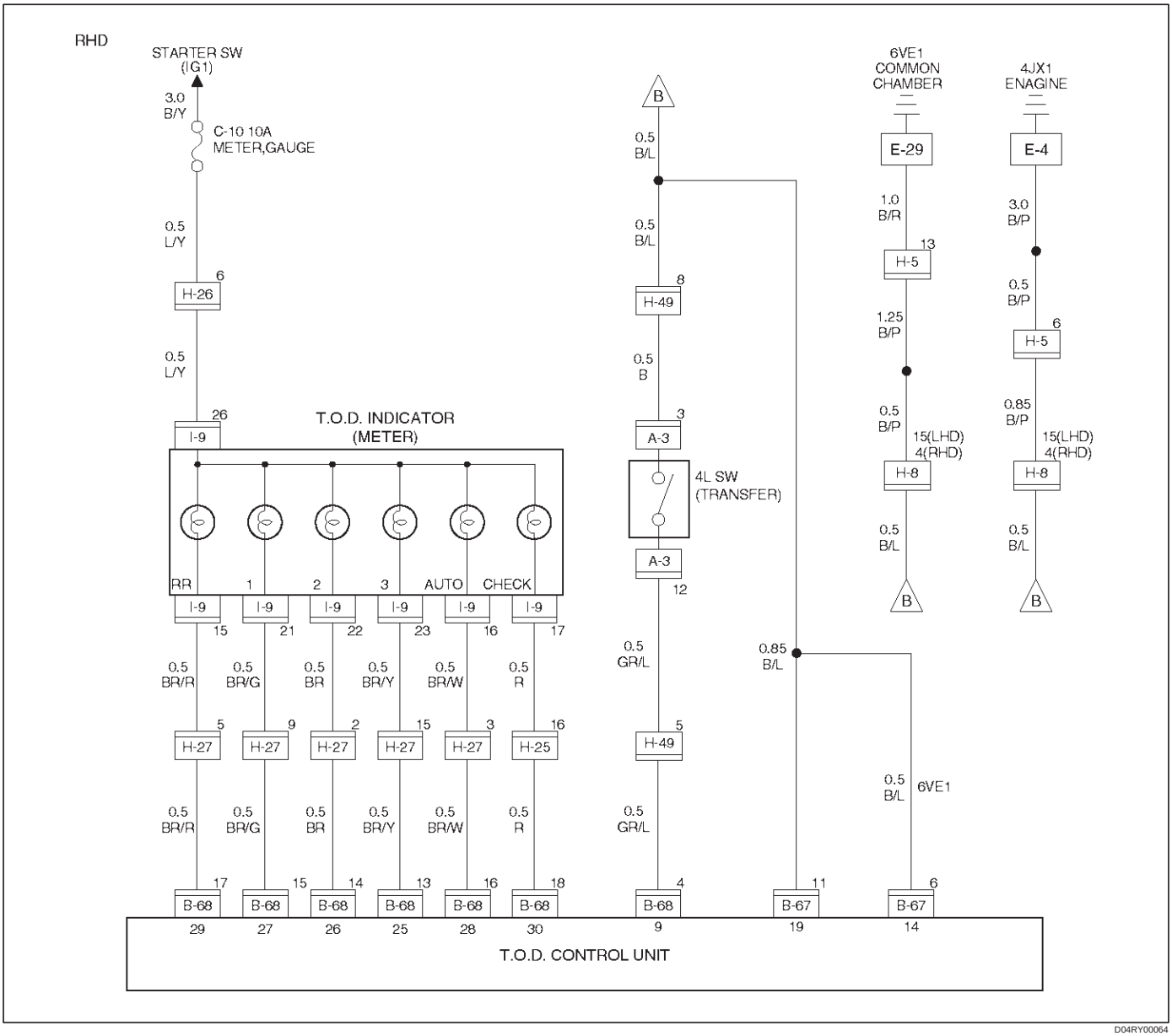

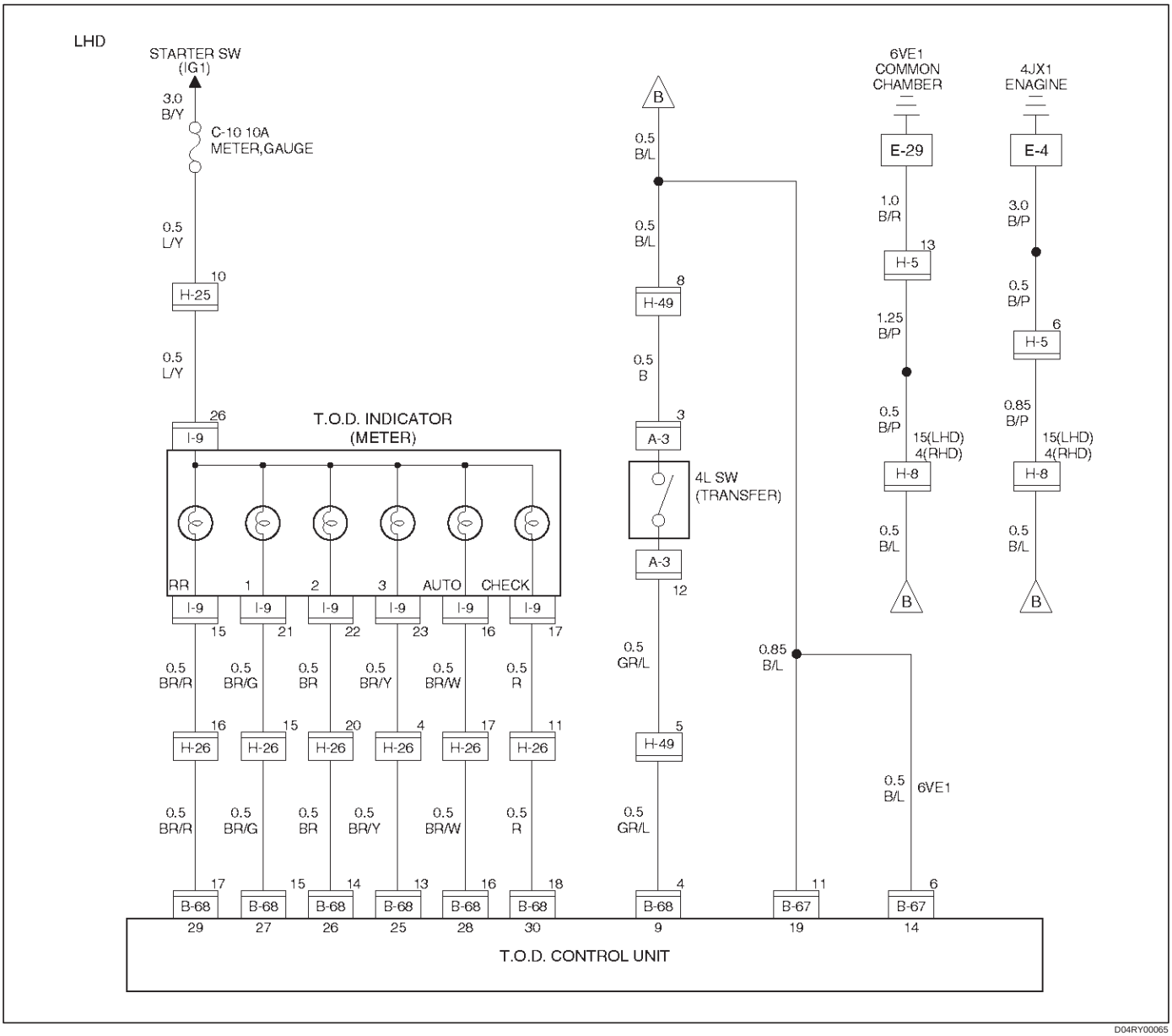
LHD
STARTER SW
(IG1)
3.0
B/Y
C-10 10A
METER,GAUGE
0.5
L/Y
10
H-25
0.5
L/Y
26
I-9
T.O.D. INDICATOR
(METER)
RR
1
2
3
AUTO
CHECK
I-9
15
21
22
23
16
17
0.5
BR/R
0.5
BR/G
0.5
BR
0.5
BR/Y
0.5
BR/W
0.5
R
16
15
20
4
17
11
H-26
0.5
BR/R
0.5
BR/G
0.5
BR
0.5
BR/Y
0.5
BR/W
0.5
R
17
15
14
13
16
18
B-68
29
27
26
25
28
30
B
0.5
B/L
0.5
B/L
8
H-49
0.5
B
3
A-3
4L SW
(TRANSFER)
A-3
12
0.5
GR/L
5
H-49
0.5
GR/L
4
B-68
9
0.85
B/L
11
B-67
19
6VE1
COMMON
CHAMBER
E-29
1.0
B/R
13
H-5
1.25
B/P
0.5
B/P
15(LHD)
4(RHD)
H-8
0.5
B/L
B
0.5
B/L
6VE1
6
B-67
14
4JX1
ENAGINE
E-4
3.0
B/P
0.5
B/P
6
H-5
0.85
B/P
15(LHD)
4(RHD)
H-8
0.5
B/L
B
T.O.D. CONTROL UNIT

D04RY00065

Step	Action	Yes	No
1	When the transfer lever is shifted to the high position, is 5V observed between terminals 9 and 19 (4L switch)?	Go to Step 2	Go to Step 7
2	When the transfer lever is shifted to the neutral position, is 0V observed between terminals 9 and 19 (4L switch)?	Go to Step 3	Go to Step 7
3	When the transfer lever is shifted to the 4L position, is 0V observed between terminals 9 and 19 (4L switch)?	Go to Step 4	Go to Step 7
4	1. Shift the 4WD AUTO SW to the 2H position. Is 12V observed between terminals 25 and 19?	Go to Step 5	The ECU has failed. Replace the ECU. Go to Step 16
5	Is 12V observed between terminals 26 and 19?	Go to Step 6	The ECU has failed. Replace the ECU. Go to Step 16
6	Is 12V observed between terminals 27 and 19?	The phenomenon is not reproduced. Refer to “Troubles intermittently observed”.	The ECU has failed. Replace the ECU. Go to Step 16
7	1. Turn off the starter switch. 2. Disconnect the ECU connector. When the transfer lever is shifted to the neutral position between High and 4L, is the continuity established between terminals (B–68)4 and (B–67)11?	Go to Step 8	Go to Step 10
8	When the transfer lever is shifted to the 4L position, is the continuity established between terminals (B–68)4 and (B–67)11?	Go to Step 9	Go to Step 10
9	When the transfer lever is shifted to the high position, is the continuity established between terminals (B–68)4 and (B–67)11?	Go to Step 10	The ECU has failed. Replace the ECU. Go to Step 16
10	1. Disconnect the H-49 connector. When the transfer lever is shifted to the neutral position between high and 4L, is the continuity established between terminals (H-49)5 and (B-67)11?	Go to Step 11	Go to Step 13
11	When the transfer lever is shifted to the 4L position, is the continuity established between transfer connector terminals (H-49)5 and (B-67)11?	Go to Step 12	Go to Step 13
12	When the transfer lever is shifted to the high position, is the continuity established between terminals (H-49)5 and (B-67)11?	Go to Step 13	GND is short-circuited between terminals (B–68)4 and (H-49)5. Repair the circuit. Go to Step 16
13	1. Disconnect the A-3 connector. When the transfer lever is shifted to the neutral position between high and 4L, is the continuity established between terminals (A-3)12 and GND?	Go to Step 14	Repair the transfer assembly. Go to Step 16
14	When the transfer lever is shifted to the 4L position, is the continuity established between terminals (A-3)12 and GND?	Go to Step 15	Repair the transfer assembly. Go to Step 16

Step	Action	Yes	No
15	When the transfer lever is shifted to the high position, is the continuity established between terminals (A-3)12 and GND?	Repair the transfer assembly. Go to Step 16	GND is short-circuited between terminals (H–49)5 and (A-3)12. Repair the circuit. Go to Step 16
16	Check that all the parts are mounted. Is this step complete?	Repeat the “Diagnosis Flow”.	Return to Step 16

Chart E–1	AXLE switch circuit wires are broken.	
Function of circuit	—	
Fail condition	Both the TOD and 4L modes are disabled. (The transition status is not removed.)	
Indicator lamp status	AUTO CHECK Blinking	AUTO CHECK Blinking
Transfer position	TOD	4L

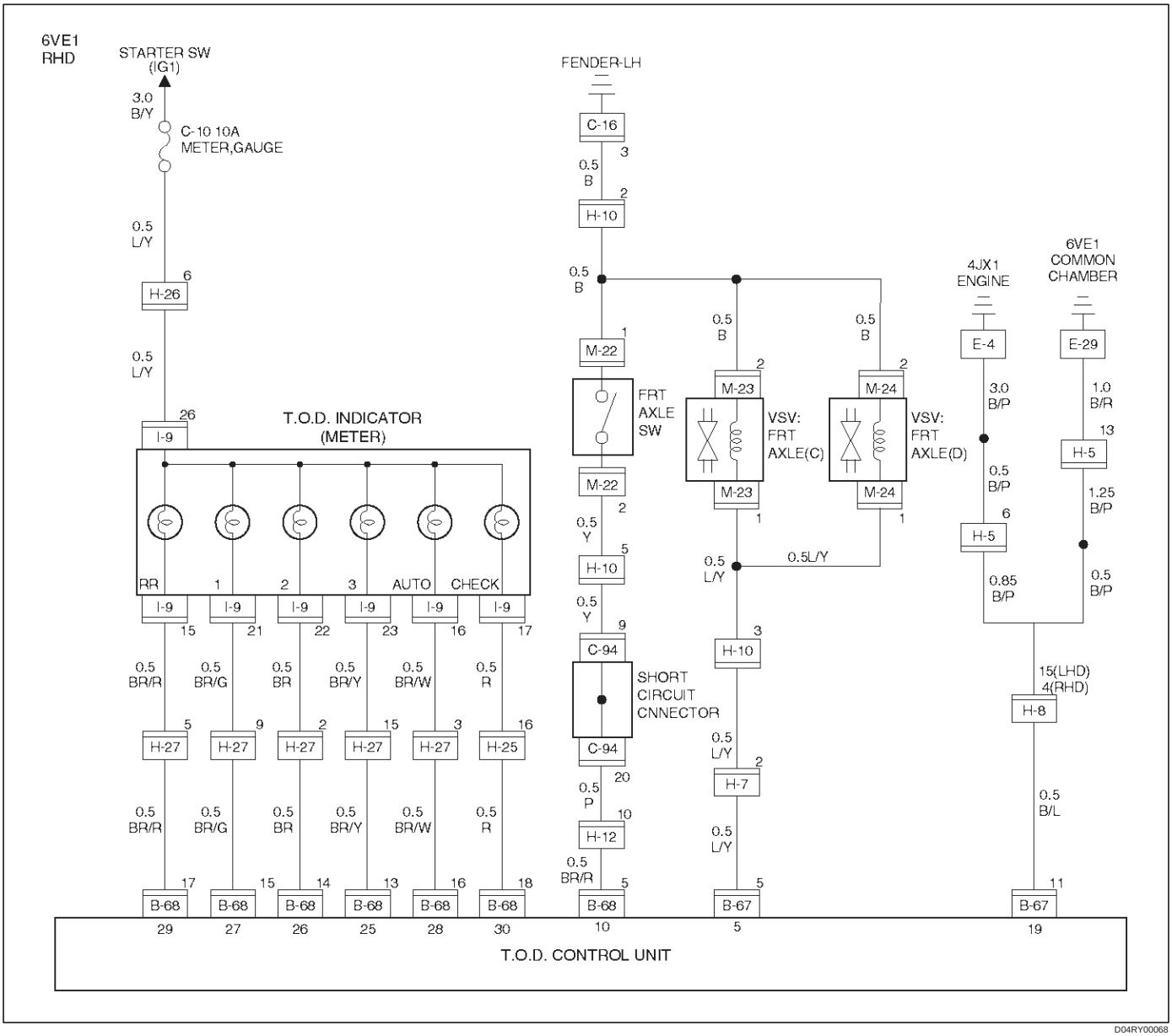

D04RY00068

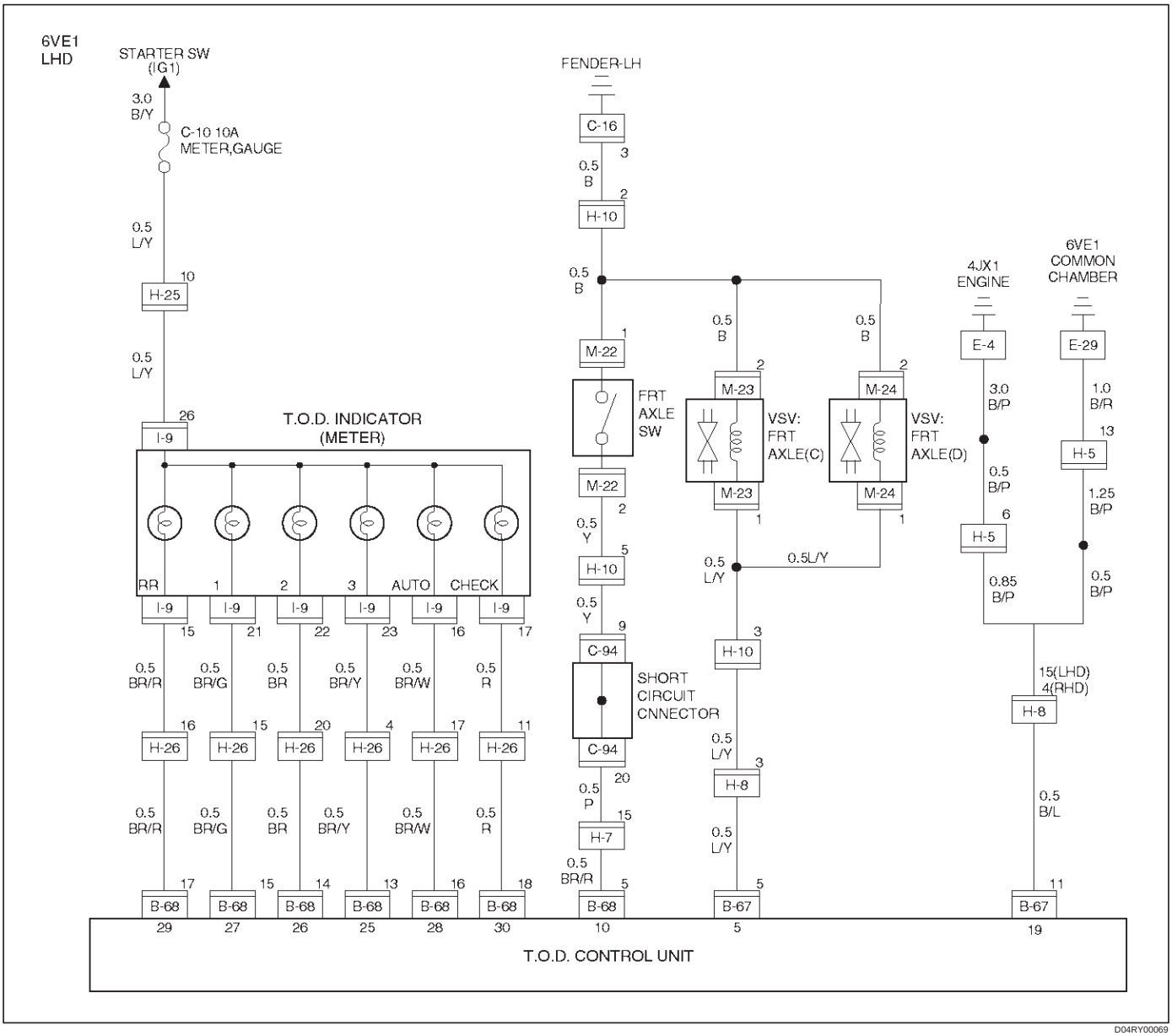
6VE1
LHD
STARTER SW
(IG1)
3.0
B/Y
C-10 10A
METER,GAUGE
0.5
L/Y
H-25
10
0.5
L/Y
I-9
26
T.O.D. INDICATOR
(METER)
RR
1
2
3
AUTO
CHECK
I-9
15
21
22
23
16
17
0.5
BR/R
0.5
BR/G
0.5
BR
0.5
BR/Y
0.5
BR/W
0.5
R
H-26
16
15
20
4
17
11
0.5
BR/R
0.5
BR/G
0.5
BR
0.5
BR/Y
0.5
BR/W
0.5
R
B-68
17
15
14
13
16
18
29
27
26
25
28
30
FENDER-LH
C-16
3
0.5
B
2
H-10
0.5
B
M-22
1
FRT
AXLE
SW
M-22
2
0.5
Y
H-10
5
0.5
Y
C-94
9
SHORT
CIRCUIT
CNNECTOR
C-94
20
0.5
P
H-7
15
0.5
BR/R
B-68
5
10
0.5
B
2
M-23
VSV:
FRT
AXLE(C)
M-23
1
0.5
B
2
M-24
VSV:
FRT
AXLE(D)
M-24
1
0.5
L/Y
0.5L/Y
H-10
3
0.5
L/Y
H-8
3
0.5
L/Y
B-67
5
5
4JX1
ENGINE
E-4
3.0
B/P
0.5
B/P
6
H-5
0.85
B/P
6VE1
COMMON
CHAMBER
E-29
1.0
B/R
13
H-5
1.25
B/P
0.5
B/P
15(LHD)
4(RHD)
H-8
0.5
B/L
B-67
11
19
T.O.D. CONTROL UNIT

D04RY00069

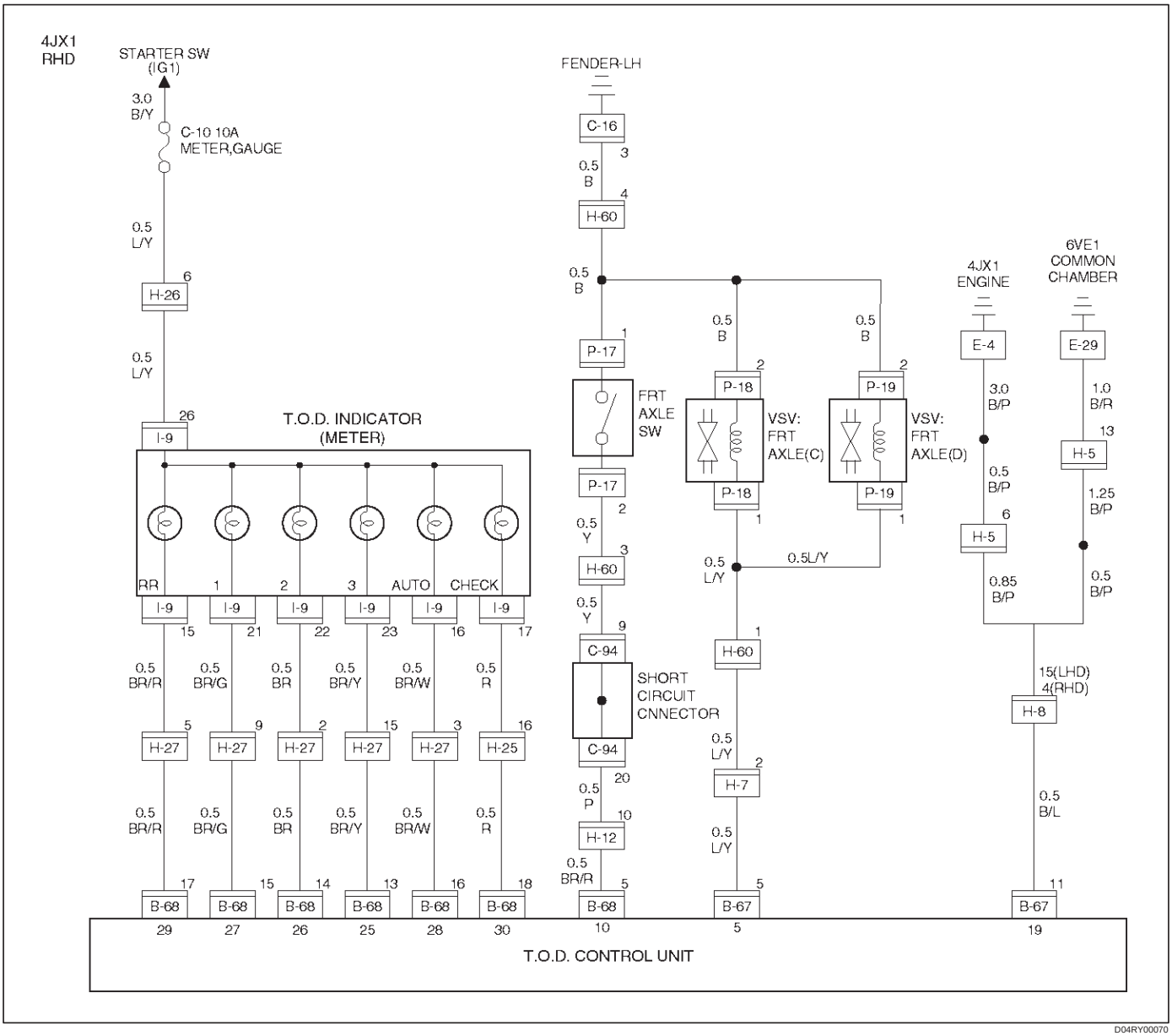
4JX1
RHD
STARTER SW
(IG1)
3.0
B/Y
C-10 10A
METER,GAUGE
0.5
L/Y
H-26
6
0.5
L/Y
26
I-9
T.O.D. INDICATOR
(METER)
RR
1
2
3
AUTO
CHECK
I-9
15
21
22
23
16
17
0.5
BR/R
0.5
BR/G
0.5
BR
0.5
BR/Y
0.5
BR/W
0.5
R
H-27
H-25
5
9
2
15
3
16
0.5
BR/R
0.5
BR/G
0.5
BR
0.5
BR/Y
0.5
BR/W
0.5
R
B-68
17
15
14
13
16
18
29
27
26
25
28
30
FENDER-LH
C-16
3
0.5
B
4
H-60
0.5
B
P-17
1
FRT
AXLE
SW
P-17
2
0.5
Y
3
H-60
0.5
Y
9
C-94
SHORT
CIRCUIT
CNNECTOR
C-94
20
0.5
P
10
H-12
0.5
BR/R
5
B-68
10
0.5
B
0.5
B
2
P-18
VSV:
FRT
AXLE(C)
P-18
1
2
P-19
VSV:
FRT
AXLE(D)
P-19
1
0.5
L/Y
0.5L/Y
1
H-60
0.5
L/Y
2
H-7
0.5
L/Y
5
B-67
5
4JX1
ENGINE
E-4
3.0
B/P
0.5
B/P
6
H-5
0.85
B/P
6VE1
COMMON
CHAMBER
E-29
1.0
B/R
13
H-5
1.25
B/P
0.5
B/P
15(LHD)
4(RHD)
H-8
0.5
B/L
11
B-67
19
T.O.D. CONTROL UNIT

D04RY00070

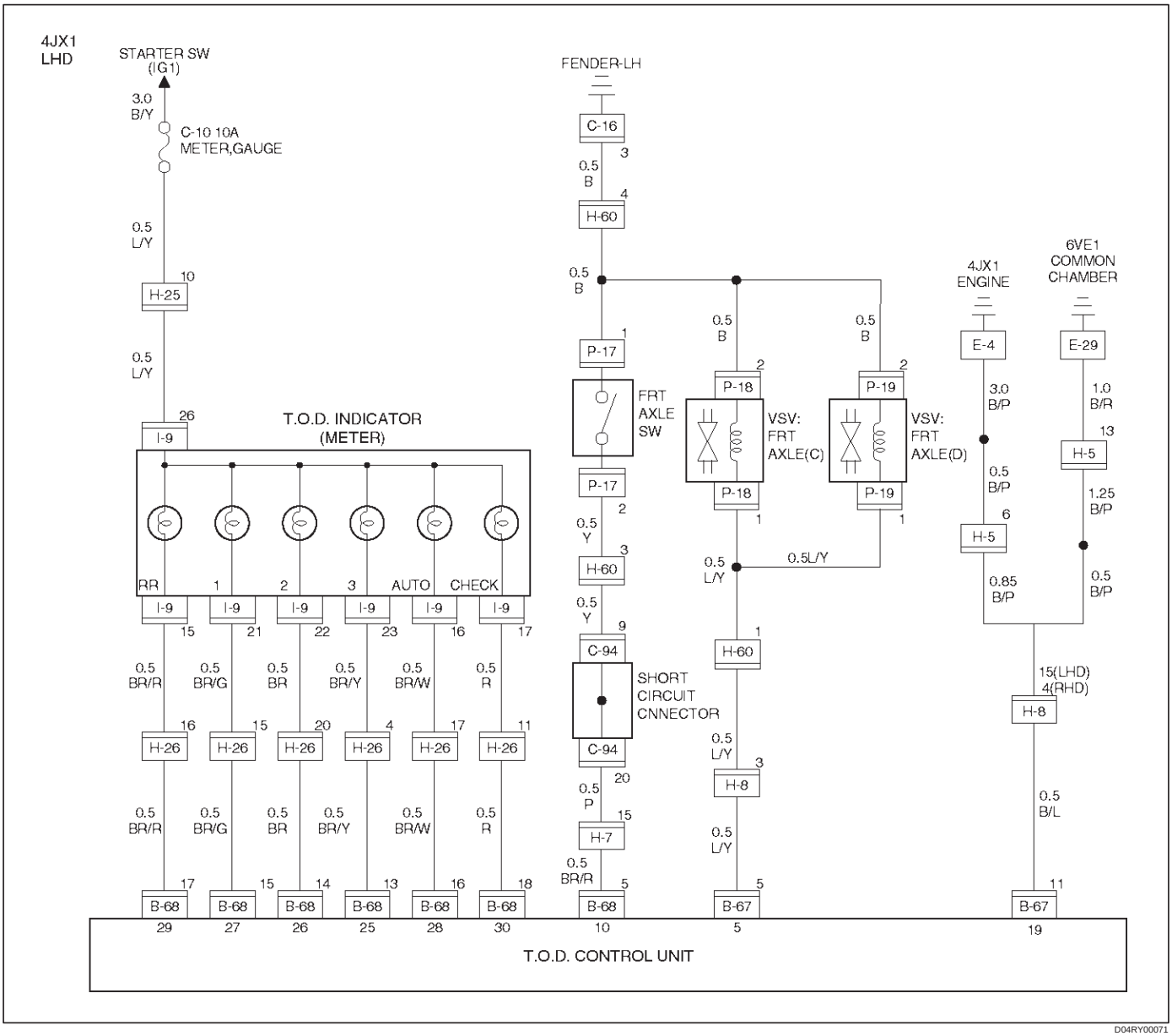
4JX1
LHD
STARTER SW
(IG1)
3.0
B/Y
C-10 10A
METER,GAUGE
0.5
L/Y
H-25
10
0.5
L/Y
I-9
26
T.O.D. INDICATOR
(METER)
RR
1
2
3
AUTO
CHECK
I-9
15
21
22
23
16
17
0.5
BR/R
0.5
BR/G
0.5
BR
0.5
BR/Y
0.5
BR/W
0.5
R
H-26
16
15
20
4
17
11
0.5
BR/R
0.5
BR/G
0.5
BR
0.5
BR/Y
0.5
BR/W
0.5
R
B-68
17
15
14
13
16
18
29
27
26
25
28
30
FENDER-LH
C-16
3
0.5
B
4
H-60
0.5
B
P-17
1
FRT
AXLE
SW
P-17
2
0.5
Y
3
H-60
0.5
Y
9
C-94
SHORT
CIRCUIT
CNNECTOR
C-94
20
0.5
P
15
H-7
0.5
BR/R
5
B-68
10
0.5
B
P-18
2
VSV:
FRT
AXLE(C)
P-18
1
0.5
B
P-19
2
VSV:
FRT
AXLE(D)
P-19
1
0.5
L/Y
0.5L/Y
1
H-60
0.5
L/Y
3
H-8
0.5
L/Y
5
B-67
5
4JX1
ENGINE
E-4
3.0
B/P
0.5
B/P
6
H-5
0.85
B/P
6VE1
COMMON
CHAMBER
E-29
1.0
B/R
13
H-5
1.25
B/P
0.5
B/P
15(LHD)
4(RHD)
H-8
0.5
B/L
11
B-67
19
T.O.D. CONTROL UNIT

D04RY00071

Step	Action	Yes	No
1	Start the engine. When the transfer lever is shifted to the neutral position between high and 4L, is 5V observed between terminals 10 and 19?	Go to Step 2	Go to Step 7
2	When the transfer lever is shifted to the high position and 4WD AUTO SW is selected to the 4WD position, is 0V observed between terminals 10 and 19?	Go to Step 3	Go to Step 7
3	When the transfer lever is shifted to the 4L position, is 0V observed between terminals 10 and 19?	The ECU has failed. Replace the ECU. Go to Step 4	Go to Step 7
4	Shift the transfer lever to the 4L position. Is 0V observed between terminals 25 and 19?	Go to Step 5	The ECU has failed. Replace the ECU. Go to Step 19
5	Is 0V observed between terminals 26 and 19?	Go to Step 6	The ECU has failed. Replace the ECU. Go to Step 19
6	Is 0V observed between terminals 27 and 19?	The phenomenon is not reproduced. Refer to “Troubles intermittently observed”.	The ECU has failed. Replace the ECU. Go to Step 19
7	When the transfer lever is shifted to the high position and 4WD AUTO SW is selected to the 2H position, is the battery voltage observed between terminals 5 and 19?	Go to Step 8	Go to Step 11
8	When the transfer lever is shifted to the neutral position between high and 4L, is the battery voltage observed between terminals 5 and 19?	Go to Step 9	Go to Step 11
9	When the transfer lever is shifted to the high position and 4WD AUTO SW is selected to the 4WD position (TOD mode), is 0V observed between terminals 5 and 19?	Go to Step 10	Go to Step 11
10	When the transfer lever is shifted to the 4L position, is 0V observed between terminals 5 and 19?	Go to Step 12	Go to Step 11
11	Is any of the trouble codes 28, 32 and 33 recorded?	Examine the trouble based on “Diagnosis from Trouble Codes”.	The ECU has failed. Replace the ECU.
12	1. Turn off the starter switch. 2. Disconnect the ECU connector. Does the resistance between terminals (B–67)5 and (B–67)11 meet the standard, 17< R < 25 ohm?	Go to Step 13	Repair the circuit or replace the VSV. Go to Step 19
13	1. Turn on the starter switch. When the 4WD AUTO SW is selected to the 2WD position, is the battery voltage supplied to each VSV?	Go to Step 14	Repair the circuit or replace the VSV. Go to Step 19
14	When the transfer lever is shifted to the neutral position between high and 4L, is the battery voltage supplied to each VSV?	Go to Step 15	Repair the circuit or replace the VSV. Go to Step 19

Step	Action	Yes	No
15	When the transfer lever is shifted to the high position and 4WD AUTO SW is selected to the 4WD position, is 0V observed on each VSV?	Go to Step 16	Repair the circuit or replace the VSV. Go to Step 19
16	When the transfer lever is shifted to the 4L position, is 0V observed on each VSV?	Go to Step 17	Repair the circuit or replace the VSV. Go to Step 19
17	Is the vacuum pressure supplied to the VSV?	Go to Step 18	Repair the vacuum system. Go to Step 19
18	Can the single AXLE switch enable and disable the continuity?	Repair the shift on the fly system (refer to Section 4B1 and 4C.)	Replace the AXLE switch (refer to Section 4B1 and 4C of Chassis Repair Manual).
19	Check that all the parts are mounted. Is this step complete?	Repeat the “Diagnosis Flow”.	Return to Step 19

Chart E–2	The AXLE switch circuit is short-circuited to GND.
Function of circuit	—
Fail condition	Even after the 4WD AUTO SW is select to the 2WD position, the 2WD mode is not enabled. (The transition status is not removed.)
Indicator lamp status	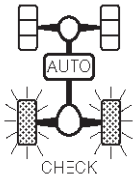
Transfer position	2H

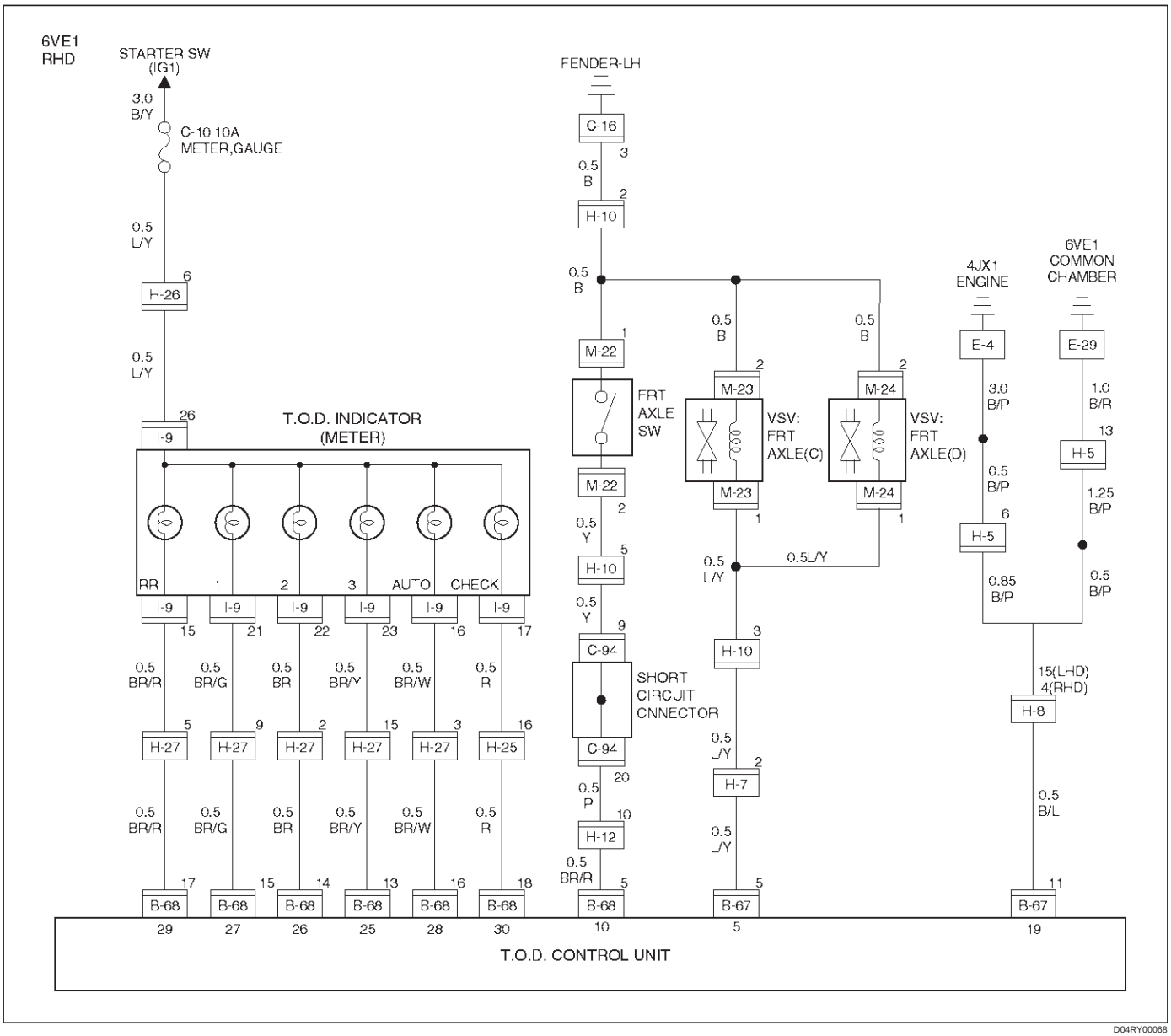

D04RY00068

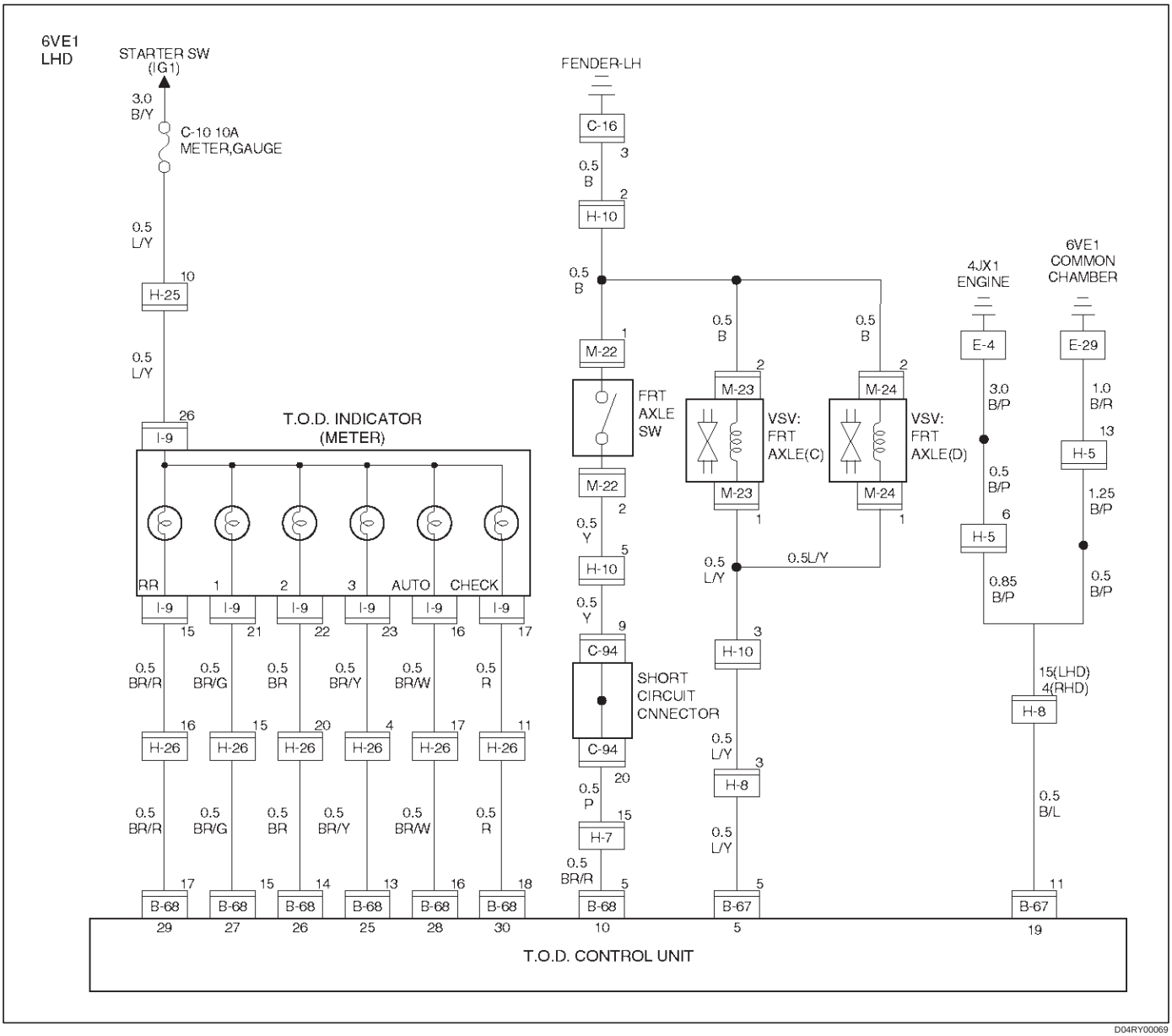
6VE1
LHD
STARTER SW
(IG1)
3.0
B/Y
C-10 10A
METER,GAUGE
0.5
L/Y
H-25
10
0.5
L/Y
26
I-9
T.O.D. INDICATOR
(METER)
RR
1
2
3
AUTO
CHECK
I-9
15
21
22
23
16
17
0.5
BR/R
0.5
BR/G
0.5
BR
0.5
BR/Y
0.5
BR/W
0.5
R
16
15
20
4
17
11
H-26
H-26
H-26
H-26
H-26
H-26
0.5
BR/R
0.5
BR/G
0.5
BR
0.5
BR/Y
0.5
BR/W
0.5
R
17
15
14
13
16
18
B-68
B-68
B-68
B-68
B-68
B-68
29
27
26
25
28
30
FENDER-LH
C-16
3
0.5
B
2
H-10
0.5
B
1
M-22
FRT
AXLE
SW
M-22
2
0.5
Y
5
H-10
0.5
Y
9
C-94
SHORT
CIRCUIT
CNNECTOR
C-94
20
0.5
P
15
H-7
0.5
BR/R
5
B-68
10
0.5
B
2
M-23
VSV:
FRT
AXLE(C)
M-23
1
0.5
B
2
M-24
VSV:
FRT
AXLE(D)
M-24
1
0.5
L/Y
0.5L/Y
3
H-10
0.5
L/Y
3
H-8
0.5
L/Y
5
B-67
5
4JX1
ENGINE
E-4
3.0
B/P
0.5
B/P
6
H-5
0.85
B/P
6VE1
COMMON
CHAMBER
E-29
1.0
B/R
13
H-5
1.25
B/P
0.5
B/P
15(LHD)
4(RHD)
H-8
0.5
B/L
11
B-67
19
T.O.D. CONTROL UNIT

D04RY00069

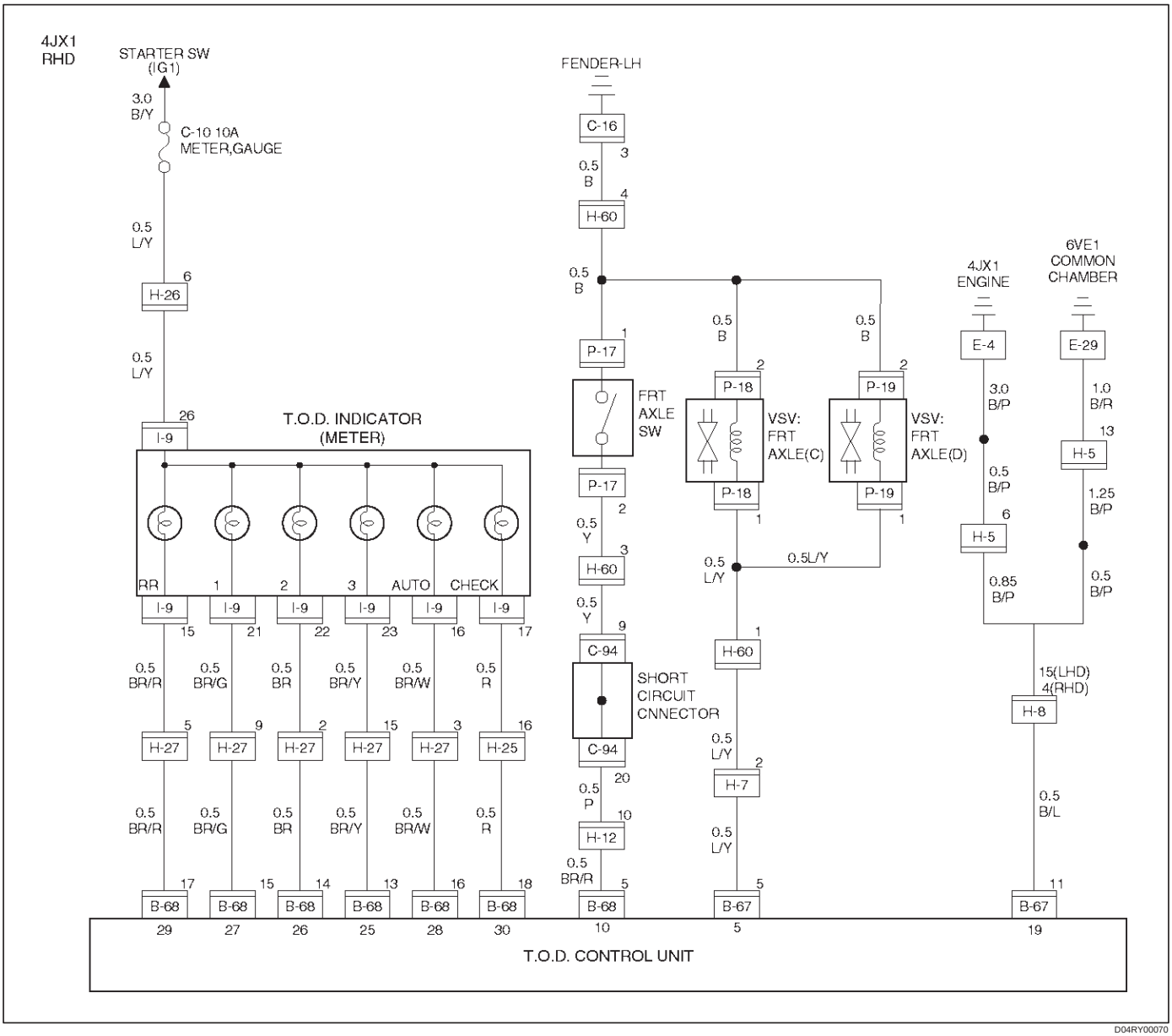
4JX1
RHD
STARTER SW
(IG1)
3.0
B/Y
C-10 10A
METER,GAUGE
0.5
L/Y
H-26
6
0.5
L/Y
26
I-9
T.O.D. INDICATOR
(METER)
RR
1
2
3
AUTO
CHECK
I-9
15
21
22
23
16
17
0.5
BR/R
0.5
BR/G
0.5
BR
0.5
BR/Y
0.5
BR/W
0.5
R
H-27
H-25
5
9
2
15
3
16
0.5
BR/R
0.5
BR/G
0.5
BR
0.5
BR/Y
0.5
BR/W
0.5
R
B-68
17
15
14
13
16
18
29
27
26
25
28
30
FENDER-LH
C-16
3
0.5
B
4
H-60
0.5
B
P-17
1
FRT
AXLE
SW
P-17
2
0.5
Y
3
H-60
0.5
Y
9
C-94
SHORT
CIRCUIT
CNNECTOR
C-94
20
0.5
P
10
H-12
0.5
BR/R
5
B-68
10
0.5
B
0.5
B
2
P-18
VSV:
FRT
AXLE(C)
P-18
1
2
P-19
VSV:
FRT
AXLE(D)
P-19
1
0.5
L/Y
0.5L/Y
1
H-60
0.5
L/Y
2
H-7
0.5
L/Y
5
B-67
5
4JX1
ENGINE
E-4
3.0
B/P
0.5
B/P
6
H-5
0.85
B/P
6VE1
COMMON
CHAMBER
E-29
1.0
B/R
13
H-5
1.25
B/P
0.5
B/P
15(LHD)
4(RHD)
H-8
0.5
B/L
11
B-67
19
T.O.D. CONTROL UNIT

D04RY00070

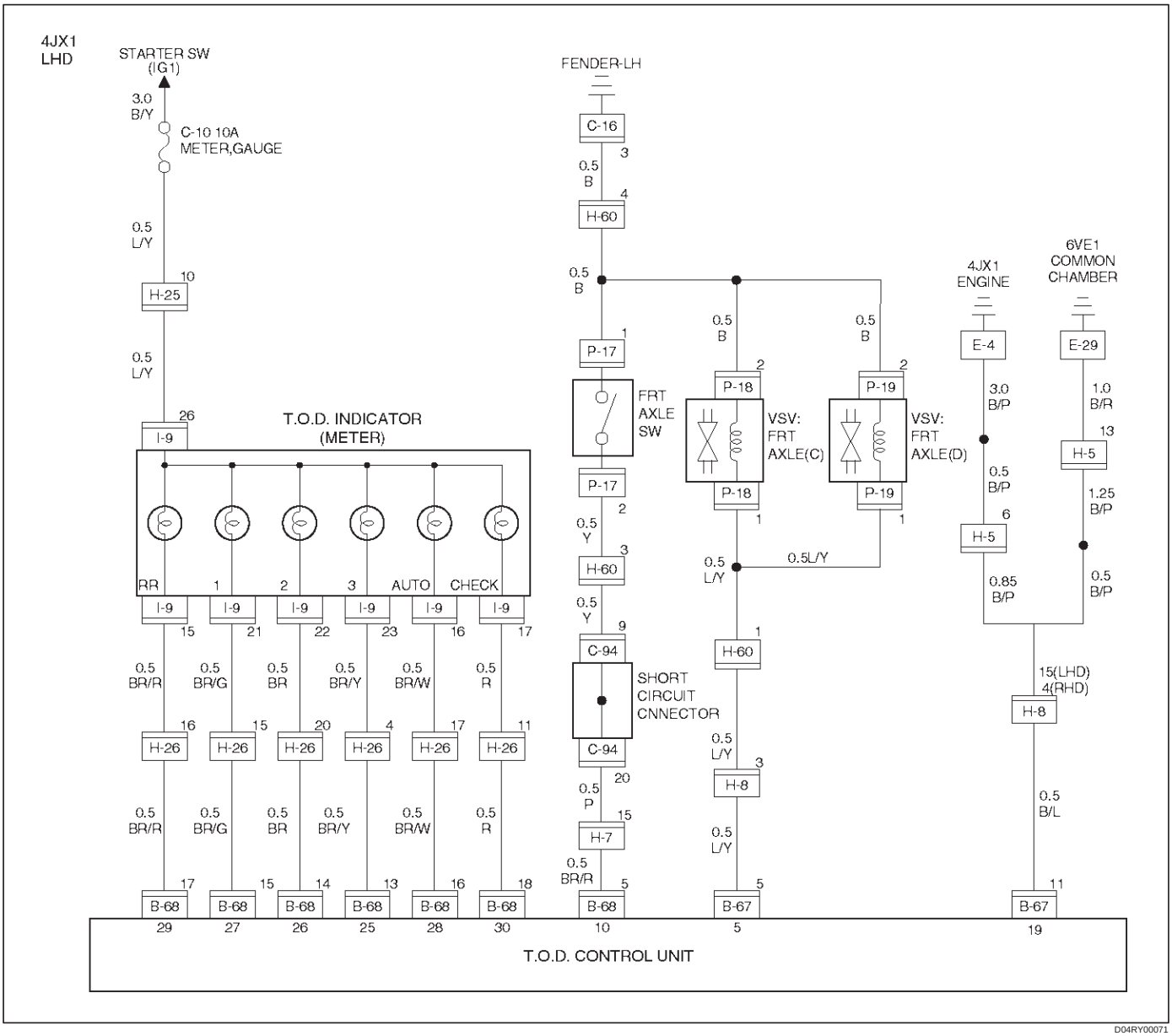
4JX1
LHD
STARTER SW
(IG1)
3.0
B/Y
C-10 10A
METER,GAUGE
0.5
L/Y
H-25
10
0.5
L/Y
26
I-9
T.O.D. INDICATOR
(METER)
RR
1
2
3
AUTO
CHECK
I-9
15
21
22
23
16
17
0.5
BR/R
0.5
BR/G
0.5
BR
0.5
BR/Y
0.5
BR/W
0.5
R
16
15
20
4
17
11
H-26
H-26
H-26
H-26
H-26
H-26
0.5
BR/R
0.5
BR/G
0.5
BR
0.5
BR/Y
0.5
BR/W
0.5
R
17
15
14
13
16
18
B-68
B-68
B-68
B-68
B-68
B-68
29
27
26
25
28
30
FENDER-LH
C-16
3
0.5
B
4
H-60
0.5
B
1
P-17
FRT
AXLE
SW
P-17
2
0.5
Y
3
H-60
0.5
Y
9
C-94
SHORT
CIRCUIT
CNNECTOR
C-94
20
0.5
P
15
H-7
0.5
BR/R
5
B-68
10
0.5
B
2
P-18
VSV:
FRT
AXLE(C)
P-18
1
0.5
L/Y
0.5
B
2
P-19
VSV:
FRT
AXLE(D)
P-19
1
0.5L/Y
1
H-60
0.5
L/Y
3
H-8
0.5
L/Y
5
B-67
5
4JX1
ENGINE
E-4
3.0
B/P
0.5
B/P
6
H-5
0.85
B/P
6VE1
COMMON
CHAMBER
E-29
1.0
B/R
13
H-5
1.25
B/P
0.5
B/P
15(LHD)
4(RHD)
H-8
0.5
B/L
11
B-67
19
T.O.D. CONTROL UNIT

D04RY00071

Step	Action	Yes	No
1	Start the engine. When the transfer lever is shifted to the neutral position between high and 4L, is 5V observed between terminals 10 and 19?	Go to Step 2	Go to Step 7
2	When the transfer lever is shifted to the high position and 4WD AUTO SW is selected to the 4WD position, is 0V observed between terminals 10 and 19?	Go to Step 3	Go to Step 7
3	When the transfer lever is shifted to the 4L position, is 0V observed between terminals 10 and 19?	Go to Step 4	Go to Step 7
4	Select the 4WD AUTO SW to the 2WD position. Is 12V observed between terminals 25 and 19?	Go to Step 5	Replace the ECU. Go to Step 19
5	Is 12V observed between terminals 26 and 19?	Go to Step 6	Replace the ECU. Go to Step 19
6	Is 12V observed between terminals 27 and 19?	The phenomenon is not reproduced. Refer to “Troubles intermittently observed”.	The ECU has failed. Replace the ECU. Go to Step 19
7	When the 4WD AUTO SW is selected to the 2WD position, is the battery voltage observed between terminals 5 and 19?	Go to Step 8	Go to Step 11
8	When the transfer lever is shifted to the neutral position between high and 4L, is the battery voltage observed between terminals 5 and 19?	Go to Step 9	Go to Step 11
9	When the transfer lever is shifted to the high position and 4WD AUTO SW is selected to the 4WD position, is 0V observed between terminals (B–67)5 and (B–67)11?	Go to Step 10	Go to Step 11
10	When the transfer lever is shifted to the 4L position, is 0V observed between terminals 5 and 19?	Go to Step 12	Go to Step 11
11	Is any of the trouble codes 28, 32 and 33 recorded?	Examine the trouble based on “Diagnosis from Trouble Codes”.	The ECU has failed. Replace the ECU.
12	1. Turn off the starter switch. 2. Disconnect the ECU connector. Does the resistance between terminals 5 and 19 meet the standard, 17< R < 25 ohm?	Go to Step 13	Repair the circuit or replace the VSV. Go to Step 19
13	1. Connect the ECU connector. 2. Turn on the starter switch. When the 4WD AUTO SW is selected to the 2WD position, is the battery voltage supplied to each VSV?	Go to Step 14	Repair the circuit or replace the VSV. Go to Step 19
14	When the transfer lever is shifted to the neutral position between high and 4L, is the battery voltage supplied to each VSV?	Go to Step 15	Repair the circuit or replace the VSV. Go to Step 19
15	When the transfer lever is shifted to the high position and 4WD AUTO SW is selected to the 4WD position, is 0V observed on each VSV?	Go to Step 16	Repair the circuit or replace the VSV. Go to Step 19

Step	Action	Yes	No
16	When the transfer lever is shifted to the 4L position, is 0V observed on each VSV?	Go to Step 17	Repair the circuit or replace the VSV. Go to Step 19
17	Is the vacuum pressure supplied to the VSV?	Go to Step 18	Repair the vacuum system. Go to Step 19
18	Can the single AXLE switch enable and disable the continuity?	Repair the shift on the fly system Refer to Section 4B1 and 4C. Go to Step 19	Replace the AXLE switch Refer to Section 4B1 and 4C. Go to Step 19
19	Check that all the parts are mounted. Is this step complete?	Repeat the “Diagnosis Flow”.	Return to Step 19

Chart G	The trouble codes are displayed.
Function of circuit	—
Fail condition	The CHECK lamp continues blinking irregularly. 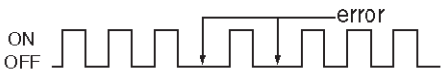
Indicator lamp status	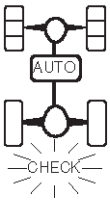
Transfer position	—

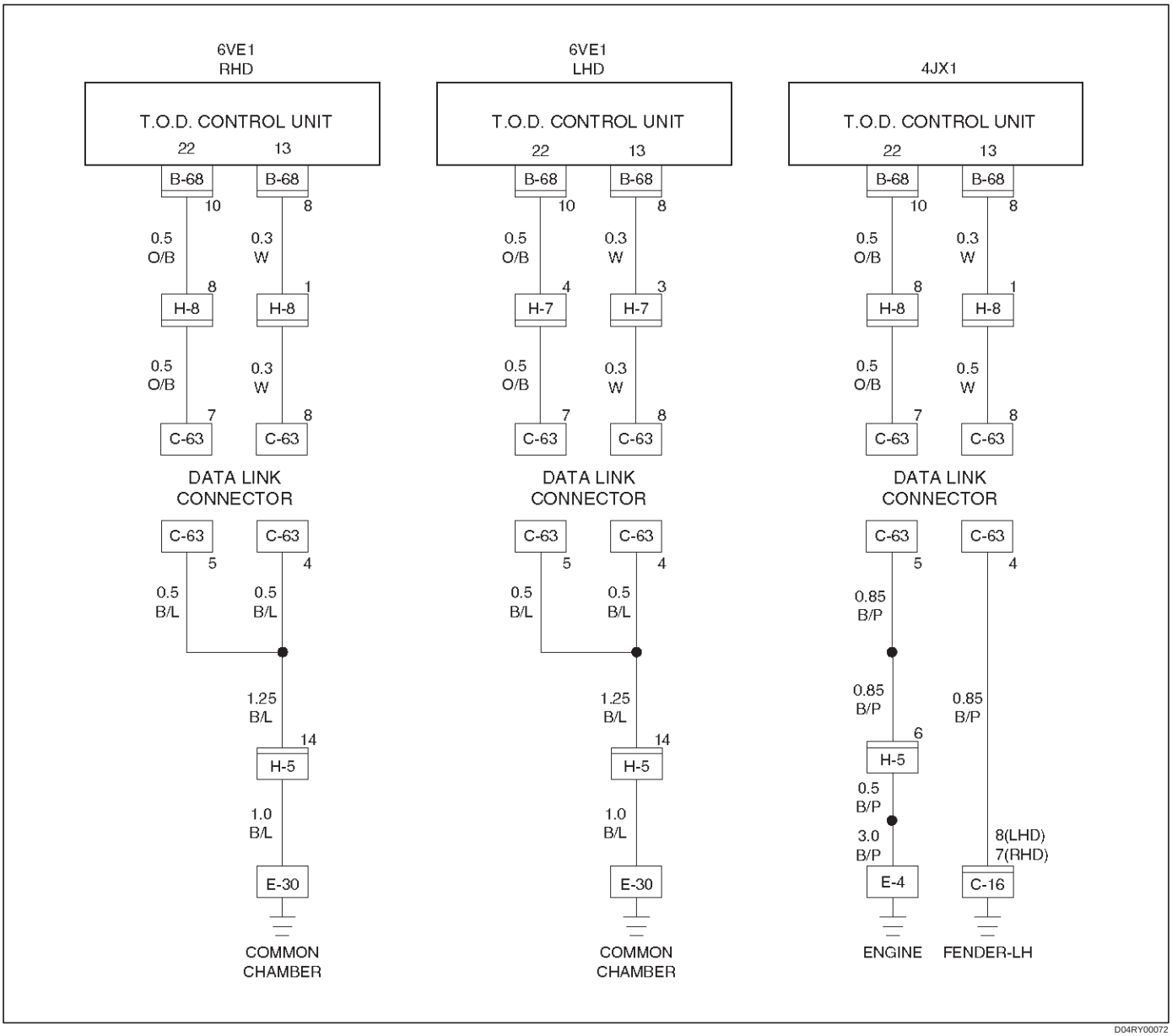

Step	Action	Yes	No
1	Disconnect the ECU connector from ECU. Is the continuity established between terminals (B–68)8 and (B–67)11?	Go to Step 2	The ECU has failed. Replace the ECU. Go to Step 3
2	Is the self-diagnostic connector short-circuited?	Go to Step 3	Repair the self-diagnostic connector circuit. Go to Step 3
3	1. Check that all the parts are mounted. 2. Clear the trouble codes. Is this step complete?	Repeat the “Diagnosis Flow”.	Return to Step 3

Chart H	lighting switch circuit
Function of circuit	Reads in the status of lighting switch and reduces the indicator brightness at night.
Fail condition	Even if the lighting switch is pressed on and off, brightness does not change.
Indicator lamp status	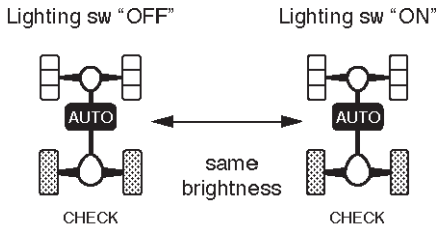
Transfer position	All position (example TOD mode)

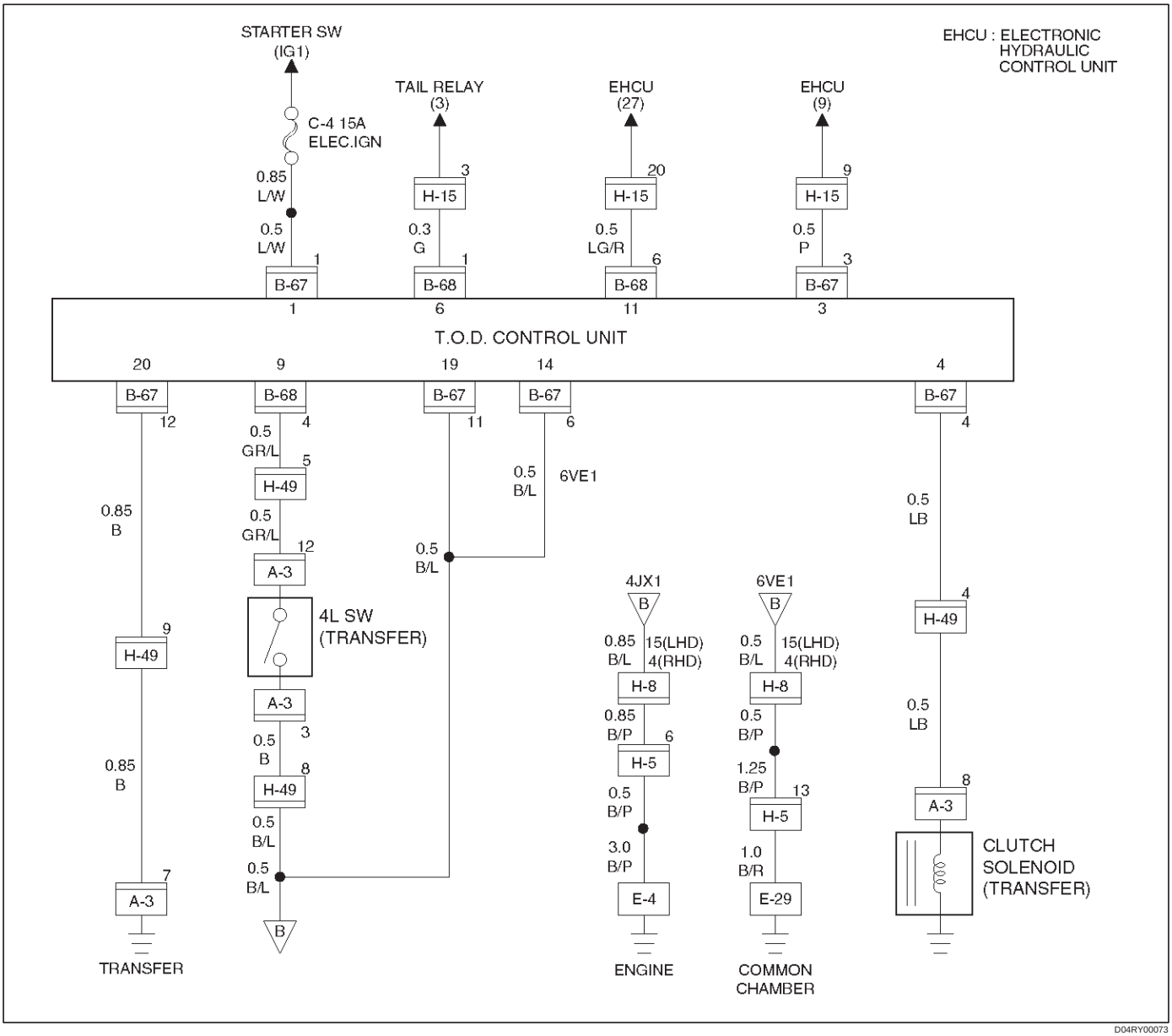

Step	Action	Yes	No
1	1. Disconnect ECU connector. 2. Turn on the starter switch. Is battery voltage observed between ECU terminals (B–68)1 and (B–67)11?	Go to Step 2	Wirers are broken lighting SW circuit. Repair the circuit. Go to Step 4
2	Turn lighting SW “ON”. Is 0 V observed between ECU terminal (B–68)1 and (B–67)11?	Go to Step 3	Lighting SW circuit battery short. Repair the circuit. Go to Step 4
3	Connect ECU terminal. While the lighting switch is pressed on and off, does the brightness of the indicator change?	The phenomenon is not reproduced. Refer to “Troubles intermittently observed”	The ECU has failed. Replace the ECU. Go to Step 4
4	Check that all the parts are mounted. Is this step complete?	Repeat the “Diagnosis Flow”.	Return to Step 4

Diagnosis from Symptom

Troubles that are not indicated by the warning lamp are listed in the table below. These troubles are caused by the faults that cannot be detected by the self-diagnostic function of the control unit.
If this type of trouble is observed, interview the customer and conduct test runs to reproduce the trouble, cross-check the reported trouble with the listed phenomena, and diagnose and analyze the trouble on the item by item basis.

	Phenomena	Major cause	Corrective action
1	The tight corner braking is observed when the vehicle is subject to full steering.	● The standard tires are not used. ● The tire pressure is incorrect. ● The tires are worn inuniformity. ● The transfer or wiring is imperfect. ● The limited slip differential is failed.	Check and recondition the vehicle according to Chart 1.
2	Even if the 4WD AUTO SW is select to the 4WD position, the 4WD mode is not active, resulting in remarkable rear wheel spin.	● The transfer or wiring is imperfect. ● The shift on the fly system is failed.	Check and recondition the vehicle according to Chart 2.
3	● When the 4WD AUTO SW is selected to the 4WD position, the drive resistance of the 4WD system is too large to get sufficient running speed. ● Noised drive line.	● The standard tires are not used. ● The tire pressure is incorrect. ● The tires are worn inuniformity. ● The transfer or wiring is imperfect. ● The limited slip differential is failed.	Check and recondition the vehicle according to Chart 1.
4	The shift on the fly system (front axle) generates gear noises.	● The wiring is imperfect. ● The shift on the fly system is failed.	Check and recondition the vehicle according to Chart 3.
5	The braking distance gets long even when the ABS is active.	● The wiring is imperfect. ● The ABS is failed.	Check and recondition the vehicle according to Chart 4.

Chart 1	The tight corner braking is observed.
Function of circuit	—
Fail condition	When the vehicle is subject to full steering in the TOD mode, the drive resistance gets large or the judder occurs. Otherwise, the above phenomenon is observed only when the brake is applied.

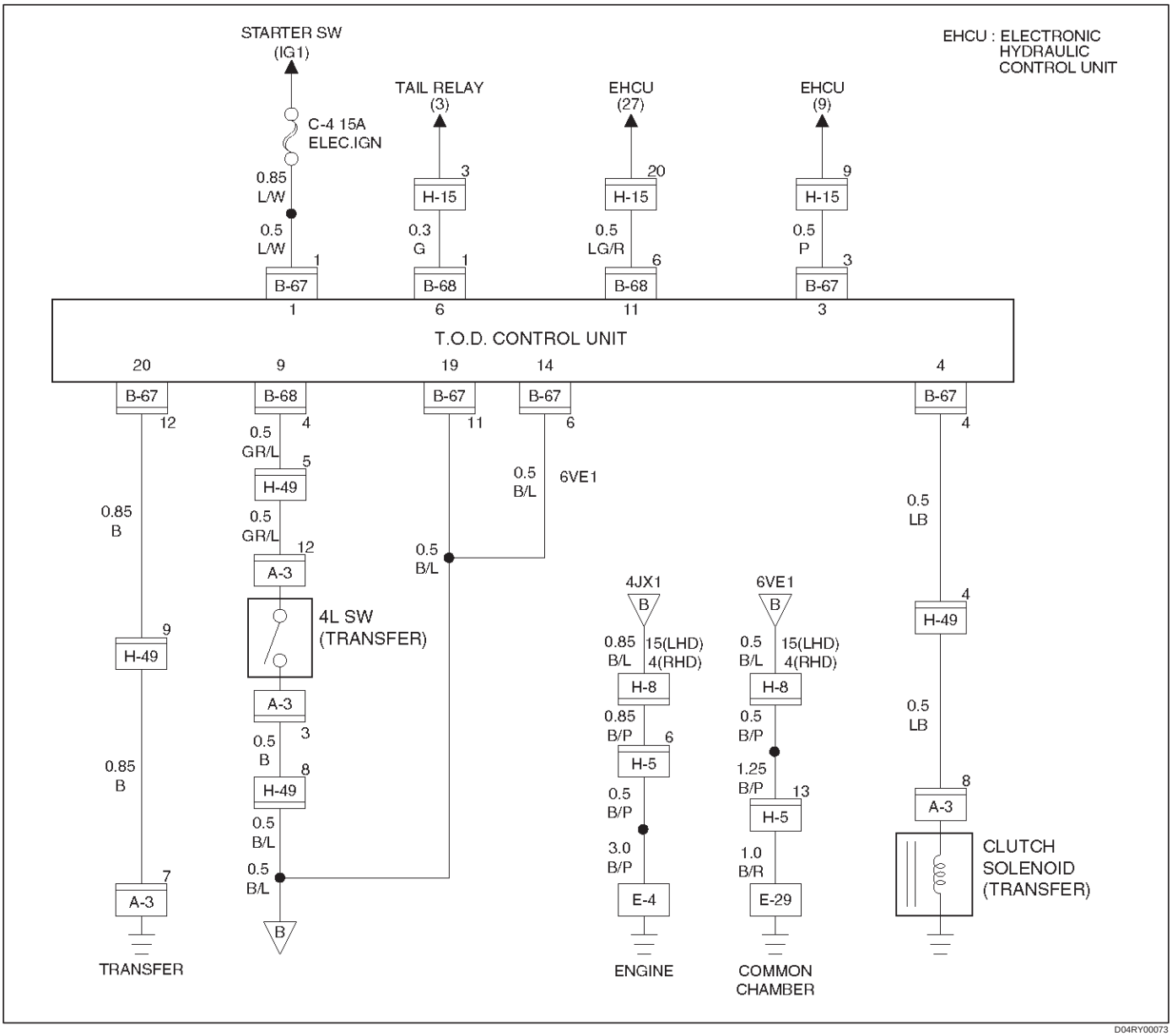

Step	Action	Yes	No
1	Are the front and rear tires in specified size?	Go to Step 2	Replace the tires with specified ones, and service the new tires. Go to Step 16
2	Is the tire pressure correct?	Go to Step 3	In flate tries to recommended pressure. Go to Step 16
3	Are the tires free from abnormal wear?	Go to Step 4	Replace the tires with specified ones, and service the new tires. Go to Step 16
4	Are different types of tires used?	Go to Step 5	Replace the tires with specified ones, and service the new tires. Go to Step 16
5	1. Start the engine. 2. Shift the transfer lever to the high position and switch the 4WD AUTO SW to 4WD position. 3. Fully turn the steering to the left (or right) end, and select the D range and start the creep run. Does the tight corner braking occur? Is the judder with chug-chug sound observed? * Use caution on the operation.	Go to Step 6	Go to Step 11
6	1. Shift the transfer lever to the high position and switch the 4WD AUTO SW to the 2H position. 2. Fully turn the steering to the left (or right) end, and select the D range and start the creep run. Does the tight corner braking occur? Is the judder with chug-chug sound observed? * Use caution on the operation.	Go to Step 7	Go to Step 14
7	Is an LSD mounted to the rear differential?	Go to Step 8	Go to Step 9
8	Is the genuine LSD oil used in the rear differential?	Go to Step 9	Replace the differential oil. Go to Step 16
9	Does the engine output the power correctly?	Go to Step 10	Check the engine. Go to Step 16
10	Do the speed sensors work correctly? (Check trouble codes.)	The ECU has failed. Replace the ECU. Go to Step 16	Replace the speed sensors. Go to Step 16
11	Is the tight corner braking observed only when the brake is applied?	Go to Step 12	Conduct full steering under WOT. Go to Step 5
12	1. Turn on the starter switch. Is the battery voltage observed between terminals 11 and 19?	Go to Step 13	Repair the circuit of terminal 11 (ABS IN). Go to Step 16

Step	Action	Yes	No
13	1. Apply the brake and fully turn the steering to the left (or right) end, and start the creep run. Does the voltage between terminals 4 and 20 range between 0.1 and 1.0V?	Repair the transfer assembly. Go to Step 16	The ECU has failed. Replace the ECU. Go to Step 16
14	1. Shift the transfer lever to the high position and switch the 4WD AUTO SW to 4WD position. 2. Fully turn the steering to the left (or right) end, and select the D range and start the creep run. Does the voltage between terminals 4 and 20 range between 0.1 and 1.0V?	Go to Step 15	Go to Step 10
15	1. Select the 4WD AUTO SW to the 2WD position. 2. Jack up the right front wheel. Does the front tire rotate smoothly?	The phenomenon is not reproduced. Refer to “Troubles intermittently observed”. Go to Step 16	Repair the transfer assembly. Go to Step 16
16	Check that all the parts are mounted. Is this step complete?	Repeat the “Diagnosis Flow”.	Return to Step 16

*NOTE: Before checking this item, run the vehicle more than 10 meters with the steering wheel in straight position so that the 4L mechanical lock sleeve can be released certainly.

Chart 2	The 4WD mode is not active.
Function of circuit	—
Fail condition	The rear wheels spin in the TOD mode, so the driving torque is not transmitted to the front wheels. The indicator lamps will not show the 4L and TOD status.

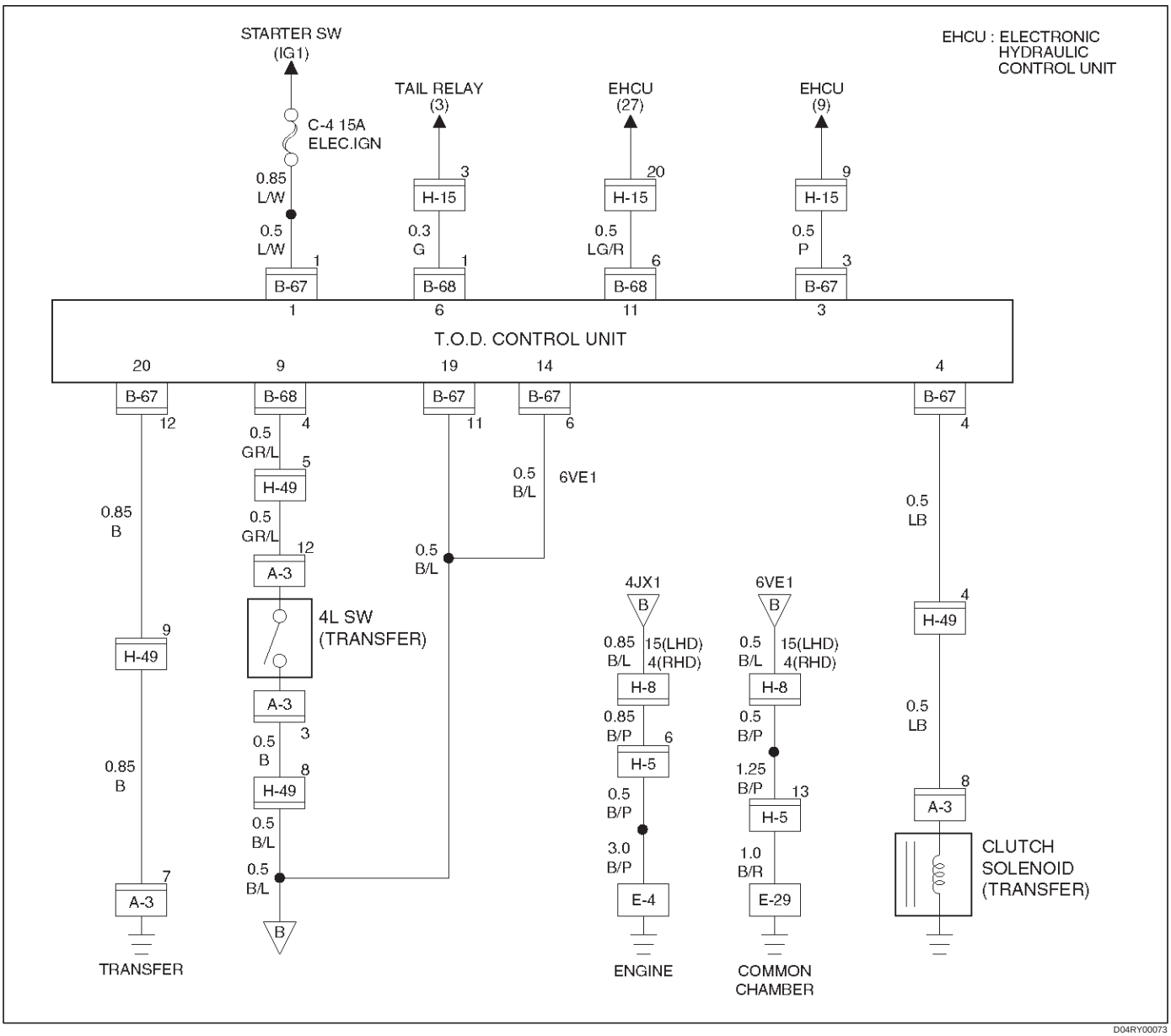

Step	Action	Yes	No
1	Is the trouble code 31 or 26 recorded?	Examine the trouble based on “Diagnosis from Trouble Codes”.	Go to Step 2
2	Is any of the trouble codes 28(P1760), 32(P1761) and 33(1762) recorded?	Examine the trouble based on “Diagnosis from Trouble Codes”.	Go to Step 3
3	When the transfer lever is in the specified position, do the TOD indicator lamps show the correct status?	Go to Step 4	Examine the trouble based on “Trouble Diagnosis Depending on The Status of TOD Indicator”.
4	Shift the transfer lever to the 4L position, fully turn the steering to the left (or right) end, and start the creep run. Does the tight corner braking occur?	Go to Step 5	Repair the transfer assembly. Go to Step 7
5	1. Shift the transfer lever to the high (TOD) position. 2. Turn on the starter switch. Does the voltage between terminals 4 and 20 indicate at least 3V while the throttle is completely open?	Go to Step 6	The ECU has failed. Replace the ECU. Go to Step 7
6	Does the voltage between terminals 4 and 20 indicate at least 0.1V while the throttle is completely closed?	The TOD clutch is worn. Repair the transfer assembly. Go to Step 7	The ECU has failed. Replace the ECU. Go to Step 7
7	Check that all the parts are mounted. Is this step complete?	Repeat the “Diagnosis Flow”.	Return to Step 7

Chart 3	The shift on the fly system generates gear noises. (The fuel economy is bad in the 2H mode.)
Function of circuit	—
Fail condition	When the vehicle is run in the 2H mode, the shift on the fly system generates gear noises or the front wheel gears are engaged to generate a shock.

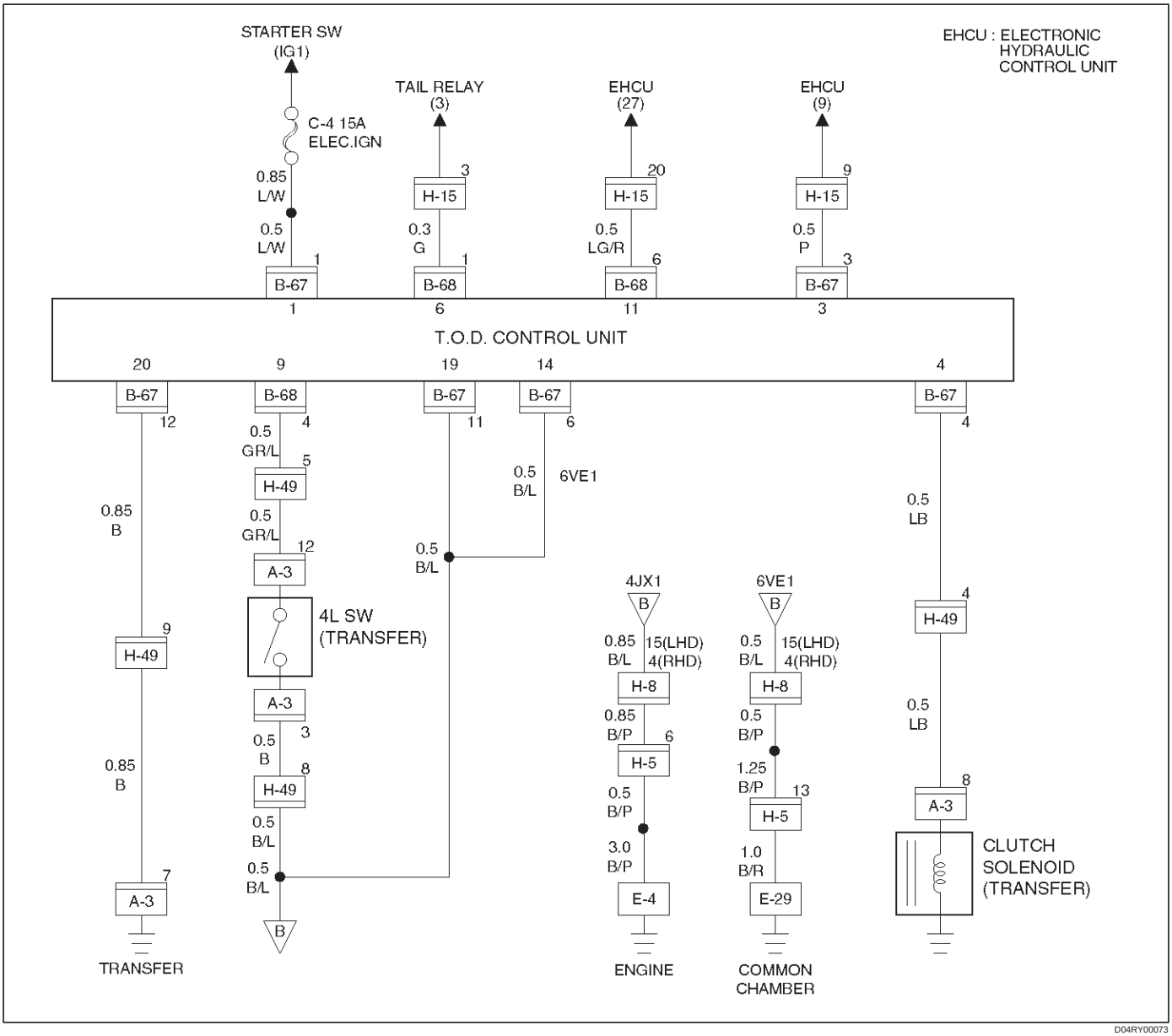

Step	Action	Yes	No
1	Do the indicator lamps show the correct status?	Go to Step 2	Examine the trouble based on “Touble Diagnosis Depending on The Status of TOD Indicator”.
2	Is any of the trouble codes 28(P1760), 32(P1761) and 33(P1762) recorded?	Examine the trouble based on “Diagnosis from Trouble Codes”.	Go to Step 3
3	Turn on the starter switch. Is the battery voltage observed between terminals 1 and 20?	Go to Step 4	Go to Step 5
4	When the 4WD AUTO SW is selected to the 2WD position, are the front axle gears correctly disengaged (and when the left front tire is jacked up and turned, is the front propeller shaft standstill)?	The phenomenon is not reproduced. Refer to “Troubles intermittently observed”.	The shift on the fly system is failed (refer to Section 4B1 and 4C.) Go to Step 6
5	Does the battery voltage maintain the correct level?	Repair the battery circuit. Go to Step 6	Repair the battery and charging system. Go to Step 6
6	Check that all the parts are mounted. Is this step complete?	Repeat the “Diagnosis Flow”.	Return to Step 6

Chart 4	The braking distance gets long even when the ABS is active.
Function of circuit	—
Fail condition	Enough deceleration is not obtained and the braking distance gets long even when the ABS is active in the 2H mode.

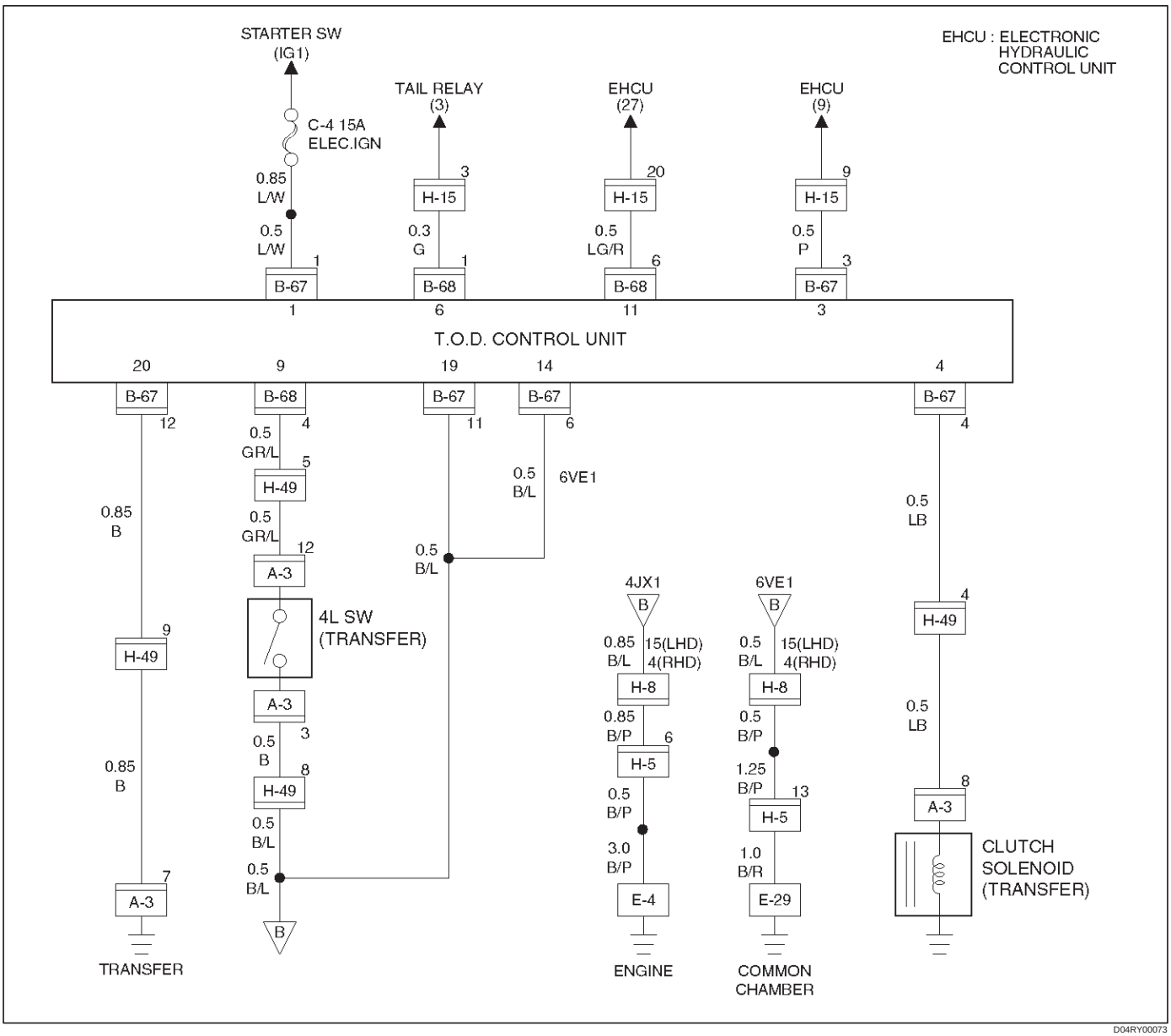

Step	Action	Yes	No
1	Are the brake and ABS systems healthy?	Go to Step 2	Repair the brake and ABS. Refer to section 5A.
2	Turn on the starter switch. Is the battery voltage observed between terminals 1 and 20?	Go to Step 3	Repair the battery system. Go to Step 4
3	1. Select the 4WD AUTO SW to the 2WD position. 2. The voltage between terminals 3 and 19 range between 7.5 and 16V (0.12 seconds make a cycle) 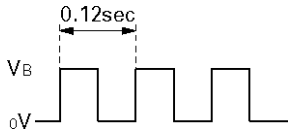 Does the voltage within the range specified?	Go to Step 4	The ECU has failed. Replace the ECU. Go to Step 4
4	Check that all the parts are mounted. Is this step complete?	Repeat the “Diagnosis Flow".	Return to Step 4

DRIVELINE/AXLE

DRIVE SHAFT SYSTEM

CONTENTS

Service Precaution 4C–2
General Description 4C–2
Diagnosis 4C–3
Rear Axle Shaft 4C–4
Rear Axle Shaft and Associated Parts 4C–4
Removal 4C–4
Inspection and Repair 4C–5
Oil Seal Replacement 4C–6
Installation 4C–6
Special Tools 4C–8
Front Hub and Disc (with Shift on the Fly) . . 4C–9
Disassembled View 4C–9
Disassembly 4C–9
Inspection and Repair 4C–10
Reassembly 4C–11
Front Hub and Disc with Manual Locking Hub 4C–14
Disassembled View 4C–14
Disassembly 4C–14
Inspection and Repair 4C–16
Reassembly 4C–16
Main Data and Specifications 4C–20
Special Tools 4C–21
Front Drive Shaft Joint 4C–22
Front Drive Shaft Joints Replacement 4C–22
Front Axle Drive Shaft 4C–23
Front Axle Drive Shaft and Associated Parts 4C–23
Disassembly 4C–24
Inspection and Repair 4C–25
Bushing Replacement 4C–25
Reassembly 4C–26
Shift On The Fly System 4C–28
Shift On The Fly System and Associated Parts 4C–28
Disassembly 4C–28
Inspection and Repair 4C–30
Main Data and Specifications 4C–35
Special Tools 4C–36
Front Propeller Shaft 4C–37
General Description 4C–37
Front Propeller Shaft and Associated Parts 4C–38
Removal 4C–38
Installation 4C–39
Disassembly (Except TOD 4×4) 4C–40
Universal Joint Disassembly 4C–41
Inspection and Repair 4C–42
Universal Joint Reassembly 4C–45
Reassembly (Except TOD 4×4) 4C–46
Main Data and Specifications 4C–47
Rear Propeller Shaft 4C–48
General Description 4C–48
Rear Propeller Shaft and Associated Parts 4C–48
Removal 4C–49
Installation 4C–49
Disassembly 4C–50
Universal Joint Disassembly 4C–51
Inspection and Repair 4C–52
Universal Joint Reassembly 4C–53
Reassembly 4C–54
Main Data and Specifications 4C–55

Service Precaution

WARNING: IF SO EQUIPPED WITH A SUPPLEMENTAL RESTRAINT SYSTEM (SRS), REFER TO THE SRS COMPONENT AND WIRING LOCATION VIEW IN ORDER TO DETERMINE WHETHER YOU ARE PERFORMING SERVICE ON OR NEAR THE SRS COMPONENTS OR THE SRS WIRING. WHEN YOU ARE PERFORMING SERVICE ON OR NEAR THE SRS COMPONENTS OR THE SRS WIRING, REFER TO THE SRS SERVICE INFORMATION. FAILURE TO FOLLOW WARNINGS COULD RESULT IN POSSIBLE AIR BAG DEPLOYMENT, PERSONAL INJURY, OR OTHERWISE UNNEEDED SRS SYSTEM REPAIRS.

CAUTION: Always use the correct fastener in the proper location. When you replace a fastener, use ONLY the exact part number for that application. ISUZU will call out those fasteners that require a replacement after removal. ISUZU will also call out the fasteners that require thread lockers or thread sealant. UNLESS OTHERWISE SPECIFIED , do not use supplemental coatings (Paints, greases, or other corrosion inhibitors) on threaded fasteners or fastener joint interfaces. Generally, such coatings adversely affect the fastener torque and the joint clamping force, and may damage the fastener. When you install fasteners, use the correct tightening sequence and specifications. Following these instructions can help you avoid damage to parts and systems.

General Description

This publication contains essential removal, installation, adjustment and maintenance procedures.
The front axle utilizes a central disconnect type front axle/transfer case system.
The drive axles are completely flexible assemblies, consisting of inner and outer constant velocity (CV) drive shaft joints connected by an axle shaft.
For description of propeller shaft and universal joint, refer to Front/Rear Propeller Shaft in this section.

Diagnosis

Condition	Possible cause	Correction
Oil Leak At Front Axle	Worn or defective oil seal.	Replace the oil seal.
	Front axle housing cracked.	Repair or replace.
Oil Leak At Pinion Shaft	Too much gear oil.	Correct the oil level.
	Oil seal worn or defective.	Replace the oil seal.
	Pinion flange loose or damaged.	Tighten or replace.
Noises In Front Axle Drive Shaft Joint	Broken or worn drive shaft joints and bellows (BJ and DOJ).	Replace the drive shaft joints and bellows.
“Clank” When Accelerating From “Coast”	Loose drive shaft joint to output shaft bolts.	Tighten.
	Damaged inner drive shaft joint.	Replace.
Shudder or Vibration During Acceleration	Excessive drive shaft joint angle.	Repair.
	Worn or damaged drive shaft joints.	Replace.
	Sticking spider assembly (inner drive shaft joint).	Lubricate or replace.
	Sticking joint assembly (outer drive shaft joint).	Lubricate or replace.
Vibration At Highway Speeds	Out of balance or out of round tires.	Balance or replace.
	Front end out of alignment.	Align.
Noises in Front Axle	Insufficient gear oil.	Replenish the gear oil.
	Wrong or poor grade gear oil.	Replace the gear oil.
	Drive pinion to ring gear backlash incorrect.	Adjust the backlash.
	Worn or chipped ring gear, pinion gear or side gear.	Replace the ring gear, pinion gear or side gear.
	Pinion shaft bearing worn.	Replace the pinion shaft bearing.
	Wheel bearing worn.	Replace the wheel bearing.
	Differential bearing loose or worn.	Tighten or replace.
Wanders and Pulls	Wheel bearing preload too tight.	Adjust the wheel bearing preload.
	Incorrect front alignment.	Adjust the front alignment.
	Steering linkage loose or worn.	Tighten or replace.
	Steering gear out of adjustment.	Adjust or replace the steering gear.
	Tire worn or improperly inflated.	Adjust the inflation or replace.
	Front or rear suspension parts loose or broken.	Tighten or replace.
Front Wheel Shimmy	Wheel bearing worn or improperly adjusted.	Adjust or replace.
	Incorrect front alignment.	Adjust the front alignment.
	Worn ball joint or bush.	Replace the ball joint or bush.
	Steering linkage loose or worn.	Tighten or replace.
	Steering gear out of adjustment.	Tighten or replace.
	Tire worn or improperly inflated.	Replace or adjust the inflation.
	Shock absorber worn.	Replace the shock absorber.

Rear Axle Shaft

Rear Axle Shaft and Associated Parts

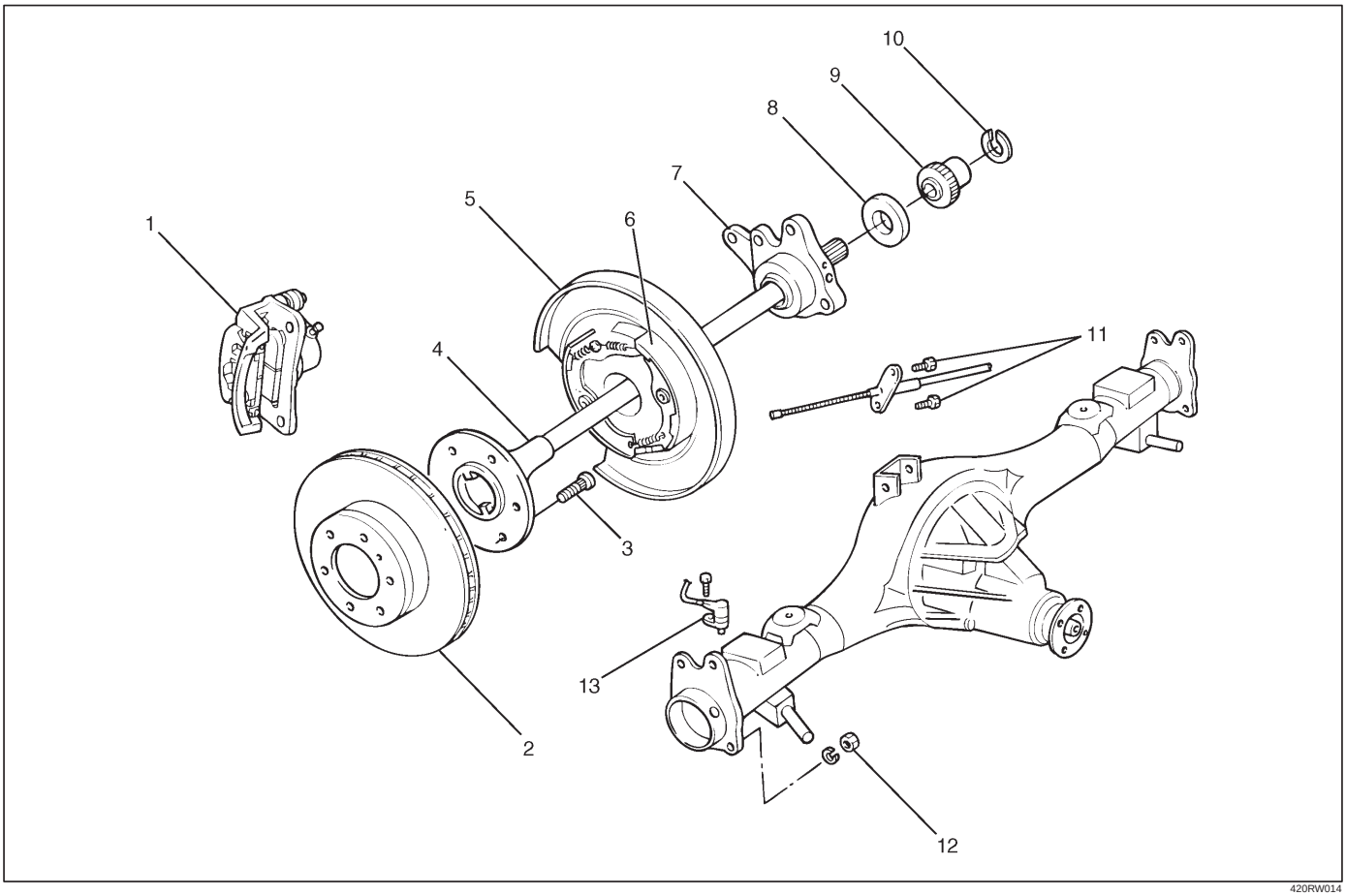

420RW014

Legend

(1) Brake Caliper
(2) Brake Disc
(3) Wheel Pin
(4) Axle Shaft Assembly
(5) Back Plate
(6) Parking Brake Assembly
(7) Bearing Holder
(8) Bearing
(9) Retainer
(10) Snap Ring
(11) Bolt
(12) Nut
(13) Antilock Brake System (ABS) Speed Sensor (if so equipped)

Removal

1. Raise the vehicle.
2. Remove tires and wheels. Refer to Wheel in Steering section.
3. Remove brake caliper. Use a wire to attach the brake caliper to the frame. Refer to Disk Brakes in Brake section.
4. Remove brake disc.
5. Remove ABS sensor (if so equipped).
6. Remove Parking brake assembly. Refer to Parking Brakes in Brake section.

7. Remove the parking brake cable mounting bolts(Behind the back plate)(1).

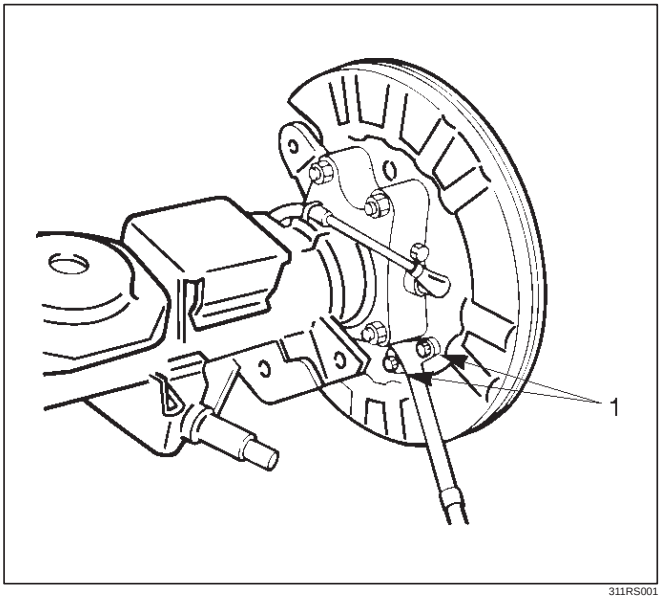

311RS001

8. Remove the bearing holder mounting nuts.
9. Remove axle shaft assembly.

NOTE: Be sure not to damage the oil seal.

10. Remove snap ring.
11. Using a bearing remover 5–8840–2295–0 and press, remove retainer together with the bearing holder.

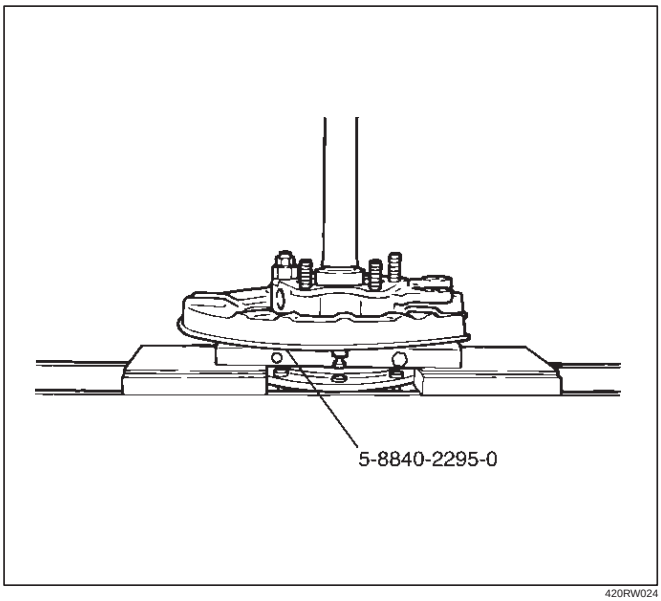

420RW024

12. Remove bearing.
13. Remove bearing holder.
14. Remove back plate.
15. Remove the wheel pins using a remover 5–8840–0079–0.

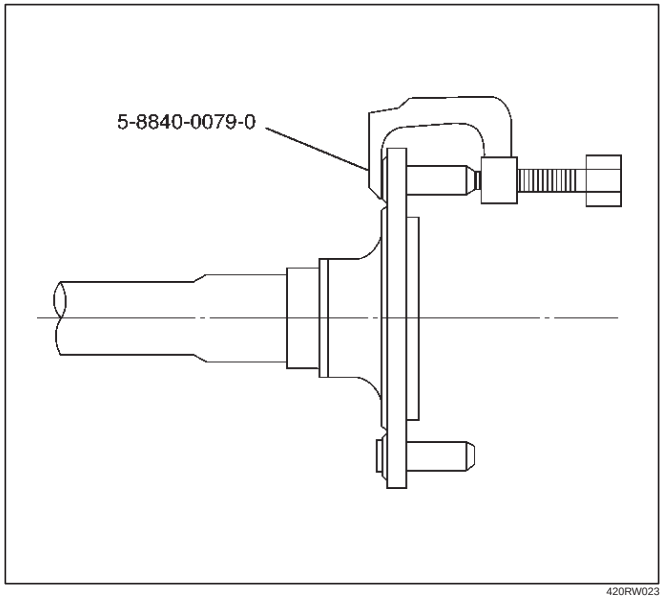

420RW023

Inspection and Repair

Make necessary correction or parts replacement if wear, corrosion or any other abnormal conditions are found through inspection.

Visual Check:

Check the following parts for wear, damage, noise or any other abnormal conditions:

1. Axle shaft
2. Bearing

When checking the axle shaft, pay special attention to the splined portions and replace the shaft if distortion or step wear is noticeable. Correct slight step wear with a grinder.

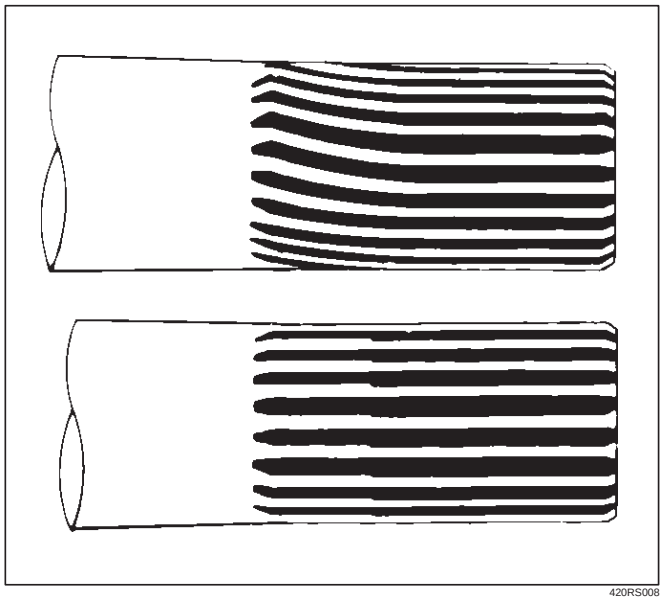

420RS008

Axle Shaft Run–out

Limit: 1.0 mm (0.039 in)

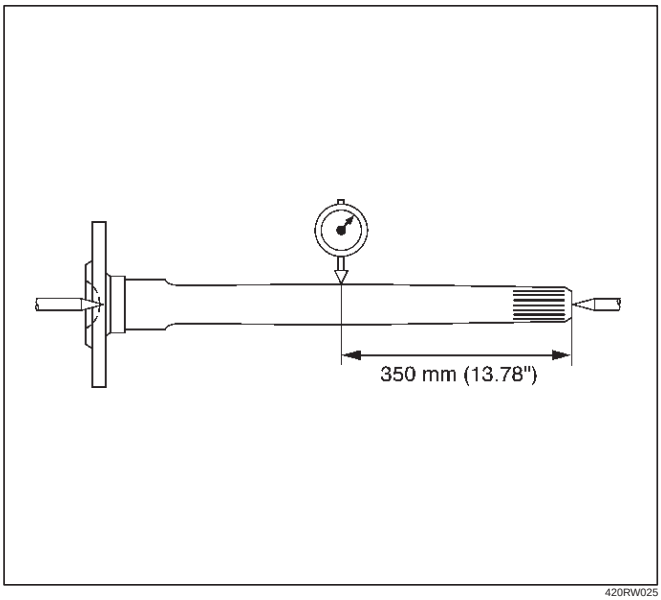

420RW025

Axle Shaft Flange Run–out

Limit: 0.08 mm (0.003 in)

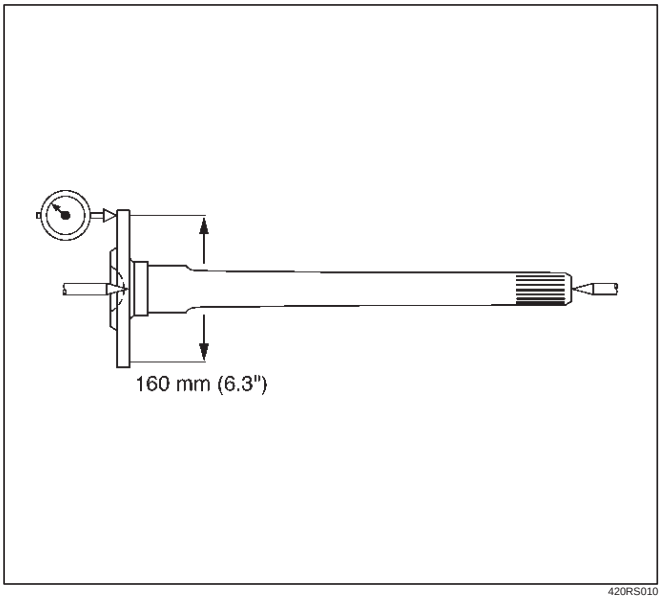

420RS010

Oil Seal Replacement

Remove the oil seal carefully not to damage the bearing holder bore .
When installing, use oil seal installer 5–8840–2310–0.

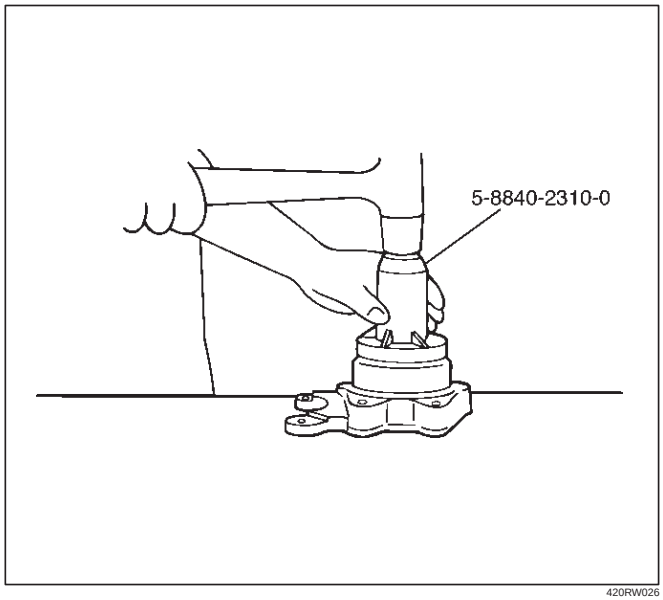

420RW026

Installation

1. Install wheel pin.
2. Install back plate.
3. Install bearing holder.
4. Install bearing.
5. Install retainer by using a bearing installer 5–8840–2296–0, press fit together with the bearing.

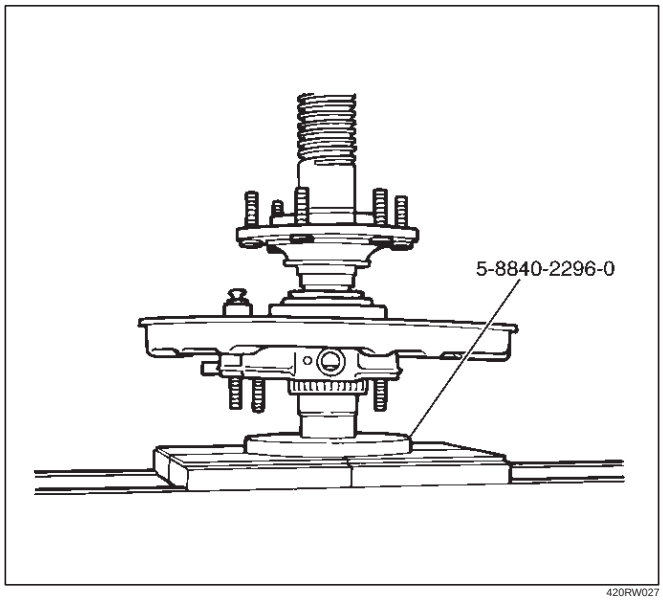

420RW027

6. Install snap ring.
7. Install axle shaft assembly.

NOTE: Be sure not to damage the oil seal.

8. Tighten the bearing holder mounting nut to the specified torque.

   Torque: 74N·m (7.5kg·m/54 lb ft)

9. Fix the parking brake cable mounting bolt (Behind the back plate).
10. Install parking brake assembly, refer to Parking Brakes in Brake section.
11. Install antilock brake system sensor (if so equipped).
12. Install brake disc.
13. Install brake caliper, refer to Disk Brakes in Brake section.

Special Tools

ILLUSTRATION	**TOOL NO.** TOOL NAME
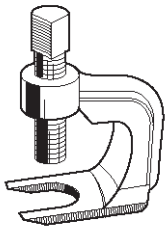 901RS206	**5–8840–0079–0** **(J–6627–A)** Wheel pin remover
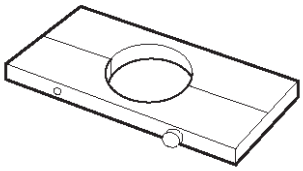 901RS207	**5–8840–2295–0** **(J–39211)** Remover; Axle shaft bearing
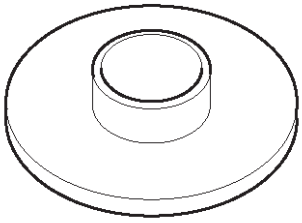 901RS208	**5–8840–2296–0** **(J–39212)** Installer; Axle shaft bearing
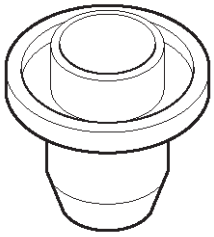 901RS209	**5–8840–2310–0** **(J–39379)** Installer; Outer axle seal

Front Hub and Disc (with Shift on the Fly)

Disassembled View

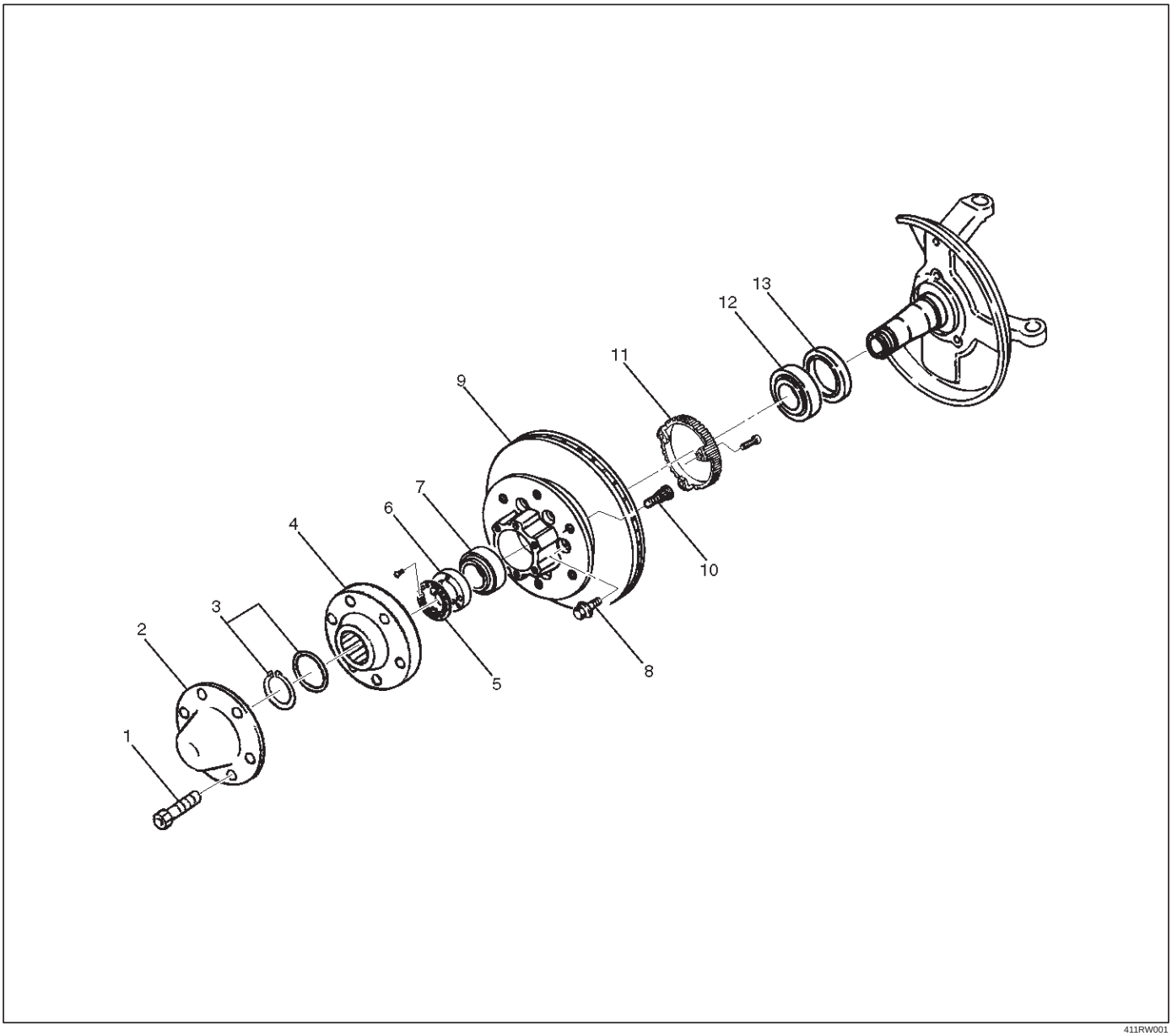

411RW001

Legend

(1) Bolt
(2) Cap
(3) Snap Ring and Shim
(4) Hub Flange
(5) Lock Washer and Lock Screw
(6) Hub Nut
(7) Outer Bearing
(8) Bolt
(9) Hub and Disc Assembly
(10) Wheel Pin
(11) ABS Sensor Ring (If equipped)
(12) Inner Bearing
(13) Oil Seal

Disassembly

1. Before disassembly, select the 2WD position.
2. Jack up the front of vehicle and support frame with jack stands.
3. Remove the disc brake caliper assembly and hang it on the frame with wires. Refer to Front Disc Brake Caliper Assembly in Brakes section.
4. Remove bolt.
5. Remove cap.
6. Remove snap ring and shim.
7. Remove hub flange.

8. Remove lock washer and lock screw.
9. Use wrench 5–8840–2117–0, remove hub nut.

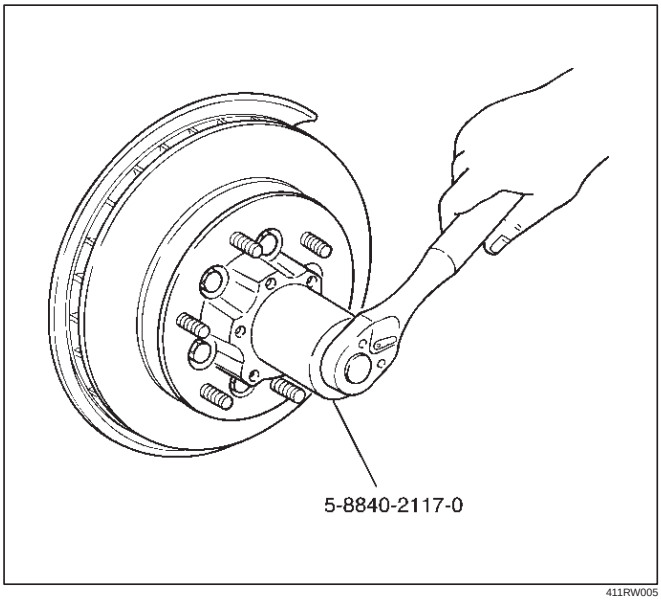

411RW005

10. Remove hub and disc assembly.
11. Remove ABS sensor ring (If equipped).
12. Remove outer bearing.
13. Remove oil seal.
14. Remove inner bearing.
15. Remove bolt , if necessary, replace the wheel pin in the following manner.
    - Apply a scribe mark(1) to disc to hub.
    - Clamp the hub and disc assembly in a vise, using protective pads. Remove the 6 disc–to–hub retaining bolts.

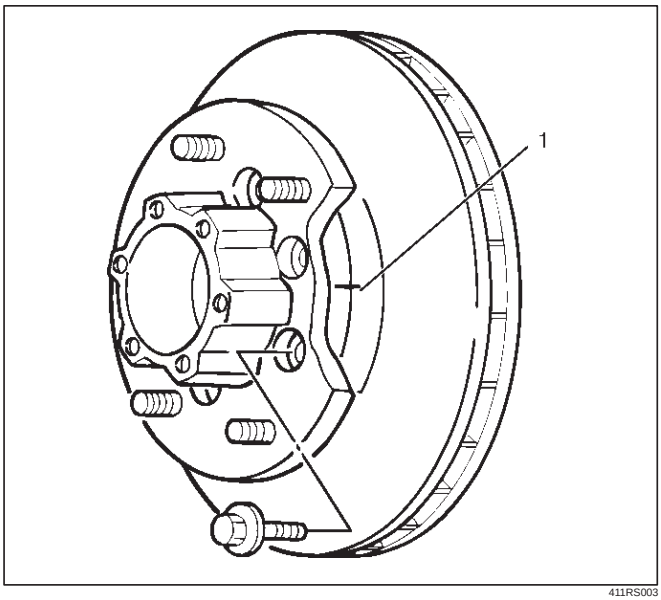

411RS003

- Place hub on a suitable work surface and remove the studs by using a hammer.

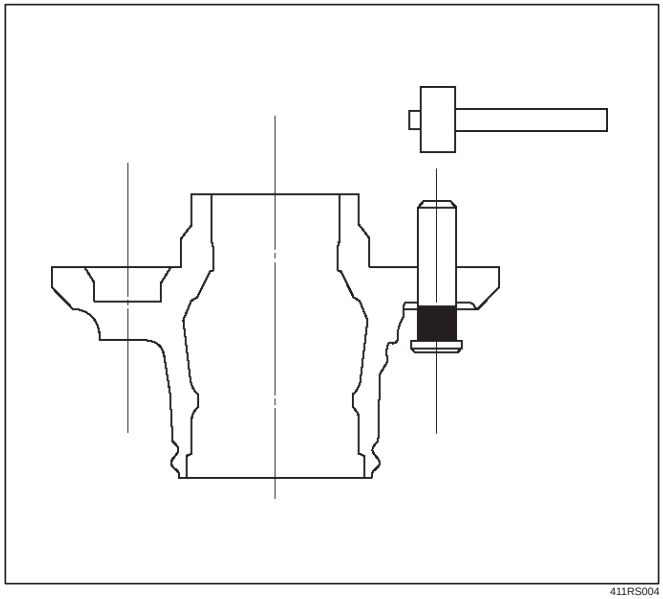

411RS004

Inspection and Repair

Make necessary correction or parts replacement if wear, damage, corrosion or any other abnormal conditions are found through inspection.
Check the following parts:

- Hub
- Hub bearing oil seal
- Knuckle spindle
- Disc
- Caliper
- Shift on the fly system parts (Cap, Hub flange, Shim, Snap ring)
- ABS sensor ring (If equipped)

For inspection and servicing of disc caliper and related parts, refer to Brakes section.

Reassembly

1. Install wheel pin.
   - Place the hub on a wood workbench or a block of wood approx. 6” by 6” to protect the wheel stud ends and threads.
   - Insert a wheel stud using a hammer.

     Be sure the wheel stud is started squarely and seats completely.

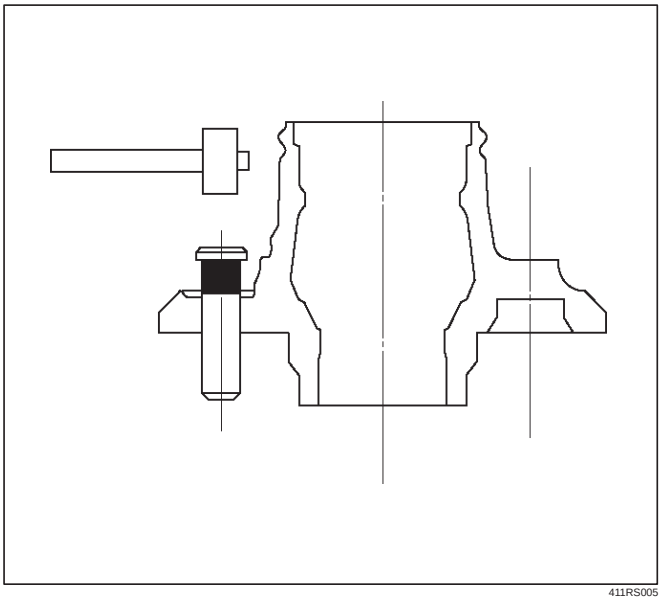

411RS005

2. Align scribe marks(1) and attach the hub to the disc, then tighten the bolts to the specified torque.

   Torque: 103 N·m (10.5 kg·m/76 lb ft)

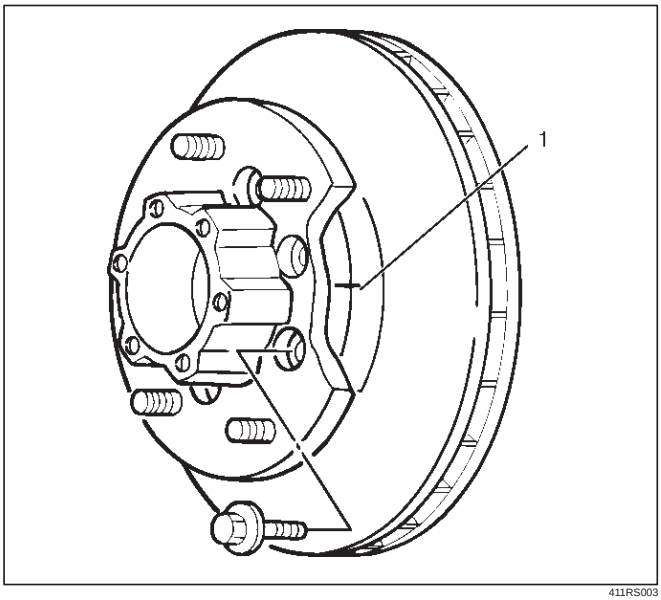

411RS003

3. Use installer 5–8840–2119–0 and grip 5–8840–0007–0, then install the inner bearing by driving it into the hub.

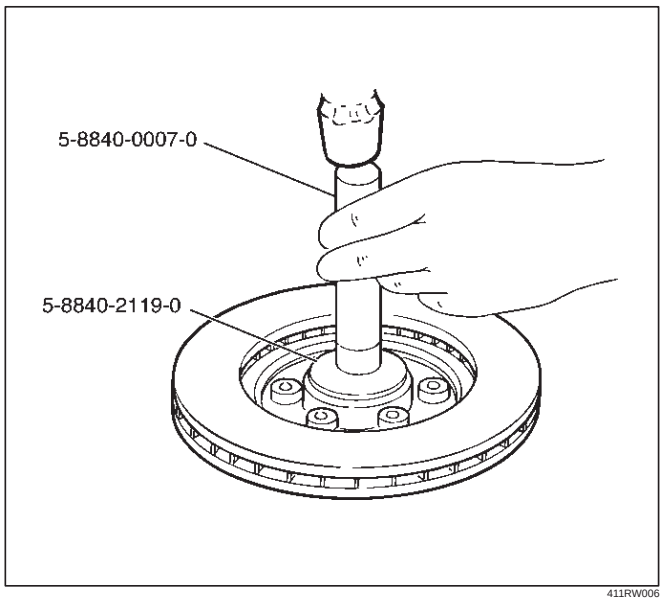

411RW006

4. Use installer 5–8840–2118–0 and grip 5–8840–0007–0, then install the outer bearing by driving it into the hub.

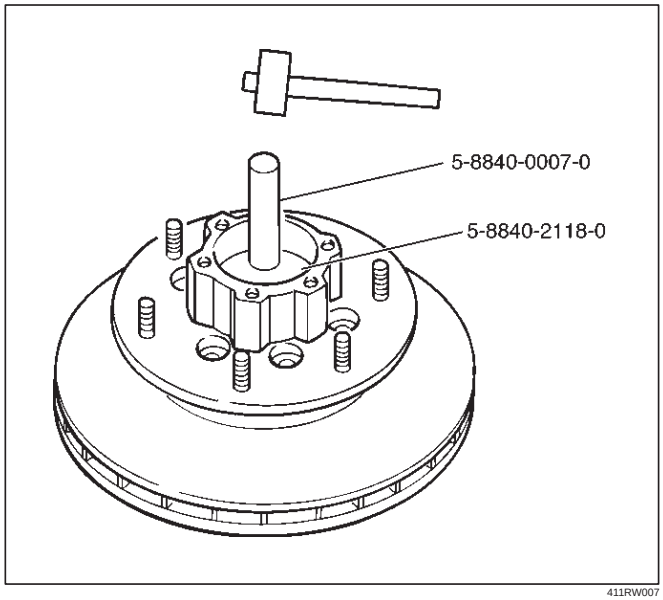

411RW007

5. Apply grease (NLGI No.2 or equivalent) to the lip portion, then install oil seal by using installer 5–8840–2120–0 and grip 5–8840–0007–0.

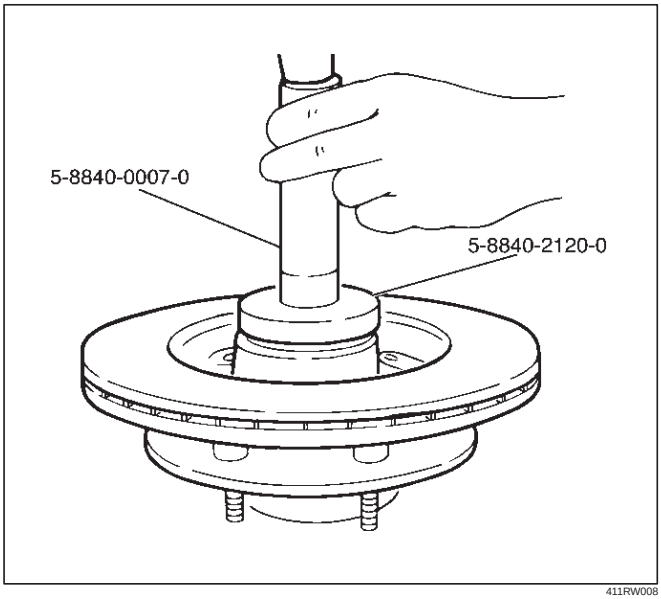

411RW008

6. Install ABS sensor ring, then tighten the bolts to the specified torque.

Torque: 18 N·m (1.8 kg·m/13 lb ft)

7. Install hub and disc assembly.
   - Apply grease in the hub.
   - Apply wheel bearing type grease NLGI No. 2 or equivalent to the outer and inner bearing.

Grease Amount

Hub: 35 g (1.23 oz)

Outer bearing: 10 g (0.35 oz)

Inner bearing: 15 g (0.53 oz)

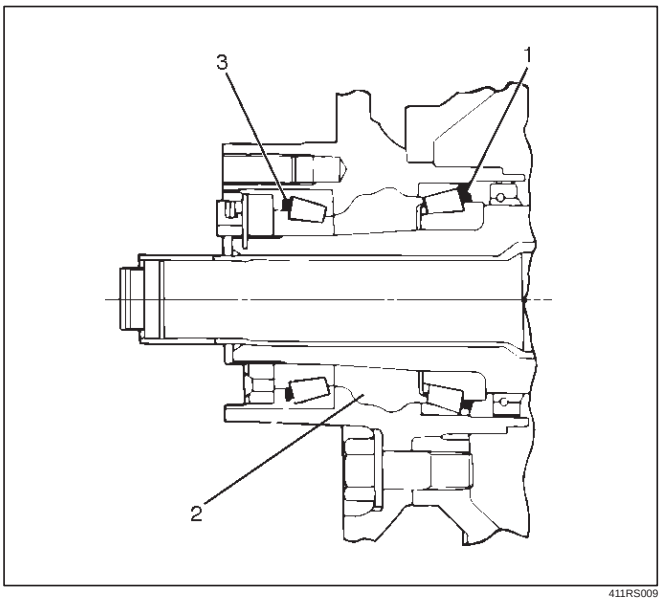

411RS009

Legend

(1) Inner Bearing
(2) Hub
(3) Outer Bearing

8. Install hub nut. Turn the place where there is a chamfer in the tapped hole to the outer side, then attach the nut by using front hub nut wrench 5–8840–2117–0.

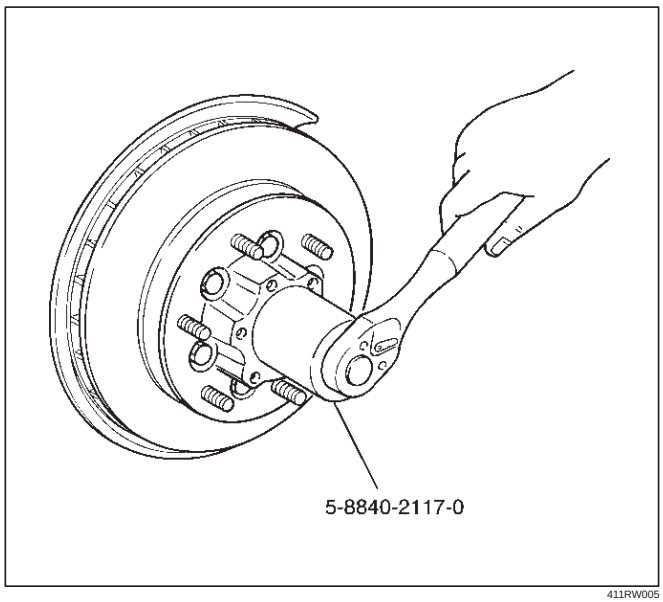

411RW005

Preload Adjustment

1. Tighten the hub nut to 29 N·m (3.0 kg·m/22 lb ft), then fully loosen the nut.
2. Tighten the hub nut to the value given below, using a spring scale on the wheel pin.

New bearing and New oil seal

Bearing Preload: 20 – 25 N (2.0–2.5 kg/4.4 – 5.5 lb)

Used bearing and New oil seal

Bearing Preload: 12 – 18 N (1.2–1.8 kg/2.6 – 4.0 lb)

If the measured bearing preload is outside the specifications, adjust it by loosening or tightening the bearing nut.

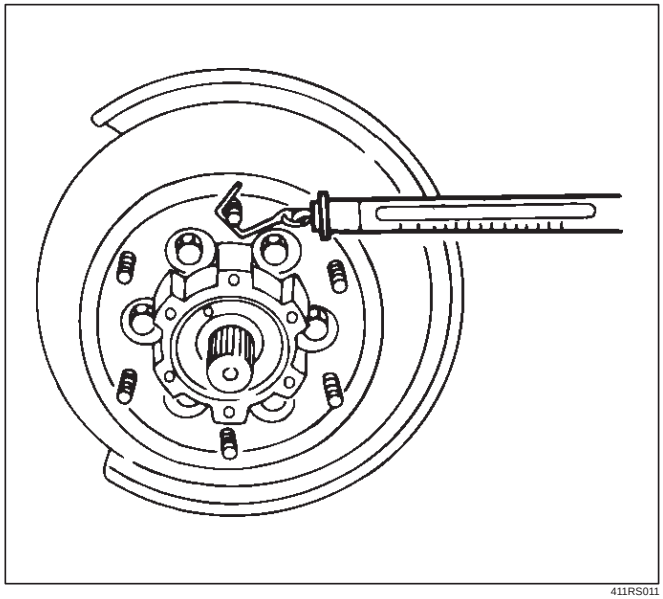

411RS011

9. Install lock washer and lock screw in the following manner.
   - Turn the side with larger diameter of the tapered bore to the vehicle outer side, then attach the washer.
   - If the bolt holes in the lock plate are not aligned with the corresponding holes in the nut, reverse the lock plate.
   - If the bolt holes are still out of alignment, turn in the nut just enough to obtain alignment.
   - Screw is to be fastened tightly so its head may come lower than the surface of the washer.

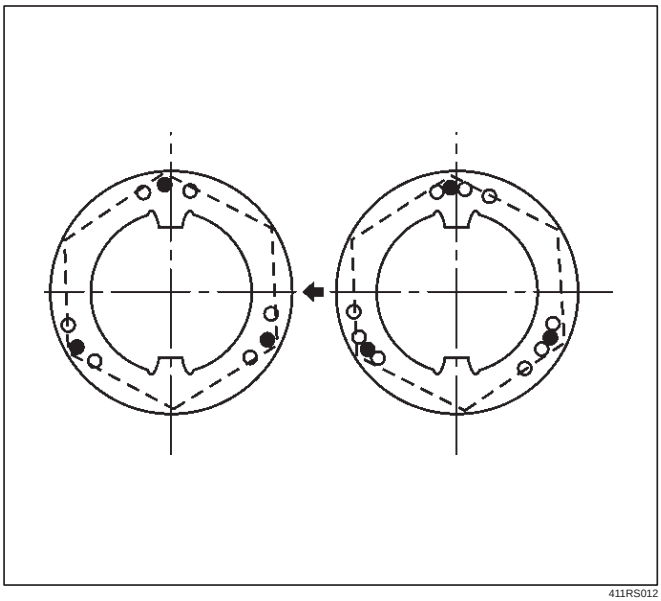

411RS012

10. Apply adhesive (LOCTITE 515 or equivalent) to both joining flange faces then install hub flange.
11. Install snap ring and shim.
    - Adjust the clearance between the free wheeling hub body and the snap ring.

    Clearance: 0 mm–0.3 mm (0 in–0.012 in)

    Shims Available: 0.2 mm, 0.3 mm, 0.5 mm, 1.0 mm (0.008 in, 0.012 in, 0.020 in, 0.039 in)

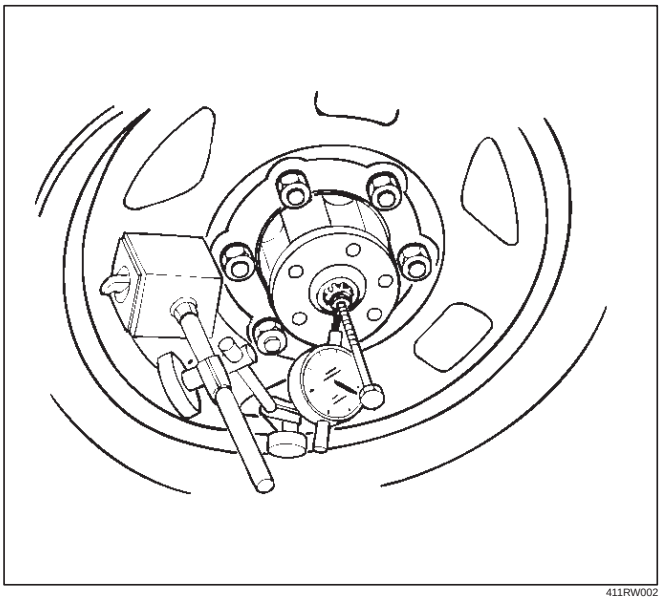

411RW002

12. Install hub cap.
13. Tighten the bolts to the specified torque.

    Torque: 59 N·m (6.0 kg·m/43 lb ft)

Front Hub and Disc with Manual Locking Hub

Disassembled View

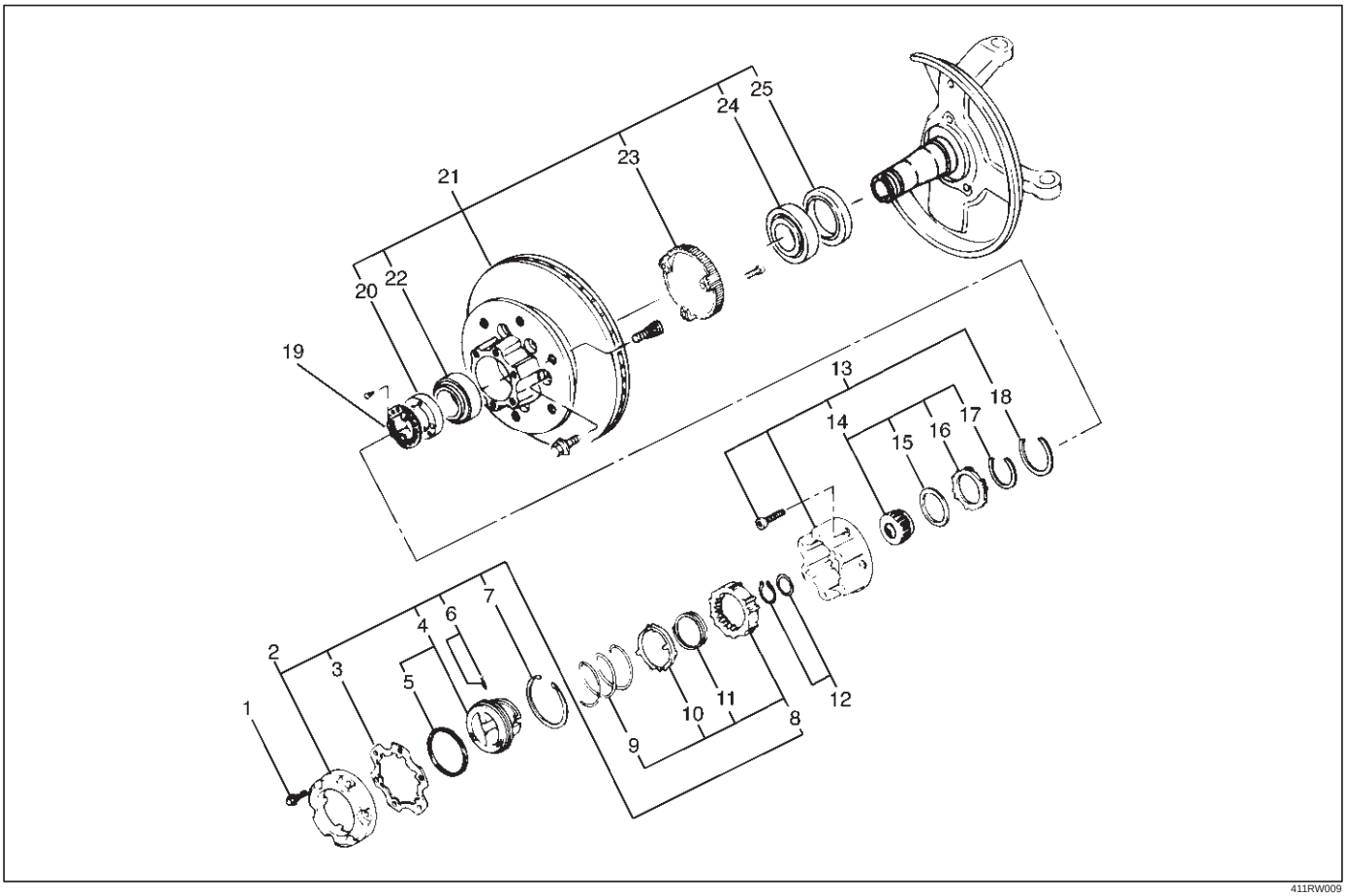

Legend

(1) Bolt
(2) Cover Assembly
(3) Gasket
(4) Knob
(5) X–ring
(6) Detent Ball and Spring
(7) Snap Ring
(8) Clutch Assembly
(9) Compression Spring
(10) Follower
(11) Retaining Spring
(12) Snap Ring and Shim
(13) Body Assembly
(14) Inner Assembly
(15) Spacer
(16) Ring
(17) Snap Ring
(18) Snap Ring
(19) Lock Washer and Lock Screw
(20) Hub Nut
(21) Hub and Disc Assembly
(22) Outer Bearing Outer Race
(23) ABS Sensor Ring (if so equipped)
(24) Inner Bearing Outer Race
(25) Oil Seal

Disassembly

1. Before disassembly, jack up the front of vehicle and support frame with jack stands.
2. Remove the disc brake caliper assembly and hang it on the frame with wires. Refer to Front Disk Brake Caliper Assembly in Brakes section.

3. Remove bolt.
   Before removal, shift transfer lever into “2H” position, set free wheeling hub knob into “FREE” position (1), and run the vehicle about 50m (160 ft).

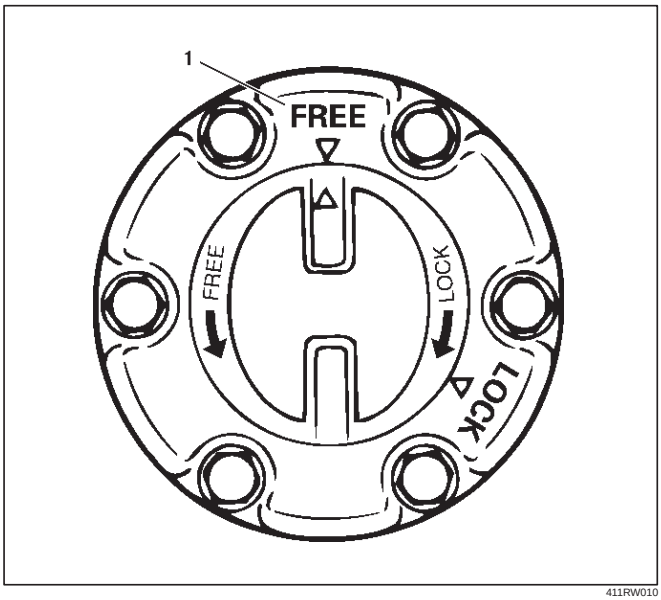

411RW010

4. Remove cover assembly.
5. Remove snap ring and shim.
6. Remove body assembly.
7. Remove lock washer and lock screw.
8. Remove hub nut by using wrench 5–8840–2117–0.

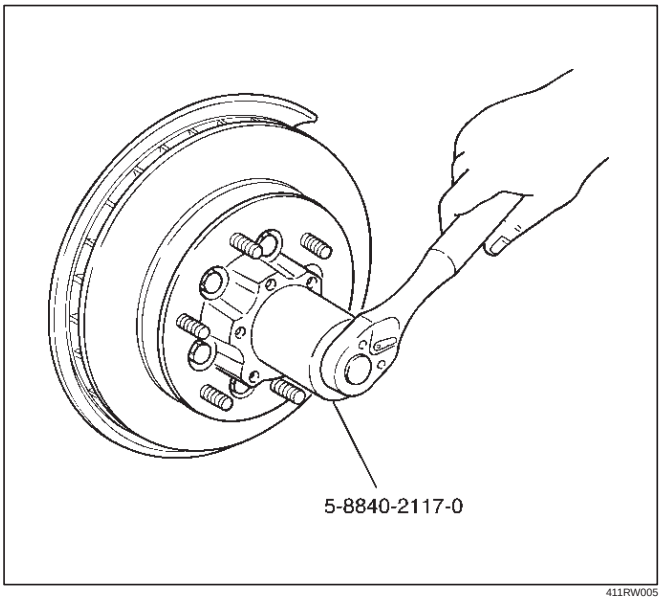

411RW005

9. Remove hub and disc assembly.
10. Remove ABS sensor ring (If equipped).
11. Remove outer bearing outer race.
12. Remove oil seal.
13. Remove inner bearing outer race.
14. While pushing follower knob against cover, turn clutch assembly clockwise and then remove clutch assembly from knob.

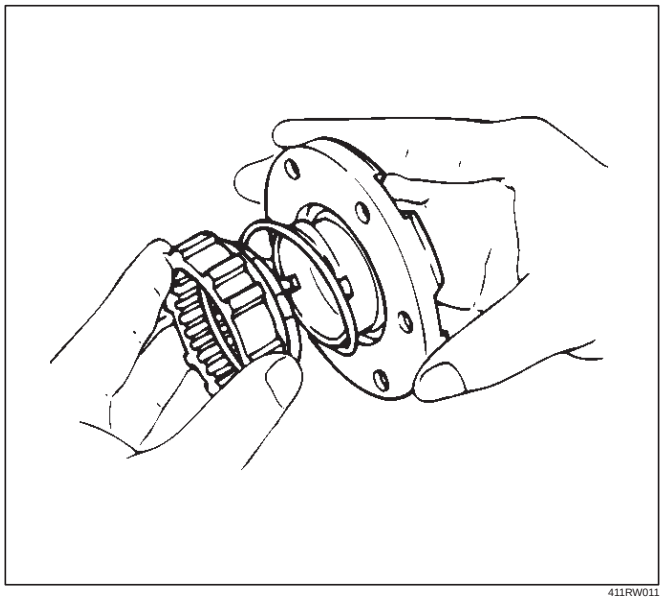

411RW011

15. Remove gasket.
16. Remove snap ring.
17. Remove knob.
18. Remove compression spring.
19. Remove follower.
20. Remove retaining spring from clutch assembly by turning it counterclockwise.

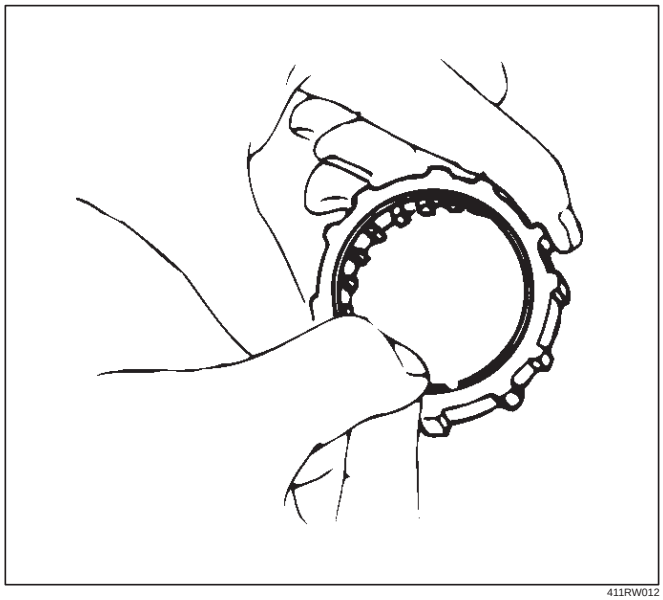

411RW012

21. Remove dedent ball and spring.
22. Remove X–ring.
23. Remove snap ring.
24. Remove inner assembly.
25. Remove snap ring.
26. Remove ring.
27. Remove spacer.

Inspection and Repair

Make necessary correction or parts replacement if wear, damage, corrosion or any other abnormal condition are found through inspection.
Check the following parts.

- Hub
- Hub bearing, oil seal
- Knuckle spindle
- Disc
- Caliper
- Free wheeling hub parts (Clutch, knob, follower, inner, ring and spring)
- ABS sensor ring (if so equipped)

For inspection and servicing of disc caliper, and relative parts, refer to Brakes section.

Reassembly

1. Install spacer.
   Apply about 1 g wheel bearing grease to both face of spacer.
2. Install ring.
   Apply about 3 g wheel bearing grease to inside face of ring.
3. Install snap ring
   Assembly with grease surplus being left unwiped up as illustrated.

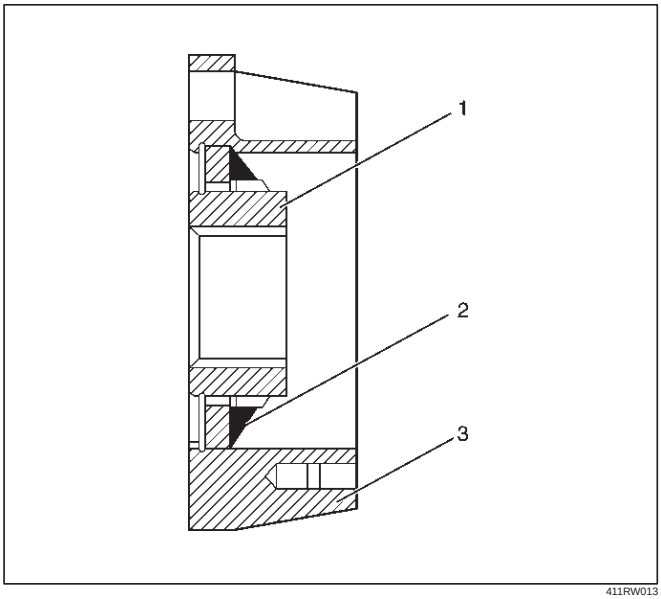

411RW013

Legend

(1) Inner Assembly
(2) Apply Grease
(3) Body

4. Install inner assembly.
   Apply grease to splined portion of body.
5. Install snap ring.
6. Install X–ring.
   Apply wheel bearing grease to hub lock ring and fit it in knob paying attention to mounting direction.

NOTE: After fitting, make sure that the hub lock ring is not twisted.

7. Apply wheel bearing grease to ball and spring and fit them in knob.
8. Install knob.
   1. Apply grease to outer circumference of knob and inner circumference of cover.
   2. Align detent ball (1) to a groove cut in the cover.

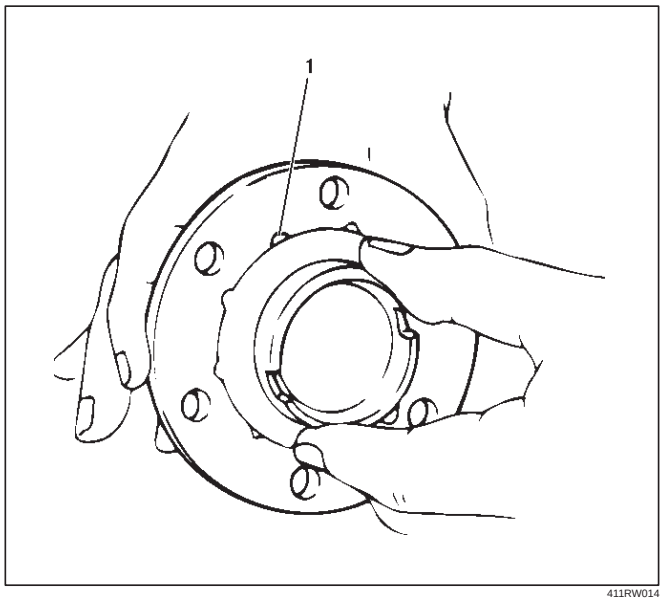

411RW014

9. Install snap ring.
   Turn the smoother face to knob side.
10. Align the end of retaining spring (1) with clutch spring groove (2) and fit in the spring.

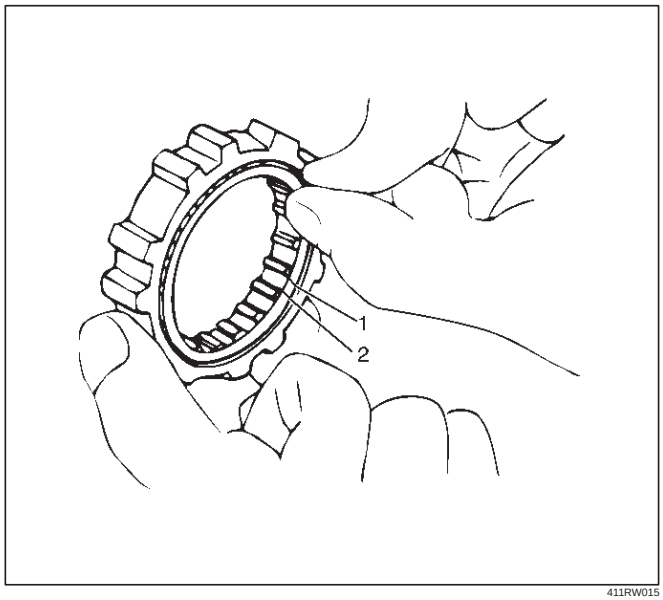

411RW015

11. Install follower to clutch so that follower nails (large) (1) will come closer to the bent portion of retaining spring by aligning follower stopper nail with outer teeth of clutch. Then, fit in with follower's nails (small) (2) caught in spring.

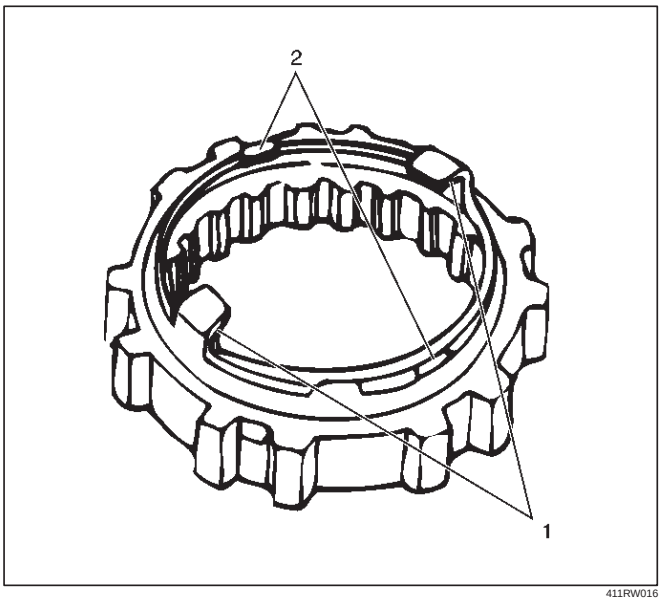

411RW016

12. Install compression ring.
    Turn the smaller diameter side toward follower and fit spring in clutch.
13. Align follower nail (1) to handle groose (2). and then assemble clutch with knob by pushing and turning clutch counterclockwise to knob.

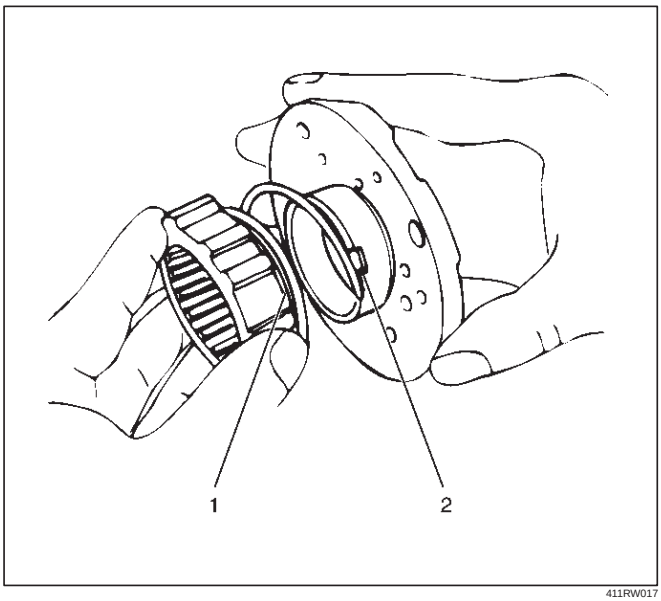

411RW017

14. Install gasket.
    Make sure that there is no breakage, etc.
15. Install outer bearing outer race by driving it into the hub, by using installer 5–8522–2118–0 and grip 5–8840–0007–0.

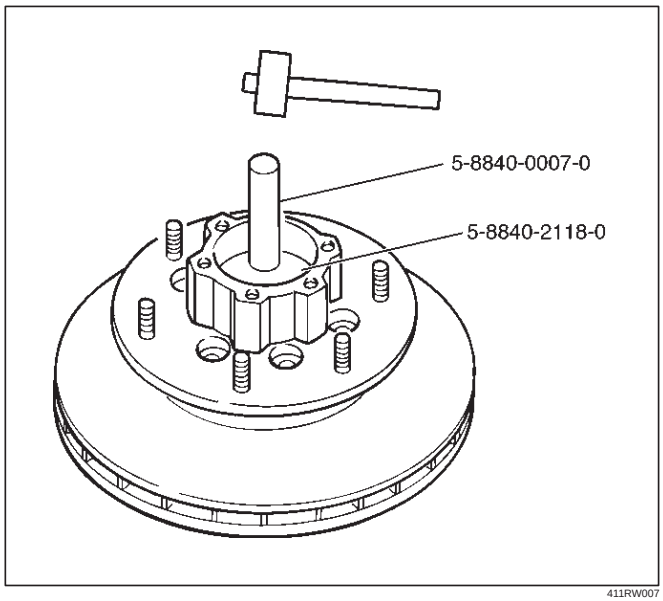

411RW007

16. Install inner bearing outer race by driving it into the hub, by using installer 5–8840–2119–0 and grip 5–8840–0007–0.

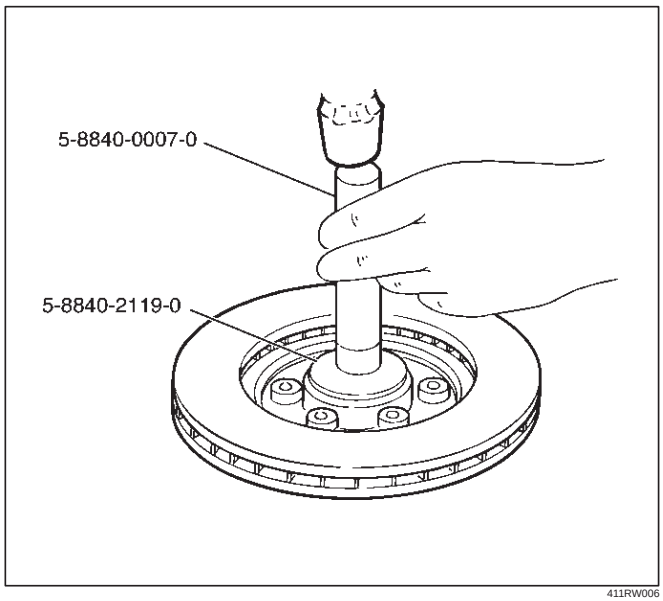

411RW006

17. Install oil seal by using installer 5–8840–2120–0 and grip 5–8840–0007–0.
    Apply grease (NLGI No.2 or equivalent) to the lip portion.

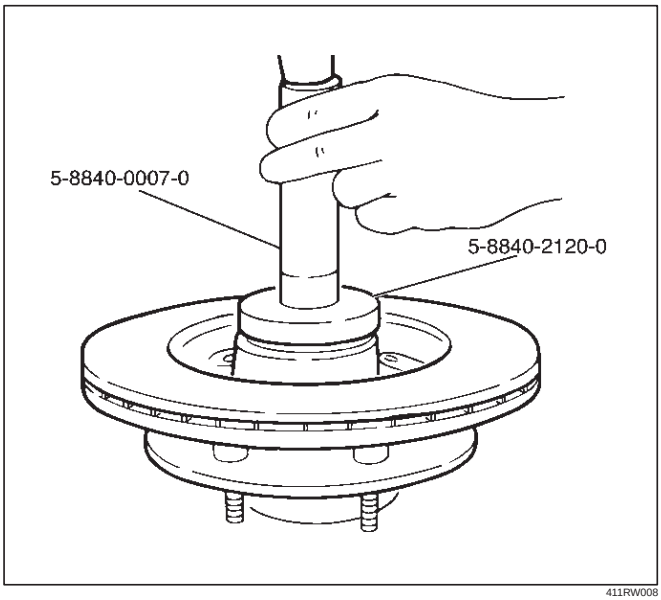

411RW008

18. Install ABS sensor ring (if so equipped).
    Tighten the bolts to the specified torque.

    Torque: 18 N·m (1.8 kg·m/13 lb ft)

19. Install hub and disc assembly.
    1. Apply grease in the hub.
    2. Apply wheel bearing type grease NLGI No.2 or equivalent to the outer and inner bearing.

    Grease Amount

    Hub: 35 g (1.23 oz)

    Outer bearing: 10 g (0.35 oz)

    Inner bearing: 15 g (0.53 oz)

20. Install hub nut.
    1. Turn the place where there is a chamfer in the tapped hole to the outer side, and attach the nut by using wrench 5–8840–2117–0.

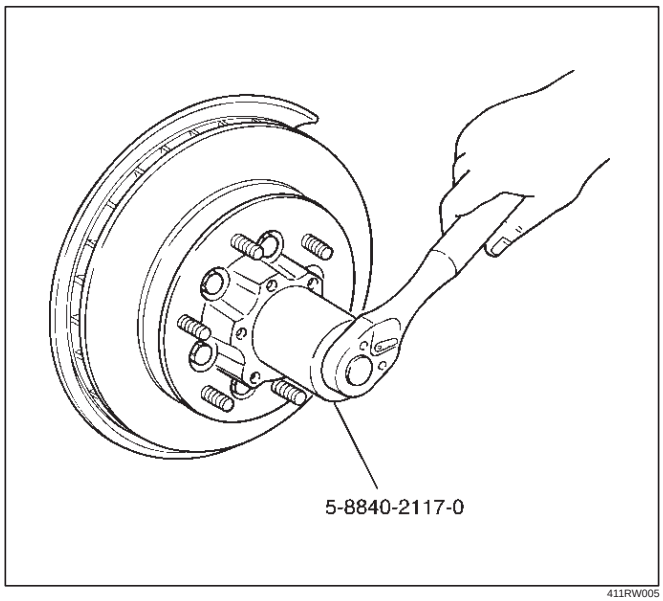

411RW005

Preload Adjustment

Tighten the hub nut to 29 N·m (3.0 kg·m/22 lb·ft), then fully loosen the nut.

Tighten the hub nut to the value given below, using a spring scale on the wheel pin.

Bearing Preload

New bearing and New oil seal:
20-25N (2-2.5 kg/4.4-5.5 lb)

Used bearing and New oil seal:
12-18N (1.2-1.8 kg/2.6-4.0 lb)

If the measured bearing preload is outside the specifications, adjust it by loosening or tightening the bearing nut.

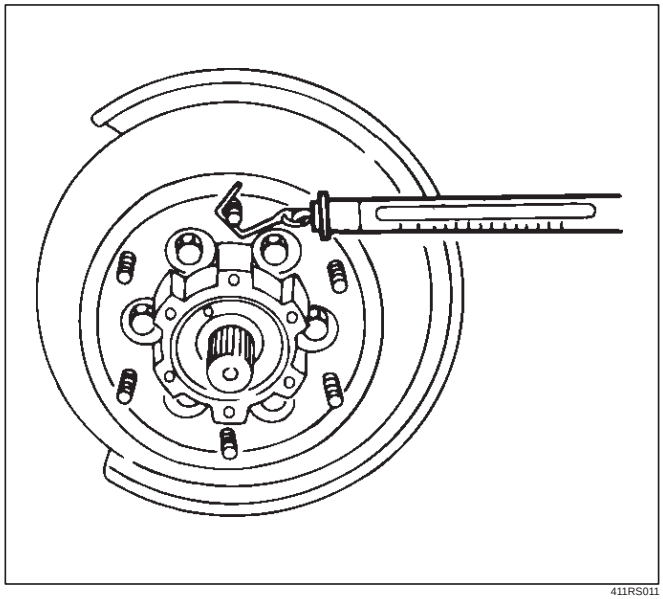

411RS011

21. Install lock washer and lock screw in the following manner.
    - Turn the side with larger diameter of the tapered bore to the vehicle outer side, and attach the washer.
    - If the bolt holes in the lock plate are not aligned with the corresponding holes in the nut, reverse the lock plate.
    - If the bolt holes are still out of alignment, trun in the nut just enough to obtain alignment.
    - Screw is to be fastened tightly so its head may come lower than the surface of the washer.

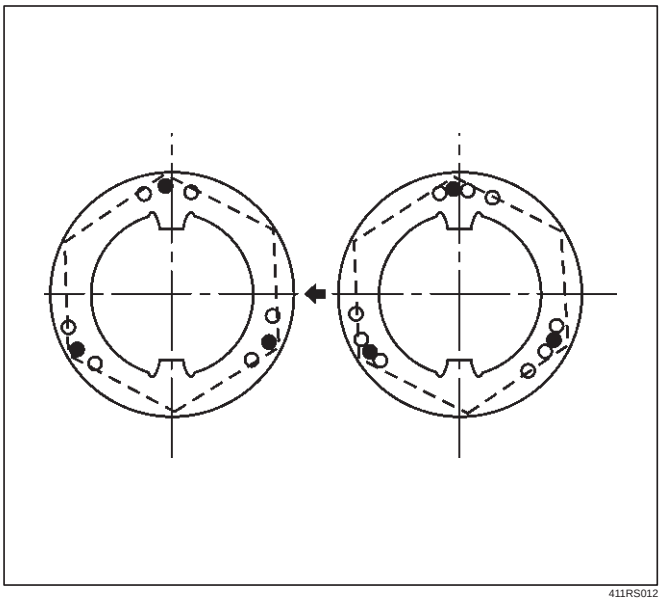

411RS012

22. Install body assembly.
    - Apply adhesive (LOCTITE 515 or equivalent) to both joining faces.
    - Tighten the bolts to the specified torque.

    Torque: 59 N·m (6.0 kg·m/43 lb ft)

23. Install snap ring and shim.
    Adjust the clearance between the free wheeling hub body and the snap ring.

    Clearance:
    0-0.3mm (0-0.012in)

    Shims Available:
    0.2mm, 0.3mm, 0.5mm, 1.0mm, (0.008in, 0.012in, 0.020in, 0.039in)

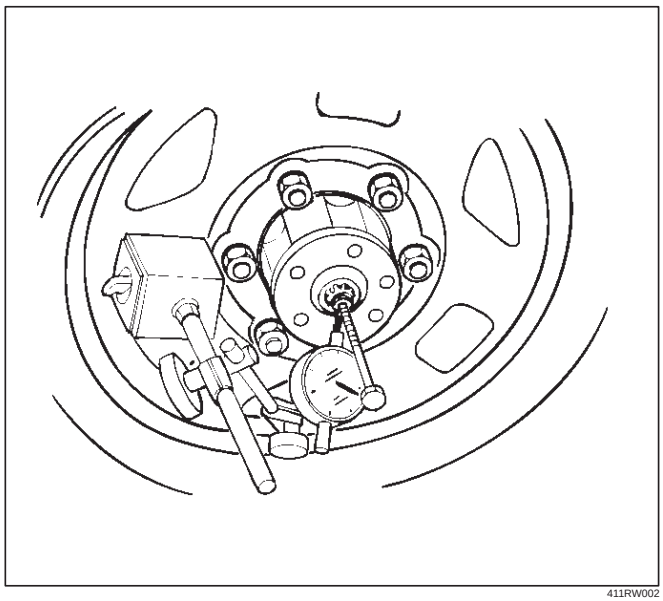

411RW002

24. Install cover assembly.
    Align stopper nails (1) to grooves of body (2).

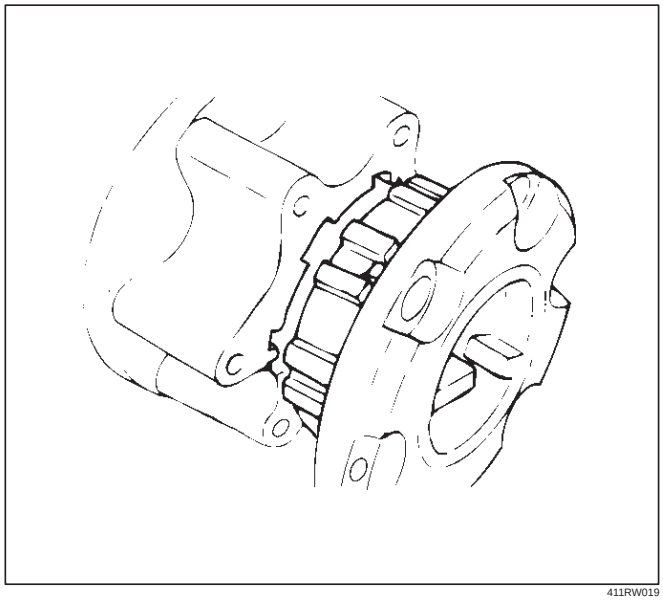

411RW019

25. Tighten the cover bolts to the specified torque.

    Torque: 12 N·m (1.2 kg·m/104 lb in)

Main Data and Specifications

Torque Specifications

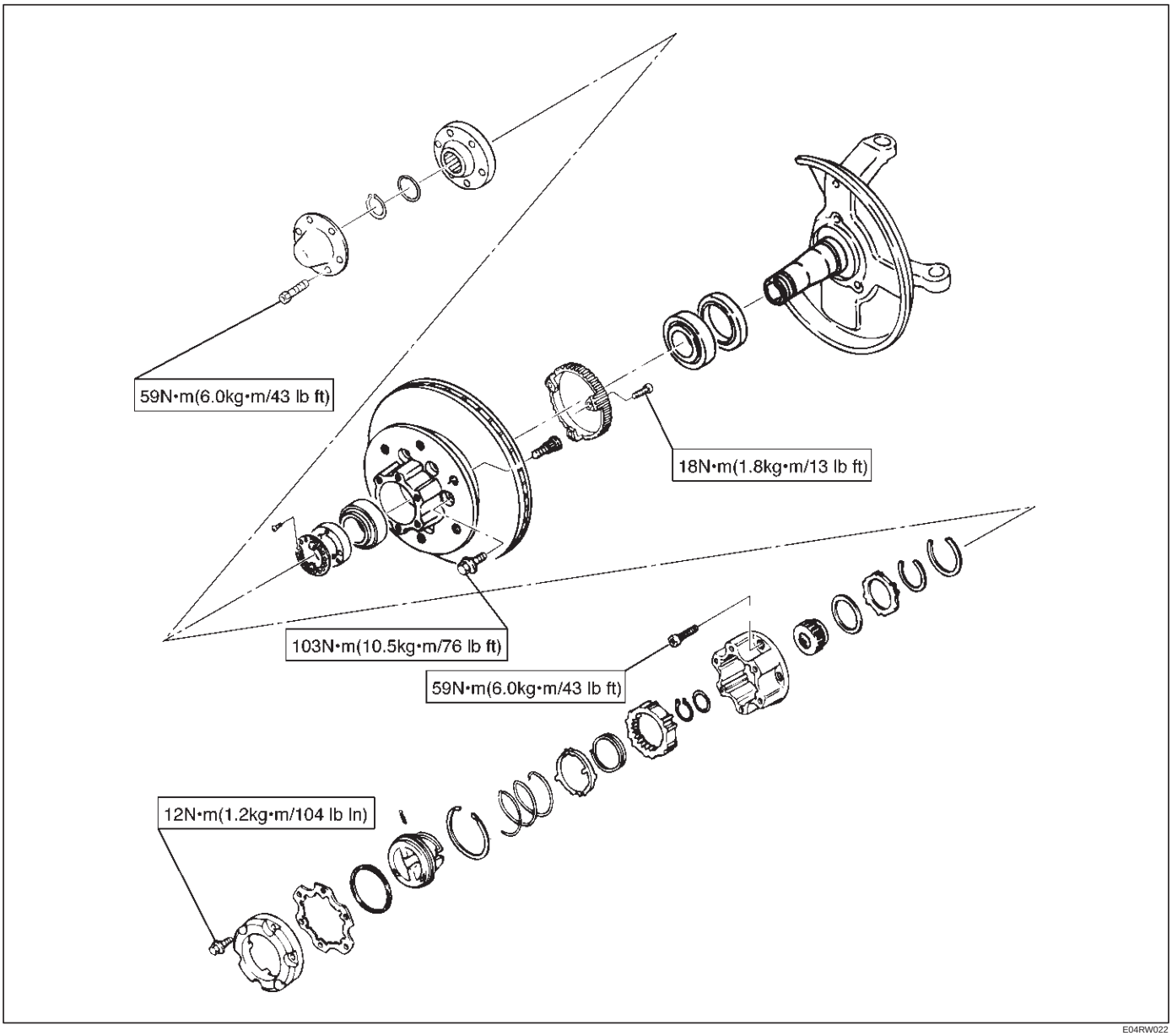

E04RW022

Special Tools

ILLUSTRATION	**TOOL NO.** TOOL NAME
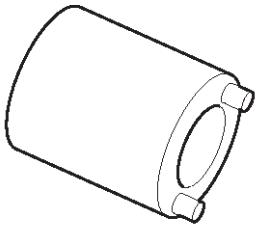 901RS246	**5–8840–2117–0** **(J–36827)** Wrench; Hub nut
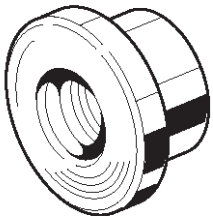 901RS247	**5–8840–2119–0** **(J–36829)** Installer; Inner bearing
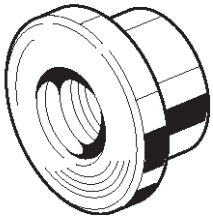 901RS248	**5–8840–2118–0** **(J–36828)** Installer; Outer bearing
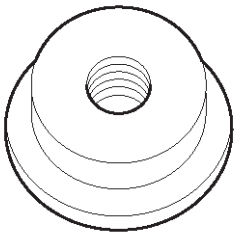 901RS249	**5–8840–2120–0** **(J–36830)** Installer; Oil seal
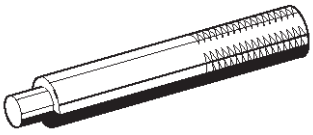 901RS241	**5–8840–0007–0** **(J–8092)** Grip

Front Drive Shaft Joint

Front Drive Shaft Joints Replacement

- Refer to Front Drive Axle Assembly Replacement in this section, and refer to Front Hub and Disc in Suspension section.

Front Hub Bearing Preload Check

Check the hub bearing preload at the wheel pin.

New bearing and New oil seal

Preload: 20 – 25 N (2.0 – 2.5 kg/4.4–5.5 lb)

New bearing and New oil seal

Preload: 12 –18 N (1.2 – 1.8 kg/2.6–4.0 lb)

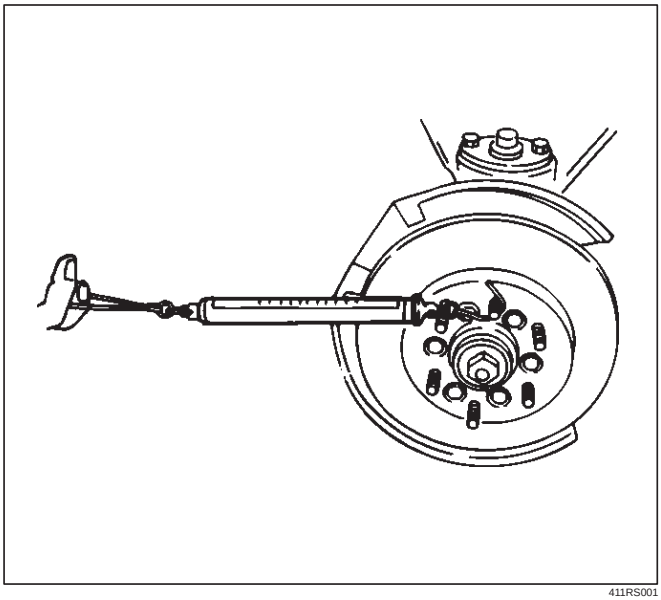

411RS001

Inspection Of Shift On The Fly System Gear Oil

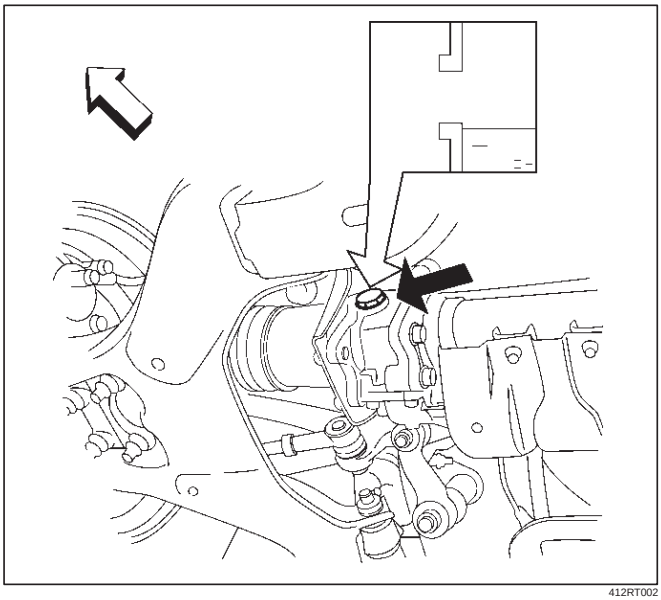

412RT002

1. Open filler plug and make sure that the oil is up to the plug port.
   If the level oil is low, replenish with gear oil GL–5 grade.
2. Tighten the filler plug to specified torque.

Torque: 7.8 N·m (7.9 kg·cm/58 lb in)

Front Axle Drive Shaft

Front Axle Drive Shaft and Associated Parts

This illustration is based on the model equipped with shift on the fly system.

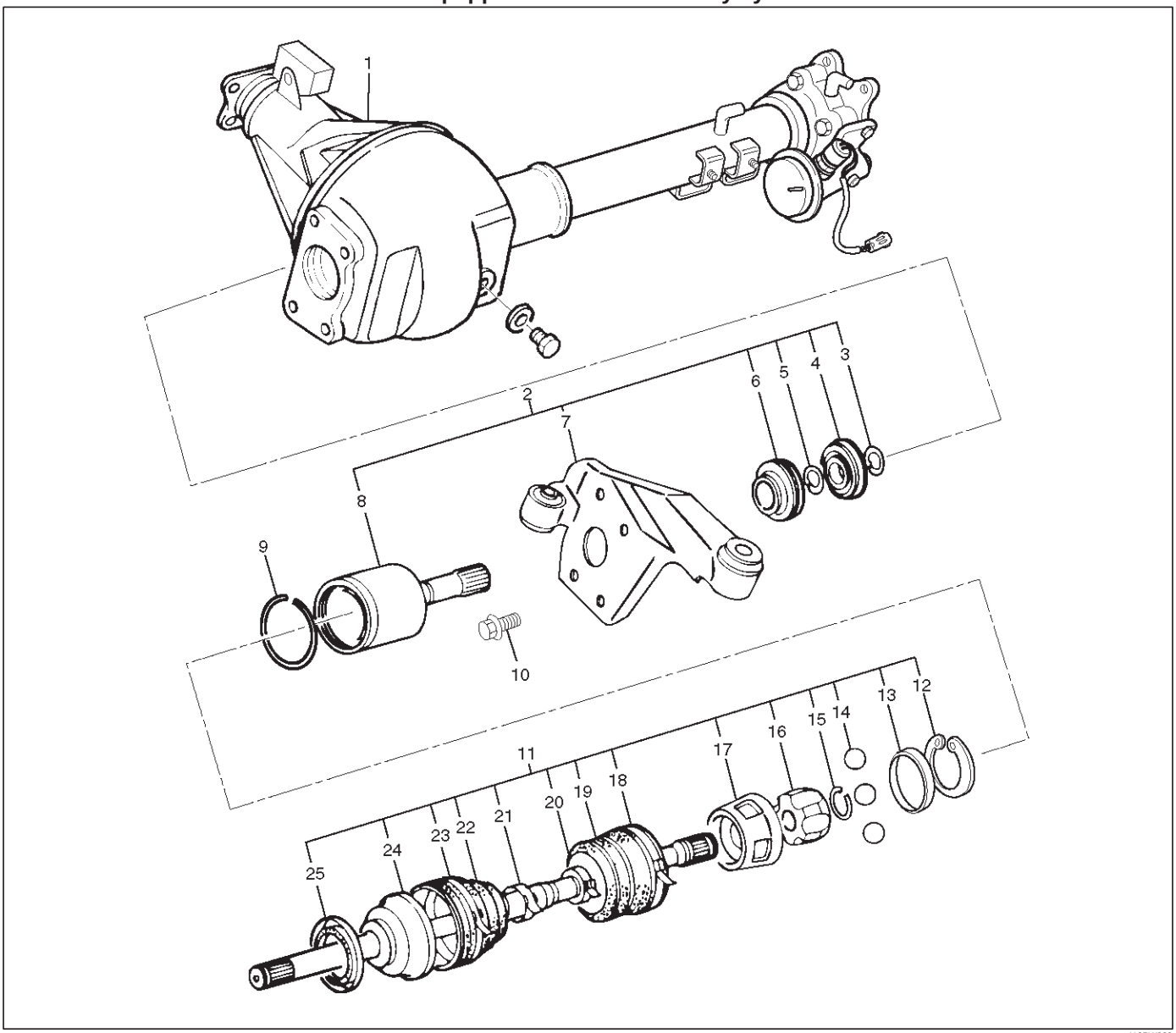

412RW003

Legend

(1) Axle Case and Differential
(2) DOJ Case Assembly
(3) Snap Ring
(4) Bearing
(5) Snap Ring
(6) Oil Seal
(7) Bracket
(8) DOJ Case
(9) Circlip
(10) Bolt
(11) Drive Shaft Joint Assembly
(12) Snap Ring
(13) Spacer
(14) Ball
(15) Snap Ring
(16) Ball Retainer
(17) Ball Guide
(18) Band
(19) Bellows
(20) Band
(21) Band
(22) Bellows
(23) Band
(24) BJ Shaft
(25) Dust Seal

Disassembly

NOTE: For the left side, follow the same steps as right side.

1. Raise the hooked end of the band (1) with a screwdriver or equivalent.

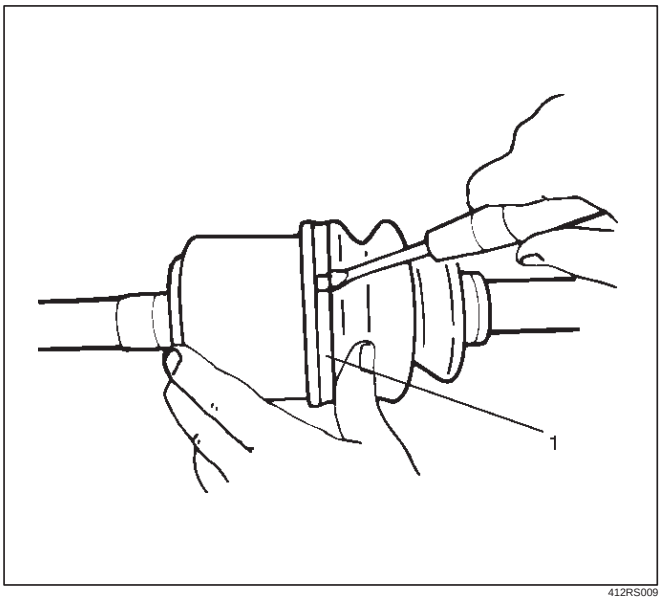

412RS009

2. Remove band.
3. Pry off circlip (1) with a screwdriver or equivalent.

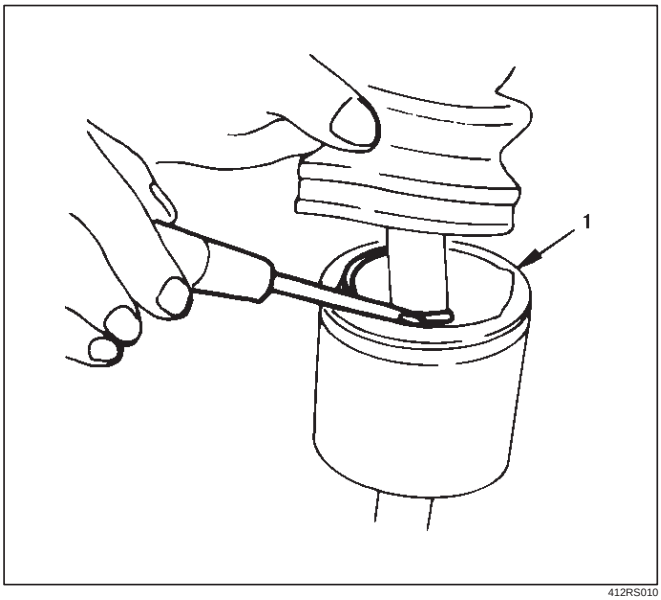

412RS010

4. Remove drive shaft joint assembly.
5. Using snap ring pliers, remove the snap ring.

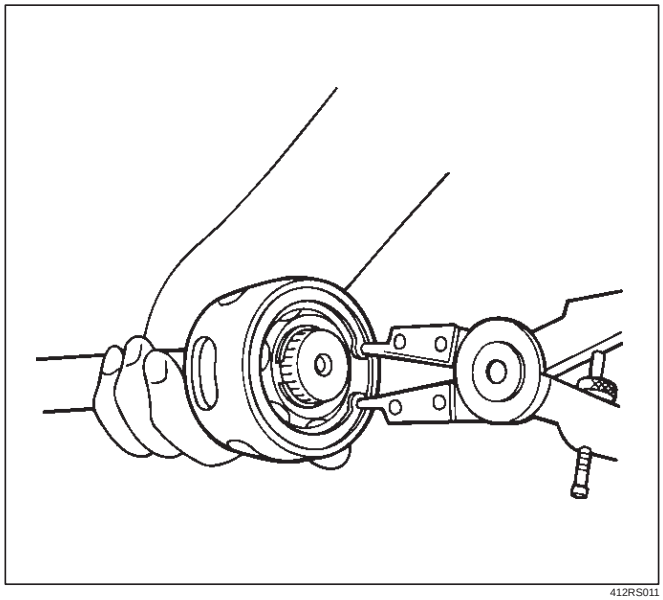

412RS011

6. Remove spacer.
7. Remove the six balls (1) with a screwdriver or equivalent.

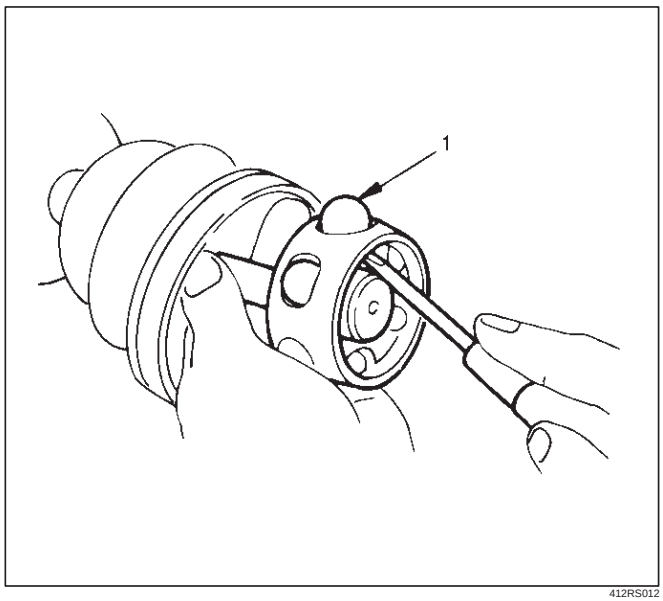

412RS012

8. Using snap ring pliers, remove the snap ring (1) fastening the ball retainer to the center shaft.

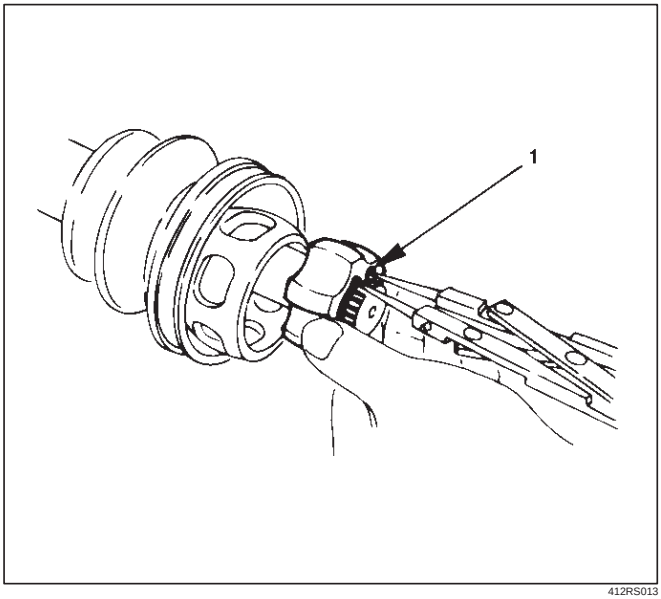

412RS013

9. Remove ball retainer, ball guide and bellows.
10. Raise the hooked end of the band (1) with a screwdriver or equivalent.

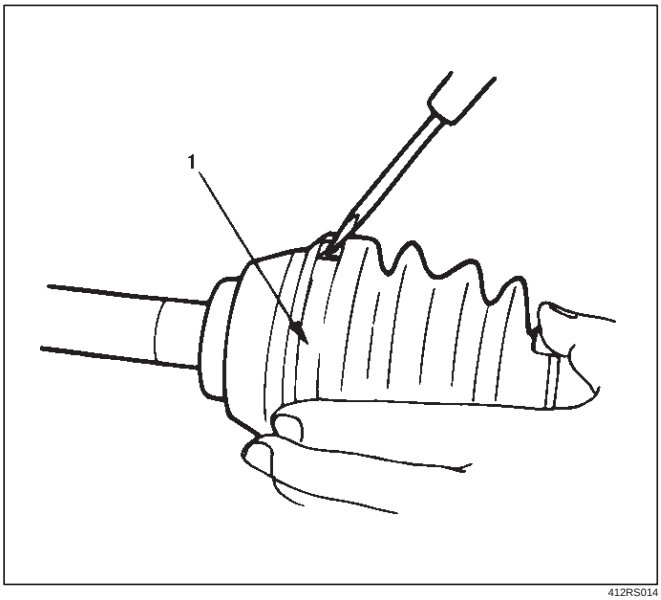

412RS014

11. Remove band.
12. Remove bellows.
13. Remove dust seal.
14. Remove BJ shaft assembly.
15. Remove the mounting bracket fixing bolts, and then remove DOJ case assembly from the axle case.
16. Remove snap ring and bearing.
17. Remove snap ring and oil seal.
18. Remove bracket.

Inspection and Repair

Make necessary correction or parts replacement if wear, damage, corrosion or any other abnormal conditions are found through inspection.
Check the following parts:

1. Drive shaft joint assembly
2. DOJ case, ball, ball guide, ball retainer
3. Bellows
4. Bearing
5. Dust seal, oil seal

Bushing Replacement

- Remove the bushings using a remover 5–8840–2309–0 and hammer.

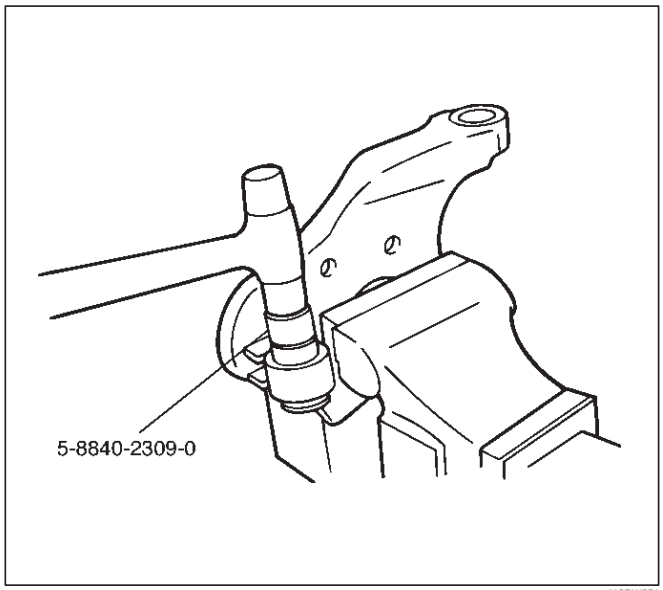

412RW051

- By using installer and base 5–8840–2309–0, press fit the bushings into the bracket.

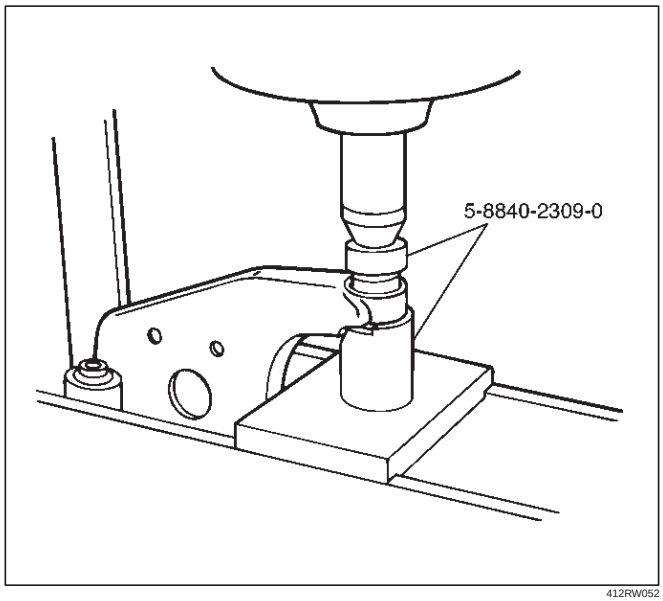

412RW052

Reassembly

1. Install DOJ case to bracket.
2. Install oil seal and fix snap ring.
3. Install bearing and fix snap ring.
4. Install bracket to axle case. Tighten the bracket bolt to the specified torque.

   Torque: 116 N·m (11.8 kg·m/85 lb ft)
5. Apply 150g of the specified grease in BJ .
6. Install dust seal .
7. Apply a thin coat of grease to the shaft for smooth installation then install bellows.
8. Install band. Note the setting direction. After installation, check that the bellows is free from distortion.

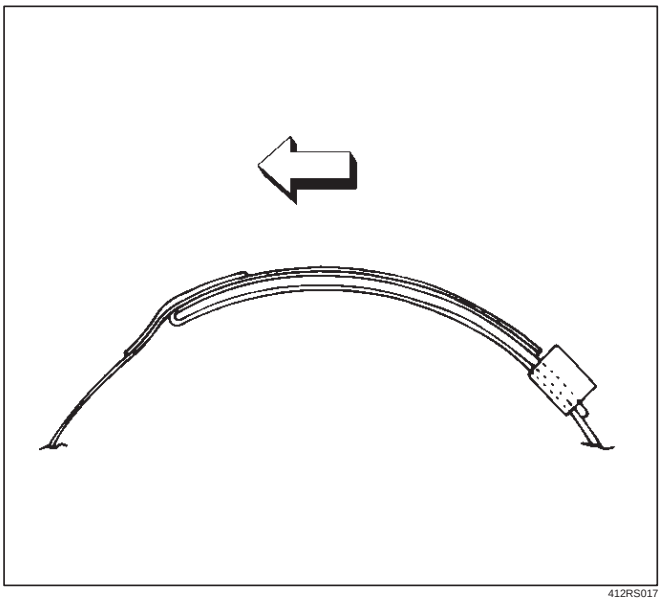

412RS017

9. Install another bellows and fix band.
10. Install the ball guide with the smaller diameter side ahead onto the shaft.
11. Install ball retainer.
12. Using snap ring pliers, install the snap ring (1) securing the ball retainer to the shaft.

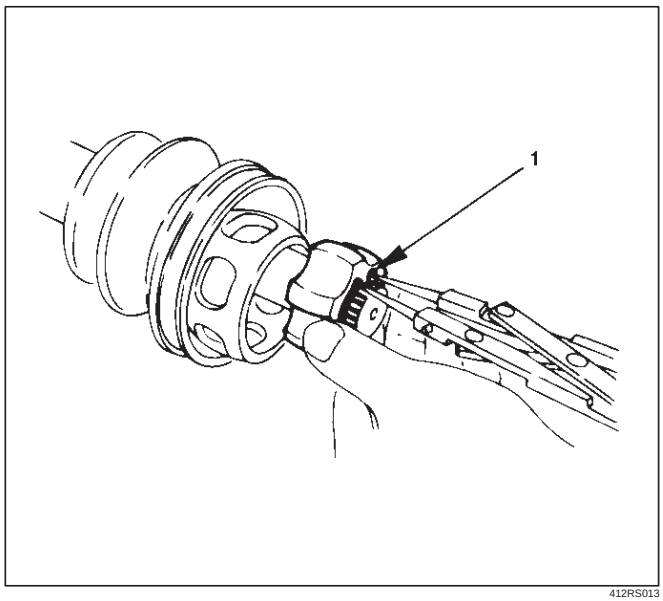

412RS013

13. Align the track on the ball (1) retainer with the window in the cage, and install the six balls into position.

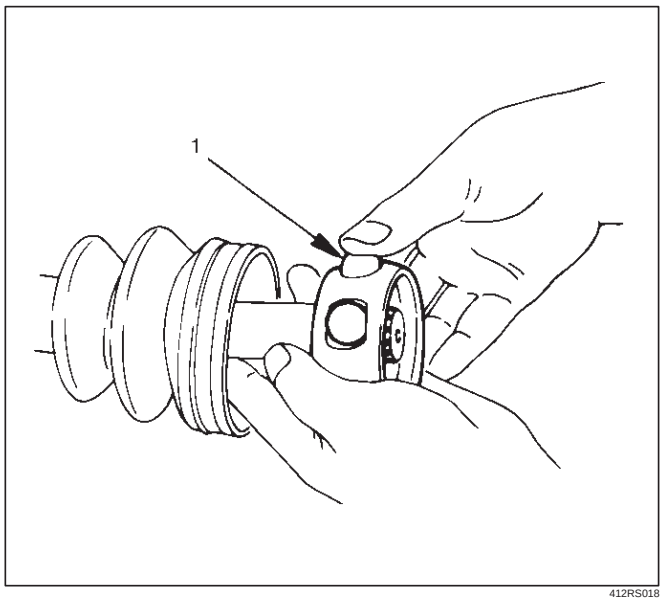

412RS018

14. Install spacer.
15. Install snap ring.
16. Enclose 150g of the specified grease in DOJ case, then install drive shaft joint assembly. After reassembly, move the DOJ longitudinally several times to get to fit.
17. Install the circlip (1) so that open ends are positioned away from the ball groove.

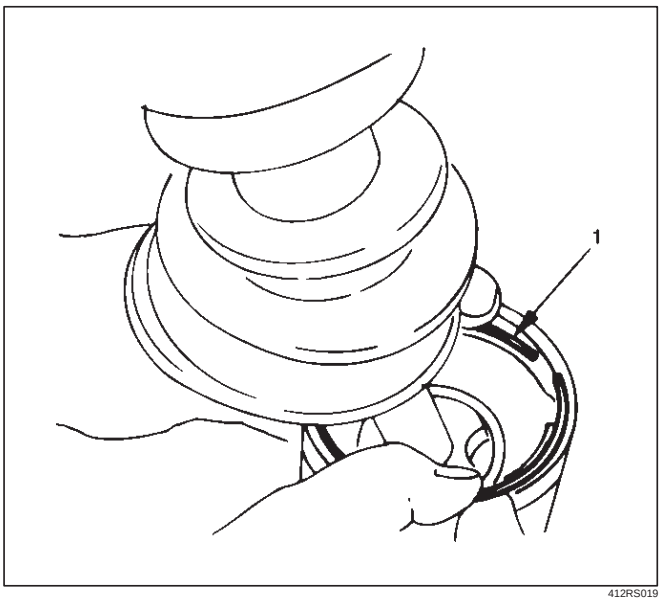

412RS019

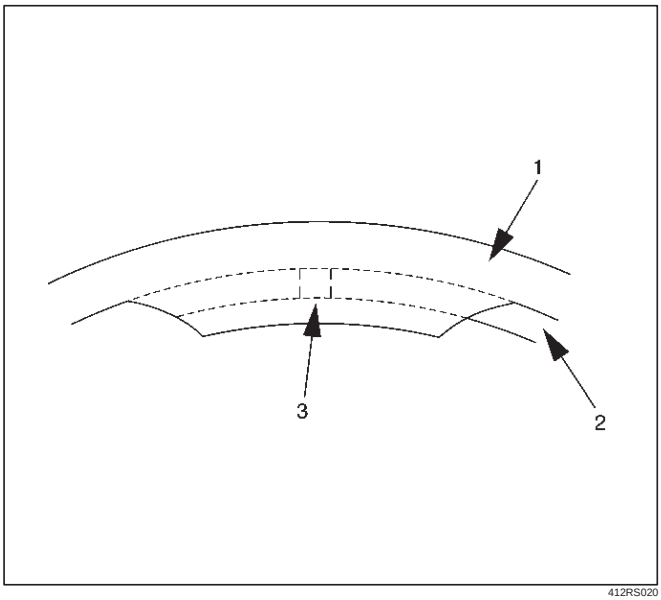

412RS020

Legend

(1) Outer Case
(2) Circlip
(3) Open Ends

18. Install bellows. Adjust the air pressure within the bellows by inserting a screwdriver or equivalent, so that it equals atmospheric pressure.

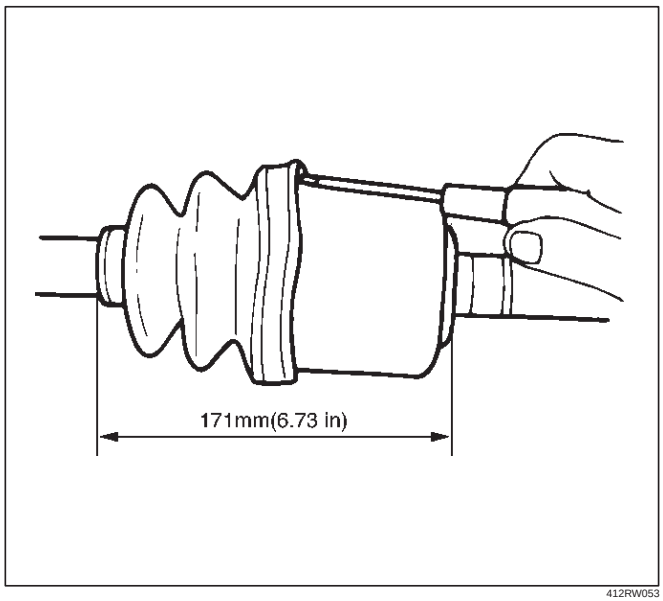

412RW053

19. Install Band. After installation, check that the bellows is free from distortion.

Shift On The Fly System

Shift On The Fly System and Associated Parts

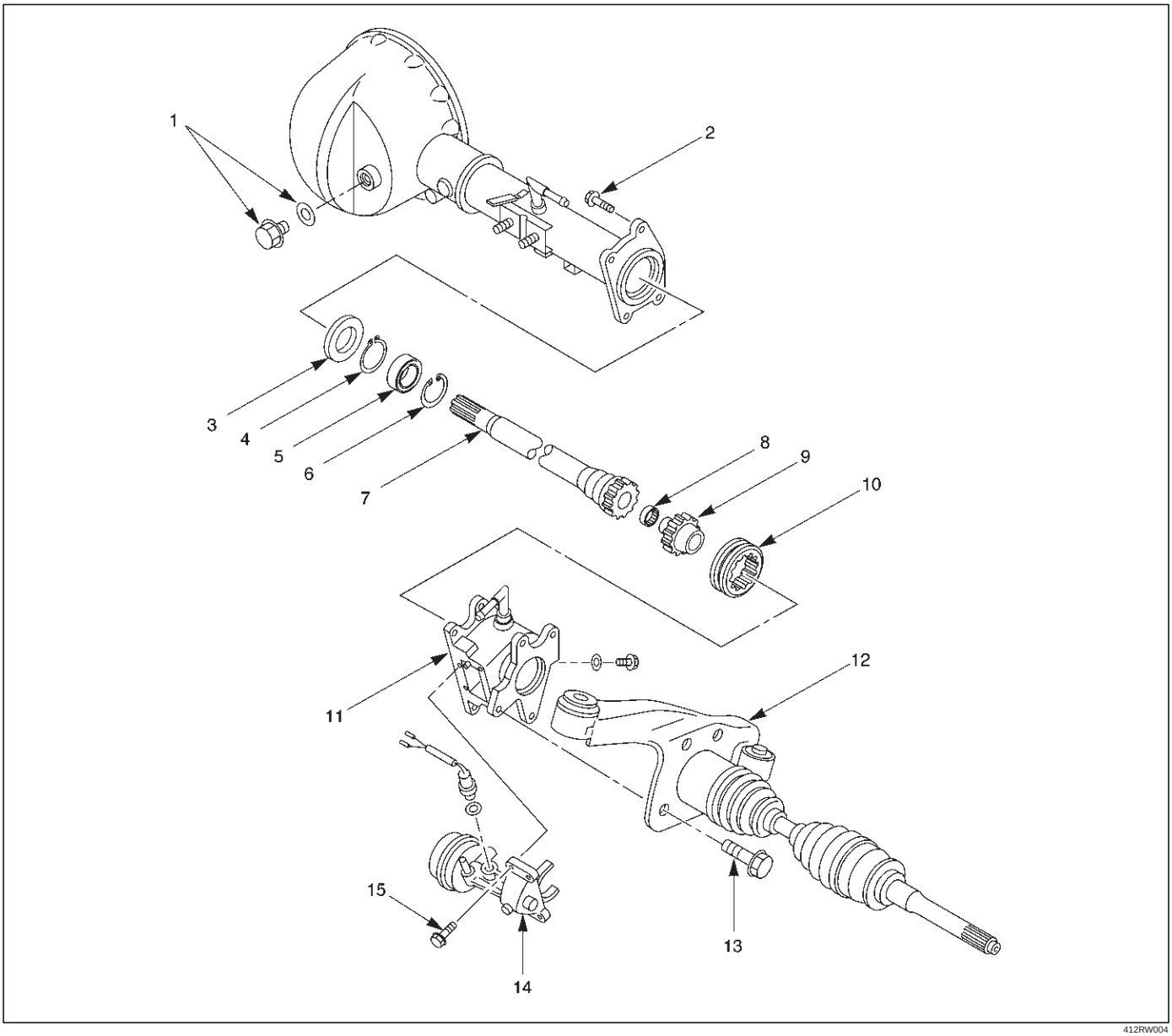

Legend

(1) Filler Plug
(2) Bolt
(3) Oil Seal
(4) Snap Ring(External)
(5) Inner Shaft Bearing
(6) Snap Ring(Internal)
(7) Inner Shaft
(8) Needle Bearing
(9) Clutch Gear
(10) Sleeve
(11) Housing
(12) Front Axle Drive Shaft (LH side)with Bracket
(13) Bolt
(14) Actuator Assembly
(15) Bolt

Disassembly

1. Remove filler plug and gasket, drain oil.
2. Loosen mounting bracket fitting bolts and remove front axle drive shaft from front axle case.
3. Remove Actuator Assembly and draw out actuator ASM.
4. Remove housing.
5. Remove sleeve.
6. Remove clutch gear.

7. Remove snap ring from front axle case by using snap ring pliers.

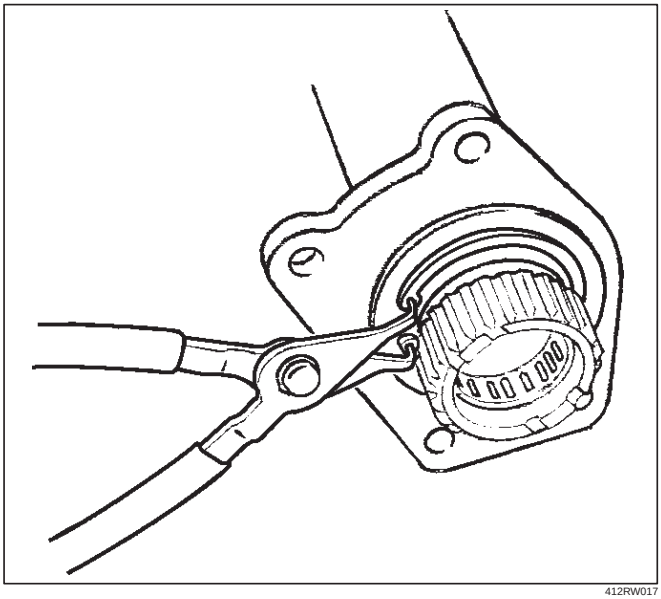

412RW017

8. Take out inner shaft from front axle case.
9. Remove snap ring from inner shaft by using snap ring pliers.

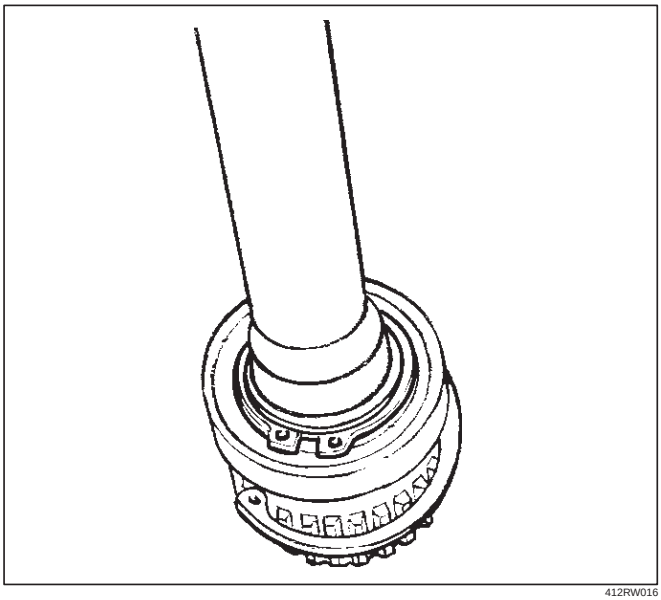

412RW016

10. Remove inner shaft bearing by using a remover 5–8840–2197–0 and press.

NOTE: Be careful not to damage the shaft.

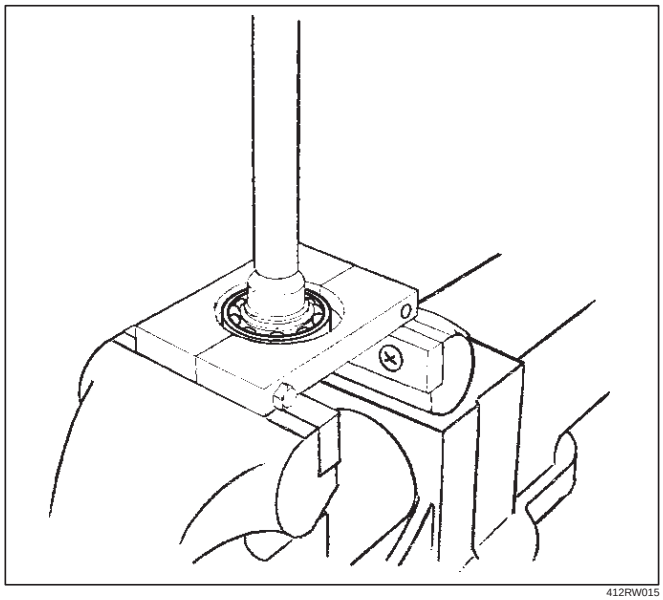

412RW015

11. Remove needle bearing from inner shaft by using a remover 5–8840–0027–0 and sliding hammer 5–8840–0084–0.

NOTE: Be careful not to damage the shaft.

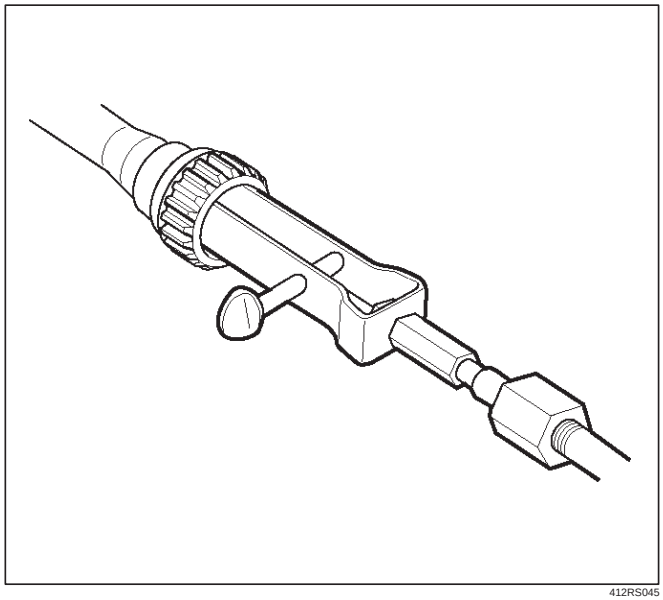

412RS045

12. Remove oil seal from front axle case.

NOTE: Be careful not to damage the front axle case.

Inspection and Repair

Inspect the removed parts. If there are abnormalities such as wear and damage, take corrective action or replace.

Visual Check

1. Check and see if the inner shaft has any abnormalities such as wear and damage.

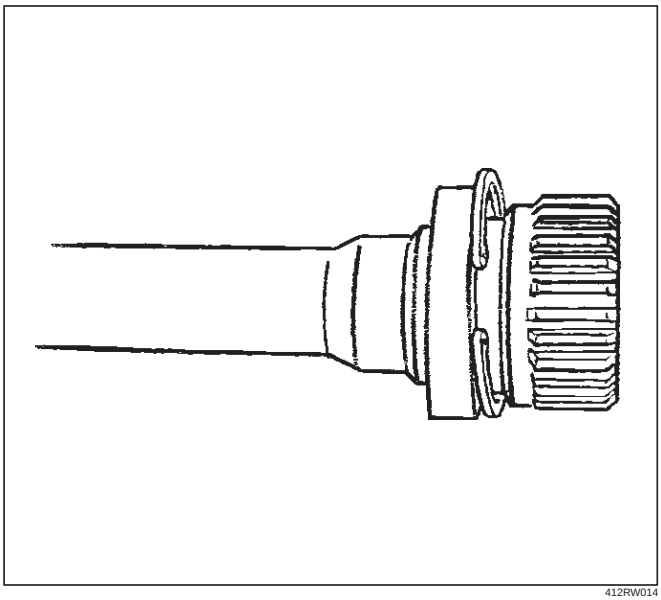

412RW014

2. When inspecting the inner shaft, be sure to check and see if its splined part is twisted, worn, or cracked. If so, replace with a new shaft. In case of an abnormality in its gear part (a slide with sleeve), replace the shaft.

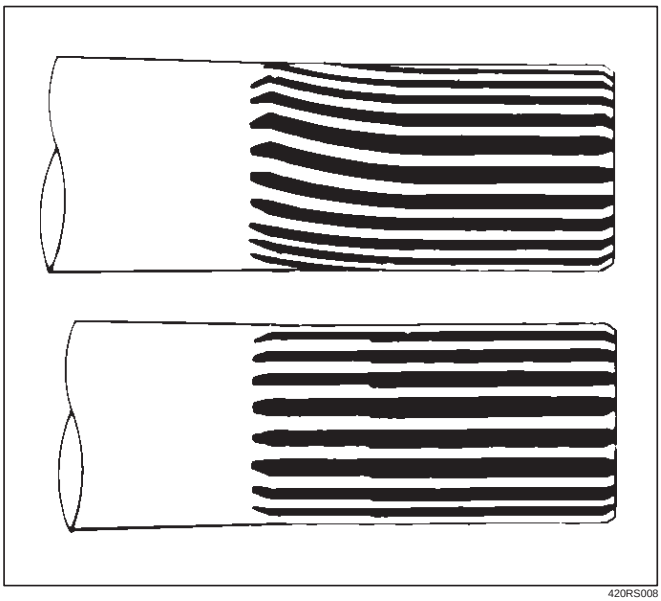

420RS008

Inner Shaft Run–Out

With both end centers supported, rotate the shaft slowly and measure deflection with a dial gauge.

Limit: 0.5 mm (0.02 in)max.

NOTE: Do not heat the shaft to correct its bend.

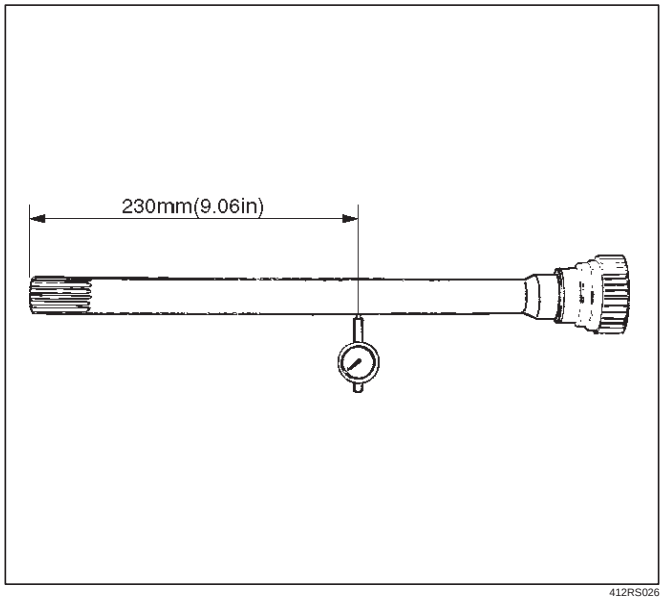

412RS026

Inner Shaft Bearing

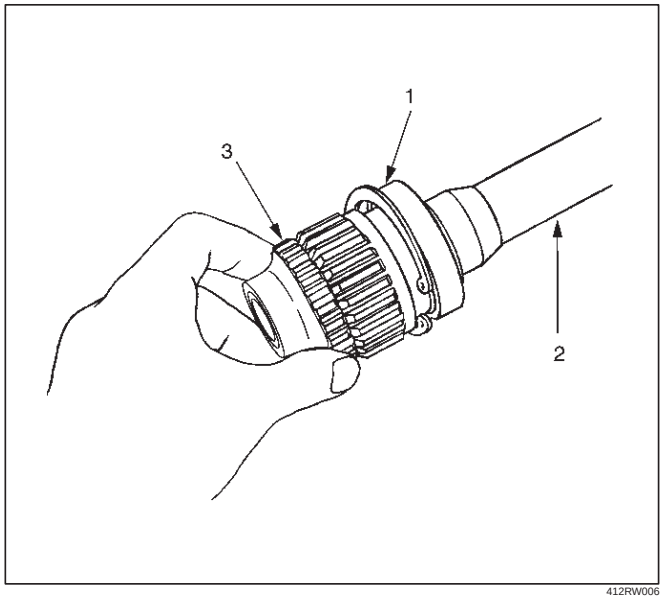

412RW006

Legend

(1) Inner Shaft Bearing
(2) Inner Shaft
(3) Clutch Gear

1. Inspect the state of inner shaft bearing. If any abnormality such as roughness is found, replace with a new inner shaft bearing.
2. Insert a clutch gear and check the state of needle bearing.
3. If there is an abnormality such as roughness, replace the needle bearing.

Sleeve Condition

Check and see that there is no wear, damage, or cracking in the sleeve.

NOTE: Close inspection of the groove and inner gear are required because those are important parts.

Sleeve Function

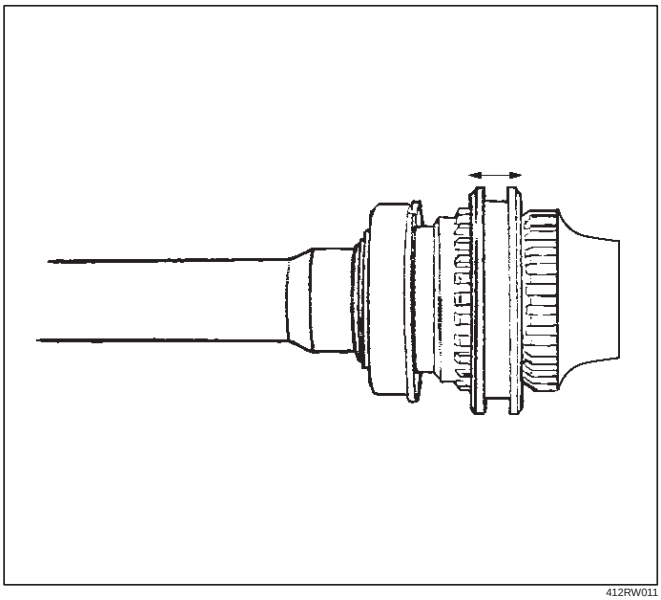

412RW011

Operate the sleeve with the inner shaft combined with the clutch gear. If roughness is felt, replace the sleeve.

NOTE: Gear oil should be applied to the contact surface of gear.

Check the width of sleeve center groove.

Limit: 7.1 mm (0.28 in) max.

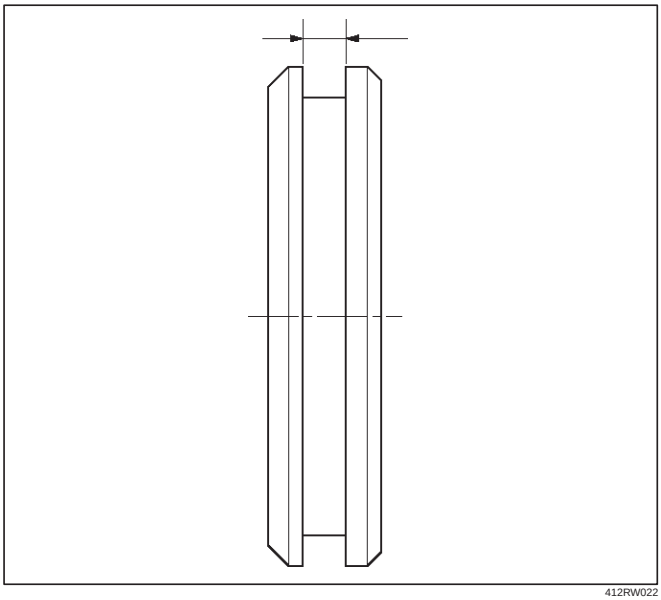

412RW022

Clutch Gear Condition

Check and see that there is no wear, damage, cracking, or any other abnormality in the clutch gear.

Clutch Gear Function

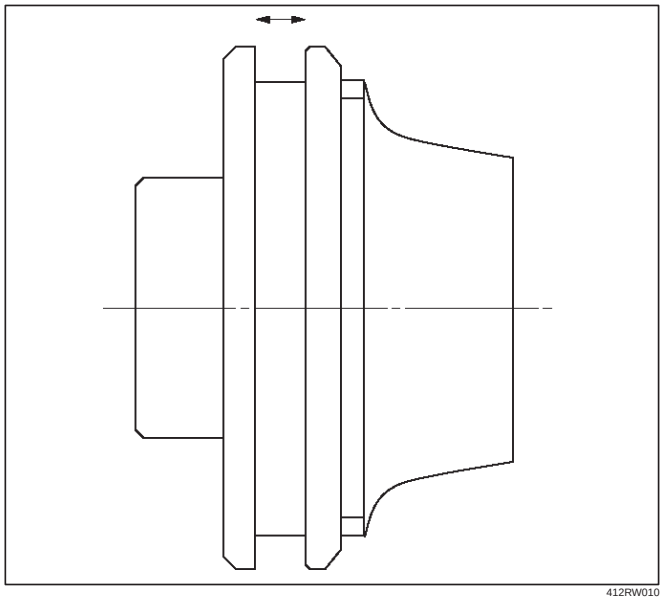

412RW010

If there is an abnormality such as roughness when operated in combination with sleeve, replace the clutch gear.

NOTE: When inspecting, gear oil should be applied to the contact surface of gear.

Clutch Gear Journal Diameter

Make sure of the size illustrated.

Limit: 36.98 mm (1.456 in) min.

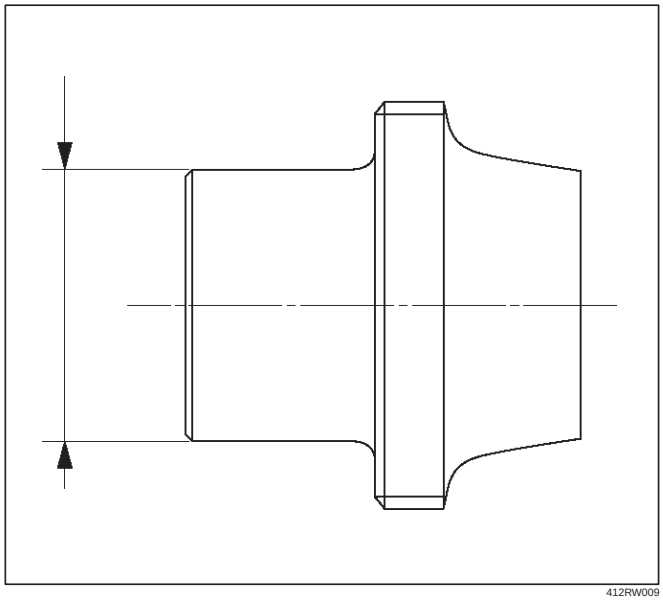

412RW009

Actuator

Check and see that there is no damage, cracking, or other abnormality.

Functional Check

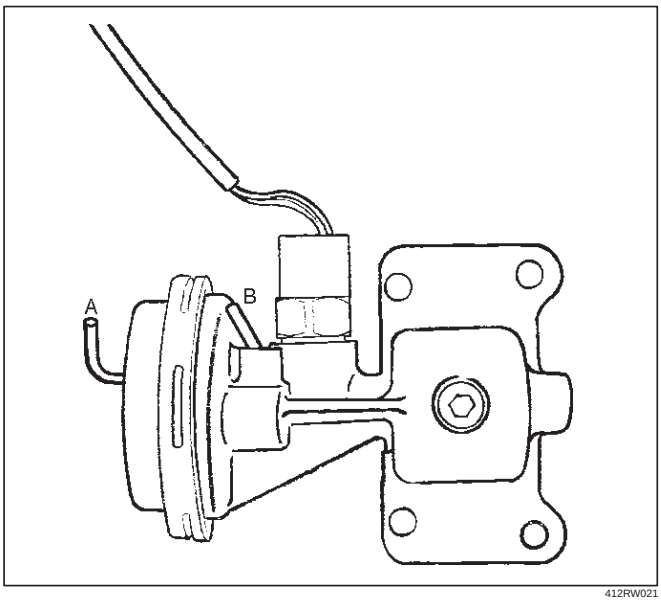

412RW021

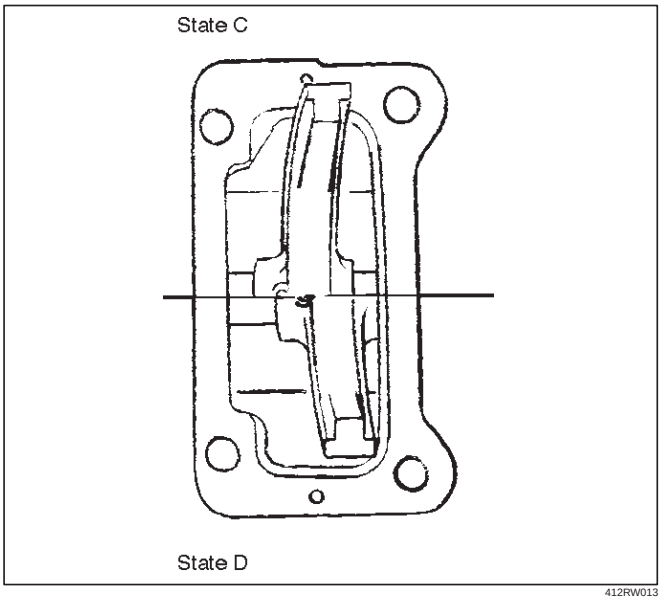

412RW013

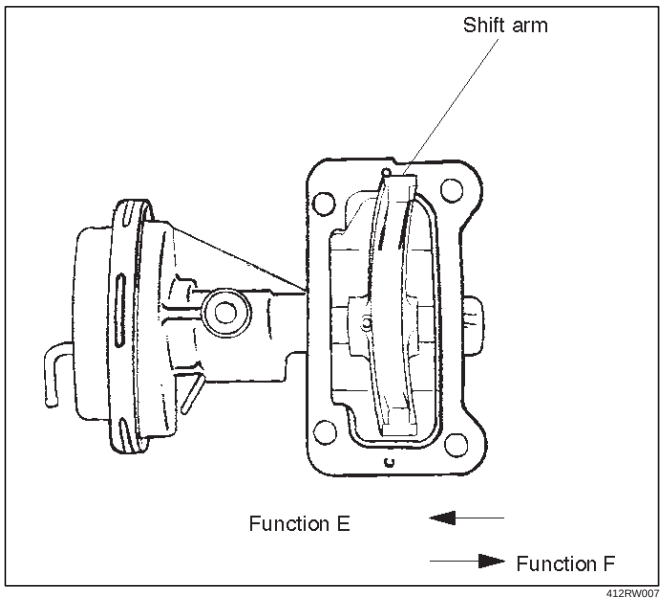

412RW007

Disconnect the shift position switch and make sure of function with a vacuum of –400 mmHg applied to Ports A and B, in accordance with the table below.

State	Port A	Port B	Function
C	–400 mmHg	A/P	E
D	A/P	–400 mmHg	F

If there is an abnormality, replace the actuator as an assembly.

NOTE:

1. If the actuator works under –400mmHg or less, there is no functional problem.
2. Be careful not to permit the entry of water or dust into the ports of the actuator.

Dimensional Check

Measure illustrated sizes 1, 2, and 3.

Limit

1=64.3 mm (2.53 in) max.

2=6.7 mm (0.26 in) min.

3=6.7 mm (0.26 in) min.

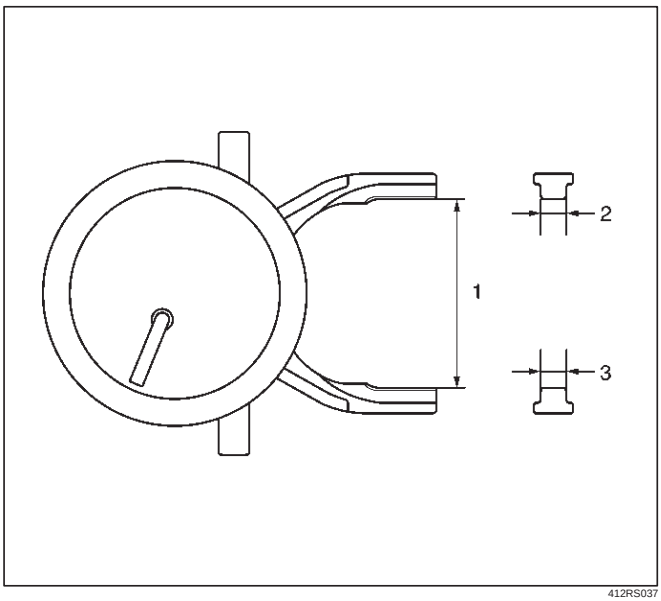

412RS037

Reassembly

1. Install the new oil seal which has been immersed in differential gear oil, by using an oil seal installer 5–8840–2407–0 and grip 5–8840–0007–0.

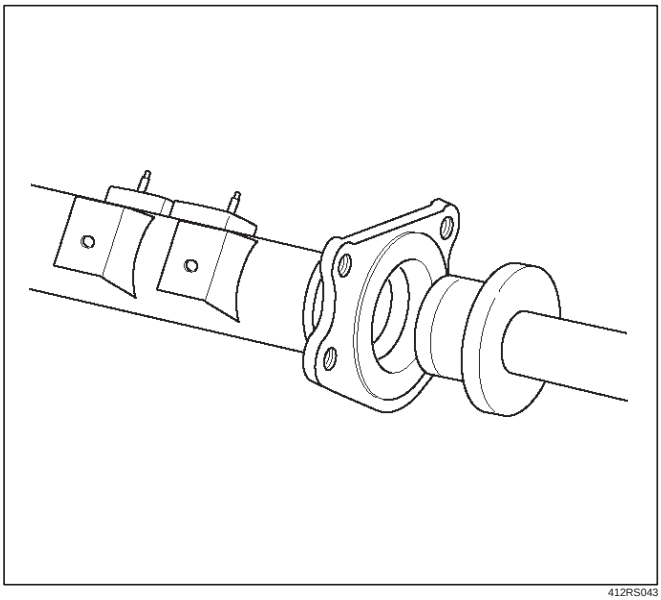

412RS043

2. Force a new needle bearing into inner shaft by using a installer 5–8840–2408–0 and grip 5–8840–0007–0.

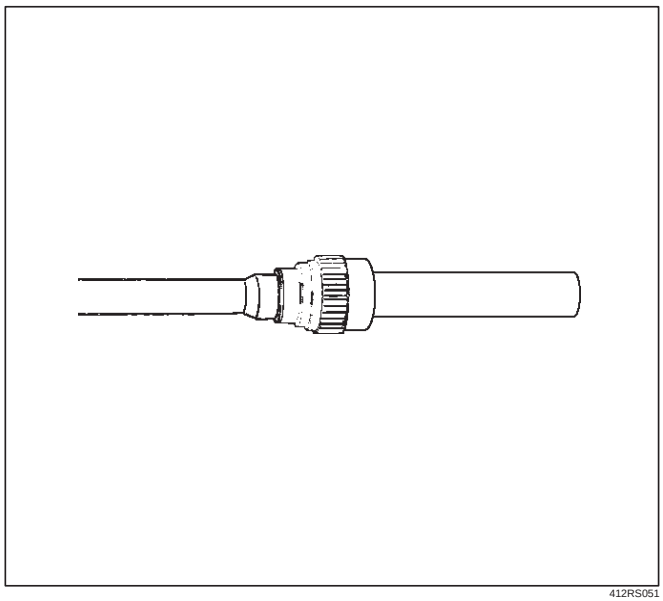

412RS051

3. Place a new snap ring(internal) in inner shaft.
   Force a new inner shaft bearing into the inner shaft by using a installer 5–8840–2197–0 and press.

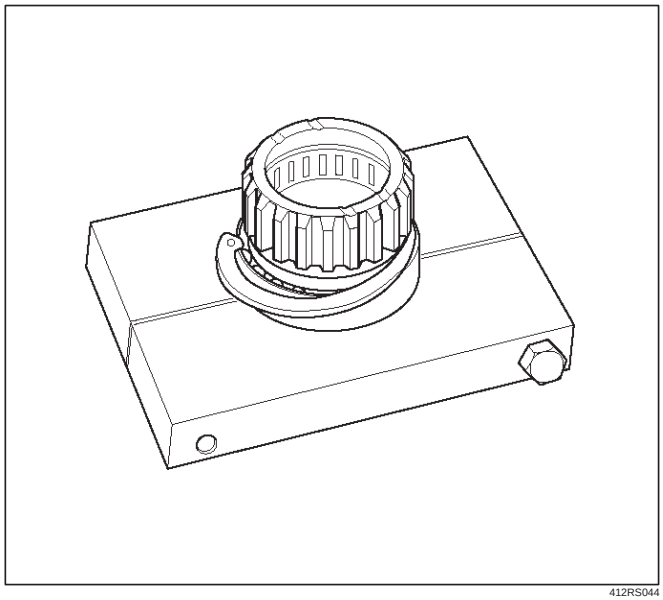

412RS044

4. Install snap ring(external).

NOTE: Be careful not to damage the inner shaft.

5. Clean the housing contact surface of the front axle case and insert inner shaft assembly into the front axle case.

NOTE: Be careful not to damage seal.

6. Install snap ring (internal) in the groove of front axle case.

NOTE: Be sure to install the snap ring properly.

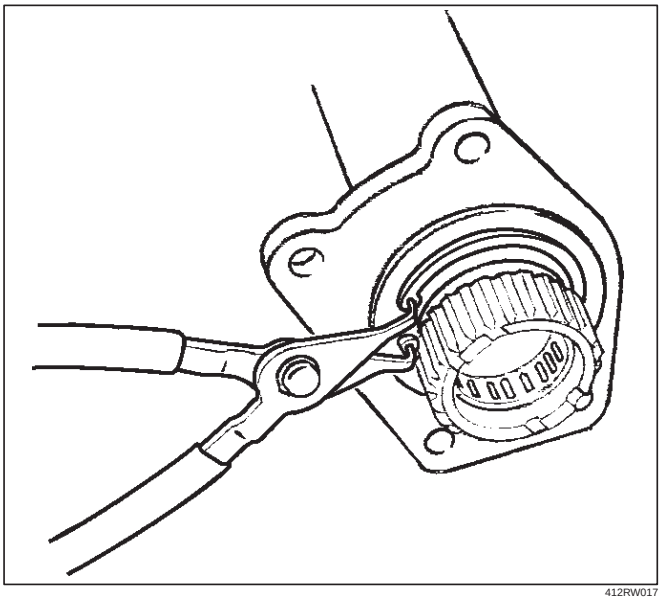

412RW017

7. Apply differential gear oil to clutch gear, then install clutch gear.
8. Apply differential gear oil to sleeve, then install sleeve.
9. Clean contact surface with the front axle and actuator mounting surface. Apply liquid gasket to the contact surface on the front axle case, then install in the housing.

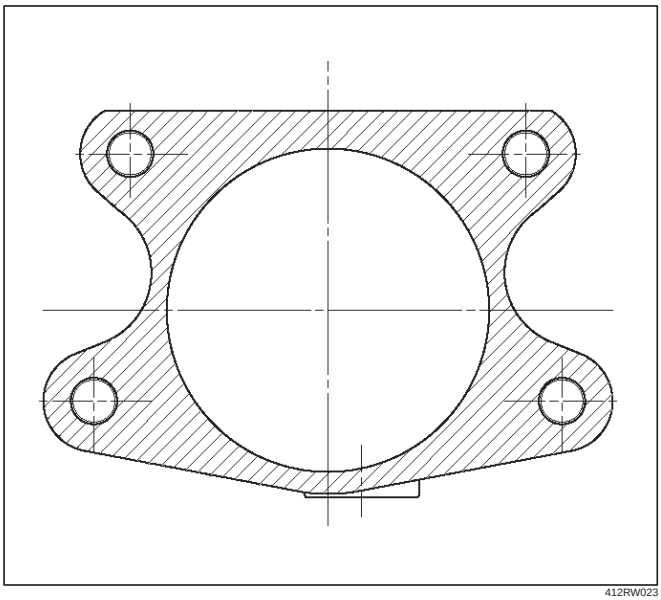

412RW023

10. Tighten bolts to specified torque.

    Torque: 116N·m (11.8 kg·m/85 lb ft)

11. Clean the actuator contact surface with the housing then Install and tighten shift position switch to specified torque.

    Torque: 39N·m (4.0 kg·m/29 lb ft)

12. Apply liquid gasket to the contact surface on the actuator side.

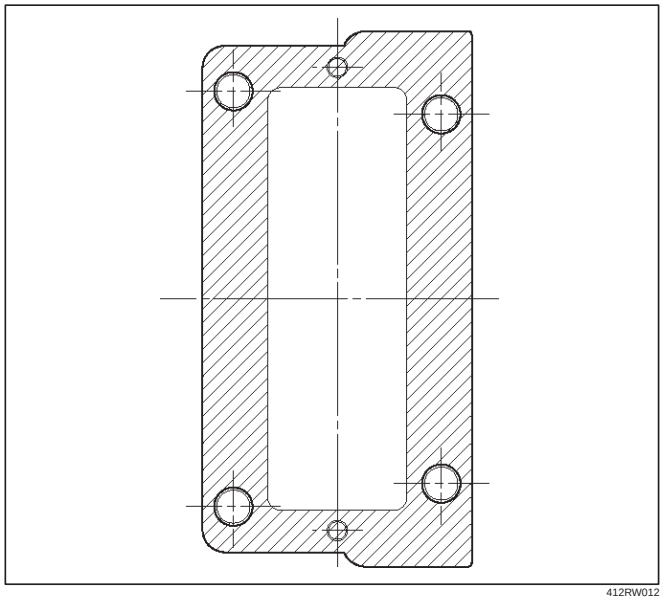

412RW012

13. Align shift arm with the groove of sleeve and install the actuator.
14. Tighten bolts to specified torque.

    Torque: 13N·m (1.3 kg·m/113 lb in)

15. Install front axle drive shaft and mounting bracket. Tighten fitting bolts to specified torque.

    Torque: 116N·m (11.8 kg·m/85 lb ft)

16. Pour specified amount of differential gear oil to filler plug.

    Front Differential

    Oil Capacity: 1.4lit (1.23 Imp qt/1.48 US qt)

    Actuator Housing

    Oil Capacity: 0.12lit (0.10 Imp qt/0.13 US qt)

17. Install filler plug through gasket and tighten to specified torque.

    Torque: 78N·m (58lb ft)

Main Data and Specifications

General Specifications

Front drive axle oil capacity	1.4 liter (1.23 Imp qt/1.48 US qt)(Differential)
	0.12 liter (0.10 Imp qt/0.13 US qt)(Actuator Housing:Shift on the fly)
Type of lubricant	GL–5 (Multi grade type) Refer to chart in General Information
Axle shaft type	Constant velocity joint(Birfield joint type and double offset joint)

Torque Specifications

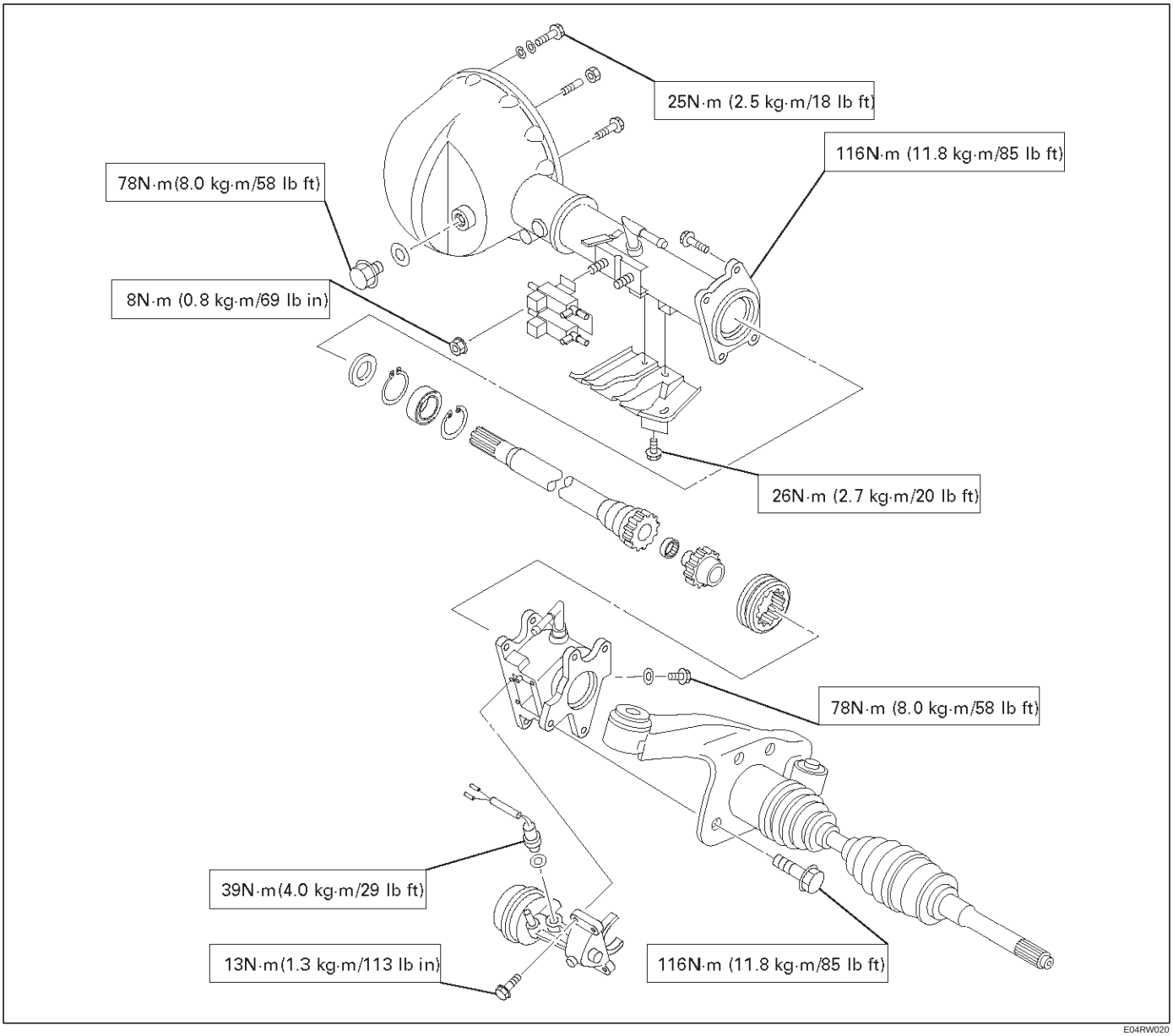

E04RW020

Special Tools

ILLUSTRATION	**TOOL NO.** TOOL NAME
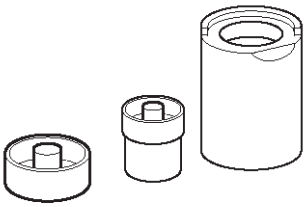 901RS233	**5–8840–2309–0** **(J–39378)** Remover and Installer; Front Axle mount bushing
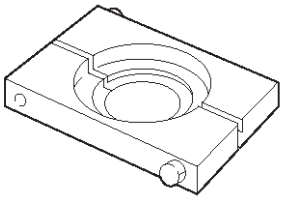 901RS216	**5–8840–2197–0** **(J–37452)** Remover and Installer; Inner shaft bearing
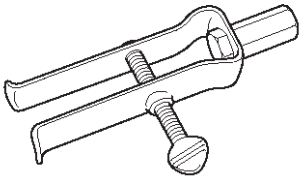 901RS234	**5–8840–0027–0 (J–26941)** Remover;Bearing needle
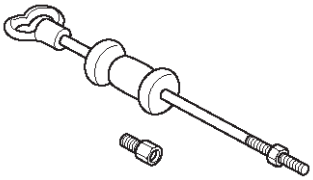 901RS235	**5–8840–0084–0** **(J–2619–01)** Hammer; Sliding
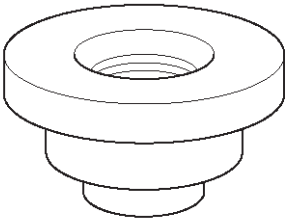 901RS236	**5–8840–2407–0** **(J–41693)** Installer; Oil seal
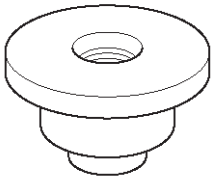 901RS177	**5–8840–2408–0** **(J–41694)** Installer; Bearing needle

ILLUSTRATION	**TOOL NO.** TOOL NAME
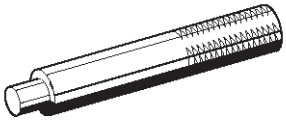 901RS285	**5–8840–0007–0** **(J–8092)** Grip

Front Propeller Shaft

General Description

Since the propeller shaft is balanced carefully, welding or any other modifications are not permitted.

Alignment marks should be applied to each propeller shaft before removal.

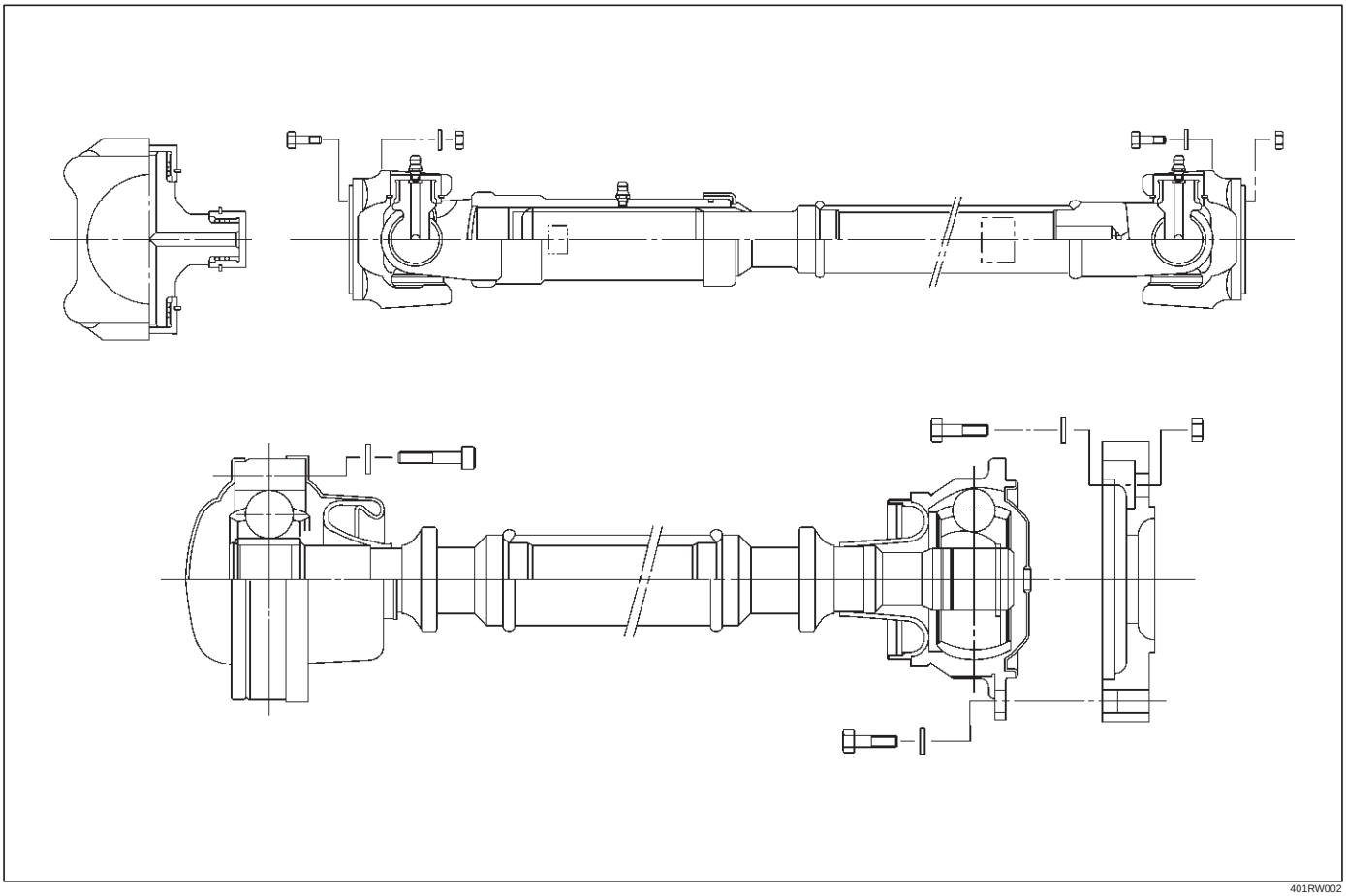

401RW002

Front Propeller Shaft and Associated Parts

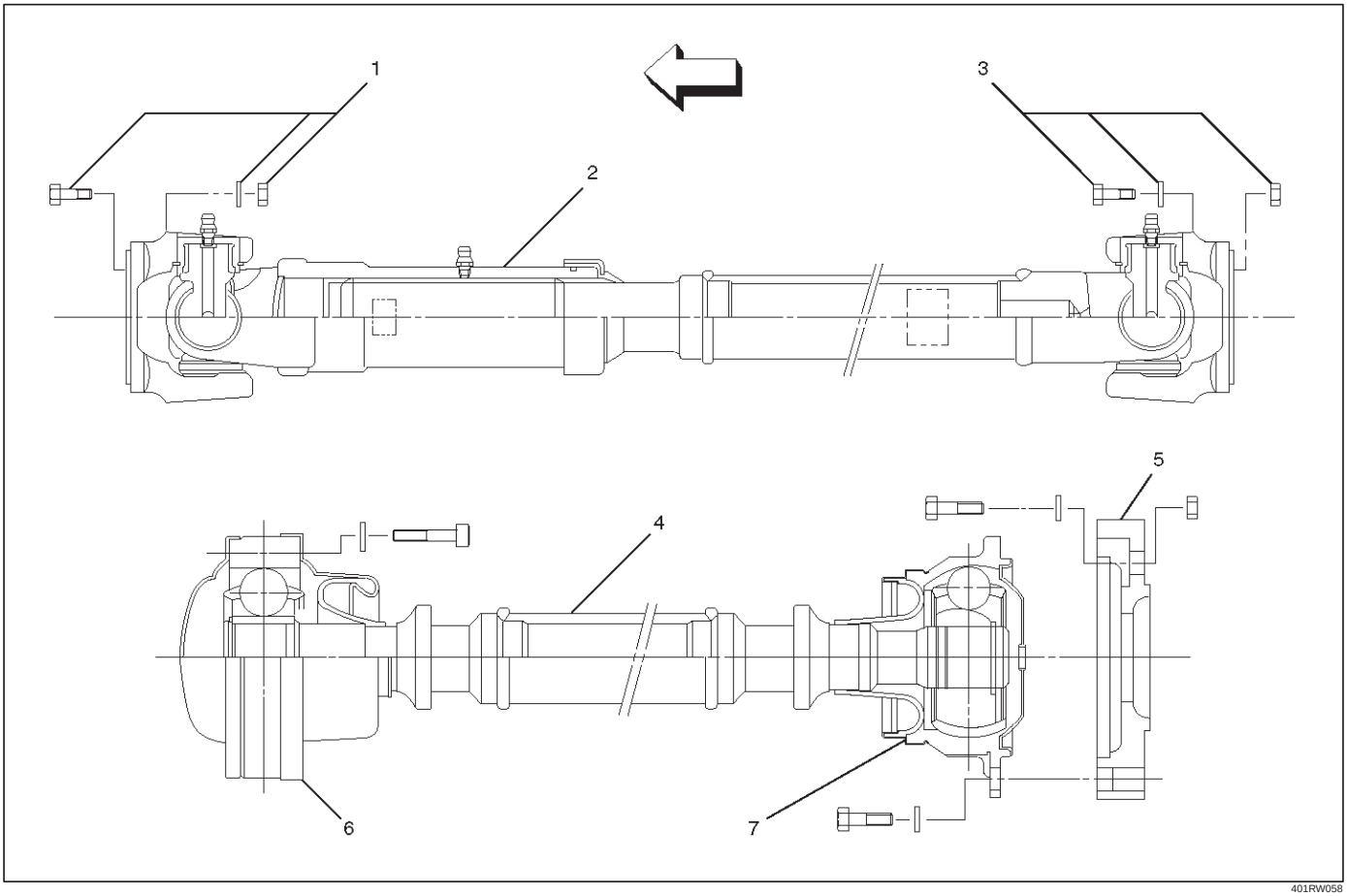

401RW058

Legend

(1) Bolt, Nut and Washer (Front Axle Side)
(2) Front Propeller Shaft
(3) Bolt, Nut and Washer (Transfer Side)
(4) Front Propeller Shaft (with TOD)
(5) Coupling
(6) LJ Constant Velocity Joint
(7) BJ Constant Velocity Joint

Removal

1. Jack up the vehicle and support it on the chassis stands.
2. Gear shift lever should be placed in neutral position and parking brake released.
3. Remove the exhaust and transfer protectors.

NOTE: Apply alignment marks on the flange at the front propeller shaft both front and rear side.

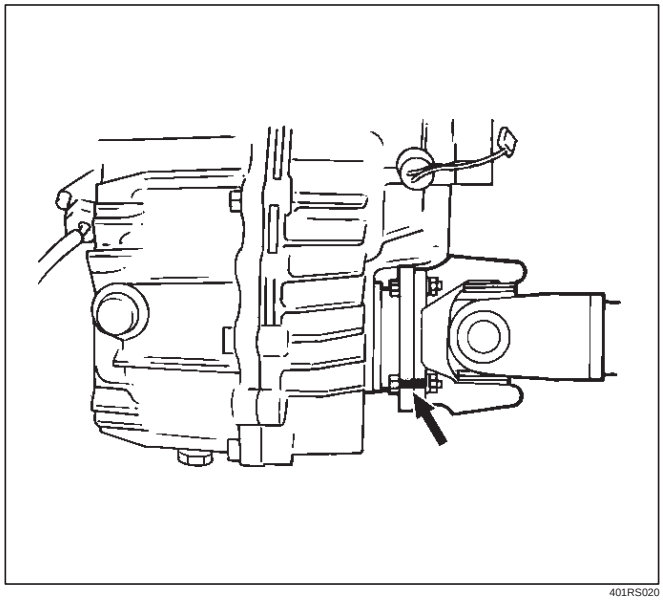

401RS020

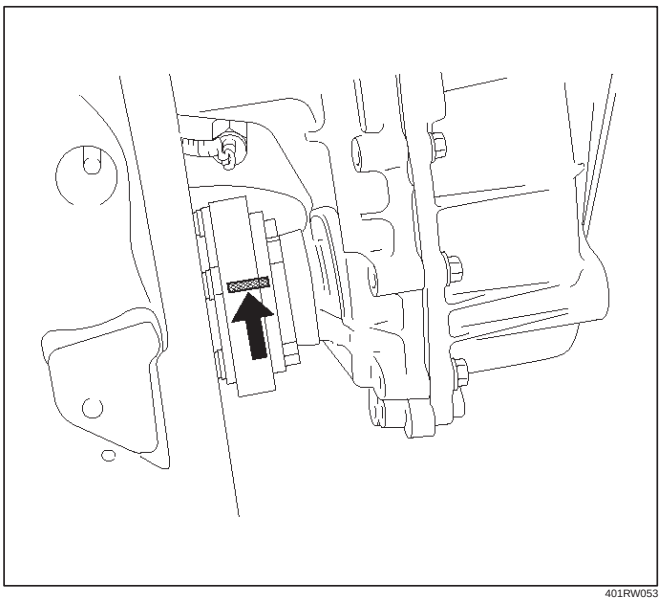

401RW053

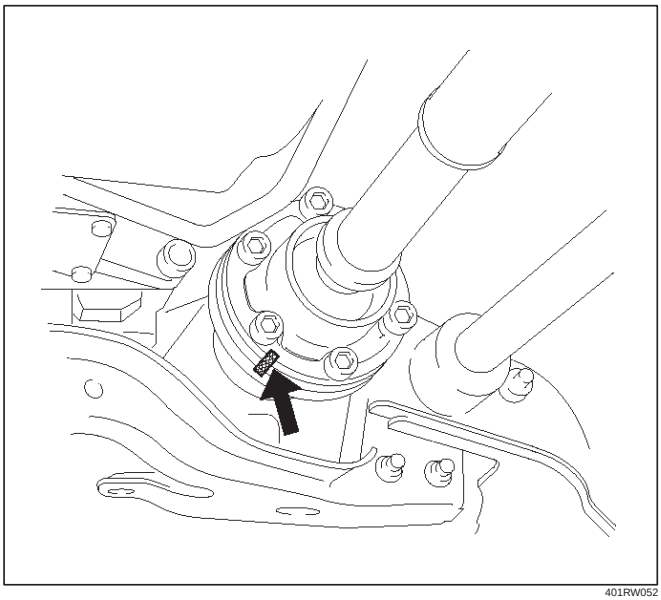

401RW052

4. Remove bolt, nut and washer (Front axle side).
5. Remove bolt, nut and washer (Transfer side).
6. Remove front propeller shaft.

NOTE: If equipped with torque on demand (TOD), when removing, installing or carring for front propeller shaft, be sure to wind a piece of cloth round the part of the boot with which fittings may interfere so that the boot can be protected. The boot may be damaged if bending force is applied to the constant velocity joint of the shaft.

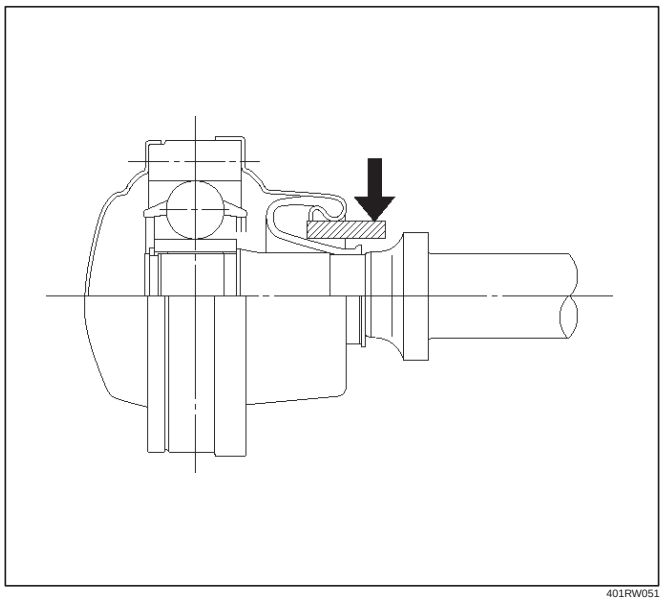

401RW051

Installation

NOTE: Never install the shaft assembly backwards. Completely remove the black paint from the connecting surface of flange coupling on each end of propeller shaft. Clean so that no foreign matter will be caught in between.

1. Align the mark which was applied at removal. Install front propeller shaft and tighten the bolts to the specified torque.

   Torque: 63 N·m (6.4 kg·m/46 lb ft)

2. Install the exhaust and transfer protectors.
3. After installing the propeller shaft, be sure to apply black paint (1) to exposed area (other than connecting surface) of the entire surface of flange coupling .

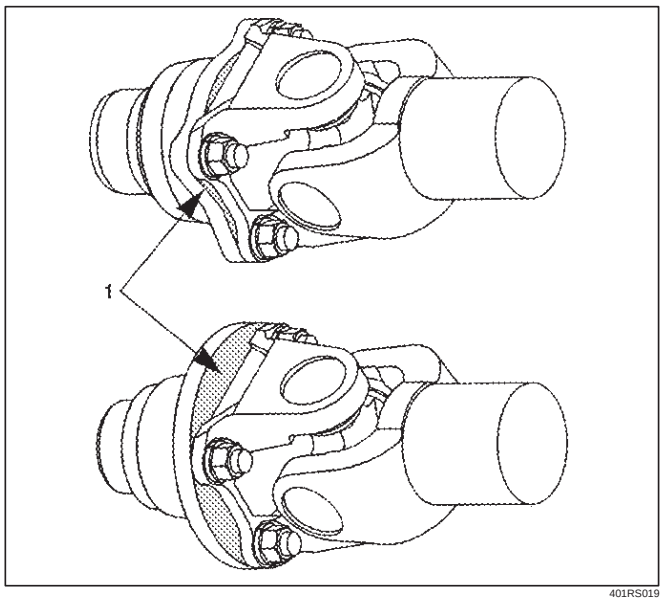

401RS019

Disassembly (Except TOD 4×4)

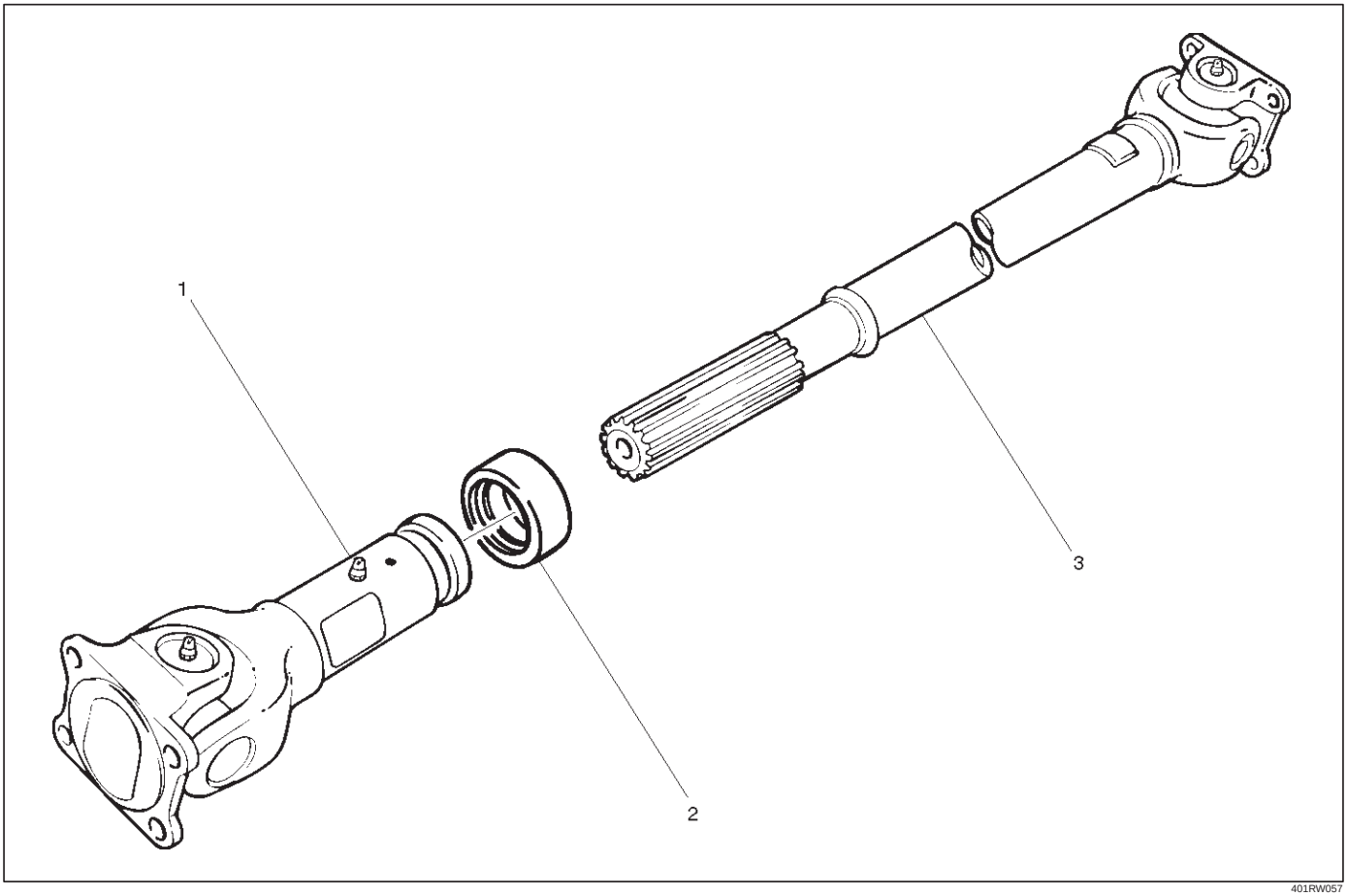

401RW057

Legend

(1) Sleeve Yoke
(2) Seal
(3) Tube Assembly

1. Apply alignment marks (1) on the sleeve yoke and tube assembly then remove sleeve yoke.

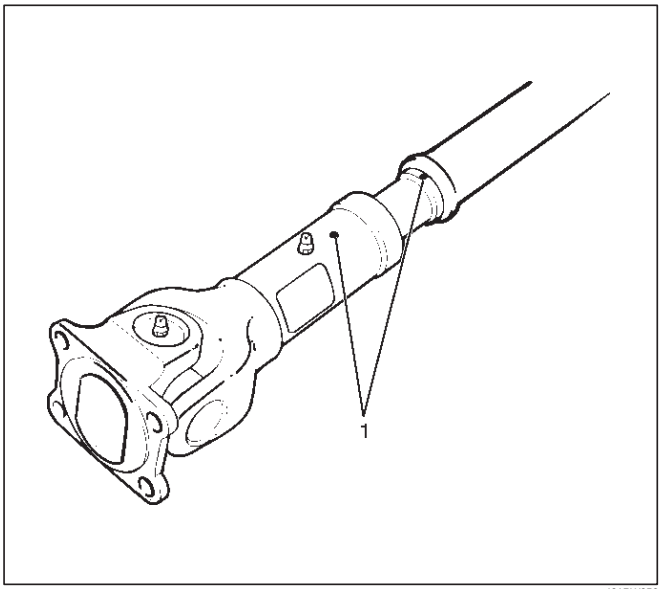

401RW056

2. Remove seal.
3. Remove tube assembly.

Universal Joint Disassembly

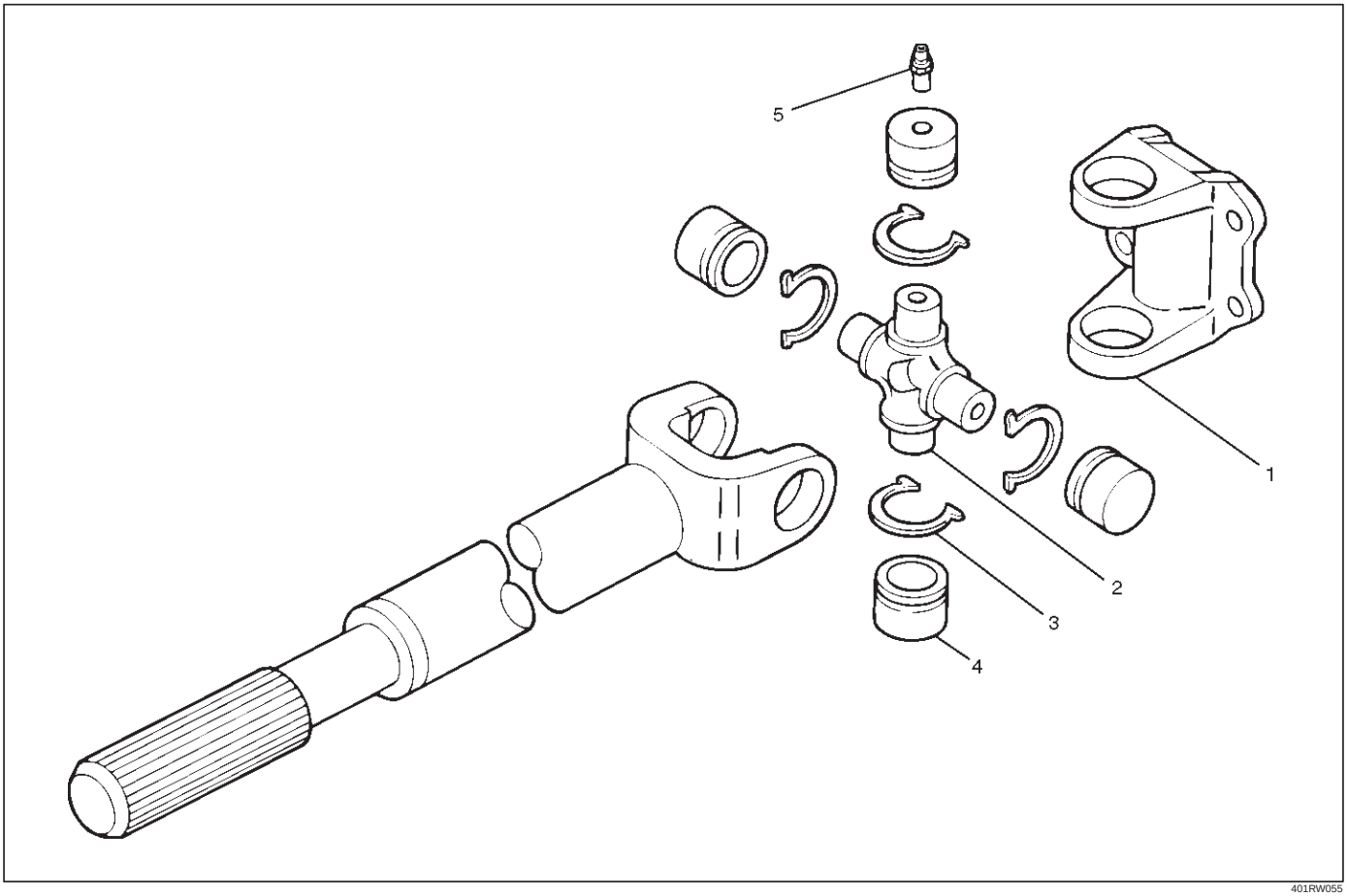

401RW055

Legend

(1) Flange Yoke
(2) Spider
(3) Snap Ring
(4) Needle Roller Bearing
(5) Grease Fitting

1. Apply alignment marks (1) on the yokes of the universal joint, then remove snap ring.

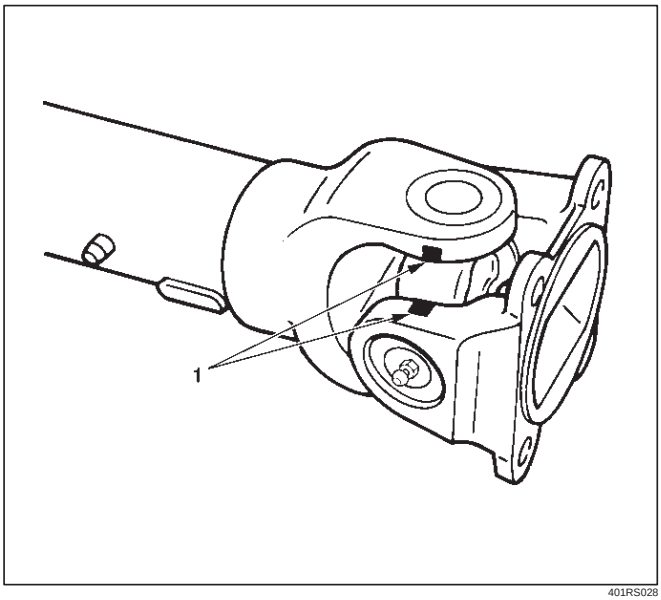

401RS028

2. Tap out the needle roller bearing by gently striking the shoulder of the yoke, using a mallet or a copper hammer.

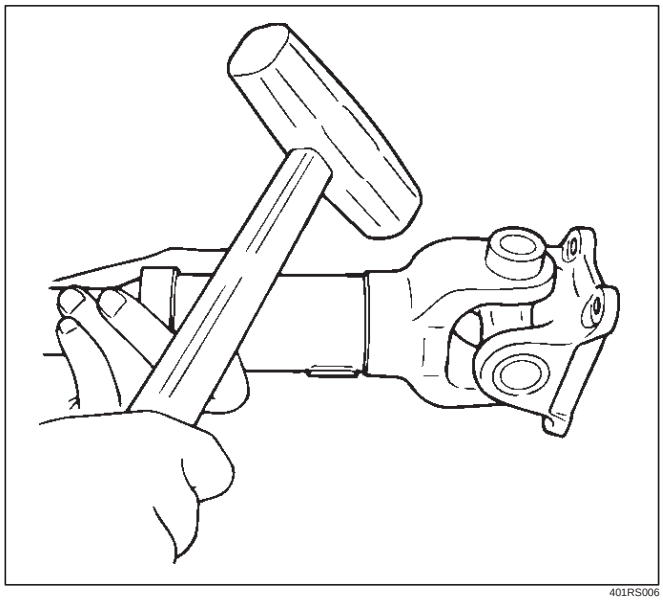

401RS006

3. Make sure of proper position for reinstallation by applying setting marks, then remove spider .

Inspection and Repair

Make necessary correction or parts replacement if wear, damage, corrosion or any other abnormal condition is found through inspection.

NOTE: When any part of the journal assembly (spider, needle roller bearing) requires replacement, be sure to replace the entire assembly.

Check the following parts for wear, damage, noise or any other abnormal conditions:

1. Spider
2. Needle roller bearing
3. Yoke
4. Flange
5. Constant velocity joint

Outside Diameter of Spider Pin

Standard: 17.00 mm (0.669 in)

Limit: 16.90 mm (0.665 in)

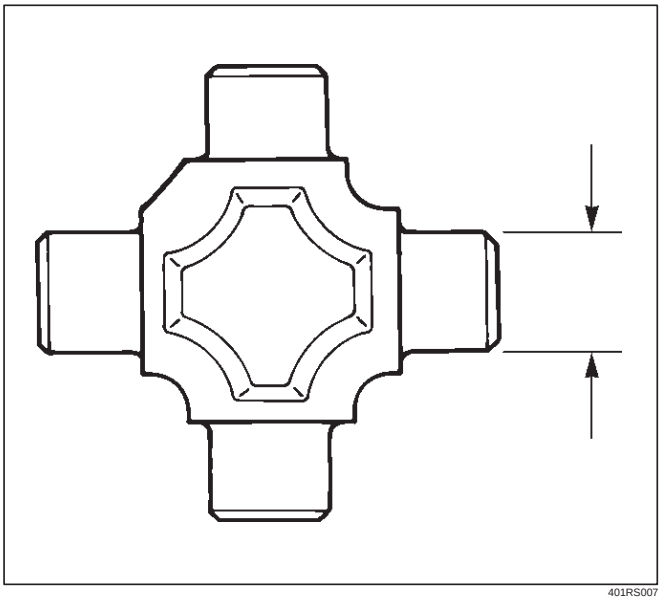

401RS007

Propeller Shaft Run–out

Support the ends of the propeller shaft on V-blocks (2) and check for run–out by holding the probe of a dial indicator (1) in contact with the center part of the shaft. If the amount of run–out is beyond the standard value for assembly, correct with a bench press or replace the shaft with a new propeller shaft assembly.

Standard: 0.3 mm (0.012 in)

Limit: 0.5 mm (0.02 in)

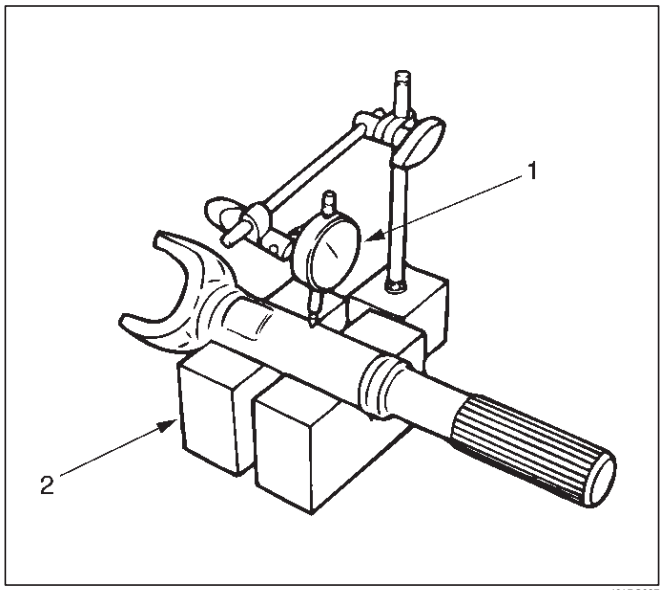

401RS027

Play in Splines in Normal Direction of Rotation

Check the amount of play between the sleeve yoke (1) and the propeller shaft spline (2) in the direction of rotation, using a pointed feeler gauge.

Standard: 0.073 – 0.156 mm (0.003 – 0.006 in)

Limit: 0.3 mm (0.012 in)

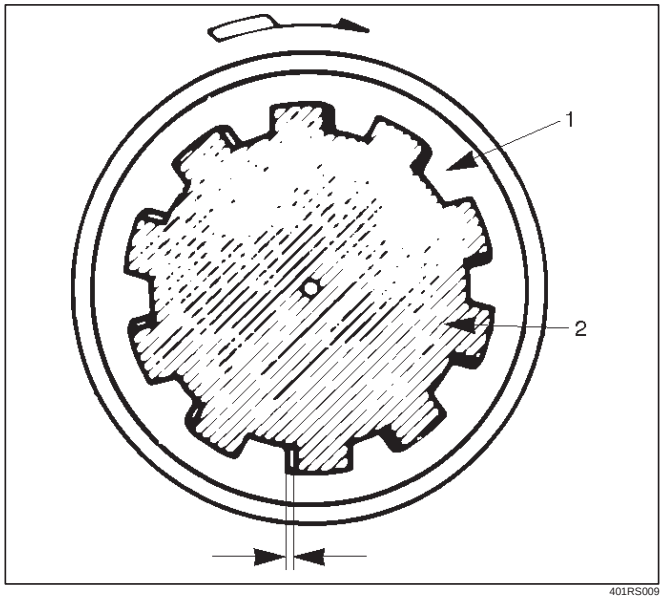

401RS009

Play in Universal Joint

Limit: Less than 0.1 mm (0.004 in)

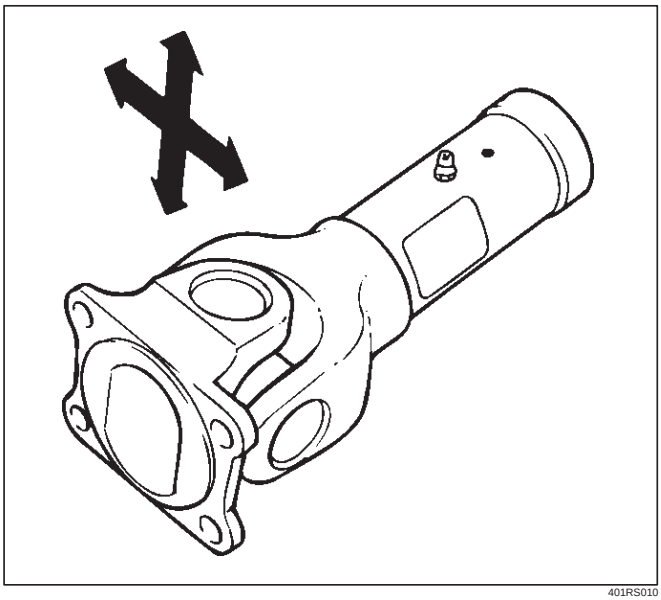

401RS010

Constant Velocity Joint

NOTE: LJ and BJ constant velocity joints are unremovable types. Check the joint for play and the boot for damage, wear, and leak of grease. If abnormality is found, replace propeller shaft as an assembly.

Play in Constant Velocity Joint

Fix the shaft in a vise throrgh pieces of wood, and try to move the joint vertically, right and left, and back and forth to make sure of smooth motions and no remarkable play.

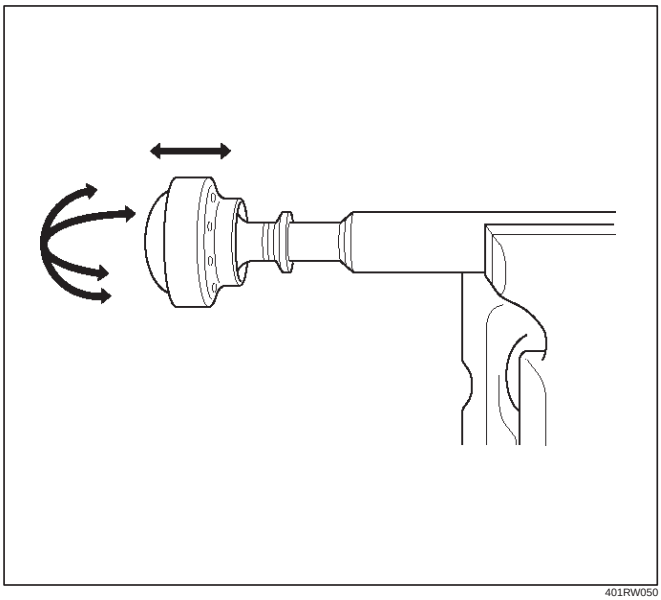

401RW050

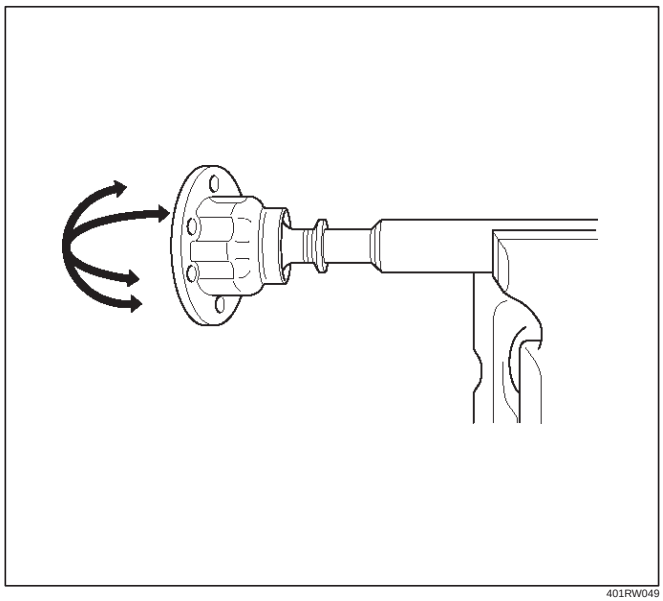

401RW049

Boot of Constant Velocity Joint

Check the boot (2) for crack, damage and grease leak, and the boot band (1) for loosening and damage. Check the both sides of the joint and make sure that there is no leak of grease from the cover press-in parts(3).

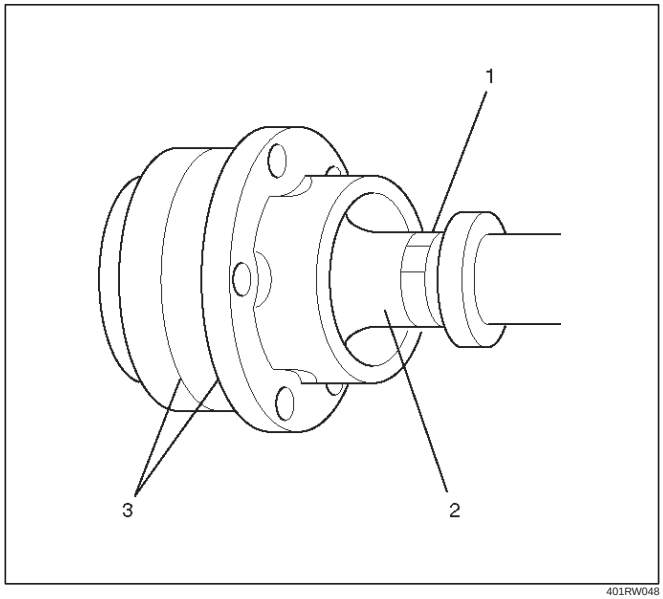

401RW048

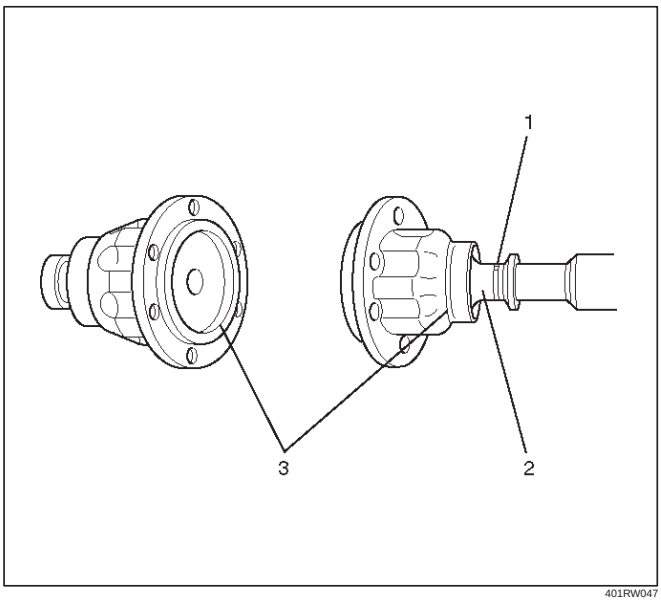

401RW047

Front Axle Flange Run-out

1. Set a dial gage at right angle near the outer circumference of the flange face and check the run-out of the flange face.

Limit: 0.15 mm (0.006 in)

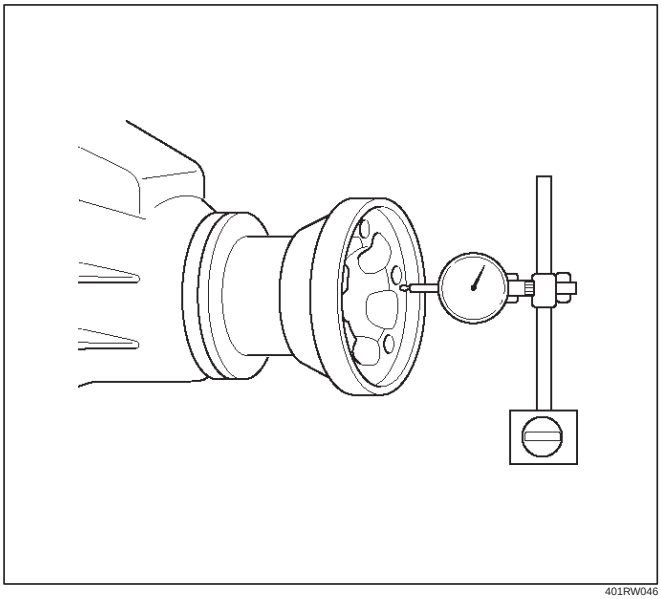

401RW046

2. Set a dial gage at right angle near the inner circumference and check the run-out of the flange.

Limit: 0.15 mm (0.006 in)

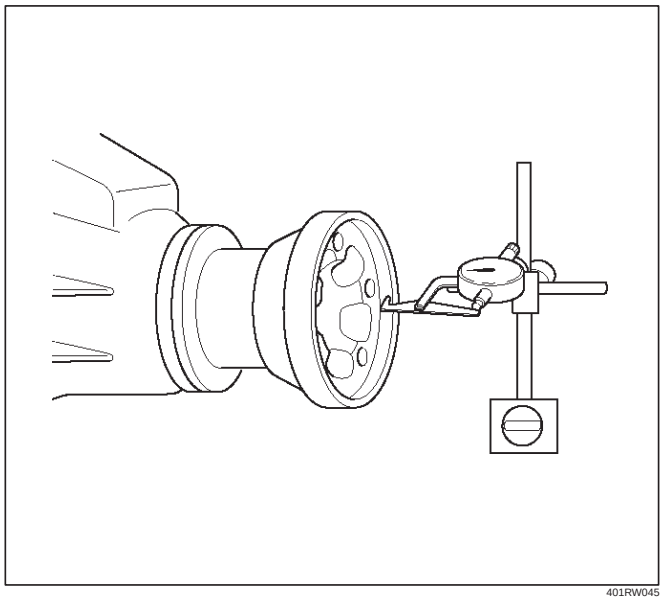

401RW045

3. If vibration is felt during the 4H AUTO drive, disconnct the propeller shaft at the front axle. Reinstall the propeller shaft at 60˚, 120˚, 180˚, 240˚, and 300˚ and conduct test drive in each position and check if there is vibration.

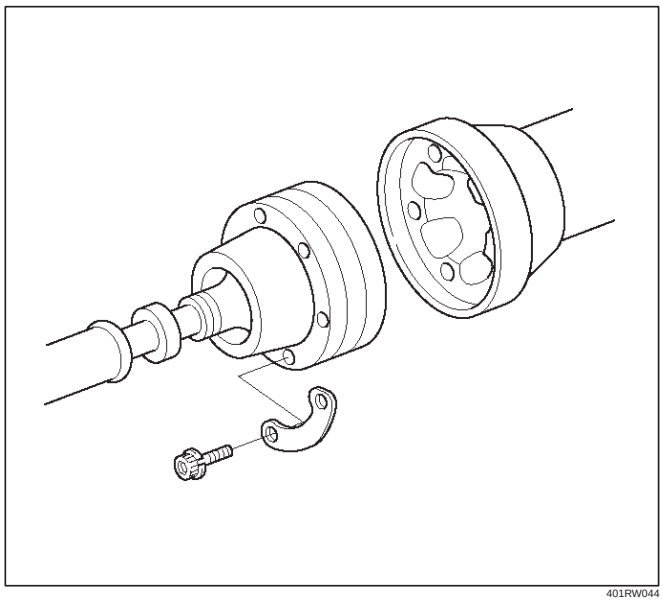

401RW044

Universal Joint Reassembly

1. Install spider to flange yoke. Be sure to install the spider by aligning the setting marks made during disassembly.
2. Apply a molybdenum–disulfide grease or a multi–purpose type grease NLGI No. 2 to inside of the bearing cap.

Grease Amount: Approx. 1.2 g (0.042 oz)

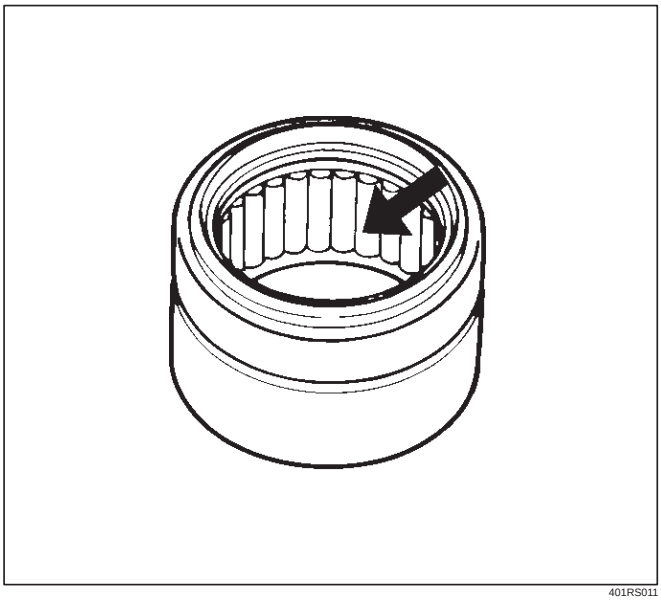

401RS011

3. Using either a mallet (or copper hammer) or a press, install the needle roller bearing into the yoke so that the snap ring can be installed in its groove.

CAUTION: The needle roller bearing cannot be installed smoothly if it is set at an incorrect angle with the flange and excessive hammering will damage the needle roller bearing.

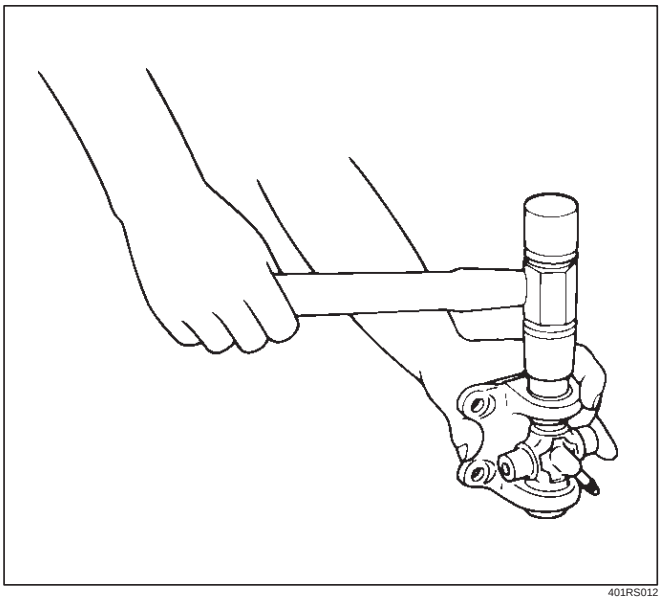

401RS012

4. Align setting marks (1) and join the yokes.

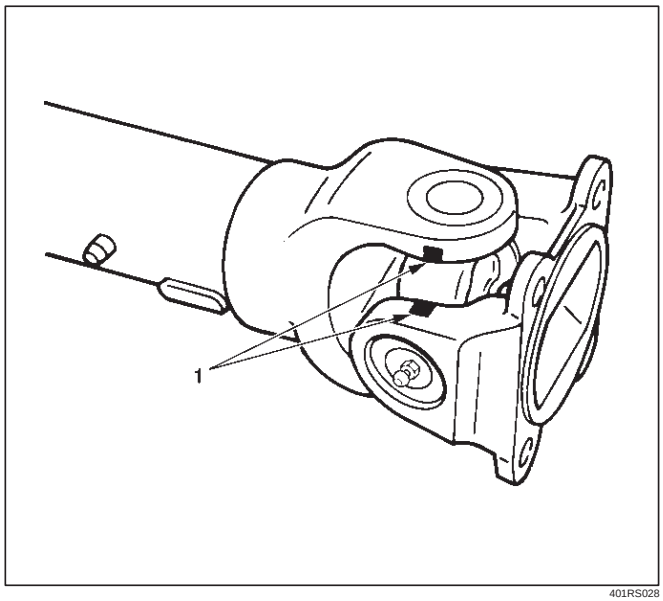

401RS028

5. Install snap ring.

NOTE: Discard used snap rings and install new ones.

When the bearing cap is in position, select and attach a snap ring of suitable thickness so that the end play of the spider pin is held within 0.1 mm (0.004 in).

Snap ring thickness and Identification color

1.5 mm (0.059 in); Blue

1.53 mm (0.060 in); White

1.59 mm (0.063 in); Yellow

1.62 mm (0.064 in); Green

1.68 mm (0.066 in); Not colored

NOTE: Be sure to use snap rings of the same thickness on both sides.

Reassembly (Except TOD 4×4)

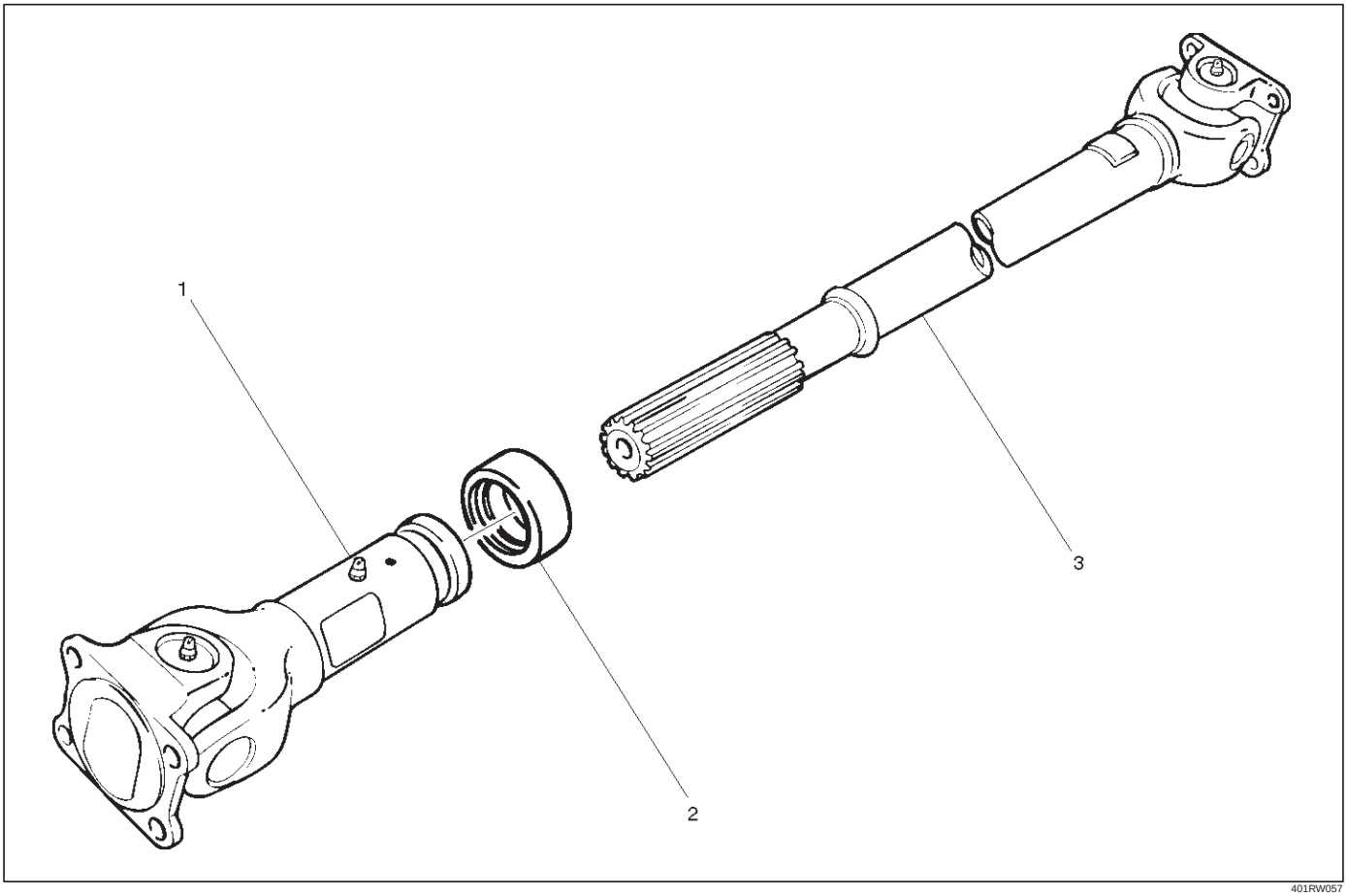

401RW057

Legend

(1) Sleeve Yoke
(2) Seal
(3) Tube Assembly

1. Discard used seal and install new one.
2. Align the alignment marks and install tube assembly to sleeve yoke.

Main Data and Specifications

General Specifications

Engine	6VE1 (3.5L)			6VD1 (3.2L)			4JX1 (3.0L)		4JG2 (3.1L)	
Transmission	M/T	A/T	A/T with TOD	M/T	A/T	A/T with TOD	M/T	A/T	M/T	A/T
Construction	Hollow steel tube with yoke and spider type universal joint		Hollow steel tube with constant velocity joints	Hollow steel tube with yoke and spider type universal joint		Hollow steel tube with constant velocity joints	Hollow steel tube with yoke and spider type universal joint			
Outside diameter	40.0mm (1.57 in)									
Length	559mm (22.01in)	559mm (22.01in)	577mm (22.72in)	393mm (15.47in)	559mm (22.01in)	577mm (22.72in)	627mm (24.69in)	627mm (24.69in)	421mm (16.57in)	627mm (24.69in)

Torque Specifications

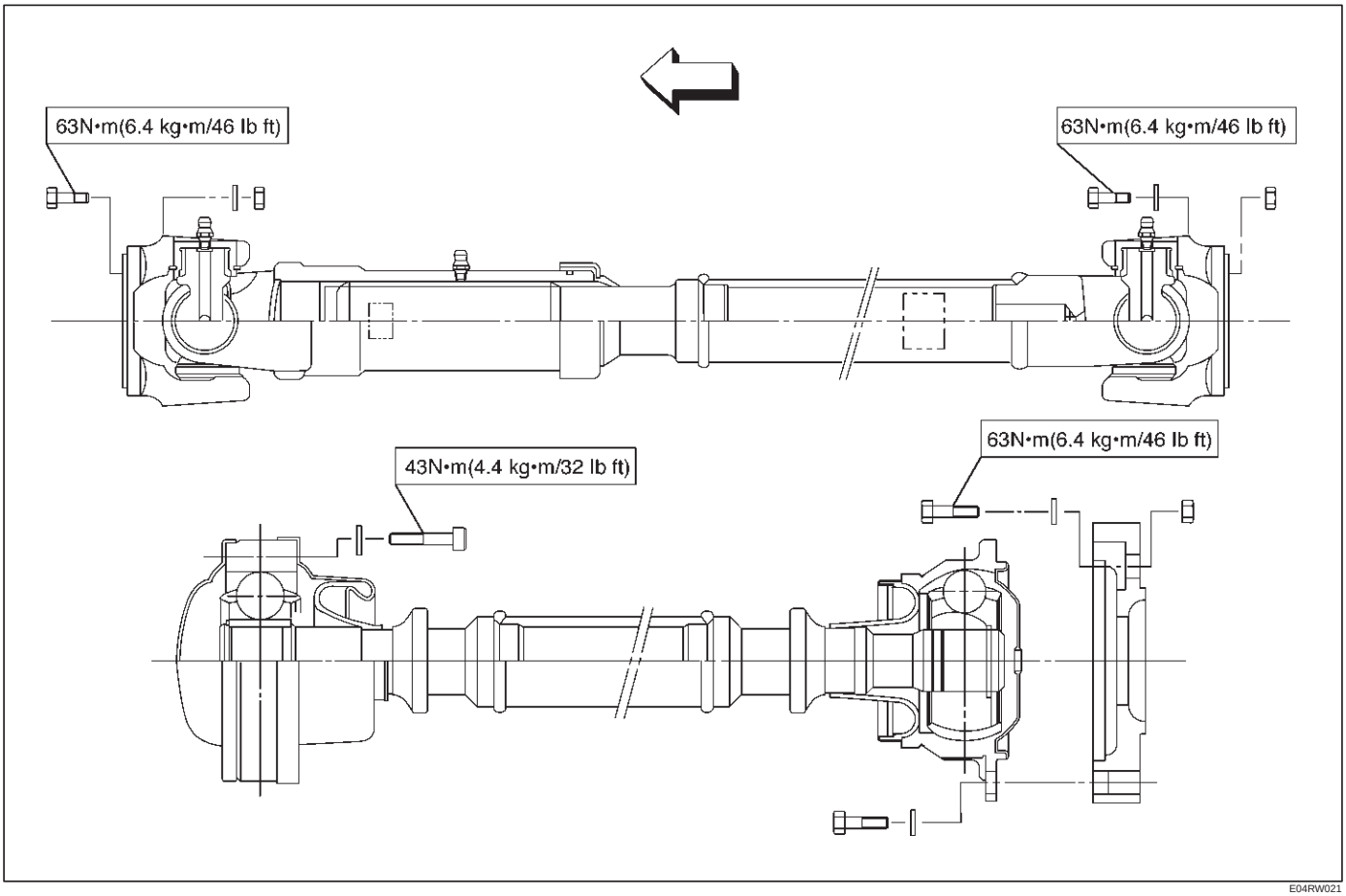

E04RW021

Rear Propeller Shaft

General Description

Since the propeller shaft is balanced carefully, welding or any other modifications are not permitted.

Alignment marks should be applied to each propeller shaft before removal.

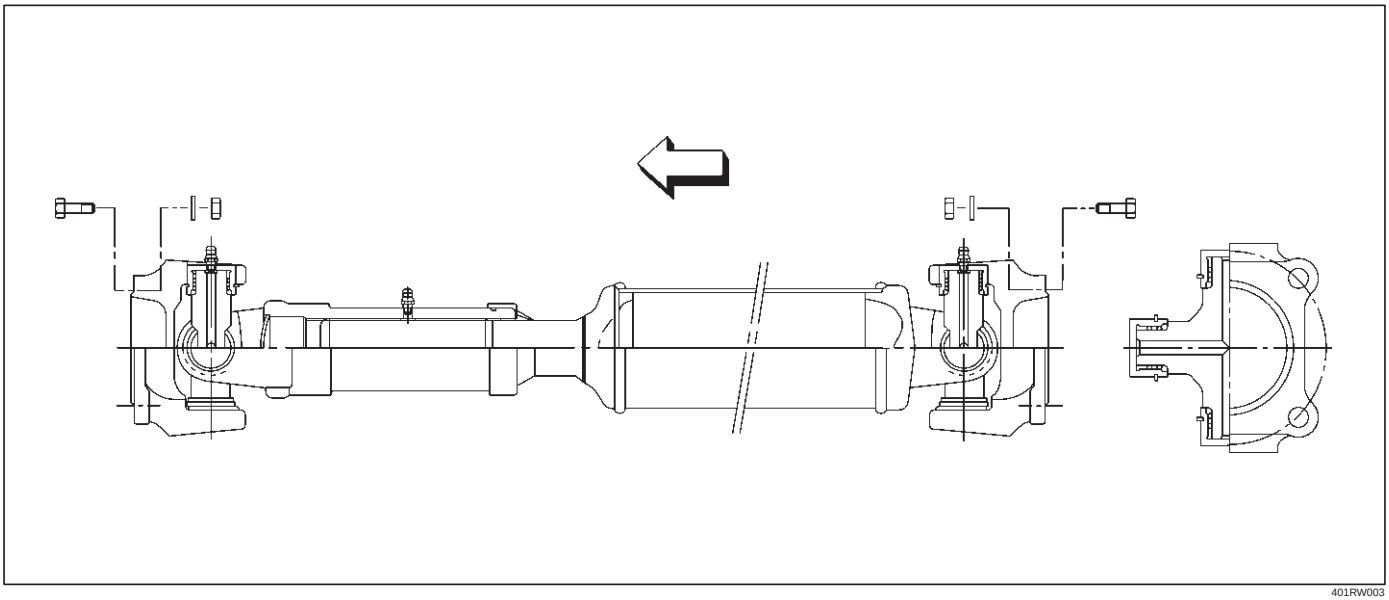

401RW003

Rear Propeller Shaft and Associated Parts

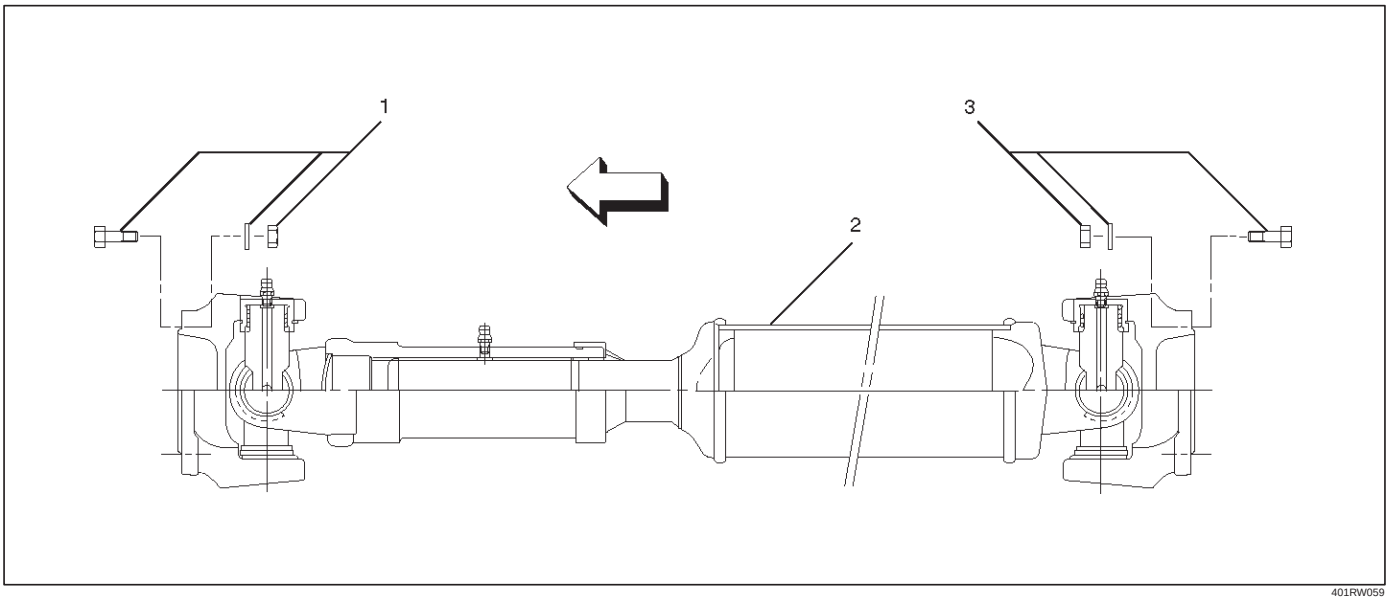

401RW059

Legend

(1) Bolt, Nut and Washer
(2) Rear Propeller Shaft
(3) Bolt, Nut and Washer

Removal

1. Jack up the vehicle and support it on the chassis stands.
2. Gear shift lever should be placed in neutral position and parking brake released.

NOTE: Apply alignment marks on the flange at the rear propeller shaft both front and rear side.

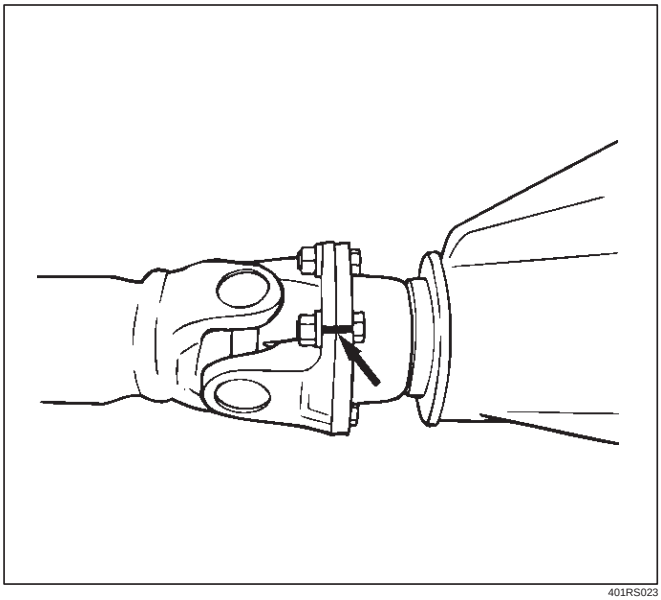

401RS023

3. Remove bolt, nut and washer (Rear axle side).
4. Remove bolt, nut and washer (Transfer side).
5. Remove rear propeller shaft.

Installation

NOTE: Never install the shaft assembly backwards.

1. Completely remove the black paint from the connecting surface of flange coupling on each end of propeller shaft. Clean so that no foreign matter will be caught in between.
2. Align the mark which is applied at removal .
   Install rear propeller shaft and tighten the bolts to the specified torque.

   Torque: 63 N·m (6.4 kg·m/46 lb ft)

3. After installing the propeller shaft, be sure to apply black paint (1) to exposed area (other than connecting surface) of the entire surface of flange coupling .

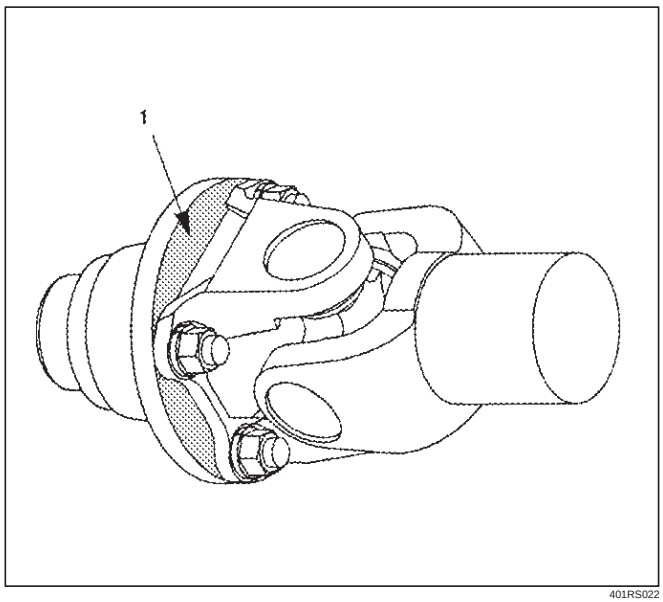

401RS022

Disassembly

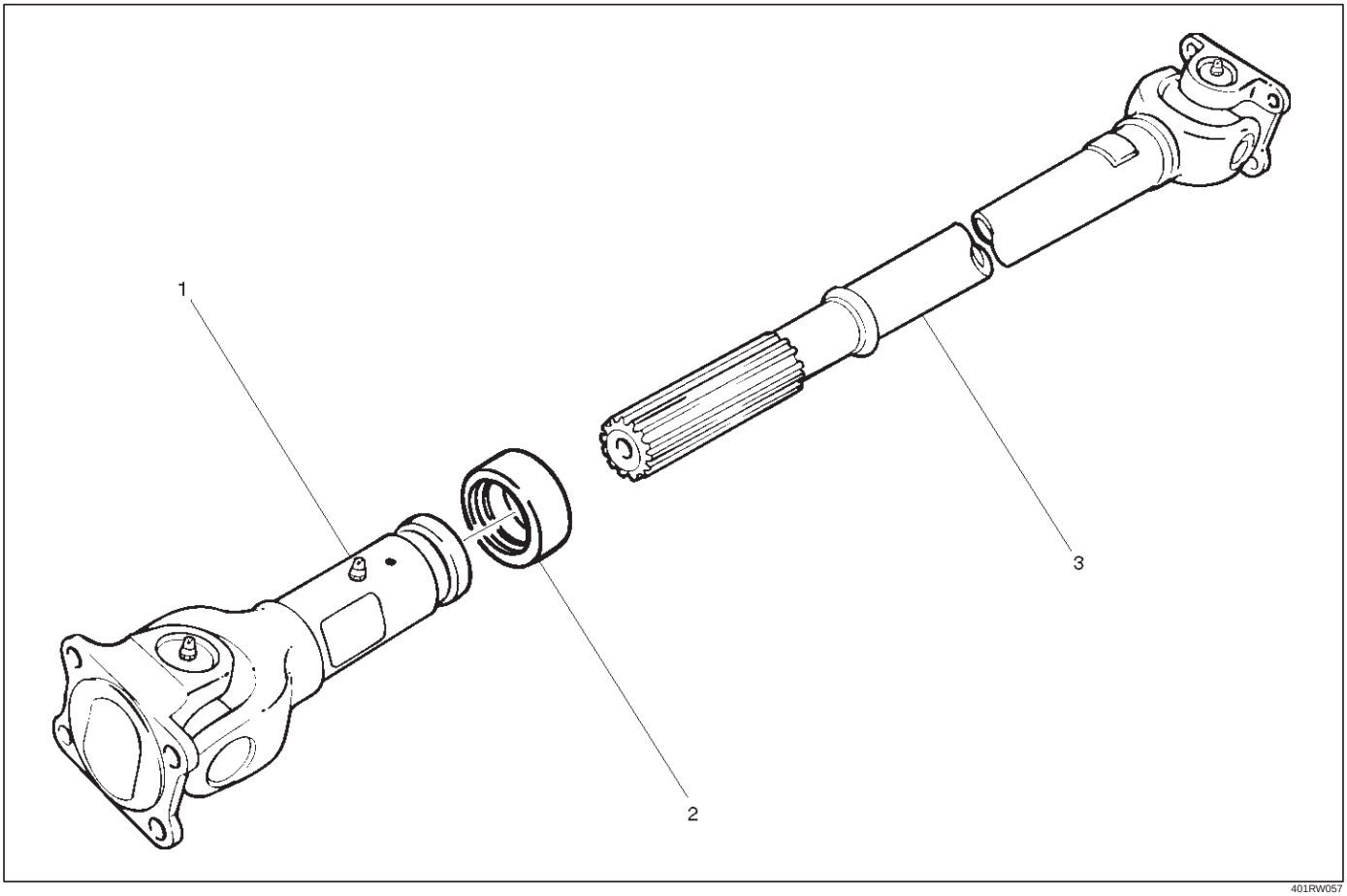

401RW057

Legend

(1) Sleeve Yoke
(2) Seal
(3) Tube Assembly

1. Apply alignment marks (1) on the sleeve yoke and tube assembly then remove sleeve yoke.

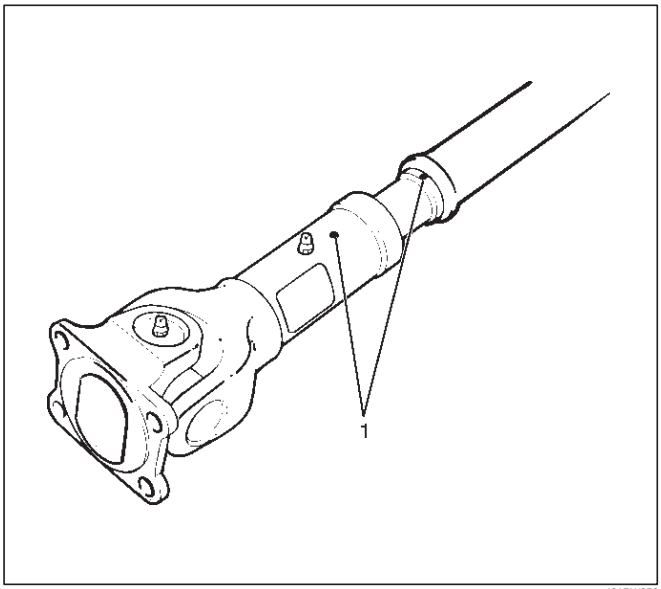

401RW056

2. Remove seal.
3. Remove tube assembly.

Universal Joint Disassembly

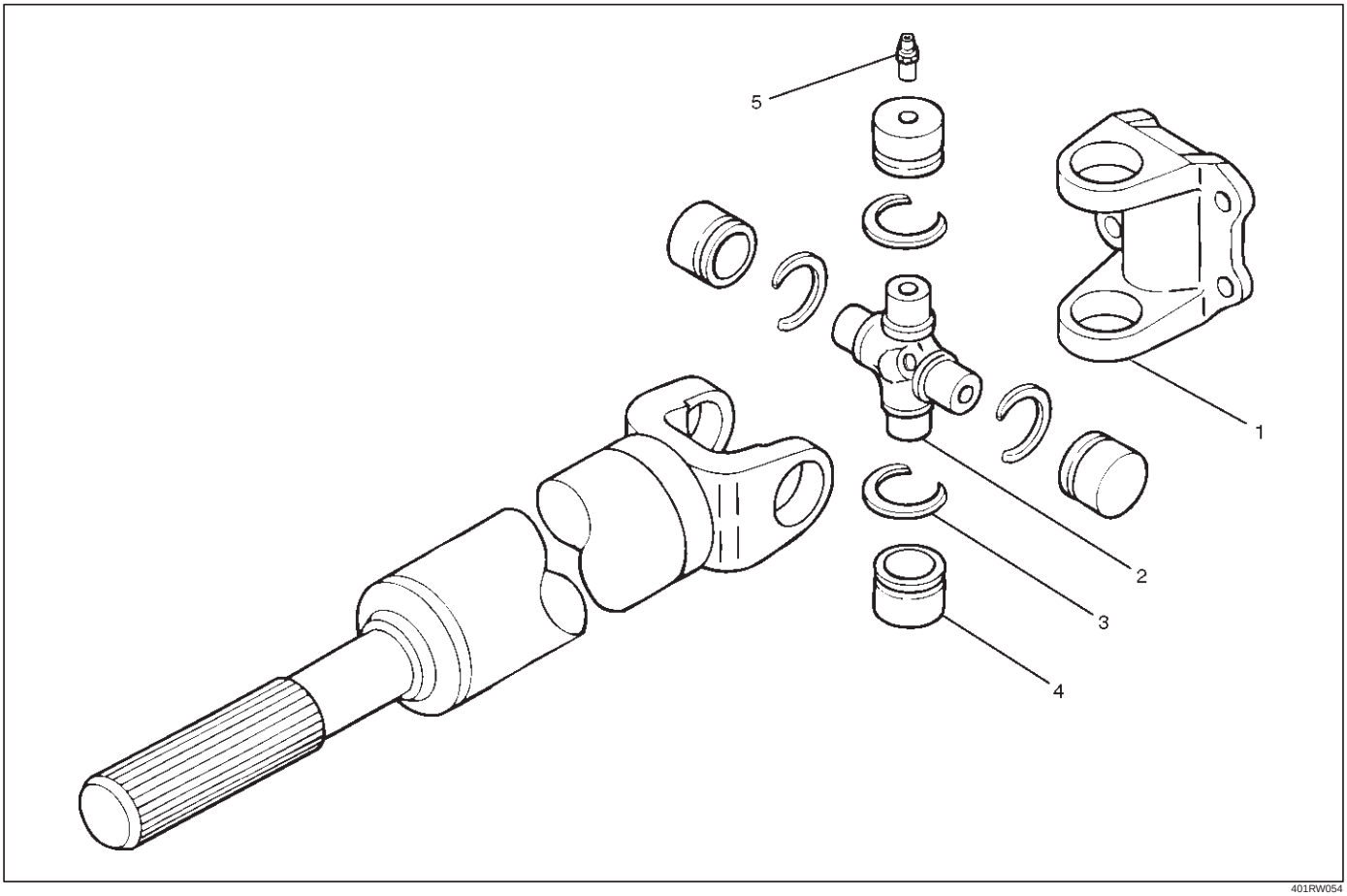

401RW054

Legend

(1) Flange Yoke
(2) Spider with Grease Fitting
(3) Snap Ring
(4) Needle Roller Bearing
(5) Grease Fitting

1. Apply alignment marks (1) on the yokes of the universal joint, then remove snap ring.

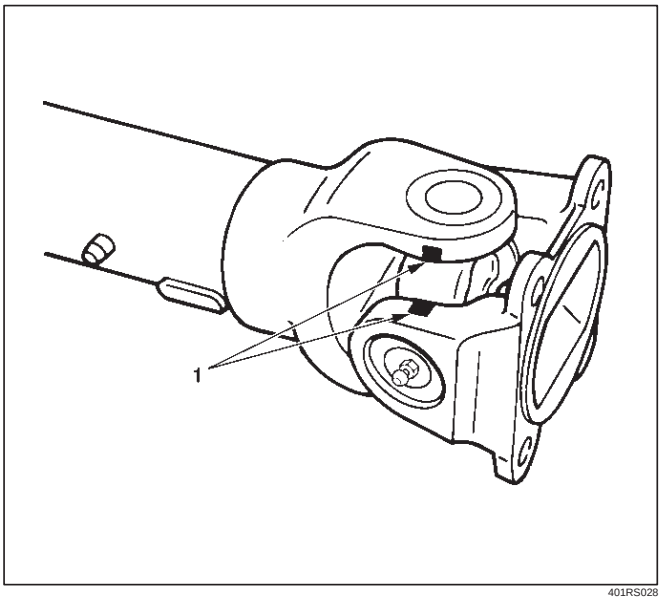

401RS028

2. Tap out the needle roller bearing by gently striking the shoulder of the yoke, using a mallet or a copper hammer.

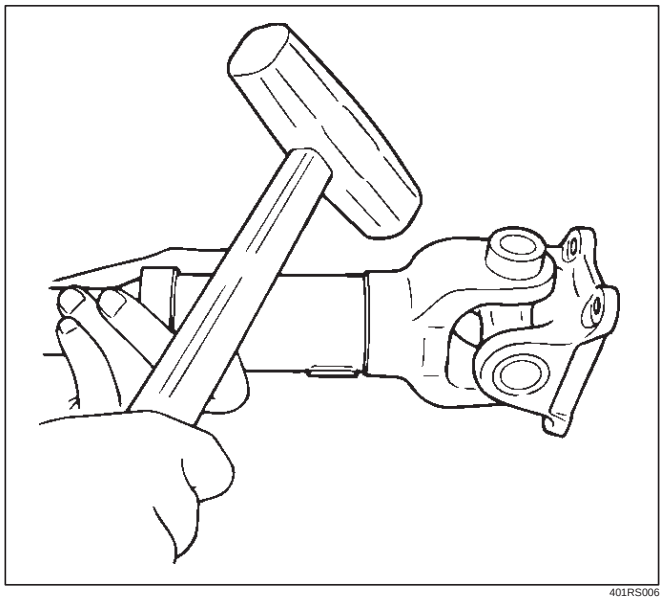

401RS006

3. Make sure of proper position for reinstallation by applying setting marks, then remove spider with grease fitting.

Inspection and Repair

Make necessary correction or parts replacement if wear, damage, corrosion or any other abnormal condition is found through inspection.

NOTE: When any part of the journal assembly (spider, needle roller bearing, grease fitting) requires replacement, be sure to replace the entire assembly.

Check the following parts for wear, damage, noise or any other abnormal conditions:

1. Spider
2. Needle roller bearing
3. Yoke
4. Flange

Outside Diameter of Spider Pin

Standard: 17.00 mm (0.669 in)

Limit: 16.90 mm (0.665 in)

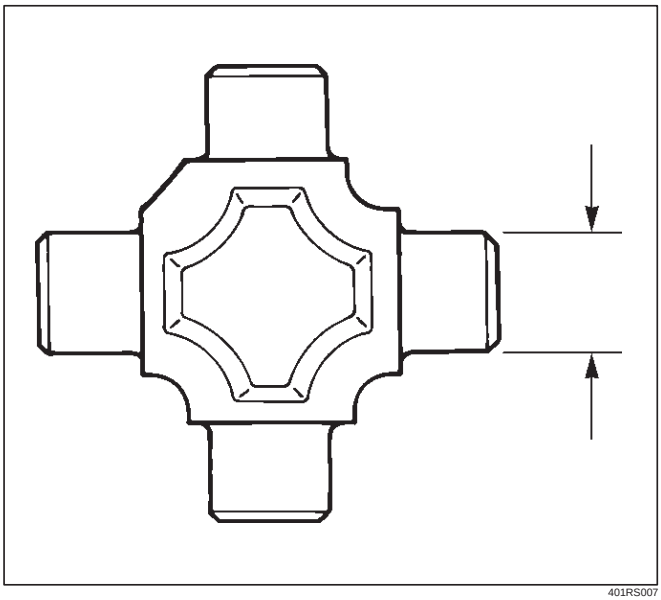

401RS007

Propeller Shaft Run-out

Support the ends of the propeller shaft on V-blocks (2) and check for run-out by holding the probe of a dial indicator (1) in contact with the center part of the shaft. If the amount of run-out is beyond the standard value for assembly, correct with a bench press or replace the shaft with a new propeller shaft assembly .

Standard: 0.3 mm (0.012 in)

Limit: 0.5 mm (0.02 in)

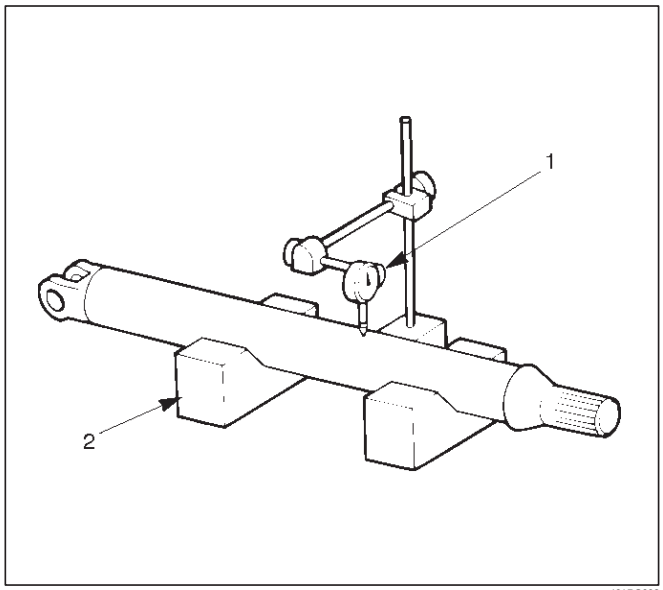

401RS008

Play in Splines in Normal Direction of Rotation

Check the amount of play between the sleeve yoke (1) and the propeller shaft spline (2) in the direction of rotation, using a pointed feeler gauge.

Standard: 0.073 – 0.156 mm (0.003 – 0.006 in)

Limit: 0.3 mm (0.012 in)

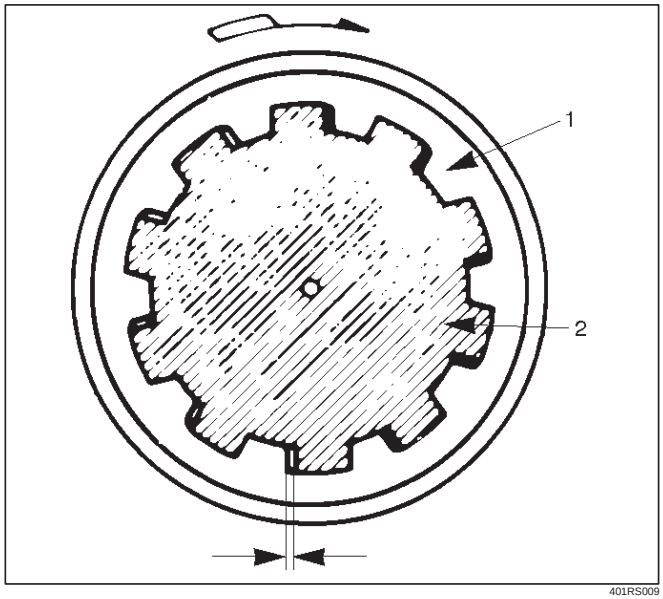

401RS009

Play in Universal Joint

Limit: Less than 0.1 mm (0.004 in)

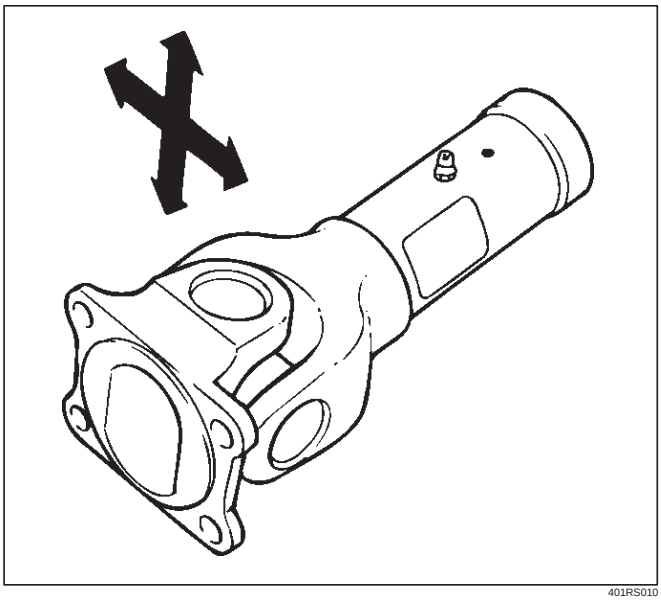

401RS010

Universal Joint Reassembly

1. Install spider to flange yoke. Be sure to install the spider by aligning the setting marks made during disassembly.
2. Before installing needle roller bearing, apply a molybdenum–disulfide grease or a multi–purpose type grease NLGI No. 2 to inside of the bearing cap.

Grease Amount: Approx. 1.2 g (0.042 oz)

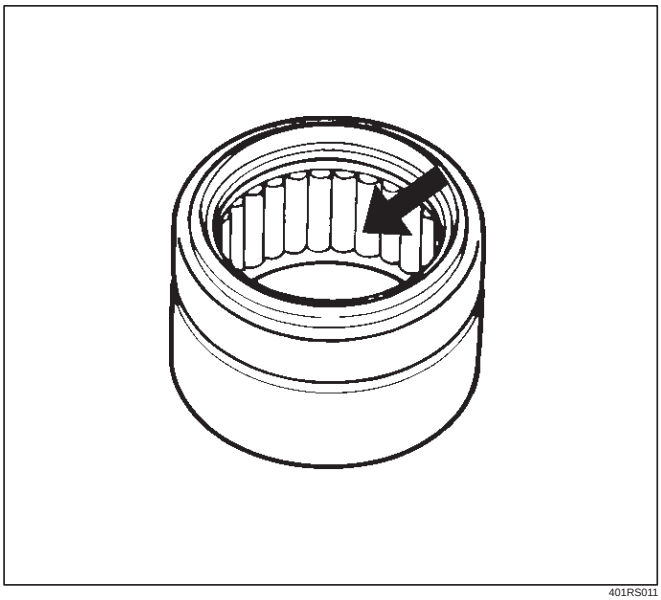

401RS011

3. Using either a mallet (or copper hammer) or a press, install the needle roller bearing into the yoke so that the snap ring can be installed in its groove.

CAUTION: The needle roller bearing cannot be installed smoothly if it is set at an incorrect angle with the flange and excessive hammering will damage the needle roller bearing.

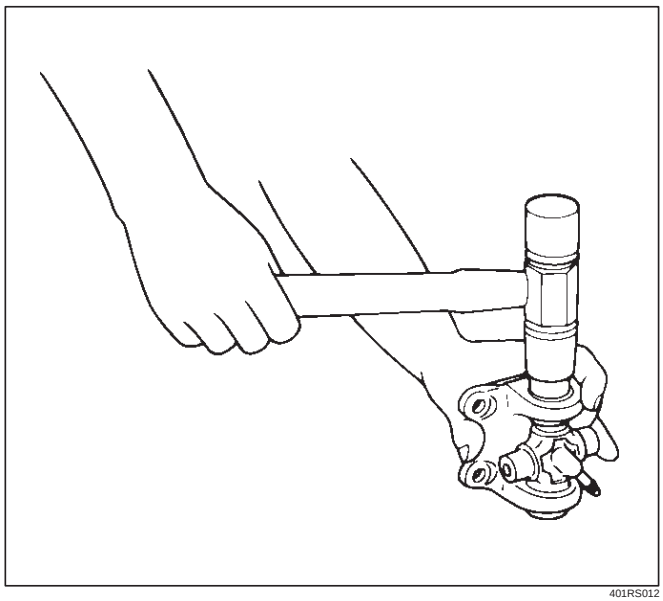

401RS012

4. Align setting marks (1) and join the yokes.

NOTE: Assemble the spider and spline yoke so that their grease fittings are arranged on the same side.

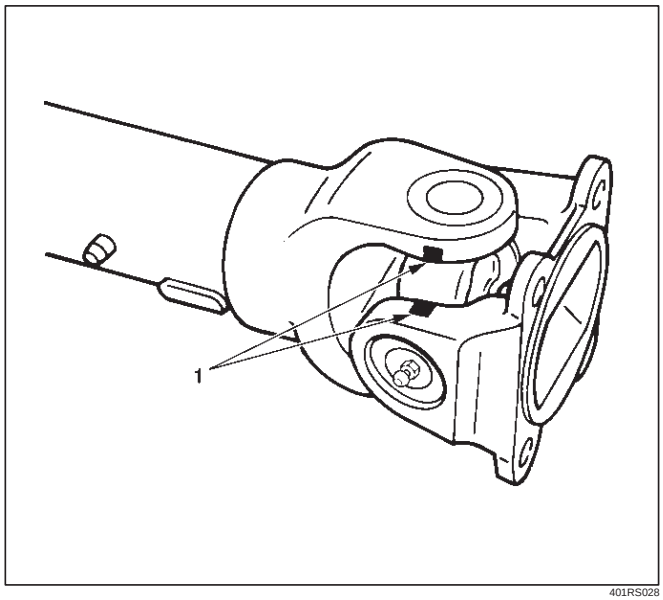

401RS028

5. Install snap ring.

NOTE: Discard used snap rings and install new ones.

When the bearing cap is in position, select and attach a snap ring of suitable thickness so that the end play of the spider pin is held within 0.1 mm (0.004 in).

Snap ring thickness and identification color

1.5 mm (0.059 in): Blue

1.545 mm (0.061 in): White

1.59 mm (0.063 in): Yellow

1.635 mm (0.064 in): Green

1.68 mm (0.066 in): Not colored

NOTE: Be sure to use snap rings of the same thickness on both sides.

Reassembly

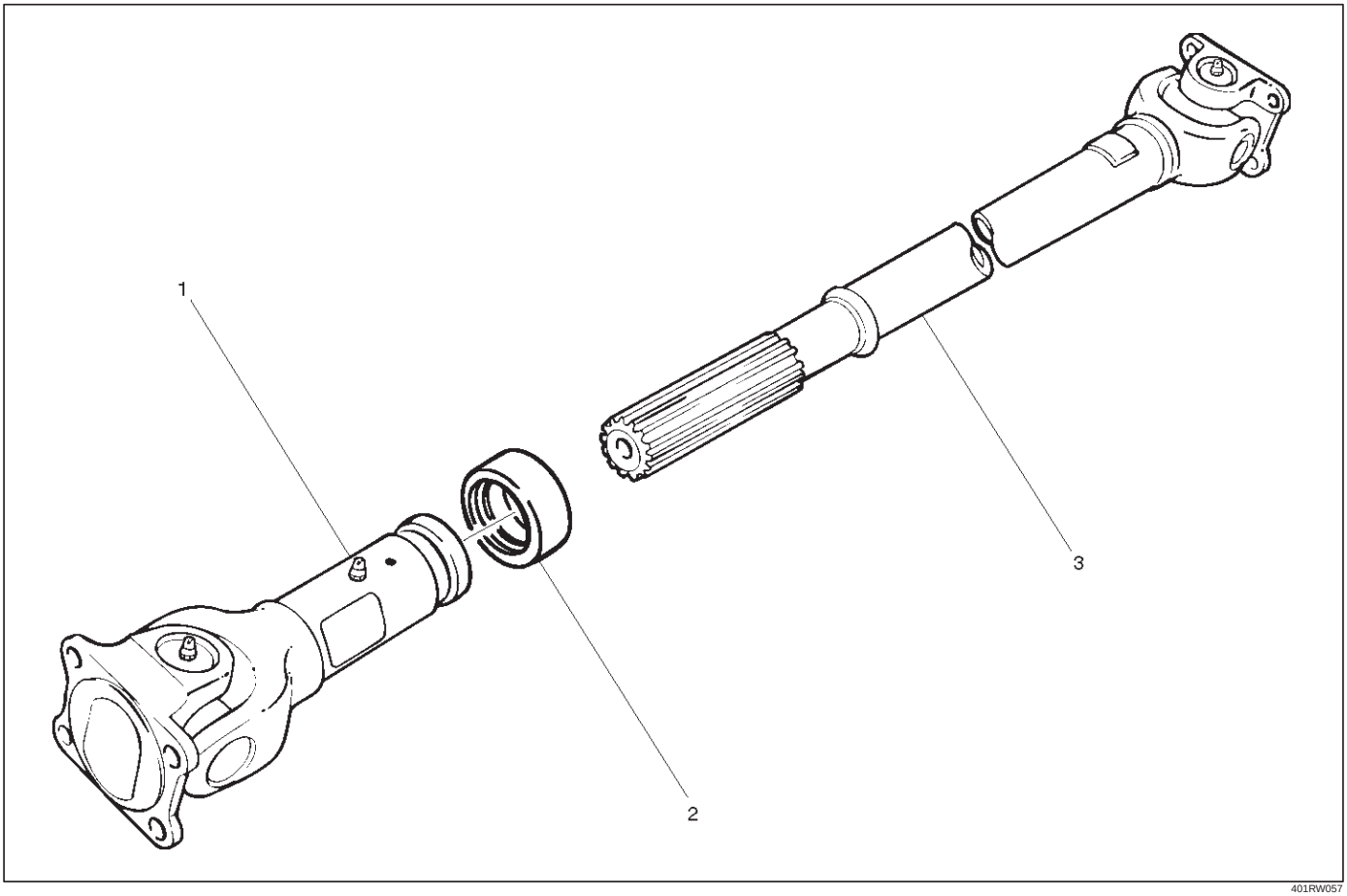

401RW057

Legend

(1) Sleeve Yoke
(2) Seal
(3) Tube Assembly

1. Discard used seal and install new one.
2. Align the alignment marks and install tube assembly to sleeve yoke.

Main Data and Specifications

General Specifications

Engine		6VE1 (3.5L)			6VD1 (3.2L)			4JX1 (3.0L)		4JG2 (3.1L)	
Transmission		M/T	A/T	A/T with TOD	M/T	A/T	A/T with TOD	M/T	A/T	M/T	A/T
Construction		Hollow steel tube with yoke and spider type universal joint									
Length	SWB	668mm (26.30in)		—	846mm (33.31in)	678mm (26.69in)	—	604mm (23.78in)		810mm (31.89in)	—
	LWB	1093mm (43.03in)		1075mm (42.32in)	1271mm (50.04in)	1103mm (43.43in)	1083mm (42.64in)	1029mm (40.51in)		1236mm (48.66in)	1037mm (40.83in)
Outside diamter	SWB	68.9mm (2.71in)		—	68.9mm (2.71in)		—	68.9mm (2.71in)			—
	LWB	68.9mm (2.71in)			82.6mm (3.25in)	68.9mm (2.71in)				82.6mm (3.25in)	68.9mm (2.71in)

Torque Specifications

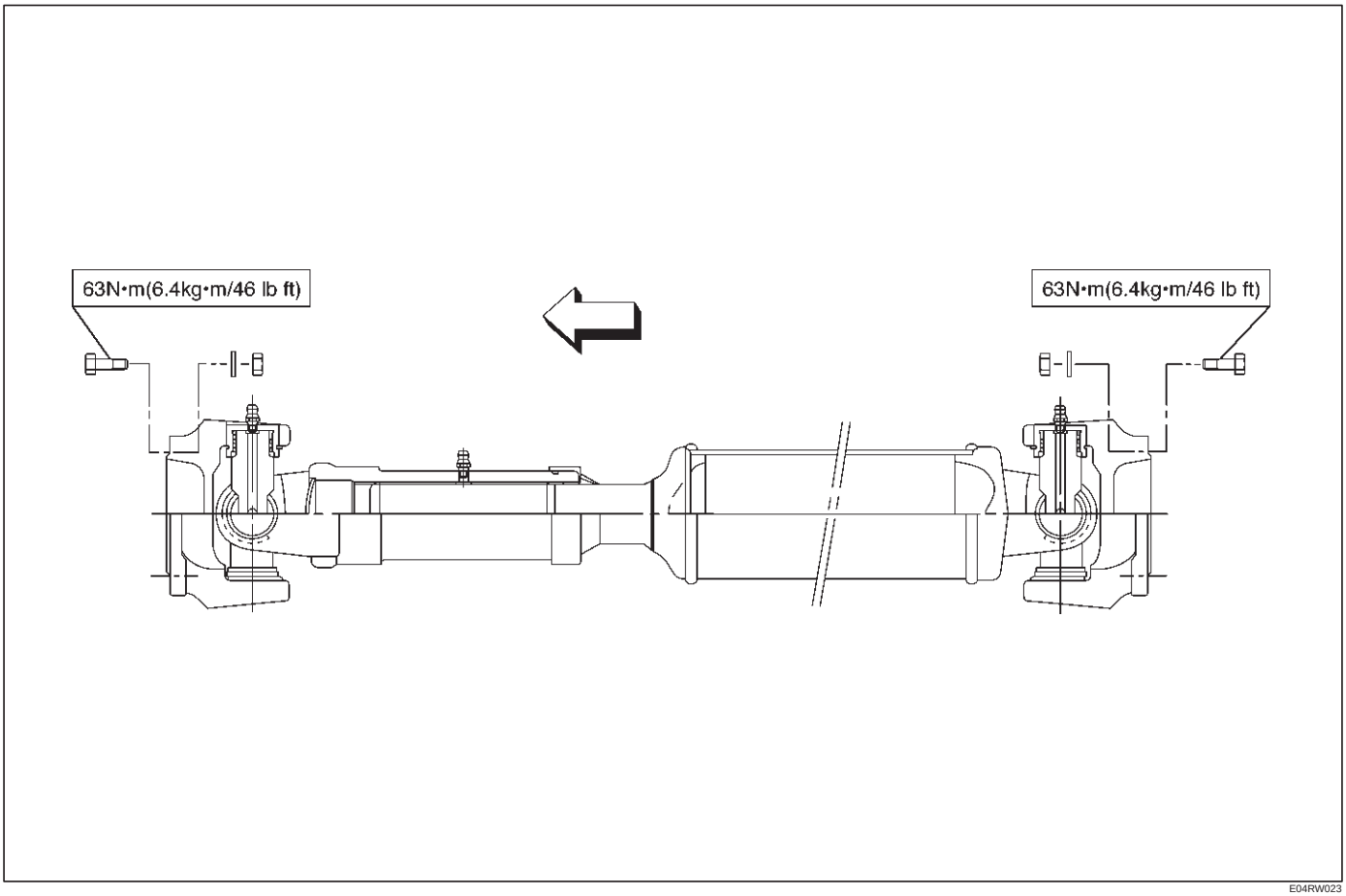

E04RW023

DRIVELINE/AXLE

TRANSFER CASE (STANDARD TYPE)

CONTENTS

Service Precaution 4D1–1
General Description 4D1–2
Transfer Rear Oil Seal 4D1–8
Removal 4D1–8
Installation 4D1–8
Transfer Case Assembly 4D1–9
Removal 4D1–9
Installation 4D1–10
Transfer Rear Cover Assembly (4WD Switch Model) 4D1–11
Transfer Rear Cover Assembly and Associated Parts 4D1–11
Removal 4D1–12
Installation 4D1–13
Disassembly 4D1–16
Inspection and Repair 4D1–17
Reassembly 4D1–17
Transfer Rear Cover Assembly (Except 4WD Switch Model) 4D1–19
Transfer Rear Cover Assembly and Associated Parts 4D1–19
Removal 4D1–20
Installation 4D1–20
Disassembly 4D1–23
Inspection and Repair 4D1–24
Reassembly 4D1–24
Detent, Shift Arm, and Interlock Pin 4D1–26
Disassembled View 4D1–26
Disassembly 4D1–26
Inspection and Repair 4D1–28
Reassembly 4D1–28
Transfer Case Assembly 4D1–30
Disassembled View 4D1–30
Disassembly 4D1–31
Inspection and Repair 4D1–33
Reassembly 4D1–37
Main Data and Specifications 4D1–43
Special Tools 4D1–46

Service Precaution

WARNING: THIS VEHICLE HAS A SUPPLEMENTAL RESTRAINT SYSTEM (SRS). REFER TO THE SRS COMPONENT AND WIRING LOCATION VIEW IN ORDER TO DETERMINE WHETHER YOU ARE PERFORMING SERVICE ON OR NEAR THE SRS COMPONENTS OR THE SRS WIRING. WHEN YOU ARE PERFORMING SERVICE ON OR NEAR THE SRS COMPONENTS OR THE SRS WIRING, REFER TO THE SRS SERVICE INFORMATION. FAILURE TO FOLLOW WARNINGS COULD RESULT IN POSSIBLE AIR BAG DEPLOYMENT, PERSONAL INJURY, OR OTHERWISE UNNEEDED SRS SYSTEM REPAIRS.

CAUTION: Always use the correct fastener in the proper location. When you replace a fastener, use ONLY the exact part number for that application. ISUZU will call out those fasteners that require a replacement after removal. ISUZU will also call out the fasteners that require thread lockers or thread sealant. UNLESS OTHERWISE SPECIFIED, do not use supplemental coatings (Paints, greases, or other corrosion inhibitors) on threaded fasteners or fastener joint interfaces. Generally, such coatings adversely affect the fastener torque and the joint clamping force, and may damage the fastener. When you install fasteners, use the correct tightening sequence and specifications. Following these instructions can help you avoid damage to parts and systems.

General Description

M/T, W/Shift On The Fly, W/4WD Switch, model

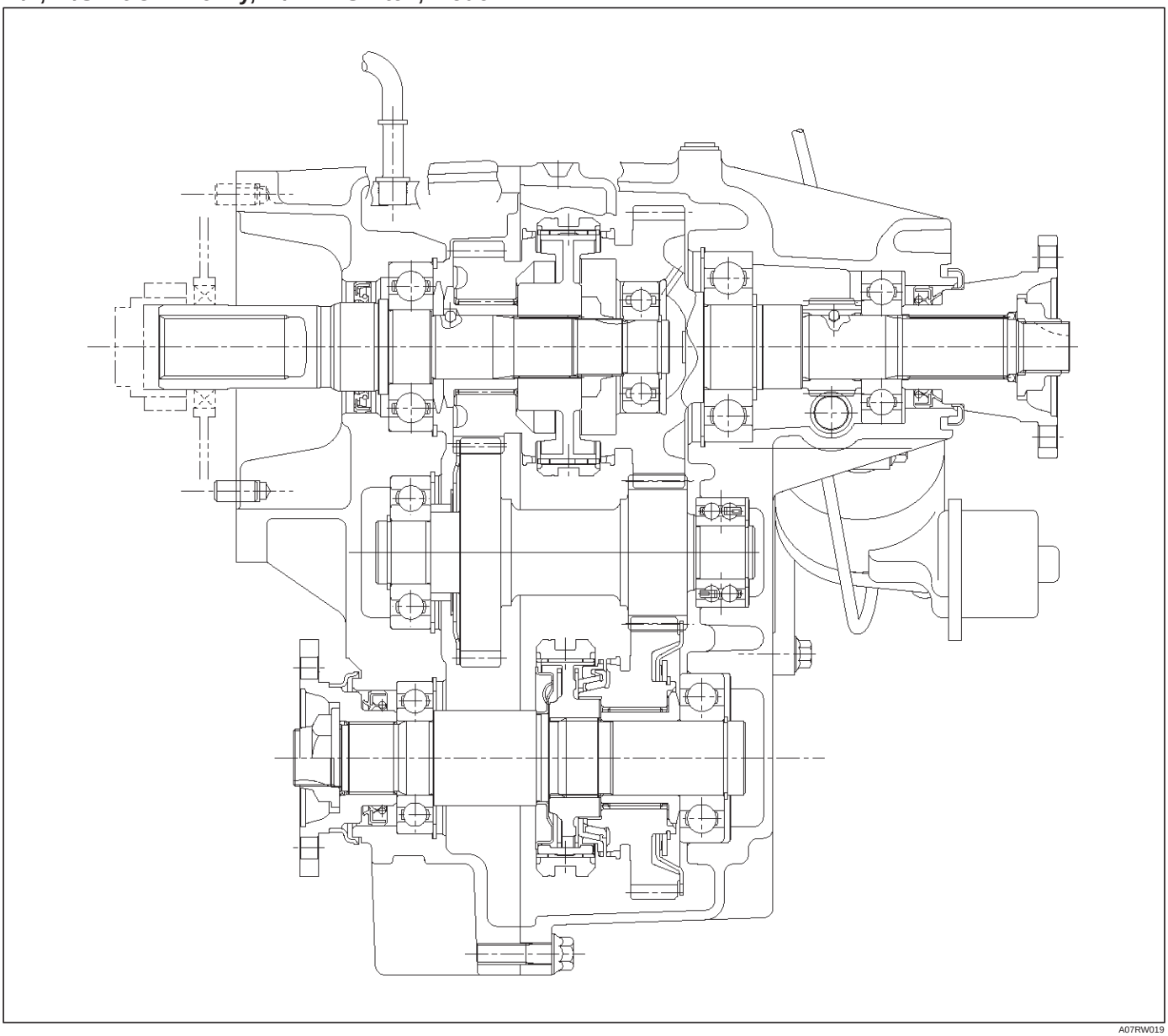

A07RW019

M/T, W/Shift On The Fly, WO/4WD Switch, model

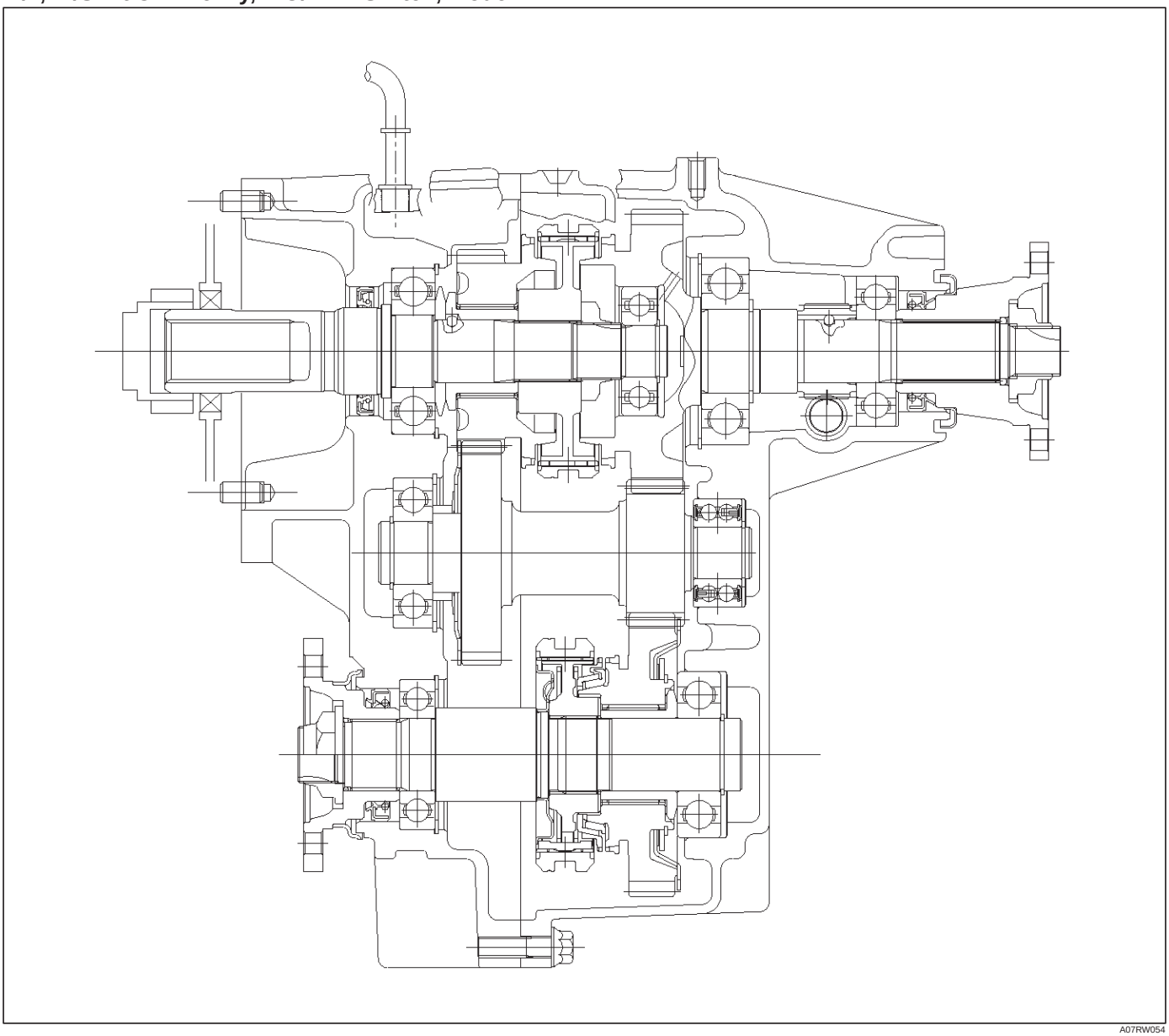

A07RW054

M/T, WO/Shift On The Fly, WO/4WD Switch, model

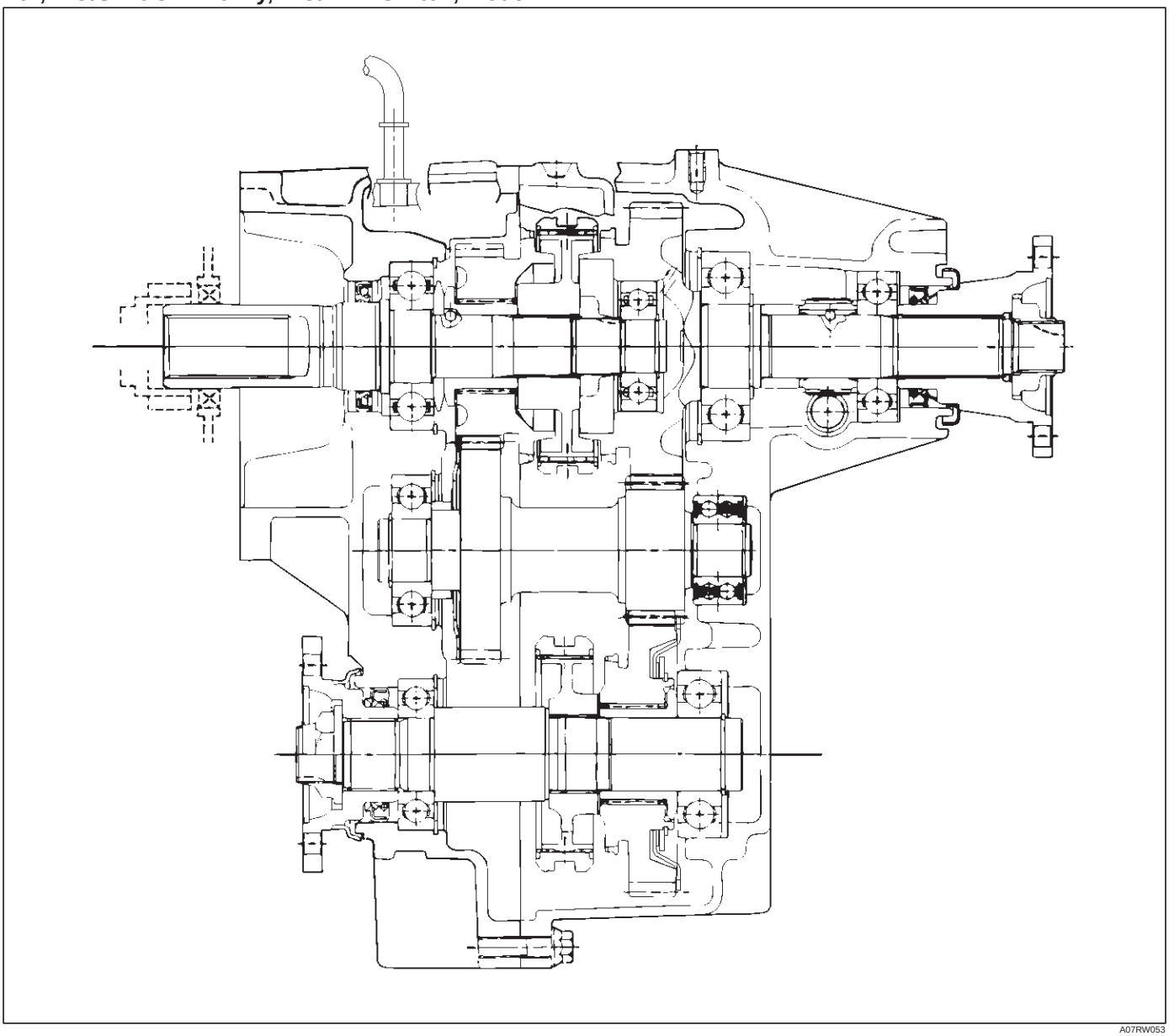

A07RW053

A/T, W/Shift On The Fly, W/4WD Switch, model

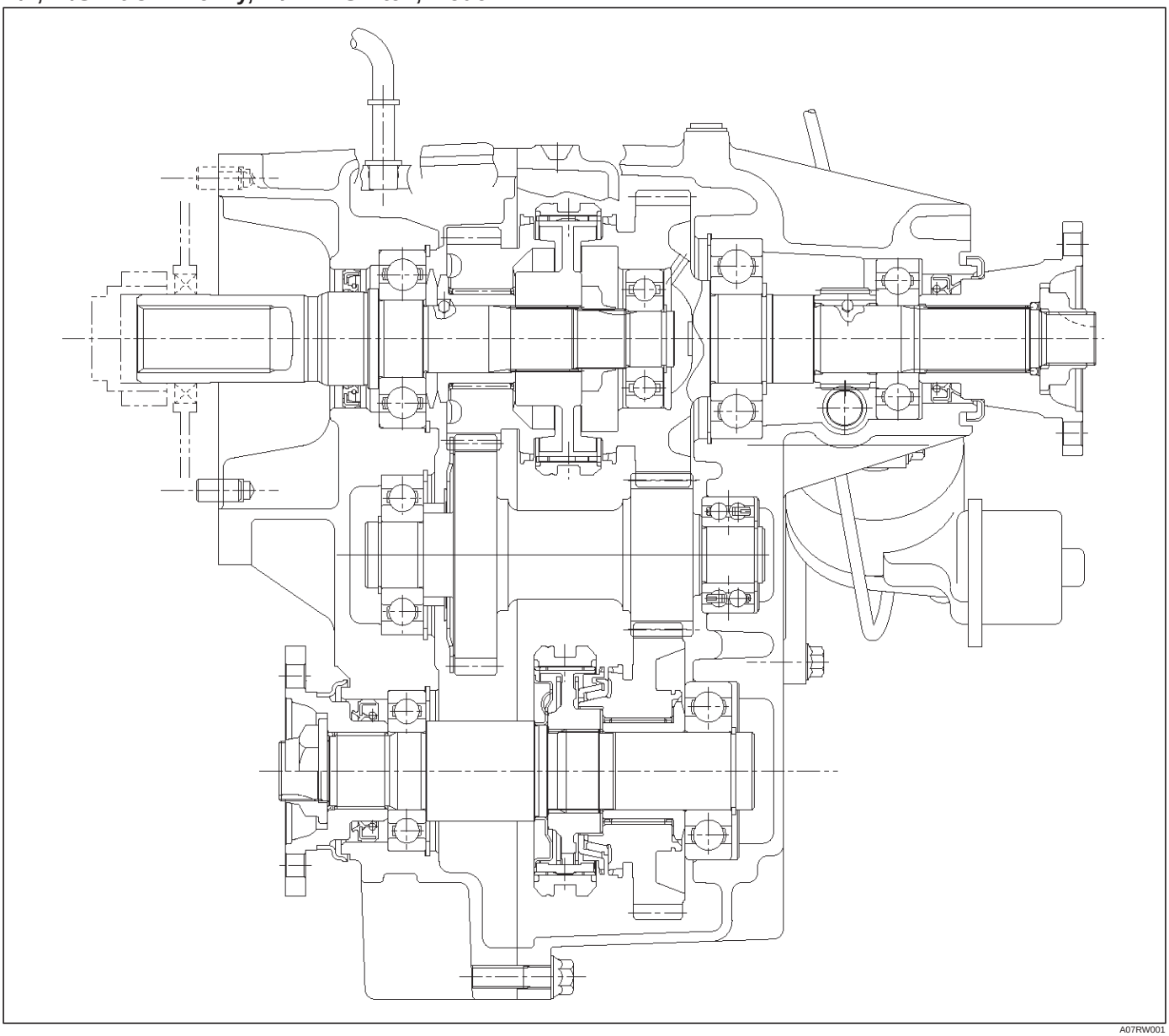

A07RW001

A/T, W/Shift On The Fly, WO/4WD Switch, model

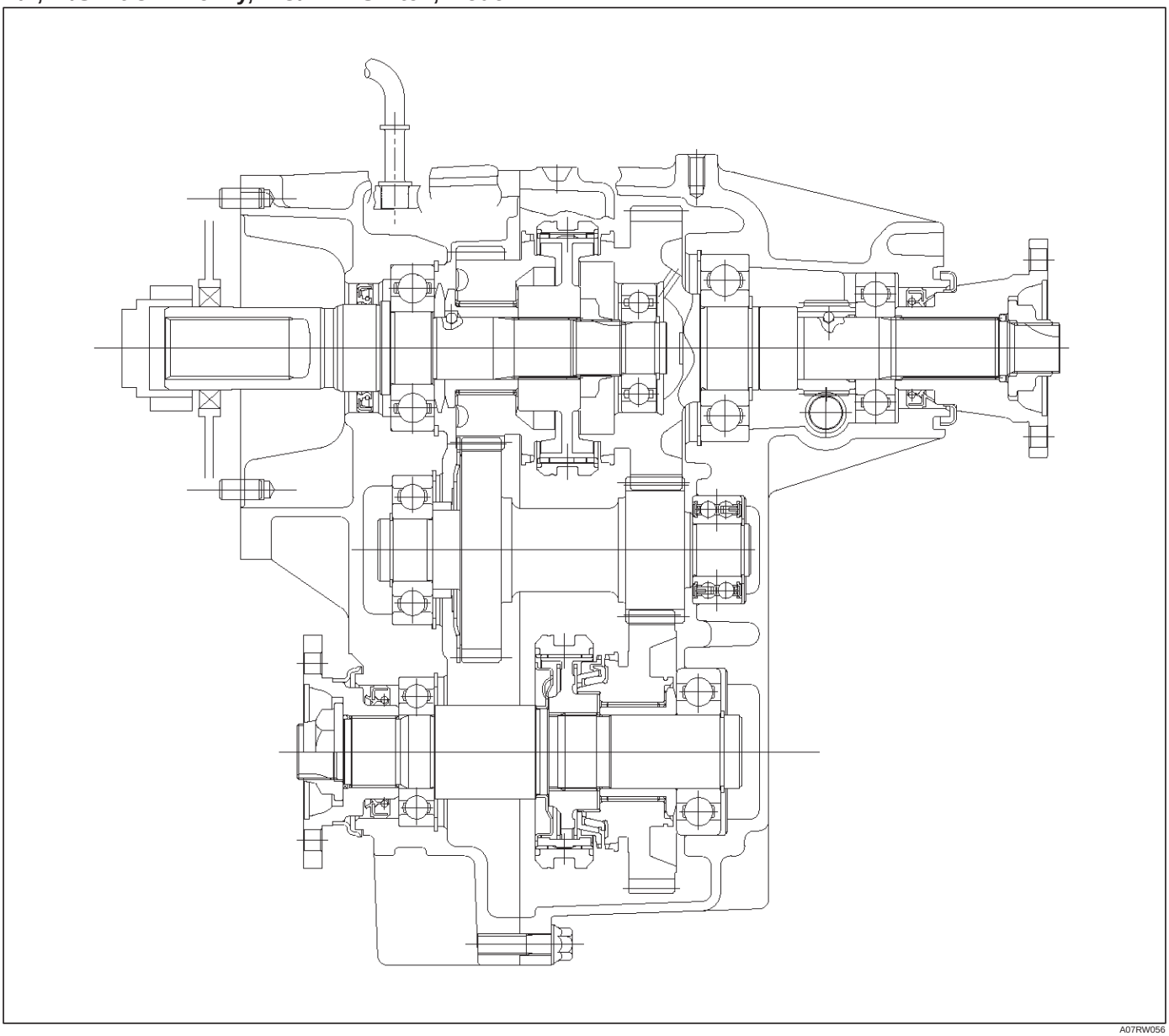

A07RW056

A/T, WO/Shift On The Fly, WO/4WD Switch, model

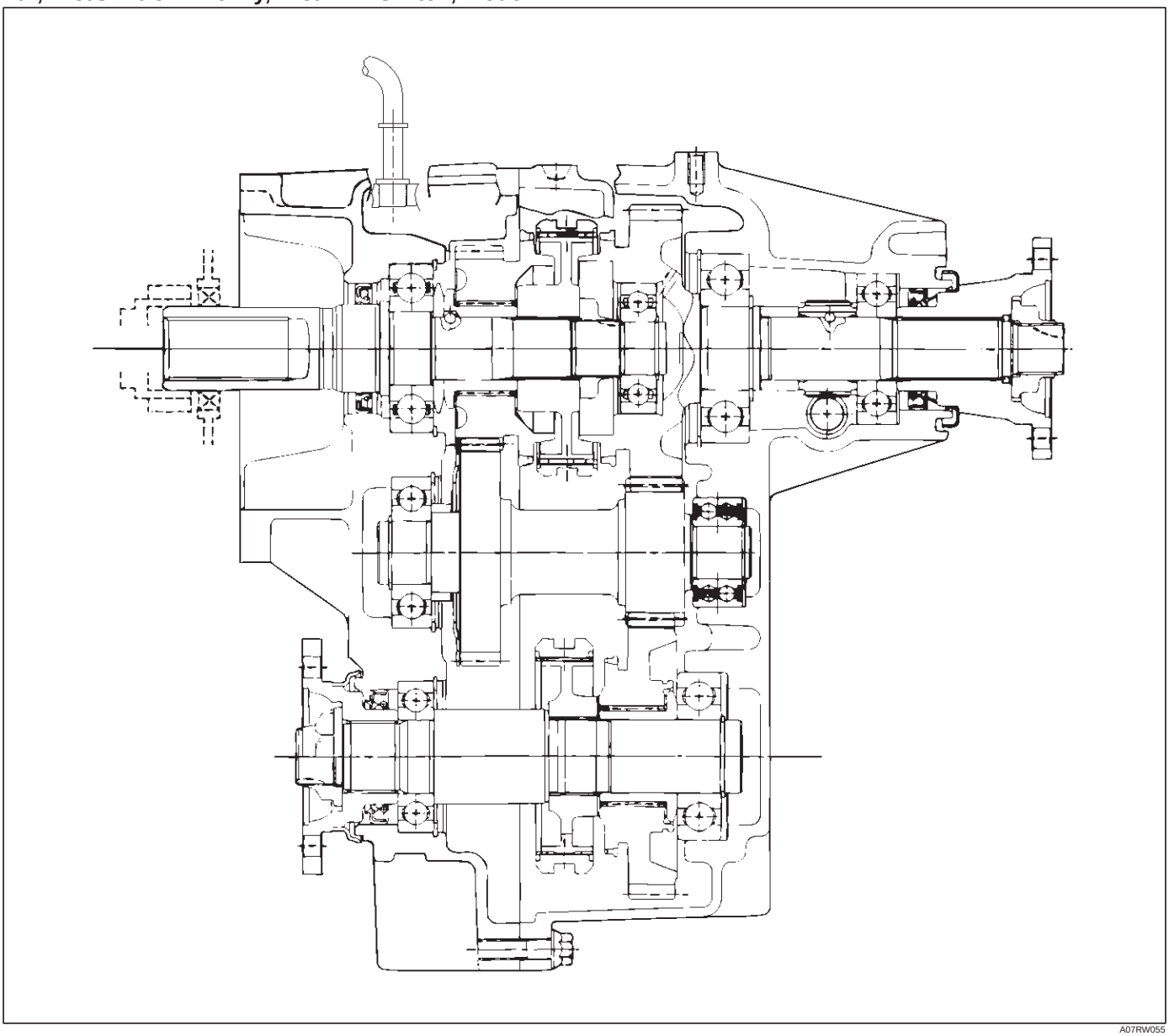

A07RW055

The transfer case is used to provide a means of providing power flow to the front axle. The transfer case also provides a means of disconnecting the front axle, providing better fuel economy and quieter operation when the vehicle is driven on improved roads where four wheel drive is not required. In addition, the transfer case provides an additional gear reduction when placed in low range, which is useful when difficult off–road conditions are encountered.

A floor mounted shift lever is used to select the high–low range. When four wheel drive switch has been turned on, the four wheel drive indicator light is designed to come on when the front axle has been engaged.

Transfer Rear Oil Seal

Removal

1. Disconnect the rear propeller shaft from the transfer case side.
2. Remove end nut and rear companion flange, using the companion flange holder 5–8840–0133–0 (J–8614–11).

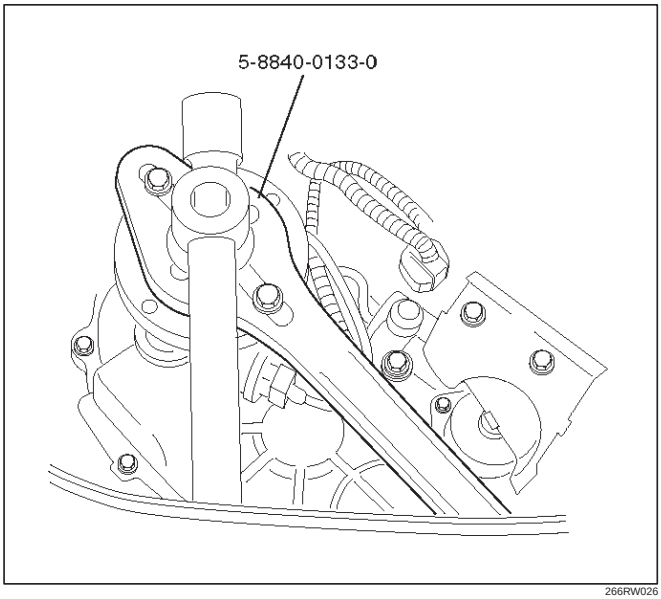

266RW026

3. Use the universal puller to remove the rear companion flange and O–ring.
4. Remove the oil seal from the transfer case.

Installation

To install, follow the removal steps in the reverse order, noting the following points:

1. Install oil seal and apply engine oil to the oil seal outer surfaces.
2. Apply the recommended grease (BESCO L2) or equivalent to the oil seal lip.
3. Use the oil seal installer 5–8840–2292–0 (J–39208) to install the rear seal to the transfer rear case.

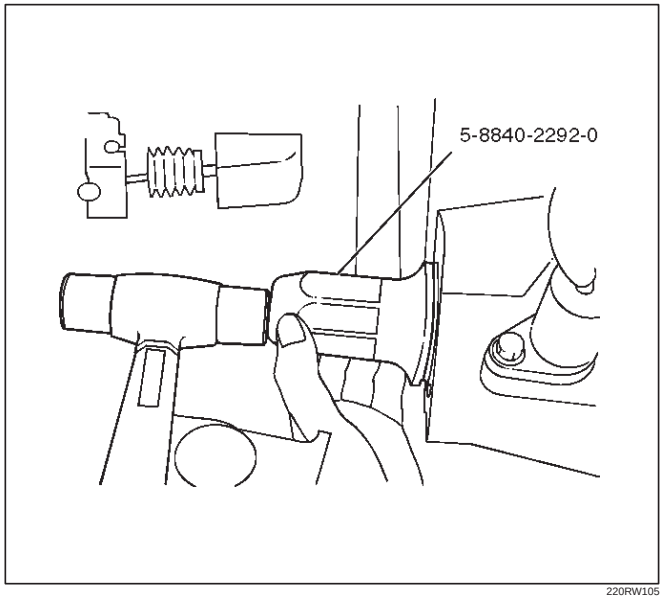

220RW105

4. Install the rear companion flange and O–ring.
5. Use the companion flange holder 5–8840–0133–0 (J–8614–11) to install a new end nut and tighten to the specified torque.

   Torque: 167 N·m (17.0kg·m/123 lb ft)

6. Use the punch 5–8840–2293–0 (J–39209) to stake the end nut at two spots.

NOTE: Be sure to confirm that there is no crack at the staked portion of the end nut after staking.

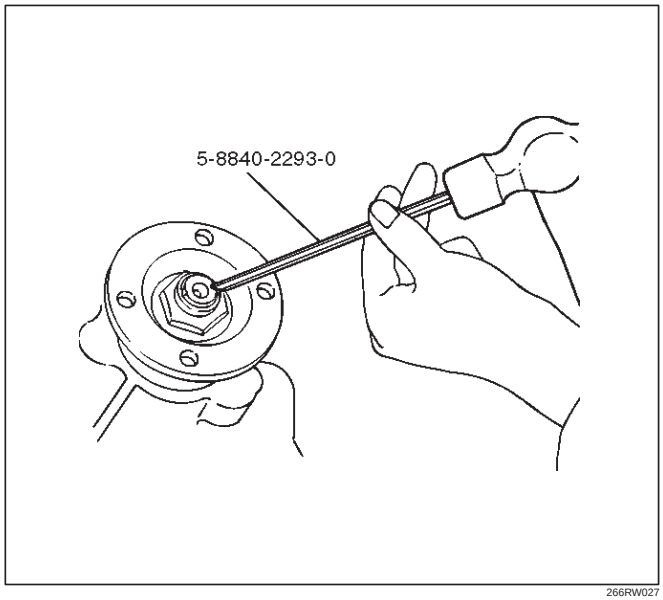

266RW027

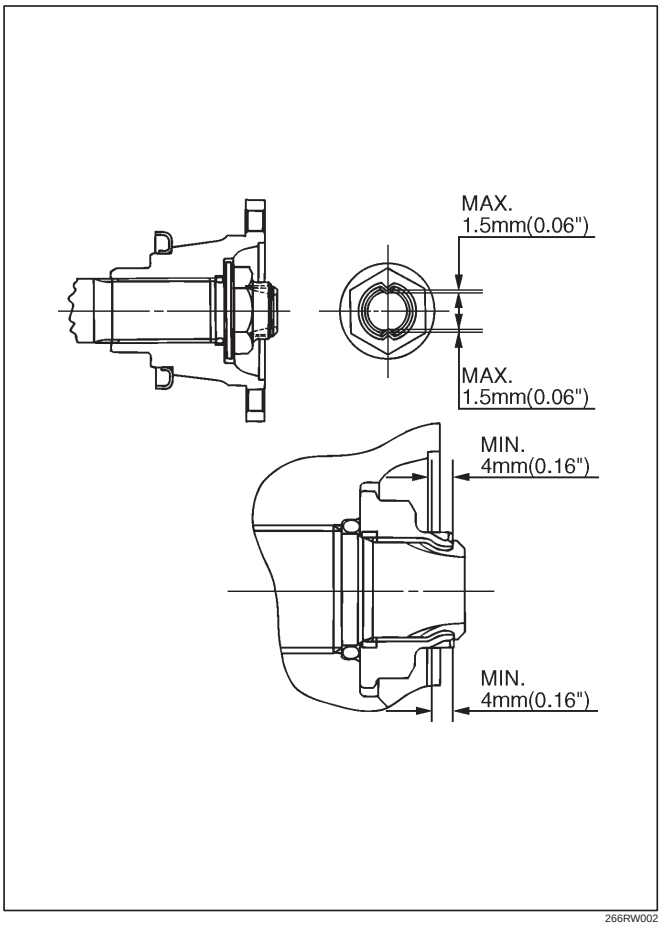

266RW002

7. Connect the rear propeller shaft to the transfer case and tighten to the specified torque.

Torque: 63 N·m (6.4kg·m/46 lb ft)

Transfer Case Assembly

Removal

NOTE: Before removing the transmission & transfer assembly from the vehicle, change the transfer mode to 2WD by pushing button switch on dash panel. (4WD Switch Model)

1. Disconnect the battery ground cable.
2. Drain the transfer case fluid, if overhauling the transter case assembly.
3. Remove the exhaust and transfer protectors.
4. Remove the rear and front propeller shafts from the transfer case side.
5. Remove the transfer control lever knob.
6. Disconnect the harness connectors and remove the front console.
7. Remove the selector lever assembly. Refer to Selector Lever in the Section 7A.
8. Remove the transfer control lever.
9. Disconnect the 4WD switch connector, speed sensor harness connector and 2WD–4WD actuator harness connector (4WD Switch Model) from the transmission harness.
10. Support the transfer case with a transmission jack.
11. Remove the transmission–transfer bolts and the nut (M/T).
12. Remove the transfer case assembly from the vehicle.

Installation

To install, follow the removal steps in the reverse order, noting the following points:

1. Apply a thin coat of molybdenum disulfide grease to the input shaft spline and install the transter case assembly to the vehicle.

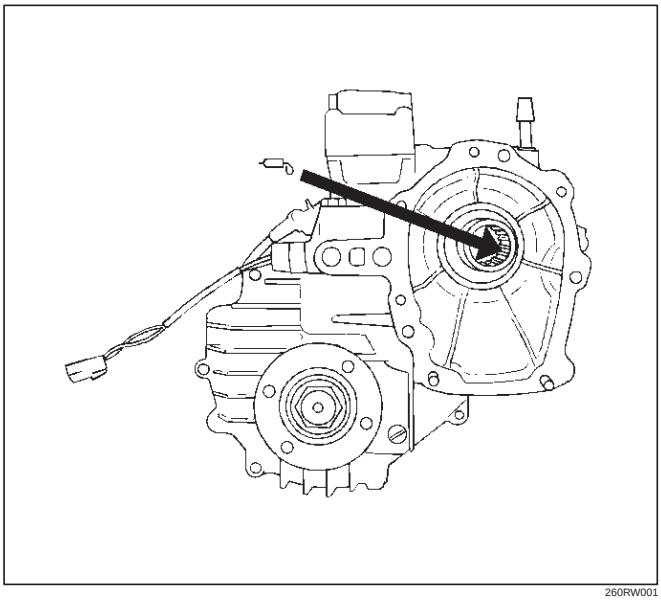

260RW001

2. Tighten the transmission–transfer bolts and the nut (M/T) to the specified torque.

   Torque: 46 N·m (4.7kg·m/34 lb ft)

3. Tighten the propeller shaft bolts to the specified torque.

   Torque: 63 N·m (6.4kg·m/46 lb ft)

4. Tighten the transfer protector bolts to the specified torque.

   Torque: 37 N·m (3.8kg·m/27 lb ft)

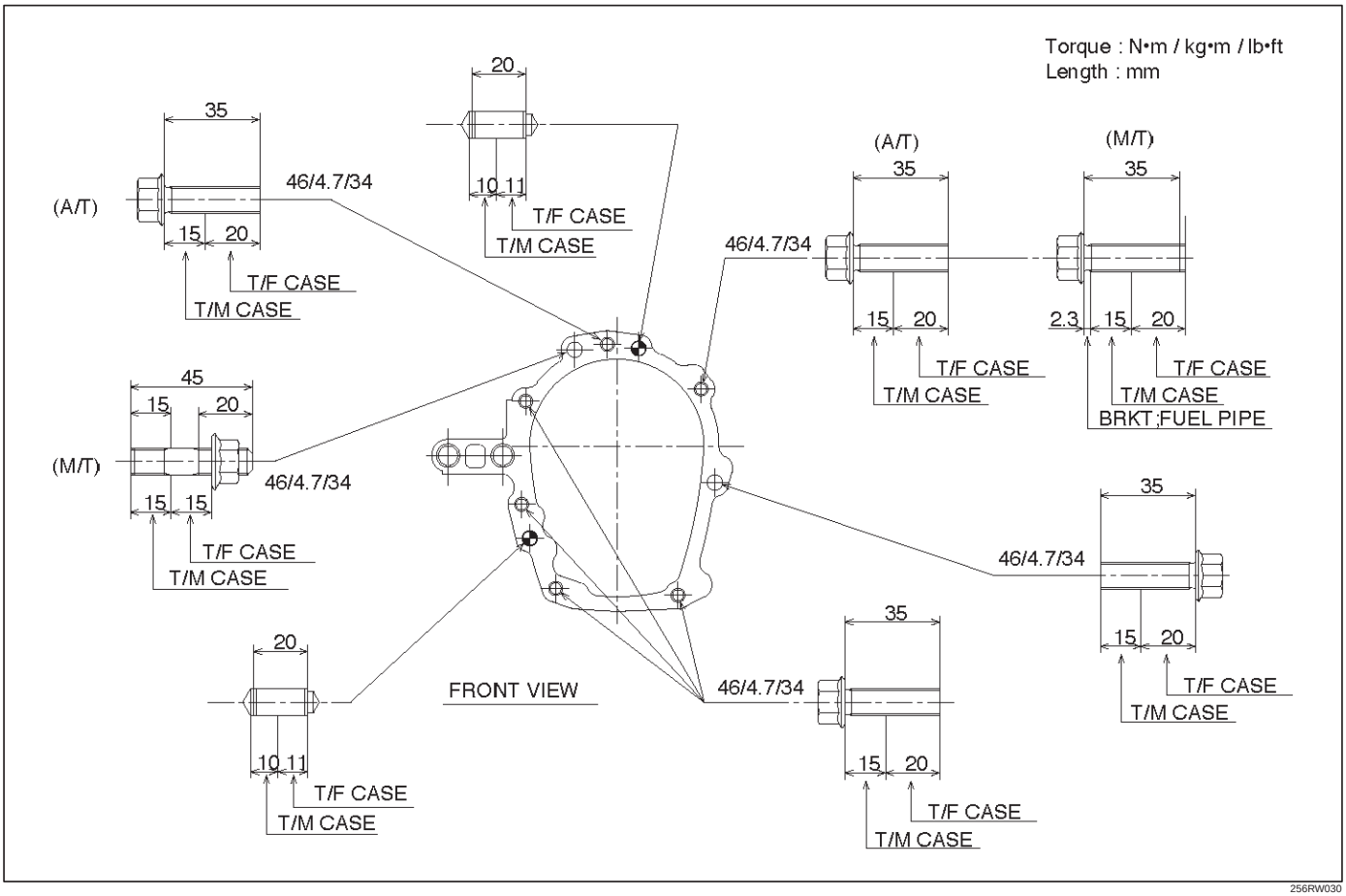

256RW030

Transfer Rear Cover Assembly (4WD Switch Model)

Transfer Rear Cover Assembly and Associated Parts

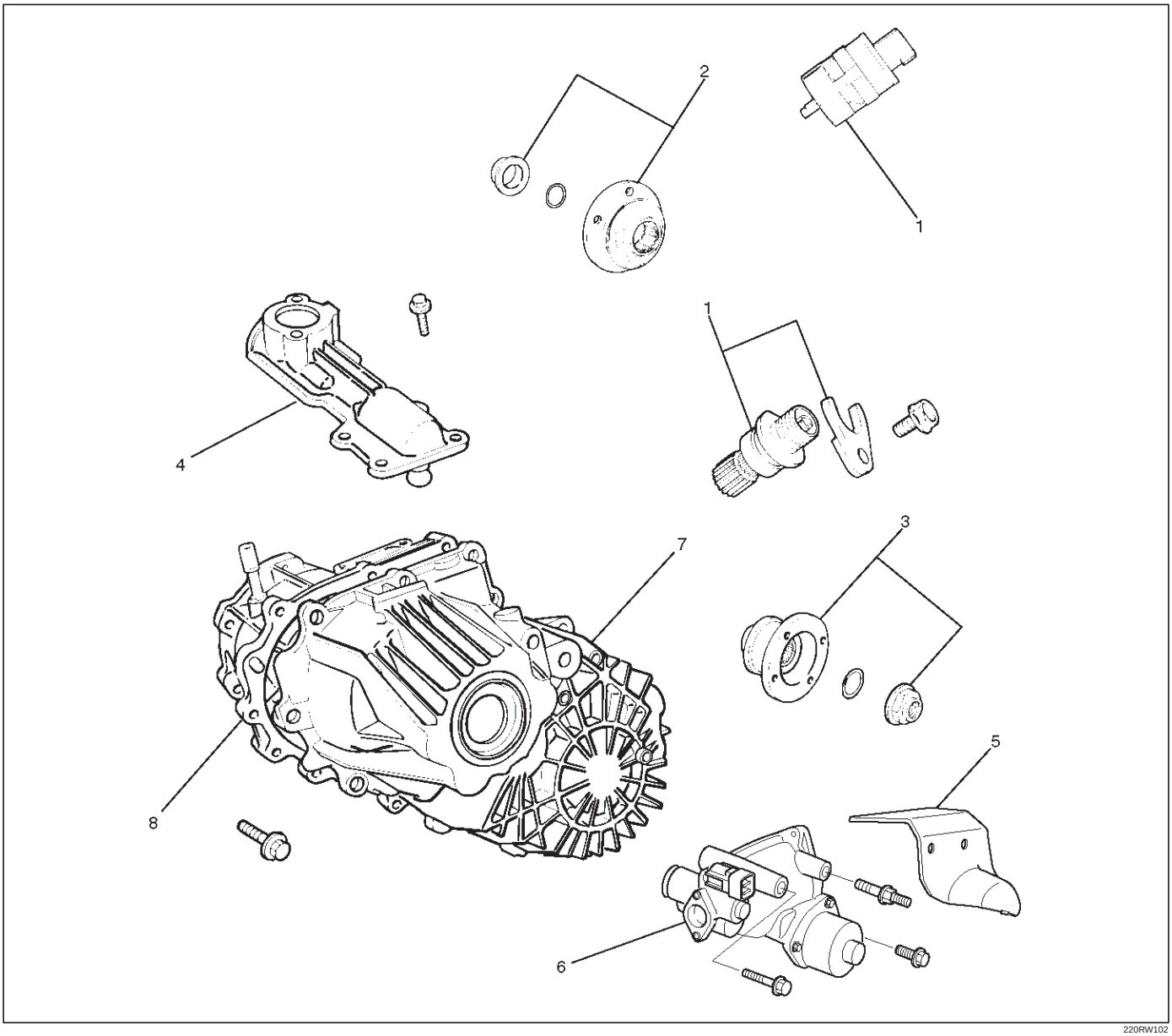

Legend

(1) Speedometer Sensor, Speedometer Driven Gear and Plate
(2) Front Companion Flange
(3) Rear Companion Flange
(4) Control Box Assembly
(5) 2WD–4WD Actuator Heat Protector
(6) 2WD–4WD Actuator Assembly
(7) Transfer Rear Cover Assembly
(8) Transfer Case Assembly

Removal

1. Remove the speedometer sensor.
2. Remove the plate.
3. Remove the speedometer driven gear bushing and driven gear.

NOTE: Apply a reference mark to the driven gear bushing before removal.

4. Remove the front companion flange and the rear companion flange, using the flange companion holder 5–8840–0133–0 (J–8614–11) to remove the end nuts.

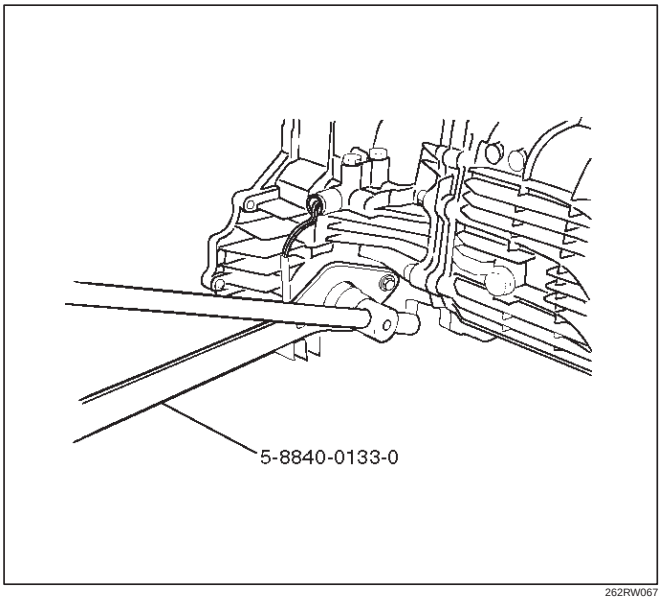

262RW067

NOTE: Use a universal puller to remove the rear companion flange.

5. Disconnect the actuator breather hose and the transfer breather hose from the control box.
6. Remove the control box assembly.
7. Disconnect the actuator breather hose and remove the 2WD–4WD actuator heat protector from the 2WD–4WD actuator assembly.

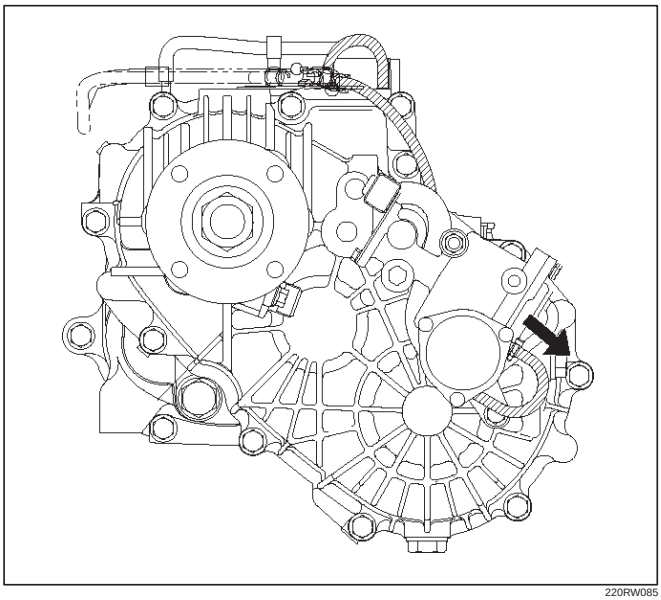

220RW085

8. Remove the 2WD–4WD actuator assembly bolts.
9. Pull the 2WD–4WD actuator assembly with 2WD–4WD shift rod.

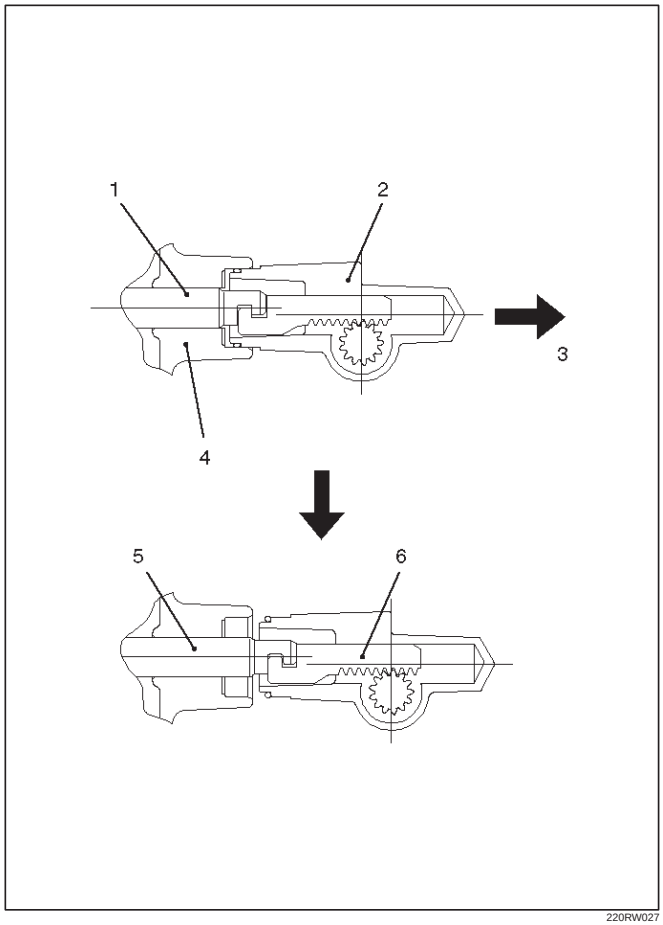

220RW027

Legend

(1) Shift Rod: 2WD–4WD (Position: 2WD)
(2) 2WD–4WD Actuator Assembly
(3) Pull Cover
(4) Rear Cover Assembly
(5) Position: 4WD
(6) Mode: 2WD

10. Offset the actuator assembly.

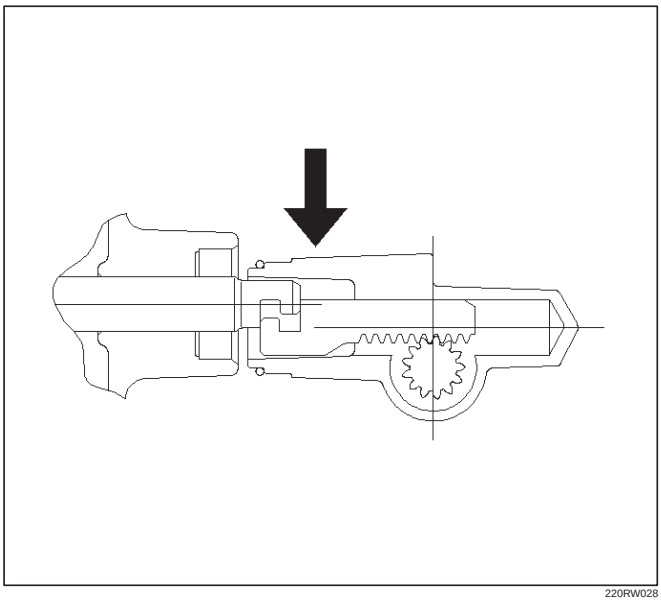

220RW028

11. Remove the actuator assembly.

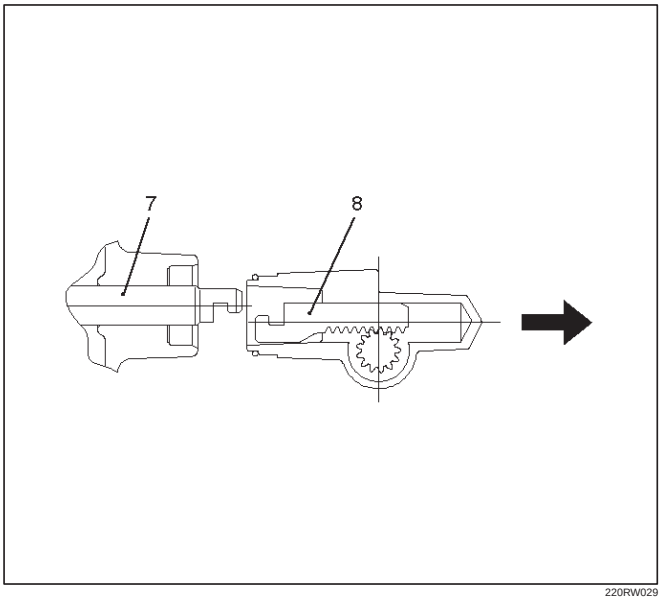

220RW029

Legend

(7) Position: 4WD
(8) Mode: 2WD

12. Remove the transfer rear cover assembly from the transfer case assembly.

Installation

1. Apply the recommended liquid gasket (LOCTITE 17430) or its equivalent to the transfer rear cover fitting faces.

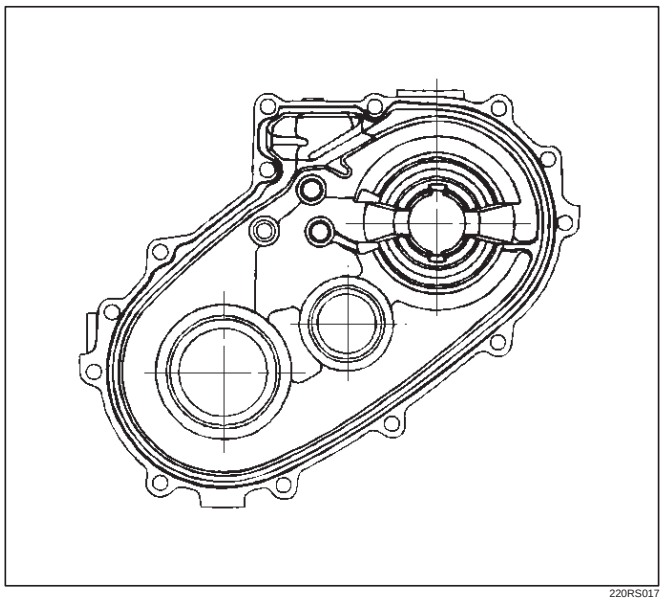

220RS017

2. Install the transfer rear cover assembly to the transfer case assembly.
3. Perform the following steps before fitting the transfer rear case:
   1. Shift the high–low shift rod to the 4H side.
   2. The cut–away portion of the select rod head (9) should align with that of the rear case hole's stopper (10).

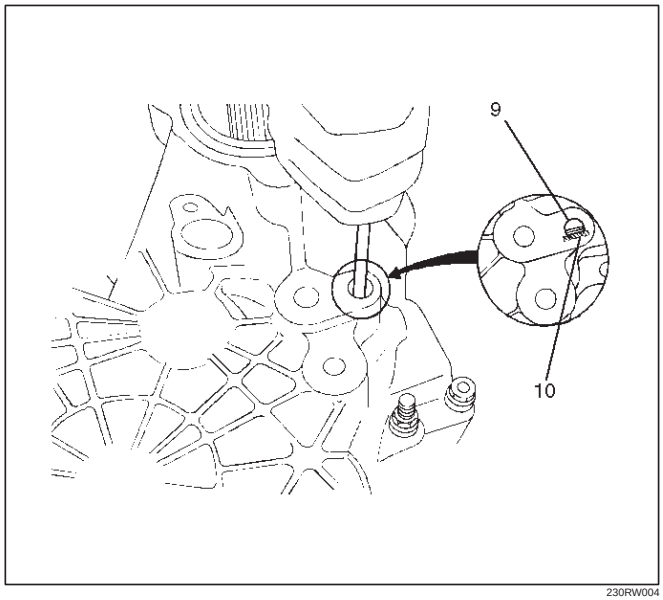

230RW004

4. Tighten the transfer rear case bolts to the specified torque.

   Torque: 37 N·m (3.8kg·m/27 lb ft)

5. Shift the 2WD–4WD shift rod (11) to the 4WD side.

6. Join the rod grooves of 2WD–4WD actuator assembly (12) and shift rod (11).

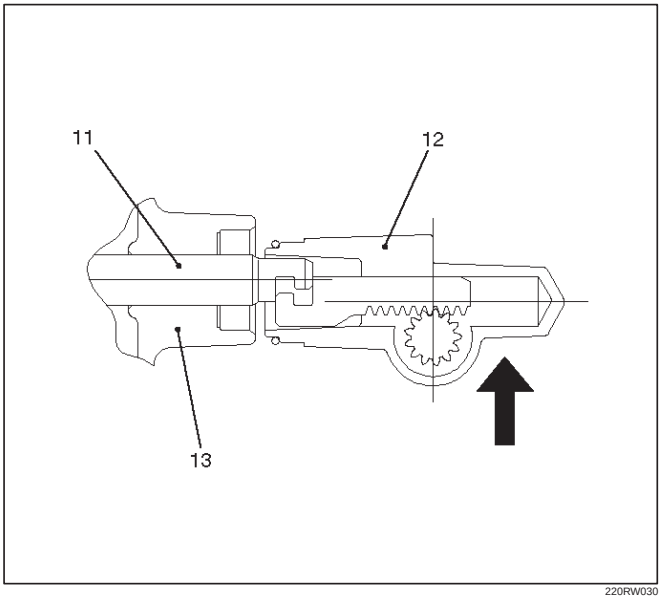

220RW030

Legend

(11) Shift Rod: 2WD–4WD (Position: 4WD)
(12) 2WD–4WD Actuator Assembly (Mode: 2WD)
(13) Rear Cover Assembly

7. Push the 2WD–4WD actuator assembly (12) with 2WD–4WD shift rod (11) till the shift rod (11) reaches the 2WD position.

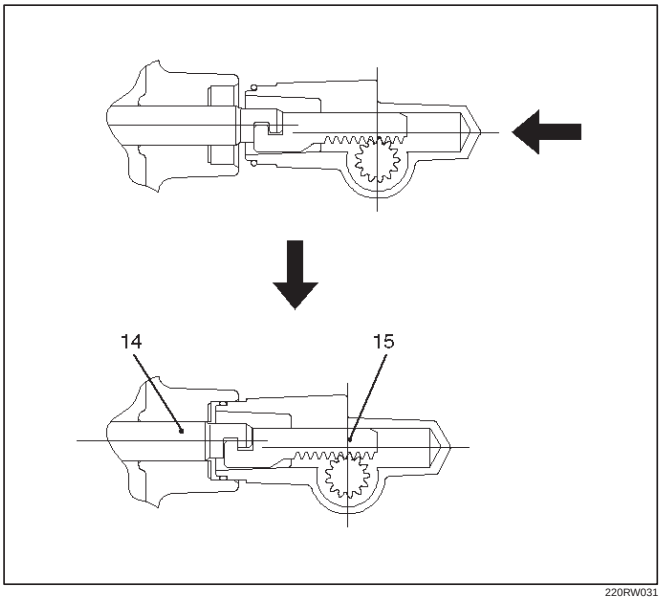

220RW031

Legend

(14) Position: 2WD
(15) Mode: 2WD

8. Tighten the 2WD–4WD actuator bolts to the specified torque.

   Torque: 19 N·m (1.9kg·m/14 lb ft)

9. Install the actuator heat protector.
10. Connect the actuator breather hose to the actuator.
11. Install the control box assembly.

    Torque: 19 N·m (1.9kg·m/14 lb ft)

12. Connect the breather hoses to the control box.
13. Install the rear companion flange and front companion flange, using the companion flange holder 5–8840–0133–0 (J–8614–11) to tighten the flange nuts to the transfer case.

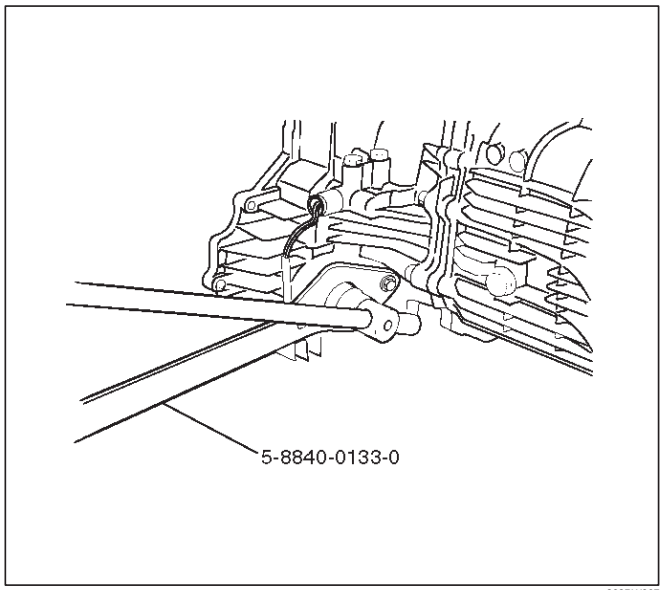

262RW067

14. Tighten the new transfer flange nuts to the specified torque.

    Torque

    Rear companion flange: 167 N·m (17.0kg·m/123 lb ft)

    Front companion flange: 137 N·m (14.0kg·m/101 lb ft)

15. Use the punch 5–8840–2293–0 (J–39209) to stake the rear companion flange nut at two spots.

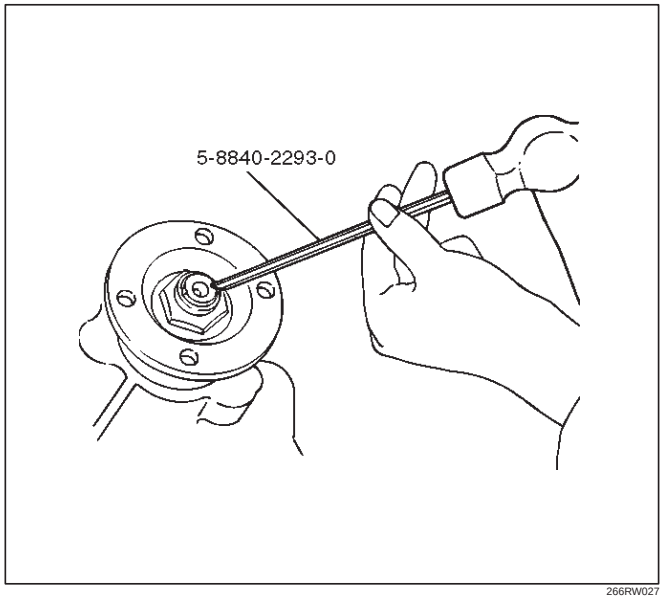

266RW027

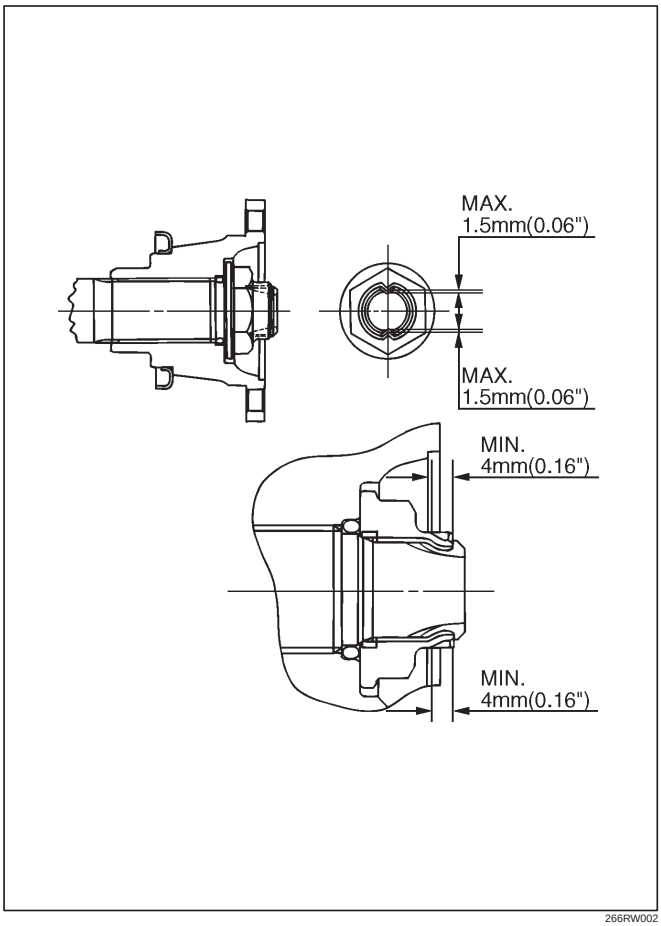

266RW002

16. Stake the front companion flange nut at one spot.

NOTE: Be sure to confirm that there is no crack at the staked portion of the flange nut after staking.

17. Install the O–ring (8) to the speedometer driven gear bushing (7).
18. Install the driven gear to the speedometer driven gear bushing (7).
19. Install the speedometer driven gear assembly to the transfer rear cover.
20. Install the plate (6) to the transfer rear case and tighten to the specified torque.

    Torque: 15 N·m (1.5kg·m/11 lb ft)

21. Install the speedometer sensor and tighten to the specified torque.

    Torque: 27 N·m (2.8kg·m/20 lb ft)

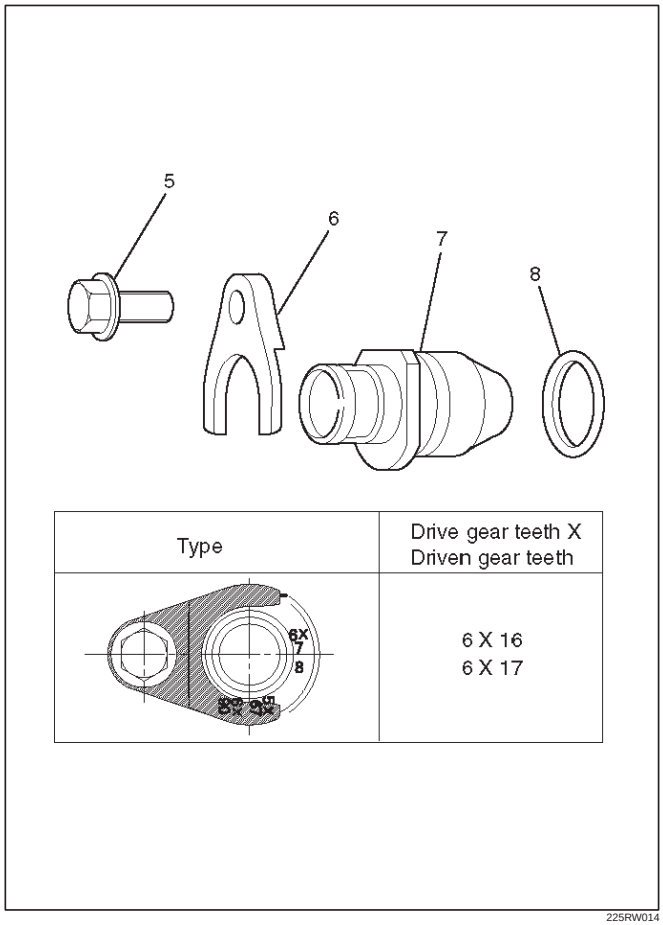

225RW014

Disassembly

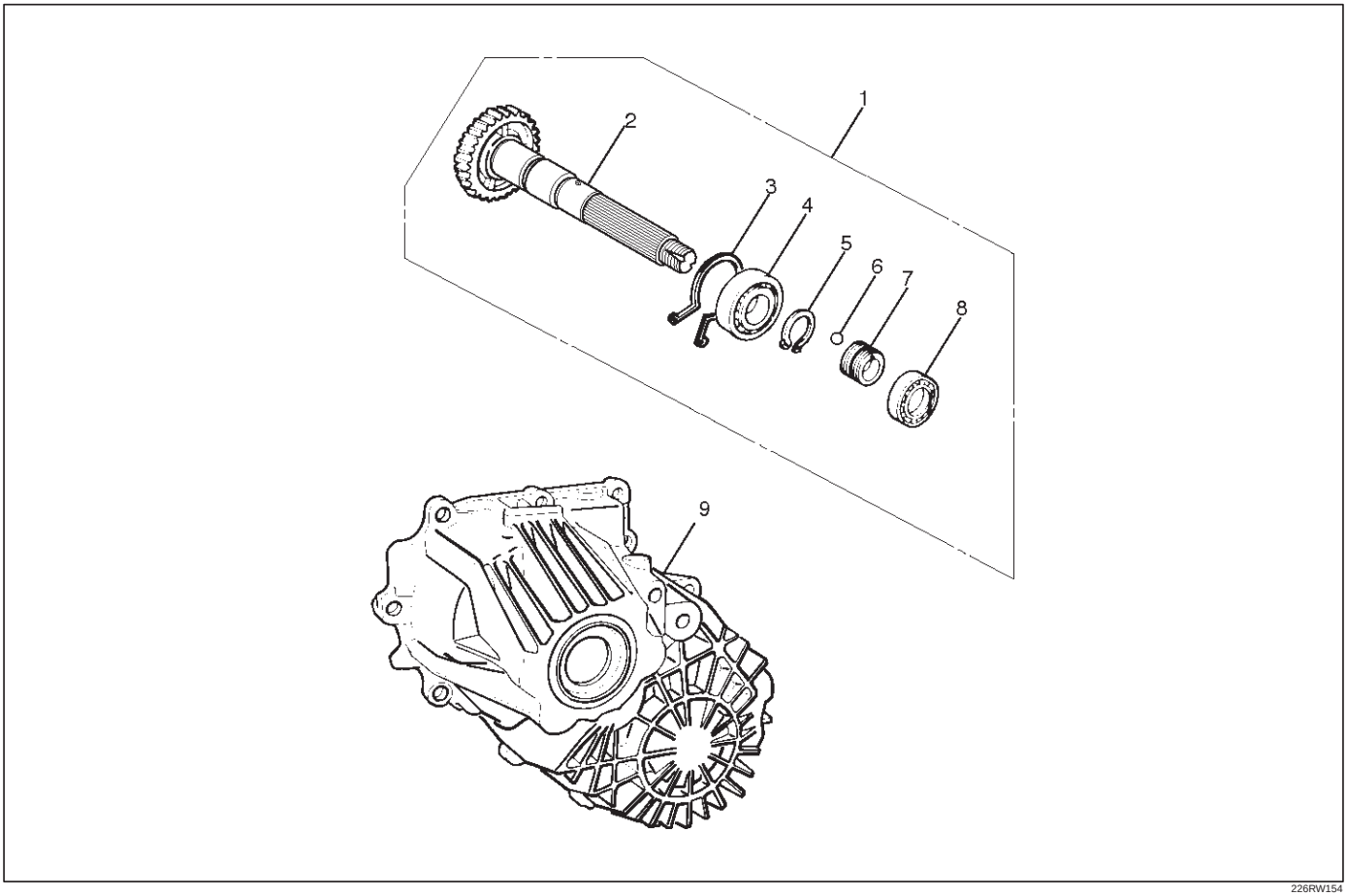

226RW154

Legend

(1) Rear Output Shaft Assembly
(2) Rear Output Shaft
(3) Bearing Snap Ring
(4) Ball Bearing
(5) Bearing Snap Ring
(6) Ball
(7) Speedometer Drive Gear
(8) Ball Bearing
(9) Transfer Rear Cover (with oil seal)

1. Remove the bearing snap ring (3), using a pair of snap ring pliers.

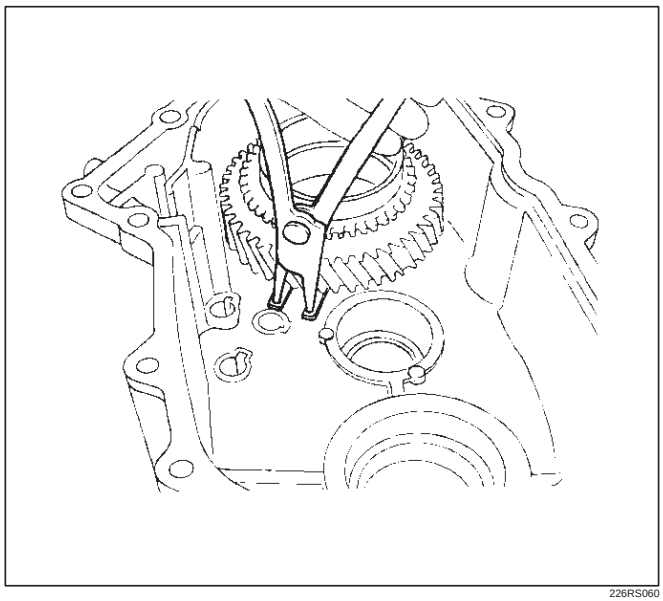

226RS060

2. Remove the rear output shaft assembly (1) from the transfer rear cover (with oil seal).
3. Remove ball bearing (8), using a bench press and the bearing remover 5–8840–0015–0 (J–22912–01) .

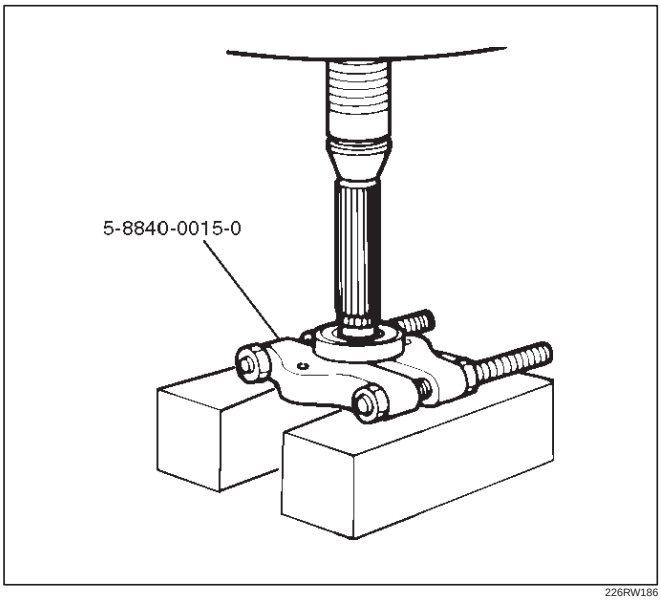

226RW186

4. Remove the speedometer drive gear (7).
5. Remove the ball (6).
6. Remove the bearing snap ring (5), using a pair of snap ring pliers.
7. Remove the ball bearing (4) from the rear output shaft, using a bench press and the bearing remover 5–8840–0015–0 (J–22912–01).

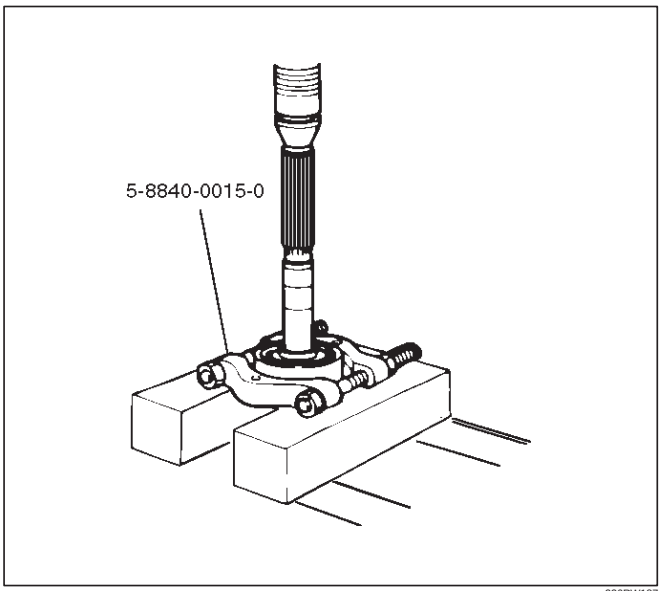

226RW187

Inspection and Repair

Refer to “TRANSFER CASE ASSEMBLY” in this section for inspection and repair.

Reassembly

1. Install transfer rear cover (with oil seal).
   Oil seal replacement
   - Remove the oil seal from the transfer rear cover.
   - Apply engine oil to the oil seal outer surfaces.
   - Fill in recommended grease (BESCO L2) or equivalent in the oil seal lip.
   - Use the oil seal installer 5–8840–2292–0 (J–39208) to install the rear oil seal to the transfer rear cover.

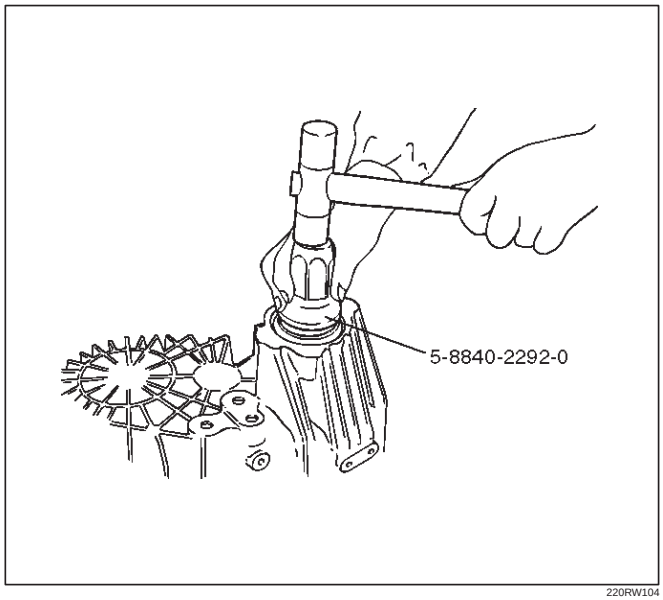

220RW104

2. Set the snap ring (3), and install ball bearing (4) to the rear output shaft (2), using the ball bearing installer 5–8840–2159–0 (J–37223) and the adapter 5–8840–2192–1 (J–37486–A).

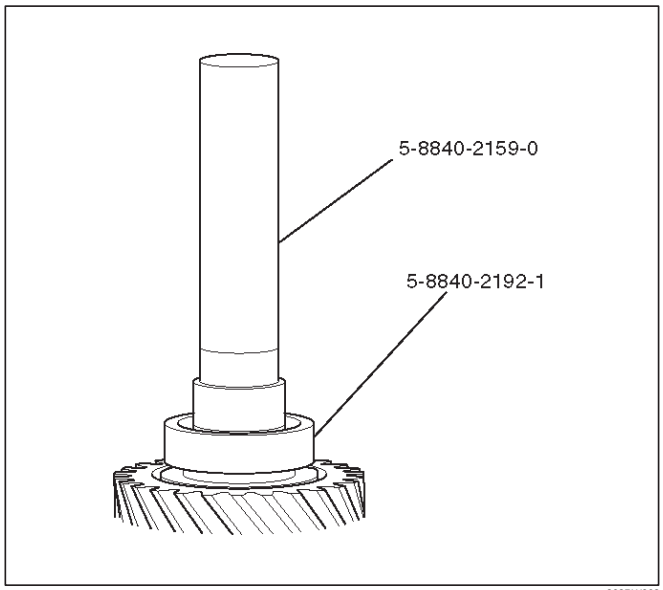

262RW068

3. Install the bearing snap ring (5).
4. Install the ball (6).
5. Install the speedometer drive gear (7).

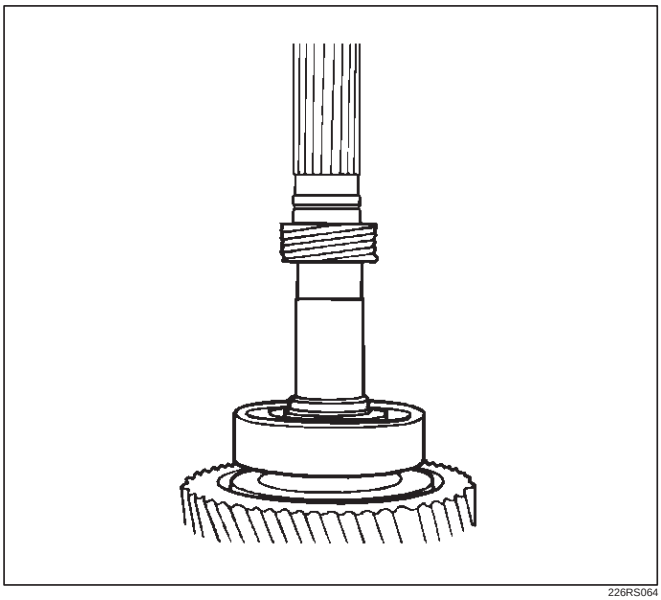

226RS064

6. Install ball bearing (8), using the ball bearing installer 5–8840–2159–0 (J–37223).

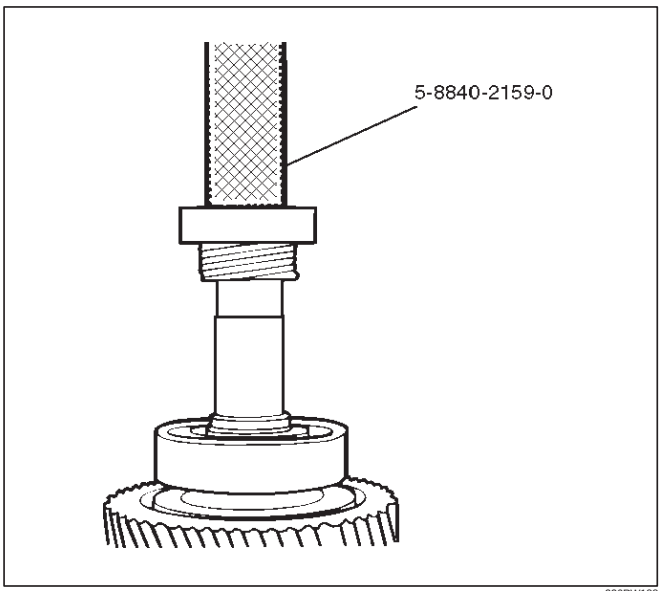

226RW188

7. Install the rear output shaft assembly (1) to the transfer rear cover.
8. Install the bearing snap ring (3).

NOTE: The snap ring must be fully inserted into the transfer rear case snap ring groove.

Transfer Rear Cover Assembly (Except 4WD Switch Model)

Transfer Rear Cover Assembly and Associated Parts

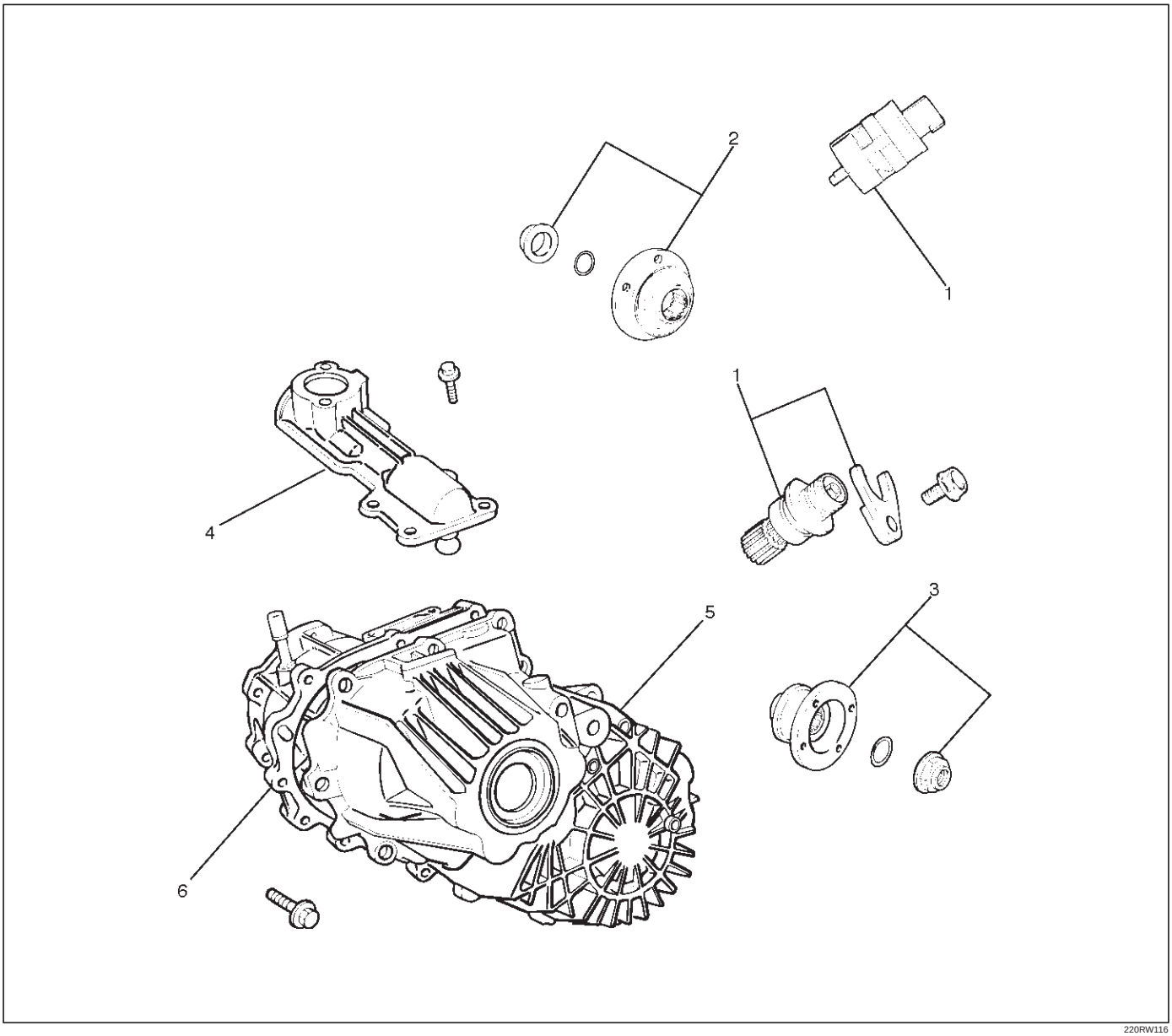

220RW116

Legend

(1) Speedometer Sensor, Speedometer Driven Gear and Plate
(2) Front Companion Flange
(3) Rear Companion Flange
(4) Control Box Assembly
(5) Transfer Rear Cover Assembly
(6) Transfer Case Assembly

Removal

1. Remove the speedometer sensor.
2. Remove the plate.
3. Remove the speedometer driven gear bushing and driven gear.

NOTE: Apply a reference mark to the driven gear bushing before removal.

4. Remove the front companion flange and the rear companion flange, using the flange companion holder 5–8840–0133–0 (J–8614–11) to remove the end nuts.

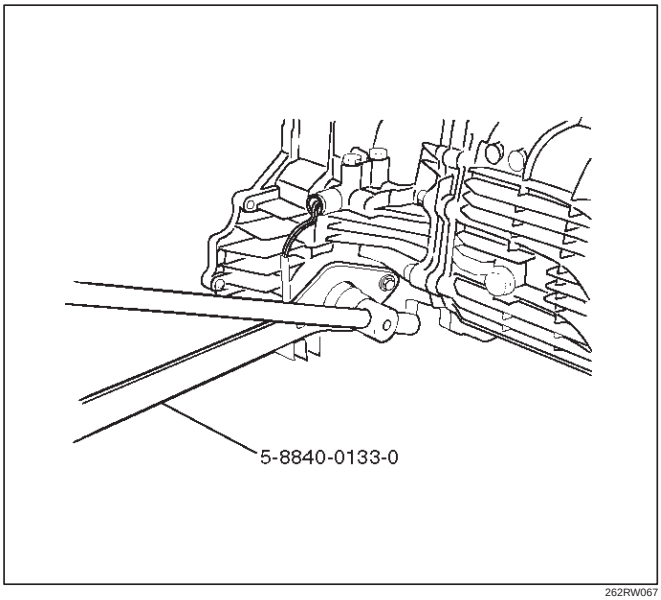

262RW067

NOTE: Use a universal puller to remove the rear companion flange.

5. Disconnect the transfer breather hose from the control box.
6. Remove the control box assembly.
7. Remove the transfer rear cover assembly from the transfer case assembly.

Installation

1. Apply the recommended liquid gasket (LOCTITE 17430) or its equivalent to the transfer rear cover fitting faces.

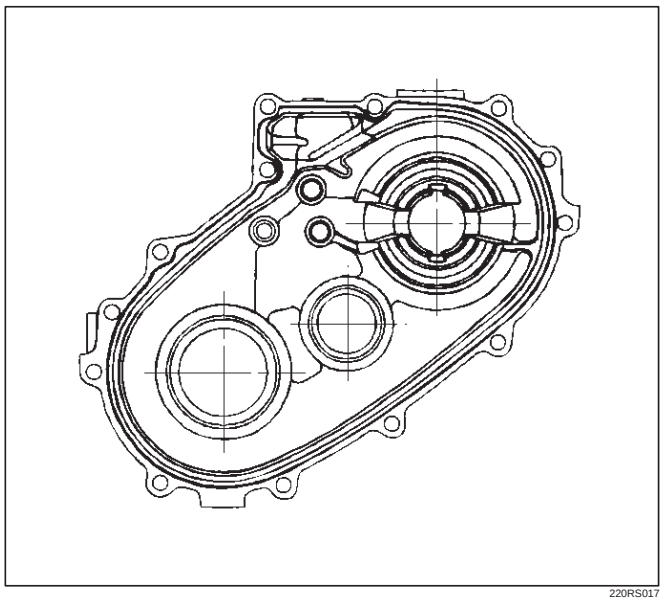

220RS017

2. Install the transfer rear cover assembly to the transfer case assembly.
3. Perform the following steps before fitting the transfer rear case:
   1. Shift the high–low shift rod to the 4H side.
   2. Turn the select rod counterclockwise so that the select block projection may enter into the 2WD–4WD shift block.
   3. The cut–away portion of the select rod head (9) should align with that of the rear case hole's stopper (10).

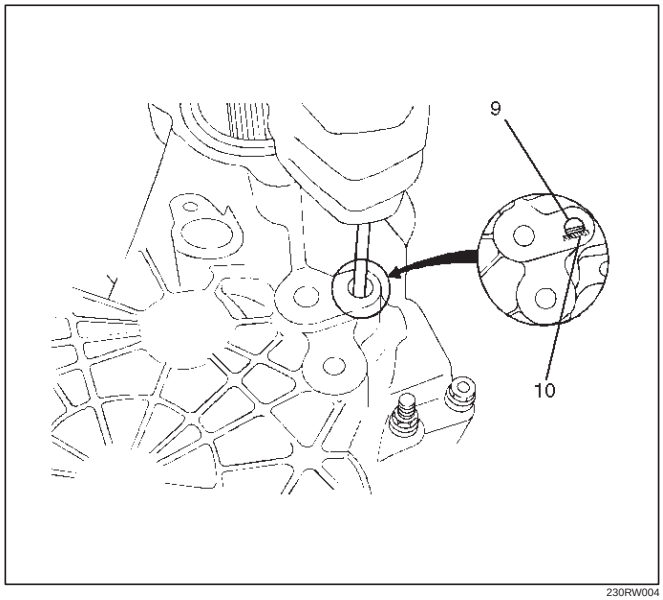

230RW004

4. Tighten the transfer rear case bolts to the specified torque.

Torque: 37 N·m (3.8kg·m/27 lb ft)

5. Install the control box assembly.

   Torque: 19 N·m (1.9kg·m/14 lb ft)

6. Connect the breather hoses to the control box.
7. Install the rear companion flange and front companion flange, using the companion flange holder 5–8840–0133–0 (J–8614–11) to tighten the flange nuts to the transfer case.

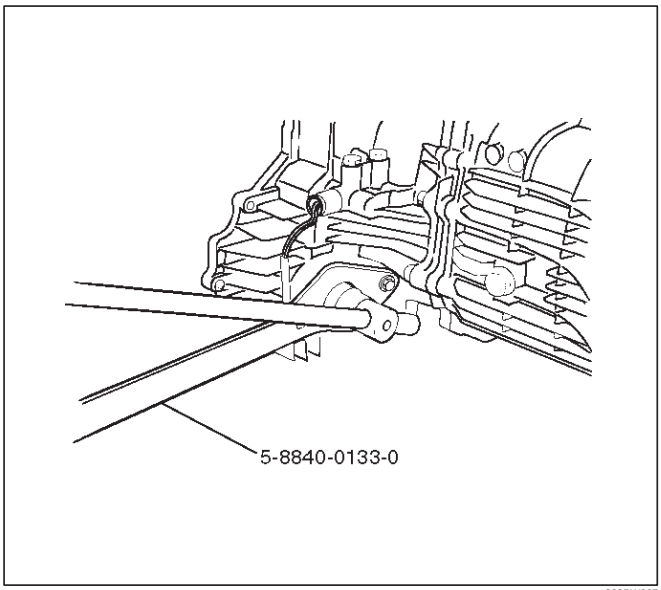

262RW067

8. Tighten the new transfer flange nuts to the specified torque.

   Torque

   Rear companion flange: 167 N·m (17.0kg·m/123 lb ft)

   Front companion flange: 137 N·m (14.0kg·m/101 lb ft)

9. Use the punch 5–8840–2293–0 (J–39209) to stake the rear companion flange nut at two spots.

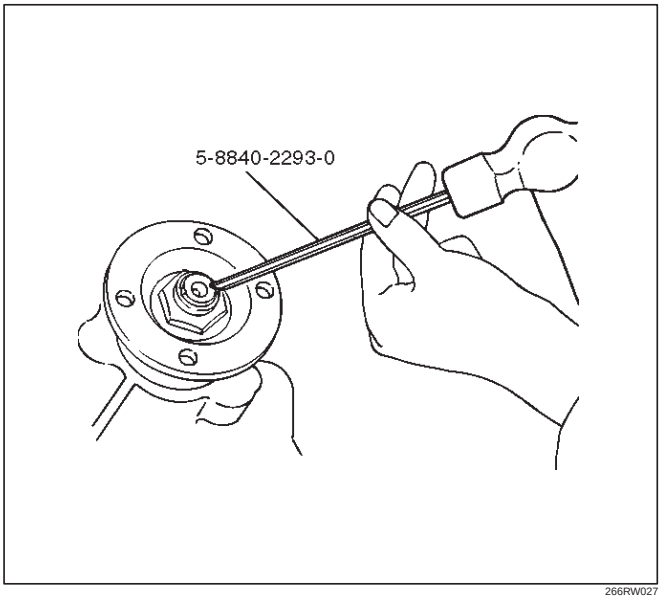

266RW027

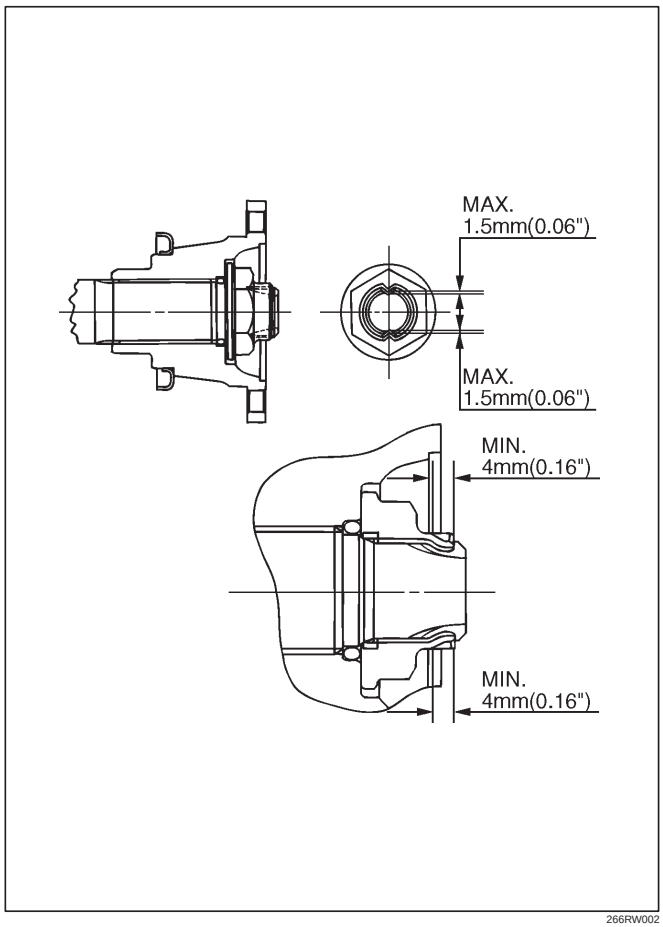

266RW002

10. Stake the front companion flange nut at one spot.

NOTE: Be sure to confirm that there is no crack at the staked portion of the flange nut after staking.

11. Install the O–ring (8) to the speedometer driven gear bushing (7).
12. Install the driven gear to the speedometer driven gear bushing (7).
13. Install the speedometer driven gear assembly to the transfer rear cover.
14. Install the plate (6) to the transfer rear case and tighten to the specified torque.

    Torque: 15 N·m (1.5kg·m/11 lb ft)

15. Install the speedometer sensor and tighten to the specified torque.

Torque: 27 N·m (2.8kg·m/20 lb ft)

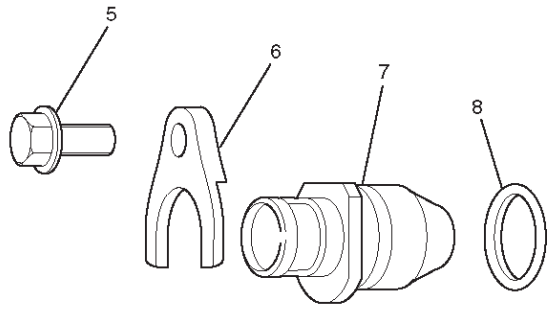

Type	Drive gear teeth X Driven gear teeth
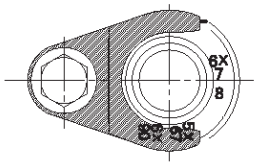	6 X 16 6 X 17

225RW014

Disassembly

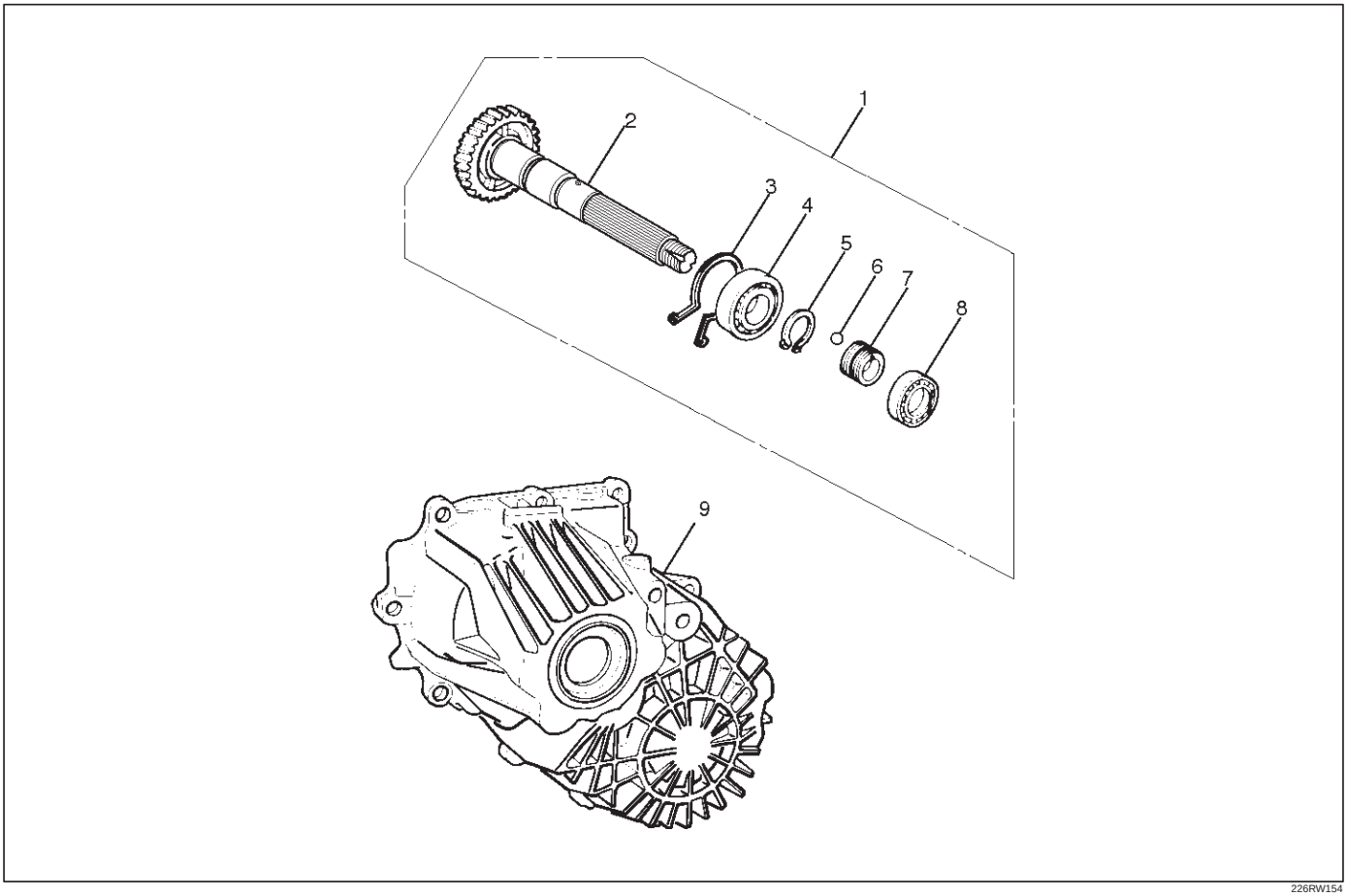

226RW154

Legend

(1) Rear Output Shaft Assembly
(2) Rear Output Shaft
(3) Bearing Snap Ring
(4) Ball Bearing
(5) Bearing Snap Ring
(6) Ball
(7) Speedometer Drive Gear
(8) Ball Bearing
(9) Transfer Rear Cover (with oil seal)

1. Remove the bearing snap ring (3), using a pair of snap ring pliers.

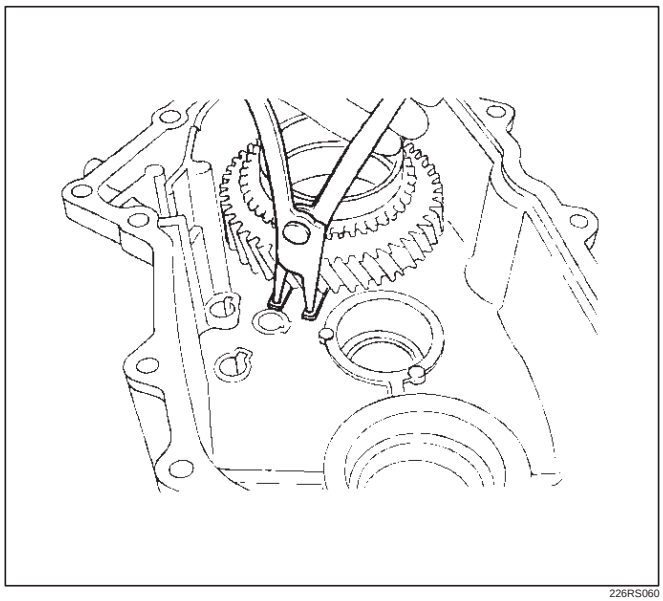

226RS060

2. Remove the rear output shaft assembly (1) from the transfer rear cover (with oil seal).
3. Remove ball bearing (8), using a bench press and the bearing remover 5–8840–0015–0 (J–22912–01) .

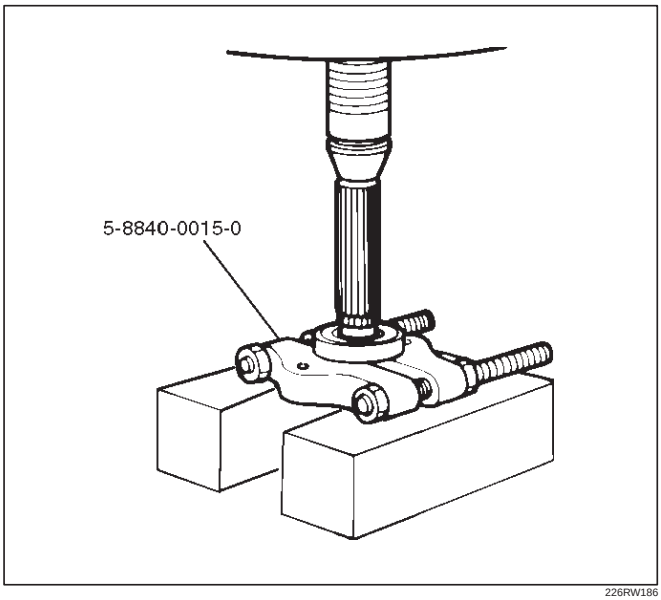

226RW186

4. Remove the speedometer drive gear (7).
5. Remove the ball (6).
6. Remove the bearing snap ring (5), using a pair of snap ring pliers.
7. Remove the ball bearing (4) from the rear output shaft, using a bench press and the bearing remover 5–8840–0015–0 (J–22912–01).

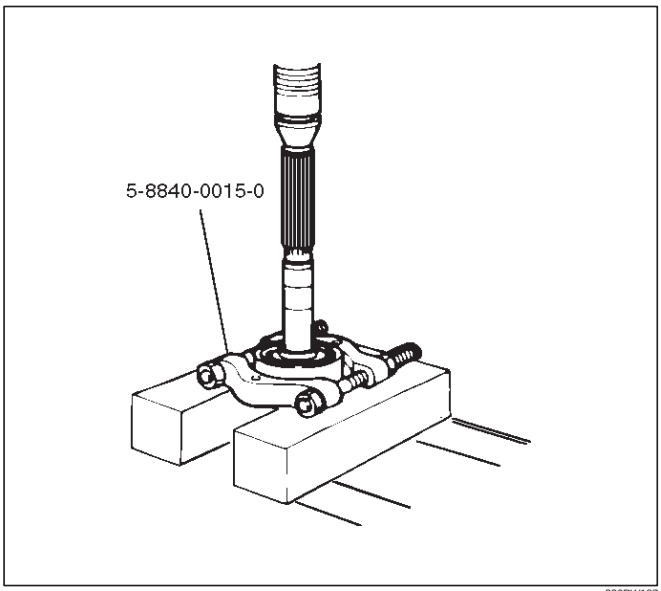

226RW187

Inspection and Repair

Refer to “TRANSFER CASE ASSEMBLY” in this section for inspection and repair.

Reassembly

1. Install transfer rear cover (with oil seal).
   Oil seal replacement
   - Remove the oil seal from the transfer rear cover.
   - Apply engine oil to the oil seal outer surfaces.
   - Fill in recommended grease (BESCO L2) or equivalent in the oil seal lip.
   - Use the oil seal installer 5–8840–2292–0 (J–39208) to install the rear oil seal to the transfer rear cover.

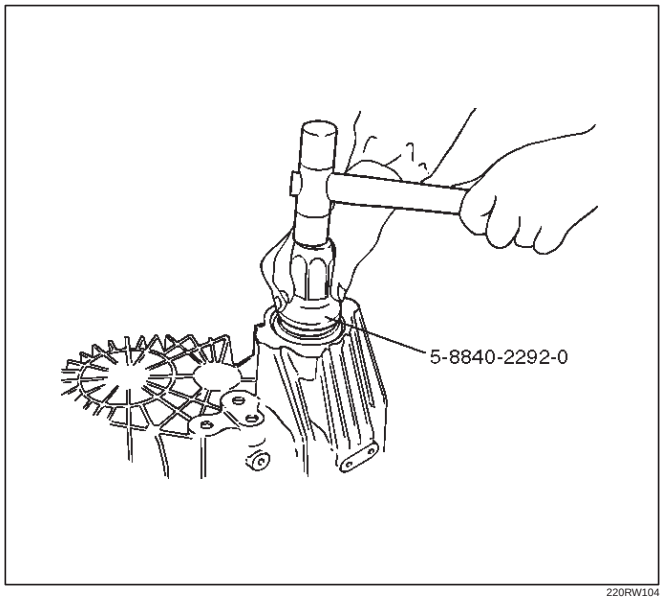

220RW104

2. Set the snap ring (3), and install ball bearing (4) to the rear output shaft (2), using the ball bearing installer 5–8840–2159–0 (J–37223) and the adapter 5–8840–2192–1 (J–37486–A).

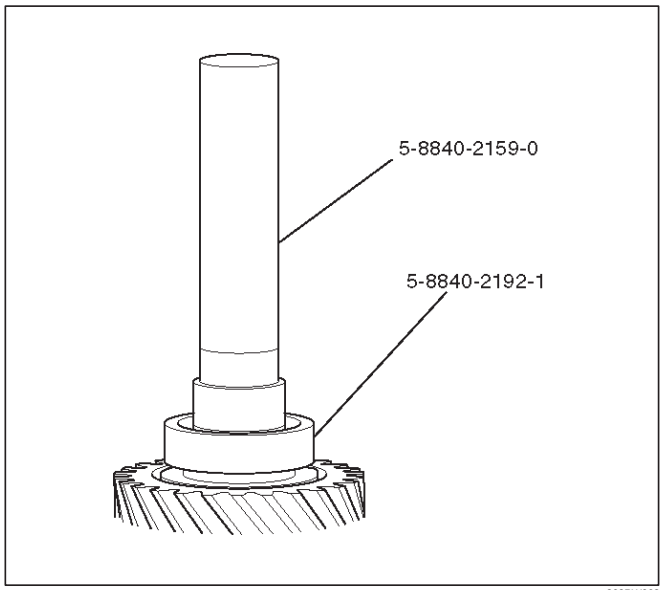

262RW068

3. Install the bearing snap ring (5).
4. Install the ball (6).
5. Install the speedometer drive gear (7).

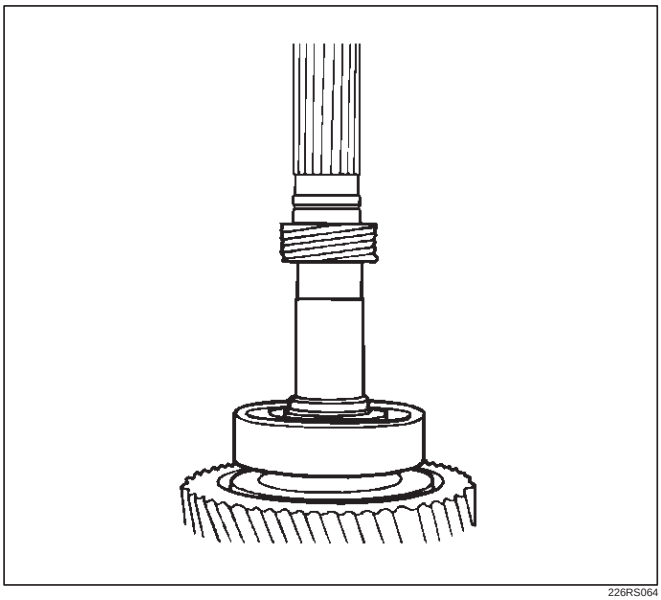

226RS064

6. Install ball bearing (8), using the ball bearing installer 5–8840–2159–0 (J–37223).

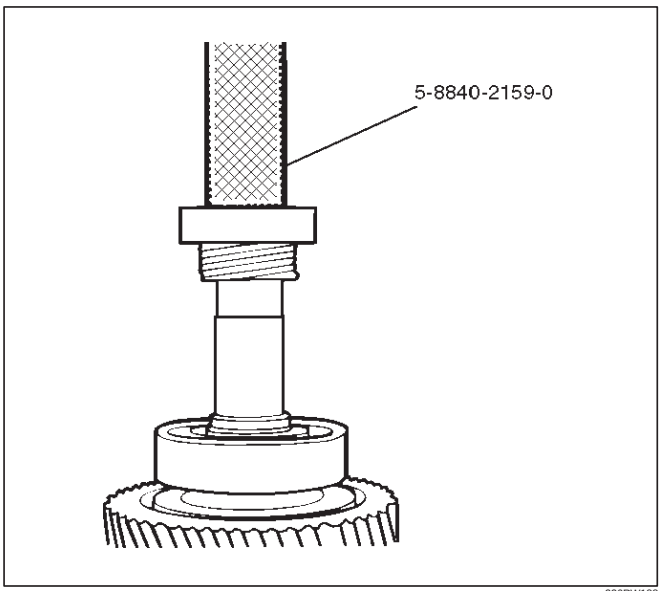

226RW188

7. Install the rear output shaft assembly (1) to the transfer rear cover.
8. Install the bearing snap ring (3).

NOTE: The snap ring must be fully inserted into the transfer rear case snap ring groove.

Detent, Shift Arm, and Interlock Pin

Disassembled View

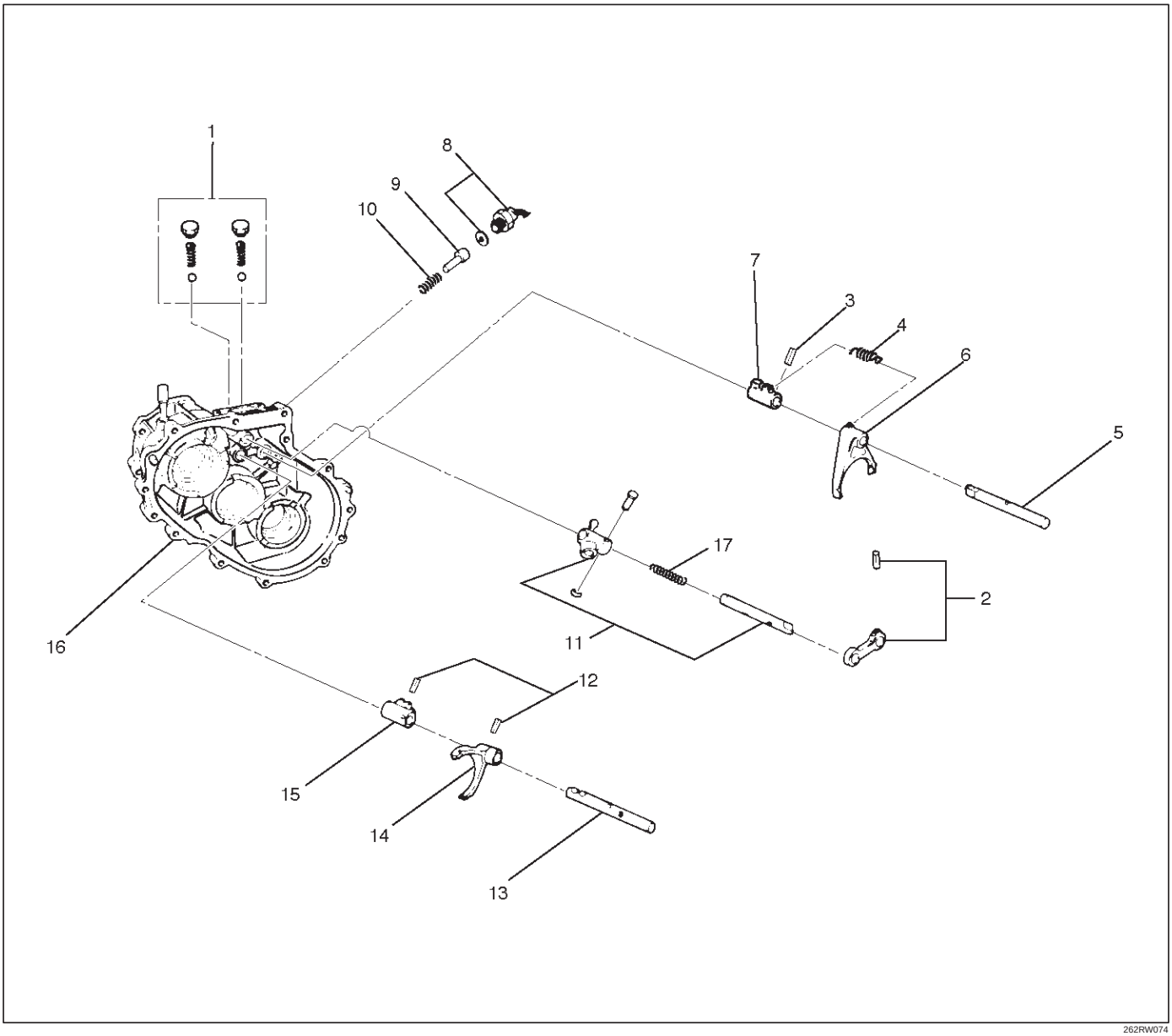

262RW074

Legend

(1) Detent Ball, Spring and Plug
(2) Spring Pin and Bridge
(3) Spring Pin
(4) Spring
(5) 2WD–4WD Shift Rod
(6) Shift Arm
(7) Shift Block
(8) 4WD Indicator Switch
(9) Interlock Pin
(10) Spring
(11) Select Rod Assembly
(12) Spring Pin
(13) High–Low Shift Rod
(14) Shift Arm
(15) Shift Block
(16) Transfer Case
(17) Spring (Except Shift On The Fly Model)

Disassembly

1. Remove the detent ball, spring and plug (1).

2. Use a spring pin remover to remove the spring pin (2) from the bridge (2).

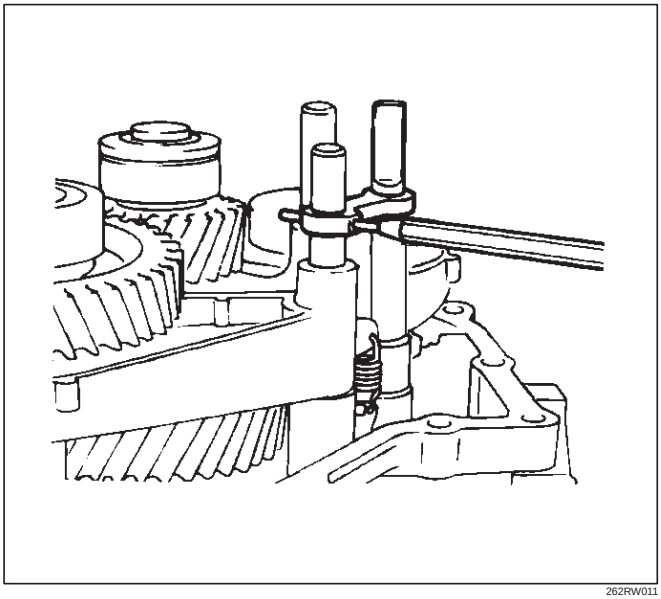

262RW011

3. Remove the spring (4).
4. Engage the 2WD–4WD sleeve with the front output gear. Remove the spring pin (3) from the block (7). Remove the 2WD–4WD shift rod (5).

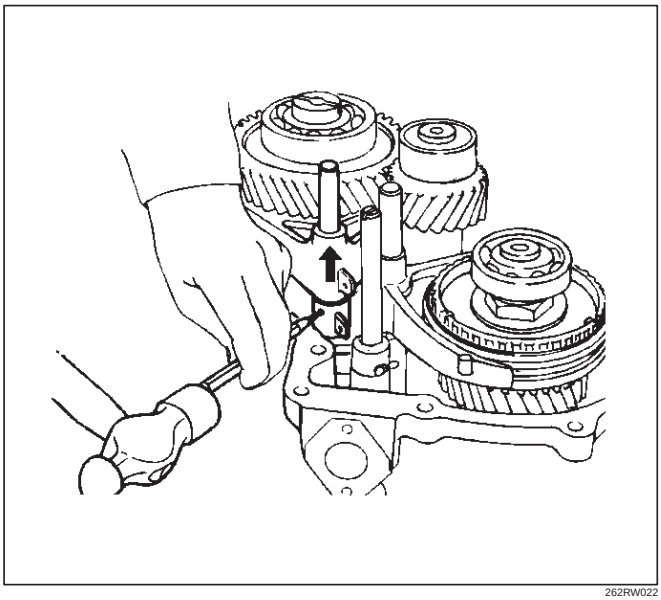

262RW022

5. Remove the shift arm (6).
6. Remove the shift block (7).
7. Remove the 4WD indicator switch (8).
8. Use a magnetic tool to remove the interlock pin (9) and spring (10) from the transfer case (16).

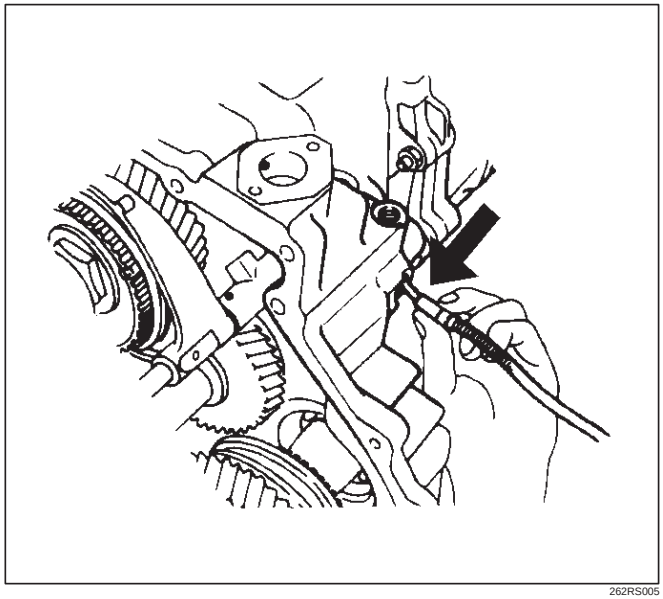

262RS005

9. Remove the select rod assembly (11).
10. Use a spring pin remover to remove the shift arm spring pins (12) from the shift arm (14) and shift block (15). Remove the high–low shift rod (13) from the transfer case (16).

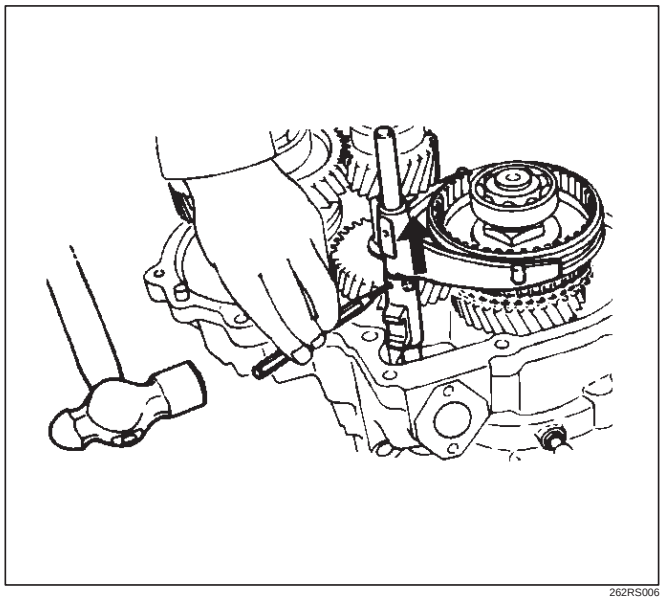

262RS006

11. Remove the shift arm (14).
12. Remove the shift block (15) from the transfer case (16).

Inspection and Repair

Refer to “TRANSFER CASE ASSEMBLY” in this section for inspection and repair.

Reassembly

1. Place the shift block (15) in the transfer case (16).
2. Set the shift arm (14) on the High–Low sleeve.
3. Push the High–Low shift rod (13) through the shift arm (14) and block (14).
4. Engage the High–Low sleeve with the 4H (1) side.
5. Install the spring pins (12) to the shift block (15) and shift arm (14).

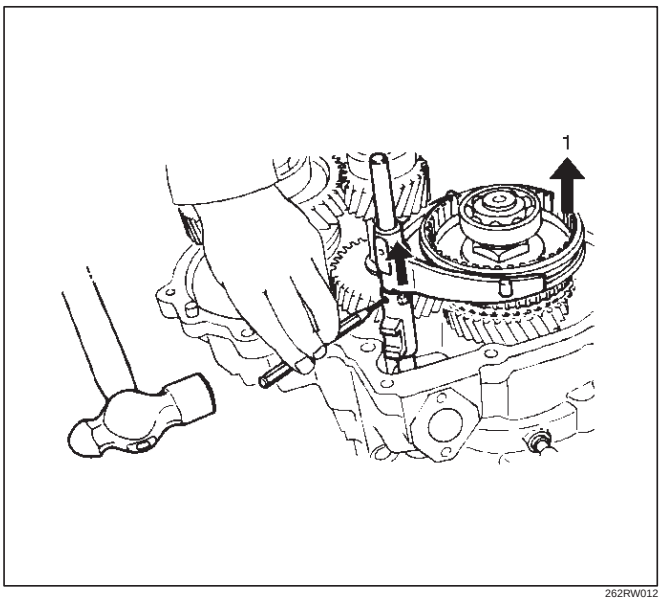

262RW012

6. Install the select rod assembly (11), joining its lever to the shift block groove.
7. Engage the High–Low sleeve with the 4H side and install the the interlock pin (9) and spring (10) in the proper direction.
8. Place the 2WD–4WD shift block (7) in the transfer case (16).
9. Set the 2WD–4WD shift arm (6) on the 2WD–4WD sleeve.
10. Push the 2WD–4WD shift rod (5) through the 2WD–4WD shift arm (6) and 2WD–4WD shift block (7).
11. Install the 2WD–4WD shift rod (5) with the interlock pin pushed in.

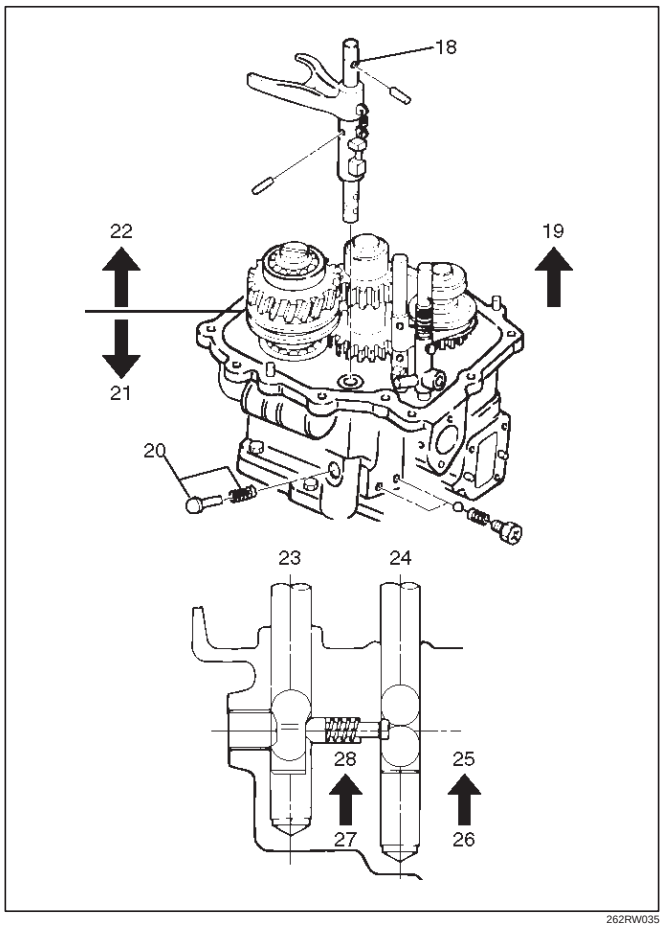

262RW035

Legend

(18) 2WD–4WD
(19) 4H Side
(20) Interlock pin
(21) 2WD
(22) 4WD
(23) Rod: 2–4
(24) Rod: H–L
(25) 4H
(26) 4L
(27) 4×2
(28) 4×4

12. Install the 4WD indicator switch and gasket (8). Tighten to the specified torque.

    Torque: 39 N·m (4.0kg·m/29 lb ft)

13. Install the spring (4).

14. Engage the 2WD–4WD sleeve with the 4WD side and install the spring pin (3).

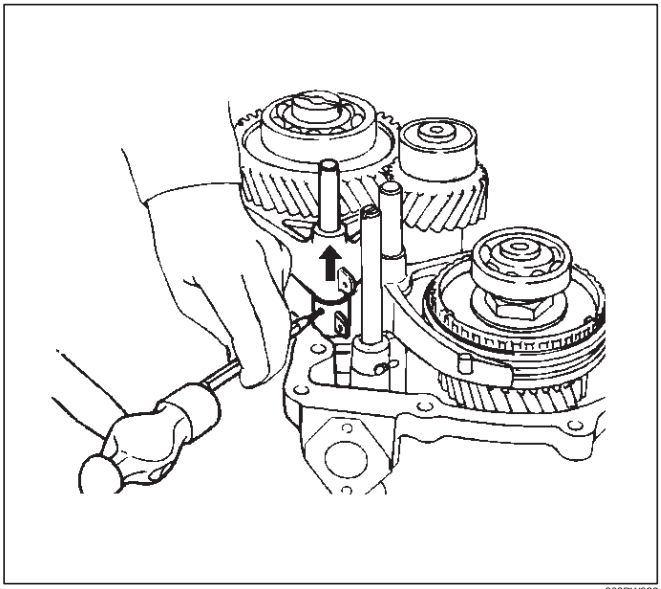

262RW022

15. Install the spring pin and bridge (2).
16. Install the detent ball, spring and plug and tighten the plug (1) to the specified torque.

Torque: 25 N·m (2.5kg·m/18 lb ft)

Transfer Case Assembly

Disassembled View

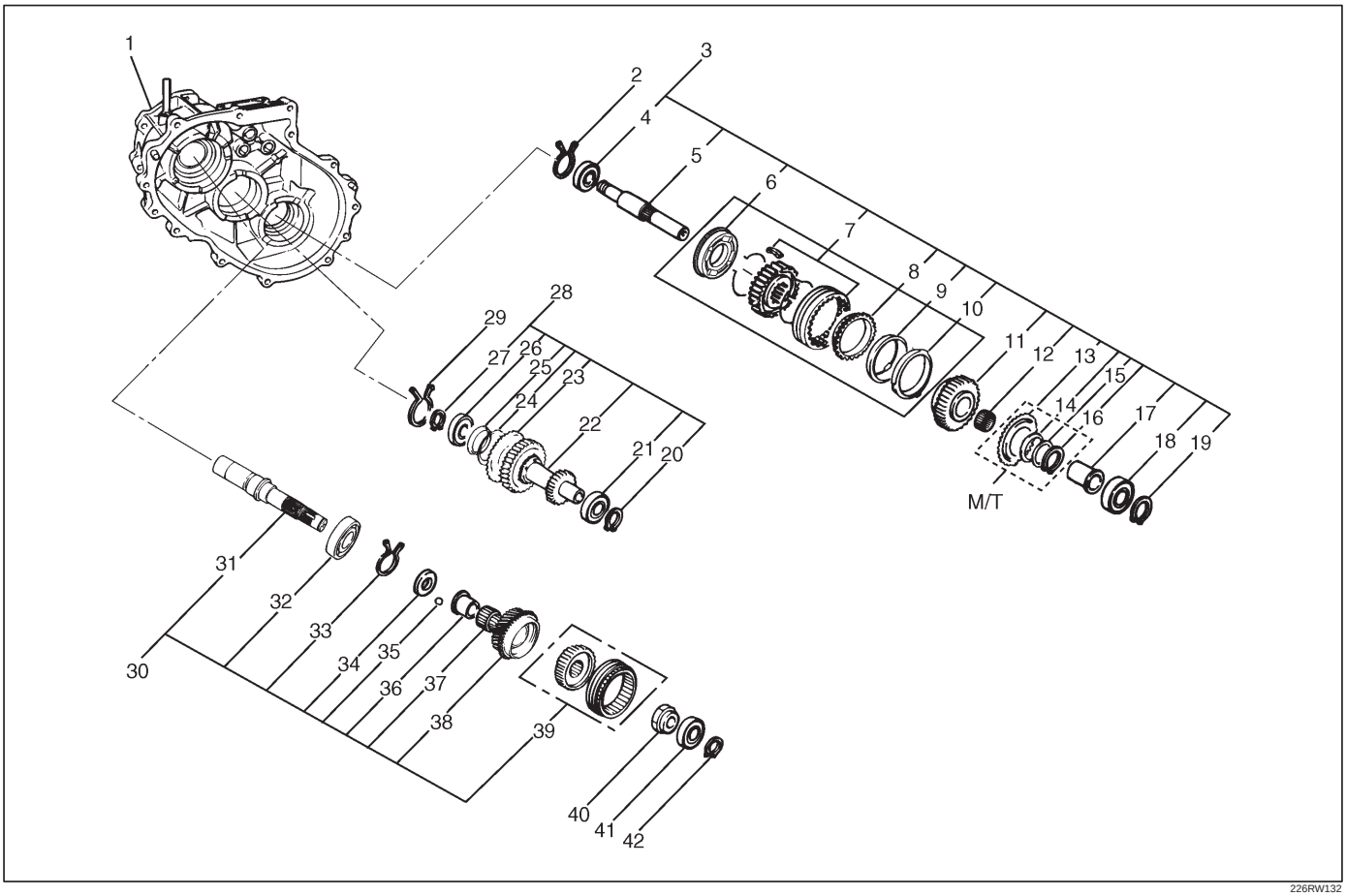

226RW132

Legend

(1) Transfer Case (with oil seal)
(2) Bearing Snap Ring
(3) Front Output Gear Assembly
(4) Ball Bearing
(5) Front Output Shaft
(6) Stopper Plate (Shift On The Fly model)
(7) 2WD–4WD Clutch Hub and Sleeve Assembly
(8) Block Ring (Shift On The Fly model)
(9) Outside Ring (Shift On The Fly model)
(10) Inside Ring (Shift On The Fly model)
(11) Front Output Gear
(12) Needle Bearing
(13) Sub–Gear (anti–lash plate) (M/T)
(14) Belleville Spring (M/T)
(15) Spacer (M/T)
(16) Sub–Gear Snap Ring (M/T)
(17) Bearing Collar
(18) Ball Bearing
(19) Bearing Snap Ring
(20) Snap Ring
(21) Ball Bearing
(22) Counter Gear
(23) Sub–Gear (anti–lash plate)
(24) Belleville Spring
(25) Spacer
(26) Ball Bearing
(27) Snap Ring
(28) Counter Gear Assembly
(29) Bearing Snap Ring
(30) Input Shaft Assembly
(31) Input Shaft
(32) Ball Bearing
(33) Snap Ring
(34) Plate
(35) Ball
(36) Bearing Collar
(37) Needle Bearing
(38) Transfer Input Gear
(39) High–Low Clutch Hub and Sleeve Assembly
(40) Lock Nut
(41) Ball Bearing
(42) Bearing Snap Ring

Disassembly

1. Use a pair of snap ring pliers to remove the snap ring (42).
2. Use a bearing remover 5–8840–2155–0 (J–37217) and puller 5–8840–2027–0 (J–37487) to remove the ball bearing (41).

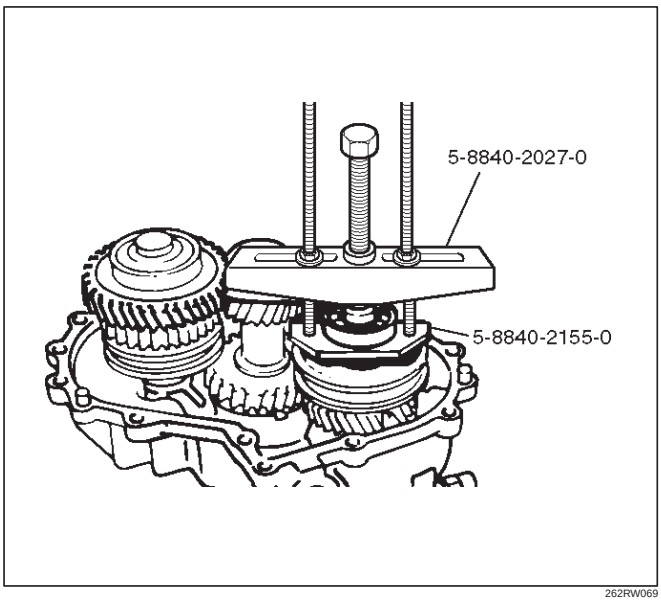

262RW069

3. Install the front companion flange temporarily.
4. Use the Companion flange holder 5–8840–0133–0 (J–8614–11) and lock nut wrench 5–8840–2156–0 (J–37219) to remove the lock nut (40).

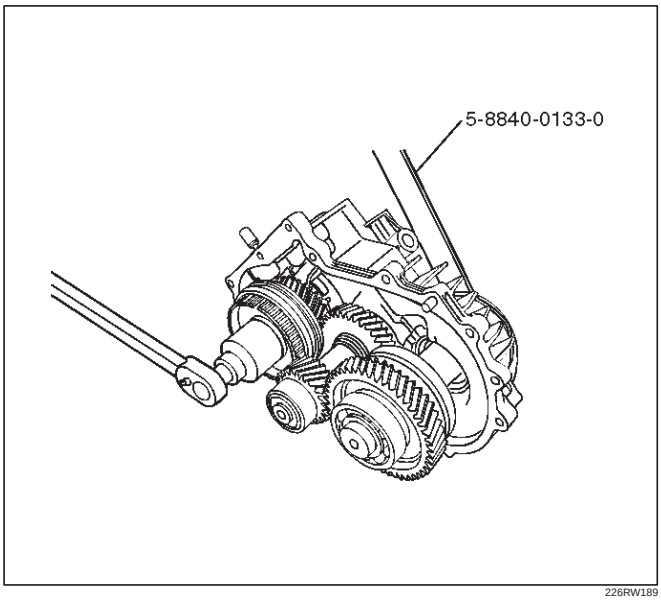

226RW189

5. Remove the front companion flange.
6. Remove the snap ring (33) from the transfer case (1).
7. Remove the input shaft assembly (30) from the transfer case.

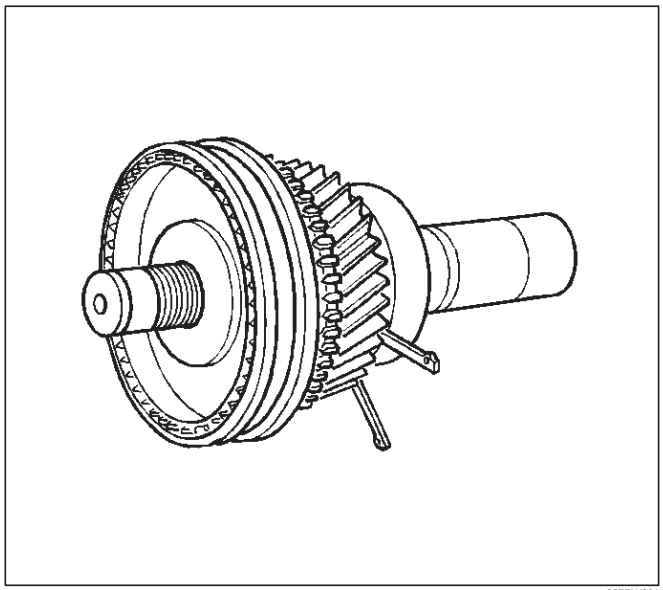

265RW001

8. Use a universal puller to remove the high–low clutch hub and sleeve (39), and transfer input gear (38).

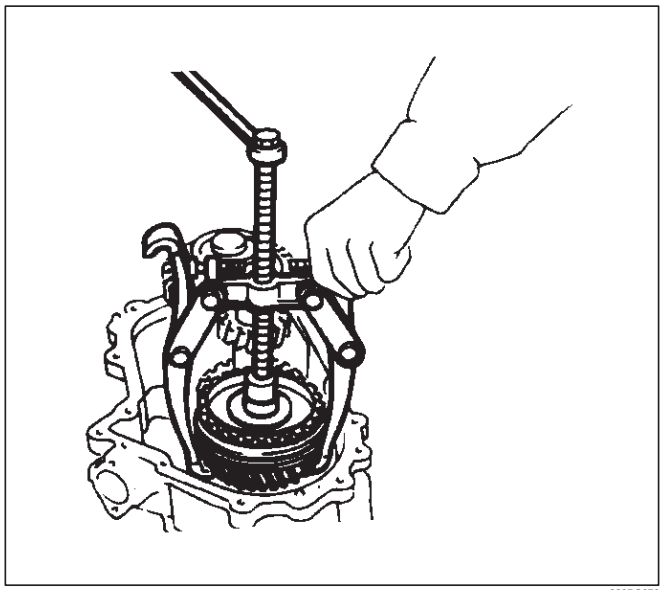

226RS070

9. Remove needle bearing (37).

10. Remove the bearing collar (36).

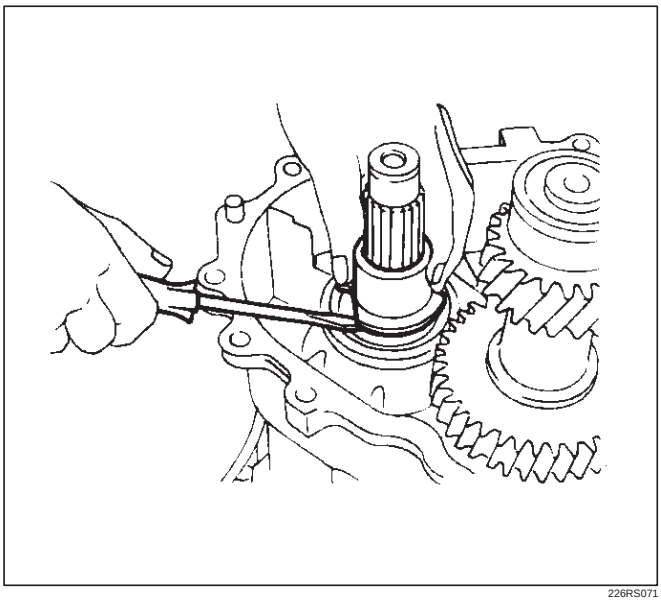

226RS071

11. Remove the ball (35).
12. Remove the plate (34).
13. Use a bench press and the ball bearing remover 5–8840–0015–0 (J–22912–01) to remove the ball bearing (32) from input shaft (31).

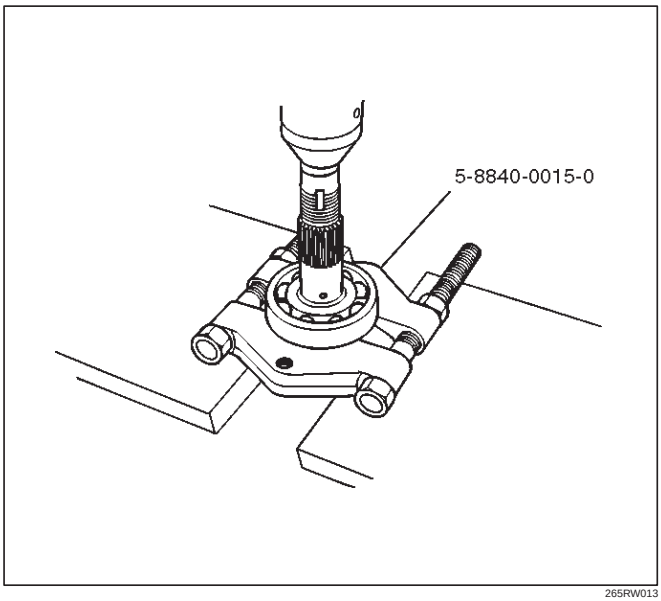

265RW013

14. Remove the bearing snap ring (2) from the transfer case, using a pair of snap ring pliers.
15. Use a plastic hammer to tap the front output gear assembly (3) free.

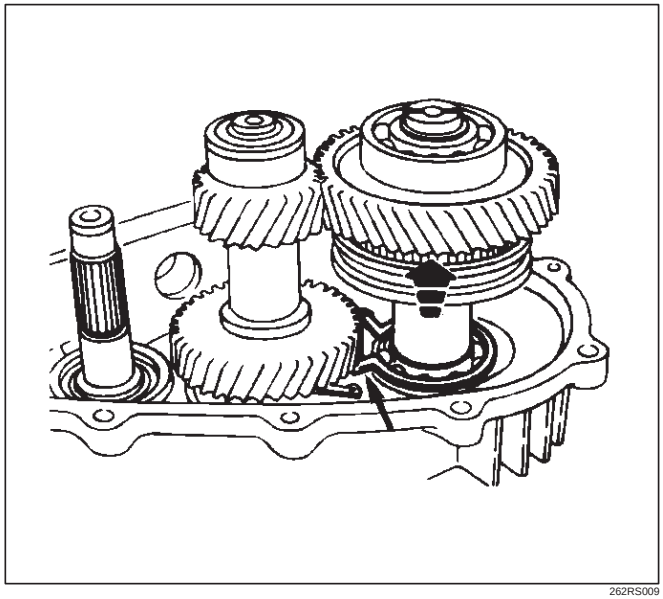

262RS009

16. Remove the bearing snap ring (19). Remove the ball bearing (18) and bearing collar (17) together with front output gear assembly: including following parts.
17. Use a bench press and the bearing remover 5–8840–0015–0 (J–22912–01) to remove the following parts.
18. Remove the sub–gear snap ring (16), spacer (15), belleville spring (14), and sub–gear (anti–lash plate) (13).(M/T)
19. Remove the front output gear (11) and needle bearing (12).

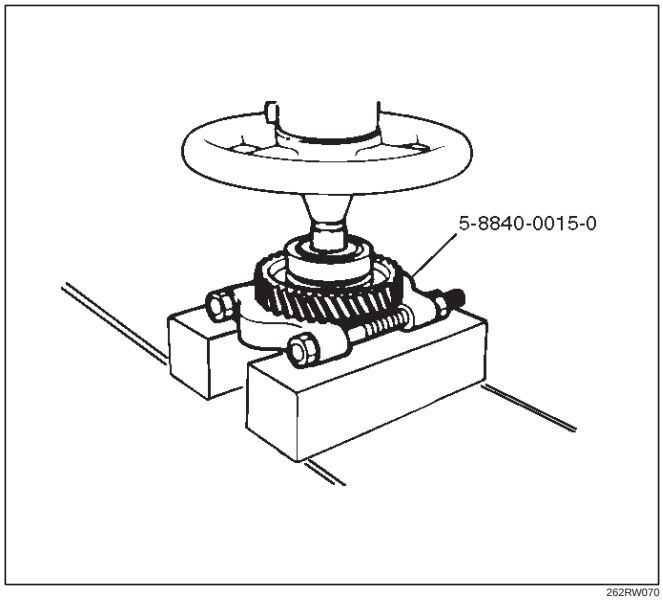

262RW070

20. Remove the inside ring (10). (Shift On The Fly model)
21. Remove the outside ring (9). (Shift On The Fly model)
22. Remove the block ring (8). (Shift On The Fly model)
23. Use a bench press and bearing remover 5–8840–0015–0 (J–22912–01) to remove the 2WD–4WD clutch hub and sleeve assembly (7) and stopper plate (6). (Shift On The Fly model)

NOTE: Do not reuse the stopper plate. (Shift On The Fly model)

24. Disassemble the 2WD–4WD clutch hub and sleeve assembly.
    - Springs (1) (Shift On The Fly model)
    - Inserts (2) (Shift On The Fly model)
    - Clutch Hub (3)
    - Sleeve (4)

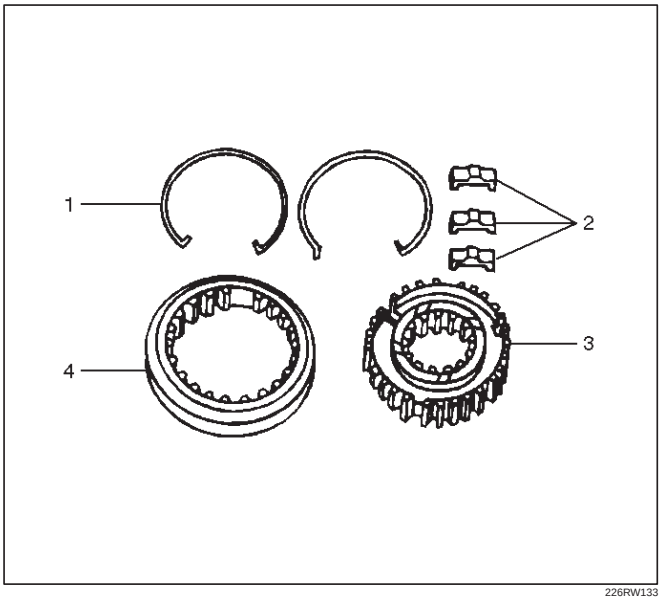

226RW133

25. Use a bench press and the ball bearing remover 5–8840–0015–0 (J–22912–01) to remove the ball bearing (4) from front output shaft (5).

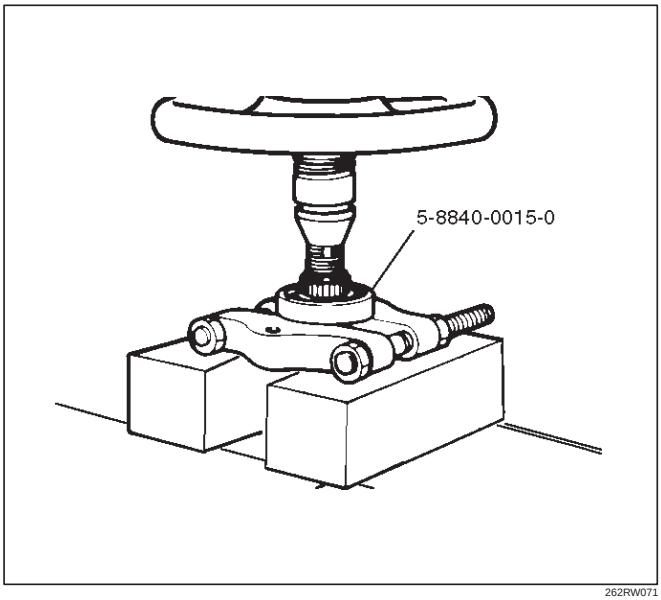

262RW071

26. Remove bearing snap ring (29) from transfer case.
27. Remove the counter gear assembly (28) from the transfer case (1).
28. Use a pair of snap ring pliers to remove the snap ring (20).
29. Use a bench press and the bearing remover 5–8840–0015–0 (J–22912–01) to remove the ball bearing (21).
30. Use a pair of snap ring pliers to remove the snap ring (27).
31. Use a bench press and the bearing remover 5–8840–0015–0 (J–22912–01) to remove the ball bearing (26).

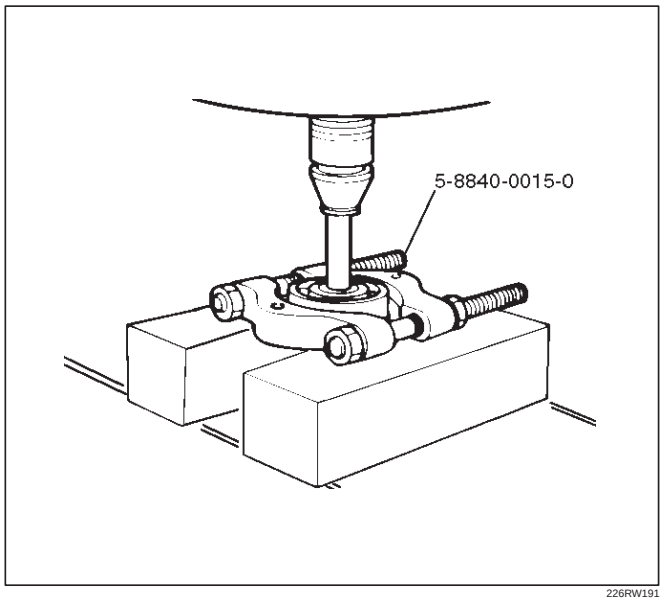

226RW191

32. Remove the spacer (25).
33. Remove the belleville spring (24).
34. Remove the sub–gear (anti–lash plate) (23) from the counter gear (22).

Inspection and Repair

1. Make the necessary repair or parts replacement if wear, damage or any other abnormal conditions are found during inspection.
2. Wash all parts thoroughly in clean solvent. Be sure all old lubricant, metallic particles, dirt, or foreign material are removed from the surfaces of every part. Apply compressed air to each oil feed port and channel in each case half to remove any obstructions or cleaning solvent residue.

Gears

1. Inspect all the gear teeth for signs of excessive wear or damage and check all the gear splines for burrs, nicks, wear or damage. Remove the minor nicks or scratches on an oil stone. Replace any part exhibiting excessive wear or damage.

Front Output Gear Inside Diameter

1. Use an inside dial indicator to measure the gear inside diameter.

2. If the measured value exceeds the specified limit, the gear must be replaced.

Gear inside diameter

Standard : 48.000–48.013 mm (1.8898–1.8903 in)

Limit : 48.10 mm (1.894 in)

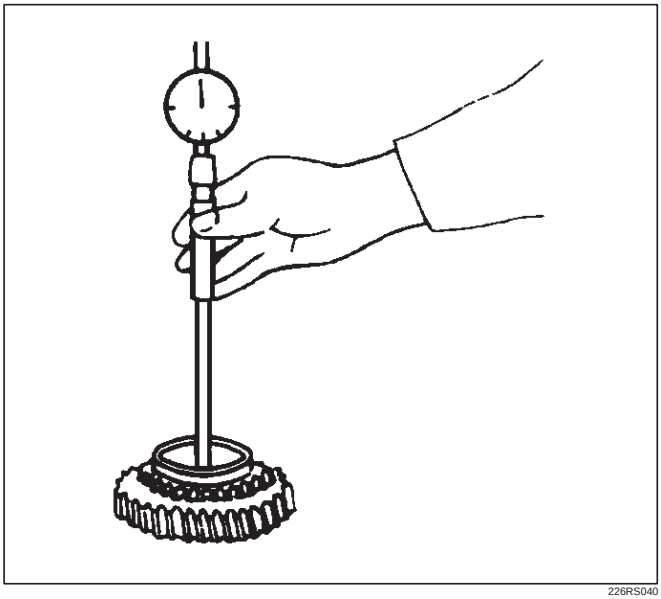

226RS040

Clutch Hub Spline Play

1. Set a dial indicator to the clutch hub to measured.
2. Move the clutch hub as far as possible to both the right and the left.
   Note the dial indicator reading.
3. If the measured value exceeds the specified limit, the clutch hub must be replaced.

Clutch hub spline play

Standard : 0–0.1 mm (0–0.004 in)

Limit : 0.2 mm (0.008 in)

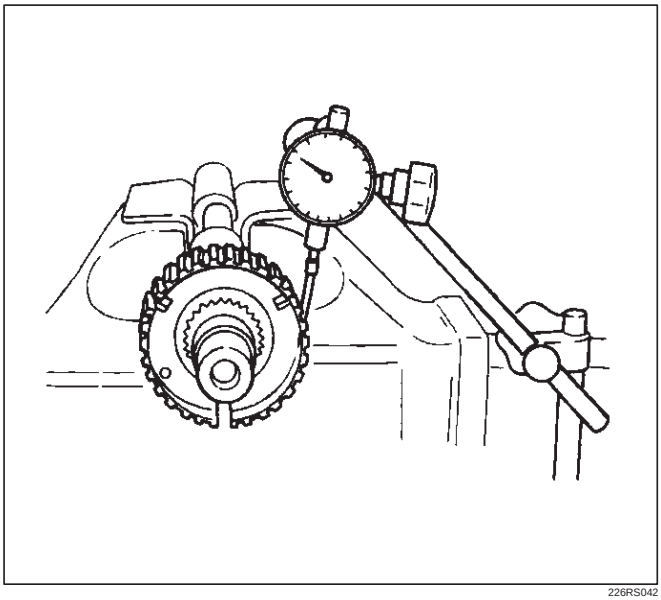

226RS042

Bearings

1. Inspect the condition of all the needles and ball bearings. Wash bearings thoroughly in a cleaning solvent. Apply compressed air to the bearings.

NOTE: Do not allow the bearings to spin. Turn them slowly by hand. Spinning bearings may damage the rollers.

2. Lubricate the bearings with a light oil and check them for roughness by slowly turning the race by hand.

Ball Bearing Play

1. Use a dial indicator to measure the ball bearing play.
2. If the measured value exceeds the specified limit, the ball bearing must be replaced.

Limit : 0.2 mm (0.008 in)

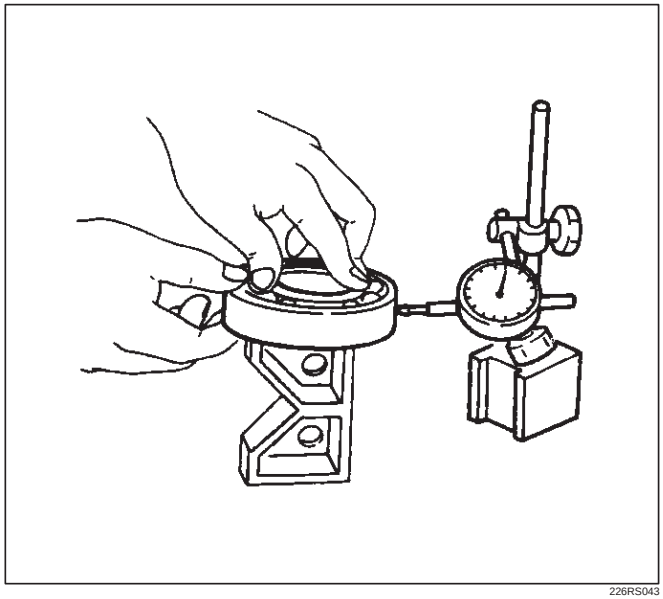

226RS043

Synchronizers

The synchronizer hubs and sliding sleeves are a selected assembly and should be kept together as originally assembled.
Clean synchronizer components with clean solvent and air dry.
Inspect the components for the following:

- Teeth for wear, scuffs, nicks, burrs or breaks.
- Keys and springs for wear, cracks or distortion, replace if these conditions are present.
- If scuffed, nicked or burred conditions cannot be corrected with a soft stone or crocus cloth, replace the component.

Block Ring and Insert Clearance

1. Use a vernier caliper to measure the clearance between the block ring and the insert.
2. If the measured value exceeds the specified limit, the block ring and the insert must be replaced.

Block ring and insert clearance

Standard : 2.46–2.74 mm (0.097–0.108 in)

Limit : 3.0 mm (0.118 in)

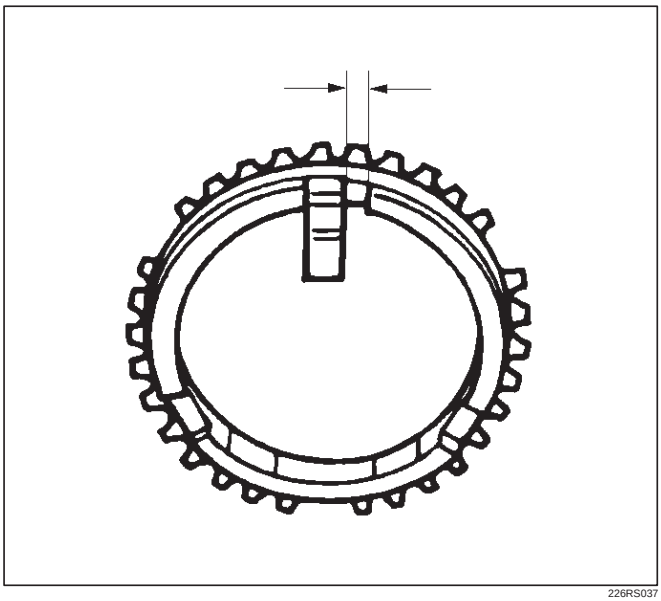

226RS037

2WD–4WD 3–Cone Synchronizer (Shift On The Fly model)

1. Use a thickness gauge to measure the clearance between the block ring and the dog teeth.
2. If the measured value exceeds the specified limit, the 2WD–4WD synchronizer assembly must be replaced.

Block ring and insert clearance

Standard : 1.5 mm (0.059 in)

Limit : 0.8 mm (0.031 in)

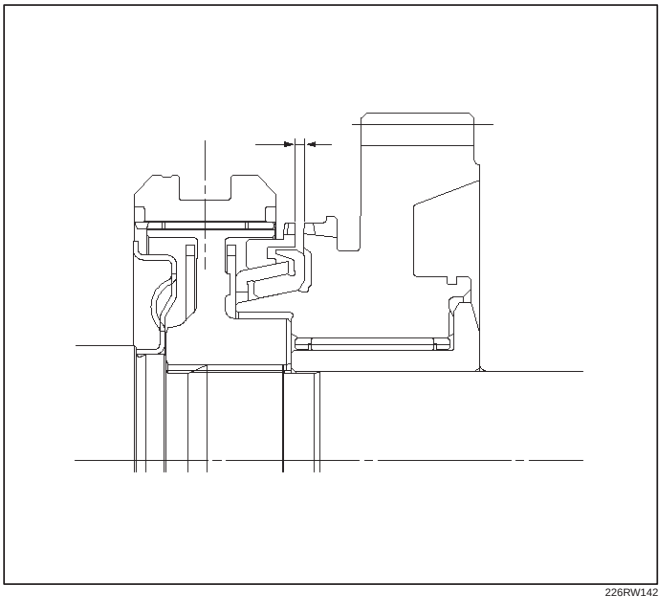

226RW142

Clutch Hub and Insert Clearance

1. Use a thickness gauge to measure the clearance between the clutch hub and the insert.
2. If the measured value exceeds the specified limit, the clutch hub and the insert must be replaced.

Clutch hub and insert clearance

Standard : 0.01–0.19 mm (0.0004–0.0075 in)

Limit : 0.3 mm (0.012 in)

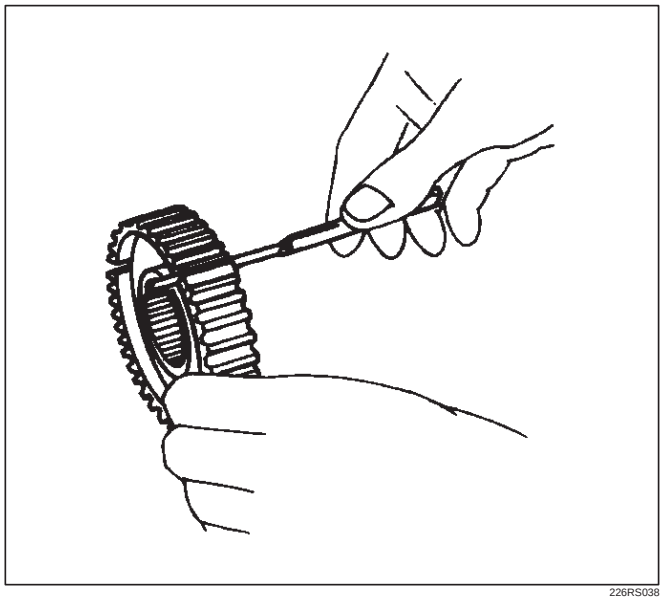

226RS038

Detent Springs

1. Inspect the springs for distortion, cracks or wear. Replace if these conditions are present.

Detent Spring Free Length

1. Use a vernier caliper to measure the detent spring free length.

2. If the measured value is less than the specified limit, the detent spring must be replaced.

Detent spring free length

Detent ball

Standard : 23.4 mm (0.921 in)

Limit : 22.8 mm (0.898 in)

Interlock pin

Standard : 1.59 mm (0.063 in)

Limit : 1.53 mm (0.060 in)

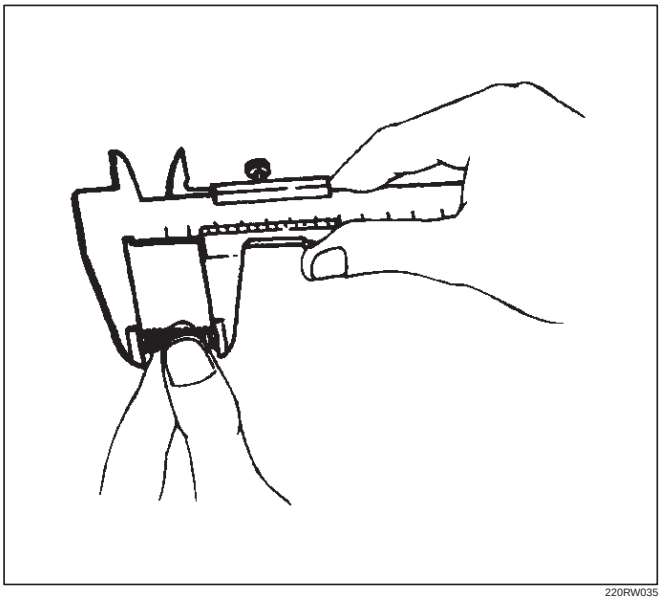

220RW035

Detent Spring Tension

1. Use a spring tester to measure the detent spring tension.
2. If the measured value is less than the specified limit, the detent spring must be replaced.

Detent spring free length

Detent ball

Compressed height : 18.7 mm (0.736 in)

Standard : 68.6–88.2 N (7.0–9.0kg/15.4–19.8 lb)

Interlock pin

Compressed height : 11.5 mm (0.453 in)

Standard : 9.8 N (1.0kg/2.2 lb)

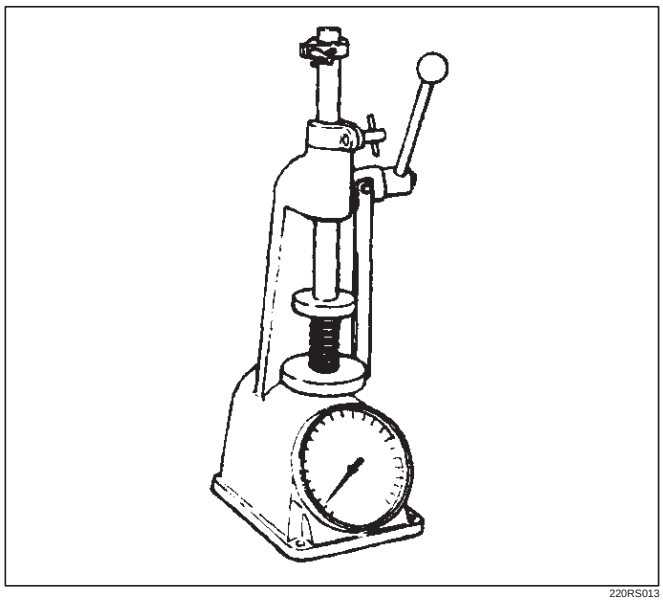

220RS013

Shift Arm

1. Inspect the shift arms for wear, distortion or scoring. Replace if these conditions are present.

Shift Arm Thickness

1. Use a micrometer to measure the shift arm thickness.
2. If the measured value is less than the specified limit, the shift arm must be replaced.

Shift arm thickness

Standard : 9.60–9.85 mm (0.378–0.388 in)

Limit : 9.0 mm (0.354 in)

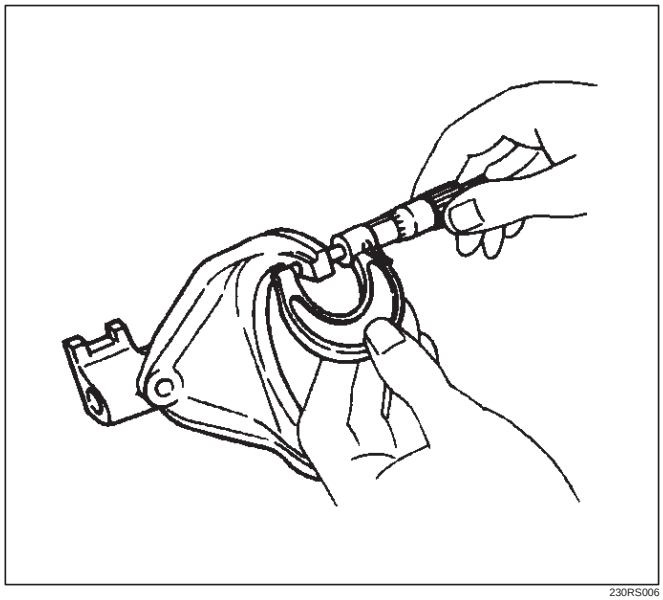

230RS006

Reassembly

1. Put the transfer case (with oil seal) as the following illustration.

Input shaft oil seal (1) replacement

1. Remove the oil seal from the transfer case.
2. Apply engine oil to the oil seal outer surfaces.
3. Apply recommended grease (BESCO L2) or equivalent to the oil seal lip.
4. Use the oil seal installer 5–8840–2279–0 (J–38592) to install the oil seal to the transfer case.

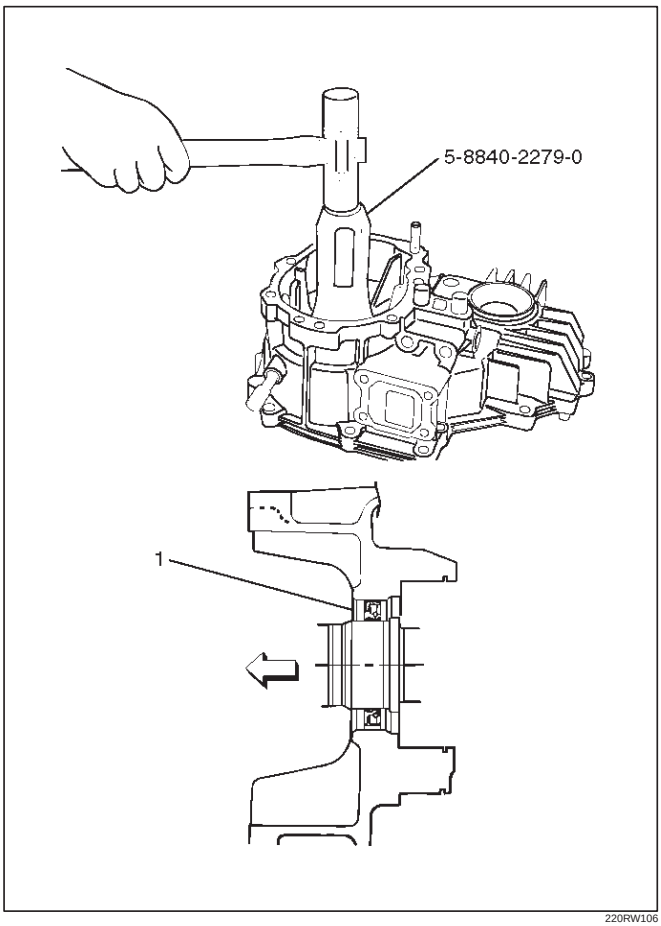

220RW106

Front output shaft oil seal (2) replacement

1. Remove the oil seal from the transfer case.
2. Apply engine oil to the oil seal outer surfaces.
3. Apply recommended grease (BESCO L2) or equivalent to the oil seal lip.
4. Use the oil seal installer 5–8840–2281–0 (J–38594) to install the oil seal to the transfer case.

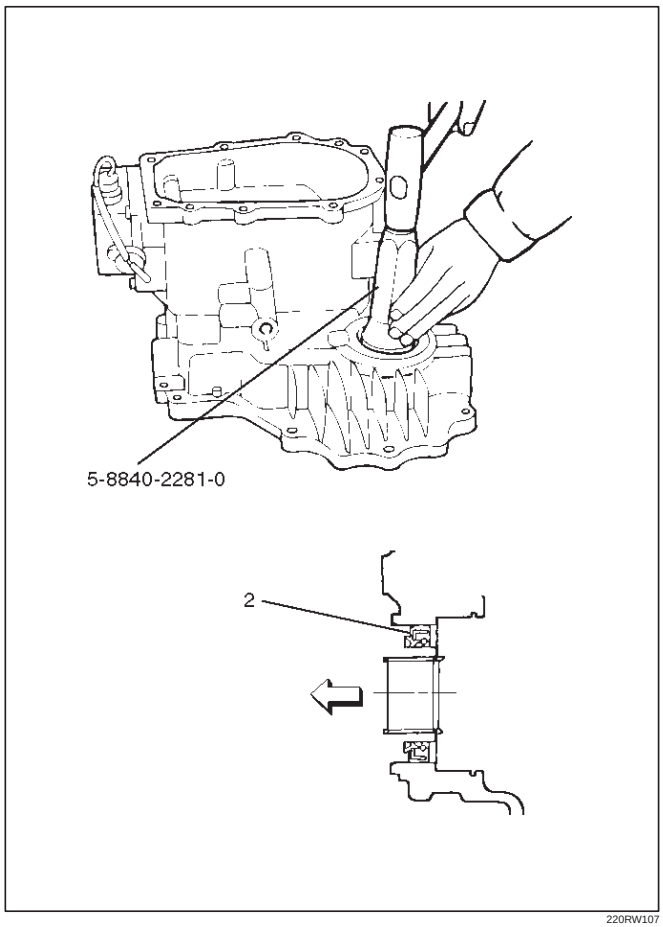

220RW107

Legend

(2) Front output shaft oil seal

2. Apply chassis grease (3) to the sub–gear (23) and the counter gear (22) thrust surfaces.

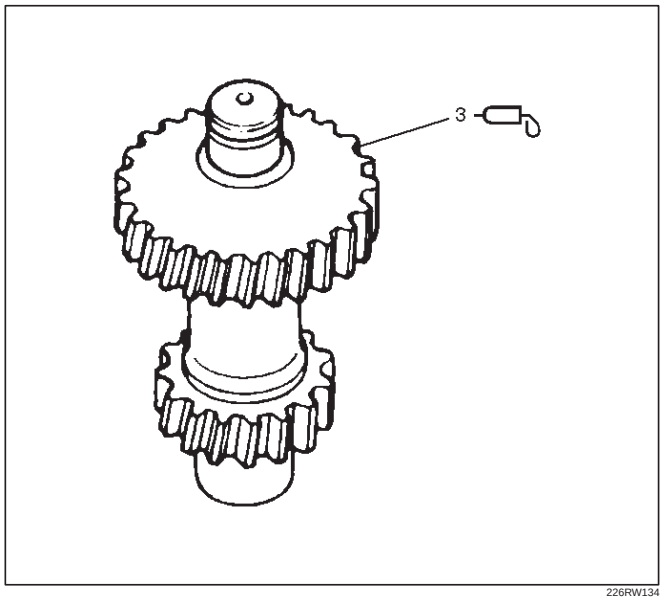

226RW134

3. Install the sub–gear (23) to the counter gear (22).
4. Install the belleville spring (24).
5. Install the spacer (25) and put the snap ring (29) on the sub–gear (23).
6. Install the ball bearing (26), using a bench press.
7. Select a snap ring that will allow the minimum axial play.

Clearance : 0–0.1 mm (0–0.004 in)

Snap ring availability:	
Thickness	Color–coding
1.50 mm (0.059 in)	White
1.55 mm (0.061 in)	Yellow
1.60 mm (0.063 in)	Blue

8. Use a pair of snap ring pliers to install the snap ring (27) to the counter gear (22).

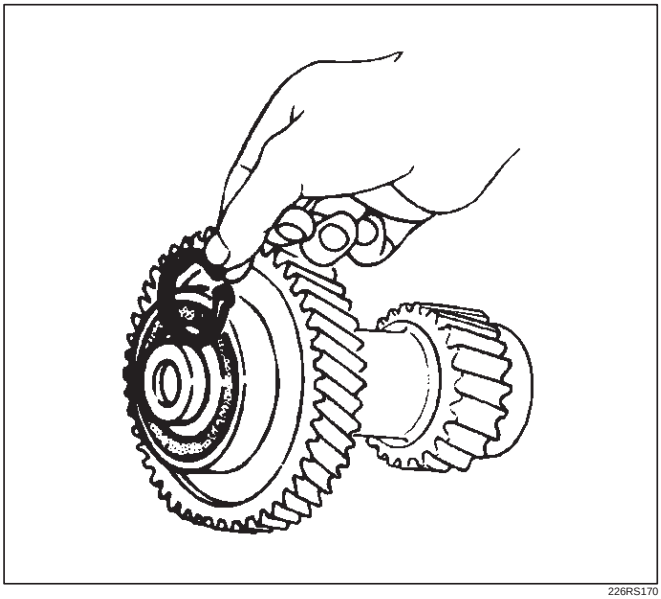

226RS170

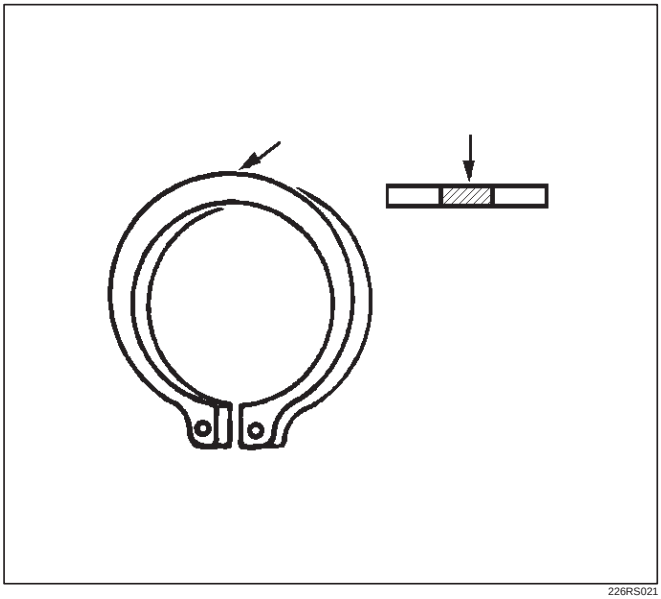

226RS021

Sub–Gear (anti–lash plate) Preload

1. Hook a length of piano wire (4) over one of the sub–gear (5) teeth.
2. Attach the other end of the piano wire (4) to a spring balancer.
3. Measure the sub–gear preload.

Preload : 59–98 N (6.0–10kg/13–22 lb)

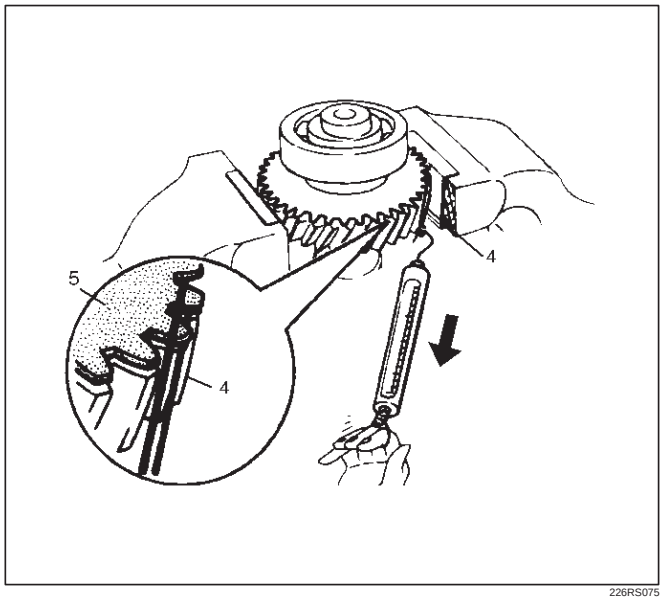

226RS075

9. Install ball bearing (21), using a bench press.
10. Install snap ring (20).
11. Install the counter gear assembly (28) to the transfer case (1).
12. Use a pair of snap ring pliers to install the snap ring (29) to the transfer case (1).

NOTE: The snap ring must be fully inserted into the transfer case snap ring groove.

13. Use a bench press to install the ball bearing (4) to the front output shaft (5).

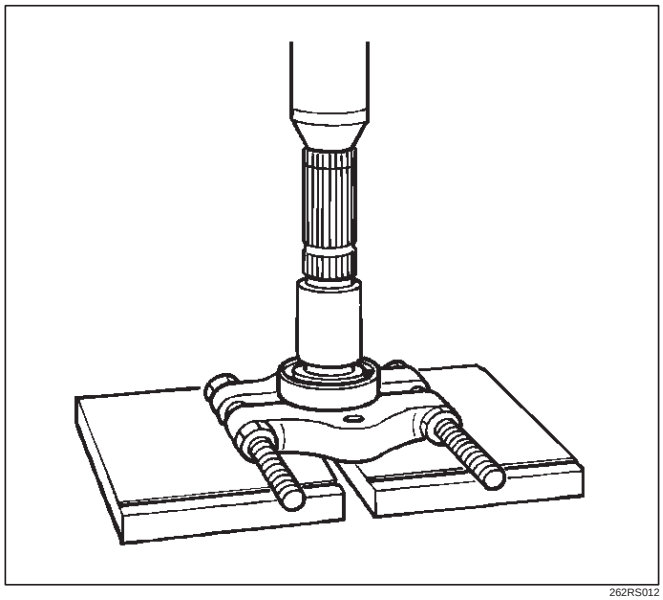

262RS012

14. Assemble the 2WD–4WD clutch hub and sleeve assembly (7).

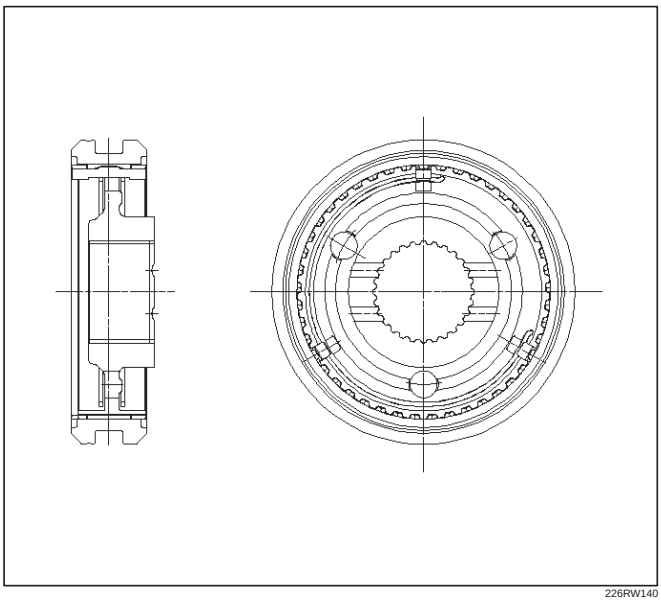

226RW140

15. Engage the springs in the same insert with the open ends away from each other. (Shift On The Fly model)

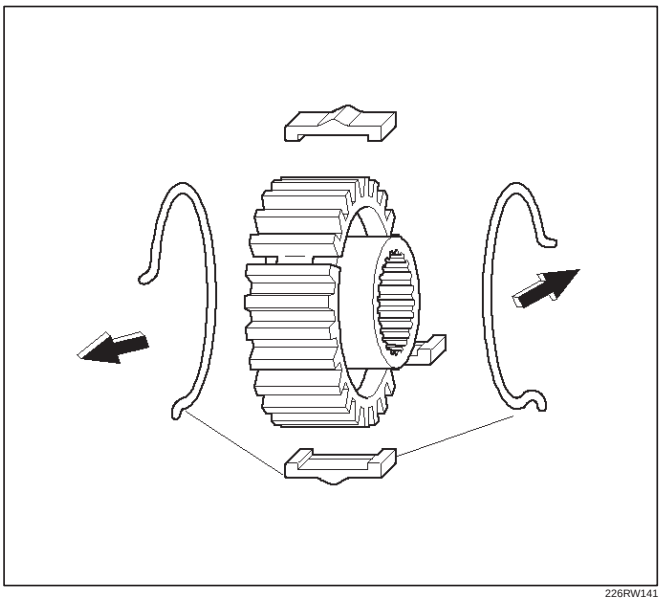

226RW141

16. Place the snap ring (2), a new stopper plate (6) (Shift On The Fly model) and the clutch sleeve and hub assembly (7) on the front output shaft (5).

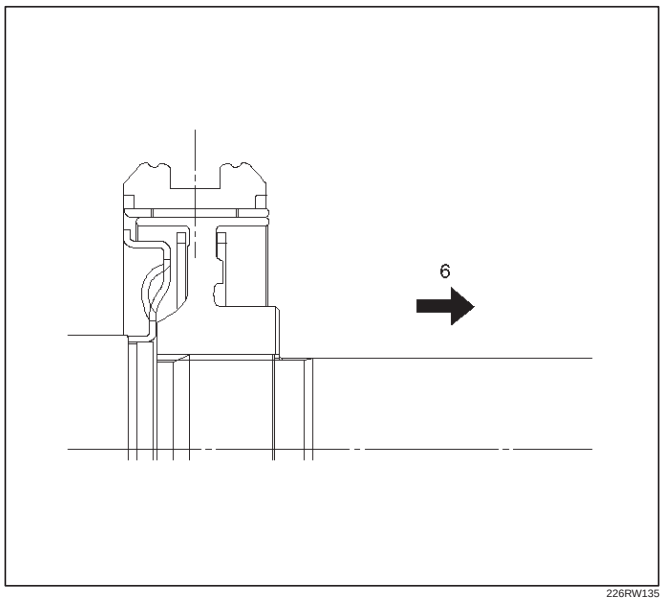

226RW135

Legend

(6) Front Output Gear

17. The clutch hub face (with the heavy boss) must be facing the front output gear side.
18. Use a bench press to slowly force the clutch hub and sleeve assembly (7) together with the stopper plate (6) (Shift On The Fly model) into place.
19. Align the inserts with the block ring insert grooves. Install the block ring (8) (Shift On The Fly model) to the clutch sleeve and hub assembly (7).
20. Install the outside ring (9) (Shift On The Fly model), inside ring (10) (Shift On The Fly model) and needle bearing (12) to the front output gear (11) and bearing collar (17).

NOTE: Coat all parts with transmission oil before installing them.

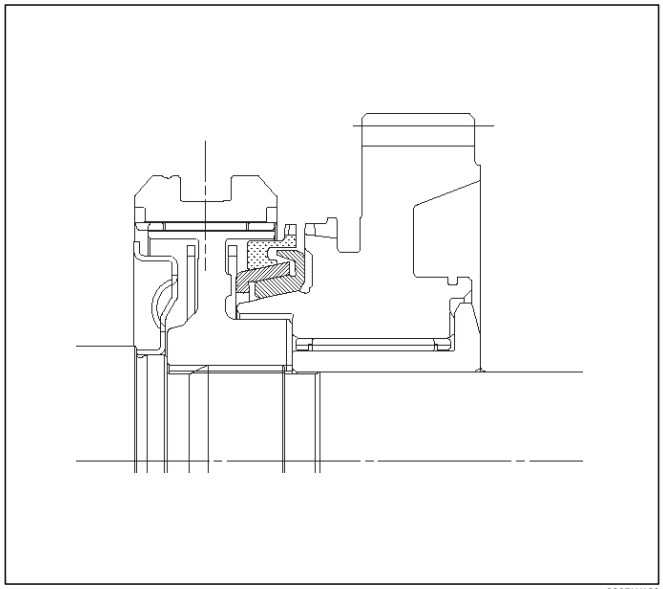

226RW139

21. Apply engine oil to the thrust surfaces of the sub–gear (13), the belleville spring (14), and the spacer (15). (M/T)

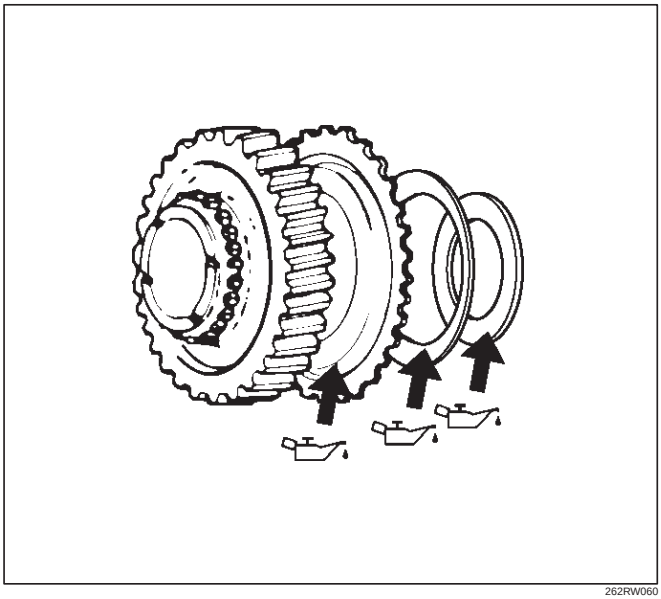

262RW060

22. Install the sub–gear (anti–lash plate) (13), belleville spring (14), and spacer (15) to the front output gear (11).(M/T)
23. Install the sub–gear snap ring (16). (M/T)
24. Use a bench press to install the needle bearing collar (17) together with the front output gear, aligning inside ring claw with block ring groove.

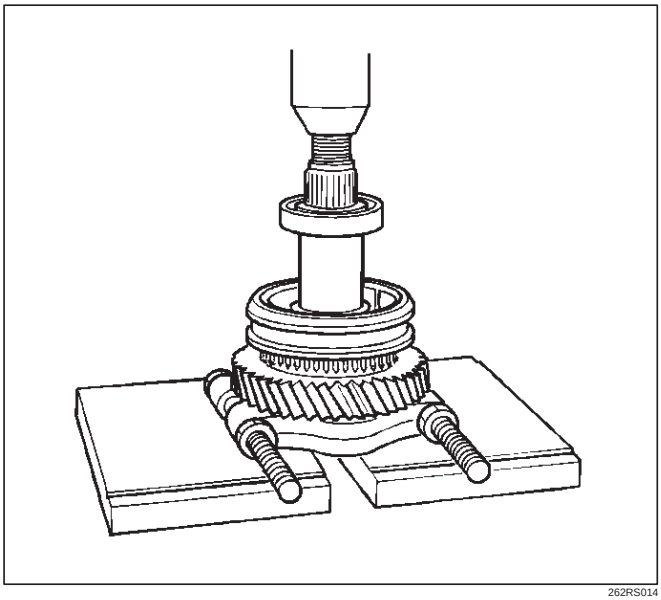

262RS014

25. Install ball bearing (18), using a bench press.
26. Select a snap ring that will allow the minimum axial play.

Clearance : 0–0.1 mm (0–0.004 in)

Snap ring availability:	
Snap ring thickness	Color coding
1.55 mm (0.061 in)	White
1.60 mm (0.063 in)	Yellow
1.65 mm (0.065 in)	Blue
1.70 mm (0.067 in)	Pink
1.75 mm (0.069 in)	Green
1.80 mm (0.071 in)	Brown
1.85 mm (0.073 in)	Red
1.90 mm (0.075 in)	Orange

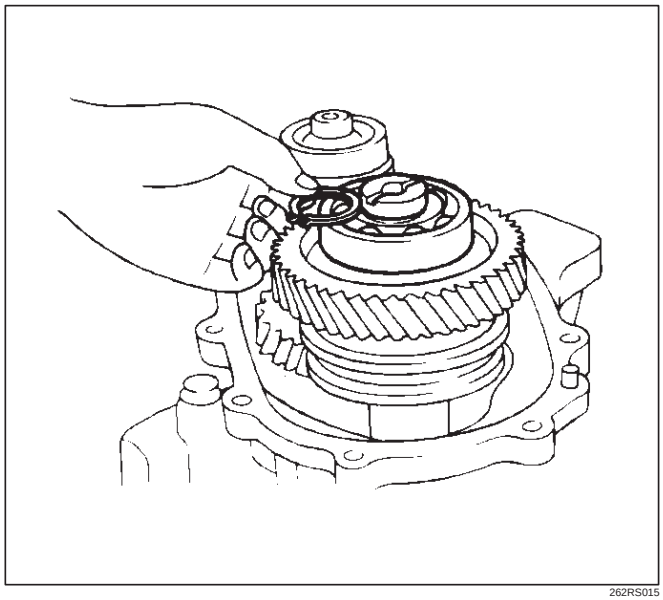

262RS015

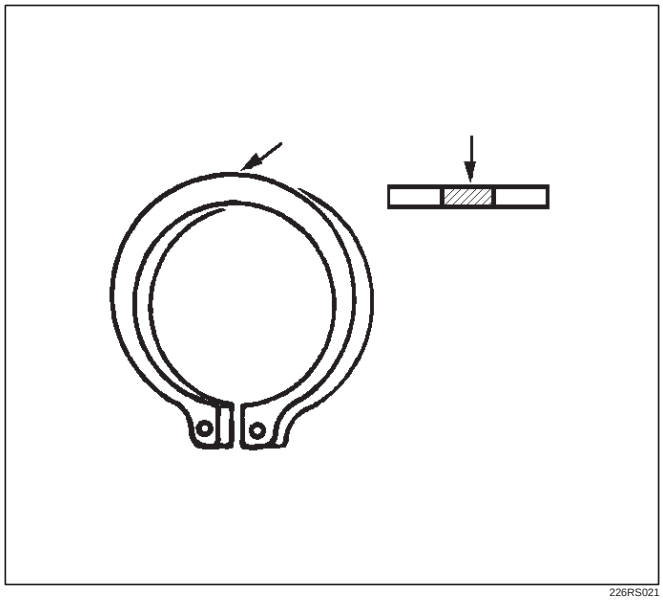

226RS021

27. Use a pair of snap ring pliers to install the snap ring (19) to the output shaft (5).

Sub gear (anti lash plate) preload (M/T)

1. Hook a length of piano wire (4) over one of the sub–gear (5) teeth.
2. Attach the other end of the piano wire to (4) a spring balancer.
3. Measure the sub–gear preload.

Preload: 59–98 N (6.0–10.0kg/13–22 lb)

(M/T)

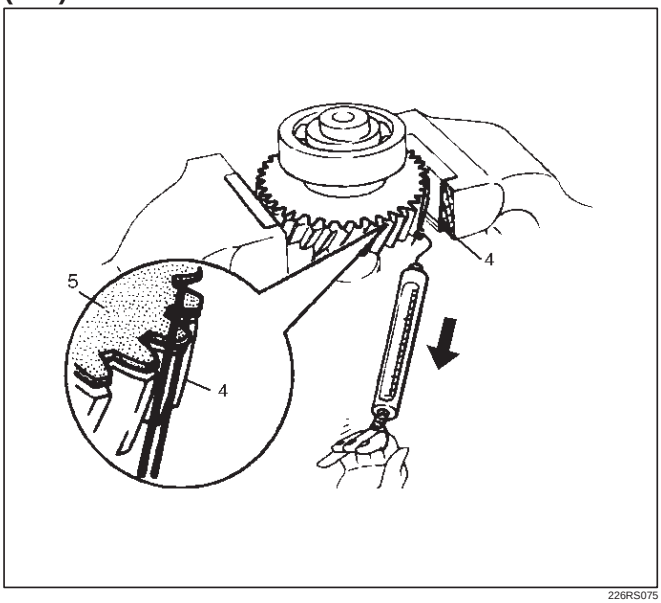

226RS075

28. Install front output gear assembly (3) to the transfer case (1).
29. Use a pair of snap ring pliers to install the snap ring (2) to the transfer case (1).

NOTE: The snap ring must be fully inserted into the transfer case snap ring groove.

30. Use a bench press to install the ball bearing (32) to the input shaft (31).

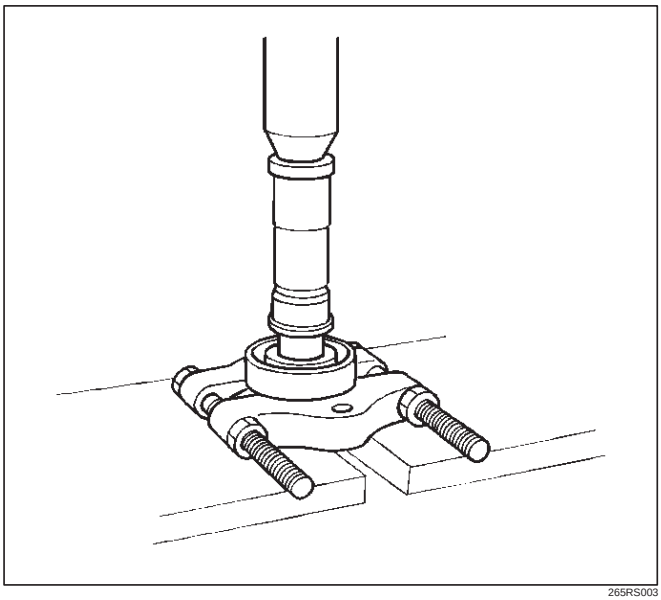

265RS003

31. Install the plate (34), ball (35), and bearing collar (36) and place the snap ring (33).
32. Install the needle bearing (37) and input gear (38).
33. The clutch hub face (with the heavy boss) must be facing the transfer input gear side (7).

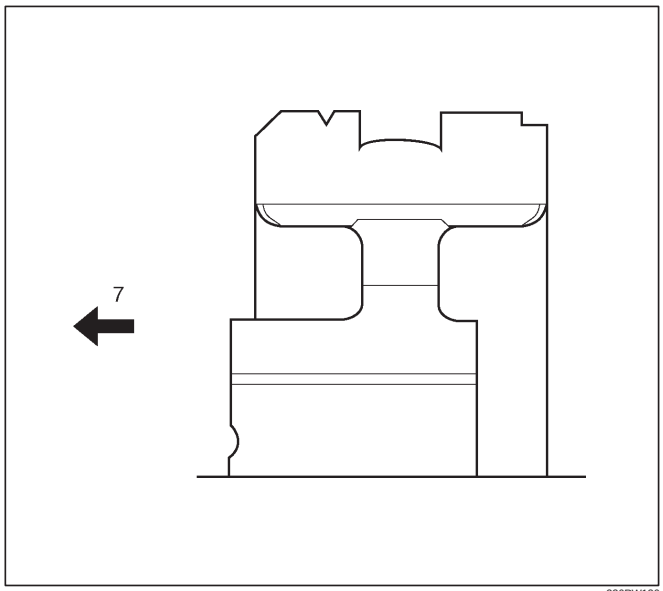

226RW136

34. Install the high–low clutch hub and sleeve (39), using a bench press.
35. Install the input shaft assembly (30) to the transfer case (1).
36. Install the snap ring (33) to the transfer case (1).

NOTE: The snap ring must be fully inserted into the transfer case snap ring groove.

37. Install the front companion flange temporarily and use the flange holder 5–8840–0133–0 (J–8614–11) and lock nut wrench 5–8840–2156–0 (J–37219) to install the lock nut (40).

Torque: 137 N·m (14.0kg·m/101 lb ft)

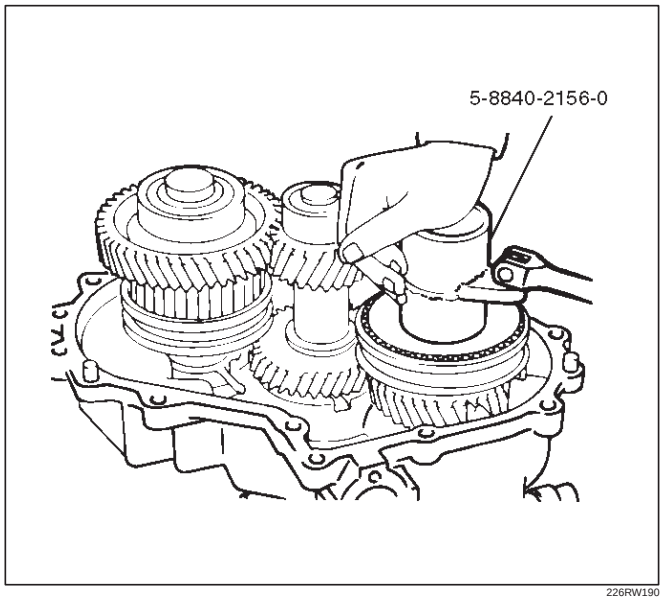

226RW190

38. Use the punch to stake the lock nut (40) at one spot.

39. Use a suitable drift and hammer to install the ball bearing (41).

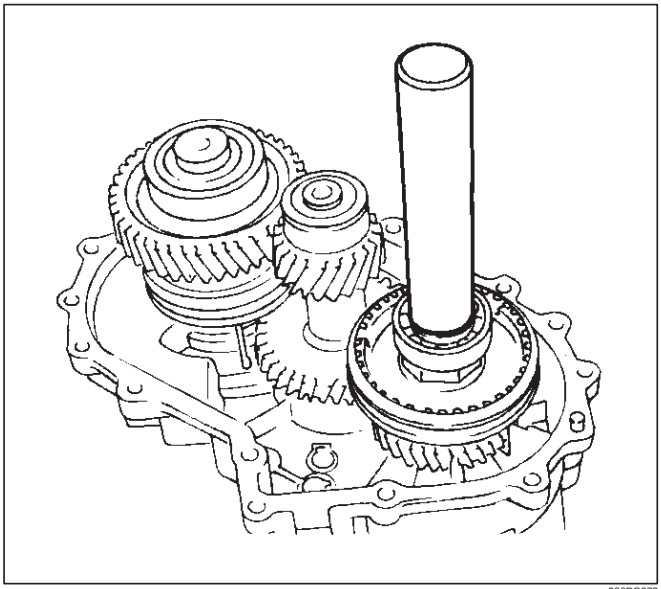

226RS079

40. Install the bearing snap ring (42).

Main Data and Specifications

General Specifications

Type	W/Shift On The Fly System model Synchronized type gears shifting between the 2 and 4 wheel drive mode. Constant mesh type gears shifting between “low” and “high”. WO/Shift On The Fly System model Constant mesh type gears shifting between the 2 and 4 wheel drive mode, and between “low” and “high”.
Control method	W/4WD Switch model Electric control with the button switch on the instrument panel for gear shifting between the 2 and 4 wheel drive mode. Remote control with the gear shift lever on the floor for gear shifting between “low and high” . WO/4WD Switch model Remote control with the gear shift lever on the floor for gear shifting.
Gear ratio	High; 1.000 Low; 2.050
Oil capacity	1.45 lit. (1.53 U.S. quart)
Type of lubricant	Engine oil Refer to chart in Section 0

Torque Specifications

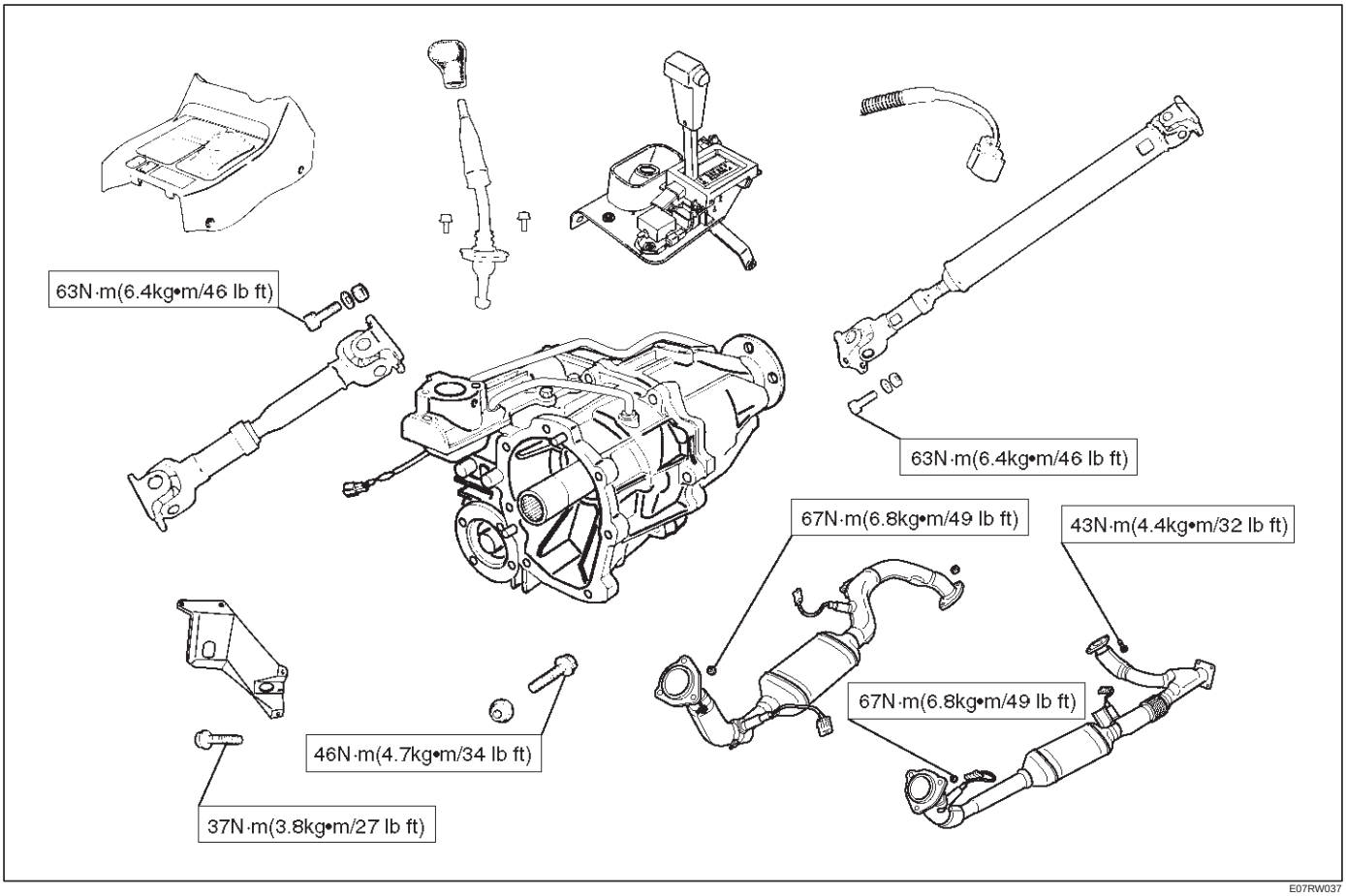

E07RW037

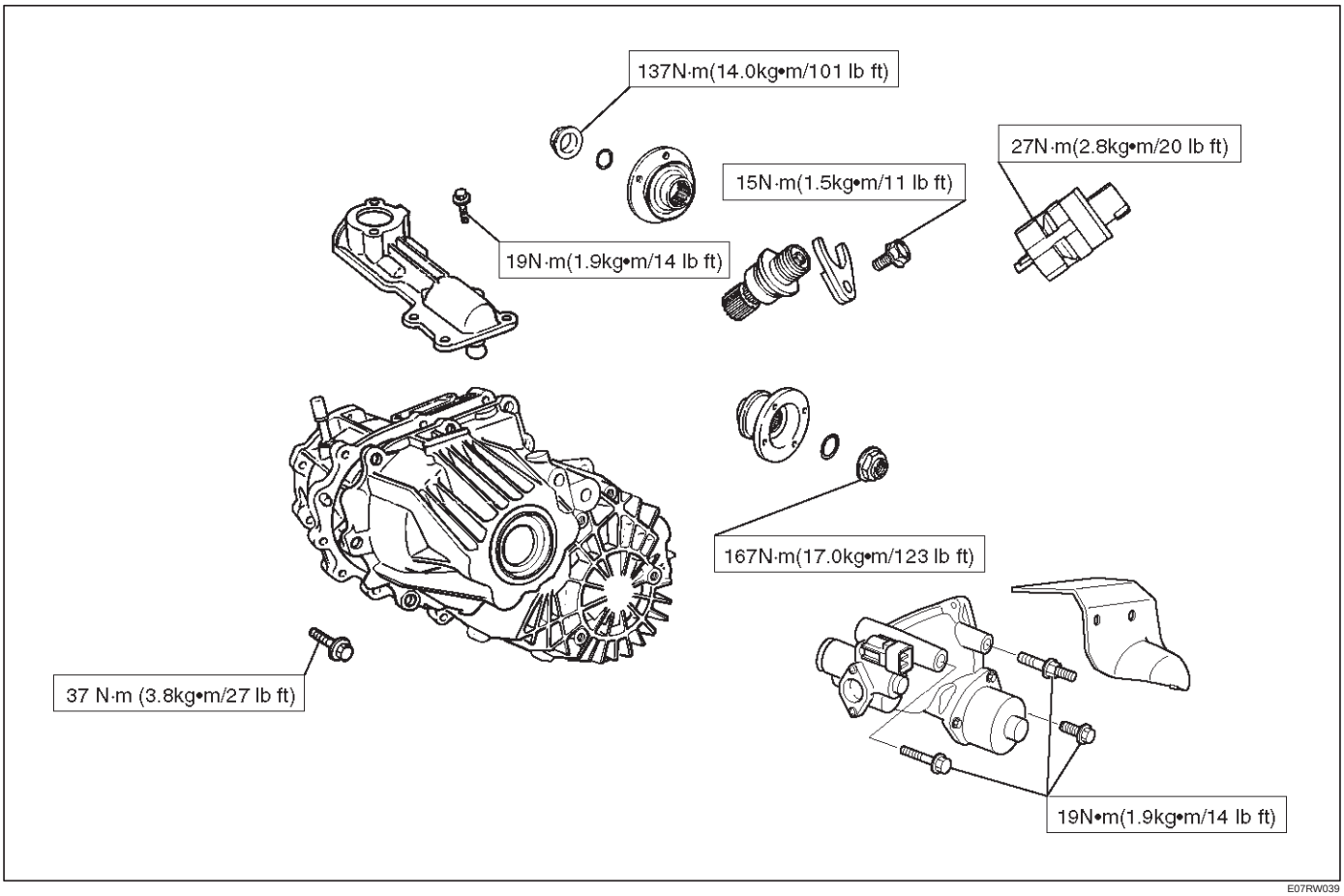
137N·m(14.0kg•m/101 lb ft)
27N·m(2.8kg•m/20 lb ft)
15N·m(1.5kg•m/11 lb ft)
19N·m(1.9kg•m/14 lb ft)
167N·m(17.0kg•m/123 lb ft)
37 N·m (3.8kg•m/27 lb ft)
19N•m(1.9kg•m/14 lb ft)

E07RW039

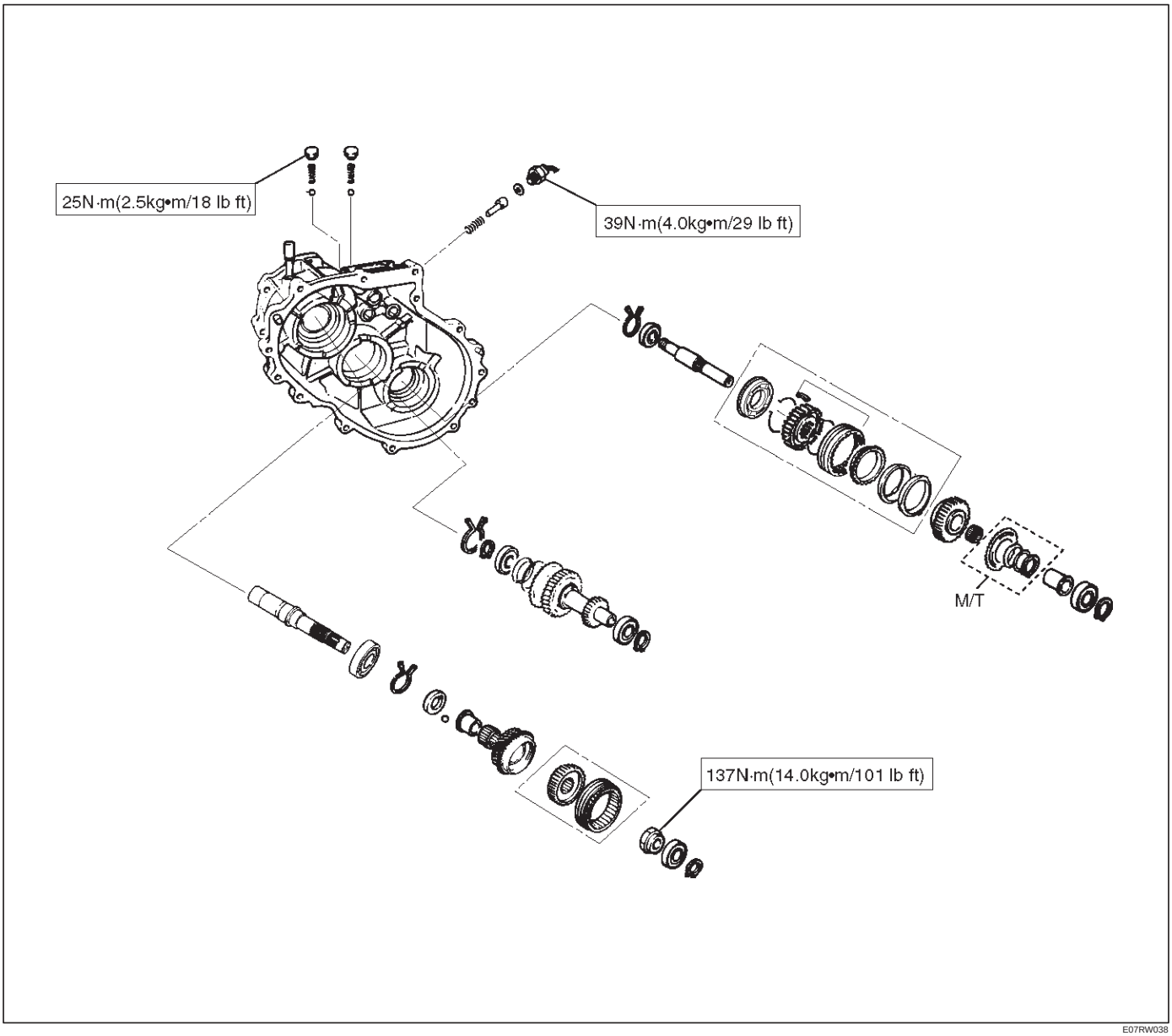
25N·m(2.5kg•m/18 lb ft)
39N·m(4.0kg•m/29 lb ft)
M/T
137N·m(14.0kg•m/101 lb ft)

E07RW038

Special Tools

ILLUSTRATION	PART NO. PART NAME
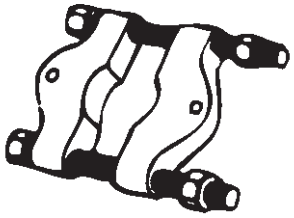 901RS258	**5–8840–0015–0** **(J–22912–01)** Bearing remover/installer
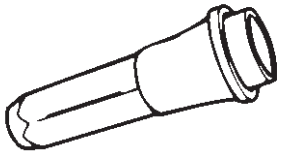 901RS269	**5–8840–2279–0** **(J–38592)** Transfer case oil seal installer
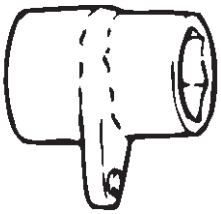 901RS255	**5–8840–2156–0** **(J–37219)** Mainshaft nut wrench
901RS257	**5–8840–2159–0** **(J–37223)** Rear output shaft and bearing installer
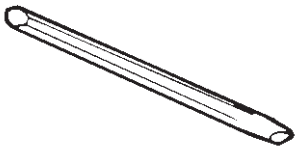 901RS263	**5–8840–2293–0** **(J–39209)** Punch, end nut
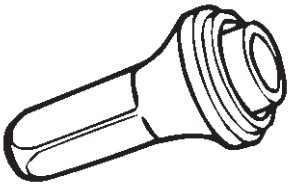 901RS271	**5–8840–2281–0** **(J–38594)** Front output shaft oil seal installer

ILLUSTRATION	PART NO. PART NAME
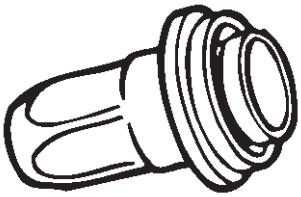 901RS272	**5–8840–2292–0** **(J–39208)** Rear oil seal installer
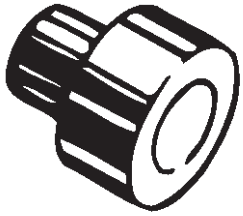 901RS273	**5–8840–2192–1** **(J–37486–A)** Bearing installer adapter
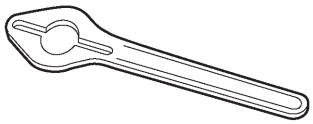 901RW071	**5–8840–0133–0** **(J–8614–11)** Flange holder
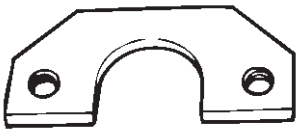 901RS274	**5–8840–2155–0** **(J–37217)** Mainshaft end bearing remover
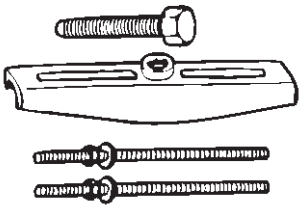 901RS252	**5–8840–2027–0** **(J–37487)** Puller
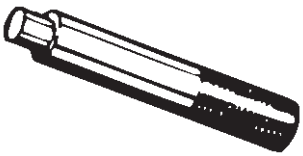 901RS268	**5–8840–0007–0** **(J–8092)** Driver handle

DRIVELINE/AXLE

TRANSFER CASE (TOD)

CONTENTS

Service Precaution 4D2–1
Transfer Case Assembly 4D2–2
Removal 4D2–2
Installation 4D2–3
Transfer Rear Oil Seal 4D2–5
Transfer Rear Oil Seal and Associated Parts 4D2–5
Removal 4D2–5
Installation 4D2–5
TOD ECU 4D2–7
Removal 4D2–7
Installation 4D2–7
Unit Repair 4D2–8
Inspection 4D2–8
Transfer Case 4D2–9
Disassembled View 4D2–9
Disassembly 4D2–9
Reassembly 4D2–10
Transfer Cover Assembly 4D2–12
Disassembled View 4D2–12
Disassembly 4D2–12
Reassembly 4D2–14
Transfer Case Assembly Clutch Pack and Clutch Cam 4D2–16
Disassembled View 4D2–16
Disassembly 4D2–16
Sprocket and Mechanical Lock 4D2–18
Disassembled View 4D2–18
Disassembly 4D2–18
Output Shafts and Shift Control Shaft 4D2–20
Disassembled View 4D2–20
Disassembly 4D2–21
Transfer Case 4D2–23
Disassembled View 4D2–23
Disassembly 4D2–24
Inspection and Repair 4D2–26
Transfer Case 4D2–30
Disassembled View 4D2–30
Reassembly 4D2–30
Output Shafts and Shift Control Shaft 4D2–34
Disassembled View 4D2–34
Reassembly 4D2–34
Sprocket and Mechanical Lock 4D2–37
Disassembled View 4D2–37
Reassembly 4D2–37
Clutch Pack and Clutch Cam 4D2–39
Disassembled View 4D2–39
Reassembly 4D2–39
Main Data and Specifications 4D2–41
Special Tools 4D2–43

Service Precaution

WARNING: IF SO EQUIPPED WITH A SUPPLEMENTAL RESTRAINT SYSTEM (SRS), REFER TO THE SRS COMPONENT AND WIRING LOCATION VIEW IN ORDER TO DETERMINE WHETHER YOU ARE PERFORMING SERVICE ON OR NEAR THE SRS COMPONENTS OR THE SRS WIRING. WHEN YOU ARE PERFORMING SERVICE ON OR NEAR THE SRS COMPONENTS OR THE SRS WIRING, REFER TO THE SRS SERVICE INFORMATION. FAILURE TO FOLLOW WARNINGS COULD RESULT IN POSSIBLE AIR BAG DEPLOYMENT, PERSONAL INJURY, OR OTHERWISE UNNEEDED SRS SYSTEM REPAIRS.

CAUTION: Always use the correct fastener in the proper location. When you replace a fastener, use ONLY the exact part number for that application. ISUZU will call out those fasteners that require a replacement after removal. ISUZU will also call out the fasteners that require thread lockers or thread sealant. UNLESS OTHERWISE SPECIFIED, do not use supplemental coatings (Paints, greases, or other corrosion inhibitors) on threaded fasteners or fastener joint interfaces. Generally, such coatings adversely affect the fastener torque and the joint clamping force, and may damage the fastener. When you install fasteners, use the correct tightening sequence and specifications. Following these instructions can help you avoid damage to parts and systems.

Transfer Case Assembly

Removal

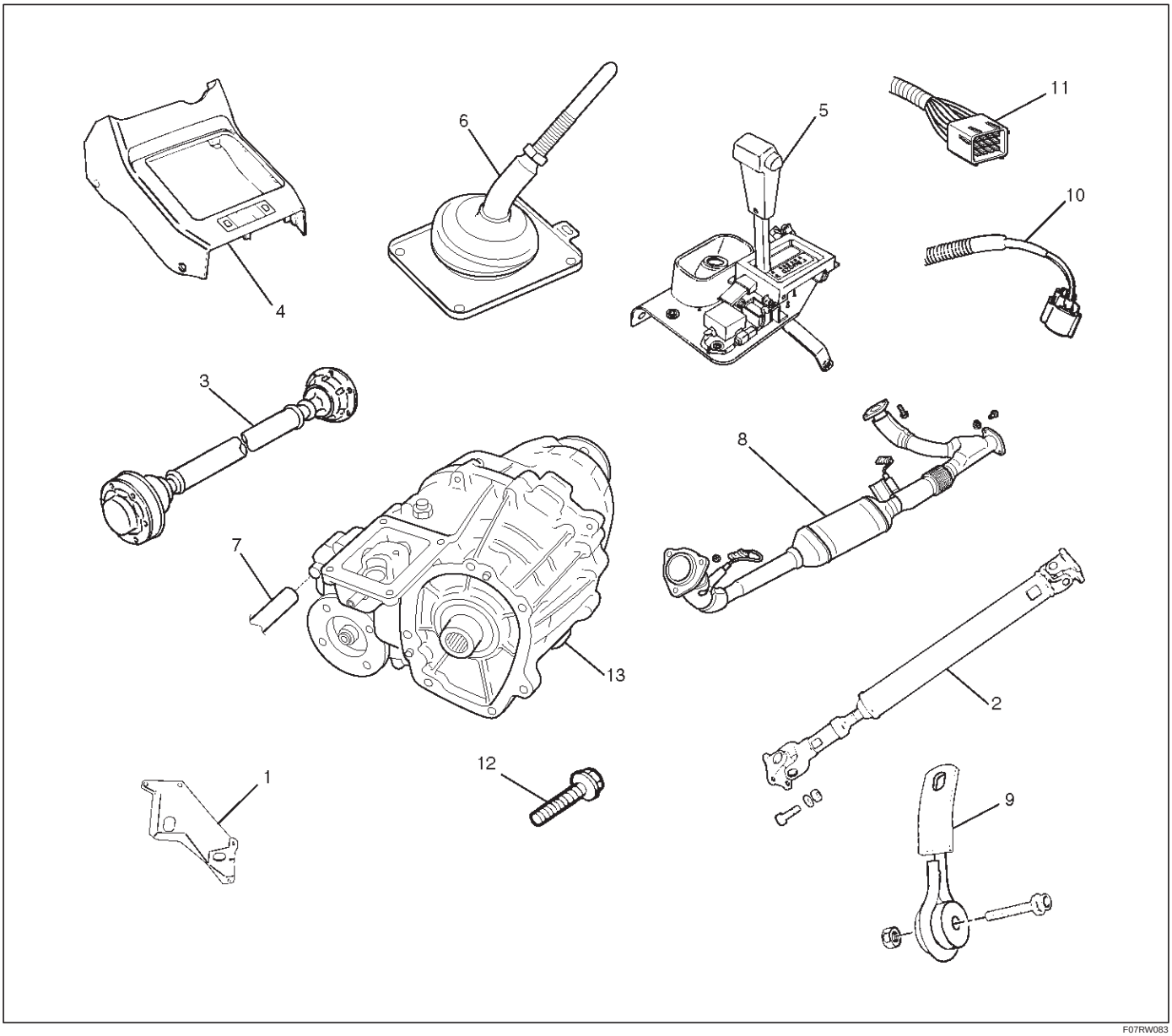

F07RW083

Legend

(1) Transfer Protector
(2) Rear Propeller Shaft
(3) Front Propeller Shaft
(4) Front Console
(5) Selector Lever Assembly
(6) Transfer Control Lever
(7) Breather Hose
(8) Exhaust Pipe
(9) Seat Belt Tension Rod
(10) Speed Sensor Harness Connector
(11) Transfer Harness Connector
(12) Transfer Case Bolt
(13) Transfer Case

1. Disconnect the ground cable.
2. Remove the transfer protector.
3. Remove the rear propeller shaft from the transfer case.
4. Remove the front propeller shaft from the transfer case.
5. Remove the shift control rod from the selector lever assembly.

6. Disconnect the wiring harness connector, transfer control lever knob and shift lock cable and then remove the front console.
7. Remove the selector lever assembly and put it aside.
8. Remove the transfer control lever.
9. Disconnect the breather hose.
10. Remove the left front exhaust pipe fixing bolts and nuts, and put the exhaust pipe aside.
11. Remove the left seat belt tension rod and put the rear proper shaft aside.

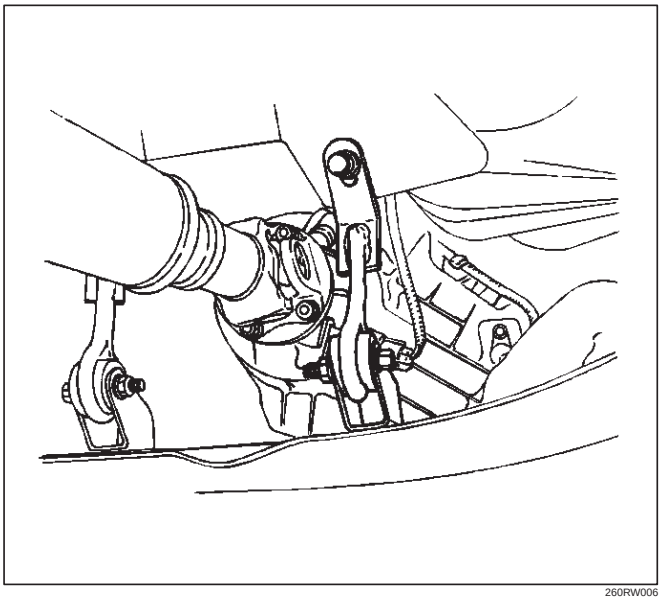

260RW006

12. Disconnect the transfer harness connector from the top of the transfer case.
13. Disconnect the speed sensor harness connector.
14. Remove the fuel pipe clip fixing bolt on the transfer case.
15. Support the transmission with a jack.
16. Remove the seven bolts from the transfer case.
17. Remove the transfer case assembly.

Installation

To install, follow the removal steps in the reverse order, noting the following points:

1. Apply a thin coat of grease (Besco L2) or equivalent to the input shaft spline.

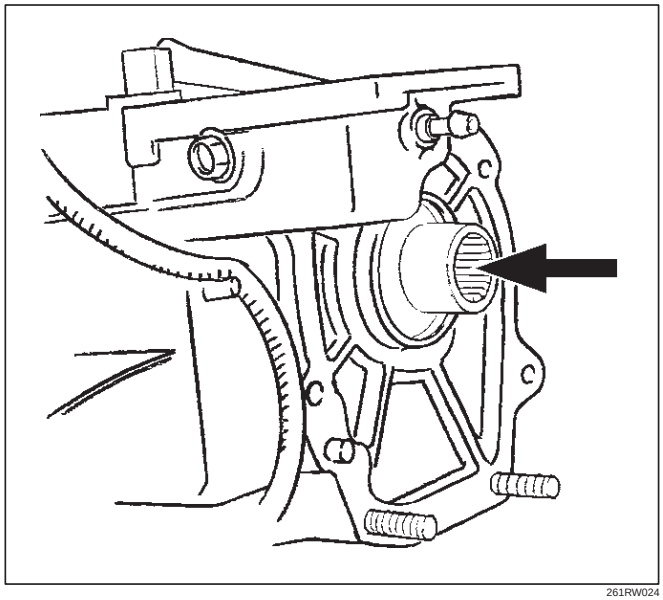

261RW024

2. Mount the transfer case.

3. Tighten the transfer case bolts (see the figure below).

Torque : 46 N·m (4.7 kg·m/34 lb ft)

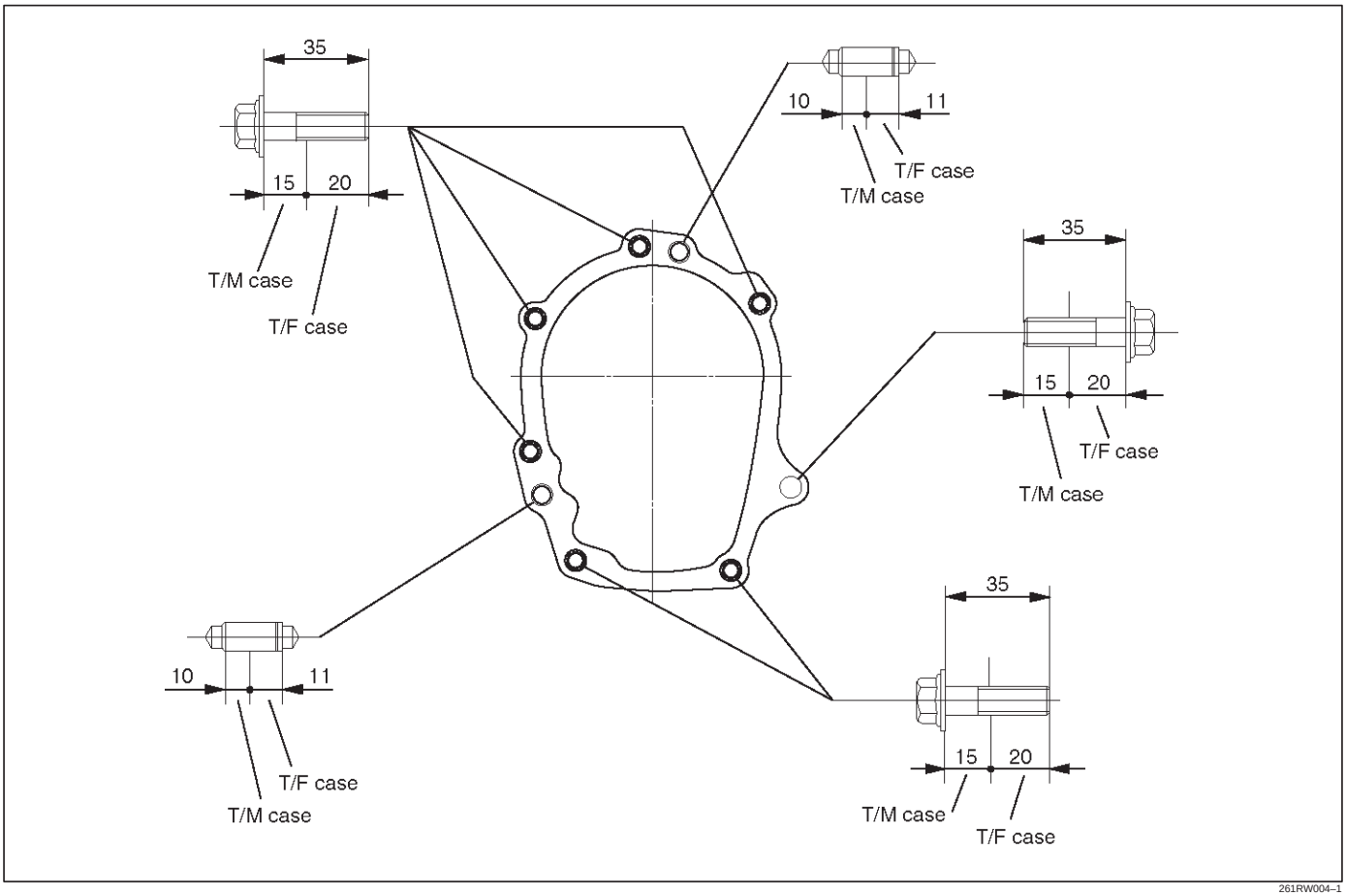

261RW004–1

4. Tighten the propeller shaft bolts.

Torque : 63 N·m (6.4 kg·m/46 lb ft)

Transfer Rear Oil Seal

Transfer Rear Oil Seal and Associated Parts

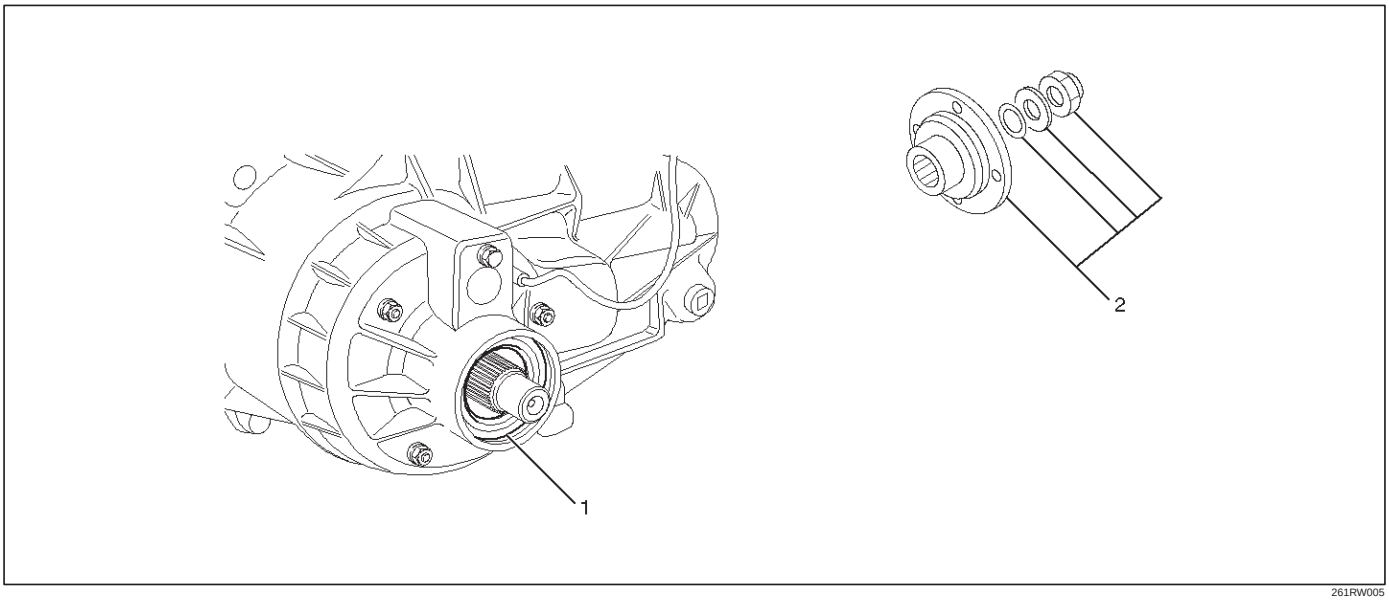

261RW005

Legend
(1) Oil Seal
(2) End Nut and Rear Companion Flange

Removal

1. Remove the rear propeller shaft from the transfer case.
2. Using the flange holder 5-8840-0133-0 (J-8614-11), remove the end nut.
3. Using the universal puller, remove the rear companion flange, washer and O-ring.
4. Remove the oil seal from the transfer rear case.

Installation

1. Apply engine oil to the oil seal outer surfaces. Fill the oil seal lip with grease (Besco L2).

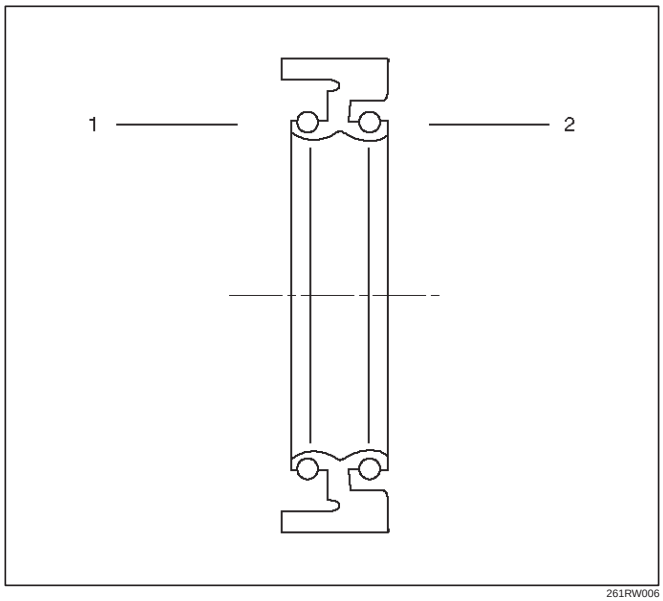

261RW006

Legend
(1) Inside
(2) Outside

2. Using the oil seal installer 5-8840-2412-0 (J-42804), install the oil seal.

NOTE: When installing the oil seal, pay attention to the direction.

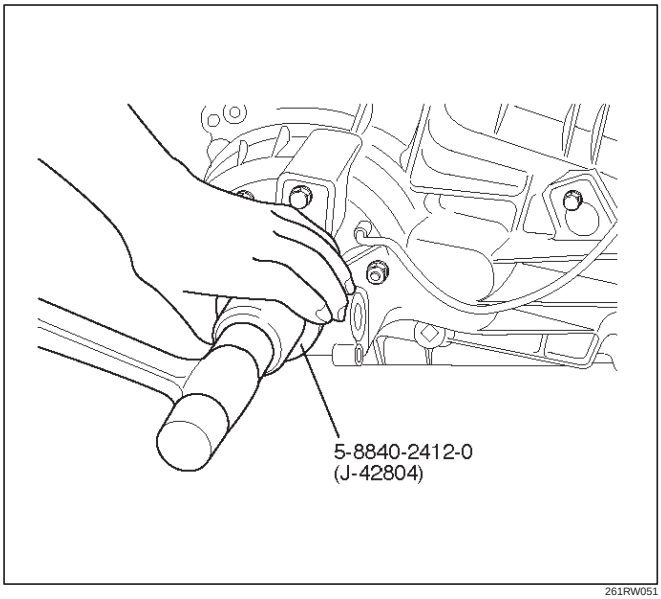

261RW051

Rear Output Shaft Oil Seal

Distance between the transfer case end and oil seal.

NOTE: When installing the oil seal to the specified dimension, be careful not to damage it.

Distance : 9.85 — 10.35mm (0.39 — 0.41 in)

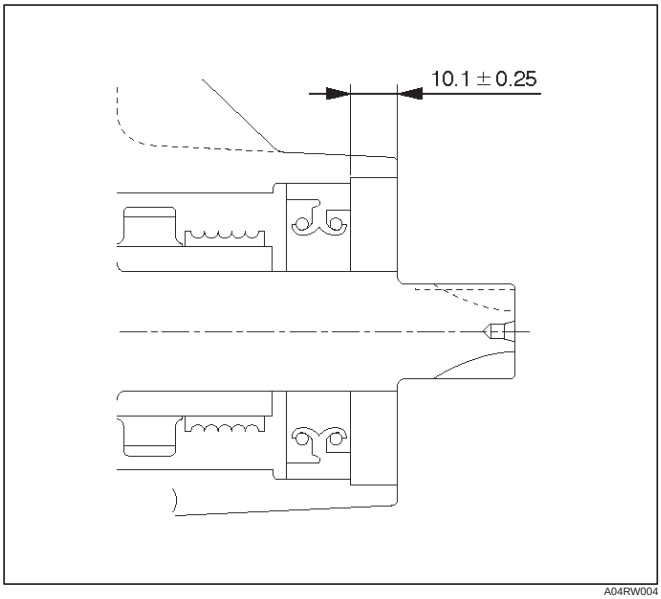

A04RW004

3. Mount the rear companion flange, O-ring , washer, and nut to the transfer case in this order.
4. Using the flange holder 5-8840-0133-0 (J-8614-11), install a new end nut.

Torque : 167 N·m (17 kg·m /123 lb ft)

5. Using the punch 5-8840-2293-0 (J-39209), stake the end nut at two spots.

NOTE: Check the staked end nut is free from cracks.

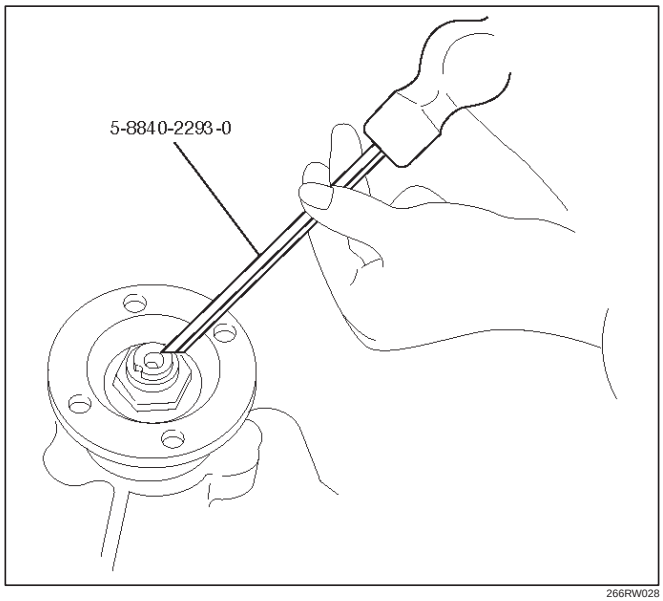

266RW028

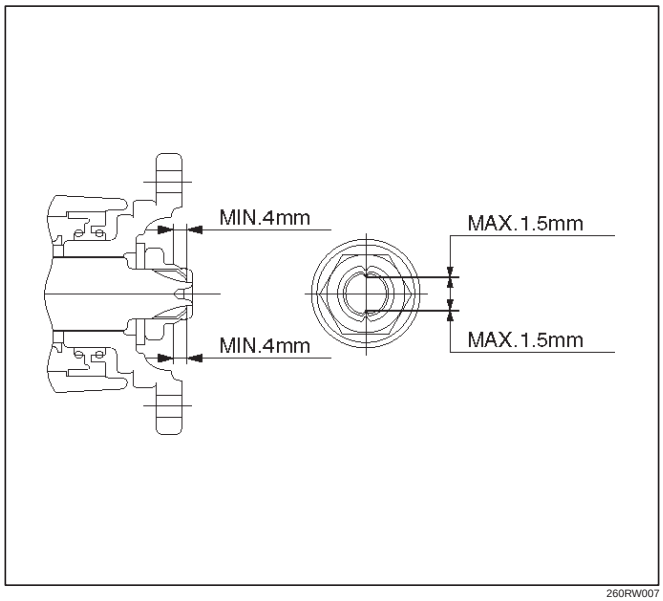

260RW007

6. Install the rear propeller shaft to the transfer case and tighten to the specified torque.

Torque : 63 N·m (6.4 kg·m /46 lb ft)

TOD ECU

Removal

1. Disconnect the ground cable.
2. Move the right-hand seat forward and remove the second seat foot rest (1).
3. Disconnect the connector from the ECU (2).
4. Remove the bolts and detach the ECU (2) from the bracket.

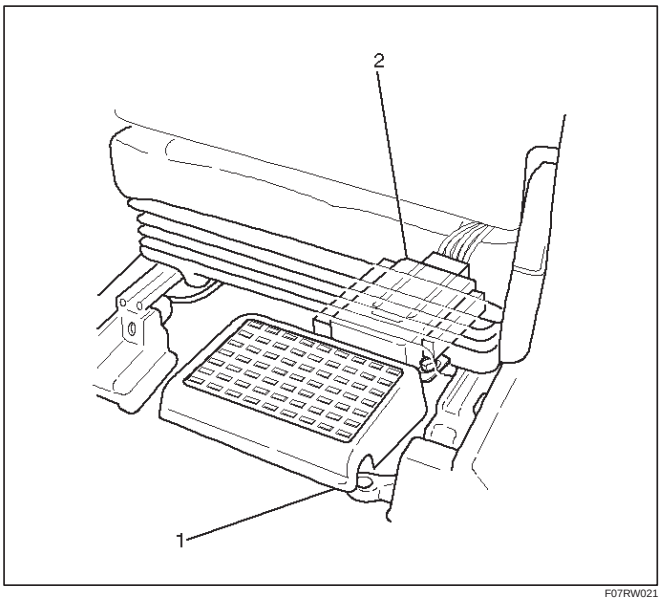

F07RW021

Installation

1. Perform the removal step in reverse order.

Unit Repair

Inspection

Before disassembling and after assembling, check the following items on the transfer connector terminals.

No.	NAME	CONTENTS
1	Ref . (Rr .)	Rear speed sensor reference output
2	Ref . (Frt .)	Front speed sensor reference output
3	SW GND	SW GND
4	4H SW (+)	4H SW plus terminal
5	Rer . (+)	Rear speed sensor plus
6	Frt . (+)	Front speed sensor plus
7	POWER GND	Power GND
8	EMC (+)	Electromagnetic coil
9	COM (–) (Rr .)	Rear speed sensor GND
10	COM (–) (Frt .)	Front speed sensor GND
11	NC	Not used
12	4L SW (+)	4L SW plus terminal

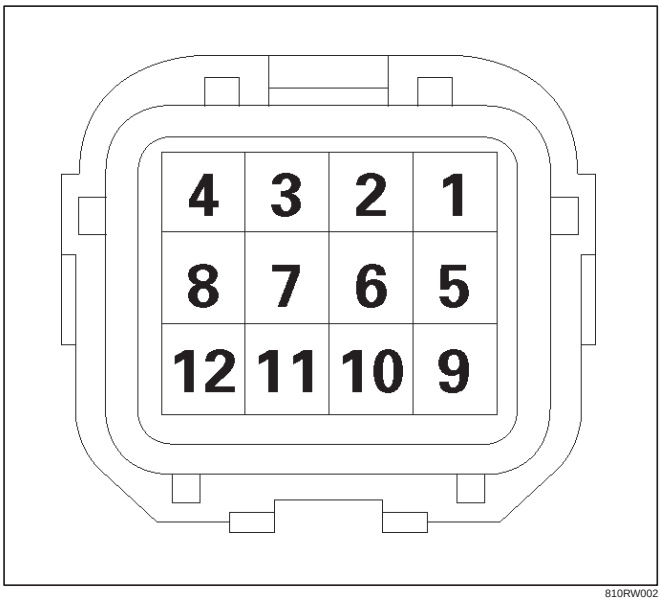

810RW002

4H and 4L switch

Check whether the 4H switch (terminals 4 and 7) and 4L switch (terminals 12 and 3) work as specified in the table below. If yes, the continuity is established on these switches. If not, check the switches, shift rails, transfer case, and rear cover, and replace the failed parts.

SHIFT POSITION	PIN 4 (4 to 7) 4H SW	PIN 12 (3 to 12) 4L SW
HIGH	OFF	OFF
(NEUTRAL)	ON	ON
4L	OFF	ON

Power GND

Check that there is a continuity between the power GND pin (terminal 7) and transfer case. If not, replace the grounding wire.

Resistance of electromagnetic coil

Check the resistance between electromagnetic coil (terminal 8) and power GND (terminal 7). If not, replace the electromagnetic coil.

Standard : 1.4 ~ 2.0Ω

Allowable : 1.0 ~ 5.0Ω

Transfer Case

Disassembled View

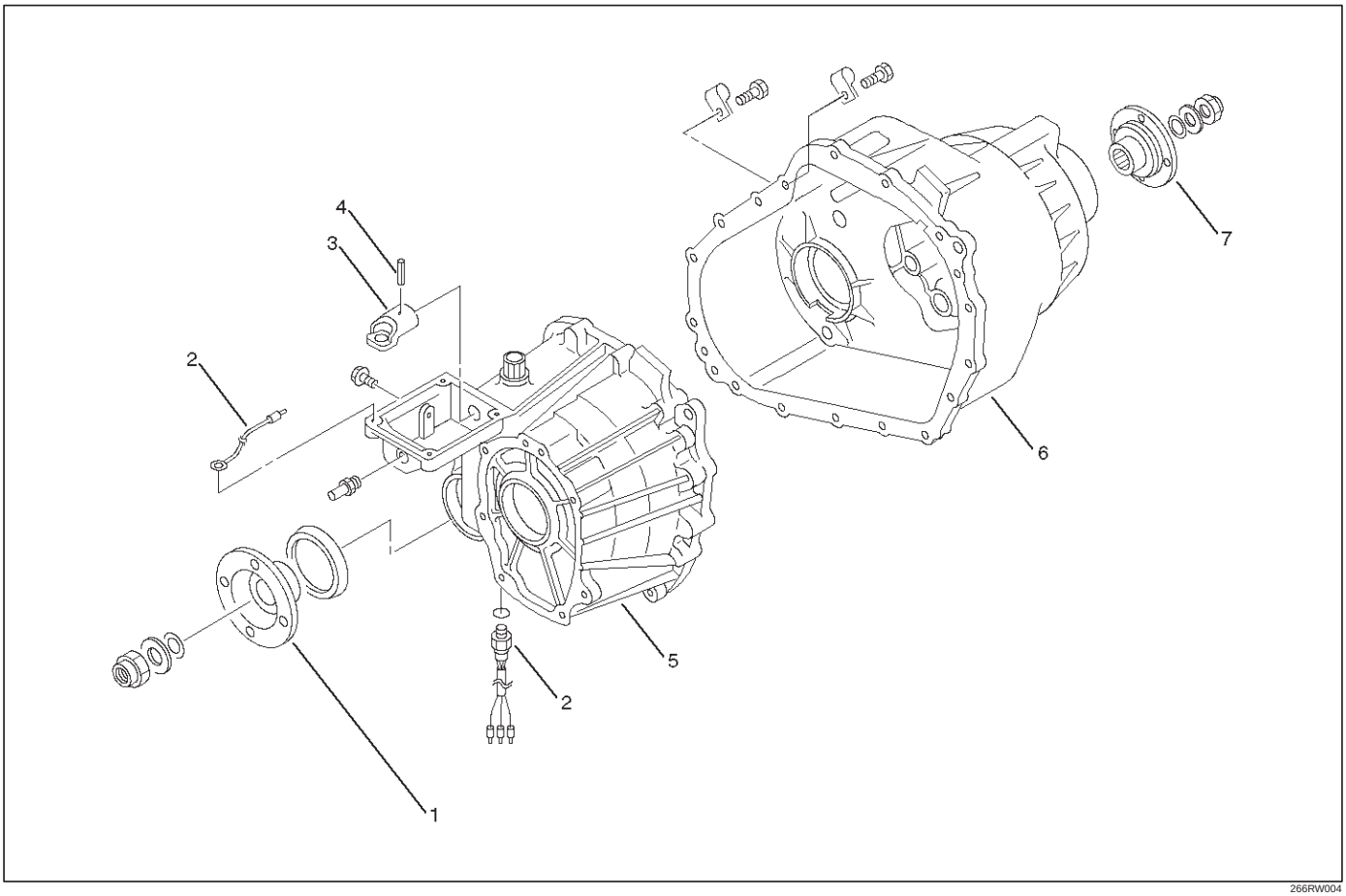

266RW004

Legend

(1) Front Companion Flange
(2) 4H and 4L Switch, Ground Cable, and Center Connector
(3) Offset Lever
(4) Spring Pin
(5) Transfer Case Assembly
(6) Transfer Cover Assembly
(7) Rear Companion Flange

Disassembly

1. Remove the drain plug from the transfer case and drain the oil.
2. Disconnect the 4H and 4L switch and ground cable.
3. Remove the clip fixing the harness.
4. Using the flange holder 5-8840-0133-0 (J-8614-11), remove the flange nut, and remove front companion flange.
5. Using the flange folder 5-8840-0133-0 (J-8614-11), remove the flange nut, and remove rear companion flange.

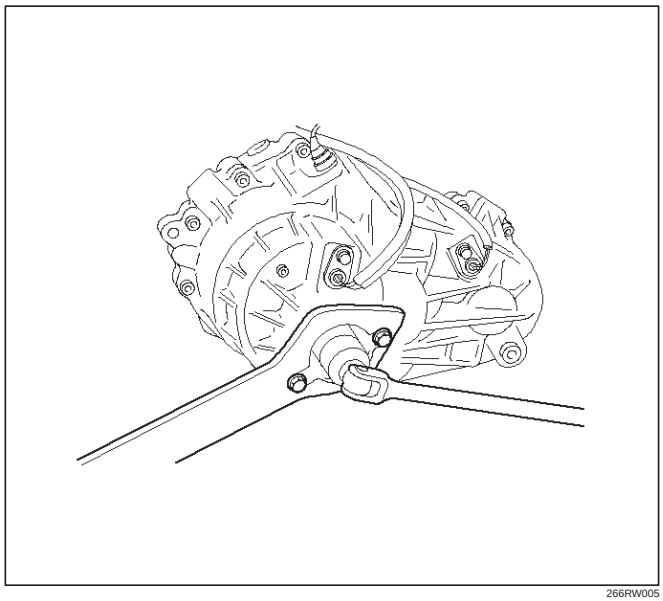

266RW005

6. Remove the offset lever set bolt on the right side.

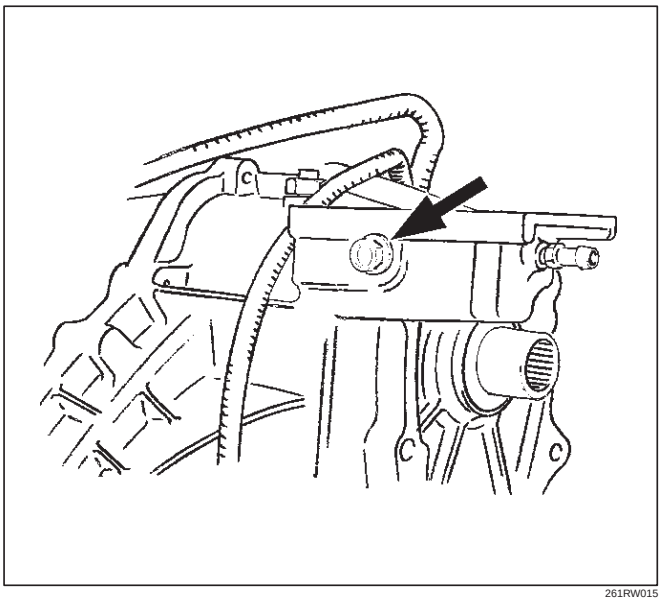

261RW015

7. Remove the offset lever lock spring pin.

NOTE: When removing the spring pin, note the recess position of the pin.

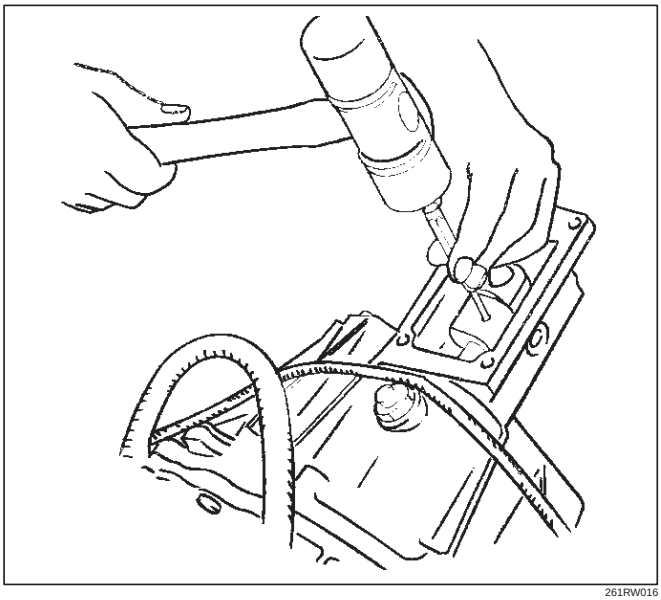

261RW016

8. Remove the offset lever.

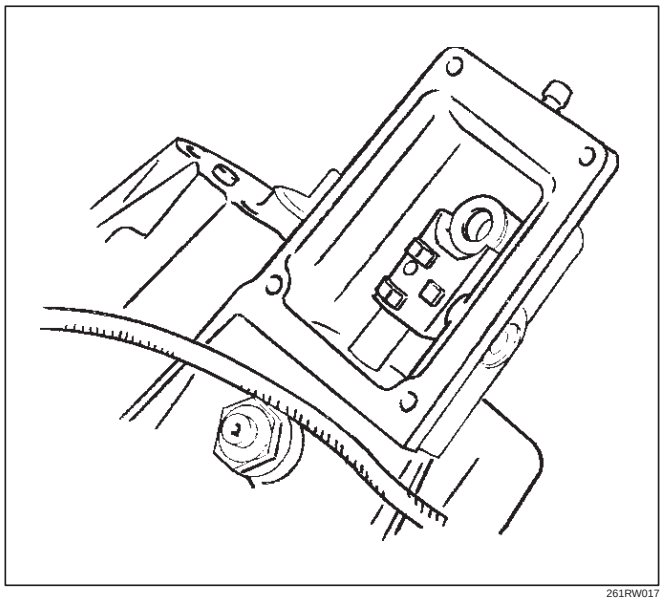

261RW017

9. Remove the sixteen bolts and detach the transfer cover assembly from the transfer case assembly.

NOTE: When removing the transfer cover assembly, be careful not to damage the oil seal.

Reassembly

1. Apply liquid gasket (Loctite 598 or equivalent) uniformly to the mating face that contacts the transfer case.

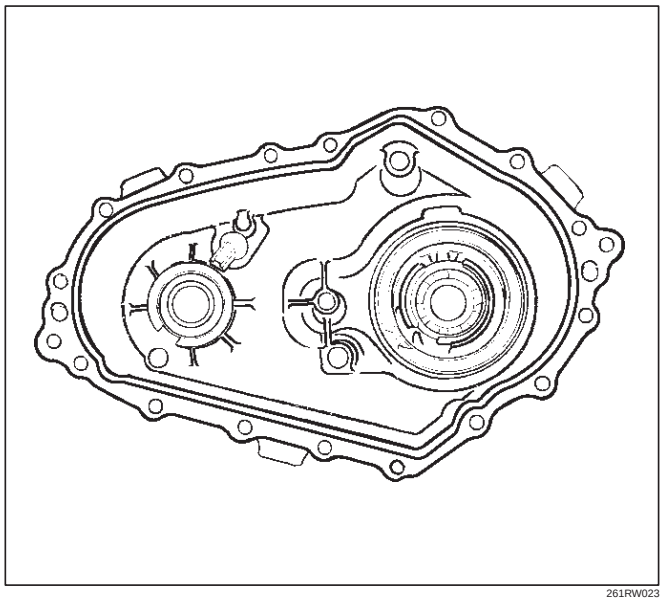

261RW023

2. Tighten the sixteen bolts to the specified torque.

   Torque : 31 N·m (3.2 kg·m/23 lb ft)

3. Wind the sealing tape around the drain plug thread and tighten the plug to the specified torque.

   Torque : 25 N·m (2.5 kg·m/18 lb ft)

4. Mount the offset lever to the transfer shift and install the spring pin.

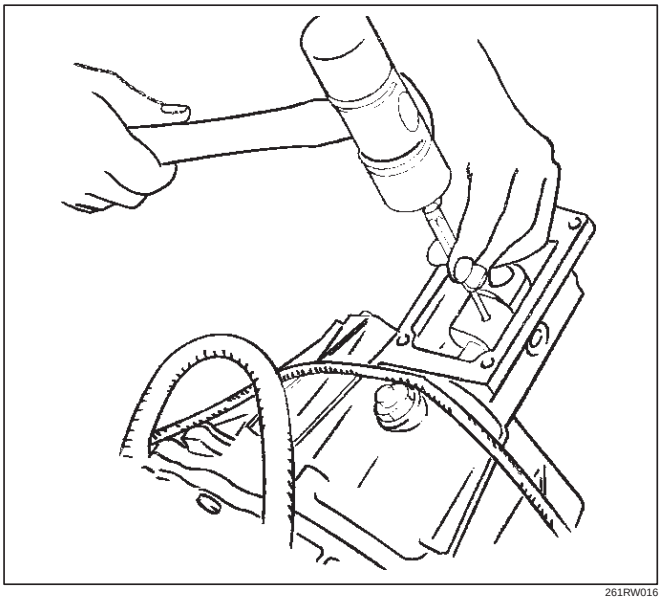

261RW016

5. Attach the O-ring and washer to the companion flange.

NOTE: Securely push the O-ring to the hollow of the companion flange, and then attach the washer.

6. Use the flange holder 5-8840-0133-0 (J-8614-11) to tighten the flange nut.
7. Tighten the flange nut to the specified torque.

   Torque : 167 N·m (17.0 kg·m/123 lb ft)

8. Using the punch 5-8840-2293-0 (J-39209), securely stake the flange nut at two spots.

NOTE: Check the staked flange nut is free from cracks.

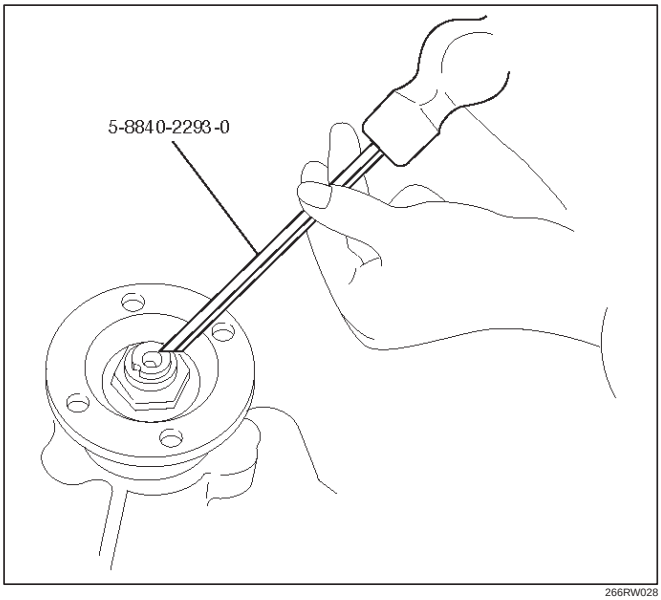

266RW028

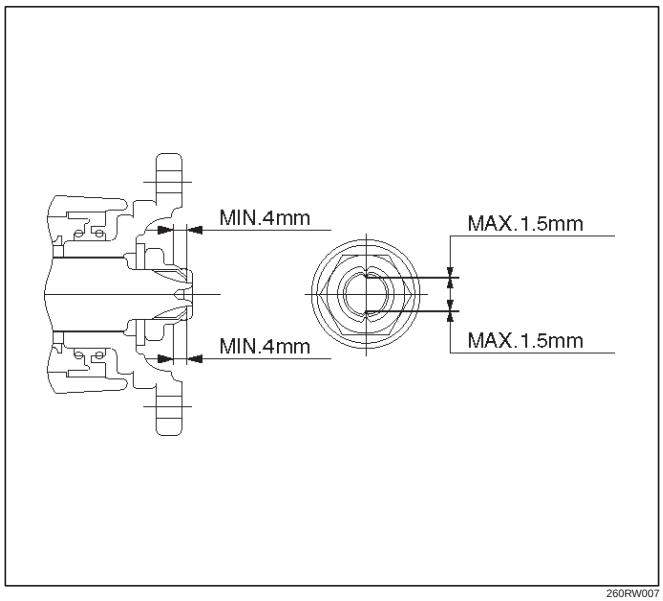

260RW007

9. Fix the harness with the clip.
10. Tighten the 4L and 4H switch to the specified torque.

    Torque : 24 N·m (2.4 kg·m/17 lb ft)

11. Fill the transfer case with ATF II or III (1.9 liters).
12. Wind the sealing tape around the filler plug thread and tighten the plug to the specified torque.

    Torque : 25 N·m (2.5 kg·m/18 lb ft)

Transfer Cover Assembly

Disassembled View

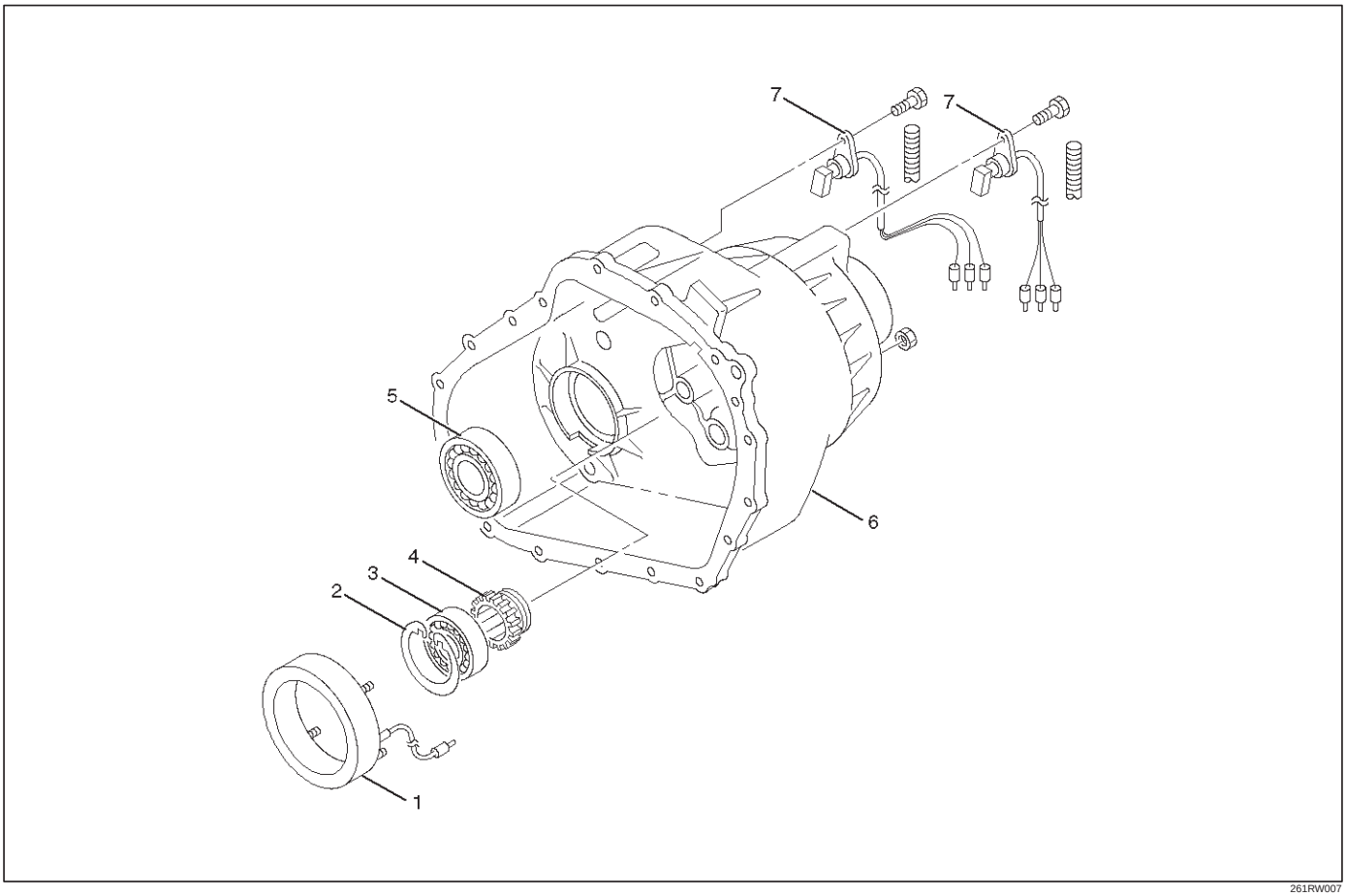

261RW007

Legend

(1) Coil Assembly
(2) Snap Ring
(3) Ball Bearing
(4) Speed Gear and Tone Wheel
(5) Ball Bearing
(6) Transfer Cover Assembly
(7) Front and Rear Speed Sensors

Disassembly

1. Using snap ring pliers, remove the snap ring.

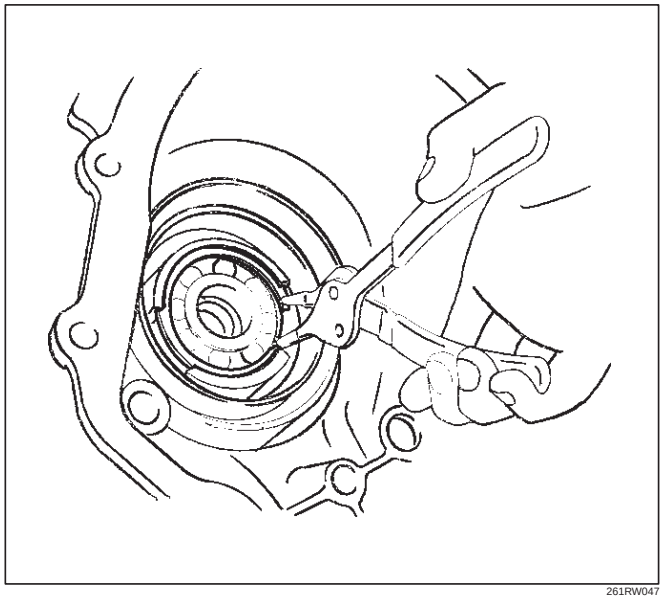

261RW047

2. Strike the speed gear and tone wheel with a rod or other appropriate tool from the outside of the transfer cover assembly, and remove the ball bearing and speed gear and tone wheel.

NOTE: Be careful not to damage the speed gear teeth.

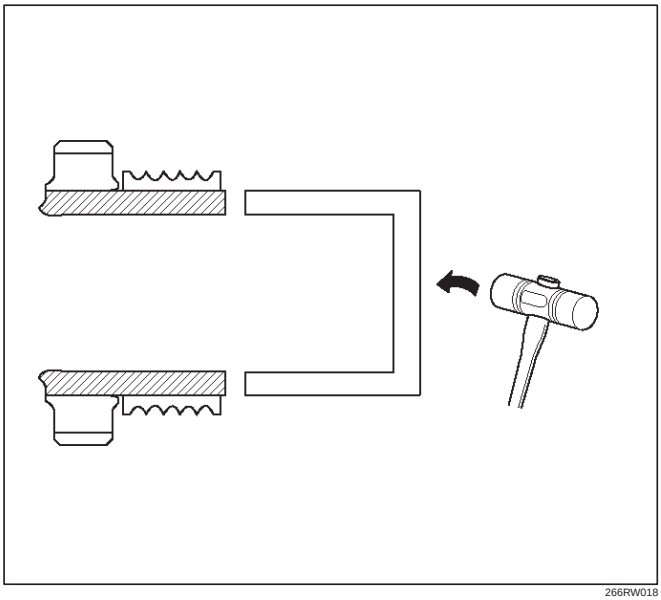

266RW018

3. Remove the stopper plate on the back with a precision screwdriver or other appropriate tool starting from the small lock of the plate.

NOTE: Be careful not to damage the stopper plate during the work.

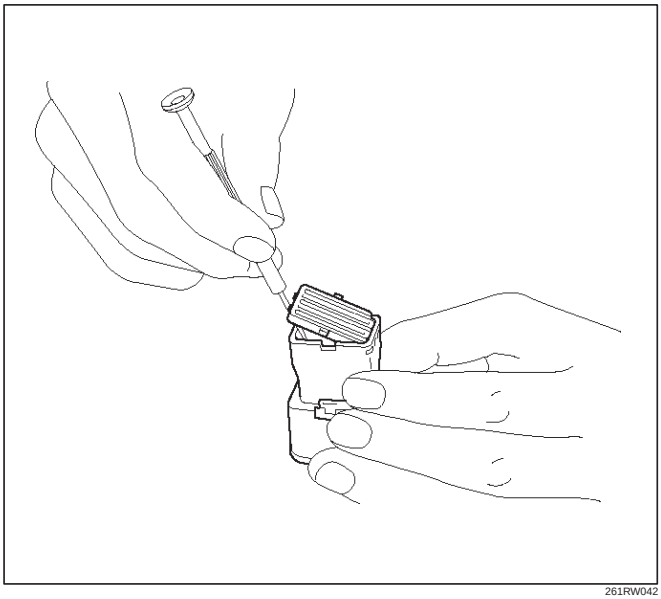

261RW042

4. Using a terminal pull-out tool or an equivalent tool, push down the lock to unlatch the terminal for the coil assembly, and pull the terminal out.

NOTE: Be careful not to damage other terminals.

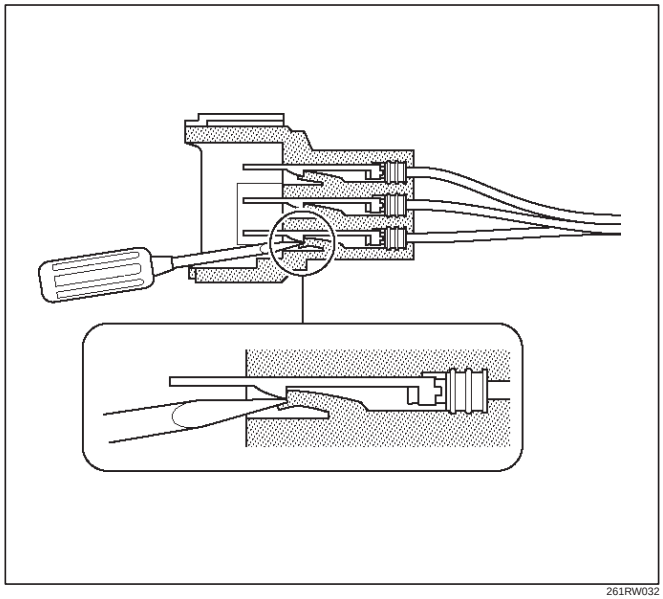

261RW032

5. Remove the fixing nuts of the coil assembly from the outside of the transfer cover assembly. Remove the coil assembly from the transfer cover.

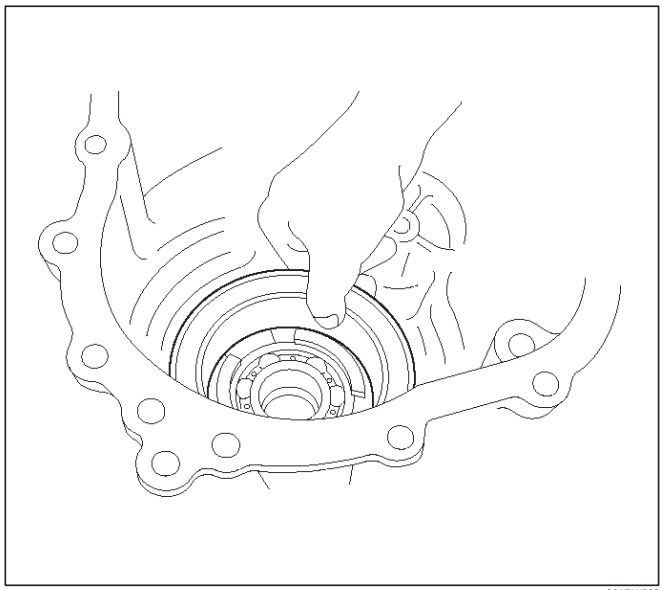

261RW030

6. Using the bearing remover 5-8840-2409-0 (J-42805) and slide hammer 5-8840-0084-0 (J-2619-01), remove the ball bearing for the front output shaft.

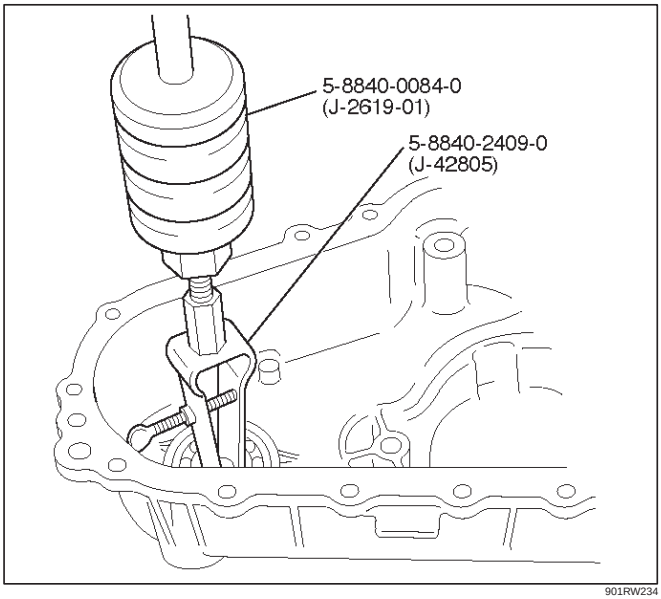

901RW234

7. Remove the bolts and front and rear speed sensors.

NOTE: Be careful not to damage the speed sensors during the work.

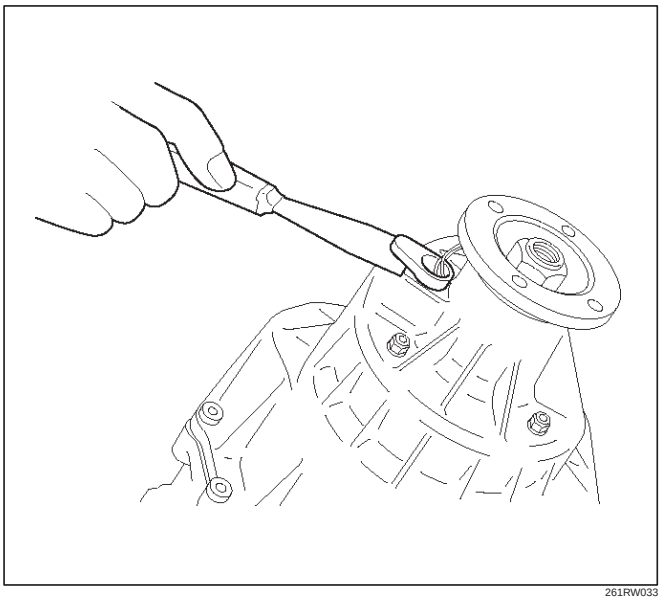

261RW033

Reassembly

1. Remove the oil seal from the transfer cover assembly.
2. Apply oil to the circumference of the new oil seal and fill the lip with grease (Besco L2 or equivalent).
3. Using the oil seal installer 5-8840-2412-0 (J-42804), install the oil seal to the transfer cover assembly.

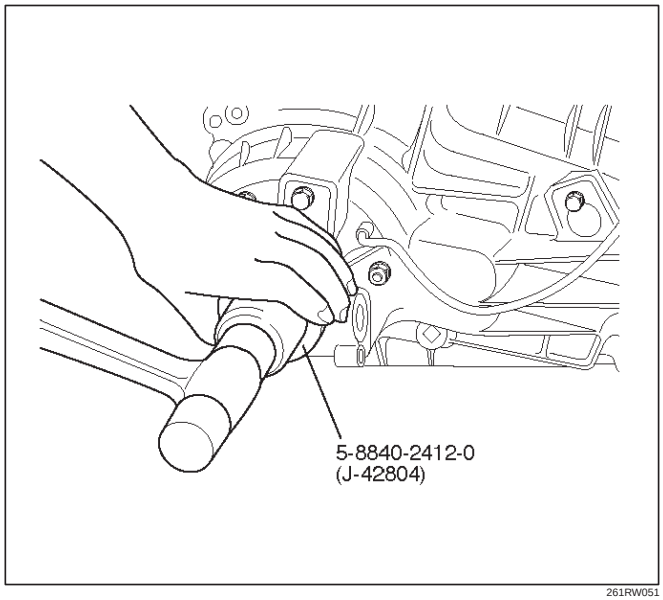

261RW051

Rear Output Shaft Oil Seal

Distance between the transfer case end and oil seal.

NOTE: When installing the oil seal to the specified dimension, be careful not to damage it.

Dimension : 9.85 — 10.35mm (0.39 — 0.41 in)

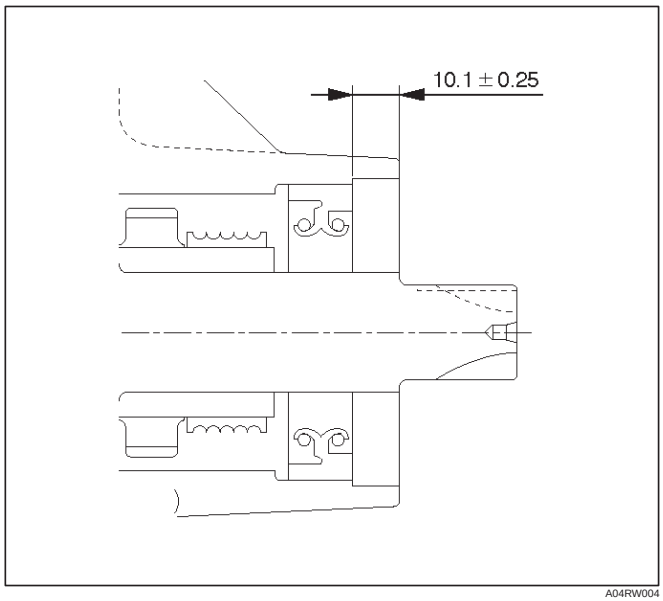

A04RW004

4. Apply a thin coat of grease to the seal ring of each front and rear speed sensor, and mount the sensors carefully.
5. Tighten the bolts to the specified torque.

Torque : 5 N·m (0.5 kg·m/43 lb in)

NOTE: Pay attention not to mount the front (or rear) sensor to the rear (or front) sensor position.

6. Install the ball bearing (1) for the front output shaft as flat as shown in the figure.

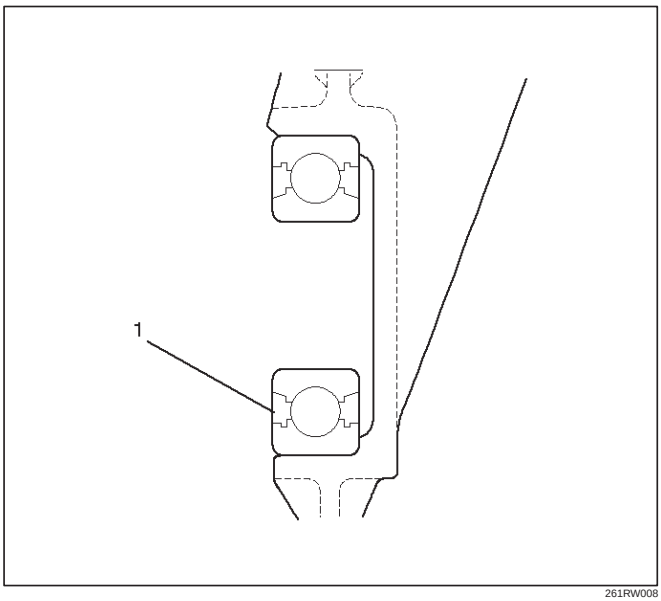

261RW008

7. Mount the coil assembly and tighten the nuts to the specified torque.

Torque : 10 N·m (1.0 kg·m/87 lb in)

8. Connect the terminal in the central connector.

NOTE: Be careful not to damage other terminals.

9. Install speed gear and tone wheel.
10. Mount the ball bearing (2) as flat as shown in the figure.

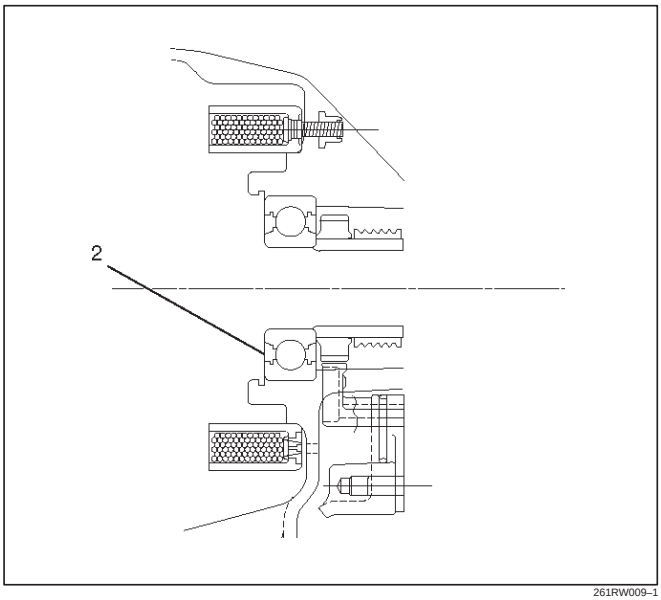

261RW009–1

11. Using snap ring pliers, install the snap ring to the transfer cover assembly.

NOTE: Securely install the snap ring to the groove of the transfer cover assembly.

Transfer Case Assembly Clutch Pack and Clutch Cam

Disassembled View

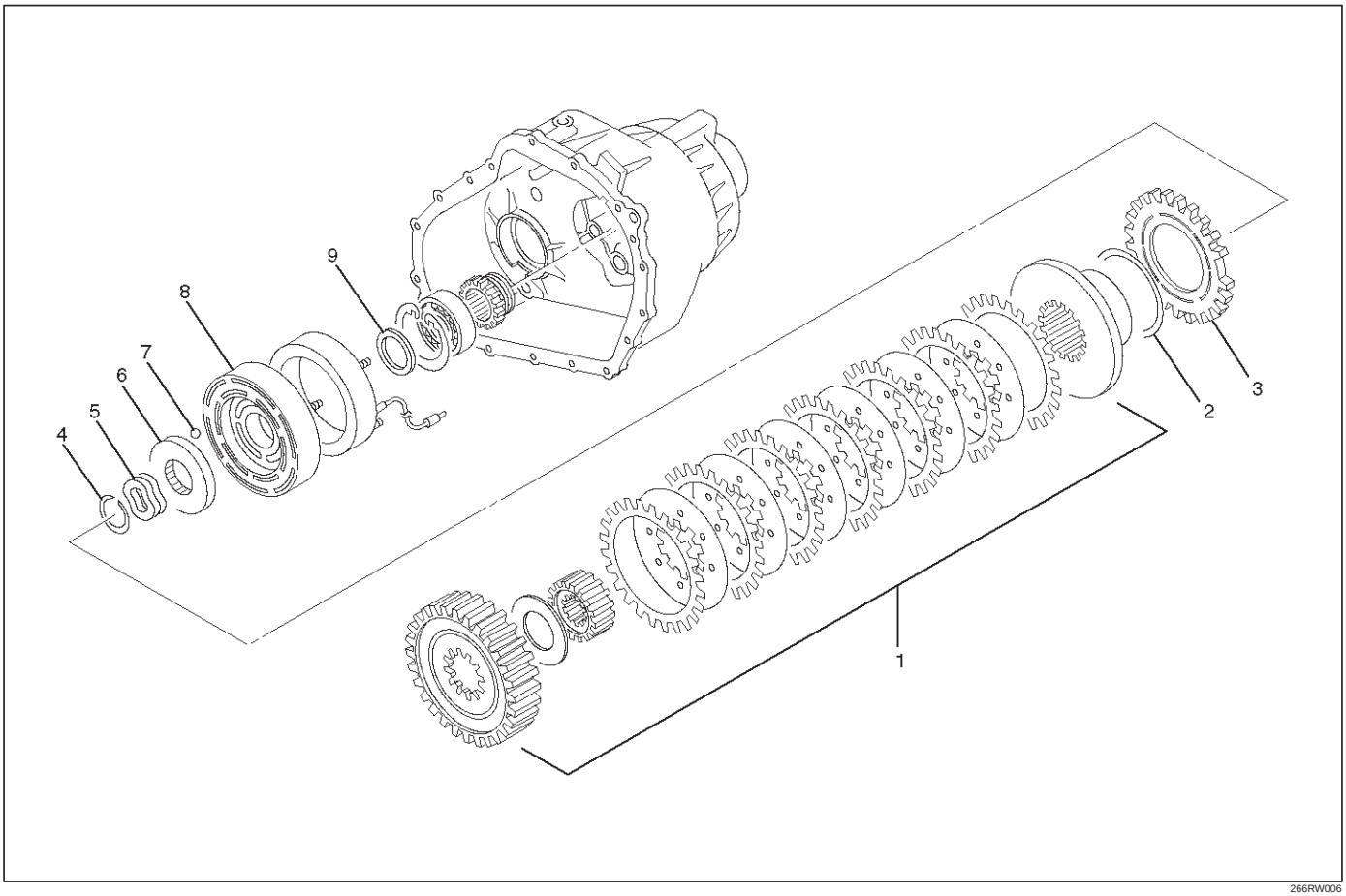

266RW006

Legend

(1) Clutch Pack Assembly
(2) Insulator Washer
(3) Armature Plate
(4) Snap Ring
(5) Wave Spring
(6) Cam Pulley
(7) Cam Ball
(8) Cam and Coil Housing
(9) Thrust Bearing

Disassembly

1. Remove the thrust bearing.
2. Remove the cam and coil housing.

NOTE: When the cam and coil housing is removed, the cam balls may be detached together with the housing. Be careful not to lose the ball.

3. Remove the cam ball.

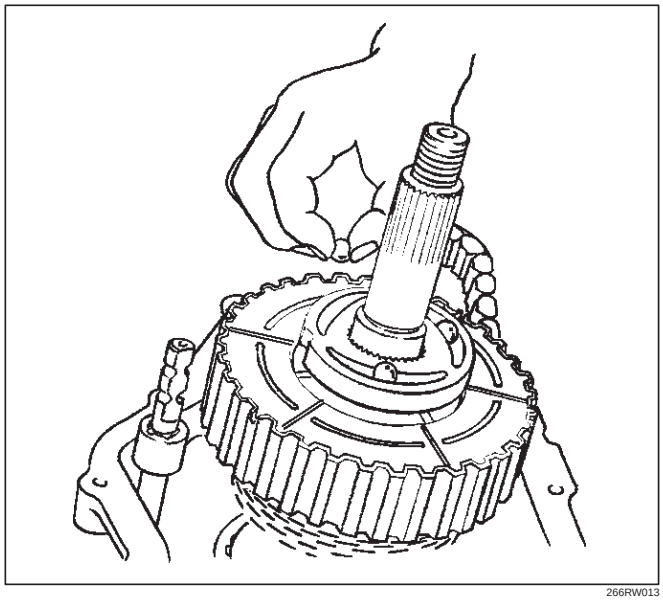

266RW013

4. Remove the cam pulley.
5. Remove the wave spring.
6. Using snap ring pliers, remove the snap ring.

NOTE: Be careful not to damage the snap ring.

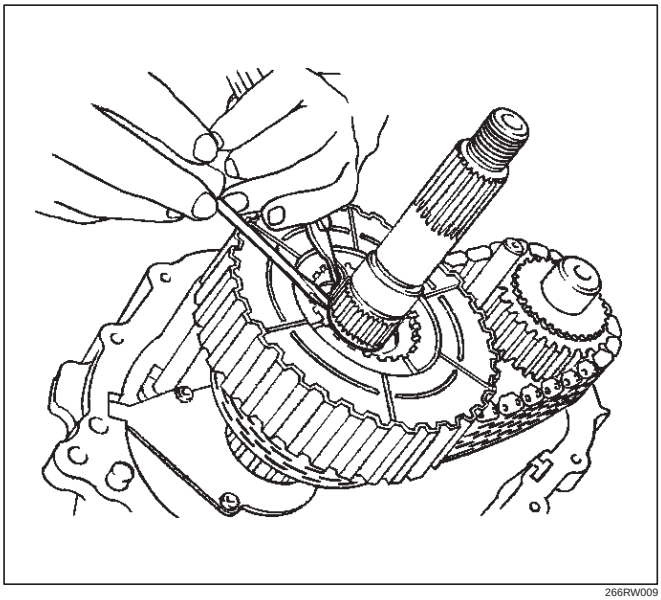

266RW009

7. Remove the armature plate.
8. Remove the insulator washer.
9. Remove the clutch pack assembly as a package.

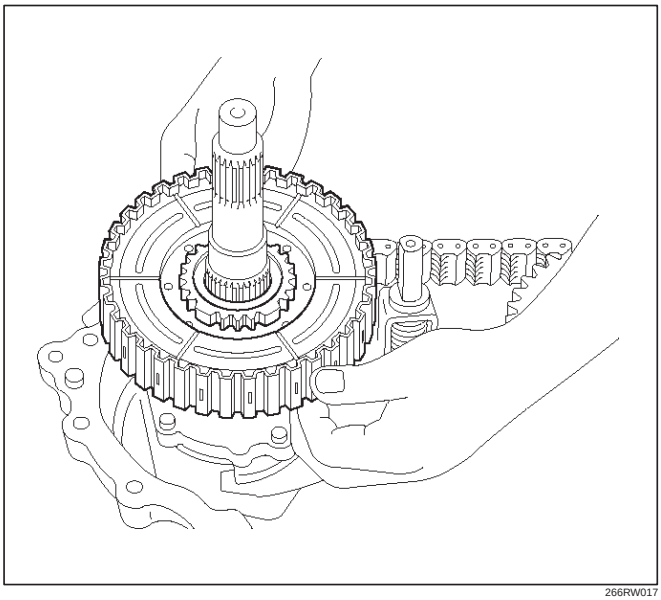

266RW017

Sprocket and Mechanical Lock

Disassembled View

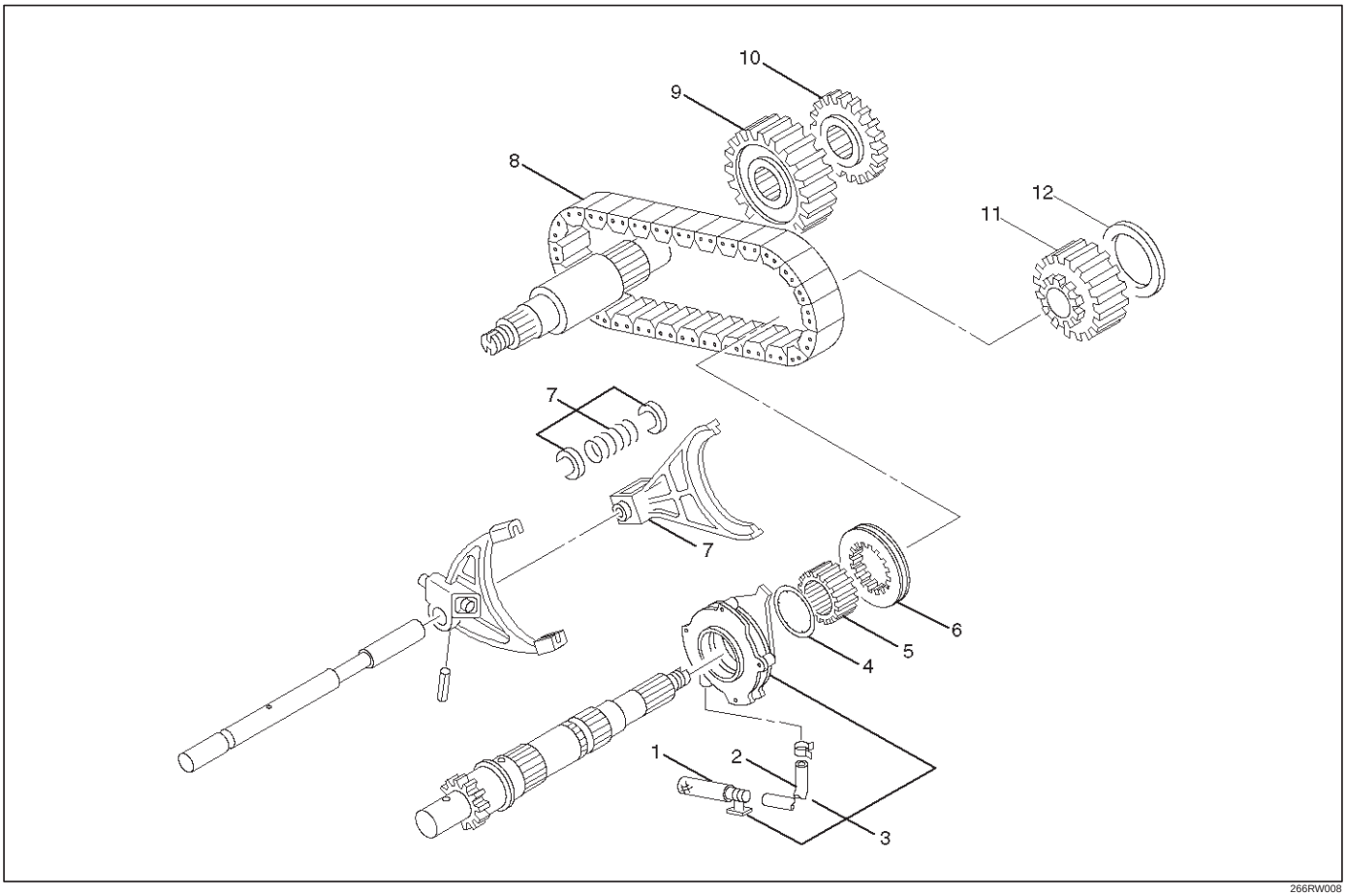

266RW008

Legend

(1) Strainer
(2) Hose
(3) Oil Pump Assembly
(4) Thrust Washer
(5) Mechanical Lock Hub
(6) Lock-up Sleeve
(7) Lock-up Fork
(8) Chain
(9) Lower Driven Sprocket
(10) Front Tone Wheel
(11) Drive Sprocket
(12) Sprocket Spacer

Disassembly

1. Remove the sprocket spacer.
2. Remove the front tone wheel.

3. Remove the drive sprocket, lower driven sprocket, and chain together from the front and rear output shafts.

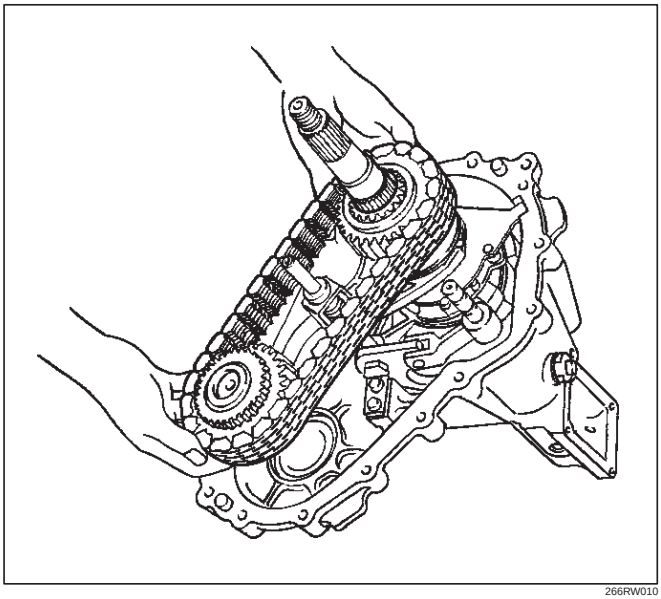

266RW010

4. Remove the mechanical lock hub.
5. Remove the lock-up fork.
6. Remove the spring retainers from the connection between the rail shaft and lock-up fork.
7. Remove the lock-up sleeve.

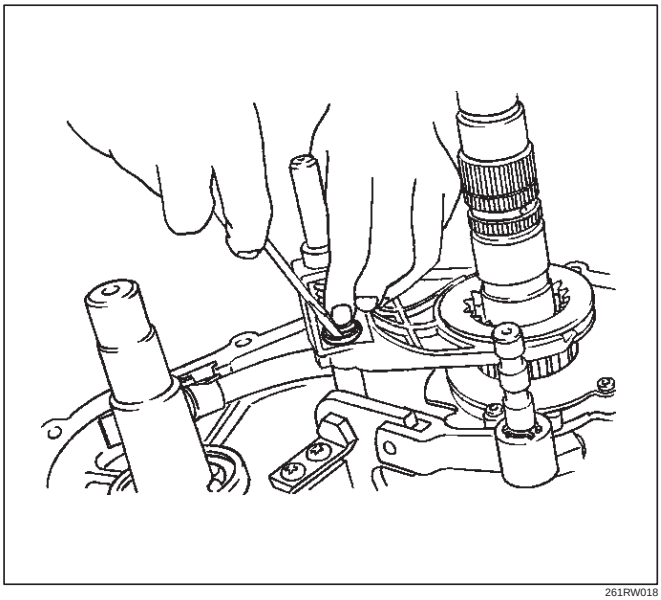

261RW018

8. Remove the thrust washer.
9. Remove the magnet from the strainer set position together with the oil pump assembly.
10. Remove the strainer from the oil pump assembly.
11. Remove the hose from the oil pump assembly.

Output Shafts and Shift Control Shaft

Disassembled View

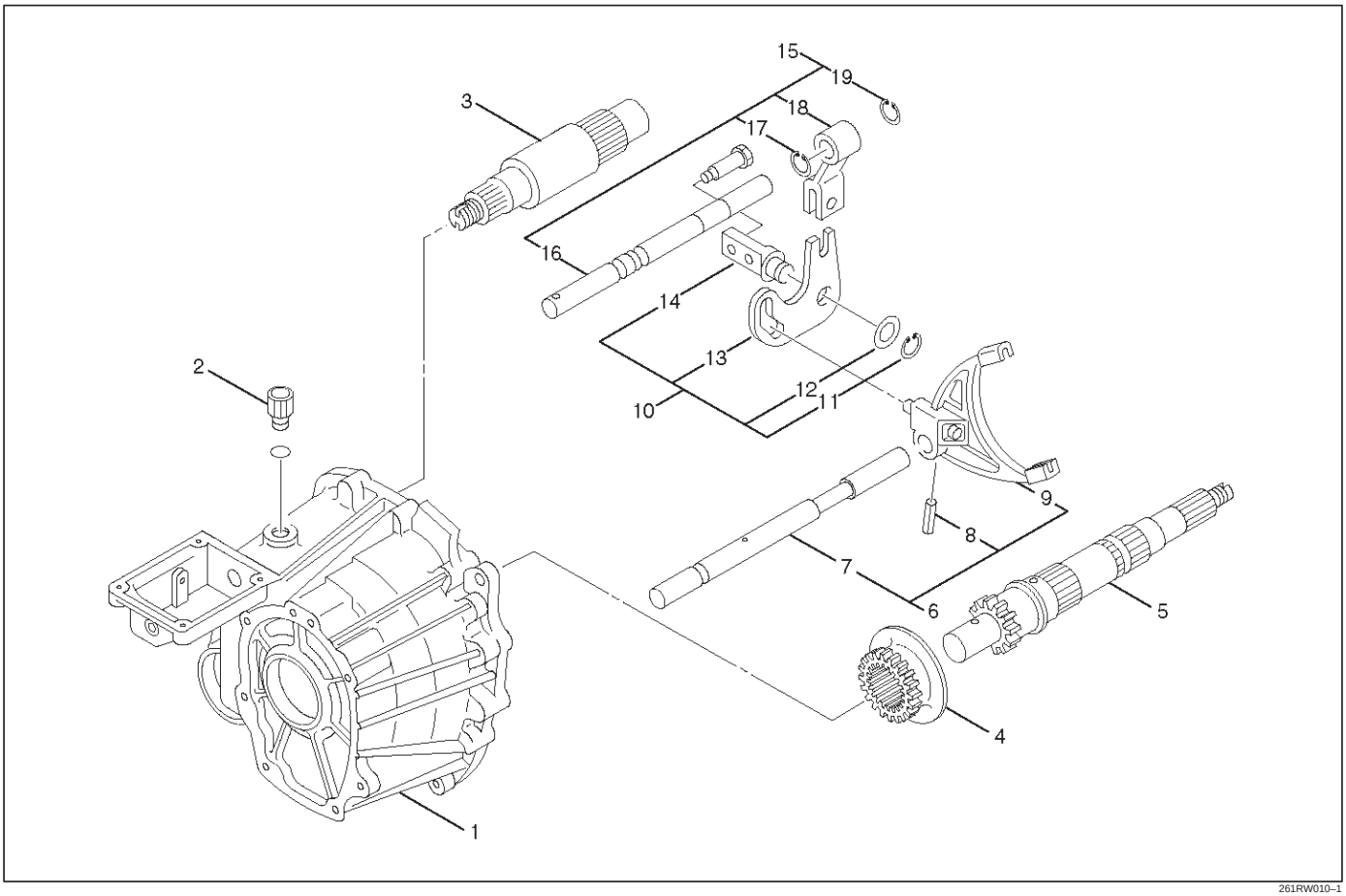

261RW010–1

Legend

(1) Transfer Case Assembly
(2) Detent Spring
(3) Front Output Shaft
(4) Reduction Hub
(5) Output Shaft
(6) Reduction Fork Assembly
(7) Lock-up Shaft
(8) Spring Pin
(9) Reduction Fork
(10) Cam Assembly
(11) Snap Ring
(12) Washer
(13) Cam
(14) Cam Pilot Block
(15) Shifter Shaft Assembly
(16) Shifter Lever Shaft
(17) Snap Ring
(18) Reduction Lever Assembly
(19) Snap Ring

Disassembly

1. Remove the output shaft.

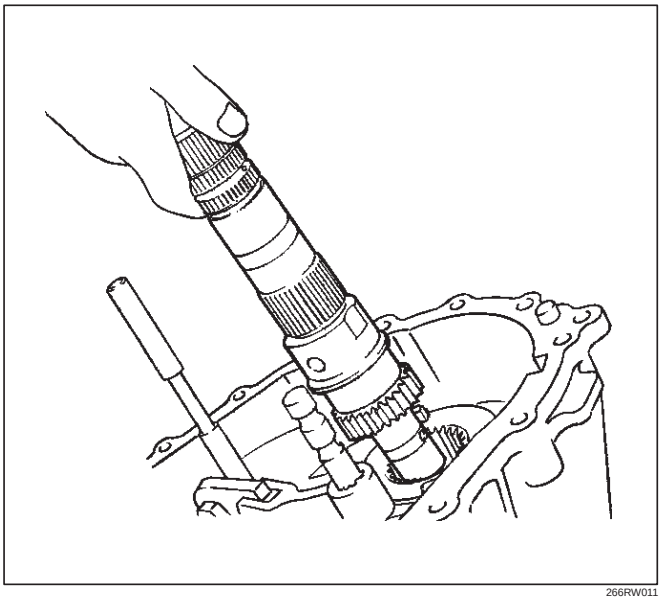

266RW011

2. Remove the detent spring.
3. Remove the cam pilot block bolts.
4. Remove the shifter shaft assembly and cam assembly.
5. Remove the reduction fork assembly together with reduction hub.

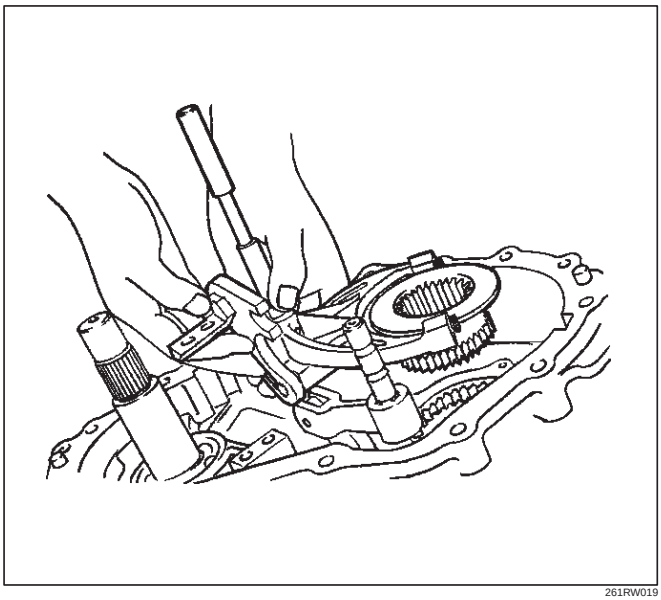

261RW019

6. Remove the spring pin that fixes the reduction fork to the lock-up shaft.

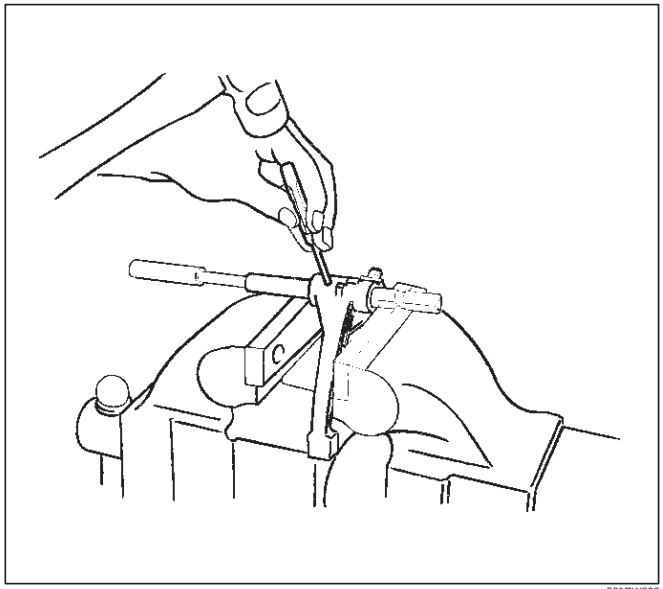

261RW020

7. Remove the reduction fork.
8. Remove the lock-up shaft.
9. Using snap ring pliers, remove the snap ring from cam pilot block.

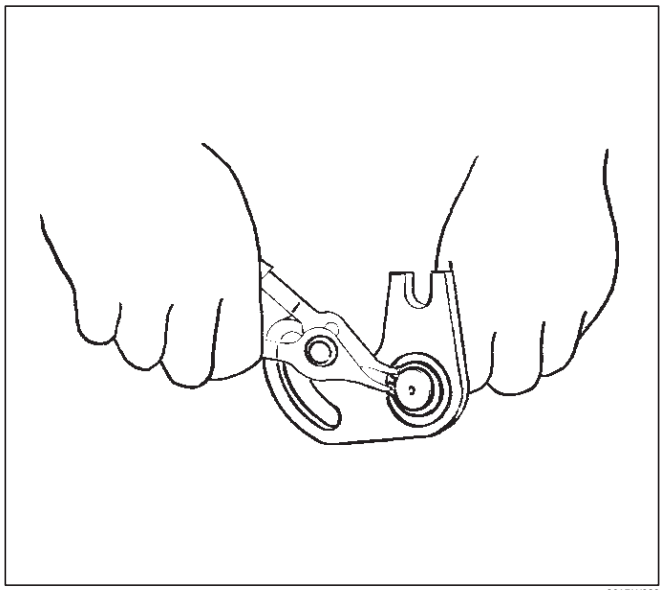

261RW029

10. Remove the washer.
11. Remove the cam.
12. Remove the cam pilot block.

13. Using snap ring pliers, remove the snap ring from the shifter shaft assembly.

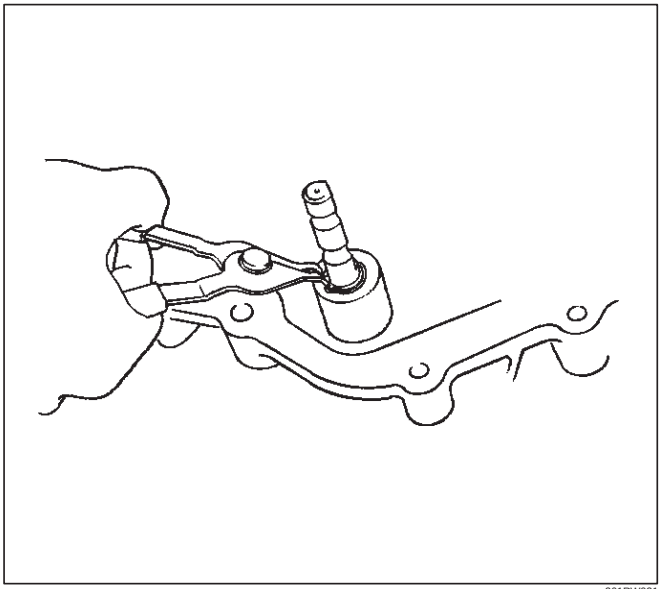

261RW021

14. Remove the reduction lever assembly.
15. Remove the snap ring.
16. Remove the shifter lever shaft.
17. Remove the front output shaft.

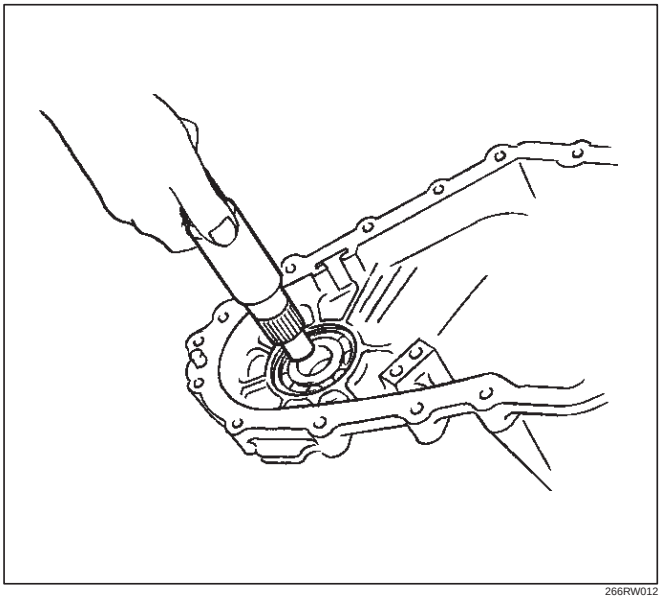

266RW012

18. Remove the transfer case assembly.

Transfer Case

Disassembled View

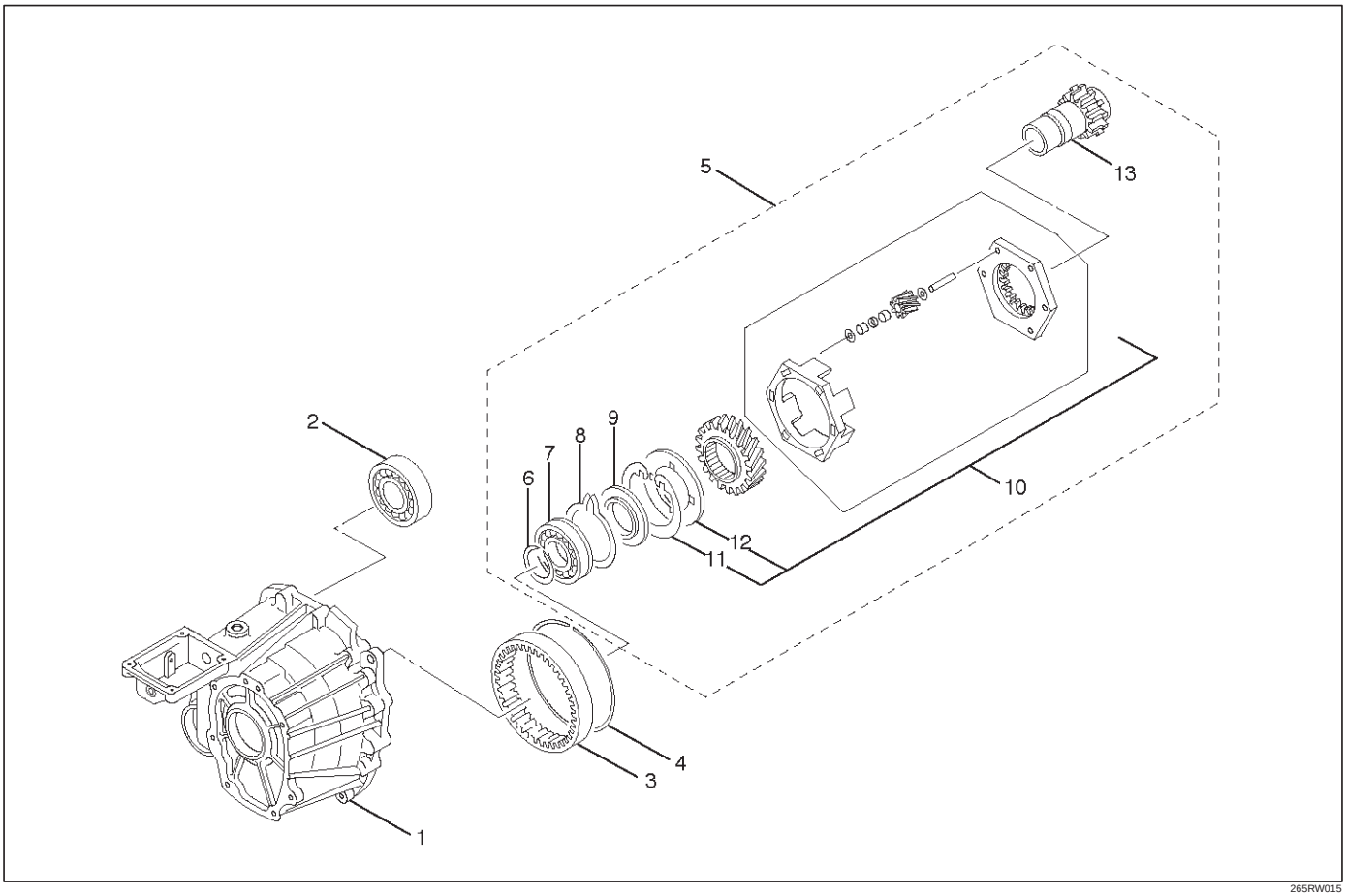

265RW015

Legend

(1) Transfer Case
(2) Ball Bearing
(3) Ring Gear
(4) Snap Ring
(5) Input Shaft and Carrier Assembly
(6) Snap Ring
(7) Ball Bearing
(8) Snap Ring
(9) Thrust Plate
(10) Carrier Assembly
(11) Snap Ring
(12) Circular Hub
(13) Input Shaft

Disassembly

1. Remove the ball bearing (for front output shaft).
2. Expand the snap ring through the opening in the planetary gear assembly.

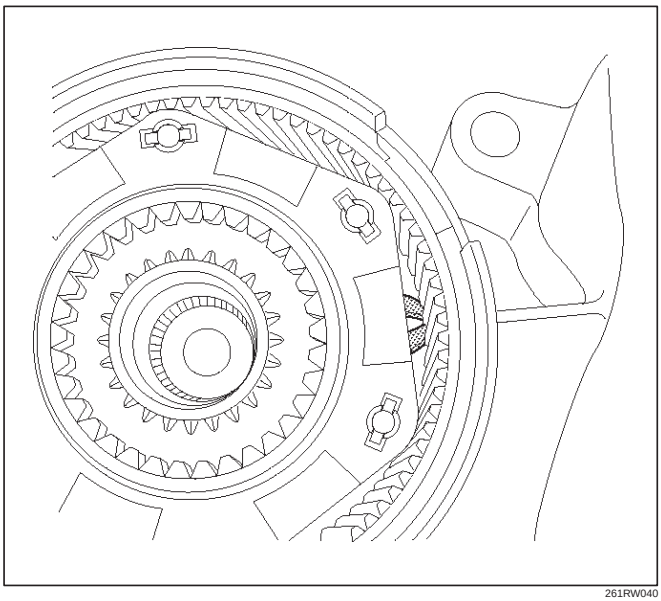

261RW040

3. While expanding the snap ring, remove the input shaft, ball bearing, carrier assembly, and thrust plate from the transfer case.

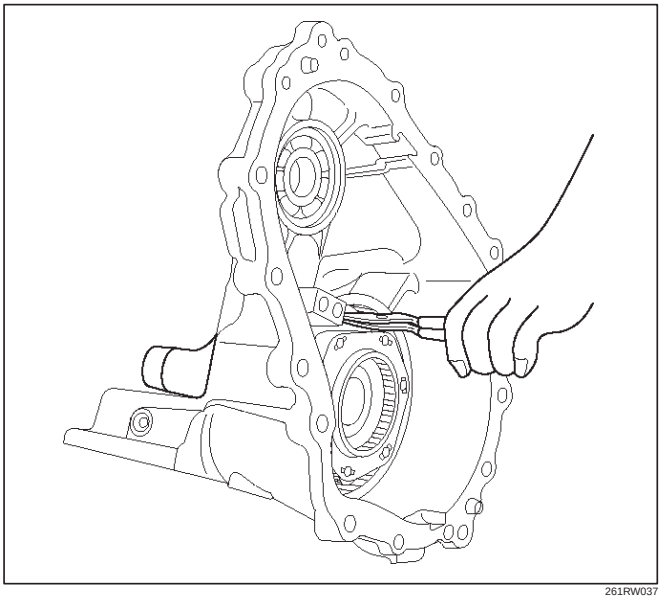

261RW037

4. Remove the snap ring from the transfer case.

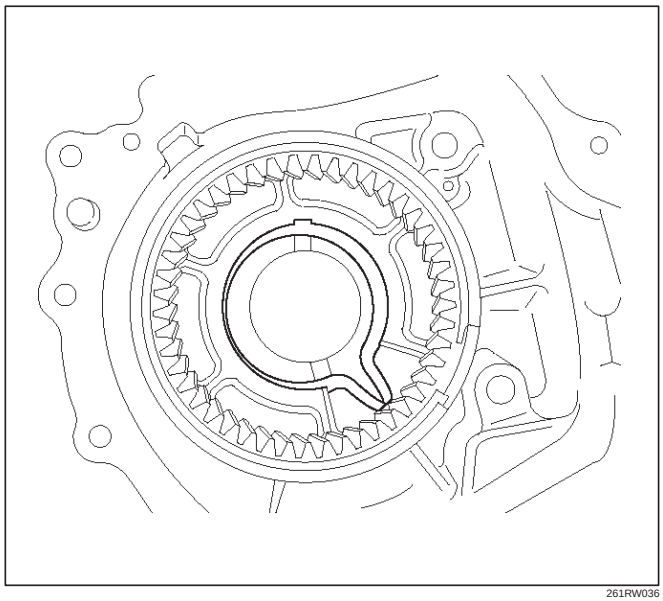

261RW036

5. Using snap ring pliers, remove the snap ring before the ball bearing.

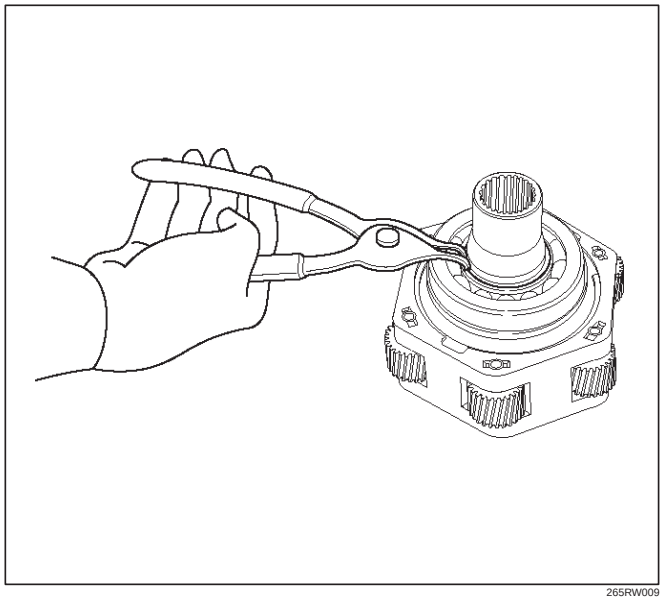

265RW009

6. Using the bearing remover 5-8840-0015-0 (J-22912-01), remove the ball bearing from the input shaft.

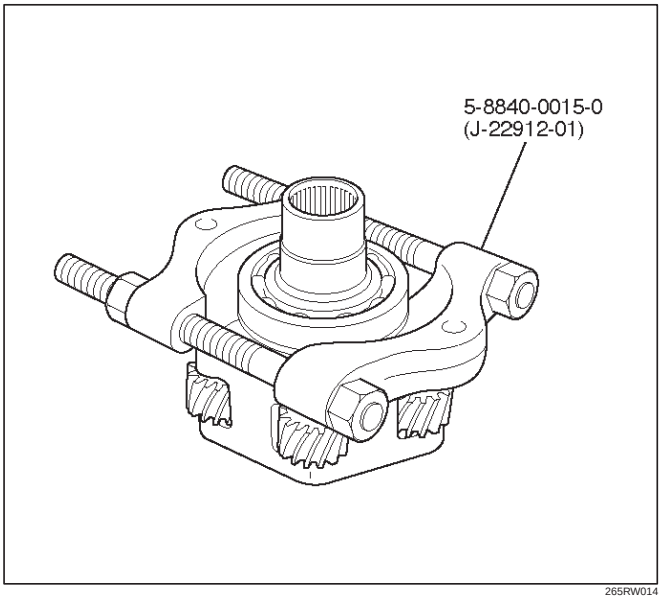

265RW014

7. Remove the thrust plate.
8. Remove the carrier assembly.
9. Remove the snap ring from the carrier assembly.

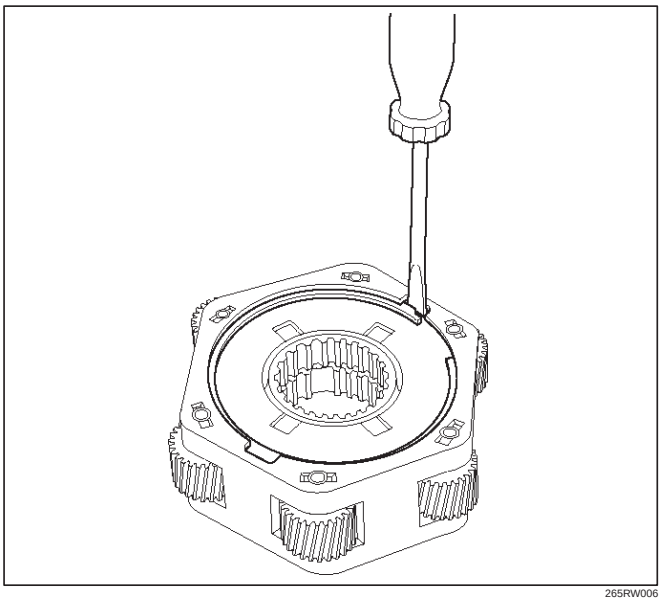

265RW006

10. Remove the circular hub.
11. Remove the snap ring before the ring gear.

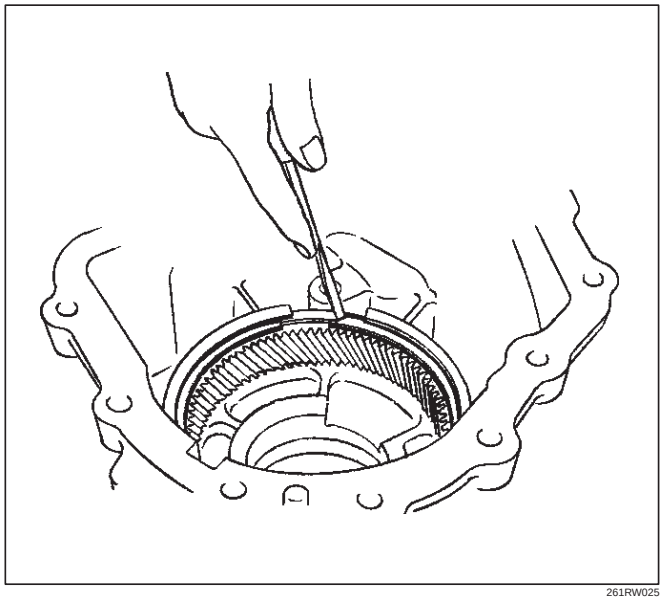

261RW025

12. Using the replacer 5-8840-2413-0 (J-42806), remove the ring gear.

NOTE: Removing the ring gear needs a high-load press. This means the transfer case may be damaged. To remove and replace the ring gear, it is recommended that the transfer case assembly should be replaced.

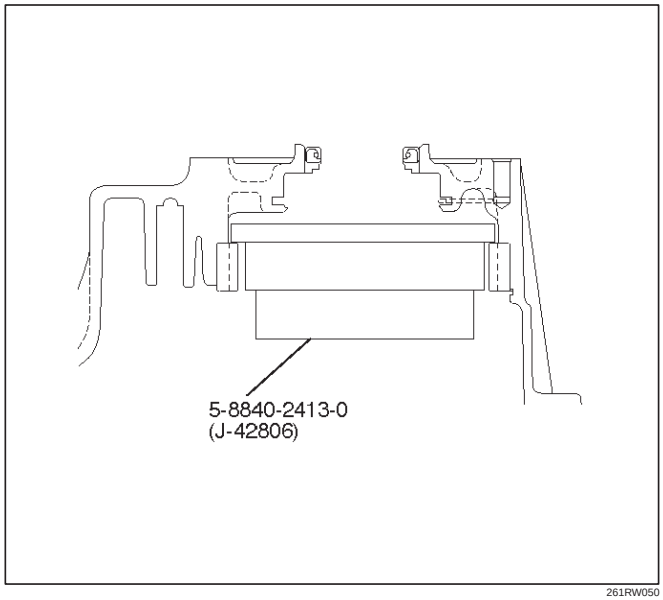

261RW050

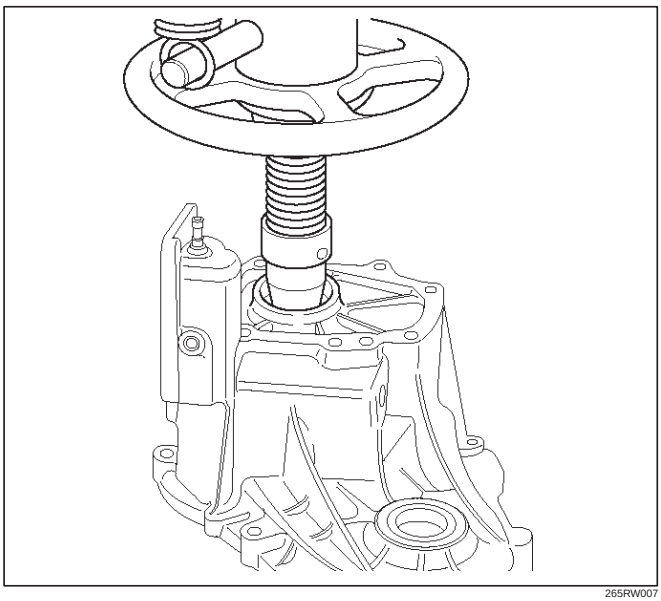

265RW007

Inspection and Repair

When wear, damage, or any other defects are observed during the inspection, the part or parts must be repaired or replaced. Wash all the parts with clean solvent, and check that old oil, metallic particles, dirt, or foreign materials are completely removed. Blow the air into oil holes and grooves to remove foreign materials or residual detergent.

Chain

- Check whether the face that contacts the sprocket is free from excessive wear or damage. If defects are observed, replace the part.
- If the chain interference mark is found on the inside wall of the transfer cover or the chain is so slack that a skipped engagement occurs between the chain and sprocket, replace the chain.

Sprocket

- Check whether the sprocket tooth surface is excessively worn or damaged, and there is evidence of burrs, chipping, wear, or damage on the gear spline. Remove minor flaws or scratches with oil stone. If excessive wear or damage is observed, replace the part.
- If excessive wear or damage is observed on the sprocket inside sliding surface, replace the part.

Gear

Check whether the gear tooth surface is excessively worn or damaged, and there is evidence of burrs, chipping, wear, or damage on the gear spline. Remove minor flaws or scratches with oil stone. If excessive wear or damage is observed, replace the part.

Thickness of Reduction Hub

- Measure the thickness with a micrometer.
- If the measurement exceeds the limit, replace the reduction hub.

  Standard : 3.05-3.30 mm (0.120-0.130 in)

  Allowable limit : 2.5 mm (0.098 in)

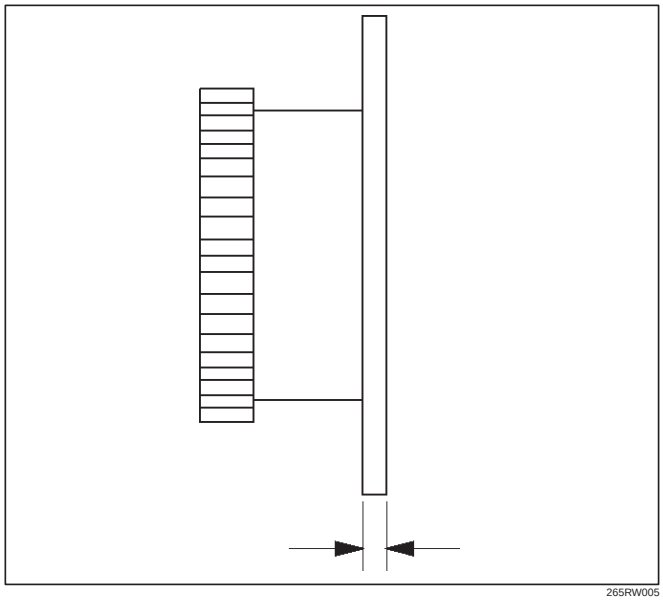

265RW005

Lock-up Sleeve

Mount the mechanical lock hub, drive sprocket assembly, and lock-up sleeve to the output shaft.

If the lock-up sleeve does not move smoothly, replace the sleeve.

NOTE: Apply ATF to the area engaging the gear.

Thickness of Lock-up Sleeve

- If the measurement exceeds the limit, replace the lock-up sleeve.

  Standard : 7.16-7.32 mm (0.282-0.288 in)

  Allowable limit : 7.9 mm (0.311 in)

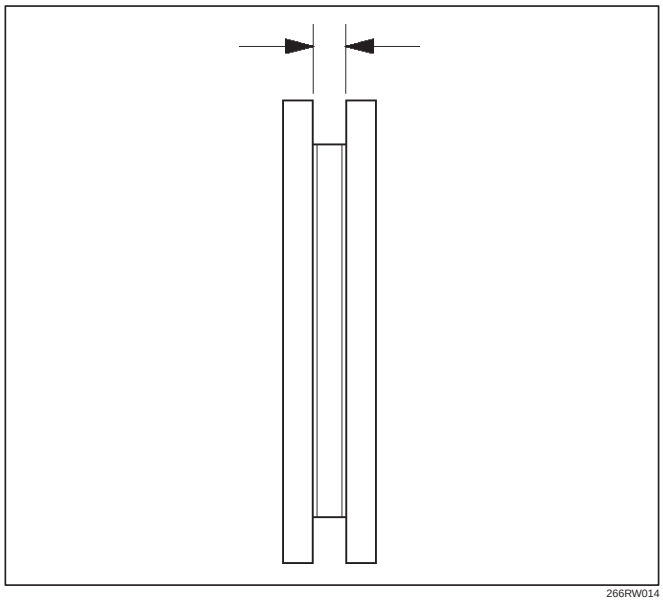

266RW014

Reduction Fork

Check the reduction fork and shaft for wear, distortion, and scratches. If defects are observed, replace the parts.

Thickness of Reduction Fork

- If the measurement exceeds the limit, replace the reduction fork.

  Standard : 3.41-3.79 mm (0.134-0.149 in)

  Allowable limit : 4.4 mm (0.173 in)

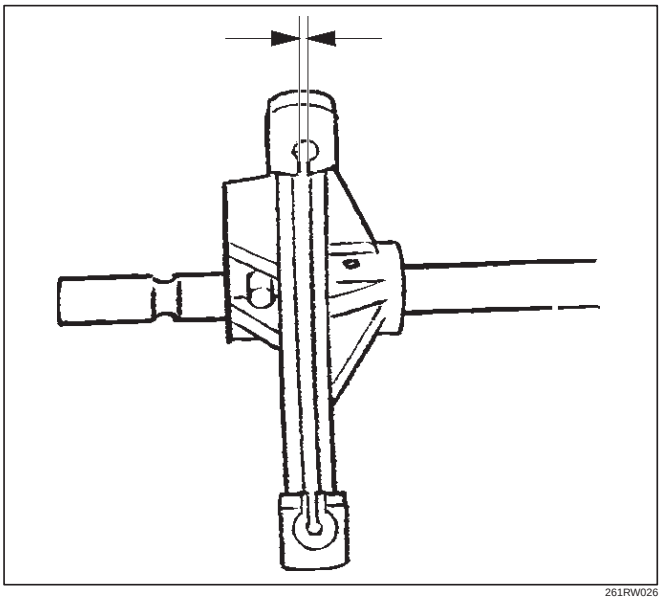

261RW026

Lock-up Fork

- Check the lock-up fork and shaft for wear, distortion, and scratches. If defects are observed, replace the parts.

Thickness Lock-up Fork

If the measurement exceeds the limit, replace the lock-up fork.

Standard : 6.99-7.09 mm (0.275-0.279 in)

Allowable limit : 6.3 mm (0.248 in)

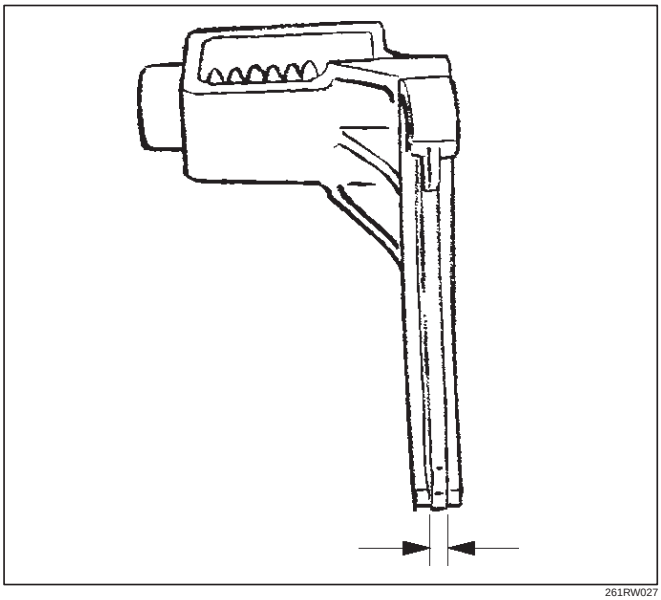

261RW027

Bearing

Check the profile of the needle, roller, ball, and thrust bearings. Wash the bearings with clean solvent completely, and dry with air.

NOTE: If the bearing is rotated excessively, the rollers may be damaged. So, rotate the bearing slowly with your hand. Apply grease to the bearing, and check the smoothness of the bearing while slowly rotating the race with your hand.

- Use a dial indicator to measure the ball bearing play.

  Allowable limit : 0.23 mm (0.009 in)

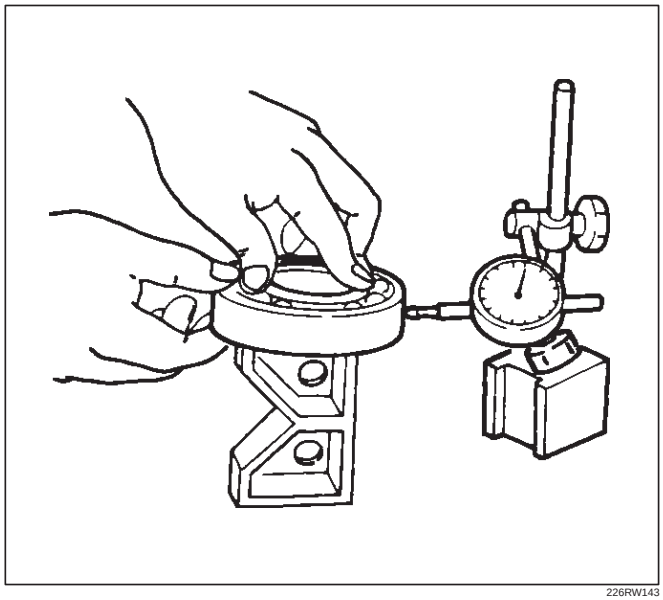

226RW143

Lock-up Fork Spring

Check the lock-up fork spring for distortion, cracking, and wear. If defects are observed, replace the part.

Free Length of the Lock-up Fork Spring

- If the measurement exceeds the limit, replace the spring.

  Standard : 60.96 mm (2.40 in)

  Allowable limit : 55.0 mm (2.17 in)

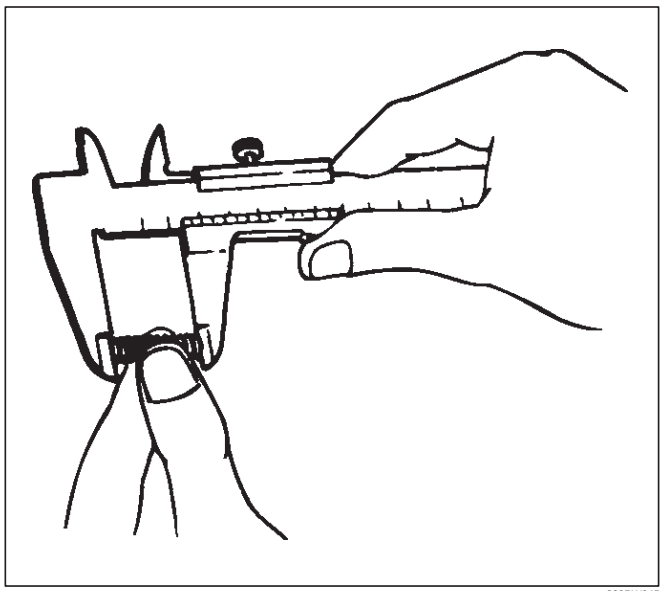

220RW045

Tension of Lock-up Fork Spring

- If the measurement exceeds the limit, replace the spring. (When compressed to 41.4 mm)

  Standard : 27.1-33.8 N {2.76-3.45 kg/6.08-7.61 lb}

  Allowable limit : 24.5 N {2.5 kg/5.5 lb}

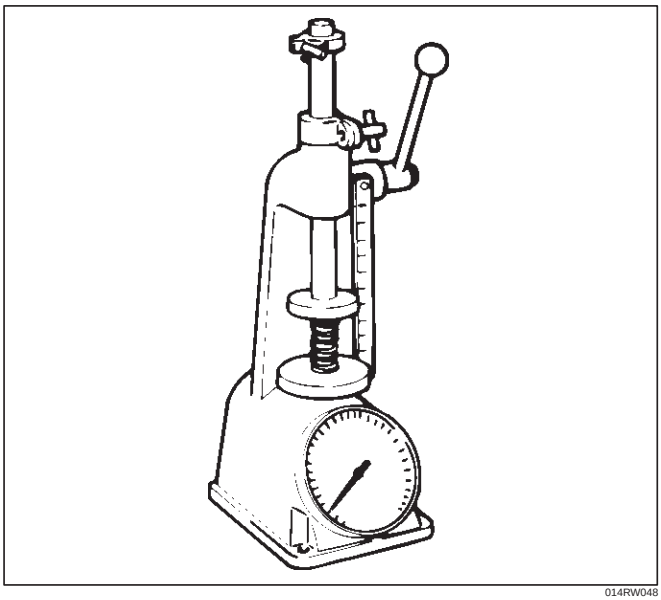

014RW048

Tension of Detent Spring Assembly

- If the measurement exceeds the limit, replace the spring. N {kg} (When compressed by 3 mm from the free length)

  Standard : 139 N -203 {14.2-20.7 kg/31.3-45.6 lb}

  Allowable limit : 130 N {13.3 kg/29.3 lb}

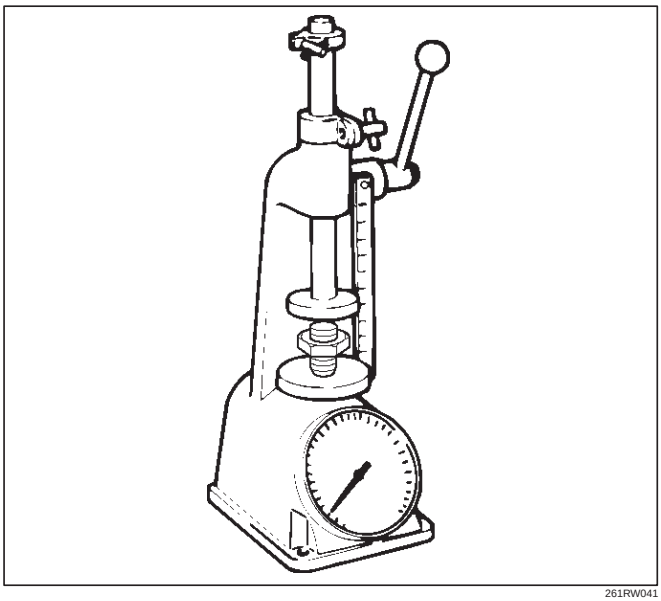

261RW041

Oil Pump

- Remove foreign materials from the strainer. If the strainer is damaged, replace it.
- If the area into which the shaft is inserted is excessively worn or damaged, replace the pump.

Multi Plate Disk Clutch

- If the burned, mirror-surfaced clutch facing, or scraping is observed on the clutch plates, clutch housing, armature plate, and insulator washer, replace the part or parts.

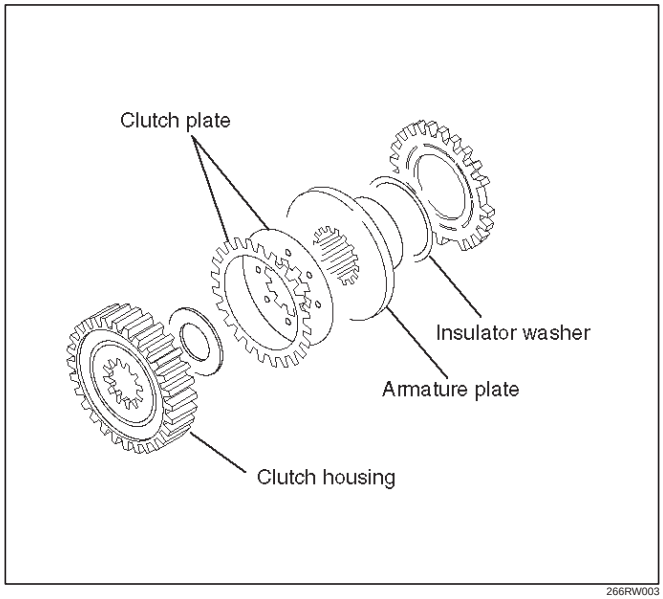

266RW003

Coil Assembly

- Check the resistance of the coil with a tester. If defects are observed, replace the assembly.
  * (ordinary temperature)

  Standard : 1.4~2.0 Ω

  Allowable limit : 1.0~5.0 Ω

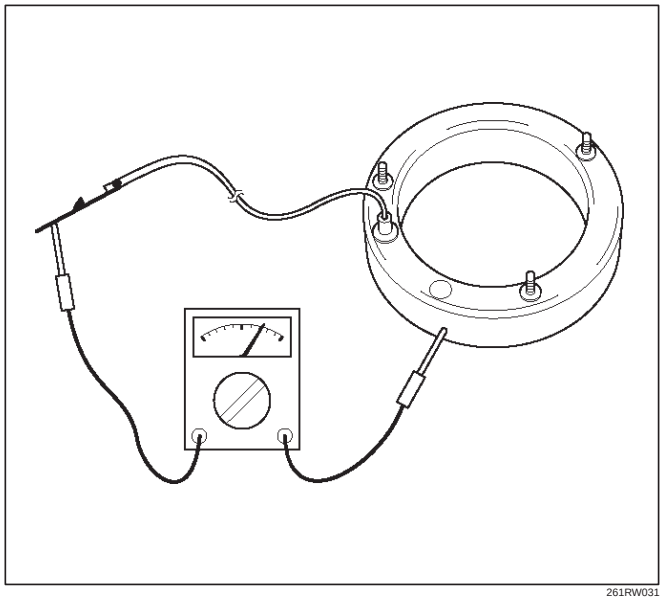

261RW031

Cam Pulley, Cam Ball, and Cam&Coil Housing

- Check the cam balls and cam for excessive wear or damage. If defective, replace the parts.

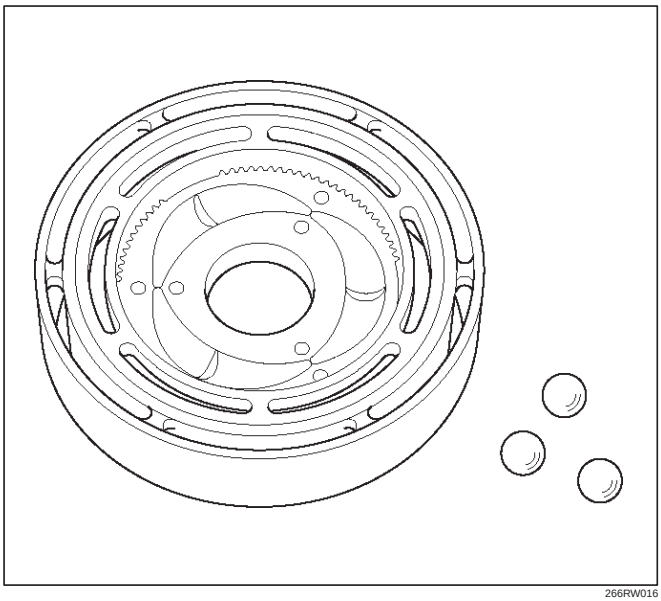

266RW016

The Parts 4H and 4L Switch

- Check the continuity of 4H and 4L switch.

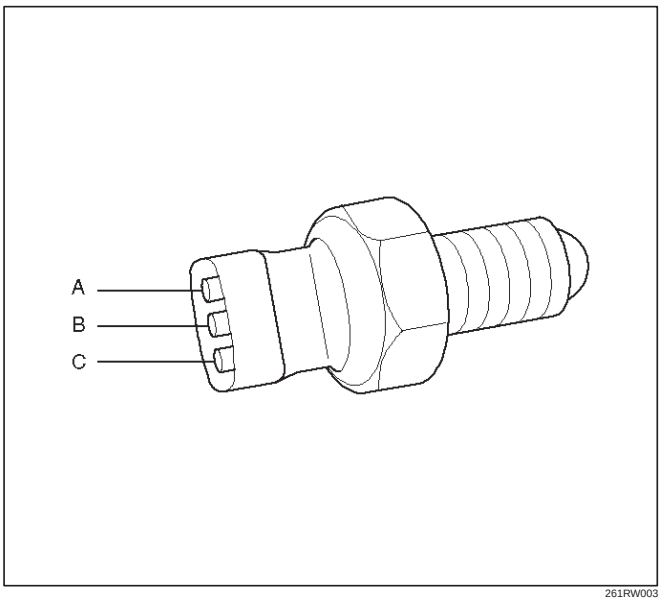

261RW003

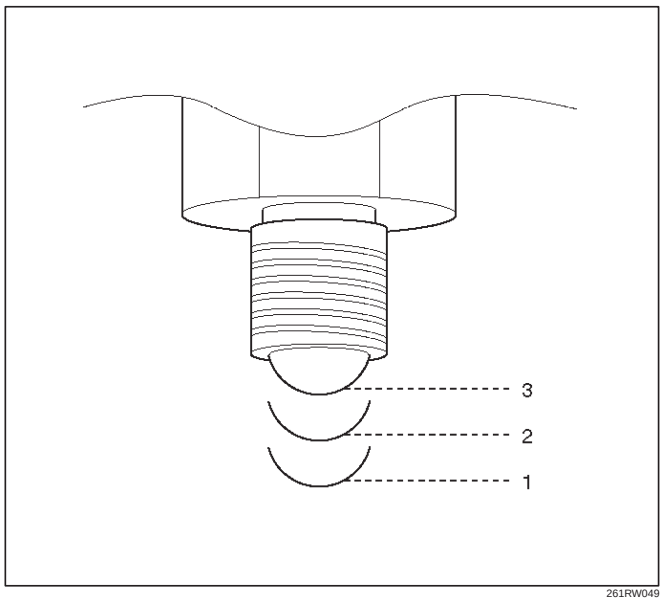

261RW049

Switch Stroke	4H Switch Signal	4L Switch Signal	The correspo nding position of transfer lever
	B to Switch Body	A to C	
1	Open	Open	High
2	Open	Close	4L
3	Close	Close	Neutral

Transfer Case

Disassembled View

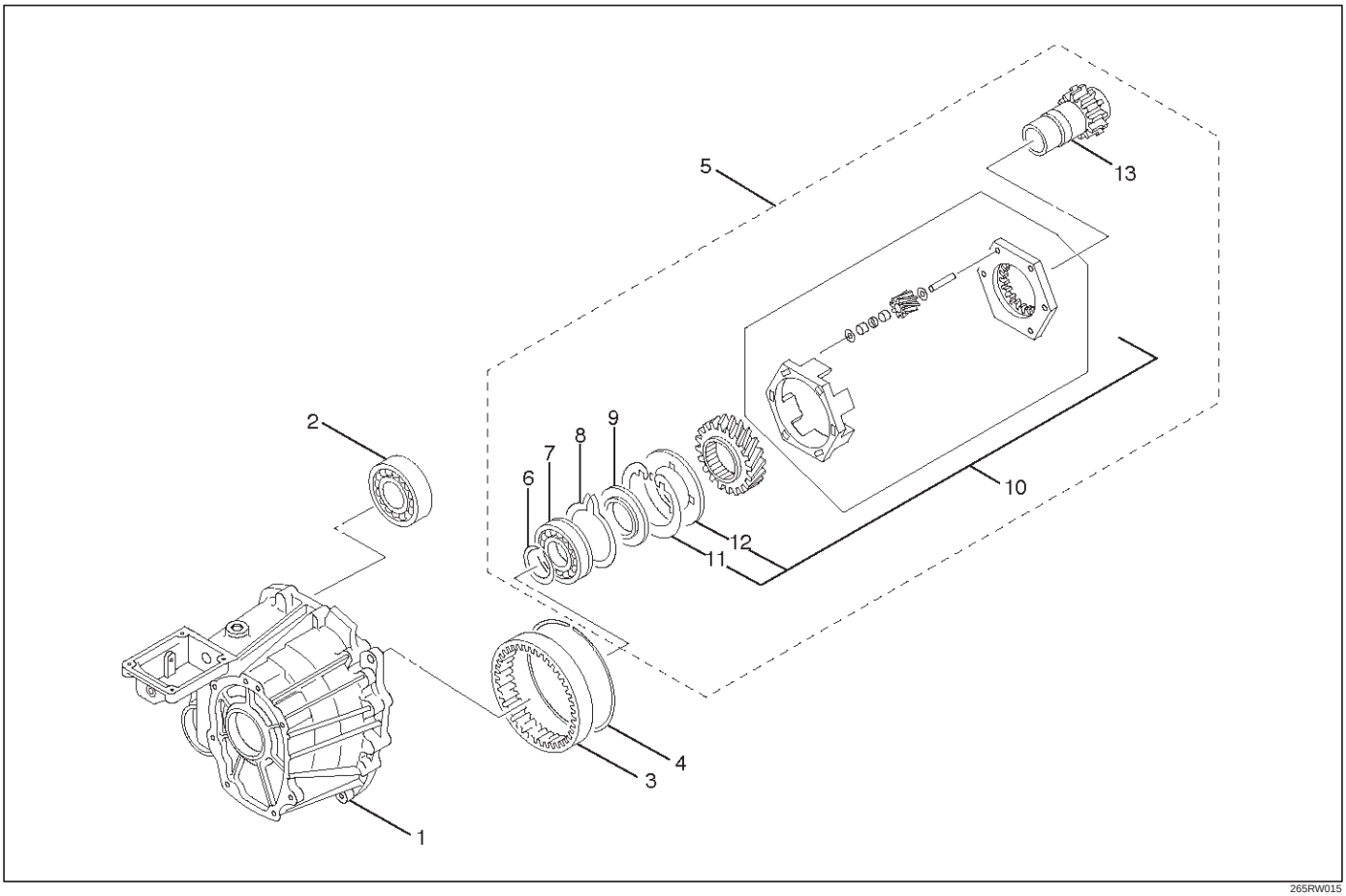

265RW015

Legend

(1) Transfer Case
(2) Ball Bearing
(3) Ring Gear
(4) Snap Ring
(5) Input Shaft and Carrier Assembly
(6) Snap Ring
(7) Ball Bearing
(8) Snap Ring
(9) Thrust Plate
(10) Carrier Assembly
(11) Snap Ring
(12) Circular Hub
(13) Input Shaft

Reassembly

1. Remove the oil seal from the transfer case.
2. Apply engine oil to the circumference of the new oil seal and fill the lip with grease (Besco L2 or equivalent).

3. Using the front output shaft oil seal installer 5-8840-2410-0 (J-42807), install the oil seal to the transfer case.

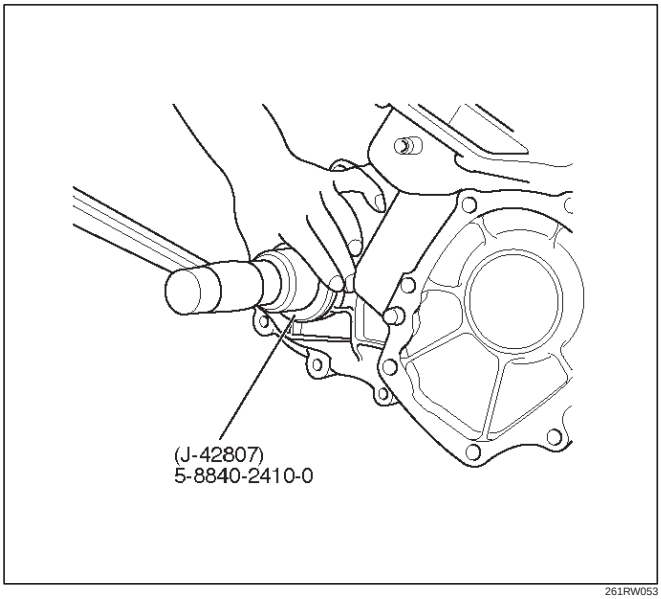

261RW053

Front Output Shaft Oil Seal

Distance between the transfer case end and oil seal.

NOTE: When installing the oil seal to the specified dimension, be careful not to damage it.

Distance : 0.93 — 1.43mm (0.037 — 0.056 in)

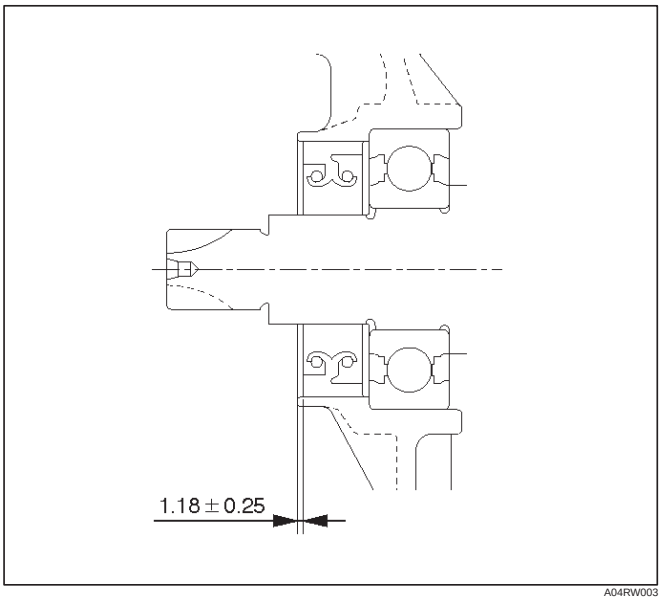

A04RW003

4. Using the input shaft (main) oil seal installer 5-8840-2411-0 (J-42808), install the oil seal to the transfer case.

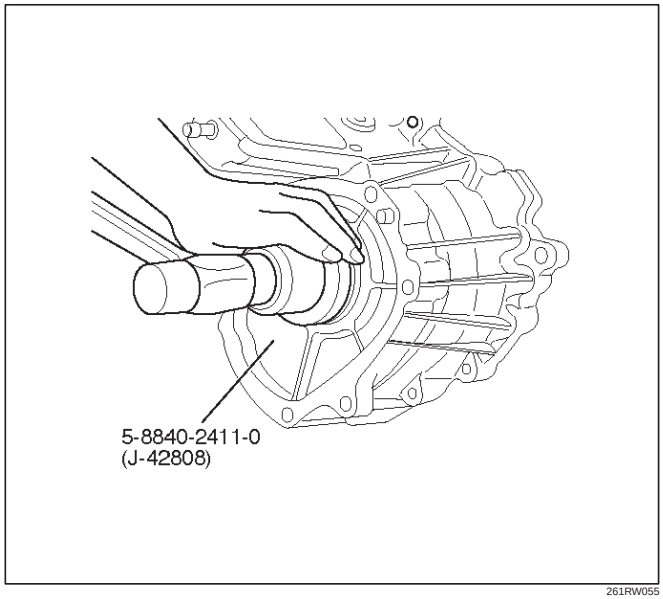

261RW055

Input Shaft Oil Seal

Distance between the transfer case end and oil seal.

NOTE: When installing the oil seal to the specified dimension, be careful not to damage it.

Distance : 3.25 — 3.75mm (0.13 — 0.15 in)

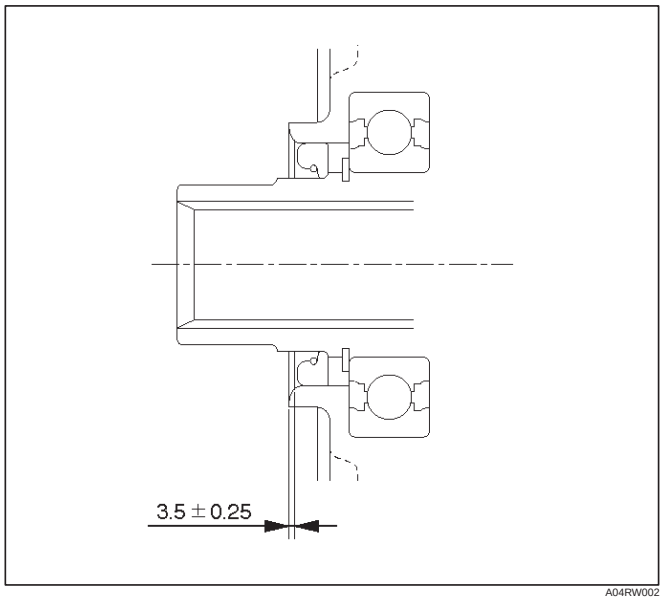

A04RW002

5. Using the installer 5-8840-2416-0 (J-42809), press-fit the ring gear.

Pay attention to the following points.

- Identify the correct direction of gear.
- Do not damage the gear.
- Do not press-fit the ring gear slantingly.
- Press-fit the ring gear to the innermost.
- Remove burrs generated by press-fitting.
- If the transfer case has serrations, match them with those of the gear and press-fit the gear.

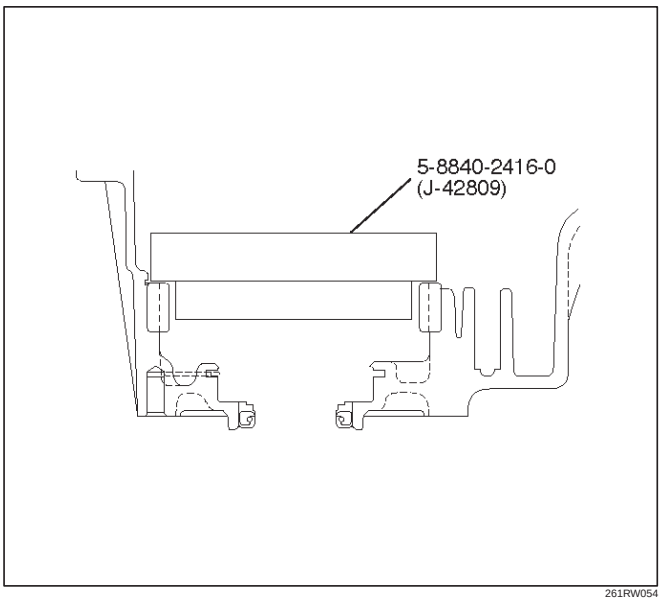

261RW054

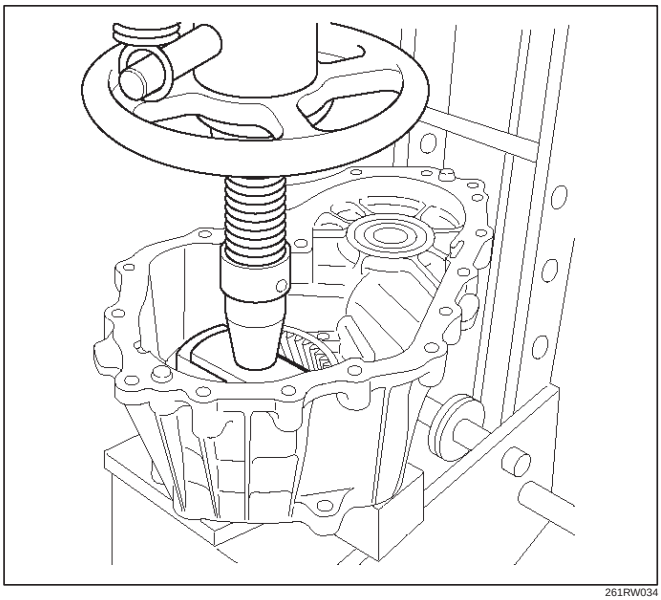

261RW034

6. Install the snap ring to the transfer case.
7. Install the circular hub.
8. Install the snap ring to the carrier.
9. Mount the carrier assembly to the input shaft.
10. Check the direction of thrust plate and mount it to the input shaft.

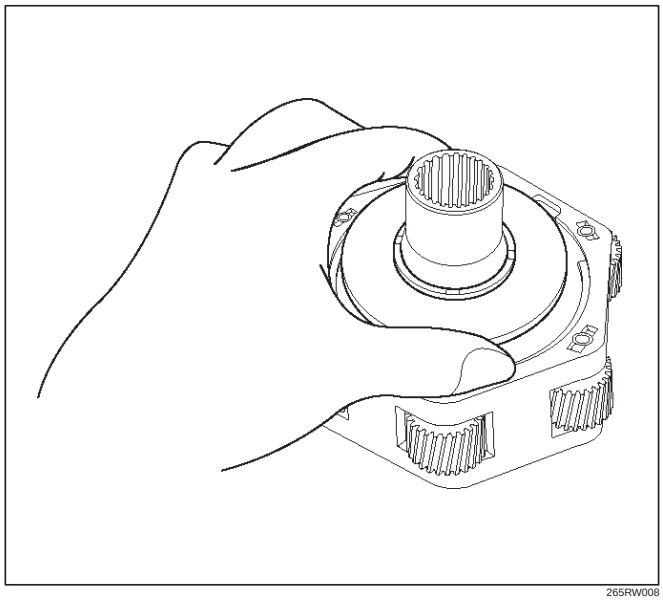

265RW008

11. Mount the ball bearing to the input shaft so that the snap ring will be installed to the input shaft.

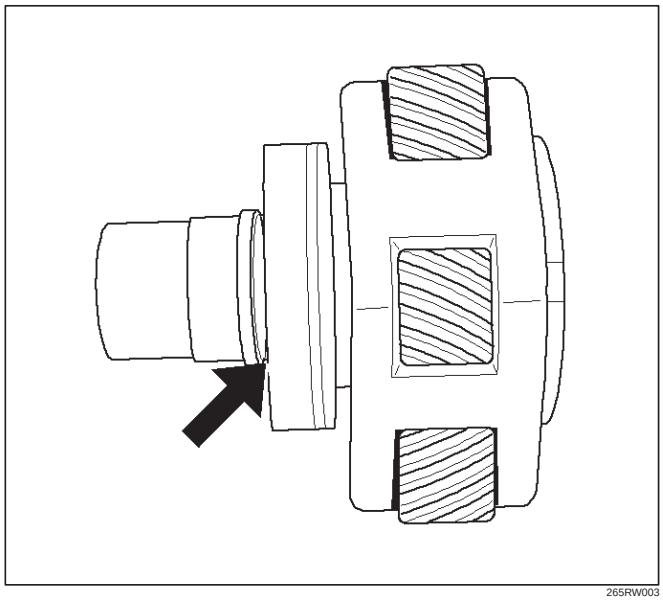

265RW003

12. Install the snap ring to the input shaft.
13. Install the snap ring to the transfer case.

14. Using the snap ring pliers, expand the snap ring through the opening between the ring gear and carrier assembly and securely install the input shaft and carrier assembly.

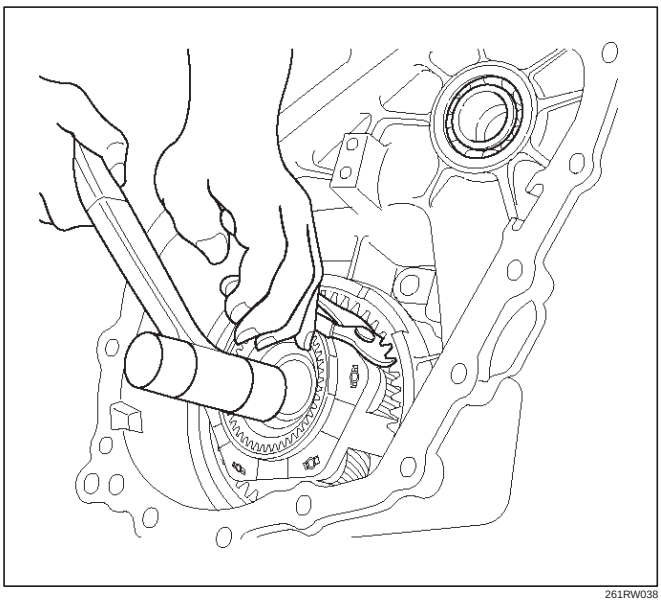

261RW038

15. Install the ball bearing (for front output shaft)

Output Shafts and Shift Control Shaft

Disassembled View

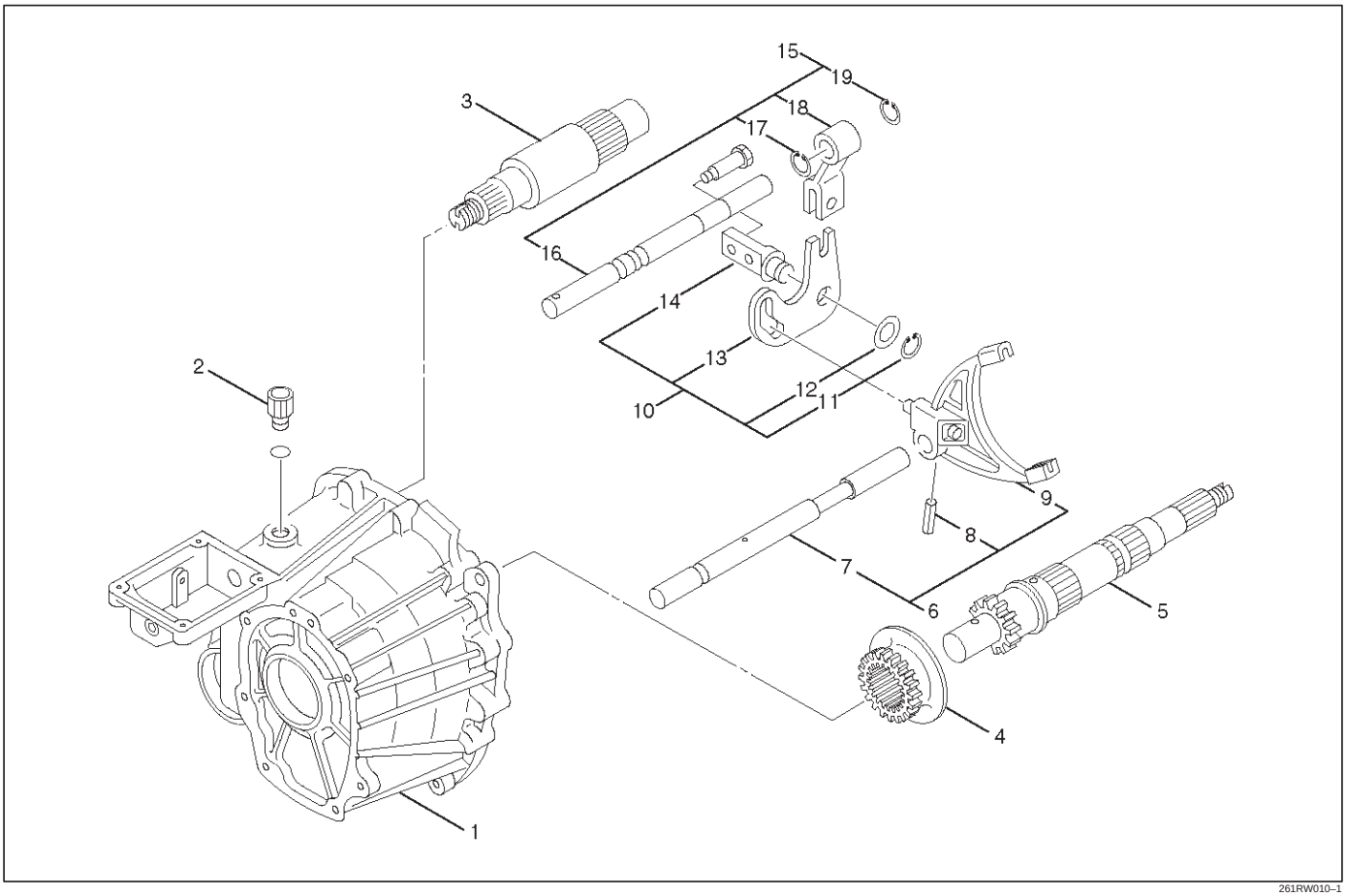

261RW010–1

Legend

(1) Transfer Case Assembly
(2) Detent Spring
(3) Front Output Shaft
(4) Reduction Hub
(5) Output Shaft
(6) Reduction Fork Assembly
(7) Lock-up Shaft
(8) Spring Pin
(9) Reduction Fork
(10) Cam Assembly
(11) Snap Ring
(12) Washer
(13) Cam
(14) Cam Pilot Block
(15) Shifter Shaft Assembly
(16) Shifter Lever Shaft
(17) Snap Ring
(18) Reduction Lever Assembly
(19) Snap Ring

Reassembly

1. Apply ATF to the inside of the ball bearing for the front output shaft.

2. Mount the front output shaft to the transfer case.

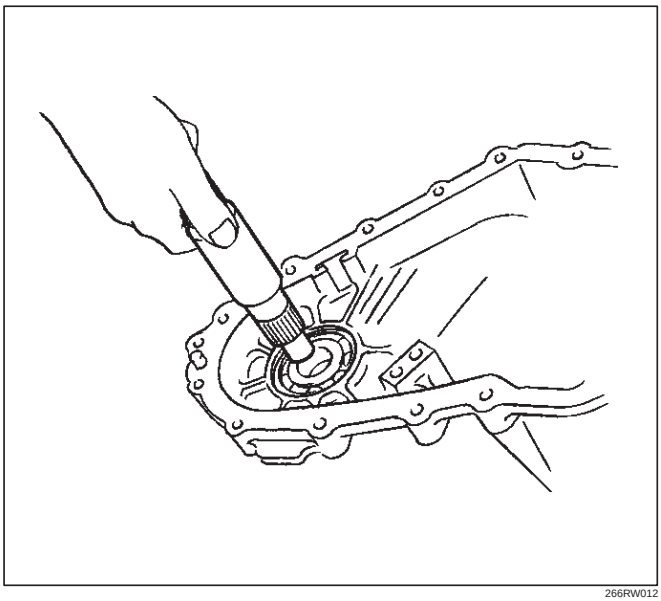

266RW012

3. Install the shifter lever shaft to the transfer case assembly.
4. Install the snap ring to the shifter lever shaft.
5. Install the reduction lever assembly to the shifter lever shaft and fix the assembly with the snap ring.

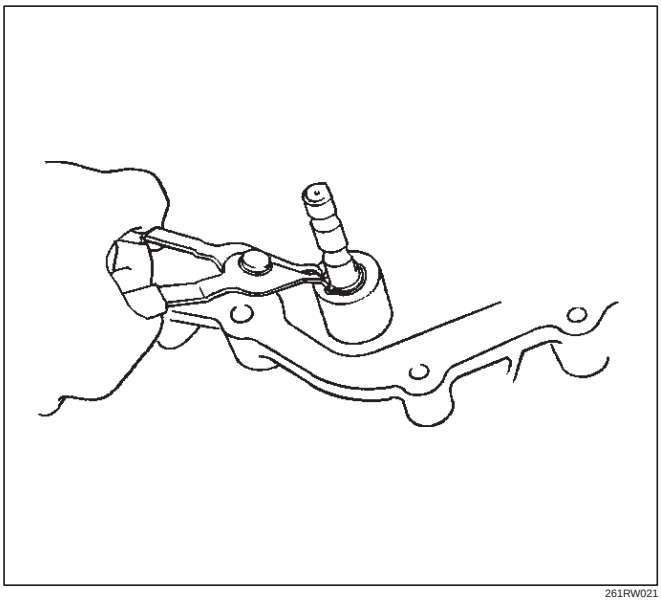

261RW021

6. Install the cam to the cam pilot block.
7. Attach the washer to the cam pilot block and fix the washer with the snap ring.

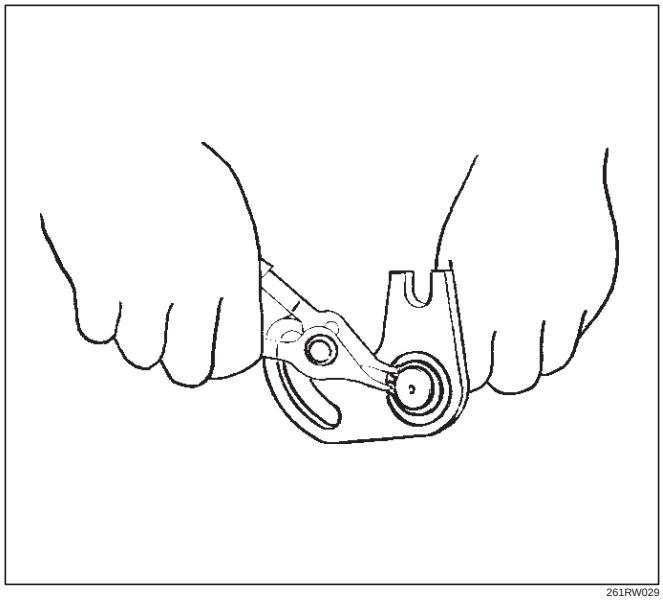

261RW029

8. Mount the reduction fork to the lock-up shaft.
9. Install the spring pin to the reduction fork and lock-up shaft.

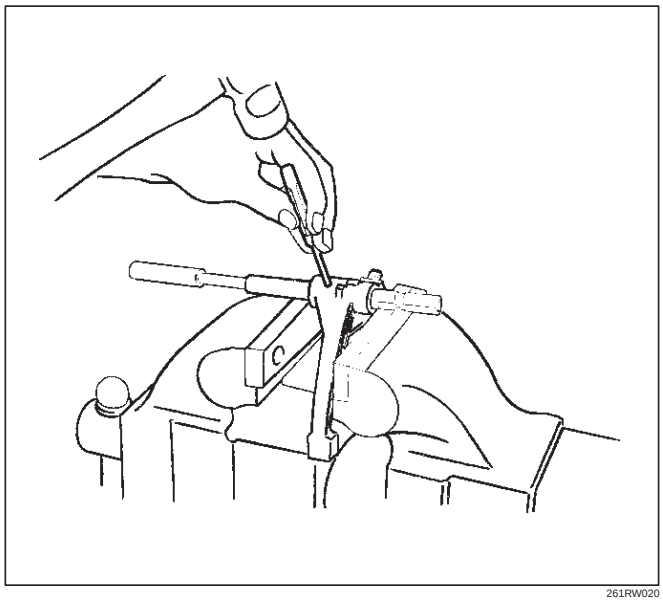

261RW020

10. Install the reduction fork assembly together with reduction hub to the transfer case assembly.

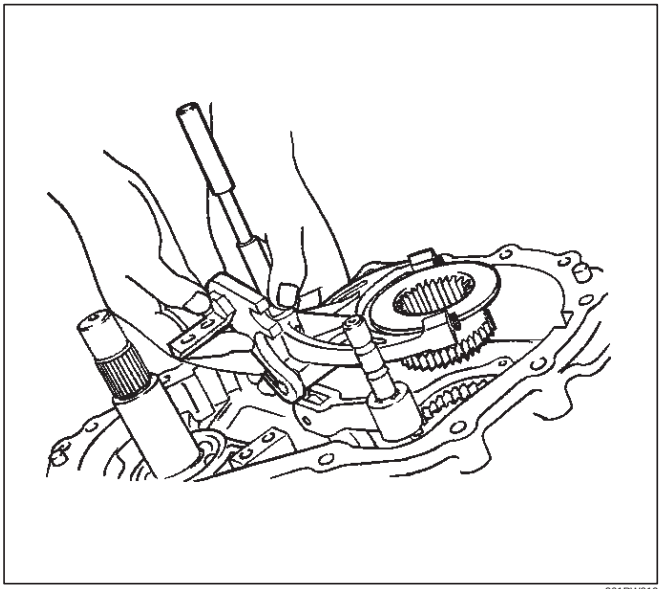

261RW019

11. Install the cam assembly and tighten the cam pilot block set bolts to the specified torque.

    Torque : 12 N·m (1.2 kg·m/104 lb in)

12. Tighten the detent spring to the specified torque.

    Torque : 24 N·m (2.4 kg·m/17 lb in)

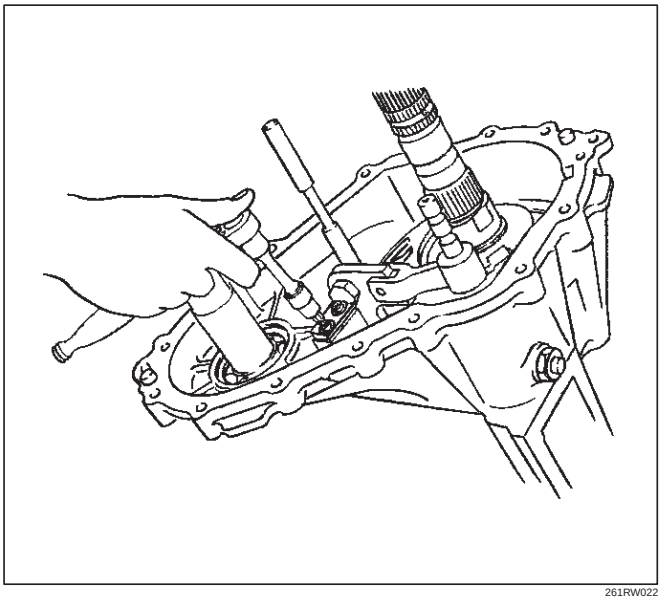

261RW022

13. Apply ATF to the needle bearing inside the input shaft assembly.
14. Install the output shaft to the transfer case assembly.

Sprocket and Mechanical Lock

Disassembled View

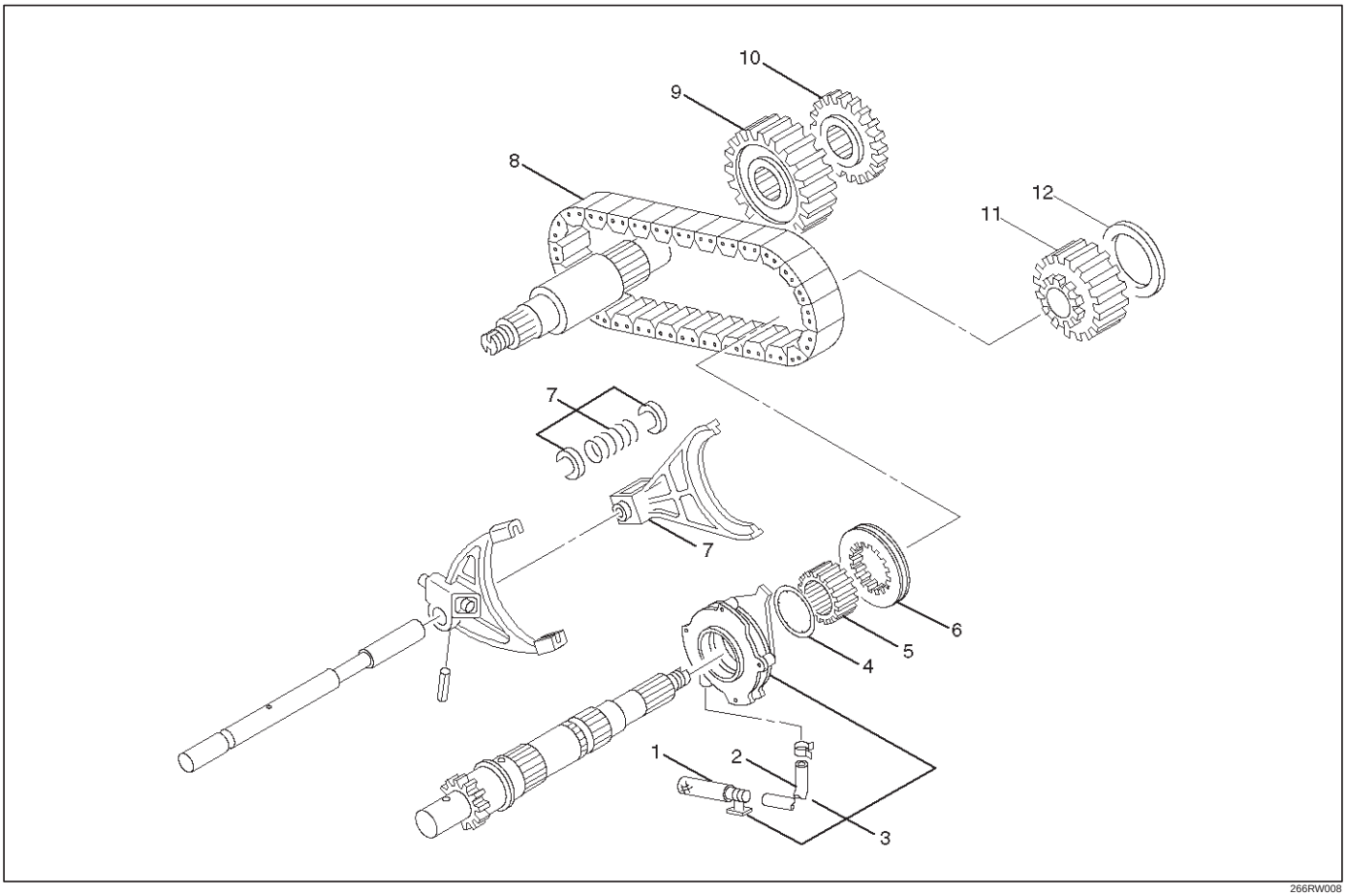

266RW008

Legend

(1) Strainer
(2) Hose
(3) Oil Pump Assembly
(4) Thrust Washer
(5) Mechanical Lock Hub
(6) Lock-up Sleeve
(7) Lock-up Fork
(8) Chain
(9) Lower Drive Sprocket
(10) Front Tone Wheel
(11) Drive Sprocket
(12) Sprocket Spacer

Reassembly

1. Connect the hose and strainer to the oil pump assembly.
2. Install the oil pump assembly to the output shaft and set the magnet to the strainer position.
3. Install the thrust washer.
4. Install the spring to the lock-up fork.

5. Install the lock-up sleeve together with the lock-up fork to the output shaft and lock-up shaft assembly.
6. Install the spring retainers to the lock-up fork.

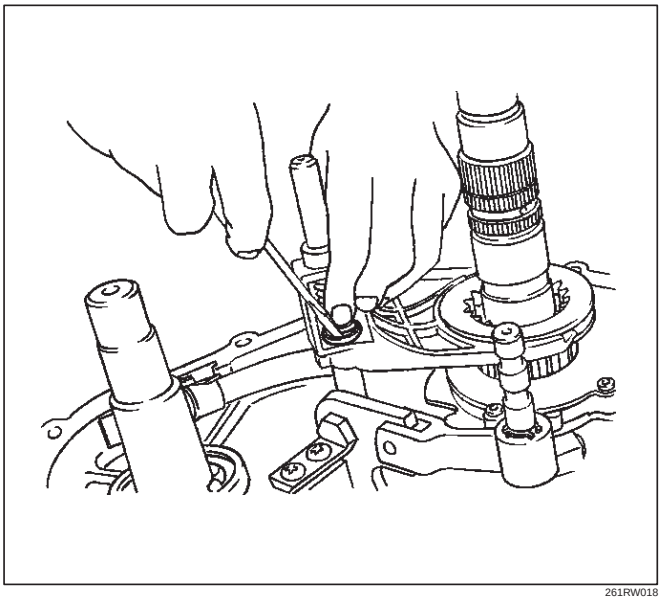

261RW018

7. Install the mechanical lock hub.
8. Apply ATF to the chain.
9. Engage the chain to both sprockets.
10. Install the chain and sprocket assembly to both output shafts.

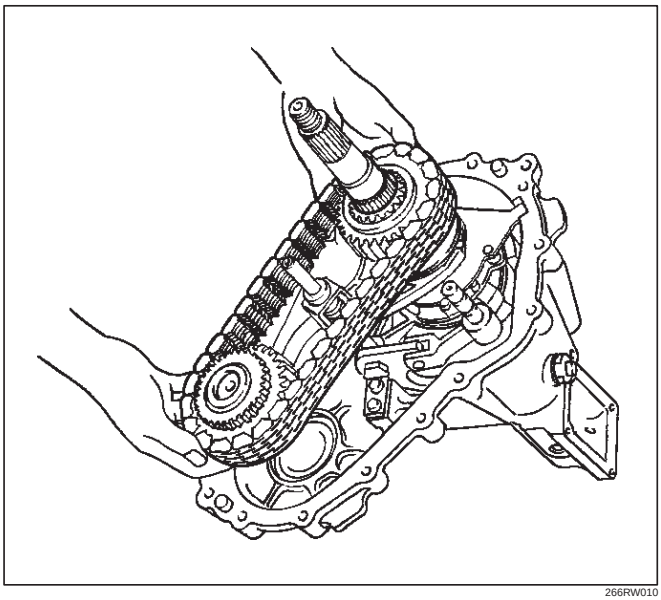

266RW010

11. Install the front tone wheel and sprocket spacer.

Clutch Pack and Clutch Cam

Disassembled View

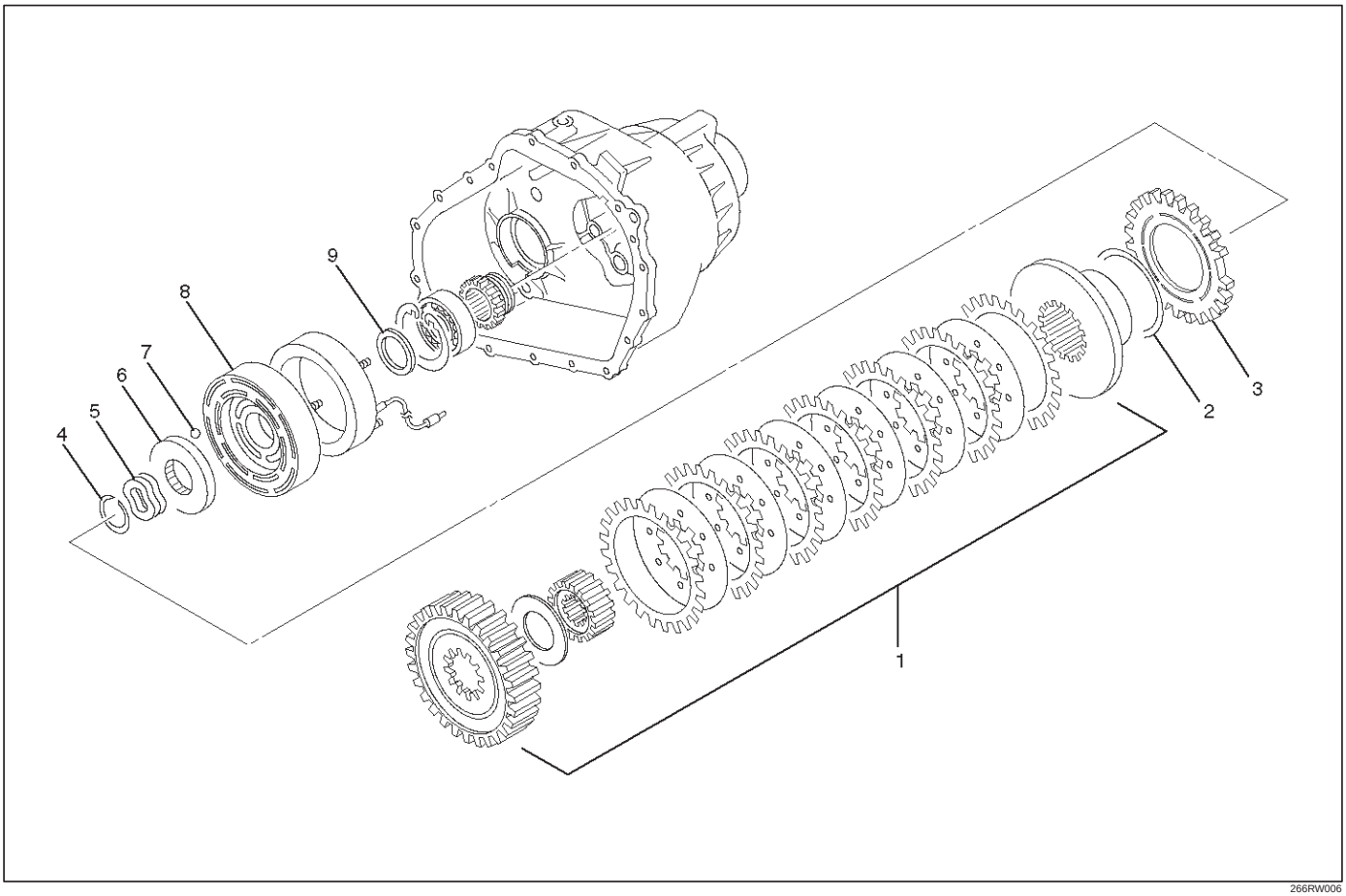

Legend

(1) Clutch Pack Assembly
(2) Insulator Washer
(3) Armature Plate
(4) Snap Ring
(5) Wave Spring
(6) Cam Pulley
(7) Cam Ball
(8) Cam and Coil Housing
(9) Thrust Bearing

Reassembly

1. Mount the clutch pack assembly to which the multi plate disk clutch is already installed to the output shaft.

NOTE: Mount the clutch pack assembly while adjusting the phase of both the clutch housing and drive sprocket.

2. Install the insulator washer.
3. Install the armature plate.

4. Using snap ring pliers, install the snap ring.

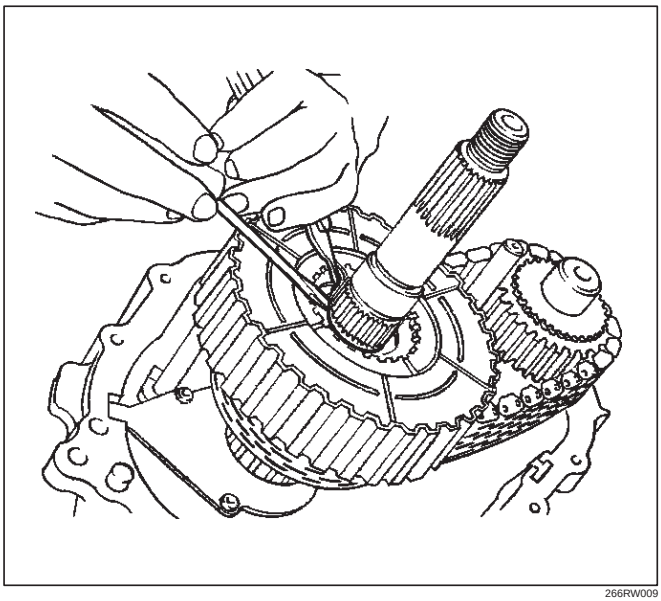

266RW009

5. Install the wave spring.
6. Install the cam pulley.
7. Place a ball on each groove of the cam pulley.

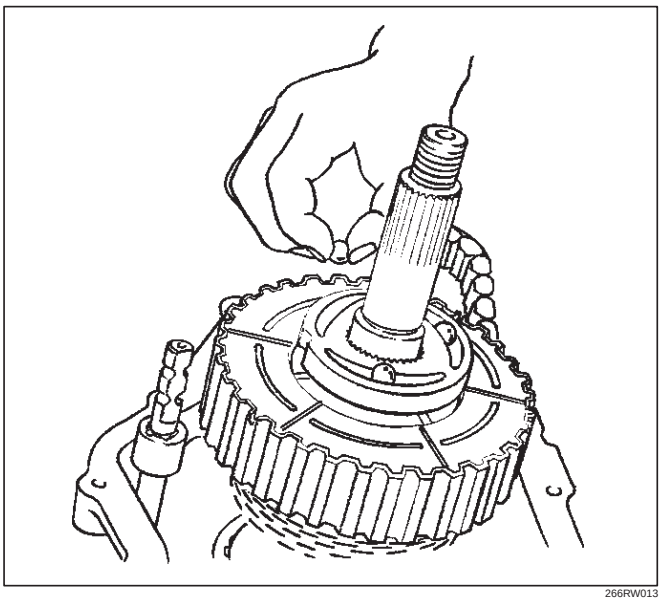

266RW013

8. Install the cam and coil housing.
9. Install the thrust bearing.

Main Data and Specifications

Leading Particulars

Type		Transfer case with low range reduction mechanism
	2H	Rear wheel drive
	TOD	Electronically controlled torque split four wheel drive
	4L	Low-speed mechanical lock-up four wheel drive
Control system		Floor direct control
Gear ratio	H	1.000
	L	2.480
Oil quantity, Lit		1.9
Oil		ATF DEXRON®-IIE or ATF DEXRON®-III

Torque Specifications

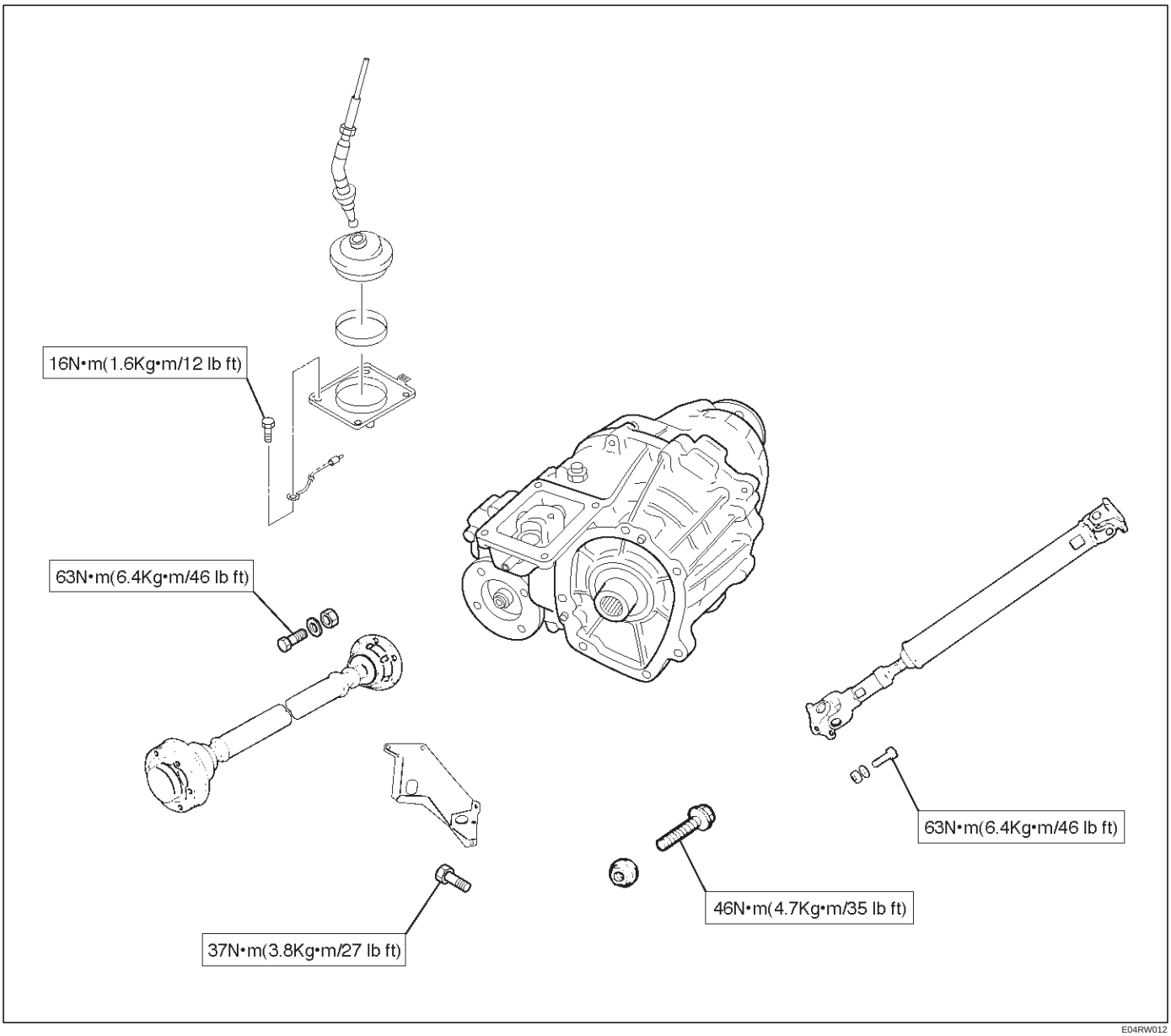

E04RW012

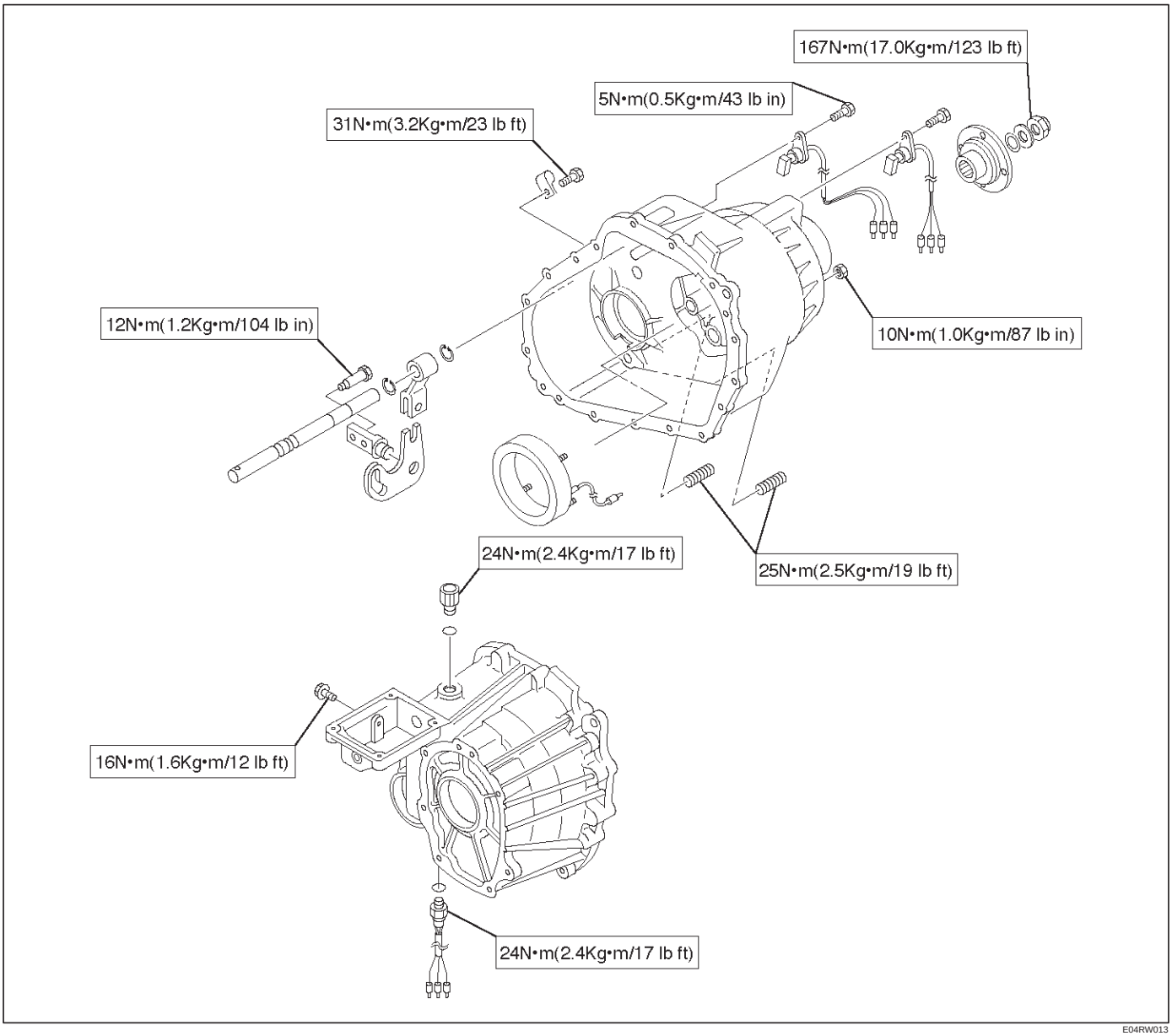
167N•m(17.0Kg•m/123 lb ft)
5N•m(0.5Kg•m/43 lb in)
31N•m(3.2Kg•m/23 lb ft)
12N•m(1.2Kg•m/104 lb in)
10N•m(1.0Kg•m/87 lb in)
24N•m(2.4Kg•m/17 lb ft)
25N•m(2.5Kg•m/19 lb ft)
16N•m(1.6Kg•m/12 lb ft)
24N•m(2.4Kg•m/17 lb ft)

E04RW013

Special Tools

ILLUSTRATION	TOOL NO. TOOL NAME
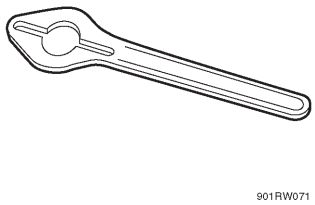 901RW071	**5–8840–0133–0** **(J–8614–11)** Flange Holder
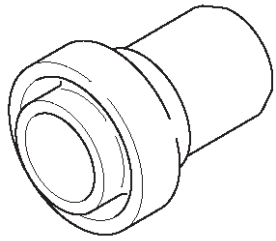 901RW095	**5–8840–2412–0** **(J–42804)** Rear Oil Seal Installer
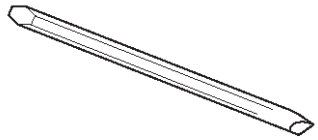 901RW089	**5–8840–2293–0** **(J–39209)** Punch
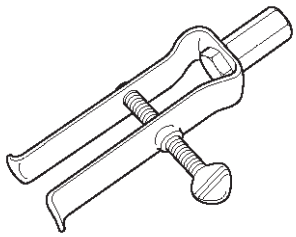 901RW094	**5–8840–2409–0** **(J–42805)** Bearing Remover
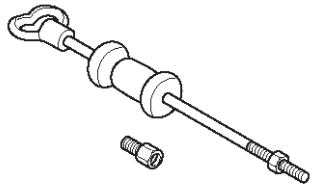 901RW096	**5–8840–0084–0** **(J–2619–01)** Slide Hammer
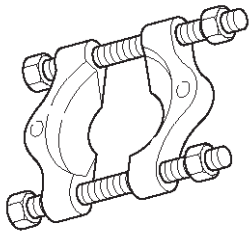 901RW091	**5–8840–0015–0** **(J–22912–01)** Bearing Remover

ILLUSTRATION	TOOL NO. TOOL NAME
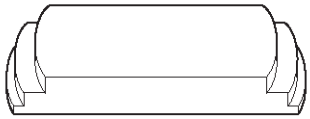 901RW093	**5–8840–2413–0** **(J–42806)** Ring Gear Replacer
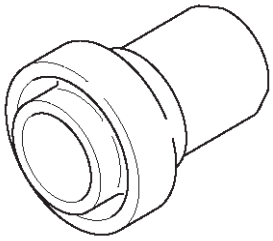 901RW095	**5–8840–2410–0** **(J–42807)** Front Out Oil Seal Installer
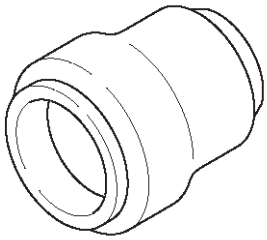 901RW097	**5–8840–2411–0** **(J–42808)** Input Shaft Oil Seal Installer
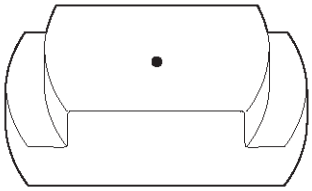 901RW098	**5–8840–2416–0** **(J–42809)** Ring Gear Installer

BRAKES

CONTENTS

Brake Control System 5A
Anti–lock Brake System 5B
Power–Assisted Brake System 5C
Parking Brakes 5D

BRAKE CONTROL SYSTEM

CONTENTS

Service Precaution 5A–2
General Description 5A–3
System Components 5A–3
Electronic Hydraulic Control Unit (EHCU) . 5A–3
ABS Warning Light 5A–4
Wheel Speed Sensor 5A–4
G-Sensor 5A–4
Normal and Anti-lock Braking 5A–4
Brake Pedal Travel 5A–4
Acronyms and Abbreviations 5A–4
General Diagnosis 5A–5
General Information 5A–5
ABS Service Precautions 5A–5
Computer System Service Precautions . . . 5A–5
General Service Precautions 5A–5
Note on Intermittents 5A–5
Test Driving ABS Complaint Vehicles 5A–6
“ABS” Warning Light 5A–6
Normal Operation 5A–6
Basic Diagnostic Flow Chart 5A–6
Basic Inspection Procedure 5A–7
Tech 2 Scan Tool 5A–8
Getting Started 5A–9
Operating Procedure 5A–10
Data List 5A–11
EHCU Connector Pin-out Checks 5A–12
Circuit Diagram (LHD model / 6VD1 and 4JG2) 5A–13
Circuit Diagram (LHD model / 4JG2) 5A–14
Circuit Diagram (LHD model / 4JG2) 5A–15
Circuit Diagram (LHD model / 6VD1) 5A–16
Circuit Diagram (LHD model / 6VD1) 5A–17
Connector List (LHD model) 5A–18
Part Location (LHD model) 5A–20
Circuit Diagram (RHD model / 6VD1 and 4JG2) 5A–21
Circuit Diagram (RHD model / 4JG2) 5A–22
Circuit Diagram (RHD model / 4JG2) 5A–23
Circuit Diagram (RHD model / 6VD1) 5A–24
Circuit Diagram (RHD model / 6VD1) 5A–25
Circuit Diagram (RHD model / 6VE1 and 4JX1) 5A–26
Circuit Diagram (RHD model / 4JX1) 5A–27
Circuit Diagram (RHD model / 4JX1) 5A–28
Circuit Diagram (RHD model / 6VE1) 5A–29
Circuit Diagram (RHD model / 6VE1) 5A–30
Connector List (RHD model) 5A–31
Part Location (RHD model) 5A–34
Symptom Diagnosis 5A–35
Chart A–1 ABS Works Frequently But Vehicle Does Not Decelerate 5A–35
Chart TA-1 ABS Works Frequently But Vehicle Does Not Decelerate (Use TECH 2) 5A–36
Chart A-2 Uneven Braking Occurs While ABS Works 5A–36
Chart A-3, TA-3 The Wheels Are Locked . 5A–36
Chart A-4 Brake Pedal Feed Is Abnormal . 5A–37
Chart A-5, TA-5 Braking Sound (From EHCU) Is Heard While Not Braking 5A–38
Diagnostic Trouble Codes 5A–39
Diagnosis By “ABS” Warning Light Illumination Pattern 5A–40
Diagnostic Trouble Codes (DTCs) 5A–40
Chart B-1 With the key in the ON position (Before starting the engine). Warning light (W/L) is not activated. 5A–43
Chart B-2 EHCU Abnormality (DTC 14) . . . 5A–43
Chart B-3 Power Voltage Drop (DTC 15) . . 5A–44
Chart B-4 CLASS-2 Communication Line Abnormality (DTC 16) 5A–44
Chart B-5 G-Sensor Circuit (DTC 21) 5A–45
Chart B-6 Abnormal Transmission Input (DTC 23) 5A–46
Chart B-7 Transfer Monitor (DTC 24) 5A–47
Chart B-8 EHCU Pump Motor And Motor Relay Circuit (DTC 32) 5A–47
Chart B-9 EHCU Pump Valve And Valve Relay Circuit (DTC 35) 5A–47
Chart B-10 FL Isolation Solenoid Valve Abnormality (DTC 41) 5A–48
Chart B-11 FL Dump Solenoid Valve Abnormality (DTC 42) 5A–48
Chart B-12 FR Isolation Solenoid Valve Abnormality (DTC 43) 5A–48
Chart B-13 FR Dump Solenoid Valve Abnormality (DTC 44) 5A–49
Chart B-14 Rear Isolation Solenoid Valve Abnormality (DTC 45) 5A–49
Chart B-15 Rear Dump Solenoid Valve Abnormality (DTC 46) 5A–49

Chart B-16 FL Speed Sensor Disconnection (DTC 51) 5A–50
Chart B-17 FR Speed Sensor Disconnection (DTC 52) 5A–50
Chart B-18 RL Speed Sensor Disconnection (DTC 53) 5A–51
Chart B-19 RR Speed Sensor Disconnection (DTC 54) 5A–51
Chart B-20 FL Speed Sensor Short Circuit (DTC 61) 5A–52
Chart B-21 FR Speed Sensor Short Circuit (DTC 62) 5A–53
Chart B-22 RL Speed Sensor Short Circuit (DTC 63) 5A–54
Chart B-23 RR Speed Sensor Short Circuit (DTC 64) 5A–55
Chart B-24 Sensor Signal Input Abnormality (DTC 65) 5A–56
Sensor Signal Abnormality Criteria using TECH 2 . . . . . 5A–56
Unit Inspection Procedure 5A–57
Chart C-1-1 FL Sensor Output Inspection Procedure 5A–57
Chart C-1-2 FR Sensor Output Inspection Procedure 5A–58
Chart C-1-3 RL Sensor Output Inspection Procedure 5A–58
Chart C-1-4 RR Sensor Output Inspection Procedure 5A–59
Chart TC-1 Sensor Output Inspection Procedure (Use TECH 2) 5A–59
Chart C-2 Transmission Input Inspection Procedure 5A–60
Chart TC-2 Transmission Input Inspection Procedure (Use TECH 2) 5A–61
Special Tools 5A–62

Service Precaution

WARNING: IF SO EQUIPPED WITH A SUPPLEMENTAL RESTRAINT SYSTEM (SRS), REFER TO THE SRS COMPONENT AND WIRING LOCATION VIEW IN ORDER TO DETERMINE WHETHER YOU ARE PERFORMING SERVICE ON OR NEAR THE SRS COMPONENTS OR THE SRS WIRING. WHEN YOU ARE PERFORMING SERVICE ON OR NEAR THE SRS COMPONENTS OR THE SRS WIRING, REFER TO THE SRS SERVICE INFORMATION. FAILURE TO FOLLOW WARNINGS COULD RESULT IN POSSIBLE AIR BAG DEPLOYMENT, PERSONAL INJURY, OR OTHERWISE UNNEEDED SRS SYSTEM REPAIRS.

CAUTION: Always use the correct fastener in the proper location. When you replace a fastener, use ONLY the exact part number for that application. ISUZU will call out those fasteners that require a replacement after removal. ISUZU will also call out the fasteners that require thread lockers or thread sealant. UNLESS OTHERWISE SPECIFIED, do not use supplemental coatings (Paints, greases, or other corrosion inhibitors) on threaded fasteners or fastener joint interfaces. Generally, such coatings adversely affect the fastener torque and the joint clamping force, and may damage the fastener. When you install fasteners, use the correct tightening sequence and specifications. Following these instructions can help you avoid damage to parts and systems.

General Description

The Anti-lock Brake System (ABS) works on all four wheels. A combination of wheel speed sensor and Electronic Hydraulic Control Unit (EHCU) can determine when a wheel is about to stop turning and adjust brake pressure to maintain best braking.

This system helps the driver maintain greater control of the vehicle under heavy braking conditions.

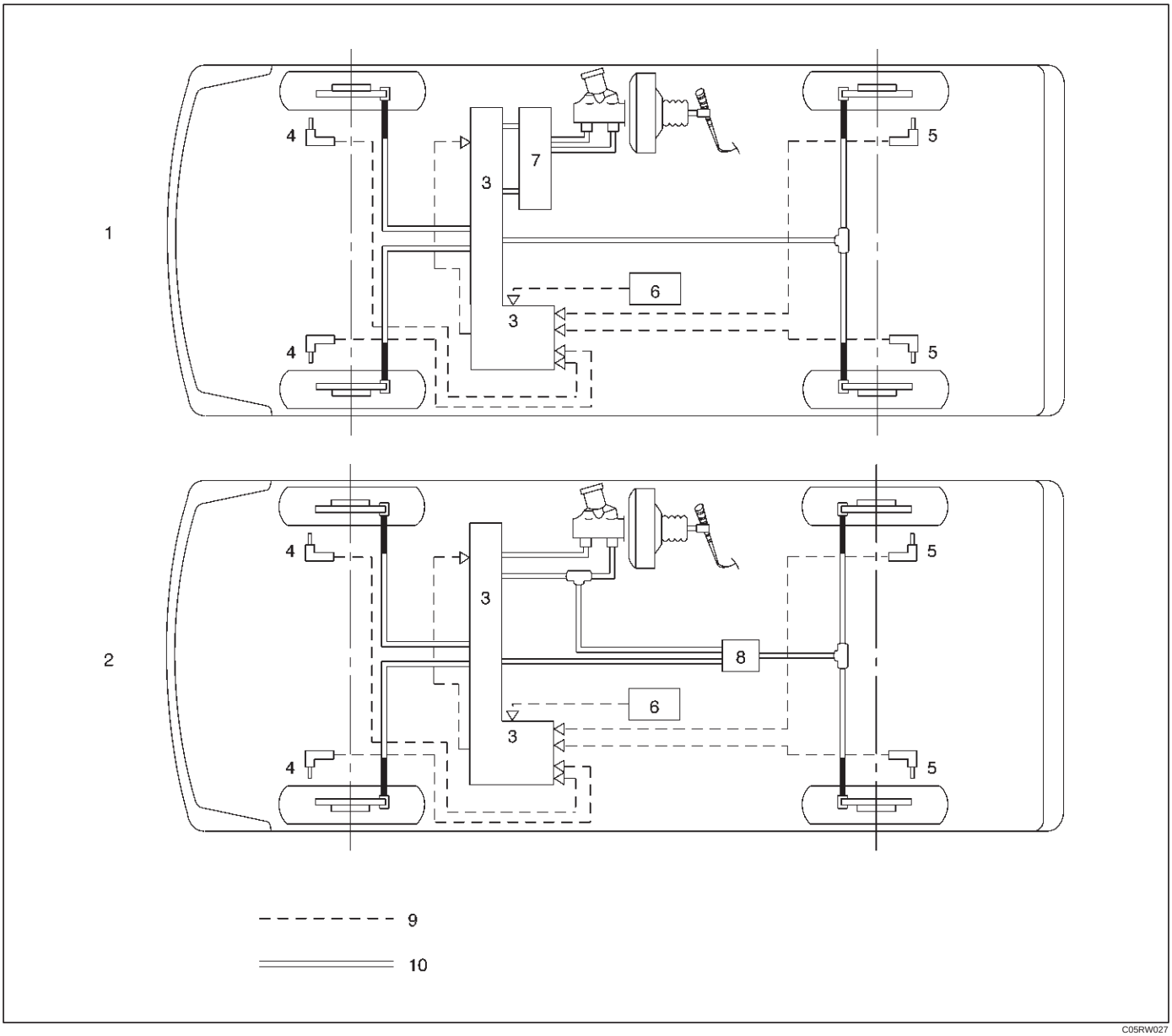

C05RW027

Legend

(1) With P&B Valve Model
(2) With LSPV Model
(3) Electronic Hydraulic Control Unit (EHCU)
(4) Front Wheel Speed Sensor
(5) Rear Wheel Speed Sensor
(6) G-Sensor
(7) Proportioning and Bypass (P&B) Valve
(8) Load Sensing Proportioning Valve (LSPV)
(9) Electronic Line
(10) Hydraulic Line

System Components

Electronic Hydraulic Control Unit (EHCU), four Wheel Speed Sensors, Warning Light, and G-sensor.

Electronic Hydraulic Control Unit (EHCU)

The EHCU consists of ABS control circuits, fault detector, and a fail-safe. It drives the hydraulic unit according to the signal from each sensor, cancelling ABS to return to

normal braking when a malfunction has occurred in the ABS.
The EHCU has a self-diagnosing function which can indicate faulty circuits during diagnosis.
The EHCU is mounted on the engine compartment front right side. It consists of a Motor, Plunger Pump, Solenoid Valves and Check Valve.
On the outside, the relay box containing a motor relay and a valve relay is installed.
Solenoid Valves: Reduces or holds the caliper fluid pressure for each front disc brake or both rear disc brakes according to the signal sent from the EHCU.
Reservoir: Temporarily holds the brake fluid that returns from the front and rear disc brake caliper so that pressure of front disc brake caliper can be reduced smoothly.
Plunger Pump: Feeds the brake fluid held in the reservoir to the master cylinder.
Motor: Drives the pump according to the signal from EHCU.
Check Valve: Controls the brake fluid flow.

ABS Warning Light

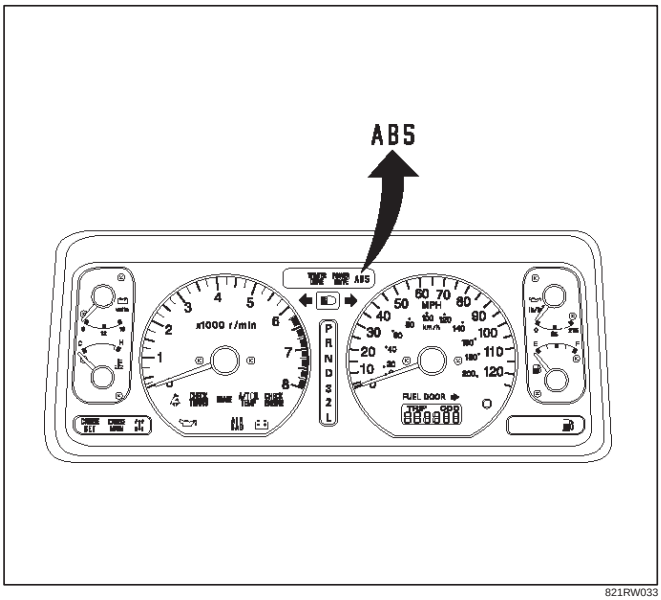

821RW033

Vehicles equipped with the Anti-lock Brake System have an amber “ABS” warning light in the instrument panel. The “ABS” warning light will illuminate if a malfunction in the Anti-lock Brake System is detected by the Electronic Hydraulic Control Unit (EHCU). In case of an electronic malfunction, the EHCU will turn “ON” the “ABS” warning light and disable the Anti-lock braking function.
The “ABS” light will turn “ON” for approximately three seconds after the ignition switch is to the “ON” position.
If the “ABS” light stays “ON” after the ignition switch is the “ON” position, or comes “ON” and stays “ON” while driving, the Anti-lock Brake System should be inspected for a malfunction according to the diagnosis procedure.

Wheel Speed Sensor

It consists of a sensor and a rotor. The sensor is attached to the knuckle on the front wheels and to the axle shaft bearing holder on the rear wheels.
The rotor is press-fit in the axle shaft.
The flux generated from electrodes magnetized by a magnet in the sensor varies due to rotation of the rotor, and the electromagnetic induction generates alternating voltage in the coil. This voltage draws a “sine curve” with the frequency proportional to rotor speed and it allows detection of wheel speed.

G-Sensor

The G-sensor installed inside the center console detects the vehicle deceleration speed and sends a signal to the EHCU. In 4WD operation, all four wheels may be decelerated in almost the same phase, since all wheels are connected mechanically.
This tendency is noticeable particularly on roads with low friction coefficient, and the ABS control is adversely affected.
The G-sensor judges whether the friction coefficient of road surface is low or high, and changes the EHCU’s operating system to ensure ABS control.

Normal and Anti-lock Braking

Under normal driving conditions, the Anti-lock Brake System functions the same as a standard power assisted brake system. However, with the detection of wheel lock-up, a slight bump or kick-back will be felt in the brake pedal. This pedal “bump” will be followed by a series of short pedal pulsations which occurs in rapid succession. The brake pedal pulsation will continue until there is no longer a need for the anti-lock function or until the vehicle is stopped. A slight ticking or popping noise may be heard during brake applications when the Anti-lock features is being used.
When the Anti-lock feature is being used, the brake pedal may rise even as the brakes are being applied. This is also normal. Maintaining a constant force on the pedal will provide the shortest stopping distance.

Brake Pedal Travel

Vehicles equipped with the Anti-lock Brake System may be stopped by applying normal force to the brake pedal. Although there is no need to push the pedal beyond the point where it stops or holds the vehicle, by applying more force the pedal will continue to travel toward the floor. This extra brake pedal travel is normal.

Acronyms and Abbreviations

Several acronyms and abbreviations are commonly used throughout this section:

ABS
Anti-lock Brake System

CKT
Circuit

DLC
Data Link Connector

EHCU
Electronic Hydraulic Control Unit

FL
Front Left

FR
Front Right

GEN
Generator

MV
Millivolts

RL
Rear Left

RR
Rear Right

RPS
Revolution per Second

VDC
Volts DC

VAC
Volts AC

W/L
Warning Light

WSS
Wheel Speed Sensor

General Diagnosis

General Information

ABS malfunction can be classified into two types, those which can be detected by the ABS warning light and those which can be detected as a vehicle abnormality by the driver.
In either case, locate the fault in accordance with the "BASIC DIAGNOSTIC FLOWCHART" and repair.
Please refer to Section 5C for the diagnosis of mechanical troubles such as brake noise, brake judder (brake pedal or vehicle vibration felt when braking), uneven braking, and parking brake trouble.

ABS Service Precautions

Required Tools and Items:

- Box Wrench
- Brake Fluid
- Special Tool

Some diagnosis procedures in this section require the installation of a special tool.

J-39200 High Impedance Multimeter

When circuit measurements are requested, use a circuit tester with high impedance.

Computer System Service Precautions

The Anti-lock Brake System interfaces directly with the Electronic Hydraulic Control Unit (EHCU) which is a control computer that is similar in some regards to the Powertrain Control Module. These modules are designed to withstand normal current draws associated with vehicle operation. However, care must be taken to avoid overloading any of the EHCU circuits. In testing for opens or shorts, do not ground or apply voltage to any of the circuits unless instructed to do so by the appropriate diagnostic procedure. These circuits should only be tested with a high impedance multimeter (J-39200) or special tools as described in this section. Power should never be removed or applied to any control module with the ignition in the "ON" position.
Before removing or connecting battery cables, fuses or connectors, always turn the ignition switch to the "OFF" position.

General Service Precautions

The following are general precautions which should be observed when servicing and diagnosing the Anti-lock Brake System and/or other vehicle systems. Failure to observe these precautions may result in Anti-lock Brake System damage.

- If welding work is to be performed on the vehicle using an electric arc welder, the EHCU and valve block connectors should be disconnected before the welding operation begins.
- The EHCU and valve block connectors should never be connected or disconnected with the ignition "ON" .
- EHCU of the Anti-lock Brake System are not separately serviceable and must be replaced as assemblies. Do not disassemble any component which is designated as non-serviceable in this Section.
- If only rear wheels are rotated using jacks or drum tester, the system will diagnose a speed sensor malfunction and the "ABS" warning light will illuminate. But actually no trouble exists. After inspection stop the engine once and re-start it, then make sure that the "ABS" warning light does not illuminate.

If the battery has been discharged

The engine may stall if the battery has been completely discharged and the engine is started via jumper cables. This is because the Anti-lock Brake System (ABS) requires a large quantity of electricity. In this case, wait until the battery is recharged, or set the ABS to a non-operative state by removing the fuse for the ABS (40A). After the battery has been recharged, stop the engine and install the ABS fuse. Start the engine again, and confirm that the ABS warning light does not light.

Note on Intermittents

As with virtually any electronic system, it is difficult to identify an intermittent failure. In such a case duplicating the system malfunction during a test drive or a good description of vehicle behavior from the customer may be helpful in locating a "most likely" failed component or circuit. The symptom diagnosis chart may also be useful in isolating the failure. Most intermittent problems are caused by faulty electrical connections or wiring. When an intermittent failure is encountered, check suspect circuits for:

- Suspected harness damage.
- Poor mating of connector halves or terminals not fully seated in the connector body (backed out).
- Improperly formed or damaged terminals.

Test Driving ABS Complaint Vehicles

In case that there has been an malfunction in the lighting pattern of “ABS” warning light, the fault can be located in accordance with the “DIAGNOSIS BY “ABS” WARNING LIGHT ILLUMINATION PATTERN” . In case of such trouble as can be detected by the driver as a vehicle symptom, however, it is necessary to give a test drive following the test procedure mentioned below, thereby reproducing the symptom for trouble diagnosis on a symptom basis:

1. Start the engine and make sure that the “ABS” W/L goes OFF. If the W/L remains ON, it means that the Diagnostic Trouble Code (DTC) is stored. Therefore, read the code and locate the fault.
2. Start the vehicle and accelerate to about 30 km/h (19 mph) or more.
3. Slowly brake and stop the vehicle completely.
4. Then restart the vehicle and accelerate to about 40 km/h (25 mph) or more.
5. Brake at a time so as to actuate the ABS and stop the vehicle.
6. Be cautious of abnormality during the test. If the W/L is actuated while driving, read the DTC and locate the fault.
7. If the abnormality is not reproduced by the test, make best efforts to reproduce the situation reported by the customer.
8. If the abnormality has been detected, repair in accordance with the “SYMPTOM DIAGNOSIS” .

NOTE:

- Be sure to give a test drive on a wide, even road with little traffic.
- If an abnormality is detected, be sure to suspend the test and start trouble diagnosis at once.

“ABS” Warning Light

When ABS trouble occurs and actuates when possible the “ABS” warning light, the trouble code corresponding to the trouble is stored in the EHCU. Only the ordinary brake system is available when the ABS is turned off. When the “ABS” warning light is actuated, if the starter switch is set ON after setting it OFF once, the EHCU checks up on the entire system and, if there is no abnormality, judges ABS to work currently and the warning light works normally even though the trouble code is stored.

NOTE: Illumination of the “ABS” warning light indicates that anti-lock braking is no longer available. Power assisted braking without anti-lock control is still available.

Normal Operation

“ABS” Warning Light

When the ignition is first moved from “OFF” to “RUN” , the amber “ABS” warning light will turn “ON” . The “ABS” warning light will turn “ON” during engine starting and will usually stay “ON” for approximately three seconds after the ignition switch is returned to the “ON” position. The warning light should remain “OFF” at all other times.

Basic Diagnostic Flow Chart

Step	Action	Yes	No
1	1. Customer complaint. 2. Questioning to customer. 3. Basic inspection (Refer to “Basic inspection procedure”) Using TECH 2?	Go to Step 2	Go to Step 4
2	Make sure of DTC by mode “F0: Diagnostic Trouble Codes”. Is EHCU including DTC?	Go to Step 3	Go to Step 5
3	1. Repair of faulty part. 2. Elimination of DTC. 3. Inspection of “ABS” W/L Illumination pattern with ignition SW “ON”. 4. Test drive. Does repeat trouble?	Repeat the diagnosis it the symptom or DTC appears again Go to Step 1	Go to Step 5
4	Check if the DTC is stored. Is EHCU including DTC?	Go to Step 3	Trouble diagnosis based on symptom (Refer to “SYMPTOM DIAGNOSIS”) Go to Step 3
5	1. Reconnect all components and ensure all component are properly mounted. 2. Clear diagnostic trouble code. Was this step finished?	Finished	Go to Step 5

Basic Inspection Procedure

1. Basic Inspection of System Brake

Step	Action	Yes	No
1	Is the fluid level normal?	Go to Step 2	Replenish with fluid. Go to Step 2
2	Does fluid leak?	Repair. Go to Step 3	Go to Step 3
3	Is the booster functioning normal?	Go to Step 4	Repair. Go to Step 4
4	Is the pad and rotor normal?	Go to Step 5	Repair. Go to Step 5
5	Reconnect all components and ensure all component are properly mounted. Was this step finished?	Finished	Go to Step 5

2. Inspection of Front Axle Switch

Step	Action	Yes	No
1	Turn the key switch on and shift the T/F to 4WD position. Does the 4WD light come on?	Go to Step 2	Repair. Go to Step 2
2	Reconnect all components and ensure all components are properly mounted. Was this step finished?	Finished	Go to Step 2

3. Ground Inspection

Step	Action	Yes	No
1	Are ABS—related ground points ok?	Go to Step 2	Repair. Go to Step 2
2	Reconnect all components and ensure all components are properly mounted. Was this step finished?	Finished	Go to Step 2

Tech 2 Scan Tool

From 98 MY, Isuzu dealer service departments are recommended to use Tech 2. Please refer to Tech 2 scan tool user guide.

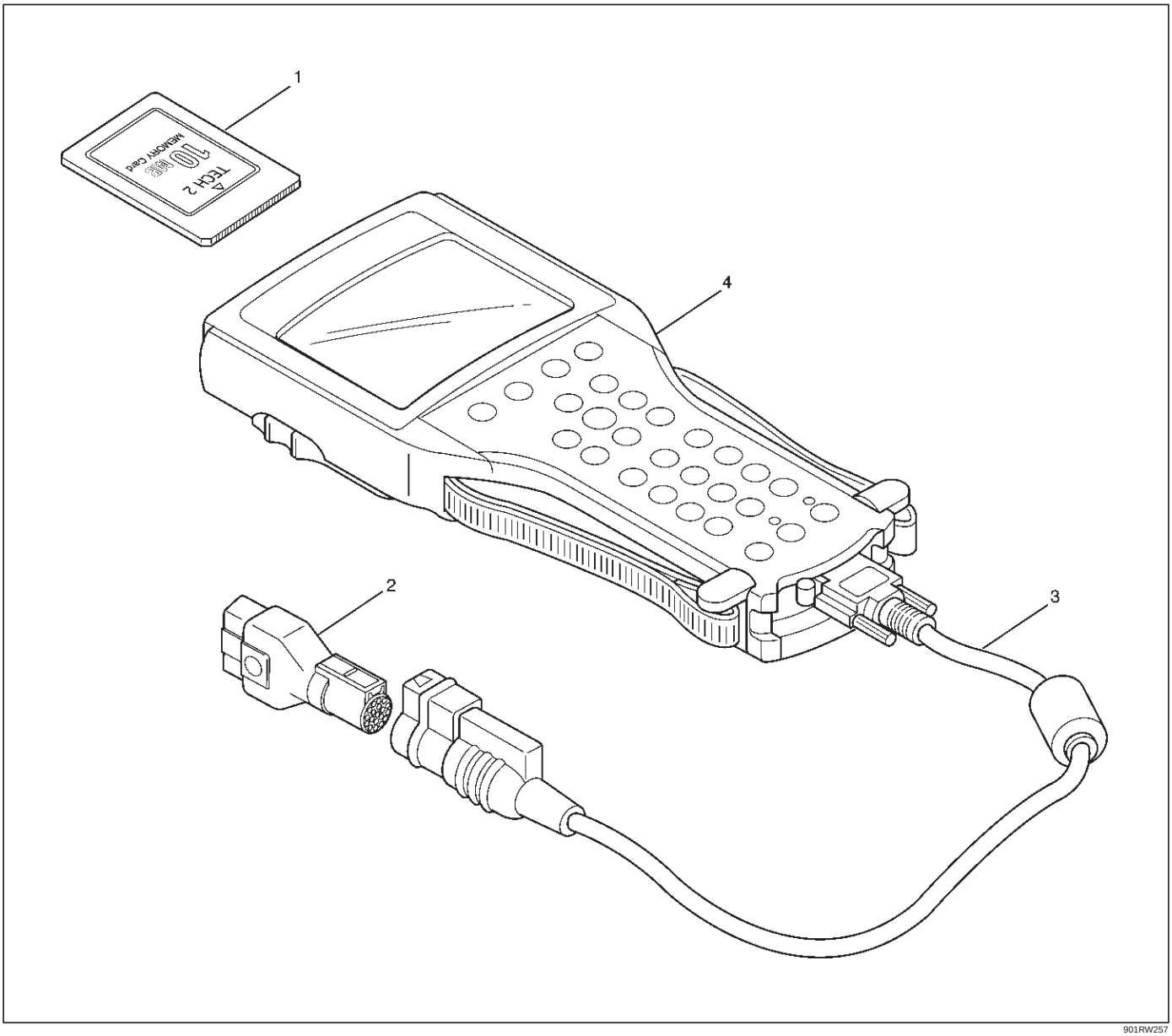

901RW257

Legend

(1) PCMCIA Card
(2) SAE 16/19 Adaptor
(3) DLC Cable
(4) Tech–2

Getting Started

- Before operating the Isuzu PCMCIA card with the Tech 2, the following steps must be performed:

1. The Isuzu 98 System PCMCIA card (1) inserts into the Tech 2 (4).
2. Connect the SAE 16/19 adapter (2) to the DLC cable (3).
3. Connect the DLC cable to the Tech 2 (4).
4. Make sure the vehicle ignition is off.
5. Connect the Tech 2 SAE 16/19 adapter to the vehicle DLC connector.

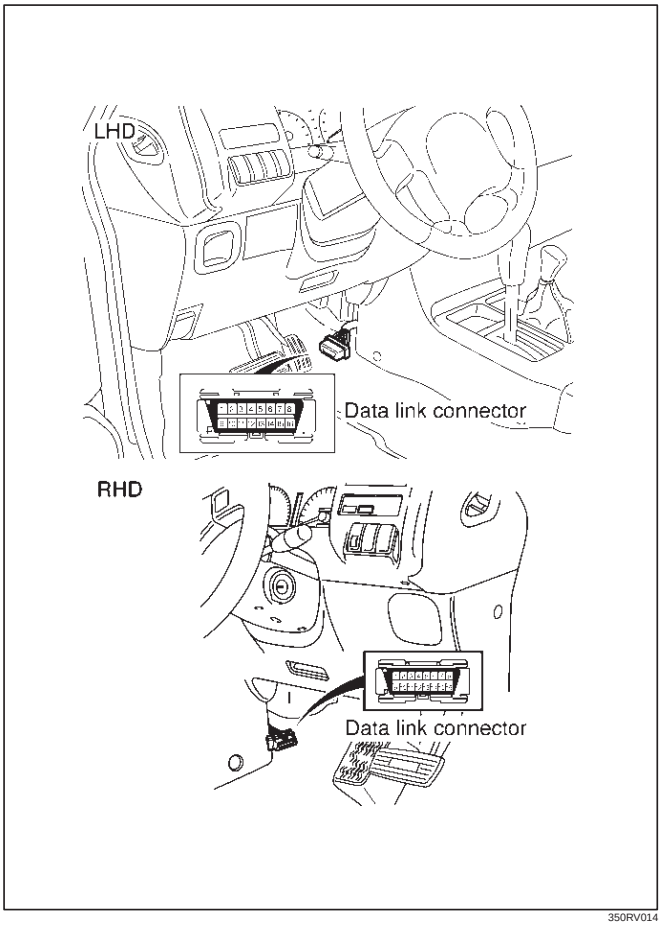

350RV014

6. The vehicle ignition turns on.
7. Power up the Tech 2.
8. Verify the Tech 2 power up display.

060RW009

Operating Procedure

The power up screen is displayed when you power up the tester with the Isuzu systems PCMCIA card. Follow the operating procedure below.

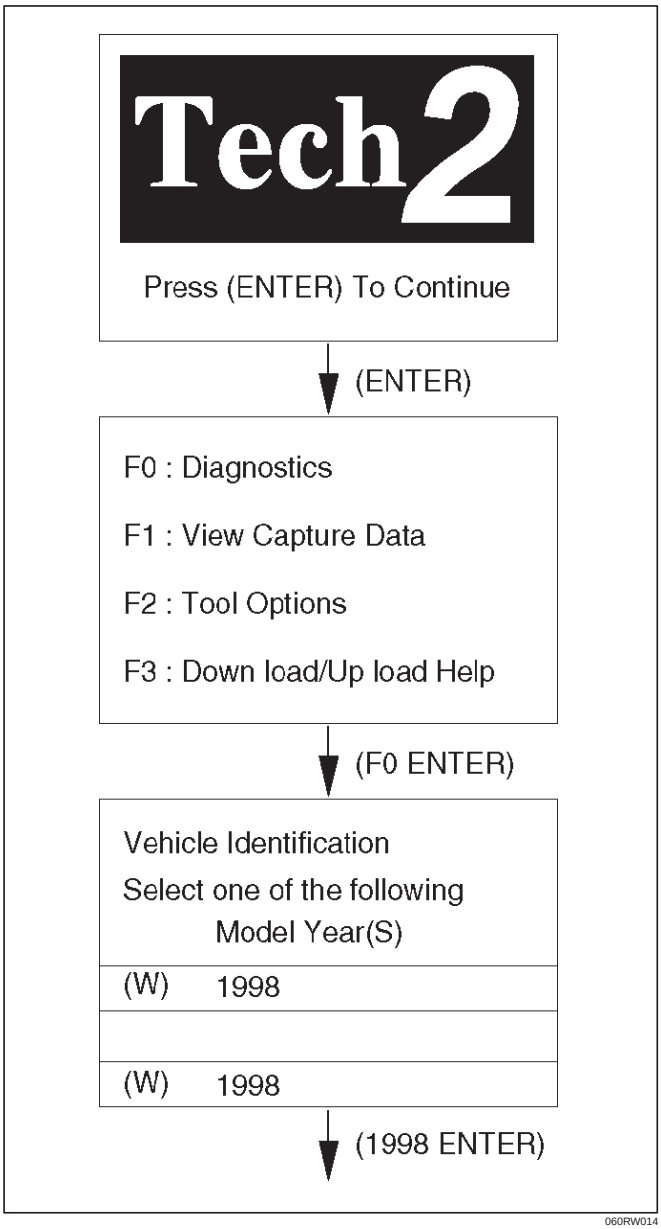

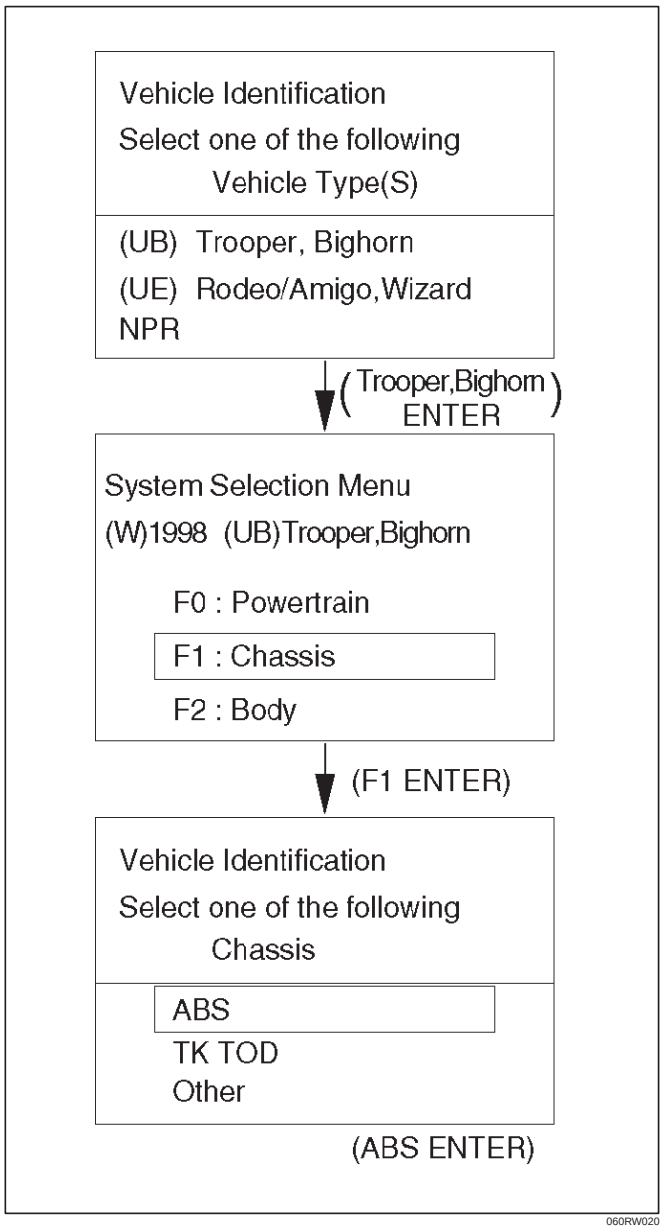

Data List

Display	Content	OK/NG Criteria for Data
Battery Voltage	Voltage	● Between 10-16.9V
Brake Light Switch	Open/Close	● Open(0V) when pedal is released
		● Closed(12V) when pedal is depressed.
Front Left Wheel Speed Front Right Wheel Speed Rear Left Wheel Speed Rear Right Wheel Speed	MPH(km/h)	● Start the vehicle and make sure of linear change in each wheel speed. ● Turn each wheel by hand and make sure that each speed data change.
Wheel Sensor Status	OK/NG	● To be OK usually
G-sensor	Low/High	● To be Low usually
Transfer Monitor(TOD)	2 Wheel Drive 4 Wheel Drive	● When 2WD: 2 Wheel Drive ● When 4WD: 4 Wheel Drive
Off-Road Switch (Transmission Input)	Active/Inactive	● When shift lever position is 1, 2 and R: Active (M/T)
		● When shift lever position is L and R: Active (A/T)
Valve Relay	Active/Inactive	● To be Active usually
ABS State	ON/OFF	● To be OFF usually
ABS Relay	Active/Inactive	● To be Active usually
Return Pump Relay	Active/Inactive	● To be Inactive usually
Front Left Isolation Valve	Active/Inactive	● To be Inactive usually
Front Left Dump Valve		
Front Right Isolation Valve		
Front Right Dump Valve		
Rear Isolation Valve		
Rear Dump Valve		
ABS Warning Lamp	ON/OFF	● To be ON usually (while engine stopped)

EHCU Connector Pin-out Checks

- Disconnect Electronic Brake Control Module.
- Perform checks with high impedance digital multimeter (5-8840-0366-0) or equivalent.

No.	Circuit to be Tested	Ignition Switch Position	Multimeter Scale/Range	Measure between Pin Number	Nominal Value	Note
1	Ignition enable	OFF	20DCV	8 (+), 15 (–)	0V to 0.1V	
		ON	20DCV	8 (+), 15 (–)	11.5V to 14.5V	
2	Stop light switch	OFF	20DCV	10, 15	10.5V to 14.5V	Press brake pedal
3	Ground connection	OFF	200Ω	12, Ground 15, Ground	Less than 2Ω	
4	FL speed sensor	OFF	2kΩ	20, 21	1.3k to 1.9kΩ	Internal Resistance
		OFF	200kΩ	20, 15	more than 100kΩ	Insulation Resistance
		OFF	200mACV	20, 21	more than 200mV	Turn wheel at 1RPS
5	FR speed sensor	OFF	2kΩ	4, 5	1.3k to 1.9kΩ	Internal Resistance
		OFF	200kΩ	4, 15	more than 100kΩ	Insulation Resistance
		OFF	200mACV	4, 5	more than 200mV	Turn wheel at 1RPS
6	RL speed sensor	OFF	2kΩ	22, 23	1.3k to 1.9kΩ	Insulation Resistance
		OFF	200kΩ	22, 15	more than 100kΩ	Internal Resistance
		OFF	200mACV	22, 23	more than 200mV	Turn wheel at 1RPS
7	RR speed sensor	OFF	2kΩ	2, 3	1.3k to 1.9kΩ	Internal Resistance
		OFF	200kΩ	2, 15	more than 100kΩ	Insulation Resistance
		OFF	200mACV	2, 3	more than 200mV	Turn wheel at 1RPS
8	G-sensor	ON		26,8	1k to 2kΩ	Horizontal vehicle
9	Transmission Input	ON	20DCV	6 (+), 15 (–)	Less than 6V (Shift lever position – L, R) 6.6 to 9.0V (other shift position)	A/T Battery voltage 12V
					More than 9.6V (Shift lever position – 1, 2, R) 6.6 to 9.0V (other shift position)	M/T Battery voltage 12V

Circuit Diagram (LHD model / 6VD1 and 4JG2)

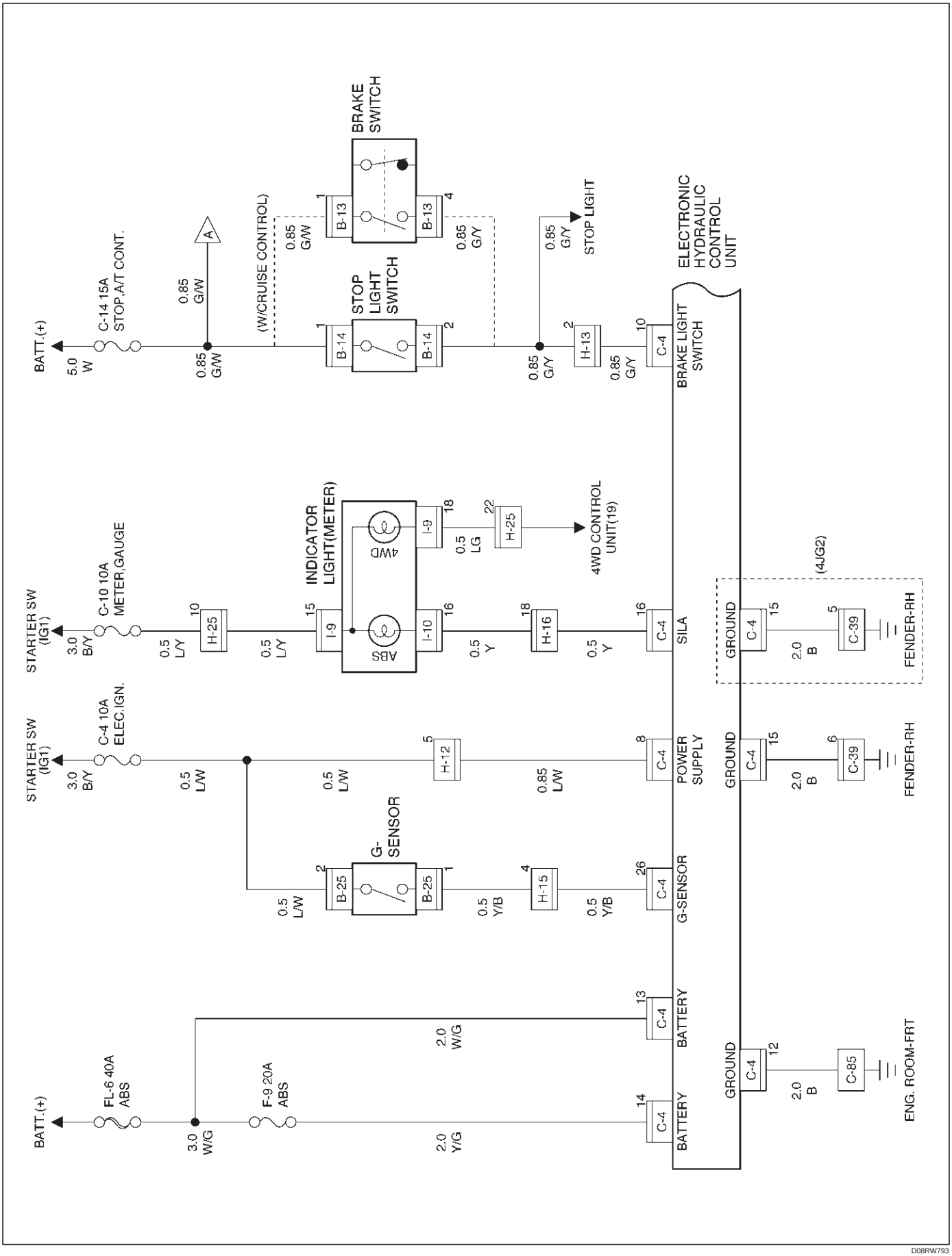

D08RW793

Circuit Diagram (LHD model / 4JG2)

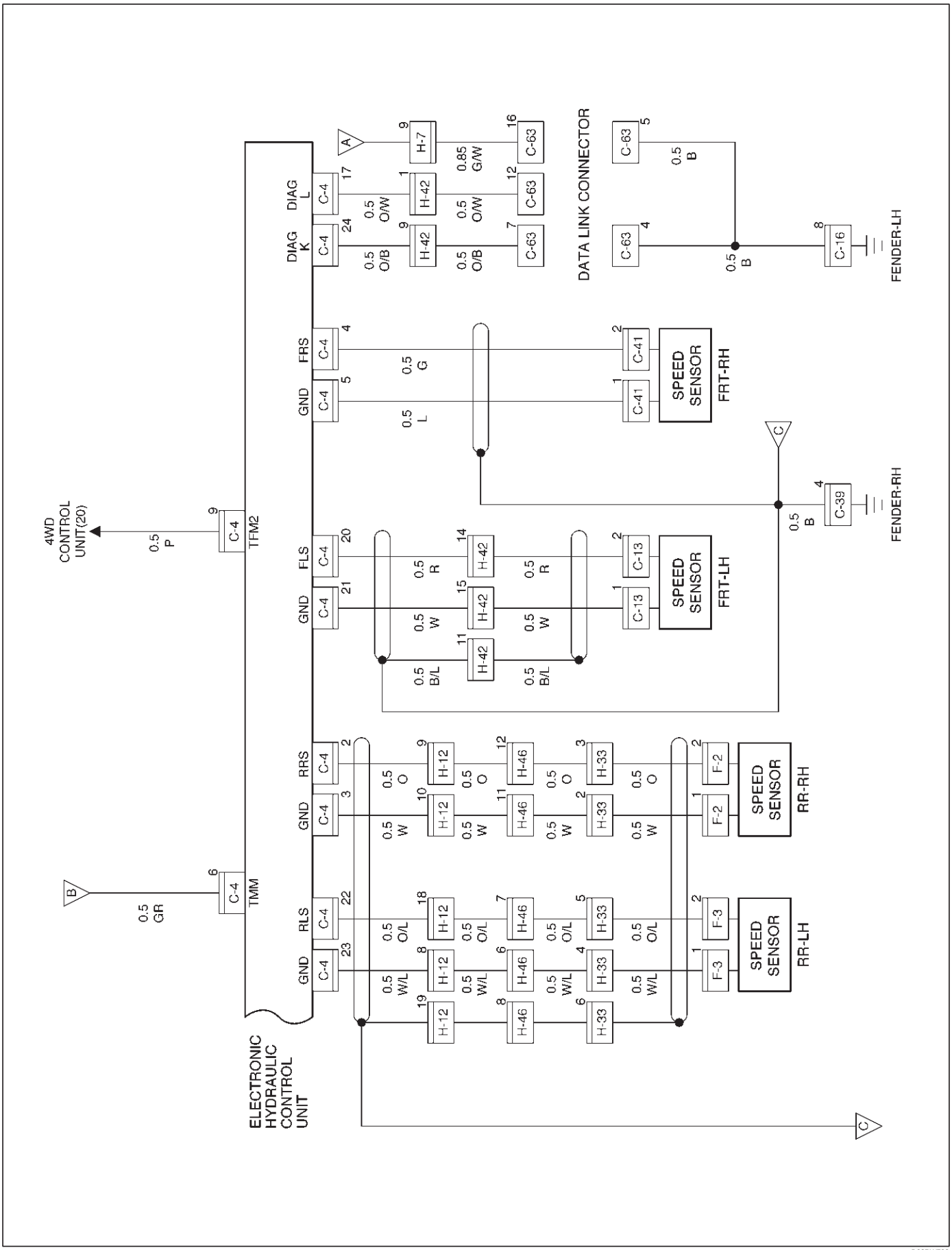

D08RW792

Circuit Diagram (LHD model / 4JG2)

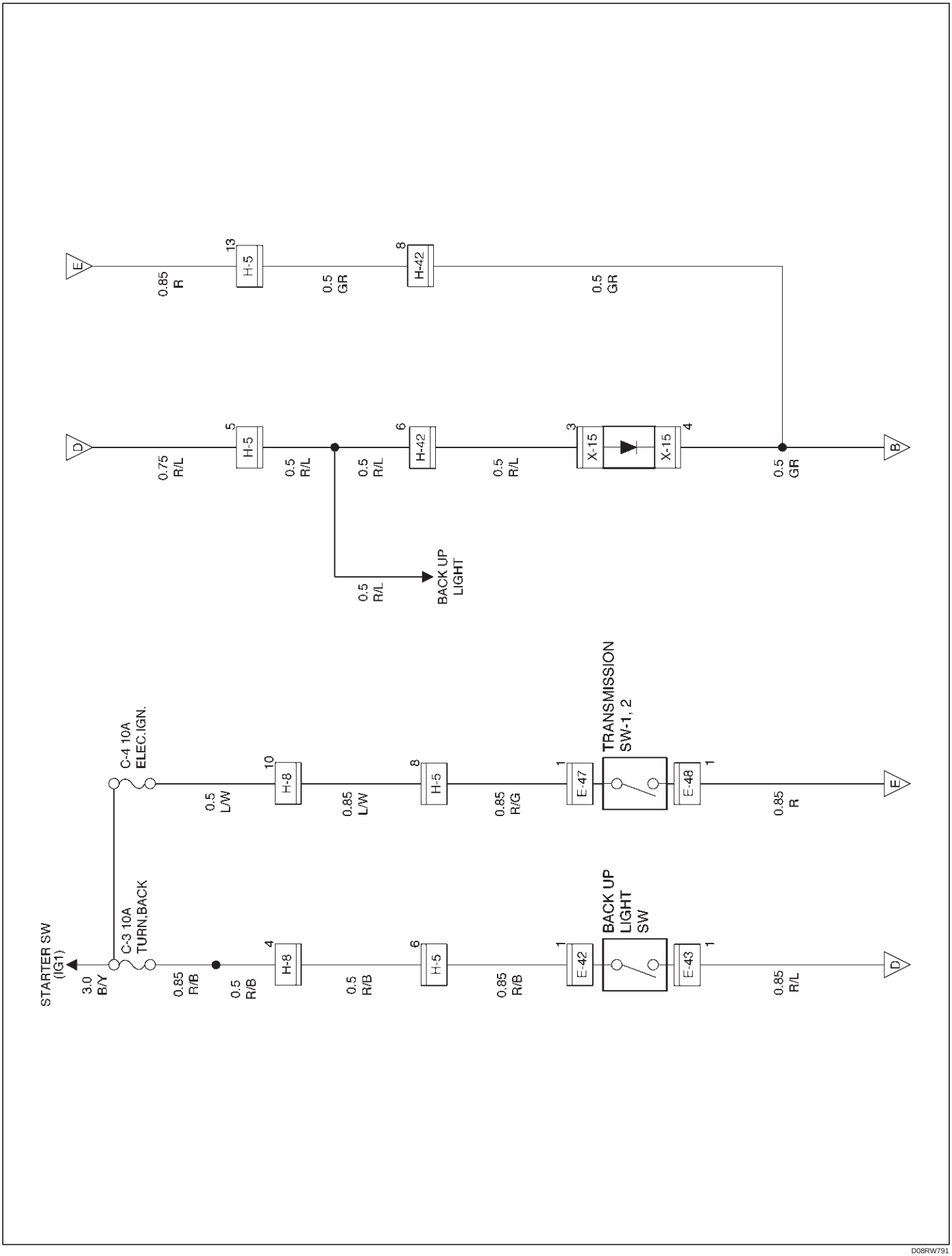

D08RW791

Circuit Diagram (LHD model / 6VD1)

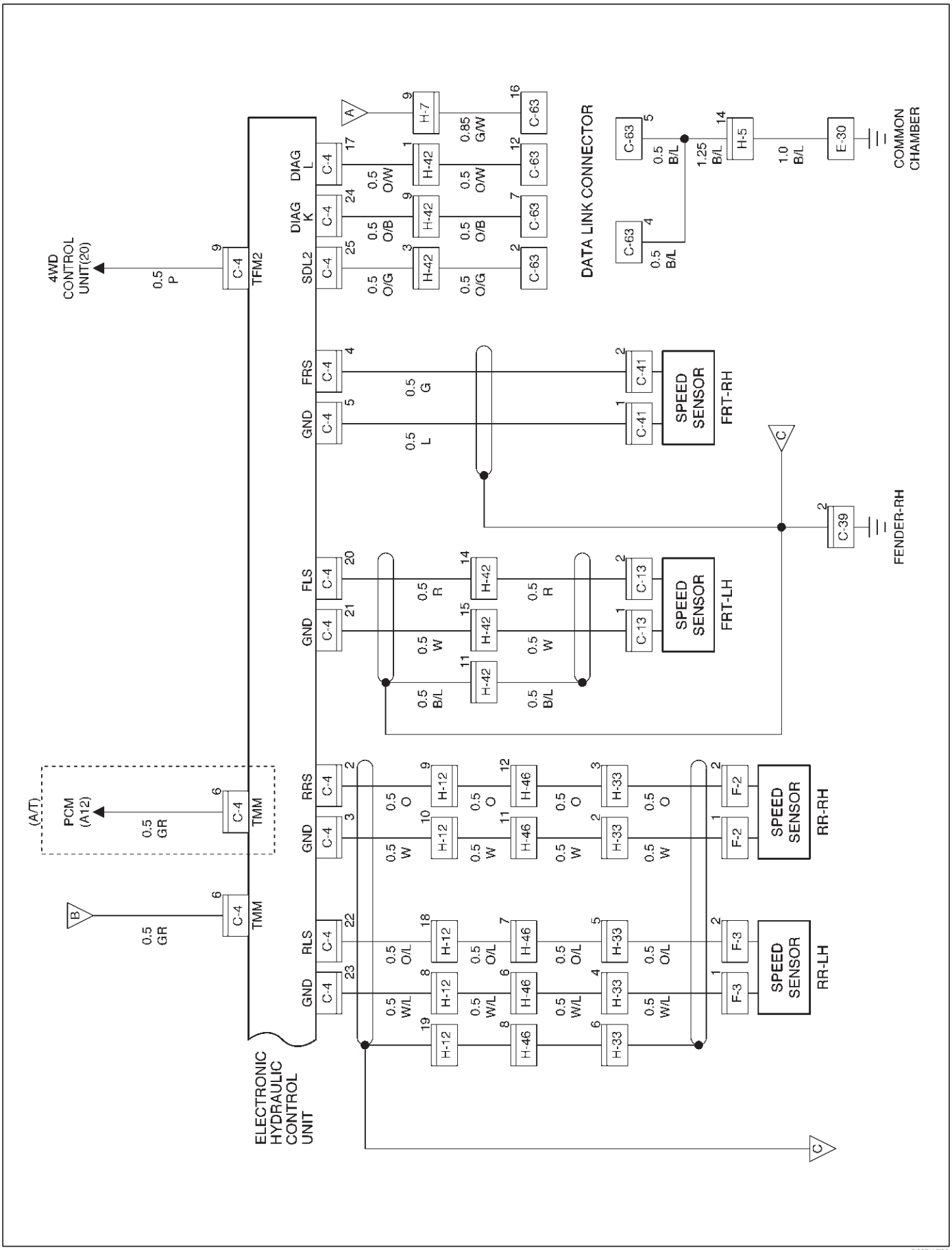

D08RW790

Circuit Diagram (LHD model / 6VD1)

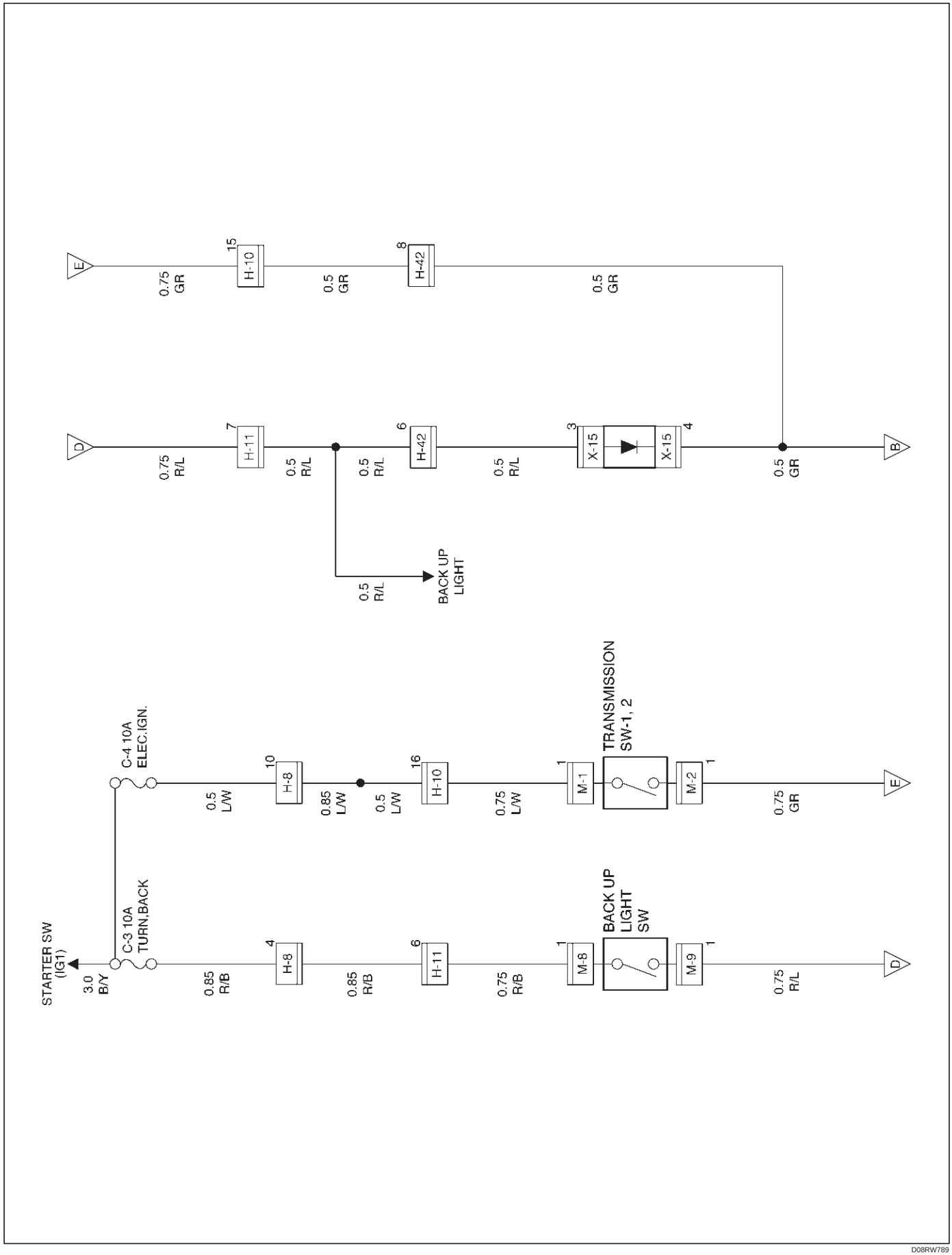

D08RW789

Connector List (LHD model)

No.	Connector face	No.	Connector face
B-13		C-85	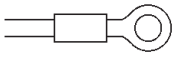
B-14		E-30	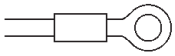
B-25		E-42	
C-4	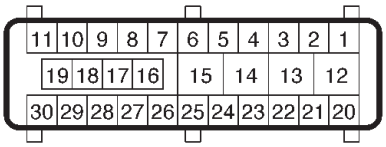	E-43	
C-13	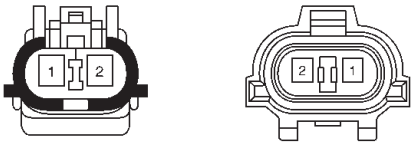	E-47	
C-16		E-48	
C-39		F-2	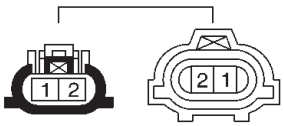
C-41	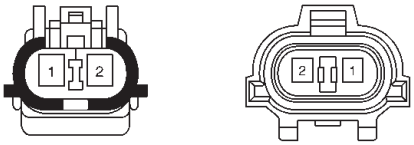	F-3	
C-63	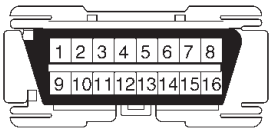	H-5	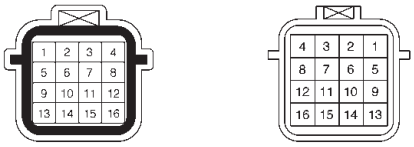

No.	Connector face	No.	Connector face
H-7	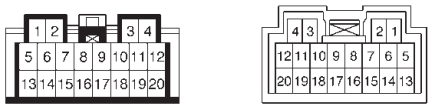	H-33	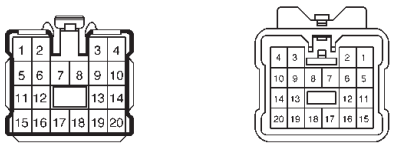
H-8	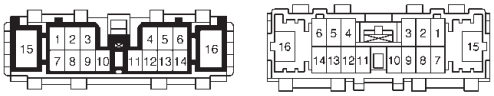	H-42	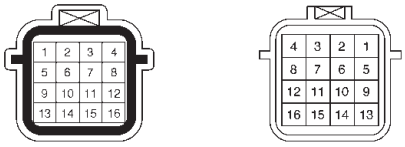
H-10	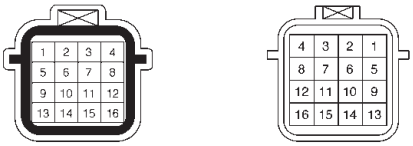	H-46	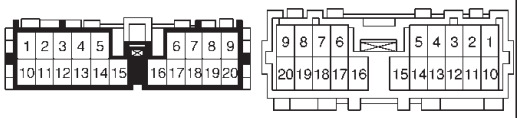
H-11	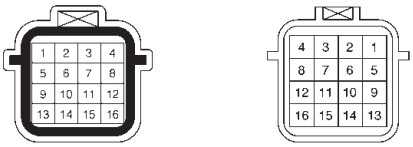	I-9	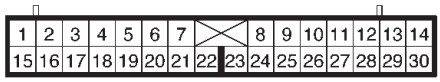
H-12	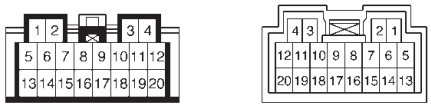	I-10	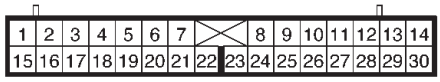
H-13		M-1	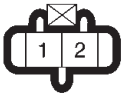
H-15	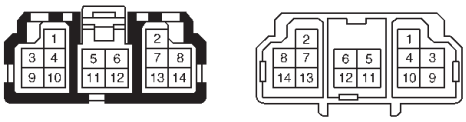	M-8	
H-16	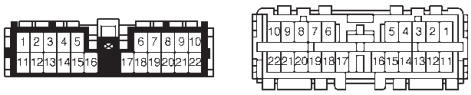		
H-25	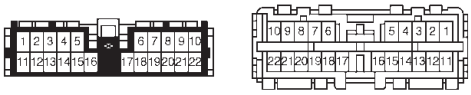		

Part Location (LHD model)

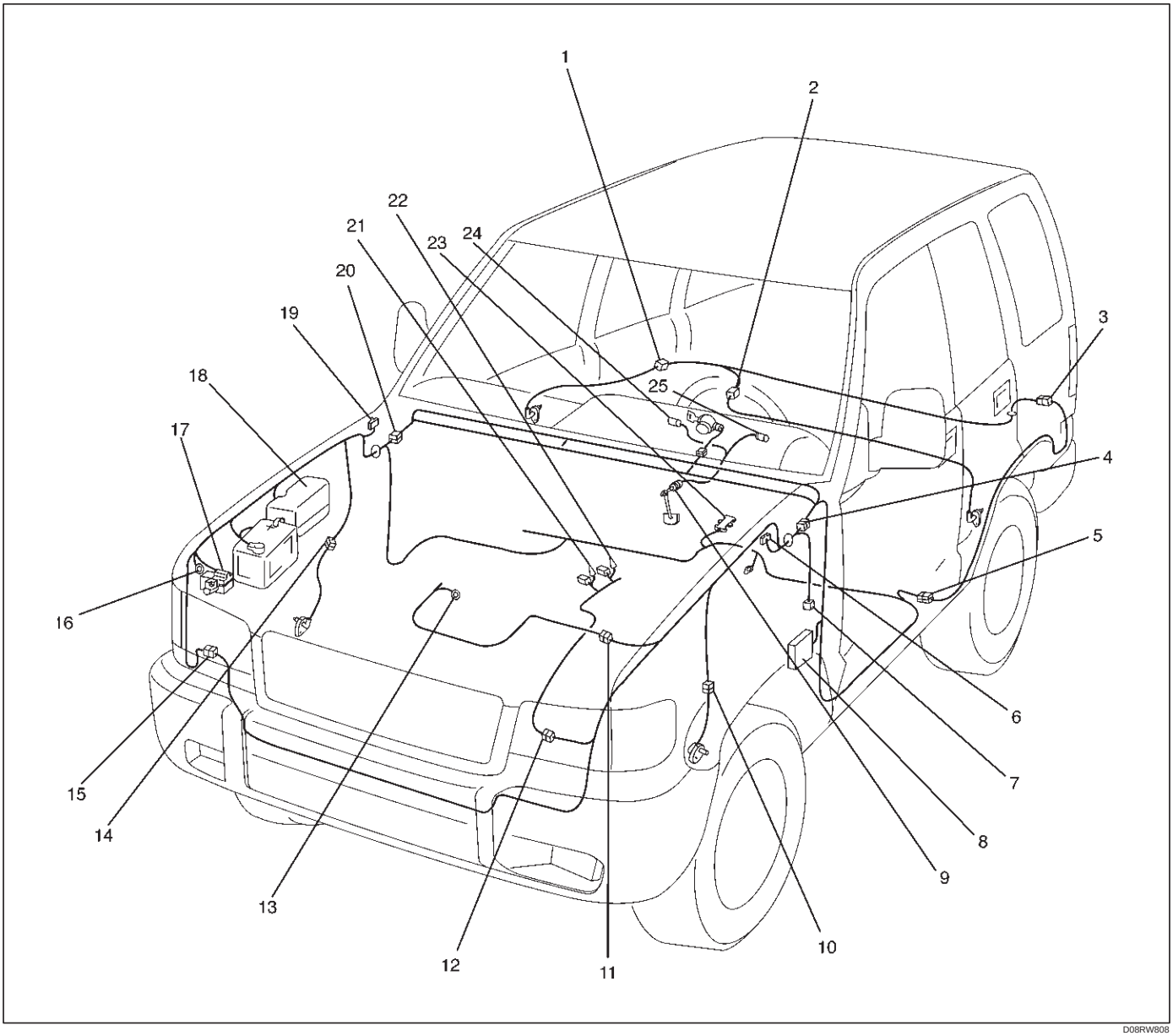

D08RW808

Legend

(1) F–2
(2) F–3
(3) H–33
(4) H–7, H–8, H–25
(5) H–46
(6) C–16
(7) C–63
(8) Fuse Box
(9) B–13 or B–14
(10) C–13
(11) H–5
(12) H–10, H–11
(13) E–30
(14) C–41
(15) H–42
(16) C–85
(17) C–4 (EHCU)
(18) Relay & Fuse Box
(19) C–39
(20) H–12, H–13, H–15, H–16
(21) E–47, E–48, M–1
(22) E–42, E–43, M–8
(23) B–25
(24) I–10
(25) I–9

Circuit Diagram (RHD model / 6VD1 and 4JG2)

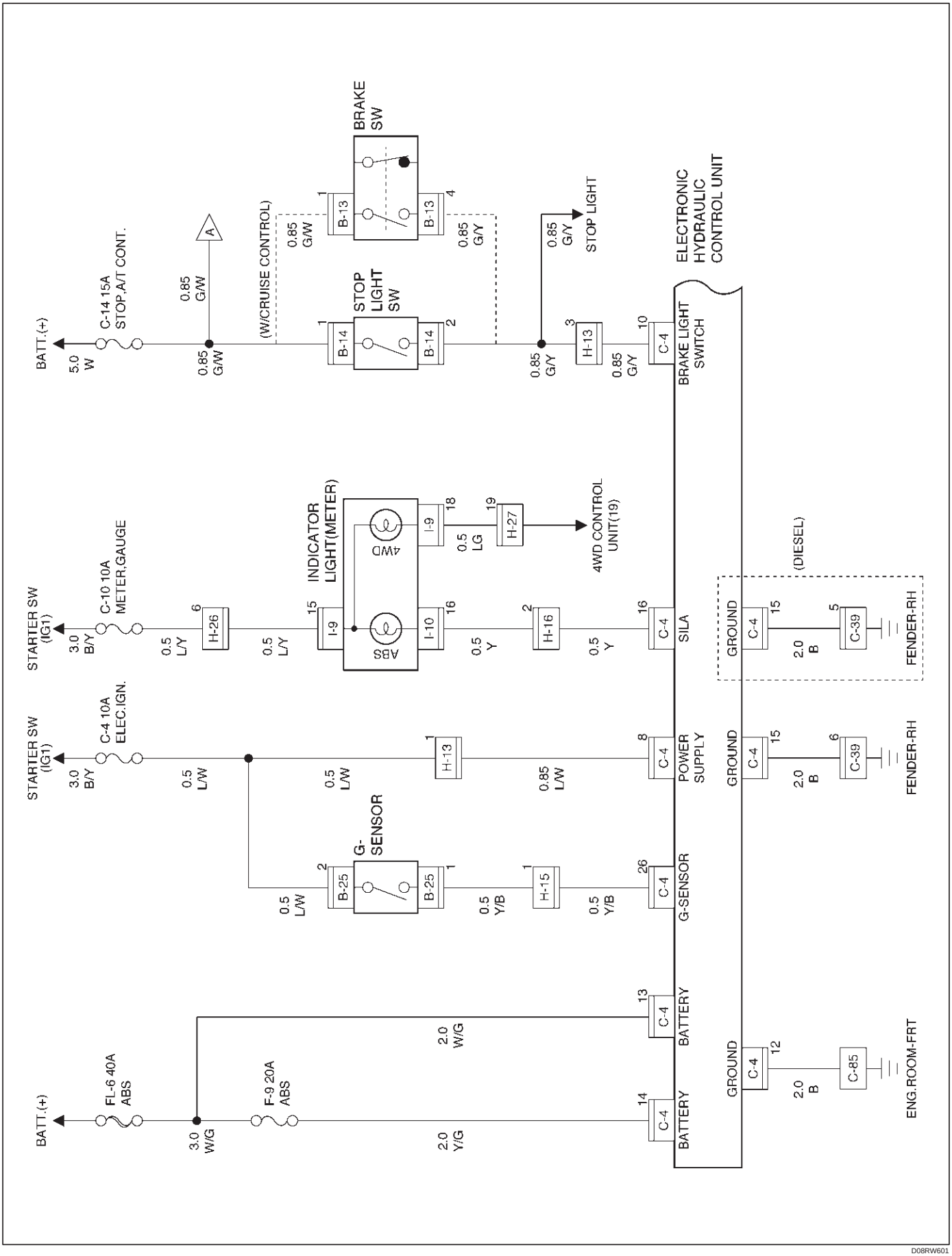

D08RW601

Circuit Diagram (RHD model / 4JG2)

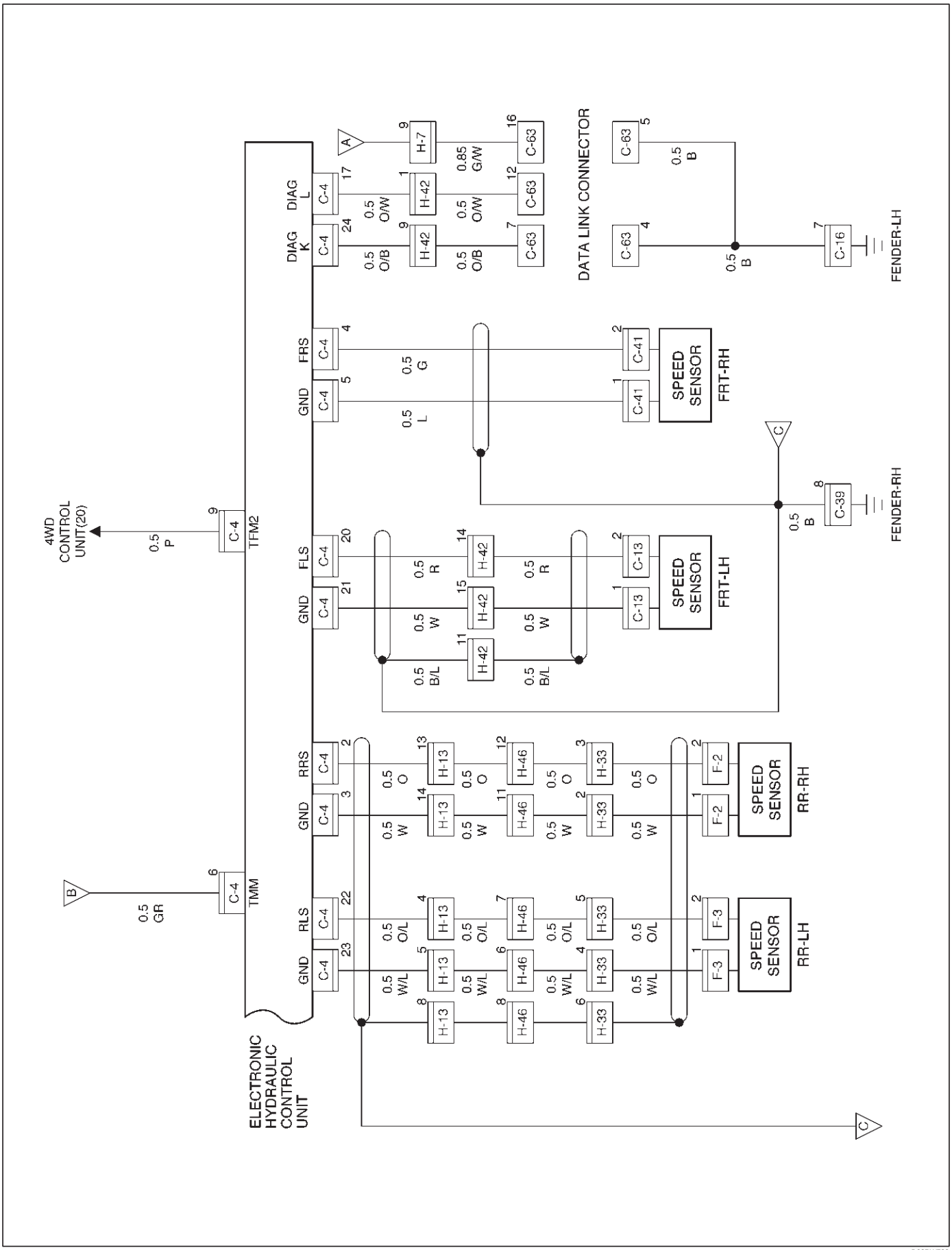

D08RW788

Circuit Diagram (RHD model / 4JG2)

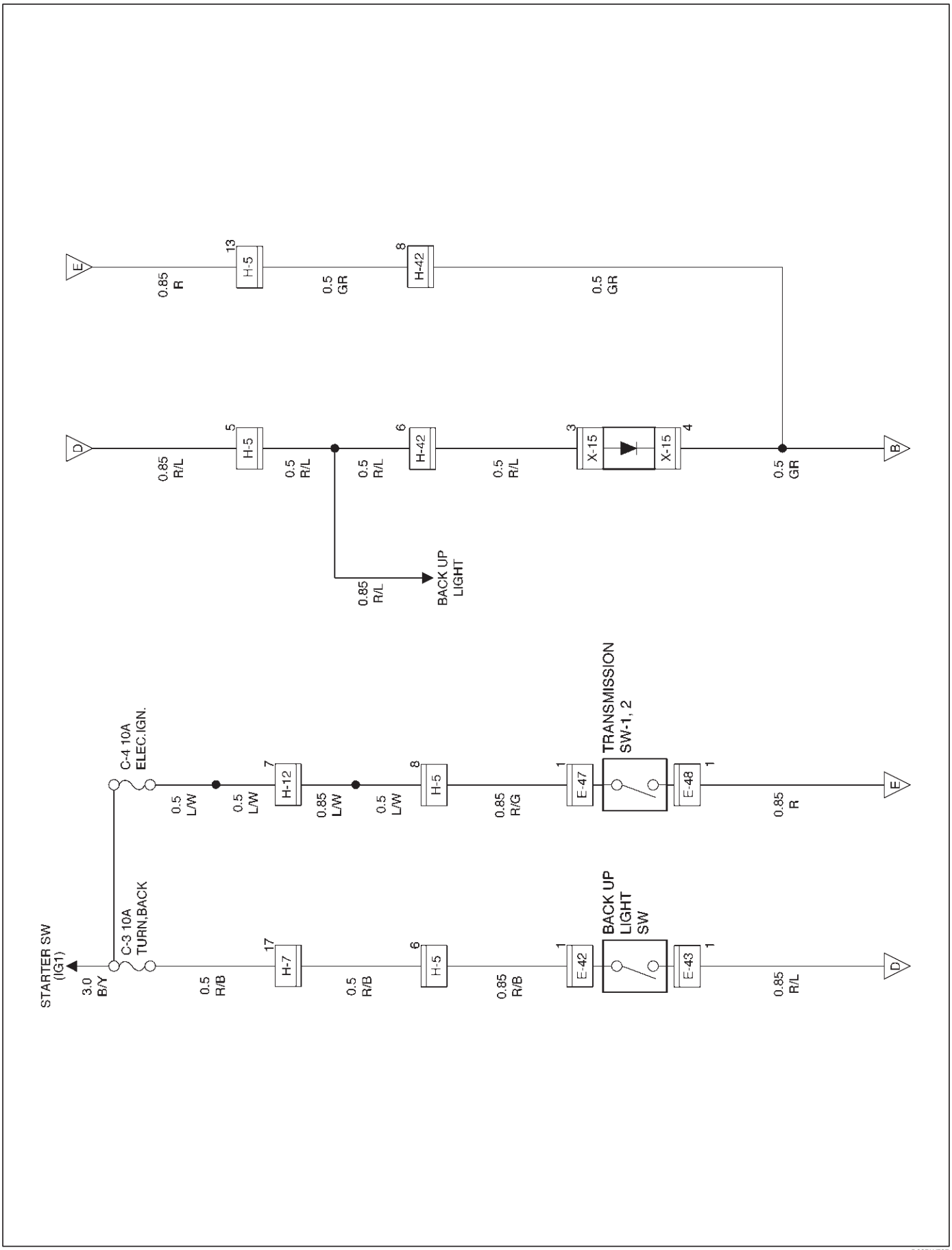

D08RW787

Circuit Diagram (RHD model / 6VD1)

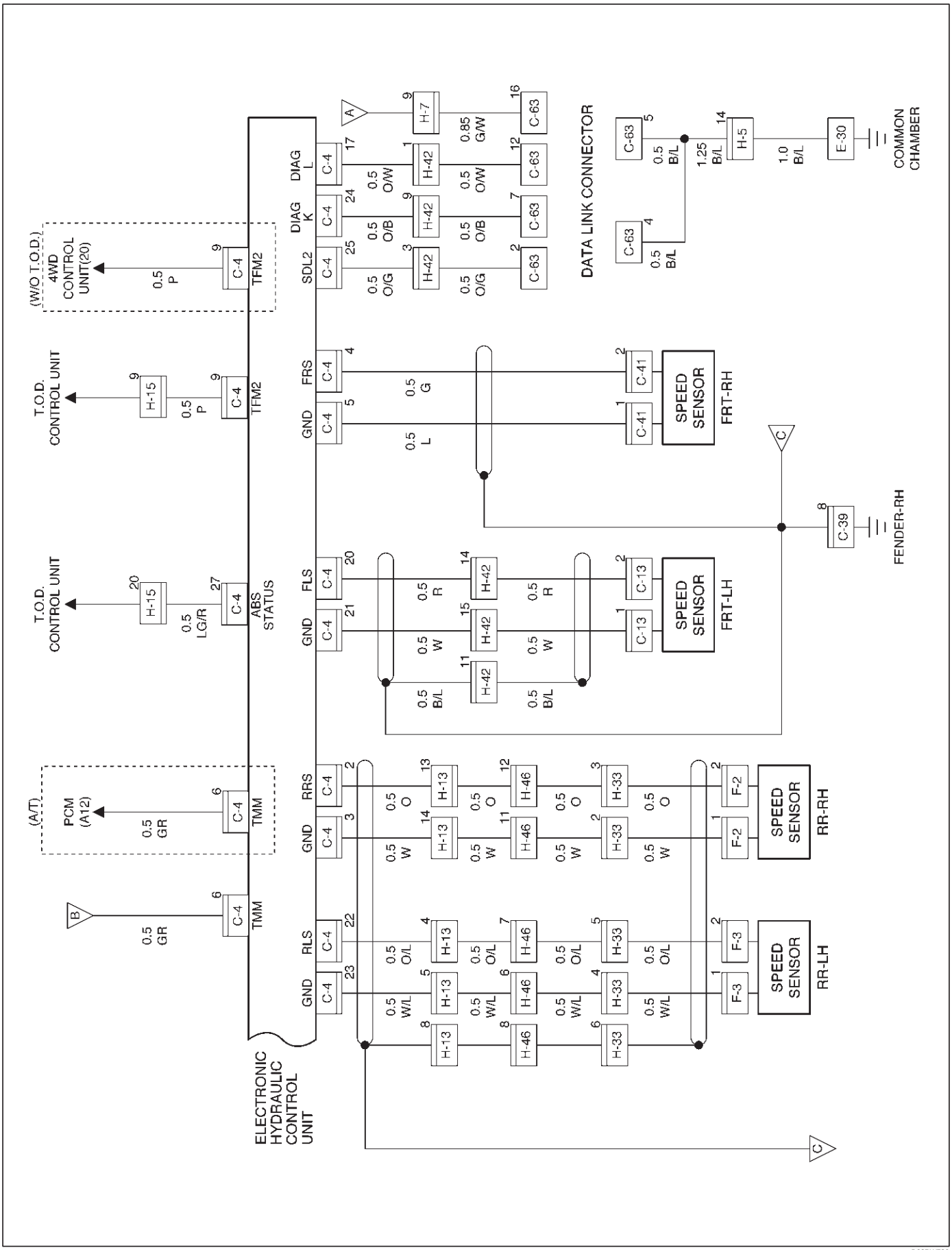

D08RW786

Circuit Diagram (RHD model / 6VD1)

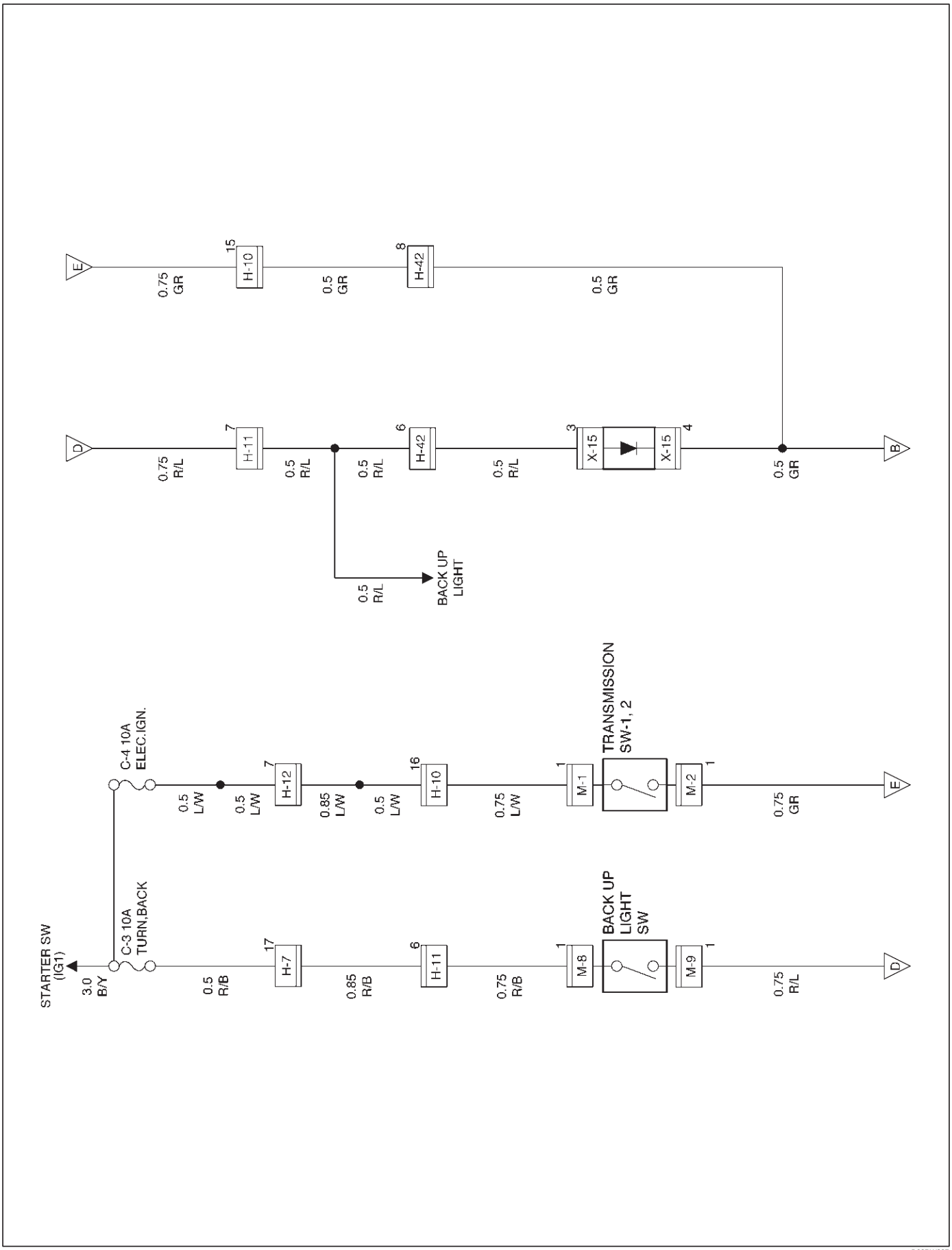

D08RW827

Circuit Diagram (RHD model / 6VE1 and 4JX1)

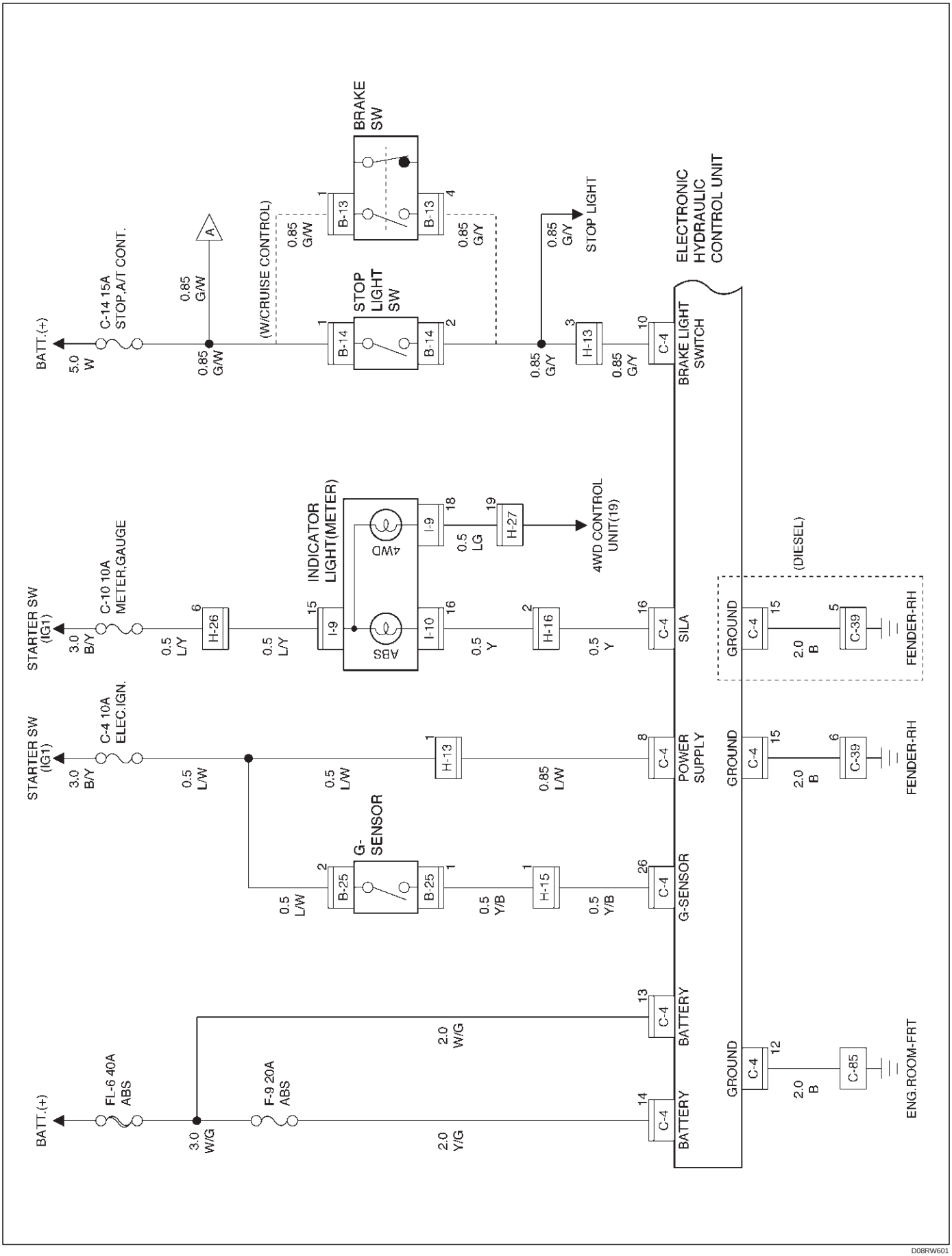

D08RW601

Circuit Diagram (RHD model / 4JX1)

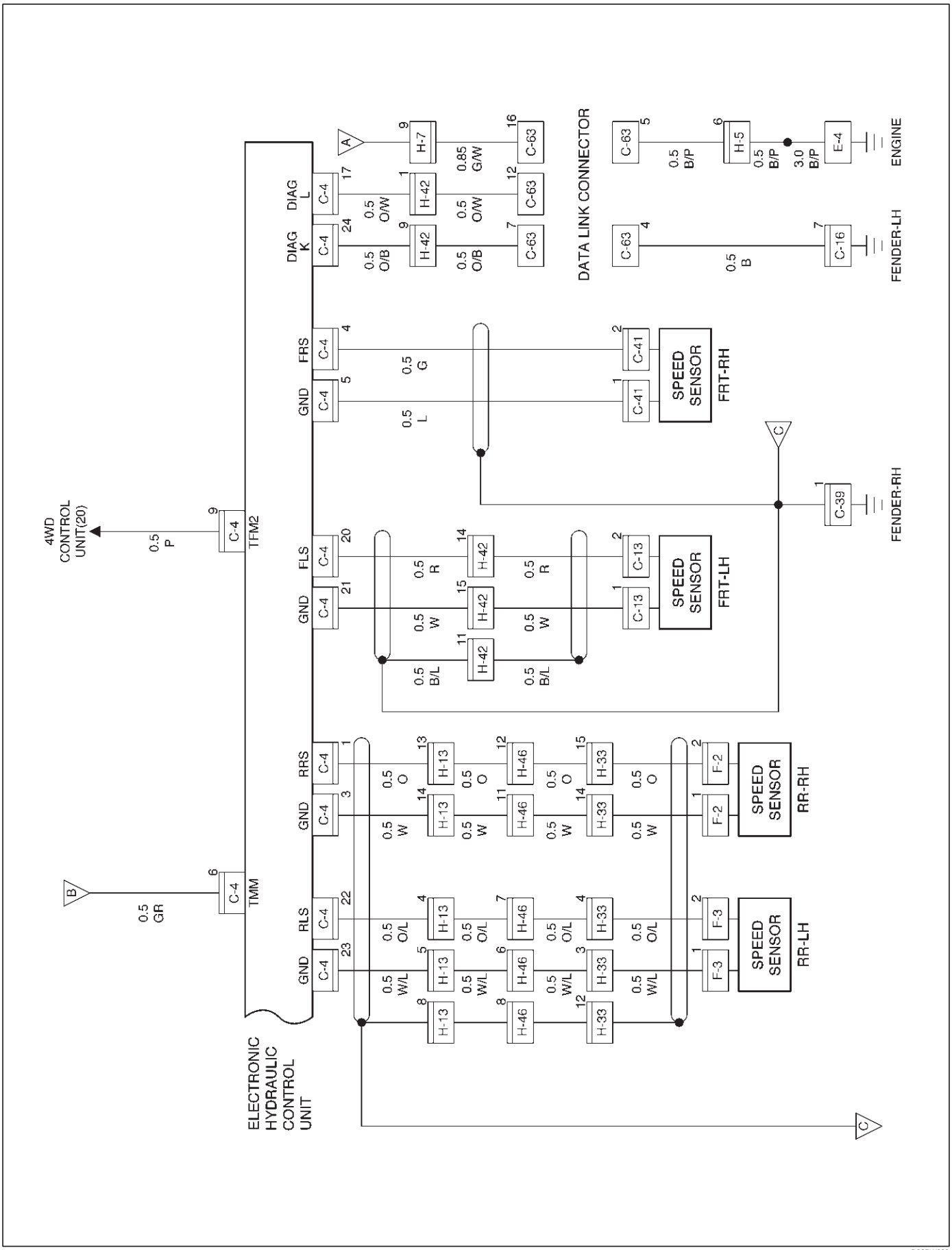

D08RW600

Circuit Diagram (RHD model / 4JX1)

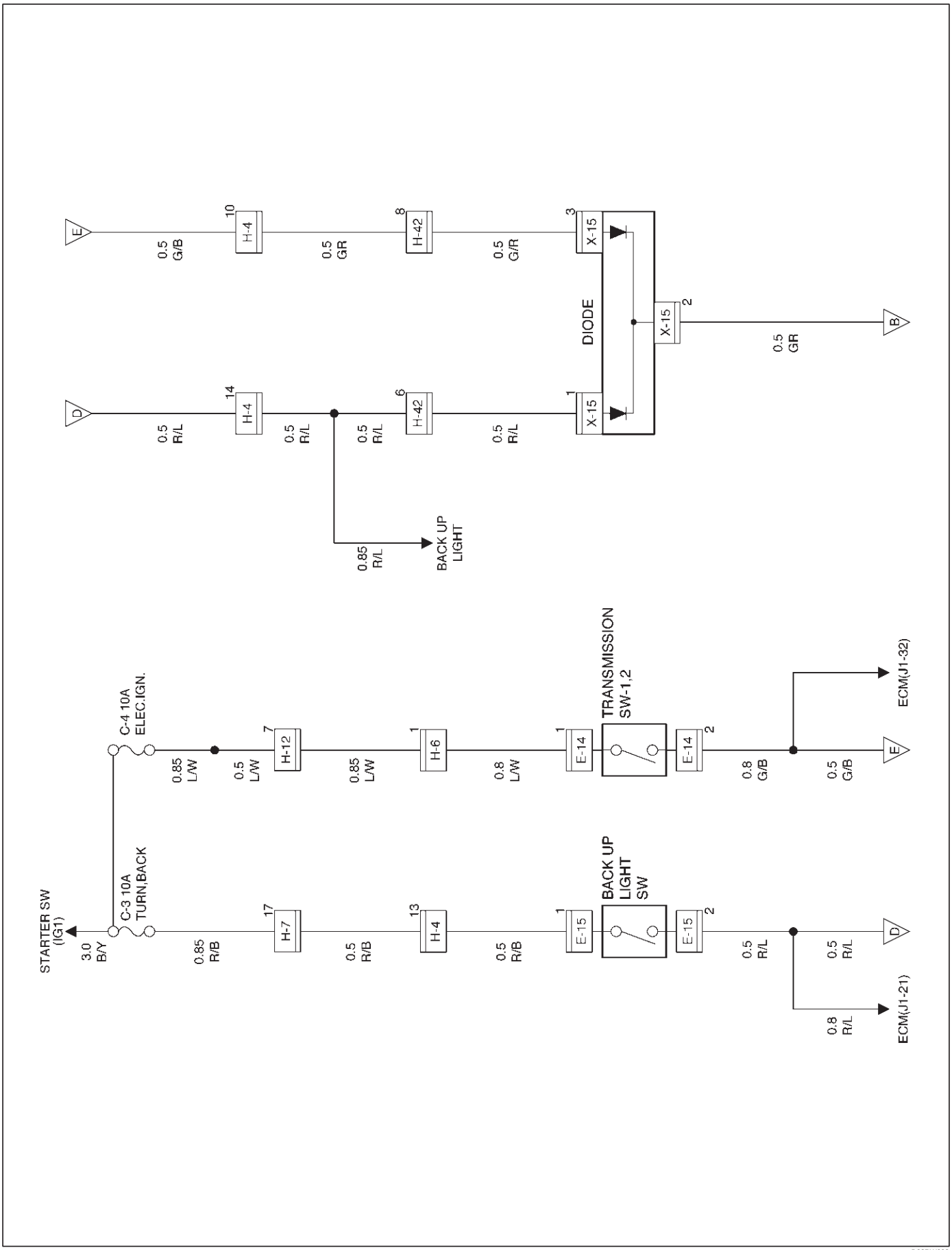

D08RW602

Circuit Diagram (RHD model / 6VE1)

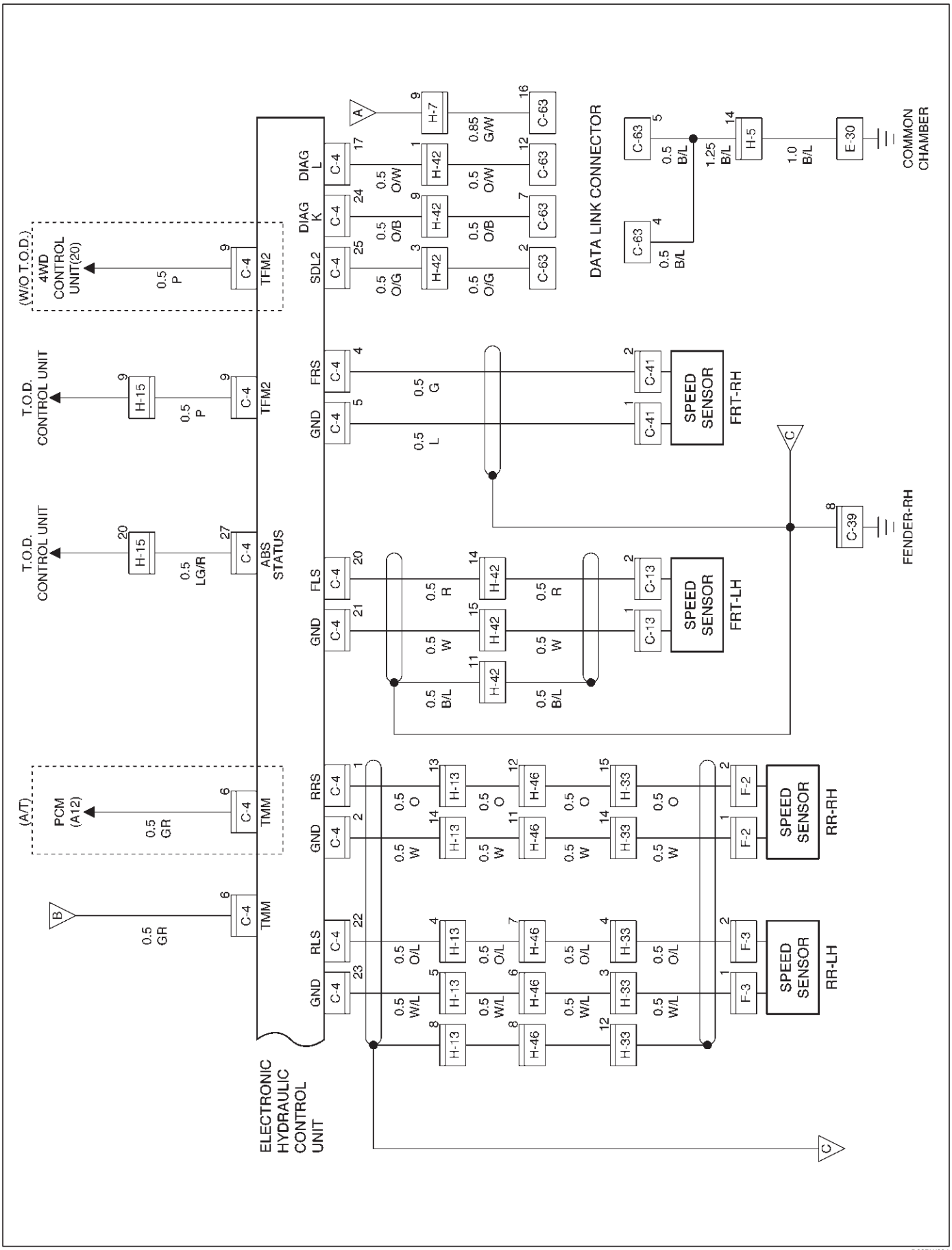

D08RW604

Circuit Diagram (RHD model / 6VE1)

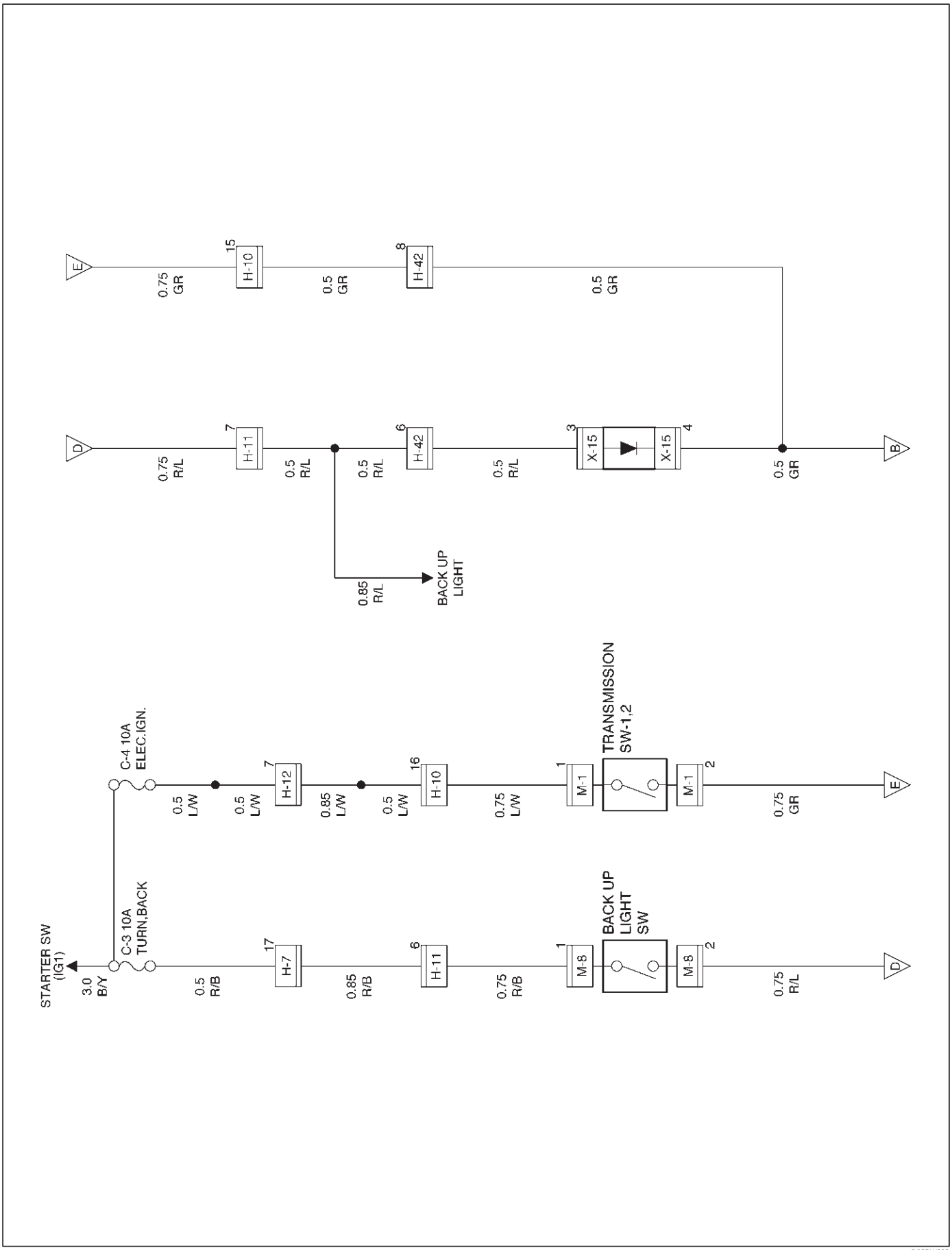

D08RW603

Connector List (RHD model)

No.	Connector face	No.	Connector face
B-13		C-85	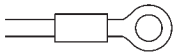
B-14		E-4	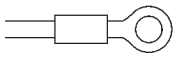
B-25		E-14	
C-4	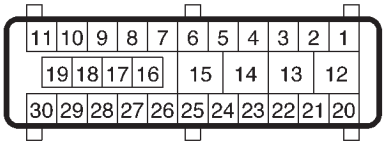	E-15	
C-13	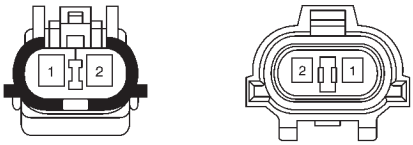	E-30	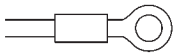
C-16		E-42	
C-39		E-43	
C-41	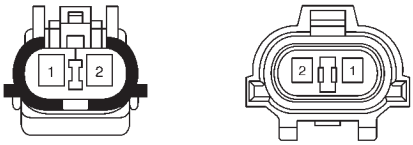	E-47	
C-63	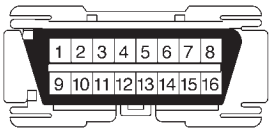	E-48	

No.	Connector face	No.	Connector face
F-2	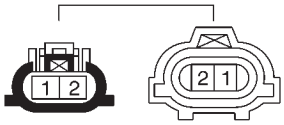	H-13	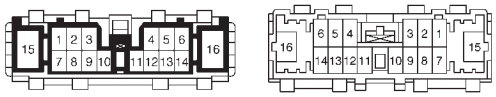
F-3		H-15	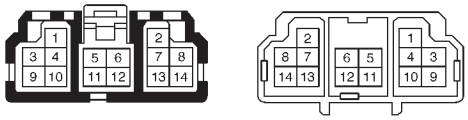
H-4	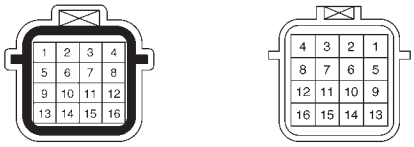	H-16	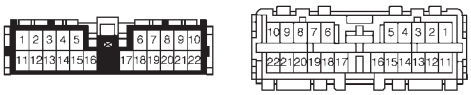
H-5	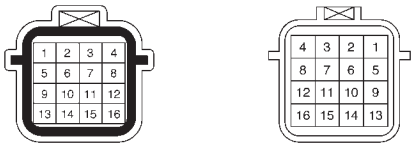	H-26	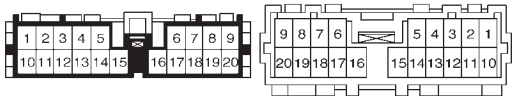
H-6	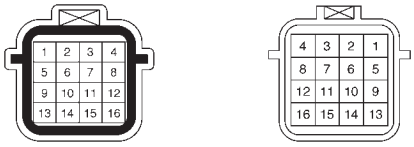	H-27	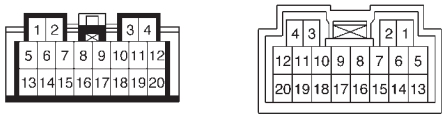
H-7	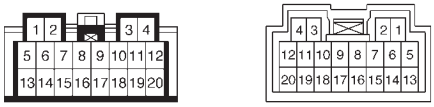	H-33	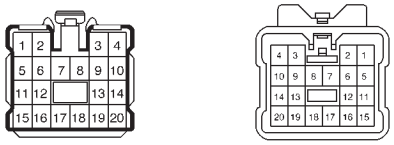
H-10	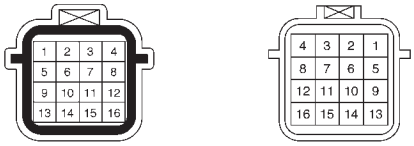	H-41	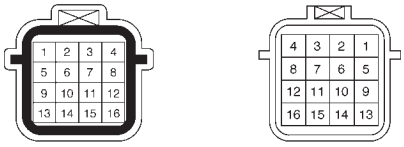
H-11	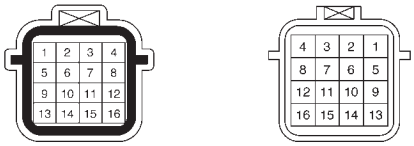	H-42	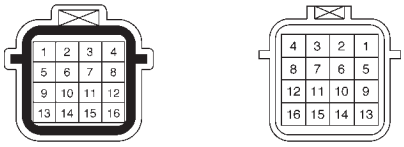
H-12	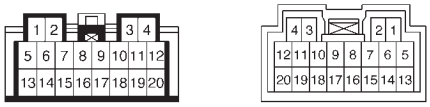	H-46	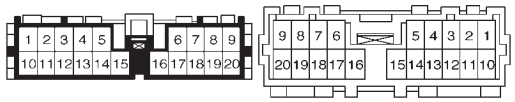

No.	Connector face	No.	Connector face
I-9	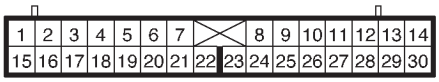		
I-10	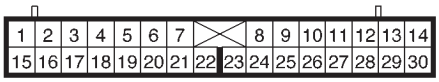		
M-1			
M-8			
X-15	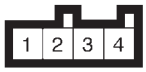		

Part Location (RHD model)

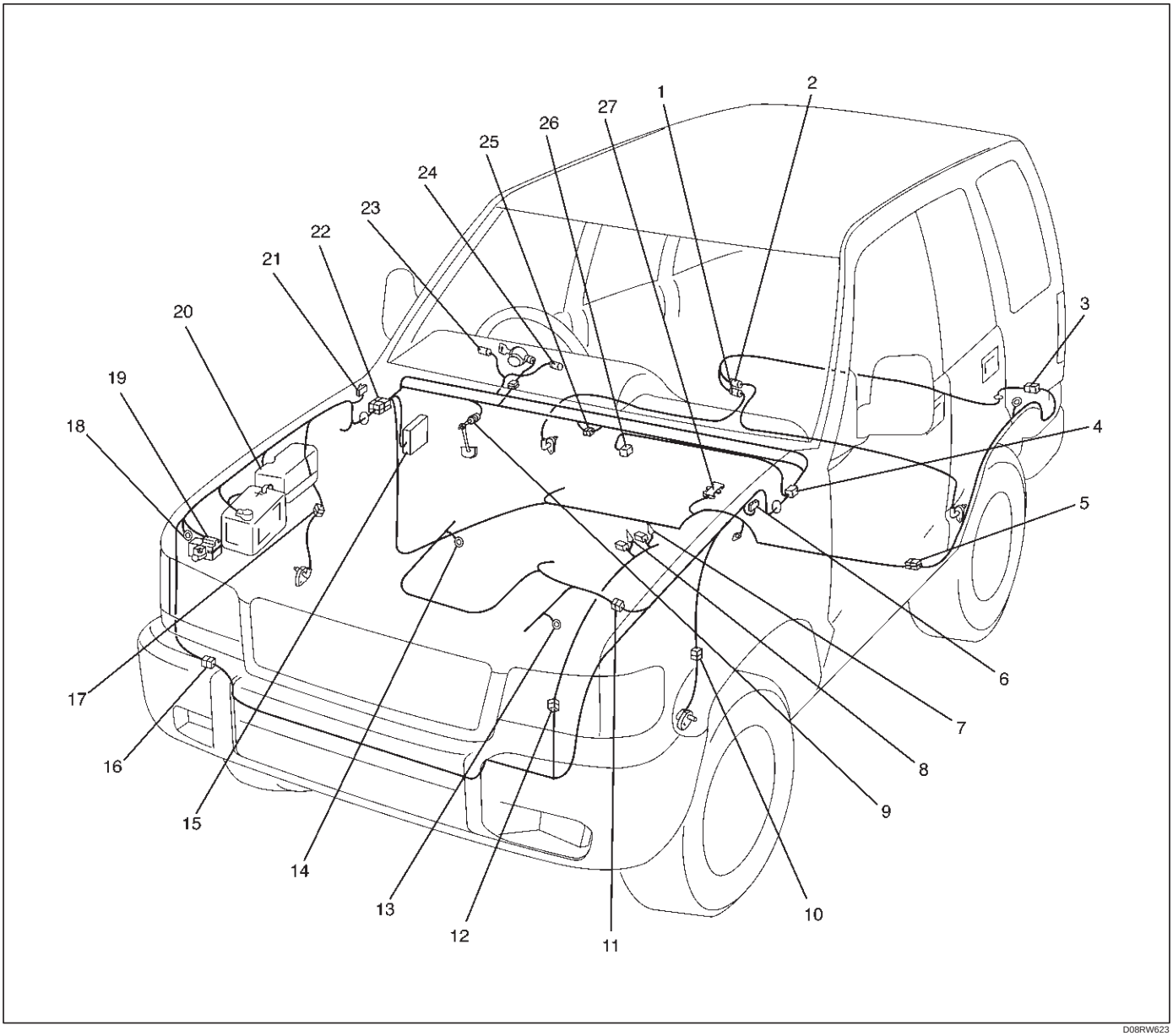

Legend

(1) F–2
(2) F–3
(3) H–33
(4) H–7
(5) H–46
(6) C–16
(7) E–42, E–43, M–8
(8) E–47, E–48, M–1
(9) B–13 or B–14
(10) C–13
(11) H–4, H–5, H–6
(12) H–10, H–11
(13) E–4 (4JX1)
(14) E–30 (4GJ2, 6VD1/6VE1)
(15) Fuse Box
(16) H–42
(17) C–41
(18) C–85
(19) C–4 (EHCU)
(20) Relay & Fuse Box
(21) C–39
(22) H–13, H–15, H–16, H–26, H–27
(23) I–10
(24) I–9
(25) H–12
(26) C–63
(27) B–25

Symptom Diagnosis

The symptoms that cannot be indicated by the warning light can be divided in the following five categories:

1. ABS works frequently but vehicle does not decelerate.
2. Uneven braking occurs while ABS works.
3. The wheels lock during braking.
4. Brake pedal feel is abnormal.
5. Braking sound (from EHCU) is heard while not braking.

These are all attributable to problems which cannot be detected by EHCU self-diagnosis. Use the customer complaint and a test to determine which symptom is present. Then follow the appropriate flow chart listed below.

No.	Symptom	Diagnostic Flow Charts	
		Without TECH 2	With TECH 2
1	ABS works frequently but vehicle does not decelerate.	Chart A–1	Chart TA–1
2	Uneven braking occurs while ABS works.	Chart A–2	—
3	The wheels are locked.	Chart A–3	Chart TA–3
4	Brake pedal feel is abnormal.	Chart A–4	—
5	Braking sound (from EHCU) is heard while not braking.	Chart A–5	Chart TA–5

Chart A–1 ABS Works Frequently But Vehicle Does Not Decelerate

Step	Action	Yes	No
1	1. Turn key off. 2. G Sensor connector and EHCU connector disconnected. Is there continuity between EHCU terminals 26 and 8?	Go to Step 2	Go to Step 3
2	Connect EHCU connector. Is there continuity between the G sensor and the EHCU?	Go to Step 3	Repair circuit. Go to Step 1
3	Is the G sensor normal? (Refer to chart B-5)	Go to Step 4	Replace G sensor. Go to Step 11
4	Is braking force distribution normal between the front and rear of the vehicle?	Go to Step 5	Repair brake parts. Go to Step 11
5	Are axle parts installed normally?	Go to Step 6	Repair axle parts. Go to Step 11
6	Is there play in each wheel speed sensor?	Repair wheel speed sensor. Go to Step 11	Go to Step 7
7	Is there damage, or powered iron sticking to each wheel speed sensor/sensor ring?	Replace sensor or sensor ring. Go to Step 11	Go to Step 8
8	Is the output of each wheel speed sensor normal? (Refer to chart C-1 or TC-1)	Go to Step 9	Replace wheel speed sensor or repair harness. Go to Step 11
9	Is the input of transmission normal? (Refer to chart C-2 or TC-2)	Go to Step 10	Replace switch or repair harness. Go to Step 11

Step	Action	Yes	No
10	Is the input of 4WD controller normal?	Go to Step 11	Replace controller or repair harness. Go to Step 11
11	Reconnect all components and ensure all components are properly mounted. Was this step finished?	Repeat the “Basic diagnostic flow chart.”	Go to Step 11

Chart TA-1 ABS Works Frequently But Vehicle Does Not Decelerate (Use TECH 2)

Step	Action	Yes	No
1	1. Connect TECH 2. 2. Make sure of the output conditions of each wheel speed sensor by mode “F1: Data Display”. Is the output of each sensor normal?	Go to Step 2	Replace wheel speed sensor. Go to Step 3
2	Return to Chart A-1. Was the Chart A-1 finished?	Go to Step 3	Go to Step 2
3	Reconnect all components, ensure all components are properly mounted. Was this step finished?	Repeat the “Basic diagnostic flow chart.”	Go to Step 3

Chart A-2 Uneven Braking Occurs While ABS Works

Step	Action	Yes	No
1	Is there play in each sensor?	Repair. Go to Step 5	Go to Step 2
2	Is there damage or powdered iron sticking to each sensor/sensor ring?	Repair. Go to Step 5	Go to Step 3
3	Is the output of each sensor normal? (Refer to chart C-1 or TC-1)	Go to Step 4	Replace sensor or repair harness. Go to Step 5
4	Is brake pipe connecting order correct?	Replace EHCU. Go to Step 5	Reconnect brake pipe correctly. Go to Step 5
5	Reconnect all components, ensure all components are properly mounted. Was this step finished?	Repeat the “Basic diagnostic flow chart.”	Go to Step 5

Chart A-3, TA-3 The Wheels Are Locked

Step	Action	Yes	No
1	Is ABS working?	Go to Step 2	Go to Step 6
2	Is vehicle speed under 10 km/h (6mph)?	Normal.	Go to Step 3
3	Is sensor output normal? (Chart C-1 or TC-1)	Go to Step 4	Replace sensor or repair harness. Go to Step 9
4	Is transmission input normal? (Chart C-2 or TC-2)	Go to Step 5	Replace SW or repair harness. Go to Step 9

Step	Action	Yes	No
5	Is front 4WD controller normal?	Replace EHCU. Go to Step 9	Replace 4WD controller or repair harness. Go to Step 9
6	Is transmission input normal? (Chart C-2 or TC-2)	Go to Step 7	Replace SW or repair harness Go to Step 9
7	Is front 4WD controller normal?	Go to Step 8	Replace 4WD controller or repair harness. Go to Step 9
8	Is hydraulic unit grounded properly?	Replace EHCU. Go to Step 9	Correct. Go to Step 9
9	Reconnect all components, ensure all components are properly mounted. Was this step finished?	Repeat the “Basic diagnostic flow chart.”	Go to Step 9

Chart A-4 Brake Pedal Feed Is Abnormal

Step	Action	Yes	No
1	Is the stop light actuated when the brake pedal is depressed?	Go to Step 2	Go to Step 3
2	1. Turn the ignition switch off. 2. Disconnected EHCU connector. 3. Measure voltage between the EHCU connector terminal 10 and 15 when brake pedal is depressed. Is the voltage equal to the battery voltage?	Go to Step 4	Harness NG between brake SW and EHCU. Go to Step 7
3	Is stop light fuse C-14 normal?	Go to Step 5	Replace fuse C-14. Go to Step 7
4	Is there continuity between EHCU connector terminals, 12 and 15 to body ground?	Go to Step 6	Repair body grounded harness. Go to Step 7
5	Is the brake SW normal?	Repair stop light harness. Go to Step 7	Replace brake SW. Go to Step 7
6	Is the check harness/connector for suspended disconnection?	Hydraulic system leakage or air entry (Refer to servicing “Leakage or brake fluid”) Go to Step 7	Repair harness. Go to Step 7
7	Reconnect all components and ensure all components are properly mounted. Was this step finished?	Repeat the “Basic diagnostic flow chart.”	Go to Step 7

Chart A-5, TA-5 Braking Sound (From EHCU) Is Heard While Not Braking

Step	Action	Yes	No
1	Is this the first time the vehicle is being driven after starting the engine?	It is self checking sound. Normal.	Go to Step 2
2	Is vehicle speed under 10 km/h (6 mph)?	It is self checking sound. Normal.	Go to Step 3
3	Check for the following condition: ● At the time of shift down or clutch operation. ● At the time of low μ drive (ice or snow road) or rough road drive. ● At the time of high-speed turn. ● At the time of passing curb. ● At the time of operating electrical equipment switches. ● At the time of racing the engine (over 5000 rpm). Did it occur under any one condition above?	ABS may sometime be actuated even when brake pedal is not applied.	Go to Step 4
4	Is there play in each sensor/wheel speed sensor rings?	Go to Step 5	Repair. Go to Step 7
5	Damage or powdered iron sticking to each sensor/wheel speed sensor ring?	Go to Step 6	Repair. Go to Step 7
6	Is each sensor output normal?(Refer to chart C-1 or TC-1).	Check harness/ connector for suspected disconnection. If no disconnection is found, replace EHCU. Go to Step 7	Repair. Go to Step 7
7	Reconnect all components, ensure all components are properly mounted. Was this step finished?	Repeat the “Basic diagnostic flow chart.”	Go to Step 7

Diagnostic Trouble Codes

Choose and trace an appropriate flowchart by the numbers listed below to find fault and repair.

Code	Item	Diagnosis	Chart No.
12	Start Code	Normal	—
14	EHCU Function	Abnormality in input/output, operational and control circuits	B-2
15	Power Voltage Drop		B-3
16	CLASS–2 Communication Line Abnormality		B-4
21	G-sensor	Wiring disconnection	B-5
23	Transmission Input	Input abnormality	B-6
24	Transfer Monitor		B-7
32	Motor & Motor Relay	Shorted or disconnected coil	B-8
35	Valve Relay	Shorted or disconnected coil/wiring	B-9
41	FL Holding Solenoid Valve	Shorted or disconnected coil/wiring	B-10
42	FL Decompression Solenoid Valve	Shorted or disconnected coil/wiring	B-11
43	FR Holding Solenoid Valve	Shorted or disconnected coil/wiring	B-12
44	FR Decompression Solenoid Valve	Shorted or disconnected coil/wiring	B-13
45	Rear Holding Solenoid Valve	Shorted or disconnected coil/wiring	B-14
46	Rear Decompression Solenoid Valve	Shorted or disconnected coil/wiring	B-15
51	FL Wheel Speed Sensor	Disconnected coil/wiring	B-16
52	FR Wheel Speed Sensor	Disconnected coil/wiring	B-17
53	RL Wheel Speed Sensor	Disconnected coil/wiring	B-18
54	RR Wheel Speed Sensor	Disconnected coil/wiring	B-19
61	FL Wheel Speed Sensor	Shorted coil/wiring	B-20
62	FR Wheel Speed Sensor	Shorted coil/wiring	B-21
63	RL Wheel Speed Sensor	Shorted coil/wiring	B-22
64	RR Wheel Speed Sensor	Shorted coil/wiring	B-23
65	Sensor Signal Input	Wrong number of teeth	B-24

Diagnosis By “ABS” Warning Light Illumination Pattern

In the event that there is abnormality in the “ABS” warning light illumination pattern while the key is in the ON position or if the warning light is actuated during driving, trouble should be diagnosed on a illumination pattern basis as follows:

No.	Condition	“ABS” Warning Light Illumination Pattern	Diagnostic
1	Warning light is actuated normally	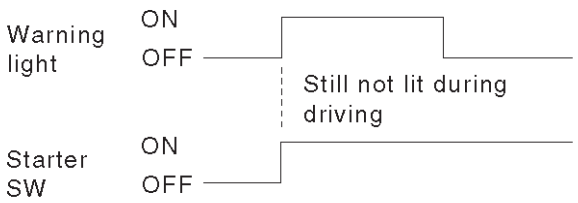	Normal
2	Warning light is not lit	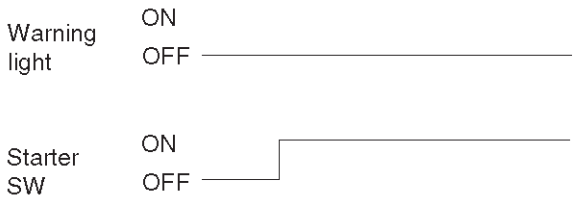	Warning light lighting circuit trouble→Go to Chart B-1
3	Warning light remains ON	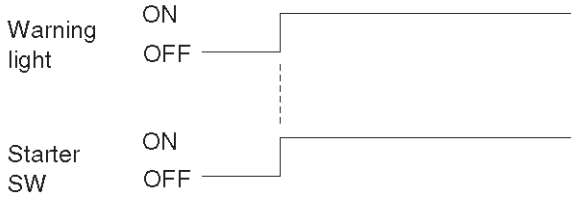	Diagnostic trouble codes are stored. Display diagnostic trouble codes and diagnose on a code basis according to the flow charts.
4	Warning light is actuated while driving	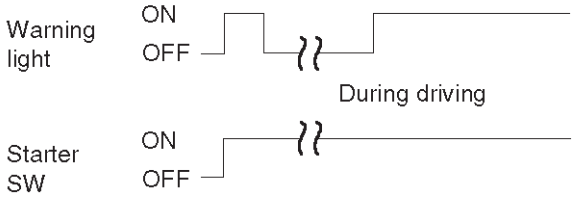	Diagnostic trouble codes are stored. Display diagnostic trouble codes and diagnose on a code basis according to the flow charts.

Diagnostic Trouble Codes (DTCs)

When the warning light in the meter remains ON, the EHCU stores the fault identification and disables the ABS.

1. How to display and erase DTCs:

NOTE:

- If DTCs are not displayed, harness C-4 connector terminal 30 and I-10 connector terminal 2 may be disconnected. Repair the harness and try DTC display again.
- DTCs can be displayed also by TECH 2. Select mode “F0: Diagnostic Trouble Codes” from Application Menu.

1. How to start DTC display:
   - Confirm that the vehicle has come to a complete stop (with the wheels standing still) and that the brake pedal is not depressed. (Unless these two conditions are satisfied, DTC display cannot be started.)
   - With IGN OFF, connect #12 terminal with #4 terminal or # 5 terminal (GND) . Then turn IGN ON.

The DLC is located behind the center console

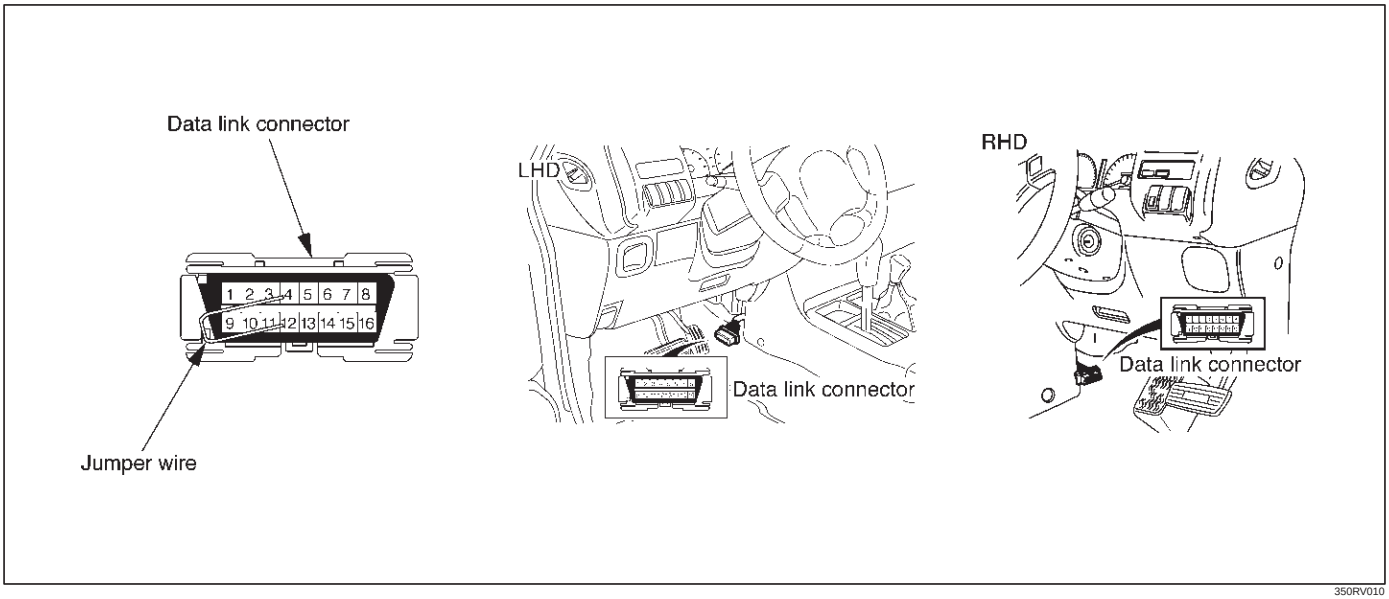

350RV010

- Keep #12 terminal connected with #4 terminal or # 5 terminal (GND) during DTC display. (If #12 terminal is separated from #4 terminal or # 5 terminal (GND) during display, display will stop.)

2. DTC display:
   - DTC is displayed by blinking warning light.
   - Double-digit display.
   - First, normal DTC 12 is displayed three times and then any other DTCs are displayed three times. (If no other DTCs have been stored, the display of DTC 12 will be repeated.)
3. How to erase code:
   - Conduct brake switch ON/OFF operation 6 or more times within 3 seconds of self-diagnosis startup.
   - The code cannot be erased if more than 3 seconds have passed since self-diagnosis startup, or if self-diagnosis has started with brake switched on (brake pedal depressed).

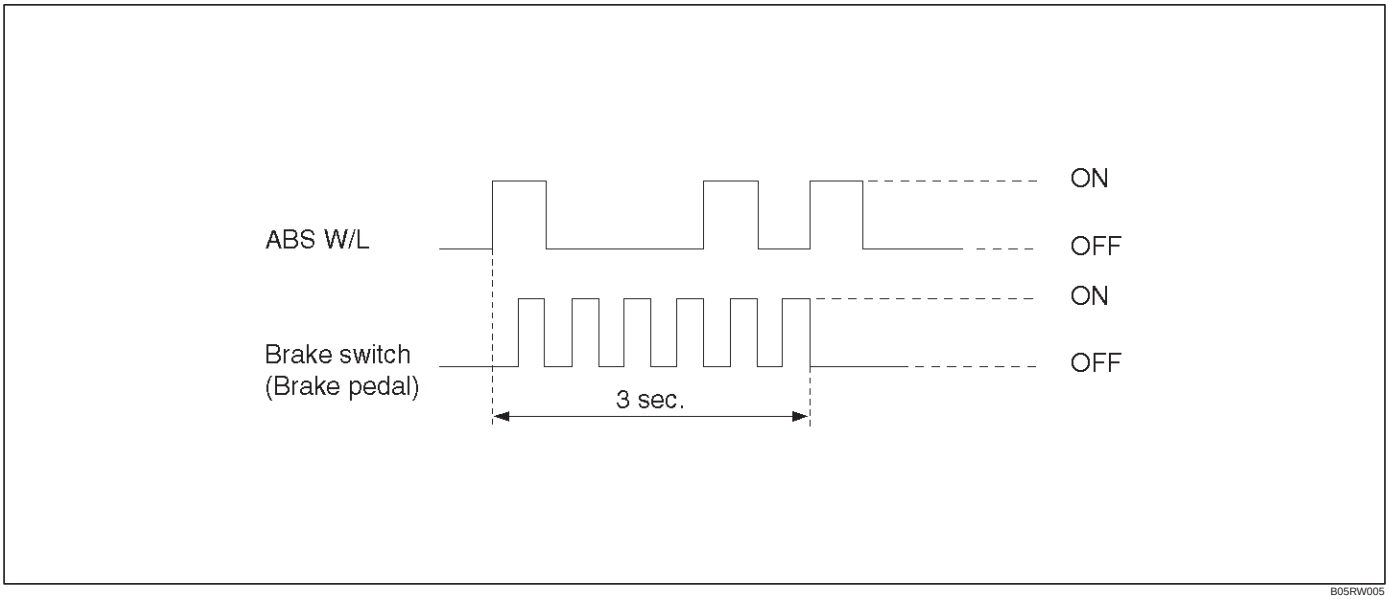

B05RW005

4. Notes
   - If the following should occurs during Diagnostic Trouble Code (DTC) display the display will be discontinued. After initial check, the status that is under the control of ABS will be returned :
     - The vehicle starts (The wheels turn) or the brake pedal is depressed.
   - Up to 3 different codes can be stored.
   - If the ABS should turn OFF due to an intermittent defect, the system will be restored at the next key cycle, if the initial check finds no abnormality (when IGN is switched from OFF to ON).
5. An example of DTC display

   Display of DTC 23

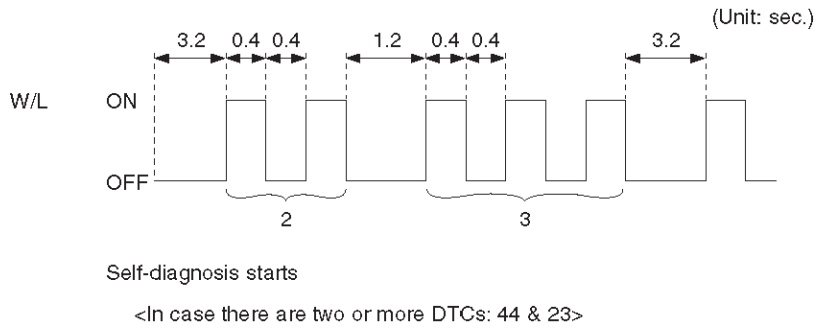

B05RW006

After displaying DTC 12 three times, one DTC after another is displayed, starting with the most recent one. (However, display is discontinued after about 5 minutes.)

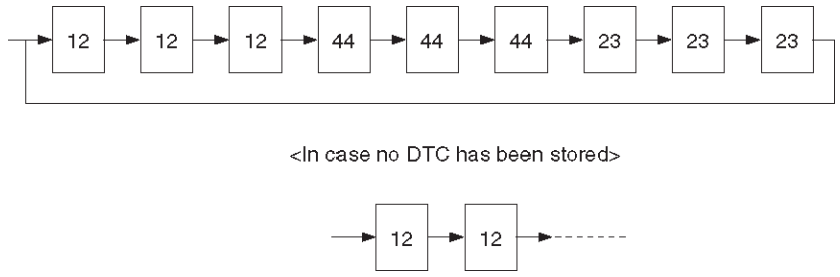

B05RS005

The DTC 12 is displayed repeatedly. (display is discontinued after about 5 minutes)

Chart B-1 With the key in the ON position (Before starting the engine). Warning light (W/L) is not activated.

Step	Action	Yes	No
1	Is W/L fuse C-10 disconnected?	Replace fuse. Go to Step 5	Go to Step 2
2	Is W/L burnt out?	Replace W/L bulb. Go to Step 5	Go to Step 3
3	1. Turn the key off. 2. Disconnect EHCU connector. 3. Turn the key ON. 4. Measure the voltage between EHCU connector terminal 13 and 14. Is the voltage equal to the battery voltage?	Go to Step 4	Repair harness and connector. Go to Step 5
4	Is there continuity between EHCU connector terminals, 12 and 15 and body ground.	Check harness for suspected disconnection. No fault found: Replace EHCU. Go to Step 5	Repair harness and connector. Go to Step 5
5	Reconnect all components, ensure all components are properly mounted. Was this step finished?	Repeat the “Basic diagnostic flow chart.”	Go to Step 5

Chart B-2 EHCU Abnormality (DTC 14)

Step	Action	Yes	No
1	1. Turn the key off. 2. Disconnect the EHCU connector. 3. Inspect EHCU ground. Is there resistance between the EHCU connector terminals, 12 and 15 and body ground?	Go to Step 2	Repair the body ground harness. Go to Step 3
2	1. Turn the key off, connect the EHCU. 2. Erase the trouble code. 3. Turn Ignition off, then on, to perform system self-check. 4. If warning light remains on, display trouble codes once again. Is the check trouble code 14?	Replace EHCU. Go to Step 3	Inspect in accordance with the DTC displayed.
3	1. Reconnect all components and ensure all components are properly mounted. 2. Clear diagnostic trouble code. Was this step finished?	Repeat the “Basic diagnostic flow chart.”	Go to Step 3

Chart B-3 Power Voltage Drop (DTC 15)

Step	Action	Yes	No
1	Is the battery voltage normal? (Battery capacity check)	Go to Step 2	Charge or replace battery. Go to Step 2
2	1. Turn the key off. 2. Disconnect EHCU connector. 3. Turn the key on. Is the voltage between EHCU connector terminals 8 and 15, higher than 10V?	Check harness connector for suspected disconnection. Fault found: Repair, and perform system self-check. No fault found: replace EHCU. Go to Step 3	Repair harness or connector. Go to Step 3
3	1. Reconnect all components, ensure all components are properly mounted. 2. Clear diagnostic trouble code. Was this step finished?	Repeat the “Basic diagnostic flow chart.”	Go to Step 3

Chart B-4 CLASS-2 Communication Line Abnormality (DTC 16)

Step	Action	Yes	No
1	1. Turn the key off. 2. Disconnect EHCU and PCM connector. Is there continuity between EHCU connector terminals 25 and ground?	Go to Step 2	Repair harness or connector. Go to Step 3
2	1. Connect EHCU connector. 2. Clear diagnostic trouble code. 3. Turn the key on. Is the diagnostic trouble code 16 shown on the displayed?	Check the PCM harness. Refer to 6E section. Go to Step 3	Replace EHCU. Go to Step 3
3	1. Reconnect all components, ensure all components are properly mounted. 2. Clear diagnostic trouble code. Was this step finished?	Repeat the “Basic diagnostic flow chart.”	Go to Step 3

Chart B-5 G-Sensor Circuit (DTC 21)

Step	Action	Yes	No
1	Vehicle placed horizontal. Is the resistance between the G sensor connector terminals 1 and 2 within 4.0-6.0 kΩ?	Check harness connector for short. Fault found : Repair , and perform system self-check. No fault found : replace EHCU. Go to Step 3	Go to Step 2
2	Is the bracket installed horizontally?	Go to Step 4	Repair or replace bracket. Go to Step 4
3	Remove G sensor. Is the resistance between the G sensor connector terminals 1 and 2 within 1.0-2.0 kΩ when G sensor is horizontal?	Go to Step 4	Replace G sensor. Go to Step 5
4	Measure resistance between G sensor connector terminals 1 and 2 within 4.0-6.0 kΩ when G sensor tilted to 30˚ or more?	Harness between EHCU and G sensor is faulty and short. Repair the harness Go to Step 5	Replace G sensor. Go to Step 5
5	1. Reconnect all components and ensure all components are properly mounted. 2. Clear diagnostic trouble code. Was this step finished?	Repeat the “Basic diagnostic flow chart.”	Go to Step 5

Chart B-6 Abnormal Transmission Input (DTC 23)

Step	Action	Yes	No
1	1. Turn the key off. 2. Disconnect EHCU connector. Is there continuity between EHCU connector terminal 6 to 15 (Gear position-P(A/T), N(M/T))?	Shorted switch harness. Repair switch or harness. Go to Step 6	Go to Step 2
2	Is the vehicle an A/T model?	Go to Step 3	Go to Step 4
3	Turn the key on and measure the voltage between EHCU connector terminal 6 and 15. Is the 6V under when the gear position is L, and R(Battery voltage 12V)?	Go to Step 5	Transmission SW trouble. Disconnected harness. Repair SW and harness. Go to Step 6
4	Turn the key on and measure the voltage between EHCU connector terminal 6 and 15. Is the 9.6V over when the gear position is 1, 2, R(Battery voltage 12V)?	Go to Step 5	Transmission SW trouble. Disconnected harness. Repair SW and harness. Go to Step 6
5	Is there 6.6 to 9.0V when the gear position is 3, 4, 5 and N(M/T) or 2,3,D,N and P(A/T)(Battery voltage 12V)?	Suspected harness/ connector short power source/GND. Suspected shorted transmission SW. Fault found: repair, and perform system self-check. No fault found: replace EHCU. Go to Step 6	Transmission SW trouble. Disconnected harness. Repair SW and harness. Go to Step 6
6	1. Reconnect all components, ensure all components are properly mounted. 2. Clear diagnostic trouble code. Was this step finished?	Repeat the “Basic diagnostic flow chart.”	Go to Step 6

Chart B-7 Transfer Monitor (DTC 24)

Step	Action	Yes	No
1	1. Turn the key off. 2. Disconnect EHCU connector. Is the EHCU connector terminal 9 line normally?	Go to Step 2	Repair Go to Step 3
2	Is the TOD ECU or 4WD controller normal?	Replace EHCU. Go to Step 3	Repair or replace TOD ECU or 4WD contrder. Go to Step 3
3	1. Reconnect all components, ensure all components are properly mounted. 2. Clear diagnostic trouble code. Was this step finished?	Repeat the “Basic diagnostic flow chart.”	Go to Step 3

Chart B-8 EHCU Pump Motor And Motor Relay Circuit (DTC 32)

Step	Action	Yes	No
1	1. Turn the key off. 2. Disconnect EHCU connector. 3. Measure voltage between EHCU connector terminal 13 and body ground. Is the voltage equal to battery voltage?	Go to Step 2	Repair fuse/harness between battery and EHCU connector terminal 13. Go to Step 3
2	Is there continuity between EHCU connector terminal 12 and ground?	Go to Step 3	Repair between EHCU connector terminal 12 and ground. Go to Step 3
3	1. Reconnect all components and ensure all components are properly mounted. 2. Clear diagnostic trouble code. Was this step finished?	Repeat the “Basic diagnostic flow chart.”	Go to Step 3

Chart B-9 EHCU Pump Valve And Valve Relay Circuit (DTC 35)

Step	Action	Yes	No
1	1. Turn the key off. 2. Disconnect EHCU connector. 3. Measure voltage between EHCU connector terminal 14 and body ground. Is the voltage equal to battery voltage?	Replace EHCU. Go to Step 2	Repair fuse and harness EHCU connector terminal 14 and battery. Go to Step 2
2	1. Reconnect all components and ensure all components are properly mounted. 2. Clear diagnostic trouble code. Was this step finished?	Repeat the “Basic diagnostic flow chart.”	Go to Step 2

Chart B-10 FL Isolation Solenoid Valve Abnormality (DTC 41)

Step	Action	Yes	No
1	Was the “EHCU Connector Pin-out Checks” performed?	Go to Step 2	Go to “EHCU Connector Pin-out Checks”.
2	Is the EHCU connector free from damage or corrosion?	Go to Step 3	Repair the connector. Repeat the “Basic Diagnostic Flow Chart”.
3	1. Replace the EHCU. 2. Reconnect all component, ensure all component are properly mounted. Was this step finished?	Repeat the “Basic Diagnostic Flow Chart”.	Go to Step 3

Chart B-11 FL Dump Solenoid Valve Abnormality (DTC 42)

Step	Action	Yes	No
1	Was the “EHCU Connector Pin-out Checks” performed?	Go to Step 2	Go to “EHCU Connector Pin-out Checks”.
2	Is the EHCU connector free from damage or corrosion?	Go to Step 3	Repair the connector. Repeat the “Basic Diagnostic Flow Chart”.
3	1. Replace the EHCU. 2. Reconnect all component, ensure all component are properly mounted. Was this step finished?	Repeat the “Basic Diagnostic Flow Chart”.	Go to Step 3

Chart B-12 FR Isolation Solenoid Valve Abnormality (DTC 43)

Step	Action	Yes	No
1	Was the “EHCU Connector Pin-out Checks” performed?	Go to Step 2	Go to “EHCU Connector Pin-out Checks”.
2	Is the EHCU connector free from damage or corrosion?	Go to Step 3	Repair the connector. Repeat the “Basic Diagnostic Flow Chart”.
3	1. Replace the EHCU. 2. Reconnect all component, ensure all component are properly mounted. Was this step finished?	Repeat the “Basic Diagnostic Flow Chart”.	Go to Step 3

Chart B-13 FR Dump Solenoid Valve Abnormality (DTC 44)

Step	Action	Yes	No
1	Was the “EHCU Connector Pin-out Checks” performed?	Go to Step 2	Go to “EHCU Connector Pin-out Checks”.
2	Is the EHCU connector free from damage or corrosion?	Go to Step 3	Repair the connector. Repeat the “Basic Diagnostic Flow Chart”.
3	1. Replace the EHCU. 2. Reconnect all component, ensure all component are properly mounted. Was this step finished?	Repeat the “Basic Diagnostic Flow Chart”.	Go to Step 3

Chart B-14 Rear Isolation Solenoid Valve Abnormality (DTC 45)

Step	Action	Yes	No
1	Was the “EHCU Connector Pin-out Checks” performed?	Go to Step 2	Go to “EHCU Connector Pin-out Checks”.
2	Is the EHCU connector free from damage or corrosion?	Go to Step 3	Repair the connector. Repeat the “Basic Diagnostic Flow Chart”.
3	1. Replace the EHCU. 2. Reconnect all component, ensure all component are properly mounted. Was this step finished?	Repeat the “Basic Diagnostic Flow Chart”.	Go to Step 3

Chart B-15 Rear Dump Solenoid Valve Abnormality (DTC 46)

Step	Action	Yes	No
1	Was the “EHCU Connector Pin-out Checks” performed?	Go to Step 2	Go to “EHCU Connector Pin-out Checks”.
2	Is the EHCU connector free from damage or corrosion?	Go to Step 3	Repair the connector. Repeat the “Basic Diagnostic Flow Chart”.
3	1. Replace the EHCU. 2. Reconnect all component, ensure all component are properly mounted. Was this step finished?	Repeat the “Basic Diagnostic Flow Chart”.	Go to Step 3

Chart B-16 FL Speed Sensor Disconnection (DTC 51)

Step	Action	Yes	No
1	1. Turn the key off. 2. Disconnect EHCU connector. 3. Measure the resistance between EHCU connector terminals 20 and 21. Is the resistance between 1.3k and 1.9k ohms?	Check for faults in harness between speed sensor and EHCU. Fault found: Repair, and perform system self-check. No fault found: Replace EHCU. Go to Step 3	Go to Step 2
2	Measure the FL speed sensor resistance at the sensor connector. Is the resistance between 1.3k and 1.9k ohms?	Repair harness abnormality between sensors and EHCU. Go to Step 3	Replace sensor. Go to Step 3
3	1. Reconnect all components, ensure all components are properly mounted. 2. Clear diagnostic trouble code. Was this step finished?	Repeat the “Basic diagnostic flow chart.”	Go to Step 3

Chart B-17 FR Speed Sensor Disconnection (DTC 52)

Step	Action	Yes	No
1	1. Turn the key off. 2. Disconnect EHCU connector. 3. Measure the resistance between EHCU connector terminals 4 and 5. Is the resistance between 1.3k and 1.9k ohms?	Check for faults in harness between speed sensor and EHCU. Fault found: Repair, and perform system self-check. No fault found: Replace EHCU. Go to Step 3	Go to Step 2
2	Measure the FR speed sensor resistance at the sensor connector. Is the resistance between 1.3k and 1.9k ohms?	Repair harness abnormality between sensors and EHCU. Go to Step 3	Replace sensor. Go to Step 3
3	1. Reconnect all components and ensure all components are properly mounted. 2. Clear diagnostic trouble code. Was this step finished?	Repeat the “Basic diagnostic flow chart.”	Go to Step 3

Chart B-18 RL Speed Sensor Disconnection (DTC 53)

Step	Action	Yes	No
1	1. Turn the key off. 2. Disconnect EHCU connector. 3. Measure the resistance between EHCU connector terminals 22 and 23. Is the resistance between 1.3k and 1.9k ohms?	Check for faults in harness between speed sensor and EHCU. Fault found: Repair, and perform system self-check. No fault found: Replace EHCU. Go to Step 3	Go to Step 2
2	Measure the RL speed sensor resistance at the sensor connector. Is the resistance between 1.3k and 1.9k ohms?	Repair harness abnormality between sensors and EHCU. Go to Step 3	Replace sensor. Go to Step 3
3	1. Reconnect all components and ensure all components are properly mounted. 2. Clear diagnostic trouble code. Was this step finished?	Repeat the “Basic diagnostic flow chart.”	Go to Step 3

Chart B-19 RR Speed Sensor Disconnection (DTC 54)

Step	Action	Yes	No
1	1. Turn the key off. 2. Disconnect EHCU connector. 3. Measure the resistance between EHCU connector terminals 2 and 3. Is the resistance between 1.3K and 1.9k ohms?	Check for faults in harness between speed sensor and EHCU. Fault found: Repair, and perform system self-check. No fault found: Replace EHCU. Go to Step 3.	Go to Step 2
2	Measure the RR speed sensor resistance at the sensor connector. Is the sensor resistance between 1.3k and 1.9k ohms?	Repair harness abnormality between sensors and EHCU. Go to Step 3	Replace sensor. Go to Step 3
3	1. Reconnect all components and ensure all components are properly mounted. 2. Clear diagnostic trouble code. Was this step finished?	Repeat the “Basic diagnostic flow chart.”	Go to Step 3

Chart B-20 FL Speed Sensor Short Circuit (DTC 61)

Step	Action	Yes	No
1	1. Turn the key off. 2. Disconnect EHCU connector 3. Measure the FL speed sensor resistance between EHCU connector terminals 20 and 21. Is the resistance between 1.3k and 1.9k ohms?	Go to Step 2	Go to Step 3
2	Is there play in the sensor/sensor rotor?	Go to Step 4	Repair. Go to Step 6
3	Measure the FL speed sensor resistance at the sensor connector. Is the resistance between 1.3k and 1.9k ohms?	Repair harness abnormality between sensors and EHCU. Go to Step 6	Replace sensor. Go to Step 6
4	Damage and powdered iron sticking to sensor/sensor ring?	Go to Step 5	Repair. Go to Step 6
5	Is sensor output normal? (Chart C-1-1 or TC-1)	Check for faults in harness between speed sensor and EHCU. Fault found: repair, and perform system self-check. No fault found: replace EHCU. Go to Step 6	Replace sensor. Go to Step 6
6	1. Reconnect all components and ensure all components are properly mounted. 2. Clear diagnostic trouble code. Was this step finished?	Repeat the “Basic diagnostic flow chart.”	Go to Step 6

NOTE: Even after repairing the faulty part the warning light (W/L) does not go out if the vehicle is at a stop. Turn the ignition switch to the ON position and drive the vehicle at 12 km/h or higher to make sure that the warning light goes out.

Chart B-21 FR Speed Sensor Short Circuit (DTC 62)

Step	Action	Yes	No
1	1. Turn the key off. 2. Disconnect EHCU connector. 3. Measure the FR speed sensor resistance between EHCU connector terminals 4 and 5. Is the resistance between 1.3k and 1.9k ohms?	Go to Step 2	Go to Step 3
2	Is there play in the sensor/sensor rotor?	Go to Step 4	Repair. Go to Step 6
3	Measure the FR speed sensor resistance at the sensor connector. Is the resistance between 1.3k and 1.9k ohms?	Repair harness abnormality between sensors and EHCU. Go to Step 6	Replace sensor. Go to Step 6
4	Damage and powdered iron sticking to sensor/sensor ring?	Go to Step 5	Repair. Go to Step 6
5	Is sensor output normal? (Chart C-1-2 or TC-1)	Check for faults in harness between speed sensor and EHCU. Fault found: repair, and perform system self-check. No fault found: replace EHCU. Go to Step 6	Replace sensor. Go to Step 6
6	1. Reconnect all components and ensure all components are properly mounted. 2. Clear diagnostic trouble code. Was this step finished?	Repeat “Basic diagnostic flow chart.”	Go to Step 6

NOTE: Even after repairing the faulty part the warning light (W/L) does not go out if the vehicle is at a stop. Turn the ignition switch to the ON position and drive the vehicle at 12 km/h or higher to make sure that the warning light goes out.

Chart B-22 RL Speed Sensor Short Circuit (DTC 63)

Step	Action	Yes	No
1	1. Turn the key off. 2. Disconnect EHCU connector 3. Measure the RL speed sensor resistance between EHCU connector terminals 22 and 23. Is the resistance between 1.3k and 1.9k ohms?	Go to Step 2	Go to Step 3
2	Is there play in the sensor/sensor rotor?	Go to Step 4	Repair. Go to Step 6
3	Measure the RL speed sensor resistance at the sensor connector. Is the resistance between 1.3k and 1.9k ohms?	Repair harness abnormality between sensors and EHCU. Go to Step 6	Replace sensor. Go to Step 6
4	Damage and powdered iron sticking to sensor/sensor ring?	Go to Step 5	Repair. Go to Step 6
5	Is sensor output normal? (Chart C-1-3 or TC-1)?	Check for faults in harness between speed sensor and EHCU. Fault found: repair, and perform system self-check. No fault found: replace EHCU. Go to Step 6	Replace sensor. Go to Step 6
6	1. Reconnect all components and ensure all components are properly mounted. 2. Clear diagnostic trouble code. Was this step finished?	Repeat the “Basic diagnostic flow chart.”	Go to Step 6

NOTE: Even after repairing the faulty part the warning light (W/L) does not go out if the vehicle is at a stop. Turn the ignition switch to the ON position and drive the vehicle at 12 km/h or higher to make sure that the warning light goes out.

Chart B-23 RR Speed Sensor Short Circuit (DTC 64)

Step	Action	Yes	No
1	1. Turn the key off. 2. Disconnect EHCU connector. 3. Measure the RR speed sensor resistance between EHCU connector terminals 2 and 3. Is the resistance between 1.3k and 1.9k ohms?	Go to Step 2	Go to Step 3
2	Is there play in the sensor/sensor rotor?	Go to Step 4	Repair. Go to Step 6
3	Measure the RR speed sensor resistance at the sensor connector. Is the resistance between 1.3k and 1.9k ohms?	Repair harness abnormality between sensors and EHCU. Go to Step 6	Replace sensor. Go to Step 6
4	Damage and powdered iron sticking to sensor/sensor ring?	Go to Step 5	Repair. Go to Step 6
5	Is sensor output normal? (Chart C-1-4 or TC-1)	Check for faults in harness between speed sensor and EHCU. Fault found: repair, and perform system self-check. No fault found: replace EHCU. Go to Step 6	Replace sensor. Go to Step 6
6	1. Reconnect all components and ensure all components are properly mounted. 2. Clear diagnostic trouble code. Was this step finished?	Repeat “Basic diagnostic flow chart.”	Go to Step 6

NOTE: Even after repairing the faulty part the warning light (W/L) does not go out if the vehicle is at a stop. Turn the ignition switch to the ON position and drive the vehicle at 12 km/h or higher to make sure that the warning light goes out.

Chart B-24 Sensor Signal Input Abnormality (DTC 65)

Step	Action	Yes	No
1	Using TECH 2?	Go to Step 2	Go to Step 3
2	1. Connect TECH 2. 2. Select Snap shot manual trigger. 3. With wheel speed data displayed, run the vehicle when speed has arrived at 30 km/h (18 mph). 4. Check speed data on each wheel (refer to the criterion given below). *1 Is the abnormal sensor condition found?	Replace. Go to Step 8	Go to Step 3 All the sensors should follow the following flowchart (without using TECH 2).
3	Is there play in sensor/sensor ring?	Repair. Go to Step 8	Go to Step 4
4	Is there powdered iron sticking to sensor/sensor ring?	Repair. Go to Step 8	Go to Step 5
5	Is there a broken tooth or indentation in sensor ring?	Replace sensor ring. Go to Step 8	Go to Step 6
6	Is there play in wheel bearing?	Adjust or repair. Go to Step 8	Go to Step 7
7	Is the check wiring between sensor and EHCU normal?	Replace EHCU. Go to Step 8	Repair, and perform system self-check. Go to Step 8
8	1. Reconnect all components, ensure all components are properly mounted. 2. Clear diagnostic trouble code. Was this step finished?	Repeat “Basic diagnostic flow chart.”	Go to Step 8

Sensor Signal Abnormality Criteria using TECH 2

1. While driving, the speed of one or two wheels 25% or more higher than that of the other wheels.
2. The speed of one or two wheels is 10 km/h (6 mph) or more higher than that of the other wheels.
3. During steady driving, wheel speed changes abruptly.

*1 The vehicle must run on a level paved road.

NOTE: Even after repairing the faulty part the warning light (W/L) does not go out if the vehicle is at a stop.

Turn the ignition switch to the ON position and drive the vehicle at 12 km/h or higher to make sure that the warning light goes out.

It is important to verify that the correct tires are installed on vehicle.

Unit Inspection Procedure

This section describes the following inspection procedures referred to during “SYMPTOM DIAGNOSIS” and “DIAGNOSIS BY ‘ABS’ WARNING LIGHT ILLUMINATION PATTERN” :

	without TECH 2	with TECH 2
Wheel Speed Sensor Output Inspection	Chart C-1-1 to C-1-4	Chart TC-1
Transmission SW Inspection	Chart C-2	Chart TC-2

Chart C-1-1 FL Sensor Output Inspection Procedure

Step	Action	Yes	No
1	1. Turn the key off. 2. Disconnect EHCU connector. 3. Jack up the vehicle, With all four wheels off the ground. Measure the AC voltage between EHCU connector terminals while turning FL wheel at a speed of 1 RPS: Is voltage between EHCU connector terminals 20 and 21 under 200 mV?	Go to Step 2	Ok. Go to Step 3
2	1. Disconnect the wheel speed sensor. 2. Measure resistance between the wheel speed sensor connector terminals 1 and 2. Is resistance between connector (C-13) terminals 1 and 2 within 1.3k - 1.9k ohms?	Connector is faulty, or open or short circuit in harness between wheel speed sensor connector and EHCU. Inspect and correct the connector or harness Go to Step 3	Wheel speed sensor is faulty. Replace the wheel speed sensor. Go to Step 3
3	Reconnect all components and ensure all components are properly mounted. Was this step finished?	Repeat the “Basic diagnostic flow chart.”	Go to Step 3

Chart C-1-2 FR Sensor Output Inspection Procedure

Step	Action	Yes	No
1	1. Turn the key off. 2. Disconnect EHCU connector. 3. Jack up the vehicle with all four wheels off the ground. Measure the AC voltage between EHCU connector terminals while turning FR wheel at a speed of 1 RPS: Is voltage between EHCU connector terminals 4 and 5 under 200 mV?	Go to Step 2	Ok. Go to Step 3
2	1. Disconnect the wheel speed sensor. 2. Measure resistance between the wheel speed sensor connector terminals 1 and 2. Is resistance between connector (C-41) terminals 1 and 2 within 1.3k - 1.9k ohms?	Connector is faulty, or open or short circuit of harness between wheel speed sensor connector and EHCU. Inspect and correct the connector or harness Go to Step 3	Wheel speed sensor is faulty. Replace the wheel speed sensor. Go to Step 3
3	Reconnect all components and ensure all components are properly mounted. Was this step finished?	Repeat the “Basic diagnostic flow chart.”	Go to Step 3

Chart C-1-3 RL Sensor Output Inspection Procedure

Step	Action	Yes	No
1	1. Turn the key off. 2. Disconnect EHCU connector. 3. Jack up the vehicle with all four wheels off the ground. Measure the AC voltage between EHCU connector terminals while turning RL wheel at a speed of 1 RPS: Is voltage between EHCU connector terminals 22 and 23 under 200 mV?	Go to Step 2	Ok. Go to Step 3
2	1. Disconnect the wheel speed sensor. 2. Measure resistance between the wheel speed sensor connector terminals 1 and 2. Is resistance between connector (F-3) terminals 1 and 2 within 1.3k - 1.9k ohms?	Connector is faulty, or open or short circuit of harness between wheel speed sensor connector and EHCU. Inspect and correct the connector or harness Go to Step 3	Wheel speed sensor is faulty. Replace the wheel speed sensor. Go to Step 3
3	Reconnect all components and ensure all components are properly mounted. Was this step finished?	Repeat the “Basic diagnostic flow chart.”	Go to Step 3

Chart C-1-4 RR Sensor Output Inspection Procedure

Step	Action	Yes	No
1	1. Turn the key off. 2. Disconnect EHCU connector. 3. Jack up the vehicle with all four wheels off the ground. Measure the AC voltage between EHCU connector terminals while turning RR wheel at a speed of 1 RPS: Is voltage between EHCU connector terminals 2 and 3 under 200 mV?	Go to Step 2	Ok. Go to Step 3
2	1. Disconnect the wheel speed sensor. 2. Measure resistance between the wheel speed sensor connector terminals 1 and 2. Is resistance between connector (F-2) terminals 1 and 2 within 1.3k - 1.9k ohms?	Connector is faulty, or open or short circuit of harness between wheel speed sensor connector and EHCU. Inspect and correct the connector or harness Go to Step 3	Wheel speed sensor is faulty. Replace the wheel speed sensor. Go to Step 3
3	Reconnect all components and ensure all components are properly mounted. Was this step finished?	Repeat the “Basic diagnostic flow chart.”	Go to Step 3

Chart TC-1 Sensor Output Inspection Procedure (Use TECH 2)

Step	Action	Yes	No
1	1. Connect TECH 2. 2. While driving the vehicle, check the wheel speed of each sensor by Data List. Is the vehicle speed value is normal?	Go to Step 6	Go to Step 2
2	Check the sensor harness for suspected disconnection (Check while shaking harness/connector). Is the sensor harness connection normal?	Replace speed sensor. Go to Step 3	Repair. Go to Step 6
3	While driving the vehicle, check the wheel speed of each sensor by Data List. Is the vehicle speed value is normal?	Go to Step 6	Go to Step 4
4	Check the sensor rotor. Is the sensor rotor normal?	Go to Step 6	Replace sensor rotor. Go to Step 5
5	While driving the vehicle, check the wheel speed of each sensor by Data List. Is the vehicle speed value is normal?	Go to Step 6	Repair harness or connector between EHCU and speed sensor. Go to Step 6
6	Reconnect all components, ensure all components are properly mounted. Was this step finished?	Repeat the “Basic diagnostic flow chart.”	Go to Step 6

Chart C-2 Transmission Input Inspection Procedure

Step	Action	Yes	No
1	1. Turn the key off. 2. Disconnect EHCU connector. Is there continuity between EHCU connector terminals 6 and 15 (Gear position-P(A/T), N(M/T))?	Shorted switch harness. Repair switch or harness. Go to Step 6	Go to Step 2
2	Is the vehicle an A/T model?	Go to Step 3	Go to Step 5
3	Turn the key on and measure voltage between EHCU connector terminals 6 and 15. Is there less than 6V when the gear position is L, and R(Battery voltage 12V)?	Go to Step 5	Transmission SW trouble. Disconnected harness. Repair SW and harness. Go to Step 6
4	Turn the key on and measure the voltage between EHCU connector terminal 6 and 15. Is there more than 9.6V when the gear position is 1, 2, R(Battery voltage 12V)?	Go to Step 5	Transmission SW trouble. Disconnected harness. Repair SW and harness. Go to Step 6
5	Measure the voltage between EHCU connector terminals 6 and 15. Is there 6.6 to 9.0V when the gear position is 3, 4, 5 and N(M/T) or 2,3,D,N and P(A/T)(Battery voltage 12V)?	Go to Step 6	Transmission SW trouble. Disconnected harness. Repair SW and harness. Go to Step 6
6	1. Reconnect all components and ensure all components are properly mounted. 2. Clear diagnostic trouble code. Was this step finished?	Repeat the “Basic diagnostic flow chart.”	Go to Step 6

Chart TC-2 Transmission Input Inspection Procedure (Use TECH 2)

Step	Action	Yes	No
1	1. Connect TECH 2. 2. Select Data List. Is this vehicle an A/T model ?	Go to Step 2	Go to Step 4
2	Is “Off-Road Switch(Transmission Input): Active” when the shift lever is the L and R?	Go to Step 3	Go to Step 6
3	Is “Off-Road Switch(Transmission Input): Inactive” when the shift lever is other than the L and R?	Go to Step 7	Go to Step 6
4	Is “Off-Road Switch(Transmission Input): Active” when the shift lever is in 1, 2 and R?	Go to Step 5	Go to Step 6
5	Is “Off-Road Switch(Transmission Input): Inactive” when the shift lever is other than the 1, 2 and R?	Go to Step 7	Go to Step 6
6	1. Abnormal T/M SW, inhibitor SW, or harness. 2. Repair T/M SW, inhibitor SW, or harness. Is the T/M SW, inhibitor SW, or harness repaired?	Go to Step 7	Go to Step 6
7	Reconnect all components, ensure all components are properly mounted. Was this step finished?	Repeat the “Basic diagnostic flow chart.”	Go to Step 7

Special Tools

ILLUSTRATION	**TOOL NO.** TOOL NAME
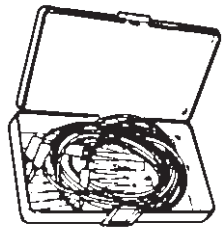	**5–8840–0385–0** **(J–35616)** Connector test adapter kit
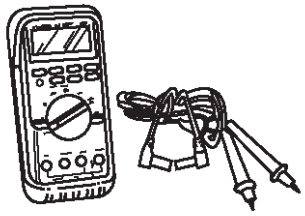	**5–8840–0366–0** **(J–39200)** High impedance multimeter
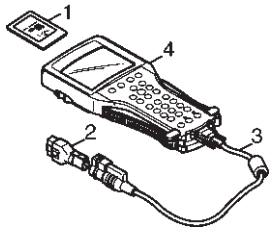	(1) PCMCIA Card (2) SAE 16/19 Adapter (3) DLC Cable (4) Tech–2

BRAKES

ANTI-LOCK BRAKE SYSTEM

CONTENTS

Service Precaution 5B–1
Electronic Hydraulic Control Unit 5B–2
Electronic Hydraulic Control Unit and Associated Parts 5B–2
Removal 5B–2
Installation 5B–2
G-Sensor 5B–3
Removal 5B–3
Inspection and Repair 5B–3
Installation 5B–3
Front Wheel Speed Sensor 5B–4
Front Wheel Speed Sensor and Associated Parts 5B–4
Removal 5B–4
Inspection and Repair 5B–5
Installation 5B–5
Rear Wheel Speed Sensor 5B–6
Rear Wheel Speed Sensor and Associated Parts 5B–6
Removal 5B–6
Inspection and Repair 5B–6
Installation 5B–6

Service Precaution

WARNING: IF SO EQUIPPED WITH A SUPPLEMENTAL RESTRAINT SYSTEM(SRS), REFER TO THE SRS COMPONENT AND WIRING LOCATION VIEW IN ORDER TO DETERMINE WHETHER YOU ARE PERFORMING SERVICE ON OR NEAR THE SRS COMPONENTS OR THE SRS WIRING. WHEN YOU ARE PERFORMING SERVICE ON OR NEAR THE SRS COMPONENTS OR THE SRS WIRING, REFER TO THE SRS SERVICE INFORMATION. FAILURE TO FOLLOW WARNINGS COULD RESULT IN POSSIBLE AIR BAG DEPLOYMENT, PERSONAL INJURY, OR OTHERWISE UNNEEDED SRS SYSTEM REPAIRS.

CAUTION: Always use the correct fastener in the proper location. When you replace a fastener, use ONLY the exact part number for that application. ISUZU will call out those fasteners that require a replacement after removal. ISUZU will also call out the fasteners that require thread lockers or thread sealant. UNLESS OTHERWISE SPECIFIED, do not use supplemental coatings (Paints, greases, or other corrosion inhibitors) on threaded fasteners or fastener joint interfaces. Generally, such coatings adversely affect the fastener torque and the joint clamping force, and may damage the fastener. When you install fasteners, use the correct tightening sequence and specifications. Following these instructions can help you avoid damage to parts and systems.

CAUTION: Replace all components included in repair kits used to service this system. Lubricate rubber parts with clean, fresh brake fluid to ease assembly. Do not use shop air with in–line lubricators on brake parts, as damage to rubber components may result. If any hydraulic component is removed or brake line disconnected, it may be necessary to bleed part or all of the brake system.

NOTE: The use of rubber hoses or parts other than those furnished specifically for the Anti–lock Brake System may lead to functional problems requiring major overhaul.

Electronic Hydraulic Control Unit

Electronic Hydraulic Control Unit and Associated Parts

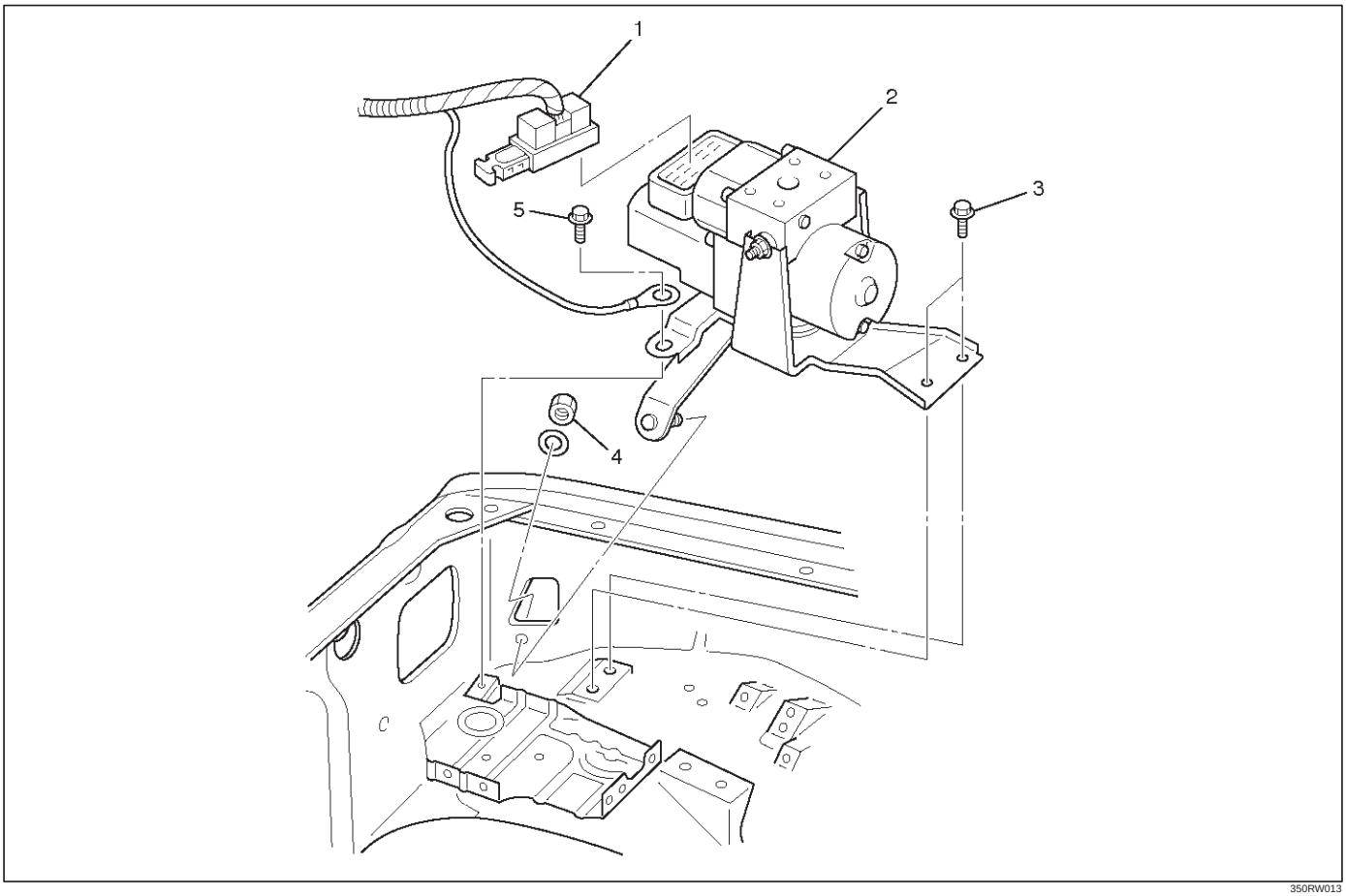

Legend

(1) Connector
(2) Hydraulic Unit ASM
(3) Bolts
(4) Nut
(5) Bolt

Removal

1. Remove battery ASM.
2. Remove harness connector.
3. Remove EHCU fixing nuts.
4. Remove brake pipes.
   - After disconnecting brake pipe, cap or tape the openings of the brake pipe to prevent the entry of foreign matter.
5. Remove hydraulic unit fixing nuts.

Installation

To install, follow the removal steps in the reverse order, noting the following points:

Torque

Hydraulic unit fixing nuts : 22 N·m (2.2kg·m/16 lb ft)

Ground cable : 14 N·m (1.4kg·m/10 lb ft)

Brake pipe (joint bolts) : 16 N·m (1.6kg·m/12 lb ft)

- After installing the hydraulic unit, bleed brakes completely. Refer to Servicing in Power Assisted Brake System section.

G-Sensor

Removal

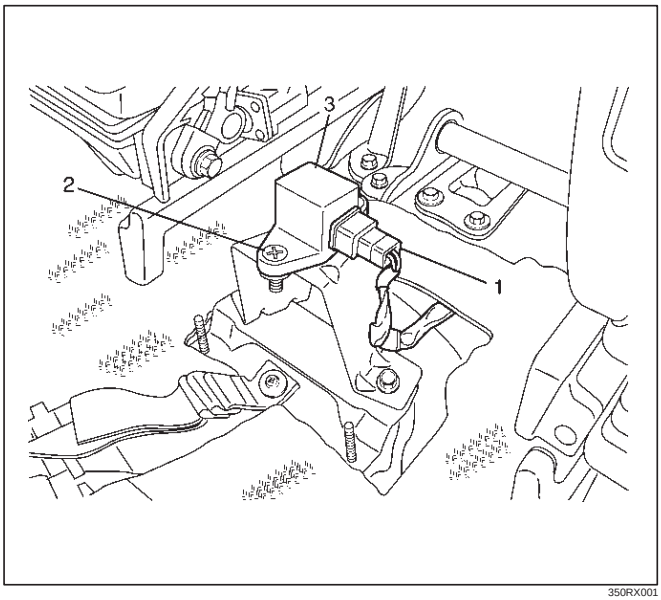

350RX001

1. Remove center console.
   - Refer to Consoles in Body and Accessories section.
2. Remove clip from G-sensor connector (1), then disconnect connector.
3. Remove G-sensor assembly fixing bolt (2).
4. Remove G-sensor assembly (3).

Inspection and Repair

Refer to Chart B-5 in Brake Control System section.

Installation

1. Install G-sensor assembly (3).
   - Care should be taken so that the G-sensor is not installed in the wrong direction.
2. Install G-sensor assembly fixing bolt (2).
   - Tighten the fixing bolt to the specified torque.

   Torque : 10 N·m (1.0kg·m/87 lb in)
3. Install G-sensor wiring connector (1).
4. Install center console.
   - Refer to Consoles in Body and Accessories section.

Front Wheel Speed Sensor

Front Wheel Speed Sensor and Associated Parts

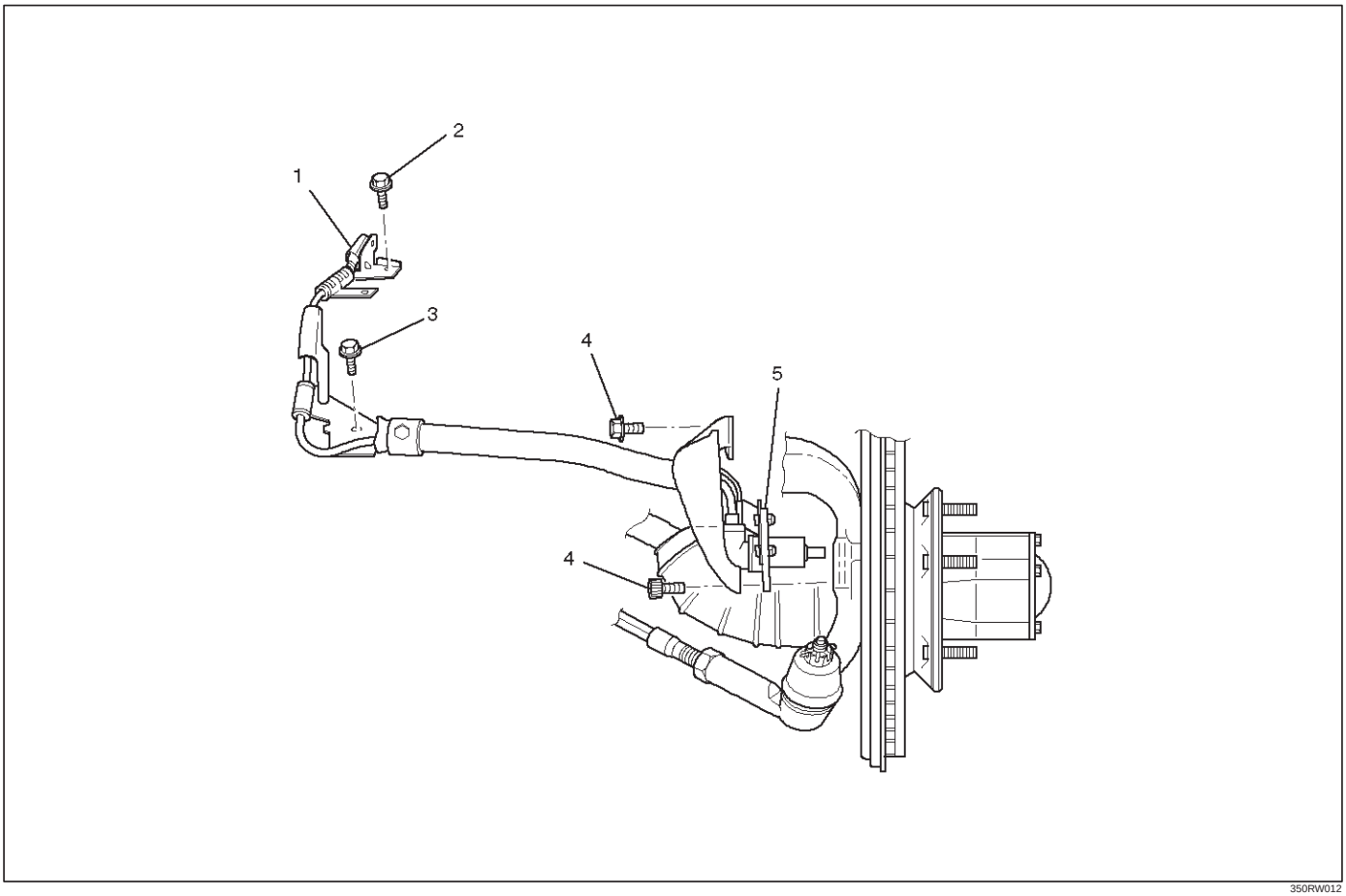

350RW012

Legend

(1) Speed Sensor Connector
(2) Sensor Cable Fixing Bolt (Upper side)
(3) Sensor Cable Fixing Bolt (Lower side)
(4) Sensor Cable Fixing Bolt (Sensor side)
(5) Speed Sensor

Removal

1. Remove speed sensor connector.
2. Remove sensor cable fixing bolt (Upper side).
3. Remove sensor cable fixing bolt (Lower side).
4. Remove the speed sensor cable fixing bolts (1) and caliper fixing bolt (2) from caliper side speed sensor cable bracket (3).

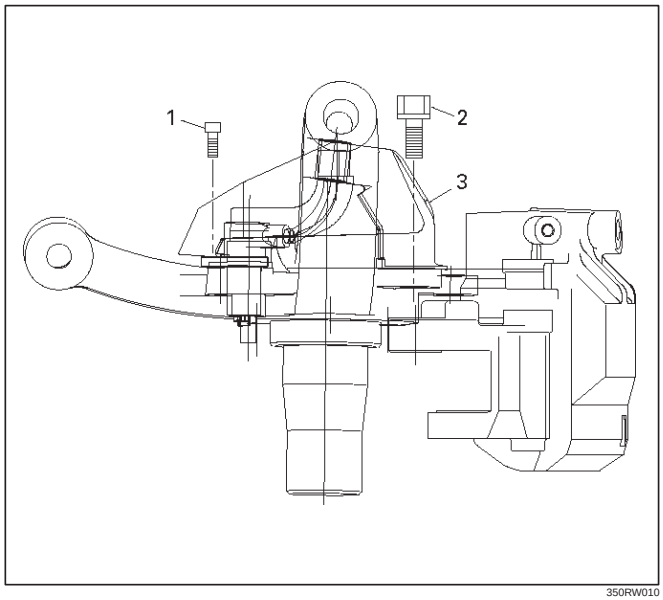

350RW010

5. Remove speed sensor.

Inspection and Repair

1. Check the speed sensor pole piece for presence of foreign materials; remove any dirt, etc.
2. Check the pole piece for damage; replace speed sensor if necessary.
3. Check the speed sensor cable for short or open circuit, and replace with a new one if necessary.
   To check for cable short or open, bend or stretch the cable while checking for continuity.
4. Check the sensor ring for damage including tooth chipping, and if damaged, replace the sensor ring assembly. Refer to Front Hub and Disc in Drive Shaft System section.

Installation

1. Install speed sensor and take care not to hit the speed sensor pole piece during installation.
2. Install speed sensor fixing bolt and tighten the fixing bolt to the specified torque.

   Torque

   Sensor side : 8 N·m (0.8kg·m/69 lb in)

   Caliper side : 155 N·m (15.8kg·m/115 lb ft)

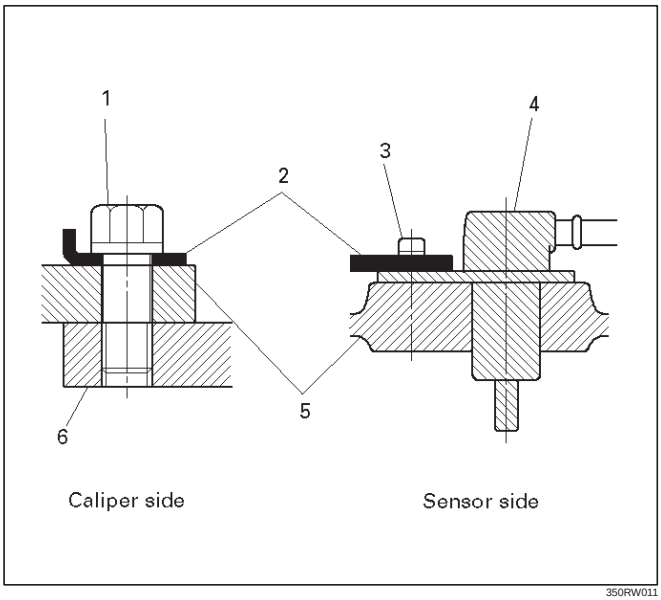

350RW011

Legend

(1) Caliper Fixing Bolt
(2) Bracket
(3) Sensor Fixing Bolt
(4) Sensor
(5) Knuckle
(6) Brake Caliper

3. Install speed sensor cable fixing bolt (Lower side) and tighten the fixing bolt to the specified torque.

   Torque : 24 N·m (2.4kg·m/18 lb ft)

4. Install speed sensor cable fixing bolt (Upper side) and tighten the fixing bolt to the specified torque.

   Torque : 6 N·m (0.6kg·m/52 lb in)

NOTE: Confirm that a white line marked on the cable is not twisted when connecting the speed sensor cable.

5. Install speed sensor connector.

Rear Wheel Speed Sensor

Rear Wheel Speed Sensor and Associated Parts

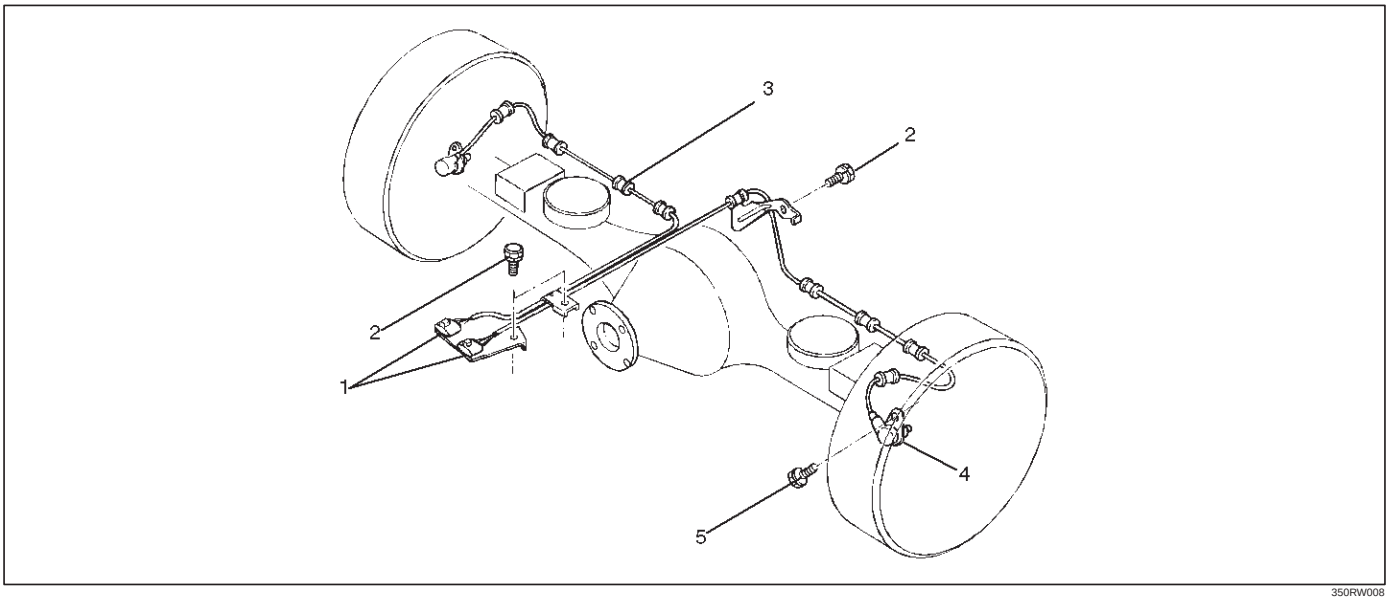

350RW008

Legend

(1) Speed Sensor Connector
(2) Sensor Cable Fixing Bolt
(3) Clip (11 pieces)
(4) Speed Sensor
(5) Sensor Fixing Bolt

Removal

1. Remove speed sensor connector.
2. Remove clip.
3. Remove sensor cable fixing bolt.
4. Remove sensor fixing bolt.
5. Remove speed sensor.

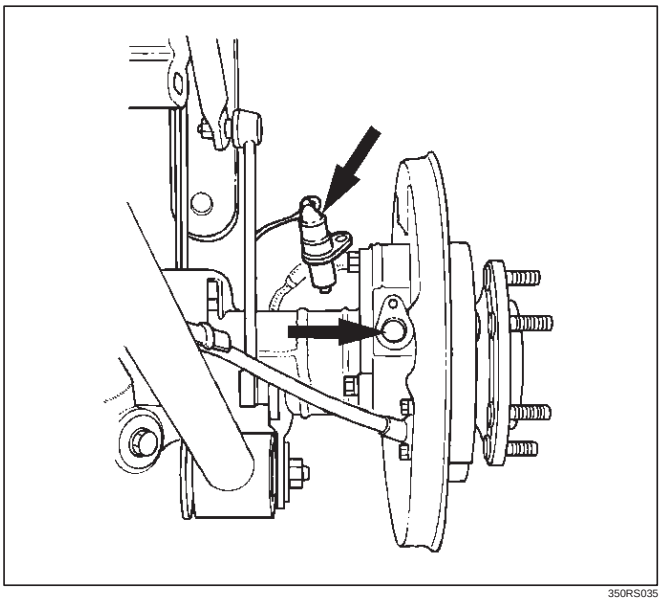

350RS035

Inspection and Repair

1. Check the speed sensor pole piece for presence of foreign materials; remove any dirt, etc.
2. Check the pole piece for damage, and replace the speed sensor if necessary.
3. Check the speed sensor cable for a short or an open, and replace with a new one if necessary. To check for cable short or open, bend or stretch the cable while checking for continuity.
4. Check the sensor ring for damage including tooth chipping. If damaged replace the axle shaft assembly. Refer to Front Hub and Disc in Drive Shaft System section.

Installation

1. Install the speed sensor and take care not to hit the speed sensor pole piece during installation.
2. Install the sensor fixing bolt and tighten it to the specified torque.

   Torque : 18 N·m (1.8kg·m/13 lb ft)

3. Install the sensor cable fixing bolt and tighten it to the specified torque.

   Torque : 24 N·m (2.4kg·m/18 lb ft)

NOTE: Confirm that the cable is not twisted when connecting the speed sensor cable.

4. Install clip.
5. Install speed sensor connector.

SECTION 5C

POWER ASSISTED BRAKE SYSTEM

CONTENTS

PAGE

Service Precaution 5C- 2
Brake System Diagnosis 5C- 3
Troubleshooting 5C- 5
Main Data and Specifications 5C- 7
Service Standard 5C- 8
Servicing 5C- 9
Fixing Torque 5C-18
Special Tools 5C-21
General Description 5C-22
- Master Cylinder 5C-22
- Vacuum Booster 5C-23
- Disc Brakes 5C-24

On-Vehicle Service 5C-25
- Brake Hose Replacement 5C-25
- Brake Pipe Replacement 5C-27
- P & B Valve 5C-28
- P & B Valve Replacement 5C-29
- Load Sensing Proportioning Valve (LSPV) 5C-30
- Brake Pedal Replacement 5C-34
- Stoplight Switch Replacement 5C-36
- Fluid Reservoir Tank 5C-38
- Master Cylinder Assembly 5C-39
- Vacuum Booster Assembly 5C-41
- Exterior Components 5C-44

Front Disc Brakes 5C-47
Brake Pads Replacement 5C-47
Caliper Replacement 5C-50
Rebuilding the Caliper 5C-53
Rear Disc Brakes 5C-56
Brake Pads Replacement 5C-56
Caliper Replacement 5C-59
Rebuilding the Caliper 5C-62
Unit Repair 5C-65
Master Cylinder 5C-65
Vacuum Booster 5C-67

SERVICE PRECAUTION

WARNING:
IF SO EQUIPPED WITH A SUPPLEMENTAL RESTRAINT SYSTEM (SRS), REFER TO THE SRS COMPONENT AND WIRING LOCATION VIEW IN ORDER TO DETERMINE WHETHER YOU ARE PERFORMING SERVICE ON OR NEAR THE SRS COMPONENTS OR THE SRS WIRING. WHEN YOU ARE PERFORMING SERVICE ON OR NEAR THE SRS COMPONENTS OR THE SRS WIRING, REFER TO THE SRS SERVICE INFORMATION. FAILURE TO FOLLOW WARNINGS COULD RESULT IN POSSIBLE AIR BAG DEPLOYMENT, PERSONAL INJURY, OR OTHERWISE UNNEEDED SRS SYSTEM REPAIRS.

CAUTION:
Always use the correct fastener in the proper location. When you replace a fastener, use ONLY the exact part number for that application. ISUZU will call out those fasteners that require a replacement after removal. ISUZU will also call out the fasteners that require thread lockers or thread sealant. UNLESS OTHERWISE SPECIFIED, do not use supplemental coatings (Paints, greases, or other corrosion inhibitors) on threaded fasteners or fastener joint interfaces. Generally, such coatings adversely affect the fastener torque and the joint clamping force, and may damage the fastener. When you install fasteners, use the correct tightening sequence and specification. Following these instructions can help you avoid damage to parts and systems.

BRAKE SYSTEM DIAGNOSIS

ROAD TESTING THE BRAKES

Brake Test

Brakes should be tested on a dry, clean, reasonably smooth and level roadway. A true test of brake performance cannot be made if the roadway is wet, greasy or covered with loose dirt so that all tires do not grip the road equally. Testing will also be adversely affected if the roadway is crowned so as to throw the weight of the vehicle toward wheels on one side or if the roadway is so rough that wheels tend to bounce. Test the brakes at different vehicle speeds with both light and heavy pedal pressure; however, avoid locking the wheels and sliding the tires. Locked wheels and sliding tires do not indicate brake efficiency, since heavily braked but turning wheels will stop the vehicle in less distance than locked wheels. More tire-to-road friction is present with a heavily braked turning tire then with a sliding tire.

The standard brake system is designed and balanced to avoid locking the wheels except at very high deceleration levels.

It is designed this way because the shortest stopping distance and best control is achieved without brake lock-up.

Because of high deceleration capability, a firmer pedal may be felt at higher deceleration levels.

External Conditions That Affect Brake Performance

1. Tires: Tires having unequal contact and grip on the road will cause unequal braking. Tires must be equally inflated, identical in size, and the tread pattern of right and left tires must be approximately equal.
2. Vehicle loading: A heavily loaded vehicle requires more braking effort.
3. Wheel Alignment: Misalignment of the wheels, particularly in regard to excessive camber and caster, will cause the brakes to pull to one side.

BRAKE FLUID LEAKS

With engine running at idle and the transmission in “Neutral”, depress the brake pedal and hold a constant foot pressure on the pedal. If pedal gradually falls away with the constant pressure, the hydraulic system may be leaking.

Check the master cylinder fluid level. While a slight drop in reservoir level will result from normal lining wear, an abnormally low level in resevoir indicates a leak in the system. The hydraulic system may be leaking internally as well as externally. Refer to “Master Cylinder Inspection”. Also, the system may appear to pass this test but still have slight leakage. If fluid level is normal, check the vacuum booster push

rod length. If an incorrect length push rod is found, adjust or replace the push rod. Check the brake pedal travel and the parking brake adjustment.

When checking the fluid level, the master cylinder fluid level may be low from the "MAX" mark if the front and rear linings are worn. This is not abnormal.

WARNING LIGHT OPERATION

When the ignition switch is in the START position, the "BRAKE" warning light should glow and go OFF when the ignition switch returns to the ON position.

The following conditions will activate the "BRAKE" light:

1. Parking brake applied. The light should be ON whenever the parking brake is applied and the ignition switch is ON.
2. Low fluid level. A low fluid level in the master cylinder will turn the "BRAKE" light ON.
3. During engine cranking the "BRAKE" light should remain ON. This notifies the driver that the warning circuit is operating properly.
4. Low vacuum warning light. The vacuum warning device is equipped on the diesel engine equipped vehicles. The "BRAKE" light comes on when the reserved vacuum is lowered to a critical level or power brake line is damaged.

NOTE:

Depressing the brake pedal repeatedly may cause the brake warning light to come ON when the engine is running at idling speed or at low speed. This is because the amount of vacuum is used more than that supplied by the vacuum pump, however, no problem will occur actually.

If the lamp is still lighting even after 2 or 3 seconds at idling speed, the vacuum line may be defective.

ANTILOCK BRAKE SYSTEM (ABS)

Refer to Brake Control System for inspection and diagnosis procedure of the hydraulic unit.

TROUBLESHOOTING

Condition	Possible Cause	Correction
Brake Pull	1. Tire inflation pressures unequal. 2. Front wheel alignment incorrect. 3. Unmatched tires on same axle. 4. Restricted brake pipes or hoses. 5. Water or oil on brake pads. 6. Brake pads hardened. 7. Brake pads worn excessively. 8. Brake rotor worn or scored. 9. Disc brake caliper malfunctioning. 10. Front hub bearing preload incorrect. 11. Loose suspension parts. 12. Loose calipers.	1. Adjust 2. Adjust 3. Tire with approx. the same amount of tread should be used on the same axle. 4. Check for soft hoses and damaged lines. Replace with new hoses and new double-walled steel brake piping. 5. Clean or replace. 6. Replace. 7. Replace. 8. Grind or replace. 9. Clean or replace. 10. Adjust or replace. 11. Check all suspension mountings. 12. Check and tighten bolts to specifications.
Brake Roughness-or Chatter (Pulsates)	1. Excessive lateral runout. 2. Parallelism not within specifications. 3. Wheel bearings not adjusted. 4. Pad reversed (steel against iron).	1. Check per instructions. If not within specifications, replace or machine the rotor. 2. Check per instructions. If not within specifications, replace or machine the rotor. 3. Adjust wheel bearings to correct specifications. 4. Replace brake pad and machine rotor to within specifications.
Excessive Pedal Effort	1. Malfunctioning vacuum booster. 2. Partial system failure. 3. Excessively worn pad. 4. Piston in caliper stuck or sluggish. 5. Fading brakes due to incorrect pad. 6. Vacuum leak to vacuum booster. 7. Check direction of check valve within vacuum hose. 8. Grease on the brake pads.	1. Check vacuum booster operation and repair, if necessary. 2. Check front and rear brake system for failure and repair. Also, check brake warning light. If a failed system is found, the light should indicate a failure. 3. Check and replace pads in sets. 4. Remove caliper and rebuild. 5. Remove and replace with original equipment pad or equivalent. 6. Check for ruptured or loose hose. 7. Correct vacuum hose direction. 8. Replace or clean.
Excessive Brake Pedal Travel	1. Air in hydraulic circuit. 2. Level of brake fluid in resevoir too low. 3. Master cylinder push rod clearance excessive. 4. Leakage in hydraulic system.	1. Bleed hydraulic circuit. 2. Replenish brake fluid resevoir to specified level and bleed hydraulic circuit as necessary. 3. Adjust. 4. Correct or replace defective parts.

Condition	Possible Cause	Correction
Brake Drag	1. Master cylinder pistons not returning correctly. 2. Restricted brake pipes or hoses. 3. Parking brake maladjusted. 4. Parking brake lining clearance insufficient. 5. Brake pedal free play insufficient. 6. Piston in master cylinder sticking. 7. Piston in disc brake caliper sticking. 8. Brake pads sticking in caliper. 9. Return spring weakened. 10. Parking brake binding. 11. Front hub bearing preload incorrect. 12. Parking brake shoes not returning. 13. Obstructions in hydraulic circuit. 14. Rotor warped excessively. 15. Rear brake drum distorted. 16. Parking cable sticking.	1. Adjust stop light switch and vacuum booster operating rod. If necessary, rebuild. 2. Check for soft hoses or damaged pipes, and replace with new hoses and new double-walled steel brake piping. 3. Adjust. 4. Adjust. 5. Adjust brake pedal height or power cylinder operating rod. 6. Replace. 7. Replace piston seals. 8. Clean. 9. Replace. 10. Overhaul parking brakes and correct. 11. Adjust or replace. 12. Correct or replace brake back plate and brake shoe as necessary. 13. Clean. 14. Grind or replace. 15. Grind or replace. 16. Clean or replace.
Grabbing or Uneven Braking Action (All conditions listed under "Pulls")	1. Malfunctioning vacuum booster. 2. Binding brake pedal mechanism. 3. Corroded caliper assembly.	1. Check operation and correct as necessary. 2. Check and lubricate, if necessary. 3. Clean and lubricate.
Brake Noisy	1. Brake pads worn. 2. Brake pads hardened. 3. Brake pads in poor contact with rotor. 4. Brake disc(s) warped, worn or damaged. 5. Disc brake anti-squeak shims fatigued. 6. Front hub bearings loose or preload is incorrect. 7. Brake disc rusted.	1. Replace. 2. Replace. 3. Correct. 4. Grind or replace. 5. Replace. 6. Adjust or replace. 7. Grind or replace.
Poor Brake Action	1. Master cylinder faulty. 2. Vacuum booster faulty. 3. Level of brake fluid in reservoir too low. 4. Air in hydraulic circuit. 5. Disc brake caliper faulty. 6. Water or oil on brake pads. 7. Brake pads in poor contact with rotor. 8. Brake pads worn. 9. Brake disc rusted. 10. Check valve in vacuum hose faulty.	1. Correct or replace. 2. Correct or replace. 3. Replenish and bleed. 4. Bleed. 5. Clean or replace. 6. Clean or replace. 7. Correct. 8. Replace. 9. Grind or replace. 10. Correct or replace.

MAIN DATA AND SPECIFICATIONS

MASTER CYLINDER		
Type		Dual-circuit
Piston Bore Diameter	mm (in)	25.4 (1.000)
VACUUM BOOSTER		
Diaphragm Diameter		
	Front; mm (in)	205 (8.07) (Gasoline) / 180 (7.09) (Diesel)
	Rear; mm (in)	230 (9.06) (Gasoline) / 205 (8.07) (Diesel)
Push Rod Stroke	mm (in)	More than 32.0 (1.26)
Plunger Diameter	mm (in)	10.13 (0.399)
Push Rod Diameter	mm (in)	27.4 (1.08)
FRONT DISC BRAKE		
Type		Floating, Pin Slide
Pad Dimension	cm^2 (in^2)	55 (8.52)
Adjusting Method		Self-adjusting
Piston Diameter	mm (in)	60.33 (2.38)
Disc (Rotor) Type		Ventilated
Disc (Rotor) Thickness	mm (in)	26 (1.02)
Disc (Rotor) Effective Diameter	mm (in)	222 (8.74)
REAR DISC BRAKE		
Type		Floating, Pin Slide
Pad Dimension	cm^2 (in^2)	33 (5.11)
Adjusting Method		Self-adjusting
Piston Diameter	mm (in)	41.3 (1.63)
Disc (Rotor) Type		Ventilated
Disc (Rotor) Thickness	mm (in)	18 (0.71)
Disc (Rotor) Effective Diameter	mm (in)	269.2 (10.60)

SERVICE STANDARD

HYDRAULIC BRAKE FLUID		DOT 3 grade
BRAKE PEDAL		
Pedal Free Play	mm (in)	6 to 10 (0.23 to 0.39)
Pedal Height (LHD / RHD)	mm (in)	208 to 218 (8.19 to 8.58) / 211 to 221 (8.31 to 8.70)
Stop Light Switch Clearance	mm (in)	0 to 0.2 (0 to 0.008)
FRONT DISC BRAKE		
Pad Thickness Minimum Limit	mm (in)	1.0 (0.039)
Disc (Rotor) Maximum Runout	mm (in)	0.13 (0.005)
Disc (Rotor) Maximum Parallelism	mm (in)	0.010 (0.0004)
Disc (Rotor) Minimum Wear Dimensions (Thickness)	mm (in)	24.60 (0.969)
Disc (Rotor) Minimum Refinish Dimensions (Thickness)	mm (in)	24.97 (0.983)
REAR DISC BRAKE		
Pad Thickness Minimum Limit	mm (in)	1.0 (0.039)
Disc (Rotor) Maximum Runout	mm (in)	0.13 (0.005)
Disc (Rotor) Maximum Parallelism	mm (in)	0.010 (0.0004)
Disc (Rotor) Minimum Wear Dimensions (Thickness)	mm (in)	16.60 (0.654)
Disc (Rotor) Minimum Refinish Dimensions (Thickness)	mm (in)	16.97 (0.668)

SERVICING

FILLING MASTER CYLINDER RESERVOIR

CAUTION:

1) **Use only specified brake fluid. Do not use any fluid which contains a petroleum base. Do not use a container which has been used for petroleum based fluids or a container which is wet with water. Petroleum based fluids will cause swelling and distortion of rubber parts in the hydraulic brake system. Water mixed with brake fluid lowers the fluid boiling point. Keep all fluid containers capped to prevent contamination.**
2) **Always fill the master cylinder reservoid when the engine is cold.**
3) **Never allow the brake fluid to come in contact with the painted surfaced.**

The master cylinder reservoir must be kept properly filled to ensure adequate reserve and to prevent air and moisture from entering the hydraulic system.
However, because of expansion due to heat absorbed from the brakes and the engine, the reservoir must not be overfilled. The brake fluid reservoir is on the master cylinder, which is located under the hood on the driver side of the cowl. Thoroughly clean reservoir cap before removal to avoid getting dirt into reservoir. Remove cap and diaphragm. Add fluid as required to bring level to the “MAX” mark on the reservoir tank. Use “DOT 3“ Hydraulic Brake Fluid. If the fluid cap diaphragm is stretched, return it to the original position before installing.

DETERIORATION OF BRAKE FLUID

Using any other brake fluid than speficied or brake fluid with mineral oil or water mixed in will drop the boiling point of brake fluid. It may, in turn, reuslt in vapor lock or deteriorated rubber parts of the hydraulic system. Be sure to change brake fluid at specified intervals.
If rubber parts are deteriorated, remover all the system parts and clean them with alcohol. Prior to reassembly, dry the cleaned parts with air to remove the alcohol. Replace all hoses and rubber parts of the system.

LEAKAGE OF BRAKE FLUID

With engine idling, set shift lever in the neutral position and continue to depress brake pedal at a constant pedal application force.
Should the pedal stroke become deeper gradually, leak from the hydraulic pressure system is possible.
Make sure by visual check that there is no leak.

BLEEDING BRAKE HYDRAULIC SYSTEM

A bleeding operation is necessary to remove air from the hydraulic brake system whenever air is introduced into the hydraulic system. It may be necessary to bleed the hydraulic system at all four brakes if air has been introduced through a low fluid level or by disconnecting brake pipes at the master cylinder. If a brake pipe is disconneted at one wheel, only that wheel cylinder/caliper needs to be bled. If pipes are disconnected at any fitting located between master cylinder and brakes, then the brake system served by the disconnected pipe must be bled.

1. For 4-wheel Antilock Brake System (ABS) equipped vehicle, be sure to remove the ABS main fuse 40A located at the relay and fuse box before bleeding air. If you attempt to bleed air without removing the main fuse, air cannot be let out thoroughly, and this may cause damage to the hydraulic unit. After bleeding air, be sure to replace the ABS main fuse back to its original position.
2. Set the parking brake completely, then start the engine.

NOTE:
The vacuum booster will be damaged if the bleeding operation is performed with the engine off.

3. Remove the master cylinder reservoir cap.
4. Fill the master cylinder reservoir with brake fluid. Keep the reservoir at least half full during the air bleeding operation.
5. Always use new brake fluid for replenishment.
6. In replenishing brake fluid, take care that air bubbles do not enter the brake fluid.
   - When the master cylinder is replaced or overhauled, first bleed the air from the master cylinder, then from each wheel cylinder and caliper following the procedures described below.

Bleeding the Master Cylinder

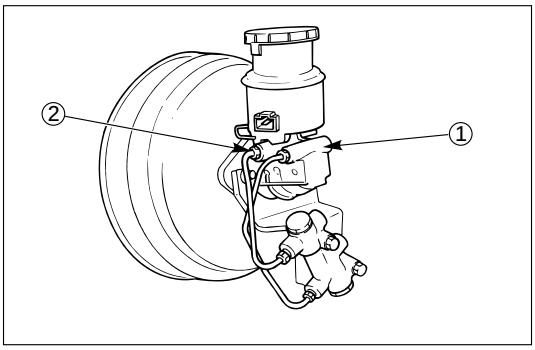

7. Disconnect the rear wheel brake pipe ① from the master cylinder. Check the fluid level and replenish as necessary. If replenished, leave the system for at least one minute.
8. Depress the brake pedal slowly once and hold it depressed.
9. Completely seal the delivery port of the master cylinder where the pipe was disconnected with your finger, then release the brake pedal slowly.
10. Release your finger from the delivery port when the brake pedal returns completely.
11. Repeat steps 7 through 9 until the brake fluid comes out of the delivery port during step 7.

NOTE:
Do not allow the fluid level in the reservoir to go below the half-way mark.

12. Reconnect the brake pipe ① to the master cylinder and tighten the pipe.
13. Depress the brake pedal slowly once and hold it depressed.
14. Loosen the rear wheel brake pipe ① at the master cylinder.
15. Retighten the brake pipe, then release the brake pedal slowly.
16. Repeat steps 13 through 15 until no air comes out from the port when the brake pipe is loosened.

NOTE:
Be very careful not to allow the brake fluid to come in contact with painted surfaces.

17. Bleed the air from the front wheel brake pipe connection ② by repeating steps 7 through 16.

Bleeding the Caliper

18. Bleed the air from each wheel in the order listed below.
    LHD models:
    1) Right rear caliper
    2) Left rear caliper
    3) Load sensing proportioning valve (only for Europe and South Africa)
    4) Right front caliper
    5) Left front caliper
    RHD models:
    1) Left rear caliper
    2) Right rear caliper
    3) Load sensing proportioning valve (only for Europe and South Africa)
    4) Left front caliper
    5) Right front caliper

Conduct air bleeding from the wheels in the above order. If no brake fluid comes out, it suggests that air is mixed in the master cylinder. In this case, bleed air from the master cylinder in accordance with Steps 7 through 17, and then bleed air from the caliper.

19. Place the proper size box end wrench over the bleeder screw.
20. Cover the bleeder screw with a transparent tube, and submerge the free end of the transparent tube in a transparent container containing brake fluid.
21. Pump the brake pedal slowly three (3) times (once/sec), then hold it depressed.
22. Loose the bleeder screw until fluid flows through the tube.
23. Retighten the bleeder screw.
24. Release the brake pedal slowly.
25. Repeat step 21 through 24 until the air is compeletely removed. It may be necessary to repeat the bleeding procedure 10 or more times for front wheels and 15 or more times for rear wheels.
26. Go to the next wheel in the sequence after each wheels is bled. Be sure to monitor reservoir fluid level.

27. Depress the brake pedal to check if you feel "sponginess" after the air has been removed from all wheel cylinders and calipers. If the pedal feels "spongy", the entire bleeding procedure must be repeated.
28. After the bleeding operation is completed on each individual wheel, check the level of brake fluid in the reservoir and replenish up to the "MAX" level if necessary.
29. Attach the reservoir cap.
    - If the diaphragm inside the cap is deformed, reform it and install.
30. Stop the engine.

FLUSHING BRAKE HYDRAULIC SYSTEM

It is recommended that the entire hydraulic system be thoroughly flushed with clean brake fluid whenever new parts are installed in the hydraluic system. Approximately one quart of fluid is required to flush the hydraulic system.

The system must be flushed if there is any doubt as to the grade of fluid in the system or if fluid has been used which contains the slightest trace of mineral oil. All rubber parts that have been subjected to a contaminated fluid must be replaced.

BRAKE PIPES AND HOSES

The hydraulic brake system components are interconnected by special steel piping and flexible hoses. Flexible hoses are used between the frame and the front calipers, the frame and rear axle case and the rear axle and the rear calipers.

When the hydraulic pipes have been disconnected for any reason, the brake system must be bled after reconnecting the pipe; refer to "Bleeding Brake Hydraulic System" in this section.

BRAKE HOSE INSPECTION

The brake hoses should be inspected at least twice a year. The brake hose assembly should be checked for road hazard, cracks and chafing of the outer cover, and for leaks and blisters. Inspect for proper routing and mounting of the hose. A brake hose that rubs on suspension components will wear and eventually fail. A light and mirror may be needed for an adequate inspection. If any of the above conditions are observed on the brake hose, adjust or replace the hose as necessary.

CAUTION:
Never allow brake components such as calipers to hang from the brake hoses, as damage to the hoses may occur.

CHECKING BRAKE PEDAL HEIGHT

The push rod serves as the brake pedal stopper when the pedal is fully released. Brake pedal height adjustment should be performed as follows:

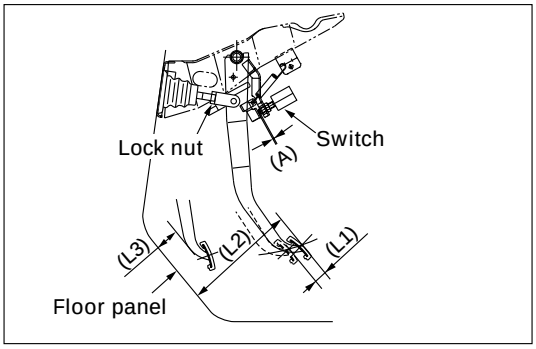

Adjust Brake Pedal

1. Measure the brake pedal height after making sure the pedal is fully returned by the pedal return spring.
   Pedal height (L2) must be measured after starting the engine and revving it several times.

Pedal Free Play (L1)	mm (in)
6 – 10 (0.23 – 0.39)	

Pedal Height (L2)	mm (in)
LHD	RHD
208 – 218 (8.19 – 8.58)	211 – 221 (8.31 – 8.70)

NOTE:
Pedal free play (L1) must be measured after turning off the engine and stepping on the brake pedal firmly five times or more.

2. If the measured value is not within the above range, adjust the brake pedal as follows:
   a) Disconnect the stop light switch connector.
   b) Loosen the stop light switch lock nut.
   c) Rotate the stop light switch so that it moves away from the brake pedal.
   d) Loosen the lock nut on the push rod.
   e) Adjust the brake pedal to the specified height by rotating the push rod in the appropriate direction.
   f) Tighten the lock nut to the specified torque.

Lock Nut Torque	N·m (kg·m/lb·ft)
20 (2.0 / 15)	

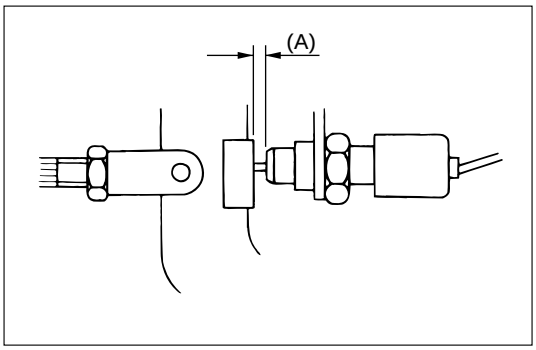

   g) Adjust the stop light switch to the specified clearance (between switch housing and brake pedal) by rotating the switch housing.

Clearance	mm (in)
0 – 0.2 (0 – 0.008)	

NOTE:
While adjusting the installation of the stoplight switch, make sure that the threaded part of the stoplight switch does not push the brake pedal.

   h) Tighten the stop light switch lock nut.
   i) Connect the stop light switch connector.

CHECKING BRAKE PEDAL TRAVEL

1. Pedal height (L3) must be measured after starting the engine and removing it several times to apply vacuum to the vacuum booster fully.

NOTE:
Pedal height (L3) must be 100 mm (3.9 in)/85 mm (3.5 in) (LHD/RHD) or more when about 50 kg (110.25 lb) of stepping force is applied.

2. If the measured value is lower than the above range, air existing in the hydrauic system is suspected and perform bleeding procedure.

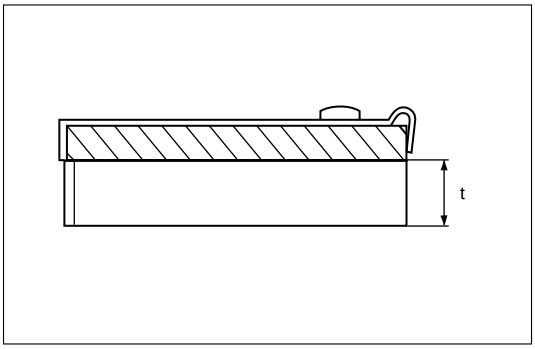

FRONT AND REAR DISC BRAKE PADS INSPECTION

Check the outer pad by looking at each caliper from above. Check the thickness on the inner pad by looking down through the inspection hole in the top of the caliper. Whenever the pad is worn to about the thickness of the pad base, the pad should be removed for further measurements. The pad should be replaced anytime the pad thickness (t) is worn to within 1.0 mm (0.039 in) of the pad itself.
The disc pads have a wear indicator that makes a noise when the pad wears to where replacement is required.

Minimum Limit	mm (in)
1.0 (0.039)	

SERVICING THE FRONT BRAKE ROTOR

In the manufacturing of the front brake rotor, all the tolerances regarding surface finish, parallelism and lateral runout are held very closely. The maintenance of these tolerances provide the surface necessary to assure smooth brake operation.

LATERAL RUNOUT

Lateral runout is the movement of the rotor from side to side as it rotates on the spindle. This could also be referred to as “rotor wobble”.
This movement causes the piston to be knocked back into its bore. This results in additional pedal travel and a vibration during braking.

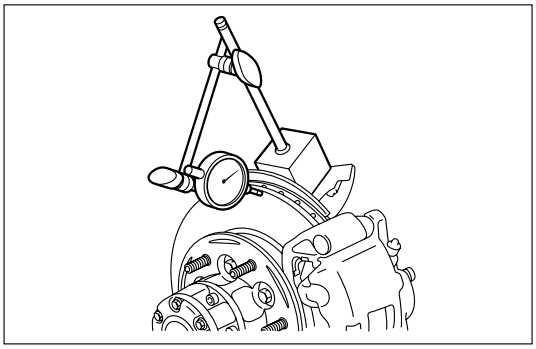

CHECKING LATERAL RUNOUT

1. Adjust the wheel bearing correctly.
   - Refer to Front Hub and Disc in Driveline / Axle Section.
2. Attach a dial indicator to some portion of the suspension so that the stem contacts the rotor face about 29 mm (1.14 in) from the rotor edge.
3. Move the rotor one complete rotation.
   - The lateral runout should not exceed 0.13 mm (0.005 in).

Maximum Runout	mm (in)
0.13 (0.005)	

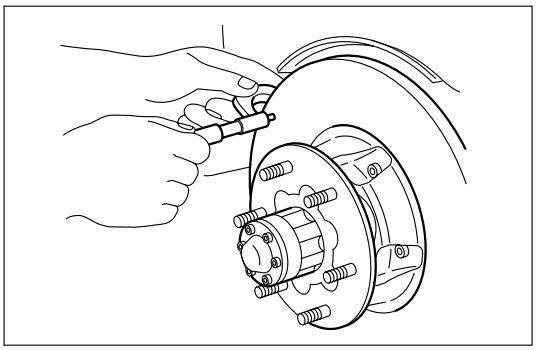

PARALLELISM

Parallelism is the measurement of the thickness of the rotor at four or more points around the circumference of the rotor. All measurement must be made at 29 mm (1.14 in) from the edge of the rotor.
The rotor thickness must not vary more than 0.010 mm (0.004 in) from point to point.

Maximum Parallelism	mm (in)
0.010 (0.0004)	

REPLACING FRONT BRAKE ROTORS

When installing new brake rotors, do not refinish the surfaces. These parts are at the correct level of surface finish.

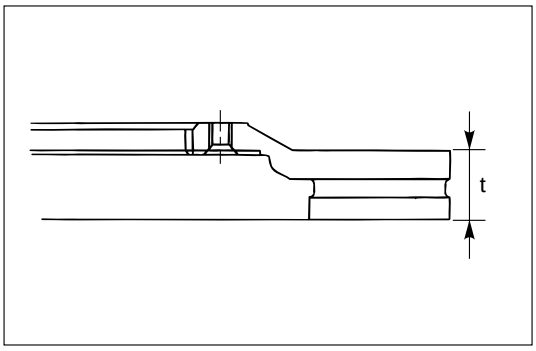

REFINISHING FRONT BRAKE ROTORS

Accurate control of the rotor tolerances is necessary for proper performance of the disc brakes. Machining of the rotor should be done only with precision equipment. All brake rotors have a minimum thickness dimension cast into them. This dimension is the minimum wear dimension and not a refinish dimension. The minimum wear dimension is 24.60 mm (0.969 in). The minimum refinish dimension is 24.97 mm (0.983 in).
When refinishing rotors, always use sharp cutting tools or bits. Dull or worn tools leave a poor surface finish which will affect initial braking performance. Vibration dampening attachments should always be used when refinishing braking surfaces. These attachments eliminate tool chatter and will result in better surface finish.
After refinishing, replace any rotor that does not meet the minimum thickness of 24.97 mm (0.983 in). Do not use a brake rotor that will not meet the specification.

Minimum Wear Dimension	mm (in)
24.60 (0.969)	

Refinish Dimension	mm (in)
24.97 (0.983)	

SERVICING THE REAR BRAKE ROTOR

In the manufacturing of the rear brake rotor, all the tolerances regarding surface finish, parallelism and lateral runout are held very closely. The maintenance of these tolerances provide the surface necessary to assure smooth brake operation.

LATERAL RUNOUT

Lateral runout is the movement of the rotor from side to side as it rotates on the spindle. This could also be referred to as “rotor wobble”.
This movement causes the piston to be knocked back into its bore. This results in additional pedal travel and a vibration during braking.

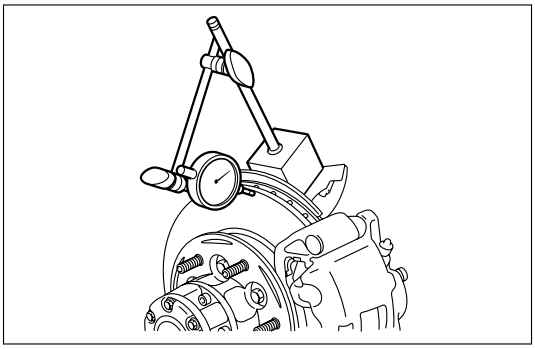

CHECKING LATERAL RUNOUT

1. Attach a dial indicator to some portion of the suspension so that the stem contacts the rotor face about 22 mm (0.87 in) from the rotor edge.
2. Move the rotor one complete rotation.
   - The lateral runout should not exceed 0.13 mm (0.005 in).

Maximum Runout	mm (in)
0.13 (0.005)	

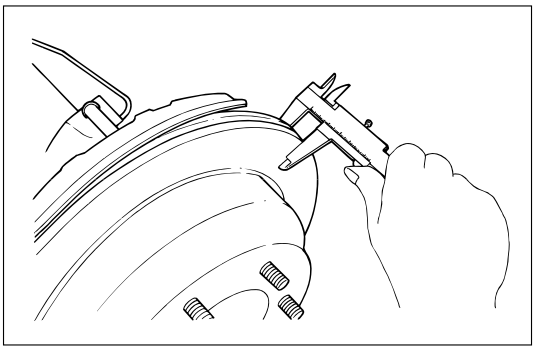

PARALLELSIM

Parallelism is the measurement of the thickness of the rotor at four or more points around the circumference of the rotor. All measurements must be made at 22 mm (0.87 in) from the edge of the rotor.
The rotor thickness must not vary more than 0.010 mm (0.0004 in) from point to point.

Maximum Parallelism Variation	mm (in)
0.010 (0.0004)	

REPLACING REAR BRAKE ROTORS

When installing new brake rotors, do not refinish the surfaces. These parts are at the correct level of surface finish.

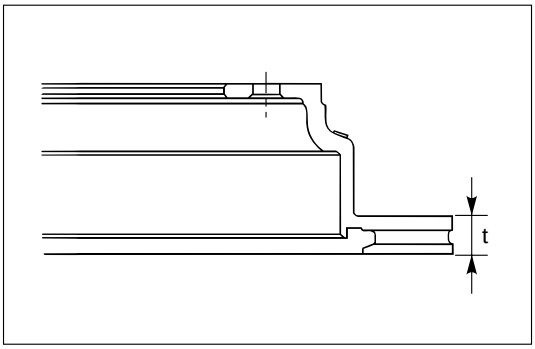

REFINISHING REAR BRAKE ROTORS

Accurate control of the rotor tolerances is necessary for proper performance of the disc brakes. Machining of the rotor should be done only with precision equipment. All brake rotors have a minimum thickness dimension cast into them. This dimension is the minimum wear dimension and not a refinish dimension. The minimum wear dimension is 16.60 mm (0.654 in). The refinish dimension is 16.97 mm (0.668 in).
When refinishing rotors, always use sharp cutting tools or bits. Dull or worn tools leave a poor surface finish which will affect initial braking performance.

Vibration dampening attachments should always be used when refinishing braking surfaces. These attachments eliminate tool chatter and will result in better surface finish.

After refinishing, replace any rotor does not meet the minimum thickness of 16.97 mm (0.668 in). Do not use a brake rotor that will not meet the specification.

Minimum Wear Dimension	mm (in)
16.60 (0.654)	

Refinish Dimension	mm (in)
16.97 (0.668)	

FIXING TORQUE

Brake Hydraulic Lines

N·m (kg·m/lb·ft)

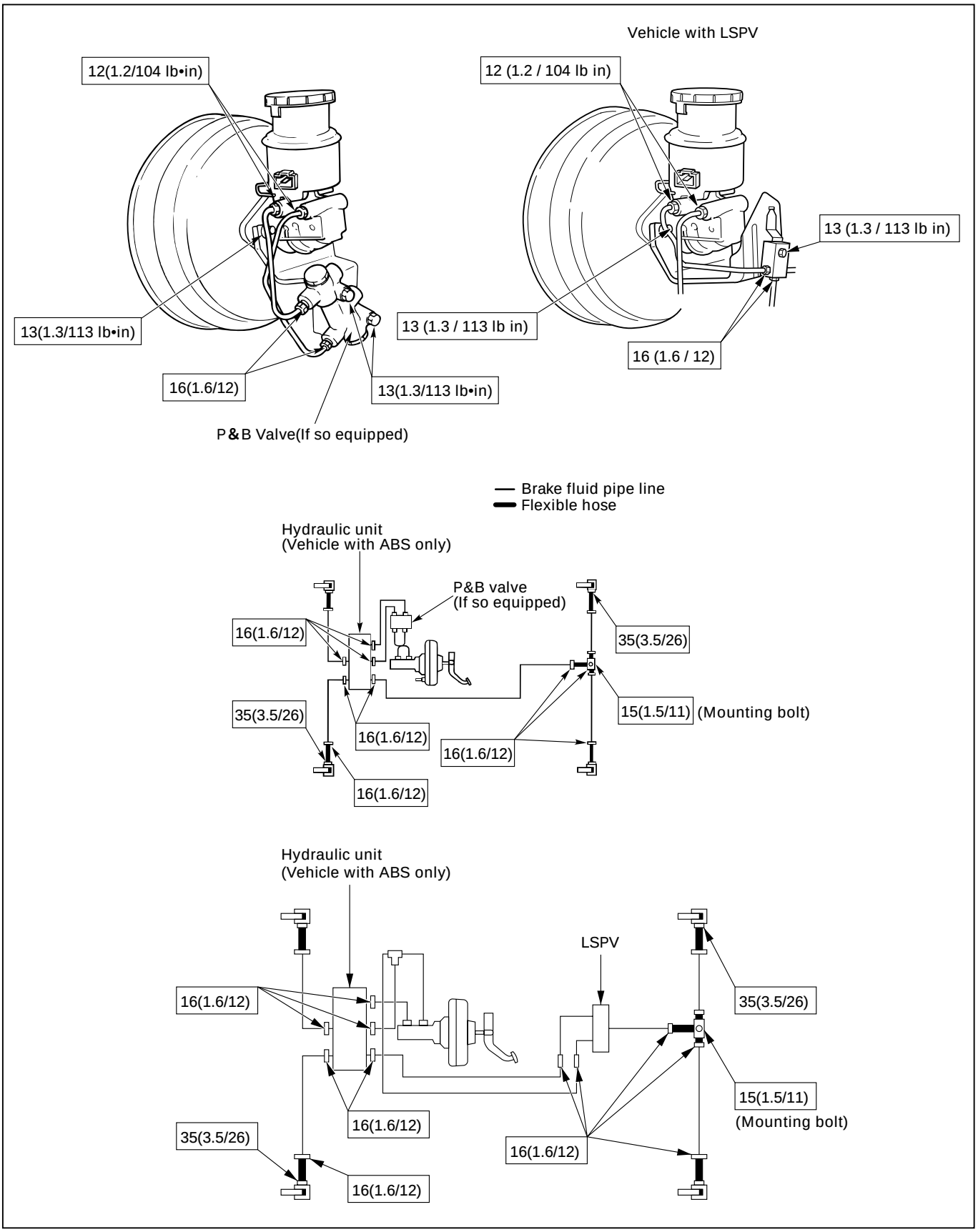

Brake Pedal

N·m (kg·m/lb·ft)

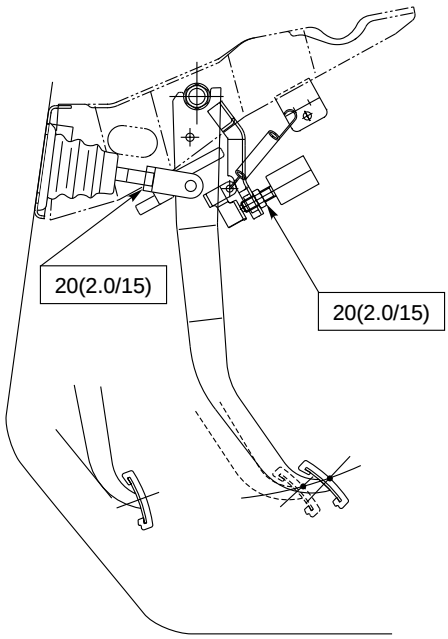

Front and Rear Brakes

N·m (kg·m/lb·ft)

Front disc brake

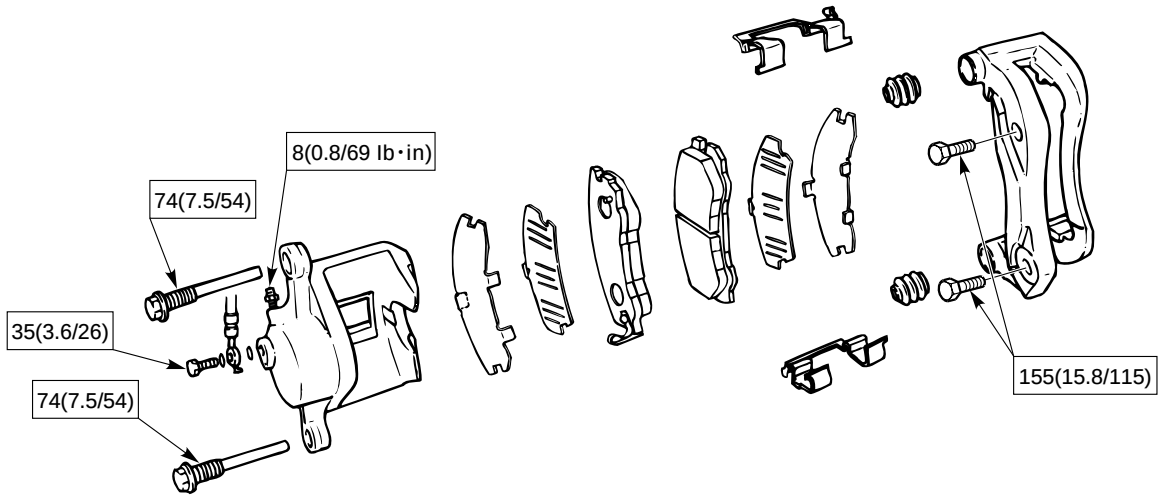

Rear disc brake

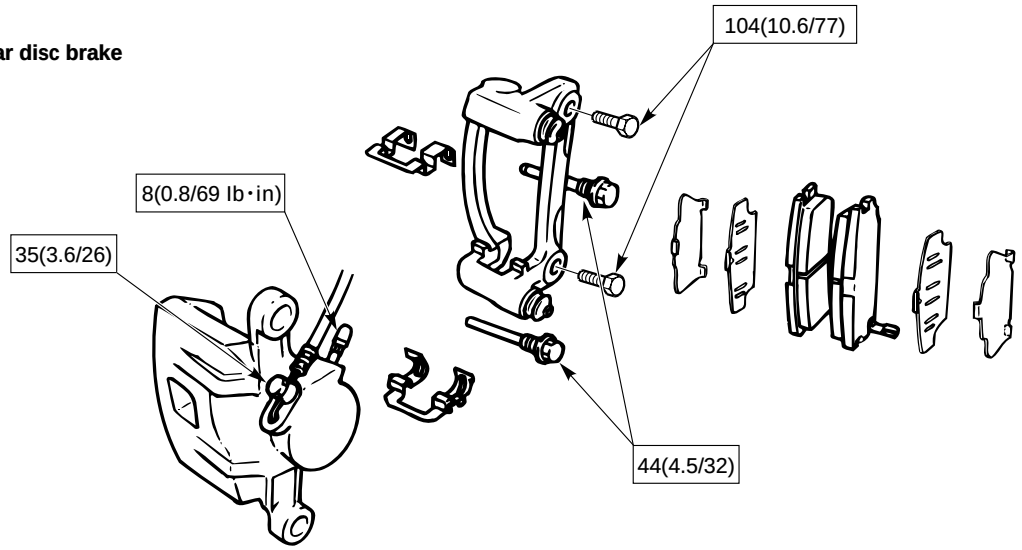

SPECIAL TOOLS

ILLUSTRATION	PART NO.	PARTNAME
	5-8840-2306-0 (J-39242)	Primary piston holder (including master cylinder attach-ment and master cylinder plug)
	5-8840-0277-0 (J-24460-01)	Radiator cap tester
	5-8840-2300-0 (J-39216)	Push rod gauge
	5-8840-0279-0 (J-23738-A)	Vacuum pump
	5-8840-2305-0 (J-39241)	Push rod support

GENERAL DESCRIPTION

MASTER CYLINDER

The master cylinder contains two pistons that supply the hydraulic pressure for a dual-circuit braking system. The primary piston provides the fluid pressure to the front brakes, while the secondary piston provides the fluid pressure to the rear brakes. If the pressure is lost from either system, the remaining system will function to stop the vehicle.

CAUTION:

1) **The master cylinder is not repairable. If found defective, it must be replaced as complete assembly.**
2) **If any hydraulic component is removed or disconneted, it may be necessary to bleed all or part of the brake system.**
3) **The torque values specified are for dry, unlubricated fasteners.**
4) **Perform service operations on a clean bench free from all mineral oil materials.**

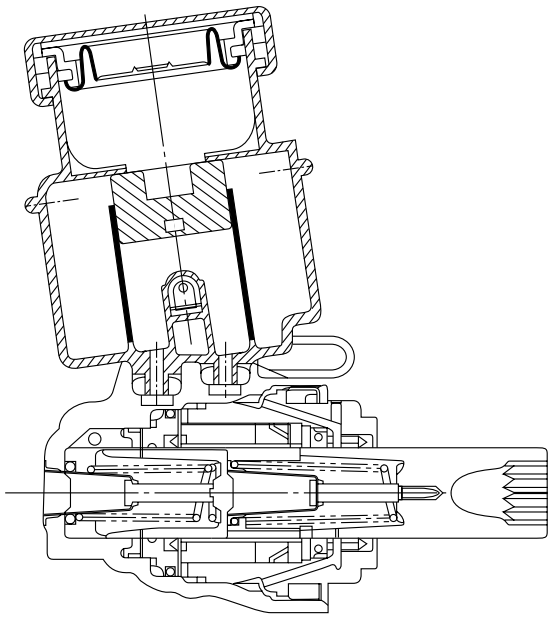

330RW013

VACUUM BOOSTER

This booster is a tandem vacuum unit with a diaphragm effective diameter 205 mm + 230 mm (gasoline engine model) / 180 mm + 205 mm (diesel engine model). In normal operating mode, with the service brakes in the released position, the tandem vacuum booster operates with vacuum on both sides of its diaphragms. When the brakes are applied, air at atmospheric pressure is admitted to one side of each diaphragm to provide the power assist. When the service brake is released, the atmospheric air is shut off from the one side of each diaphragm. The air is then drawn from the booster through the vacuum check valve to the vacuum source.

CAUTION:

1) **If any hydraulic component is removed or disconnected, it may be necessary to bleed all or part of the brake system.**
2) **The torque values specified are for dry, unlubricated fasteners.**
3) **The vacuum booster is not repairable and must be replaced as complete assembly.**

DISC BRAKES

The disc brake assembly consists of a caliper, piston, rotor, pad assembly and support bracket. The caliper assembly has a single bore and is mounted to the support bracket with 2 mounting bolts. The support bracket allows the caliper to move laterally against the rotor. The caliper is a one-piece casting with the inboard side containing the piston bore. A square cut rubber seal is located in a groove in the piston bore which provides the hydraulic seal between the piston and the cylinder wall.

NOTE:

1) **Replace all components included in repair kits used to service this caliper.**
2) **Lubricate rubber parts with clean brake fluid to ease assembly.**
3) **If any hydraulic component is removed or disconnected, it may be necessary to bleed all or part of the brake system.**
4) **Replace pads in axle sets only.**
5) **The torque values specified are for dry, unlubricated fasteners.**
6) **Perform service operation a clean bench free from all mineral oil materials.**

OPERATION

Hydraulic pressure, created by applying the brake pedal, is converted by the caliper to a stopping force. This force acts equally against the piston and the bottom of the caliper bore to move the piston outward and to move (slide) the caliper inward resulting in a clamping action on the rotor. This clamping action forces the linings against the rotor, creating friction to stop the vehicle.

Front disc brakes

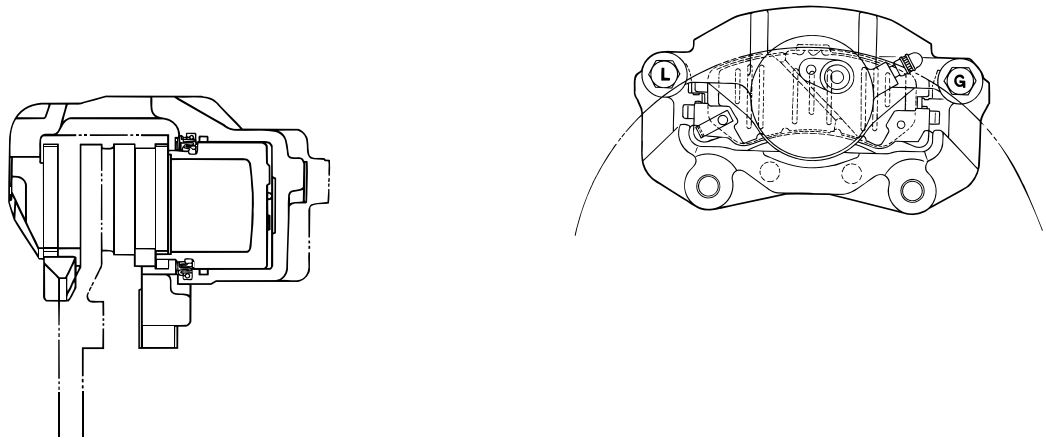

Rear disc brakes

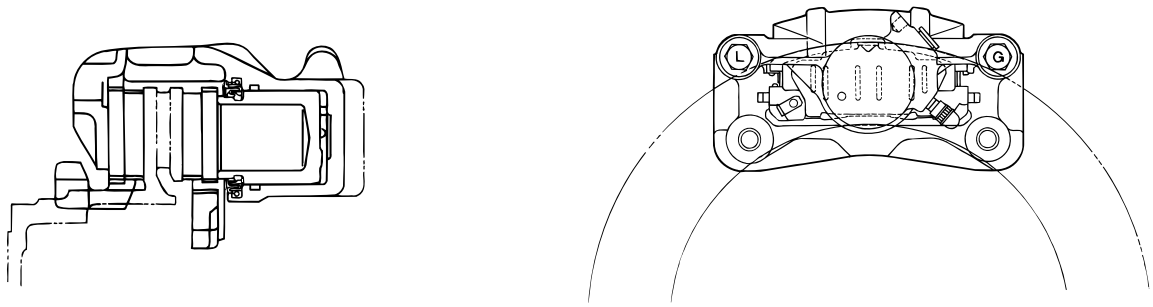

ON-VEHICLE SERVICE

BRAKE HOSE REPLACEMENT

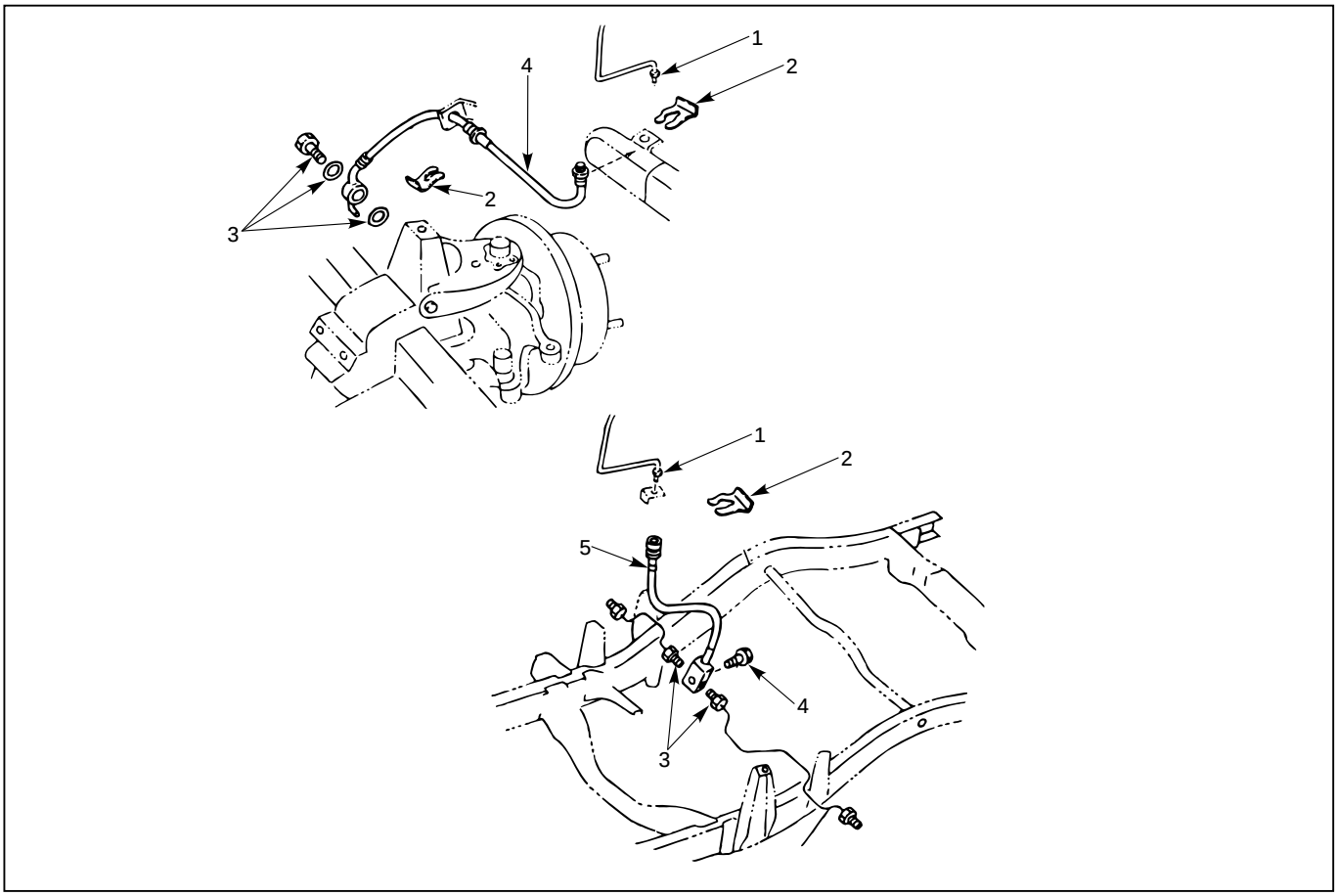

Front/Rear Caliper Brake Hose

Removal Steps

1. Brake pipe
2. Clip
3. Bolt and gasket
4. Hose

Installation Steps

To install, follow the removal steps in the reverse order.

Rear Axle Brake Hose

Removal Steps

1. Brake pipe
2. Clip
3. Brake pipe
4. Bolt
5. Hose

Installation Steps

To install, follow the removal steps in the reverse order.

REMOVAL

Preparation:

1) Raise the vehicle and support it with suitable safety stands.
2) Remove wheel and tire assembly.
3) Clean dirt, grease, and other foreign material off the hose fittings at both ends.

Front/Rear Caliper Brake Hose

1. **Brake Pipe**
2. **Clip**
3. **Bolt and Gasket**
4. **Hose**

Rear Axle Brake Hose

1. **Brake Pipe**
2. **Clip**
3. **Brake Pipe**
4. **Bolt**
5. **Hose**

INSTALLATION

To install, follow the removal steps in the reverse order, noting the following points. After installing the brake hoses, bleed brakes as described in this section.

Front/Rear Caliper Brake Hose

1. Tighten the brake pipes to the specified torque.

Brake Pipe Torque	N·m(kg·m/lb·ft)
16 (1.6 / 12)	

2. Tighten the bolt to the specified torque.

Bolt Torque	N·m(kg·m/lb·ft)
35 (3.5 / 26)	

NOTE:

- **Always use new copper gaskets.**
- **Be sure to put the hooked edge of the flexible hose end into the anti-rotation cavity.**

Rear Axle Brake Hose

1. Tighten the brake pipes to the specified torque.

Brake Pipe Torque	N·m(kg·m/lb·ft)
16 (1.6 / 12)	

2. Tighten the bolt to the specified torque.

Bolt Torque	N·m(kg·cm/lb·in)
13 (130 / 113)	

BRAKE PIPE REPLACEMENT

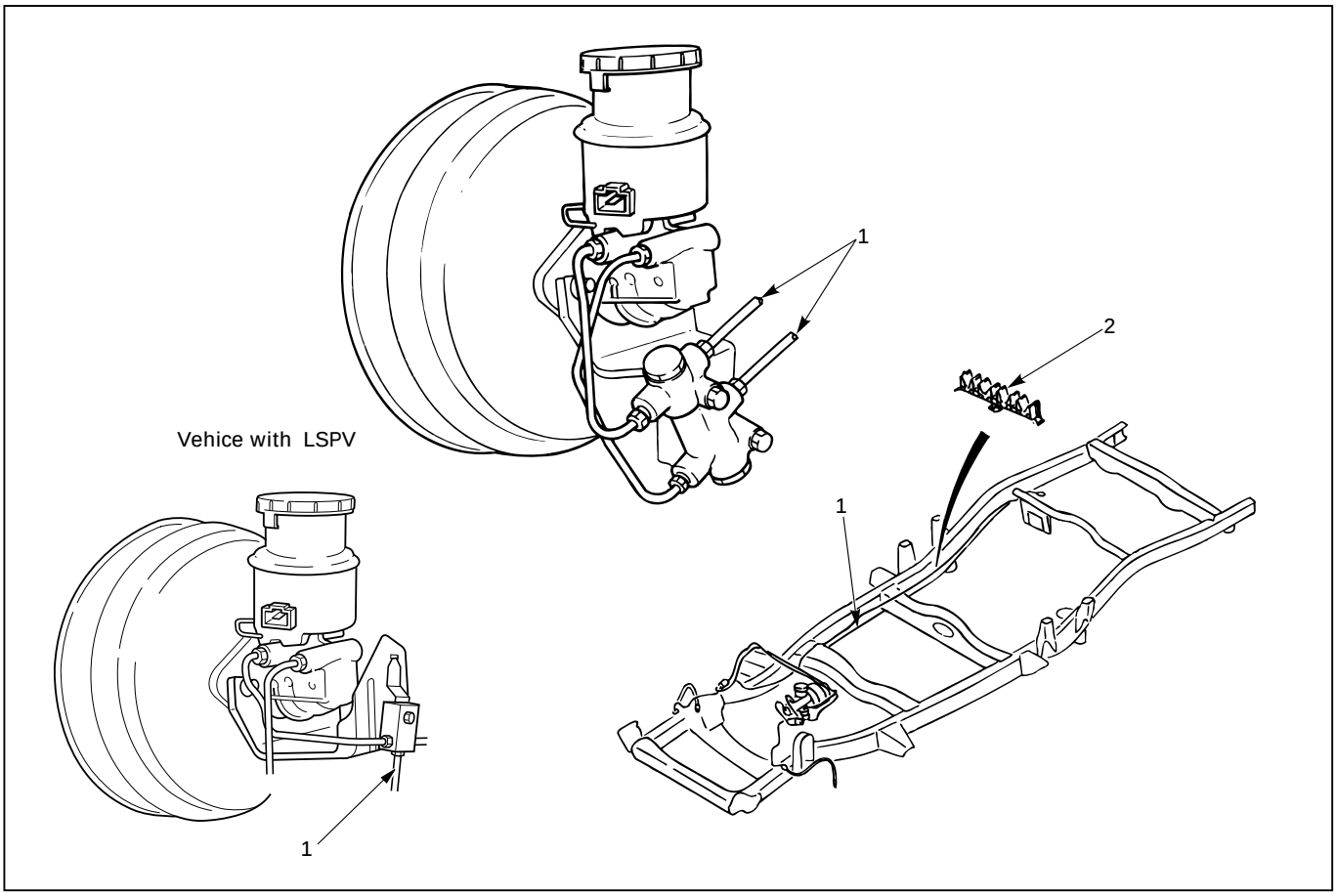

Removal Steps

1. Brake pipe
2. Plastic clip

Installation Steps

To install, follow the removal steps in the reverse order.

REMOVAL

Preparation:

1) Raise the vehicle and support it with suitable safety stands.
2) Remove wheel and tire assembly as necessary.
3) Clean dirt, grease, and other foreign material off the pipe fittings at both ends.

1. Brake Pipe

2. Plastic Clip

INSTALLATION

To install, follow the removal steps in the reverse order, noting the following points. After installing the brake pipes, bleed brakes as described in this section.

1. Tighten the brake pipes to the specified torque.

Brake Pipe Torque	N·m(kg·m/lb·ft)
Master Cylinder Side	Others
12 (1.2/9)	16 (1.6/12)

P & B (PROPORTIONING AND BYPASS) VALVE

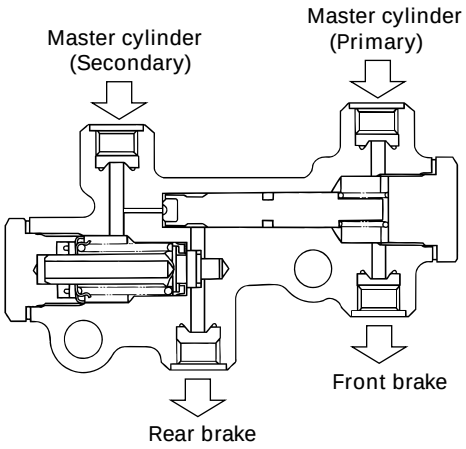

The P & B valve contains two sections, each serving a different function.
The proportioning section of the P & B valve proportions outlet pressure to the rear brakes after a predetermined rear input pressure has been reached. This is done to prevent rear wheel lock-up on the vehicles with light rear wheel loads.
The valve has a By-bass feature which assures full system pressure to the rear brakes in the event of a font brake mulfunction, also full front pressure is retained in the event of rear brake mulfunction.
The P & B valve is not repairable and must be replaced as a complete assembly.

P & B VALVE REPLACEMENT

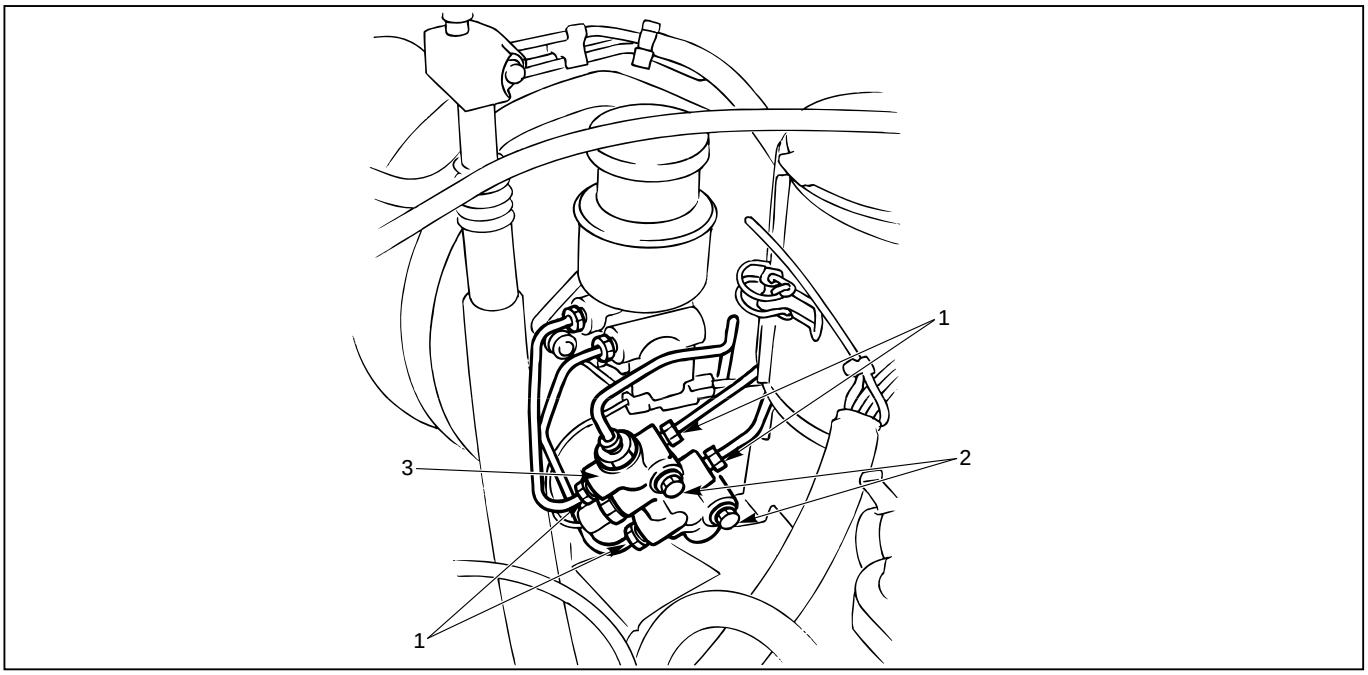

Removal Steps

1. Hydraulic pipes
2. Bolt
3. P & B valve

Installation Steps

To install, follow the removal steps in the reverse order.

REMOVAL

- P & B valve is not repairable and must be replaced as a complete assembly.
- Care must be taken to prevent brake fluid from contacting any painted surface.

1. Hydraulic Pipes

- Plug the pipes to prevent the loss of fluid or the entrance of dirt.

2. Bolt

3. P & B Valve

INSTALLATION

3. P & B Valve

2. Bolt

Bolt Torque	N·m(kg·cm/lb·in)
13 (130/113)	

1. Hydraulic Pipes

Hydraulic Pipe Torque	N·m(kg·m/lb·ft)
16 (1.6/12)	

After installing the brake pipes, bleed brakes as described in Bleeding Brake Hydrauric System this section.

LOAD SENSING PROPORTIONING VALVE (LSPV) (FOR EUROPE AND SOUTH AFRICA)

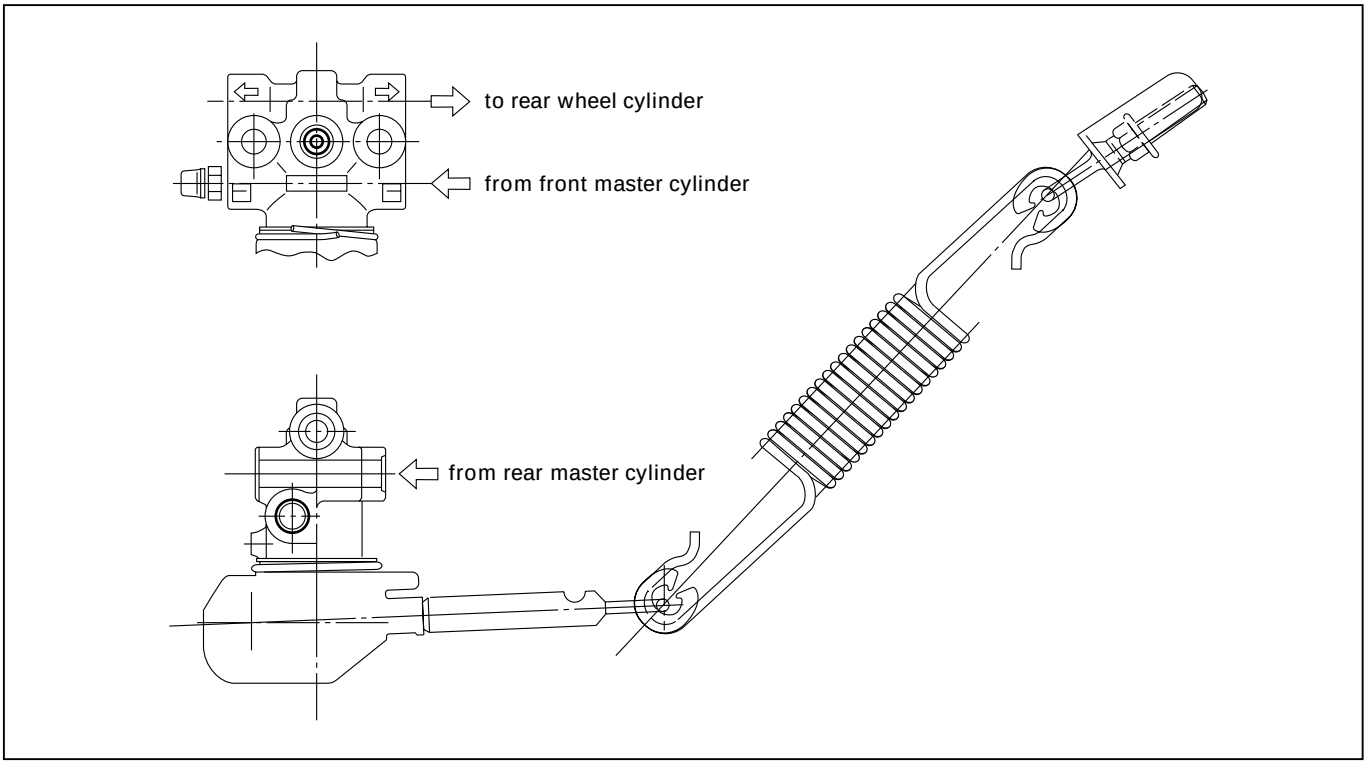

F05RW003

Structure and Operation

The following is an explanation of the structure and operation of the linkage type load sensing device. This device controls the fluid pressure to the rear brakes in accordance with changes in rear axle load (vertical displacements of the rear axle springs).

- Structure

  This device consists of a load sensing lever and a valve.

  The valve is mounted through a bracket to the frame. One end of the load sensing lever is fixed to the valve at the frame and the other end to the rear axle housing through a spring.

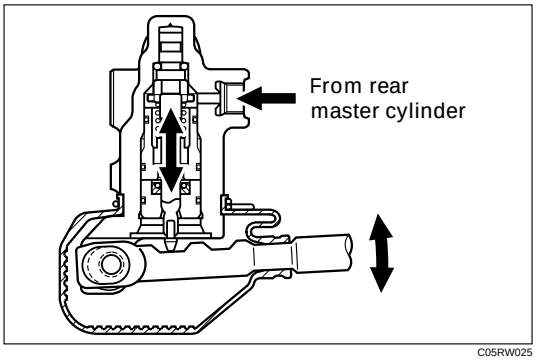

C05RW025

- Operation

1) Outline

When the L.S.P.V. (Load Sensing Proportioning Valve) detects a change in load weight, the load sensing lever moves. Its reaction force is transmitted to the bottom of the load sensing valve to secure an optimum rear wheel cylinder fluid pressure break point in proportion to the actual load weight.
Besides, if the front brake system should fail, the devices is designed to prevent the master cylinder fluid pressure from decreasing and to apply it directly to the rear wheel cylinder to obtain a sufficient braking performance.

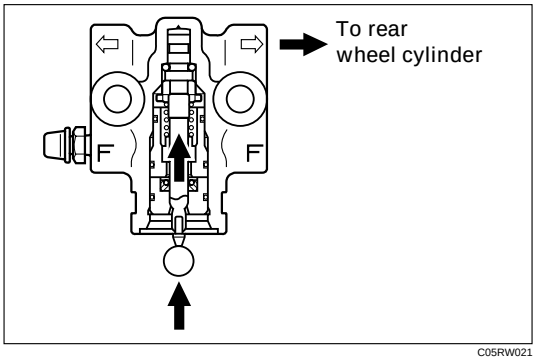

C05RW021

2) Operation

(1) When the fluid pressure is under the break point.
The fluid pressure of the rear master cylinder passes through a clearance between the valve seal and the piston and acts on the rear wheel cylinder. At this moment, a downward force is applied to the piston. However, the compression spring force and reaction force of the load sensing lever keep the piston in the upper position by pushing upwards. (See the left figure.)

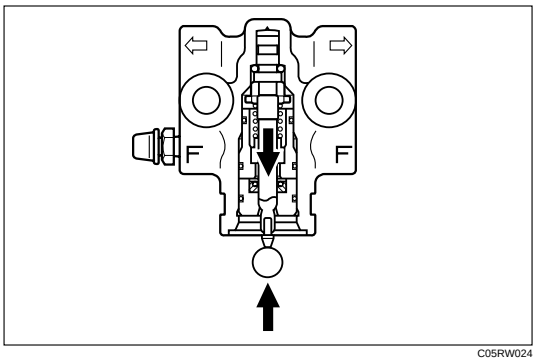

C05RW024

(2) When the fluid pressure is equal to the break point.
As the rear wheel cylinder pressure increases, it surpasses the compression spring force and reaction force of the load sensing lever, causing the pistion to move downwards, so that the pistion butts against the valve seal to shut off the fluid line between the master cylinder and rear wheel cylinder. (See the left figure.)

(3) When the fluid pressure is over the break point.
When the fluid pressure increases further, the piston moves upwards. The moment the piston comes apart from the valve seal, fluid pressure is applied to the rear wheel cylinder and the piston moves downwards so that the fluid line is shut off again. This process goes on repeatedly to control the fluid pressure to the rear wheel cylinder.

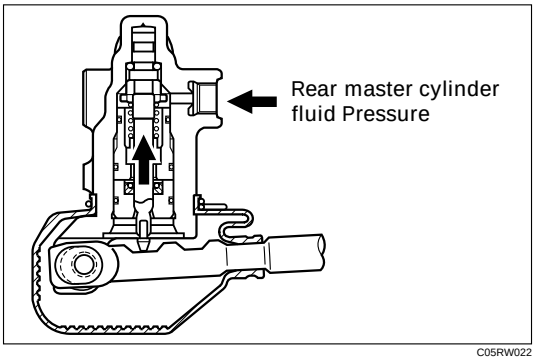

C05RW022

(4) When the front brake system fails.
When there is a failure in the front brake system, the fluid pressure from the front master cylinder decreases. As a result, the balance between the front and rear brake side fluid pressures is lost at the control valve sleeve so that the control valve sleeve moves upwards.
The control valve sleeve strikes against the piston, thereby pushing the piston upwards.
Accordingly, the fluid pressure of the rear master cylinder is not decreased and is applied directly to the rear wheel cylinder to secure a sufficient braking performance of the rear brakes. (See the left figure.)

Valve Maintenance
In the case of fluid leak or other abnormalities, faulty valve should be replaced.

Note:
The load sensing proportioning valve is not repairable and must be replaced as a complete assembly.

ADJUSTMENT PROCEDURE OF LSPV

1. Adjust the rear axle weight by loading the laggage compartmemt as necessary.

Rear Axle Weight	N (kg / lb)
10,300 (1,050 / 2,315)	

Note:
The rear axle weight should be adjusted to the specified value with a man seated in the driver seat.

2. Check the rear wheel cylinder fluid pressure. Install the pressure gauge on bleeder screws on the front and rear brakes.
   a. Depress the brake pedal slowly until the front wheel cylinder fluid pressure reaches 7845 kPa (80 kg/cm^2 / 114 psi)

      Note:
      - **The brake pedal should be depressed gradually until specified pressure is reached without pumping or adjusting foot pressure.**
      - **If the front wheel cylinder fluid pressure rises abobe 7845 kPa (80 kg/cm^2 / 114 psi), release the pedal fully, then depress the pedal again.**

   b. Hold the front wheel cylinder fluid pressure at 7845 kPa (80 kg/cm^2 / 114 psi) for 2 seconds, check the rear wheel cylinder fluid pressure.

Rear wheel cylinder fluid pressure	kPa (kg/cm^2 / psi)
6374±539 (65±5.5 / 924±78)	

   c. If the rear wheel cylinder fluid pressure is not within the specified range, adjust the fluid pressure.

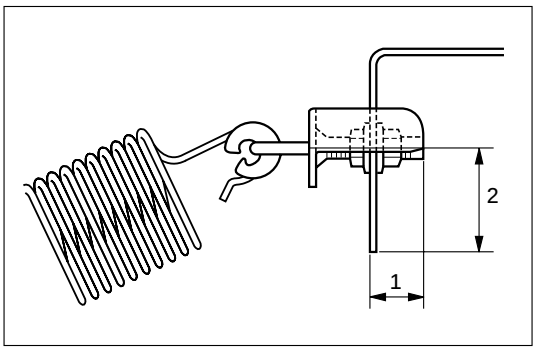

C05RW023

3. Adjust the rear wheel cylinder fluid pressure. The fluid pressure can be adjusted by the bolt projection (1) or bolt projection (2).
   a. If the fluid pressure is lower than specified range, increase the dimention (1) or (2).
   b. If the fluid pressure is higher than the specified range, decrease the dimention (1) or (2).

      Reference:

      Dimention (1): The fluid pressure can be adjusted about 196 kPa (2 kg/cm^2 / 28 psi) by one turning of the nut.

      Dimention (2): The fluid pressure can be adjusted about 98 kPa (1 kg/cm^2 / 14 psi) by sliding the bolt position (per 1 mm / 0.039 in).
4. Check the rear wheel cylinder fluid pressure. If the rear wheel cylinder fluid pressure is not within the specified range, try the adjustment again.
5. Bleed the brake hydraulic line and check the fluid leak.

BRAKE PEDAL REPLACEMENT

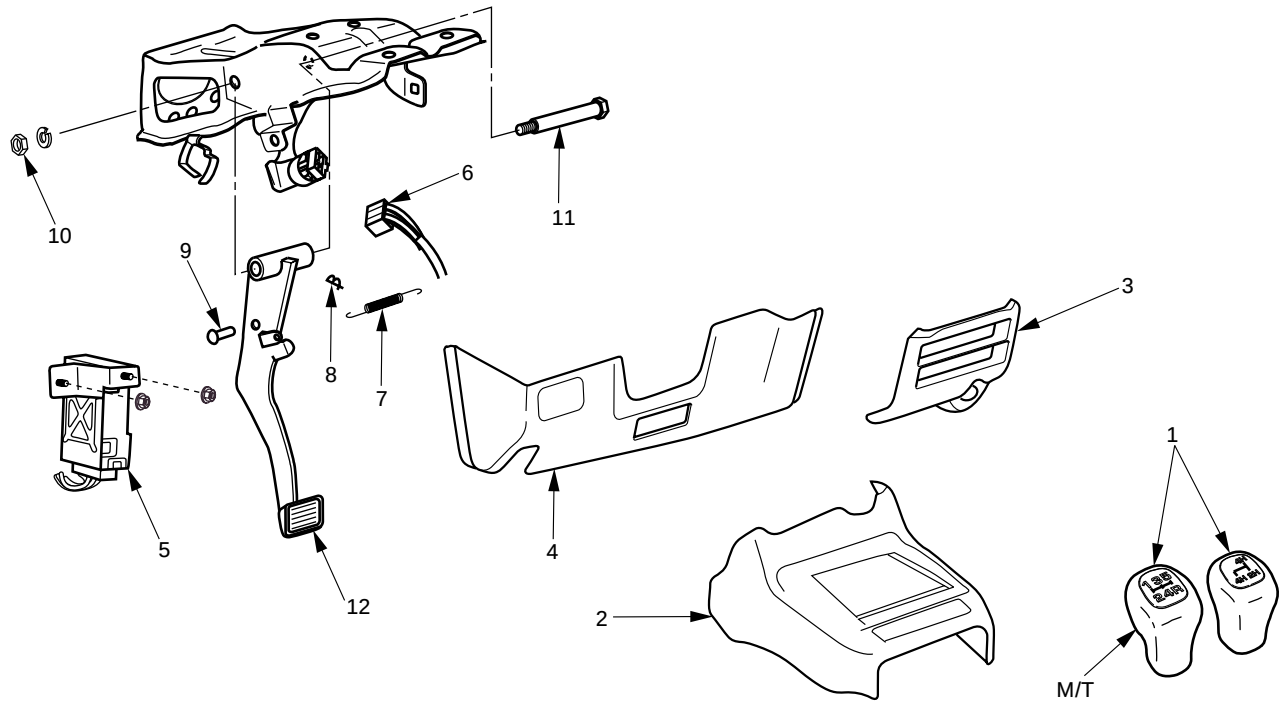

This illustration is based on the LHD model.

Removal Steps

1. Shift knob
2. Front console assembly
3. Lower cluster assembly
4. Instrument panel driver lower cover assembly
5. Anti-theft controller
6. Stoplight switch connector
7. Return spring
8. Snap pin
9. Pin
10. Nut
11. Pin, fulcrum
12. Brake pedal

Installation Steps

12. Brake pedal
11. Pin, fulcrum
10. Nut
9. Pin
8. Snap pin
7. Return spring
6. Stoplight switch connector
5. Anti-theft controller
4. Instrument panel driver lower cover assembly
3. Lower cluster assembly
2. Front console assembly
1. Shift knob

REMOVAL

1. **Shift Knob**
2. **Front Console Assembly**
3. **Lower Cluster Assembly**
4. **Instrument Panel Driver Lower Cover Assembly**
5. **Anti-theft Controller**
6. **Stoplight switch Connector**
7. **Return Spring**
8. **Snap Pin**
9. **Pin**
10. **Nut**
11. **Pin, Fulcrum**
12. **Brake Pedal**

INSTALLATION

12. **Brake Pedal**
11. **Pin, Fulcrum**
    - Apply grease to the entire circumference of the fulcrum pin.
10. **Nut**

Bolt and Nut Torque	N·m (kg·m / lb·ft)
	33 (3.3 / 24)

9. **Pin**
    - Apply grease to the entire circumference of the push rod pin.
8. **Snap Pin**
    - Adjust pedal free travel. Refer to “Brake Pedal Adjustment” previously in this section.
7. **Return Spring**
6. **Stoplight Switch Connector**
5. **Anti-theft Connector**
4. **Instrument Panel Driver Lower Cover Assembly**
3. **Lower Cluster Assembly**
2. **Front Console Assembly**
1. **Shift Knob**

STOPLIGHT SWITCH REPLACEMENT

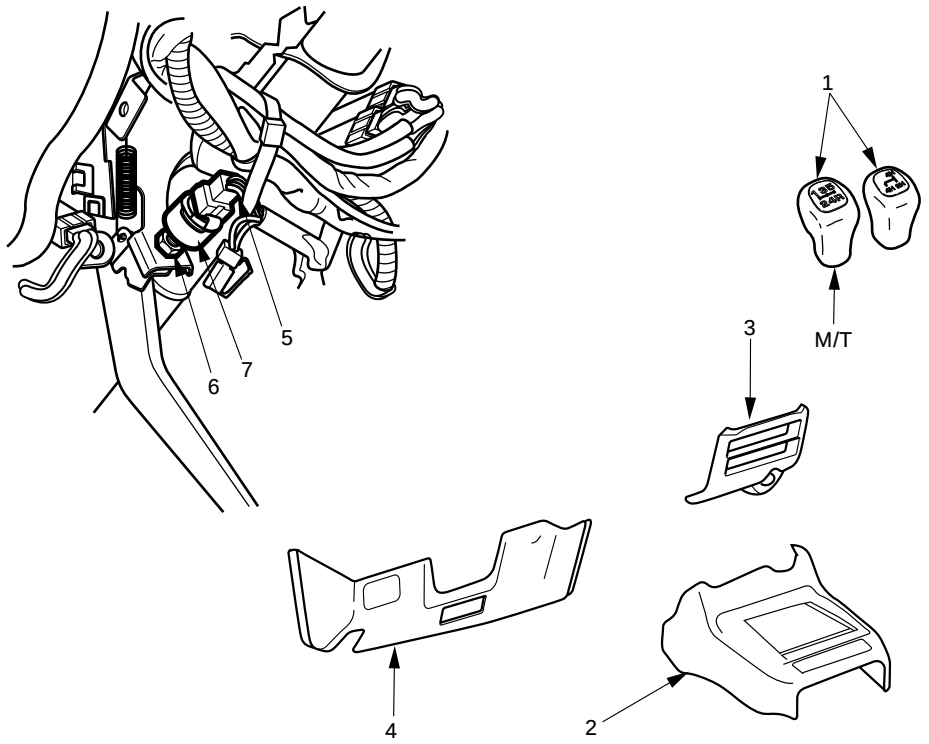

This illustration is based on the LHD model.

Removal Steps

1. Shift Knob
2. Front Console Assembly
3. Lower Cluster Assembly
4. Instrument Panel Driver Lower Cover Assembly
5. Stoplight Switch Connector
6. Lock Nut
7. Switch

Installation Steps

7. Switch
6. Lock Nut
5. Stoplight Switch Connector
4. Instrument Panel Driver Lower Cover Assembly
3. Lower Cluster Assembly
2. Front Console Assembly
1. Shift Knob

REMOVAL

1. **Shift Knob**
2. **Front Console Assembly**
3. **Lower Cluster Assembly**
4. **Instrument Panel Driver Lower Cover Assembly**
5. **Stoplight Switch Connector**
6. **Lock Nut**
7. **Switch**

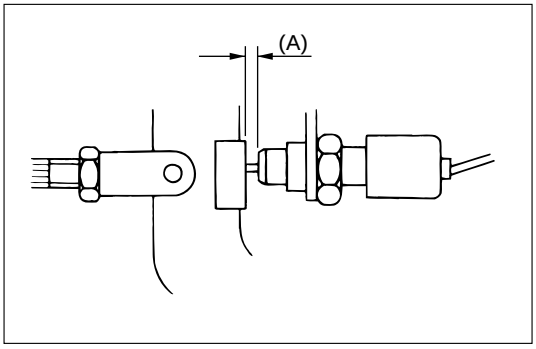

INSTALLATION

7. **Switch**
   - Adjust the stoplight switch to the specified clearance (between switch housing and brake pedal) by rotating the switch housing.

Clearance	mm (in)
0 – 0.2 (0 – 0.008)	

NOTE:
While adjusting the installation of the stoplight switch, make sure that the threaded part of the stoplight switch does not push the brake pedal.

6. **Lock Nut**
5. **Stoplight Switch Connector**
4. **Instrument Panel Driver Lower Cover Assembly**
3. **Lower Cluster Assembly**
2. **Front Console Assembly**
1. **Shift Knob**

FLUID RESERVOIR TANK

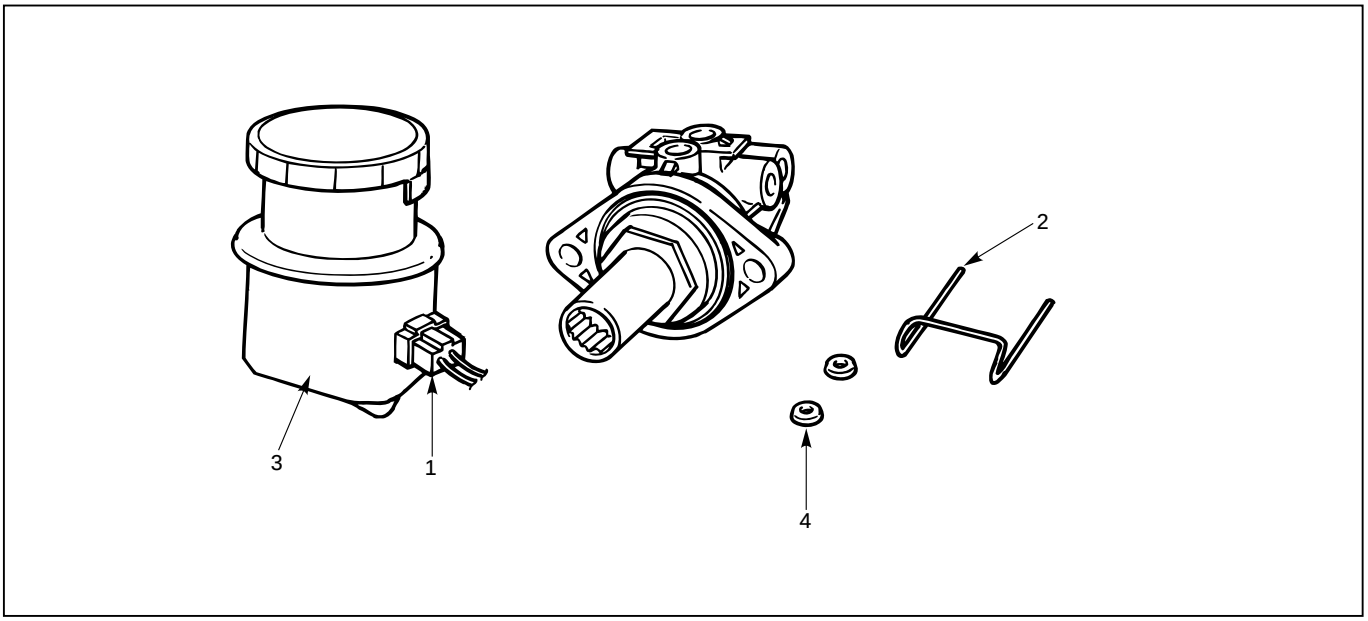

Removal Steps

1. Electrical connector
2. Retainer
3. Fluid reservoir
4. O-ring

Installation Steps

To install, follow the removal steps in the reverse order.

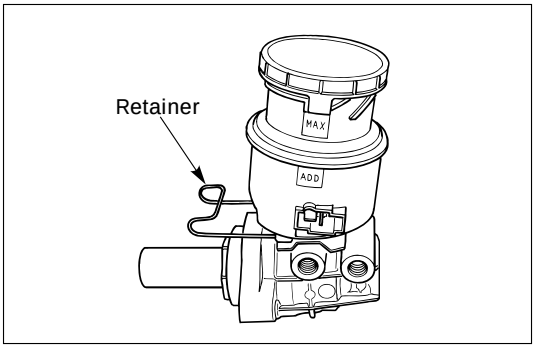

REMOVAL

NOTE:
Before removing fluid reservoir, remove brake fluid from fluid reservoir.

1. **Electrical Connector**
2. **Retainer**
3. **Fluid Reservoir**
   - The fluid level sensor is built into the fluid reservoir. It cannot be removed for servicing.
4. **O-ring**

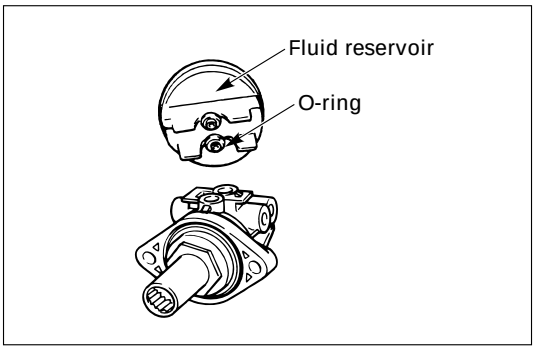

INSTALLATION

To install, follow the removal steps in the reverse order, noting the following points;

4. **O-ring**
   - O-ring must be set onto the fluid reservoir, before installing fluid reservoir.

MASATER CYLINDER ASSEMBLY

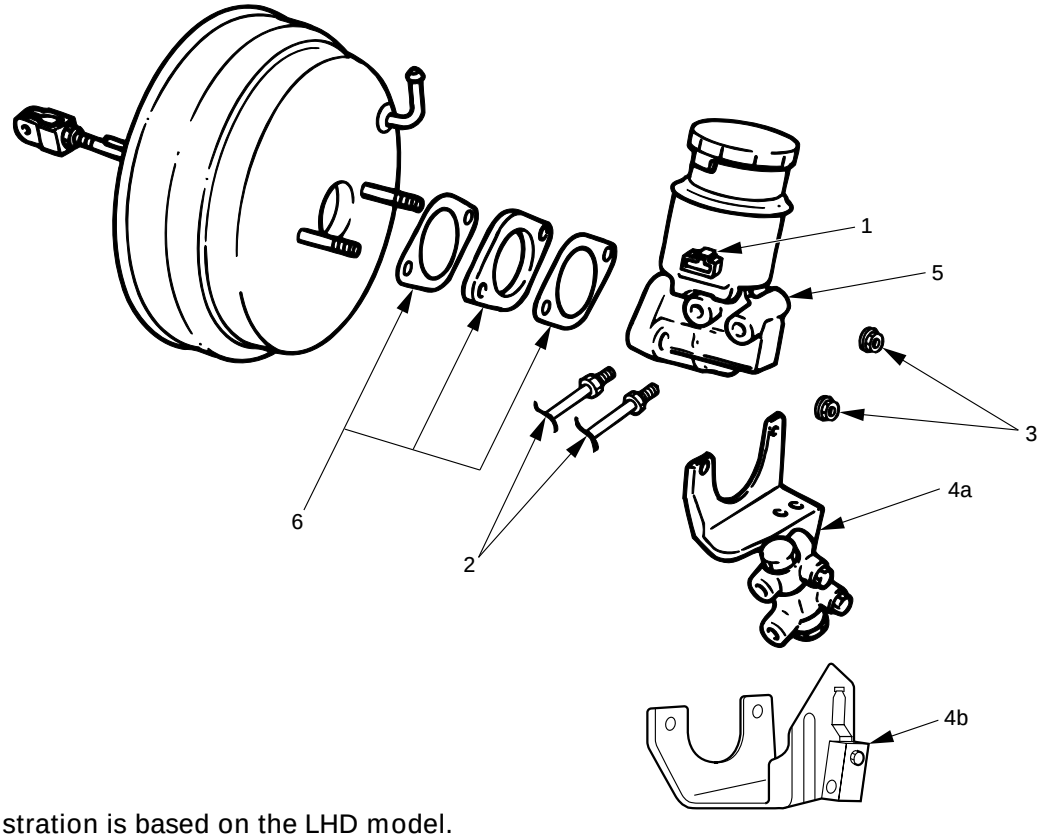

This illustration is based on the LHD model.

330RW015

Removal Steps

1. Electrical connector
2. Brake pipes
3. 2 attaching nuts

4a. P&B valve and bracket

4b. 3-way connector and bracket (Vehicle with LSPV only)

5. Master cylinder
6. Spacer and 2 gaskets

Installation Steps

To install, follow the removal steps in the reverse order.

REMOVAL

CAUTION:
When removing master cylinder from vacuum booster, be sure to get rid of the internal negative pressure of the vacuum booster (by, for instance, disconnecting vacuum hose) in advance.
If any negative pressure remains in the vacuum booster, the piston may possibly come out when the master cylinder is being removed, letting the brake fluid run out.
While removing master cylinder, further, do not hold the piston as it can be easily pulled out.
Outside surface of the piston is the surface on which seals are to slide. Care should be taken to keep the surface free of cuts and dents.

1. **Electrical Connector**
2. **Brake Pipes**
   - After disconnecting the brake pipe, cap or tape the openings of the brake pipe to prevent the entry of foreign matter.
3. **2 Attaching Nuts**

4a. **P & B Valve and Bracket**

4b. **3-way Connector and Bracket (Vehicle with LSPV Only)**

5. **Master Cylinder**
6. **Spacer and 2 Gaskets**

INSTALLATION

6. **Spacer and 2 Gaskets**
5. **Master Cylinder**
   - When replacing the master cylinder or vacuum booster or both, always measure the vacuum booster push rod protrusion and adjust it as necessary. (Refer to Vacuum Booster Assembly in this section.)

4a. **P & B Valve and Bracket**

4b. **3-way Connector and Bracket (Vehicle with LSPV Only)**

3. **2 Attaching Nuts**
   - Tighten the attaching nuts to the specified torque.

Attaching Nut Torque	N·m (kg·cm / lb·in)
13 (130 / 113)	

2. **Brake Pipes**
   - Tighten the brake pipe to the specified torque.

Brake Pipe Torque	N·m (kg·m / lb·ft)
Master Cylinder Side	Others
12 (1.2 / 9)	16 (1.6 / 12)

1. **Electrical Connector**

VACUUM BOOSTER ASSEMBLY

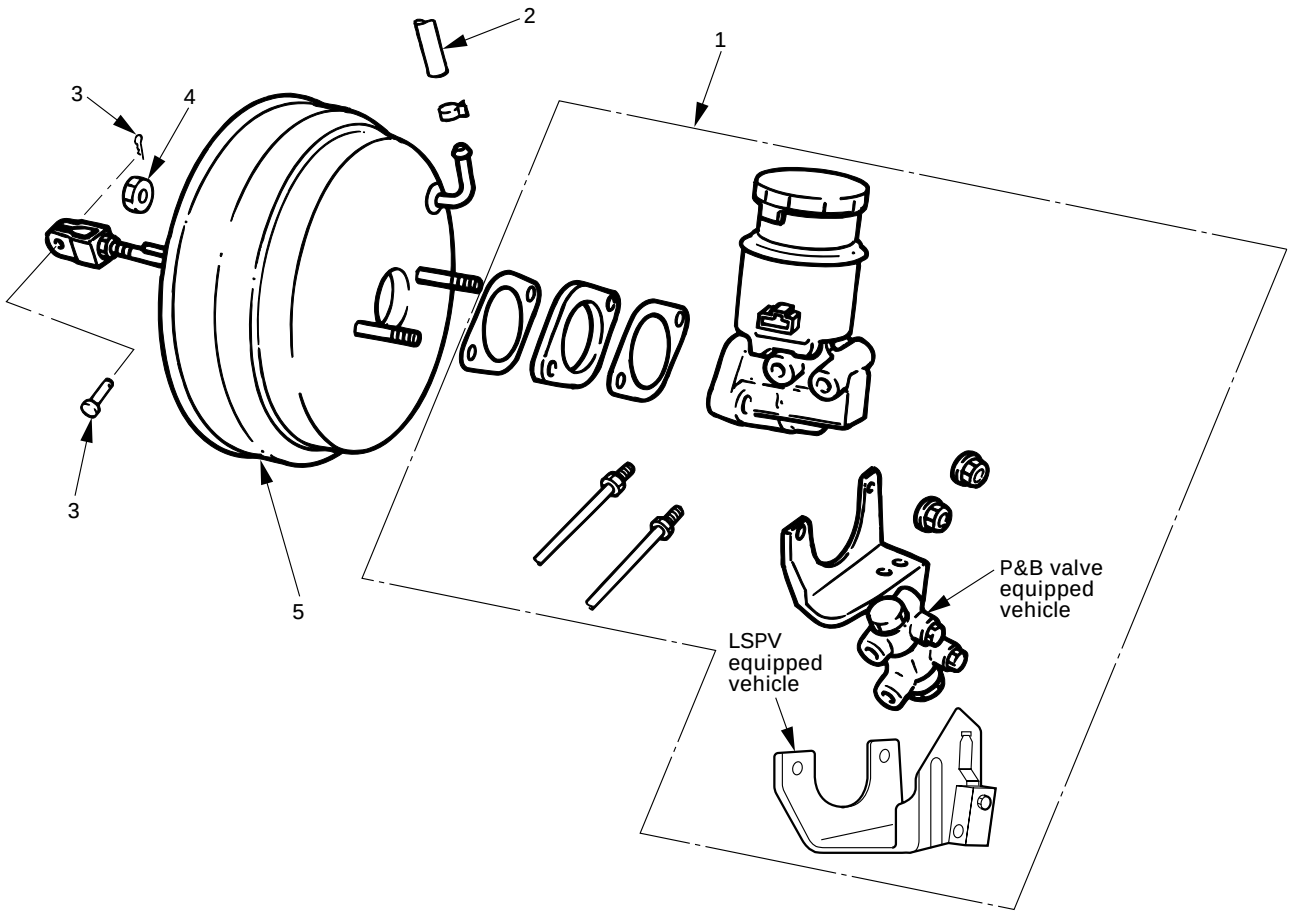

This illustration is based on the LHD model.

331RW010

Removal Steps

1. Master cylinder
2. Vacuum hose
3. Yoke clevis
4. Vacuum booster fixing nut
5. Vauum booster

Installation Steps

To install, follow the removal steps in the reverse order.

REMOVAL

- Before removing the vacuum booster assembly, disconnect and remove brake pipes.

1. **Master Cylinder**
   - Refer to Master Cylinder Assembly in this Section.

CAUTION:
When removing master cylinder from vacuum booster, be sure to get rid of the internal negative pressure of the vacuum booster (by, for instance, disconnecting vacuum hose) in advance.
If any negative pressure remains in the vacuum booster, the piston may possibly come out when the master cylinder is being removed, letting the brake fluid run out.
While removing master cylinder, further, do not hold the piston as it can be easily pulled out.
Outside surface of the piston is the surface on which seals are to slide. Care should be taken to keep the surface free of cuts and dents.

2. **Vacuum Hose**
3. **Yoke Clevis**
   - Disconnect the yoke clevis from the brake pedal.
4. **Vacuum Booster Fixing Nut**
5. **Vacuum Booster**

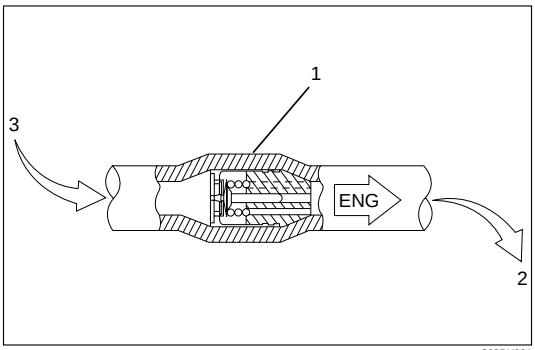

360RX001

INSPECTION AND REPAIR

Vacuum Hose

Inspect the check valve (1), which is installed inside the vacuum hose.

1) Air should pass freely from the vacuum booster side (3) to the engine side (2).
2) Air should not pass from the engine side (2) to the vacuum booster side (3). If it does, the check valve is inoperative and vacuum hose must be replaced.

INSTALLATION

5. **Vacuum Booster**

Vacuum booster push rod adjustment.

NOTE:
When replacing either master cylinder or vacuum booster, be sure to measure push rod, and adjust required.

Push rod gauge: 5-8840-2300-0 (J-39216)
Vacuum pump: 5-8840-0279-0 (J-23738-A)
Push rod support: 5-8840-2305-0 (J-39241)

1) Remove retainer from vacuum booster front shell using a small screwdriver. Then gently draw plate and seal assembly out of the shell inside.

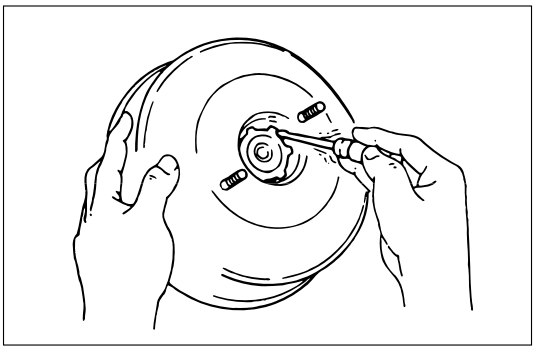

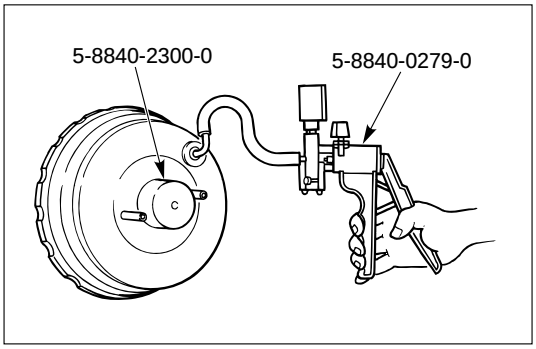

2) Set push rod gauge on vacuum booster, and apply negative pressure by means of vacuum pump so that the pressure in the vacuum booster becomes 500 mm Hg.

NOTE:
Be sure to apply. NEGATIVE pressure after installing a push rod gauge on vacuum booster.

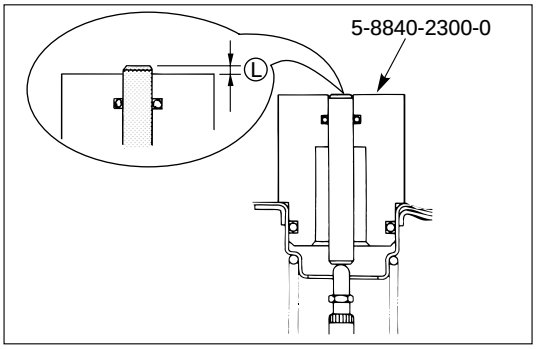

3) Measure dimension Ⓛ

Dimension Ⓛ (Standard)	mm
0 ± 0.1	

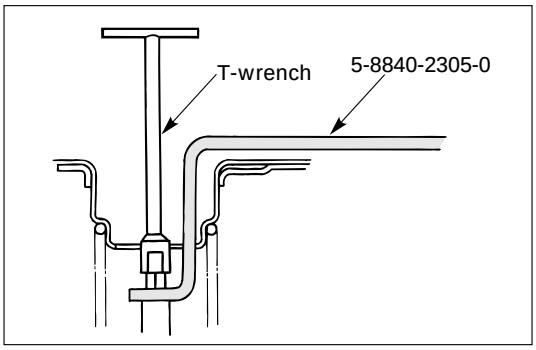

4) If dimension Ⓛ is out of the standard range, adjust push rod using the special tool.
5) Mount plate and seal assembly in vacuum booster front shell. Then install retainer.

4. Vacuum Booster Fixing Nut

Vacuum Booster Fixing Nut Torque	N·m (kg·m / lb·ft)
21 (2.1 / 16)	

3. Yoke Clevis

2. Vacuum Hose

- In case of the gasoline engine model, make sure that the arrow on the hose points in the direction of the engine.

1. Master Cylinder

- Refer to Master Cylinder Assembly in this Section.

EXTERIOR COMPONENTS

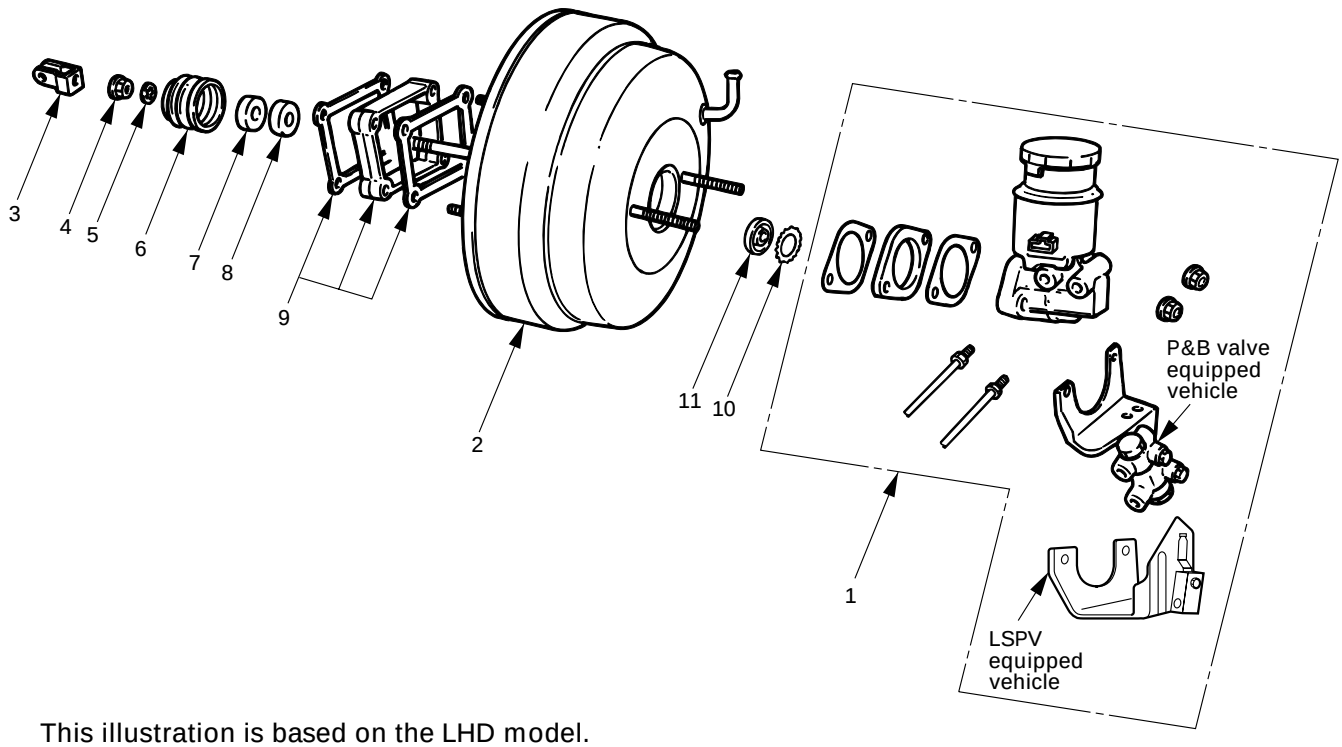

This illustration is based on the LHD model.

331RW011

Removal Steps

1. Master cylinder
2. Vacuum booster
3. Yoke clevis
4. Lock nut
5. Retaining clip
6. Valve body guard
7. Silencer
8. Filter
9. 2 gaskets and spacer
10. Retainer
11. Plate and seal assembly

Installation Steps

To install, follow the removal steps in the reverse order.

REMOVAL

1. **Master Cylinder**
   - Refer to Master Cylinder Assembly in this Section.
2. **Vacuum Booster**
   - Refer to Vacuum Booster Assembly in this section.
3. **Yoke Clevis**
4. **Lock Nut**
5. **Retaining Clip**
6. **Valve Body Guard**
7. **Silencer**
8. **Filter**
9. **2 gaskets and Spacer**
10. **Retainer**
    - Use a small screwdriver to pry out the retainer. Gently pull out the plate and seal assembly from the shell.

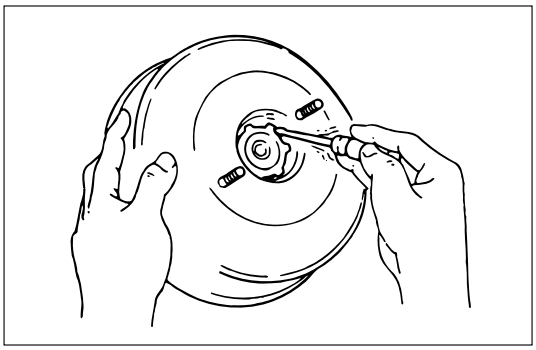

11. **Plate and Seal Assembly**

INSPECTION AND REPAIR

Visual Check:

Make necessary parts replacement if cuts, nicks, excessive wear, or other abnormal conditions are found through inspection. Check the following parts.

1) Yoke clevis
2) Valve body guard
3) Silencer
4) Filter
5) Plate and seal assembly

INSTALLATION

11. **Plate and Seal Assembly**
10. **Retainer**
9. **2 gaskets and Spacer**
8. **Filter**
7. **Silencer**
6. **Valve Body Guard**
5. **Retaining Clip**
4. **Lock Nut**

Lock Nut Torque	N·m (kg·m / lb·ft)
	20 (2.0 / 15)

3. **Yoke Clevis**
2. **Vacuum Booster**
   - Refer to Vacuum Booster Assembly in this section.
1. **Master Cylinder**
   1) Refer to Master Cylinder Assembly in this Section.
   2) After installation, perform brake pedal check and adjustment. Refer to Checking Brake Pedal Height / Travel in this section.

FRONT DISC BRAKE

BRAKE PADS REPLACEMENT

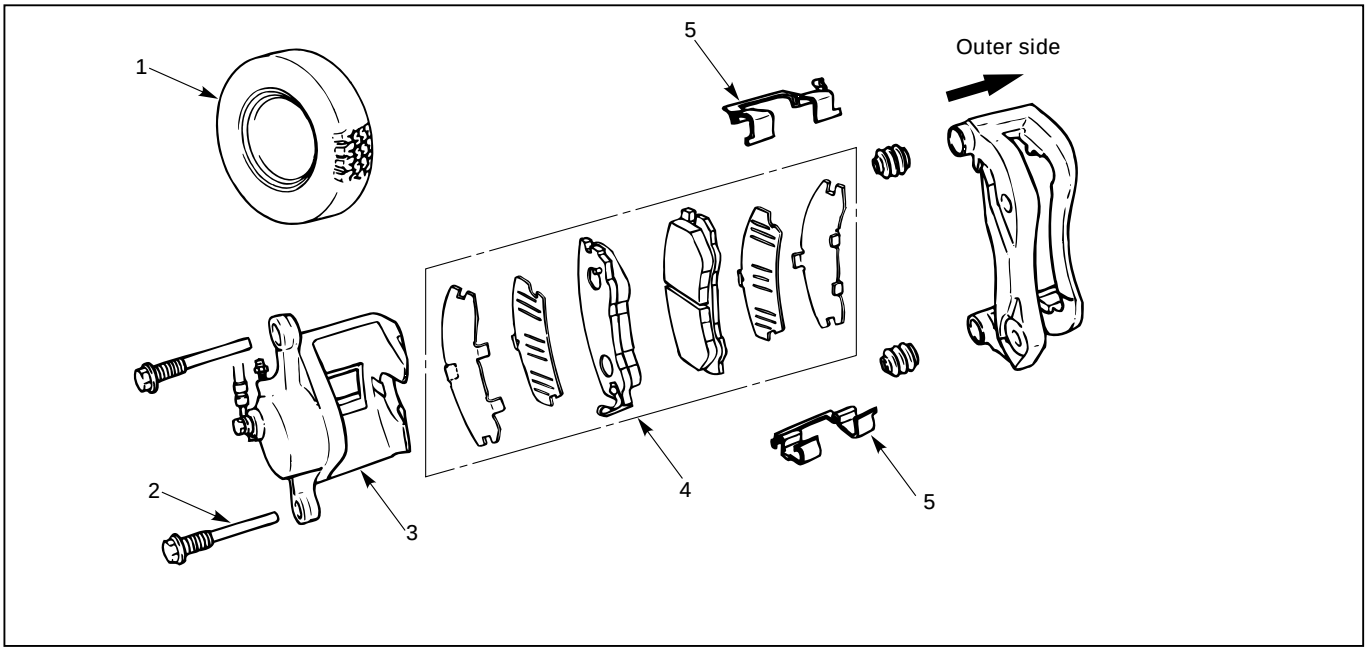

Removal Steps

1. Wheel and tire assembly
2. Lock bolt
3. Caliper assembly
4. Pad assembly with shim
5. Clip

Installation Steps

To install, follow the removal steps in the reverse order.

REMOVAL

NOTE:
If a squealing noise occurs from the front brake while driving, check the pad wear indicator plate. If the indicator plate contacts the rotor, the disc pad assembly should be replaced.

Preparation:

1) Draw out two-thirds of the brake fluid from the reservoir.
2) Raise the vehicle and support it with suitable safety stands.

1. Wheel and Tire Assembly

- Refer to Wheels and Tires in Suspension section.

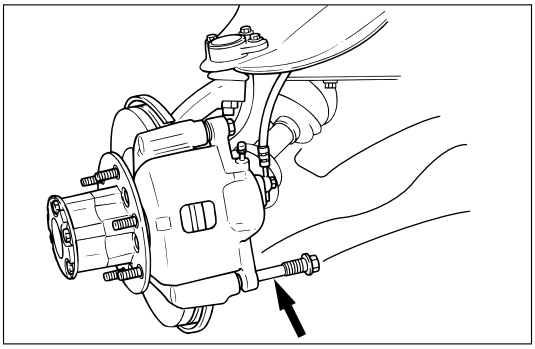

2. **Lock Bolt**

3. **Caliper Assembly**
   - Support the caliper assembly so that the brake hose is not stretched or damaged.
4. **Pad Assembly with Shim**
5. **Clip**

INSTALLATION

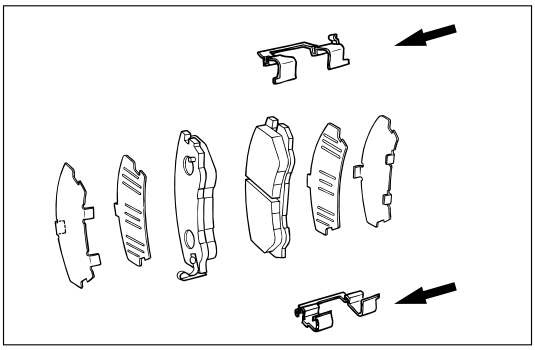

5. **Clip**

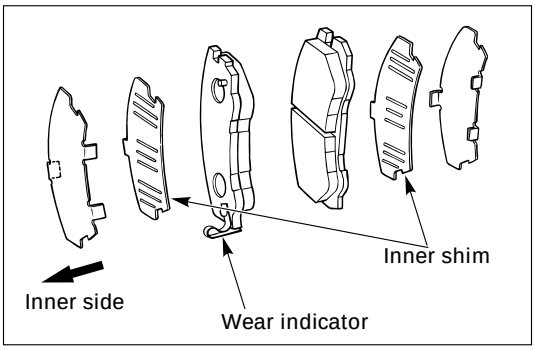

4. **Pad Assembly with Shim**
   - Apply special grease (approx 0.2 g) to both contacting surfaces of inner shims. Wipe off extruded grease after installing.

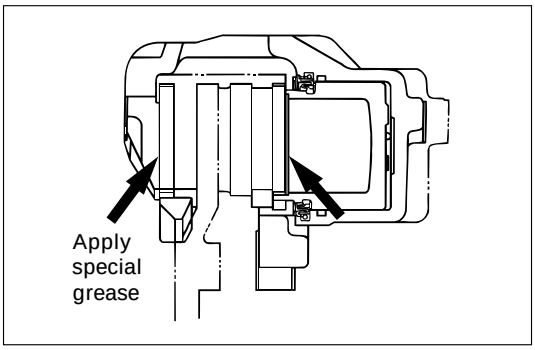

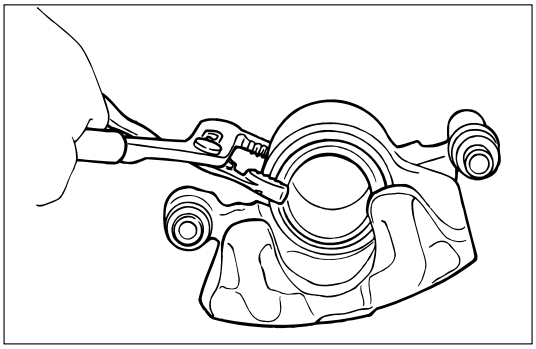

3. Caliper Assembly

1) Use adjustable pliers to bottom the piston into the caliper bore. Be careful not to damage the piston dust boot.
2) Do not damage the flexible hose by twisting or pulling it.

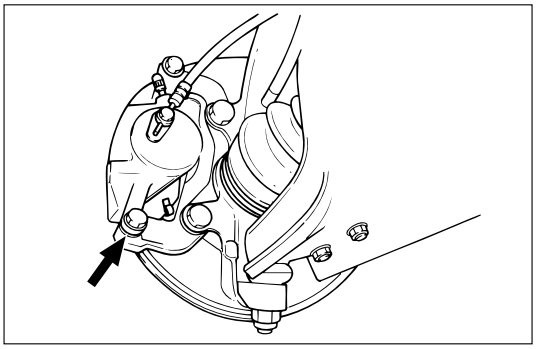

2. Lock Bolt

Lock Bolt Torque	N·m (kg·m / lb·ft)
74 (7.5 / 54)	

1. Wheel and Tire Assembly

1) Refer to Wheels and Tires in Suspension section.
2) Pump the brake pedal several times to make sure that the pedal is firm. Check the brake fluid level in the reservoir after pumping the brakes.

CALIPER REPLACEMENT

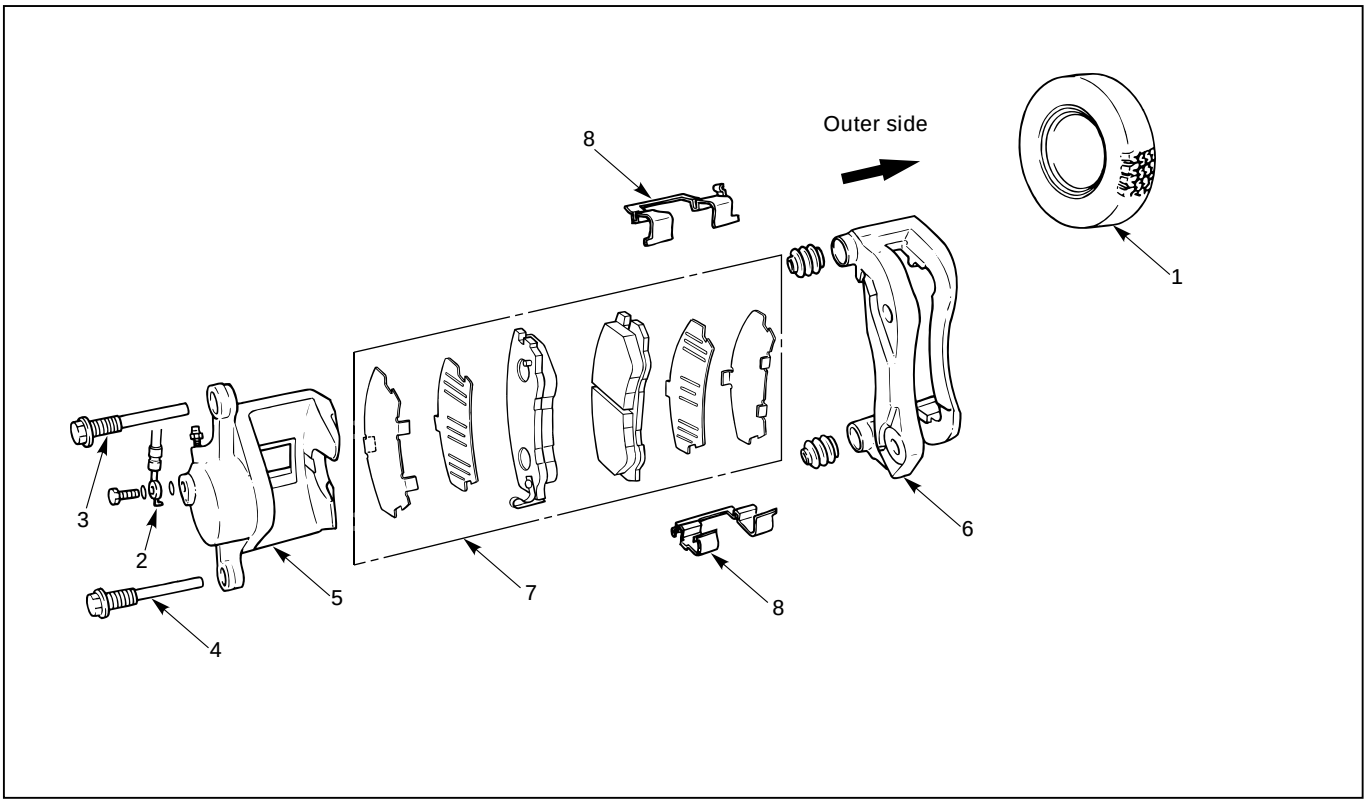

Removal Steps

1. Wheel and tire assembly
2. Brake flexible hose
3. Guide bolt
4. Lock bolt
5. Caliper assembly
6. Support bracket with pad assembly
7. Pad assembly with shim
8. Clip

Installation Steps

To install, follow the removal steps in the reverse order.

REMOVAL

Raise the vehicle and support with suitable safety stands

1. Wheel and Tire Assembly

- Refer to Wheels and Tires in Suspension section.

2. Brake Flexible Hose

1) Remove the bolt and gaskets, then disconnect the flexible hose from the caliper.
2) After disconnecting the flexible hose, cap or tape the openings to prevent entry of foreign material.
3) Since the brake fluid flows out from the connecting coupler, place a drain pan under the vehicle.

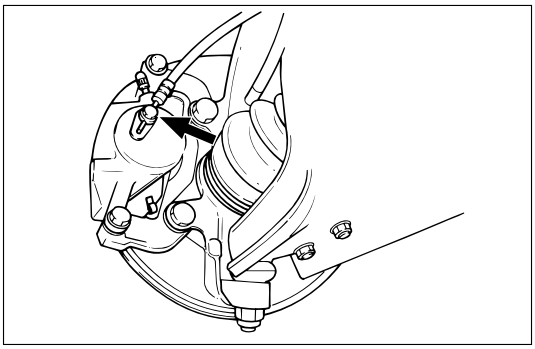

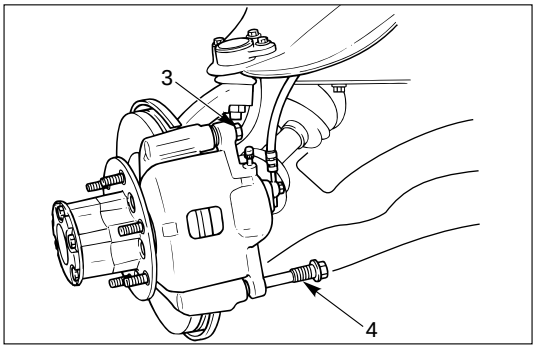

3. **Guide Bolt**
4. **Lock Bolt**

5. **Caliper Assembly**
6. **Support Bracket with Pad Assembly**
   - Take care not to damage the flexible brake hose when removing the support bracket.
7. **Pad Assembly with Shim**
   - Mark the lining locations if they are to be reinstalled.
8. **Clip**

INSTALLATION

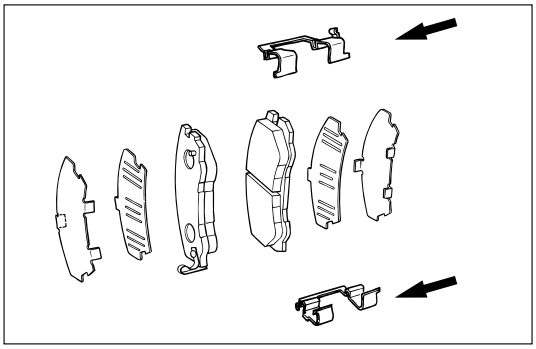

8. **Clip**

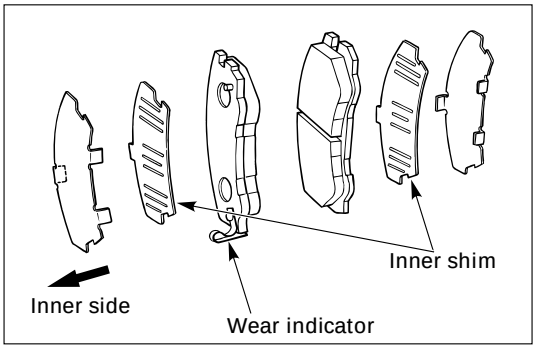

7. **Pad Assembly with Shim**
   - Apply special greae (approx 0.2 g) to the both contacting surfaces of inner shims. Wipe off extruded grease after installing.

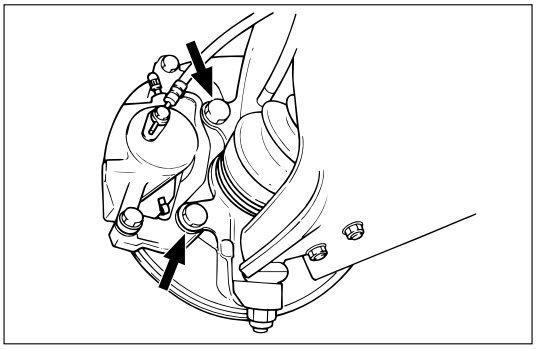

6. **Support Bracket**

Support Bracket Torque	N·m (kg·m / lb·ft)
155 (15.8 / 115)	

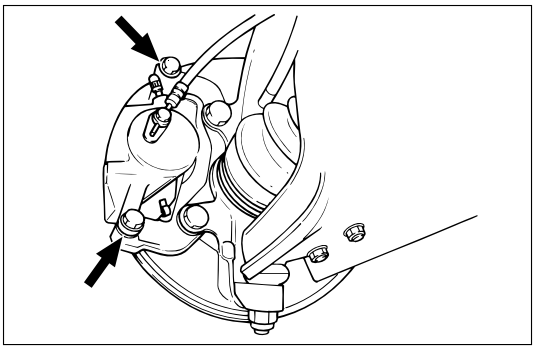

5. Caliper Assembly

4, 3. Lock Bolt and Guide Bolt

Lock Bolt and Guide Bolt Torque	N·m (kg·m / lb·ft)
74 (7.5 / 54)	

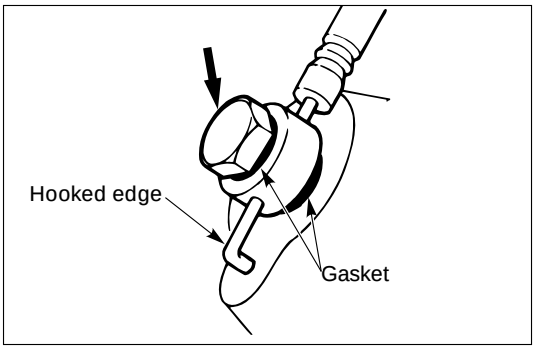

2. Brake Flexible Hose

1) Always use new gaskets.
2) Be sure to put the hooked edge of the flexible hose end into the anti-rotation cavity.

Brake Flexible Hose Torque	N·m (kg·m / lb·ft)
35 (3.5 / 26)	

1. Wheel and Tire Assembly

1) Refer to Wheels and Tires in Suspension section.
2) Bleed brakes. Refer to Bleeding Brake Hydraulic System in this section.

REBUILDING THE CALIPER

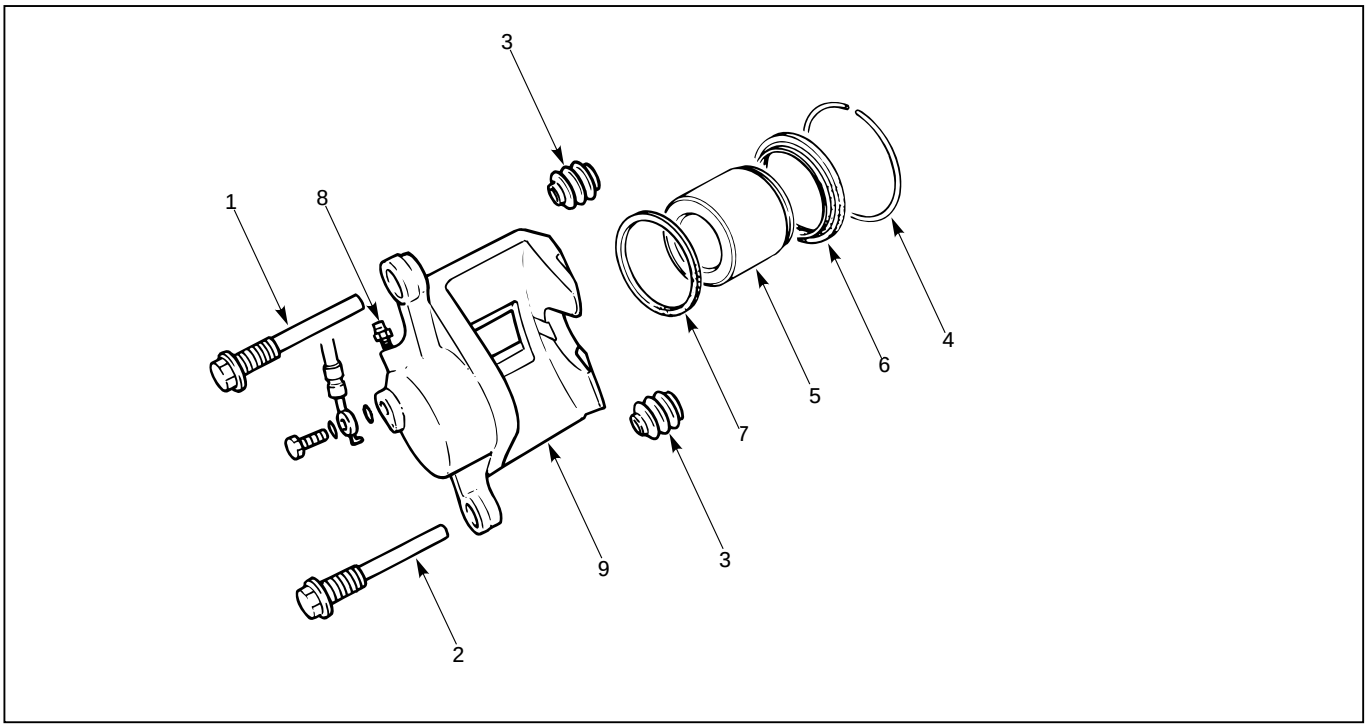

Disassembly Steps

1. Guide bolt
2. Lock bolt
3. Dust boot; guide bolt and lock bolt
4. Dust boot ring
5. Piston
6. Dust boot; piston
7. Piston seal
8. Bleeder with cap
9. Caliper body

Reassembly Steps

9. Caliper body
8. Bleeder with cap
7. Piston seal
5. Piston
6. Dust boot; piston
4. Dust boot ring
3. Dust boot; guide bolt and lock bolt
2. Lock bolt
1. Guide bolt

DISASSEMBLY

1. **Guide Bolt**
2. **Lock Bolt**
3. **Dust Boot; Guide Bolt and Lock Bolt**
4. **Dust Boot Ring**
   - Using a small screwdriver, remove the dust boot ring.

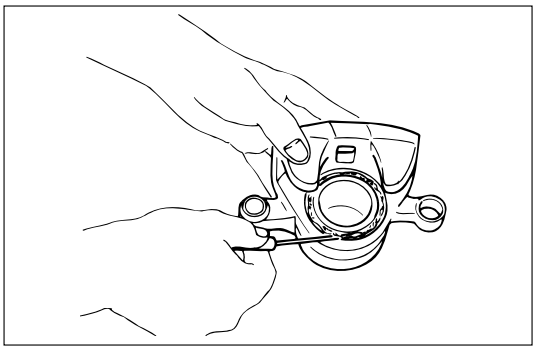

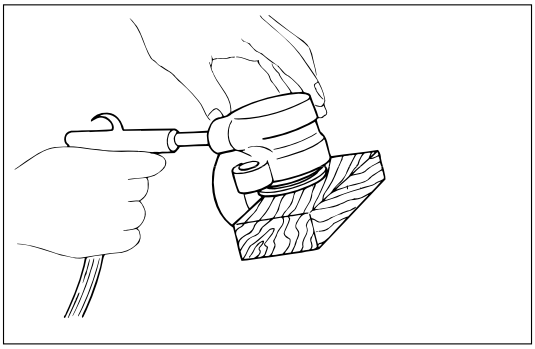

5. **Piston**
   - Insert a block of wood into the caliper and force out the piston by blowing compressed air into the caliper at the flexible hose attachment. This procedure must be done prior to removal of dust boot.

WARNING:
DO NOT PLACE YOUR FINGERS IN FRONT OF THE PISTON IN AN ATTEMPT TO CATCH OR PROTECT IT WHEN APPLYING COMPRESSED AIR. THIS COULD RESULT IN PERSONAL INJURY.

CAUTION:
Use just enough air to ease the piston out of the bore. If the piston is blown out, it may be damaged.

6. **Dust Boot; Piston**
7. **Piston Seal**
8. **Bleeder with Cap**
9. **Caliper Body**

INSPECTION AND REPAIR

Make necessary parts replacement, if wear, damage, corrosion or any other abnormal conditions are found through inspection.
Check the following parts;
- Rotor
- Cylinder body
- Cylinder bore
- Piston
- Guide bolt, Lock bolt
- Support bracket

NOTE:
The piston seal, boot ring and dust boot are to be replaced each time the caliper is overhauled. Discard these used rubber parts and replace with new ones.

REASSEMBLY

9. **Caliper Body**
8. **Bleeder with Cap**

Bleeder Torque	N·m (kg·cm / lb·in)
	8 (80 / 69)

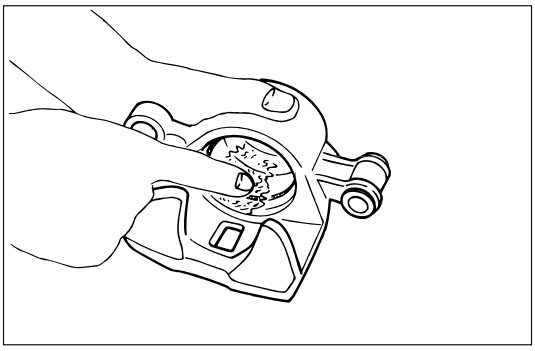

7. **Piston Seal**
   - Apply special rubber grease to the piston seal and cylinder wall, then insert the piston seal into the cylinder. The special rubber grease is included in the repair kit.

5. **Piston**

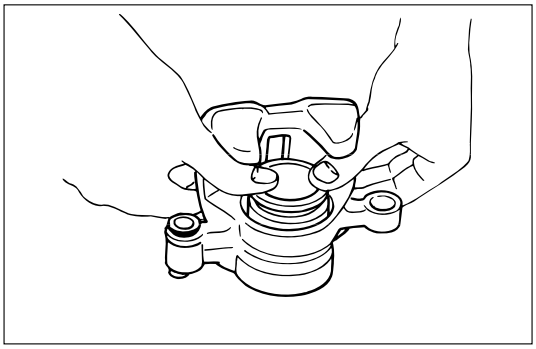

6. Dust Boot; Piston

- When inserting the piston into the cylinder, use finger pressure only. Do not use a mallet or other impact tools, since damage to the cylinder wall or piston seal can result.

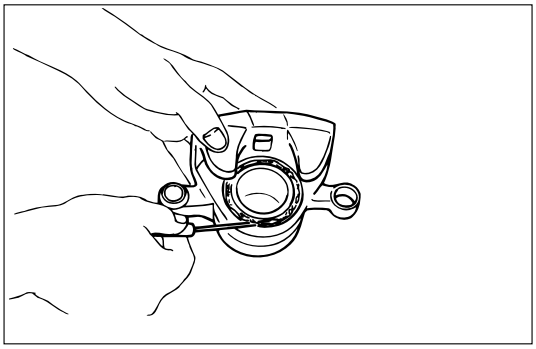

4. Dust Boot Ring

- Apply special grease (Approx. 1 g) to the piston and attach the dust boot to the piston and caliper. Insert the dust boot ring into the dust boot.

3. Dust Boot; Guide Bolt and Lock Bolt

2, 1. Lock Bolt and Guide Bolt

Lock and Guide Bolt Torque	N·m (kg·m / lb·ft)
74 (7.5 / 54)	

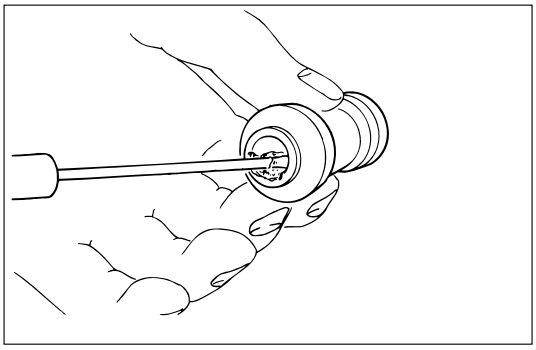

- Install the dust boot on the support bracket after applying special grease (Approx. 1 g) onto the dust boot inner surface. Also apply special grease onto the lock bolt and guide bolt setting hole of the support bracket.

REAR DISC BRAKE

BRAKE PADS REPLACEMENT

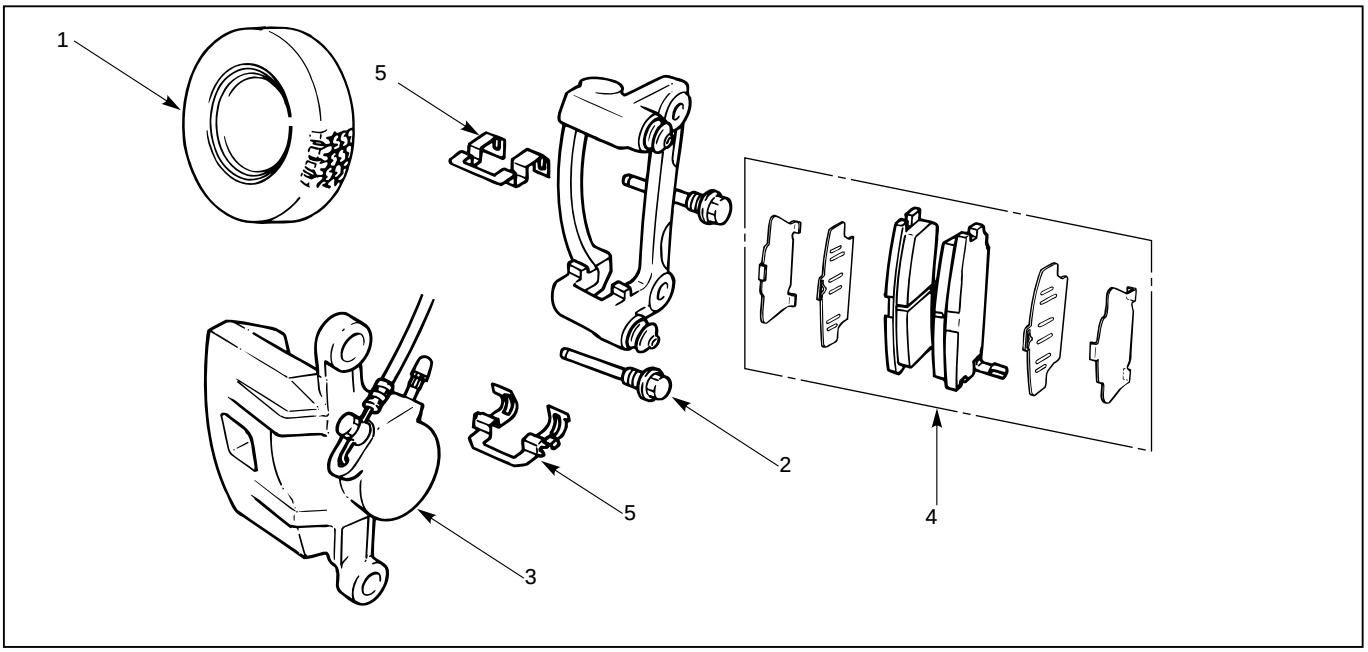

Removal Steps

1. Wheel and tire assembly
2. Lock bolt
3. Caliper assembly
4. Pad assembly with shim
5. Clip

Installation Steps

To install, follow the removal steps in the reverse order.

REMOVAL

NOTE:
If a squealing noise occurs from the rear brake while driving, check the pad wear indicator plate. If the indicator plate contacts the rotor, the disc pad assembly should be replaced.

1) Draw out two-thirds of the brake fluid from the reservoir.
2) Raise the vehicle and support it with suitable safety stands.

1. Wheel and Tire Assembly

- Refer to Wheels and Tires in Suspension section.

2. Lock Bolt

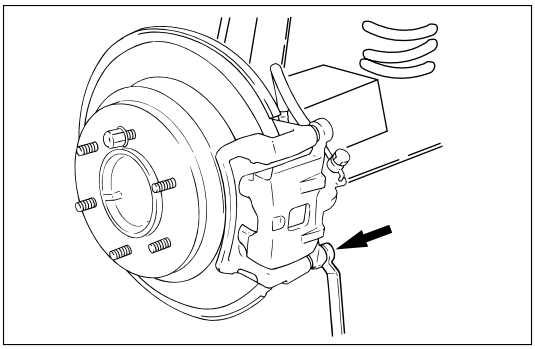

3. **Caliper Assembly**
   - Support the caliper assembly so that the brake hose is not stretched or damaged.
4. **Pad Assembly with Shim**
5. **Clip**

INSTALLATION

5. **Clip**

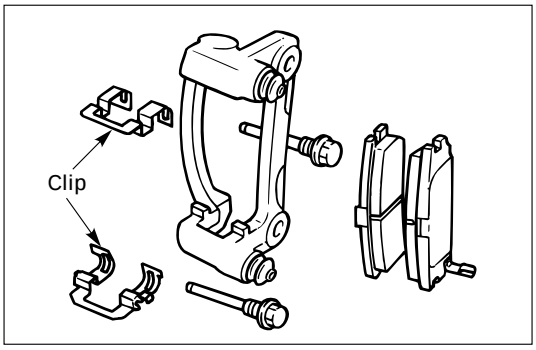

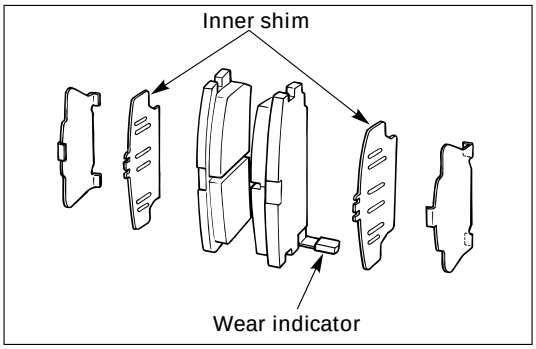

4. **Pad Assembly with Shim**
   - Apply special grease (approx. 0.2 g) to both contacting surfaces of inner shims. Wide off extruded grease after installing.

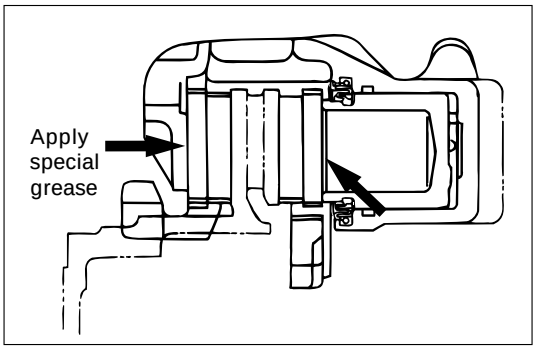

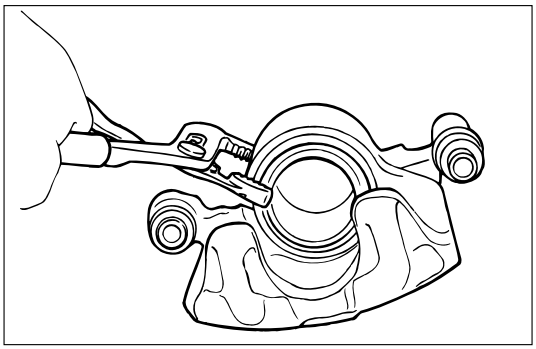

3. **Caliper Assembly**
   1) Use adjustable pliers to bottom the piston into the caliper bore. Be careful not to damage the piston dust boot.
   2) Do not damage the flexible hose by twisting or pulling it.

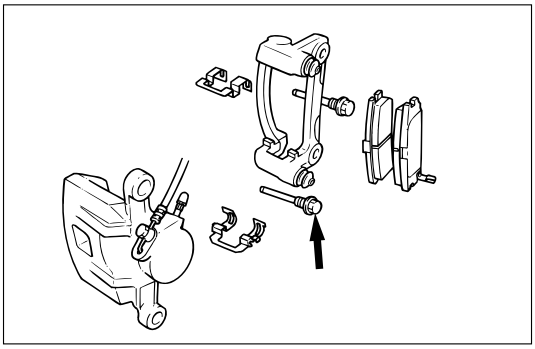

2. Lock Bolt

Lock Bolt Torque	N·m (kg·m / lb·ft)
44 (4.5 / 32)	

1. Wheel and Tire Assembly

1) Refer to Wheels and Tires in Suspension section.
2) Pump the brake pedal several times to make sure that the pedal is firm. Check the brake fluid level in the reservoir after pumping the brakes.

CALIPER REPLACEMENT

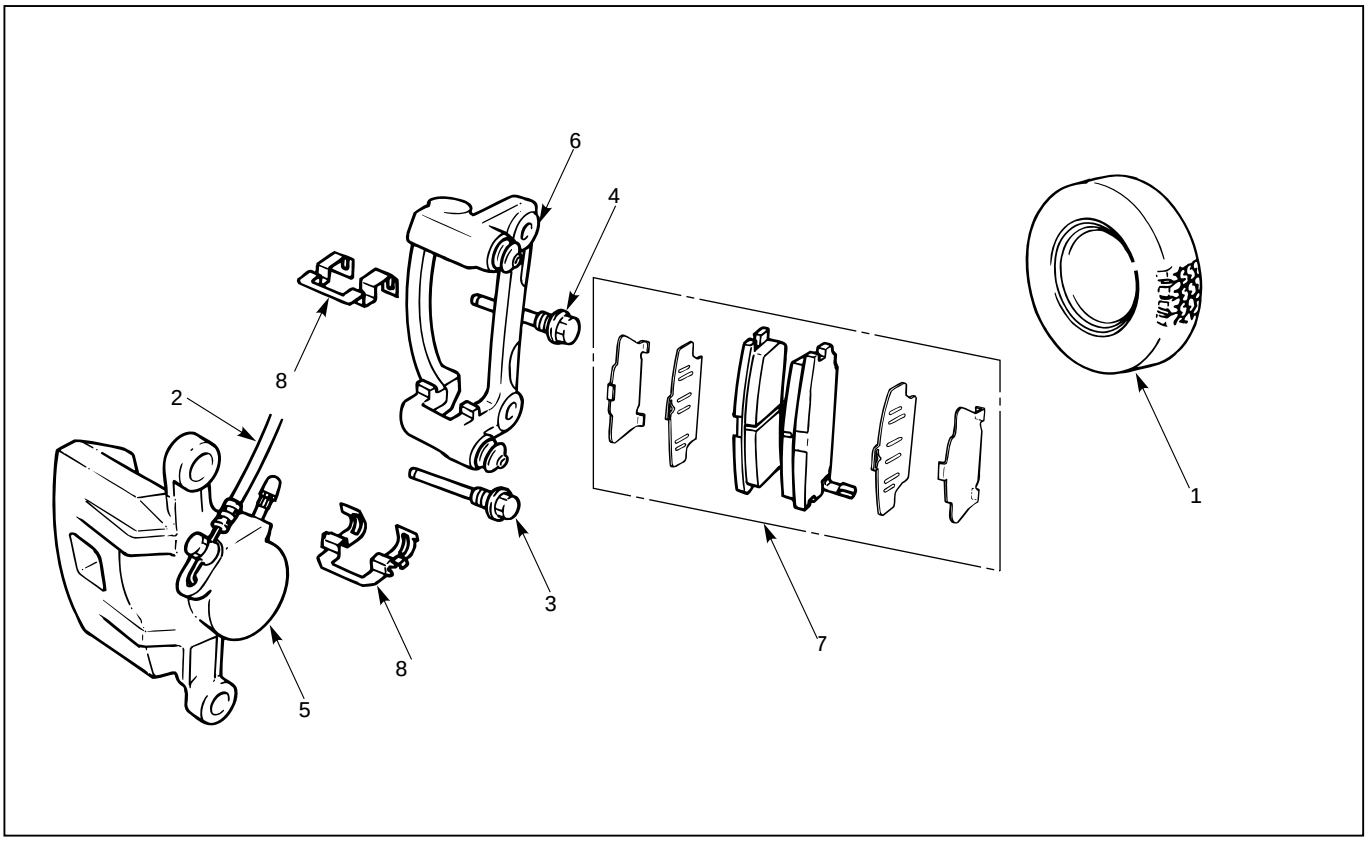

Removal Steps

1. Wheel and tire assembly
2. Brake flexible hose
3. Lock bolt
4. Guide bolt
5. Caliper assembly
6. Support bracket
7. Pad assembly with shim
8. Clip

Installation Steps

To install, follow the removal steps in the reverse order.

REMOVAL

- Raise the vehicle and support with suitable safety stands.

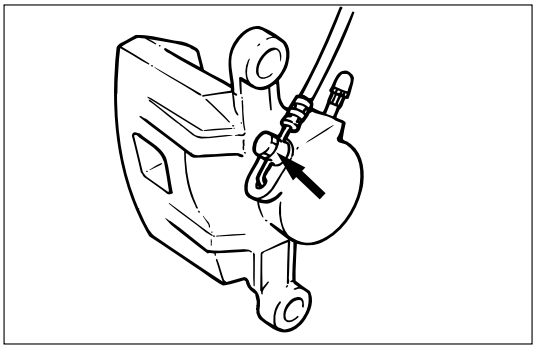

1. Wheel and Tire Assembly

- Refer to Wheels and Tires in Suspension section.

2. Brake Flexible Hose

1) Remove the bolt and gaskets, then disconnect the flexible hose from the caliper.
2) After disconnecting the flexible hose, cap or tape the openings to prevent entry of foreign material.
3) Since the brake fluid flows out from the connecting coupler, place a drain pan under the vehicle.

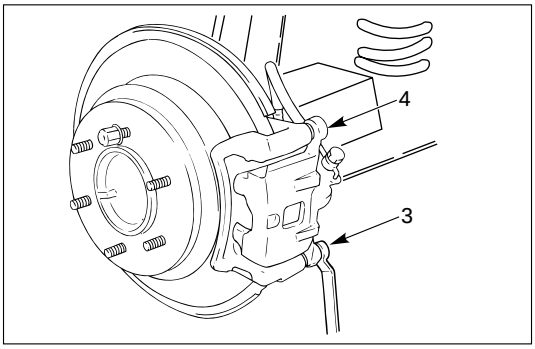

3. **Lock Bolt**
4. **Guide Bolt**

5. **Caliper Assembly**
6 **Support Bracket**
   - Take care not to damage the flexible brake hose when removing the support bracket.
7. **Pad Assembly with Shim**
   - Mark the lining locations if they are to be reinstalled.
8. **Clip**

INSTALLATION

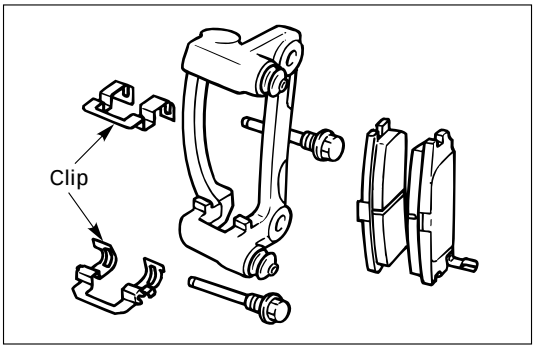

8. **Clip**

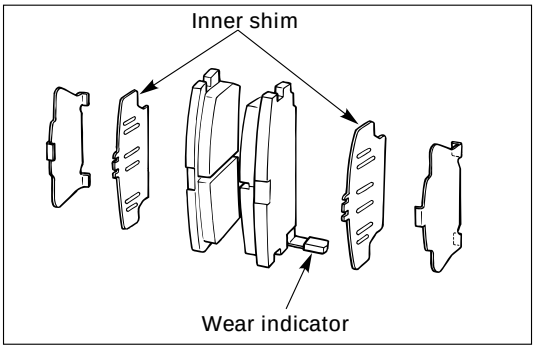

7. **Pad Assembly with Shim**
   - Apply special grease (approx. 0.2 g) to both contacting surfaces of inner shims. Wipe off extruded grease after installing.

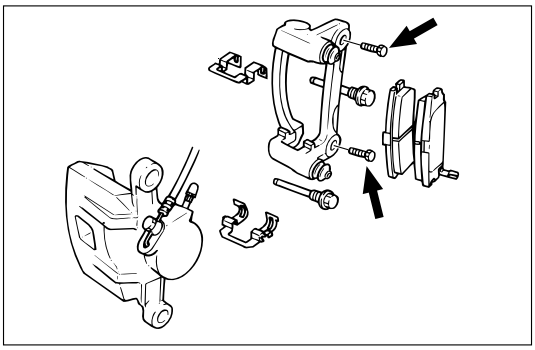

6. **Support Bracket**

Support Bracket Torque	N·m (kg·m / lb·ft)
104 (10.6 / 77)	

5. **Caliper Assembly**

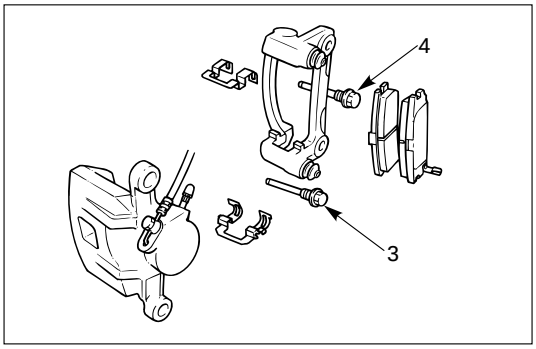

4. Guide Bolt

3. Lock Bolt

Lock Bolt Torque	N·m (kg·m / lb·ft)
44 (4.5 / 32)	

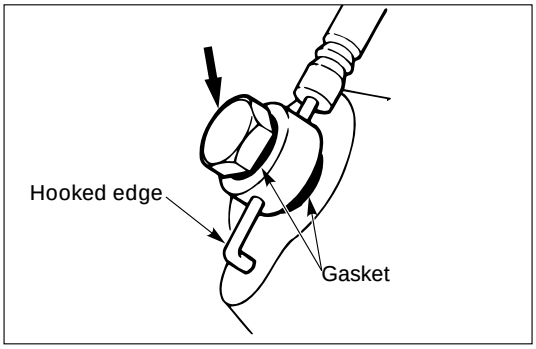

2. Brake Flexible Hose

1) Always use new gaskets.
2) Be sure to put the hooked edge of the flexible hose end into the anti-rotation cavity.

Brake Flexible Hose Torque	N·m (kg·m / lb·ft)
35 (3.5 / 26)	

1. Wheel and Tire Assembly

1) Refer to Wheels and Tires in Suspension section.
2) Bleed brakes.

REBUILDING THE CALIPER

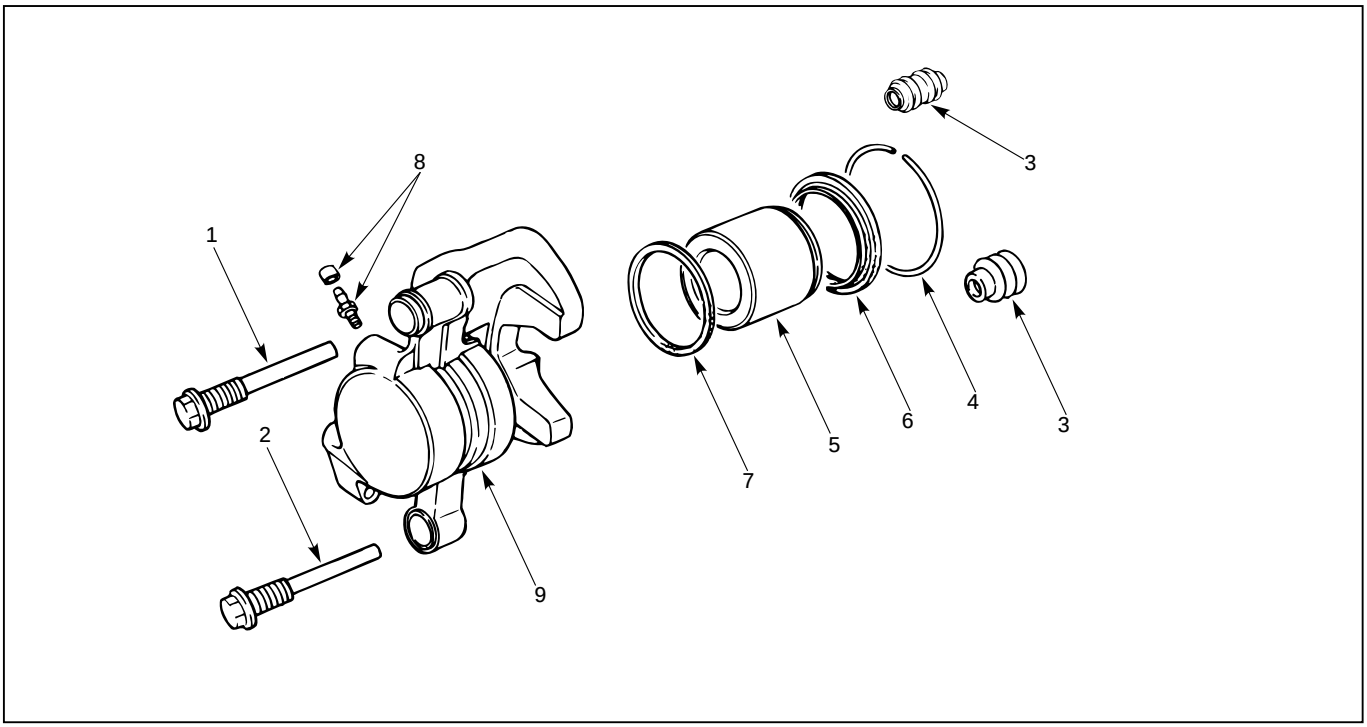

Disassembly Steps

1. Guide bolt
2. Lock bolt
3. Dust boot
4. Dust boot ring
5. Piston
6. Dust boot; piston
7. Piston seal
8. Bleeder with cap
9. Caliper body

Reassembly Steps

9. Caliper body
8. Bleeder with cap
7. Piston seal
5. Piston
6. Dust boot; pisotn
4. Dust boot ring
3. Dust boot
2. Lock bolt
1. Guide bolt

DISASSEMBLY

1. **Guide Bolt**
2. **Lock Bolt**
3. **Dust Boot**
4. **Dust Boot Ring**
   - Using a small screwdriver, remove the dust boot ring.

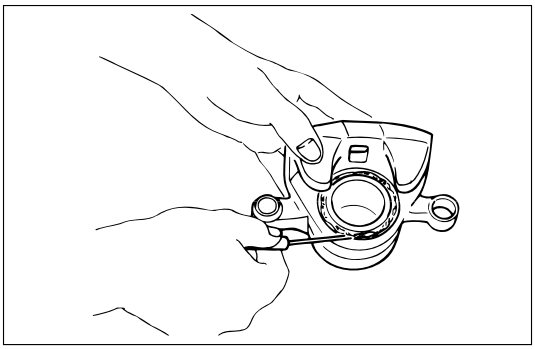

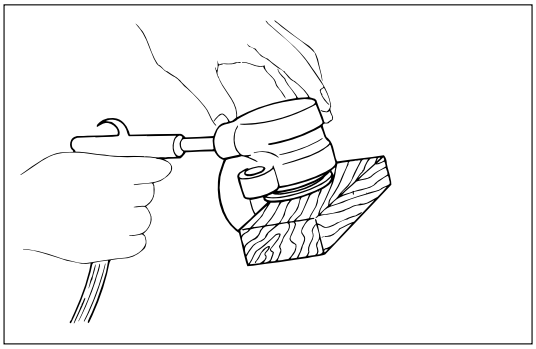

5. **Piston**
   - Insert a block of wood into the caliper and force out the piston by blowing compressed air into the caliper at the flexible hose attachment. This procedure must be done prior to removal of dust boot.

WARNING:
DO NOT PLACE YOUR FINGERS IN FRONT OF THE PISTON IN AN ATTEMPT TO CATCH OR PROTECT IT WHEN APPLYING COMPRESSED AIR. THIS COULD RESULT IN PERSONAL INJURY.

CAUTION:
Use just enough air to ease the piston out of the bore. If the piston is blown out, it may be damaged.

6. **Dust Boot; Piston**
7. **Piston Seal**
8. **Bleeder with Cap**
9. **Caliper Body**

INSPECTION AND REPAIR

Make necessary parts replacement, if wear, damage, corrosion or any other abnormal conditions are found through inspection.
Check the following parts;
- Rotor
- Cylinder body
- Cylinder bore
- Piston
- Slide pin
- Support bracket

NOTE:
The piston dust seal and dust boot are to be replaced each time the caliper is overhauled.
Discard these used rubber parts and replace with new ones.

REASSEMBLY

9. **Caliper Body**
8. **Bleeder with Cap**

Bleeder Torque	N·m (kg·cm / lb·in)
8 (80 / 69)	

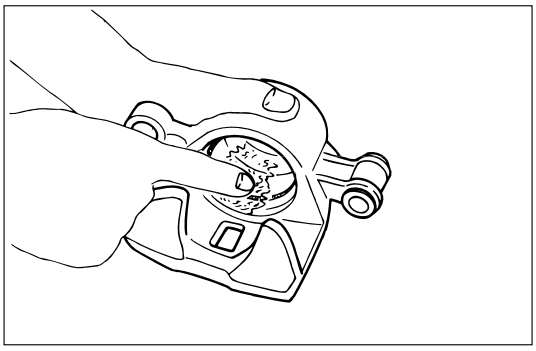

7. **Piston Seal**
   - Apply special rubber grease to the piston seal and cylinder wall, then insert the piston seal into the cylinder. The special rubber grease is included in the repair kit.
5. **Piston**

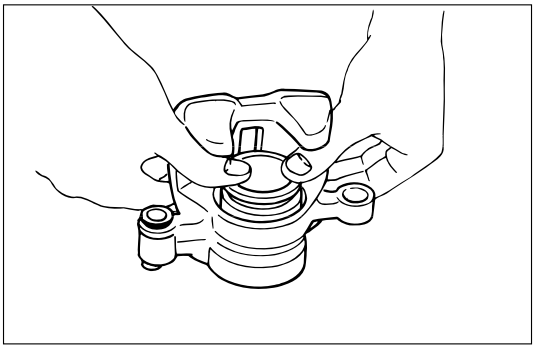

6. Dust Boot; Piston

- When inserting the piston into the cylinder, use finger pressure only. Do not use a mallet or other impact tools, since damage to the cylinder wall or piston seal can result.

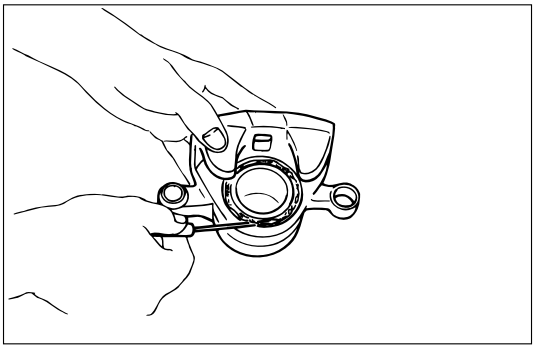

4. Dust Boot Ring

- Apply special grease (Approx. 1 g) to the piston and attach the dust boot to the piston and caliper. Insert the dust boot ring into the dust boot.

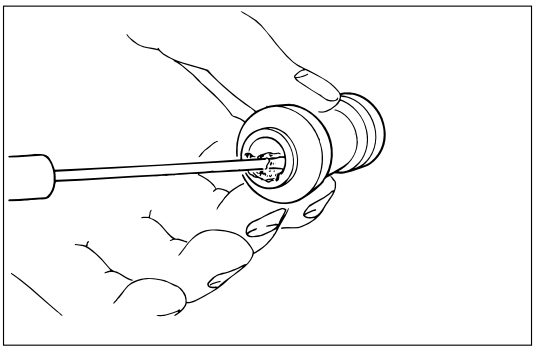

3. Dust Boot

- Install the dust boot on the support bracket after applying special grease (Approx 1 g) onto the dust boot inner surface. Also apply special grease onto the lock bolt and guide bolt setting hole of the support bracket.

2. Lock Bolt

1. Guide Bolt

Guide Bolt Torque	N·m (kg·m / lb·ft)
44 (4.5 / 32)	

UNIT REPAIR

MASTER CYLINDER

The master cylinder is not repairable and must be replaced as complete assembly if found defective.

INSPECTION

Excessive brake pedal travel, malfunction or dragging brake suggests that the master cylinder is defective. In such cases perform the following visual check.

Visual check

Make parts replacement as required if wear, distortion, nicks, cuts, corrosion, or other abnormal conditions are found through the following parts inspection;

- Master cylinder body
- Fluid reservoir
- O-ring

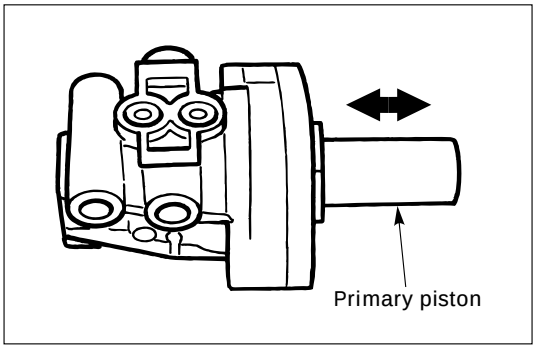

FUNCTIONAL INSPECTION OF MASTER CYLINDER PISTON

Push the primary piston with your fingers to check that it travels smoothly. If the motion is questionable, replace the master cylinder as a complete assembly.

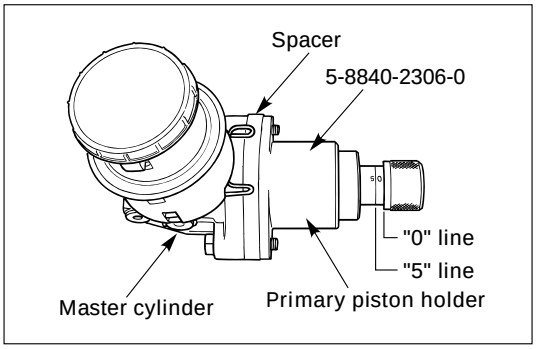

FUNCTIONAL INSPECTION OF MASTER CYLINDER

Inspect the master cylinder for function as follows. If any abnormal function is found, replace with a new one.

Primary piston holder: 5-8840-2306-0 (J-39242) (including master cylinder attachment and master cylinder plug)

- Install the primary piston holder onto the master cylinder with the spacer (2 bolts) with its adjusting bolt screwed in up to the “0” line.

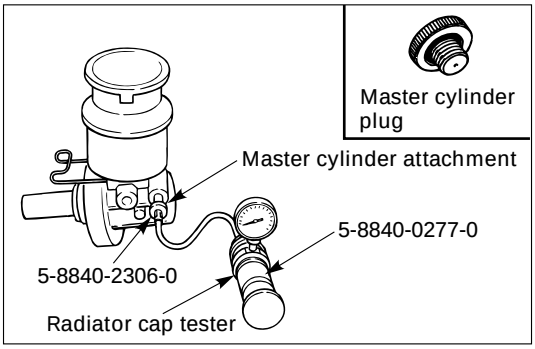

Radiator cap tester: 5-8840-0277-0 (J-24460-01)

- Connect master cylinder attachment with the end of radiator cap tester, and apply air pressure with the cap tester. Make sure there is no rise in pressure and that with the adjusting bolt further screwed in 5 mm (align the adjusting bolt to the “5” line). There should be a pressure increase of 49 kpa (0.5 kg/cm^2/7.1 psi) or more.

NOTE:
When checking the front (or primary) side, be sure to mount master cylinder plug in the rear (or secondary) port.

	“0” line	“5” line
Apply air pressure to the front and rear ports	No pressure rise.	Pressure increase of 49 kpa (0.5 kg/cm^2/ 7.1 psi) more
Remarks	Check port into the atmospheric pressure chamber	Checks air tightness of the pressure chamber

NOTE:
1) **Do not use an air compressor, as the air from compressor is mixed with compressor oil.**
2) **When installing the master cylinder onto the vacuum booster, always adjust vacuum booster push rod. (Refer to Vacuum Booster Assembly in this section.)**
3) **After the master cylinder is installed onto the vehicle, check for leakage, pedal travel and pedal free play.**

VACUUM BOOSTER

- The vacuum booster cannot be disassembled for repair. Replace a defective vacuum booster with a new one.

SECTION 5D
PARKING BRAKES

CONTENTS

PAGE
Service Precaution 5D- 1
Main Data and Specifications 5D- 2
Service Standard 5D- 2
Servicing 5D- 3
Fixing Torque 5D- 5
General Description 5D- 6
On-Vehicle Service 5D- 7
Parking Brake Lever Replacement 5D- 7
Parking Brake Cable 5D- 9

SERVICE PRECAUTION

WARNING:
IF SO EQUIPPED WITH A SUPPLEMENTAL RESTRAINT SYSTEM (SRS), REFER TO THE SRS COMPONENT AND WIRING LOCATION VIEW IN ORDER TO DETERMINE WHETHER YOU ARE PERFORMING SERVICE ON OR NEAR THE SRS COMPONENTS OR THE SRS WIRING. WHEN YOU ARE PERFORMING SERVICE ON OR NEAR THE SRS COMPONENTS OR THE SRS WIRING, REFER TO THE SRS SERVICE INFORMATION. FAILURE TO FOLLOW WARNINGS COULD RESULT IN POSSIBLE AIR BAG DEPLOYMENT, PERSONAL INJURY, OR OTHERWISE UNNEEDED SRS SYSTEM REPAIRS.

CAUTION:
Always use the correct fastener in the proper location. When you replace a fastener, use ONLY the exact part number for that application. ISUZU will call out those fasteners that require a replacement after removal. ISUZU will also call out the fasteners that require thread lockers or thread sealant. UNLESS OTHERWISE SPECIFIED, do not use supplemental coatings (Paints, greases, or other corrosion inhibitors) on threaded fasteners or fastener joint interfaces. Generally, such coatings adversely affect the fastener torque and the joint clamping force, and may damage the fastener. When you install fasteners, use the correct tightening sequence and specification. Following these instructions can help you avoid damage to parts and systems.

MAIN DATA AND SPECIFICATIONS

REAR PARKING BRAKE		
Type		Duo-servo
Lining Dimensions	cm^2 (in^2)	121.2 (18.79)
Adjusting Method		Manual Adjusting
Rear Drum (in Disc)		
Inside Diameter	mm (in)	210 (8.27)
Parking Brake Lever Stroke		6 to 7 notches When pulled with a force of 30 kg (66 lb)

SERVICE STANDARD

REAR PARKING BRAKE		
Rear Drum (in Disc) Minimum Wear		
Inside Diameter	mm (in)	211.4 (8.32)
Parking Brake Lining Thickness		
Minimum Limit	mm (in)	1.0 (0.039)
Parking Brake Lever Stroke		6 to 7 notches When pulled with a force of 30 kg (66 lb)

SERVICING

REAR DRUM (IN DISC) INSIDE DIAMETER CHECK

Check the rear drum inside diameter by measuring at more than two portions as shown in the figure.
If the inside diameter is greater than the limit, replace the rear rotor.

Rear Drum Inside Diameter — mm (in)

Standard	Limit
210.0 (8.27)	211.4 (8.32)

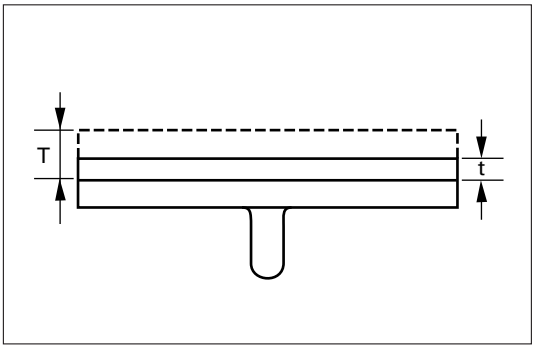

PARKING BRAKE LINING INSPECTION

Check the shoe assemblies for wear by removing the brake drum rotor.
Replace the shoe assemblies, if the lining thickness is less than 1.0 mm (0.039 in).

Minimum Limit	mm (in)
1.0 (0.039)	

PARKING BRAKE ADJUSTMENT

1. **Adjustment of Parking Brake Assembly**
   - Prior to lever stroke adjustment, adjust the rear brake shoe/rotor (drum) gap. Perform this procedure by loosening the adjust nut of the equalizer.

   a) Remove the adjusting hole plug (rubber) and turn the shoe adjusting screw downward with a small screwdriver so that shoes will expand until they get into close touch with the rotor. (Turn down the adjusting screw notch by notch until the rotor does not turn.)

   b) Turn the adjusting screw in the opposite direction (upward) until the rotor can be turned lightly. Standard number of notches to turn upward: 7 or 8.
   Turn the rotor and make sure that there is no brake dragging.

2. Adjustment of Parking Brake Cable

a) Turn the equalizer nut so that the parking brake lever travels 6 or 7 notches when pulled up with a force of 30 kg (66 lb).

b) Make sure there is no brake dragging and tighten the cable lock nut.

Cable Lock Nut Torque	N·m (kg·cm/lb·in)
6 (60 / 52)	

3. Break-in of Parking Brake Shoe

- When poor braking effect possibly resulting from insufficient break-in is felt, or just after replacement of parking brake shoe, be sure to conduct break-in by driving vehicle as follows:

a) Forward 50 km/h (30 mph) x 400 m (About 30 seconds) with a lever pull force of 15 kg (33 lb), and

b) Backward 10 km/h (6 mph) x 50 m (18 seconds) with a lever pull force of 15kg (33 lb).

NOTE:
Break-in procedure must be performed under the safety conditions and traffic rules.

- If braking effect still remains poor after the above break-in, wait for some time until parking brake shoe cools down and repeat the procedures a) and b) notes above.
- On completion of break-in, inspect parking brake lever stroke, and if the lever does not come within the specified number of notches when pulled up, readjust.
- Excessive break-in may cause premature wear of the parking brake lining.

FIXING TORQUE

N·m (kg·m/lb·ft)

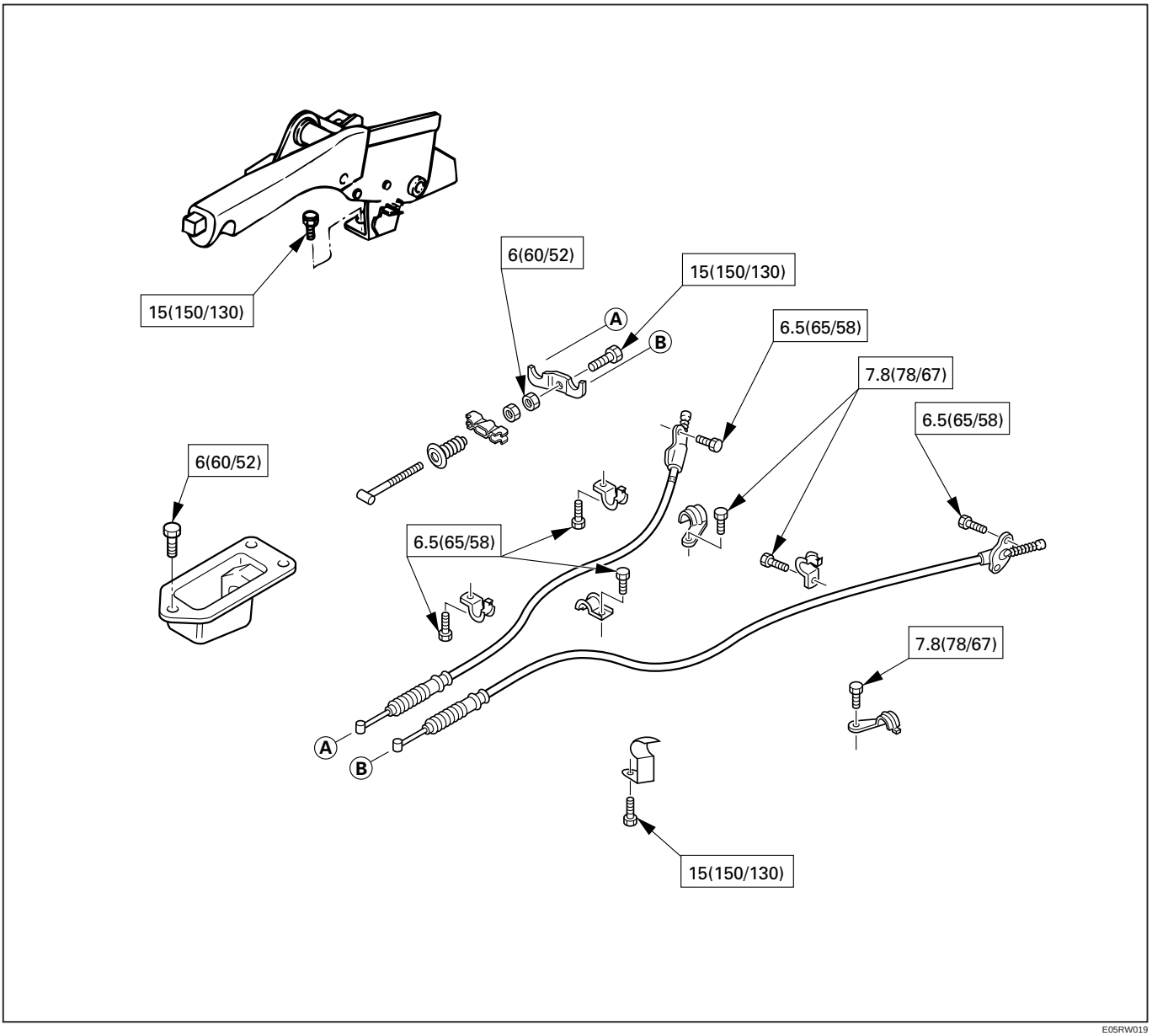

E05RW019

GENERAL DESCRIPTION

Pulling up the parking brake lever by hand will set the parking brake. Once pulled up, the lever is held by means of a ratchet type lock until it is released. The position of the lever is transmitted through cable/lever systems to the rear wheels. These parts are designed to obtain sufficient braking force when parking on slopes. When the parking brake is set, or when the ignition SW is in the “ON” position, the brake warning light illuminates. The rear wheel parking brake is a duo-servo brake (mechanical inside expansion type) built-in to rear disc brake. Parking brake adjustment is made through the adjusting hole (bored through back plate). Parking brake lever stroke should be adjusted to 6 or 7 notches.

OPERATION

When pulled in the direction “A”, the parking lever presses the secondary shoe against the brake drum using the lever/shoe joint “B” as a fulcrum and pushes the strut in the direction “C”. The strut, in turn, presses the primary shoe against the brake drum. Counter force “D” to the primary shoe is transmitted again to the secondary shoe through the fulcrum “B”. The secondary shoe contacts the drum, thereby producing braking effect. Clearance which may result from worn parking brake shoe lining can be adjusted by turning the adjusting screw

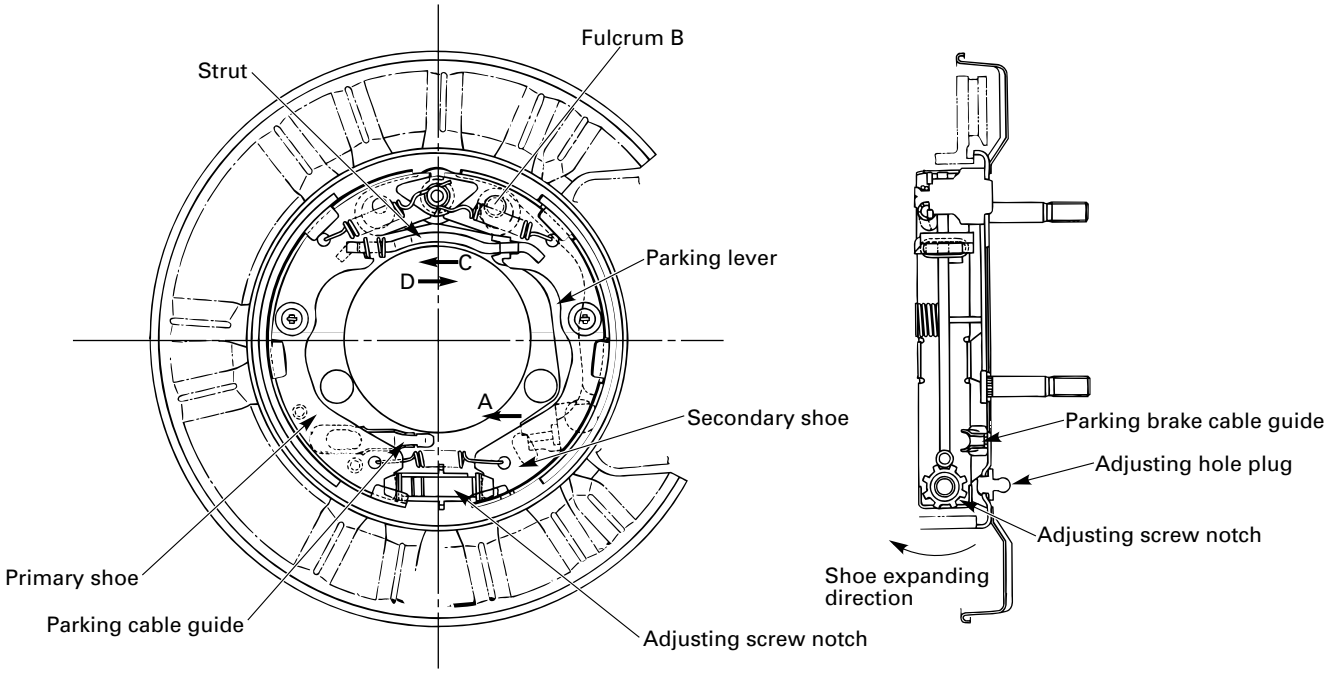

ON-VEHICLE SERVICE

PARKING BRAKE LEVER REPLACEMENT

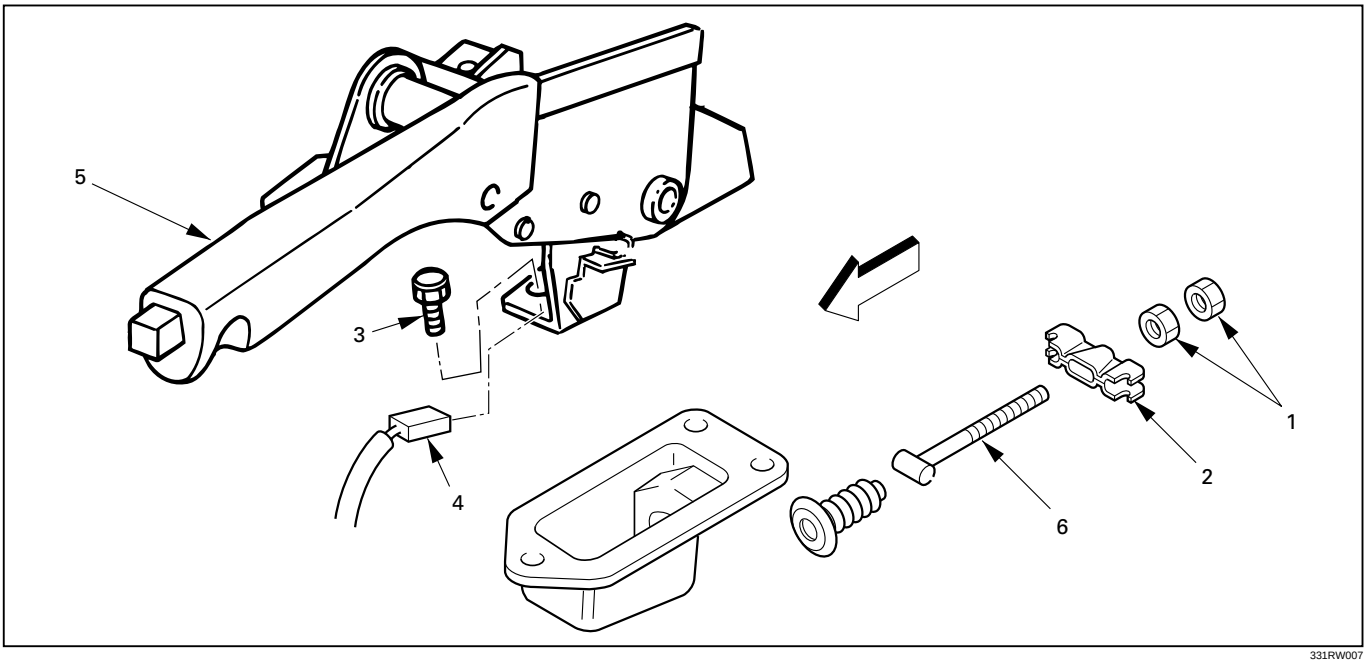

331RW007

Removal Steps

1. Ajusting nut
2. Equalizer
3. Bolt
4. Switch connector
5. Parking brake lever
6. Parking brake front cable

Installation Steps

To install, follow the removal steps in the reverse order.

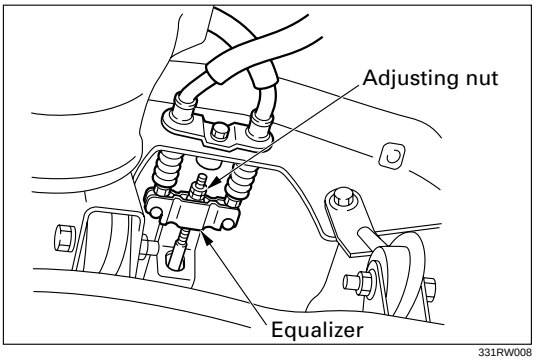

331RW008

REMOVAL

1. **Ajusting Nut**
2. **Equalizer**
3. **Bolt**

   Remove the center console as described in Body and Accessories section.
   Then remove the fixing bolt.
4. **Switch Connector**
5. **Parking Brake Lever**
6. **Parking Brake Front Cable**

INSTALLATION

6. **Parking Brake Front Cable**
5. **Parking Brake Lever**
   - Apply grease (BESCO L-2 or equivalent) to front cable contact point.
4. **Switch Connector**
3. **Bolt**
   - Tighten the parking brake lever fixing bolt to the specified torque.

Bolt Torque	N·m (kg·m / lb·ft)
15 (1.5 / 11)	

   - Install the center console.
2. **Equalizer**
1. **Adjusting Nut**

PARKING BRAKE CABLE

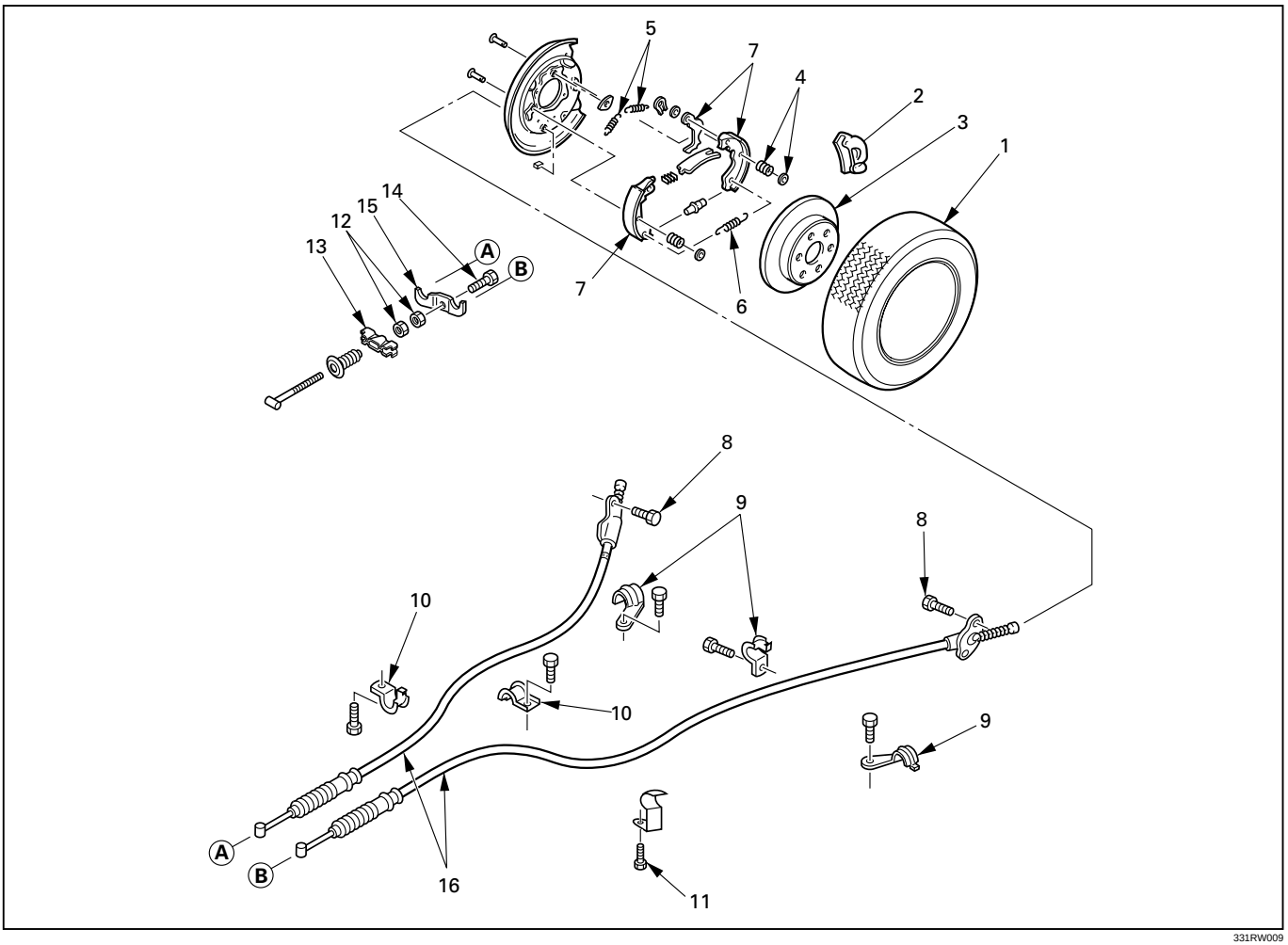

331RW009

Removal Steps

1. Rear wheels
2. Caliper assembly
3. Rotor (Drum)
4. Holding spring
5. Return spring; upper
6. Return spring; lower
7. Shoe assembly
8. Cable fixing bolt
9. Clip
10. Clip
11. Clip
12. Adjust nut
13. Equalizer
14. Bolt
15. Retaining plate
16. Parking brake cable

Installation Steps

To install, follow the removal steps in the reverse order.

REMOVAL

1. **Rear Wheels**
2. **Caliper Assembly**
   - Remove 2 bolts to remove the caliper assembly from the support bracket. (Refer to Rear Disc Brakes in Power Assisted Brake System section.) Temporarily hang the caliper with wire to avoid stretching the brake hose.
3. **Rotor (Drum)**
4. **Holding Spring**
5. **Return Spring; Upper**
6. **Return Spring; Lower**
7. **Shoe Assembly**
   - Remove the brake shoe assembly. Then remove the parking brake cable from the parking brake lever.
8. **Cable Fixing Bolt**
9. **Clip**
10. **Clip**
11. **Clip**
12. **Adjust Nut**
13. **Equalizer**
14. **Bolt**
15. **Retaining Plate**
16. **Parking Brake Cable**

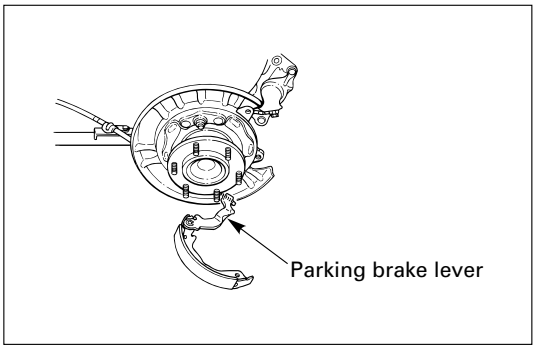

INSTALLATION

To install, follow the removal steps in the reverse order, noting the following points.

15. **Parking Brake Cable**
    - Apply grease (BESCO L-2 or equivalent) to the connecting portion of the rear cable and equalizer.
12. **Adjust Nut**
    - Tighten the adjust nut to the specified torque.

Adjust Nut Torque	N·m (kg·cm / lb·in)
6 (60 / 52)	

    - To adjust the parking brake, refer to Parking Brake Adjustment in this section.
11. **Clip**
    - Tighten the fixing bolt to the specified torque.

Fixing Bolt Torque	N·m (kg·cm / lb·in)
15 (150 / 130)	

10. **Clip**
    - Tighten the fixing bolt to the specified torque.

Fixing Bolt Torque	N·m (kg·cm / lb·in)
6.5 (65 / 58)	

9. Clip

- Tighten the fixing bolt to the specified torque.

Fixing Bolt Torque	N·m (kg·cm / lb·in)
7.8 (78 / 67)	

8. Cable Fixing Bolt

- Tighten the cable fixing bolt to the specified torque.

Cable Fixing Bolt Torque	N·m (kg·cm / lb·in)
6.5 (65 / 58)	

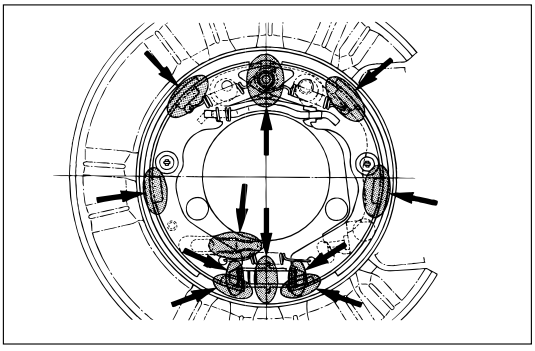

7. Shoe Assembly

- After installation of the shoe and cable assembly, apply special grease (included in the repair kit) to the following portions indicated in the left figure.

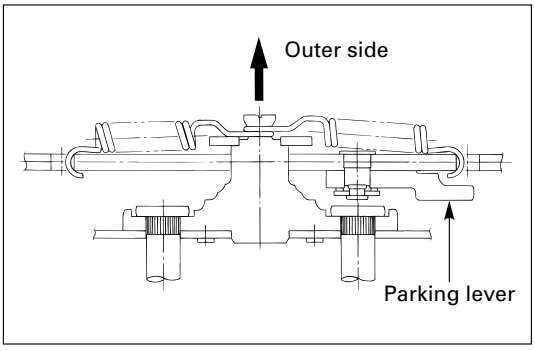

5. Return Spring; Upper

- The parking brake lever side (secondary side) return spring must be installed on the outer side of the primary side return spring.

ENGINE

CONTENTS

Engine Mechanical 6A
Engine Cooling 6B
Engine Fuel 6C
Engine Electrical 6D1
Ignition System 6D2
Starting and Charging System 6D3
Driveability and Emissions 6E
Engine Exhaust 6F
Engine Lubrication 6G
Engine Speed Control System 6H
Inducton 6J

ENGINE MECHANICAL

CONTENTS

Service Precaution 6A–2
General Description 6A–3
Engine Diagnosis 6A–4
Cylinder Head Cover LH 6A–18
Removal 6A–18
Installation 6A–19
Cylinder Head Cover RH 6A–21
Removal 6A–21
Installation 6A–22
Common Chamber 6A–24
Removal 6A–24
Installation 6A–24
Exhaust Manifold LH 6A–26
Removal 6A–26
Installation 6A–26
Exhaust Manifold RH 6A–27
Removal 6A–27
Installation 6A–27
Crankshaft Pulley 6A–28
Removal 6A–28
Installation 6A–28
Timing Belt 6A–29
Removal 6A–29
Installation 6A–30
Camshaft 6A–33
Removal 6A–33
Installation 6A–33
Cylinder Head 6A–37
Removal 6A–37
Installation 6A–37
Valve Stem Oil Controller , Valve Spring and Valve Guide 6A–39
Removal 6A–39
Installation 6A–39
Piston, Piston Ring and Connecting Rod . . . 6A–40
Removal 6A–40
Installation 6A–41
Crankshaft and Main Bearings 6A–42
Removal 6A–42
Installation 6A–43
Rear Oil Seal 6A–47
Removal 6A–47
Installation 6A–47
Engine Assembly 6A–48
Removal 6A–48
Installation 6A–48
Cylinder Head 6A–52
Cylinder Head and Associated Parts 6A–52
Disassembly 6A–52
Clean 6A–53
Inspection and Repair 6A–53
Reassembly 6A–53
Valve Spring, Oil Controller, Valve, Valve Guide 6A–56
Valve Spring, Oil Controller, Valve, Valve Guide and Associated Parts 6A–56
Disassembly 6A–56
Inspection and Repair 6A–57
Reassembly 6A–60
Valve Clearance Adjustments 6A–61
Camshaft 6A–63
Camshaft and Associated Parts 6A–63
Disassembly 6A–63
Inspection and Repair 6A–64
Reassembly 6A–66
Crankshaft 6A–69
Crankshaft and Associated Parts 6A–69
Disassembly 6A–69
Inspection and Repair 6A–70
Inspection and Repair 6A–71
Reassembly 6A–73

Piston and Connecting Rod 6A–77
Piston, Connecting Rod and Associate Parts 6A–77
Disassembly 6A–77
Inspection and Repair 6A–78
Reassembly 6A–82
Cylinder Block 6A–85
Cylinder Block and Associated Parts 6A–85
Disassembly 6A–85
Inspection and Repair 6A–86
Reassembly 6A–87
Main Data and Specification 6A–90
Special Tool 6A–96

Service Precaution

WARNING: IF SO EQUIPPED WITH A SUPPLEMENTAL RESTRAINT SYSTEM (SRS), REFER TO THE SRS COMPONENT AND WIRING LOCATION VIEW IN ORDER TO DETERMINE WHETHER YOU ARE PERFORMING SERVICE ON OR NEAR THE SRS COMPONENTS OR THE SRS WIRING. WHEN YOU ARE PERFORMING SERVICE ON OR NEAR THE SRS COMPONENTS OR THE SRS WIRING, REFER TO THE SRS SERVICE INFORMATION. FAILURE TO FOLLOW WARNINGS COULD RESULT IN POSSIBLE AIR BAG DEPLOYMENT, PERSONAL INJURY, OR OTHERWISE UNNEEDED SRS SYSTEM REPAIRS.

CAUTION: Always use the correct fastener in the proper location. When you replace a fastener, use ONLY the exact part number for that application. ISUZU will call out those fasteners that require a replacement after removal. ISUZU will also call out the fasteners that require thread lockers or thread sealant. UNLESS OTHERWISE SPECIFIED, do not use supplemental coatings (Paints, greases, or other corrosion inhibitors) on threaded fasteners or fastener joint interfaces. Generally, such coatings adversely affect the fastener torque and the joint clamping force, and may damage the fastener. When you install fasteners, use the correct tightening sequence and specifications. Following these instructions can help you avoid damage to parts and systems.

General Description

Engine Cleanliness And Care

An automobile engine is a combination of many machined, honed, polished and lapped surfaces with tolerances that are measured in the thousandths of a millimeter (ten thousandths of an inch). Accordingly, when any internal engine parts are serviced, care and cleanliness are important. Throughout this section, it should be understood that proper cleaning and protection of machined surfaces and friction areas is part of the repair procedure. This is considered standard shop practice even if not specifically stated.

- A liberal coating of engine oil should be applied to all friction areas during assembly to protect and lubricate the surfaces on initial operation.
- Whenever valve train components, pistons, piston rings, connecting rods, rod bearings, and crankshaft journal bearings are removed for service, they should be retained in order.
- At the time of installation, they should be installed in the same locations and with the same mating surfaces as when removed.
- Battery cables should be disconnected before any major work is performed on the engine. Failure to disconnect cables may result in damage to wire harness or other electrical parts.
- The six cylinders of this engine are identified by numbers; Right side cylinders 1, 3 and 5, Left side cylinders 2, 4 and 6, as counted from crankshaft pulley side to flywheel side.

General Information on Engine Service

The following information on engine service should be noted carefully, as it is important in preventing damage and contributing to reliable engine performance:

- When raising or supporting the engine for any reason, do not use a jack under the oil pan. Due to the small clearance between the oil pan and the oil pump strainer, jacking against the oil pan may cause damage to the oil pick–up unit.
- The 12–volt electrical system is capable of damaging circuits. When performing any work where electrical terminals could possibly be grounded, the ground cable of the battery should be disconnected at the battery.
- Any time the intake air duct or air cleaner is removed, the intake opening should be covered. This will protect against accidental entrance of foreign material into the cylinder which could cause extensive damage when the engine is started.

Cylinder Block

The cylinder block is made of aluminum die–cast casting for 75˚V–type six cylinders. It has a rear plate integrated structure and employs a deep skint. The cylinder liner is cast and the liner inner diameter and crankshaft journal diameter are classified into grades. The crankshaft is supported by four bearings of which width of No.3 bearing on the body side is different in order to support the thrust bearing. The bearing cap is made of nodular cast iron and each bearing cap uses four bolts and two side bolts.

Cylinder Head

The cylinder head, made of aluminum alloy casting employs a pent–roof type combustion chamber with a spark plug in the center. The intake and exhaust valves are placed in V–type design. The ports are cross–flow type.

Valve Train

Intake and exhaust camshaft on the both side of banks are driven through an camshaft drive gear by timing belt. The valves are operated by the camshaft and the valve clearance is adjusted to select suitable thickness shim.

Intake Manifold

The intake manifold system is composed of the aluminum cast common chamber and intake manifold attached with six fuel injectors.

Exhaust Manifold

The exhaust manifold is made of nodular cast iron.

Pistons and Connecting Rods

Aluminum pistons are used after selecting the grade that meets the cylinder bore diameter. Each piston has two compression rings and one oil ring. The piston pin is made of chromium steel is offset 1mm toward the thrust side, and the thrust pressure of piston to the cylinder wall varies gradually as the piston travels. The connecting rods are made of forged steel. The connecting rod bearings are graded for correct seze selection.

Crankshaft and Bearings

The crankshaft is made of Ductile cast–iron. Pins and journals are graded for correct size selection for their bearing.

Engine Lubrication

The oil discharged by a trochoid–type oil pump driven by the crankshaft is fed through full–flow oil filter and to the oil gallery provided under the crankshaft bearing cap. The oil is then led to the crankshaft journals and cylinder head. The crank pins are lubricated with oil from crankshaft journals through oil holes. Also, an oil jet is fed to each cylinder from crankshaft juornals on the connecting rod for piston cleaning. The oil pan flange is dealed with liquid packing only; do not deform or damage the flange surface during removal or installation.

Engine Diagnosis

Hard Starting

1. Starting Motor Does Not Turn Over

Troubleshooting Procedure

Turn on headlights and starter switch.

Condition	Possible cause	Correction
Headlights go out or dim considerably	Battery run down or under charged	Recharge or replace battery
	Terminals poorly connected	Clean battery posts and terminals and connect properly
	Starting motor coil circuit shorted	Overhaul or replace
	Starting motor defective	Overhaul or replace

2. Ignition Trouble — Starting Motor Turns Over But Engine Does Not Start

Spark Test

Disconnect an igniton coil from any spark plug. Connect the spark plug tester 5–8840–0607–0, start the engine, and check if a spark is generated in the spark plug tester. Before starting the engine, make sure that the spark plug tester is properly grounded. To avoid electrical shock, do not touch the part where insulation of the igniton coil is broken while the engine is running.

Condition	Possible cause	Correction
Spark jumps across gap	Spark plug defective	Clean, adjust spark gap or replace
	Ignition timing incorrect	Refer to Ignition System
	Fuel not reaching fuel injector(s) or engine	Refer to item 3 (Trouble in fuel system)
	Valve timing incorrect	Adjust
	Engine lacks compression	Refer to item 4 (Engine lacks compression)
No sparking takes place	Ignition coil disconnected or broken	Connect properly or replace
	Electronic Ignition System with module	Replace
	Poor connections in engine harness	Correct
	Powertrain Control Module cable disconnected or defective	Correct or replace

3. Trouble In Fuel System

Condition	Possible cause	Correction
Starting motor turns over and spark occurs but engine does not start.	Fuel tank empty	Fill
	Water in fuel system	Clean
	Fuel filter clogged	Replace filter
	Fuel pipe clogged	Clean or replace
	Fuel pump defective	Replace
	Fuel pump circuit open	Correct or replace
	Evaporative Emission Control System circuit clogged	Correct or replace
	Multiport Fuel Injection System faulty	Refer to “Electronic Fuel Injection” section

4. Engine Lacks Compression

Condition	Possible cause	Correction
Engine lacks compression	Spark plug loosely fitted or spark plug gasket defective	Tighten to specified torque or replace gasket
	Valve timing incorrect	Adjust
	Cylinder head gasket defective	Replace gasket
	Valve incorrectly seated	Lap valve
	Valve stem seized	Replace valve and valve guide
	Valve spring weakened or broken	Replace
	Cylinder or piston rings worn	Overhaul engine
	Piston ring seized	Overhaul engine.

Engine Compression Test Procedure

1. Start and run the engine until the engine reaches normal operating temperature.
2. Turn the engine off.
3. Remove all the spark plugs.
4. Remove ignition coil fuse (15A) and disable the ignition system.
5. Remove the fuel pump relay from the relay and fuse box.
6. Engage the starter and check that the cranking speed is approximately 300 rpm.
7. Install cylinder compression gauge into spark plug hole.
8. With the throttle valve opened fully, keep the starter engaged until the compression gage needle reaches the maximum level. Note the reading.
9. Repeat the test with each cylinder.
   If the compression pressure obtained falls below the limit, engine overhaul is necessary.

   Limit; 1000 kPa (145 psi)

Rough Engine Idling or Engine Stalling

Condition	Possible cause	Correction
Trouble in fuel injection system	Idle air control valve defective	Replace
	Throttle shutting off incomplete	Correct or replace
	Throttle position sensor circuit open or shorted	Correct or replace
	Fuel injector circuits open or shorted	Correct or replace
	Fuel injectors damaged	Replace
	Fuel pump relay defective	Replace
	Mass Airflow Sensor circuit open or poor connections	Correct or replace
	Mass Airflow Sensor defective	Replace
	Manifold Absolute Pressure Sensor circuit open or poor connections	Correct or replace
	Manifold Absolute Pressure Sensor defective	Replace
	Engine Coolant Temperature Sensor circuit open or poor connections	Correct or replace
	Engine Coolant Temperature Sensor defective	Replace
	Intake Air Temperature sensor circuit open or poor connections	Correct or replace
	Intake Air Temperature sensor defective	Replace
	Knock Sensor (KS) cable broken or poor connections	Correct or replace
	KS defective	Replace
	KS Module circuits open or ground	Correct or replace
	KS Module defective	Replace
	Vehicle Speed Sensor circuit open or shorted	Correct or replace
	Vehicle Speed Sensor defective	Replace
Trouble in emission control system	Powertrain Control Module defective	Replace
	Exhaust Gas Recirculation Valve circuit open or poor connections	Correct or replace
	Exhaust Gas Recirculation Valve faulty	Replace
	Canister purge valve circuit open or poor connections	Correct or replace
	Canister purge valve defective	Replace
	Evaporative Emission Canister Purge control valve defective	Replace
	Trouble in ignition system	Refer to “Hard Start”

Condition	Possible cause	Correction
Others	Engine lacks compression	Refer to “Hard Start”
	Valve incorrectly seated	Lap valve
	Air Cleaner Filter clogged	Replace filter element
	Valve timing incorrect	Readjust
	Idle air control valve broken	Replace
	Fast idle solenoid defective	Replace
	Positive Crankcase Ventilation valve defective or clogged	Replace

Rough Engine Running

Condition	Possible cause	Correction
Engine misfires periodically	Ignition coil layer shorted	Replace
	Spark plugs fouling	Clean or install hotter type plug
	Spark plug(s) insulator nose leaking	Replace
	Fuel injector(s) defective	Replace
	Powertrain control module faulty	Replace
Engine knocks periodically	Spark plugs running too hot	Install colder type spark plugs
	Powertrain control module faulty	Replace
Engine lacks power	Spark plugs fouled	Clean
	Fuel injectors defective	Replace
	Mass Airflow Sensor or Intake Airflow Sensor circuit defective	Correct or replace
	Manifold Absolute Pressure (MAP) Sensor or Manifold Absolute Pressure Sensor circuit defective	Correct or replace
	Engine Coolant Temperature Sensor or Engine Coolant Temperature Sensor circuit defective	Correct or replace
	Powertrain Control Module faulty	Replace
	Intake Air Temperature Sensor or Intake Air Temperature Sensor circuit defective	Correct or replace
	Throttle Position Sensor or Throttle Position Sensor circuit defective	Correct or replace
	Knock Sensor or Knock Sensor circuits defective	Correct or replace
	Knock Sensor Module or Knock Sensor Module circuits defective	Correct or replace

Hesitation

Condition	Possible cause	Correction
Hesitation on acceleration	Throttle Position Sensor adjustment incorrect	Replace throttle valve assembly
	Throttle Position Sensor circuit open or shorted	Correct or replace
	Excessive play in accelerator linkage	Adjust or replace
	Mass Airflow Sensor circuit open or poor connections	Correct or replace
	Mass Airflow Sensor defective	Replace
	Manifold Absolute Pressure (MAP) Sensor circuit open or shorted	Correct or replace
	MAP Sensor defective	Replace
	Intake Air Temperature (IAT) Sensor circuit open or shorted	Correct or replace
	Knock Sensor (KS) Circuit open or poor connections	Correct or replace
	KS defective	Replace
	KS Module circuits open or shorted	Correct or replace
	KS Module defective	Replace
	IAT Sensor defective	Replace
Hesitation at high speeds (Fuel pressure too low)	Fuel tank strainer clogged	Clean or replace
	Fuel pipe clogged	Clean or replace
	Fuel filter clogged	Replace
	Defective fuel pump system	Check and replace
	Fuel Pressure Control Valve leaking	Replace
Hesitation at high speeds (Fuel injector not working normally)	Power supply or ground circuit for Multiport Fuel Injection System shorted or open	Check and correct or replace
	Fuel Injector defective	Replace
	Cable of Multiport Fuel Injection System circuit open or poor connections	Correct or replace

Condition	Possible cause	Correction
Hesitation at high speeds	Powertrain Control Module defective	Replace
	Throttle Position Sensor cable broken or poor connections	Correct or replace
	Throttle Position Sensor defective	Replace
	Engine Coolant Temperature Sensor circuit open or shorted	Correct or replace
	Engine Coolant Temperature Sensor defective	Replace
	Mass Airflow Sensor circuit open or poor connections	Correct or replace
	Mass Airflow Sensor defective	Replace
	MAP Sensor cable broken or poor connections	Correct or replace
	MAP Sensor defective	Replace
	IAT Sensor circuit open or poor connections	Correct or replace
	IAT Sensor defective	Replace
	KS circuit open or poor connections	Correct or replace
	KS defective	Replace
	KS Module circuit open or shorted	Correct or replace
	KS Module defective	Replace
	Throttle valve not fully opened	Check and correct or replace
	Air Cleaner Filter clogged	Replace filter element
	Power supply voltage too low	Check and correct or replace

Engine Lacks Power

Condition	Possible cause	Correction
Trouble in fuel system	Fuel Pressure Control Valve not working normally	Replace
	Fuel injector clogged	Clean or replace
	Fuel pipe clogged	Clean
	Fuel filter clogged or fouled	Replace
	Fuel pump drive circuit not working normally	Correct or replace
	Fuel tank not sufficiently breathing due to clogged Evaporative Emission Control System circuit	Clean or replace
	Water in fuel system	Clean
	Inferior quality fuel in fuel system	Use fuel of specified octane rating
	Powertrain Control Module supplied poor voltage	Correct circuit
	Throttle Position Sensor cable broken or poor connections	Correct or replace
	Throttle Position Sensor defective	Replace
	Mass Airflow Sensor not working normally	Replace
	Manifold Absolute Pressure Sensor not working normally	Replace
	Intake Air Temperature Sensor not working normally	Replace
	Engine Coolant Temperature Sensor circuit open or shorted	Correct or replace
	Engine Coolant Temperature Sensor defective	Replace
	Powertrain Control Module defective	Replace
Trouble in intake or exhaust system	Air Cleaner Filter clogged	Replace filter element
	Air duct kinked or flattened	Correct or replace
Ignition failure	———	Refer to Hard Start Troubleshooting Guide
	Heat range of spark plug inadequate	Install spark plugs of adequate heat range
	Ignition coil defective	Replace

Condition	Possible cause	Correction
Engine overheating	Level of Engine Coolant too low	Replenish
	Fan clutch defective	Replace
	Incorrect fan installed	Replace
	Thermostat defective	Replace
	Engine Coolant pump defective	Correct or replace
	Radiator clogged	Clean or replace
	Radiator filler cap defective	Replace
	Level of oil in engine crankcase too low or wrong engine oil	Change or replenish
	Resistance in exhaust system increased	Clean exhaust system or replace defective parts
	Throttle Position Sensor adjustment incorrect	Replace with Throttle Valve ASM
	Throttle Position Sensor circuit open or shorted	Correct or replace
	Cylinder head gasket damaged	Replace
Engine overcooling	Thermostat defective	Replace (Use a thermostat set to open at 82˚C (180˚F))
Engine lacks compression	———	Refer to Hard Start
Others	Tire inflation pressure abnormal	Adjust to recommended pressures
	Brake drag	Adjust
	Clutch slipping	Adjust or replace
	Level of oil in engine crankcase too high	Correct level of engine oil
	Exhaust Gas Recirculation Valve defective	Replace

Engine Noisy

Abnormal engine noise often consists of various noises originating in rotating parts, sliding parts and other moving parts of the engine. It is, therefore, advisable to locate the source of noise systematically.

Condition	Possible cause	Correction
Noise from crank journals or from crank bearings (Faulty crank journals and crank bearings usually make dull noise that becomes more evident when accelerating)	Oil clearance increased due to worn crank journals or crank bearings	Replace crank bearings and crankshaft or regrind crankshaft and install the undersize bearing
	Crankshaft out of round	Replace crank bearings and crankshaft or regrind crankshaft and install the undersize bearing
	Crank bearing seized	Crank bearing seized. Replace crank bearings and crankshaft or regrind crankshaft and install the undersize bearing

Troubleshooting Procedure

Short out each spark plug in sequence using insulated spark plug wire removers. Locate cylinder with defective bearing by listening for abnormal noise that stops when spark plug is shorted out.

Condition	Possible cause	Correction
Noise from connecting rods or from connecting rod bearings (Faulty connecting rods or connecting rod bearings usually make an abnormal noise slightly higher than the crank bearing noise, which becomes more evident when engine is accelerated)	Bearing or crankshaft pin worn	Replace connecting rod bearings and crankshaft or regrind crankshaft pin and install the undersize bearing
	Crankpin out of round	Replace connecting rod bearings and crankshaft or regrind crankshaft pin and install the undersize bearing
	Connecting rod bent	Correct or replace
	Connecting rod bearing seized	Replace connecting rod bearings and crankshaft or regrind crankshaft pin and install the undersize bearing

Troubleshooting Procedure

Abnormal noise stops when the spark plug on the cylinder with defective part is shorted out.

Condition	Possible cause	Correction
Piston and cylinder noise (Faulty piston or cylinder usually makes a combined mechanical thumping noise which increases when engine is suddenly accelerated but diminishes gradually as the engine warms up)	Piston clearance increased due to cylinder wear	Replace piston and cylinder body
	Piston seized	Replace piston and cylinder body
	Piston ring broken	Replace piston and cylinder body
	Piston defective	Replace pistons and others

Troubleshooting Procedure

Short out each spark plug and listen for change in engine noise.

Condition	Possible cause	Correction
Piston pin noise (Piston makes noise each time it goes up and down)	Piston pin or piston pin hole worn	Replace piston, piston pin and connecting rod assy

Troubleshooting Procedure

The slapping sound stops when spark plug on bad cylinder is shorted out.

Condition	Possible cause	Correction
Timing belt noise	Timing belt tension is incorrect	Replace pusher or adjust the tension pulley or replace timing belt
	Tensioner bearing defective	Replace
	Timing belt defective	Replace
	Timing pulley defective	Replace
	Timing belt comes in contact with timing cover	Replace timing belt and timing cover
Valve noise	Valve clearance incorrect	Replace adjusting shim
	Valve and valve guide seized	Replace valve and valve guide
	Valve spring broken or weakened	Replace
	Valve seat off–positioned	Correct
	Camshaft worn out	Replace
Crankshaft noise	Crankshaft end play excessive (noise occurs when clutch is engaged)	Replace thrust bearing

Condition	Possible cause	Correction
Engine knocking	Preignition due to use of spark plugs of inadequate heat range	Install Spark Plugs of adequate heat range
	Carbon deposits in combustion chambers	Clean
	Fuel too low in octane rating	Replace fuel
	Wide Open Throttle enrichment system failure	Refer to Section 6E
	Selection of transmission gear incorrect	Caution operator of incorrect gear selection
	Engine overheating	Refer to “Engine Lacks Power”
Others	Water pump defective	Replace
	Drive belt slipping	Replace auto tentioner or drive belt

Abnormal Combustion

Condition	Possible cause	Correction
Trouble in fuel system	Fuel pressure control valve defective	Replace
	Fuel filter clogged	Replace
	Fuel pump clogged	Clean or replace
	Fuel tank or fuel pipe clogged	Clean or replace
	Fuel injector clogged	Clean or replace
	Fuel pump relay defective	Replace
	Power supply cable for fuel pump broken or poor connections	Reconnect, correct or replace
	Mass Airflow (MAF) sensor circuit open or defective	Correct or replace
	MAF Sensor defective	Replace
	Manifold Absolute Pressure Sensor circuit open or shorted	Correct or replace
	Manifold Absolute Pressure Sensor defective	Replace
	Engine Coolant Temperature (ECT) Sensor circuit open or shorted	Correct or replace
	ECT Sensor defective	Replace
	Throttle Position Sensor adjustment incorrect	Readjust
	Throttle Position Sensor defective	Replace
	Throttle Position Sensor connector poor connections	Reconnect
	Vehicle Speed Sensor cable poor connections or defective	Correct or replace
	Vehicle Speed Sensor loosely fixed	Fix tightly
	Vehicle Speed Sensor in wrong contact or defective	Replace
	Powertrain Control Module cable poor connections or defective	Correct or replace

Condition	Possible cause	Correction
Trouble in emission control system	Heated Oxygen Sensor circuit open	Correct or replace
	Heated Oxygen Sensor defective	Replace
	Signal vacuum hose loosely fitted or defective	Correct or replace
	EGR Valve circuit open or shorted	Correct or replace
	Exhaust Gas Recirculation Valve defective	Replace
	ECT Sensor circuit open or shorted	Correct or replace
	Canister Purge Valve circuit open or shorted	Correct or replace
	Canister Purge Valve defective	Replace
	ECT Sensor defective	Replace
	Positive Crankcase Ventilation (PCV) valve and hose clogged	Correct or replace
	Evaporator system	Refer to Section 6E
Trouble in ignition system	———	Refer to “Engine Lacks Power”
Trouble in cylinder head parts	Carbon deposits in combustion chamber	Remove carbon
	Carbon deposit on valve, valve seat and valve guide	Remove carbon

Engine Oil Consumption Excessive

Condition	Possible cause	Correction
Oil leaking	Oil pan drain plug loose	Retighten or replace gasket
	Crankcase fixing bolts loosened	Retighten
	Oil pan setting bolts loosened	Retighten
	Oil pan gasket broken	Replace gasket
	Front cover retaining bolts loose or gasket broken	Retighten or replace gasket
	Head cover fixing bolts loose or gasket broken	Retighten or replace gasket
	Oil cooler adapter cracked	Replace
	Oil cooler center bolt loose	Retighten
	Oil cooler O–ring broken	Replace
	Oil cooler piping loose or broken	Retighten or replace
	Oil filter adapter cracked	Replace
	Oil filter attaching bolt loose or rubber gasket broken	Retighten or replace oil filter
	Oil cooler broken	Replace
	Crankshaft front or rear oil seal defective	Replace oil seal
	Oil pressure unit loose or broken	Retighten or replace
	Blow–by gas hose broken	Replace hose
	Positive Crankcase Ventilation Valve clogged	Clean
	Engine/Transmission coupling failed	Replace oil seal

Condition	Possible cause	Correction
Oil leaking into combustion chambers due to poor seal in valve system	Valve stem oil seal defective	Replace
	Valve stem or valve guide worn	Replace valve and valve guide
Oil leaking into combustion chambers due to poor seal in cylinder parts	Cylinders and pistons worn excessively	Replace cylinder body assembly and pistons
	Piston ring gaps incorrectly positioned	Correct
	Piston rings set with wrong side up	Correct
	Piston ring sticking	Replace cylinder body assembly and pistons
	Piston ring and ring groove worn	Replace pistons and others
	Return ports in oil rings clogged	Clean piston and replace rings
Positive Crankcase Ventilation System malfunctioning	Positive Crankcase Ventilation Valve clogged	Clean
Others	Improper oil viscosity	Use oil of recommended S.A.E. viscosity
	Continuous high speed driving and/or severe usage such as trailer towing	Continuous high speed operation and/or severe usage will normally cause increased oil consumption

Fuel Consumption Excessive

Condition	Possible cause	Correction
Trouble in fuel system	Mixture too rich or too lean due to trouble in fuel injection system	Refer to “Abnormal Combustion”
	Fuel cut function does not work	Refer to “Abnormal Combustion”
Trouble in ignition system	Misfiring or abnormal combustion due to trouble in ignition system	Refer to “Hard Start” or “Abnormal Combustion”
Others	Engine idle speed too high	Reset Idle Air Control Valve
	Returning of accelerator control sluggish	Correct
	Fuel system leakage	Correct or replace
	Clutch slipping	Correct
	Brake drag	Correct
	Selection of transmission gear incorrect	Caution operator of incorrect gear selection
	Excessive Exhaust Gas Recirculation flow due to trouble in Exhaust Gas Recirculation system	Refer to “Abnormal Combustion”

Lubrication Problems

Condition	Possible cause	Correction
Oil pressure too low	Wrong oil in use	Replace with correct engine oil
	Relief valve sticking	Replace
	Oil pump not operating properly	Correct or replace
	Oil pump strainer clogged	Clean or replace strainer
	Oil pump worn	Replace
	Oil pressure gauge defective	Correct or replace
	Crankshaft bearing or connecting rod bearing worn	Replace
Oil contamination	Wrong oil in use	Replace with correct engine oil
	Oil filter clogged	Replace oil filter
	Cylinder head gasket damage	Replace gasket
	Burned gases leaking	Replace piston and piston rings or cylinder body assembly
Oil not reaching valve system	Oil passage in cylinder head or cylinder body clogged	Clean or correct

Engine Oil Pressure Check

1. Check for dirt, gasoline or water in the engine oil.
   a. Check the viscosity of the oil.
   b. Change the oil if the viscosity is outside the specified standard.
   c. Refer to the “Maintenance and Lubrication” section of this manual.
2. Check the engine oil level.
   The level should fall somewhere between the “ADD” and the “FULL” marks on the oil level dipstick.
   If the oil level does not reach the “ADD” mark on the oil level dipstick, engine oil must be added.
3. Remove the oil pressure unit.
4. Install an oil pressure gauge.
5. Start the engine and allow the engine to reach normal operating temperature (About 80˚C).
6. Measure the oil pressure.
   Oil pressure should be:
   392–550 kPa (56.9–80.4 psi) at 3000 rpm.
7. Stop the engine.
8. Remove the oil pressure gauge.
9. Install the oil pressure unit.
10. Start the engine and check for leaks.

Malfunction Indicator Lamp

The instrument panel “CHECK ENGINE” Malfunction Indicator Lamp (MIL) illuminates by self diagnostic system when the system checks the starting of engine, or senses malfunctions.

Condition	Possible cause	Correction
“CHECK ENGINE” MIL does not illuminate at the starting of engine	Bulb defective	Replace
	MIL circuit open	Correct or replace
	Command signal circuit to operate self diagnostic system shorted	Correct or replace
	Engine Control Module (PCM) cable loosely connected, disconnected or defective	Correct or replace
	PCM defective	Replace
“CHECK ENGINE” MIL illuminates, and stays on	Deterioration of heated oxygen sensor internal element	Replace
	Heated oxygen sensor connector terminal improper contact	Reconnect properly
	Heated oxygen sensor lead wire shorted	Correct
	Heated oxygen sensor circuit open	Correct or replace
	Deterioration of engine coolant temperature sensor internal element	Replace
	Engine coolant temperature sensor connector terminal improper contact	Reconnect properly
	Engine coolant temperature sensor lead wire shorted	Correct
	Engine coolant temperature sensor circuit open	Correct or replace
	Throttle position sensor open or shorted circuits	Correct or replace
	Deterioration of crankshaft position sensor	Replace
	Crankshaft position sensor circuit open or shorted	Correct or replace
	Vehicle speed sensor circuit open	Correct or replace
	Manifold absolute pressure sensor circuit open or shorted	Correct or replace
	Intake air temperature sensor circuit open or shorted	Correct or replace
	Fuel injector circuit open or shorted	Correct or replace
	PCM driver transistor defective	Replace PCM
	Malfunctioning of PCM RAM (Random Access Memory) or ROM (Read Only Memory)	Replace PCM

Cylinder Head Cover LH

Removal

1. Disconnect battery ground cable.
2. Drain engine coolant from faucet bottom of radiator.
3. Remove engine cover from the dowels on the common chamber.

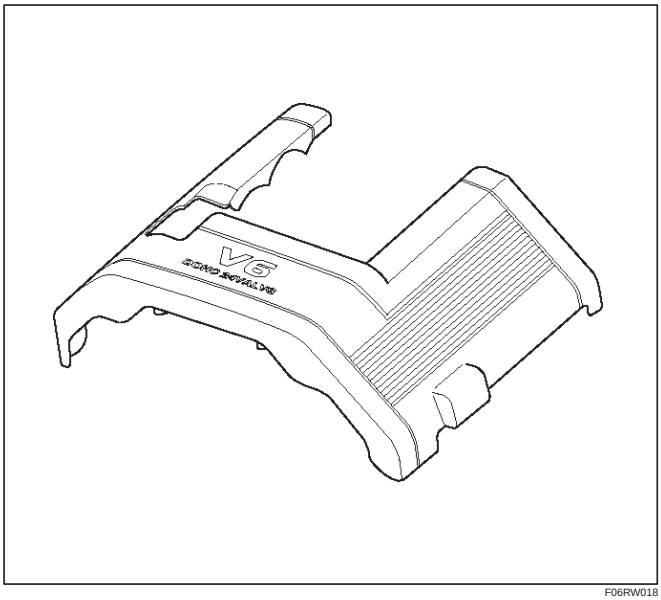

F06RW018

4. Remove air cleaner duct assembly (3) and air cleaner element (4).

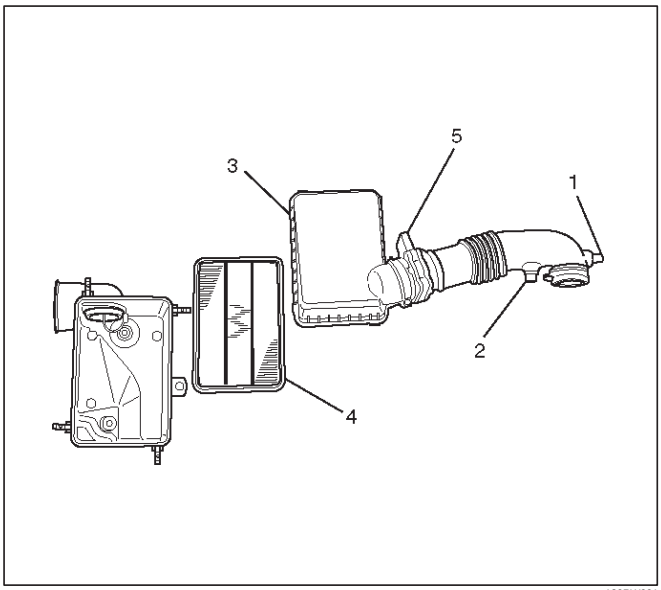

130RW001

Legend

(1) Positive Crankcase Ventilation Hose Connector
(2) Intake Air Temperature Sensor
(3) Air Cleaner Duct Assembly
(4) Air Cleaner Element
(5) Mass Air Flow Sensor

NOTE: Disconnect the mass air flow (MAF) sensor connector, intake air temperature (IAT) sensor connector, and positive crankcase ventilation (PCV) hose before hand the air cleaner duct assembly is removed.

5. Disconnect following wiring connectors and bonding cable:
   - Manifold Absolute Pressure (MAP) sensor
   - Vacuum Switching Valve (VSV) for Induction Air Control Valve (IACV) actuator
   - Ignition coils for left bank
   - Fuel injectors for left bank
   - Idle air control (IAC) valve
   - Throttle position sensor (TPS)
   - Bonding cable
   - Others as necessitated
6. Disconnect following vacuum hoses:
   - Brake master VAC
   - Canister
   - VSV for IACV actuator
   - Duty solenoid valve
   - PCV
7. Disconnect radiator upper and lower hoses
8. Remove engine harness from the cylinder head cover.
9. Remove the upper fan guide.
10. Remove cooling fan and clutch assembly.
11. Remove drive belt by pushing down the auto tensioner using spanner as illustrated.

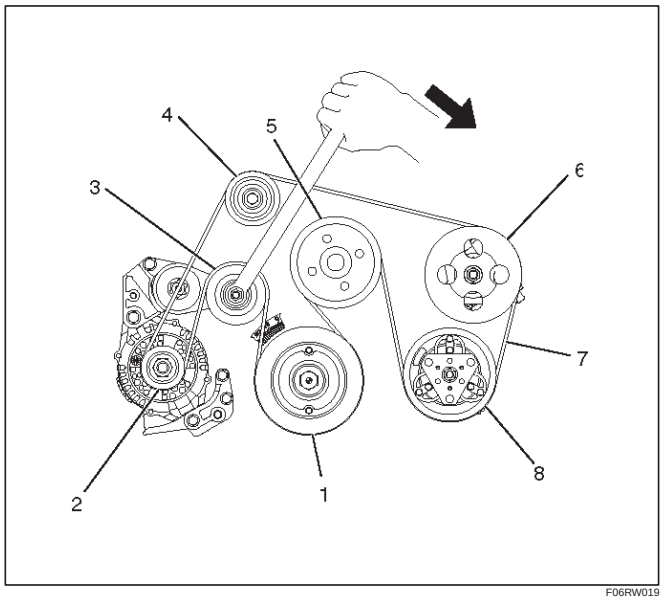

F06RW019

Legend

(1) Crankshaft Pulley
(2) Generator
(3) Auto Tensioner
(4) Idle Pulley
(5) Cooling Fan Pulley
(6) Power Steering Oil Pump
(7) Drive Belt
(8) Air Conditioner Compressor

12. Remove power steering oil pump pulley.
13. Remove fan pulley and bracket assembly.
14. Remove idle pulley assembly.
15. Remove auto tensioner assembly.
16. Remove crankshaft pulley using 5–8840–0133–0 crankshaft holder.
17. Remove timing belt covers from the right bank side to the left bank side in order.
18. Remove ignition coil assemblies for the left side bank.

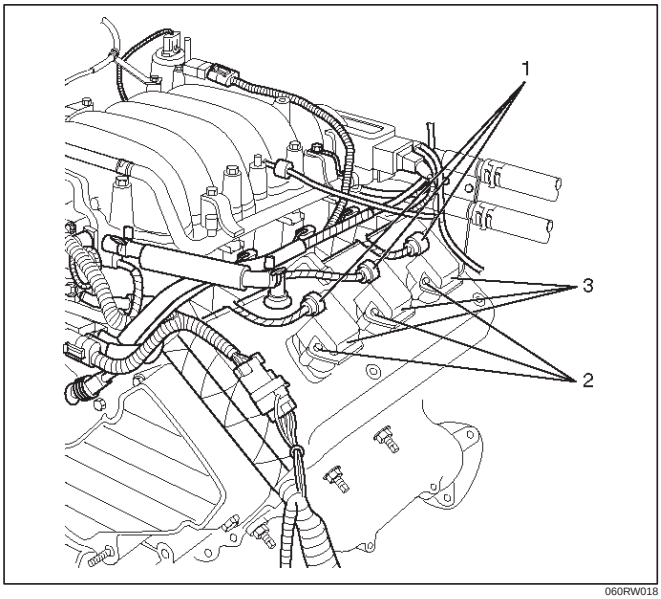

060RW018

Legend

(1) Ignition Coil Connectors
(2) Bolts
(3) Ignition Coil Assemblies

19. Remove cylinder head cover assembly.

Installation

1. Install cylinder head cover.
   - Clean the sealing surface of cylinder head and cylinder head cover to remove oil and sealing materials completely.
   - Apply sealant (TB-1207B or equivalent) of bead diameter 2-3 mm at eight place of arched area of camshaft bracket on front and rear sides.
   - The cylinder head cover must be installed within 5 minutes after sealant application to prevent premature hardening of sealant.

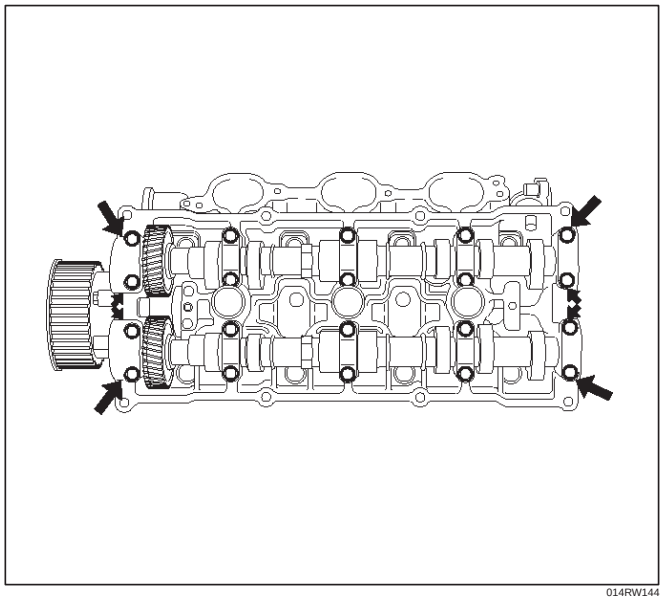

014RW144

   - Tighten bolts to the specified torque.

   Torque : 9 N·m (0.9 Kg·m/78 lb in)

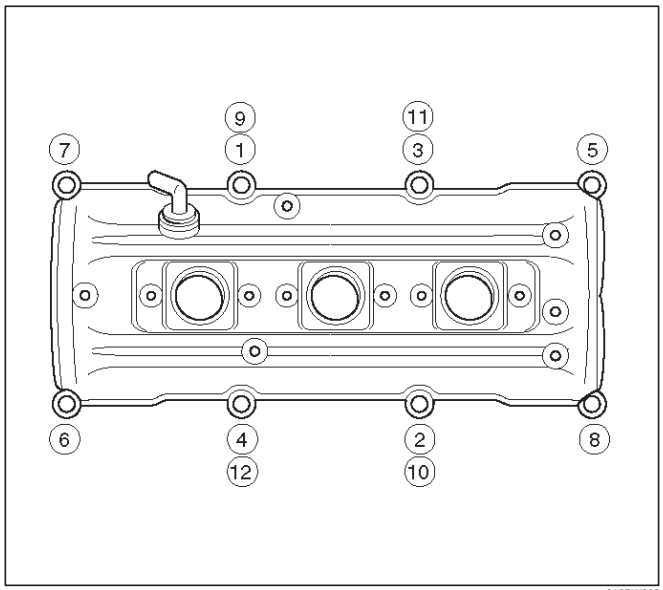

010RW008

2. Install ignition coil assemblies and tighten the fixing bolts to the specified torque.

   Torque : 4 N·m (0.4 Kg·m/35 lb in)

3. Install timing belt covers from left bank side to right bank side, and tighten the fixing bolts and nut to the specified torque.

   Torque : 19 N·m (1.9 Kg·m/14 lb ft)

4. Install crankshaft pulley and tighten the fixing bolt using 5–8840–0133–0 crankshaft holder to the specified torque.

   Torque : 167 N·m (17.0 Kg·m/123 lb ft)

5. Install auto tensioner assembly and tighten the fixing bolts to the specified torque.

   Torque :

   Shorter Bolt : 20 N·m (2.0 Kg·m/14 lb ft)

   Longer Bolt : 39 N·m (4.0 Kg·m/29 lb ft)

6. Install idle pulley and bracket assembly and tighten the fixing bolt to the specified torque.

   Torque : 52 N·m (5.3 Kg·m/38 lb ft)

7. Install fan pulley and bracket assembly and tighten the fixing bolts and nut to the specified torque.

   Torque : 22 N·m (2.2 Kg·m/16 lb ft)

8. Install power steering oil pump pulley and tighten the fixing bolt to the specified torque.

   Torque : 78 N·m (8.0 Kg·m/58 lb ft)

9. Install drive belt by pushing down the auto tensioner using spanner as shown in the removal step of drive belt.
10. Install cooling fan and clutch assembly and tighten the fixing bolts to the specified torque.

    Torque : 10 N·m (1.0 Kg·m/87 lb in)

11. Install upper fan guide and clip both side and tighten the fixing bolts to the specified torque.

    Torque : 4 N·m (0.4 Kg·m/35 lb in)

12. Install engine harness and tighten the fixing bolts of the retaining clip and bracket to the specified torque.

    Torque : 4 N·m (0.4 Kg·m/35 lb in)

13. Connect radiator upper and lower hoses and clip them securely.
14. Connect vacuum hoses of those which were disconnected in the removal step.
15. Connect wiring connectors and bonding cable of those which were disconnected in the removal step.
16. Install air cleaner element and air cleaner duct assembly, and clip the both end securely.
17. Connect MAF sensor connector, IAT sensor connector and PCV hose.
18. Install engine cover mating with the dowels.

Cylinder Head Cover RH

Removal

1. Disconnect battery ground cable.
2. Remove battery from the vehicle.
3. Drain engine coolant from faucet bottom of radiator.
4. Remove engine cover from the dowels on the common chamber.

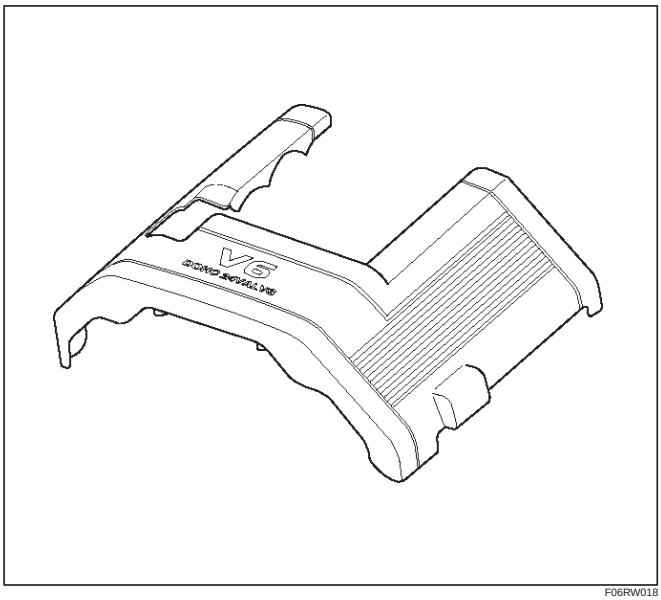

F06RW018

5. Remove air cleaner duct assembly (3) and air cleaner element (4).

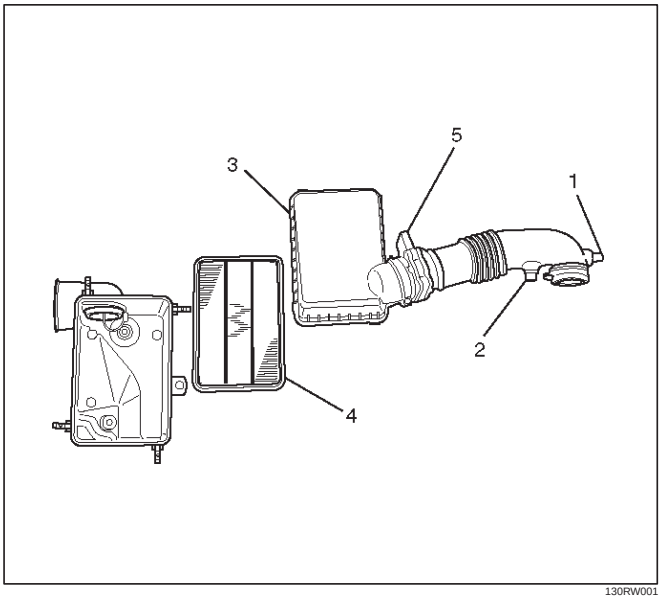

130RW001

Legend

(1) Positive Crankcase Ventilation Hose Connector
(2) Intake Air Temperature Sensor
(3) Air Cleaner Duct Assembly
(4) Air Cleaner Element
(5) Mass Air Flow Sensor

NOTE: Disconnect the mass air flow (MAF) sensor connector, intake air temperature (IAT) sensor connector, and positive crankcase ventilation (PCV) hose before hand the air cleaner duct assembly is removed.

6. Disconnect following wiring connectors and bonding cable:
   - Exhaust Gas Recirculation (EGR) valve
   - Fuel injectors for right bank
   - Ignition coils for right bank
   - Bonding cable
   - Othres as necessitated
7. Disconnect radiator upper and lower hoses.
8. Remove engine harness from the cylinder head cover.
9. Remove the upper fan guide.
10. Remove cooling fan and clutch assembly.
11. Remove drive belt by pushing down the auto tensioner using spanner as illustrated.

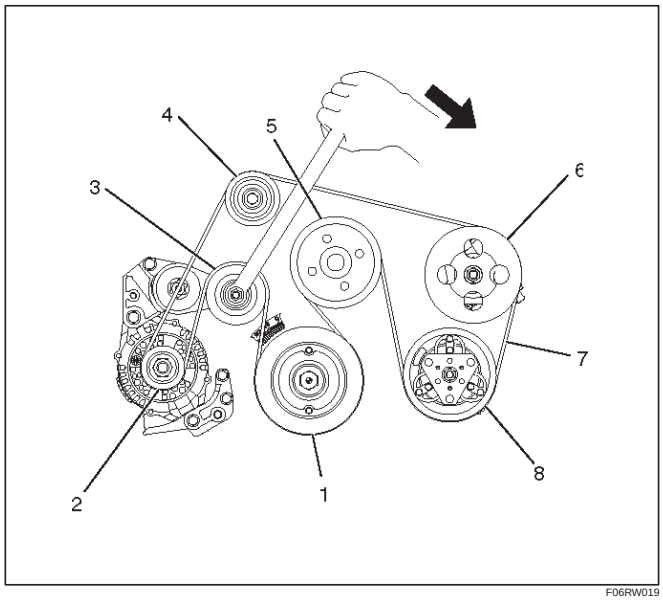

F06RW019

Legend

(1) Crankshaft Pulley
(2) Generator
(3) Auto Tensioner
(4) Idle Pulley
(5) Cooling Fan Pulley
(6) Power Steering Oil Pump
(7) Drive Belt
(8) Air Conditioner Compressor

12. Remove fan pulley and bracket assembly.
13. Remove idle pulley assembly.
14. Remove auto tensioner assembly.
15. Remove crankshaft pulley using 5–8840–0133–0 crankshaft holder.

16. Remove timing belt covers for right bank side.
17. Reomve timing belt covers for right bank side.

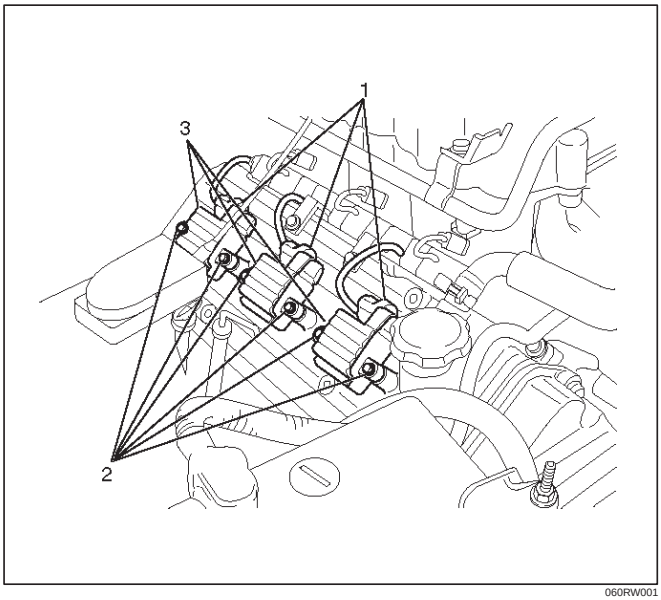

060RW001

Legend

(1) Ignition Coil Connectors
(2) Bolts
(3) Ignition Coil Assemblies

18. Remove ignition coil assemblies for the right side bank.
19. Remove cylinder head cover assembly.

Installation

1. Install cylinder head cover.
   - Clean the sealing surface of cylinder head and cylinder head cover to remove oil and sealing materials completely.
   - Apply sealant (TB-1207B or equivalent) of bead diameter 2-3 mm at eight place of arched area of camshaft bracket on front and rear sides.
   - The cylinder head cover must be installed within 5 minutes after sealant application before the sealant hardens.

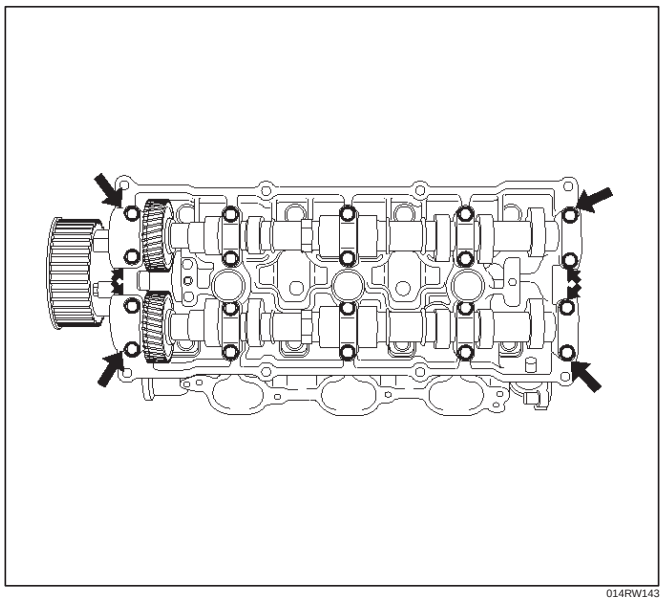

014RW143

- Tighten bolts in turn to the specified torque.

Torque : 8.8 N·m (0.9 Kg·m/78 lb in)

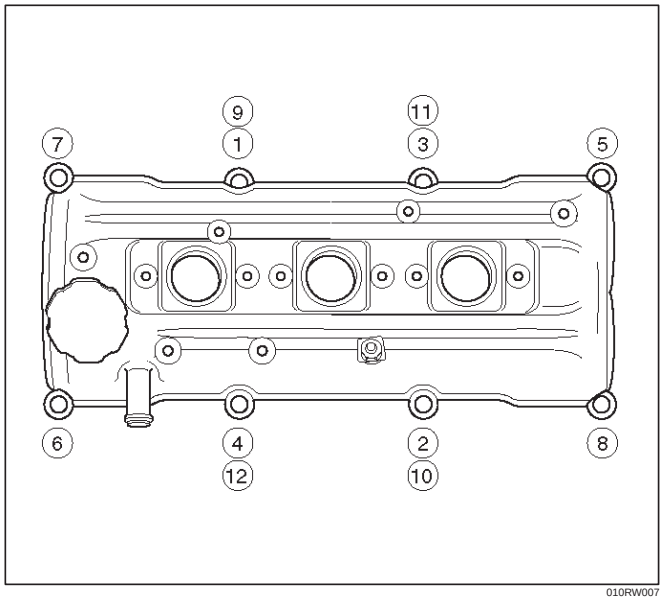

010RW007

2. Install ignition coil assemblies and tighten the fixing bolts to the specified torque.

   Torque : 4 N·m (0.4 Kg·m/35 lb in)

3. Install timing belt cover and tighten the fixing bolts and nut to the specified torque.

   Torque : 19 N·m (1.9 Kg·m/14 lb ft)

4. Install crankshaft pulley and tighten the fixing bolt using 5–8840–0133–0 crankshaft holder to the specified torque.

   Torque : 167 N·m (17 Kg·m/123 lb ft)

5. Install auto tensioner assembly and tighten the fixing bolts to the specified torque.

   Torque :

   Shorter Bolt : 20 N·m (2.0 Kg·m/14.8 lb ft)

   Longer Bolt : 39 N·m (4.0 Kg·m/28.8 lb ft)

6. Install idle pulley assembly and tighten the fixing bolt to the specified torque.

   Torque : 52 N·m (5.3 Kg·m/38.4 lb ft)

7. Install fan pulley and bracket assembly and tighten the fixing bolts and nut to the specified torque.

   Torque : 22 N·m (2.2 Kg·m/16.2 lb ft)

8. Install drive belt by pushing down the auto tensioner using spanner as shown in the removal step of drive belt.
9. Install cooling fan clutch assembly and tighten the fixing bolts to the specified torque.

   Torque : 10 N·m (1.0 Kg·m/88.5 lb in)

10. Install upper fan guide and clip both side and tighten the fixing bolts to the specified torque.

    Torque : 4 N·m (0.4 Kg·m/35.4 lb in)

11. Install engine harness and tighten the fixing bolts of the retaining clip and brackets to the specified torque.

    Torque : 4 N·m (0.4 Kg·m/35.4 lb in)

12. Connect radiator upper and lower hoses and clip them securely.
13. Connect wiring connectors and bonding cable of those which were disconnected in the removal step.
14. Install air cleaner element and air cleaner duct assembly, and the clip both end securely.
15. Connect MAF sensor connector, IAT sensor connector and PCV hose.
16. Install engine cover mating with the dowels.

Common Chamber

Removal

1. Disconnect battery ground cable.
2. Remove air cleaner duct assembly.

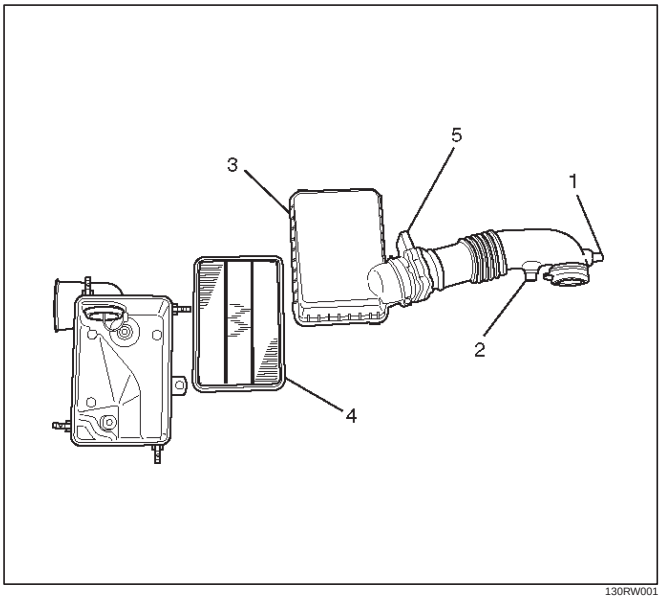

130RW001

Legend

(1) Positive Crankcase Ventilation Hose Connector
(2) Intake Air Temperature Sensor
(3) Air Cleaner Duct Assembly
(4) Air Cleaner Element
(5) Air Flow Sensor

3. Disconnect accelerator pedal cable from throttle body and cable bracket.
4. Disconnect vacuum booster hose from common chamber.
5. Disconnect connector from manifold absolute pressure sensor, idle air control valve, throttle position sensor, solenoid valve, electric vacuum sensing valve, and EGR valve.
6. Disconnect vacuum hose on canister VSV and positive crankcase ventilation hose, fuel rail assembly with pressure control valve bracket.
7. Remove ventilation hose from throttle valve and intake duct and remove water hose.
8. Remove the four throttle body fixing bolts.
9. Remove exhaust gas recirculation valve assembly fixing bolt and nut on common chamber and remove EGR valve assembly.
10. Remove two bolts from common chamber rear side for remove fuel hose bracket.
11. Remove common chamber four bolts and four nuts then remove the common chamber.

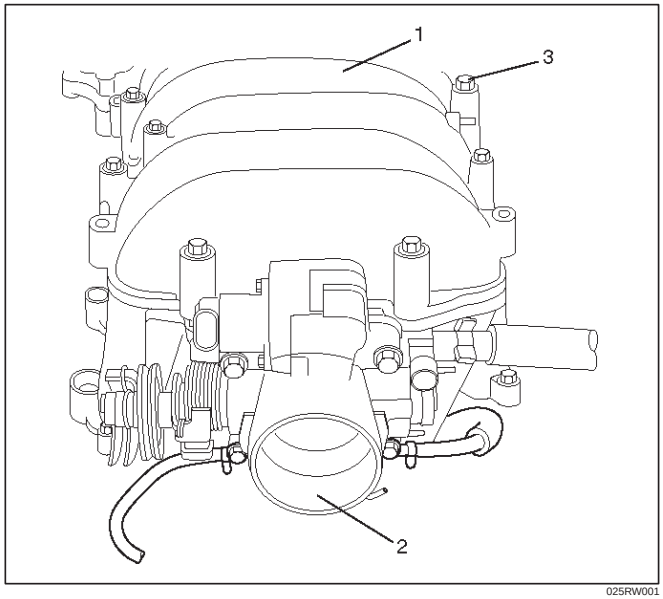

025RW001

Legend

(1) Common Chamber
(2) Throttle Valve Assembly
(3) Bolt

Installation

1. Install common chamber and tighten bolts and nuts to the specified torque.

   Torque :

   Bolt : 25 N·m (2.5 Kg·m/18 lb ft)

   Nut : 25 N·m (2.5 Kg·m/18 lb ft)
2. Install fuel hose bracket and tighten bolts to specified torque.

   Torque : 10 N·m (1.0 Kg·m/89 lb in)
3. Install exhaust gas recirculation valve assembly and tighten bolt and nut to the specified torque.

   Torque : 25 N·m (2.5 Kg·m/18 lb ft)
4. Install throttle body and tighten bolts to the specified torque.

   Torque : 25 N·m (2.5 Kg·m/18 lb ft)
5. Install ventilating hose to throttle valve and intake duct.
6. Connect vacuum hoses on canister VSV and positive crankcase ventilation hose. Tighten bolts for fuel rail assembly with pressure control valve bracket.

   Torque : 25 N·m (2.5 Kg·m/18 lb ft)
7. Connect each connector without fail.
8. Connect vacuum booster hose.
9. Connect accelerator pedal cable.

   Accelerator pedal cable adjustment

   1. Loosen the adjusting nut and screw cap.
   2. Pull outer cable while fully closing the throttle valve.

3. Tighten adjusting nut and lock nut temporarily.
4. Loosen adjusting nut by three turns and tighten lock nut.

   Then manually operating the throttle valve, make sure that the valve lever returns up to the stopper screw.
   If it does not reach the stopper screw, repeat from step 1.

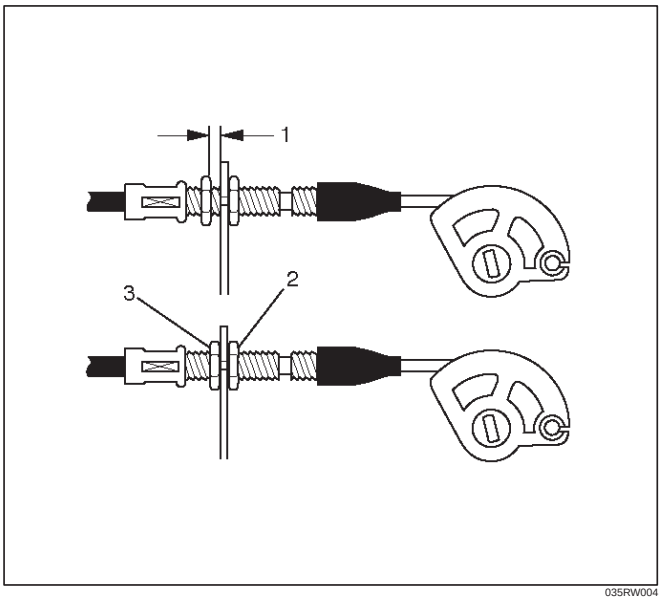

035RW004

Legend
(1) Clearance
(2) Lock Nut
(3) Adjusting Nut

10. Install air cleaner duct assembly.

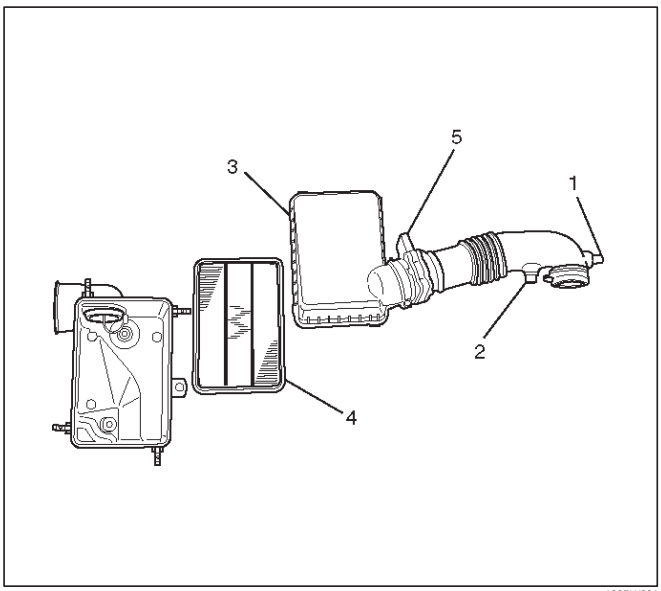

130RW001

Legend
(1) Positive Crankcase Ventilation Hose Connector
(2) Intake Air Temperature Sensor
(3) Air Cleaner Duct Assembly
(4) Air Cleaner Element.
(5) Mass Air Flow Sensor

Exhaust Manifold LH

Removal

1. Disconnect battery ground cable.
2. Remove air cleaner duct assembly.

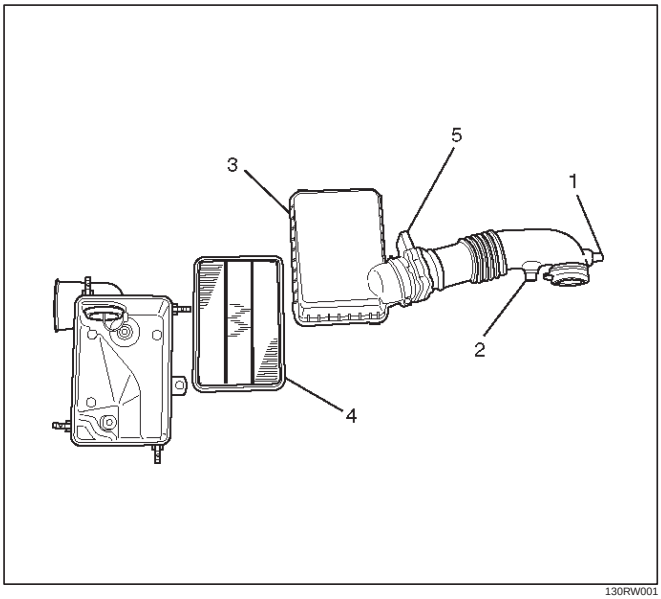

130RW001

Legend

(1) Positive Crankcase Ventilation Hose Connector
(2) Intake Air Temperature Sensor
(3) Air Cleaner Duct Assembly
(4) Air Cleaner Element
(5) Mass Air Flow Sensor

3. Remove exhaust front pipe three stud nuts from exhaust side and two nuts from rear end of exhaust front pipe.

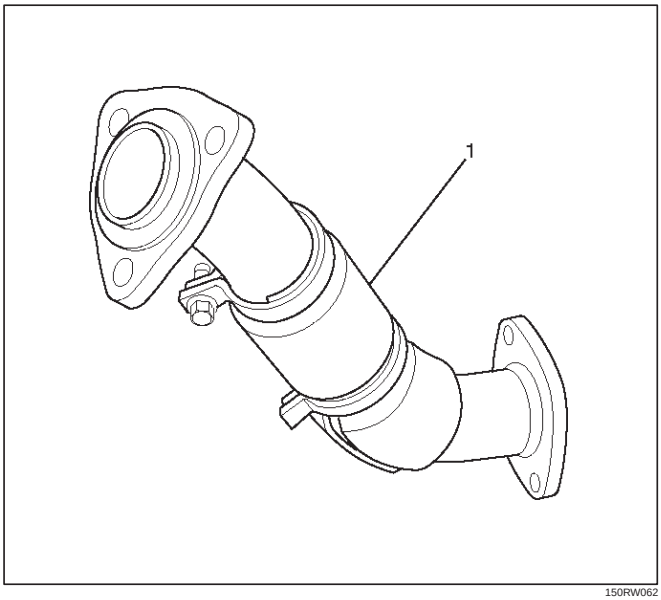

150RW062

Legend

(1) Exhaust Front Pipe LH

4. Remove heat protector two fixing bolts then the heat protector.
5. Remove a bolt on engine LH side for air conditioner (A/C) compressor bracket and loosen two bolts for A/C compressor then move A/C compressor to front side.
6. Remove exhaust manifold eight fixing nuts and remove exhaust manifold from the engine.

Installation

1. Install exhaust manifold and tighten exhaust manifold fixing nuts to the specified torque with new nuts.

   Torque: 57 N·m (5.8 Kg·m/42 lb ft)

2. Install heat protector.
3. Install exhaust front pipe and tighten three stud nuts and two nuts to the specified torque.

   Torque :

   Stud nuts: 67 N·m (6.8 Kg·m/49 lb ft)

   Nuts: 43 N·m (4.4 Kg·m/32 lb ft)

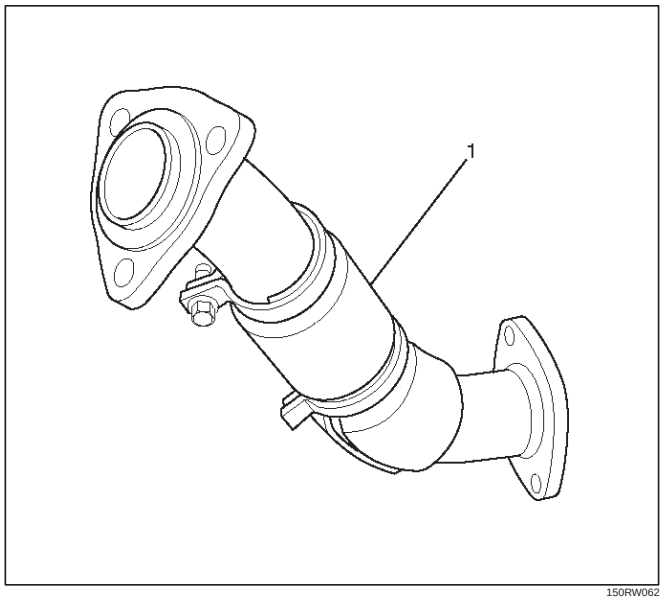

150RW062

Legend

(1) Exhaust Front Pipe LH

4. Set A/C compressor to normal position and tighten two bolts and a bolt to the specified torque.

   Torque : 40 N·m (4.1 Kg·m/30 lb ft)

5. Install air cleaner duct assembly.

Exhaust Manifold RH

Removal

1. Disconnect battery ground cable.
2. Remove torsion bar. Refer to removal procedure in Front Suspension section.
3. Remove exhaust front pipe three stud nuts and two nuts then disconnect exhaust front pipe.

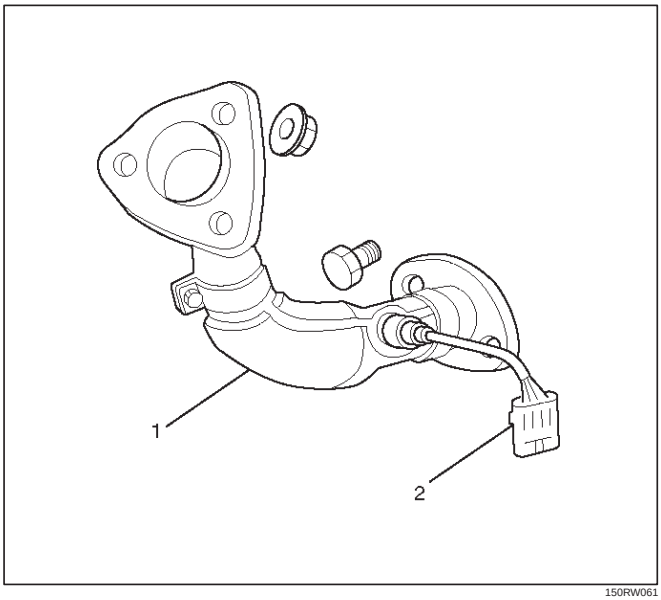

150RW061

Legend

(1) Exhaust Front Pipe RH
(2) O_2 Sensor (for IGM)

4. Remove heat protector two fixing bolts then the heat protector.
5. Remove exhaust gas recirculation (EGR) pipe fixing bolt and nut from exhaust manifold, remove a nut from EGR valve and a bolt from rear side of cylinder head for bracket of EGR pipe then remove the EGR pipe.

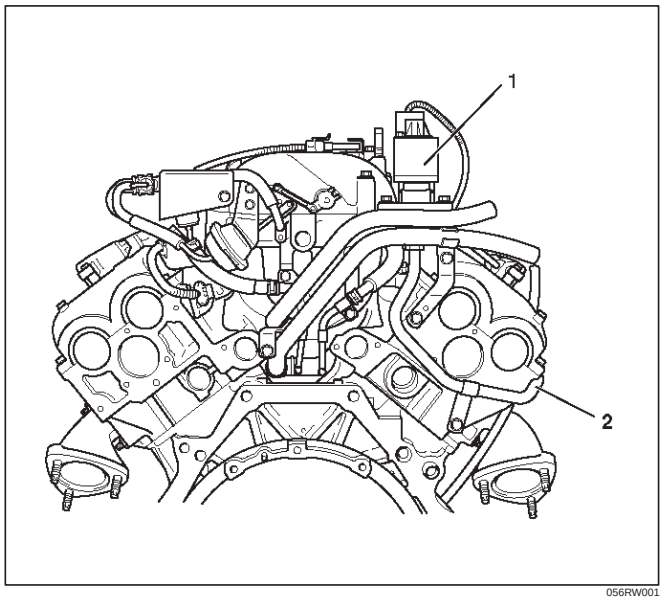

056RW001

Legend

(1) Exhaust Gas Recirculation (EGR) Valve
(2) EGR Pipe

6. Remove exhaust manifold eight fixing nuts then the exhaust manifold.

Installation

1. Install exhaust manifold and tighten bolts to the specified torque.

   Torque : 57 N·m (5.8 Kg·m/42 lb ft)

2. Install the EGR pipe, tighten bolt and nut on exhaust manifold to specified torque.

   Torque : 28 N·m (2.9 Kg·m/21 lb ft)

   Tighten nut to EGR valve to the specified torque.

   Torque : 44 N·m (4.5 Kg·m/33 lb ft)

   Tighten the bolt for EGR pipe bracket to specified torque.

   Torque : 25 N·m (2.5 Kg·m/18 lb ft)

3. Install heat protector
4. Install exhaust front pipe and tighten three stud nuts and two nuts to the specified torque.

   Torque:

   Stud nuts: 67 N·m (6.8 Kg·m/49 lb ft)

   Nuts: 43 N·m (4.4 Kg·m/32 lb ft)

5. Install the torsion bar and readjust the vehicle height. Refer to installation and vehicle height adjustment procedure for Front Suspension.

Crankshaft Pulley

Removal

1. Disconnect battery ground cable.
2. Remove air cleaner assembly.

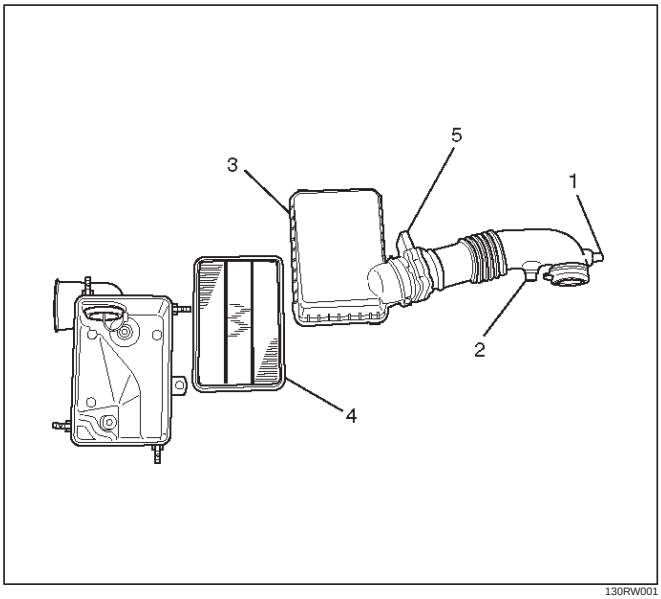

130RW001

Legend

(1) Positive Crankcase Ventilation Hose Connector
(2) Intake Air Temperature Sensor
(3) Air Cleaner Duct Assembly
(4) Air Cleaner Element
(5) Mass Air Flow Sensor

3. Remove radiator upper fan shroud from radiator.
4. Move serpentine belt tensioner to loose side using wrench then remove serpentine belt.

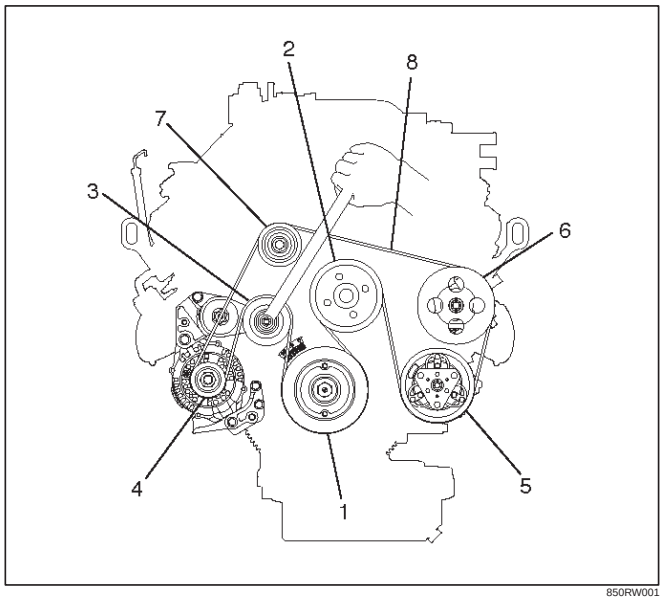

850RW001

Legend

(1) Crankshaft Pulley
(2) Cooling Fan Pulley
(3) Tensioner
(4) Generator
(5) Air Conditioner Compressor
(6) Power Steering Oil Pump
(7) Serpentine Belt

5. Remove cooling fan assembly four fixing nuts, then the cooling fan assembly.
6. Remove crankshaft pulley assembly using J-8614-01 crankshaft holder, hold crankshaft pulley then remove center bolt and pulley.

Installation

1. Install crankshaft pulley using J-8614-01 crankshaft holder, hold the crankshaft pulley and tighten center bolt to the specified torque.

   Torque : 167 N·m (17.0 Kg·m/123 lb ft)

2. Install cooling fan assembly and tighten bolts/nuts to the specified torque.

   Torque : 22 N·m (2.2 Kg·m/16 lb ft) for fan pulley and fan bracket.

   Torque : 10 N·m (1.0 Kg·m/88.5 lb in) for fan and clutch assembly.

3. Move serpentine belt tensioner to loose side using wrench, then install serpentine belt to normal position.
4. Install radiator upper fan shroud.
5. Install air cleaner assembly.

Timing Belt

Removal

1. Disconnect battery ground cable.
2. Remove air cleaner assembly.
3. Remove radiator upper fan shroud from radiator.
4. Move drive belt tensioner to loose side using wrench then remove drive belt.

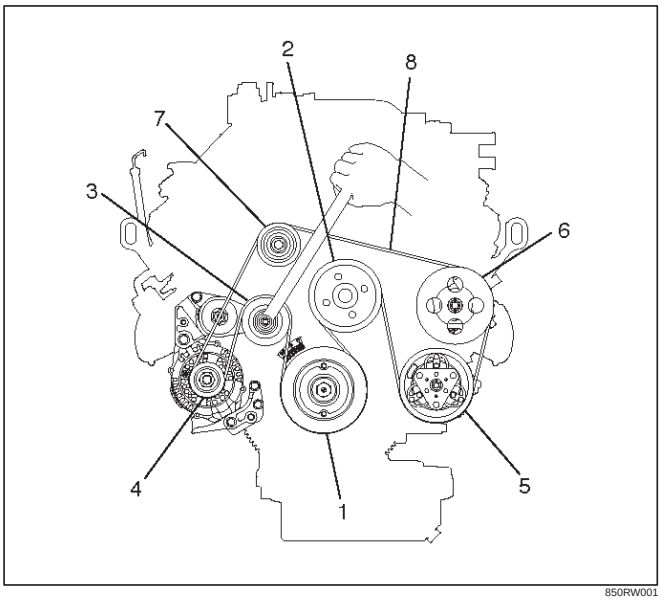

850RW001

Legend

(1) Crankshaft Pulley
(2) Cooling Fan Pulley
(3) Tensioner
(4) Generator
(5) Air Conditioner Compressor
(6) Power Steering Oil Pump
(7) Drive Belt

5. Remove cooling fan assembly four nuts, then the cooling fan assembly.
6. Remove cooling fan drive pulley assembly.
7. Remove idle pulley assembly.
8. Remove serpentine belt tensioner assembly.
9. Remove power steering pump assembly.
10. Remove crankshaft pulley assembly using 5–8840–0133–0 crankshaft holder, hold crankshaft pulley remove center bolt, then the pulley.
11. Remove right side timing belt cover then left side timing belt cover.
12. Remove lower timing belt cover
13. Remove pusher.

CAUTION: The pusher prevents air from entering the oil chamber. Its rod must always be facing upward.

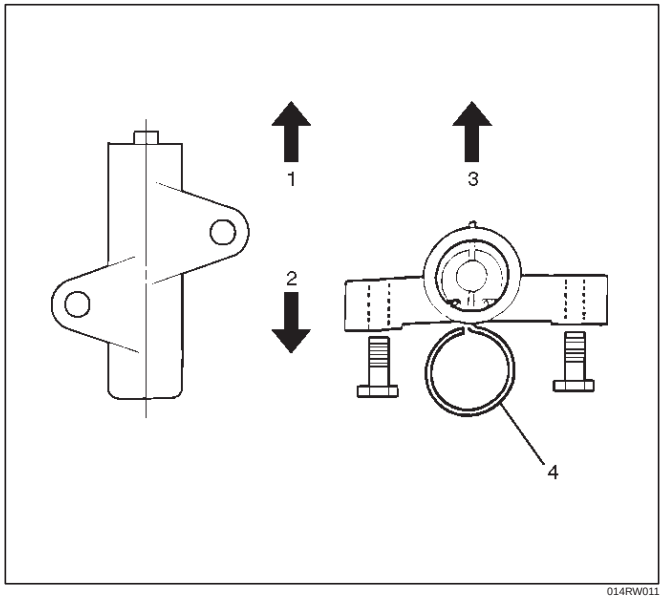

014RW011

Legend

(1) Up Side
(2) Down Side
(3) Direction For Installation
(4) Locking Pin

14. Remove timing belt.

CAUTION:

1. **Do not bend or twist the belt, otherwise its core could be damaged. The belt should not be bent at a radius less than 30 mm.**
2. **Do not allow oil or other chemical substances to come in contact with the belt. They will shorten the life.**
3. **Do not attempt to pry or stretch the belt with a screw driver or any other tool during installation.**
4. **Store timing belt in a cool and dark place. Never expose the belt direct sunlight or heat.**

Installation

NOTE: For correct belt installation, the letter on the belt must be able to be read as viewed from the front of the vehicle.

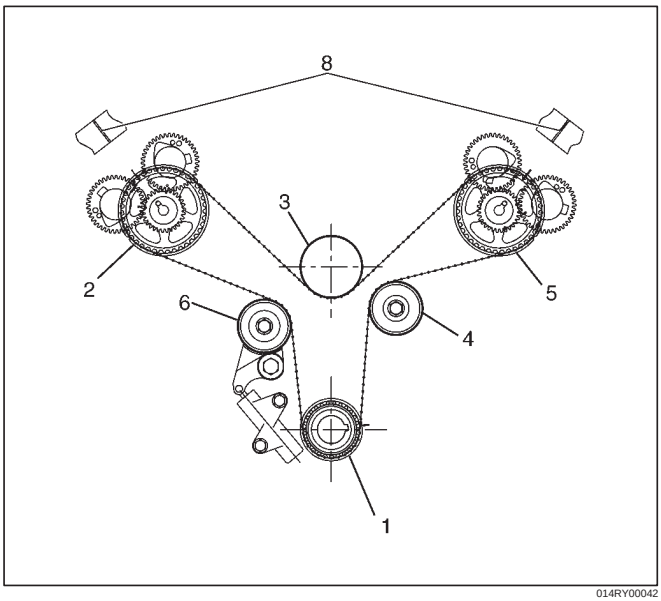

014RY00042

Legend

(1) Crankshaft Timing Pulley
(2) RH Bank Camshaft Drive Gear Pulley
(3) Water Pump Pulley
(4) Idle Pulley
(5) LH Bank Camshaft Drive Gear Pulley
(6) Tension Pulley

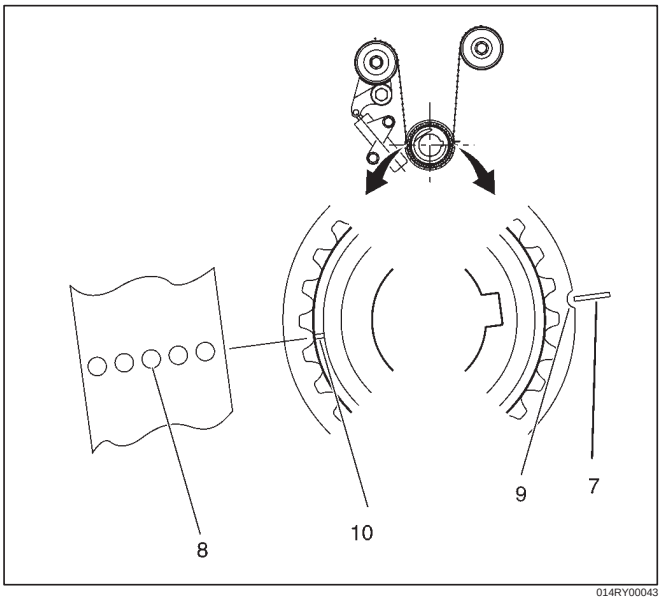

014RY00043

Legend

(7) Alignment Mark on Oil Pump.
(8) Alignment Mark on Timing Belt
(9) Alignment Mark (notch) on Crankshaft Timing Pulley.
(10) Alignment Mark (groove) on Crankshaft Timing Pulley.

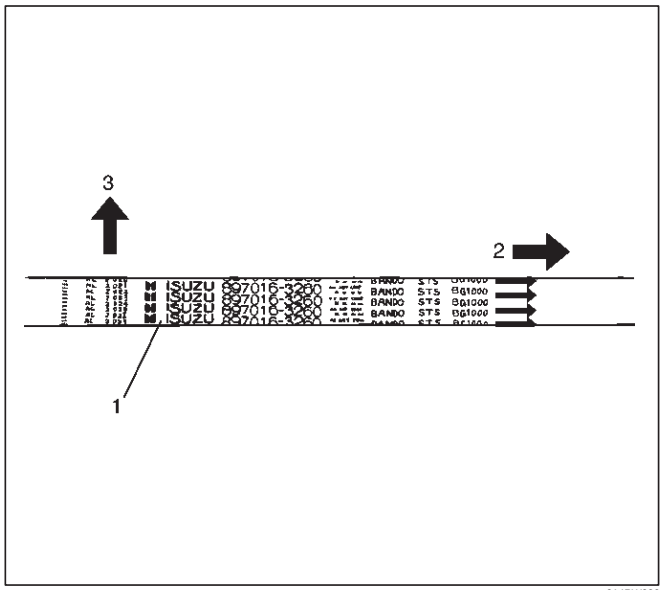

014RW006

Legend

(1) Timing Belt
(2) Engine Rotation Direction
(3) Cylinder Head Side

1. Install timing belt.
   1. Align the mark (notch) of crankshaft timing pulley (2) with mark on oil pump (1).
      Align the mark (groove) on the crankshaft timing pulley (3) with alignment mark (white dots line) on the timing belt (4).

NOTE: When timing marks are aligned, No.2 piston will be on Top Dead Center.

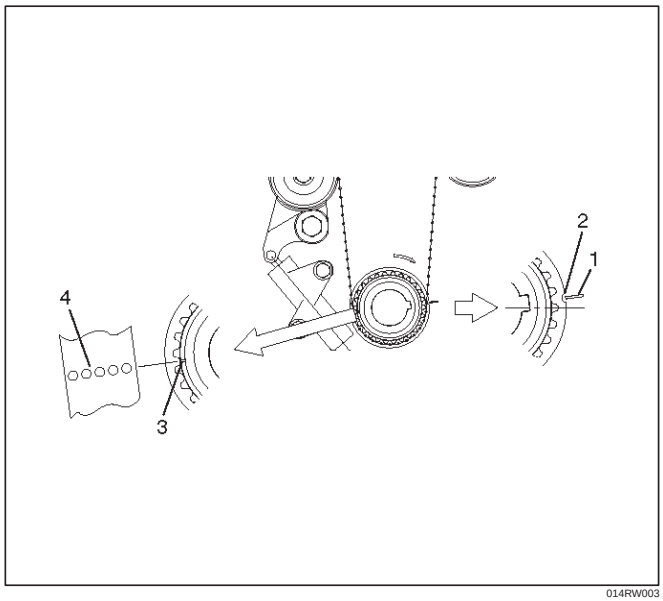

014RW003

Legend

(1) Alignment Mark on Oil Pump
(2) Groove on Crankshaft Timing Pulley
(3) Alignment Mark on Crankshaft Timing Pulley
(4) Alignment Mark on Timing Belt

2. Align the alignment mark on the RH bank camshaft drive gear pulley (2) to the alignment mark of the cylinder head cover RH (3).
3. Align the alignment mark (white line) on the timing belt (1) with alignment mark on the RH bank camshaft drive gear pulley (2) (on the left side as viewed from the front of the vehicle) and put the timing belt on the camshaft drive gear pulley.

   Secure the belt with a double clip or equivalent clip.

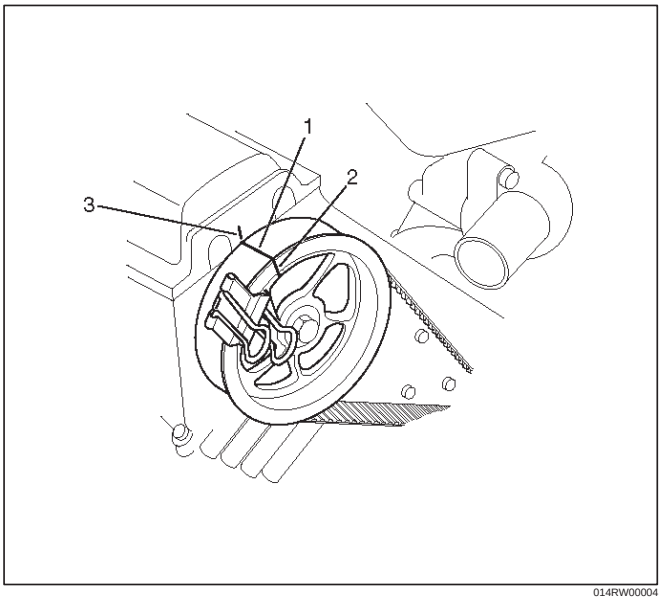

014RW00004

Legend

(1) Alignment Mark on Timing Belt (White line).
(2) Alignment Mark on Camshaft Drive Gear Pulley.
(3) Alignemnt Mark on Cylinder Head Cover RH.

4. Align the alignment mark on the LH bank camshaft drive gear pulley (2) to the alignment mark of the cylinder head cover LH (3).
5. Align the alignment mark (white line) on the timing belt (1) with the alignment mark on the LH bank camshaft drive gear pulley (2).

   When aligning the timing marks, use a wrench to turn the camshaft drive gear pulley, then set the timing mark between timing belt and camshaft drive gear pulley and put the timing belt on the camshaft drive gear pulley.
   Secure the belt with a double clip or equivalent clip.

NOTE: It is recommended for easy installation that the belt be secured with a double clip or equivalent clip after it is installed the timing belt to each pulley.

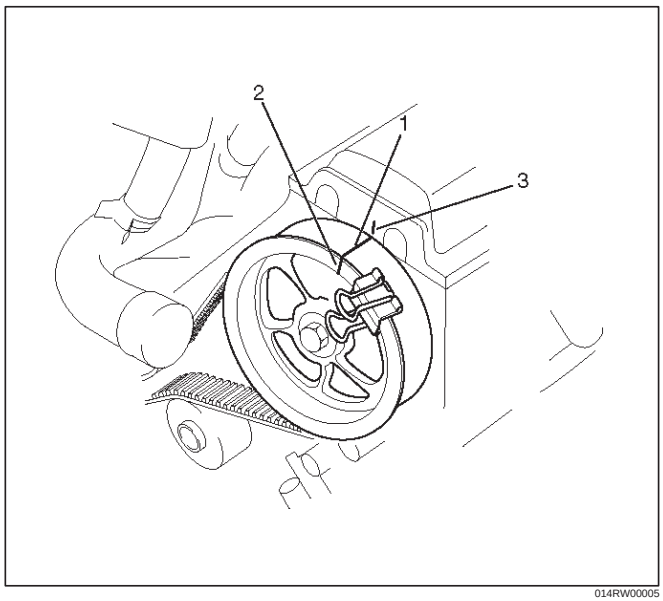

014RW00005

Legend

(1) Alignment Mark on Timing Belt (White line).
(2) Alignment Mark on Camshaft Drive Gear Pulley.
(3) Alignemnt Mark on Cylinder Head Cover LH.

6. Install crankshaft pulley temporarily and tighten center bolt by hand (do not use a wrench).

   Turn the crankshaft pulley clockwise to give some belt slack between the crankshaft timing pulley and the RH bank camshaft drive gear pulley.

2. Install pusher and tighten bolt to the specified torque.

Torque : 25 N·m (2.5 Kg·m/18 lb ft)

1. Install the pusher while pushing the tension pulley to the belt.
2. Pull out pin from the pusher.

NOTE: When reusing the pusher, press the pusher with approximately 100Kg to retract the rod, and insert a pin (1.4 mm piano wire).

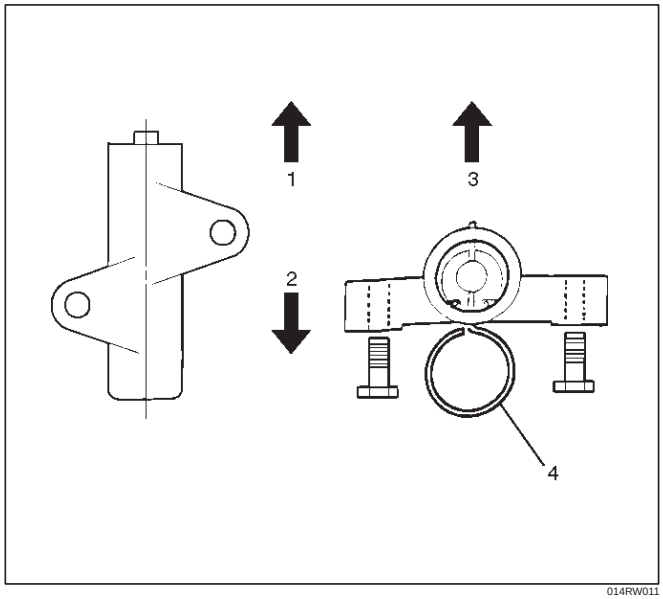

014RW011

Legend
(1) Up Side
(2) Down Side
(3) Direction for Installation
(4) Locking Pin

3. Remove double clips or equivalent clips, from timing belt pulleys.

   Turn the crankshaft pulley clockwise by two turns.

3. Install timing belt cover.

   Remove crankshaft pulley that was installed in step 1 item 5.

   Tighten bolts to the specified torque.

   Torque: 19 N·m (1.9 Kg·m/14 lb ft)

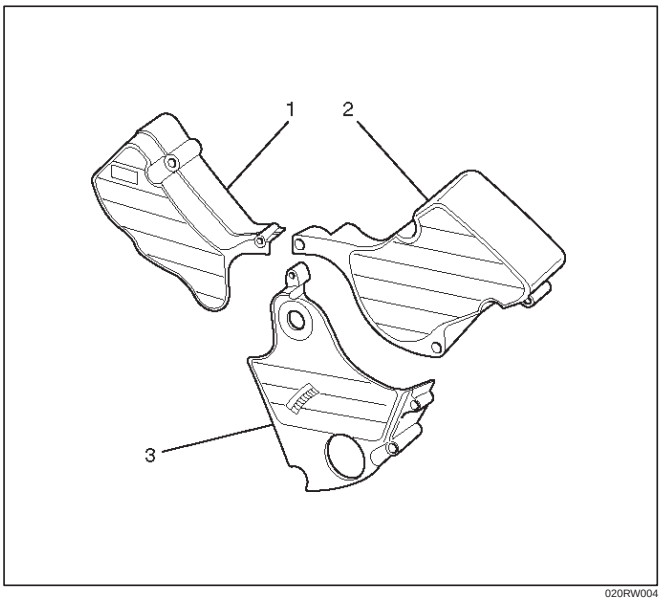

020RW004

Legend
(1) Timing Belt Cover RH
(2) Timing Belt Cover LH
(3) Timing Belt Cover Lower

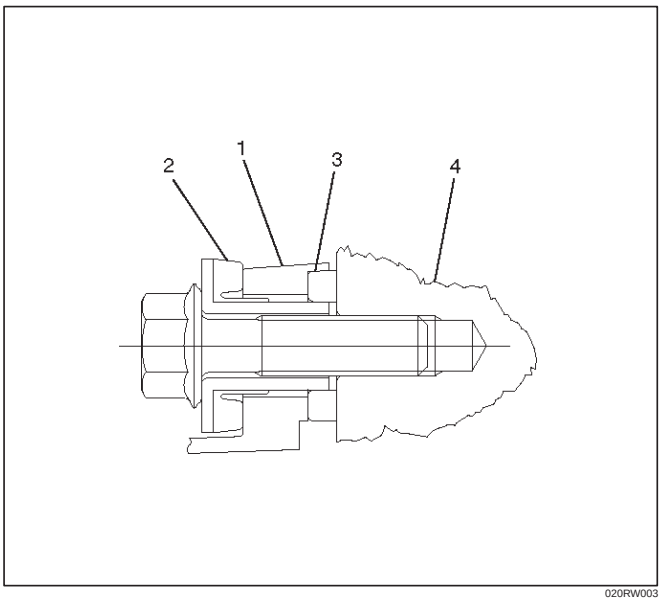

020RW003

Legend
(1) Timing Belt Cover
(2) Rubber Bushing
(3) Sealing Rubber
(4) Cylinder Body

4. Install crankshaft pulley using 5–8840–0133–0, hold the crankshaft pulley and tighten center bolt to the specified torque.

   Torque : 167 N·m (17.0 Kg·m/123 lb ft)

5. Install fan pulley bracket and tighten fixing bolts to the specified torque.

   Torque : 22 N·m (2.2 Kg·m/16 lb ft)

6. Install power steering pump assembly and tighten to the specified torque.

   Torque :

   M8 bolt : 22 N·m (2.2 Kg·m/16 lb ft)

   M10 bolt : 46 N·m (4.7 Kg·m/34 lb ft)

7. Install cooling fan assembly and tighten bolts/nuts to the specified torque.

   Torque : 22 N·m (2.2 Kg·m/16 lb ft) for fan pulley and fan bracket.

   Torque : 10 N·m (1.0 Kg·m/88.5 lb in) for fan and clutch assembly.

8. Move drive belt tensioner to loose side using wrench, then install drive belt to normal position.

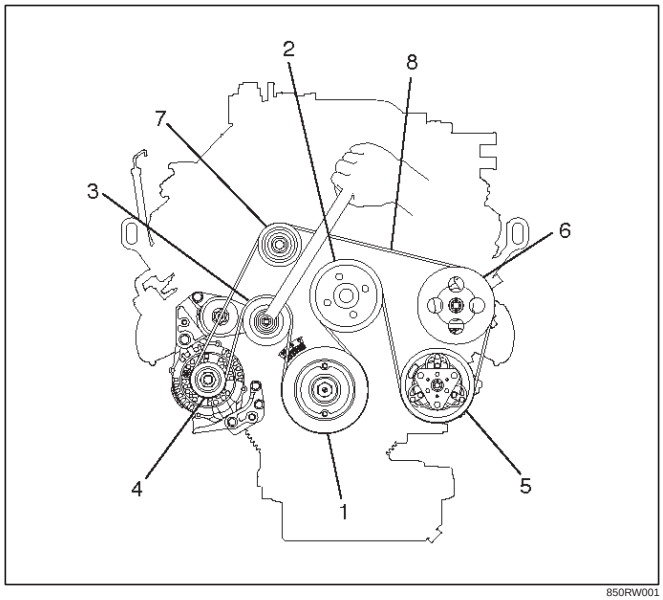

850RW001

Legend
(1) Crankshaft Pulley
(2) Cooling Fan Pulley
(3) Auto Tensioner
(4) Generator
(5) Air Conditioner Compressor
(6) Power Steering Oil Pump
(7) Idle Pulley
(8) Drive Belt

9. Install radiator upper fan shroud.
10. Install air cleaner assembly.

Camshaft

Removal

1. Disconnect battery ground cable.
2. Remove crankshaft pulley.
   - Refer to removal procedure for Crankshaft Pulley in this manual.
3. Remove timing belt.
   - Refer to removal procedure for Timing Belt in this manual.
4. Remove cylinder head cover LH.
   - Refer to removal procedure for Cylinder Head Cover LH in this manual.
5. Remove cylinder head cover RH.
   - Refer to removal procedure for Cylinder Head Cover RH in this manual.
6. Remove twenty fixing bolts from inlet and exhaust camshaft bracket on one side bank, then camshaft brackets.

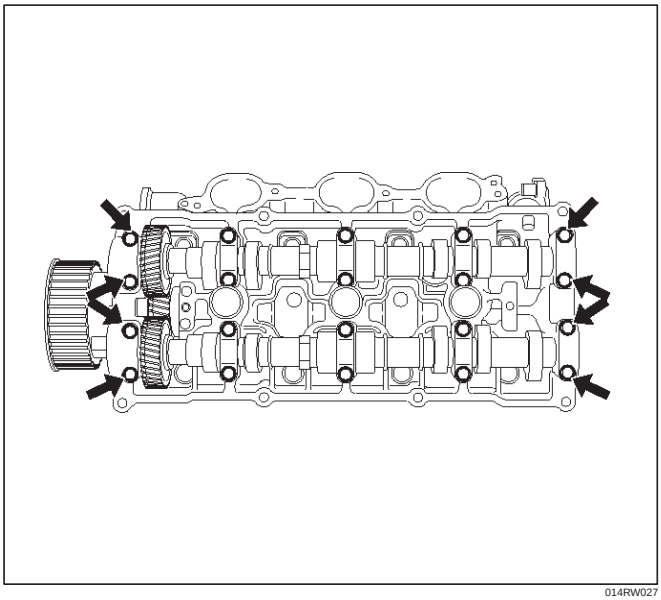

014RW027

7. Remove camshaft assembly.
8. Remove fixing bolt for camshaft drive gear pulley.
9. Remove three fixing bolts from camshaft drive gear retainer, then camshaft drive gear assembly.

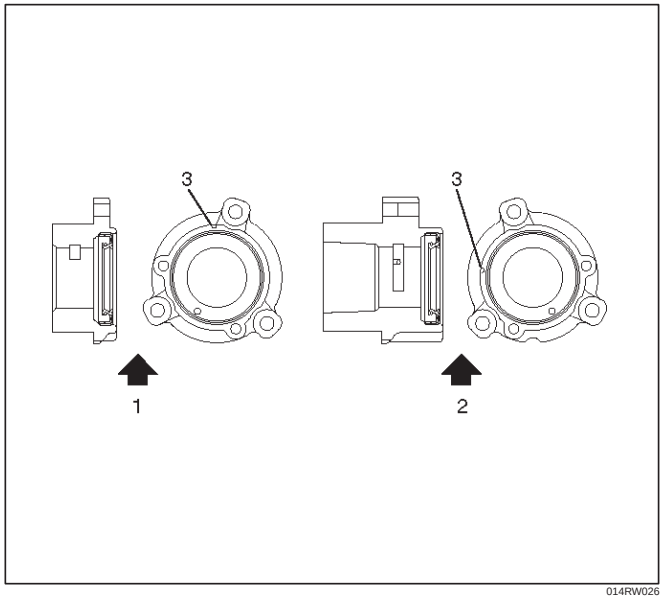

014RW026

Legend

(1) Right Bank
(2) Left Bank
(3) Timing Mark on Retainer

Installation

1. Install camshaft drive gear assembly and tighten three bolts to the specified torque.

   Torque : 10 N·m (1.0 Kg·m/89 lb in)

2. Tighten bolt for camshaft drive gear assembly pulley to the specified torque.

   Torque : 98 N·m (10.0 Kg·m/72 lb ft)

3. Tighten sub gear setting bolt.
   1. Use the 5–8840–2443–0 gear spring lever to turn sub gear to right direction until it aligns with the M5 bolt hole between camshaft driven gear and sub gear.
   2. Tighten the M5 bolt to a suitable torque to prevent the sub gear from moving.

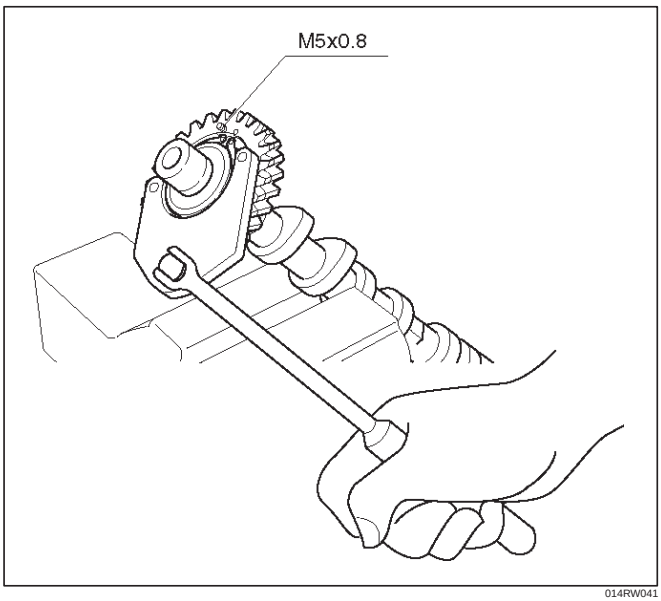

014RW041

4. Install camshaft assembly and camshaft brackets, tighten twenty bolts on one side bank to the specified torque.
   1. Apply engine oil to camshaft journal and bearing surface of camshaft bracket.
   2. Align timing mark on intake camshaft (one dot for right bank, two dot for left bank) and exhaust camshaft (one dot for right bank, two dots for left bank) to timing mark on camshaft drive gear (one dot).

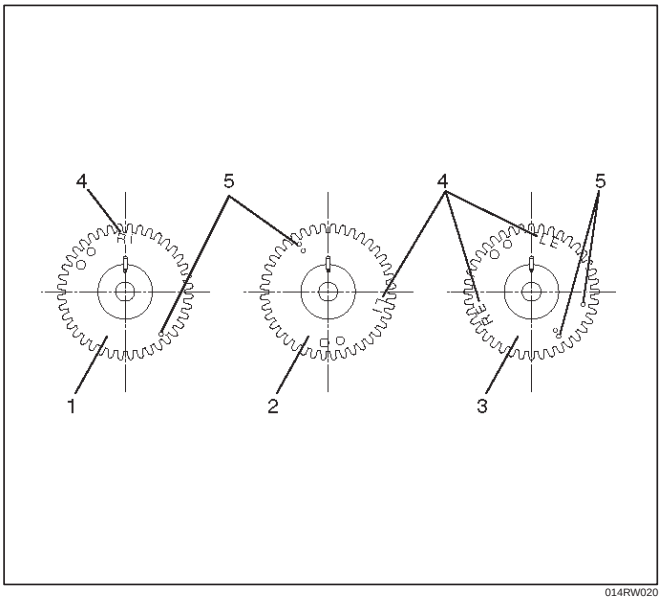

014RW020

Legend

(1) Intake Camshaft Timing Gear for Right Bank
(2) Intake Camshaft Timing Gear for Left Bank
(3) Exhaust Camshaft Timing Gear
(4) Discrimination Mark
(LI: Left bank intake, RI: Right bank intake)
(LE: Left bank exhaust, RE: Right bank exhaust)

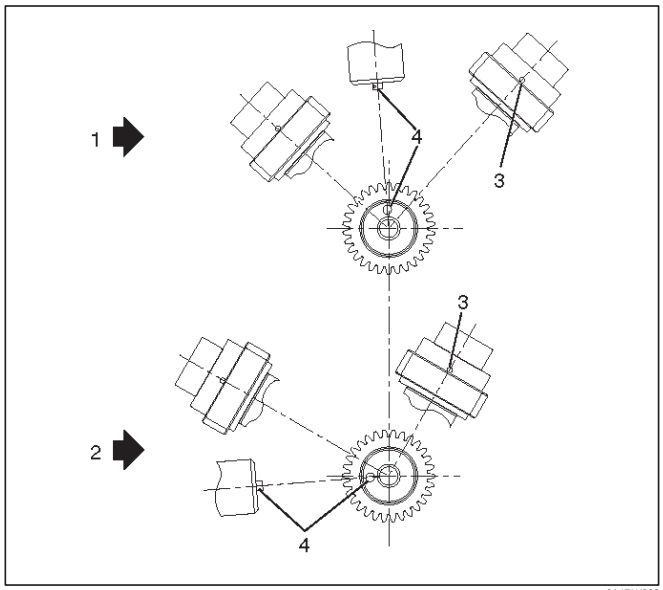

014RW023

Legend

(1) Right Bank Camshaft Drive Gear
(2) Left Bank Camshaft Drive Gear
(3) Timing Mark on Drive Gear
(4) Dowel Pin

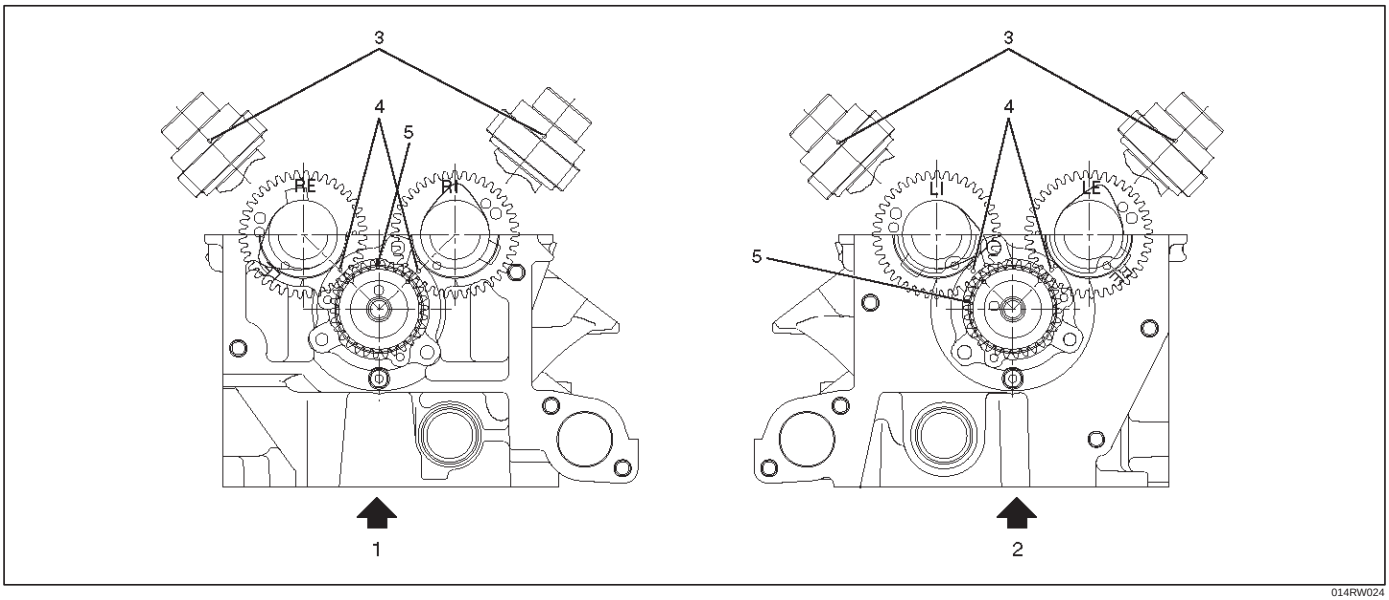

014RW024

Legend

(1) Right Bank
(2) Left Bank
(3) Alignment Mark on Camshaft Drive Gear
(4) Alignment Mark on Camshaft
(5) Alignment Mark on Retainer

3. Tighten twenty bolts on numerical order an one side bank as shown in the illustration.

Torque : 10 N·m (1.0 Kg·m/89 lb in)

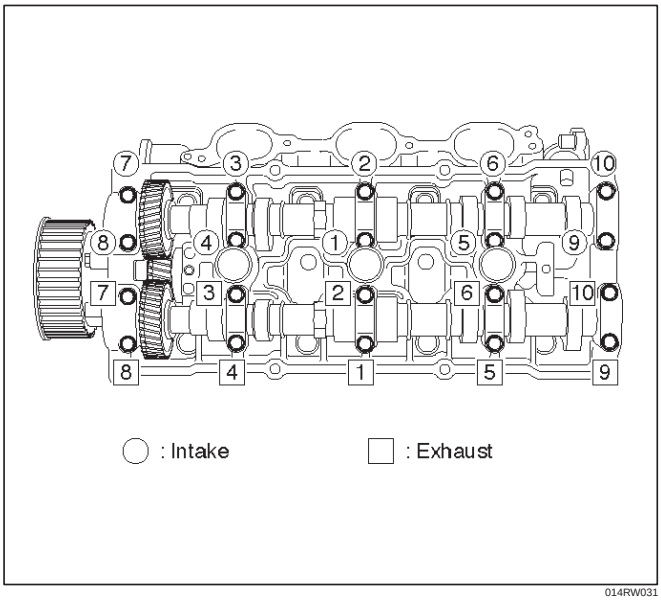

014RW031

5. Install cylinder head cover RH.
   - Refer to installation procedure for CYLINDER HEAD COVER RH in this manual.
6. Install cylinder head cover LH.
   - Refer to installation procedure for CYLINDER HEAD COVER LH in this manual.
7. Install timing belt.
   - Refer to installation procedure for TIMING BELT in this manual.
8. Install crankshaft pulley.
   - Refer to installation procedure for CRANKSHAFT PULLEY in this manual.

   Accelerator pedal cable adjustment

   1. Loosen adjusting nut and lock nut.
   2. Pull outer cable while closing fully the throttle valve.
   3. Tighten adjusting nut and lock nut temporarily.

4. Loosen adjusting nut by three turns and tighten lock nut.

   Then, manually operating the throttle valve, make sure that the valve lever returns up to the stopper screw.
   If it does not reach the stopper screw, repeat from step 1.

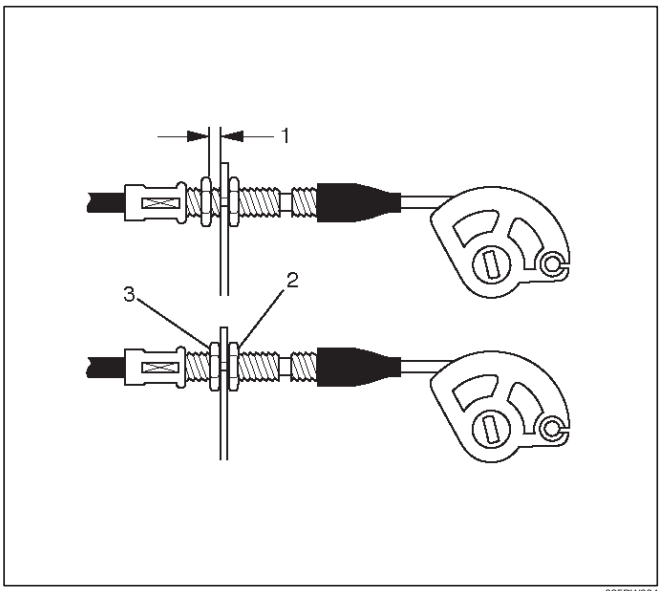

035RW004

Legend

(1) Clearance
(2) Lock Nut
(3) Adjusting Nut

Cylinder Head

Removal

1. Remove engine hood.
2. Disconnect battery ground cable.
3. Drain radiator coolant.
4. Drain engine oil.
5. Remove crankshaft pulley.
   - Refer to removal procedure for Crankshaft Pulley in this manual.
6. Remove timing belt.
   - Refer to removal procedure for Timing Belt in this manual.
7. Remove cylinder head cover LH.
   - Refer to removal procedure for Cylinder Head Cover LH in this manual.
8. Remove cylinder head cover RH.
   - Refer to removal procedure for Cylinder Head Cover RH in this manual.
9. Remove common chamber.
   - Refer to removal procedure for Common Chamber in this manual.
10. Remove cylinder head assembly.
    1. Loosen eights bolts for tight cylinder head.
    2. Remove cylinder head assembly.

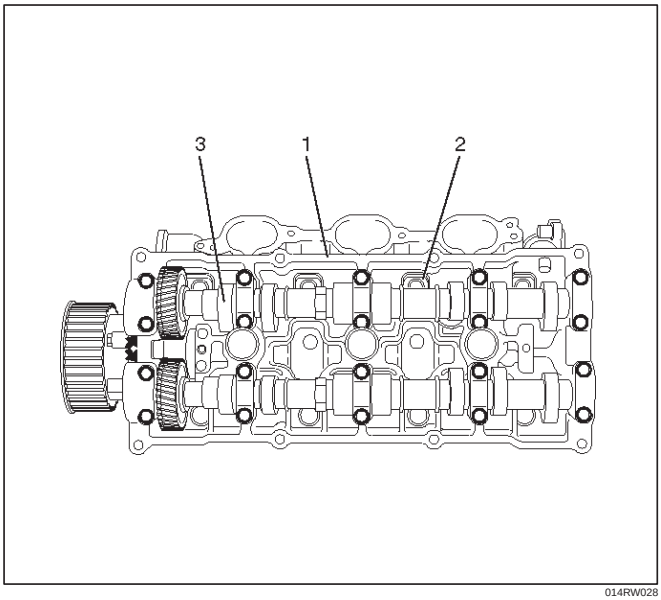

014RW028

Legend

(1) Cylinder Head
(2) Cylinder Head Bolt
(3) Camshaft

Installation

1. Install cylinder head assembly to cylinder block.
   1. Put cylinder head gasket on the cylinder block.

NOTE: There is discrimination mark “R” for right bank and “L” for left bank on the cylinder head gasket as shown in the illustration.

Do not reuse cylinder head gasket.

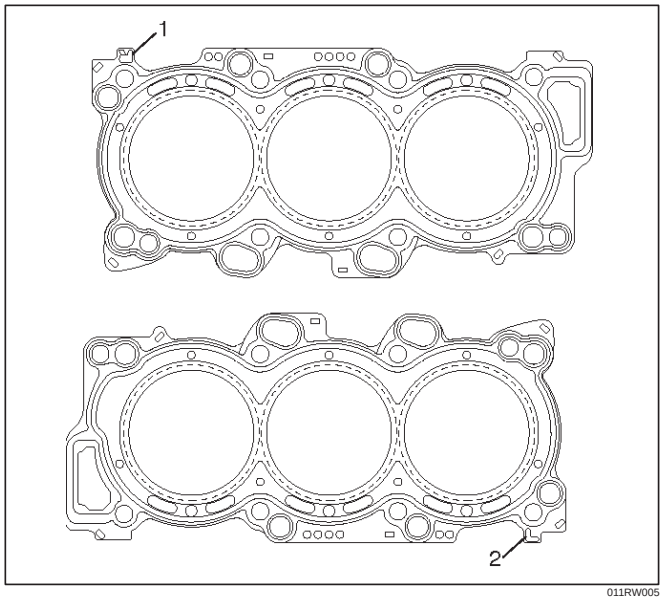

011RW005

   2. Align dowel pin hole to dowel pin on the cylinder block.
   3. Tighten two bolts temporarily by hand to prevent the cylinder head assembly from moving.
   4. Using 9–8511–4209–0 cylinder head bolt wrench, tighten bolts in numerical order as shown in the illustration to the specified torque.

NOTE: Do not reuse cylinder head bolts.

Do not apply any lubricant to the cylinder head bolts.

Torque :

Temporary : 29 N·m (3.0 Kg·m/21 lb ft)

Final : 64 N·m (6.5 Kg·m/47 lb ft)

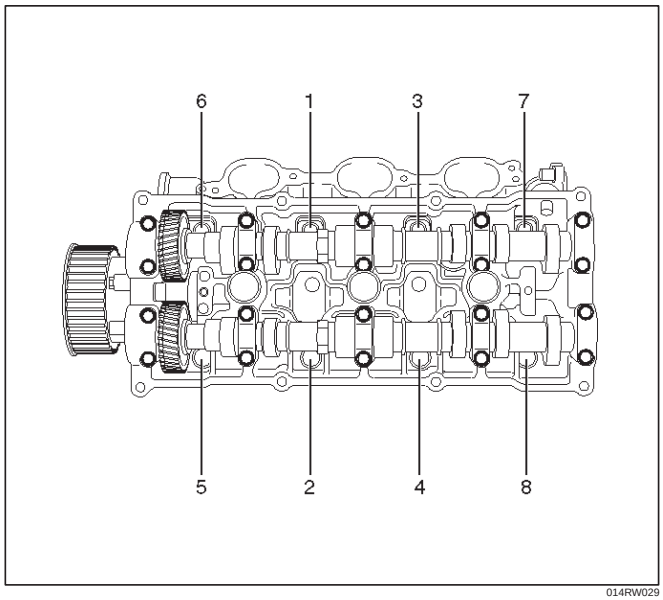

014RW029

2. Install common chamber.
   - Refer to installation procedure for Common Chamber in this manual.
3. Install cylinder head cover RH.
   - Refer to installation procedure for Cylinder Head Cover RH in this manual.
4. Install cylinder head cover LH.
   - Refer to installation procedure for Cylinder Head Cover LH in this manual.
5. Install timing belt.
   - Refer to installation procedure for Timing Belt in this manual.
6. Install crankshaft pulley.
   - Refer to installation procedure for Crankshaft Pulley in this manual.

Accelerator pedal cable adjustment

1. Loosen adjusting nut and lock nut.
2. Pull outer cable while closing fully the throttle valve.
3. Tighten adjusting nut and lock nut temporarily.
4. Loosen adjusting nut by three turns and tighten lock nut.

   Then, manually operating the throttle valve, make sure that the valve lever returns up to the stopper screw.
   If it does not reach the stopper screw, repeat from step 1.

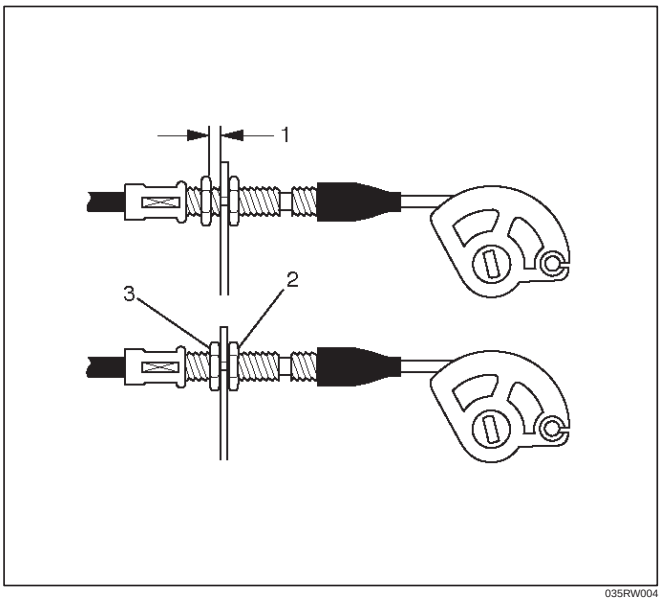

035RW004

Legend

(1) Clearance
(2) Lock Nut
(3) Adjusting Nut

Valve Stem Oil Controller , Valve Spring and Valve Guide

Removal

1. Disconnect battery ground cable.
2. Drain engine oil.
   - Drain engine coolant.
3. Remove cylinder head assembly.
   - Refer to removal procedure for Cylinder Head in this manual.
4. Remove camshaft.
   - Refer to removal procedure for Camshaft in this manual.
5. Remove tappets with shim.

NOTE: Do not damage shim surface.

6. Remove valve springs using 5–8840–2446–0 valve spring compressor and 5–8840–2547–0 valve spring compressor adapter then remove upper valve spring seat and lower seat.

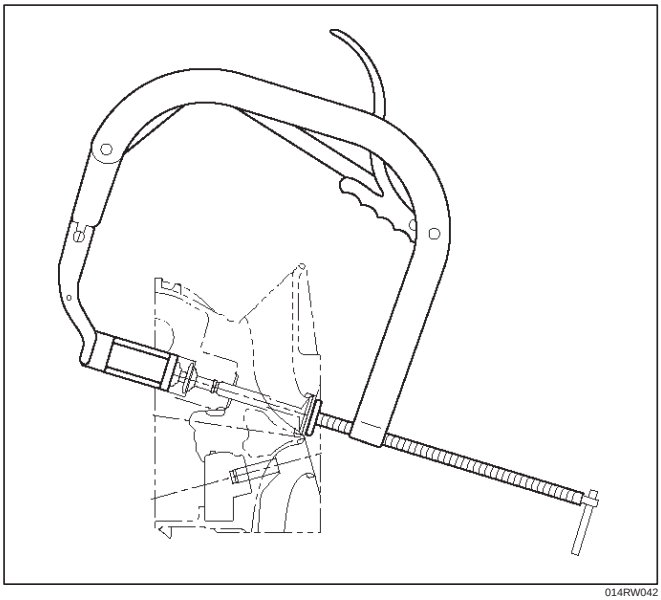

014RW042

7. Remove oil controller using 5–8840–0623–0 oil controller remover, remove each valve stem oil controller.
8. Remove valve guide using 5–8840–2549–0 valve guide replacer.

Installation

1. Install valve guide using 5–8840–2442–0 valve guide installer.
2. Install oil controller using 5–8840–0624–0 oil controller installer.
3. Install lower valve spring seat, valve spring and upper valve spring seat then put split collars on the upper spring seat, using 5–8840–2446–0 valve spring compressor and 5–8840–2547–0 valve spring compressor adapter to install the split collars.

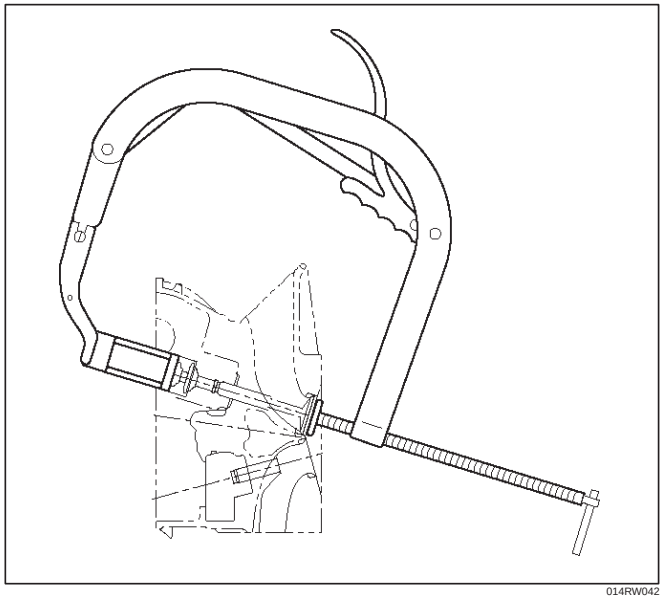

014RW042

4. Install tappet with shim.
5. Install camshaft assembly.
   - Refer to installation procedure for Camshaft in this manual.
6. Install cylinder head assembly.
   - Refer to installation procedure for Cylinder Head in this manual.
7. Fill engine oil until full level.
8. Fill engine coolant.

Piston, Piston Ring and Connecting Rod

Removal

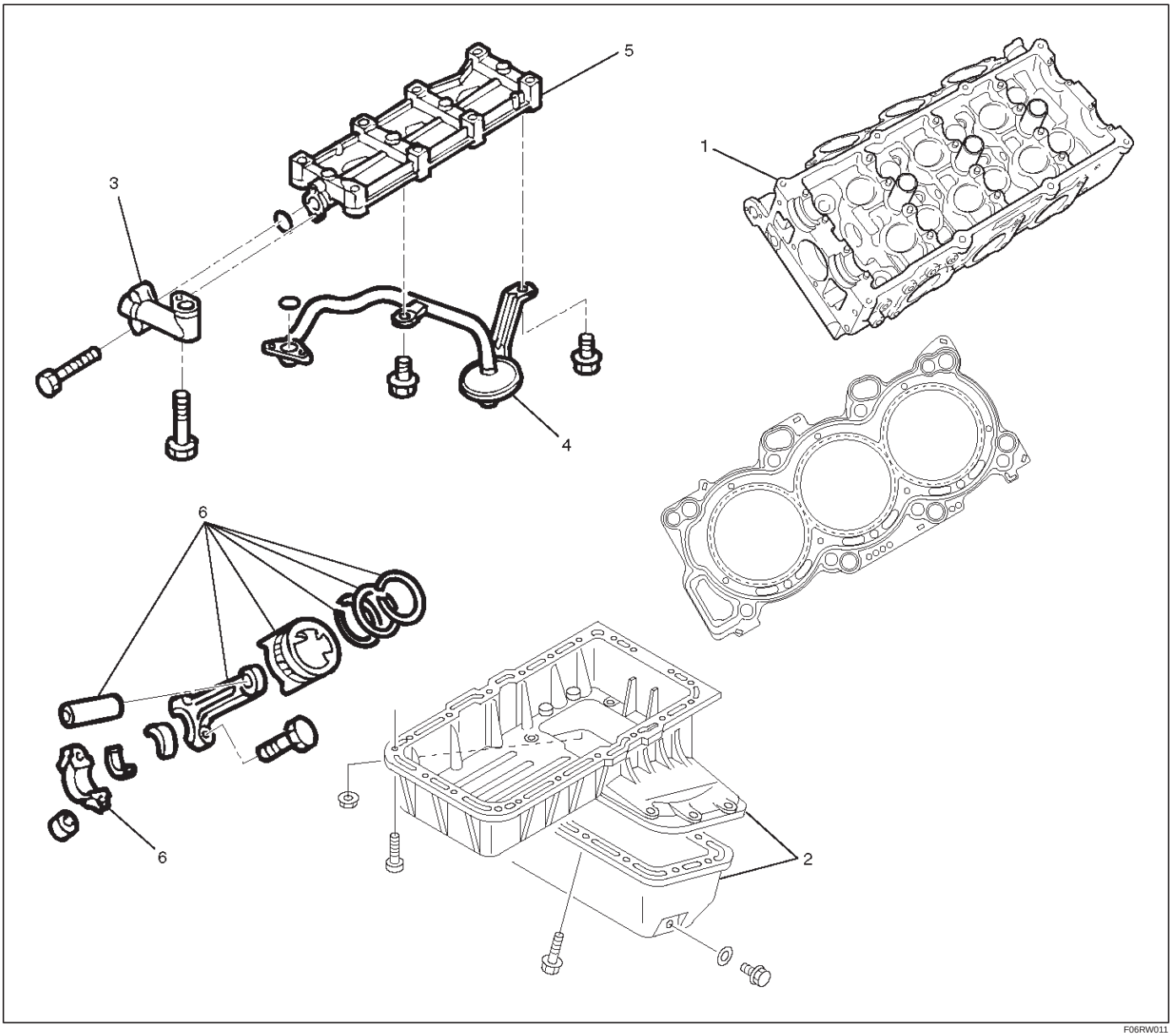

F06RW011

Legend

(1) Cylinder Head
(2) Crankcase with Oil Pan
(3) Oil Pipe
(4) Oil Strainer
(5) Oil Gallery
(6) Piston with Connecting Rod Assembly

1. Remove cylinder head assembly.
   - Refer to removal procedure for Cylinder Head in this manual.
2. Remove crankcase with Oil Pan.
   - Refer to removal procedure for Oil Pan and Crankcase in this manual.

3. Remove oil strainer fixing bolts, remove oil strainer assembly with O-ring.

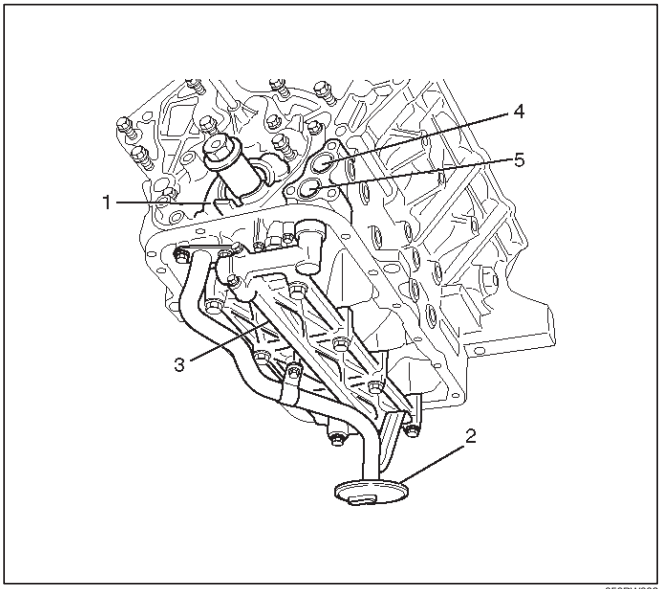

050RW002

Legend
(1) Oil Pump
(2) Oil Strainer
(3) Oil Gallery
(4) From Oil Filter
(5) To Oil Filter

4. Remove three fixing bolts, oil pipe with O-ring.
5. Remove eight fixing bolts, oil gallery.
6. Remove piston with connecting rod assembly, before removing the bearing cap, remove carbon on the top of cylinder bore and push piston with connecting rod out from the top of cylinder bore.

Installation

1. Install piston with connecting rod assembly.
   - Apply engine oil to cylinder bore, connecting rod bearing and crank pin.
     When installing the piston, its front mark must face the engine front side.
   - The bearing cap number must be the same as connecting rod number.
   - Apply engine oil to the thread and seating surface of each nut.
   - Tighten nuts to the specified torque.

   Torque : 54 N·m (5.5 Kg·m/40 lb ft)

   - After tightening the nuts, make sure that the crankshaft rotates smoothly.

NOTE: Do not apply engine oil to the bearing back faces and connecting rod bearing fitting surfaces.

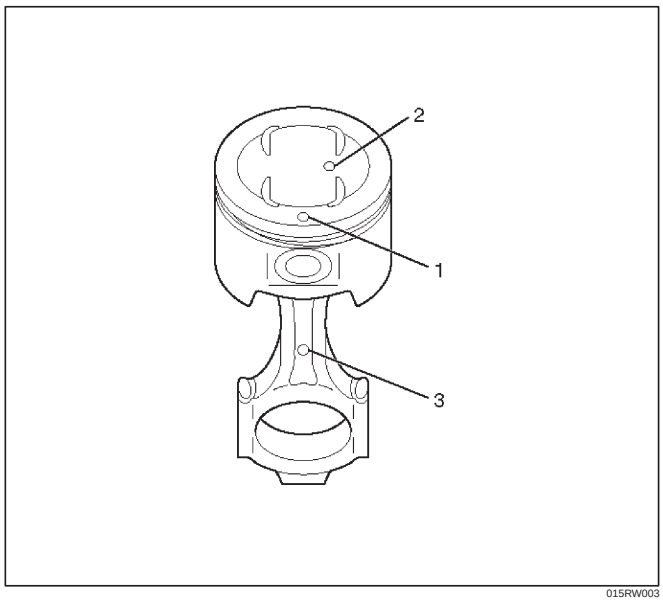

015RW003

Legend
(1) Piston Front Mark
(2) Piston Grade
(3) Connecting Rod Front Mark

2. Install oil gallery and tighten the bolts in two steps, in the order shown in illustration.

   Torque :

   1st step : 29 N·m (3.0 Kg·m/21 lb ft)

   2nd step : 55°–65°

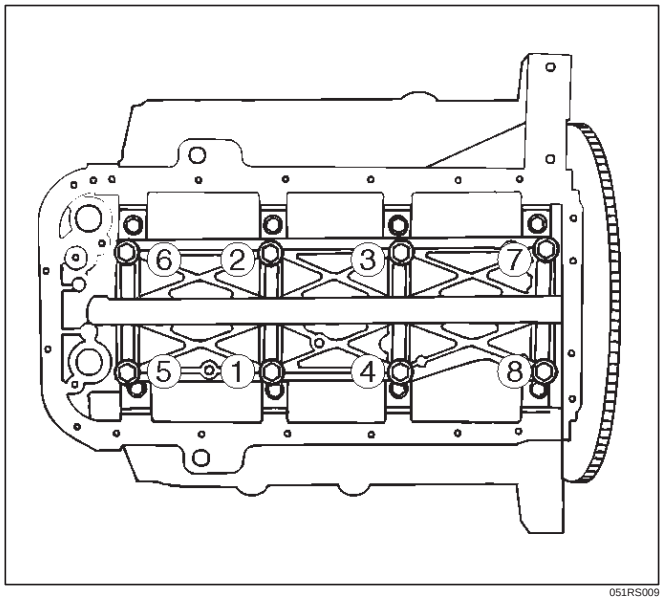

051RS009

3. Install oil pipe with O-ring.

   Torque : 10 N·m (1.0 Kg·m/89 lb in)

4. Install oil strainer assembly with O-ring.

   Torque : 25 N·m (2.5 Kg·m/18 lb ft)

5. Install crankcase with Oil Pan.
   - Refer to installation procedure for Oil Pan and Crankcase in this manual.
6. Install cylinder head assembly.
   - Refer to installation procedure for Cylinder Head in this manual.

Crankshaft and Main Bearings

Removal

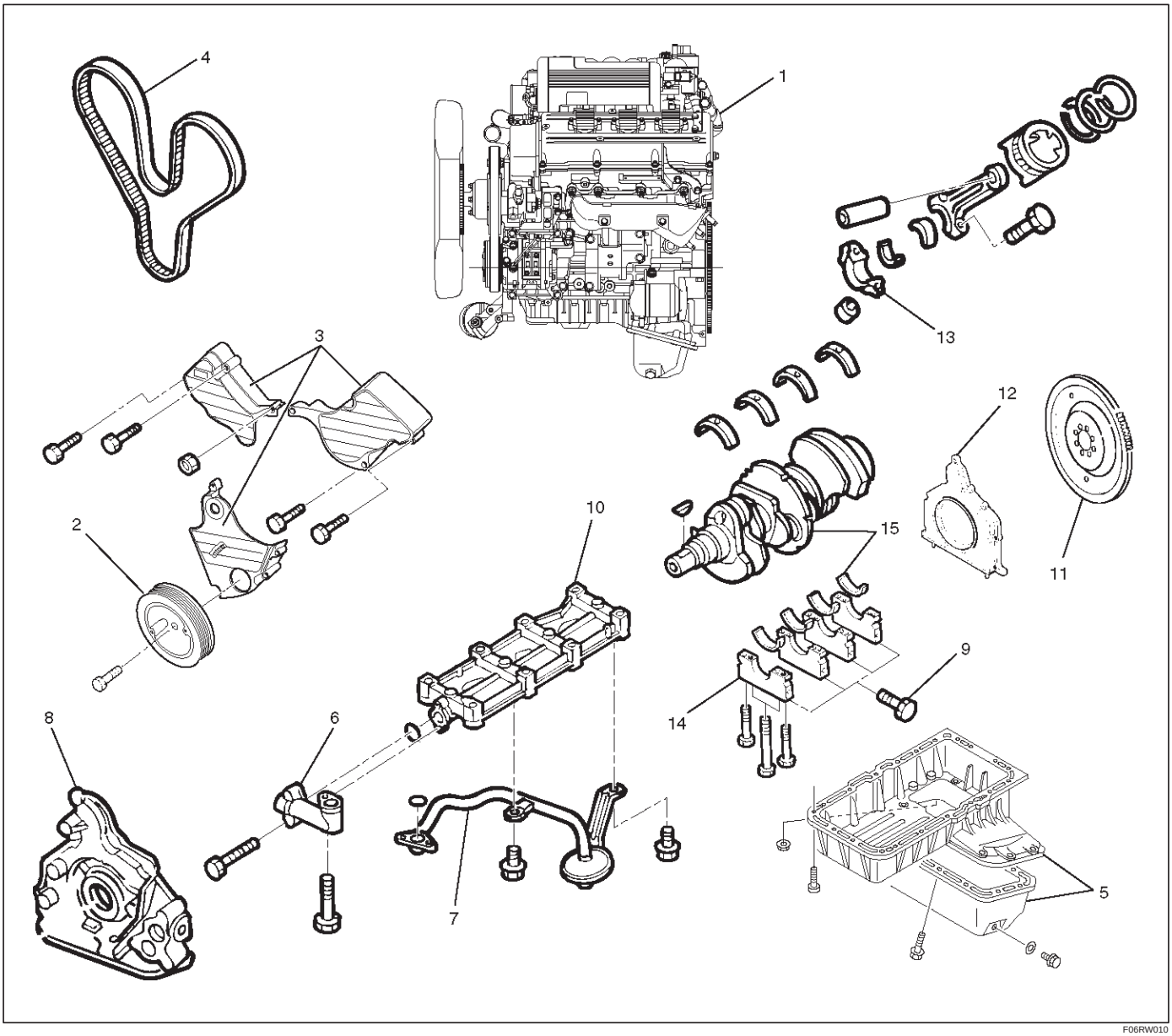

F06RW010

Legend

(1) Engine Assembly
(2) Crankshaft Pulley
(3) Timing Belt Cover
(4) Timing Belt
(5) Crankcase with Oil Pan
(6) Oil Pipe
(7) Oil Strainer
(8) Oil Pump Assembly
(9) Cylinder Body Side Bolt
(10) Oil Gallery
(11) Flywheel
(12) Rear Oil Seal Retainer
(13) Connecting Rod Cap
(14) Crankshaft Main Bearing Cap
(15) Crankshaft and Main Bearing

1. Remove engine assembly.
   - Refer to removal procedure for Engine Assembly in this manual.
2. Remove timing belt.
   - Refer to removal procedure for Timing Belt in this manual.
3. Remove oil pan and crankcase.
   - Refer to removal procedure for Oil Pan and Crankcase in this manual.
4. Remove oil pipe with O-ring.
5. Remove oil strainer assembly with O-ring.

6. Remove oil pump assembly.
   - Refer to removal procedure for Oil Pump in this manual.
7. Remove cylinder body side bolts.
8. Remove oil gallery.
9. Remove flywheel.
10. Remove rear oil seal retainer.
    - Refer to removal procedure for Rear Oil Seal in this manual.
11. Remove connecting rod caps.
12. Remove crankshaft main bearing caps.
13. Remove crankshaft and main bearings.

Installation

1. Install crankshaft and main bearings.
   - Install main bearing in the cylinder block and main bearing cap respectively.
     Apply new engine oil to upper and lower main bearings.

NOTE:

- Do not apply engine oil to the bearing back faces.
- Make sure that main bearings are in correct position.
- Install crankshaft with care.
- Apply engine oil to the thrust washer.
- Install thrust washer on No.3 journal.
- Oil grooves in thrust washer must face the crankshaft.

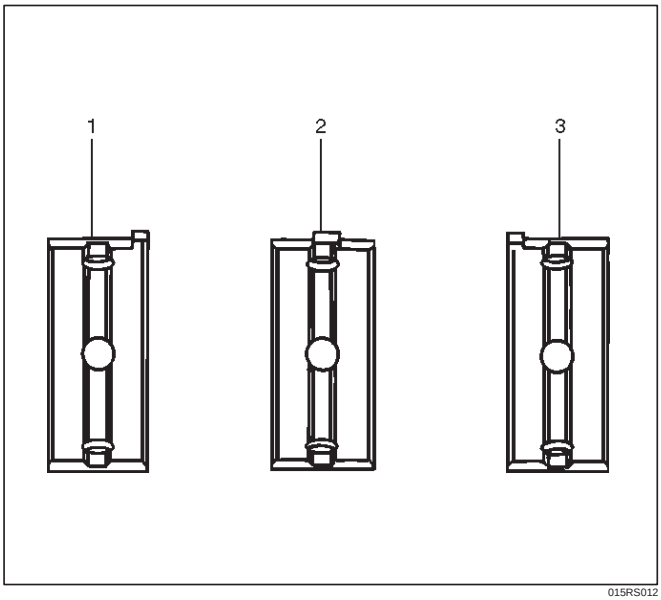

015RS012

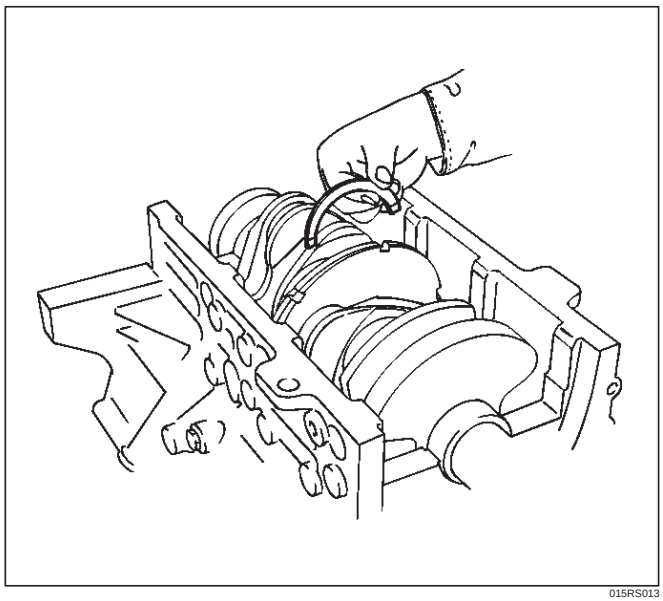

015RS013

2. Install crankshaft main bearing caps.
   - Apply engine oil to the thread and seating surface of each bearing cap fixing bolt.

NOTE:

- Do not apply engine oil to the bearing back faces.
- Install bearing caps in the order of numbers, starting with cylinder block front side.
- Tighten main bearing fixing bolts to the specified torque.

  Torque : 39 N·m (4.0 Kg·m/29 lb ft)
- After tightening the bolts, make sure that the crankshaft rotates smoothly.

3. Install connecting rod caps.
   - The cap number must be same as connecting rod number.
   - Apply engine oil to the thread and seating surface of each nut.
   - Tighten nuts to the specified torque.

   Torque : 54 N·m (5.5 Kg·m/40 lb ft)
   - After tightening the nuts, make sure that the crankshaft rotates smoothly.
4. Install rear oil seal retainer.
   - Remove oil on cylinder block and retainer fitting surface.
   - Apply sealant (TB1207B or equivalent) to retainer fitting surface as shown in illustration.

- The oil seal retainer must be installed within 5 minutes after sealant application before the sealant hardens.

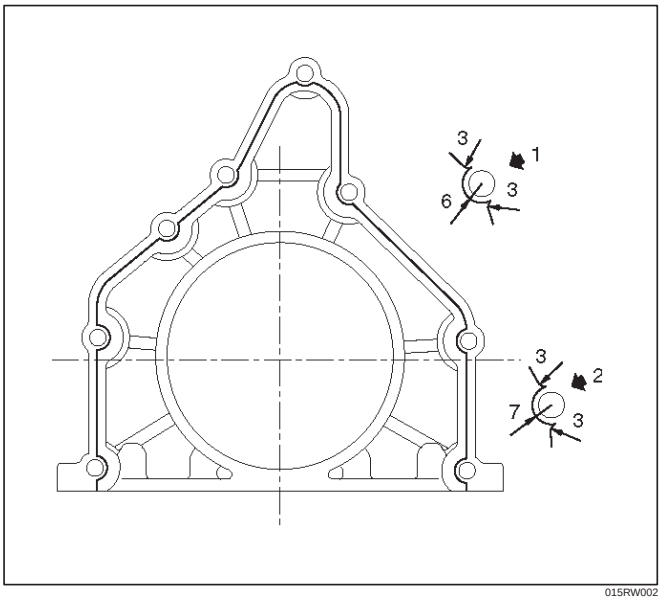

015RW002

Legend

(1) Around Bolt Holes
(2) Around Dowel Pin

- Apply engine oil to oil seal lip and align a dowel pin hole in the cylinder block with that in the retainer.
- Tighten retainer fixing bolts to the specified torque.

Torque : 18 N·m (1.8 Kg·m/13 lb ft)

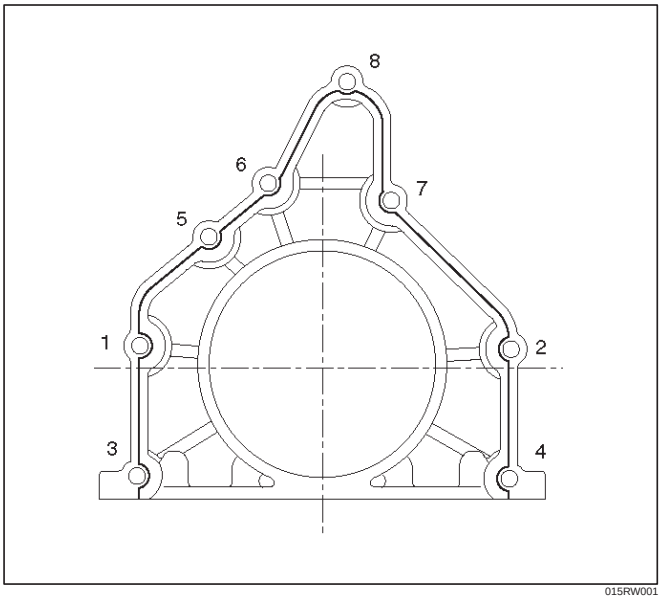

015RW001

5. Install flywheel.
   - Clean tapped holes in the crankshaft.
   - Remove oil on crankshaft and flywheel fitting surface.

NOTE:

- Do not reuse the bolts.
- Do not apply oil or thread lock to the bolts.
- Tighten fixing bolts to the specified torque.

Torque : 54 N·m (5.5 Kg·m/40 lb ft)

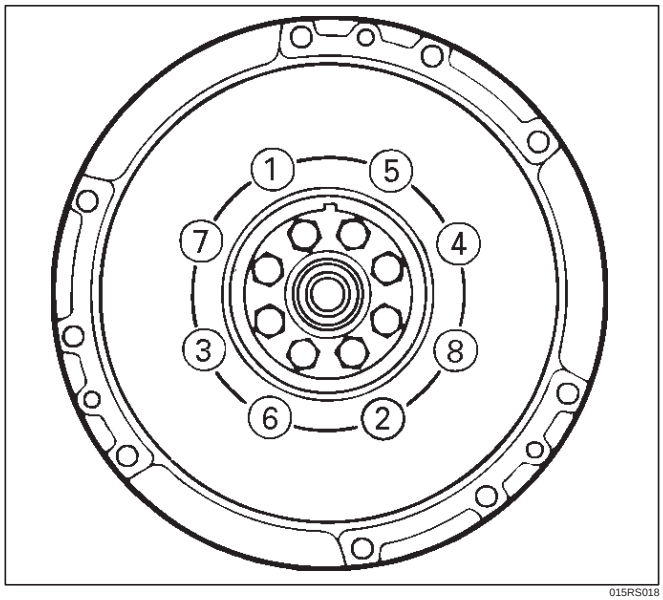

015RS018

6. Install oil gallery.
   - Clean contact surface of oil gallery and main bearing cap.
     Apply engine oil to oil gallery fixing bolts and tighten the bolts in two steps, in the order shown in illustration.

Torque :

1st step : 29 N·m (3.0 Kg·m/21 lb ft)

2nd step : 55˚–65˚

7. Install cylinder body side bolts and tighten bolts in order to the specified torque.

Torque : 39 N·m (4.0 Kg·m/29 lb ft)

NOTE: Do not apply the oil to the bolts.

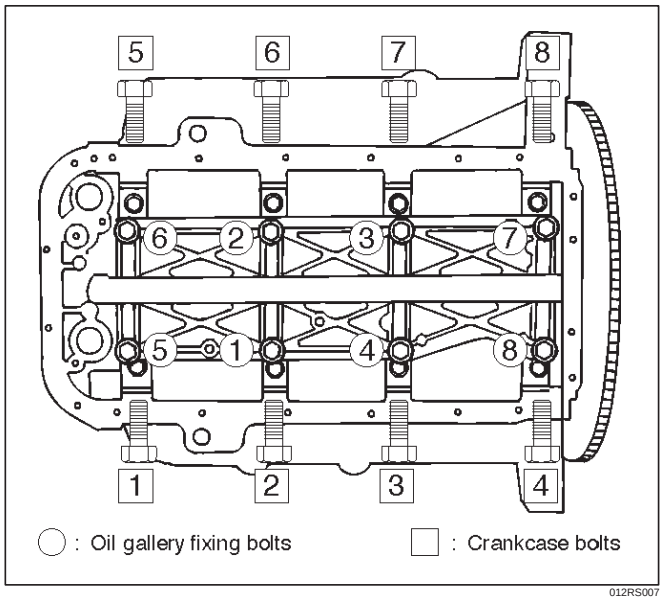

012RS007

8. Install oil pump assembly.
   - Remove oil on cylinder block and oil pump mounting surface.

- Apply sealant (TB1207B or equivalent) to the oil pump mounting surface.
- The oil pump assembly must be installed within 5 minutes after sealant application before the sealant hardens.
- Apply engine oil to oil seal lip.
- Install oil pump in the cylinder block and tighten fixing bolts to the specified torque.

Torque : 25 N·m (2.5 Kg·m/18 lb ft)

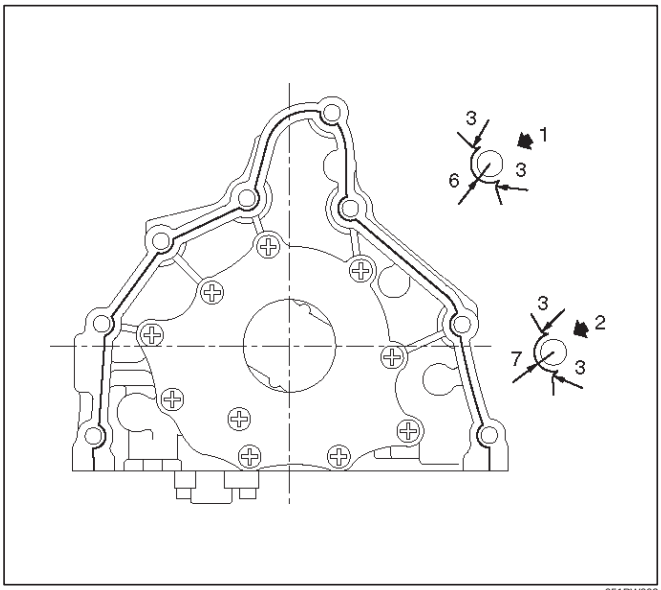

051RW002

Legend

(1) Around Bolt Holes
(2) Around Dowel Pin

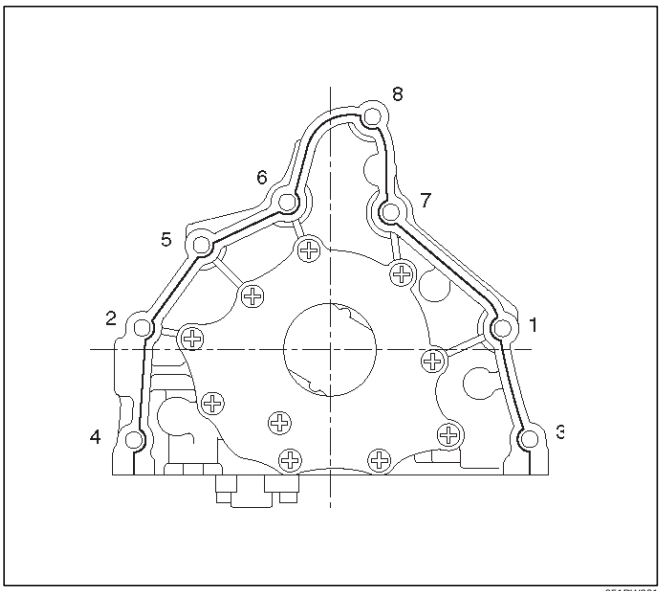

051RW001

9. Install oil strainer with O-ring, tighten to the specified torque.

   Torque : 25 N·m (2.5 Kg·m/18 lb ft)

10. Install oil pipe with O-ring, tighten fixing bolts to the specified torque.

    Torque : 25 N·m (2.5 Kg·m/18 lb ft)

11. Install crankcase.
    - Remove oil on crankcase mounting surface and dry the surface.
    - Properly apply a 4.5 mm (0.7 in) wide bead of sealant (TB1207C or equivalent) to the crankcase mounting surface. The bead must be continuous.
    - The crankcase must be installed within 5 minutes after sealant application before the sealant hardens.
    - Tighten fixing bolts to the specified torque.

    Torque : 10 N·m (1.0 Kg·m/89 lb in)

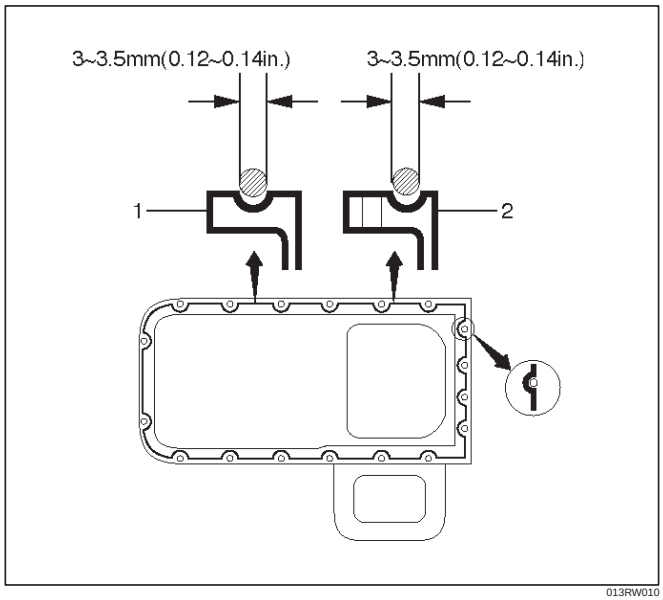

013RW010

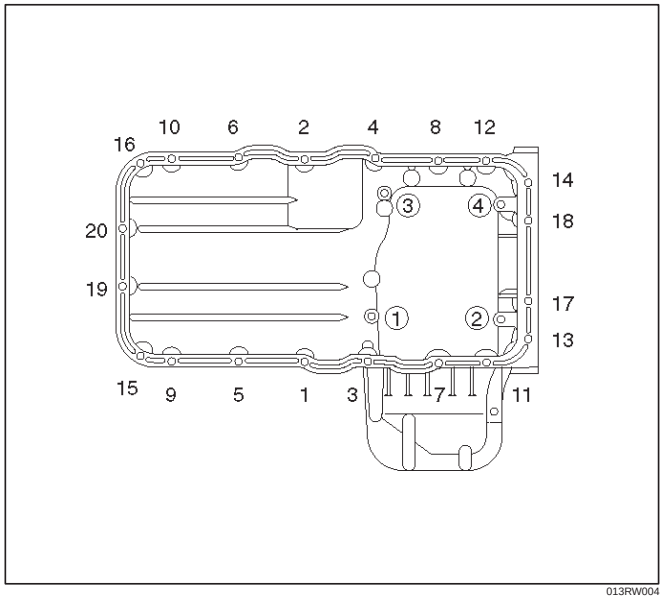

013RW004

12. Install oil pan
    - Remove oil on oil pan mounting surface and dry the surface.
    - Properly apply a 4.5 mm (0.7 in) wide bead of sealant (TB1207C or equivalent) to the oil pan mounting surface. The bead must be continuous.
    - The oil pan must be installed within 5 minutes after sealant application to prevent premature hardening of sealant.

- Tighten fixing bolts to the specified torque.

Torque : 25 N·m (2.5 Kg·m/18 lb ft)

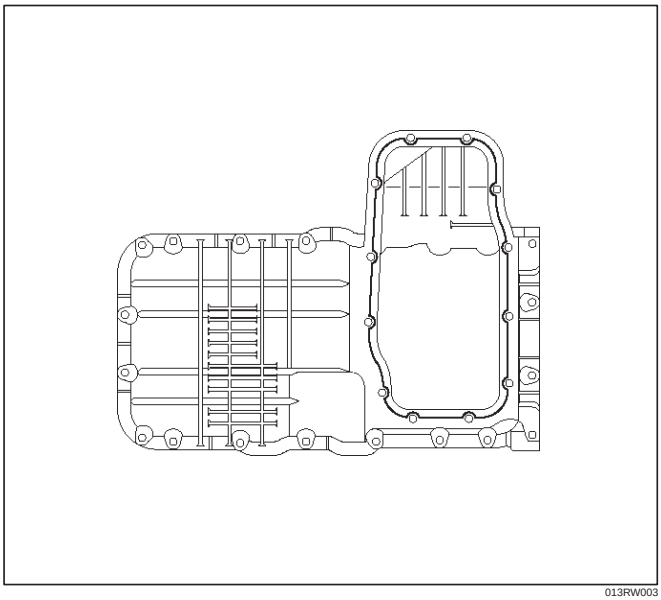

013RW003

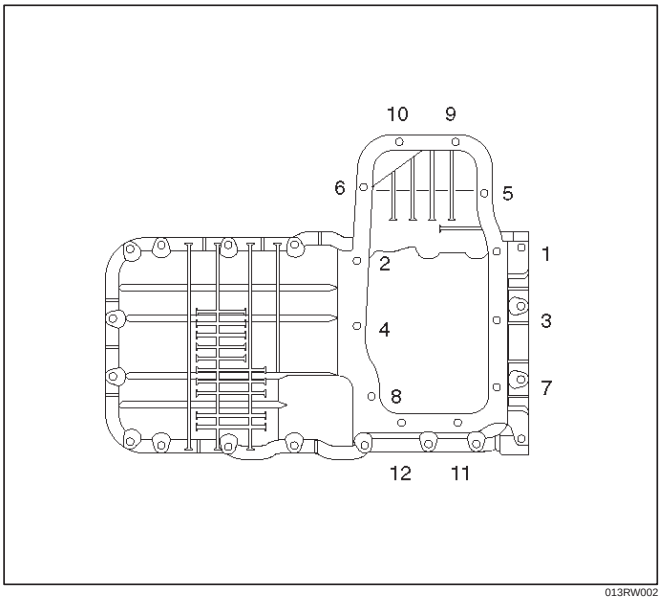

013RW002

13. Install timing belt.
    - Refer to installation procedure for Timing Belt in this manual.
14. Install engine assembly.
    - Refer to installation procedure for Engine in this manual.

Rear Oil Seal

Removal

1. Remove transmission assembly.
   - Refer to removal procedure for Transmission section in this manual.
2. Remove flywheel.
3. Remove rear oil seal using a seal remover.

NOTE: Take care not to damage the crankshaft or oil seal retainer when removing oil seal.

Installation

1. Apply engine oil to oil seal lip and install oil seal using 5–8840–2286–0.

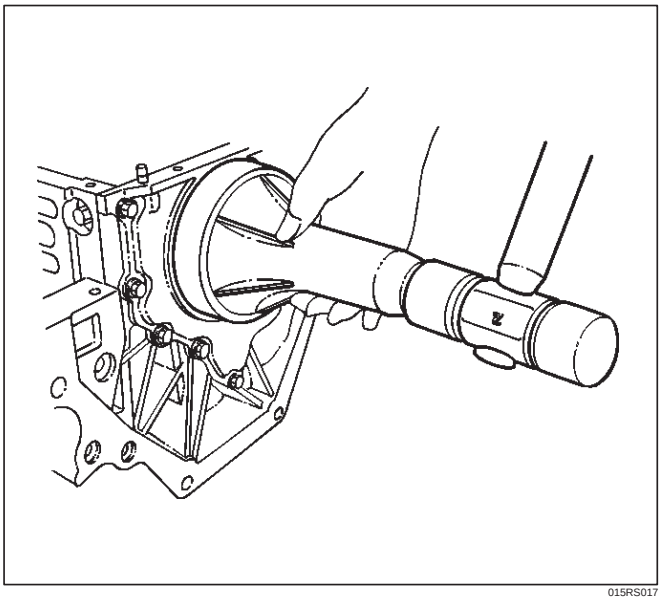

015RS017

2. Install flywheel.
   - Clean tapped holes in the crankshaft.
   - Remove oil on the crankshaft and flywheel mounting surface.
   - Tighten fixing bolts to the specified torque.

NOTE: Do not reuse the bolts and do not apply oil or thread lock to the bolts.

Torque : 54 N·m (5.5 Kg·m/40 lb ft)

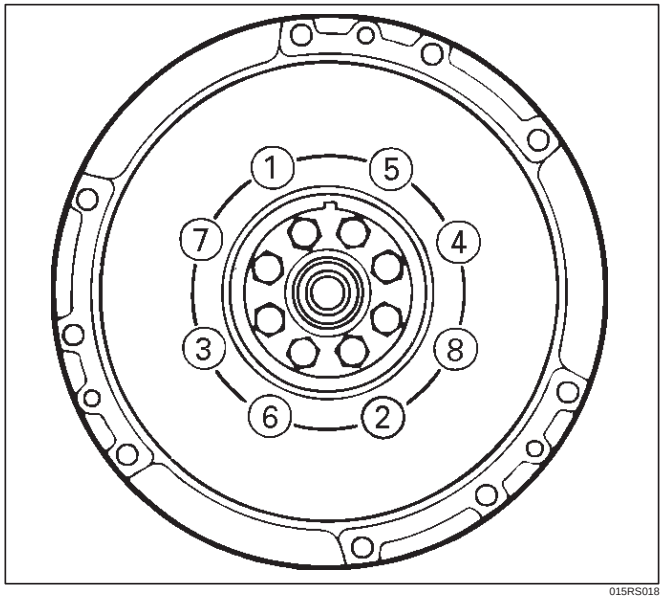

015RS018

3. Install transmission.
   - See Transmission section in this manual.

CAUTION: When assembling the engine and transmission, confirm that dowels have been mounted in the specified positions at the engine side. Take care that dowel positions are different between the manual transmission and the automatic transmission.
Otherwise, the transmission may be damaged.

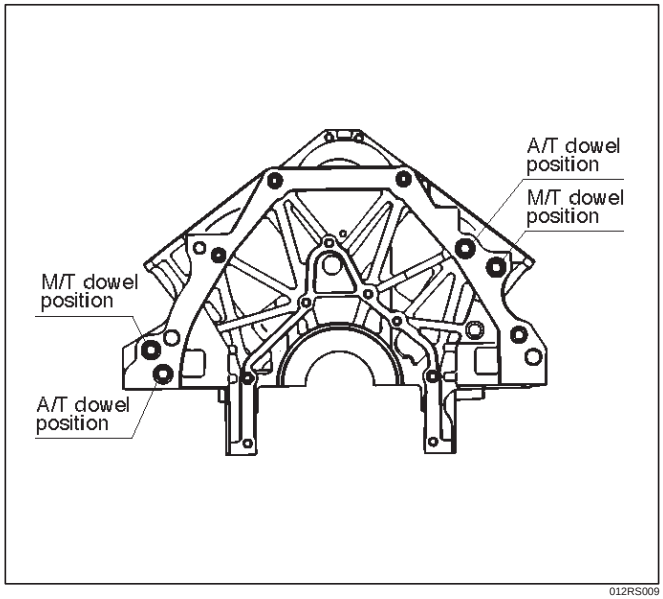

012RS009

Engine Assembly

Removal

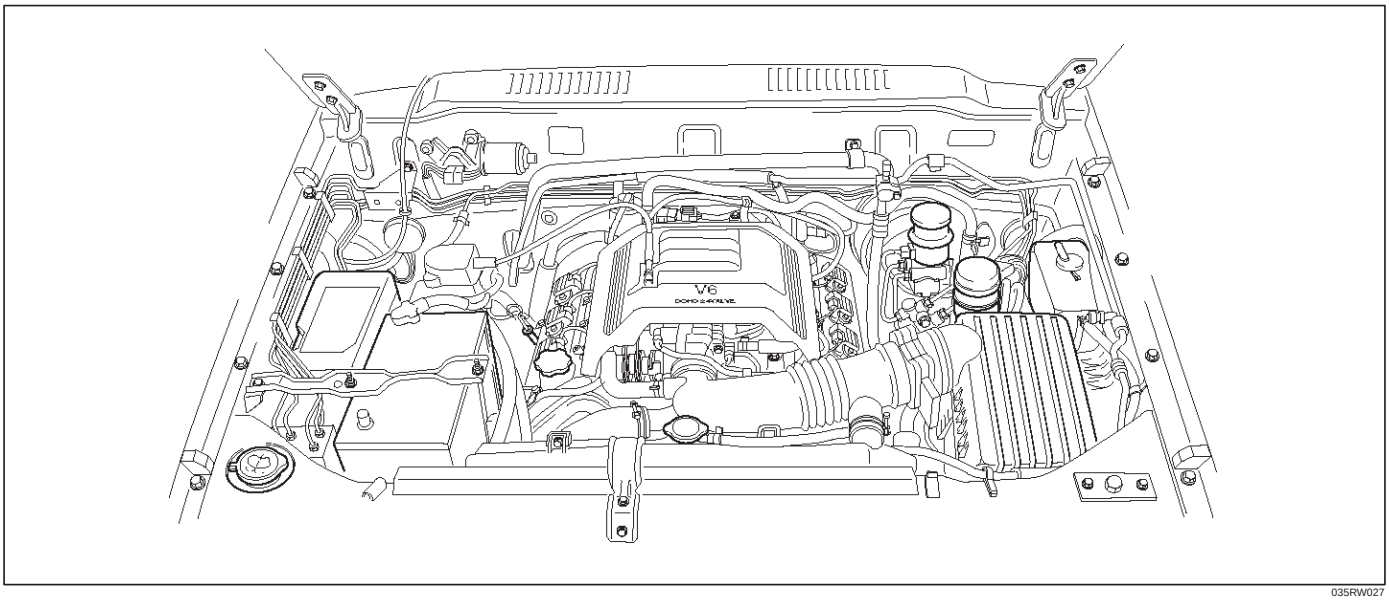

035RW027

1. Disconnect battery ground and positive cable.
2. Remove battery.
3. Make alignment mark on the engine hood and hinges before removal in order to return the hood to original position exactly.
4. Remove engine hood.
5. Drain radiator coolant.
6. Disconnect accelerator cable and automatic cruise control cable from throttle valve on common chamber.
7. Disconnect air duct with air cleaner cover.
8. Remove air cleaner assembly.
9. Disconnect canister vacuum hose.
10. Disconnect vacuum booster hose.
11. Disconnect three engine harness connectors.
12. Disconnect harness connector to transmission (left front side of engine compartment), disconnect shift on the fly harness connector from front side of front axle and remove transmission harness bracket from engine left side.
13. Disconnect ground cable between engine and frame.
14. Disconnect bonding cable connector on the back of right dash panel.
15. Disconnect bonding cable terminal on the left bank.
16. Disconnect starter harness connector from starter.
17. Disconnect generator harness connector from generator.
18. Disconnect coolant reserve tank hose from radiator.
19. Remove radiator upper and lower hoses.
20. Remove upper fan shroud.
21. Remove cooling fan assembly four fixing nuts, then the cooling fan assembly.
22. Move drive belt tensioner to loose side using wrench then remove drive belt.
23. Remove power steering pump fixing bolts, then power steering pump. Place the power steering pump along with piping on the body side.
24. Remove air conditioning compressor fixing bolts from bracket and place the compressor along with piping on the body side.
25. Remove O_2 sensor harness connectors from exhaust front pipe.
26. Remove three exhaust pipe fixing nuts from each bank.
27. Remove two exhaust pipe fixing nuts from each exhaust pipe, then move exhaust pipe to rear side of vehicle.
28. Remove flywheel dust covers.
29. Disconnect two heater hoses from engine.
30. Disconnect fuel hoses from right side of transmission.

CAUTION: Plug fuel pipes on engine side and fuel hoses from fuel tank.

31. Remove transmission assembly. Refer to Transmission section in this manual.
32. Support the engine by engine hoist.
33. Remove two left side engine mount fixing bolts from engine mount on chassis side.
34. Remove two right side engine mount fixing bolts from engine mount on chassis side.
35. Remove engine assembly.

Installation

CAUTION: When assembling the engine and transmission, confirm that dowels have been mounted in the specified positions at the engine side. Take care that dowel positions are different between the manual transmission and the automatic transmission.

If the engine is assembled in the condition that the dowels have not been mounted in the specified positions, the transmission may be damaged the transmission.

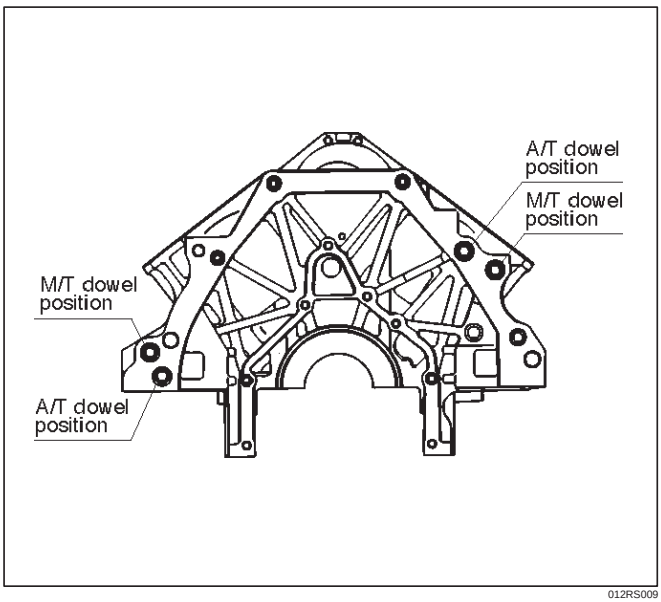

012RS009

1. Install engine assembly. Tighten engine mount fixing bolts to frame to the specified torque.

   Torque: 41 N·m (4.2 Kg·m/30 lb ft)

2. Reconnect fuel hose to fuel pipe on engine.
3. Install transmission assembly. Refer to Transmission section in this manual.
4. Reconnect two heater hoses to engine.
5. Install flywheel dust covers.
6. Install exhaust pipe and temporally tighten two (each bank) rear exhaust flange nuts then tighten three stud nuts (each bank) between exhaust manifold and exhaust pipe, finally tighten rear side nuts to the specified torque.

   Torque:

   Nuts: 43 N·m (4.4 Kg·m/32 lb ft)

   Stud nuts: 67 N·m (6.8 Kg·m/49 lb ft)

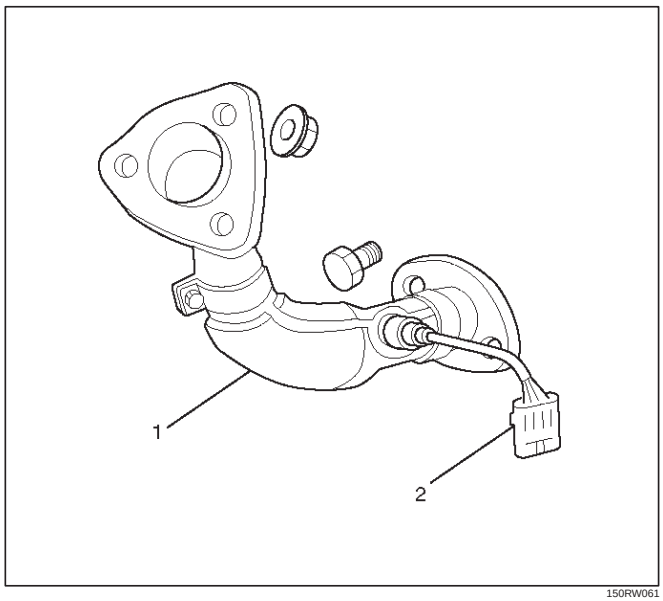

150RW061

Legend

(1) Exhaust Front Pipe RH

(2) O_2 Sensor (for IGM)

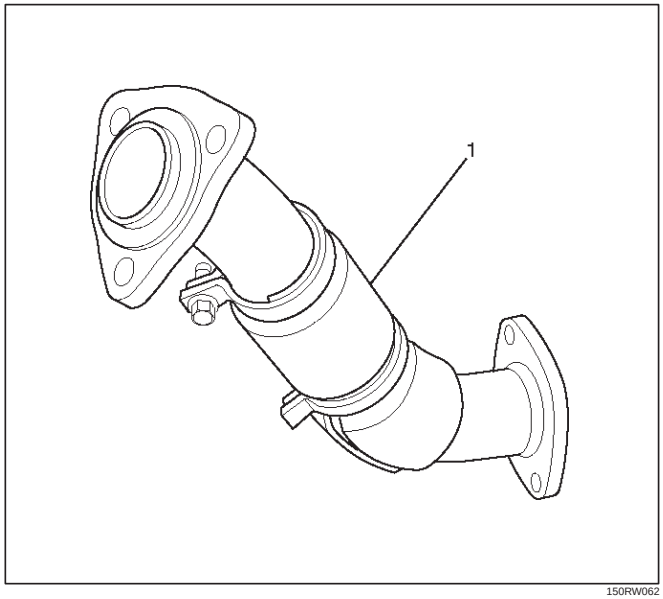

150RW062

Legend

(1) Exhaust Front Pipe LH

7. Reconnect O_2 sensor connector.
8. Install cooling fan assembly and tighten bolts/nuts to the specified torque.

   Torque : 22 N·m (2.2 Kg·m/16 lb ft) for fan pulley and fan bracket.

   Torque : 10 N·m (1.0 Kg·m/88.5 lb in) for fan and clutch assembly.

9. Install air conditioner compressor to engine and tighten to the specified torque.

   Torque :

   M8 bolts : 22 N·m (2.2 Kg·m/16 lb ft)

   M10 bolts : 43 N·m (4.4 Kg·m/32 lb ft)

10. Install power steering pump, tighten fixing bolt to the specified torque.

    Torque :

    M8 bolts : 22N·m (2.2 Kg·m/16 lb ft)

    M10 bolts : 46 N·m (4.7 Kg·m/34 lb ft)

11. Move drive belt tensioner to loose side using wrench, then install drive belt to normal position.

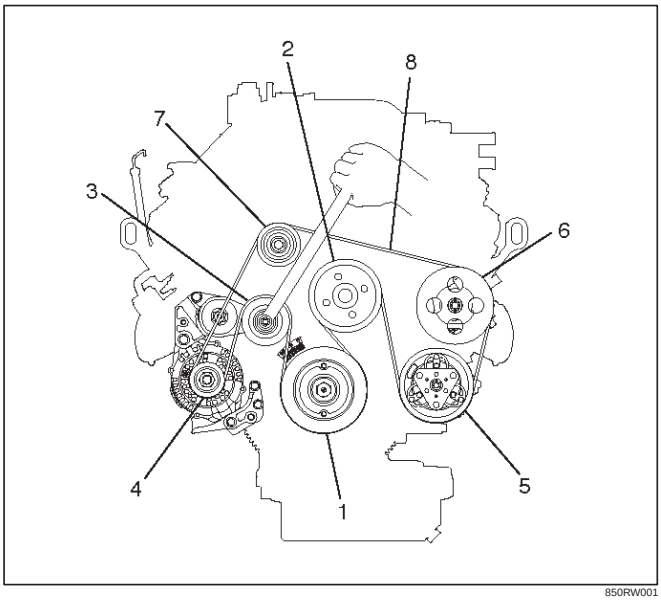

850RW001

Legend

(1) Crankshaft Pulley
(2) Cooling Fan Pulley
(3) Tensioner
(4) Generator
(5) Air Conditioner Compressor
(6) Power Steering Oil Pump
(7) Drive Belt

12. Install upper fan shroud.
13. Reconnect radiator upper and lower hoses.
14. Reconnect coolant reserve tank hose to radiator.
15. Reconnect generator harness connector.
16. Reconnect starter harness connector.
17. Reconnect bonding cable terminal on left bank
18. Reconnect bonding cable terminal on the back of right dash panel.
19. Reconnect ground cable between engine and chassis.
20. Reconnect harness connector to transmission and install transmission harness bracket on engine left side.
21. Reconnect three engine harness connectors.
22. Reconnect vacuum booster hose.
23. Reconnect canister vacuum hose.
24. Install air cleaner assembly.
25. Reconnect air duct.
26. Reconnect accelerator cable and automatic cruise control cable to throttle valve on common chamber.

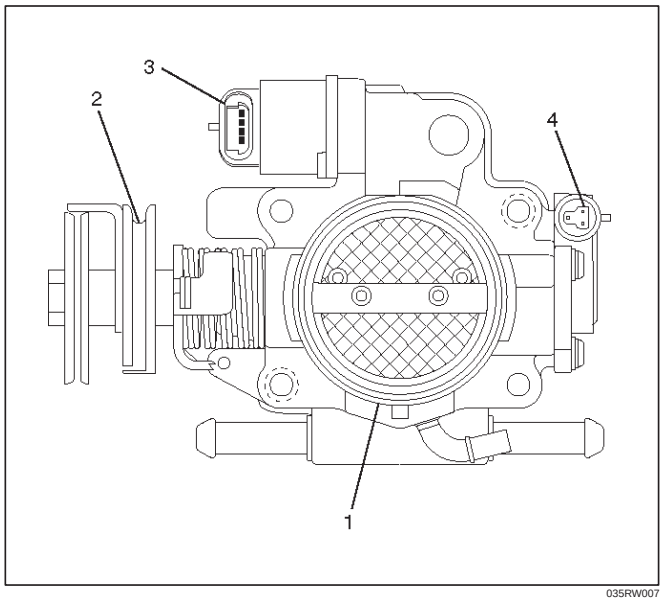

035RW007

Legend

(1) Throttle Valve Assembly
(2) Throttle Lever
(3) Idle Air Control Valve
(4) Throttle Position Sensor

27. Install engine hood to the original position.
    - Refer to installation procedure for Body section in this manual.

    Accelerator pedal cable adjustment

    1. Loosen adjusting nut and lock nut.
    2. Pull outer cable while fully closing the throttle valve.
    3. Tighten adjusting nut and lock nut temporarily.
    4. Loosen adjusting nut by three turns and tighten lock nut.

       Then, manually operating the throttle valve, make sure that the valve lever returns up to the stopper screw.

If it does not reach the stopper screw, repeat from step 1.

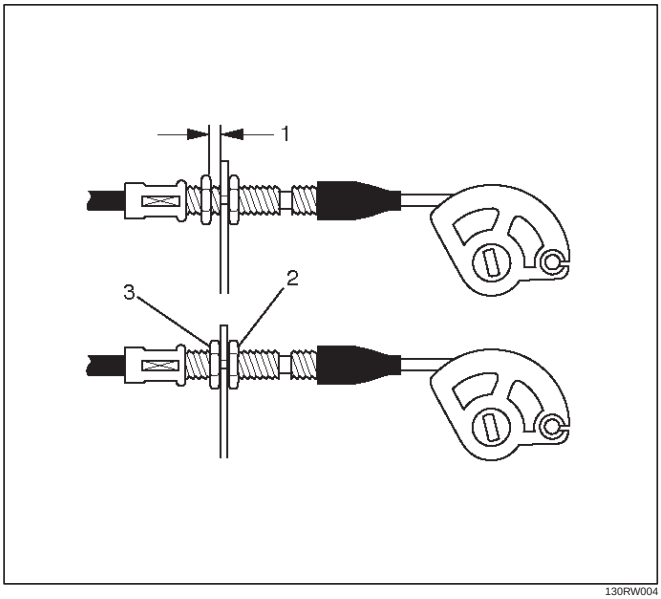

130RW004

Legend

(1) Clearance
(2) Lock Nut
(3) Adjusting Nut

Cylinder Head

Cylinder Head and Associated Parts

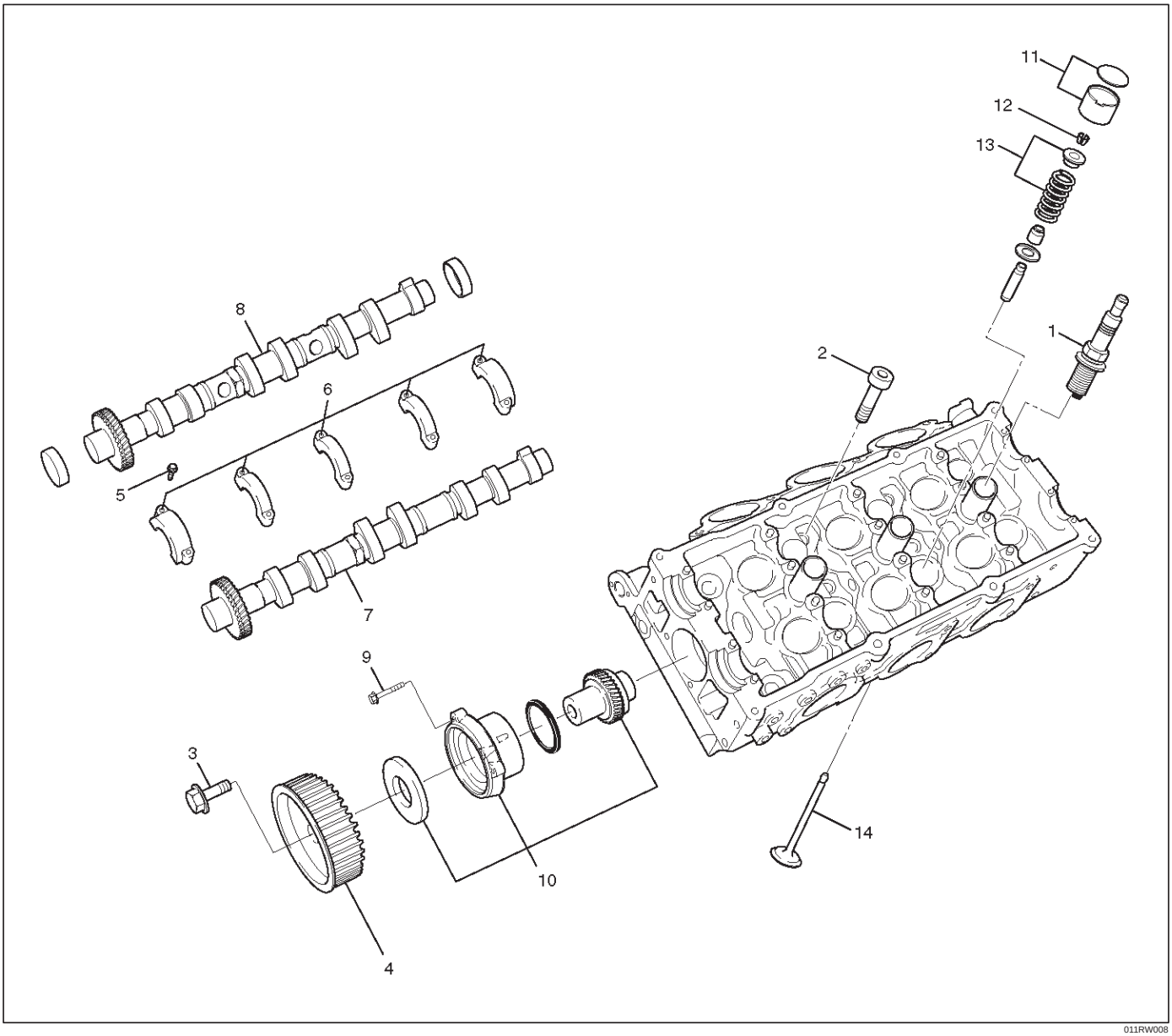

011RW008

Legend

(1) Spark Plug
(2) Cylinder Head Bolt
(3) Camshaft Drive Gear Pulley Fixing Bolt
(4) Camshaft Drive Gear Pulley
(5) Camshaft Bracket Fixing Bolt
(6) Camshaft Bracket
(7) Camshaft Exhaust
(8) Camshaft Intake
(9) Retainer Fixing Bolt
(10) Retainer Assembly
(11) Tappet with Shim
(12) Split Collar
(13) Valve Spring and Spring Upper Seat
(14) Valve

Disassembly

NOTE:

- During disassembly, be sure that the valve train components are kept together and identified so that they can be reinstalled in their original locations.
- Before removing the cylinder head from the engine and before disassembling the valve mechanism, perform a compression test and note the results.

1. Remove camshaft drive gear pulley fixing bolt (3), then pulley (4).

2. Remove camshaft bracket fixing bolt (5), camshaft bracket (6), then camshaft exhaust (7), and intake side (8).
3. Remove tappet with shim (11).
4. Use the 5–8840–2446–0 valve spring compressor and 5–8840–2547–0 valve spring compressor adapter to remove the split collar (12), valve spring with upper seat (13) and valve (14).

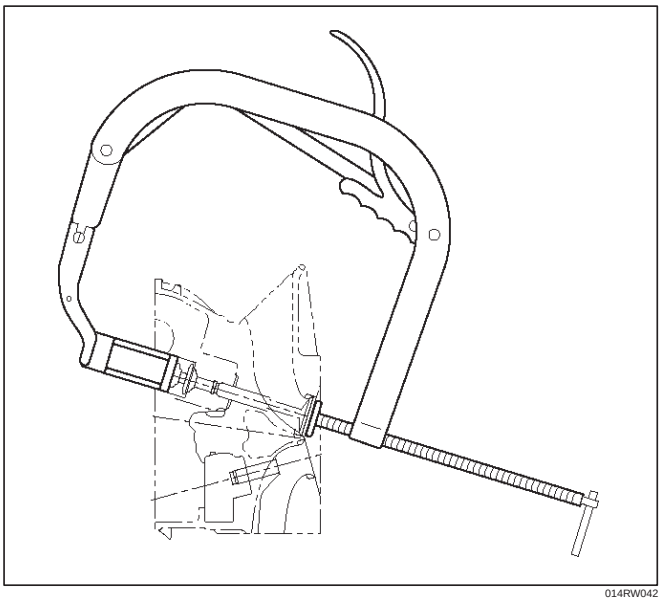

014RW042

5. Remove spark plug (1).

CAUTION: Do not remove the spark plugs when the head and plugs are hot. Clean dirt and debris from spark plug recess areas before removal.

Clean

Cylinder head

Carefully remove all varnish, soot and carbon from the bare metal. Do not use a motorized wire brush on any gasket sealing surface.

Inspection and Repair

1. Cylinder head gasket and mating surfaces for leaks, corrosion and blow–by. If the gasket has failed, determine the cause.
   – Insufficient torque on head bolts.
   – Improper installation
   – Loose or warped cylinder head
   – Missing dowel pins
   – Warped case surface
2. Cylinder head for cracks, especially between valve seats and in the exhaust ports.
3. Cylinder head deck for corrosion, sand particles in head and porosity.

CAUTION:

- **Do not attempt to weld the cylinder head. Replace it.**
- **Do not reuse cylinder head bolts.**

4. Cylinder head deck, common chamber and exhaust manifold mating surfaces for flatness. These surfaces may be reconditioned by milling. If the surfaces are “out of flat” by more than specification, the surface should be ground to within specifications. Replace the head if it requires machining beyond the repairable limit.

   Head surface and manifold surface

   Standard: 0.05 mm (0.002 in) or less

   Warpage limit: 0.2 mm (0.0079 in)

   Maximum Repairable limit: 0.2 mm (0.0079 in)

   Head height

   Standard height : 133.2 mm (5.2441 in)

   Warpage limit : 0.2 mm (0.0079 in)

   Maximum Repairable limit : 133.0 mm (5.2362 in)

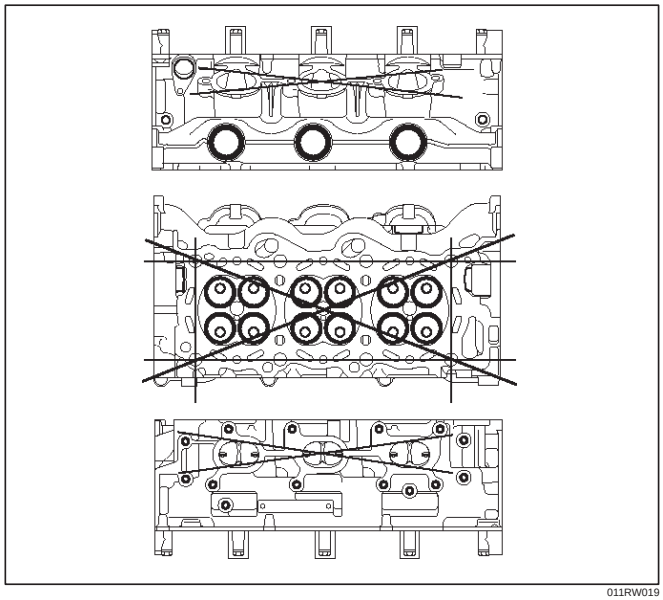

011RW019

5. Water jacket sealing plugs seating surfaces.

Reassembly

1. Install Spark plug and tighten all the spark plugs to specified torque.

   Torque: 18 N·m (1.8 Kg·m/13 lb ft)

2. Tighten sub gear setting bolt.
   1. Use 5–8840–2443–0 gear spring lever to turn sub gear to right direction until the M5 bolt aligns with the hole between camshaft driven gear and sub gear.

2. Tighten the M5 bolt to a suitable torque to prevent the sub gear from moving .

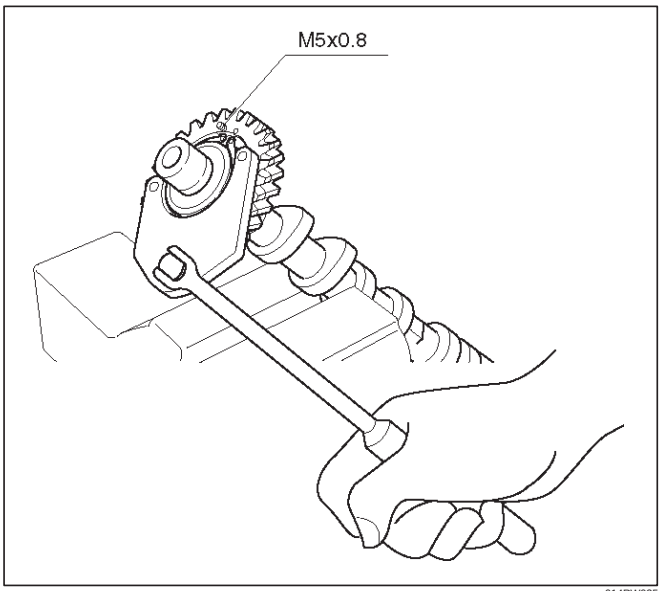

014RW025

3. Install camshaft drive gear assembly and tighten three bolts to the specified torque.

Torque: 10 N·m (1.0 Kg·m/89 lb in)

4. Install camshaft assembly and camshaft brackets, tighten twenty bolts on one side bank to the specified torque.
   1. Apply engine oil to camshaft journal and bearing surface of camshaft bracket.
   2. Align timing mark on intake camshaft (one dot for right bank, two dots for left bank) and exhaust camshaft (one dot for right bank, two dots for left bank) to timing mark on camshaft drive gear (one dot).

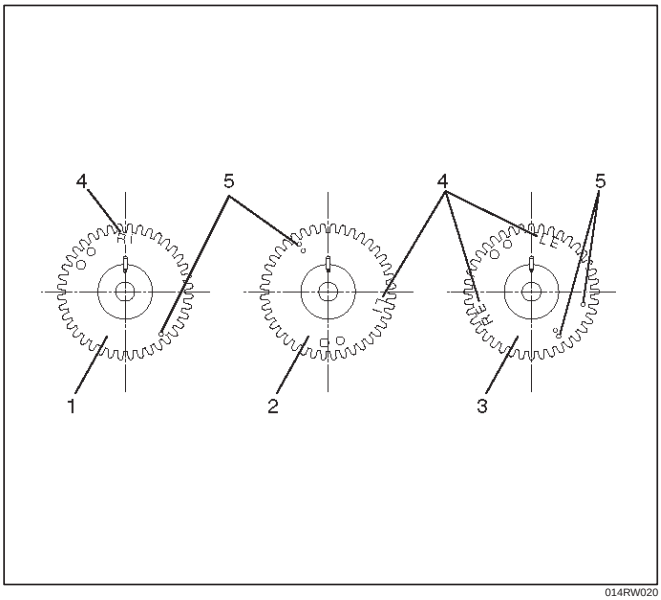

014RW020

Legend

(1) Intake Camshaft Timing Gear for Right Bank
(2) Intake Camshaft Timing Gear for Left Bank
(3) Exhaust Camshaft Timing Gear
(4) Discrimination Mark
LI: Left Bank Intake
RI: Right Bank Intake
LE: Left Bank Exhaust
RE: Right Bank Exhaust

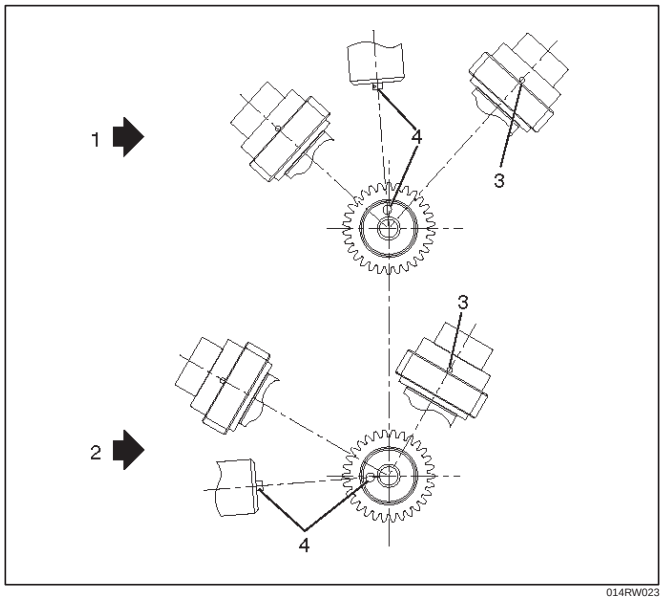

014RW023

Legend

(1) Right Bank Camshaft Drive Gear
(2) Left Bank Camshaft Drive Gear
(3) Timing Mark on Drive Gear
(4) Dowel Pin

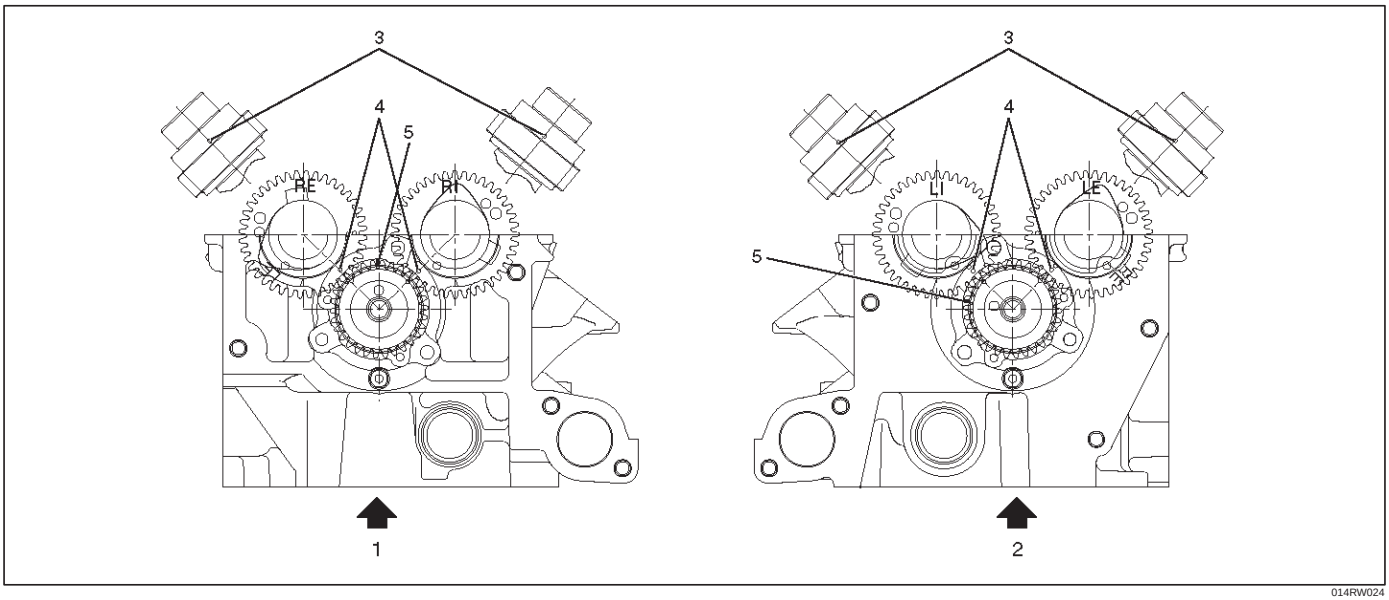

014RW024

Legend

(1) Right Bank
(2) Left Bank
(3) Alignment Mark on Camshaft Drive Gear
(4) Alignment Mark on Camshaft
(5) Alignment Mark on Retainer

3. Tighten twenty bolts in numerical order on one side bank as shown in the illustration.

Torque: 10 N·m (1.0 Kg·m/89 lb in)

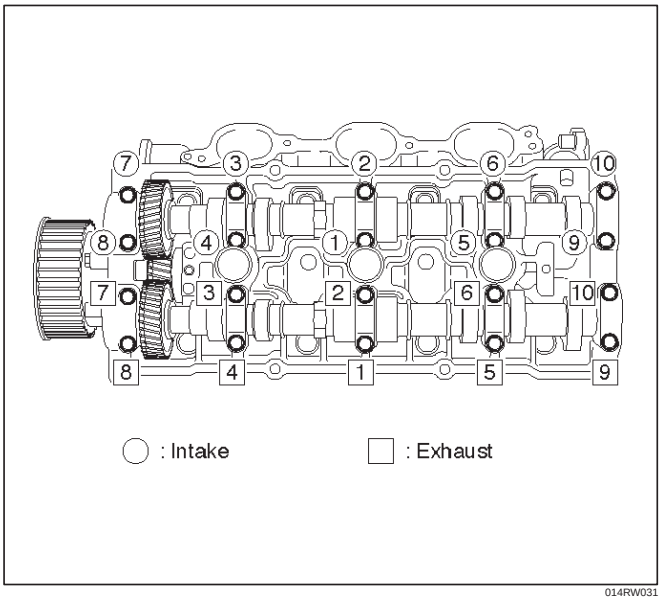

014RW031

5. Tighten bolt for camshaft drive gear assembly pulley to the specified torque.

Torque: 98 N·m (10.0 Kg·m/72 lb ft)

Valve Spring, Oil Controller, Valve, Valve Guide

Valve Spring, Oil Controller, Valve, Valve Guide and Associated Parts

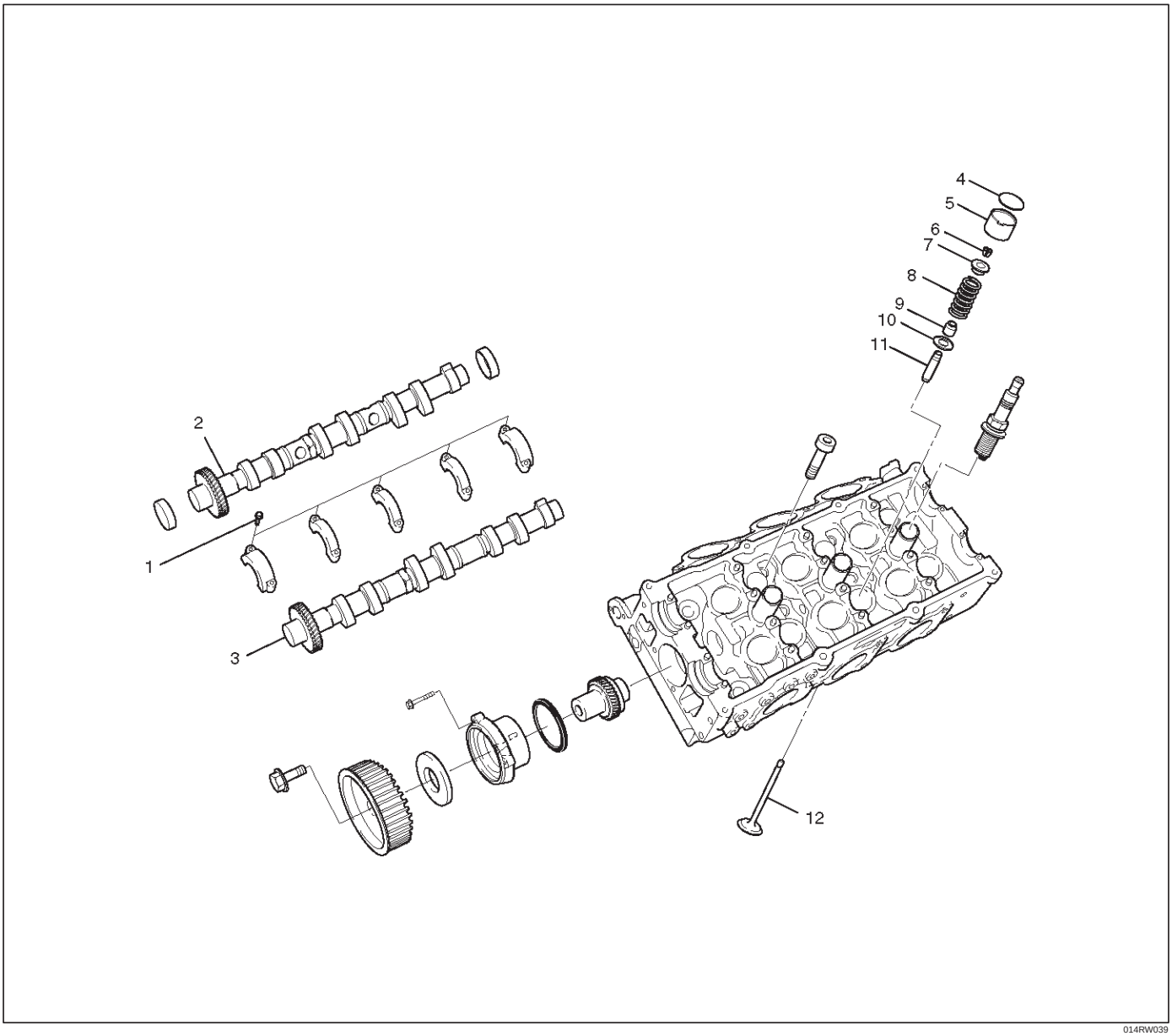

014RW039

Legend

(1) Camshaft Bracket Fixing Bolts
(2) Camshaft Assembly Inlet
(3) Camshaft Assembly Exhaust
(4) Shim
(5) Tappet
(6) Split Collar
(7) Spring Upper Seat
(8) Valve Spring
(9) Oil Controller
(10) Spring Lower Seat
(11) Valve Guide
(12) Valve

Disassembly

1. Remove camshaft bracket fixing bolts (1).
2. Remove camshaft assembly (intake).
3. Remove camshaft assembly (Exhaust side).
4. Remove shim (4) and tappet (5).

5. Use 5–8840–2446–0 valve spring compressor and 5–8840–2547–0 valve spring compressor adapter to remove split collar.

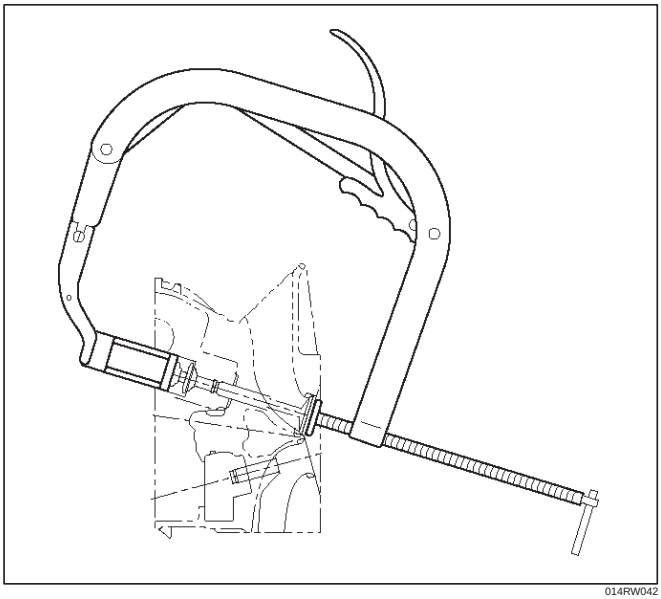

014RW042

6. Remove valve spring.
7. Remove valve.
8. Remove oil controller and spring lower seat.
9. Remove the valve guide using the 5–8840–2442–0 valve guide replacer.

Inspection and Repair

Valve Spring

CAUTION: Visually inspect the valve springs and replace them if damage or abnormal wear is evident.

1. Measure the free height of the springs. The springs must be replaced if the free height is below the specified limit.

   Standard : 44.6 mm (1.7559 in)

   Limit : 43.6 mm (1.7165 in)

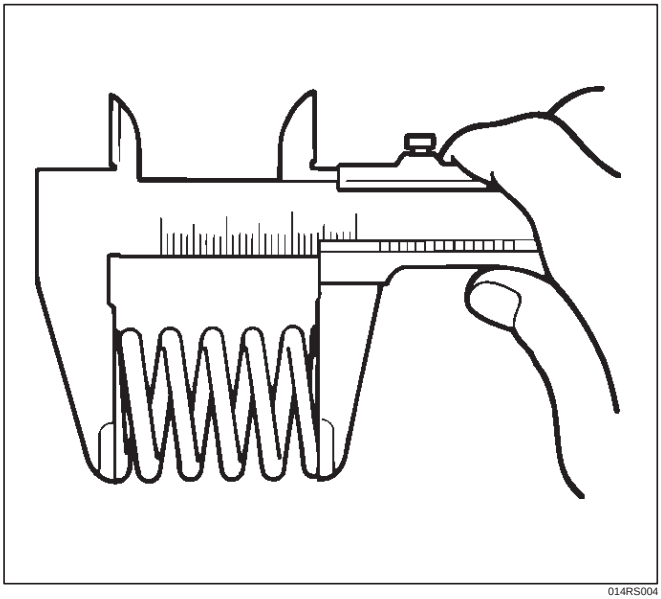

014RS004

2. Measure the valve spring squareness with a steel square and replace the valve springs if the measured value exceeds the specified limit.

   Limit : 2 mm (0.0787 in)

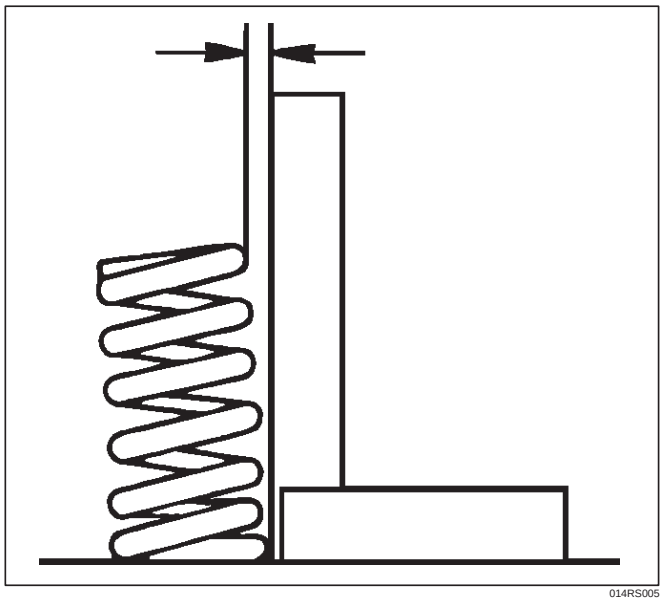

014RS005

3. Using a spring tester to compress the springs to the installed height, measure the compressed spring tension, and replace the springs if the measured tension is below the specified limit.

   At installed height: 35.0 mm (1.38 in)

   Standard: 196 N (44 lb)

   Limit: Less than 181 N (41 lb)

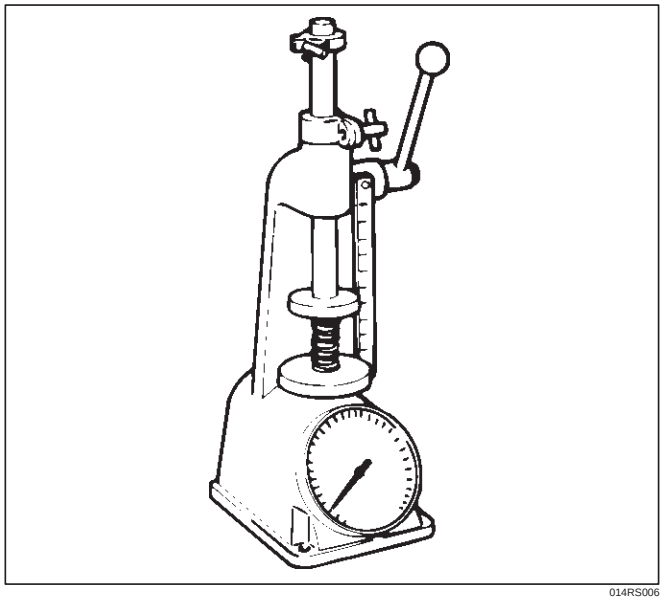

014RS006

Valve Guide

CAUTION: Take care not to damage the valve seat contact surface, when removing carbon adhering to the valve head. Carefully inspect the valve stem for scratchs or abnormal wear. If these conditions are present, the valve and the valve guide must be replaced as a set.

1. Measure the valve stem diameter with a micrometer. If the valve stem diameter is less than the specified limit, the valve and the valve guide must be replaced as a set.

Diameter of Valve Stem

Intake

Standard : 5.977 mm–5.959 mm (0.2353 in–0.2346 in)

Limit : 5.90 mm (0.2323 in)

Exhaust

Standard : 5.952 mm–5.970 mm (0.2343 in–0.2350 in)

Limit : 5.90 mm (0.2323 in)

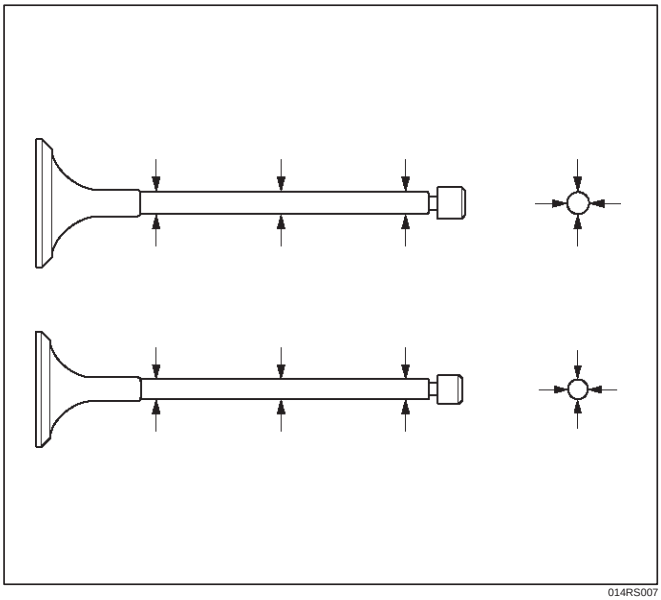

014RS007

2. Measure the inside diameter of the valve guide with a micrometer. Subtract the measured outer diameter of the valve stem from the measured inner diameter of the valve guide. If the value exceeds the specified limit, the valve and the valve guide must be replaced as a set.

Inside Diameter of the Vale Guide

Inlet clearance

Standard : 0.023 mm–0.056 mm (0.0009 in–0.0002 in)

Limit : 0.20 mm (0.00787 in)

Exhaust clearance

Standard : 0.030 mm–0.063 mm (0.0012 in–0.0025 in)

Limit : 0.20 mm (0.00787 in)

Valve Guide Replacement

1. Using Valve guide replacer: 5–8840–2442–0, drive out the valve guide from the combustion chamber side.

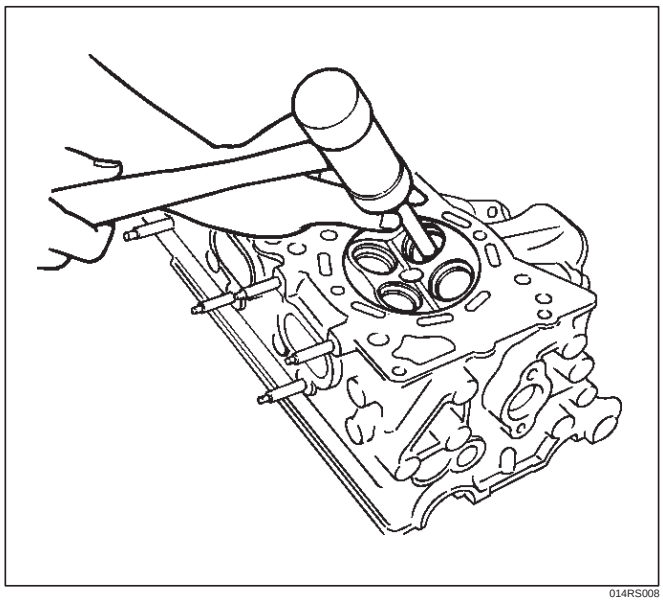

014RS008

2. Apply engine oil to the outside of the valve guide. Using valve guide replacer 5–8840–2442–0, drive in a new valve guide from the camshaft side, and check the valve guide height.

Valve guide upper end height: 13.0 mm (0.5118 in)

(Measured from the cylinder head upper face)

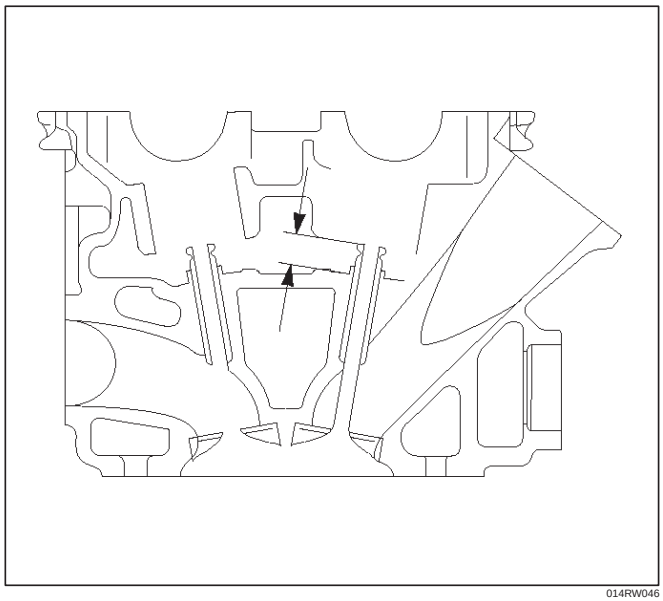

014RW046

3. Check the clearance. If the clearance is less than the specified value, ream the inside diameter of valve guide. Using a sharp 6 mm reamer, ream the valve guide to obtain the specified clearance.

Valve Seat

1. Measure the protrusion of the valve stem when a new valve is installed in the cylinder head. If the protrusion of the valve stem exceeds the limit, replace the valve seat insert or the cylinder head assembly.

Protrusion of valve stem

Intake

Standard: 39.32 mm (1.5480 in)

Limit: 39.47 mm (1.5539 in)

Exhaust

Standard: 39.30 mm (1.5472 in)

Limit: 39.45 mm (1.5531 in)

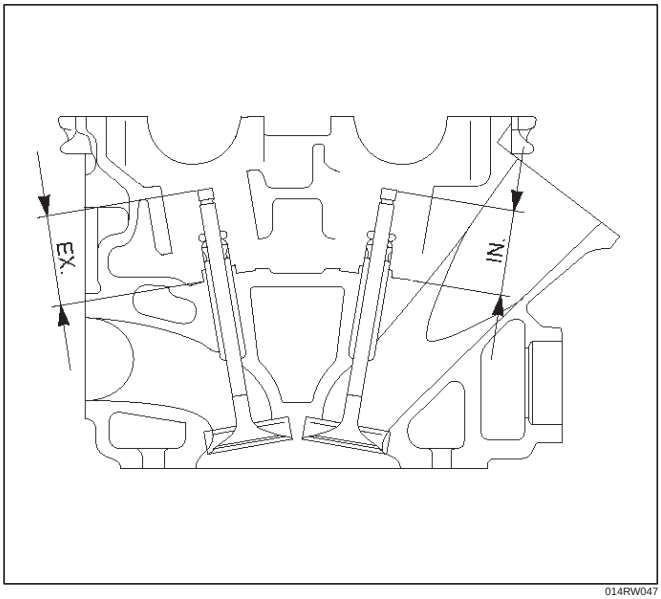

014RW047

2. Measure the valve seat contact width. Make the necessary corrections if the seat contact surface is damaged or rough or if the contact width wear exceeds the limit.

Valve seat contact width

Standard: 1.1 mm (0.0433 in)

Limit: 1.7 mm (0.0669 in)

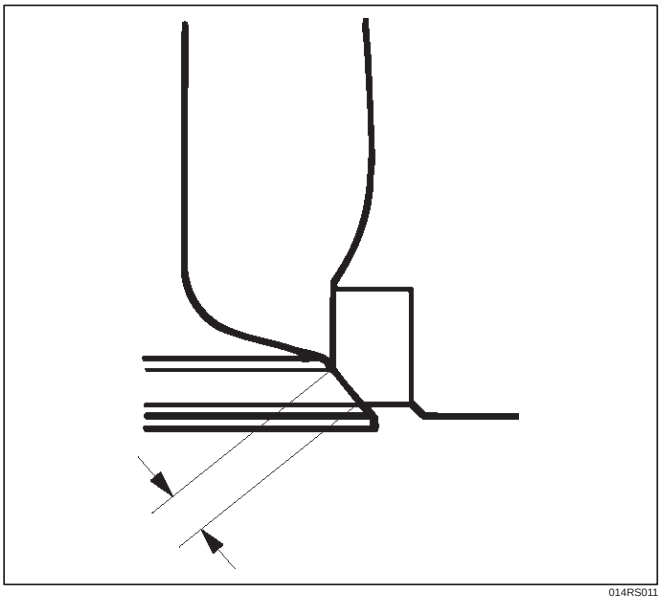

014RS011

Contact Surface Angle on Valve Seat on Valve

1. Measure contact surface angle on valve seat.
2. If the measured value exceeds the limit, replace valve, valve guide and valve seat as a set.

Valve contact surface angle: 45˚

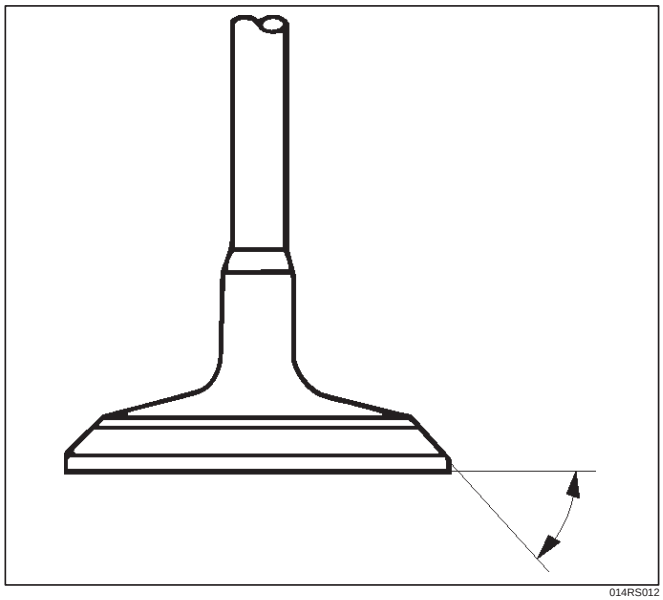

014RS012

Valve Seat Insert Correction

1. Remove the carbon from the valve seat insert surface.
2. Use a valve cutter to minimize scratches and other rough areas. This will bring the contact width back to the standard value. Remove only the scratches and rough areas. Do not cut away too much. Take care not to cut away unblemished areas of the valve seat surface.

Valve seat angle degree: 90˚

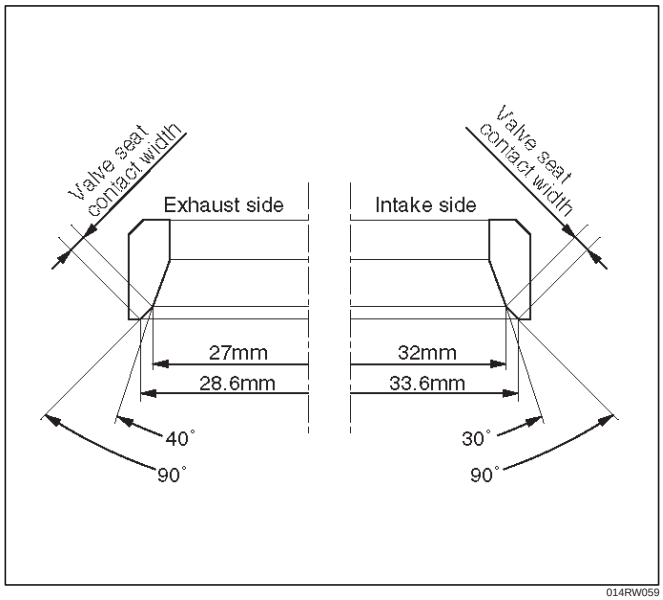

014RW059

3. Apply abrasive compound to the valve seat insert surface.
4. Insert the valve into the valve guide.
5. Turn the valve while lapping it to fit the valve seat insert.

6. Check that the valve contact width is correct.
7. Check that the valve seat insert surface is in contact with the entire circumference of the valve.

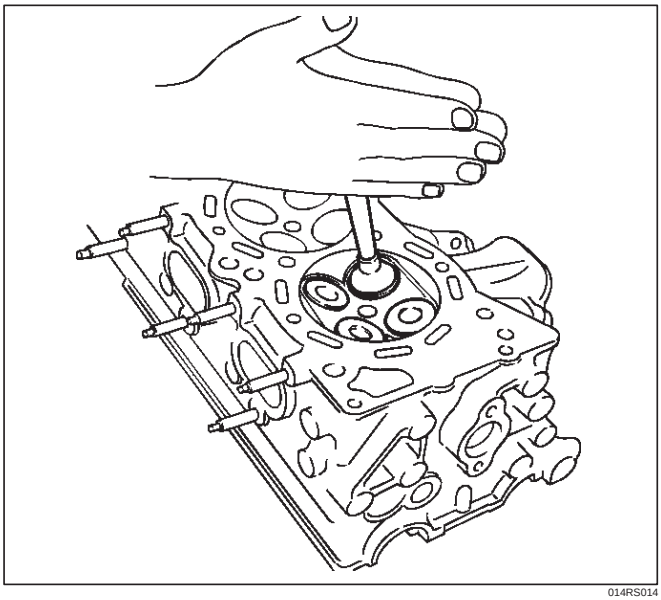

014RS014

Valve Seat Insert Replacement

1. Arc weld the rod at several points. Be careful not to damage the aluminum section.
2. Allow the rod to cool for a few minutes. This will cause the valve seat to shrink.
3. Strike the rod and pull it out.

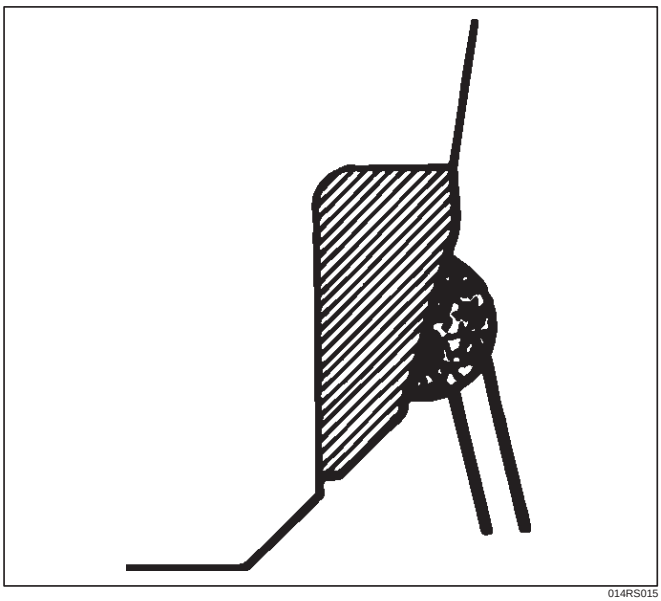

014RS015

4. Carefully clean the valve seat press–fit section on the cylinder head side.
5. Heat the press–fit section with steam or some other means to cause expansion. Cool the valve seat with dry ice or some other means.
6. Insert the press–fit section into the valve seat horizontally.

   Standard fitting interference: 0.14 mm–0.09 mm (0.0055 in–0.0035 in)

7. After insertion, use a seat grinder to grind finish the seating face. Carefully note the seating angle, the contact width, and the depression.
8. Lap the valve and the seat.

Reassembly

1. Install valve guide (1) to cylinder head. Apply engine oil to the outside of the valve guide. Using valve guide replacer 5–8840–2442–0, drive in a new valve guide from the camshaft side.
2. Install oil controller (3) and spring lower seat (2). Using oil controller replacer 5–8840–0623–0, drive in a new oil controller.

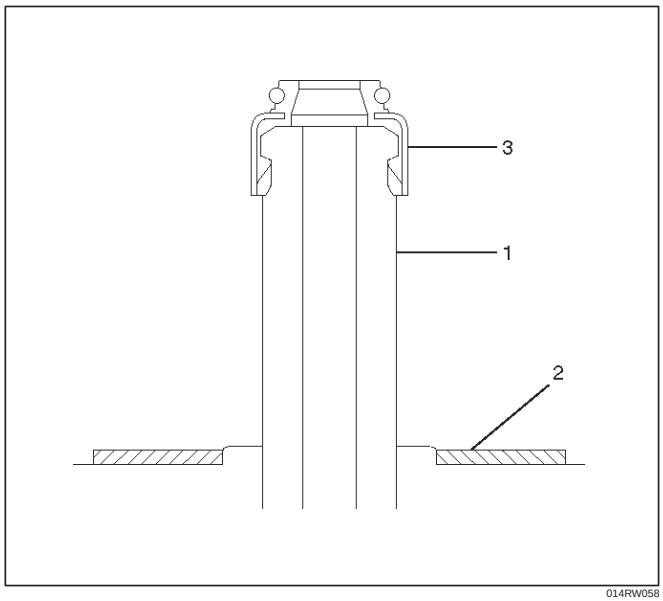

014RW058

3. Install valve to valve guide. Before install valve guide apply engine oil to the outside of the valve stem.
4. Install valve spring to cylinder head. Attach the valve spring to the lower spring seat. The painted area of the valve spring should be facing downward.

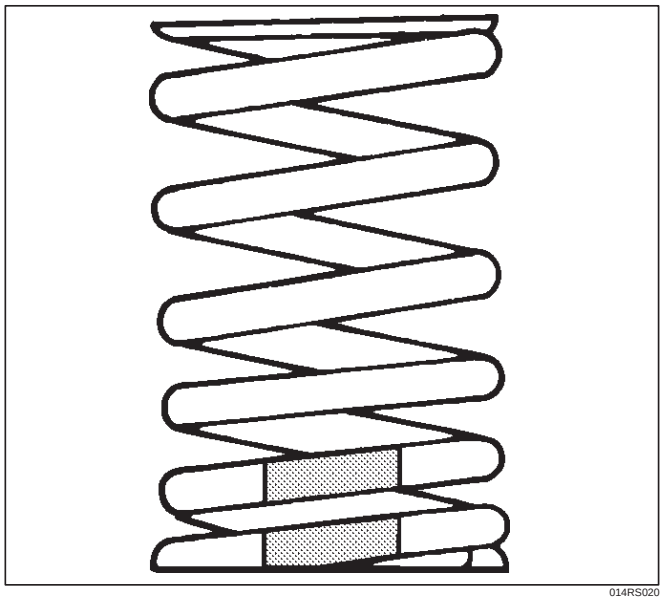

014RS020

5. Install lower valve spring seat, valve spring and upper valve spring seat then put split collars on the upper spring seat, using the 5–8840–2446–0 valve spring compressor and 5–8840–2547–0 valve spring compressor adapter to install the split collars.

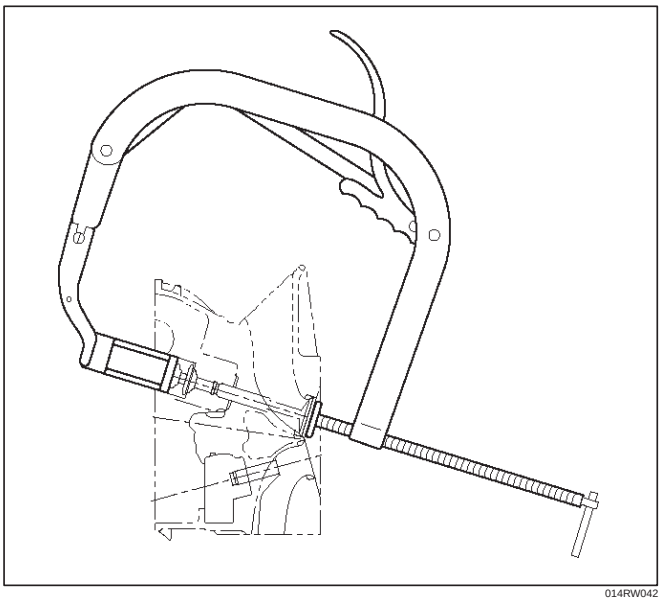

014RW042

6. Install tappet with shim.
7. Install camshaft assembly.
   - Refer to installation procedure for Camshaft in this manual.

Valve Clearance Adjustments

NOTE: To adjust valve clearance, apply engine oil to the cam as well as to the adjusting shim (2) with the cylinder head built on the cylinder block, give a few turns to the camshaft by means of timing pulley tightening bolt, and measure valve clearance when the nose of cam is just opposite to maximum cam lift (1) as shown in illistration below.

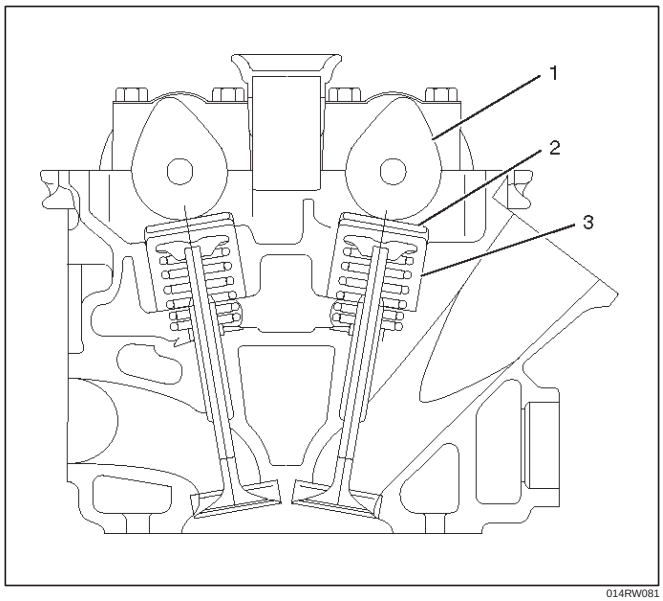

014RW081

Legend

(1) Cam
(2) Shim
(3) Tappet

Valve Clearance Standard Value (cold)

Intake: 0.23 mm–0.33 mm (0.0091 in–0.0130 in)

Exhaust: 0.25 mm–0.35 mm (0.0098 in–0.0138 in)

Selection of Adjusting Shim

Shim to be selected = (Thickness of removed shim) + (Valve clearance measurement – Standard valve)
Based on the above formula, the best suited shim should be selected from 41 sorts of shim (differently thick at 0.02mm (0.0008 in) intervals from 2.40mm (0.0945 in) through 3.2mm (0.1260 in) thick). Install the shim and check valve clearance.

Replacement of Shim

Let the cam push down the edge of tappet by using 5–8840–2444–0 valve clearance adjusting tool and push out the shim with a flat blade screw driver as shown in illustrations below.

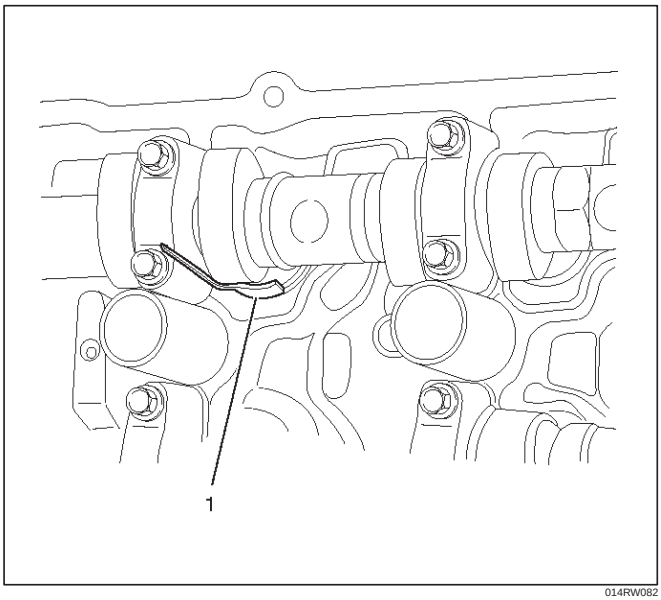

014RW082

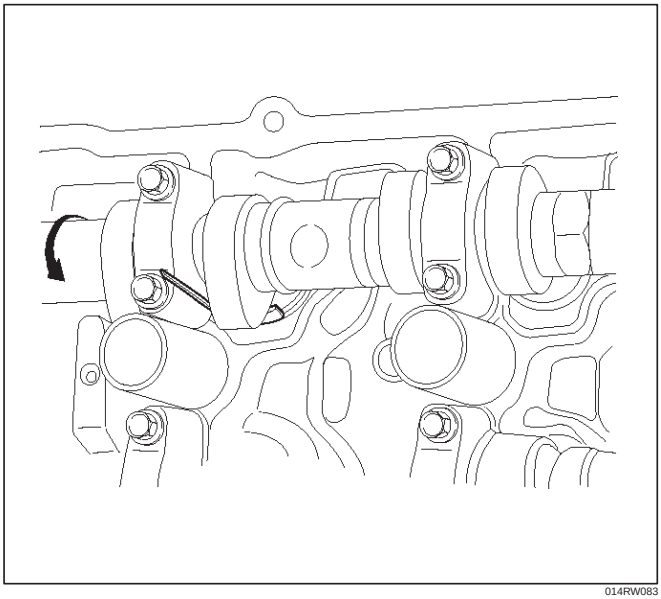

014RW083

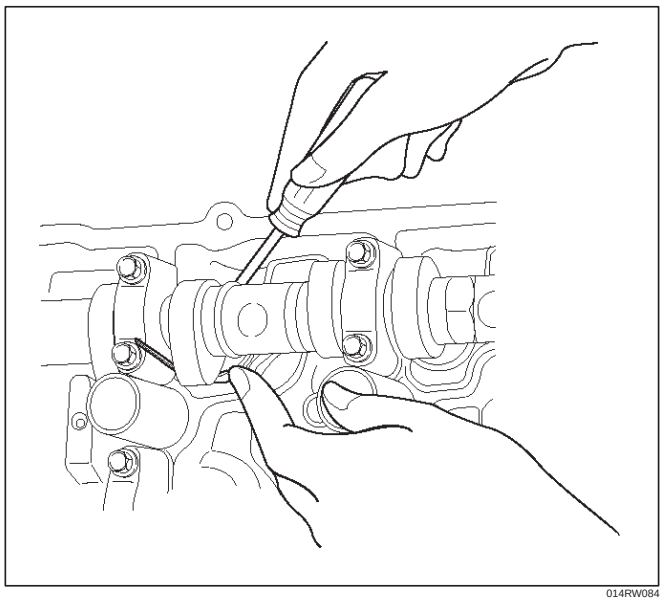

014RW084

Camshaft

Camshaft and Associated Parts

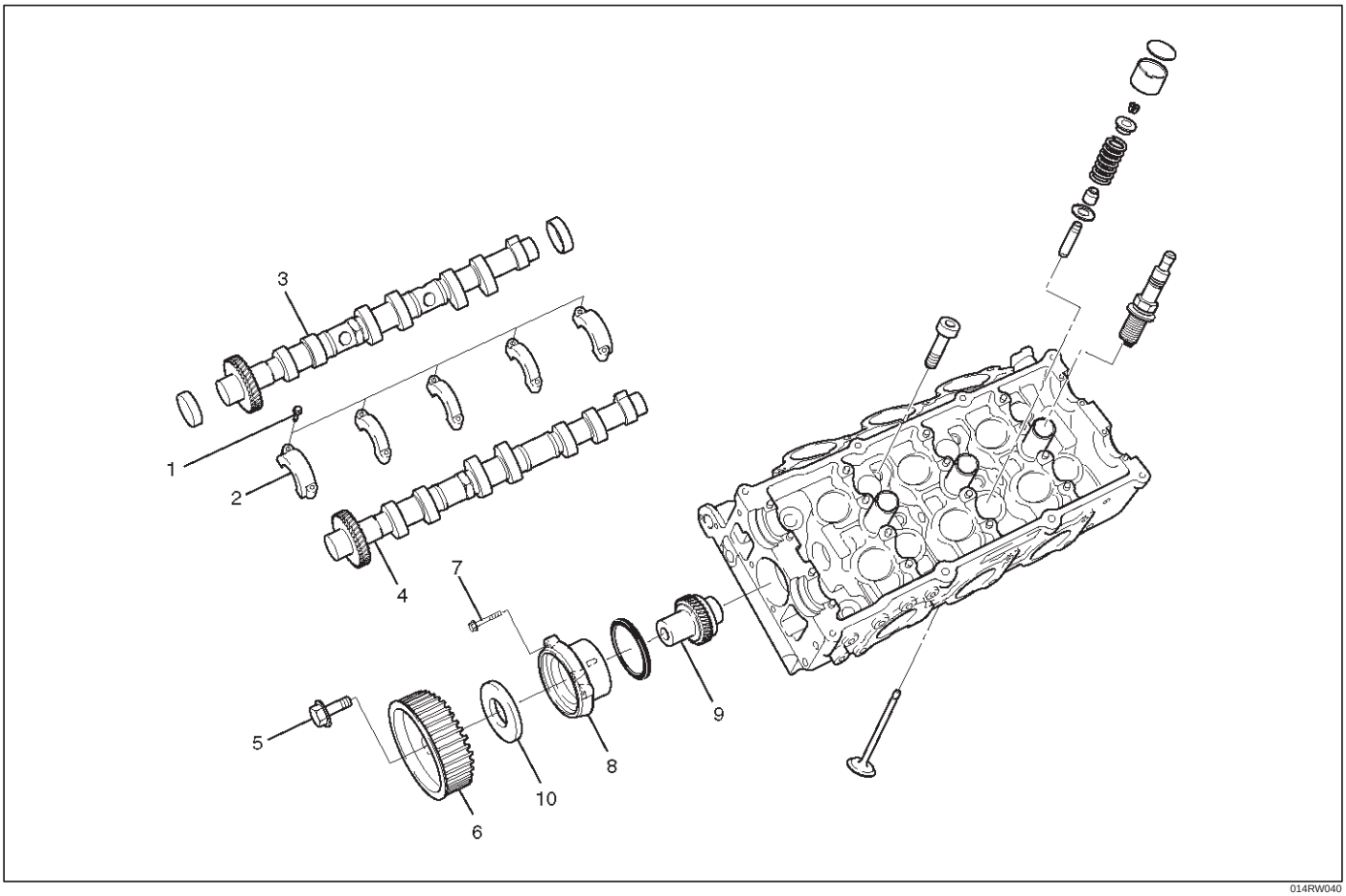

014RW040

Legend

(1) Camshaft Bracket Fixing Bolt
(2) Camshaft Bracket
(3) Camshaft Assembly Intake
(4) Camshaft Assembly Exhaust
(5) Pulley Fixing Bolt
(6) Camshaft Drive Gear Pulley
(7) Retainer Fixing Bolt
(8) Retainer
(9) Camshaft Drive Gear
(10) Oil Seal

Disassembly

1. Remove fixing bolt (5) for camshaft drive gear pulley using the 5–8840–2447–0 universal holder.

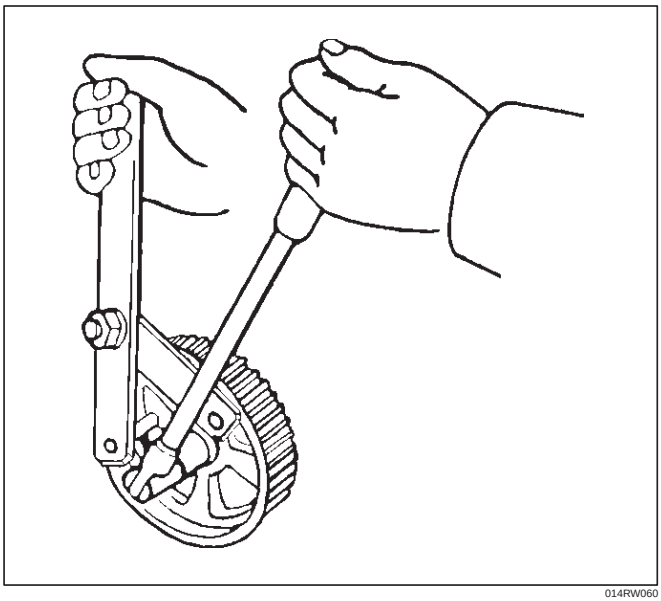

014RW060

2. Remove twenty fixing bolts from inlet and exhaust camshaft bracket on one side bank, then camshaft brackets (2).

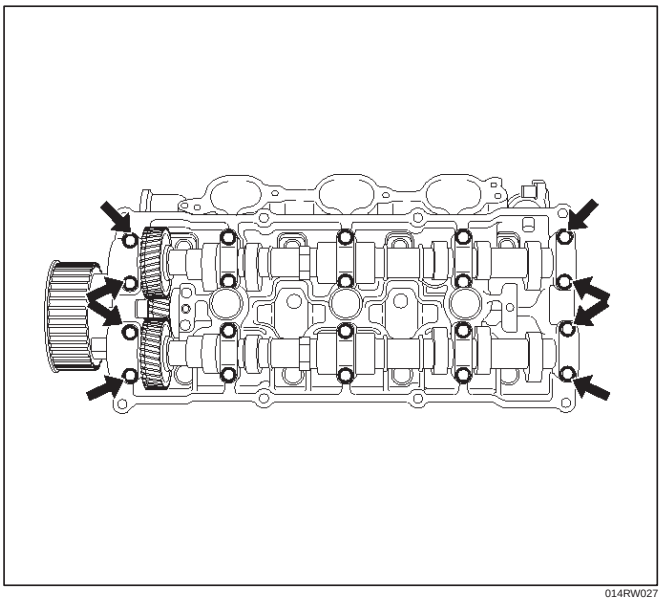

014RW027

3. Remove camshaft assembly (3), (4).
4. Remove three fixing bolts (7) from camshaft drive gear retainer (8), then camshaft drive gear assembly.

Inspection and Repair

1. Use a micrometer to measure the cam lobe height and uneven wear. Replace the camshaft if either the lobe height or the uneven wear exceeds the specified limit.

Lobe height : 44.709 mm (1.7602 in)

Uneven wear : 0.05 mm (0.0020 in)

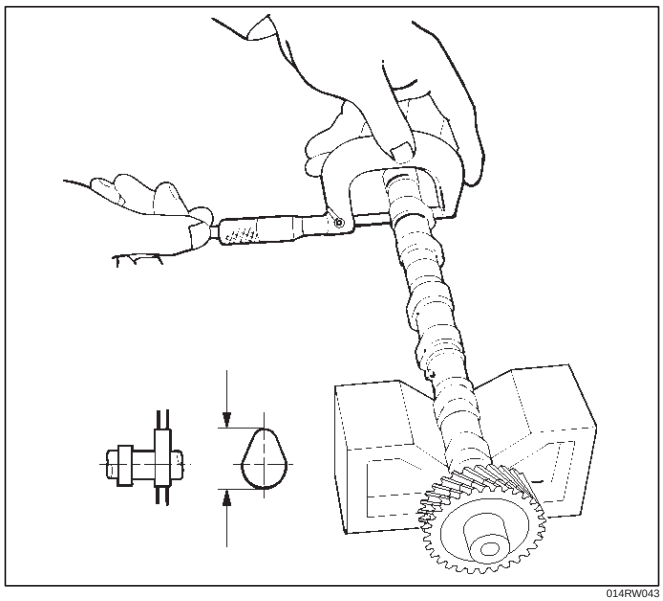

014RW043

2. Use a micrometer to measure the diameter and the uneven wear of the camshaft journals.
   Replace the camshaft if the diameter or the uneven wear exceeds the specified limit.

Journal Diameter

Standard : 25.972 mm–25.993 mm (1.0225 in–1.0233 in)

Limit : 25.8 mm (1.0157 in)

Uneven wear : 0.05 mm (0.0020 in)

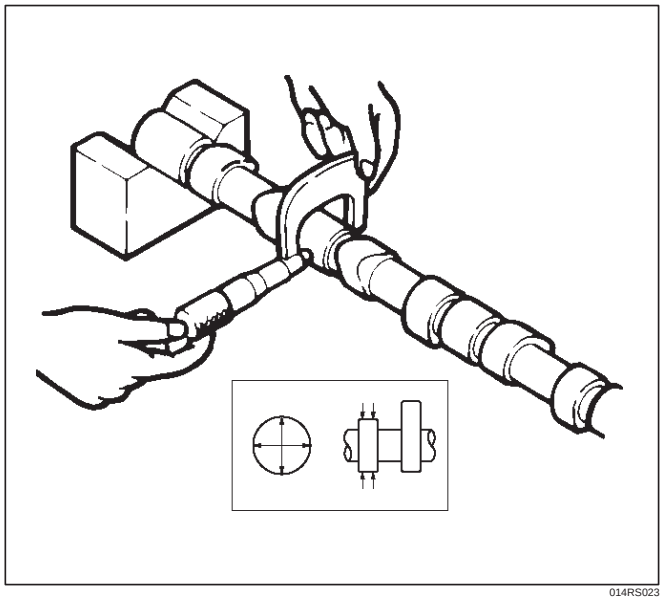

014RS023

3. Place the camshaft on V–blocks.
   Slowly rotate the camshaft and measure the runout with a dial indicator.
   Replace the camshaft if the runout exceeds the specified limit.

Runout

Limit : 0.1 mm (0.0039 in)

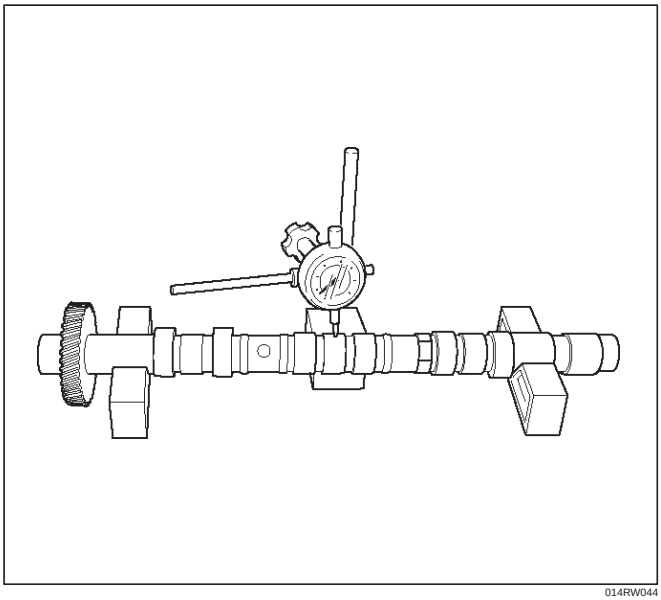

014RW044

4. Measure the camshaft journal oil clearance.
   1. Measure the camshaft bracket housing inside diameter.

NOTE: Tighten camshaft bracket (2) to specified torque before measuring the camshaft bracket inside diameter.

Torque : 10 N·m (1.0 Kg·m/89 lb in)

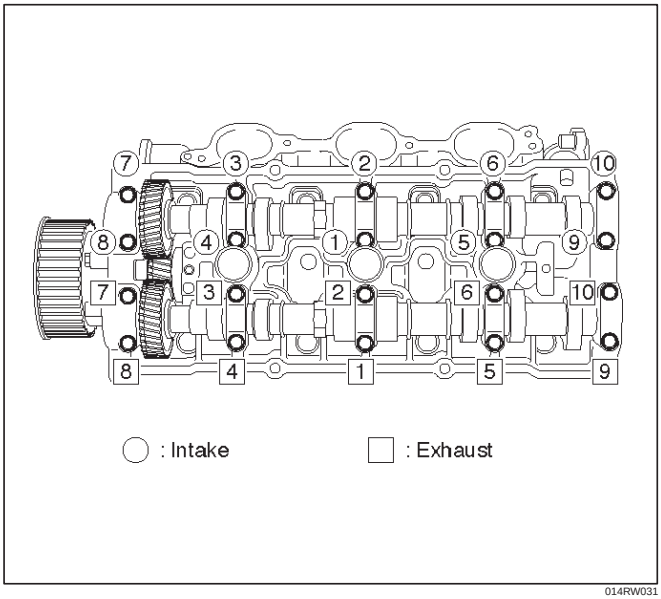

014RW031

   2. Subtract the camshaft outside diameter from the camshaft bracket housing inside diameter.

Oil Clearance

Standard : 0.027 mm–0.078 mm (0.0011 in–0.0031 in)

Limit : 0.11 mm (0.0043 in)

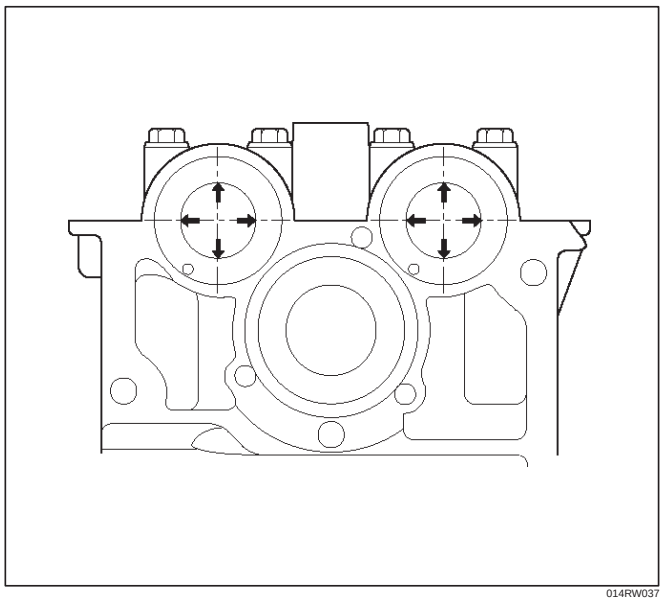

014RW037

5. Replace the cylinder head and/or camshaft if the measured oil clearance exceeds the specified limit.
   1. Carefully clean the camshaft journal, the camshaft bracket, and the cylinder head.
   2. Install camshaft assembly and camshaft brackets (2), tighten twenty bolts (1) on one side bank to the specified torque.

Torque: 10 N·m (1.0 Kg·m/89 lb in)

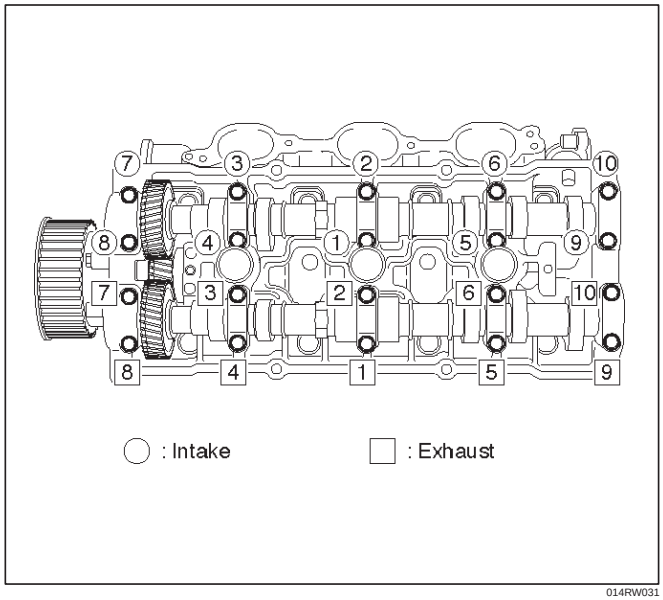

014RW031

   3. Measure the camshaft thrust clearance with a dial indicator. Replace the camshaft and/or the cylinder head if the camshaft thrust clearance exceeds the specified limit.

Camshaft thrust Clearance

Standard : 0.03 mm–0.08 mm (0.0012 in.–0.0031 in.)

Limit : 0.12 mm (0.0047 mm)

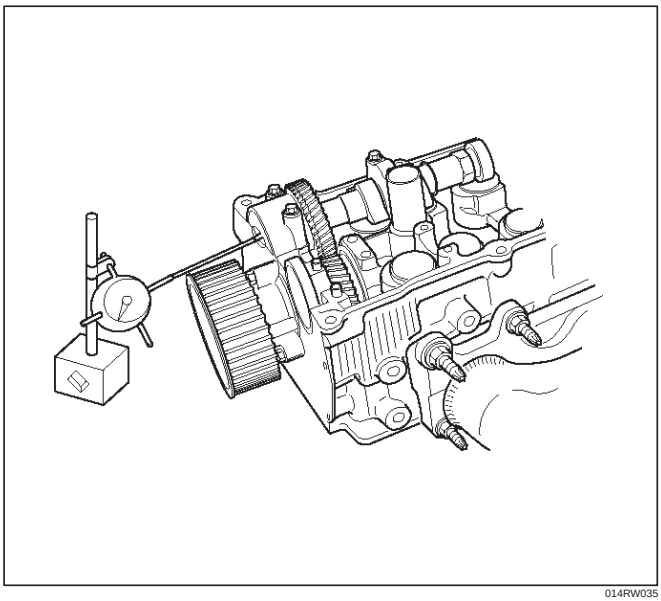

014RW035

Reassembly

1. Install camshaft drive gear assembly and tighten three bolts to specified torque.

   Torque: 10 N·m (1.0 Kg·m/89 lb in)

2. Tighten sub gear setting bolt.
   1. Use 5–8840–2443–0 to turn sub gear to right direction until the M5 bolt hole aligns between camshaft driven gear and sub gear.
   2. Tighten M5 bolt suitable torque for prevent moving the sub gear.

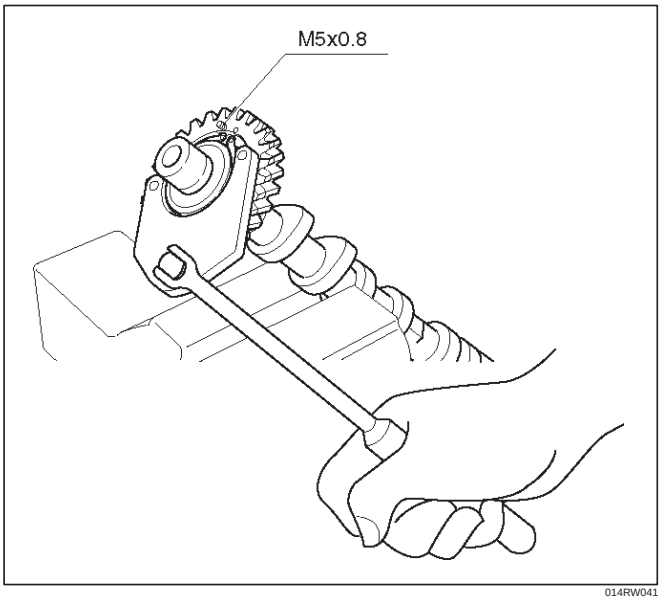

014RW041

3. Install camshaft assembly and camshaft brackets, tighten twenty bolts on one side bank to the specified torque.
   1. Apply engine oil to camshaft journal and bearing surface of camshaft bracket.
   2. Align timing mark on intake camshaft (one dot for right bank, two dots for left bank) and exhaust camshaft (one dot for right bank, two dots for left bank) to timing mark on camshaft drive gear (one dot).

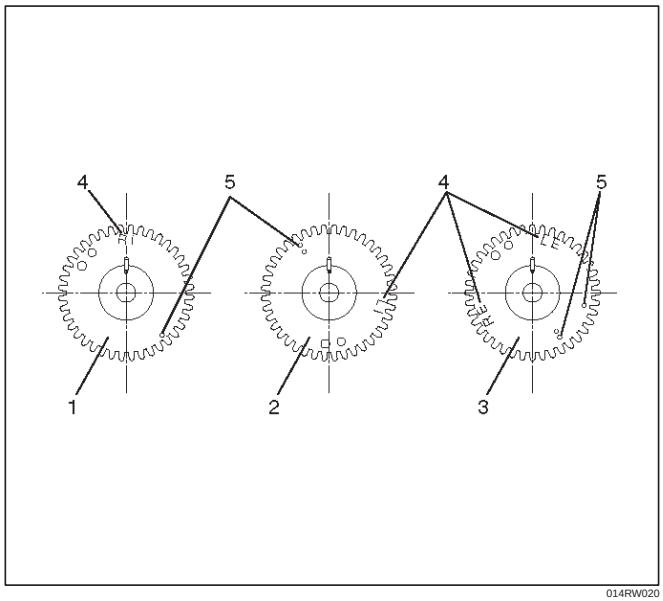

014RW020

Legend

(1) Intake Camshaft Timing Gear for Right Bank
(2) Intake Camshaft Timing Gear for Left Bank
(3) Exhaust Camshaft Timing Gear
(4) Discerning Mark
LI: Left Bank Intake
RI: Right Bank Intake
LE: Left Bank Exhaust
RE: Right Bank Exhaust

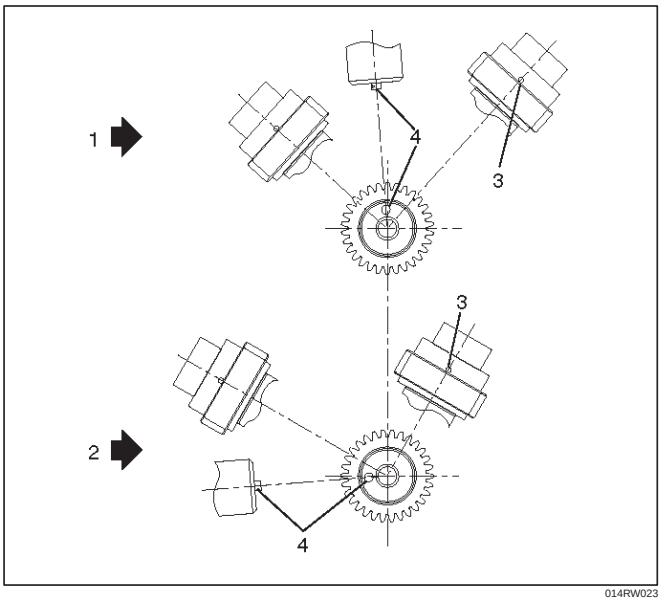

Legend

(1) Right Bank Camshaft Drive Gear
(2) Left Bank Camshaft Drive Gear
(3) Timing Mark on Drive Gear
(4) Dowel Pin

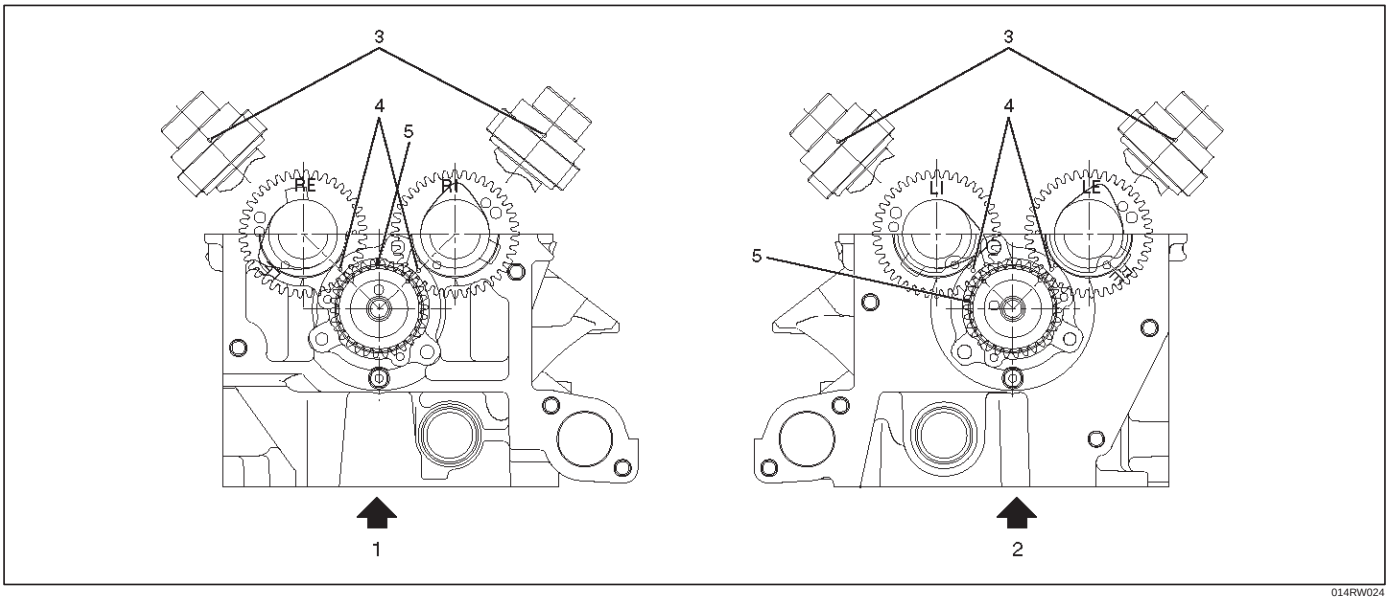

Legend

(1) Right Bank
(2) Left Bank
(3) Alignment Mark on Camshaft Drive Gear
(4) Alignment Mark on Camshaft
(5) Alignment Mark on Retainer

3. Tighten twenty bolts in numerical order on one side bank as shown in the illustration.

Torque: 10 N·m (1.0 Kg·m/89 lb in)

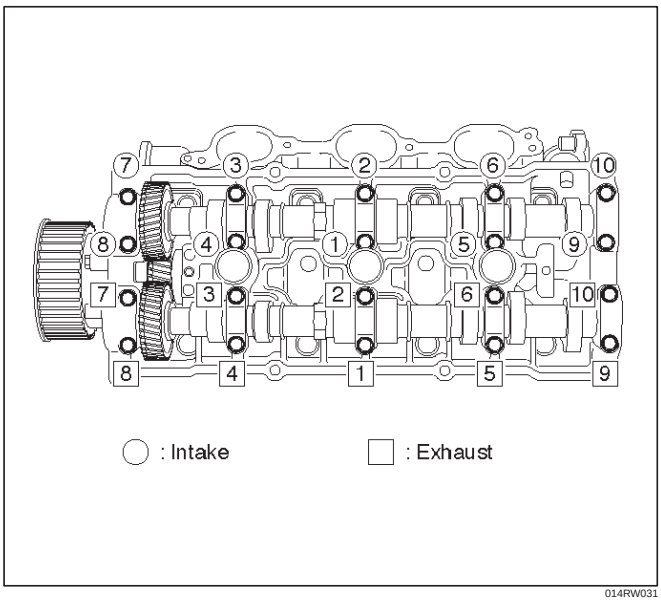

014RW031

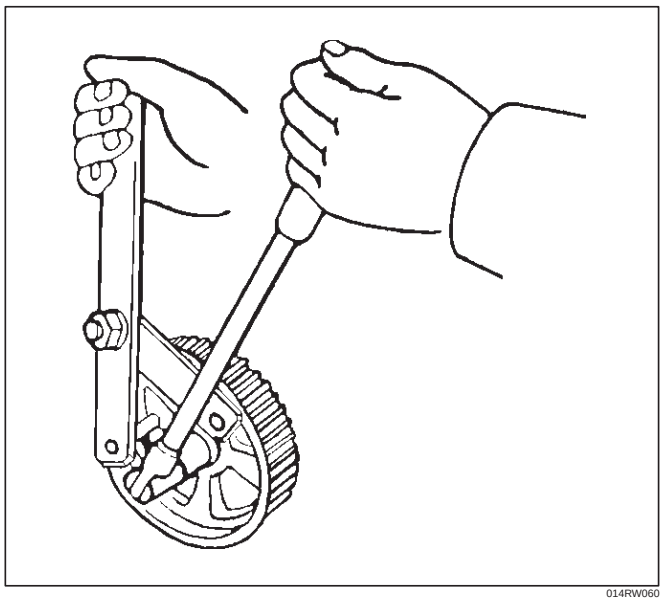

014RW060

4. If the oil seal requires replacement, use the 5–8840–2445–0 to install the oil seal.

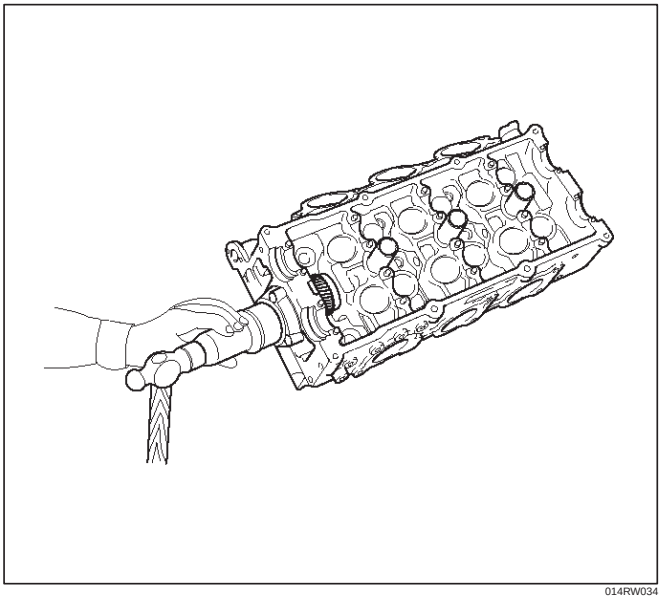

014RW034

5. Tighten bolt for camshaft drive gear pulley to the specified torque using the 5–8840–2447–0 universal holder.

Torque: 98 N·m (10.0 Kg·m/72 lb ft)

Crankshaft

Crankshaft and Associated Parts

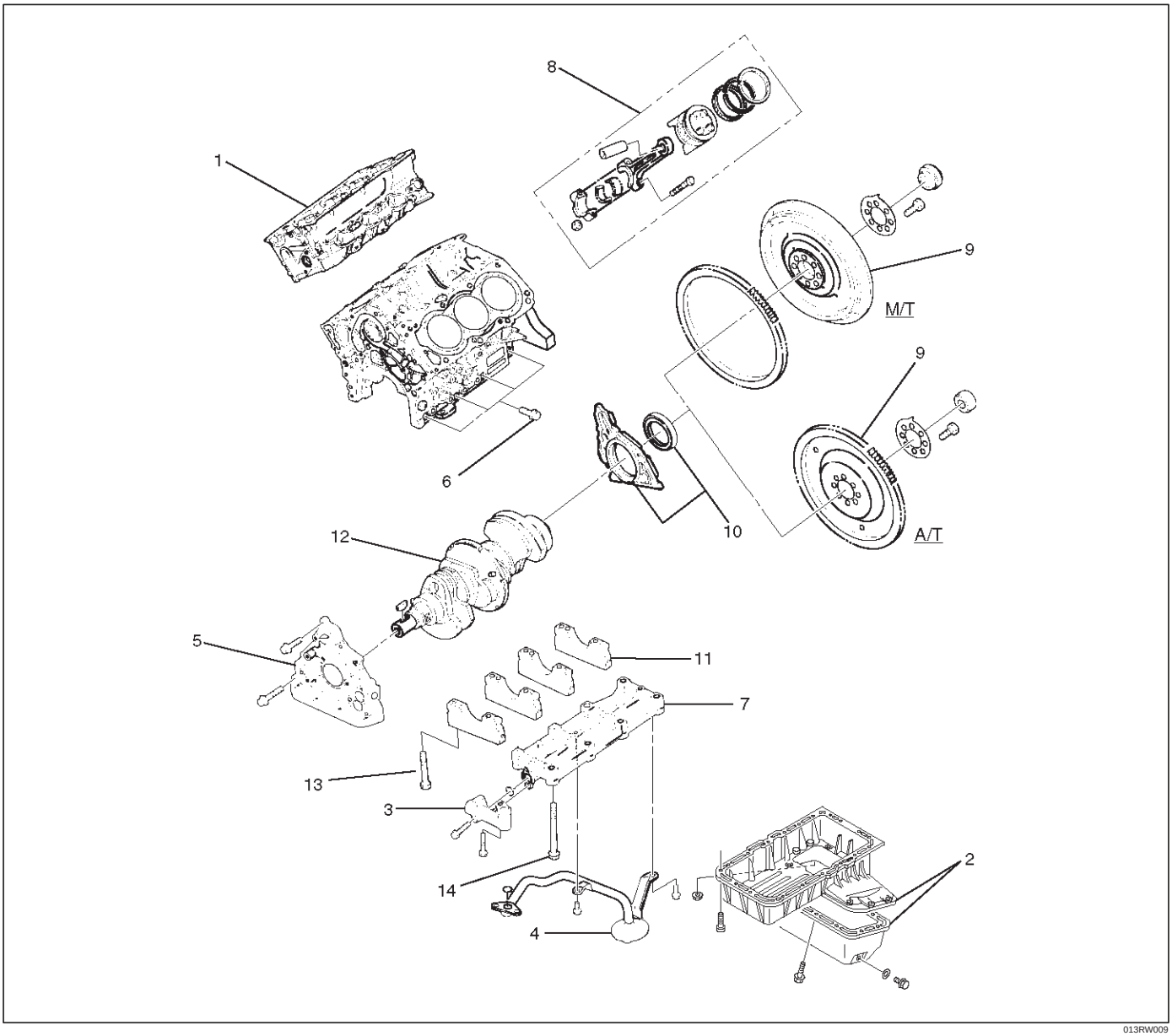

013RW009

Legend

(1) Cylinder Head Assembly
(2) Crankcase with Oil Pan
(3) Oil Pipe and O-Ring
(4) Oil Strainer and O-Ring
(5) Oil Pump Assembly
(6) Cylinder Block Side Bolts
(7) Oil Gallery
(8) Piston and Connecting Rod Assembly
(9) Flywheel
(10) Rear Oil Seal Retainer and Oil Seal
(11) Main Bearing Cap
(12) Crankshaft
(13) Main Bearing Cap Fixing Bolts
(14) Oil Gallery Fixing Bolts

Disassembly

1. Remove cylinder head assembly (1). Refer to “Cylinder Head” in this manual.
2. Remove crankcase with oil pan (2). Refer to “Oil Pan and Crankcase” in this manual.

CAUTION: Take care not to damage or deform the sealing flange surface of crankcase.

3. Remove oil pipe and O-ring (3).
4. Remove oil strainer and O-ring (4).
5. Remove oil pump assembly (5).
6. Remove crankcase side bolts (6).

7. Remove oil gallery (7).
8. Remove piston and connecting rod assembly (8). Refer to “Piston, Piston Ring and Connecting Rod” in this manual.
9. Remove flywheel (9).
10. Remove rear oil seal retainer (10).
11. Remove main bearing cap (11).
12. Remove crankshaft (12).

Inspection and Repair

1. Crankshaft
   Set the dial indicator as shown in the illustration and measure the crankshaft thrust clearance. If the thrust clearance exceeds the specified limit, replace the thrust bearings as a set.

   Thrust Clearance

   Standard : 0.06 mm–0.24 mm (0.0024 in–0.0094 in)

   Limit : 0.30 mm (0.0118 in)

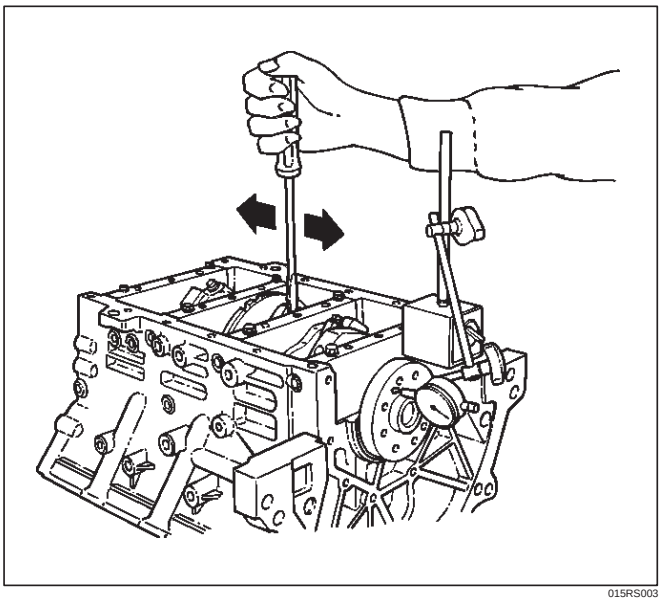

015RS003

Main Bearing Clearance

1. Remove the bearing caps and measure the oil clearance.
2. Remove the main bearing cap fixing bolts in the sequence shown in the illustration.
   Arrange the removed main bearing caps in the cylinder number order.
   Remove the main bearings.

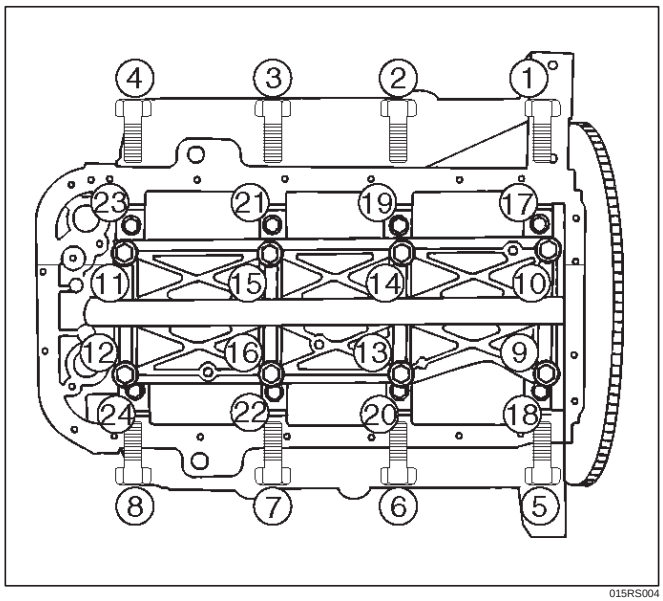

015RS004

3. Remove the crankshaft.
   Remove the main bearings.
4. Clean the upper and lower bearings as well as the crankshaft main journal.
5. Check the bearings for damage or excessive wear.
   The bearings must be replaced as a set if damage or excessive wear is discovered during inspection.
6. Set the upper bearings and the thrust washers to their original positions.
   Carefully install the crankshaft.
7. Set the lower bearings to the bearing cap original position.
8. Apply plastigage to the crankshaft journal unit as shown in the illustration.

NOTE: Do not set the plastigage on the oil hole.

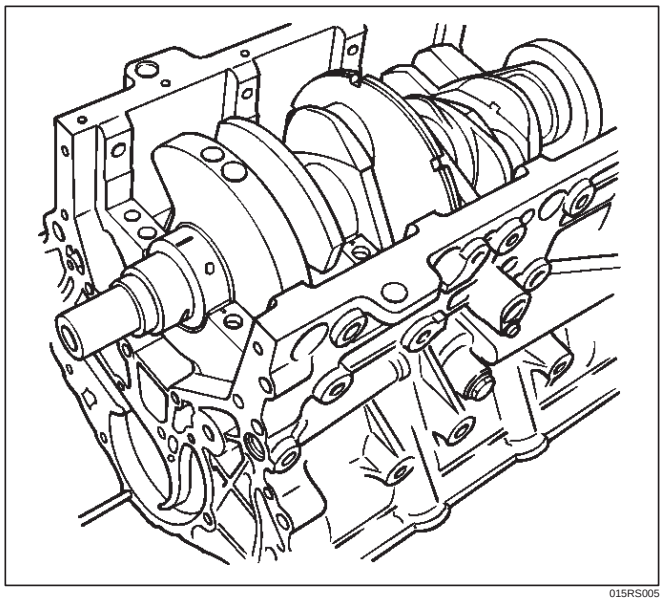

015RS005

9. Install main bearing caps, oil gallery and crank case bolts in the order shown, and tighten each bolt to the specified torque.

NOTE: Do not apply engine oil to the crank case side bolts.

Main bearing cap bolts.

Torque: 39 N·m (4.0 Kg·m/29 lb ft)

Oil gallery fixing bolts.

Torque:

1st step: 29 N·m (3.0 Kg·m/21 lb ft)

2nd step 55°~ 65°

Crank case side bolts

Torque : 39 N·m (4.0 Kg·m/29 lb ft)

NOTE: Do not allow the crankshaft to rotate.

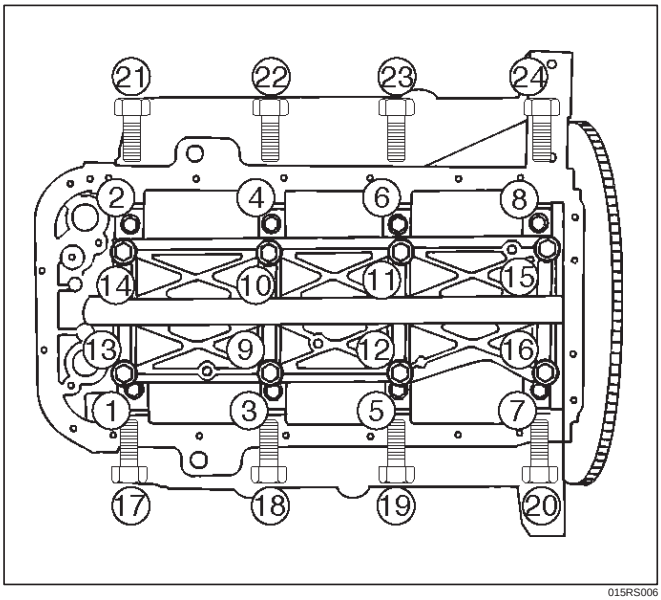

015RS006

10. Remove the main bearing caps in the sequence shown in the illustration.

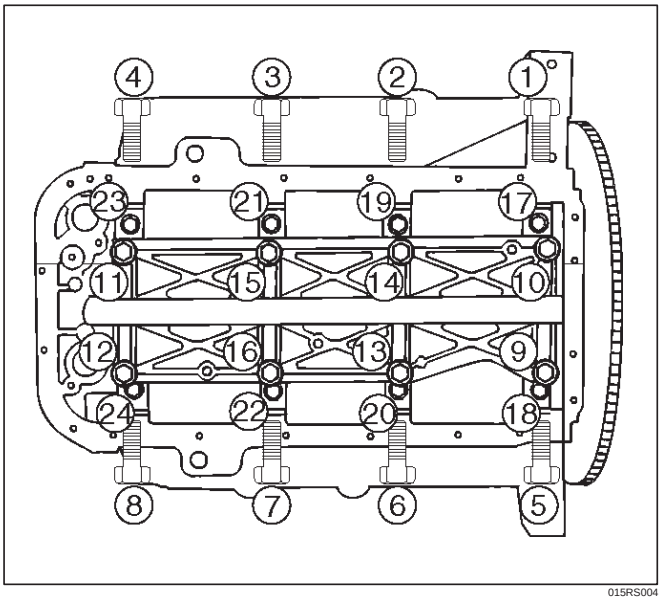

015RS004

11. Measure the plastigage width and determine the oil clearance. If the oil clearance exceeds the specified limit, replace the main bearings as a set and/or replace the crankshaft.

Standard : 0.019 mm–0.043 mm (0.0007 in–0.0017 in)

Limit : 0.08 mm (0.0031 in)

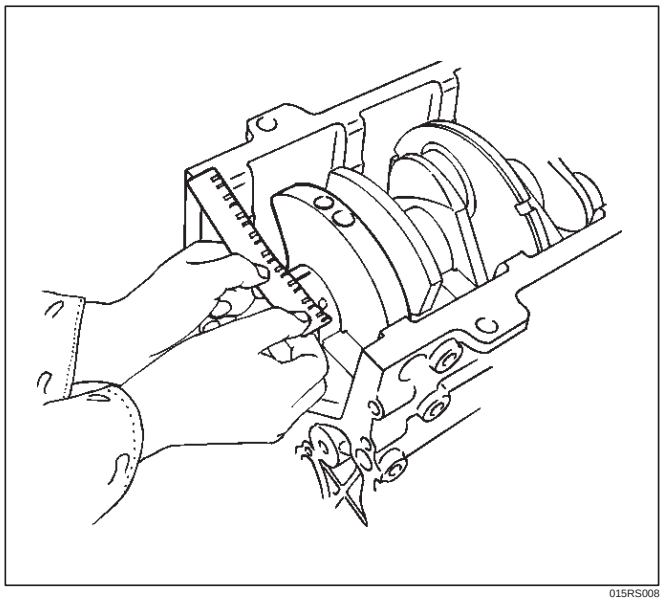

015RS008

12. Clean the plastigage from the bearings and the crankshaft.
    Remove the crankshaft and the bearings.

Crankshaft (12) Inspection

Inspect the surface of the crankshaft journal and crank pins for excessive wear and damage. Inspect the oil seal fitting surfaces for excessive wear and damage. Inspect the oil ports for obstructions.

Inspection and Repair

1. Carefully set the crankshaft on the V–blocks. Slowly rotate the crankshaft and measure the runout. If the crankshaft runout exceeds the specified limit, the crankshaft must be replaced.

Runout : 0.04 mm (0.0016 in)

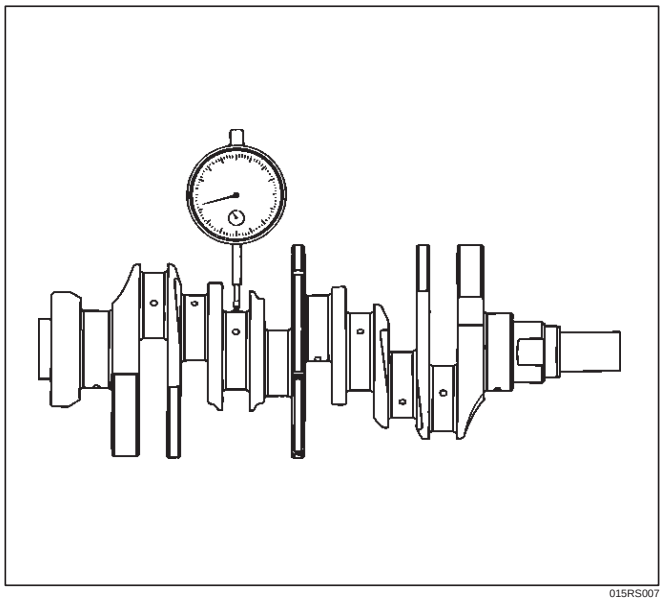

015RS007

2. Measure the diameter and the uneven wear of main journal and crank pin. If the crankshaft wear exceeds the specified limit, crankshaft must be replaced.

Main journal diameter : 63.918 mm–63.933 mm (2.5165 in–2.5170 in)

Crank pin diameter : 53.922 mm–53.937 mm (2.1229 in.–2.1235 in.)

Uneven wear limit : 0.005 mm (0.0002 in)

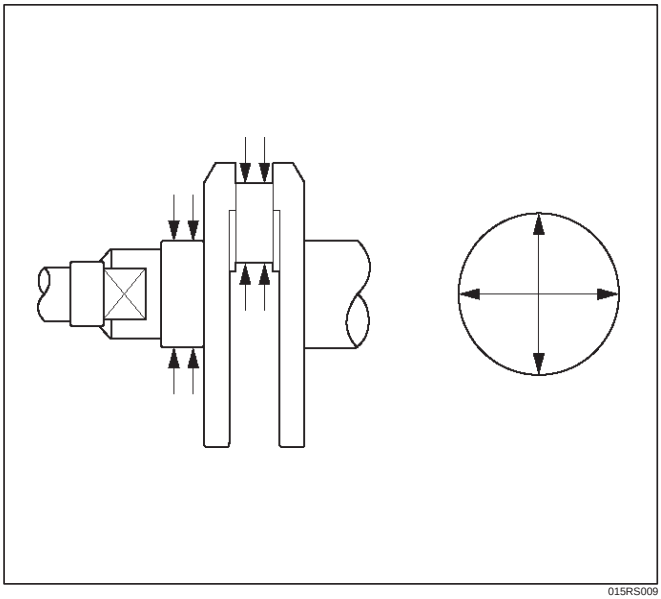

015RS009

Crankshaft Bearing Selection

When installing new crankshaft bearings or replacing bearings, refer to the selection table below. Select and install the new crankshaft bearings, paying close attention to the cylinder block journal hole.

1. Diameter size mark (1) and the crankshaft journal.

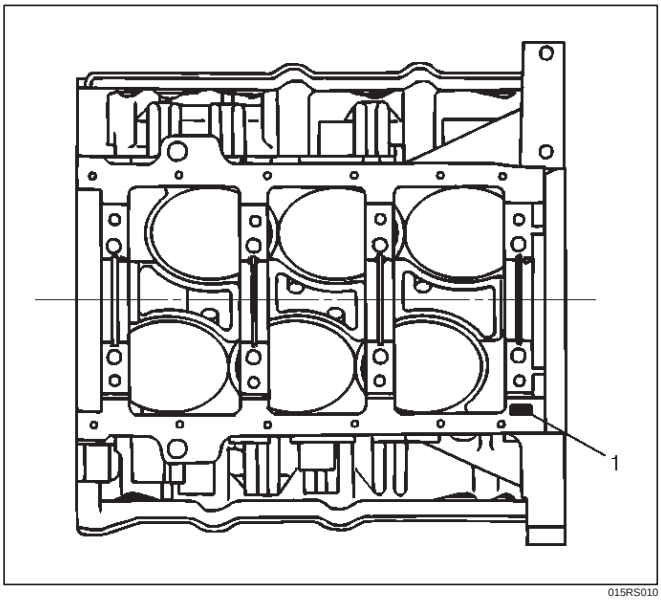

015RS010

2. Diameter size mark (1).
   The diameter size marks are stamped on the No.1 crankshaft balancer as shown in the illustration.

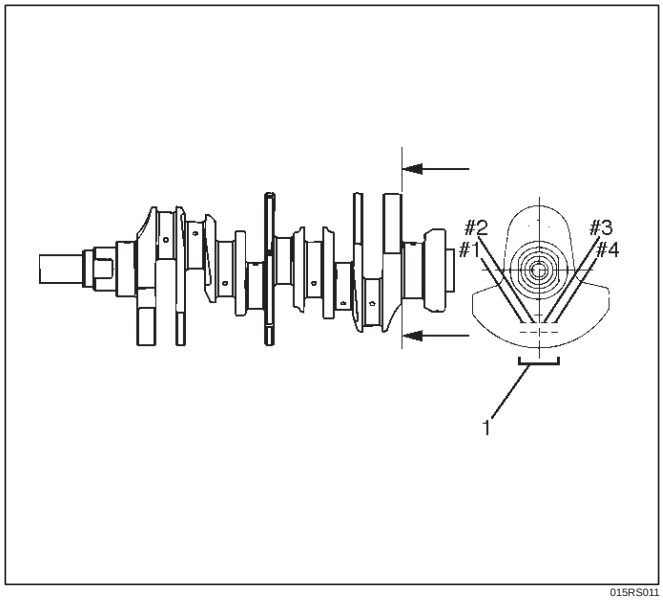

015RS011

NOTE: Take care to ensure the bearings are positioned correctly.

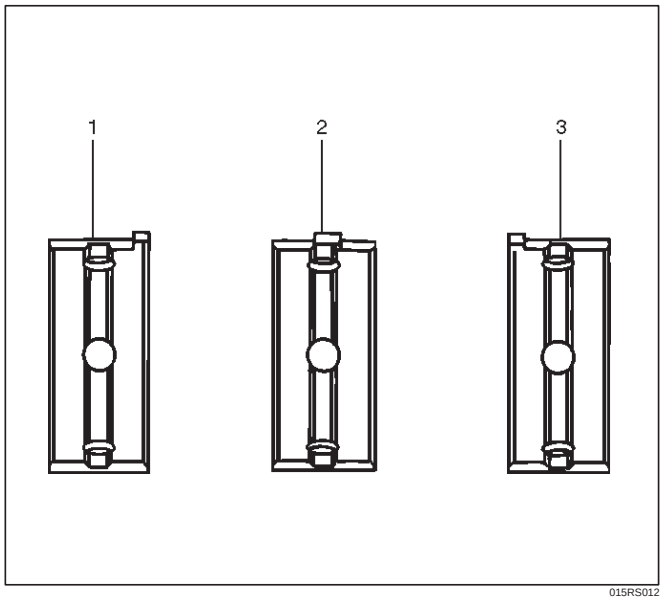

015RS012

Legend

(1) Number 1 and 4 main bearing upper and lower
(2) Number 2 and 3 main bearing upper
(3) Number 2 and 3 main bearing lower

1 Size Mark	Main Bearing Bore Diameter	Crank Shaft Main Journal Diameter	2 Size Mark	Crank Shaft Bearing Size Mark (Upper Side)	Crank Shaft Bearing Size Mark (Lower Side)	Oil Clearance (Reference)
1	68.994-69.000 (2.7163-2.7165)	63.918-63.925 (2.5165-2.5167)	2	Blue	Blue	0.030-0.049 (0.0012-0.0019)
		63.926-63.933 (2.5168-2.5170)	1	Brown	Brown	0.028-0.047 (0.0011-0.0019)
2	68.987-68.993 (2.7160-2.7163)	63.918-63.925 (2.5165-2.5167)	2			0.029-0.048 (0.0011-0.0019)
		63.926-63.933 (2.5168-2.5170)	1	Green	Green	0.027-0.046 (0.0011-0.0018)
3	68.980-68.986 (2.7157-2.7160)	63.918-63.925 (2.5165-2.5167)	2			0.028-0.047 (0.0011-0.0019)
		63.926-63.933 (2.5168-2.5170)	1	Yellow	Yellow	0.026-0.045 (0.0010-0.0018)

Reassembly

1. Crankshaft (12)
   - Install the main bearings to the cylinder block and the main bearing caps.
   - Be sure that they are positioned correctly.
   - Apply new engine oil to the upper and lower main bearing faces.

NOTE: Do not apply engine oil to the main bearing back faces.

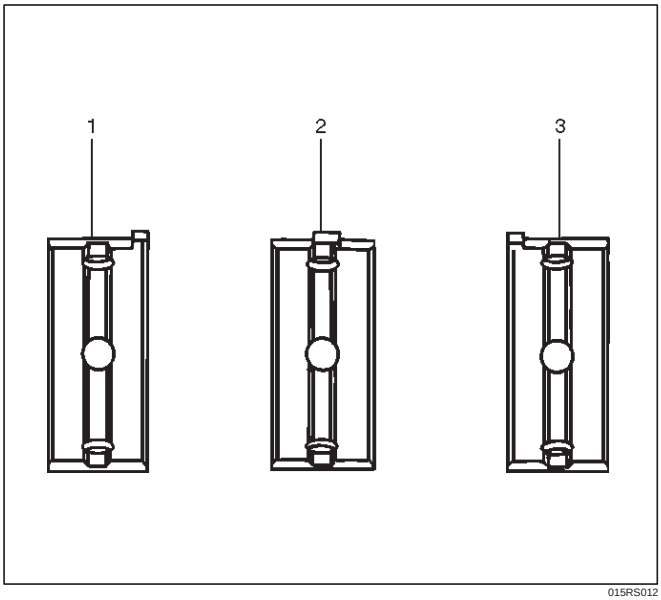

015RS012

- Carefully mount the crankshaft.
- Apply engine oil to the thrust washer.
- Assemble the thrust washer to the No.3 bearing journal. The oil grooves must face the crankshaft.

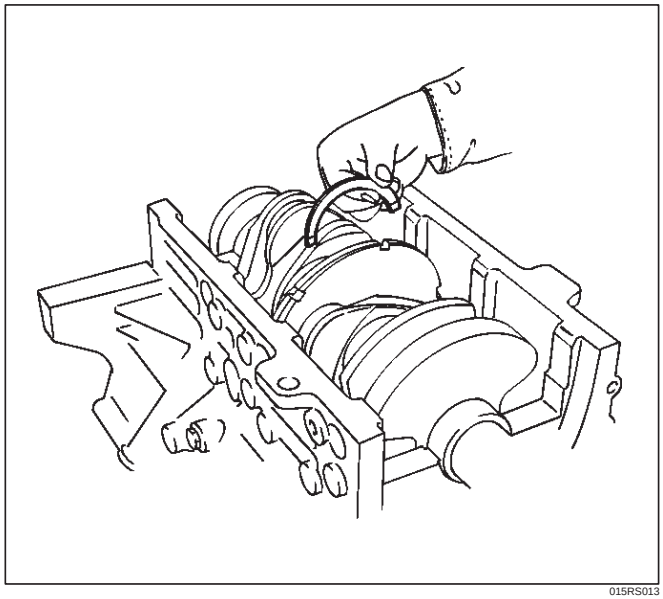

015RS013

2. Rear oil seal (10)
   - Remove the oil from the cylinder block and the retainer mounting surface.
   - Apply sealant (TB–1207B or equivalent) to the retainer mounting surface, following the pattern shown in the illustration.

     The retainer must be installed within 5 minutes after sealant application befor the sealant hardens.

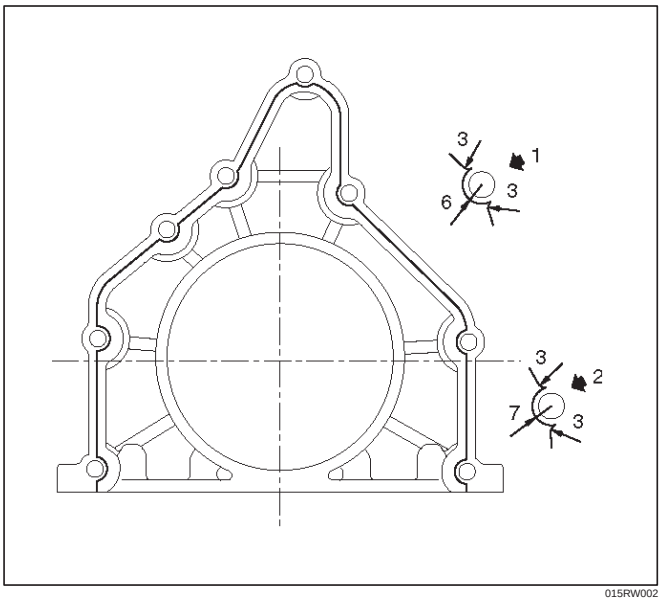

015RW002

Legend

(1) Around Bolt Holes
(2) Around Dowel Pin

- Apply engine oil to the oil seal lip.
- Align the cylinder block dowel pin holes with the rear retainer dowel pins.
- Tighten the rear retainer fixing bolts. New bolts should be used when installing rear retainer.

Torque: 18 N·m (1.8 Kg·m/13 lb ft)

NOTE: Be very careful not to disengage the oil seal garter spring during installation of the rear retainer.

If the seal was removed from retainer for replacement, apply engine oil to the oil seal lip and install the oil seal using 5–8840–2286–0 oil seal installer.

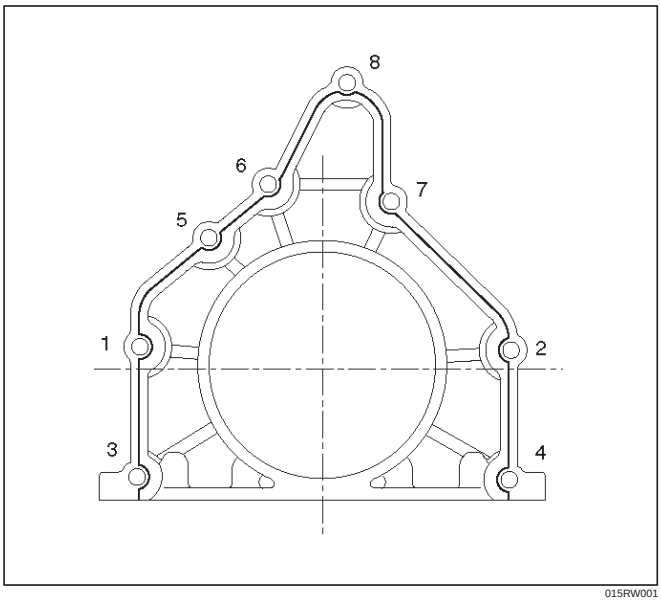

015RW001

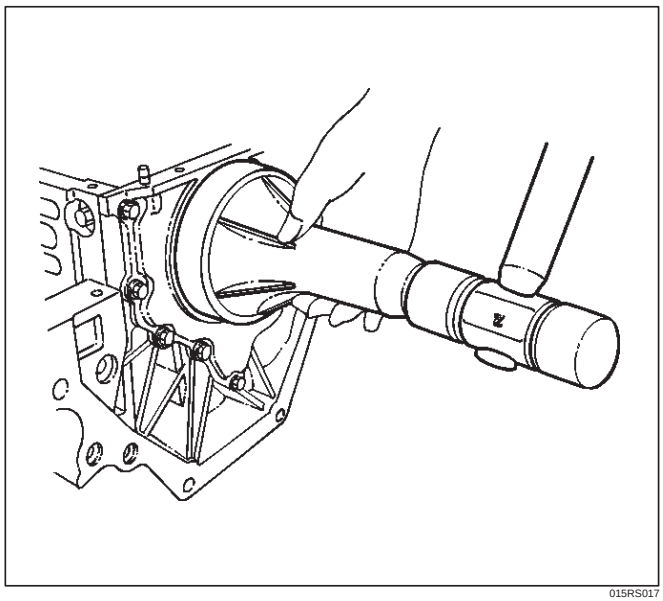

015RS017

3. Flywheel (9)
   1. Thoroughly clean and remove the oil from the threads of crankshaft.
   2. Remove the oil from the crankshaft and flywheel mounting faces.
   3. Mount the flywheel on the crankshaft and then install the washer.
   4. Hold the crankshaft to prevent from rotating then install the bolts in the order shown to the specified torque.

Torque: 54 N·m (5.5 Kg·m/40 lb ft)

NOTE: Do not reuse the bolt and do not apply oil or thread lock to the bolt.

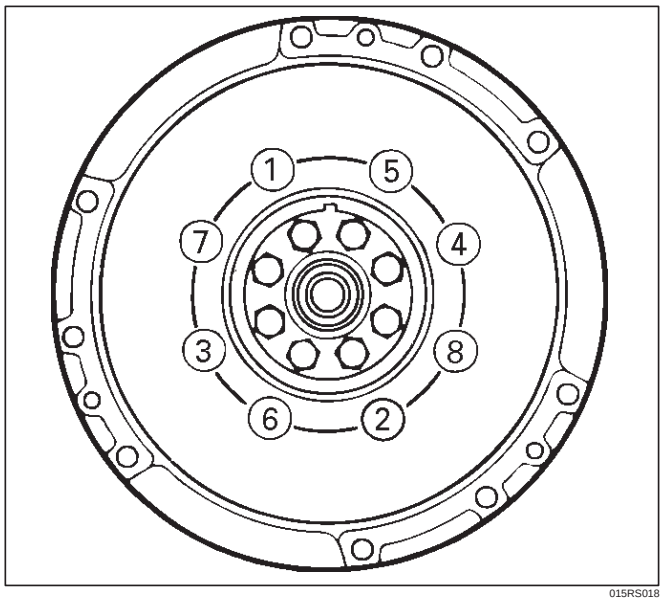

015RS018

4. Piston and connecting rod assembly (8)
   - Apply engine oil to the cylinder bores, the connecting rod bearings and the crankshaft pins. Check to see that the piston ring end gaps are correctly positioned.

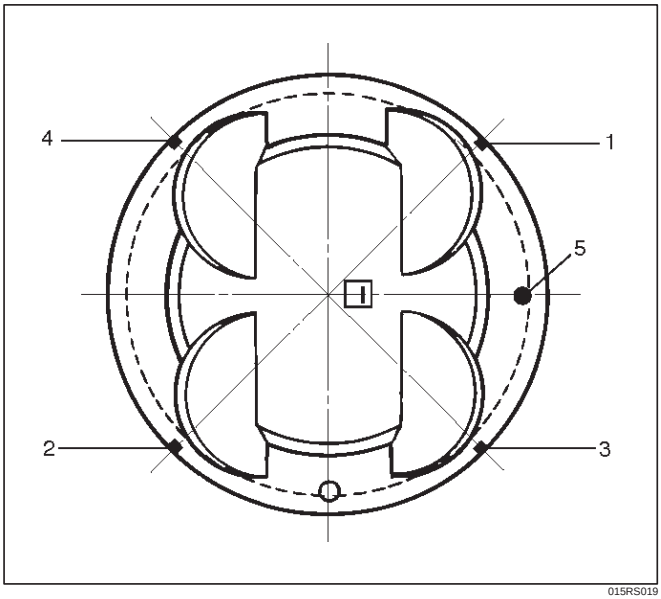

015RS019

Legend

(1) No.1 Compression Ring
(2) No.2 Compression Ring
(3) Oil Ring Side Rail Upper
(4) Oil Ring Side Rail Lower
(5) Piston Front Mark

- Insert the piston/connecting rod assemblies into each cylinder with the piston ring compressor. The front marks must be facing the front of the engine.
- Match the numbered caps with the numbers on the connecting rods. Align the punched marks on the connecting rods and caps.
- Apply engine oil to the threads and seating faces of the nuts.
- Tighten the nuts.

Torque: 54 N·m (5.5 Kg·m/40 lb ft)

After tightening the cap nuts, check to see that the crankshaft rotates smoothly.

NOTE: Do not apply engine oil to the bearing back faces.

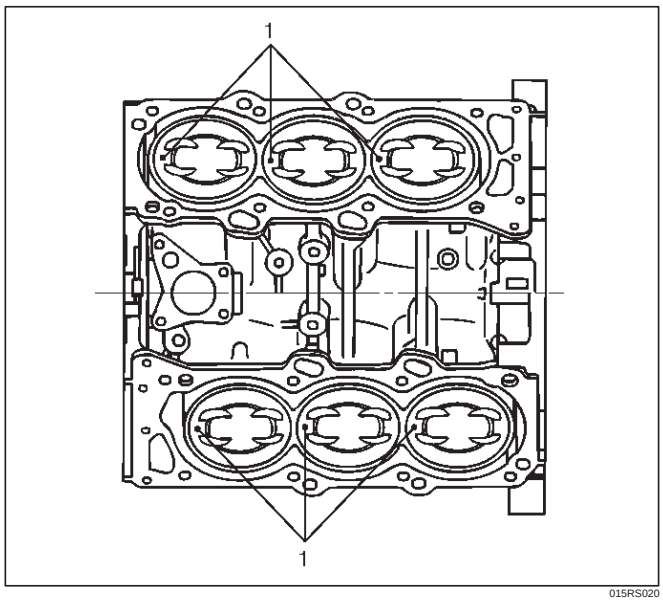

015RS020

5. Install oil gallery (7) and tighten the bolts in 2 steps, in the order shown.

1st step: 29 N·m (3.0 Kg·m/22 lb ft)

2nd step: 55°~ 65°

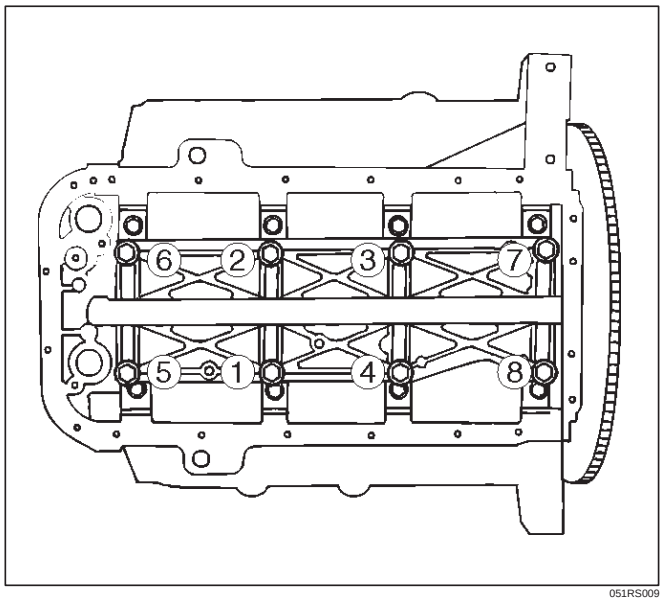

051RS009

6. Cylinder block side bolts (6)
   - Tighten all the bolts to the specified torque in the order shown.

NOTE: Do not apply engine oil to the crank case side bolts.

Torque: 39 N·m (4.0 Kg·m/29 lb ft)

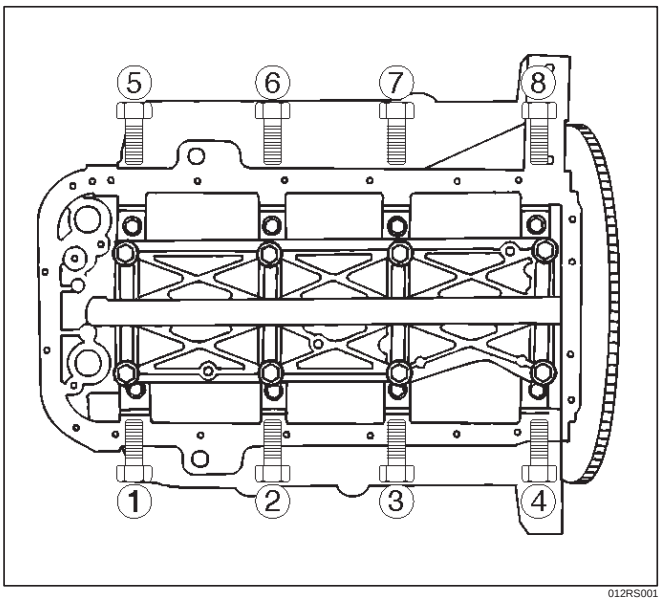

012RS001

7. Install oil pump assembly (5), refer to “Oil pump” in this manual.
8. Install oil strainer and O-ring (4).
9. Install oil pipe and O-ring (3) and tighten the bolts.

Torque: 25 N·m (2.5 Kg·m/18 lb ft)

10. Install crankcase with oil pan (2).
    1. Completely remove all residual sealant, lubricant and moisture from the sealing surfaces. The surfaces must be perfectly dry.
    2. Apply a correct width bead of sealant (TB—1207C or its equivalent) to the contact surfaces of the oil pan. There must be no gaps in the bead.
    3. The crankcase assembly must be installed within 5 minutes after sealant application to prevent premature hardening of the sealant.
    4. Tighten the bolts and nuts to the specified torque.

Torque : 10 N·m (1.0 Kg·m/89 lb in)

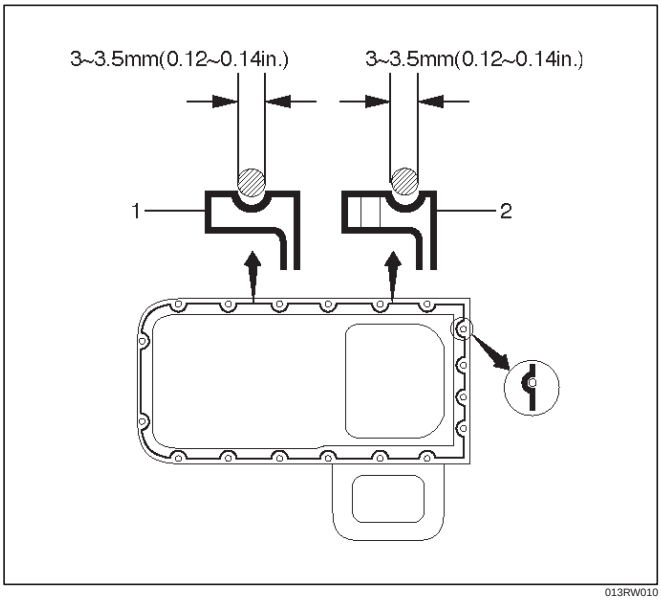

013RW010

Legend

(1) Portion Between Bolt Holes
(2) Bolt Hole Portion

11. Install cylinder head assembly, refer to “Cylinder head” in this manual.

Piston and Connecting Rod

Piston, Connecting Rod and Associate Parts

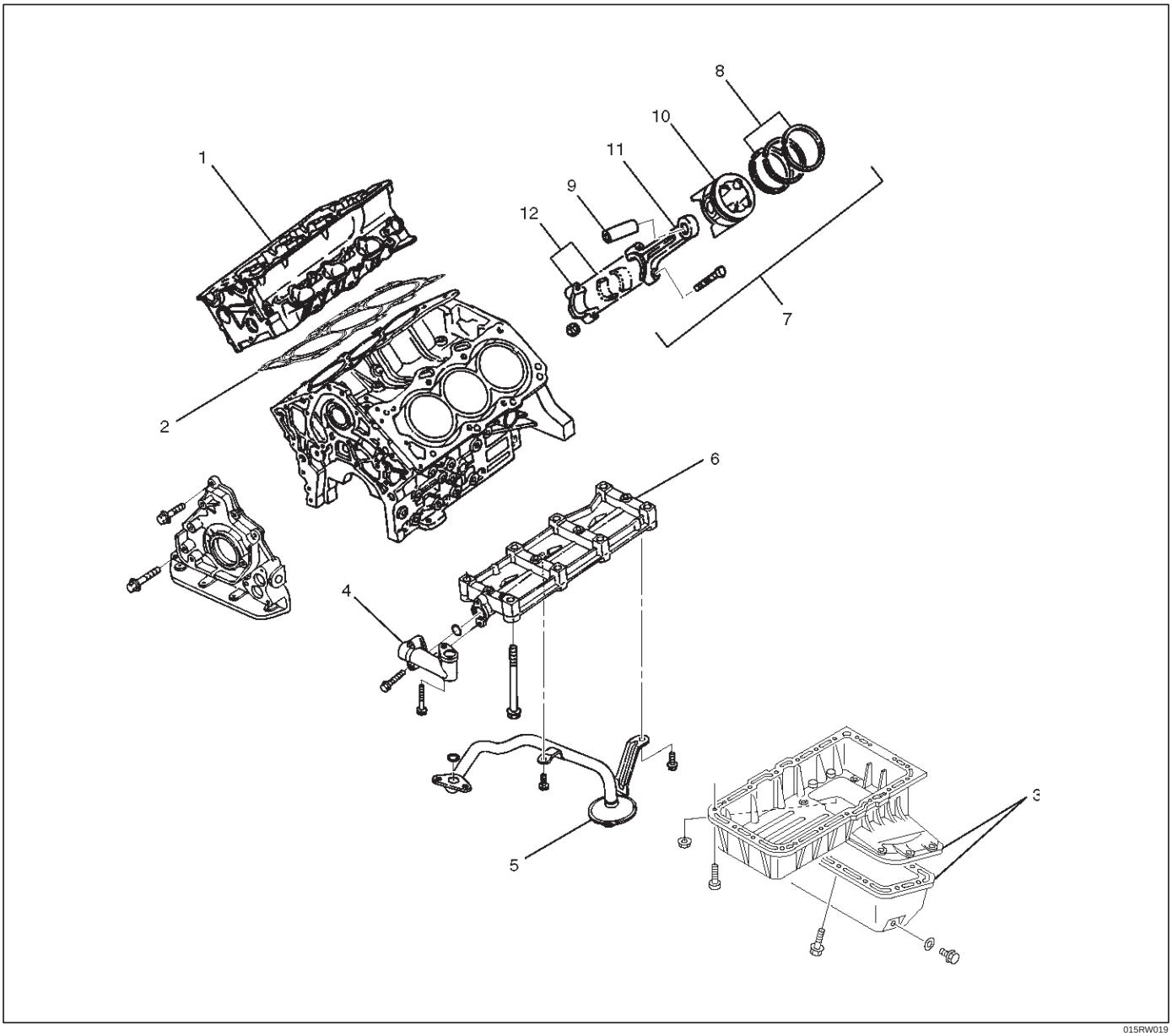

015RW019

Legend

(1) Cylinder Head Assembly
(2) Cylinder Head Gasket
(3) Crankcase with Oil Pan
(4) Oil Pipe and O-Ring
(5) Oil Strainer and O-Ring
(6) Oil Gallery
(7) Piston and Connecting Rod Assembly
(8) Piston Ring
(9) Piston Pin
(10) Piston
(11) Connecting Rod
(12) Connecting Rod Cap

Disassembly

1. Remove cylinder head assembly (1). Refer to “Cylinder Head Removal” in this manual.
2. Remove cylinder head gasket (2).
3. Remove crankcase with oil pan (3). Refer to“Oil Pan and Crankcase” in this manual.
4. Remove oil pipe and O-ring (4).
5. Remove oil strainer and O-ring (5).
6. Remove oil gallery (6).
7. Remove connecting rod cap with connecting rod lower bearing (12).
8. Remove piston and connecting rod assembly (7).

NOTE: Before removing piston and connecting rod assembly, measure thrust clearance.

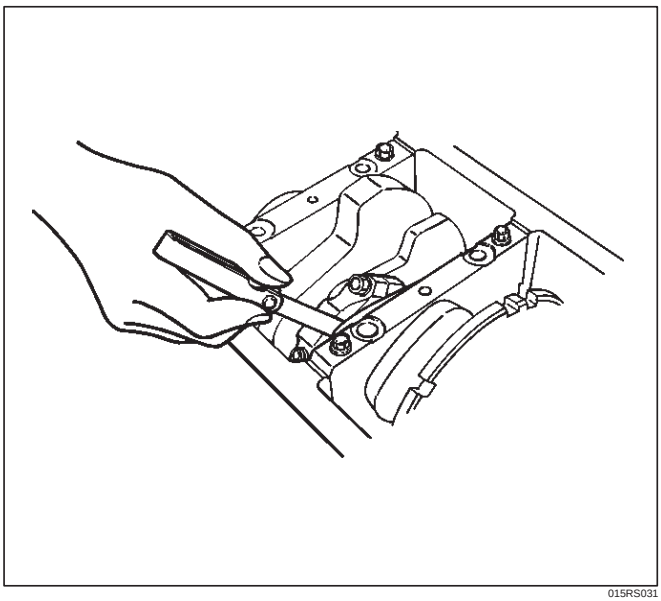

015RS031

- Remove any ridge or carbon build up from the top end of the cylinder.

9. Remove the piston rings (8) with a piston ring expander. Arrange the removed piston rings in the cylinder number order.

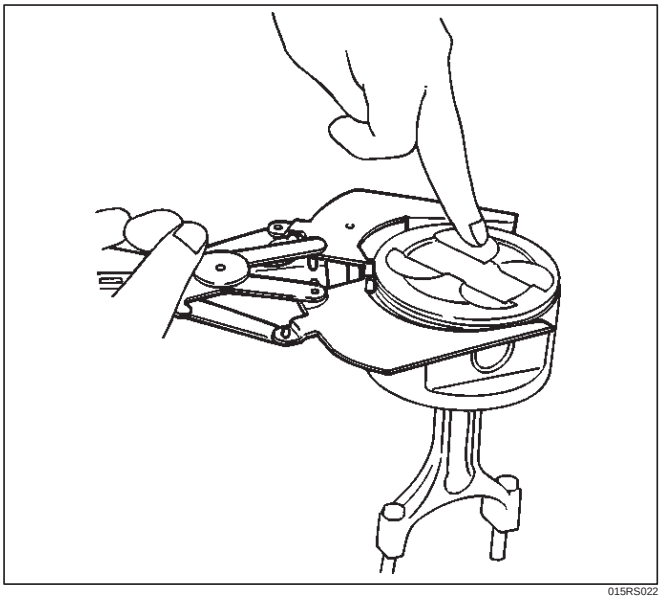

015RS022

10. Remove the piston pin (9) using 5–8840–0551–0 piston pin service set and piston support with a press.

NOTE: Keep the parts removed from each cylinder separate. All parts must be reinstalled in their original positions. Heating the connecting rod will permit easy removal of the piston pin.

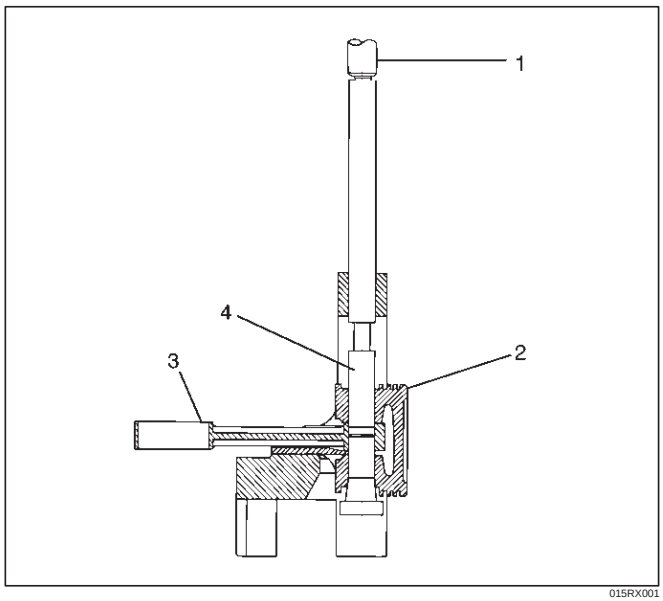

015RX001

Legend

(1) Press Ram
(2) Piston
(3) Connecting Rod
(4) Piston Pin

11. Piston (10)
12. Connecting rod (11)

Inspection and Repair

Pistons (10)

Carefully clean away all the carbon adhering to the piston head and the piston ring grooves.

NOTE: Never use a wire brush to clean the pistons. Damage will result. Visually check each piston for cracking, scoring, and other signs of excessive wear. If any of the above conditions are found, the piston must be replaced.

Piston Diameter

1. Measure the piston outside diameter with micrometer at the piston grading position and a right angle to the piston pin.
   Piston grading position (from piston head)

Piston grading position : 43.0 mm (1.6929 in)

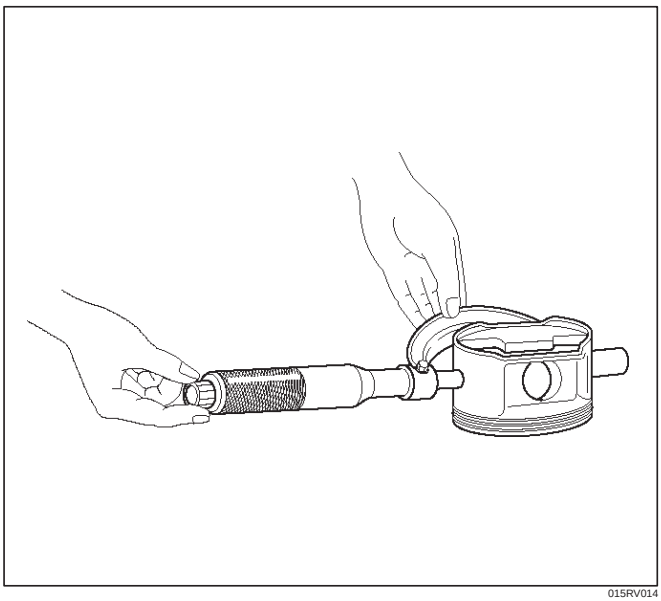

015RV014

The size mark (1) for piston outside diameter is represented as shown in illustration below.

Outside Diameter

Size Mark A : 93.360 mm–93.370 mm (3.6756 in–3.6760 in)

Size Mark B : 93.371 mm–93.380 mm (3.6760 in–3.6764 in)

Size Mark C : 93.381 mm–93.390 mm (3.6764 in–3.6768 in)

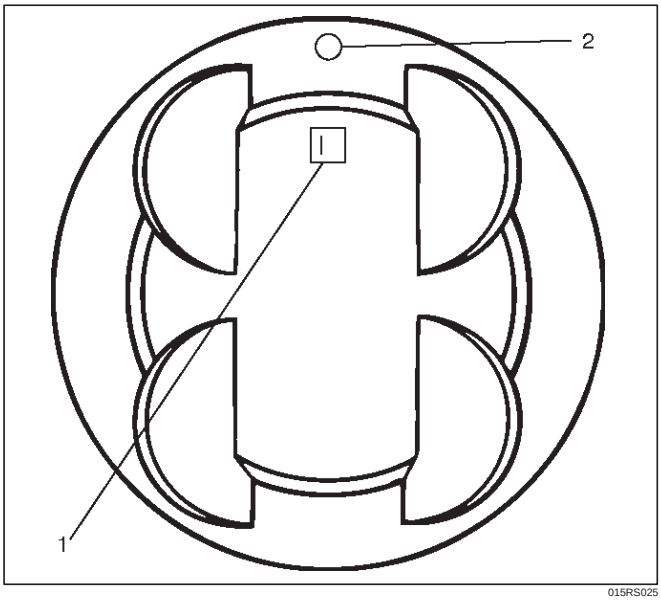

015RS025

Measure the cylinder bore inside diameter (refer to “Cylinder Block” in this manual).

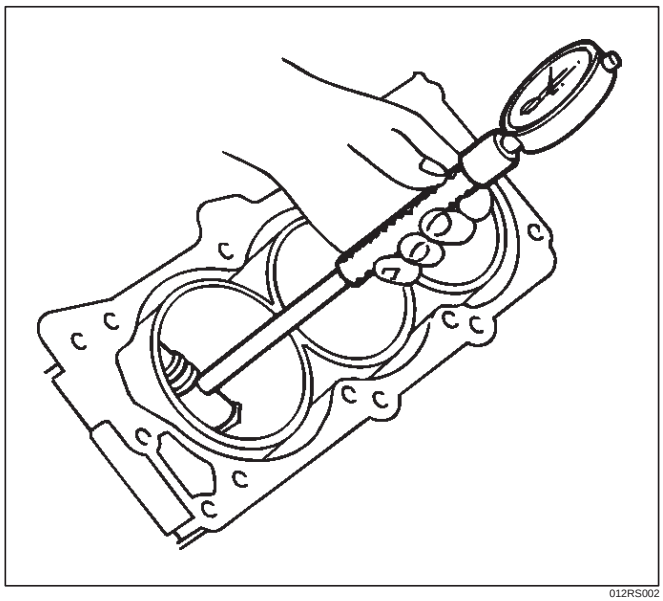

012RS002

Piston Rings (8)

Any worn or damaged part discovered during engine overhaul must be replaced with a new one.

1. Ring end gap measurement
   - Insert the piston ring into the bore.
   - Push the ring by the piston, at a right angle to the wall, into the point at which the cylinder bore diameter is the smallest.
   - Measure the ring end gap.

Compression Ring

1st ring	
Standard:	**0.300 mm–0.400 mm (0.0118 in–0.0157 in)**
Limit:	**1.0 mm (0.0394 in)**
2nd ring	
Standard:	**0.450 mm–0.600 mm (0.0177 in–0.0236 in)**
Limit:	**1.2 mm (0.0472 in)**
Oil ring	
Standard:	**0.150 mm–0.450 mm (0.0059 in–0.0177 in)**
Limit:	**1.05 mm (0.0413 in)**

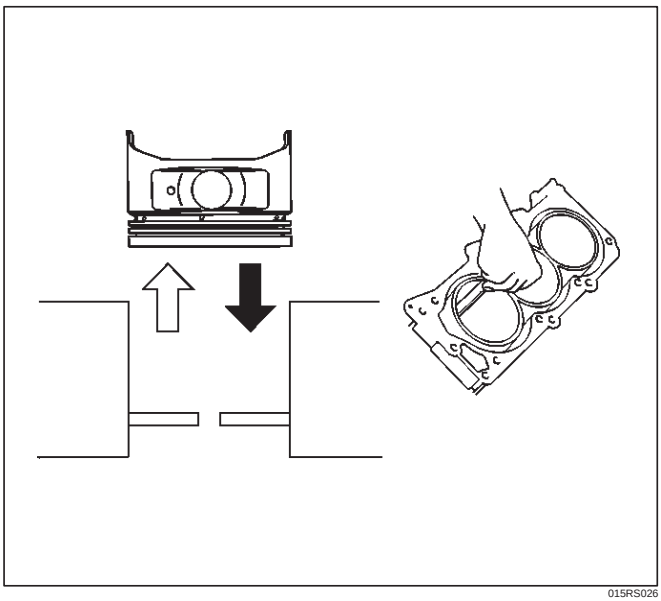

015RS026

- Positioning mark (1) is painted as shown in the illustration.

Marked T : No.1 Compression ring

Marked T2 : No.2 Compression ring

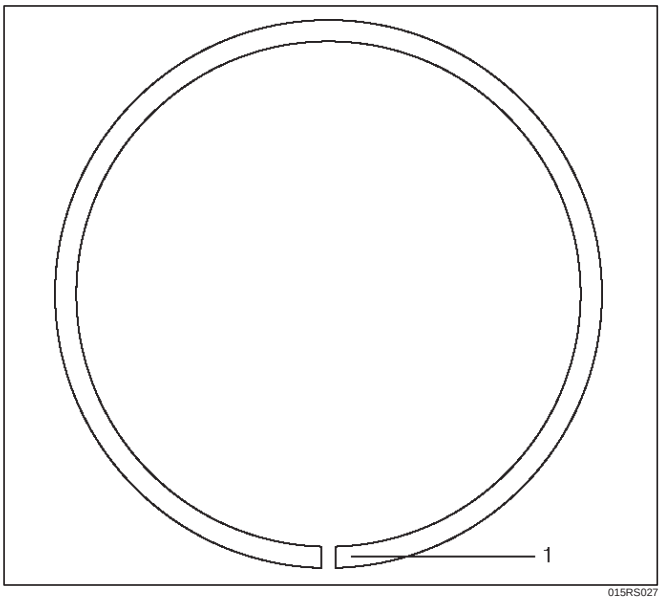

015RS027

2. Measure the clearance between the piston ring groove and the piston ring with a feeler gauge. If the piston ring groove / piston ring clearance exceeds the specified limit, the piston must be replaced.

Compression Ring Clearance

Standard : 0.016 mm–0.038 mm (0.0006 in.–0.0015 in)

Limit : 0.15mm (0.0059 in)

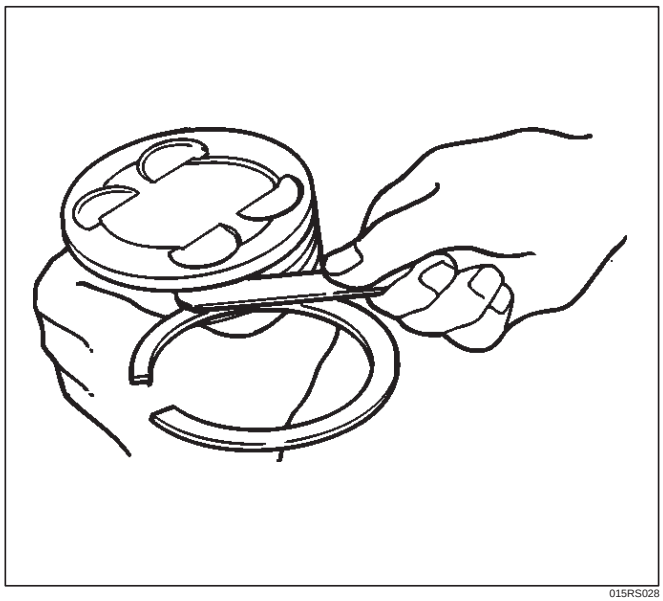

015RS028

Piston Pin (9)

NOTE: Do not reuse the old piston pin.

1. Use a micrometer to measure the new piston pin outside diameter in both directions at three different positions.
2. Measure the inside diameter of the connecting rod small end. If the fitting interference between the small end and pin does not conform to the specified value, the connecting rod must be replaced.

Standard : 0.023 mm–0.038 mm (0.0009 in–0.0015 in)

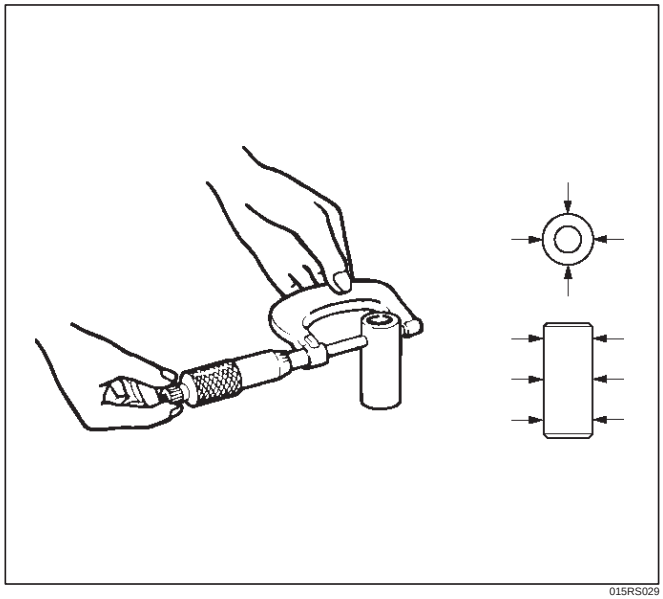

015RS029

3. Insert the new pin into the piston and rotate it. If the pin rotates smoothly with no backlash, the clearance is normal. If there is backlash or roughness, measure the clearance. If the clearance exceeds the specified limit, the piston must be replaced.

Clearance

Standard : 0.010 mm–0.017 mm (0.0004 in.–0.0007 in)

Limit : 0.040 mm (0.0016 in)

Connecting Rods (11)

1. Check the connecting rod alignment If either the bend or the twist exceeds the specified limit, the connecting rod must be replaced.

   Bend per 100 mm (3.937 in)

   Limit: 0.15 (0.0059)

   Twist per 100 mm (3.937 in)

   Limit: 0.20 (0.0078)

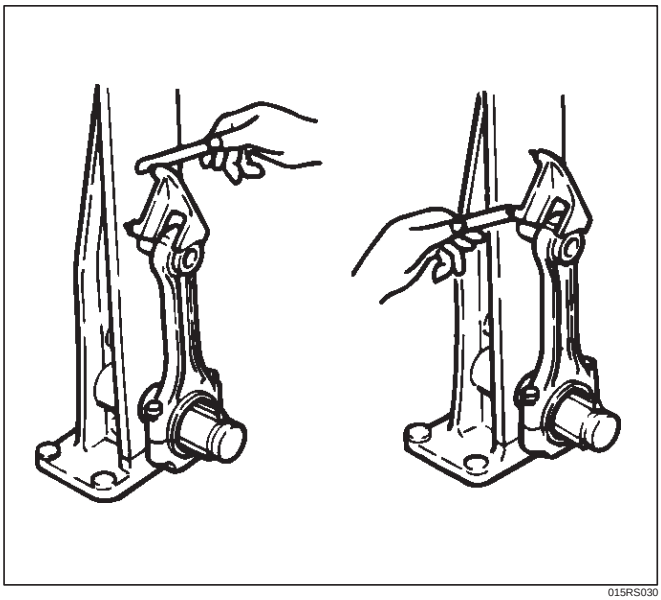

015RS030

2. Measure the connecting rod thrust clearance. Use a feeler gauge to measure the thrust clearance at the large end of the connecting rod If the clearance exceeds the specified limit, the connecting rod must be replaced.

   Standard : 0.16 mm–0.35 mm (0.0063 in.–0.0138 in)

   Limit : 0.40 mm (0.0157 in)

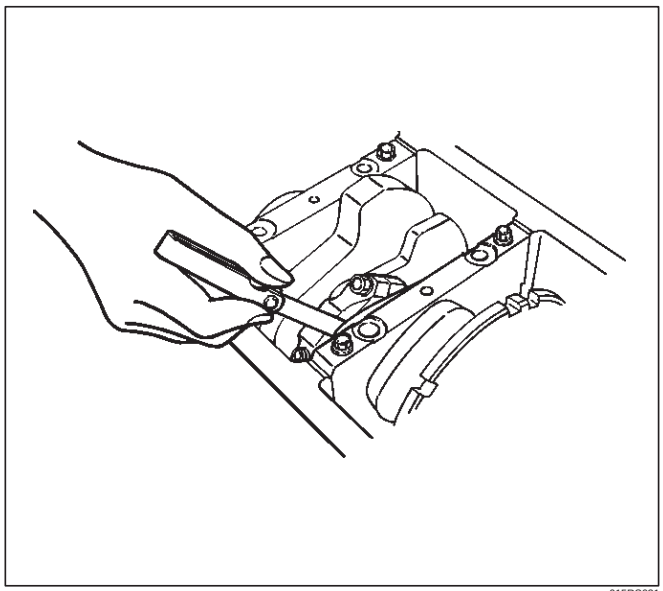

015RS031

3. Measure the oil clearance between the connecting rod and the crankshaft.
   1. Remove the connecting rod cap nuts and the rod caps (12).
      Arrange the removed rod caps in the cylinder number order.
   2. Clean the rod bearings and the crankshaft pins.
   3. Carefully check the rod bearings. If even one bearing is found to be damaged or badly worn, the entire bearing assembly must be replaced as a set. Reinstall the bearings in their original positions. Apply plastigage to the crank pin.

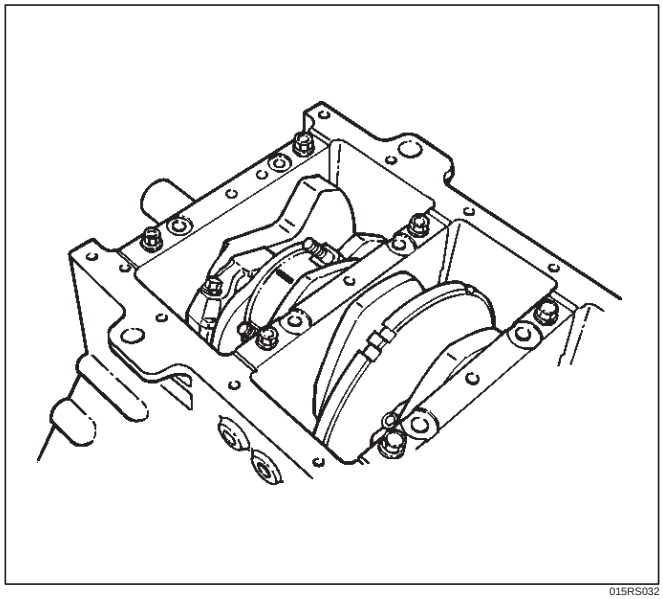

015RS032

4. Reinstall the rod caps (12) to their original positions.

   Tighten the rod cap nuts.

Torque: 54 N·m (5.5 Kg·m/40 lb ft)

NOTE: Do not allow the crankshaft to rotate.

5. Remove the rod caps.
6. Measure the width of the plastigage and determine the oil clearance. If the oil clearance exceeds the limit, replace the rod bearing as a set.

Standard : 0.019 mm–0.043 mm (0.0007 in–0.0017 in)

Limit : 0.08 mm (0.003 in)

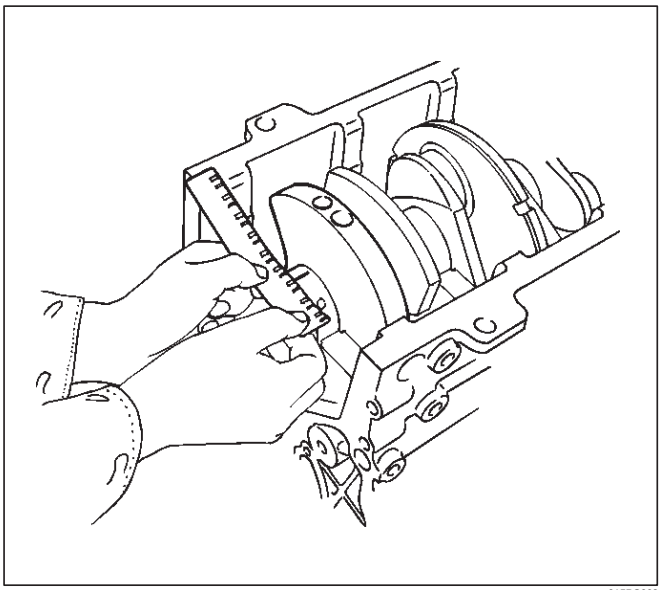

015RS008

7. Clean the plastigage from the bearings and the crankshaft pins.

Con–rod Bearing Selection

Select and install the new connecting rod bearings, paying close attention to the connecting rod big end diameter size mark (1).

NOTE: Take care not to confuse the alignment mark (2) and the size mark (1) during the installation procedure.

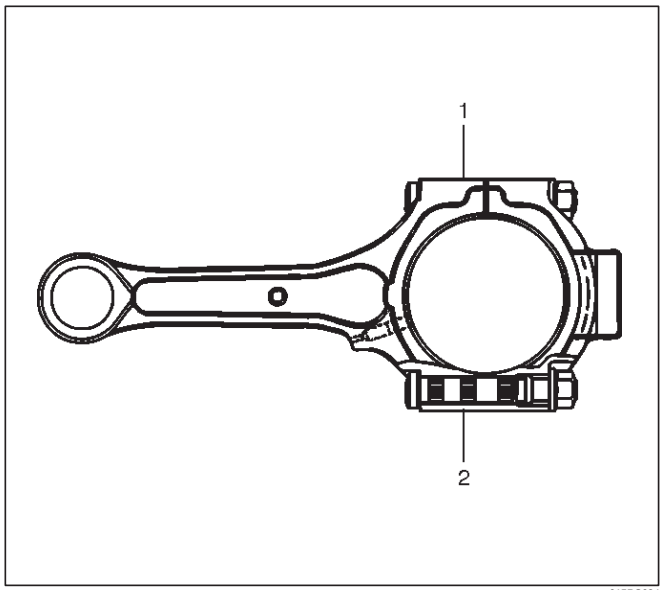

015RS034

1 Size Mark	Big end Bore Diameter	Crankshaft Pin Diameter	Connecting Rod Bearing Thickness (Reference)	Color of Size Mark	Oil Clearance (Reference)
A	56.994-57.000 (2.2439-2.2441)	53.922-53.937 (2.1229-2.1235)	1.512-1.516 (0.0595-0.0597)	Yellow	0.025-0.054 (0.0010-0.0021)
B	56.988-56.994 (2.2436-2.2439)		1.508-1.512 (0.0594-0.0595)	Green	0.027-0.056 (0.0011-0.0022)
C	56.982-56.988 (2.2434-2.2436)		1.504-1.508 (0.0592-0.0594)	Pink	0.029-0.058 (0.0011-0.0023)

Reassembly

1. Install connecting rod
2. Install piston
3. Install piston pin
   - Apply a thin coat of engine oil to the piston pin. Try to insert the piston pin into the piston pin hole with normal finger pressure.

NOTE: When changing piston / connecting rod combinations, do not change the piston / piston pin combination and do not reuse the old piston pin.

- Attach the piston to the connecting rod with the piston front mark and the connecting rod front mark on the same side.

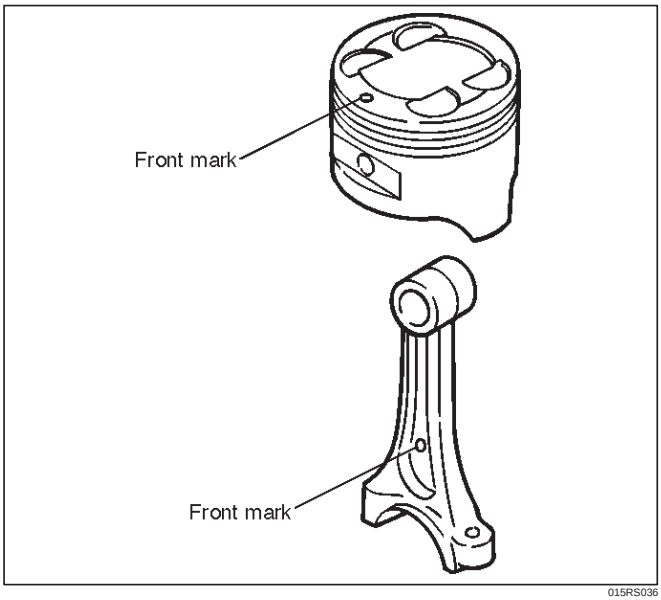

015RS036

- With 5–8840–0551–0 Piston pin service set and a press, press fit the piston pin.

NOTE: Heat the connecting rod small end to a suitable temperature to ensure smooth installation.

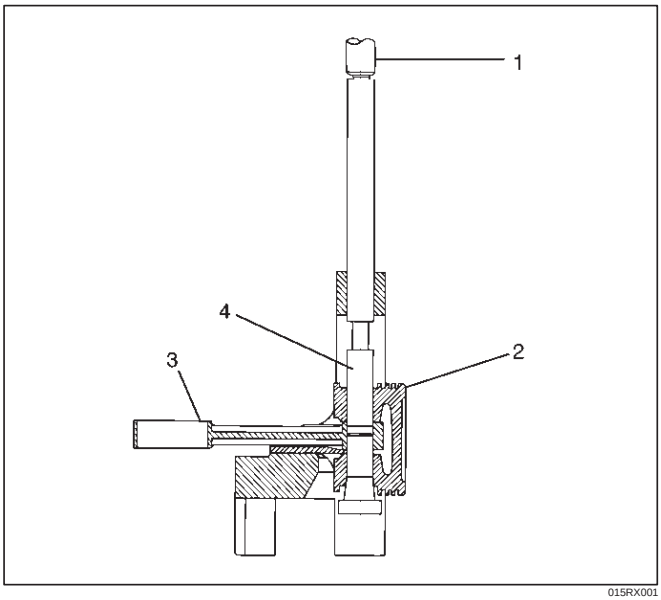

015RX001

Legend

(1) Press Ram
(2) Piston
(3) Connecting Rod
(4) Piston Pin

4. Install piston ring with the piston ring expander. The compression ring must be set with the T mark (1) facing up.

Marked T : No.1 Compression ring

Marked T2 : No.2 Compression ring

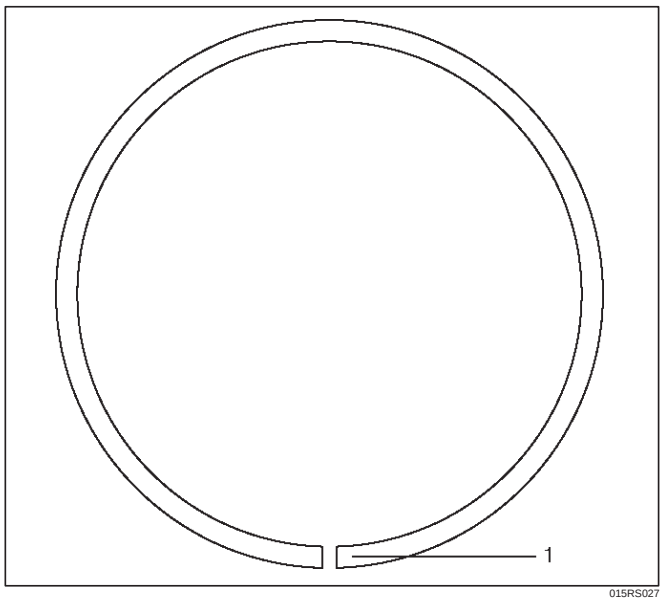

015RS027

- Install piston rings in the following sequence.

1. Oil ring
   1. Expander ring
   2. Upper side rail
   3. Lower side rail
2. 2nd compression ring
3. 1st compression ring

- The compression rings must be set with the T or T2 mark facing up.

Marked T : No.1 Compression ring

Marked T2 : No.2 Compression ring

- After installation, apply engine oil to the entire circumference of the piston rings. Check to see that all the rings rotate smoothly.

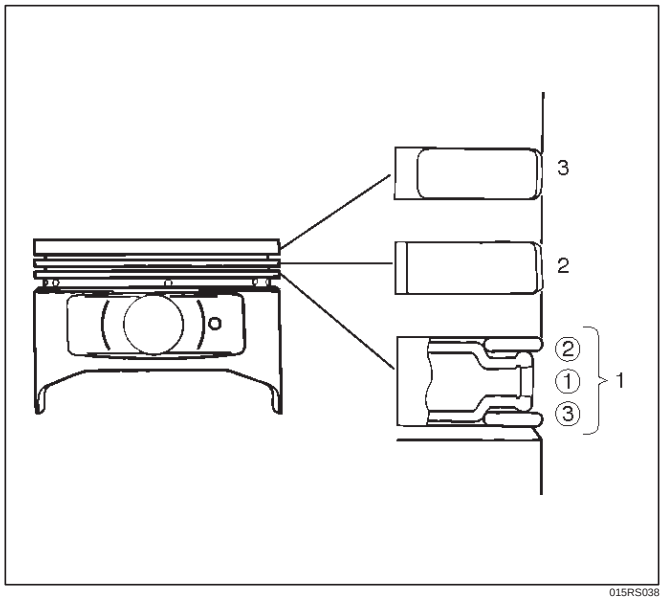

015RS038

5. Install piston and connecting rod assembly.

- Insert the bearings into the connecting rods and caps. Apply new engine oil to the bearing faces and nuts.

- Tighten the connecting rod cap nuts

Torque : 54 N·m (5.5 Kg·m/40 lb ft)

NOTE: Do not apply engine oil to the bearing back faces.

6. Oil gallery, refer to “Crankshaft and main bearing” in this manual.
7. Oil strainer and O-ring.
8. Oil pipe and O-ring.
9. Install crankcase with oil pan, refer to “Oil pan and Crankcase” in this manual.
10. Install cylinder head gasket.
11. Install Cylinder head assembly.
    - Refer to “Cylinder head” in this manual.

Cylinder Block

Cylinder Block and Associated Parts

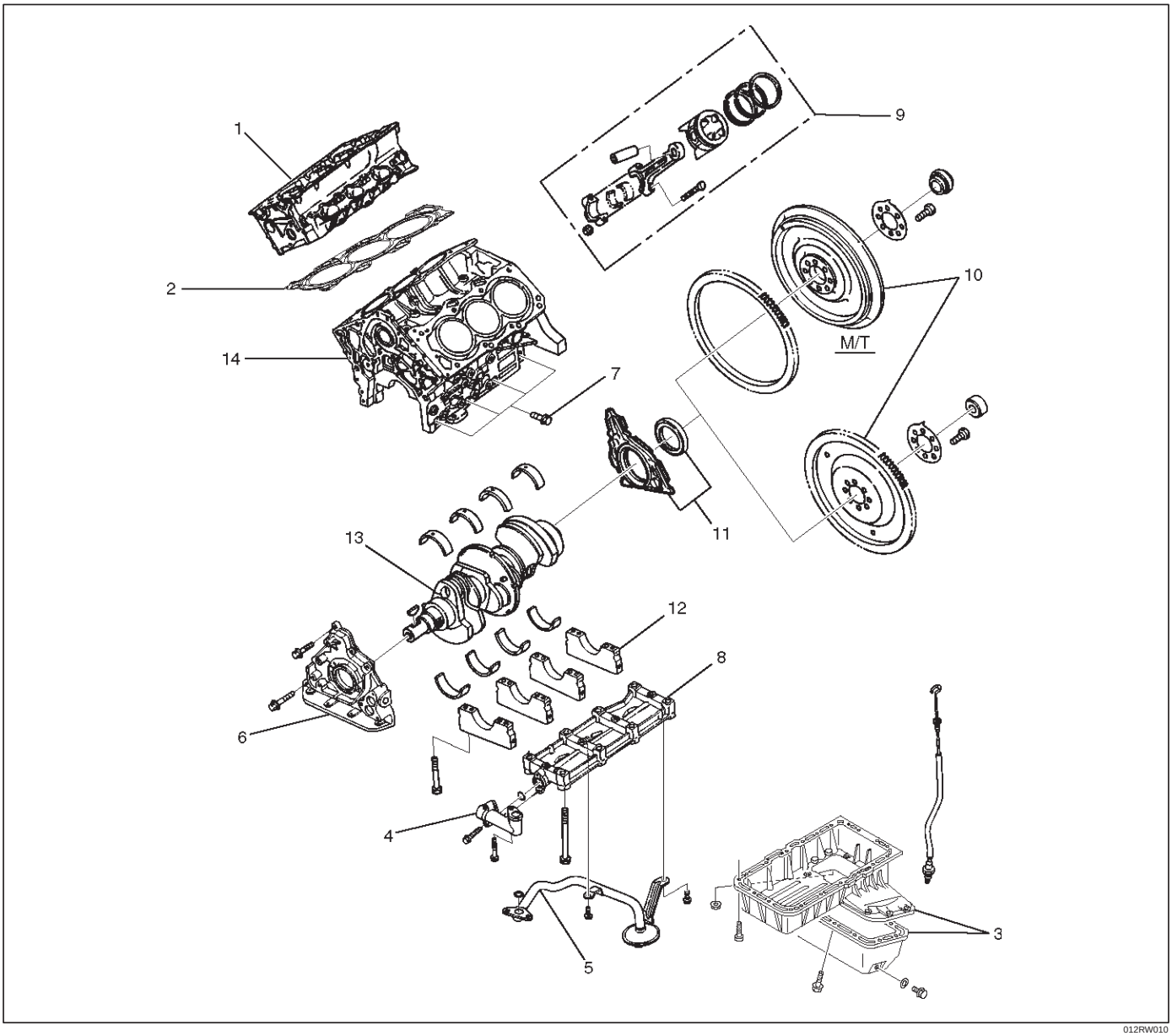

012RW010

Legend

(1) Cylinder Head Assembly
(2) Cylinder Head Gasket
(3) Crankcase with Oil Pan
(4) Oil Pipe and O-Ring
(5) Oil Strainer and O-Ring
(6) Oil Pump Assembly
(7) Cylinder Block Side Bolts
(8) Oil Gallery
(9) Piston and Connecting Rod Assembly
(10) Flywheel
(11) Rear Oil Seal Retainer Assembly
(12) Main Bearing Cap
(13) Crankshaft
(14) Cylinder Block

Disassembly

1. Remove cylinder head assembly.
2. Remove cylinder head gasket.
3. Remove crankcase with oil pan.
4. Remove oil pipe and O-ring.
5. Remove oil strainer and O-ring.
6. Remove oil pump assembly.
7. Remove crankcase side bolts.
8. Remove oil gallery.
9. Remove piston and connecting rod assembly.
10. Remove flywheel.

11. Remove rear oil seal retainer assembly.
12. Remove main bearing cap.
13. Remove crankshaft.
14. Remove cylinder block.

Inspection and Repair

1. Remove the cylinder head gasket and any other material adhering to the upper surface of the cylinder block. Be very careful not to allow any material to accidentally drop into the cylinder block. Be very careful not to scratch the cylinder block.
2. Carefully remove the oil pump, rear oil seal retainer, and crankcase assembly installation surface seal.
3. Wipe the cylinder block clean.
4. Visually inspect the cylinder block. If necessary, use a flaw detector to perform a dye penetrate and hydraulic (or air pressure) test. If cracking or other damage is discovered, the cylinder block must either be repaired or replaced.

Flatness

1. Using a straight–edge and feeler gauge, check that the upper surface of the cylinder block is not warped.

CAUTION: Be very careful not to allow any material to accidentally drop into the upper surface of the cylinder block. Be very careful not to scratch the upper surface of the cylinder block.

2. The cylinder block must be reground or replaced if the warpage exceeds the limit.

Warpage

Limit : 0.15 mm (0.0059 in)

Maximum repairable limit: 0.15 mm (0.0059 in)

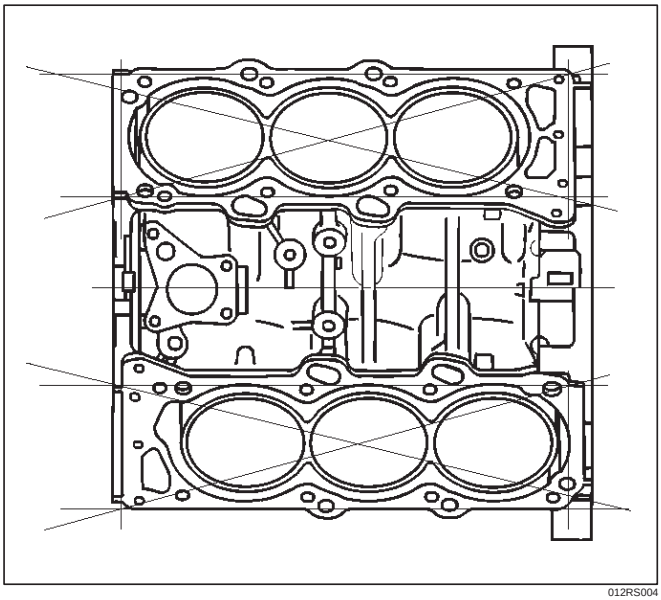

012RS004

Cylinder Bore

Use a cylinder gauge to measure the cylinder bore diameter in both the axial and thrust directions. Each measurement should be made at six points.

CAUTION: Be very careful not to allow any material to accidentally drop into the upper surface of the cylinder block. Be very careful not to scratch the upper surface of the cylinder block.

Cylinder Bore Inside Diameter

Limit : 93.530 (3.6823)

If the measurement exceed the specified limit, the cylinder block must be replaced.

Diameter

Grade A : 93.400 mm–93.410 mm (3.6772 in–3.6776 in)

Grade B : 93.411 mm–93.420 mm (3.6776 in–3.6779 in)

Grade C : 93.421 mm–93.430 mm (3.6780 in–3.6783 in)

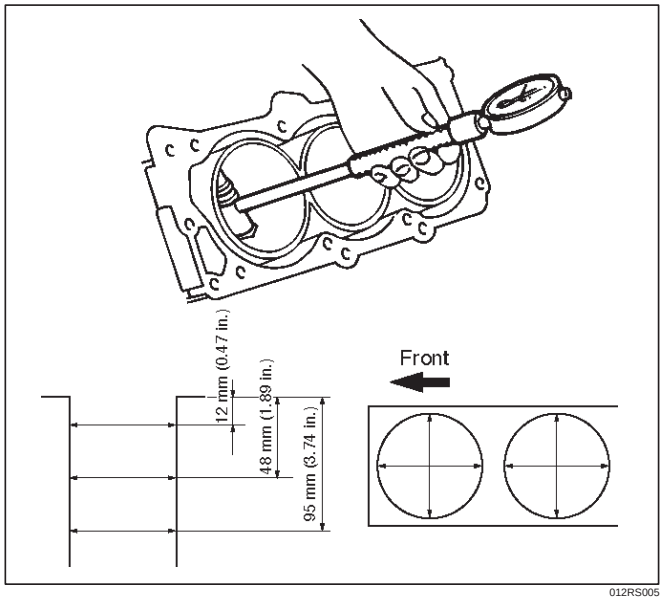

012RS005

NOTE: For information on piston diameter, please refer to the section ”Inspection of the Piston and Connecting Rod Assembly” in this manual.

- The ”Grade” mark (1) is stamped at the position illustrated.

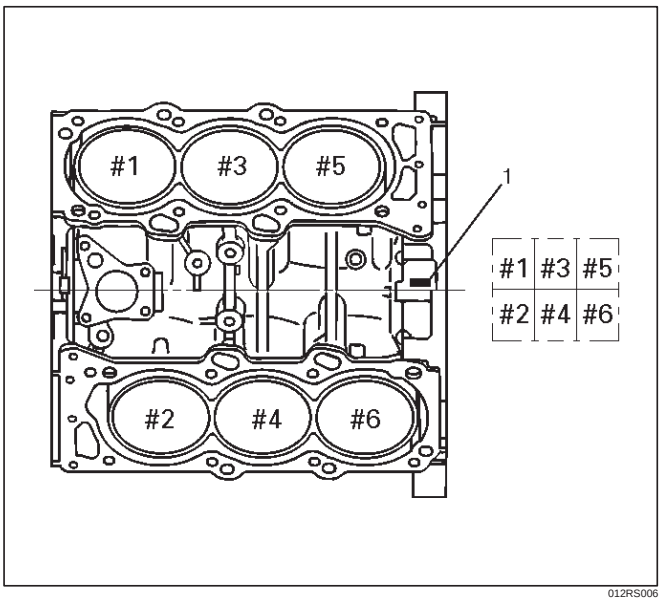

012RS006

Reassembly

1. Install cylinder block.
2. Install crankshaft.
   - Install the main bearings to the cylinder block and the main bearing caps.
   - Be sure that they are positioned correctly.
   - Apply new engine oil to the upper and lower main bearing faces.

NOTE: Do not apply engine oil to the bearing back faces.

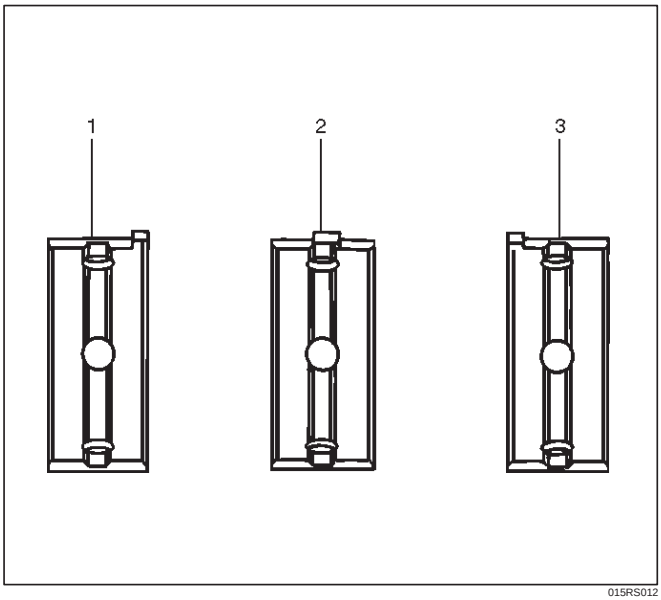

015RS012

Legend

(1) Number 1 and 4 main bearing upper and lower.
(2) Number 2 and 3 main bearing upper.
(3) Number 2 and 3 main bearing lower.

- Carefully mount the crankshaft.
- Apply engine oil to the thrust washer.
- Assemble the thrust washer to the No. 3 bearing journal. The oil grooves must face the crankshaft.

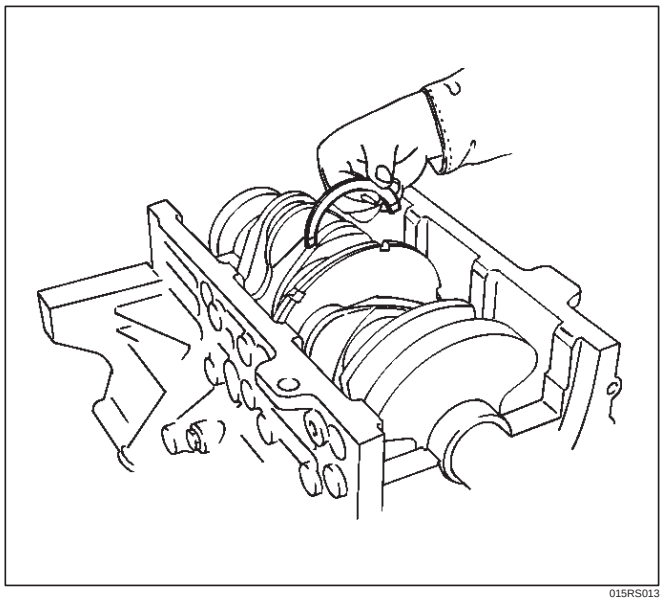

015RS013

3. Install rear oil seal retainer.
   - Remove oil on cylinder block and retainer fitting surface.
   - Apply sealant (TB1207B or equivalent) to retainer fitting surface as shown in illustration.
   - The oil seal retainer must be installed within 5 minutes after sealant application before the sealant hardens.

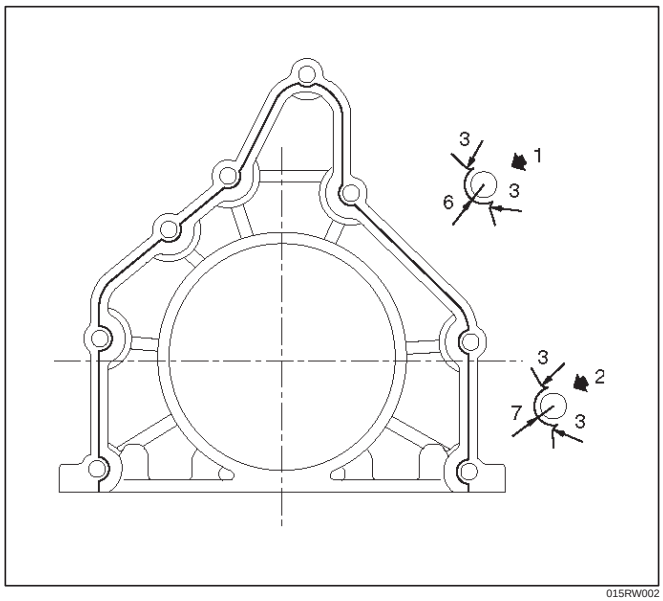

015RW002

Legend

(1) Around Bolt Holes
(2) Around Dowel Pin

- Apply engine oil to oil seal lip and align a dowel pin hole in the cylinder block with that in the retainer.
- Tighten retainer fixing bolts to the specified torque.

Torque: 25 N·m (2.5 Kg·m/18.4 lb ft)

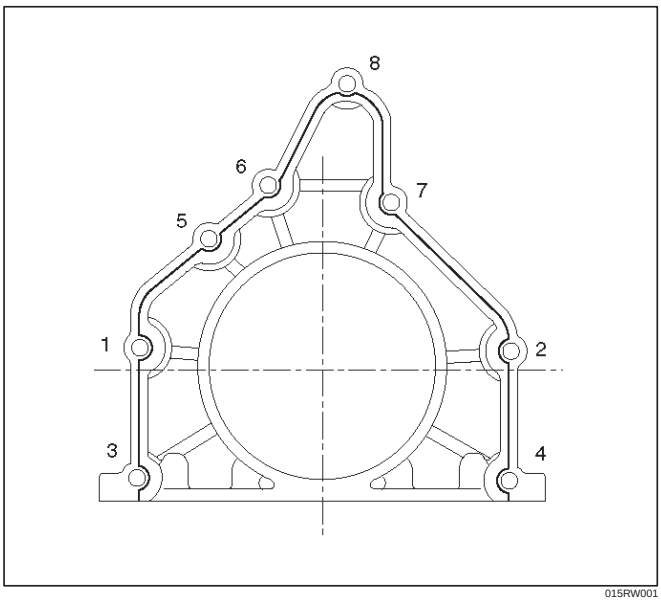

015RW001

4. Install flywheel
   1. Thoroughly clean and remove the oil from the threads of crankshaft.
   2. Remove the oil from the crankshaft and flywheel mounting faces.
   3. Mount the flywheel on the crankshaft and then install the washer.
   4. Holding the crankshaft stationary, tighten the flywheel bolts in the order shown.

Torque: 54 N·m (5.5 Kg·m/40 lb ft)

NOTE: Do not reuse the bolts and do not apply oil or thread lock to the bolts.

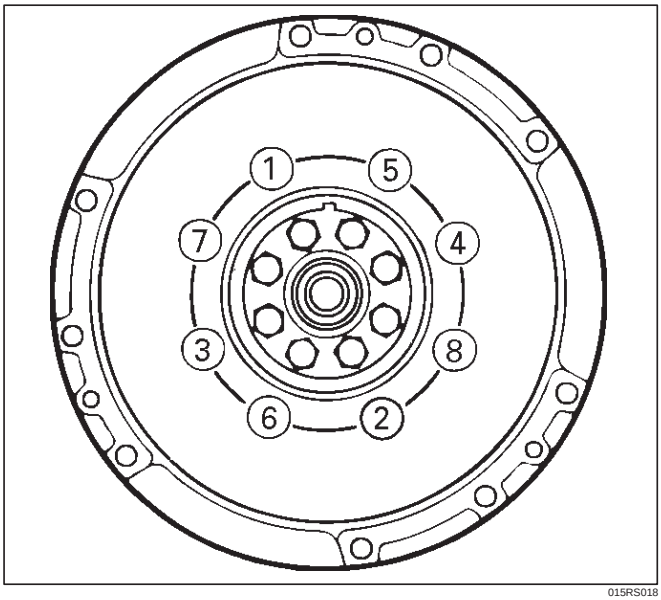

015RS018

5. Install piston and connecting rod assembly.
   - Apply engine oil to the cylinder bores, the connecting rod bearings and the crankshaft pins.

NOTE: Do not apply engine oil to the bearing back faces.

- Check to see that the piston ring end gaps are correctly positioned.

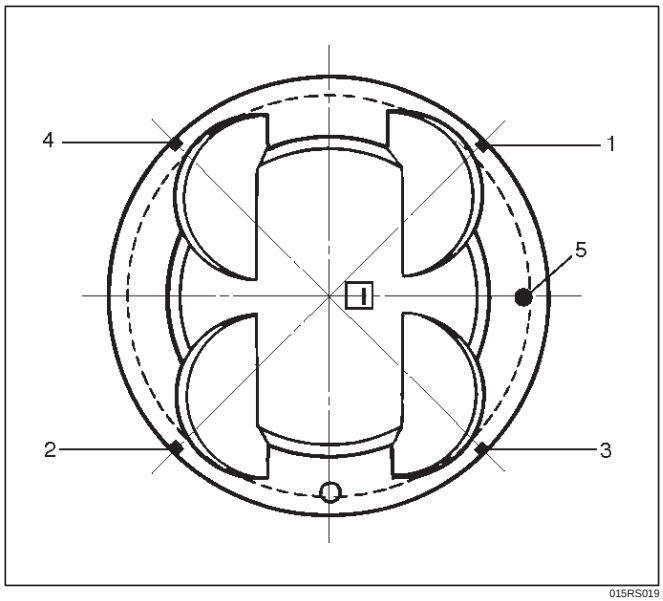

015RS019

Legend

(1) No.1 Compression Ring
(2) No.2 Compression Ring
(3) Oil Ring Side Rail Upper
(4) Oil Ring Side Rail Lower
(5) Piston Front Mark

- Insert the piston/connecting rod assemblies into each cylinder with the piston ring compressor.
- The front marks (1) must be facing the front of the engine.

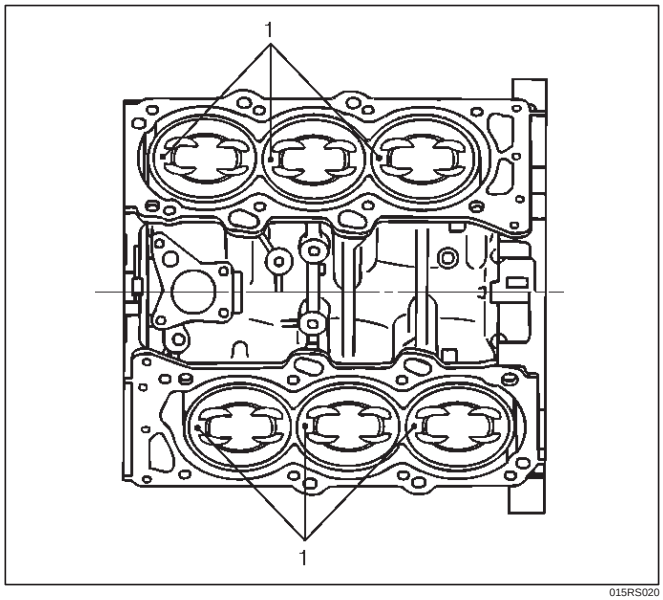

015RS020

6. Install oil gallery and tighten the bolts in 2 steps in the order shown.

1st step : 29 N·m (3.0 Kg·m/22 lb ft)

2nd step : 55˚~ 65˚

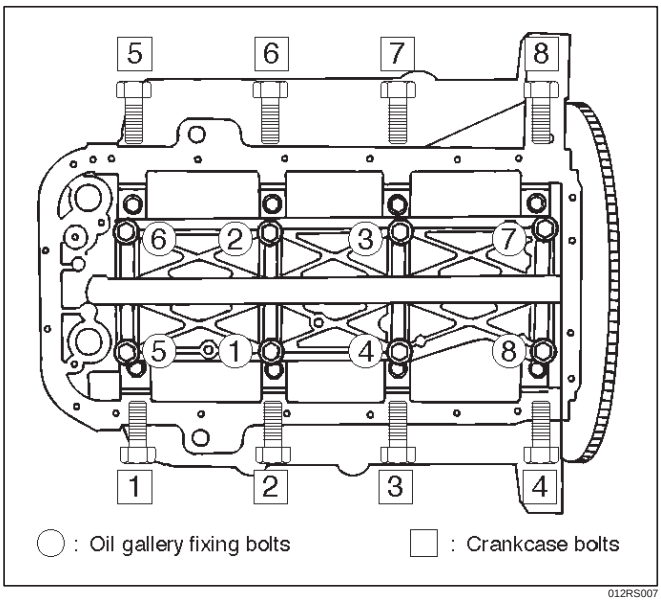

012RS007

7. Install cylinder block side bolts (1) and tighten crankcase bolts in sequence shown in the illustration.

Torque : 39 N·m (4.0 Kg·m/29 lb ft)

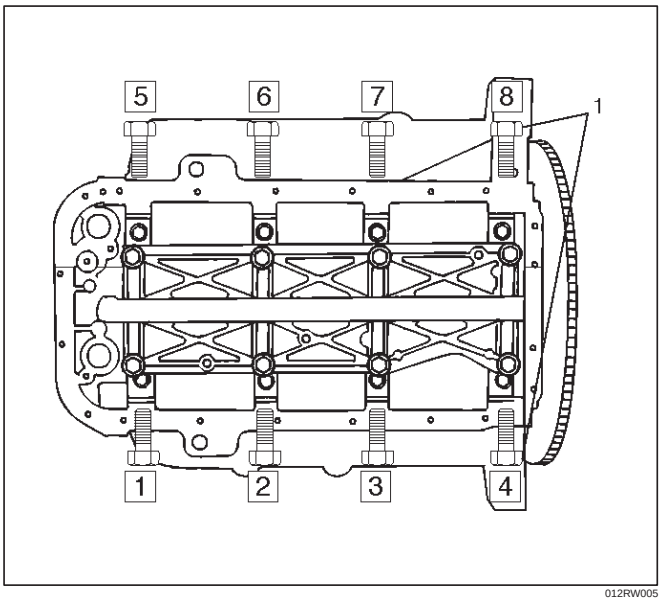

012RW005

8. Install oil pump assembly. Refer to “Oil Pump” in this manual.
9. Install oil strainer and O-ring.
10. Install oil pipe and O-ring.
11. Install crankcase with oil pan.
    1. Completely remove all residual sealant, lubricant and moisture from the sealing surfaces. The surfaces must be perfectly dry.
    2. Apply a correct width bead of sealant (TB– 1207C or its equivalent) to the contact surfaces of the crankcase. There must be no gaps in the bead.
    3. The oil pan must be installed within 5 minutes after sealant application to prevent premature hardening of sealant.
    4. Tighten the bolts and nuts to the specified torque.

Torque : 10 N·m (1.0 Kg·m/89 lb in)

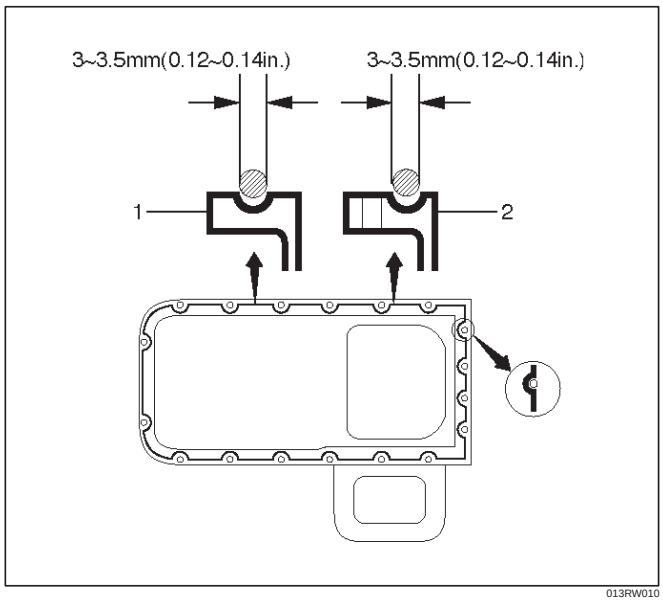

013RW010

Legend

(1) Portion Between Both Holes
(2) Bolt Hole Portions

12. Install cylinder head gasket.
13. Install cylinder head assembly. Refer to “Cylinder Head” in this manual.

Main Data and Specification

General Specification

Item	Specifications	
	6VD1	6VE1
Engine type, number of cylinders and arrangement	Water cooled, four cycle V6	
Form of combustion chamber	Pent roof type	
Valve mechanism	4-Cams, 4-Valves, DOHC Gear & Belt Drive	
Cylinder liner type	Casted in cylinder drive	
Total piston displacement	3165 cc	3494 cc
Cylinder bore x stroke	93.4mm x 77.0mm (3.6772 in x 3.0315 in)	93.4mm x 85.0mm (3.6772 in x 3.3465 in)
Compression ratio	9.1 : 1	
Compression pressure at 300rpm	14.0 Kg/cm^2	
Engine idling speed rpm	Non adjustable (750)	
Valve clearance	Intake: 0.28 mm (0.11 in)	
	Exhaust: 0.30mm (0.12in)	
Oil capacity	5.3 liters	
Ignition timing	Non adjustable 16˚ BTDC at idle rpm)	Non adjustable (20˚ BTDC at idle rpm)
Spark plug	K16PR–P11, PK16PR11, RC10PYP4	
Plug gap	1.0 mm–1.1 mm(0.0394 in – 0.0433 in)	

Torque Specifications

Ignition coil, Spark plug, Crankshaft angle sensor and Under cover

N·m (Kg·m/lb ft)

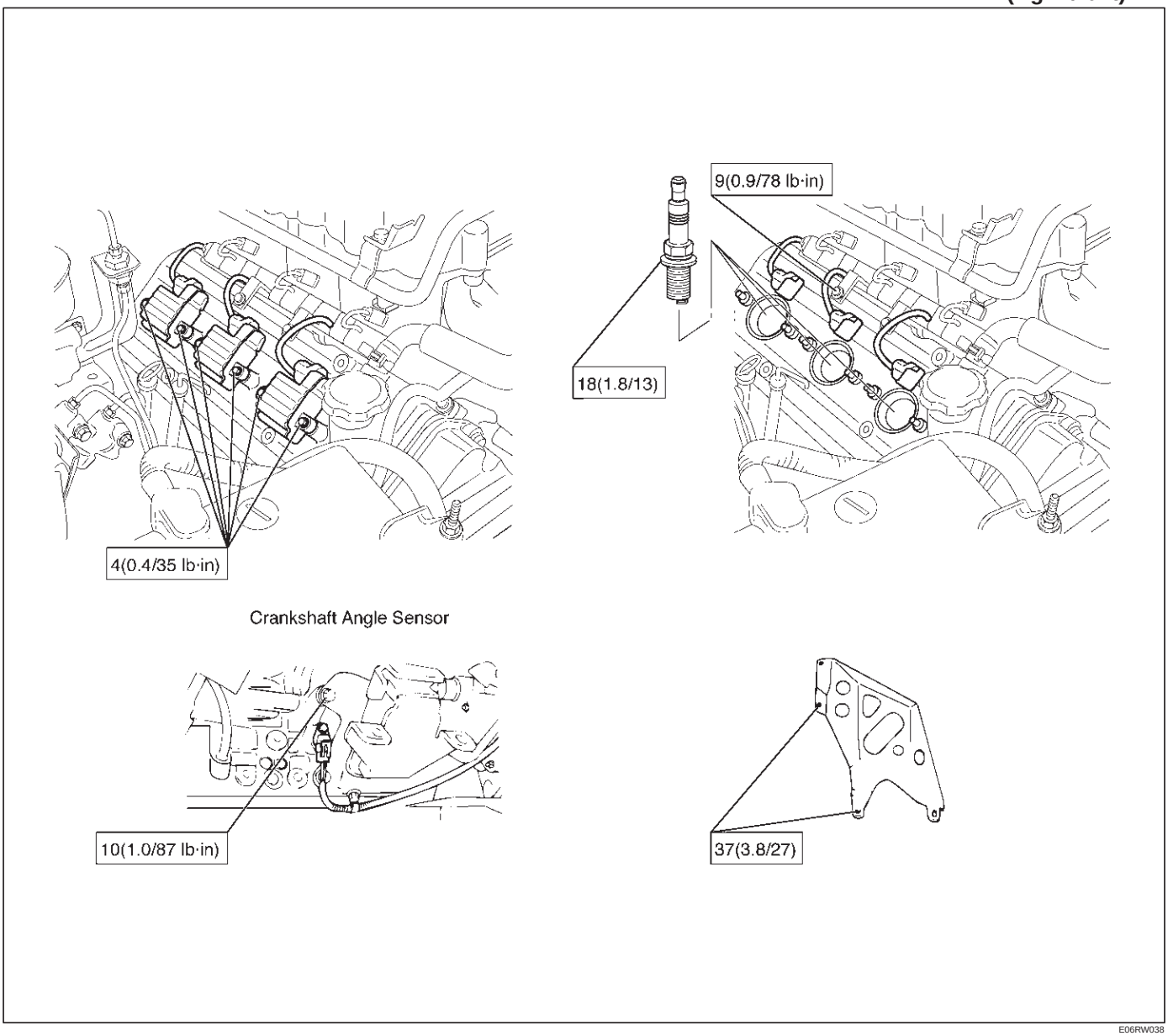

E06RW038

Cylinder head cover, Cylinder head, Camshaft bracket, Common chamber, EGR valve and EGR pipe

N·m (Kg·m/lb ft)

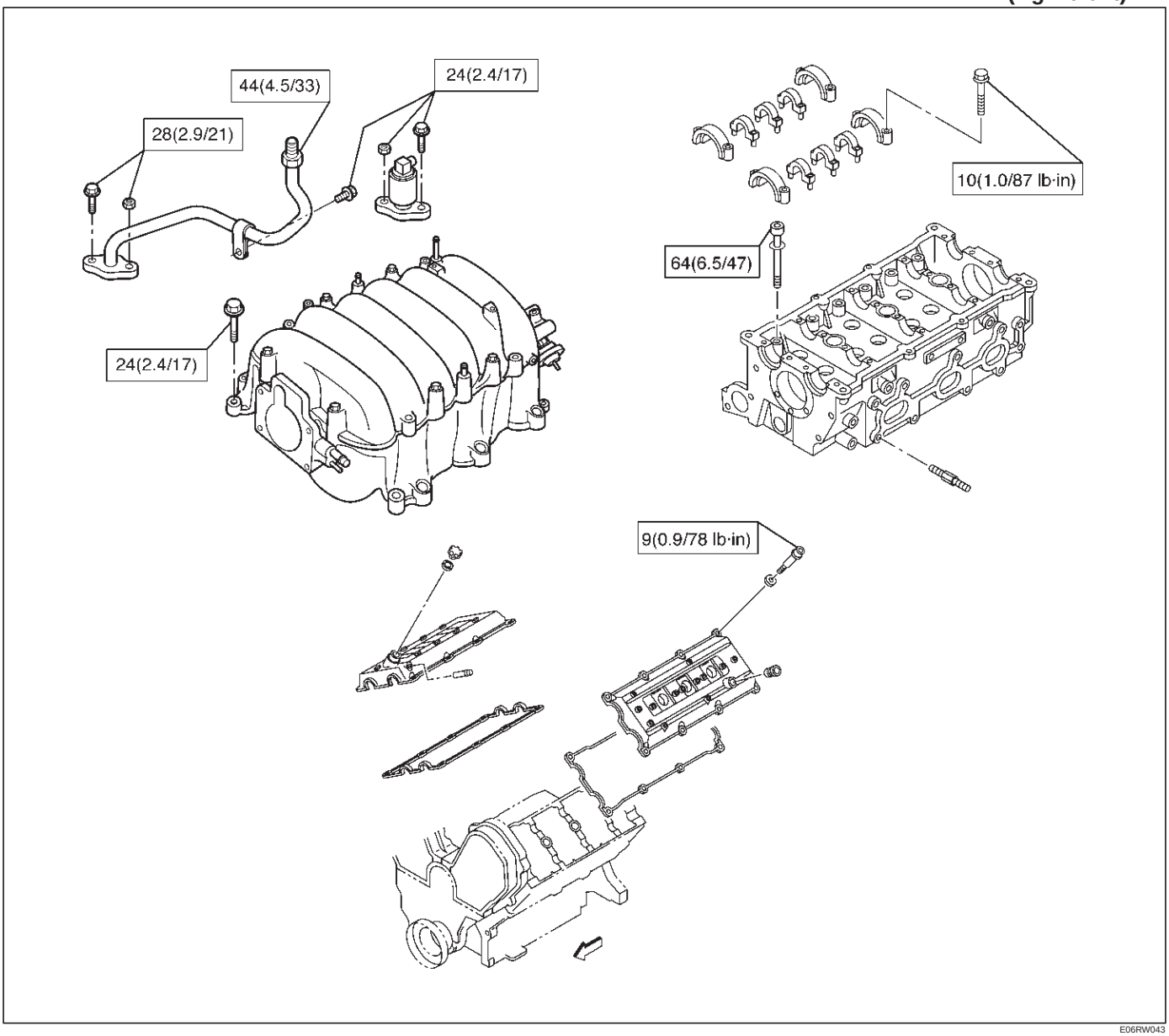

E06RW043

Crankshaft main bearing, Flywheel, Crankcase, Oil pan, Timing belt tensioner, Timing pulley, Timing belt cover, Oil pump, Oil gallery, Oil strainer and Water pump

N·m (Kg·m/lb ft)

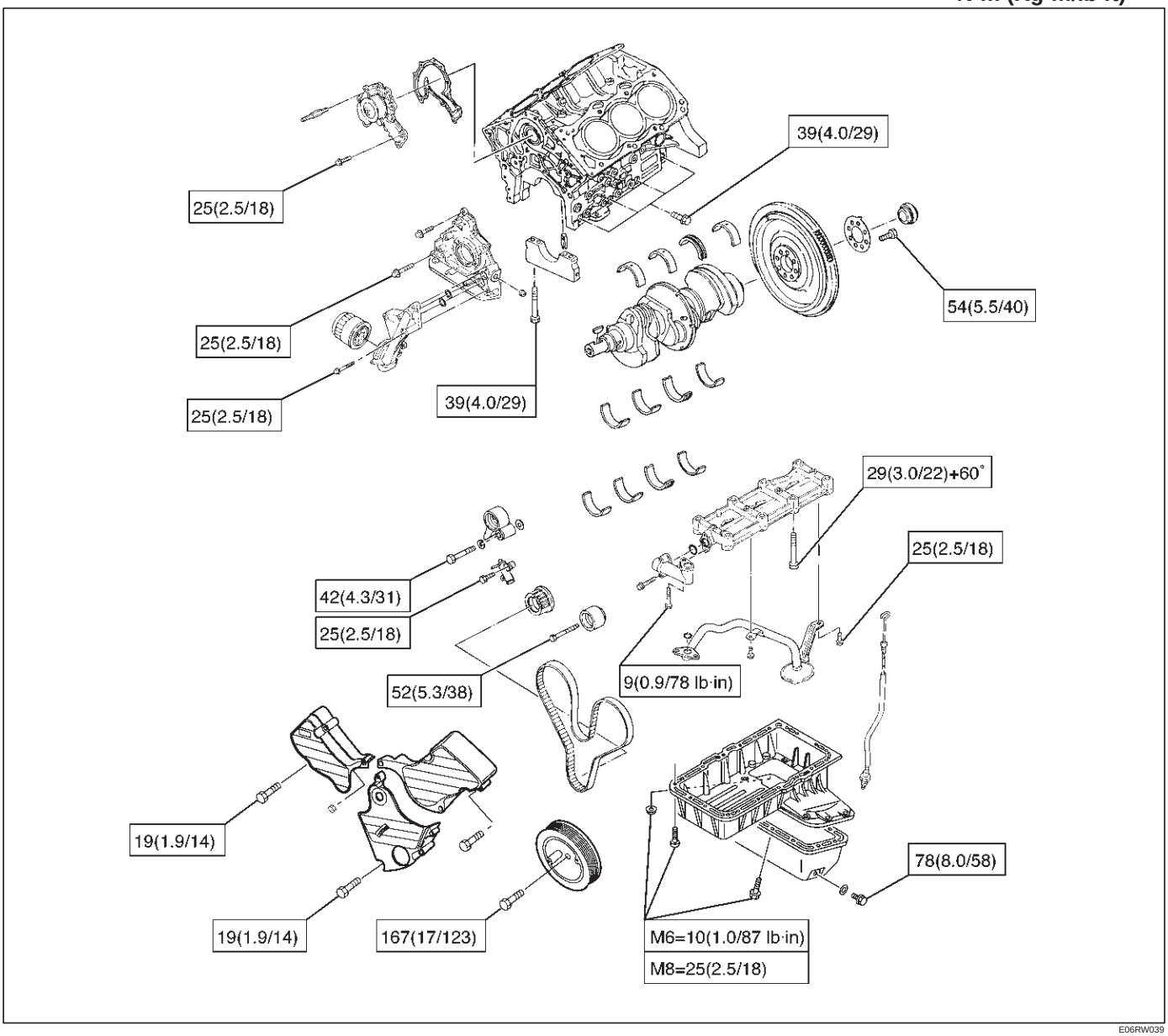

E06RW039

Connecting rod and Water pump

N·m (Kg·m/lb ft)

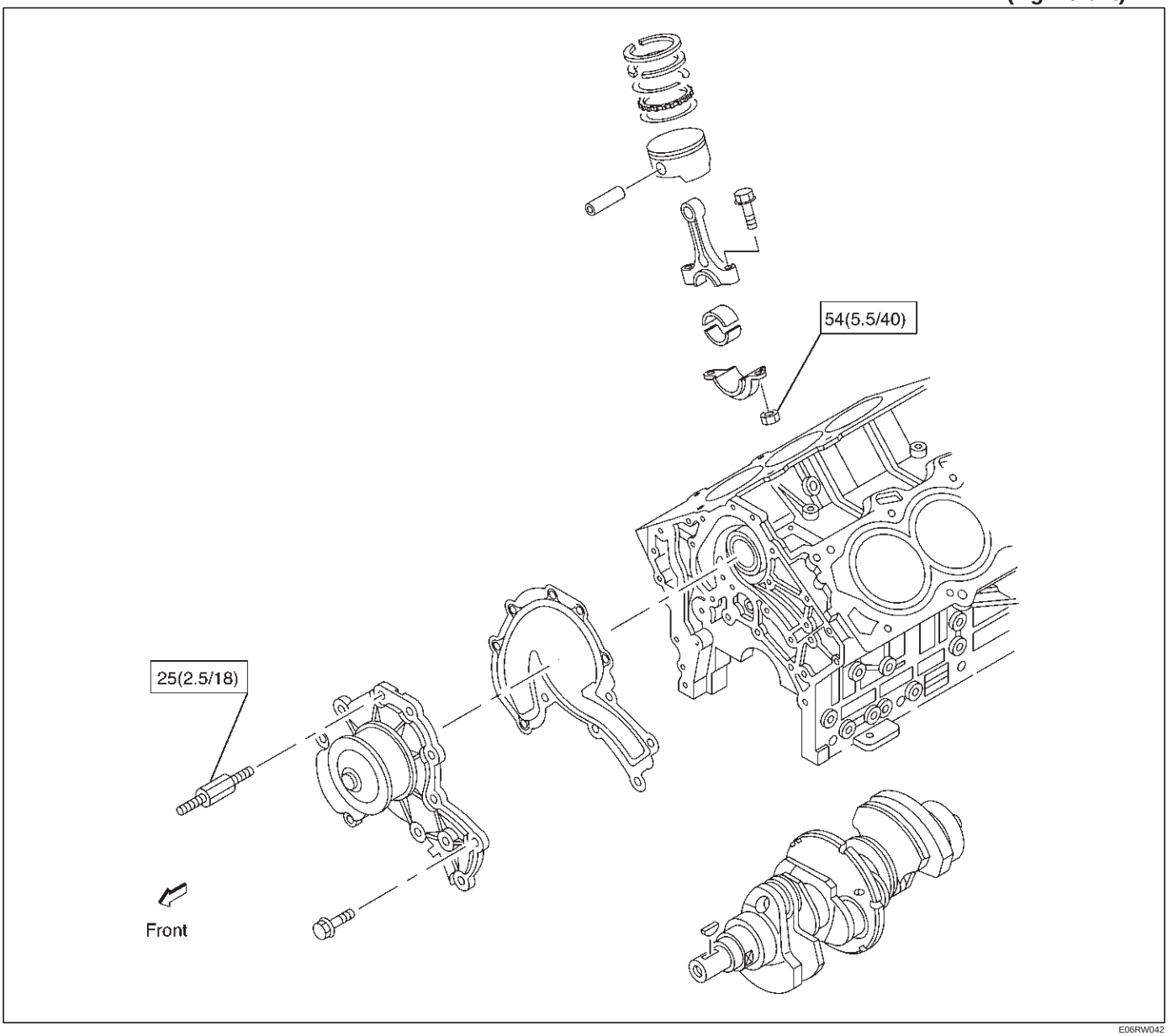

E06RW042

Engine mount

N·m (Kg·m/lb ft)

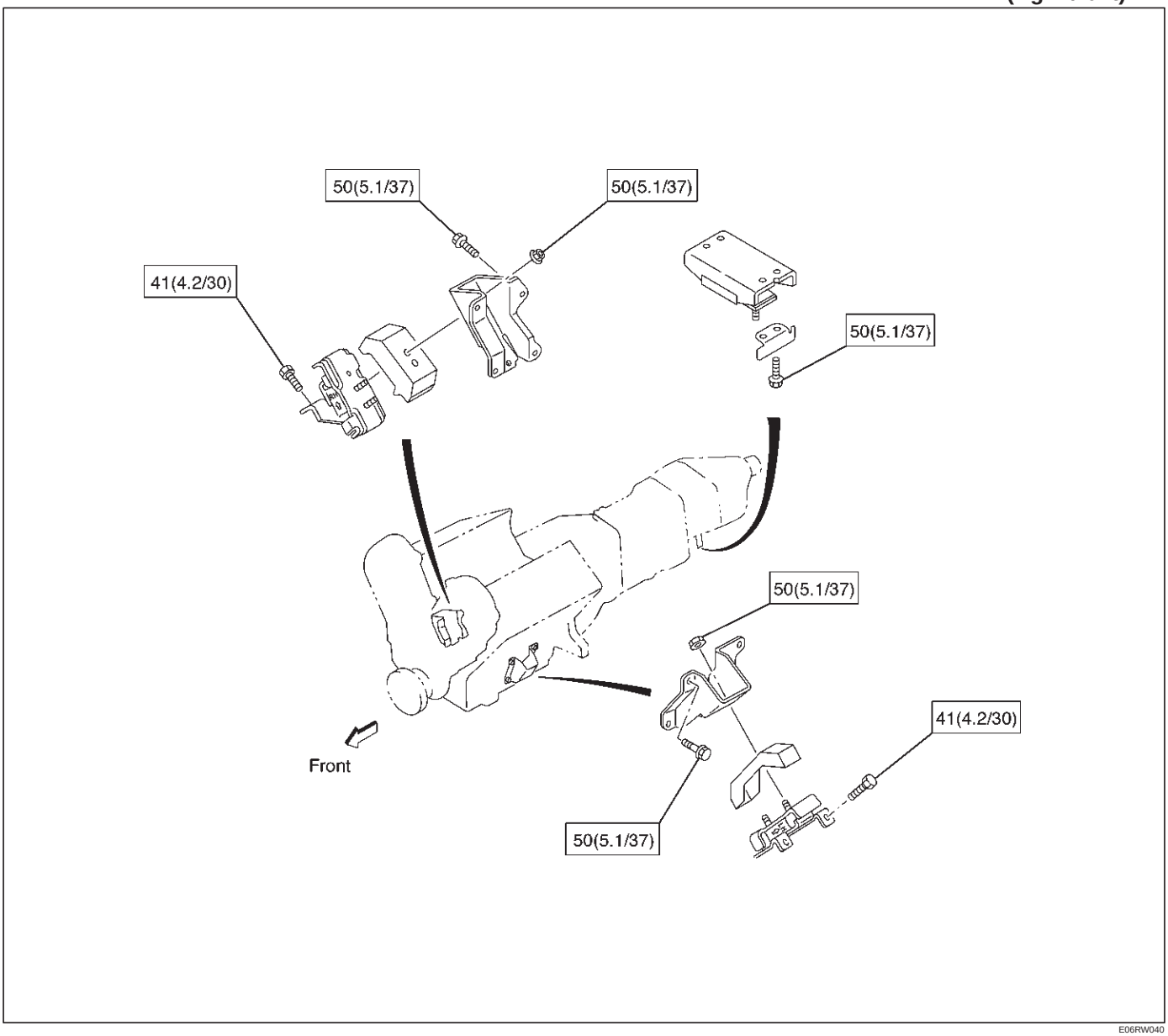

E06RW040

Special Tool

ILLUSTRATION	TOOL NO. TOOL NAME
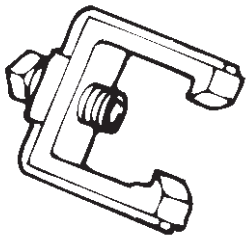 901RT033	**5–8840–0011–0** **(J–21687–02)** Remover; tie rod end
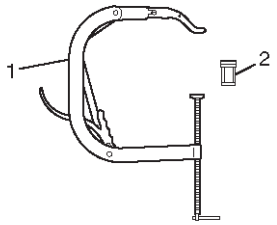 F06RW002	**5–8840–2441–0** Set Number of Valve Compressor **5–8840–2446–0** **(J–8062)** Compressor; Valve Spring (1) **5–8840–2547–0** **(J–42898)** Adapter; Compressor Valve Spring (2)
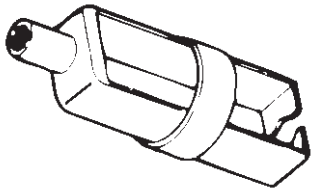 901RT036	**5–8840–0623–0** **(J–37281)** Remover; Oil controller
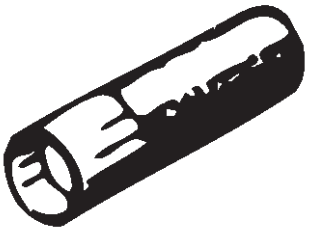 901RT037	**5–8840–0624–0** **(J–38537)** Installer; Oil controller
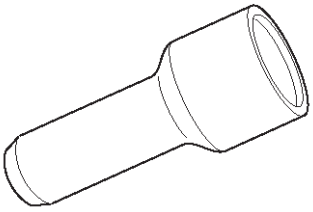 901RW171	**5–8840–2445–0** **(J–42985)** Installer; Camshaft oil seal
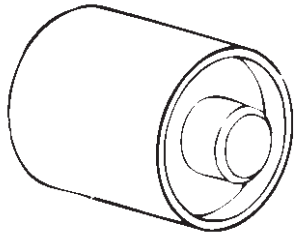 901RT040	**5–8840–2545–0** **(J–39206)** Installer; Pilot bearing

ILLUSTRATION	TOOL NO. TOOL NAME
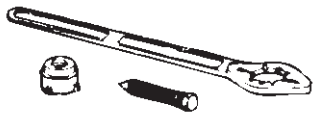 901RT041	**5–8840–0133–0** **(J–8614–01)** Holder; Crankshaft
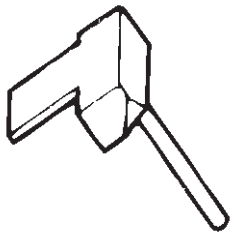 901RT042	**5–8840–2153–0** **(J–37228)** Seal cutter
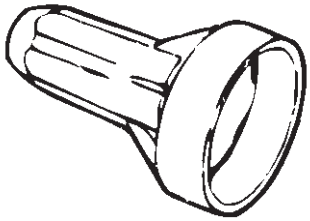 901RT043	**5–8840–2286–0** **(J–39201)** Installer; Real oil seal
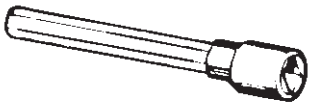 901RT046	**9–8511–4209–0** **(J–24239–1)** Cylinder head bolt wrench
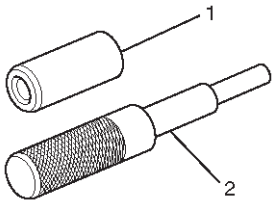 901RW182	**5–8840–2442–0** **(J–42899)** Replacer; Valve guide (set) (1,2) **5–8840–2548–0** **(J–42687)** Installer; Valve guide (1) **5–8840–2549–0** **(J–37985–1)** Remover; Valve guide (2)
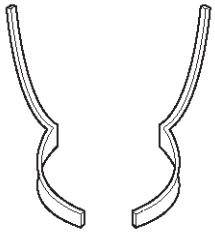 901RW109	**5–8840–2444–0** **(J–42689)** Adjusting Tool: Valve clearance

ILLUSTRATION	**TOOL NO.** TOOL NAME
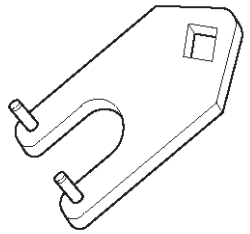 901RW110	**5–8840–2443–0** **(J–42686)** Lever; Gear spring
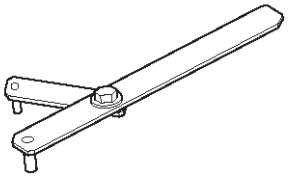 901RW115	**5–8840–2447–0** **(J–43041)** Holder; Universal

ENGINE

ENGINE COOLING

CONTENTS

Service Precaution 6B–1
General Description 6B–2
Diagnosis 6B–5
Draining and Refilling Cooling System 6B–6
Water Pump 6B–7
Water Pump and Associated Parts 6B–7
Removal 6B–7
Inspection 6B–7
Installation 6B–7
Thermostat 6B–8
Thermostat and Associated Parts 6B–8
Removal 6B–8
Inspection 6B–8
Installation 6B–8
Radiator 6B–9
Radiator and Associated Parts 6B–9
Removal 6B–9
Inspection 6B–10
Installation 6B–11
Drive Belt and Cooling Fan 6B–12
Drive Belt and Associated Parts 6B–12
Inspection 6B–12
Installation 6B–12
Main Data and Specifications 6B–13
Special Tool 6B–14

Service Precaution

WARNING: IF SO EQUIPPED WITH A SUPPLEMENTAL RESTRAINT SYSTEM (SRS), REFER TO THE SRS COMPONENT AND WIRING LOCATION VIEW IN ORDER TO DETERMINE WHETHER YOU ARE PERFORMING SERVICE ON OR NEAR THE SRS COMPONENTS OR THE SRS WIRING. WHEN YOU ARE PERFORMING SERVICE ON OR NEAR THE SRS COMPONENTS OR THE SRS WIRING, REFER TO THE SRS SERVICE INFORMATION. FAILURE TO FOLLOW WARNINGS COULD RESULT IN POSSIBLE AIR BAG DEPLOYMENT, PERSONAL INJURY, OR OTHERWISE UNNEEDED SRS SYSTEM REPAIRS.

CAUTION: Always use the correct fastener in the proper location. When you replace a fastener, use ONLY the exact part number for that application. ISUZU will call out those fasteners that require a replacement after removal. ISUZU will also call out the fasteners that require thread lockers or thread sealant. UNLESS OTHERWISE SPECIFIED, do not use supplemental coatings (Paints, greases, or other corrosion inhibitors) on threaded fasteners or fastener joint interfaces. Generally, such coatings adversely affect the fastener torque and the joint clamping force, and may damage the fastener. When you install fasteners, use the correct tightening sequence and specifications. Following these instructions can help you avoid damage to parts and systems.

General Description

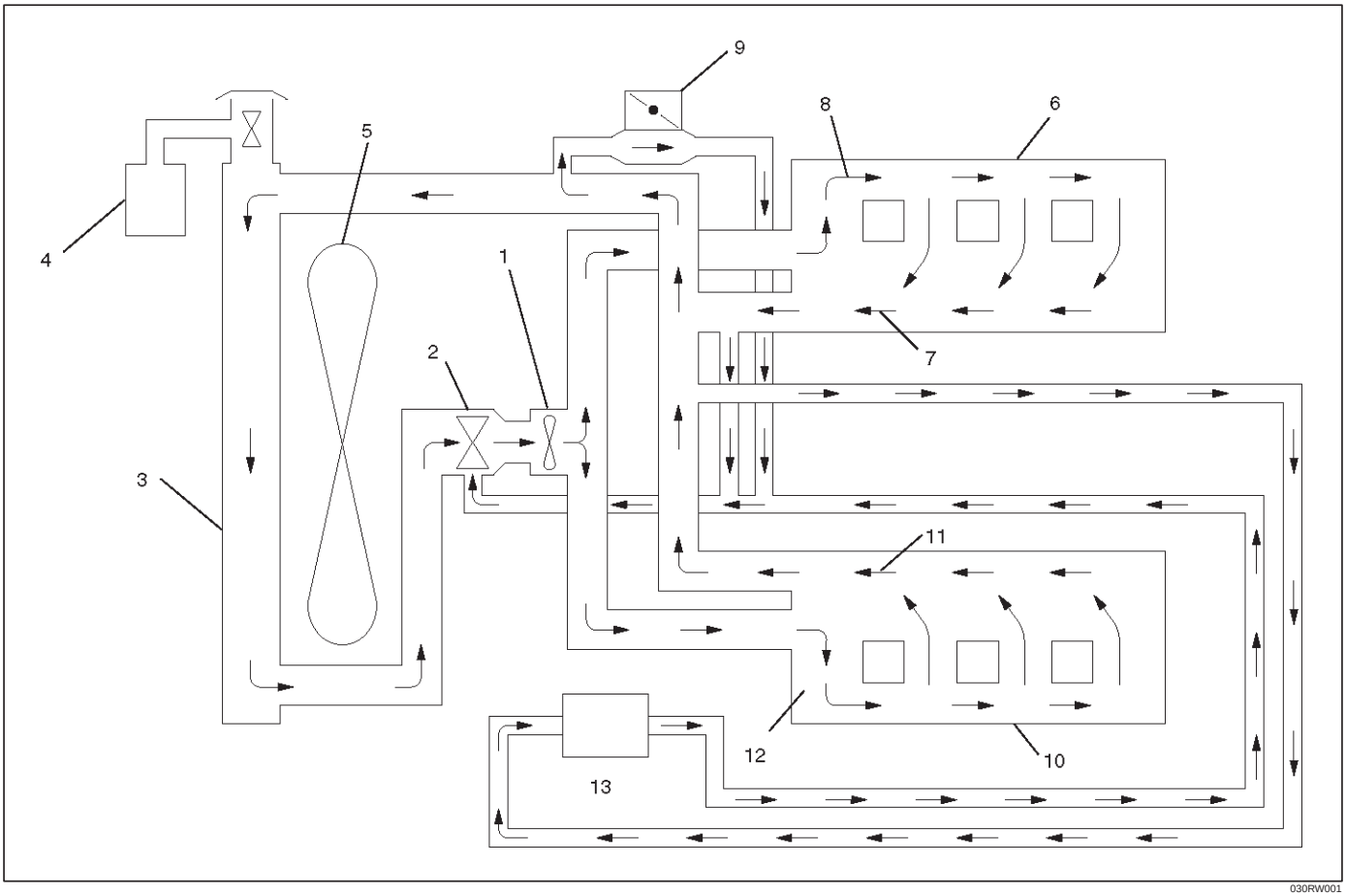

030RW001

Legend

(1) Water Pump
(2) Thermostat
(3) Radiator
(4) Reserve Tank
(5) Cooling Fan
(6) Cylinder Block
(7) Cylinder Head
(8) Right Bank
(9) Throttle Body
(10) Cylinder Block
(11) Cylinder Head
(12) Left Bank
(13) Heater

The cooling system is a pressurized Engine Coolant (EC) forced circulation type which consists of a water pump, thermostat cooling fan, radiator and other components. The automatic transmission fluid is cooled by the EC in radiator.

Water Pump

The EC pump is a centrifugal impeller type and is driven by a timing belt.

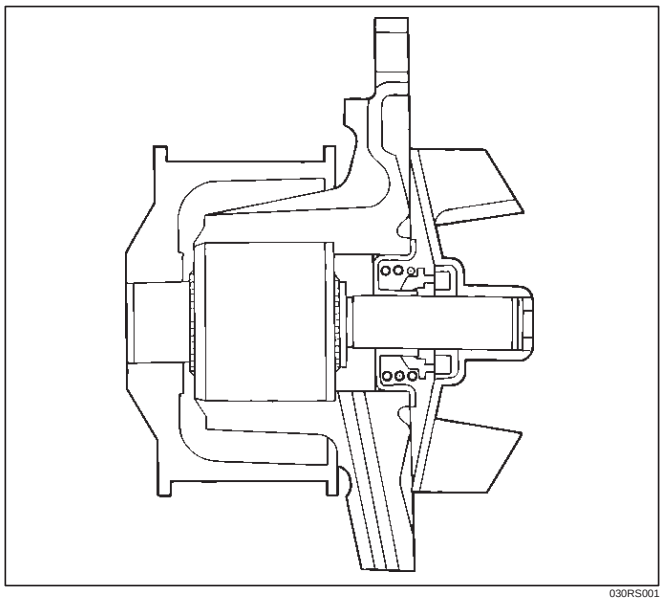

030RS001

Thermostat

The thermostat is a wax pellet type with a air hole(1) and is installed in the thermostat housing.

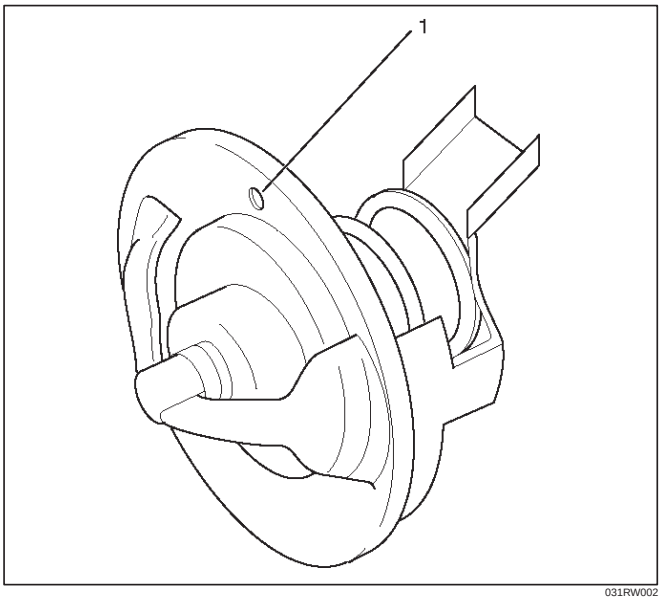

031RW002

Radiator

The radiator is a tube type with corrugated fins. In order to raise the boiling point of the coolant, the radiator is fitted with a cap in which the valve is operated at 88.2 ~ 117.6 kPa (12.8 ~ 17.0 psi) pressure. (No oil cooler provided for M/T)

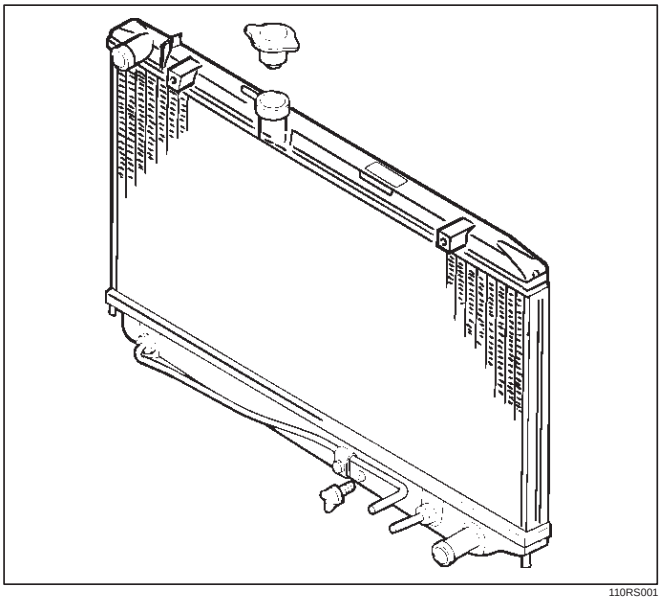

110RS001

Anti Freeze Solution

- Relation between the mixing ratio and freezing temperature of the EC varies with the ratio of anti–freeze solution in water. Proper mixing ratio can be determined by referring to the chart. Supplemental inhibitors or additives claiming to increase cooling capability that have not been specifically approved by Isuzu are not recommended for addition to the cooling system.
- Calculating mixing ratio

$$\text{Mixing ratio} = \frac{\text{Anti freeze solution (Lit/gal.)}}{\text{Anti freeze solution (Lit/gal.)} + \text{Water (Lit/gal.)}}$$

F06RW005

NOTE: Antifreeze solution + Water = Total cooling system capacity.

- **Total Cooling System Capacity**
- **M/T 8.8Lit (2.32Us gal)**
- **A/T 8.4Lit (2.22Us gal)**

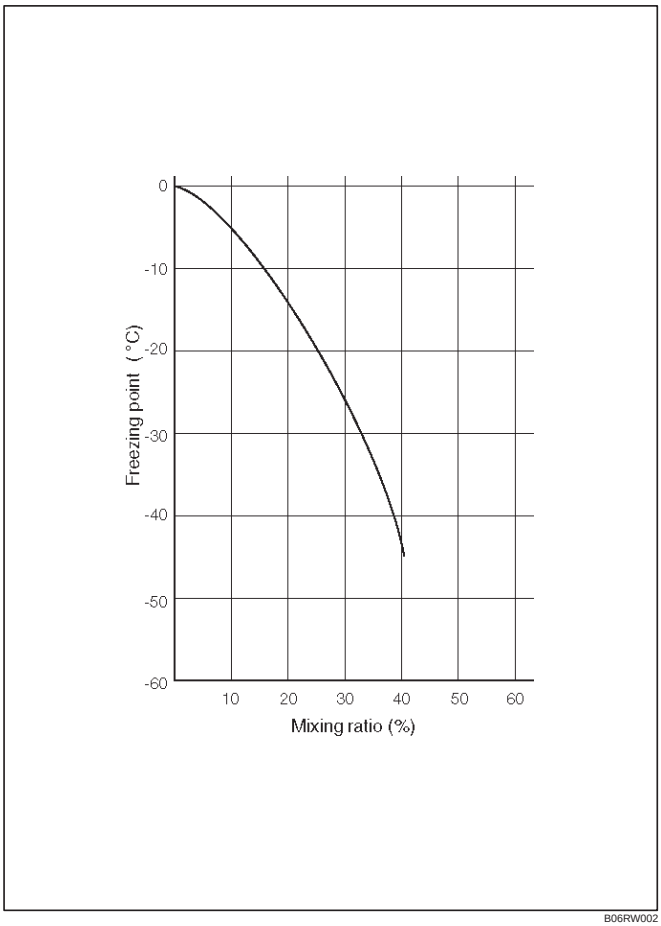

B06RW002

- Mixing ratio

  Check the specific gravity of engine coolant in the cooling system temperature ranges from 0˚C to 50˚C using a suction type hydrometer, then determine the density of the engine coolant by referring to the table.

NOTE:

1. Even in the areas where the atmospheric temperature is higher than 0˚C, be sure not to use antifreeze solution at a mixing ratio lower than 20% so that the inside of the engine may not be corroded.
2. If antifreeze solution is used at a mixing ratio higher than 60%, the specific heat of the coolant falls and the engine may be overheated. Moreover, antifreeze performance drop and the coolant may be frozen. The density of the solution must be adjusted as occasion calls.

Antifreeze solution lower than 20% may not have sufficient anticorrosive performance, and therefore, please never fail to adjust as occasion demands within the range of 20% to 60%.

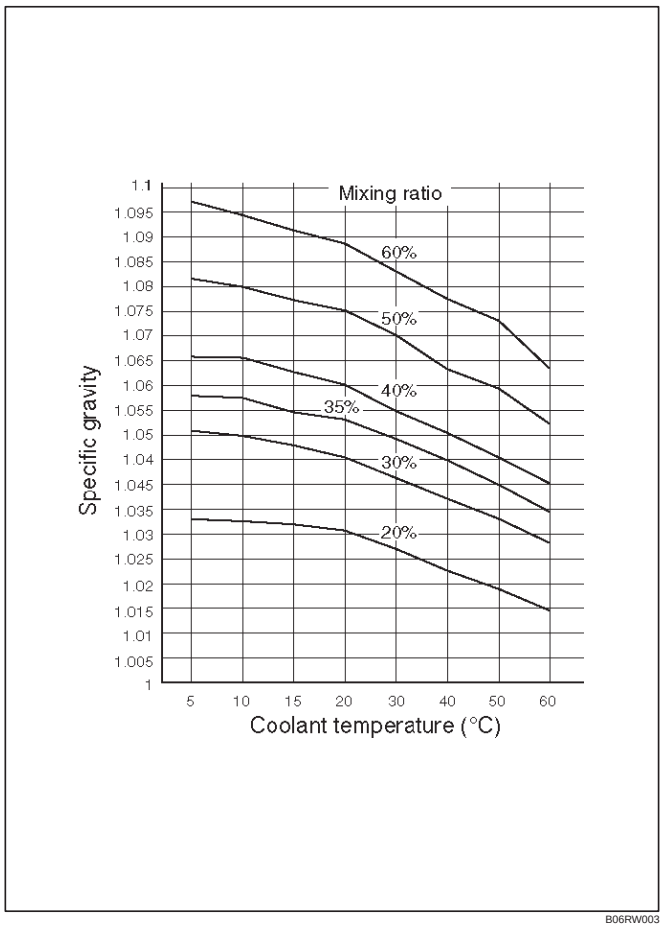

B06RW003

Diagnosis

Engine Cooling Trouble

Condition	Possible cause	Correction
Engine overheating	Low Engine Coolant level	Replenish
	Incorrect fan installed	Replace
	Thermo meter unit faulty	Replace
	Faulty thermostat	Replace
	Faulty Engine Coolant temperature sensor	Repair or replace
	Clogged radiator	Clean or replace
	Faulty radiator cap	Replace
	Low engine oil level or use of improper engine oil	Replenish or change oil
	Clogged exhaust system	Clean exhaust system or replace faulty parts
	Faulty Throttle Position sensor	Replace throttle valve assembly
	Open or shorted Throttle Position sensor circuit	Repair or replace
	Damaged cylinder head gasket	Replace
Engine overcooling	Faulty thermostat	Replace
Engine slow to warm–up	Faulty thermostat	Replace
	Thermo unit faulty	Replace

Draining and Refilling Cooling System

Before draining the cooling system, inspect the system and perform any necessary service to ensure that it is clean, does not leak and is in proper working order. The engine coolant (EC) level should be between the “MIN” and “MAX” lines of reserve tank when the engine is cold. If low, check for leakage and add EC up to the “MAX” line. There should not be any excessive deposit of rust or scales around the radiator cap or radiator filler hole, and the EC should also be free from oil.
Replace the EC if excessively dirty.

1. Completely drain the cooling system by opening the drain plug (2) at the bottom of the radiator.

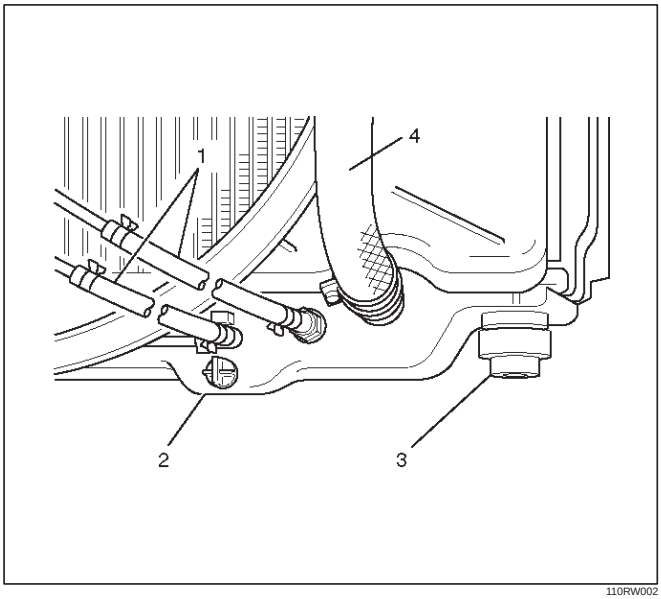

110RW002

2. Remove the radiator cap.

WARNING: TO AVOID THE DANGER OF BEING BURNED, DO NOT REMOVE THE CAP WHILE THE ENGINE AND RADIATOR ARE STILL HOT. SCALDING FLUID AND STEAM CAN BE BLOWN OUT UNDER PRESSURE.

3. Disconnect all hoses from the EC reserve tank.
   Scrub and clean the inside of the reserve tank with soap and water. Flush it well with clean water, then drain it. Install the reserve tank and hoses.
4. Refill the cooling system with the EC using a solution that is at least 50 percent antifreeze but no more than 70 percent antifreeze.
5. Fill the radiator to the base of the filler neck.
   Fill the EC reserve tank to “MAX” line when the engine is cold.
6. Block the drive wheels and firmly apply the parking brake. Shift an automatic transmission to “P” (Park) or a manual transmission to neutral.
7. Remove the radiator cap. Start the engine and warm it up at 2,500 ~ 3,000 rpm for about 30 minutes.
8. When the air comes out from the radiator filler neck and the EC level has gone down, replenish with the EC. Repeat this procedure until the EC level does not go down. Then stop the engine and install the radiator cap. Let the engine cool down.
9. After the engine has cooled, replenish with EC up to the “MAX” line of the reserve tank.
10. Start the engine. With the engine running at 3,000 rpm, make sure there is no running water sound from the heater core (behind the center console).
11. If the running water sound is heard, repeat steps 8 to 10.

Water Pump

Water Pump and Associated Parts

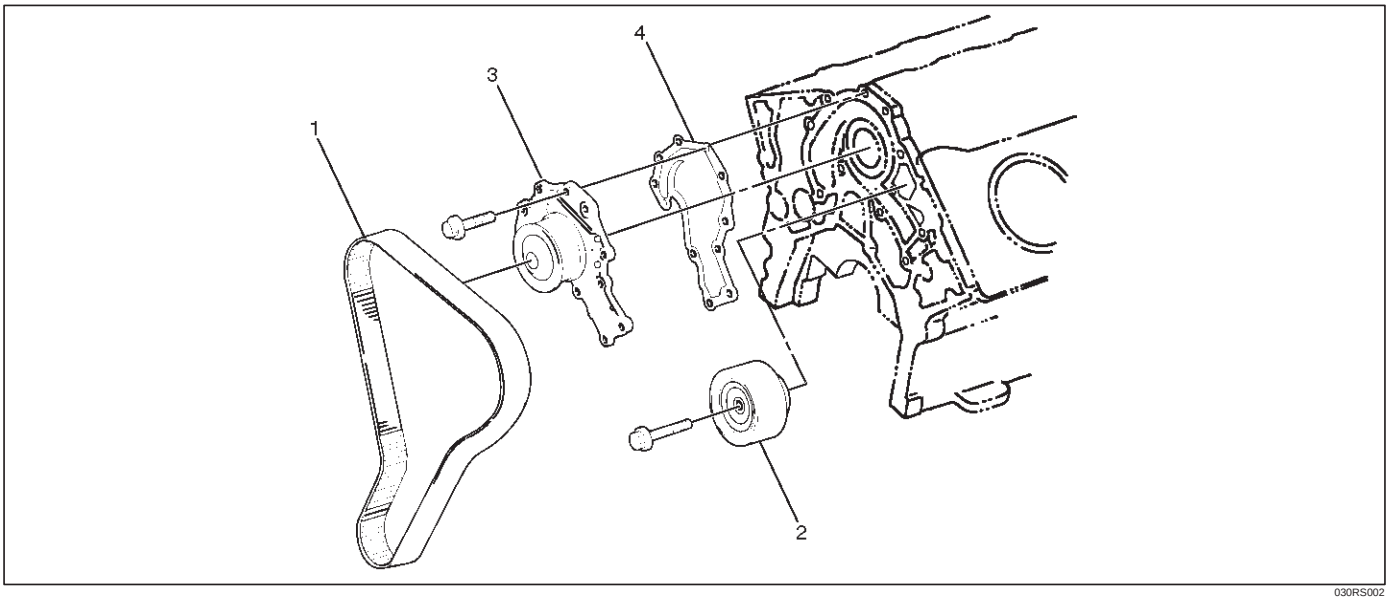

030RS002

Legend
(1) Timing Belt
(2) Idle Pulley
(3) Water Pump Assembly
(4) Gasket

Removal

1. Disconnect battery ground cable.
2. Drain coolant.
3. Radiator hose (on inlet pipe side).
4. Remove timing belt. Refer to “Timing Belt” in this manual.
5. Remove Idle pulley.
6. Remove water pump assembly.
7. Remove gasket.

Inspection

Make necessary repair and parts replacement if extreme wear or damage is found during inspection. Should any of the following problems occur, the entire water pump assembly must be replaced:

- Crack in the water pump body
- EC leakage from the seal unit
- Play or abnormal noise in the bearing
- Cracks or corrosion in the impeller.

Installation

1. Install gasket, clean the mating surface of gasket before installation.
2. Install water pump assembly and tighten bolts to the specified torque.

   Torque: 25 N·m (2.5 Kg·m/18 lb ft)

   - Tightening order
     The tightening order are in the illustrate.

NOTE: To prevent the oil leakage, apply the LOCTITE 262 or an equivalent, to the arrow marked fixing bolt thread.

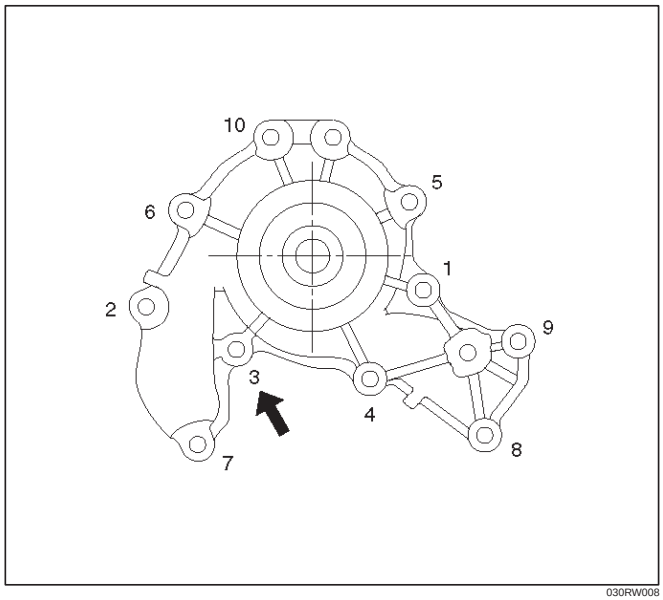

030RW008

3. Idle pulley
   - Install idle pulley and tighten bolt to the specified torque.

   Torque: 52 N·m (5.3 Kg·m/38 lb ft)

4. Timing belt
   - Install timing belt. Refer to timing belt installation step in “Timing Belt” in this manual.
5. Connect radiator inlet hose and replenish EC.
6. Connect battery ground cable.

Thermostat

Thermostat and Associated Parts

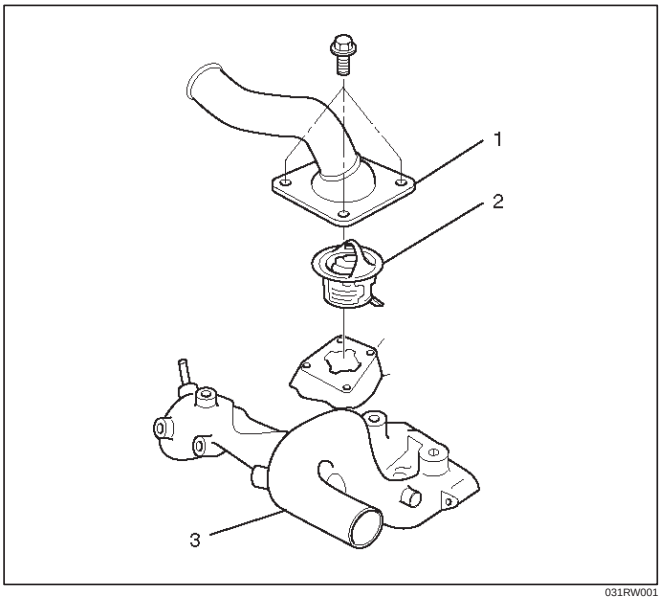

031RW001

Legend

(1) Thermostat Housing
(2) Thermostat
(3) Outlet Pipe

Removal

1. Disconnect battery ground cable.
2. Drain engine coolant from the radiator and engine.
3. Disconnect radiator hose from the inlet pipe.
4. Remove thermostat housing.
5. Remove thermostat(2).

Inspection

Suspend the thermostat in a water–filled container using thin wire. Place a thermometer next to the thermostat. Do not directly heat the thermostat.
Gradually increase the water temperature. Stir the water so that the entire water is same temperature.

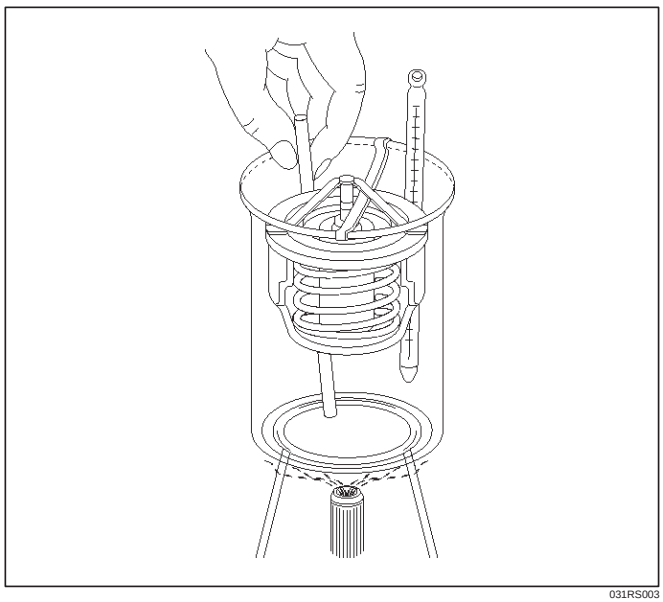

031RS003

Confirm the temperature when the valve first begins to open.

Valve opening temperature 74.5C ~ 78.5˚C (166.1˚F ~ 173.3˚F)

Confirm the temperature when the valve is fully opened.

Valve full open temperature and lift More than 8.5mm (0.33 in) at 90˚C (194˚F)

Make necessary repair and parts replacement if extreme wear or damage is found during inspection.

Installation

1. Install thermostat into the outlet pipe(4) making sure that the air hole is in the up position.
2. Install thermostat housing and tighten bolts to the specified torque.

   Torque: 25 N·m (2.5 Kg·m/18 lb ft)

3. Installation rubber hose.
4. Replenish engine coolant (EC).
5. Start engine and check for EC leakage.

Radiator

Radiator and Associated Parts

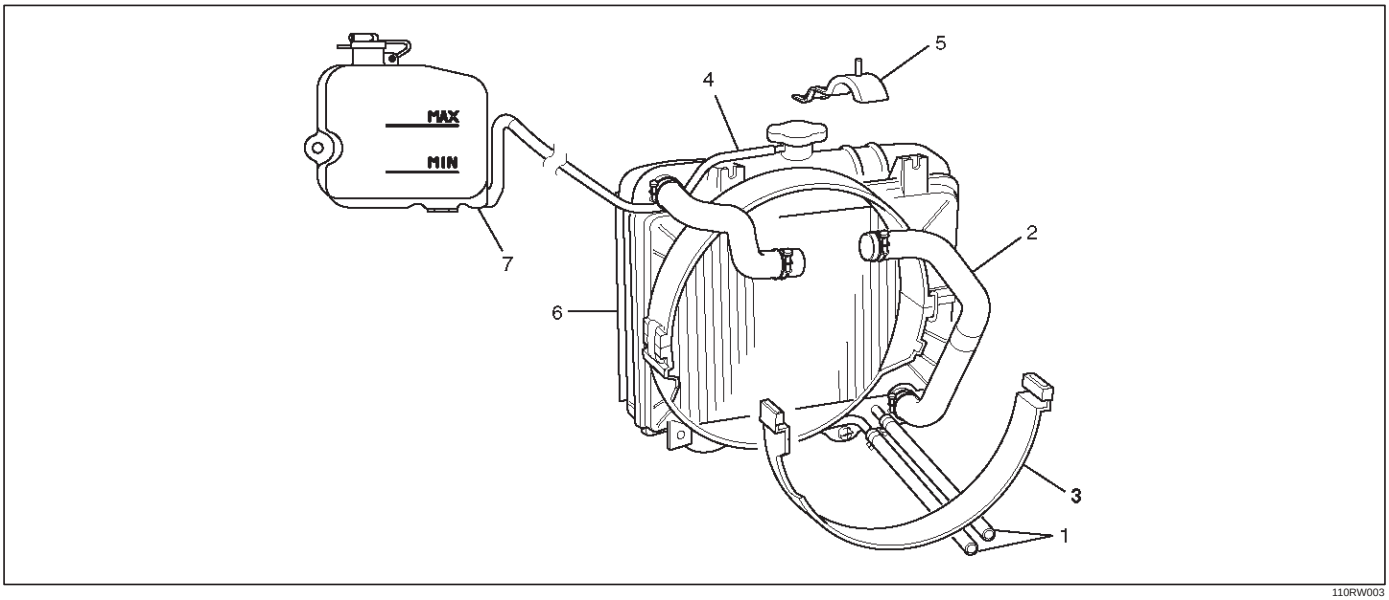

110RW003

Legend

(1) Oil Cooler Hose For Automatic Transmission
(2) Radiator Hose
(3) Fan Guide, Lower
(4) Reserve Tank Hose
(5) Bracket
(6) Radiator Assembly
(7) Reserve Tank

Removal

1. Disconnect battery ground cable.
2. Loosen a drain plug(2) to drain EC.
3. Disconnect oil cooler hose(1) on automatic transmission (A/T).
4. Disconnect radiator inlet hose and outlet hose from the engine.

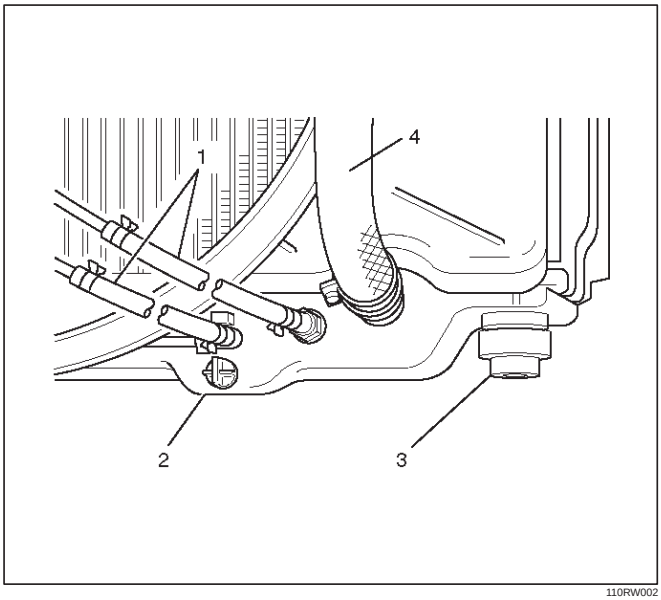

110RW002

5. Remove fan guide(1), clips(3) on both sides and the bottom lock, then remove lower fan guide(3) with fan shroud(4).

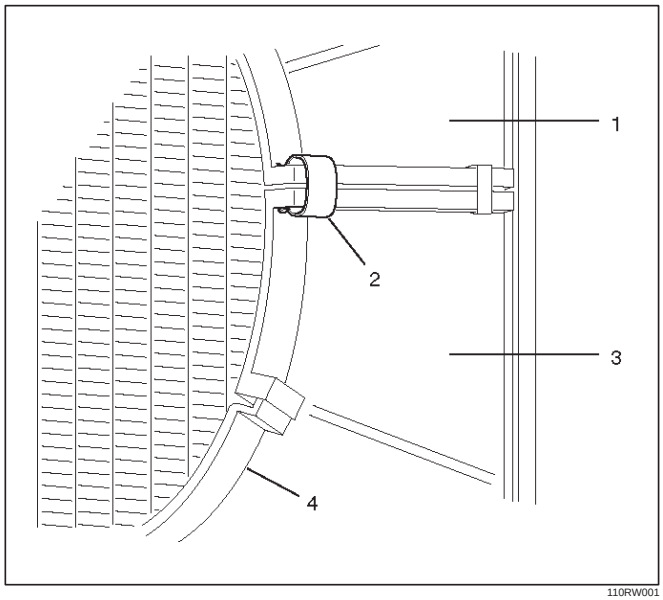

110RW001

6. Disconnect the reserve tank hose(4) from radiator.
7. Remove bracket(5).

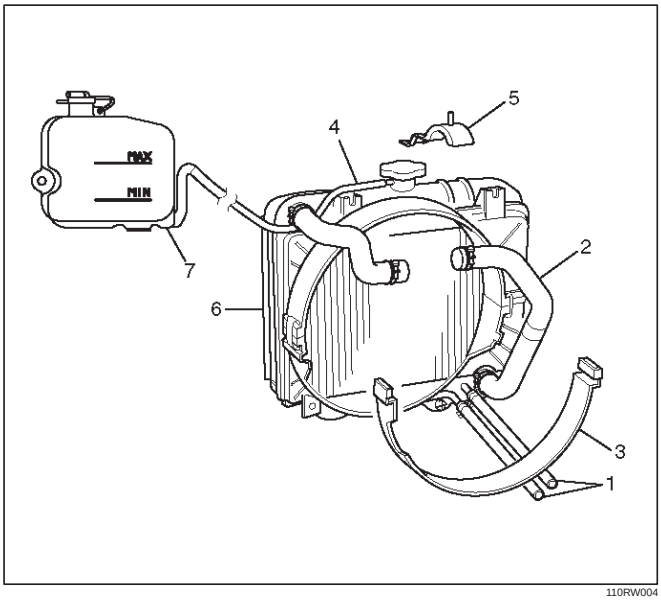

110RW004

8. Lift up and remove the radiator assembly with hose, taking care not to damage the radiator core with a fan blade.
9. Remove rubber cushions on both sides at the bottom.

Inspection

Radiator Cap

Measure the valve opening pressure of the pressurizing valve with a radiator filler cap tester.
Replace the cap if the valve opening pressure is outside the standard range.

Valve opening pressure kPa (psi) 88.3 ~ 117.7 (12.8 ~17.1)

Cap tester: 5–8840–0277–0
Adapter: 5–8840–2603–0
Check the condition of the vacuum valve in the center of the valve seat side of the cap. If considerable rust or dirt is found, or if the valve seat cannot be moved by hand, clean or replace the cap.

Valve opening vacuum kPa (psi) 1.96 ~ 4.91 (0.28 ~ 0.71)

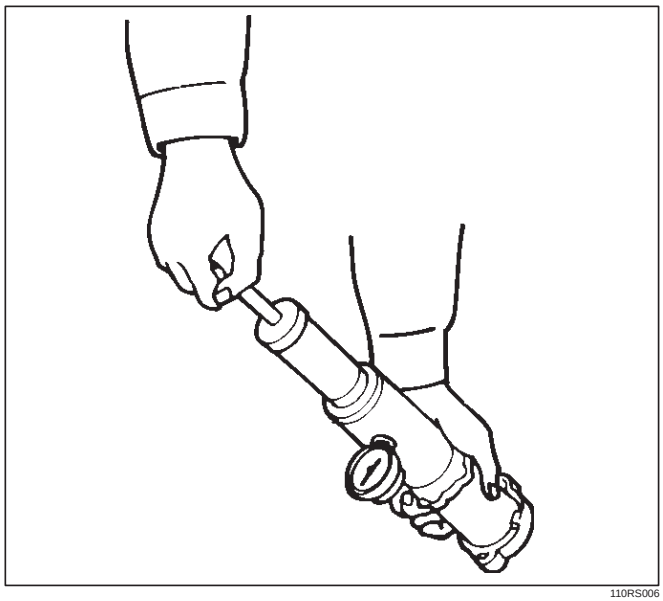
110RS006

Radiator Core

1. A bent fin may result in reduced ventilation and overheating may occur. All bent fins must be straightened. Pay close attention to the base of the fin when it is being straightened.
2. Remove all dust, bugs and other foreign material.

Flushing the Radiator

Thoroughly wash the inside of the radiator and the engine coolant passages with cold water and mild detergent. Remove all signs of scale and rust.

Cooling System Leakage Check

Use a radiator cap tester to force air into the radiator through the filler neck at the specified pressure of 196 kPa (28.5 psi) with a cap tester:

- Leakage from the radiator
- Leakage from the coolant pump
- Leakage from the water hoses
- Check the rubber hoses for swelling.

Cap tester: 5–8840–0277–0
Adapter: 5–8840–2603–0

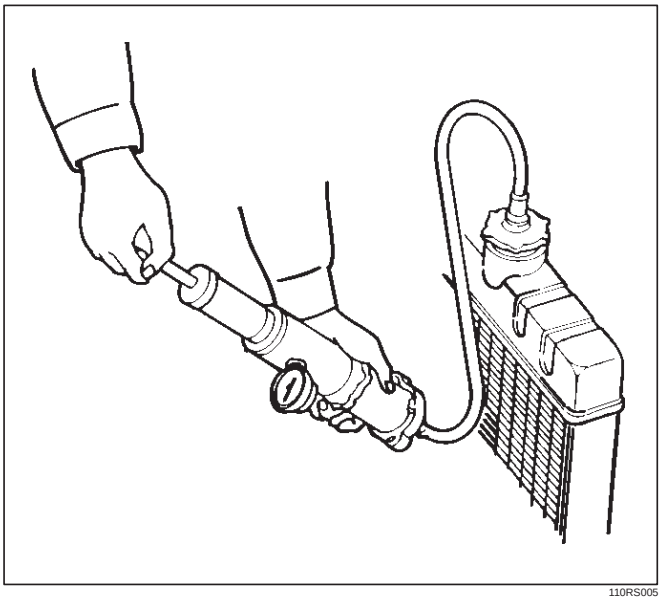

110RS005

Installation

1. Install rubber cushions on both sides of radiator bottom.
2. Install radiator assembly with hose, taking care not to damage the radiator core with a fan blade.
3. Install bracket (6) and support the radiator upper tank with the bracket (5) and secure the radiator.
4. Connect reserve tank hose (4).
5. Install lower fan guide (3).
6. Connect radiator inlet hose and outlet hose to the engine.
7. Connect oil cooler hose (1) to automatic transmission.

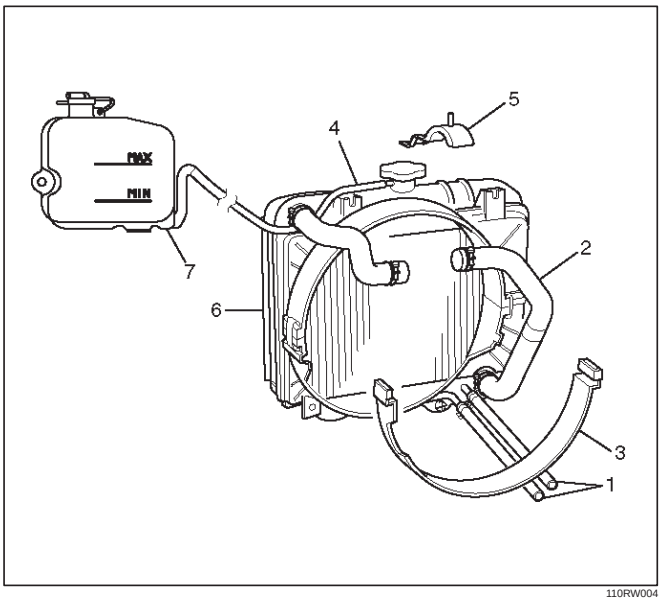

110RW004

8. Connect battery ground cable.
9. Pour engine coolant up to filler neck of radiator, and up to MAX mark of reserve tank.

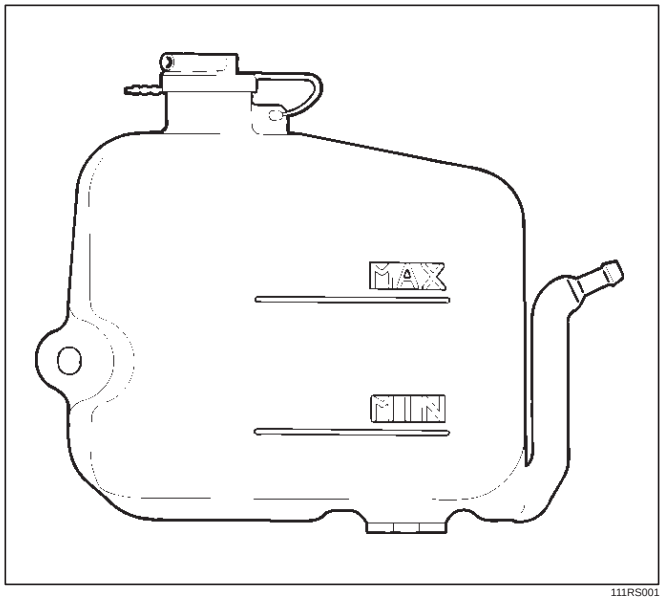

111RS001

Important operation (in case of 100% engine coolant change) procedure for filling with engine coolant.

1. Make sure that the engine is cool.
2. Open radiator cap pour coolant up to filler neck.
3. Pour coolant into reservoir tank up to “MAX” line.
4. Tighten radiator cap and start the engine. After idling for 2 to 3 minutes, stop the engine and reopen radiator cap. If the water level is lower, replenish.

WARNING: WHEN THE COOLANT IS HEATED TO A HIGH TEMPERATURE, BE SURE NOT TO LOOSEN OR REMOVE THE RADIATOR CAP. OTHERWISE YOU MIGHT GET SCALDED BY HOT VAPOR OR BOILING WATER. TO OPEN THE RADIATOR CAP, PUT A PIECE OF THICK CLOTH ON THE CAP AND LOOSEN THE CAP SLOWLY TO REDUCE THE PRESSURE WHEN THE COOLANT HAS BECOME COOLER.

5. After tightening radiator cap, warm up the engine at about 2000 rpm. Set heater adjustment to the highest temperature position, and let the coolant circulate also into heater water system.
6. Check to see the thermostat has opened through the needle position of water thermometer, conduct a 5–minute idling again and stop the engine.
7. When the engine has been cooled, check filler neck for water level and replenish if required. Should extreme shortage of coolant is found, check the cooling system and reservoir tank hose for leakage.
8. Pour coolant into reservoir tank up tp “MAX” line.

Drive Belt and Cooling Fan

Drive Belt and Associated Parts

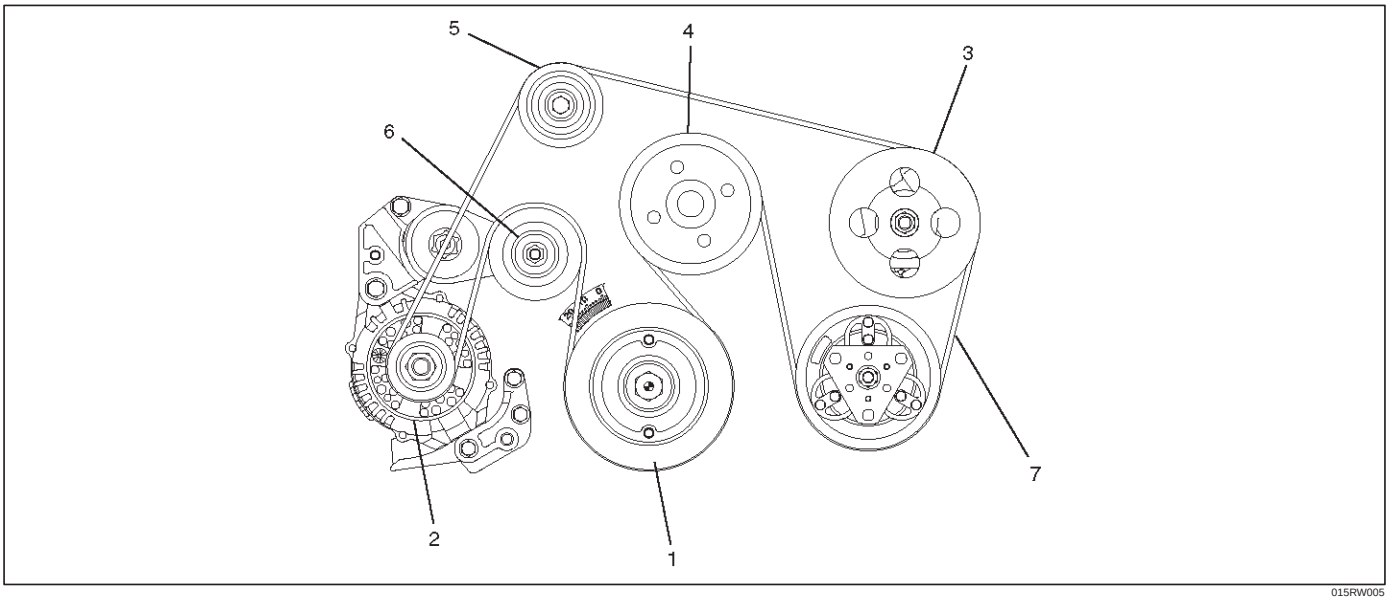

015RW005

Legend

(1) Crankshaft Pulley
(2) Generator
(3) Power Steering Pump
(4) Water Pump and Cooling Fan Pulley
(5) Idle Pulley
(6) Tension Pulley
(7) Drive Belt

The drive belt adjustment is not required as automatic drive belt tensioner is equipped.

Inspection

Check drive belt for wear or damage, and replace with a new one as necessary.

Installation

Install cooling fan assembly and tighten bolts/nuts to the specified torque.

Torque : 22 N·m (2.2 Kg·m/16 lb ft) for fan pulley and fan bracket.

Torque : 10 N·m (1.0 Kg·m/88.5 lb in) for fan and clutch assembly.

NOTE: Fan belts for 6VE1 Gasoline Engine mounted on 98MY (UX) have been brought into one. As a result, the rotating direction of a fan belt is opposite to the direction of cooling fan for 92 to 97MY 6VD1 with no interchangeability.

Therefore, incorrect installation of a fan may cause the air for cooling to flow in the opposite direction, this resulting in the poor performance of the air-conditioner and a rise temperature in engine cooling water.

Main Data and Specifications

General Specifications

	M/T	A/T
Cooling system	Engine coolant forced circulation	
Radiator	(1 tube in row) Tube type corrugated (2 tube in row)	
Heat radiation capacity	68,000 kcal/h	77,000 kcal/h
Heat radiation area	9.445m^2 (0.878ft^2)	11.21m^2 (1.04ft^2)
Radiator front area	0.302m^2 (0.028ft^2)	
Radiator dry weight	39N (8.8lb)	44N (9.9lb)
Radiator cap valve opening pressure	93.3 ~ 122.7kpa (13.5 ~ 17.8psi)	
Engine coolant capacity	2.5lit (2.6U.S q.t.)	2.4lit (2.5U.S q.t.)
Engine coolant pump	Centrifugal impeller type	
Delivery	300 (317) or more	
Pump speed	5000 ± 50 rpm	
Thermostat	Wax pellet type with air hole	
Valve opening temperature	74.5 ~ 78.5˚C (166.1 ~ 173.3˚F)	
Engine coolant total capacity	10.4lit (11.0U.S qt)	10.5lit (11.1U.S qt)

Torque Specifications

N·m (Kg·m/lb ft)

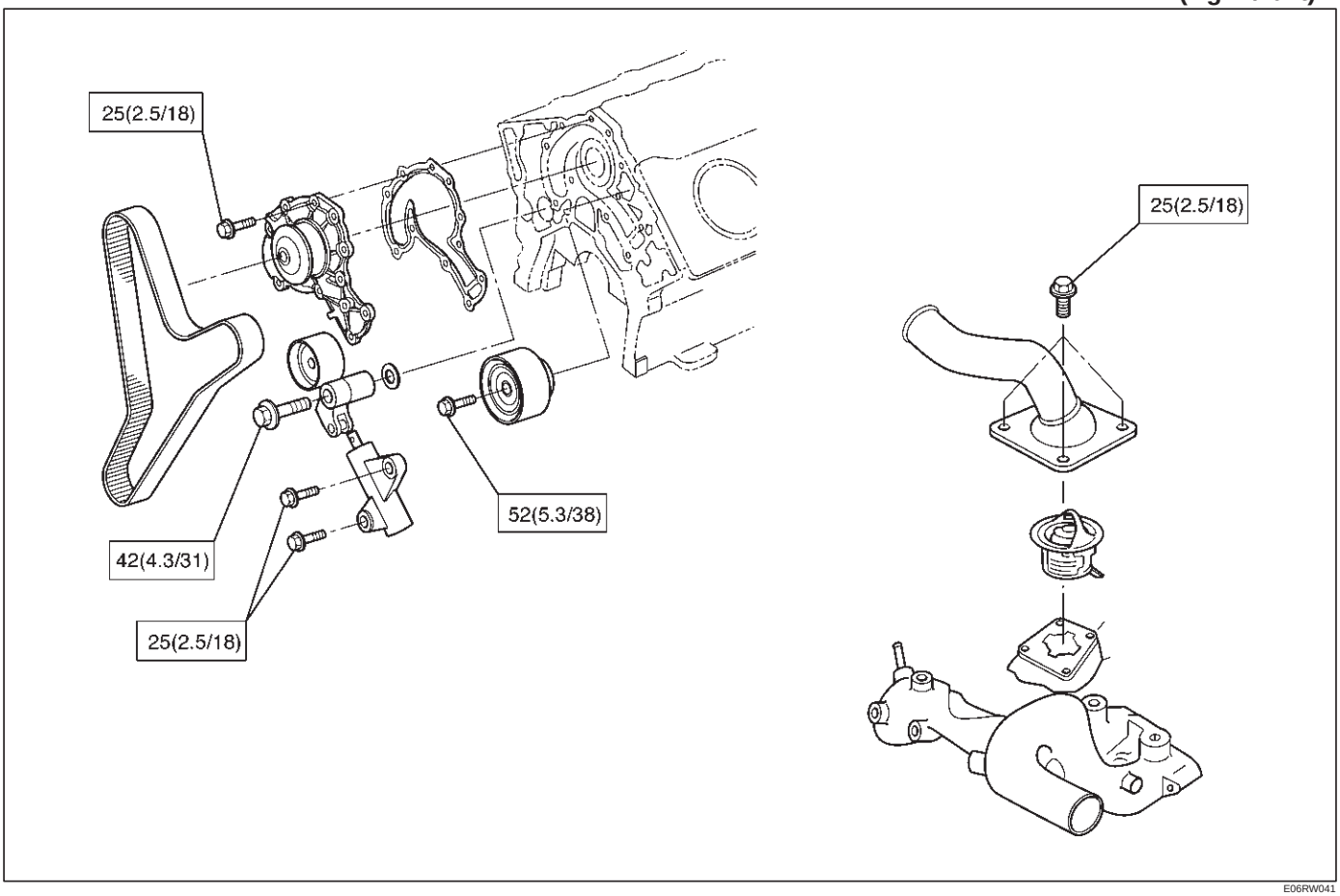

E06RW041

Special Tool

ILLUSTRATION	**TOOL NO.** TOOL NAME
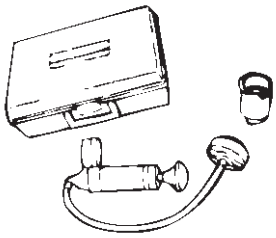	**5–8840–0277–0** **(J–24460–01)** Tester; radiator cap
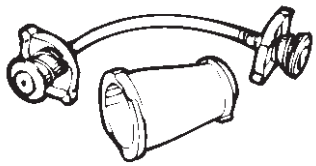	**5–8840–2603–0** **(J–33984–A)** Adapter; radiator cap

ENGINE

ENGINE FUEL

CONTENTS

Service Precaution 6C–1
General Description 6C–2
Fuel Metering 6C–3
Fuel Filter 6C–4
Fuel Filter and Associated Parts 6C–4
Removal 6C–4
Inspection 6C–4
Installation 6C–5
Inspection 6C–5
In–Tank Fuel Filter 6C–5
Fuel Pump Flow Test 6C–5
Fuel Pump 6C–6
Fuel Pump and Associated Parts 6C–6
Removal 6C–6
Installation 6C–6
Fuel Pump Relay 6C–7
General Description 6C–7
Fuel Tank 6C–7
Fuel Tank and Associated Parts 6C–7
Removal 6C–7
Installation 6C–8
Fuel Tube / Quick – Connect Fittings 6C–8
Precautions 6C–8
Cautions During Work 6C–8
Removal 6C–8
Reuse of Quick–Connector 6C–10
Assembling Advice 6C–10
Fuel Gauge Unit 6C–11
Fuel Gauge Unit and Associated Parts . . . 6C–11
Removal 6C–11
Installation 6C–11
Fuel Filler Cap 6C–12
General Description 6C–12
Inspection 6C–12
Main Data and Specifications 6C–12

Service Precaution

WARNING: IF SO EQUIPPED WITH A SUPPLEMENTAL RESTRAINT SYSTEM (SRS), REFER TO THE SRS COMPONENT AND WIRING LOCATION VIEW IN ORDER TO DETERMINE WHETHER YOU ARE PERFORMING SERVICE ON OR NEAR THE SRS COMPONENTS OR THE SRS WIRING. WHEN YOU ARE PERFORMING SERVICE ON OR NEAR THE SRS COMPONENTS OR THE SRS WIRING, REFER TO THE SRS SERVICE INFORMATION. FAILURE TO FOLLOW WARNINGS COULD RESULT IN POSSIBLE AIR BAG DEPLOYMENT, PERSONAL INJURY, OR OTHERWISE UNNEEDED SRS SYSTEM REPAIRS.

CAUTION: Always use the correct fastener in the proper location. When you replace a fastener, use ONLY the exact part number for that application. ISUZU will call out those fasteners that require a replacement after removal. ISUZU will also call out the fasteners that require thread lockers or thread sealant. UNLESS OTHERWISE SPECIFIED, do not use supplemental coatings (Paints, greases, or other corrosion inhibitors) on threaded fasteners or fastener joint interfaces. Generally, such coatings adversely affect the fastener torque and the joint clamping force, and may damage the fastener. When you install fasteners, use the correct tightening sequence and specifications. Following these instructions can help you avoid damage to parts and systems.

General Description

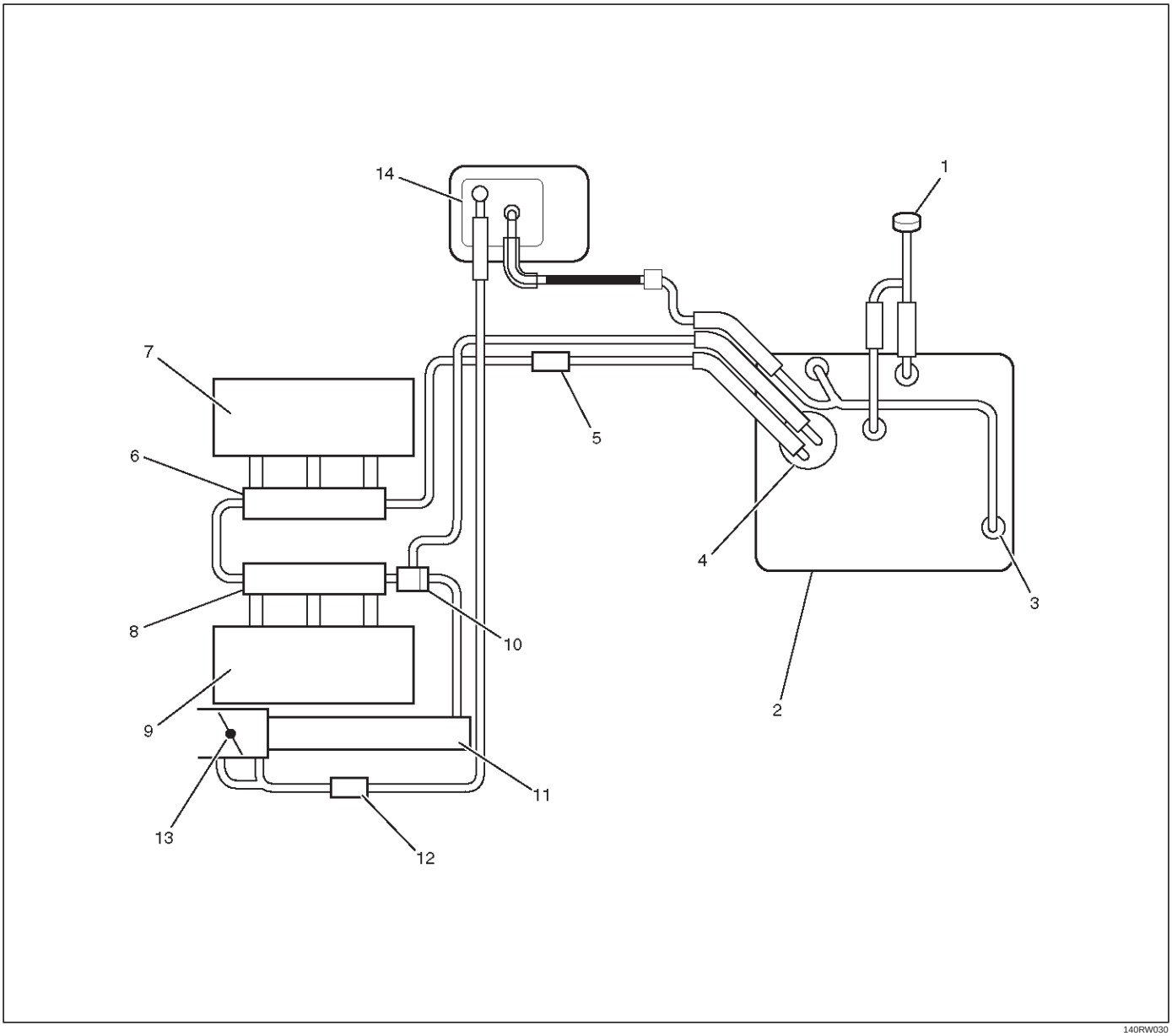

140RW030

Legend

(1) Fuel Filler Cap
(2) Fuel Tank
(3) Rollover Valve
(4) Fuel Pump
(5) Fuel Filter
(6) Fuel Rail Right
(7) Right Bank
(8) Fuel Rail Left
(9) Left Bank
(10) Fuel Pressure Control Valve
(11) Common Chamber
(12) Duty Solenoid Valve
(13) Throttle Valve
(14) Canister

When working on the fuel system, there are several things to keep in mind:

- Any time the fuel system is being worked on, disconnect the negative battery cable except for those tests where battery voltage is required.
- Always keep a dry chemical (Class B) fire extinguisher near the work area.
- Replace all pipes with the same pipe and fittings that were removed.
- Clean and inspect “O” rings. Replace if required.
- Always relieve the line pressure before servicing any fuel system components.
- Do not attempt repairs on the fuel system until you have read the instructions and checked the pictures relating to that repair.

- Adhere to all Notices and Cautions.

All gasoline engines are designed to use only unleaded gasoline. Unleaded gasoline must be used for proper emission control system operation.
Its use will also minimize spark plug fouling and extend engine oil life. Using leaded gasoline can damage the emission control system and could result in loss of emission warranty coverage.
All cars are equipped with an Evaporative Emission Control System. The purpose of the system is to minimize the escape of fuel vapors to the atmosphere.

Fuel Metering

The Engine Control Module (ECM) is in complete control of this fuel delivery system during normal driving conditions.
The intake manifold function, like that of a diesel, is used only to let air into the engine. The fuel is injected by separate injectors that are mounted over the intake manifold.
The Manifold Absolute Pressure (MAP) sensor measures the changes in the intake manifold pressure which result from engine load and speed changes, which the MAP sensor converts to a voltage output.
This sensor generates the voltage to change corresponding to the flow of the air drawn into the engine. The changing voltage is transformed into an electric signal and provided to the ECM.
With receipt of the signals sent from the MAP sensor, Intake Air Temperature sensor and others, the ECM determines an appropriate fuel injection pulse width feeding such information to the fuel injector valves to effect an appropriate air/fuel ratio.
The Multiport Fuel Injection system utilizes an injection system where the injectors turn on at every crankshaft revolution. The ECM controls the injector on time so that the correct amount of fuel is metered depending on driving conditions.
Two interchangeable “O” rings are used on the injector that must be replaced when the injectors are removed.
The fuel rail is attached to the top of the intake manifold and supplies fuel to all the injectors.
Fuel is recirculated through the rail continually while the engine is running. This removes air and vapors from the fuel as well as keeping the fuel cool during hot weather operation.
The fuel pressure control valve that is mounted on the fuel rail maintains a pressure differential across the injectors under all operating conditions. It is accomplished by controlling the amount of fuel that is recirculated back to the fuel tank based on engine demand.
See Section “Driveability and Emission” for more information and diagnosis.

Fuel Filter

Fuel Filter and Associated Parts

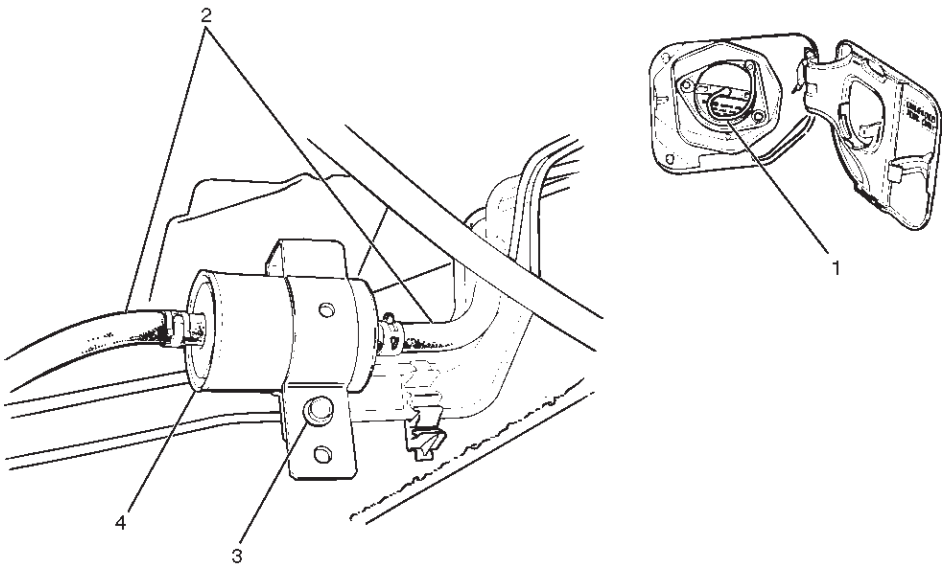

041RW014

Legend

(1) Fuel Filler Cap
(2) Fuel Hose
(3) Fuel Filter Fixing Bolt
(4) Fuel Filter

Removal

CAUTION: When repair to the fuel system has been completed, start engine and check the fuel system for loose connection or leakage. For the fuel system diagnosis, see Section “Driveability and Emission”.

1. Disconnect battery ground cable.
2. Remove Fuel filler cap(1).
3. Disconnect fuel hoses(2) from fuel filter on both engine side and fuel tank side.
4. Fuel filter fixing bolt(3).
   - Remove the fuel filter fixing bolt(3) on fuel filter holder.
5. Remove fuel filter(4).

Inspection

1. Replace the fuel filter if the fuel leaks from fuel filter body or if the fuel filter body itself is damaged.
2. Replace the filter if it is clogged with dirt or sediment.
3. Check the drain of receive rubber and if it is clogged with dust, clean it up with air.

Installation

1. Install the fuel filter in the proper direction.
2. Install fuel filter holder fixing bolt.
3. Connect fuel hoses on engine side(1) and fuel tank side(2).

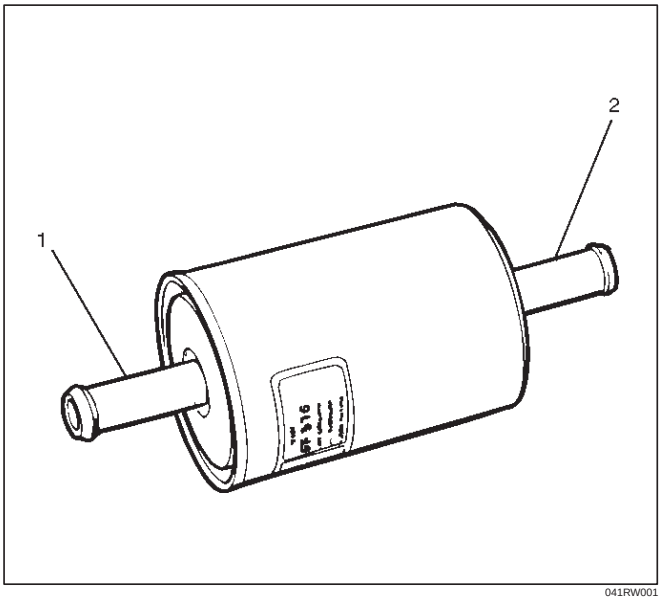

041RW001

4. Install fuel filler cap
5. Connect the battery ground cable.

Inspection

After installation, start engine and check for fuel leakage.

In–Tank Fuel Filter

The filter is located on the lower end of fuel pickup tube in the fuel tank. It prevents dirt from entering the fuel pipe and also stops water unless the filter is completely submerged in the water. It is a self cleaning type, not requiring scheduled maintenance. Excess water and sediment in the tank restricts fuel supply to the engine, resulting in engine stoppage. In such a case, the tank must be cleaned thoroughly.

Fuel Pump Flow Test

If reduction of fuel supply is suspected, perform the following checks:

1. Make sure that there is fuel in the tank.
2. With the engine running, check the fuel feed pipe and hose from fuel tank to injector for evidence of leakage. Retighten, if pipe or hose connection is loose. Also, check pipes and hoses for squashing or clogging.
3. Insert the hose from fuel feed pipe into a clean container, and check for fuel pump flow rate.
4. Connect the pump relay terminals with a jumper wire(1) as shown and start the fuel pump to measure delivery.

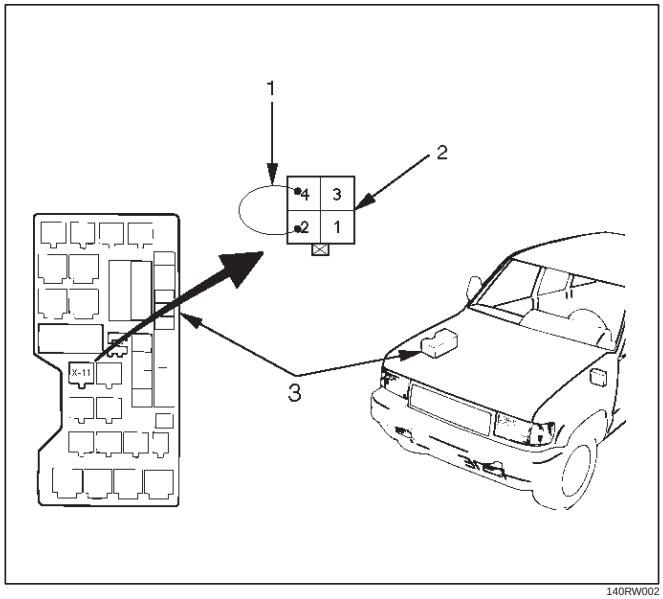

140RW002

CAUTION: Never generate sparks when connecting a jumper wire.

Delivery	Delivery
15 seconds	0.38 liters minimum

If the measure value is out of standard, conduct the pressure test.

Pressure test

For the pressure test to the fuel system, see Section 6E “Fuel Control System”.

Fuel Pump

Fuel Pump and Associated Parts

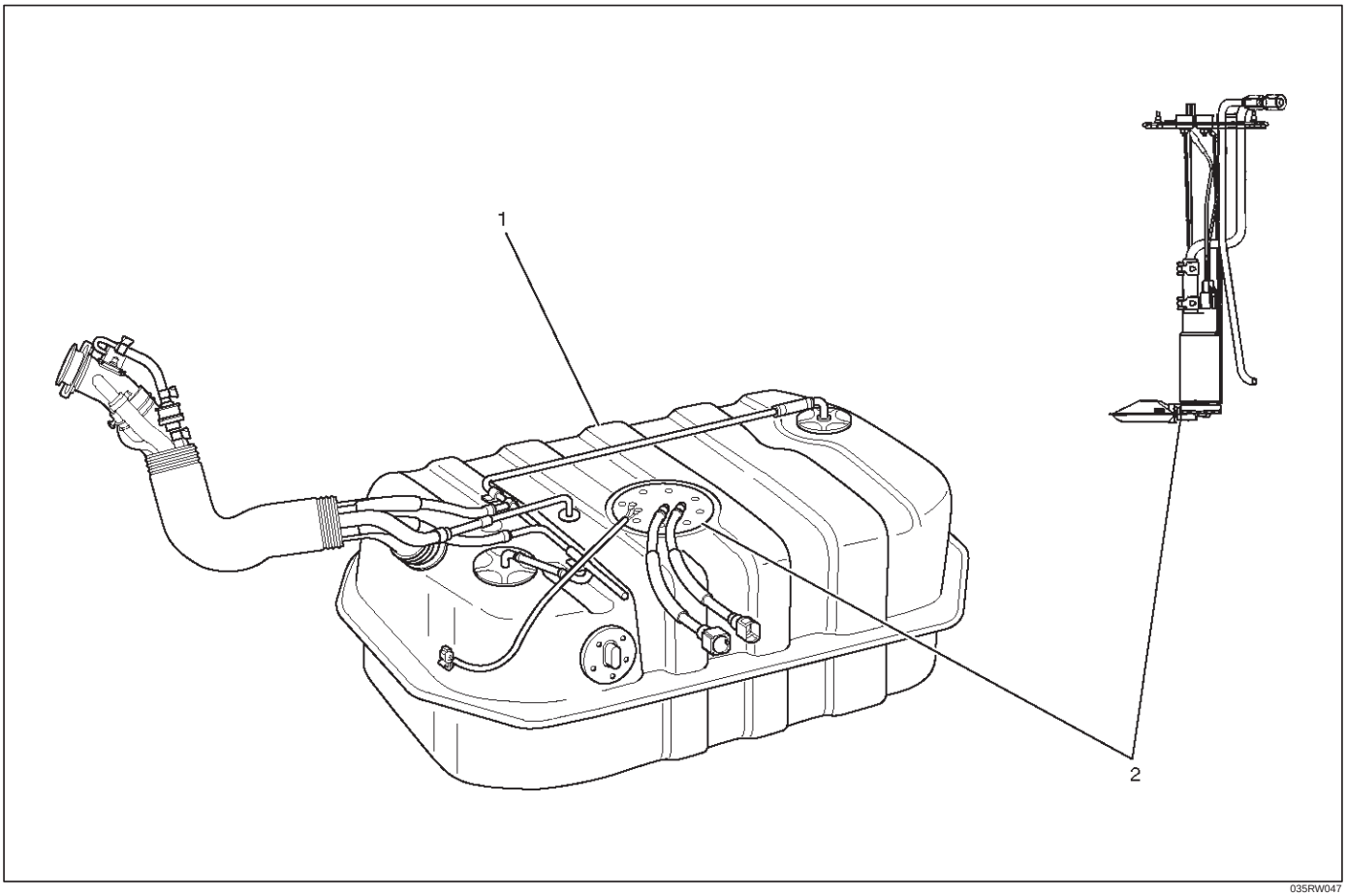

035RW047

Removal

CAUTION: When repair to the fuel system has been completed, start engine and check the fuel system for loose connection or leakage. For the fuel system diagnosis, see Section "Driveability and Emission".

1. Disconnect battery ground cable.
2. Loosen fuel filler cap.
3. Drain fuel.
   Tighten drain plug to the specified torque after draining fuel.

   Torque: 20 N·m (2.0 Kg·m/14 lb ft) — M8
4. Remove fuel tank assembly(1). Refer to "Fuel Tank Removal" in this section.
5. Remove fuel pump (FP) assembly(2) fixing screws and remove the FP assembly.

NOTE: After removing FP, cover fuel tank to prevent any dust entering.

Installation

1. Install FP assembly(2).
2. Install fuel tank assembly(1). Refer to "Fuel Tank Installation".
3. Fill the tank with fuel and tighten fuel filler cap.
4. Connect battery ground cable.

Fuel Pump Relay

General Description

In order to control the FP operation, the FP relay is provided. When the starter switch is turned to “ON” position, the FP relay operates the FP for 2 seconds. When it is turned to “START” position, the Power Train Control Module (PCM) receives the reference pulse from the Ignition Control Module and it operates the relay, again causing the FP to feed fuel.

Fuel Tank

Fuel Tank and Associated Parts

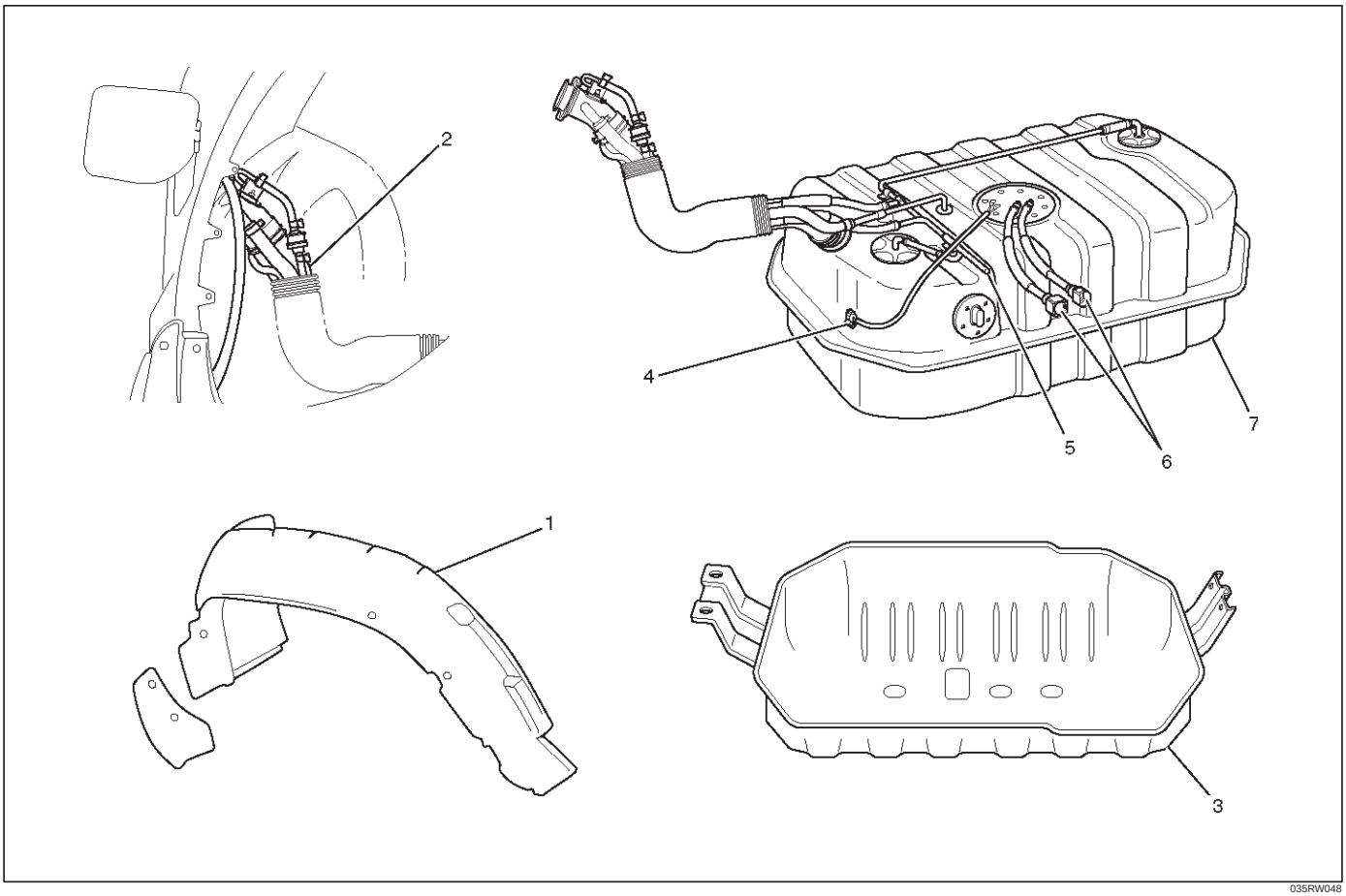

035RW048

Legend

(1) Fender Liner
(2) Fuel Filler Hose and Air Breather Hose and Evapo Hose
(3) Undercover
(4) Fuel Tank Wiring Connector
(5) Evapo Fuel Hose
(6) Fuel Feed Tube and Fuel Return Tube/Quick–Connect Fittings
(7) Fuel Tank

Removal

CAUTION: When repair to the fuel system has been completed, start engine and check the fuel system for loose connection or leakage. For the fuel system diagnosis, see Section “Driveability and Emission”.

1. Disconnect battery ground cable.
2. Loosen fuel filler cap.
3. Drain fuel.
   Tighten drain plug to the specified torque after draining fuel.

   Torque: 20 N·m (2.0 Kg·m/14 lb ft) — M8
4. Remove fender liner (1) of wheel well on rear right side.
5. Fuel filler hose, air breather hose and evapo hose (2).
6. Remove undercover fixing bolts on both sides and remove under cover(3).

7. Disconnect two fuel tank wiring connectors(4) on front right side of tank.
8. Disconnect evapo fuel hose(5).
9. Disconnect fuel feed tube and fuel return tube(6).

NOTE: Handling of the fuel tube, be sure to refer “Fuel Tube/Quick–Connect Fittings” in this section.

10. Remove fuel tank fixing bolts on both sides and remove fuel tank(7).

Installation

1. Install fuel tank(7).
   - Place a flange on right side of tank on the bracket.
   - Install a flange on left side on the bracket from the bottom, and tighten bolts to the specified torque.

   Torque: 36 N·m (3.7 Kg·m/27 lb ft)
2. Connect fuel feed tube and fuel return tube(6).
3. Connect evapo fuel hose(5).
4. Connect fuel tank wiring connector(4).
5. Install undercover(3).
6. Connect fuel filler hose, air breather hose and evapo hose(2).
7. Install fender liner(1).
   - Mount fender liner to the wheel well.
   - Fill the tank with fuel and tighten fuel filler cap.
   - Connect battery ground cable.

Fuel Tube / Quick – Connect Fittings

Precautions

- Lighting of Fires Prohibited.
- Keep flames away from your work area to prevent the inflammable from catching fire.
- Disconnect the battery negative cable to prevent shorting during work.
- When welding or conducting other heat-generating work on other parts, be sure to provide pretreatment to protect the piping system from thermal damage or spattering.

Cautions During Work

Do not expose the assembly to battery electrolyte or do not wipe the assembly with a cloth used to wipe off spilt battery electorolyte.
The piping wet with battery electrolyte cannot be used.
Be careful not to give a bending or twisting force to the piping during the work. If deformed, replace with a new piping.

Removal

1. Open the fuel cap to relieve the fuel pressure in the tank.
   If the fuel quick-connect fittings are dusty, clean with an air blower, etc. and then remove it.

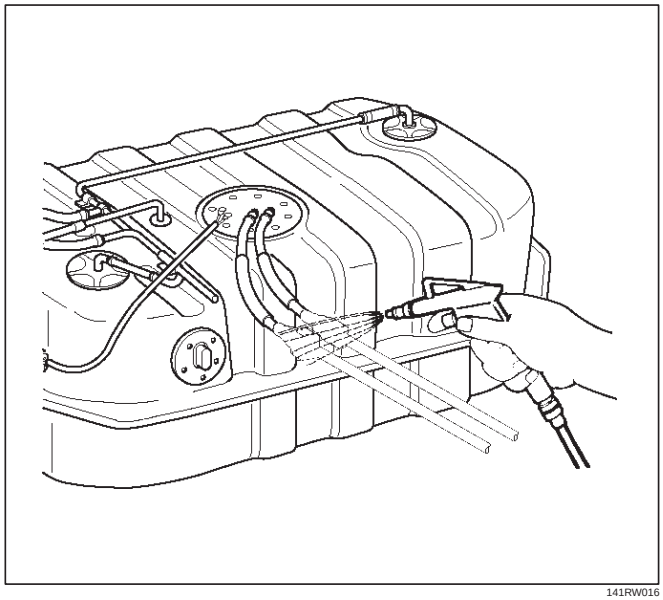

141RW016

As some pressure may remain in the piping, cover the connector with a cloth, etc. to prevent the splashing of fuel in the first disconnection of the piping.

2. For removal of the delivery pipe (feeding fuel to the engine), hold the connector in one hand, and hold the retainer tab with the other hand and pull out the connector, as illustrated. The pipe can be removed with the retainer attached.

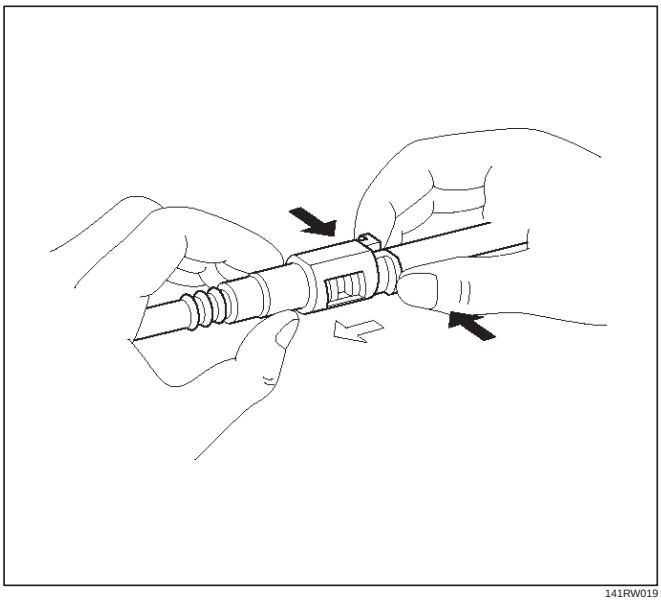

141RW019

3. For removal of the return pipe (returning fuel to the tank), hold the pipe in one hand, and pull out the connentor with the other hand while pressing the square relieve button of the retainer, as illustrated.

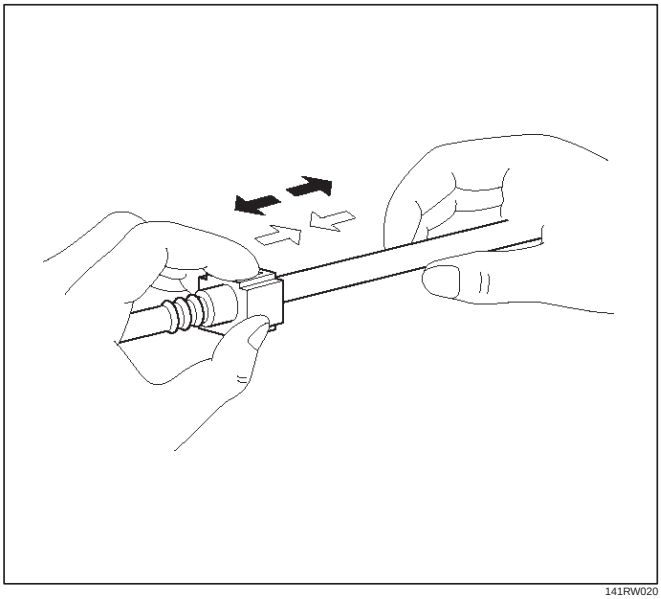

141RW020

NOTE: This work should be done by hands. Do not use any tools. Should the pipe can hardly be removed from the connector, use a lubricant (light oil) and/or push and pull the connector longitudinally until the pipe is removed.

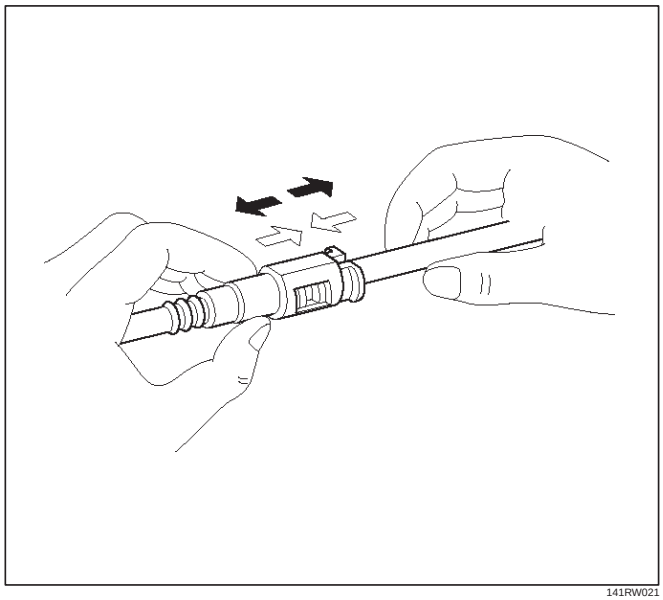

141RW021

When reusing the delivery pipe retainer, reuse without removing the retainer from the pipe. If the retainer is damaged or deformed, however, replace with a new retainer.

Cover the connectors removed with a plastic bag, etc. to prevent the entry of dust or rain water.

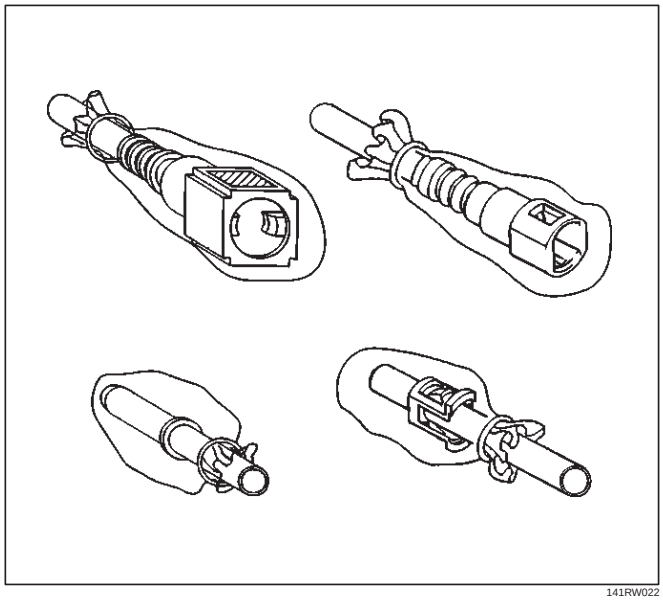

141RW022

Reuse of Quick–Connector

(Delivery Pipe)

- Replace the pipe and connector if scratch, dent or crack is found.
- Remove mud and dust from the pipe and make sure that the end including spool is free of defects, such as scratch, rust, and dent, which may cause poor sealability. If defective, replace with a new pipe.
- If the retainer removed according to the removal step above is attached to the pipe, clean and insert it straight into the quick-connector till it clicks. After it clicks, try pulling it out to make sure that it is not drawn and is securely locked.

NOTE: The retainer, once removed from the pipe, cannot be reused. Just replace with a new retainer. Insert the new retainer into the connector side until it clicks, and connect the pipe as inserting it into the retainer until it clicks.

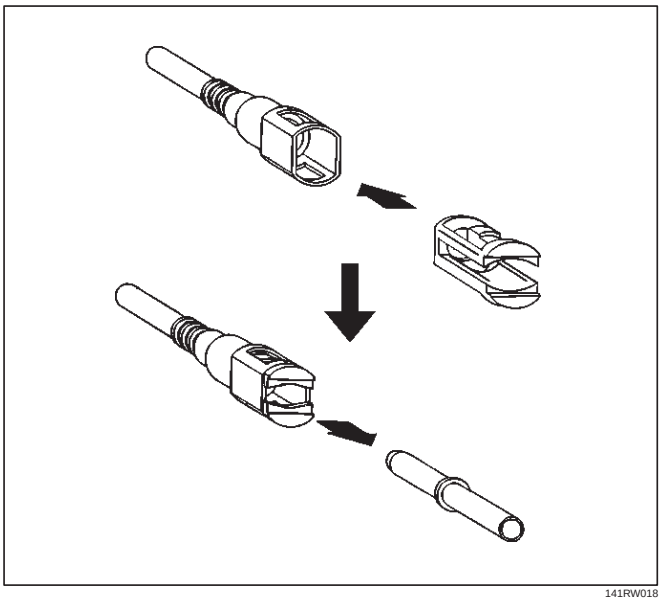

141RW018

(Return Pipe)

- Replace the pipe and connector if scratch, dent or crack is found.
- Remove mud or dust from the pipe and make sure that the end including spool is free from defects, such as scratch, rust, and dent, which may cause poor sealability. If defective, replace with a new pipe.
- After cleaning the pipe, insert it straight into the connector until it clicks. After it clicks, try pulling it out to make sure that it is not drawn and is securely locked.

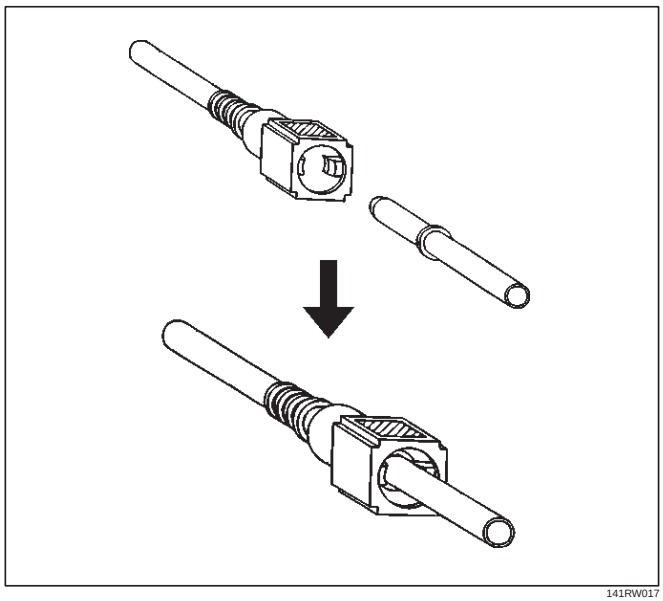

141RW017

Assembling Advice

Application of engine oil or light oil to the pipe facilitates connecting work. The work should be started immediately after lubrication, since dust may stick to the pipe surface to cause poor sealability if a long time passes after lubrication.

Test/Inspection After Assembling

1. Reconnect the battery negative cable.
2. Turn the ignition key to the “ON” position and check pump startup sound. As the pump is actuated to raise fuel pressure, check and see fuel leak from the piping system.
3. Make sure of no fuel leakage by conducting the above fuel leak check a few times.
4. Start the engine and make sure of stable idling speed and normal vehicle run.The entry of dust during the work may sometimes affect the fuel injection system.

Fuel Gauge Unit

Fuel Gauge Unit and Associated Parts

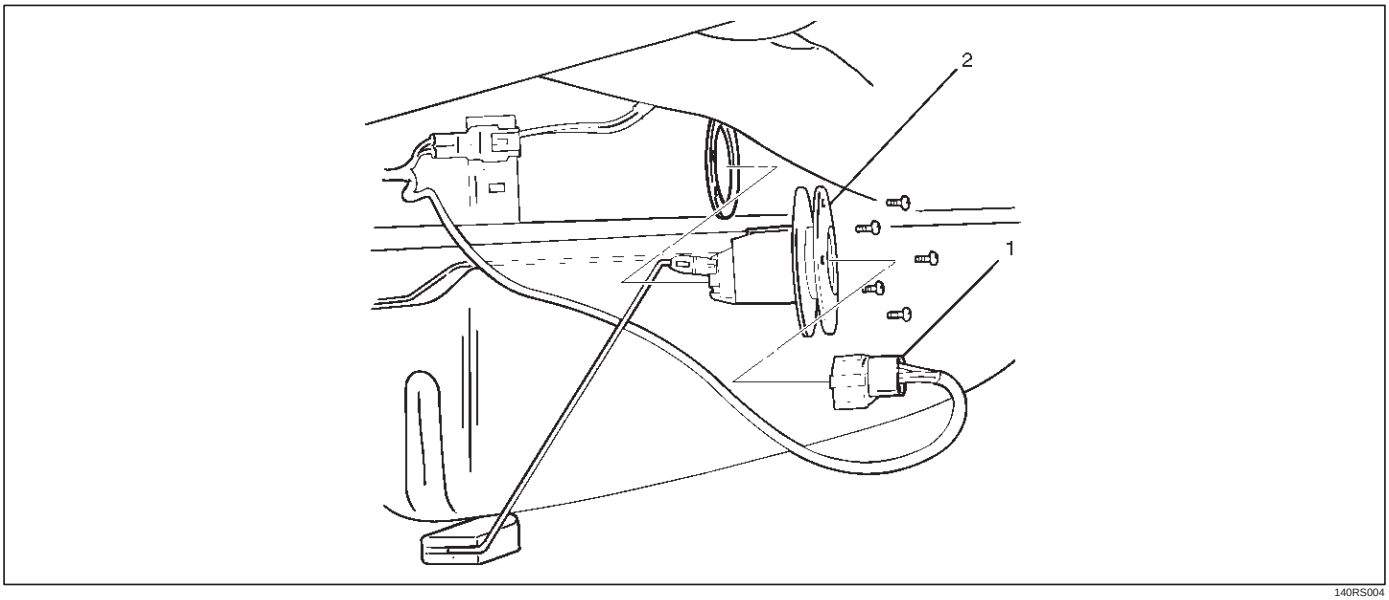

140RS004

Legend

(1) Wiring Connector
(2) Fuel Gauge Unit

Removal

CAUTION: When repair to the fuel system has been completed, start engine and check the fuel system for loose connection or leakage. For the fuel system diagnosis, see Section "Driveability and Emission".

1. Disconnect battery ground cable.
2. Loosen fuel filler cap.
3. Drain fuel.
   Tighten drain plug to the specified torque after draining fuel.

   Torque: 20 N·m (2.0 Kg·m/14 lb ft) — M8
4. Wiring connector
   - Disconnect wiring connector(1) from the unit.
5. Fuel gauge unit
   - Remove the fixing screws, then the fuel gauge unit(2).

NOTE: After removing fuel gauge unit, cover fuel tank to prevent any dust entering

Installation

1. Fuel gauge unit(2).
2. Wiring connector(1).
   - Connect the wiring connector to the fuel gauge unit.
   - Fill the tank with fuel and tighten fuel filler cap.
   - Connect battery ground cable.

Fuel Filler Cap

General Description

Fuel filler cap includes vacuum valve and pressure valve. In case any high vacuum and any high pressure happen in tank, each valve works to adjust the pressure to prevent the tank from being damaged.

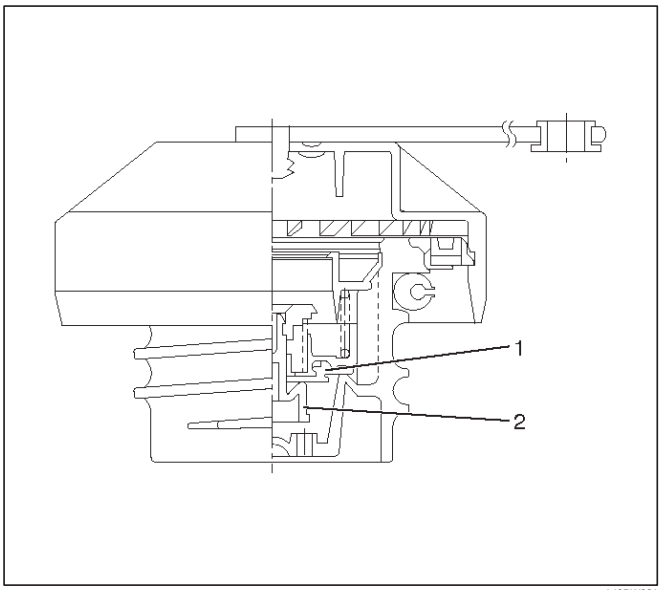

140RW021

Legend

(1) Vacuum Valve
(2) Pressure Valve

Inspection

Check the seal ring in the filler cap for presence of any abnormality and for seal condition.
Replace the filler cap, if abnormal.

CAUTION: The fuel filler cap valves have characteristics.

A defective valve, no valve at all or a valve with the wrong characteristics will do a lot of harm to engine operating characteristics; be sure to use the same fuel filler cap as installed in this vehicle.

Main Data and Specifications

Torque Specification

N·m (Kg·m/lb ft)

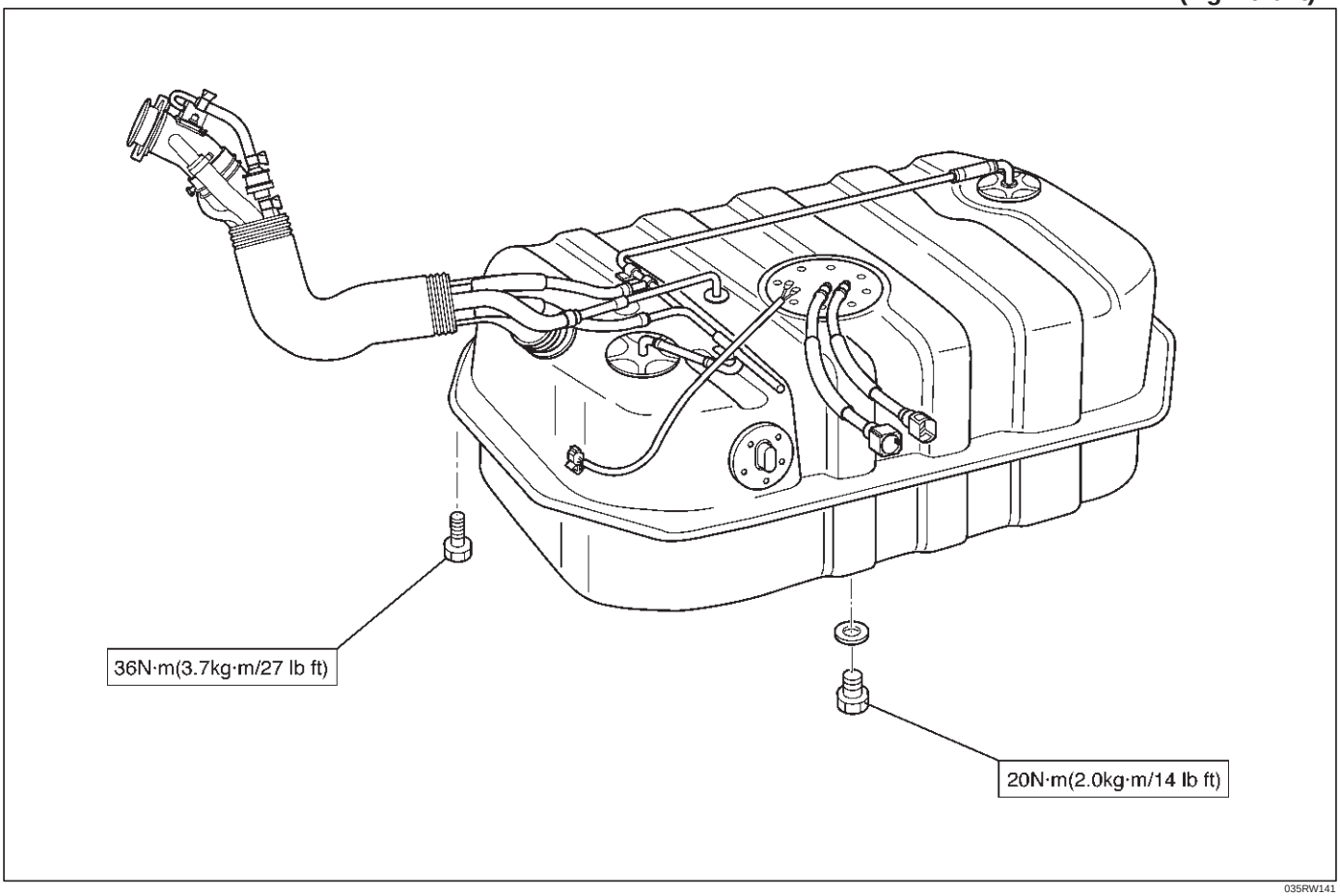

035RW141

ENGINE

ENGINE ELECTRICAL

CONTENTS

Service Precaution 6D1–1
Battery 6D1–2
General Description 6D1–2
Diagnosis 6D1–2
Battery Charging 6D1–3
Jump Starting 6D1–3
Battery Removal 6D1–4
Battery Installation 6D1–4
Main Data and Specifications 6D1–5

Service Precaution

WARNING: IF SO EQUIPPED WITH A SUPPLEMENTAL RESTRAINT SYSTEM (SRS), REFER TO THE SRS COMPONENT AND WIRING LOCATION VIEW IN ORDER TO DETERMINE WHETHER YOU ARE PERFORMING SERVICE ON OR NEAR THE SRS COMPONENTS OR THE SRS WIRING. WHEN YOU ARE PERFORMING SERVICE ON OR NEAR THE SRS COMPONENTS OR THE SRS WIRING, REFER TO THE SRS SERVICE INFORMATION. FAILURE TO FOLLOW WARNINGS COULD RESULT IN POSSIBLE AIR BAG DEPLOYMENT, PERSONAL INJURY, OR OTHERWISE UNNEEDED SRS SYSTEM REPAIRS.

CAUTION: Always use the correct fastener in the proper location. When you replace a fastener, use ONLY the exact part number for that application. ISUZU will call out those fasteners that require a replacement after removal. ISUZU will also call out the fasteners that require thread lockers or thread sealant. UNLESS OTHERWISE SPECIFIED, do not use supplemental coatings (Paints, greases, or other corrosion inhibitors) on threaded fasteners or fastener joint interfaces. Generally, such coatings adversely affect the fastener torque and the joint clamping force, and may damage the fastener. When you install fasteners, use the correct tightening sequence and specifications. Following these instructions can help you avoid damage to parts and systems.

Battery

General Description

There are six battery fluid caps on top of the battery. These are covered by a paper label.
The battery is completely sealed except for the six small vent holes on the side. These vent holes permit the escape of small amounts of gas generated by the battery.
This type of battery has the following advantages over conventional batteries:

1. There is no need to add water during the entire service life of the battery.
2. The battery protects itself against overcharging.
   The battery will refuse to accept an extensive charge.
   (A conventional battery will accept an excessive charge, resulting in gassing and loss of battery fluid.)
3. The battery is much less vulnerable to self discharge than a conventional type battery.

Diagnosis

1. Visual Inspection

Inspect the battery for obvious physical damage, such as a cracked or broken case, which would permit electrolyte loss.
Replace the battery if obvious physical damage is discovered during inspection.
Check for any other physical damage and correct it as necessary.

2. Hydrometer Check

There is a built–in hydrometer (Charge test indicator(1)) at the top of the battery. It is designed to be used during diagnostic procedures.
Before trying to read the hydrometer, carefully clean the upper battery surface.
If your work area is poorly lit, additional light may be necessary to read the hydrometer.

a. BLUE RING OR DOT VISIBLE(5) – Go to Step 4.
b. BLUE RING OR DOT NOT VISIBLE(4) – Go to Step 3.

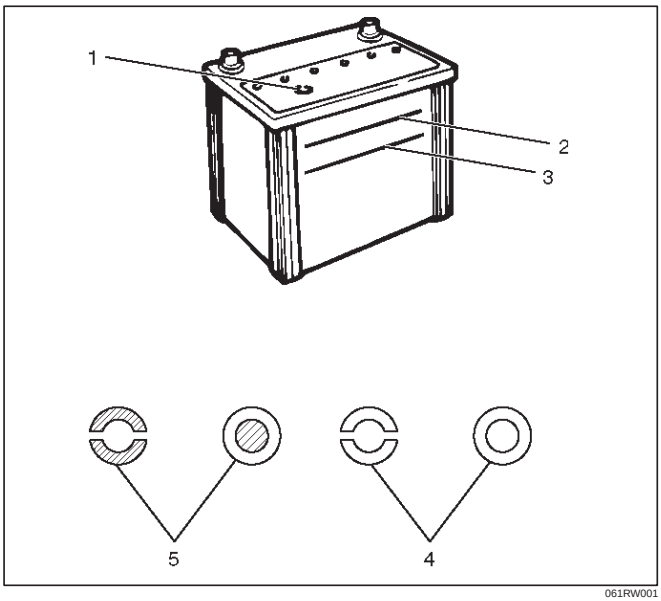

061RW001

3. Fluid Level Check

The fluid level should be between the upper level line(2) and lower level line(3) on side of battery.

a. CORRECT FLUID LEVEL – Charge the battery.
b. BELOW LOWER LEVEL – Replace battery.

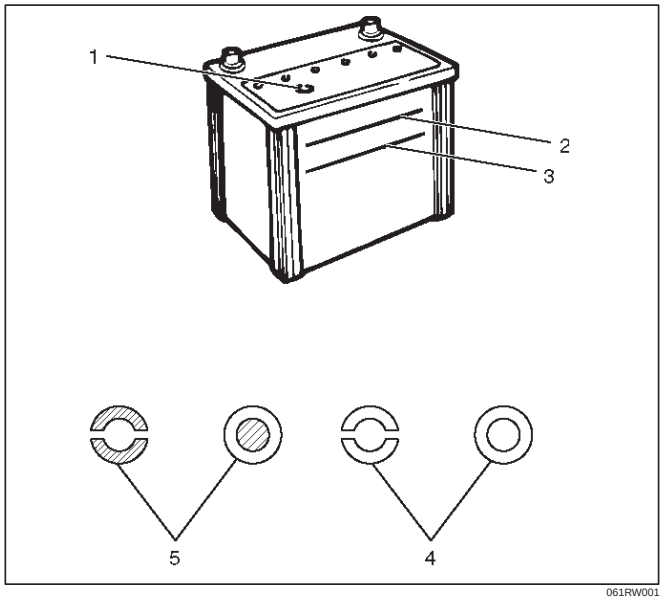

061RW001

4. Voltage Check

1. Put voltmeter test leads to battery terminals.
   a. VOLTAGE IS 12.4V OR ABOVE – Go to Step 5.
   b. VOLTAGE IS UNDER 12.4V – Go to procedure (2) below.
2. Determine fast charge amperage from specification. (See Main Data and Specifications in this section).
   Fast charge battery for 30 minutes at amperage rate no higher than specified value.
   Take voltage and amperage readings after charge.
   a. VOLTAGE IS ABOVE 16V AT BELOW 1/3 OF AMPERAGE RATE – Replace battery.
   b. VOLTAGE IS ABOVE 16V AT ABOVE 1/3 OF AMPERAGE RATE – Drop charging voltage to 15V and charge for 10 – 15 hours. Then go to Step 5.
   c. VOLTAGE IS BETWEEN 12V AND 16V – Continue charging at the same rate for an additional 3–1/2 hours. Then go to Step 5.
   d. VOLTAGE BELOW 12V – Replace Battery.

5. Load Test

1. Connect a voltmeter and a battery load tester across the battery terminals.
2. Apply 300 ampere load for 15 seconds to remove surface charge from the battery. Remove load.
3. Wait 15 seconds to let battery recover. Then apply specified load from specifications (See Main Data and Specifications in this section).
   Read voltage after 15 seconds, then remove load.

a. VOLTAGE DOES NOT DROP BELOW THE MINIMUM LISTED IN THE TABLE – The battery is good and should be returned to service.

b. VOLTAGE IS LESS THAN MINIMUM LISTED – Replace battery.

ESTIMATED TEMPERATURE		MINIMUM VOLTAGE
˚F	˚C	V
70	21	9.6
60	16	9.5
50	10	9.4
40	4	9.3
30	–1	9.1
20	–7	8.9
10	–12	8.7
0	–18	8.5
The battery temperature must be estimated by feel and by the temperature the battery has been exposed to for the preceding few hours.		

Battery Charging

Observe the following safety precautions when charging the battery:

1. Never attempt to charge the battery when the fluid level is below the lower level line on the side of the battery. In this case, the battery must be replaced.
2. Pay close attention to the battery during charging procedure.

   Battery charging should be discontinued or the rate of charge reduced if the battery feels hot to the touch.

   Battery charging should be discontinued or the rate of charge reduced if the battery begins to gas or spew electrolyte from the vent holes.
3. In order to more easily view the hydrometer blue dot or ring, it may be necessary to jiggle or tilt the battery.
4. Battery temperature can have a great effect on battery charging capacity.
5. The sealed battery used on this vehicle may be either quick charged or slow charged in the same manner as other batteries.

   Whichever method you decide to use, be sure that you completely charge the battery. Never partially charge the battery.

Jump Starting

Jump Starting with an Auxiliary (Booster) Battery

CAUTION: Never push or tow the vehicle in an attempt to start it. Serious damage to the emission system as well as other vehicle parts will result.

Treat both the discharged battery and the booster battery with great care when using jumper cables. Carefully follow the jump starting procedure, being careful at all times to avoid sparking.

WARNING: FAILURE TO CAREFULLY FOLLOW THE JUMP STARTING PROCEDURE COULD RESULT IN THE FOLLOWING:

1. Serious personal injury, particularly to your eyes.
2. Property damage from a battery explosion, battery acid, or an electrical fire.
3. Damage to the electronic components of one or both vehicles particularly.

Never expose the battery to an open flame or electrical spark. Gas generated by the battery may catch fire or explode.

Remove any rings, watches, or other jewelry before working around the battery. Protect your eyes by wearing an approved set of goggles.

Never allow battery fluid to come in contact with your eyes or skin.

Never allow battery fluid to come in contact with fabrics or painted surfaces.

Battery fluid is a highly corrosive acid.

Should battery fluid come in contact with your eyes, skin, fabric, or a painted surface, immediately and thoroughly rinse the affected area with clean tap water.

Never allow metal tools or jumper cables to come in contact with the positive battery terminal, or any other metal surface of the vehicle. This will protect against a short circuit.

Always keep batteries out of reach of young children.

Jump Starting Procedure

1. Set the vehicle parking brake.

   If the vehicle is equipped with an automatic transmission, place the selector level in the “PARK” position.

   If the vehicle is equipped with a manual transmission, place the shift lever in the “NEUTRAL” position.

   Turn “OFF” the ignition.

   Turn “OFF” all lights and any other accessory requiring electrical power.
2. Look at the built–in hydrometer.

   If the indication area of the built–in hydrometer is completely clear, do not try to jump start.
3. Attach the end of one jumper cable to the positive terminal of the booster battery.

   Attach the other end of the same cable to the positive terminal of the discharged battery.

   Do not allow the vehicles to touch each other. This will cause a ground connection, effectively neutralizing the charging procedure.

   Be sure that the booster battery has a 12 volt rating.

4. Attach one end of the remaining cable to the negative terminal of the booster battery.

   Attach the other end of the same cable to a solid engine ground (such as the air conditioning compressor bracket or the generator mounting bracket) of the vehicle with the discharged battery.

   The ground connection must be at least 450 mm (18 in.) from the battery of the vehicle whose battery is being charged.

WARNING: NEVER ATTACH THE END OF THE JUMPER CABLE DIRECTLY TO THE NEGATIVE TERMINAL OF THE DEAD BATTERY.

5. Start the engine of the vehicle with the good battery.
   Make sure that all unnecessary electrical accessories have been turned “OFF”.
6. Start the engine of the vehicle with the dead battery.
7. To remove the jumper cables, follow the above directions in reverse order.
   Be sure to first disconnect the negative cable from the vehicle with the discharged battery.

Battery Removal

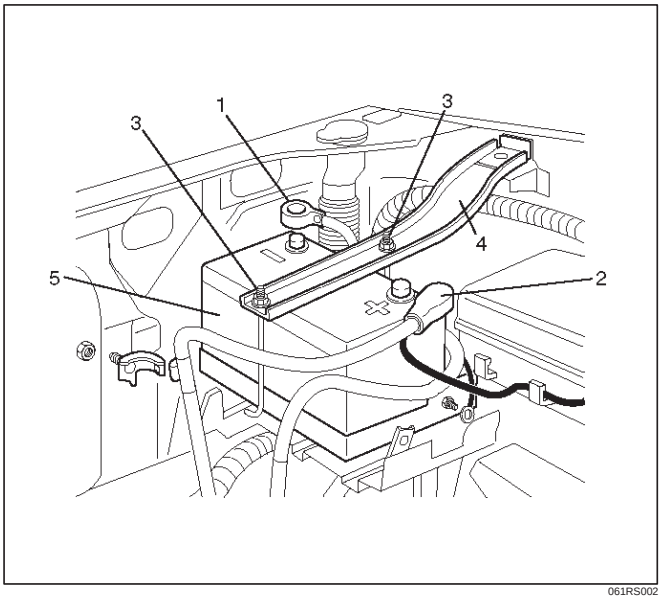

061RS002

1. Remove negative cable (1).
2. Remove positive cable (2).
3. Remove retainer screw and rods (3).
4. Remove retainer (4).
5. Remove battery (5).

Battery Installation

1. Install battery (5).
2. Install retainer (4).
3. Instal retainer screw and rods (3).

NOTE: Make sure that the rod is hooked on the body side.

4. Install positive cable (2).
5. Install negative cable (1).

Main Data and Specifications

General Specifications

Model (JIS)	95D31R–MF	80D26R–MF	75D26R–MF
Voltage (V)	12	12	12
Cold Cranking Performance (Amp)	622	582	490
Reserve Capacity (Min)	159	133	123
Load Test (Amp)	310	290	245
Fast Charge Maximum Amperage (Amp)	20	20	20
BCI Group No.	27	24	24

MEMO

ENGINE

IGNITION SYSTEM

CONTENTS

Service Precaution 6D2–1
General Description 6D2–2
Diagnosis 6D2–2
Ignition Coil 6D2–3
Removal 6D2–3
Inspection and Repair 6D2–3
Installation 6D2–3
Spark Plug 6D2–4
Removal 6D2–4
Inspection and Repair 6D2–4
Installation 6D2–4
Crankshaft Angle Sensor 6D2–5
Removal 6D2–5
Installation 6D2–5
Main Data and Specifications 6D2–6

Service Precaution

WARNING: IF SO EQUIPPED WITH A SUPPLEMENTAL RESTRAINT SYSTEM (SRS), REFER TO THE SRS COMPONENT AND WIRING LOCATION VIEW IN ORDER TO DETERMINE WHETHER YOU ARE PERFORMING SERVICE ON OR NEAR THE SRS COMPONENTS OR THE SRS WIRING. WHEN YOU ARE PERFORMING SERVICE ON OR NEAR THE SRS COMPONENTS OR THE SRS WIRING, REFER TO THE SRS SERVICE INFORMATION. FAILURE TO FOLLOW WARNINGS COULD RESULT IN POSSIBLE AIR BAG DEPLOYMENT, PERSONAL INJURY, OR OTHERWISE UNNEEDED SRS SYSTEM REPAIRS.

CAUTION: Always use the correct fastener in the proper location. When you replace a fastener, use ONLY the exact part number for that application. ISUZU will call out those fasteners that require a replacement after removal. ISUZU will also call out the fasteners that require thread lockers or thread sealant. UNLESS OTHERWISE SPECIFIED, do not use supplemental coatings (Paints, greases, or other corrosion inhibitors) on threaded fasteners or fastener joint interfaces. Generally, such coatings adversely affect the fastener torque and the joint clamping force, and may damage the fastener. When you install fasteners, use the correct tightening sequence and specifications. Following these instructions can help you avoid damage to parts and systems.

General Description

Ignition is done by the electronic ignition (EI) that directly fires the spark plugs from ignition coils through spark plug wires without using a distributor. A pair of ignition coils for the cylinders having different phases by 360˚ (No.1 and No.4,No.2 and No.5,No.3 and No.6) are fired simultaneously.

Since the cylinder on exhaust stroke requires less energy to fire its ignition plug, energy from the ignition coils can be utilized to fire the mating cylinder on compression stroke. After additional 360˚ rotation, respective cylinder strokes are reversed.

The EI consists of six ignition coils,ignition control module, crank angle sensor, powertrain control module (PCM) and other components.

The ignition coils are connected with the PCM by means of a 32 pin connector.

The ignition control module turns on/off the primary circuit of ignition coils, and also it controls the ignition timing at the engine speed below 538 rpm.

A notch in the timing disc on the crankshaft activates the crank angle sensor which then sends information such as firing order and starting timing of each ignition coil to the PCM.

Further, the EI employs ignition control (IC) to control similar to a distributor system.

By receiving signals such as crank position,engine speed, water temperature and Manifold Absolute Pressure (MAP), the PCM controls the ignition timing.

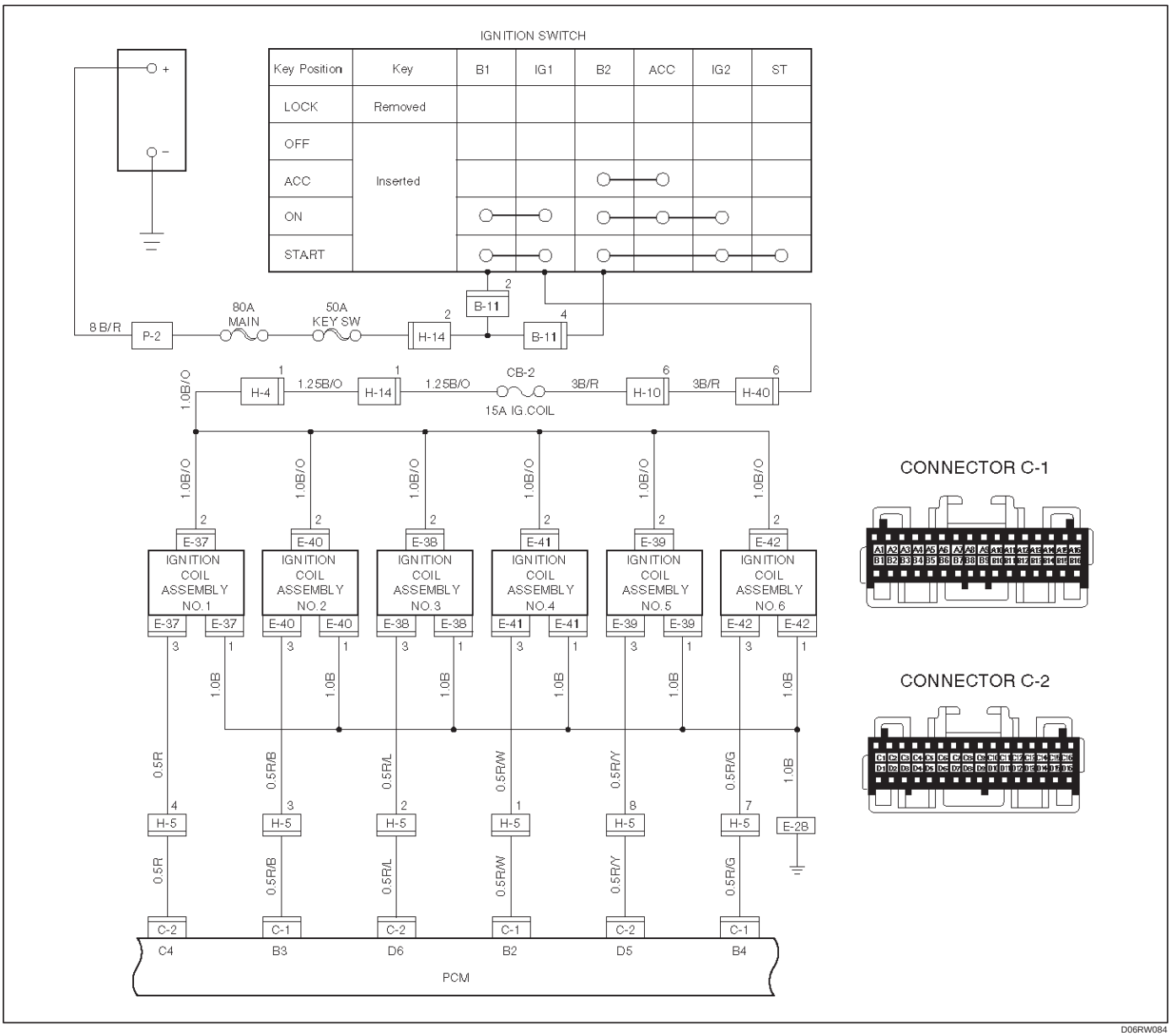

D06RW084

Diagnosis

Refer to Section Drivability and Emissions for the diagnosis to electronic ignition system (EI system).

Ignition Coil

Removal

1. Disconnect battery ground cable.
2. Ignition coil connector and ignition coil.
   - Disconnect three connector from ignition coil.
   - Remove harness bracket bolt on cylinder head cover.
   - Remove fixing bolts on ignition coil.

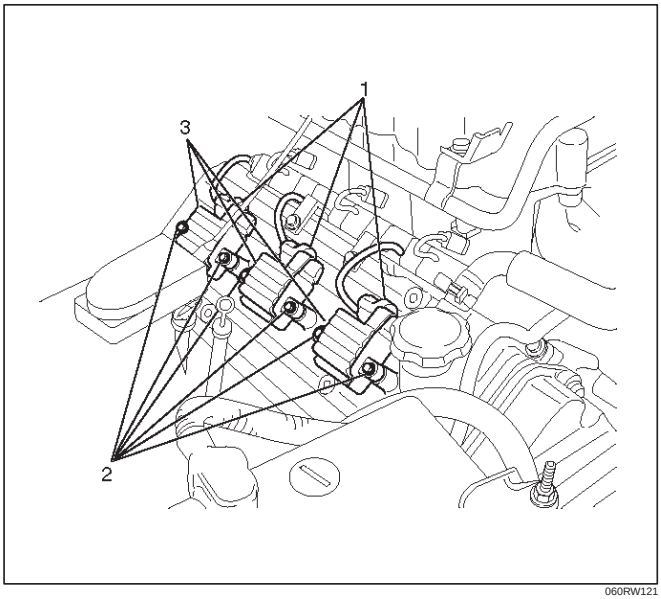

060RW121

Legend

(1) Ignition Coil Connector
(2) Bolt
(3) Ignition Coil Assembly

Inspection and Repair

Check the ignition coil assembly for insulation. Check terminals for corrosion or damage, and replace as necessary.
Measuring resistance of ignition coil assembly.

Terminal No.	Limit
1 to 2	Without 0 ohm or infinity maximum ohm.
1 to 3	Same as above
2 to 3	Same as above

Measure resistance of ignition coil assembly, and replace the ignition coil assembly if its value exceeds the standard.

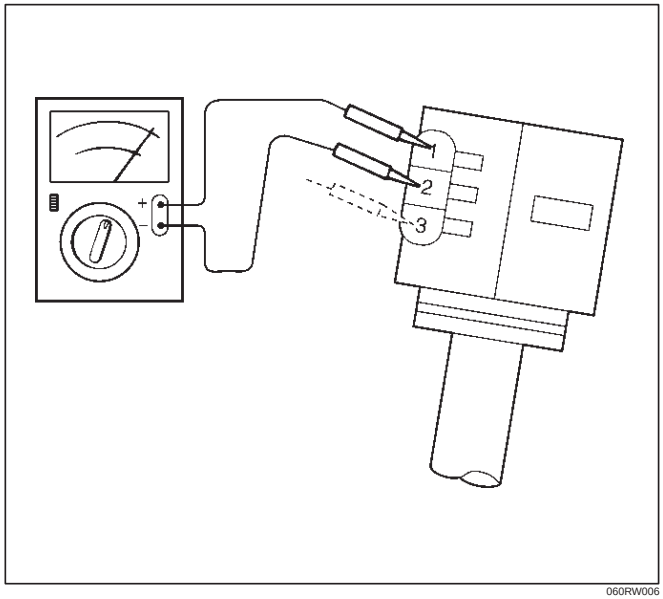

060RW006

Installation

1. Install the ignition coil assembly (3).
   Connect ignition coil connector (1) and ignition coil (3), then tighten bolt (2) to the specified torque.

   Torque: 4 N·m (0.4 Kg·m/35 lb in)

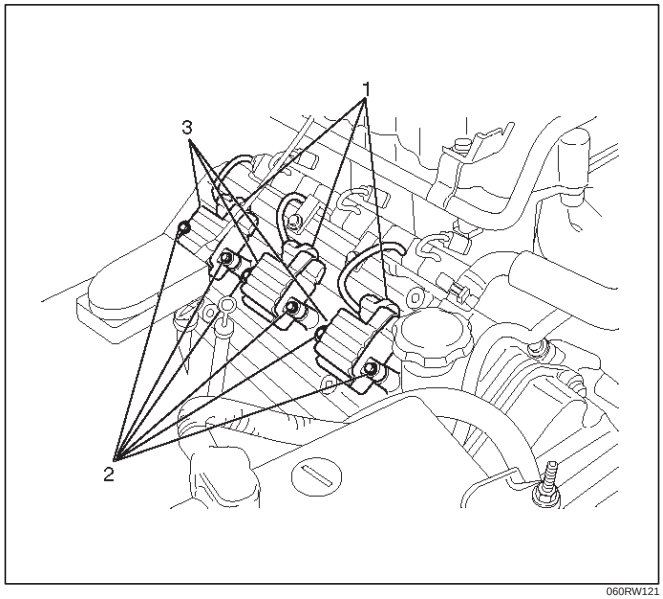

060RW121

2. Connect battery ground cable.

Spark Plug

Removal

1. Remove spark plugs.

Inspection and Repair

The spark plug affects entire engine performance and therefore its inspection is very important.

- Check electrode and insulator for presence of cracks, and replace if any.
- Check electrode for wear, and replace if necessary.
- Check gasket for damage, and replace if necessary.
- Measure insulation resistance with an ohmmeter, and replace if faulty.
- Adjust spark plug gap to 1.0 mm (0.04 in) ~ 1.1 mm (0.043 in).
- Check fuel and electrical systems if spark plug is extremely dirty.
- Use spark plugs having low heat value (hot type plug) if fuel and electrical systems are normal.
- Use spark plugs having high heat value (cold type plug) if insulator and electrode are extremely burned.

Sooty Spark Plugs

Much deposit of carbon or oil on the electrode and insulator of spark plug reduces the engine performance.

Possible causes:

- Too rich mixture
- Presence of oil in combustion chamber
- Incorrectly adjusted spark plug gap

Burning Electrodes

This fault is characterized by scorched or heavily oxidized electrode or blistered insulator nose.

Possible causes:

- Too lean mixture
- Improper heat value

Measuring Insulation Resistance

- Measure insulation resistance using a 500 volt megaohm meter.
- Replace spark plugs if measured value is out of standard.

Insulation resistance: 50 MΩ or more

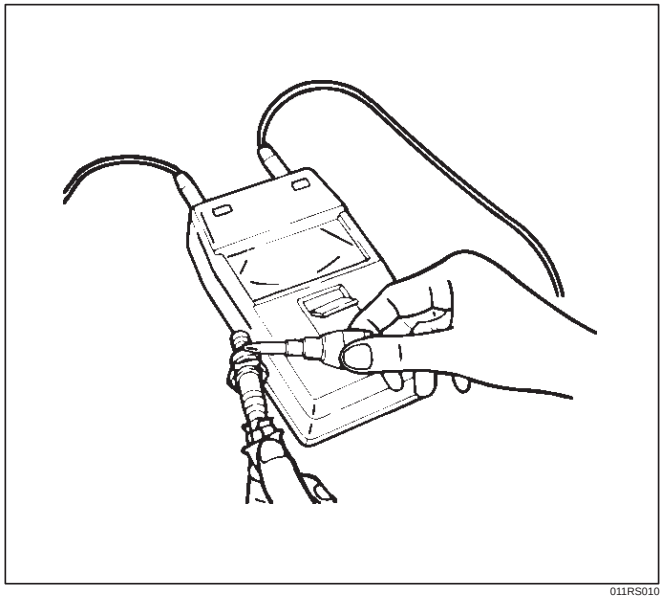

011RS010

Cleaning Spark Plugs

- Clean spark plugs with a spark plug cleaner.
- Raise the ground electrode to an angle of 45 to 60 degrees. If electrode is wet, dry it before cleaning.
- After spark plug is thoroughly cleaned, check insulator for presence of cracks.
- Clean threads and metal body with a wire brush.
- File the electrode tip if electrode is extremely worn.
- Bend the ground electrode to adjust the spark plug gap.

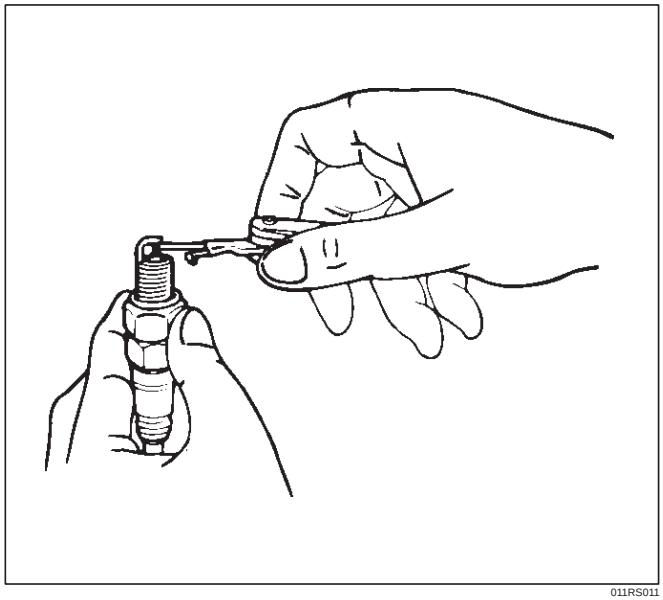

011RS011

Installation

1. Spark plugs
   - Tighten spark plugs to the specified torque.

   Torque: 18 N·m (1.8 Kg·m/13 lb ft)

Crankshaft Angle Sensor

Removal

1. Disconnect battery ground cable
2. Wiring connector from crankshaft angle sensor.
3. Remove crankshaft angle sensor from cylinder block.

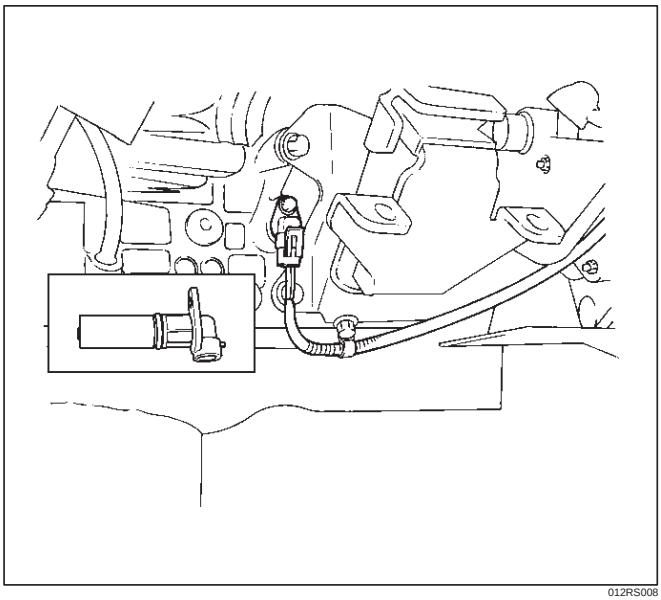

012RS008

Installation

1. Install crankshaft angle sensor into the cylinder block. Before installation,apply small amount of engine oil to the O–ring.

   Torque: 10 N·m (1.0 Kg·m/89 lb in)

2. Reconnect wiring connector to crankshaft angle sensor.

Main Data and Specifications

General Specifications

Ignition System	
Ignition Form	Electronic Ignition System (El system) with Crankshaft angle Sensor
Spark Plug	
Type	K16PR–P11 RC10PYP4 PK16PR11
Plug gap	1.0 mm (0.04 in) – 1.1 mm (0.043 in)
Torque	18 N·m (1.8 Kg·m/13 lb ft)

Torque Specifications

N·m (Kg·m/lb ft)

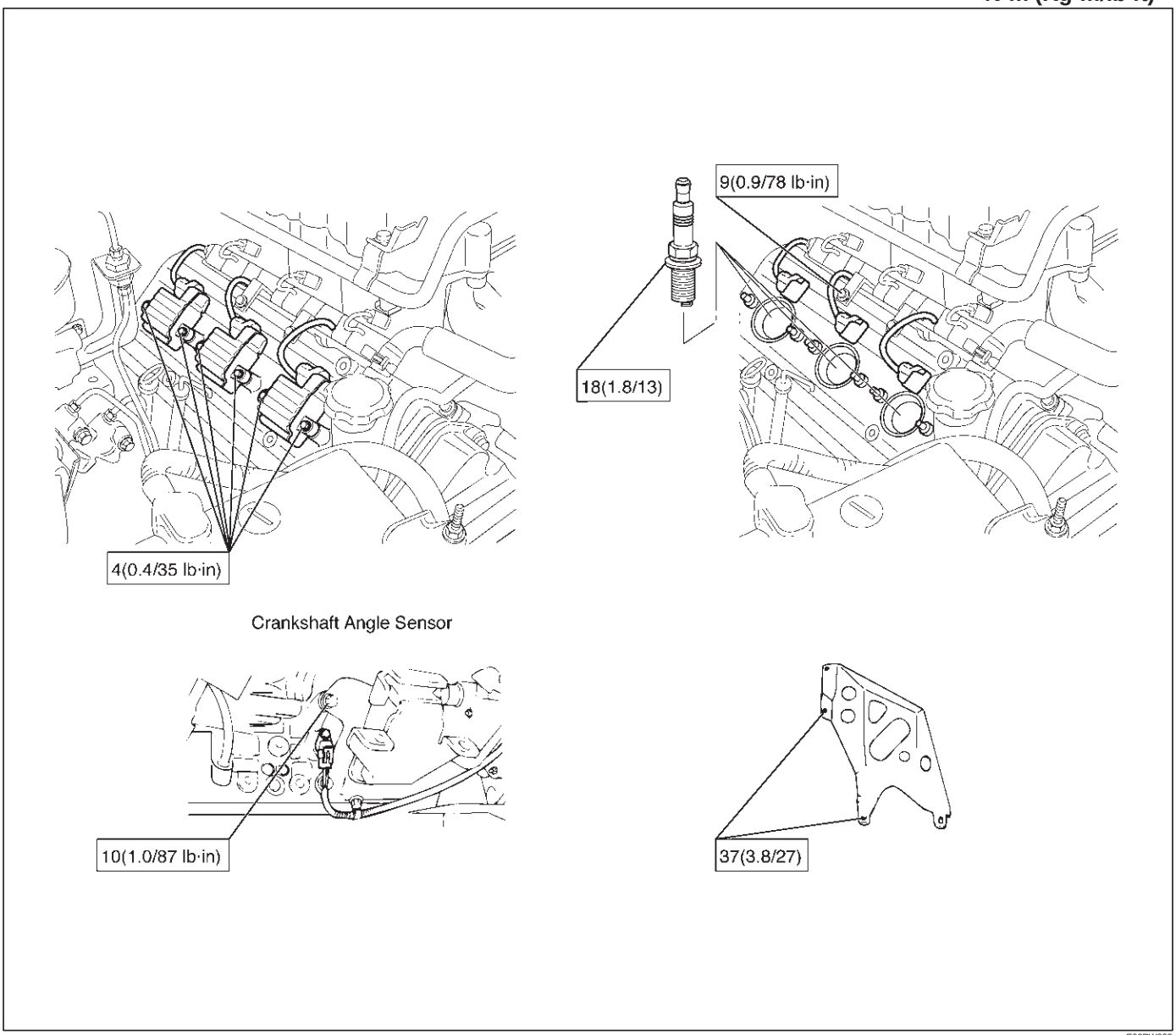

E06RW038

ENGINE

STARTING AND CHARGING SYSTEM

CONTENTS

Service Precaution 6D3–1
Starting System 6D3–2
General Description 6D3–2
Diagnosis 6D3–4
Starter 6D3–5
Removal 6D3–5
Installation 6D3–5
Disassembled View 6D3–6
Disassembly 6D3–7
Inspection and Repair 6D3–9
Reassembly 6D3–13
Main Data and Specifications 6D3–15
Charging System 6D3–18
General Description 6D3–18
General On–Vehicle Inspection 6D3–18
Generator 6D3–19
Removal 6D3–19
Inspection 6D3–19
Installation 6D3–19
Disassembled View 6D3–20
Disassembly 6D3–21
Inspection and Repair 6D3–23
Reassembly 6D3–24
Bench Test 6D3–25
Main Data and Specifications 6D3–26

Service Precaution

WARNING: IF SO EQUIPPED WITH A SUPPLEMENTAL RESTRAINT SYSTEM (SRS), REFER TO THE SRS COMPONENT AND WIRING LOCATION VIEW IN ORDER TO DETERMINE WHETHER YOU ARE PERFORMING SERVICE ON OR NEAR THE SRS COMPONENTS OR THE SRS WIRING. WHEN YOU ARE PERFORMING SERVICE ON OR NEAR THE SRS COMPONENTS OR THE SRS WIRING, REFER TO THE SRS SERVICE INFORMATION. FAILURE TO FOLLOW WARNINGS COULD RESULT IN POSSIBLE AIR BAG DEPLOYMENT, PERSONAL INJURY, OR OTHERWISE UNNEEDED SRS SYSTEM REPAIRS.

CAUTION: Always use the correct fastener in the proper location. When you replace a fastener, use ONLY the exact part number for that application. ISUZU will call out those fasteners that require a replacement after removal. ISUZU will also call out the fasteners that require thread lockers or thread sealant. UNLESS OTHERWISE SPECIFIED, do not use supplemental coatings (Paints, greases, or other corrosion inhibitors) on threaded fasteners or fastener joint interfaces. Generally, such coatings adversely affect the fastener torque and the joint clamping force, and may damage the fastener. When you install fasteners, use the correct tightening sequence and specifications. Following these instructions can help you avoid damage to parts and systems.

Starting System

General Description

Cranking Circuit

The cranking system consists of a battery, starter, starter switch, starter relay, etc. These main components are connected.

Starter

The cranking system employs a magnetic type reduction starter in which the motor shaft is also used as a pinion shaft. When the starter switch is turned on, the contacts of magnetic switch are closed, and the armature rotates. At the same time, the plunger is attracted, and the pinion is pushed forward by the shift lever to mesh with the ring gear.

Then, the ring gear runs to start the engine. When the engine starts and the starter switch is turned off, the plunger returns, the pinion is disengaged from the ring gear, and the armature stops rotation. When the engine speed is higher than the pinion, the pinion idles, so that the armature is not driven.

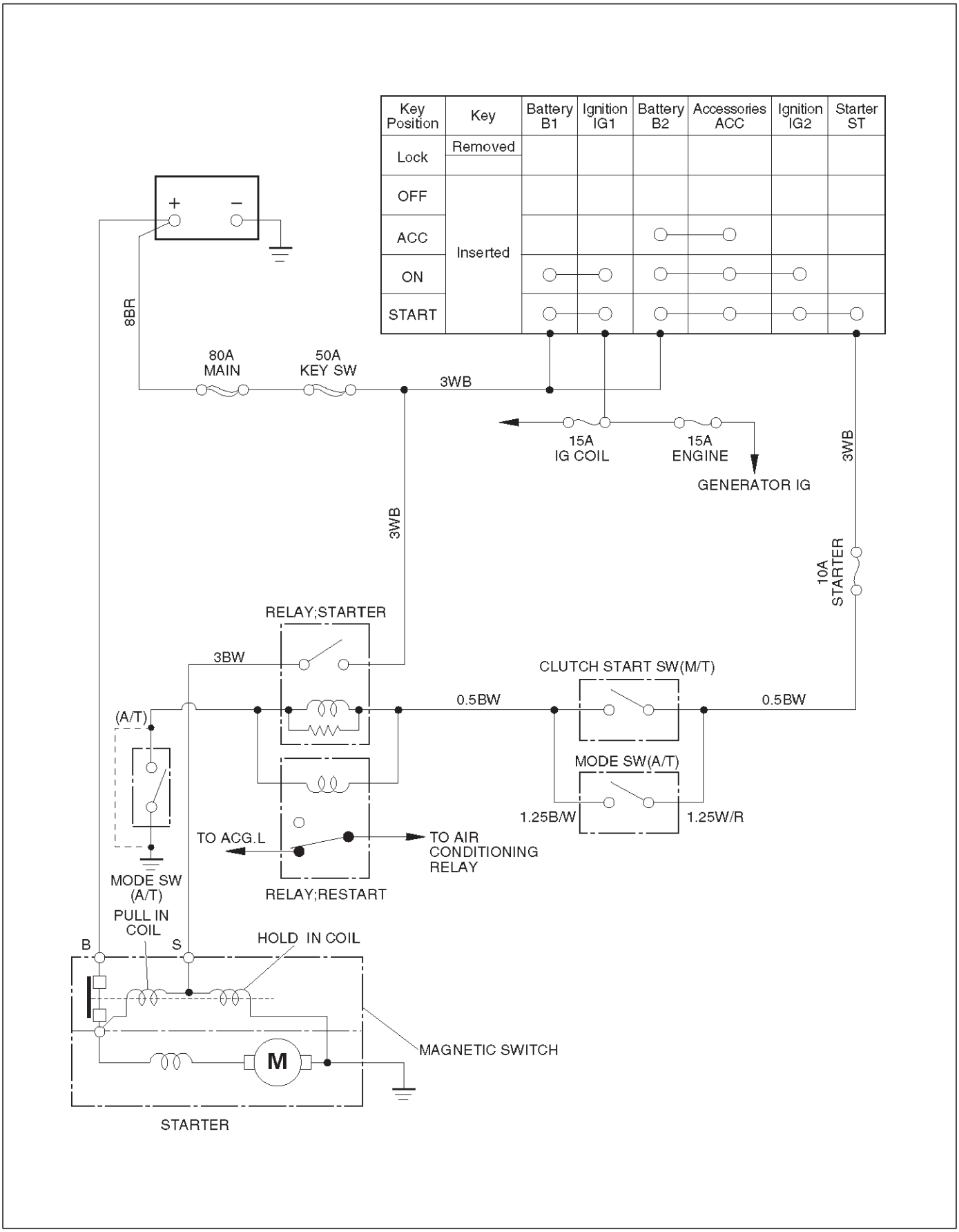
Key Position
Key
Battery B1
Ignition IG1
Battery B2
Accessories ACC
Ignition IG2
Starter ST
Lock
Removed
OFF
ACC
ON
START
Inserted
+
–
8BR
80A MAIN
50A KEY SW
3WB
15A IG COIL
15A ENGINE
GENERATOR IG
3WB
3WB
10A STARTER
RELAY;STARTER
3BW
CLUTCH START SW(M/T)
0.5BW
0.5BW
(A/T)
MODE SW(A/T)
1.25B/W
1.25W/R
TO ACG.L
TO AIR CONDITIONING RELAY
MODE SW (A/T)
RELAY;RESTART
PULL IN COIL
B
S
HOLD IN COIL
MAGNETIC SWITCH
M
STARTER

C06RW005

Diagnosis

Condition	Possible cause	Correction
Starter does not run	Charging failure	Repair charging system
	Battery Failure	Replace Battery
	Terminal connection failure	Repair or replace terminal connector and/or wiring harness
	Starter switch failure	Repair or replace starter switch
	Starter failure	Repair or replace starter

Starter

Removal

1. Battery ground cable.
2. Remove exhaust front left pipe(1).

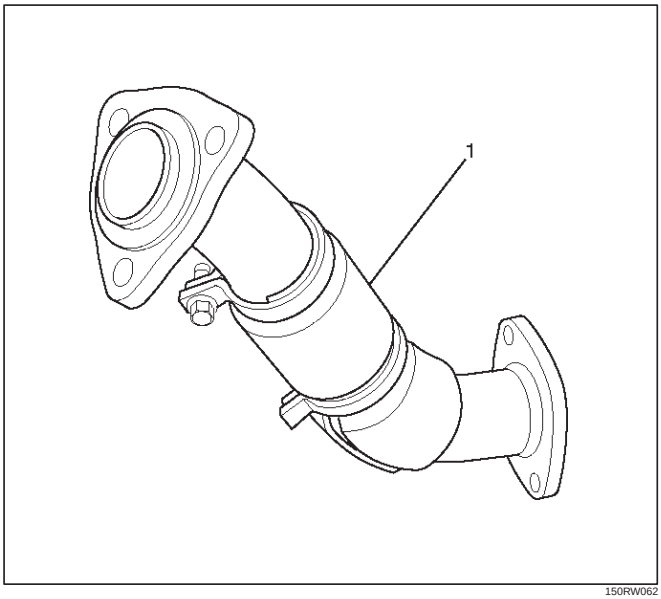

150RW062

3. Remove heat protector(3).
4. Disconnect starter wiring connector from terminals “B” and “S”(4).
5. Remove starter assembly mounting bolts on inside and outside(5).
6. Remove starter assembly toward the bottom of engine(6).

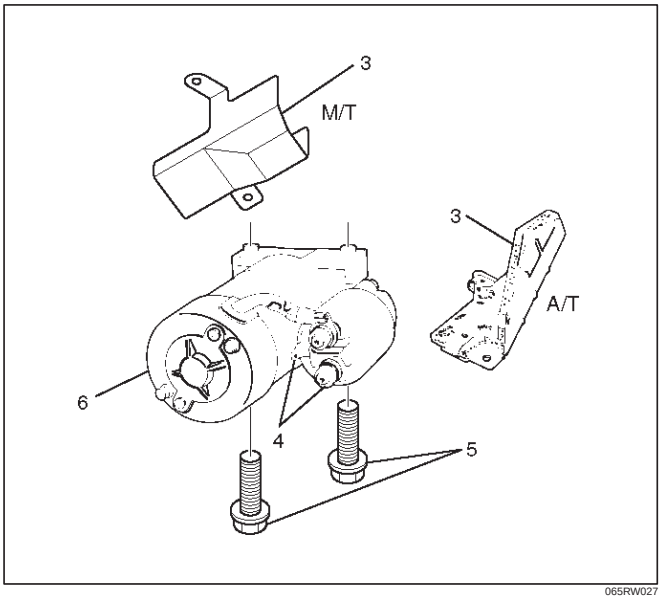

065RW027

Installation

1. Install starter assembly(6).
2. Install mounting bolts and tighten bolts to specified torque(5).

   Torque: 40 N·m (4.1 Kg·m/30 lb ft)
3. Reconnect the connectors to terminals “B” and “S” and tighten Terminals “B” to specified torque.

   Torque: 9 N·m (0.9 Kg·m/80 lb in)
4. Install heat protector(3).

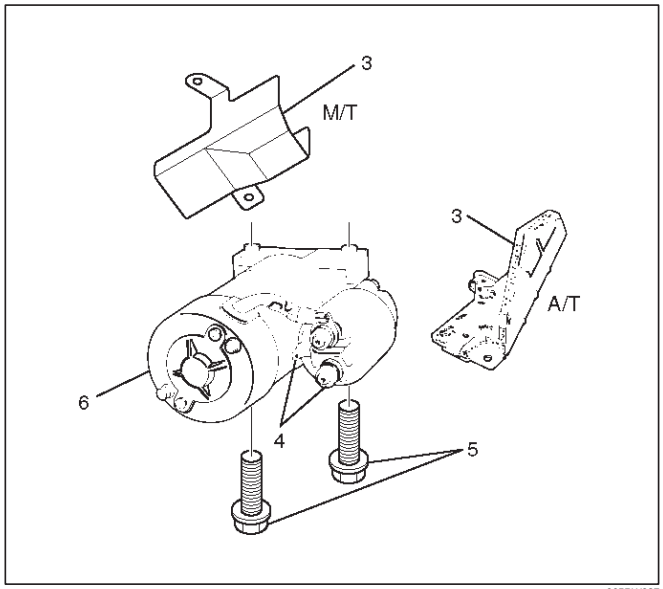

065RW027

5. Install exhaust front left pipe and tighten bolts and nuts to specified torque(2).

   Stud Nuts

   Torque: 67 N·m (6.8 Kg·m/49 lb ft)

   Nuts

   Torque: 43 N·m (4.4 Kg·m/32 lb ft)

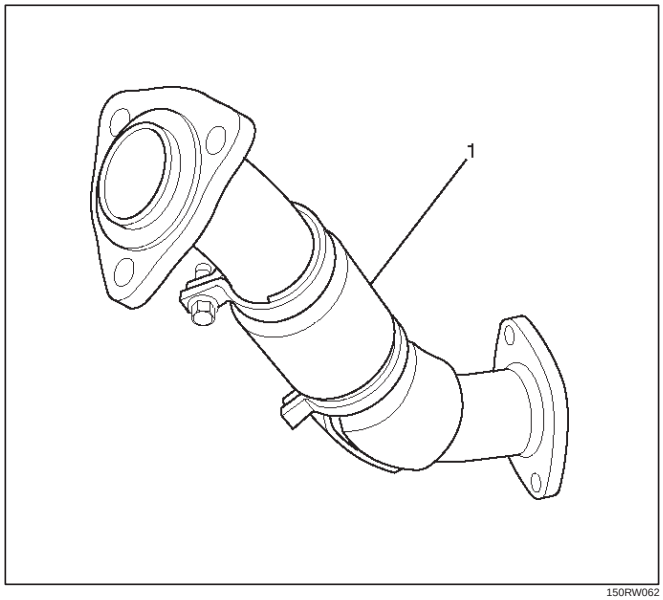

150RW062

6. Reconnect the battery ground cable.

Disassembled View

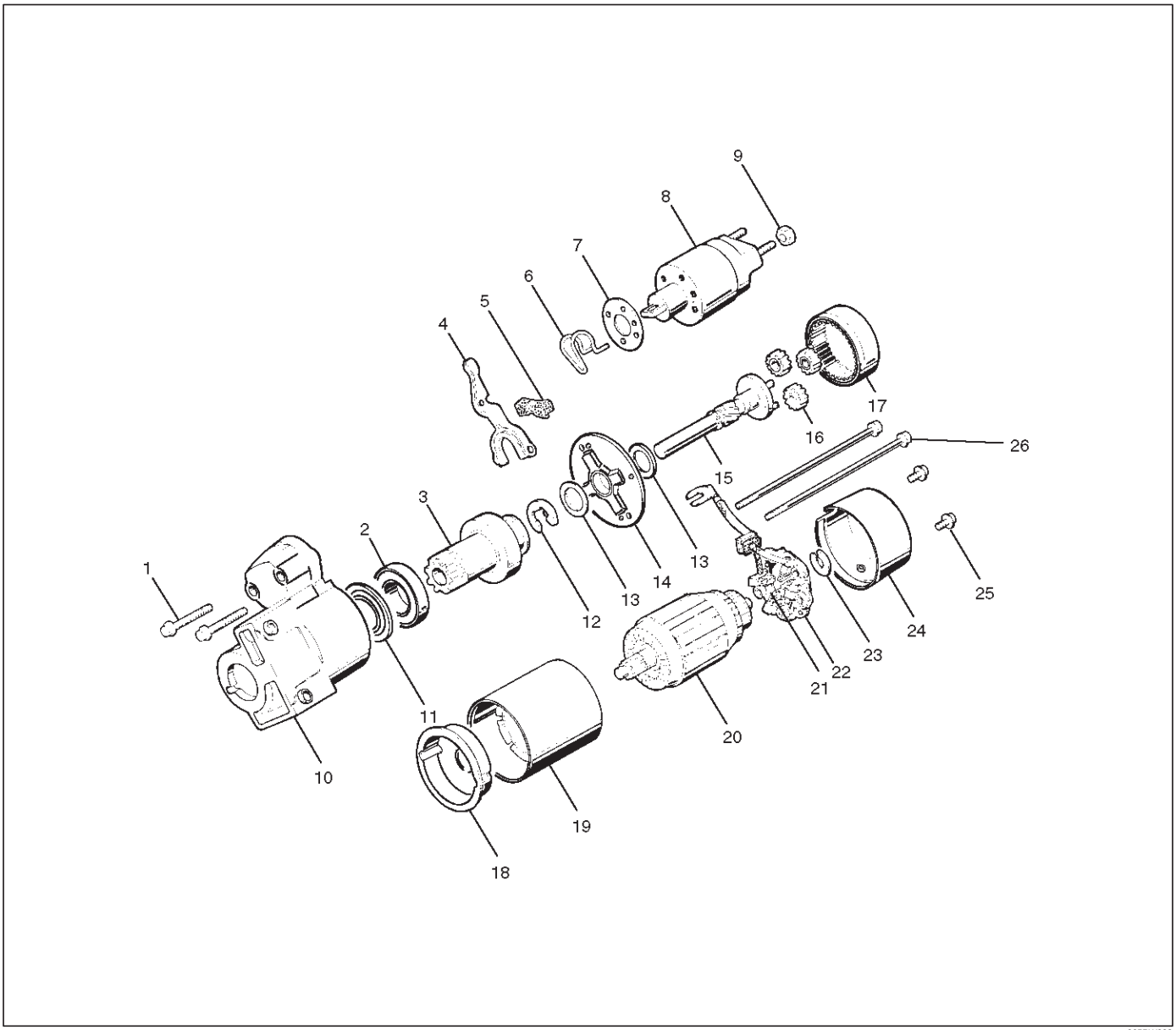

065RW002

Legend

(1) Bolt (2 pcs)
(2) Ball Bearing
(3) Pinion
(4) Shift Lever
(5) Dust Cover
(6) Torsion Spring
(7) Dust Cover
(8) Magnetic Switch
(9) Nut
(10) Gear Case
(11) Bearing Cover
(12) E–Ring
(13) Thrust Washer (2)
(14) Center Bracket
(15) Pinion Shaft
(16) Planet Gear (3)
(17) Internal Gear
(18) Center Bracket (A)
(19) Yoke Assembly
(20) Armature
(21) Brush
(22) Brush Holder
(23) Thrust Washer
(24) Rear Cover
(25) Screw (2 pcs)
(26) Through Bolt (2 pcs)

Disassembly

1. Loosen the nut(1) on terminal “M” of magnetic switch and disconnect the connector cable.
2. Remove bolt (2 pcs) (2).

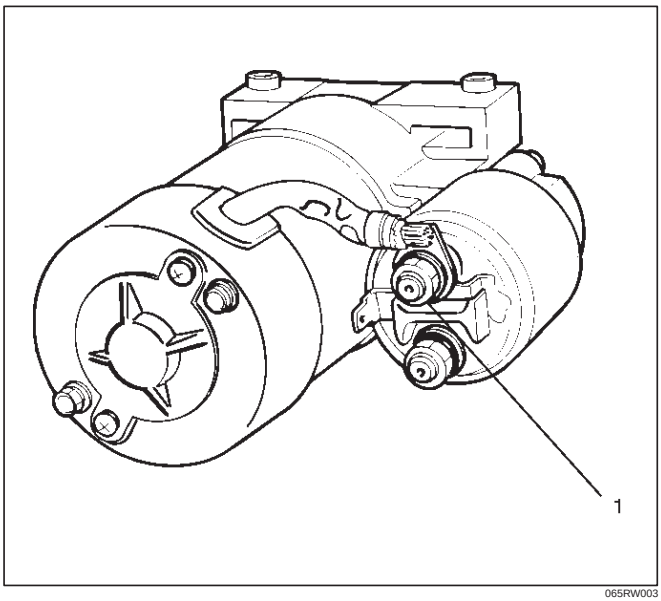

065RW003

3. Remove magnetic switch(5).
4. Remove dust cover(4).
5. Remove torsion spring bolts, then the magnetic switch assembly.
6. Remove torsion spring(3) from magnetic switch assembly(5).

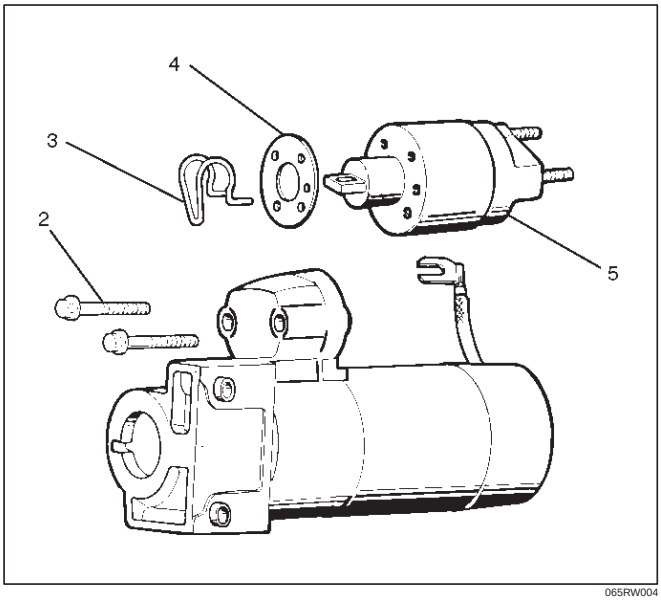

065RW004

7. Remove screw (2 pcs) (8).
8. Remove through bolt (2 pcs) (7).
9. Remove screws and through bolts, then the rear cover(9) then remove thrust washer(10).
10. Remove brush holder(6).

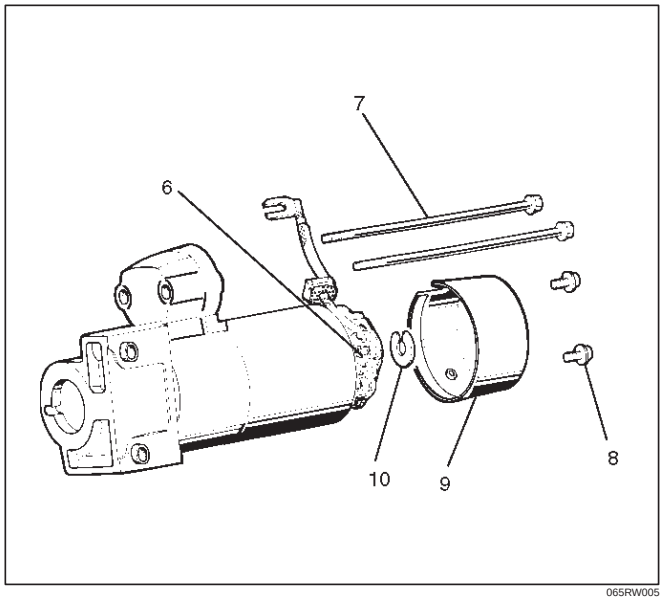

065RW005

11. Raise a brush spring to detach brushes (4 pcs) from the commutator face and pull off the brush holder(12) and brush(11).

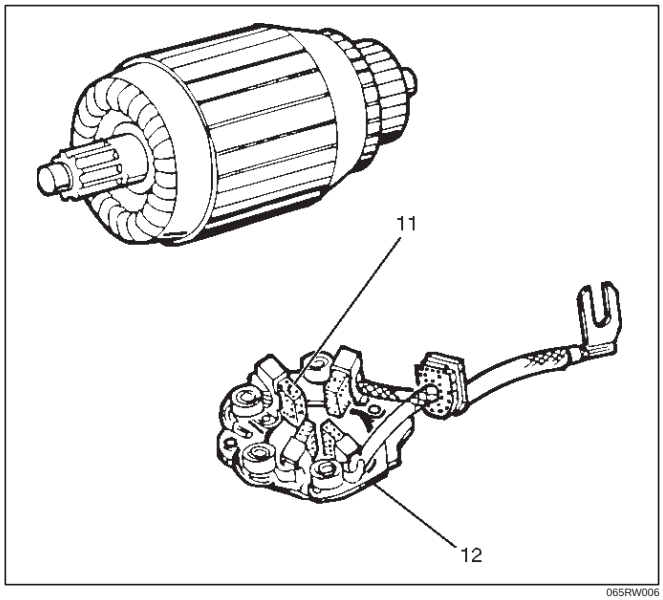

065RW006

12. Remove yoke assembly(14).
13. Remove armature(15).
14. Pull off the yoke assembly, then remove armature, washer and center bracket.(A) (13).

NOTE: In disassembling the yoke assembly, hold the armature and pull off slowly the yoke assembly. Because of strong magnetic force, avoid placing a metallic part near armature.

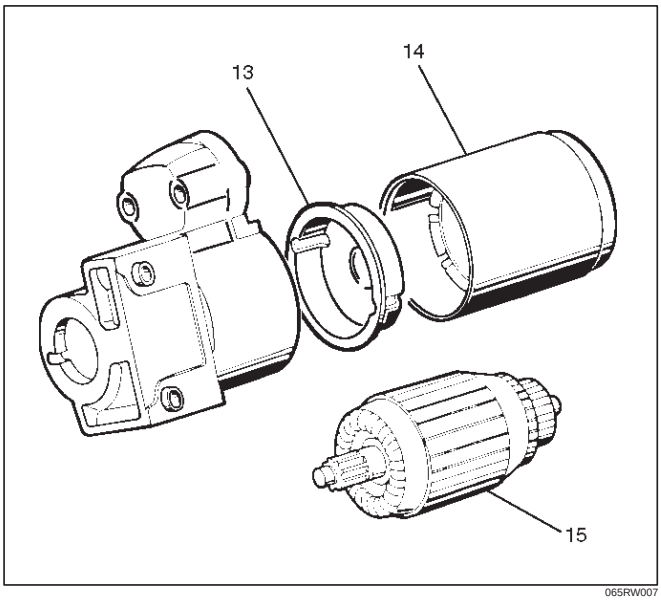

065RW007

15. Remove dust cover(17).
16. Remove a dust cover and shift lever(16) from the gear case.

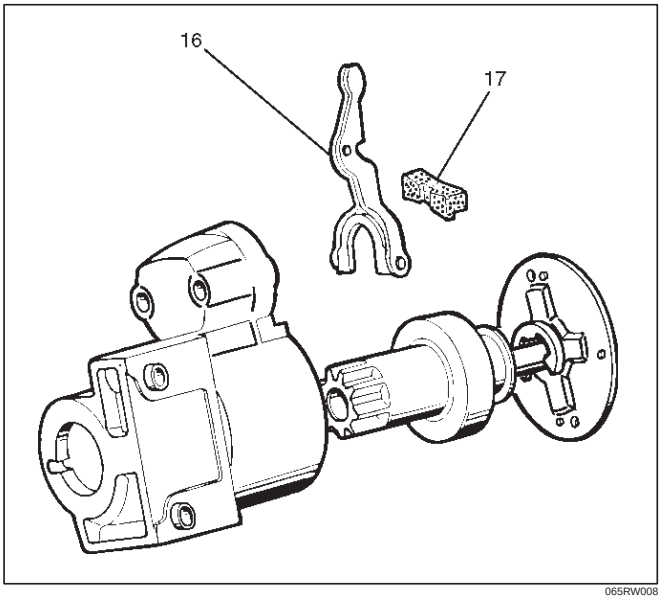

065RW008

17. Remove ball bearing(19).
18. Remove bearing cover(20).
19. Remove a ball bearing and bearing cover from the gear case(18).

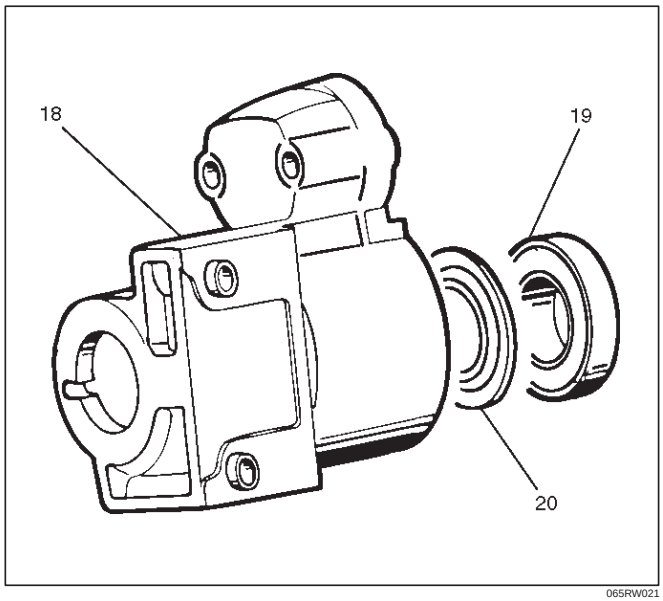

065RW021

20. Internal gear(21).
21. Remove internal gear and planet gear(3) (22).

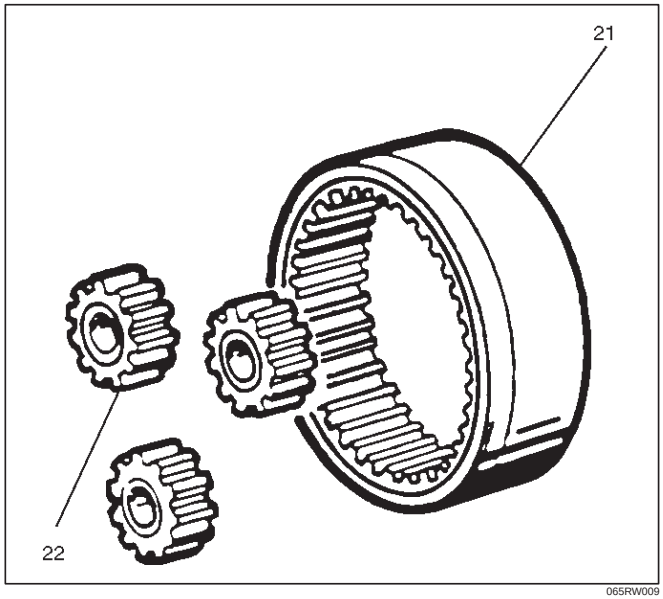

065RW009

22. Remove an E–ring(23) from the pinion shaft using a flat blade screwdriver.

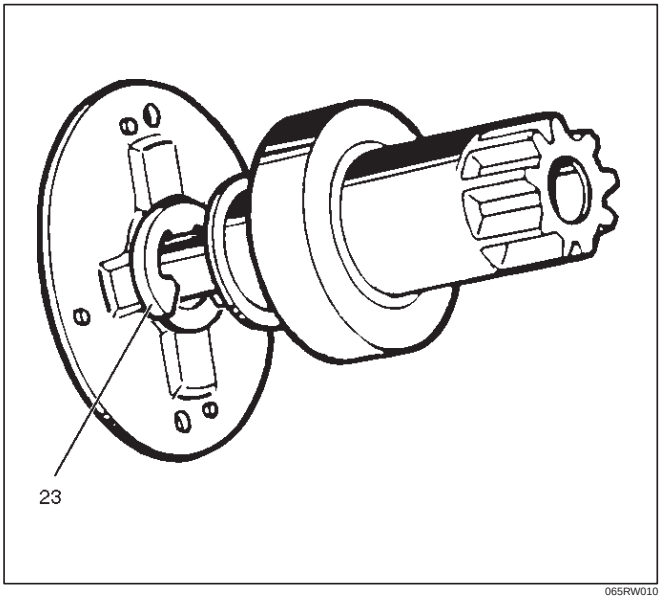

065RW010

23. Holding the pinion shaft, push pinion toward the center bracket. and turn the pinion clockwise or counterclockwise by one tooth of spline, then pull off the pinion.
24. Remove thrust washer(24).
25. Remove center bracket
26. Remove pinion shaft.

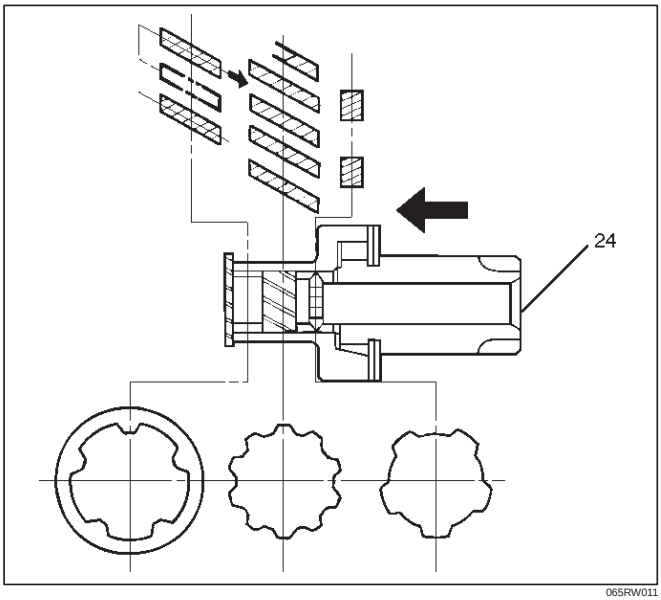

065RW011

Inspection and Repair

Repair or replace necessary parts if extreme wear or damage is found during inspection.

Armature

Measure the outer diameter of commutator, and replace with a new one if it is out of the limit.

Standard: 33.0 mm (1.30 in)

Limit: 32.0 mm (1.26 in)

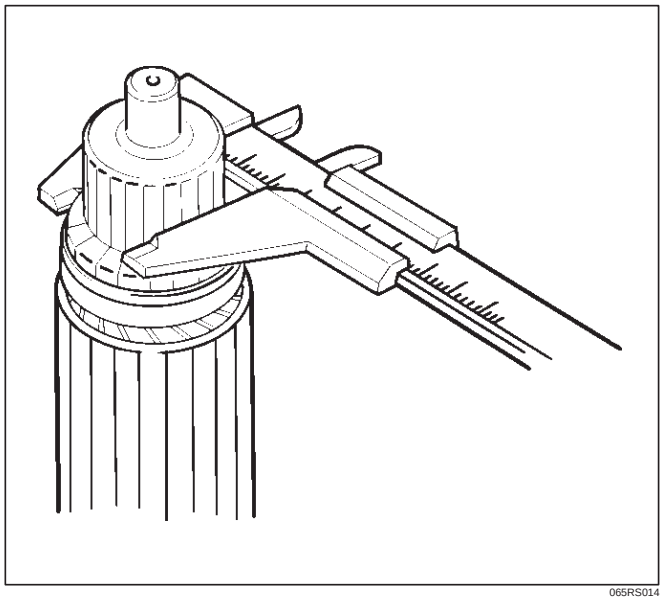

065RS014

Check for continuity between commutator and segment. Replace commutator if there is no continuity (i.e., disconnected).

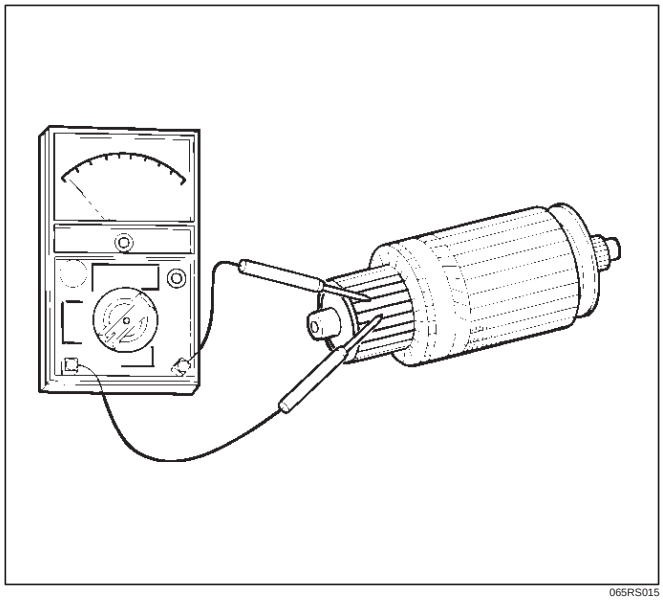

065RS015

Check for continuity between commutator and shaft. Also, check for continuity between commutator and armature core,armature core and shaft. Replace commutator if there is continuity (i.e., internally grounded).

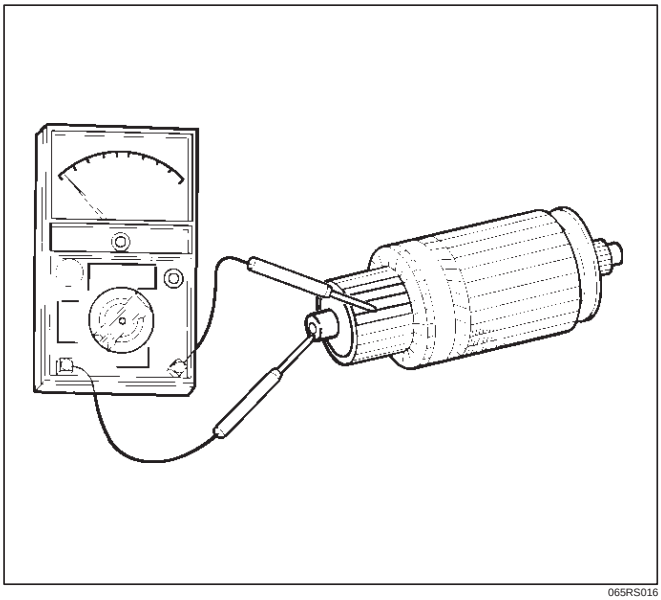

065RS016

Measure runout of armature core and commutator with a dial gauge. Repair or replace, if it exceeds the limit.

Armature

Standard: 0.05 mm (0.002 in) Max.

Limit: 0.10 mm (0.004 in)

Commutator

Standard: 0.05 mm (0.002 in) Max.

Limit: 0.10 mm (0.004 in)

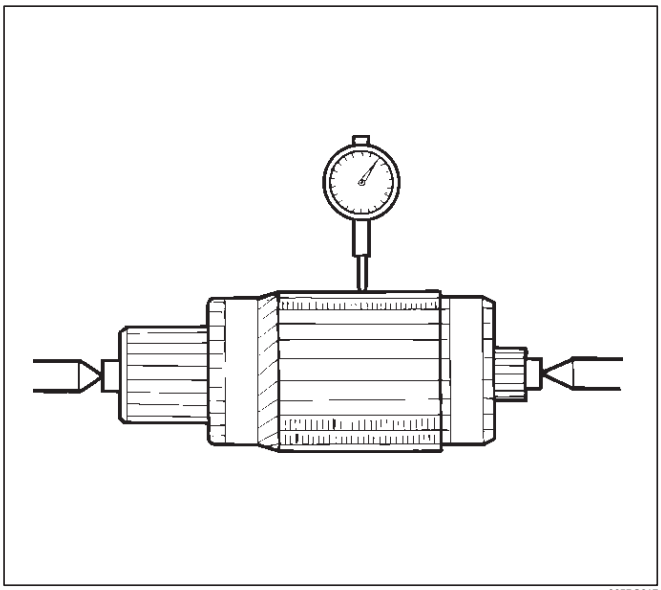

065RS017

Polish the commutator surface with sandpaper #500 to #600 if it is rough.

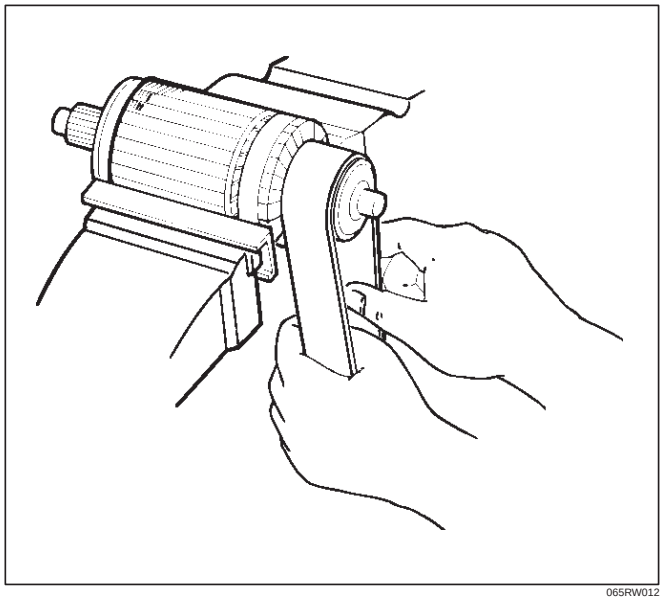

065RW012

Measure the depth of insulator in commutator. Repair, if it is below the limit.

Standard: 0.05 mm to 0.8 mm (0.02 in to 0.03 in)

Limit: 0.2 mm (0.008 in)

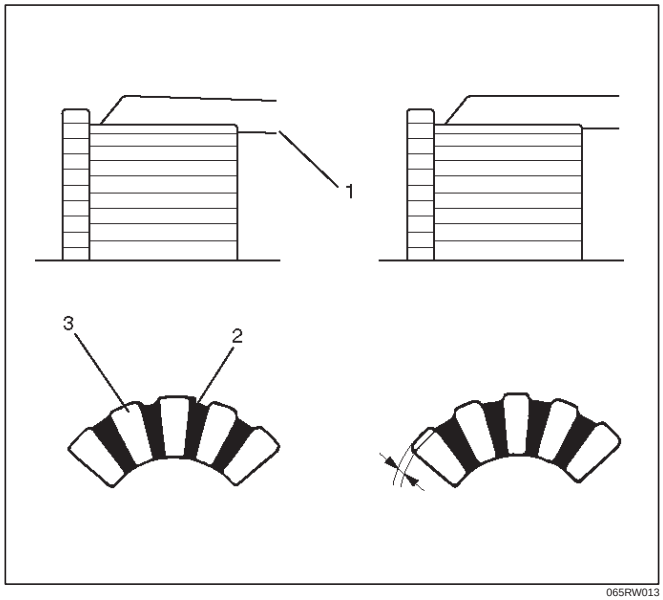

065RW013

Legend

(1) Steel Saw
(2) Insulator
(3) Commutator Segments

Brush

Measure the length of brush.
Replace with a new one, if it is below the limit.

Standard: 16 mm (0.63 in)

Limit: 11 mm (0.43 in)

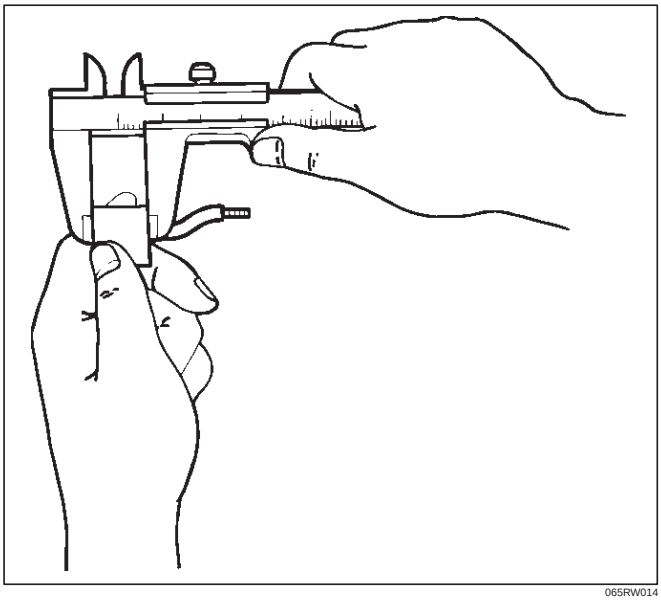

065RW014

Brush Holder

Check for continuity between brush holder (+) (4) and base (–). Replace, if there is continuity (i.e., insulation is broken).

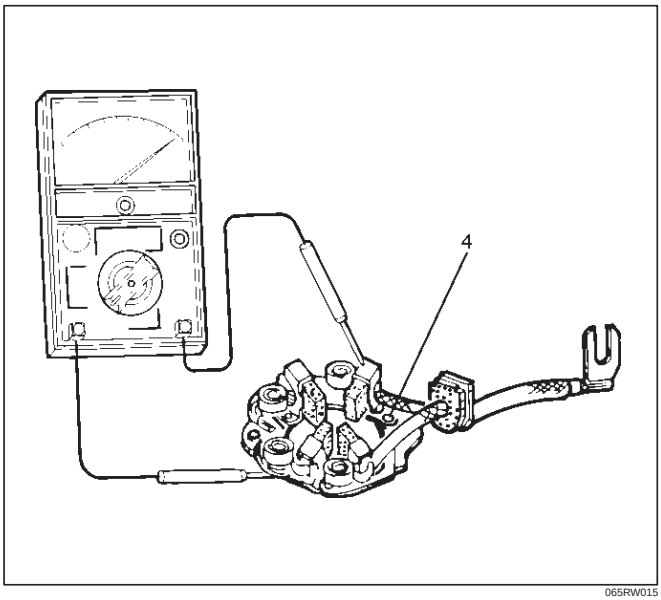

065RW015

Magnetic Switch

Check for continuity of shunt coil between terminals S and M.
Replace, if there is no continuity (i.e., coil is disconnected).

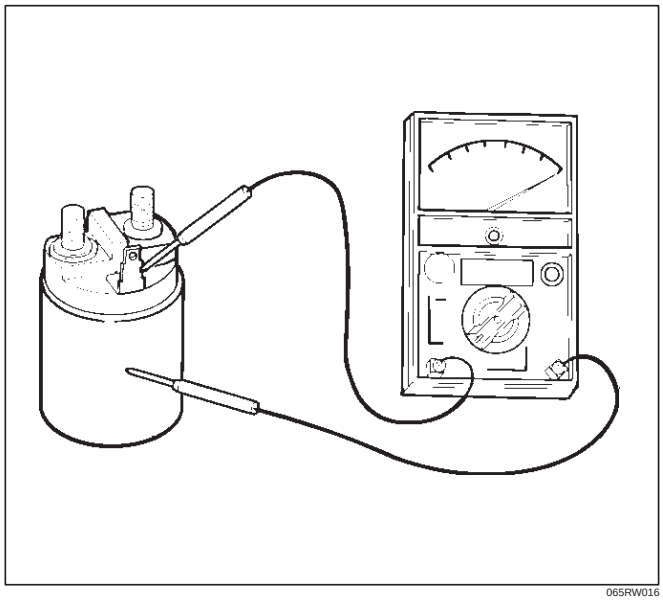

065RW016

Continuity of Series Coil

Check for continuity between terminals S and M.
Replace, if there is no continuity (i.e., coil is disconnected).

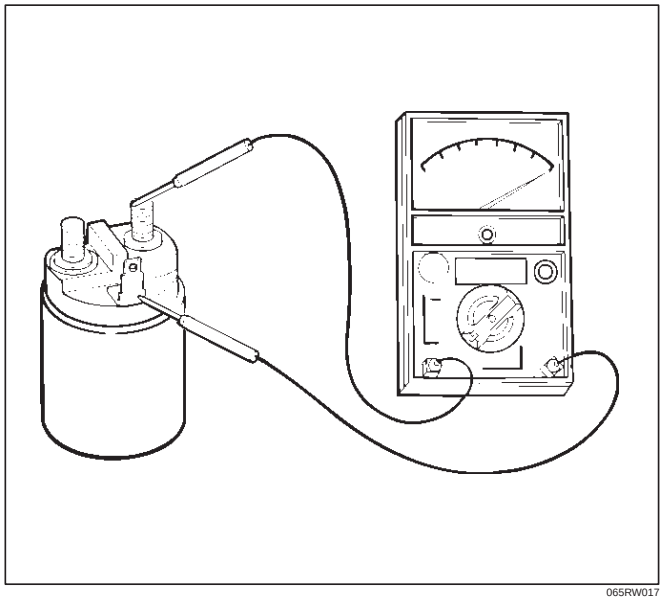

065RW017

Continuity of Contacts

With the plunger faced downward, push down the magnetic switch. In this state, check for continuity between terminals B and M. Replace, if there is no continuity (i.e., contacts are faulty).

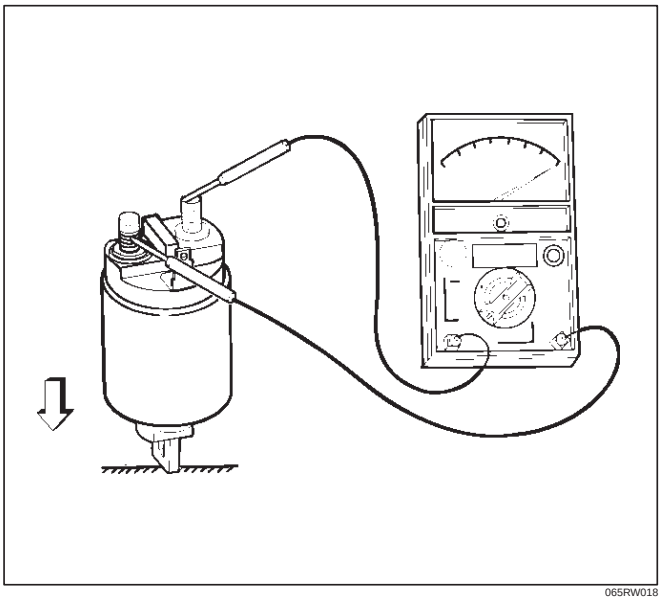

065RW018

Pinion

Check if the pinion rotates smoothly in drive direction by hand, or if it is locked when it is rotated in reverse. If not, replace the pinion.

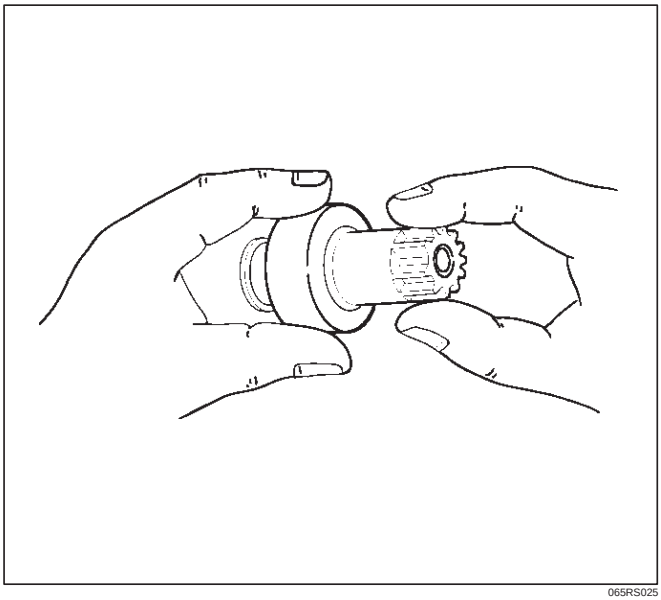

065RS025

Yoke Assembly

Check a magnet inside the yoke.
Replace the yoke assembly if it is broken.

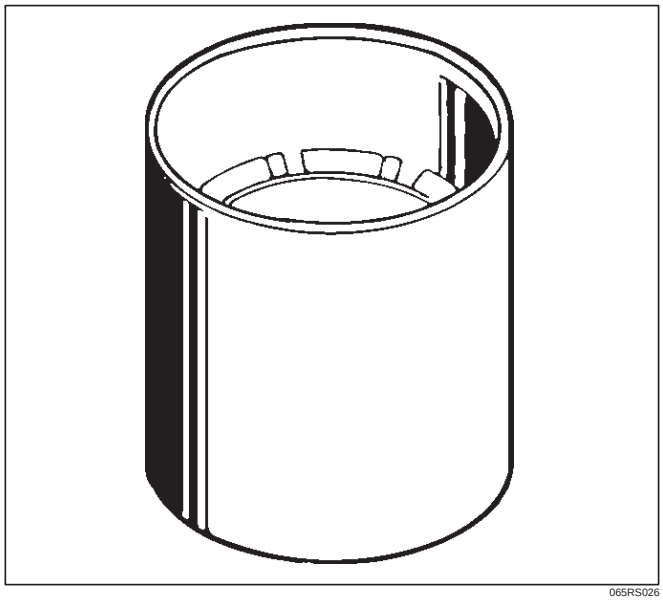

065RS026

Ball Bearing

Clamp the inner race of the ball bearing with your finger, and check for sticking or play when rotating the outer race.
Replace, if abnormality is found.

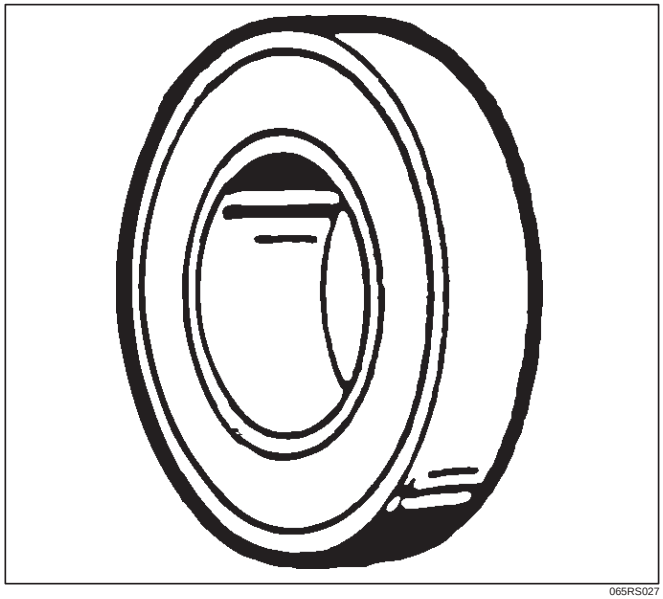

065RS027

Measure inner diameter of bushing in the rear cover, and replace if it exceeds the limit.

Standard: 12.50 mm to 12.527 mm (0.492 in to 0.4932 in)

Limit: 12.60 mm (0.4961 in)

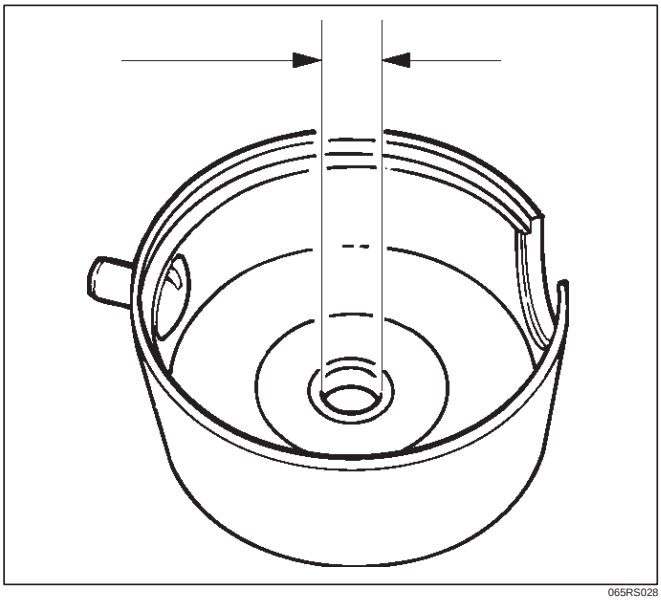

065RS028

Measure inner diameter of bushing in the center bracket (P), and replace if it exceeds the limit.

Standard: 18.01 mm to 18.127 mm (0.7091 in to 0.7137 in)

Limit: 18.15 mm (0.7146 in)

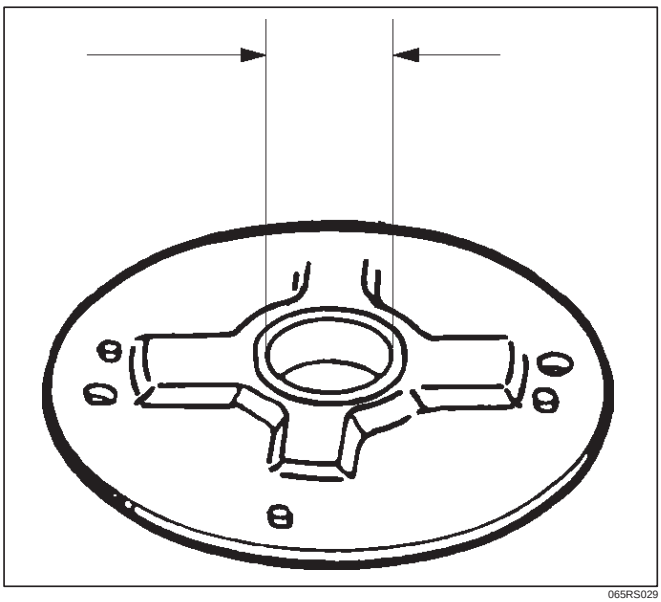

065RS029

Reassembly

To install, follow the removal steps in the reverse order, noting the following points:

Grease application places

- Bushing in rear cover and center bracket
- Gears in reduction gear
- Shift lever operating portion
- Sliding portion of pinion
- Plunger sliding portion of magnetic switch

Reassembling Yoke Assembly

Before reassembly, make sure that no metallic parts attach to the yoke assembly. Because of strong magnetic force, hold the yoke assembly and insert it slowly into the armature.

Torque

Torque for each part (See Torque Specifications in this section)

Pinion Jump–out Dimension

Connect the “+” cable of battery to terminal S and the “–” cable to terminal M. Turn the switch on, and measure pinion travel dimension in thrust direction from the jump–out position.

In measuring the dimension, pull the pinion out a little in the arrow direction.

Dimension(L): 0.05 mm to 1.5 mm (0.002 in to 0.06 in)

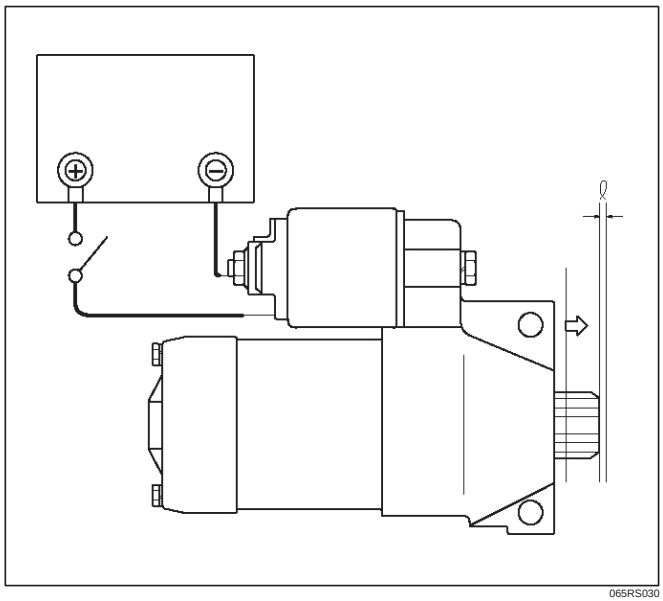

065RS030

If the measured value is out of standard, insert dust cover, or disassemble and adjust.

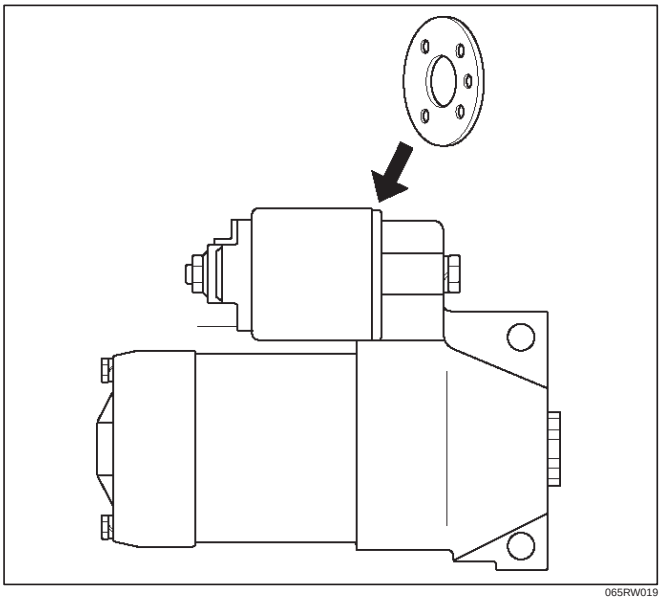

065RW019

Characteristic Test

For easily confirming the characteristics, conduct the no load test as follows:
Rating as short as 30 seconds requires rapid testing.
Fix the starter on the test bench, and wire as shown in illustration. When the switch is closed, the current flows and the starter runs under no load. At this time, measure current, voltage and speed to check if they satisfy the standard.

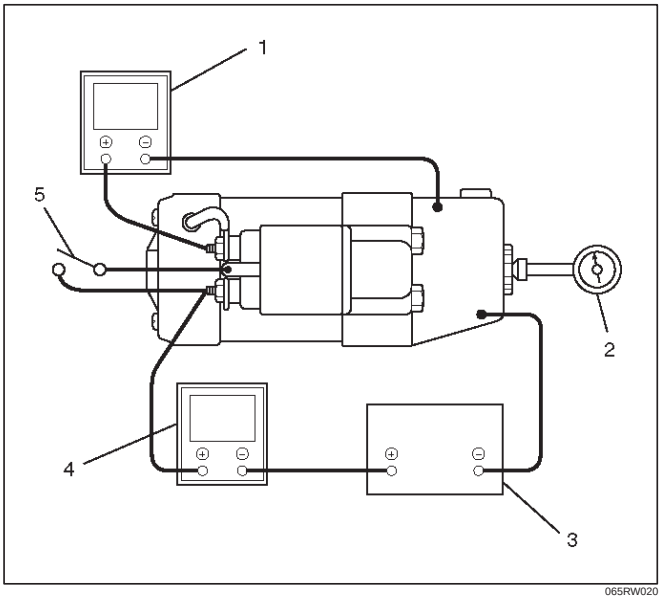

065RW020

Legend

(1) Volt Meter
(2) Tachometer
(3) Battery
(4) Ammeter
(5) Switch

Main Data and Specifications

General Specifications

Model	HITACHI GD002350
Rating	
Voltage	12 V
Output	1.4 Kw
Time	30 sec
Number of teeth of pinion	9
Rotating direction(as viewed from pinion)	Clockwise
Weight(approx.)	34 N
No load characteristics	
Voltage /Current	11V/90A or less
Speed	2700rpm or more
Load characteristics	
Voltage/current	8.4V/250A
Torque	7.3N·m(64lb·in.) or more
Speed	1200rpm or more
Locking characteristics	
Voltage/current	3V/750A or less
Torque	19N·m(14lb·in) or more

Torque Specifications

N·m (Kg·m/lb ft)

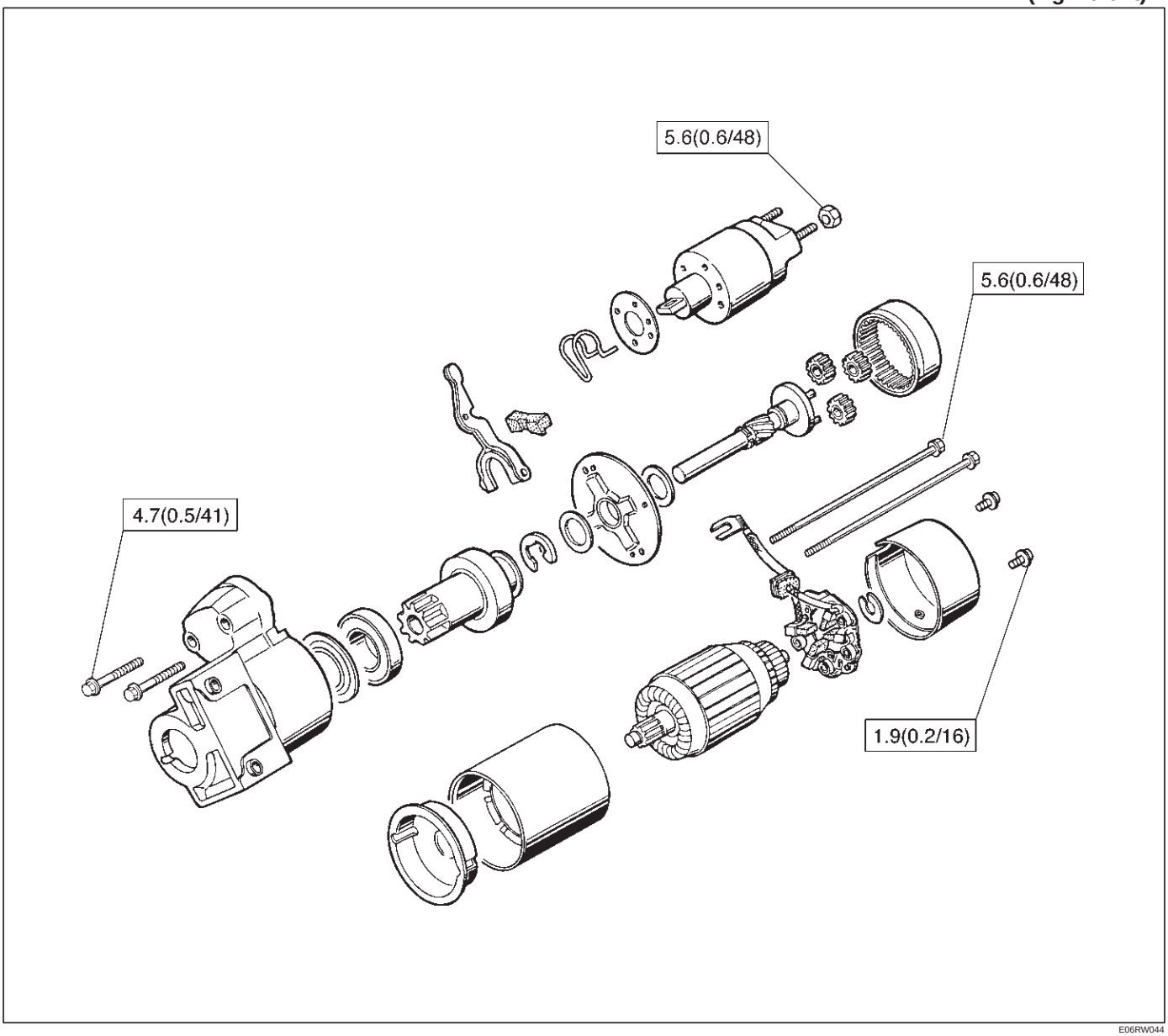

E06RW044

N·m (Kg·m/lb ft)

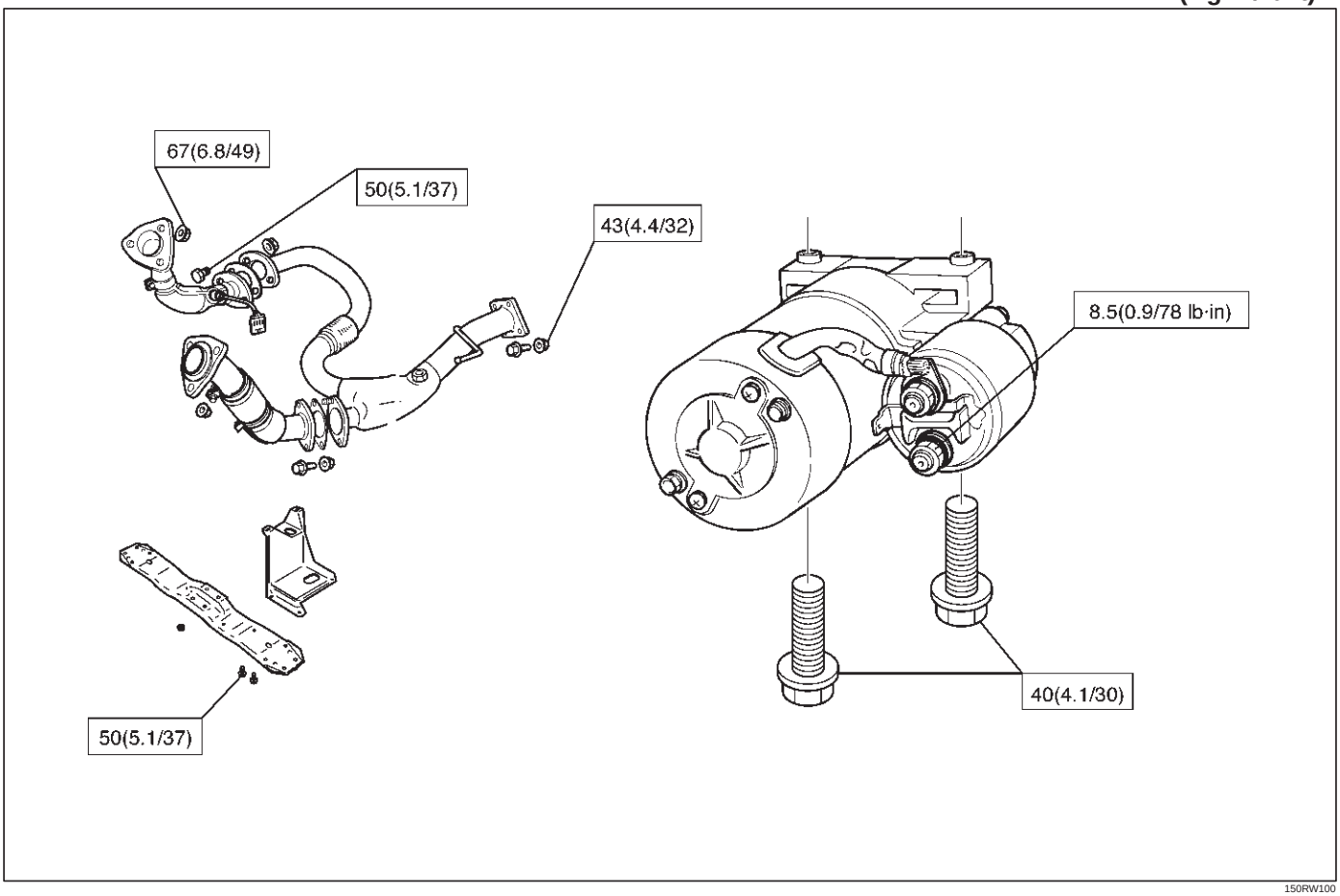

150RW100

Charging System

General Description

The IC integral regulator charging system and its main components are connected as shown in the illustration.
The regulator is a solid state type and it is mounted along with the brush holder assembly inside the generator installed on the rear end cover.
The generator does not require particular maintenance such as voltage adjustment.
The rectifier connected to the stator coil has eight diodes to transform AC voltage into DC voltage.
This DC voltage is connected to the output terminal of generator.

General On–Vehicle Inspection

The operating condition of charging system is indicated by the charge warning lamp. The warning lamp comes on when the starter switch is turned to “ON” position. The charging system operates normally if the lamp goes off when the engine starts.
If the warning lamp shows abnormality or if undercharged or overcharged battery condition is suspected, perform diagnosis by checking the charging system as follows:

1. Check visually the belt and wiring connector.
2. With the engine stopped, turn the stator switch to “ON” position and observe the warning lamp.

   If lamp does not come on:

   Disconnect wiring connector from generator, and ground the terminal “L” on connector side.

   If lamp comes on:

   Repair or replace the generator.

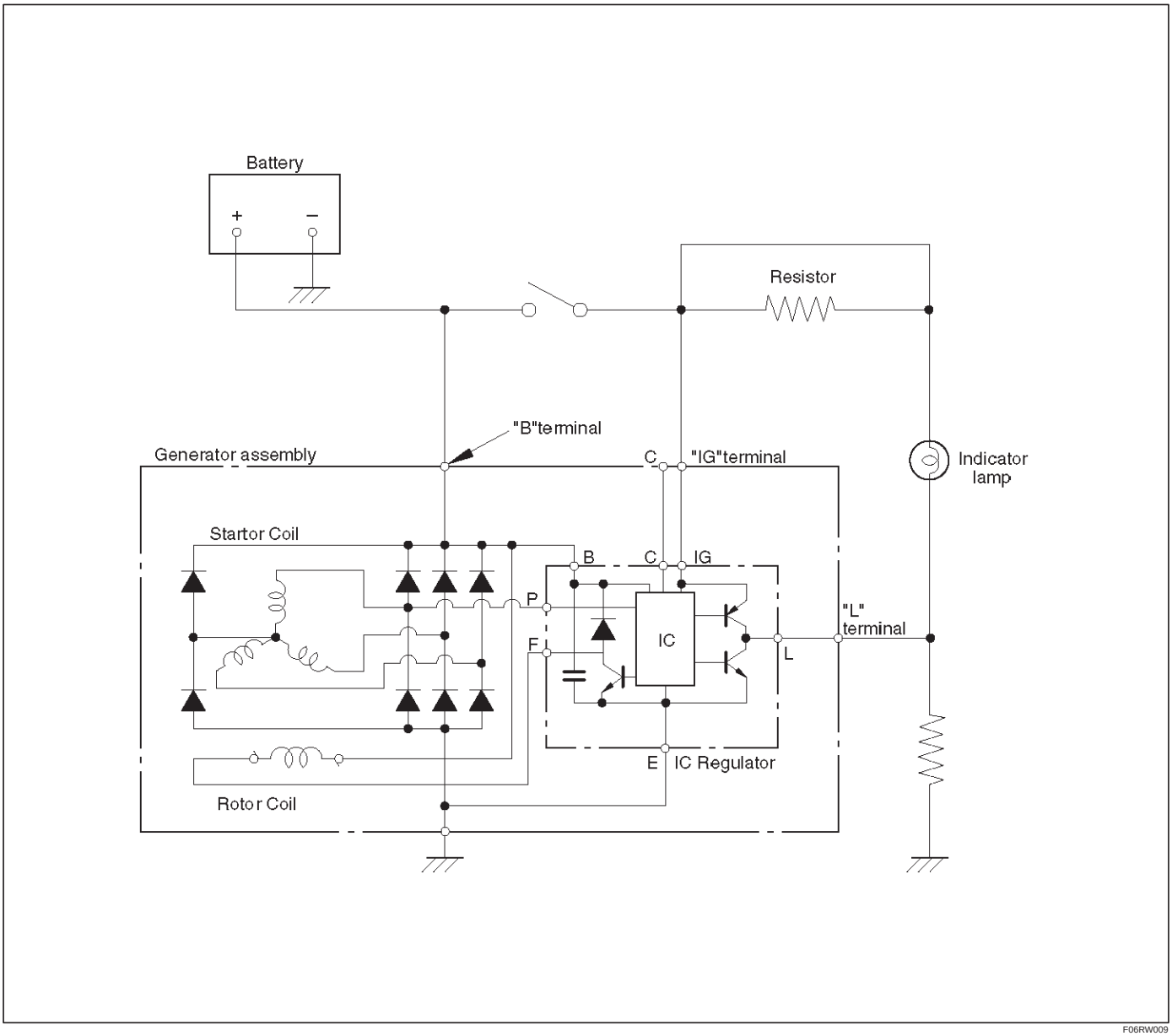

F06RW009

Generator

Removal

1. Disconnect battery ground cable.
2. Move drive belt tensioner to loose side using wrench then remove drive belt (1).
3. Disconnect the wire from terminal “B” and disconnect the connector (4).
4. Remove generator fixing bolt (3).
5. Remove generator assembly (2).

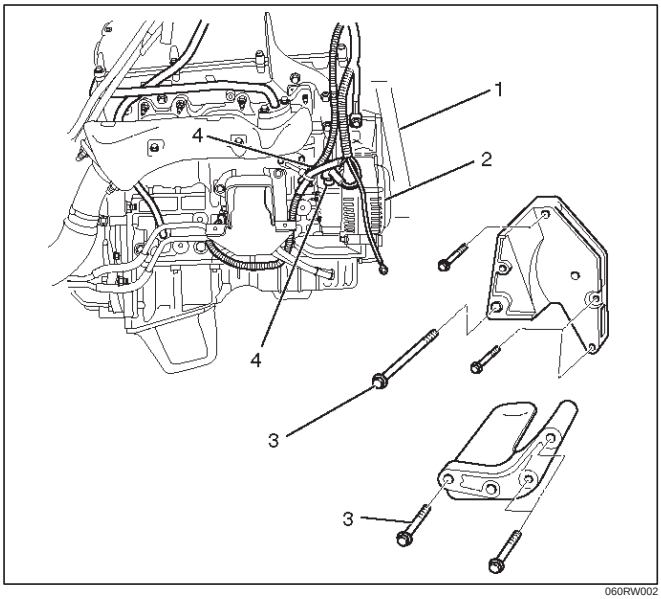

060RW002

Inspection

1. Disconnect the wiring connector from generator.
2. With the engine stopped, turn starter switch to “ON” and connect a voltmeter between connector terminal L (2) and ground or between terminal IG (1) and ground.

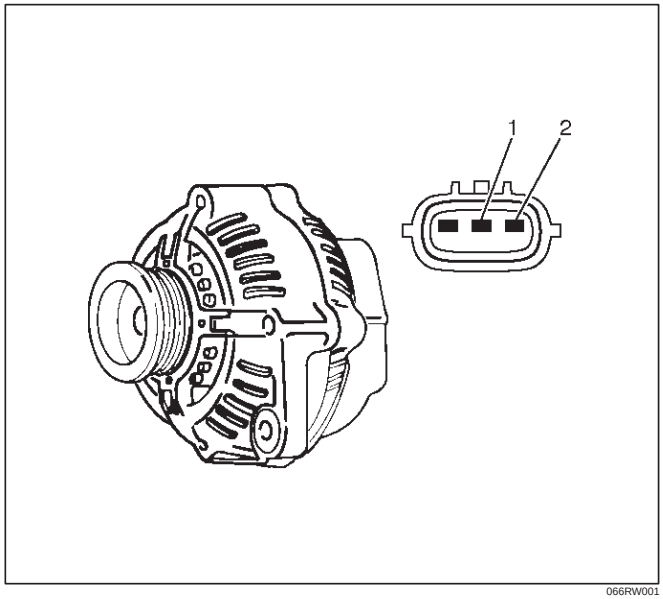

066RW001

If voltage is not present, the line between battery and connector is disconnected and so requires repair.

3. Reconnect the wiring connector to the generator, run the engine at middle speed, and turn off all electrical devices other than engine.
4. Measure battery voltage. If it exceeds 16V, repair or replace the generator.
5. Connect an ammeter to output terminal of generator, and measure output current under load by turning on the other electrical devices (eg., head lights). At this time, the voltage must not be less than 13V.

Installation

1. Install generator assembly to the position to be installed.
2. Install generator assembly and tighten the fixing bolts to the specified torque.

   Torque:

   M10 bolt: 41 N·m (4.2 Kg·m/30 lb ft)

   M8 bolt: 21 N·m (2.1 Kg·m/15 lb ft)
3. Connect wiring harness connector and direct terminal “B”.
4. Move drive belt tensioner to loose side using wrench, then install drive belt to normal position.
5. Reconnect battery ground cable.

Disassembled View

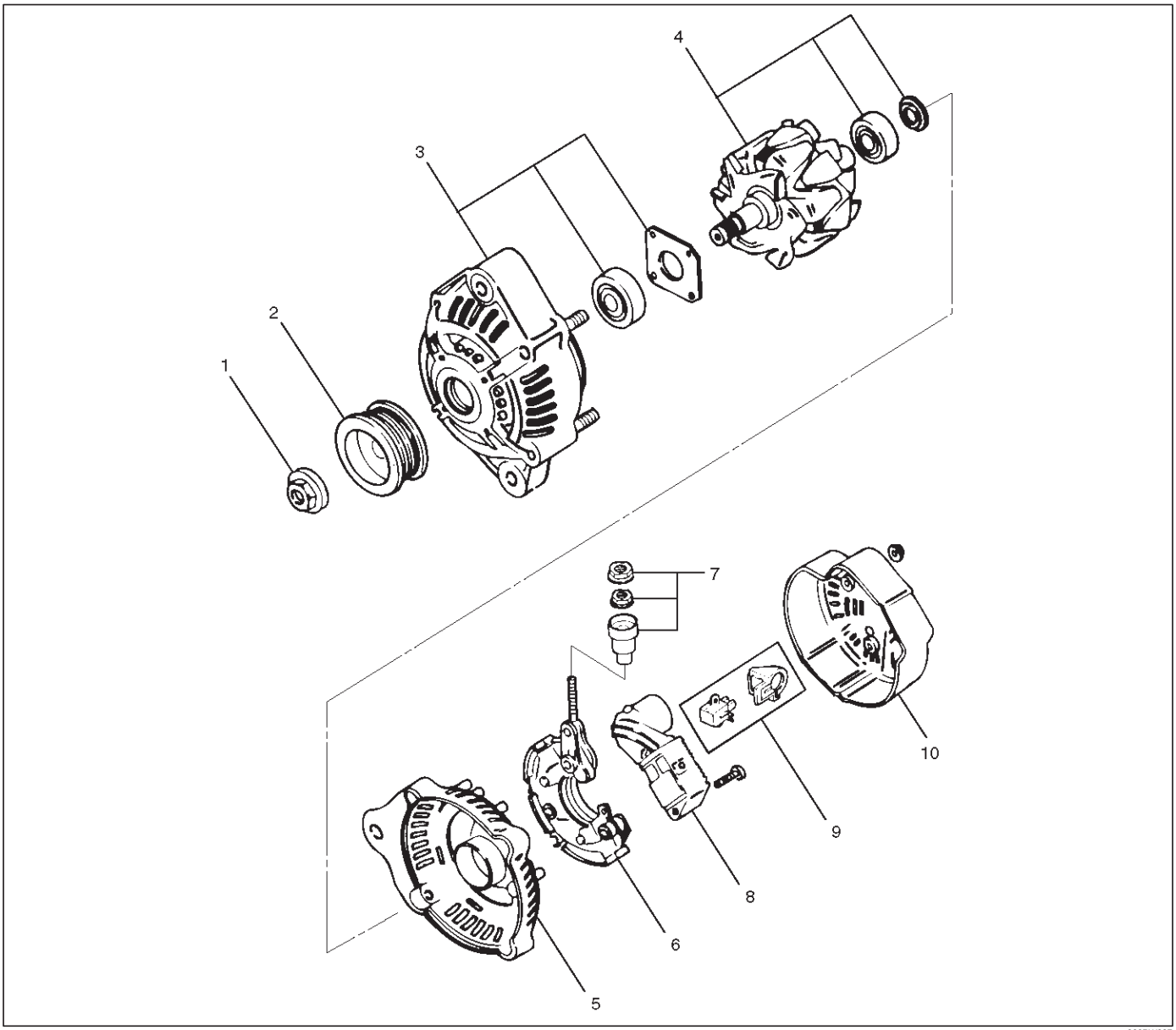

066RW007

Legend

(1) Pulley Nut
(2) Pulley
(3) Front Cover Assembly
(4) Rotor Assembly
(5) Rear End Cover
(6) Rectifier
(7) Terminal Insulator and Nut
(8) Regulator Assembly
(9) Brush Holder Assembly
(10) Rear Cover

Disassembly

1. Terminal insulator and nut(2).
2. Remove three nuts(1) on the rear cover and a nut on terminal B and insulator, then remove the rear cover(3).

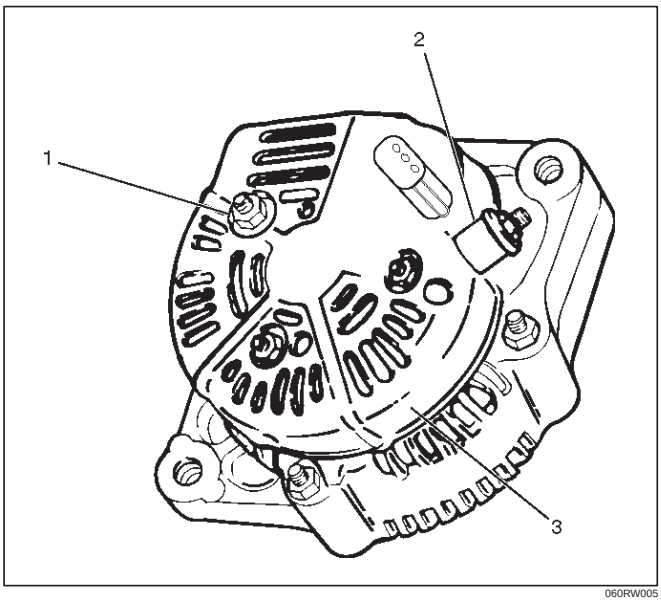

060RW005

3. Remove two screws that fix the brush holder(5) and rectifier, then remove the brush holder assembly(4).

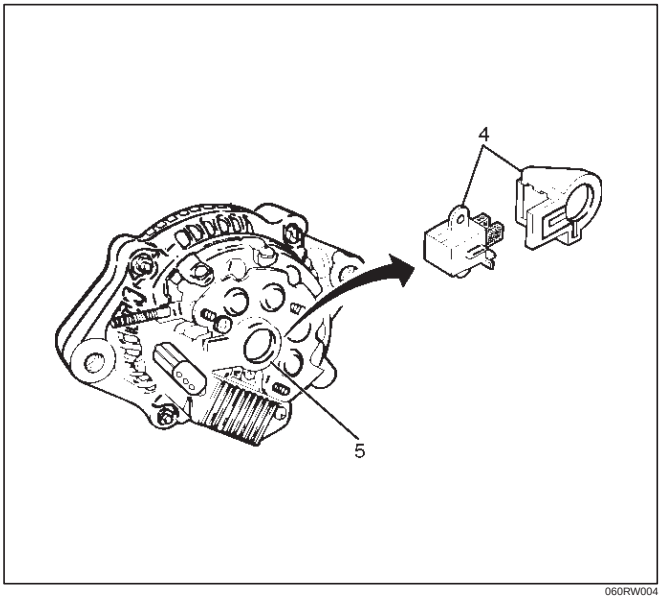

060RW004

4. Remove three screws on the IC regulator, then the IC regulator assembly(6).

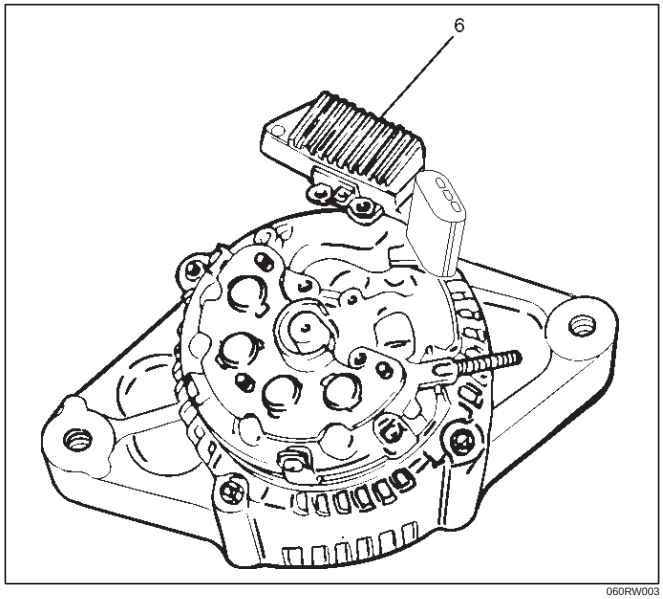

060RW003

5. Remove four screws that fix rectifier(7) and stator lead wires.

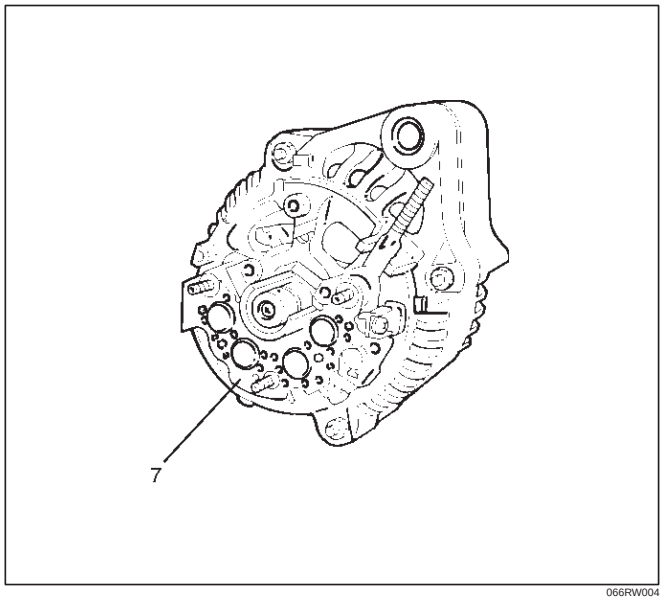

066RW004

6. Secure the pulley directly in the vise between two copper plates, and remove the nut and pulley.

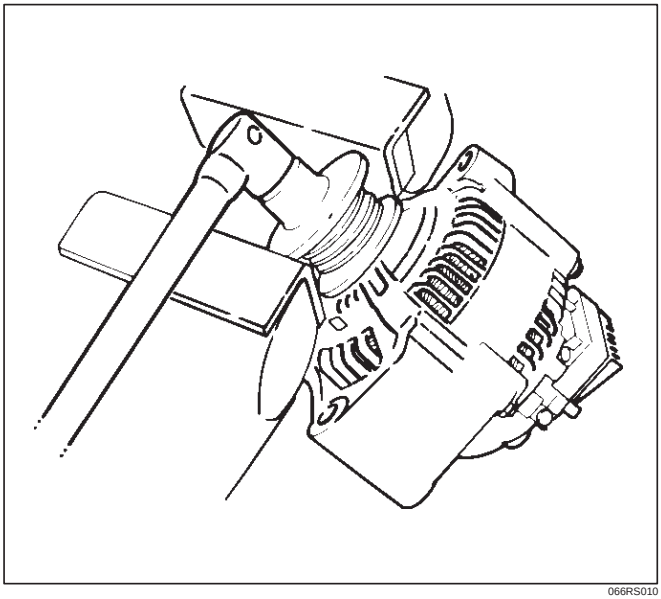

066RS010

7. Remove four nuts(8) that secure the front cover assembly and rear end cover, and an insulator(9).

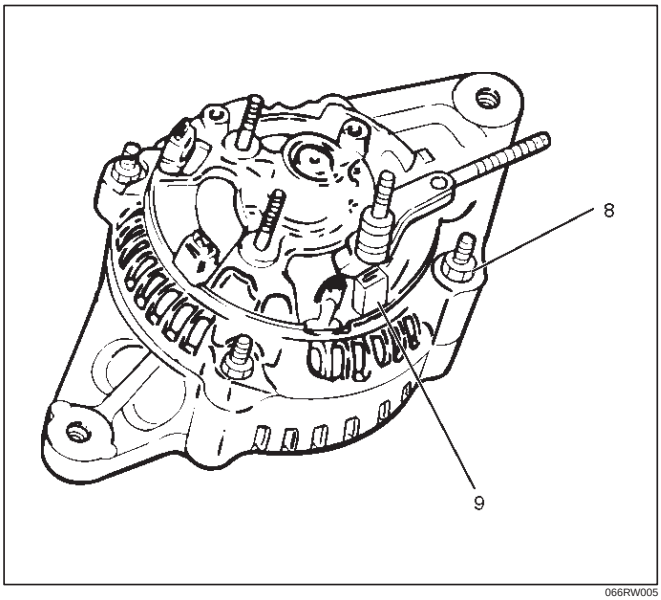

066RW005

8. Use the puller to remove the rear end cover.
9. Rotor assembly

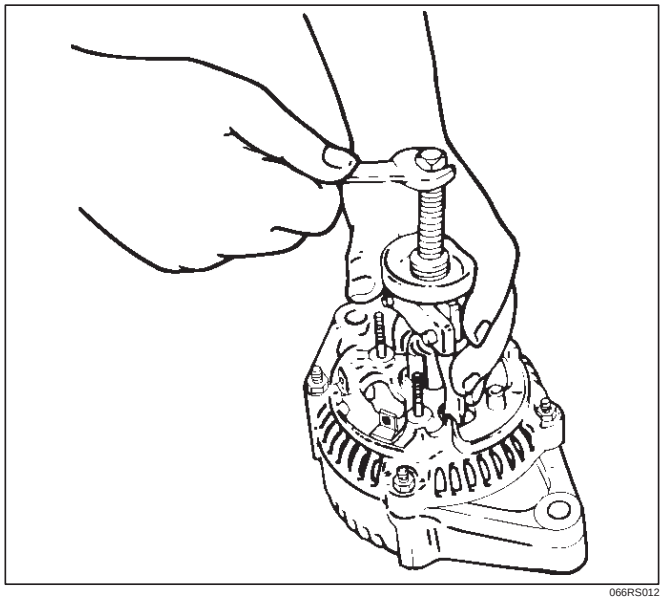

066RS012

10. Pull the rotor assembly(10) off the front cover assembly(12) using a bench press(11).

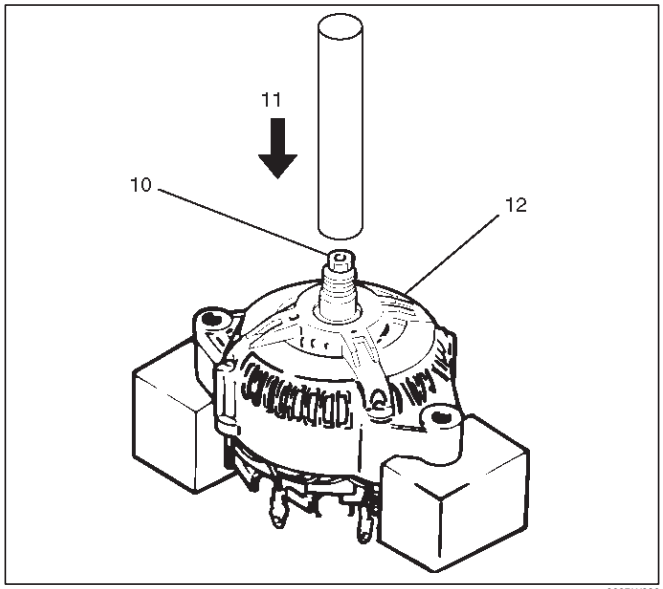

066RW006

Inspection and Repair

Repair or replace necessary parts if extreme wear or damage is found during inspection.

Rotor Assembly

1. Check the rotor slip ring surfaces for contamination and roughness. If rough, polish with #500—600 sandpaper.

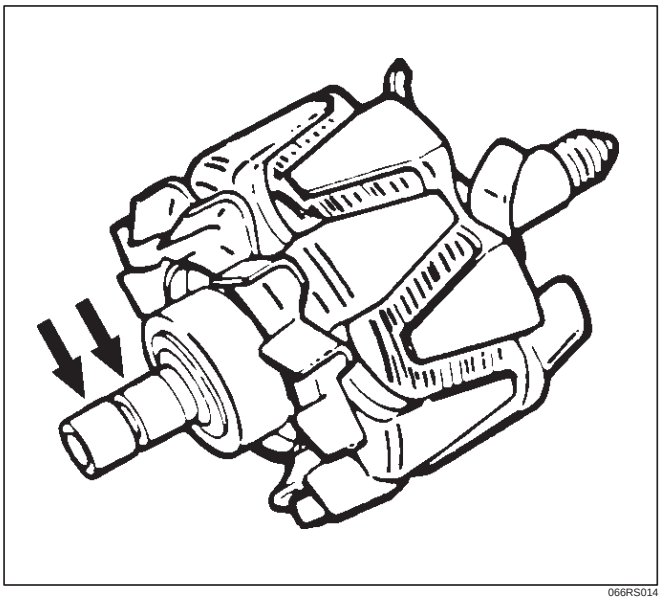

066RS014

2. Measure the slip ring diameter, and replace if it exceeds the limit.

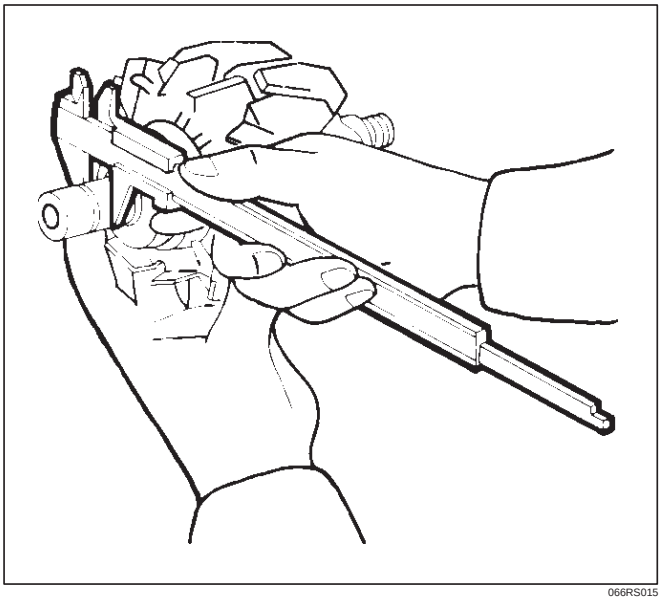

066RS015

3. Check resistance between slip rings, and replace if there is no continuity.

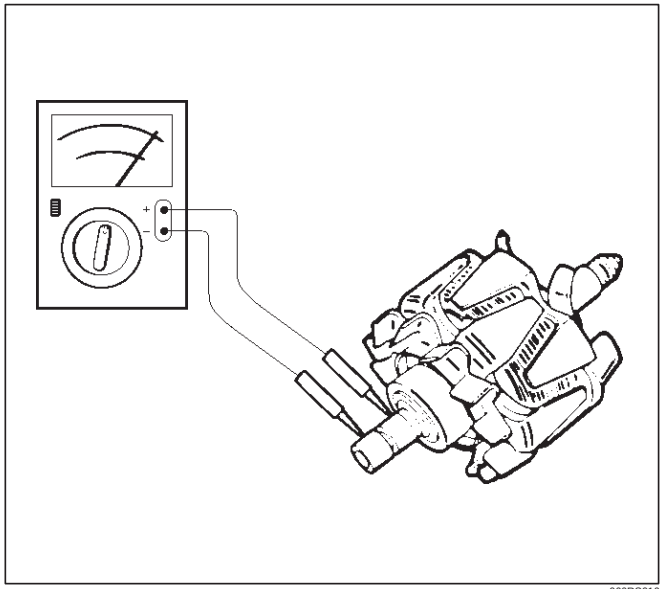

066RS016

4. Check for continuity between slip ring and rotor core. In case of continuity, replace the rotor assembly.

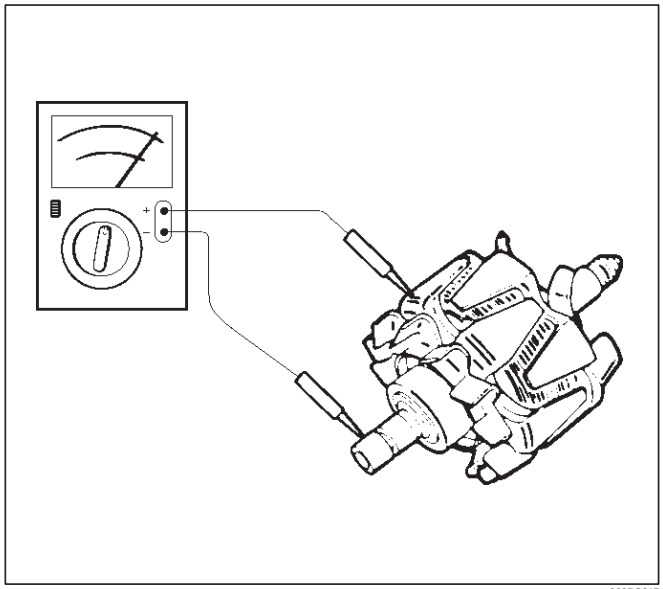

066RS017

Stator Coil

1. Measure resistance between respective phases.
2. Measure insulation resistance between stator coil and core with a mega–ohmmeter.
   If less than standard, replace the coil.

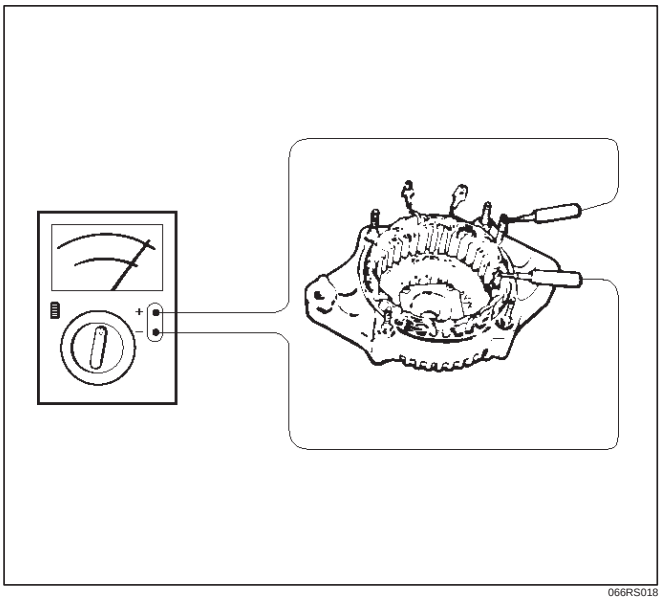

066RS018

Brush

Measure the brush length.
If more than limit, replace the brush.

Standard: 10.mm (0.4134 in)

Limit: 8.4.mm (0.3307 in)

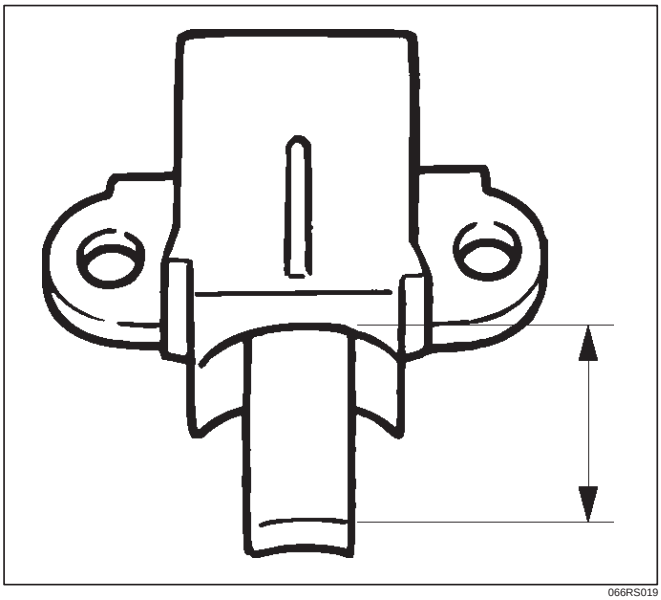

066RS019

Rectifier Assembly

Check for continuity across “P” and “E” in the × 100W range of multimeter.

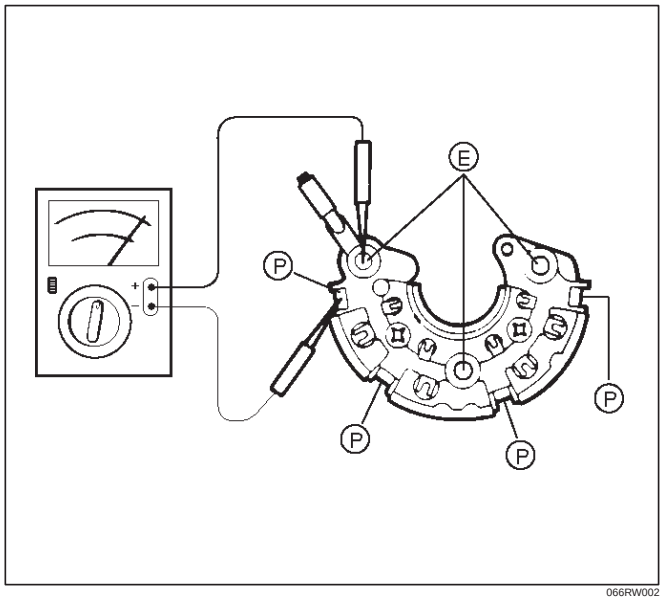

066RW002

Change polarity, and make sure that there is continuity in one direction, and not in the reverse direction. In case of continuity in both directions, replace the rectifier assembly.

IC Regulator Assembly

Check for continuity across “B” and “F” in the × 100W range of multimeter.

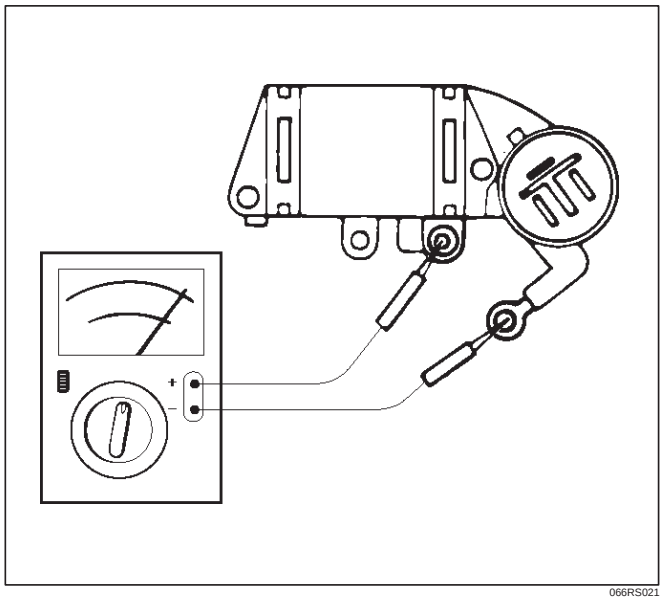

066RS021

Change polarity, and make sure that there is continuity in one direction, and not in the reverse direction. In case of continuity in both directions, replace the IC regulator assembly.

Reassembly

To reassemble, follow the disassembly steps in the reverse order, noting the following points:

1. Using a press with a socket wrench attached, reassemble rotor and rear end cover assembly in the front cover.

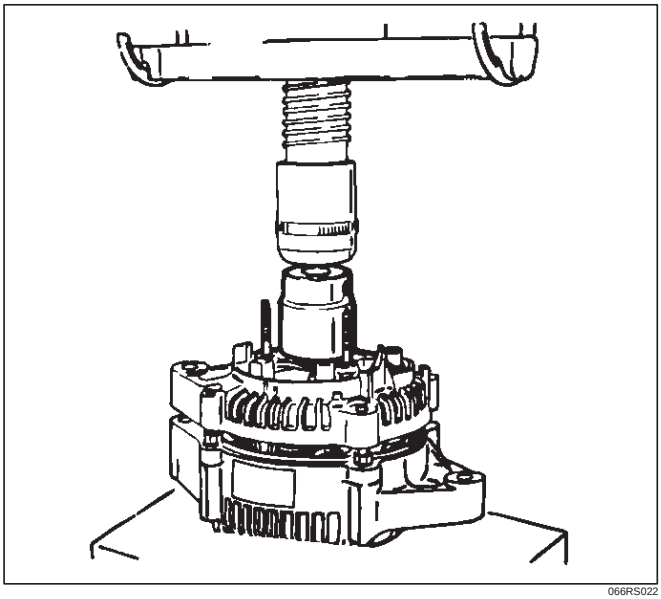

066RS022

2. Install pulley on the rotor.
   Secure the pulley directly in the vise between two copper plates, and tighten nut to the specified torque.

Torque: 111 N·m (11.3 Kg·m/82 lb ft)

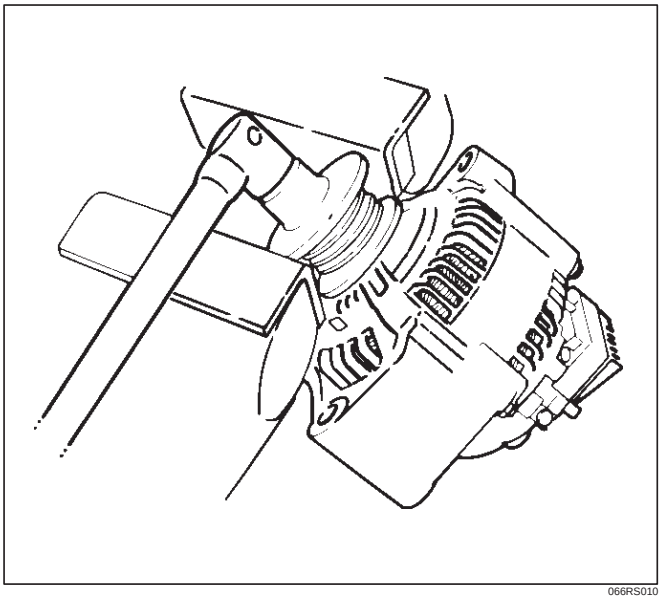

066RS010

Bench Test

Conduct a bench test of the generator.

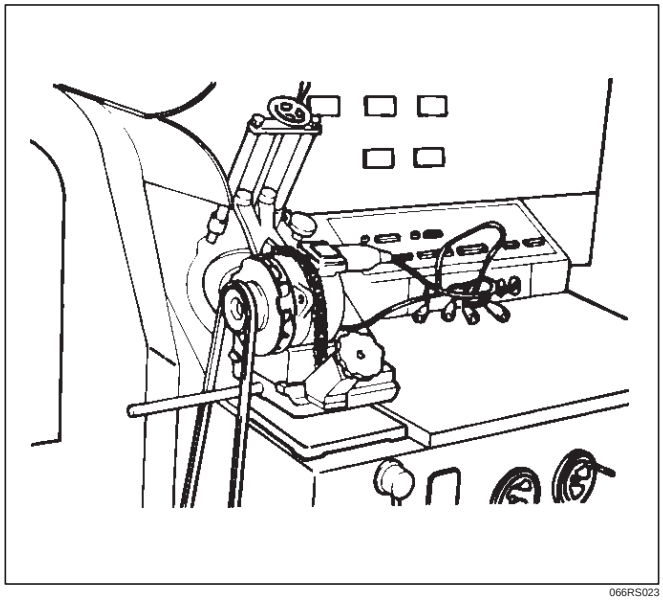

066RS023

Preparation

Remove generator from the vehicle (see “Generator removal”).

1. Secure generator to the bench test equipment and connect wires.
   Terminal “IG” for energization
   Terminal “L” for neutral (warning lamp)
   Terminal “B” for output
2. Conduct the generator characteristic test.
   Characteristics of generator are shown in illustration.
   Repair or replace the generator if its outputs are abnormal.

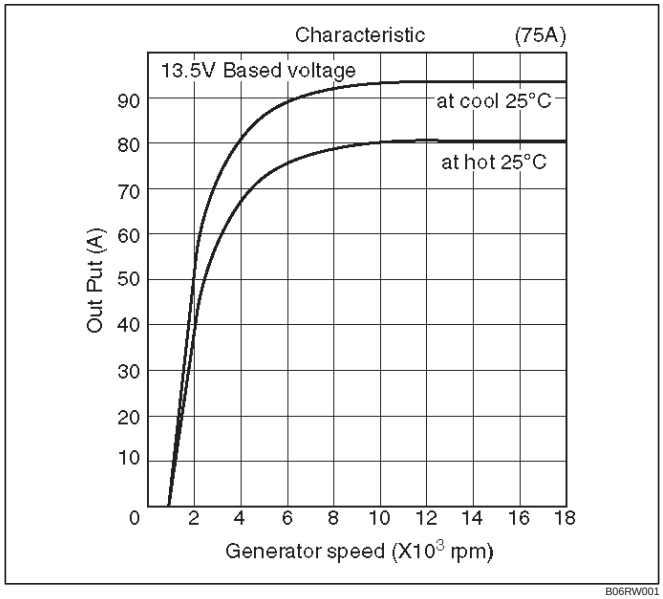

B06RW001

Main Data and Specifications

General Specifications

Parts Number (Nippon denso)	102211—5030
Model	ACHD04
Rated voltage	12 V
Rated output	75 A
Rotating direction (As viewed from pulley)	Clockwise
Pulley effective diameter	50 mm (1.97 in)
Weight	44 N (33 lb)

ENGINE

ENGINE DRIVEABILITY AND EMISSIONS

CONTENTS

Specifications 6E–5
Tightening Specifications 6E–5
Vehicle Type Specifications 6E–5
Diagrams and Schematics 6E–6
PCM Wiring Diagram (1 of 11) 6E–6
PCM Wiring Diagram (2 of 11) For EC, THAILAND, SOUTH EAST ASIA, LATIN AMERICA, GULF, SAUDI, CHINA. 6E–7
PCM Wiring Diagram (3 of 11) For SOUTH AFRICA and EXP. 6E–8
PCM Wiring Diagram (4 of 11) 6E–9
PCM Wiring Diagram (5 of 11) 6E–10
PCM Wiring Diagram (6 of 11) For AUSTRALIA, THAILAND, SOUTH EAST ASIA, LATIN AMERICA, GULF, SAUDI, LATIN AMERICA. 6E–11
PCM Wiring Diagram (7 of 11) For EC. . . . 6E–12
PCM Wiring Diagram (8 of 11) For EXPORT and SOUTH AFRICA. 6E–13
PCM Wiring Diagram (9 of 11) Except EXP and SOUTH AFRICA 6E–14
PCM Wiring Diagram (10 of 11) For EXPORT and SOUTH AFRICA 6E–15
PCM Wiring Diagram (11 of 11) 6E–16
PCM Pinouts 6E–17
PCM Pinout Table, 32-Way Red Connector – Row “A” 6E–17
PCM Pinout Table, 32-Way Red Connector – Row “B” 6E–19
PCM Pinout Table, 32-Way White Connector – Row “C” (For EC) 6E–20
PCM Pinout Table, 32-Way White Connector – Row “C” (For except EC) . . . 6E–21
PCM Pinout Table, 32-Way White Connector – Row “D” (For except EXPORT and SOUTH AFRICA) 6E–22
PCM Pinout Table, 32-Way White Connector – Row “D” (For EXPORT and SOUTH AFRICA) 6E–23
PCM Pinout Table, 32-Way Blue Connector – Row “E” (For except EXPORT and SOUTH AFRICA) 6E–24
PCM Pinout Table, 32-Way Blue Connector – Row “E” (For EXPORT and SOUTH AFRICA) 6E–26
PCM Pinout Table, 32-Way Blue Connector – Row “F” 6E–27
Component Locators 6E–28
Engine Component Locator (This illustration is based on RHD model.) 6E–28
Engine Component Locator Table 6E–29
Engine Component Locator Table 6E–31
Undercarriage Component Locator 6E–32
Undercarriage Component Locator Table (Automatic Transmission) 6E–32
Undercarriage Component Locator Table (Manual Transmission) 6E–33
Fuse and Relay Panel (Underhood Electrical Center) 6E–33
Sensors and Miscellaneous Component Locators 6E–34
Diagnosis 6E–37
Strategy-Based Diagnostics 6E–37
Strategy-Based Diagnostics 6E–37
DTC Stored 6E–37
No DTC 6E–37
No Matching Symptom 6E–37
Intermittents 6E–37
No Trouble Found 6E–37
Verifying Vehicle Repair 6E–37
General Service Information 6E–38
OBD Serviceablity Issues 6E–38
Maintenance Schedule 6E–38
Visual / Physical Engine Compartment Inspection 6E–38
Basic Knowledge of Tools Required 6E–38
Serial Data Communications 6E–38
Class II Serial Data Communications 6E–38
On-Board Diagnostic (OBD) 6E–39
On-Board Diagnostic Tests 6E–39
Comprehensive Component Monitor Diagnostic Operation 6E–39
Common OBD Terms 6E–40
The Diagnostic Executive 6E–40
DTC Types 6E–41
Verifying Vehicle Repair 6E–42
Reading Diagnostic Trouble Codes Using A Tech 2 . . . . . 6E–42
Tech 2 Tech 2 . . . . . 6E–43
Tech 2 Features 6E–43
Getting Started 6E–44
Operating Procedure (For Example) 6E–44
DTC Modes 6E–45
DTC Information Mode 6E–46
Injector Balance Test 6E–46
EGR Control Test 6E–47
Idle Air Control System Test 6E–48

Primary System-Based Diagnostic 6E–50
Primary System-Based Diagnostic 6E–50
Fuel Control Heated Oxygen Sensor 6E–50
HO2S Heater 6E–50
Fuel Trim System Monitor Diagnostic Operation 6E–50
Fuel Trim System Monitor Diagnostic Operation 6E–50
Fuel Trim Cell Diagnostic Weights 6E–50
On-Board Diagnostic (OBD) System Check . 6E–51
A/C Clutch Control Circuit Diagnosis 6E–54
Electronic Ignition System Diagnosis 6E–60
Fuel Metering System Check 6E–60
Idle Air Control (IAC) Valve 6E–60
Fuel System Pressure Test 6E–60
Fuel Injector Coil Test Procedure and Fuel Injector Balance Test Procedure 6E–60
Knock Sensor Diagnosis 6E–65
Powertrain Control Module (PCM) Diagnosis 6E–65
Multiple PCM Information Sensor DTCS Set 6E–65
Exhaust Gas Recirculation (EGR) Diagnosis (For except EXPORT and SOUTH AFRICA) 6E–68
Engine Tech 2 Data Definitions and Ranges 6E–68
Typical Scan Data Values 6E–70
No Malfunction Indicator Lamp (MIL) 6E–74
Malfunction Indicator Lamp (MIL) “ON” Steady 6E–77
Engine Cranks But Will Not Run 6E–79
Fuel System Electrical Test 6E–85
Fuel System Diagnosis 6E–88
Idle Air Control (IAC) System Check 6E–93
Knock Sensor (KS) System Check (Engine Knock, Poor Performance, or Poor Economy) 6E–95
Exhaust Gas Recirculation (EGR) System Check 6E–97
Manifold Absolute Pressure (MAP) Output Check 6E–99
PCM Diagnostic Trouble Codes 6E–101
Diagnostic Trouble Code (DTC) P0101 MAF System Performance 6E–104
Diagnostic Trouble Code (DTC) P0102 MAF Sensor Circuit Low Frequency 6E–107
Diagnostic Trouble Code (DTC) P0103 MAF Sensor Circuit High Frequency 6E–110
Diagnostic Trouble Code (DTC) P0107 MAP Sensor Circuit Low Voltage 6E–112
Diagnostic Trouble Code (DTC) P0108 MAP Sensor Circuit High Voltage 6E–115
Diagnostic Trouble Code (DTC) P0112 IAT Sensor Circuit Low Voltage 6E–118
Diagnostic Trouble Code (DTC) P0113 IAT Sensor Circuit High Voltage 6E–121
Diagnostic Trouble Code (DTC) P0117 ECT Sensor Circuit Low Voltage 6E–124
Diagnostic Trouble Code (DTC) P0118 ECT Sensor Circuit High Voltage 6E–127
Diagnostic Trouble Code (DTC) P0121 TP System Performance 6E–130
Diagnostic Trouble Code (DTC) P0122 TP Sensor Circuit Low Voltage 6E–133
Diagnostic Trouble Code (DTC) P0123 TP Sensor Circuit High Voltage 6E–136
Diagnostic Trouble Code (DTC) P0131 HO2S Circuit Low Voltage Bank 1 Sensor 1 . . . . . 6E–139
Diagnostic Trouble Code (DTC) P0132 HO2S Circuit High Voltage Bank 1 Sensor 1 . . . . . 6E–142
Diagnostic Trouble Code (DTC) P0134 HO2S Circuit Insufficient Activity Bank 1 Sensor 1 . . . . . 6E–145
Diagnostic Trouble Code (DTC) P0151 HO2S Circuit Low Voltage Bank 2 Sensor 1 . . . . . 6E–148
Diagnostic Trouble Code (DTC) P0152 HO2S Circuit HIGH Voltage Bank 2 Sensor 1 . . . . . 6E–151
Diagnostic Trouble Code (DTC) P0171 Fuel Trim System Lean Bank 1 . . . . . 6E–154
Diagnostic Trouble Code (DTC) P0172 Fuel Trim System Rich Bank 1 . . . . . 6E–158
Diagnostic Trouble Code (DTC) P0174 Fuel Trim System Lean Bank 2 . . . . . 6E–162
Diagnostic Trouble Code (DTC) P0175 Fuel Trim System Rich Bank 2 . . . . . 6E–166
Diagnostic Trouble Code (DTC) P0201 Injector 1 Control Circuit 6E–170
Diagnostic Trouble Code (DTC) P0202 Injector 2 Control Circuit 6E–173
Diagnostic Trouble Code (DTC) P0203 Injector 3 Control Circuit 6E–176
Diagnostic Trouble Code (DTC) P0204 Injector 4 Control Circuit 6E–179
Diagnostic Trouble Code (DTC) P0205 Injector 5 Control Circuit 6E–182
Diagnostic Trouble Code (DTC) P0206 Injector 6 Control Circuit 6E–185
Diagnostic Trouble Code (DTC) P0325 KS Module Circuit 6E–188
Diagnostic Trouble Code (DTC) P0327 KS Sensor Circuit 6E–190
Diagnostic Trouble Code (DTC) P0336 58X Reference Signal Circuit 6E–193
Diagnostic Trouble Code (DTC) P0337 CKP Sensor Circuit Low Frequency 6E–195
Diagnostic Trouble Code (DTC) P0341 CMP Sensor Circuit Performance 6E–198
Diagnostic Trouble Code (DTC) P0342 CMP Sensor Circuit Low 6E–202

Diagnostic Trouble Code (DTC) P0351 Ignition 1 Control Circuit 6E–206
Diagnostic Trouble Code (DTC) P0352 Ignition 2 Control Circuit 6E–209
Diagnostic Trouble Code (DTC) P0353 Ignition 3 Control Circuit 6E–212
Diagnostic Trouble Code (DTC) P0354 Ignition 4 Control Circuit 6E–215
Diagnostic Trouble Code (DTC) P0355 Ignition 5 Control Circuit 6E–218
Diagnostic Trouble Code (DTC) P0356 Ignition 6 Control Circuit 6E–221
Diagnostic Trouble Code (DTC) P0402 EGR Pintle Crank Error 6E–224
Diagnostic Trouble Code (DTC) P0404 EGR Open Stuck 6E–226
Diagnostic Trouble Code (DTC) P0405 EGR Low Voltage 6E–228
Diagnostic Trouble Code (DTC) P0406 EGR High Voltage 6E–231
Diagnostic Trouble Code (DTC) P0502 VSS Circuit Low Input 6E–234
Diagnostic Trouble Code (DTC) P0562 System Voltage Low 6E–237
Diagnostic Trouble Code (DTC) P0563 System Voltage High 6E–239
Diagnostic Trouble Code (DTC) P0601 PCM Memory 6E–240
Diagnostic Trouble Code (DTC) P1154 HO2S Circuit Transition Time Ratio Bank 2 Sensor 1 . . . . . 6E–241
Diagnostic Trouble Code (DTC) P1171 Fuel System Lean During Acceleration 6E–245
Diagnostic Trouble Code (DTC) P1380 ABS Rough Road ABS System Fault 6E–248
Diagnostic Trouble Code (DTC) P1404 EGR Closed Stuck 6E–249
Diagnostic Trouble Code (DTC) P1508 IAC System Low RPM 6E–251
Diagnostic Trouble Code (DTC) P1509 IAC System High RPM 6E–254
Diagnostic Trouble Code (DTC) P1618 Serial Peripheral Interface (SPI) PCM Interprocessor Communication Error 6E–257
Diagnostic Trouble Code (DTC) P1625 PCM Unexpected Reset 6E–258
Diagnostic Trouble Code (DTC) P1640 Driver-1-Input High Voltage 6E–259
Symptom Diagnosis 6E–262
Default Matrix Table 6E–288
Camshaft Position (CMP) Sensor 6E–291
Crankshaft Position (CKP) Sensor 6E–292
Engine Coolant Temperature (ECT) Sensor . 6E–292
Heated Oxygen Sensor (HO2S) 6E–293
Intake Air Temperature (IAT) Sensor 6E–295
Knock Sensor (KS) 6E–296
Mass Air Flow (MAF) Sensor 6E–297
Manifold Absolute Pressure (MAP) Sensor . 6E–297
Malfunction Indicator Lamp (MIL) 6E–298
Powertrain Control Module (PCM) 6E–298
EEPROM 6E–300
Power Steering Pressure (PSP) Switch 6E–300
Throttle Position (TP) Sensor 6E–301
Vehicle Speed Sensor (VSS) 6E–302
Air Cleaner/Air Filter 6E–303
Idle Air Control (IAC) Valve 6E–304
Common Chamber 6E–305
Accelerator Cable Assembly 6E–305
Accelerator Pedal Replacement 6E–308
Fuel Filter Cap 6E–310
Fuel Filter 6E–310
Fuel Gauge Unit 6E–313
Fuel Injectors 6E–314
Fuel Pressure Regulator 6E–315
Fuel Metering System 6E–317
Fuel Pump Assembly 6E–318
Fuel Pump Relay 6E–319
Fuel Rail Assembly 6E–319
Fuel Tank 6E–321
Throttle Body (TB) 6E–323
Electronic Ignition System 6E–324
Catalytic Converter 6E–325
Air Conditioning Relay 6E–325
EVAP Canister Hoses 6E–326
EVAP Canister 6E–326
EVAP Canister Purge Solenoid 6E–327
Fuel Tank Vent Valve 6E–328
Linear Exhaust Gas Recirculation (EGR) Valve 6E–328
Positive Crankcase Ventilation (PCV) Valve . 6E–329
Wiring and Connectors 6E–330
PCM Connectors and Terminals 6E–330
Wire Harness Repair: Twisted Shielded Cable 6E–330
Twisted Leads 6E–331
Weather-Pack Connector 6E–332
Com-Pack III 6E–333
Metri-Pack 6E–333
General Description 6E–335
General Description (PCM and Sensors) . . . 6E–335
58X Reference PCM Input 6E–335
A/C Request Signal 6E–335
Crankshaft Position (CKP) Sensor 6E–335
Camshaft Position (CMP) Sensor and Signal 6E–335
Engine Coolant Temperature (ECT) Sensor 6E–335
Electrically Erasable Programmable Read Only Memory (EEPROM) 6E–336
Fuel Control Heated Oxygen Sensors 6E–336
Intake Air Temperature (IAT) Sensor 6E–336

Knock Sensor 6E–337
Linear Exhaust Gas Recirculation (EGR) Control 6E–337
Mass Air Flow (MAF) Sensor 6E–337
Manifold Absolute Pressure (MAP) Sensor 6E–338
Powertrain Control Module (PCM) 6E–338
PCM Function 6E–338
PCM Components 6E–339
PCM Voltage Description 6E–339
PCM Input/Outputs 6E–339
PCM Service Precautions 6E–339
Reprogramming The PCM 6E–339
Throttle Position (TP) Sensor 6E–339
Transmission Fluid Temperature (TFT) Sensor 6E–340
Transmission Range Switch 6E–340
Vehicle Speed Sensor (VSS) 6E–340
Use of Circuit Testing Tools 6E–340
Aftermarket Electrical and Vacuum Equipment 6E–340
Electrostatic Discharge Damage 6E–341
Upshift Lamp 6E–341
General Description (Air Induction) 6E–341
Air Induction System 6E–341
General Description (Fuel Metering) 6E–341
Acceleration Mode 6E–341
Accelerator Controls 6E–341
Battery Voltage Correction Mode 6E–341
CMP Signal 6E–341
Clear Flood Mode 6E–342
Deceleration Mode 6E–342
Engine Speed/Vehicle Speed/Fuel Disable Mode 6E–342
Fuel Cutoff Mode 6E–342
Fuel Injector 6E–342
Fuel Metering System Components 6E–342
Fuel Metering System Purpose 6E–342
Fuel Pressure Regulator 6E–343
Fuel Pump Electrical Circuit 6E–343
Fuel Rail 6E–343
Idle Air Control (IAC) Valve 6E–343
Run Mode 6E–344
Starting Mode 6E–344
Throttle Body Unit 6E–344
General Description (Electronic Ignition System) 6E–344
Camshaft Position (CMP) Sensor 6E–344
Crankshaft Position (CKP) Sensor 6E–345
Electronic Ignition 6E–345
Ignition Coils 6E–345
Ignition Control 6E–345
Ignition Control PCM Output 6E–347
Knock Sensor (KS) PCM Input 6E–347
Powertrain Control Module (PCM) 6E–347
Spark Plug 6E–347
A/C Clutch Diagnosis 6E–349
A/C Clutch Circuit Operation 6E–349
A/C Clutch Circuit Purpose 6E–349
A/C Request Signal 6E–349
General Description (Exhaust Gas Recirculation (EGR) System) 6E–349
EGR Purpose 6E–349
Linear EGR Valve 6E–349
Linear EGR Control 6E–349
Linear EGR Valve Operation and Results of Incorrect Operation 6E–349
EGR Pintle Position Sensor 6E–350
General Description (Positive Crankcase Ventilation (PCV) System) 6E–350
Crankcase Ventilation System Purpose . . . 6E–350
Crankcase Ventilation System Operation . 6E–350

Specifications

Tightening Specifications

Application	N·m	Lb Ft.	Lb In.
Camshaft Position Sensor Retaining Screw	9	—	78
Crankshaft Position Sensor Mounting Bolt	10	—	87
EGR Bolt	28	21	—
EGR Nut	28	21	—
Engine Coolant Temperature Sensor	20	7.7	—
Fuel Drain Plug	29	22	—
Fuel Pressure Regulator Attaching Screw	6.5	—	60
Fuel Rail Bolts	25	18	—
Fuel Tank Undercover Retaining Bolts	36	27	—
Heated Oxygen Sensor	42	31	—
Lower Intake Manifold to Engine Block Bolts	25	18	—
Lower Intake Manifold to Engine Block Nuts	25	18	—
Spark Plugs	18	13	—
Throttle Body Mounting Bolts	25	18	—
Upper Intake Manifold to Lower Intake Manifold Bolts	25	18	—
VSS Retaining Bolt	13	—	120

Vehicle Type Specifications

EC		AUSTRALIA		THAILAND SOUTH-EAST-ASIA LATIN AMERICA		GULF CONTRIES SAUDI CHINA		SOUTH AFRICA	EXPORT		Specifications			
UBS		UBS		UBS		UBS		UBS	UBS		OBD	O_2 SENSOR	CATA	EGR
MT	AT	MT	AT	MT	AT	MT	AT	MT	MT	AT				
•											I	2	1	●
	•										I	2	1	●
		•										1	1	●
			•									1	1	●
				•								1	1	●
					•							1	1	●
						•						1		●
							•					1		●
								•						
									•		I			
										•				

Diagrams and Schematics

PCM Wiring Diagram (1 of 11)

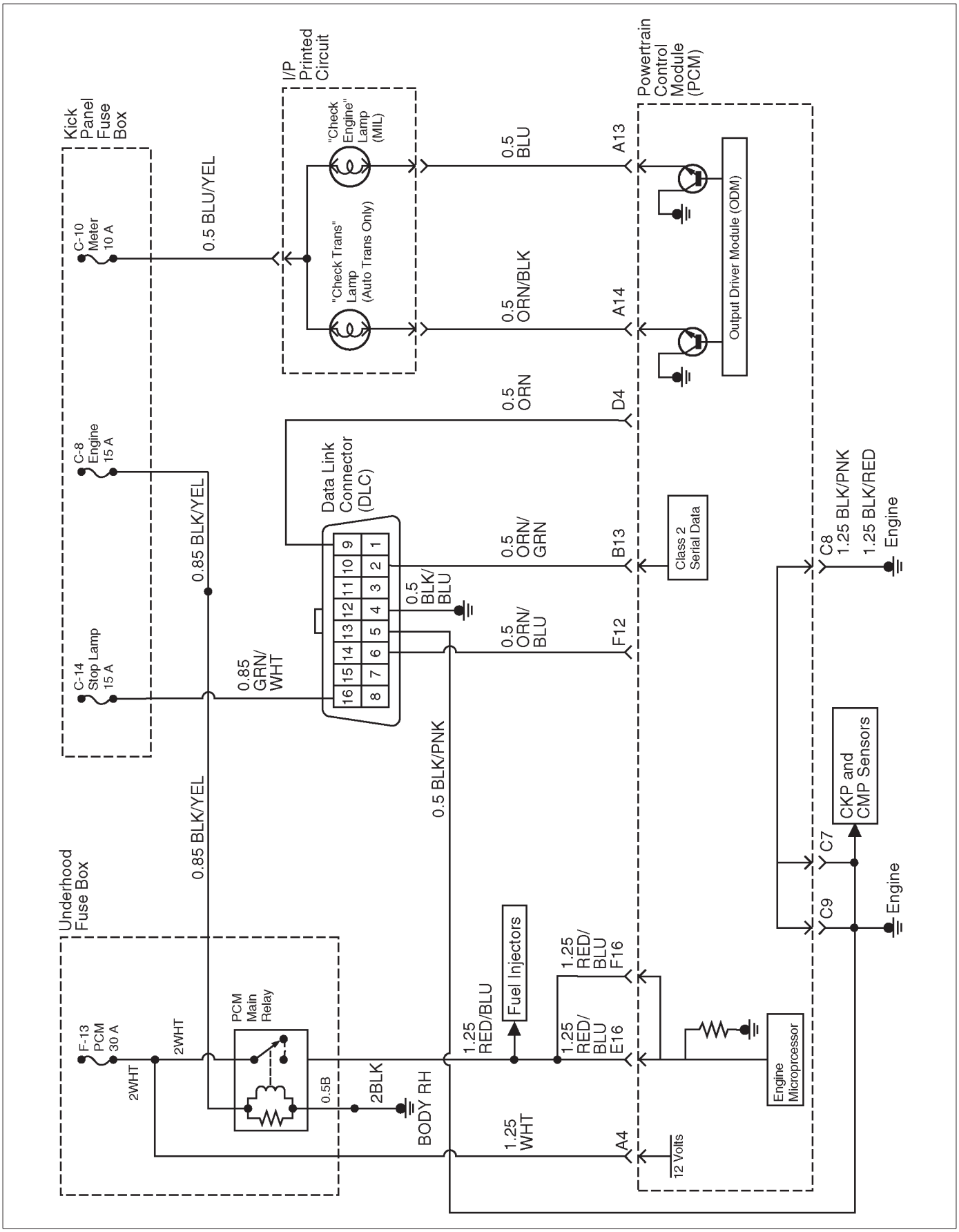

D06RW00005

PCM Wiring Diagram (2 of 11) For EC, THAILAND, SOUTH EAST ASIA, LATIN AMERICA, GULF, SAUDI, CHINA.

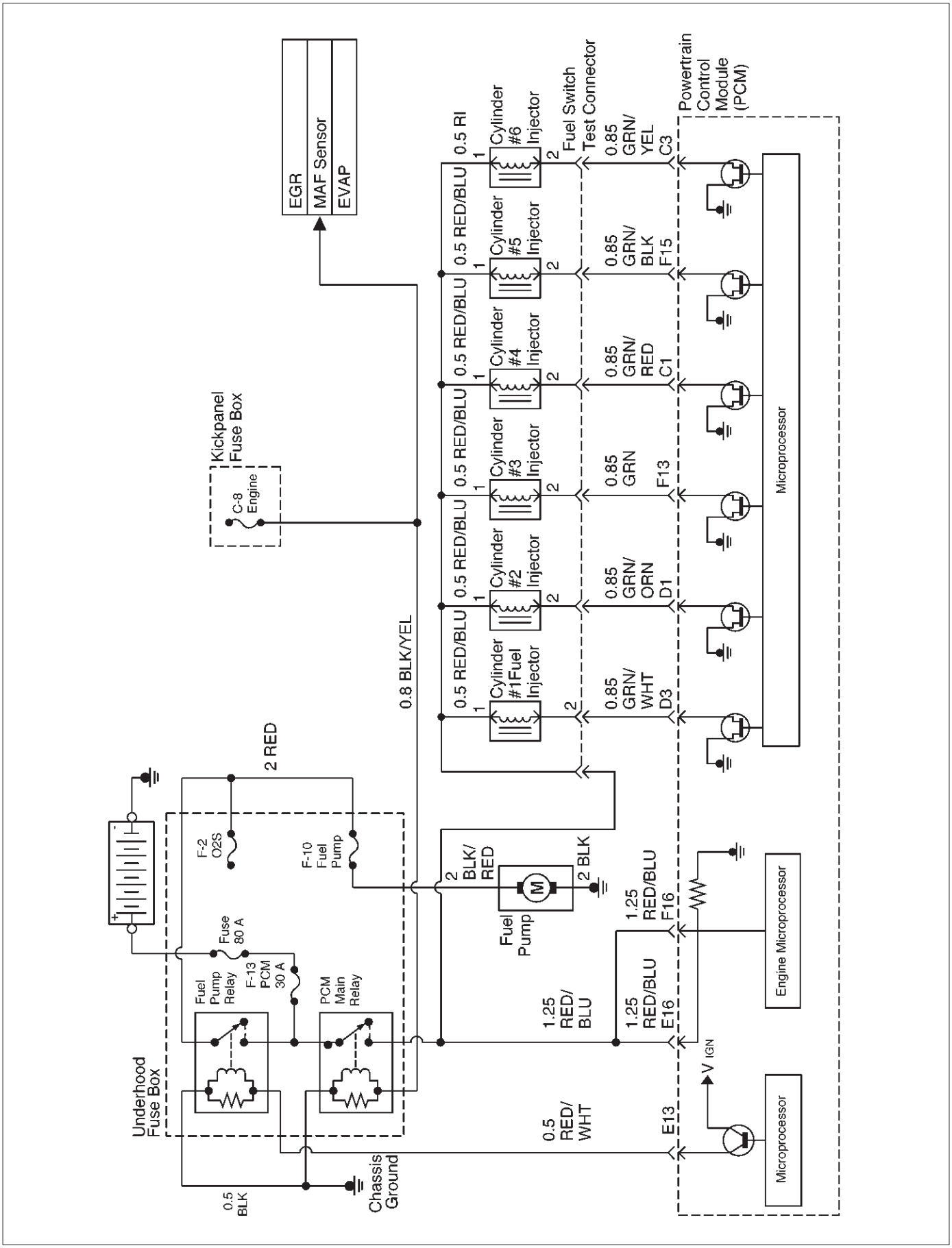

D06RW134

PCM Wiring Diagram (3 of 11) For SOUTH AFRICA and EXP.

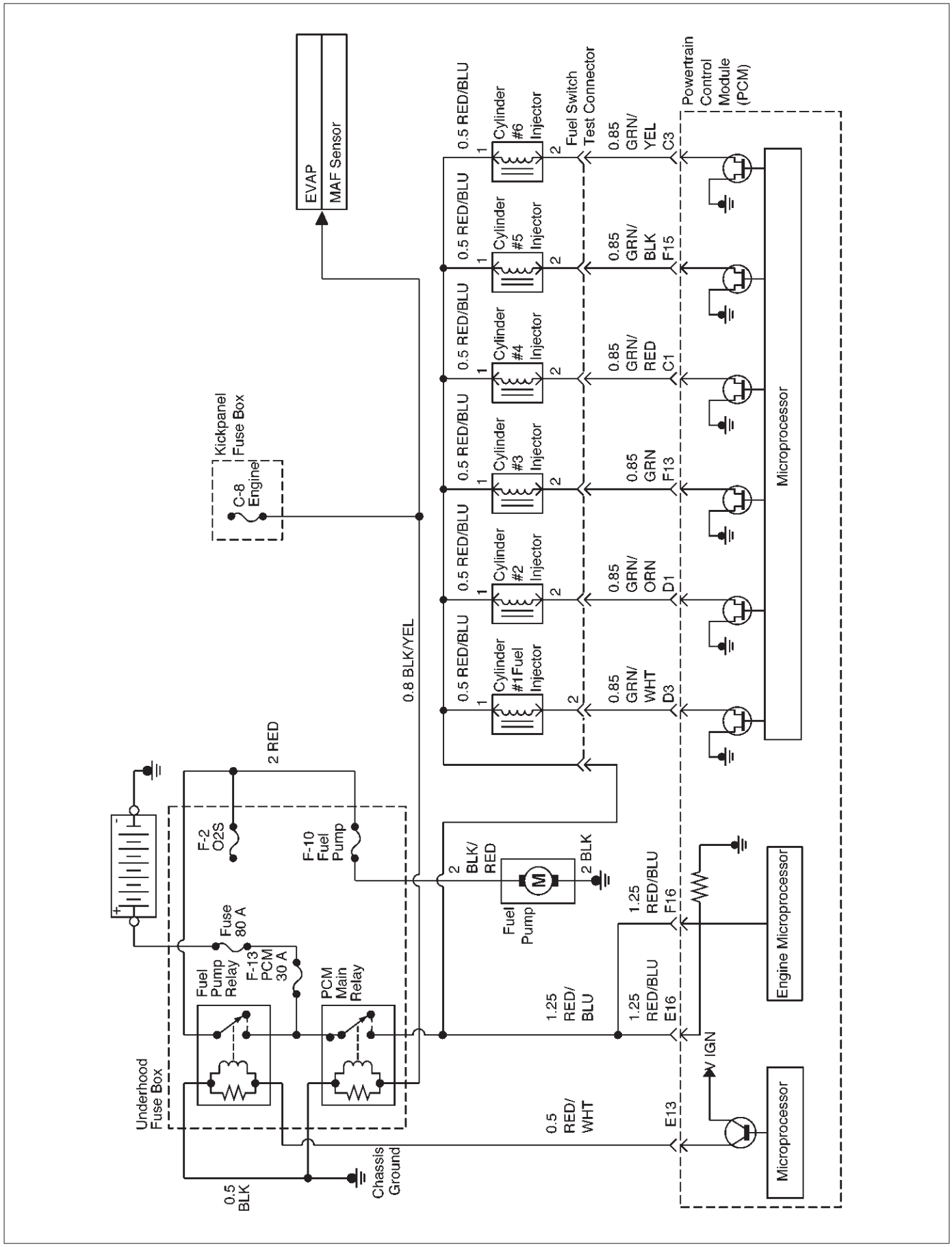

D06RW140

PCM Wiring Diagram (4 of 11)

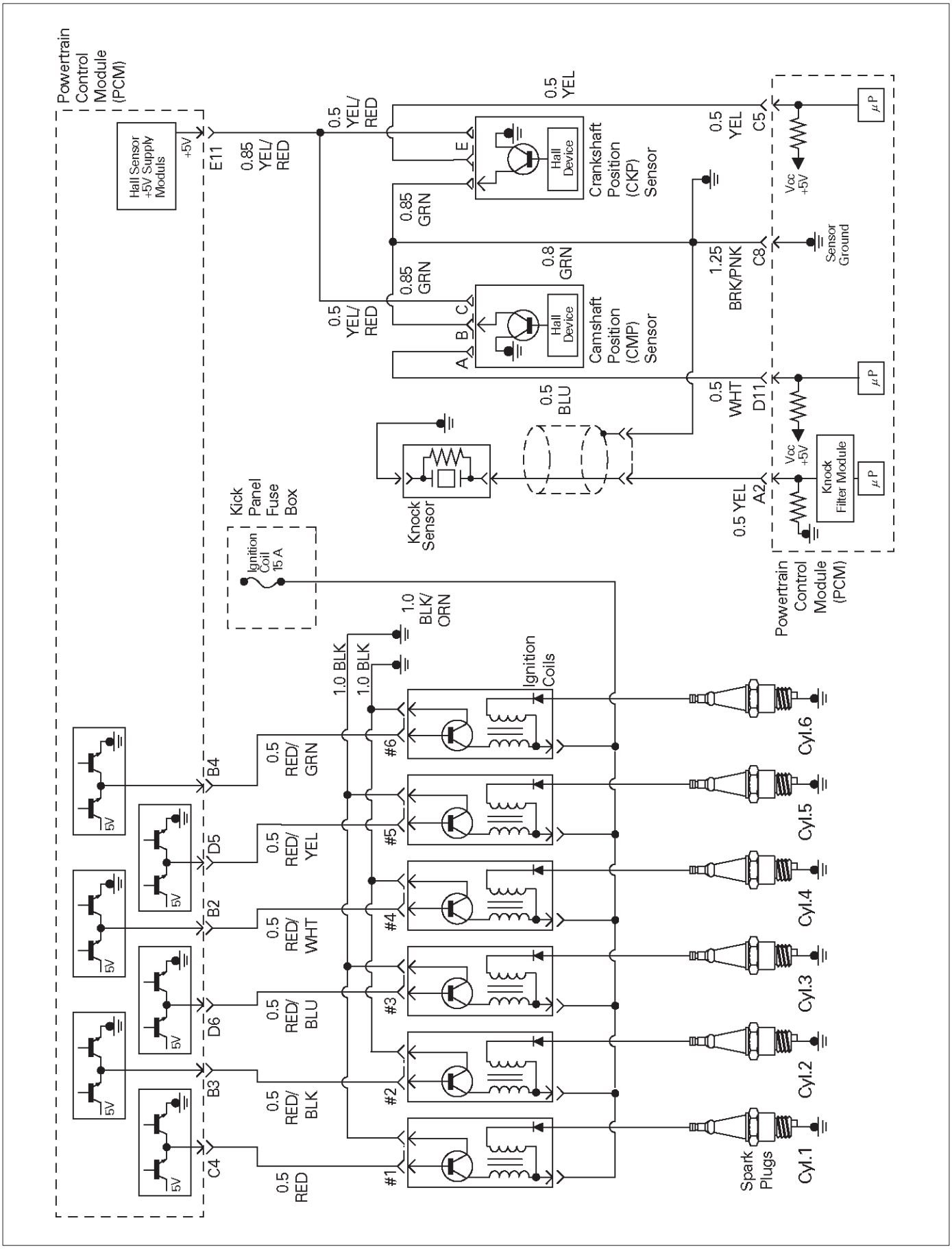

D06RX00003

PCM Wiring Diagram (5 of 11)

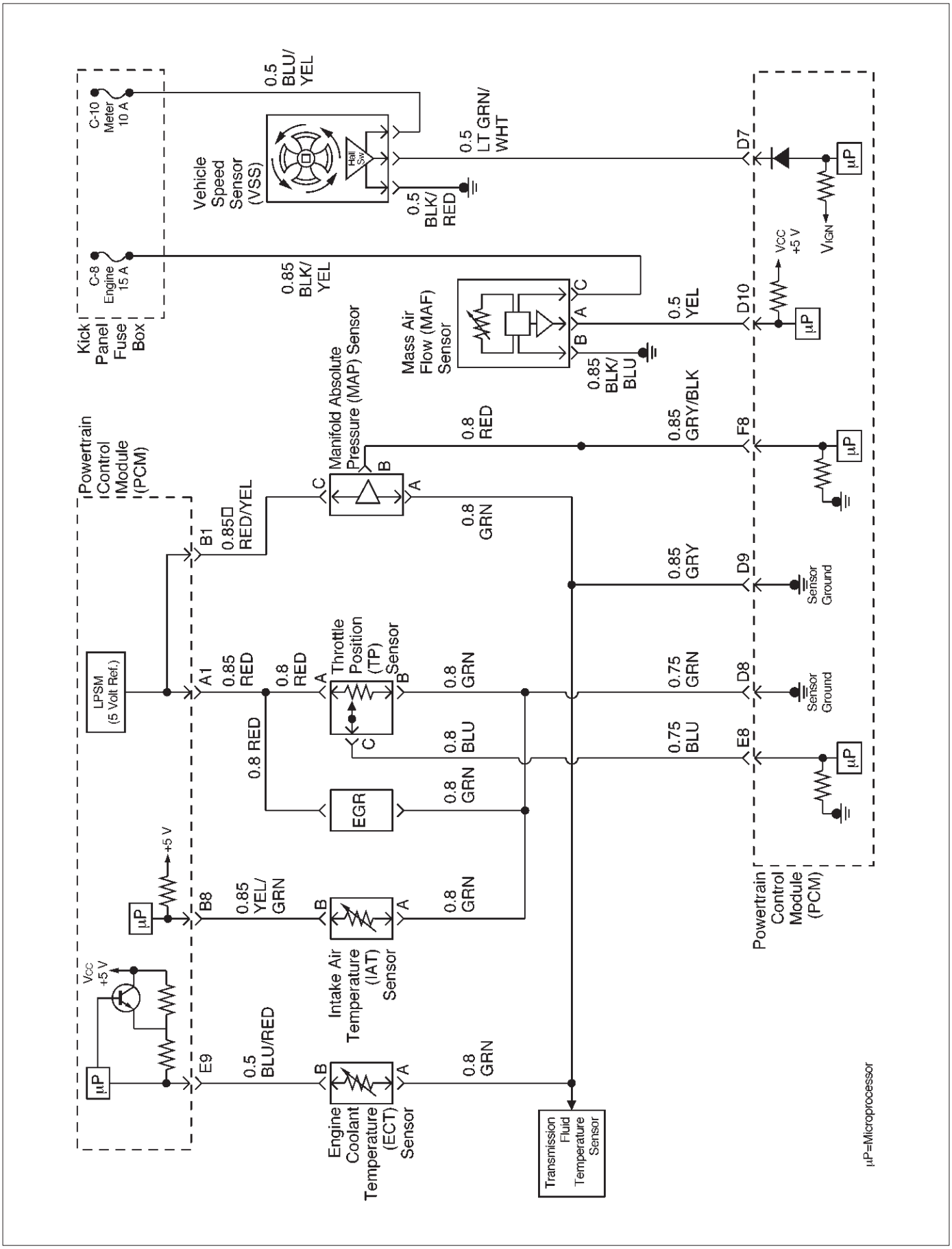

PCM Wiring Diagram (6 of 11) For AUSTRALIA, THAILAND, SOUTH EAST ASIA, LATIN AMERICA, GULF, SAUDI, LATIN AMERICA.

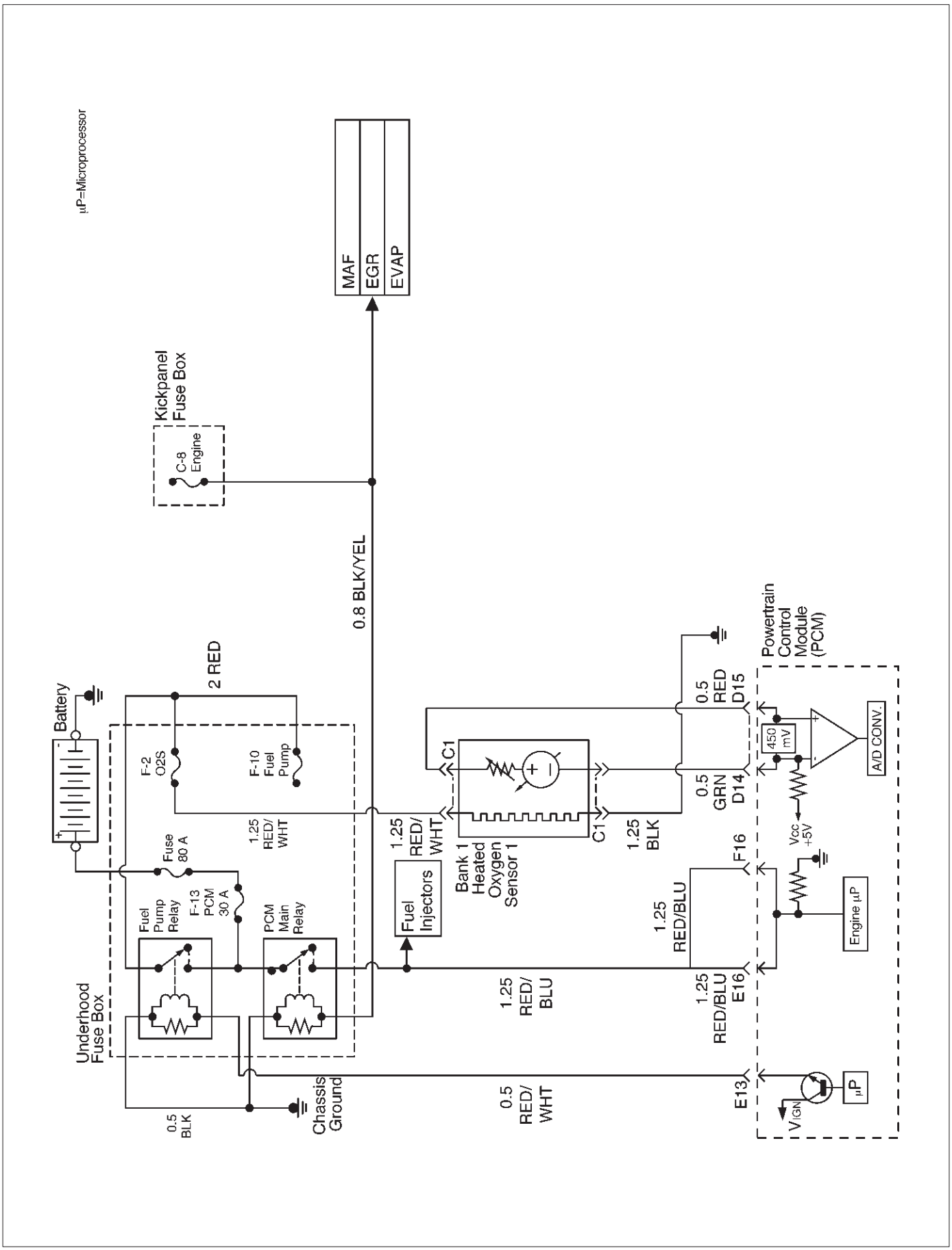

D06RW137

PCM Wiring Diagram (7 of 11) For EC.

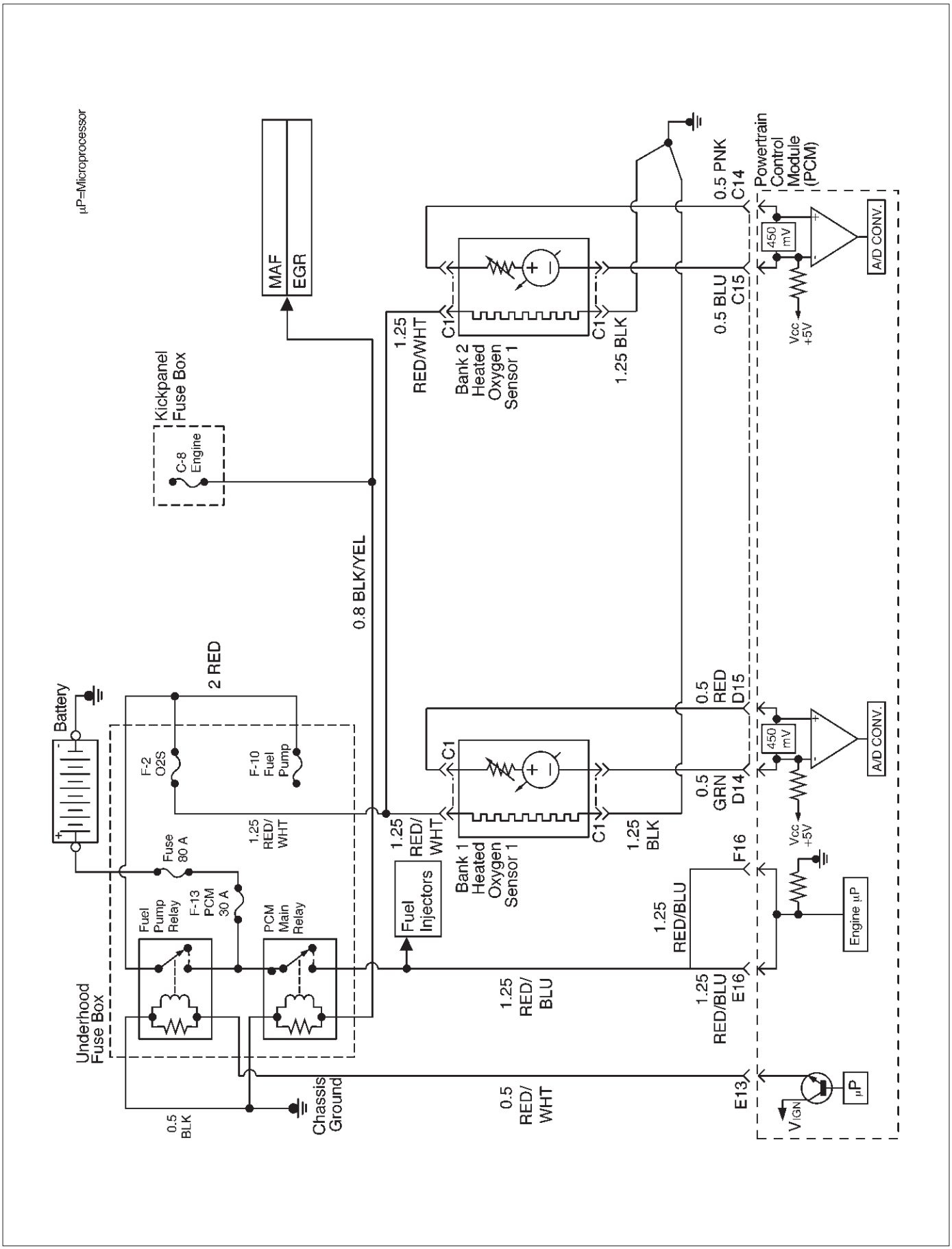

D06RW100

PCM Wiring Diagram (8 of 11) For EXPORT and SOUTH AFRICA.

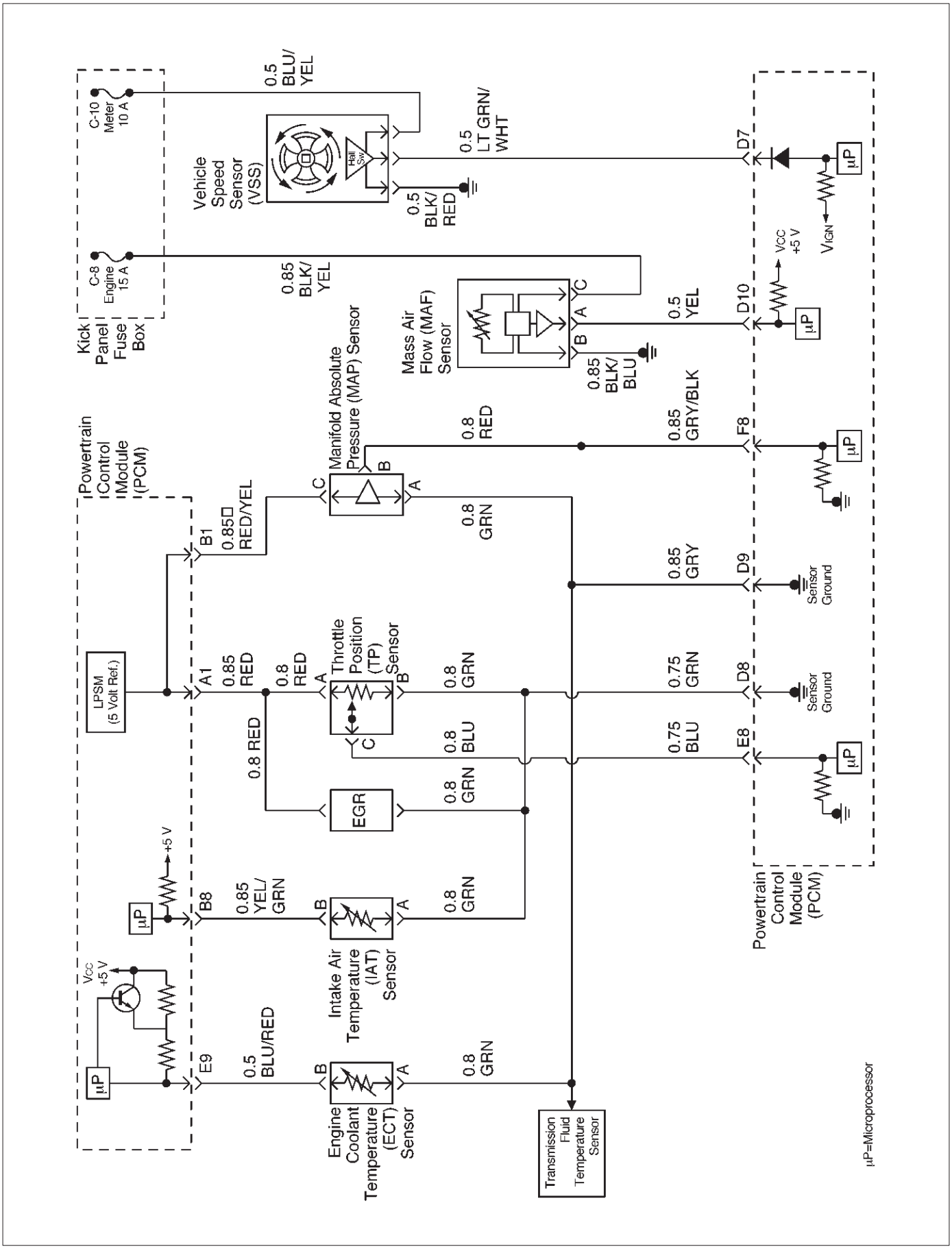

D06RW138

PCM Wiring Diagram (9 of 11) Except EXP and SOUTH AFRICA

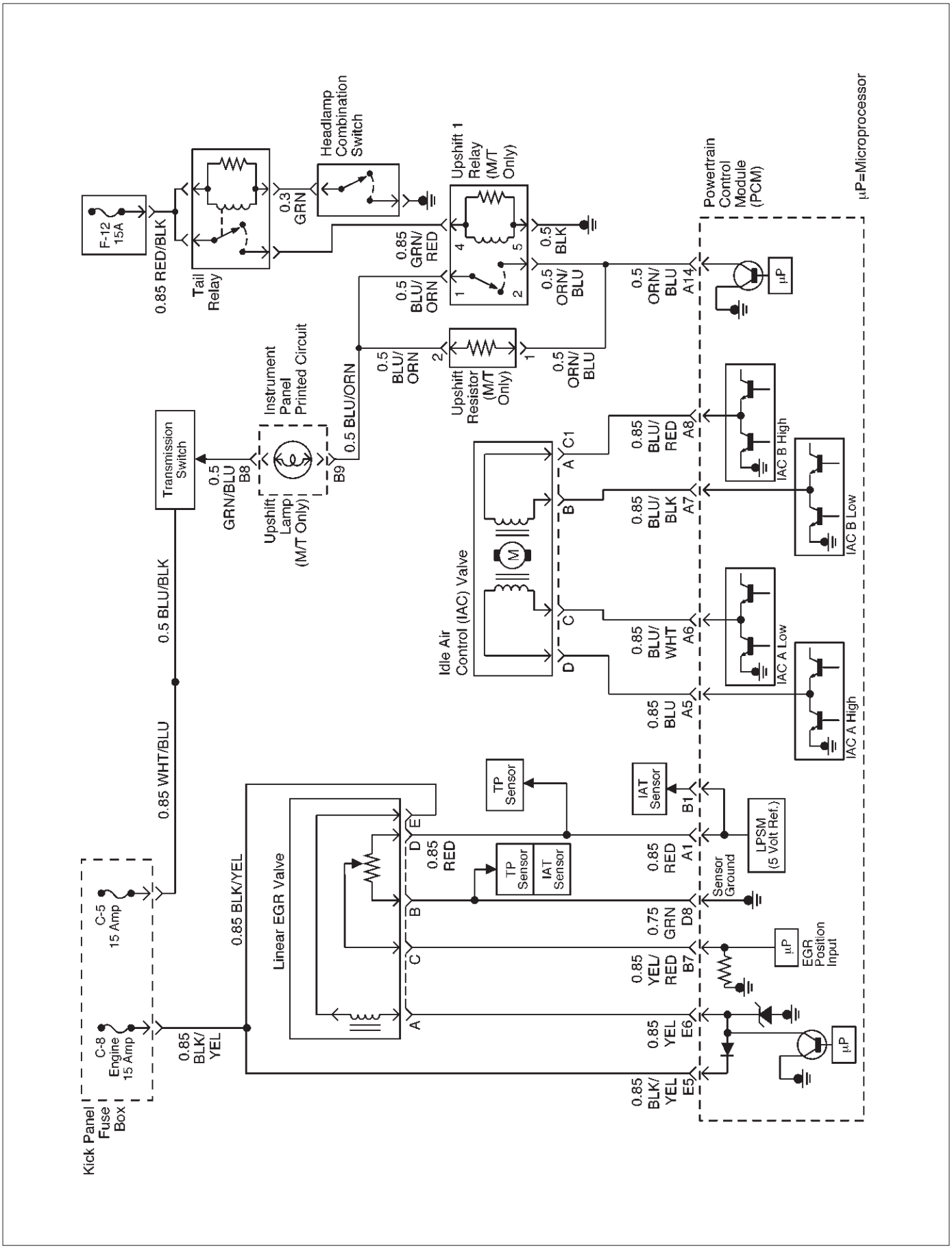

D06RW099

PCM Wiring Diagram (10 of 11) For EXPORT and SOUTH AFRICA

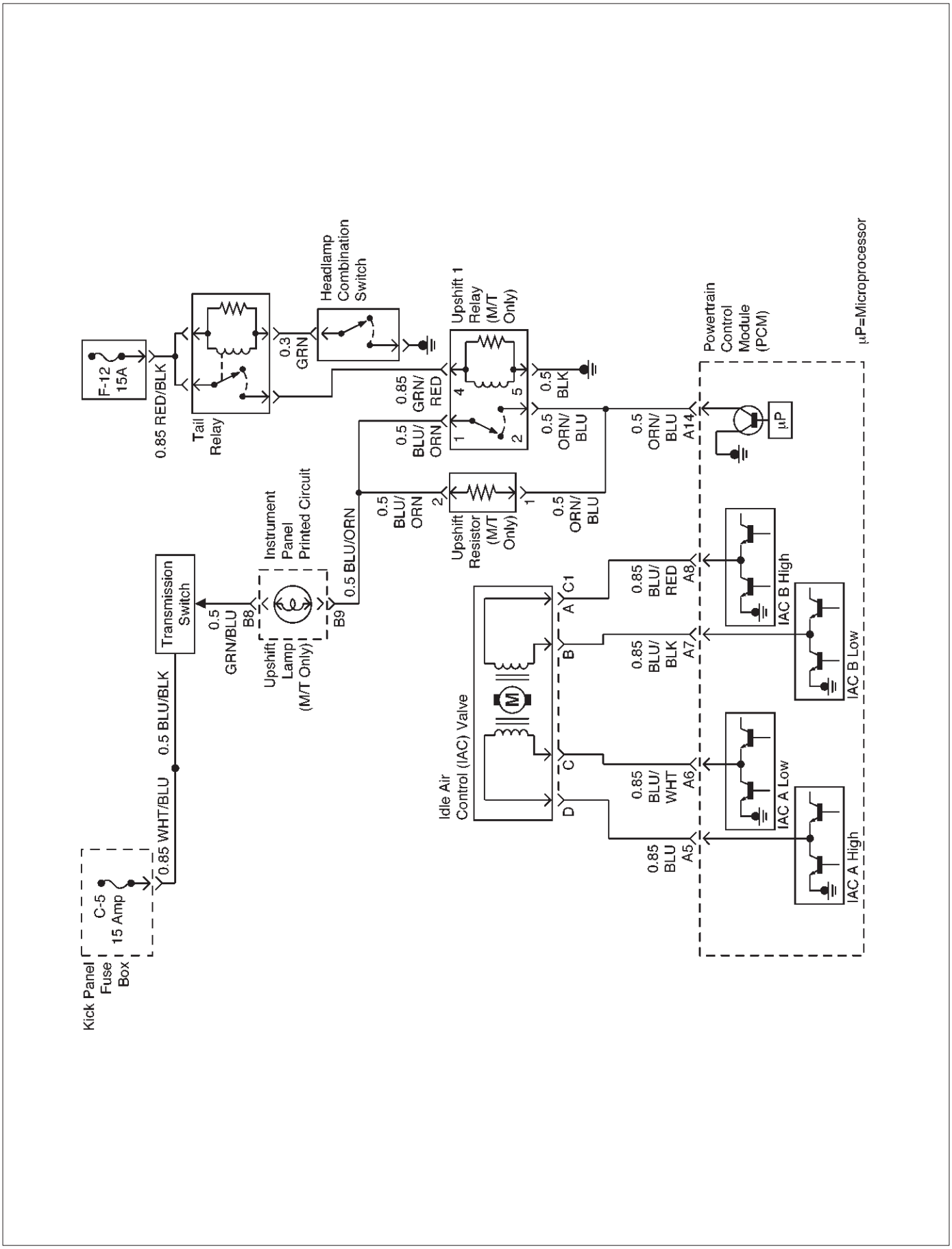

D06RW141

PCM Wiring Diagram (11 of 11)

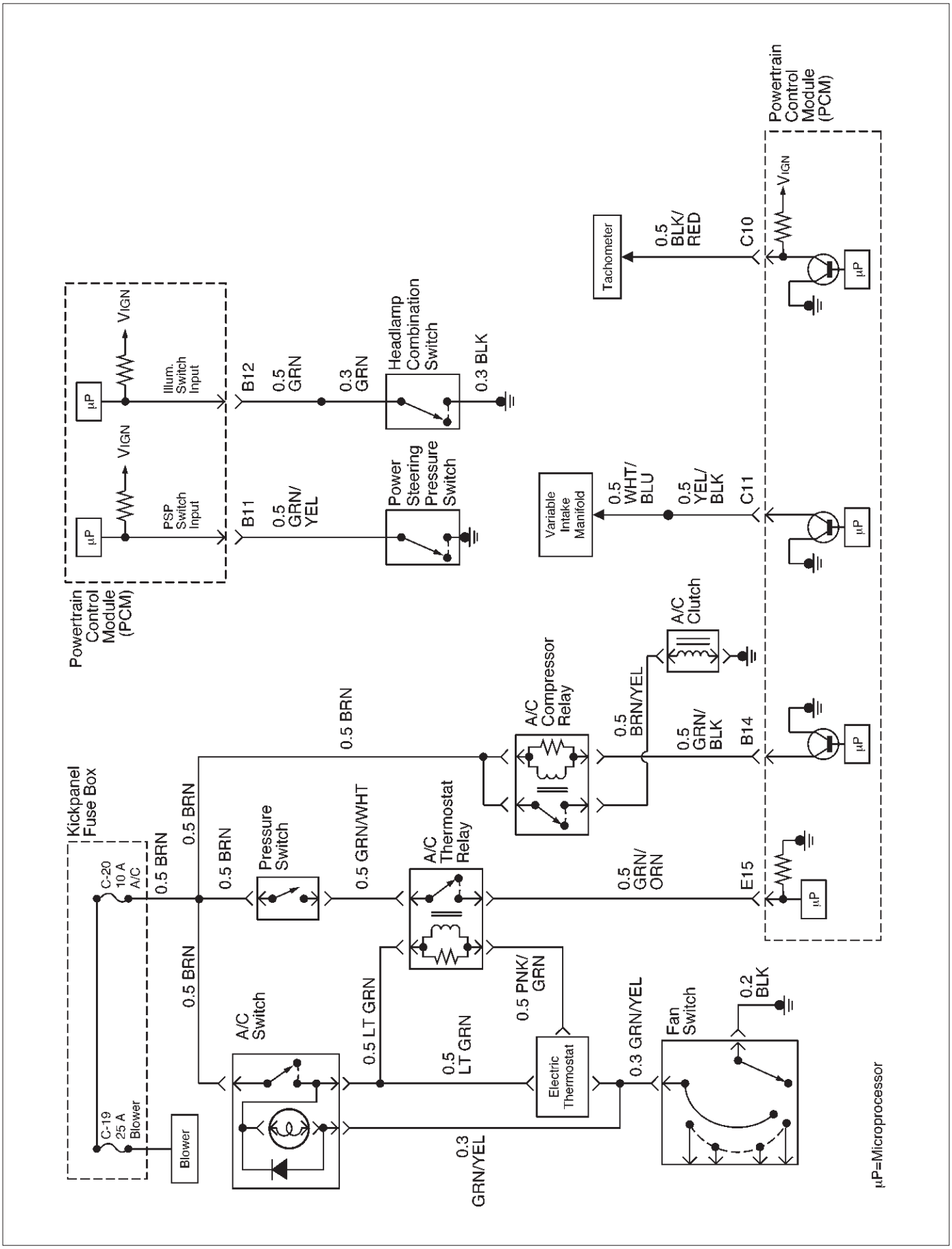

D06RW136

PCM Pinouts

PCM Pinout Table, 32-Way Red Connector – Row “A”

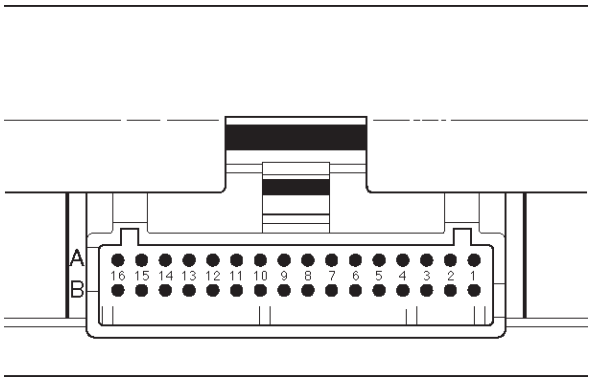

TS23344

PIN	PIN Function	Wire Color	IGN ON	ENG RUN	Refer To
A1	5 Volt Reference “A”	RED	5.0 V	5.0 V	Appropriate Sensor
A2	Knock Sensor	YEL	0.0 V DC 2mV AC	0.0 V DC 18mV AC (at idle)	General Description and Operation, Knock Sensor
A3	Not Used	—	—	—	—
A4	Battery Feed	WHT	B+	B+	Chassis Electrical
A5	Idle Air Control (IAC) “A” High	BLU	B+/0.8 V	B+/0.8 V	General Description and Operation, IAC
A6	IAC “A” Low	BLU/WHT	B+/0.8 V	B+/0.8 V	General Description and Operation, IAC
A7	IAC “B” Low	BLU/BLK	B+/0.8 V	B+/0.8 V	General Description and Operation, IAC
A8	IAC “B” High	BLU/RED	B+/0.8 V	B+/0.8 V	General Description and Operation, IAC
A9	Automatic Transmission Fluid (ATF) Lamp	ORN/BLU	B+	B+	Automatic Transmission (4L30E)
A10	Winter Lamp	PNK/GRN	B+	B+	Automatic Transmission (4L30E)
A11	Power Lamp	GRY/WHT	B+	B+	Automatic Transmission (4L30E)
A12	Antilock Brake System (ABS)	GRY	B+	B+	Antilock Brake System
A13	Malfunction Indicator (Check Engine or MIL) Lamp	BLU	0.0 V	B+	Chassis Electrical
A14	“Check Transmission” Lamp Driver (AT) Up Shift Lamp Driver (MT)	ORN/BLK ORN/BLU	B+	B+	Chassis Electrical

PIN	PIN Function	Wire Color	IGN ON	ENG RUN	Refer To
A15	EVAP	RED/BLU	B+	5.0 V	—
A16	Band Apply (AT) Air Pump (MT)	BRN/YEL	B+	B+	Automatic Transmission (4L30E)

PCM Pinout Table, 32-Way Red Connector – Row “B”

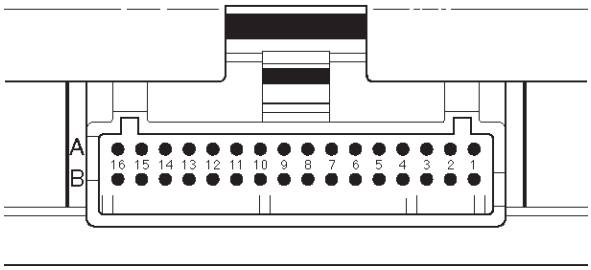

TS23344

PIN	PIN Function	Wire Color	IGN ON	ENG RUN	Refer To
B1	5 Volt Reference “B”	RED/YEL	5.0 V	5.0 V	Appropriate Sensor
B2	Ignition coil	RED/WHT	0.0 V	0.1 V	General Description and Operation
B3	Ignition coil	RED/BLK	0.0 V	0.1 V	General Description and Operation
B4	Ignition coil	RED/GRN	0.0 V	0.1 V	General Description and Operation
B5	Not Used	—	—	—	—
B6	Not Used	—	—	—	—
B7	Exhaust Gas Recirculation (EGR)	YEL/RED	0.6 V	0.6 V	General Description and Operation, Linear EGR Control
B8	Intake Air Temperature (IAT) Sensor	YEL/GRN	0.5-4.9 V (depends on temperature)	0.5-4.9 V (depends on temperature)	General Description and Operation, IAT
B9	Not Used	—	—	—	—
B10	Not Used	—	—	—	—
B11	Power Steering Pressure (PSP) Switch	GRN/YEL	B+	B+	General Description and Operation, PSP
B12	Illuminated Switch	GRN	B+	B+	Chassis Electrical
B13	Class 2 Data	ORN/GRN	0.0 V	0.0 V	Diagnosis, Class 2 Serial Data
B14	A/C Clutch	GRN/BLK	B+ (A/C OFF)	B+ (A/C OFF)	General Description and Operation, A/C Clutch Circuit Operation
B15	ECM to ECU Communication	Violet	0.0 V	0.1 V	—
B16	Not Used	—	—	—	—

PCM Pinout Table, 32-Way White Connector – Row “C” (For EC)

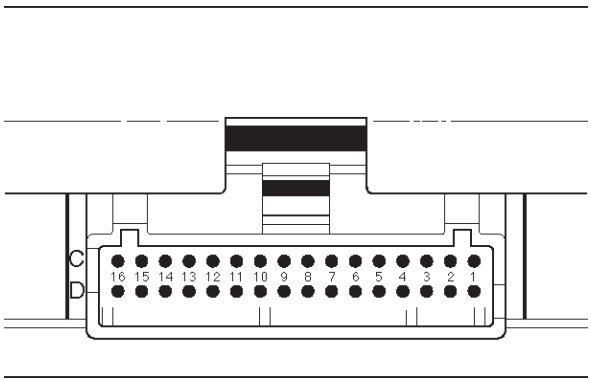

TS23345

PIN	PIN Function	Wire Color	IGN ON	ENG RUN	Refer To
C1	Injector Cylinder #4	GRN/RED	B+	B+	General Description and Operation, Fuel Injector
C2	Shift “B” Solenoid	BRN/BLK	0.0 V	0.0 V	Automatic Transmission (4L30E)
C3	Injector Cylinder #6	GRN/YEL	B+	B+	General Description and Operation, Fuel Injector
C4	Ignition Control (IC) Cylinder #1	RED	0.0 V	0.1 V	General Description and Operation, Fuel Injector
C5	Crankshaft Position Sensor, “A” Circuit	YEL	0.3 V to 5 V	2.2 V	General Description and Operation, Crankshaft Position Sensor
C6	Not Used	—	—	—	—
C7	PCM Ground	YEL	0.0 V	0.0 V	Chassis Electrical
C8	PCM Ground	BLK/PNK	0.0 V	0.0 V	Chassis Electrical
C9	PCM Ground	BLK/BLU	0.0 V	0.0 V	Chassis Electrical
C10	Tachometer	BLK/RED	8.8 V	10.0 V (at idle)	Chassis Electrical
C11	Variable Intake Manifold	YEL/BLK	0.0 V	B+ (rpm 3600 over)	Manual Transmission
C12	Alternator Control Gain	WHT/BLU	10.5 V	B+	Chassis Electrical
C13	Fuel PWM	BLU/PNK	B+	B+	—
C14	Bank 2 HO2S 1 High	PNK	0.4 V	0.1-0.9 V	General Description and Operation, Fuel HO2S 1
C15	Bank 2 HO2S 1 Low	BLU	0.0 V	0.1 V	General Description and Operation, Fuel HO2S 1
C16	Not Used	—	—	—	—

PCM Pinout Table, 32-Way White Connector – Row “C” (For except EC)

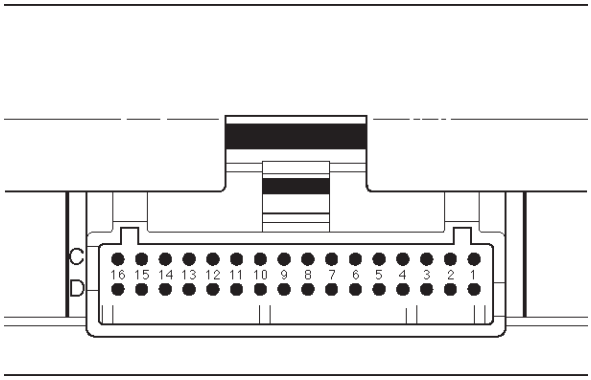

TS23345

PIN	PIN Function	Wire Color	IGN ON	ENG RUN	Refer To
C1	Injector Cylinder #4	GRN/RED	B+	B+	General Description and Operation, Fuel Injector
C2	Shift “B” Solenoid	BRN/BLK	0.0 V	0.0 V	Automatic Transmission (4L30E)
C3	Injector Cylinder #6	GRN/YEL	B+	B+	General Description and Operation, Fuel Injector
C4	Ignition Control (IC) Cylinder #1	RED	0.0 V	0.1 V	General Description and Operation, Fuel Injector
C5	Crankshaft Position Sensor, “A” Circuit	YEL	0.3 V to 5 V	2.2 V	General Description and Operation, Crankshaft Position Sensor
C6	Not Used	—	—	—	—
C7	PCM Ground	BLK/BLU	0.0 V	0.0 V	Chassis Electrical
C8	PCM Ground	BLK/PNK	0.0 V	0.0 V	Chassis Electrical
C9	PCM Ground	BLK/BLU	0.0 V	0.0 V	Chassis Electrical
C10	Tachometer	BLK/RED	8.8 V	10.0 V (at idle)	Chassis Electrical
C11	Variable Intake Manifold	YEL/BLK	0.0 V	B+ (rpm 3600 over)	Manual Transmission
C12	Not Used	—	—	—	—
C13	Not Used	—	—	—	—
C14	Not Used	—	—	—	—
C15	Not Used	—	—	—	—
C16	Not Used	—	—	—	—

PCM Pinout Table, 32-Way White Connector – Row “D” (For except EXPORT and SOUTH AFRICA)

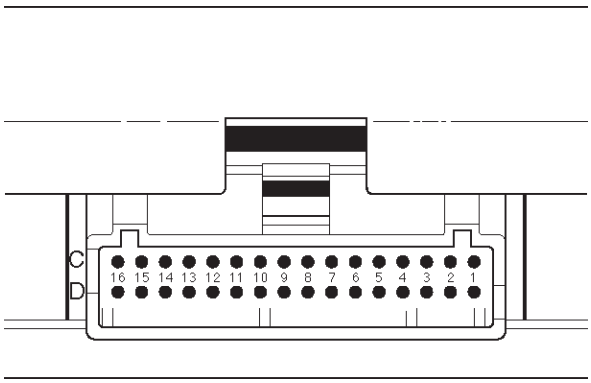

TS23345

PIN	PIN Function	Wire Color	IGN ON	ENG RUN	Refer To
D1	Injector Cylinder #2	GRN/ORN	B+	B+	General Description and Operation, Fuel Injector
D2	Torque Converter Clutch (TCC)	BRN/BLU	0.0 V	0.0 V	On-Vehicle Service, Torque Converter Clutch
D3	Injector Cylinder #1	GRN/WHT	B+	B+	General Description and Operation, Fuel Injector
D4	Serial Data (8192)	ORN	5.0 V	5.0 V	Chassis Electrical
D5	Ignition Control, Cylinder #5	RED/YEL	0.0 V	0.1 V	General Description and Operation, Ignition Coil
D6	Ignition Control, Cylinder #3	RED/BLUE	0.0 V	0.0 V	General Description and Operation, Ignition Coil
D7	VSS Input / IMOB Response	WHT/BLK	0.0 V	0.1 V (at rest)	Chassis Electrical
D8	Sensor Ground 5V Reference A Return	GRN	0.0 V	0.0 V	Appropriate Sensor
D9	Sensor Ground 5 V Reference B Return	GRY	0.0 V	0.0 V	Appropriate Sensor
D10	Mass Air Flow (MAF)	YEL	4.9 V	4.2 V	General Description, Mass Air Flow Sensor
D11	Camshaft Position Sensor	WHT	5.0 V or less than 1.0 V	4.6 V	General Description and Operation, Camshaft Position Sensor
D12	Not Used	—	—	—	—
D13	Not Used	—	—	—	—
D14	Bank 1 HO2S 1 Low	GRN	0.0 V	0.1 V	General Description and Operation, Fuel HO2S 1
D15	Bank 1 HO2S 1 Signal	RED	0.4 V	0.1-0.9 V	General Description and Operation, Fuel HO2S 1
D16	Not Used	—	—	—	—

PCM Pinout Table, 32-Way White Connector – Row “D” (For EXPORT and SOUTH AFRICA)

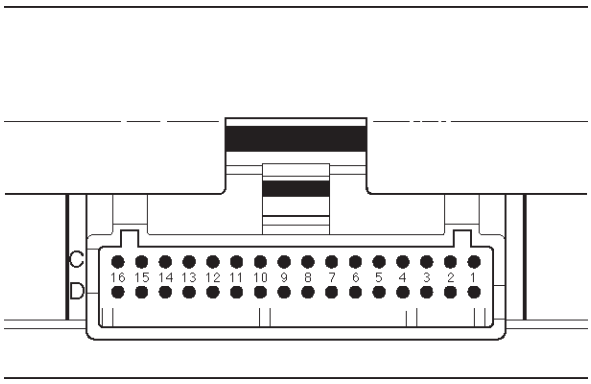

TS23345

PIN	PIN Function	Wire Color	IGN ON	ENG RUN	Refer To
D1	Injector Cylinder #2	GRN/ORN	B+	B+	General Description and Operation, Fuel Injector
D2	Torque Converter Clutch (TCC)	BRN/BLU	0.0 V	0.0 V	On-Vehicle Service, Torque Converter Clutch
D3	Injector Cylinder #1	GRN/WHT	B+	B+	General Description and Operation, Fuel Injector
D4	Serial Data (8192)	ORN	5.0 V	5.0 V	Chassis Electrical
D5	Ignition Control, Cylinder #5	RED/YEL	0.0 V	0.1 V	General Description and Operation, Ignition Coil
D6	Ignition Control, Cylinder #3	RED/BLUE	0.0 V	0.0 V	General Description and Operation, Ignition Coil
D7	VSS Input / IMOB Response	LIGHT GRN/WHT	0.0 V	0.1 V (at rest)	Chassis Electrical
D8	Sensor Ground 5V Reference A Return	GRN	0.0 V	0.0 V	Appropriate Sensor
D9	Sensor Ground 5 V Reference B Return	GRY	0.0 V	0.0 V	Appropriate Sensor
D10	Mass Air Flow (MAF)	YEL	4.9 V	4.2 V	General Description, Mass Air Flow Sensor
D11	Camshaft Position Sensor	WHT	5.0 V or less than 1.0 V	4.6 V	General Description and Operation, Camshaft Position Sensor
D12	Not Used	—	—	—	—
D13	Not Used	—	—	—	—
D14	Not Used	—	—	—	—
D15	Not Used	—	—	—	—
D16	Not Used	—	—	—	—

PCM Pinout Table, 32-Way Blue Connector – Row “E” (For except EXPORT and SOUTH AFRICA)

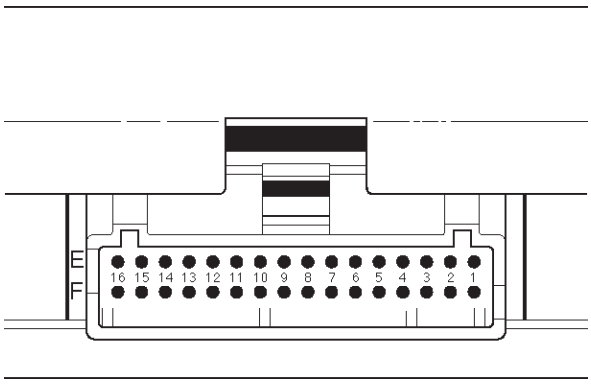

TS23346

PIN	PIN Function	Wire Color	IGN ON	ENG RUN	Refer To
E1	Transmission Output Shaft Sensor (TOSS) High	RED	0.0 V	0.1 V	Automatic Transmission (4L30E)
E2	Transmission Output Shaft Sensor (TOSS) Low	WHT	0.0 V	0.0 V	Automatic Transmission (4L30E)
E3	Pressure Control Solenoid Low	PPL/RED	0.0 V	1.1 V	Automatic Transmission (4L30E)
E4	Pressure Control Solenoid High	PPL/WHT	0.0 V	4.9 V	Automatic Transmission (4L30E)
E5	Exhaust Gas Recirculation (EGR) Control High	BLK/YEL	B+	B+	General Description and Operation, EGR Control
E6	Exhaust Gas Recirculation (EGR) Control Low	YEL	B+	B+	General Description and Operation, EGR Control
E7	Transmission Range Signal “B”	BLU/YEL	0.0 V	0.0 V	Automatic Transmission (4L30E)
E8	Throttle Position (TP) Sensor	BLU	0.5-0.8 V	0.5-0.8 V (at idle)	General Description and Operation, Throttle Position Sensor
E9	Engine Coolant Temperature (ECT) Sensor	BLU/RED	0.5-4.9 V (depends on temperature)	0.5-4.9 V (depends on temperature)	General Description and Operation, Engine Coolant Temperature (ECT) Sensor
E10	Not Used	—	—	—	—
E11	Crankshaft Position (CKP) Sensor +5 Volt Reference	YEL/RED	5.0 V or less than 1.0 V	5.0 V	General Description and Operation, Crankshaft Position Sensor
E12	Transmission Range Signal “A”	BLU/WHT	B+	B+	Automatic Transmission (4L30E)
E13	Fuel Pump (FP) Relay	RED/WHT	0.0 V	B+	On-Vehicle Service, Fuel Pump Relay
E14	Shift High (BAND APPLY)	BRN/WHT	B+	B+	Automatic Transmission (4L30E)

PIN	PIN Function	Wire Color	IGN ON	ENG RUN	Refer To
E15	A/C Request	GRN/ORN	0.0 V	0.0 V	Electric Cooling Fans
E16	Ignition Feed (1 of 2 F16)	RED/BLU	B+	B+	—

PCM Pinout Table, 32-Way Blue Connector – Row “E” (For EXPORT and SOUTH AFRICA)

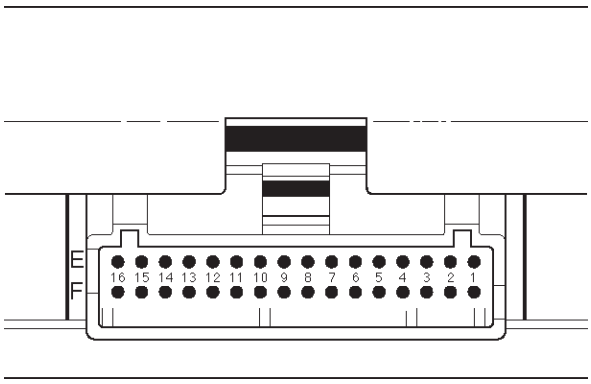

TS23346

PIN	PIN Function	Wire Color	IGN ON	ENG RUN	Refer To
E1	Transmission Output Shaft Sensor (TOSS) High	RED	0.0 V	0.1 V	Automatic Transmission (4L30E)
E2	Transmission Output Shaft Sensor (TOSS) Low	WHT	0.0 V	0.0 V	Automatic Transmission (4L30E)
E3	Pressure Control Solenoid Low	PPL/RED	0.0 V	1.1 V	Automatic Transmission (4L30E)
E4	Pressure Control Solenoid High	PPL/WHT	0.0 V	4.9 V	Automatic Transmission (4L30E)
E5	Not Used	—	—	—	—
E6	Not Used	—	—	—	—
E7	Transmission Range Signal “B”	BLU/YEL	0.0 V	0.0 V	Automatic Transmission (4L30E)
E8	Throttle Position (TP) Sensor	BLU	0.5-0.8 V	0.5-0.8 V (at idle)	General Description and Operation, Throttle Position Sensor
E9	Engine Coolant Temperature (ECT) Sensor	BLU/RED	0.5-4.9 V (depends on temperature)	0.5-4.9 V (depends on temperature)	General Description and Operation, Engine Coolant Temperature (ECT) Sensor
E10	Not Used	—	—	—	—
E11	Crankshaft Position (CKP) Sensor +5 Volt Reference	YEL/RED	5.0 V or less than 1.0 V	5.0 V	General Description and Operation, Crankshaft Position Sensor
E12	Transmission Range Signal “A”	BLU/WHT	B+	B+	Automatic Transmission (4L30E)
E13	Fuel Pump (FP) Relay	RED/WHT	0.0 V	B+	On-Vehicle Service, Fuel Pump Relay
E14	Shift High (BAND APPLY)	BRN/WHT	B+	B+	Automatic Transmission (4L30E)
E15	A/C Request	GRN/ORN	0.0 V	0.0 V	Electric Cooling Fans
E16	Ignition Feed (1 of 2 F16)	RED/BLU	B+	B+	—

PCM Pinout Table, 32-Way Blue Connector – Row “F”

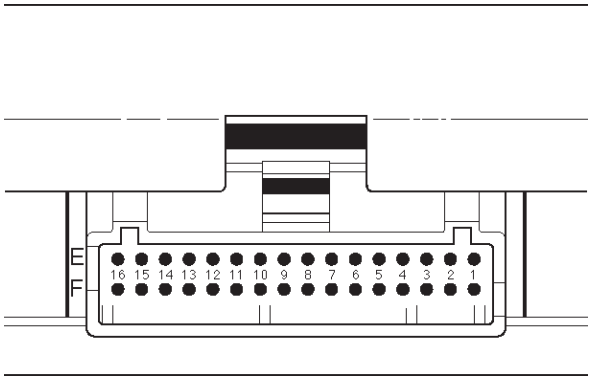

TS23346

PIN	PIN Function	Wire Color	IGN ON	ENG RUN	Refer To
F1	Not Used	—	—	—	—
F2	Transmission Range Signal “C”	BLU/BLK	0.0 V	0.0 V	Automatic Transmission (4L30E)
F3	Transmission Range Signal “P”	YEL/GRN	B+	0.0 V	Automatic transmission (4L30E)
F4	Brake Switch	GRN/YEL	0.0 V	0.0 V	Automatic transmission (4L30E)
F5	Power Switch	PPL/RED	B+	B+	Automatic Transmission (4L30E)
F6	Winter Switch	PPL/GRN	B+	B+	Automatic Transmission (4L30E)
F7	Transmission Fluid Temperature	RED/BLK	0.5-4.9 V (depends on temperature)	0.5-4.9 V (depends on temperature)	Automatic Transmission (4L30E)
F8	Manifold Absolute Pressure (MAP)	GRY/BLK	3.5-4.9 V (depends on altitude and barometric pressure)	0.6-1.3 V	General Description and Operation, Manifold Absolute Pressure
F9	Not Used	—	—	—	—
F10	Cruise Control	GRY/BLU	B+	B+	Automatic transmission (4L30E)
F11	Kickdown Switch	LT BLU	B+	B+	Automatic Transmission (4L30E)
F12	DIAG	ORN/BLU	B+	B+	—
F13	Injector “C” Cylinder #3	GRN	B+	B+	General Description and Operation, Fuel Injector
F14	Shift “A” Solenoid	BRN/RED	B+	B+	Automatic Transmission (4L30E)
F15	Injector Cylinder #5	GRN/BLK	B+	B+	General Description and Operation, Fuel Injector
F16	Ignition Feed (1 of 2 E16)	RED/BLU	B+	B+	—

Component Locators

Engine Component Locator (This illustration is based on RHD model.)

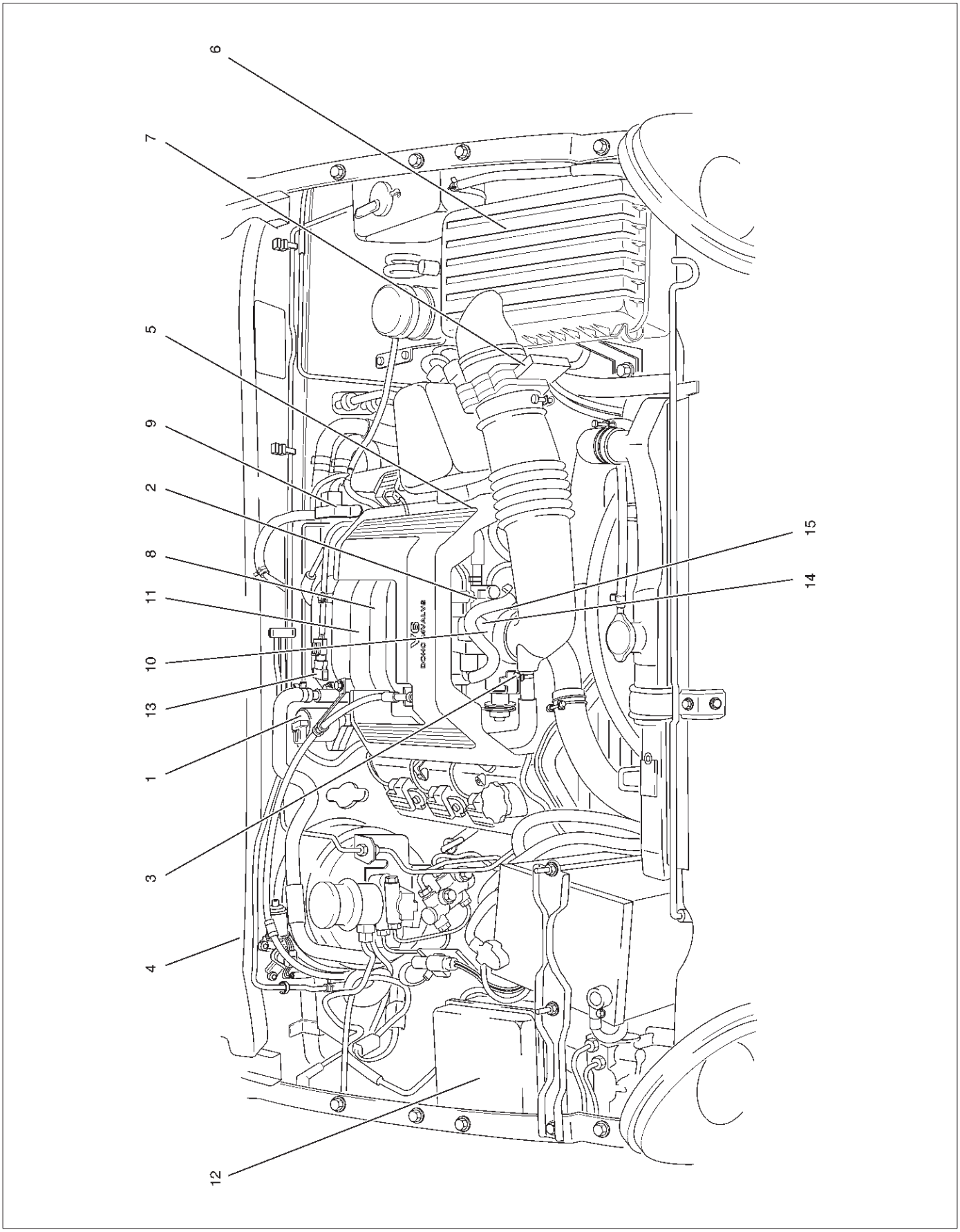

060RW210

Engine Component Locator Table

Number	Name	Location
1	Linear Exhaust Gas Recirculation (EGR) Valve	Rear right side of the engine
2	Throttle Position (TP) Sensor	On the rear of the throttle body
3	Intake Air Temperature (IAT) Sensor	On the intake air duct near the throttle body
4	Check Engine (MIL) Light	On the instrument panel beneath the tachometer
5	Positive Crankcase Ventilation (PCV) Valve	On the left of the cylinder head cover
6	Air Cleaner	Left front of the engine bay
7	Mass Air Flow (MAF) Sensor	Attached to the air filter box
8	Camshaft Position (CMP) Sensor	On the rear right side at the left of the cylinder head cover
9	Fuel Pressure Regulator	Rear right side of the engine
10	Idle Air Control (IAC) Valve	On the left of the throttle body
11	Upper Intake Manifold	Top of the engine
12	Fuse/Relay Box	Along the inside of the right fender
13	Manifold Absolute Pressure (MAP) Sensor	Bolted to the top of the upper intake manifold
14	Throttle Body	Between the intake air duct and the upper intake manifold
15	Engine Coolant Temperature Sensor	On the coolant crossover pipe at the front of the engine, near the throttle body

Engine Component Locator (This illustration is based on LHD model.)

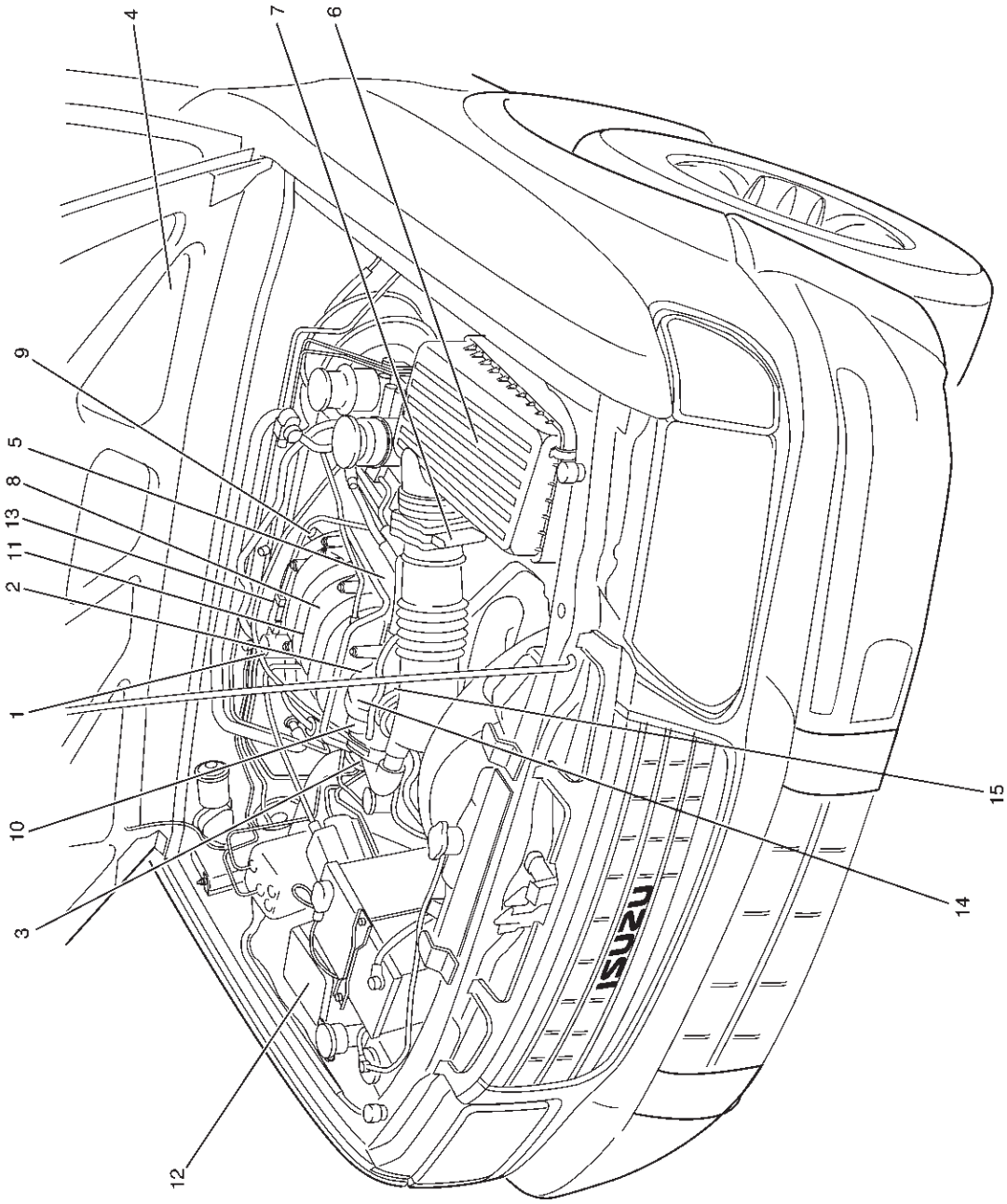

755RW062

Engine Component Locator Table

Number	Name	Location
1	Linear Exhaust Gas Recirculation (EGR) Valve	Rear right side of the engine
2	Throttle Position (TP) Sensor	On the rear of the throttle body
3	Intake Air Temperature (IAT) Sensor	On the intake air duct near the throttle body
4	Check Engine (MIL) Light	On the instrument panel beneath the tachometer
5	Positive Crankcase Ventilation (PCV) Valve	On the left of the cylinder head cover
6	Air Cleaner	Left front of the engine bay
7	Mass Air Flow (MAF) Sensor	Attached to the air filter box
8	Camshaft Position (CMP) Sensor	On the rear right side at the left of the cylinder head cover
9	Fuel Pressure Regulator	Rear right side of the engine
10	Idle Air Control (IAC) Valve	On the left of the throttle body
11	Upper Intake Manifold	Top of the engine
12	Fuse/Relay Box	Along the inside of the right fender
13	Manifold Absolute Pressure (MAP) Sensor	Bolted to the top of the upper intake manifold
14	Throttle Body	Between the intake air duct and the upper intake manifold
15	Engine Coolant Temperature Sensor	On the coolant crossover pipe at the front of the engine, near the throttle body

Undercarriage Component Locator

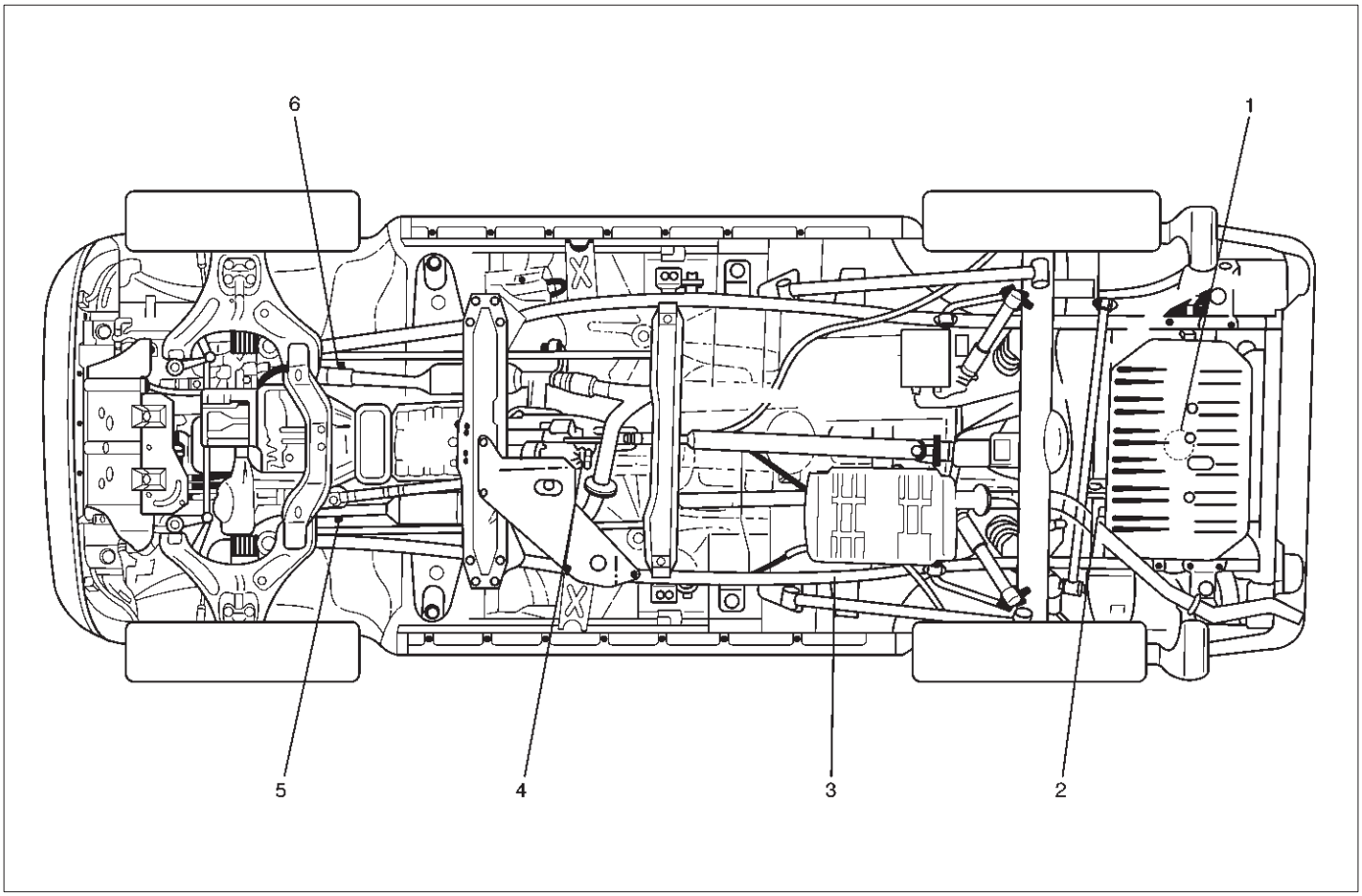

F00RW040

Undercarriage Component Locator Table (Automatic Transmission)

Number	Name	Location
1	Fuel Pump Assembly	Installed in the top of the fuel tank
2	Fuel Gauge Unit	Installed in the front edge of the fuel tank, on the right side
3	Fuel Filter	Located along the inside of the right frame rail, ahead of the rear axle
4	Vehicle Speed Sensor (VSS)	2WD: Protrudes from the transmission housing, just ahead of the propeller shaft. 4WD: Protrudes from the rear output shaft housing of the transfer case.
5	Heated Oxygen Sensor (Bank 1, HO2S 1)	Threaded into the exhaust pipe ahead of the right-hand catalytic converter
6	Heated Oxygen Sensor (Bank 2, HO2S 1)	Threaded into the exhaust pipe ahead the left-hand catalytic converter

Undercarriage Component Locator Table (Manual Transmission)

Number	Name	Location
1	Fuel Pump Assembly	Installed in the top of the fuel tank
2	Fuel Gauge Unit	Installed in the front edge of the right frame rail, ahead of the rear axle
3	Fuel Filter	Located along the inside of the right frame rail, ahead of the rear axle
4	Vehicle Speed Sensor (VSS)	2WD: Protrudes from the transmission housing, just ahead of the propeller shaft. 4WD: Protrudes from the rear output shaft housing of the transfer case.
5	Heated Oxygen Sensor (Bank 1, HO2S 1)	Threaded into the exhaust pipe ahead of the right-hand catalytic converter
6	Heated Oxygen Sensor (Bank 2, HO2S 1)	Threaded into the exhaust pipe ahead of the left-hand catalytic converter

Fuse and Relay Panel (Underhood Electrical Center)

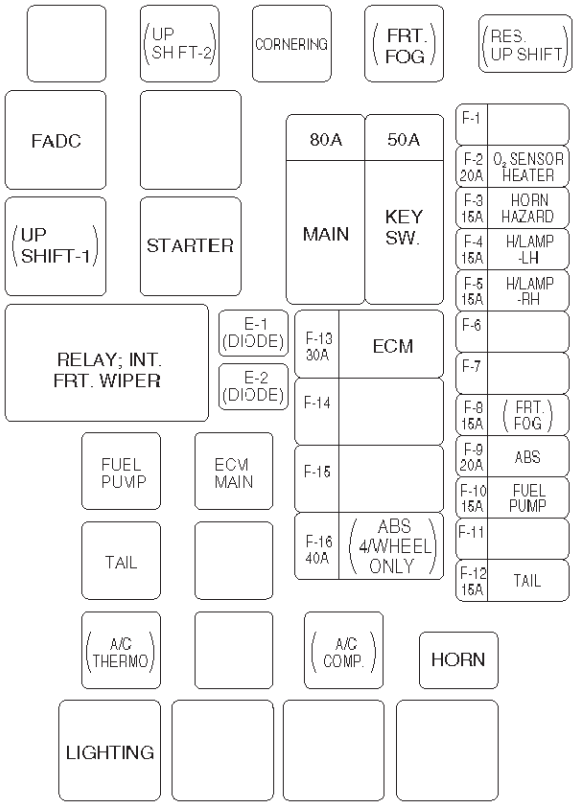

TS23336

Sensors and Miscellaneous Component Locators

- **For EC.**

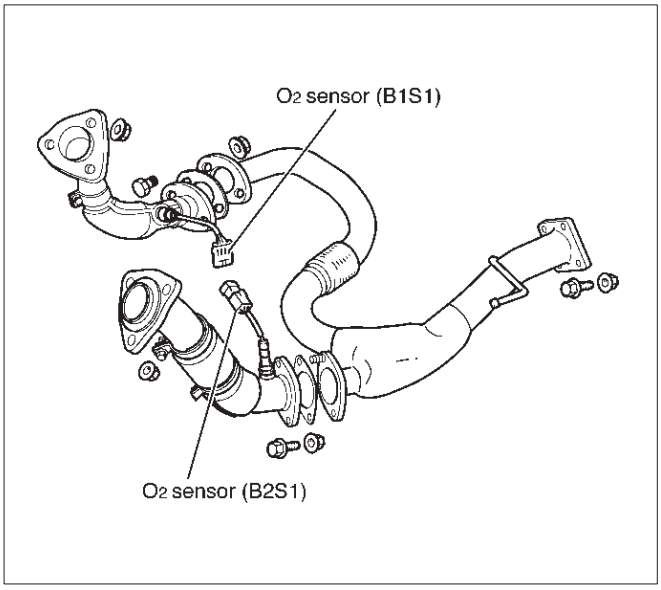

060RW194

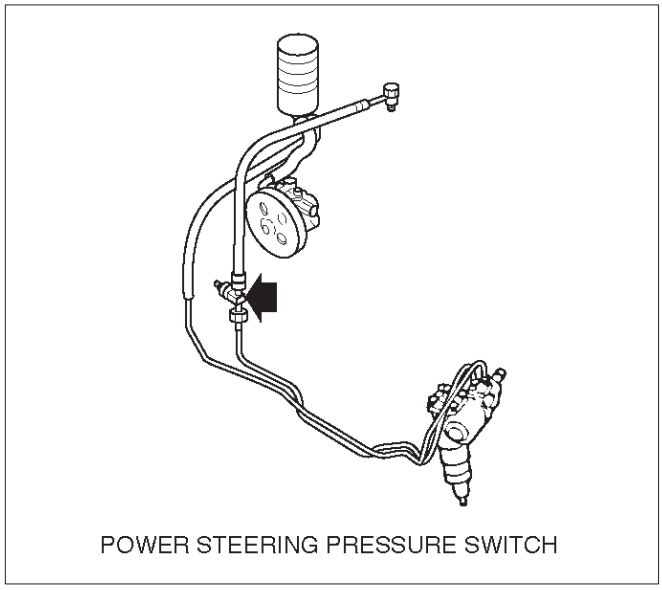

T321066

- **For AUSTRALIA, THAILAND, SOUTH EAST ASIA, LATIN AMERICA, GULF, SAUDI, CHINA.**

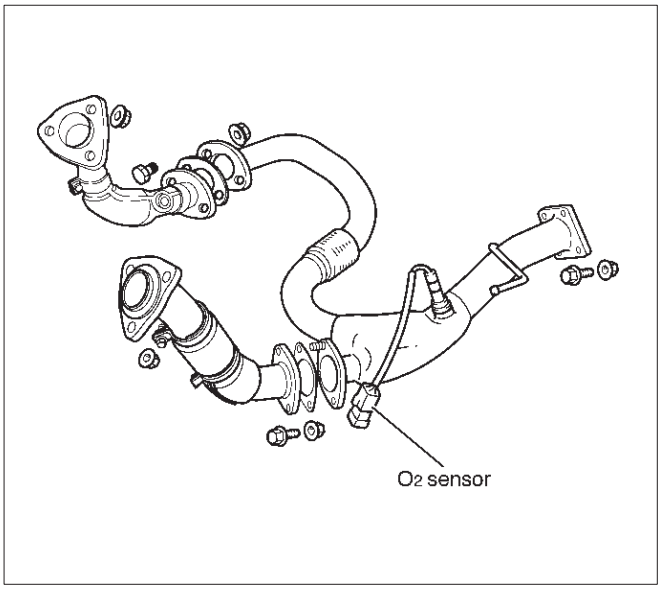

150RW101

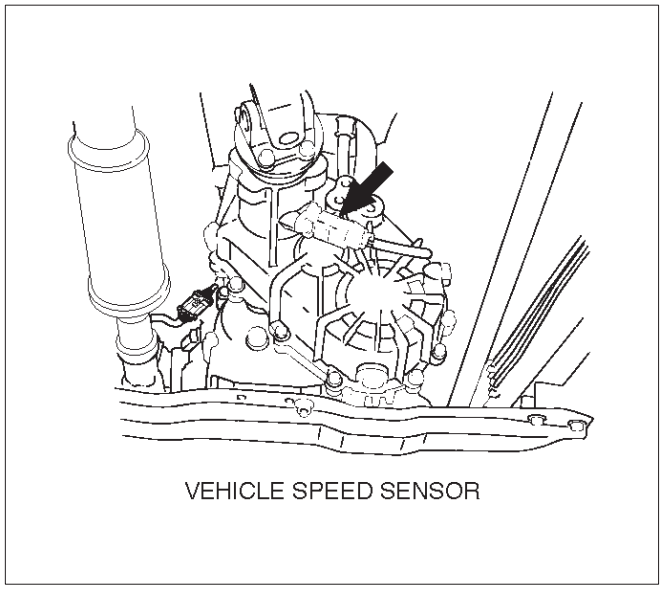

T321067

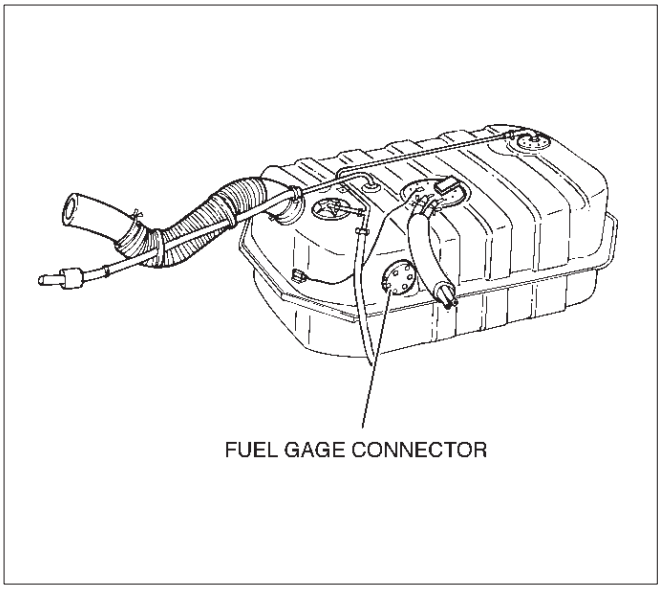

140RW032

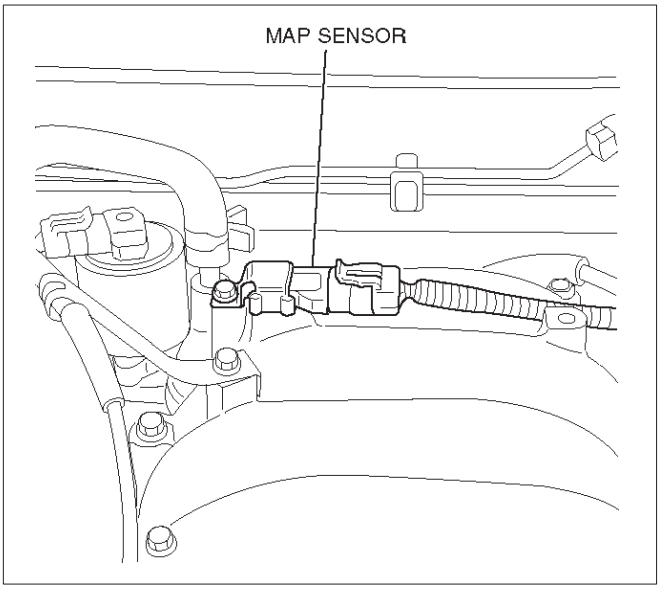

055RW003

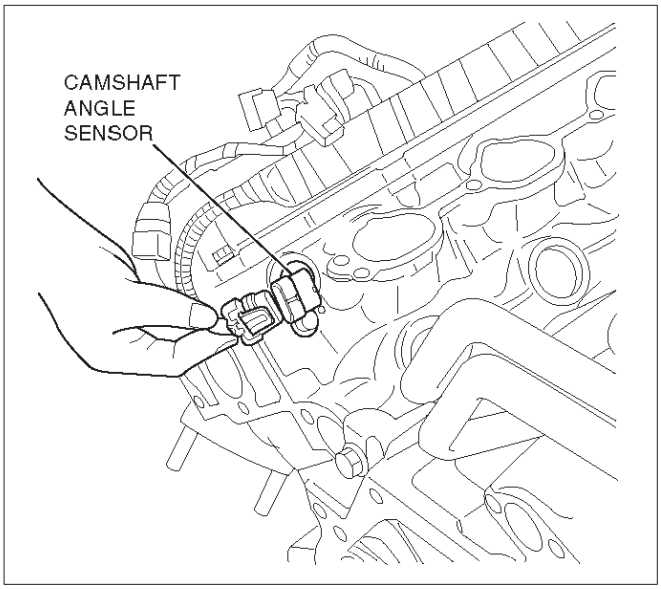

014RW125

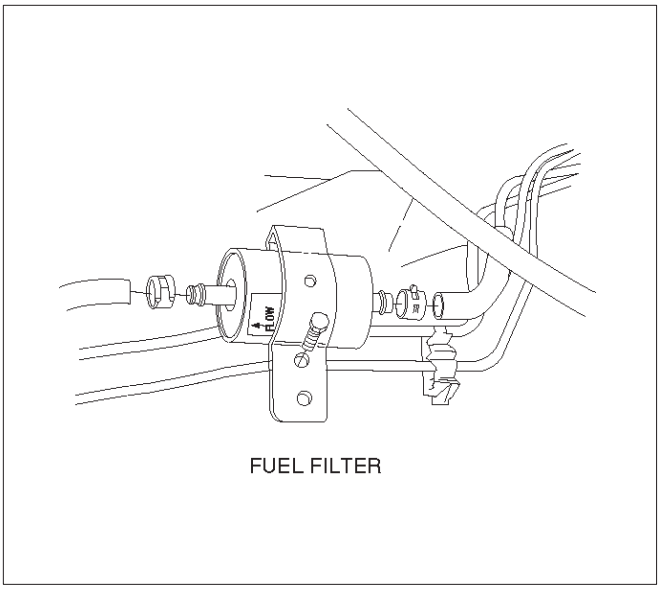

041RW004

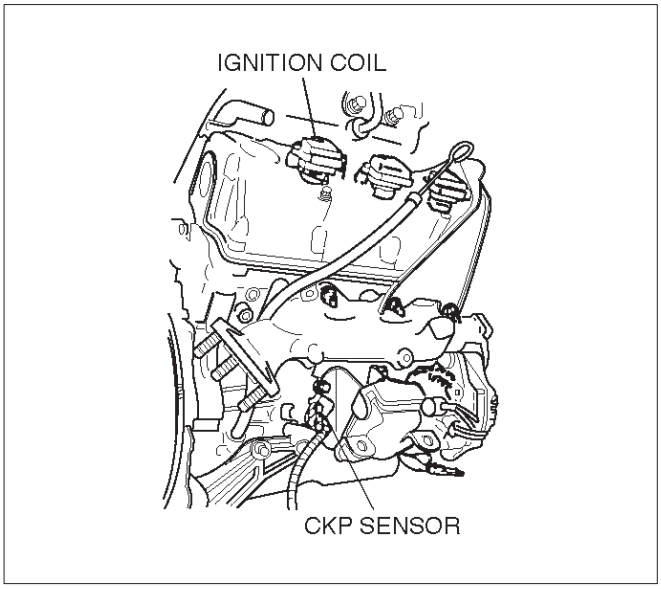

T321070

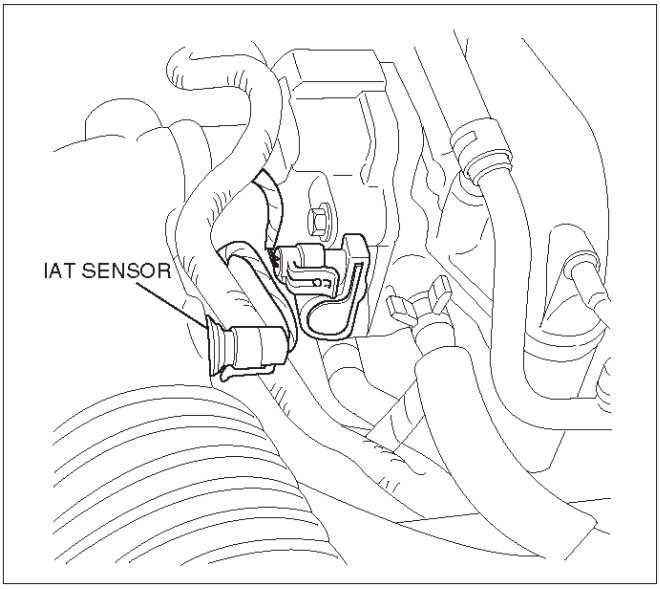

025RW005

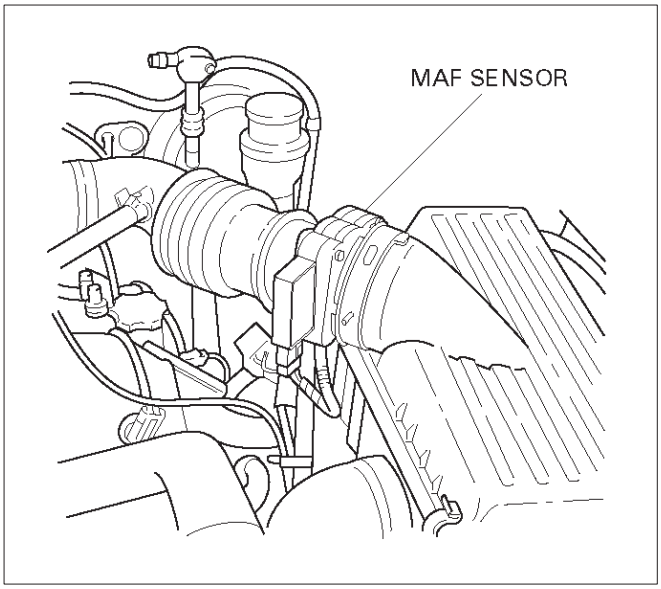

T321078

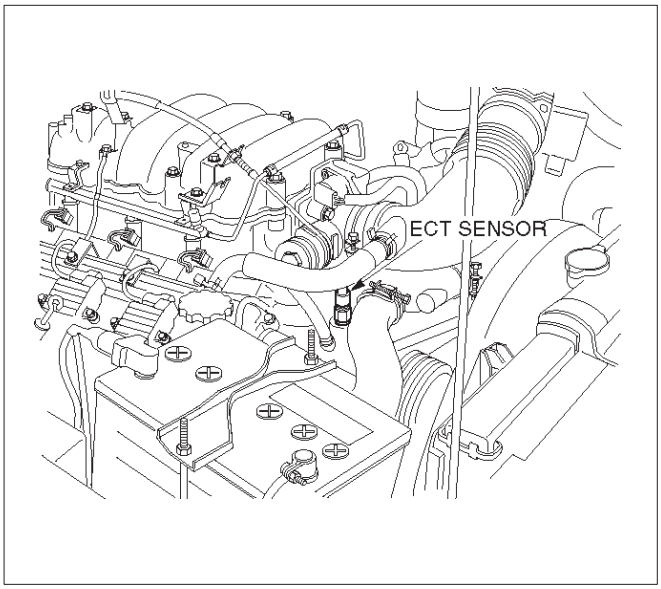

060RW007

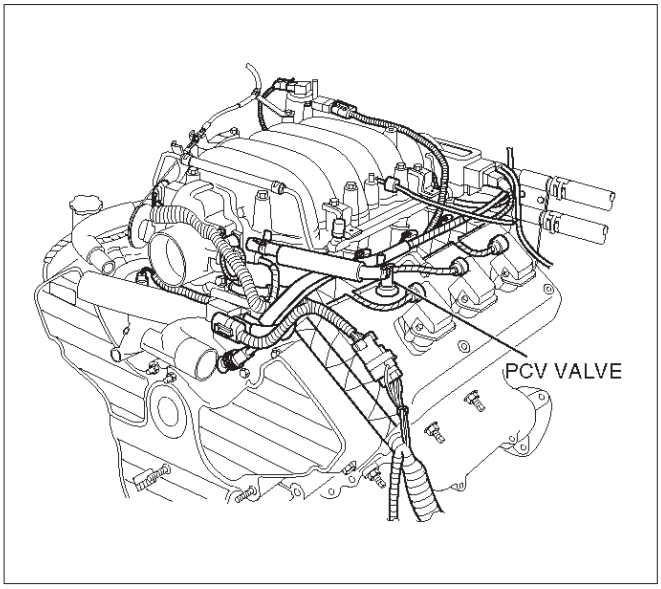

028RW001

Diagnosis

Strategy-Based Diagnostics

Strategy-Based Diagnostics

The strategy-based diagnostic is a uniform approach to repair all Electrical/Electronic (E/E) systems. The diagnostic flow can always be used to resolve an E/E system problem and is a starting point when repairs are necessary. The following steps will instruct the technician how to proceed with a diagnosis:

1. Verify the customer complaint.
   - To verify the customer complaint, the technician should know the normal operation of the system.
2. Perform preliminary checks.
   - Conduct a thorough visual inspection.
   - Review the service history.
   - Detect unusual sounds or odors.
   - Gather diagnostic trouble code information to achieve an effective repair.
3. Check bulletins and other service information.
   - This includes videos, newsletters, etc.
4. Refer to service information (manual) system check(s).
   - “System checks” contain information on a system that may not be supported by one or more DTCs. System checks verify proper operation of the system. This will lead the technician in an organized approach to diagnostics.
5. Refer to service diagnostics.

DTC Stored

Follow the designated DTC chart exactly to make an effective repair.

No DTC

Select the symptom from the symptom tables. Follow the diagnostic paths or suggestions to complete the repair. You may refer to the applicable component/system check in the system checks.

No Matching Symptom

1. Analyze the complaint.
2. Develop a plan for diagnostics.
3. Utilize the wiring diagrams and the theory of operation.

Call technical assistance for similar cases where repair history may be available. Combine technician knowledge with efficient use of the available service information.

Intermittents

Conditions that are not always present are called intermittents. To resolve intermittents, perform the following steps:

1. Observe history DTCs, DTC modes, and freezeframe data.
2. Evaluate the symptoms and the conditions described by the customer.
3. Use a check sheet or other method to identify the circuit or electrical system component.
4. Follow the suggestions for intermittent diagnosis found in the service documentation.

Most Tech 2s, such as the Tech II and the 5–8840–0285–0 (Fluke model 87 DVOM), have data-capturing capabilities that can assist in detecting intermittents.

No Trouble Found

This condition exists when the vehicle is found to operate normally. The condition described by the customer may be normal. Verify the customer complaint against another vehicle that is operating normally. The condition may be intermittent. Verify the complaint under the conditions described by the customer before releasing the vehicle.

1. Re-examine the complaint.

   When the Complaint cannot be successfully found or isolated, a re-evaluation is necessary. The complaint should be re-verified and could be intermittent as defined in *Intermittents*, or could be normal.
2. Repair and verify.

   After isolating the cause, the repairs should be made. Validate for proper operation and verify that the symptom has been corrected. This may involve road testing or other methods to verify that the complaint has been resolved under the following conditions:
   - Conditions noted by the customer.
   - If a DTC was diagnosed, verify a repair by duplicating conditions present when the DTC was set as noted in the Failure Records or Freeze Frame data.

Verifying Vehicle Repair

Verification of the vehicle repair will be more comprehensive for vehicles with OBD system diagnostics. Following a repair, the technician should perform the following steps:

IMPORTANT: Follow the steps below when you verify repairs on OBD systems. Failure to follow these steps could result in unnecessary repairs.

1. Review and record the Failure Records and the Freeze Frame data for the DTC which has been diagnosed (Freeze Frame data will only be stored for an A or B type diagnostic and only if the MIL(”Check Engine” lamp) has been requested).
2. Clear the DTC(S).
3. Operate the vehicle within conditions noted in the Failure Records and Freeze Frame data.
4. Monitor the DTC status information for the specific DTC which has been diagnosed until the diagnostic test associated with that DTC runs.

General Service Information

OBD Serviceablity Issues

The list of non-vehicle faults that could affect the performance of the OBD system has been compiled. These non-vehicle faults vary from environmental conditions to the quality of fuel used.
The illumination of the MIL ("Check Engine" lamp) due to a non-vehicle fault could lead to misdiagnosis of the vehicle, increased warranty expense and customer dissatisfaction. The following list of non-vehicle faults does not include every possible fault and may not apply equally to all product lines.

Fuel Quality

Using fuel with the wrong octane rating for your vehicle may cause driveability problems. Many of the major fuel companies advertise that using "premium" gasoline will improve the performance of your vehicle. Most premium fuels use alcohol to increase the octane rating of the fuel. Although alcohol-enhanced fuels may raise the octane rating, the fuel's ability to turn into vapor in cold temperatures deteriorates. This may affect the starting ability and cold driveability of the engine.
Low fuel levels can lead to fuel starvation, lean engine operation, and eventually engine misfire.

Non-OEM Parts

All of the OBD diagnostics have been calibrated to run with OEM parts. Something as simple as a high-performance exhaust system that affects exhaust system back pressure could potentially interfere with the operation of the EGR valve and thereby turn on the MIL ("Check Engine" lamp). Small leaks in the exhaust system near the post catalyst oxygen sensor can also cause the MIL ("Check Engine" lamp) to turn on.
Aftermarket electronics, such as cellular phones, stereos, and anti-theft devices, may radiate EMI into the control system if they are improperly installed. This may cause a false sensor reading and turn on the MIL ("Check Engine" lamp).

Environment

Temporary environmental conditions, such as localized flooding, will have an effect on the vehicle ignition system. If the ignition system is rain-soaked, it can temporarily cause engine misfire and turn on the MIL ("Check Engine" lamp).

Poor Vehicle Maintenance

The sensitivity of OBD diagnostics will cause the MIL ("Check Engine" lamp) to turn on if the vehicle is not maintained properly. Restricted air filters, fuel filters, and crankcase deposits due to lack of oil changes or improper oil viscosity can trigger actual vehicle faults that were not previously monitored prior to OBD. Poor vehicle maintenance can not be classified as a "non-vehicle fault", but with the sensitivity of OBD diagnostics, vehicle maintenance schedules must be more closely followed.

Related System Faults

Many of the OBD system diagnostics will not run if the PCM detects a fault on a related system or component. One example would be that if the PCM detected a Misfire fault, the diagnostics on the catalytic converter would be suspended until Misfire fault was repaired. If the Misfire fault was severe enough, the catalytic converter could be damaged due to overheating and would never set a Catalyst DTC until the Misfire fault was repaired and the Catalyst diagnostic was allowed to run to completion. If this happens, the customer may have to make two trips to the dealership in order to repair the vehicle.

Maintenance Schedule

Refer to the *Maintenance Schedule*.

Visual / Physical Engine Compartment Inspection

Perform a careful visual and physical engine compartment inspection when performing any diagnostic procedure or diagnosing the cause of an emission test failure. This can often lead to repairing a problem without further steps. Use the following guidelines when performing a visual/physical inspection:

- Inspect all vacuum hoses for punches, cuts, disconnects, and correct routing.
- Inspect hoses that are difficult to see behind other components.
- Inspect all wires in the engine compartment for proper connections, burned or chafed spots, pinched wires, contact with sharp edges or contact with hot exhaust manifolds or pipes.

Basic Knowledge of Tools Required

NOTE: Lack of basic knowledge of this powertrain when performing diagnostic procedures could result in an incorrect diagnosis or damage to powertrain components. Do not attempt to diagnose a powertrain problem without this basic knowledge.

A basic understanding of hand tools is necessary to effectively use this section of the Service Manual.

Serial Data Communications

Class II Serial Data Communications

This vehicle utilizes the "Class II" communication system. Each bit of information can have one of two lengths: long or short. This allows vehicle wiring to be reduced by transmitting and receiving multiple signals over a single wire. The messages carried on Class II data streams are also prioritized. If two messages attempt to establish communications on the data line at the same time, only the message with higher priority will continue. The device with the lower priority message must wait. The most significant result of this regulation is that it provides Tech 2 manufacturers with the capability to access data from any make or model vehicle that is sold.

The data displayed on the other Tech 2 will appear the same, with some exceptions. Some Tech 2s will only be able to display certain vehicle parameters as values that are a coded representation of the true or actual value. For more information on this system of coding, refer to *Decimal/Binary/Hexadecimal Conversions.* On this vehicle Tech 2 displays the actual values for vehicle parameters. It will not be necessary to perform any conversions from coded values to actual values.

On-Board Diagnostic (OBD)

On-Board Diagnostic Tests

A diagnostic test is a series of steps, the result of which is a pass or fail reported to the diagnostic executive. When a diagnostic test reports a pass result, the diagnostic executive records the following data:

- The diagnostic test has been completed since the last ignition cycle.
- The diagnostic test has passed during the current ignition cycle.
- The fault identified by the diagnostic test is not currently active.

When a diagnostic test reports a fail result, the diagnostic executive records the following data:

- The diagnostic test has been completed since the last ignition cycle.
- The fault identified by the diagnostic test is currently active.
- The fault has been active during this ignition cycle.
- The operating conditions at the time of the failure.

Remember, a fuel trim DTC may be triggered by a list of vehicle faults. Make use of all information available (other DTCs stored, rich or lean condition, etc.) when diagnosing a fuel trim fault.

Comprehensive Component Monitor Diagnostic Operation

Input Components:

Input components are monitored for circuit continuity and out-of-range values. This includes rationality checking. Rationality checking refers to indicating a fault when the signal from a sensor does not seem reasonable, i.e. Throttle Position (TP) sensor that indicates high throttle position at low engine loads or MAP voltage. Input components may include, but are not limited to the following sensors:

- Vehicle Speed Sensor (VSS)
- Crankshaft Position (CKP) sensor
- Knock Sensor (KS)
- Throttle Position (TP) sensor
- Engine Coolant Temperature (ECT) sensor
- Camshaft Position (CMP) sensor
- Manifold Absolute Pressure (MAP) sensor
- Mass Air Flow (MAF) sensor

In addition to the circuit continuity and rationality check, the ECT sensor is monitored for its ability to achieve a steady state temperature to enable closed loop fuel control.

Output Components:

Output components are diagnosed for proper response to control module commands. Components where functional monitoring is not feasible will be monitored for circuit continuity and out-of-range values if applicable. Output components to be monitored include, but are not limited to, the following circuits:

- Idle Air Control (IAC) Motor
- Electronic Transmission controls
- A/C relays
- Cooling fan relay
- VSS output
- MIL control
- Cruise control inhibit

Refer to PCM and Sensors in General Descriptions.

Passive and Active Diagnostic Tests

A passive test is a diagnostic test which simply monitors a vehicle system or component. Conversely, an active test, actually takes some sort of action when performing diagnostic functions, often in response to a failed passive test. For example, the EGR diagnostic active test will force the EGR valve open during closed throttle decel and/or force the EGR valve closed during a steady state. Either action should result in a change in manifold pressure.

Intrusive Diagnostic Tests

This is any on-board test run by the Diagnostic Management System which may have an effect on vehicle performance or emission levels.

Warm-Up Cycle

A warm-up cycle means that engine at temperature must reach a minimum of 70˚C (160˚F) *and* rise at least 22˚C (40˚F) over the course of a trip.

Freeze Frame

Freeze Frame is an element of the Diagnostic Management System which stores various vehicle information at the moment an emissions-related fault is stored in memory and when the MIL is commanded on. These data can help to identify the cause of a fault. Refer to *Storing And Erasing Freeze Fame Data* for more detailed information.

Failure Records

Failure Records data is an enhancement of the OBD Freeze Frame feature. Failure Records store the same vehicle information as does Freeze Frame, but it will store that information for any fault which is stored in on-board memory, while Freeze Frame stores information only for emission-related faults that command the MIL on.

Common OBD Terms

Diagnostic

When used as a noun, the word diagnostic refers to any on-board test run by the vehicle's Diagnostic Management System. A diagnostic is simply a test run on a system or component to determine if the system or component is operating according to specification. There are many diagnostics, shown in the following list:

- Oxygen sensors
- Oxygen sensor heaters
- EGR
- Catalyst monitoring

Enable Criteria

The term "enable criteria" is engineering language for the conditions necessary for a given diagnostic test to run. Each diagnostic has a specific list of conditions which must be met before the diagnostic will run. "Enable criteria" is another way of saying "conditions required".
The enable criteria for each diagnostic is listed on the first page of the DTC description under the heading "Conditions for Setting the DTC". Enable criteria varies with each diagnostic, and typically includes, but is not limited to the following items:

- engine speed
- vehicle speed
- ECT
- MAF/MAP
- barometric pressure
- IAT
- TP
- fuel trim
- TCC enabled
- A/C on

Trip

Technically, a trip is a key on-run-key off cycle in which all the enable criteria for a given diagnostic are met, allowing the diagnostic to run. Unfortunately, this concept is not quite that simple. A trip is official when all the enable criteria for a given diagnostic are met. But because the enable criteria vary from one diagnostic to another, the definition of trip varies as well. Some diagnostic are run when the vehicle is at operating temperature, some when the vehicle first start up; some require that the vehicle be cruising at a steady highway speed, some run only when the vehicle is idle; some diagnostics function with the TCC disables. Some run only immediately following a cold engine start-up.
A trip then, is defined as a key on-run-key off cycle in which the vehicle was operated in such a way as to satisfy the enables criteria for a given diagnostic, and this diagnostic will consider this cycle to be one trip. However, another diagnostic with a different set of enable criteria (which were not met) during this driving event, would not consider it a trip. No trip will occur for that particular diagnostic until the vehicle is driven in such a way as to meet all the enable criteria.

The Diagnostic Executive

The Diagnostic Executive is a unique segment of software which is designed to coordinate and prioritize the diagnostic procedures as well as define the protocol for recording and displaying their results. The main responsibilities of the Diagnostic Executive are listed as following:

- Commanding the MIL ("Check Engine" lamp) on and off
- DTC logging and clearing
- Freeze Frame data for the first emission related DTC recorded
- Non-emission related Service Lamp (future)
- Operating conditions Failure Records buffer, (the number of records will vary)
- Current status information on each diagnostic

The Diagnostic Executive records DTCs and turns on the MIL when emission-related faults occur. It can also turn off the MIL if the conditions cease which caused the DTC to set.

Diagnostic Information

The diagnostic charts and functional checks are designed to locate a faulty circuit or component through a process of logical decisions. The charts are prepared with the requirement that the vehicle functioned correctly at the time of assembly and that there are not multiple faults present.
There is a continuous self-diagnosis on certain control functions. This diagnostic capability is complemented by the diagnostic procedures contained in this manual. The language of communicating the source of the malfunction is a system of diagnostic trouble codes. When a malfunction is detected by the control module, a diagnostic trouble code is set and the Malfunction Indicator Lamp (MIL) ("Check Engine" lamp) is illuminated.

Malfunction Indicator Lamp (MIL)

The Malfunction Indicator Lamp (MIL) looks the same as the MIL you are already familiar with ("Check Engine" lamp). However, OBD requires that the it illuminate under a strict set of guide lines.
Basically, the MIL is turned on when the PCM detects a DTC that will impact the vehicle emissions.
The MIL is under the control of the Diagnostic Executive. The MIL will be turned on if an emissions-related diagnostic test indicates a malfunction has occurred. It will stay on until the system or component passes the same test, for three consecutive trips, with no emissionsrelated faults.

Extinguishing the MIL

When the MIL is on, the Diagnostic Executive will turn off the MIL after *three consecutive* trips that a "test passed" has been reported for the diagnostic test that originally caused the MIL to illuminate.
Although the MIL has been turned off, the DTC will remain in the PCM memory (both Freeze Frame and Failure Records) until *forty(40) warm-up cycles after no faults* have been completed.

If the MIL was set by either a fuel trim or misfire-related DTC, additional requirements must be met. In addition to the requirements stated in the previous paragraph, these requirements are as follows:

- The diagnostic tests that are passed must occur with 375 RPM of the RPM data stored at the time the last test failed.
- Plus or minus ten (10) percent of the engine load that was stored at the time the last failed.
- Similar engine temperature conditions (warmed up or warming up) as those stored at the time the last test failed.

Meeting these requirements ensures that the fault which turned on the MIL has been corrected.

The MIL ("Check Engine" lamp) is on the instrument panel and has the following function:

- It informs the driver that a fault affects vehicle emission levels has occurred and that the vehicle should be taken for service as soon as possible.
- As a bulb and system check, the MIL will come "ON" with the key "ON" and the engine not running. When the engine is started, the MIL will turn "OFF."
- When the MIL remains "ON" while the engine is running, or when a malfunction is suspected due to a driveability or emissions problem, a Powertrain On-Board Diagnostic (OBD ll) System Check must be performed. The procedures for these checks are given in On-Board Diagnostic (OBD) System Check. These checks will expose faults which may not be detected if other diagnostics are performed first.

DTC Types

Each DTC is directly related to a diagnostic test. The Diagnostic Management System sets DTC based on the failure of the tests during a trip or trips. Certain tests must fail two (2) consecutive trips before the DTC is set. The following are the four (4) types of DTCs and the characteristics of those codes:

- Type A
  - Emissions related
  - Requests illumination of the MIL of the first trip with a fail
  - Stores a History DTC on the first trip with a fail
  - Stores a Freeze Frame (if empty)
  - Stores a Fail Record
  - Updates the Fail Record each time the diagnostic test fails
- Type B
  - Emissions related
  - "Armed" after one (1) trip with a fail
  - "Disarmed" after one (1) trip with a pass
  - Requests illumination of the MIL on the *second consecutive trip* with a fail
  - Stores a History DTC on the second consecutive trip with a fail (The DTC will be armed after the first fail)
  - Stores a Freeze Frame on the second consecutive trip with a fail (if empty)
  - Stores a Fail Record when the first test fails (not dependent on *consecutive trip* fails)
  - Updates the Fail Record each time the diagnostic test fails
- Type C (if the vehicle is so equipped)
  - Non-Emissions related
  - Requests illumination of the Service Lamp or the service message on the Drive Information Center (DIC) on the *first trip* with a fail
  - Stores a History DTC on the *first trip* with a fail
  - *Does not* store a Freeze Frame
  - Stores Fail Record when test fails
  - Updates the Fail Record each time the diagnostic test fails
- Type D (*Type D* non-emissions related are not utilized on certain vehicle applications).
  - Non-Emissions related
  - Dose not request illumination of any lamp
  - Stores a History DTC on the *first trip* with a fail
  - *Does not* store a Freeze Frame
  - Stores Fail Record when test fails
  - Updates the Fail Record each time the diagnostic test fails

IMPORTANT: Only four Fail Records can be stored. Each Fail Record is for a different DTC. It is possible that there will not be Fail Records for every DTC if multiple DTCs are set.

Storing and Erasing Freeze Frame Data and Failure Records

The data captured is called Freeze Frame data. The Freeze Frame data is very similar to a single record of operating conditions. Whenever the MIL is illuminated, the corresponding record of operating conditions is recorded to the Freeze Frame buffer.

Data from these faults take precedence over data associated with any other fault. The Freeze Frame data will not be erased unless the associated history DTC is cleared.

Each time a diagnostic test reports a failure, the current engine operating conditions are recorded in the *Failure Records* buffer. A subsequent failure will update the recorded operating conditions. The following operating conditions for the diagnostic test which failed *typically* include the following parameters:

- Air Fuel Ratio
- Air Flow Rate
- Fuel Trim
- Engine Speed
- Engine Load
- Engine Coolant Temperature
- Vehicle Speed
- TP Angle
- MAP/BARO
- Injector Base Pulse Width
- Loop Status

Intermittent Malfunction Indicator Lamp

In the case of an “intermittent” fault, the MIL (“Check Engine” lamp) may illuminate and then (after three trips) go “OFF”. However, the corresponding diagnostic trouble code will be stored in the memory. When unexpected diagnostic trouble codes appear, check for an intermittent malfunction.

A diagnostic trouble code may reset. Consult the “Diagnostic Aids” associated with the diagnostic trouble code. A physical inspection of the applicable sub-system most often will resolve the problem.

Data Link Connector (DLC)

The provision for communication with the control module is the Data Link Connector (DLC). The DLC is used to connect to Tech 2. Some common uses of Tech 2 are listed below:

- Identifying stored Diagnostic Trouble Codes (DTCs).
- Clearing DTCs.
- Performing output control tests.
- Reading serial data.

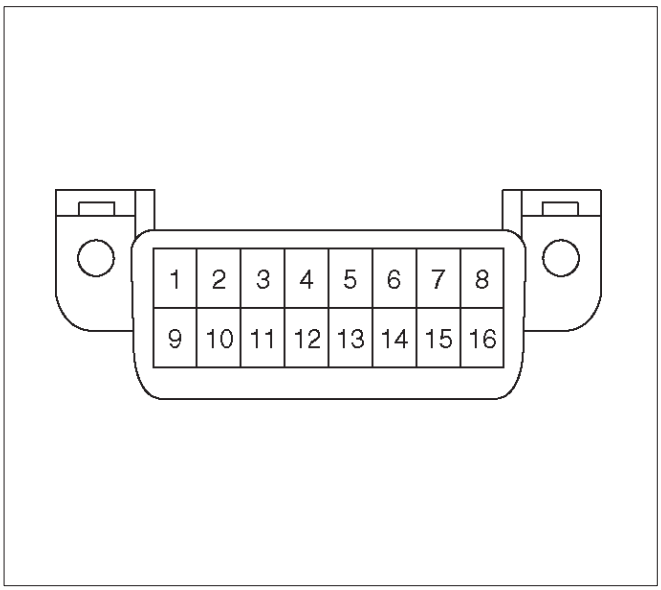

TS24064

Verifying Vehicle Repair

Verification of vehicle repair will be more comprehensive for vehicles with OBD system diagnostic. Following a repair, the technician should perform the following steps:

1. Review and record the Fail Records and/or Freeze Frame data for the DTC which has been diagnosed (Freeze Frame data will only be stored for an A or B type diagnostic and only if the MIL has been requested).
2. Clear DTC(s).
3. Operate the vehicle within conditions noted in the Fail Records and/or Freeze Frame data.
4. Monitor the DTC status information for the specific DTC which has been diagnosed until the diagnostic test associated with that DTC runs.

Following these steps are very important in verifying repairs on OBD systems. Failure to follow these steps could result in unnecessary repairs.

Reading Diagnostic Trouble Codes Using A Tech 2

The procedure for reading diagnostic trouble code(s) is to used a diagnostic Tech 2. When reading DTC(s), follow instructions supplied by Tech 2 manufacturer.

Clearing Diagnostic Trouble Codes

IMPORTANT: Do not clear DTCs unless directed to do so by the service information provided for each diagnostic procedure. When DTCs are cleared, the Freeze Frame and Failure Record data which may help diagnose an intermittent fault will also be erased from memory.

If the fault that caused the DTC to be stored into memory has been corrected, the Diagnostic Executive will begin to count the “warm-up” cycles with no further faults detected, the DTC will automatically be cleared from the PCM memory.

To clear Diagnostic Trouble Codes (DTCs), use the diagnostic Tech 2 “clear DTCs”. When clearing DTCs follow instructions supplied by the tool manufacturer.

When Tech 2 is not available, DTCs can also be cleared by disconnecting *one* of the following sources for at least thirty (30) seconds.

NOTE: To prevent system damage, the ignition key must be “OFF” when disconnecting or reconnecting battery power.

- The power source to the control module. Examples: fuse, pigtail at battery PCM connectors etc.
- The negative battery cable. (Disconnecting the negative battery cable will result in the loss of other on-board memory data, such as preset radio tuning).

Tech 2

From 98 MY, Isuzu dealer service departments are recommended to use Tech 2. Please refer to Tech 2 Tech 2 user guide.

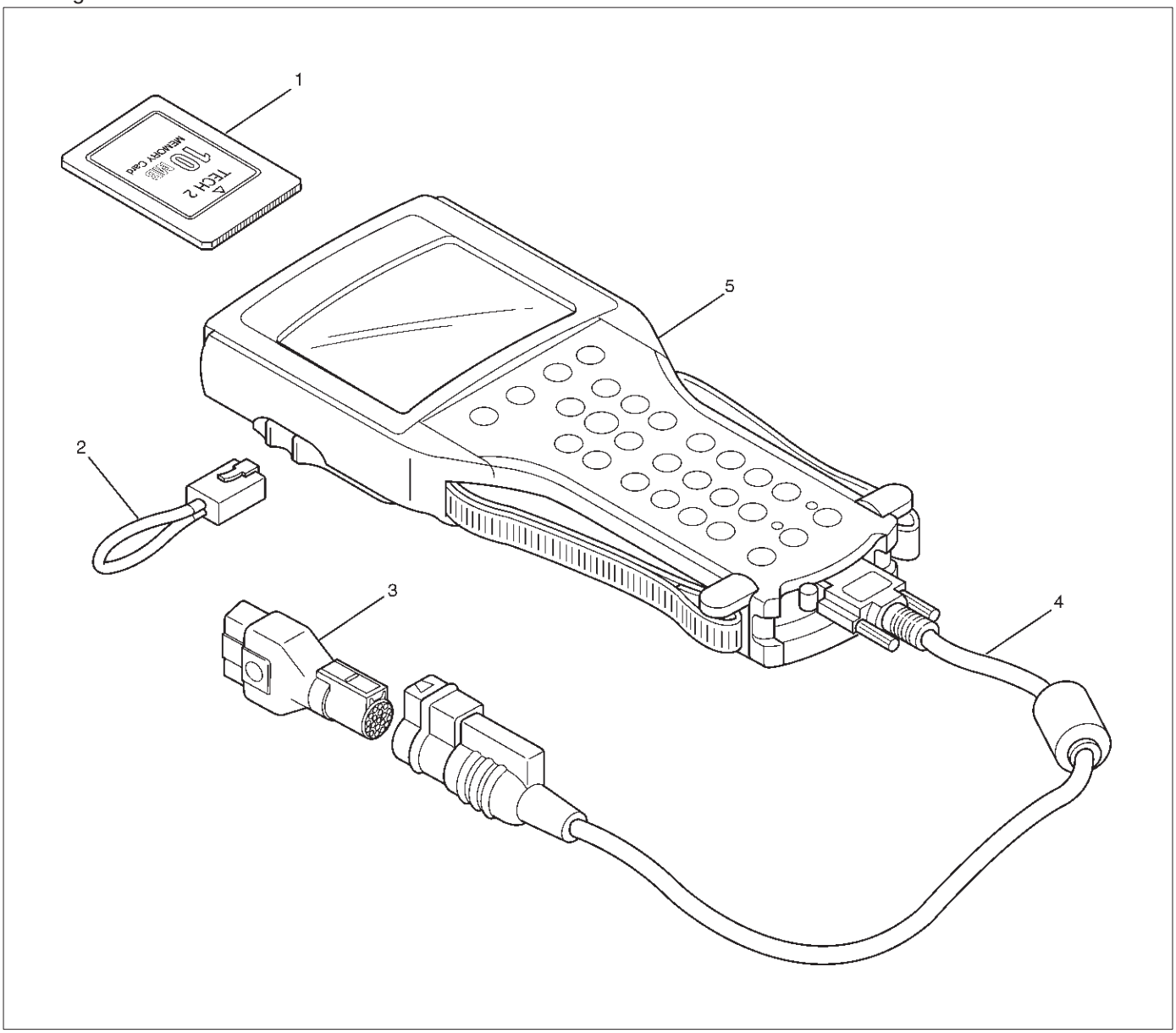

901RW180

Legend

(1) PCMCIA Card
(2) RS 232 Loop Back Connector
(3) SAE 16/19 Adaptor
(4) DLC Cable
(5) Tech–2

Tech 2 Features

1. Tech 2 is 12 volt system. Do not apply 24 volt.
2. After connect and/or install Tech 2 body, Vehicle Communications Interface (VCI) module, PCMCIA card and DLC connector, connect them to the vehicle DLC.
3. After power off to the Tech 2, remove and reinstall the PCMCIA card.
4. The PCMCIA card has a capacity of 10 Megabytes which is 10 times greater than the memory of the Tech 1 Mass Storage Cartridge.
5. The Tech 2 has the capability of two snapshots.
6. The PCMCIA card is sensitive to magnetism and static electricity, so care should be taken in the handling of the card.
7. The Tech 2 can plot a graph when replaying a snapshot.
8. Always return to the Main Menu to press EXIT key several times before shutting down.
9. To clear Diagnostic Trouble Codes (DTCs), open Application Menu and press “F1: Clear DTC Info”.

Getting Started

- Before operating the Isuzu PCMCIA card with the Tech 2, the following steps must be performed:

1. The Isuzu 98 System PCMCIA card (1) inserts into the Tech 2 (5).
2. Connect the SAE 16/19 adapter (3) to the DLC cable (4).
3. Connect the DLC cable to the Tech 2 (5)
4. Make sure the vehicle ignition is off.
5. Connect the Tech 2 SAE 16/19 adapter to the vehicle DLC.
   1. For RHD model: Right front side in the console box.
   2. For LHD model: Left front side in the console box.

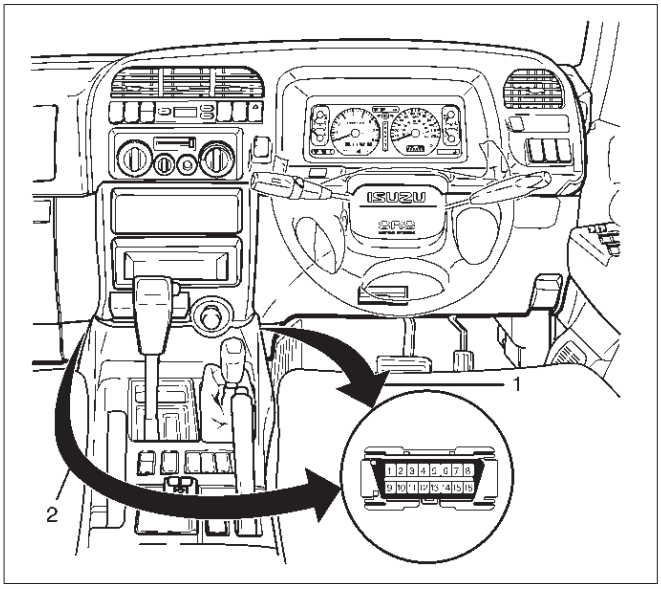

060RW220

6. The vehicle ignition turns on.
7. Verify the Tech 2 power up display.

060RW009

NOTE: The RS232 Loop back connector is only to use for diagnosis of Tech 2 and refer to user guide of the Tech 2.

Operating Procedure (For Example)

The power up screen is displayed when you power up the tester with the Isuzu systems PCMCIA card. Follow the operating procedure below. (Ver. 5.471)

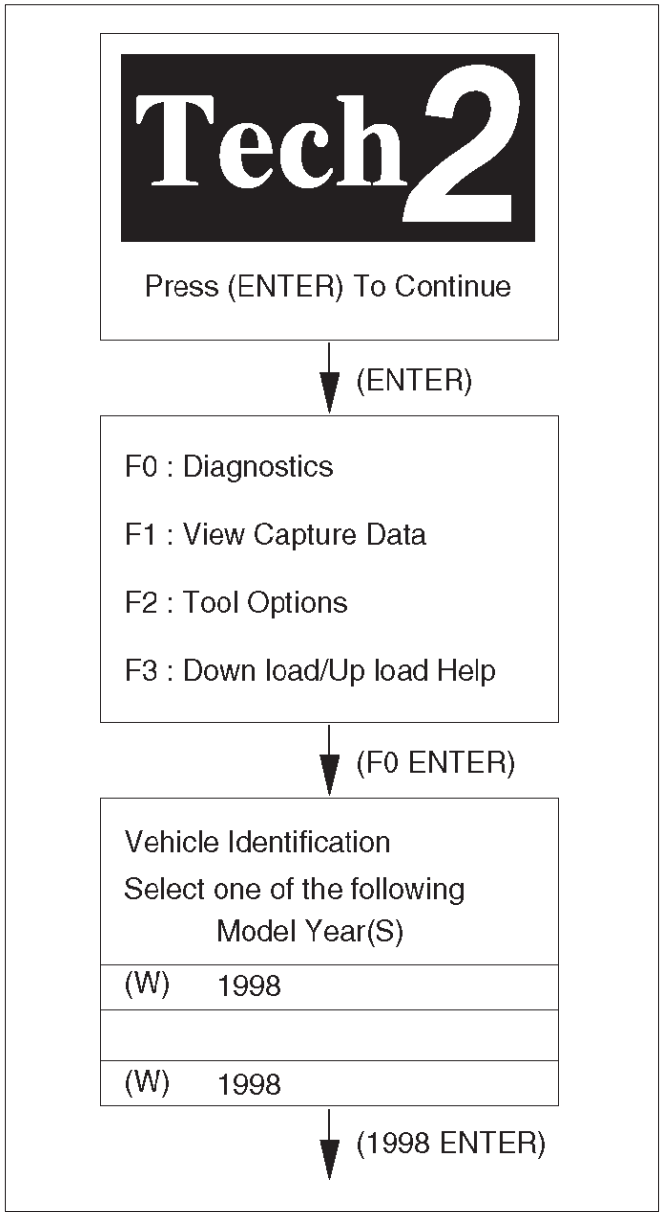

060RW014

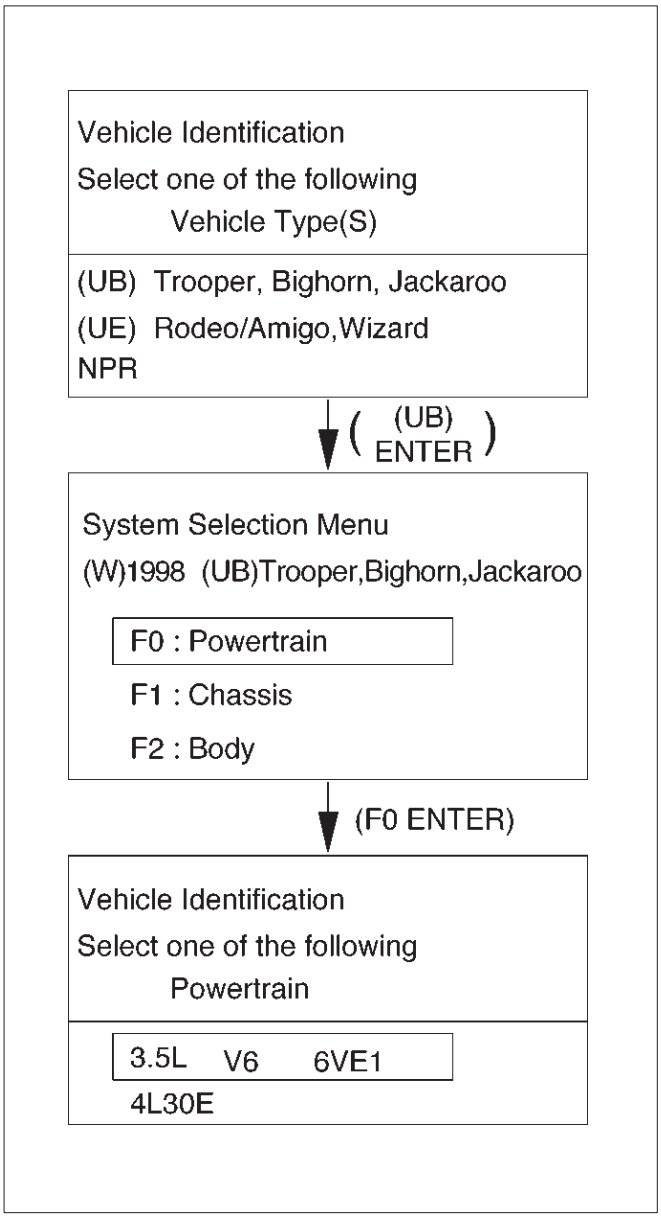

060RW218

Menu

- The following table shows, which functions are used the available equipment versions.

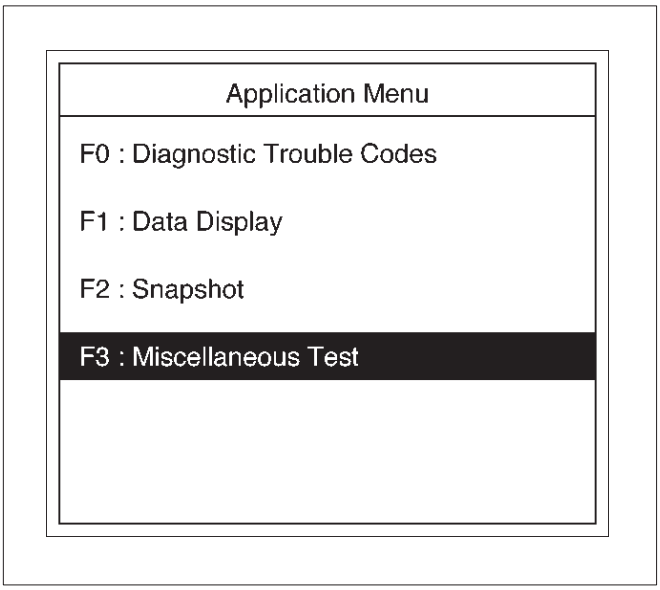

060RW228

DTC Modes

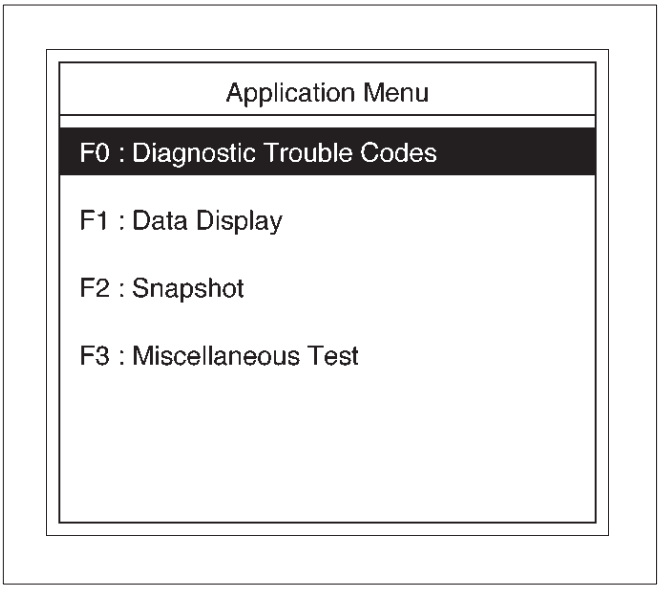

060RW229

On OBD passenger cars there are five options available in Tech 2 DTC mode to display the enhanced information available. A description of the new modes, DTC Info follows. After selecting DTC, the following menu appears:

- DTC Info
- Freeze Frame
- Fail Records (not all applications)
- Clear Info

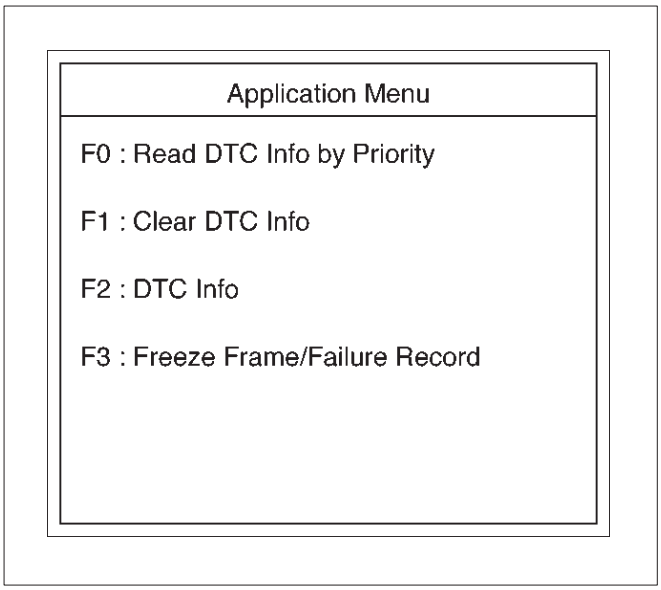

060RW223

The following is a brief description of each of the sub menus in DTC Info and Specific DTC. The order in which they appear here is alphabetical and not necessarily the way they will appear on the Tech 2.

DTC Information Mode

Use the DTC info mode to search for a specific type of stored DTC information. There are seven choices. The service manual may instruct the technician to test for DTCs in a certain manner. Always follow published service procedures.

To get a complete description of any status, press the "Enter" key before pressing the desired F-key. For example, pressing "Enter" then an F-key will display a definition of the abbreviated Tech 2 status.

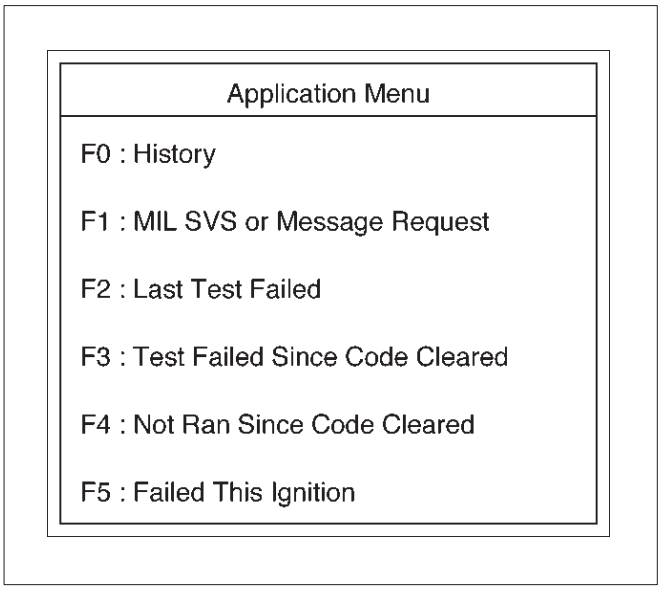

060RW221

DTC Status

This selection will display any DTCs that have not run during the current ignition cycle or have reported a test failure during this ignition up to a maximum of 33 DTCs. DTC tests which run and pass will cause that DTC number to be removed from Tech 2 screen.

Fail This Ignition

This selection will display all DTCs that have failed during the present ignition cycle.

History

This selection will display only DTCs that are stored in the PCM's history memory. It will not display Type B DTCs that have not requested the MIL ("Check Engine" lamp). It will display all type A and B DTCs that have requested the MIL and have failed within the last 40 warm-up cycles. In addition, it will display all type C and type D DTCs that have failed within the last 40 warm-up cycles.

Last Test Failed

This selection will display only DTCs that have failed the last time the test ran. The last test may have run during a previous ignition cycle if a type A or type B DTC is displayed. For type C and type D DTCs, the last failure must have occurred during the current ignition cycle to appear as Last Test Fail.

MILSVC or Message Requested

This selection will display only DTCs that are requesting the MIL. Type C and type D DTCs cannot be displayed using this option. This selection will report type B DTCs only after the MIL has been requested.

Not Run Since Code Clear

This option will display up to 33 DTCs that have not run since the DTCs were last cleared. Since any displayed DTCs have not run, their condition (passing or failing) is unknown.

Test Failed Since Code Clear

This selection will display all active and history DTCs that have reported a test failure since the last time DTCs were cleared. DTCs that last failed more than 40 warm-up cycles before this option is selected will not be displayed.

Injector Balance Test

This test is conducted to make it sure that appropriate electric signals are being sent to injectors Nos. 1–6.

Tech 2 must be used for this test.

Test Procedure:

1. Connect Tech 2 to the vehicle DLC.
2. Run the Engine at idle.

3. Select F3: Miscellaneous Test in the Application Menu.

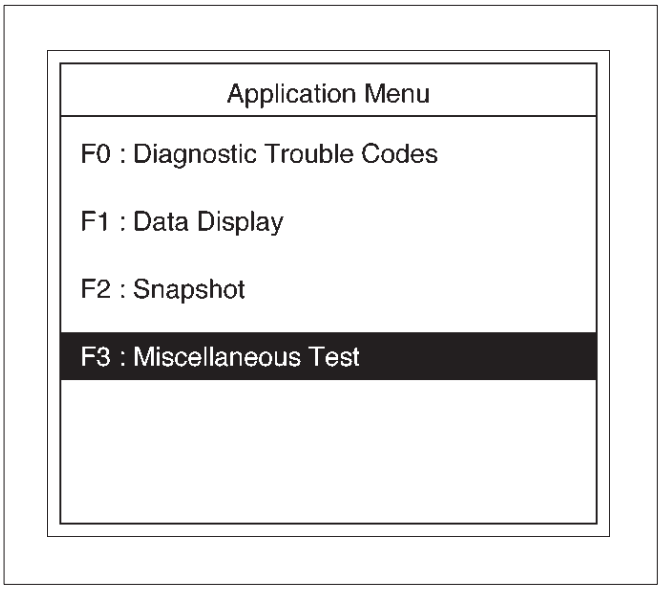

060RW228

4. Select F7: Injector Balance Test in the Miscellaneous Test.

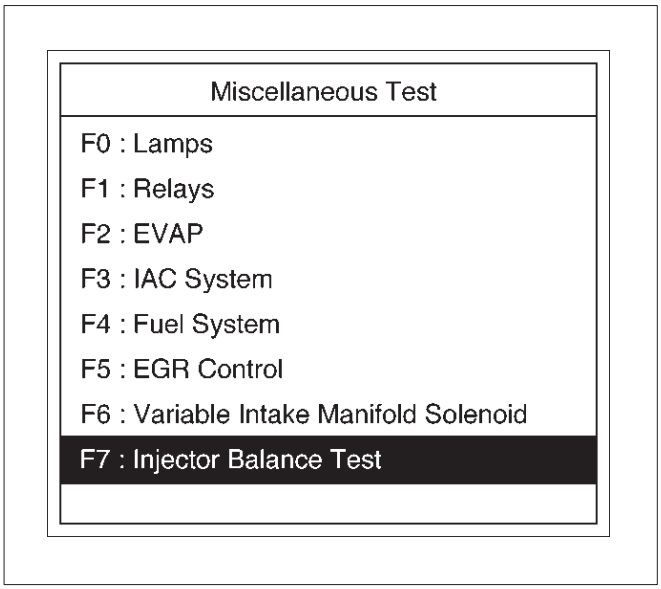

060RX006

5. Select injector number and push “injector off” of soft key.

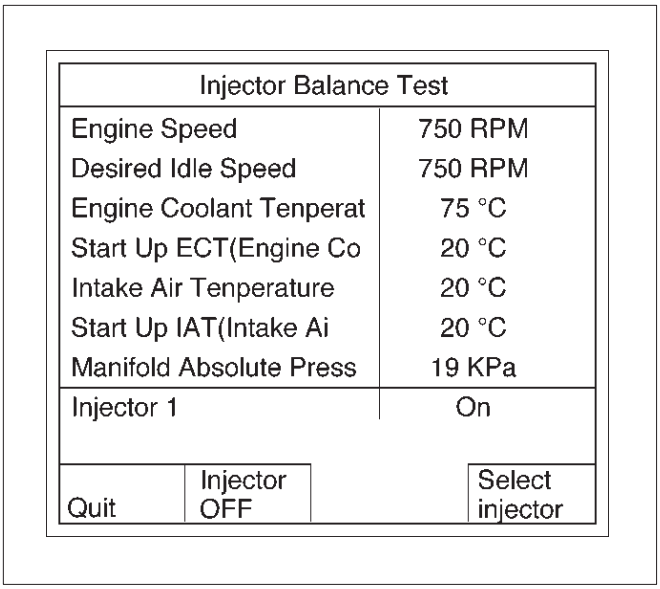

060RW230

6. Make sure of engine speed change.
7. In the engine speed whose change has been confirmed, the injector electric circuit can be regard as normal.

   As for the engine speed whose change has not been confirmed, the injector electric circuit or the injector proper is faulty.

EGR Control Test

This test is conducted check EGR valve for its working. Tech 2 must be used for this test.
Test Procedure:

1. Connect Tech 2 to the vehicle DLC.
2. Run the Engine at idle.
3. Select F3: Miscellaneous Test in the Application Menu.

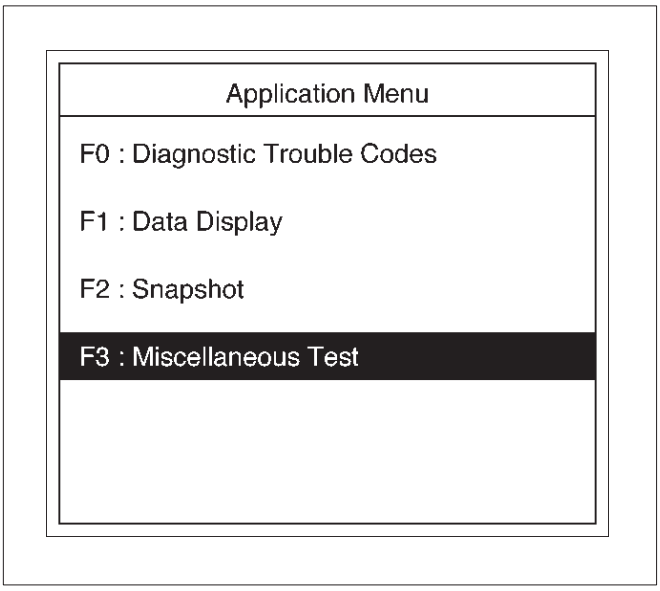

060RW228

4. Select F5: EGR Control Test in the Miscellaneous Test.

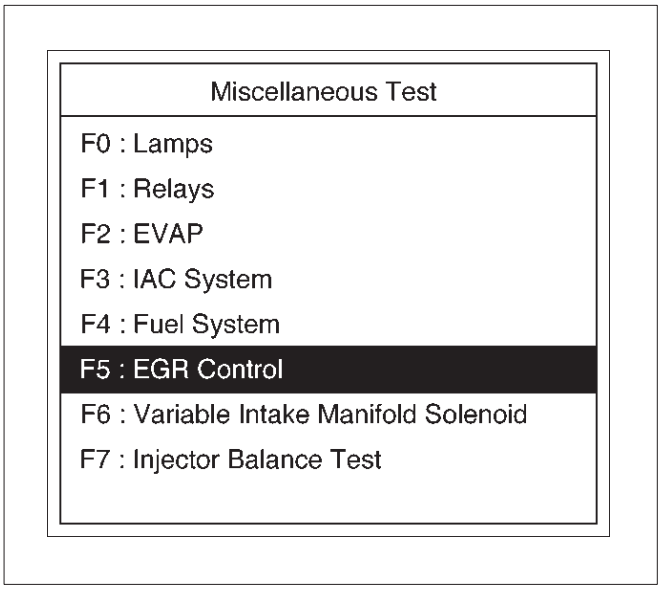

060RX008

5. Instruct EGR Valve to check a data list.

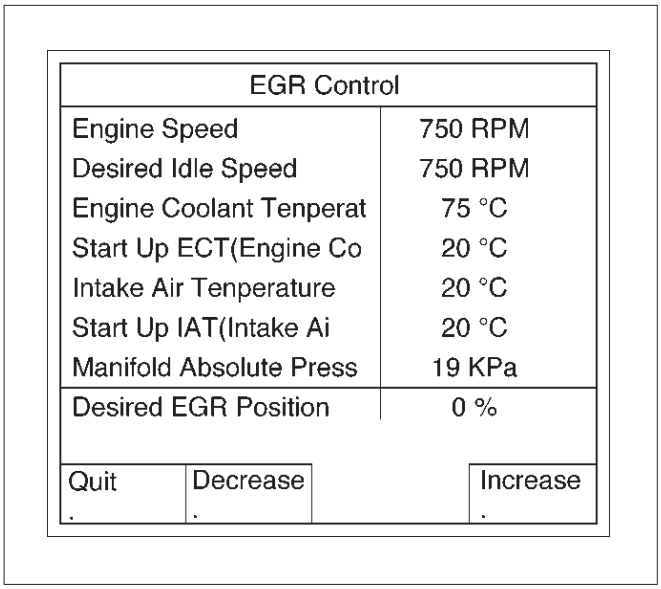

060RW234

6. If change in the data list shows a normal valve.

Idle Air Control System Test

This test is conducted check IAC system for its working. Tech 2 must be used for this test.

Test Procedure:

1. Connect Tech 2 to the vehicle DLC.
2. Run the Engine at idle.
3. Select F3: Miscellaneous Test in the Application Menu.

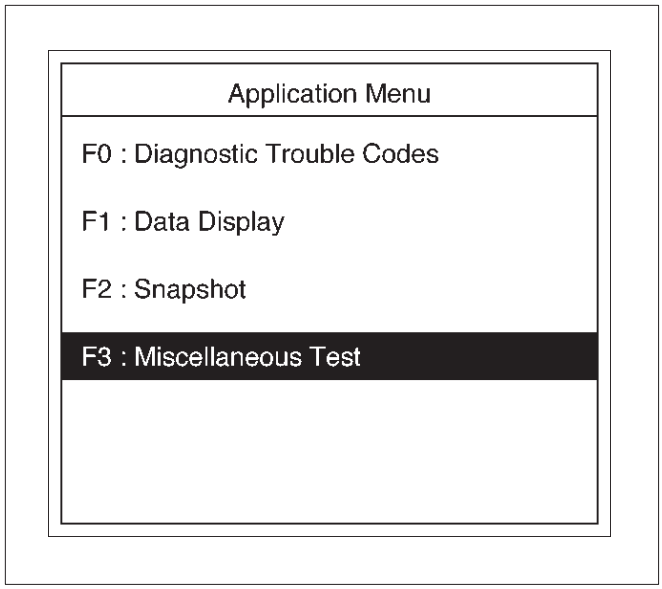

060RW228

4. Select F3: IAC System Test in the Miscellaneous Test.

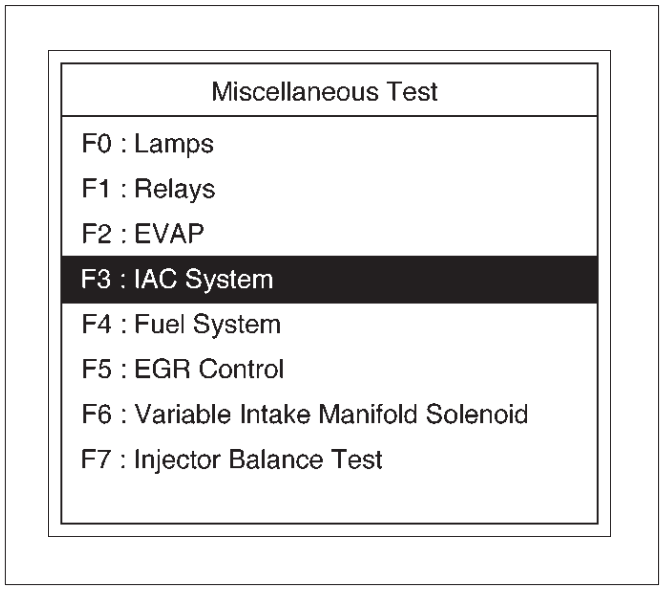

060RX007

5. Select F1: IAC Control Test.

Application Menu
F0 : RPM Control
F1 : IAC Control
F2 : IAC Reset

060RW235

6. Instruct IAC system to check a data list.

IAC Control	
Engine Speed	750 RPM
Desired Idle Speed	750 RPM
Engine Coolant Tenperat	75 °C
Start Up ECT(Engine Co	20 °C
Intake Air Tenperature	20 °C
Start Up IAT(Intake Ai	20 °C
Manifold Absolute Press	19 KPa
Idle Air Control	21 Steps

Quit	Decrease	Increase
.	.	.

060RW233

- F0: RPM Control

RPM Control	
Engine Speed	750 RPM
Desired Idle Speed	750 RPM
Engine Coolant Tenperat	75 °C
Start Up ECT(Engine Co	20 °C
Intake Air Tenperature	20 °C
Start Up IAT(Intake Ai	20 °C
Manifold Absolute Press	19 KPa
Desired Idle Speed	750 RPM

Quit	Decrease	Increase
.	.	.

060RW232

- F2: IAC Reset

IAC Reset	
Engine Speed	750 RPM
Desired Idle Speed	750 RPM
Engine Coolant Tenperat	75 °C
Start Up ECT(Engine Co	20 °C
Intake Air Tenperature	20 °C
Start Up IAT(Intake Ai	20 °C
Manifold Absolute Press	19 KPa
Idle Air Control	21 Steps

Quit	Reset IAC

060RW231

7. If change in the data list shows a normal IAC.

Primary System-Based Diagnostic

Primary System-Based Diagnostic

There are primary system-based diagnostics which evaluate system operation and its effect on vehicle emissions. The primary system-based diagnostics are listed below with a brief description of the diagnostic function:

Oxygen Sensor Diagnosis

The fuel control heated oxygen sensors (Bank 1 HO2S 1 and Bank 2 HO2S 1) are diagnosed for the following conditions:

- Inactive signal (output steady at bias voltage – approx. 450 mV)
- Signal fixed high
- Signal fixed low

If the oxygen sensor pigtail wiring, connector or terminal are damaged, the entire oxygen sensor assembly must be replaced. DO NOT attempt to repair the wiring, connector or terminals. In order for the sensor to function properly, it must have clean reference air provided to it. This clean air reference is obtained by way of the oxygen sensor wire(s). Any attempt to repair the wires, connector or terminals could result in the obstruction of the reference air and degrade oxygen sensor performance. Refer to *On-Vehicle Service, Heated Oxygen Sensors.*

Fuel Control Heated Oxygen Sensor

The main function of the fuel control heated oxygen sensors is to provide the control module with exhaust stream oxygen content information to allow proper fueling and maintain emissions within mandated levels. After it reaches operating temperature, the sensor will generate a voltage, inversely proportional to the amount of oxygen present in the exhaust gases. The control module uses the signal voltage from the fuel control heated oxygen sensors while in closed loop to adjust fuel injector pulse width. While in closed loop, the PCM can adjust fuel delivery to maintain an air/fuel ratio which allows the best combination of emission control and driveability.

HO2S Heater

Heated oxygen sensors are used to minimize the amount of time required for closed loop fuel control to begin operation and to allow accurate catalyst monitoring. The oxygen sensor heater greatly decreases the amount of time required for fuel control sensors (Bank 1 HO2S 1 and Bank2 HO2S 1) to become active. Oxygen sensor heaters are required to maintain a sufficiently high temperature which allows accurate exhaust oxygen content readings further away from the engine.

Fuel Trim System Monitor Diagnostic Operation

Fuel Trim System Monitor Diagnostic Operation

This system monitors the averages of short-term and long-term fuel trim values. If these fuel trim values stay at their limits for a calibrated period of time, a malfunction is indicated. The fuel trim diagnostic compares the averages of short-term fuel trim values and long-term fuel trim values to rich and lean thresholds. If either value is within the thresholds, a pass is recorded. If both values are outside their thresholds, a rich or lean DTC will be recorded.

The fuel trim system diagnostic also conducts an intrusive test. This test determines if a rich condition is being caused by excessive fuel vapor from the EVAP canister. In order to meet OBD requirements, the control module uses weighted fuel trim cells to determine the need to set a fuel trim DTC. A fuel trim DTC can only be set if fuel trim counts in the weighted fuel trim cells exceed specifications. This means that the vehicle could have a fuel trim problem which is causing a problem under certain conditions (i.e., engine idle high due to a small vacuum leak or rough idle due to a large vacuum leak) while it operates fine at other times. No fuel trim DTC would set (although an engine idle speed DTC or HO2S DTC may set). Use a Tech 2 to observe fuel trim counts while the problem is occurring.

A fuel trim DTC may be triggered by a number of vehicle faults. Make use of all information available (other DTCs stored, rich or lean condition, etc.) when diagnosing a fuel trim fault.

Fuel Trim Cell Diagnostic Weights

No fuel trim DTC will set regardless of the fuel trim counts in cell 0 unless the fuel trim counts in the weighted cells are also outside specifications. This means that the vehicle could have a fuel trim problem which is causing a problem under certain conditions (i.e. engine idle high due to a small vacuum leak or rough due to a large vacuum leak) while it operates fine at other times. No fuel trim DTC would set (although an engine idle speed DTC or HO2S DTC may set). Use a Tech 2 to observe fuel trim counts while the problem is occurring.

On-Board Diagnostic (OBD) System Check

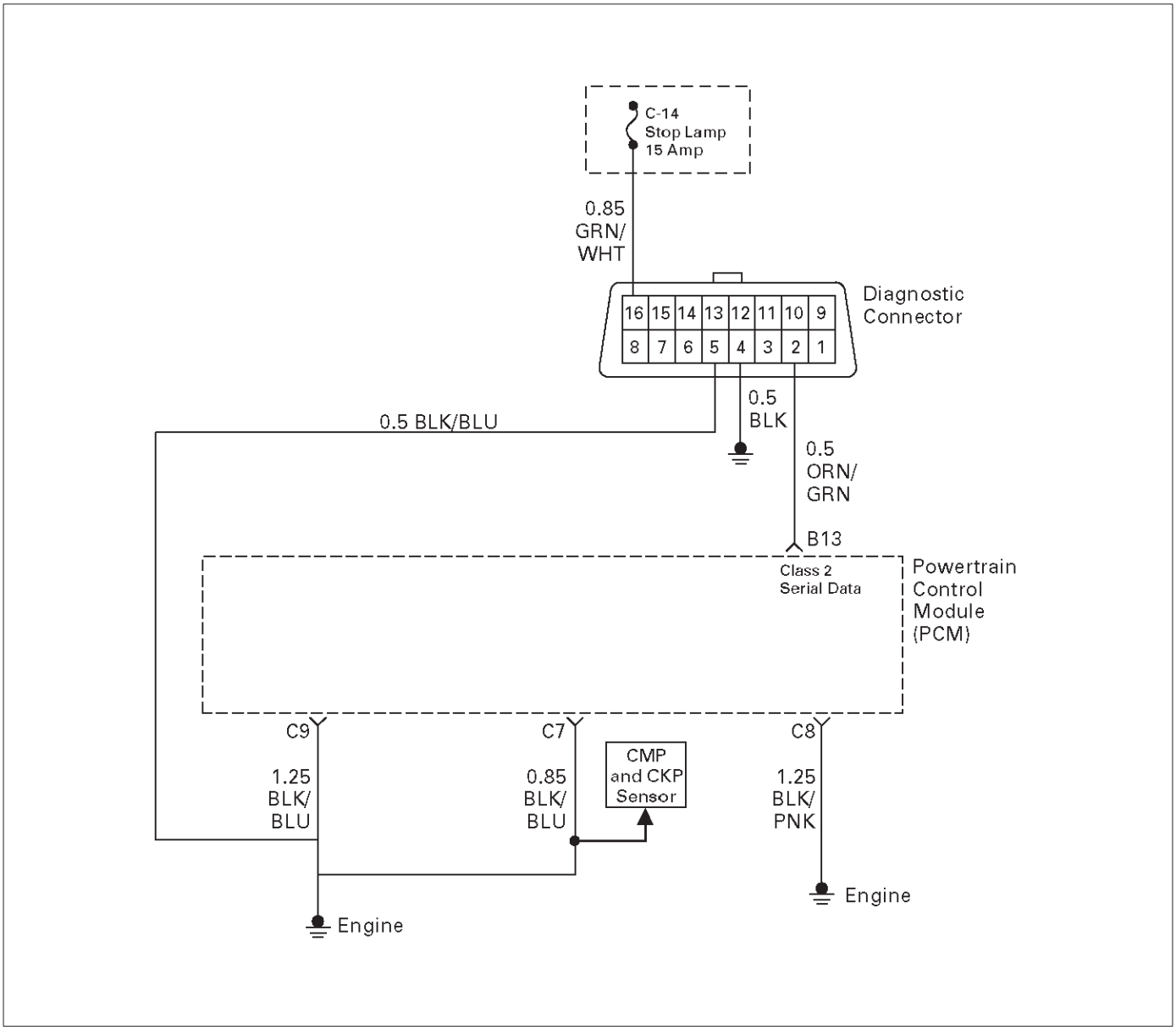

TS321119

Circuit Description

The on-board diagnostic system check is the starting point for any driveability complaint diagnosis. Before using this procedure, perform a careful visual/physical check of the PCM and engine grounds for cleanliness and tightness.

The on-board diagnostic system check is an organized approach to identifying a problem created by an electronic engine control system malfunction.

Diagnostic Aids

An intermittent may be caused by a poor connection, rubbed-through wire insulation or a wire broken inside the insulation. Check for poor connections or a damaged harness. Inspect the PCM harness and connector for improper mating, broken locks, improperly formed or damaged terminals, poor terminal-to-wire connection, and damaged harness.

Test Description

Number(s) below refer to the step number(s) on the Diagnostic Chart:

1. The MIL (“Check Engine” lamp) should be “ON” steady with the ignition “ON”/engine “OFF.” If not, Chart A-1 should be used to isolate the malfunction.
2. Checks the Class 2 data circuit and ensures that the PCM is able to transmit serial data.
3. This test ensures that the PCM is capable of controlling the MIL (“Check Engine” lamp) and the MIL (“Check Engine” lamp) driver circuit is not shorted to ground.
4. If the engine will not start, the *Cranks But Will Not Run* chart should be used to diagnose the condition.
7. A Tech 2 parameter which is not within the typical range may help to isolate the area which is causing the problem.

10. This vehicle is equipped with a PCM which utilizes an electrically erasable programmable read only memory (EEPROM). When the PCM is replaced, the new PCM must be programmed. *Refer to UBS 98 model year Immobilizer Workshop Manual.*

On-Board Diagnostic (OBD) System Check

Step	Action	Value(s)	Yes	No
1	1. Ignition “ON,” engine “OFF.” 2. Observe the malfunction indicator lamp (MIL or “Check Engine” lamp). Is the MIL (“Check Engine” lamp)“ON?”	—	Go to *Step 2*	Go to *No MIL (“Check Engine” lamp)*
2	1. Ignition “OFF.” 2. Install a Tech 2. 3. Ignition “ON.” 4. Attempt to display PCM engine data with the Tech 2. Does the Tech 2 display PCM data?	—	Go to *Step 3*	Go to *Step 8*
3	1. Using the Tech 2 output tests function, select MIL (“Check Engine” lamp) dash lamp control and command the MIL (“Check Engine” lamp) “OFF.” 2. Observe the MIL (“Check Engine” lamp). Did the MIL (“Check Engine” lamp) turn “OFF?”	—	Go to *Step 4*	Go to *MIL (“Check Engine” lamp) On Steady*
4	Attempt to start the engine. Did the engine start and continue to run?	—	Go to *Step 5*	Go to *Cranks But Will Not Run*
5	Select “Display DTCs” with the Tech 2. Are any DTCs stored?	—	Go to *Step 6*	Go to *Step 7*
6	Are two or more of the following DTCs stored? P0107, P0108, P0113, P0118, P0122, P0123, P0712.?	—	Go to *“Multiple PCM Information Sensor DTCs Set”*	Go to applicable DTC table
7	Compare PCM data values displayed on the Tech 2 to the typical engine scan data values. Are the displayed values normal or close to the typical values?	—	Refer to *Typical scan data value*	Refer to indicated *Component System Checks*
8	1. Ignition “OFF,” disconnect the PCM. 2. Ignition “ON,” engine “OFF.” 3. Check the Class 2 data circuit for an open, short to ground, or short to voltage. Also, check the DLC ignition feed circuit for an open or short to ground and the DLC ground circuit for an open. 4. If a problem is found, repair as necessary. Was a problem found?	—	Go to *Step 2*	Go to *Step 9*
9	Attempt to display PCM data with the Tech 2. Does the Tech 2 display PCM engine data?	—	Go to *Step 2*	Go to *Step 10*
10	Replace the PCM. **IMPORTANT:** The replacement PCM must be programmed. Refer to *Powertrain Control Module (PCM) in On-Vehicle Service.* Is the action complete?	—	Go to *Step 2*	—

A/C Clutch Control Circuit Diagnosis

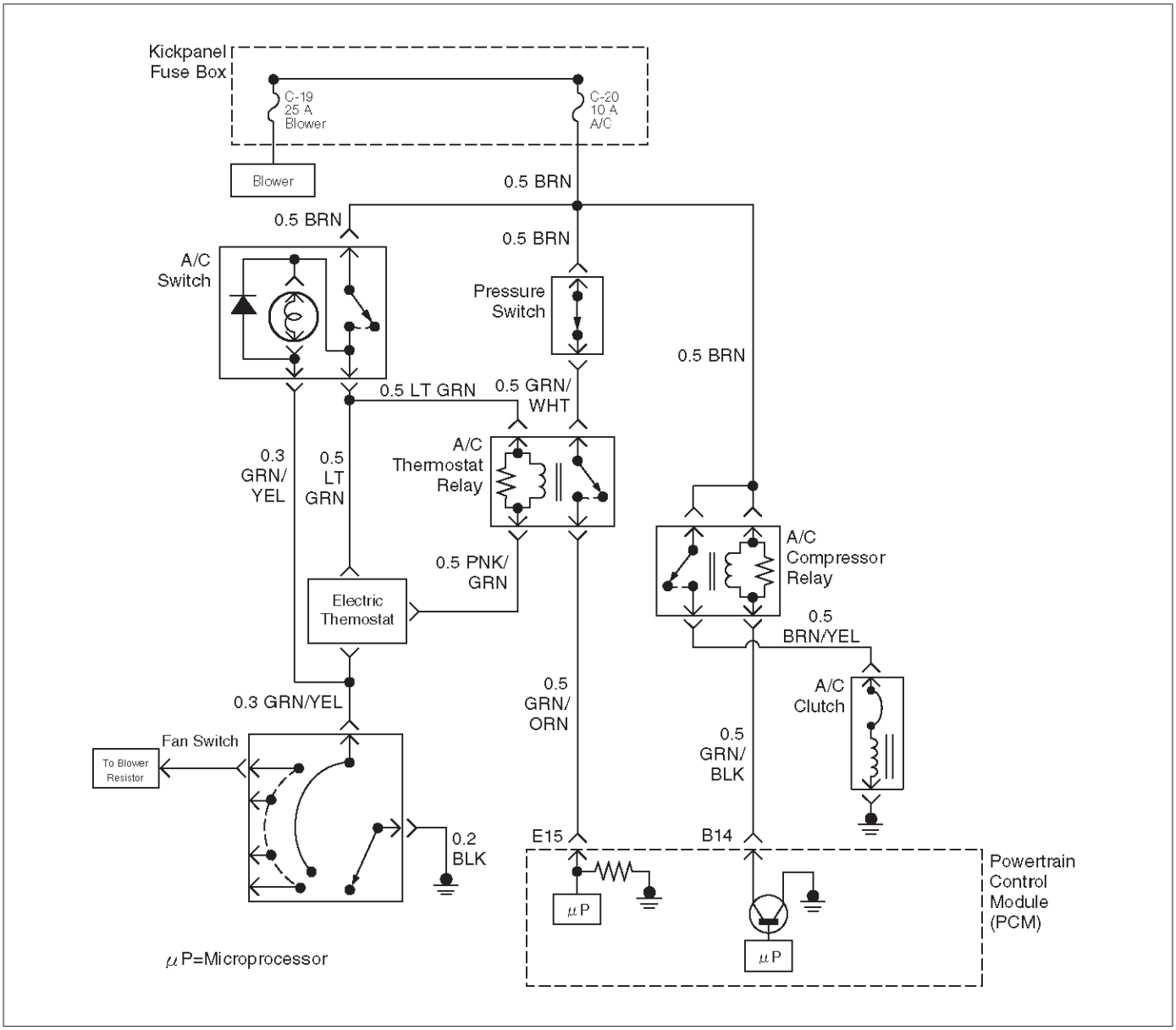

D06RW085

Circuit Description

When air conditioning and blower fan are selected, and if the system has a sufficient refrigerant charge, a 12-volt signal is supplied to the A/C request input of the powertrain control module (PCM). The A/C request signal may be temporarily canceled during system operation by the electronic thermostat in the evaporator case. The electronic thermostat may intermittently remove the control circuit ground for the A/C thermostat relay to prevent the evaporator from forming ice. When the A/C request signal is received by the PCM, the PCM supplies a ground from the compressor clutch relay if the engine operating conditions are within acceptable ranges. With the A/C compressor relay energized, voltage is supplied to the compressor clutch coil.

The PCM will enable the compressor clutch to engage whenever A/C has been selected with the engine running, unless any of the following conditions are present:

- The throttle is greater than 90%.
- The ignition voltage is below 10.5 volts.
- The engine speed is greater than 4500 RPM for 5 seconds or 5400 RPM.
- The engine coolant temperature (ECT) is greater than 125 °C (257 °F).
- The intake air temperature (IAT) is less than 5°C (41°F).
- The power steering pressure switch signals a cramped position.

Diagnostic Aids

To diagnose an the intermittent fault, check for the following conditions:

- Poor connection at the PCM–Inspect connections for backed-out terminals, improper mating, broken locks, improperly formed or damaged terminals, and poor terminal-to-wire connection.

- Damaged harness–Inspect the wiring harness for damage. If the harness appears to OK, observe the A/C clutch while moving connectors and wiring harnesses related to the A/C. A sudden clutch malfunction will indicate the source of the intermittent fault.

A/C Clutch Diagnosis

This chart should be used for diagnosing the electrical portion of the A/C compressor clutch circuit. A Tech 2 will be used in diagnosing the system. The Tech 2 has the ability to read the A/C request input to the PCM. The Tech 2 can display when the PCM has commanded the A/C clutch "ON." The Tech 2 should have the ability to override the A/C request signal and energize the A/C compressor relay.

Test Description

IMPORTANT: Do not engage the A/C compressor clutch with the engine running if an A/C mode is not selected at the A/C control switch.

The numbers below refer to the step numbers on the Diagnostic Chart:

3. This a test determine is the problem is with the refrigerant system. If the switch is open, A/C pressure gauges will be used to determine if the pressure switch is faulty or if the system is partially discharged or empty.
4. Although the normal complaint will be the A/C clutch failing to engage, it is possible for a short circuit to cause the clutch to run when A/C has not been selected. This step is a test for that condition.
7. There is an extremely low probability that both relays will fail at the same time, so the substitution process is one way to check the A/C Thermostat relay. Use a known good relay to do a substitution check.
9. The blower system furnishes a ground for the A/C control circuit, and it also shares a power source through the Heater and A/C Relay. The blower must be "ON" in order to test the A/C system.

A/C Clutch Control Circuit Diagnosis

Step	Action	Value(s)	Yes	No
1	Was the "On-Board Diagnostic (OBD) System Check" performed?	—	Go to *Step 2*	Go to *OBD System Check*
2	Are any other DTCs stored?	—	Go to the other DTC chart(s) first	Go to *Step 3*
3	1. Disconnect the electrical connector at the pressure switch located on the receiver/drier. 2. Use an ohmmeter to check continuity across the pressure switch. Is the pressure switch open?	—	Go to Air *Conditioning* to diagnose the cause of the open pressure switch	Go to *Step 4*
4	**IMPORTANT:** Before continuing with the diagnosis, the following conditions must be met: ● The intake air temperature must be greater than 15˚C. (60˚F). ● The engine coolant temperature must be less than 119˚C (246˚F). 1. A/C "OFF." 2. Start the engine and idle for 1 minute. 3. Observe the A/C compressor. Is the A/C compressor clutch engaged even though A/C has not been requested?	—	Go to *Step 45*	Go to *Step 5*
5	1. Idle the engine. 2. A/C "ON". 3. Blower "ON". 4. Observe the A/C compressor. Is the A/C compressor magnetic clutch engaged?	—	Refer to *Diagnostic Aids*	Go to *Step 6*

A/C Clutch Control Circuit Diagnosis (Cont'd)

Step	Action	Value(s)	Yes	No
6	1. Engine idling. 2. A/C "ON". 3. Blower "ON". 4. Observe the "A/C Request" display on the Tech 2. Does the tool "A/C Request" display indicate "Yes?"	—	Go to *Step 34*	Go to *Step 7*
7	Temporarily substitute the A/C compressor relay in place of the A/C thermostat relay, then repeat Step 5. Did the "A/C Request" display indicate "Yes?"	—	Go to *Step 8*	Go to *Step 9*
8	Replace the original A/C thermostat relay. Is the action complete?	—	Verify repair	—
9	Dose the blower operate?	—	Go to *Step 10*	Go to *Step 11*
10	Repair the blower. Is the action complete?	—	Verify repair	—
11	Check for a faulty 10a A/C fuse in the underdash fuse panel. Was the 10A fuse OK?	—	Go to *Step 13*	Go to *Step 12*
12	Check for short circuit and make repairs if necessary. Replace the 10A A/C fuse. Is the action complete?	—	Verify repair	—
13	1. Ignition "ON." 2. Use a DVM to check voltage at the positive A/C switch wire (BRN). Was voltage equal to the specified value?	+B	Go to *Step 15*	Go to *Step 14*
14	Repair the open wire (BRN) between the A/C switch and the A/C fuse. Is the action complete?	—	Verify repair	—
15	1. Remove the glove box to gain access to the A/C thermostat. 2. Disconnect the thermostat connector. 3. Attach a fused jumper between ground and the PNK/GRN wire at the thermostat. 4. A/C "ON." 5. Blower "ON." Dose A/C request indicate "YES" on the Tech 2?	—	Go to *Step 16*	Go to *Step 23*
16	1. Ignition "ON." 2. Use a DVM to check voltage at the electronic A/C thermostat. Was voltage equal to the specified value?	+B	Go to *Step 20*	Go to *Step 17*
17	Check for an open (LT GRN) between the thermostat and the A/C switch. Was the wire open?	—	Go to *Step 18*	Go to *Step 19*
18	Repair the open wire (LT GRN) between the thermostat and the A/C switch. Is the action complete?	—	Verify repair	—

A/C Clutch Control Circuit Diagnosis (Cont'd)

Step	Action	Value(s)	Yes	No
19	Replace the A/C switch. Is the action complete?	—	Verify repair	—
20	Use an ohmmeter to check continuity between the electronic A/C thermostat and the blower switch. Was there an open circuit?	—	Go to *Step 21*	Go to *Step 22*
21	Repair the open wire (GRN/YEL) between the thermostat and the blower switch. Is the action complete?	—	Verify repair	—
22	Replace the electronic A/C thermostat. Is the an action complete?	—	Verify repair	—
23	Check for an open circuit between A/C thermostat relay and PCM A/C request terminal (E-15). Was there an open circuit?	—	Go to *Step 24*	Go to *Step 25*
24	Repair the open circuit between the PCM and A/C thermostat relay. Is the action complete?	—	Verify repair	—
25	Check for an open circuit between the A/C switch (LT GRN) and the A/C thermostat relay (LT GRN). Was there an open circuit?	—	Go to *Step 26*	Go to *Step 27*
26	Repair the open circuit between the A/C switch and the A/C thermostat relay. Is the action complete?	—	Verify repair	—
27	1. Ignition "ON." 2. Use a DVM to check voltage at the A/C pressure switch (BRN). Was voltage equal to the specified value?	+B	Go to *Step 29*	Go to *Step 28*
28	Repair the open circuit between the 10A A/C fuse and the pressure switch. Is the action complete?	—	Verify repair	—
29	Use an ohmmeter to check continuity between the pressure switch (GRN/WHT) and the A/C thermostat relay (GRN/WHT). Was the circuit open?	—	Go to *Step 30*	Go to *Step 31*
30	Repair the open circuit between the pressure switch and the A/C thermostat relay. Is the action complete?	—	Verify repair	—
31	Check for damaged pin or terminal at E-15 of the PCM. Was a damaged pin or terminal found?	—	Go to *Step 32*	Go to *Step 33*
32	Repair the damaged pin or terminal. Is the action complete?	—	Verify repair	—
33	Replace the PCM. **IMPORTANT:** The replacement PCM must be programmed. Refer to *UBS 98model year Immobilizer Workshop Manual.* Is the action complete?	—	Verify repair	—

A/C Clutch Control Circuit Diagnosis (Cont'd)

Step	Action	Value(s)	Yes	No
34	1. Remove the A/C compressor relay. 2. Ignition "ON." 3. Use a DVM to check voltage at both of the BRN wires at the A/C compressor relay socket. Is the voltage equal to the specified value?	+B	Go to *Step 36*	Go to *Step 35*
35	Repair the faulty BRN wire between the A/C fuse and the A/C compressor relay . Is the action complete?	—	Verify repair	—
36	1. A/C compressor relay removed. 2. Engine idling. 3. A/C "ON." 4. Blower "ON." 5. Use a DVM to measure voltage between the GRN/BLK wire at the A/C compressor relay socket and battery±. Did the DVM indicate the specified value?	+B	Go to *Step 40*	Go to *Step 37*
37	Check for an open GRN/BLK wire between PCM terminal B-14 and the A/C compressor relay. Was the wire open?	—	Go to *Step 38*	Go to *Step 39*
38	Repair the open GRN/BLK wire between the PCM and the A/C compressor relay. Is the action complete?	—	Verify repair	—
39	Check for a damaged pin or terminal at B-14 of the PCM. Was a damaged pin or a terminal found?	—	Go to *Step 32*	Go to *Step 33*
40	1. A/C compressor relay removed. 2. Connect a fused jumper at the A/C compressor relay socket between either BRN wire and the BRN/YEL wire. 3. Engine idling. 4. A/C "ON." 5. Blower "ON." Did the compressor magnetic clutch engage?	—	Go to *Step 41*	Go to *Step 42*
41	Repair the A/C compressor relay. Is the action complete?	—	Verify repair	—
42	Check for an open circuit between the A/C compressor relay and the A/C clutch. Was an open circuit found?	—	Go to *Step 43*	Go to *Step 44*
43	Repair the open circuit between the compressor Clutch and the A/C compressor relay. Is the action complete?	—	Verify repair	—
44	Service the compressor clutch or replace the compressor due to a faulty internal overheat switch. Is the action complete?	—	Verify repair	—

A/C Clutch Control Circuit Diagnosis (Cont'd)

Step	Action	Value(s)	Yes	No
45	1. Remove the A/C compressor relay. 2. Idle the engine. Is the compressor clutch still engaged when A/C is not selected?	—	Go to *Step 46*	Go to *Step 47*
46	Repair the short to voltage between the A/C clutch and A/C compressor relay. Is the action complete?	—	Verify repair	—
47	1. Reinstall the A/C compressor relay. 2. Remove the A/C thermostat relay. 3. Engine idling. Is the compressor clutch still engaged when A/C is not selected?	—	Go to *Step 48*	Go to *Step 50*
48	Use a DVM to check for a short to ground between the A/C compressor relay and B-14 of the PCM. Was a short detected?	—	Go to *Step 49*	Go to *Step 33*
49	Repair the short to ground between the PCM and A/C compressor relay. Is the action complete?	—	Verify repair	—
50	Repair the short to ground between the A/C thermostat relay and the electronic thermostat. Is the action complete?	—	Verify repair	—

Electronic Ignition System Diagnosis

If the engine cranks but will not run or immediately stalls, the Engine Cranks But Will Not Start chart must be used to determine if the failure is the ignition system or the fuel system. If DTC P0341, or P0336 is set, the appropriate diagnostic trouble code chart must be used for diagnosis. If a misfire is being experienced with no DTC set, refer to the *Symptoms* section for diagnosis.

Fuel Metering System Check

Some failures of the fuel metering system will result in an "Engine Cranks But Will Not Run" symptom. If this condition exists, refer to the *Cranks But Will Not Run* chart. This chart will determine if the problem is caused by the ignition system, the PCM, or the fuel pump electrical circuit.

Refer to *Fuel System Electrical Test* for the fuel system wiring schematic.

If there is a fuel delivery problem, refer to *Fuel System Diagnosis*, which diagnoses the fuel injectors, the fuel pressure regulator, and the fuel pump. If a malfunction occurs in the fuel metering system, it usually results in either a rich HO2S signal or a lean HO2S signal. This condition is indicated by the HO2S voltage, which causes the PCM to change the fuel calculation (fuel injector pulse width) based on the HO2S reading. Changes made to the fuel calculation will be indicated by a change in the long term fuel trim values which can be monitored with a Tech 2. Ideal long term fuel trim values are around 0%; for a lean HO2S signal, the PCM will add fuel, resulting in a fuel trim value above 0%. Some variations in fuel trim values are normal because all engines are not exactly the same. If the fuel trim values are greater than +23%, refer to *DTC P0131, DTC P0151, DTC P0171, and DTC 1171* for items which can cause a lean HO2S signal.

Idle Air Control (IAC) Valve

The Tech 2 displays the IAC pintle position in counts. A count of "0" indicates the PCM is commanding the IAC pintle to be driven all the way into a fully-seated position. This is usually caused by a large vacuum leak.

The higher the number of counts, the more air is being commanded to bypass the throttle blade. Refer to IAC System Check in order to diagnose the IAC system. Refer to *Rough, Unstable, or Incorrect Idle, Stalling* in *Symptoms* for other possible causes of idle problems.

Fuel System Pressure Test

A fuel system pressure test is part of several of the diagnostic charts and symptom checks. To perform this test, refer to *Fuel Systems Diagnosis.*

Fuel Injector Coil Test Procedure and Fuel Injector Balance Test Procedure

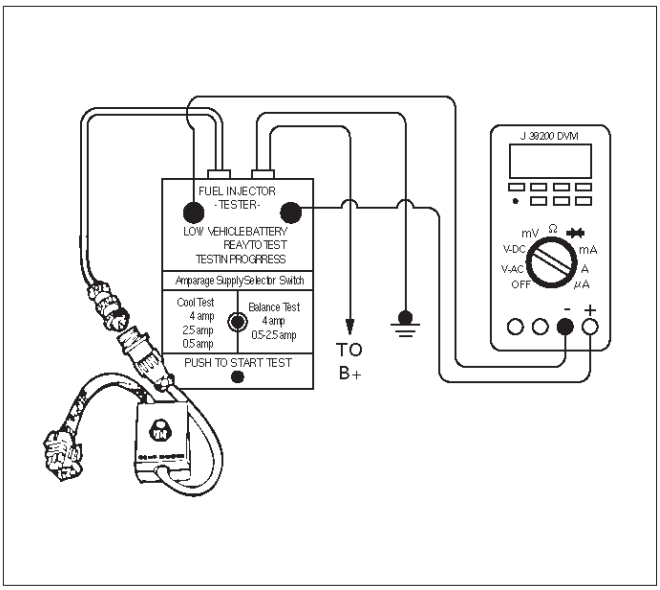

T32003

Test Description

Number(s) below refer to the step number(s) on the Diagnostic Chart:

2. Relieve the fuel pressure by connecting the 5-8840-0378-0 Fuel Pressure Gauge to the fuel pressure connection on the fuel rail.

CAUTION: In order to reduce the risk of fire and personal injury, wrap a shop towel around the fuel pressure connection. The towel will absorb any fuel leakage that occurs during the connection of the fuel pressure gauge. Place the towel in an approved container when the connection of the fuel pressure gauge is complete.

Place the fuel pressure gauge bleed hose in an approved gasoline container.

With the ignition switch "OFF," open the valve on the fuel pressure gauge.

3. Record the lowest voltage displayed by the DVM after the first second of the test. (During the first second, voltage displayed by the DVM may be inaccurate due to the initial current surge.)

Injector Specifications:

Resistance Ohms	Voltage Specification at 10˚C-35˚C (50˚F-95˚F)
11.8 – 12.6	5.7 – 6.6

- The voltage displayed by the DVM should be within the specified range.
- The voltage displayed by the DVM may increase throughout the test as the fuel injector windings warm and the resistance of the fuel injector windings changes.

- An erratic voltage reading (large fluctuations in voltage that do not stabilize) indicates an intermittent connection within the fuel injector.

5. Injector Specifications:

Highest Acceptable Voltage Reading Above/Below 35˚C/10˚C (95˚F/50˚F)	Acceptable Subtracted Value
9.5 Volts	0.6 Volts

7. The Fuel Injector Balance Test portion of this chart (Step 7 through Step 11) checks the mechanical (fuel delivery) portion of the fuel injector. An engine cool-down period of 10 minutes is necessary in order to avoid irregular fuel pressure readings due to “Hot Soak” fuel boiling.

Injector Coil Test Procedure (Steps 1-6) and Injector Balance Test Procedure (Steps 7-11)

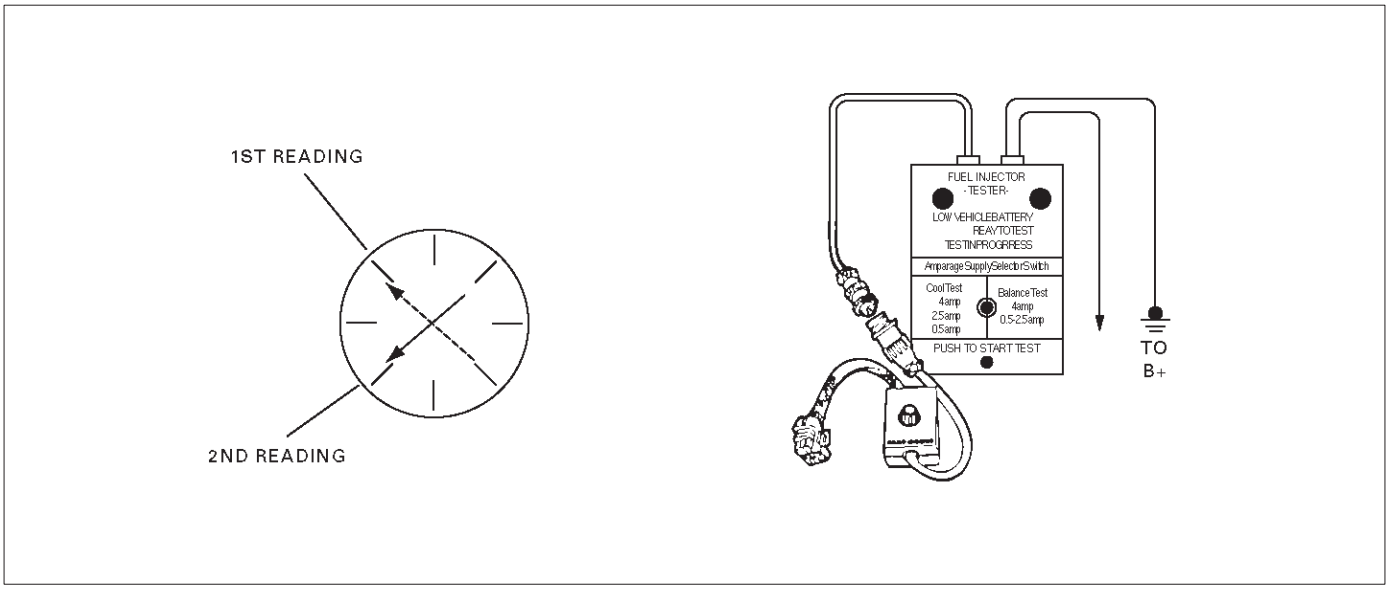

R262001

CYLINDER	1	2	3	4	5	6
1st Reading (1)	296 kPa (43 psi)	296 kPa (43 psi)	296 kPa (43 psi)	296 kPa (43 psi)	296 kPa (43 psi)	296 kPa (43 psi)
2nd Reading (2)	131 kPa (19 psi)	117 kPa (17 psi)	124 kPa (18 psi)	145 kPa (21 psi)	131 kPa (19 psi)	130 kPa (19 psi)
Amount of Drop (1st Reading–2nd Reading)	165 kPa (24 psi)	179 kPa (26 psi)	172 kPa (25 psi)	151 kPa (22 psi)	165 kPa (24 psi)	166 kPa (24 psi)
Av.drop = 166 kPa/24 psi ± 10 kPa/1.5 psi = 156 – 176 kPa or 22.5 – 25.5 psi	OK	Faulty, Rich (Too Much Fuel Drop)	OK	Faulty, Lean (Too Little Fuel Drop)	OK	OK

NOTE: These figures are examples only.

Injector Coil Test Procedure (Steps 1-6) and Injector Balance Test Procedure (Steps 7-11)

Step	Action	Value(s)	Yes	No
1	Was the “On-Board Diagnostic (OBD) System Check” performed?	—	Go to Step 2	Go to *OBD System Check*
2	1. Turn the engine “OFF.” NOTE: In order to prevent flooding of a single cylinder and possible engine damage, relieve the fuel pressure before performing the fuel injector coil test procedure. 2. Relieve the fuel pressure. Refer to *Test Description Number 2.* 3. Connect the 5-8840-2638-0 Fuel Injector Tester to B+ and ground, and to the 5-8840-2619-0 Injector Switch Box. 4. Connect the injector switch box to the grey fuel injector harness connector located on the front of the EVAP canister bracket. 5. Set the amperage supply selector switch on the fuel injector tester to the “Coil Test” 0.5 amp position. 6. Connect the leads from the 5-8840-0285-0 Digital Voltmeter (DVM) to the injector tester. Refer to the illustrations associated with the test description. 7. Set the DVM to the tenths scale (0.0). 8. Observe the engine coolant temperature. Is the engine coolant temperature within the specified values?	10˚C (50˚F) to 35˚C (95˚F)	Go to *Step 3*	Go to *Step 5*
3	1. Set injector switch box injector #1. 2. Press the “Push to Start Test” button on the fuel injector tester. 3. Observe the voltage reading on the DVM. **IMPORTANT:** The voltage reading may rise during the test. 4. Record the lowest voltage observed after the first second of the test. 5. Set the injector switch box to the next injector and repeat steps 2, 3, and 4. Did any fuel injector have an erratic voltage reading (large fluctuations in voltage that did not stabilize) or a voltage reading outside of the specified values?	5.7-6.6 V	Go to *Step 4*	Go to *Step 7*
4	Replace the faulty fuel injector(s). Refer to *Fuel Injector.* Is the action complete?	—	Go to *Step 7*	—

Injector Coil Test Procedure (Steps 1-6) and Injector Balance Test Procedure (Steps 7-11) (Cont'd)

Step	Action	Value(s)	Yes	No
5	1. Set injector switch box injector #1. 2. Press the "Push to Start Test" button on the fuel injector tester. 3. Observe the voltage reading on the DVM. **IMPORTANT:** The voltage reading may rise during the test. 4. Record the lowest voltage observed after the first second of the test. 5. Set the injector switch box to the next injector and repeat steps 2, 3, and 4. Did any fuel injector have an erratic voltage reading (large fluctuations in voltage that did not stabilize) or a voltage reading above the specified value?	9.5 V	Go to *Step 4*	Go to *Step 6*
6	1. Identify the highest voltage reading recorded (other than those above 9.5 V). 2. Subtract the voltage reading of each injector from the highest voltage selected in step 1. Repeat until you have a subtracted value for each injector. For any injector, is the subtracted Value in step 2 greater than the specified value?	0.6 V	Go to *Step 4*	Go to *Step 7*
7	**CAUTION: In order to reduce the risk of fire and personal injury, wrap a shop towel around the fuel pressure connection. The towel will absorb any fuel leakage that occurs during the connection of the fuel pressure gauge. Place the towel in an approved container when the connection of the fuel pressure gauge is complete.** 1. Connect the 5-8840-0378-0 Fuel Pressure Gauge to the fuel pressure test port. 2. Energize the fuel pump using the scan tool. 3. Place the bleed hose of the fuel pressure gauge into an approved gasoline container. 4. Bleed the air out of the fuel pressure gauge. 5. With the fuel pump running, observe the reading on the fuel pressure gauge. Is the fuel pressure within the specified values?	296-376 kPa (43-55 psi)	Go to *Step 8*	Go to *Fuel System Diagnosis*
8	Turn the fuel pump "OFF." Does the fuel pressure remain constant?	—	Go to *Step 9*	Go to *Fuel System Diagnosis*

Injector Coil Test Procedure (Steps 1-6) and Injector Balance Test Procedure (Steps 7-11) (Cont'd)

Step	Action	Value(s)	Yes	No
9	1. Connect the 5-8840-2638-0 Fuel Injector Tester and 5-8840-2619-0 Injector Switch Box the fuel injector harness connector. 2. Set the amperage supply selector switch on the fuel injector tester to the "Balance Test" 0.5–2.5 amp position. 3. Using the scan tool turn the fuel pump "ON" then "OFF" in order to pressurize the fuel system. 4. Record the fuel pressure indicated by the fuel pressure gauge after the fuel pressure stabilizes. This is the first pressure reading. 5. Energize the fuel injector by depressing the "Push to Start Test" button on the fuel injector tester. 6. Record the fuel pressure indicated by the fuel pressure gauge after the fuel pressure gauge needle has stopped moving. This is the second pressure reading. 7. Repeat steps 1 through 6 for each fuel injector. 8. Subtract the second pressure reading from the first pressure reading for one fuel injector. The result is the pressure drop value. 9. Obtain a pressure drop value for each fuel injector. 10. Add all of the individual pressure drop values. This is the total pressure drop. 11. Divide the total pressure drop by the number of fuel injectors. This is the average pressure drop. Does any fuel injector have a pressure drop value that is either higher than the average pressure drop or lower than the average pressure drop by the specified value?	10 kPa (1.5 psi)	Go to *Step 10*	Go to *OBD System Check*
10	Re-test any fuel injector that does not meet the specification. Refer to the procedure in step 11. NOTE: Do not repeat any portion of this test before running the engine in order to prevent the engine from flooding. Does any fuel injector still have a pressure drop value that is either higher than the average pressure drop or lower than the average pressure drop by the specified value?	10 kPa (1.5 psi)	Go to *Step 11*	Go to *Symptoms*
11	Replace the faulty fuel injector(s). Refer to *Fuel Injector.* Is the action complete?	—	Verify repair	—

Knock Sensor Diagnosis

The Tech 2 has two data displays available for diagnosing the knock sensor (KS) system. The two displays are described as follows:

- "Knock Retard" indicates the number of degrees that the spark timing is being retarded due to a knock condition.
- "KS Noise Channel" indicates the current voltage level being monitored on the noise channel.

DTCs P0325 and P0327 are designed to diagnose the KS module, the knock sensor, and the related wiring. The problems encountered with the KS system should set a DTC. However, if no DTC was set but the KS system is suspect because of a detonation complaint, refer to *Detonation/Spark Knock in Symptoms.*

Powertrain Control Module (PCM) Diagnosis

To read and clear diagnostic trouble codes, use a Tech 2.

IMPORTANT: Use of a Tech 2 is recommended to clear diagnostic trouble codes from the PCM memory. Diagnostic trouble codes can also be cleared by turning the ignition "OFF" and disconnecting the battery power from the PCM for 30 seconds. Turning off the ignition and disconnecting the battery power from the PCM will cause all diagnostic information in the PCM memory to be cleared. Therefore, all the diagnostic tests will have to be re-run.

Since the PCM can have a failure which may affect only one circuit, following the diagnostic procedures in this section will determine which circuit has a problem and where it is.

If a diagnostic chart indicates that the PCM connections or the PCM is the cause of a problem, and the PCM is replaced, but this does not correct the problem, one of the following may be the reason:

- There is a problem with the PCM terminal connections. The terminals may have to be removed from the connector in order to check them properly.
- The problem is intermittent. This means that the problem is not present at the time the system is being checked. In this case, refer to the *Symptoms* portion of the manual and make a careful physical inspection of all component and wiring associated with the affected system.
- There is a shorted solenoid, relay coil, or harness. Solenoids and relays are turned "ON" and "OFF" by the PCM using internal electronic switches called drivers. A shorted solenoid, relay coil, or harness will not damage the PCM but will cause the solenoid or relay to be inoperative.

Multiple PCM Information Sensor DTCS Set

Circuit Description

The powertrain control module (PCM) monitors various sensors to determine the engine operating conditions. The PCM controls fuel delivery, spark advance, transmission operation, and emission control device operation based on the sensor inputs.

The PCM provides a sensor ground to all of the sensors. The PCM applies 5 volts through a pull-up resistor, and determines the status of the following sensors by monitoring the voltage present between the 5-volt supply and the resistor:

- The engine coolant temperature (ETC) sensor
- The intake air temperature (IAT) sensor
- The transmission fluid temperature (TFT) sensor

The PCM provides the following sensors with a 5-volt reference and a sensor ground signal:

- The exhaust gas recirculating (EGR) pintle position sensor
- The throttle position (TP) sensor
- The manifold absolute pressure (MAP) sensor

The PCM monitors the separate feedback signals from these sensors in order to determine their operating status.

Diagnostic Aids

IMPORTANT: Be sure to inspect PCM and engine grounds for being secure and clean.

A short to voltage in one of the sensor input circuits may cause one or more of the following DTCs to be set:

- P0108
- P0113
- P0118
- P0123
- P0560
- P0712
- P0406

IMPORTANT: If a sensor input circuit has been shorted to voltage, ensure that the sensor is not damaged. A damaged sensor will continue to indicate a high or low voltage after the affected circuit has been repaired. If the sensor has been damaged, replace it.

An open in the sensor ground circuit between the PCM and the splice will cause one or more of the following DTCs to be set:

- P0108
- P0113
- P0118
- P0123
- P0712
- P0406

A short to ground in the 5-volt reference A or B circuit will cause one or more of the following DTCs to be set:

- P0107
- P0122

In the 5-volt reference circuit A, between the PCM and the splice, will cause one or more of the following DTCs to be set:

- P0122

In the 5-volt reference circuit B, between the PCM and the splice, will cause one or more of the following DTCs to be set:

- P0107

Check for the following conditions:

- **Poor connection at PCM.** Inspect the harness connectors for backed-out terminals, improper mating, broken locks, improperly formed or damage terminals, and a poor terminal-to-wire connection.
- **Damaged harness.** Inspect the wiring harness for damage. If the harness is not damaged, observe an affected sensor's displayed value on the Tech 2 with the ignition "ON" and the engine "OFF" while you move the connectors and the wiring harnesses related to the following sensors:
  - IAT
  - ECT
  - TP
  - MAP
  - EGR
  - TFT

Multiple PCM Information Sensor DTCs Set

Step	Action	Value(s)	Yes	No
1	Was the "On-Board Diagnostic (OBD) System Check" performed?	—	Go to *Step 2*	Go to *OBD System Check*
2	1. Turn the ignition "OFF," disconnect the PCM. 2. Turn the ignition "ON," check the 5 volt reference A circuit for the following conditions: • A poor connection at the PCM. • An open between the PCM connector and the splice. • A short to ground. • A short to voltage. Is there an open or short?	—	Go to *Step 3*	Go to *Step 4*
3	Repair the open or short. Is the action complete?	—	Verify repair	—
4	Check the sensor ground circuit for the following conditions: • A poor connection at the PCM or the affected sensors. • An open between the PCM connector and the affected sensors. Is there an open or a poor connection?	—	Go to *Step 5*	Go to *Step 6*
5	Repair the open or the poor connection. Is the action complete?	—	Verify repair	—
6	Measure the voltage between the EGR pintle position sensor signal circuit at the PCM harness connector and ground. Does the voltage measure near the specified value?	0 V	Go to *Step 7*	Go to *Step 12*
7	Measure the voltage between the MAP sensor signal circuit at the PCM harness connector and ground. Does the voltage measure near the specified value?	0 V	Go to *Step 8*	Go to *Step 15*
8	Measure the voltage between the TP sensor signal circuit at the PCM harness connector and ground. Does the voltage measure near the specified value?	0 V	Go to *Step 9*	Go to *Step 16*
9	Measure the voltage between the IAT sensor signal circuit at the PCM harness connector and ground. Does the voltage measure near the specified value?	0 V	Go to *Step 10*	Go to *Step 17*
10	Measure the voltage between the ECT sensor signal circuit at the PCM harness connector and ground. Does the voltage measure near the specified value?	0 V	Go to *Step 11*	Go to *Step 18*

Multiple PCM Information Sensor DTCs Set (Cont'd)

Step	Action	Value(s)	Yes	No
11	1. Disconnect the EGR valve. 2. Measure the voltage between the EGR pintle position sensor signal circuit at the PCM harness connector and ground. Does the voltage measure near the specified value?	0 V	Go to *Step 13*	Go to *Step 18*
12	Measure the voltage between the TFT sensor signal circuit at the PCM harness connector and ground. Does the voltage measure near the specified value?	0 V	Go to *Step 20*	Go to *Step 19*
13	Replace the EGR valve. Is the action complete?	—	Verify repair	—
14	Locate and repair the short to voltage in the MAP sensor signal circuit. Is the action complete?	—	Verify repair	—
15	Locate and repair the short to voltage in the TP sensor signal circuit. Is the action complete?	—	Verify repair	—
16	Locate and repair the short to voltage in the IAT sensor signal circuit. Is the action complete?	—	Verify repair	—
17	Locate and repair the short to voltage in the ECT sensor signal circuit. Is the action complete?	—	Verify repair	—
18	Locate and repair the short to voltage in the EGR pintle position sensor signal circuit. Is the action complete?	—	Verify repair	—
19	Locate and repair the short to voltage in the TFT sensor signal circuit. Is the action complete?	—	Verify repair	—
20	Replace the PCM. **IMPORTANT:** The replacement PCM must be programmed. Refer to *UBS 98model year Immobilizer Workshop Manual.* Is the action complete?	—	Go to *OBD System Check*	—

Exhaust Gas Recirculation (EGR) Diagnosis (For except EXPORT and SOUTH AFRICA)

Pintle position error diagnosis is covered by DTC P0402, P0404, P1404, P0405, P0406. If EGR diagnostic trouble codes P0402, P0404, P1404, P0405, P0406 are encountered, refer to the DTC charts.

Engine Tech 2 Data Definitions and Ranges

A/C CLUTCH – Tech 2 Displays ON or OFF –
Indicates whether the PCM has commanded the A/C clutch ON. Used in A/C system diagnostic.

A/C REQUEST — Tech 2 Displays YES or NO —
Indicates the state of the A/C request input circuit from the HVAC controls. The PCM uses the A/C request signal to determine whether A/C compressor operation is being requested.

AIR/FUEL RATIO — Tech 2 Range 0.0-25.5 —
Air/fuel ratio indicates the PCM commanded value. In closed loop, the air/fuel ratio should normally be displayed around “14.2-14.7.” A lower air/fuel ratio indicates a richer commanded mixture, which may be seen during power enrichment or TWC protection modes. A higher air/fuel ratio indicates a leaner commanded mixture. This can be seen during deceleration fuel mode.

BAROMETRIC PRESSURE — Tech 2 Range 10-105 kPa/0.00-5.00 Volts —
The barometric pressure reading is determined from the MAP sensor signal monitored during key up and wide open throttle (WOT) conditions. The barometric pressure is used to compensate for altitude differences and is normally displayed around “61-104” depending on altitude and barometric pressure.

CHECK TRANS LAMP — AUTO TRANSMISSION —
Indicates the need to check for a DTC with the Tech 2 when the lamp is flashing 0.2 seconds ON and 0.2 seconds OFF.

CMP ACT. COUNTER – Cam Position Activity
DECEL FUEL MODE — Tech 2 Display ACTIVE or INACTIVE —
“ACTIVE” displayed indicates that the PCM has detected conditions appropriate to operate in deceleration fuel mode. The PCM will command the deceleration fuel mode when it detects a closed throttle position while the vehicle is traveling over 20 mph. While in the deceleration fuel delivered by entering open loop and decreasing the injector pulse width.

DESIRED EGR POS. — Tech 2 Range 0%-100% —
Represents the EGR pintle position that the PCM is commanding.

DESIRED IDLE — Tech 2 Range 0-3187 RPM —
The idle speed that the PCM is commanding. The PCM will compensate for various engine loads based on engine coolant temperature, to keep the engine at the desired speed.

ECT — (Engine Coolant Temperature) Tech 2 Range –40˚C to 151˚C (–40˚F to 304˚F) —
The engine coolant temperature (ECT) is mounted in the coolant stream and sends engine temperature information to the PCM. The PCM applies 5 volts to the ECT sensor circuit. The sensor is a thermistor which changes internal resistance as temperature changes. When the sensor is cold (high resistance), the PCM monitors a high signal voltage and interprets that as a cold engine. As the sensor warms (decreasing resistance), the voltage signal will decrease and the PCM will interpret the lower voltage as a warm engine.

EGR DUTY CYCLE — Tech 2 Range 0%-100% —
Represents the EGR valve driver PWM signal from the PCM. A duty cycle of 0% indicates that no EGR flow is being commanded; a 100% duty cycle indicates maximum EGR flow commanded.

EGR FEEDBACK — Tech 2 Range 0.00-5.00 Volts —
Indicates the EGR pintle position sensor signal voltage being monitored by the PCM. A low voltage indicates a fully extended pintle (closed valve); a voltage near 5 volts indicates a retracted pintle (open valve).

ENGINE LOAD — Tech 2 Range 0%-100% —
Engine load is calculated by the PCM from engine speed and MAF sensor readings. Engine load should increase with an increase in RPM or air flow.

ENGINE RUN TIME — Tech 2 Range 00:00:00-99:99:99 Hrs:Min:Sec —
Indicates the time elapsed since the engine was started. If the engine is stopped, engine run time will be reset to 00:00:00.

ENGINE SPEED — Range 0-9999 RPM —
Engine speed is computed by the PCM from the 58X reference input. It should remain close to desired idle under various engine loads with engine idling.

FUEL PUMP — Tech 2 Displays ON or OFF —
Indicates the PCM commanded state of the fuel pump relay driver circuit.

FUEL TRIM CELL — Tech 2 Range 0-21 —
The fuel trim cell is dependent upon engine speed and MAF sensor readings. A plot of RPM vs. MAF is divided into 22 cells. Fuel trim cell indicates which cell is currently active.

FUEL TRIM LEARN — Tech 2 Displays NO or YES —
When conditions are appropriate for enabling long term fuel trim corrections, fuel trim learn will display “YES.” This indicates that the long term fuel trim is responding to the short term fuel trim. If the fuel trim learn displays “NO,” then long term fuel trim will not respond to changes in short term fuel trim.

HO2S BANK 1, SEN. 1 — Tech 2 Range 0-1132 mV —
Represents the fuel control exhaust oxygen sensor output voltage. Should fluctuate constantly within a range between 10 mV (lean exhaust) and 1000 mV (rich exhaust) while operating in closed loop.

HO2S BANK2, SEN. 1—Tech 2 Range 0-1132 mV—
Represents the fuel control exhaust oxygen sensor output voltage. Should fluctuate constantly within a range between 10mV (lean exhaust) and 1000 mV (rich exhaust) while operating in closed loop.

HO2S BANK 1, SEN. 1—Tech 2 Displays NOT READY or READY—
Indicates the status of the exhaust oxygen sensor. The Tech 2 will indicate that the exhaust oxygen sensor is ready when the PCM detects a fluctuating HO2S voltage sufficient to allow closed loop operation. This will not occur unless the exhaust oxygen sensor is warmed up.

HO2S BANK 2, SEN. 1 — Tech 2 Displays NOT READY or READY —
Indicates the status of the exhaust oxygen sensor. The Tech 2 will indicate that the exhaust oxygen sensor is ready when the PCM detects a fluctuating HO2S voltage sufficient to allow closed loop operation. This will not occur unless the exhaust oxygen sensor is warmed up.

HO2S WARM UP TIME BANK 1, SEN. 1/BANK 2 SEN. 1 — Tech 2 Range 00:00:00-99:99:99 HRS:MIN:SEC —
Indicates warm-up time for each HO2S. The HO2S warm-up time is used for the HO2S heater test. The PCM will run the heater test only after a cold start (determined by engine coolant and intake air temperature at the time of start-up) and only once during an ignition cycle. When the engine is started the PCM will monitor the HO2S voltage. When the HO2S voltage indicates a sufficiently active sensor, the PCM looks at how much time has elapsed since start-up. If the PCM determines that too much time was required for the HO2S to become active, a DTC will set. If the engine was warm when started, HO2S warm-up will the display “00:00:00”.

IAC POSITION — Tech 2 Range 0-255 Counts —
Displays the commanded position of the idle air control pintle in counts. A larger number of counts means that more air is being commanded through the idle air passage. Idle air control should respond fairly quickly to changes in engine load to maintain desired idle RPM.

IAT (INTAKE AIR TEMPERATURE) — Tech 2 Range –40˚C to 151˚C (–40˚F to 304˚F) —
The PCM converts the resistance of the intake air temperature sensor to degrees. Intake air temperature (IAT) is used by the PCM to adjust fuel delivery and spark timing according to incoming air density.

IGNITION 1 — Tech 2 Range 0-25.5 Volts —
This represents the system voltage measured by the PCM at its ignition feed.

INJ. PULSE BANK 1/INJ. PULSE BANK 2 — Tech 2 Range 0-1000 msec. —
Indicates the amount of time the PCM is commanding each injector “ON” during each engine cycle. A longer injector pulse width will cause more fuel to be delivered. Injector pulse width should increase with increased engine load.

KS NOISE CHANNEL (Knock Sensor) —
Indicates the output from the KS noise channel. There is always some electrical noise in an engine compartment and to avoid mistaking this as engine knock, the output from the knock sensor is compared to the output from the noise channel. A knock condition is not set unless the knock sensor output is greater than the noise channel output.

LONG TERM FUEL TRIM BANK 1/BANK 2 —
The long term fuel trim is derived from the short term fuel trim values and represents a long term correction of fuel delivery for the bank in question. A value of 0% indicates that fuel delivery requires no compensation to maintain the PCM commanded air/fuel ratio. A negative value significantly below 0% indicates that the fuel system is rich and fuel delivery is being reduced (decreased injector pulse width). A positive value significantly greater than 0% indicates that a lean condition exists and the PCM is compensating by adding fuel (increased injector pulse width). Because long term fuel trim tends to follow short term fuel trim, a value in the negative range due to canister purge at idle should not be considered unusual. Fuel trim values at maximum authority may indicate an excessively rich or lean system.

LOOP STATUS — Tech 2 Displays OPEN or CLOSED —
“CLOSED” indicates that the PCM is controlling fuel delivery according to oxygen sensor voltage. In “OPEN” the PCM ignores the oxygen sensor voltage and bases the amount of fuel to be delivered on TP sensor, engine coolant, and MAF sensor inputs only.

MAF — Tech 2 Range 0.0-512 gm/s —
MAF (mass air flow) is the MAF input frequency converted to grams of air per second. This indicates the amount of air entering the engine.

MAP — Tech 2 Range 10-105 kPa (0.00-4.97 Volts) —
The manifold absolute pressure (MAP) sensor measures the change in the intake manifold pressure from engine load, EGR flow, and speed changes. As intake manifold pressure increases, intake vacuum decreases, resulting in a higher MAP sensor voltage and kPa reading. The MAP sensor signal is used to monitor intake manifold pressure changes during the EGR flow test, to update the BARO reading, and as an enabling factor for several of the diagnostics.

MIL — Tech 2 Displays ON or OFF —
Indicates the PCM commanded state of the malfunction indicator lamp.

POWER ENRICHMENT — Tech 2 Displays ACTIVE or INACTIVE —
“ACTIVE” displayed indicates that the PCM has detected conditions appropriate to operate in power enrichment mode. The PCM will command power enrichment mode when a large increase in throttle position and load is detected. While in power enrichment mode, the PCM will increase the amount of fuel delivered by entering open loop and increasing the injector pulse width. This is done to prevent a possible sag or hesitation from occurring during acceleration.

SPARK — Tech 2 Range –64˚ to 64˚ —
Displays the amount of spark advance being commanded by the PCM on the IC circuit.

START-UP ECT — Tech 2 Range –40˚C to 151˚C (–40˚F to 304˚F) —
Indicates the engine coolant temperature at the time that the vehicle was started. Used by the HO2S diagnostic to determine if the last start-up was a cold start.

START-UP IAT — Tech 2 Range –40˚C to 151˚C (–40˚F to 304˚F) —
Indicates the intake air temperature at the time that the vehicle was started. Used by the HO2S diagnostic to determine if the last start-up was a cold start.

TP — Tech 2 Range 0%-100% —
TP (throttle position) angle is computed by the PCM from the TP sensor voltage. TP angle should display “0%” at idle and “100%” at wide open throttle.

TP SENSOR — Tech 2 Range 0.00-5.00 Volts —
The voltage being monitored by the PCM on the TP sensor signal circuit.

CATALYST PROTECTION MODE — Tech 2 Displays YES or NO —
“YES” displayed indicates that the PCM has detected conditions appropriate to operate in TWC protection mode. The PCM will decrease the air/fuel ratio to a value that depends on mass air flow (higher mass air flow = lower air/fuel ratio).

UPSHIFT LAMP (MANUAL TRANSMISSION)
VEHICLE SPEED — Tech 2 Range 0-255 km/h (0-155 mph) —
The vehicle speed sensor signal is converted into km/h and mph for display.

WEAK CYLINDER — Tech 2 Displays Cylinder Number —
This indicates that the PCM has detected crankshaft speed variations that indicate 2% or more cylinder firing events are misfires.

Typical Scan Data Values

Use the Typical Scan Data Values Table only after the On-Board Diagnostic System Check has been completed, no DTC(s) were noted, and you have determined that the on-board diagnostics are functioning properly. Tech 2 values from a properly-running engine may be used for comparison with the engine you are diagnosing. The typical scan data values represent values that would be seen on a normally-running engine.

NOTE: A Tech 2 that displays faulty data should not be used, and the problem should be reported to the Tech 2 manufacturer. Use of a faulty Tech 2 can result in misdiagnosis and unnecessary replacement of parts.

Only the parameters listed below are referred to in this service manual for use in diagnosis. For further information on using the Tech 2 to diagnose the PCM and related sensors, refer to the applicable reference section listed below. If all values are within the typical range described below, refer to the *Symptoms* section for diagnosis.

Test Conditions

Engine running, lower radiator hose hot, transmission in park or neutral, closed loop, accessaries off, brake not applied and air conditioning off.

3.2/3.5L V-6 Engine

Tech 2 Parameter	Data List	Units Displayed	Typical Data Values (IDLE)	Typical Data Values (2500 RPM)	Refer To
A/C Clutch	Engine	On/Off	Off	Off	General Description and Operation, A/C Clutch Circuit Operation
A/C Request	Engine	Yes/No	No	No	General Description and Operation, A/C Request Signal
Air/Fuel Ratio	Engine	Ratio: _ to 1	14.7	14.7	General Description and Operation, Fuel System Metering Purpose
Barometric Pressure	Engine	kPa	61-104 (depends on altitude and barometric)	61-104 (depends on altitude and barometric)	General Description and Operation
CMP Act. Counter (Cam Position Activity)	Engine	Counts	0-255, always increasing	0-255, always increasing	DTC P0341 and P0342
Decel Fuel Mode	Engine	Active/Inactive	Inactive	Inactive	General Description and Operation, Deceleration Mode
Desired EGR Position	Engine	Percent	0%	0%	General Description and Operation, EGR Pintle Position Sensor
Desired Idle	Engine	RPM	750	—	General Description and Operation, Idle Air Control (IAC) Valve
ECT (Engine Coolant Temp)	Engine	Degrees C, Degrees F	80-100˚C (176-212˚F)	80-100˚C (176-212˚F)	General Description and Operation, Engine Coolant Temperature (ECT) Sensor
EGR Closed Valve Pintle Position	Engine	Steps	20-40	20-40	General Description and Operation, EGR Pintle Position Sensor
EGR Duty Cycle	Engine	Percent	0%	0%	General Description and Operation, Linear EGR Operation and Results of Incorrect Operation
EGR Feedback	Engine	Volts	0.45-0.80	0.45-0.80	—
EGR Normalized	Engine	Percent	0%	0%	—
Engine Load	Engine	Percent	2.0% - 5.5%	8.0% - 16.0%	General Description and Operation, Mass Air Flow (MAF) Sensor
Time From Start	Engine	Sec	Varies. Resets at each engine start.	Varies. Resets at each engine start.	—
Engine Speed	Engine	RPM	Within –50 to +100 of “Desired Idle”	Actual engine speed	DTCs: P1508, P1509
Fuel Pump	Engine	On/Off	On	On	Engine Fuel
HO2S Bank 1 Sen.1 (millivolts)	O2 Sensor Data	Millivolts	50-950 changing quickly	50-950, always changing quickly	General Description and Operation, Fuel control HO2S

Tech 2 Parameter	Data List	Units Displayed	Typical Data Values (IDLE)	Typical Data Values (2500 RPM)	Refer To
HO2S Bank 2 Sen.1 (millivolts)	O2 Sensor Data	Millivolts	50-950 changing quickly	50-950 changing quickly	General Description and Operation, Fuel Control HO2S
HO2S Bank 1 Sen.1 (ready/not ready)	O2 Sensor Data	Ready Yes/No	Ready Yes	Ready Yes	General Description and Operation, Fuel Control HO2S; DTC: P0135
HO2S Bank 2 Sen.1 (ready/not ready)	O2 Sensor Data	Ready Yes/No	Ready Yes	Ready Yes	General Description and Operation, Fuel Control HO2S
HO2S Warm-Up Time Bank 1 Sen.1	O2 Sensor Data	Seconds	25-45	25-45	General Description and Operation, Fuel Control HO2S
HO2S Warm-Up Time Bank 2 Sen.1	O2 Sensor Data	Seconds	25-45	25-45	General Description and Operation, Fuel Control HO2S
IAT (Intake Air Temp)	Engine	Degrees C, Degrees F	0-100˚C, depends on underhood	0-80˚C, depends on underhood	General Description and Operation, Intake Air Temperature (IAT) Sensor
Ignition Voltage	Engine	Volts	12.8-14.1	12.8-14.1	General Description and Operation, Electronic Ignition System
Inj. Pulse Bank 1	Engine	Milliseconds	2.0-4.0	2.5-4.0	General Description, Fuel Metering, Fuel Injector
Inj. Pulse Bank 2	Engine	Milliseconds	2.0-4.0	2.5-4.0	General Description, Fuel Metering, Fuel Injector
KS Noise Channel (Knock Sensor)	Engine	Volts	0.10-0.40	0.50-1.75	General Description and Operation, Knock Sensor Purpose and Operation; DTCs: P0352, P0327
Loop Status	Engine	Open/Closed	Closed	Closed	General Description and Operation, Fuel Metering System; DTCs: P0125-P0155
MAF (Mass Air Flow)	Engine	Grams per second	2.85-6.65	9.5-16.5	General Description and Operation, MAF; DTCs: P101, P0102, P0103
MAP kPa (Manifold Absolute Pressure)	Engine	Kilopascals	—	—	General Description and Operation, Manifold Absolute Pressure (MAP) Sensor; DTCs: P0106, P0107, P0108
MIL	Engine	On/Off	Off	Off	On-Board Diagnostic System Check
Power Enrichment	Engine	Inactive/Active	Inactive	Inactive	General Description and Operation, Acceleration Mode
Spark (Advance)	Engine	Degrees Before Top Dead Center	15-22	34-44	General Description and Operation, Electronic Ignition System

Tech 2 Parameter	Data List	Units Displayed	Typical Data Values (IDLE)	Typical Data Values (2500 RPM)	Refer To
Start-Up ECT (Engine Coolant Temp)	Engine	Degrees C, Degrees F	Depends on engine coolant temperature at time of start-up	Depends on engine coolant temperature at time of start-up	General Description and Operation, Engine Coolant Temperature (ECT) Sensor
Start-Up IAT (Intake Air Temp)	Engine	Degrees C, Degrees F	Depends on intake air temperature at time of start-up	Depends on intake air temperature at time of start-up	General Description and Operation, Intake Air Temperature (IAT) Sensor
TP (Throttle Position)	Engine	Percent	0	—	General Description and Operation, Throttle Position (TP) Sensor; DTCs: P0121, P0122,P0123
TP Sensor (Throttle Position)	Engine	Volts	0.50-0.82	0.60-1.00	General Description and Operation, Throttle Position (TP) Sensor; DTCs: P0121, P0122,P0123
Catalyst Protection Mode	Engine	No/Yes	No	No	General Description, Fuel Metering, catalytic Converter Protection Mode
Vehicle Speed	Engine	MPH / km/h	0	0	4L30-E Automatic Transmission Diagnosis
EVAP Purge Solenoid	Engine	Percent	65	99	General Description
VIM Solenoid	Engine	On/Off	On	On	General Description
Security Wait Time	Engine	Active/Inactive	Inactive	Inactive	—

No Malfunction Indicator Lamp (MIL)

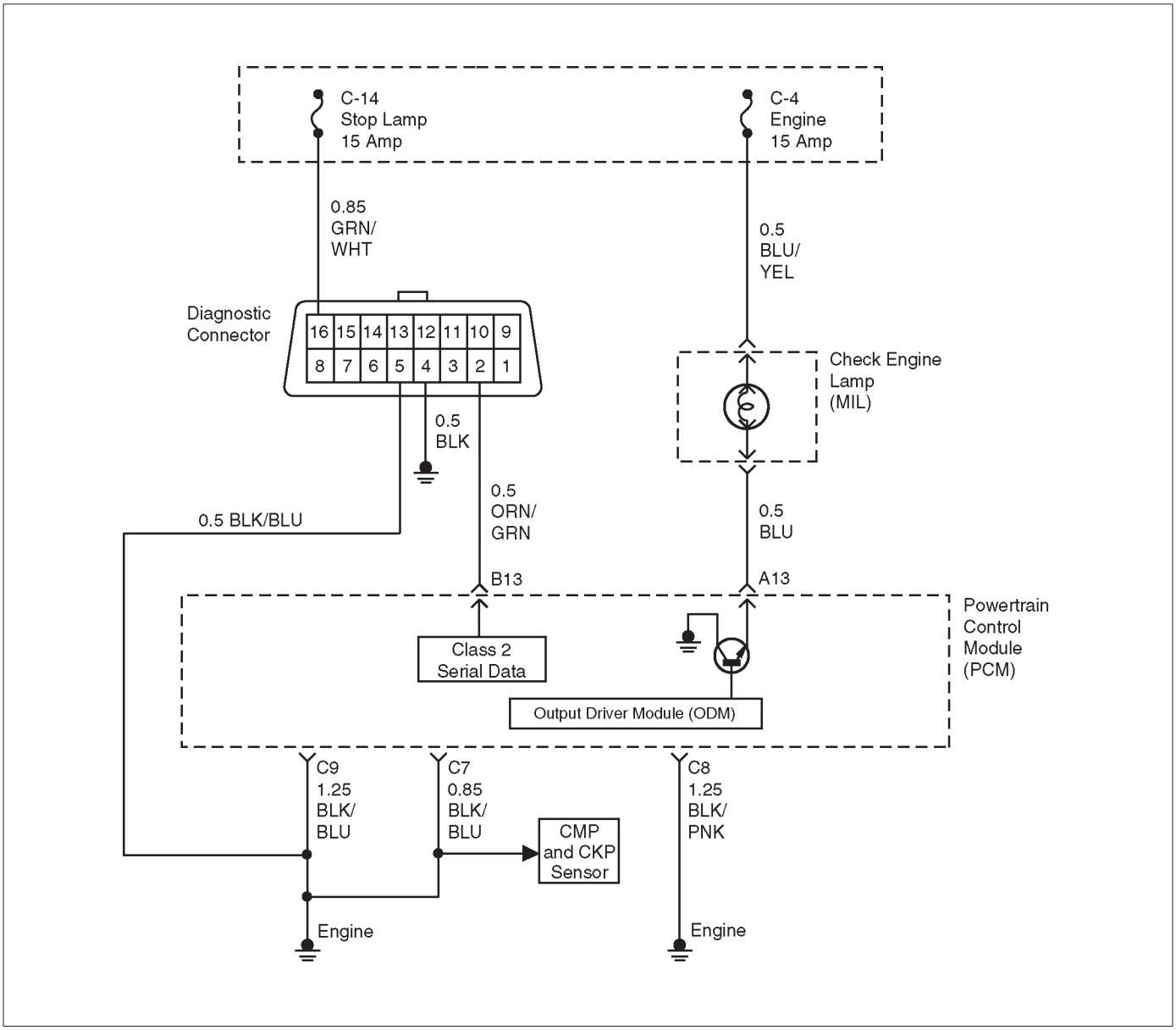

D06RW00006

Circuit Description

The “Check Engine” lamp (MIL) should always be illuminated and steady with the ignition “ON” and the engine stopped. Ignition feed voltage is supplied to the MIL bulb through the meter fuse. The powertrain control module (PCM) turns the MIL “ON” by grounding the MIL driver circuit.

Diagnostic Aids

An intermittent MIL may be cased by a poor connection, rubbed-through wire insulation, or a wire broken inside the insulation. Check for the following items:

- Inspect the PCM harness and connections for improper mating, broken locks, improperly formed or damaged terminals, poor terminal-to-wire connection, and damaged harness.
- If the engine runs OK, check for a faulty light bulb, an open in the MIL driver circuit, or an open in the instrument cluster ignition feed.
- If the engine cranks but will not run, check for an open PCM ignition or battery feed, or a poor PCM to engine ground.

Test Description

Number(s) below refer to the step number(s) on the Diagnostic Chart.

2. A “No MIL” condition accompanied by a no-start condition suggests a faulty PCM ignition feed or battery feed circuit.

9. Using a test light connected to B+, probe each of the PCM ground terminals to ensure that a good ground is present. Refer to *PCM Terminal End View* for terminal locations of the PCM ground circuits.

12. In this step, temporarily substitute a known good relay for the PCM relay. The horn relay is nearby, and it can be verified as “good” simply by honking the horn. Replace the horn relay after completing this step.

17. This vehicle is equipped with a PCM which utilizes an electrically erasable programmable read only memory (EEPROM). When the PCM is replaced, the new PCM must be programmed. Refer to *UBS 98 model year Immobilizer Workshop Manual.*

No Malfunction Indicator Lamp (MIL)

Step	Action	Value(s)	Yes	No
1	Was the "On-Board Diagnostic (OBD) System Check" performed?	—	Go to *Step 2*	Go to *OBD System Check*
2	Attempt to start the engine. Does the engine start?	—	Go to *Step 3*	Go to *Step 6*
3	Check the meter fuse for the instrument cluster ignition feed circuit. Is the fuse OK?	—	Go to *Step 4*	Go to *Step 16*
4	Ignition "ON," probe the ignition feed circuit at the cluster connector with a test light to ground. Is the test light "ON?"	—	Go to *Step 5*	Go to *Step 13*
5	1. Ignition "OFF." 2. Disconnect the PCM. 3. Jumper the MIL driver circuit at the PCM connector to ground. 4. Ignition "ON." Is the MIL "ON?"	—	Go to *Step 10*	Go to *Step 11*
6	Check the PCM ignition feed and battery feed fuses (15 A engine fuse and 15 A PCM fuse). Are both fuses OK?	—	Go to *Step 7*	Go to *Step 15*
7	1. Ignition "OFF." 2. Disconnect the PCM. 3. Ignition "ON." 4. Probe the ignition feed circuit at the PCM harness connector with a test light to ground. Is the test light "ON?"	—	Go to *Step 8*	Go to *Step 12*
8	Probe the battery feed circuit at the PCM harness connector with a test light to ground. Is the test light "ON?"	—	Go to *Step 9*	Go to *Step 14*
9	Check for a faulty PCM ground connection. Was a problem found?	—	Verify repair	Go to *Step 10*
10	Check for damaged terminals at the PCM. Was a problem found?	—	Verify repair	Go to *Step 17*
11	Check for an open MIL driver circuit between the PCM and the MIL. Was a problem found?	—	Verify repair	Go to *Step 18*
12	Substitute a known "good" relay for the PCM main relay. Was the malfunction fixed?	—	Verify repair	Go to *Step 13*
13	Repair the open in the ignition feed circuit. Is the action complete?	—	Verify repair	—

No Malfunction Indicator Lamp (MIL) (Cont'd)

Step	Action	Value(s)	Yes	No
14	Locate and repair the open PCM battery feed circuit. Is the action complete?	—	Verify repair	—
15	Locate and repair the short to ground in the PCM ignition feed circuit or PCM battery feed circuit. Is the action complete?	—	Verify repair	—
16	Locate and repair the short to ground in the ignition feed circuit to the instrument cluster, and replace the fuse. Is the action complete?	—	Verify repair	—
17	Replace the PCM. **IMPORTANT:** The replacement PCM must be programmed. Refer to *PCM* in *ON-Vehicle Service* for procedures. Is the action complete?	—	Verify repair	—
18	Check the MIL driver circuit for a poor connection at the instrument panel connector. Was a problem found?	—	Verify repair	Go to *Instrument Panel* in *Electrical Diagnosis*

Malfunction Indicator Lamp (MIL) “ON” Steady

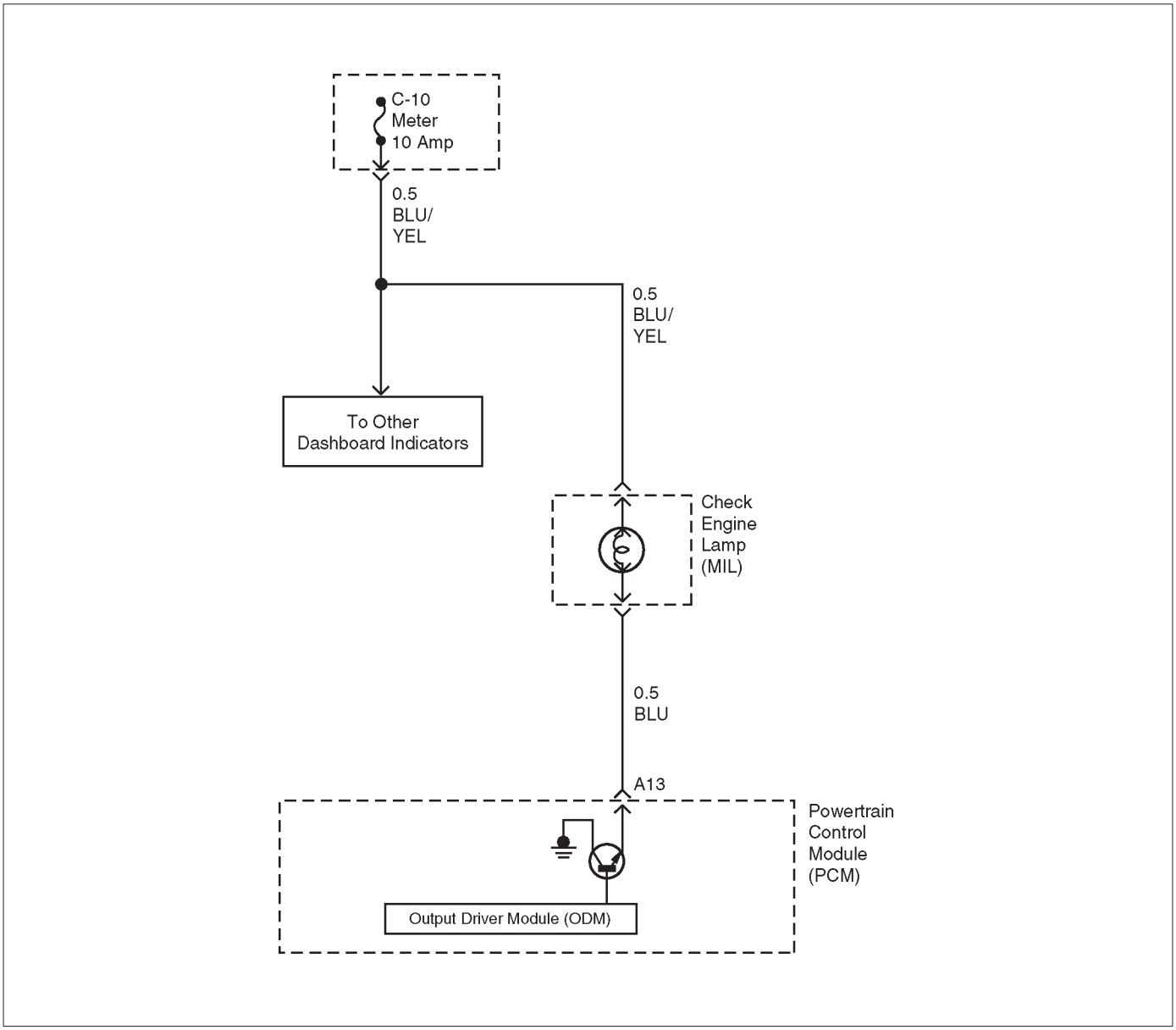

D06RW00007

Circuit description

The malfunction indicator lamp (MIL) should always be illuminated and steady with ignition “ON” and the engine stopped. Ignition feed voltage is supplied directly to the MIL indicator. The powertrain control module (PCM) turns the MIL “ON” by grounding the MIL driver circuit. The MIL should not remain “ON” with the engine running and no DTC(s) set. A steady MIL with the engine running and no DTC(s) suggests a short to ground in the MIL driver circuit.

Diagnostic Aids

An intermittent may be caused by a poor connection, rubbed-through wire insulation, or a wire broken inside the insulation. Check for the following items:

- Poor connection or damaged harness – Inspect the PCM harness and connectors for improper mating, broken locks, improperly formed or damaged terminals, poor terminal-to-wire connection, and damaged harness.

Test Description

Number(s) below refer to the step number(s) on the Diagnostic Chart.

2. If the MIL does not remain “ON” when the PCM is disconnected, the MIL driver wiring is not faulty.
3. If the MIL driver circuit is OK, the instrument panel cluster is faulty.
6. This vehicle is equipped with a PCM which utilizes an electrically erasable programmable read only memory (EEPROM). When the PCM is replaced, the new PCM must be programmed. Refer to *UBS 98 model year Immobilizer Workshop Manual.*

Malfunction Indicator Lamp (MIL) “ON” Steady

Step	Action	Value(s)	Yes	No
1	Was the “On-Board diagnostic (OBD) System Check” performed?	—	Go to *Step 2*	Go to *OBD System Check*
2	1. Ignition “OFF,” disconnect PCM. 2. Ignition “ON,” observe the MIL (Service Engine Soon lamp). Is the MIL “ON?”	—	Go to *Step 3*	Go to *Step 5*
3	1. Ignition “OFF,” disconnect the instrument panel cluster. 2. Check the MIL driver circuit between the PCM and the instrument panel cluster for a short to ground. 3. If a problem is found, repair as necessary. Was the MIL driver circuit shorted to ground?	—	Go to *OBD System Check*	Go to *Step 4*
4	Replace the instrument panel cluster. Is the action complete?	—	Go to *OBD System Check*	—
5	1. Ignition “OFF,” reconnect the PCM. 2. Using Tech 2, select “Output Miscellaneous Test” and command the MIL “OFF.” Did the MIL turn “OFF?”	—	Go to *OBD System Check*	Go to *Step 6*
6	Replace the PCM. **IMPORTANT:** The replacement PCM must be programmed. Refer to *UBS 98model year Immobilizer Workshop Manual.* Is the action complete?	—	Go to *OBD System Check*	—

Engine Cranks But Will Not Run

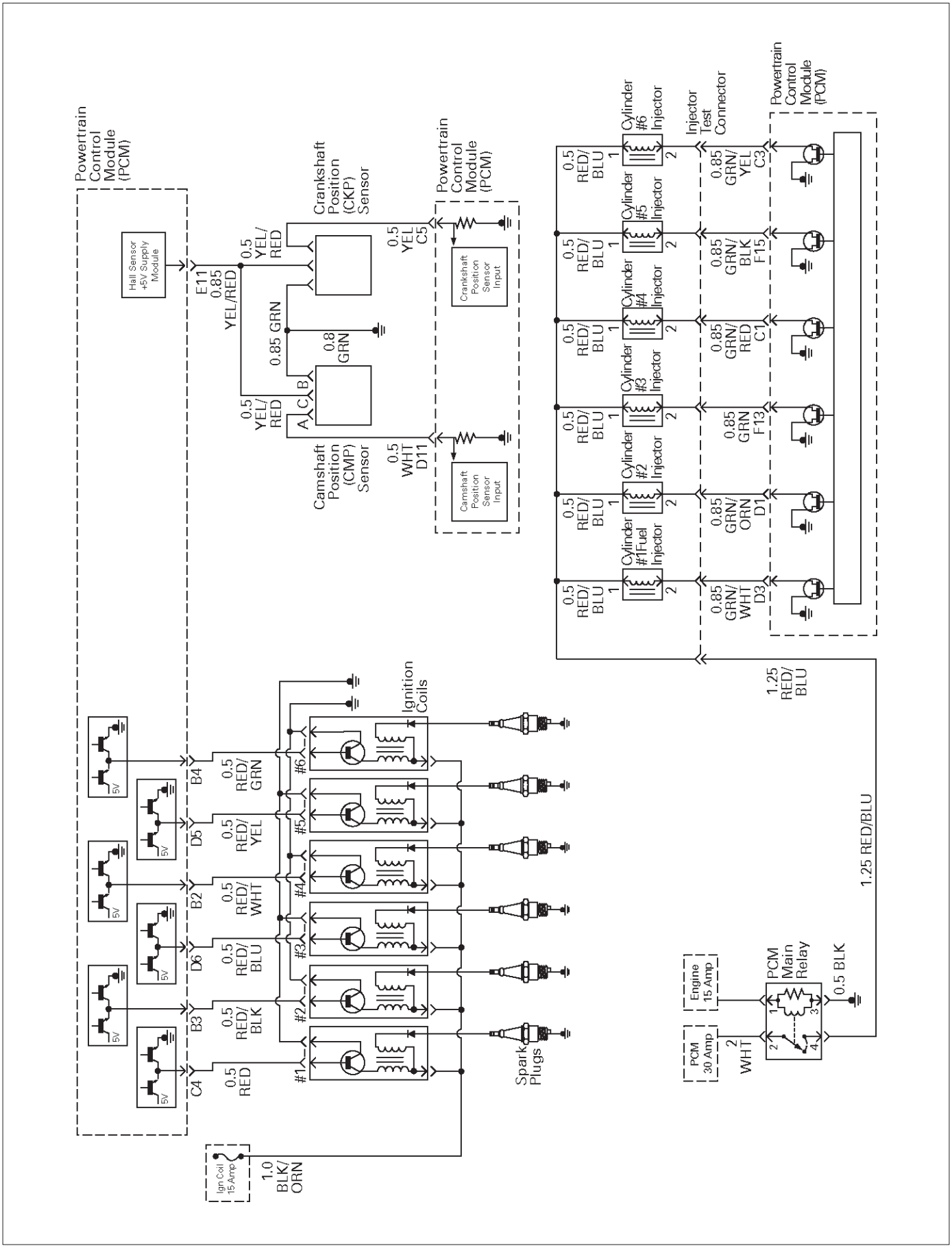

D06RX00004

Circuit Description

The electronic Ignition system uses a coil-at-plug method of spark distribution. In this type of ignition system, the powertrain control module (PCM) triggers the correct driver inside the ignition coil, which then triggers the correct ignition coil based on the 58X signal received from the crankshaft position sensor (CKP). The spark plug connected to the coil fires when the ICM opens the ground circuit for the coil's primary circuit.

During crank, the PCM monitors the CKP 58X signal. The CKP signal is used to determine which cylinder will fire first. After the CKP 58X signal has been processed by the PCM, it will command all six injectors to allow a priming shot of fuel for all the cylinders. After the priming, the injectors are left "OFF" during the next six 58X reference pulses from the CKP. This allows each cylinder a chance to use the fuel from the priming shot. During this waiting period, a camshaft position (CMP) signal pulse will have been received by the PCM. The CMP signal allows the PCM to operate the injectors sequentially based on camshaft position. If the camshaft position signal is not present at start-up, the PCM will begin sequential fuel delivery with a 1-in-6 chance that fuel delivery is correct. The engine will run without a CMP signal, but will set a DTC code.

Diagnostic Aids

An intermittent problem may be caused by a poor connection, rubbed-through wire insulation or a wire broken inside the insulation. Check for the following items:

- Poor connection or damaged harness – Inspect the PCM harness and connectors for improper mating, broken locks, improperly formed or damaged terminals, poor terminal-to-wire connection, and damaged harness.
- Faulty engine coolant temperature sensor – Using Tech 2, compare engine coolant temperature with intake air temperature on a completely cool engine. Engine coolant temperature should be within 10˚C of intake air temperature. If not, replace the ECT sensor.

Test Description

Number(s) below refer to the step number(s) on the Diagnostic Chart.

5. An obvious cause of low fuel pressure would be an empty fuel tank.

6. The engine will easily start and run if a few injectors are disabled. It is not necessary to test all injectors at this time since this step is only a test to verify that all of the injectors have not been disabled by fuel contamination.

7. A blinking test light verifies that the PCM is monitoring the 58X crankshaft reference signal and is capable of activating the injectors. If there is an open or shorted driver circuit, DTCs 201-206 should be set.

19. By using a spark tester, each ignition coil's ability to produce 25,000 volts is verified.

25. If there is an open or shorted driver circuit, DTCs 201-206 should be set. All six injector driver circuits can be checked at one time without removing the intake manifold if a 5-8840-2636-0 test light is available. This is the alternative procedure:
    - With the ignition "OFF," disconnect the gray connector located at the rear of the air filter, attached to a bracket on the purge canister.
    - Connect test light 5-8840-2636-0 to the connector. Do any of the light constantly illuminate or fail to blink when the engine is cranked? If so, repair the short or open circuit, or replace the PCM if indicated.

This procedure only tests the driver circuit as far as the test connection, so step 31 is added to test the circuit all the way to the injector.

Engine Cranks But Will Not Run

Step	Action	Value(s)	Yes	No
1	Was the “On-Board Diagnostic (OBD) System Check” performed?	—	Go to *Step 2*	Go to *OBD System Check*
2	Check the 15 A ignition coil fuse, the 15 A engine fuse, and the 30 A PCM fuse. Was a fuse blown?	—	Go to *Step 3*	Go to *Step 4*
3	Check for a short to ground and replace the fuse. Is the action complete?	—	Verify repair	—
4	1. Ignition “OFF,” install a fuel pressure gauge at the test fitting on the fuel supply line in the engine compartment. (Use a shop cloth to absorb any fuel leakage while making the connection.) 2. Ignition “ON,” observe the fuel pressure. Is the fuel pressure within the specified values, and does it hold steady?	285-376 kPa (43-55 psi)	Go to *Step 6*	Go to *Step 5*
5	Is any fuel pressure indicated?	—	Go to *Fuel System Electrical Test*	Go to *Fuel System Diagnosis*
6	Install an injector switch box to the injector test connector, and attempt to operate the injector. Did the fuel pressure drop when the injector is operated?	—	Go to *Step 7*	Go to *Step 12*
7	Install an injector test light at the #2 cylinder injector harness connector. Does the light blink when the engine is cranked?	—	Go to *Step 8*	Go to *Step 18*
8	1. Ignition “ON.” 2. While the coil connectors are disconnected, touch each coil connector’s ignition feed terminal with a grounded test light (the ignition feed wire is black with orange tracer). Did the test light illuminate?	—	Go to *Step 10*	Go to *Step 9*
9	Repair the open ignition feed circuit. Is the action complete?	—	Verify repair	—
10	While the coil connectors are disconnected, touch each connector’s secondary ground terminal with a test light to B+. (The ground wires are black.) Did the test light illuminate at each coil connector?	—	Go to *Step 12*	Go to *Step 11*
11	Repair the open secondary ground circuit. Is the action complete?	—	Verify repair	—
12	1. Test the fuel for contamination. 2. If a problem is found, clean the fuel system and correct the contaminated fuel condition as necessary. Replace the fuel filter and replace any injectors that are not delivering fuel (see Injector Balance Test). Was a problem found?	—	Verify repair	Go to *Step 13*

Engine Cranks But Will Not Run (Cont'd)

Step	Action	Value(s)	Yes	No
13	1. Remove any ignition coil and install a spark tester at the spark plug end of the coil. 2. Observe the tester while the engine is cranking. Was a crisp, blue spark observed? Only one or two sparks followed by no result is considered the same as "No Spark."	—	Go to *Step 15*	Go to *Step 14*
14	Replace the ignition coil, and return to Step 13 to test the remaining coils. Is the action complete?	—	Verify repair	—
15	Repeat Step 13 for each coil. Remove only one coil at a time, and reinstall each coil on its spark plug after testing, but do not refasten coils with screws at this time. After all coils have passed the spark test, does the engine start?	—	Refasten all coils with their screws	Go to *Step 16*
16	1. Remove the spark plugs from all cylinders. 2. Visually inspect the spark plug electrodes. 3. Replace any spark plugs with loose or missing electrodes or cracked insulators. Did your inspection reveal any spark plugs exhibiting excessive fouling?	—	Correct the fouling condition	Go to *Step 17*
17	Refer to *Engine Mechanical Diagnosis* to diagnose the following conditions: ● Faulty or incorrect camshaft drive belts ● Leaking or sticky valves or rings ● Excessive valve deposits ● Loose or worn rocker arms ● Weak valve springs ● Incorrect valve timing ● Leaking head gasket Is the action complete?	—	Verify repair	Go to *Step 19*
18	Observe the "Engine Speed" data display on the scan tool while cranking the engine. Is the engine RPM indicated? (If the scan tool is normally powered from the cigarette lighter socket, and if the scan tool display goes blank while cranking the engine, it will be necessary to power the scan tool directly from the vehicle battery.)	—	Go to *Step 19*	Go to *Step 28*
19	1. Disconnect the 7-pin gray connector at the rear of the air filter beneath the point where the air duct attaches to the MAF sensor. 2. Ignition "ON." 3. Using a test light connected to ground, probe the ignition terminal at the PCM (female) side of the 7-pin connector. Is the test light "ON?"	—	Go to *Step 20*	Go to *Step 26*

Engine Cranks But Will Not Run (Cont'd)

Step	Action	Value(s)	Yes	No
20	1. At the PCM (female) side of the connector, connect a test light between the ignition + terminal and one of the injector driver circuits at the same connector. 2. Ignition "ON." 3. Observe the test light, and repeat the test for each injector driver circuit. Did the test light stay on when checking any of the 6 injector driver circuits?	—	Go to *Step 21*	Go to *Step 23*
21	1. Ignition "OFF," disconnect the PCM. 2. Ignition "ON," observe the test light. Is the test light "ON?"	—	Go to *Step 22*	Go to *Step 27*
22	Locate and repair the short to ground in the injector driver circuit. Is the action complete?	—	Verify repair	—
23	1. Using the same test location as in step 20, connect a test light between the ignition terminal and one of the driver circuits. 2. Crank the engine and observe the test light. 3. Repeat for each injector driver circuit. Did the light blink during the test for each circuit?	—	Go to *Step 25*	Go to *Step 24*
24	Check for an open injector driver circuit. Was a problem found?	—	Verify repair	Go to *Step 27*
25	1. At the injector (male) side of the gray connector, connect an ohmmeter between the ignition pin and one of the driver circuit pins. 2. Check for continuity in the circuit. 3. Repeat for each injector circuit. The readings should be approximately equal to the specified value for injector resistance. Was a problem found?	12.5 ohms	Verify repair	Go to *Step 8*
26	Repair the ignition feed circuit. Is the action complete?	—	Verify repair	—
27	Replace the PCM. **IMPORTANT:** The replacement PCM must be programmed. Refer to *UBS 98model year Immobilizer Workshop Manual.* Is the action complete?	—	Verify repair	—
28	1. Raise the vehicle and disconnect the CKP sensor harness. 2. Ignition "ON." 3. With a test light to ground, probe the harness ignition feed terminal. Did the light illuminate?	—	Go to *Step 30*	Go to *Step 29*
29	Check the ignition feed wire between the sensor and the PCM for a short to ground or open circuit. Is the action complete?	—	Verify repair	—

Engine Cranks But Will Not Run (Cont'd)

Step	Action	Value(s)	Yes	No
30	1. Ignition "ON." 2. At the CKP harness connector, connect a test light between the ignition and ground terminals. Did the light illuminate?	—	Go to *Step 32*	Go to *Step 31*
31	Check the sensor ground circuit for an open or short to voltage. Is the action complete?	—	Verify repair	—
32	Check the signal circuit between the sensor and the PCM for a short to ground, short to voltage, or an open. Was a problem found?	—	Verify repair	Go to *Step 33*
33	Replace the CKP sensor. Is the action complete?	—	Verify repair	Go to *Step 27*

Fuel System Electrical Test

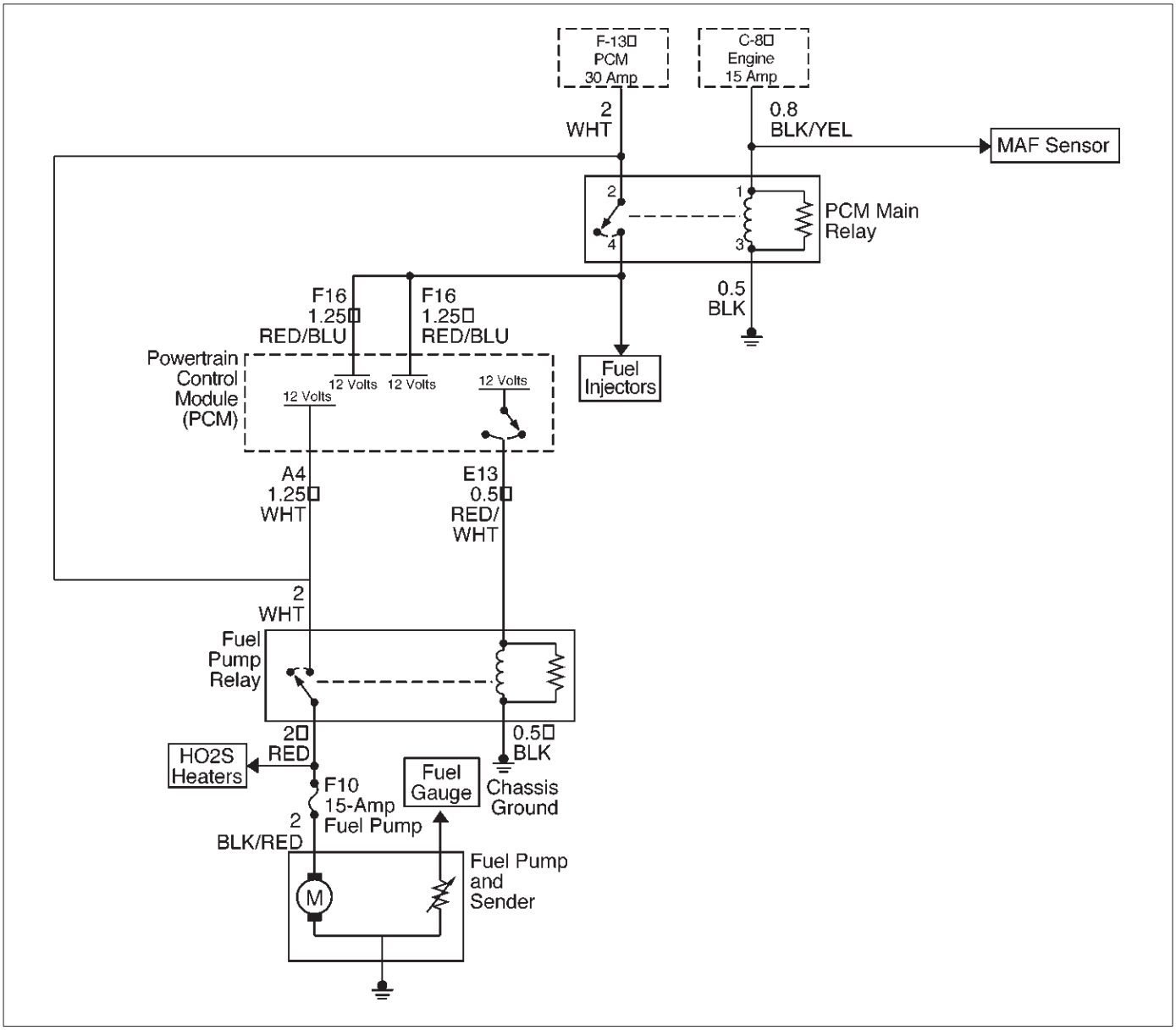

D06RW101

Circuit Description

When the ignition switch is first turned "ON," the powertrain control module (PCM) energizes the fuel pump relay which applies power to the in-tank fuel pump. The fuel pump relay will remain "ON" as long as the engine is running or cranking and the PCM is receiving 58X crankshaft position pulses. If no 58X crankshaft position pulses are present, the PCM de-energizes the fuel pump relay within 2 seconds after the ignition is turned "ON" or the engine is stopped.

The fuel pump delivers fuel to the fuel rail and injectors, then to the fuel pressure regulator. The fuel pressure regulator controls fuel pressure by allowing excess fuel to be returned to the fuel tank. With the engine stopped and ignition "ON," the fuel pump can be turned "ON" by using a command by Tech 2.

Diagnostic Aids

An intermittent may be caused by a poor connection, rubbed-through wire insulation, or a wire broken inside the insulation. Check for the following items:

- Poor connection or damaged harness – Inspect the PCM harness and connectors for improper mating, broken locks, improperly formed or damaged terminals, poor terminal-to-wire connection, and damaged harness.

Test Description

Number(s) below refer to the step number(s) on the Diagnostic Chart.

2. If the fuel pump is operating but incorrect pressure is noted, the fuel pump wiring is OK and the "Fuel System Pressure Test" chart should be used for diagnosis.

CAUTION: To reduce the risk of fire and personal injury:

- **It is necessary to relieve fuel system pressure before connecting a fuel pressure gauge. Refer to Fuel Pressure Relief Procedure, below.**
- **A small amount of fuel may be released when disconnecting the fuel lines. Cover fuel line fittings with a shop towel before disconnecting, to catch any fuel that may leak out. Place the towel in an approved container when the disconnect is completed.**

Fuel Pressure Relief Procedure

1. Remove the fuel cap.
2. Remove the fuel pump relay from the underhood relay center.
3. Start the engine and allow it to stall.
4. Crank the engine for an additional 3 seconds.

Fuel Gauge Installation

1. Remove the shoulder fitting cap.
2. Install fuel gauge 5-8840-0378-0 to the fuel feed line located in front of and above the right side valve train cover .
3. Reinstall the fuel pump relay.

Fuel System Electrical Test

Step	Action	Value(s)	Yes	No
1	Was the “On-Board Diagnostic (OBD) System Check” performed?	—	Go to *Step 2*	Go to *OBD System Check*
2	1. Read the “Caution” above. 2. Relieve the fuel system pressure and install the fuel pump pressure gauge to the test fitting. 3. Use Tech 2 to command the fuel pump “ON.” Is there an immediate pressure build-up which indicates the pump is running?	—	Go to *Step 3*	Go to *Step 4*
3	1. Verify that the pump is not running by removing the fuel filler cap and listening. 2. Command the pump “ON” with Tech 2. Did the pump turn “OFF” after 2 seconds?	—	Test completed	Go to *Step 12*
4	1. Ignition “OFF.” 2. Remove the fuel pump relay. 3. Using a test light connected to ground, probe the battery feed to the relay. Did the light illuminate?	—	Go to *Step 6*	Go to *Step 5*
5	Repair short or open battery feed to fuel pump relay. Is the action complete?	—	Verify repair	—
6	1. Connect a test light between the two wires that connect to the fuel pump relay pull-in coil. 2. Ignition “ON.” Did the test light illuminate for 2 seconds and then turn off?	—	Go to *Step 12*	Go to *Step 7*
7	1. With a test light connected to battery (–), probe the fuel pump relay connector at the wire which runs from the relay pull-in coil to the PCM. 2. Ignition “ON.” Did the test light illuminate for 2 seconds and then turn off?	—	Go to *Step 8*	Go to *Step 9*
8	Locate and repair open in the fuel pump relay ground circuit. Is the action complete?	—	Verify repair	—

Fuel System Electrical Test (Cont'd)

Step	Action	Value(s)	Yes	No
9	Check for short or open between the PCM and the fuel pump relay. Was a problem found?	—	Verify repair	Go to *Step 10*
10	1. Check the fuel pump relay circuit for a poor terminal connection at the PCM. 2. If a problem is found, replace terminal as necessary. Was a problem found?	—	Verify repair	Go to *Step 11*
11	Replace the PCM. **IMPORTANT:** The replacement PCM must be programmed. Refer to *UBS 98model year Immobilizer Workshop Manual.* Is the action complete?	—	Verify repair	—
12	1. Reconnect the fuel pump relay. 2. Disconnect the fuel pump electrical connector at the fuel tank. 3. Using a test light connected to ground, probe the fuel pump feed wire (harness side). 4. Command the fuel pump "ON" with Tech 2. Did the light illuminate for 2 seconds?	—	Go to *Step 15*	Go to *Step 13*
13	1. Honk the horn to verify that the horn relay is functioning. 2. Substitute the horn relay for the fuel pump relay. 3. Leave the test light connected as in step 12. 4. Command the fuel pump "ON" with Tech 2. Did the test light illuminate for 2 seconds when the fuel pump was commanded "ON?"	—	Go to *Step 17*	Go to *Step 14*
14	1. Re-connect the horn relay in its proper location. 2. Check for a short circuit, blown fuse or open circuit between the relay and the fuel tank. Is the action complete?	—	Verify repair	—
15	1. With the fuel pump electrical connector at the fuel tank disconnected, connect a test light between the feed wire and the ground wire (harness side). 2. Command the fuel pump "ON" with Tech 2. Did the test light illuminate for 2 seconds?	—	Go to *Step 18*	Go to *Step 16*
16	Repair the open circuit in the fuel pump ground wire. Is the action complete?	—	Verify repair	—
17	1. Re-connect the horn relay in its proper location. 2. Replace the fuel pump relay. Is the action complete?	—	Verify repair	—
18	Replace the fuel pump. Is the action complete?	—	Verify repair	—

Fuel System Diagnosis

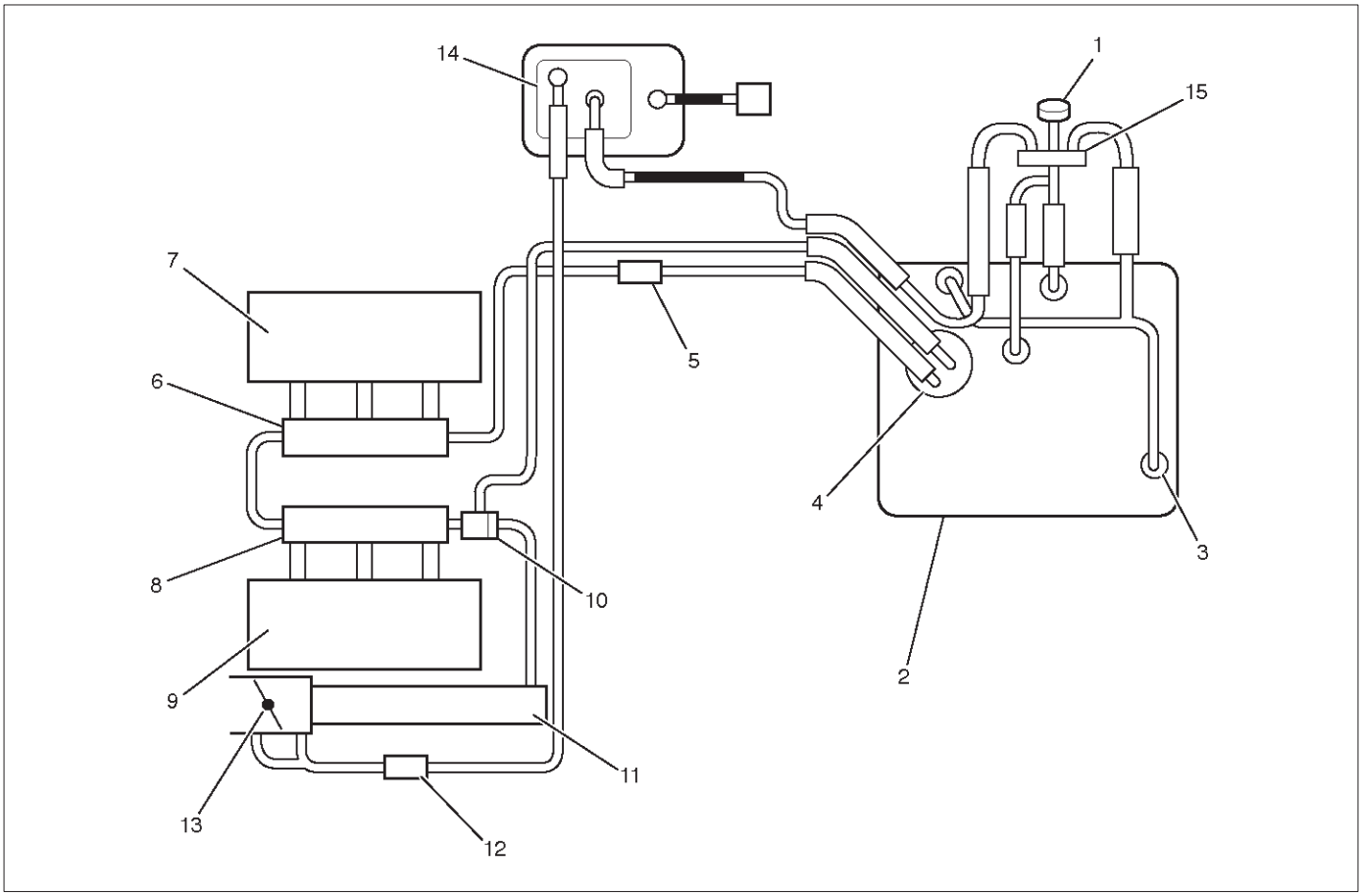

140RW020

Legend

(1) Fuel Filler Cap
(2) Fuel Tank
(3) Rollover Valve
(4) Fuel Pump and Sender Assembly
(5) Fuel Filter
(6) Fuel Rail Right
(7) Right Bank
(8) Fuel Rail Left
(9) Left Bank
(10) Fuel Pressure Control Valve
(11) Common Chamber
(12) Duty Solenoid Valve
(13) Throttle Valve
(14) Canister
(15) Evapo Shut Off Valve

Circuit Description

When the ignition switch is turned "ON," the powertrain control module (PCM) will turn "ON" the in-tank fuel pump. The in-tank fuel pump will remain "ON" as long as the engine is cranking or running and the PCM is receiving 58X crankshaft position pulses. If there are no 58X crankshaft position pulses, the PCM will turn the in-tank fuel pump "OFF" 2 seconds after the ignition switch is turned "ON" or 2 seconds after the engine stops running. The in-tank fuel pump is an electric pump within an integral reservoir. The in-tank fuel pump supplies fuel through an in-line fuel filter to the fuel rail assembly. The fuel pump is designed to provide fuel at a pressure above the pressure needed by the fuel injectors. A fuel pressure regulator, attached to the fuel rail, keeps the fuel available to the fuel injectors at a regulated pressure. Unused fuel is returned to the fuel tank by a separate fuel return line.

Test Description

Number(s) below refer to the step number(s) on the Diagnostic Chart.

2. Connect the fuel pressure gauge to the fuel feed line as shown in the fuel system illustration. Wrap a shop towel around the fuel pressure connection in order to absorb any fuel leakage that may occur when installing the fuel pressure gauge. With the ignition switch "ON" and the fuel pump running, the fuel pressure indicated by the fuel pressure gauge should be 333-376 kPa (48-55 psi). This pressure is controlled by the amount of pressure the spring inside the fuel pressure regulator can provide.
3. A fuel system that cannot maintain a constant fuel pressure has a leak in one or more of the following areas:
   - The fuel pump check valve.
   - The fuel pump flex line.

- The valve or valve seat within the fuel pressure regulator.
- The fuel injector(s).

4. Fuel pressure that drops off during acceleration, cruise, or hard cornering may case a lean condition. A lean condition can cause a loss of power, surging, or misfire. A lean condition can be diagnosed using a Tech II Tech 2. If an extremely lean condition occurs, the oxygen sensor(s) will stop toggling. The oxygen sensor output voltage(s) will drop below 500 mV. Also, the fuel injector pulse width will increase.

IMPORTANT: Make sure the fuel system is not operating in the "Fuel Cut-Off Mode."

When the engine is at idle, the manifold pressure is low (high vacuum). This low pressure (high vacuum) is applied to the fuel pressure regulator diaphragm. The low pressure (high vacuum) will offset the pressure being applied to the fuel pressure regulator diaphragm by the spring inside the fuel pressure regulator. When this happens, the result is lower fuel pressure. The fuel pressure at idle will vary slightly as the barometric pressure changes, but the fuel pressure at idle should always be less than the fuel pressure noted in step 2 with the engine "OFF."

16. Check the spark plug associated with a particular fuel injector for fouling or saturation in order to determine if that particular fuel injector is leaking. If checking the spark plug associated with a particular fuel injector for fouling or saturation does not determine that a particular fuel injector is leaking, use the following procedure:
    - Remove the fuel rail, but leave the fuel lines and injectors connected to the fuel rail. Refer to *Fuel Rail Assembly* in *On-Vehicle Service.*
    - Lift the fuel rail just enough to leave the fuel injector nozzles in the fuel injector ports.

CAUTION: In order to reduce the risk of fire and personal injury that may result from fuel spraying on the engine, verify that the fuel rail is positioned over the fuel injector ports and verify that the fuel injector retaining clips are intact.

- **Pressurize the fuel system by connecting a 10 amp fused jumper between B+ and the fuel pump relay connector.**
- **Visually and physically inspect the fuel injector nozzles for leaks.**

17. A rich condition may result from the fuel pressure being above 376 kPa (55 psi). A rich condition may cause a DTC P0132 or a DTC P0172 to set. Driveability conditions associated with rich conditions can include hard starting (followed by black smoke) and a strong sulfur smell in the exhaust.
20. This test determines if the high fuel pressure is due to a restricted fuel return line or if the high fuel pressure is due to a faulty fuel pressure regulator.
21. A lean condition may result from fuel pressure below 333 kPa (48 psi). A lean condition may cause a DTC P0131 or a DTC P0171 to set. Driveability conditions associated with lean conditions can include hard starting (when the engine is cold), hesitation, poor driveability, lack of power, surging , and misfiring.
22. Restricting the fuel return line causes the fuel pressure to rise above the regulated fuel pressure. Command the fuel pump "ON" with Tech 2. The fuel pressure should rise above 376 kPa (55 psi) as the fuel return line becomes partially closed.

NOTE: Do not allow the fuel pressure to exceed 414 kPa (60 psi). Fuel pressure in excess of 414 kPa (60 psi) may damage the fuel pressure regulator.

CAUTION: To reduce the risk of fire and personal injury:

- **It is necessary to relieve fuel system pressure before connecting a fuel pressure gauge. Refer to Fuel Pressure Relief Procedure, below.**
- **A small amount of fuel may be released when disconnecting the fuel lines. Cover fuel line fittings with a shop towel before disconnecting, to catch any fuel that may leak out. Place the towel in an approved container when the disconnect is completed.**

Fuel Pressure Relief Procedure

1. Remove the fuel cap.
2. Remove the fuel pump relay from the underhood relay center.
3. Start the engine and allow it to stall.
4. Crank the engine for an additional 3 seconds.

Fuel Gauge Installation

1. Remove the shoulder fitting cap.
2. Install fuel gauge 5-8840-0378-0 to the fuel feed line located in front of and above the right side valve train cover.
3. Reinstall the fuel pump relay.

Fuel System Diagnosis

Step	Action	Value(s)	Yes	No
1	Was the “On-Board Diagnostic (OBD) System Check” performed?	—	Go to *Step 2*	Go to *OBD System Check*
2	1. Turn the ignition “OFF.” 2. Turn the air conditioning system “OFF.” 3. Relieve fuel system pressure and install the fuel pressure gauge. 4. Turn the ignition “ON.” NOTE: The fuel pump will run for approximately 2 seconds. Use Tech 2 to command the fuel pump “ON”. 5. Observe the fuel pressure indicated by the fuel pressure gauge with the fuel pump running. Is the fuel pressure within the specified limits?	290-376 kPa (42-55 psi)	Go to *Step 3*	Go to *Step 17*
3	NOTE: The fuel pressure will drop when the fuel pump stops running, then it should stabilize and remain constant. Does the fuel pressure indicated by the fuel pressure gauge remain constant?	—	Go to *Step 4*	Go to *Step 12*
4	1. When the vehicle is at normal operation temperature, turn the ignition “ON” to build fuel pressure and observe the measurement on the gauge. 2. Start the engine and observe the fuel pressure gauge. Did the reading drop by the amount specified after the engine was started?	21-105 kPa (3-15 psi)	Go to *Step 5*	Go to *Step 9*
5	Is fuel pressure dropping off during acceleration, cruise, or hard cornering?	—	Go to *Step 6*	Check for improper fuel
6	Visually and physically inspect the following items for a restriction: ● The in-pipe fuel filter. ● The fuel feed line. Was a restriction found?	—	Verify repair	Go to *Step 7*
7	Remove the fuel tank and visually and physically inspect the following items: ● The fuel pump strainer for a restriction. ● The fuel line for a leak. ● Verify that the correct fuel pump is in the vehicle. Was a problem found in any of these areas?	—	Verify repair	Go to *Step 8*
8	Replace the fuel pump. Is the action complete?	—	Verify repair	—
9	1. Disconnect the vacuum hose from the fuel pressure regulator. 2. With the engine idling, apply 12-14 inches of vacuum to the fuel pressure regulator. Does the fuel pressure indicated by the fuel pressure gauge drop by the amount specified?	21-105 kPa (3-15 psi)	Go to *Step 10*	Go to *Step 11*

Fuel System Diagnosis (Cont'd)

Step	Action	Value(s)	Yes	No
10	Locate and repair the loss of vacuum to the fuel pressure regulator. Is the action complete?	—	Verify repair	—
11	Replace the fuel pressure regulator. Is the action complete?	—	Verify repair	—
12	1. Run the fuel pump with Tech 2. 2. After pressure has built up, turn off the pump and clamp the supply hose shut with suitable locking pliers. Does the fuel pressure indicated by the fuel pressure gauge remain constant?	—	Go to *Step 13*	Go to *Step 15*
13	Visually inspect the fuel supply line and repair any leaks. Was a problem found?	—	Verify repair	Go to *Step 14*
14	Remove the fuel tank and inspect for leaky hose or in-tank fuel line. Was a problem found?	—	Verify repair	Go to *Step 8*
15	1. If the pliers are still clamped to the fuel supply hose, remove the locking pliers. 2. With suitable locking pliers, clamp the fuel return line to prevent fuel from returning to the fuel tank. 3. Run the fuel pump with Tech 2. 4. After pressure has built up, remove power to the pump. Does the fuel pressure indicated by the fuel pressure gauge remain constant?	—	Go to *Step 11*	Go to *Step 16*
16	Locate and replace any leaking fuel injector(s). Is the action complete?	—	Verify repair	—
17	Is the fuel pressure indicated by the fuel pressure gauge above the specified limit?	376 kPa (55 psi)	Go to *Step 18*	Go to *Step 21*
18	1. Relieve the fuel pressure. Refer to the *Fuel Pressure Relief.* 2. Disconnect the fuel return line from the fuel rail. 3. Attach a length of flexible hose to the fuel rail return outlet passage. 4. Place the open end of the flexible hose into an approved gasoline container. 5. Run the fuel pump with Tech 2. 6. Observe the fuel pressure indicated by the fuel pressure gauge with the fuel pump running. Is the fuel pressure within the specified limits?	290-376 kPa (42-55 psi)	Go to *Step 19*	Go to *Step 20*
19	Locate and correct the restriction in the fuel return line. Is the action complete?	—	Verify repair	—
20	Visually and physically inspect the fuel rail outlet passages for a restriction. Was a restriction found?	—	Verify repair	Go to *Step 11*
21	Is the fuel pressure indicated by the fuel pressure gauge above the specified value?	0 kPa (0 psi)	Go to *Step 22*	Go to *Step 23*

Fuel System Diagnosis (Cont'd)

Step	Action	Value(s)	Yes	No
22	1. Command the fuel pump "ON" with Tech 2. 2. Using suitable pliers which will not damage the fuel hose, gradually apply pressure with the pliers to pinch the flexible fuel return hose closed. **CAUTION: Do not let the fuel pressure exceed the second specified value.** Does the fuel pressure indicated by the fuel pressure gauge rise above the first specified value?	376 kPa (55 psi) 414 kPa (60 psi)	Go to *Step 11*	Go to *Step 7*
23	1. Command the fuel pump "ON" with Tech 2. 2. Remove the fuel filler cap and listen for the sound of the fuel pump running. 3. Turn the pump off. Was the fuel pump running?	—	Go to *Step 7*	Go to *Fuel System Electrical Test Chart*

Idle Air Control (IAC) System Check

Circuit Description

The powertrain control module (PCM) controls engine idle speed with the idle air control (IAC) valve. To increase idle speed, the PCM retracts the IAC valve pintle away from its seat, allowing more air to bypass the throttle bore. To decrease idle speed, it extends the IAC valve pintle towards its seat, reducing by pass air flow. Tech 2 will read the PCM commands to the IAC valve in counts. Higher counts indicate more air bypass (higher idle). Lower counts indicate less air is allowed to bypass (lower idle).

Diagnostic Aids

A slow, unstable, or fast idle may be caused by a non-IAC system problem that cannot be overcome by the IAC valve. Out of control range IAC Tech 2 counts will be above 60 if idle is too low, and zero counts if idle is too high. The following checks should be made to repair a non-IAC system problem:

- Vacuum leak (high idle) – If idle is too high, stop the engine. Fully extend (low) IAC with the Tech 2. Start the engine. If idle speed is above 800 RPM, locate and correct the vacuum leak, including the PCV system. Check for binding of the throttle blade or linkage.
- Lean heated oxygen sensor signal (high air/fuel ratio) – The idle speed may be too high or too low. Engine speed may vary up and down, and disconnecting the IAC valve does not help. Diagnostic trouble codes P0131, P0151, P0171, or P0174 may be set. Tech 2 oxygen (O2) voltage will be less than 100 mV (0.1 V). Check for low regulated fuel pressure, water in fuel, or a restricted injector.
- Rich heated oxygen sensor signal (low air/fuel ratio) – The idle speed will be too low. Tech 2 IAC counts will usually be above 80. The system is obviously rich and may exhibit black smoke in the exhaust.

  Tech 2 O2 voltage will be fixed at about 750 mV (0.75 V). Check for high fuel pressure, or a leaking or sticking injector. A silicon-contaminated heated oxygen sensor will show an O2 voltage slow to respond on Tech 2.
- Throttle body – Remove the IAC valve and inspect the bore for foreign material.
- IAC valve electrical connections – IAC valve connections should be carefully checked for proper contact.
- PCV valve – An incorrect or faulty PCV valve may result in an incorrect idle speed. Refer to *Diagnosis, Rough Idle, Stalling.* If intermittent poor driveability or idle symptoms are resolved by disconnecting the IAC, carefully recheck the connections and valve terminal resistance, or replace the IAC.

Test Description

Number(s) below refer to the step number(s) on the Diagnostic Chart.

1. The Tech 2 is used to extend and retract the IAC valve. Valve movement is verified by an engine speed change. If no change in engine speed occurs, the valve can be resettled when removed from the throttle body.
2. This step checks the quality of the IAC movement in step 1. Between 700 revolutions per minute (RPM) and about 1500 RPM, the engine speed should change smoothly with each flash of the tester light in both extend and retract. If the IAC valve is retracted beyond the control range (about 1500 RPM), it may take many flashes to extend the IAC valve before engine speed will begin to drop. This is normal on certain engines. Fully extending the IAC may cause engine stall. This may be normal.

Idle Air Control (IAC) System Check

Step	Action	Value(s)	Yes	No
1	1. Ignition “OFF.” 2. Connect the Tech 2. 3. Set the parking brake. 4. Block the wheels. 5. Turn the air conditioning “OFF.” 6. Idle the engine in Park (A/T) or Neutral (M/T). 7. Operate the IAC test. 8. The engine speed should decrease and increase as the IAC is cycled. Does the RPM change?	—	Go to *Step 2*	Go to *Step 3*
2	RPM should change smoothly. Does the RPM change within the range specified?	700-1500 RPM	—	Go to *Step 3*
3	Check the IAC passages. Are the IAC passages OK?	—	Go to *Step 4*	Go to *Step 5*
4	Clear any obstruction from the IAC passages. Is the action complete?	—	Verify repair	—
5	Replace the IAC. Refer to *On-Vehicle Service, Idle Air Control Valve.* Is the action complete?	—	Verify repair	—

Knock Sensor (KS) System Check (Engine Knock, Poor Performance, or Poor Economy)

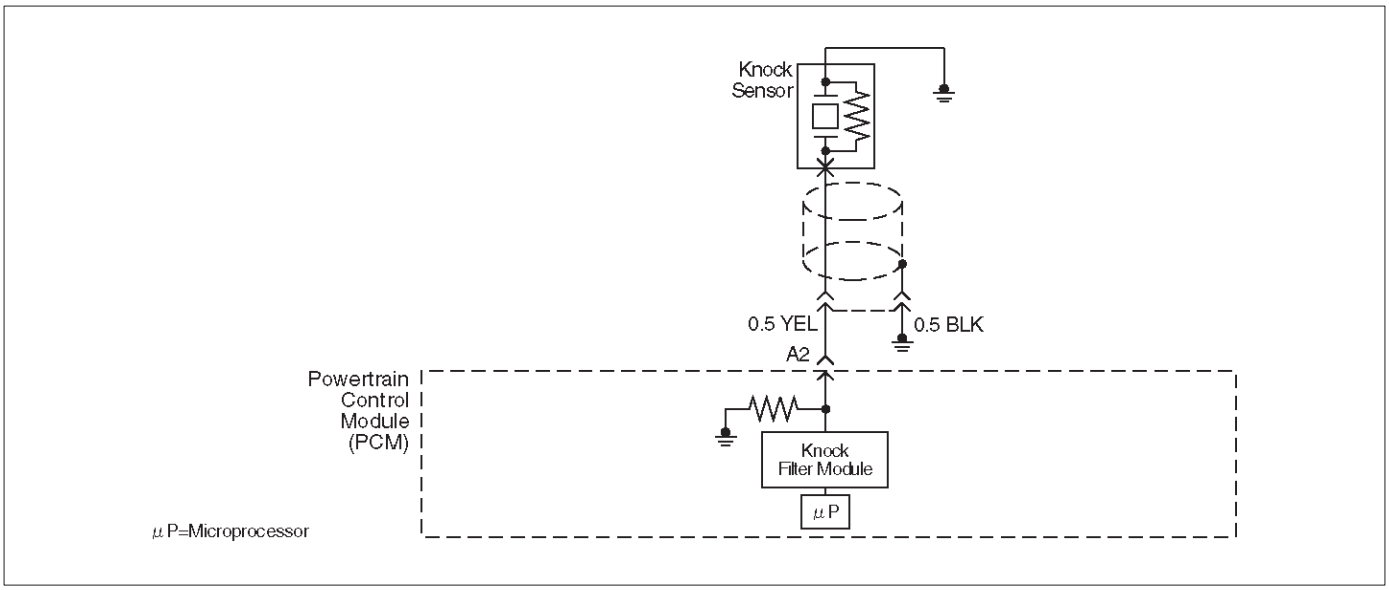

D06RW035

Circuit Description

The knock sensor (KS) sends an AC voltage signal to the powertrain control module (PCM). As the KS detects engine knock, the signal to the PCM changes in amplitude and frequency. The PCM retards timing if the engine speed is over 900 RPM.

Diagnostic Aids

If the KS system checks OK, but detonation is the complaint, refer to *Diagnosis, Detonation/Spark Knock.*

Test Description

The numbers below refer to the step numbers on the Diagnostic Chart.

9. The change in signal speed depends on how hard the tapping is done. Normally there is about 1.5 to 10 mV at PCM pin A2 with the engine off. Loud tapping should be able to make the reading jump to 20-25 mV AC.

Knock Sensor (KS) System Check (Engine Knock, Poor Performance, or Poor Economy)

Step	Action	Value(s)	Yes	No
1	Is DTC P0325 or P0327 set?	—	Go to *DTC P0325 or DTC P0327*	Go to *Step 2*
2	Run the engine at 1500 RPM. Is there an internal engine knock?	—	Go to *Step 3*	Go to *Step 4*
3	Repair the mechanical problem. Is the action complete?	—	Verify repair	—
4	1. Install Tech 2. 2. Turn the ignition “ON.” 3. Cycle through the list until “Knock Retard” is displayed. Is knock retard at the specified value?	0˚	Go to *Step 6*	Go to *Step 7*
5	Replace the PCM. **IMPORTANT:** The replacement PCM must be programmed. Refer to *UBS 98model year Immobilizer Workshop Manual.* Is the action complete?	—	Verify repair	—
6	1. Start the engine. 2. Monitor the knock retard display on Tech 2 while changing the throttle setting to place different loads on the engine. Is knock retard at the specified value? (Turn the ignition “OFF.”)	0˚	Go to *Step 9*	Go to *Step 7*
7	1. At the rear of the engine, behind the rear fuel injector on the lift side, disconnect the 2-wire knock sensor harness connector. 2. Attach the positive lead of DVM to B+. 3. On the main harness side of the connector, use the negative lead of the DVM to probe the connector pin that is connected to the black wire. Dose the DVM indicate the specified value? (Reconnect the knock sensor harness.)	B+	Go to *Step 9*	Go to *Step 8*
8	Repair the open black wire ground for the shield which prevents stray electromagnetic pulses from affecting the knock signal. Is the action complete?	—	Verify repair	—
9	1. Reconnect the wire harness. 2. Set a DVM to AC voltage. 3. With the DVM, backprobe the PCM connector at A2. 4. Tap the engine lift brackprobe with a socket extension. Did the DVM show an increase in AC voltage while tapping on the lift bracket?	—	System OK	Go to *Step 10*
10	Replace the knock sensor. Is the action complete?	—	Verify repair	—

Exhaust Gas Recirculation (EGR) System Check

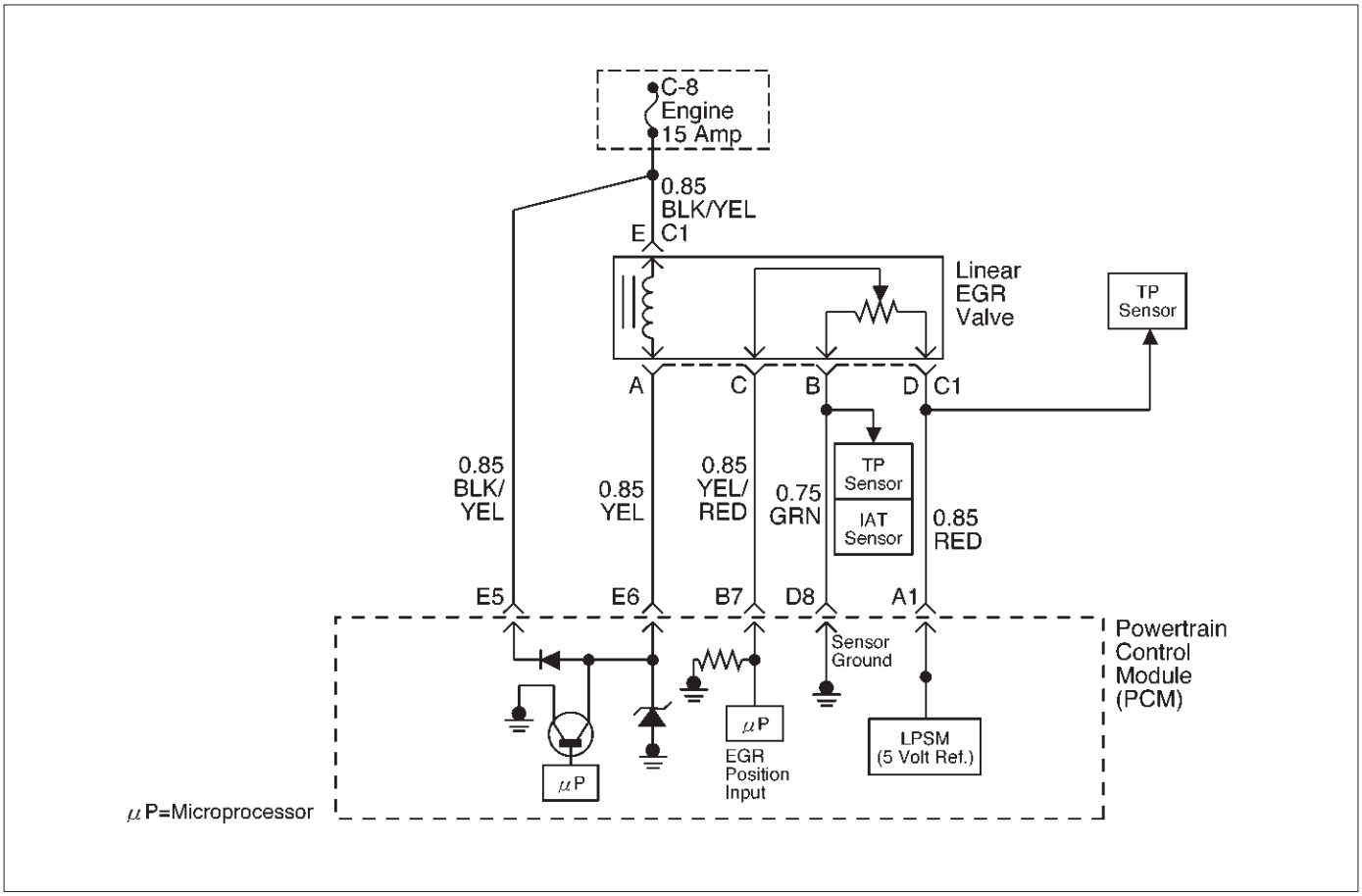

D06RW106

Circuit Description

A properly operation exhaust gas recirculation (EGR) system will directly affect the air/fuel requirements of the engine. Since the exhaust gas introduced into the air/fuel mixture is an inert gas (contains very little or no oxygen), less fuel is required to maintain a correct air/fuel ratio.

Introducing exhaust gas into the combustion chamber lowers combustion temperatures and reduces the formation of oxides of nitrogen (NOx) in the exhaust gas. Lower combustion temperatures also prevent detonation. If the EGR pintle were to stay closed, the inert exhaust gas would be replaced with air and the air/fuel mixture would be leaner. The powertrain control module (PCM) would compensate for the lean condition by adding fuel, resulting in higher long term fuel trim values.

Diagnostic Aids

The EGR valve chart is a check of the EGR system. An EGR pintle constantly in the closed position could cause detonation and high emissions of NOx. It could also result in high long term fuel trim values in the open throttle cell, but not in the closed throttle cell. An EGR pintle constantly in the open position would cause a rough idle. Also, an EGR mounted incorrectly (rotated 180˚) could cause rough idle. Check for the following items:

- EGR passages – Check for restricted or blocked EGR passages.
- Manifold absolute pressure sensor – A manifold absolute pressure sensor may shift in calibration enough to affect fuel delivery. Refer to *Manifold Absolute Pressure Output Check.*

Exhaust Gas Recirculation (EGR) System Check

Step	Action	Value(s)	Yes	No
1	Check the EGR valve for looseness. Is the EGR valve Loose?	—	Go to *Step 2*	Go to *Step 3*
2	Tighten the EGR valve. Is the action complete?	—	Verify repair	—
3	1. Place the transmission selector in Park or Neutral. 2. Start the engine and idle until warm. 3. Using Tech 2, command EGR “50% ON.” Does the engine idle rough and lose RPMs?	—	EGR system working properly. No problem found.	Go to *Step 4*
4	1. Engine “OFF.” 2. Ignition “ON.” 3. Using a test light to ground, check the EGR harness between the EGR valve and the ignition feed. Does the test light illuminate?	—	Go to *Step 6*	Go to *Step 5*
5	Repair the EGR harness ignition feed. Was the problem corrected?	—	Verify repair	Go to *Step 6*
6	1. Remove the EGR valve. 2. Visually and physically inspect the EGR valve pintle, valve passages and adapter for excessive deposits, obstructions or any restrictions. Does the EGR valve have excessive deposits, obstructions or any restrictions?	—	Go to *Step 7*	Go to *Step 8*
7	Clean or replace EGR system components as necessary. Was the problem corrected?	—	Verify repair	Go to *Step 8*
8	1. Ground the EGR valve metal case to battery (–). 2. Using Tech 2, command EGR “ON” and observe the EGR valve pintle for movement. Does the EGR valve pintle move according to command?	—	Go to *Step 9*	Go to *DTC P1406 chart*
9	1. Remove the EGR inlet and outlet pipes from the intake and exhaust manifolds. 2. Visually and physically inspect manifold EGR ports and EGR inlet and outlet pipes for blockage or restriction caused by excessive deposits or other damage. Do the manifold EGR ports or inlet and outlet pipes have excessive deposits, obstructions, or any restrictions?	—	Go to *Step 10*	EGR system working properly. No problem found.
10	Clean or replace EGR system components as necessary. Is the action complete?	—	Verify repair	—

Manifold Absolute Pressure (MAP) Output Check

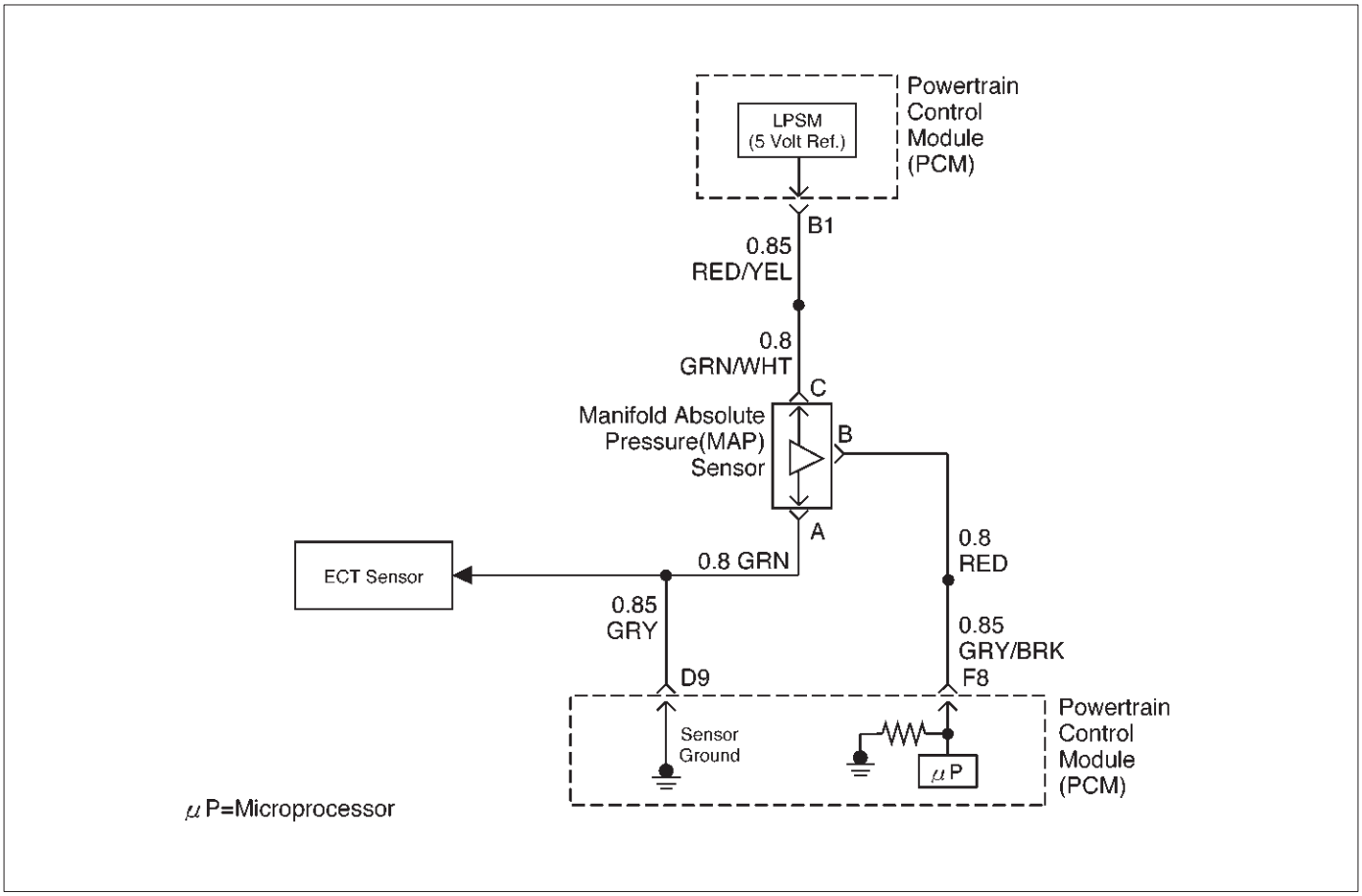

D06RW102

Circuit Description

The manifold absolute pressure (MAP) sensor measures the changes in the intake MAP which result from engine load (intake manifold vacuum) and engine speed changes; and converts these into a voltage output. The powertrain control module (PCM) sends a 5-volt reference voltage to the MAP sensor. As the MAP changes, the output voltage of the sensor also changes. By monitoring the the sensor output voltage, the PCM knows the MAP. A lower pressure (low voltage) output voltage will be about 1-2 volts at idle. Higher pressure (high voltage) output voltage will be about 4-4.8 volts at wide open throttle. The MAP sensor is also used, under certain conditions, to measure barometric pressure, allowing the PCM to make adjustments for different altitudes. The PCM uses the MAP sensor to diagnose proper operation of the EGR system, in addition to other functions.

Test Description

IMPORTANT: Be sure to used the same diagnostic test equipment for all measurements.

The number(s) below refer to the step number(s) on the Diagnostic Chart.

2. Applying 34 kPa (10 Hg) vacuum to the MAP sensor should cause the voltage to be 1.5-2.1 volts less than the voltage at step 1. Upon applying vacuum to the sensor, the change in voltage should be instantaneous. A slow voltage change indicates a faulty sensor.
3. Check the vacuum hose to the sensor for leaking or restriction, Be sure that no other vacuum devices are connected to the MAP hose.

IMPORTANT: Make sure the electrical connector remains securely fastened.

4. Disconnect the sensor from the bracket. Twist the sensor with your hand to check for an intermittent connection. Output changes greater than 0.10 volt indicate a bad sensor.

Manifold Absolute Pressure (MAP) Output Check

Step	Action	Value(s)	Yes	No
1	1. Turn the ignition “OFF”and leave it “OFF” for 15 seconds. 2. Ignition “ON.” Don’t crank engine. 3. Tech 2 should indicate a manifold absolute pressure (MAP) sensor voltage. 4. Compare this scan reading to scan reading of a known good vehicle obtained using the exact same procedure as in Steps 1-4. Is the voltage reading the same +/–0.40 volt?	—	Go to *Step 2*	Go to *Step 5*
2	1. Disconnect the vacuum hose at the MAP sensor and plug the hose. 2. Connect a hand vacuum pump to the MAP sensor. 3. Start the engine. 4. Apply 34 kPa (10 Hg) of vacuum and note the voltage change. Is the voltage change 1.5-2.1 volts less than Step 1?	—	Go to *Step 3*	Go to *Step 4*
3	No trouble found. Check the sensor cover for leakage or restriction. Does the hose supply vacuum to the MAP sensor only?	—	Go to *Step 5*	Go to *Step 4*
4	Repair the material to block. Is the action complete?	—	Verify repair	—
5	Check the sensor connection. Is the sensor connection good?	—	Go to *Step 6*	Go to *Step 7*
6	Replace the sensor. Refer to *On-Vehicle Service, MAP Sensor.* Is the action complete?	—	Verify repair	—
7	Repair the poor connection. Is the action complete?	—	Verify repair	—

PCM Diagnostic Trouble Codes

The following table lists the diagnostic trouble codes supported by this vehicle application. If any DTCs not listed here are displayed by a Tech 2, the Tech 2 data may be faulty; notify the Tech 2 manufacturer of any DTCs displayed that are not included in the following table.

A - Emission related P-code, check engine light on as soon as a failure detected.

B - Emission related P-code, check engine light on if a failure detected in two consecutive trips.

C - Non emission related P-code, check engine light on if a failure detected in one trip.

D - Non emission related P-code, no check engine light, but P-code will be set if a failure detected.

X - Do not check.

PCM Diagnostic Trouble Codes

DTC	Description / Countries	G. EXP A/T w/o immobi	G. EXP M/T w/o immobi	EC A/T w/ immobi	EC A/T w/o immobi	EC M/T w/ immobi	EC M/T w/o immobi	AUST A/T w/ immobi	AUST M/T w/ immobi
P0101	MAF system performance	B	B	B	B	B	B	B	B
P0102	MAF sensor circuit low frequency	A	A	A	A	A	A	A	A
P0103	MAF sensor circuit high frequency	A	A	A	A	A	A	A	A
P0107	MAP sensor circuit low voltage	A	A	A	A	A	A	A	A
P0108	MAP sensor circuit high voltage	A	A	A	A	A	A	A	A
P0112	ITA sensor circuit low voltage	A	A	A	A	A	A	A	A
P0113	ITA sensor circuit high voltage	A	A	A	A	A	A	A	A
P0117	ETC sensor circuit low voltage	A	A	A	A	A	A	A	A
P0118	ETC sensor circuit high voltage	A	A	A	A	A	A	A	A
P0121	TP system performance	A	A	A	A	A	A	A	A
P0122	TP sensor circuit low voltage	A	A	A	A	A	A	A	A
P0123	TP sensor circuit high voltage	A	A	A	A	A	A	A	A
P0131	HO2S circuit low voltage bank 1 sensor 1	X	X	A	A	A	A	A	A
P0132	HO2S circuit high voltage bank 1 sensor 1	X	X	A	A	A	A	A	A
P0134	HO2S circuit insufficient activity bank 1 sensor 1	X	X	X	X	X	X	A	A
P0151	HO2S circuit low voltage bank 2 sensor 1	X	X	A	A	A	A	X	X
P0152	HO2S circuit high voltage bank 2 sensor 1	X	X	A	A	A	A	X	X
P0171	Fuel trim system lean bank 1	X	X	B	B	B	B	B	B
P0172	Fuel trim system rich bank 1	X	X	B	B	B	B	B	B
P0174	Fuel trim system lean bank 2	X	X	B	B	B	B	X	X
P0175	Fuel trim system rich bank 2	X	X	B	B	B	B	X	X
P0201	Injector 1 control circuit	A	A	A	A	A	A	A	A
P0202	Injector 2 control circuit	A	A	A	A	A	A	A	A
P0203	Injector 3 control circuit	A	A	A	A	A	A	A	A
P0204	Injector 4 control circuit	A	A	A	A	A	A	A	A
P0205	Injector 5 control circuit	A	A	A	A	A	A	A	A
P0206	Injector 6 control circuit	A	A	A	A	A	A	A	A
P0218	T overtemp	D	X	D	D	X	X	D	X
P0325	KS sensor circuit	B	B	B	B	B	B	B	B
P0327	KS sensor circuit	B	B	B	B	B	B	B	B
P0336	58X reference signal circuit	B	B	B	B	B	B	B	B
P0337	CKP sensor circuit low frequency	B	B	B	B	B	B	B	B
P0341	CMP sensor circuit performance	B	B	B	B	B	B	B	B
P0342	CMP sensor circuit low	B	B	B	B	B	B	B	B
P0351	Injector 1 control circuit	A	A	A	A	A	A	A	A
P0352	Injector 2 control circuit	A	A	A	A	A	A	A	A
P0353	Injector 3 control circuit	A	A	A	A	A	A	A	A
P0354	Injector 4 control circuit	A	A	A	A	A	A	A	A
P0355	Injector 5 control circuit	A	A	A	A	A	A	A	A
P0356	Injector 6 control circuit	A	A	A	A	A	A	A	A
P0402	EGR pintle crank error	X	X	B	B	B	B	A	A
P0404	EGR open stuck	X	X	B	B	B	B	A	A
P0405	EGR low voltage	X	X	A	A	A	A	A	A
P0406	EGR high voltage	X	X	A	A	A	A	A	A
P0502	VSS circuit low input	B	B	B	B	B	B	B	B
P0560	T voltage	C	X	C	C	X	X	C	X
P0562	System voltage low	D	D	D	D	D	D	D	D
P0563	System voltage high	B	B	B	B	B	B	B	B
P0601	PCM memory	A	A	A	A	A	A	A	A
P0705	T range circuit	D	X	D	D	X	X	D	X
P0706	T range rat	D	X	D	D	X	X	D	X
P0712	T temp LO	D	X	D	D	X	X	D	X
P0713	T temp HI	D	X	D	D	X	X	D	X
P0719	T switch B LO	D	X	D	D	X	X	D	X
P0722	T shaft speed no signal	C	X	C	C	X	X	C	X
P0723	T shaft speed rat	C	X	C	C	X	X	C	X
P0730	T gear ratio	C	X	C	C	X	X	C	X
P0748	press solenoid circuit	C	X	C	C	X	X	C	X
P0753	T solenoid A circuit	C	X	C	C	X	X	C	X
P0758	T solenoid B circuit	C	X	C	C	X	X	C	X
P1127	CO ADJUST ERROR	A	A	X	X	X	X	X	X
P1154	HO2S circuit transition time ratio bank 2 sensor 1	X	X	A	A	A	A	X	X
P1171	Fuel system lean during acceleration	X	X	A	A	A	A	A	A
P1380	ABS rough road ABS system fault	X	X	X	X	X	X	A	A
P1404	EGR closed stuck	X	X	B	B	B	B	A	A
P1508	IAC system low RPM	B	B	B	B	B	B	B	B
P1509	IAC system high RPM	B	B	B	B	B	B	B	B
P1618	Serial peripheral interface(SPI)	C	X	C	C	X	X	C	X
P1625	PCM unexpected reset	D	D	D	D	D	D	D	D
P1626	immobi no response	X	X	D	X	D	X	D	D
P1631	immobi incorrect response	X	X	D	X	D	X	D	D
P1640	Driver 1 input high voltage	D	D	D	D	D	D	D	D
P1648	immobi wrong key	X	X	D	X	D	X	D	D
P1649	immobi no key	X	X	D	X	D	X	D	D
P1790	T ROM checksum	C	X	C	C	X	X	C	X
P1792	EEPROM checksum	C	X	C	C	X	X	C	X
P1835	T kick down switch	D	X	D	D	X	X	D	X
P1850	brake band solenoid	D	X	D	D	X	X	D	X
P1860	TCC PWM circuit	D	X	D	D	X	X	D	X

PCM Diagnostic Trouble Codes (Cont'd)

DTC	Description / Countries	LAO A/T w/o immobi	LAO M/T w/o immobi	S.A. M/T w/ ommobi	SAUD/CHINA A/T w/o immobi	SAUD/CHINA M/T w/o immobi
P0101	MAF system performance	B	B	B	B	B
P0102	MAF sensor circuit low frequency	A	A	A	A	A
P0103	MAF sensor circuit high frequency	A	A	A	A	A
P0107	MAP sensor circuit low voltage	A	A	A	A	A
P0108	MAP sensor circuit high voltage	A	A	A	A	A
P0112	ITA sensor circuit low voltage	A	A	A	A	A
P0113	ITA sensor circuit high voltage	A	A	A	A	A
P0117	ETC sensor circuit low voltage	A	A	A	A	A
P0118	ETC sensor circuit high voltage	A	A	A	A	A
P0121	TP system performance	A	A	A	A	A
P0122	TP sensor circuit low voltage	A	A	A	A	A
P0123	TP sensor circuit high voltage	A	A	A	A	A
P0131	HO2S circuit low voltage bank 1 sensor 1	A	A	X	A	A
P0132	HO2S circuit high voltage bank 1 sensor 1	A	A	X	A	A
P0134	HO2S circuit insufficient activity bank 1 sensor 1	A	A	X	X	X
P0151	HO2S circuit low voltage bank 2 sensor 1	X	X	X	A	A
P0152	HO2S circuit high voltage bank 2 sensor 1	X	X	X	A	A
P0171	Fuel trim system lean bank 1	B	B	X	B	B
P0172	Fuel trim system rich bank 1	B	B	X	B	B
P0174	Fuel trim system lean bank 2	X	X	X	B	B
P0175	Fuel trim system rich bank 2	X	X	X	B	B
P0201	Injector 1 control circuit	A	A	A	A	A
P0202	Injector 2 control circuit	A	A	A	A	A
P0203	Injector 3 control circuit	A	A	A	A	A
P0204	Injector 4 control circuit	A	A	A	A	A
P0205	Injector 5 control circuit	A	A	A	A	A
P0206	Injector 6 control circuit	A	A	A	A	A
P0218	T overtemp	D	X	X	D	X
P0325	KS sensor circuit	B	B	B	B	B
P0327	KS sensor circuit	B	B	B	B	B
P0336	58X reference signal circuit	B	B	B	B	B
P0337	CKP sensor circuit low frequency	B	B	B	B	B
P0341	CMP sensor circuit performance	B	B	B	B	B
P0342	CMP sensor circuit low	B	B	B	B	B
P0351	Injector 1 control circuit	A	A	A	A	A
P0352	Injector 2 control circuit	A	A	A	A	A
P0353	Injector 3 control circuit	A	A	A	A	A
P0354	Injector 4 control circuit	A	A	A	A	A
P0355	Injector 5 control circuit	A	A	A	A	A
P0356	Injector 6 control circuit	A	A	A	A	A
P0402	EGR pintle crank error	A	A	X	B	B
P0404	EGR open stuck	A	A	X	B	B
P0405	EGR low voltage	A	A	X	A	A
P0406	EGR high voltage	A	A	X	A	A
P0502	VSS circuit low input	B	B	B	B	B
P0560	T voltage	C	X	X	C	X
P0562	System voltage low	D	D	D	D	D
P0563	System voltage high	B	B	B	B	B
P0601	PCM memory	A	A	A	A	A
P0705	T range circuit	D	X	X	D	X
P0706	T range rat	D	X	X	D	X
P0712	T temp LO	D	X	X	D	X
P0713	T temp HI	D	X	X	D	X
P0719	T switch B LO	D	X	X	D	X
P0722	T shaft speed no signal	C	X	X	C	X
P0723	T shaft speed rat	C	X	X	C	X
P0730	T gear ratio	C	X	X	C	X
P0748	press solenoid circuit	C	X	X	C	X
P0753	T solenoid A circuit	C	X	X	C	X
P0758	T solenoid B circuit	C	X	X	C	X
P1127	CO ADJUST ERROR	X	X	A	X	X
P1154	HO2S circuit transition time ratio bank 2 sensor 1	X	X	X	A	A
P1171	Fuel system lean during acceleration	A	A	X	A	A
P1380	ABS rough road ABS system fault	A	A	X	X	X
P1404	EGR closed stuck	A	A	X	B	B
P1508	IAC system low RPM	B	B	B	B	B
P1509	IAC system high RPM	B	B	B	B	B
P1618	Serial peripheral interface(SPI)	C	X	X	C	X
P1625	PCM unexpected reset	D	D	D	D	D
P1626	immobi no response	X	X	D	X	X
P1631	immobi incorrect response	X	X	D	X	X
P1640	Driver 1 input high voltage	D	D	D	D	D
P1648	immobi wrong key	X	X	D	X	X
P1649	immobi no key	X	X	D	X	X
P1790	T ROM checksum	C	X	X	C	X
P1792	EEPROM checksum	C	X	X	C	X
P1835	T kick down switch	D	X	X	D	X
P1850	brake band solenoid	D	X	X	D	X
P1860	TCC PWM circuit	D	X	X	D	X

Diagnostic Trouble Code (DTC) P0101 MAF System Performance

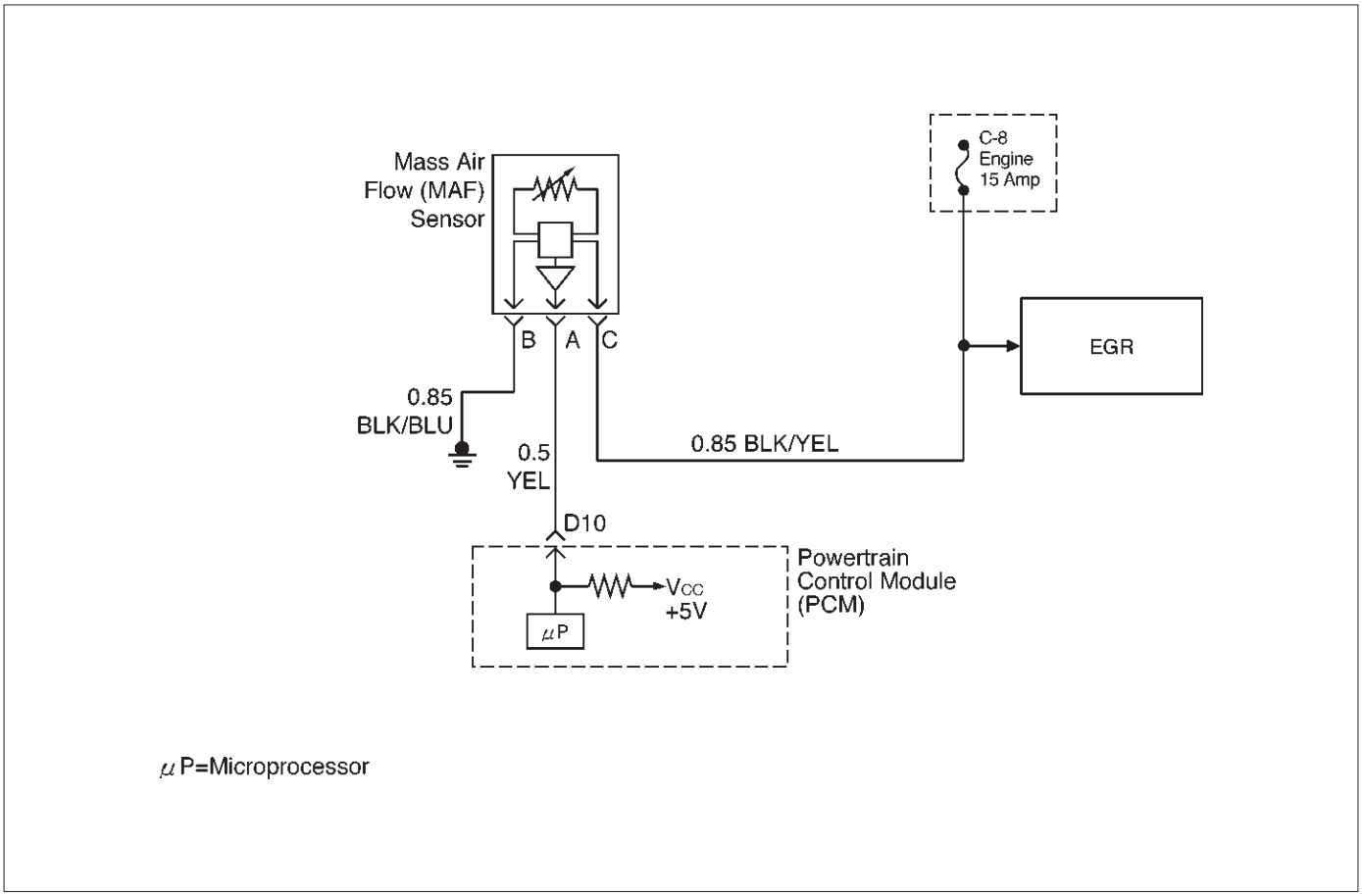

D06RW103

Circuit Description

The mass air flow (MAF) sensor measures the amount of air which passes through it into the engine during a given time. The powertrain control module (PCM) uses the mass air flow information to monitor engine operating conditions for fuel delivery calculations. A large quantity of air entering the engine indicates an acceleration or high load situation, while a small quantity or air indicates deceleration or idle.

The MAF sensor produces a frequency signal which can be monitored using a Tech 2. DTC P0101 will be set if the signal from the MAF sensor does not match a predicted value based on throttle position and engine RPM.

Conditions for Setting the DTC

- The engine is running.
- No TP sensor or MAP sensor DTCs are set.
- The throttle is steady, TP angle doesn't change by more than 1%.
- System voltage is between 11.5 volts and 16 volts.
- Calculated air flow is between 25 g/second and 40 g/second.
- Above conditions present for at least 1 second.
- MAF signal frequency indicates an airflow significantly higher or lower than a predicted value based on throttle position and engine RPM for a total of 12.5 seconds over a 25-second period of time.

Action Taken When the DTC Sets

- The PCM will illuminate the malfunction indicator lamp (MIL) after the second consecutive trip in which the fault is detected.
- The PCM calculates an airflow value based on idle air control valve position, throttle position, RPM and barometric pressure.
- The PCM will store conditions which were present when the DTC was set as Freeze Frame and in the Failure Records data.

Conditions for Clearing the MIL/DTC

- DTC P0101 can be cleared by using the Tech 2 "Clear Info" function or by disconnecting the PCM battery feed.

Diagnostic Aids

An intermittent may be caused by the following:

- Poor connections.
- Mis-routed harness.
- Rubbed through wire insulation.
- Broken wire inside the insulation.

Refer to Intermittents under service category Symptoms.

Any un-metered air may cause this DTC to set. Check for the following:

- The duct work at the MAF sensor for leaks.
- An engine vacuum leak.
- The PCV system for vacuum leaks.
- An incorrect PCV valve.

- The engine oil dip stick not fully seated.
- The engine oil fill cap loose or missing.

Test Description

Number(s) below refer to the step number(s) on the Diagnostic Chart.

2. The MAF system performance or “rationality” diagnostic uses the MAP sensor signal along with other input to calculate an expected airflow rate that is then compared to the actual measured airflow from the MAF sensor. The first few steps of this table verify that the MAP sensor is working properly.

6. Using Freeze Frame and/or Failure Records data may aid in locating an intermittent condition. If the DTC cannot be duplicated, the information included in the Freeze Frame and/or Failure Records data can be useful in determining how many miles since the DTC set. The Fail Counter and Pass Counter can also be used to determine how many ignition cycles the diagnostic reported a pass and/or a fail. Operate the vehicle within the same Freeze Frame conditions (RPM, load, vehicle speed , temperature, etc.) that were noted. This will isolate when the DTC failed.

   For any test that requires back probing the PCM or component harness connectors, use the Connector Test Adapter Kit J 35616-A. Using this kit will prevent any damage to the harness connector terminals.

7. Any un-metered air may cause this DTC to set. Check the PVC system for vacuum leaks. Also inspect the dip stick for being pulled out. Check the oil fill cap for being loose.

8. Verifies the signal circuit from the MAF sensor electrical connector to the PCM.

9. Verifies whether a ground and B+ circuit is available.

10. Checks a signal circuit for an open.

11. Checks for a signal circuit shorted to B+.

DTC P0101 – MAF System Performance

Step	Action	Value(s)	Yes	No
1	Was the “On-Board Diagnostic (OBD) System Check” performed?	—	Go to *Step 2*	Go to *OBD System Check*
2	1. Ignition “ON,” engine “OFF.” 2. Using a Tech 2, select “MAP” from the Engine 1 Data List. Is the value displayed greater than the value shown?	85 kPa	Go to *Step 3*	Go to*Step 13*
3	1. Remove the MAP sensor from the intake manifold but leave the electrical harness connected. 2. Connect a hand operated vacuum pump to the MAP sensor. 3. Observe the MAP display while slowly applying vacuum up to 20” Hg as indicated on the pump gauge. Each 1” of vacuum applied should result in a 3 to 4 kPa drop in the MAP sensor value on the Tech 2 and the value should change smoothly with each increase in vacuum. Did the MAP value change smoothly through the entire range of the test without any erratic readings?	—	Go to *Step 13*	Go to *Step 4*
4	With 20” Hg vacuum applied to the MAP sensor, is the MAF sensor reading the same or less than the value shown?	34 kPa	Go to *Step 5*	Go to *Step 13*
5	Disconnect the vacuum source from the MAP sensor. Does the MAP sensor reading return to its original value?	—	Go to *Step 6*	Go to *Step 13*

DTC P0101 – MAF System Performance (Cont'd)

Step	Action	Value(s)	Yes	No
6	1. Ignition "ON," engine "OFF." 2. Review the Freeze Frame and/or Failure Records data for this DTC and note parameters. 3. Ignition "OFF" for 15 seconds. 4. Start the engine and operate the vehicle within the conditions required for this diagnostic to run, and as close to the conditions recorded in Freeze Frame /Failure Records possible. (Special operating conditions that need to be met before the PCM will run this diagnostic (where applicable) are listed in "Conditions for Setting the DTC"). 5. Using the Tech 2, select "DTC," then enter the DTC number which was set. Does the Tech 2 indicate that this diagnostic failed this ignition?	—	Go to *Step 7*	Refer to *Diagnostic Aids*
7	1. Check for the following conditions: • Objects blocking the MAF sensor inlet screen; • Intake manifold vacuum leaks; • Vacuum leaks at throttle body; • Vacuum leaks EGR value flange and pipes. • Crankcase ventilation valve faulty, missing, or incorrectly installed. 2. If a problem is found, repair as necessary. Was a problem found?	—	Verify repair	Go to*Step 8*
8	1. Ignition "OFF." 2. Disconnect the MAF sensor connector. 3. Ignition "ON," engine "OFF." 4. Using DVM 5-8840-0285-0, measure voltage between the MAF sensor signal circuit and chassis ground. Is the voltage near the specified value?	5 V	Go to *Step 9*	Go to*Step 10*
9	Connect a test light (5-8840-0607-0) between the MAF sensor ignition feed and ground circuits at the MAF sensor harness connector. Is the test light "ON?"	—	Go to *Step 13*	Go to*Step 12*
10	Is the voltage less than the specified value?	4.5 V	Go to *Step 13*	Go to*Step 11*
11	1. Ignition "OFF," disconnect the PCM. 2. Ignition "ON," engine "OFF." 3. Measure voltage between the MAF signal circuit and ground. Does the voltage measure near the specified value?	0 V	Go to *Step 13*	Go to*Step 12*
12	Connect a test light (5-8840-0607-0) between the MAF sensor ignition feed circuit and chassis ground. Is the test light "ON?"	—	Go to *Step 13*	Go to*Step 7*
13	1. Check for a poor connection at the MAF sensor. 2. If a poor connection is found, replace faulty terminal(s). Refer to *Repair Procedures in Electrical Diagnosis (8A Cell 5).* Was a poor connection found?	—	Verify repair	Solved

Diagnostic Trouble Code (DTC) P0102 MAF Sensor Circuit Low Frequency

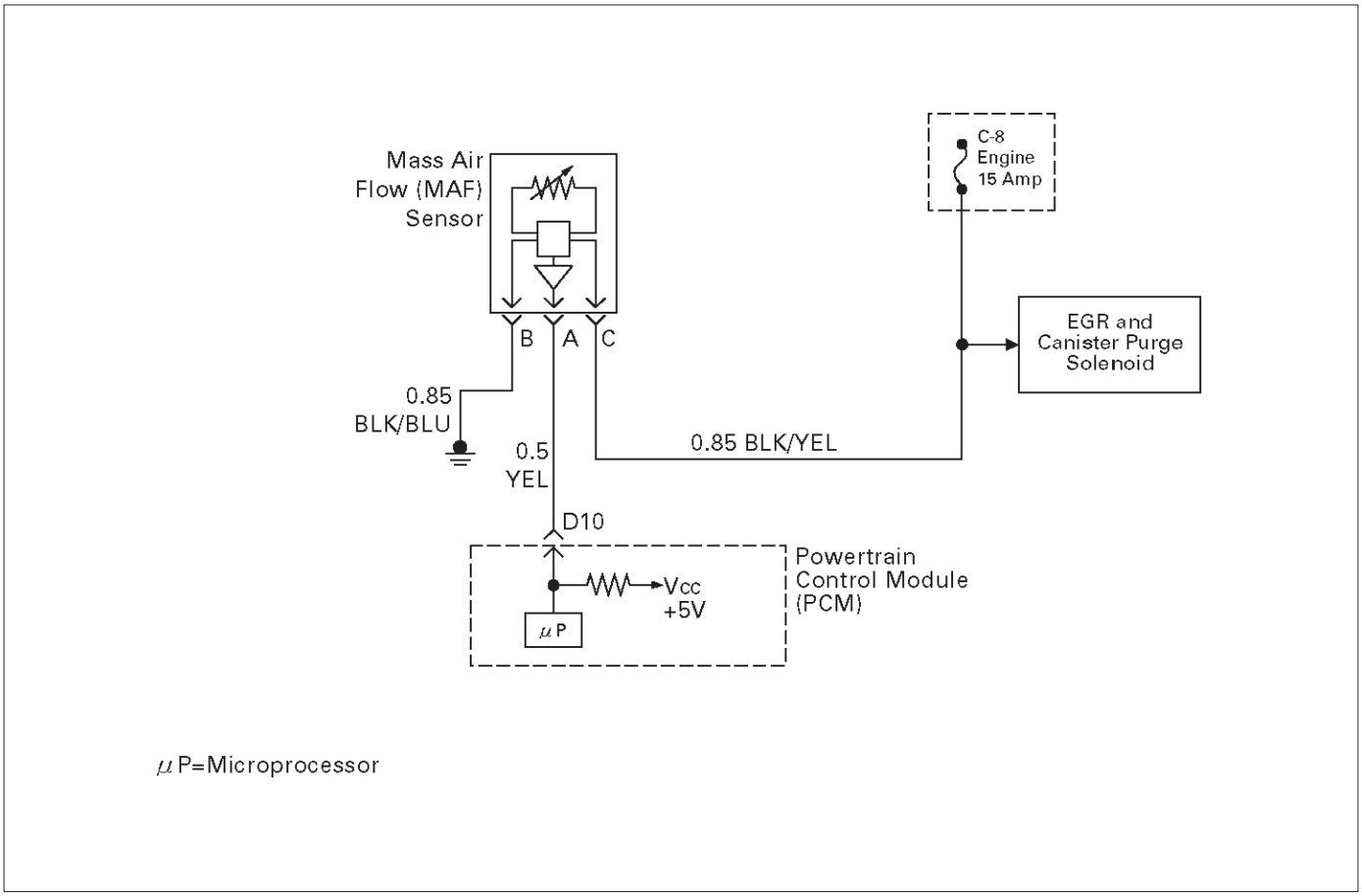

T321122

Circuit Description

The mass air flow (MAF) sensor measures the amount of air which passes through it into the engine during a given time. The powertrain control module (PCM) uses the mass air flow information to monitor engine operating conditions for fuel delivery calculations. A large quantity of air entering the engine indicates an acceleration or high load situation, while a small quantity of air indicates deceleration or idle.

The MAF sensor produces a frequency signal which can be monitored using a Tech 2. The frequency will vary within a range of around 2500 Hz at idle to around 1900 Hz at maximum engine load. DTC P0102 will be set if the signal from the MAF sensor is below the possible range of a normally operating MAF sensor.

Conditions for Setting the DTC

- The engine is running above 500 RPM for greater than 10 seconds.
- System voltage is above 11.5 volts.
- MAF signal frequency is below 1000 Hz for a total of 50-percent of the last 1000 samples monitored. A sample is taken every cylinder event.

Action Taken When the DTC Sets

- The PCM will illuminate the malfunction indicator lamp (MIL) the first time the fault is detected.
- The PCM calculates an air flow value based on idle air control valve position, throttle position, RPM and barometric pressure.
- The PCM will store conditions which were present when the DTC was set as Freeze Frame and in the Failure Records data.

Conditions for Clearing the MIL/DTC

- DTC P0102 can be cleared by using the Tech 2 “Clear Info” function or by disconnecting the PCM battery feed.

Diagnostic Aids

Check for the following conditions:

- Poor connection at PCM – Inspect harness connectors for backed-out terminals, improper mating, broken locks, improperly formed or damaged terminals, and poor terminal-to-wire connection.
- Misrouted harness – Inspect the MAF sensor harness to ensure that it is not routed too close to high voltage wires.
- Damaged harness – Inspect the wiring harness for damage. If the harness appears to be OK, observe the Tech 2 while moving connectors and wiring harnesses related to the MAF sensor. A change in the display will indicate the location of the fault.
- Plugged intake air duct or filter element – A wide-open throttle acceleration from a stop should cause the mass air flow displayed on a Tech 2 to increase from about 3-6 g/second at idle to 100 g/second or greater at the time of the 1-2 shift. If not, check for a restriction.

If DTC P0102 cannot be duplicated, the information included in the Failure Records data can be useful in determining vehicle mileage since the DTC was last set.

Test Description

Number(s) below refer to the step number(s) on the Diagnostic Chart.

2. This step verifies that the problem is present at idle.
4. A voltage reading of less than 4 or over 5 volts at the MAF sensor signal circuit indicates a fault in the wiring or a poor connection.
5. This verifies that ignition feed voltage and a good ground are available at the MAF sensor.

DTC P0102 – MAF Sensor Circuit Low Frequency

Step	Action	Value(s)	Yes	No
1	Was the “On-Board Diagnostic (OBD) System Check” performed?	—	Go to *Step 2*	Go to *OBD System Check*
2	1. Start the engine. 2. With the engine idling, monitor “MAF Frequency” display on the Tech 2. Is the “MAF Frequency” below the specified value?	3 g/Sec	Go to *Step 4*	Go to *Step 5*
3	1. Ignition “ON,” engine “OFF.” 2. Review and record Tech 2 Failure Records data. 3. Operate the vehicle within Failure Records conditions as noted. 4. Using a Tech 2, monitor “DTC” info for DTC P0102. Does the Tech 2 indicate DTC P0102 failed this ignition?	—	Go to *Step 4*	Refer to *Diagnostic Aids*
4	1. Ignition “OFF.” 2. Disconnect the MAF sensor connector. 3. Ignition “ON,” engine “OFF.” 4. Using a DVM, measure voltage between the MAF sensor signal circuit and battery ground. Is the voltage near the specified value?	5 V	Go to *Step 5*	Go to *Step 8*
5	Connect a test light between the MAF sensor ignition feed and ground circuits at the MAF sensor harness connector. Is the test light “ON?”	—	Go to *Step 13*	Go to *Step 6*
6	Connect a test light between the MAF sensor ignition feed circuit and battery ground. Is the test light “ON?”	—	Go to *Step 12*	Go to *Step 7*
7	1. Check for a poor connection at the MAF sensor. 2. If a poor connection is found, replace the faulty terminal(s). Was a poor connection found?	—	Verify repair	Go to *Step 11*
8	1. Ignition “OFF.” 2. Disconnect the MAF sensor. 3. Disconnect the PCM connector for the MAF signal circuit. 4. Ignition “ON,” engine “OFF.” 5. With the DVM, measure the voltage between the MAF signal terminal at the PCM and battery ground. Is the voltage under the specified value?	4 V	Go to *Step 9*	Go to *Step 10*

DTC P0102 – MAF Sensor Circuit Low Frequency (Cont'd)

Step	Action	Value(s)	Yes	No
9	1. Ignition "OFF." 2. Disconnect the PCM white connector. 3. Ignition "ON." 4. Check the MAF sensor signal circuit for a short to 5 volts. Is the action complete?	—	Verify repair	—
10	1. Ignition "OFF." 2. Disconnect the PCM white connector. 3. Ignition "ON." 4. Check the MAF sensor signal circuit between the PCM and the MAF sensor for an open, short to ground, or short to the MAF ground circuit. Is the action complete?	—	Verify repair	Go to *Step 13*
11	Locate and repair the open in the ground circuit to the MAF sensor. Is the action complete?	—	Verify repair	—
12	Locate and repair the open in the ignition feed circuit to the MAF sensor. Is the action complete?	—	Verify repair	—
13	Replace the MAF sensor. Is the action complete?	—	Verify repair	Go to *Step 14*
14	Replace the PCM. **IMPORTANT:** The replacement PCM must be programmed. Refer to *UBS 98model year Immobilizer Workshop Manual.* Is the action complete?	—	Verify repair	—

Diagnostic Trouble Code (DTC) P0103 MAF Sensor Circuit High Frequency

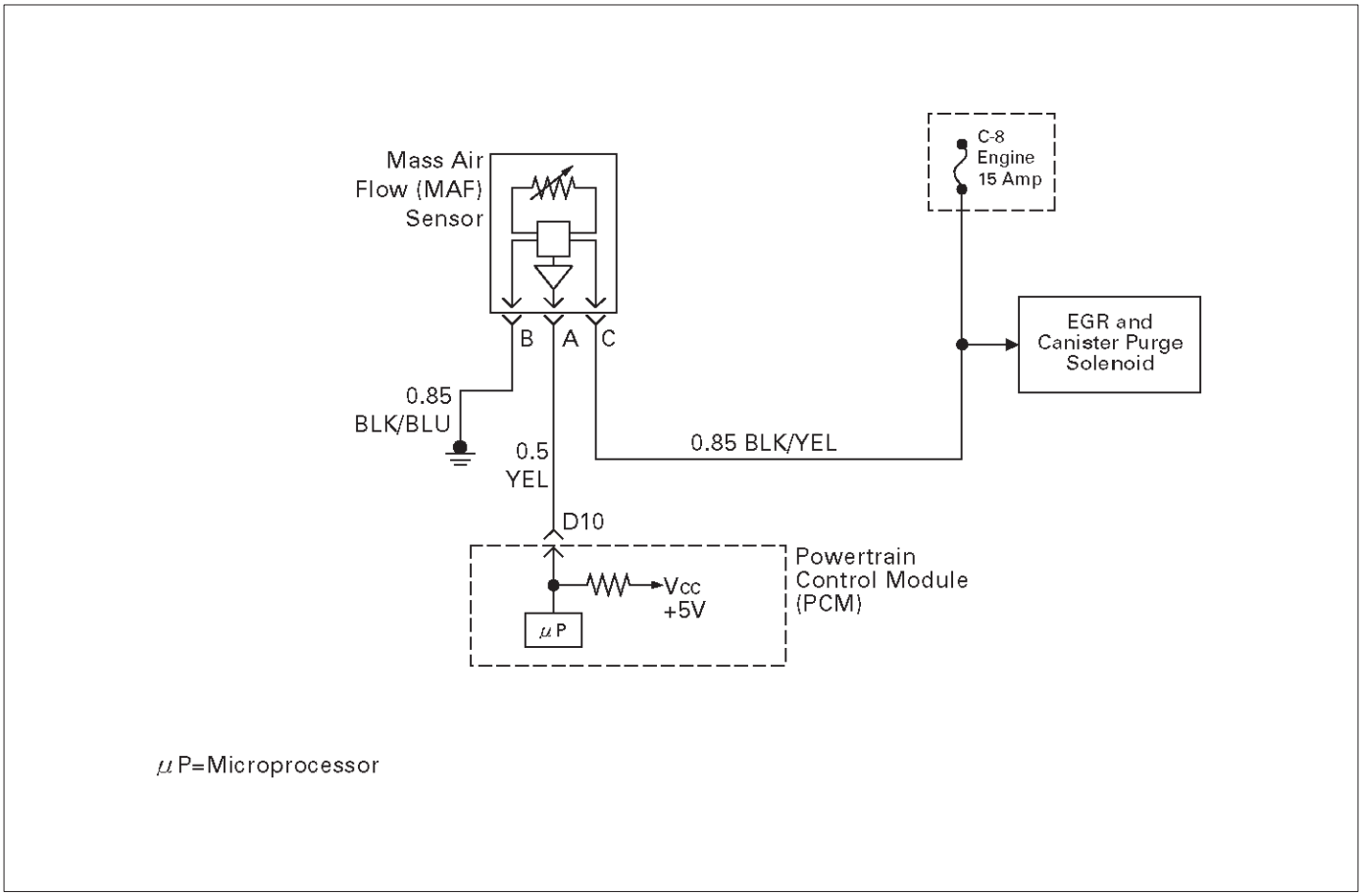

T321122

Circuit Description

The mass air flow (MAF) sensor measures the amount of air which passes through it into the engine during a given time. The powertrain control module (PCM) uses the mass air flow information to monitor engine operating conditions for fuel delivery calculations. A large quantity of air entering the engine indicates an acceleration or high load situation, while a small quantity of air indicates deceleration or idle.

The MAF sensor produces a frequency signal which can be monitored using a Tech 2. The frequency will vary within a range of around 2500 Hz at idle to around 9000 Hz at maximum engine load. DTC P0103 will be set if the signal from the MAF sensor is above the possible range of a normally operating MAF sensor.

Conditions for Setting the DTC

- The engine is running above 500 RPM for more than 10 seconds.
- System voltage is above 11.5 volts.
- MAF signal frequency is above 10,000 Hz (10.0 kHz) for a total of 50 percent of the last 200 samples monitored. A sample is taken every cylinder event.

Action Taken When the DTC Sets

- The PCM will illuminate the malfunction indicator lamp (MIL) the first time the fault is detected.
- The PCM calculates an airflow value based on idle air control valve position, throttle position, RPM and barometric pressure.
- The PCM will store conditions which were present when the DTC was set as Freeze Frame and in the Failure Records data.

Conditions for clearing the MIL/DTC

- DTC P0103 can be cleared by using the Tech 2 “Clear Info” function or by disconnecting the PCM battery feed.

Diagnostic Aids

If DTC P0103 cannot be duplicated, the information included in the Failure Records data can be useful in determining vehicle mileage since the DTC was last set.

Test Description

Number(s) below refer to the step number(s) on the Diagnostic Chart.

2. This step verifies that the problem is present at idle.

4. A frequency reading with the MAF sensor connector disconnected indicates an electromagnetic interfernce (EMI) related fault.

DTC P0103 – MAF Sensor Circuit High Frequency

Step	Action	Value(s)	Yes	No
1	Was the “On-Board Diagnostic (OBD) System Check” performed?	—	Go to *Step 2*	Go to *OBD System Check*
2	1. Ignition “ON,” engine “OFF.” 2. Review and record Tech 2 Failure Records data. 3. Operate the vehicle within Failure Records conditions as noted. 4. Using a Tech 2, monitor “DTC” info for DTC P0103. Does the Tech 2 indicate DTC P0103 failed this ignition?	—	Go to *Step 3*	Refer to *Diagnostic Aids*
3	1. Start the engine. 2. With the engine idling, monitor “MAF Frequency” display on the Tech 2. Is “MAF Frequency” above the specified value?	219 g/Sec	Go to *Step 4*	Go to *Step 7*
4	1. Ignition “OFF.” 2. Disconnect the MAF sensor connector. 3. Ignition “ON,” engine idling. 4. Using a Tech 2, monitor “MAF Frequency.” Does the Tech 2 indicate a “MAF Frequency” at the specified value?	0.0 g/Sec	Go to *Step 5*	Go to *Step 6*
5	Replace the MAF sensor. Is the action complete?	—	Verify repair	Go to *Step 8*
6	1. Check the MAF harness for incorrect routing near high voltage components (solenoids, relays, motors). 2. If incorrect routing is found, correct the harness routing. Was a problem found?	—	Verify repair	Go to *Step 7*
7	1. With the engine idling, monitor “MAF Frequency” display on the Tech 2. 2. Quickly snap open throttle to wide open throttle while under a road load and record value. Does the Tech 2 indicate “MAF Frequency” above the specified value?	219 g/Sec	Go to *Step 5*	Go to *Step 8*
8	Replace the PCM. **IMPORTANT:** The replacement PCM must be programmed. Refer to *UBS 98model year Immobilizer Workshop Manual.* Is the action complete?	—	Verify repair	—

Diagnostic Trouble Code (DTC) P0107 MAP Sensor Circuit Low Voltage

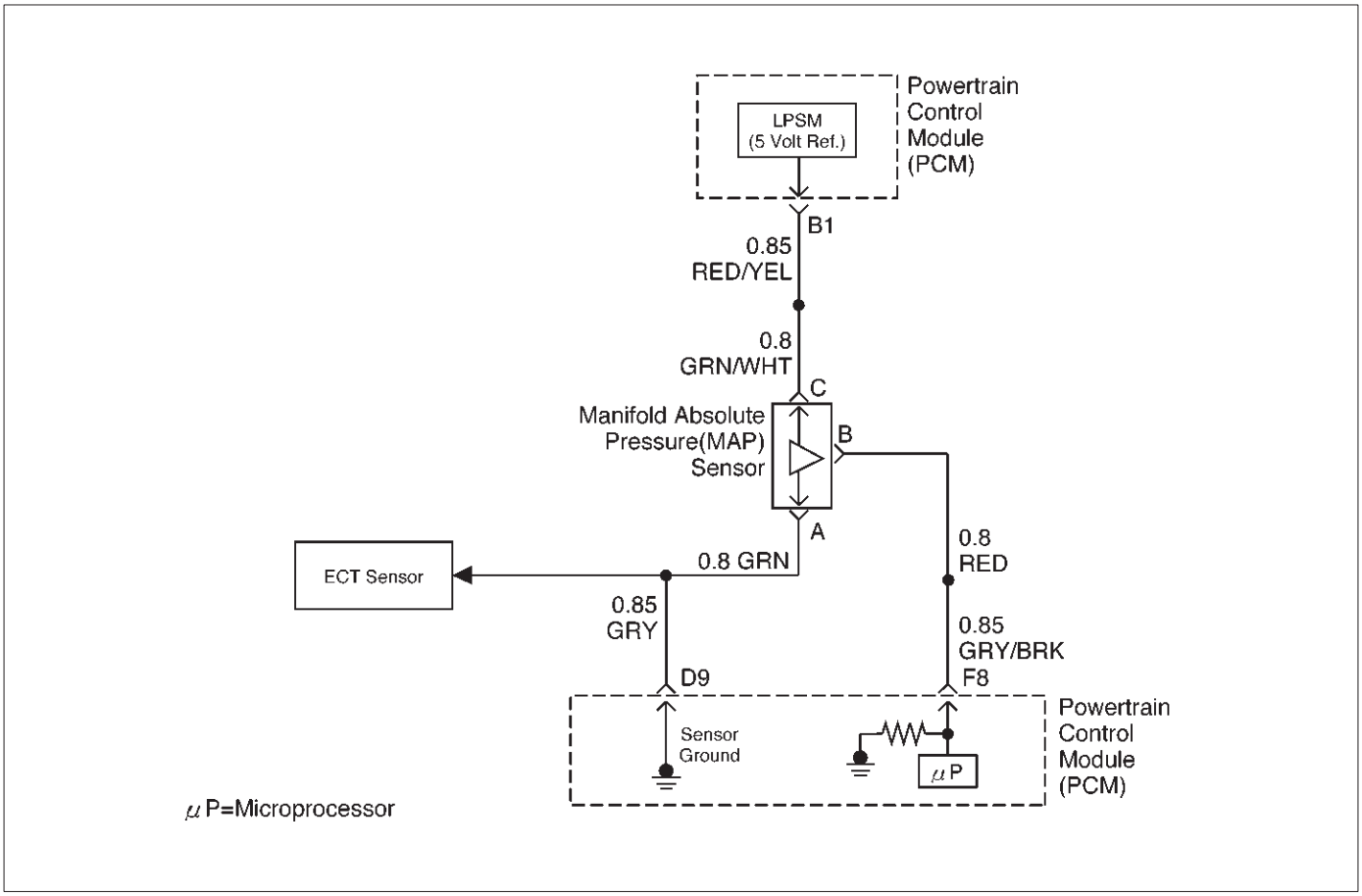

D06RW102

Circuit Description

The manifold absolute pressure (MAP) sensor responds to changes in intake manifold pressure (vacuum). The MAP sensor signal voltage to the powertrain control module (PCM) varies from below 2 volts at idle (high vacuum) to above 4 volts with the ignition "ON," engine not running or at wide-open throttle (low vacuum).

The MAP sensor is used to determine manifold pressure changes while the exhaust gas recirculation (EGR) flow test diagnostic is being run (refer to *DTC P0401*), to determine engine vacuum level for some other diagnostics and to determine barometric pressure (BARO). The PCM monitors the MAP signals for voltages outside the normal range of the MAP sensor. If the PCM detects a MAP signal voltage that is excessively low, DTC P0107 will be set.

Conditions for Setting the DTC

- No TP sensor DTCs present.
- Engine is running.
- Throttle angle is above 1% if engine speed is less than 1000 RPM.
- Throttle angle is above 2% if engine speed is above 1000 RPM.
- The MAP sensor indicates manifold absolute pressure at or below 11 kPa for a total of approximately 10 seconds over a 16-second period.
- Ignition voltage more than 11 volts.

Action Taken When the DTC Sets

- The PCM will illuminate the malfunction indicator lamp (MIL) the first time the fault is detected.
- The PCM will default to a BARO value of 79.3 kPa.
- The PCM will store conditions which were present when the DTC was set as Freeze Frame and in the Failure Records data.

Conditions for Clearing the MIL/DTC

- DTC P0107 can be cleared by using the Tech 2 "Clear Info" function or by disconnecting the PCM battery feed.

Diagnostic Aids

Check for the following conditions:

- Check for intermittent codes.
- The MAP sensor shares a 5 Volt reference with the Rough Road Sensor. If these codes are also set, it could indicate a problem with the 5 Volt reference circuit .
- The MAP sensor shares a ground with the Rough Road Sensor, the ECT sensor, and the Transmission Fluid Temperature sensor.
- Poor connection at PCM – Inspect harness connectors for backed-out terminals, improper mating, broken locks, improperly formed or damaged terminals, and poor terminal-to-wire connection.
- Damaged harness – Inspect the wiring harness for damage. If the harness appears to be OK, observe the MAP display on the Tech 2 while moving connectors

and wiring harnesses related to the sensor. A change in the display will indicate the location of the fault.

If DTC P0107 cannot be duplicated, the information included in the Failure Records data can be useful in determining vehicle mileage since the DTC was last set. If it is determined that the DTC occurs intermittently, performing the DTC P0107 Diagnostic Chart may isolate the cause of the fault.

DTC P0107 – MAP Sensor Circuit Low Voltage

Step	Action	Value(s)	Yes	No
1	Was the “On-Board Diagnostic (OBD) System Check” performed?	—	Go to *Step 2*	Go to *OBD System Check*
2	1. Ignition “ON,” engine “OFF.” 2. With the throttle closed, observe the MAP value displayed on the Tech 2. Is the MAP value near the specified value?	11 kPa at sea level	Go to *Step 4*	Go to *Step 3*
3	1. Ignition “ON,” engine “OFF.” 2. Review and record Tech 2 Failure Records data. 3. Operate the vehicle within Failure Records conditions as noted. 4. Using a Tech 2, monitor “Specific DTC” info for DTC P0107. Does the Tech 2 indicate DTC P0107 failed?	—	Go to *Step 4*	Refer to *Diagnostic Aids*
4	1. Ignition “OFF.” 2. Disconnect the MAP sensor electrical connector. 3. Jumper the 5 volt reference “A” circuit and the MAP signal together at the MAP sensor harness connector. 4. Ignition “ON.” 5. Observe the MAP value displayed on the Tech 2. Is the MAP value near the specified value?	5 V 104 kPa	Go to *Step 10*	Go to *Step 5*
5	1. Disconnect the jumper. 2. Connect a test light between B+ and the MAP sensor signal circuit at the MAP sensor harness connector. 3. Observe the MAP value displayed on the Tech 2. Is the MAP value near the specified value.	5 V 104 kPa	Go to *Step 6*	Go to *Step 8*
6	1. Ignition “OFF.” 2. Disconnect the PCM and check the 5 volt reference “A” circuit for an open or short to ground. 3. If the 5 volt reference “A” circuit is open or shorted to ground, repair it as necessary. Was the 5 volt reference “A” circuit open or shorted to ground?	—	Verify repair	Go to *Step 7*
7	Check the 5 volt reference “A” circuit for a poor connection at the PCM and replace the terminal if necessary. Did the terminal require replacement?	—	Verify repair	Go to *Step 11*
8	1. Ignition “OFF.” 2. Disconnect the PCM, and check the MAP signal circuit for an open, short to ground, or short to the sensor ground circuit. 3. If the MAP sensor signal circuit is open or shorted to ground, repair it as necessary. Was the MAP signal circuit open or shorted to ground?	—	Verify repair	Go to *Step 9*

DTC P0107 – MAP Sensor Circuit Low Voltage (Cont'd)

Step	Action	Value(s)	Yes	No
9	Check the MAP sensor signal circuit for a poor connection at the PCM and the MAP sensor; replace the terminal if necessary. Did the terminal require replacement?	—	Verify repair	Go to *Step 11*
10	Replace the MAP sensor. Is the action complete?	—	Verify repair	—
11	Replace the PCM. **IMPORTANT:** The replacement PCM must be programmed. Refer to *UBS 98model year Immobilizer Workshop Manual.* Is the action complete?	—	Verify repair	—

Diagnostic Trouble Code (DTC) P0108 MAP Sensor Circuit High Voltage

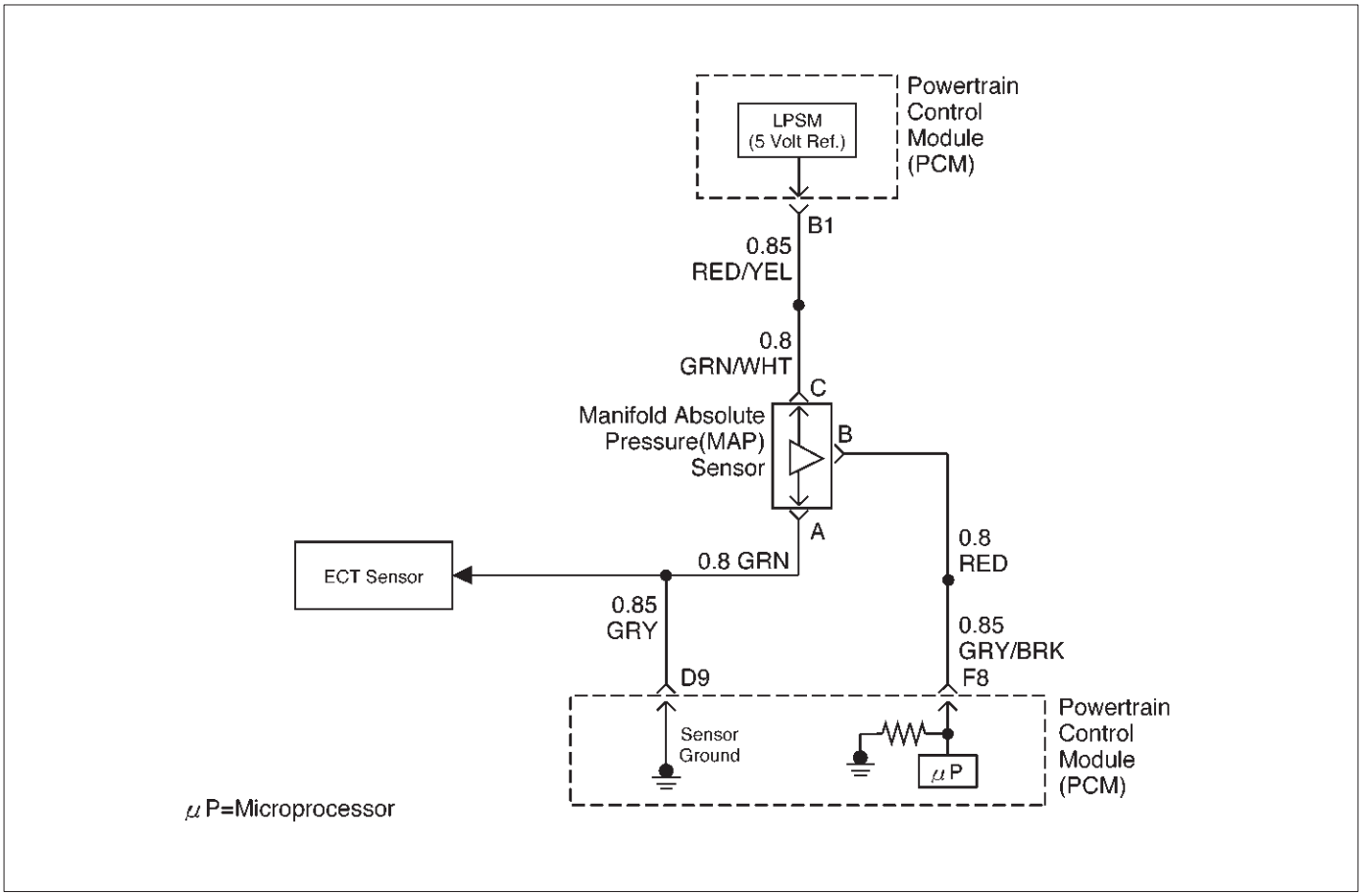

D06RW102

Circuit Description

The manifold absolute pressure (MAP) sensor responds to changes in intake manifold pressure (vacuum). The MAP sensor signal voltage to the powertrain control module (PCM) varies from below 2 volts at idle (high vacuum) to above 4 volts with the key "ON," engine not running or at wide-open throttle (low vacuum).

The MAP sensor is used to determine manifold pressure changes while the linear EGR flow test diagnostic is being run (refer to *DTC P0401*), to determine engine vacuum level for some other diagnostics and to determine barometric pressure (BARO). The PCM monitors the MAP signals for voltages outside the normal range of the MAP sensor. If the PCM detects a MAP signal voltage that is excessively high, DTC P0108 will be set.

Conditions for Setting the DTC

- No TP sensor DTCs present.
- Engine is running for more than 10 seconds.
- Throttle position is below 3% if engine speed is below 1000 RPM.
- Throttle position is below 10% if engine speed is above 1000 RPM.
- The MAP sensor indicates an intermittent manifold absolute pressure above 80 kPa for a total of approximately 10 seconds over a 16-second period.

Action Taken When the DTC Sets

- The PCM will illuminate the malfunction indicator lamp (MIL) the first time the fault is detected.
- The PCM will default to a BARO value of 79.3 kPa.
- The PCM will store conditions which were present when the DTC was set as Freeze Frame and in the Failure Records data.

Conditions for Clearing the MIL/DTC

- DTC P0108 can be cleared by using the Tech 2 "Clear Info" function or by disconnecting the PCM battery feed.

Diagnostic Aids

Check for the following conditions:

- Poor connection at PCM – Inspect harness connectors for backed-out terminals, improper mating, broken locks, improperly formed or damaged terminals, and poor terminal-to-wire connection.
- Damaged harness – Inspect the wiring harness for damage. If the harness appears to be OK, observe the MAP display on the Tech 2 while moving connectors and wiring harnesses related to the sensor. A change in the display will indicate the location of the fault.

If DTC P0108 cannot be duplicated, the information included in the Failure Records data can be useful in determining vehicle mileage since the DTC was last set. If it is determined that the DTC occurs intermittently, performing the DTC P1108 Diagnostic Chart may isolate the cause of the fault.

DTC P0108 – MAP Sensor Circuit High Voltage

Step	Action	Value(s)	Yes	No
1	Was the “On-Board Diagnostic (OBD) System Check” performed?	—	Go to *Step 2*	Go to *OBD System Check*
2	1. If the engine idle is rough, unstable or incorrect, repair the idle problem before using this chart. Refer to *Symptoms* section. 2. With the engine idling, note the MAP value on the Tech 2. Is the MAP reading above the specified value?	90 kPa	Go to *Step 4*	Go to *Step 3*
3	1. Ignition “ON,” engine “OFF.” 2. Review and record Tech 2 Failure Records data. 3. Operate the vehicle within Failure Records conditions as noted. 4. Using a Tech 2, monitor “Specific DTC” info for DTC P0108. Does the Tech 2 indicate DTC P0108 failed this ignition?	—	Go to *Step 4*	Refer to *Diagnostic Aids*
4	1. Ignition “OFF.” 2. Disconnected the MAP sensor electrical connector. 3. Ignition “ON.” 4. Note the MAP sensor voltage displayed on the Tech 2. Is the MAP sensor voltage at the specified value?	0.0 V 11 kPa	Go to *Step 5*	Go to *Step 6*
5	Probe the sensor ground circuit with a test light to B+. Is the test light “ON?”	—	Go to *Step 7*	Go to *Step 9*
6	1. Check the MAP signal circuit for a short to voltage or a short to the 5 volt reference “A” circuit. 2. If the MAP sensor signal circuit is shorted, repair circuit as necessary. Was the MAP sensor signal circuit shorted?	—	Verify repair	Go to *Step 11*
7	1. Check for a poor sensor ground terminal connection at the MAP sensor electrical connector. 2. If a problem if found, replace the faulty terminal. Did the terminal require replacement?	—	Verify repair	Go to *Step 8*
8	Check for a plugged or leaking vacuum supply to the MAP sensor. Is the vacuum supply plugged or leaking?	—	Verify repair	Go to *Step 12*
9	1. Check for a poor sensor ground terminal connection at the PCM. 2. If a problem is found, replace the faulty terminal. Did the terminal require replacement?	—	Verify repair	Go to *Step 10*
10	1. Check the continuity of the MAP sensor ground circuit. 2. If the MAP sensor ground circuit measures over 5 ohms, repair open or poor connection. Was a condition found and corrected?	—	Verify repair	Go to *Step 11*

DTC P0108 – MAP Sensor Circuit High Voltage (Cont'd)

Step	Action	Value(s)	Yes	No
11	Replace the PCM. **IMPORTANT:** The replacement PCM must be programmed. Refer to *UBS 98model year Immobilizer Workshop Manual.* Is the action complete?	—	Verify Repair	—
12	Replace the MAP sensor. Is the action complete?	—	Verify repair	—

Diagnostic Trouble Code (DTC) P0112 IAT Sensor Circuit Low Voltage

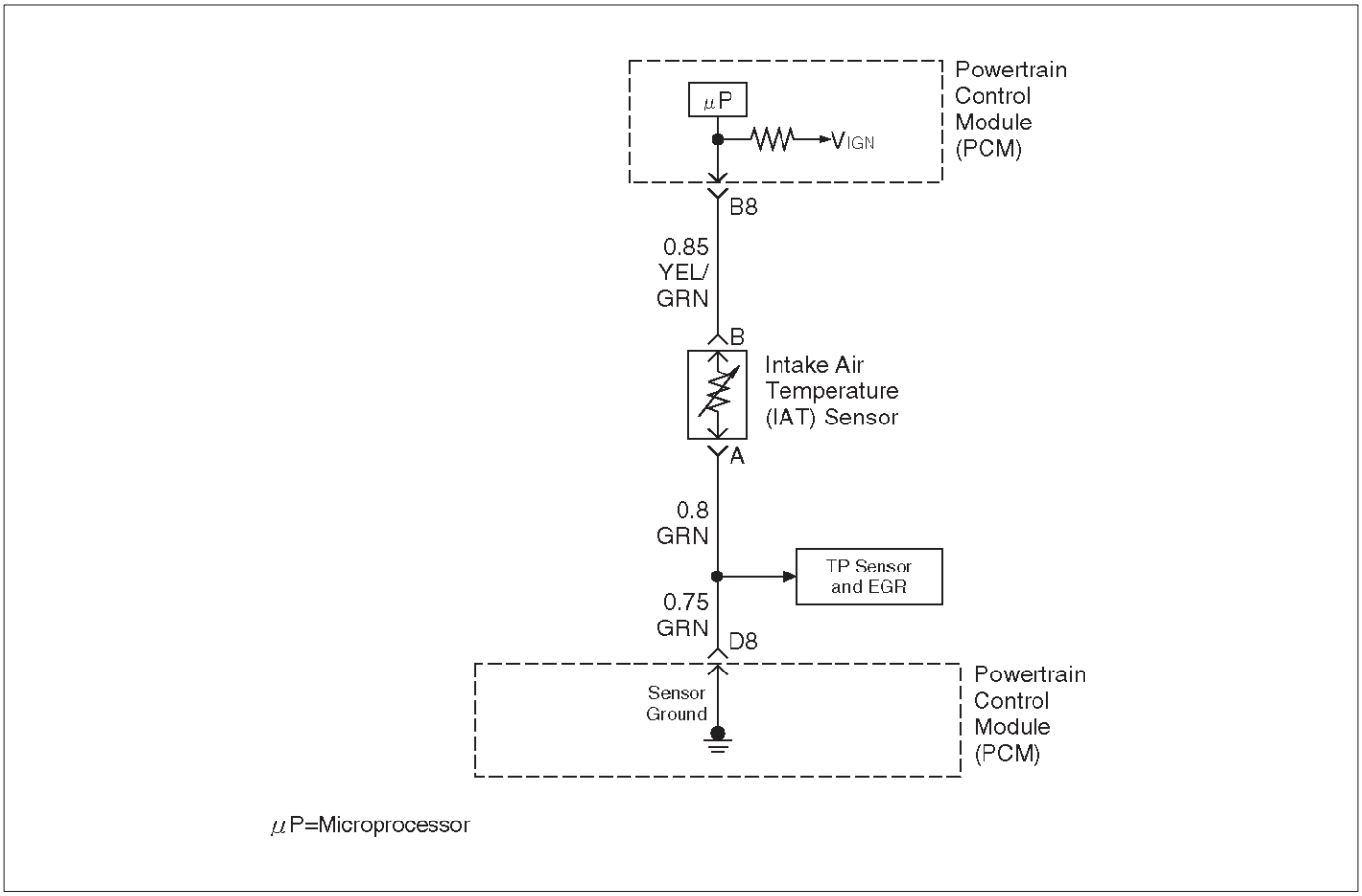

D06RW026

Circuit Description

The intake air temperature (IAT) sensor is a thermistor which measures the temperature of the air entering the engine. The powertrain control module (PCM) applies 5 volts through a pull-up resistor to the IAT sensor. When the intake air is cold, the sensor resistance is high and the PCM will monitor a high signal voltage on the IAT signal circuit. If the intake air is warm, the sensor resistance is lower, causing the PCM to monitor a lower voltage. DTC P0112 will set when the PCM detects an excessively low signal voltage on the intake air temperature sensor signal circuit.

Conditions for Setting the DTC

- The engine has been running for over 2 minutes.
- Vehicle speed is greater than 30 mph (48 km/h) .
- IAT signal voltage indicates and intake air temperature greater than 148˚C (298˚F) (about 5 volts) for a total of 12.5 seconds over a 25-second period of time.

Action Taken When the DTC Sets

- The PCM will illuminate the malfunction indicator lamp (MIL) the first time the fault is detected.
- The PCM will store conditions which were present when the DTC was set as Freeze Frame and in the Failure Records data.

Conditions for Clearing the MIL/DTC

- DTC P0112 can be cleared by using the Tech 2 “Clear Info” function or by disconnecting the PCM battery feed.

Diagnostic Aids

Check for the following conditions:

- Poor connection at PCM – Inspect harness connectors for backed-bout terminals, improper mating, broken locks, improperly formed or damaged terminals, and poor terminal-to-wire connection.
- Damaged harness – Inspect the wiring harness for damage. If the harness appears to be OK, observe the IAT display on the Tech 2 while moving connectors and wiring harnesses related to the IAT sensor. A change in the IAT display will indicate the location of the fault.

If DTC P0112 cannot be duplicated, the information included in the Failure Records data can be useful in determining vehicle mileage since the DTC was last set.

Test Description

Number(s) below refer to the step number(s) on the Diagnostic Chart:

2. Verifies that the fault is present.

3. If DTC P0112 can be repeated only by duplicating the Failure Records condition, refer to the *Temperature vs. Resistance Value* table. The table may be used to test the IAT sensor at various temperatures to evaluate the possibility of a "shifted" sensor that may be stored above or below a certain temperature. If this is the case, replace the IAT sensor. If the IAT sensor appears to be OK, the fault is intermittent; refer to *Diagnostic Aids*.

Intake Air Temperature Sensor

˚C	˚F	OHMS
Temperature vs. Resistance Values (approximate)		
100	212	177
80	176	332
60	140	667
45	113	1188
35	95	1802
25	77	2796
15	59	4450
5	41	7280
–5	23	12300
–15	5	21450
–30	–22	52700
–40	–40	100700

DTC P0112–IAT Sensor Circuit Low Voltage

Step	Action	Value(s)	Yes	No
1	Was the “On-Board Diagnostic (OBD) System Check” performed?	—	Go to *Step 2*	Go to *OBD System Check*
2	1. Ignition “ON,” engine “OFF.” 2. Using a Tech 2, monitor the intake air temperature (IAT). Is the intake air temperature greater than the specified value?	148˚C (283˚F)	Go to *Step 4*	Go to *Step 3*
3	1. Ignition “ON,” engine “OFF.” Review and record Tech 2 Failure Records data. 2. Operate the vehicle within Failure Records conditions as noted. 3. Using a Tech 2, monitor the “Specific DTC” info for DTC P0112. Does the Tech 2 indicate DTC P0112 failed this ignition?	—	Refer to *Test Description*	Refer to *Diagnostic Aids*
4	1. Ignition “OFF.” 2. Disconnect the IAT sensor electrical connector. 3. Ignition “ON.” 4. Observe the intake air temperature on the Tech 2. Is the intake air temperature below the specified value?	–38˚C (–36˚F)	Go to *Step 6*	Go to *Step 5*
5	1. Ignition “OFF.” 2. Disconnect the PCM electrical connectors. 3. Check the IAT sensor signal circuit for a short to ground. Is the IAT sensor signal circuit shorted to ground?	—	Verify repair	Go to *Step 7*
6	Replace the IAT sensor. Is the action complete?	—	Verify repair	—
7	Replace the PCM. **IMPORTANT:** The replacement PCM must be programmed. Refer to *UBS 98model year Immobilizer Workshop Manual.* Is the action complete?	—	Verify repair	—

Diagnostic Trouble Code (DTC) P0113 IAT Sensor Circuit High Voltage

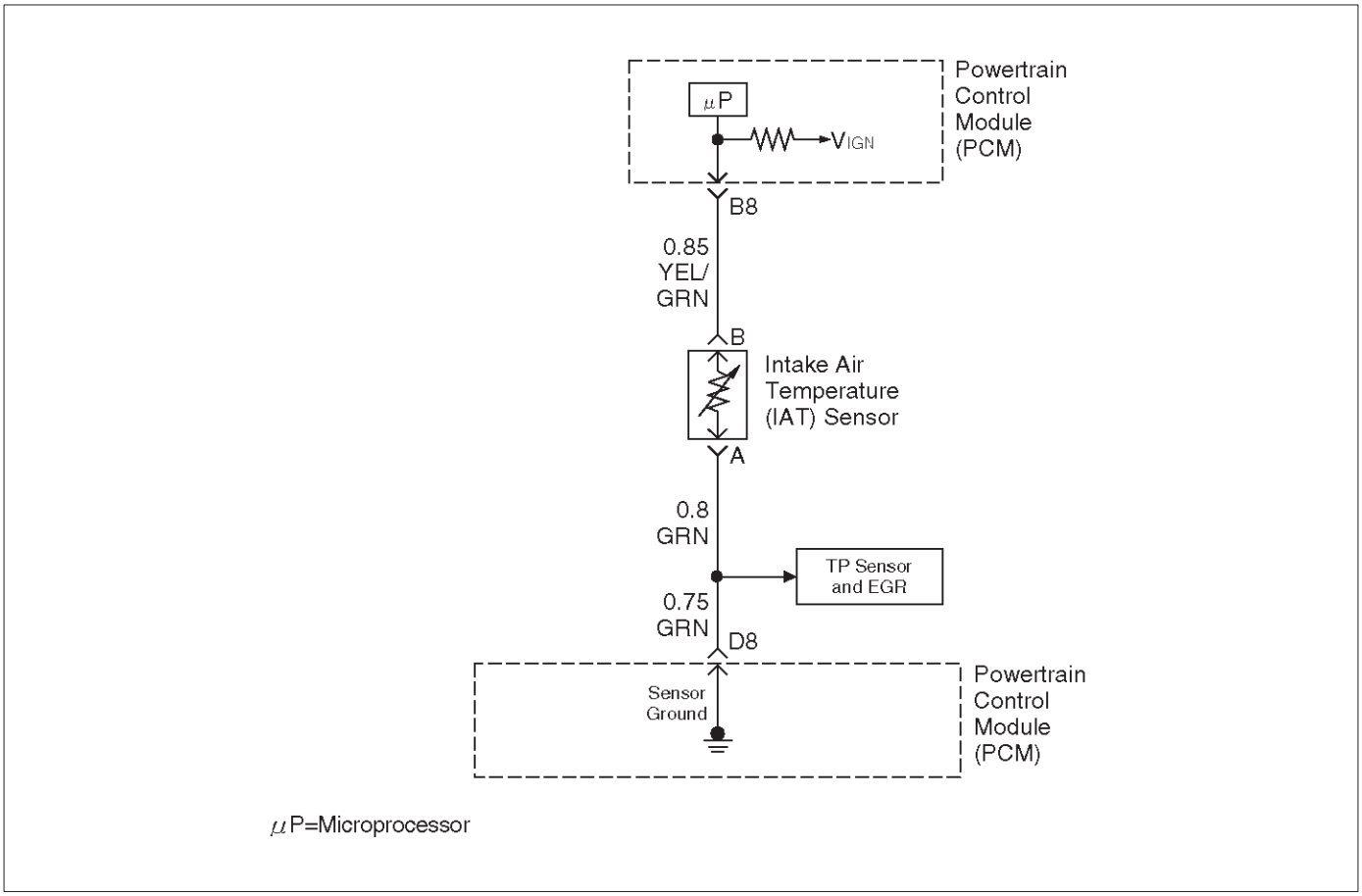

D06RW026

Circuit Description

The intake air temperature (IAT) sensor is a thermistor which measures the temperature of the air entering the engine. The powertrain control module (PCM) applies 5 volts through a pull-up resistor to the IAT sensor. When the intake air is cold, the sensor resistance is high and the PCM will monitor a high signal voltage on the IAT signal circuit. If the intake air is warm, the sensor resistance is lower causing the PCM to monitor a lower voltage. DTC P0113 will set when the PCM detects an excessively high signal voltage on the intake air temperature sensor signal circuit.

Conditions for Setting the DTC

- The engine has been running for over 4 minutes.
- Vehicle speed is less than 20 mph (32 km/h).
- ECT signal temperature is above 60˚C (140˚F).
- Mass air flow is less then 20 g/second.
- IAT signal voltage indicates an intake air temperature less than –39˚C (–38˚F) for total of 12.5 seconds over a 25-second period.

Action Taken When the DTC Sets

- The PCM will illuminate the malfunction indicator lamp (MIL) the first time the fault is detected.
- The PCM will store conditions which were present when the DTC was set as Freeze Frame and in the Failure Records data.

Conditions for Clearing the MIL/DTC

- DTC P0113 can be cleared by using the Tech 2 “Clear Info” function or by disconnecting the PCM battery feed.

Diagnostic Aids

Check for the following conditions:

- The IAT sensor shares a ground with the EGR position sensor and the TP sensor. Check the ground if these DTC’s are set.
- Poor connection at PCM – Inspect harness connectors for backed-out terminals, improper mating, broken locks, improperly formed or damaged terminals, and poor terminal-to-wire connection.
- Damaged harness – Inspect the wiring harness for damage. If the harness appears to be OK, observe the IAT display on the Tech 2 while moving connectors and wiring harnesses related to the IAT sensor. A change in the IAT display will indicate the location of the fault.

If DTC P0113 cannot be duplicated, the information included in the Failure Records data can be useful in determining vehicle mileage since the DTC was last set.

Test Description

Number(s) below refer to the step number(s) on the Diagnostic Chart:

2. Verifies that the fault is present.

3. If DTC P0113 can be repeated only by duplicating the Failure Records conditions, refer to the "Temperature vs. Resistance Values" table. The table may be used to test the IAT sensor at various temperatures to evaluate the possibility of a "shifted" sensor that may be open above or below a certain temperature. If this is the case, replace the IAT sensor. If the IAT sensor appears to be OK, the fault is intermittent; refer to *Diagnostic Aids*.

Intake Air Temperature Sensor

˚C	˚F	OHMS
Temperature vs. Resistance Values (approximate)		
100	212	177
80	176	332
60	140	667
45	113	1188
35	95	1802
25	77	2796
15	59	4450
5	41	7280
–5	23	12300
–15	5	21450
–30	–22	52700
–40	–40	100700

DTC P0113 –IAT Sensor Circuit High Voltage

Step	Action	Value(s)	Yes	No
1	Was the "On-Board Diagnostic (OBD) System Check" performed?	—	Go to *Step 2*	Go to *OBD System Check*
2	Ignition "ON," engine "OFF." Observe the "Intake Air Temp" display on the Tech 2. Is the "Intake Air Temp" below the specified value?	–38˚C (–36˚F)	Go to *Step 4*	Go to *Step 3*
3	1. Ignition "ON," engine "OFF." 2. Review and record Tech 2 Failure Records data parameters. 3. Operate the vehicle within Failure Records conditions as noted. 4. Using a Tech 2, monitor "Specific DTC" info for DTC P0113. Does the Tech 2 indicate DTC P0113 failed?	—	Refer to *Test Description*	Refer to *Diagnostic Aids*
4	1. Ignition "OFF." 2. Disconnect the IAT sensor electrical connector. 3. Jumper the IAT signal circuit and the sensor ground circuit together at the IAT sensor harness connector. 4. Ignition "ON." 5. Observe the "Intake Air Temp" display on the Tech 2. Is the "Intake Air Temp" at the specified value?	140˚C (284˚F)	Go to *Step 6*	Go to *Step 5*
5	1. Jumper the IAT signal circuit at the IAT sensor harness connector to chassis ground. 2. Observe the "Intake Air Temp" display on the Tech 2. Is the "Intake Air Temp" at the specified value?	140˚C (284˚F)	Go to *Step 7*	Go to *Step 8*

DTC P0113 –IAT Sensor Circuit High Voltage (Cont'd)

Step	Action	Value(s)	Yes	No
6	Check for poor connections at the IAT sensor and replace terminals if necessary. Did any terminals require replacement?	—	Verify repair	Go to *Step 10*
7	1. Ignition "OFF." 2. Disconnect the PCM, and check the IAT sensor ground circuit for an open. 3. If the IAT sensor ground circuit is open, repair it as necessary. Was the IAT sensor ground circuit open?	—	Verify repair	Go to *Step 9*
8	1. Ignition "OFF." 2. Disconnect the PCM, and check the IAT signal circuit for an open. 3. If the IAT sensor signal circuit is open, repair it as necessary. Was the IAT signal circuit open?	—	Verify repair	Go to *Step 9*
9	Check for a poor sensor ground or IAT signal circuit terminal connection at the PCM and replace terminal(s) if necessary. Did any of the terminals need to be replaced?	—	Verify repair	Go to *Step 11*
10	Replace the IAT sensor. Is the action complete?	—	Verify repair	—
11	Replace the PCM. **IMPORTANT:** The replacement PCM must be programmed. Refer to *UBS 98model year Immobilizer Workshop Manual.* Is the action complete?	—	Verify repair	—

Diagnostic Trouble Code (DTC) P0117 ECT Sensor Circuit Low Voltage

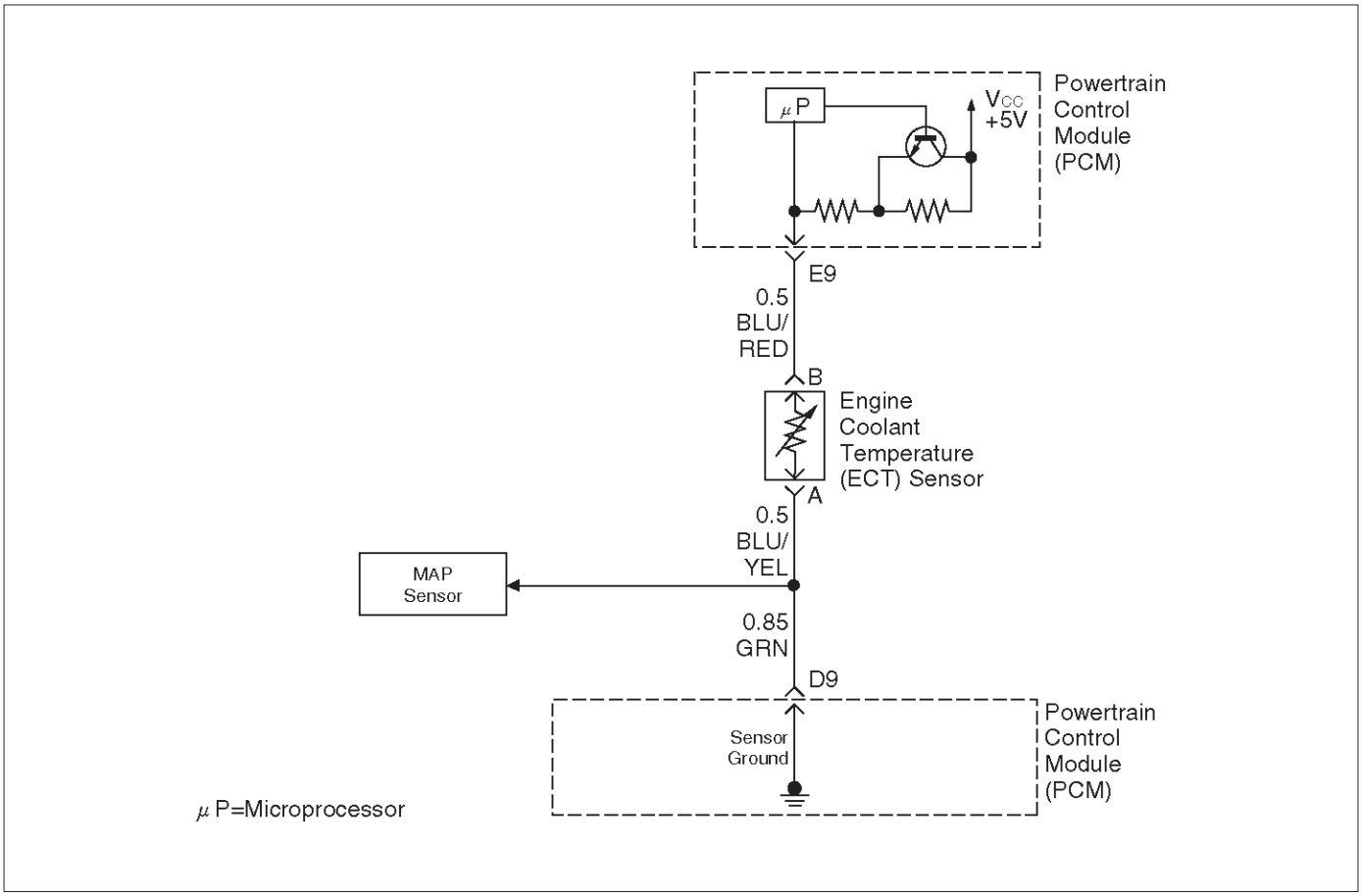

060RY00304

Circuit Description

The engine coolant temperature (ETC) sensor is a thermistor mounted on a coolant crossover pipe at the rear of the engine. The powertrain control module (PCM) applies a voltage (about 5 volts) through a pull-up resistor to the ECT signal circuit. When the engine coolant is cold, the sensor (thermistor) resistance is high, therefore the PCM will measure a high signal voltage. As the engine coolant warms, the sensor resistance becomes lower, and the ECT signal voltage measured at the PCM drops. With a fully warmed-up engine, the ECT signal voltage should measure about 1.5 to 2.0 volts.

Conditions for Setting the DTC

- Engine running time is longer than one minute.
- The ECT sensor signal indicates an engine coolant temperature greater than 150˚C (302˚F) (about 0.10 V) for a total of 50 seconds over a 100–second period.

Action Taken When the DTC Sets

- The PCM will illuminate the malfunction indicator lamp (MIL) the first time the fault is detected.
- The PCM will substitute the ECT reading with a default engine coolant temperature value. The default value is based on start-up intake air temperature and running time.
- The PCM will store conditions which were present when the DTC was set as Freeze Frame and in the Failure Records data.

Conditions for Clearing the MIL/DTC

- DTC P0117 can be cleared by using the Tech 2 “Clear Info” function or by disconnecting the PCM battery feed.

Diagnostic Aids

Check for the following conditions:

- Poor connection at PCM – Inspect harness connectors for backed-out terminals, improper mating, broken locks, improperly formed or damaged terminals, and poor terminal-to-wire connection.
- Damaged harness – Inspect the wiring harness for damage. If the harness appears to be OK, observe the ECT display on the Tech 2 while moving connectors and wiring harnesses related to the ECT sensor. A change in the ECT display will indicate the location of the fault.

If DTC P0117 cannot be duplicated, the information included in the Failure Records data can be useful in determining vehicle mileage since the DTC was last set.

Test Description

Number(s) below refer to the step number(s) on the Diagnostic Chart.

2. Verifies that the fault is present.
3. If DTC P0117 can be repeated only by duplicating the Failure Records conditions, refer to the “Temperature vs. Resistance Values” table. The table may be used to test the ECT sensor at various temperatures to evaluate the possibility of a “shifted” sensor that may be shorted above or below a certain temperature. If this is the case, replace the ECT sensor. If the ECT sensor appears to be OK, the fault is intermittent; refer to *Diagnostic Aids*.

Engine Coolant Temperature Sensor

˚C	˚F	OHMS
Temperature vs. Resistance Values (approximate)		
100	212	177
80	176	332
60	140	667
45	113	1188
35	95	1802
25	77	2796
15	59	4450
5	41	7280
–5	23	12300
–15	5	21450
–30	–22	52700
–40	–40	100700

DTC P0117 – ECT Sensor Low Voltage

Step	Action	Value(s)	Yes	No
1	Was the “On-Board Diagnostic (OBD) System Check” performed?	—	Go to *Step 2*	Go to *OBD System Check*
2	1. Ignition “ON,” engine “OFF.” 2. Observe the “Eng Cool Temp” display on the Tech 2. Is the “Eng Cool Temp” below the specified value?	139˚C (282˚F)	Go to *Step 4*	Go to *Step 3*
3	1. Ignition “ON,” engine “OFF.” 2. Review and record Tech 2 Failure Records data. 3. Operate the vehicle within Failure Records conditions as noted. 4. Using a Tech 2, monitor “Specific DTC” info for DTC P0117. Does the Tech 2 indicate DTC P0117 failed this ignition?	—	Go to *Step 4*	Refer to *Diagnostic Aids*
4	1. Disconnect the ECT sensor electrical connector. 2. Observe the “Eng Cool Temp” display on the Tech 2. Is the “Eng Cool Temp” at the specified value?	–39˚C (–38˚F)	Go to *Step 6*	Go to *Step 5*
5	1. Ignition “OFF.” 2. Disconnect the PCM and check the ECT signal circuit for a short to ground or a short to the sensor ground circuit. 3. If the ECT signal circuit is shorted. repair it as necessary. Was the ECT signal circuit shorted to ground?	—	Verify repair	Go to *Step 7*
6	Replace the ECT sensor. Is the action complete?	—	Verify repair	—
7	Replace the PCM. **IMPORTANT:** The replacement PCM must be programmed. Refer to *UBS 98model year Immobilizer Workshop Manual.* Is the action complete?	—	Verify repair	—

Diagnostic Trouble Code (DTC) P0118 ECT Sensor Circuit High Voltage

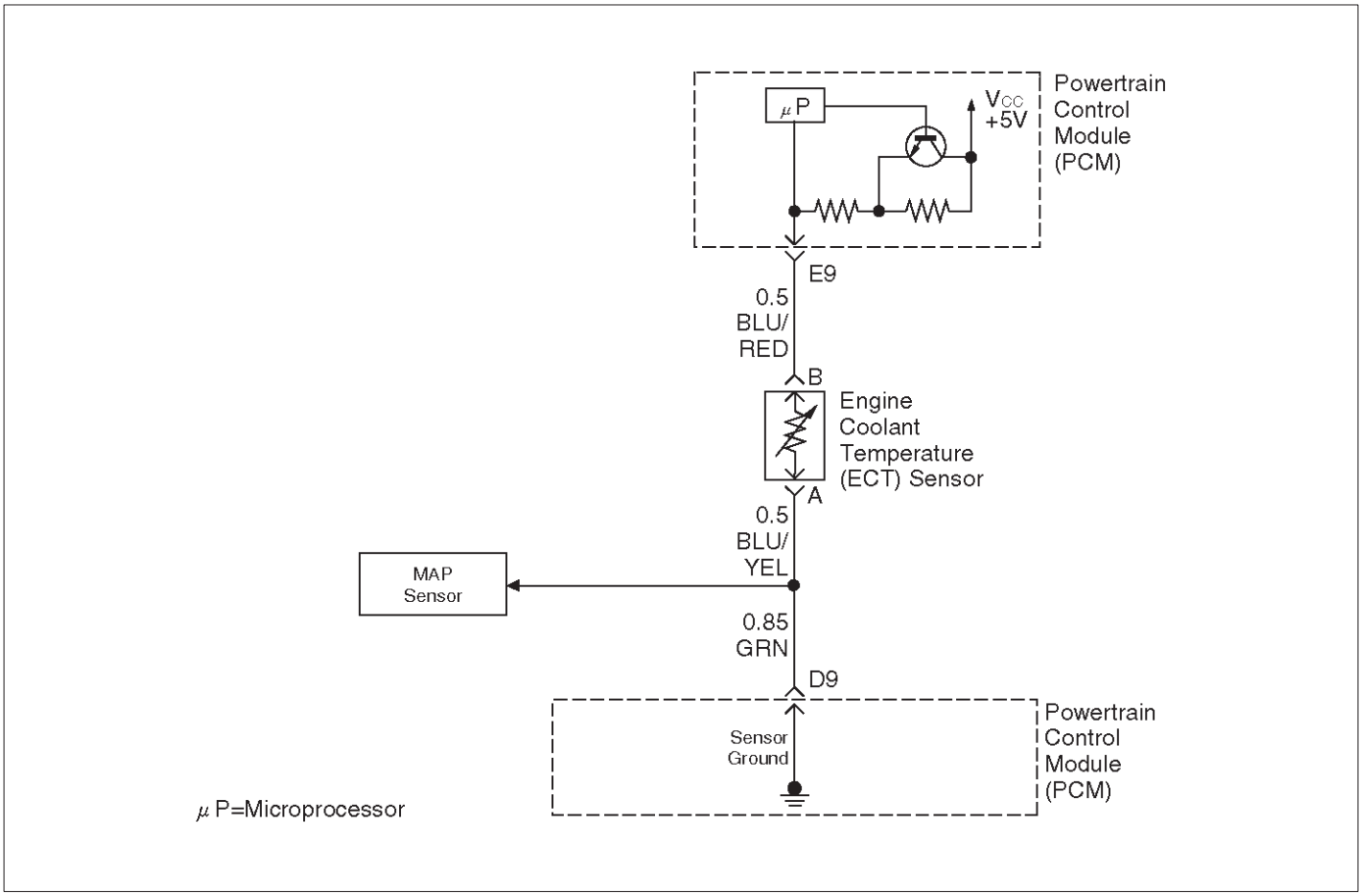

060RY00304

Circuit Description

The engine coolant temperature (ETC) sensor is a thermistor mounted in on a coolant crossover pipe at the rear of the engine. The powertrain control module (PCM) applies a voltage (about 5 volts) through a pull-up resistor to the ECT signal circuit. When the engine coolant is cold, the sensor (thermistor) resistance is high, therefore the PCM will measure a high signal voltage. As the engine coolant warms, the sensor resistance becomes less, and the ECT signal voltage measured at the PCM drops. With a fully warmed-up engine, the ECT signal voltage should measure about 1.5 to 2.0 volts.

Conditions for Setting the DTC

- Engine running time is longer than 1.5 minutes.
- The ECT sensor signal indicates an engine coolant temperature of –39˚C (–38˚F) or less (about 5 volts) for a total of 50 seconds over a 100-second period.

Action Taken When the DTC Sets

- The PCM will illuminate the malfunction indicator lamp (MIL) the first time the fault is detected.
- The PCM will substitute the ECT reading with a default engine coolant temperature value. The default value is based on start-up intake air temperature and running time.
- The PCM will store conditions which were present when the DTC was set as Freeze Frame and in the Failure Records data.

Conditions for Clearing the MIL/DTC

- DTC P0118 can be cleared by using the Tech 2 “Clear Info” function or by disconnecting the PCM battery feed.

Diagnostic Aids

Check for the following conditions:

The ECT shares a ground with the Transmission Fluid Temperature sensor, the Rough Road sensor, and the MAP sensor.

Check the ground if these DTCs are also set.

- Poor connection at PCM – Inspect harness connectors for backed-out terminals, improper mating, broken locks, improperly formed or damaged terminals, and poor terminal-to-wire connection.
- Damaged harness – Inspect the wiring harness for damage. If the harness appears to be OK, observe the ECT display on the Tech 2 while moving connectors and wiring harnesses related to the ECT sensor. A change in the ECT display will indicate the location of the fault.

If DTC P0118 cannot be duplicated, the information included in the Failure Records data can be useful in determining vehicle mileage since the DTC was last set. If it is determined that the DTC occurs intermittently, performing the DTC P1115 Diagnostic Chart may isolate the cause of the fault.

Test Description

Number(s) below refer to the step number(s) on the Diagnostic Chart.

2. Verifies that the fault is present.

3. If DTC P0118 can be repeated only by duplicating the Failure Records conditions, refer to the "Temperature vs. Resistance Value" table. The table may be used to test the ECT sensor at various temperatures to evaluate the possibility of a "shifted" sensor that may be shorted above or below a certain temperature. If this is the case, replace the ECT sensor. If the ECT sensor appears to be OK, the fault is intermittent; refer to *Diagnostic Aids*.

Engine Coolant Temperature Sensor

˚C	˚F	OHMS
Temperature vs. Resistance Values (approximate)		
100	212	177
80	176	332
60	140	667
45	113	1188
35	95	1802
25	77	2796
15	59	4450
5	41	7280
–5	23	12300
–15	5	21450
–30	–22	52700
–40	–40	100700

DTC P0118 – ECT Sensor Circuit High Voltage

Step	Action	Value(s)	Yes	No
1	Was the "On-Board Diagnostic (OBD) System Check" performed?	—	Go to *Step 2*	Go to *OBD System Check*
2	1. Ignition "ON," engine "OFF." 2. Observe the "Eng Cool Temp" display on the Tech 2. Is the "Eng Cool Temp" below the specified value?	–39˚C (–38˚F)	Go to *Step 4*	Go to *Step 3*
3	1. Ignition "ON," engine "OFF." 2. Review and record Tech 2 Failure Records data. 3. Operate the vehicle within Failure Records conditions as noted. 4. Using a Tech 2, monitor the "Specific DTC" info for DTC P0118. Does the Tech 2 indicate DTC P0118 failed?	—	Refer to *Test Description*	Refer to *Diagnostic Aids*
4	1. Disconnect the ECT sensor electrical connector. 2. Jumper the ECT signal circuit and the sensor ground circuit together at the ECT sensor harness connector. 3. Observe the "Eng Cool Temp" display on the Tech 2. Is the "Eng Cool Temp" at the specified value?	140˚C (284˚F)	Go to *Step 6*	Go to *Step 5*
5	1. Jumper the ECT signal circuit at the ECT sensor harness connector to chassis ground. 2. Observe the "Eng Cool Temp" display on the Tech 2. Is the "Eng Cool Temp" at the specified value?	140˚C (284˚F)	Go to *Step 7*	Go to *Step 8*
6	Check for poor connections at the ECT sensor and replace terminals if necessary. Did any terminals require replacement?	—	Verify repair	Go to *Step 10*

DTC P0118 – ECT Sensor Circuit High Voltage (Cont'd)

Step	Action	Value(s)	Yes	No
7	1. Ignition "OFF." 2. Disconnect the PCM, and check the ECT sensor ground circuit for an open. 3. If the ECT sensor ground circuit is open, repair it as necessary. Was the ECT sensor ground circuit open?	—	Verify repair	Go to *Step 9*
8	1. Ignition "OFF." 2. Disconnect the PCM, and check the ECT signal circuit for an open. 3. If the ECT sensor signal circuit is open, repair it as necessary. Was the ECT signal circuit open?	—	Verify repair	Go to *Step 9*
9	Check for a poor sensor ground or ECT signal circuit terminal connection at the PCM and replace terminal(s) if necessary. Did any of the terminals need to be replaced?	—	Verify repair	Go to *Step 11*
10	Replace the ECT sensor. Is the action complete?	—	Verify repair	—
11	Replace the PCM. **IMPORTANT:** The replacement PCM must be programmed. Refer to *UBS 98model year Immobilizer Workshop Manual.* Is the action complete?	—	Verify repair	—

Diagnostic Trouble Code (DTC) P0121 TP System Performance

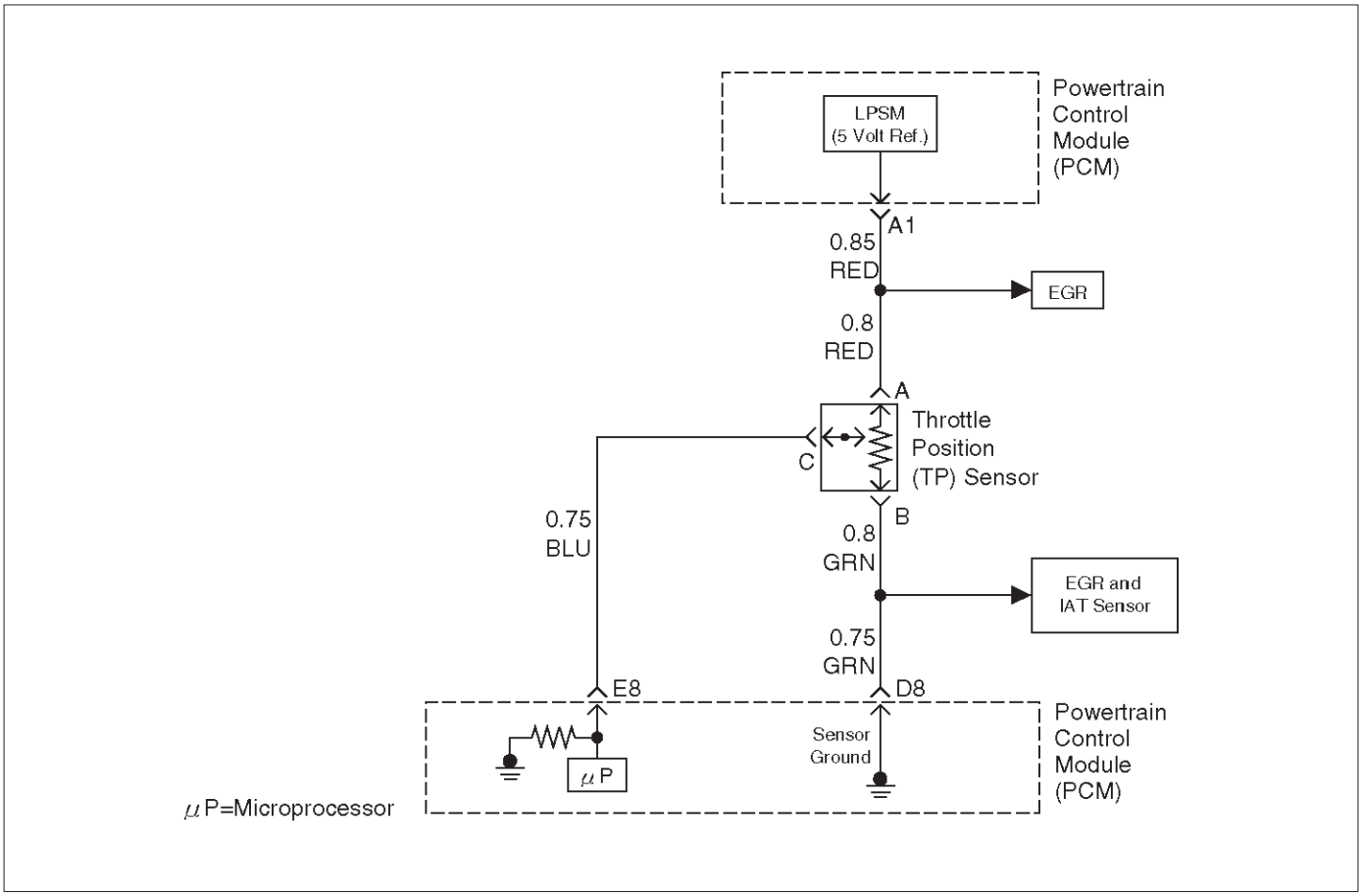

D06RW028

Circuit Description

The throttle position (TP) sensor circuit provides a voltage signal that changes relative to throttle blade angle. The signal voltage will vary from about 0.6 volts at closed throttle to about 4.5 volts at wide open throttle (WOT).
The TP signal is used by the powertrain control module (PCM) for fuel control and many of the PCM-controlled outputs. The PCM monitors throttle position and compares actual throttle position from the TP sensor to a predicted TP value calculated from engine speed. If the PCM detects an out-of-range condition, DTC P0121 will set.

Conditions for Setting the DTC

- The engine is running.
- No MAP DTCs, or P0121, P0122, P0123 are set.
- MAP reading is below 55 kPa.
- Throttle is steady, throttle angle is changing less than 1%.
- Predicted throttle angle is not close to actual throttle angle.
- Above conditions are present for a total of 12.5 seconds over a 25-second period of time.

Action Taken When the DTC Sets

- The PCM will illuminate the malfunction indicator lamp (MIL) after the second consecutive trip in which the fault is detected.
- The PCM will store conditions which were present when the DTC was set as Freeze Frame and in the Failure Records data.
- The PCM will use a default throttle position based on mass air flow and RPM.

Conditions for Clearing the MIL/DTC

- DTC P0121 can be cleared by using the Tech 2 “Clear info ” function or by disconnecting the PCM battery feed.

Diagnostic Aids

Check for the following conditions:

- Skewed MAP signal or faulty Map sensor – An incorrect MAP signal may cause the PCM to incorrectly calculate the predicted TP sensor value during high engine load situations. Check for an unusually low MAP reading. This condition can cause DTC P0121 to be set.
- Poor connection at PCM – Inspect harness connectors for backed-out terminals, improper mating, broken locks improperly formed or damaged terminals, and poor terminal-to-wire connection.
- Damaged harness – Inspect the wiring harness for damage. If the harness appears to be OK, observe the ECT display on the Tech 2 while moving connectors and wiring harnesses related to the sensor. A change in the display will indicate the location of the fault.

If DTC P0121 cannot be duplicated, the information included in the Failure Records data can be useful in determining vehicle mileage since the DTC was last set.

DTC P0121 –TP System Performance

Step	Action	Value(s)	Yes	No
1	Was the “On-Board Diagnostic (OBD) System Check” performed?	—	Go to *Step 2*	Go to *OBD System Check*
2	1. Ignition “ON,” engine not running. 2. Observe the MAP reading on the Tech 2. Is the MAP reading less than the specified value?	65 kPa	Go to *Step 3*	Go to *Step 6*
3	1. Disconnected the MAP sensor. 2. Connect a test light between the 5 volt reference “A” circuit and the MAP signal circuit at the MAP sensor harness connector. 3. Observe the MAP reading on the Tech 2. Is the MAP reading less than the specified value?	65 kPa	Go to *Step 5*	Go to *Step 4*
4	1. Check the MAP signal circuit between the PCM and the MAP sensor for an open, short to ground, or short to the MAP ground circuit. 2. If the MAP signal circuit is open or shorted, repair it as necessary. Was the MAP signal circuit open or shorted?	—	Verify repair	Go to *Step 12*
5	Replace the MAP sensor. Is the action complete?	—	Verify repair	—
6	Observe the TP angle reading on the Tech 2 while slowly opening the throttle. Does the TP angle increase steadily and evenly from the closed throttle value to the wide open throttle value?	Closed throttle = 0% Wide open throttle = 100%	Refer to *Diagnostic Aids*	Go to *Step 7*
7	1. Disconnect the TP sensor. 2. Observe the TP sensor reading on the Tech 2. Is the TP sensor reading near the specified value?	0 V	Go to *Step 8*	Go to *Step 9*
8	1. Connect a test light between the 5 volt reference “A” circuit and the TP sensor signal circuit at the TP sensor harness connector. 2. Observe the TP sensor reading on the Tech 2. Is the TP sensor reading at the specified value?	5 V	Go to *Step 11*	Go to *Step 10*
9	Check the following items: 1. TP signal circuit for a short to voltage. 2. TP sensor ground circuit for high resistance between the PCM and the TP sensor. 3. TP sensor ground circuit for a poor connection. 4. If a problem is found, repair wiring harness as necessary. Was a problem found?	—	Verify repair	Go to *Step 12*

DTC P0121 –TP System Performance (Cont'd)

Step	Action	Value(s)	Yes	No
10	Check the following items: 1. TP signal circuit or 5 volt reference "A" circuit for a poor connection. 2. TP signal circuit or 5 volt reference "A" circuit for high resistance between the PCM and the TP sensor. 3. If a problem is found, repair wiring harness as necessary. Was a problem found?	—	Verify repair	Go to *Step 12*
11	Replace the TP sensor. Is the action complete?	—	Verify repair	—
12	Replace the PCM. **IMPORTANT:** The replacement PCM must be programmed. Refer to *UBS 98model year Immobilizer Workshop Manual.* Is the action complete?	—	Verify repair	—

Diagnostic Trouble Code (DTC) P0122 TP Sensor Circuit Low Voltage

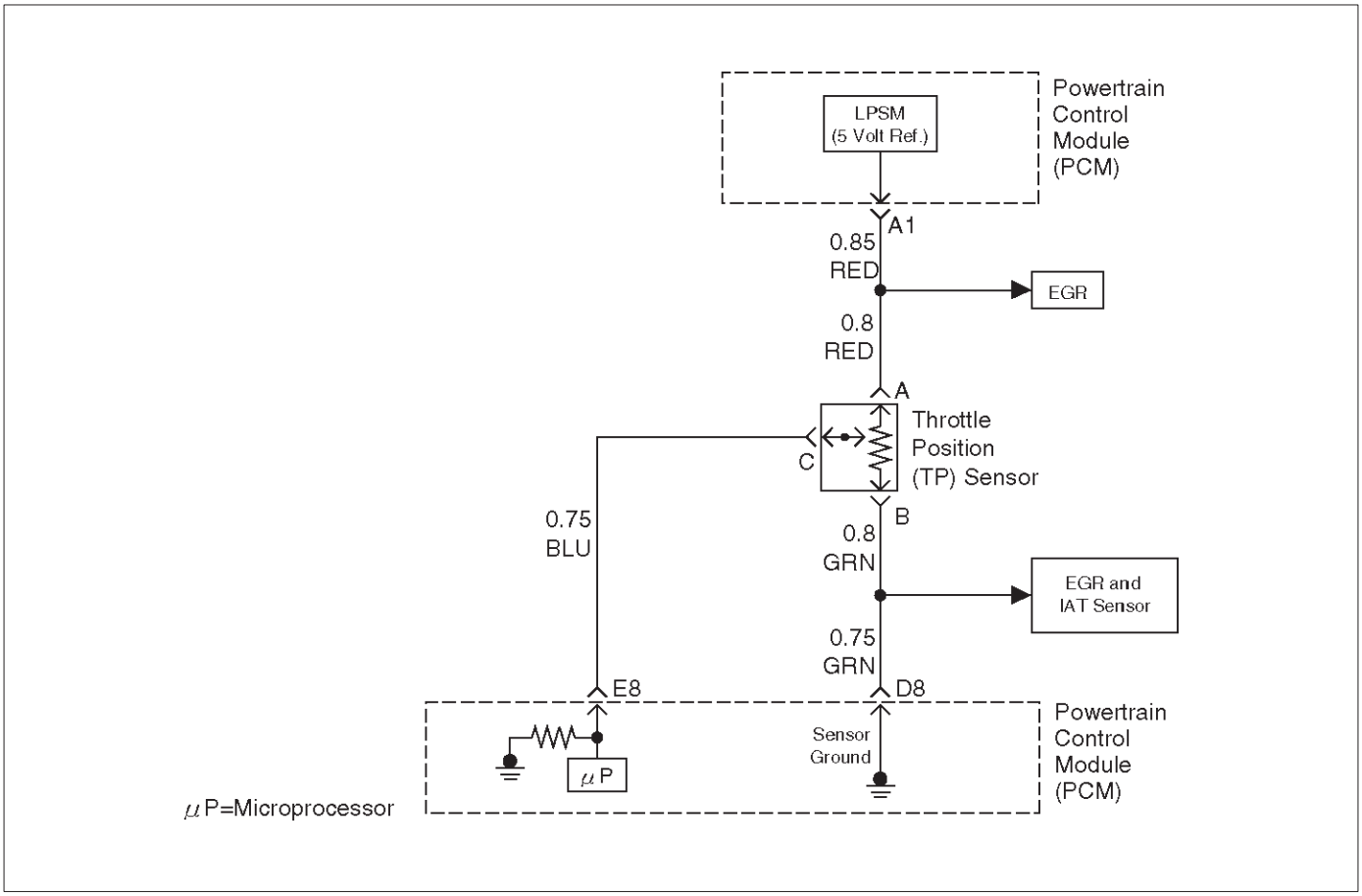

D06RW028

Circuit Description

The throttle position (TP) sensor circuit provides a voltage signal that changes relative to throttle blade angle. The signal voltage will vary from below 0.6 volts at closed throttle to about 4.5 volts at wide open throttle (WOT). The TP signal is used by the powertrain control module (PCM) for fuel control and many of the PCM–controlled outputs.

Conditions for Setting the DTC

- The ignition is “ON.”
- TP sensor signal voltage is less than 0.22 volt for a total of 0.78 second over a 1.5-second period.

Action Taken When the DTC Sets

- The PCM will illuminate the malfunction indicator lamp (MIL) the first time the fault is detected.
- The PCM will store conditions which were present when the DTC was set as Freeze Frame and in the Failure Records data.
- The PCM will use a default throttle position based on mass air flow and RPM.

Conditions for Clearing the MIL/DTC

- DTC P0122 can be cleared by using the Tech 2 “Clear Info” function or by disconnecting the PCM battery feed.

Diagnostic Aids

Check for the following conditions:

- Check intermittent codes.
- The TP sensor shares a 5 Volt reference with the EGR position sensor. Check the 5 Volt reference if these DTCs are also set.
- The TP sensor shares a ground with the IAT sensor, the EGR position sensor.
- Poor connection at PCM – Inspect harness connectors for backed-out terminals, improper mating, broken locks, improperly formed or damaged terminals, and poor terminal-to-wire connection.
- Damaged harness – Inspect the wiring harness for damage. If the harness appears to be OK, observe the throttle position display on the Tech 2 while moving connectors and wiring harnesses related to the TP sensor. A change in the display will indicate the location of the fault.

If DTC P0122 cannot be duplicated, the information included in the Failure Records data can be useful in determining vehicle mileage since the DTC was last set.

DTC P0122 –TP Sensor Circuit Low Voltage

Step	Action	Value(s)	Yes	No
1	Was the “On-Board Diagnostic (OBD) System Check” performed?	—	Go to *Step 2*	Go to *OBD System Check*
2	1. Ignition “ON,” engine “OFF.” 2. With the throttle closed, observe the “TP Sensor” display on the Tech 2. Is the “TP Sensor” below the specified value?	0.22 V	Go to *Step 4*	Go to *Step 3*
3	1. Ignition “ON,” engine “OFF.” 2. Review and record Tech 2 Failure Records data. 3. Operate the vehicle within Failure Records conditions as noted. 4. Using a Tech 2, monitor the “DTC” info for DTC P0122. Does the Tech 2 indicate DTC P0122 failed?	—	Go to *Step 4*	Refer to *Diagnostic Aids*
4	1. Ignition “OFF.” 2. Disconnect the TP sensor electrical connector. 3. Jumper the 5 volt reference “A” circuit and the TP signal together at the TP sensor harness connector. 4. Ignition “ON.” Observe the “TP Sensor” display on the Tech 2. Is the “TP Sensor” at the specified value?	5 V	Go to *Step 10*	Go to *Step 5*
5	1. Disconnect jumper. 2. Connect a test light between B+ and the TP sensor signal circuit at the TP sensor harness connector. Observe the “TP Sensor” display on the Tech 2. Is the “TP Sensor” at the specified value?	5 V	Go to *Step 6*	Go to *Step 8*
6	1. Ignition “OFF.” 2. Disconnect the PCM and check the 5 volt reference “A” circuit for an open or short to ground. 3. If the 5 volt reference “A” circuit is open or shorted to ground, repair it as necessary. Was the 5 volt reference “A” circuit open or shorted to ground?	—	Verify repair	Go to *Step 7*
7	Check the 5 volt reference “A” circuit for a poor connection at the PCM and replace the terminal if necessary. Did the terminal require replacement?	—	Verify repair	Go to *Step 12*
8	1. Ignition “OFF.” 2. Disconnect the PCM, and check the TP signal circuit for an open, short to ground, or short to the sensor ground circuit. 3. If the TP sensor signal circuit is open or shorted to ground, repair it as necessary. Was the TP signal circuit open or shorted to ground?	—	Verify repair	Go to *Step 9*
9	Check the TP sensor signal circuit for a poor connection at the PCM and replace the terminal if necessary. Did the terminal require replacement?	—	Verify repair	Go to *Step 12*

DTC P0122 –TP Sensor Circuit Low Voltage (Cont'd)

Step	Action	Value(s)	Yes	No
10	Check the TP sensor signal circuit for a poor connection at the TP sensor and replace the terminal if necessary. Did the terminal require replacement?	—	Verify repair	Go to *Step 11*
11	Replace the TP sensor. Is the action complete?	—	Verify repair	—
12	Replace the PCM. **IMPORTANT:** The replacement PCM must be programmed. Refer to *UBS 98model year Immobilizer Workshop Manual.* Is the action complete?	—	Verify repair	—

Diagnostic Trouble Code (DTC) P0123 TP Sensor Circuit High Voltage

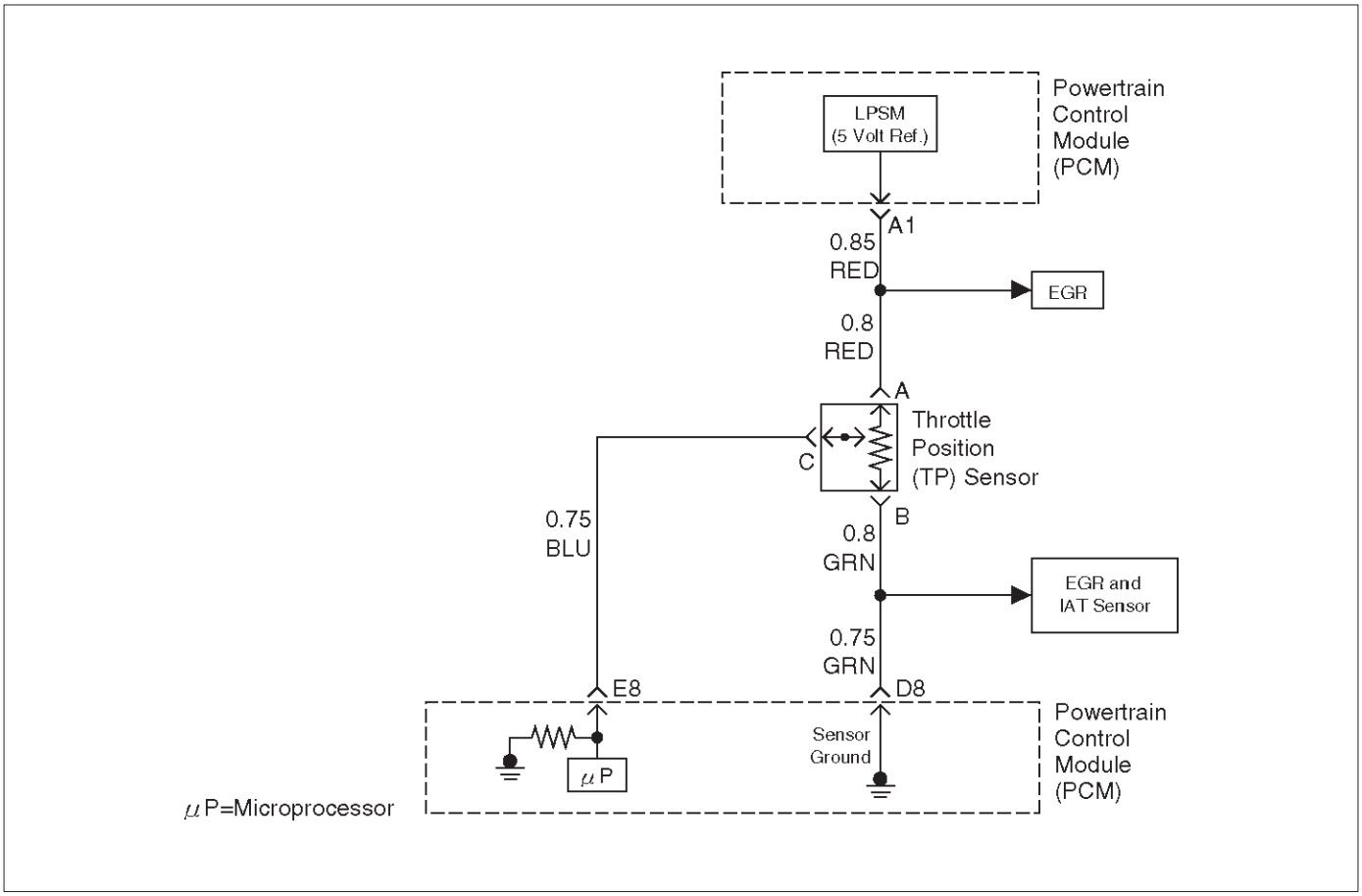

D06RW028

Circuit Description

The throttle position (TP) sensor circuit provides a voltage signal that changes relative to throttle blade angle. The signal voltage will vary from about 0.6 volts at closed throttle to about 4.5 volts at wide open throttle (WOT). The TP signal is one of the most important inputs used by the powertrain control module (PCM) for fuel control and many of the PCM-controlled outputs.

Conditions for Setting the DTC

- The ignition is “ON.”
- TP sensor signal voltage is greater than 4.88 volts for a total of 0.78 second over a 1.5-second period.

Action Taken When the DTC Sets

- The PCM will illuminate the malfunction indicator lamp (MIL) the first time the fault is detected.
- The PCM will store conditions which were present when the DTC was set as Freeze Frame and in the Failure Records data.
- The PCM will use a default throttle position based on mass air flow and RPM.

Conditions for Clearing the MIL/DTC

- DTC P0123 can be cleared by using the Tech 2 “Clear Info” function or by disconnecting the PCM battery feed.

Diagnostic Aids

Check for the following conditions:

- Check intermittent codes.
- The TP sensor shares a 5 Volt reference with the EGR position sensor. Check the 5 Volt reference if these DTCs are also set.
- The TP sensor shares a ground with the IAT sensor and the EGR position sensor. Check the ground if these other DTCs are also set.
- Poor connection at PCM – Inspect harness connectors for backed-out terminals, improper mating, broken locks, improperly formed or damaged terminals, and poor terminal-to-wire connection.
- Damaged harness – Inspect the wiring harness for damage. If the harness appears to be OK, observe the TP sensor display on the Tech 2 while moving connectors and wiring harnesses related to the TP sensor. A change in the display will indicate the location of the fault.
- Faulty TP sensor – With the ignition key “ON,” engine “OFF,” observe the TP sensor display on the Tech 2 while slowly depressing the accelerator to wide open throttle. If a voltage over 4.88 volts is seen at any point in normal accelerator travel, replace the TP sensor.

If DTC P0123 cannot be duplicated, the information included in the Failure Records data can be useful in determining vehicle mileage since the DTC was last set.

Test Description

Number (s) below refer to the step number(s) on the Diagnostic Chart.

7. Components that share the TP sensor 5 volt reference “A” circuit include the following device:

- EGR valve

Disconnect the component while observing the TP sensor display on the Tech 2. If the reading changes drastically when this component is disconnected, replace the component that affected the reading.

DTC P0123 – TP Sensor Circuit High Voltage

Step	Action	Value(s)	Yes	No
1	Was the “On-Board Diagnostic (OBD) System Check” performed?	—	Go to *Step 2*	Go to *OBD System Check*
2	1. Ignition “ON,” engine “OFF.” 2. With the throttle closed, observe the “TP Sensor” display on the Tech 2. Is the “TP Sensor” above the specified value?	4.88 V	Go to *Step 4*	Go to *Step 3*
3	1. Ignition “ON,” engine “OFF.” 2. Review and record Tech 2 Failure Records data. 3. Operate the vehicle within Failure Records conditions as noted. 4. Using a Tech 2, monitor “Specific DTC” info for DTC P0123. Does the Tech 2 indicate DTC P0123 failed.	—	Go to *Step 4*	Refer to *Diagnostic Aids*
4	1. Disconnect the TP sensor electrical connector. 2. Observe the “TP Sensor” display on the Tech 2. Is the “TP Sensor” near the specified value?	0 V	Go to *Step 5*	Go to *Step 6*
5	Probe the sensor ground circuit at the TP sensor harness connector with a test light connected to B+. Is the test light “ON?”	—	Go to *Step 7*	Go to *Step 10*
6	1. Ignition “OFF,” disconnect the PCM. 2. Ignition “ON,” engine “OFF.” 3. Check for a short to voltage on the TP sensor signal circuit. 4. If the TP sensor signal circuit is shorted, repair it as necessary. Was the TP sensor signal circuit shorted?	—	Verify repair	Go to *Step 12*
7	1. Ignition “ON.” 2. Monitor the “TP Sensor” Tech 2 display while disconnecting each of the components that share the 5 volt reference “A” circuit (one at a time). 3. If the “TP Sensor” Tech 2 display changes, replace the component that caused the display to change when disconnected. Does disconnecting any of these components cause the “TP Sensor” display to change?	—	Verify repair	Go to *Step 8*
8	1. Ignition “OFF,” disconnect the PCM. 2. Ignition “ON,” engine “OFF.” 3. Check for a short to B+ on the 5 volt reference “A” circuit. 4. If the 5 volt reference “A” circuit is shorted, repair it as necessary. Was the 5 volt reference “A” circuit shorted?	—	Verify repair	Go to *Step 9*
9	Check for poor electrical connections at the TP sensor and replace terminals if necessary. Did any terminals require replacement?	—	Verify repair	Go to *Step 11*

DTC P0123 – TP Sensor Circuit High Voltage (Cont'd)

Step	Action	Value(s)	Yes	No
10	1. Ignition "OFF." 2. Disconnect the PCM, and check for an open sensor ground circuit to the TP sensor. 3. If a problem is found, repair it as necessary. Was the sensor ground circuit to the TP sensor open?	—	Verify repair	Go to *Step 12*
11	Replace the TP sensor. Is the action complete?	—	Verify repair	—
12	Replace the PCM. **IMPORTANT:** The replacement PCM must be programmed. Refer to *UBS 98model year Immobilizer Workshop Manual.* Is the action complete?	—	Verify repair	—

Diagnostic Trouble Code (DTC) P0131 HO2S Circuit Low Voltage Bank 1 Sensor 1

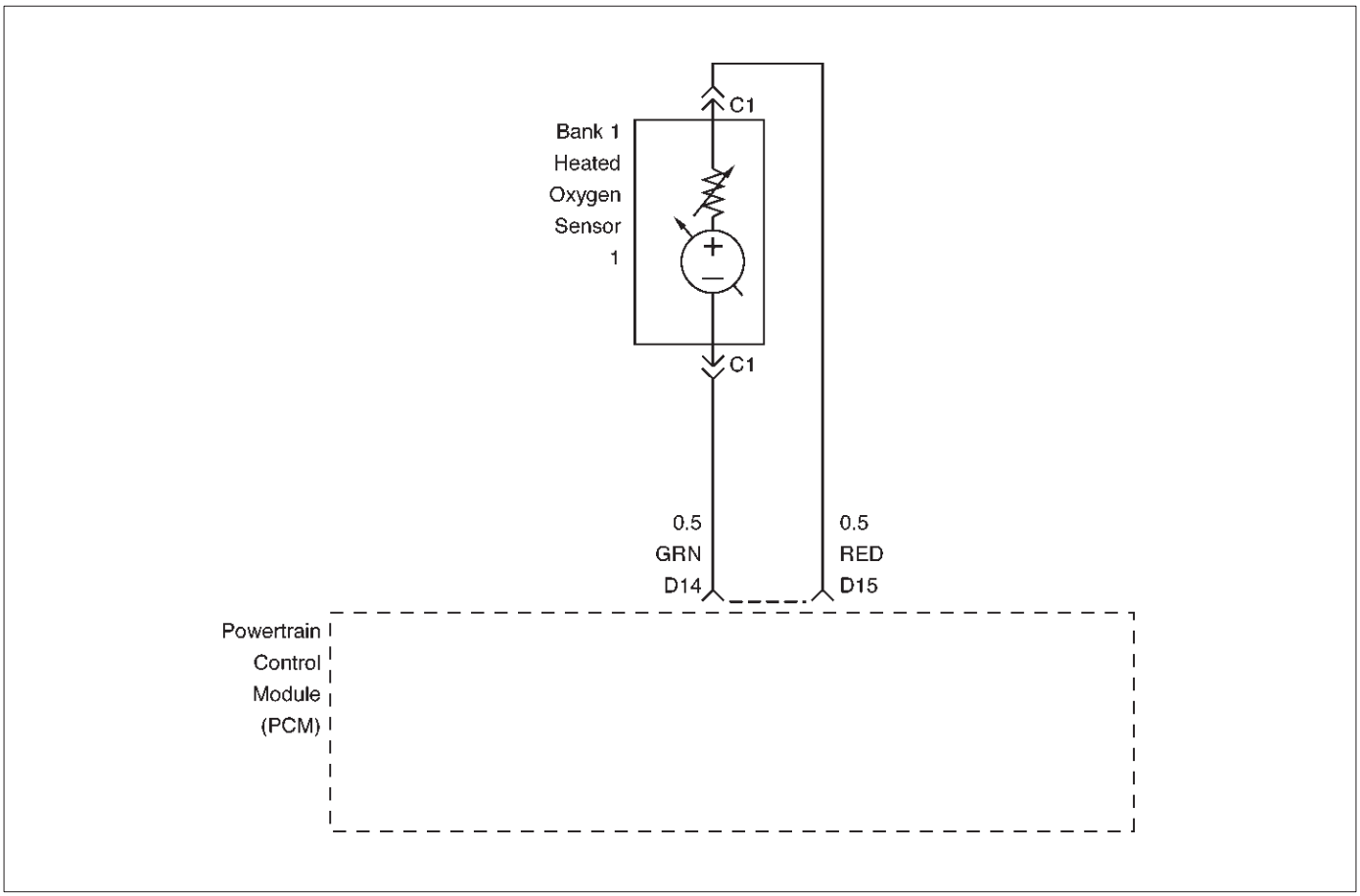

060RW236

Circuit Description

The powertrain control module (PCM) supplies a bias voltage of about 450 mV between the heated oxygen sensor (HO2S) signal high and signal low circuits. When measured with a 10 megaohm digital voltmeter, this may display as low as 350 mV. The oxygen sensor varies the voltage within a range of about 1000 mV when the exhaust is rich, down through about 10 mV when exhaust is lean. The PCM constantly monitors the HO2S signal during “closed loop” operation and compensates for a rich or lean condition by decreasing or increasing injector pulse width as necessary. If the Bank 1 HO2S 1 voltage remains excessively low for an extended period of time, DTC P0131 will be set.

Conditions for Setting the DTC

- No related DTCs.
- Vehicle is operating in “closed loop.”
- Engine coolant temperature is above 60˚C (140˚F).
- “Closed loop” commanded air/fuel ratio is between 14.5 and 14.8.
- Throttle angle is between 3% and 19%.
- Bank 1 HO2S 1 signal voltage remains below 22 mV during normal “closed loop” operation for a total of 77 seconds over a 90-second period of time.

Action Taken When the DTC Sets

- The PCM will illuminate the malfunction indicator lamp (MIL) the first time the fault is detected.
- The PCM will store conditions which were present when the DTC was set as Freeze Frame and in the Failure Records data.
- “Open loop” fuel control will be in effect.

Conditions for Clearing the MIL/DTC

- DTC P0131 can be cleared by using the Tech 2 “Clear Info” function or by disconnecting the PCM battery feed.

Diagnostic Aids

Check for the following conditions:

- Heated oxygen sensor wiring – The sensor pigtail may be routed incorrectly and contacting the exhaust system.
- Poor PCM to engine block grounds.
- Fuel pressure – The system will go lean if pressure is too low. The PCM can compensate for some decrease. However, If fuel pressure is too low, a DTC P0131 may be set. Refer to *Fuel System Diagnosis*.
- Lean injector(s) – Perform “Injector Balance Test.”
- Vacuum leaks – Check for disconnected or damaged vacuum hoses and for vacuum leaks at the intake manifold, throttle body, EGR system, and PCV system.
- Exhaust leaks – An exhaust leak may cause outside air to be pulled into the exhaust gas stream past the

HO2S, causing the system to appear lean. Check for exhaust leaks that may cause a false lean condition to be indicated.

- MAF sensor – The system can go lean if the MAF sensor signal indicates an engine airfiow measurement that is not correct. Disconnect the MAF sensor to see if the lean condition is corrected. If so, replace the MAF sensor.
- Fuel contamination – Water, even in small amounts, can be delivered to the fuel injectors. The water can cause a lean exhaust to be indicated. Excessive alcohol in the fuel can also cause this condition. Refer to *Fuel System Diagnosis* for the procedure to check for fuel contamination.
- If none of the above conditions are present, replace the affected HO2S.

Test Description

Number(s) below refer to step numbers on the diagnostic chart.

3. DTC P0131 failing during operation may indicate a condition described in the “Diagnostic Aids” above. If the DTC P0131 test passes while the Failure Records conditions are being duplicated, an intermittent condition is indicated.

Reviewing the Failure Records vehicle mileage since the diagnostic test last failed may help determine how often the condition that caused the DTC to be set occurs. This may assist in diagnosing the condition.

DTC P0131 –HO2S Circuit Low Voltage Bank 1 Sensor 1

Step	Action	Value(s)	Yes	No
1	Was the “On-Board Diagnostic (OBD) System Check” performed?	—	Go to *Step 2*	Go to *OBD System Check*
2	1. Install the Tech 2. 2. Run the engine at operating temperature. 3. Operate the vehicle within the parameters specified under “Conditions for Setting the DTC” criteria included in Diagnostic Support. 4. Using a Tech 2, monitor Bank 1 HO2S 1 voltage. Does the Bank 1 HO2S 1 voltage remain below the specified value?	22 mV	Go to *Step 4*	Go to *Step 3*
3	1. Ignition “ON,” engine “OFF,” review and record Tech 2 Failure Records data and note parameters. 2. Operate the vehicle within Failure Records conditions as noted. 3. Using a Tech 2, monitor “Specific DTC” info for DTC P0131 until the DTC P0131 test runs. Note test result. Does Tech 2 indicate DTC P0131 failed this ignition?	—	Go to *Step 4*	Refer to *Diagnostic Aids*
4	1. Turn the ignition “OFF.” 2. Disconnect the PCM. 3. Check the Bank 1 HO2S 1 high and low circuits for a short to ground or a short to the heater ground circuit. Are the Bank 1 HO2S 1 signal circuits shorted to ground?	—	Go to *Step 5*	Go to *Step 6*
5	Repair the Bank 1 HO2S 1 signal circuit. Is the action complete?	—	Verify repair	—
6	1. Turn the ignition “OFF,” HO2S 1 and PCM disconnected. 2. Check for continuity between the high and low signal circuits. Was there continuity between the high and low circuits?	—	Go to *Step 7*	Go to *Step 8*
7	Repair the short between the high and low circuits. Is the action complete?	—	Verify repair	—

DTC P0131 –HO2S Circuit Low Voltage Bank 1 Sensor 1 (Cont'd)

Step	Action	Value(s)	Yes	No
8	1. Ignition "OFF." 2. Reconnect the PCM, leave the sensor disconnected. 3. Ignition "ON." Does the Tech 2 indicate Bank 1 HO2S 1 voltage between the specified values?	425-475 mV	Refer to *Diagnostic Aids*	Go to *Step 9*
9	Replace the PCM. **IMPORTANT:** The replacement PCM must be programmed. Refer to *UBS 98model year Immobilizer Workshop Manual.* Is the action complete?	—	Verify repair	—

Diagnostic Trouble Code (DTC) P0132 HO2S Circuit High Voltage Bank 1 Sensor 1

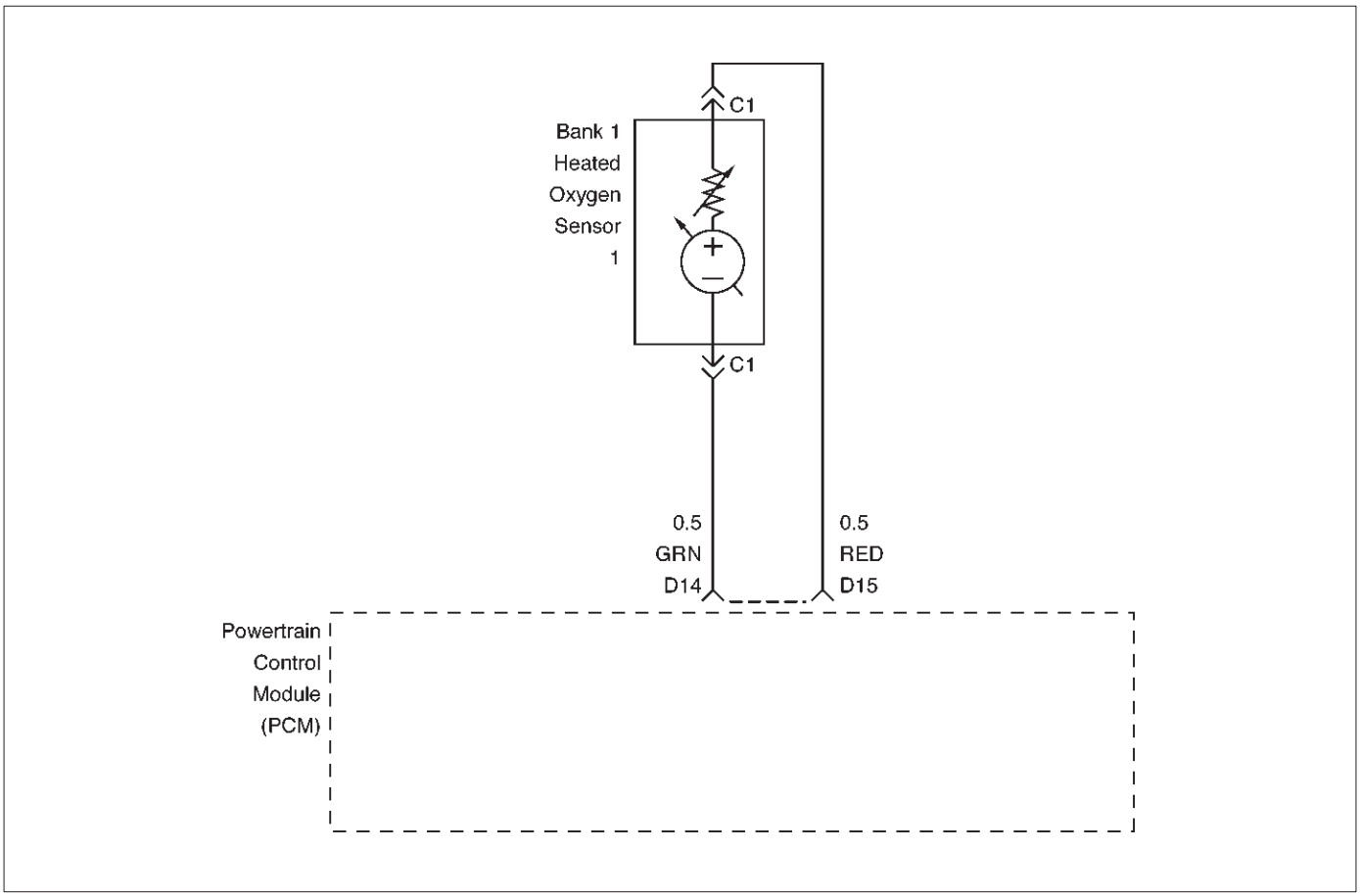

060RW236

Circuit Description

The powertrain control module (PCM) supplies a bias voltage of about 450 mV between the heated oxygen sensor (HO2S) signal and low circuits. When measured with a 10 megaohm digital voltmeter, this may display as low as 320 mV. The oxygen sensor varies the voltage within a range of about 1000 mV when exhaust is rich, down through about 10 mV when exhaust is lean. The PCM constantly monitors the HO2S signal during "closed loop" operation and compensates for a rich or lean condition by decreasing or increasing injector pulse width as necessary. If the Bank 1 HO2S 1 voltage remains excessively high for an extended period of time, DTC P0132 will be set.

Conditions for Setting the DTC

- No related DTCs.
- Engine coolant temperature is above 60˚C (140˚F)
- "Closed loop" commanded air/fuel ratio is between 14.5 and 14.8.
- Throttle angle is between 3% and 19%.
- Bank 1 HO2S 1 signal voltage remains above 952 mV during normal "closed loop" operation for a total of 77 seconds over a 90-second period.

OR

- Bank 1 HO2S 1 signal voltage remains above 500 mV during "deceleration fuel cutoff mode" operation for 3 seconds.

Action Taken When the DTC Sets

- The PCM will illuminate the malfunction indicator lamp (MIL) the first time the fault is detected.
- The PCM will store conditions which were present when the DTC was set as Freeze Frame and in the Failure Records data.
- "Open loop" fuel control will be in effect.

Conditions for Clearing the MIL/DTC

- DTC P0132 can be cleared by using the Tech 2 "Clear Info" function or by disconnecting the PCM battery feed.

Diagnostic Aids

Check the following items:

- Fuel pressure – The system will go rich if pressure is too high. The PCM can compensate for some increase. However, if fuel pressure is too high, a DTC P0132 may be set. Refer to *Fuel System Diagnosis*.
- Perform "Injector Balance Test" – Refer to *Fuel System Diagnosis*.
- MAF sensor –The system can go rich if MAF sensor signal indicates an engine airflow measurement that is not correct. Disconnect the MAF sensor to see it the rich condition is corrected. If so, replace the MAF sensor.
- Check for a leak in the fuel pressure regulator diaphragm by checking the vacuum line to the regulator for the presence of fuel. There should be no fuel in the vacuum line.

- An intermittent TP sensor output will cause the system to go rich due to a false indication of the engine accelerating.
- Shorted Heated Oxygen Sensor (HO2S) –If the HO2S is internally shorted, the HO2S voltage displayed on the Tech 2 will be over 1 volt. Try disconnecting the affected HO2S with the key "ON," engine "OFF." If the displayed HO2S voltage changes from over 1000 mV to around 450 mV, replace the HO2S. Silicon contamination of the HO2S can also cause a high HO2S voltage to be indicated. This condition is indicated by a powdery white deposit on the portion of the HO2S exposed to the exhaust stream. If contamination is noticed, replace the affected HO2S.
- Open HO2S Signal Circuit or Faulty HO2S–A poor connection or open in the HO2S signal circuit can cause the DTC to set during deceleration fuel mode. An HO2S which is faulty and not allowing a full voltage swing between the rich and lean thresholds can also cause this condition. Operate the vehicle by monitoring the HO2S voltage with a Tech 2. If the HO2S voltage is limited within a range between 300 mV to 600 mV, check the HO2S signal circuit wiring and associated terminal conditions.
- If none of the above conditions are present, replace the affected HO2S.

Test Description

Number(s) below refer to the step number(s) on the Diagnostic Chart.

3. DTC P0132 failing during "deceleration fuel cutoff mode" operation may indicate a condition described in the "Diagnostic Aids" above. If the DTC P0132 test passes while the Failure Records conditions are being duplicated, an intermittent condition is indicated.

Reviewing the Failure Records vehicle mileage since the diagnostic test last failed may help determine how often the condition that caused the DTC to be set occurs. This may assist in diagnosing the condition.

DTC P0132 – HO2S Circuit High Voltage Bank 1 Sensor 1

Step	Action	Value(s)	Yes	No
1	Was the "On-Board Diagnostic (OBD) System Check" performed?	—	Go to *Step 2*	Go to *OBD System Check*
2	1. Install the Tech 2. 2. Run the engine at operating temperature. 3. Operate the vehicle within parameters specified under "Conditions for Setting the DTC" included in Diagnostic Support. 4. Using a Tech 2, monitor Bank 1 HO2S 1 voltage. Does the Bank 1 HO2S 1 voltage remain above the specified value?	952 mV (500 mV in deceleration fuel cutoff mode)	Go to *Step 4*	Go to *Step 3*
3	1. Ignition "ON," review and record Tech 2 Failure Records data. 2. Operate the vehicle within Failure Records conditions as noted. 3. Using a Tech 2, monitor "Specific DTC" info for DTC P0132 until the DTC P0132 test runs. 4. Note the test result. Does the Tech 2 indicate DTC P0132 failed this ignition?	—	Go to *Step 4*	Refer to *Diagnostic Aids*
4	1. Ignition "OFF." 2. Disconnect Bank 1 HO2S 1. 3. Ignition "ON." 4. At HO2S Bank 1 Sensor 1 connector (PCM side) use a DVM to measure voltages at the high and low signal terminals. Are the voltages in the specified range?	3-4 V	Go to *Step 5*	Go to *Step 6*
5	Repair short to voltage in signal circuit. Is the action complete?	—	Verify repair	—

DTC P0132 – HO2S Circuit High Voltage Bank 1 Sensor 1 (Cont'd)

Step	Action	Value(s)	Yes	No
6	1. Ignition "ON," engine"OFF." 2. At Bank 1 HO2S 1 connector (PCM side) jumper both the HO2S high and low signal circuits (PCM side) to ground. 3. Using a Tech 2, monitor Bank 1 HO2S 1 voltage. Is Bank 1 HO2S 1 voltage below the specified value?	10 mV	Go to *Step 7*	Go to *Step 8*
7	1. Disconnect the jumpers to ground from Bank 1 HO2S 1 PCM-side connector. 2. With the HO2S 1 connector disconnected, monitor Bank 1 HO2S 1 voltage. Is Bank 1 HO2S 1 voltage between the specified values?	425-475 mV	Refer to *Diagnostic Aids*	Go to *Step 8*
8	Replace the PCM. **IMPORTANT:** The replacement PCM must be programmed. Refer to *UBS 98model year Immobilizer Workshop Manual.* Is the action complete?	—	Verify repair	—

Diagnostic Trouble Code (DTC) P0134 HO2S Circuit Insufficient Activity Bank 1 Sensor 1

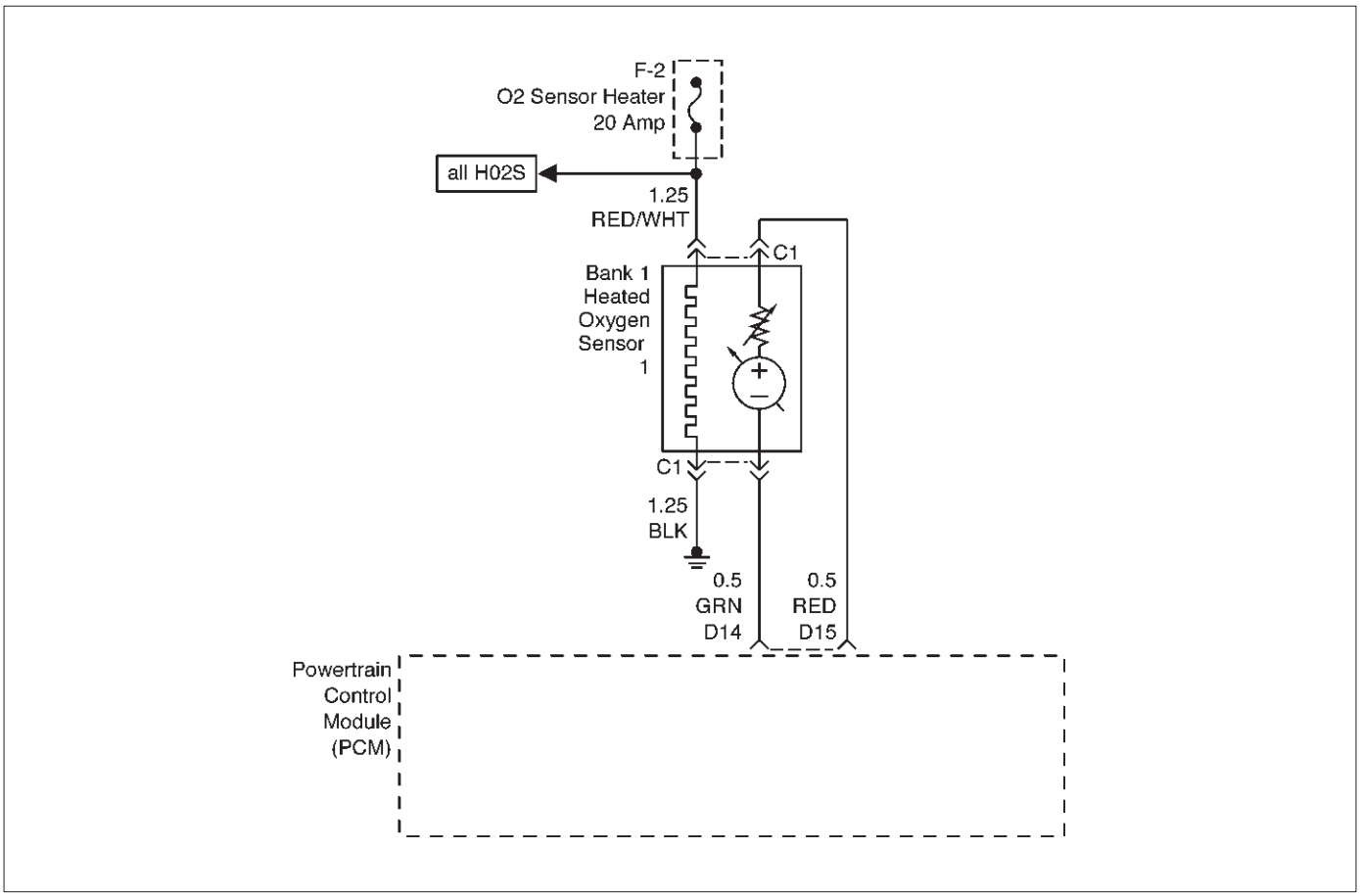

060RW237

Circuit Description

- The powertrain control module (PCM) supplies a bias voltage of about 450 mV between the heated oxygen sensor (HO2S) high and low circuits. When measured with a 10 megaohm digital voltmeter, this may display as low as 320 mV. The oxygen sensor varies the voltage within a range of about 1000 mV when the exhaust is rich, down through about 10 mV when exhaust is lean. The PCM constantly monitors the HO2S signal during “closed loop” operation and compensates for a rich or lean condition by decreasing or increasing injector pulse width as necessary. If the Bank 1 HO2S 1 voltage remains at or near the 450 mV bias for an extended period of time, DTC P0134 will be set, indicating an open sensor signal or sensor low circuit.
- Heated oxygen sensors are used to minimize the amount of time required for “closed loop” fuel control operation and to allow accurate catalyst monitoring. The oxygen sensor heater greatly decreases the amount of time required for fuel control sensors Bank 1 HO2S 1 and Bank 2 HO2S 1 to become active.
- Oxygen sensor heaters are required by post-catalyst monitor sensors to maintain a sufficiently high temperature for accurate exhaust oxygen content readings further from the engine.

Conditions for Setting the DTC

- No related DTCs.
- Battery voltage is above 10 volts.
- Engine run time is longer than 40 seconds.
- Oxygen sensor heater has been determined to be functioning properly.
- Bank 1 HO2S 1 signal voltage remains between 400 mV and 500 mV for a total of 77 seconds over a 90-second period of time.

Action Take When the DTC Sets

- The PCM will illuminate the malfunction indicator lamp (MIL) the first time the fault is detected.
- The PCM will store conditions which were present when the DTC was set as Freeze Frame and in the Failure Records data.
- “Open loop” fuel control will be in effect.

Conditions for Clearing the MIL/DTC

- DTC P0134 can be cleared by using Tech 2 “Clear Info” function or by disconnecting the PCM battery feed.

Diagnostic Aids

Check for the following conditions:

- Poor connection or damaged harness – Inspect the harness connectors for backed-out terminals, improper mating, broken locks, improperly formed or damaged terminals, poor terminal-to-wire connection, and damaged harness.
- Faulty HO2S heater or heater circuit – With the ignition “ON,” engine “OFF,” after a cool down period, the HO2S 1 voltage displayed on Tech 2 is normally 455-460 mV. A reading over 1000 mV indicates a signal line shorted to voltage. A reading under 5 mV

indicates a signal line shorted to ground or signal lines shorted together. Disconnect the HO2S and connect a test light between the HO2S ignition feed and heater ground circuits. If the test light does not light for 2 seconds when the ignition is turned on, repair the open ignition feed or sensor ground circuit as necessary. If the test light lights and the HO2S signal and low circuits are OK, replace the HO2S.

- Intermittent test – With the Ignition "ON," monitor the HO2S signal voltage while moving the wiring harness and related connectors. If the fault is induced, the HO2S signal voltage will change. This may help isolate the location of the malfunction.

Test Description

Number(s) below refer to the step number(s) on the Diagnostic Chart.

3. If the DTC P0134 test passes while the Failure Records conditions are being duplicated, an intermittent conditions is indicated.

Reviewing the Failure Records vehicle mileage since the diagnostic test last failed may help determine how often the condition that caused the DTC to be set occurs. This may assist in diagnosing the condition.

DTC P0134 –HO2S Circuit Insufficient Activity Bank 1 Sensor 1

Step	Action	Value(s)	Yes	No
1	Was the "On-Board Diagnostic (OBD) System Check" performed?	—	Go to *Step 2*	Go to *OBD System Check*
2	1. Install Tech 2. 2. Run the engine at operating temperature. 3. Operate the engine above 1200 RPM for two minutes. Does Tech 2 indicate Bank 1 HO2S 1 voltage varying outside the specified values?	400-500 mV	Go to *Step 3*	Go to *Step 4*
3	1. Ignition "ON," engine "OFF," review and record Tech 2 Failure Records data and note parameters. 2. Operate the vehicle within Failure Records conditions as noted. 3. Using Tech 2, monitor "Specific DTC" info for DTC P0134 until the DTC P0134 test runs. 4. Note the test result. Does Tech 2 indicate DTC P0134 failed this ignition?	—	Go to *Step 4*	Refer to *Diagnostic Aids*
4	Check for a damaged harness. Was a problem found?	—	Verify repair	Go to *Step 5*
5	Check for poor Bank 1 HO2S 1 high and low circuit terminal connections at the Bank 1 HO2S 1 harness connector and replace terminal(s) if necessary. Did any terminals require replacement?	—	Verify repair	Go to *Step 6*
6	Check for poor Bank 1 HO2S 1 high and low circuit terminal connections at the PCM and replace terminals if necessary. Did any terminals require replacement?	—	Verify repair	Go to *Step 7*
7	1. Ignition "OFF." 2. With the PCM disconnected, check continuity of the Bank 1 HO2S 1 high circuit. 3. If the Bank 1 HO2S 1 high circuit measures over 5.0 ohms, repair open or poor connection as necessary. Was a Bank 1 HO2S 1 high circuit problem found and corrected?	—	Verify repair	Go to *Step 8*

DTC P0134 –HO2S Circuit Insufficient Activity Bank 1 Sensor 1 (Cont'd)

Step	Action	Value(s)	Yes	No
8	1. Ignition "OFF." 2. With the PCM disconnected, check continuity of the Bank 1 HO2S 1 low circuit. 3. If the Bank 1 HO2S 1 low circuit measures over 5 ohms, repair open or poor connection as necessary. Was a Bank 1 HO2S 1 low circuit problem found and corrected?	—	Verify repair	Go to *Step 9*
9	1. Ignition "ON," engine "OFF." 2. Disconnect Bank 1 HO2S 1 and jumper the HO2S high and low circuits (PCM side) to ground. 3. Using Tech 2, monitor Bank 1 HO2S 1 voltage. Is Bank 1 HO2S 1 voltage in the specified range?	0-10 mV	Go to *Step 10*	Go to *Step 11*
10	Replace Bank 1 HO2S 1. Is the action complete?	—	Verify repair	—
11	Replace the PCM. **IMPORTANT:** The replacement PCM must be programmed. Refer to *UBS 98model year Immobilizer Workshop Manual.* Is the action complete?	—	Verify repair	—

Diagnostic Trouble Code (DTC) P0151 HO2S Circuit Low Voltage Bank 2 Sensor 1

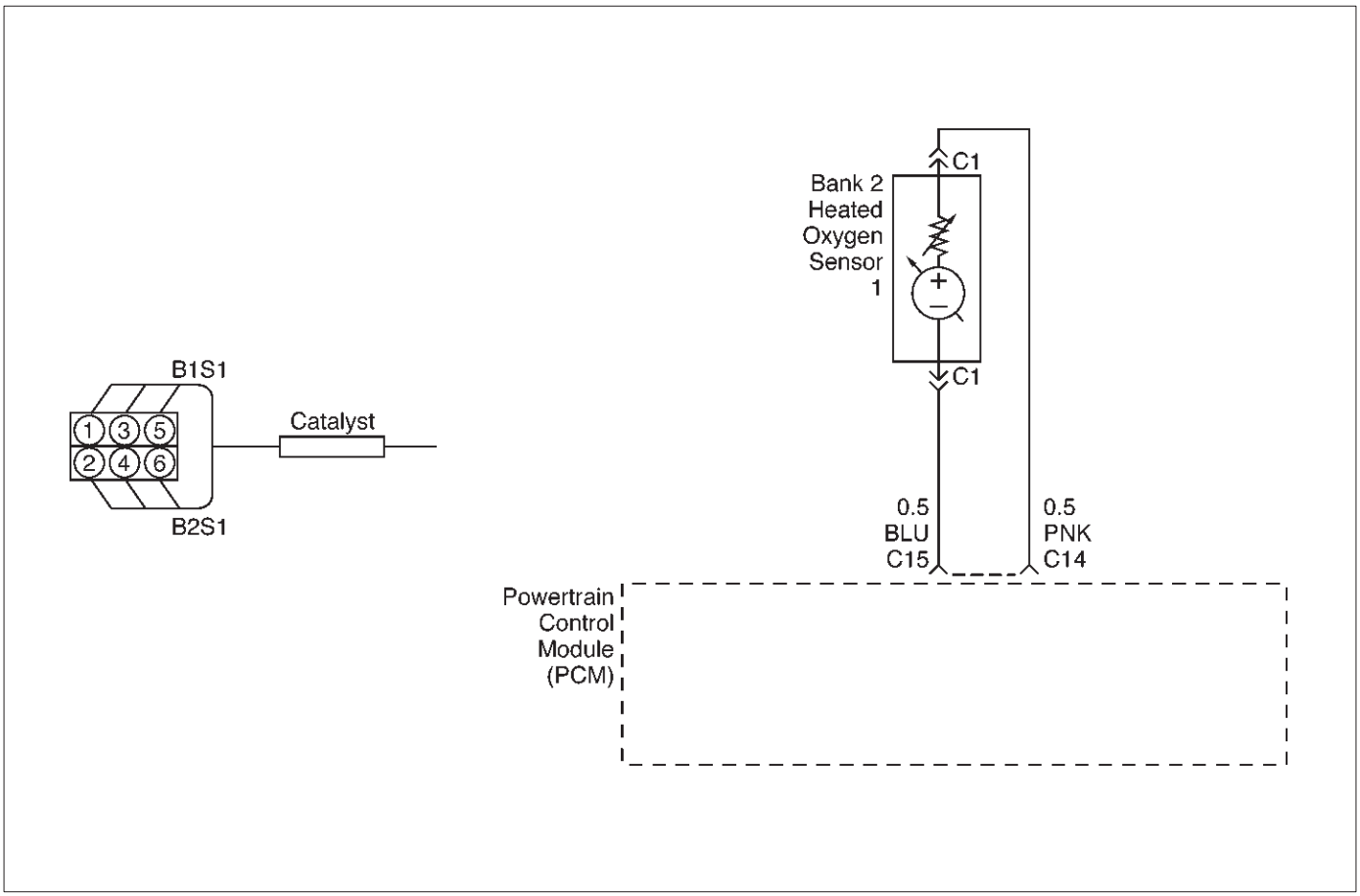

060RW190

Circuit Description

The powertrain control module (PCM) supplies a bias voltage of about 450 mV between the heated oxygen sensor (HO2S) signal high and signal low circuits. When measured with a 10 megaohm digital voltmeter, this may display as low as 320 mV. The oxygen sensor varies the voltage within a range of about 1000 mV when the exhaust is rich, down through about 10 mV when exhaust is lean. The PCM constantly monitors the HO2S signal during "closed loop" operation and compensates for a rich or lean condition by decreasing or increasing injector pulse width as necessary. If the Bank 2 HO2S 1 voltage remains excessively low for an extended period of time, DTC P0151 will be set.

Conditions for Setting the DTC

- No related DTCs.
- The engine is operating in "closed loop."
- Engine coolant temperature is above 60˚C (140˚F).
- "Closed loop" commanded air/fuel ratio is between 14.5 and 14.8.
- Throttle angle is between 3% and 19%.
- Bank 2 HO2S 1 signal voltage remains below 22 mV during normal "closed loop" operation for a total of 77 seconds over a 90-second period of time.

Action Taken When the DTC Sets

- The PCM will illuminate the malfunction indicator lamp (MIL) the first time the fault is detected.
- The PCM will store conditions which were present when the DTC was set as Freeze Frame and in the Failure Records data.
- "Open loop" fuel control will be in effect.

Conditions for Clearing the MIL/DTC

- DTC P0151 can be cleared by using Tech 2 "Clear Info" function or by disconnecting the PCM battery feed.

Diagnostic Aids

Check for the following conditions:

- Heated oxygen sensor wiring – The sensor pigtail may be mispositioned and contacting the exhaust system.
- Poor PCM to engine block grounds.
- Fuel pressure – The system will go lean if pressure is too low. The PCM can compensate for some decrease. However, if fuel pressure is too low, a DTC P0151 may be set. Refer to *Fuel System Diagnosis*.
- Lean injector(s) – Perform "Injector Balance Test."
- Vacuum leaks – Check for disconnected or damaged vacuum hoses and for vacuum leaks at the intake manifold, throttle body, EGR system, and PCV system.
- Exhaust leaks – An exhaust leak may cause outside air to be pulled into the exhaust gas stream past the HO2S, causing the system to appear lean. Check for

exhaust leaks that may cause a false lean condition to be indicated.

- MAF sensor –The system can go lean if the MAF sensor signal indicates an engine airflow measurement that is not correct. Disconnect the MAF sensor to see if the lean condition is corrected. If so, replace the MAF sensor.
- Fuel contamination – Water, even in small amounts, can be delivered to the fuel injectors. The water can cause a lean exhaust to be indicated. Excessive alcohol in the fuel can also cause this condition. Refer to *Fuel System Diagnosis* for the procedure to check for fuel contamination.
- If none of the above conditions are present, replace the affected HO2S.

Test Description

Number(s) below refer to the step number(s) on the Diagnostic Chart.

3. DTC P0151 failing during operation may indicate a condition described in the “Diagnostic Aids” above. If the DTC P0151 test passes while the Failure Records conditions are being duplicated, an intermittent condition is indicate.

Reviewing the Failure Records vehicle mileage since the diagnostic test last failed may help determine how often the condition that caused the DTC to be set occurs. This may assist in diagnosing the condition.

DTC P0151 – HO2S Circuit Low Voltage Bank 2 Sensor 1

Step	Action	Value(s)	Yes	No
1	Was the “On-Board Diagnostic (OBD) System Check” performed?	—	Go to *Step 2*	Go to *OBD System Check*
2	1. Install Tech 2. 2. Run the engine at operating temperature. 3. Operate the vehicle within the parameters specified under “Conditions for Setting the DTC” criteria included in Diagnostic Support. 4. Using Tech 2, monitor Bank 2 HO2S 1 voltage. Does the Bank 2 HO2S 1 voltage remain below the specified value?	22 mV	Go to *Step 4*	Go to *Step 3*
3	1. Ignition “ON,” engine “OFF,” review and record Tech 2 Failure Records data and note parameters. 2. Operate the vehicle within Failure Records conditions as noted. 3. Using Tech 2, monitor “Specific DTC” info for DTC P0151 until the DTC P0151 test runs. 4. Note test result. Does Tech 2 indicate DTC P0151 failed this ignition?	—	Go to *Step 4*	Refer to *Diagnostic Aids*
4	1. Turn ignition “OFF.” 2. Disconnect the PCM. 3. Check the Bank 2 HO2S 1 high and low signal circuits for a short to ground or a short to the heater ground circuit. Were Bank 2 HO2S 1 signal circuits shorted?	—	Go to *Step 5*	Go to *Step 6*
5	Repair the Bank 2 HO2S 1 signal circuit. Is the action complete?	—	Verify repair	—
6	1. Ignition “OFF.” 2. Leave the PCM and HO2S 1 disconnected. 3. Check for continuity between the high and low signal circuits. Was there continuity between the high and low circuits?	—	Go to *Step 7*	Go to *Step 8*
7	Repair the short between the high and low circuits. Is the action complete?	—	Verify repair	—

DTC P0151 – HO2S Circuit Low Voltage Bank 2 Sensor 1 (Cont'd)

Step	Action	Value(s)	Yes	No
8	1. Ignition "OFF." 2. Reconnect the PCM, leave HO2S 2 disconnected. 3. Ignition "ON." Does Tech 2 indicate Bank 2 HO2S 1 voltage near the specified value?	425-475 mV	Refer to *Diagnostic Aids*	Go to *Step 9*
9	Replace the PCM. **IMPORTANT:** The replacement PCM must be programmed. Refer to *UBS 98model year Immobilizer Workshop Manual.* Is the action complete?	—	Verify repair	—

Diagnostic Trouble Code (DTC) P0152 HO2S Circuit HIGH Voltage Bank 2 Sensor 1

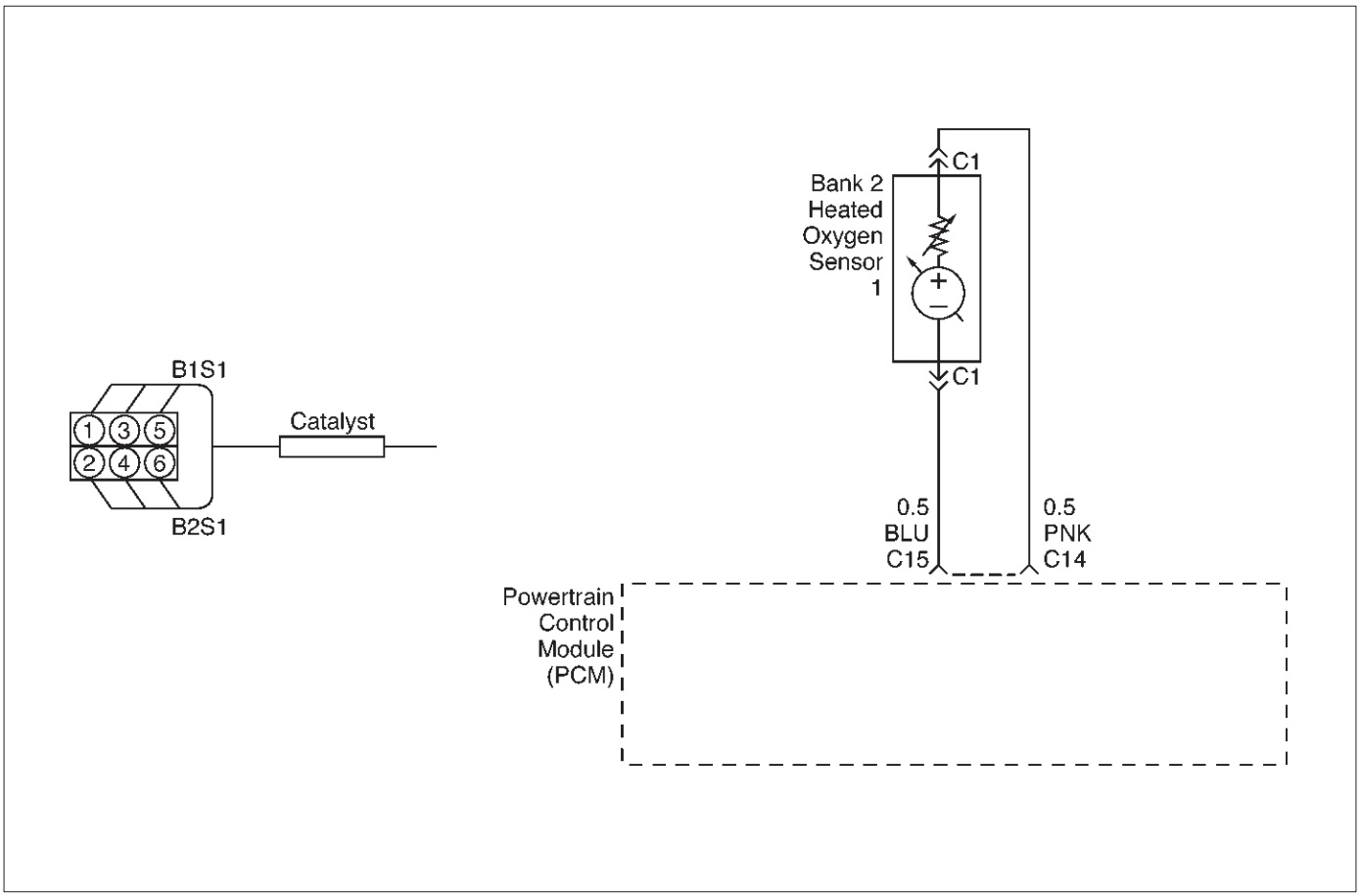

060RW190

Circuit Description

The powertrain control module (PCM) supplies a bias voltage of about 450 mV between the heated oxygen sensor (HO2S) signal high and signal low circuits. When measured with a 10 megaohm digital voltmeter, this may display as low as 320 mV. The oxygen sensor varies the voltage within a range of about 1000 mV when the exhaust is rich, down through about 10 mV when exhaust is lean. The PCM constantly monitors the HO2S signal during "closed loop" operation and compensates for a rich or lean condition by decreasing or increasing the injector pulse width as necessary. If the Bank 2 HO2S 1 voltage remains excessively high for an extended period of time, DTC P0152 will be set.

Conditions for Setting the DTC

- No related DTCs.
- The engine is operating in "closed loop."
- The engine coolant temperature is above 60˚C (140˚F).
- "Closed loop" commanded air/fuel ratio between 14.5 and 14.8.
- Throttle angle between 3% and 19%.
- Bank 2 HO2S 1 signal voltage remains above 952 mV during normal "closed loop" operation for a total of 77 seconds over a 90-second period.

OR

- Bank 2 HO2S 1 signal voltage remains above 500 mV during deceleration fuel cutoff mode operation for up to 3 seconds.

Action Taken When the DTC Sets

- The PCM will illuminate the malfunction indicator lamp (MIL) the first time the fault is detected.
- The PCM will store conditions which were present when the DTC was set as Freeze Frame and in the Failure Records data.
- "Open loop" fuel control will be in effect.

Conditions for Clearing the MIL/DTC

- DTC P0152 can be cleared by using Tech 2 "Clear Info" function or by disconnecting the PCM battery feed.

Diagnostic Aids

Check for the following conditions:

- Fuel pressure – The system will go rich if pressure is too high. The PCM can compensate for some increase. However, if fuel pressure is too high, a DTC P0152 may be set. Refer to *Fuel System Diagnosis*.
- Rich injector(s) – Perform "Injector Balance Test."
- Leaking injector – Refer to *Fuel System Diagnosis*.
- Evaporative emissions (EVAP) system – Check the canister for fuel saturation. If the canister is full of fuel, check EVAP control system components and hoses. Refer to *Evaporative Emission (EVAP) Control System*.

- MAF sensor – The system can go rich if the MAF sensor signal indicates an engine airflow measurement that is not correct. Disconnect the MAF sensor to see if rich condition is corrected. If so, replace MAF sensor.
- Check for leaking fuel pressure regulator diaphragm by checking vacuum line to regulator for the presence of fuel. There should be no fuel in the vacuum line.
- TP sensor – An intermittent TP sensor output will cause the system to go rich, due to a false indication of the engine accelerating.
- Shorted Heated Oxygen Sensor (HO2S)– If the HO2S is internally shorted, the HO2S voltage displayed on Tech 2 will be over 1 volt. Try disconnecting the affected HO2S with the key "ON," engine "OFF." If the displayed HO2S voltage changes from over 1000 mV to around 450 mV, replace the HO2S. Silicon contamination of the HO2S can cause a high HO2S voltage to be indicated. This condition is indicated by powdery white deposit on the portion of the HO2S exposed to the exhaust stream. If contamination is noticed, replace the affected HO2S.
- Open HO2S Signal Circuit of Faulty HO2S– A poor connection or open in the HO2S signal circuit can cause the DTC to set during deceleration fuel mode. An HO2S which is faulty and not allowing a full voltage switch between the rich and lean thresholds can also cause the condition. Operate the vehicle while monitoring the HO2S voltage with Tech 2. If the HO2S is limited within a range between 300 mV to 600 mV, check the HO2S signal circuit wiring and associated terminal connections.
- If none of the above conditions are present, replace the affected HO2S.

Test Description

Number(s) below refer to the step number(s) on the Diagnostic Chart.

3. DTC P0152 failing during deceleration fuel cutoff mode operation may indicate a condition described in the "Diagnostic Aids" above. If the DTC P0152 test passes while the Failure Records conditions are being duplicated, an intermittent condition is indicated.

Reviewing the Failure Records vehicle mileage since the diagnostic test last failed may help determine how often the condition that caused the DTC to be set occurs. This may assist in diagnosing the condition.

DTC P0152 – HO2S Circuit High Voltage Bank 2 Sensor 1

Step	Action	Value(s)	Yes	No
1	Was the "On-Board Diagnostic (OBD) System Check" performed?	—	Go to *Step 2*	Go to *OBD System Check*
2	1. Install Tech 2. 2. Engine is at operating temperature. 3. Operate the vehicle within the parameters specified under "Conditions for Setting the DTC" criteria included in Diagnostic Support. 4. Using Tech 2, monitor Bank 2 HO2S 1 voltage. Does the Bank 2 HO2S 1 voltage remain above the specified value?	952 mV (500 mV in deceleration fuel cut-off mode)	Go to *Step 4*	Go to *Step 3*
3	1. Ignition "ON." 2. Review and record Tech 2 Failure Records data. 3. Operate the vehicle within Failure Records conditions as noted. 4. Using Tech 2, monitor "Specific DTC" info for DTC P0152 until the DTC P0152 test runs. 5. Note the test result. Does Tech 2 indicate DTC P0152 failed this ignition?	—	Go to *Step 4*	Refer to *Diagnostic Aids*
4	1. Ignition "OFF." 2. Disconnect Bank 2 HO2S 1. 3. Ignition "ON." 4. At HO2S Bank 2 Sensor 1 connector (PCM side) use a DVM to measure voltages at the high and low signal terminals. Are the voltages in the specified range?	3-4 V	Go to *Step 5*	Go to *Step 6*
5	Repair short to voltage in signal circuit. Is the action complete?	—	Verify repair	—

DTC P0152 – HO2S Circuit High Voltage Bank 2 Sensor 1 (Cont'd)

Step	Action	Value(s)	Yes	No
6	1. Ignition "ON," engine"OFF." 2. At Bank 2 HO2S 1 connector (PCM side) jumper both the HO2S high and low signal circuits (PCM side) to ground. 3. Using Tech 2, monitor Bank 2 HO2S 1 voltage. Is Bank 2 HO2S 1 voltage below the specified value?	10 mV	Go to *Step 7*	Go to *Step 8*
7	1. Disconnect the jumpers to ground from Bank 2 HO2S 1 PCM-side connector. 2. With the HO2S 1 connector disconnected, monitor Bank 2 HO2S 1 voltage. Is the Bank 2 HO2S 1 voltage between the specified values?	425-475 mV	Refer to *Diagnostic Aids*	Go to *Step 8*
8	Replace the PCM. **IMPORTANT:** The replacement PCM must be programmed. Refer to *UBS 98model year Immobilizer Workshop Manual.* Is the action complete?	—	Verify repair	—

Diagnostic Trouble Code (DTC) P0171 Fuel Trim System Lean Bank 1

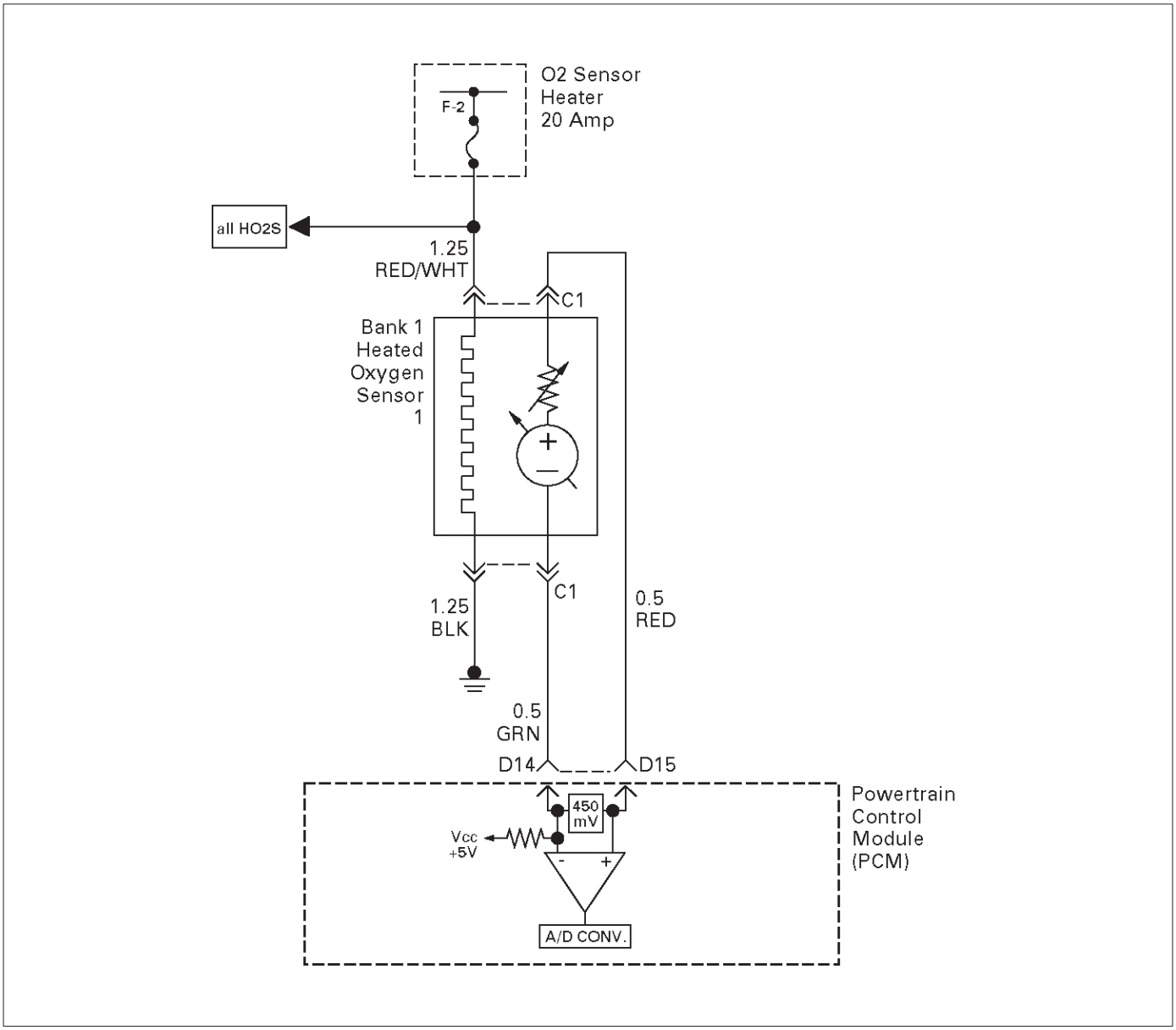

D06RW030

Circuit Description

To provide the best possible combination of driveability, fuel economy, and emission control, a “closed loop” air/fuel metering system is used. While in “closed loop,” the powertrain control module (PCM) monitors the Bank 1 HO2S 1 and Bank 2 HO2S 1 signals and adjusts fuel delivery based upon the HO2S signal voltages. A change made to fuel delivery will be indicated by the long and short term fuel trim values which can be monitored with a Tech 2. Ideal fuel trim values are around 0%; if the HO2S signals are indicating a lean condition the PCM will add fuel, resulting in fuel trim values above 0%. If a rich condition is detected, the fuel trim values will be below 0%, indicating that the PCM is reducing the amount of fuel delivered. If an excessively lean condition is detected on Bank 1, the PCM will set DTC P0171.

The PCM’s maximum authority to control long term fuel trim allows a range between –15% (automatic transmission) or –12% (manual transmission) and +20%. The PCM monitors fuel trim under various engine speed/load fuel trim cells before determining the status of the fuel trim diagnostic.

Conditions for Setting the DTC

- No Tech 2 test is being run.
- None of the following: EGR DTCs, HO2S DTCs, (response, transition, open, low volts, no activity), MAF DTCs, TP sensor DTCs, MAP DTCs, IAT DTCs, canister purge DTCs, EVAP DTCs, injector circuit DTCs, or misfire DTCs.
- Engine coolant temperature is between 25˚C (77˚F) and 100˚C (212˚F).
- Intake air temperature is between –40˚C (–40˚F) and 120˚C (248˚F).
- Manifold absolute pressure is between 24 kPa and 99 kPa.
- Throttle angle is steady below 95%.
- Vehicle speed is below 136 km/h (85 mph).
- Engine speed is between 400 and 6,000 RPM.
- Barometric pressure is greater than 72.5 kPa.

- Mass air flow is between 2 g/second and 200 g/second.
- Ignition voltage is above 9.5 volts.
- Fuel system is in “closed loop.”

Action Taken When the DTC Sets

- The PCM will illuminate the malfunction indicator lamp (MIL) after the second consecutive trip in which the fault is detected.
- The PCM will store conditions which were present when the DTC was set as Freeze Frame and in the Failure Records data.

Conditions for Clearing the MIL/DTC

- DTC P0171 can be cleared by using the Tech 2 “Clear Info” function or by disconnecting the PCM battery feed.

Diagnostic Aids

Check for the following conditions:

- Poor connection at PCM – Inspect harness connectors for backed-out terminals, improper mating, broken locks, improperly formed or damaged terminals, and poor terminal-to-wire connection.
- Damaged harness – Inspect the wiring harness for damage. If the harness appears to be OK, observe the Bank 1 HO2S 1 display on the Tech 2 while moving connectors and wiring harnesses related to the engine harness. A change in the display will indicate the location of the fault.

Reviewing the Failure Records vehicle mileage since the diagnostic test last failed may help determine how often the condition that caused the DTC to be set occurs. This may assist in diagnosing the condition.

Test Description

Number(s) below refer to the step number(s) on the Diagnostic Chart.

2. DTCs other than P0171 and P0174 may indicate a condition present which may cause a lean condition. If this is the case, repairing the condition which caused the other DTC will most likely correct the DTC P0171/P0174.

4. If the DTC P0171 test passes while the Failure Records conditions are being duplicated, the lean condition is intermittent. Refer to *Diagnostic Aids* or *Symptoms* for additional information on diagnosing intermittent problems.

DTC P0171 – Fuel Trim System Lean Bank 1

Step	Action	Value(s)	Yes	No
1	Was the “On-Board Diagnostic (OBD) System Check” performed?	—	Go to *Step 2*	Go to *OBD System Check*
2	Are any DTCs set other than P0171 and P0174?	—	Go to the applicable DTC charts and repair the other DTCs before proceeding with this chart	Go to *Step 3*
3	1. Start the engine and operate the vehicle in “closed loop.” 2. Observe the “BANK 1 L.T. FUEL TRIM” display on the Tech 2. Is the displayed value greater than the specified value?	L.T. Fuel Trim: +20%	Go to *Step 5*	Go to *Step 4*
4	1. Review and record the Tech 2 Failure Records data. 2. Clear the DTC P0171/P0174 and operate the vehicle to duplicate the Failure Records conditions. 3. Monitor the Tech 2 “Specific DTC” info for DTC P0171 while operating the vehicle to duplicate the Failure Records conditions. 4. Continue operating the vehicle until the DTC P0171 test runs and note the test result. Does the Tech 2 indicate DTC P0171 failed this ignition?	—	Go to *Step 5*	The lean condition is not present. If a driveability symptom still exists, refer to *Symptoms* section.
5	Was DTC P0174 also set?	—	Go to *Step 6*	Go to *Step 15*
6	Visually and physically inspect the vacuum hoses for disconnects, splits, kinks, improper routing and improper connections and repair any problem found. Did your inspection reveal a problem requiring repair?	—	Verify repair	Go to *Step 7*
7	Visually and physically inspect the crankcase ventilation valve for proper installation and repair any problem found (refer to *Crankcase Ventilation System*). Did your inspection reveal a problem requiring repair?	—	Verify repair	Go to *Step 8*
8	1. Inspect the MAF sensor inlet screen for damage or for the presence of foreign objects which may partially block the air flow sample through the MAF sensor. 2. Correct any problem that is found as necessary. Did your inspection of the MAF sensor reveal a condition requiring repair?	—	Verify repair	Go to *Step 9*
9	Start the engine and note the idle quality. Is a high or unsteady idle being experienced?	—	Go to *Step 10*	Go to *Step11*
10	1. Visually and physically inspect the throttle body, intake manifold, EGR valve and the EGR feed pipe for vacuum leaks. 2. Repair any vacuum leaks as necessary. Did your inspection reveal a vacuum leak?	—	Verify repair	Go to *Step 11*

DTC P0171 – Fuel Trim System Lean Bank 1 (Cont'd)

Step	Action	Value(s)	Yes	No
11	Check the fuel for excessive water, alcohol, or other contaminants (see *Diagnosis* in *Engine Fuel* for the procedure) and correct the contaminated fuel condition if present (see *Engine Fuel*). Was the fuel contaminated?	—	Verify repair	Go to *Step 12*
12	1. Visually and physically inspect the PCM injector grounds, power grounds and sensor grounds to ensure that they are clean, tight, and in their proper locations. 2. If a faulty ground condition is present, correct it as necessary. Did your inspection reveal a condition requiring repair?	—	Verify repair	Go to *Step 13*
13	1. Disconnect the MAF sensor electrical connector. 2. Operate the vehicle in "closed loop" while monitoring the "BANK 1 S.T. FUEL TRIM" displayed on the Tech 2. Does "BANK 1 S.T. FUEL TRIM" value decrease to near the specified value?	0%	Go to *Step 19*	Go to *Step 14*
14	Perform the procedure in the "Fuel System Pressure Test" and repair fuel system problem if necessary. Did Fuel System Pressure Test isolate a condition requiring repair?	—	Verify repair	Go to *Step 15*
15	1. Visually and physically inspect the intake manifold, injector O-rings, EGR adapter, EGR valve and the EGR feed pipes for vacuum leaks. 2. Repair any problem that is found. Did your inspection reveal a problem?	—	Verify repair	Go to *Step 16*
16	Visually and physically inspect the Bank 1 exhaust manifold for leaks and loose or missing hardware and correct any problem found. Did your inspection reveal a problem?	—	Verify repair	Go to *Step 17*
17	Perform the "Injector Balance Test," and correct any problem found (refer to *Fuel Metering System*). Did Injector Balance Test isolate a problem?	—	Verify repair	Go to *Step 18*
18	1. Visually and physically inspect the Bank 1 HO2S 1 to ensure that it is installed securely and that the Bank 1 HO2S 1 pigtail and wiring harness are not contacting the exhaust or otherwise damaged. 2. If a problem is found, correct it as necessary. Did your inspection reveal a problem?	—	Verify repair	Refer to *Diagnostic Aids*
19	Replace the MAF sensor. Is the action complete?	—	Verify repair	—

Diagnostic Trouble Code (DTC) P0172 Fuel Trim System Rich Bank 1

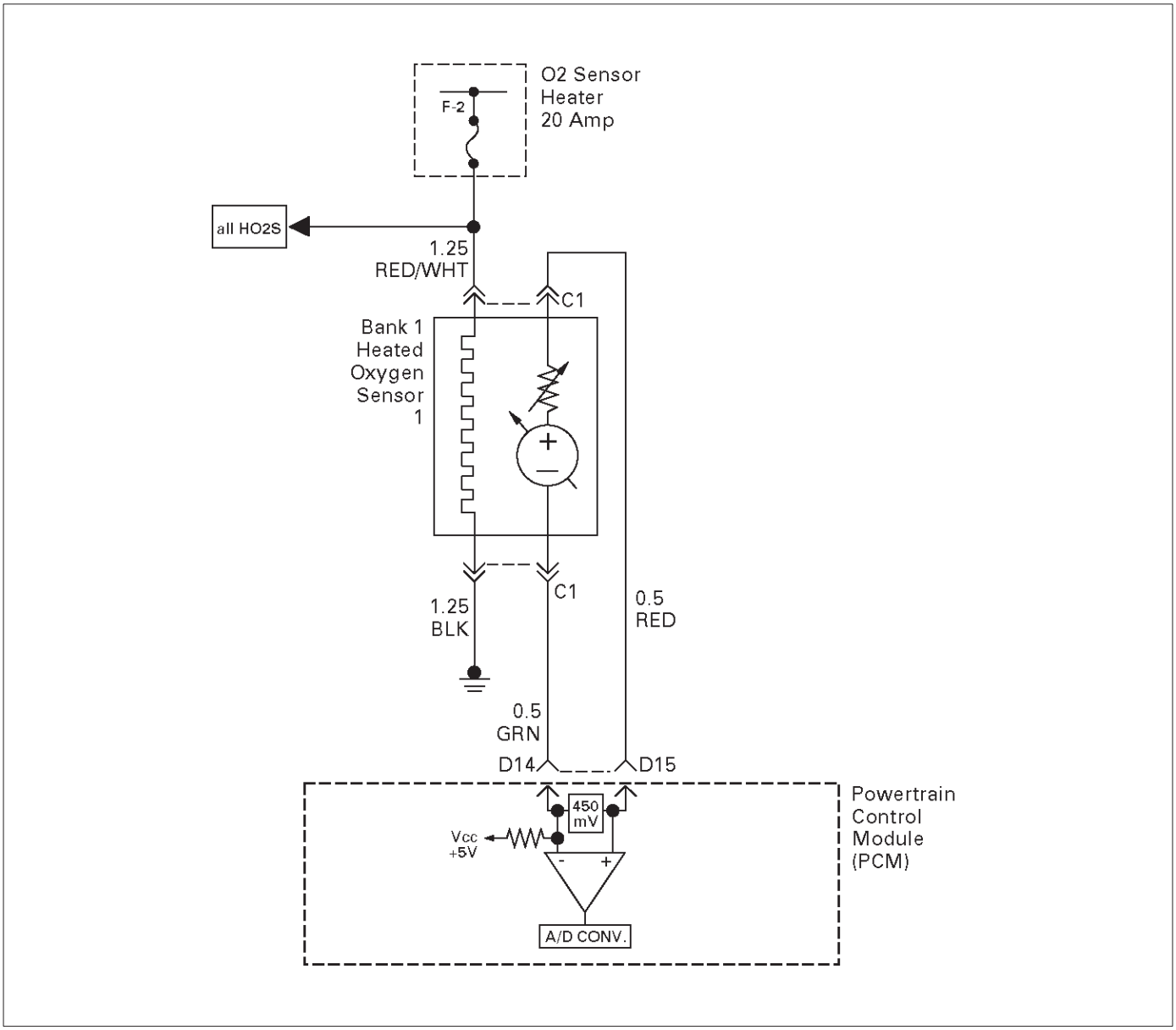

D06RW030

Circuit Description

To provide the best possible combination of driveability, fuel economy, and emission control, a “closed loop” air/fuel metering system is used. While in “closed loop,” the powertrain control module (PCM) monitors the Bank 1 heated oxygen sensors (HO2S) 1 and Bank 2 HO2S 1 signals and adjusts fuel delivery based upon the HO2S signal voltages. A change made to fuel delivery will be indicated by the long and short term fuel trim values which can be monitored with a Tech 2. Ideal fuel trim values are around 0%; if the HO2S signals are indicating a lean condition the PCM will add fuel, resulting in fuel trim values above 0%. If a rich condition is detected, the fuel trim values will be below 0%, indicating that the PCM is reducing the amount of fuel delivered. If an excessively rich condition is detected on Bank 1, the PCM will set DTC P0172.

The PCM’s maximum authority to control long term fuel trim allows a range between –15% (automatic transmission) or –12 (manual transmission) and +20%. The PCM’s maximum authority to control short term fuel trim allows a range between –11% and +20%. The PCM monitors fuel trim under various engine speed/load fuel trim cells before determining the status of the fuel trim diagnostic.

Conditions for Setting the DTC

- No Tech 2 test is being run.
- None of the following was set: EGR DTCs, HO2S DTCs, (response, transition, open, low volts, no activity), MAF DTCs, TPS DTCs, MAP DTCs, IAT DTCs, canister purge DTCs, EVAP DTCs, injector circuit DTCs, or misfire DTCs.
- Engine coolant temperature is between 25˚C (77˚F) and 100˚C (212˚F).
- Intake air temperature is between –40˚C (–40˚F) and 120˚C (248˚F).
- Manifold absolute pressure is between 24 kPa and 99 kPa.
- Throttle angle is steady below 95%.

- Vehicle speed is below 136 km/h (85 mph).
- Engine speed is between 400 and 6,000 RPM.
- Barometric pressure is greater than 72.5 kPa.
- Mass air flow is between 2 g/second and 200 g/second.
- Ignition voltage is above 9.5 volts.
- Fuel system is in “closed loop.”

Action Taken When the DTC Sets

- The PCM will illuminate the malfunction indicator lamp (MIL) after the second consecutive trip in which the fault is detected.
- The PCM will store conditions which were present when the DTC was set as Freeze Frame and in the Failure Records data.

Conditions for Clearing the MIL/DTC

- DTC P0172 can be cleared by using the Tech 2 “Clear Info” function or by disconnecting the PCM battery feed.

Diagnostic Aids

Check for the following conditions:

- Poor connection at PCM – Inspect harness connectors for backed-out terminals, improper mating, broken locks, improperly formed or damaged terminals, and poor terminal-to-wire connection.
- Damaged harness – Inspect the wiring harness for damage. If the harness appears to be OK, observe the Bank 1 HO2S 1 display on the Tech 2 while moving connectors and wiring harnesses related to the engine harness. A change in the display will indicate the location of the fault.

Reviewing the Failure Records vehicle mileage since the diagnostic test last failed may help determine how often the condition that caused the DTC to be set occurs. This may assist in diagnosing the condition.

Test Description

Number(s) below refer to the step number(s) on the Diagnostic Chart.

2. DTCs other than P0172 and P0175 may indicate a condition present which may cause a lean condition. If this is the case, repairing the condition which caused the other DTC will most likely correct the DTC P0172/P0175.

4. If the DTC P0172 test passes while the Failure Records conditions are being duplicated, the rich condition is intermittent. Refer to *Diagnostic Aids* or *Symptoms* for additional information on diagnosing intermittent problems.

DTC P0172 – Fuel Trim System Rich Bank 1

Step	Action	Value(s)	Yes	No
1	Was the “On-Board Diagnostic (OBD) System Check” performed?	—	Go to *Step 2*	Go to *OBD System Check*
2	Are any DTCs set other than P0172 and P0175?	—	Go to the applicable DTC charts and repair the other DTCs before proceeding with this chart	Go to *Step 3*
3	1. Start the engine and operate the vehicle in “closed loop.” 2. Observe “B1 Long Term Fuel Trim” display on the Tech 2. Is the displayed value more negative than the specified value?	L.T. Fuel Trim: –15% (auto. trans.) OR –12% (man. trans.)	Go to *Step 5*	Go to *Step 4*
4	1. Review and record the Tech 2 Failure Records data. 2. Clear the DTC P0172/P0175 and operate the vehicle to duplicate the Failure Records conditions. 3. Monitor the Tech 2 “DTC” info for DTC P0172 while operating the vehicle to duplicate the Failure Records conditions. 4. Continue operating the vehicle until the DTC P0172 test runs and note test result. Does the Tech 2 indicate DTC P0172 failed this ignition?	—	Go to *Step 5*	The rich condition is not present. If a driveability symptom still exists, refer to *Symptoms*.
5	Is DTC P0175 also set?	—	Go to *Step 6*	Go to *Step 15*
6	Visually and physically inspect the air filter element and replace it if necessary. Did the air filter require replacement?	—	Verify repair	Go to *Step 7*
7	Visually and physically inspect the air intake duct for collapse or restriction and repair if necessary. Did your inspection reveal a condition requiring repair?	—	Verify repair	Go to *Step 8*
8	Inspect the MAF sensor inlet screen for damage or for the presence of foreign objects which may partially block air flow through the screen and correct any problem found. Did your inspection of the MAF sensor reveal a condition requiring repair or replacement?	—	Verify repair	Go to *Step 9*
9	Start the engine and note the idle quality. Is a low or unsteady idle being experienced?	—	Go to *Step 10*	Go to *Step 11*
10	1. Ignition “OFF.” 2. Physically inspect the throttle body bore, throttle plate, and IAC passages for coking and foreign objects. 3. If a problem was found, repair as necessary. Did your inspection reveal a condition requiring repair?	—	Verify repair	Go to *Step 11*

DTC P0172 – Fuel Trim System Rich Bank 1 (Cont'd)

Step	Action	Value(s)	Yes	No
11	1. Disconnect the vacuum hose from the fuel pressure regulator and inspect the hose for the presence of fuel. 2. If fuel is present in the vacuum hose, replace the fuel pressure regulator (refer to *Fuel Metering System*). Did the fuel pressure regulator require replacement?	—	Verify repair	Go to *Step 12*
12	Ignition "ON," engine "OFF," monitor the TP Angle display on the Tech 2 while slowly depressing the accelerator pedal. Does the TP Angle display increase steadily and evenly from minimum value at closed throttle to maximum value at wide-open throttle?	Minimum 0% Maximum 100%	Go to *Step 13*	Go to *Step 18*
13	1. Disconnect the MAF sensor electrical connector. 2. Operate the vehicle in "closed loop" while monitoring the "BANK 1 L.T. FUEL TRIM" and "BANK 1 S. T. FUEL TRIM" display on the Tech 2. Did both values change to near the specified value?	0%	Go to *Step 19*	Go to *Step 14*
14	1. Perform "Fuel System Pressure Test." 2. If Fuel System Pressure Test isolates a problem, repair as necessary (refer to *Engine Fuel* or *Fuel Metering System*). Did the Fuel System Pressure Test isolate a problem requiring repair?	—	Verify repair	Go to *Step 16*
15	Replace the PCM. **IMPORTANT:** The replacement PCM must be programmed. Refer to *UBS 98model year Immobilizer Workshop Manual.* Is the action complete?	—	Verify repair	—
16	1. Perform the "Injector Balance Test." 2. If Injector Balance Test isolates a problem, repair as necessary (refer to *Fuel Metering System*). Did the Injector Balance Test isolate a problem requiring repair?	—	Verify repair	Go to *Step 17*
17	1. Remove and visually/physically inspect the Bank 1 HO2S 1 for silicon contamination. This will be indicated by a powdery white deposit on the portion of the HO2S that is exposed to the exhaust stream. 2. If contamination is evident on the Bank 1 HO2S 1, replace the contaminated sensors. Did the sensor require replacement?	—	Verify repair	Refer to *Diagnostic Aids*
18	1. Check the TP sensor mounting screws and tighten or replace them as necessary if they are loose or missing. 2. If the screws are OK, replace the TP sensor. Is the action complete?	—	Verify repair	—
19	Replace the MAF sensor. Is the action complete?	—	Verify repair	—

Diagnostic Trouble Code (DTC) P0174 Fuel Trim System Lean Bank 2

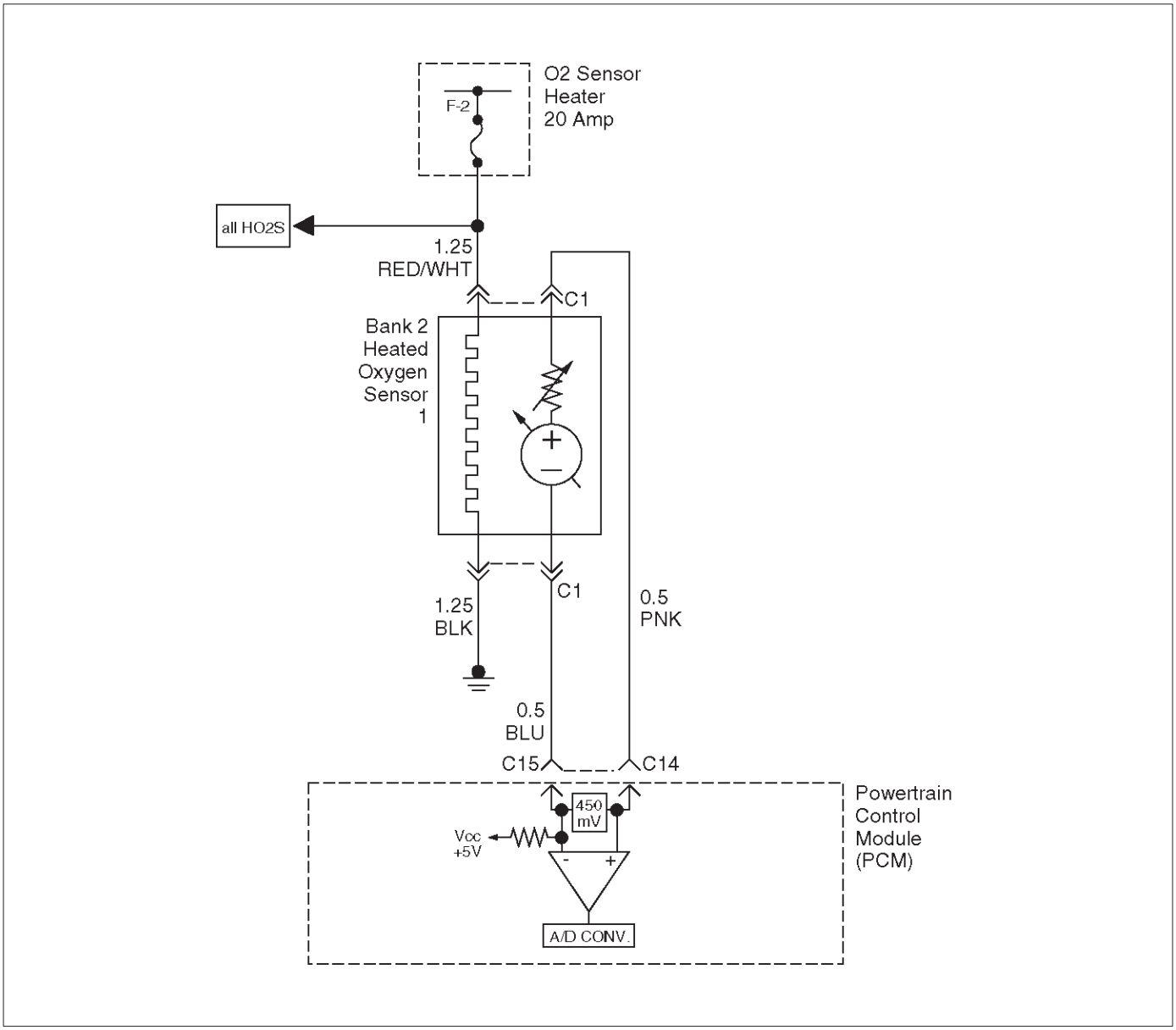

D06RW031

Circuit Description

To provide the best possible combination of driveability, fuel economy, and emission control, a “closed loop” air/fuel metering system is used. While in “closed loop,” the powertrain control module (PCM) monitors the Bank 1 HO2S 1 and Bank 2 HO2S 1 signals and adjusts fuel delivery based upon the HO2S signal voltages. A change made to fuel delivery will be indicated by the long and short term fuel trim values which can be monitored with a Tech 2. Ideal fuel trim values are around 0%; if the HO2S signals are indicating a lean condition the PCM will add fuel, resulting in fuel trim values above 0%. If a rich condition is detected, the fuel trim values will be below 0%, indicating that the PCM is reducing the amount of fuel delivered. If an excessively lean condition is detected on Bank 2, the PCM will set DTC P0174.

The PCM’s maximum authority to control long term fuel trim allows a range between –15%(automatic transmission) or –12%(manual transmission) and +20%. The PCM monitors fuel trim under various engine speed/load fuel trim cells before determining the status of the fuel trim diagnostic.

Conditions for Setting the DTC

- No Tech 2 test is being run.
- None of the following DTCs are set: idle system, EGR, HO2S, (response, transition, open, low volts, no activity), MAF, TP sensor, MAP, IAT, canister purge, EVAP, injector circuit, or misfire.
- Engine coolant temperature is between 25˚C (77˚F) and 100˚C (212˚F).
- Intake air temperature is between –40˚C (–40˚F) and 120˚C (248˚F).
- Manifold absolute pressure is between 24 kPa and 99 kPa.
- Throttle angle is steady below 95%.
- Vehicle speed is below 136 km/h (85 mph).
- Engine speed is between 400 and 6,000 RPM.
- Barometric pressure is greater than 72.5 kPa.
- Mass air flow is between 2 g/second and 200 g/second.

- Ignition voltage is above 9.5 volts.
- Fuel system is in “closed loop.”

Action Taken When the DTC Sets

- The PCM will illuminate the malfunction indicator lamp (MIL) after the second consecutive trip in which the failure is detected.
- The PCM will store conditions which were present when the DTC was set as Freeze Frame and in the Failure Records data.

Conditions for Clearing the MIL/DTC

- DTC P0174 can be cleared by using the Tech 2 “Clear Info” function or by disconnecting the PCM battery feed.

Diagnostic Aids

Check for the following conditions:

- Poor connection at PCM – Inspect harness connectors for backed-out terminals, improper mating, broken locks, improperly formed or damaged terminals, and poor terminal-to-wire connection.
- Damaged harness – Inspect the wiring harness for damage. If the harness appears to be OK, observe the Bank 2 HO2S 1 display on the Tech 2 while moving connectors and wiring harnesses related to the engine harness. A change in the display will indicate the location of the fault.

Reviewing the Failure Records vehicle mileage since the diagnostic test last failed may help determine how often the condition that caused the DTC to be set occurs. This may assist in diagnosing the condition.

Test Description

Number(s) below refer to the step number(s) on the Diagnostic Chart.

2. DTCs other than P0171 and P0174 may indicate a condition present which may cause a lean condition. If this is the case, repairing the condition which caused the other DTC will most likely correct the DTC P0171/P0174.

4. If the DTC P0174 test passes while the Failure Records conditions are being duplicated, the lean condition is intermittent. Refer to *Diagnostic Aids* or *Symptoms* for additional information on diagnosing intermittent problems.

DTC P0174 – Fuel Trim System Lean Bank 2

Step	Action	Value(s)	Yes	No
1	Was the “On-Board Diagnostic (OBD) System Check” performed?	—	Go to *Step 2*	Go to *OBD System Check*
2	Are any DTCs set other than P0174 and P0171?	—	Go to the applicable DTC charts and repair the other DTCs before proceeding with this chart.	Go to *Step 3*
3	1. Start the engine and operate the vehicle in “closed loop.” 2. Observe the “BANK 2 L.T. FUEL TRIM” display on the Tech 2. Is the displayed values greater than the specified values?	L.T. Fuel Trim: +20%	Go to *Step 5*	Go to *Step 4*
4	1. Review and record Tech 2 Failure Records data. 2. Clear the DTC P0171/P0174 and operate the vehicle to duplicate the Failure Records conditions. 3. Monitor the Tech 2 “DTC” info for DTC P0174 while operating the vehicle to duplicate the Failure Records conditions. 4. Continue operating the vehicle until the DTC P0174 test runs. 5. Note the test result. Does the Tech 2 indicate DTC P0174 failed this ignition?	—	Go to *Step 5*	The lean condition is not present. If a driveability symptom still exists, refer to *Symptoms* section.
5	Was DTC P0171 also set?	—	Go to *Step 6*	Go to *Step 15*
6	Visually and physically inspect the vacuum hoses for disconnects, splits, kinks, improper routing and improper connections and repair any problem found. Did your inspection reveal a problem requiring repair?	—	Verify repair	Go to *Step 7*
7	Visually and physically inspect the crankcase ventilation valve for proper installation and repair any problem found (refer to *Crankcase Ventilation System*). Did your inspection reveal a problem requiring repair?	—	Verify repair	Go to *Step 8*
8	1. Inspect the MAF sensor inlet screen for damage or for the presence of foreign objects which may partially block the air flow sample through the MAF sensor. 2. Correct any problem that is found as necessary. Did your inspection of the MAF sensor reveal a condition requiring repair?	—	Verify repair	Go to *Step 9*
9	Start the engine and note the idle quality. Is a high or unsteady idle being experienced?	—	Go to *Step 10*	Go to *Step 11*

DTC P0174 – Fuel Trim System Lean Bank 2 (Cont'd)

Step	Action	Value(s)	Yes	No
10	1. Visually and physically inspect the throttle body, intake manifold, EGR valve and the EGR feed pipe for vacuum leaks. 2. Repair any vacuum leaks as necessary. Did your inspection reveal a vacuum leak?	—	Verify repair	Go to *Step 11*
11	Check the fuel for excessive water, alcohol, or other contaminants (see *Diagnosis* in *Engine Fuel* for procedure) and correct the contaminated fuel condition is present (see *Engine Fuel*). Was the fuel contaminated?	—	Verify repair	Go to *Step 12*
12	1. Visually and physically inspect the PCM injector grounds, power grounds and sensor grounds to ensure that they are clean, tight, and in their proper locations. 2. If a faulty ground condition is present, correct it as necessary. Did your inspection reveal a condition requiring repair?	—	Verify repair	Go to *Step 13*
13	1. Disconnect the MAF sensor electrical connector. 2. Operate the vehicle in "closed loop" while monitoring the "BANK 1 S.T. FUEL TRIM" displayed on the Tech 2. Does the "BANK 1 S.T. FUEL TRIM" value decrease to near the specified value?	0%	Go to *Step 19*	Go to *Step 14*
14	Perform the procedure in the "Fuel System Pressure Test" and repair fuel system problem if necessary. Did the Fuel System Pressure Test isolate a condition requiring repair?	—	Verify repair	Go to *Step 15*
15	1. Visually and physically inspect the intake manifold, injector O-rings, EGR adapter, EGR valve and the EGR feed pipes for vacuum leaks. 2. Repair any problem that is found. Did your inspection reveal a problem?	—	Verify repair	Go to *Step 16*
16	Visually and physically inspect the Bank 2 exhaust manifold for leaks and loose or missing hardware and correct any problem found. Did your inspection reveal a problem?	—	Verify repair	Go to *Step 17*
17	Perform the "Injector Balance Test," and correct any problem found (refer to *Fuel Metering System*). Did the Injector Balance Test isolate a problem?	—	Verify repair	Go to *Step 18*
18	1. Visually and physically inspect the Bank 2 HO2S 1 to ensure that it is installed securely and that the Bank 2 HO2S 1 pigtail and wiring harness are not contacting the exhaust or otherwise damaged. 2. If a problem is found, correct it as necessary. Did your inspection reveal a problem?	—	Verify repair	Refer to *Diagnostic Aids*
19	Replace the MAF sensor. Is the action complete?	—	Verify repair	—

Diagnostic Trouble Code (DTC) P0175 Fuel Trim System Rich Bank 2

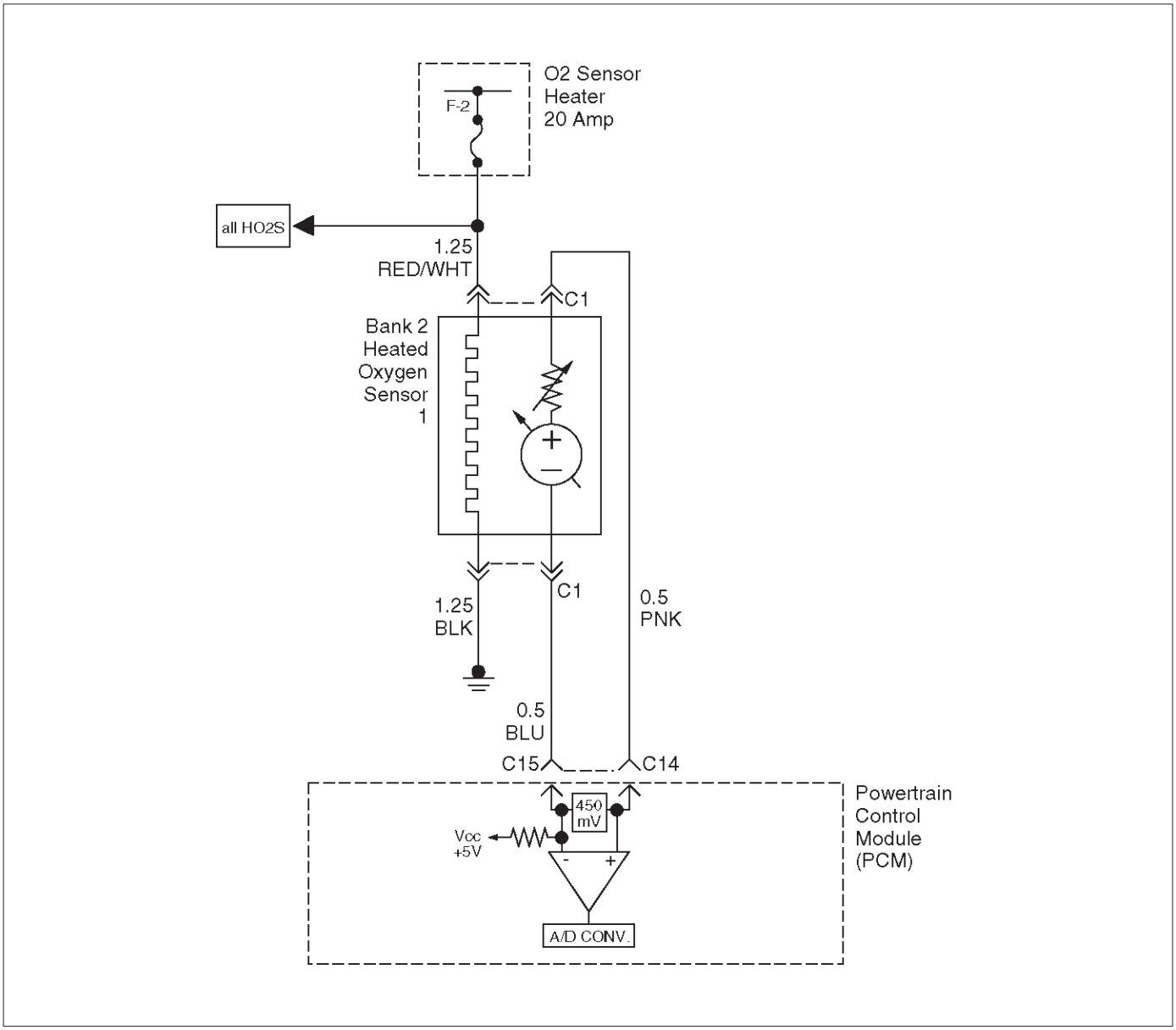

D06RW031

Circuit Description

To provide the best possible combination of driveability, fuel economy, and emission control, a “closed loop” air/fuel metering system is used. While in “closed loop,” the powertrain control module (PCM) monitors the Bank 1 HO2S 1 and Bank 2 HO2S 1 signals and adjusts fuel delivery based upon the HO2S signal voltages. A change made to fuel delivery will be indicated by the long and short term fuel trim values which can be monitored with a Tech 2. Ideal fuel trim values are around 0%; if the HO2S signals are indicating a lean condition the PCM will add fuel, resulting in fuel trim values above 0%. If a rich condition is detected, the fuel trim values will be below 0%, indicating that the PCM is reducing the amount of fuel delivered. If an excessively rich condition is detected on Bank 2, the PCM will set DTC P0175.

The PCM’s maximum authority to control long term fuel trim allows a range between –15%(automatic transmission) or –12%(manual transmission) and +20%. The PCM’s maximum authority to control short term fuel trim allows a range between –11% and +20%. The PCM monitors fuel trim under various engine speed/load fuel trim cells before determining the status of the fuel trim diagnostic.

Conditions for Setting the DTC

- No Tech 2 test is being run.
- None of the following DTCs are set: idle system, EGR, HO2S, (response, transition, open, low volts, no activity), MAF, TPS, MAP, IAT, canister purge, EVAP, injector circuit, or misfire.
- Engine coolant temperature is between 25˚C (77˚F) and 100˚C (212˚F).
- Intake air temperature is between –40˚C (–40˚F) and 120˚C (248˚F).
- Manifold absolute pressure is between 24 kPa and 99 kPa.
- Throttle angle is steady below 95%.
- Vehicle speed is below 136 km/h (85 mph).
- Engine speed is between 400 and 6,000 RPM.

- Barometric pressure is greater than 72.5 kPa.
- Mass air flow is between 2 g/second and 200 g/second.
- Ignition voltage is above 9.5 volts.
- Fuel system is in “closed loop.”

Action Taken When the DTC Sets

- The PCM will illuminate the malfunction indicator lamp (MIL) after the second consecutive trip in which the failure is detected.
- The PCM will store conditions which were present when the DTC was set as Freeze Frame and in the Failure Records data.

Conditions for Clearing the MIL/DTC

- DTC P0175 can be cleared by using the Tech 2 “Clear Info” function or by disconnecting the PCM battery feed.

Diagnostic Aids

Check for the following conditions:

- Poor connection at PCM – Inspect harness connectors for backed -out terminals, improper mating, broken locks, improperly formed or damaged terminals, and poor terminal-to-wire connection.
- Damaged harness – Inspect the wiring harness for damage. If the harness appears to be OK, observe the Bank 2 HO2S 1 display on the Tech 2 while moving connectors and wiring harnesses related to the engine harness. A change in the display will indicate the location of the fault.

Reviewing the Failure Records Vehicle mileage since the diagnostic test last failed may help determine how often the condition that caused the DTC to be set occurs. This may assist in diagnosing the condition.

Test Description

Number(s) below refer to the step number(s) on the Diagnostic Chart.

2. DTCs other than P0172 and P0175 may indicate a condition present which may cause a lean condition. If this is the case, repairing the condition which caused the other DTC will most likely correct the DTC P0172/P0175.

4. If the DTC P0175 test passes while the Failure Records conditions are being duplicated, the rich condition is intermittent. Refer to *Diagnostic Aids* or *Symptoms* for additional information on diagnosing intermittent problems.

DTC P0175 – Fuel Trim System Rich Bank 2

Step	Action	Value(s)	Yes	No
1	Was the ”On-Board Diagnostic (OBD) System Check” performed?	—	Go to Step 2	Go to *OBD System Check*
2	Are any DTCs set other than P0172 and P0175?	—	Go to the applicable DTC charts and repair the other DTCs before proceeding with this chart.	Go to *Step 3*
3	1. Start the engine and operate the vehicle in “closed loop.” 2. Observe the “BANK 2 L.T. FUEL TRIM” display on the Tech 2. Is the displayed value more negative than the specified value?	L.T. Fuel Trim: –15% (auto. trans.) OR –12% (man. trans.)	Go to *Step 5*	Go to *Step 4*
4	1. Review and record the Tech 2 Failure Records data. 2. Clear the DTC P0172/P0175 and operate the vehicle to duplicate the Failure Records conditions. 3. Monitor the Tech 2 “DTC” info for DTC P0175 while operating the vehicle to duplicate the Failure Records conditions. 4. Continue operating the vehicle until the DTC P0175 test runs. 5. Note the test result. Does the Tech 2 indicate DTC P0175 failed this ignition?	—	Go to *Step 5*	The rich condition is not present. If a driveability symptom still exists, refer to *Symptoms*.
5	Was DTC P0172 also set?	—	Go to *Step 6*	Go to *Step 15*
6	Visually and physically inspect the air filter element and replace it if necessary. Did the air filter require replacement?	—	Verify repair	Go to *Step 7*
7	Visually and physically inspect the air intake duct for collapse or restriction and repair if necessary. Did your inspection reveal a problem requiring repair?	—	Verify repair	Go to *Step 8*
8	Inspect the MAF sensor inlet screen for damage or for the presence of foreign objects which may partially block air flow through the screen and correct any problem found. Did your inspection of the MAF sensor reveal a condition requiring repair or replacement?	—	Verify repair	Go to *Step 9*
9	Start the engine and note the idle quality. Is a low or unsteady idle being experienced?	—	Go to *Step 10*	Go to *Step 11*
10	1. Turn the ignition off and physically inspect the throttle body bore, throttle plate, and IAC passages for coking and foreign objects. 2. If a problem was found, repair as necessary. Did your inspection reveal a condition requiring repair?	—	Verify repair	Go to *Step 11*

DTC P0175 – Fuel Trim System Rich Bank 2 (Cont'd)

Step	Action	Value(s)	Yes	No
11	1. Disconnect the vacuum hose from the fuel pressure regulator and inspect the hose for the presence of fuel. 2. If fuel is present in the vacuum hose, replace the fuel pressure regulator (refer to *Fuel Metering System*). Did the fuel pressure regulator require replacement?	—	Verify repair	Go to *Step 12*
12	1. Ignition "ON," engine "OFF." 2. Monitor the TP Angle display on the Tech 2 while slowly depressing the accelerator pedal. Does the TP Angle display increase steadily and evenly from minimum value at closed throttle to maximum value at wide-open throttle?	Minimum 0% Maximum 100%	Go to *Step 13*	Go to *Step 18*
13	1. Disconnect the MAF sensor electrical connector. 2. Operate the vehicle in "closed loop" while monitoring the "BANK 1 L.T. FUEL TRIM" and "BANK 1 S.T. FUEL TRIM" display on the Tech 2. Did both values change to near the specified value?	0%	Go to *Step 19*	Go to *Step 14*
14	1. Perform the "Fuel System Pressure Test." 2. If Fuel System Pressure Test isolates a problem, repair as necessary (refer to *Engine Fuel* or *Fuel Metering System*). Did the Fuel System Pressure Test isolate a condition requiring repair?	—	Verify repair	Go to *Step 16*
15	Replace the PCM. **IMPORTANT:** The replacement PCM must be programmed. Refer to *UBS 98model year Immobilizer Workshop Manual.* Is the action complete?	—	Verify repair	—
16	1. Perform the "Injector Balance Test." 2. If the Injector Balance Test isolates a problem, repair as necessary (refer to *Fuel Metering System*). Did the Injector Balance Test isolate a problem requiring repair?	—	Verify repair	Go to *Step 17*
17	1. Remove and visually/physically inspect the Bank 2 HO2S 1 for silicon contamination. This will be indicated by a powdery white deposit on the portion of the HO2S that is exposed to the exhaust stream. 2. If contamination is evident on the Bank 2 HO2S 1, replace the contaminated sensor. Did the sensor require replacement?	—	Verify repair	Refer to *Diagnostic Aids*
18	1. Check the TP sensor mounting screws and tighten or replace them as necessary if they are loose or missing. 2. If the screws are OK, replace the TP sensor. Is the action complete?	—	Verify repair	—
19	Replace the MAF sensor. Is the action complete?	—	Verify repair	—

Diagnostic Trouble Code (DTC) P0201 Injector 1 Control Circuit

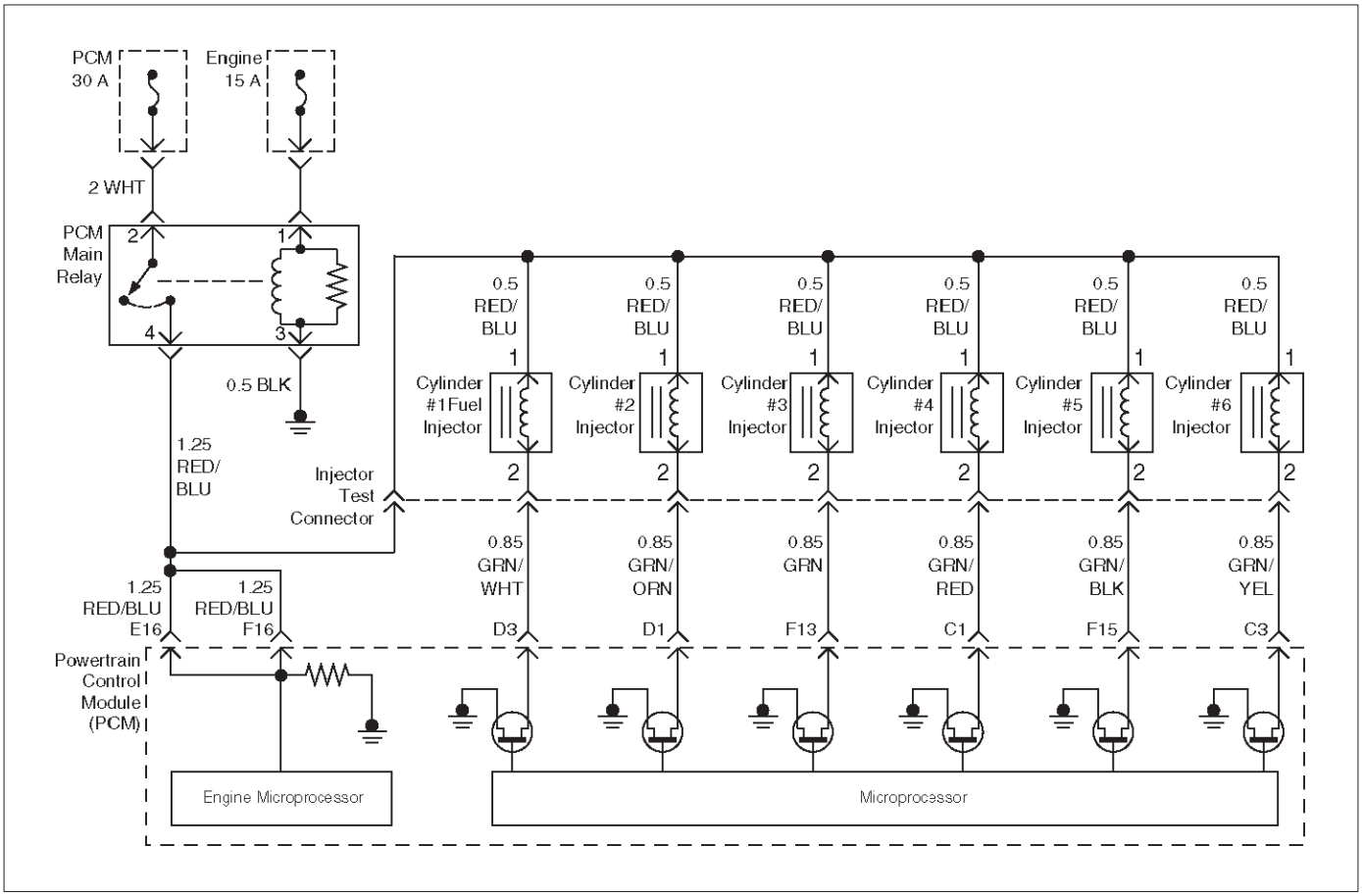

D06RW034

Circuit Description

The powertrain control module (PCM) has six individual injector driver circuits. Each controls an injector. When a driver circuit is grounded by the PCM, the injector is activated. The PCM monitors the current in each driver circuit. The voltage on each driver is monitored to detect a fault. If the voltage is not what the PCM expects to monitor on the circuit, a DTC is set. This DTC is also set if an injector driver is shorted to voltage or if there is an open circuit.

Conditions for Setting the DTC

- The battery voltage is more than 9 volts.
- The engine is turning, determined by 58X crankshaft position input signal.
- The injector voltage does not equal the ignition voltage when the injector is commanded “OFF” or the injector voltage does not equal 0 volts when the injector is commanded “ON.”
- The above conditions are met for 15 seconds.

Action Taken When the DTC Sets

- The PCM will illuminate the malfunction indicator lamp (MIL) the first time the fault is detected.
- The PCM will store conditions which were present when the DTC was set as Freeze Frame and in the Failure Records data.

Conditions for Clearing the MIL/DTC

- DTC P0201 can be cleared by using the Tech 2 “Clear Info” function or by disconnecting the PCM battery feed.

Diagnostic Aids

An injector driver circuit that is open or shorted to voltage will cause a DTC P0201 to set. It will also cause a misfire due to an inoperative injector. A misfire DTC will also be set indicating which cylinder is inoperative.
Long term and short term fuel trims that are excessively high or low are a good indication that an injector is faulty. Use Fuel Injector Coil Test Procedure to check for faulty injectors.

Test Description

The number(s) below refer to the step number(s) on the Diagnostic Chart.

3. This step determines if DTC P0201 is the result of a hard failure or an intermittent condition.

5. A special injector test connector is provided so that the injectors can be electrically tested without removal of the manifold. On the Trooper, the special 7-way gray connector is located at the front of the charcoal canister. The test connector can be identified by the blue connector lock which is tethered to the wiring harness. If the light for cylinder 1 is “ON” steady before cranking the engine as well as while cranking the engine, then the injector driver circuit is shorted to ground.

If the test light blinks while cranking, the PCM and the wiring to the injectors are OK. The Fuel Injector Coil Test Procedure will check if the injectors are faulty.

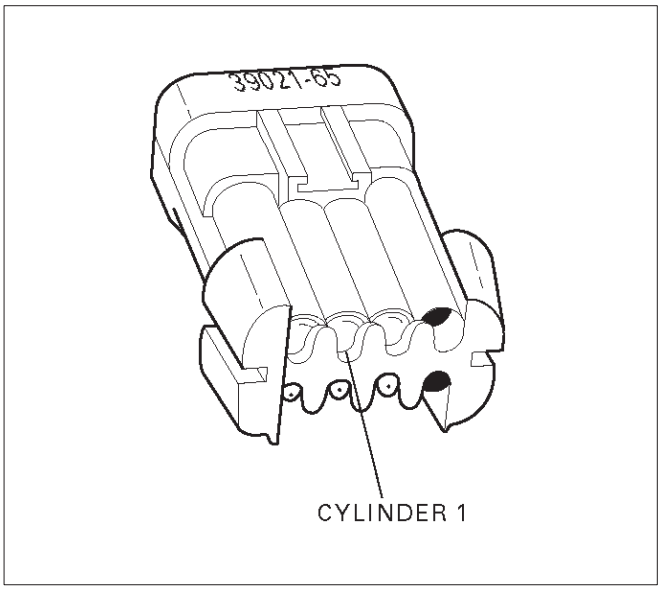

R321054

7. Because the test light was “ON” steady, voltage to the injector is OK, but the driver circuit is grounded at all times. This step determines if the circuit is shorted to ground or the PCM is faulty.
9. The reading should be about 12-14Ω.
10. Locating the open in the harness or in the injector will require removal of the manifold to provide access.

DTC P0201 – Injector 1 Control Circuit

Step	Action	Value(s)	Yes	No
1	Was the “On-Board Diagnostic (OBD) System Check” performed?	—	Go to *Step 2*	Go to *OBD System Check*
2	Will the engine start?	—	Go to *Step 3*	Go to *Engine Cranks But Will Not Run* chart
3	1. Install the Tech 2. Clear the DTC. 2. Idle the engine for one minute. Does DTC P0201 reset?	—	Go to *Step 5*	Go to *Step 4*
4	1. Review the Freeze Frame data with the ignition “ON” and the engine “OFF” and note the parameters. 2. Operate the vehicle within the Freeze Frame conditions as noted. Does P0201 reset?	—	Go to *Step 5*	Go to *Diagnostic Aids*
5	1. Engine “OFF.” 2. Disconnect the injector connector. 3. Install an injector test light 5-8840-2636-0 on the injector test connector. 4. Crank the engine and note the light. Does the injector test light blink?	—	Go to *Fuel Injector Coil Test Procedure*	Go to *Step 6*
6	Note whether the injector test light for cylinder 1 was “OFF” or “ON” steady in step 5. Was the test light “ON” steady while cranking the engine?	—	Go to *Step 7*	Go to *Step 9*

DTC P0201 – Injector 1 Control Circuit (Cont'd)

Step	Action	Value(s)	Yes	No
7	1. Disconnect the PCM connector for the affected injectors. 2. With a test light connected to B+, probe the affected injector driver circuit. Does the test light illuminate?	—	Go to *Step 8*	Go to *Step 15*
8	Repair short to ground in the injector driver circuit. Is the action complete?	—	Go to *OBD System Check*	—
9	1. Disconnect the injector test connector. 2. At the injector side of the harness, connect an ohmmeter between the positive wire (red with blue tracer) and the wire for cylinder 1 (green with white tracer). Does the ohmmeter indicate continuity?	—	Go to *Step 11*	Go to *Step 10*
10	Repair the open injector harness wire or open injector. Is the action complete?	—	Verify repair	—
11	At the PCM side of the injector test connector, check the green/white wire for a short to voltage. Was there a short to voltage?	—	Go to *Step 12*	Go to *Step 13*
12	Repair the short to voltage. Is the action complete?	—	Verify repair	—
13	Check for an open circuit between the injector test connector and the PCM. Was there an open circuit?	—	Go to *Step 14*	Go to *Step 15*
14	Repair the open circuit. Is the action complete?	—	Verify repair	—
15	Replace the PCM. **IMPORTANT:** The replacement PCM must be programmed. Refer to *UBS 98model year Immobilizer Workshop Manual.* Is the action complete?	—	Verify repair	—

Diagnostic Trouble Code (DTC) P0202 Injector 2 Control Circuit

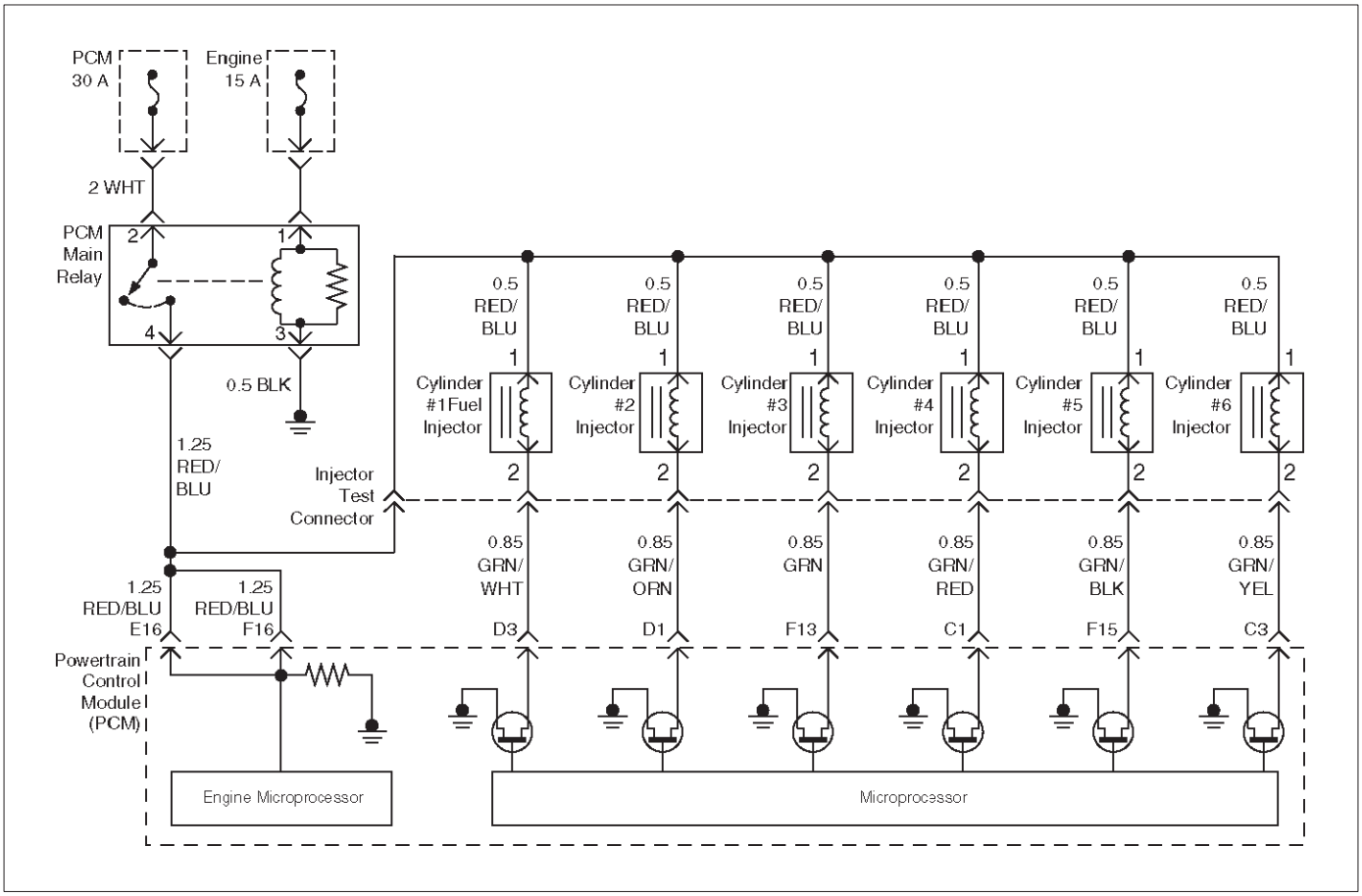

D06RW034

Circuit Description

The powertrain control module (PCM) has six individual injector driver circuits. Each controls an injector. When a driver circuit is grounded by the PCM, the injector is activated. The PCM monitors the current in each driver circuit. The voltage on each driver is monitored to detect a fault. If the voltage is not what the PCM expects to monitor on the circuit, a DTC is set. This DTC is also set if an injector driver is shorted to voltage or if there is an open circuit.

Conditions for Setting the DTC

- The battery voltage is more than 9 volts.
- The engine is turning, determined by 58X crankshaft position input signal.
- The injector voltage does not equal the ignition voltage when the injector is commanded “OFF” or the injector voltage does not equal 0 volts when the injector is commanded “ON.”
- The above conditions are met for 15 seconds.

Action Taken When the DTC Sets

- The PCM will illuminate the malfunction indicator lamp (MIL) the first time the fault is detected.
- The PCM will store conditions which were present when the DTC was set as Freeze Frame and in the Failure Records data.

Conditions for Clearing the MIL/DTC

- DTC P0202 can be cleared by using the Tech 2 “Clear Info” function or by disconnecting the PCM battery feed.

Diagnostic Aids

An injector driver circuit that is open or shorted to voltage will cause a DTC P0202 to set. It will also cause a misfire due to an inoperative injector. A misfire DTC will also be set indicating which cylinder is inoperative.
Long term and short term fuel trims that are excessively high or low are a good indication that an injector is faulty. Use Fuel Injector Coil Test Procedure to check for faulty injectors.

Test Description

The number(s) below refer to the step number(s) on the Diagnostic Chart.

3. This step determines if DTC P0202 is the result of a hard failure or an intermittent condition.

5. A special injector test connector is provided so that the injectors can be electrically tested without removal of the manifold. On the Trooper, the special 7-way gray connector is located at the front of the charcoal canister. The test connector can be identified by the blue connector lock which is tethered to the wiring harness. If the light for cylinder 2 is “ON” steady before cranking the engine as well as while cranking the engine, then the injector driver circuit is shorted to ground.

If the test light blinks while cranking, the PCM and the wiring to the injectors are OK. The Fuel Injector Coil Test Procedure will check if the injectors are faulty.

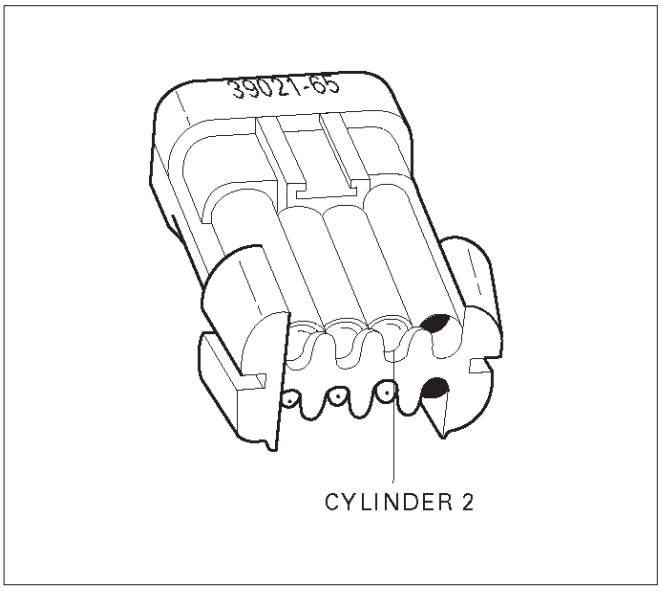

R321055

7. Because the test light was “ON” steady, voltage to the injector is OK, but the driver circuit is grounded at all times. This step determines if the circuit is shorted to ground or the PCM is faulty.

9. The reading should be about 12-14Ω.

10. Locating the open in the harness or in the injector will require removal of the manifold to provide access.

DTC P0202 – Injector 2 Control Circuit

Step	Action	Value(s)	Yes	No
1	Was the “On-Board Diagnostic (OBD) System Check” performed?	—	Go to *Step 2*	Go to *OBD System Check*
2	Will the engine start?	—	Go to *Step 3*	Go to *Engine Cranks But Will Not Run* chart
3	1. Install the Tech 2. Clear the DTC. 2. Idle the engine for one minute. Does DTC P0202 reset?	—	Go to *Step 5*	Go to *Step 4*
4	1. Review the Freeze Frame data with the ignition “ON” and the engine “OFF” and note the parameters. 2. Operate the vehicle within the Freeze Frame conditions as noted. Does P0202 reset?	—	Go to *Step 5*	Go to *Diagnostic Aids*
5	1. Engine “OFF.” 2. Disconnect the injector test connector. 3. Install an injector test light 5-8840-2636-0 on injector connector. 4. Crank the engine and note the light. Does the cylinder 2 test light blink?	—	Go to *Fuel Injector Coil Test Procedure*	Go to *Step 6*
6	Note whether the injector test light for cylinder 2 was “OFF” or “ON” steady in step 5. Was the test light “ON” steady while cranking the engine?	—	Go to *Step 7*	Go to *Step 9*

DTC P0202 – Injector 2 Control Circuit (Cont'd)

Step	Action	Value(s)	Yes	No
7	1. Disconnect the PCM connector for the affected injectors. 2. With a test light connected to B+, probe the affected injector driver circuit. Does the test light illuminate?	—	Go to *Step 8*	Go to *Step 15*
8	Repair short to ground in the injector driver circuit. Is the action complete?	—	Go to *OBD System Check*	—
9	1. Disconnect the injector test connector. 2. At the injector side of the harness, connect an ohmmeter between the positive wire (red with blue tracer) and the wire for cylinder 2 (green with orange tracer). Does the ohmmeter indicate continuity?	—	Go to *Step 11*	Go to *Step 10*
10	Repair the open injector harness wire or open injector. Is the action complete?	—	Verify repair	—
11	At the PCM side of the injector test connector, check the green/orange wire for a short to voltage. Was there a short to voltage?	—	Go to *Step 12*	Go to *Step 13*
12	Repair the short to voltage. Is the action complete?	—	Verify repair	—
13	Check for an open circuit between the injector test connector and the PCM. Was there an open circuit?	—	Go to *Step 14*	Go to *Step 15*
14	Repair the open circuit. Is the action complete?	—	Verify repair	—
15	Replace the PCM. **IMPORTANT:** The replacement PCM must be programmed. Refer to *UBS 98model year Immobilizer Workshop Manual.* Is the action complete?	—	Verify repair	—

Diagnostic Trouble Code (DTC) P0203 Injector 3 Control Circuit

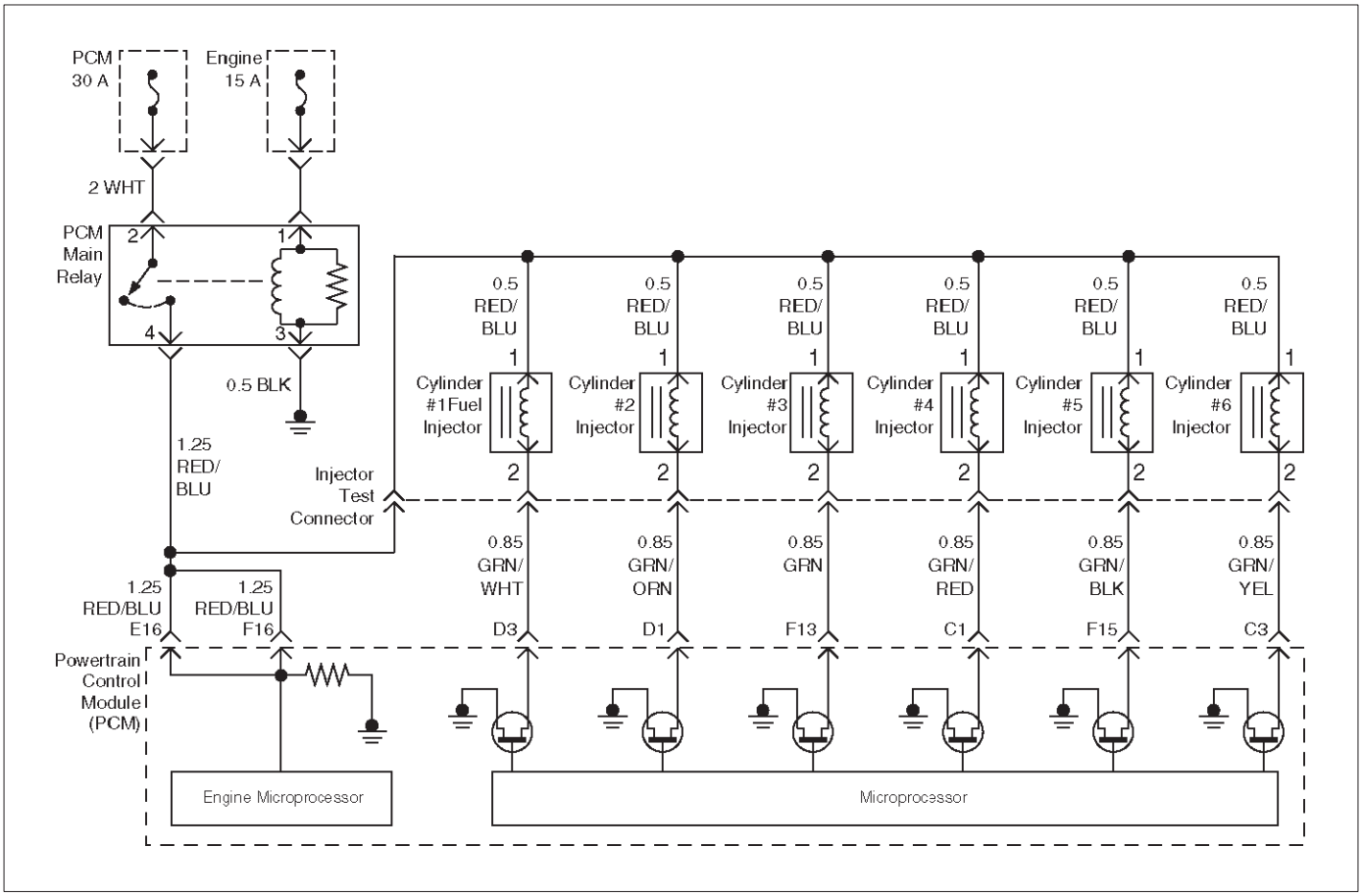

D06RW034

Circuit Description

The powertrain control module (PCM) has six individual injector driver circuits. Each controls an injector. When the driver circuit is grounded by the PCM, the injector is activated. The PCM monitors the current in each driver circuit. The voltage on each driver is monitored to detect a fault. If the voltage is not what the PCM expects to monitor on the circuit, a DTC is set. This DTC is also set if an injector driver is shorted to voltage or if there is an open circuit.

Conditions for Setting the DTC

- The battery voltage is more than 9 volts.
- The engine is turning, determined by the 58X crankshaft position input signal.
- The injector voltage does not equal the ignition voltage when the injector is commanded “OFF” or the injector voltage does not equal 0 volts when the injector is commanded “ON.”
- The above conditions are met for 15 seconds.

Action Taken When the DTC Sets

- The PCM will illuminate the malfunction indicator lamp (MIL) the first time the fault is detected.
- The PCM will store conditions which were present when the DTC was set as Freeze Frame and in the Failure Records data.

Conditions for Clearing the MIL/DTC

- DTC P0203 can be cleared by using the Tech 2 “Clear Info” function or by disconnecting the PCM battery feed.

Diagnostic Aids

An injector driver circuit that is open or shorted to voltage will cause a DTC P0203 to set. It will also cause a misfire due to an inoperative injector. A misfire DTC will also be set indicating which cylinder is inoperative.
Long term and short term fuel trims that are excessively high or low are a good indication that an injector is faulty. Use Fuel Injector Coil Test Procedure to check for faulty injectors.

Test Description

The number(s) below refer to the step number(s) on the Diagnostic Chart.

3. This step determines if DTC P0203 is the result of a hard failure or an intermittent condition.

5. A special injector test connector is provided so that the injectors can be electrically tested without removal of the manifold. On the Trooper, the special 7-way gray connector is located at the front of the charcoal canister. The test connector can be identified by the blue connector lock which is tethered to the wiring harness. If the light for cylinder 3 is “ON” steady before cranking the engine as well as while cranking the engine, then the injector driver circuit is shorted to ground.

If the test light blinks while cranking, the PCM and the wiring to the injectors are OK. The Fuel Injector Coil Test Procedure will check if the injectors are faulty.

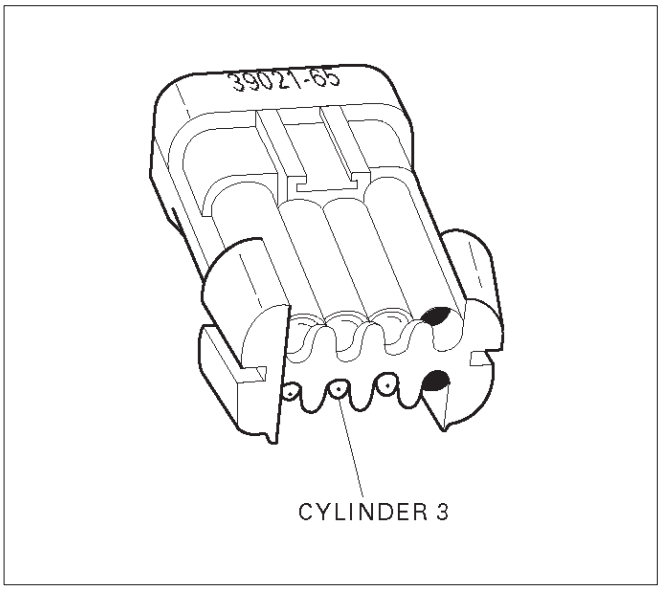

R321056

7. Because the test light was “ON” steady, voltage to the injector is OK, but the driver circuit is grounded at all times. This step determines if the circuit is shorted to ground or the PCM is faulty.
9. The reading should be about 12-14Ω.
10. Locating the open in the harness or in the injector will require removal of the manifold to provide access.

DTC P0203 – Injector 3 Control Circuit

Step	Action	Value(s)	Yes	No
1	Was the “On-Board Diagnostic (OBD) System Check” performed?	—	Go to *Step 2*	Go to *OBD System Check*
2	Will the engine start?	—	Go to *Step 3*	Go to *Engine Cranks But Will Not Run* chart
3	1. Install the Tech 2. Clear the DTC. 2. Idle the engine for one minute. Does DTC P0203 reset?	—	Go to *Step 5*	Go to *Step 4*
4	1. Review the Freeze Frame data with the ignition “ON” and the engine “OFF” and note the parameters. 2. Operate the vehicle within the Freeze Frame conditions as noted. Does P0203 reset?	—	Go to *Step 5*	Go to *Diagnostic Aids*
5	1. Engine “OFF.” 2. Disconnect the injector test connector . 3. Install an injector test light 5-8840-2636-0 on injector connector. 4. Crank the engine and note the light. Does the cylinder 3 test light blink?	—	Go to *Fuel Injector Coil Test Procedure*	Go to *Step 6*
6	Note whether the injector test light for cylinder 3 was “OFF” or “ON” steady in step 5. Was the test light “ON” steady while cranking the engine?	—	Go to *Step 7*	Go to *Step 9*

DTC P0203 – Injector 3 Control Circuit (Cont'd)

Step	Action	Value(s)	Yes	No
7	1. Disconnect the PCM connector for the affected injectors. 2. With a test light connected to B+, probe the affected injector driver circuit. Does the test light illuminate?	—	Go to *Step 8*	Go to *Step 15*
8	Repair short to ground in the injector driver circuit. Is the action complete?	—	Go to *OBD System Check*	—
9	1. Disconnect the injector test connector. 2. At the injector side of the harness, connect an ohmmeter between the positive wire (red with blue tracer) and the wire for cylinder 3 (green). Does the ohmmeter indicate continuity?	—	Go to *Step 11*	Go to *Step 10*
10	Repair the open injector harness wire or open injector. Is the action complete?	—	Verify repair	—
11	At the PCM side of the injector test connector, check the green wire for a short to voltage. Was there a short to voltage?	—	Go to *Step 12*	Go to *Step 13*
12	Repair the short to voltage. Is the action complete?	—	Verify repair	—
13	Check for an open circuit between the injector test connector and the PCM. Was there an open circuit?	—	Go to *Step 14*	Go to *Step 15*
14	Repair the open circuit. Is the action complete?	—	Verify repair	—
15	Replace the PCM. **IMPORTANT:** The replacement PCM must be programmed. Refer to *UBS 98model year Immobilizer Workshop Manual.* Is the action complete?	—	Verify repair	—

Diagnostic Trouble Code (DTC) P0204 Injector 4 Control Circuit

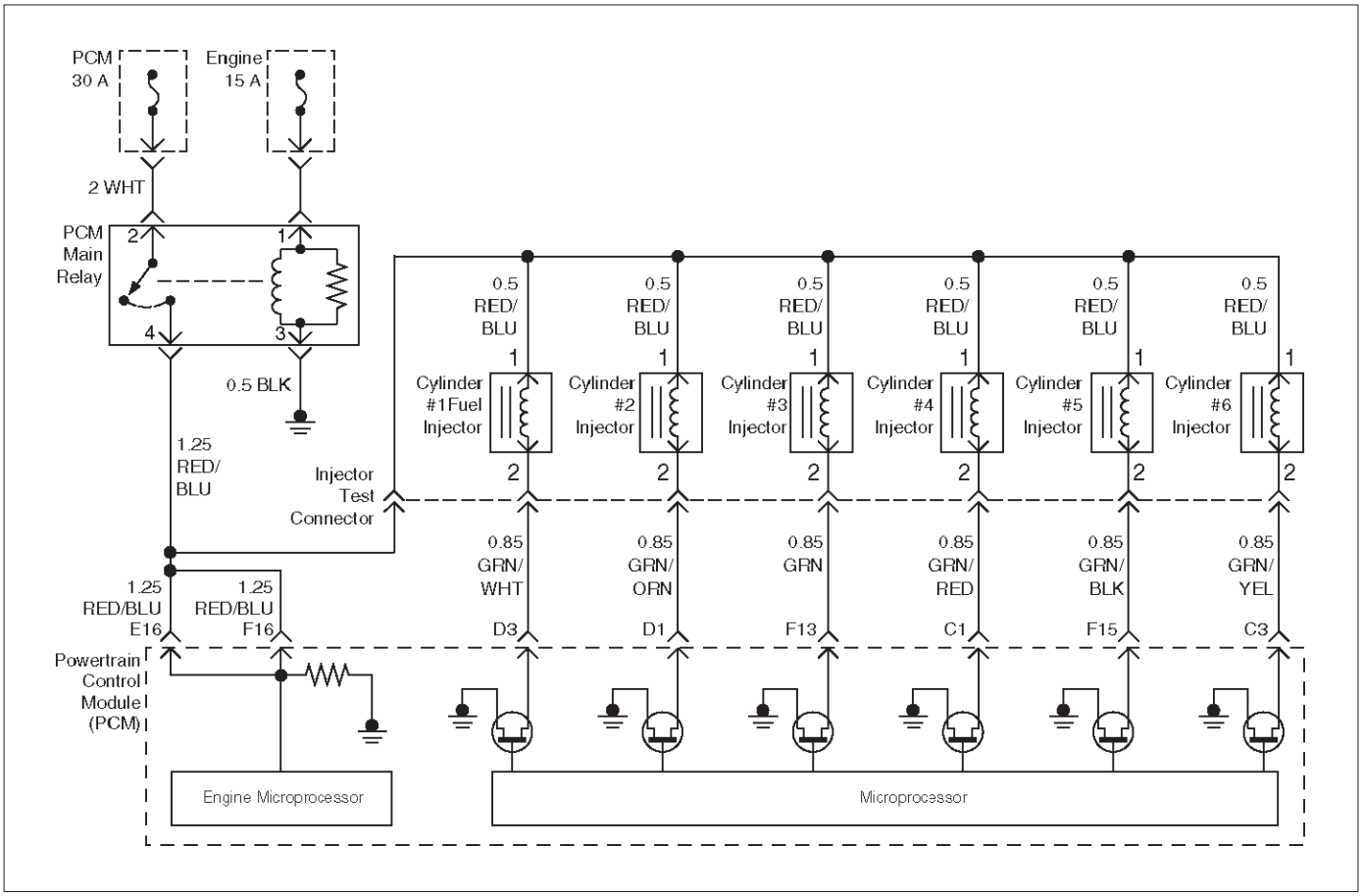

D06RW034

Circuit Description

The powertrain control module (PCM) has six individual injector driver circuits. Each controls an injector. When the driver circuit is grounded by the PCM, the injector is activated. The PCM monitors the current in each driver circuit. The voltage on each driver is monitored to detect a fault. If the voltage is not what the PCM expects to monitor on the circuit, a DTC is set. This DTC is also set if an injector driver is shorted to voltage or if there is an open circuit.

Conditions for Setting the DTC

- The battery voltage is more than 9 volts.
- The engine is turning, determined by the 58X crankshaft position input signal.
- The injector voltage does not equal the ignition voltage when the injector is commanded “OFF” or the injector voltage does not equal 0 volts when the injector is commanded “ON.”
- The above conditions are met for 15 seconds.

Action Taken When the DTC Sets

- The PCM will illuminate the malfunction indicator lamp (MIL) the first time the fault is detected.
- The PCM will store conditions which were present when the DTC was set as Freeze Frame and in the Failure Records data.

Conditions for Clearing the MIL/DTC

- DTC P0204 can be cleared by using the Tech 2 “Clear Info” function or by disconnecting the PCM battery feed.

Diagnostic Aids

An injector driver circuit that is open or shorted to voltage will cause a DTC P0204 to set. It will also cause a misfire due to an inoperative injector. A misfire DTC will also be set indicating which cylinder is inoperative.
Long term and short term fuel trims that are excessively high or low are a good indication that an injector is faulty. Use Fuel Injector Coil Test Procedure to check for faulty injectors.

Test Description

The number(s) below refer to the step number(s) on the Diagnostic Chart.

3. This step determines if DTC P0204 is the result of a hard failure or an intermittent condition.

5. A special injector test connector is provided so that the injectors can be electrically tested without removal of the manifold. On the Trooper, the special 7-way gray connector is located at the front of the charcoal canister. The test connector can be identified by the blue connector lock which is tethered to the wiring harness. If the light for cylinder 4 is “ON” steady before cranking the engine as well as while cranking the engine, then the injector driver circuit is shorted to ground.

If the test light blinks while cranking, the PCM and the wiring to the injectors are OK. The Fuel Injector Coil Test Procedure will check if the injectors are faulty.

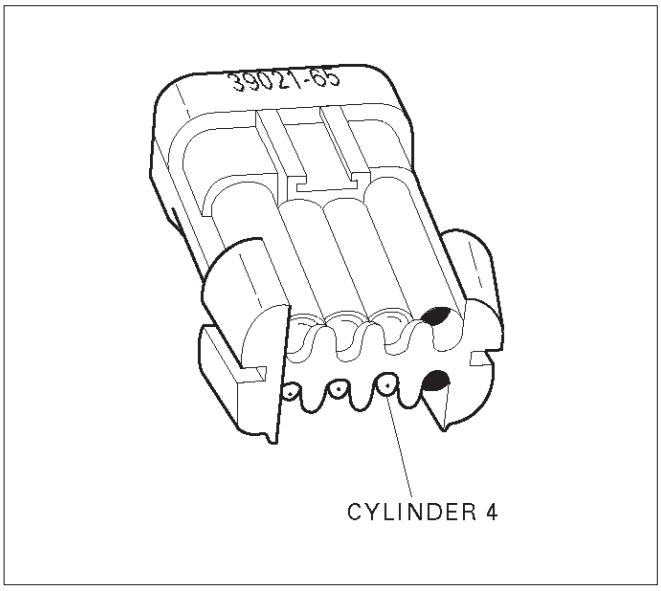

R321057

7. Because the test light was “ON” steady, voltage to the injector is OK, but the driver circuit is grounded at all times. This step determines if the circuit is shorted to ground or the PCM is faulty.
9. The reading should be about 12-14Ω.
10. Locating the open in the harness or in the injector will require removal of the manifold to provide access.

DTC P0204 – Injector 4 Control Circuit

Step	Action	Value(s)	Yes	No
1	Was the “On-Board Diagnostic (OBD) System Check” performed?	—	Go to *Step 2*	Go to *OBD System Check*
2	Will the engine start?	—	Go to *Step 3*	Go to *Engine Cranks But Will Not Run* chart
3	1. Install the Tech 2. Clear the DTC. 2. Idle the engine for one minute. Does DTC P0204 reset?	—	Go to *Step 5*	Go to *Step 4*
4	1. Review the Freeze Frame data with the ignition “ON” and the engine “OFF” and note the parameters. 2. Operate the vehicle within the Freeze Frame conditions as noted. Does P0204 reset?	—	Go to *Step 5*	Go to *Diagnostic Aids*
5	1. Engine “OFF.” 2. Disconnect the injector test connector. 3. Install an injector test light 5-8840-2636-0 on injector connector. 4. Crank the engine and note the light. Does the cylinder 4 test light blink?	—	Go to *Fuel Injector Coil Test Procedure*	Go to Step 6
6	Note whether the injector test light for cylinder 4 was “OFF” or “ON” steady in step 5. Was the test light “ON” steady while cranking the engine?	—	Go to *Step 7*	Go to *Step 9*

DTC P0204 – Injector 4 Control Circuit (Cont'd)

Step	Action	Value(s)	Yes	No
7	1. Disconnect the PCM connector for the affected injectors. 2. With a test light connected to B+, probe the affected injector driver circuit. Does the test light illuminate?	—	Go to *Step 8*	Go to *Step 15*
8	Repair short to ground in the injector driver circuit. Is the action complete?	—	Go to *OBD System Check*	—
9	1. Disconnect the injector test connector. 2. At the injector side of the harness, connect an ohmmeter between the positive wire (red with blue tracer) and the wire for cylinder 4 (green/red). Does the ohmmeter indicate continuity?	—	Go to *Step 11*	Go to *Step 10*
10	Repair the open injector harness wire or open injector. Is the action complete?	—	Verify repair	—
11	At the PCM side of the injector test connector, check the green/red wire for a short to voltage. Was there a short to voltage?	—	Go to *Step 12*	Go to *Step 13*
12	Repair the short to voltage. Is the action complete?	—	Verify repair	—
13	Check for an open circuit between the injector test connector and the PCM. Was there an open circuit?	—	Go to *Step 14*	Go to *Step 15*
14	Repair the open circuit. Is the action complete?	—	Verify repair	—
15	Replace the PCM. **IMPORTANT:** The replacement PCM must be programmed. Refer to *UBS 98model year Immobilizer Workshop Manual.* Is the action complete?	—	Verify repair	—

Diagnostic Trouble Code (DTC) P0205 Injector 5 Control Circuit

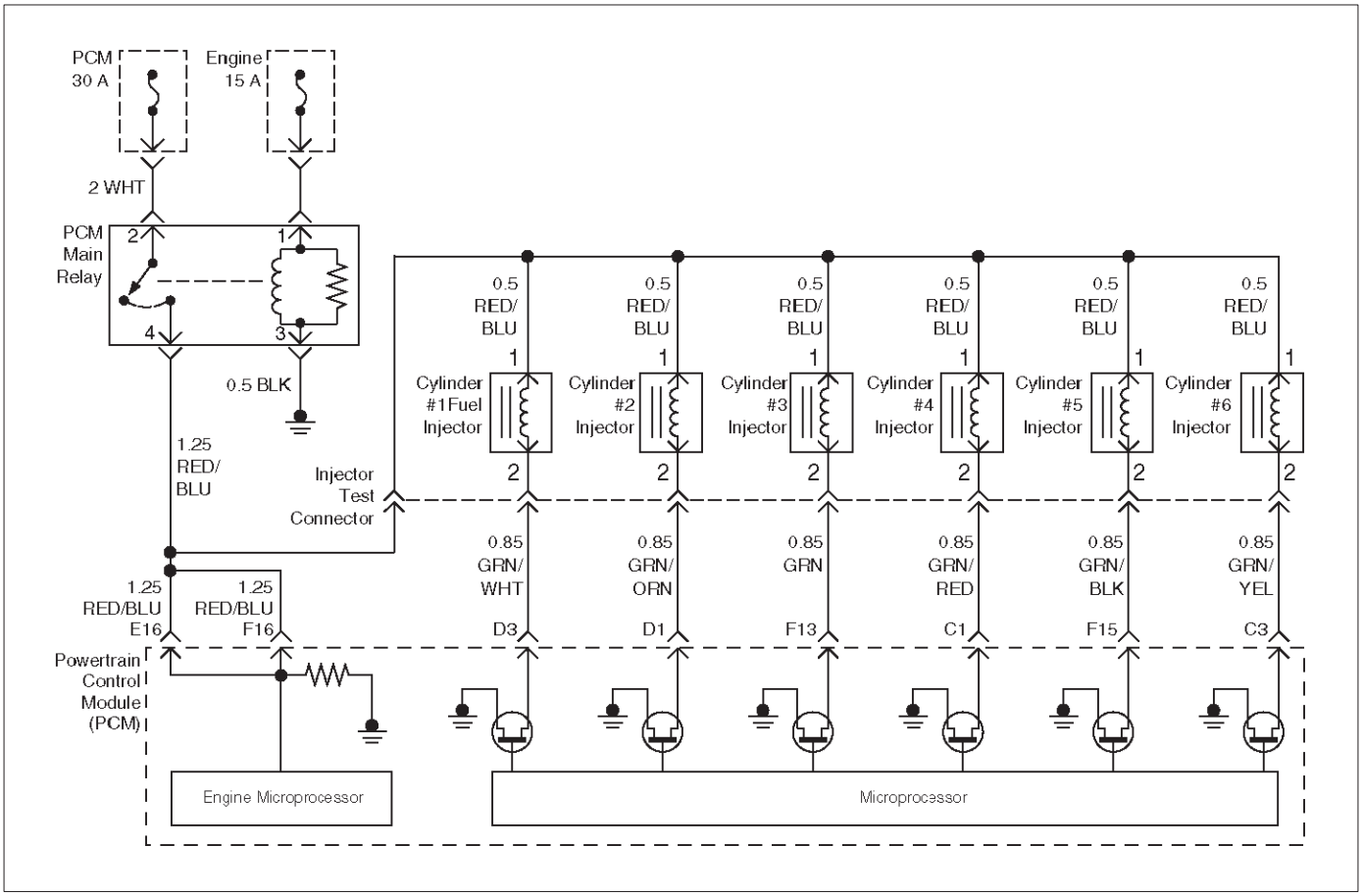

D06RW034

Circuit Description

The powertrain control module (PCM) has six individual injector driver circuits. Each controls an injector. When the driver circuit is grounded by the PCM, the injector is activated. The PCM monitors the current in each driver circuit. If the voltage is not what the PCM expects to monitor on the circuit, a DTC is set. This DTC is also set if an injector driver is shorted to voltage or if there is an open circuit.

Conditions for Setting the DTC

- The battery voltage is more than 9 volts.
- The engine is turning, determined by the 58X crankshaft position input signal.
- The injector voltage does not equal the ignition voltage when the injector is commanded “OFF” or the injector voltage does not equal 0 volts when the injector is commanded “ON.”
- The above conditions are met for 15 seconds.

Action Taken When the DTC Sets

- The PCM will illuminate the malfunction indicator lamp (MIL) the first time the fault is detected.
- The PCM will store conditions which were present when the DTC was set as Freeze Frame and in the Failure Records data.

Conditions for Clearing the MIL/DTC

- DTC P0205 can be cleared by using the Tech 2 “Clear Info” function or by disconnecting the PCM battery feed.

Diagnostic Aids

An injector driver circuit that is open or shorted to voltage will cause a DTC P0205 to set. It will also cause a misfire due to an inoperative injector. A misfire DTC will also be set indicating which cylinder is inoperative.
Long term and short term fuel trims that are excessively high or low are a good indication that an injector is faulty. Use Fuel Injector Coil Test Procedure to check for faulty injectors.

Test Description

The number(s) below refer to the step number(s) on the Diagnostic Chart.

3. This step determines if DTC P0205 is the result of a hard failure or an intermittent condition.

5. A special injector test connector is provided so that the injectors can be electrically tested without removal of the manifold. On the Trooper, the special 7-way gray connector is located at the front of the charcoal canister. The test connector can be identified by the blue connector lock which is tethered to the wiring harness. If the light for cylinder 5 is “ON” steady before cranking the engine as well as while cranking the engine, then the injector driver circuit is shorted to ground.

If the test light blinks while cranking, the PCM and the wiring to the injectors are OK. The Fuel Injector Coil Test Procedure will check if the injectors are faulty.

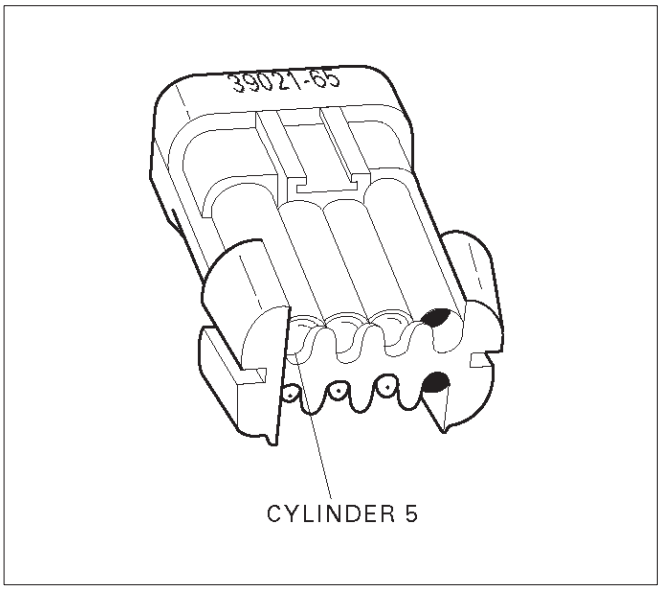

R321058

7. Because the test light was “ON” steady, voltage to the injector is OK, but the driver circuit is grounded at all times. This step determines if the circuit is shorted to ground or the PCM is faulty.
9. The reading should be about 12-14Ω.
10. Locating the open in the harness or in the injector will require removal of the manifold to provide access.

DTC P0205 – Injector 5 Control Circuit

Step	Action	Value(s)	Yes	No
1	Was the “On-Board Diagnostic (OBD) System Check” performed?	—	Go to *Step 2*	Go to *OBD System Check*
2	Will the engine start?	—	Go to *Step 3*	Go to *Engine Cranks But Will Not Run* chart
3	1. Install the Tech 2. Clear the DTC. 2. Idle the engine for one minute. Does DTC P0205 reset?	—	Go to *Step 5*	Go to *Step 4*
4	1. Review the Freeze Frame data with the ignition “ON” and the engine “OFF” and note the parameters. 2. Operate the vehicle within the Freeze Frame conditions as noted. Does P0205 reset?	—	Go to *Step 5*	Go to *Diagnostic Aids*
5	1. Engine “OFF.” 2. Disconnect the injector test connector. 3. Install an injector test light 5-8840-2636-0 on injector connector. 4. Crank the engine and note the light. Does the cylinder 5 test light blink?	—	Go to *Fuel Injector Coil Test Procedure*	Go to *Step 6*
6	Note whether the injector test light for cylinder 5 was “OFF” or “ON” steady in step 5. Was the test light “ON” steady while cranking the engine?	—	Go to *Step 7*	Go to *Step 9*

DTC P0205 – Injector 5 Control Circuit (Cont'd)

Step	Action	Value(s)	Yes	No
7	1. Disconnect the PCM connector for the affected injectors. 2. With a test light connected to B+, probe the affected injector driver circuit. Does the test light illuminate?	—	Go to *Step 8*	Go to *Step 15*
8	Repair short to ground in the injector driver circuit. Is the action complete?	—	Go to *OBD System Check*	—
9	1. Disconnect the injector test connector. 2. At the injector side of the harness, connect an ohmmeter between the positive wire (red with blue tracer) and the wire for cylinder 5 (green with black tracer). Does the ohmmeter indicate continuity?	—	Go to *Step 11*	Go to *Step 10*
10	Repair the open injector harness wire or open injector. Is the action complete?	—	Verify repair	—
11	At the PCM side of the injector test connector, check the green/black wire for a short to voltage. Was there a short to voltage?	—	Go to *Step 12*	Go to *Step 13*
12	Repair the short to voltage. Is the action complete?	—	Verify repair	—
13	Check for an open circuit between the injector test connector and the PCM. Was there an open circuit?	—	Go to *Step 14*	Go to *Step 15*
14	Repair the open circuit. Is the action complete?	—	Verify repair	—
15	Replace the PCM. **IMPORTANT:** The replacement PCM must be programmed. Refer to *UBS 98model year Immobilizer Workshop Manual.* Is the action complete?	—	Verify repair	—

Diagnostic Trouble Code (DTC) P0206 Injector 6 Control Circuit

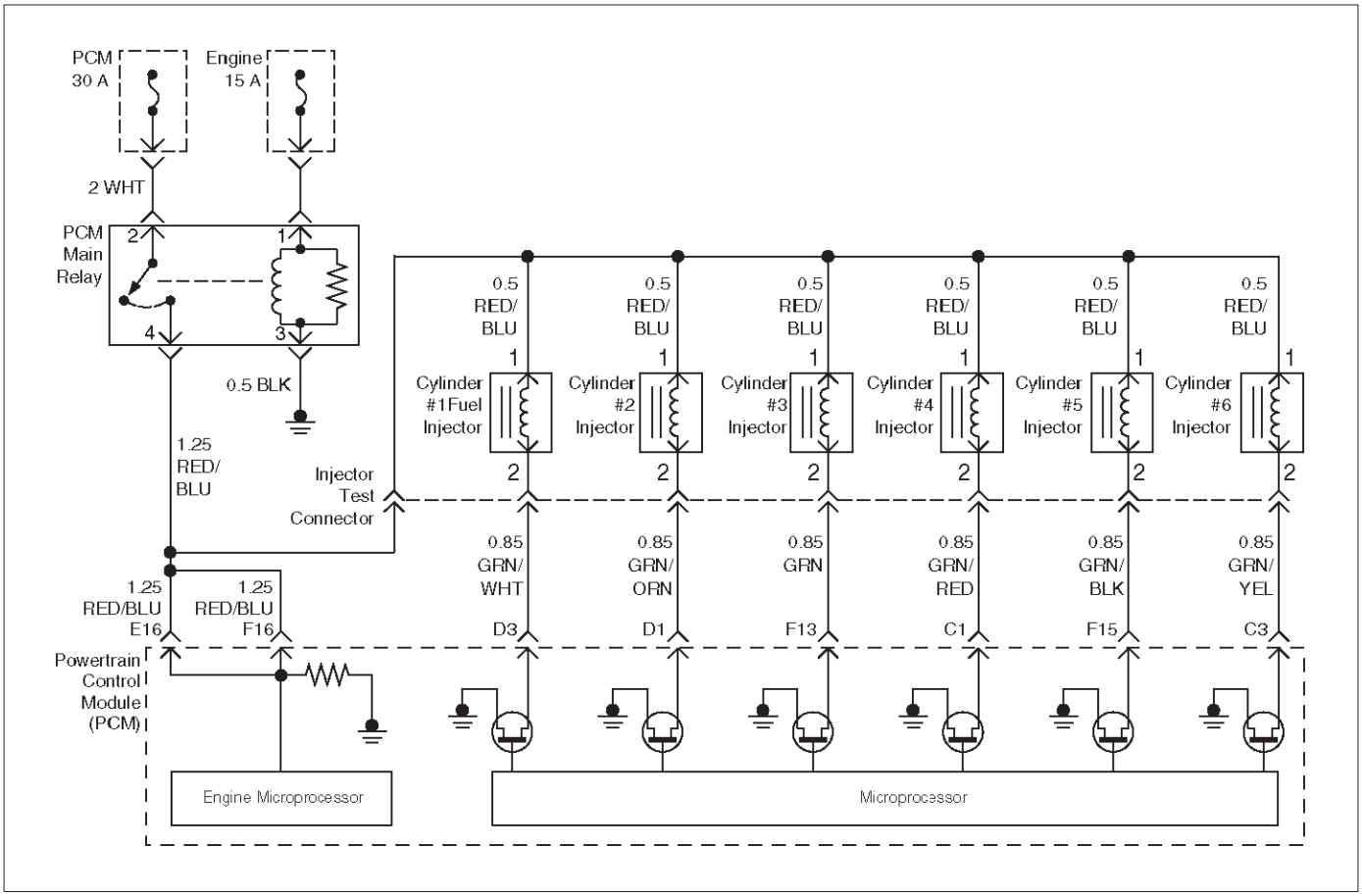

D06RW034

Circuit Description

The powertrain control module (PCM) has six individual injector driver circuits. Each controls an injector. When the driver circuit is grounded by the PCM, the injector is activated. The PCM monitors the current in each driver circuit. The voltage on each driver is monitored to detect a fault. If the voltage is not what the PCM expects to monitor on the circuit, a DTC is set. This DTC is also set if an injector driver is shorted to voltage or if there is an open circuit.

Conditions for Setting the DTC

- The battery voltage is more than 9 volts.
- The engine is turning, determined by 58X crankshaft position input signal.
- The injector voltage does not equal the ignition voltage when the injector is commanded “OFF” or the injector voltage does not equal 0 volts when the injector is commanded “ON.”
- The above conditions are met for 15 seconds.

Action Taken When the DTC Sets

- The PCM will illuminate the malfunction indicator lamp (MIL) the first time the fault is detected.
- The PCM will store conditions which were present when the DTC was set as Freeze Frame and in the Failure Records data.

Conditions for Clearing the MIL/DTC

- DTC P0206 can be cleared by using the Tech 2 “Clear Info” function or by disconnecting the PCM battery feed.

Diagnostic Aids

An injector driver circuit that is open or shorted to voltage will cause a DTC P0206 to set. It will also cause a misfire due to an inoperative injector. A misfire DTC will also be set indicating which cylinder is inoperative.
Long term and short term fuel trims that are excessively high or low are a good indication that an injector is faulty. Use Fuel Injector Coil Test Procedure to check for faulty injectors.

Test Description

The number(s) below refer to the step number(s) on the Diagnostic Chart.

3. This step determines if DTC P0206 is the result of a hard failure or an intermittent condition.

5. A special injector test connector is provided so that the injectors can be electrically tested without removal of the manifold. On the Trooper, the special 7-way gray connector is located at the front of the charcoal canister. The test connector can be identified by the blue connector lock which is tethered to the wiring harness. If the light for cylinder 6 is “ON” steady before cranking the engine as well as while cranking the engine, then the injector driver circuit is shorted to ground.

If the test light blinks while cranking, the PCM and the wiring to the injectors are OK. The Fuel Injector Coil Test Procedure will check if the injectors are faulty.

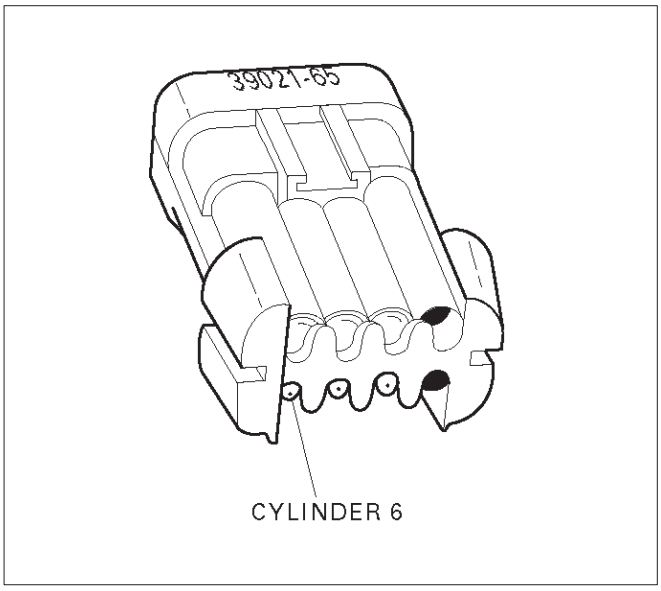

R321059

7. Because the test light was “ON” steady, voltage to the injector is OK, but the driver circuit is grounded at all times. This step determines if the circuit is shorted to ground or the PCM is faulty.
9. The reading should be about 12-14Ω.
10. Locating the open in the harness or in the injector will require removal of the manifold to provide access.

DTC P0206 – Injector 6 Control Circuit

Step	Action	Value(s)	Yes	No
1	Was the “On-Board Diagnostic (OBD) System Check” performed?	—	Go to *Step 2*	Go to *OBD System Check*
2	Will the engine start?	—	Go to *Step 3*	Go to *Engine Cranks But Will Not Run* chart
3	1. Install the Tech 2. Clear the DTC. 2. Idle the engine for one minute. Does DTC P0206 reset?	—	Go to *Step 5*	Go to *Step 4*
4	1. Review the Freeze Frame data with the ignition “ON” and the engine “OFF” and note the parameters. 2. Operate the vehicle within the Freeze Frame conditions as noted. Does P0206 reset?	—	Go to *Step 5*	Go to *Diagnostic Aids*
5	1. Engine “OFF.” 2. Disconnect the injector test connector. 3. Install an injector test light 5-8840-2636-0 on injector connector. 4. Crank the engine and note the light. Does the cylinder 6 test light blink?	—	Go to *Fuel Injector Coil Test Procedure*	Go to *Step 6*
6	Note whether the injector test light for cylinder 6 was “OFF” or “ON” steady in step 5. Was the test light “ON” steady while cranking the engine?	—	Go to *Step 7*	Go to *Step 9*

DTC P0206 – Injector 6 Control Circuit (Cont'd)

Step	Action	Value(s)	Yes	No
7	1. Disconnect the PCM connector for the affected injectors. 2. With a test light connected to B+, probe the affected injector driver circuit. Does the test light illuminate?	—	Go to *Step 8*	Go to *Step 15*
8	Repair short to ground in the injector driver circuit. Is the action complete?	—	Go to *OBD System Check*	—
9	1. Disconnect the injector test connector. 2. At the injector side of the harness, connect an ohmmeter between the positive wire (red with blue tracer) and the wire for cylinder 6 (green with yellow tracer). Does the ohmmeter indicate continuity?	—	Go to *Step 11*	Go to *Step 10*
10	Repair the open injector harness wire or open injector Is the action complete?	—	Verify repair	—
11	At the PCM side of the injector test connector, check the green/yellow wire for a short to voltage. Was there a short to voltage?	—	Go to *Step 12*	Go to *Step 13*
12	Repair the short to voltage. Is the action complete?	—	Verify repair	—
13	Check for an open circuit between the injector test connector and the PCM. Was there an open circuit?	—	Go to *Step 14*	Go to *Step 15*
14	Repair the open circuit. Is the action complete?	—	Verify repair	—
15	Replace the PCM. **IMPORTANT:** The replacement PCM must be programmed. Refer to *UBS 98model year Immobilizer Workshop Manual.* Is the action complete?	—	Verify repair	—

Diagnostic Trouble Code (DTC) P0325 KS Module Circuit

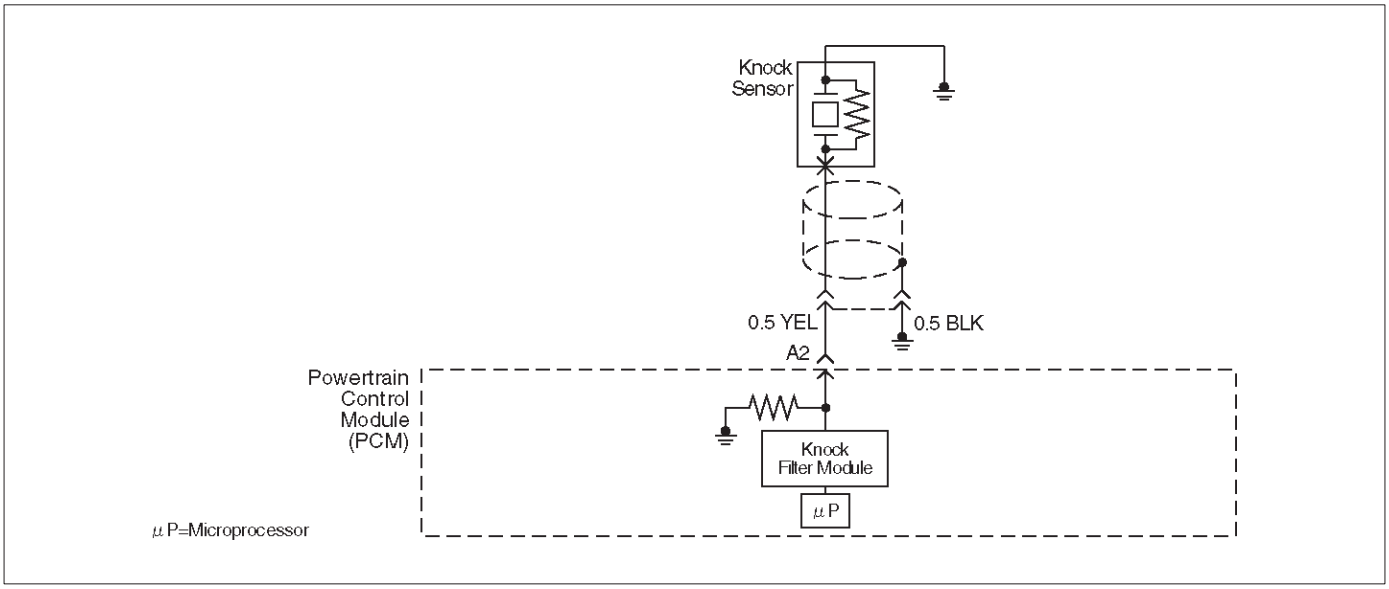

D06RW035

Circuit Description

The knock sensor is used to detect engine detonation, allowing the powertrain control module (PCM) to retard ignition control (IC) spark timing based on the knock sensor (KS) signal being received. The knock sensor produces an AC signal so that under a no knock condition the signal on the KS circuit measures about 0.007 V AC. The KS signal's amplitude and frequency depend upon the amount of knock being experienced. The PCM contains a non-replaceable knock filter module called a signal-to-noise enhancement filter (SNEF) module. This filter module in the PCM determines whether knock is occurring by comparing the signal level on the KS circuit with the voltage level on the noise channel. The noise channel allows the PCM to reject any false knock signal by knowing the amount of normal engine mechanical noise present. Normal engine noise varies depending on engine speed and load. When the PCM determines that an abnormally low noise channel voltage level is being experienced, a DTC P0325 will set.

Conditions for Setting the DTC

- Engine has been running for at least 30 seconds.
- The PCM determines that its internal signal from its knock filter module indicates a continuous knocking condition for more than 10 seconds.

Action Taken When the DTC Sets

- The PCM will store conditions which were present when the DTC was set as Freeze Frame and in the Failure Records data.
- The PCM will use a "substitute" default spark retard value of 6 degrees to minimize knock during conditions when knock is likely to occur.

Conditions for Clearing the MIL/DTC

- DTC P0325 can be cleared by using Tech 2 "Clear Info" function or by disconnecting the PCM battery feed.

Diagnostic Aids

Check for the following conditions:

- Poor connection at PCM – Inspect the knock sensor and PCM connectors for backed-out terminals, broken locks, and improperly formed or damaged terminals.
- Misrouted harness – Inspect the knock sensor harness to ensure that it is not routed too close to high voltage wires such as spark plug leads.

Reviewing the Failure Records vehicle mileage since the diagnostic test last failed may help determine how often the condition that caused the DTC to be set occurs. This may assist in diagnosing the condition.

Test Description

Number(s) below refer to the step number(s) on the Diagnostic Chart.

2. Ensures that the fault is present.

DTC P0325 – KS Module Circuit

Step	Action	Value(s)	Yes	No
1	Was the “On-Board Diagnostic (OBD) System Check” performed?	—	Go to *Step 2*	Go to *OBD System Check*
2	**IMPORTANT:** If an engine knock can be heard, repair the engine mechanical problem before proceeding with this diagnostic. 1. Operate the vehicle within parameters specified under criteria included in “Conditions for Setting the DTC.” 2. Using Tech 2, monitor “Specific DTC” info for DTC P0325 until the DTC P0325 test runs. 3. Note the test result. Does Tech 2 indicate DTC P0325 failed this ignition?	—	Go to *Step 4*	Go to *Step 3*
3	1. Ignition “ON,” engine “OFF.” 2. Review and record Tech 2 Failure Records data for DTC P0325. 3. Operate the vehicle within Failure Records conditions. 4. Using Tech 2, monitor “Specific DTC” info for DTC P0325 until the DTC P0325 test runs. Does Tech 2 indicate DTC P0325 test failed this ignition?	—	Go to *Step 4*	Refer to *Diagnostic Aids*
4	Replace the PCM. **IMPORTANT:** The replacement PCM must be programmed. Refer to *UBS 98model year Immobilizer Workshop Manual.* Is the action complete?	—	Verify repair	—

Diagnostic Trouble Code (DTC) P0327 KS Sensor Circuit

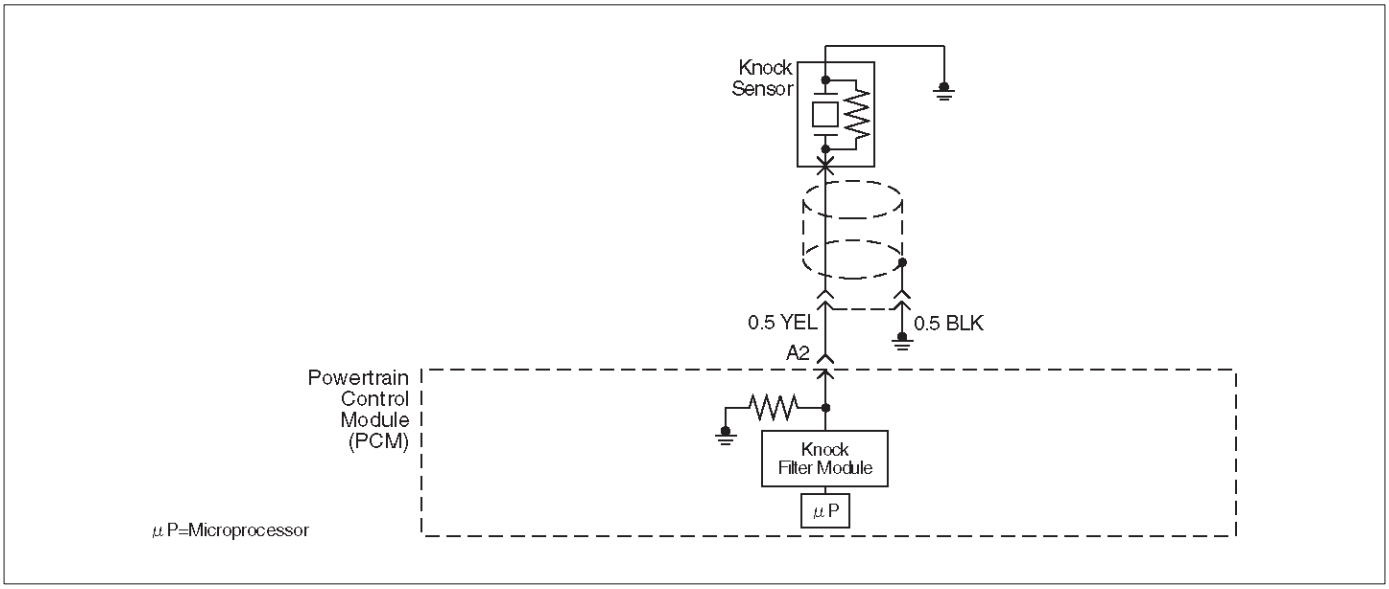

D06RW035

Circuit Description

The powertrain control module (PCM) uses the knock sensor to detect engine detonation, allowing the PCM to retard ignition control (IC) spark timing based on the knock sensor (KS) signal being received. The knock sensor produces an AC signal so that under a no knock condition the signal on the KS circuit measures about 0.007 V AC. The signal amplitude and frequency are dependent upon the amount of knock being experienced. The PCM monitors the KS signal and can diagnose the KS sensor and circuitry.

Conditions for Setting the DTC

- Engine running for at least 10 seconds.
- The TP sensor is greater than 5%.
- The ECT sensor is greater than 60˚C (140˚F).
- Engine speed is between 2000 and 4000 RPM.
- The knock sensor signal voltage is less than 0.20 volts, or greater than 4.8 volts.
- All conditions are present for more than 15 seconds.

Action Taken When the DTC Sets

- The PCM will illuminate the malfunction indicator lamp (MIL) after the second consecutive trip in which the fault is detected.
- The PCM will store conditions which were present when the DTC was set as Freeze Frame and in the Failure Records data.
- The PCM will use a calculated spark retard value to minimize knock during conditions when knock is likely to occur. The calculated value will vary based on engine speed and load.

Conditions for Clearing the MIL/DTC

- DTC P0327 can be cleared by using Tech 2 “Clear Info” function or by disconnecting the PCM battery feed.

Diagnostic Aids

Reviewing the Failure Records vehicle mileage since the diagnostic test last failed may help determine how often the condition that caused the DTC to be set occurs. This may assist in diagnosing the condition.

Test Description

Number(s) below refer to the step number(s) on the Diagnostic Chart.

2. Ensures that the fault is present.

4. The knock sensor is attached to a short jumper harness, so it can be tested without removing the intake manifold. A 2-wire connector for the knock sensor is accessible behind the left rear fuel injector.

DTC P0327 – KS Sensor Circuit

Step	Action	Value(s)	Yes	No
1	Was the “On-Board Diagnostic (OBD) System Check” performed?	—	Go to *Step 2*	Go to *OBD System Check*
2	**IMPORTANT:** If an engine knock can be heard, repair the engine mechanical problem before proceeding with this diagnostic. 1. Operate the engine within the conditions specified in diagnostic support “Conditions for Setting the DTC.” 2. Using Tech 2, monitor “Specific DTC” info for DTC P0327 until the DTC P0327 test runs. 3. Note the test result. Does Tech 2 indicate DTC P0327 failed this ignition?	—	Go to *Step 4*	Go to *Step 3*
3	1. Ignition “ON,” engine “OFF.” 2. Review and record Tech 2 Failure Records data. 3. Operate the vehicle within Failure Records conditions. 4. Using Tech 2, monitor “Specific DTC” info for DTC P0327 until the DTC P0327 test runs. 5. Note the test result. Does Tech 2 indicate DTC P0327 failed this ignition?	—	Go to *Step 4*	Refer to *Diagnostic Aids*
4	1. Check for a damaged terminal at the knock sensor connector. 2. If a problem is found, repair as necessary. Was a problem found?	—	Verify repair	Go to *Step 5*
5	Using a test light to battery +, check the black/blue wire (PCM side) to verify that the shield connection is good. Did the test light illuminate?	—	Go to *Step 7*	Go to *Step 6*
6	Repair the open shield ground. Is the action complete?	—	Verify repair	—
7	1. Ignition “OFF,” disconnect the PCM. 2. Check the KS signal circuit for a poor terminal connection at the PCM. 3. If a problem is found, replace the faulty terminal. Was a problem found?	—	Verify repair	Go to *Step 8*
8	1. Ignition “OFF,” PCM disconnected. 2. Check the KS signal circuit between the PCM and the knock sensor connector for an open, a short to voltage, or a short to ground. 3. If a problem is found, repair as necessary. Was a problem found?	—	Verify repair	Go to *Step 9*
9	1. Ignition “OFF,” PCM disconnected. 2. Knock sensor connected. 3. Measure the resistance of the knock sensor by connecting the DVM between the PCM connector and the engine block. Is the resistance of each knock sensor near the specified value?	100K ohms	Go to *Step 10*	Go to *Step 11*

DTC P0327 – KS Sensor Circuit (Cont'd)

Step	Action	Value(s)	Yes	No
10	1. Ignition "OFF," PCM disconnected. 2. Connect the DVM to monitor AC voltage between the PCM connector and engine ground. 3. Tap on the engine lift bracket with a socket extension while observing the signal indicated on the DVM. Is any signal indicated on the DVM while tapping on the engine lift bracket?	—	Go to *Step 12*	Go to *Step 11*
11	Replace the knock sensor. Is the action complete?	—	Verify repair	—
12	Replace the PCM. **IMPORTANT:** The replacement PCM must be programmed. Refer to *UBS 98model year Immobilizer Workshop Manual.* Is the action complete?	—	Verify repair	—

Diagnostic Trouble Code (DTC) P0336 58X Reference Signal Circuit

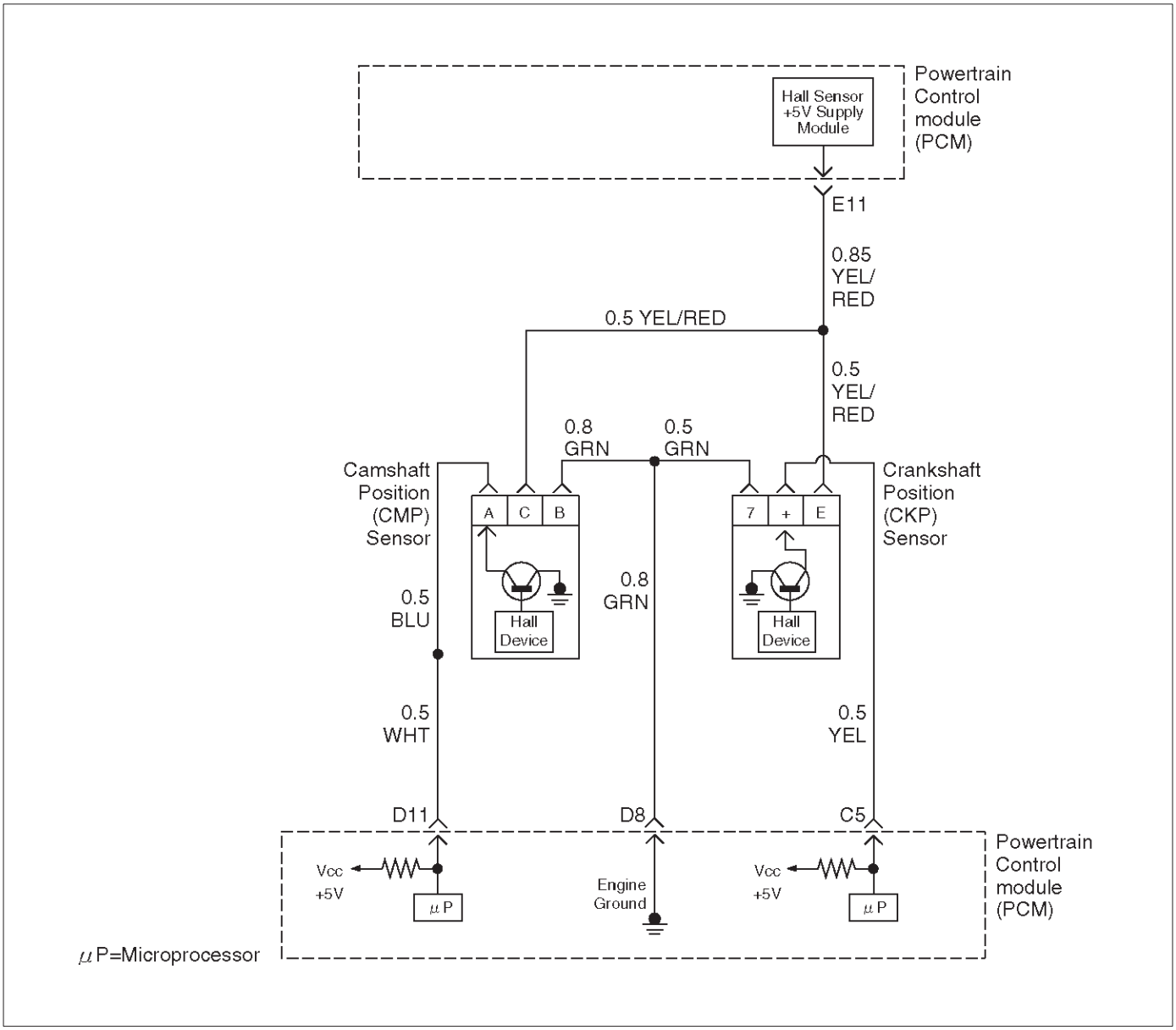

D06RW032

Circuit Description

The 58X reference signal is produced by the crankshaft position (CKP) sensor. During one crankshaft revolution, 58 crankshaft pulses will be produced. The powertrain control module (PCM) uses the 58X reference signal to calculate engine RPM and crankshaft position. The PCM constantly monitors the number of pulses on the 58X reference circuit and compares them to the number of camshaft position (CMP) signal pulses being received. If the PCM receives an incorrect number of pulses on the 58X reference circuit, DTC P0336 will set.

Conditions for Setting the DTC

- Engine is running.
- Extra or missing pulse is detected between consecutive 58X reference pulses.
- Above condition is detected in 10 of 100 crankshaft rotations.

Action Taken When the DTC Sets

- The PCM will illuminate the malfunction indicator lamp (MIL) after the second consecutive trip in which the fault is detected.
- The PCM will store conditions which were present when the DTC was set as Freeze Frame and in the Failure Records data.

Conditions for Clearing the MIL/DTC

- DTC P0336 can be cleared by using Tech 2 “Clear Info” function or by disconnecting the PCM battery feed.

Diagnostic Aids

An intermittent may be caused by a poor connection, rubbed-through wire insulation or a wire broken inside the insulation. Check for:

- Poor connection - Inspect the PCM harness and connectors for improper mating, broken locks, improperly formed or damaged terminals, and poor terminal-to-wire connection.

- Damaged harness – Inspect the wiring harness for damage. If the harness appears to be OK, disconnect the PCM, turn the ignition on and observe a voltmeter connected to the 58X reference circuit at the PCM harness connector while moving connectors and wiring harnesses related to the ICM. A change in voltage will indicate the location of the fault.

Reviewing the Failure Records vehicle mileage since the diagnostic test last failed may help determine how often the condition that caused the DTC to be set occurs. This may assist in diagnosing the condition.

DTC P0336 – 58X Reference Signal Circuit

Step	Action	Value(s)	Yes	No
1	Was the "On-Board Diagnostic (OBD) System Check" performed?	—	Go to *Step 2*	Go to *OBD System Check*
2	Attempt to start the engine. Does the engine start?	—	Go to *Step 3*	Go to *"Engine Cranks But Will Not Run"* chart
3	1. Review and record Failure Records information. 2. Clear DTC P0336. 3. Start the engine and idle for 1 minute. 4. Observe DTCs. Is DTC P0336 set?	—	Go to *Step 4*	Refer to Diagnostic Aids
4	1. Disconnect the PCM and CKP sensor. 2. Check for an open or a short to ground in the 58X reference circuit between the CKP sensor connector and the PCM harness connector. 3. If a problem is found, repair as necessary. Was a problem found?	—	Verify repair	Go to *Step 5*
5	1. Reconnect the PCM and CKP sensor. 2. Connect a DVM to measure voltage on the 58X reference circuit at the PCM connector. 3. Observe the voltage while cranking the engine. Is the voltage near the specified value?	2.5 V	Go to *Step 8*	Go to *Step 6*
6	Check the connections at the CKP sensor and replace the terminals if necessary. Did any terminals require replacement?	—	Verify repair	Go to *Step 7*
7	Replace the CKP sensor. Use caution to avoid any hot oil that may drip out. Is the action complete?	—	Verify repair	—
8	Check connections at the PCM and replace the terminals if necessary. Did any terminals require replacement?	—	Verify repair	Go to *Step 9*
9	Replace the PCM. **IMPORTANT:** The replacement PCM must be programmed. Refer to *UBS 98model year Immobilizer Workshop Manual.* Is the action complete?	—	Verify repair	—

Diagnostic Trouble Code (DTC) P0337 CKP Sensor Circuit Low Frequency

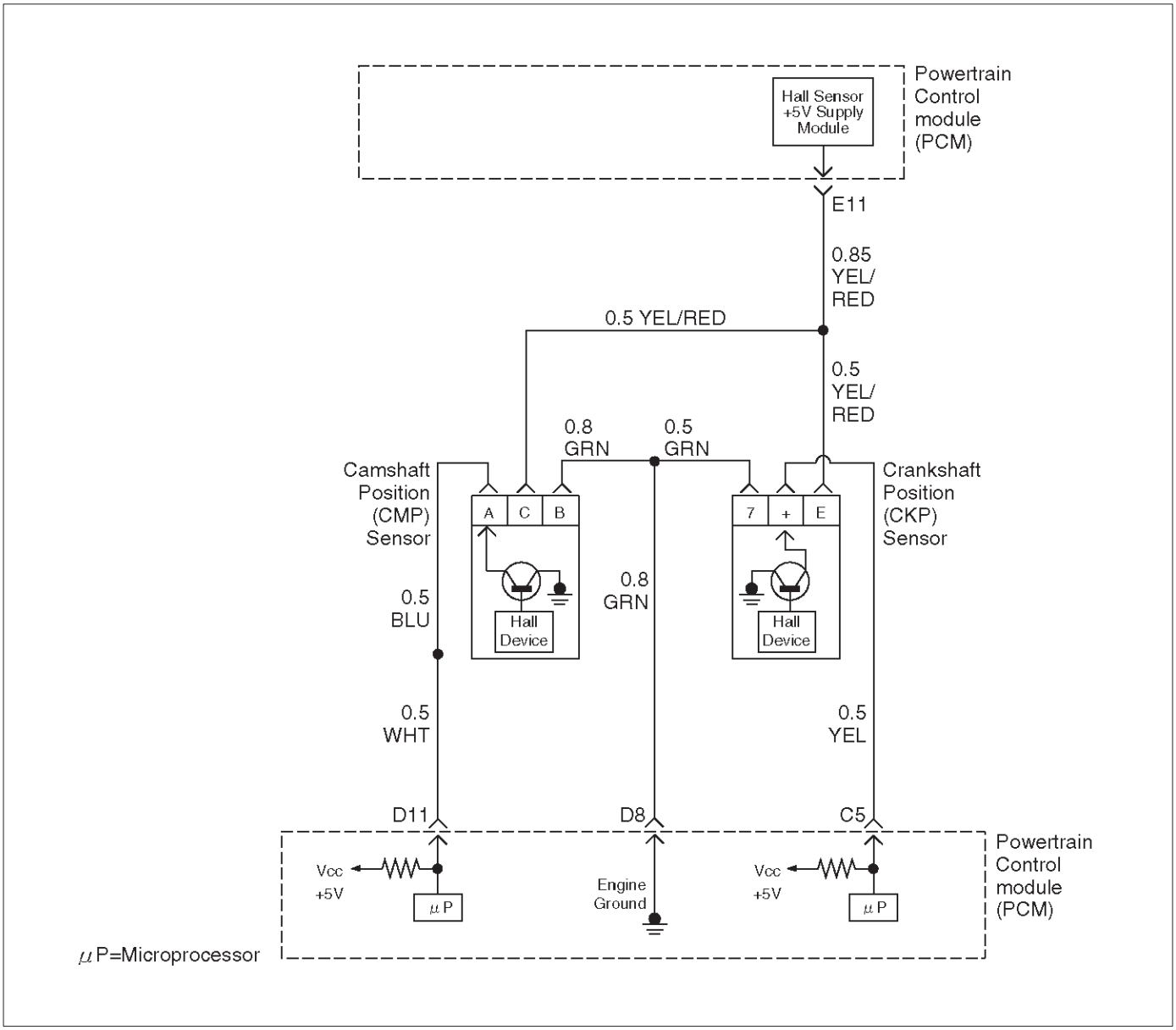

D06RW032

Circuit Description

The 58X reference signal is produced by the crankshaft position (CKP) sensor. During one crankshaft revolution, 58 crankshaft reference pulses will be produced. The powertrain control module (PCM) uses the 58X reference signal to calculate engine RPM and crankshaft position. The PCM constantly monitors the number of pulses on the 58X reference circuit and compares them to the number of camshaft position (CMP) signal pulses being received. If the PCM does not receive pulses on the 58X reference circuit, DTC P0337 will set.

Conditions for Setting the DTC

- No camshaft position (CMP) sensor DTCs are set.
- Engine cranking.
- Crankshaft position (CKP) sensor signal is not present between two cam pulses.
- CKP reference pulse is not detected within 8 CMP pulses.

Action Taken When the DTC Sets

- The PCM will illuminate the malfunction indicator lamp (MIL) after the second consecutive trip in which the fault is detected.
- The PCM will store conditions which were present when the DTC was set as Freeze Frame and in the Failure Records data.

Conditions for Clearing the MIL/DTC

- DTC P0337 can be cleared by using Tech 2 “Clear Info” function or by disconnecting the PCM battery feed.

Diagnostic Aids

An intermittent may be caused by a poor connection, rubbed-through wire insulation or a wire broken inside the insulation. Check for:

- Poor connection – Inspect the PCM harness and connectors for improper mating, broken locks, improperly formed or damaged terminals, and poor terminal-to-wire connection.

- Damaged harness – Inspect the wiring harness for damage. If the harness appears to be OK, disconnect the PCM, turn the ignition on and observe a voltmeter connected to the 58X reference circuit at the PCM harness connector while moving connectors and wiring harnesses related to the ICM. A change in voltage will indicate the location of the fault.

Reviewing the Failure Records vehicle mileage since the diagnostic test last failed may help determine how often the condition that caused the DTC to be set occurs. This may assist in diagnosing the condition.

DTC P0337 – CKP Sensor Circuit Low Frequency

Step	Action	Value(s)	Yes	No
1	Was the “On-Board Diagnostic (OBD) System Check” performed?	—	Go to *Step 2*	Go to *OBD System Check*
2	Attempt to start the engine. Does the engine start?	—	Go to *Step 3*	Go to *Chart 3*
3	1. Review and record Failure Records information. 2. Clear DTC P0337. 3. Start the engine and idle for 1 minute. 4. Observe DTCs. Is DTC P0337 set?	—	Go to *Step 4*	Refer to *Diagnostic Aid*
4	1. Disconnect the CKP sensor. 2. Ignition “ON.” 3. Using a DVM, verify that 5 V reference and ground are being supplied at the sensor connector (PCM side). Are 4-6 volts and ground available at the sensor?	—	Go to *Step 7*	Go to *Step 5*
5	1. Ignition “ON.” 2. With a DVM, backprobe the PCM connector 5 V reference and ground connections. Are 5 V reference and ground available at the PCM?	—	Go to *Step 6*	Go to *Step 11*
6	Check 5 V reference or ground between the CKP sensor and PCM and repair the open circuit, short to ground or short to voltage. Is the action complete?	—	Verify repair	—
7	1. Ignition “OFF.” 2. Disconnect the PCM and CKP sensor. 3. Check for an open or a short to ground in the 58X reference circuit between the CKP sensor connector and the PCM harness connector. 4. If a problem is found, repair as necessary. Was a problem found?	—	Verify repair	Go to *Step 8*
8	1. Reconnect the PCM and CKP sensor. 2. Connect a DVM to measure voltage on the 58X reference circuit at the PCM connector. 3. Observe the voltage while cranking the engine. Is the voltage near the specified value?	2.5 V	Go to *Step 11*	Go to *Step 9*
9	Check the connections at the CKP sensor and replace the terminals if necessary. Did any terminals require replacement?	—	Verify repair	Go to *Step 10*
10	Replace the CKP sensor. Use caution and avoid hot oil that may drip out. Is the action complete?	—	Verify repair	—

DTC P0337 – CKP Sensor Circuit Low Frequency (Cont'd)

Step	Action	Value(s)	Yes	No
11	Check the connections at the PCM and replace the terminals if necessary. Did any terminals require replacement?	—	Verify repair	Go to *Step 12*
12	Replace the PCM. **IMPORTANT:** The replacement PCM must be programmed. Refer to *UBS 98model year Immobilizer Workshop Manual.* Is the action complete?	—	Verify repair	—

Diagnostic Trouble Code (DTC) P0341 CMP Sensor Circuit Performance

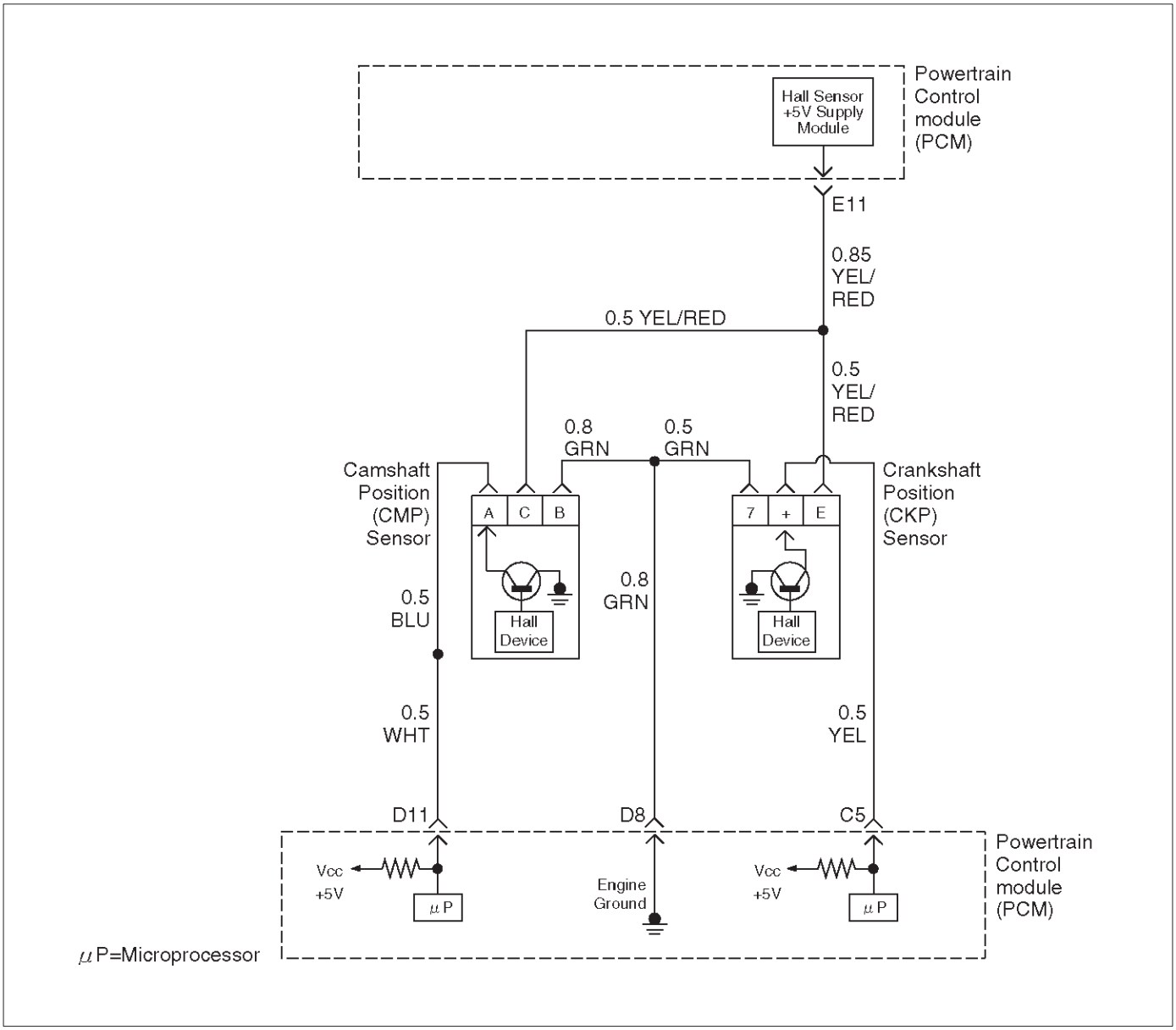

D06RW032

Circuit Description

The CMP signal is produced by the camshaft position (CMP) sensor pulses when the engine is running and crankshaft position (CKP) sync pulses are also being received. The powertrain control module (PCM) uses the CMP signal pulses to initiate sequential fuel injection. The PCM constantly monitors the number of pulses on the CMP signal circuit and compares the number of CMP pulses to the number of 58X reference pulses received. If the PCM receives an incorrect number of pulses on the CMP reference circuit, DTC P0341 will set and the PCM will initiate injector sequence without the CMP signal with a one in six chance that injector sequence is correct. The engine will continue to start and run normally, although the misfire diagnostic will be affected if a misfiring condition occurs.

Conditions for Setting the DTC

- The engine is running (1X CMP reference pulses are being received).
- The CMP sensor signal is not detected at the correct interval every 6 cylinders.
- Above condition fails for 100 occurrences within 200 test samples.

Action Taken When the DTC Sets

- The PCM will illuminate the malfunction indicator lamp (MIL) after the second consecutive trip in which the fault is detected.
- The PCM will initiate the injector sequence without the CMP signal with a one in six chance that the injector sequence is correct.
- The PCM will store conditions which were present when the DTC was set as Freeze Frame and in the Failure Records data.

Conditions for Clearing the MIL/DTC

- DTC P0341 can be cleared by using Tech 2 “Clear Info” function or by disconnecting the PCM battery feed.

Diagnostic Aids

An intermittent may be caused by a poor connection, rubbed-through wire insulation or a wire broken inside the insulation. Check for:

- Poor connection – Inspect the PCM harness and connectors for improper mating, broken locks, improperly formed or damaged terminals, and poor terminal-to-wire connection.
- Damaged harness – Inspect the wiring harness for damage. If the harness appears to be OK, disconnect the PCM, turn the ignition on and observe a voltmeter connected to the CMP signal circuit at the PCM harness connector while moving connectors and wiring harnesses related to the ICM and the CMP sensor. A change in voltage will indicate the location of the fault.

Reviewing the Failure Records vehicle mileage since the diagnostic test last failed may help determine how often the condition that caused the DTC to be set occurs. This may assist in diagnosing the condition.

Test Description

Number(s) below refer to the step number(s) on the Diagnostic Chart.

2. Ensures that the fault is present.

12. Determines whether the fault is being caused by a missing camshaft magnet or a faulty sensor. The voltage measured in this step should read around 4 volts, toggling to near 0 volts when the CMP sensor interfaces with the camshaft magnet.

DTC P0341 – CMP Sensor Circuit Performance

Step	Action	Value(s)	Yes	No
1	Was the “On-Board Diagnostic (OBD) System Check” performed?	—	Go to *Step 2*	Go to *OBD System Check*
2	1. Ignition “ON.” 2. Review and record Tech 2 Failure Records data. 3. Operate the vehicle within Failure Records conditions as noted. 4. Using Tech 2, monitor “Specific DTC” info for DTC P0341 until the DTC P0341 test runs. 5. Note the test result. Does Tech 2 indicate DTC P0341 failed this ignition?	—	Go to *Step 3*	Refer to *Diagnostic Aids*
3	1. Disconnect the CMP sensor. 2. Measure the voltage between the sensor feed circuit and the sensor ground circuit at the CMP sensor harness connector. Does the voltage measure near the specified value?	4-6 V	Go to *Step 4*	Go to *Step 5*
4	Measure the voltage between the CMP sensor signal circuit and the sensor ground circuit at the CMP sensor harness connector. Does the voltage measure near the specified value?	4-6 V	Go to *Step 11*	Go to *Step 8*
5	If the voltage measured in step 3 was less than 4-6 volts, proceed directly to step 6 without completing this step. If the voltage in step 3 was greater than 4-6 V, repair the short to voltage in the CMP feed circuit. Is the action complete?	—	Verify repair	—
6	1. Check for poor connections at the camshaft position sensor. 2. If a problem is found, repair it as necessary. Was a problem found?	—	Verify repair	Go to *Step 7*
7	1. Ignition “OFF,” disconnect the PCM and the CMP sensor. 2. Check the following circuits for an open between the ignition coil and the CMP sensor: ● The sensor feed circuit. 3. If a problem is found, repair as necessary. Was a problem found?	—	Verify repair	Go to *Step 9*
8	1. Ignition “OFF,” disconnect the PCM (leave the CMP sensor disconnected). 2. Ignition “ON,” check the following circuits: ● The CMP sensor signal circuit for an open or a short to voltage. ● The CMP sensor input signal circuit for a short to ground. 3. If a problem is found, repair it as necessary. Was a problem found?	—	Verify repair	Go to *Step 9*
9	Check for a short or open in the sensor ground circuit. Was a problem found?	—	Verify repair	Go to *Step 10*

DTC P0341 – CMP Sensor Circuit Performance (Cont'd)

Step	Action	Value(s)	Yes	No
10	1. Check for poor connections at the PCM. 2. If a problem is found, repair it as necessary. Was a problem found?	—	Verify repair	Go to *Step 11*
11	Backprobe the PCM connector with a DVM to monitor voltage on the camshaft position input signal circuit while cranking the engine with the sensor connected. (Use rubber band, tape, or an assistant to keep the DVM lead in contact with the sensor terminal during this test.) Does the voltage toggle between the specified values?	4-0 V	Go to *Step 15*	Go to *Step 12*
12	1. Remove the CMP sensor from the engine front cover (leave the sensor wiring connected). 2. Place a magnet on the CMP sensor. (If you use a magnet that is too small to cover the face of the sensor, test on every part of the sensor face because only a small area will respond to this test.) Does the DVM display a voltage near the specified value?	0 V	Go to *Step 13*	Go to *Step 14*
13	Replace the faulty or missing camshaft position sensor magnet. Is the action complete?	—	Verify repair	—
14	Replace the camshaft position sensor. Is the action complete?	—	Verify repair	—
15	Replace the PCM. **IMPORTANT:** The replacement PCM must be programmed. Refer to *UBS 98model year Immobilizer Workshop Manual.* Is the action complete?	—	Verify repair	—

Diagnostic Trouble Code (DTC) P0342 CMP Sensor Circuit Low

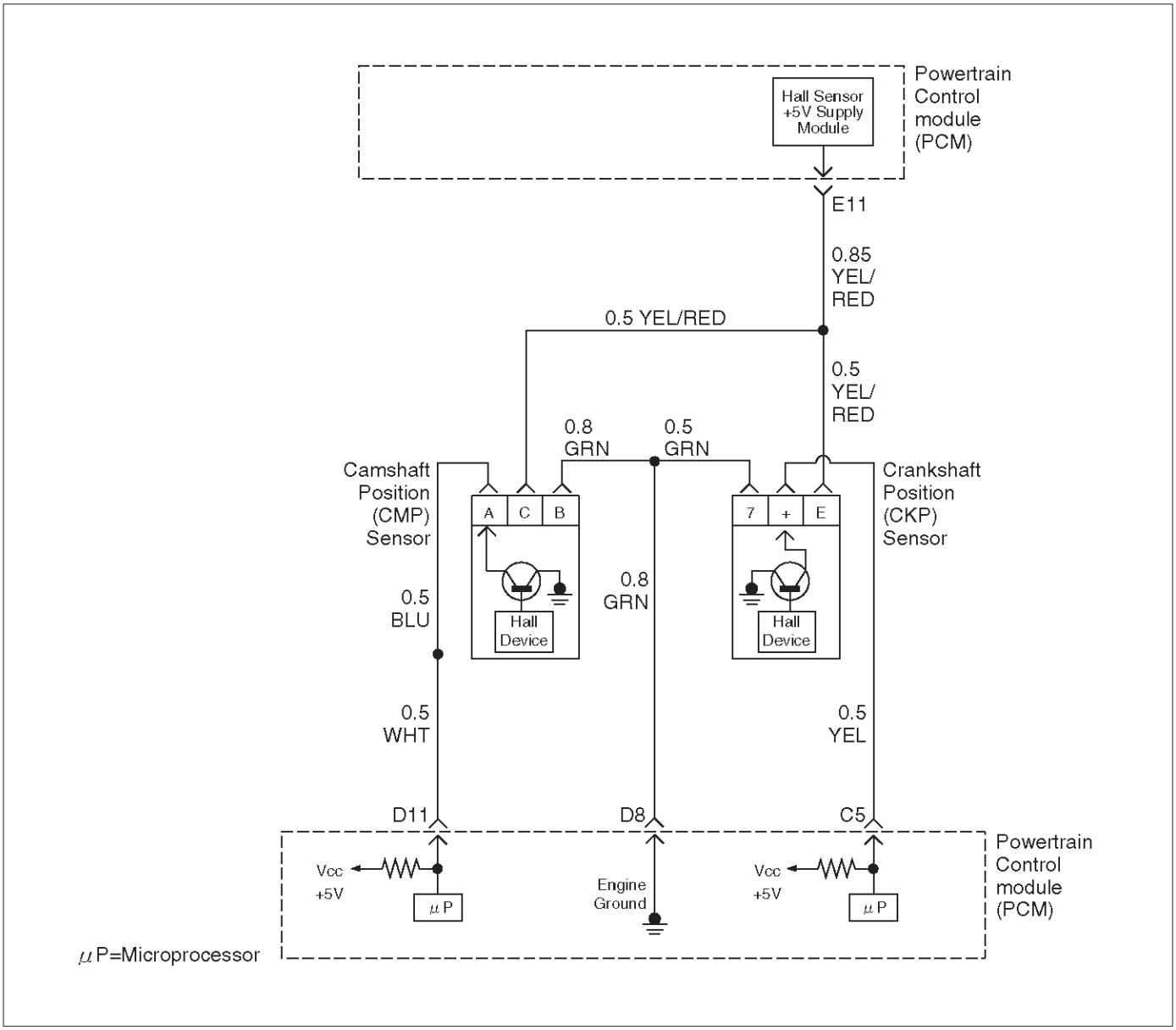

D06RW032

Circuit Description

The CMP signal produced by the camshaft position (CMP) sensor pulses when the engine is running and crankshaft position (CKP) sync pulses are also being received. The hall type CMP sensor and the CKP sensor share 5 V and ground connections at the powertrain control module (PCM). The third wire at the sensor is a signal circuit to the PCM. The PCM uses the CMP signal pulses to initiate sequential fuel injection. The PCM constantly monitors the number of pulses on the CMP signal circuit and compares the number of CMP pulses to the number of 58X reference pulses received. If the PCM does not receive pulses on the CMP reference circuit, DTC P0342 will set and the PCM will initiate injector sequence without the CMP signal with a one in six chance that injector sequence is correct. The engine will continue to start and run normally, although the misfire diagnostic will be affected if a misfiring condition occurs.

Conditions for Setting the DTC

- The engine is running.
- The CMP sensor signal is not received by the PCM once every 6 cylinders.
- The above condition occurs for 10 seconds.

Action Taken When the DTC Sets

- The PCM will illuminate the malfunction indicator lamp (MIL) after the second consecutive trip in which the fault is detected.
- The PCM will initiate injector sequence without the CMP signal with a one in six chance that the injector sequence is correct.
- The PCM will store conditions which were present when the DTC was set as Freeze Frame and in the Failure Records data.

Conditions for Clearing the MIL/DTC

- DTC P0342 can be cleared by using Tech 2 “Clear Info” function or by disconnecting the PCM battery feed.

Diagnostic Aids

An intermittent may be caused by a poor connection, rubbed-through wire insulation or a wire broken inside the insulation. Check for:

- Poor connection – Inspect the PCM harness and connectors for improper mating, broken locks, improperly formed or damaged terminals, and poor terminal to wire connection.
- Damaged harness – Inspect the wiring harness for damage. If the harness appears to be OK, disconnect the PCM, turn the ignition on and observe a voltmeter connected to the CMP signal circuit at the PCM harness connector while moving connectors and wiring harnesses related to the ICM and the CMP sensor. A change in voltage will indicate the location of the fault.

Test Description

Number(s) below refer to the step number(s) on the Diagnostic Chart.

2. Ensures that the fault is present.

14. Determines whether the fault is being caused by a missing camshaft magnet or a faulty PCM. The voltage measured in this step should read around 4 volts, toggling to near 0 volts when the CMP sensor interfaces with the camshaft magnet.

DTC P0342 – CMP Sensor Circuit Low

Step	Action	Value(s)	Yes	No
1	Was the “On-Board Diagnostic (OBD) System Check” performed?	—	Go to *Step 2*	Go to *OBD System Check*
2	1. Ignition “ON.” 2. Review and record Tech 2 Failure Records data. 3. Operate the vehicle within Failure Records conditions as noted. 4. Using Tech 2, monitor “Specific DTC” information for DTC P0342 until the DTC P0342 test runs. 5. Note test result. Does Tech 2 indicate DTC P0342 failed this ignition?	—	Go to *Step 3*	Refer to *Diagnostic Aids*
3	1. Ignition “ON.” 2. Disconnect the CMP sensor. 3. Measure the voltage between the sensor feed circuit and the sensor ground circuit at the CMP sensor harness connector. Does the voltage measure near the specified value?	4-6 V	Go to *Step 7*	Go to *Step 4*
4	1. Ignition “OFF,” disconnect the PCM and the CMP sensor. 2. Check for poor connections at the camshaft position sensor. 3. If a problem is found, repair it as necessary. Was a problem found?	—	Verify repair	Go to *Step 5*
5	1. Check for poor connections at the PCM. 2. If a problem is found, repair it as necessary. Was a problem found?	—	Verify repair	Go to *Step 6*
6	1. Check the following circuits between the PCM and the CMP sensor: • The sensor feed circuit. Open or short to ground? • The sensor ground circuit. Open or short to voltage? 2. If a problem is found, repair as necessary. Was a problem found?	—	Verify repair	—

DTC P0342 – CMP Sensor Circuit Low (Cont'd)

Step	Action	Value(s)	Yes	No
7	1. Ignition "ON," engine "OFF." 2. Measure the voltage between the CMP sensor signal circuit and the sensor ground circuit at the CMP sensor harness connector. Does the voltage measure near the specified value?	4-6 V	Go to *Step 8*	Go to *Step 9*
8	1. Turn the ignition "OFF." 2. Disconnect the PCM and connect a DVM to monitor voltage on the camshaft position signal circuit at the PCM connector. 3. Ignition "ON." 4. Monitor the voltage display on the DVM while repeatedly touching the CMP sensor signal circuit at the CMP sensor connector with a test light to ground. Does the DVM voltage display switch between 0 and approximately 5 volts when the test light is touched to the CMP sensor signal circuit?	—	Go to *Step 12*	Go to *Step 9*
9	1. Ignition "OFF." 2. Leave the PCM disconnected. 3. Ignition "ON." 4. Probe the camshaft position signal circuit at the PCM connector with a test light to B+. 5. If the test light is "ON," locate and repair the short to ground in the camshaft position input signal circuit. Was either circuit shorted to ground?	—	Verify repair	Go to *Step 10*
10	1. Ignition "OFF." 2. Leave the PCM disconnected. 3. Ignition "ON." 4. Probe the camshaft position signal circuit with a test light to ground. 5. If the test light is "ON," locate and repair the short to voltage in the camshaft position input signal circuit. Was the test light "ON"?	—	Verify repair	Go to *Step 11*
11	1. Ignition "OFF," disconnect the PCM (leave the CMP sensor disconnected). 2. Ignition "ON," check the following circuit: ● The CMP sensor signal circuit for an open. 3. If a problem is found, repair it as necessary. Was a problem found?	—	Verify repair	—
12	1. Ignition "ON." 2. Remove the CMP sensor from the engine front cover (leave the sensor wiring connected). 3. Place a magnet on the CMP sensor. If you use a magnet that is too small to cover the face of the sensor, test on every part of the sensor face because only a small area will respond to this test. Does the DVM display a voltage near the specified value?	0 V	Go to *Step 14*	Go to *Step 13*
13	Replace the camshaft position sensor. Is the action complete?	—	Verify repair	—

DTC P0342 – CMP Sensor Circuit Low (Cont'd)

Step	Action	Value(s)	Yes	No
14	1. Reinstall the CMP sensor to the engine front cover. 2. Observe the DVM connected to monitor voltage on the camshaft position signal circuit while cranking the engine. Does the voltage toggle between the specified values?	4-0 V	Go to *Step 15*	Go to *Step 16*
15	Replace the PCM. NOTE: The replacement PCM must be programmed. Refer to *UBS 98model year Immobilizer Workshop Manual.* Is the action complete?	—	Verify repair	—
16	Replace faulty or missing camshaft magnet. Is the action complete?	—	Verify repair	—

Diagnostic Trouble Code (DTC) P0351 Ignition 1 Control Circuit

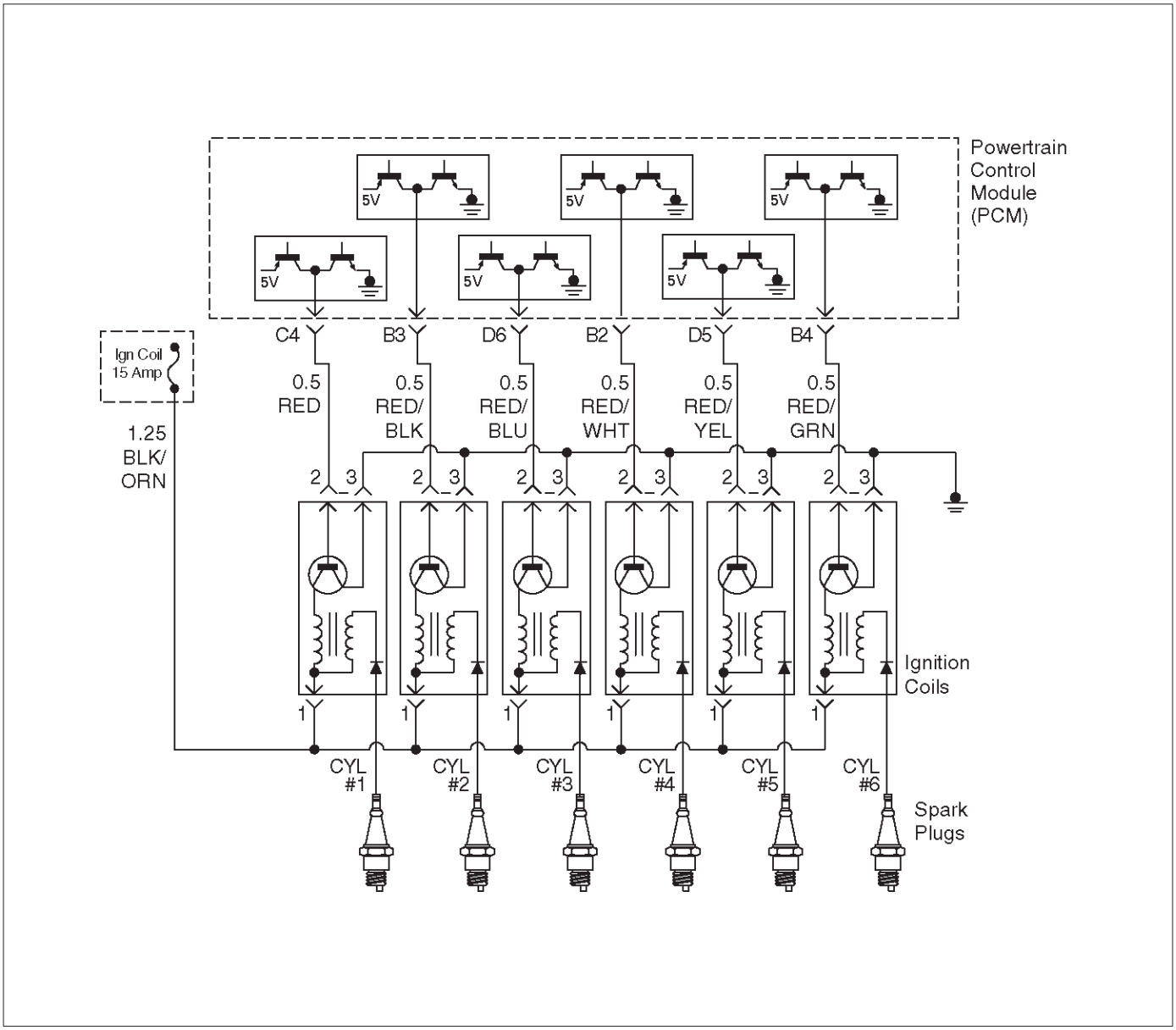

D06RW072

Circuit Description

The powertrain control module's (PCM) control circuit 1 provides a zero-volt or a 5-volt output signal to the ignition coil. The normal voltage on the circuit is zero volts. When the ignition coil receives the 5-volt signal from the PCM, it provides a ground path for the B+ supply to the primary side of the number 1 ignition coil. When the PCM shuts off the 5 volts to the ignition coil, the ignition coil turns "OFF." This causes the ignition coil primary magnetic field to collapse, producing a voltage in the secondary coil which fires the spark plug.

The circuit between the PCM and ignition coil is monitored for an open circuit, short to voltage, and short to ground. When the PCM detects a problem on ignition control circuit 1, it will set a DTC P0351.

Conditions for Setting the DTC

- The ignition is "ON."
- The engine is turning, determined by the 58X crankshaft position input signal.
- The output voltage is not equal to 5 volts when output is "ON."
- The output voltage is not equal to 0 volts when output is "OFF."
- Twenty test failures occur within 40 samples of continuous spark events.

Action Taken When the DTC Sets

- The PCM will illuminate the malfunction indicator lamp (MIL) the first time the fault is detected.
- The PCM will store conditions which were present when the DTC was set as Freeze Frame and in the Failure Records data.

Conditions for Clearing the MIL/DTC

- DTC P0351 can be cleared by using Tech 2 "Clear Info" function or by disconnecting the PCM battery feed.

Diagnostic Aids

Check for the following conditions:

- Poor connection at PCM – Inspect the harness connectors for backed-out terminals, improper mating, broken locks, improperly formed or damaged terminals, and poor terminal-to-wire connections.
- Damaged harness – Inspect the wiring harness for damage. If the harness appears to be OK, observe Tech 2 display related to DTC P0351 while moving the connector and wiring related to the ignition system. A change in the display will indicate the location of the fault.

Reviewing the Failure Records vehicle mileage since the diagnostic test last failed may help determine how often the condition that caused the DTC to be set occurs. This may assist in diagnosing the condition.

DTC P0351 – Ignition 1 Control Circuit

Step	Action	Value(s)	Yes	No
1	Was the “On-Board Diagnostic (OBD) System Check” performed?	—	Go to *Step 2*	Go to *OBD System Check*
2	1. Ignition “ON,” engine “OFF.” 2. Review and record Tech 2 Failure Records data. 3. Operate the vehicle within Failure Record conditions as noted. 4. Use Tech 2 to monitor the “Specific DTC” information for DTC P0351 until the DTC P0351 test runs. 5. Note the test result. Does Tech 2 indicate DTC P0351 failed this ignition cycle?	—	Go to *Step 3*	Go to *Diagnostic Aids*
3	Check for faulty connection at ignition coil. Was a problem found?	—	Verify repair	Go to *Step 4*
4	Check for faulty connection at PCM connector. Was a problem found?	—	Verify repair	Go to *Step 5*
5	1. Ignition “ON,” engine “OFF.” 2. Back probe the ignition control circuit 1 at the PCM with a DVM. Is the voltage near the specified value?	25-55 mV	Go to *Step 6*	Go to *Step 9*
6	1. Ignition “ON,” engine running. 2. Back probe the ignition control circuit at the PCM for the cylinder being tested. Is the voltage in the specified range, rapidly toggling back and forth to a reading 20-50 mV higher?	100-180 mV	Go to *Step 7*	Go to *Step 13*
7	1. Ignition “OFF.” 2. Disconnect the 3-pin and 5-pin connectors at the ignition coil. 3. Check ignition control circuit 1 voltage at the ignition coil connector while cranking the engine. Does the voltage measure between the specified values?	200-1200 mV	Go to *Step 8*	Go to *Step 11*
8	Replace the ignition coil. Is the action complete?	—	Verify repair	—
9	1. Ignition “OFF.” 2. Disconnect the PCM and the ignition coil. 3. Check ignition control circuit 1 for short to ground. Was a problem found?	—	Verify repair	Go to *Step 10*
10	Check ignition control circuit 1 for short to voltage. Was a problem found?	—	Verify repair	Go to *Step 13*

DTC P0351 – Ignition 1 Control Circuit (Cont'd)

Step	Action	Value(s)	Yes	No
11	Check for an open ignition control circuit 1. Was the ignition control circuit open?	—	Go to *Step 12*	Go to *Step 13*
12	Repair the open ignition control circuit. Is the action complete?	—	Verify repair	—
13	Replace the PCM. **IMPORTANT:** The replacement PCM must be programmed. Refer to *UBS 98model year Immobilizer Workshop Manual.* Is the action complete?	—	Verify repair	—

Diagnostic Trouble Code (DTC) P0352 Ignition 2 Control Circuit

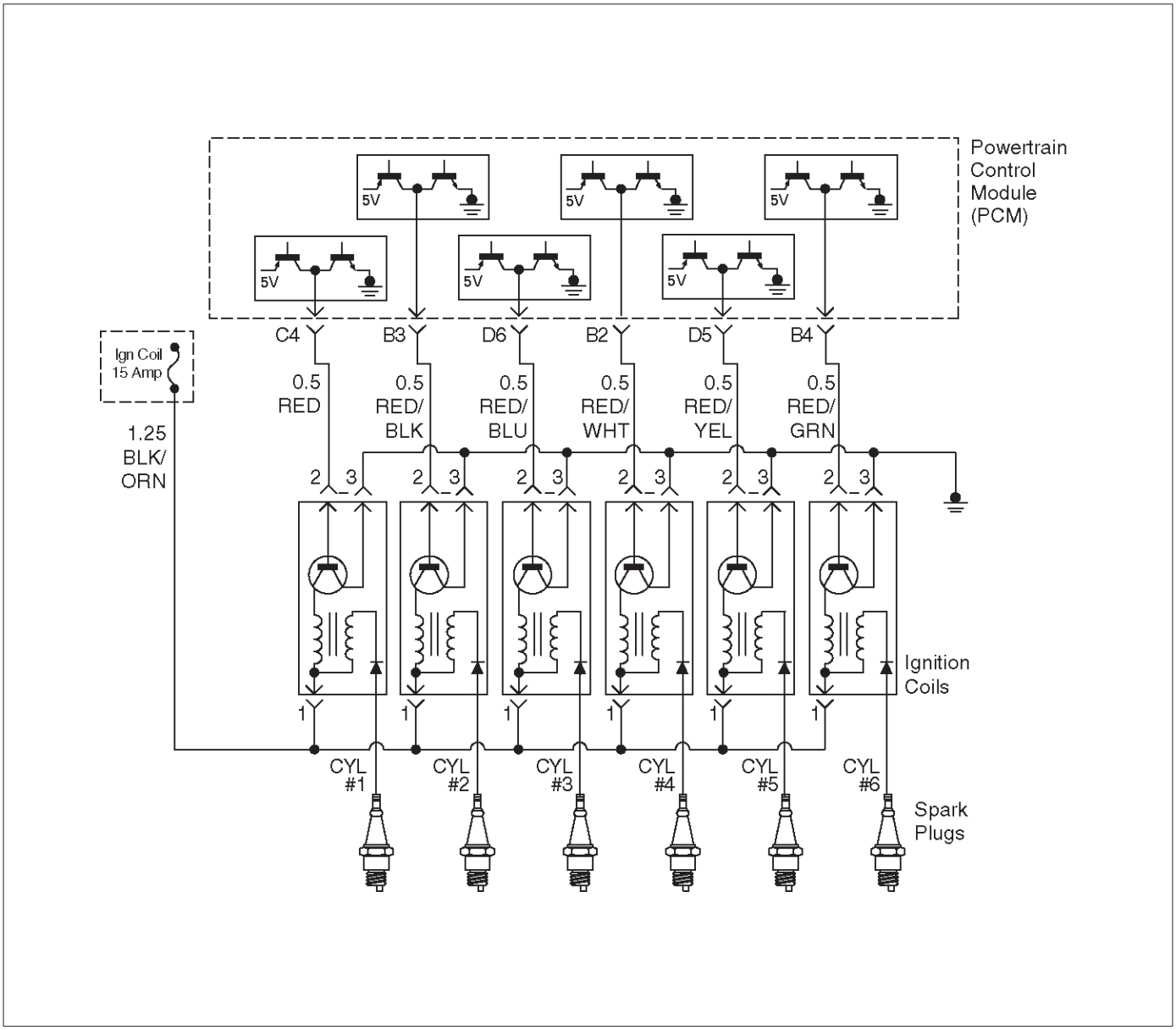

D06RW072

Circuit Description

The powertrain control module's (PCM) control circuit 2 provides a zero-volt or a 5-volt output signal to the ignition coil. The normal voltage on the circuit is zero volts. When the ignition coil receives the 5-volt signal from the PCM, it provides a ground path for the B+ supply to the primary side of the number 2 ignition coil. When the PCM shuts off the 5 volts to the ignition coil, the ignition coil turns "OFF." This causes the ignition coil primary magnetic field to collapse, producing a voltage in the secondary coil which fires the spark plug.

The circuit between the PCM and ignition coil is monitored for an open circuit, short to voltage, and short to ground. When the PCM detects a problem on ignition control circuit 2, it will set a DTC P0352.

Conditions for Setting the DTC

- The ignition is "ON."
- The engine is turning, determined by the 58 X crankshaft position input signal.
- The output voltage is not equal to 5 volts when output is "ON."
- The output voltage is not equal to 0 volts when output is "OFF."
- Twenty test failures occur within 40 samples of continuous spark events.

Action Taken When the DTC Sets

- The PCM will illuminate the malfunction indicator lamp (MIL) the first time the fault is detected.
- The PCM will store conditions which were present when the DTC was set as Freeze Frame and in the Failure Records data.

Conditions for Clearing the MIL/DTC

- DTC P0352 can be cleared by using the Tech 2 "Clear Info" function or by disconnecting the PCM battery feed.

Diagnostic Aids

Check for the following conditions:

- Poor connection at PCM – Inspect the harness connectors for backed-out terminals, improper mating, broken locks, improperly formed or damaged terminals, and poor terminal-to-wire connections.
- Damaged harness – Inspect the wiring harness for damage. If the harness appears to be OK, observe the Tech 2 display related to DTC P0352 while moving the connector and wiring related to the ignition system. A change in the display will indicate the location of the fault.

Reviewing the Failure Records vehicle mileage since the diagnostic test last failed may help determine how often the condition that caused the DTC to be set occurs. This may assist in diagnosing the condition.

DTC P0352 – Ignition 2 Control Circuit

Step	Action	Value(s)	Yes	No
1	Was the “On-Board Diagnostic (OBD) System Check” performed?	—	Go to *Step 2*	Go to *OBD System Check*
2	1. Ignition “ON,” engine “OFF.” 2. Review and record Tech 2 Failure Records data. 3. Operate the vehicle within Failure Record conditions as noted. 4. Use a Tech 2 to monitor the “Specific DTC” information for DTC P0352 until the DTC P0352 test runs. 5. Note the test result. Does the Tech 2 indicate DTC P0352 failed this ignition cycle?	—	Go to *Step 3*	Go to *Diagnostic Aids*
3	Check for faulty connection at ignition coil. Was a problem found?	—	Verify repair	Go to *Step 4*
4	Check for faulty connection at PCM connector. Was a problem found?	—	Verify repair	Go to *Step 5*
5	1. Ignition “ON,” engine “OFF.” 2. Back probe the ignition control circuit 2 at the PCM with a DVM . Is the voltage near the specified value?	25-55 mV	Go to *Step 6*	Go to *Step 9*
6	1. Ignition “ON,” engine running. 2. Back probe the ignition control circuit at the PCM for the cylinder being tested. Is the voltage in the specified range, rapidly toggling back and forth to a reading 20-50 mV higher?	100-180 mV	Go to *Step 7*	Go to *Step 13*
7	1. Ignition “OFF.” 2. Disconnect the 3-pin and 5-pin connectors at the ignition coil. 3. Check ignition control circuit 2 voltage at the ignition coil connector while cranking the engine connector. Does the voltage measure between the specified values?	200-1200 mV	Go to *Step 8*	Go to *Step 11*
8	Replace the ignition coil. Is the action complete?	—	Verify repair	—
9	1. Ignition “OFF.” 2. Disconnect the PCM and the ignition coil. 3. Check ignition control circuit 2 for short to ground. Was a problem found?	—	Verify repair	Go to *Step 10*
10	Check ignition control circuit 2 for short to voltage. Was a problem found?	—	Verify repair	Go to *Step 13*

DTC P0352 – Ignition 2 Control Circuit (Cont'd)

Step	Action	Value(s)	Yes	No
11	Check for an open ignition control circuit 1. Was the ignition control circuit open?	—	Go to *Step 12*	Go to *Step 13*
12	Repair the open ignition control circuit. Is the action complete?	—	Verify repair	—
13	Replace the PCM. **IMPORTANT:** The replacement PCM must be programmed. Refer to *UBS 98model year Immobilizer Workshop Manual.* Is the action complete?	—	Verify repair	—

Diagnostic Trouble Code (DTC) P0353 Ignition 3 Control Circuit

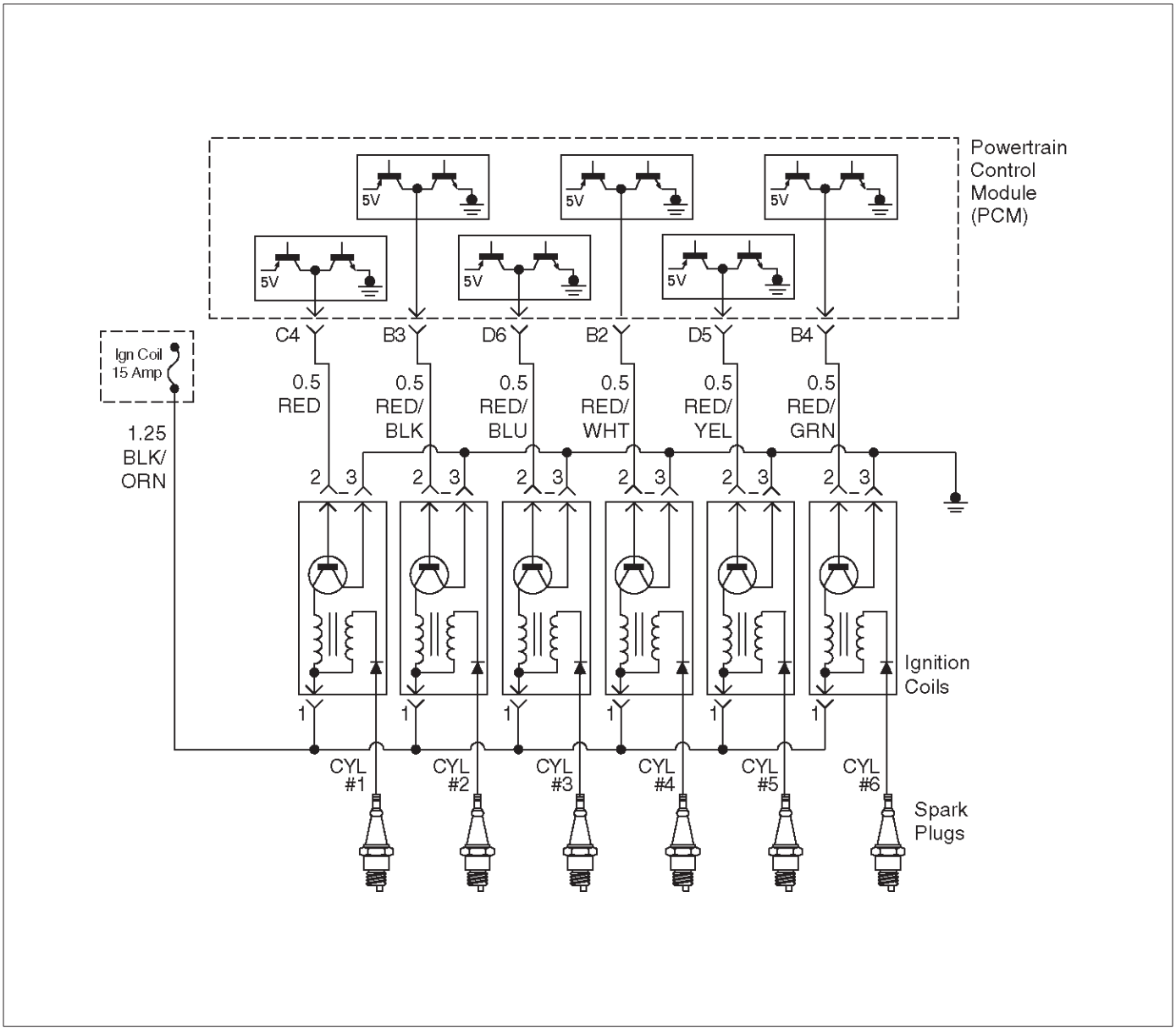

Circuit Description

The powertrain control module's (PCM) control circuit 3 provides a zero-volt or a 5-volt output signal to the ignition coil. The normal voltage on the circuit is zero volts. When the ignition coil receives the 5-volt signal from the PCM, it provides a ground path for the B+ supply to the primary side of the number 3 ignition coil. When the PCM shuts off the 5 volts to the ignition coil, the ignition coil turns "OFF." This causes the ignition coil primary magnetic field to collapse, producing a voltage in the secondary coil which fires the spark plug.

The circuit between the PCM and ignition coil is monitored for an open circuit, short to voltage, and short to ground. When the PCM detects a problem on ignition control circuit 3, it will set a DTC P0353.

Conditions for Setting the DTC

- The ignition is "ON."
- The engine is turning, determined by the 58X crankshaft position input signal.
- The output voltage is not equal to 5 volts when output is "ON."
- The output voltage is not equal to 0 volts when output is "OFF."
- Twenty test failures occur within 40 samples of continuous spark events.

Action Taken When the DTC Sets

- The PCM will illuminate the malfunction indicator lamp (MIL) the first time the fault is detected.
- The PCM will store conditions which were present when the DTC was set as Freeze Frame and in the Failure Records data.

Conditions for Clearing the MIL/DTC

- DTC P0353 can be cleared by using the Tech 2 "Clear Info" function or by disconnecting the PCM battery feed.

Diagnostic Aids

Check for the following conditions:

- Poor connection at PCM – Inspect the harness connectors for backed-out terminals, improper mating, broken locks, improperly formed or damaged terminals, and poor terminal-to-wire connections.
- Damaged harness – Inspect the wiring harness for damage. If the harness appears to be OK, observe the Tech 2 display related to DTC P0353 while moving the connector and wiring related to the ignition system. A change in the display will indicate the location of the fault.

Reviewing the Failure Records vehicle mileage since the diagnostic test last failed may help determine how often the condition that caused the DTC to be set occurs. This may assist in diagnosing the condition.

DTC P0353 – Ignition 3 Control Circuit

Step	Action	Value(s)	Yes	No
1	Was the “On-Board Diagnostic (OBD) System Check” performed?	—	Go to *Step 2*	Go to *OBD System Check*
2	1. Ignition “ON,” engine “OFF.” 2. Review and record Tech 2 Failure Records data. 3. Operate the vehicle within Failure Record conditions as noted. 4. Use a Tech 2 to monitor the “Specific DTC” information for DTC P0353 until the DTC P0353 test runs. 5. Note the test result. Does the Tech 2 indicate DTC P0353 failed this ignition cycle?	—	Go to *Step 3*	Go to *Diagnostic Aids*
3	Check for faulty connection at ignition coil. Was a problem found?	—	Verify repair	Go to *Step 4*
4	Check for faulty connection at PCM connector. Was a problem found?	—	Verify repair	Go to *Step 5*
5	1. Ignition “ON,” engine “OFF.” 2. Back probe the ignition control circuit 3 at the PCM with a DVM positive lead with the negative lead to ground. Is the voltage near the specified value?	25-55 mV	Go to *Step 6*	Go to *Step 9*
6	1. Ignition “ON,” engine running. 2. Back probe the ignition control circuit at the PCM for the cylinder being tested. Is the voltage in the specified range, rapidly toggling back and forth to a reading 20-50 mV higher?	100-180 mV	Go to *Step 7*	Go to *Step 13*
7	1. Ignition “OFF.” 2. Disconnect the 3-pin and 5-pin connectors at the ignition coil. 3. Check ignition control circuit 3 voltage at the ignition coil connector while cranking the engine. Does the voltage measure between the specified values?	200-1200 mV	Go to *Step 8*	Go to *Step 11*
8	Replace the ignition coil. Is the action complete?	—	Verify repair	—
9	1. Ignition “OFF.” 2. Disconnect the PCM and the ignition coil. 3. Check ignition control circuit 3 for short to ground. Was a problem found?	—	Verify repair	Go to *Step 10*
10	Check ignition control circuit 3 for short to voltage. Was a problem found?	—	Verify repair	Go to *Step 13*

DTC P0353 – Ignition 3 Control Circuit (Cont'd)

Step	Action	Value(s)	Yes	No
11	Check for an open ignition control circuit 1. Was the ignition control circuit open?	—	Go to *Step 12*	Go to *Step 13*
12	Repair the open ignition control circuit. Is the action complete?	—	Verify repair	—
13	Replace the PCM. **IMPORTANT:** The replacement PCM must be programmed. Refer to *UBS 98model year Immobilizer Workshop Manual.* Is the action complete?	—	Verify repair	—

Diagnostic Trouble Code (DTC) P0354 Ignition 4 Control Circuit

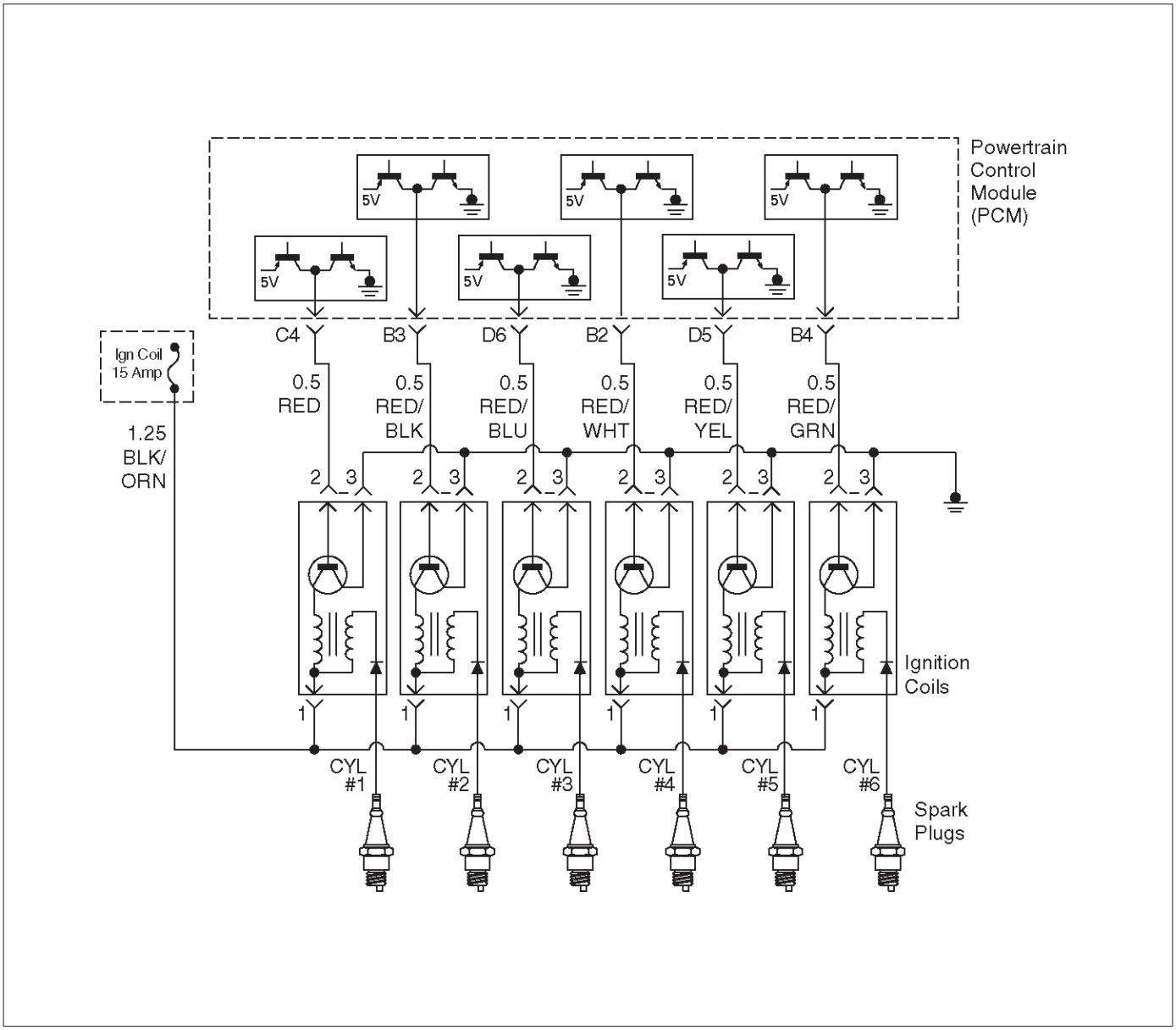

Circuit Description

The powertrain control module's (PCM) control circuit 4 provides a zero-volt or a 5-volt output signal to the ignition coil. The normal voltage on the circuit is zero volts. When the ignition coil receives the 5-volt signal from the PCM, it provides a ground path for the B+ supply to the primary side of the number 4 ignition coil. When the PCM shuts off the 5 volts to the ignition coil, the ignition coil turns "OFF." This causes the ignition coil primary magnetic field to collapse, producing a voltage in the secondary coil which fires the spark plug.

The circuit between the PCM and ignition coil is monitored for an open circuit, short to voltage, and short to ground. When the PCM detects a problem on ignition control circuit 4, it will set a DTC P0354.

Conditions for Setting the DTC

- The ignition is "ON."
- The engine is turning, determined by the 58X crankshaft position input signal.
- The output voltage is not equal to 5 volts when output is "ON."
- The output voltage is not equal to 0 volts when output is "OFF."
- Twenty test failures occur within 40 samples of continuous spark events.

Action Taken When the DTC Sets

- The PCM will illuminate the malfunction indicator lamp (MIL) the first time the fault is detected.
- The PCM will store conditions which were present when the DTC was set as Freeze Frame and in the Failure Records data.

Conditions for Clearing the MIL/DTC

- DTC P0354 can be cleared by using the Tech 2 "Clear Info" function or by disconnecting the PCM battery feed.

Diagnostic Aids

Check for the following conditions:

- Poor connection at PCM – Inspect the harness connectors for backed-out terminals, improper mating, broken locks, improperly formed or damaged terminals, and poor terminal-to-wire connections.
- Damaged harness – Inspect the wiring harness for damage. If the harness appears to be OK, observe the Tech 2 display related to DTC P0354 while moving the connector and wiring related to the ignition system. A change in the display will indicate the location of the fault.

Reviewing the Failure Records vehicle mileage since the diagnostic test last failed may help determine how often the condition that caused the DTC to be set occurs. This may assist in diagnosing the condition.

DTC P0354 – Ignition 4 Control Circuit

Step	Action	Value(s)	Yes	No
1	Was the “On-Board Diagnostic (OBD) System Check” performed?	—	Go to *Step 2*	Go to *OBD System Check*
2	1. Ignition “ON,” engine “OFF.” 2. Review and record Tech 2 Failure Records data. 3. Operate the vehicle within Failure Record conditions as noted. 4. Use a Tech 2 to monitor the “Specific DTC” information for DTC P0354 until the DTC P0354 test runs. 5. Note the test result. Does the Tech 2 indicate DTC P0354 failed this ignition cycle?	—	Go to *Step 3*	Go to *Diagnostic Aids*
3	Check for faulty connection at ignition coil. Was a problem found?	—	Verify repair	Go to *Step 4*
4	Check for faulty connection at PCM connector. Was a problem found?	—	Verify repair	Go to *Step 5*
5	1. Ignition “ON,” engine “OFF.” 2. Back probe the ignition control circuit 4 at the PCM with a DVM positive lead with the negative lead to ground. Is the voltage near the specified value?	25-55 mV	Go to *Step 6*	Go to *Step 9*
6	1. Ignition “ON,” engine running. 2. Back probe the ignition control circuit at the PCM for the cylinder being tested. Is the voltage in the specified range, rapidly toggling back and forth to a reading 20-50 mV higher?	100-180 mV	Go to *Step 7*	Go to *Step 13*
7	1. Ignition “OFF.” 2. Disconnect the 3-pin and 5-pin connectors at the ignition coil. 3. Check ignition control circuit 4 voltage at the ignition coil connector while cranking the engine. Does the voltage measure between the specified values?	200-1200 mV	Go to *Step 8*	Go to *Step 11*
8	Replace the ignition coil. Is the action complete?	—	Verify repair	—
9	1. Ignition “OFF.” 2. Disconnect the PCM and the ignition coil. 3. Check ignition control circuit 4 for short to ground. Was a problem found?	—	Verify repair	Go to *Step 10*
10	Check ignition control circuit 4 for short to voltage. Was a problem found?	—	Verify repair	Go to *Step 13*

DTC P0354 – Ignition 4 Control Circuit (Cont'd)

Step	Action	Value(s)	Yes	No
11	Check for an open ignition control circuit 1. Was the ignition control circuit open?	—	Go to *Step 12*	Go to *Step 13*
12	Repair the open in ignition control circuit. Is the action complete?	—	Verify repair	—
13	Replace the PCM. **IMPORTANT:** The replacement PCM must be programmed. Refer to *UBS 98model year Immobilizer Workshop Manual.* Is the action complete?	—	Verify repair	—

Diagnostic Trouble Code (DTC) P0355 Ignition 5 Control Circuit

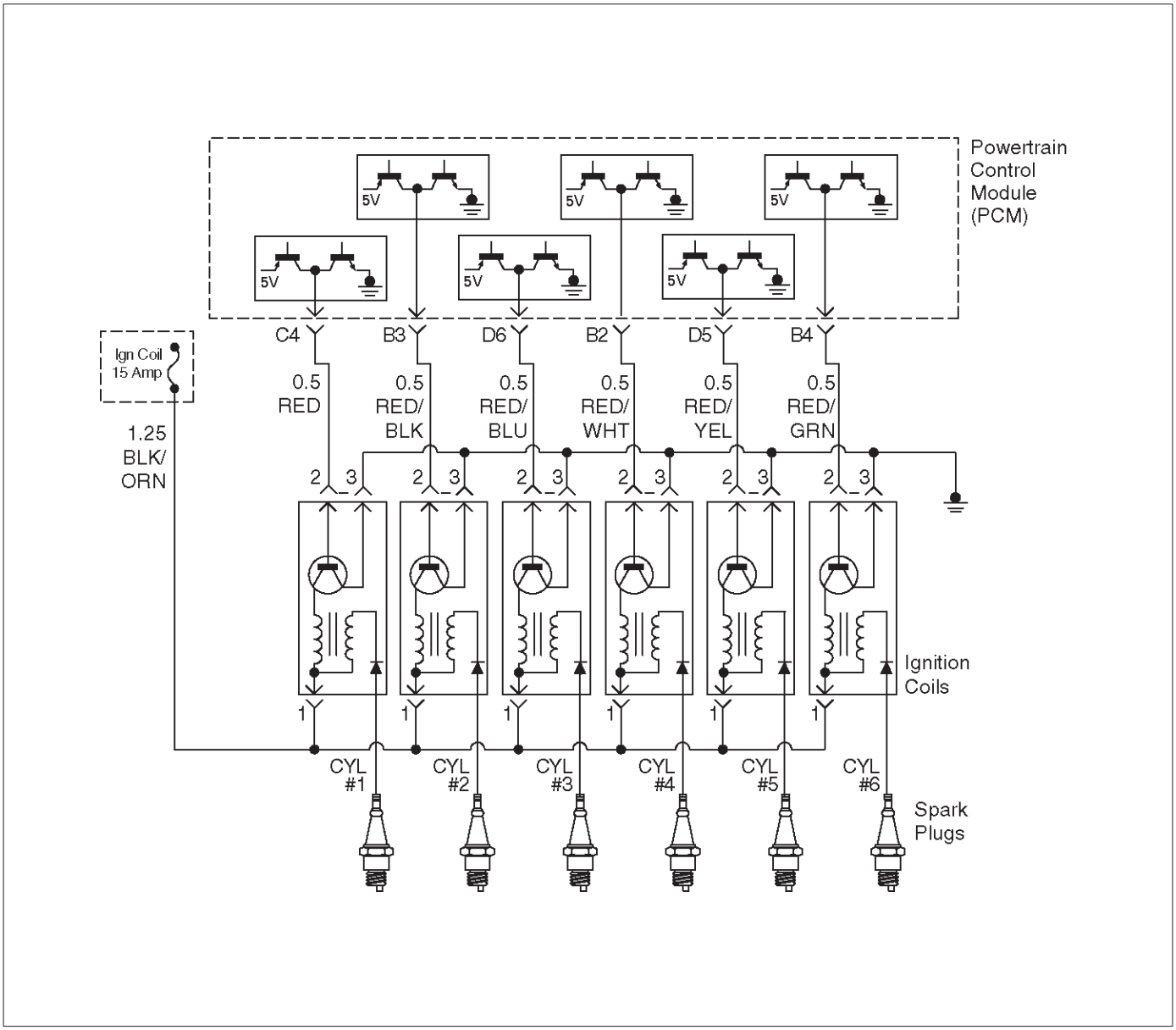

D06RW072

Circuit Description

The powertrain control module's (PCM) control circuit 5 provides a zero-volt or a 5-volt output signal to the ignition coil. The normal voltage on the circuit is zero volts. When the ignition coil receives the 5-volt signal from the PCM, it provides a ground path for the B+ supply to the primary side of the number 5 ignition coil. When the PCM shuts off the 5 volts to the ignition coil, the ignition coil turns "OFF." This causes the ignition coil primary magnetic field to collapse, producing a voltage in the secondary coil which fires the spark plug.

The circuit between the PCM and ignition coil is monitored for an open circuit, short to voltage, and short to ground. When the PCM detects a problem on ignition control circuit 5, it will set a DTC P0355.

Conditions for Setting the DTC

- The ignition is "ON."
- The engine is turning, determined by the 58X crankshaft position input signal.
- The output voltage is not equal to 5 volts when output is "ON."
- The output voltage is not equal to 0 volts when output is "OFF."
- Twenty test failures occur within 40 samples of continuous spark events.

Action Taken When the DTC Sets

- The PCM will illuminate the malfunction indicator lamp (MIL) the first time the fault is detected.
- The PCM will store conditions which were present when the DTC was set as Freeze Frame and in the Failure Records data.

Conditions for Clearing the MIL/DTC

- DTC P0355 can be cleared by using the Tech 2 "Clear Info" function or by disconnecting the PCM battery feed.

Diagnostic Aids

Check for the following conditions:

- Poor connection at PCM – Inspect the harness connectors for backed-out terminals, improper mating, broken locks, improperly formed or damaged terminals, and poor terminal-to-wire connections.
- Damaged harness – Inspect the wiring harness for damage. If the harness appears to be OK, observe the Tech 2 display related to DTC P0355 while moving the connector and wiring related to the ignition system. A change in the display will indicate the location of the fault.

Reviewing the Failure Records vehicle mileage since the diagnostic test last failed may help determine how often the condition that caused the DTC to be set occurs. This may assist in diagnosing the condition.

DTC P0355 – Ignition 5 Control Circuit

Step	Action	Value(s)	Yes	No
1	Was the “On-Board Diagnostic (OBD) System Check” performed?	—	Go to *Step 2*	Go to *OBD System Check*
2	1. Ignition “ON,” engine “OFF.” 2. Review and record Tech 2 Failure Records data. 3. Operate the vehicle within Failure Record conditions as noted. 4. Use a Tech 2 to monitor the “Specific DTC” information for DTC P0355 until the DTC P0355 test runs. 5. Note the test result. Does the Tech 2 indicate DTC P0355 failed this ignition cycle?	—	Go to *Step 3*	Go to *Diagnostic Aids*
3	Check for faulty connection at ignition coil. Was a problem found?	—	Verify repair	Go to *Step 4*
4	Check for faulty connection at PCM connector. Was a problem found?	—	Verify repair	Go to *Step 5*
5	1. Ignition “ON,” engine “OFF.” 2. Back probe the ignition control circuit 5 at the PCM with a DVM positive lead with the negative lead to ground. Is the voltage near the specified value?	25-55 mV	Go to *Step 6*	Go to *Step 9*
6	1. Ignition “ON,” engine running. 2. Back probe the ignition control circuit at the PCM for the cylinder being tested. Is the voltage in the specified range, rapidly toggling back and forth to a reading 20-50 mV higher?	100-180 mV	Go to *Step 7*	Go to *Step 13*
7	1. Ignition “OFF.” 2. Disconnect the 3-pin and 5-pin connectors at the ignition coil. 3. Check ignition control circuit 5 voltage at the ignition coil connector while cranking the engine. Does the voltage measure between the specified values?	200-1200 mV	Go to *Step 8*	Go to *Step 11*
8	Replace the ignition coil. Is the action complete?	—	Verify repair	—
9	1. Ignition “OFF.” 2. Disconnect the PCM and the ignition coil. 3. Check ignition control circuit 5 for short to ground. Was a problem found?	—	Verify repair	Go to *Step 10*
10	Check ignition control circuit 5 for short to voltage. Was a problem found?	—	Verify repair	Go to *Step 13*

DTC P0355 – Ignition 5 Control Circuit (Cont'd)

Step	Action	Value(s)	Yes	No
11	Check for an open ignition control circuit 1. Was the ignition control circuit open?	—	Go to *Step 12*	Go to *Step 13*
12	Repair the open ignition control circuit. Is the action complete?	—	Verify repair	—
13	Replace the PCM. **IMPORTANT:** The replacement PCM must be programmed. Refer to *UBS 98model year Immobilizer Workshop Manual.* Is the action complete?	—	Verify repair	—

Diagnostic Trouble Code (DTC) P0356 Ignition 6 Control Circuit

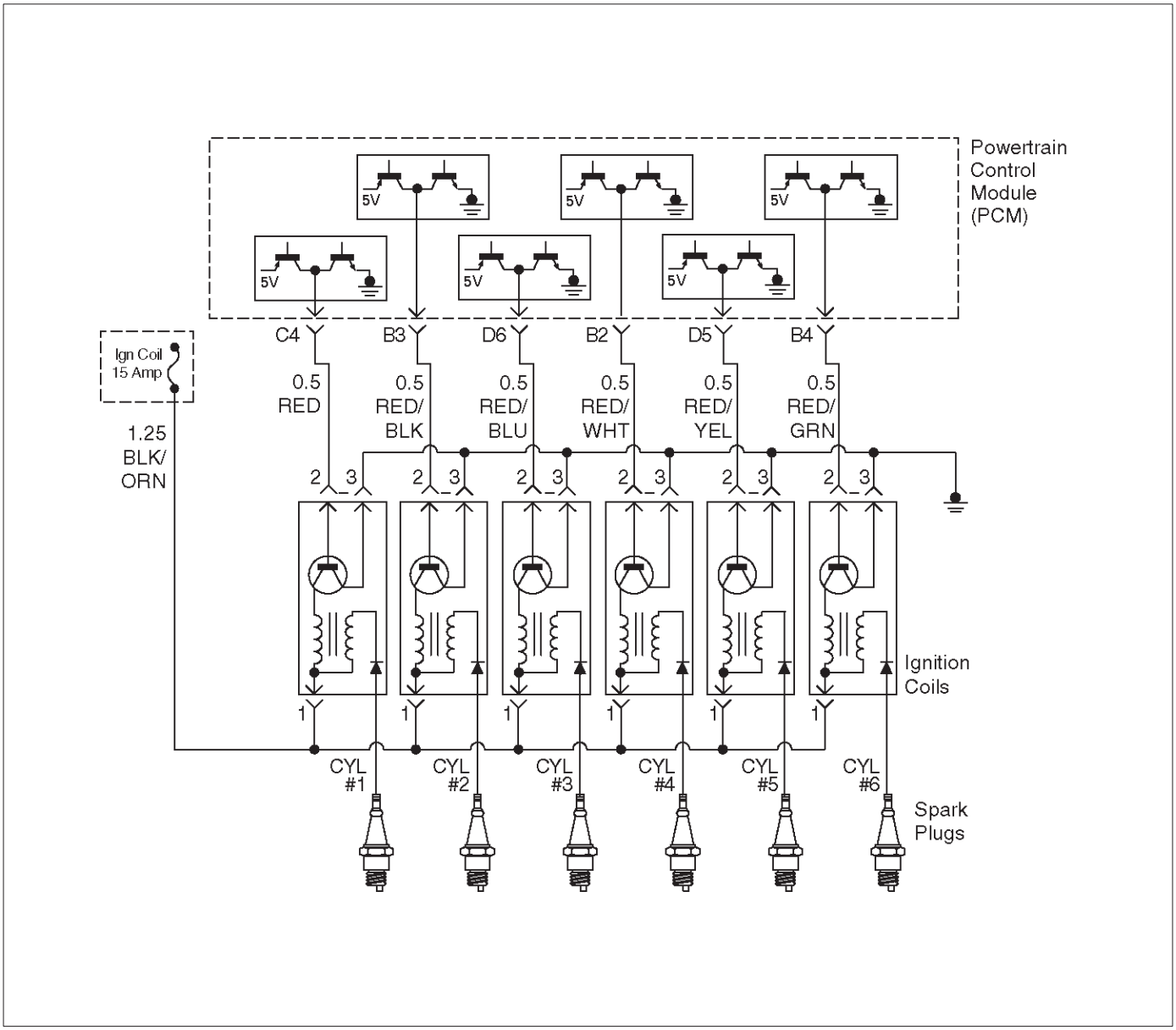

Circuit Description

The powertrain control module's (PCM) control circuit 6 provides a zero-volt or a 5-volt output signal to the ignition coil. The normal voltage on the circuit is zero volts. When the ignition coil receives the 5-volt signal from the PCM, it provides a ground path for the B+ supply to the primary side of the number 6 ignition coil. When the PCM shuts off the 5 volts to the ignition coil, the ignition coil turns "OFF." This causes the ignition coil primary magnetic field to collapse, producing a voltage in the secondary coil which fires the spark plug.

The circuit between the PCM and ignition coil is monitored for an open circuit, short to voltage, and short to ground. When the PCM detects a problem on ignition control circuit 6, it will set a DTC P0356.

Conditions for Setting the DTC

- The ignition is "ON."
- The engine is turning, determined by the 58X crankshaft position input signal.
- The output voltage is not equal to 5 volts when output is "ON."
- The output voltage is not equal to 0 volts when output is "OFF."
- Twenty test failures occur within 40 samples of continuous circuit monitoring.

Action Taken When the DTC Sets

- The PCM will illuminate the malfunction indicator lamp (MIL) the first time the fault is detected.
- The PCM will store conditions which were present when the DTC was set as Freeze Frame and in the Failure Records data.

Conditions for Clearing the MIL/DTC

- DTC P0356 can be cleared by using the Tech 2 "Clear Info" function or by disconnecting the PCM battery feed.

Diagnostic Aids

Check for the following conditions:

- Poor connection at PCM – Inspect the harness connectors for backed-out terminals, improper mating, broken locks, improperly formed or damaged terminals, and poor terminal-to-wire connections.
- Damaged harness – Inspect the wiring harness for damage. If the harness appears to be OK, observe the Tech 2 display related to DTC P0356 while moving the connector and wiring related to the ignition system. A change in the display will indicate the location of the fault.

Reviewing the Failure Records vehicle mileage since the diagnostic test last failed may help determine how often the condition that caused the DTC to be set occurs. This may assist in diagnosing the condition.

DTC P0356 – Ignition 6 Control Circuit

Step	Action	Value(s)	Yes	No
1	Was the “On-Board Diagnostic (OBD) System Check” performed?	—	Go to *Step 2*	Go to *OBD System Check*
2	1. Ignition “ON,” engine “OFF.” 2. Review and record Tech 2 Failure Records data. 3. Operate the vehicle within Failure Record conditions as noted. 4. Use a Tech 2 to monitor the “Specific DTC” information for DTC P0356 until the DTC P0356 test runs. 5. Note the test result. Does the Tech 2 indicate DTC P0356 failed this ignition cycle?	—	Go to *Step 3*	Go to *Diagnostic Aids*
3	Check for faulty connection at ignition coil. Was a problem found?	—	Verify repair	Go to *Step 4*
4	Check for faulty connection at PCM connector. Was a problem found?	—	Verify repair	Go to *Step 5*
5	1. Ignition “ON,” engine “OFF.” 2. Back probe the ignition control circuit 6 at the PCM with a DVM positive lead with the negative lead to ground. Is the voltage near the specified value?	25-55 mV	Go to *Step 6*	Go to *Step 9*
6	1. Ignition “ON,” engine running. 2. Back probe the ignition control circuit at the PCM for the cylinder being tested. Is the voltage in the specified range, rapidly toggling back and forth to a reading 20-50 mV higher?	100-180 mV	Go to *Step 7*	Go to *Step 13*
7	1. Ignition “OFF.” 2. Disconnect the 3-pin and 5-pin connectors at the ignition coil. 3. Check ignition control circuit 6 voltage at the ignition coil connector while cranking the engine. Does the voltage measure between the specified values?	200-1200 mV	Go to *Step 8*	Go to *Step 11*
8	Replace the ignition coil. Is the action complete?	—	Verify repair	—
9	1. Ignition “OFF.” 2. Disconnect the PCM and the ignition coil. 3. Check ignition control circuit 6 for short to ground. Was a problem found?	—	Verify repair	Go to *Step 10*
10	Check ignition control circuit 6 for short to voltage. Was a problem found?	—	Verify repair	Go to *Step 13*

DTC P0356 – Ignition 6 Control Circuit (Cont'd)

Step	Action	Value(s)	Yes	No
11	Check for an open ignition control circuit 1. Was the ignition control circuit open?	—	Go to *Step 12*	Go to *Step 13*
12	Repair the open ignition control circuit. Is the action complete?	—	Verify repair	—
13	Replace the PCM. **IMPORTANT:** The replacement PCM must be programmed. Refer to *UBS 98model year Immobilizer Workshop Manual.* Is the action complete?	—	Verify repair	—

Diagnostic Trouble Code (DTC) P0402 EGR Pintle Crank Error

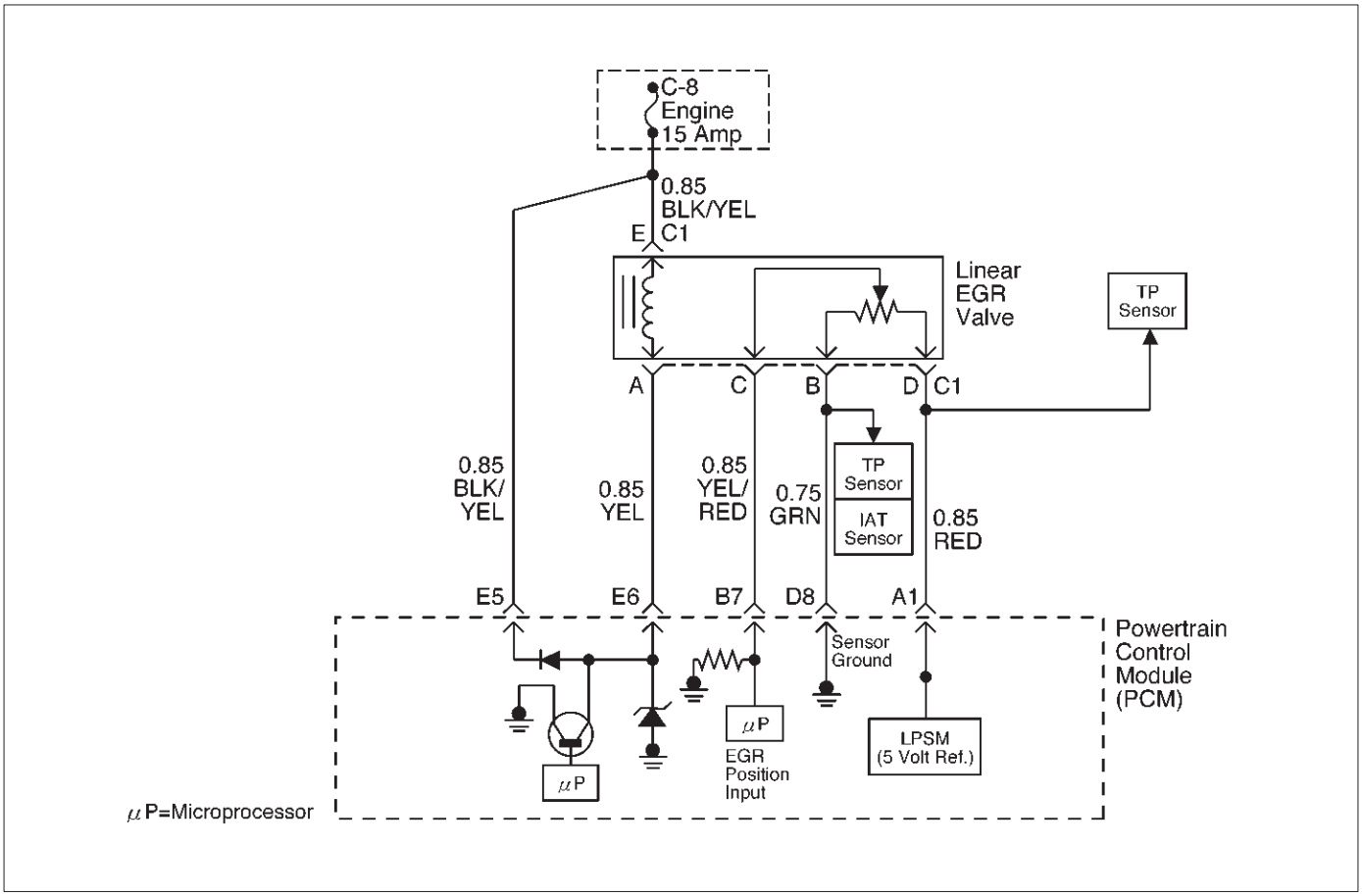

D06RW106

Circuit Description

The powertrain control module (PCM) monitors the EGR valve pintle position input to ensure that the valve responds properly to commands from the PCM, and to detect a fault if pintle position is stuck open. If the PCM detects a pintle position signal indicates more than 21.5% and more than for 625 msec during cranking, the PCM will set DTC P0402.

Conditions for Setting the DTC

- Ignition voltage is between 11 and 16 volts.
- Intake Air temp is more than 3˚C
- At Engine revolution less than 600 RPM, EGR pintle position indicates more than 21.5% and more than for 625 msecs.

Action Taken When the DTC Sets

- The PCM will illuminate the malfunction indicator lamp (MIL) after the second consecutive trip in which the fault is detected.
- The PCM will store conditions which were present when the DTC was set as Freeze Frame and in Failure Records data.

Conditions for Clearing the MIL/DTC

- DTC P0402 can be cleared by using Tech 2 “Clear Info” function or by disconnecting the PCM battery feed.

Diagnostic Aids

Check for the following conditions:

- Foreign material on EGR valve between pintle and seat may cause EGR stuck open. Inspect foreign material in EGR valve.
- Excessive carbon deposit may cause unsmooth operation of EGR valve shaft. Inspect carbon deposit and clean up inside of carbon deposit.
- Poor connection or damaged harness–inspect the wiring harness for damage If the harness appears to be OK, observe the EGR actual position display on Tech 2 while moving connectors and wiring harnesses related to EGR valve. A change in the display will indicate the location of the fault.

NOTE: If the EGR valve shows signs of excessive heat, check the exhaust system for blockage (possibly a plugged catalytic converter) using the “Restricted Exhaust System Check”.

DTC P0402 – EGR Pintle Crank Open Error

Step	Action	Value(s)	Yes	No
1	Was the “On-Board Diagnostic (OBD) System Check” performed?	—	Go to *Step 2*	Go to *OBD System Check*
2	1. Ignition “ON”, engine “OFF”, review and record Tech 2 Failure Records data. 2. Operate the vehicle within Failure Records conditions as noted. 3. Using Tech 2, monitor “Specific DTC” info for DTC P0402 until the DTC P0402 test runs. Note the result. Does Tech 2 indicates DTC P0402 failed this ignition?	—	Go to *Step 3*	Refer to *Diagnostic Aids*
3	1. Disconnect the EGR valve harness connector. 2. Inspect the EGR valve and connectors for damaged pin or terminals. Were there any damaged pins or terminals?	—	Go to *Step 4*	Go to *Step 5*
4	Repair the damaged pin or terminal. Is the action complete?	—	Verify repair	—
5	1. Remove EGR valve from Engine. 2. Inspect EGR valve whether there is any foreign material between seat and pintle. Was any foreign material in EGR valve?	—	Go to *Step 6*	Go to *Step 7*
6	1. Remove EGR valve foreign material from EGR valve and clean up inside. 2. Visually inspect damage of pintle and seat, which leakage may occur. Was there any severe damage which affects function?	—	Go to *Step 7*	Verify repair Go to *Step 8*
7	1. Reconnect. 2. Ignition “OFF”. 3. Install Tech 2. 4. Run the engine at idle. 5. On Tech-II, select special function for EGR. 6. Use the “UP” arrow to increase the EGR from 0% to 40%. Did EGR work properly?	—	—	Go to *Step 8*
8	Replace the EGR valve. Does DTC P0402 still fail “DTC” test on Tech 2?	—	Go to *Step 9*	Verify repair
9	Replace the EGR valve. Is the action complete?	—	Verify repair	—

Diagnostic Trouble Code (DTC) P0404 EGR Open Stuck

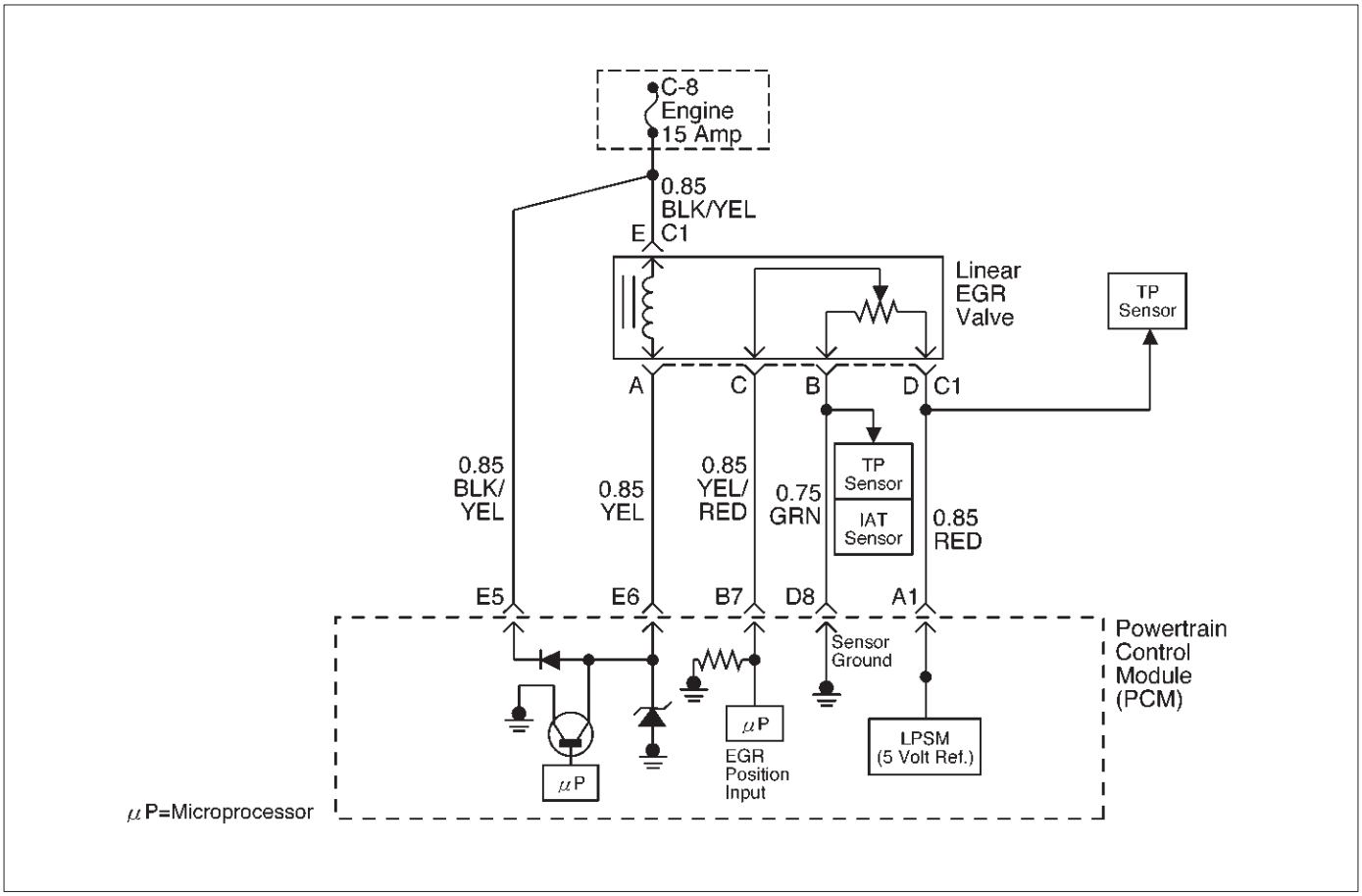

D06RW106

Circuit Description

The powertrain control module (PCM) monitors the EGR valve pintle position input to ensure that the valve responds properly to commands from the PCM, and to detect a fault if pintle position is different from commanded position. If the PCM detects a pintle position signal indicates more than 15 points different between current and commanded and more than 15 seconds, the PCM will set DTC P0404.

Conditions for Setting the DTC

- Ignition voltage is between 11 and 16 volts.
- Intake Air temp is more than 3˚C.
- Desire EGR position is more than 0.
- The difference between desired EGR and current EGR is less than 3%.
- Difference EGR pintle position between current and commanded position becomes more than 15% and last more than 15 seconds, and this condition meets three times in a trip. Then it trigger, the PCM lights on.

Action Taken When the DTC Sets

- The PCM will illuminate the malfunction indicator lamp (MIL) as soon as failure detected after consecutive 2nd trip in which the fault is detected.
- The PCM will store conditions which were present when the DTC was set as Freeze Frame and in Failure Records data.

Conditions for Clearing the MIL/DTC

- DTC P0404 can be cleared by using Tech 2 “Clear Info” function or by disconnecting the PCM battery feed.

Diagnostic Aids

Check for the following conditions:

- Excessive carbon deposit on EGR valve shaft may cause EGR stuck open or unsmooth operation. Those carbon deposit may occur by unusual port operation. Clean up carbon may make smooth function of EGR valve.
- Poor connection or damaged harness – Inspect the wiring harness for damage. If the harness appears to be OK, observe the EGR actual position display on Tech 2 while moving connectors and wiring harnesses related to EGR valve. A change in the display will indicate the location of the fault.

DTC P0404 – EGR Open Stuck

Step	Action	Value(s)	Yes	No
1	Was the “On-Board Diagnostic (OBD) System Check” performed?	—	Go to *Step 2*	Go to *OBD System Check*
2	1. Ignition “ON,” engine “OFF”, review and record Tech 2 Failure Records Data. 2. Operate the vehicle within Failure Records conditions as noted. 3. Using Tech 2, monitor “Specific DTC” info for DTC P0404 until the DTC P0404 test runs. Note the result. Does Tech 2 indicates DTC P0404 failed this ignition?	—	Go to *Step 3*	Refer to *Diagnostic Aids*
3	1. Disconnect the EGR valve harness connector. 2. Inspect the EGR valve and connectors for damaged pin or terminals. Were there any damaged pins or terminals?	—	Go to *Step 4*	Go to *Step 5*
4	Repair the damaged pin or terminal.	—	Verify repair	Is the action complete?
5	1. Remove EGR valve from Engine. 2. Inspect EGR valve whether there is any excessive carbon deposit on EGR shaft. Was excessive carbon deposit 0n EGR valve shaft?	—	Go to *Step 6*	Go to *Step 7*
6	1. Clean up EGR valve shaft and inside of EGR valve. 2. Visually inspect damage of pintle and seat whether there is bent, leakage may occur. Was there any severe damage which affects function?	—	Go to *Step 8*	Verify repair Go to *Step 7*
7	1. Reconnect. 2. Ignition “OFF”. 3. Install Tech 2. 4. Run the engine at idle. 5. On Tech 2, select F3:Misc. Test; F2:EGR. 6. Use the “UP” arrow to increase the EGR from 0% to 40%. Did EGR work properly?	—	—	Go to *Step 8*
8	Replace the EGR valve. Does DTC P0404 still fail “DTC” test on Tech 2?	—	Go to *Step 9*	Verify repair
9	Replace the PCM. **IMPORTANT:** The replacement PCM must be programmed. Refer to *UBS 98model year Immobilizer Workshop Manual.* Is the action complete?	—	Verify repair	—

Diagnostic Trouble Code (DTC) P0405 EGR Low Voltage

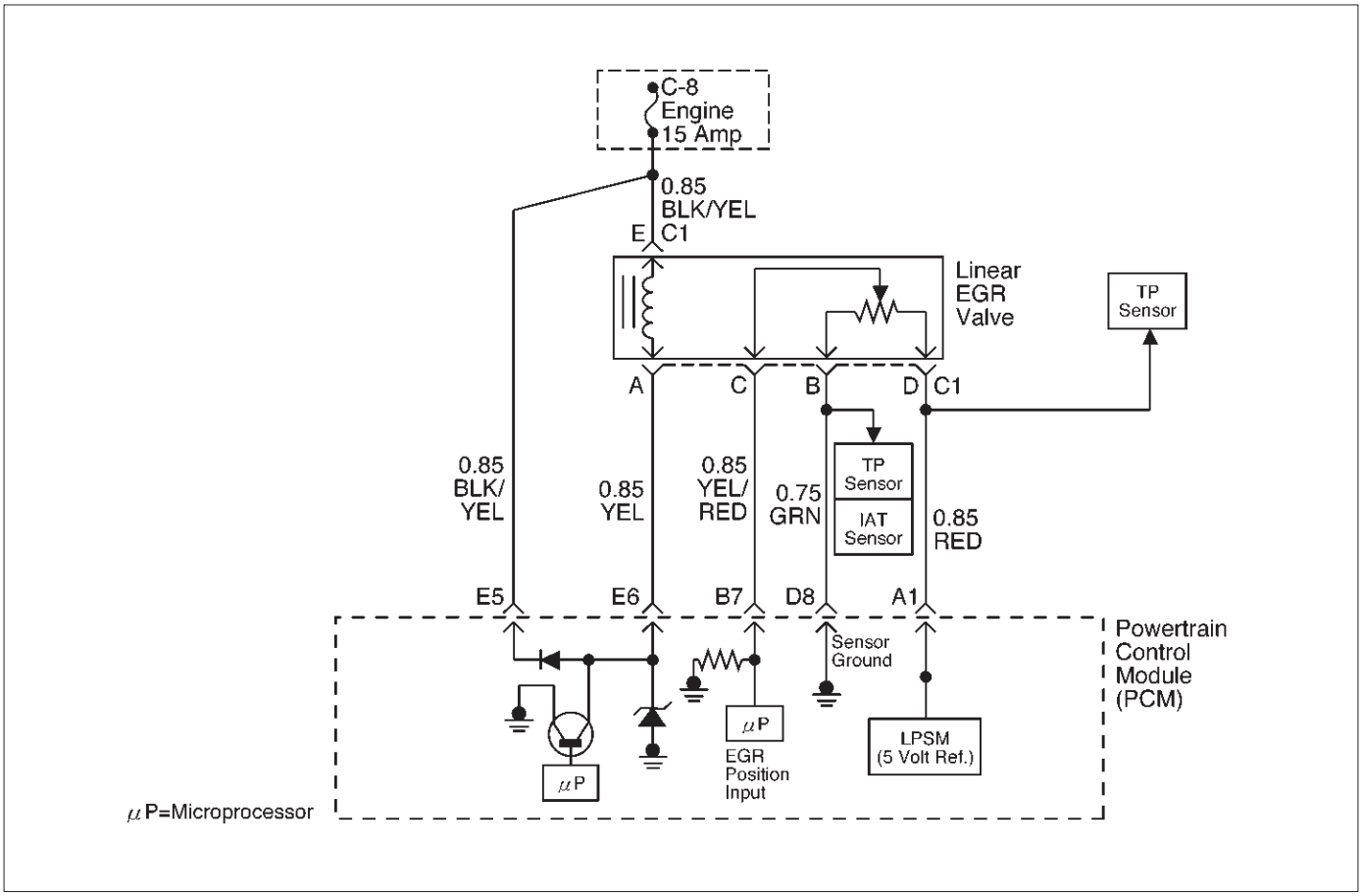

D06RW106

Circuit Description

The powertrain control module (PCM) monitors the EGR valve pintle position input to ensure that the valve responds properly to command from the PCM. If current pintle position voltage indicates less than 0.1 V and last more than 10 seconds, then the PCM will set DTC P0405.

Conditions for Setting the DTC

- Ignition voltage is between 11 and 16 volts.
- EGR pintle position output voltage is less than 0.1 volt and last more than 10 sec. Action taken when the DTC sets.

Action Taken When the DTC Sets

- The PCM will illuminate the malfunction indicator lamp (MIL) as soon as failure detected.
- The PCM will store conditions which were present when the DTC was set as Freeze Frame and in Failure Records data.

Conditions for Clearing the MIL/DTC

- DTC P0405 can be cleared by using Tech 2 “Clear Info” function or by disconnecting the PCM battery feed.

Diagnostic Aids

Check for the following conditions:

- Poor connection or damaged harness – Inspect the wiring harness for damage. If the harness appears to be OK, observe the EGR actual position display on Tech 2 while moving connectors and wiring harnesses related to EGR valve. A change in the display will indicate the location of the fault.

DTC P0405 – EGR Low Volt

Step	Action	Value(s)	Yes	No
1	Was the “On-Board Diagnostic (OBD) System Check” performed?	—	Go to *Step 2*	Go to *OBD System Check*
2	1. Ignition “ON,” engine “OFF”, review and record Tech 2 Failure Records Data. 2. Operate the vehicle within Failure Records conditions as noted. 3. Using Tech 2, monitor “DTC” info for DTC P0405 until the DTC P0405 test runs. Note the result. Does Tech 2 indicates DTC P0405 failed this ignition?	—	Go to *Step 3*	Refer to *Diagnostic Aids*
3	1. Disconnect the EGR valve harness connector. 2. Inspect the EGR valve and connectors for damaged pin or terminals. Were there any damaged pins or terminals?	—	Go to *Step 4*	Go to *Step 5*
4	Repair the damaged pin or terminal. Is the action complete?	—	Verify repair	—
5	1. Disconnect the EGR harness connector. 2. Ignition “ON”. 3. At the EGR valve, use a DVM to check the voltage at the 5 volt reference wire (RED) and ground (B). Did the DVM indicate the specified value?	4–6 V	Go to *Step 6*	Go to *Step 7*
6	1. Disconnect the EGR harness connector. 2. Measure resistance between terminal B and D. Was resistance in range?	5–5.5 KΩ	Go to *Step 10*	Go to *Step 17*
7	1. Ignition “ON”. 2. At the PCM connector, backprobe with a DVM at the 5 volt reference for the EGR valve. Did the DVM indicate the specified value?	4–6 V	Go to *Step 8*	Go to *Step 9*
8	Repair the open 5 volt reference circuit. Is the action complete?	—	Verify repair	—
9	Repair the damaged sensor ground wire. Is the action complete?	—	Verify repair	—
10	1. Disconnect the EGR harness 2. Use an ohmmeter to measure between the pintle position pin and the sensor ground pin on the EGR valve. NOTE: J-35616 Connector Test Adapter Kit may be useful for gaining access to the recessed pins on the valve. Was the ohmmeter reading approximately equal to the specified value?	1 to 1.25 KΩ	Go to *Step 11*	Go to *Step 17*
11	1. Ignition “ON”. 2. Backprobe with a DVM to measure voltage at EGR valve pintle position pin and sensor ground pin. Was voltage in range?	Less than 0.1 V	Go to *Step 17*	Go to *Step 12*

DTC P0405 – EGR Low Volt (Cont'd)

Step	Action	Value(s)	Yes	No
12	1. Ignition "ON". 2. Backprobe with a DVM to measure voltage at PCM sensor ground pin and pintle position pin. Was voltage in range?	Less than 0.1 V	Go to *Step 13*	Go to *Step 18*
13	1. Ignition "OFF". 2. Disconnect the EGR harness. 3. Check short circuit between EGR pintle position circuit and EGR ground circuit. Was any short circuit?	—	Go to *Step 14*	Go to *Step 18*
14	Locate and repair the short to ground in the pintle position circuit Is the action complete?	—	Verify repair	—
15	1. Ignition "OFF". 2. Disconnect the PCM. 3. Ignition "ON". 4. Measure the voltage between the EGR pintle position circuit and ground. Is the measured voltage near the specified value?	Less than 0.1 V	Go to *Step 17*	Go to *Step 16*
16	Check for a short circuit between other wires and the pintle position circuit Was any short circuit?	—	Repair short circuit Verify repair	Go to *Step 17*
17	Replace the EGR valve. Does DTC P1404 still fail "specific DTC test on Tech 2?	—	Go to *Step 18*	Verify repair
18	Examine the PCM pin and terminal connection. Was there a damaged terminal?	—	Go to *Step 4*	Go to *Step 19*
19	Replace the PCM. **IMPORTANT:** The replacement PCM must be programmed. Refer to *UBS 98model year Immobilizer Workshop Manual.* Is the action complete?	—	Verify repair	—

Diagnostic Trouble Code (DTC) P0406 EGR High Voltage

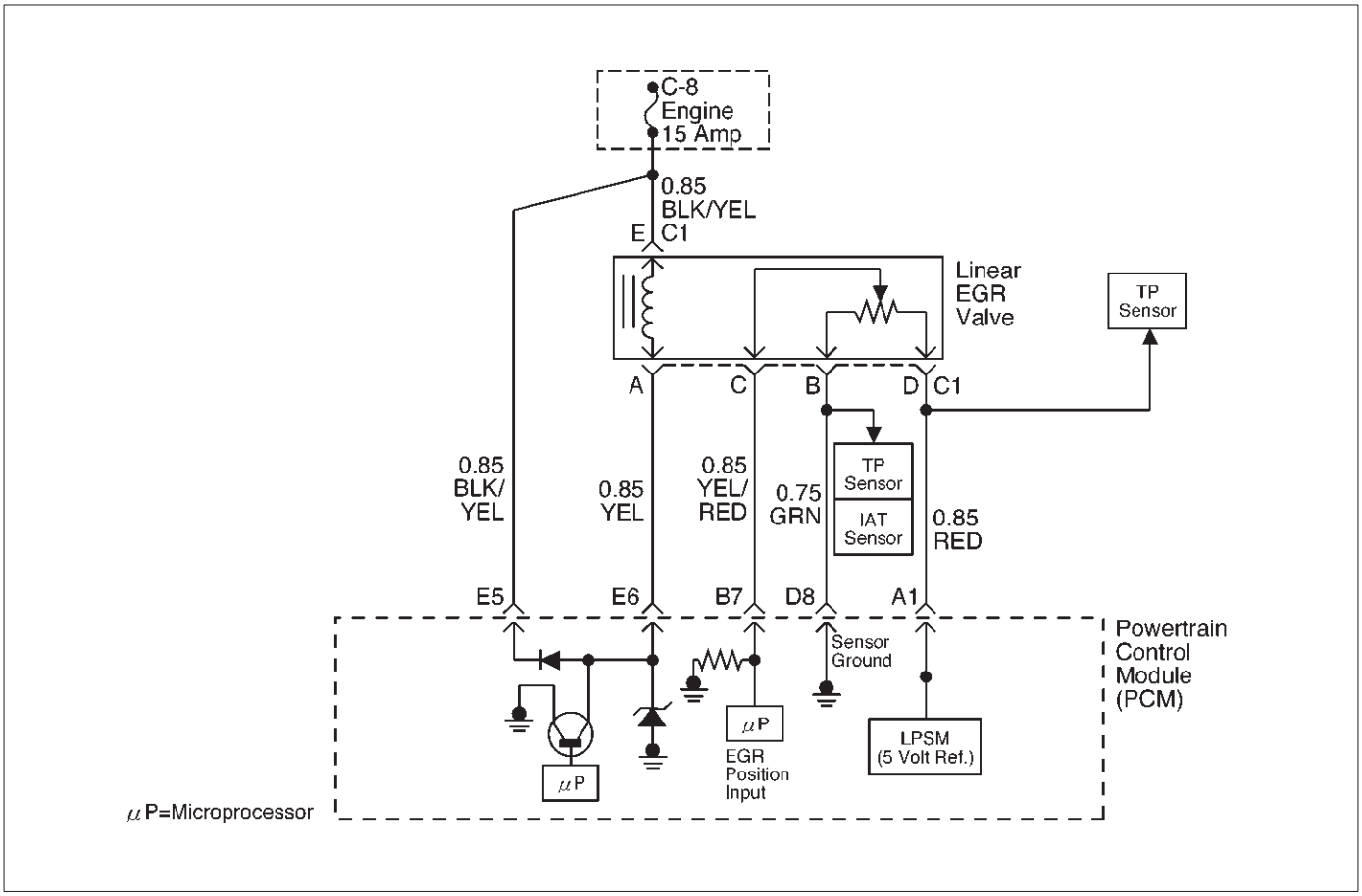

D06RW106

Circuit Description

The powertrain control module (PCM) monitors the EGR valve pintle position input to ensure that the valve responds properly to command from the PCM. If current pintle position voltage indicates more than 4.8 V and last more than 10 seconds, then the PCM will set DTC P0406.

Conditions for Setting the DTC

- Ignition voltage is between 11 and 16 volts.
- EGR pintle position output voltage is more than 4.8 volt and last more than 10 sec.

Action Taken When the DTC Sets

- The PCM will illuminate the malfunction indicator lamp (MIL) as soon as failure detected.
- The PCM will store conditions which were present when the DTC was set as Freeze Frame and in Failure Records data.

Conditions for Clearing the MIL/DTC

- DTC P0404 can be cleared by using Tech 2 “Clear Info” function or by disconnecting the PCM battery feed.

Diagnostic Aids

Check for the following conditions:

- Poor connection or damaged harness – Inspect the wiring harness for damage. If the harness appears to be OK, observe the EGR actual position display on Tech 2 while moving connectors and wiring harnesses related to EGR valve. A change in the display will indicate the location of the fault.

DTC P0406 – EGR High Voltage

Step	Action	Value(s)	Yes	No
1	Was the “On-Board Diagnostic (OBD) System Check” performed?	—	Go to *Step 2*	Go to *OBD System Check*
2	1. Ignition “ON,” engine “OFF”, review and record Tech 2 Failure Records Data. 2. Operate the vehicle within Failure Records conditions as noted. 3. Using Tech 2, monitor “DTC” info for DTC P0406 until the DTC P0406 test runs. Note the result. Does Tech 2 indicates DTC P0406 failed this ignition?	—	Go to *Step 3*	Refer to *Diagnostic Aids*
3	1. Disconnect the EGR valve harness connector. 2. Inspect the EGR valve and connectors for damaged pin or terminals. Were there any damaged pins or terminals?	—	Go to *Step 4*	Go to *Step 5*
4	Repair the damaged pin or terminal. Is the action complete?	—	Verify repair	Is the action complete?
5	1. Disconnect the EGR harness connector. 2. Ignition “ON”. 3. At the EGR valve, use a DVM to check the voltage at the 5 volt reference wire (RED). Did the DVM indicate the specified value?	4–6 V	Go to *Step 8*	Go to *Step 6*
6	1. Ignition “ON”. 2. At the PCM connector, backprobe with a DVM at the 5 volt reference for the EGR valve. Did the DVM indicate the specified value?	4–6 V	Go to *Step 7*	Go to *Step 16*
7	Repair the open 5 volt reference circuit Is the action complete?	—	Verify repair	—
8	1. Ignition “OFF” 2. Disconnect the EGR harness. 3. Use a DVM to check for an resistance between D (5 V reference) and B (Sensor Ground) at EGR sensor terminals. NOTE: J-35616 Connector Test Adapter Kit may be useful for gaining access to the recessed pins on the valve. Was there measured resistance in range?	5 to 5 KΩ	Go to *Step 9*	Go to *Step 15*
9	1. Ignition “OFF”. 2. Disconnect the EGR harness. 3. Use a DVM to check for an resistance between B and C at EGR sensor terminal. Was there open circuit?	—	Go to *Step 15*	Go to *Step 10*
10	1. Ignition “OFF”. 2. Disconnect the EGR harness at PCM connector. 3. Use a DVM to check for shorted wire between A1 and B7. Was there shorted wire?	—	Go to *Step 14*	Go to *Step 11*

DTC P0406 – EGR High Voltage (Cont'd)

Step	Action	Value(s)	Yes	No
11	1. Ignition "ON". 2. Use a DVM to backprobe at terminal C of EGR valve for voltage. Was measured voltage more than 4.8 V?	more than 4.8 V	Go to *Step 12*	Go to *Step 12*
12	1. Ignition "ON". 2. Stay the EGR harness connected. 3. Check voltage by backproving at PCM B7 terminal. Was voltage more than 4.8 V?	4.8 V	Go to *Step 16*	Go to *Step 13*
13	1. Locate short circuit at EGR harness between RED to RED or GREEN, RED to YEL. 2. Replace EGR harness. Is the action complete?	—	Verify repair	—
14	Replace EGR harness. Is the action complete?	—	Verify repair	—
15	Replace the EGR valve. Does DTC P1404 still fail "specific DTC test on Tech 2?	—	Go to *Step 16*	Verify repair
16	Replace the PCM. **IMPORTANT:** The replacement PCM must be programmed. Refer to *UBS 98model year Immobilizer Workshop Manual.* Is the action complete?	—	Verify repair	—

Diagnostic Trouble Code (DTC) P0502 VSS Circuit Low Input

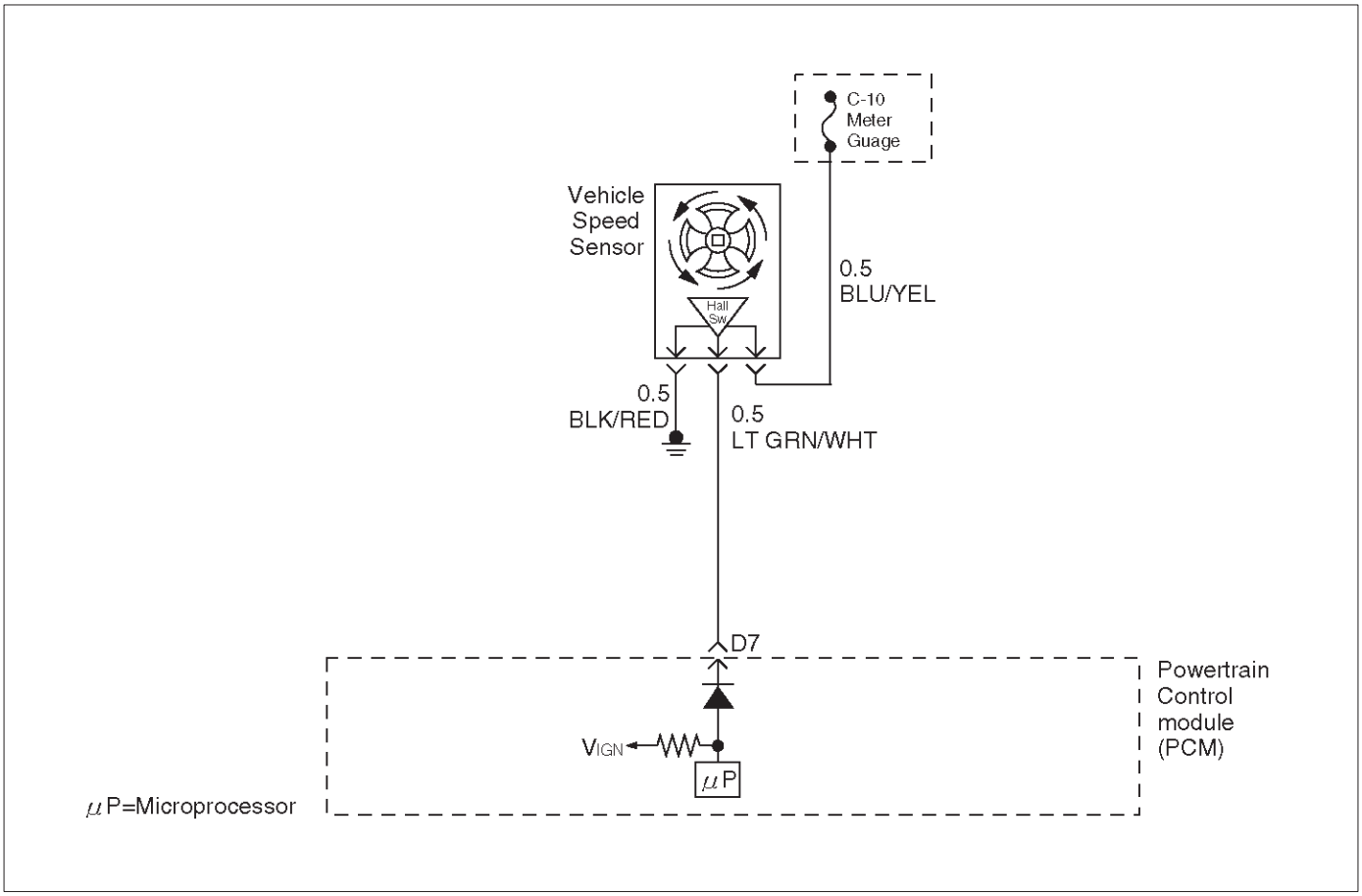

D06RW019

Circuit Description

The vehicle speed sensor has a magnet rotated by the transmission output shaft. Attached to the sensor is a hall effect circuit the interacts with the magnetic field treated by the rotating magnet. A 12-volt operating supply for the speed sensor hall circuit is supplied from the meter fuse. The VSS pulses to ground the 9-volt signal sent from the powertrain control module (PCM) on the reference circuit. The PCM interprets vehicle speed by the number of pulses to ground per second on the reference circuit.

Conditions for Setting the DTC

- Engine is running.
- Engine coolant temperature is above 60˚C (140˚F).
- Engine speed is between 1800 RPM and 2500 RPM.
- Throttle angle is between 10% and 40%.
- Engine load is greater than 50 kPa.
- MAP sensor indicates greater than 50 kPa manifold pressure.
- PCM detects no VSS signal for 12.5 seconds over a period of 25 seconds.

Action Taken When the DTC Sets

- The PCM will illuminate the malfunction indicator lamp (MIL) the first time the fault is detected.
- The PCM will store conditions which were present when the DTC was set as Freeze Frame and in the Failure Records data.

Conditions for Clearing the MIL/DTC

- DTC P0502 can be cleared by using the Tech 2 “Clear Info” function or by disconnecting the PCM battery feed.

Test Description

Number(s) below refer to the step number(s) on the Diagnostic Chart.

10. To avoid backprobing the VSS and possibly damaging a seal or terminal, the VSS output can be tested at the point where the transmission harness connects to the engine harness. Power and ground are applied by jumpers to the VSS through the connectors which are located just in front of the air cleaner assembly. The VSS signal is monitored with a DVM as the rear driveshaft turns. The wheels can be turned to rotate the driveshaft, or in 2-wheels-drive vehicles the driveshaft can be turned directly.

12. The speedometer-to-PCM VSS signal wire is spliced to a wire leading to the cruise control module. If a short to ground or voltage is indicated between the PCM and speedometer, it could be on the cruise control circuit if the vehicle is equipped with cruise control.

DTC P0502 – VSS Circuit Low Input

Step	Action	Value(s)	Yes	No
1	Was the “On-Board Diagnostic (OBD) System Check” performed?	—	Go to *Step 2*	Go to *OBD System Check*
2	Does the speedometer work?	—	Go to *Step 10*	Go to *Step 3*
3	1. Disconnect the VSS connector. 2. Ignition “ON.” 3. Using a test light to battery +, probe the connector ground wire. Did the light illuminate?	—	Go to *Step 5*	Go to *Step 4*
4	Repair the sensor ground. Is the action complete?	—	Verify repair	—
5	1. Ignition “ON,” sensor disconnected. 2. Using a DVM, measure at the VSS connector between ground and voltage supply. Was the measurement near the specified value?	Battery voltage	Go to *Step 7*	Go to *Step 6*
6	Repair the open or short to ground which may have blown the meter fuse. Is the action complete?	—	Verify repair	—
7	1. Ignition “ON,” VSS disconnected. 2. Using a DVM, measure at the VSS connector between ground and the wire from the speedometer. Was the measurement near the specified value?	7.5-8 V	Go to *Step 9*	Go to *Step 8*
8	Check for an open or short circuit between the speedometer and the VSS. Was an open or short circuit located?	—	Verify repair	Go to *Step 9*
9	Replace the speedometer. Is the action complete?	—	Verify repair	—

DTC P0502 – VSS Circuit Low Input (Cont'd)

Step	Action	Value(s)	Yes	No
10	1. Ignition "OFF." 2. Disconnect the MAF sensor and remove the air cleaner assembly and filter element to gain access to the 16-way black connector located immediately to the rear of the left front headlamp. The connector attaches the VSS wires from the transmission harness to the left-side engine harness. 3. Disconnect the black 16-way connector. 4. Select a terminal adapter from kit J 35616 that can be used with a jumper to supply B+ to the blue wire with a yellow tracer (transmission side of the connector). 5. Use another terminal adapter to attach a voltmeter to the light-green wire with a while tracer (next to the wire in the previous step.) 6. Disconnect the blue connector next to the black 16-way connector, and locate the black/red tracer wire at one corner of the blue connector. The black/red wire is the VSS ground. Use a terminal adapter to attach a jumper to ground to the black/red VSS ground wire at the transmission side of the blue connector. 7. Raise the rear wheels off the ground with transmission in neutral. Does the DVM toggle back and forth between 0.6 V and 10 V as the wheels (and driveshaft) are rotated?	—	Go to *Step 11*	Go to *Step 12*
11	Replace the VSS. Is the action complete?	—	Verify repair	—
12	Check for an open or short between the PCM and the speedometer. Was a problem found?	—	Verify repair	Go to *Step 13*
13	Replace the PCM. **IMPORTANT:** The replacement PCM must be programmed. Refer to *UBS 98model year Immobilizer Workshop Manual.* Is the action complete?	—	Verify repair	—

Diagnostic Trouble Code (DTC) P0562 System Voltage Low

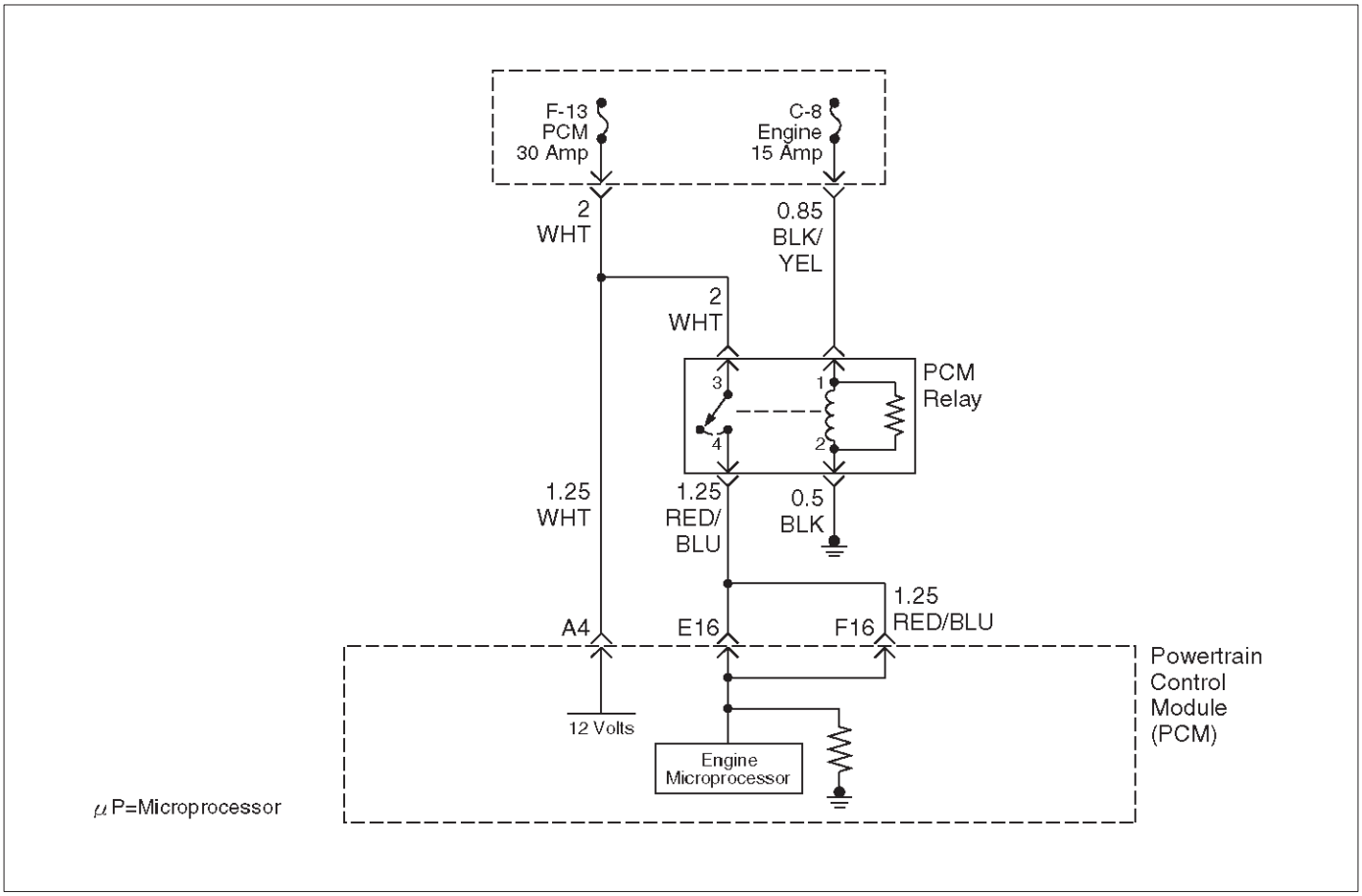

D06RW020

Circuit Description

The powertrain control module (PCM) monitors the system voltage on the ignition feed terminal to the PCM. A system voltage DTC will set whenever the voltage is below a calibrated value.

Conditions for Setting the DTC

- Ignition “ON.”
- System voltage is below 11.5 volts for 15 minutes.

Action Taken When the DTC Sets

- The PCM will not illuminate the malfunction indicator lamp (MIL).
- The PCM will store as Failure Records conditions which were present when the DTC was set. This information will not be stored as Freeze Frame data.

Conditions for Clearing the MIL/DTC

- A history DTC P0562 will clear after 40 consecutive warm-up cycles have occurred without a fault.
- DTC P0562 can be cleared by using the Tech 2 “Clear Info” function or by disconnecting the PCM battery feed.

Diagnostic Aids

If the DTC sets when an accessory is operated, check for a poor connection or excessive current draw.

DTC P0562 – System Voltage Low

Step	Action	Value(s)	Yes	No
1	Was the “On-Board Diagnostic (OBD) System Check” performed?	—	Go to *Step 2*	Go to *OBD System Check*
2	Using a Tech 2, measure the battery voltage at the battery. Is the battery voltage greater than the specified value?	11.5 V	Go to *Step 3*	Charge battery, then go to *Step 3*
3	1. Using a Tech 2. 2. Select “Ignition Volts” on the Tech 2. 3. Start the engine and raise the engine speed to the specified value. 4. Load the electrical system by turning on the headlights, high blower, etc. Is the ignition voltage approximately equal to the specified value?	2000 RPM 12.8-14.1 V	Go to *Step 4*	Go to *Starting/Charging*
4	1. Ignition “OFF.” 2. Disconnect the PCM connector at the PCM. 3. Using a DVM, measure the battery voltage at the PCM connector A-4. Is it approximately equal to battery voltage?	—	Check for excessive current draw with ignition “OFF,” engine “OFF.”	Go to *Step 5*
5	1. Check for faulty connections at the PCM harness terminals. 2. Repair as necessary. Was a repair necessary?	—	Verify repair	Go to *Step 6*
6	Check for an open battery feed circuit to the PCM. Is the action complete?	—	Verify repair	Go to *Step 7*
7	Replace the PCM. **IMPORTANT:** The replacement PCM must be programmed. Refer to *UBS 98model year Immobilizer Workshop Manual.* Is the action complete?	—	Verify repair	—

Diagnostic Trouble Code (DTC) P0563 System Voltage High

Circuit Description

The powertrain control module (PCM) monitors the system voltage on the ignition feed terminals to the PCM. A system voltage DTC will set whenever the voltage is above a calibrated value.

Conditions for Setting the DTC

- Ignition “ON.”
- System voltage is above 16 volts for 15 minutes.

Action Taken When the DTC Sets

- The PCM will not illuminate the malfunction indicator lamp (MIL).
- The PCM will store as Failure Records only conditions which were present when the DTC was set. This information will not be stored as Freeze Frame data.

Conditions for Clearing the MIL/DTC

- A history DTC P0563 will clear after 40 consecutive warm-up cycles have occurred without a fault.
- DTC P0563 can be cleared by using the Tech 2 “Clear Info” function or by disconnecting the PCM battery feed.

Diagnostic Aids

If the DTC sets when an accessory is operated, check for a poor connection or excessive current draw.

DTC P0563 – System Voltage High

Step	Action	Value(s)	Yes	No
1	Was the “ON-Board Diagnostic (OBD) System Check” performed?	—	Go to *Step 2*	Go to *OBD System Check*
2	Using a Tech 2, measure the battery voltage at the battery. Is the battery voltage less than the specified value?	11.5 V	Go to *Step 3*	Go to *Step 4*
3	1. Charge the battery and clean the battery terminals. 2. Clean the battery ground cable connection if corrosion is indicated. Is the battery voltage less than the specified value?	11.5 V	Replace battery	Go to *Step 4*
4	1. Turn “OFF” all the accessories. 2. Install a Tech 2. 3. Select the ignition voltage parameter on the Tech 2. 4. Start the engine and raise the engine RPM to the specified value. Is the voltage more than 2.5 volts greater than the measurement taken in step 2 or 3?	2000 RPM	Go to *Starting/Charging*	Go to *Step 5*
5	Replace the PCM. **IMPORTANT:** The replacement PCM must be programmed. Refer to *UBS 98 model year Immobilizer Workshop Manual.* Is the action complete?	—	Verify repair	—

Diagnostic Trouble Code (DTC) P0601 PCM Memory

Circuit Description

The powertrain control module (PCM) used in this vehicle utilizes an electrically erasable programmable read-only memory (EEPROM). The EEPROM contains program information and the calibrations required for engine, transmission, and powertrain diagnostics operation. Unlike the PROM used in past applications, the EEPROM is not replaceable.

Conditions for Setting the DTC

- The PCM detects an internal program fault (check sum error).

Action Taken When the DTC Sets

- The PCM will not illuminate the malfunction indicator lamp (MIL).
- The PCM will store conditions which were present when the DTC was set in the Failure Records data only.

Conditions for Clearing the MIL/DTC

- DTC P0601 can be cleared by using the Tech 2 “Clear Info” function or by disconnecting the PCM battery feed.

Diagnostic Aids

- DTC P0601 indicates that the contents of the EEPROM have changed since the PCM was programmed. The only possible repair is PCM replacement.

DTC P0601 – PCM Memory

Step	Action	Value(s)	Yes	No
1	Was the “On-Board Diagnostic (OBD) System Check” performed?	—	Go to *Step 2*	Go to *OBD System Check*
2	Replace the PCM. **IMPORTANT:** The replacement PCM must be programmed. Refer to *UBS 98model year Immobilizer Workshop Manual.* Is the action complete?	—	Verify repair	—

Diagnostic Trouble Code (DTC) P1154 HO2S Circuit Transition Time Ratio Bank 2 Sensor 1

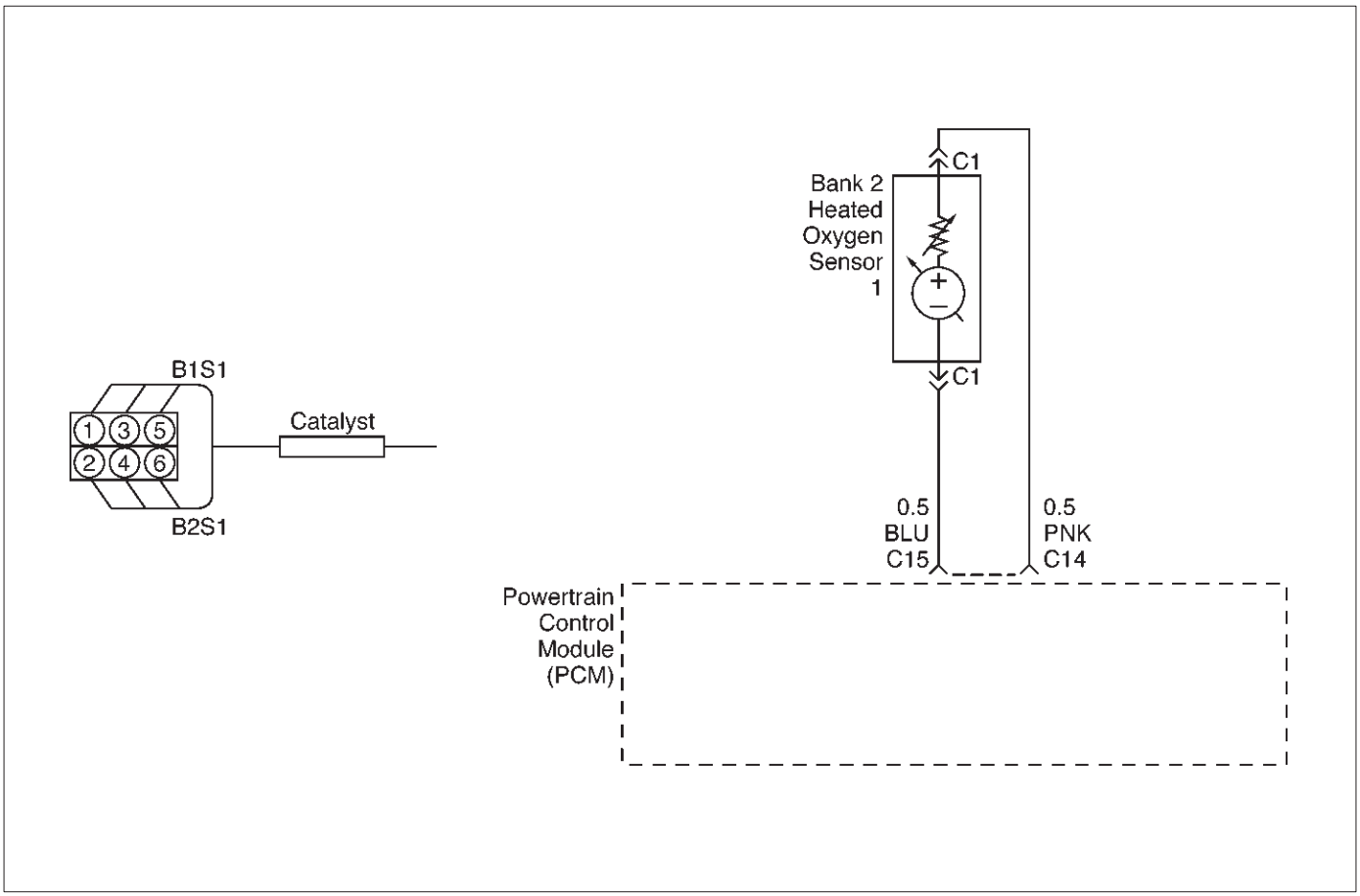

060RW190

Circuit Description

The powertrain control module (PCM) monitors the heated oxygen sensor (HO2S) activity for 90 seconds after “closed loop” and stoichiometric operation have been enabled. During the monitor period the PCM counts the number of times that the HO2S responds from rich-to-lean and from lean-to-rich and adds the amount of time it took to complete all transitions. With this information, an average time for all transitions can be determined. The PCM then divides the rich-to-lean average by the lean-to-rich average to obtain a ratio. If the HO2S transition time ratio is not within this range, DTC P1154 will be set, indicating that the oxygen sensor is not responding as expected to changes in exhaust oxygen content.

Conditions for Setting the DTC

- No related DTCs.
- Engine coolant temperature (ETC) is above 50˚C (122˚F) for automatic transmission; 75˚C (167˚F) for manual transmission.
- The engine is operating in “closed loop.”
- The engine has been running at least one minute.
- Canister purge duty cycle is greater than 2%.
- Engine speed is between 1500 RPM and 3000 RPM.
- Mass air flow is between 9 g/second and 42 g/second.
- Above conditions are present for a 3-second monitoring period.
- 90 seconds after “closed loop” and stoichiometric operation have been enabled, Bank 2 HO2S 1 transition ratio between lean to rich and rich to lean is less than 0.44 or greater than 3.8.

Action Taken When the DTC Sets

- The PCM will illuminate the malfunction indicator lamp (MIL) after the second consecutive trip in which the fault is detected.
- ”Open loop” fuel control will be in effect.
- The PCM will store conditions which were present when the DTC was set as Freeze Frame and in the Failure Records data.

Conditions for Clearing the MIL/DTC

- DTC P1154 can be cleared by using Tech 2 “Clear Info” function or by disconnecting the PCM battery feed.

Diagnostic Aids

A multifunction in the HO2S heater ignition feed or ground circuit may cause a DTC P1154 to set. Check HO2S heater circuitry for intermittent faults or poor connections. If connections and wiring are OK and DTC P1154 continues to set, replace the Bank 2 HO2S 1.

Reviewing the Failure Records vehicle mileage since the diagnostic test last failed may help determine how often

the condition that caused the DTC to be set occurs. This may assist in diagnosing the condition.

Test Description

Number(s) below refer to the step number(s) on the Diagnostic Chart.

3. A condition that affects other heated oxygen sensors indicates probable contamination. To avoid damaging replacement sensors, correct the condition which caused the contamination before replacing the affected sensors.
5. This step checks for conditions which may cause the heated oxygen sensor to appear faulty. Correct any of the described conditions if present.
8. To avoid damaging replacement sensors, correct the condition which caused the contamination before replacing the affected sensors.

DTC P1154 – HO2S Transition Time Ratio Bank 2 Sensor 1

Step	Action	Value(s)	Yes	No
1	Was the “On-Board Diagnostic (OBD) System Check” performed?	—	Go to *Step 2*	Go to *OBD System Check*
2	**IMPORTANT:** If any other DTCs are set (except P1133 and/or P1134), refer to those DTCs before proceeding with this diagnostic chart. 1. Idle the engine at operating temperature. 2. Operate the vehicle within parameters specified under “Conditions for Setting the DTC” criteria included in Diagnostic Support. 3. Using a Tech 2, monitor “Specific DTC” info for DTC P1154 until the DTC P1154 test runs. Note the test result. Does Tech 2 indicate DTC failed this ignition?	—	Go to *Step 3*	Refer to *Diagnostic Aids*
3	Did Tech 2 also indicate P1133, and/or P1134 test failed?	—	Go to *Step 17*	Go to *Step 4*
4	Check for leaks at the pipe joints. Are the joints leaking?	—	Go to *Step 5*	Go to *Step 6*
5	Tighten the U-bolt nuts at the leaking joints. Is your action complete?	—	Go to *Step 2*	—
6	Check for gaskets that are damaged or improperly installed. Are there damaged or misaligned gaskets?	—	Go to *Step 7*	Go to *Step 8*
7	1. Replace the damaged gaskets. 2. Align the connections. 3. Tighten the connections. Is your action complete?	—	Go to *Step 2*	—
8	Check for loose exhaust flange connections. Are the flange connections loose?	—	Go to *Step 9*	Go to *Step 10*
9	Tighten the stud nuts or bolts to specifications. Is your action complete?	—	Go to *Step 2*	—
10	Check for burned or corroded exhaust pipes. Are the exhaust pipes burned or corroded?	—	Go to *Step 11*	Go to *Step 12*
11	Replace the exhaust pipes, as required. Is your action complete?	—	Go to *Step 2*	—

DTC P1154 – HO2S Transition Time Ratio Bank 2 Sensor 1 (Cont'd)

Step	Action	Value(s)	Yes	No
12	Check for leaks at the exhaust manifold. Are there leaks at the exhaust manifold?	—	Go to *Step 13*	Go to *Step 14*
13	Tighten the bolts to specifications or replace the manifold if necessary. Is your action complete?	—	Go to *Step 2*	—
14	Visually/physically inspect the following items: ● Ensure that the Bank 2 HO2S 1 is securely installed. ● Check for corrosion on terminals. ● Check terminal tension (at Bank 2 HO2S 1 and at the PCM). ● Check for damaged wiring. Was a problem found in any of the above areas?	—	Go to *Step 18*	Go to *Step 15*
15	1. Disconnect Bank 1 HO2S 1. 2. Ignition "ON." 3. Using a DVM at the PCM side of the HO2S 1 connector, measure the voltage between the high signal circuit and ground. Also measure the voltage between the low signal circuit and ground. Are both voltages in the specified range?	3-4 V	Go to *Step 16*	Go to *Step 19*
16	1. With Bank 1 HO2S 1 disconnected, jumper the high and low (PCM side) signal circuits to ground. 2. Ignition "ON." 3. Using Tech 2, monitor the Bank 2 HO2S 1 voltage. Does the scan too indicate less than 10 mV and immediately return to about 450 mV when the jumper is removed?	—	Go to *Step 21*	Go to *Step 22*
17	Replace affected heated oxygen sensors. NOTE: Before replacing sensors, the cause of the contamination must be determined and corrected. ● Fuel contamination. ● Use of improper RTV sealant. ● Engine oil/coolant consumption. Is the action complete?	—	Verify repair	—
18	Repair condition as necessary. Is the action complete?	—	Verify repair	—
19	Check for faulty PCM connections or terminal damage. Is the action complete?	—	Verify repair	Go to *Step 20*
20	Repair open, short or grounded signal circuit. Is the action complete?	—	Verify repair	—

DTC P1154 – HO2S Transition Time Ratio Bank 2 Sensor 1 (Cont'd)

Step	Action	Value(s)	Yes	No
21	Replace Bank 2 HO2S 1. Is the action complete?	—	Verify repair	—
22	Replace the PCM. **IMPORTANT:** The replacement PCM must be programmed. Refer to *UBS 98model year Immobilizer Workshop Manual.* Is the action complete?	—	Verify repair	—

Diagnostic Trouble Code (DTC) P1171 Fuel System Lean During Acceleration

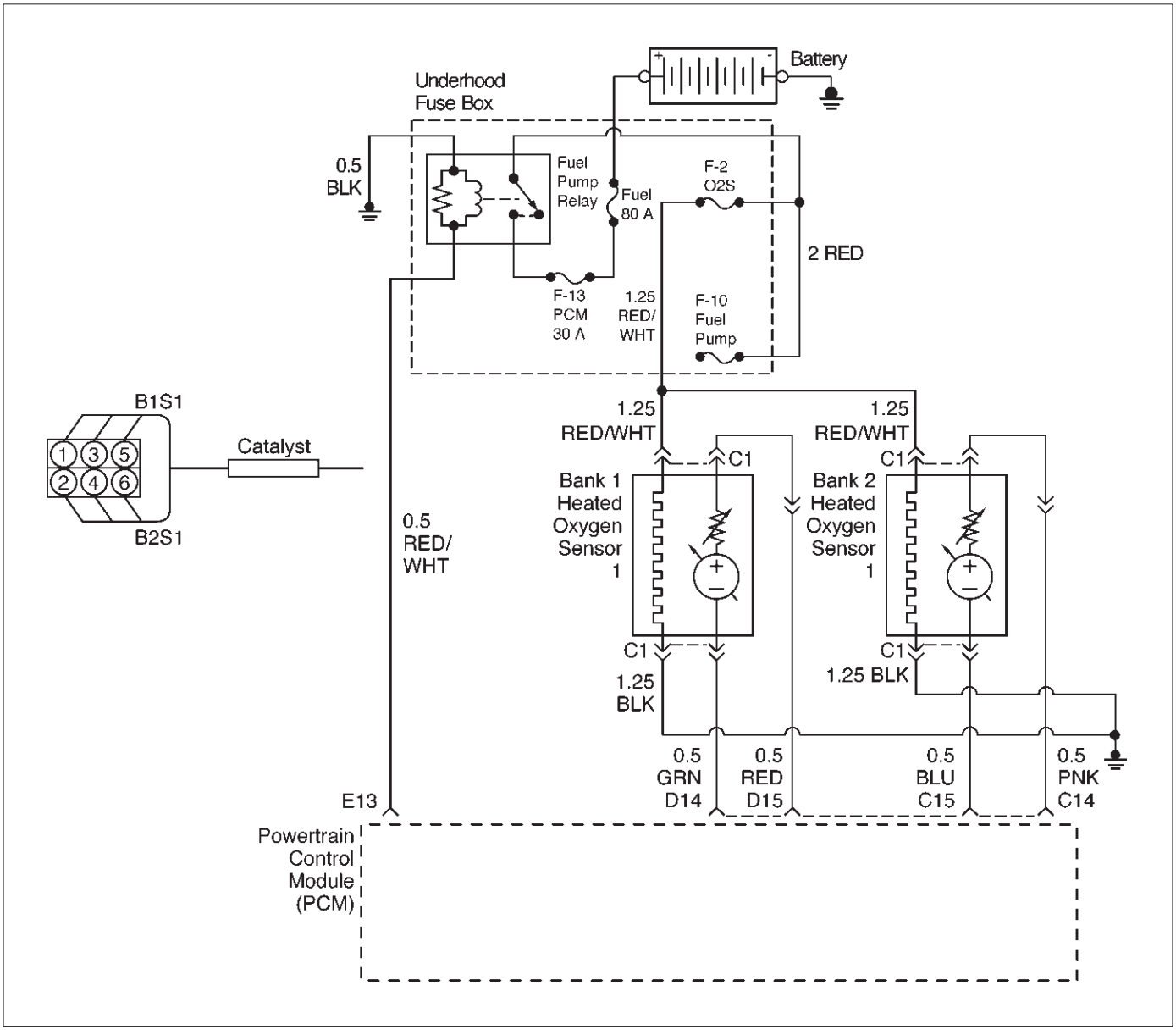

060RW193–1

Circuit Description

The powertrain control module (PCM) internal circuitry can identify if the vehicle fuel system is capable of supplying adequate amounts of fuel during heavy acceleration (power enrichment). The PCM monitors the voltage of the oxygen sensor during power enrichment. When a power enrichment mode of operation is requested during “closed loop” operation (by heavy acceleration), the PCM will provide more fuel to the engine. Under these conditions the PCM should detect a “rich” condition (high oxygen sensor voltage). If this “rich” exhaust is not detected at this time, a DTC P1171 will set. A plugged fuel filter, restricted fuel line, restricted in-tank filter or defective fuel pump can prevent adequate amounts of fuel from being supplied during power enrichment mode.

Conditions for Setting the DTC

- No related DTCs.
- Engine is operating in “closed loop power enrichment” mode for 3 seconds.
- Engine coolant temperature is above 60˚C (140˚F).
- While in “power enrichment” mode the oxygen sensor voltage remains below 400 mV for 3 seconds.

Action Taken When the DTC Sets

- The PCM will illuminate the malfunction indicator lamp (MIL) the first the fault is detected.
- The PCM will store conditions which were present when the DTC was set as Freeze Frame and in the Failure Records data.

Conditions for Clearing the MIL/DTC

- DTC P1171 can be cleared by using Tech 2 “Clear Info” function or by disconnecting the PCM battery feed.

Diagnostic Aids

- A restricted fuel filter or fuel line, restricted in-tank filter, or a defective fuel pomp may supply adequate

amounts of fuel at idle, but may not be able to supply enough fuel during heavy acceleration.

- Water or alcohol in the fuel may cause low HO2S voltage during acceleration.
- Check for faulty or plugged fuel injector(s).
- Check for low fuel.

Test Description

Number(s) below refer to the step number(s) on the Diagnostic Chart.

4. When the engine is idling or at steady cruise, the HO2S voltage should vary from between approximately 100 mV to 900 mV. It is possible to measure a satisfactory fuel pressure at idle even though the pressure may drop at high flow requirements. It may be necessary to watch fuel pressure at high engine load.
5. Wrap a shop towel around the fuel pressure connector to absorb any small amount of fuel leakage that may occur when installing gauge. Ignition “ON,” pump pressure should be 280-320 kPa.

DTC P1171 – Fuel System Lean During Acceleration

Step	Action	Value(s)	Yes	No
1	Was the “On-Board Diagnostic (OBD) System Check” performed?	—	Go to *Step 2*	Go to *OBD System Check*
2	Are any component-related DTCs set?	—	Go to component DTC charts	Go to *Step 3*
3	1. Check the vehicle’s fuel tank for an adequate amount of fuel. 2. Add fuel to the vehicle’s fuel tank if the tank is almost empty. Was fuel added to the vehicle’s fuel tank?	—	Go to *Step 4*	Go to *Step 5*
4	1. Place the transmission in park. 2. Using Tech 2, observe HO2S 1 voltage while running warm engine 75˚C-95˚C (167˚F-203˚F) at 1200 RPM. 3. HO2S 1 voltage should vary within the specified range. 4. Quickly open the throttle halfway for a few seconds. Did the voltage suddenly rise toward the high end of the specified range?	100-900 mV	Go to Chart A-7	Go to *Step 5*
5	1. Disconnect the fuel pump relay and crank the engine to relieve the fuel pressure. 2. Install the fuel pressure gauge. 3. Start the engine and idle at normal operating temperature. 4. Disconnect the vacuum line going to the fuel pressure regulator. With the engine running, is the fuel pressure within the specified range?	280-325 kPa (41-46 psi)	Go to *OBD System Check*	Go to *Step 6*
6	Check for restricted fuel lines or restricted in-line filter. Was a problem found?	—	Verify repair	Go to *Step 7*

DTC P1171 – Fuel System Lean During Acceleration (Cont'd)

Step	Action	Value(s)	Yes	No
7	1. Ignition "OFF." 2. Remove the fuel pump relay and replace it with a fused jumper which will connect the relay's battery terminal to the terminal leading to the fuel pump fuse. 3. While the fuel pump is operating, use pliers to slowly close the return line (do not exceed the first specified value). Using the pliers to restrict the return line, can the fuel pressure be manipulated to exceed the second specified value?	414 kPa (60 psi) 325 kPa (46 psi)	Go to *Diagnostic Aids*	Go to *Step 8*
8	Check for: ● Faulty fuel pump ● Restricted fuel pump strainer (sock) ● Incorrect fuel pump ● Incorrect fuel being used ● Hot fuel Is the action complete?	—	Verify repair	—

Diagnostic Trouble Code (DTC) P1380 ABS Rough Road ABS System Fault

Circuit Description

The powertrain control module (PCM) monitors ABS fault signal. When PCM receives fault signal, PCM will set DTC P1380.

Conditions for Setting the DTC

- Vehicle speed is more than 5 mph.
- Load is less than 99%.
- Engine revolution is less than 6250 rpm.
- PCM receives ABS fault signals from ABS unit.
- Ignition on.
- Misfire DTCs exist.
- 100 test failures within 120 test samples.

Action Taken When the DTC Sets

- The PCM will store DTC 1380 only, no MIL turn on.

Conditions for Clearing the MIL/DTC

- A history DTC P1380 will clear after 40 consecutive warm-up cycles have occurred without a fault.
- DTC 1380 can be cleared by using Tech-2 or disconnecting the PCM battery feed.

Diagnostic Aids

Check for the following conditions:

- PCM and ABS communication line short circuit to other line may cause faulty signal. Inspect communication line.
- Follow ABS ECU diagnosis procedure, refer to ABS procedure page.

DTC P1380 – ABS Rough Road ABS System Fault

Step	Action	Value(s)	Yes	No
1	Was the “On-Board Diagnostic (OBD) System Check” performed?	—	Go to *Step 2*	Go to *OBD System Check*
2	1. Ignition “ON,” engine “OFF”, review and record Tech 2 Failure Records Data. 2. Operate the vehicle within Failure Records conditions as noted. 3. Using a Tech 2, monitor “Specific DTC” info for DTC P1380 and Misfire DTCs until the DTC P1380 and Misfire DTCs test runs. Note the result. Does the Tech 2 indicates DTC P1380 and Misfire DTCs failed this ignition?	—	Refer to ABS diagnosis After inspect ABS, unit repeat *Step 2* Still problem exists, go to *Step 3*	Clear DTC by Tech 2
3	Check short circuit among communication line of PCM/ABS and others. Was short circuit?	—	Repair wiring Verify repair	Go to *Step 4*
4	Replace the PCM. **IMPORTANT:** The replacement PCM must be programmed. Refer to *UBS 98model year Immobilizer Workshop Manual.* Is the action complete?	—	Verify repair	—

Diagnostic Trouble Code (DTC) P1404 EGR Closed Stuck

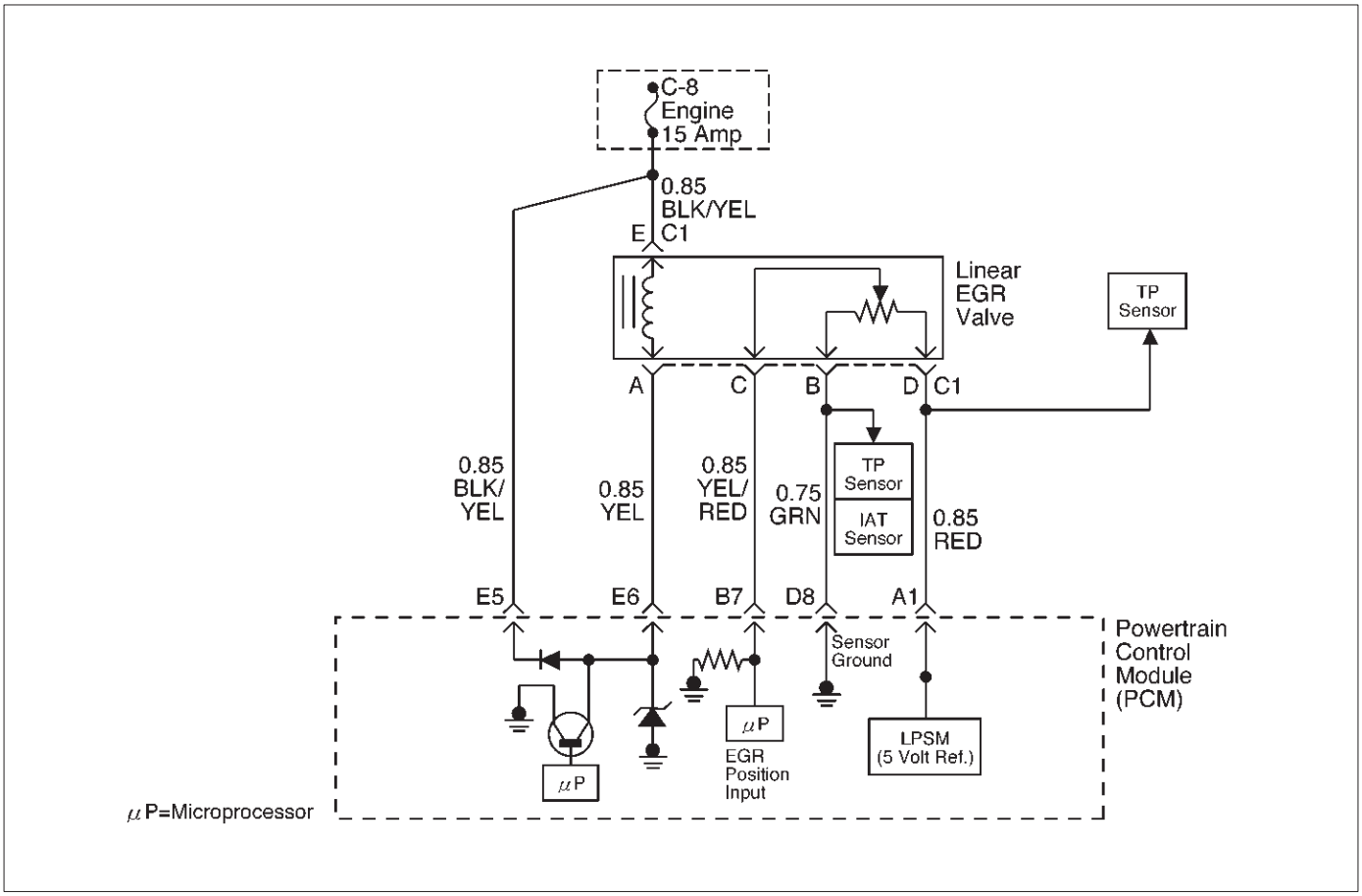

D06RW106

Circuit Description

The powertrain control module (PCM) monitors the EGR valve pintle position input to ensure that the valve responds properly to commands from the PCM, and to detect a fault if current pintle zero position is different from the learned zero position. If the PCM detects a pintle position signal indicates more than 30 % different between current zero position and the learned zero position and more than 5 seconds, and this condition meet 3 times during trip, then the PCM will set DTC P1404.

Conditions for Setting the DTC

- Ignition voltage is between 11 and 16 volts.
- Intake Air temp is more than 3˚C.
- Desire EGR position is 0.
- Difference EGR pintle position between current and the learned zero is more than 30 % last more than 5 seconds, and meet three time to the above condition during a trip. Then it trigger the PCM lights on.

Action Taken When the DTC Sets

- The PCM will illuminate the malfunction indicator lamp (MIL) after consecutive 2nd trip in which the fault is detected.
- The PCM will store conditions which were present when the DTC was set as Freeze Frame and in Failure Records data.

Conditions for Clearing the MIL/DTC

- DTC P1404 can be cleared by using the Tech 2 “Clear Info” function or by disconnecting the PCM battery feed.

Diagnostic Aids

Check for the following conditions:

- Excessive carbon deposit on EGR valve shaft or/and foreign material may cause no return to EGR valve fully seated. Those carbon deposit may occur by unusual port operation. Remove foreign material or/and excessive carbon deposit on EGR valve shaft may make return to EGR valve fully seated.
- Poor connection or damaged harness – Inspect the wiring harness for damage. Same as P1406 description

Reviewing the Failure Records vehicle mileage since the diagnostic test last failed may help determine how often the condition that caused the DTC to be set occurs. This may assist in diagnosing the condition.

DTC P1404 – EGR Closed Stuck

Step	Action	Value(s)	Yes	No
1	Was the “On-Board Diagnostic (OBD) System Check” performed?	—	Go to *Step 2*	Go to *OBD System Check*
2	1. Ignition “ON,” engine “OFF”, review and record Tech 2 Failure Records Data. 2. Operate the vehicle within Failure Records conditions as noted. 3. Using a Tech 2, monitor “DTC inf. for DTC P1404 until the DTC P1404 test runs. Note the result. Does the Tech 2 indicates DTC P1404 failed this ignition?	—	Go to *Step 3*	Refer to *Diagnostic Aids*
3	1. Disconnect the EGR valve harness connector. 2. Inspect the EGR valve and connectors for damaged pin or terminals. Were there any damaged pins or terminals?	—	Go to *Step 4*	Go to *Step 5*
4	Repair the damaged pin or terminal. Is the action complete?	—	Verify repair	—
5	1. Remove EGR valve from Engine. 2. Inspect EGR valve whether there is any excessive carbon deposit on EGR shaft. 3. Inspect any foreign material inside of EGR valve. Was excessive carbon deposit on EGR valve shaft or/and foreign material in EGR valve ?	—	Go to *Step 6*	Go to *Step 7*
6	1. Clean up EGR valve shaft and inside of EGR valve. 2. Remove foreign material from EGR valve. 3. Visually inspect damage of pintle and seat whether there is bent, leakage may occur. Was there any severe damage which affects function?	3–6 ohms	Go to *Step 8*	Verify repair Go to *Step 7*
7	1. Reconnect. 2. Ignition “OFF”. 3. Install the Tech 2. 4. Run the engine at idle. 5. On the Tech 2, select F3:Misc. Test F5:EGR. 6. Use the “UP” arrow to increase the EGR from 0% to 40%. Did EGR work properly?	—	—	Go to *Step 8*
8	1. Reset the learned zero EGR valve position. 2. Repeat step 7. Did EGR work properly?	—	Verify repair	Go to *Step 9*
9	Replace the EGR valve. Replace the EGR valve. Does DTC P1404 still fail “specific DTC” test on the Tech 2?	—	Go to *Step 10*	Verify repair
10	Replace the PCM. **IMPORTANT:** The replacement PCM must be programmed. Refer to *UBS 98model year Immobilizer Workshop Manual.* Is the action complete?	—	Verify repair	—

Diagnostic Trouble Code (DTC) P1508 IAC System Low RPM

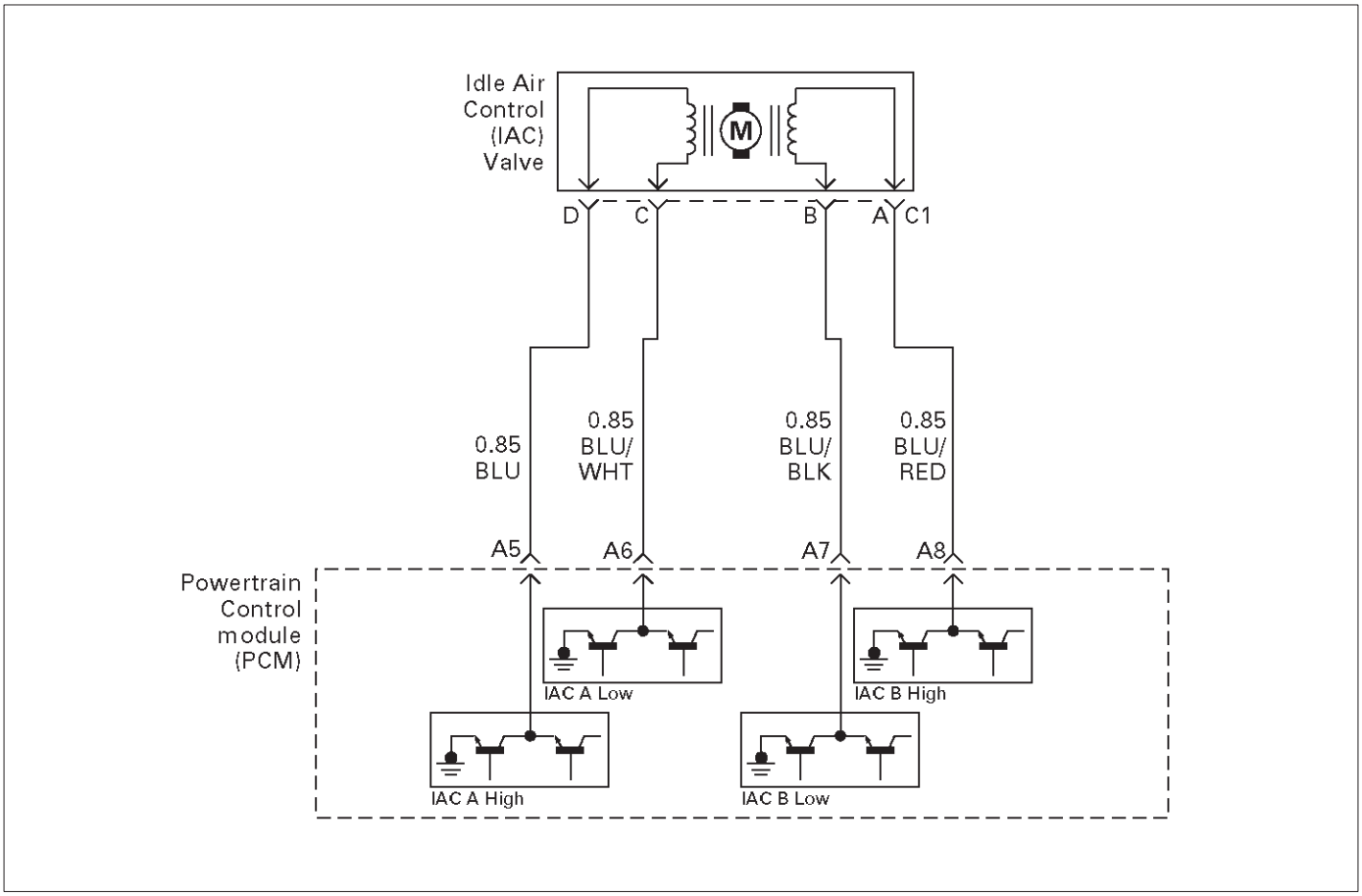

T321115

Circuit Description

The powertrain control module (PCM) controls engine idle speed by adjusting the position of the idle air control (IAC) motor pintle. The IAC is a bi-directional stepper motor driven by two coils. The PCM applies current to the IAC coils in steps (counts) to extend the IAC pintle into a passage in the throttle body to decrease air flow. The PCM reverses the current to retract the pintle, increasing air flow. This method allows highly accurate control of idle speed and quick response to changes in engine load. If the PCM detects a condition where too low of an idle speed is present and the PCM is unable to adjust idle speed by increasing the IAC counts, DTC P1508 will set, indicating a problem with the idle control system.

Conditions for Setting the DTC

- No Tech 2 test is being run.
- None of these DTCs are set: TP sensor, VSS, ECT, EGR, fuel system, MAF, MAP, IAT, canister purge, injector control or ignition control.
- Barometric pressure is above 75 kPa.
- Engine coolant temperature (ECT) is above 50˚C (120˚F).
- Engine speed is more than 100-200 RPM lower than desired idle, based upon coolant temperature.
- The engine has been running for at least 125 seconds.
- Vehicle speed is less than 1 mph.
- Canister purge duty cycle is above 10%.
- Ignition voltage is between 9.5 volts and 16.7 volts.
- The throttle is closed.
- Engine speed is lower than desired idle.
- All of the above conditions are met for 10 seconds.

Action Taken When the DTC Sets

- The PCM will illuminate the malfunction indicator lamp (MIL) after the second consecutive trip in which the fault is detected.
- The PCM will store conditions which were present when the DTC was set as Freeze Frame and in the Failure Records data.

Conditions for Clearing the MIL/DTC

- DTC P1508 can be cleared by using the Tech 2 “Clear Info” function or by disconnecting the PCM battery feed.

Diagnostic Aids

Check for the following conditions:

- Poor connection at PCM or IAC motor – Inspect harness connectors for backed-out terminals, improper mating, broken locks, improperly formed or damaged terminals, and poor terminal-to-wire connection.
- Damaged harness – Inspect the wiring for damage.
- Restricted air intake system – Check for a possible collapsed air intake duct, restricted air filter element, or foreign objects blocking the air intake system.
- Throttle body – Check for objects blocking the IAC passage or throttle bore, excessive deposits in the IAC

passage and on the IAC pintle, and excessive deposits in the throttle bore and on the throttle plate.

- Large vacuum leak – Check for a condition that causes a large vacuum leak, such as an incorrectly installed or faulty PCV valve or a disconnected brake booster hose.

Reviewing the Failure Records vehicle mileage since the diagnostic test last failed may help determine how often the condition that caused the DTC to be set occurs. This may assist in diagnosing the condition.

DTC P1508 – IAC System Low RPM

Step	Action	Value(s)	Yes	No
1	Was the “On-Board Diagnostic (OBD) System Check” performed?	—	Go to *Step 2*	Go to *OBD System Check*
2	1. Start the engine. 2. Turn all accessories “OFF”(A/C, rear defroster, etc). 3. Using a Tech 2, command RPM up to 1500, down to 500, and the up to 1500 while monitoring the “Engine Speed” on the Tech 2. NOTE: This Tech 2 command may cause the engine to “cut out” when RPM goes above 1500. If this occurs, the “cutting out” will stop when the Tech 2 command for the test is discontinued, or if the Tech 2 command is changed to less than 1500 RPM. Does the “Engine Speed” remain within the specified value of the “Desired Idle” for each RPM command?	± 50 RPM	No trouble found. Go to *Diagnostic Aids*	Go to *Step 3*
3	1. Disconnect the IAC. 2. Install IAC Node Light 5-8840-2312-0 or equivalent. 3. With the engine running, command RPM up to 1500, down to 500, and then up to 1500 while observing the node light. NOTE: This Tech 2 command may cause the engine to “cut out” when RPM goes above 1500. If this occurs, the “cutting out” will stop when the Tech 2 command for the test is discontinued, or if the Tech 2 command is changed to less than 1500 RPM. Does each node light cycle red and green (never “OFF”)?	—	Go to *Step 5*	Go to *Step 4*
4	1. Check the following circuits for an open, short to voltage, short ground, or poor connections at the PCM: • IAC “A” Low. • IAC “A” High. • IAC “B” Low. • IAC “B” High. 2. If a problem is found, repair as necessary. Was a problem found?	—	Verify repair	Go to *Step 8*

DTC P1508 – IAC System Low RPM (Cont'd)

Step	Action	Value(s)	Yes	No
5	Visually/physically inspect for following conditions: ● Restricted air intake system. Check for a possible collapsed air intake duct, restricted air filter element, or foreign objects blocking the air intake system. ● Throttle body. Check for objects blocking the IAC passage or throttle bore, excessive deposits in the IAC passage and on the IAC pintle, and excessive deposits in the throttle bore and on the throttle plate. Do any of the above require a repair?	—	Refer to appropriate section for on-vehicle service	Go to *Step 6*
6	1. Check for a poor connection at the IAC harness connector. 2. If a problem is found, replace faulty terminals as necessary. Was a problem found?	—	Verify repair	Go to *Step 7*
7	Replace the IAC valve. Is the action complete?	—	Verify repair	—
8	Replace the PCM. **IMPORTANT:** The replacement PCM must be programmed. Refer to *UBS 98model year Immobilizer Workshop Manual.* Is the action complete?	—	Verify repair	—

Diagnostic Trouble Code (DTC) P1509 IAC System High RPM

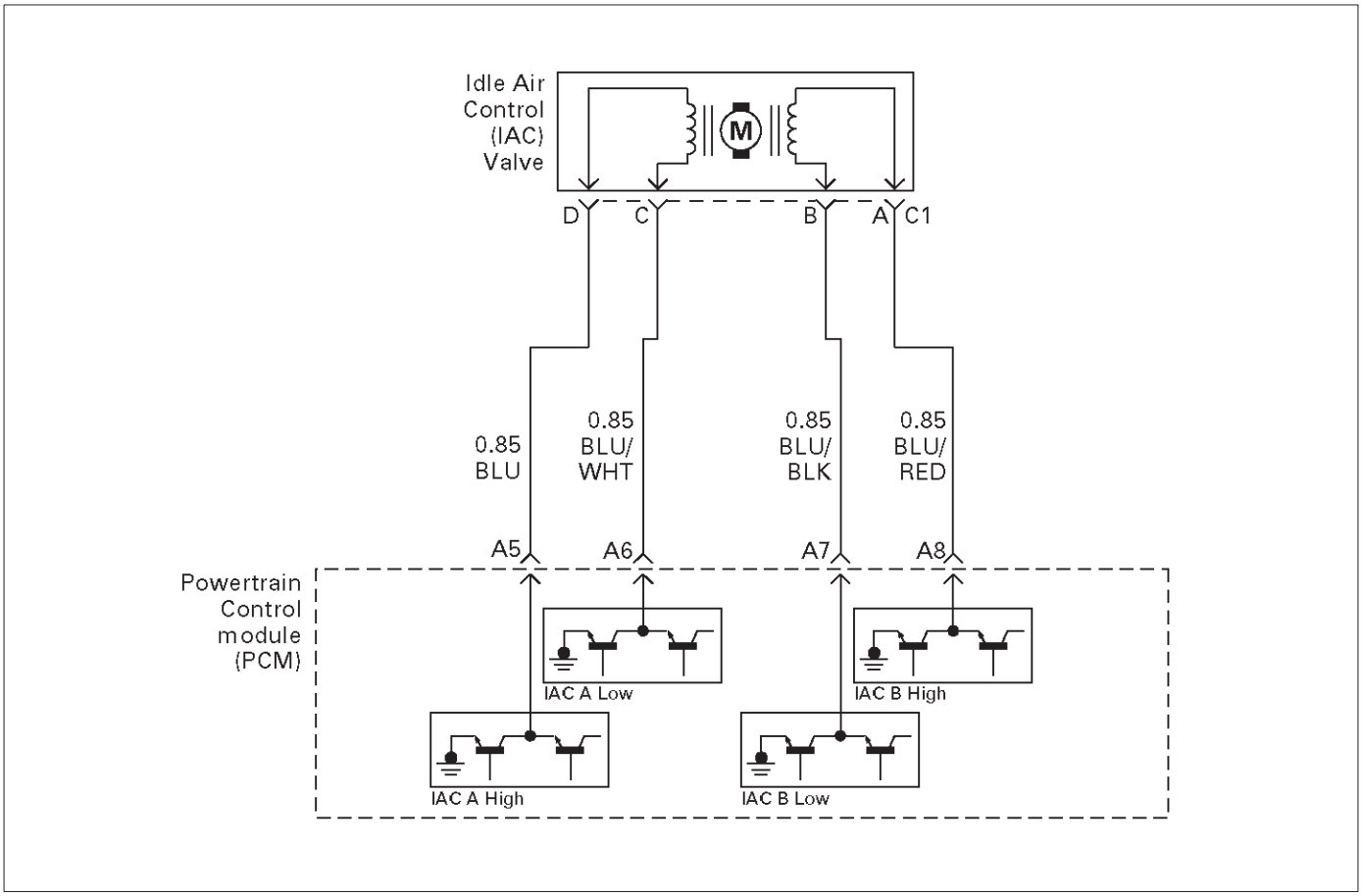

T321115

Circuit Description

The powertrain control module (PCM) controls engine idle speed by adjusting the position of the idle air control (IAC) motor pintle. The IAC is a bi-directional stepper motor driven by two coils. The PCM applies current to the IAC coils in steps (counts) to extend the IAC pintle into a passage in the throttle body to decrease air flow. The PCM reverses the current to retract the pintle, increasing air flow. This method allows highly accurate control of idle speed and quick response to changes in engine load. If the PCM detect a condition where too high of an idle speed is present and the PCM is unable to adjust idle speed by increasing the IAC counts, DTC P1509 will set, indicating a problem with the idle control system.

Conditions for Setting the DTC

- No Tech 2 test is being run.
- None of these DTCs are set: TP sensor, VSS, ECT, EGR, fuel system, MAF, MAP, IAT, canister purge, injector control or ignition control.
- Barometric pressure is above 75 kPa.
- Engine coolant temperature is above 50˚C (120˚F).
- Engine speed is more than 100-200 RPM lower than desired idle, based upon coolant temperature.
- The engine has been running for at least 125 seconds.
- Vehicle speed is less than 1 mph.
- Canister purge duty cycle is above 10%.
- Ignition voltage is between 9.5 volts and 16.7 volts.
- Engine speed is lower than desired idle.
- All of the above conditions are met for 5 seconds.

Action Taken When the DTC Sets

- The PCM will illuminate the malfunction indicator lamp (MIL) after the second consecutive trip in which the fault is detected.
- The PCM will store conditions which were present when the DTC was set as Freeze Frame and in the Failure Records data.

Conditions for Clearing the MIL/DTC

- DTC P1509 can be cleared by using the Tech 2 “Clear Info” function or by disconnecting the PCM battery feed.

Diagnostic Aids

Check for the following conditions:

- Poor connection at PCM or IAC motor – Inspect harness connectors for backed-out terminals, improper mating, broken locks, improperly formed or damaged terminals, and poor terminal-to-wire connection.
- Damaged harness – Inspect the wiring for damage.
- Vacuum leak – Check for a condition that causes a vacuum leak, such as disconnected or damaged hoses, leaks at the EGR valve and the EGR pipe to the intake manifold, leaks at the throttle body, faulty or incorrectly installed PCV valve, leaks at the intake manifold, etc.

- Throttle body – Check for sticking throttle plate. Also inspect the IAC passage for deposits or objects which keep the IAC pintle from fully extending.

Reviewing the Failure Records vehicle mileage since the diagnostic test last failed may help determine how often the condition that caused the DTC to be set occurs. This may assist in diagnosing the condition.

DTC P1509 – IAC System High RPM

Step	Action	Value(s)	Yes	No
1	Was the "On-Board Diagnostic (OBD) System Check" performed?	—	Go to *Step 2*	Go to *OBD System Check*
2	1. Start the engine. 2. Turn all accessories "OFF" (A/C, rear defroster, etc.). 3. Using a Tech 2, command RPM up to 1500, down to 500, and then up to 1500 while monitoring "Engine Speed" on the Tech 2. NOTE: This Tech 2 command may cause the engine to "cut out" when RPM goes above 1500. If this occurs, the "cutting out" will stop when the Tech 2 command for the test is discontinued, or if the Tech 2 command is changed to less than 1500 RPM. Does the "Engine Speed" remain within the specified value of "Desired Idle" for each RPM command?	± 50 RPM	No trouble found. Go to *Diagnostic Aids*	Go to *Step 3*
3	1. Disconnect the IAC. 2. Install IAC Node Light 5-8840-2312-0 or equivalent. 3. With the engine running, command RPM up to 1500, down to 500, and then up to 1500 while observing the node light. NOTE: This Tech 2 command may cause the engine to "cut out" when RPM goes above 1500. If this occurs, the "cutting out" will stop when the Tech 2 command for the test is discontinued, or if the Tech 2 command is changed to less than 1500 RPM. Does each node light cycle red and green (never "OFF")?	—	Go to *Step 5*	Go to *Step 4*
4	1. Check the following circuits for an open, short to voltage, short ground, or poor connections at the PCM: • IAC "A" Low • IAC "A" High • IAC "B" Low • IAC "B" High 2. If a problem is found, repair as necessary. Was a problem found?	—	Verify repair	Go to *Step 8*
5	Visually/physically inspect for following conditions: • Vacuum leaks. • Throttle plate or throttle shaft for binding. • Accelerator and cruise control cables for being misadjusted or for binding. • Faulty, missing, or incorrectly installed PCV valve. Do any of the above require a repair?	—	Refer to appropriate section for on-vehicle service	Go to *Step 6*

DTC P1509 – IAC System High RPM (Cont'd)

Step	Action	Value(s)	Yes	No
6	1. Check for a poor connection at the IAC harness connector. 2. If a problem is found, replace faulty terminals as necessary. Was a problem found?	—	Verify repair	Go to *Step 7*
7	Replace the IAC valve. Is the action complete?	—	Verify repair	—
8	Replace the PCM. **IMPORTANT:** The replacement PCM must be programmed, Refer to *UBS 98model year Immobilizer Workshop Manual.* Is the action complete?	—	Verify repair	—

Diagnostic Trouble Code (DTC) P1618 Serial Peripheral Interface (SPI) PCM Interprocessor Communication Error

Circuit Description

The serial peripheral interface (SPI) communication is used internally by the PCM to send messages between the engine processor and the automatic transmission processor. Included in each message sent between the two-processors is a checksum of the message. Both the engine processor and automatic transmission processor will compare this check sum value with the calculated value. If the checksums don't match, the processor will view the new data as being corrupted and ignore the values. The processor will then use the previous message. The receiving processor will then send a message to the sending processor informing it that it's last message was corrupted.

Conditions for Setting the DTC

- Battery voltage is above 9.0 V for 2 seconds.
- The PCM detects an internal program fault (check sum of data communications error).
- Check sum fault present for 3 out 6 seconds.
- No TCM resets for 2 seconds.

Action Taken When the DTC Sets

- The PCM will flash the "Check Trans" lamp the first time the fault is detected.
- The PCM will store conditions which were present when the DTC was set as Freeze Frame and in the Failure Records data.
- The automatic transmission will operate in the "safety mode" to protect the mechanical parts of the transmission. Shift quality and/or gear changes may not be normal.

Conditions for Clearing the MIL/DTC

- DTC P1618 can be cleared by using the Tech 2 "Clear Info" function or by disconnecting the PCM battery feed.

DTC P1618 – Serial Peripheral Interface (SPI) PCM Interprocessor Communication Error

Step	Action	Value(s)	Yes	No
1	Was the "On-Board Diagnostic (OBD) System Check" performed?	—	Go to Step 2	Go to *OBD System Check*
2	Is the EEPROM calibration the latest version available?	—	Go to *Step 4*	Go to *Step 3*
3	Reprogram the PCM with the latest available calibrations. Does DTC 1618 re-appear when the *OBD System Check* is repeated?	—	Go to *Step 4*	Repair completed
4	Replace the PCM. **IMPORTANT:** The replacement PCM must be programmed. Refer to *UBS 98model year Immobilizer Workshop Manual.* Is the action complete?	—	Verify repair	—

Diagnostic Trouble Code (DTC) P1625 PCM Unexpected Reset

Circuit Description

The powertrain control module (PCM) monitors unexpected PCM reset. This will not turn on MIL light on, only records code DTC P1625.

Conditions for Setting the DTC

- Clock or COP reset.

Action Taken When the DTC Sets

- The PCM will not illuminate the malfunction indicator lamp (MIL).
- The PCM will store conditions which were present when the DTC was set as Failure Records only. This information will not be stored as Freeze Frame data.

Conditions for Clearing the MIL/DTC

- DTC P1625 can be cleared by using the Tech 2 “Clear Info” function or by disconnecting the PCM battery feed.

Diagnostic Aids

Check for the following conditions:

- P1625 alone stored does not need diagnosis. Clear DTC code.

Diagnostic Trouble Code (DTC) P1640 Driver-1-Input High Voltage

Circuit Description

Output driver modules (ODMs) are used by the powertrain control module (PCM) to turn “ON” many of the current-driven devices that are needed to control various engine and transmission functions. Each ODM is capable of controlling up to 7 separate outputs by applying ground to the device which the PCM is commanding “ON.”

Unlike the Quad Driver Modules (QDMs) used in prior model years, ODMs have the capability of diagnosing each output circuit individually. DTC P1640 set indicates an improper voltage level has been detected on an ODM output.

Since A/C is an option, No A/C will cause the air conditioning clutch relay output to always fault. If a fault is seen on the air conditioning clutch relay output, it will not be logged as a fault until the A/C request input interrupts a high voltage, indicating that A/C has been installed.

Conditions for Setting the DTC

- Ignition “ON.”
- Engine running.
- No DTC 1618.
- Ignition voltage is above 13.2 volts for 4 seconds.
- Output voltage does not equal ignition voltage when output is “OFF” or output voltage is not less than 1 volt when output is “ON.”
- Above conditions occur for at least 1 second.

Action Taken When the DTC Sets

- The PCM will not illuminate the malfunction indicator lamp (MIL).
- The PCM will store conditions which were present when the DTC was set as Failure Records only. This information will not be stored as Freeze Frame data.

Conditions for Clearing the MIL/DTC

- DTC P1640 can be cleared by using the Tech 2 “Clear Info” function or by disconnecting the PCM battery feed.

Diagnostic Aids

Check for the following conditions:

- Poor connection at PCM – Inspect harness connectors for backed-out terminals, improper mating, broken locks, improperly formed or damaged terminals, and poor terminal-to-wire connection.
- Damaged harness – Inspect the wiring harness for damage, If the harness appears to be OK, disconnect the PCM, turn the ignition “ON” and observe a voltmeter connected to the suspect driver circuit at the PCM harness connector while moving connectors and wiring harnesses relates to the MIL. A change in voltage will indicate the location of the fault.
- Poor connection at component – Examine for damaged connectors, unplugged connector, or damaged terminals at the following locations: Instrument cluster harness, canister purge solenoid, A/C clutch relay. An open ignition feed circuit at any of these components will cause DTC P1640 to be set.

Reviewing the Failure Records vehicle mileage since the diagnostic test last failed may help determine how often the condition that caused the DTC to be set occurs. This may assist in diagnosing the condition.

The following PCM pins are controlled by output driver modules (ODMs):

- A13 – “Check Engine Lamp”
- A14 – SVS (”Check Trans”)
- B14 – A/C Clutch

Test Description

Number(s) below refer to the step number(s) on the Diagnostic Chart.

6. The Tech 2 Driver Module Status indicates the PCM pin that is affected.

11. The Tech 2 may indicate “short circuit” even when the problem is an open circuit. The cause of an open circuit may be in the component itself-lamp, purge, solenoid, or A/C compressor relay.

13. A short to ground on the ignition side of the component will blow the fuse. Since the fuse was checked in Step 4, a short to ground would be between the affected component and the PCM.

DTC P1640 – Driver-1-Input High Voltage

Step	Action	Value(s)	Yes	No
1	Was the “On-Board Diagnostic (OBD) System Check” performed?	—	Go to *Step 2*	Go to *OBD System Check*
2	1. Ignition “ON,”engine “OFF.” 2. Install the Tech 2. 3. Review and record Tech 2 Failure Records data. 4. Operate the vehicle within Failure Records conditions as noted. 5. Use the Tech 2 to indicate DTC P1640. Does the Tech 2 indicate DTC P1640?	—	Go to *Step 3*	—
3	Check the fuse for the driver circuit that was shown as faulty. Was the fuse blown?	—	Go to *Step 4*	Go to *Step 5*
4	1. Check for a short to ground between the fuse and the affected component. 2. Replace the fuse after making any necessary repairs. Is the action complete?	—	Verify repair	—
5	Disconnect the PCM connector for the affected driver circuit. Is there any damage to the PCM pin or connector?	—	Go to *Step 6*	Go to *Step 7*
6	Repair the damaged pin or terminal. Is the action complete?	—	Verify repair	—
7	Were either of the lamp circuits for “Check Engine” or “Check Trans.” indicated as faulty by the Tech 2?	—	Go to *Step 8*	Go to *Step 14*
8	1. Leave the PCM connector for the lamp driver circuit disconnected. 2. Ignition “ON.” 3. Using a DVM, check the voltage at the PCM connector for the affected lamp driver circuit. Was the voltage equal to the specified value?	B+	Go to *Step 16*	Go to *Step 9*
9	1. Ignition “ON.” 2. Check for battery voltage at the fuse for the affected lamp circuit. Was battery voltage available at the fuse?	—	Go to *Step 11*	Go to *Step 10*
10	Repair the open circuit between the ignition switch and the fuse. Is the action complete?	—	Verify repair	—
11	1. Ignition “OFF.” 2. Disconnect the PCM connector for the affected driver terminal. 3. Connect an ohmmeter between a good ground and the PCM connector for the affected driver. Did the ohmmeter indicate continuity?	—	Go to *Step 12*	Go to *Step 13*
12	Repair the short to ground between the affected component and is PCM driver terminal. Is the action complete?	—	Verify repair	—

DTC P1640 – Driver-1-Input High Voltage (Cont'd)

Step	Action	Value(s)	Yes	No
13	Repair the open circuit between the fuse and the PCM driver terminal for the affected circuit. Is the action complete?	—	Verify repair	—
14	1. Connect the PCM. 2. Start the engine and let it idle. 3. Backprobe the affected terminal at the PCM with a DVM. Was the voltage equal to the specified value?	+B	Go to *Step 16*	Go to *Step 15*
15	1. Run the engine at idle. 2. Check for battery voltage at the fuse for the affected circuit. Was battery voltage available at the fuse?	—	Go to *Step 11*	Go to *Step 10*
16	Replace the PCM. **IMPORTANT:** The replacement PCM must be programmed. Refer to *UBS 98model year Immobilizer Workshop Manual.* Is the action complete?	—	Verify repair	—

Symptom Diagnosis

Preliminary Checks

Before using this section, perform the "On-Board Diagnostic (OBD) System Check" and verify all of the following items:

- The powertrain control module (PCM) and malfunction indicator lamp (MIL) (Service Engine Soon lamp) are operating correctly.
- There are no DTC(s) stored.
- Tech 2 data is within normal operating range. Refer to *Typical Scan Data Values*.
- Verify the customer complaint and locate the correct symptom in the table of contents. Perform the procedure included in the symptom chart.

Visual/Physical Check

Several of the symptom procedures call for a careful visual/physical check. This can lead to correcting a problem without further checks and can save valuable time.

This check should include the following items:

- PCM grounds for cleanliness, tightness and proper location.
- Vacuum hoses for splits, kinks, and proper connections, as shown on the "Vehicle Emission Control Information" label. Check thoroughly for any type of leak or restriction.
- Air intake ducts for collapsed or damaged areas.
- Air leaks at throttle body mounting area, mass air flow (MAF) sensor and intake manifold sealing surfaces.
- Ignition wires for cracking, hardness, and carbon tracking.
- Wiring for proper connections, pinches and cuts.

Intermittents

IMPORTANT: An intermittent problem may or may not turn on the malfunction indicator lamp (MIL) or store a DTC. DO NOT use the Diagnostic Trouble Code (DTC) charts for intermittent problems. The fault must be present to locate the problem.

Most intermittent problems are caused by faulty electrical connections or wiring. Perform a careful visual/physical check for the following conditions:

- Poor mating of the connector halves or a terminal not fully seated in the connector (backed out).
- Improperly formed or damaged terminal.
- All connector terminals in the problem circuit should be carefully checked for proper contact tension.
- Poor terminal-to-wire connection. This requires removing the terminal from the connector body to check.

Road test the vehicle with a J 39200 Digital Multimeter connected to a suspected circuit. An abnormal voltage when the malfunction occurs is a good indication that there is a fault in the circuit being monitored.

Use Tech 2 to help detect intermittent conditions. Tech 2s have several features that can be used to locate an intermittent condition. Use the following feature to find intermittent faults:

- Using Tech 2's "Freeze Frame" buffer or "Failure Records" buffer can aid in locating an intermittent condition. Review and record the information in the freeze frame or failure record associated with the intermittent DTC being diagnosed. The vehicle can be driven within the conditions that were present when the DTC originally set.

To check for loss of diagnostic code memory, disconnect the MAP sensor and idle the engine until the MIL (Service Engine Soon lamp) comes on. DTC P0107 should be stored and kept in memory when the ignition is turned "OFF." If not, the PCM is faulty. When this test is completed, make sure that you clear the DTC P0107 from memory.

An intermittent MIL (Service Engine Soon lamp) with no stored DTC may be caused by the following:

- Ignition coil shorted to ground and arcing at ignition wires or plugs.
- MIL (Service Engine Soon lamp) wire to PCM shorted to ground.
- Poor PCM grounds. Refer to the PCM wiring diagrams.

Check for improper installation of electrical options such as lights, cellular phones, etc. Route ignition coil wiring away from the ignition coils. Check all wires from the PCM to the ignition coil for poor connections.

Check for an open diode across the A/C compressor clutch and check for other open diodes (refer to wiring diagrams in *Electrical Diagnosis*).

If problem has not been found, refer to *PCM Connector Symptom* tables.

Hard Start Symptom

Step	Action	Value(s)	Yes	No
1	**DEFINITION:** Engine cranks, but does not start for a long time. Does eventually run, or may start but immediately stalls. Was the "On-Board Diagnostic (OBD) System Check" performed?	—	Go to *Step 2*	Go to *OBD System Check*
2	1. Perform a bulletin search. 2. If a bulletin that addresses the symptom is found, correct the condition as instructed in the bulletin. Was a bulletin found that addresses the symptom?	—	Verify repair	Go to *Step 3*
3	Was a visual/physical check performed?	—	Go to *Step 4*	Go to *Visual/Physical Check*
4	Check engine coolant temperature (ECT) sensor for shift in value. After 8 hours with the hood up and the engine not running, connect Tech 2. With the ignition "ON" and the engine not running, compare engine coolant temperature to intake air temperature. Are ECT and IAT within the specified value of each other?	± 5˚C (± 9˚F)	Go to *Step 8*	Go to *Step 5*
5	1. Using Tech 2, display the engine coolant temperature and note the value. 2. Check the resistance of the engine coolant temperature sensor. 3. Refer to *Engine Coolant Temperature Sensor Temperature vs. Resistance* chart on *DTC P0118 Diagnostic Support* for resistance specifications. Is the resistance value near the resistance for the temperature noted?	—	Go to *Step 7*	Go to *Step 6*
6	Replace the ECT sensor. Is the action complete?	—	Verify repair	—
7	Locate and repair high resistance or poor connection in the ECT signal circuit or the ECT sensor ground. Is the action complete?	—	Verify repair	—
8	1. Check for a faulty, plugged, or incorrectly installed PCV valve. 2. If a problem is found, repair as necessary. Was a problem found?	—	Verify repair	Go to *Step 9*
9	1. Check for water- or alcohol-contaminated fuel. 2. If a problem is found, repair as necessary. Was a problem found?	—	Verify repair	Go to *Step 10*
10	1. Perform the procedure in *Fuel System Pressure Test*. 2. If a problem is found, repair as necessary. Was a problem found?	—	Verify repair	Go to *Step 11*
11	1. Check for proper ignition voltage output with spark tester J 26792 (ST-125). Refer to *Electric Ignition System* for procedure. 2. If a problem is found, repair as necessary. Was a problem found?	—	Verify repair	Go to *Step 12*

Hard Start Symptom (Cont'd)

Step	Action	Value(s)	Yes	No
12	1. Remove spark plugs. Check for wet plugs, cracks, wear, improper gap, burned electrodes, or heavy deposits. Refer to *Electronic Ignition System*. NOTE: If spark plugs are gas or oil fouled, the cause of the fouling must be determined before replacing the spark plugs. 2. If a problem is found, repair as necessary. Was a problem found?	—	Verify repair	Go to *Step 13*
13	1. Check for a loose ignition coil ground. Refer to *Electronic Ignition System*. 2. If a problem is found, repair as necessary. Was a problem found?	—	Verify repair	Go to *Step 14*
14	1. Remove the ignition coils and check the ignition coils for cracks or carbon tracking. 2. If a problem is found, replace affected coil(s) as necessary. Was a problem found?	—	Verify repair	Go to *Step 15*
15	1. Check IAC operation. Perform the procedure in the *DTC P0506, Step 6* diagnostic table. 2. If a problem is found, repair as necessary. Was a problem found?	—	Verify repair	Go to *Step 16*
16	1. Check for the following engine mechanical problems (refer to *Engine Mechanical*): ● Low compression ● Leaking cylinder head gaskets ● Worn or incorrect camshaft ● Camshaft drive belt slipped or stripped 2. If a problem is found, repair as necessary. Was a problem found?	—	Verify repair	Go to *Step 17*
17	1. Review all diagnostic procedures within this table. 2. If all procedures have been completed and no malfunctions have been found, review/inspect the following: ● Visual/physical inspection ● Tech 2 data ● Freeze Frame data/Failure Records buffer ● All electrical connections within a suspected circuit and/or system. 3. If a problem is found, repair as necessary. Was a problem found?	—	Verify repair	Contact Technical Assistance

Surges and/or Chuggles Symptom

Step	Action	Value(s)	Yes	No
1	**DEFINITION:** Engine power variation under steady throttle or cruise. Feels like the vehicle speeds up and slows down with no change in the accelerator pedal. Was the “On-Board Diagnostic (OBD) System Check” performed?	—	Go to *Step 2*	Go to *OBD System Check*
2	1. Perform a bulletin search. 2. If a bulletin that addresses the symptom is found, correct the condition as instructed in the bulletin. Was a bulletin found that addresses the symptom?	—	Verify repair	Go to *Step 3*
3	Was a visual/physical check performed?	—	Go to *Step 4*	Go to *Visual/Physical Check*
4	Be sure that the driver understands transmission torque converter clutch and A/C compressor operation as explained in the owner’s manual. Inform the customer how the TCC and the A/C clutch operate. Is the customer experiencing a normal condition?	—	System OK	Go to *Step 5*
5	1. Check the the fuel control heated oxygen sensors (HO2S, B1S1 and B2S1). The fuel control heated oxygen sensors (HO2S) should respond quickly to different throttle positions. If they don’t, check them for silicon or other contaminants from fuel or use of improper RTV sealant. The sensors may have a white powdery coating. Silicon contamination causes a high but false HO2S signal voltage (rich exhaust indication). The PCM will then reduce the amount of fuel delivered to the engine, causing a severe driveability problem. For more information, refer to *Powertrain Control Module (PCM) and Sensors*. 2. If a problem is found, repair as necessary. Was a problem found?	—	Verify repair	Go to *Step 6*
6	1. Check the fuel pressure. Refer to *Fuel System Pressure Test*. 2. If a problem is found, repair as necessary. Was a problem found?	—	Verify repair	Go to *Step 7*
7	Monitor the long term fuel trim on Tech 2. Is the long term fuel trim significantly in the negative range (rich condition)?	—	Go to *Step 8*	Go to *Step 9*
8	1. Check items that can cause the engine to run rich. Refer to *Diagnostic Aids* in *DTC P0172 Diagnostic Support*. 2. If a problem is found, repair as necessary. Was a problem found?	—	Go to *Step 10*	Verify repair
9	1. Check items that can cause the engine to run lean. Refer to *Diagnostic Aids* in *DTC P0171*. 2. If a problem is found, repair as necessary. Was a problem found?	—	Go to *Step 10*	Verify repair

Surges and/or Chuggles Symptom (Cont'd)

Step	Action	Value(s)	Yes	No
10	1. Check for proper ignition voltage output with spark tester J 26792 (ST-125). Refer to *Electric Ignition System* for procedure. 2. If a problem is found, repair as necessary. Was a problem found?	—	Verify repair	Go to *Step 11*
11	1. Check for a loose ignition coil ground. Refer to *Electric Ignition System*. 2. If a problem is found, repair as necessary. Was a problem found?	—	Verify repair	Go to *Step 12*
12	1. Check the ignition coils for cracks or carbon tracking. 2. If a problem is found, repair as necessary. Was a problem found?	—	Verify repair	Go to *Step 13*
13	1. Remove the spark plugs and check for wet plugs, cracks, wear, improper gap, burned electrodes, or heavy deposits. Refer to *Electronic Ignition System*. NOTE: If spark plugs are gas or oil fouled, the cause of the fouling must be determined before replacing the spark plugs. 2. If a problem is found, repair as necessary. Was a problem found?	—	Verify repair	Go to *Step 14*
14	1. Check the injector connections. 2. If any of the injector connectors are connected to an incorrect cylinder, correct as necessary. Was a problem found?	—	Verify repair	Go to *Step 15*
15	1. Check PCM grounds for the cleanliness, tightness and proper locations. Refer to the PCM wiring diagrams in *Electrical Diagnosis*. 2. If a problem is found, repair as necessary. Was a problem found?	—	Verify repair	Go to *Step 16*
16	1. Check MAF sensor connections. 2. If a problem is found, replace the faulty terminals as necessary. Refer to *Electrical Diagnosis* for wiring repair procedures. Was a problem found?	—	Verify repair	Go to *Step 17*
17	1. Visually/physically check vacuum hoses for splits, kinks, and proper connections and routing as shown on the "Vehicle Emission Control Information" label. 2. If a problem is found, repair as necessary. Was a problem found?	—	Verify repair	Go to *Step 18*

Surges and/or Chuggles Symptom (Cont'd)

Step	Action	Value(s)	Yes	No
18	1. Check the exhaust system for possible restriction: ● Inspect the exhaust system for damaged or collapsed pipes. ● Inspect the muffler for heat distress or possible internal failure. ● Check for a possible plugged three-way catalytic converter by checking the exhaust system back pressure. Refer to *Restricted Exhaust System Check*. 2. If a problem is found, repair as necessary. Was a problem found?	—	Verify repair	Go to *Step 19*
19	1. Review all diagnostic procedures within this table. 2. If all procedures have been completed and no malfunctions have been found, review/inspect the following: ● Visual/physical inspection ● Tech 2 data ● Freeze Frame data/Failure Records buffer ● All electrical connections within a suspected circuit and/or system. 3. If a problem is found, repair as necessary. Was a problem found?	—	Verify repair	Contact Technical Assistance

Lack of Power, Sluggish or Spongy Symptom

Step	Action	Value(s)	Yes	No
1	**DEFINITION:** Engine delivers less than expected power. Little or no increase in speed when accelerator pedal is pushed down part-way. Was the "On-Board Diagnostic (OBD) System Check" performed?	—	Go to *Step 2*	Go to *OBD System Check*
2	1. Perform a bulletin search. 2. If a bulletin that addresses the symptom is found, correct the condition as instructed in the bulletin. Was a bulletin found that addresses the symptom?	—	Verify repair	Go to *Step 3*
3	Was a visual/physical check performed?	—	Go to *Step 4*	Go to *Visual/Physical Check*
4	1. Remove and check the air filter element for dirt or restrictions. Refer to *Air Intake System* in *ON-Vehicle Service*. 2. Replace the air filter element if necessary. Was a repair required?	—	Verify repair	Go to *Step 5*
5	1. Check for low fuel pressure. Refer to *Fuel System Pressure Test*. 2. If a problem is found, repair as necessary. Was a problem found?	—	Verify repair	Go to *Step 6*
6	1. Check for water- or alcohol-contaminated fuel. 2. If a problem is found, repair as necessary. Was a problem found?	—	Verify repair	Go to *Step 7*
7	1. Using Tech 2, monitor the knock sensor (KS) system for excessive spark retard activity. Refer to *Knock Sensor (KS) System*. 2. If a problem is found, repair as necessary. Was a problem found?	—	Verify repair	Go to *Step 8*
8	1. Check for proper ignition voltage output with spark tester J 26792 (ST-125). Refer to *Electronic Ignition System* for procedure. 2. If a problem is found, repair as necessary. Was a problem found?	—	Verify repair	Go to *Step 9*
9	1. Remove the spark plugs and check for wet plugs, cracks, wear, improper gap, burned electrodes, or heavy deposits. Refer to *Electronic Ignition System*. NOTE: If spark plugs are gas or oil fouled, the cause of the fouling must be determined before replacing the spark plugs. 2. If a problem is found, repair as necessary. Was a problem found?	—	Verify repair	Go to *Step 10*
10	1. Check the ignition coils for cracks or carbon tracking. 2. If a problem is found, repair as necessary. Was a problem found?	—	Verify repair	Go to *Step 11*

Lack of Power, Sluggish or Spongy Symptom (Cont'd)

Step	Action	Value(s)	Yes	No
11	1. Check the PCM grounds for the cleanliness, tightness and proper locations. Refer to the PCM wiring diagrams in *Electrical Diagnosis*. 2. If a problem is found, repair as necessary. Was a problem found?	—	Verify repair	Go to *Step 12*
12	1. Check the exhaust system for possible restriction: ● Inspect the exhaust system for damaged or collapsed pipes. ● Inspect the muffler for heat distress or possible internal failure. ● Check for a possible plugged three-way catalytic converter by checking the exhaust system back pressure. Refer to *Restricted Exhaust System Check*. 2. If a problem is found, repair as necessary. Was a problem found?	—	Verify repair	Go to *Step 13*
13	1. Check the torque converter clutch (TCC) for proper operation. Refer to *4L30-E Transmission Diagnosis*. 2. If a problem is found, repair as necessary. Was a problem found?	—	Verify repair	Go to *Step 14*
14	1. Check for an engine mechanical problem. Check for low compression, incorrect or worn camshaft, loose timing belt, etc. Refer to *Engine Mechanical*. 2. If a problem is found, repair as necessary. Was a problem found?	—	Verify repair	Go to *Step 15*
15	1. Review all diagnostic procedures within this table. 2. If all procedures have been completed and no malfunctions have been found, review/inspect the following: ● Visual/physical inspection ● Tech 2 data ● Freeze Frame data/Failure Records buffer ● All electrical connections within a suspected circuit and/or system. 3. If a problem is found, repair as necessary. Was a problem found?	—	Verify repair	Contact Technical Assistance

Detonation/Spark Knock Symptom

Step	Action	Value(s)	Yes	No
1	**DEFINITION:** A mild to severe ping, usually worse under acceleration. The engine makes sharp metallic knocks that change with throttle opening. Was the “On-Board Diagnostic (OBD) System Check” performed?	—	Go to *Step 2*	Go to *OBD System Check*
2	1. Perform a bulletin search. 2. If a bulletin that addresses the symptom is found, correct the condition as instructed in the bulletin. Was a bulletin found that addresses the symptom?	—	Verify repair	Go to *Step 3*
3	Was a visual/physical check performed?	—	Go to *Step 4*	Go to *Visual/Physical Check*
4	If Tech 2 readings are normal (refer to *Typical Scan Values*) and there are no engine mechanical faults, fill the fuel tank with a known quality gasoline that has a minimum octane rating of 87 and re-evaluate the vehicle performance. Is detonation present?	—	Go to *Step 5*	Verify repair
5	1. Check the transmission range switch circuit. Use Tech 2 and be sure Tech 2 indicates that the vehicle is in drive with the gear selector in drive or overdrive. 2. If a problem is found, diagnose and repair the transmission range switch as necessary (refer to *4L30-E Automatic Transmission Diagnosis*). Was a problem found?	—	Verify repair	Go to *Step 6*
6	1. Check TCC operation. Refer to *4L30-E Transmission Diagnosis*. 2. If a problem is found, repair as necessary. Was a problem found?	—	Verify repair	Go to *Step 7*
7	1. Check for obvious overheating problems: • Low engine coolant. • Restricted air flow to radiator, or restricted water flow through radiator. • Correct coolant solution should be a 50/50 mix of approved antifreeze/coolant and water. Refer to *Engine Cooling*. 2. If a problem is found, repair as necessary. Was a problem found?	—	Verify repair	Go to *Step 8*
8	1. Check fuel pressure. Refer to Chart Fuel System Pressure Test. 2. If a problem is found, repair as necessary. Was a problem found?	—	Verify repair	Go to *Step 9*
9	1. Check items that can cause an engine to run lean (long term fuel trim significantly in the positive range). For a lean condition, refer to *Diagnostic Aids* in *DTC P0171 Diagnostic Support*. 2. If a problem is found, repair as necessary. Was a problem found?	—	Verify repair	Go to *Step 10*

Detonation/Spark Knock Symptom (Cont'd)

Step	Action	Value(s)	Yes	No
10	1. Spark plugs for proper heat range. Refer to *General Information*. 2. If incorrect spark plugs are installed, replace spark plugs as necessary. Did any spark plugs require replacement?	—	Verify repair	Go to *Step 11*
11	1. Remove excessive carbon buildup with a top engine cleaner. Refer to instructions on the top engine cleaner can. 2. Re-evaluate vehicle performance. Is detonation still present?	—	Go to *Step 12*	Verify repair
12	1. Check for an engine mechanical problem. Perform a cylinder compression check. Refer to *Engine Mechanical*. 2. If a problem is found, repair as necessary. Was a problem found?	—	Verify repair	Go to *Step 13*
13	1. Review all diagnostic procedures within this table. 2. If all procedures have been completed and no malfunctions have been found, review/inspect the following: • Visual/physical inspection • Tech 2 data • Freeze Frame data/Failure Records buffer • All electrical connections within a suspected circuit and/or system. 3. If a problem is found, repair as necessary. Was a problem found?	—	Verify repair	Contact Technical Assistance

Rough, Unstable, or Incorrect Idle, Stalling Symptom

Step	Action	Value(s)	Yes	No
1	**DEFINITION:** Engine runs unevenly at idle. If severe, the engine or vehicle may shake. Engine idle speed may vary in RPM. Either condition may be severe enough to stall the engine. Was the “On-Board Diagnostic (OBD) System Check” performed?	—	Go to *Step 2*	Go to *OBD System Check*
2	1. Perform a bulletin search. 2. If a bulletin that addresses the symptom is found, correct the condition as instructed in the bulletin. Was a bulletin found that addresses the symptom?	—	Go to *Step 13*	Go to *Step 3*
3	Was a visual/physical check performed?	—	Go to *Step 4*	Go to *Visual/Physical Check*
4	1. Check the PCM grounds for cleanliness, tightness and proper routing. Refer to the PCM wiring diagrams in *Electrical Diagnosis*. 2. If a problem is found, repair as necessary. Was a problem found?	—	Verify repair	Go to *Step 5*
5	Observe the long term fuel trim on Tech 2. Is the long term fuel trim significantly in the negative range (rich condition)?	—	Go to *Step 6*	Go to *Step 7*
6	1. Check items that can cause the engine to run rich. Refer to *Diagnostic Aids* in *DTC P0172 Diagnostic Support*. 2. If a problem is found, repair as necessary. Was a problem found?	—	Verify repair	Go to *Step 9*
7	Is the long term fuel trim significantly in the positive range (lean condition)?	—	Go to *Step 8*	Go to *Step 9*
8	1. Check items that can cause the engine to run lean. Refer to *Diagnostic Aids* in *DTC P0171 Diagnostic Support*. 2. If a problem is found, repair as necessary. Was a problem found?	—	Verify repair	Go to *Step 9*
9	1. Check for incorrect idle speed. Ensure that the following conditions are present: ● The engine is fully warm. ● The accessories are “OFF.” 2. Using Tech 2, monitor the IAC position. Is the IAC position within the specified values?	Between 10 and 50 counts	Go to *Step 11*	Go to *Step 10*

Rough, Unstable, or Incorrect Idle, Stalling Symptom (Cont'd)

Step	Action	Value(s)	Yes	No
10	1. Visually/physically inspect for the following conditions: ● Restricted air intake system. Check for a possible collapsed air intake duct, restricted air filter element, or foreign objects blocking the air intake system. ● Throttle body. Check for objects blocking the IAC passage or throttle bore, excessive deposits in the IAC passage and on the IAC pintle, and excessive deposits in the throttle bore and on the throttle plate. ● Large vacuum leak. Check for a condition that causes a large vacuum leak, such as an incorrectly installed or faulty crankcase ventilation valve or a disconnected brake booster hose. 2. If a problem is found, repair as necessary. Was a problem found?	—	Verify repair	Go to *Step 8*
11	Check the injector connections. If any of the injectors are connected to an incorrect cylinder, correct as necessary. Was a problem found?	—	Verify repair	Go to *Step 12*
12	1. Perform the "Injector Coil/Balance Test" in *Fuel Metering System*. 2. If a problem is found, repair as necessary. Was a problem found?	—	Verify repair	Go to *Step 13*
13	1. Check for fuel in the pressure regulator vacuum hose. 2. If fuel is present, replace the fuel pressure regulator assembly. Refer to *Fuel Metering System*. 3. If a problem is found, repair as necessary. Was a problem found?	—	Verify repair	Go to *Step 14*
14	1. Check for proper ignition voltage output with spark tester J 26792 (ST-125). Refer to *Electronic Ignition System* for the procedure. 2. If a problem is found, repair as necessary. Was a problem found?	—	Verify repair	Go to *Step 15*
15	1. Remove spark plugs. Check for wet plugs, cracks, wear, improper gap, burned electrodes, or heavy deposits. Refer to *Electronic Ignition System*. NOTE: If spark plugs are gas or oil fouled, the cause of the fouling must be determined before replacing the spark plugs. 2. If a problem is found, repair as necessary. Was a problem found?	—	Verify repair	Go to *Step 16*
16	1. Check for a loose ignition coil ground. Refer to *Electrical Ignition System*. 2. If a problem is found, repair as necessary. Was a problem found?	—	Verify repair	Go to *Step 17*

Rough, Unstable, or Incorrect Idle, Stalling Symptom (Cont'd)

Step	Action	Value(s)	Yes	No
17	1. Check ignition coils for cracks or carbon tracking. 2. If a problem is found, repair as necessary. Was a problem found?	—	Verify repair	Go to *Step 18*
18	Using Tech 2, monitor the throttle position (TP) angle with the engine idling. Is the TP angle at the specified value and steady?	0%	Go to *Step 19*	Refer to *DTC P0123* for further diagnosis
19	1. Check the positive crankcase ventilation (PCV) valve for proper operation. Refer to *Crankcase Ventilation System*. 2. If a problem is found, repair as necessary. Was a problem found?	—	Verify repair	Go to *Step 20*
20	1. Check the transmission range switch circuit. Use Tech 2 and be sure Tech 2 indicates that the vehicle is in drive with the gear selector in drive or overdrive. 2. If a problem is found, diagnose and repair the transmission range switch as necessary (refer to *4L30-E Automatic Transmission Diagnosis*). Was a problem found?	—	Verify repair	Go to *Step 21*
21	1. Check for the following engine mechanical items. Refer to *Engine Mechanical* for diagnosis procedures: • EGR valve mounted backward. Compare with a known-good vehicle. • Low compression • Sticking or leaking valves • Worn camshaft lobe(s) • Camshaft drive belt slipped or stripped • Incorrect valve timing • Worn rocker arms • Broken valve springs 2. If a problem is found, repair as necessary. Was a problem found?	—	Verify repair	Go to *Step 22*
22	1. Check for faulty motor mounts. Refer to *Engine Mechanical* for inspection of mounts. 2. If a problem is found, repair as necessary. Was a problem found?	—	Verify repair	Go to *Step 23*
23	1. Review all diagnostic procedures within this table. 2. If all procedures have been completed and no malfunctions have been found, review/inspect the following: • Visual/physical inspection • Tech 2 data • Freeze Frame data/Failure Records buffer • All electrical connections within a suspected circuit and/or system. 3. If a problem is found, repair as necessary. Was a problem found?	—	Verify repair	Contact Technical Assistance

Poor Fuel Economy Symptom

Step	Action	Value(s)	Yes	No
1	**DEFINITION:** Fuel economy, as measured by an actual road test, is noticeably lower than expected. Also, economy is noticeably lower than it was on this vehicle at one time, as previously shown by an actual road test. (Non-standard tires will cause odometer readings to be incorrect, and that may cause fuel economy to appear poor when it is actually normal.) Was the "On-Board Diagnostic (OBD) System Check" performed?	—	Go to *Step 2*	Go to *OBD System Check*
2	1. Perform a bulletin search. 2. If a bulletin that addresses the symptom is found, correct the condition as instructed in the bulletin. Was a bulletin found that addresses the symptom?	—	Verify repair	Go to *Step 3*
3	Was a visual/physical check performed?	—	Go to *Step 4*	Go to *Visual/Physical Check*
4	Check owner's driving habits. ● Is the A/C "ON" full time (defroster mode "ON")? ● Are tires at the correct pressure? ● Are excessively heavy loads being carried? ● Is acceleration too much, too often? Was a problem found?	—	Go to *Step 5*	Go to *Step 6*
5	Review the items in Step 4 with the customer and advise as necessary. Is the action complete?	—	System OK	—
6	1. Visually/physically check: Vacuum hoses for splits, kinks, and improper connections and routing as shown on the "Vehicle Emission Control Information" label. 2. If a problem is found, repair as necessary. Was a problem found?	—	Verify repair	Go to *Step 7*
7	1. Remove and check the air filter element for dirt or for restrictions. Refer to *Air Intake System*. 2. Replace the air filter element if necessary. Was a repair required?	—	Verify repair	Go to *Step 8*
8	1. Remove spark plugs and check for wet plugs, cracks, wear, improper gap, burned electrodes, or heavy deposits. Refer to *Spark Plug Replacement*. NOTE: If spark plugs are gas or oil fouled, the cause of the fouling must be determined before replacing the spark plugs. 2. If a problem is found, repair as necessary. Was a problem found?	—	Verify repair	Go to *Step 9*
9	1. Check for low engine coolant level. Refer to *Engine Cooling*. 2. If a problem is found, repair as necessary. Was a problem found?	—	Verify repair	Go to *Step 10*

Poor Fuel Economy Symptom (Cont'd)

Step	Action	Value(s)	Yes	No
10	1. Check for an incorrect or faulty engine thermostat. Refer to *Engine Cooling*. 2. If a problem is found, repair as necessary. Was a problem found?	—	Verify repair	Go to *Step 11*
11	1. Check for low engine compression. Refer to *Engine Mechanical*. 2. If a problem is found, repair as necessary. Was a problem found?	—	Verify repair	Go to *Step 12*
12	1. Check the TCC operation. Refer to *4L30-E Transmission Diagnosis*. 2. If a problem is found, repair as necessary. Was a problem found?	—	Verify repair	Go to *Step 13*
13	1. Check the exhaust system for possible restriction: ● Inspect the exhaust system for damaged or collapsed pipes. ● Inspect the muffler for heat distress or possible internal failure. ● Check for a possible plugged three-way catalytic converter by checking the exhaust system back pressure. Refer to *Restricted Exhaust System Check*. 2. If a problem is found, repair as necessary. Was a problem found?	—	Verify repair	Go to *Step 14*
14	Check for proper calibration of the speedometer. Does the speed indicated on the speedometer closely match the vehicle speed displayed on Tech 2?	—	Go to *Step 16*	Go to *Step 15*
15	Diagnose and repair an inaccurate speedometer condition as necessary. Refer to *Vehicle Speed Sensor* in *Electrical Diagnosis*. Was a problem found?	—	Verify repair	—
16	1. Check the air intake system and the crankcase for air leaks. Refer to *Air Intake System* and *Crankcase Ventilation System*. 2. If a problem is found, repair as necessary. Was a problem found?	—	Verify repair	Go to *Step 17*
17	1. Review all diagnostic procedures within this table. 2. When all procedures have been completed and no malfunctions have been found, review/inspect the following: ● Visual/physical inspection ● Tech 2 data ● Freeze Frame data/Failure Records buffer ● All connections within a suspected circuit and/or system. 3. If a problem is found, repair as necessary. Was a problem found?	—	Verify repair	Go to *Step 18*
18	Perform the procedure in *Fuel System Pressure Test*. Was the fuel pressure normal?	—	Contact Technical Assistance	Verify repair

Excessive Exhaust Emissions or Odors Symptom

Step	Action	Value(s)	Yes	No
1	**DEFINITION:** Vehicle fails an emission test. Vehicle has excessive "rotten egg" smell. (Excessive odors do not necessarily indicate excessive emissions.) Was the "On-Board Diagnostic (OBD) System Check" performed?	—	Go to *Step 2*	Go to *OBD System Check*
2	1. Perform a bulletin search. 2. If a bulletin that addresses the symptom is found, correct the condition as instructed in the bulletin. Was a bulletin found that addresses the symptom?	—	Go to *Step 12*	Go to *Step 3*
3	Was a thorough visual/physical check performed?	—	Go to *Step 4*	Go to *Visual/Physical Check*
4	1. Check for vacuum leaks. Check vacuum lines, intake manifold, throttle body, etc. 2. If a problem is found, repair as necessary. Were any vacuum leaks located?	—	Go to *Step 12*	Go to *Step 5*
5	1. Check the fuel cap for proper installation. 2. Secure the fuel cap if necessary. Was the fuel cap installed properly?	—	Go to *Step 6*	Go to *Step 12*
6	1. Check the fuel pressure. Perform the procedure in *Fuel System Pressure Test*. 2. If a problem is found, repair as necessary. Was a problem found?	—	Go to *Step 12*	Go to *Step 7*
7	1. Check for a faulty, plugged, or incorrectly installed crankcase ventilation valve; also check the crankcase ventilation system for plugging. 2. If a problem is found, repair as necessary. Was a problem found?	—	Go to *Step 12*	Go to *Step 8*
8	1. Check the injector connections. 2. If any of the injectors are connected to an incorrect cylinder, correct as necessary. Was a problem found?	—	Go to *Step 12*	Go to *Step 9*
9	1. Perform the "Injector Coil/Balance Test" in *Fuel Metering System*. 2. If a problem is found, repair as necessary. Was a problem found?	—	Go to *Step 12*	Go to *Step 10*
10	1. Refer to *Engine Cooling* for cooling system diagnosis. 2. If a problem is found, repair as necessary. Was a problem found?	—	Go to *Step 12*	Go to *Step 11*
11	1. Remove excessive carbon buildup with a top engine cleaner. Refer to the instructions on the top engine cleaner can. 2. Perform the exhaust emission test. Does the vehicle pass the test?	—	System OK	Go to *Step 13*
12	Perform the exhaust emission test. Does the vehicle pass the test?	—	System OK	Go to *Step 13*

Excessive Exhaust Emissions or Odors Symptom (Cont'd)

Step	Action	Value(s)	Yes	No
13	Does the exhaust emission test indicate excessive CO and HC levels or is long term fuel trim significantly in the negative range (rich condition)?	—	Go to *Step 14*	Go to *Step 15*
14	1. Check items that can cause the engine to run rich. Refer to *Diagnostic Aids* in *DTC P0172 Diagnostic Support*. Make any necessary repairs. 2. Perform the exhaust emission test. Does the vehicle pass the test?	—	System OK	Go to *Step 16*
15	1. Check items that can cause the engine to run lean. Refer to *Diagnostic Aids* in *DTC P0171 Diagnostic Support*. Make any necessary repairs. 2. Perform the exhaust emission test. Does the vehicle pass the test?	—	System OK	Go to *Step 16*
16	1. Check the EGR system. 2. If a problem is found, repair as necessary. Was a problem found?	—	Go to *Step 12*	Go to *Step 17*
17	1. Check for an engine mechanical problem. Perform a cylinder compression check (refer to *Engine Mechanical*). 2. If a problem is found, repair as necessary. Was a problem found?	—	Go to *Step 12*	Go to *Step 18*
18	1. Review all diagnostic procedures within this table. 2. If all procedures have been completed and no malfunctions have been found, review/inspect the following: ● Visual/physical inspection ● Tech 2 data ● Freeze Frame data/Failure Records butter ● All electrical connections within a suspected circuit and/or system. 3. If a problem is found, repair as necessary. Was a problem found?	—	Verify repair	Contact Technical Assistance

Dieseling, Run-On Symptom

Step	Action	Value(s)	Yes	No
1	**DEFINITION:** Engine continues to run after key is turned “OFF,” but runs very rough. If engine runs smooth, check ignition switch and adjustment. Was the “On-Board Diagnostic (OBD) System Check” performed?	—	Go to *Step 2*	Go to *OBD System Check*
2	1. Perform a bulletin search. 2. If a bulletin that addresses the symptom is found, correct the condition as instructed in the bulletin. Was a bulletin found that addresses the symptom?	—	Verify repair	Go to *Step 3*
3	Was a visual/physical check performed?	—	Go to *Step 4*	Go to *Visual/Physical Check*
4	1. Check for a short between B+ and any of the ignition feed circuits. 2. If a problem is found, repair as necessary. Was a problem found?	—	Verify repair	Go to *Step 5*
5	1. Review all diagnostic procedures within this table. 2. If all procedures have been completed and no malfunctions have been found, review/inspect the following: ● Visual/physical inspection ● Tech 2 data ● Freeze Frame data/Failure Records butter ● All electrical connections within a suspected circuit and/or system 3. If a problem is found, repair as necessary. Was a problem found?	—	Verify repair	Contact Technical Assistance

Backfire Symptom

Step	Action	Value(s)	Yes	No
1	**DEFINITION:** Fuel ignites in the intake manifold, or in the exhaust system, making a loud popping noise. Was the “On-Board Diagnostic (OBD) System Check” performed?	—	Go to *Step 2*	Go to *OBD System Check*
2	1. Perform a bulletin search. 2. If a bulletin that addresses the symptom is found, correct the condition as instructed in the bulletin. Was a bulletin found that addresses the symptom?	—	Verify repair	Go to *Step 3*
3	Was a visual/physical check performed?	—	Go to *Step 4*	Go to *Visual/Physical Check*
4	1. Check for proper ignition voltage coil output with spark tester 5-8840-0383-0. Refer to *Electric Ignition System* for procedure. 2. If a problem is found, repair as necessary. Was a problem found?	—	Verify repair	Go to *Step 5*
5	1. Remove spark plugs and check for wet plugs, cracks, wear, improper gap, burned electrodes, or heavy deposits. Refer to *Electronic Ignition System*. NOTE: If spark plugs are gas or oil fouled, the cause of the fouling must be determined before replacing the spark plugs. Refer to *DTC P0172* to determine the cause of a rich condition or *Engine Mechanical* for an oil fouling condition. 2. If a problem is found, repair as necessary. Was a problem found?	—	Verify repair	Go to *Step 6*
6	1. Visually/physically inspect the ignition coils for cracks. 2. If a problem is found, repair as necessary. Was a problem found?	—	Verify repair	Go to *Step 7*
7	1. Check for an intermittent ignition system malfunction: • Intermittent CKP 58X signal. • Intermittent ignition feed circuit or sensor ground circuit to the crankshaft position sensor. 2. If a problem is found, repair as necessary. Was a problem found?	—	Verify repair	Go to *Step 8*
8	1. Check the fuel pressure. Refer to *Fuel System Pressure Test*. 2. If a problem is found, repair as necessary. Was a problem found?	—	Verify repair	Go to *Step 9*

Backfire Symptom (Cont'd)

Step	Action	Value(s)	Yes	No
9	1. Check for the following engine mechanical conditions. Refer to *Engine Mechanical* for diagnosis procedures: ● Low compression ● Sticking or leaking valves ● Worn camshaft lobe(s) ● Camshaft drive belt slipped or stripped ● Incorrect valve timing 2. If a problem is found, repair as necessary. Was a problem found?	—	Verify repair	Go to *Step 10*
10	1. Check the intake and exhaust manifold(s) for casting flash. Refer to *Engine Mechanical*. 2. If a problem is found, repair as necessary. Was a problem found?	—	Verify repair	Go to *Step 11*
11	1. Review all diagnostic procedures within this table. 2. If all procedures have been completed and no malfunctions have been found, review/inspect the following: ● Visual/physical inspection ● Tech 2 data ● Freeze Frame data/Failure Records butter ● All electrical connections within a suspected circuit and/or system. 3. If a problem is found, repair as necessary. Was a problem found?	—	Verify repair	Contact Technical Assistance

Cuts Out, Misses Symptom

Step	Action	Value(s)	Yes	No
1	**DEFINITION:** Steady pulsation or jerking that follows engine speed; usually more pronounced as engine load increases. Was the “On-Board Diagnostic (OBD) System Check” performed?	—	Go to *Step 2*	Go to *OBD System Check*
2	1. Perform a bulletin search. 2. If a bulletin that addresses the symptom is found, correct the condition as instructed in the bulletin. Was a bulletin found that addresses the symptom?	—	Go to *Step 13*	Go to *Step 3*
3	Was a visual/physical check performed?	—	Go to *Step 4*	Go to *Visual/Physical Check*
4	1. Check the PCM grounds for clearness, tightness and proper routing. Refer to the PCM wiring diagrams in *Electrical Diagnosis*. 2. If a problem is found, repair as necessary. Was a problem found?	—	Verify repair	Go to *Step 5*
5	Observe the long term fuel trim on Tech 2. Is the long term fuel trim significantly in the negative range (rich condition)?	—	Go to *Step 6*	Go to *Step 7*
6	1. Check items that can cause the engine to run rich. Refer to *Diagnostic Aids* in *DTC P0172 Diagnostic Support*. 2. If a problem is found, repair as necessary. Was a problem found?	—	Verify repair	Go to *Step 9*
7	Is the long term fuel trim significantly in the positive range (lean condition)?	—	Go to *Step 8*	Go to *Step 9*
8	1. Check items that can cause the engine to run lean. Refer to *Diagnostic Aids* in *DTC P0171 Diagnostic Support*. 2. If a problem is found, repair as necessary. Was a problem found?	—	Verify repair	Go to *Step 9*
9	1. Check for incorrect idle speed. Ensure that the following conditions are present: ● The engine is fully warm. ● The accessories are “off.” 2. Using Tech 2, monitor the IAC position. Is the IAC position within the specified values?	Between 5 and 50 counts	Go to *Step 11*	Go to *Step 10*

Cuts Out, Misses Symptom (Cont'd)

Step	Action	Value(s)	Yes	No
10	1. Visually/physically inspect for the following conditions: ● Restricted air intake system. Check for a possible collapsed air intake duct, restricted air filter element, or foreign objects blocking the air intake system. ● Throttle body. Check for objects blocking the IAC passage or throttle bore, excessive deposits in the IAC passage and on the IAC pintle, and excessive deposits in the throttle bore and on the throttle plate. ● Large vacuum leak. Check for a condition that causes a large vacuum leak, such as an incorrectly installed or faulty PCV valve or brake booster hose disconnected . 2. If a problem is found, repair as necessary. Was a problem found?	—	Verify repair	Go to *Step 8*
11	Check the injector connections. If any of the injectors are connected to an incorrect cylinder, correct as necessary. Was a problem found?	—	Verify repair	Go to *Step 12*
12	1. Perform the "Injector Coil/Balance Test" in *Fuel Metering System*. 2. If a problem is found, repair as necessary. Was a problem found?	—	Verify repair	Go to *Step 13*
13	1. Check for fuel in the pressure regulator vacuum hose. 2. If fuel is present, replace the fuel pressure regulator assembly. Refer to *Fuel Metering System*. 3. If a problem is found, repair as necessary. Was a problem found?	—	Verify repair	Go to *Step 14*
14	1. Check for proper ignition voltage output with spark tester J 26792 (ST-125). Refer to *Electronic Ignition System* for the procedure. 2. If a problem is found, repair as necessary. Was a problem found?	—	Verify repair	Go to *Step 15*
15	1. Remove spark plugs. Check for wet plugs, cracks, wear, improper gap, burned electrodes, or heavy deposits. Refer to *Electronic Ignition System*. NOTE: If spark plugs are gas or oil fouled, the cause of the fouling must be determined before replacing the spark plugs. 2. If a problem is found, repair as necessary. Was a problem found?	—	Verify repair	Go to *Step 16*
16	1. Check for a loose ignition coil ground. Refer to *Electronic Ignition System*. 2. If a problem is found, repair as necessary. Was a problem found?	—	Verify repair	Go to *Step 17*

Cuts Out, Misses Symptom (Cont'd)

Step	Action	Value(s)	Yes	No
17	1. Check ignition coils for cracks or carbon tracking. 2. If a problem is found, repair as necessary. Was a problem found?	—	Verify repair	Go to *Step 18*
18	Using Tech 2, monitor the TP angle with the engine idling. Is the TP angle at the specified value and steady?	0%	Go to *Step 19*	Refer to *DTC P0123* for further diagnosis
19	1. Check the PCV valve for proper operation. Refer to *Crankcase Ventilation System*. 2. If a problem is found, repair as necessary. Was a problem found?	—	Verify repair	Go to *Step 20*
20	1. Check the transmission range switch circuit. Use Tech 2 and be sure Tech 2 indicates that the vehicle is in drive with the gear selector in drive or overdrive. 2. If a problem is found, diagnose and repair the transmission range switch as necessary (refer to *4L30-E Automatic Transmission Diagnosis*). Was a problem found?	—	Verify repair	Go to *Step 21*
21	1. Check the following engine mechanical items. Refer to *Engine Mechanical* for diagnosis procedures: • Low compression • Sticking or leaking valves • Worn camshaft lobe(s) • Camshaft drive belt slipped or stripped • Incorrect valve timing • Worn rocker arms • Broken valve springs 2. If a problem is found, repair as necessary. Was a problem found?	—	Verify repair	Go to *Step 22*
22	1. Check for faulty motor mounts. Refer to *Engine Mechanical* for inspection of mounts. 2. If a problem is found, repair as necessary. Was a problem found?	—	Verify repair	Go to *Step 23*
23	1. Review all diagnostic procedures within this table. 2. If all procedures have been completed and no malfunctions have been found, review/inspect the following: • Visual/physical inspection • Tech 2 data • Freeze Frame data/Failure Records butter • All electrical connections within a suspected circuit and/or system 3. If a problem is found, repair as necessary. Was a problem found?	—	Verify repair	Contact Technical Assistance

Hesitation, Sag, Stumble Symptom

Step	Action	Value(s)	Yes	No
1	**DEFINITION:** Momentary lack of response as the accelerator is pushed down. Can occur at any vehicle speed. Usually most pronounced when first trying to make the vehicle move, as from a stop sign. May cause the engine to stall if severe enough. Was the "On-Board Diagnostic (OBD) System Check" performed?	—	Go to *Step 2*	Go to *OBD System Check*
2	1. Perform a bulletin search. 2. If a bulletin that addresses the symptom is found, correct the condition as instructed in the bulletin. Was a bulletin found that addresses the symptom?	—	Verify repair	Go to *Step 3*
3	Was a visual/physical check performed?	—	Go to *Step 4*	Go to *Visual/Physical Check*
4	1. Check the fuel control heated oxygen sensors (HO2S, B1S1 and B2S1). The fuel control heated oxygen sensors (HO2S) should respond quickly to different throttle positions. If they don't, check them for silicon or other contaminants from fuel or use of improper RTV sealant. The sensors may have a white powdery coating. Silicon contamination causes a high but false HO2S signal voltage (rich exhaust indication). The PCM will then reduce the amount of fuel delivered to the engine, causing a severe driveability problem. For more information, refer to *Powertrain Control Module (PCM) and Sensors*. 2. If a problem is found, repair as necessary. Was a problem found?	—	Verify repair	Go to *Step 5*
5	1. Check the fuel pressure. Refer to *Fuel System Pressure Test.* 2. If a problem is found, repair as necessary. Was a problem found?	—	Verify repair	Go to *Step 6*
6	Observe the TP angle display on Tech 2 while slowly increasing throttle pedal. Does the TP angle display steadily increase from 0% at closed throttle to 100% at WOT?	—	Go to *Step 7*	Go to *Step 18*
7	Monitor the long term fuel trim on Tech 2. Is the long term fuel trim significantly in the negative range (rich condition)?	—	Go to *Step 8*	Go to *Step 9*
8	1. Check items that can cause the engine to run rich. Refer to *Diagnostic Aids* in *DTC P0172 Diagnostic Support*. 2. If a problem is found, repair as necessary. Was a problem found?	—	Verify repair	Go to *Step 10*
9	1. Check items that can cause the engine to run lean. Refer to *Diagnostic Aids* in *DTC P0171 Diagnostic Support*. 2. If a problem is found, repair as necessary. Was a problem found?	—	Verify repair	Go to *Step 10*

Hesitation, Sag, Stumble Symptom (Cont'd)

Step	Action	Value(s)	Yes	No
10	1. Check for proper ignition voltage output with spark tester J 26792 (ST-125). Refer to *Electronic Ignition System* for the procedure. 2. If a problem is found, repair as necessary. Was a problem found?	—	Verify repair	Go to *Step 11*
11	1. Check for a loose ignition coil ground. Refer to *Electronic Ignition System*. 2. If a problem is found, repair as necessary. Was a problem found?	—	Verify repair	Go to *Step 12*
12	1. Check the ignition coils for cracks or carbon tracking. 2. If a problem is found, repair as necessary. Was a problem found?	—	Verify repair	Go to *Step 13*
13	1. Remove spark plugs and check for wet plugs, cracks, wear, improper gap, burned electrodes, or heavy deposits. Refer to *Electronic Ignition System*. NOTE: If spark plugs are gas or oil fouled, the cause of the fouling must be determined before replacing the spark plugs. 2. If a problem is found, repair as necessary. Was a problem found?	—	Verify repair	Go to *Step 14*
14	1. Check the PCM grounds for clearness, tightness and proper routing. Refer to the PCM wiring diagrams in Electrical Diagnosis. 2. If a problem is found, repair as necessary. Was a problem found?	—	Verify repair	Go to *Step 15*
15	1. Check the MAF sensor connections. 2. If a problem is found, replace the faulty terminals as necessary. Refer to *Electrical Diagnosis* for wiring repair procedures. Was a problem found?	—	Verify repair	Go to *Step 16*
16	1. Visually/physically check vacuum hoses for splits, kinks, and proper connections and routing as shown on the "Vehicle Emission Control Information" label. 2. If a problem is found, repair as necessary. Was a problem found?	—	Verify repair	Go to *Step 17*

Hesitation, Sag, Stumble Symptom (Cont'd)

Step	Action	Value(s)	Yes	No
17	1. Review all diagnostic procedures within this table. 2. If all procedures have been completed and no malfunctions have been found, review/inspect the following: ● Visual/physical inspection ● Tech 2 data ● Freeze Frame data/Failure Records butter ● All electrical connections within a suspected circuit and/or system 3. If a problem is found, repair as necessary. Was a problem found?	—	Verify repair	Contact Technical Assistance
18	Replace the TP sensor. Is the action complete?	—	Verify repair	—

Default Matrix Table

Service Procedure Default Strategy

A referral strategy has been established to assist the technician with additional information when the cause of the failure cannot be determined. If no problem is found after performing diagnostics, then refer to the default matrix table for further diagnostic information.

Default Matrix Table

Strategy Based Diagnostic Charts	Initial Diagnosis	Default Section(s)
On-Board Diagnostic (OBD) System Check	Vehicle does not enter diagnostics.	Chassis Electrical
On-Board Diagnostic (OBD) System Check	Vehicle enters diagnostics and communicates with Tech 2. MIL is “ON” in diagnostics. Engine does not start and run.	Ignition System Check
On-Board Diagnostic (OBD) System Check	Engine starts and runs, no PCM codes set. Customer complains of vibration.	—
On-Board Diagnostic (OBD) System Check	Engine starts and runs, no PCM codes set. Customer complains of harsh or soft shift, poor performance, delayed or no engagement into drive or reverse, transmission fluid leak, transmission noise or vibration, or improper TCC operation.	Automatic Transmission
PCM Power and Ground Check	On-Board Diagnostic (OBD) System Check.	Chassis Electrical
PCM Power and Ground Check	On-Board Diagnostic (OBD) System Check. PCM power and ground circuits OK. Data link voltage incorrect.	Chassis Electrical
On-Board Diagnostic (OBD) System Check	Engine starts and runs, no PCM codes set. Customer complains of harsh or soft shift, poor performance, delayed or no engagement into drive or reverse, transmission fluid leak, transmission noise or vibration, or improper TCC operation.	Automatic Transmission

Symptoms	Initial Diagnosis	Default Section(s)
Intermittents	1. On-board Diagnostic (OBD) system check. 2. Careful visual/physical inspections.	Chassis Electrical
Hard Starts	1. OBD system check. 2. Sensors (ECT, MAP, MAF, TP) ; MAP output chart. 3. Fuel system electrical test, fuel system diagnosis. 4. Ignition system. 5. IAC system check.	Engine Mechanical, Ignition System Check, Exhaust System Diagnosis
Surges and/or Chuggles	1. OBD system check. 2. Heated oxygen sensors. 3. Fuel system diagnosis. 4. Ignition system.	Calibration ID “Broadcast Code”/Service Bulletins, Ignition System Check, Generator Output, Exhaust System Diagnosis, 4L30-E System Test

Symptoms	Initial Diagnosis	Default Section(s)
Lack of Power, Sluggish or Spongy	1. OBD system check. 2. Fuel system diagnosis. 3. Ignition system. 4. Knock sensor. 5. EGR operation. 6. EGR system check.	Refer to *Exhaust System* in *Engine Exhaust*, TCC Operation, Calibration ID/Service Bulletins
Detonation/Spark Knock	1. OBD system check. 2. Transmission range switch. 3. EGR operation. 4. EGR system check. 5. TCC operation. 6. Fuel system diagnosis. 7. Ignition system. 8. Knock sensor.	TCC operation, Cooling System, Ignition System Check, Calibration ID/Service Bulletins
Hesitation, Sag, Stumble	1. OBD system check. 2. TP. 3. MAP output check. 4. Fuel system diagnosis. 5. Fuel injector and fuel injector balance test. 6. Ignition system.	EGR Operation, EGR System Check, Generator Output Voltage (refer to *Chassis Electrical*), Calibration ID/Service Bulletins, Ignition System Check
Cuts Out, Misses	1. OBD system check. 2. Cylinder balance test.	Ignition System Check
Rough, Unstable, or Incorrect Idle, Stalling	1. OBD system check. 2. Fuel injector and fuel injector balance test. 3. Ignition system. 4. IAC operation. 5. EGR operation.	MAP Output Check, Throttle Linkage, IAC System Check, EGR System Check, A/C Clutch Control Circuit Diagnosis, Crankcase Ventilation System, Calibration ID/Service Bulletins, Generator Output Voltage (refer to *Chassis Electrical*), Exhaust Diagnosis
Poor Fuel Economy	1. OBD system check. 2. Careful visual/physical inspection. 3. Ignition system. 4. Cooling system.	TCC Operation, Exhaust System (refer to *Engine Exhaust*)
Engine Cranks But Will Not Run	1. OBD system check.	Fuel System Electrical Diagnosis, Fuel System Diagnosis, Fuel Injector and Fuel Injector Balance Test.
Excessive Exhaust Emissions or Odors	1. OBD system check. 2. Emission test. 3. Cooling system. 4. Fuel system diagnosis. 5. Fuel injector and fuel injector balance test. 6. Crankcase ventilation system. 7. Ignition system. 8. MAP output check.	EGR System Check, Exhaust Diagnosis, Calibration ID/Service Bulletins
Dieseling, Run-On	1. OBD system check. 2. Careful visual/physical inspection. 3. Fuel system diagnosis.	—

Symptoms	Initial Diagnosis	Default Section(s)
Backfire	1. OBD system check. 2. Ignition system. 3. Fuel system diagnosis. 4. Fuel injector and fuel injector balance test. 5. EGR operation, EGR system check.	Exhaust System Diagnosis, Intake Casting Flash, Ignition System Check
Catalyst Monitor	1. OBD system check. 2. Careful visual/physical inspection. 3. Heated oxygen sensors.	Exhaust System
Fuel Trim	1. OBD system check. 2. Careful visual/physical inspection. 3. Fuel system diagnosis. 4. Heated oxygen sensors, MAF sensors.	Exhaust System Intake Air System
Evaporative Emissions	1. OBD system check. 2. Careful visual/physical inspection. 3. Fuel system diagnosis.	—
Heated Oxygen Sensors	1. OBD system check. 2. Careful visual/physical inspection.	Exhaust System

Camshaft Position (CMP) Sensor

Removal Procedure

1. Disconnect the negative battery cable.
2. Remove the engine cover.
3. Remove the common chamber assembly.
   Refer to Common Chamber in Engine Mechanical.

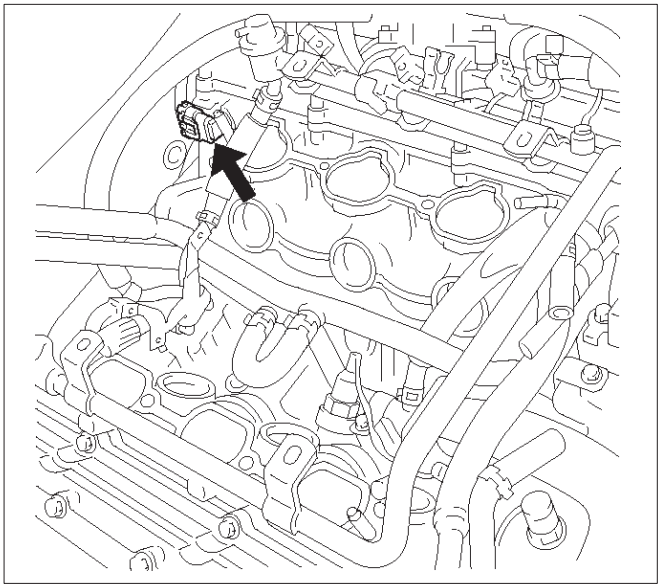

014RW120

4. Disconnect the electrical connector to the CMP sensor.

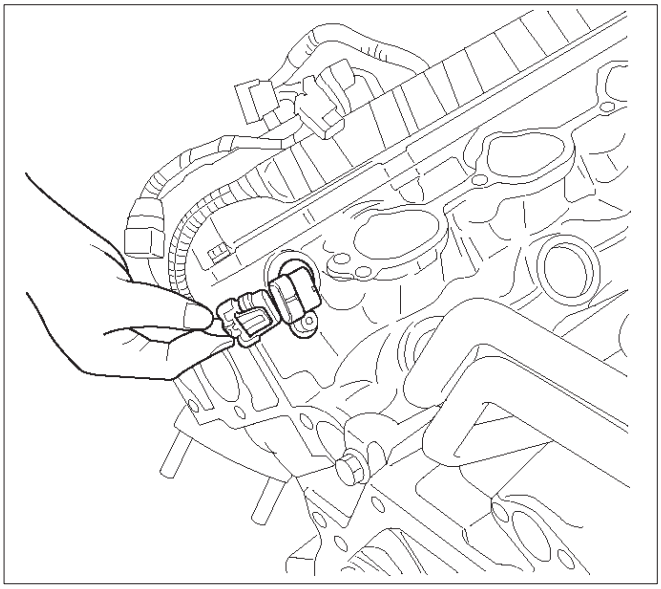

014RV053

5. Remove the CMP retaining bolt from the side of left cylinder head.
6. Remove the CMP sensor from the cylinder head.

Inspection Procedure

1. Inspect the sensor O-ring for cracks or leaks.
2. Replace the O-ring if it is worn or damaged.
3. Lubricate the new O-ring with engine oil.
4. Install the lubricated O-ring.

Installation Procedure

1. Install the CMP sensor in the cylinder head.
2. Install the CMP sensor retaining bolt.

Tighten

- Tighten the retaining screw to 9 N·m (78 lb in.).

3. Connect the electrical connector to the CMP sensor.

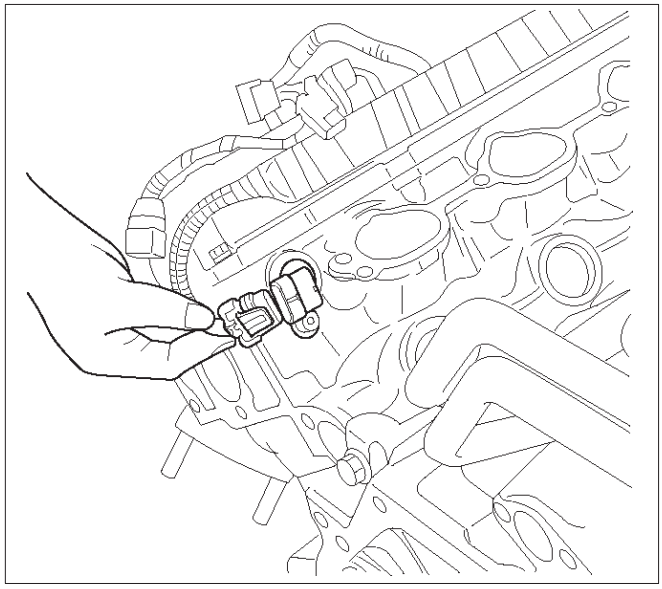

014RV053

4. Install the common chamber assembly.
   Refer to Common Chamber in Engine Mechanical.

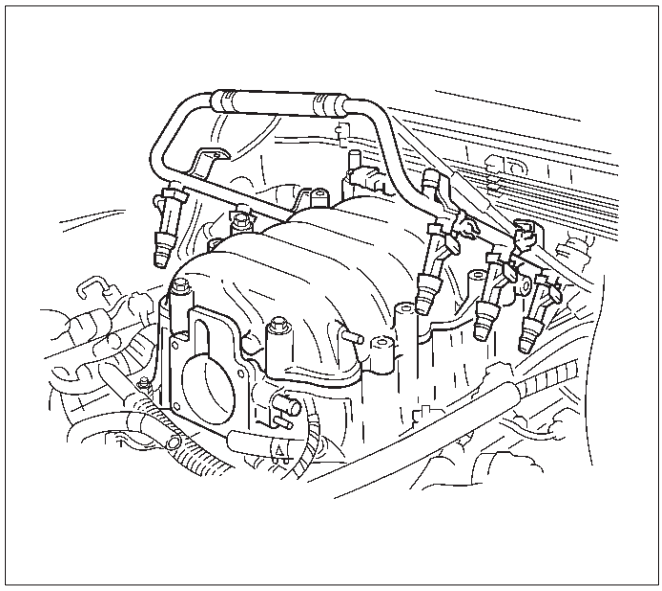

014RW106

5. Install the engine cover.
6. Connect the negative battery cable.

Crankshaft Position (CKP) Sensor

Removal Procedure

1. Disconnect the negative battery cable.
2. Disconnect the electrical connector to the CKP sensor.
3. Remove one bolt and the CKP sensor from the right side of the engine block, just behind the mount.

NOTE: Use caution to avoid any hot oil that might drip out.

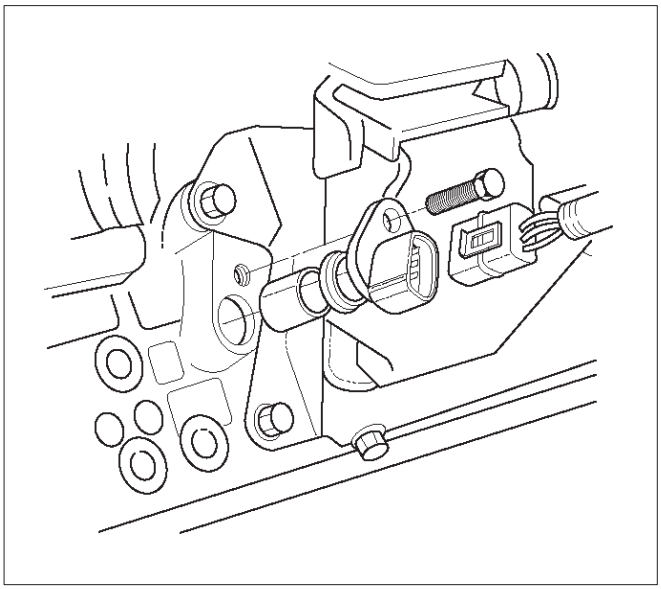

TS22909

Inspection Procedure

1. Inspect the sensor O-ring for cracks or leaks.
2. Replace the O-ring if it is worn or damaged.
3. Lubricate the new O-ring with engine oil.
4. Install the lubricated O-ring.

Installation Procedure

1. Install the CKP sensor in the engine block.
2. Install the CKP sensor mounting bolt.

Tighten

- Tighten the mounting bolt to 9 N·m (78 lb in.).

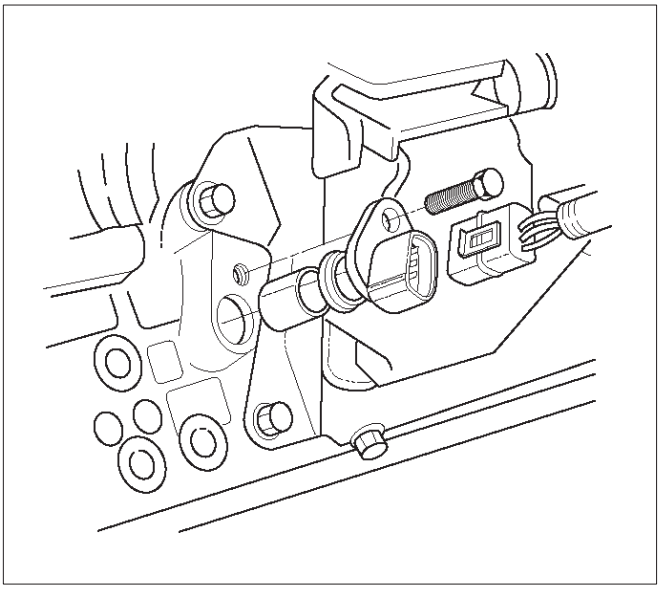

TS22909

3. Connect the electrical connector to the CKP sensor.
4. Connect the negative battery cable.

Engine Coolant Temperature (ECT) Sensor

Removal Procedure

NOTE: Care must be taken when handling the engine coolant temperature (ECT) sensor. Damage to the ECT sensor will affect proper operation of the fuel injection system.

1. Disconnect the negative battery cable.
2. Drain the radiator coolant. Refer to *Draining and Refilling Cooling System* in *Engine Cooling*.
3. Disconnect the electrical connector.

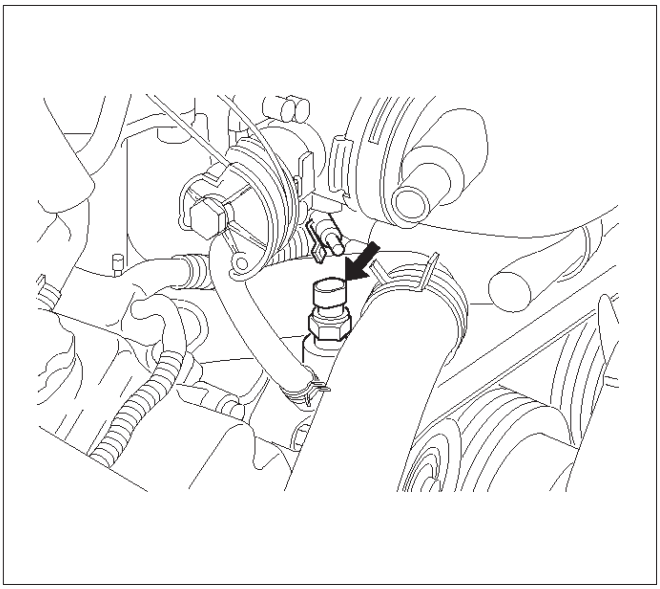

014RW127

4. Remove the ECT sensor from the coolant crossover.

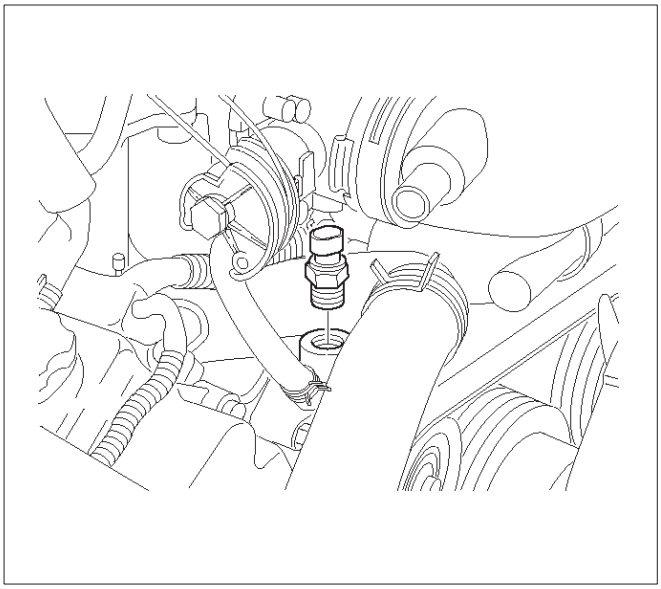

014RW086

Installation Procedure

1. Apply sealer or the equivalent to the threads of the ECT sensor.
2. Install the ECT sensor in the coolant crossover.

Tighten

- Tighten the ECT sensor to 30 N·m (22 lb ft.).

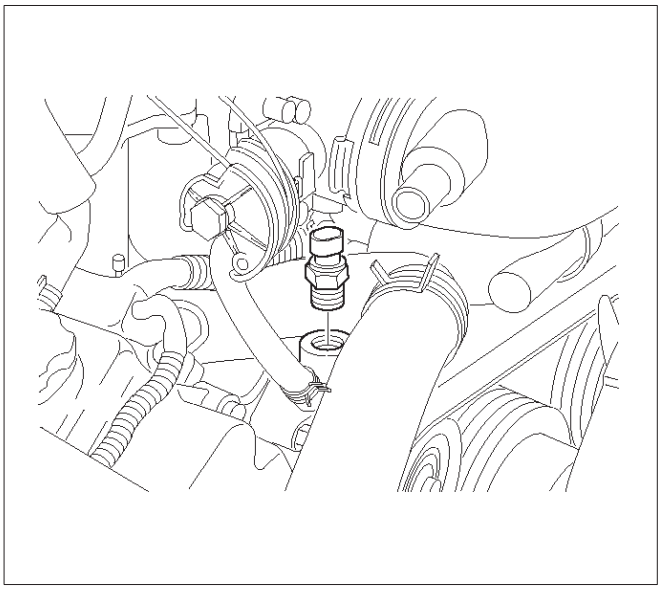

014RW086

3. Connect the electrical connector.

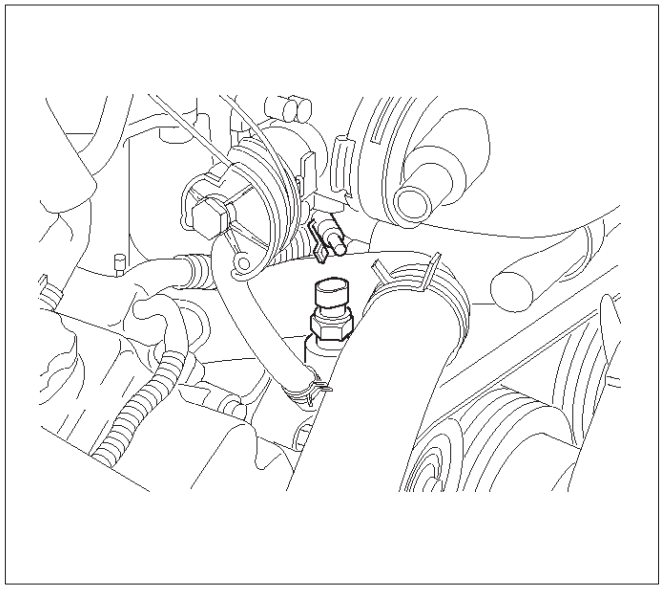

014RW085

4. Fill the radiator with coolant. Refer to *Draining and Refilling Cooling System* in *Engine Cooling*.
5. Connect the negative battery cable.

Heated Oxygen Sensor (HO2S)

Removal Procedure

1. Disconnect the negative battery cable.
2. Locate the oxygen sensors.
   - Bank 1 sensor 1 is mounted on the right-hand front exhaust pipe.

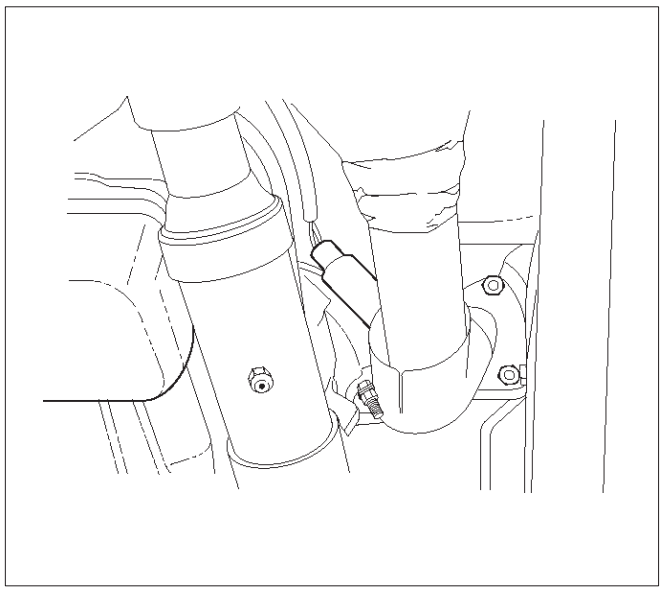

TS22912

- Bank 2 sensor 1 is mounted on the exhaust pipe ahead of the catalytic converter.

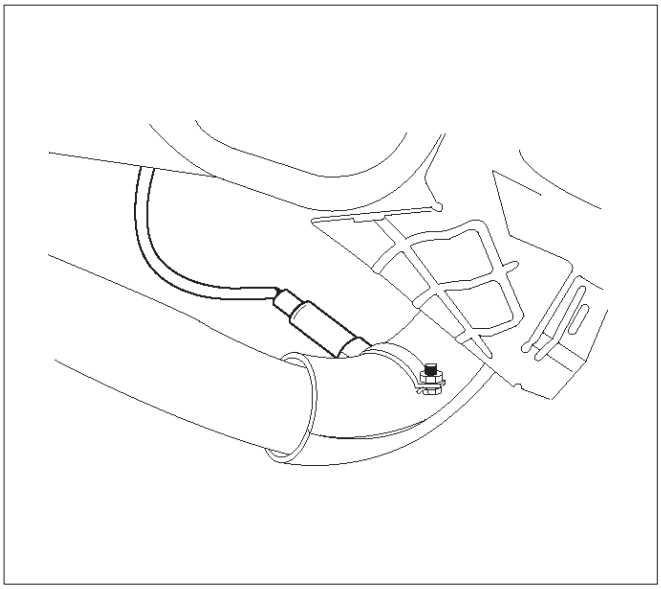

TS22914

3. Disconnect the pigtail from the wiring harness.

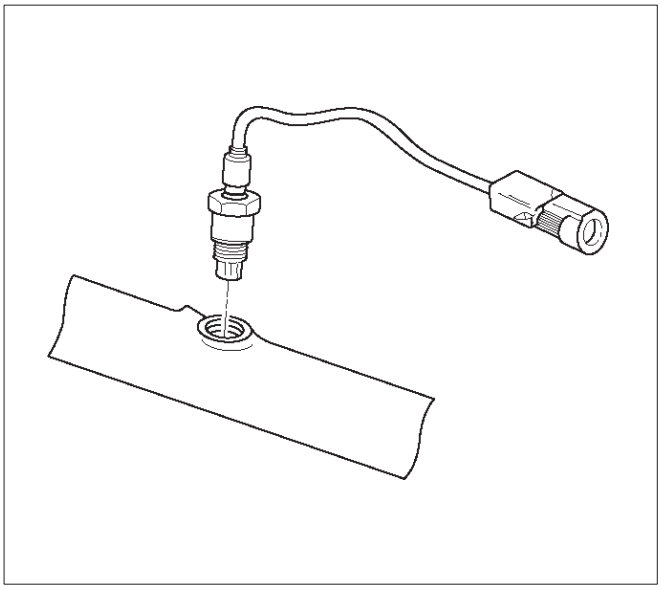

TS23739

IMPORTANT: The pigtail is permanently attached to the sensor. Be careful not to pull the wires out.

NOTE: Do not use a torch to remove an HO2S unless the sensor is being replaced. Using a torch could damage the sensor.

4. Remove the sensor from the exhaust pipe.
   - Because of the expansion and contraction of the metal in the exhaust system over time, this may be difficult if the engine temperature is below 48˚C (120˚F).

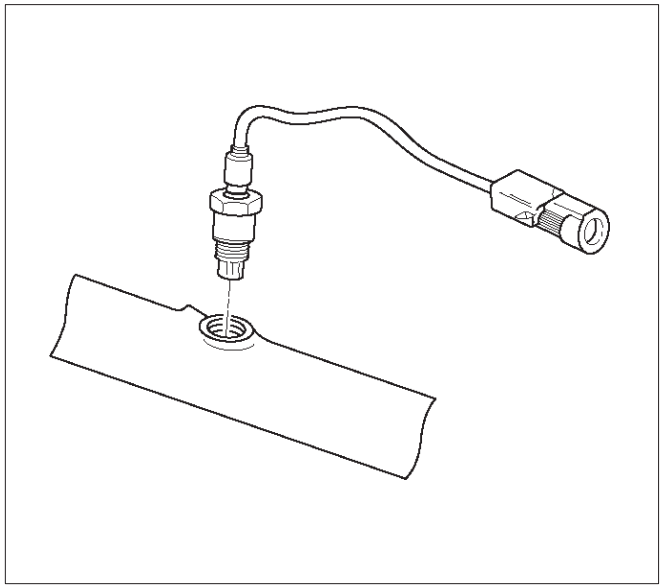

TS23739

Inspection Procedure

All two sensors are identical. Inspect each in the same way.

1. Inspect the pigtail and the electrical connector for grease, dirt, corrosion, and bare wires or worn insulation.
2. Inspect the louvered end of the sensor for grease, dirt, or other contaminations.

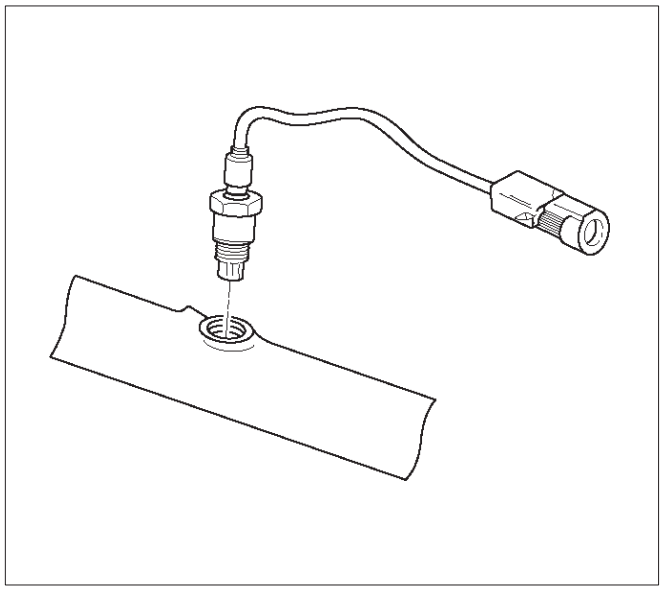

TS23739

Installation Procedure

IMPORTANT:

- A special anti-seize compound, P/N 5613695, is used on the HO2S threads. This compound consists of glass beads suspended in a liquid graphite solution. The graphite burns away with engine heat, but the glass beads will remain, making the sensor easier to remove.
- New or service sensors will already have the compound applied to the threads. If a sensor is removed and is to be reinstalled for any reason, the threads must have anti-seize compound applied.

1. Apply anti-seize compound or the equivalent to the threads of the oxygen sensor, if necessary.
2. Install the oxygen sensor on the exhaust pipe in its original position.

Tighten

- Tighten the oxygen sensor to 55 N·m (40 lb in.).

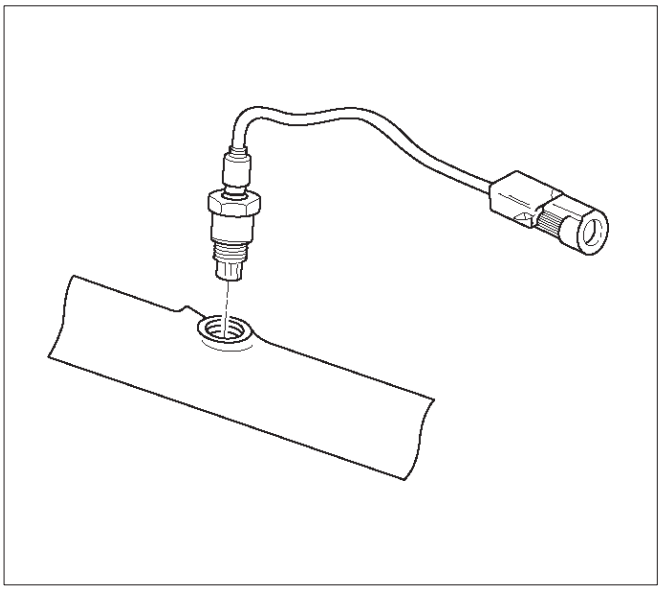

TS23739

3. Connect the pigtail to the wiring harness.
4. Connect the negative battery cable.

Intake Air Temperature (IAT) Sensor

Removal Procedure

1. Disconnect the negative battery cable.
2. Remove the engine cover
3. The IAT sensor is located in the intake air duct, behind the throttle body.
4. Disconnect the electrical connector from the IAT sensor.

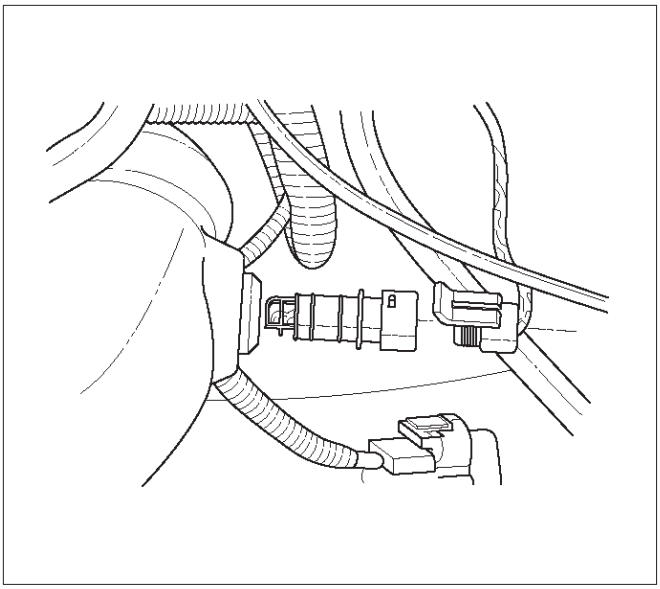

TS23741

5. Remove the IAT sensor from the intake air duct by using a rocking motion while pulling the sensor.

Installation Procedure

1. Install the IAT sensor into the grommet in the intake air duct.
2. Correct the IAT electrical connector.

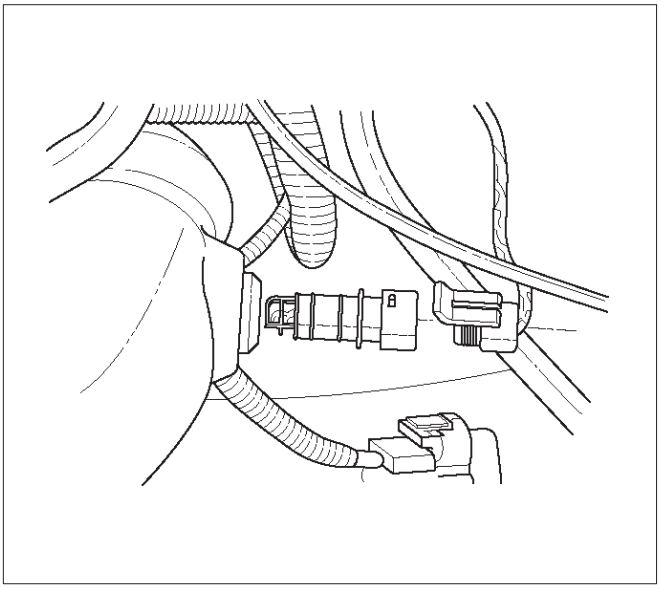

TS23741

3. Install the engine cover.
4. Connect the negative battery cable.

Knock Sensor (KS)

Removal Procedure

1. Disconnect the negative battery cable.
2. Drain the cooling system. Refer to *Draining and Filling the Cooling System* in *Engine Cooling*.
3. Remove the engine cover.
4. Remove the common chamber assembly.

   Refer to Common Chamber in Engine Mechanical.

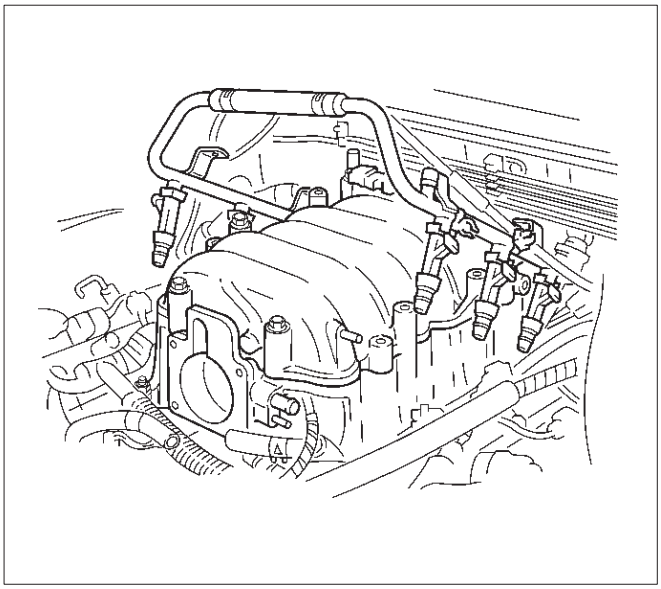

014RW106

5. Disconnect the electrical connector from the knock sensor.

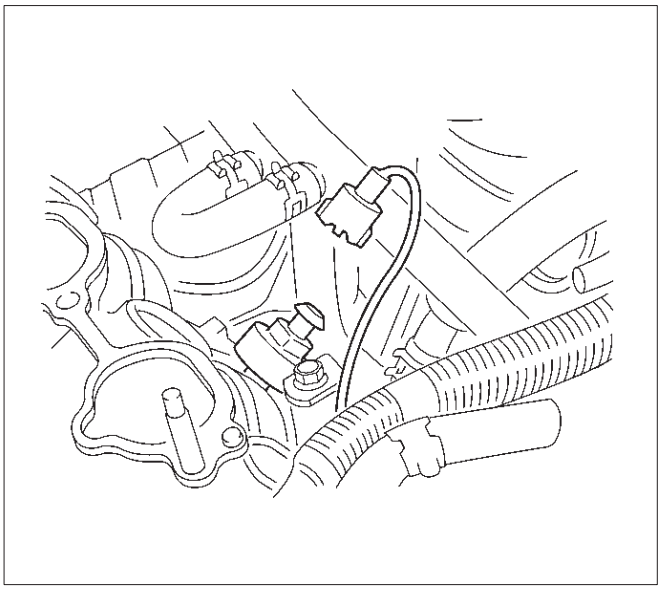

014RW103

6. Unscrew the knock sensor from the engine block.

Installation Procedure

NOTE: Do not apply thread sealant to the sensor threads. The sensor is coated at the factory and applying additional sealant will affect the sensor's ability to detect detonation.

1. Screw the knock sensor into the engine block.

Tighten

- Tighten the knock sensor to 20 N·m (177 lb in.).

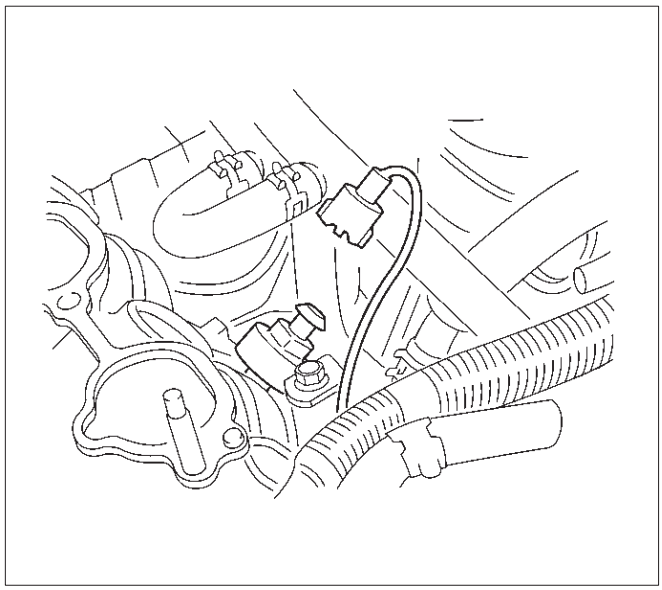

014RW103

2. Connect the electrical connector to the knock sensor.
3. Install the common chamber assembly.

   Refer to Common Chamber in Engine Mechanical.

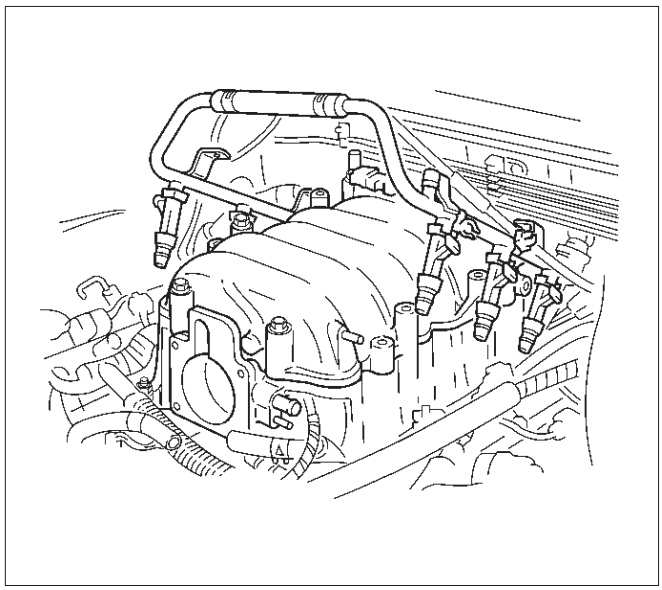

014RW106

4. Install the engine cover.
5. Fill the cooling system.

   Refer to Draining and Filling the Cooling System in Engine Cooling.
6. Connect the negative battery cable.

Mass Air Flow (MAF) Sensor

Removal Procedure

1. Disconnect the negative battery cable.
2. Disconnect the electrical connector from the MAF sensor.

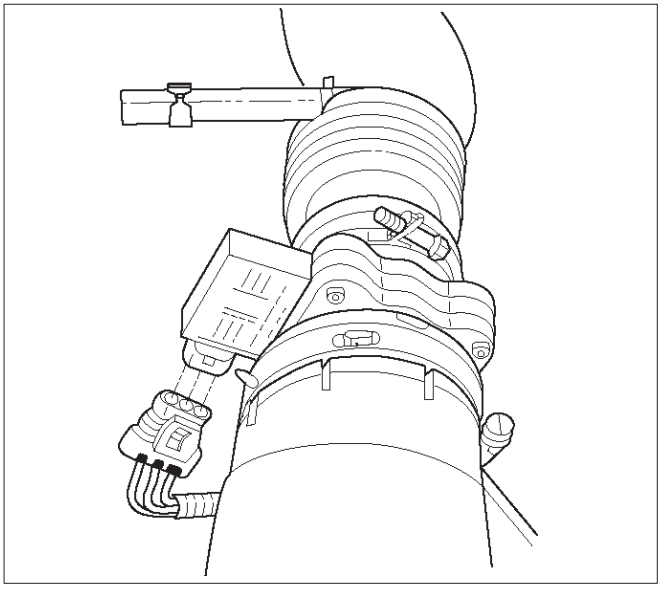

TS23740

3. Loosen the clamps which secure the intake air duct and the air cleaner to the MAF sensor.
4. Remove the intake air duct from the MAF sensor.
5. Remove the MAF sensor from the air cleaner.

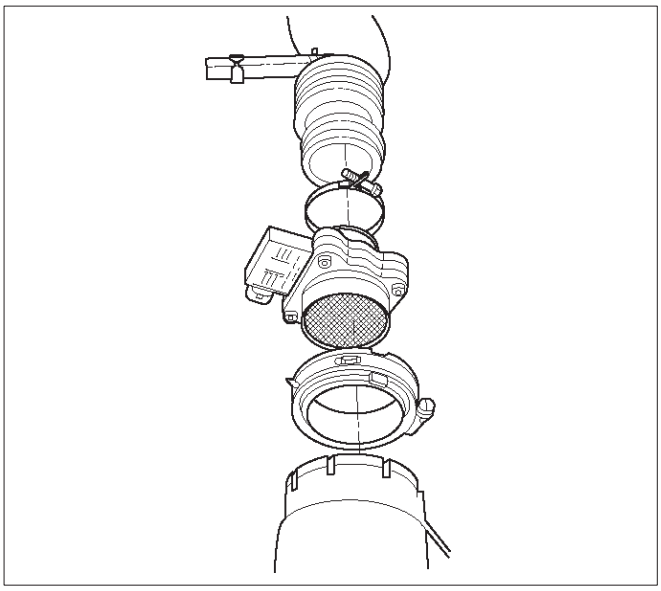

TS23781

Installation Procedure

1. Install the MAF sensor on the air cleaner with the clamp.
2. Install the intake air duct and the clamp on the MAF sensor.

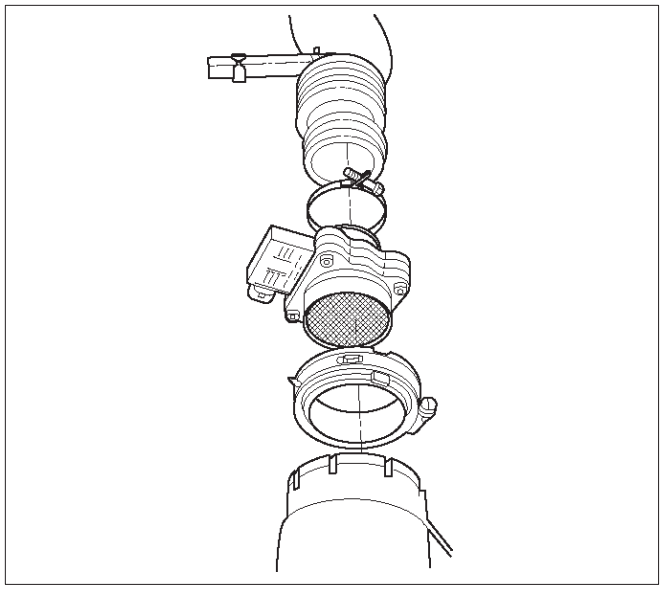

TS23781

3. Tighten the clamps to secure the MAF sensor to the intake air duct and the air cleaner.
4. Connect the MAF electrical connector.
5. Connect the negative battery cable.

Manifold Absolute Pressure (MAP) Sensor

Removal Procedure

1. Disconnect the negative battery cable.
2. Disconnect the electrical connector from the MAP sensor.

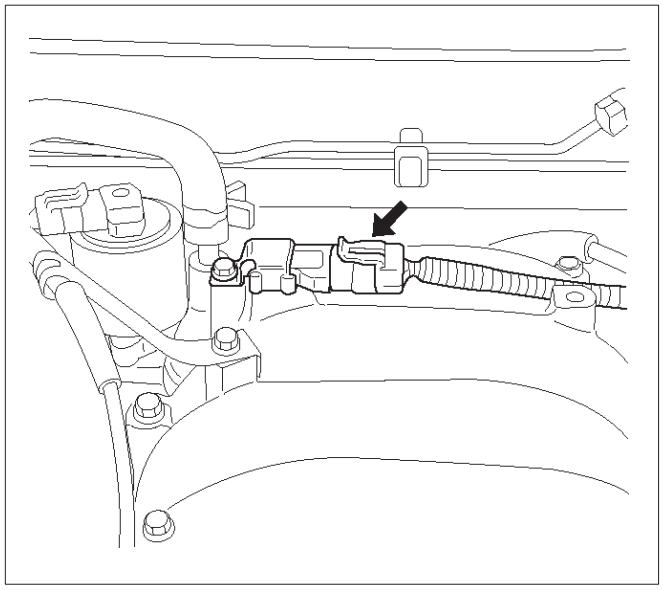

055RW005

3. Remove the bolt securing the MAP sensor to the mounting bracket on the common chamber.

4. Remove the MAP sensor from the mounting bracket.

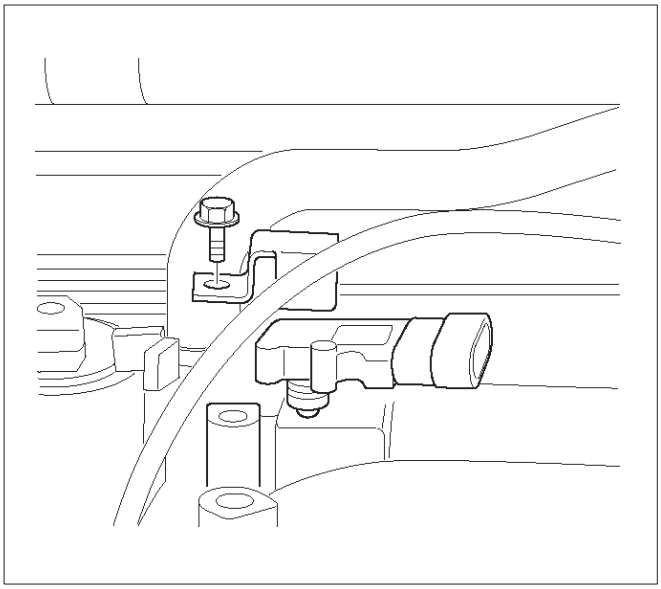

055RW002

Installation Procedure

1. Install the MAP sensor in the mounting bracket.

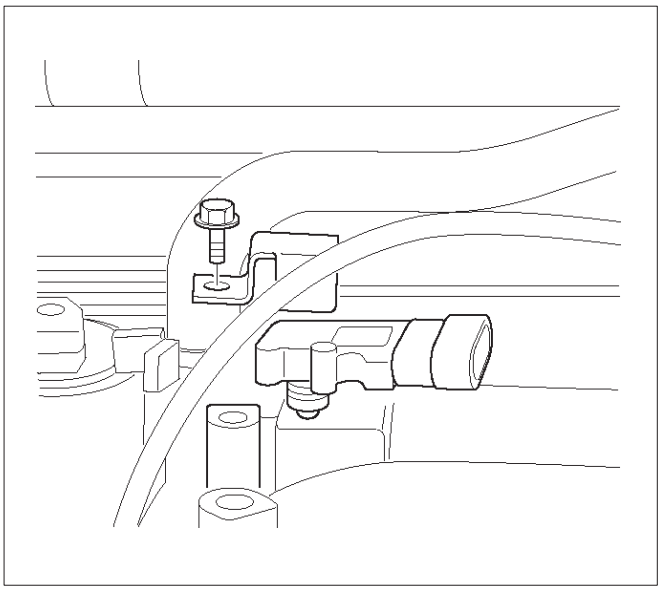

055RW002

2. Install the mounting bracket retaining bolt on the common chamber.
3. Connect the MAP electrical connector.

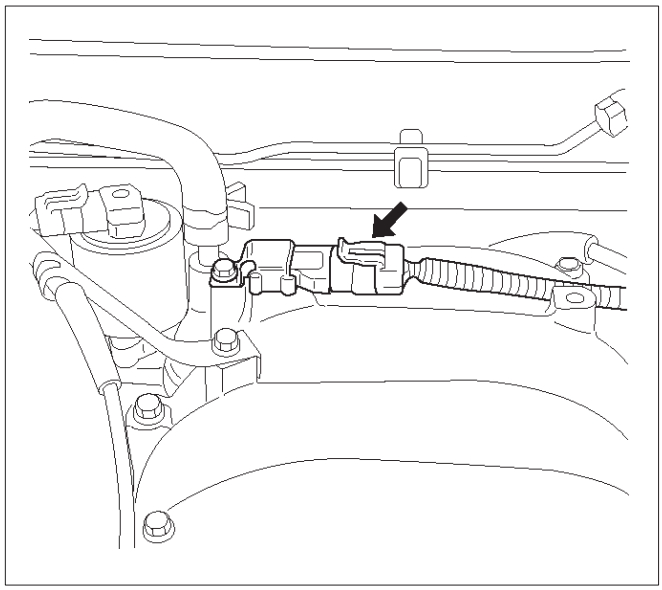

055RW005

4. Connect the negative battery cable.

Malfunction Indicator Lamp (MIL)

Removal and Installation Procedure

Refer to Warning light bulb, indicator light valve, illumination light bulb, A/T indicator light bulb in Meter and Gauge.

Powertrain Control Module (PCM)

Service Precaution

NOTE: To prevent possible electrostatic discharge damage to the PCM, do not touch the connector pins or soldered components on the circuit board.

Electrostatic Discharge (ESD) Damage

Electronic components used in the control systems are often designed to carry very low voltage. Electronic components are susceptible to damage caused by electrostatic discharge. Less than 100 volts of static electricity can cause damage to some electronic components. By comparison, it takes as much as 4,000 volts for a person to even feel the zap of a static discharge.

There are several ways for a person to become statically charged. The most common methods of charging are by friction and by induction. An example of charging by friction is a person sliding across a car seat.

Charging by induction occurs when a person with well insulated shoes stands near a highly charged object and momentarily touches ground. Charges of the same polarity are drained off leaving the person highly charged with the opposite polarity. Static charges can cause

damage, therefore, it is important to use care when handling and testing electronic components.

NOTE: To prevent possible Electrostatic Discharge damage, follow these guidelines:

- Do not touch the control module connector pins or soldered components on the control module circuit board.
- Do not open the replacement part package until the part is ready to be installed.
- Before removing the part from the package, ground the package to a known good ground on the vehicle.
- If the part has been handled while sliding across the seat, or while sitting down from a standing position, or while walking a distance, touch a known good ground before installing the part.

NOTE: To prevent internal PCM damage, the ignition must be in the “OFF” position in order to disconnect or reconnect power to the PCM (for example: battery cable, PCM pigtail, PCM fuse, jumper cables, etc.).

IMPORTANT: When replacing the production PCM with a service PCM, it is important to transfer the broadcast code and production PCM number to the service PCM label. This will allow positive identification of PCM parts throughout the service life of the vehicle. Do not record this information on the metal PCM cover.

IMPORTANT: The ignition should always be in the “OFF” position in order to install or remove the PCM connectors.

Service of the PCM should normally consist of either replacement of the PCM or EEPROM programming. If the diagnostic procedures call for the PCM to be replaced, the PCM should be checked first to ensure it is the correct part. If it is, remove the faulty PCM and install the new service PCM.

The service PCM EEPROM will not be programmed. DTC P0601 indicates the check sum error.

Removal Procedure

1. Disconnect the negative battery cable.
2. Block the wheels.
3. Remove the front console assembly.
   1. Remove the four screws.

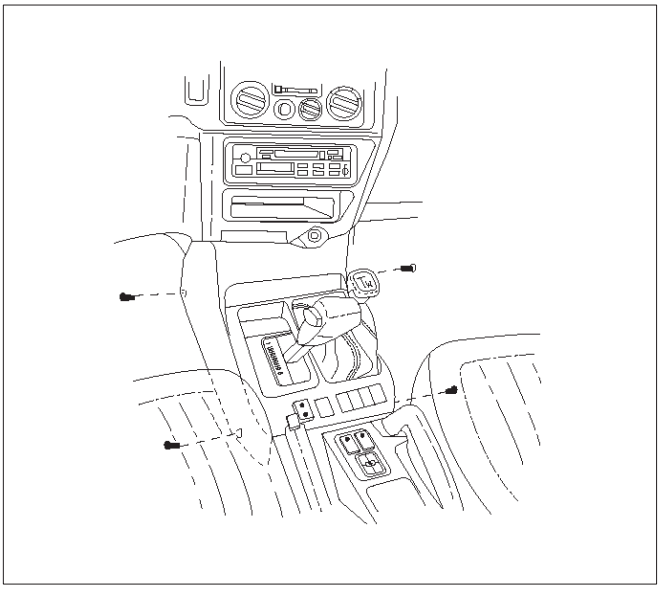

TS23755

   2. Remove the transfer shift lever knob by unscrewing the knob.
   3. Move the transmission gear selector out of the park position.
   4. Lift up sharply on the back edge of the assembly.
   5. Disconnect the seat heater switch connectors (if equipped).
   6. Disconnect the POWER and WINTER switch connectors.
   7. Lift out the front console assembly.

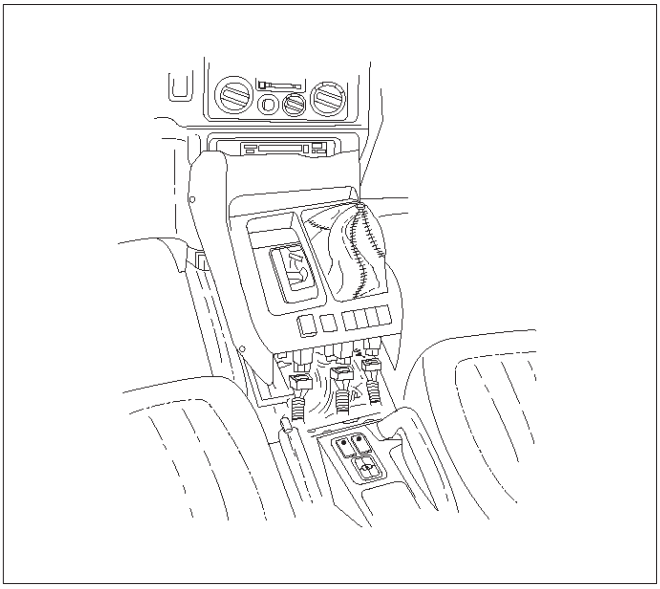

TS23756

4. Disconnect the red, white, and blue electrical connectors at the PCM.
5. Remove the two screws in the front of the PCM.
6. Remove the one screw at the left rear of the PCM.
7. Pull the PCM straight out from the dashboard.

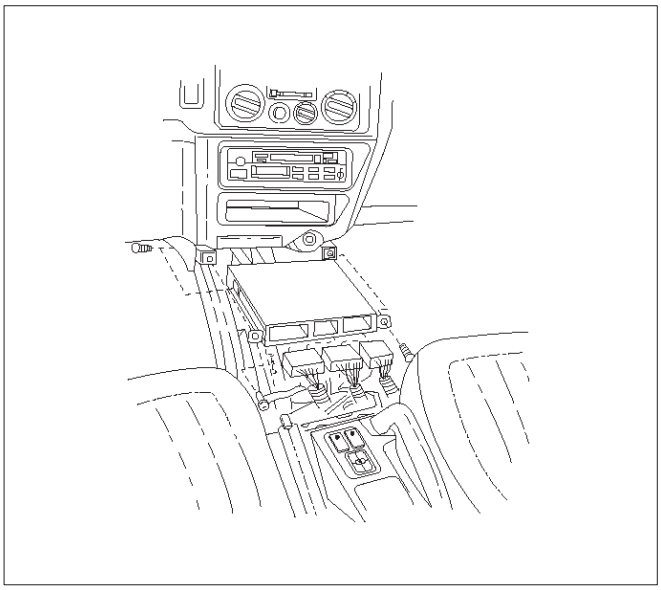

TS23757

Installation Procedure

1. Insert the PCM into the dashboard.
   - Line up the holes in front for the mounting screws.
2. Install the PCM with two screws in the front and one screw at the left rear.
3. Plug the red, white, and blue connectors into the appropriate sockets.

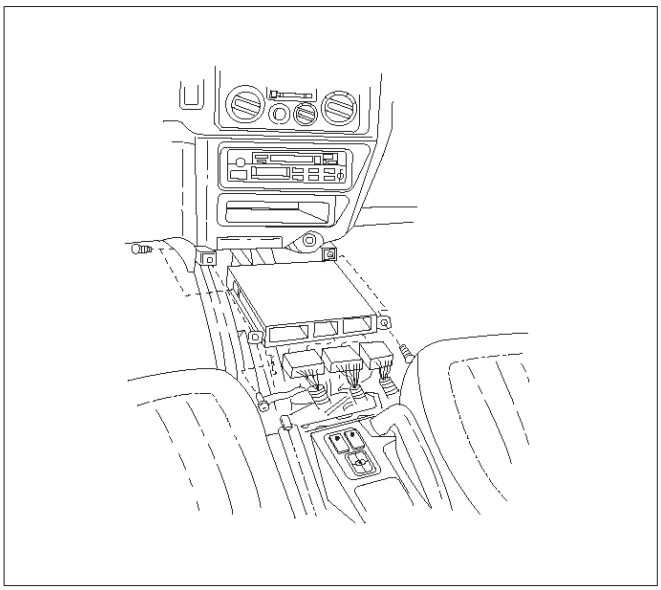

TS23757

EEPROM

General Description

The Electronically Erasable Programmable Read Only Memory (EEPROM) is a permanent memory that is physically soldered within the PCM. The EEPROM contains program and calibration information that the PCM needs to control powertrain operation.

EEPROM Programming

1. Step-up – Ensure that the following conditions have been met:
   - The battery is fully charged.
   - The ignition is “ON.”
   - The Vehicle Interface Module cable connection at the DLC is secure.
2. Program the PCM using the latest software matching the vehicle. Refer to up-to-date Techline equipment user’s instructions.
3. If the PCM fails to program, Refer to *UBS 98 model year Immobilizer Workshop Manual.*

Functional Check

1. Perform the On-Board Diagnostic System Check.
2. Start the engine and run for one minute.
3. Scan for DTCs using the Tech 2.

Power Steering Pressure (PSP) Switch

General Description

The Power Steering Pressure (PSP) switch closes when the hydraulic pressure reaches 3920 ± 690 kPa (570 ± 100 psi). This causes the PCM to actuate the idle air control valve in order to prevent the additional load from slowing down the engine. The switch opens when the hydraulic pressure drops to 2970 ± 560 kPa (430 ± 80 psi).

Removal Procedure

1. Disconnect the PSP switch pigtail from the wiring harness.
   - The pigtail is permanently attached to the switch. Do not attempt to remove the wires from the sensor.
   - Have a container ready to catch the power steering fluid that leaks out of the line when the switch is removed.

2. Remove the PSP switch from the power steering line.
   - Plug the line to prevent excessive loss of fluid and possible contamination of the power steering system.

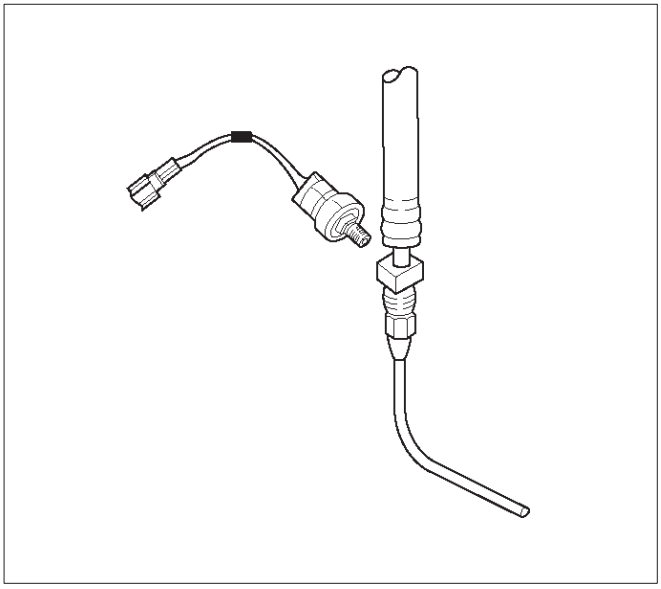

TS23760

Installation Procedure

1. Install the PSP switch in the power steering line.

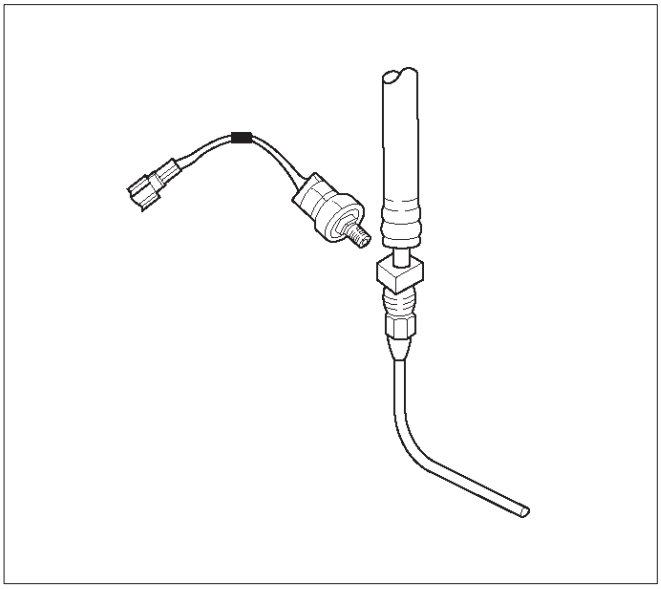

TS23760

2. Connect the PSP switch pigtail to the wiring harness.
3. Check the power steering fluid level. Refer to *Power Steering*.
4. Start the engine. Watch the PSP switch for signs of fluid leakage.

Throttle Position (TP) Sensor

Removal Procedure

1. Disconnect the negative battery cable.
2. Disconnect the TPS electrical connector.
3. Remove the bolts and the TP sensor from the throttle body.

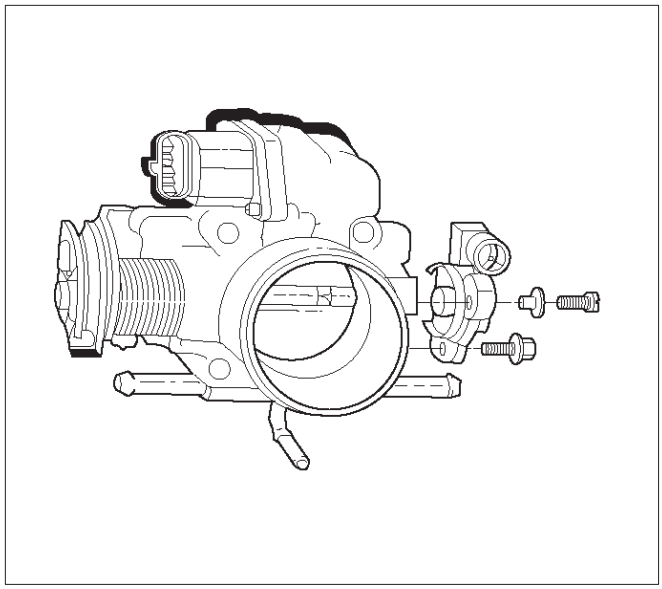

TS23747

NOTE: Do not clean the TP sensor by soaking it in solvent. The sensor will be damaged as a result.

Function Check

Use a Tech 2 to check the TP sensor output voltage at closed throttle.

- The voltage should be under 0.85 volt.
- If the reading is greater than 0.85 volt, check the throttle shaft to see if it is binding. Check that the throttle cable is properly adjusted, also. Refer to *Throttle Cable Adjustment*.
- If the throttle shaft is not binding and the throttle cable is properly adjusted, install a new TP sensor.

Installation Procedure

1. Install the TP sensor on the throttle body with the bolts.

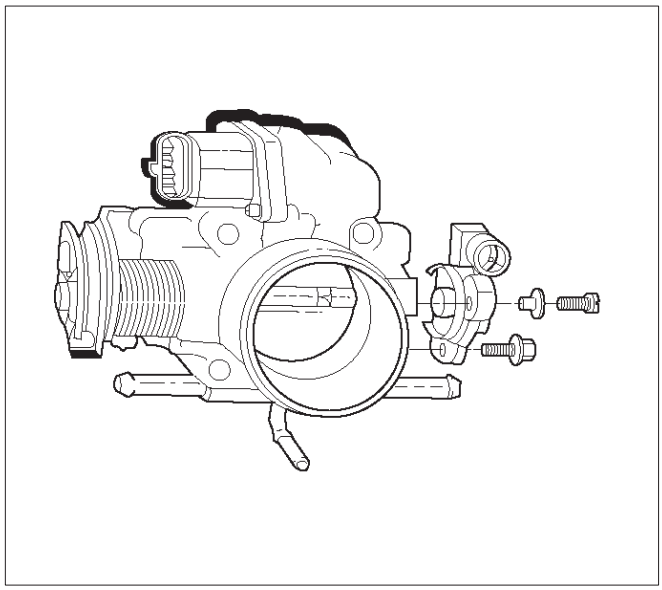

TS23747

2. Connect the TP electrical connector.
3. Install the negative battery cable.

Vehicle Speed Sensor (VSS)

Removal Procedure

CAUTION: The VSS is located on the right side of the transfer case just ahead of the rear propeller shaft and very close to the exhaust pipes. Be sure that the exhaust pipes are cool enough to touch before trying to remove the VSS. If the pipes are hot, you could be burned.

1. Disconnect the negative battery cable.
2. Disconnect the VSS electrical connector.

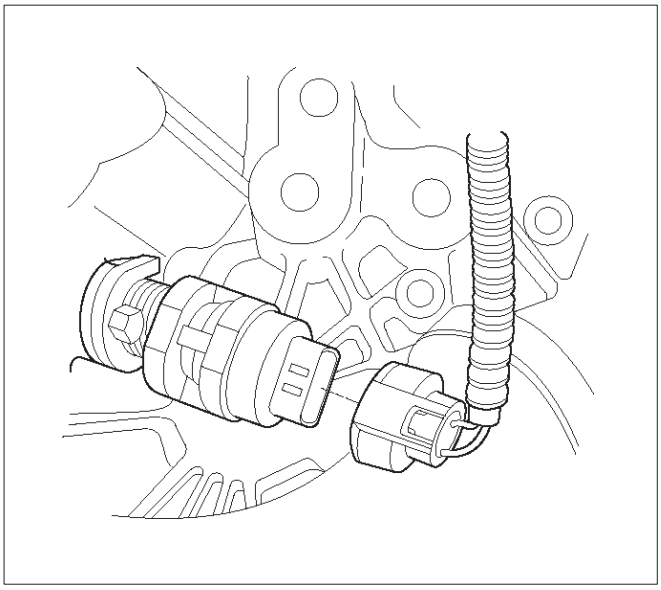

TS23748

3. Remove the bolt and the clamp securing the VSS in place.

IMPORTANT: Have a container ready to catch any fluid that leaks out when the VSS is removed from the transfer case.

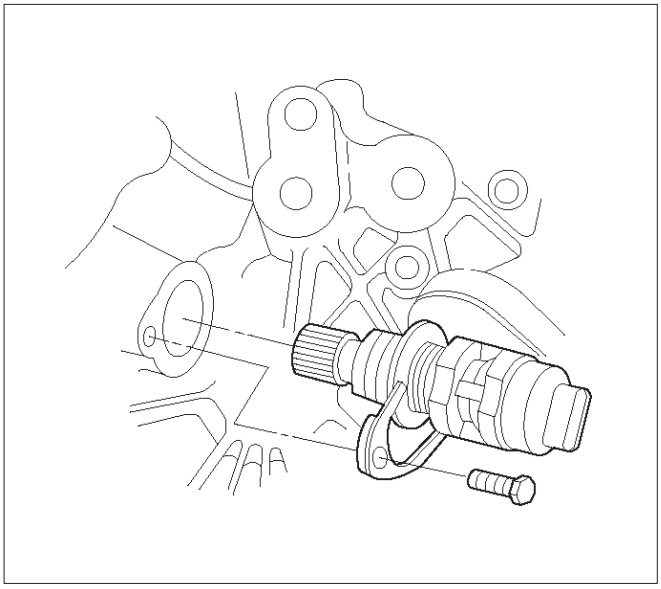

TS23780

4. Remove the VSS from the transfer case by wiggling it slightly and pulling it straight out.

Inspection Procedure

1. Inspect the electrical connector for signs of corrosion or warping. Replace the VSS if the electrical connector is corroded or warped.
2. Inspect the VSS driven gear for chips, breaks, or worn condition. Replace the VSS if the driven gear is chipped, broken or worn.
3. Inspect the O-ring for wear, nicks, tears, or looseness. Replace the O-ring if necessary.

Installation Procedure

1. Install the VSS in the transfer case with the notch for the connector facing the rear.
2. Secure the VSS in place with the clamp and the bolt.

Tighten

- Tighten the bolt to 16 N·m (12 lb ft.).

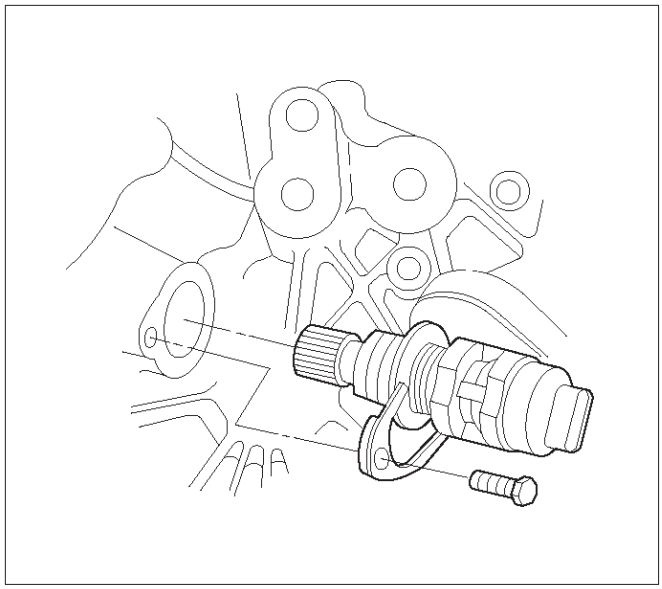

TS23780

3. Connect the VSS electrical connector.

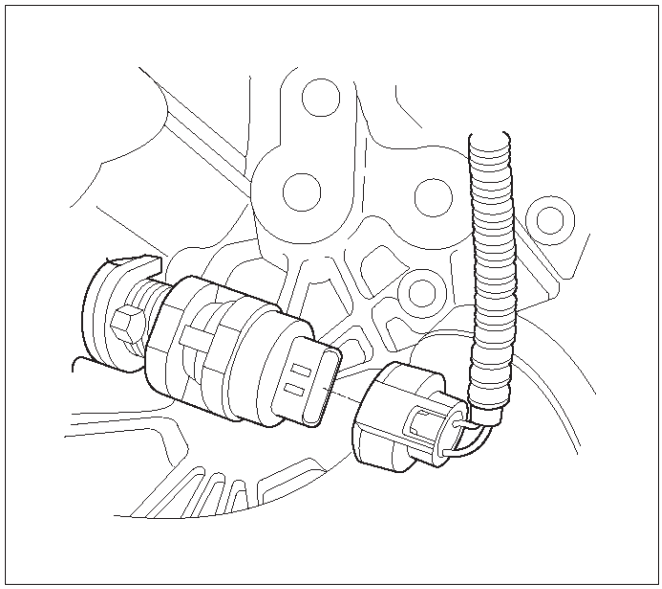

TS23748

4. Check the transfer case oil level. Add fluid if necessary.
5. Connect the negative battery cable.

Air Cleaner/Air Filter

Removal Procedure

1. Loosen the clamp between the air cleaner lid and the mass air flow sensor.
2. Release the four latches securing the lid to the air cleaner housing.
3. Remove the air cleaner lid.

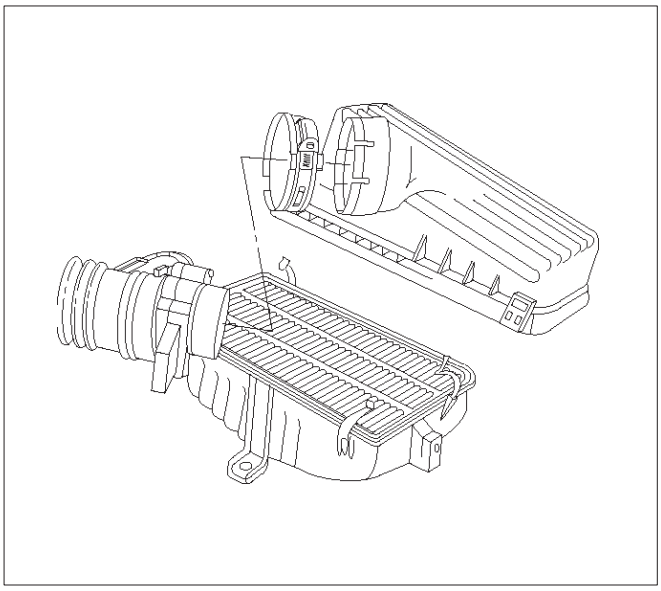

TS23973

4. Remove the air filter element.

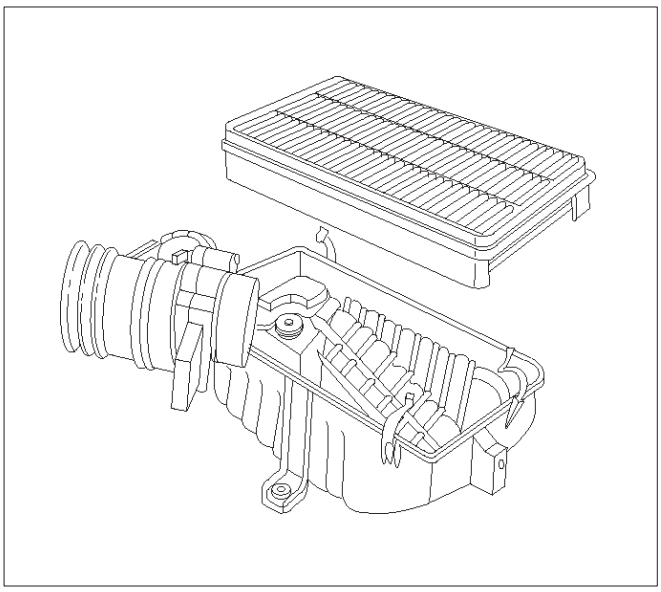

TS23794

5. Remove the retaining bolts and the air cleaner housing from the vehicle.

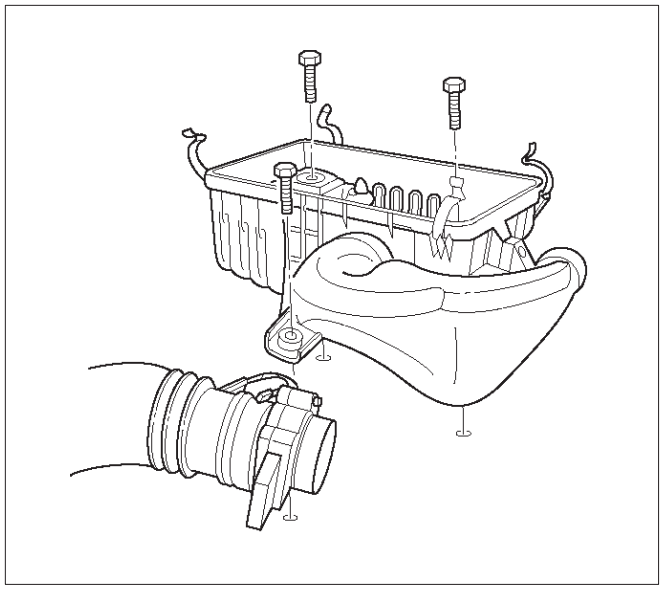

130RT002

Installation Procedure

1. Install the air cleaner housing in the vehicle with the retaining bolts.

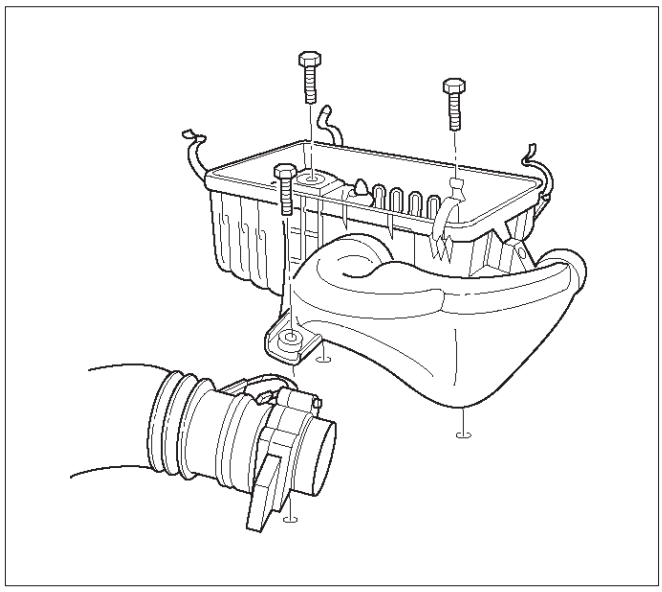

130RT002

2. Install the air filter element in the air cleaner housing.

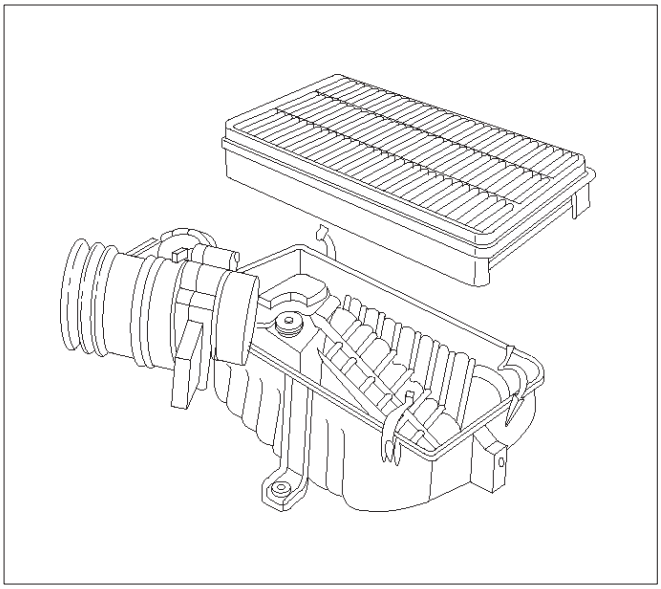

TS23794

3. Install the air cleaner lid on the MAF sensor and the air cleaner housing.

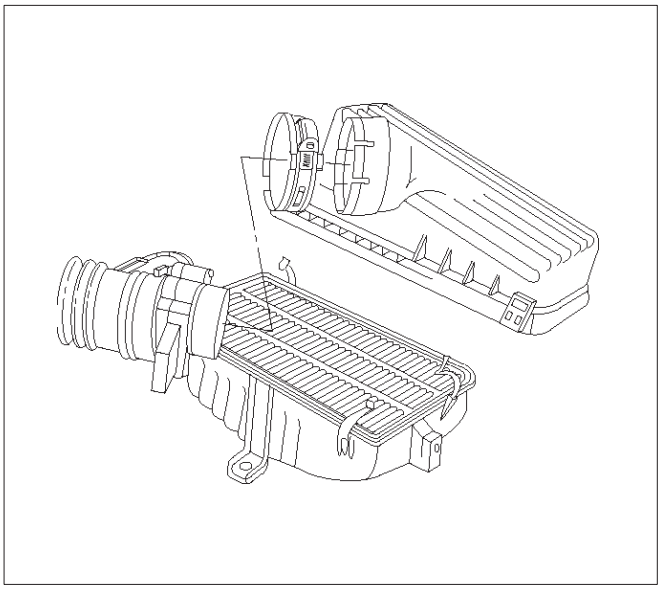

TS23973

4. Tighten the clamp and secure the four latches between the lid and the air cleaner housing.

Idle Air Control (IAC) Valve

Removal Procedure

1. Disconnect the negative battery cable.
2. Disconnect the IAC electrical connector.
3. Remove the bolts and the IAC valve from the throttle body.

NOTE: Do not clean the IAC valve by soaking it in solvent. The valve will be damaged as a result.

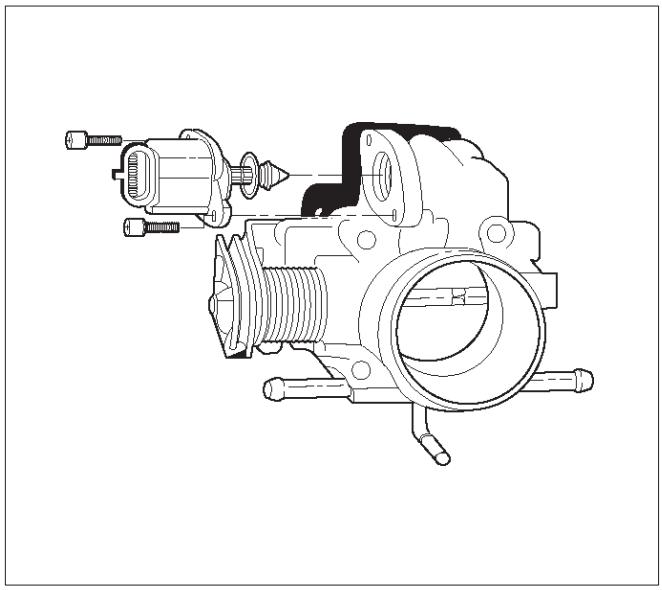

TS23745

Cleaning, Inspection, and Measurement Procedure

- Clean the IAC valve O-ring sealing surface, pintle valve seat and air passage.
  - Use carburetor cleaner and a parts cleaning brush to remove carbon deposits. Do not use a cleaner that contains methyl ethyl ketone. This is an extremely strong solvent and not necessary for this type of deposit.
  - Shiny spots on the pintle are normal and do not indicate misalignment or a bent pintle shaft.
  - If the air passage has heavy deposits, remove the throttle body for complete cleaning.

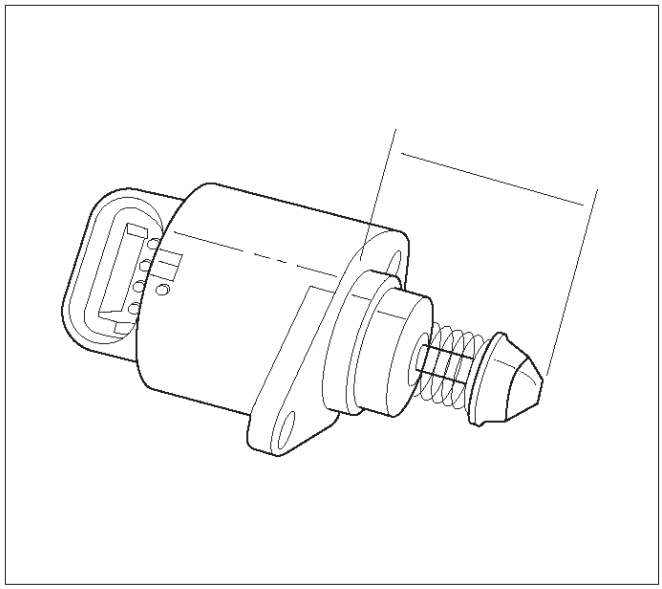

TS23746

- Inspect the IAC valve O-ring for cuts, cracks, or distortion. Replace the O-ring if damaged.

- In order to install a new IAC valve, measure the distance between the tip of the pintle and the mounting flange. If that measurement is 28 mm (1.1 in.) or less, the valve needs no adjustment. If the measurement is greater than 28 mm (1.1 in.), apply finger pressure and retract the valve. The force required to retract the pintle on a new valve will not damage the valve, shaft, or pintle.

NOTE: Do not push or pull on the IAC valve pintle on IAC valves that have been in service. The force required to move the pintle may damage it.

IMPORTANT: Use an identical replacement part in order to replace a valve. IAC valve pintle shape and diameter are designed for the specific application.

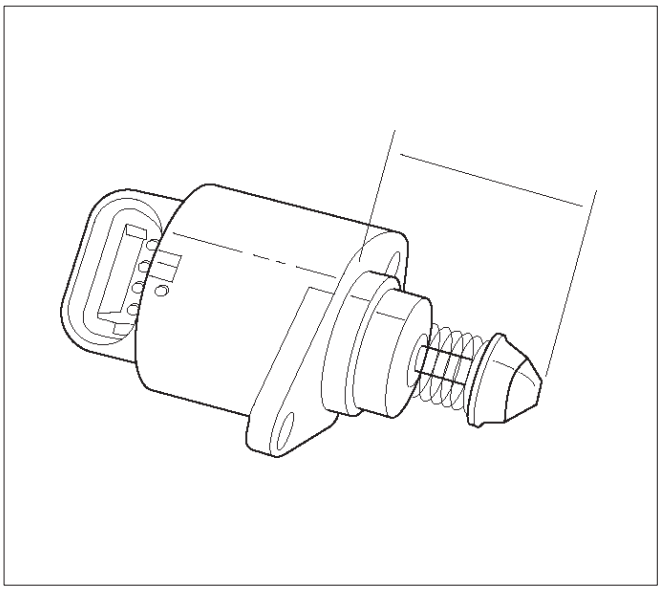

TS23746

Installation Procedure

1. Install the IAC valve on the throttle body with the bolts.

Tighten

- Tighten the bolts to 1 N·m (9 lb in.).

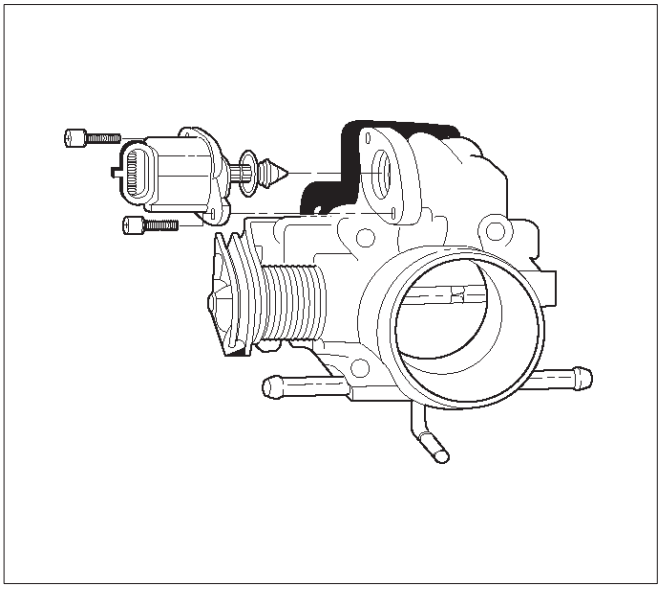

TS23745

2. Connect the IAC valve electrical connector.
3. Install the negative battery cable.

Common Chamber

Removal and Installation Procedure

Refer to Common Chamber in Engine Mechanical.

Accelerator Cable Assembly

Removal Procedure

1. Remove the engine cover.
2. Loosen the adjusting nut on the cable bracket mounting on the common chamber.

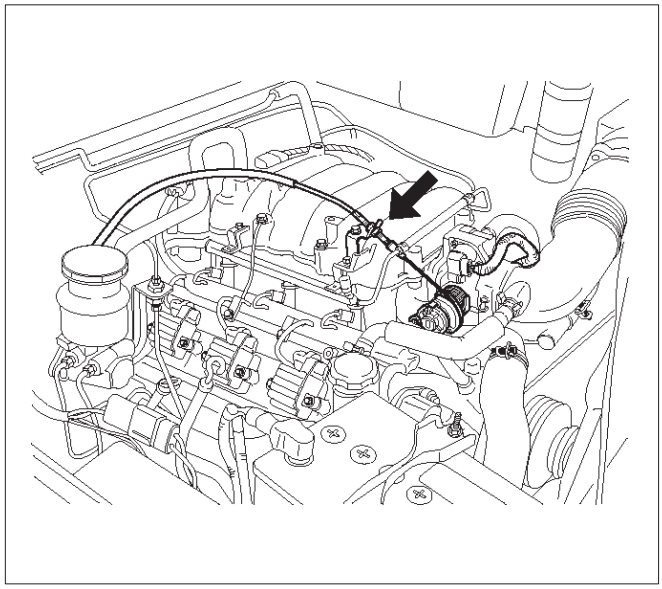

101RW005

3. Remove the accelerator control cable (on the throttle valve end).

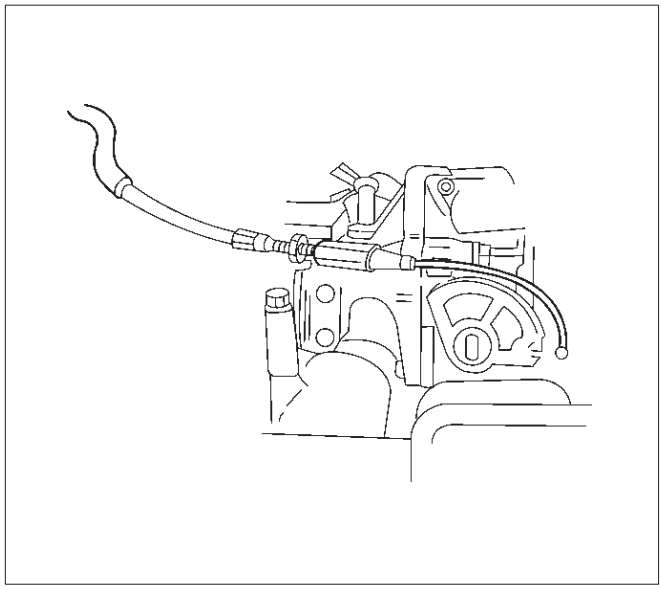

101RW006

4. Remove the accelerator control cable (on the accelerator pedal end).

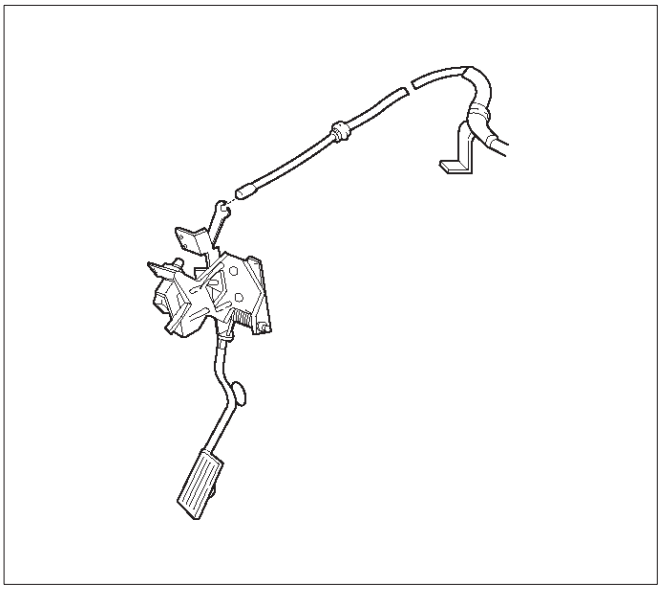

TS23982

5. Remove the grommet.
6. Remove the accelerator control cable.

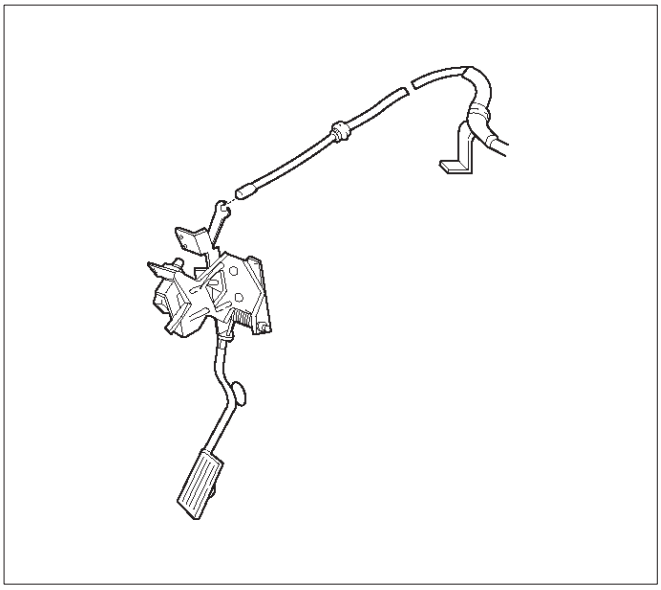

TS23983

Inspection Procedure

Check the following items, and replace the control cable if any abnormality is found:

- The control cable should move smoothly.
- The control cable should not be bent or kinked.
- The control cable should be free of damage and corrosion.

Installation Procedure

1. Install the accelerator control cable.

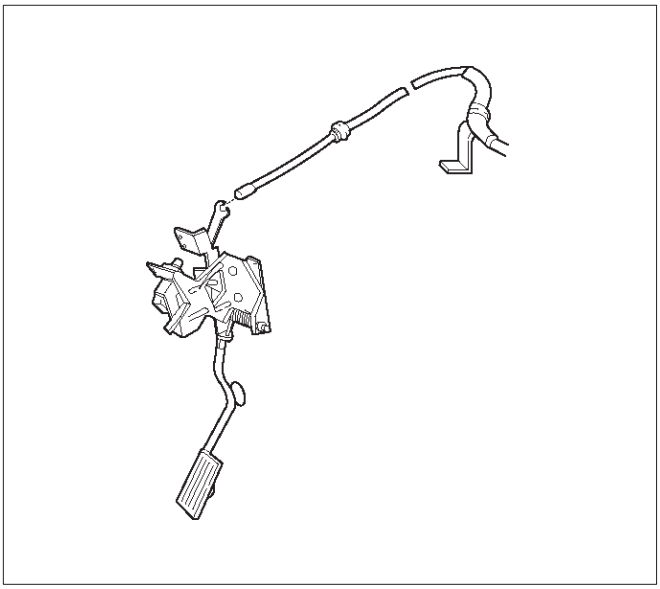

TS23983

2. Install the grommet.
3. Install the accelerator control cable (on the accelerator pedal end).

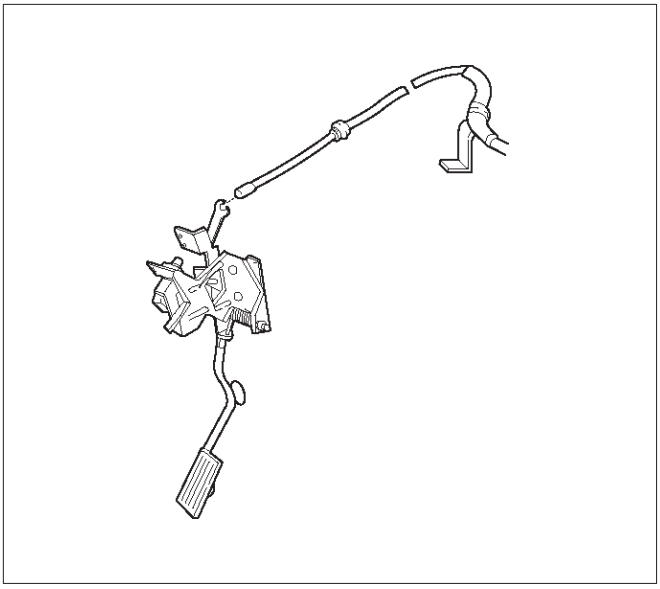

TS23982

4. Install the accelerator control cable (on the throttle valve end).

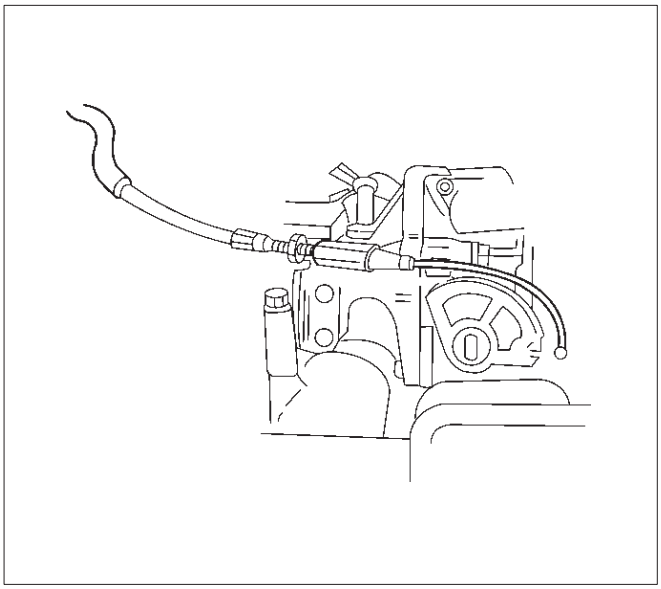

101RW006

5. Install the adjusting nut.

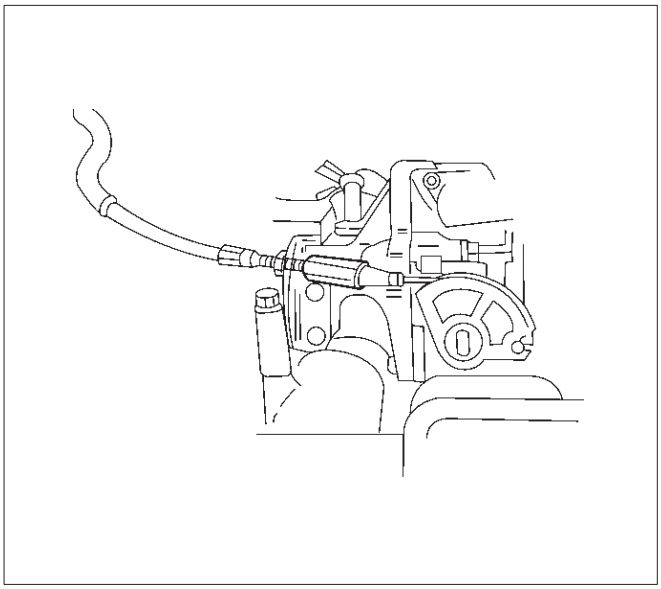

101RW007

6. Adjust the accelerator cable at the throttle body. Refer to *Accelerator Cable Adjustment*.
7. Install the engine cover.

Adjustment Procedure

1. Loosen the adjusting nut and lock nut.
2. Pull outer cable closing fully the throttle valve.
3. Tighten adjusting nut and lock nut temporarily.

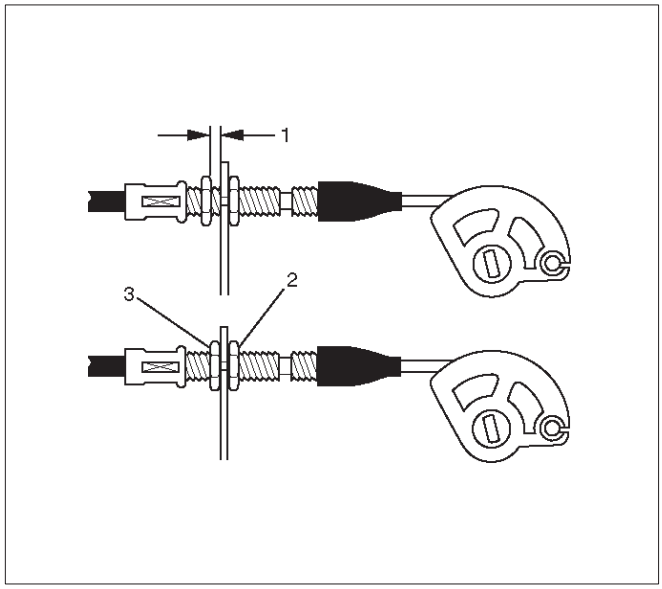

035RW004

4. Loosen adjusting nut by three turns and tighten lock nut. Then, manually operating the throttle valve, make sure that the valve lever returns up to the stopper screw.

IMPORTANT: The valve lever must return up to the stopper screw. If the valve lever does not reach the stopper screw, repeat the procedure again from step 1.

5. It does not reach the stopper screw, repeat from step 1.

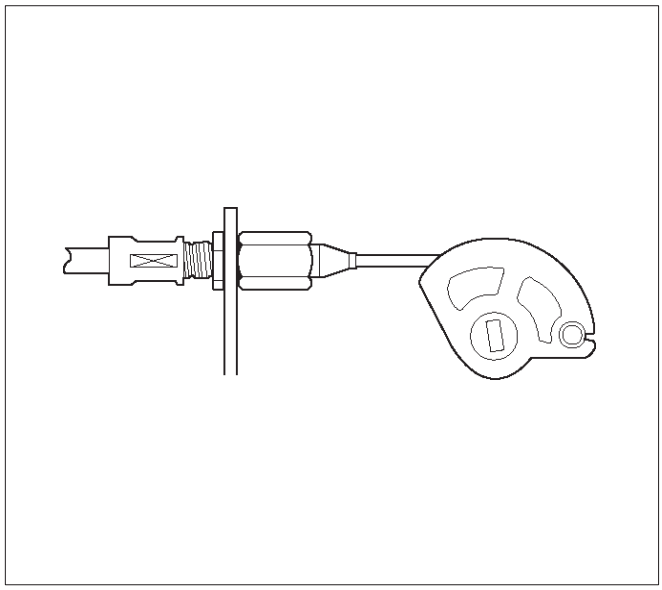

TS23782

Accelerator Pedal Replacement

Removal Procedure

1. Disconnect the cruise control cable from the accelerator pedal assembly.

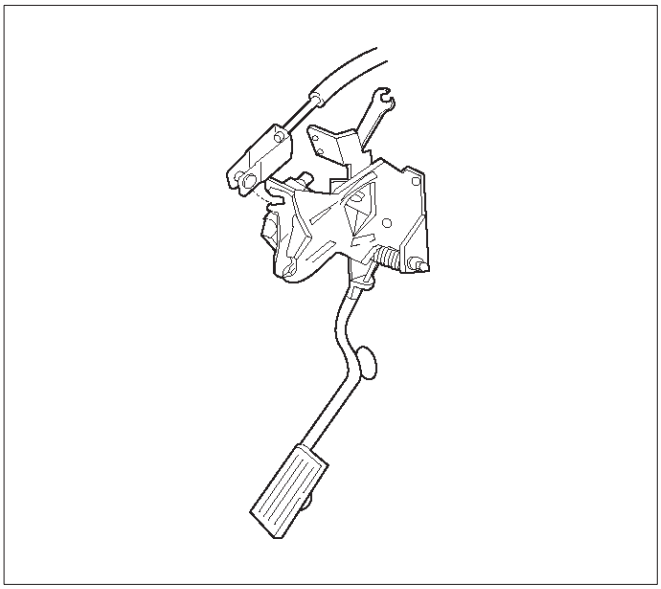

TS24053

2. Disconnect the accelerator pedal control cable from the accelerator pedal assembly.

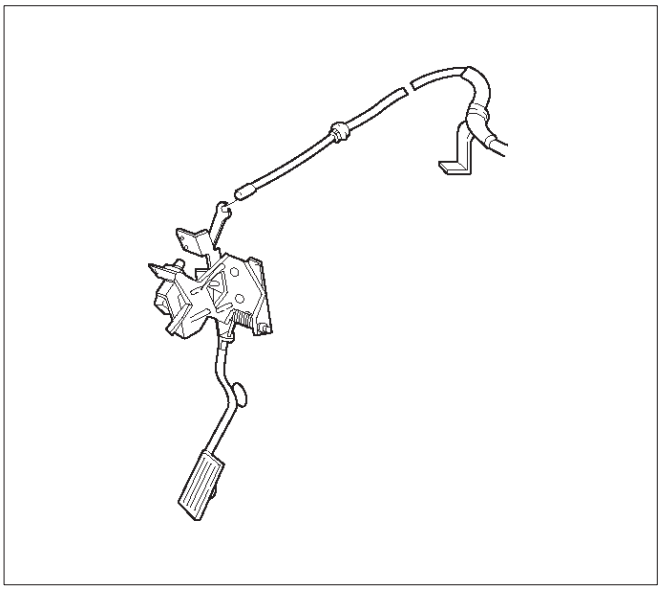

TS24054

3. Disconnect the wiring harness from the kick-down switch.

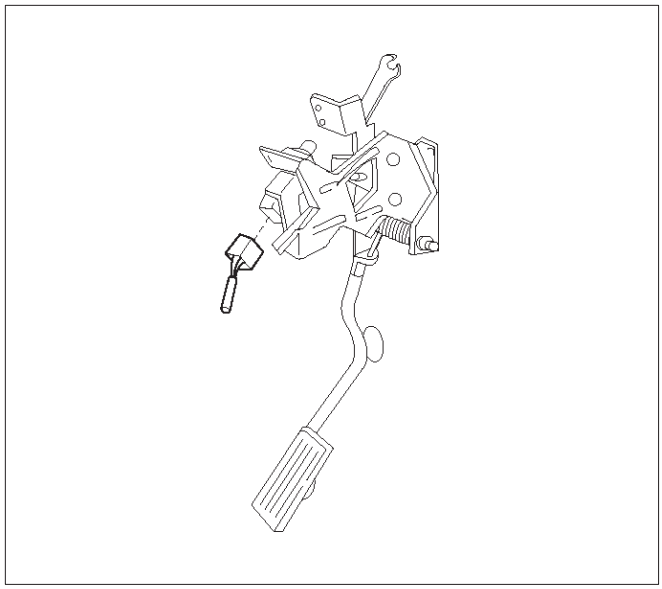

TS24038

4. Remove the two screws from the accelerator pedal assembly.

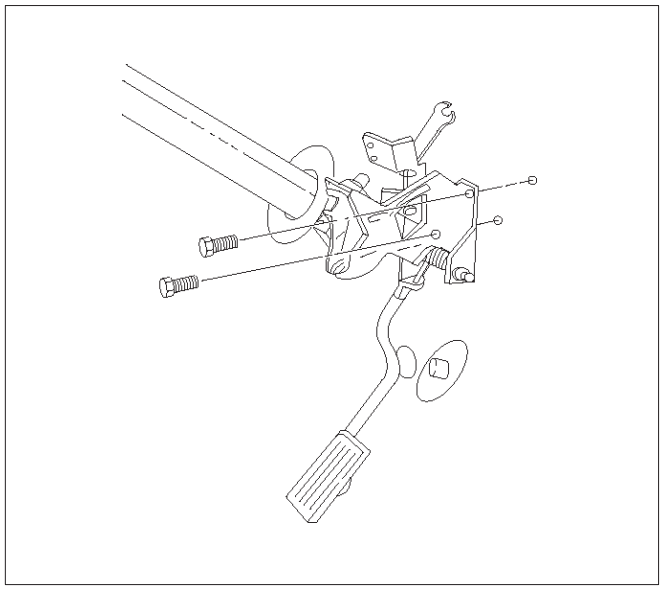

TS24055

5. Remove the accelerator pedal assembly from the bulkhead.

Installation Procedure

1. Install the accelerator pedal assembly on the bulkhead.
2. Install the two screws to the accelerator pedal assembly.

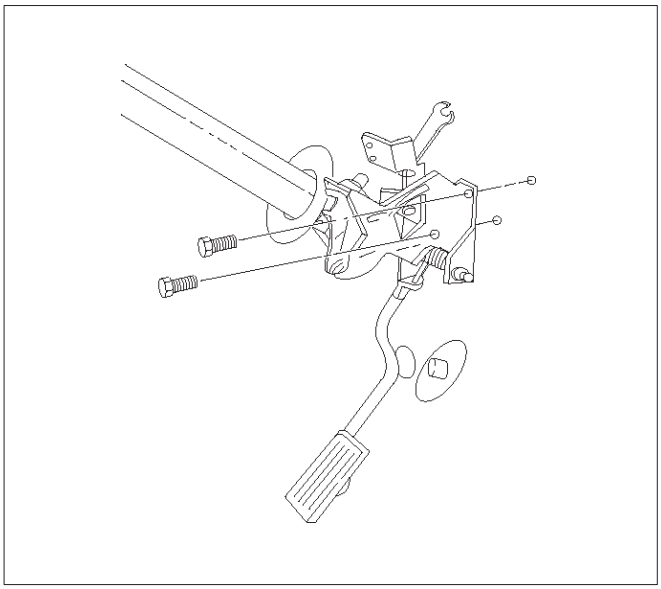

TS24055

3. Connect the wiring harness to the kick-down switch.

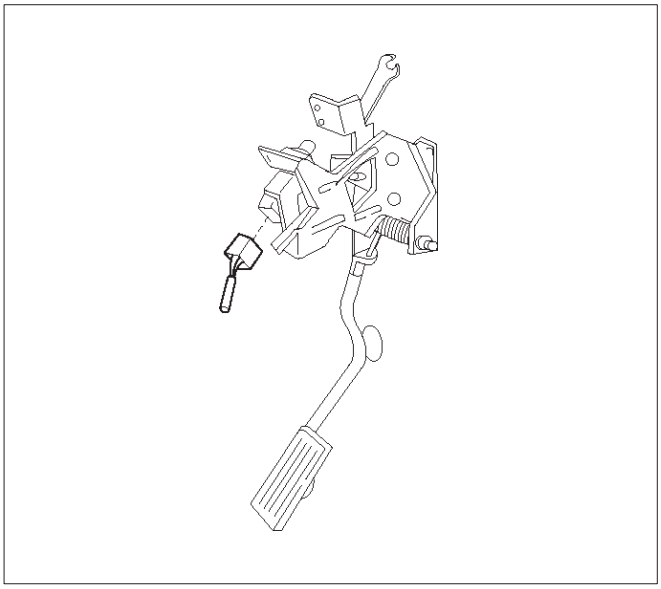

TS24038

4. Connect the accelerator pedal control cable to the accelerator pedal assembly.

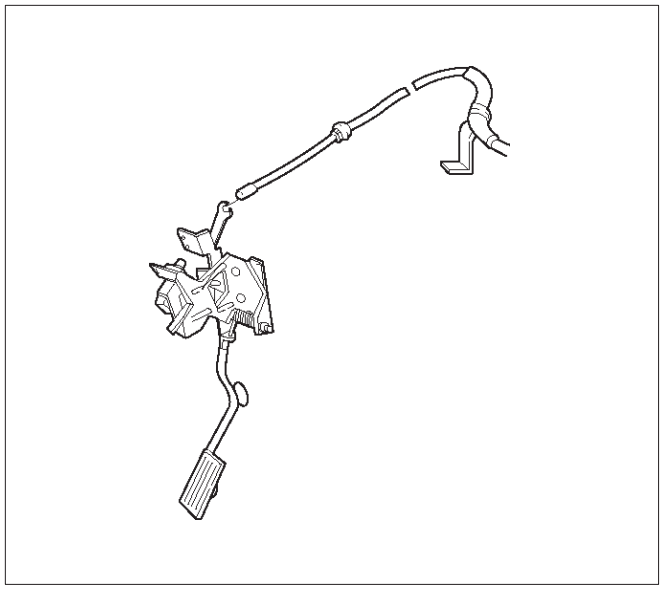

TS24054

5. Connect the cruise control cable to the accelerator pedal assembly.

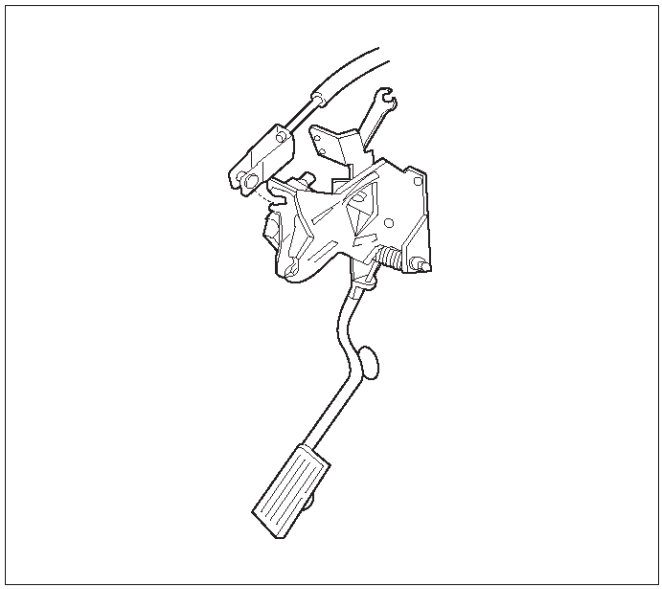

TS24053

Pedal Stroke Adjustment Procedure

1. Loosen the jam nut and rotate the kick-down switch counterclockwise.

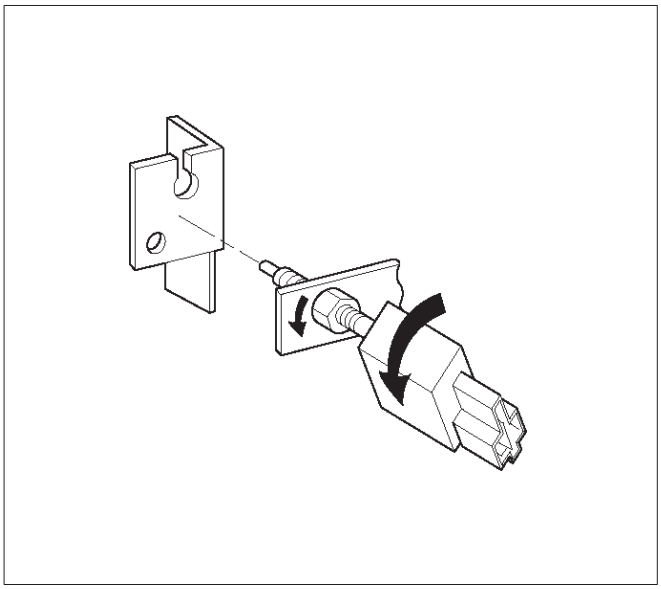

TS24039

2. Fully depress the pedal and hold it by hand. Rotate the switch clockwise until the switch clicks.
3. Rotate the switch 1/2 turn further and lock it in this position by tightening the jam nut.

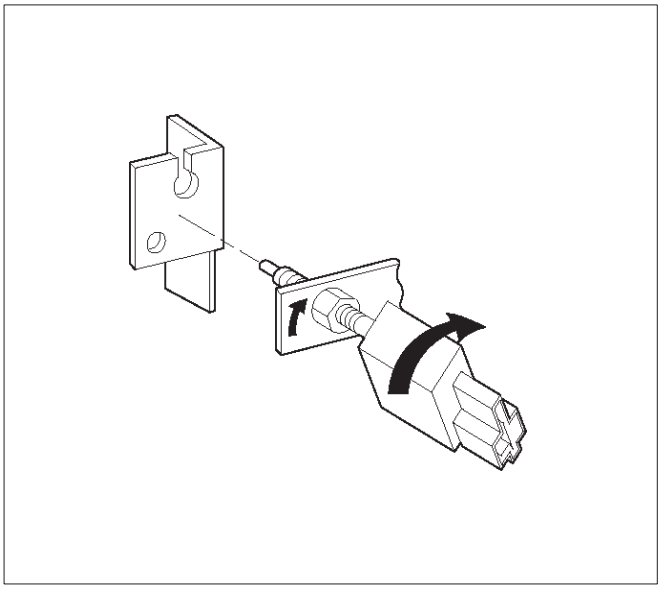

TS24040

4. Step on the accelerator pedal and make sure there is a clicking sound at the full-stroke position.

Fuel Filter Cap

General Description

The fuel filler cap includes a vacuum valve and a pressure valve.

If high vacuum or high pressure occurs in the fuel tank, each valve works to adjust the pressure in order to prevent damage to the tank at the EGR valve.

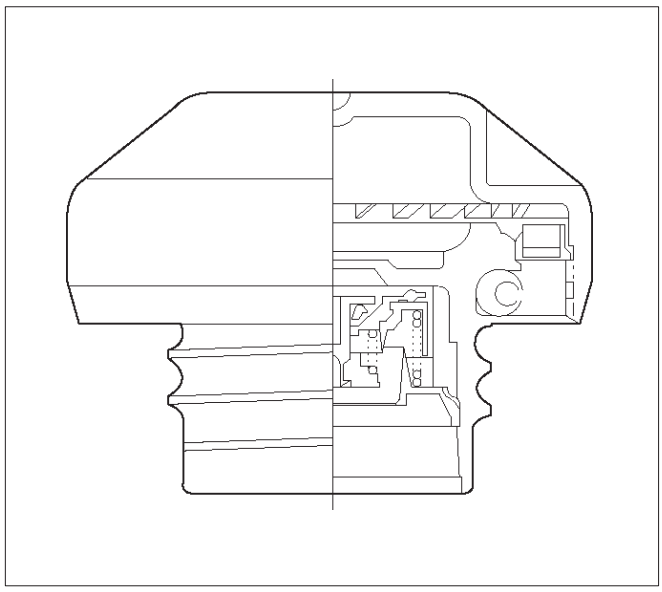

TS23767

Inspection Procedure

NOTE: Replace the fuel filler cap with the same type of filler cap that was originally installed on the vehicle.

- Check the seal ring in the filler cap for any abnormality and for seal condition.
- Replace the filler cap if any abnormality is found.

Fuel Filter

Removal Procedure

1. Disconnect the negative battery cable.
2. Remove the fuel filler cap.

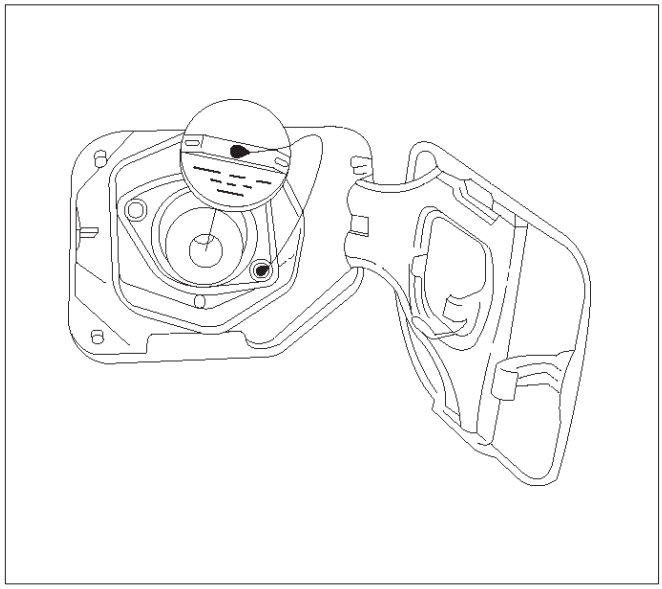

041RW005

3. Disconnect the fuel line from the fuel filter on the engine side.
4. Disconnect the fuel line from the fuel filter on the fuel tank side.

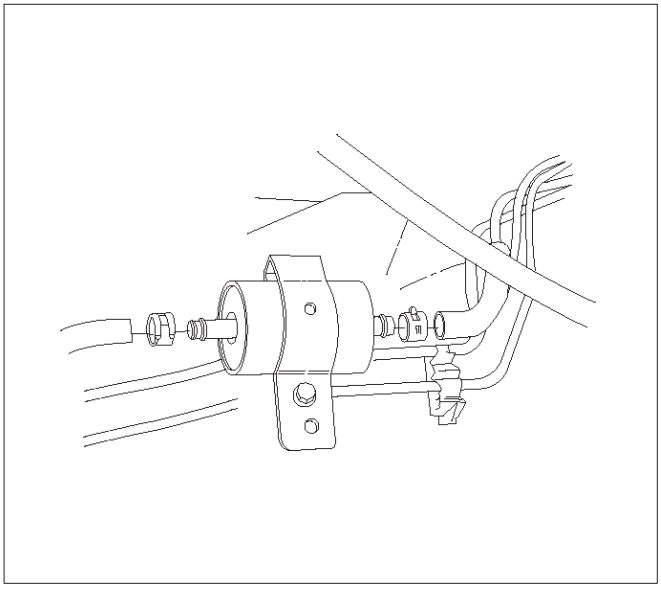

041RW006

5. Remove the bolt on the fuel filter holder.

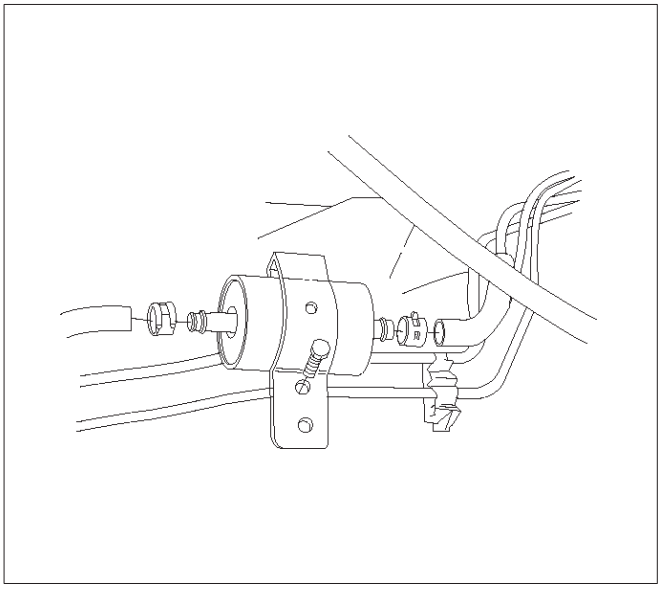

041RW007

6. Remove the fuel filter.

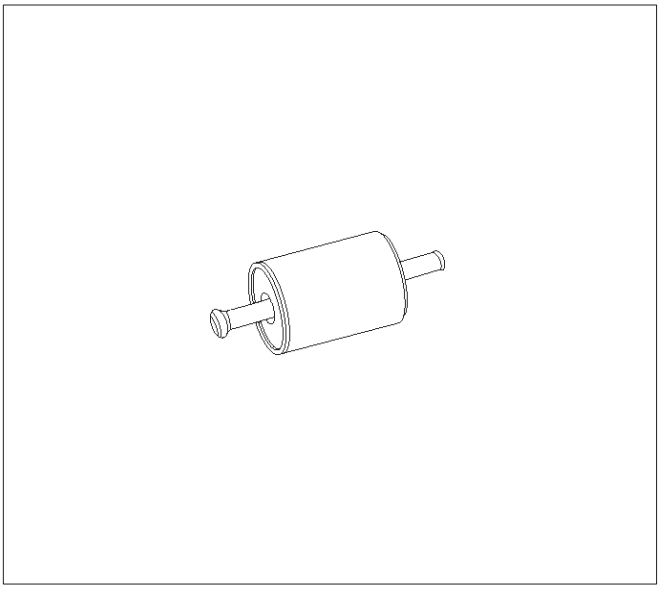

041RW008

Inspection Procedure

1. Replace the fuel filter when the following occur:
   - Fuel leaks from the fuel filter body.
   - The fuel filter body is damaged.
   - The fuel filter is clogged with dirt or sediment.
2. If the drain hole is clogged, clean the drain.

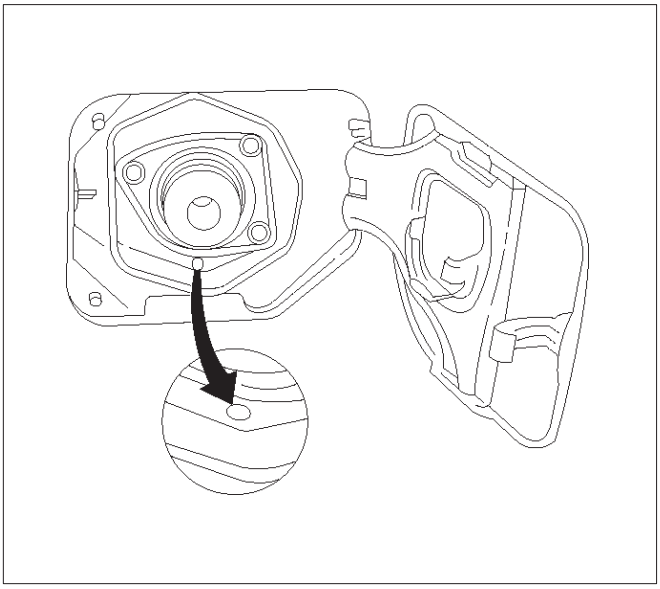

041RW009

Installation Procedure

1. Install the fuel filter in the correct direction.

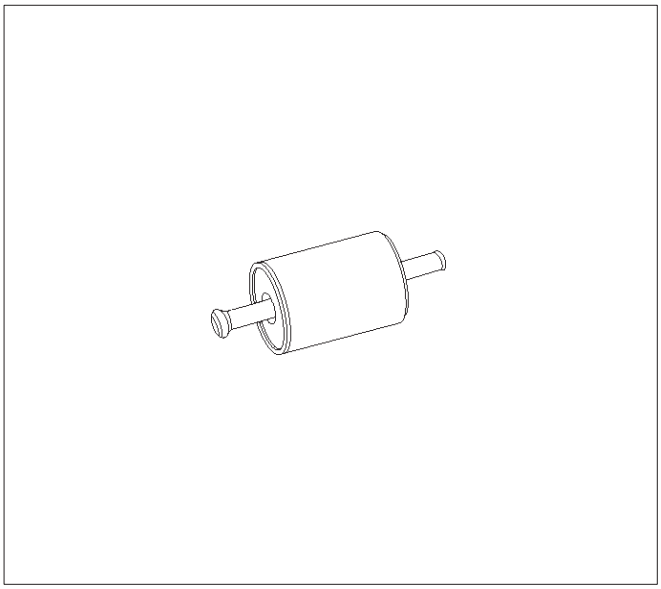

041RW008

2. Install the bolt on the fuel filter holder.

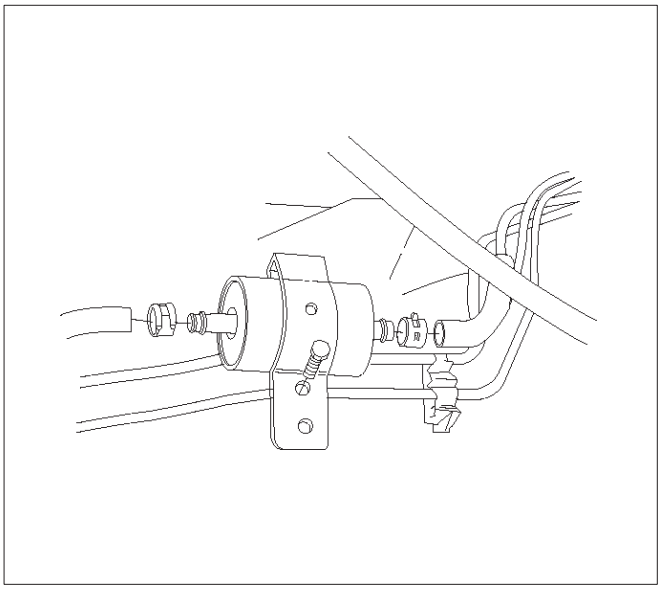

041RW007

3. Connect the fuel line on the engine side.
4. Connect the fuel line on the fuel tank side.

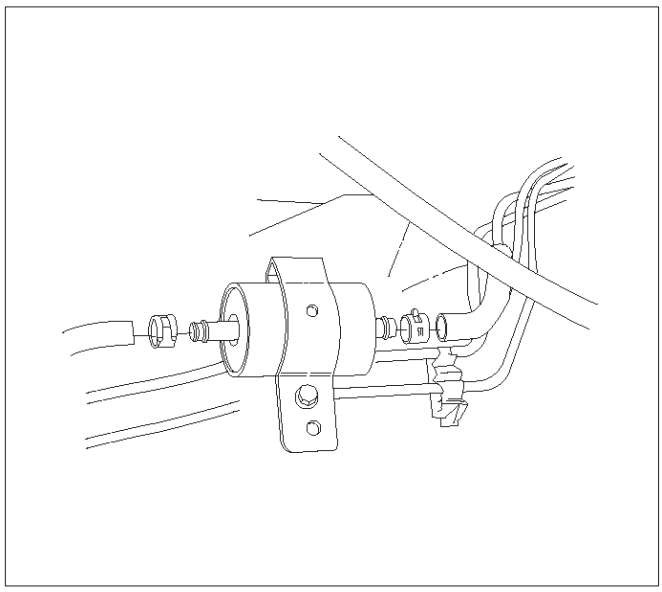

041RW006

5. Install the fuel filler cap.

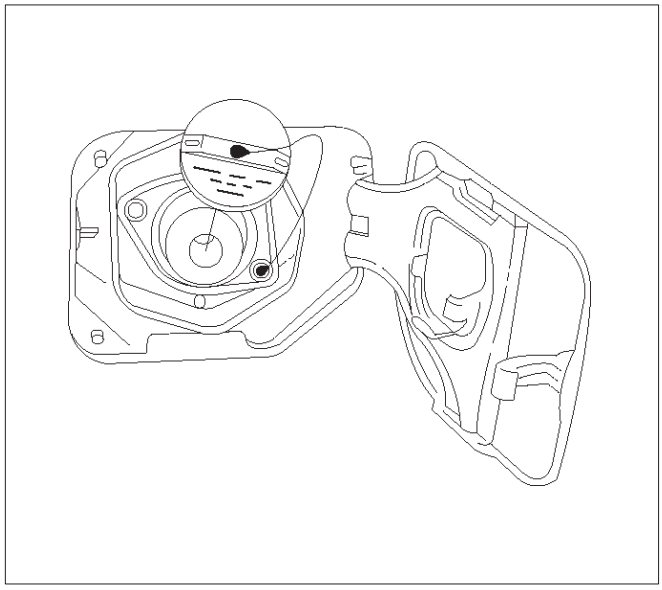

041RW005

6. Connect the negative battery cable.

Fuel Gauge Unit

Removal Procedure

1. Disconnect the negative battery cable.
2. Loosen the fuel filler cap.
3. Drain the fuel from the tank.

Tighten

- Tighten the drain plug to 20 N·m (14 lb ft.).

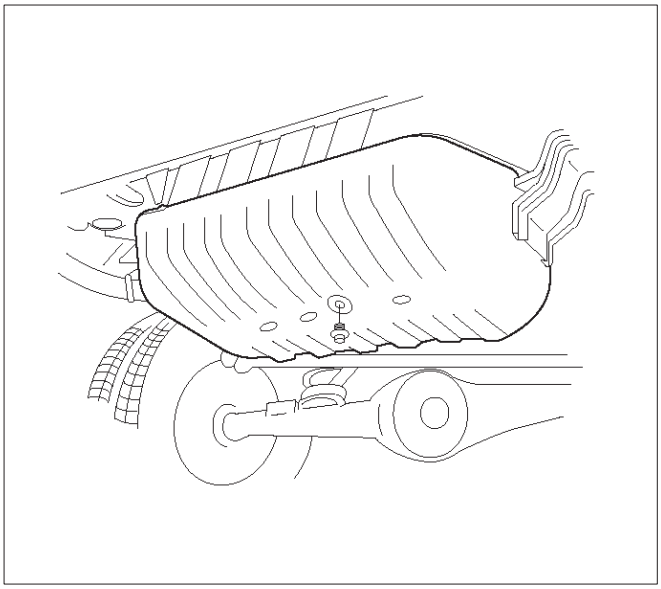

TS22907

4. Disconnect the wiring connector from the fuel gauge unit.

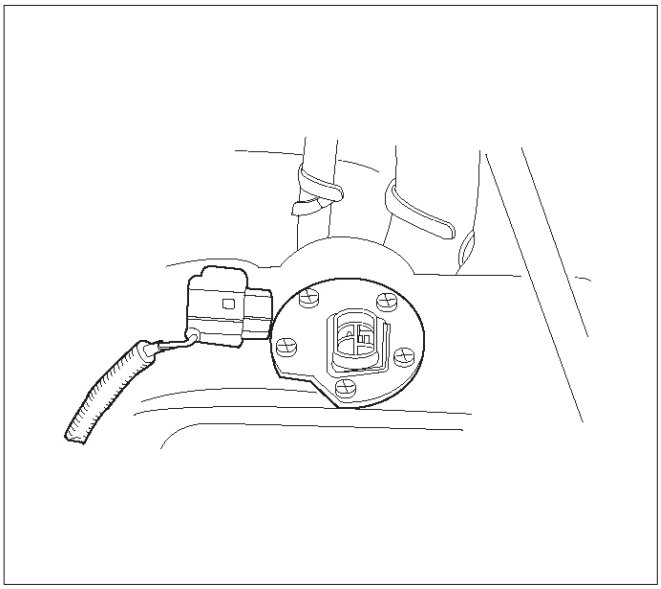

TS23771

5. Remove the fuel gauge unit retaining screws.
6. Remove the fuel gauge unit.
   - Cover or plug the fuel tank to prevent dust, dirt, or debris from entering the tank.

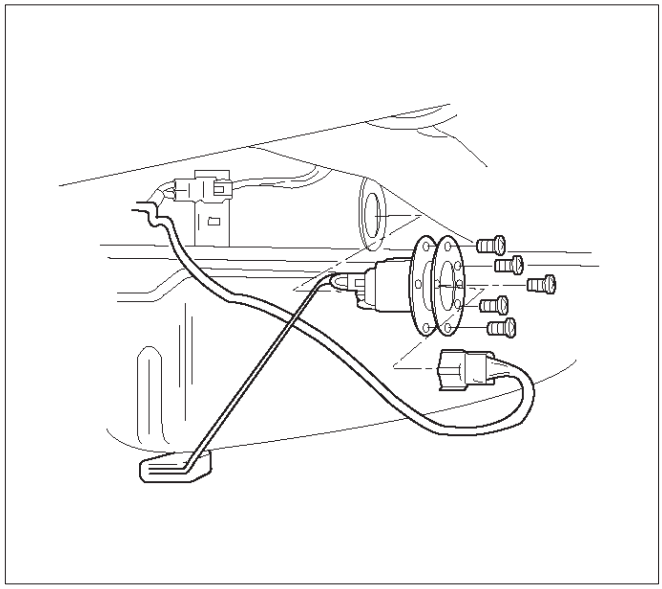

TS22911

Installation Procedure

1. Install the fuel gauge unit.
2. Install the fuel gauge unit retaining screws.

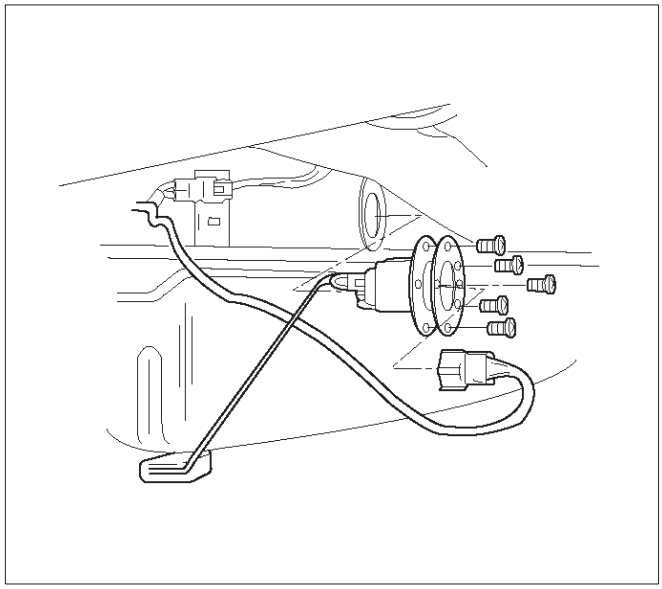

TS22911

3. Connect the wiring connector to the fuel gauge unit.

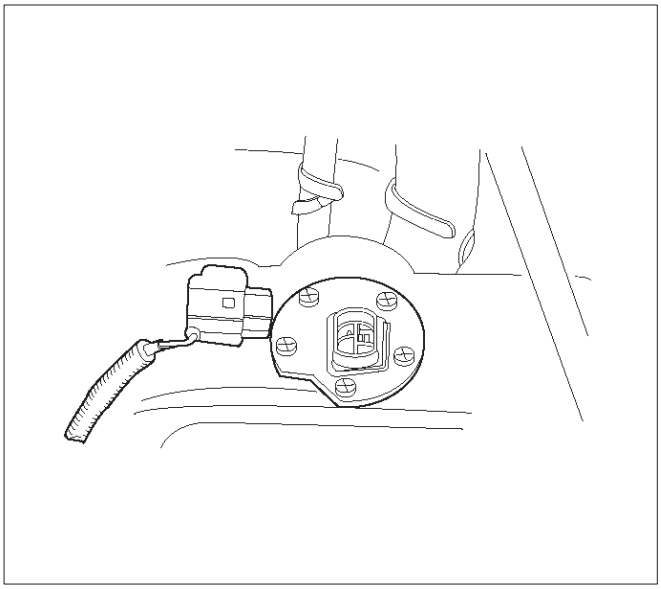

TS23771

4. Fill the fuel tank with fuel.
   - Tighten the fuel filler cap.
   - Check for leaks at the fuel gauge unit gasket.
5. Connect the negative battery cable.

Fuel Injectors

Removal Procedure

NOTE: If the fuel injectors are leaking, the engine oil may be contaminated with fuel. Check the oil for signs of contamination and change the oil and the filter if necessary.

NOTE: Use care in removing the fuel injectors in order to prevent damage to the fuel injector electrical connector pins or the fuel injector nozzles. The fuel injector is an electrical component and should not be immersed in any type of cleaner as this may damage the fuel injector.

IMPORTANT: Fuel injectors are serviced as a complete assembly only.

1. Disconnect the negative battery cable.
2. Remove the upper intake manifold. Refer to *Common Chamber in Engine Mechanical.*.
3. Remove the fuel rail. Refer to *Fuel Rail*.

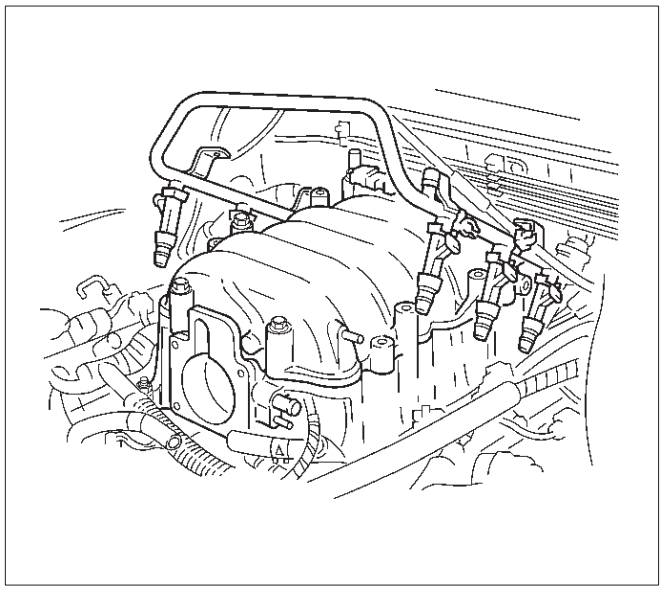

014RW164

4. Remove the injector retainer clip.

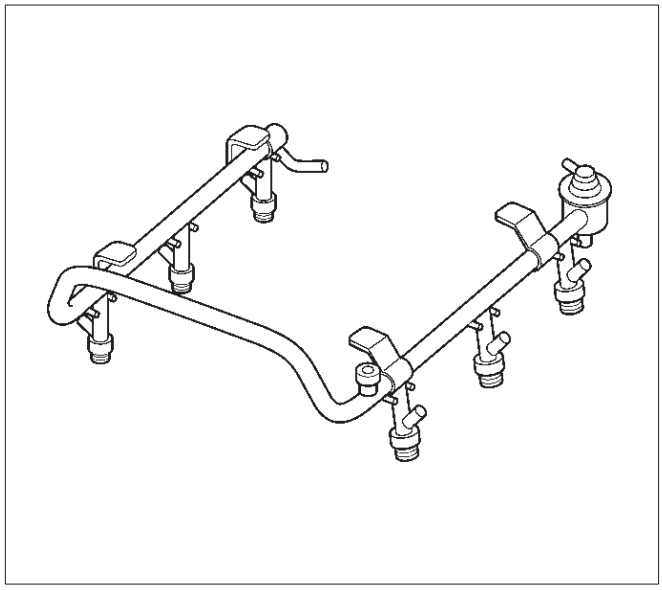

055RW009

5. Remove the fuel injector assembly.
6. Remove the O-ring from the fuel injector.
7. Remove the O-ring backup from the fuel injector .

Inspection Procedure

1. Inspect the O-rings for cracks or leaks.
2. Replace worn or damaged O-rings.
3. Lubricate the new O-rings with engine oil before installation.

Installation Procedure

1. Install the O-ring backup on the fuel injector.
2. Install the new O-ring on the fuel injector.
3. Install the fuel injector on the fuel rail.

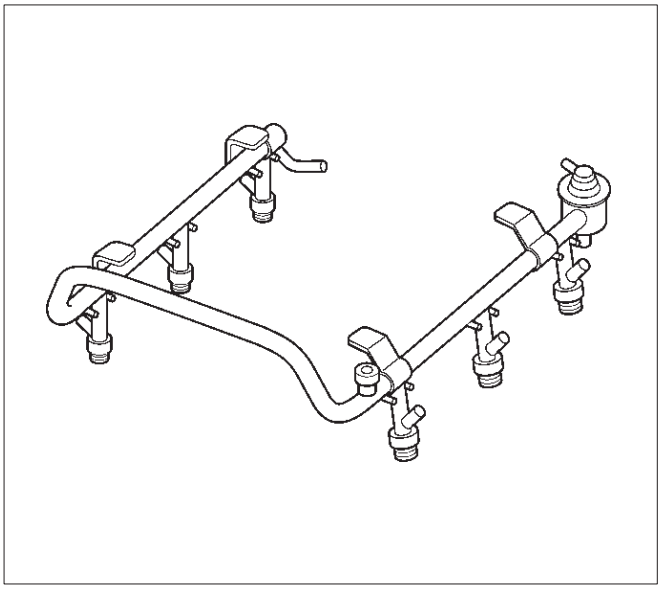

055RW009

4. Use new fuel injector retainer clips to retain the fuel injector to the fuel rail.
5. Coat the end of the fuel injector with engine oil.
6. Install the fuel rail. Refer to *Fuel Rail*.

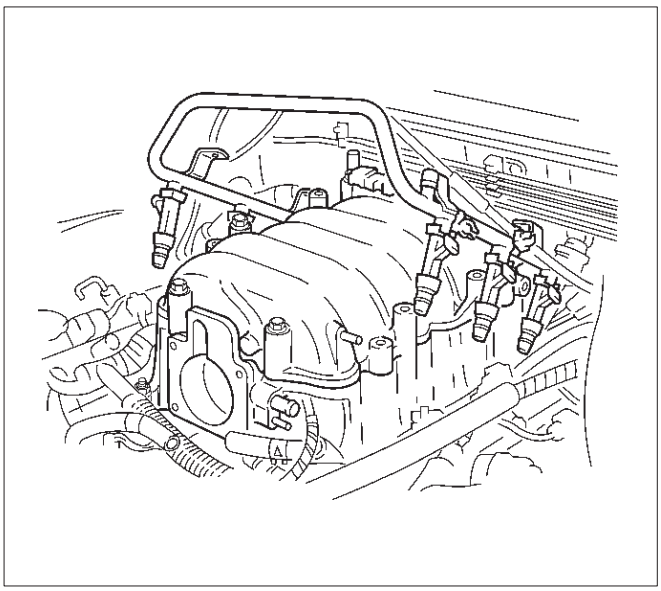

014RW164

7. Install the upper intake manifold. Refer to *Common Chamber in Engine Mechanical.*
8. Install the engine cover.
9. Connect the negative battery cable.

Fuel Pressure Regulator

Removal Procedure

CAUTION: To reduce the risk of fire and personal injury, it is necessary to relieve the fuel system pressure before servicing the fuel system components.

CAUTION: After relieving the system pressure, a small amount of fuel may be released when servicing fuel lines or connections. Reduce the chance of personal injury by covering the fuel line fittings with a shop towel before disconnecting the fittings. The towels will absorb any fuel that may leak out. When the disconnect is completed, place the towel in an approved container.

NOTE: Compressed air must never be used to test or clean a fuel pressure regulator, as damage to the fuel pressure regulator may result.

NOTE: To prevent damage to the fuel pressure regulator, do not immerse the pressure regulator in solvent.

1. Depressurize the fuel system. Refer to *Fuel Pressure Relief Procedure*.
2. Disconnect the negative battery cable.
3. Remove the fuel pump relay. Refer to *Fuel Pump Relay*.
4. Remove the pressure regulator hose from the fuel pressure regulator.

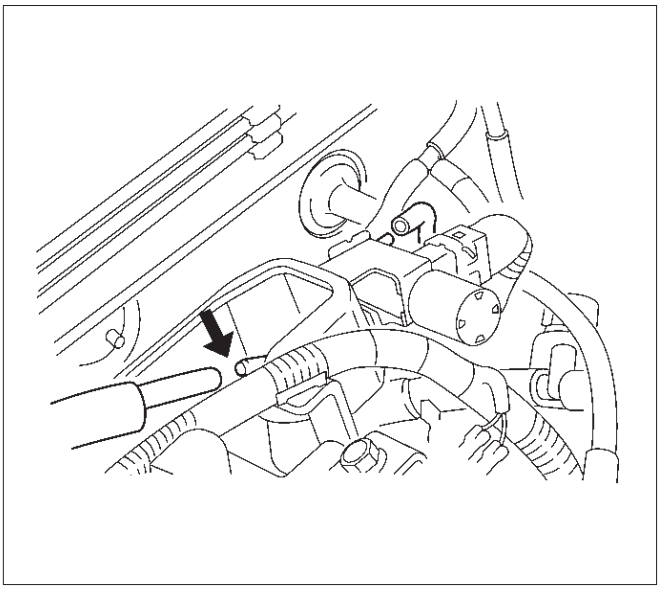

014RW110

5. Remove the two bolts from the protector that secures the common chamber.

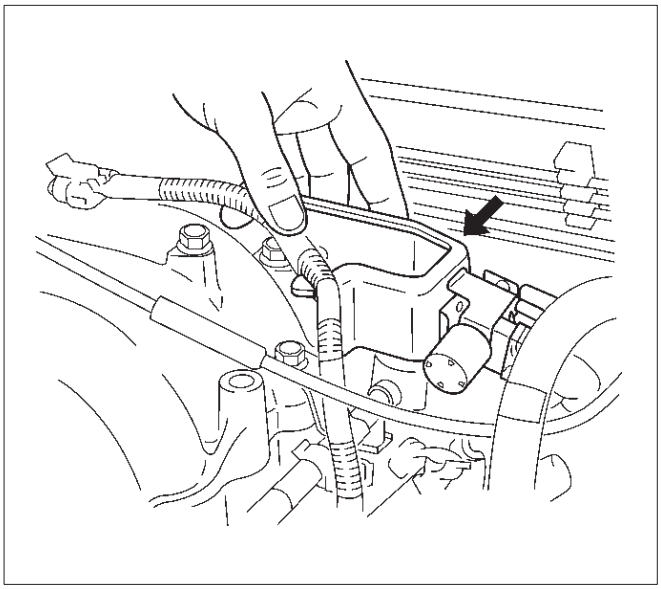

014RW109

6. Remove the fuel pressure regulator attaching screw.

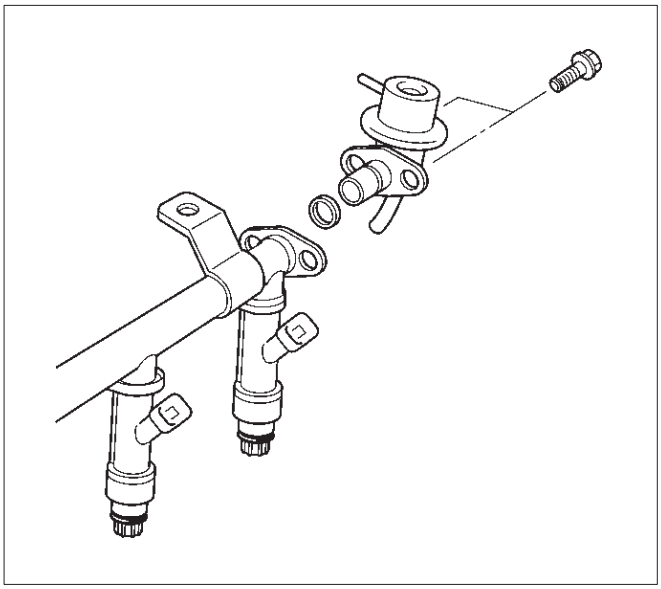

F06RW043

7. Remove the fuel pressure regulator from the fuel rail.

Disassembly Procedure

1. Remove the O-ring from the fuel pressure regulator.
2. Loosen the swivel nut.
3. Remove the fuel return line from the fuel pressure regulator.
4. Remove the O-ring from the fuel return line.
   - The O-ring may be left inside the fuel pressure regulator instead of on the fuel return line.

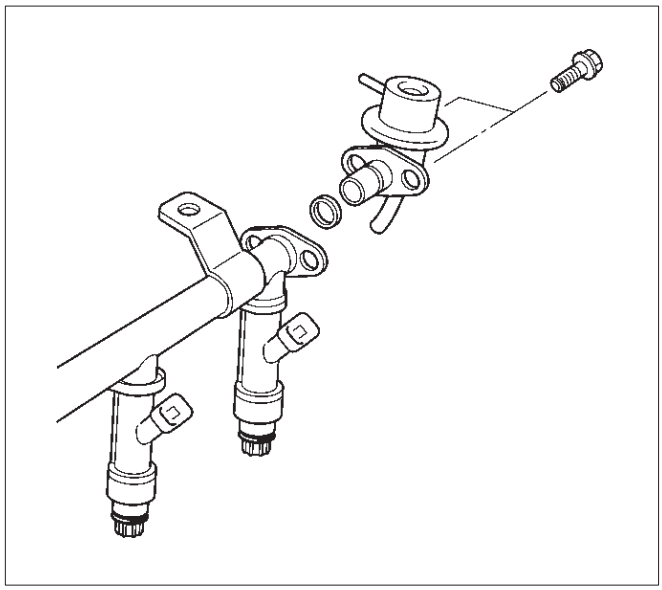

F06RW043

Assembly Procedure

1. Install a new O-ring on the fuel return line.
2. Install the fuel return line on the fuel pressure regulator.

NOTE: Do not over-tighten the swivel nut on the fuel pressure regulator. The fuel pressure regulator can be damaged and fuel may leak if the swivel nut is over-tightened.

3. Tighten the swivel nut.
4. Install a new O-ring on the fuel pressure regulator.

Installation Procedure

1. Install the fuel pressure regulator attaching screw.

Tighten

- Tighten the fuel pressure regulator attaching screw to 3 N·m (26 lb in.).

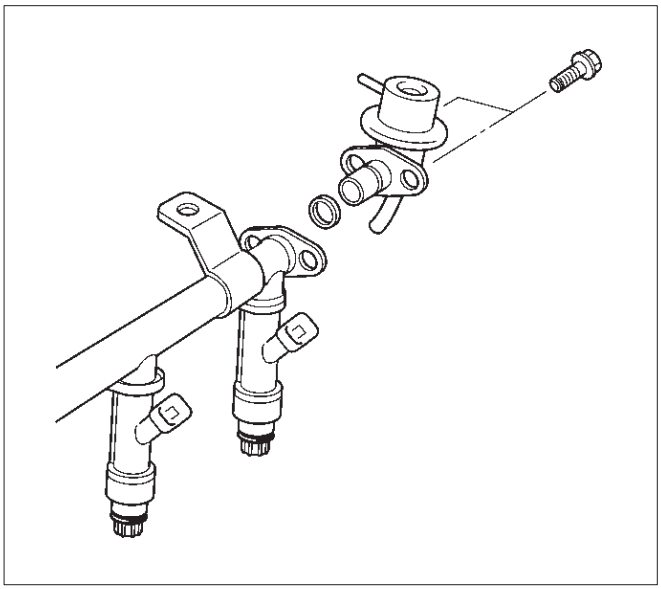

F06RW043

2. Install the fuel pressure regulator on the fuel rail.
3. Install the two bolts to the protector that secures the common chamber.

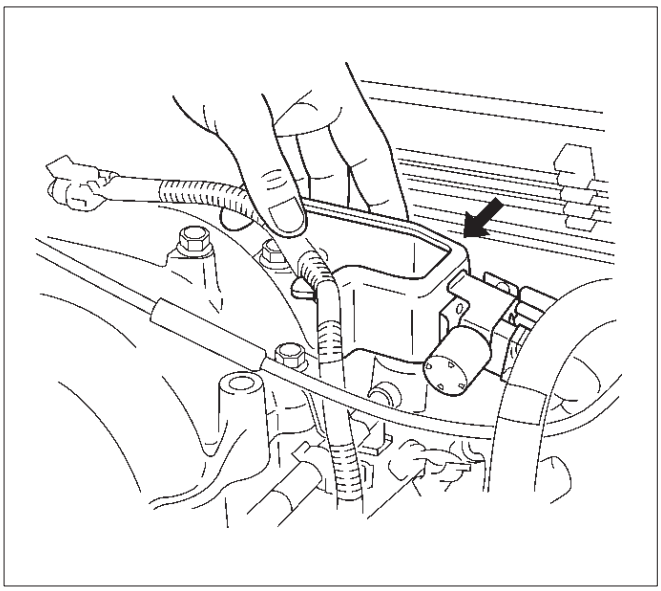

014RW109

4. Install the pressure regulator hose to the fuel pressure regulator.

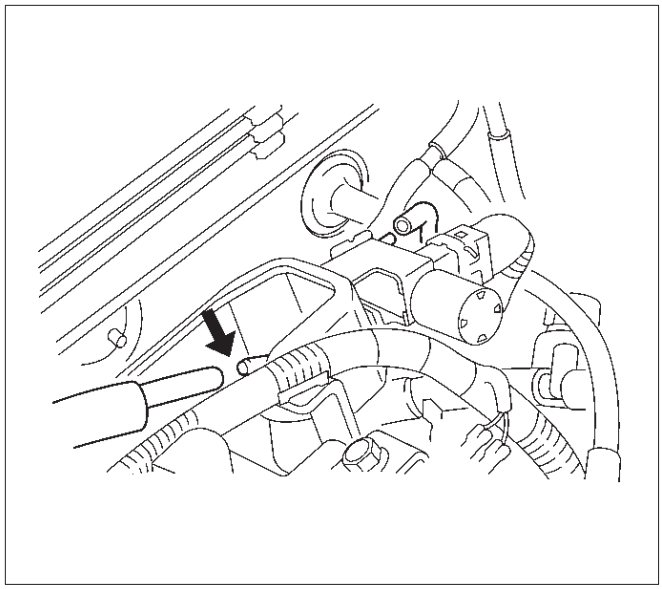

014RW110

5. Install the fuel pump relay. Refer to *Fuel Pump Relay*.
6. Connect the negative battery cable.
7. Crank the engine until it starts. Cranking the engine may take longer than usual due to trapped air in the fuel lines.

Fuel Metering System

Fuel Pressure Relief Procedure

CAUTION: To reduce the risk of fire and personal injury, it is necessary to relieve the fuel system pressure before servicing the fuel system components.

CAUTION: After relieving the system pressure, a small amount of fuel may be released when servicing fuel lines or connections. Reduce the chance of personal injury by covering the fuel line fittings with a shop towel before you disconnect the fittings. The towels will absorb any fuel that may leak out. When the disconnect is completed, place the towel in an approved container.

1. Remove the fuel cap.

2. Remove the fuel pump relay from the underhood relay box. Refer to *Fuel Pump Relay*.

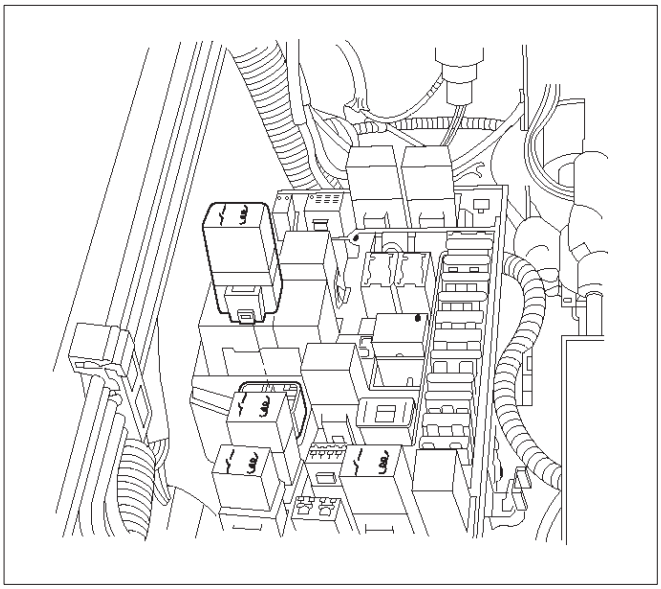

TS23976R

3. Start the engine and allow it to stall.
4. Crank the engine for 30 seconds.
5. Disconnect the negative battery cable.

Fuel Pump Assembly

Removal Procedure

1. Disconnect the negative battery cable.
2. Drain all the fuel from the tank.
3. Install and tighten the drain plug.

Tighten

- Tighten the drain plug to 20 N·m (14 lb ft.).

4. Remove the fuel tank. Refer to *Fuel Tank*.
5. Remove the retaining screws from the fuel tank.
6. Remove the fuel pump assembly from the fuel tank.
   - Cover the fuel pump opening in order to prevent dust, dirt, or debris from entering the fuel tank.

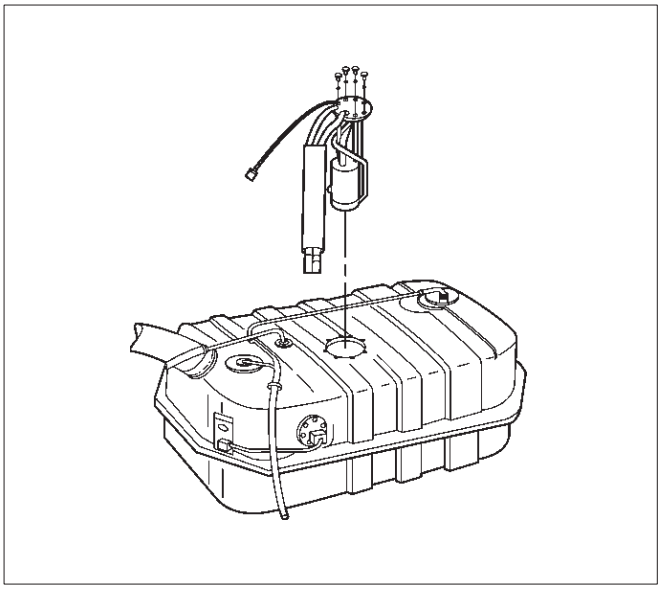

TS23795

Inspection Procedure

1. Inspect the fuel pump gasket for tears, cracks, stretching, or rotting. If any of these conditions are found, replace the fuel pump gasket.
2. Inspect the in-tank fuel filter for tears or evidence of dirt, debris, or water in the fuel. If any of these conditions are found, replace the in-tank fuel filter.

Installation Procedure

1. Install the fuel pump assembly.
2. Install the fuel pump assembly retaining screws.
3. Install the fuel tank assembly. Refer to *Fuel Tank*.
4. Fill the tank with fuel.
5. Tighten the fuel filler cap.
6. Connect the negative battery cable.

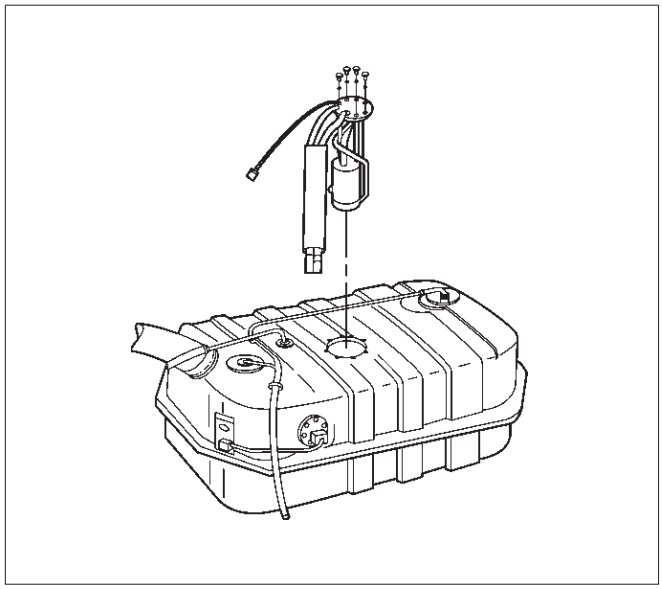

TS23795

Fuel Pump Relay

Removal Procedure

1. Remove the fuse and relay box cover from under the hood.
2. Consult the diagram on the cover to determine which is the correct relay.
3. Insert a small screwdriver into the catch slot on the forward side of the fuel pump relay.
   - The screwdriver blade will release the catch inside.

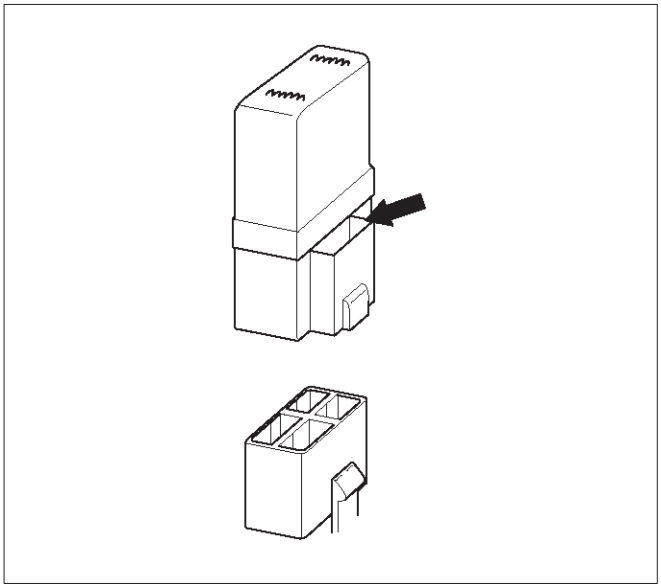

T321092

4. Pull the relay straight up and out of the fuse and relay box.

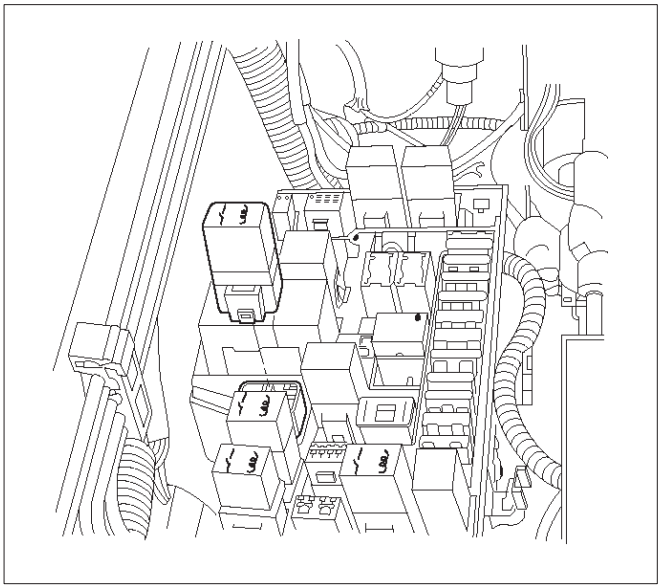

TS23976R

Installation Procedure

1. Insert the relay into the correct place in the fuse and relay box with the catch slot facing forward.
2. Press down until the catch engages.
   - An audible “click” will be heard.

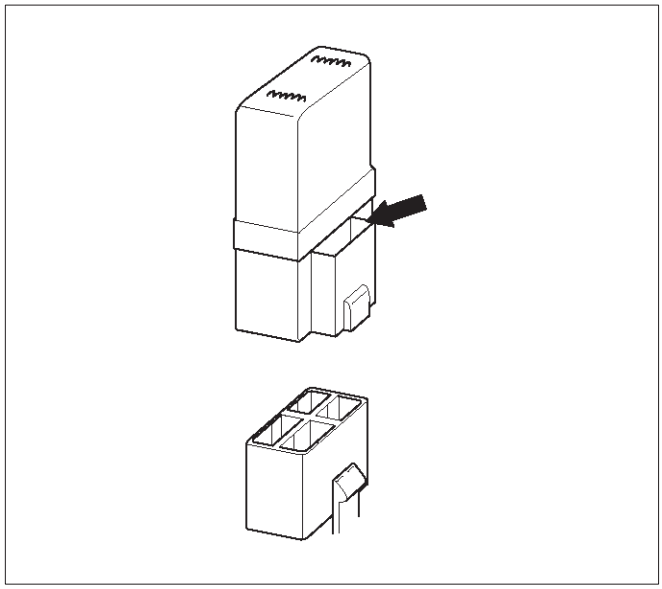

T321092

3. Install the fuse and relay box cover.

Fuel Rail Assembly

Removal Procedure

NOTE:

- Do not attempt to remove the fuel inlet fitting on the fuel rail. It is staked in place. Removing the fuel inlet fitting will result in damage to the fuel rail or the internal O-ring seal.
- Use care when removing the fuel rail assembly in order to prevent damage to the injector electrical connector terminals and the injector spray tips.
- Fittings should be capped and holes plugged during servicing to prevent dirt and other contaminants from entering open lines and passages.

IMPORTANT: An eight-digit identification number is stamped on the side of the fuel rail. Refer to this number when you service the fuel rail or when a replacement part is required.

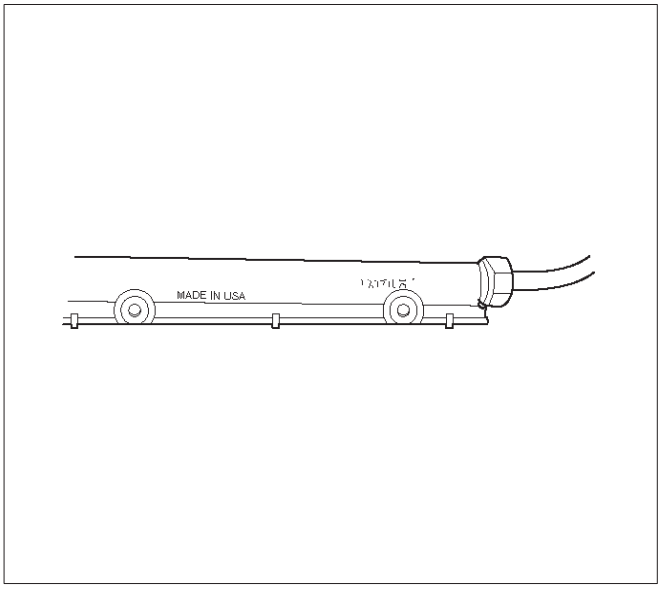

TS24022

Before removal, the fuel rail assembly may be cleaned with a spray type engine cleaner. Follow the spray package instructions. Do not immerse the fuel rails in liquid cleaning solvent.

1. Depressurize the fuel system. Refer to Fuel Pressure Relief Procedure in this Section.
2. Disconnect the negative battery cable.
3. Remove the engine cover.
4. Disconnect the accelerator pedal cable from throttle body and cable bracket.
5. Disconnect the connectors from manifold absolute pressure sensor, solenoid valve, electric vacuum sensing valve.
6. Disconnect the vacuum hose on canister VSV and positive crankcase ventilation hose.
7. Remove the common chamber. Refer to the common chamber in Engine Mechanical.
   1. Lift up carefully on the fuel injectors. Do not separate the fuel injectors from the fuel rail.
   2. If an injector becomes separated from the fuel rail, the infector O-ring seals and the retainer clip must be replaced.
   3. Drain residual fuel into an approved container.

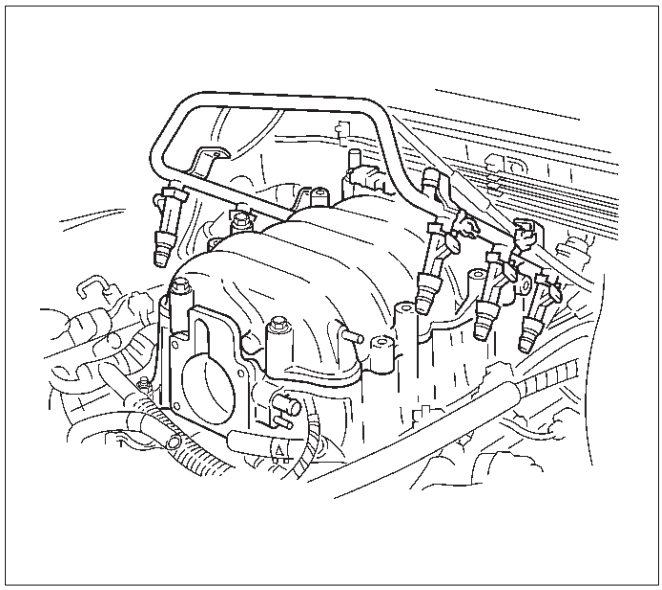

014RW164

8. If removal of the fuel pressure regulator is necessary, refer to *Fuel Pressure Regulator*.
9. If removal of the fuel injectors is necessary, refer to *Fuel Injectors*.

Installation Procedure

1. If the fuel injectors were removed, install them. Refer to *Fuel Injectors*.
2. If the fuel pressure regulator was removed, install it. Refer to *Fuel Pressure Regulator*.
3. Install the common chamber. Refer to common chamber in engine Mechanical.

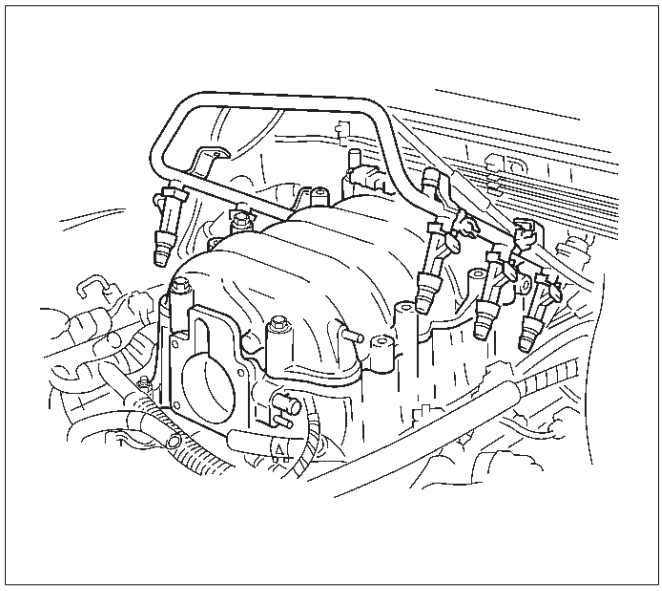

014RW164

4. Connect the vacuum hose on Canister VSV and positive crankcase ventilation hose.
5. Connect the connectors to manifold absolute pressure sensor, solenoid valve, electric vacuum sensing valve.
6. Connect the accelerator pedal cable to throttle body and cable bracket.
7. Install the engine cover.
8. Connect the negative battery cable.
9. Crank the engine until it starts. Cranking the engine may take longer than usual due to trapped air in the fuel rail and in the injectors.

Fuel Tank

Removal Procedure

1. Disconnect the negative battery cable.
2. Loosen the fuel filler cap.
3. Drain the fuel from the tank into an approved container.
4. Install and tighten the drain plug.

Tighten

- Tighten the drain plug to 20 N·m (14 lb ft.).

5. Disconnect the fuel filler hose at the fuel tank.
6. Disconnect the air breather hose at the fuel tank.

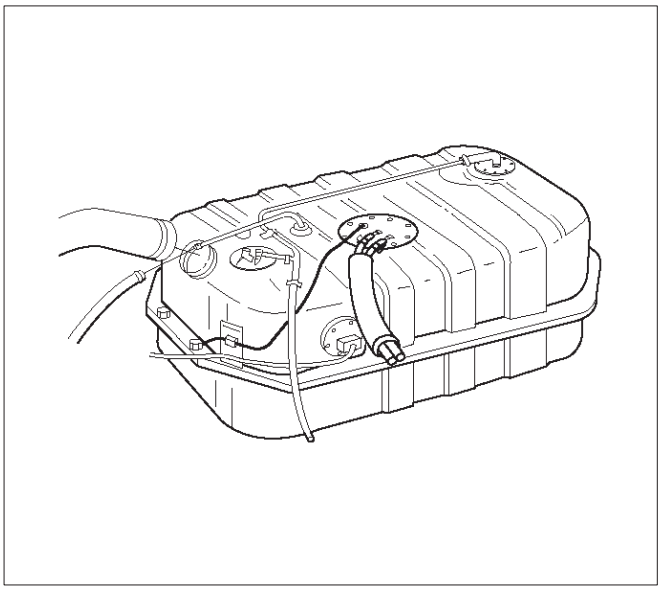

TS23796

7. Remove the undercover retaining bolts.
8. Remove the undercover.

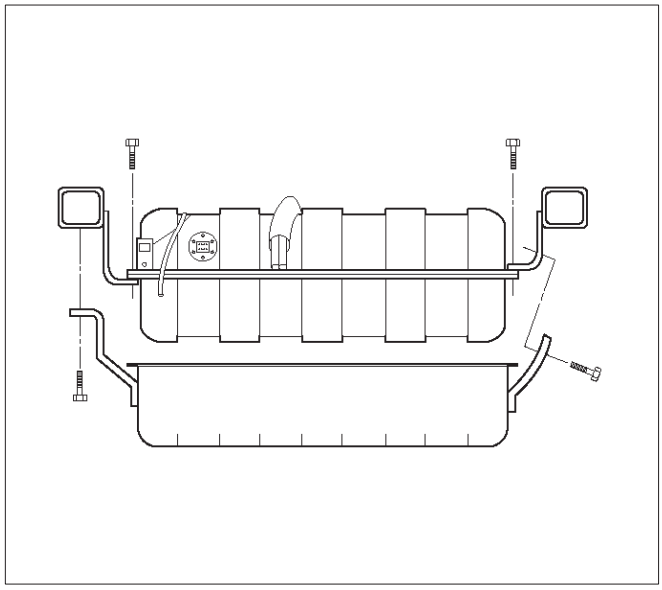

TS23797

9. Disconnect the wiring connector to the fuel pump.
10. Disconnect the wiring connector to the fuel gauge unit.
11. Remove the fuel gauge unit connector from the bracket.
12. Disconnect the EVAP vapor hose.
13. Disconnect the fuel supply hose.
14. Disconnect the fuel return hose.
    - Plug the hoses to prevent dust from entering the hoses.

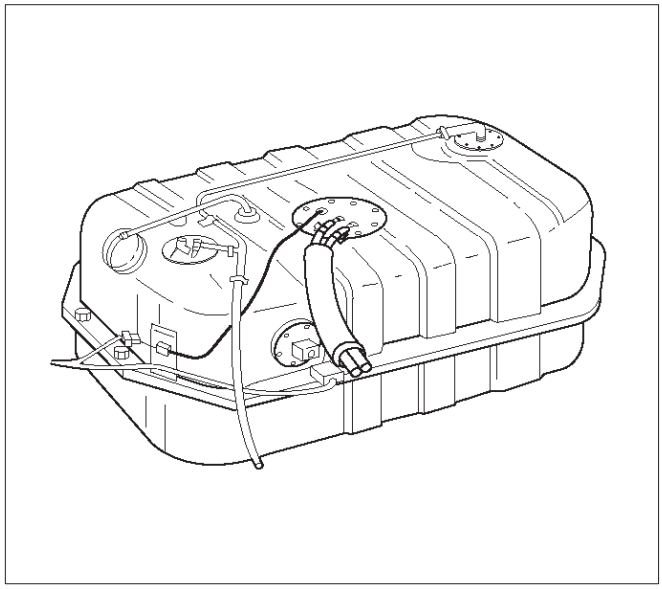

TS23769

15. Remove the fuel tank retaining bolts on both sides.
16. Remove the fuel tank.

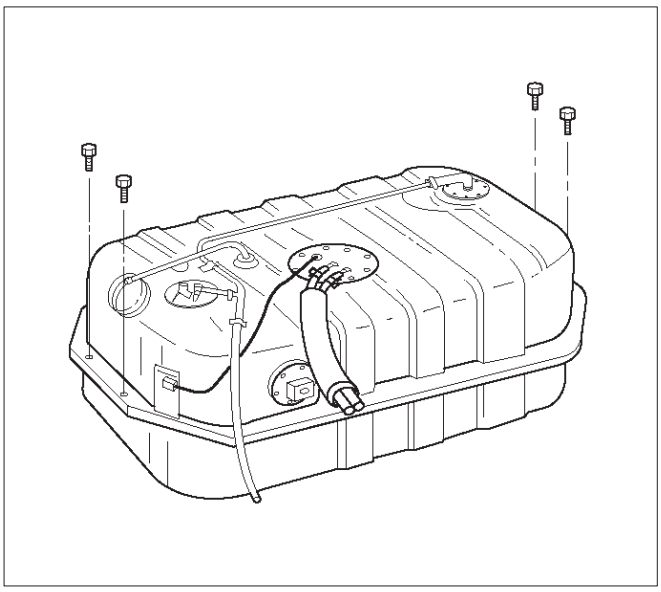

TS23770

Installation Procedure

1. Install the fuel tank.
   - Place the flanges on the left and right side of the tank on the bracket.
2. Install the fuel tank retaining bolts.

Tighten

- Tighten the fuel tank retaining bolts to 36 N·m (27 lb ft.).

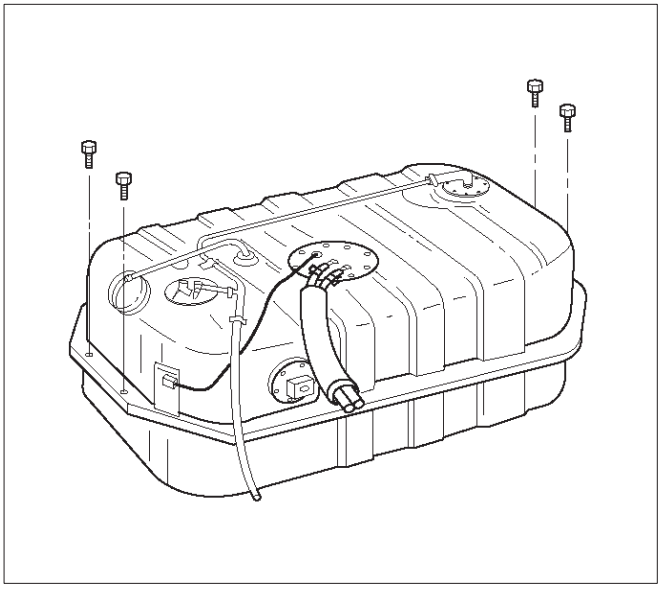

TS23770

3. Connect the fuel return hose.
4. Connect the fuel supply hose.
5. Connect the EVAP vapor hose.
6. Connect the wiring connector for the fuel gauge unit.
7. Connect the fuel gauge wiring connector to the bracket.
8. Connect the wiring connector for the fuel pump.

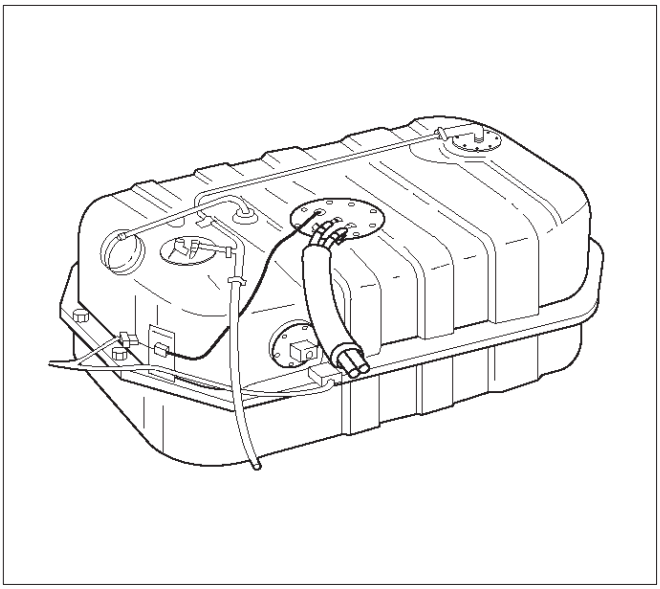

TS23769

9. Install the undercover.
10. Secure the undercover with the retaining bolts.

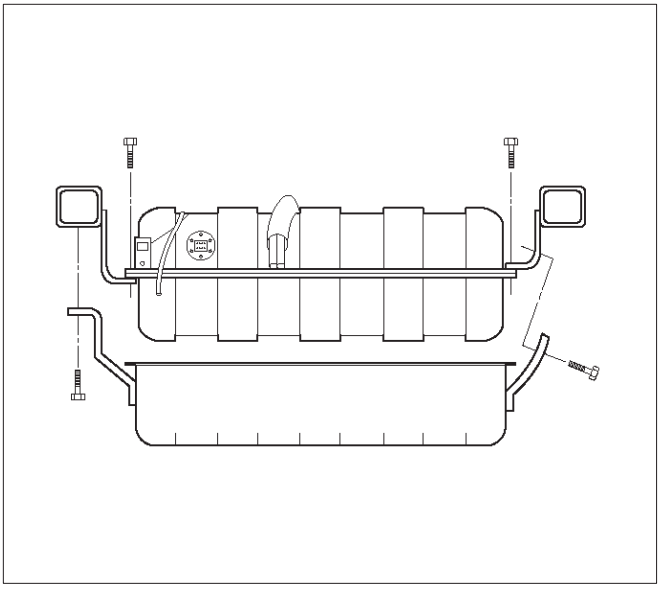

TS23797

11. Connect the fuel filler fuse at the tank.
12. Connect the air breather hose at the tank.

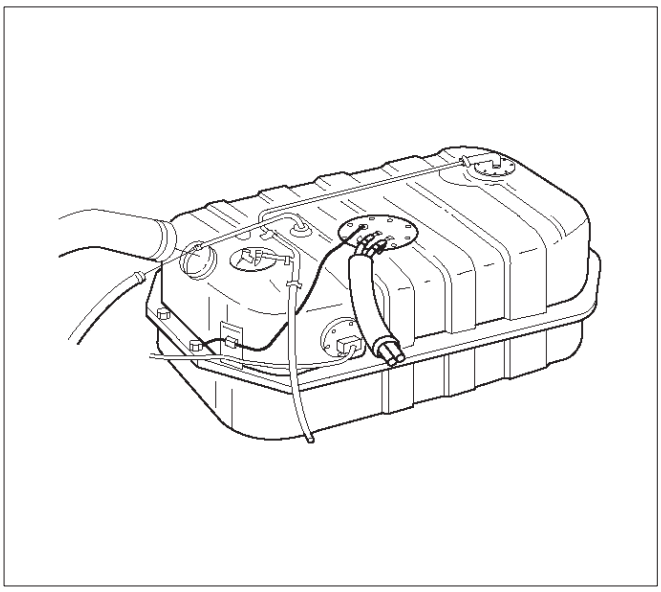

TS23796

13. Fill the fuel tank with fuel.
14. Tighten the fuel filler cap.
15. Connect the negative battery cable.

Throttle Body (TB)

Removal Procedure

1. Disconnect the negative battery cable.
2. Drain the cooling system. Refer to *Cooling System*.
3. Remove the accelerator cable assembly. Refer to *Accelerator Cable in Engine Speed Control System.*.
4. Disconnect the electrical connectors:
   - Throttle position (TP) sensor.
   - Idle air control (IAC) solenoid.
   - Intake air temperature (IAT) sensor. Refer to *Intake Air Temperature Sensor*.

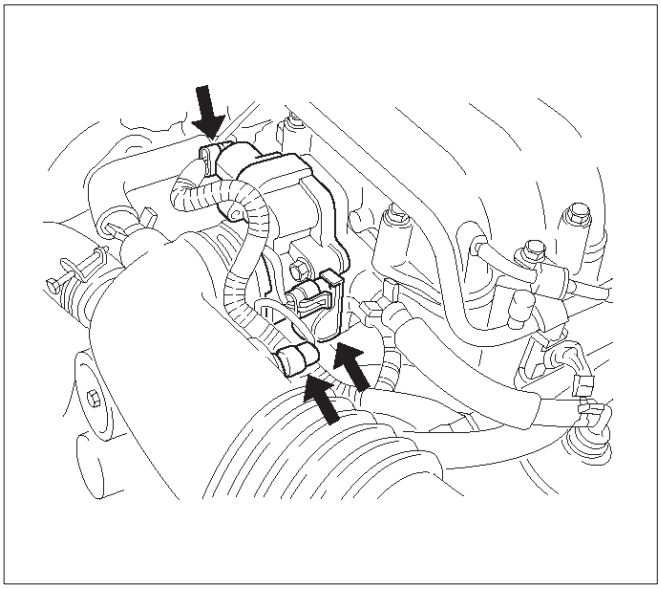

035RW023

5. Disconnect the vacuum hose below the air horn.
6. Remove the intake air duct clamp.
7. Disconnect the intake air duct.
8. Disconnect the coolant lines from the throttle body.
9. Remove the bolts from the common chamber.
10. Remove the throttle body from the common chamber.
11. Remove the gasket from the upper intake manifold.

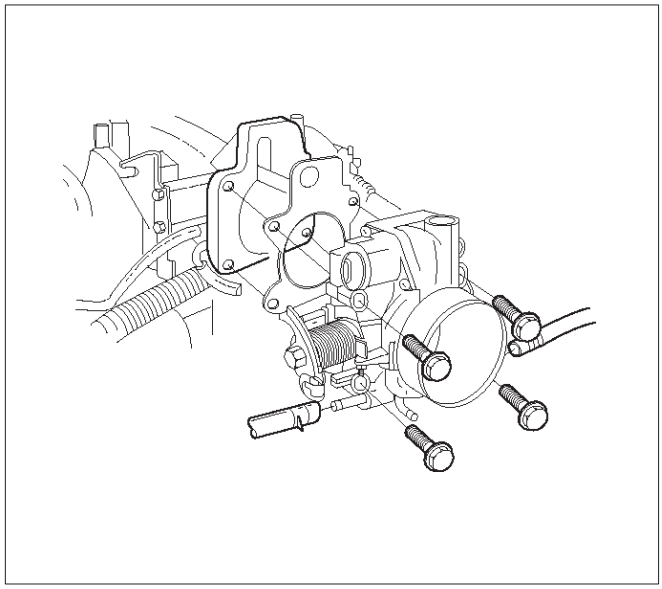

035RW024

12. Remove the IAC. Refer to *Idle Air Control (IAC) Solenoid*.
13. Remove the TP sensor. Refer to *Throttle Position (TP) Sensor*.

Inspection Procedure

NOTE: Do not use solvent of any type when you clean the gasket surfaces on the intake manifold and the throttle body assembly. The gasket surfaces and the throttle body assembly may be damaged as a result.

- If the throttle body gasket needs to be replaced, remove any gasket material that may be stuck to the mating surfaces of the manifold.
- Do not leave any scratches in the aluminum casting.

Installation Procedure

1. Install the TP sensor. Refer to *Throttle Position (TP) Sensor*.
2. Install the IAC. Refer to *Idle Air Control (IAC) Solenoid*.
3. Install the gasket on the common chamber.
4. Install the throttle body on the common chamber.

5. Secure the gasket and the throttle body with the four bolts.
   - The vacuum lines must be properly routed under the throttle body before tightening the mounting bolts.

Tighten

- Tighten the throttle body mounting bolts to 24 N·m (17 lb ft.).

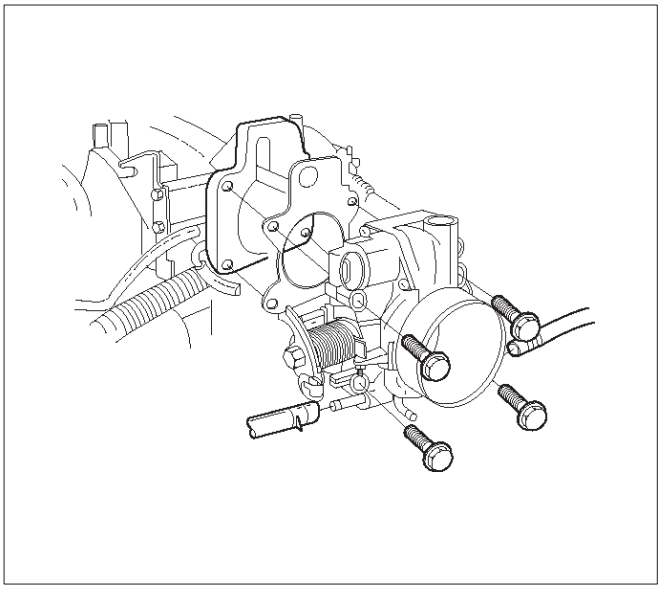

035RW024

6. Install the coolant lines.
7. Connect all the vacuum lines.
8. Install the intake air duct.
9. Tighten the intake air duct clamp.
10. Connect all the electrical connectors:
    - Throttle position (TP) sensor.
    - Idle air control (IAC) solenoid.
    - Intake air temperature (IAT) sensor. Refer to *Intake Air Temperature Sensor*.

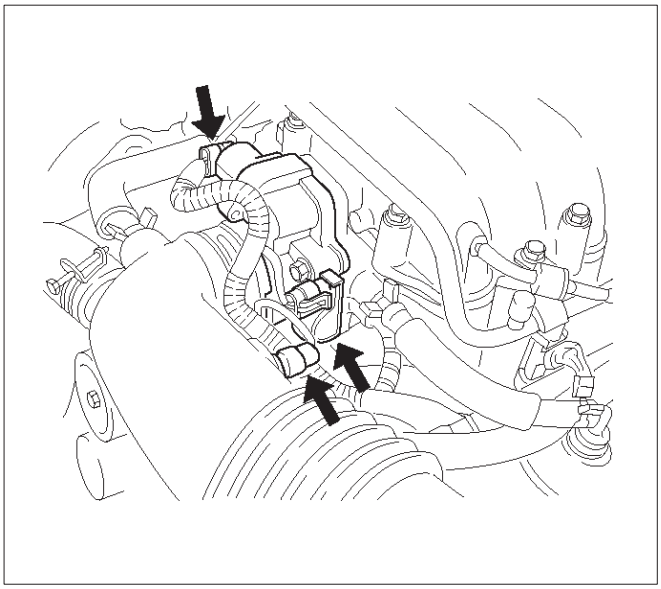

035RW023

11. Install the accelerator cable assembly. Refer to *Accelerator Cable in Engine Speed Control System.*.
12. Fill the cooling system. Refer to *Cooling System*.
13. Install the negative battery cable.

Electronic Ignition System

Removal Procedure

1. Disconnect the negative battery cable.
2. Disconnect the electrical connector at the ignition coil.
3. Remove the two screws that secure the ignition coil to the rocker cover.

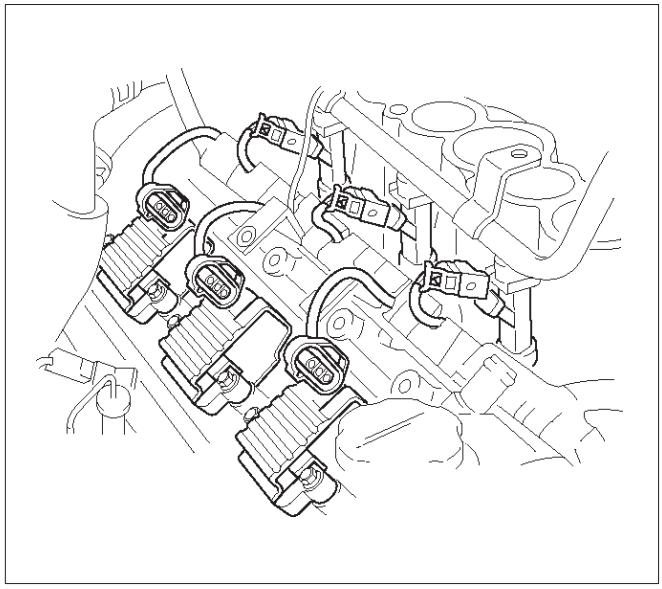

014RW108

4. Remove the ignition coil and the spark plug boot from the spark plug.
   - Twist the ignition coil while pulling it straight up.

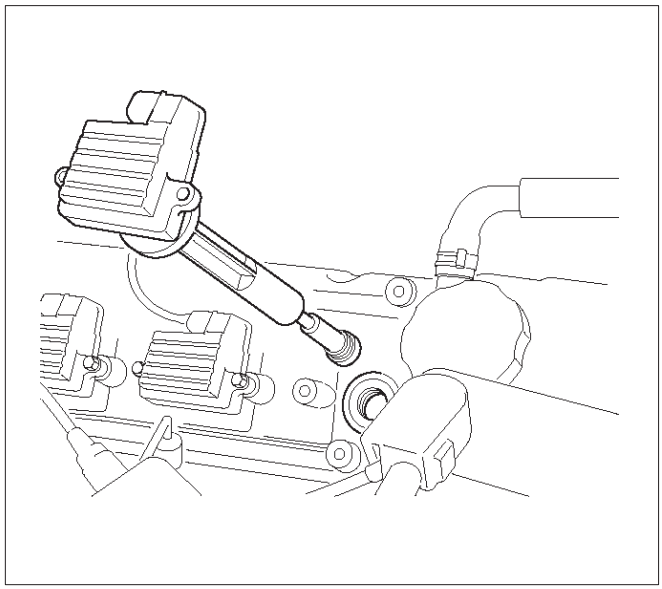

014RW091

5. Use the spark plug socket in order to remove the spark plug from the engine.

Spark Plug Gap Check

- Check the gap of all spark plugs before installation.
- Use a round wire feeler gauge to ensure an accurate check.
- Plugs installed with the wrong gap can cause poor engine performance and excessive emissions.

Installation Procedure

NOTE: The plug must thread smoothly into the cylinder head and be fully seated. Use a thread chaser if necessary to clean the threads in the cylinder head. Cross-threading or failure to fully seat the spark plug can cause plug overheating, exhaust blow-by gas, or thread damage. Do not overtighten the spark plugs. Over tightening can cause aluminum threads to strip.

1. Install the spark plug in the engine. Use the appropriate spark plug socket.

Tighten

- Tighten the spark plug to 18 N·m (13 lb ft.).

2. Install the ignition coil and spark plug boot over the spark plug.

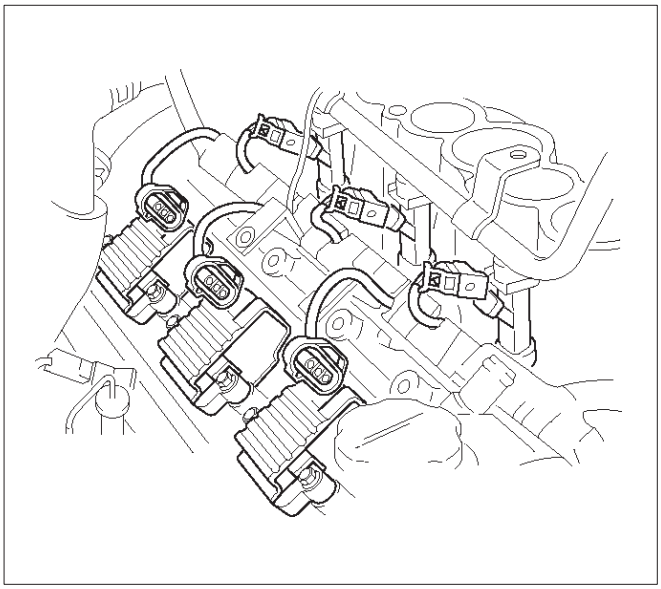

014RW108

3. Secure the ignition coil to the rocker cover with two screws.

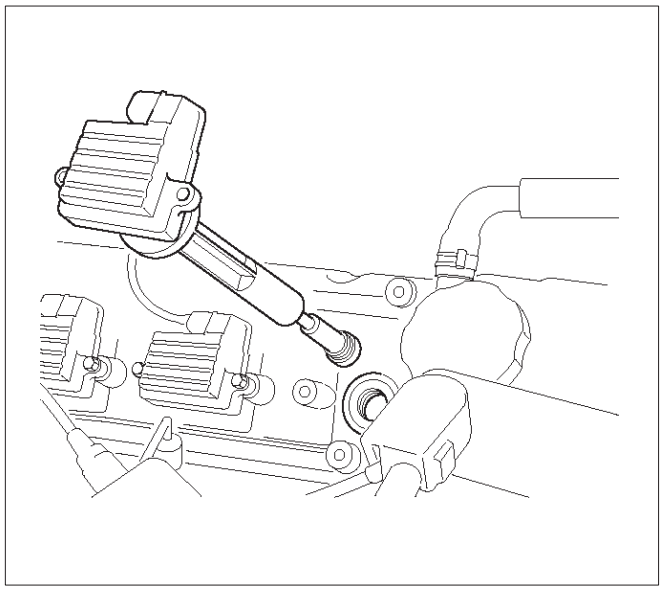

014RW091

4. Connect the electrical connector at the ignition coil.
5. Connect the negative battery cable.

Catalytic Converter

Removal and Installation Procedure

Refer to *Engine Exhaust in Engine*.

Air Conditioning Relay

Removal Procedure

1. Remove the fuse and relay box cover from under the hood.
2. Consult the diagram on the cover to determine which is the correct relay.
3. Insert a small screwdriver into the catch slot on the forward side of the fuel pump relay.
   - The screwdriver blade will release the catch inside.

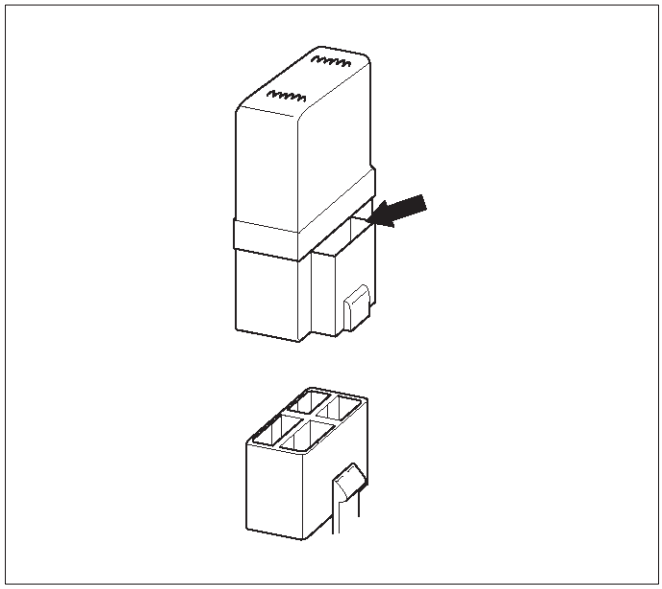

T321092

4. Pull the relay straight up and out of the fuse and relay box.

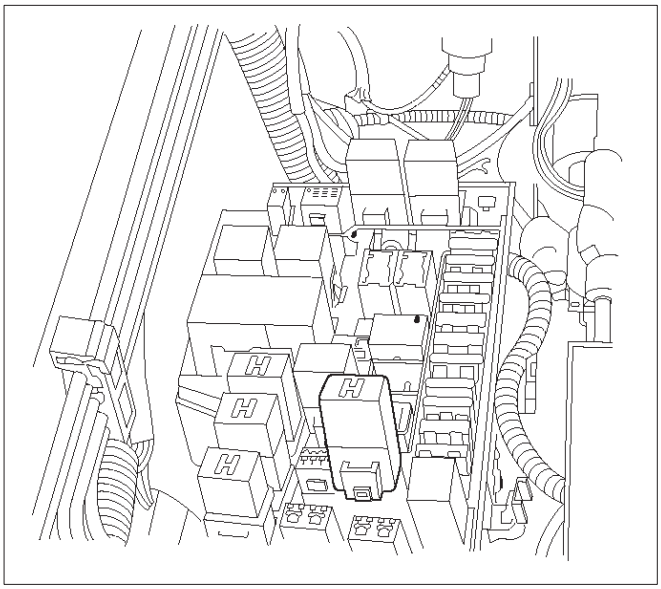

TS23986

Installation Procedure

1. Insert the relay into the correct place in the fuse and relay box with the catch slot facing forward.
2. Press down until the catch engages.
   - An audible “click” will be heard.
3. Install the fuse and relay box cover.

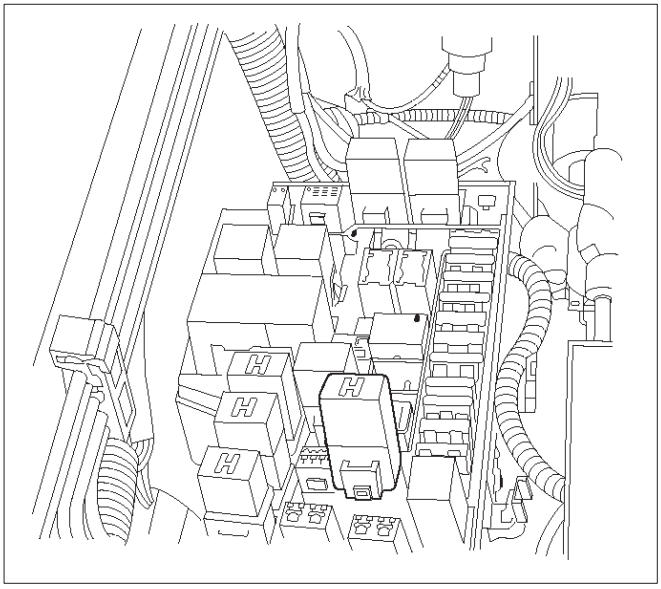

TS23986

EVAP Canister Hoses

Service Information

To view the routing of the EVAP canister hoses, refer to *Vehicle Emission Control Information* in *Diagnosis*. Use 6148M or equivalent when you replace the EVAP canister hoses.

EVAP Canister

Removal Procedure

1. Disconnect the negative battery cable.
2. Disconnect the three hoses from the EVAP canister.

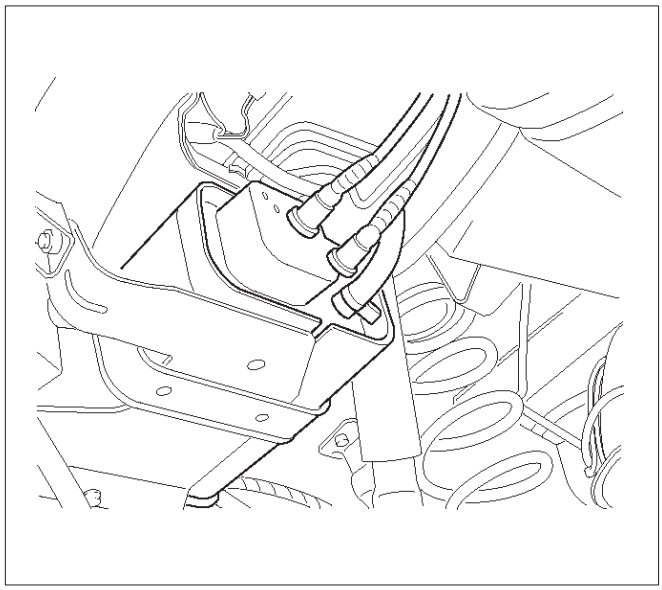

014RW145

3. Remove the retaining two bolts on the mounting bracket and slide the canister out of mounting bracket.

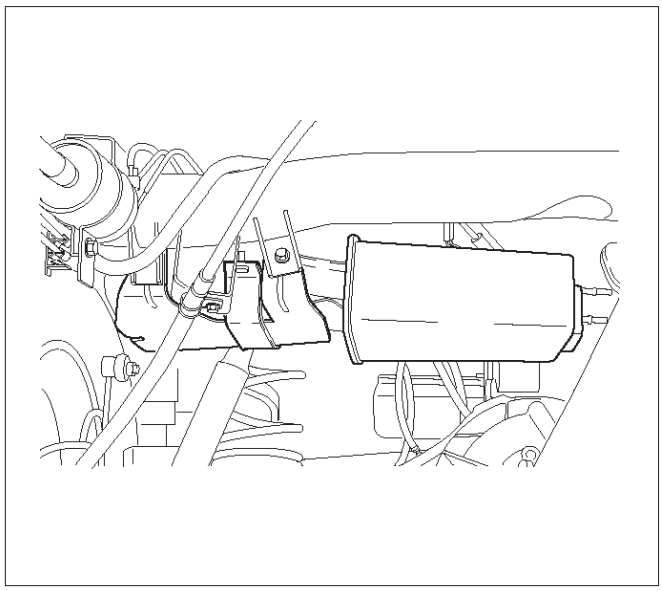

014RW146

Inspection Procedure

1. Inspect the hoses for cracks and leaks.
2. Inspect the canister for a damaged case.

Installation Procedure

1. Slide the canister into mounting bracket and install the mounting bracket two bolts.

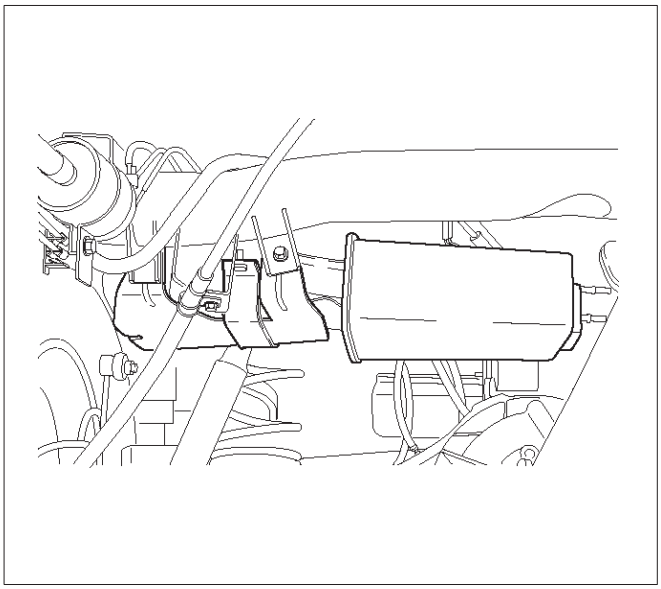

014RW146

2. Connect the three hoses to the EVAP canister.

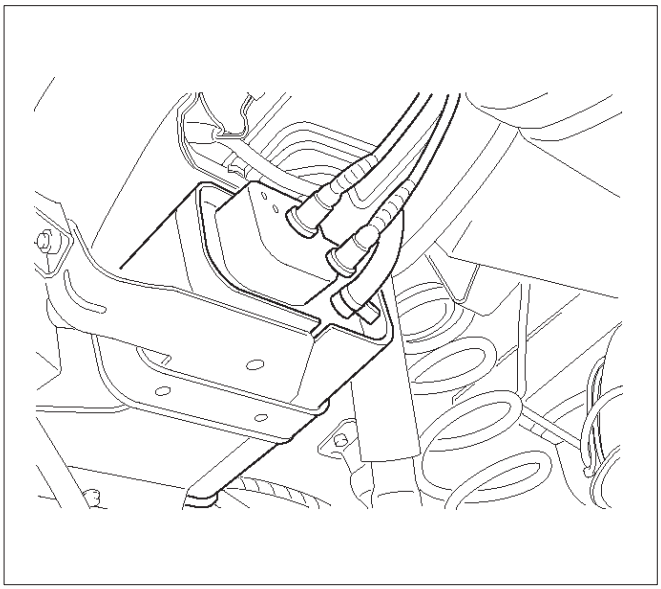

014RW145

3. Disconnect the negative battery cable.

EVAP Canister Purge Solenoid

Removal Procedure

1. Disconnect the electrical connector from the EVAP canister purge solenoid.
2. Disconnect the vacuum hoses from the EVAP canister purge solenoid.

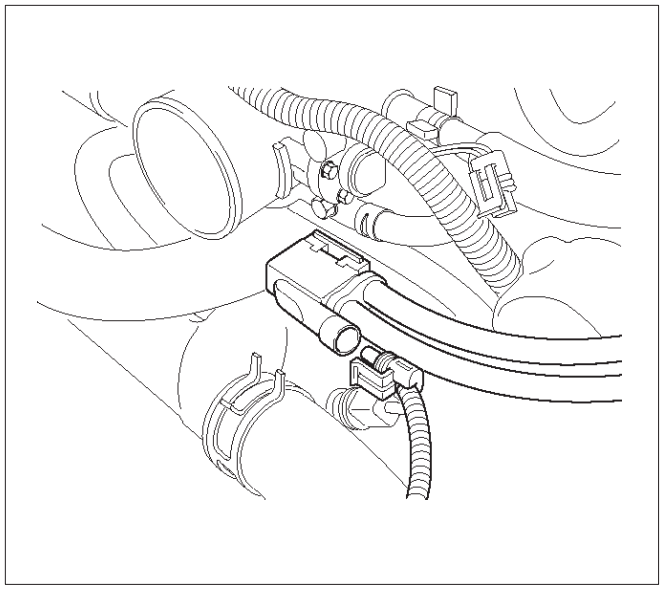

014RW136

3. Remove the EVAP canister purge solenoid retaining bolt from the upper intake manifold.
4. Remove the EVAP canister purge solenoid.

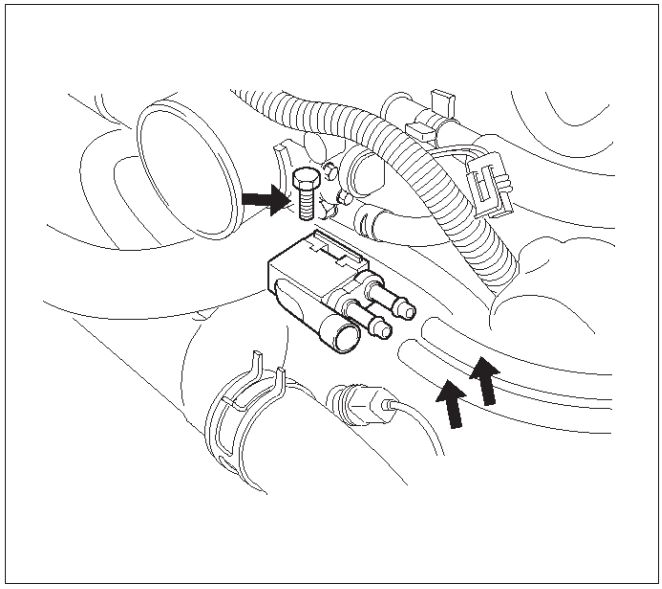

014RW137

Installation Procedure

1. Install the EVAP canister purge solenoid on the upper intake manifold.
2. Install the EVAP canister purge solenoid retaining bolt.

3. Connect the vacuum hoses to the EVAP canister purge solenoid.

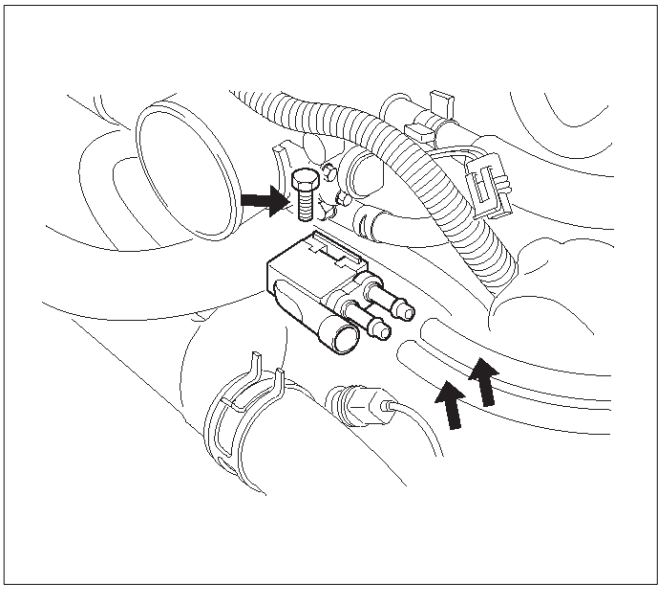

014RW137

4. Connect the electrical connector to the EVAP canister purge solenoid.

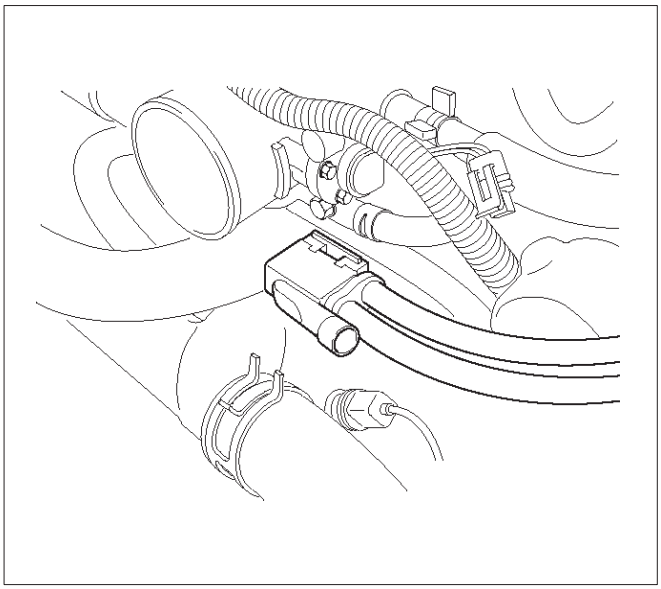

014RW138

Fuel Tank Vent Valve

Removal and Installation Procedure

Refer to *Fuel Pump*

Linear Exhaust Gas Recirculation (EGR) Valve

Removal Procedure

1. Disconnect the negative battery cable.
2. Disconnect the electrical connector at the EGR valve.

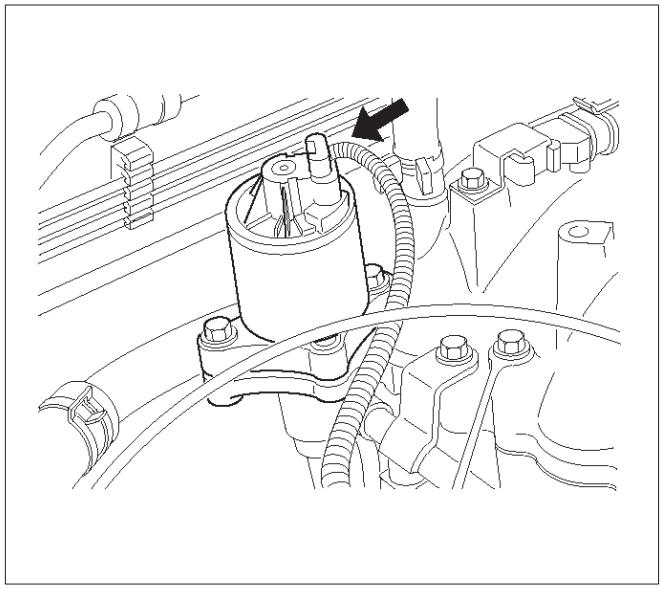

014RW139

3. Remove the bolt and the nut from the upper intake manifold.

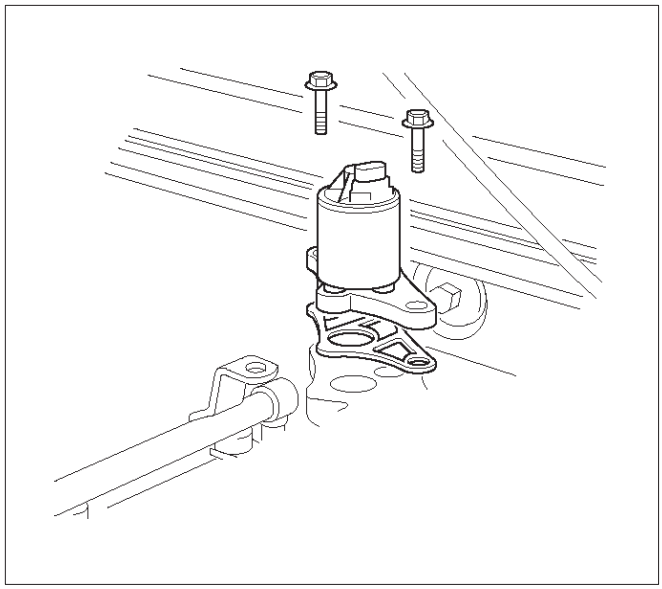

014RW098

4. Remove the EGR valve from the upper intake manifold.
5. Remove the gasket from the upper intake manifold.

Installation Procedure

1. Install the gasket on the upper intake manifold.
2. Install the EGR valve on the upper intake manifold.
3. Secure the EGR valve and the gasket with the bolt and the nut.

NOTE: It is possible to install the EGR valve rotated 180˚ from the correct position. Make sure that the base of the valve is placed so that it aligns with the mounting flange.

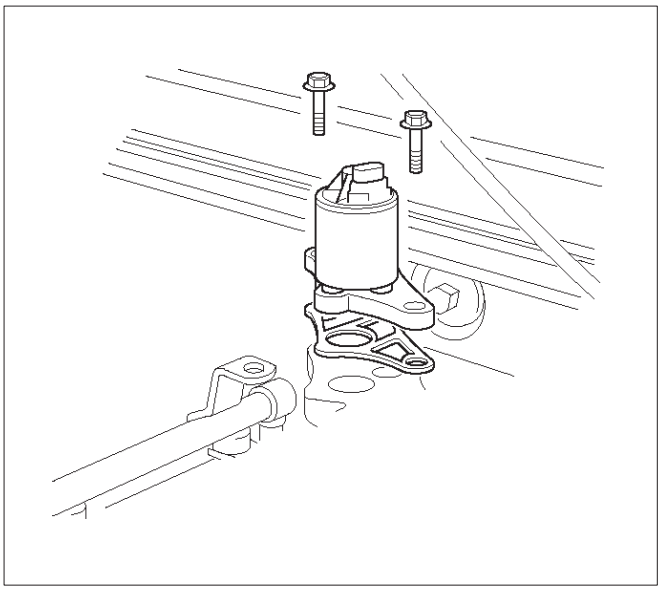

014RW098

4. Connect the electrical connector at the EGR valve.

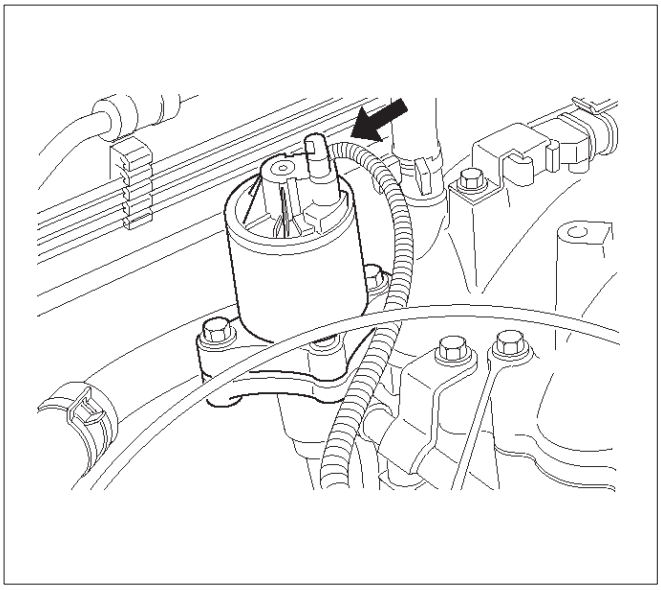

014RW139

5. Connect the negative battery cable.

Positive Crankcase Ventilation (PCV) Valve

Removal Procedure

1. Remove the vacuum hose at the PCV valve.
   - Slide the clamp back to release the hose.
2. Pull the PCV valve from the rubber grommet in the right valve cover.

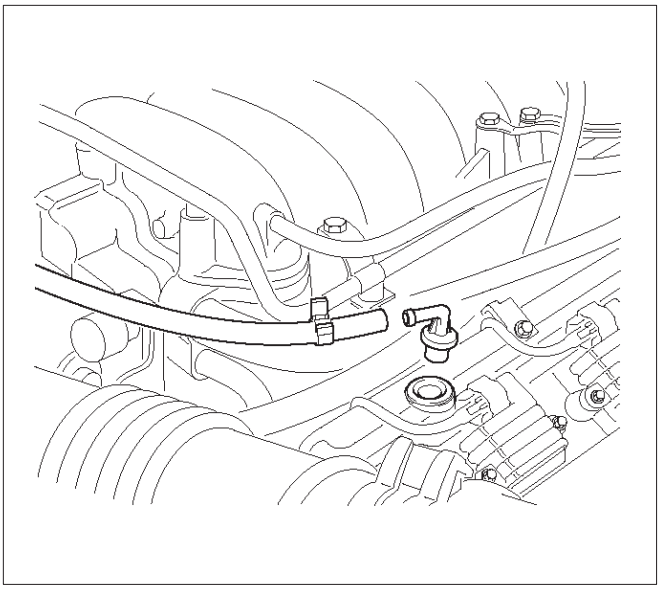

014RW097

Inspection Procedure

1. Shake the valve and listen for the rattle of the needle inside the valve.
2. If the valve does not rattle, replace the valve.

Installation Procedure

1. Push the PCV valve into the rubber grommet in the left valve cover.
2. Install the vacuum hose on the PCV valve and secure the vacuum hose with the clamp.

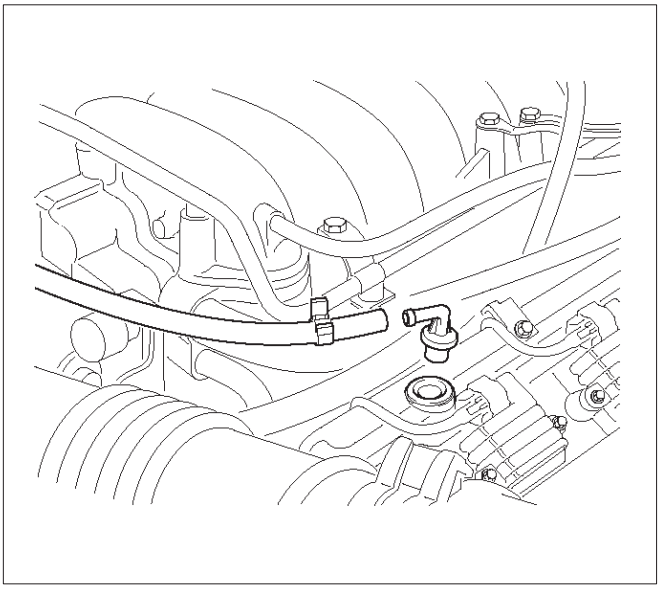

014RW097

Wiring and Connectors

Wiring Harness Service

The control module harness electrically connects the control module to the various solenoids, switches and sensors in the vehicle engine compartment and passenger compartment.
Replace wire harnesses with the proper part number replacement.
Because of the low amperage and voltage levels utilized in powertrain control systems, it is essential that all wiring in environmentally exposed areas be repaired with crimp and seal splice sleeves.
The following wire harness repair information is intended as a general guideline only. Refer to *Chassis Electrical* for all wire harness repair procedures.

Connectors and Terminals

Use care when probing a connector and when replacing terminals. It is possible to short between opposite terminals. Damage to components could result. Always use jumper wires between connectors for circuit checking. NEVER probe through Weather-Pack seals. Use an appropriate connector test adapter kit which contains an assortment of flexible connectors used to probe terminals during diagnosis. Use an appropriate fuse remover and test tool for removing a fuse and to adapt the fuse holder to a meter for diagnosis.
Open circuits are often difficult to locate by sight because oxidation or terminal misalignment are hidden by the connectors. Merely wiggling a connector on a sensor, or in the wiring harness, may temporarily correct the open circuit. Intermittent problems may also be caused by oxidized or loose connections.
Be certain of the type of connector/terminal before making any connector or terminal repair. Weather-Pack and Com-Pack III terminals look similar, but are serviced differently.

PCM Connectors and Terminals

Removal Procedure

1. Remove the connector terminal retainer.
2. Push the wire connected to the affected terminal through the connector face so that the terminal is exposed.
3. Service the terminal as necessary.

Installation Procedure

1. Bend the tab on the connector to allow the terminal to be pulled into position within the connector.
2. Pull carefully on the wire to install the connector terminal retainer.

Wire Harness Repair: Twisted Shielded Cable

Removal Procedure

1. Remove the outer jacket.
2. Unwrap the aluminum/mylar tape. Do not remove the mylar.

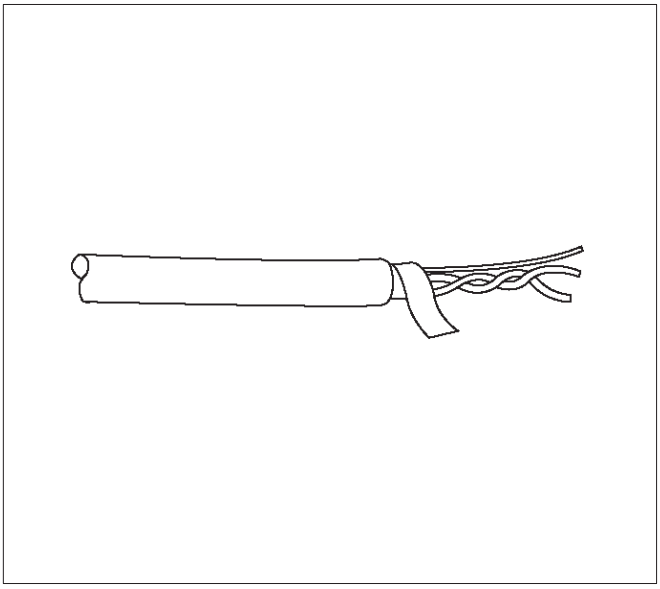

047

3. Untwist the conductors.
4. Strip the insulation as necessary.

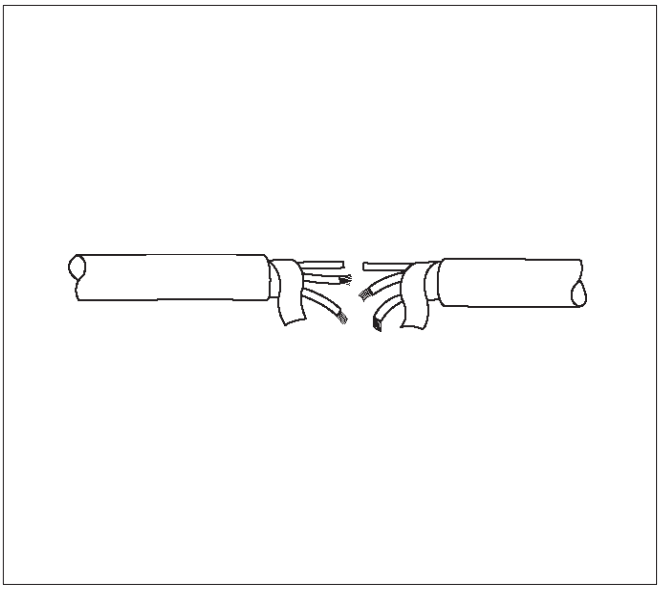

048

Installation Procedure

1. Splice the wires using splice clips and rosin core solder.
2. Wrap each splice to insulate.
3. Wrap the splice with mylar and with the drain (uninsulated) wire.

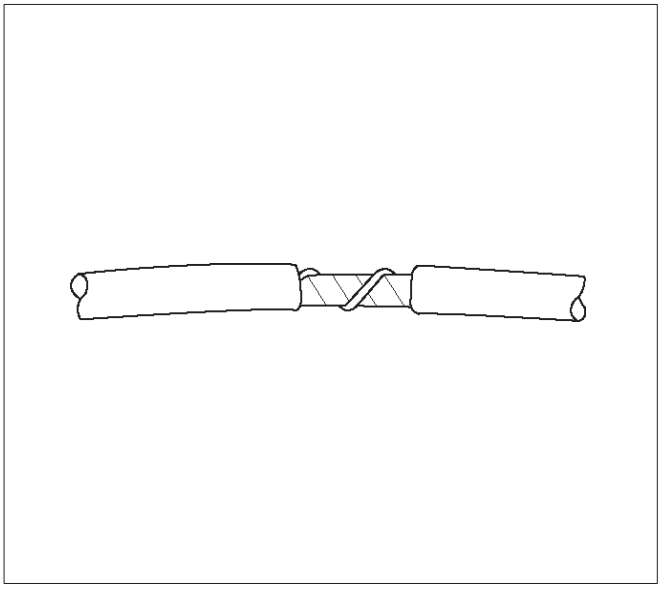

049

4. Tape over the whole bundle to secure.

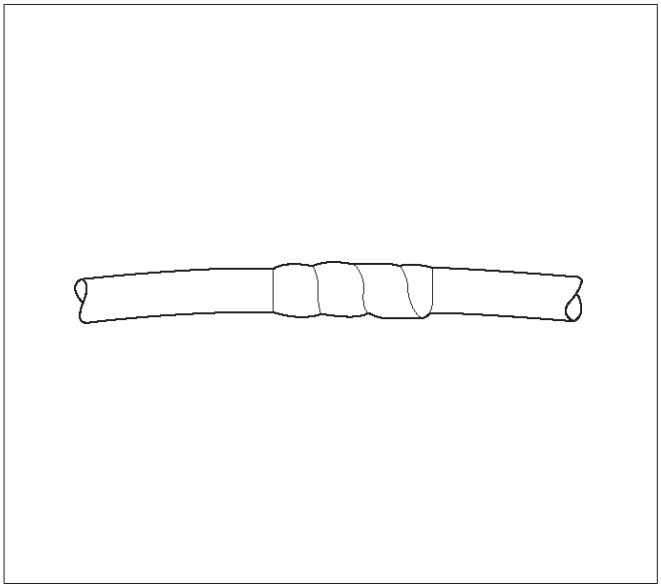

050

Twisted Leads

Removal Procedure

1. Locate the damaged wire.
2. Remove the insulation as required.

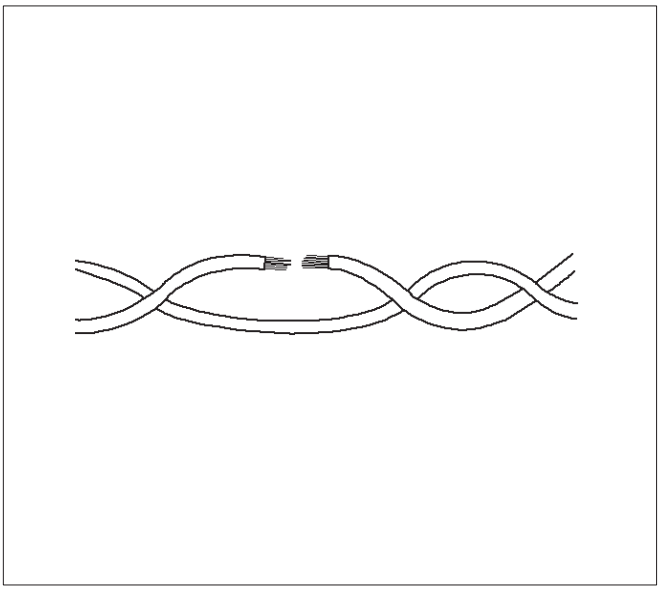

051

Installation Procedure

1. Use splice clips and rosin core solder in order to splice the two wires together.

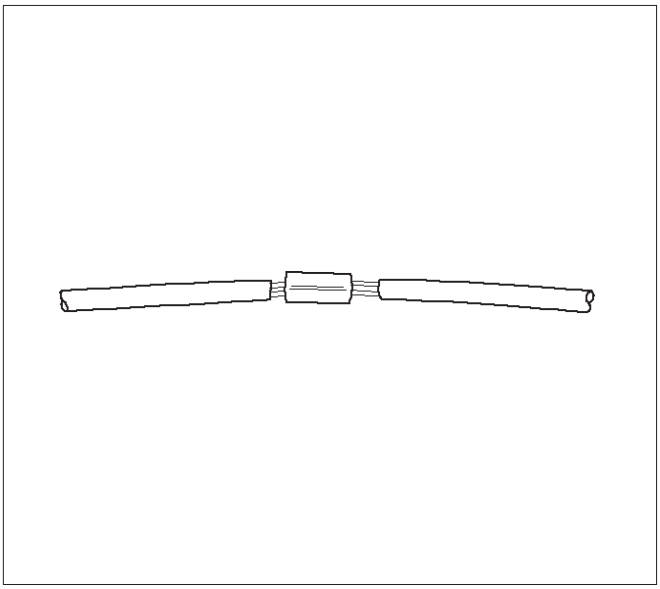

052

2. Cover the splice with tape in order to insulate it from the other wires.

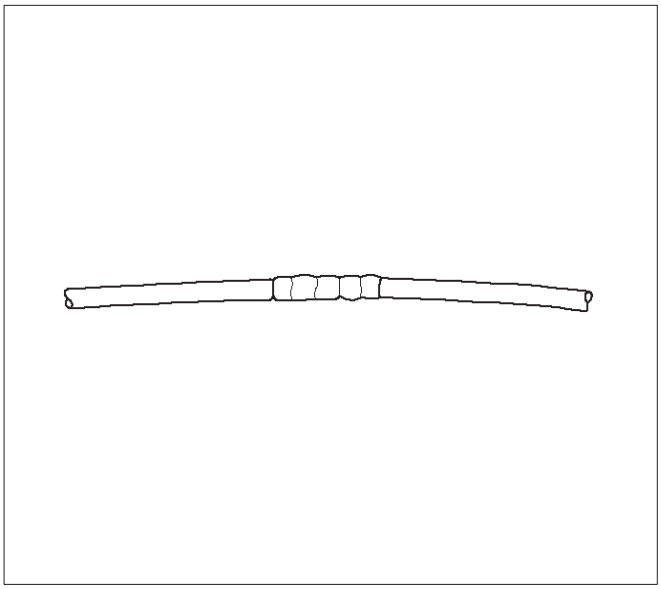

053

3. Twist the wires as they were before starting this procedure.

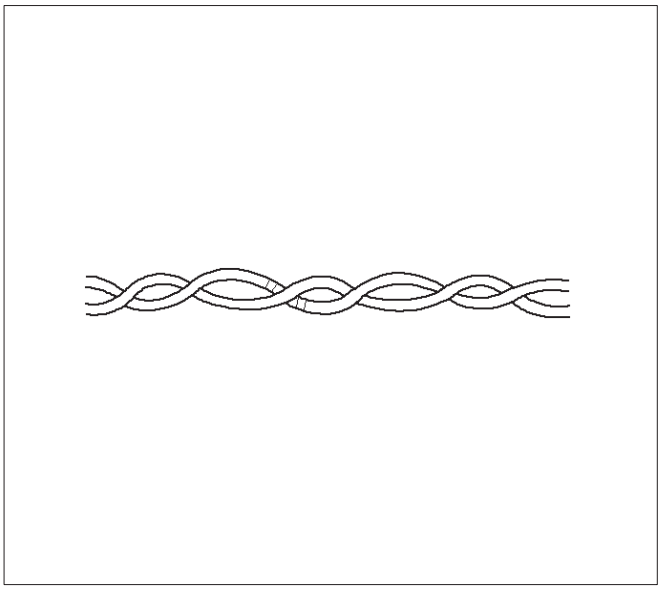

054

4. Tape the wires with electrical tape. Hold in place.

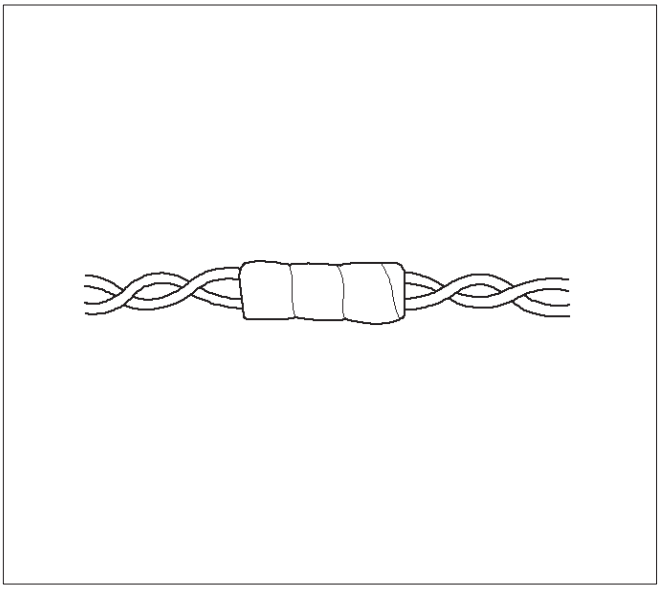

055

Weather-Pack Connector

Tools Required

J 28742-A Weather-Pack II Terminal Remover

Removal Procedure

A Weather-Pack connector can be identified by a rubber seal at the rear of the connector. This engine room connector protects against moisture and dirt, which could from oxidation and deposits on the terminals. This protection is important, because of the low voltage and the low amperage found in the electronic systems.

1. Open the secondary lock hinge on the connector.

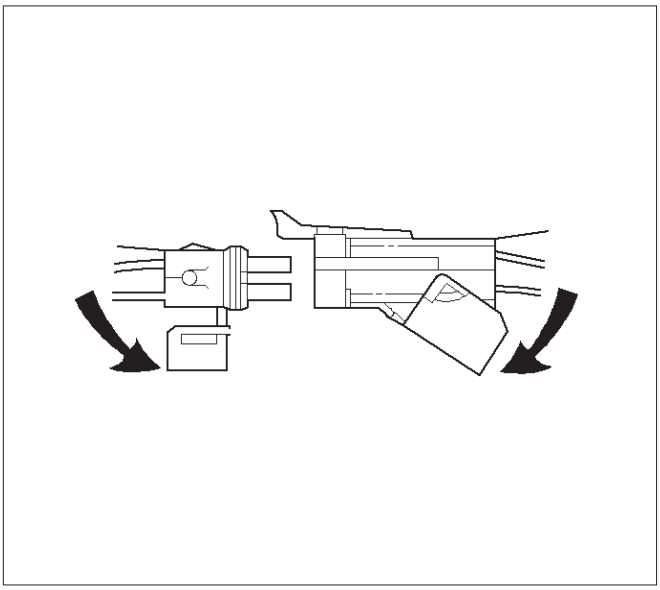

070

2. Use tool J 28742-A or the equivalent to remove the pin and the sleeve terminals. Push on J 28742-A to release.

NOTE: Do the use an ordinary pick or the terminal may be bent or deformed. Unlike standard blade terminals, these terminals cannot be straightened after they have been improperly bent.

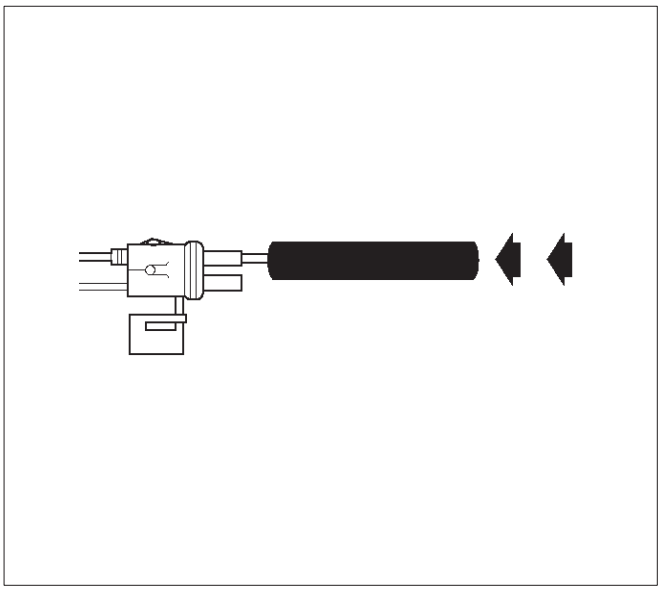

071

3. Cut the wire immediately behind the cable seal.

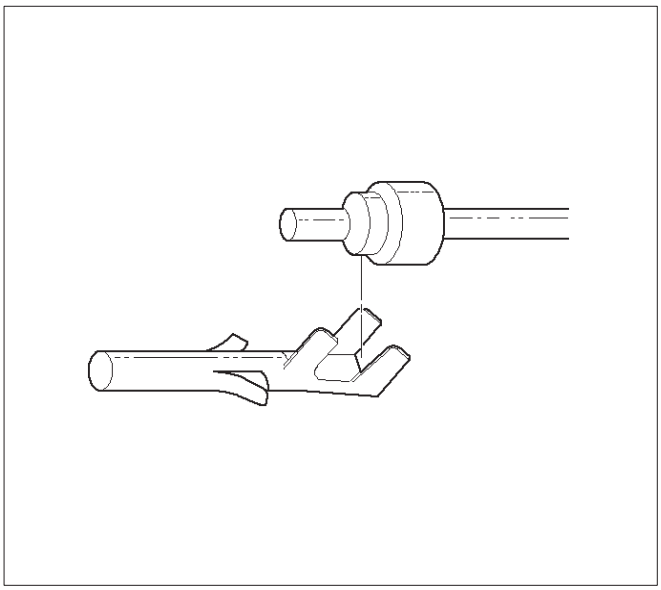

072

Installation Procedure

Make certain the connectors are properly seated and all of the sealing rings are in place when you reconnect the leads. The secondary lock hinge provides a backup locking feature for the connector. The secondary lock hinge is used for added reliability. This flap should retain the terminals even if the small terminal lock tangs are not positioned properly.

Do not replace the Weather-Pack connections with standard connections. Read the instructions provided with the Weather-Pack connector and terminal packages.

1. Replace the terminal.
2. Slip the new seal onto the wire.
3. Strip 5 mm (0.2”) of insulation from the wire.
4. Crimp the terminal over the wire and the seal.

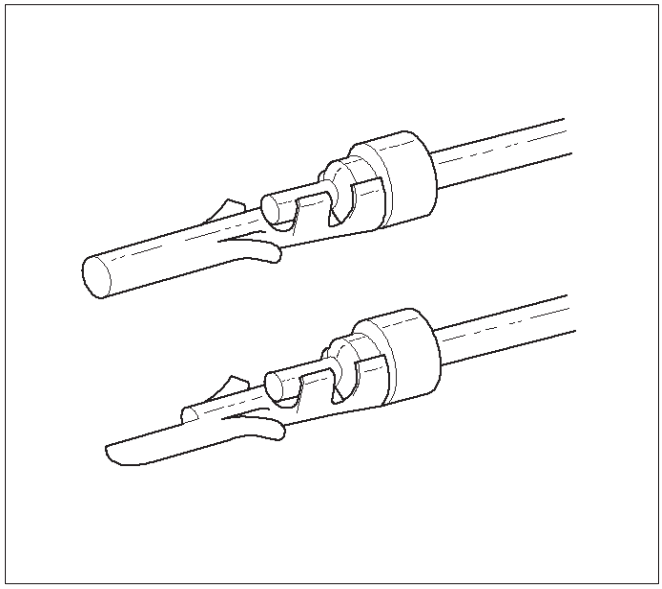

073

5. Push the terminal and the connector to engage the locking tangs.

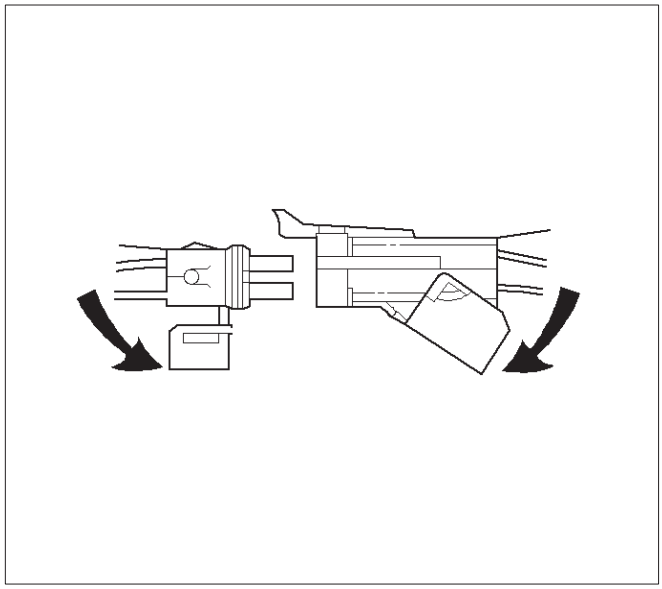

070

6. Close the secondary locking hinge.

Com-Pack III

General Information

The Com-Pack III terminal looks similar to some Weather-Pack terminals. This terminal is not sealed and is used where resistance to the environment is not required. Use the standard method when repairing a terminal. Do not use the Weather-Pack terminal tool J 28742-A or equivalent. These will damage the terminals.

Metri-Pack

Tools Required

J 35689 Terminal Remover

Removal Procedure

Some connectors use terminals called Metri-Pack Series 150. These may be used at the engine coolant temperature (ECT) sensor.

1. Slide the seal (1) back on the wire.
2. Insert the J 35689 tool or equivalent (3) in order to release the terminal locking tang (2).

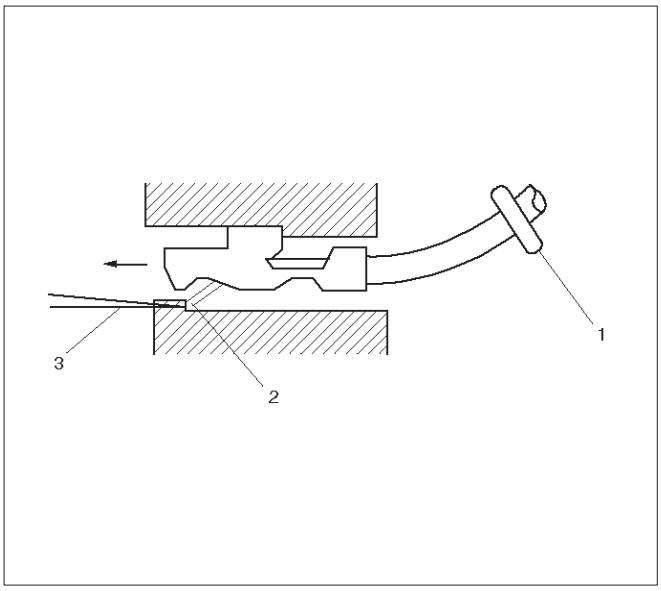

060

3. Push the wire and the terminal out through the connector. If you reuse the terminal, reshape the locking tang.

Installation Procedure

Metri-Pack terminals are also referred to as “pull-to-seat” terminals.

1. In order to install a terminal on a wire, the wire must be inserted through the seal (2) and through the connector (3).
2. The terminal (1) is then crimped onto the wire.

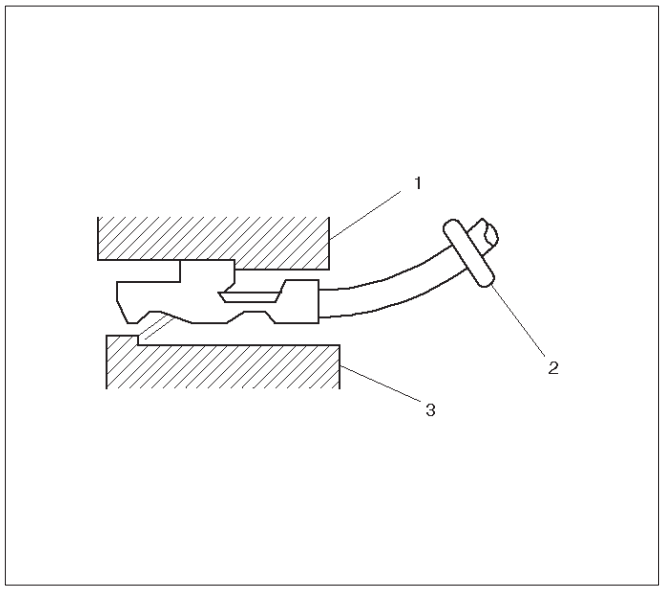

061

3. Then the terminal is pulled back into the connector to seat it in place.

General Description

General Description (PCM and Sensors)

58X Reference PCM Input

The powertrain control module (PCM) uses this signal from the crankshaft position (CKP) sensor to calculate engine RPM and crankshaft position at all engine speeds. The PCM also uses the pulses on this circuit to initiate injector pulses. If the PCM receives no pulses on this circuit, DTC P0337 will set. The engine will not start and run without using the 58X reference signal.

A/C Request Signal

This signal tells the PCM when the A/C mode is selected at the A/C control head. The PCM uses this to adjust the idle speed before turning “ON” the A/C clutch. The A/C compressor will be inoperative if this signal is not available to the PCM.
Refer to *A/C Clutch Circuit Diagnosis* for A/C wiring diagrams and diagnosis for the A/C electrical system.

Crankshaft Position (CKP) Sensor

The crankshaft position (CKP) sensor provides a signal used by the powertrain control module (PCM) to calculate the ignition sequence. The CKP sensor initiates the 58X reference pulses which the PCM uses to calculate RPM and crankshaft position.
Refer to *Electronic Ignition System* for additional information.

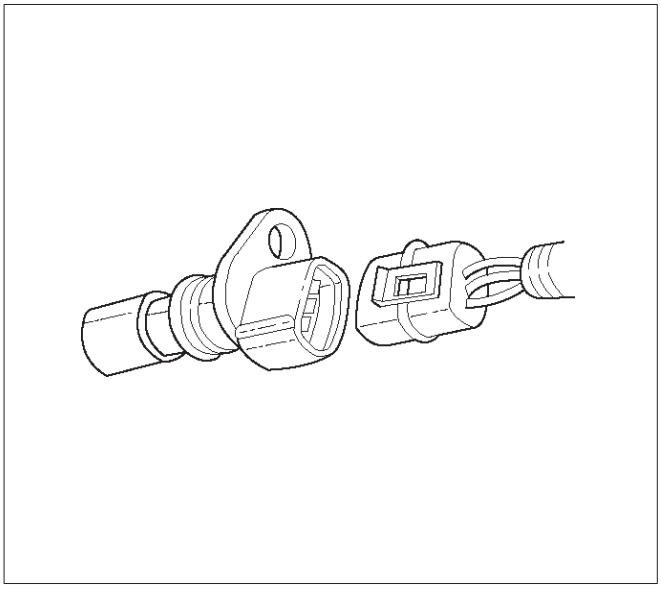

0013

Camshaft Position (CMP) Sensor and Signal

The camshaft position (CMP) sensor sends a CMP signal to the PCM. The PCM uses this signal as a “sync pulse” to trigger the injectors in the proper sequence. The PCM uses the CMP signal to indicate the position of the #1 piston during its power stroke. This allows the PCM to calculate true sequential fuel injection (SFI) mode of operation. If the PCM detects an incorrect CMP signal while the engine is running, DTC P0341 will set. If the CMP signal is lost while the engine is running, the fuel injection system will shift to a calculated sequential fuel injection mode based on the last fuel injection pulse, and the engine will continue to run. As long as the fault is present, the engine can be restarted. It will run in the calculated sequential mode with a 1-in-6 chance of the injector sequence being correct.
Refer to *DTC P0341* for further information.

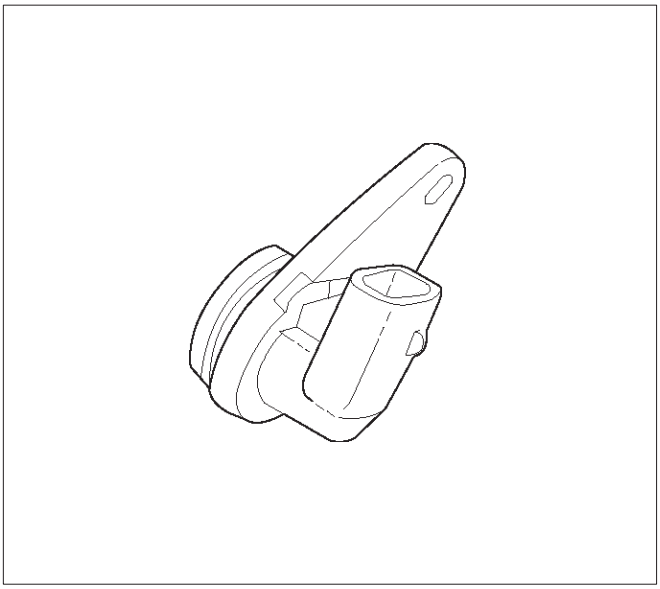

0014

Engine Coolant Temperature (ECT) Sensor

The engine coolant temperature (ECT) sensor is a thermistor (a resistor which changes value based on temperature) mounted in the engine coolant stream. Low coolant temperature produces a high resistance of 100,000 ohms at –40˚C (–40˚F). High temperature causes a low resistance of 70 ohms at 130˚C (266˚F). The PCM supplies a 5-volt signal to the ECT sensor through resistors in the PCM and measures the voltage. The signal voltage will be high when the engine is cold and low when the engine is hot. By measuring the voltage, the PCM calculates the engine coolant temperature. Engine coolant temperature affects most of the systems that the PCM controls.
Tech 2 displays engine coolant temperature in degrees. After engine start-up, the temperature should rise steadily to about 85˚C (185˚F). It then stabilizes when the thermostat opens. If the engine has not been run for several hours (overnight), the engine coolant temperature and intake air temperature displays should be close to each other. A hard fault in the engine coolant sensor circuit will set DTC P0177 or DTC P0118. An intermittent fault will set a DTC P1114 or P1115.

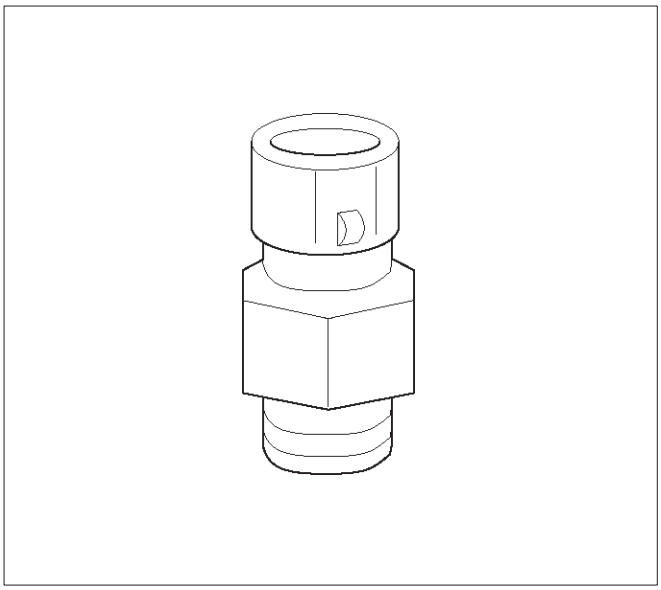

0016

Electrically Erasable Programmable Read Only Memory (EEPROM)

The electrically erasable programmable read only memory (EEPROM) is a permanent memory chip that is physically soldered within the PCM. The EEPROM contains the program and the calibration information that the PCM needs to control powertrain operation.

Unlike the PROM used in past applications, the EEPROM is not replaceable. If the PCM is replaced, the new PCM will need to be programmed. Equipment containing the correct program and calibration for the vehicle is required to program the PCM.

Fuel Control Heated Oxygen Sensors

The fuel control heated oxygen sensors (Bank 1 HO2S 1 and Bank 2 HO2S 1) are mounted in the exhaust stream where they can monitor the oxygen content of the exhaust gas. The oxygen present in the exhaust gas reacts with the sensor to produce a voltage output. This voltage should constantly fluctuate from approximately 100 mV to 900 mV. The heated oxygen sensor voltage can be monitored with Tech 2. By monitoring the voltage output of the oxygen sensor, the PCM calculates the pulse width command for the injectors to produce the proper combustion chamber mixture.

- Low HO2S voltage is a lean mixture which will result in a rich command to compensate.
- High HO2S voltage is a rich mixture which will result in a lean command to compensate.

An open Bank 1 HO2S 1 signal circuit will set a DTC P0134 and Tech 2 will display a constant voltage between 400-500 mV. A constant voltage below 300 mV in the sensor circuit (circuit grounded) will set DTC P0131. A constant voltage above 800 mV in the circuit will set DTC P0132. Faults in the Bank 2 HO2S 1 signal circuit will cause DTC 0154 (open circuit), DTC P0151 (grounded circuit), or DTC P0152 (signal voltage high) to set.

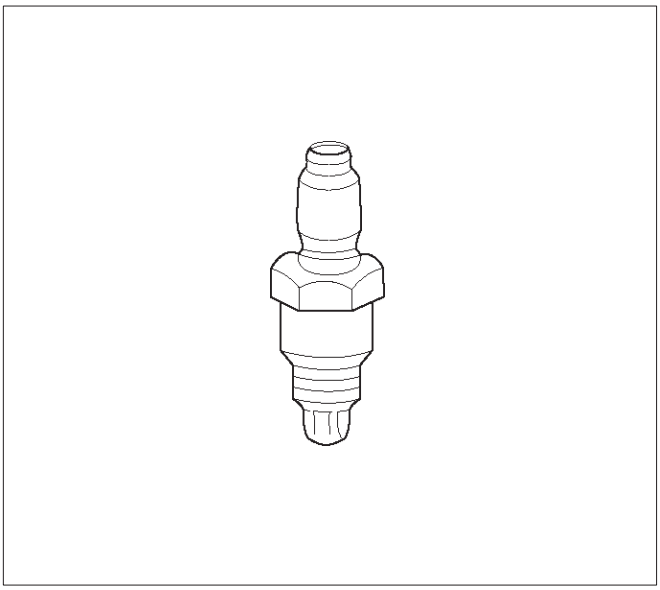

0012

Intake Air Temperature (IAT) Sensor

The intake air temperature (IAT) sensor is a thermistor which changes its resistance based on the temperature of air entering the engine. Low temperature produces a high resistance of 100,000 ohms at –40˚C (–40˚F). High temperature causes low resistance of 70 ohms at 130˚C (266˚F) . The PCM supplies a 5-volt signal to the sensor through a resistor in the PCM and monitors the signal voltage. The voltage will be high when the incoming air is cold. The voltage will be low when the incoming air is hot. By measuring the voltage, the PCM calculates the incoming air temperature. The IAT sensor signal is used to adjust spark timing according to the incoming air density.

Tech 2 displays the temperature of the air entering the engine. The temperature should read close to the ambient air temperature when the engine is cold and rise as underhood temperature increases. If the engine has not been run for several hours (overnight), the IAT sensor temperature and engine coolant temperature should read close to each other. A fault in the IAT sensor circuit will set DTC P0112 or DTC P0113.

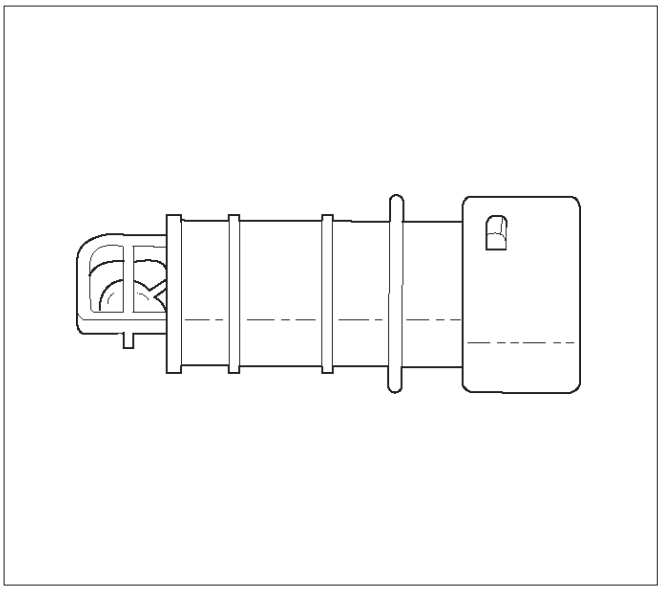

0018

Knock Sensor

Insufficient gasoline octane levels may cause detonation in some engines. Detonation is an uncontrolled explosion (burn) in the combustion chamber. This uncontrolled explosion results from a flame front opposite that of the normal flame front produced by the spark plug. The rattling sound normally associated with detonation is the result of two or more opposing pressures (flame fronts) colliding within the combustion chamber. Light detonation is sometimes considered normal, but heavy detonation could result in engine damage.

A knock sensor system is used to control detonation. This system is designed to retard spark timing up to 20 degrees to reduce detonation in the engine. This allows the engine to use maximum spark advance to improve driveability and fuel economy.

The knock sensor system has two major components:

- The knock sensor (KS) module.
- The knock sensor.

The knock sensor, mounted in the engine block near the cylinders, detects abnormal vibration in the engine. The sensor produces an AC output signal of about 10 millivolts. The signal amplitude and frequency are dependent on the amount of knock being experienced. The signal voltage increases with the severity of the knock. This signal voltage is input to the PCM. The PCM then retards the ignition control (IC) spark timing based on the KS signal being received.

The PCM determines whether knock is occurring by comparing the signal level on the KS circuit with the voltage level on the noise channel. The noise channel allows the PCM to reject any false knock signal by indicating the amount of normal engine mechanical noise present. Normal engine noise varies depending on the engine speed and load. If the voltage level on the KS noise channel circuit is below the range considered normal, DTC P0327 will set, indicating a fault in the KS circuit or the knock sensor. If the PCM determines that an abnormal minimum or maximum noise level is being experienced, DTC P0325 will set.

The PCM contains a knock sensor (KS) module. The KS module contains the circuitry which allows the PCM to utilize the KS signal and diagnose the KS sensor and the KS circuitry. If the KS module is missing or faulty, a continuous knock condition will be indicated, and the PCM will set DTC P0325.

Although it is a plug-in device, the KS module is not replaceable. If the KS module is faulty, the entire PCM must be replaced.

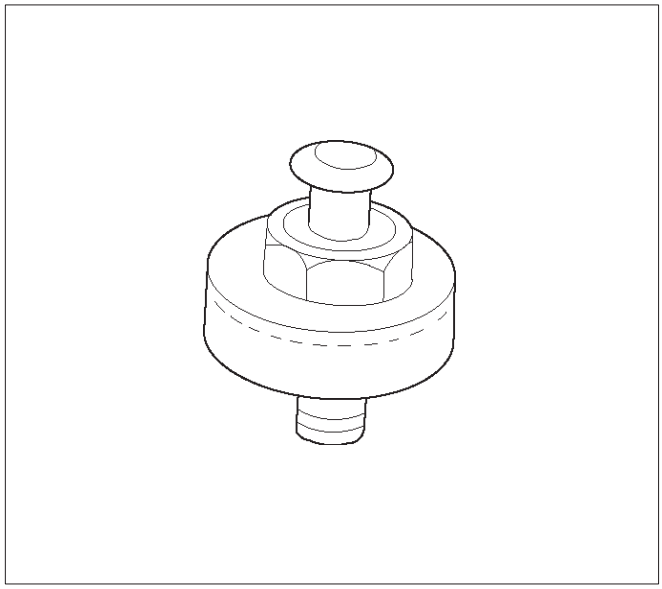

0009

Linear Exhaust Gas Recirculation (EGR) Control

The PCM monitors the exhaust gas recirculation (EGR) actual position and adjusts the pintle position accordingly. The PCM uses information from the following sensors to control the pintle position:

- Engine coolant temperature (ECT) sensor.
- Throttle position (TP) sensor.
- Mass air flow (MAF) sensor.

Mass Air Flow (MAF) Sensor

The mass air flow (MAF) sensor measures the difference between the volume and the quantity of air that enters the engine. “Volume” means the size of the space to be filled. “Quantity” means the number of air molecules that will fit into the space. This information is important to the PCM because heavier, denser air will hold more fuel than lighter, thinner air. The PCM adjusts the air/fuel ratio as needed depending on the MAF value. Tech 2 reads the MAF value and displays it in terms of grams per second (gm/s). At idle, Tech 2 should read between 4-7 gm/s on a fully warmed up engine. Values should change quickly on acceleration. Values should remain stable at any given

RPM. A failure in the MAF sensor or circuit will set DTC P0101, DTC P0102, or DTC P0103.

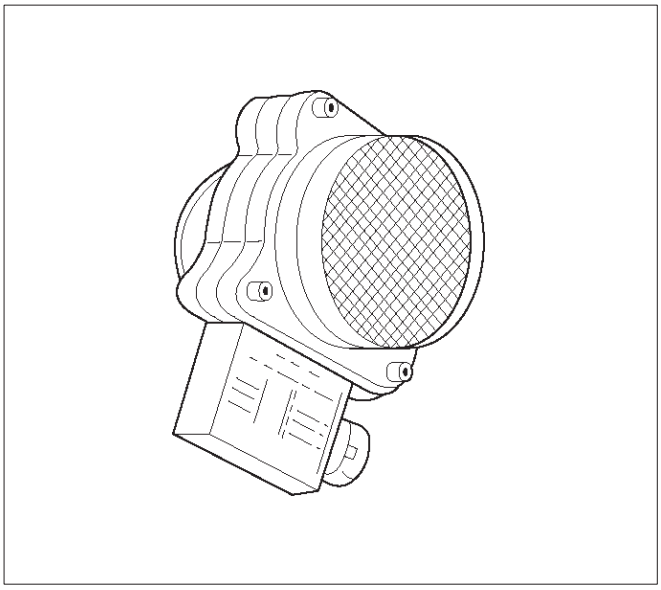

0007

Manifold Absolute Pressure (MAP) Sensor

The manifold absolute pressure (MAP) sensor responds to changes in intake manifold pressure (vacuum). The MAP sensor signal voltage to the PCM varies from below 2 volts at idle (high vacuum) to above 4 volts with the ignition ON, engine not running or at wide-open throttle (low vacuum).

The MAP sensor is used to determine the following:

- Manifold pressure changes while the linear EGR flow test diagnostic is being run. Refer to *DTC P0401*.
- Engine vacuum level for other diagnostics.
- Barometric pressure (BARO).

If the PCM detects a voltage that is lower than the possible range of the MAP sensor, DTC P0107 will be set. A signal voltage higher than the possible range of the sensor will set DTC P0108. An intermittent low or high voltage will set DTC P1107 or DTC P1106, respectively. The PCM can detect a shifted MAP sensor. The PCM compares the MAP sensor signal to a calculated MAP based on throttle position and various engine load factors. If the PCM detects a MAP signal that varies excessively above or below the calculated value, DTC P0106 will set.

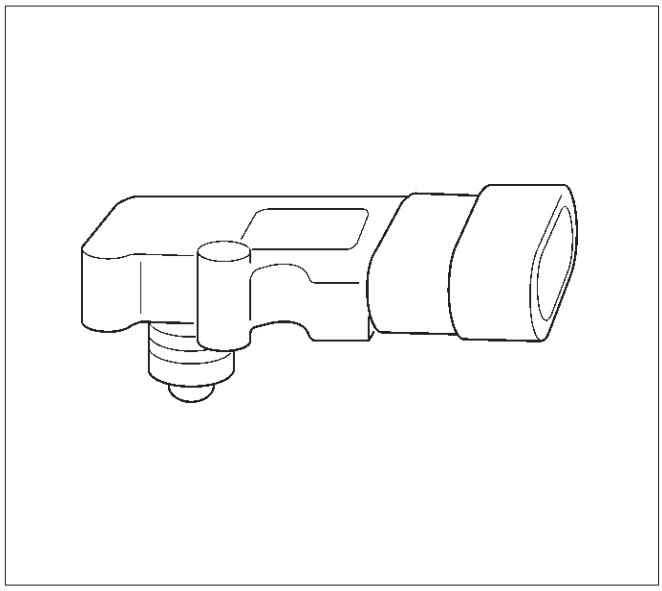

055RW004

Powertrain Control Module (PCM)

The powertrain control module (PCM) is located in the passenger compartment below the center console. The PCM controls the following:

- Fuel metering system.
- Transmission shifting (automatic transmission only).
- Ignition timing.
- On-board diagnostics for powertrain functions.

The PCM constantly observes the information from various sensors. The PCM controls the systems that affect vehicle performance. The PCM performs the diagnostic function of the system. It can recognize operational problems, alert the driver through the MIL (Service Engine Soon lamp), and store diagnostic trouble codes (DTCs). DTCs identify the problem areas to aid the technician in making repairs.

This engine uses 2 different control modules:

- IPCM-6KT for automatic transmission-equipped vehicles.
- ISFI-6 for manual transmission-equipped vehicles.

PCM Function

The PCM supplies either 5 or 12 volts to power various sensors or switches. The power is supplied through resistances in the PCM which are so high in value that a test light will not light when connected to the circuit. In some cases, even an ordinary shop voltmeter will not give an accurate reading because its resistance is too low. Therefore, a digital voltmeter with at least 10 megohms input impedance is required to ensure accurate voltage readings. Tool J 39200 meets this requirement. The PCM controls output circuits such as the injectors, IAC, cooling fan relays, etc., by controlling the ground or the power feed circuit through transistors of following device.

- Output Driver Module (ODM)

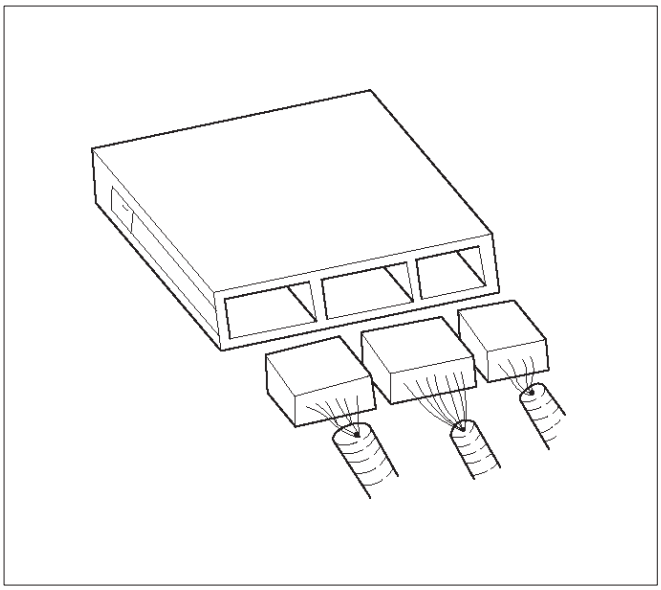

0005

PCM Components

The PCM is designed to maintain exhaust emission levels to government mandated standards while providing excellent driveability and fuel efficiency. The PCM monitors numerous engine and vehicle functions via electronic sensors such as the throttle position (TP) sensor, heated oxygen sensor (HO2S), and vehicle speed sensor (VSS). The PCM also controls certain engine operations through the following:

- Fuel injector control
- Ignition control module
- Knock sensor
- Automatic transmission shift functions
- Cruise control
- A/C clutch control

PCM Voltage Description

The PCM supplies a buffered voltage to various switches and sensors. It can do this because resistance in the PCM is so high in value that a test light may not illuminate when connected to the circuit. An ordinary shop voltmeter may not give an accurate reading because the voltmeter input impedance is too low. Use a 10-megohm input impedance digital voltmeter (such as J 39200) to assure accurate voltage readings.

The input/output devices in the PCM include analog-to-digital converters, signal buffers, counters, and special drivers. The PCM controls most components with electronic switches which complete a ground circuit when turned “ON.” These switches are arranged in groups of 4 and 7, called either a surface-mounted quad driver module (QDM), which can independently control up to 4 output terminals, or QDMs which can independently control up to 7 outputs. Not all outputs are always used.

PCM Input/Outputs

Inputs – Operating Conditions Read

- Air Conditioning “ON” or “OFF”
- Engine Coolant Temperature
- Crankshaft Position
- Exhaust Oxygen Content
- Electronic Ignition
- Manifold Absolute Pressure
- Battery Voltage
- Throttle Position
- Vehicle Speed
- Fuel Pump Voltage
- Power Steering Pressure
- Intake Air Temperature
- Mass Air Flow
- Engine Knock
- Camshaft Position

Outputs – Systems Controlled

- Exhaust Gas Recirculation (EGR)
- Ignition Control
- Fuel Control
- Idle Air Control
- Electric Fuel Pump
- Air Conditioning
- Diagnostics
  - Malfunction Indicator Lamp (Service Engine Soon lamp)
  - Data Link Connector (DLC)
  - Data Output
- Transmission Control Module
- Alternator Gain Control

PCM Service Precautions

The PCM is designed to withstand normal current draws associated with vehicle operation. Avoid overloading any circuit. When testing for opens and shorts, do not ground or apply voltage to any of the PCM’s circuits unless instructed to do so. These circuits should only be tested Tech-2. The PCM should remain connected to the PCM or to a recommended breakout box.

Reprogramming The PCM

The Trooper allow reprogramming of the PCM without removing it from the vehicle . This provides a flexible and cost-effective method of making changes in software calibrations.

The service programming system (SPS) will not allow incorrect software programming or incorrect calibration changes.

Refer to the UBS 98model year Immobilizer Workshop Manual.

Throttle Position (TP) Sensor

The throttle position (TP) sensor is a potentiometer connected to the throttle shaft on the throttle body. The PCM monitors the voltage on the signal line and calculates throttle position. As the throttle valve angle is changed (accelerator pedal moved), the TP sensor signal also changes. At a closed throttle position, the output of

the TP sensor is low. As the throttle valve opens, the output increases so that at wide open throttle (WOT), the output voltage should be above 4 volts.

The PCM calculates fuel delivery based on throttle valve angle (driver demand). A broken or loose TP sensor may cause intermittent bursts of fuel from an injector and unstable idle because the PCM thinks the throttle is moving. A hard failure in the TP sensor 5-volt reference or signal circuits will set a DTC P0123. A hard failure with the TP sensor ground circuit may set DTC P0123. Once a DTC is set, the PCM will use an artificial default value based on engine RPM and mass air flow for the throttle position, and some vehicle performance will return. A high idle may result when DTC P0123 is set. The PCM can also detect a shifted TP sensor. The PCM monitors throttle position and compares the actual TP sensor reading to a predicted TP value calculated from engine speed. If the PCM detects an out-of-range condition, DTC P0121 will be set.

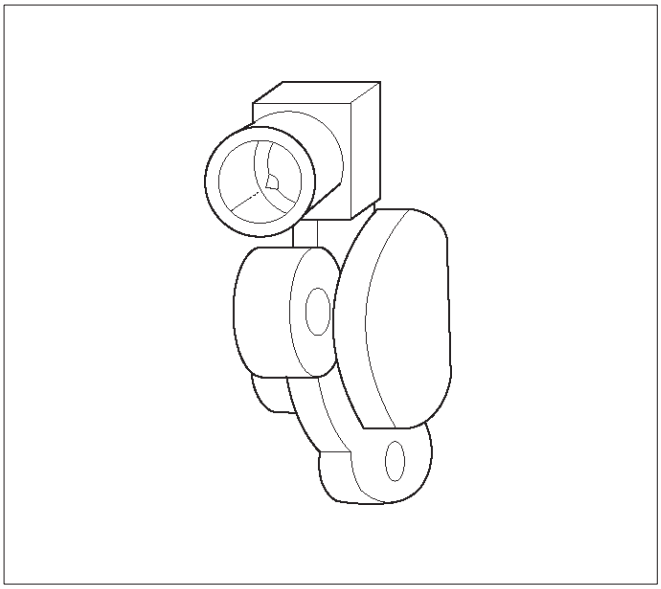

0021

Transmission Fluid Temperature (TFT) Sensor

The transmission fluid temperature sensor is a thermistor which changes its resistance based on the temperature of the transmission fluid. For a complete description of the TFT sensor, refer to *4L30-E Automatic Transmission Diagnosis*.

A failure in the TFT sensor or associated wiring will cause DTC P0712 or DTC P0713 to set. In this case, engine coolant temperature will be substituted for the TFT sensor value and the transmission will operate normally.

Transmission Range Switch

IMPORTANT: The vehicle should not be driven with the transmission range switch disconnected; idle quality will be affected.

The four inputs from the transmission range switch indicate to the PCM which position is selected by the transmission selector lever. This information is used for ignition timing, EVAP canister purge, EGR and IAC valve operation.

For more information on the transmission on the transmission range switch, refer to *4L30-E Automatic Transmission*.

Vehicle Speed Sensor (VSS)

The PCM determines the speed of the vehicle by converting a plusing voltage signal from the vehicle speed sensor (VSS) into miles per hour. The PCM uses this signal to operate the cruise control, speedometer, and the TCC and shift solenoids in the transmission. For more information on the TCC and shift solenoids, refer to *4L30-E Automatic Transmission.*

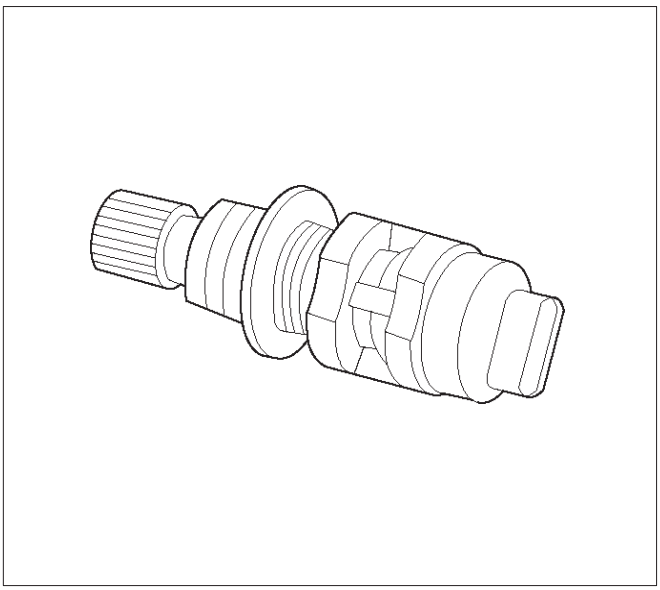

0008

Use of Circuit Testing Tools

Do not use a test light to diagnose the powertrain electrical systems unless specifically instructed by the diagnostic procedures. Use Connector Test Adapter Kit J 35616 whenever diagnostic procedures call for probing connectors.

Aftermarket Electrical and Vacuum Equipment

Aftermarket (add-on) electrical and vacuum equipment is defined as any equipment which connects to the vehicle's electrical or vacuum systems that is installed on a vehicle after it leaves the factory. No allowances have been made in the vehicle design for this type of equipment.

NOTE: No add-on vacuum equipment should be added to this vehicle.

NOTE: Add-on electrical equipment must only be connected to the vehicle's electrical system at the battery (power and ground).

Add-on electrical equipment, even when installed to these guidelines, may still cause the powertrain system to malfunction. This may also include equipment not connected to the vehicle electrical system such as portable telephones and radios. Therefore, the first step in diagnosing any powertrain problem is to eliminate all aftermarket electrical equipment from the vehicle. After

this is done, if the problem still exists, it may be diagnosed in the normal manner.

Electrostatic Discharge Damage

Electronic components used in the PCM are often designed to carry very low voltage. Electronic components are susceptible to damage caused by electrostatic discharge. Less than 100 volts of static electricity can cause damage to some electronic components. By comparison, it takes as much as 4000 volts for a person to feel even the zap of a static discharge.

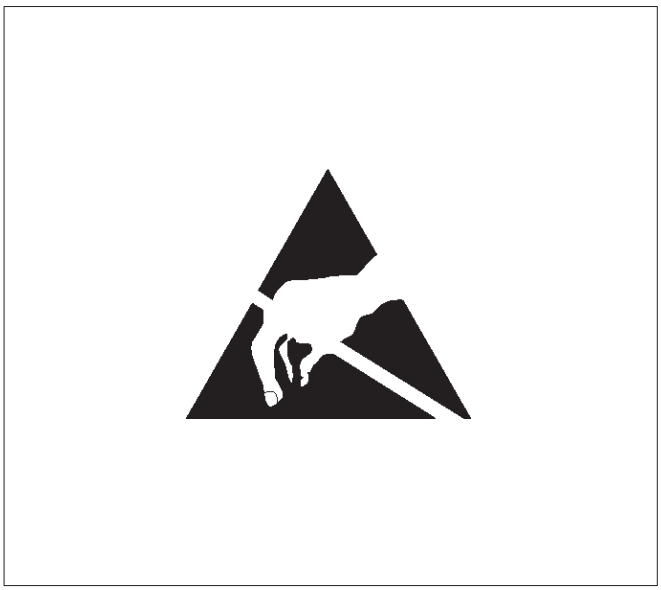

TS23793

There are several ways for a person to become statically charged. The most common methods of charging are by friction and induction.

- An example of charging by friction is a person sliding across a vehicle seat.
- Charge by induction occurs when a person with well insulated shoes stands near a highly charged object and momentary touches ground. Charges of the same polarity are drained off leaving the person highly charged with the opposite polarity. Static charges can cause damage, therefore it is important to use care when handling and testing electronic components.

NOTE: To prevent possible electrostatic discharge damage, follow these guidelines:

- Do not touch the PCM connector pins or soldered components on the PCM circuit board.
- Do not touch the knock sensor module component leads.
- Do not open the replacement part package until the part is ready to be installed.
- Before removing the part from the package, ground the package to a known good ground on the vehicle.
- If the part has been handled while sliding across the seat, while sitting down from a standing position, or while walking a distance, touch a known good ground before installing the part.

Upshift Lamp

Refer to *Manual Transmission*.

General Description (Air Induction)

Air Induction System

The air induction system filters contaminants from the outside air, and directs the progress of the air as it is drawn into the engine. A remote-mounted air cleaner prevents dirt and debris in the air from entering the engine. The air duct assembly routes filtered air to the throttle body. Air enters the engine by to following steps:

1. Through the throttle body.
2. Into the common chamber.
3. Through the cylinder head intake ports.
4. Into the cylinders.

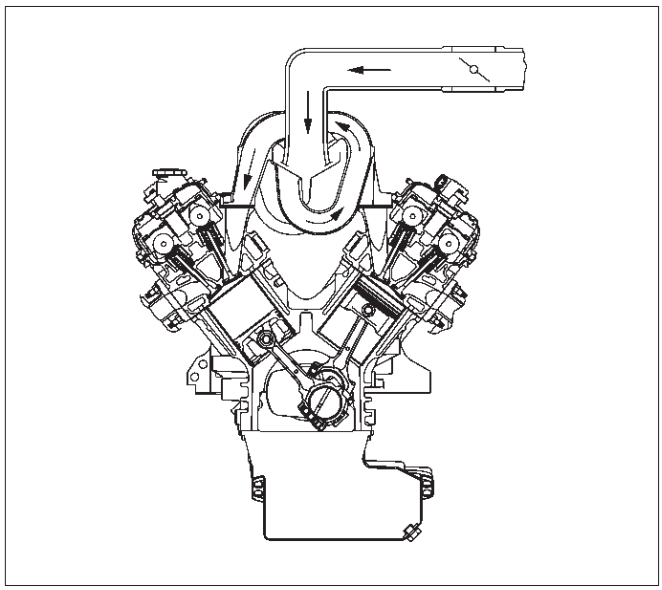

055RV010

General Description (Fuel Metering)

Acceleration Mode

The PCM provides extra fuel when it detects a rapid increase in the throttle position and the air flow.

Accelerator Controls

The accelerator control system is a cable-type system with specific linkage adjustments.
Refer to *Cable Adjustment*.

Battery Voltage Correction Mode

When battery voltage is low, the PCM will compensate for the weak spark by increasing the following:

- The amount of fuel delivered.
- The idle RPM.
- Ignition dwell time.

CMP Signal

The PCM uses this signal to determine the position of the number 1 piston during its power stroke, allowing the

PCM to calculate true sequential multiport fuel injection (SFI). Loss of this signal will set a DTC P0341. If the CMP signal is lost while the engine is running, the fuel injection system will shift to a calculated sequential fuel injection based on the last fuel injection pulse, and the engine will continue to run. The engine can be restarted and will run in the calculated sequential mode as long as the fault is present, with a 1-in-6 chance of being correct.

Clear Flood Mode

Clear a flooded engine by pushing the accelerator pedal down all the way. The PCM then de-energizes the fuel injectors. The PCM holds the fuel injectors de-energized as long as the throttle remains above 80% and the engine speed is below 800 RPM. If the throttle position becomes less than 80%, the PCM again begins to pulse the injectors “ON” and “OFF,” allowing fuel into the cylinders.

Deceleration Mode

The PCM reduces the amount of fuel injected when it detects a decrease in the throttle position and the air flow. When deceleration is very fast, the PCM may cut off fuel completely for short periods.

Engine Speed/Vehicle Speed/Fuel Disable Mode

The PCM monitors engine speed. It turns off the fuel injectors when the engine speed increase above 6400 RPM. The fuel injectors are turned back on when engine speed decreases below 6150 RPM.

Fuel Cutoff Mode

No fuel is delivered by the fuel injectors when the ignition is “OFF.” This prevents engine run-on. In addition, the PCM suspends fuel delivery if no reference pulses are detected (engine not running) to prevent engine flooding.

Fuel Injector

The sequential multiport fuel injection (SFI) fuel injector is a solenoid-operated device controlled by the PCM. The PCM energizes the solenoid, which opens a valve to allow fuel delivery.

The fuel is injected under pressure in a conical spray pattern at the opening of the intake valve. Excess fuel not used by the injectors passes through the fuel pressure regulator before being returned to the fuel tank.

A fuel injector which is stuck partly open will cause a loss of fuel pressure after engine shut down, causing long crank times.

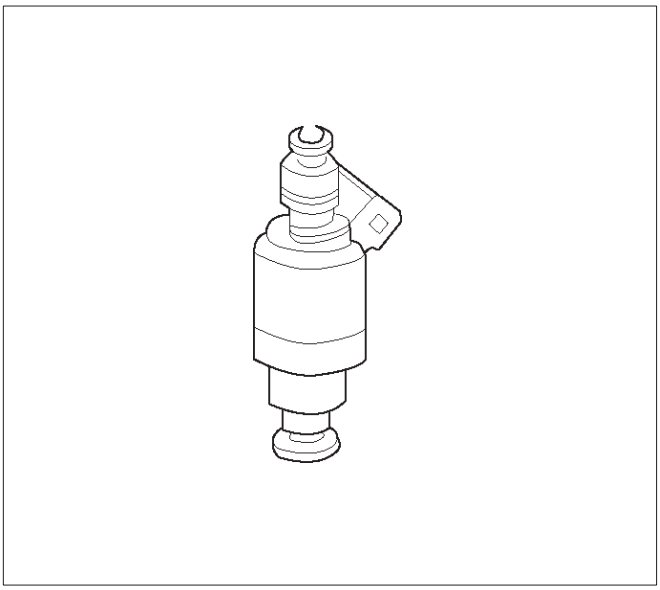

0003

Fuel Metering System Components

The fuel metering system is made up of the following parts:

- The fuel injectors.
- The throttle body.
- The fuel rail.
- The fuel pressure regulator.
- The PCM.
- The crankshaft position (CKP) sensor.
- The camshaft position (CMP) sensor.
- The idle air control (IAC) valve.
- The fuel pump.
- The fuel pump relay.

Basic System Operation

The fuel metering system starts with the fuel in the fuel tank. An electric fuel pump, located in the fuel tank, pumps fuel to the fuel rail through an in-line fuel filter. The pump is designed to provide fuel at a pressure above the pressure needed by the injectors. A fuel pressure regulator in the fuel rail keeps fuel available to the fuel injectors at a constant pressure. A return line delivers unused fuel back to the fuel tank. Refer to *Section 6C* for further information on the fuel tank, line filter, and fuel pipes.

Fuel Metering System Purpose

The basic function of the air/fuel metering system is to control the air/fuel delivery to the engine. Fuel is delivered to the engine by individual fuel injectors mounted in the intake manifold near each intake valve.

The main control sensor is the heated oxygen sensor (HO2S) located in the exhaust system. The HO2S tells the PCM how much oxygen is in the exhaust gas. The PCM changes the air/fuel ratio to the engine by controlling the amount of time that fuel injector is “ON.” The best mixture to minimize exhaust emissions is 14.7 parts of air to 1 part of gasoline by weight, which allows the catalytic converter to operate most efficiently. Because of the

constant measuring and adjusting of the air/fuel ratio, the fuel injection system is called a “closed loop” system.
The PCM monitors signals from several sensors in order to determine the fuel needs of the engine. Fuel is delivered under one of several conditions called “modes.” All modes are controlled by the PCM.

Fuel Pressure Regulator

The fuel pressure regulator is a diaphragm-operated relief valve mounted on the fuel rail with fuel pump pressure on one side and manifold pressure on the other side. The fuel pressure regulator maintains the fuel pressure available to the injector at three times barometric pressure adjusted for engine load. It may be serviced separate.
If the pressure is too low, poor performance and a DTC P0131, DTC P0151,DTC P0171 or DTC P1171 will be the result. If the pressure is too high, excessive odor and/or a DTC P0132, DTC P0152,DTC P0172 or DTC P0175 will be the result. Refer to *Fuel System Diagnosis* for information on diagnosing fuel pressure conditions.

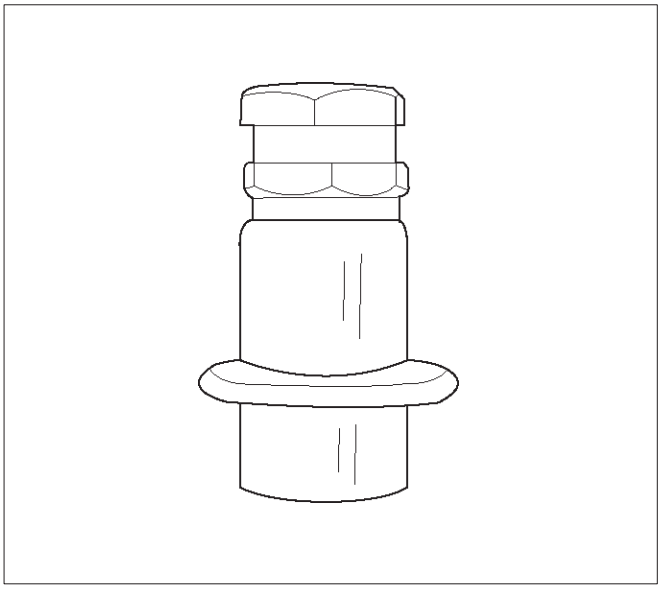

0011

Fuel Pump Electrical Circuit

When the key is first turned “ON,” the PCM energizes the fuel pump relay for two seconds to build up the fuel pressure quickly. If the engine is not started within two seconds, the PCM shuts the fuel pump off and waits until the engine is cranked. When the engine is cranked and the 58 X crankshaft position signal has been detected by the PCM, the PCM supplies 12 volts to the fuel pump relay to energize the electric in-tank fuel pump.
An inoperative fuel pump will cause a “no-start” condition. A fuel pump which does not provide enough pressure will result in poor performance.

Fuel Rail

The fuel rail is mounted to the top of the engine and distributes fuel to the individual injectors. Fuel is delivered to the fuel inlet tube of the fuel rail by the fuel lines. The fuel goes through the fuel rail to the fuel pressure regulator. The fuel pressure regulator maintains a constant fuel pressure at the injectors. Remaining fuel is then returned to the fuel tank.

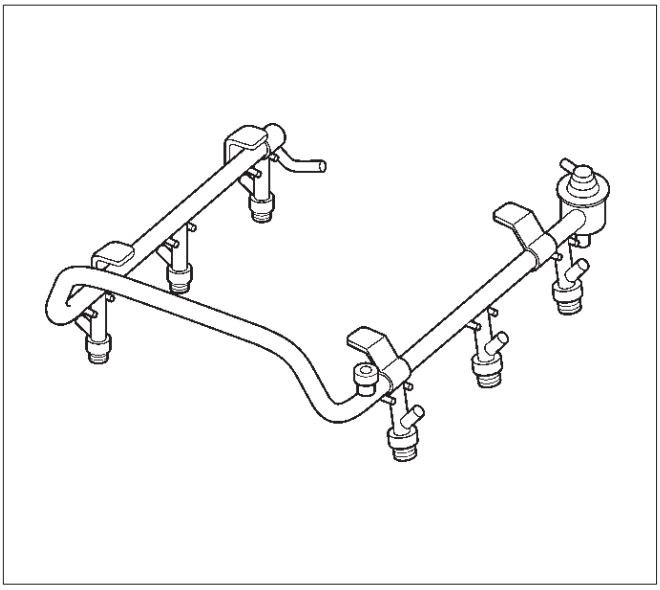

055RW009

Idle Air Control (IAC) Valve

The purpose of the idle air control (IAC) valve is to control engine idle speed, while preventing stalls due to changes in engine load. The IAC valve, mounted in the throttle body, controls bypass air around the throttle plate. By moving the conical valve (pintle) in (to decrease air flow) or out (to increase air flow), a controlled amount of air can move around the throttle plate. If the RPM is too low, the PCM will retract the IAC pintle, resulting in more air moving past the throttle plate to increase the RPM. If the RPM is too high, the PCM will extend the IAC pintle, allowing less air to move past the throttle plate, decreasing the RPM.
The IAC pintle valve moves in small steps called counts. During idle, the proper position of the IAC pintle is calculated by the PCM based on battery voltage, coolant temperature, engine load, and engine RPM. If the RPM drops below a specified value, and the throttle plate is closed, the PCM senses a near-stall condition. The PCM will then calculate a new IAC pintle valve position to prevent stalls.
If the IAC valve is disconnected and reconnected with the engine running, the idle RPM will be wrong. In this case, the IAC must be reset. The IAC resets when the key is cycled “ON” then “OFF.” When servicing the IAC, it should only be disconnected or connected with the ignition “OFF.”
The position of the IAC pintle valve affects engine start-up and the idle characteristics of the vehicle. If the IAC pintle is fully open, too much air will be allowed into the manifold. This results in high idle speed, along with possible hard starting and a lean air/fuel ratio. DTC P0507 or DTC P1509 may set. If the IAC pintle is stuck closed, too little air will be allowed in the manifold. This results in a low idle speed, along with possible hard starting and a rich air/fuel ratio. DTC P0506 or DTC P1508 may set. If the IAC pintle is stuck part-way open, the idle may be high or low and will not respond to changes in the engine load.

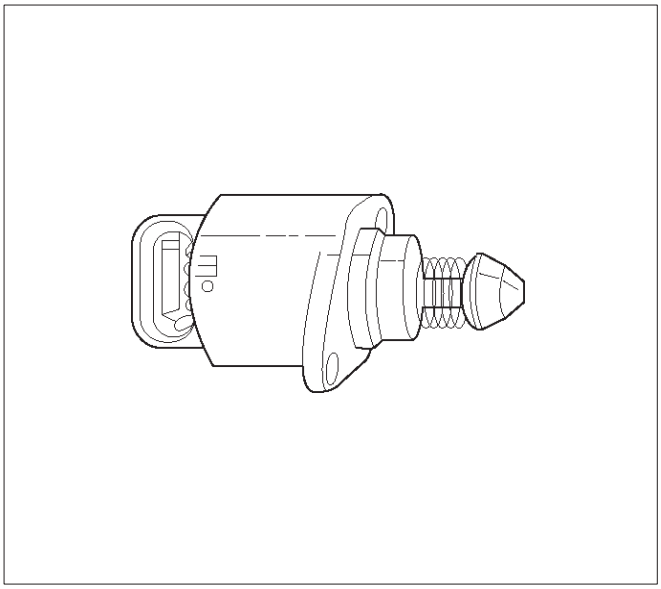

0006

Run Mode

The run mode has the following two conditions:

- Open loop
- Closed loop

When the engine is first started the system is in “open loop” operation. In “open loop,” the PCM ignores the signal from the heated oxygen sensor (HO2S). It calculates the air/fuel ratio based on inputs from the TP, ECT, and MAF sensors.

The system remains in “open loop” until the following conditions are met:

- The HO2S has a varying voltage output showing that it is hot enough to operate properly (this depends on temperature).
- The ECT has reached a specified temperature.
- A specific amount of time has elapsed since starting the engine.
- Engine speed has been greater than a specified RPM since start-up.

The specific values for the above conditions vary with different engines and are stored in the programmable read only memory (PROM). When these conditions are met, the system enters “closed loop” operation. In “closed loop,” the PCM calculates the air/fuel ratio (injector on-time) based on the signal from the HO2S. This allows the air/fuel ratio to stay very close to 14.7:1.

Starting Mode

When the ignition is first turned “ON,” the PCM energizes the fuel pump relay for two seconds to allow the fuel pump to build up pressure. The PCM then checks the engine coolant temperature (ECT) sensor and the throttle position (TP) sensor to determine the proper air/fuel ratio for starting.

The PCM controls the amount of fuel delivered in the starting mode by adjusting how long the fuel injectors are energized by pulsing the injectors for very short times.

Throttle Body Unit

The throttle body has a throttle plate to control the amount of air delivered to the engine. The TP sensor and IAC valve are also mounted on the throttle body. Vacuum ports located behind the throttle plate provide the vacuum signals needed by various components.

Engine coolant is directed through a coolant cavity in the throttle body to warm the throttle valve and to prevent icing.

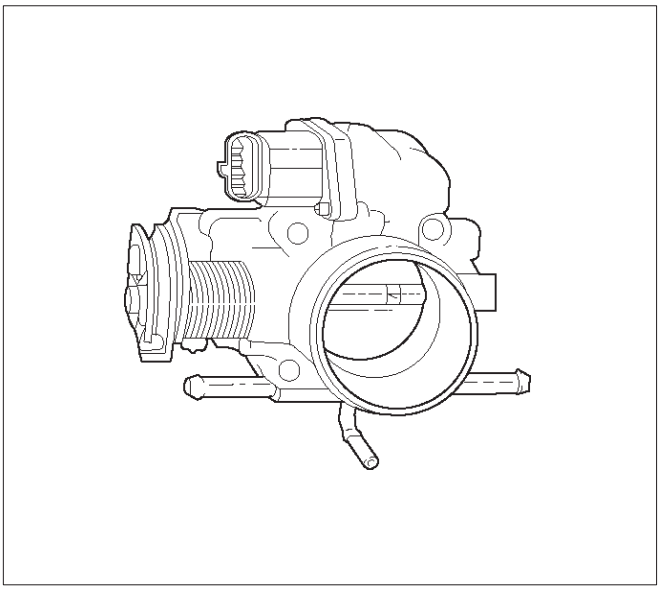

0019

General Description (Electronic Ignition System)

Camshaft Position (CMP) Sensor

As the camshaft sprocket turns, a magnet in the sprocket activates the Hall-effect switch in the CMP sensor. When the Hall-effect switch is activated, it grounds the signal line to the PCM, pulling the camshaft position sensor signal circuit’s applied voltage low. This is a CMP signal. The CMP signals is created as piston #1 is approximately 25˚ after top dead counter on the power stroke. If the correct CMP signal is not received by the PCM, DTC P0341 will be set.

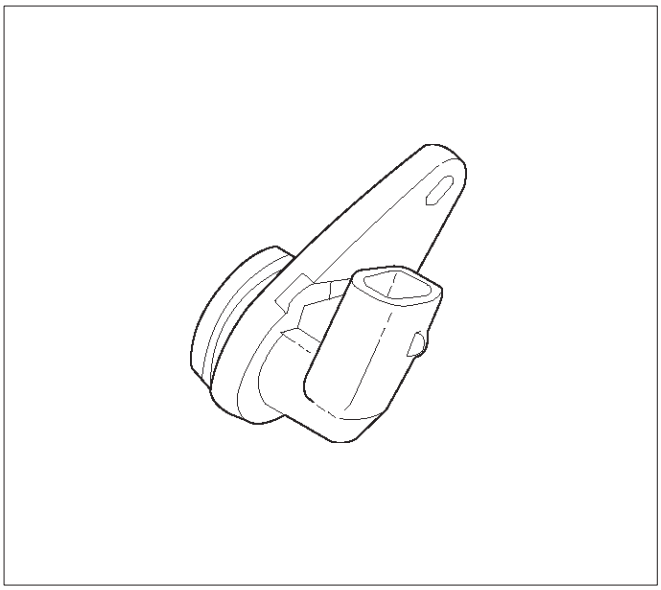

0014

Crankshaft Position (CKP) Sensor

The crankshaft position (CKP) sensor provides a signal used by the powertrain control module (PCM) to calculate the ignition sequence. The sensor initiates the 58X reference pulses which the PCM uses to calculate RPM and crankshaft position. Refer to *Electronic Ignition System* for additional information.

Electronic Ignition

The electronic ignition system controls fuel combustion by providing a spark to ignite the compressed air/fuel mixture at the correct time. To provide optimum engine performance, fuel economy, and control of exhaust emissions, the PCM controls the spark advance of the ignition system. Electronic ignition has the following advantages over a mechanical distributor system:

- No moving parts.
- Less maintenance.
- Remote mounting capability.
- No mechanical load on the engine.
- More coil cooldown time between firing events.
- Elimination of mechanical timing adjustments.
- Increased available ignition coil saturation time.

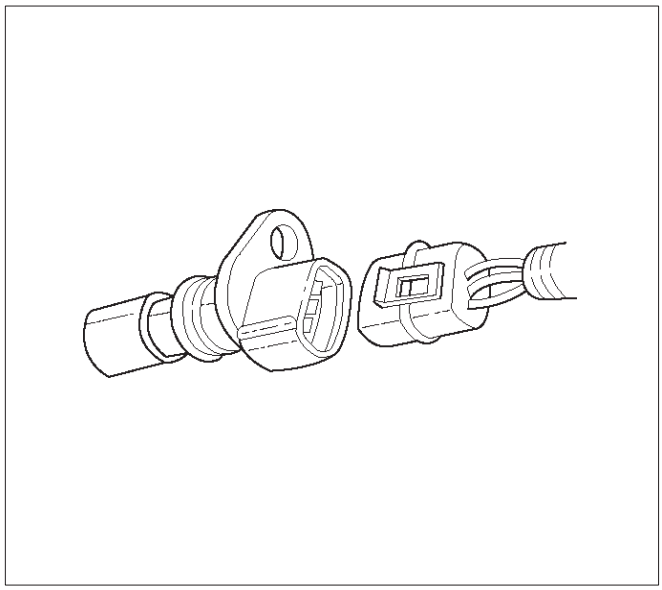

0013

Ignition Coils

A separate coil-at-plug module is located at each spark plug. The coil-at-plug module is attached to the engine with two screws. It is installed directly to the spark plug by an electrical contact inside a rubber boot. A three-way connector provides 12-volt primary supply from the 15-amp ignition fuse, a ground-switching trigger line from the PCM, and a ground.

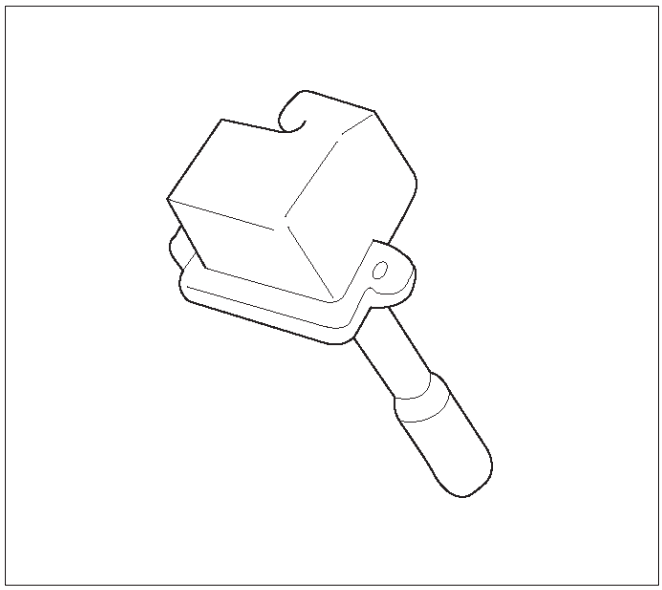

0001

Ignition Control

The ignition control (IC) spark timing is the PCM's method of controlling the spark advance and the ignition dwell. The IC spark advance and the ignition dwell are calculated by the PCM using the following inputs:

- Engine speed.

- Crankshaft position (58X reference).
- Camshaft position (CMP) sensor.
- Engine coolant temperature (ECT) sensor.
- Throttle position (TP) sensor.
- Knock signal (knock sensor).
- Park/Neutral position (PRNDL input).
- Vehicle speed (vehicle speed sensor).
- PCM and ignition system supply voltage.
- The crankshaft positron (CKP) sensor sends the PCM a 58X signal related to the exact position of the crankshaft.

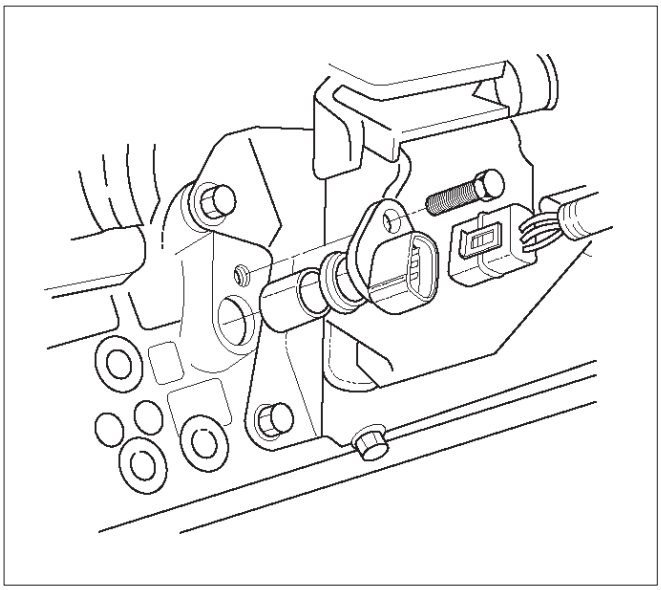

TS22909

- The camshaft position (CMP) sensor sends a signal related to the position of the camshaft.

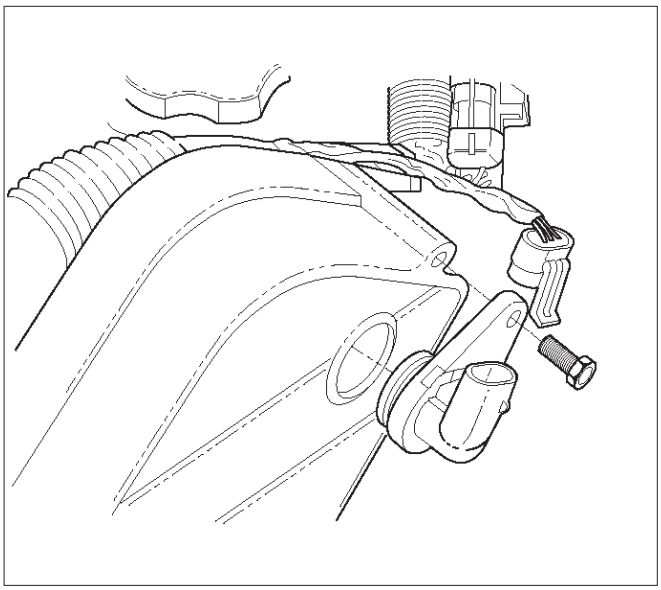

TS22910

- The knock sensor tells the PCM if there is any problem with pre-ignition or detonation. This information allows the PCM to retard timing, if necessary.

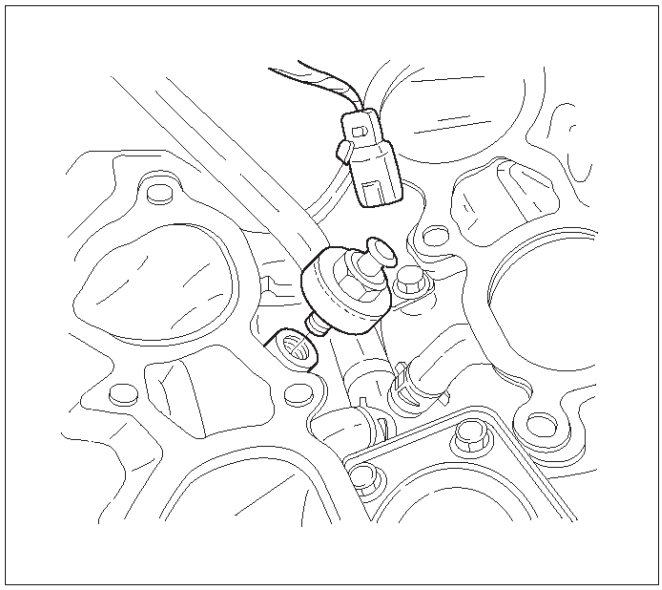

TS24037

Based on these sensor signals and engine load information, the PCM sends 5V to each ignition coil.

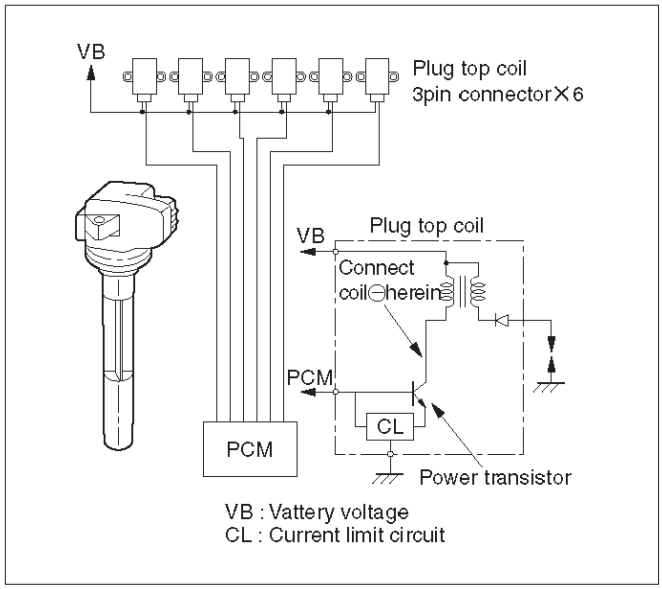

060RW015

The PCM applies 5V signal voltage to the ignition coil requiring ignition. This signal sets on the power transistor of the ignition coil to establish a grounding circuit for the primary coil, applying battery voltage to the primary coil. At the ignition timing, the PCM stops sending the 5V signal voltage. Under this condition the power transistor of the ignition coil is set off to cut the battery voltage to the primary coil, thereby causing a magnetic field generated in the primary coil to collapse. On this moment a line of magnetic force flows to the secondary coil, and when this magnetic line crosses the coil, high voltage induced by

the secondary ignition circuit to flow through the spark plug to the ground.

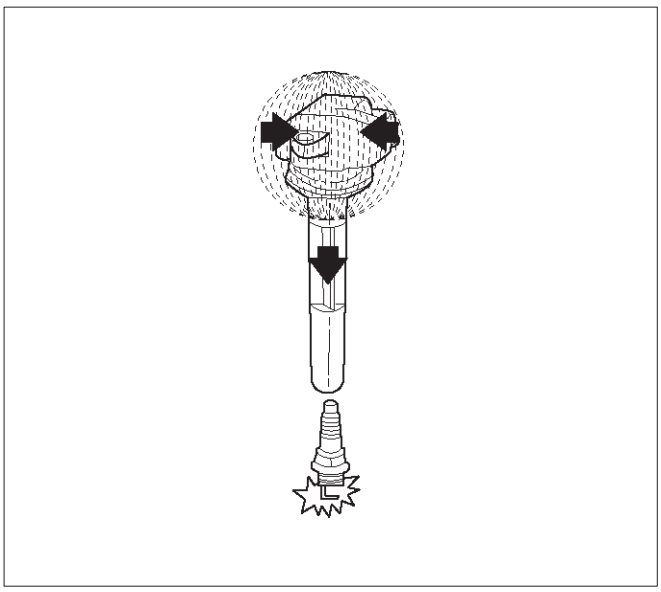

TS24047

Ignition Control PCM Output

The PCM provides a zero volt (actually about 100 mV to 200 mV) or a 5-volt output signal to the ignition control (IC) module. Each spark plug has its own primary and secondary coil module (”coil-at-plug”) located at the spark plug itself. When the ignition coil receives the 5-volt signal from the PCM, it provides a ground path for the B+ supply to the primary side of the coil-at -plug module. This energizes the primary coil and creates a magnetic field in the coil-at-plug module. When the PCM shuts off the 5-volt signal to the ignition control module, the ground path for the primary coil is broken. The magnetic field collapses and induces a high voltage secondary impulse which fires the spark plug and ignites the air/fuel mixture. The circuit between the PCM and the ignition coil is monitored for open circuits, shorts to voltage, and shorts to ground. If the PCM detects one of these events, it will set one of the following DTCs:

- P0351: Ignition coil Fault on Cylinder #1
- P0352: Ignition coil Fault on Cylinder #2
- P0353: Ignition coil Fault on Cylinder #3
- P0354: Ignition coil Fault on Cylinder #4
- P0355: Ignition coil Fault on Cylinder #5
- P0356: Ignition coil Fault on Cylinder #6

Knock Sensor (KS) PCM Input

The knock sensor (KS) system is comprised of a knock sensor and the PCM. The PCM monitors the KS signals to determine when engine detonation occurs. When a knock sensor detects detonation, the PCM retards the spark timing to reduce detonation. Timing may also be retarded because of excessive mechanical engine or transmission noise.

Powertrain Control Module (PCM)

The PCM is responsible for maintaining proper spark and fuel injection timing for all driving conditions. To provide optimum driveability and emissions, the PCM monitors the input signals from the following components in order to calculate spark timing:

- Engine coolant temperature (ECT) sensor.
- Intake air temperature (IAT) sensor.
- Mass air flow (MAF) sensor.
- PRNDL input from transmission range switch.
- Throttle position (TP) sensor.
- Vehicle speed sensor (VSS) .
- Crankshaft position (CKP) sensor.

Spark Plug

Although worn or dirty spark plugs may give satisfactory operation at idling speed, they frequency fail at higher engine speeds. Faulty spark plugs may cause poor fuel economy, power loss, loss of speed, hard starting and generally poor engine performance. Follow the scheduled maintenance service recommendations to ensure satisfactory spark plug performance. Refer to *Maintenance and Lubrication*.

Normal spark plug operation will result in brown to grayish-tan deposits appearing on the insulator portion of the spark plug. A small amount of red-brown, yellow, and white powdery material may also be present on the insulator tip around the center electrode. These deposits are normal combustion by-products of fuels and lubricating oils with additives. Some electrode wear will also occur. Engines which are not running properly are often referred to as “misfiring.” This means the ignition spark is not igniting the air/fuel mixture at the proper time. While other ignition and fuel system causes must also be considered, possible causes include ignition system conditions which allow the spark voltage to reach ground in some other manner than by jumping across the air gap at the tip of the spark plug, leaving the air/fuel mixture unburned. Misfiring may also occur when the tip of the spark plug becomes overheated and ignites the mixture before the spark jumps. This is referred to as “pre-ignition.”

Spark plugs may also misfire due to fouling, excessive gap, or a cracked or broken insulator. If misfiring occurs before the recommended replacement interval, locate and correct the cause.

Carbon fouling of the spark plug is indicated by dry, black carbon (soot) deposits on the portion of the spark plug in the cylinder. Excessive idling and slow speeds under light engine loads can keep the spark plug temperatures so low that these deposits are not burned off. Very rich fuel mixtures or poor ignition system output may also be the cause. Refer to DTC P0172.

Oil fouling of the spark plug is indicated by wet oily deposits on the portion of the spark plug in the cylinder, usually with little electrode wear. This may be caused by oil during break-in of new or newly overhauled engines. Deposit fouling of the spark plug occurs when the normal red-brown, yellow or white deposits of combustion by products become sufficient to cause misfiring. In some cases, these deposits may melt and form a shiny glaze on the insulator around the center electrode. If the fouling is found in only one or two cylinders, valve stem clearances or intake valve seals may be allowing excess lubricating

oil to enter the cylinder, particularly if the deposits are heavier on the side of the spark plug facing the intake valve.

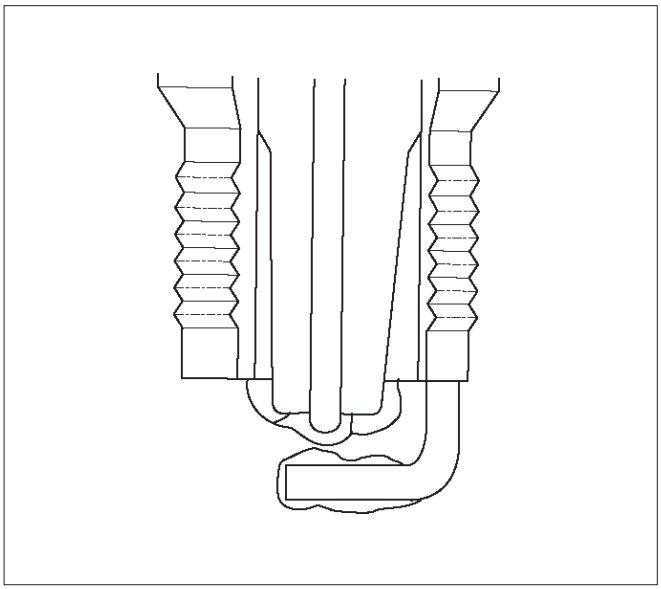

TS23995

Excessive gap means that the air space between the center and the side electrodes at the bottom of the spark plug is too wide for consistent firing. This may be due to improper gap adjustment or to excessive wear of the electrode during use. A check of the gap size and comparison to the gap specified for the vehicle in *Maintenance and Lubrication* will tell if the gap is too wide. A spark plug gap that is too small may cause an unstable idle condition. Excessive gap wear can be an indication of continuous operation at high speeds or with engine loads, causing the spark to run too hot. Another possible cause is an excessively lean fuel mixture.

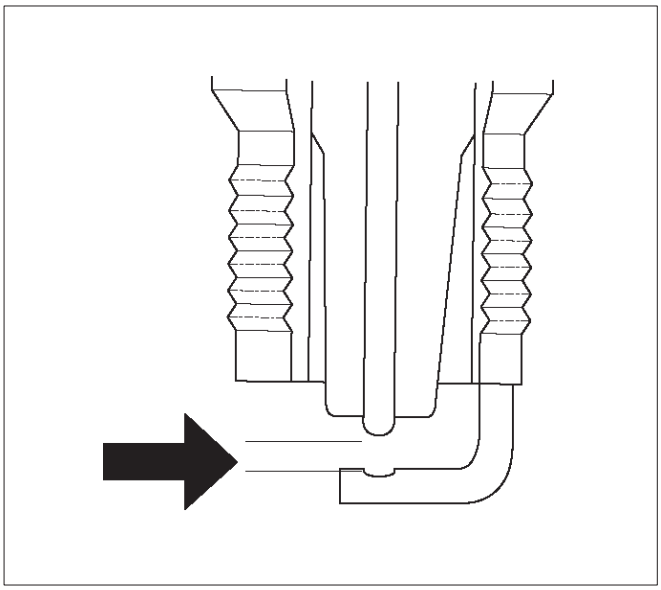

TS23992

Low or high spark plug installation torque or improper seating can result in the spark plug running too hot and can cause excessive center electrode wear. The plug and the cylinder head seats must be in good contact for proper heat transfer and spark plug cooling. Dirty or damaged threads in the head or on the spark plug can keep it from seating even though the proper torque is applied. Once spark plugs are properly seated, tighten them to the torque shown in the Specifications Table. Low torque may result in poor contact of the seats due to a loose spark plug. Overtightening may cause the spark plug shell to be stretched and will result in poor contact between the seats. In extreme cases, exhaust blow-by and damage beyond simple gap wear may occur.

Cracked or broken insulators may be the result of improper installation, damage during spark plug re-gapping, or heat shock to the insulator material. Upper insulators can be broken when a poorly fitting tool is used during installation or removal, when the spark plug is hit from the outside, or is dropped on a hard surface. Cracks in the upper insulator may be inside the shell and not visible. Also, the breakage may not cause problems until oil or moisture penetrates the crack later.

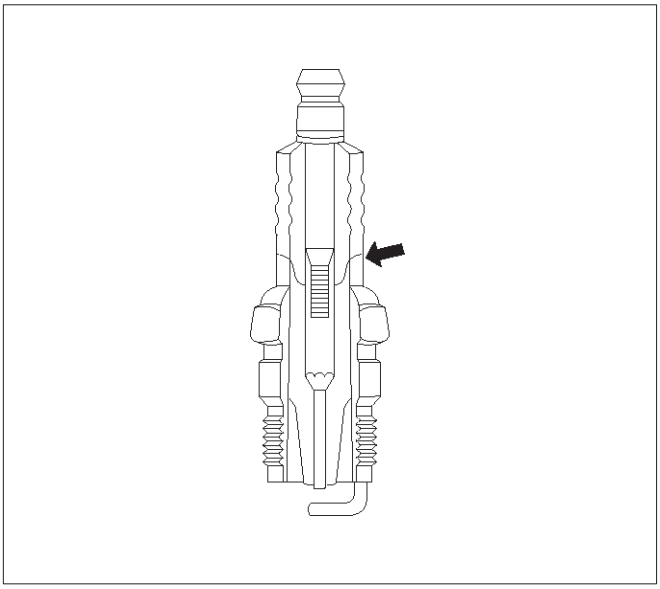

TS23994

A broken or cracked lower insulator tip (around the center electrode) may result from damage during re-gapping or from “heat shock” (spark plug suddenly operating too hot).

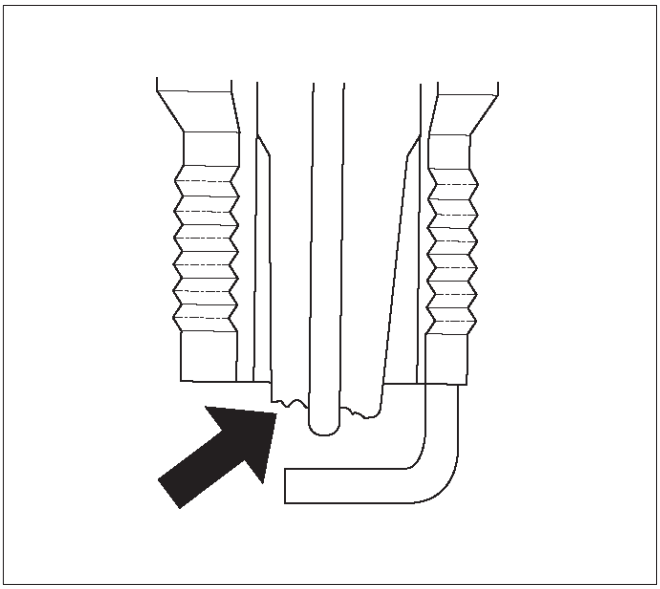

TS23993

- Damage during re-gapping can happen if the gapping tool is pushed against the center electrode or the insulator around it, causing the insulator to crack. When re-gapping a spark plug, make the adjustment by bending only the ground side terminal, keeping the tool clear of other parts.
- ”Heat shock” breakage in the lower insulator tip generally occurs during several engine operating conditions (high speeds or heavy loading) and may be caused by over-advanced timing or low grade fuels. Heat shock refers to a rapid increase in the tip temperature that causes the insulator material to crack.

Spark plugs with less than the recommended amount of service can sometimes be cleaned and re-gapped , then returned to service. However, if there is any doubt about the serviceability of a spark plug, replace it. Spark plugs with cracked or broken insulators should always be replaced.

A/C Clutch Diagnosis

A/C Clutch Circuit Operation

A 12-volt signal is supplied to the A/C request input of the PCM when the A/C is selected through the A/C control switch.

The A/C compressor clutch relay is controlled through the PCM. This allows the PCM to modify the idle air control position prior to the A/C clutch engagement for better idle quality. If the engine operating conditions are within their specified calibrated acceptable ranges, the PCM will enable the A/C compressor relay. This is done by providing a ground path for the A/C relay coil within the PCM. When the A/C compressor relay is enabled, battery voltage is supplied to the compressor clutch coil. The PCM will enable the A/C compressor clutch whenever the engine is running and the A/C has been requested. The PCM will not enable the A/C compressor clutch if any of the following conditions are met:

- The throttle is greater than 90%.
- The engine speed is greater than 6315 RPM.
- The ECT is greater than 119˚C (246˚F).
- The IAT is less than 5˚C (41˚F).
- The throttle is more than 80% open.

A/C Clutch Circuit Purpose

The A/C compressor operation is controlled by the powertrain control module (PCM) for the following reasons:

- It improvises idle quality during compressor clutch engagement.
- It improvises wide open throttle (WOT) performance.
- It provides A/C compressor protection from operation with incorrect refrigerant pressures.

The A/C electrical system consists of the following components:

- The A/C control head.
- The A/C refrigerant pressure switches.
- The A/C compressor clutch.
- The A/C compressor clutch relay.
- The PCM.

A/C Request Signal

This signal tells the PCM when the A/C mode is selected at the A/C control head. The PCM uses this to adjust the idle speed before turning on the A/C clutch. The A/C compressor will be inoperative if this signal is not available to the PCM.

Refer to *A/C Clutch Circuit Diagnosis* for A/C wiring diagrams and diagnosis for A/C electrical system.

General Description (Exhaust Gas Recirculation (EGR) System)

EGR Purpose

The exhaust gas recirculation (EGR) system is use to reduce emission levels of oxides of nitrogen (NOx). NOx emission levels are caused by a high combustion temperature. The EGR system lowers the NOx emission levels by decreasing the combustion temperature.

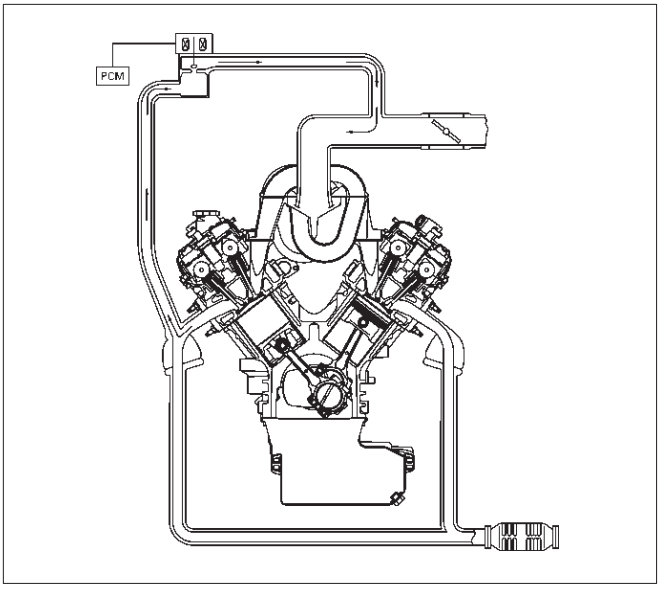

057RW002

Linear EGR Valve

The main element of the system is the linear EGR valve. The EGR valve feeds small amounts of exhaust gas back into the combustion chamber. The fuel/air mixture will be diluted and combustion temperatures reduced.

Linear EGR Control

The PCM monitors the EGR actual positron and adjusts the pintle position accordingly. The uses information from the following sensors to control the pintle position:

- Engine coolant temperature (ECT) sensor.
- Throttle position (TP) sensor.
- Mass air flow (MAF) sensor.

Linear EGR Valve Operation and Results of Incorrect Operation

The linear EGR valve is designed to accurately supply EGR to the engine independent of intake manifold vacuum. The valve controls EGR flow from the exhaust

to the intake manifold through an orifice with a PCM controlled pintle. During operation, the PCM controls pintle position by monitoring the pintle position feedback signal. The feedback signal can be monitored with Tech 2 as “Actual EGR Pos.” “Actual EGR Pos.” should always be near the commanded EGR position (”Desired EGR Pos.”). If a problem with the EGR system will not allow the PCM to control the pintle position properly, DTC P1406 will set. The PCM also tests for EGR flow. If incorrect flow is detected, DTC P0401 will set. If DTCs P0401 and/or P1406 are set, refer to the DTC charts.

The linear EGR valve is usually activated under the following conditions:

- Warm engine operation.
- Above-idle speed.

Too much EGR flow at idle, cruise or cold operation may cause any of the following conditions to occur:

- Engine stalls after a cold start.
- Engine stalls at idle after deceleration.
- Vehicle surges during cruise.
- Rough idle.

Too little or no EGR flow may allow combustion temperatures to get too high. This could cause:

- Spark knock (detonation).
- Engine overheating.
- Emission test failure.
- DTC P0401 (EGR flow test).
- Poor fuel economy.

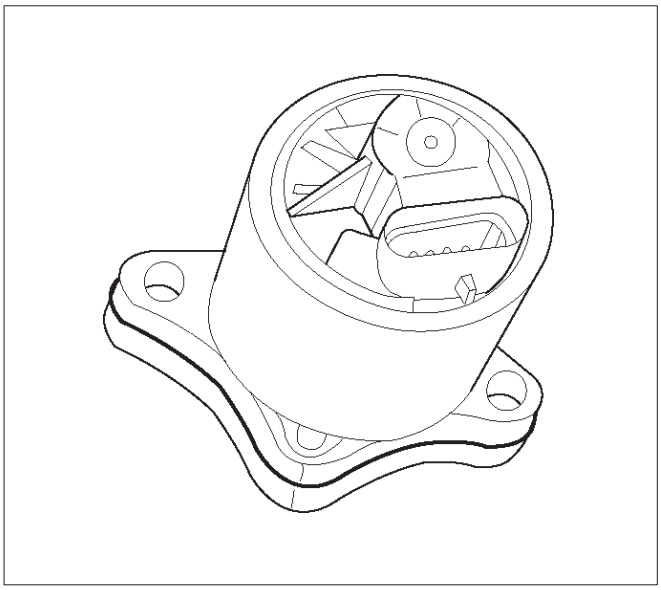

0017

EGR Pintle Position Sensor

The PCM monitors the EGR valve pintle position input to endure that the valve responds properly to commands from the PCM and to detect a fault if the pintle position sensor and control circuits are open or shorted. If the PCM detects a pintle position signal voltage outside the normal range of the pintle position sensor, or a signal voltage that is not within a tolerance considered acceptable for proper EGR system operation, the PCM will set DTC P1406.

General Description (Positive Crankcase Ventilation (PCV) System)

Crankcase Ventilation System Purpose

The crankcase ventilation system is use to consume crankcase vapors in the combustion process instead of venting them to the atmosphere. Fresh air from the throttle body is supplied to the crankcase and mixed with blow-by gases. This mixture is then passed through the positive crankcase ventilation (PCV) valve into the common chamber.

Crankcase Ventilation System Operation

The primary control is through the positive crankcase ventilation (PCV) valve. The PCV valve meters the flow at a rate that depends on the intake vacuum. The PCV valve restricts the flow when the inlet vacuum is highest. In addition, the PCV valve can seal the common chamber off in case of sudden high pressure in the crankcase.

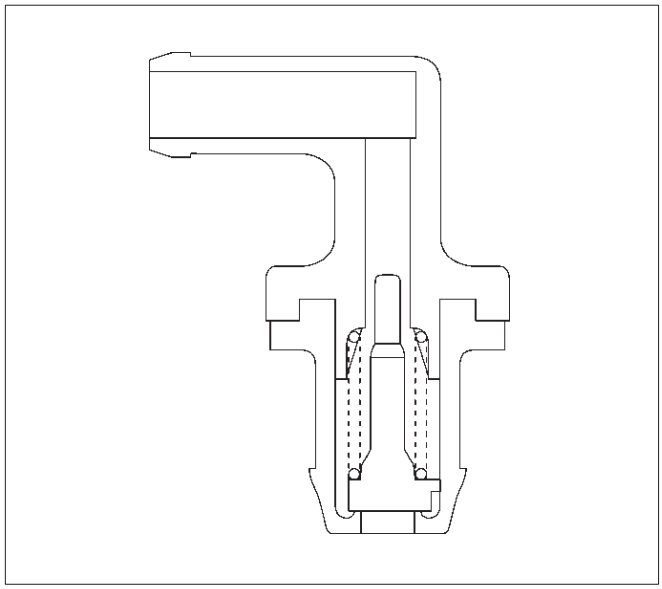

028RV002

While the engine is running, exhaust fuses and small amounts of the fuel/air mixture escape past the piston

rings and enter the crankcase. These gases are mixed with clean air entering through a tube from the air intake duct.

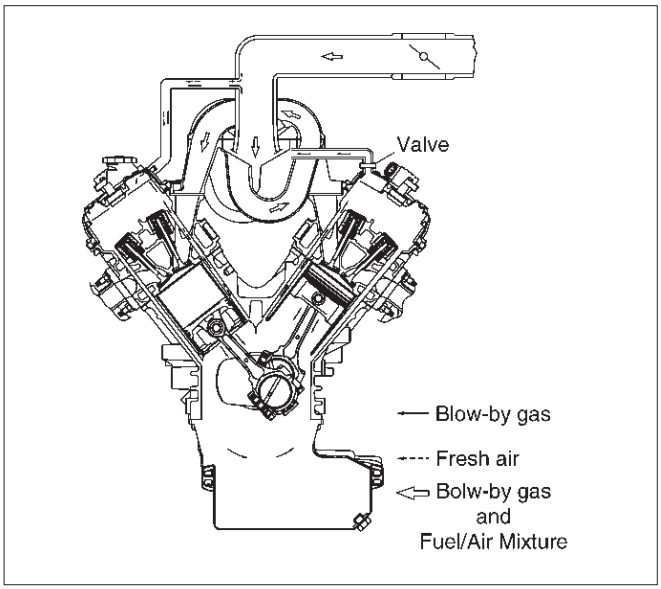

028RW002

During normal, part-throttle operation, the system is designed to allow crankcase gases to flow through the PCV valve into the throttle body to be consumed by normal combustion.

A plugged valve or PCV hose may cause the following conditions:

- Rough idle.
- Stalling of slow idle speed.
- Oil leaks.
- Sludge in the engine.

A leaking PCV hose would cause:

- Rough idle.
- Stalling.
- High idle speed.

Special Tools

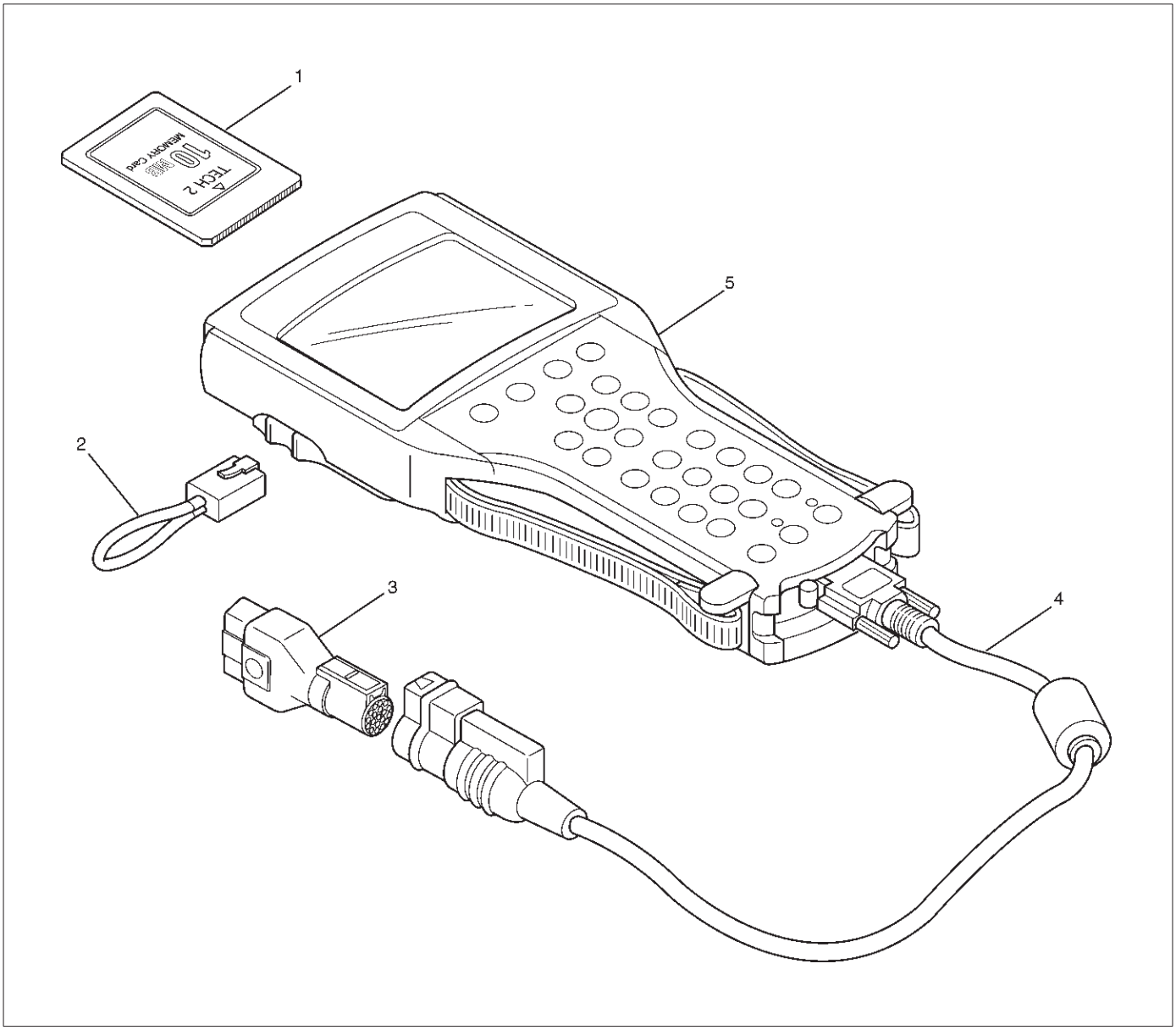

901RW180

Legend

(1) PCMCIA Card
(2) RS232 Loop Back Connector
(3) SAE 16/19 Adapter
(4) DLC Cable
(5) TECH–2

ILLUSTRATION	**TOOL NO.** TOOL NAME
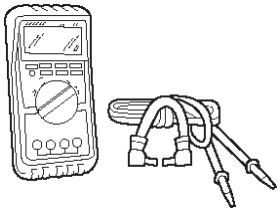	5-8840-0285-0 **(J 39200)** High Impedance Multimeter (Digital Voltmeter – DVM)
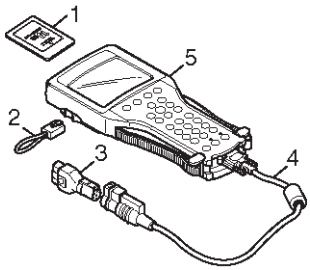	(1) PCMCIA Card (2) RS232 Loop Back Connector (3) SAE 16/19 Adapter (4) DLC Cable (5) TECH–2
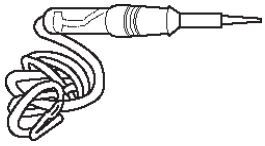	5-8840-0607-0 **(J 34142-B)** Unpowered Test Light
	5-8840-0385-0 **(J 35616-A/BT-8637)** Connector Test Adapter Kit
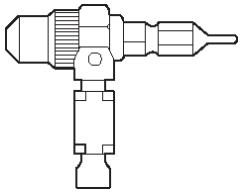	5-8840-0383-0 **(J 26792/BT-7220-1)** Spark Tester
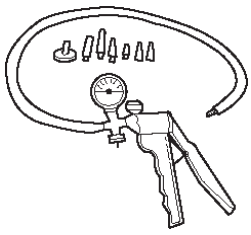	5-8840-0279-0 **(J 23738-A)** Vacuum Pump with Gauge common tool

ILLUSTRATION	**TOOL NO.** TOOL NAME
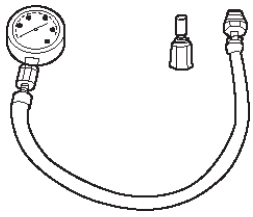	**BT-8515** Exhaust Back Pressure Tester or common tool
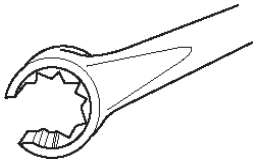	5-8840-2640-0 **(J 39194-B)** Heated Oxygen Sensor Wrench
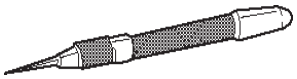	5-8840-0632-0 **(J 35689-A)** Terminal Remover
	5-8840-0388-0 **(J 28742-A)** Weather Pack II Terminal Remover
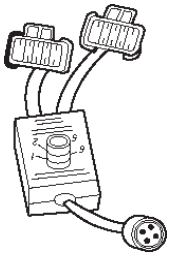	5-8840-2635-0 **(J 39021-90)** Injector Switch Box
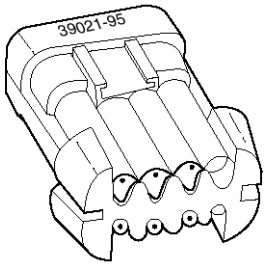	5-8840-2636-0 **(J 39021-65)** Injector Test Light

ILLUSTRATION	**TOOL NO.** TOOL NAME
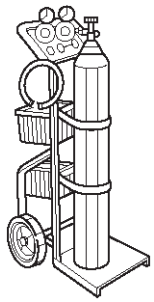	5-8840-2607-0 **(J 41413)** EVAP Pressure/Purge Diagnostic Station
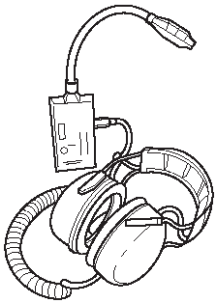	5-8840-2608-0 **(J 41416)** Ultrasonic Leak Detector

1. 5-8840-2607-0 (J-41413)EVAP Pressure/Purge Diagnostic Station is a multipurpose tool which is used to perform several diagnostic procedures for enhanced emission testing. The station will accommodate a nitrogen gas filled cylinder which is used to pressurize the vehicle EVAP system for a leakdown test and leak location test when a vehicle is repaired for leakage in the enhanced evaporative emission control system. It also has two additional gauges (inches of mercury and inches of water) which are used to measure both source vacuum and EVAP canister purge vacuum to verify correct operation and vapor flow within the canister purge circuit.
2. 5-8840-2608-0 (J-41416) Ultrasonic Leak Detector is a microprocessor-based device used to detect leaks in the enhanced evaporative emission control system. The evaporative system is pressurized to 30 inches of water using the 5-8840-2607-0 (J-41413) EVAP Pressure/Purge Diagnostic System. Small leaks in the EVAP system will emit sound at a high frequency undetectable by a human ear but detectable with the 5-8840-2608-0 (J-41416). The technician traces along the evaporative system and can pinpoint leaks due to corroded lines, cracked hoses, or a damaged EVAP component. The detector includes a high quality set of headphones to block out surrounding shop noise and the LED sensitivity meter allows a visual reference for locating leaks in conjunction with the audio output heard through the headphones. Powered by (1) nine volt battery.

ENGINE

ENGINE EXHAUST

CONTENTS

Service Precaution 6F–1
General Description 6F–2
Front Exhaust Pipe 6F–4
Front Exhaust Pipe and Associated Parts . 6F–4
Removal 6F–4
Installation 6F–4
Three Way Catalytic Converter 6F–5
Removal 6F–5
Installation 6F–5
Exhaust Silencer 6F–6
Exhaust Silencer and Associated Parts . . . 6F–6
Removal 6F–6
Installation 6F–6
Rear Exhaust pipe 6F–7
Rear Exhaust pipe and Associated Parts . 6F–7
Removal 6F–7
Installation 6F–7
Main Data and Specifications 6F–8

Service Precaution

WARNING: IF SO EQUIPPED WITH A SUPPLEMENTAL RESTRAINT SYSTEM (SRS), REFER TO THE SRS COMPONENT AND WIRING LOCATION VIEW IN ORDER TO DETERMINE WHETHER YOU ARE PERFORMING SERVICE ON OR NEAR THE SRS COMPONENTS OR THE SRS WIRING. WHEN YOU ARE PERFORMING SERVICE ON OR NEAR THE SRS COMPONENTS OR THE SRS WIRING, REFER TO THE SRS SERVICE INFORMATION. FAILURE TO FOLLOW WARNINGS COULD RESULT IN POSSIBLE AIR BAG DEPLOYMENT, PERSONAL INJURY, OR OTHERWISE UNNEEDED SRS SYSTEM REPAIRS.

CAUTION: Always use the correct fastener in the proper location. When you replace a fastener, use ONLY the exact part number for that application. ISUZU will call out those fasteners that require a replacement after removal. ISUZU will also call out the fasteners that require thread lockers or thread sealant. UNLESS OTHERWISE SPECIFIED, do not use supplemental coatings (Paints, greases, or other corrosion inhibitors) on threaded fasteners or fastener joint interfaces. Generally, such coatings adversely affect the fastener torque and the joint clamping force, and may damage the fastener. When you install fasteners, use the correct tightening sequence and specifications. Following these instructions can help you avoid damage to parts and systems.

General Description

General export with three way catalytic converter model

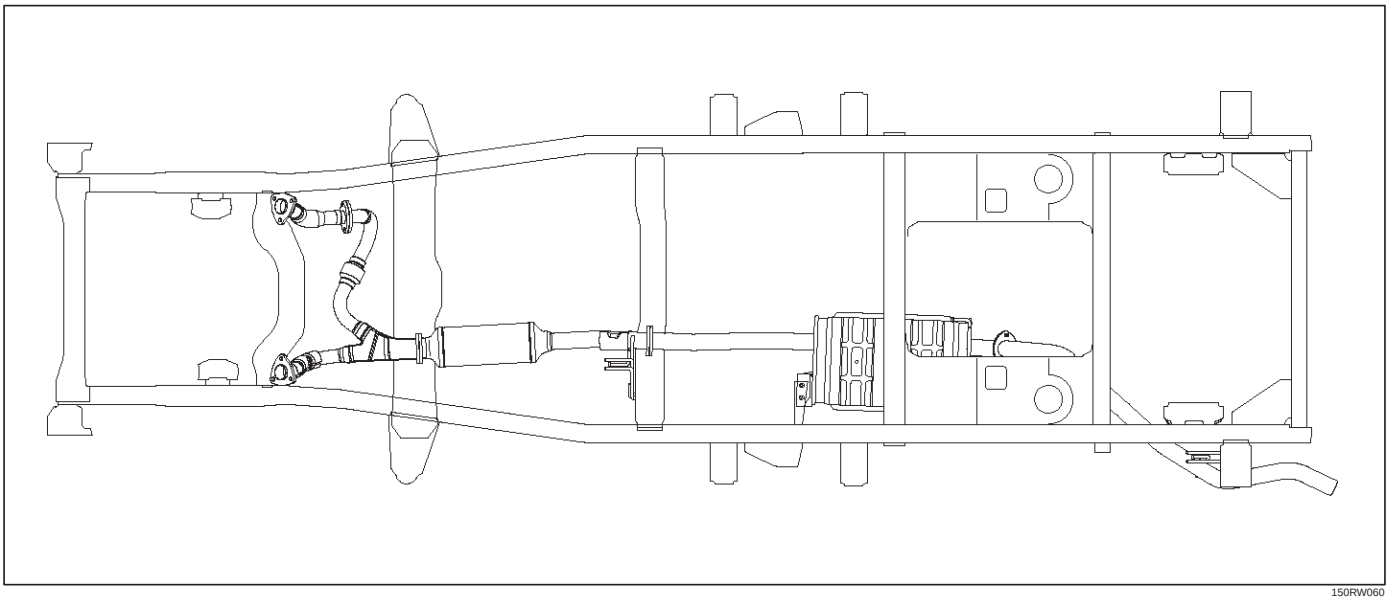

150RW060

General export with out three way catalytic converter model

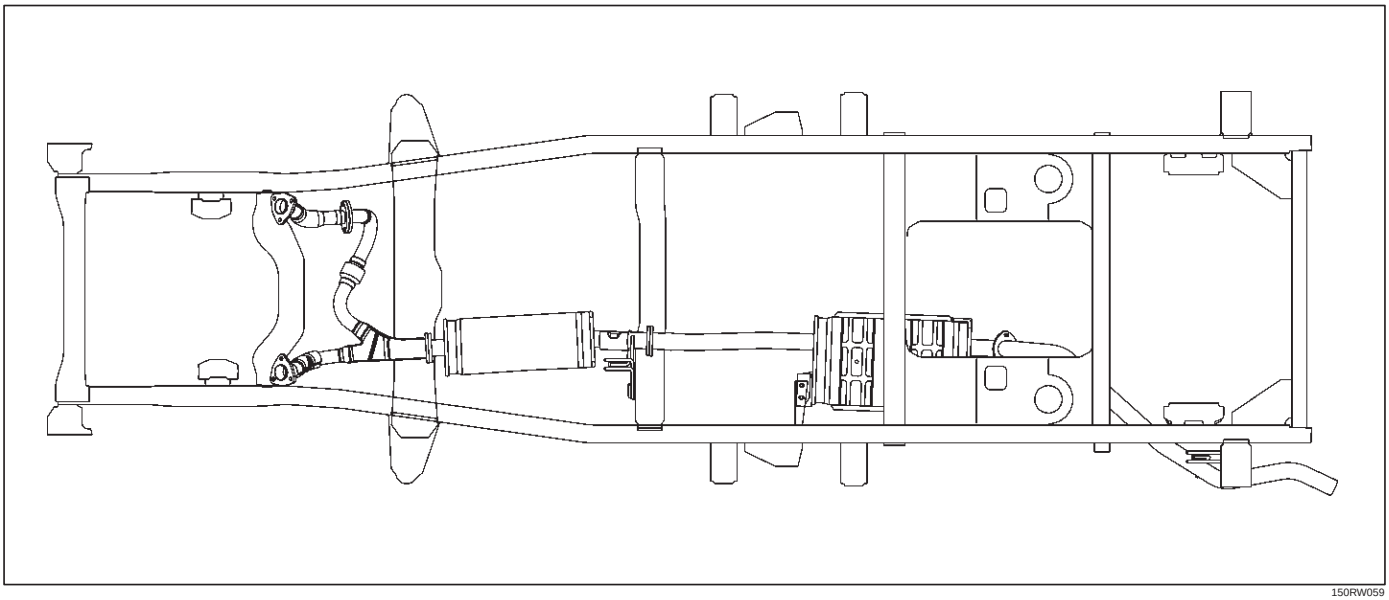

150RW059

For Isuzu General Motors (IGM)

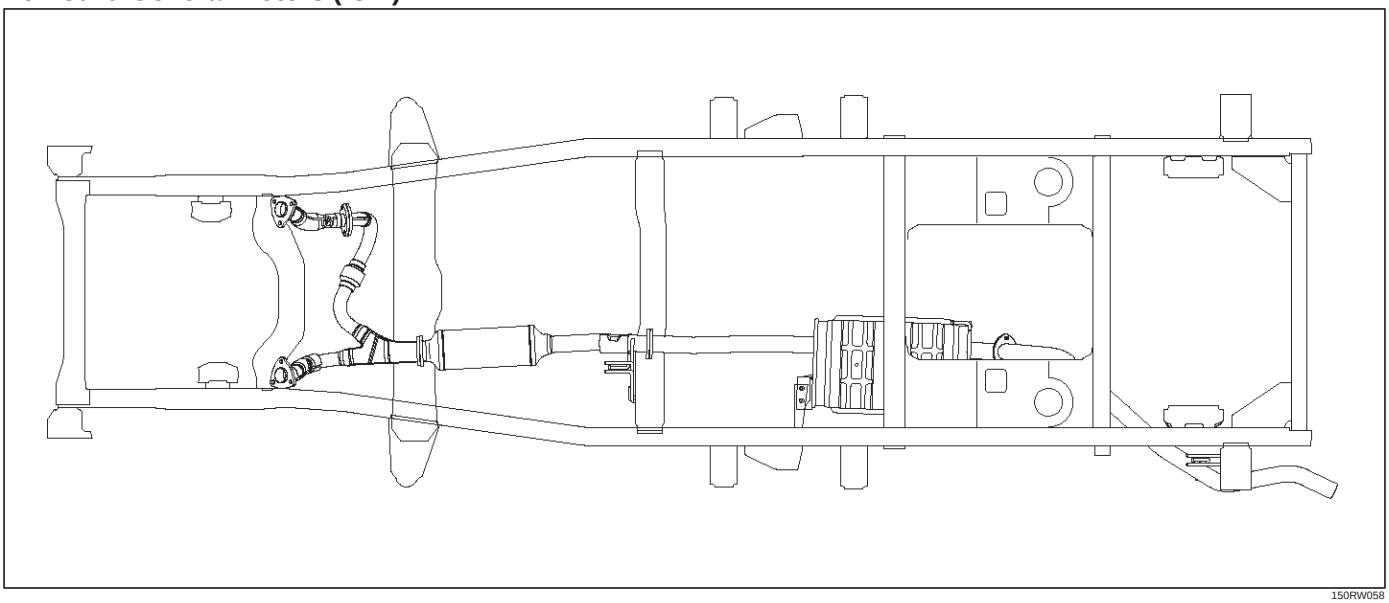

150RW058

When inspecting or replacing exhaust system components, make sure there is adequate clearance from all points on the underbody to prevent overheating the floor pan and possible damage to the passenger compartment insulation and trim materials.

Check complete exhaust system and nearby body areas and rear compartment lid for broken, damaged, missing or mispositioned parts, open seams, holes, loose connections or other deterioration which could permit exhaust fumes to seep into the rear compartment or passenger compartment. Dust or water in the rear compartment may be an indication of a problem in one of these areas. Any faulty areas should be corrected immediately.

Hangers

Various types of hangers are used to support exhaust system(s). These include conventional rubber straps, rubber rings, and rubber blocks.

The installation of exhaust system supports is very important, as improperly installed supports can cause annoying vibrations which can be difficult to diagnose.

Three Way Catalytic Converter

The three way catalytic converter is an emission control device added to the exhaust system to reduce pollutants from the exhaust gas stream.

CAUTION: The catalytic converter requires the use of unleaded fuel only.

Periodic maintenance of the exhaust system is not required. If the vehicle is raised for other service, it is advisable to check the condition of the complete exhaust system.

A dual bed monolith catalytic converter is used in combination with three way catalytic converter.

Catalytic Types:

Three way (Reduction/Oxidation) catalyst

The catalyst coating on the three way (reduction) converter contains platinum and rhodium which lowers the levels of nitrous oxide (NOx) as well as hydrocarbons (HC) and carbon monoxide (Co).

Gasket

The gasket must be replaced whenever a new exhaust pipe, muffler or catalytic converter is installed.

Front Exhaust Pipe

Front Exhaust Pipe and Associated Parts

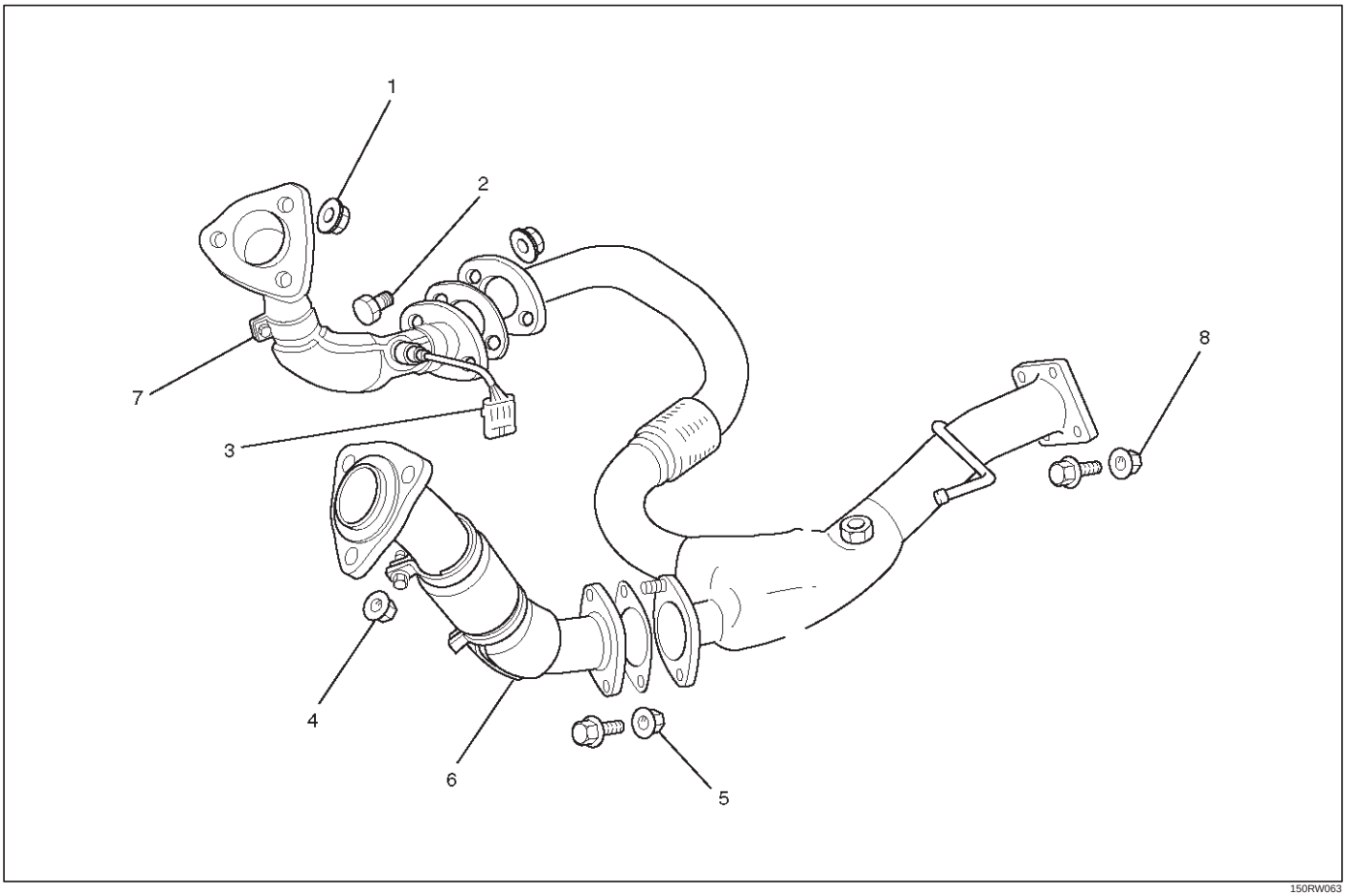

Legend

(1) Front Exhaust Pipe RH Fixing Nuts
(2) Front Exhaust Pipe RH Fixing Bolts and Nuts
(3) O_2 Sensor Terminal Connector (for IGM)
(4) Front Exhaust Pipe LH Fixing Nuts
(5) Front Exhaust Pipe LH Fixing Bolts and Nuts
(6) Front Exhaust Pipe LH
(7) Front Exhaust Pipe RH
(8) Three way Exhaust Pipe Fixing Bolts and Nuts

Removal

1. Disconnect battery ground cable.
2. Raise the vehicle and support with suitable safety stands.
3. Disconnect O_2 sensor harness connector (3).
4. Remove front exhaust pipe fixing nuts and three way Exhaust Pipe Fixing Bolts and Nuts (2)(5)(8).
5. Remove front exhaust pipe fixing three stud nuts from exhaust manifold (1)(4).
6. Remove front exhaust pipe (6)(7).

Installation

1. Install front exhaust pipe (6)(7) and tighten three stud nuts (1)(4) and nuts (2)(5)(8) to the specified torque.

   Torque

   Stud Nuts : 67 N·m (6.8 Kg·m/49 lb ft)

   Nuts : 43 N·m (4.3 Kg·m/32 lb ft)
2. Reconnect O_2 sensor harness connector (3).

Three Way Catalytic Converter

Removal

1. Disconnect battery ground cable.
2. Raise the vehicle and support with suitable safety stands.
3. Remove three way exhaust pipe fixing bolts and nuts.

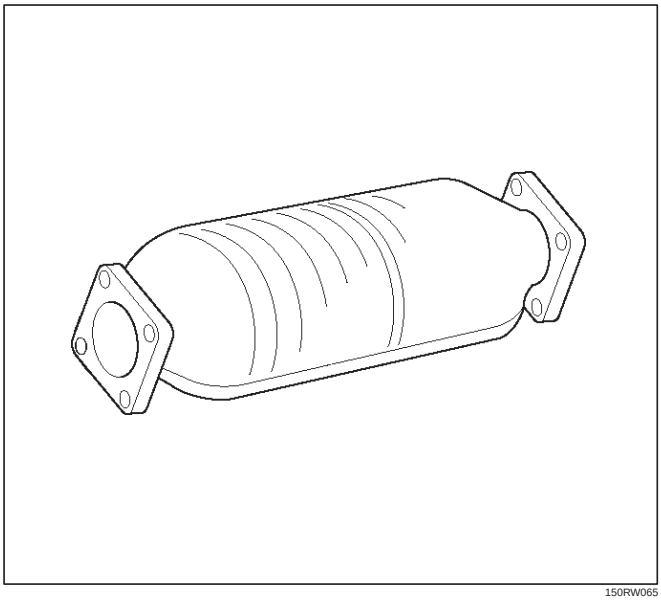

150RW065

Installation

1. Install three way catalytic converter between three way exhaust pipe and silencer.
2. Tighten nuts to the specified torque.

Torque

Nuts : 43 N·m (4.4 Kg·m/32 lb ft)

Exhaust Silencer

Exhaust Silencer and Associated Parts

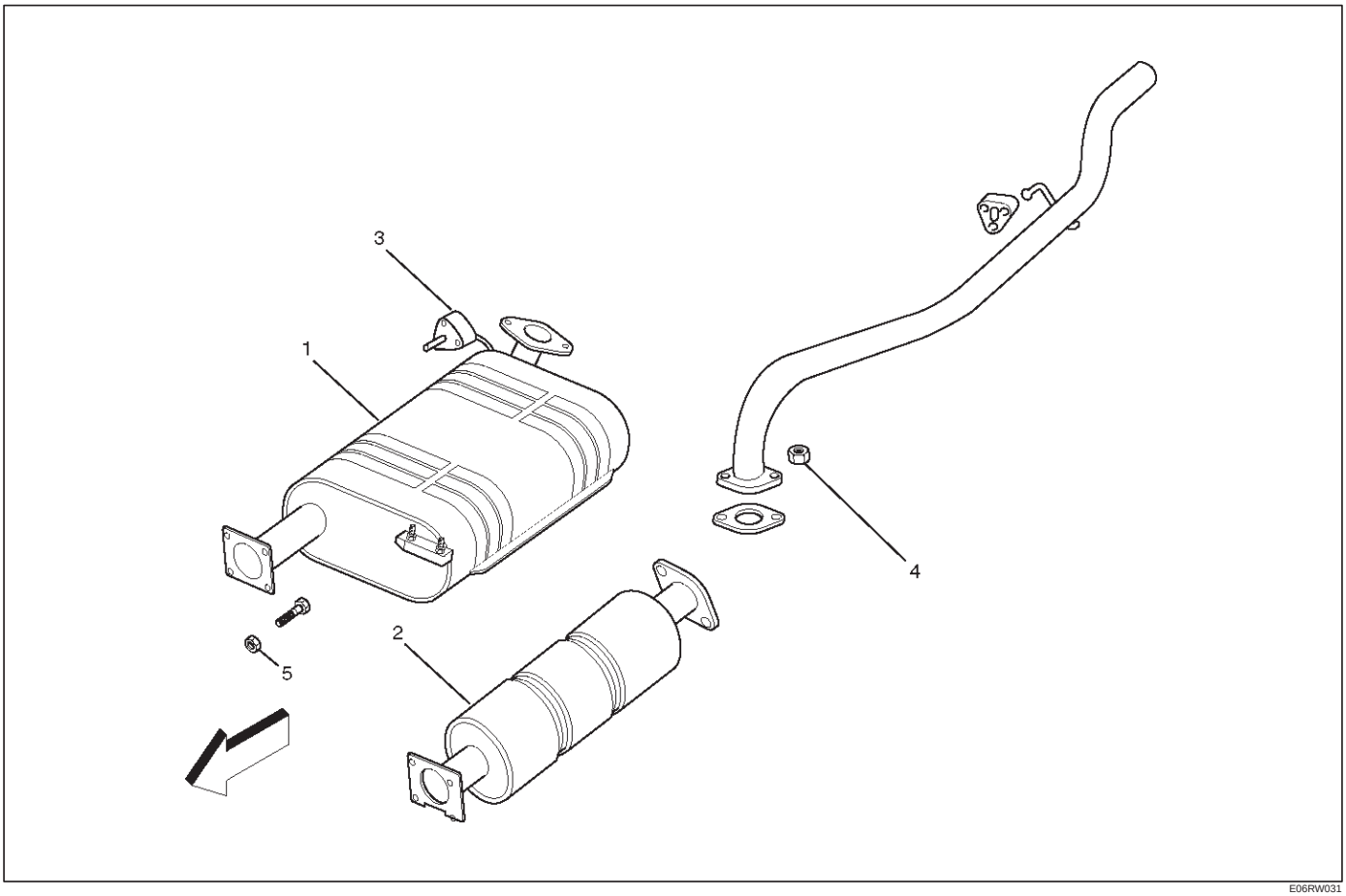

E06RW031

Legend

(1) Exhaust Silencer
(2) Exhaust Silencer
(3) Mounting Rubber
(4) Exhaust Silencer Fixing Nuts
(5) Exhaust Silencer Fixing Bolts

Removal

1. Disconnect battery ground cable.
2. Raise the vehicle and support with suitable safety stands.
3. Remove exhaust silencer fixing nuts (4) then disconnect rear exhaust pipe from exhaust silencer.
4. Remove exhaust silencer fixing nuts (5) then disconnect exhaust silencer from three way exhaust pipe.
5. Remove exhaust silencer mounting nuts from chassis side then remove exhaust silencer (1)(2).

Installation

1. Install the exhaust silencer (1)(2) chassis side and tighten nuts to the specified torque.

   Nuts: 16 N·m (1.6 Kg·m/12 lb ft)

2. Install the exhaust silencer and tighten nuts (5) on front exhaust pipe to specified torque.

   Nuts: 43 N·m (4.4 Kg·m/32 lb ft)

3. Install the rear exhaust pipe and tighten fixing nuts on exhaust silencer to specified torque.

   Nuts: 43 N·m (4.4 Kg·m/32 lb ft)

Rear Exhaust pipe

Rear Exhaust pipe and Associated Parts

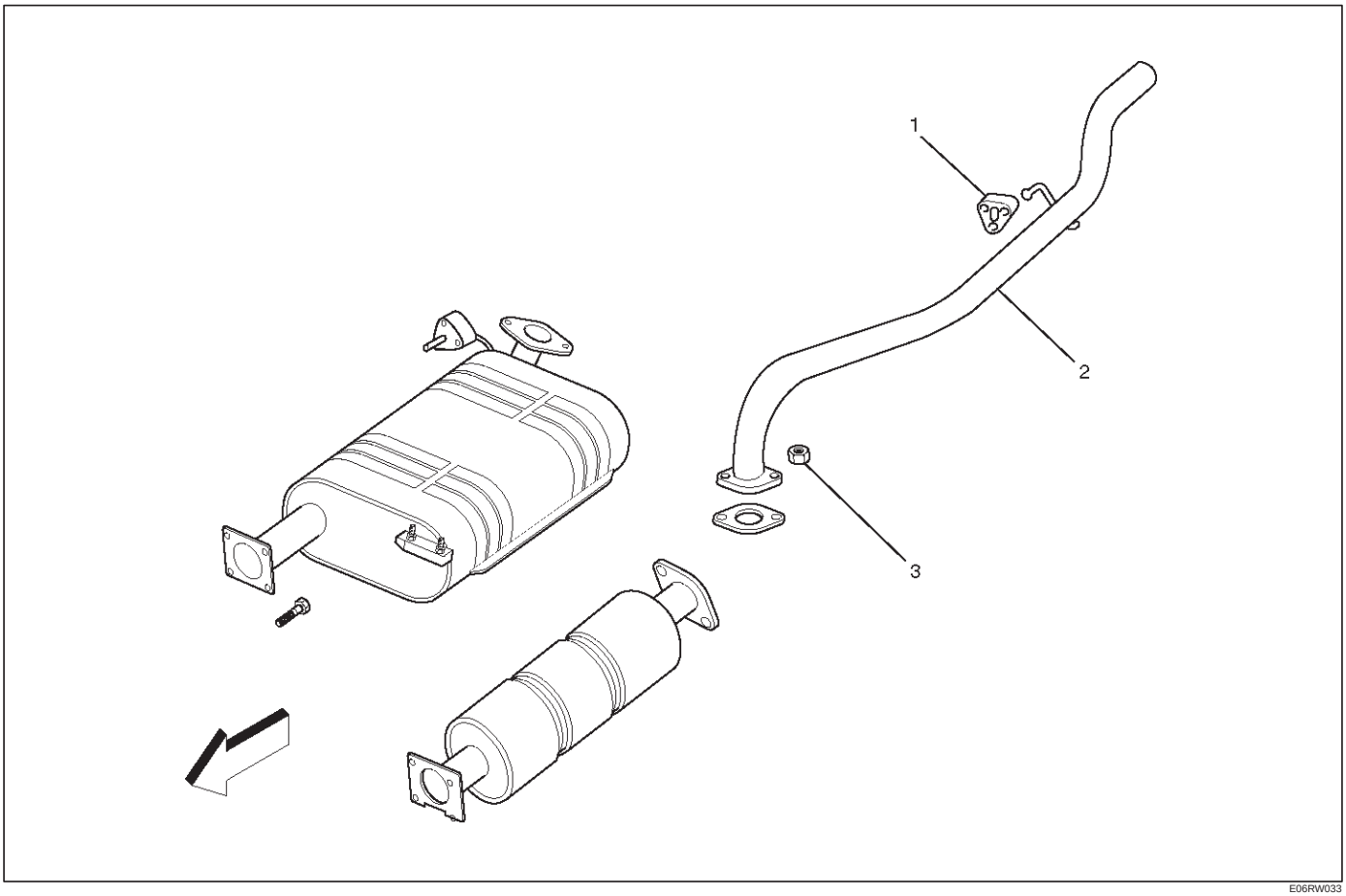

E06RW033

Legend

(1) Mounting Rubber
(2) Rear Exhaust Pipe
(3) Rear Exhaust Pipe Fixing Nuts

Removal

1. Disconnect battery ground cable.
2. Raise the vehicle and support with suitable safety stands.
3. Remove rear exhaust pipe fixing nuts (3), then disconnect rear exhaust pipe from exhaust silencer.
4. Remove mounting rubber (1).
5. Remove rear exhaust pipe (2).

Installation

1. Install the mounting rubber (1).
2. Install the exhaust pipe (2) and tighten two nuts (3) on exhaust silencer to specified torque.

   Nuts: 43 N·m (4.4 Kg·m/32 lb ft)

Main Data and Specifications

Torque Specifications

N·m (Kg·m/lb ft)

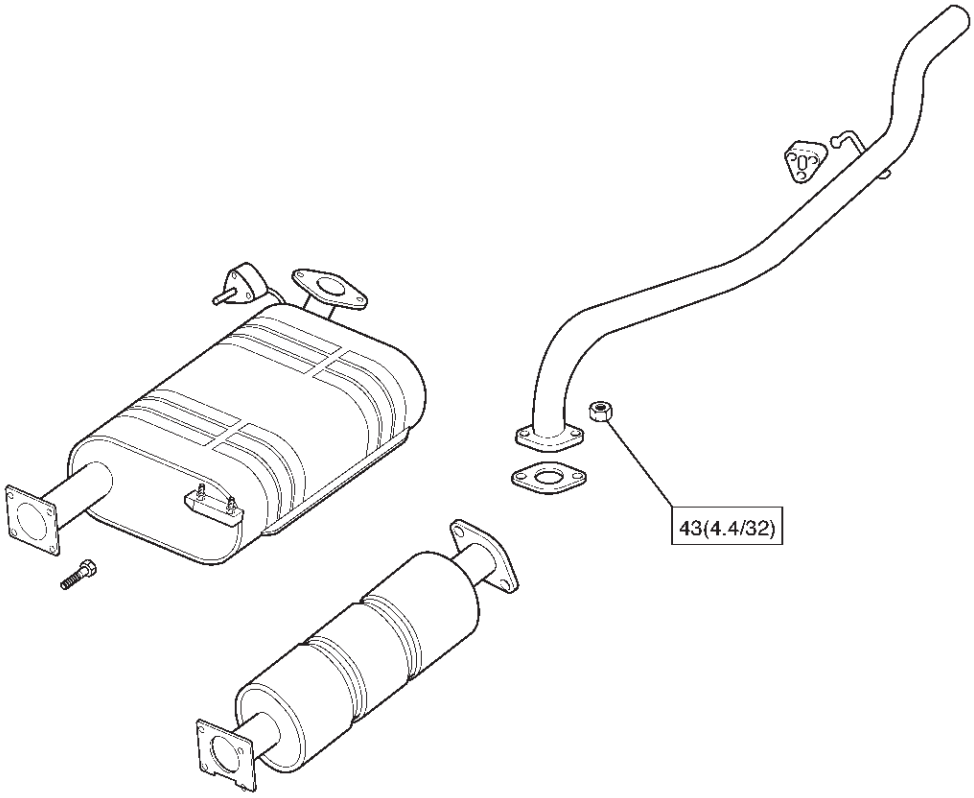

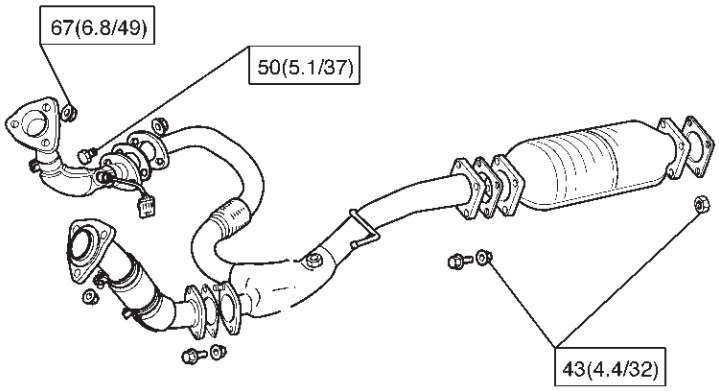

E06RW047

ENGINE

ENGINE LUBRICATION

CONTENTS

Service Precaution 6G–1
General Description 6G–2
Oil Pump 6G–3
Oil Pump and Associated Parts 6G–3
Oil Pump and Associated Parts 6G–3
Inspection and Repair 6G–4
Reassembly 6G–5
Oil Pan and Crankcase 6G–7
Removal 6G–7
Installation 6G–7
Oil Pump 6G–10
Removal 6G–10
Installation 6G–10
Oil Pump Oil Seal 6G–12
Removal 6G–12
Installation 6G–12
Oil Filter 6G–13
Removal 6G–13
Installation 6G–13
Main Data and Specification 6G–14
Special Tool 6G–15

Service Precaution

WARNING: IF SO EQUIPPED WITH A SUPPLEMENTAL RESTRAINT SYSTEM (SRS), REFER TO THE SRS COMPONENT AND WIRING LOCATION VIEW IN ORDER TO DETERMINE WHETHER YOU ARE PERFORMING SERVICE ON OR NEAR THE SRS COMPONENTS OR THE SRS WIRING. WHEN YOU ARE PERFORMING SERVICE ON OR NEAR THE SRS COMPONENTS OR THE SRS WIRING, REFER TO THE SRS SERVICE INFORMATION. FAILURE TO FOLLOW WARNINGS COULD RESULT IN POSSIBLE AIR BAG DEPLOYMENT, PERSONAL INJURY, OR OTHERWISE UNNEEDED SRS SYSTEM REPAIRS.

CAUTION: Always use the correct fastener in the proper location. When you replace a fastener, use ONLY the exact part number for that application. ISUZU will call out those fasteners that require a replacement after removal. ISUZU will also call out the fasteners that require thread lockers or thread sealant. UNLESS OTHERWISE SPECIFIED, do not use supplemental coatings (Paints, greases, or other corrosion inhibitors) on threaded fasteners or fastener joint interfaces. Generally, such coatings adversely affect the fastener torque and the joint clamping force, and may damage the fastener. When you install fasteners, use the correct tightening sequence and specifications. Following these instructions can help you avoid damage to parts and systems.

General Description

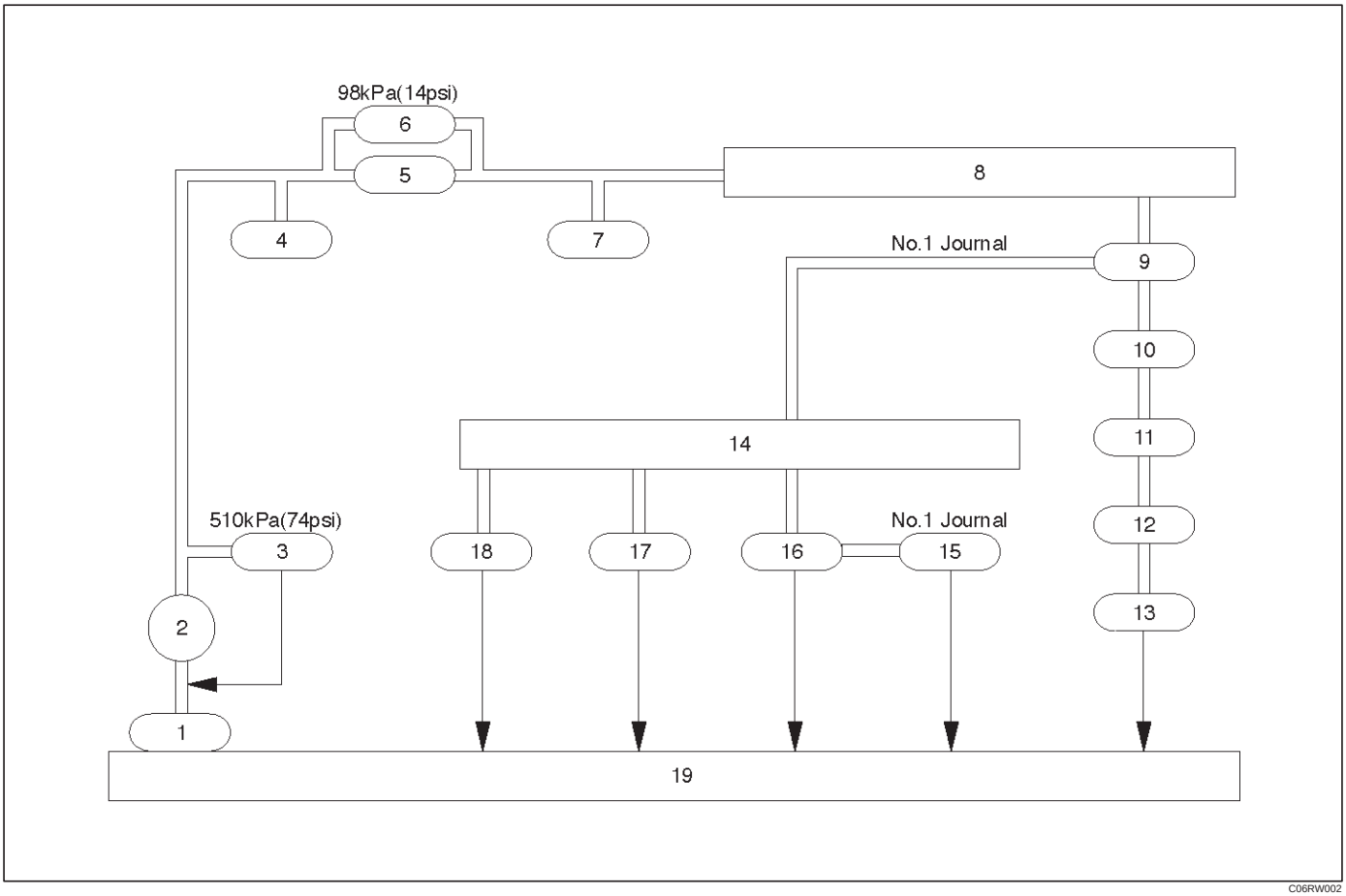

Legend

(1) Oil Strainer
(2) Oil Pump
(3) Relief Valve
(4) Oil Pressure Switch
(5) Oil Filter
(6) Safety Valve
(7) Oil Pressure Unit
(8) Oil Gallery
(9) Crankshaft Bearing
(10) Crankshaft
(11) Connecting Rod Bearing
(12) Connecting Rod
(13) Piston
(14) Oil Gallery; Cylinder Head
(15) Camshaft
(16) Camshaft Journal
(17) Front Journal; Camshaft Drive Gear
(18) Rear Journal; Camshaft Drive Gear
(19) Oil Pan

Oil Pump

Oil Pump and Associated Parts

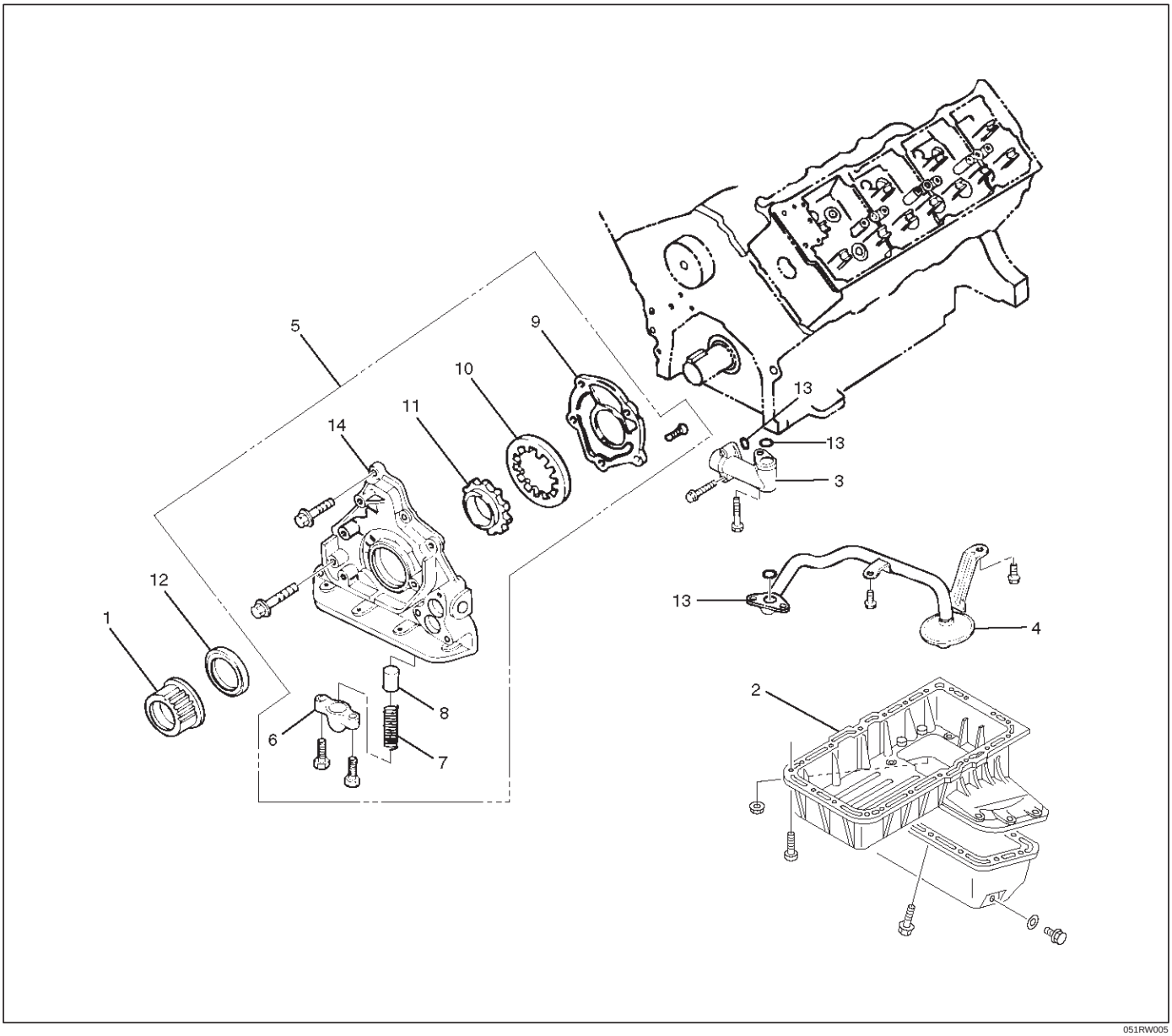

051RW005

Legend

(1) Crankshaft Timing Pulley
(2) Crankcase with Oil Pan
(3) Oil Pipe
(4) Oil Strainer
(5) Oil Pump Assembly
(6) Plug
(7) Spring
(8) Relief Valve
(9) Oil Pump Cover
(10) Driven Gear
(11) Drive Gear
(12) Oil Seal
(13) O-ring
(14) Oil Pump Body

Oil Pump and Associated Parts

1. Remove crankshaft timing pulley.
2. Remove crankcase with oil pan.
3. Remove oil pipe.
4. Remove oil strainer.
5. Remove oil pump assembly.
6. Remove plug.
7. Remove spring.
8. Remove relief valve.
9. Remove oil pump cover.
10. Remove driven gear.

11. Remove drive gear.
12. Remove oil seal.
13. Remove O-ring.

Inspection and Repair

CAUTION: Make necessary correction or parts replacement if wear, damage or any other abnormal conditions are found during inspection.

Relief Valve (8)

- Check to see that the relief valve slides freely.
- The oil pump must be replaced if the relief valve does not slide freely.
- Replace the spring and/or the oil pump assembly (5) if the spring is damaged or badly worn.

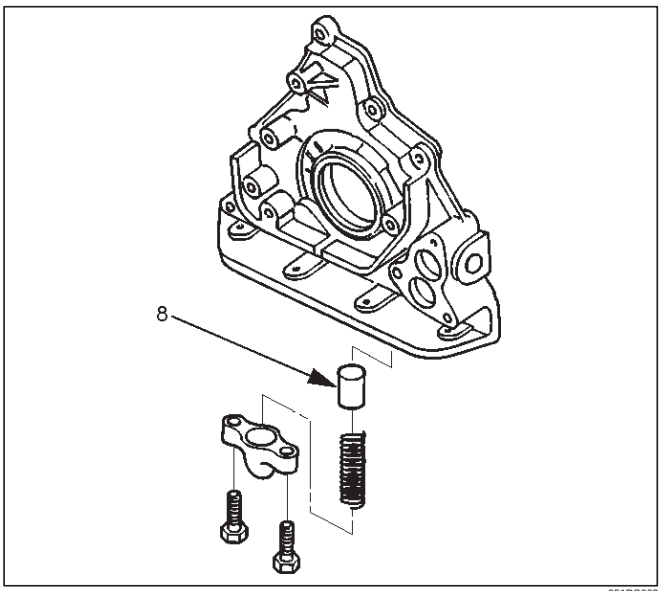

051RS002

Body (14) and Gears (10, 11)

The pump assembly must be replaced if one or more of the conditions below is discovered during inspection.

- Badly worn or damaged driven gear (10).
- Badly worn drive gear (11) driving face.
- Badly scratched or scored body sliding face (14) or driven gear (10).
- Badly worn or damaged gear teeth.

Measure the clearance between the body and the driven gear with a feeler gauge.

Standard : 0.10 mm–0.18 mm (0.0039 in.–0.0070 in)

Limit : 0.20mm (0.0079 in)

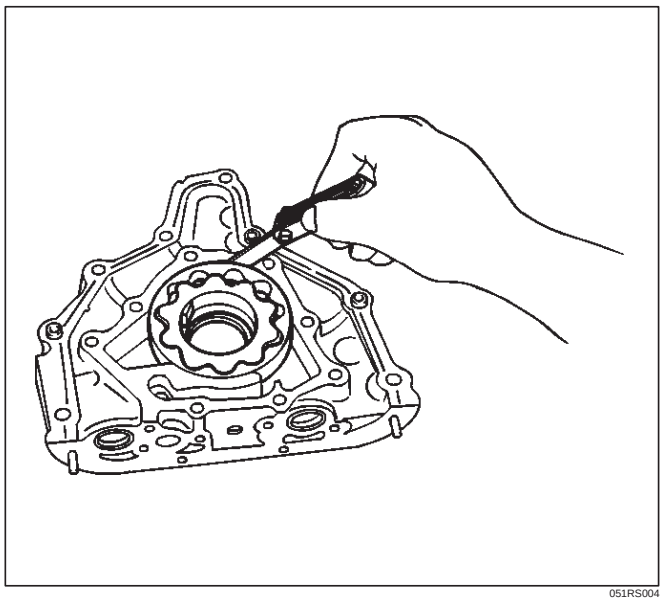

051RS004

- Measure the clearance between the drive gear and driven gear with a feeler gauge.

Standard : 0.11 mm–0.24 mm (0.0043 in–0.0094 in)

Limit : 0.35mm (0.0138 in)

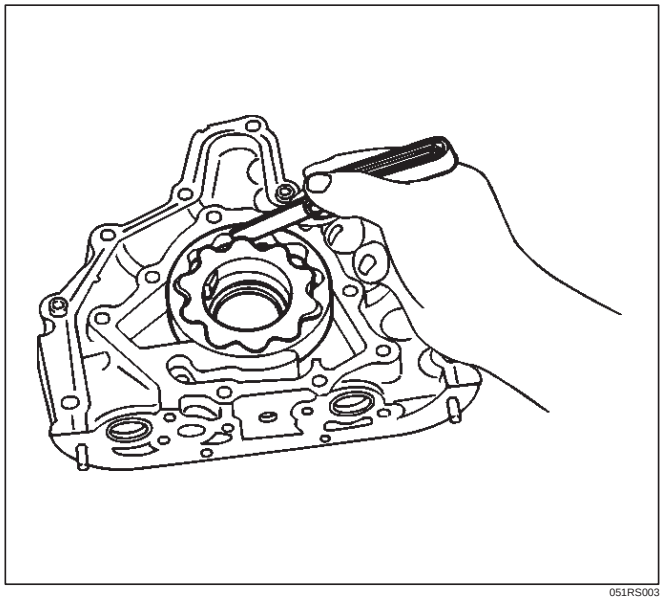

051RS003

- Measure the side clearance with a precision straight edge and a feeler gauge.

Clearance

Standard : 0.03 mm–0.09 mm (0.0011 in–0.0035 in)

Limit : 0.15mm (0.0059 in)

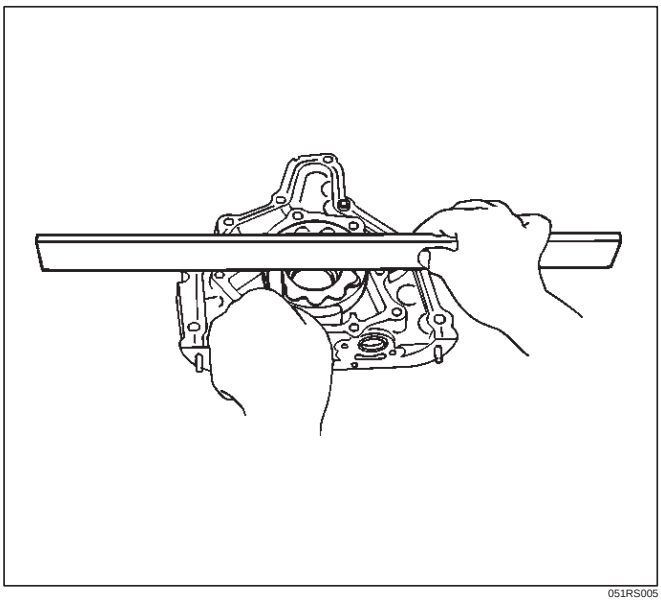

051RS005

Oil Strainer

Check the oil strainer for cracking and scoring. If cracking and scoring are found, the oil strainer must be replaced.

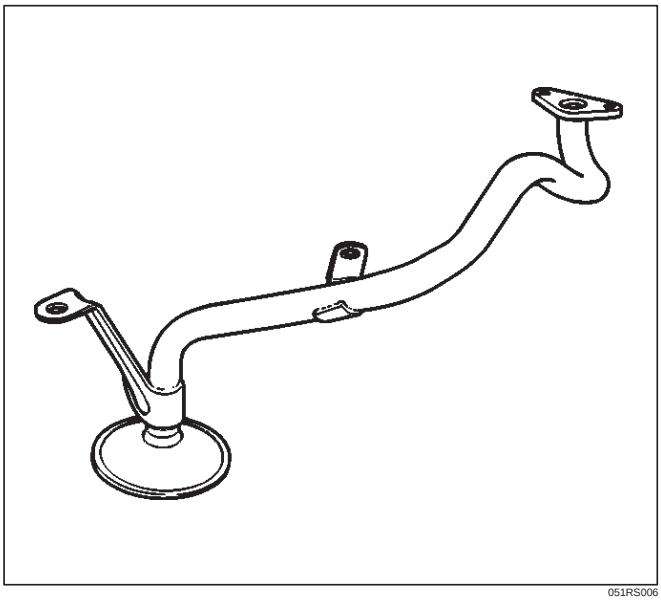

051RS006

Reassembly

1. Install drive gear (11).
2. Install driven gear (10).
3. Install oil pump cover (9) and first, loosely tighten all of the attaching screws. Next, tighten the attaching screws to the specified torque.

   Torque : 10 N·m (1.0 Kg·m/89 lb in)

   After installation, check that the gear rotates smoothly.
4. Install relief valve (8) and apply engine oil to the relief valve and spring (7).
5. Install spring (7).
6. Install the plug (6).

   Torque : 8 N·m (0.8 Kg·m/69 lb in)

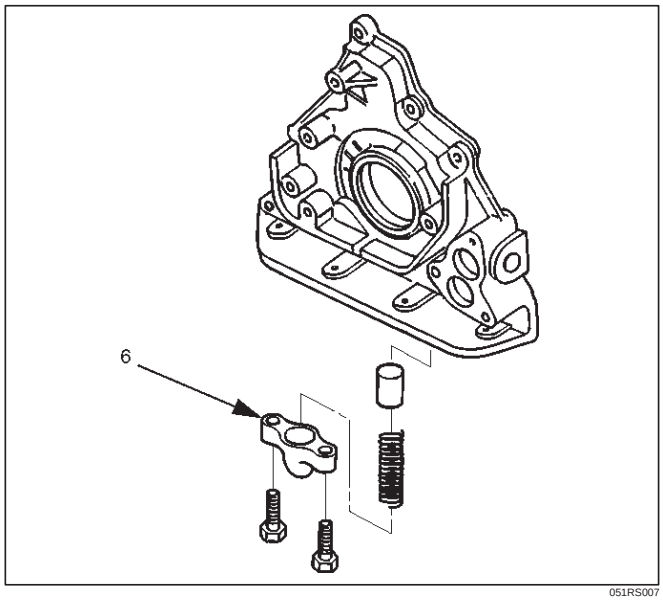

051RS007

7. Install oil pump assembly (5).
   - Carefully remove any oil from the cylinder body and the pump. Apply sealant (TB–1207B or equivalent) to the pump fitting face as shown in illustration. Take care that sealant is not applied to oil port surfaces. The oil pump assembly must be installed within 5 minutes after sealant application before the sealant hardens.

CAUTION: Do not apply an excessive amount of sealant to the contact surface. Applying too much sealant will overflow the contact surfaces. This could cause serious damage to the engine.

- **Attach oil pump assembly to cylinder body.**
- **Tighten the oil pump fixing bolts.**

  Torque : 25 N·m (2.5 Kg·m/18 lb·ft)

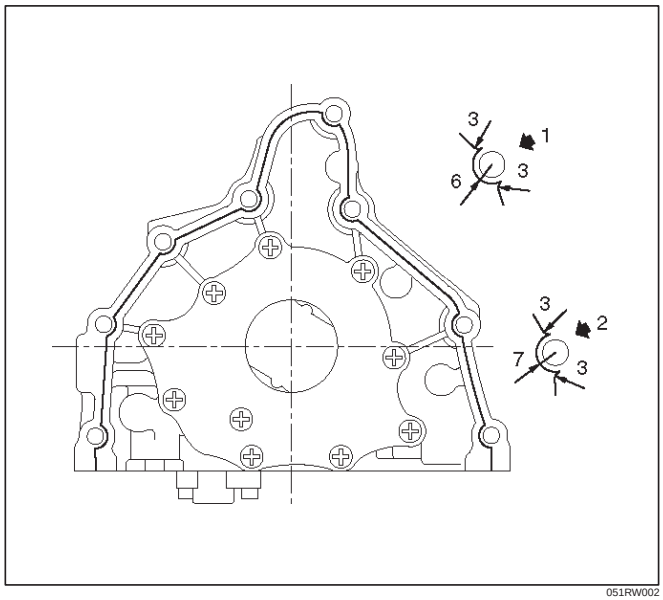

051RW002

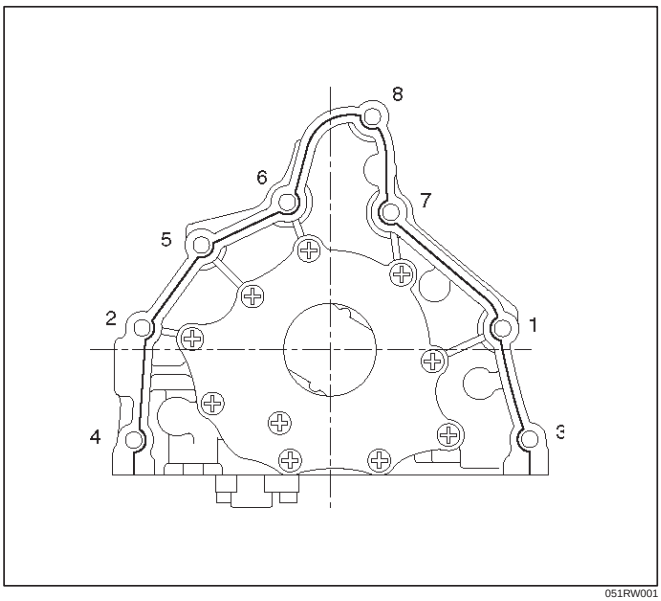

051RW001

Legend

(1) Around Bolt Holes
(2) Around Dowel Pin

8. Install the new oil seal (12). Apply engine oil to the oil seal lip before installation then use 5–8840–2287–0 oil seal Installer, install oil seal.

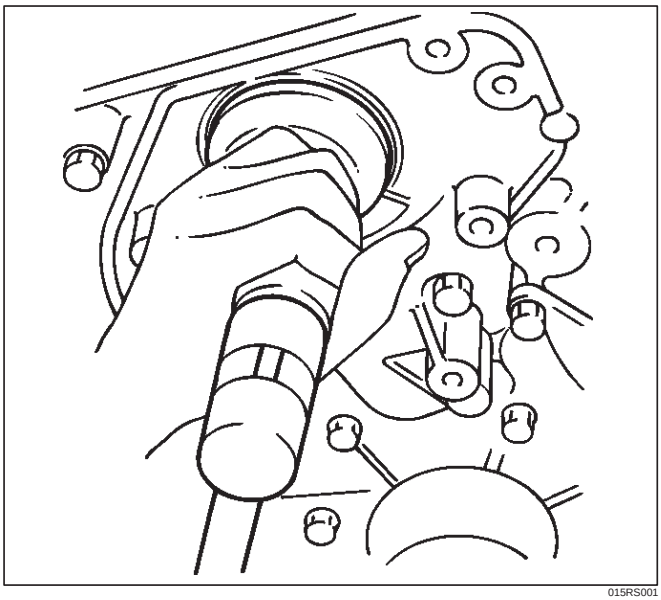

015RS001

9. Install oil strainer (4) with O-ring (13).

   Torque: 25 N·m (2.5 Kg·m/18 lb ft)

10. Install oil pipe (3) with O-ring (13).

    Torque: 25 N·m (2.5 Kg·m/18 lb ft)

11. Install crankcase with oil pan (2).
    - Remove oil on crankcase mounting surface and dry the surface.
    - Apply a proper 4.5 mm (0.7 in) wide bead of sealant (TB1207C or equivalent) to the crankcase mounting surface. The bead must be continuous.
    - The crankcase must be installed within 5 minutes after sealant application before the sealant hardens.
    - Tighten fixing bolts to the specified torque.

    Torque : 10 N·m (1.0 Kg·m/89 lb in)

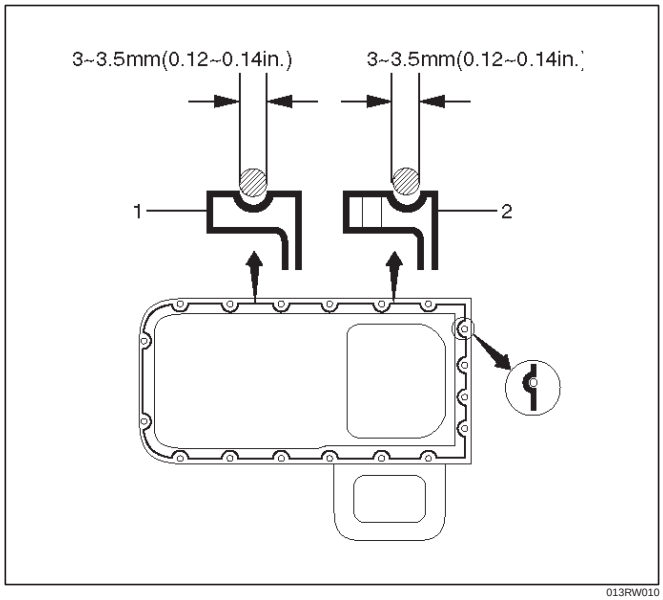

013RW010

12. Install crankshaft timing pulley.

Oil Pan and Crankcase

Removal

1. Disconnect battery ground cable.
2. Drain engine oil.
3. Lift vehicle by supporting the frame.
4. Remove front wheels.
5. Remove oil level dipstick from level gauge tube.
6. Remove stone guard.
7. Remove radiator under fan shroud.
8. Remove suspension cross member fixing bolts, 2 pcs each per side and remove suspension cross member.
9. Remove pitman arm and relay lever assembly, using the 5–8840–2005–0 remover, remove pitman arm from the steering unit and remove four fixing bolts for relay lever assembly.
10. Remove axle housing assembly four fixing bolts from housing isolator side and mounting bolts from wheel side. At this time support the axle with a garage jack and remove axle housing assembly.
11. Remove oil pan fixing bolts.
12. Remove oil pan, using 5–8840–2153–0 sealer cutter, remove oil pan.

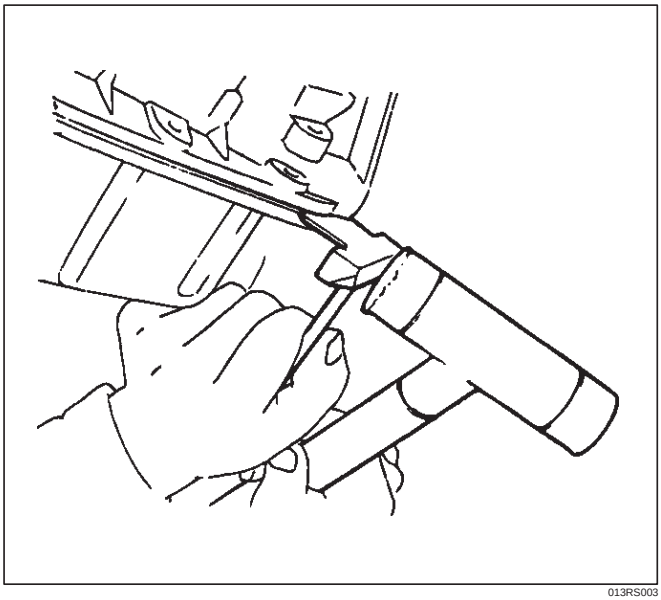

013RS003

13. Remove crankcase fixing bolts.
14. Remove crankcase, using 5–8840–2153–0 sealer cutter, remove crankcase.

NOTE: Do not deform or damage the flange of oil pan and crankcase.

Replace the oil pan and/or crankcase if deformed or damaged.

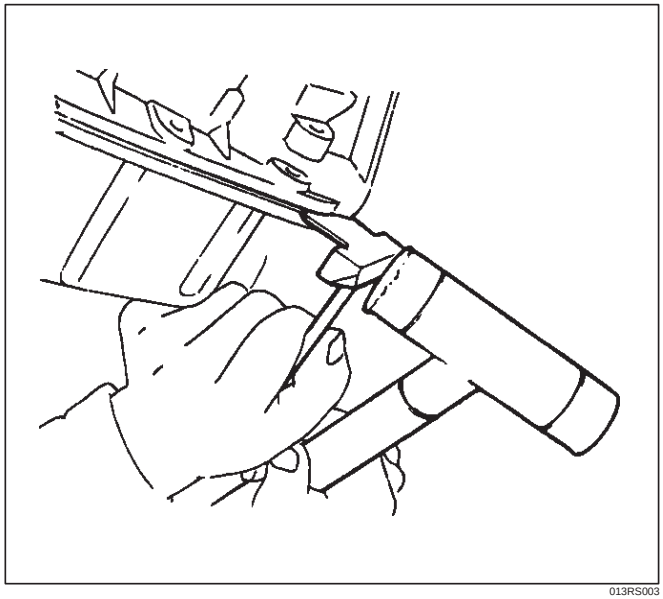

013RS003

Installation

1. Install crankcase.
   1. Remove residual sealant, lubricant and moisture from mounting surface, then dry thoroughly.
   2. Properly apply a 4.5 mm (0.7 in) wide bead of sealant (TB-1207C or equivalent) to mounting surface of crankcase.

      Sealant beat must be continuous.
      - The crankcase must be installed within 5 minutes after sealant application before the sealant hardens.

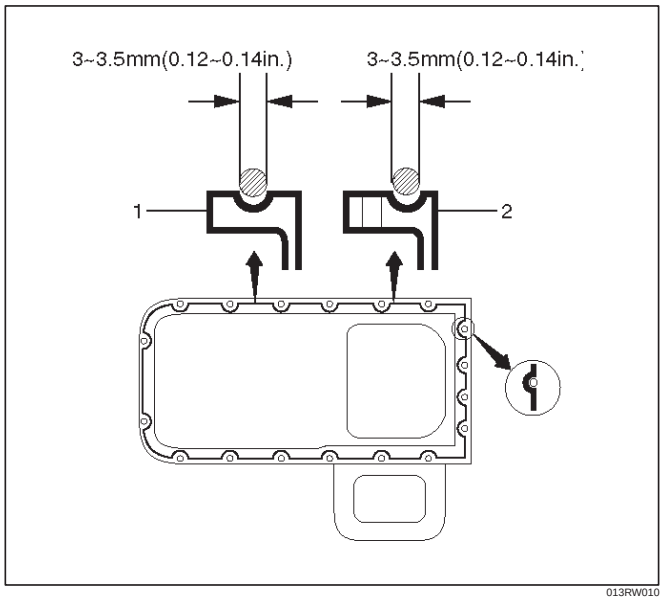

013RW010

3. Install crankcase, tighten crankcase fixing bolts to the specified torque.

Torque : 10 N·m (1.0 Kg·m/89 lb in)

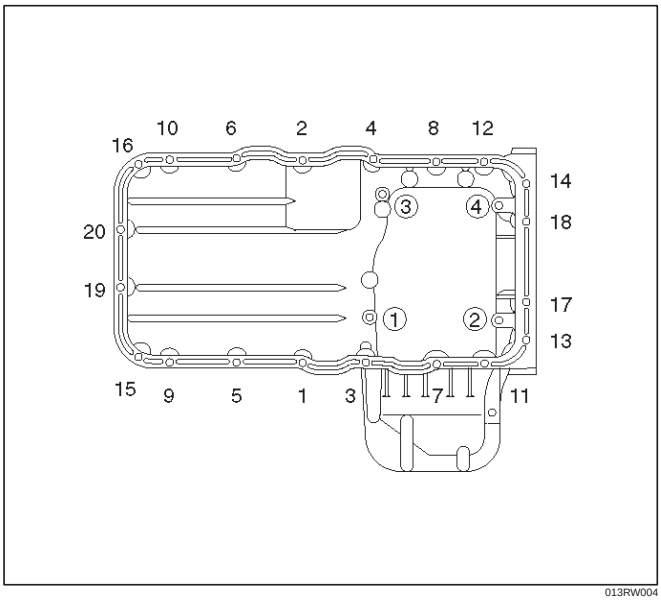

013RW004

2. Install oil pan
   1. Remove residual sealant, lubricant and moisture from mounting surface, then dry thoroughly.
   2. Properly apply a 4.5 mm (07 in) wide bead of sealant (TB-1207C or equivalent) to mounting surface of oil pan.

      Sealant beat must be continuous.
      - The crankcase must be installed within 5 minutes after sealant application befor the sealant hardens.

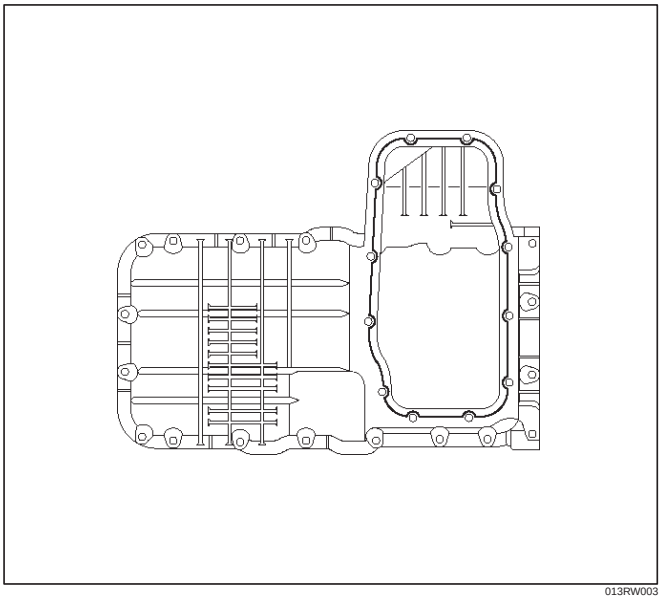

013RW003

3. Install oil pan, tighten oil pan fixing bolts to the specified torque.

Torque : 25 N·m (2.5 Kg·m/18 lb ft)

3. Install axle housing assembly and tighten fixing bolts to the specified torque.

Axle case bolts

Torque : 82 N·m (8.4 Kg·m/60 lb ft)

Mounting bolts

Torque : 152 N·m (15.5 Kg·m/112 lb ft)

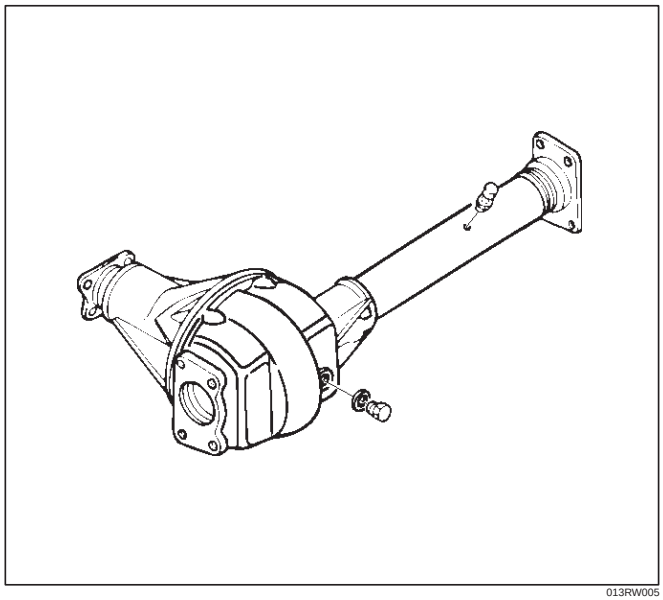

013RW005

4. Install relay lever assembly and tighten fixing bolts.

Torque: 44 N·m (4.5 Kg·m/32 lb ft)

5. Engage teeth of pitman arm and steering unit, and tighten nut to the specified torque.

Torque : 216 N·m (22.0 Kg·m/159 lb ft)

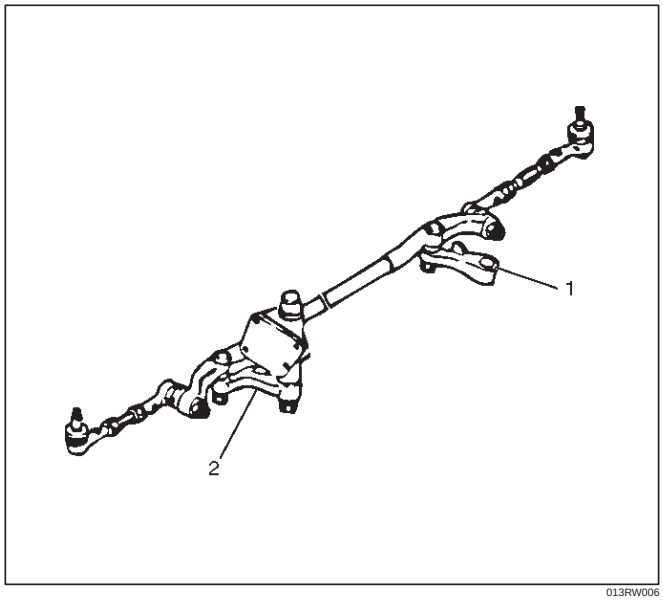

013RW006

Legend

(1) Pitman Arm
(2) Relay Lever

6. Install suspension cross member and tighten fixing bolts to the specified torque.

Torque : 78 N·m (8.0 Kg·m/58 lb ft)

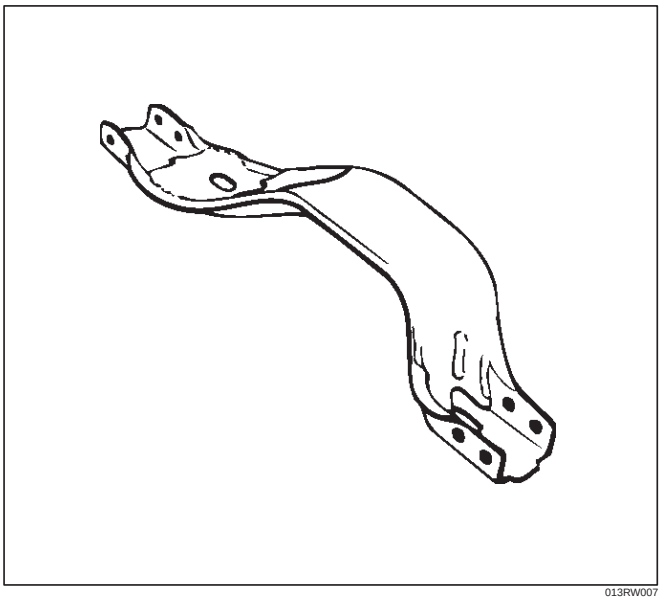

013RW007

7. Install radiator under fan shroud.
8. Install stone guard.
9. Install engine oil level dipstick.
10. Fill engine oil until full level on engine oil gauge dipstick.

Oil Pump

Removal

1. Disconnect battery ground cable.
2. Drain engine oil.
3. Remove crankcase assembly.
   - Refer to removal procedure for Oil Pan and Crankcase in this manual.
4. Remove crankshaft pulley.
   - Refer to removal procedure for Crankshaft Pulley in this manual.
5. Remove timing belt.
   - Refer to removal procedure for Timing Belt in this manual.
6. Remove timing pulley from crankshaft.
7. Remove four fixing bolts from oil filter assembly.
8. Remove oil strainer fixing bolts, remove oil strainer assembly with O-ring.
9. Remove three bolts from oil pipe and O-ring.
10. Remove eight oil pump fixing bolts, then oil pump assembly.
11. Remove sealant from mounting surface of oil pump assembly, cylinder block and take care not to damage mounting surfaces of oil pump and cylinder block.

Installation

1. Install oil pump assembly
   - Apply sealant (TB-1207B or equivalent) to the oil pump mounting surfaces as shown in the illustration.
   - The oil pump assembly must be installed within 5 minutes after sealant application before the sealant hardens.

NOTE: Do not apply sealant to the oil ports.

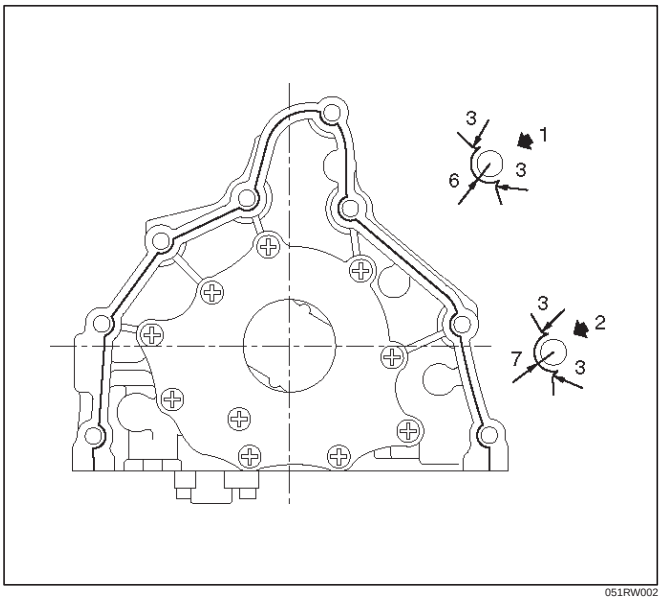

051RW002

- Use 5–8840–2287–0 installer when installing new oil seal.
- Apply engine oil to oil seal lip.
- Install oil pump assembly to the cylinder block.

NOTE: Do not damage oil seal during installation of oil pump assembly.

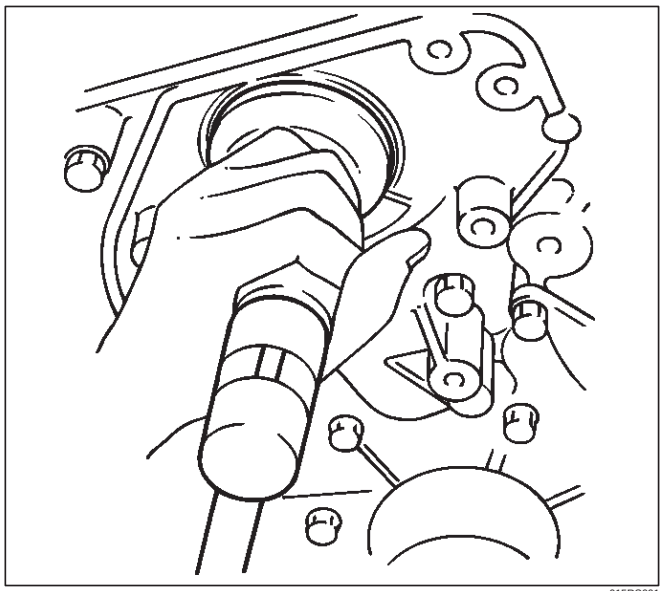

015RS001

- Tighten fixing bolts to the specified torque.

Torque : 25 N·m (2.5 Kg·m/18 lb ft)

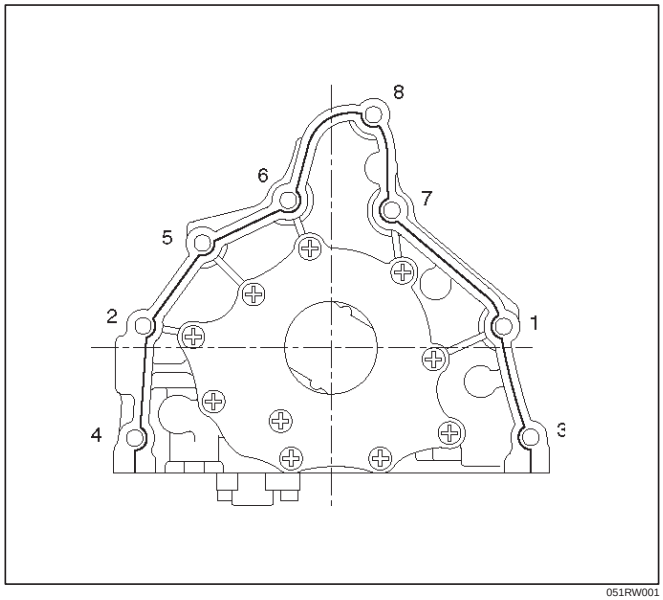

051RW001

2. Install oil pipe with O-ring, tighten fixing bolt to the specified torque.

   Torque : 10 N·m (1.0 Kg·m/89 lb in)

3. Install oil strainer with O-ring, tighten fixing bolt to the specified torque.

   Torque : 25 N·m (2.5 Kg·m/18 lb ft)

4. Install oil filter assembly and tighten bolts to the specified torque.

Torque : 25 N·m (2.5 Kg·m/18 lb ft)

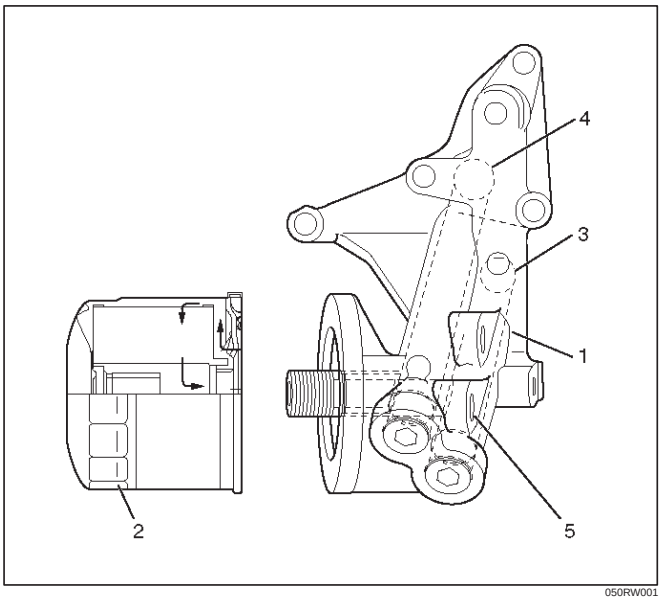

050RW001

Legend

(1) Oil Pump
(2) Oil Filter
(3) Oil Gallery
(4) From Oil Filter
(5) To Oil Filter

5. Install timing pulley on crankshaft.
   Install timing belt.
   - Refer to installation procedure for Timing Belt in this manual.
6. Install crankshaft pulley.
   - Refer to install procedure for Crankshaft Pulley in this manual.
7. Install crankcase assembly.
   - Refer to installation procedure for Oil Pan and Crankcase in this manual.
8. Refill engine oil until full level on engine oil dipstick.

Oil Pump Oil Seal

Removal

1. Disconnect battery ground cable.
2. Drain engine oil.
3. Remove crankshaft pulley.
   - Refer to removal procedure for Crankshaft Pulley in this manual.
4. Remove timing belt.
   - Refer to removal procedure for Timing Belt in this manual.
5. Remove timing pulley from crankshaft.
6. Remove oil pump oil seal using a sealer puller.

NOTE: Take care not to damage sealing surfaces of oil pump and crankshaft when removing oil seal.

Installation

1. Install oil pump oil seal, apply engine oil to oil seal lip, then install oil seal using 5–8840–2287–0 installer.

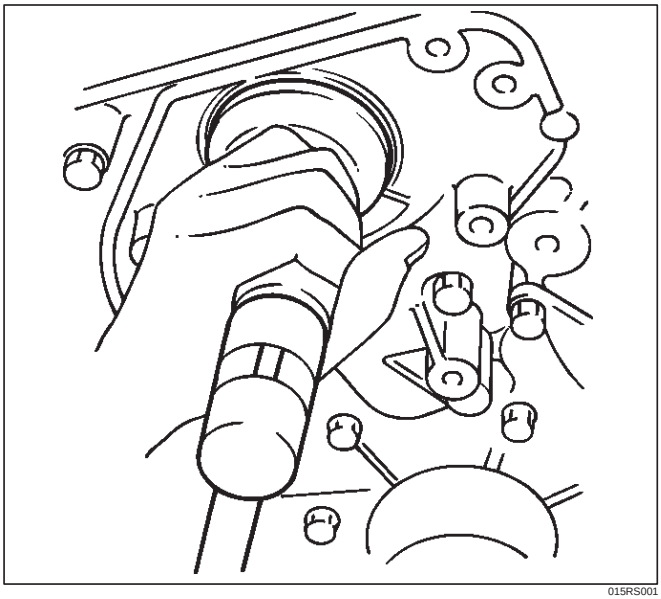

015RS001

2. Install timing pulley to crankshaft.
3. Install timing belt.
   - Refer to installation procedure for Timing Belt in this manual.
4. Install crankshaft pulley.
   - Refer to installation procedure for Crankshaft Pulley in this manual.
5. Refill engine oil until full level.

Oil Filter

Removal

1. Disconnect battery ground cable.
2. Drain engine oil.
3. Remove oil filter using 5-8840-0203-0 filter wrench.

Installation

1. Clean filter fitting surface and apply small amount of engine oil to sealing surface.
2. Install oil filter cartridge by hand until it comes in contact with sealing surface then rotate additional 2/3 turn to tighten using 5-8840-0203-0 filter wrench.

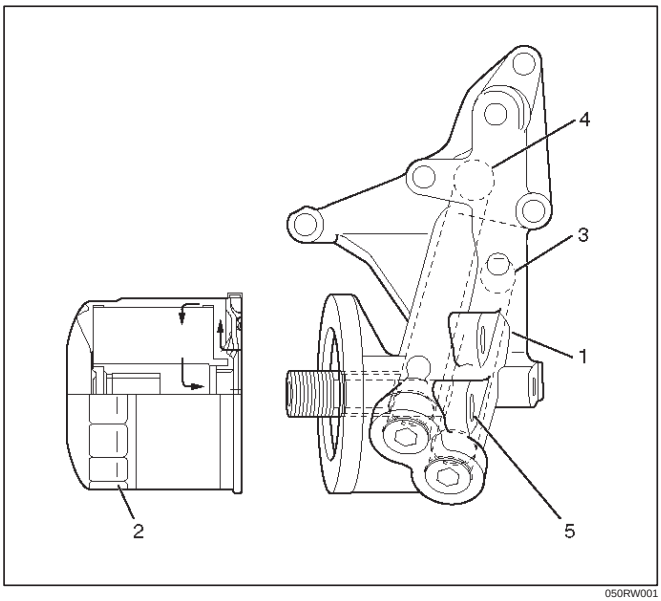

050RW001

Legend

(1) Oil Pump
(2) Oil Filter
(3) Oil Gallery
(4) From Filter
(5) To Filter

3. Fill engine oil until full level on dipstick.
4. Reconnect battery ground cable.

Main Data and Specification

General Specification

Item	Specifications	
	6VD1	6VE1
Oil capacity	5.3 liters	

Torque Specifications

Crankcase, Oil pan, Timing belt tensioner, Timing pulley, timing belt cover, Oil pump, Oil gallery, Oil strainer N·m (Kg·m/lb ft)

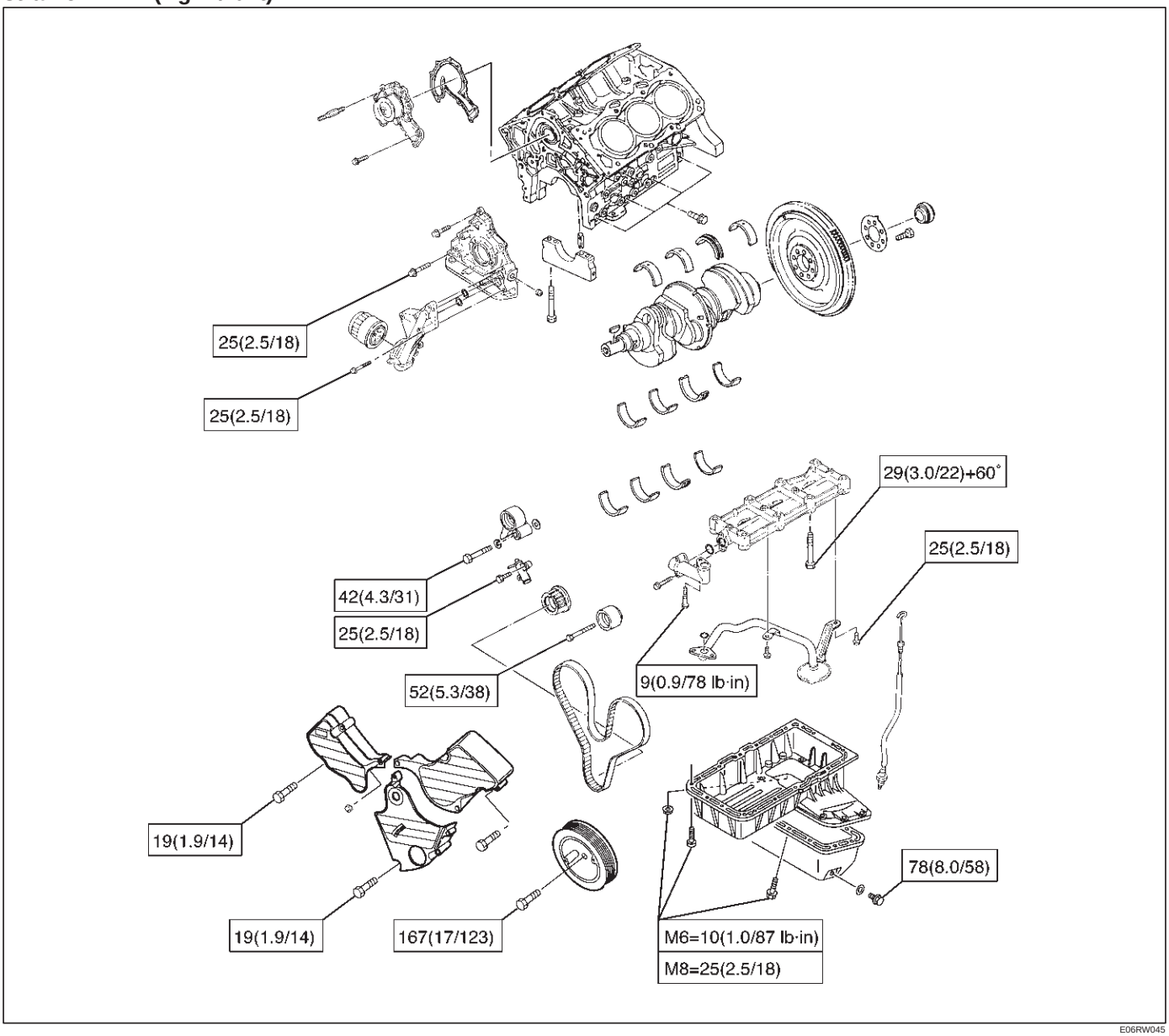

E06RW045

Special Tool

ILLUSTRATION	**TOOL NO.** TOOL NAME
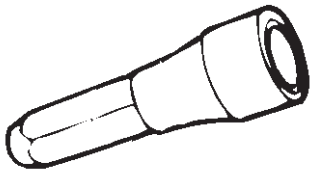 901RT044	**5–8840–2287–0** **(J–39202)** Installer; Oil pump oil seal
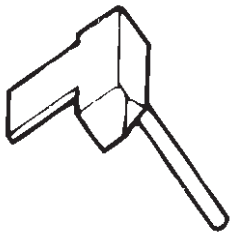 901RT042	**5–8840–2153–0** **(J–37228)** Seal cutter
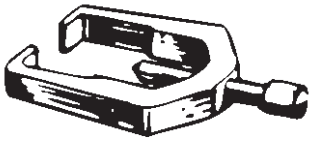 901RT038	**5–8840–2005–0** **(J–29107)** Universal pitman arm puller
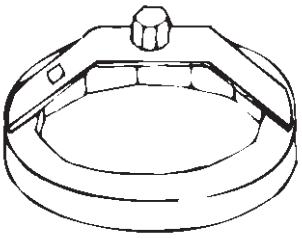 901RT034	**5–8840–0203–0** **(J–36390)** Wrench; Oil filter

ENGINE

ENGINE SPEED CONTROL SYSTEM

CONTENTS

Service Precaution 6H–1
Accelerator Pedal Control Cable 6H–2
Removal 6H–2
Inspection 6H–2
Installation 6H–2
Adjustment 6H–2
Accelerator Pedal 6H–3
Accelerator Pedal and Associated Parts . . 6H–3
Removal 6H–3
Installation 6H–3
Adjustment 6H–3

Service Precaution

WARNING: IF SO EQUIPPED WITH A SUPPLEMENTAL RESTRAINT SYSTEM (SRS), REFER TO THE SRS COMPONENT AND WIRING LOCATION VIEW IN ORDER TO DETERMINE WHETHER YOU ARE PERFORMING SERVICE ON OR NEAR THE SRS COMPONENTS OR THE SRS WIRING. WHEN YOU ARE PERFORMING SERVICE ON OR NEAR THE SRS COMPONENTS OR THE SRS WIRING, REFER TO THE SRS SERVICE INFORMATION. FAILURE TO FOLLOW WARNINGS COULD RESULT IN POSSIBLE AIR BAG DEPLOYMENT, PERSONAL INJURY, OR OTHERWISE UNNEEDED SRS SYSTEM REPAIRS.

CAUTION: Always use the correct fastener in the proper location. When you replace a fastener, use ONLY the exact part number for that application. ISUZU will call out those fasteners that require a replacement after removal. ISUZU will also call out the fasteners that require thread lockers or thread sealant. UNLESS OTHERWISE SPECIFIED, do not use supplemental coatings (Paints, greases, or other corrosion inhibitors) on threaded fasteners or fastener joint interfaces. Generally, such coatings adversely affect the fastener torque and the joint clamping force, and may damage the fastener. When you install fasteners, use the correct tightening sequence and specifications. Following these instructions can help you avoid damage to parts and systems.

Accelerator Pedal Control Cable

Removal

1. Loosen the adjusting nut(5) on the cable bracket mounted on the common chamber.
2. Remove cable clip(3).
3. Disconnect accelerator pedal (AP) control cable(6). (on throttle valve side)
4. Disconnect AP control cable(1). (on AP pedal(7) side)
5. Remove molding cap(2).
6. Remove AP control cable(4).

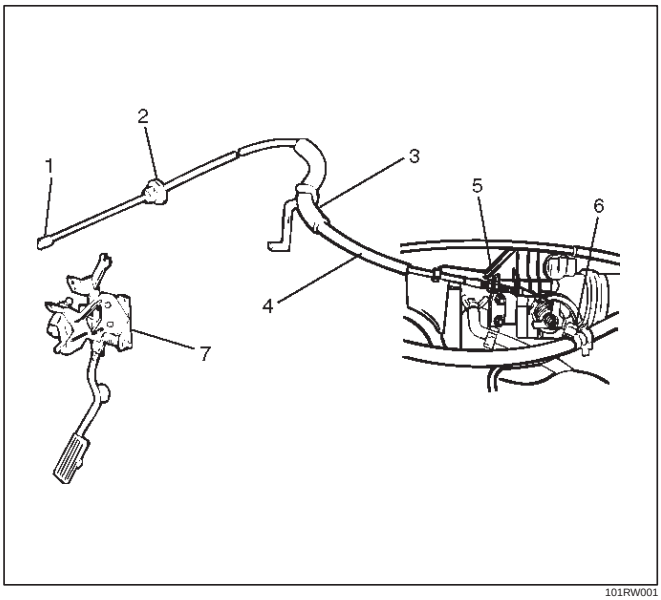

101RW001

Inspection

Check the following items, and replace the control cable if any abnormality is found:

- The control cable should move smoothly.
- The control cable should not be bent or kinked.
- The control cable should be free of damage and corrosion.

Installation

1. Install AP control cable(4).
2. Install molding cap(2).
3. Connect AP control cable(1). (on AP side)
4. Connect AP control cable(6). (on throttle valve side)
5. Install cable clip(3).
6. Install adjusting nut(5).

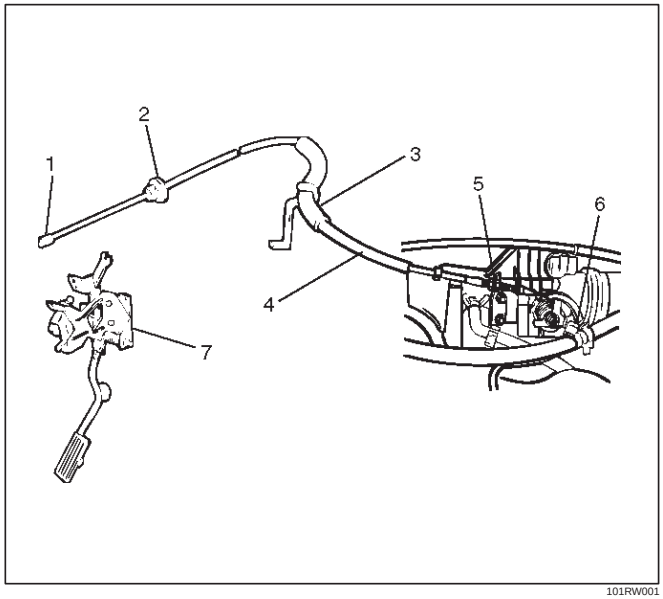

101RW001

Adjustment

1. Loosen adjusting nut and lock nut.
2. Pull outer cable while closing fully the throttle valve.
3. Tighten adjusting nut and lock nut temporarily.
4. Loosen adjusting nut by three turns and tighten lock nut.

   Then, manually operating the throttle valve, make sure that the valve lever returns up to the stopper screw.

   If it does not reach the stopper screw, repeat from step 1.

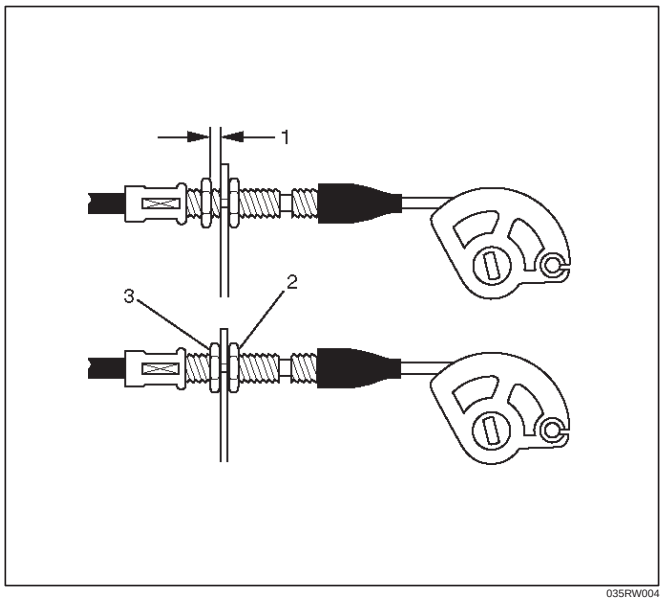

035RW004

Legend

(1) Clearance
(2) Lock Nut
(3) Adjusting Nut

Accelerator Pedal

Accelerator Pedal and Associated Parts

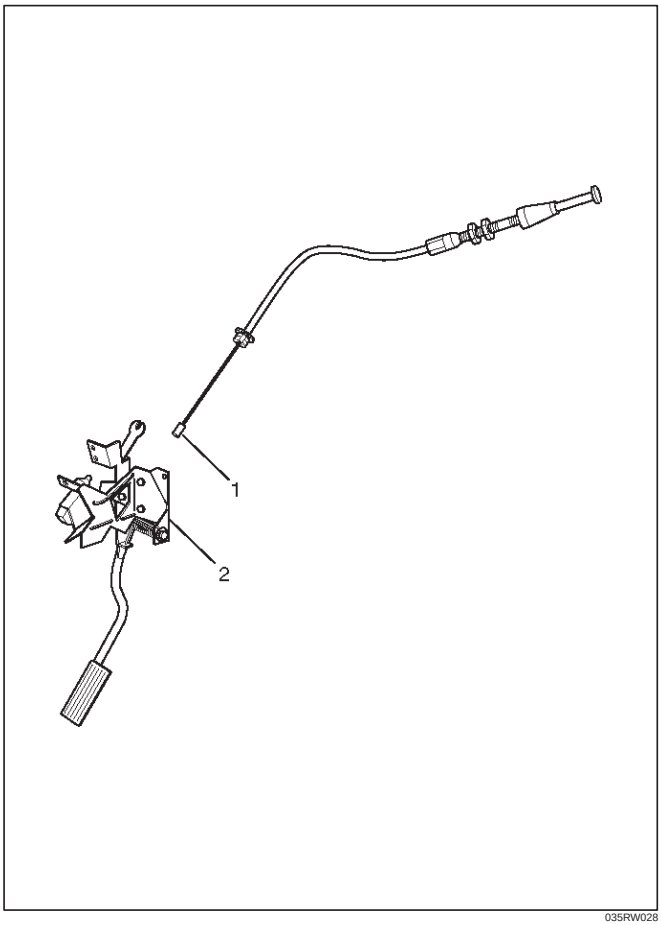

Legend

(1) Accelerator Pedal Control Cable
(2) Accelerator Pedal Assembly

Removal

1. Accelerator Pedal control cable(1).
2. Accelerator Pedal assembly(2).

Installation

1. Accelerator pedal assembly(2).
2. Accelerator pedal control cable(1).

Adjustment

Manual Transmission:

- Rotate counterclockwise to loosen the lock nut and screw the stopper bolt in sufficiently.
- Fully depress the pedal and hold it there with your hand. Next, rotate the stopper bolt until it hits the stopper of pedal bracket. Then, lock the stopper bolt there.

Automatic Transmission:

- Rotate counterclockwise to loosen the kickdown switch sufficiently.
- Fully depress the pedal and hold it there with your hand. Rotate the switch clockwise and then rotate further by 1/2 turn from the position where the switch clicks. Lock the switch there.
- Step on the accelerator pedal and make sure that you can hear a clicking sound at the full stroke position.

MEMO

ENGINE

INDUCTION

CONTENTS

Service Precaution 6J–1
Air Cleaner Element 6J–2
Removal 6J–2
Inspection 6J–2
Installation 6J–2

Service Precaution

WARNING: IF SO EQUIPPED WITH A SUPPLEMENTAL RESTRAINT SYSTEM (SRS),REFER TO THE SRS COMPONENT AND WIRING LOCATION VIEW IN ORDER TO DETERMINE WHETHER YOU ARE PERFORMING SERVICE ON OR NEAR THE SRS COMPONENTS OR THE SRS WIRING. WHEN YOU ARE PERFORMING SERVICE ON OR NEAR THE SRS COMPONENTS OR THE SRS WIRING, REFER TO THE SRS SERVICE INFORMATION. FAILURE TO FOLLOW WARNINGS COULD RESULT IN POSSIBLE AIR BAG DEPLOYMENT, PERSONAL INJURY, OR OTHERWISE UNNEEDED SRS SYSTEM REPAIRS.

CAUTION: Always use the correct fastener in the proper location. When you replace a fastener, use ONLY the exact part number for that application. ISUZU will call out those fasteners that require a replacement after removal. ISUZU will also call out the fasteners that require thread lockers or thread sealant. UNLESS OTHERWISE SPECIFIED, do not use supplemental coatings (Paints, greases, or other corrosion inhibitors) on threaded fasteners or fastener joint interfaces. Generally, such coatings adversely affect the fastener torque and the joint clamping force, and may damage the fastener. When you install fasteners, use the correct tightening sequence and specifications. Following these instructions can help you avoid damage to parts and systems.

Air Cleaner Element

Removal

1. Remove positive ventilation hose from connector(1).
2. Remove intake air temperature sensor(2).
3. Remove air flow sensor(3).
4. Remove air cleaner duct cover(4).
5. Remove air cleaner element(5).

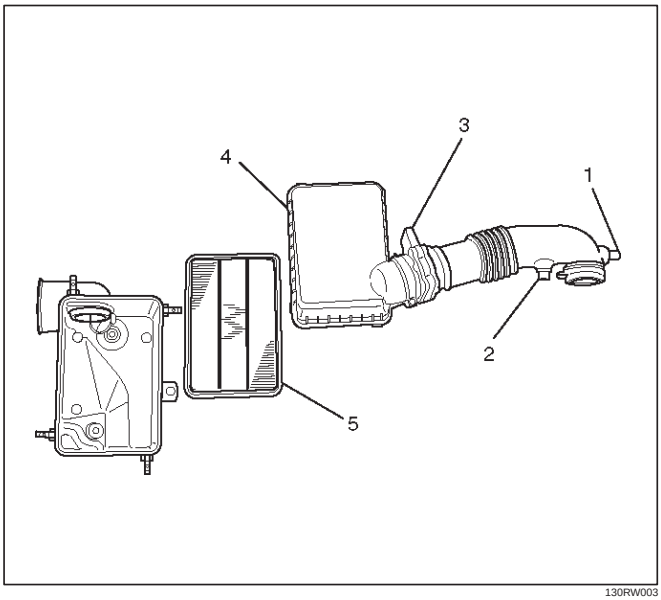

130RW003

Inspection

Check the air cleaner element for damage or dust clogging. Replace if it is damaged, or clean if it is clogged.

Cleaning Method

Tap the air cleaner element gently so as not to damage the paper element, or clean the element by blowing with compressed air of about 490 kPa (71 psi) from the clean side if it is extremely dirty.

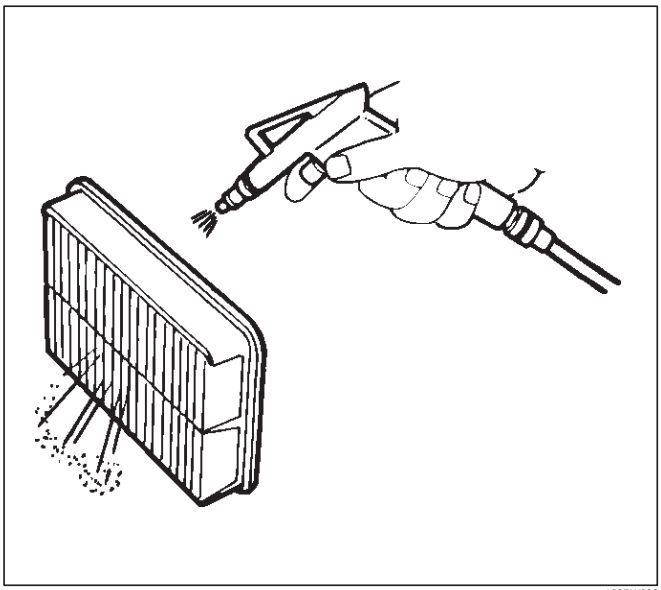

130RW002

Installation

1. Install air cleaner element(5).
2. Attach the air cleaner duct cover (4) to the body completely, then clamp it with the clip.
3. Install mass air flow sensor(3).
4. Install air temperature sensor(2).
5. Connect positive crankcase ventilation hose to connector(1).

For General Export Model

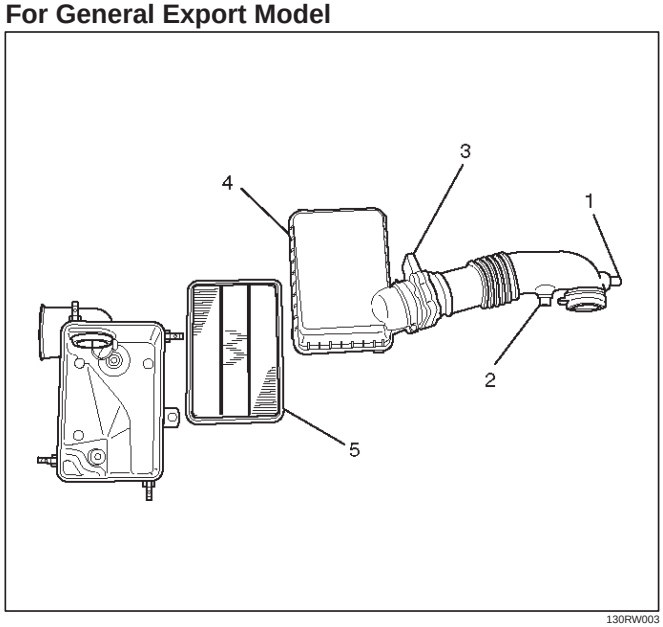

130RW003

For Isuzu General Motors (IGM) Model

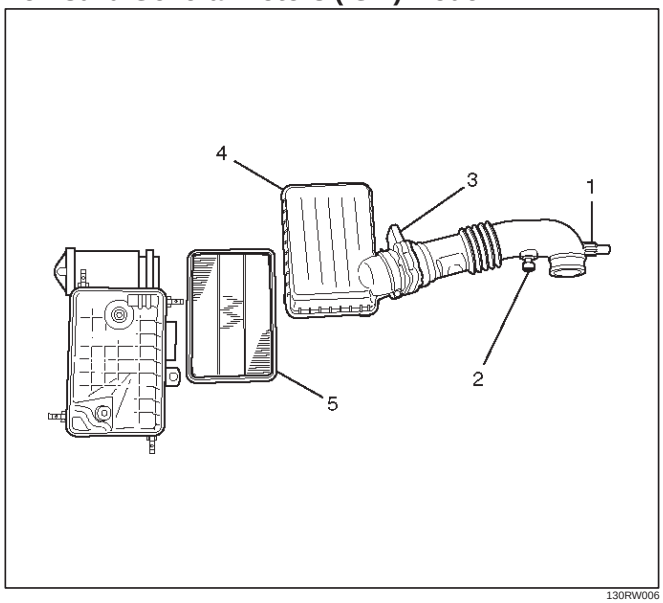

130RW006

ENGINE

CONTENTS

Engine Mechanical 6A
Engine Cooling 6B
Engine Fuel 6C
Engine Electrical 6D1
Ignition System 6D2
Starting and Charging System 6D3
Driveability and Emissions 6E
Engine Exhaust 6F
Engine Lubrication 6G
Engine Speed Control System 6H
Induction 6J

ENGINE MECHANICAL (6VE1 3.5L)

CONTENTS

Service Precaution 6A–2
General Description 6A–3
Engine Diagnosis 6A–4
Cylinder Head Cover LH 6A–19
Removal 6A–19
Installation 6A–20
Cylinder Head Cover RH 6A–21
Removal 6A–21
Installation 6A–21
Common Chamber 6A–22
Removal 6A–22
Installation 6A–22
Exhaust Manifold LH 6A–24
Removal 6A–24
Installation 6A–24
Exhaust Manifold RH 6A–25
Removal 6A–25
Installation 6A–25
Crankshaft Pulley 6A–26
Removal 6A–26
Installation 6A–26
Timing Belt 6A–27
Removal 6A–27
Installation 6A–28
Camshaft 6A–32
Removal 6A–32
Installation 6A–33
Cylinder Head 6A–35
Removal 6A–35
Installation 6A–35
Valve Stem Oil Controller , Valve Spring and Valve Guide 6A–37
Removal 6A–37
Installation 6A–37
Piston, Piston Ring and Connecting Rod . . . 6A–38
Removal 6A–38
Installation 6A–39
Crankshaft and Main Bearings 6A–40
Removal 6A–40
Installation 6A–41
Rear Oil Seal 6A–45
Removal 6A–45
Installation 6A–45
Engine Assembly 6A–46
Removal 6A–46
Installation 6A–47
Cylinder Head 6A–49
Cylinder Head and Associated Parts 6A–49
Disassembly 6A–50
Clean 6A–50
Inspection and Repair 6A–50
Reassembly 6A–51
Valve Spring, Oil Controller, Valve, Valve Guide 6A–53
Valve Spring, Oil Controller, Valve, Valve Guide and Associated Parts 6A–53
Disassembly 6A–53
Inspection and Repair 6A–54
Reassembly 6A–57
Camshaft 6A–60
Camshaft and Associated Parts 6A–60
Disassembly 6A–60
Inspection and Repair 6A–61
Reassembly 6A–63
Crankshaft 6A–67
Crankshaft and Associated Parts 6A–67
Disassembly 6A–67
Inspection and Repair for Bearings 6A–68
Inspection and Repair for Crankshaft 6A–70
Reassembly 6A–71

Piston and Connecting Rod 6A–75
Piston, Connecting Rod and Associate Parts 6A–75
Disassembly 6A–75
Inspection and Repair 6A–76
Reassembly 6A–80
Cylinder Block 6A–82
Cylinder Block and Associated Parts 6A–82
Disassembly 6A–82
Inspection and Repair 6A–83
Reassembly 6A–84
Main Data and Specification 6A–87
Special Tool 6A–93

Service Precaution

WARNING: THIS VEHICLE HAS A SUPPLEMENTAL RESTRAINT SYSTEM (SRS). REFER TO THE SRS COMPONENT AND WIRING LOCATION VIEW IN ORDER TO DETERMINE WHETHER YOU ARE PERFORMING SERVICE ON OR NEAR THE SRS COMPONENTS OR THE SRS WIRING. WHEN YOU ARE PERFORMING SERVICE ON OR NEAR THE SRS COMPONENTS OR THE SRS WIRING, REFER TO THE SRS SERVICE INFORMATION. FAILURE TO FOLLOW WARNINGS COULD RESULT IN POSSIBLE AIR BAG DEPLOYMENT, PERSONAL INJURY, OR OTHERWISE UNNEEDED SRS SYSTEM REPAIRS.

CAUTION: Always use the correct fastener in the proper location. When you replace a fastener, use ONLY the exact part number for that application. ISUZU will call out those fasteners that require a replacement after removal. ISUZU will also call out the fasteners that require thread lockers or thread sealant. UNLESS OTHERWISE SPECIFIED, do not use supplemental coatings (Paints, greases, or other corrosion inhibitors) on threaded fasteners or fastener joint interfaces. Generally, such coatings adversely affect the fastener torque and the joint clamping force, and may damage the fastener. When you install fasteners, use the correct tightening sequence and specifications. Following these instructions can help you avoid damage to parts and systems.

General Description

Engine Cleanliness And Care

An automobile engine is a combination of many machined, honed, polished and lapped surfaces with tolerances that are measured in the thousandths of a millimeter (ten thousandths of an inch). Accordingly, when any internal engine parts are serviced, care and cleanliness are important. Throughout this section, it should be understood that proper cleaning and protection of machined surfaces and friction areas is part of the repair procedure. This is considered standard shop practice even if not specifically stated.

- A liberal coating of engine oil should be applied to all friction areas during assembly to protect and lubricate the surfaces on initial operation.
- Whenever valve train components, pistons, piston rings, connecting rods, rod bearings, and crankshaft journal bearings are removed for service, they should be retained in order.
- At the time of installation, they should be installed in the same locations and with the same mating surfaces as when removed.
- Battery cables should be disconnected before any major work is performed on the engine. Failure to disconnect cables may result in damage to wire harness or other electrical parts.
- The six cylinders of this engine are identified by numbers; Right side cylinders 1, 3 and 5, Left side cylinders 2, 4 and 6, as counted from crankshaft pulley side to flywheel side.

General Information on Engine Service

The following information on engine service should be noted carefully, as it is important in preventing damage and contributing to reliable engine performance.

- When raising or supporting the engine for any reason, do not use a jack under the oil pan. Due to the small clearance between the oil pan and the oil pump strainer, jacking against the oil pan may cause damage to the oil pick–up unit.
- The 12–volt electrical system is capable of damaging circuits. When performing any work where electrical terminals could possibly be grounded, the ground cable of the battery should be disconnected at the battery.
- Any time the intake air duct or air cleaner is removed, the intake opening should be covered. This will protect against accidental entrance of foreign material into the cylinder which could cause extensive damage when the engine is started.

Cylinder Block

The cylinder block is made of aluminum die–cast casting for 75˚V–type six cylinders. It has a rear plate integrated structure and employs a deep skirt. The cylinder liner is cast and the liner inner diameter and crankshaft journal diameter are classified into grades. The crankshaft is supported by four bearings of which width is different between No.2, No.3 and No.1, No.4; the width of No.3 bearing on the body side is different in order to support the thrust bearing. The bearing cap is made of nodular cast iron and each bearing cap uses four bolts and two side bolts.

Cylinder Head

The cylinder head, made of aluminum alloy casting employs a pent–roof type combustion chamber with a spark plug in the center. The intake and exhaust valves are placed in V–type design. The ports are cross–flow type.

Valve Train

Intake and exhaust camshaft on both banks are driven with a camshaft drive gear by the timing belt. The valves are operated by the camshaft and the valve clearance is adjusted to select suitable thickness shim.

Intake Manifold

The intake manifold system is composed of the aluminum cast common chamber and intake manifold attached with six fuel injectors.

Exhaust Manifold

The exhaust manifold is made of nodular cast iron.

Pistons and Connecting Rods

Aluminum pistons are used after selecting the grade that meets the cylinder bore diameter. Each piston has two compression rings and one oil ring. The piston pin made of chromium steel is offset 1mm toward the thrust side, and the thrust pressure of piston to the cylinder wall varies gradually as the piston travels. The connecting rods are made of forged steel. The connecting rod bearings are graded for correct size selection.

Crankshaft and Bearings

The crankshaft is made of Ductile cast–iron. Pins and journals are graded for correct size selection for their bearing.

Engine Diagnosis

First of all the engine diagnose to check the fuel quantity, the engine level and the engine coolant level.

Hard Starting

1. Starting Motor Does Not Turn Over

Troubleshooting Procedure

Turn on headlights and starter switch.

Condition	Possible cause	Correction
Headlights go out or dim considerably	Battery run down or under charged	Recharge or replace battery
	Terminals poorly connected	Clean battery posts and terminals and connect properly
	Starting motor coil circuit shorted	Overhaul or replace
	Starting motor defective	Overhaul or replace
Headlights stay bright	Starting motor circuit open	Refer to Starting and Charging System
	Starting motor coil open	Replace

2. Ignition Trouble — Starting Motor Turns Over But Engine Does Not Start

Spark Test

Disconnect an ignition coil from any spark plug. Connect the spark plug tester (For example J–26792), start the engine, and check if a spark is generated in the spark plug tester. Before starting the engine, make sure that the spark plug tester is properly grounded. To avoid electrical shock, do not touch the part where insulation of the ignition coil is broken while the engine is running.

Condition	Possible cause	Correction
Spark jumps across gap	Spark plug defective	Replace
	Ignition timing incorrect	Refer to Ignition System
	Fuel not reaching fuel injector(s) or engine	Refer to item 3 (Trouble in fuel system)
	Valve timing incorrect	Adjust
	Engine lacks compression	Refer to item 4 (Engine lacks compression)
No sparking takes place	Ignition coil disconnected or broken	Connect properly or replace
	Ion sensing module defective	Replace
	Ion sensing module cable broken or poor connections	Correct or raplace
	Poor connections in engine harness	Correct
	Powertrain Control Module cable disconnected or defective	Correct or replace

3. Trouble In Fuel System

Condition	Possible cause	Correction
Starting motor turns over and spark occurs but engine does not start.	Fuel tank empty	Fill
	Water in fuel system	Clean
	Fuel filter clogged	Replace filter
	Fuel pipe clogged	Clean or replace
	Fuel pump defective	Replace
	Fuel pump circuit open	Correct or replace
	Evaporative Emission Control System circuit clogged	Correct or replace
	Multiport Fuel Injection System faulty	Refer to “Driveability and Emissions” section

4. Engine Lacks Compression

Condition	Possible cause	Correction
Engine lacks compression	Spark plug loosely fitted or spark plug gasket defective	Tighten to specified torque or replace gasket
	Valve timing incorrect	Adjust
	Cylinder head gasket defective	Replace gasket
	Valve incorrectly seated	Lap valve
	Valve stem seized	Replace valve and valve guide
	Valve spring weakened or broken	Replace
	Cylinder or piston rings worn	Overhaul engine
	Piston ring seized	Overhaul engine.

Engine Compression Test Procedure

1. Start and run the engine until the engine reaches normal operating temperature.
2. Turn the engine off.
3. Remove all the spark plugs.
4. Remove ignition coil fuse (15A) and disable the ignition system.
5. Remove the fuel pump relay from the relay and fuse box.
6. Engage the starter and check that the cranking speed is approximately 300 rpm.
7. Install cylinder compression gauge into spark plug hole.
8. With the throttle valve opened fully, keep the starter engaged until the compression gage needle reaches the maximum level. Note the reading.
9. Repeat the test with each cylinder.
   If the compression pressure obtained falls below the limit, engine overhaul is necessary.

Limit; 1000 kPa (10.2 kg/cm^2, 145 psi)

Rough Engine Idling or Engine Stalling

Condition	Possible cause	Correction
Trouble in fuel injection system	Throttle valve defective	Correct or replace
	Throttle position sensor circuit open or shorted	Correct or replace
	Fuel injector circuits open or shorted	Correct or replace
	Fuel injectors damaged	Replace
	Fuel pump relay defective	Replace
	Mass Airflow Sensor circuit open or poor connections	Correct or replace
	Mass Airflow Sensor defective	Replace
	Manifold Absolute Pressure Sensor circuit open or poor connections	Correct or replace
	Manifold Absolute Pressure Sensor defective	Replace
	Engine Coolant Temperature Sensor circuit open or poor connections	Correct or replace
	Engine Coolant Temperature Sensor defective	Replace
	Intake Air Temperature sensor circuit open or poor connections	Correct or replace
	Intake Air Temperature sensor defective	Replace
	Ion Sensing Module cable broken or poor connections	Correct or replace
	Ion Sensing Module defective	Replace
	Vehicle Speed Sensor circuit open or shorted	Correct or replace
	Vehicle Speed Sensor defective	Replace
Trouble in emission control system	Powertrain Control Module defective	Replace
	Exhaust Gas Recirculation Valve circuit open or poor connections	Correct or replace
	Exhaust Gas Recirculation Valve faulty	Replace
	Canister purge valve circuit open or poor connections	Correct or replace
	Canister purge valve defective	Replace
	Trouble in ignition system	Refer to “Hard Start”
Others	Engine lacks compression	Refer to “Hard Start”
	Valve incorrectly seated	Lap valve
	Air Cleaner Filter clogged	Replace filter element
	Valve timing incorrect	Readjust
	Positive Crankcase Ventilation valve defective or clogged	Replace

Rough Engine Running

Condition	Possible cause	Correction
Engine misfires periodically	Ignition coil layer shorted	Replace
	Spark plugs fouling	Clean or install hotter type plug
	Spark plug(s) insulator nose leaking	Replace
	Ion sensing module or ION sensing module circuits defective	Correct or replace
	Fuel injector(s) defective	Replace
	Powertrain control module faulty	Replace
Engine knocks periodically	Spark plugs running too hot	Install colder type spark plugs
	Powertrain control module faulty	Replace
	Ion Sensing module or ION sensing module circuits defective	Correct or replace
Engine lacks power	Spark plugs fouled	Clean
	Fuel injectors defective	Replace
	Mass Airflow Sensor or Intake Airflow Sensor circuit defective	Correct or replace
	Manifold Absolute Pressure (MAP) Sensor or Manifold Absolute Pressure Sensor circuit defective	Correct or replace
	Engine Coolant Temperature Sensor or Engine Coolant Temperature Sensor circuit defective	Correct or replace
	Powertrain Control Module faulty	Replace
	Intake Air Temperature Sensor or Intake Air Temperature Sensor circuit defective	Correct or replace
	Throttle Position Sensor or Throttle Position Sensor circuit defective	Correct circuit or replace throttle valve ASM
	ION Sensing Module or ION Sensing Module circuits defective	Correct or replace

Hesitation

Condition	Possible cause	Correction
Hesitation on acceleration	Throttle Position Sensor adjustment incorrect	Replace throttle valve assembly
	Throttle Position Sensor circuit open or shorted	Correct or replace
	Mass Airflow Sensor circuit open or poor connections	Correct or replace
	Mass Airflow Sensor defective	Replace
	Manifold Absolute Pressure (MAP) Sensor circuit open or shorted	Correct or replace
	MAP Sensor defective	Replace
	Intake Air Temperature (IAT) Sensor circuit open or poor connections	Correct or replace
	Ion Sensing Module circuit open or poor connections	Correct or replace
	Ion Sensing Module defective	Replace
	IAT Sensor defective	Replace
Hesitation at high speeds (Fuel pressure too low)	Fuel tank strainer clogged	Clean or replace
	Fuel pipe clogged	Clean or replace
	Fuel filter clogged	Replace
	Defective fuel pump system	Check and replace
	Fuel Pressure Control Valve leaking	Replace
Hesitation at high speeds (Fuel injector not working normally)	Power supply or ground circuit for Multiport Fuel Injection System shorted or open	Check and correct or replace
	Fuel Injector defective	Replace
	Cable of Multiport Fuel Injection System circuit open or poor connections	Correct or replace

Condition	Possible cause	Correction
Hesitation at high speeds	Powertrain Control Module defective	Replace
	Throttle Position Sensor cable broken or poor connections	Correct cable or replace throttle valve ASM
	Throttle Position Sensor defective	Replace throttle valve ASM
	Engine Coolant Temperature Sensor circuit open or shorted	Correct or replace
	Engine Coolant Temperature Sensor defective	Replace
	Mass Airflow Sensor circuit open or poor connections	Correct or replace
	Mass Airflow Sensor defective	Replace
	MAP Sensor cable broken or poor connections	Correct or replace
	MAP Sensor defective	Replace
	IAT Sensor circuit open or poor connections	Correct or replace
	IAT Sensor defective	Replace
	Ion Sensing Module circuit open or poor connections	Correct or replace
	Ion Sensing Module defective	Replace
	Throttle valve not fully opened	Check and correct or replace
	Air Cleaner Filter clogged	Replace filter element
	Power supply voltage too low	Check and correct or replace

Engine Lacks Power

Condition	Possible cause	Correction
Trouble in fuel system	Fuel Pressure Control Valve not working normally	Replace
	Fuel injector clogged	Clean or replace
	Fuel pipe clogged	Clean
	Fuel filter clogged or fouled	Replace
	Fuel pump drive circuit not working normally	Correct or replace
	Fuel tank not sufficiently breathing due to clogged Evaporative Emission Control System circuit	Clean or replace
	Water in fuel system	Clean
	Inferior quality fuel in fuel system	Use fuel of specified octane rating
	Powertrain Control Module supplied poor voltage	Correct circuit
	Throttle Position Sensor cable broken or poor connections	Correct or replace
	Throttle Position Sensor defective	Replace
	Mass Airflow Sensor not working normally	Replace
	Manifold Absolute Pressure Sensor not working normally	Replace
	Intake Air Temperature Sensor not working normally	Replace
	Engine Coolant Temperature Sensor circuit open or shorted	Correct or replace
	Engine Coolant Temperature Sensor defective	Replace
	Powertrain Control Module defective	Replace
Trouble in intake or exhaust system	Air Cleaner Filter clogged	Replace filter element
	Air duct kinked or flattened	Correct or replace
	TWC defective	Repair
Ignition failure	———	Refer to Hard Start Troubleshooting Guide
	Heat range of spark plug inadequate	Install spark plugs of adequate heat range
	Ignition coil defective	Replace

Condition	Possible cause	Correction
Engine overheating	Level of Engine Coolant too low	Replenish
	Fan clutch defective	Replace
	Incorrect fan installed	Replace
	Thermostat defective	Replace
	Engine Coolant pump defective	Correct or replace
	Radiator clogged	Clean or replace
	Radiator filler cap defective	Replace
	Level of oil in engine crankcase too low or wrong engine oil	Change or replenish
	Resistance in exhaust system increased	Clean exhaust system or replace defective parts
	Throttle Position Sensor adjustment incorrect	Replace with Throttle Valve ASM
	Throttle Position Sensor circuit open or shorted	Correct or replace
	Cylinder head gasket damaged	Replace
Engine overcooling	Thermostat defective	Replace (Use a thermostat set to open at 82˚C (180˚F))
Engine lacks compression	———	Refer to Hard Start
Others	Tire inflation pressure abnormal	Adjust to recommended pressures
	Brake drag	Adjust
	Clutch slipping	Adjust or replace
	Level of oil in engine crankcase too high	Correct level of engine oil
	Exhaust Gas Recirculation Valve defective	Replace

Engine Noisy

Abnormal engine noise often consists of various noises originating in rotating parts, sliding parts and other moving parts of the engine. It is, therefore, advisable to locate the source of noise systematically.

Troubleshooting Procedure for Crankshaft Journals or Crankshaft Bearing Noise

Condition	Possible cause	Correction
Noise from crank journals or from crank bearings (Faulty crank journals and crank bearings usually make dull noise that becomes more evident when accelerating)	Oil clearance increased due to worn crank journals or crank bearings	Replace crank bearings and crankshaft or regrind crankshaft and install the undersize bearing
	Crankshaft out of round	Replace crank bearings and crankshaft or regrind crankshaft and install the undersize bearing
	Crank bearing seized	Crank bearing seized Replace crank bearings and crankshaft or regrind crankshaft and install the undersize bearing

Troubleshooting Procedure for Connecting Rods or Connecting Rod Bearing Noise

Short out each spark plug in sequence using insulated spark plug wire removers. Locate cylinder with defective bearing by listening for abnormal noise that stops when spark plug is shorted out.

Condition	Possible cause	Correction
Noise from connecting rods or from connecting rod bearings (Faulty connecting rods or connecting rod bearings usually make an abnormal noise slightly higher than the crank bearing noise, which becomes more evident when engine is accelerated)	Bearing or crankshaft pin worn	Replace connecting rod bearings and crankshaft or regrind crankshaft pin and install the undersize bearing
	Crankpin out of round	Replace connecting rod bearings and crankshaft or regrind crankshaft pin and install the undersize bearing
	Connecting rod bent	Correct or replace
	Connecting rod bearing seized	Replace connecting rod bearings and crankshaft or regrind crankshaft pin and install the undersize bearing

Troubleshooting Procedure for Piston and Cylinder Noise

Abnormal noise stops when the spark plug on the cylinder with defective part is shorted out.

Condition	Possible cause	Correction
Piston and cylinder noise (Faulty piston or cylinder usually makes a combined mechanical thumping noise which increases when engine is suddenly accelerated but diminishes gradually as the engine warms up)	Piston clearance increased due to cylinder wear	Replace piston and cylinder body
	Piston seized	Replace piston and cylinder body
	Piston ring broken	Replace piston and cylinder body
	Piston defective	Replace pistons and others

Troubleshooting Procedure for Piston Pin Noise

Short out each spark plug and listen for change in engine noise.

Condition	Possible cause	Correction
Piston pin noise (Piston makes noise each time it goes up and down)	Piston pin or piston pin hole worn	Replace piston, piston pin and connecting rod assy

Troubleshooting Procedure for Slapping or Hitting etc Noise

The slapping sound stops when spark plug on bad cylinder is shorted out.

Condition	Possible cause	Correction
Timing belt noise	Timing belt tension is incorrect	Replace pusher or adjust the tension pulley or replace timing belt
	Tensioner bearing defective	Replace
	Timing belt defective	Replace
	Timing pulley defective	Replace
	Timing belt comes in contact with timing cover	Replace timing belt and timing cover
Valve noise	Valve clearance incorrect	Replace adjusting shim
	Valve and valve guide seized	Replace valve and valve guide
	Valve spring broken or weakened	Replace
	Valve seat off–positioned	Correct
	Camshaft worn out	Replace
Crankshaft noise	Crankshaft end play excessive (noise occurs when clutch is engaged)	Replace thrust bearing
Engine knocking	Preignition due to use of spark plugs of inadequate heat range	Install Spark Plugs of adequate heat range
	Carbon deposits in combustion chambers	Clean
	Fuel too low in octane rating	Replace fuel
	Wide Open Throttle enrichment system failure	Refer to Section 6E
	Selection of transmission gear incorrect	Caution operator of incorrect gear selection
	Engine overheating	Refer to “Engine Lacks Power”
Others	Water pump defective	Replace
	Exhaust system defective	Repair or Replace
	Drive belt slipping	Replace auto tensioner or drive belt

Abnormal Combustion

Condition	Possible cause	Correction
Trouble in fuel system	Fuel pressure control valve defective	Replace
	Fuel filter clogged	Replace
	Fuel pump clogged	Clean or replace
	Fuel tank or fuel pipe clogged	Clean or replace
	Fuel injector clogged	Clean or replace
	Fuel pump relay defective	Replace
	Power supply cable for fuel pump broken or poor connections	Reconnect, correct or replace
	Mass Airflow (MAF) Sensor circuit open or defective	Correct or replace
	MAF Sensor defective	Replace
	Manifold Absolute Pressure Sensor circuit open or shorted	Correct or replace
	Manifold Absolute Pressure Sensor defective	Replace
	Engine Coolant Temperature (ECT) Sensor circuit open or shorted	Correct or replace
	ECT Sensor defective	Replace
	Throttle Position Sensor adjustment incorrect	Readjust
	Throttle Position Sensor defective	Replace
	Throttle Position Sensor connector poor connections	Reconnect
	Vehicle Speed Sensor cable poor connections or defective	Correct or replace
	Vehicle Speed Sensor loosely fixed	Fix tightly
	Vehicle Speed Sensor in wrong contact or defective	Replace
	Powertrain Control Module cable poor connections or defective	Correct or replace
Trouble in emission control system	Heated Oxygen Sensor circuit open	Correct or replace
	Heated Oxygen Sensor defective	Replace
	Signal vacuum hose loosely fitted or defective	Correct or replace
	EGR Valve circuit open or shorted	Correct or replace
	Exhaust Gas Recirculation Valve defective	Replace
	ECT Sensor circuit open or shorted	Correct or replace
	Canister Purge Valve circuit open or shorted	Correct or replace
	Canister Purge Valve defective	Replace
	ECT Sensor defective	Replace
	Positive Crankcase Ventilation (PCV) valve and hose clogged	Correct or replace
	Evaporator system	Refer to Section 6E
Trouble in ignition system	———	Refer to “Engine Lacks Power”

Condition	Possible cause	Correction
Trouble in cylinder head parts	Carbon deposits in combustion chamber	Remove carbon
	Carbon deposit on valve, valve seat and valve guide	Remove carbon

Excessive Engine Oil Consumption

Condition	Possible cause	Correction
Oil leaking	Oil pan drain plug loose	Retighten or replace gasket
	Crankcase fixing bolts loosened	Retighten
	Oil pan setting bolts loosened	Retighten
	Oil pan gasket broken	Replace gasket
	Front cover retaining bolts loose or gasket broken	Retighten or replace gasket
	Head cover fixing bolts loose or gasket broken	Retighten or replace gasket
	Oil filter adapter cracked	Replace
	Oil filter attachings bolt loose or rubber gasket broken	Retighten or replace oil filter
	Crankshaft front or rear oil seal defective	Replace oil seal
	Oil pressure unit loose or broken	Retighten or replace
	Blow–by gas hose broken	Replace hose
	Positive Crankcase Ventilation Valve clogged	Clean
	Engine/Transmission coupling failed	Replace oil seal
Oil leaking into combustion chambers due to poor seal in valve system	Valve stem oil seal defective	Replace
	Valve stem or valve guide worn	Replace valve and valve guide
Oil leaking into combustion chambers due to poor seal in cylinder parts	Cylinders and pistons worn excessively	Replace cylinder body assembly and pistons
	Piston ring gaps incorrectly positioned	Correct
	Piston rings set with wrong side up	Correct
	Piston ring sticking	Replace cylinder body assembly and pistons
	Piston ring and ring groove worn	Replace pistons and others
	Return ports in oil rings clogged	Clean piston and replace rings
Positive Crankcase Ventilation System malfunctioning	Positive Crankcase Ventilation Valve clogged	Clean
Others	Improper oil viscosity	Use oil of recommended S.A.E. viscosity
	Continuous high speed driving and/or severe usage such as trailer towing	Continuous high speed operation and/or severe usage will normally cause increased oil consumption

Excessive Fuel Consumption

Condition	Possible cause	Correction
Trouble in fuel system	Mixture too rich or too lean due to trouble in fuel injection system	Refer to “Abnormal Combustion”
	Fuel cut function does not work	Refer to “Abnormal Combustion”
Trouble in ignition system	Misfiring or abnormal combustion due to trouble in ignition system	Refer to “Hard Start” or “Abnormal Combustion”
Others	Engine idle speed too high	Reset Idle Air Control Valve
	Fuel system leakage	Correct or replace
	Clutch slipping	Correct
	Brake drag	Correct
	Selection of transmission gear incorrect	Caution operator of incorrect gear selection
	Excessive Exhaust Gas Recirculation flow due to trouble in Exhaust Gas Recirculation system	Refer to “Abnormal Combustion”

Lubrication Problems

Condition	Possible cause	Correction
Oil pressure too low	Wrong oil in use	Replace with correct engine oil
	Relief valve sticking	Replace
	Oil pump not operating properly	Correct or replace
	Oil pump strainer clogged	Clean or replace strainer
	Oil pump worn	Replace
	Oil pressure gauge defective	Correct or replace
	Crankshaft bearing or connecting rod bearing worn	Replace
Oil contamination	Wrong oil in use	Replace with correct engine oil
	Oil filter clogged	Replace oil filter
	Cylinder head gasket damage	Replace gasket
	Burned gases leaking	Replace piston and piston rings or cylinder body assembly
Oil not reaching valve system	Oil passage in cylinder head or cylinder body clogged	Clean or correct

Engine Oil Pressure Check

1. Check for dirt, gasoline or water in the engine oil.
   a. Check the viscosity of the oil.
   b. Check the viscosity of the oil.
   c. Change the oil if the viscosity is outside the specified standard.
   d. Refer to the “Maintenance and Lubrication” section of this manual.
2. Check the engine oil level.
   The level should fall somewhere between the “ADD” and the “FULL” marks on the oil level dipstick.
   If the oil level does not reach the “ADD” mark on the oil level dipstick, engine oil must be added.
3. Remove the oil pressure unit.
4. Install an oil pressure gauge.
5. Start the engine and allow the engine to reach normal operating temperature (About 80˚C).
6. Measure the oil pressure.
   Oil pressure should be:
   390–550 kPa (4.0–5.6 kg/cm^2, 57–80 psi) at 3000 rpm.
7. Stop the engine.
8. Remove the oil pressure gauge.
9. Install the oil pressure unit.
10. Start the engine and check for leaks.

Malfunction Indicator Lamp

The instrument panel “CHECK ENGINE” Malfunction Indicator Lamp (MIL) illuminates by self diagnostic system when the system checks the starting of engine, or senses malfunctions.

Condition	Possible cause	Correction
“CHECK ENGINE” MIL does not illuminate at the starting of engine	Bulb defective	Replace
	MIL circuit open	Correct or replace
	Command signal circuit to operate self diagnostic system shorted	Correct or replace
	Powertrain Control Module (PCM) cable loosely connected, disconnected or defective	Correct or replace
	PCM defective	Replace
“CHECK ENGINE” MIL illuminates, and stays on	Deterioration of heated oxygen sensor internal element	Replace
	Heated oxygen sensor connector terminal improper contact	Reconnect properly
	Heated oxygen sensor lead wire shorted	Correct
	Heated oxygen sensor circuit open	Correct or replace
	Deterioration of engine coolant temperature sensor internal element	Replace
	Engine coolant temperature sensor connector terminal improper contact	Reconnect properly
	Engine coolant temperature sensor lead wire shorted	Correct
	Engine coolant temperature sensor circuit open	Correct or replace
	Throttle position sensor open or shorted circuits	Correct or replace
	Deterioration of crankshaft position sensor	Replace
	Crankshaft position sensor circuit open or shorted	Correct or replace
	Vehicle speed sensor circuit open	Correct or replace
	Manifold absolute pressure sensor circuit open or shorted	Correct or replace
	Intake air temperature sensor circuit open or shorted	Correct or replace
	Fuel injector circuit open or shorted	Correct or replace
	PCM driver transistor defective	Replace PCM
	Malfunctioning of PCM RAM (Random Access Memory) or ROM (Read Only Memory)	Replace PCM

Cylinder Head Cover LH

Removal

1. Disconnect battery ground cable.
2. Remove engine cover from the dowels on the common chamber.

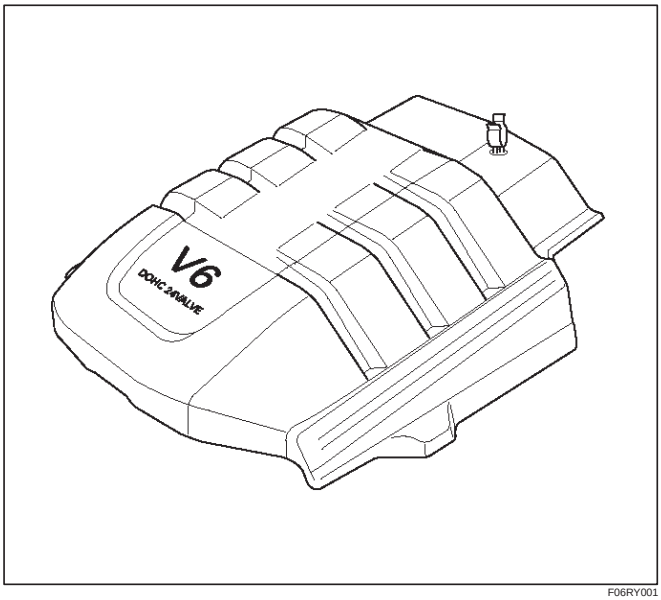

F06RY001

3. Disconnect positive crankcase ventilation hose.
4. Remove ground cable fixing bolt on cylinder head cover.
5. Ignition coil connector and ignition coil.
   - Disconnect the three connectors from the ignition coils.
   - Remove harness bracket bolt on cylinder head cover.
   - Remove fixing bolts on ignition coils.

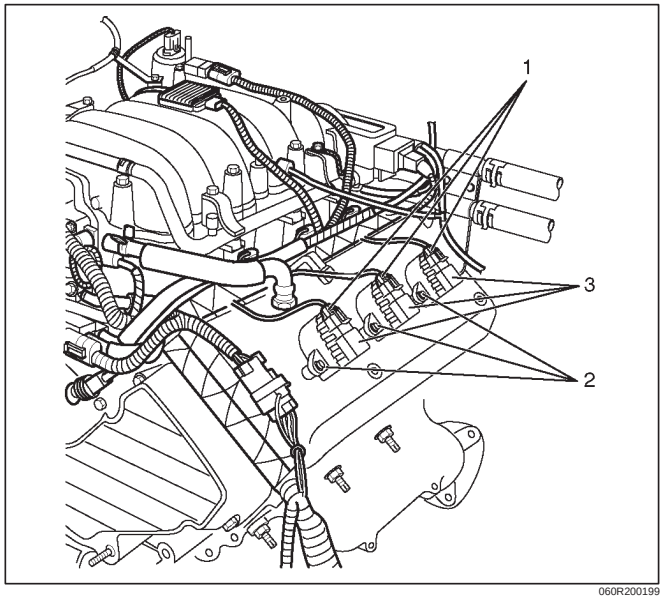

060R200199

Legend

(1) Ignition Coil Connector
(2) Bolt
(3) Ignition Coil Assemblies

6. Disconnect fuel injector harness connector then remove fuel injector harness bracket bolt.
7. Remove eight fixing bolts, then the cylinder head cover.

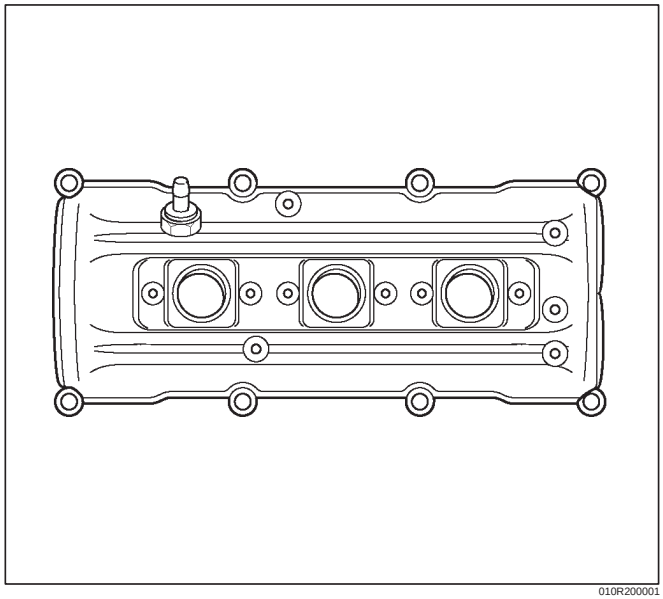

010R200001

NOTE: Where do you refer the tech in case of bolt removal difficulties.

Installation

1. Install cylinder head cover.
   - Clean the sealing surface of cylinder head and cylinder head cover to remove oil and sealing materials completely.
   - Apply sealant (TB-1207B or equivalent) of bead diameter 2-3 mm at eight place of arched area of camshaft bearing cap on front and rear sides.
   - The cylinder head cover must be installed with in 5 minutes after sealant application to prevent hardening of sealant.
   - Tighten bolts to the specified torque.

   Torque : 9 N·m (0.9 kg·m/78 lb in)

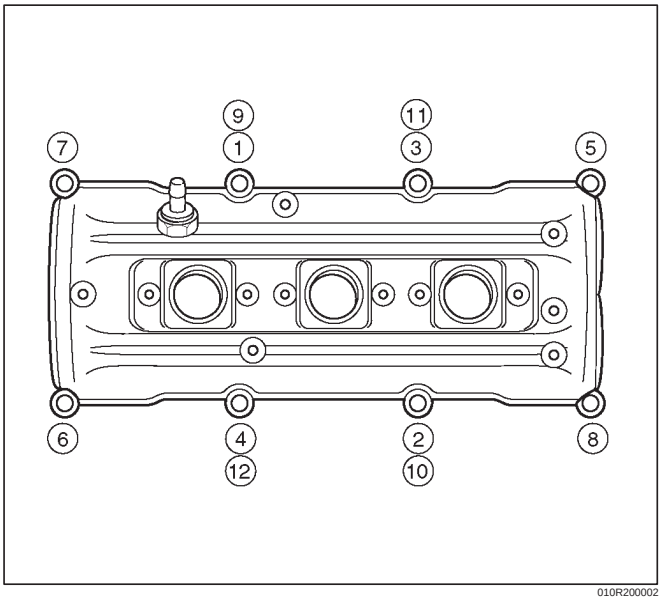

010R200002

2. Install fuel injection harness bracket and tighten bolt to the specified torque.

   Torque : 9 N·m (0.9 kg·m/78 lb in)

3. Connect ignition coil connector and ignition coil, then tighten bolt to the specified torque.

   Torque : 4 N·m (0.4kg·m/35 lb in)

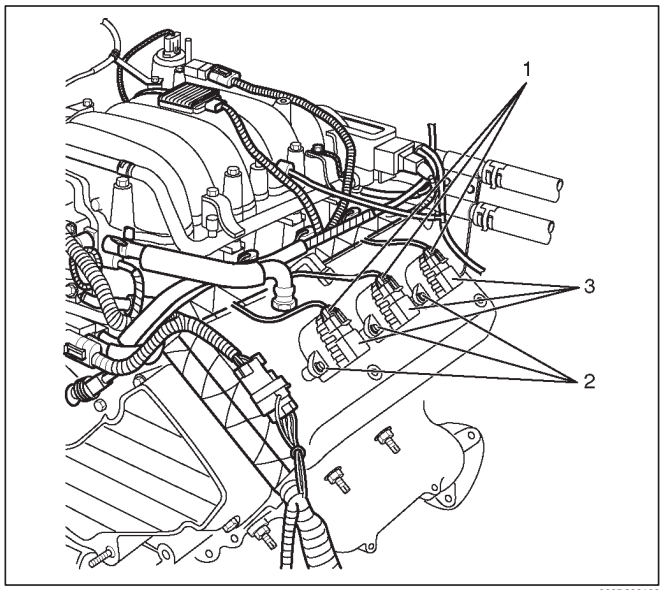

060R200199

Legend

(1) Ignition Coil Connector
(2) Bolt
(3) Ignition Coil Assembly

CAUTION: Ignition coil assembly #6 is different from ignition coil assembly from #1 to #5. Ignition coil assembly #6 is short type. So, note it when installing ignition coil assembly of #6.

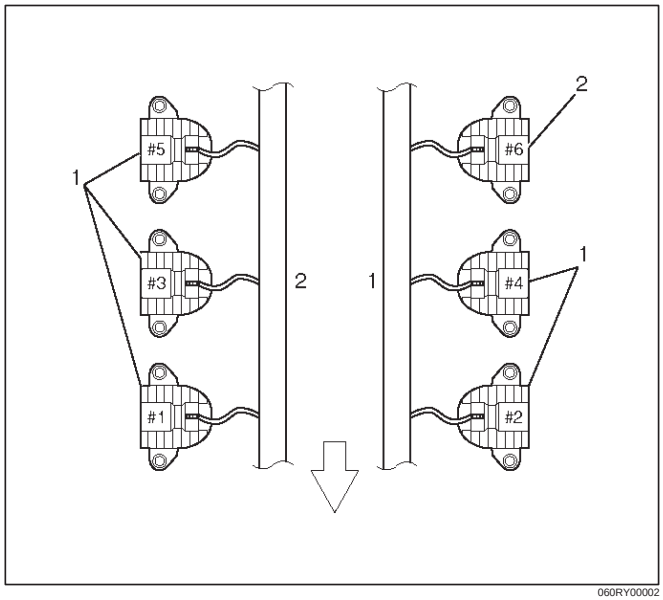

060RY00002

Legend

(1) Long Type Ignition Coil Assemblies (# 1 ~ # 5)
(2) Short Type Ignition Coil Assembly (# 6)

4. Connect ground cable and tighten bolts to the specified torque.

   Torque : 9 N·m (0.9 kg·m/78 lb in)

5. Install positive crankcase ventilation hose.
6. Install engine cover mating with the dowels.

Cylinder Head Cover RH

Removal

1. Disconnect battery ground cable.
2. Remove engine cover from the dowels on the common chamber.

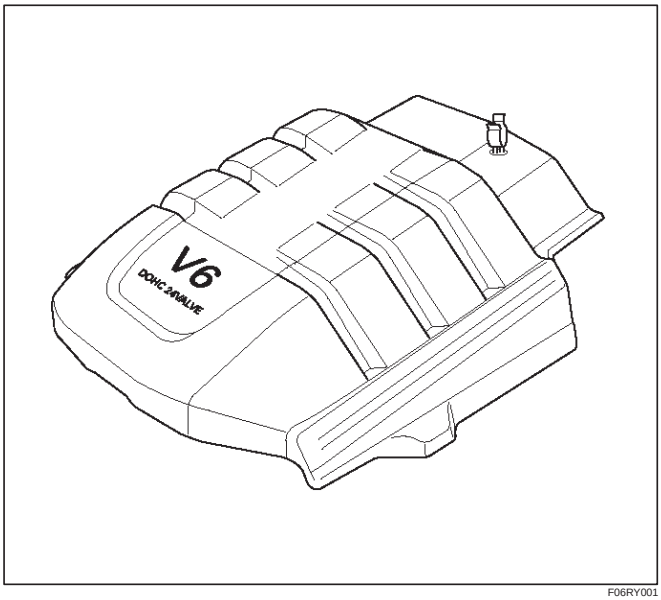

F06RY001

3. Disconnect ventilation hose from cylinder head cover.
4. Disconnect three ignition coil connectors from ignition coils and remove harness bracket bolts on cylinder head cover then remove ignition coil fixing bolts on ignition coils and remove ignition coils.
5. Disconnect fuel injector harness connector then remove fuel injector harness bracket bolt.
6. Remove eight fixing bolts then the cylinder head cover.

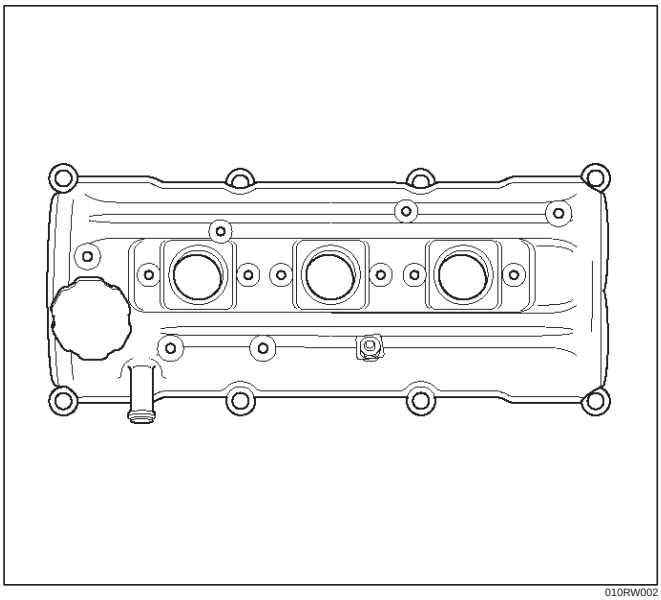

010RW002

Installation

1. Install cylinder head cover.
   - Clean the sealing surface of cylinder head and cylinder head cover to remove oil and sealing materials completely.
     Apply sealant (TB-1207B or equivalent) bead (diameter 2-3 mm) at eight places of arched areas of camshaft bracket on front and rear sides.

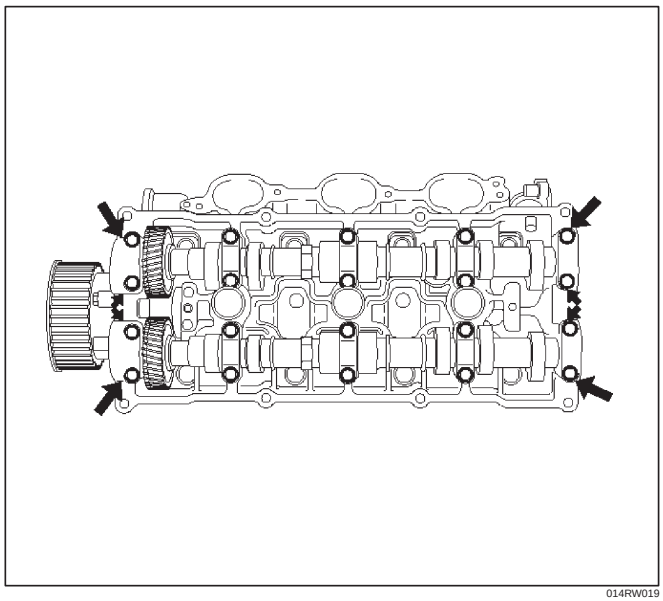

014RW019

   - The cylinder head cover must be installed within 5 minutes after sealant application to prevent premature hardening of sealant.
   - Tighten bolts to the specified torque.

   Torque : 9 N·m (0.9 kg·m/78 lb in)

2. Tighten fuel injector harness bracket bolts to specified torque then reconnect fuel injector harness connector.

   Torque : 9 N·m (0.9 kg·m/78 lb in)

3. Connect ignition coil connector and tighten ignition coil fixing bolts to specified torque.

   Torque : 4 N·m (0.4 kg·m/35 lb in)

4. Connect ventilation hose to cylinder head.
5. Install engine cover mating with the dowels.

Common Chamber

Removal

1. Disconnect battery ground cable.
2. Remove air cleaner duct assembly.

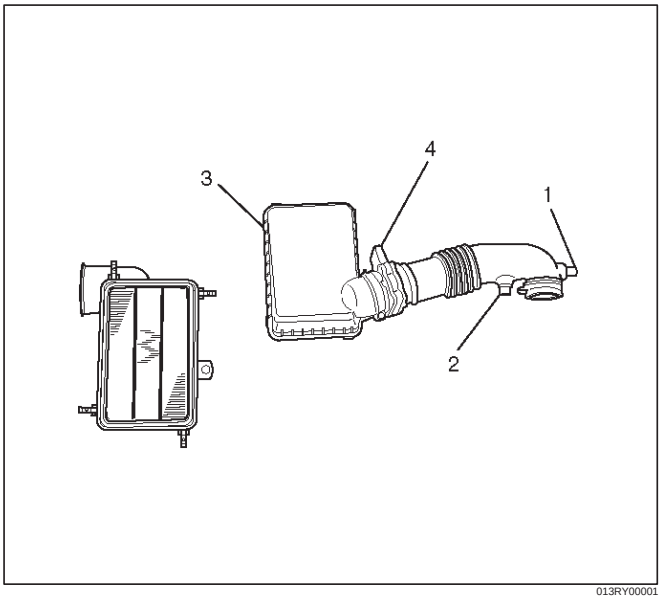

013RY00001

Legend

(1) Positive Crankcase Ventilation Hose Connector
(2) Intake Air Temperature Sensor
(3) Air Cleaner Duct Assembly
(4) Air Flow Sensor

3. Disconnect vacuum booster hose from common chamber.
4. Disconnect connector from manifold absolute pressure sensor, Ion sensing module, throttle position sensor, solenoid valve, electric vacuum sensing valve, and EGR valve.
5. Disconnect vacuum hose on canister VSV and positive crankcase ventilation hose, fuel rail assembly with pressure control valve bracket.
6. Remove ventilation hose from throttle valve and intake duct and remove water hose.
7. Remove the four throttle body fixing bolts.
8. Remove exhaust gas recirculation valve assembly fixing bolt and nut on common chamber and remove EGR valve assembly.
9. Remove two bolts from common chamber rear side to remove fuel hose bracket.
10. Remove common chamber four bolts and four nuts then remove the common chamber.

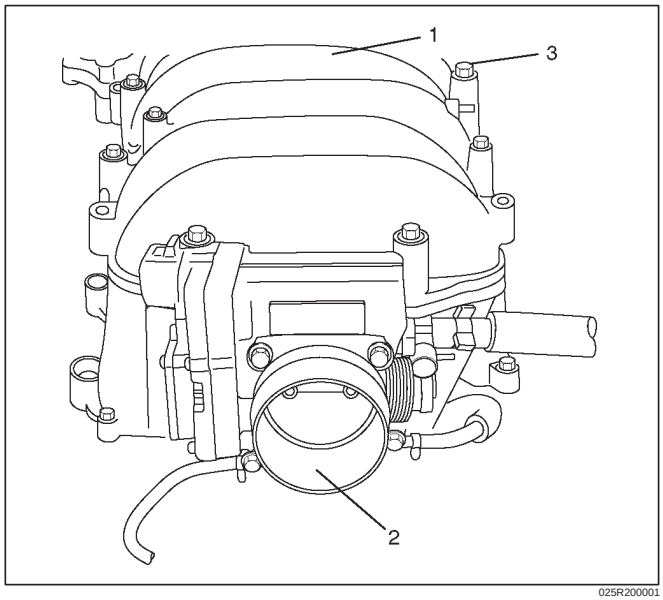

025R200001

Legend

(1) Common Chamber
(2) Throttle Valve Assembly
(3) Bolt

Installation

1. Install common chamber and tighten bolts and nuts to the specified torque.

   Torque :

   Bolt : 25 N·m (2.5 kg·m/18 lb ft)

   Nut : 25 N·m (2.5 kg·m/18 lb ft)
2. Install fuel hose bracket and tighten bolts to specified torque.

   Torque : 10 N·m (1.0 kg·m/87 lb in)
3. Install exhaust gas recirculation valve assembly and tighten bolt and nut to the specified torque.

   Torque : 25 N·m (2.5 kg·m/18 lb ft)
4. Install throttle body and tighten bolts to the specified torque.

   Torque : 25 N·m (2.5 kg·m/18 lb ft)
5. Install ventilating hose to throttle valve and intake duct.
6. Connect vacuum hoses on canister VSV and positive crankcase ventilation hose. Tighten bolts for fuel rail assembly with pressure control valve bracket.

   Torque : 25 N·m (2.5 kg·m/18 lb ft)

7. Connect each connector.
8. Connect vacuum booster hose.
9. Connect the Ion sensing module connectors as shown in the illustration.

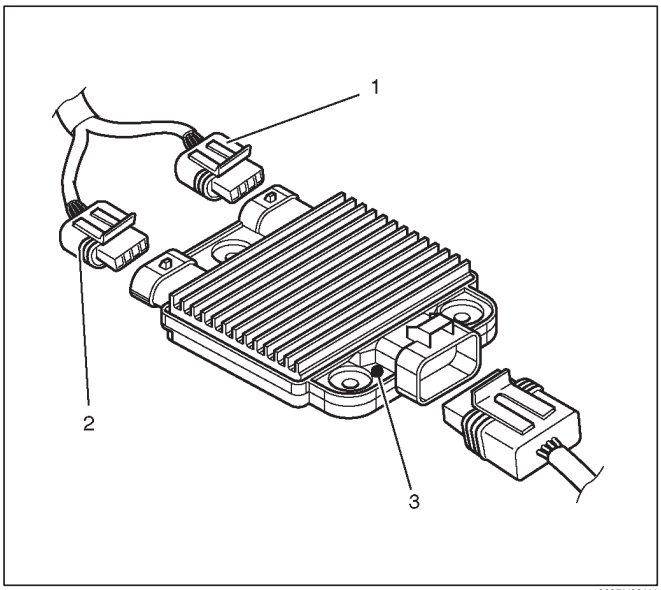

060RY00111

Legend

(1) Green Connector
(2) Blue Connector
(3) Identification Mark (6VE1 Engine Only)

10. Install air cleaner duct assembly.

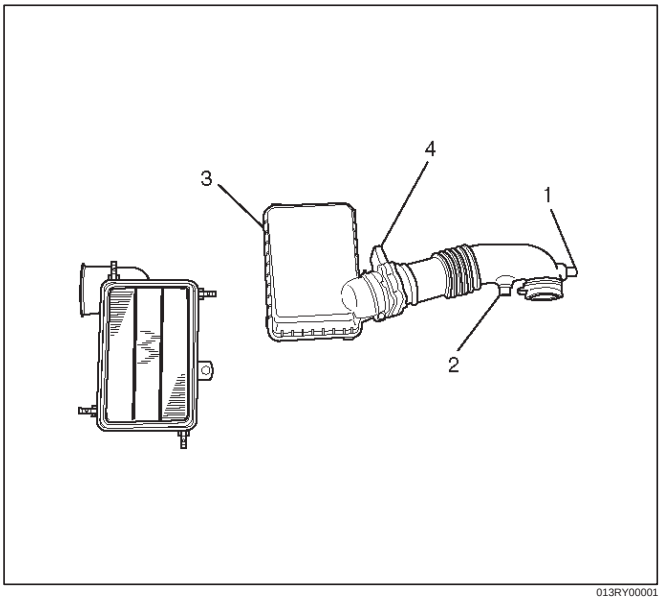

013RY00001

Legend

(1) Positive Crankcase Ventilation Hose Connector
(2) Intake Air Temperature Sensor
(3) Air Cleaner Duct Assembly
(4) Mass Air Flow Sensor

Exhaust Manifold LH

Removal

1. Disconnect battery ground cable.
2. Remove transfer case skid plate.
3. Remove 3rd crossmember.
4. Disconnect Heated oxygen (O_2) sensor connector.
5. Remove the three stud nuts from the front exhaust pipe flange and two nuts from the rear exhaust pipe flange.

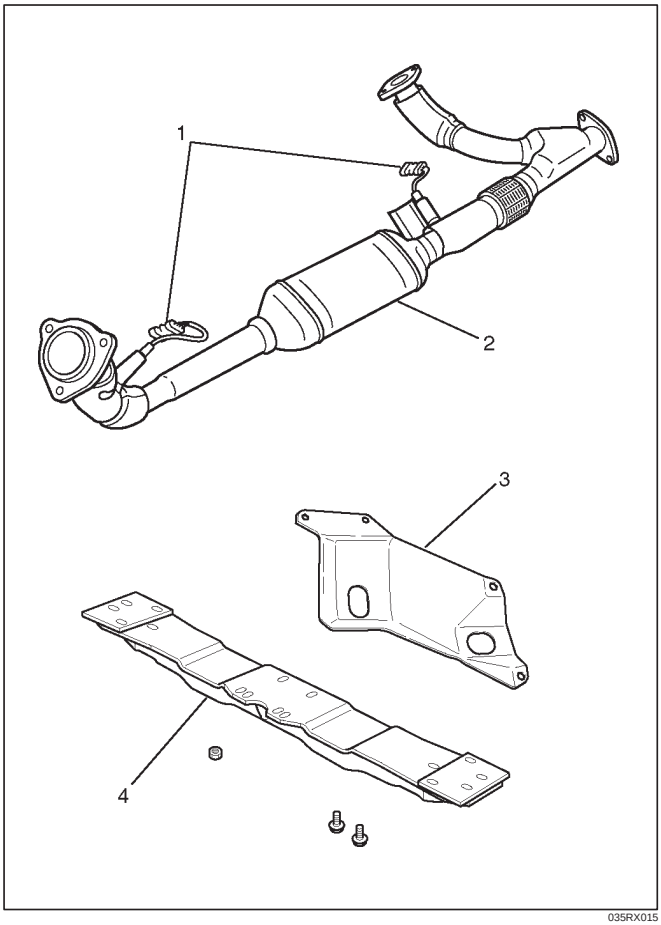

035RX015

Legend

(1) O_2 Sensors
(2) Exhaust Front Pipe LH
(3) Transfer Case Skid Plate
(4) 3rd Crossmember

6. Remove heat protector two fixing bolts then the heat protector.
7. Remove a bolt on engine LH side for air conditioner (A/C) compressor bracket and loosen two bolts for A/C compressor then move A/C compressor to front side.
8. Remove exhaust manifold eight fixing nuts and remove exhaust manifold from the engine.

Installation

1. Install exhaust manifold and gasket and tighten exhaust manifold fixing nuts to the specified torque with new nuts.

   Torque: 52 N·m (5.2 kg·m/38 lb ft)

2. Install heat protector.
3. Install exhaust front pipe's three stud nuts and rear pipe's two nuts to the specified torque.

   Torque :

   Stud nuts: 67 N·m (6.8 kg·m/49 lb ft)

   Nuts: (Exhaust front pipe LH–RH): 57 N·m (5.8 kg·m/42 lb ft)

   Nuts: (Exhaust front pipe-silencer): 43 N·m (4.4 kg·m/32 lb ft)

4. Set A/C compressor to normal position and tighten two bolts to the specified torque.

   Torque : 40 N·m (4.1 kg·m/30 lb ft)

5. Reconnect O_2 sensor connectors.
6. Install 3rd crossmember.
7. Install transfer case skid plate.

Exhaust Manifold RH

Removal

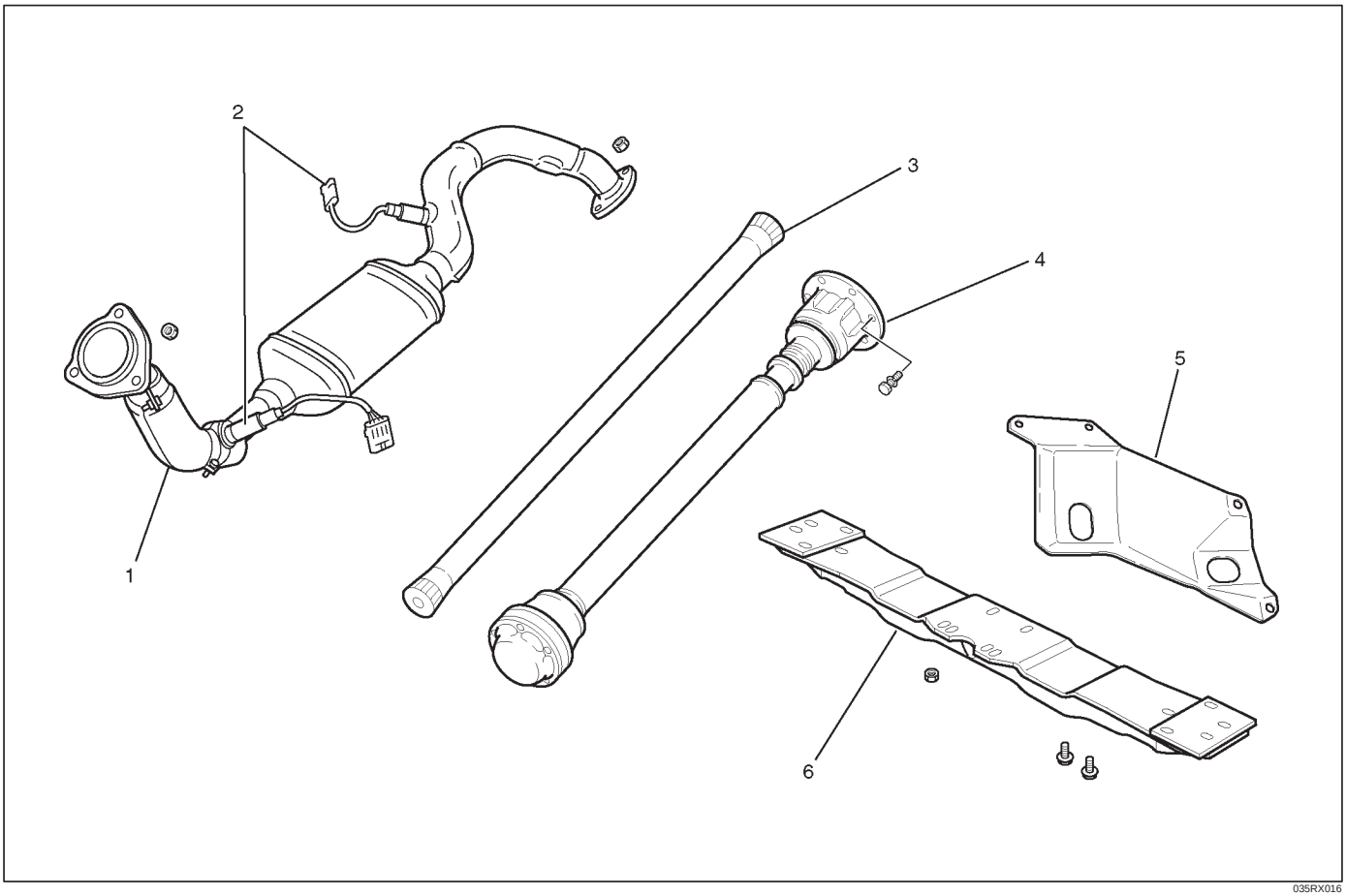

035RX016

Legend

(1) Exhaust Front Pipe RH
(2) O_2 Sensors
(3) Torsion Bar
(4) Front Propeller Shaft
(5) Transfer Case Skid Plate
(6) 3rd Crossmember

1. Disconnect battery ground cable.
2. Remove transfer case skid plate.
3. Remove 3rd crossmember.
4. Remove torsion bar and front propeller shaft. Refer to removal procedure in Front Suspension section.
5. Disconnect front Heated oxygen (O_2) sensor connectors.
6. Remove front exhaust flange pipe three stud nuts and two rear flange nuts then disconnect exhaust pipe.
7. Remove heat protector two fixing bolts then the heat protector.
8. Remove exhaust gas recirculation (EGR) pipe fixing bolt and nut from exhaust manifold, remove a nut from EGR valve and a bolt from rear side of cylinder head for bracket of EGR pipe then remove the EGR pipe.
9. Remove exhaust manifolds eight fixing nuts and the exhaust manifold.

Installation

1. Install exhaust manifold and tighten bolts to the specified torque.

   Torque : 52 N·m (5.3 kg·m/38 lb ft)

2. Install the EGR pipe, tighten bolts and nut on exhaust manifold to specified torque.

   Torque : 28 N·m (2.9 kg·m/21 lb ft)

   Tighten nut to EGR valve to the specified torque.

   Torque : 44 N·m (4.5 kg·m/33lb ft)

   Tighten the bolt for EGR pipe bracket to specified torque.

   Torque : 25 N·m (2.5 kg·m/18 lb ft)

3. Install heat protector
4. Install front exhaust flange pipe and tighten three stud nuts and rear two nuts to the specified torque.

   Torque:

   Stud nuts: 67 N·m (6.8 kg·m/49 lb ft)

Nuts: 57 N·m (5.8 kg·m/42 lb ft)

5. Reconnect O_2 Sensor harness connector.
6. Install the torsion bar and readjust the vehicle height. Refer to installation and vehicle height adjustment procedure for Front Suspension.
7. Install front propeller shaft. Refer to installation procedue in Front suspension section.
8. Install 3rd crossmember.
9. Install transfer case skid plate.

Crankshaft Pulley

Removal

1. Disconnect battery ground cable.
2. Remove air cleaner assembly.

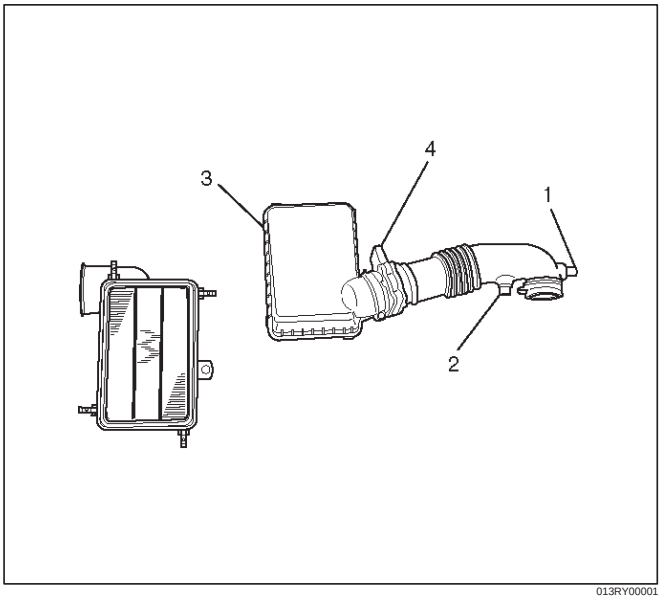

013RY00001

Legend

(1) Positive Crankcase Ventilation Hose Connector
(2) Intake Air Temperature Sensor
(3) Air Cleaner Duct Assembly
(4) Air Flow Sensor

3. Remove radiator upper fan shroud from radiator.
4. Move serpentine belt tensioner to loose side using wrench then remove serpentine belt.

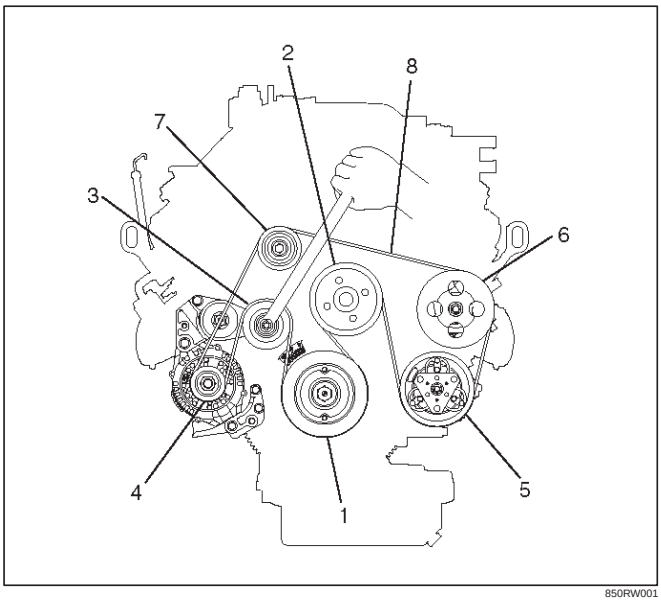

850RW001

Legend

(1) Crankshaft Pulley
(2) Cooling Fan Pulley
(3) Tensioner
(4) Generator
(5) Air Conditioner Compressor
(6) Power Steering Oil Pump
(7) Idle Pulley
(8) Driver Belt

5. Remove cooling fan assembly four fixing nuts, then the cooling fan assembly.
6. Remove crankshaft pulley assembly using 5-8840-0133-0 crankshaft holder, hold crankshaft pulley then remove center bolt and pulley.

Installation

1. Install crankshaft pulley using 5-8840-0133-0 crankshaft holder, hold the crankshaft pulley and tighten center bolt to the specified torque.

   Torque : 167 N·m (17.0 kg·m/123 lb ft)

2. Install cooling fan assembly and tighten bolts/nuts to the specified torque.

   Torque : 22 N·m (2.2 kg·m/16 lb ft) for fan pulley and fan bracket.

   Torque : 10 N·m (1.0 kg·m/87 lb in) for fan and clutch assembly.

3. Move serpentine belt tensioner to loose side using wrench, then install serpentine belt to normal position.
4. Install radiator upper fan shroud.
5. Install air cleaner assembly.

Timing Belt

Removal

1. Disconnect battery ground cable.
2. Remove air cleaner assembly.
3. Remove radiator upper fan shroud from radiator.
4. Move drive belt tensioner to loose side using wrench then remove drive belt.

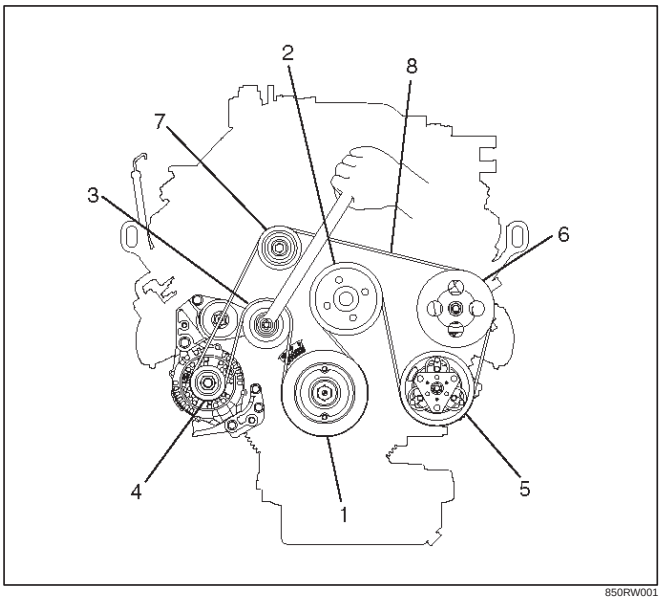

850RW001

Legend

(1) Crankshaft Pulley
(2) Cooling Fan Pulley
(3) Tensioner
(4) Generator
(5) Air Conditioner Compressor
(6) Power Steering Oil Pump
(7) Idle Pulley
(8) Drive Belt

5. Remove cooling fan assembly four nuts, then the cooling fan assembly.
6. Remove cooling fan drive pulley assembly.
7. Remove idle pulley assembly.
8. Remove serpentine belt tensioner assembly.
9. Remove power steering pump assembly.
10. Remove crankshaft pulley assembly using 5-8840-0133-0 crankshaft holder, hold crankshaft pulley remove center bolt, then the pulley.
11. Remove right side timing belt cover then left side timing belt cover.
12. Remove lower timing belt cover
13. Remove pusher.

CAUTION: The pusher prevents air from entering the oil chamber. Its rod must always be facing upward.

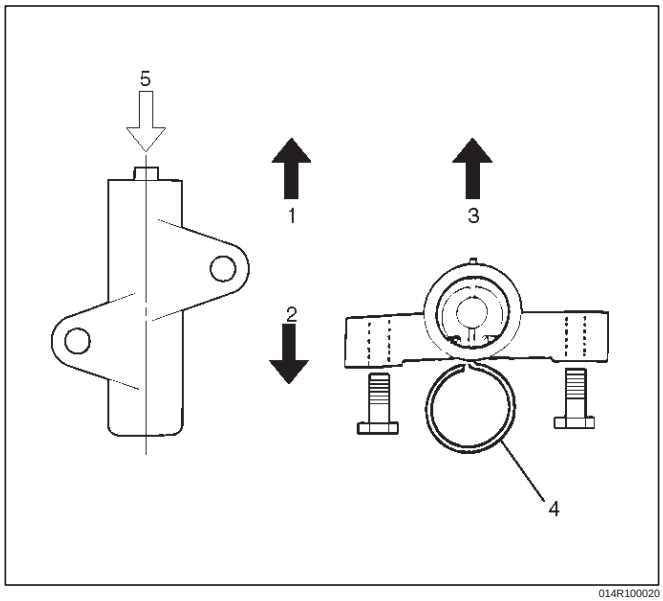

014R100020

Legend

(1) Up Side
(2) Down Side
(3) Direction For Installation
(4) Locking Pin
(5) Apply a force of 980 N (220 lb) when compressing the pusher rod.

14. Remove timing belt.

CAUTION:

1. **Do not bend or twist the belt, otherwise its core could be damaged. The belt should not be bent at a radius less than 30 mm (1.1811 in).**
2. **Do not allow oil or other chemical substances to come in contact with the belt. They will shorten the life.**
3. **Do not attempt to pry or stretch the belt with a screw driver or any other tool during installation.**
4. **Store timing belt in a cool and dark place. Never expose the belt direct sunlight or heat.**

Installation

NOTE: For correct belt installation, the letter on the belt must be able to be read as viewed from the front of the vehicle.

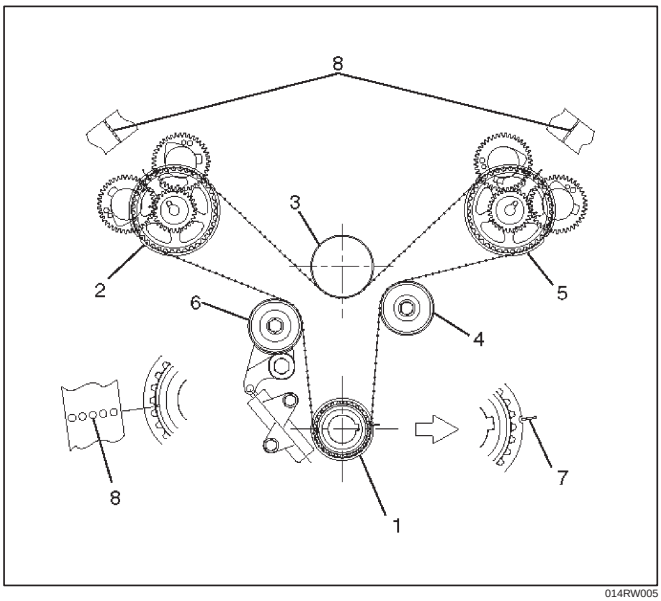

014RW005

Legend

(1) Crankshaft Timing Pulley
(2) RH Bank Camshaft Drive Gear Pulley
(3) Water Pump Pulley
(4) Idle Pulley
(5) LH Bank Camshaft Drive Gear Pulley
(6) Tension Pulley
(7) Alignment Mark on Oil Pump.
(8) Alignment Mark on Timing Belt

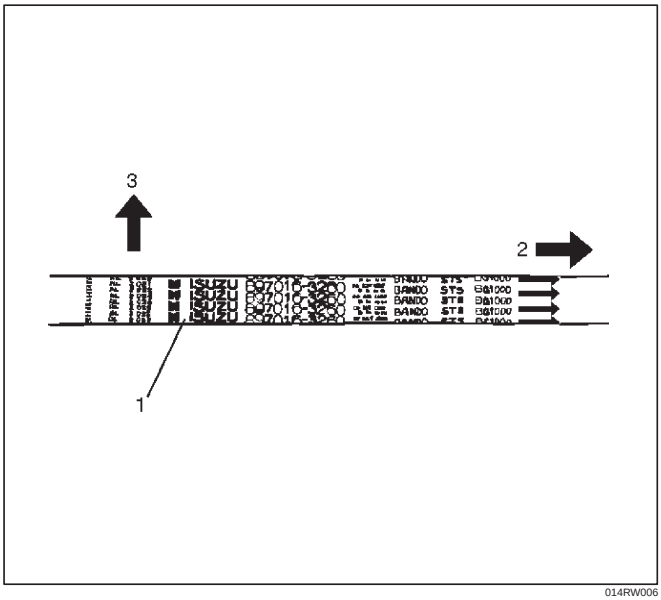

014RW006

Legend

(1) Timing Belt
(2) Engine Rotation Direction
(3) Cylinder Head Side

1. Install timing belt.
   1. Align groove of crankshaft timing pulley (2) with mark on oil pump (1).
      Align the mark on the crankshaft timing pulley (3) with alignment mark (white dotted line) on the timing belt (4).
      Secure the belt with a double clip or equivalent clip.

NOTE: When timing marks are aligned, No.2 piston will be on Top Dead Center.

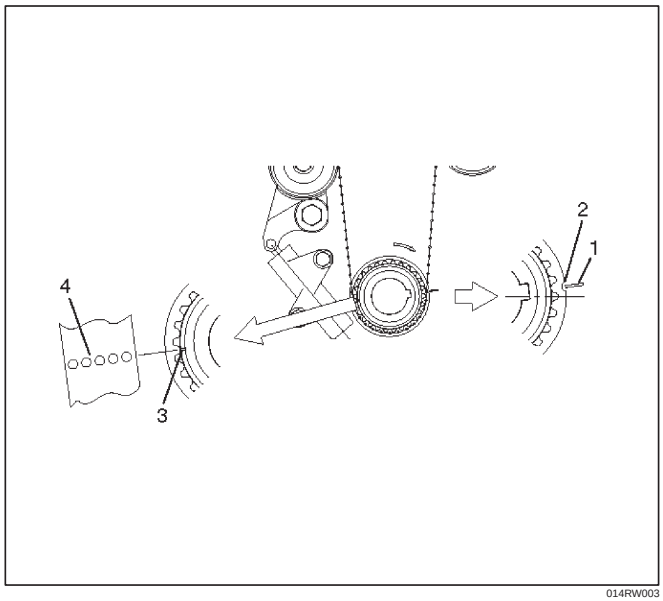

014RW003

Legend

(1) Alignment Mark on Oil Pump
(2) Groove on Crankshaft Timing Pulley
(3) Alignment Mark on Crankshaft Timing Pulley
(4) Alignment Mark on Timing Belt

2. Align the alignment mark on the RH bank camshaft drive pulley (2) to the alignment mark of the cylinder head cover RH (3).
   The camshaft pulley is not 1:1 with the camshafts. It is necessary to rotate the camshaft pulley until the camshaft lobes are in the position as shown in the diagram on page 6A–34.
   The camshaft pulley alignment mark should also align with alignment mark on the cylinder head cover.
   It may require up to four revolutions of the camshaft pulley to achieve alignment of all marks.

3. Align the alignment mark (white line) on the timing belt (1) with alignment mark on the RH bank camshaft drive pulley (2) (on the left side as viewed from the front of the vehicle) and put the timing belt on the camshaft drive pulley.

   Secure the belt with a double clip or equivalent clip.

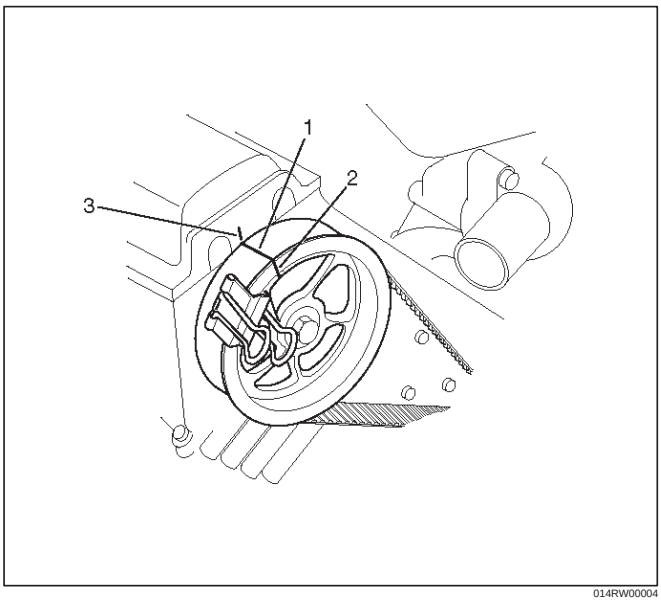

014RW00004

Legend

(1) Alignment Mark on Timing Belt (White line).
(2) Alignment Mark on Camshaft Drive Pulley.
(3) Alignment Mark on Cylinder Head Cover RH.

4. Align the alignment mark on the LH bank camshaft drive pulley (2) to the alignment mark of the cylinder head cover LH (3).

   The camshaft pulley is not 1:1 with the camshafts. It is necessary to rotate the camshaft pulley until the camshaft lobes are in the position as shown in the diagram on page 6A–34.
   The camshaft pulley alignment mark should also align with alignment mark on the cylinder head cover.
   It may require up to four revolutions of the camshaft pulley to achieve alignment of all marks.

5. Align the alignment mark (white line) on the timing belt (1) with the alignment mark on the LH bank camshaft drive pulley (2).

   When aligning the timing marks, use a wrench to turn the camshaft drive pulley, then set the timing mark between timing belt and camshaft drive pulley and put the timing belt on the camshaft drive pulley.
   Secure the belt with a double clip or equivalent clip.

NOTE: It is recommended for easy installation that the belt be secured with a double clip or equivalent clips after it is installed to each pulley.

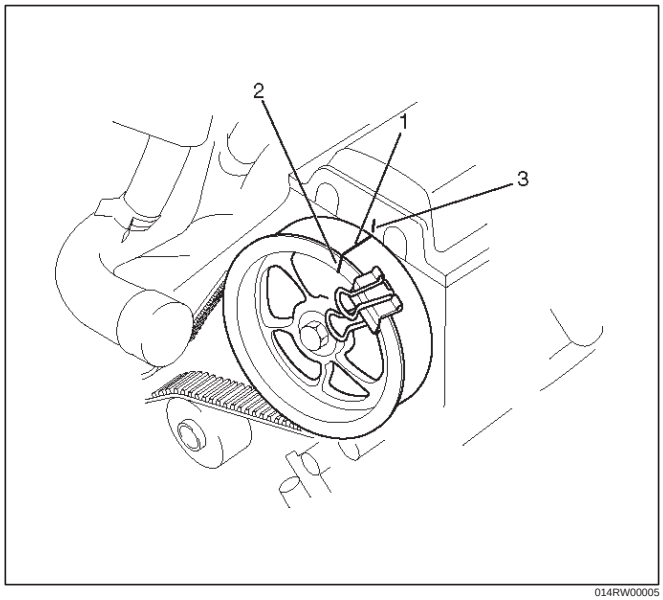

014RW00005

Legend

(1) Alignment Mark on Timing Belt (White line).
(2) Alignment Mark on Camshaft Drive Pulley.
(3) Alignment Mark on Cylinder Head Cover LH.

6. Install crankshaft pulley temporarily and tighten center bolt by hand (do not use a wrench).

   Turn the crankshaft pulley clockwise to give some belt slack between the crankshaft timing pulley and the RH bank camshaft drive pulley.

2. Install pusher and tighten bolt to the specified torque.

   Torque : 25 N·m (2.5 kg·m/18 lb ft)

   1. Install the pusher while pushing the tension pulley to the belt.
   2. Pull out pin from the pusher.

NOTE: When reusing the pusher, press the pusher with approximately 980 N (100 kgf/220 lb) to retract the rod, and insert a pin (1.4 mm (0.055 in) piano wire).

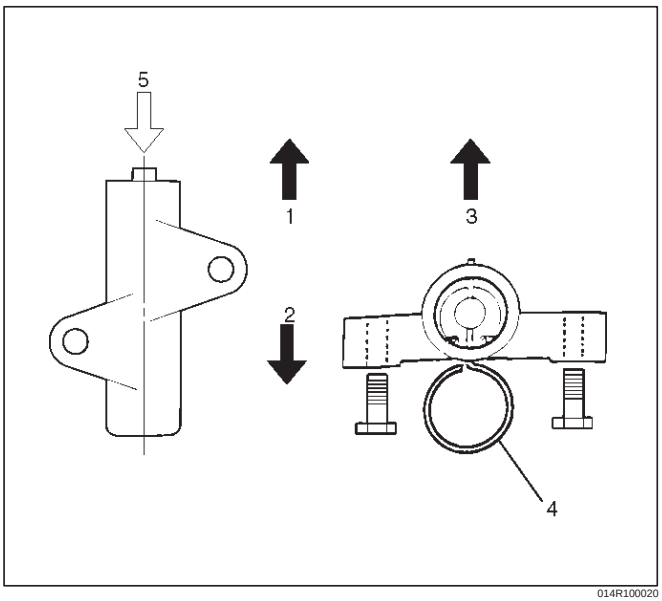

014R100020

Legend

(1) Up Side
(2) Down Side
(3) Direction for Installation
(4) Locking Pin
(5) Apply a force of 980 N (100 kgf/220 lb) when compressing the pusher rod.

After release the push rod from the locking pin, the rod projection is approximate 5 mm (0.1969 in).

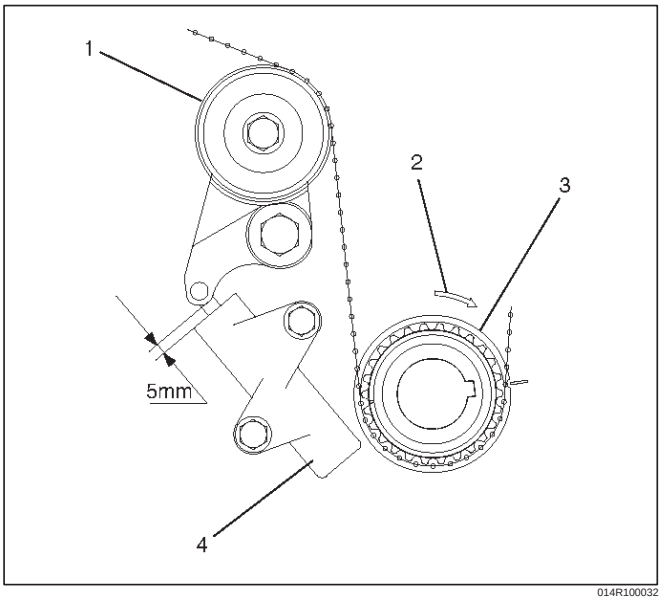

014R100032

Legend

(1) Tensioner Pulley
(2) Crankshaft Pulley Rotation Direction
(3) Crankshaft Pulley
(4) Pusher Assembly

3. Remove double clips or equivalent clips from timing belt pulleys.

   Turn the crankshaft pulley by six turns and check for timing mark alignment.

3. Install timing belt cover.

   Remove crankshaft pulley that was installed in step 1 item 5.

   Tighten bolts to the specified torque.

   Torque: 19 N·m (1.9 kg·m/14 lb ft)

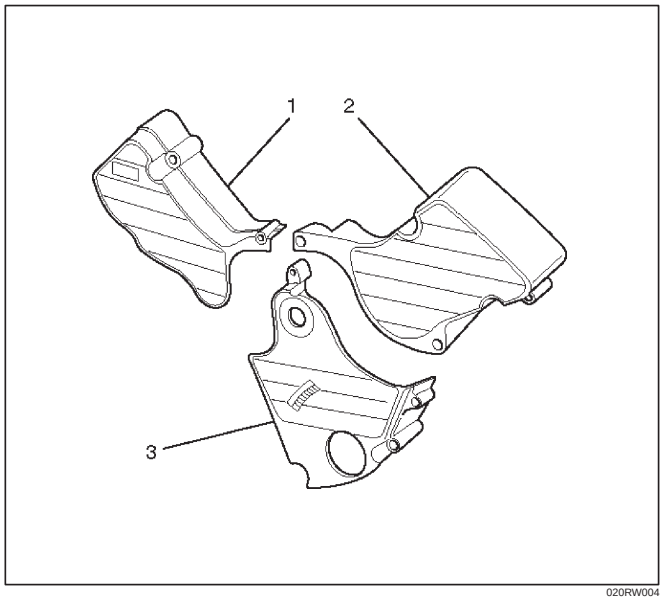

020RW004

Legend

(1) Timing Belt Cover RH
(2) Timing Belt Cover LH
(3) Timing Belt Cover Lower

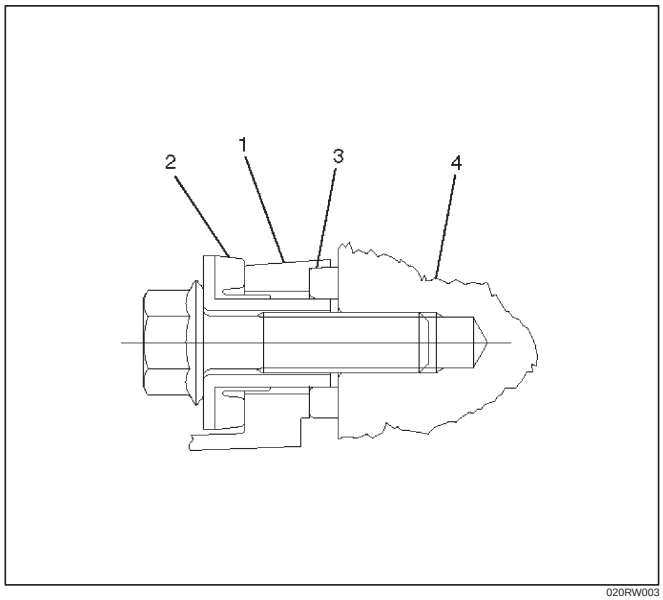

020RW003

Legend

(1) Timing Belt Cover
(2) Rubber Bushing
(3) Sealing Rubber
(4) Cylinder Body

4. Install crankshaft pulley using 5-8840-0133-0, hold the crankshaft pulley and tighten center bolt to the specified torque.

   Torque : 167 N·m (17.0 kg·m/123 lb ft)

5. Install fan pulley bracket and tighten fixing bolts to the specified torque.

   Torque : 22 N·m (2.2 kg·m/16 lb ft)

6. Install power steering pump assembly and tighten to the specified torque.

   Torque :

   M8 bolt : 22 N·m (2.2 kg·m/16 lb ft)

   M10 bolt : 46 N·m (4.7 kg·m/34 lb ft)

7. Install cooling fan assembly and tighten bolts/nuts to the specified torque.

   Torque : 22 N·m (2.2 kg·m/16 lb ft) for fan pulley and fan bracket.

   Torque : 10 N·m (1.0 kg·m/87 lb in) for fan and clutch assembly.

8. Move drive belt tensioner to loose side using wrench, then install drive belt to normal position.

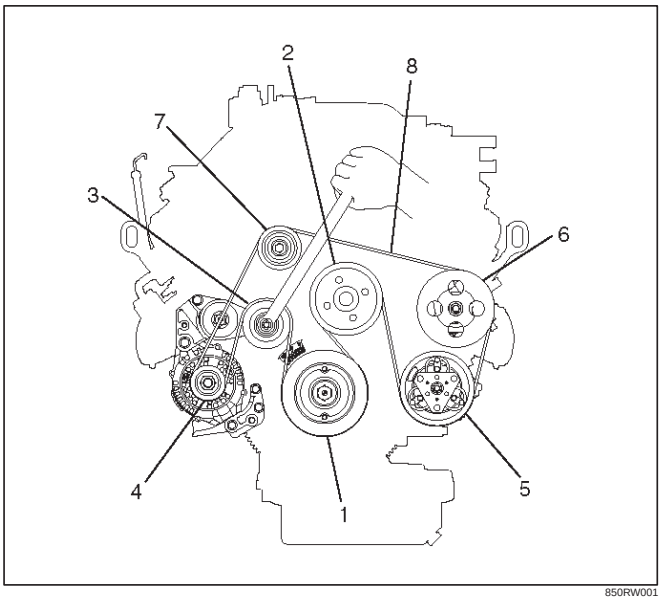

850RW001

Legend

(1) Crankshaft Pulley
(2) Cooling Fan Pulley
(3) Tensioner
(4) Generator
(5) Air Conditioner Compressor
(6) Power Steering Oil Pump
(7) Idle Pulley
(8) Drive Belt

9. Install radiator upper fan shroud.
10. Install air cleaner assembly.

Camshaft

Removal

1. Disconnect battery ground cable.
2. Remove crankshaft pulley.
   - Refer to removal procedure for Crankshaft Pulley in this manual.
3. Remove timing belt.
   - Refer to removal procedure for Timing Belt in this manual.
4. Remove cylinder head cover LH.
   - Refer to removal procedure for Cylinder Head Cover LH in this manual.
5. Remove cylinder head cover RH.
   - Refer to removal procedure for Cylinder Head Cover RH in this manual.
6. Remove twenty fixing bolts from inlet and exhaust camshaft bearing cap on one side bank, then camshaft bearing cap.

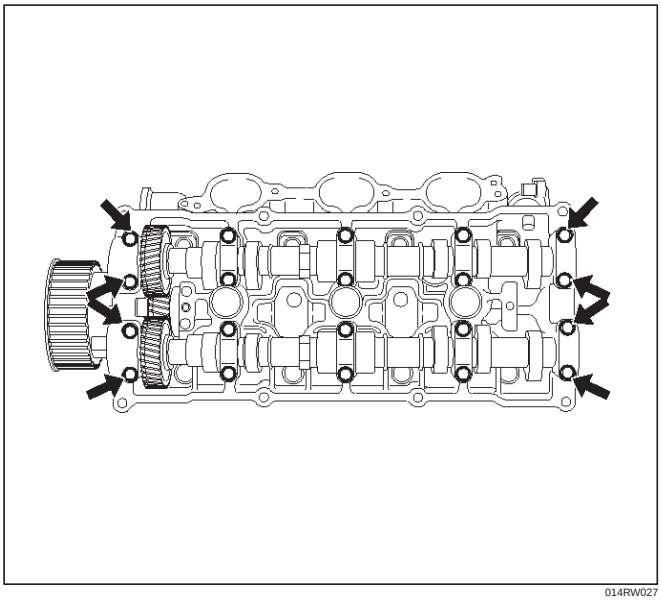

014RW027

7. Remove camshaft assembly.
8. Remove fixing bolt for camshaft drive gear pulley.
9. Remove three fixing bolts from camshaft drive gear retainer, then camshaft drive gear assembly.

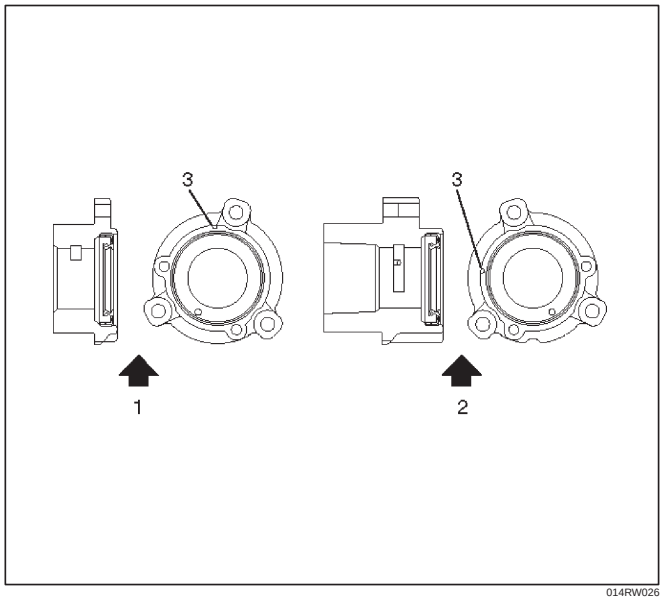

014RW026

Legend

(1) Right Bank
(2) Left Bank
(3) Timing Mark on Retainer

Installation

1. Install camshaft drive gear assembly and tighten three bolts to the specified torque.

   Torque : 10 N·m (1.0 kg·m/87 lb in)

2. Tighten bolt for camshaft drive gear assembly pulley to the specified torque.

   Torque : 98 N·m (10.0 kg·m/72 lb ft)

3. Tighten sub gear setting bolt.
   1. Use 5-8840-2443-0 to turn sub gear to right direction until it aligns with the M5 bolt hole between camshaft driven gear and sub gear.
   2. Tighten the M5 bolt to a suitable torque to prevent the sub gear from moving.

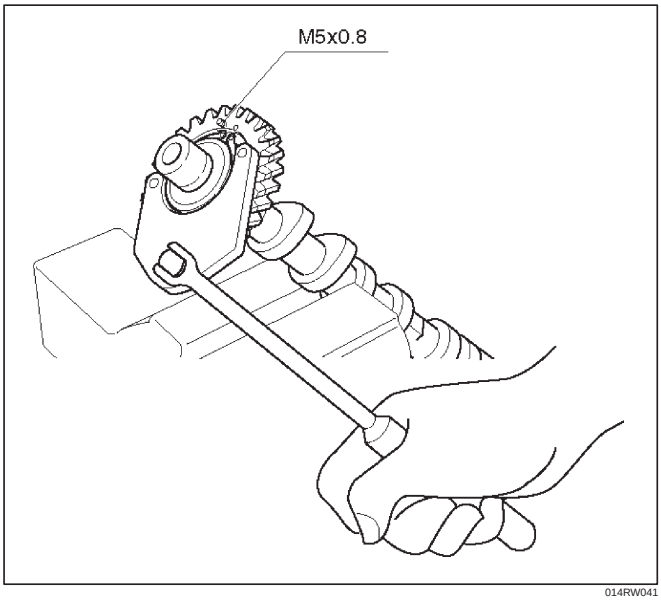

014RW041

4. Install camshaft assembly and camshaft bearing caps, tighten twenty bolts on one side bank to the specified torque.
   1. Apply engine oil to camshaft journal and bearing surface of camshaft bearing caps.
   2. Align timing mark on intake camshaft (one dot for right bank, two dot for left bank) and exhaust camshaft (one dots for right bank, two dots for left bank) to timing mark on camshaft drive gear (one dot).

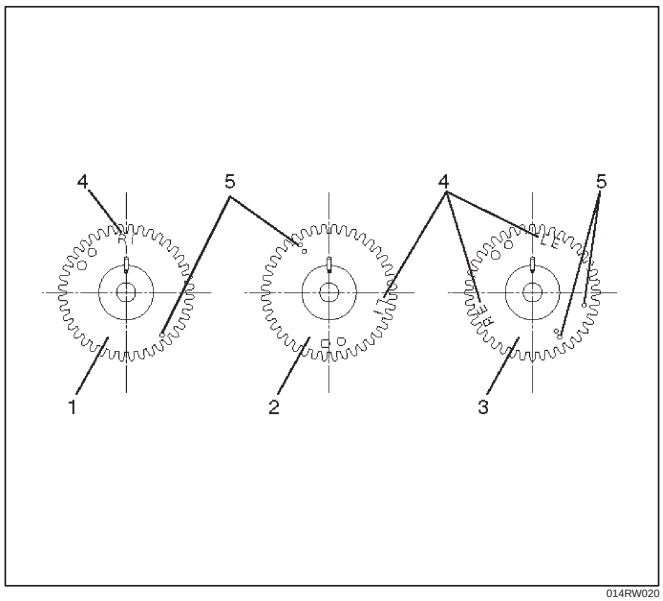

014RW020

Legend

(1) Intake Camshaft Timing Gear for Right Bank
(2) Intake Camshaft Timing Gear for Left Bank
(3) Exhaust Camshaft Timing Gear
(4) Discrimination Mark
(LI: Left bank intake, RI: Right bank intake)
(LE: Left bank exhaust, RE: Right bank exhaust)

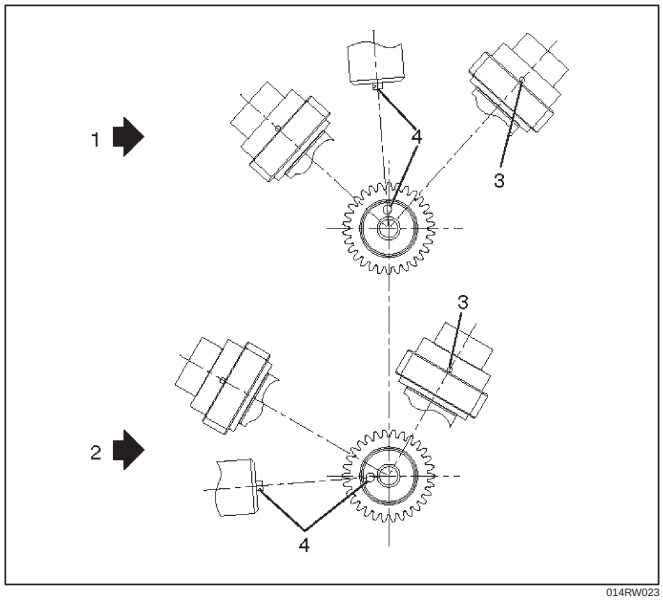

014RW023

Legend

(1) Right Bank Camshaft Drive Gear
(2) Left Bank Camshaft Drive Gear
(3) Timing Mark on Drive Gear
(4) Dowel Pin

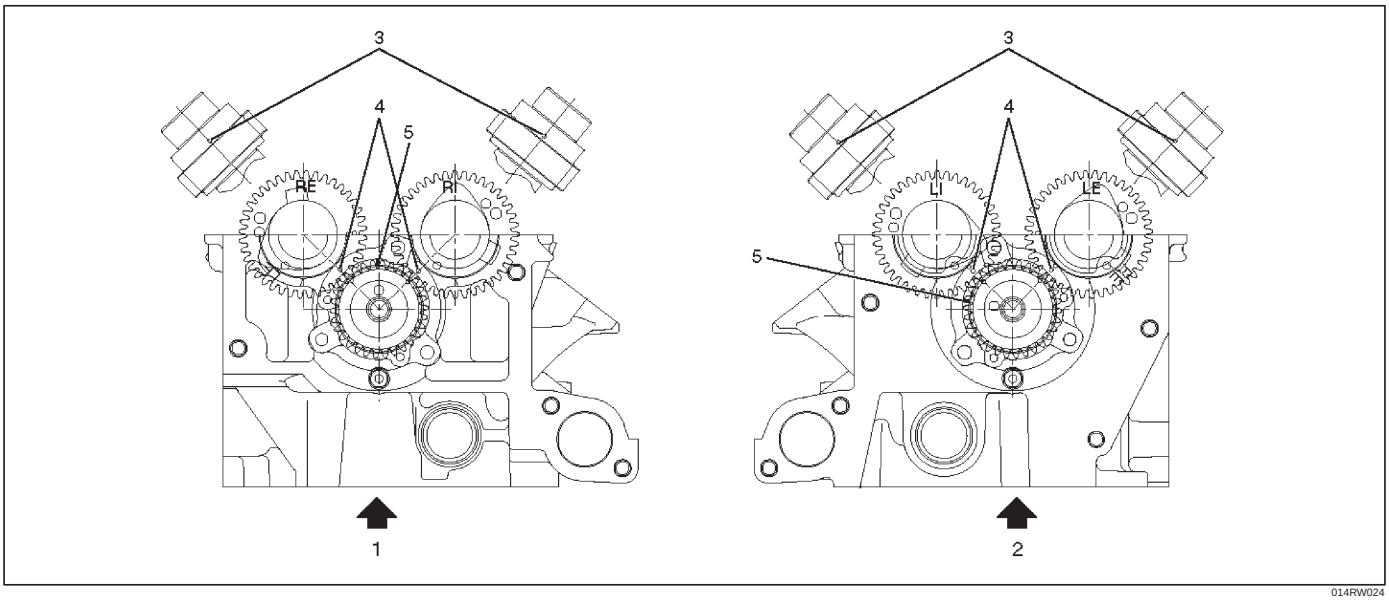

014RW024

Legend

(1) Right Bank
(2) Left Bank
(3) Alignment Mark on Camshaft Drive Gear
(4) Alignment Mark on Camshaft
(5) Alignment Mark on Retainer

3. Tighten twenty bolts on numerical order an one side bank as shown in the illustration.

Torque : 10 N·m (1.0 kg·m/87 lb in)

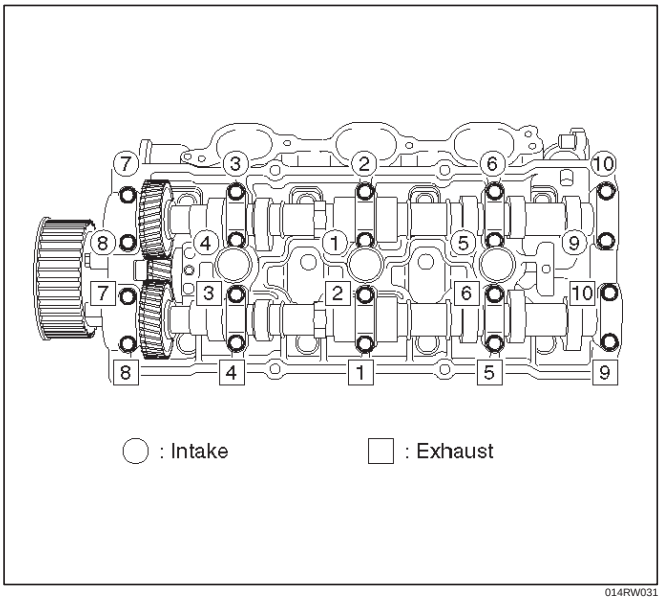

014RW031

5. Install cylinder head cover RH.
   - Refer to installation procedure for CYLINDER HEAD COVER RH in this manual.
6. Install cylinder head cover LH.
   - Refer to installation procedure for CYLINDER HEAD COVER LH in this manual.
7. Install timing belt.
   - Refer to installation procedure for TIMING BELT in this manual.
8. Install crankshaft pulley.
   - Refer to installation procedure for CRANKSHAFT PULLEY in this manual.

Cylinder Head

Removal

1. Remove engine hood.
2. Disconnect battery ground cable.
3. Drain radiator coolant.
4. Drain engine oil.
5. Remove crankshaft pulley.
   - Refer to removal procedure for Crankshaft Pulley in this manual.
6. Remove timing belt.
   - Refer to removal procedure for Timing Belt in this manual.
7. Remove cylinder head cover LH.
   - Refer to removal procedure for Cylinder Head Cover LH in this manual.
8. Remove cylinder head cover RH.
   - Refer to removal procedure for Cylinder Head Cover RH in this manual.
9. Remove common chamber.
   - Refer to removal procedure for Common Chamber in this manual.
10. Remove cylinder head assembly.
    1. Loosen head bolts in reverse of tightening sequence.
    2. Remove cylinder head assembly.

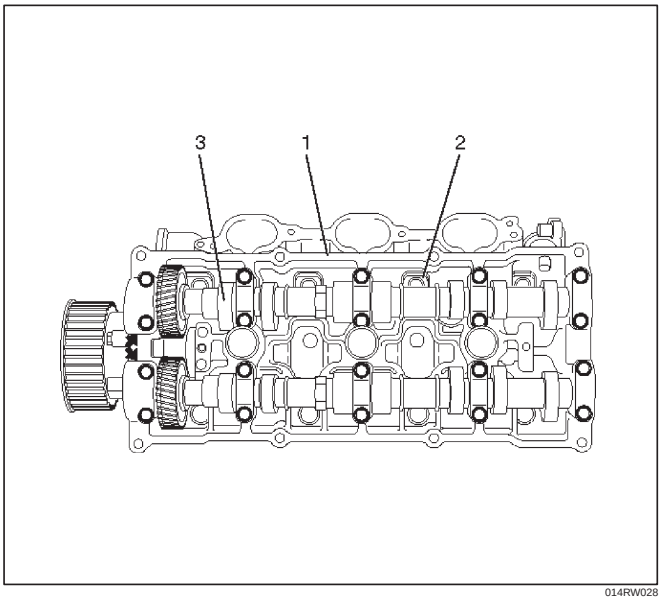

014RW028

Legend

(1) Cylinder Head
(2) Cylinder Head Bolt
(3) Camshaft

Installation

1. Install cylinder head assembly to cylinder block.
   A. Put cylinder head gasket on the cylinder block.

NOTE: There is discrimination mark “R” for right bank and “L” for left bank on the cylinder head gasket as shown in the illustration.

Do not reuse cylinder head gasket.

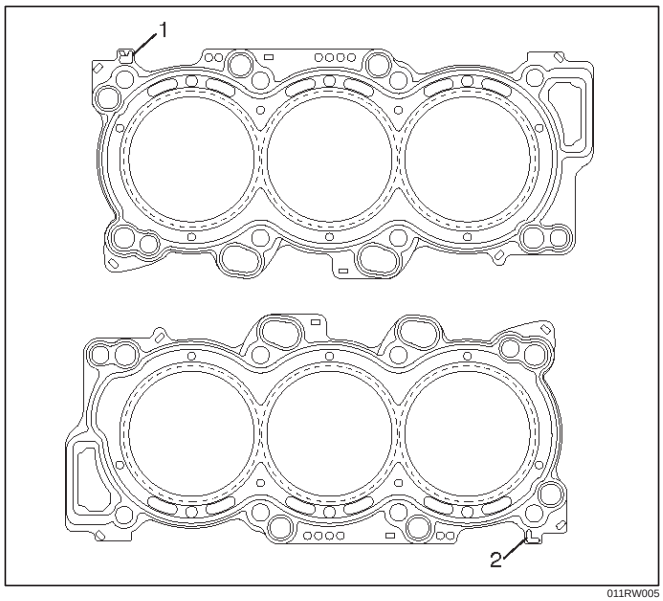

011RW005

B. Align dowel pin hole to dowel pin on the cylinder block.
C. Position cylinder head on the cylinder block.
D. Tighten two bolts temporarily by hand to prevent the cylinder head assembly from moving.
E. Using 9-8511-4209-0 cylinder head bolt wrench, tighten bolts in numerical order as shown in the illustration to the specified torque.

NOTE: Do not reuse cylinder head bolts.
Do not apply any lubricant to the cylinder head bolts.

Torque :
Temporary : 29 N·m (3.0 kg·m/22 lb ft)
Final : 64 N·m (4.8 kg·m/47 lb ft)

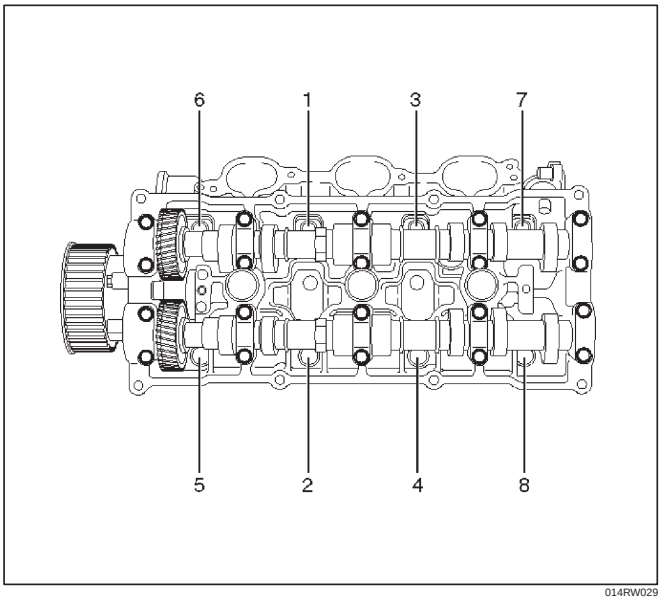

014RW029

2. Install common chamber.
   - Refer to installation procedure for Common Chamber in this manual.
3. Install cylinder head cover RH.
   - Refer to installation procedure for Cylinder Head Cover RH in this manual.
4. Install cylinder head cover LH.
   - Refer to installation procedure for Cylinder Head Cover LH in this manual.
5. Install timing belt.
   - Refer to installation procedure for Timing Belt in this manual.
6. Install crankshaft pulley.
   - Refer to installation procedure for Crankshaft Pulley in this manual.

Valve Stem Oil Controller , Valve Spring and Valve Guide

Removal

1. Disconnect battery ground cable.
2. Drain engine oil.
   - Drain engine coolant.
3. Remove cylinder head assembly.
   - Refer to removal procedure for Cylinder Head in this manual.
4. Remove camshaft.
   - Refer to removal procedure for Camshaft in this manual.
5. Remove tappets with shim.

NOTE: Do not damage shim surface.

6. Remove valve springs using 5-8840-2446-0 valve spring compressor and 5-8840-2547-0 valve spring compressor adapter then remove upper valve spring seat and lower seat.

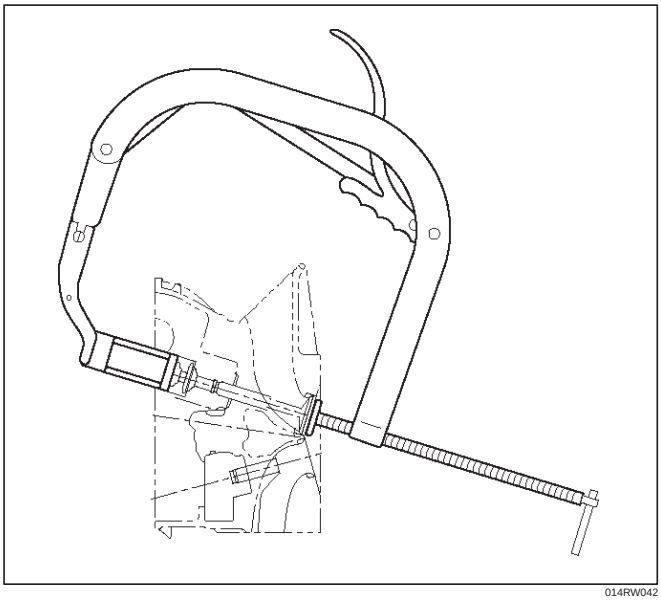

014RW042

7. Remove oil controller using 5-8840-0623-0 oil controller remover, remove each valve stem oil controller.
8. Remove valve guide using 5-8840-2549-0 valve guide replacer.

Installation

1. Install valve guide using 5-8840-2442-0 valve guide installer.
2. Install oil controller using 5-8840-0624-0 oil controller installer.
3. Install lower valve spring seat, valve spring and upper valve spring seat then put split collars on the upper spring seat, using 5-8840-2446-0 valve spring compressor and 5-8840-2547-0 valve spring compressor adapter to install the split collars.

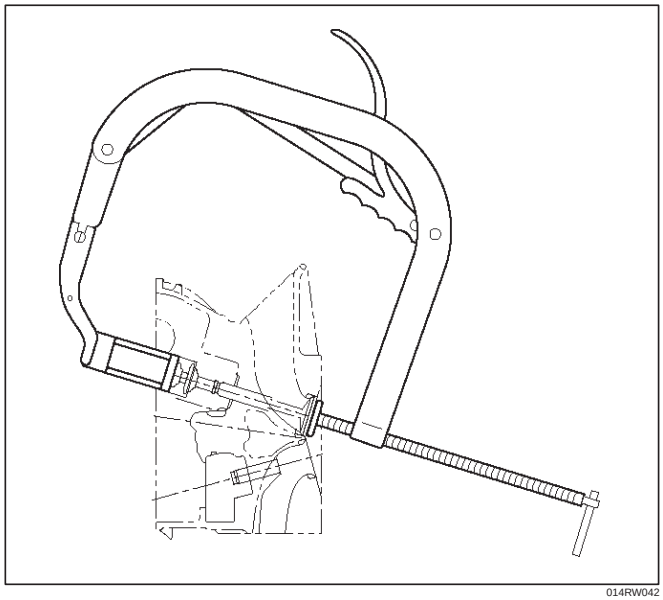

014RW042

4. Install tappet with shim.
5. Install camshaft assembly.
   - Refer to installation procedure for Camshaft in this manual.
6. Install cylinder head assembly.
   - Refer to installation procedure for Cylinder Head in this manual.
7. Fill engine oil until full level.
8. Fill engine coolant.

Piston, Piston Ring and Connecting Rod

Removal

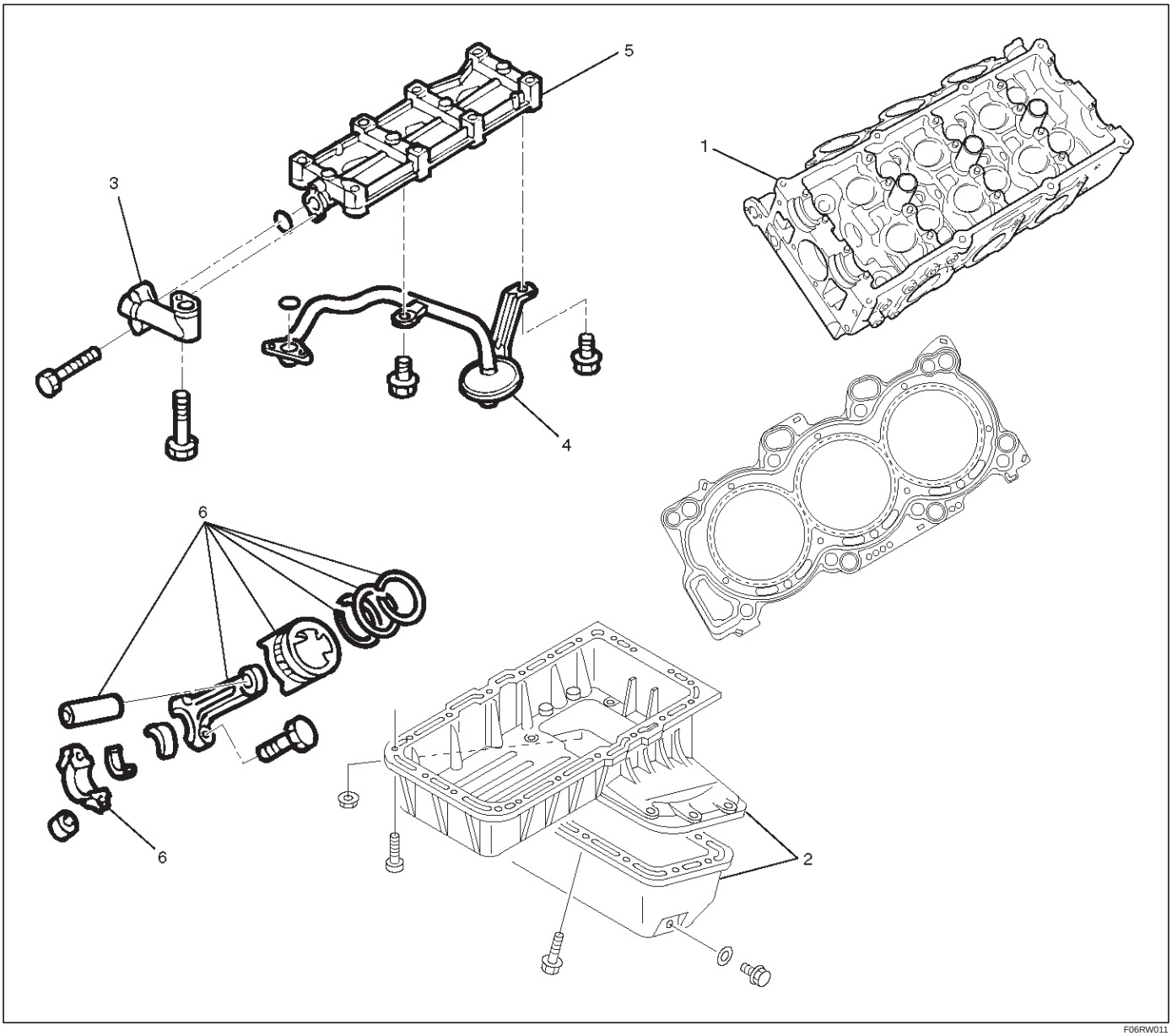

F06RW011

Legend

(1) Cylinder Head
(2) Crankcase with Oil Pan
(3) Oil Pipe
(4) Oil Strainer
(5) Oil Gallery
(6) Piston with Connecting Rod Assembly

1. Remove cylinder head assembly.
   - Refer to removal procedure for Cylinder Head in this manual.
2. Remove crankcase with oil pan.
   - Refer to removal procedure for Oil Pan and Crankcase in this manual.

3. Remove oil strainer fixing bolts, remove oil strainer assembly with O-ring.

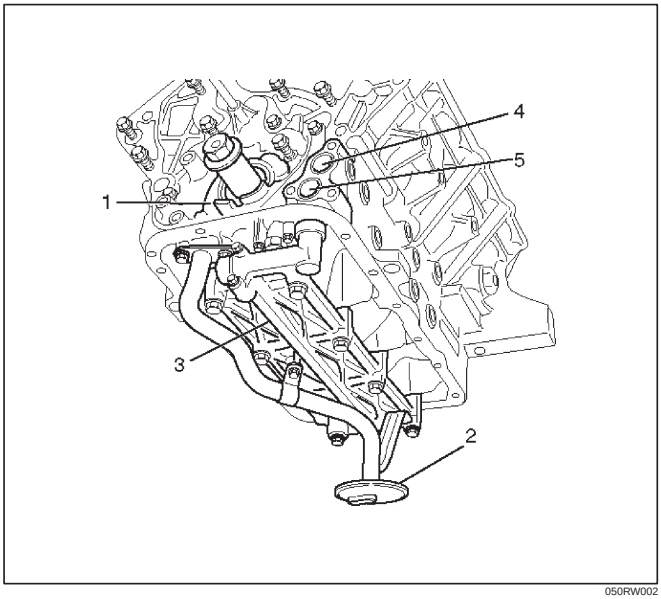

050RW002

Legend
(1) Oil Pump
(2) Oil Strainer
(3) Oil Gallery
(4) From Oil Filter
(5) To Oil Filter

4. Remove three fixing bolts, oil pipe with O-ring.
5. Remove eight fixing bolts, oil gallery.
6. Remove piston with connecting rod assembly. (before removing the bearing cap, remove carbon on the top of cylinder bore and push piston with connecting rod out from the top of cylinder bore.)

Installation

1. Install piston with connecting rod assembly.
   - Apply engine oil to cylinder bore, connecting rod bearing and crank pin.
     When installing the piston, its front mark must face the engine front side.
   - The bearing cap number must be the same as connecting rod number.
   - Apply engine oil to the thread and seating surface of each nut.
   - Tighten nuts to the specified torque.

   Torque : 54 N·m (5.5 kg·m/40 lb ft)

   - After tightening the nuts, make sure that the crankshaft rotates smoothly.

NOTE: Do not apply engine oil to the bearing back faces and connecting rod bearing fitting surfaces.

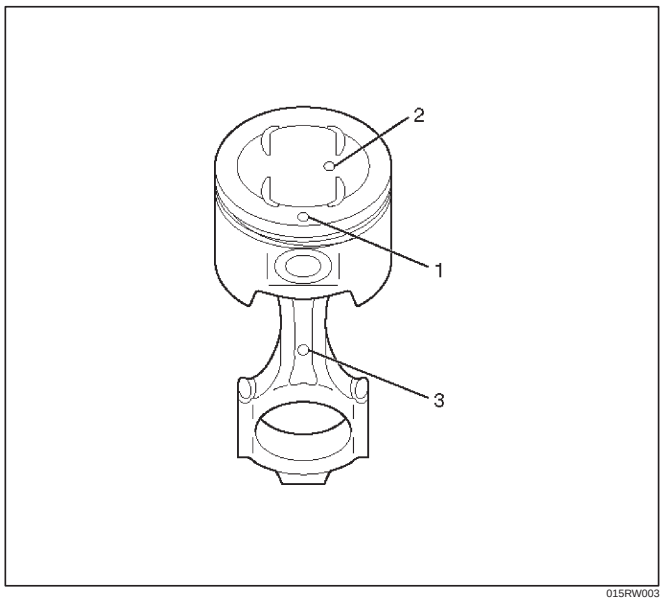

015RW003

Legend
(1) Piston Front Mark
(2) Piston Grade
(3) Connecting Rod Front Mark

2. Install oil gallery and tighten the bolts in two steps, in the order shown in illustration.

   Torque :

   1st step : 29 N·m (3.0 kg·m/22 lb ft)

   2nd step : 55°–65°

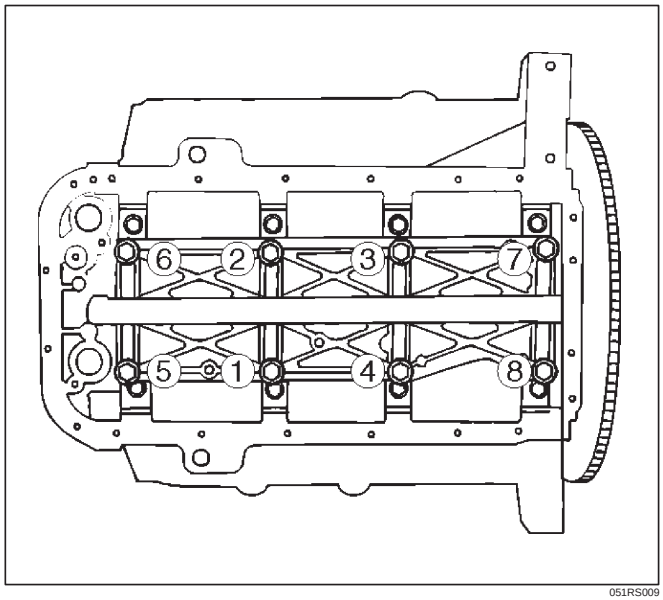

051RS009

3. Install oil pipe with O-ring.

   Torque : 10 N·m (1.0 kg·m/87 lb in)

4. Install oil strainer assembly with O-ring.

   Torque : 25 N·m (2.5 kg·m/18 lb ft)

5. Install crankcase with oil pan.
   - Refer to installation procedure for Oil Pan and Crankcase in this manual.
6. Install cylinder head assembly.
   - Refer to installation procedure for Cylinder Head in this manual.

Crankshaft and Main Bearings

Removal

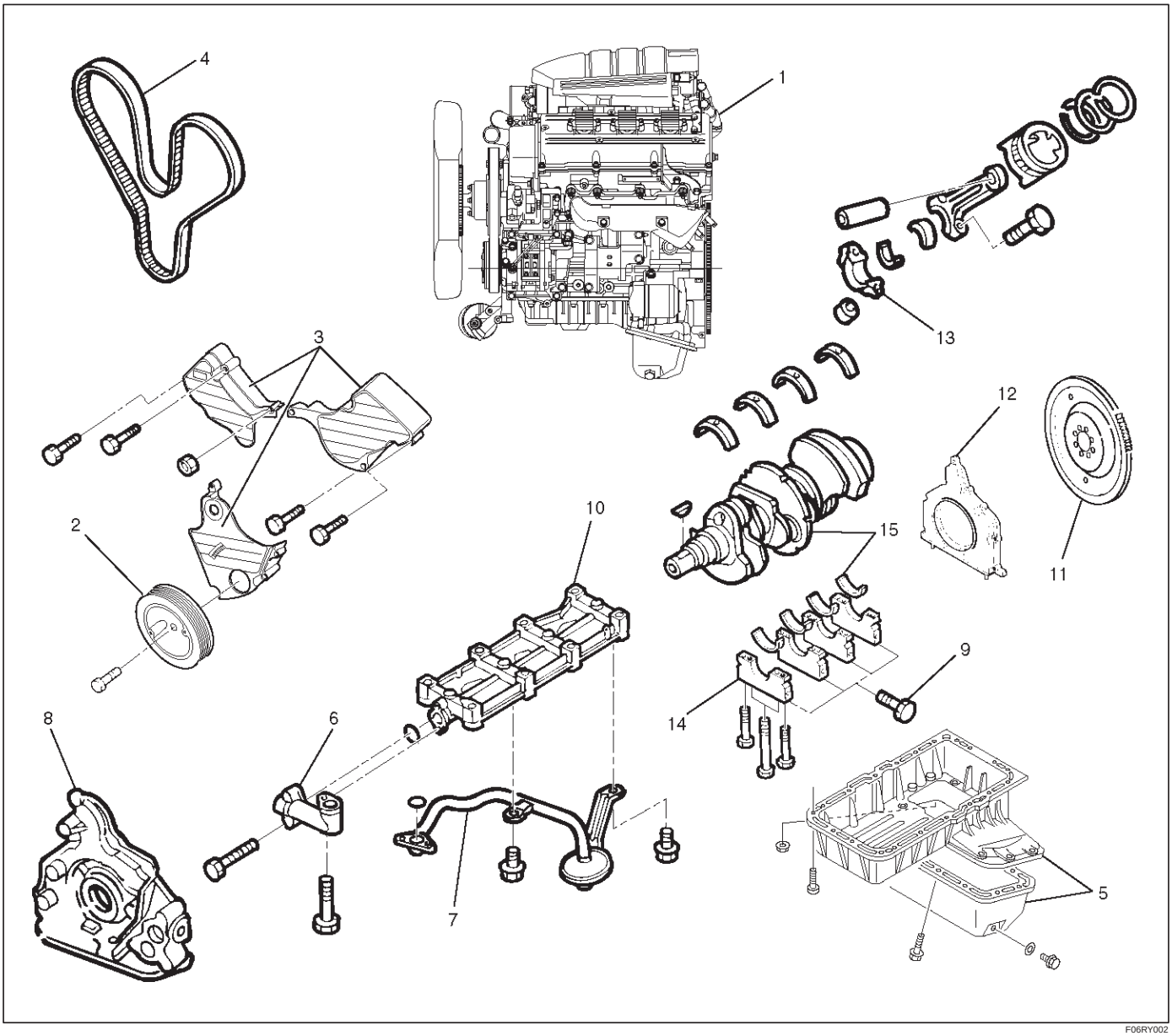

F06RY002

Legend

(1) Engine Assembly
(2) Crankshaft Pulley
(3) Timing Belt Cover
(4) Timing Belt
(5) Crankcase with Oil Pan
(6) Oil Pipe
(7) Oil Strainer
(8) Oil Pump Assembly
(9) Cylinder Body Side Bolt
(10) Oil Gallery
(11) Flywheel
(12) Rear Oil Seal Retainer
(13) Connecting Rod Cap
(14) Crankshaft Main Bearing Cap
(15) Crankshaft and Main Bearing

1. Remove engine assembly.
   - Refer to removal procedure for Engine Assembly in this manual.
2. Remove timing belt.
   - Refer to removal procedure for Timing Belt in this manual.
3. Remove oil pan and crankcase.
   - Refer to removal procedure for Oil Pan and Crankcase in this manual.
4. Remove oil pipe with O-ring.
5. Remove oil strainer assembly with O-ring.

6. Remove oil pump assembly.
   - Refer to removal procedure for Oil Pump in this manual.
7. Remove cylinder body side bolts.
8. Remove oil gallery.
9. Remove flywheel.
10. Remove rear oil seal retainer.
    - Refer to removal procedure for Rear Oil Seal in this manual.
11. Remove connecting rod caps.
12. Remove crankshaft main bearing caps.
13. Remove crankshaft and main bearings.

Installation

1. Install crankshaft and main bearings.
   - Install main bearing in the cylinder block and main bearing cap respectively.
     Apply new engine oil to upper and lower main bearings.

NOTE:

- Do not apply engine oil to the bearing back faces.
- Make sure that main bearings are in correct position.
- Install crankshaft with care.
- Apply engine oil to the thrust washer.
- Install thrust washer on No.3 journal.
- Oil grooves in thrust washer must face the crankshaft.

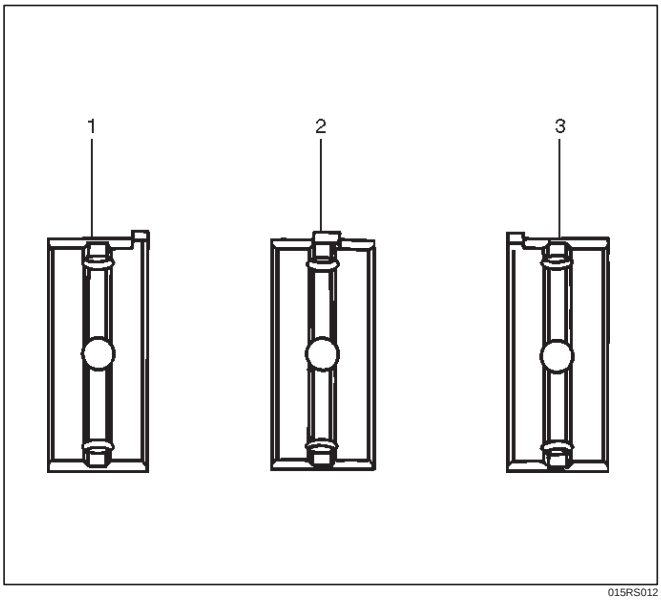

015RS012

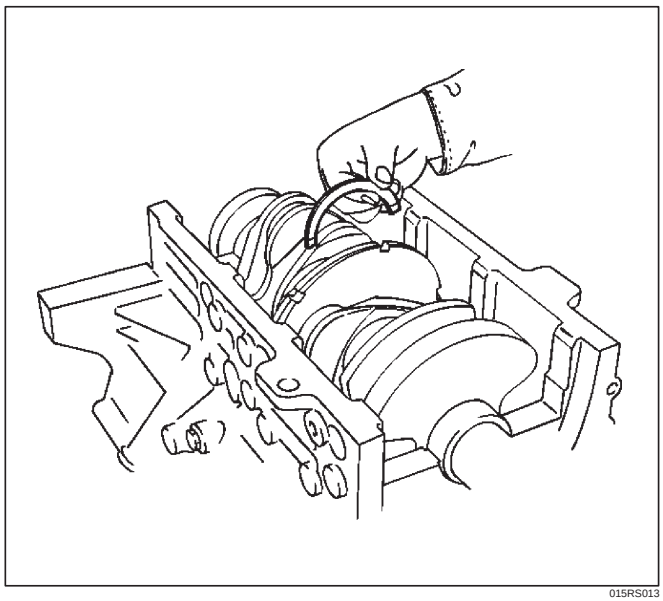
015RS013

2. Install crankshaft main bearing caps.
   - Apply engine oil to the thread and seating surface of each bearing cap fixing bolt.

NOTE:

- Do not apply engine oil to the bearing back faces.
- Install bearing caps, starting with cylinder block front side.
- Tighten main bearing fixing bolts to the specified torque.

  Torque : 39 N·m (4.0 kg·m/29 lb ft)
- After tightening the bolts, make sure that the crankshaft rotates smoothly.

3. Install connecting rod caps.
   - The cap number must be same as connecting rod number.
   - Apply engine oil to the thread and seating surface of each nut.
   - Tighten nuts to the specified torque.

   Torque : 54 N·m (5.5 kg·m/40 lb ft)
   - After tightening the nuts, make sure that the crankshaft rotates smoothly.
4. Install rear oil seal retainer.
   - Remove oil on cylinder block and retainer fitting surface.
   - Apply sealant (TB1207B or equivalent) to retainer fitting surface as shown in illustration.
   - The oil seal retainer must be installed within 5 minutes after sealant application to prevent premature hardening of sealant.

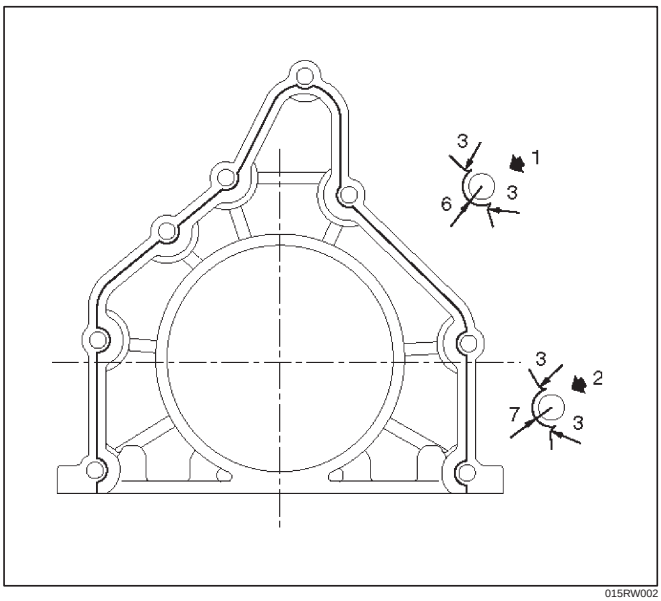

015RW002

Legend

(1) Around Bolt Holes
(2) Around Dowel Pin

- Apply engine oil to oil seal lip and align a dowel pin hole in the cylinder block with that in the retainer.
- Tighten retainer fixing bolts to the specified torque.

Torque : 18 N·m (1.8 kg·m/13 lb ft)

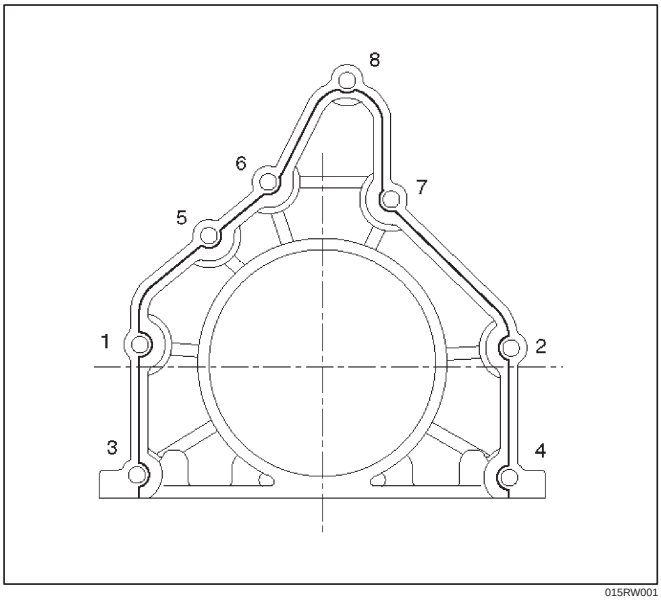

015RW001

5. Install flywheel.
   - Clean tapped holes in the crankshaft.
   - Remove oil on crankshaft and flywheel fitting surface.

NOTE:

- Do not reuse the bolts.
- Do not apply oil or thread lock to the bolts.
- Tighten fixing bolts to the specified torque.

Torque : 54 N·m (5.5 kg·m/40 lb ft)

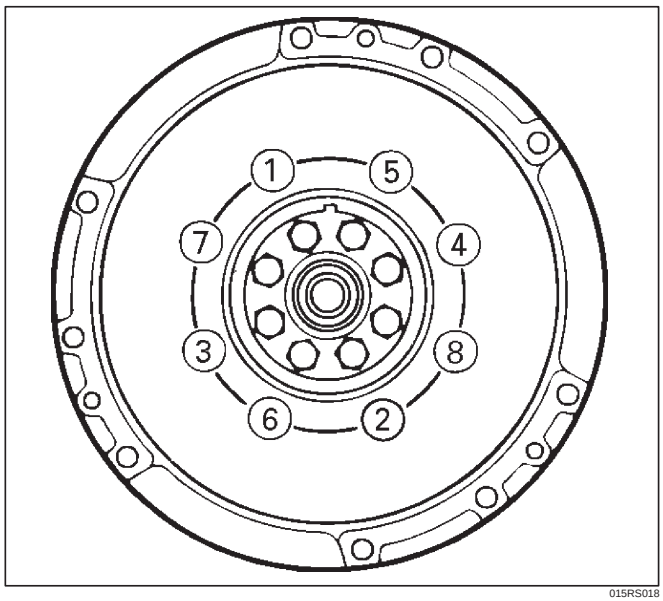

015RS018

6. Install oil gallery.
   - Clean contact surface of oil gallery and main bearing cap.
     Apply engine oil to oil gallery fixing bolts and tighten the bolts in two steps, in the order shown.

Torque :

1st step : 29 N·m (3.0 kg·m/22 lb ft)

2nd step : 55˚–65˚

7. Install cylinder body side bolts and tighten bolts in order to the specified torque.

Torque : 39 N·m (4.0 kg·m/29 lb ft)

NOTE: Do not apply the oil to the bolts.

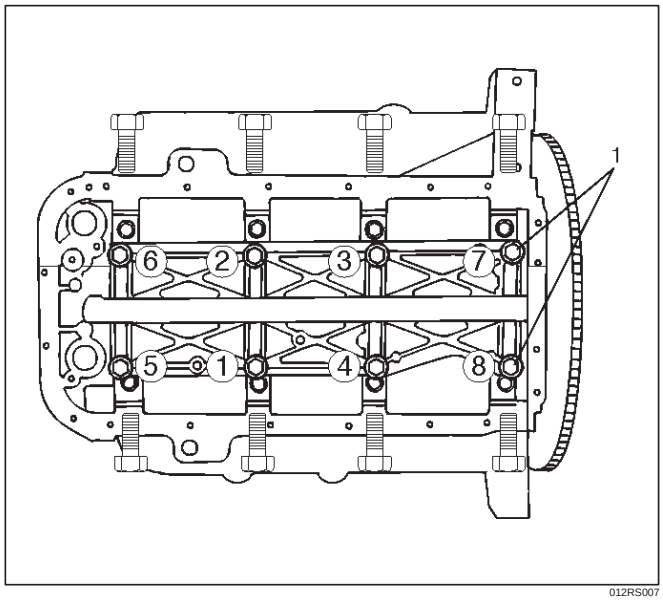

012RS007

8. Install oil pump assembly.
   - Remove oil on cylinder block and oil pump mounting surface.
   - Apply sealant (TB1207B or equivalent) to the oil pump mounting surface.
   - The oil pump assembly must be installed within 5 minutes after sealant application to prevent premature hardening of sealant.

- Apply engine oil to oil seal lip.
- Install oil pump in the cylinder block and tighten fixing bolts to the specified torque.

Torque : 25 N·m (2.5 kg·m/18 lb ft)

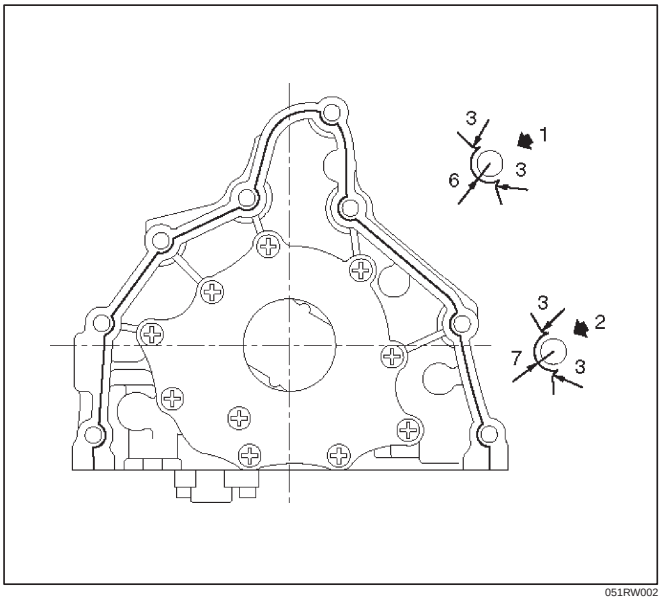

051RW002

Legend

(1) Around Bolt Holes
(2) Around Dowel Pin

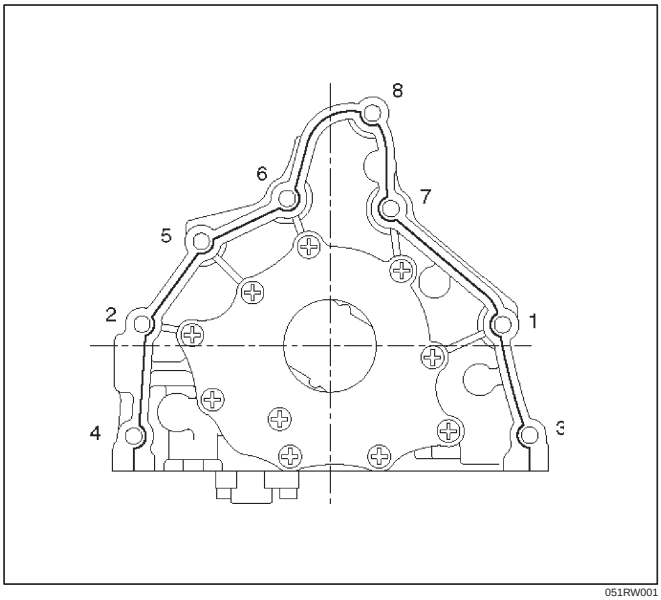

051RW001

9. Install oil strainer with O-ring, tighten to the specified torque.

   Torque : 25 N·m (2.5 kg·m/18 lb ft)

10. Install oil pipe with O-ring, tighten fixing bolts to the specified torque.

    Torque : 25 N·m (2.5 kg·m/18 lb ft)

11. Install crankcase.
    - Remove oil on crankcase mounting surface and dry the surface.
    - Properly apply a 4.5 mm (0.7 in) wide bead of sealant (TB1207C or equivalent) to the crankcase mounting surface. The bead must be continuous.
    - The crankcase must be installed within 5 minutes after sealant application to prevent premature hardening of sealant.
    - Tighten fixing bolts to the specified torque.

    Torque : 10 N·m (1.0 kg·m/87 lb in)

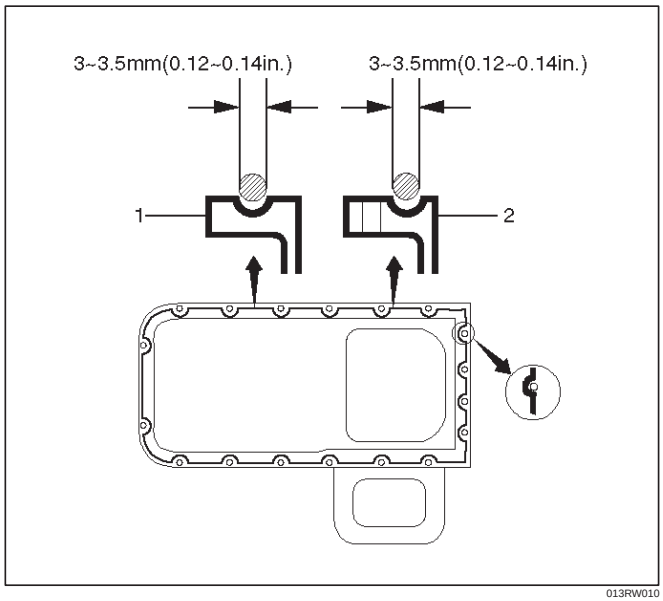

013RW010

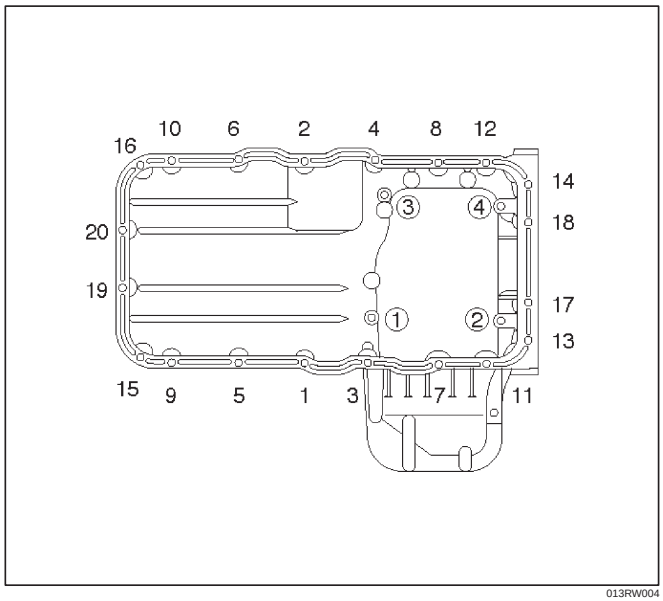

013RW004

12. Install oil pan
    - Remove oil on oil pan mounting surface and dry the surface.
    - Properly apply a 4.5 mm (0.7 in) wide bead of sealant (TB1207C or equivalent) to the oil pan mounting surface. The bead must be continuous.
    - The oil pan must be installed within 5 minutes after sealant application to prevent premature hardening of sealant.

- Tighten fixing bolts to the specified torque.

Torque : 25 N·m (2.5 kg·m/18 lb ft)

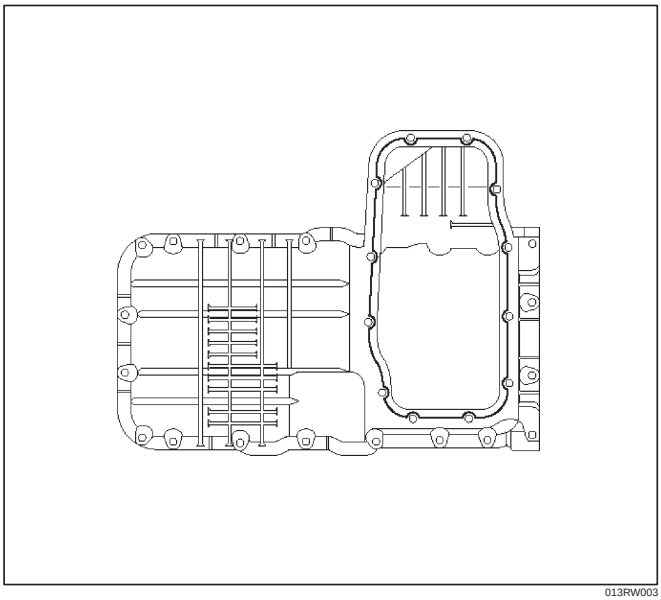

013RW003

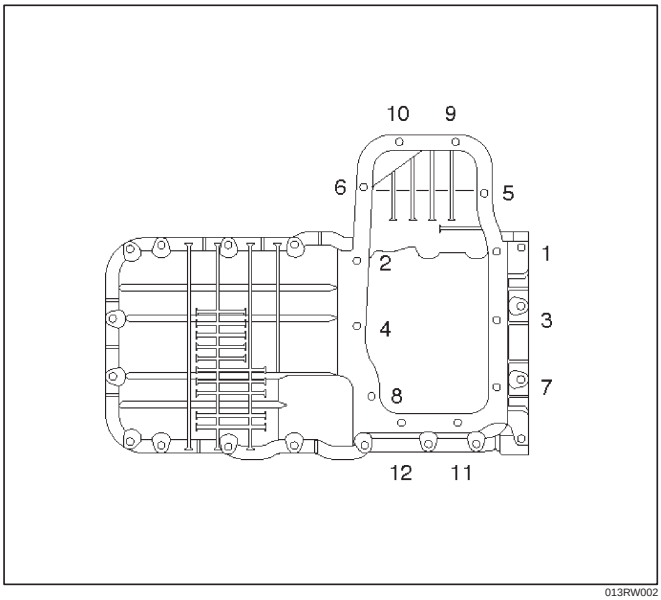

013RW002

13. Install timing belt.
    - Refer to installation procedure for Timing Belt in this manual.
14. Install engine assembly.
    - Refer to installation procedure for Engine Assembly in this manual.

Rear Oil Seal

Removal

1. Remove transmission assembly.
   - See Transmission section in this manual.
2. Remove flywheel.
3. Remove rear oil seal using a seal remover.

NOTE: Take care not to damage the crankshaft or oil seal retainer when removing oil seal.

Installation

1. Apply engine oil to oil seal lip and install oil seal using 5-8840-2286-0.

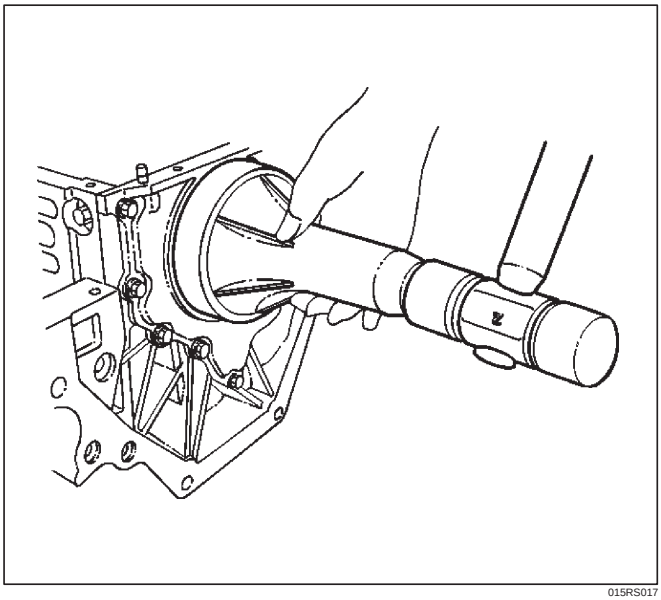

015RS017

2. Install flywheel.
   - Clean tapped holes in the crankshaft.
   - Remove oil on the crankshaft and flywheel mounting surface.
   - Tighten fixing bolts to the specified torque.

NOTE: Do not reuse the bolts and do not apply oil or thread lock to the bolts.

Torque : 54 N·m (5.5 kg·m/40 lb ft)

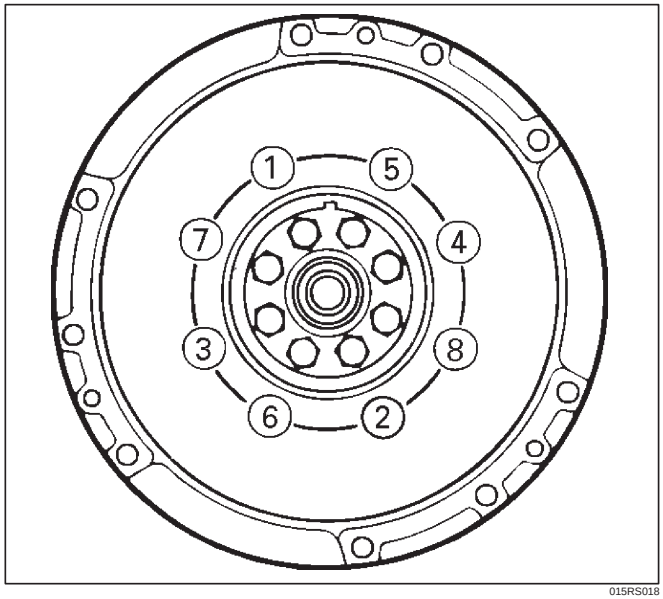

015RS018

3. Install transmission.
   - See Transmission section in this manual.

CAUTION: When assembling the engine and transmission, confirm that dowels have been mounted in the specified positions at the engine side.

NOTE: Take care that dowel positions are different between the manual transmission and the automatic transmission.

Otherwise, the transmission may be damaged.

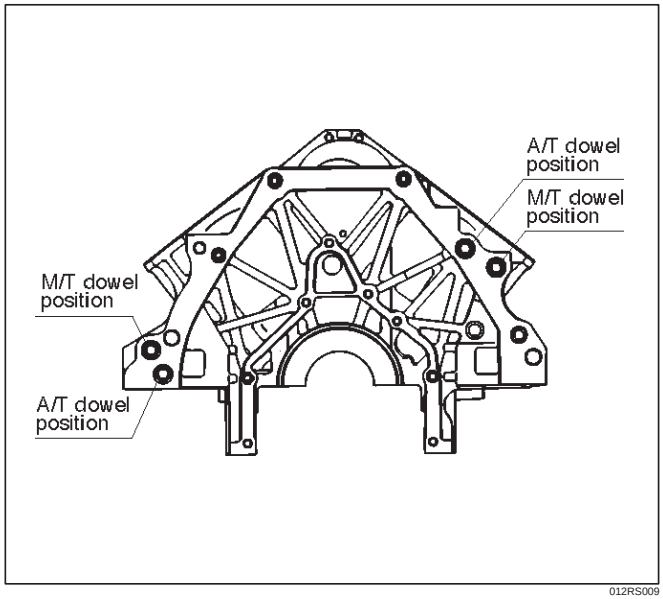

012RS009

Engine Assembly

Removal

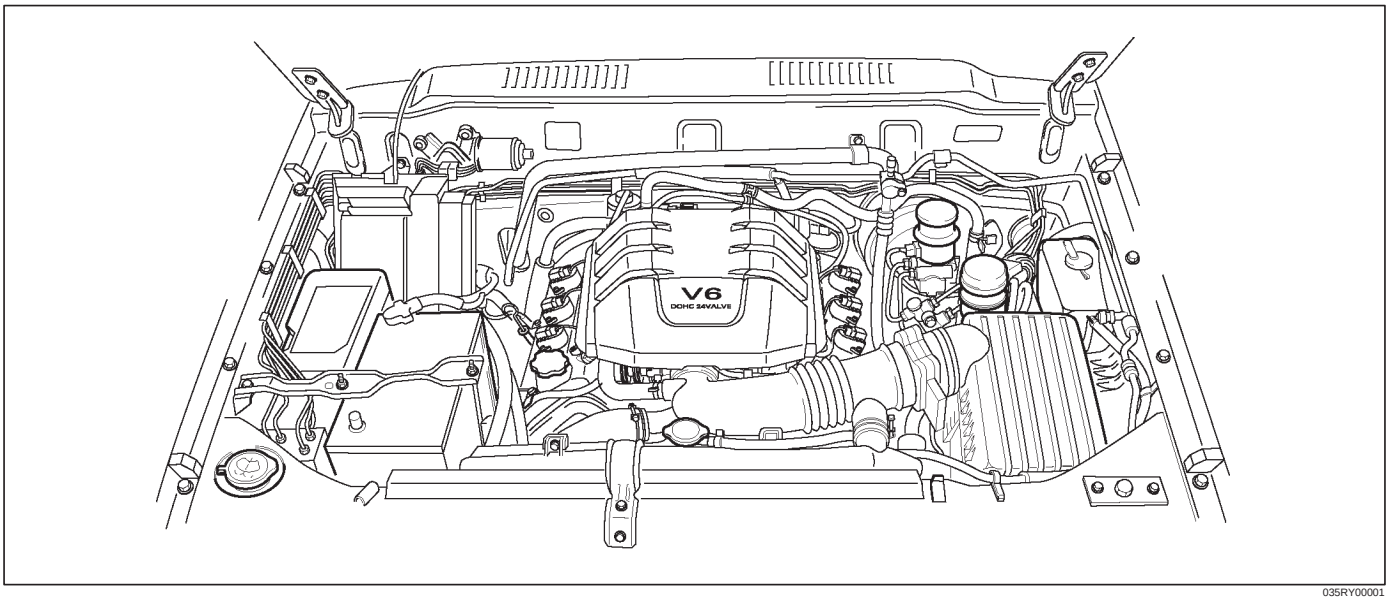

035RY00001

1. Disconnect battery ground and positive cable.
2. Remove battery.
3. Make alignment mark on the engine hood and hinges before removal in order to return the hood to original position exactly.
4. Remove engine hood.
5. Drain radiator coolant.
6. Disconnect Ion sensing module harness connectors, and manifold absolute pressure sensor harness connectors from sensor on common chamber.
7. Disconnect throttle position sensor harness connectors from throttle body.
8. Disconnect air duct with air cleaner cover.
9. Remove air cleaner assembly.
10. Disconnect canister vacuum hose.
11. Disconnect vacuum booster hose.
12. Disconnect three engine harness connectors.
13. Disconnect harness connector to transmission (left front side of engine compartment), disconnect shift on the fly harness connector from front side of front axle and remove transmission harness bracket from engine left side.
14. Disconnect ground cable between engine and frame.
15. Disconnect bonding cable connector on the back of right dash panel.
16. Disconnect bonding cable terminal on the left bank.
17. Disconnect starter harness connector from starter.
18. Disconnect generator harness connector from generator.
19. Disconnect coolant reserve tank hose from radiator.
20. Remove radiator upper and lower hoses.
21. Remove upper fan shroud.
22. Remove cooling fan assembly four fixing nuts, then the cooling fan assembly.
23. Move drive belt tensioner to loose side using wrench then remove drive belt.
24. Remove power steering pump fixing bolts, then power steering pump. Place the power steering pump along with piping on the body side.
25. Remove air conditioning compressor fixing bolts from bracket and place the compressor along with piping on the body side.
26. Remove four O_2 sensor harness connectors (two each bank) from exhaust front pipe.
27. Remove three exhaust pipe fixing nuts from each bank.
28. Remove two exhaust pipe fixing nuts from each exhaust pipe, then move exhaust pipe to rear side of vehicle.
29. Remove flywheel dust covers.
30. Disconnect two heater hoses from engine.
31. Disconnect fuel hoses from right side of transmission.

CAUTION: Plug fuel pipes on engine side and fuel hoses from fuel tank.

32. Remove transmission assembly. Refer to Transmission section in this manual.
33. Support the engine by engine hoist.
34. Remove two left side engine mount fixing bolts from engine mount on chassis side.
35. Remove two right side engine mount fixing bolts from engine mount on chassis side.
36. Remove engine assembly.

Installation

CAUTION: When assembling the engine and transmission, confirm that dowels have been mounted in the specified positions at the engine side.

NOTE: Take care that dowel positions are different between the manual transmission and the automatic transmission.

If the engine is assembled in the condition that the dowels have not been mounted in the specified positions, the transmission may be damaged.

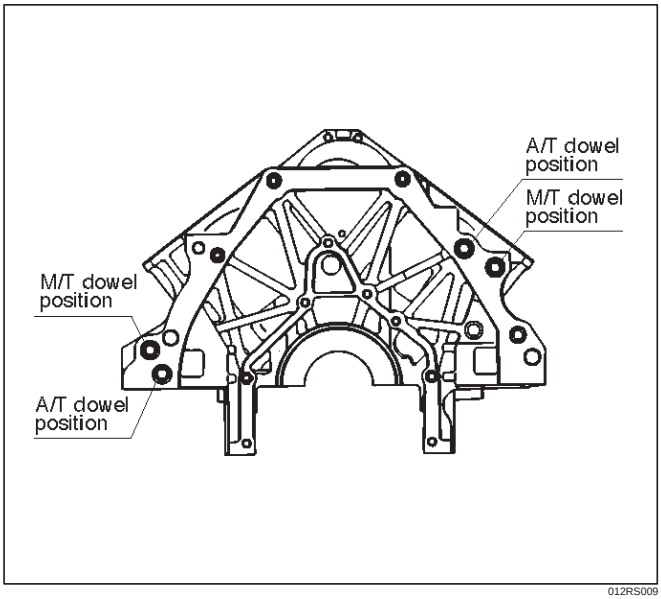

012RS009

1. Install engine assembly. Tighten engine mount fixing bolts to frame to the specified torque.

   Torque: 41 N·m (4.2 kg·m/30 lb ft)

2. Reconnect fuel hose to fuel pipe on engine.
3. Install transmission assembly. Refer to Transmission section in this manual.
4. Reconnect two heater hoses to engine.
5. Install flywheel dust covers.
6. Install exhaust pipe and temporally tighten two (each bank) rear exhaust flange nuts then tighten three stud nuts (each bank) between exhaust manifold and exhaust pipe, finally tighten rear side nuts to the specified torque.

   Torque:

   Nuts: (Exhaust front pipe LH–RH): 57 N·m (5.8 kg·m/42 lb ft)

   Nuts: (Exhaust front pipe pipe–silencer): 43 N·m (4.4 kg·m/32 lb ft)

   Stud nuts: 67 N·m (6.8 kg·m/49 lb ft)

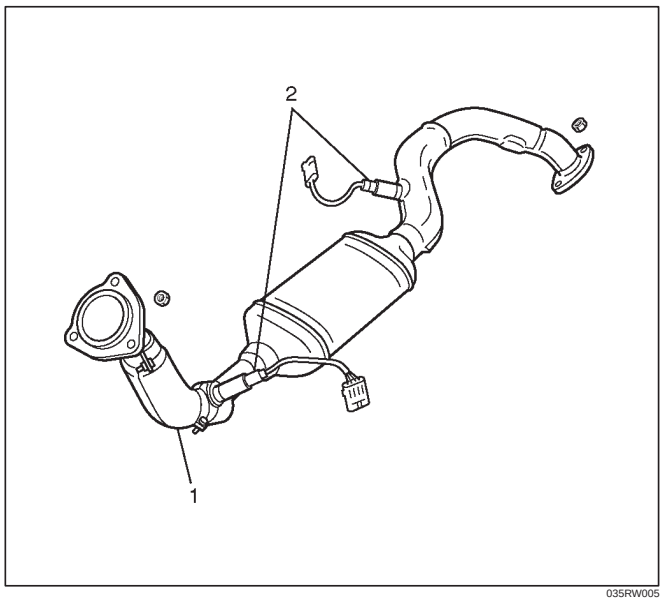

035RW005

Legend

(1) Exhaust Front Pipe RH
(2) O_2 Sensor

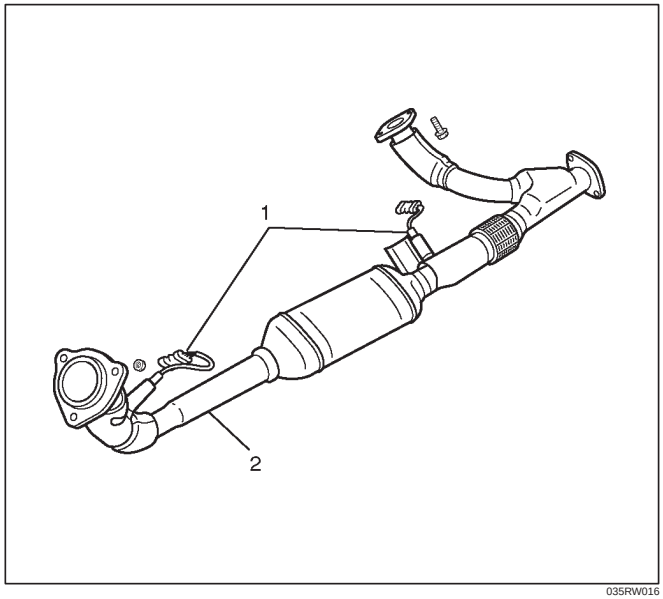

035RW016

Legend

(1) O_2 Sensor
(2) Exhaust Front Pipe LH

7. Reconnect O_2 sensor connector.
8. Install cooling fan assembly and tighten bolts/nuts to the specified torque.

   Torque : 22 N·m (2.2 kg·m/16 lb ft) for fan pulley and fan bracket.

   Torque : 10 N·m (1.0 kg·m/87 lb in) for fan and clutch assembly.

9. Install air conditioner compressor to engine and tighten to the specified torque.

   Torque :

   M8 bolts : 22 N·m (2.2 kg·m/16 lb ft)

   M10 bolts : 43 N·m (4.4 kg·m/32 lb ft)

10. Install power steering pump, tighten fixing bolt to the specified torque.

    Torque :

    M8 bolts : 22N·m (2.2 kg·m/16 lb ft)

    M10 bolts : 46 N·m (4.7 kg·m/34 lb ft)

11. Move drive belt tensioner to loose side using wrench, then install drive belt to normal position.

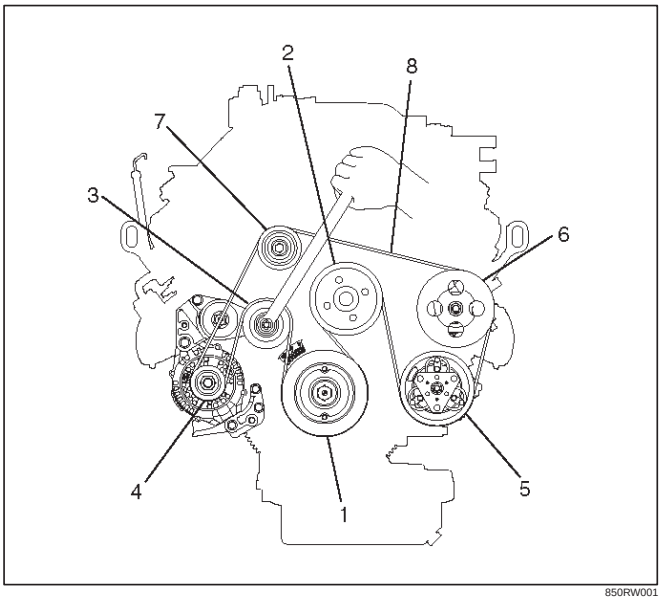

850RW001

Legend

(1) Crankshaft Pulley
(2) Cooling Fan Pulley
(3) Tensioner
(4) Generator
(5) Air Conditioner Compressor
(6) Power Steering Oil Pump
(7) Idle Pulley
(8) Drive Belt

12. Install upper fan shroud.
13. Reconnect radiator upper and lower hoses.
14. Reconnect coolant reserve tank hose to radiator.
15. Reconnect generator harness connector.
16. Reconnect starter harness connector.
17. Reconnect bonding cable terminal on left bank
18. Reconnect bonding cable terminal on the back of right dash panel.
19. Reconnect ground cable between engine and chassis.
20. Reconnect harness connector to transmission and install transmission harness bracket on engine left side.
21. Reconnect three engine harness connectors.
22. Reconnect vacuum booster hose.
23. Reconnect canister vacuum hose.
24. Install air cleaner assembly.
25. Reconnect air duct.
26. Reconnect throttle position sensor harness connector.

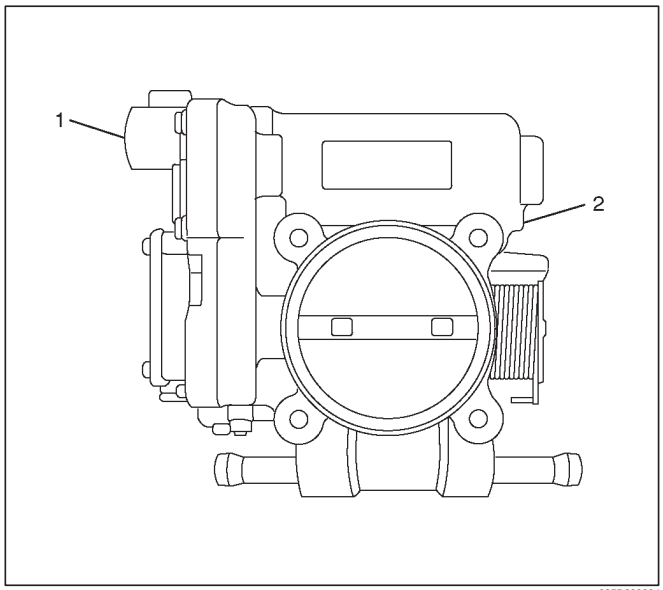

035R200004

Legend

(1) Throttle Position Sensor Connector
(2) Throttle Valve Assembly

27. Reconnect manifold absolute pressure sensor harness connectors.
28. Reconnect ion sensing module connectors as shown in the illustration.

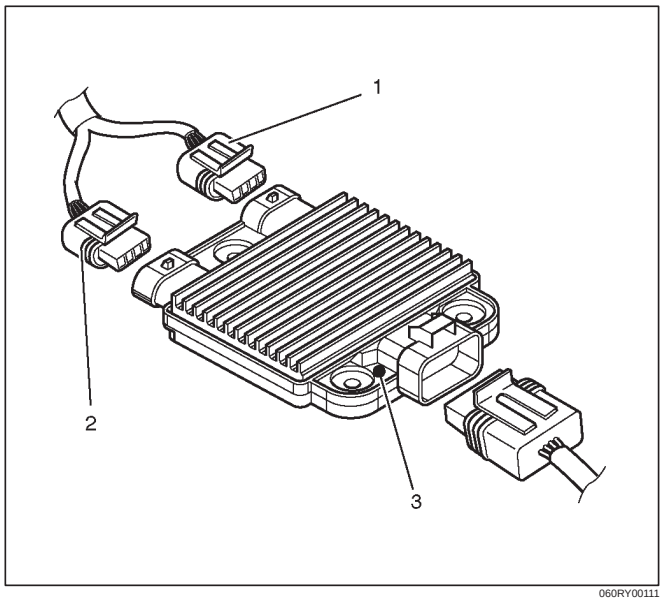

060RY00111

Legend

(1) Green Connector
(2) Blue Connector
(3) Identification Mark (6VE1 Engine Only)

29. Install engine hood to the original position.
    - Refer to installation procedure for Body section in this manual.

Cylinder Head

Cylinder Head and Associated Parts

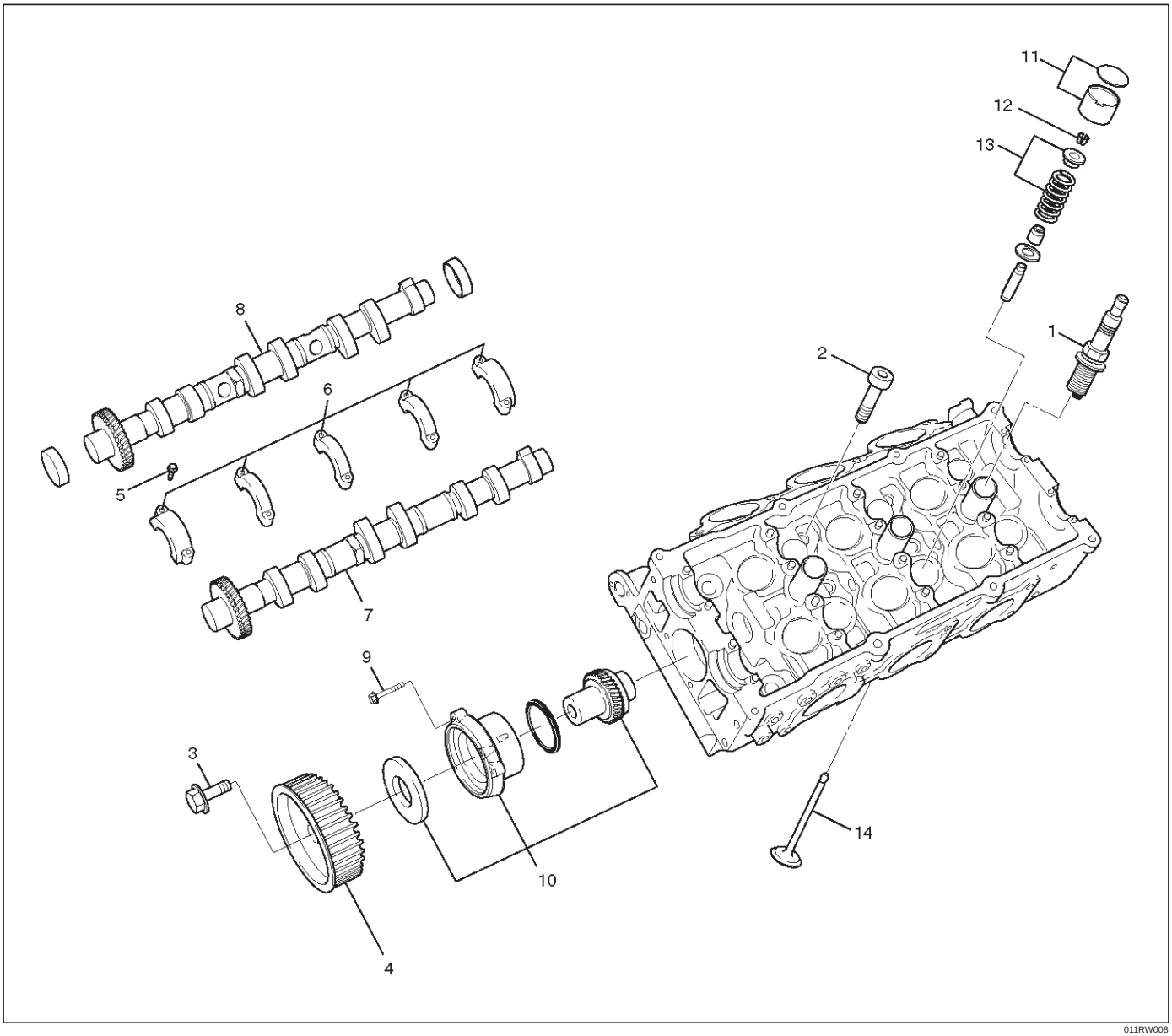

011RW008

Legend

(1) Spark Plug
(2) Cylinder Head Bolt
(3) Camshaft Drive Gear Pulley Fixing Bolt
(4) Camshaft Drive Gear Pulley
(5) Camshaft Bearing Cap Fixing Bolt
(6) Camshaft Bearing Cap
(7) Camshaft Exhaust
(8) Camshaft Intake
(9) Retainer Fixing Bolt
(10) Retainer Assembly
(11) Tappet with Shim
(12) Split Collar
(13) Valve Spring and Spring Upper Seat
(14) Valve

Disassembly

NOTE:

- During disassembly, be sure that the valve train components are kept together and identified so that they can be reinstalled in their original locations.
- Before removing the cylinder head from the engine and before disassembling the valve mechanism, perform a compression test and note the results.

1. Remove camshaft drive gear pulley fixing bolt (3), then pulley (4).
2. Remove camshaft bearing cap fixing bolt (5), camshaft bearing cap (6), then camshaft exhaust (7), and intake side (8).
3. Remove tappet with shim (11).
4. Use the 5-8840-2446-0 valve spring compressor and 5-8840-2547-0 valve spring compressor adapter to remove the split collar (12), valve spring with upper seat (13) and valve (14).

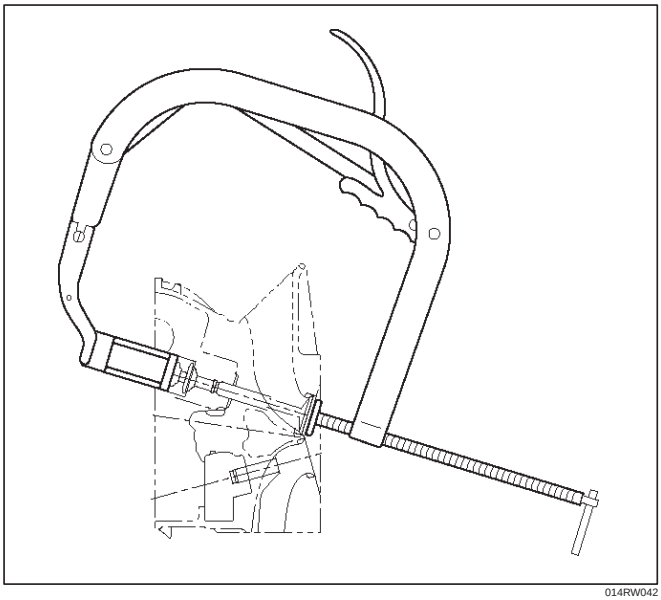

014RW042

5. Remove spark plug (1).

CAUTION: Do not remove the spark plugs when the head and plugs are hot. Clean dirt and debris from spark plug recess areas before removal.

Clean

Cylinder head

Carefully remove all varnish, soot and carbon from the bare metal. Do not use surface conditioning disc on any gasket sealing surface.

Inspection and Repair

1. Inspect cylinder head gasket and mating surfaces for leaks, corrosion and blow–by. If the gasket has failed, determine the cause.
   - Insufficient torque on head bolts
   - Improper installation
   - Loose or warped cylinder head
   - Missing dowel pins
   - Warped case surface
2. Inspect cylinder head for cracks, especially between valve seats and in the exhaust ports.
3. Inspect cylinder head deck for corrosion, sand particles in head and porosity.

CAUTION:

- **Do not attempt to weld the cylinder head. Replace it.**
- **Do not reuse cylinder head bolts.**

4. Inspect cylinder head deck, common chamber and exhaust manifold mating surfaces for flatness. These surfaces may be reconditioned by milling. If the surfaces are “out of flat” with “round” by more than specification, the surface should be ground to within specifications. Replace the head if it requires machining beyond the repairable limit.

   Head surface and manifold surface

   Standard: 0.05 mm (0.002 in) or less

   Warpage limit: 0.2 mm (0.0079 in)

   Maximum Repairable limit: 0.2 mm (0.0079 in)

   Head height

   Standard height : 133.2 mm (5.2441 in)

   Warpage limit : 0.2 mm (0.0079 in)

   Maximum Repairable limit : 133.0 mm (5.2362 in)

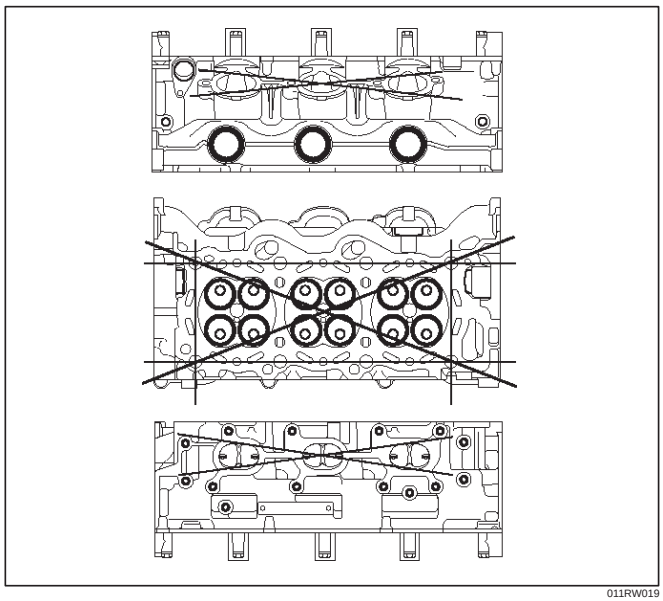

011RW019

5. Water jacket sealing plugs seating surfaces.

Reassembly

1. Install Spark plug and tighten all the spark plugs to specified torque.

   Torque: 18 N·m (1.8 kg·m/13 lb ft)

2. Tighten sub gear setting bolt.
   1. Use 5-8840-2443-0 gear spring lever to turn sub gear to right direction until the M5 bolt aligns with the hole between camshaft driven gear and sub gear.
   2. Tighten the M5 bolt to a suitable torque to prevent the sub gear from moving.

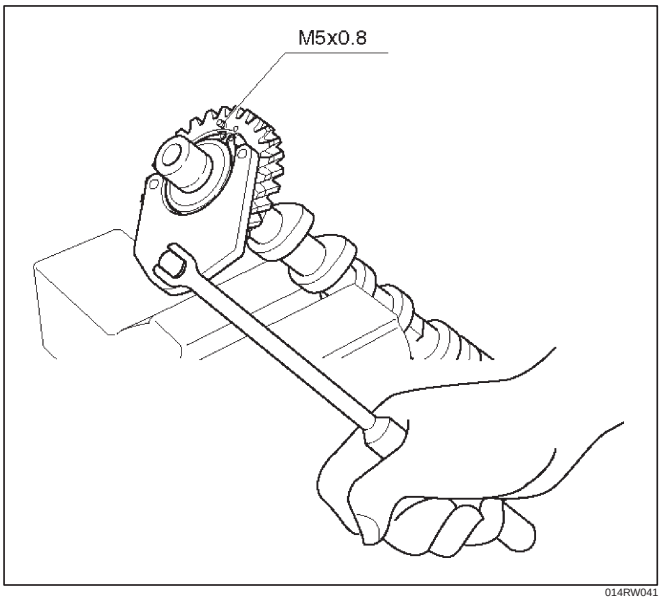

014RW041

3. Install camshaft drive gear assembly and tighten three bolts to the specified torque.

   Torque: 10 N·m (1.0 kg·m/87 lb in)

4. Install camshaft assembly and camshaft bearing cap, tighten twenty bolts on one side bank to the specified torque.
   1. Apply engine oil to camshaft journal and bearing surface of camshaft bearing cap.
   2. Align timing mark on intake camshaft (one dot for right bank, two dots for left bank) and exhaust camshaft (one dot for right bank, two dots for left bank) to timing mark on camshaft drive gear (one dot).

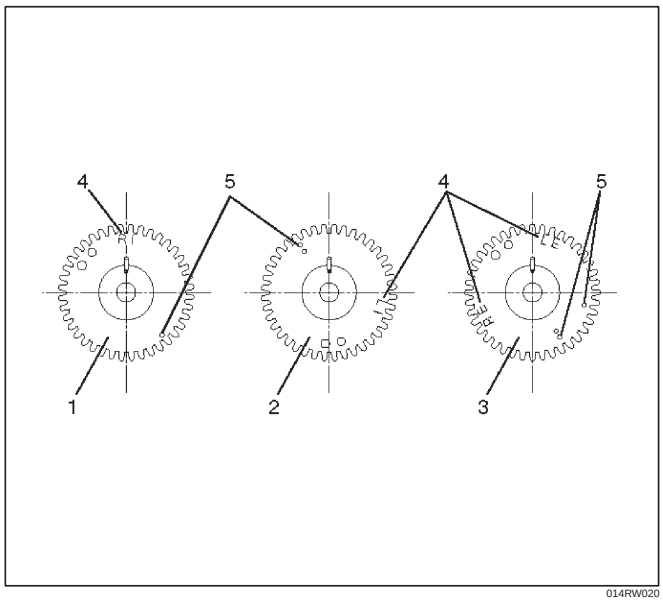

014RW020

Legend

(1) Intake Camshaft Timing Gear for Right Bank
(2) Intake Camshaft Timing Gear for Left Bank
(3) Exhaust Camshaft Timing Gear
(4) Discrimination Mark
LI: Left Bank Intake
RI: Right Bank Intake
LE: Left Bank Exhaust
RE: Right Bank Exhaust

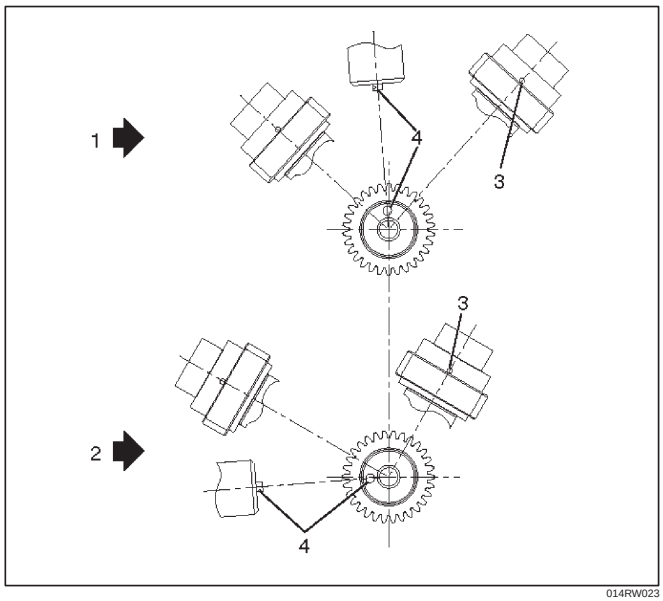

014RW023

Legend

(1) Right Bank Camshaft Drive Gear
(2) Left Bank Camshaft Drive Gear
(3) Timing Mark on Drive Gear
(4) Dowel Pin

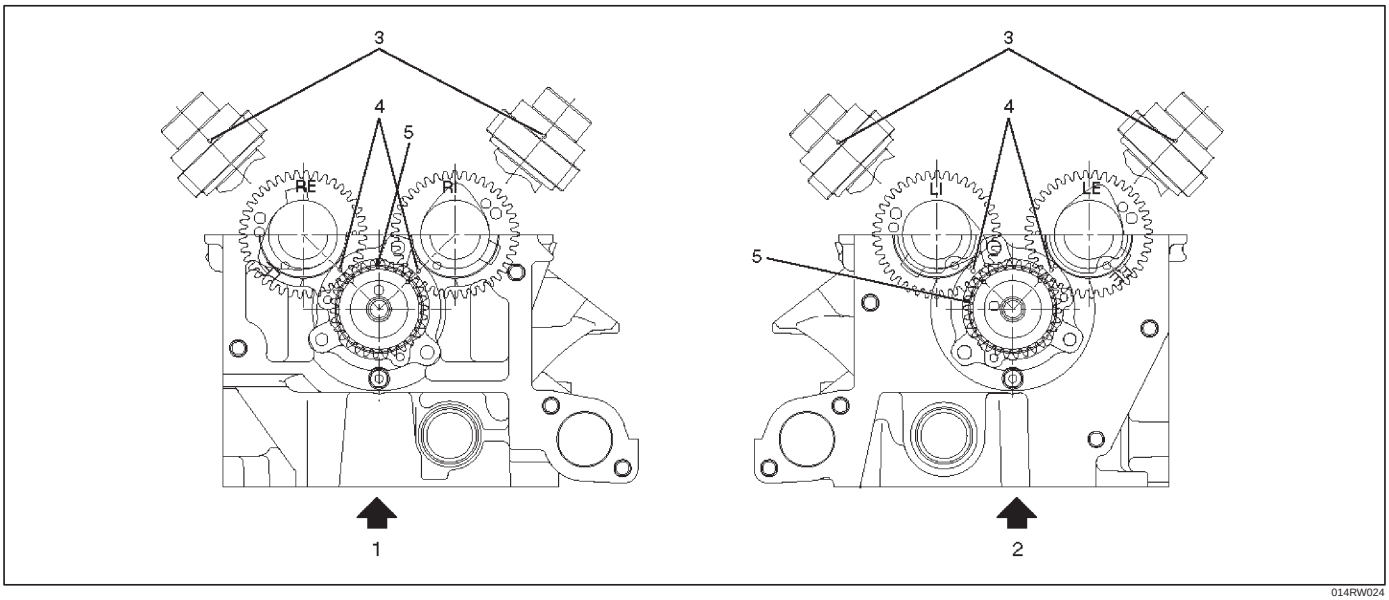

014RW024

Legend

(1) Right Bank
(2) Left Bank
(3) Alignment Mark on Camshaft Drive Gear
(4) Alignment Mark on Camshaft
(5) Alignment Mark on Retainer

3. Tighten twenty bolts in numerical order on each bank as shown in the illustration.

Torque: 10 N·m (1.0 kg·m/87 lb in)

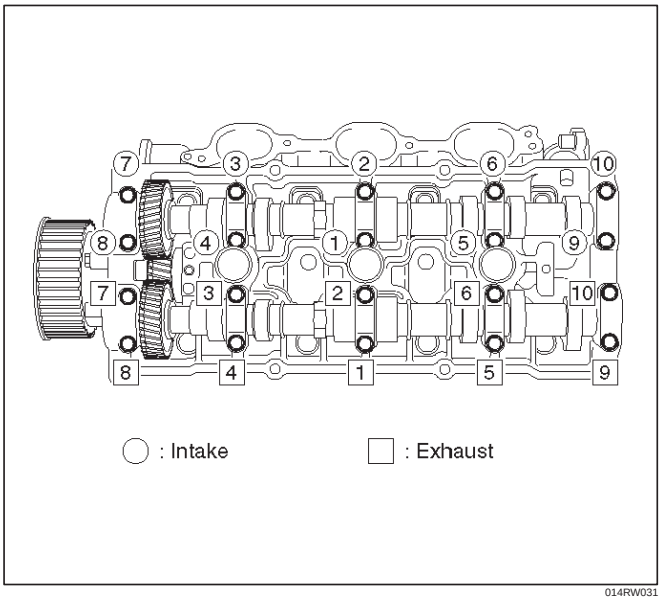

014RW031

5. Tighten bolt for camshaft drive gear assembly pulley to the specified torque.

Torque: 98 N·m (10.0 kg·m/72 lb ft)

Valve Spring, Oil Controller, Valve, Valve Guide

Valve Spring, Oil Controller, Valve, Valve Guide and Associated Parts

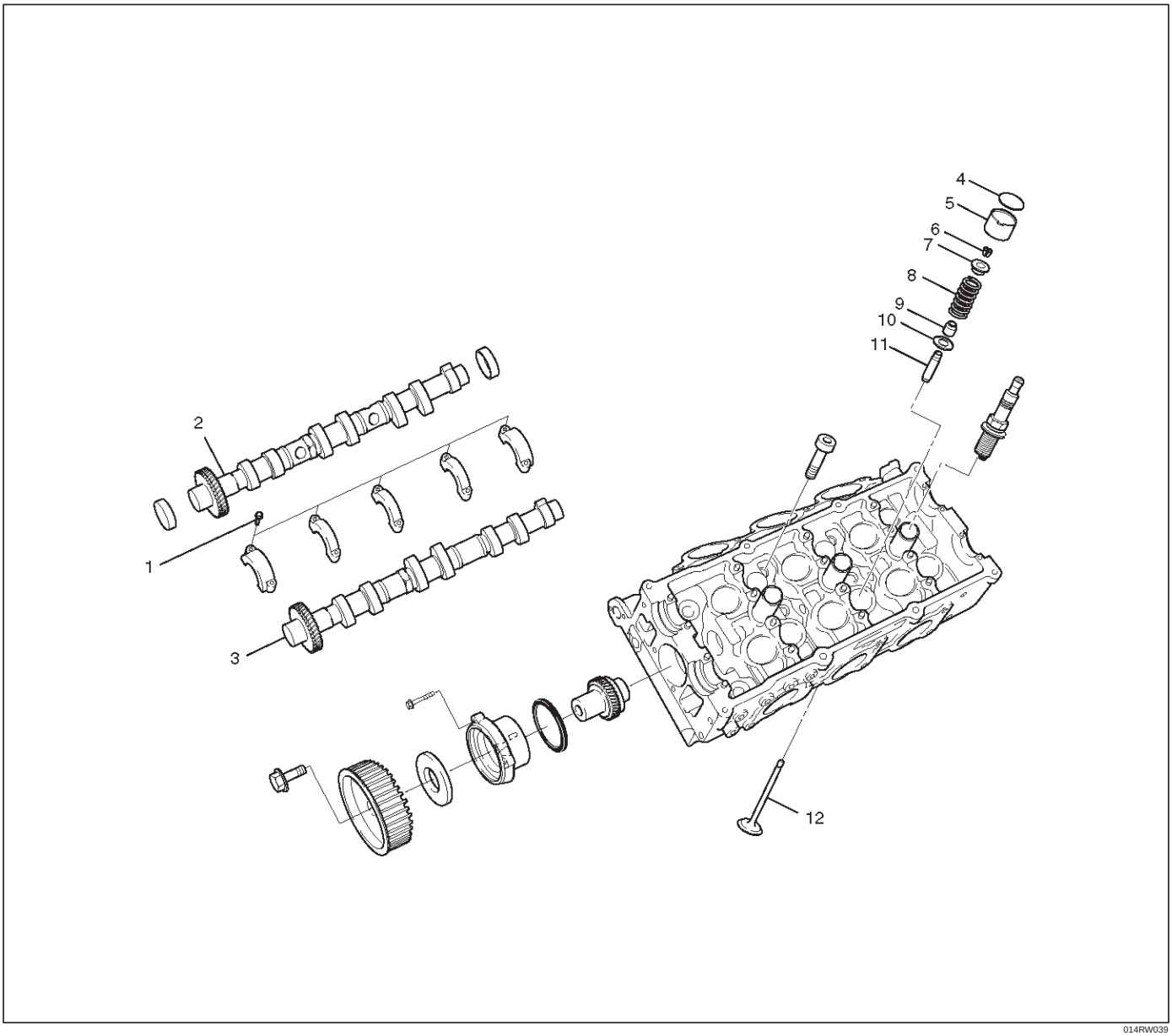

014RW039

Legend

(1) Camshaft Bearing Cap Fixing Bolts
(2) Camshaft Assembly Inlet
(3) Camshaft Assembly Exhaust
(4) Shim
(5) Tappet
(6) Split Collar
(7) Spring Upper Seat
(8) Valve Spring
(9) Oil Controller
(10) Spring Lower Seat
(11) Valve Guide
(12) Valve

Disassembly

1. Remove camshaft bearing cap fixing bolts (1).
2. Remove camshaft assembly (intake).
3. Remove camshaft assembly (Exhaust side).
4. Remove shim (4) and tappet (5).

5. Use the 5-8840-2446-0 valve spring compressor and 5-8840-2547-0 valve spring compressor adapter to remove split collar.

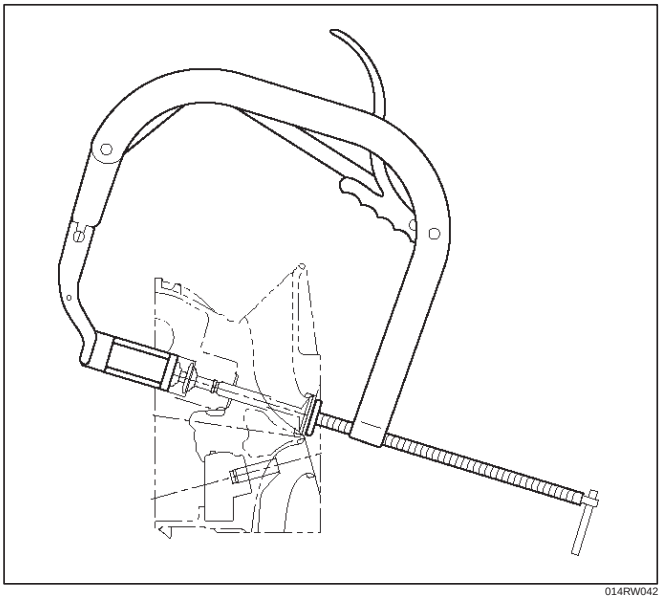

014RW042

6. Remove valve spring.
7. Remove valve.
8. Remove oil controller and spring lower seat.
9. Remove the valve guide using the 5-8840-2442-0 valve guide replacer.

Inspection and Repair

Valve Spring

CAUTION: Visually inspect the valve springs and replace them if damage or abnormal wear is evident.

1. Measure the free height of the springs. The springs must be replaced if the free height is below the specified limit.

Standard : 44.6 mm (1.756 in)

Limit : 43.6 mm (1.717 in)

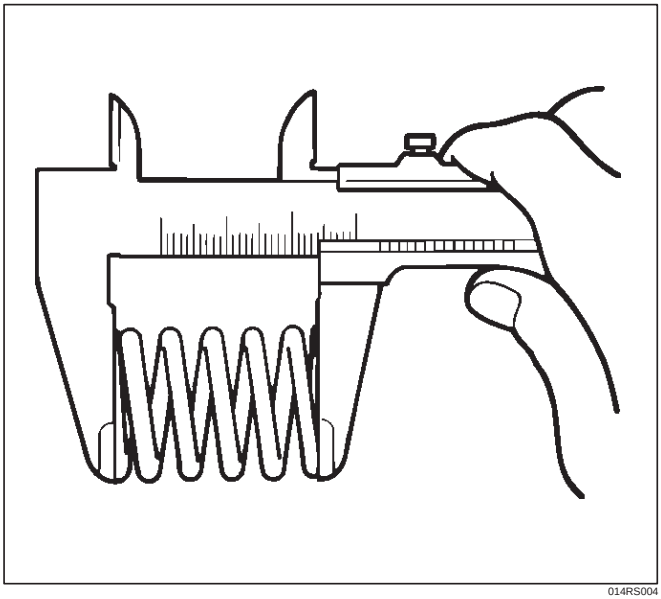

014RS004

2. Measure the valve spring squareness with a steel square and replace the valve springs if the measured value exceeds the specified limit.

Limit : 2 mm (0.079 in)

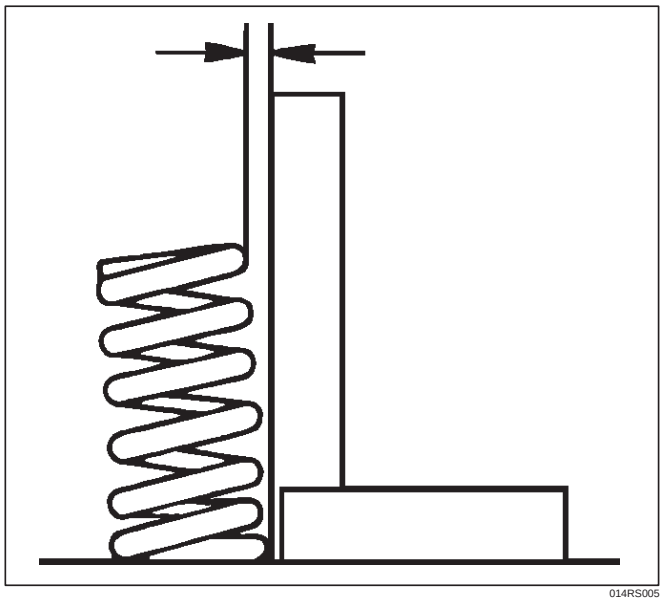

014RS005

3. Using a spring tester to compress the springs to the installed height, measure the compressed spring tension, and replace the springs if the measured tension is below the specified limit.

At installed height: 35.0 mm (1.38 in)

Standard: 196 N (20.0 kgf/44 lb)

Limit: Less than 181 N (18.5 kgf/41 lb)

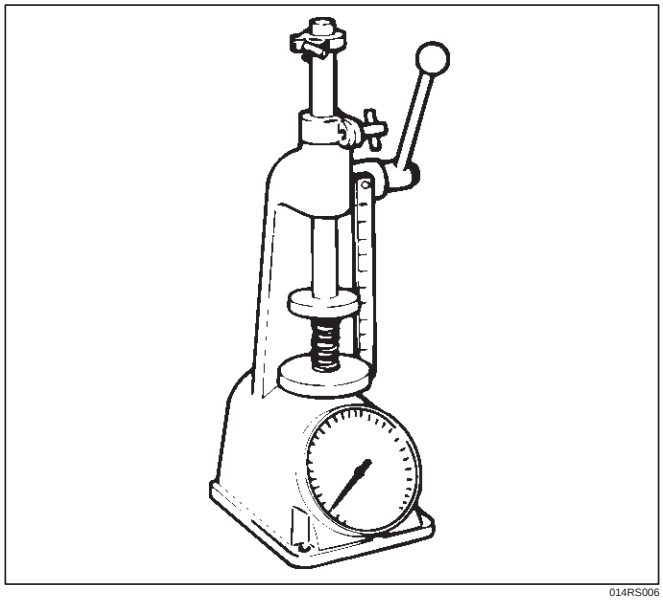

014RS006

Valve Guide

CAUTION: Take care not to damage the valve seat contact surface, when removing carbon adhering to the valve head. Carefully inspect the valve stem for scratches or abnormal wear. If these conditions are present, the valve and the valve guide must be replaced as a set.

1. Measure the valve stem diameter with a micrometer. If the valve stem diameter is less than the specified limit, the valve and the valve guide must be replaced as a set.

Diameter of Valve Stem

Intake

Standard : 5.977 mm–5.959 mm (0.2353 in–0.2346 in)

Limit : 5.90 mm (0.2323 in)

Exhaust

Standard : 5.952 mm–5.970 mm (0.2343 in–0.2350 in)

Limit : 5.90 mm (0.2323 in)

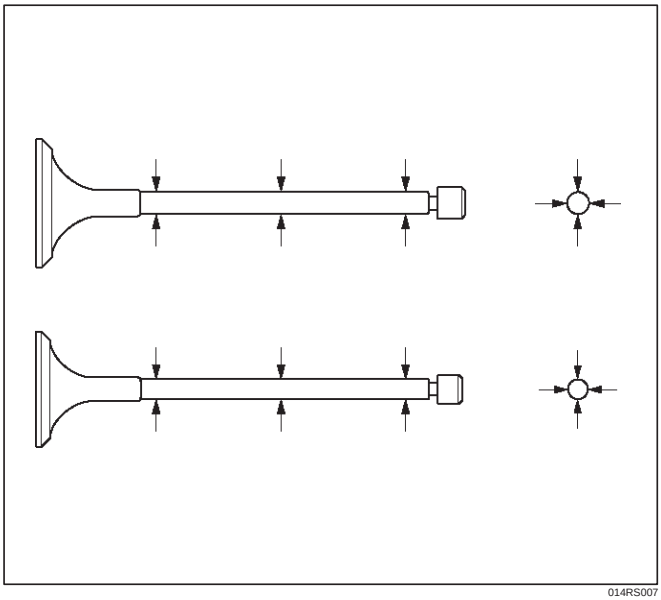

014RS007

2. Measure the inside diameter of the valve guide with a micrometer. Subtract the measured outer diameter of the valve stem from the measured inner diameter of the valve guide. If the value exceeds the specified limit, the valve and the valve guide must be replaced as a set.

Inside Diameter of the Vale Guide

Inlet clearance

Standard : 0.023 mm–0.056 mm (0.0009 in–0.0002 in)

Limit : 0.20 mm (0.00787 in)

Exhaust clearance

Standard : 0.030 mm–0.063 mm (0.0012 in–0.0025 in)

Limit : 0.20 mm (0.00787 in)

Valve Guide Replacement

1. Using Valve guide replacer: 5-8840-2442-0, drive out the valve guide from the combustion chamber side.

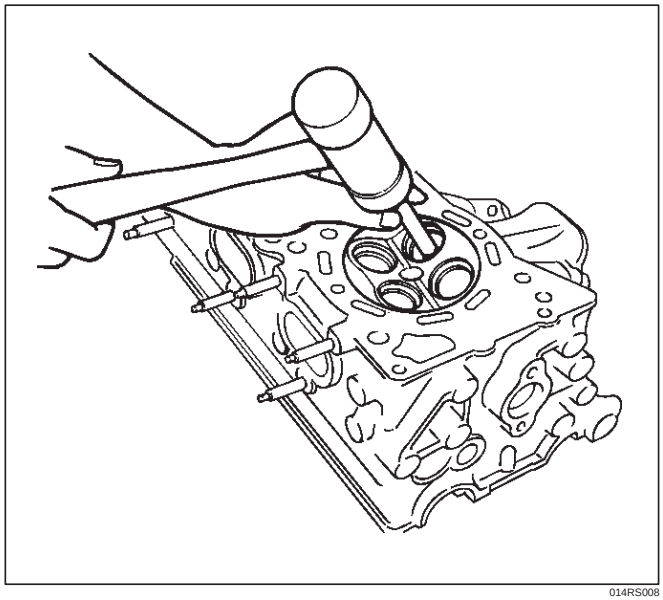

014RS008

2. Apply engine oil to the outside of the valve guide. Using valve guide replacer 5-8840-2442-0, drive in a new valve guide from the camshaft side, and check the valve guide height.

Valve guide upper end height: 13.0 mm (0.5118 in)

(Measured from the cylinder head upper face)

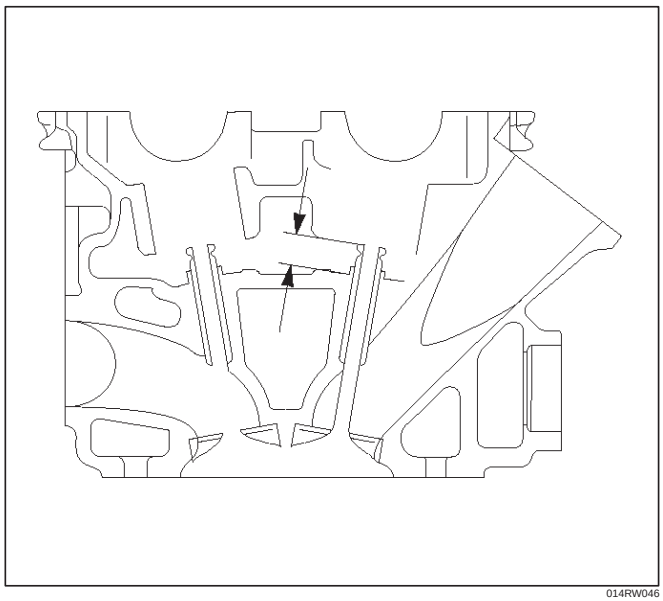

014RW046

3. Check the clearance. If the clearance is less than the specified value, ream the inside diameter of valve guide. Using a sharp 6 mm reamer, ream the valve guide to obtain the specified clearance.

Valve Seat

1. Measure the protrusion of the valve stem when a new valve is installed in the cylinder head. If the protrusion of the valve stem exceeds the limit, replace the valve seat insert or the cylinder head assembly.

Protrusion of valve stem

Intake

Standard: 39.32 mm (1.5480 in)

Limit: 39.47 mm (1.5539 in)

Exhaust

Standard: 39.3 mm (1.5472 in)

Limit: 39.45 mm (1.5531 in)

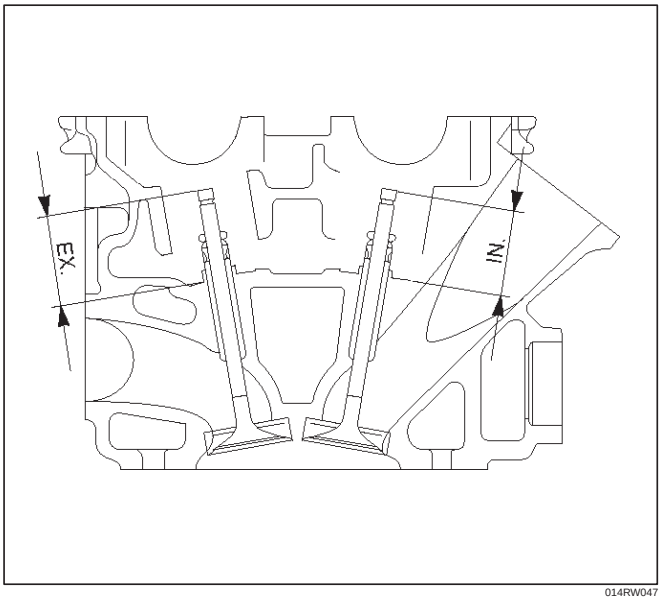

014RW047

2. Measure the valve seat contact width. Make the necessary corrections if the seat contact surface is damaged or rough or if the contact width wear exceeds the limit.

Valve seat contact width

Standard: 1.1 mm (0.0433 in)

Limit: 1.7 mm (0.0669 in)

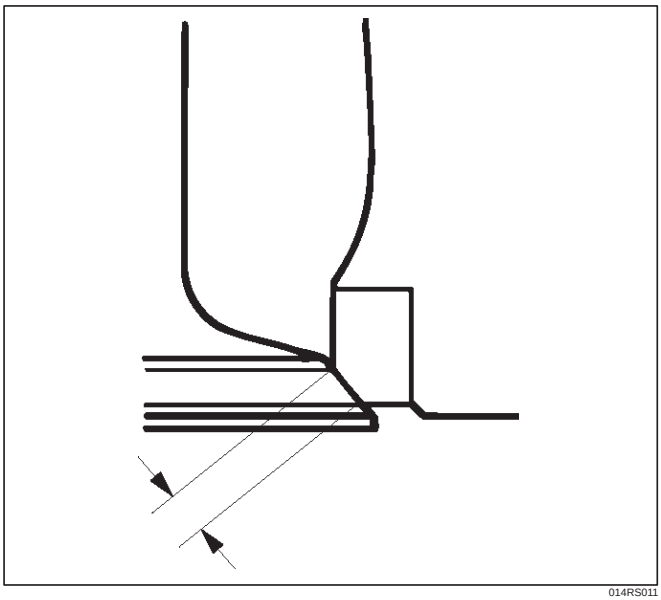

014RS011

Contact Surface Angle on Valve Seat on Valve

1. Measure contact surface angle on valve seat.
2. If the measured value exceeds the limit, replace valve, valve guide and valve seat as a set.

Valve contact surface angle: 45˚

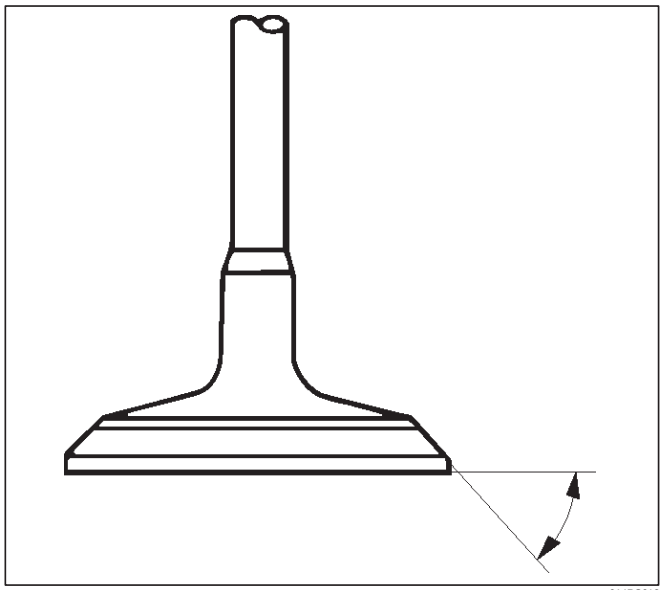

014RS012

Valve Seat Insert Correction

1. Remove the carbon from the valve seat insert surface.
2. Use a valve cutter to minimize scratches and other rough areas. This will bring the contact width back to the standard value. Remove only the scratches and rough areas. Do not cut away too much. Take care not to cut away unblemished areas of the valve seat surface.

Valve seat angle degree: 90˚

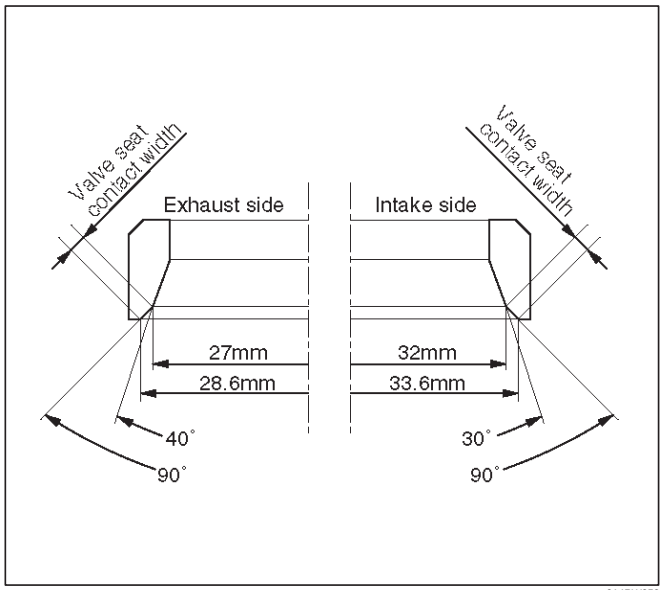

014RW059

3. Apply abrasive compound to the valve seat insert surface.
4. Insert the valve into the valve guide.
5. Turn the valve while lapping it to fit the valve seat insert.
6. Check that the valve contact width is correct.
7. Check that the valve seat insert surface is in contact with the entire circumference of the valve.

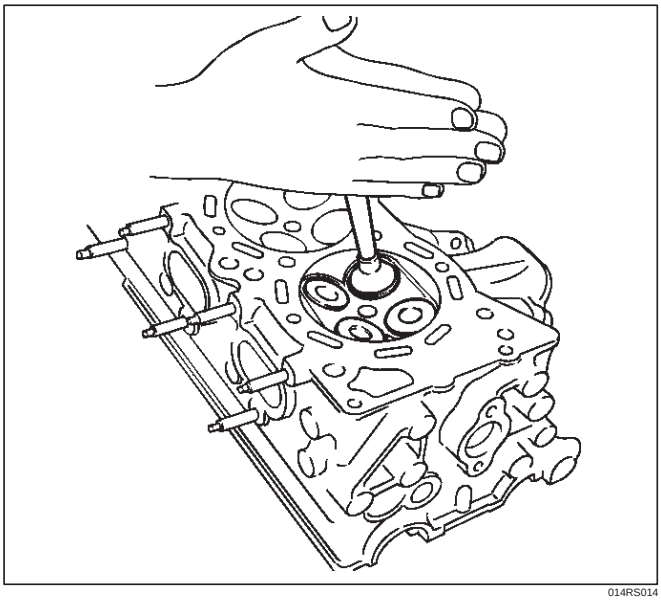

014RS014

Valve Seat Insert Replacement

1. Arc weld the rod at several points. Be careful not to damage the aluminum section.
2. Allow the rod to cool for a few minutes. This will cause the valve seat to shrink.
3. Strike the rod and pull it out.

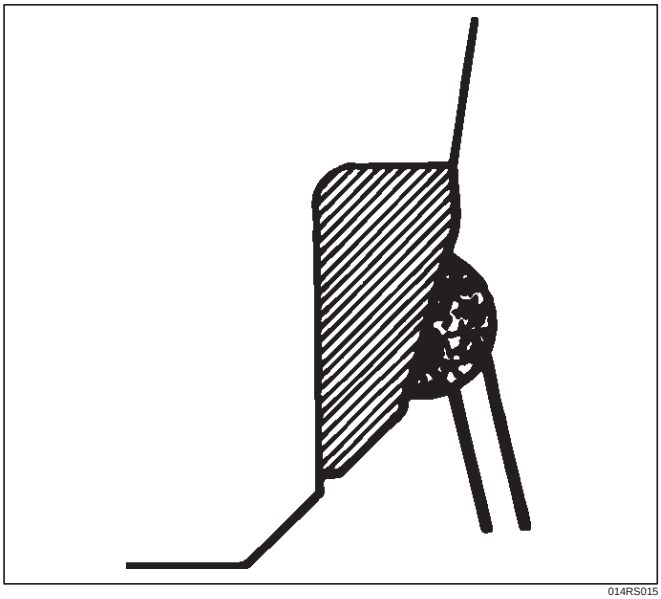

014RS015

4. Carefully clean the valve seat press–fit section on the cylinder head side.
5. Heat the press–fit section with steam or some other means to cause expansion. Cool the valve seat with dry ice or some other means.
6. Insert the press–fit section into the valve seat horizontally.

Standard fitting interference: 0.14 mm–0.09 mm (0.0055 in–0.0035 in)

7. After insertion, use a seat grinder to grind finish the seating face. Carefully note the seating angle, the contact width, and the depression.
8. Lap the valve and the seat.

Reassembly

1. Install valve guide (1) to cylinder head. Apply engine oil to the outside of the valve guide. Using valve guide replacer 5-8840-2442-0, drive in a new valve guide from the camshaft side.
2. Install oil controller (3) and spring lower seat (2). Using oil controller replacer 5-8840-0623-0, drive in a new oil controller.

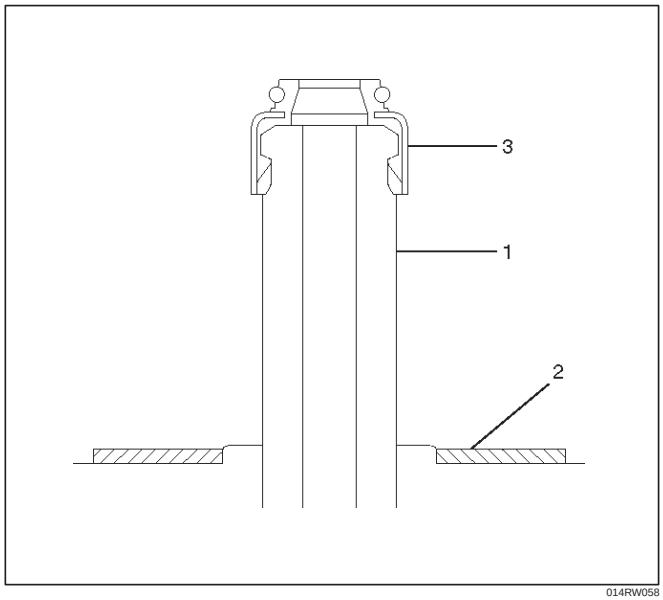

014RW058

3. Install valve to valve guide. Before installing valve guide apply engine oil to the outside of the valve stem.
4. Install valve spring to cylinder head. Attach the valve spring to the lower spring seat. The painted area of the valve spring should be facing downward.

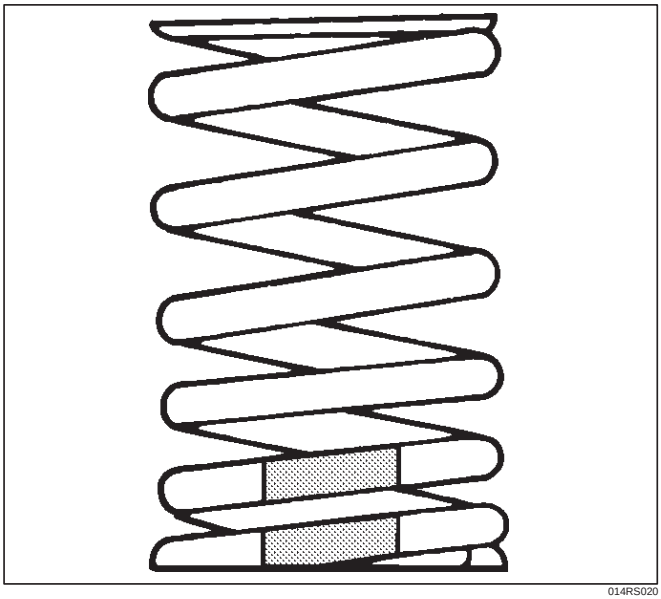

014RS020

5. Install lower valve spring seat, valve spring and upper valve spring seat then put split collars on the upper spring seat, using the 5-8840-2446-0 valve spring compressor and 5-8840-2547-0 valve spring compressor adapter to install the split collars.

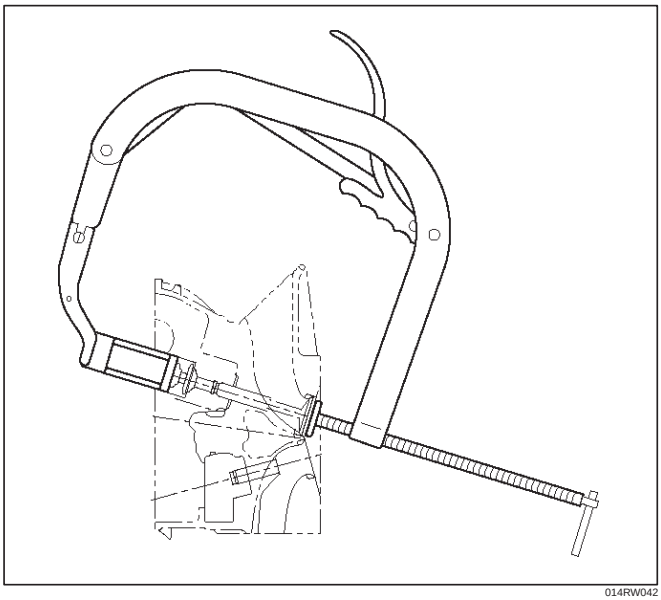

014RW042

6. Install tappet with shim.
7. Install camshaft assembly.
   - Refer to installation procedure for Camshaft in this manual.

Valve Clearance Adjustments

NOTE: To adjust valve clearance, apply engine oil to the cam as well as to the adjusting shim (2) with the cylinder head built on the cylinder block, give a few turns to the camshaft by means of timing pulley tightening bolt, and measure valve clearance when the nose of cam is just opposite of maximum cam lift (1) as shown in illustration below.

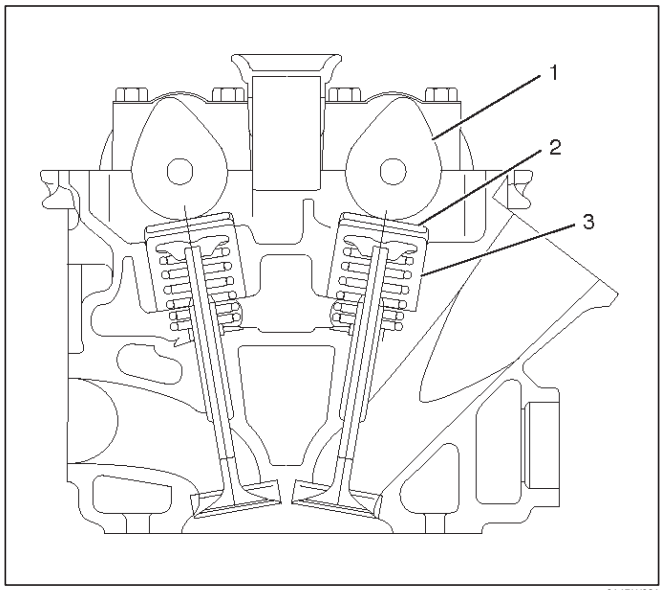

014RW081

Legend

(1) Cam
(2) Shim
(3) Tappet

Valve Clearance Standard Value (cold)

Intake: 0.23 mm–0.33 mm (0.0091 in–0.0130 in)

Exhaust: 0.25 mm–0.35 mm (0.0098 in–0.0138 in)

Selection of Adjusting Shim

Shim to be selected = (Thickness of removed shim) + (Valve clearance measurement – Standard value)
Based on the above formula, the best suited shim should be selected from 41 types of shim (differently thick at 0.02mm (0.0008 in) intervals from 2.40mm (0.0945 in) through 3.2mm (0.1260 in) thick). Install the shim and check valve clearance.

Replacement of Shim

Let the cam push down the edge of tappet by using 5-8840-2444-0 valve clearance adjusting tool and push out the shim with a flat blade screw driver as shown in illustrations below.

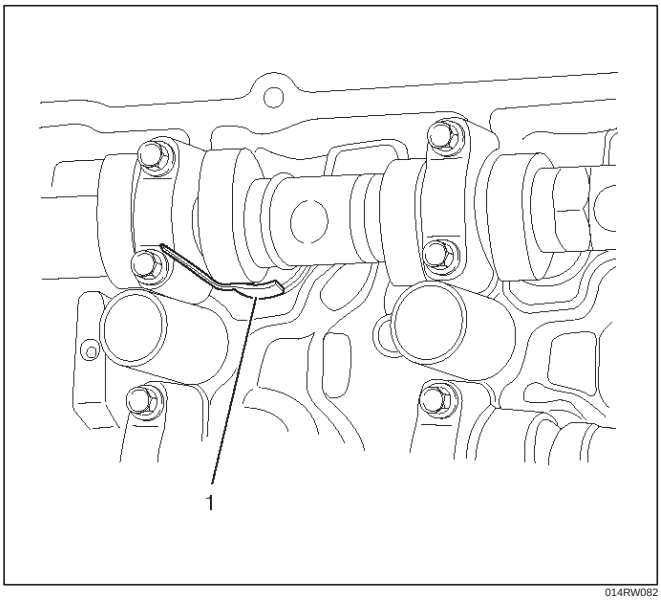

014RW082

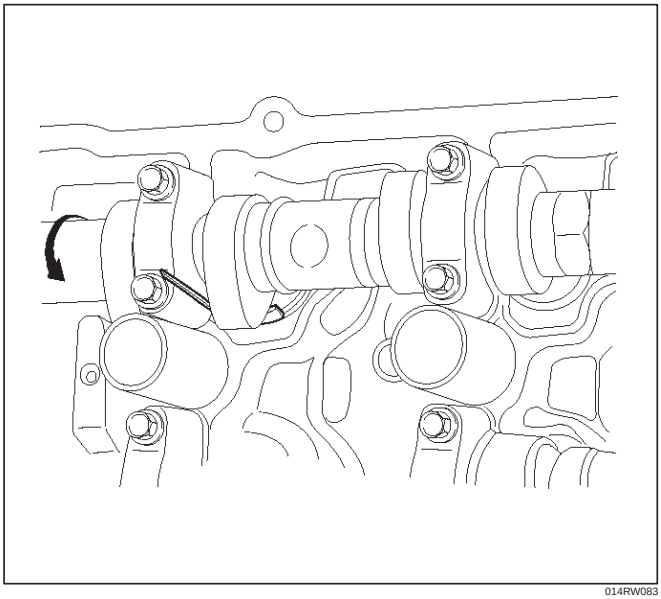

014RW083

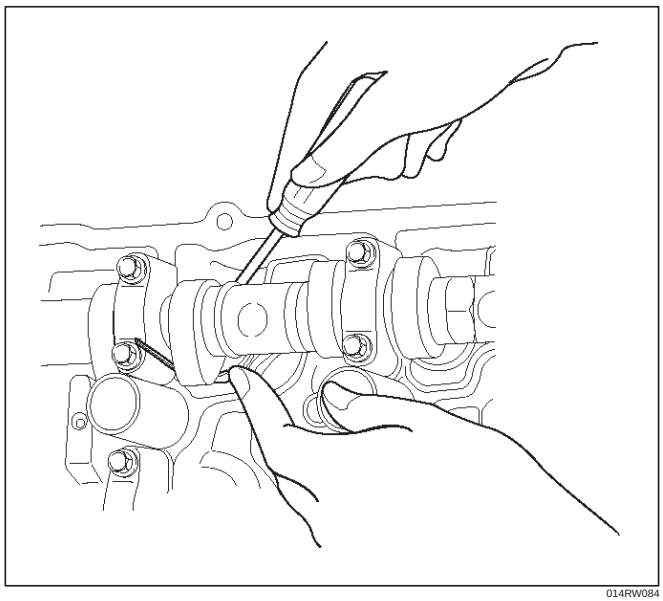

014RW084

Camshaft

Camshaft and Associated Parts

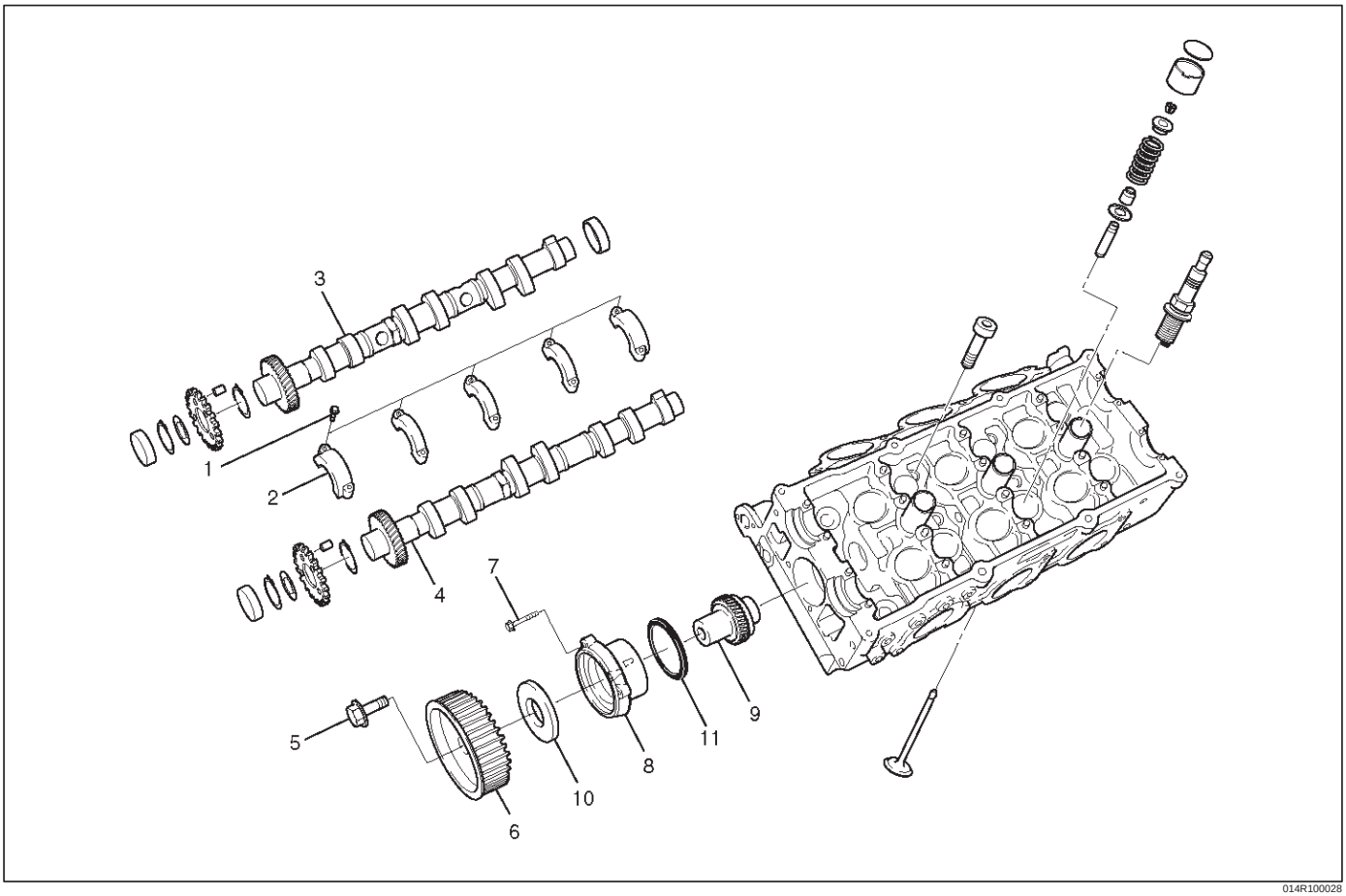

014R100028

Legend

(1) Camshaft Bracket Fixing Bolt
(2) Camshaft Bracket
(3) Camshaft Assembly Intake
(4) Camshaft Assembly Exhaust
(5) Pulley Fixing Bolt
(6) Camshaft Drive Gear Pulley
(7) Retainer Fixing Bolt
(8) Retainer
(9) Camshaft Drive Gear
(10) Oil Seal
(11) O–ring

Disassembly

1. Remove fixing bolt (5) for camshaft drive gear pulley using the 5-8840-2447-0 universal holder.

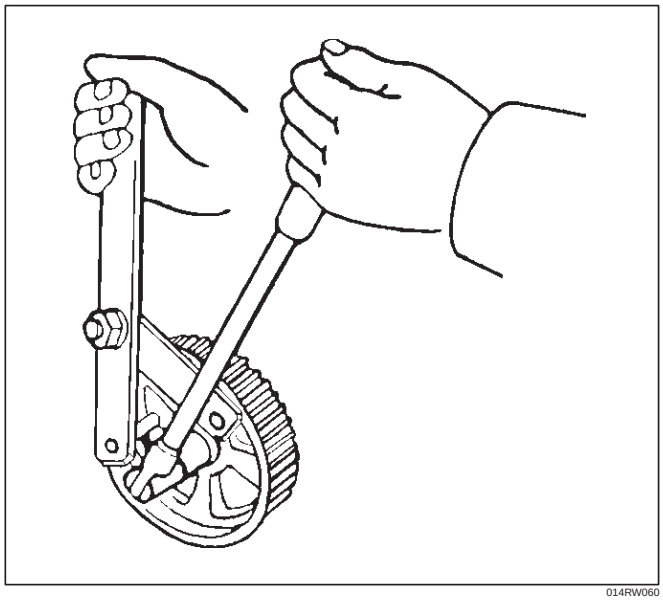

014RW060

2. Remove twenty fixing bolts from intake and exhaust camshaft bracket on one side bank, then camshaft brackets (2).

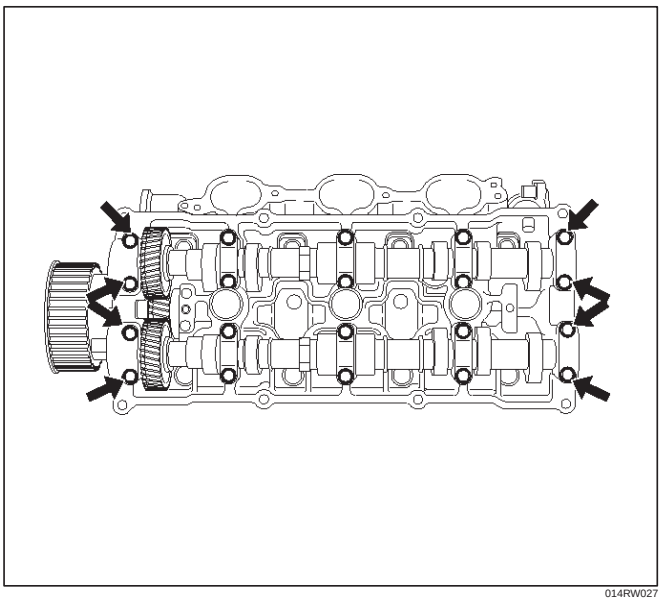

014RW027

3. Remove camshaft assembly (3), (4) with camshaft end plug.
4. Remove three fixing bolts (7) from camshaft drive gear retainer (8), then camshaft drive gear assembly.
5. Use the snap ring pliers to remove the snap ring(1).
6. Remove the wave washer(2), sub gear(3) and spring camshaft gear(4) from the camshaft assembly(5).

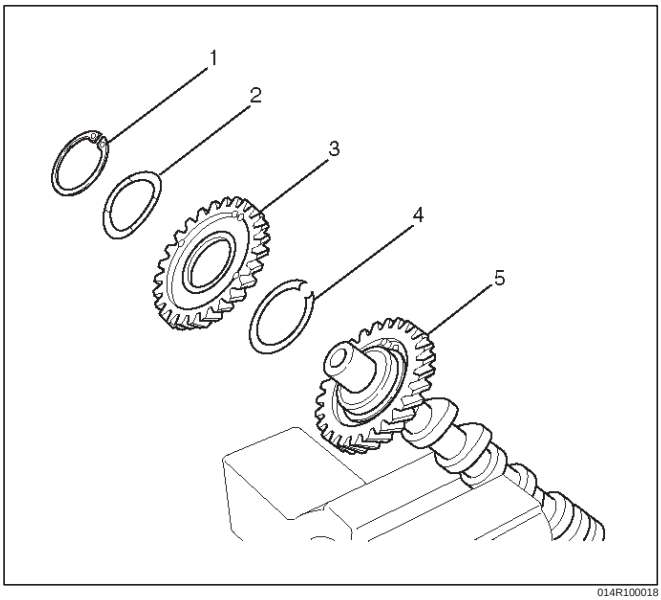

014R100018

Legend

(1) Snap Ring
(2) Wave Washer
(3) Sub Gear
(4) Spring; Camshaft Gear
(5) Camshaft Assembly

Inspection and Repair

1. Use a micrometer to measure the cam lobe height and uneven wear. Replace the camshaft if either the lobe height or the uneven wear exceeds the specified limit.

Lobe height : 44.709 mm (1.7602 in)

Uneven wear : 0.05 mm (0.0020 in)

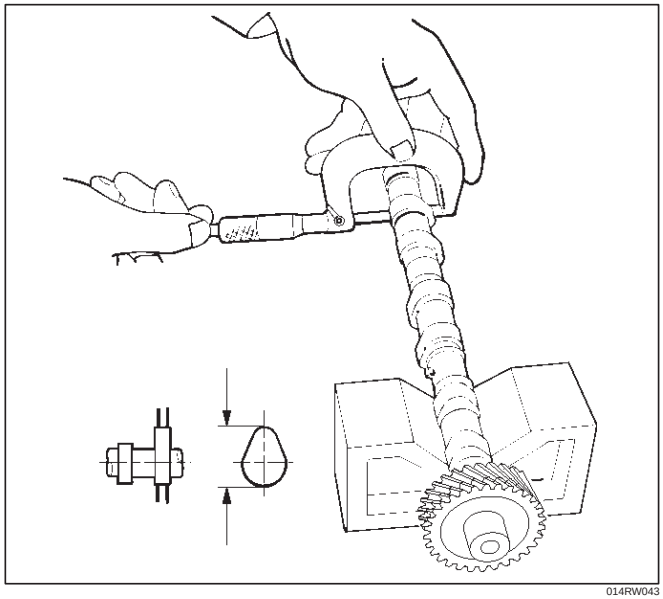

014RW043

2. Use a micrometer to measure the diameter and the uneven wear of the camshaft journals.
   Replace the camshaft if the diameter or the uneven wear exceeds the specified limit.

Journal Diameter

Standard : 25.972 mm–25.993 mm (1.0225 in–1.0233 in)

Limit : 25.8 mm (1.0157 in)

Uneven wear : 0.05 mm (0.0020 in)

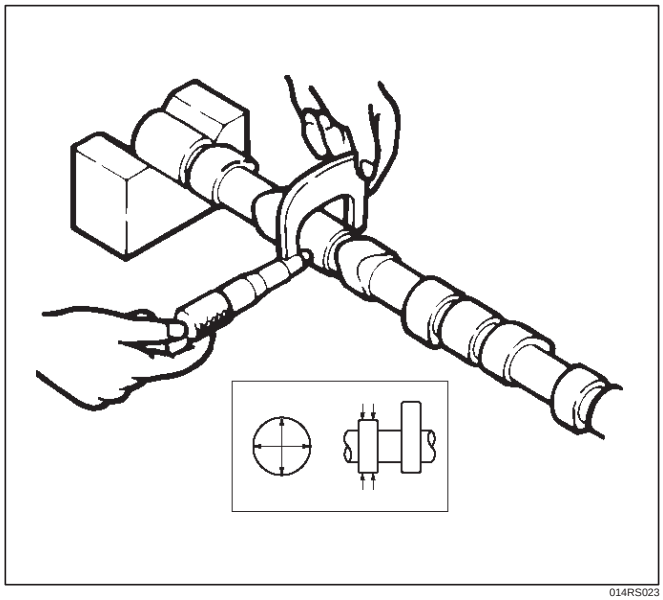

014RS023

3. Place the camshaft on V–blocks.
   Slowly rotate the camshaft and measure the runout with a dial indicator.
   Replace the camshaft if the runout exceeds the specified limit.

Runout

Limit : 0.1 mm (0.0039 in)

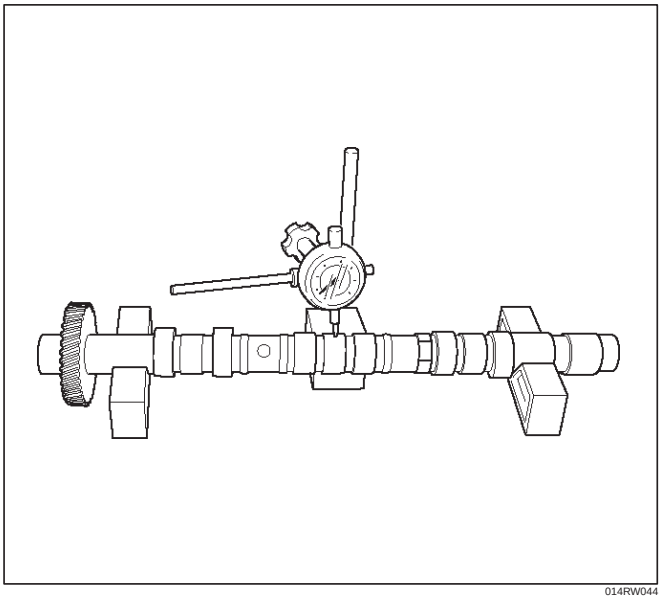

014RW044

4. Measure the camshaft journal oil clearance.
   1. Measure the camshaft bracket housing inside diameter.

NOTE: Tighten camshaft bracket (2) to specified torque before measuring the camshaft bracket inside diameter.

Torque : 10 N·m (1.0 kg·m/87 lb in)

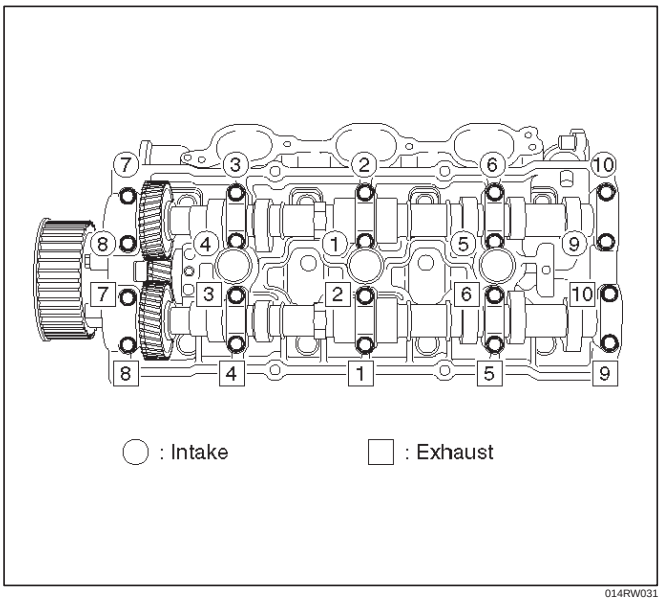

014RW031

   2. Subtract the camshaft outside diameter from the camshaft bracket housing inside diameter.

Oil Clearance

Standard : 0.027 mm–0.078 mm (0.0011 in–0.0031 in)

Limit : 0.11 mm (0.0043 in)

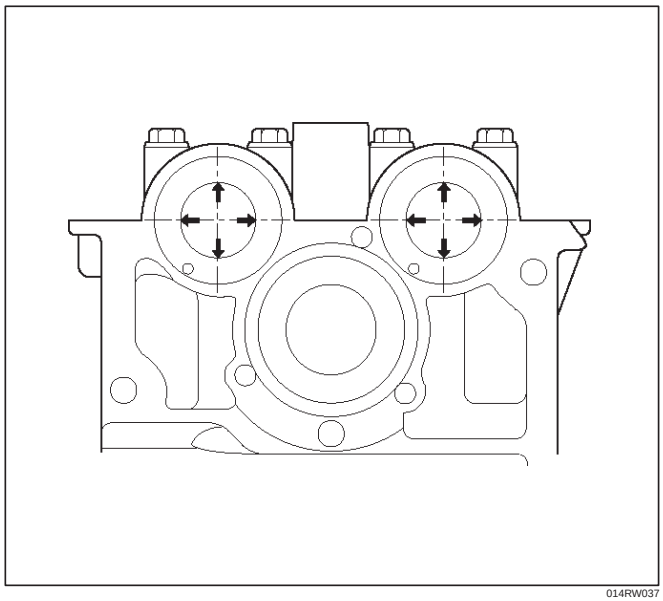

014RW037

5. Replace the cylinder head and/or camshaft if the measured oil clearance exceeds the specified limit.
   1. Carefully clean the camshaft journal, the camshaft bracket, and the cylinder head.
   2. Install camshaft assembly and camshaft brackets (2), tighten twenty bolts (1) on one side bank to the specified torque.

Torque: 10 N·m (1.0 kg·m/87 lb in)

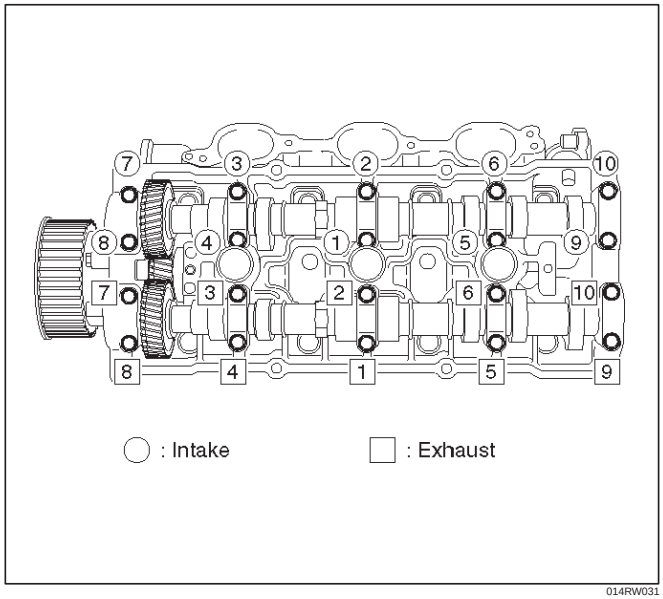

014RW031

3. Measure the camshaft thrust clearance with a dial indicator. Replace the camshaft and/or the cylinder head if the camshaft thrust clearance exceeds the specified limit.

Camshaft thrust Clearance

Standard : 0.03 mm–0.08 mm (0.0012 in.–0.0031 in.)

Limit : 0.12 mm (0.0047 mm)

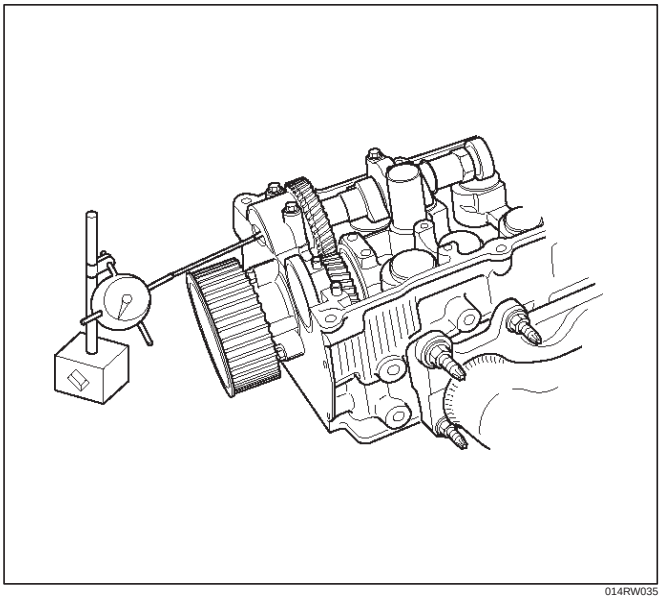

014RW035

Reassembly

1. Install camshaft drive gear assembly and tighten three bolts to specified torque.

   Torque: 10 N·m (1.0 kg·m/87 lb in)

2. Install the spring ; camshaft gear(1) into the camshaft assembly.
   Ensure the clearance is between the right side of the spring; camshaft gear (1) and the dowel pin (2).

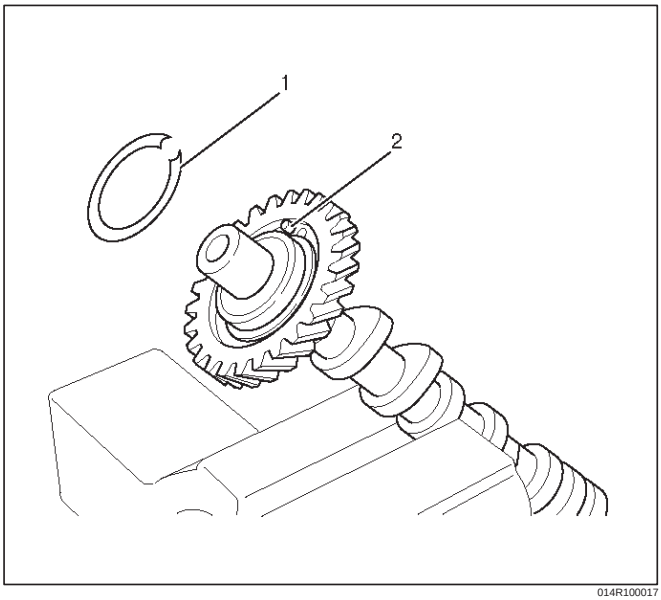

014R100017

3. Align the dowel pin on the sub gear to the clearance of the spring ; camshaft gear made in step 2 and install the sub gear (3).
4. Install the wave washer (2). Use snap ring pliers to install the snap ring (1).

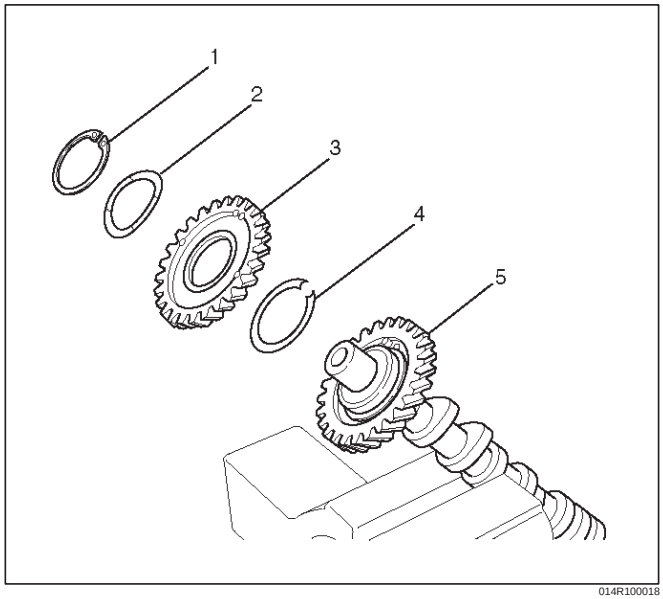

014R100018

5. Tighten sub gear setting bolt.
   a. Use 5-8840-2443-0 gear spring lever to pre-load the sub gear. Turn the sub gear in a clockwise direction until the M5 bolt hole aligns with the hole in the camshaft driven gear.
   b. Install the M5 bolt and tighten to a suitable torque to prevent the sub gear from moving.

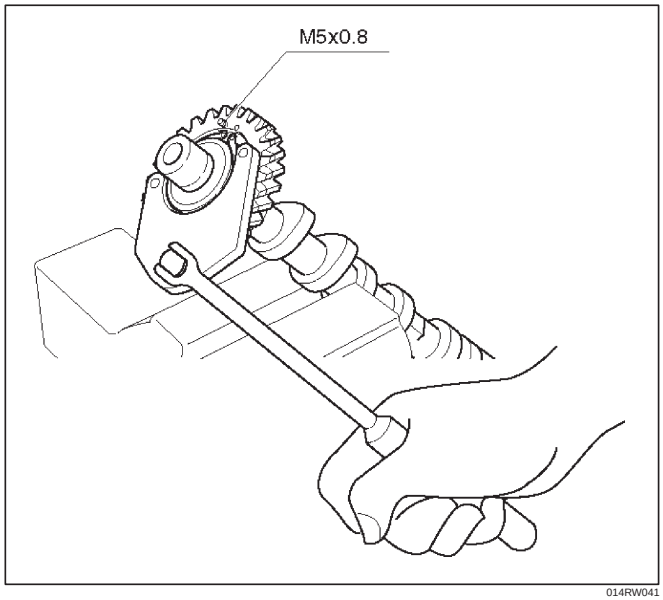

014RW041

6. Align the timing mark on the retainer and dowel pin of the camshaft drive gear.
7. Install camshaft assembly and camshaft brackets, tighten twenty bolts on one side bank to the specified torque.

a. Apply engine oil to camshaft journal and bearing surface of camshaft bracket.

b. Align timing mark on intake camshaft (one dot for right bank, two dots for left bank) and exhaust camshaft (one dot for right bank, two dots for left bank) to timing mark on camshaft drive gear (one dot).

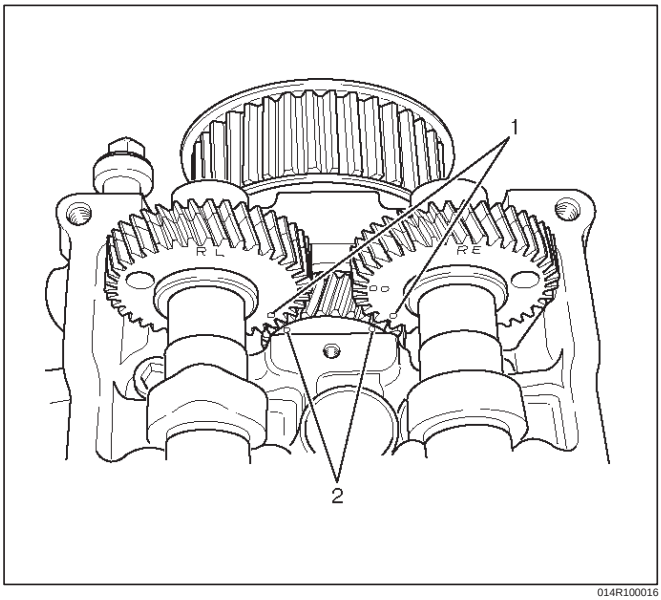

014R100016

Legend

(1) Alignment Mark on the Camshaft Gear
(2) Alignment Mark on the Camshaft Drive Gear

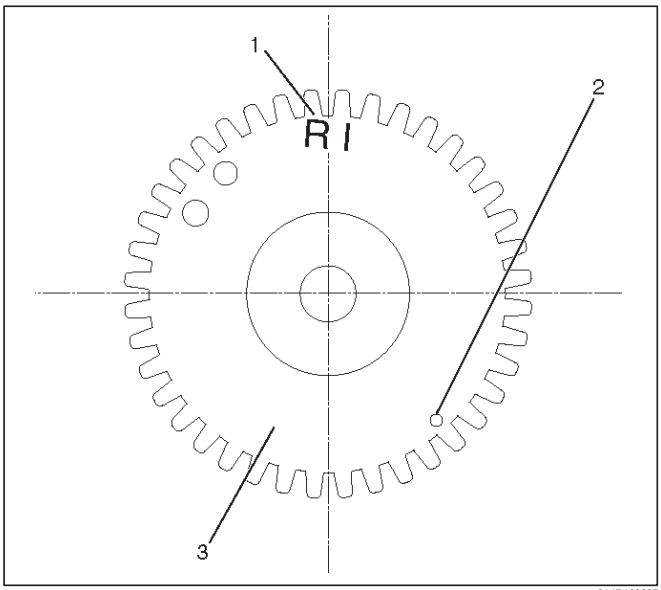

014R100025

Legend

(1) Discrimination Mark for Right Bank Intake Camshaft Gear
(2) Alignment Mark for Right Bank (One Dot)
(3) Camshaft Timing Gear for Right Bank Intake

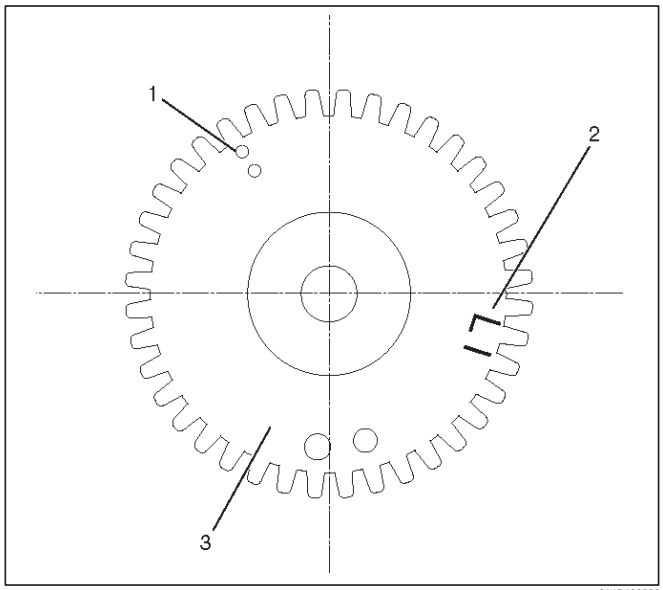

014R100026

Legend

(1) Alignment Mark for Left Bank (Two Dots)
(2) Discrimination Mark for Left Bank Intake Camshaft Gear
(3) Camshaft Timing Gear for Left Bank Intake

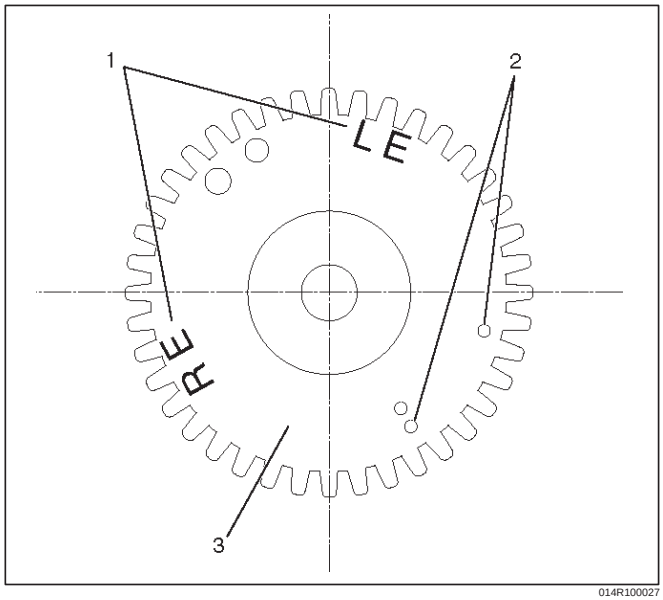

014R100027

Legend

(1) Discrimination Mark
LE : Left Bank Exhaust
RE : Right Bank Exhaust
(2) Alignment Mark
One Dot for Right Bank
Two Dots for Left Bank
(3) Camshaft Timing Gear for Exhaust

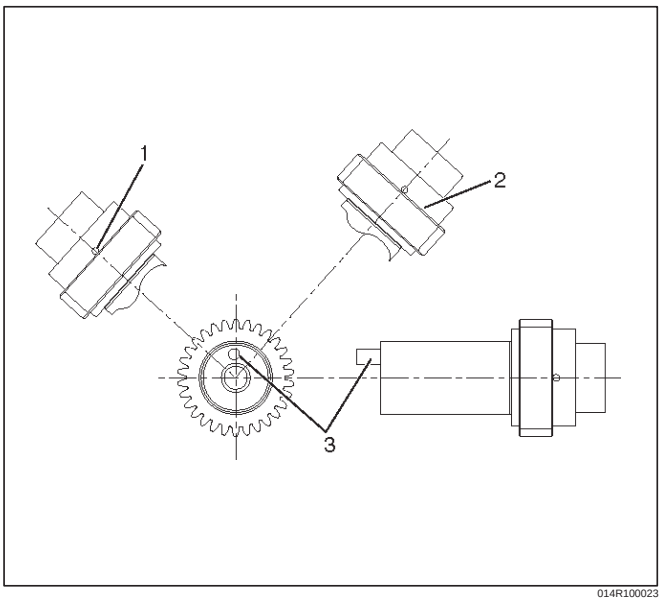

014R100023

Legend

(1) Timing Mark on the Camshaft Drive Gear for Right Bank Exhaust Camshaft
(2) Timing Mark on the Camshaft Drive Gear for Right Bank Intake Camshaft
(3) Dowel Pin

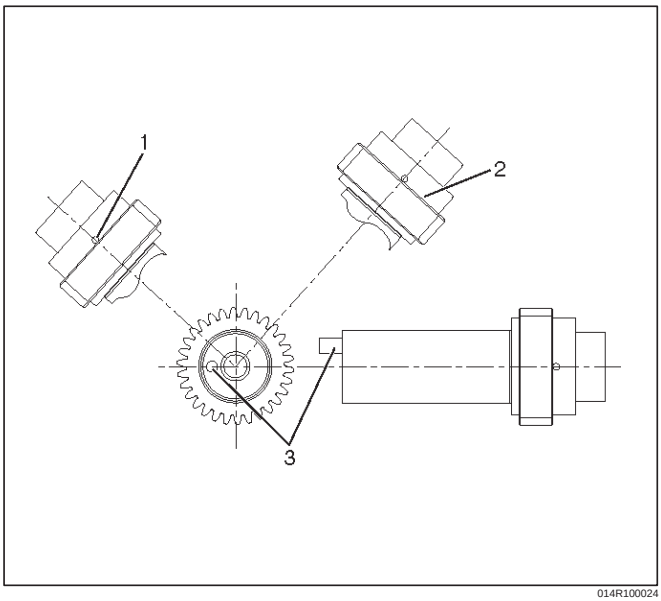

014R100024

Legend

(1) Timing Mark on the Camshaft Drive Gear for Left Bank Intake Camshaft
(2) Timing Mark on the Camshaft Drive Gear for Left Bank Exhaust Camshaft
(3) Dowel Pin

c. Tighten twenty bolts in numerical order on one side bank as shown in the illustration.

Torque: 10 N·m (1.0 kg·m/87 lb in)

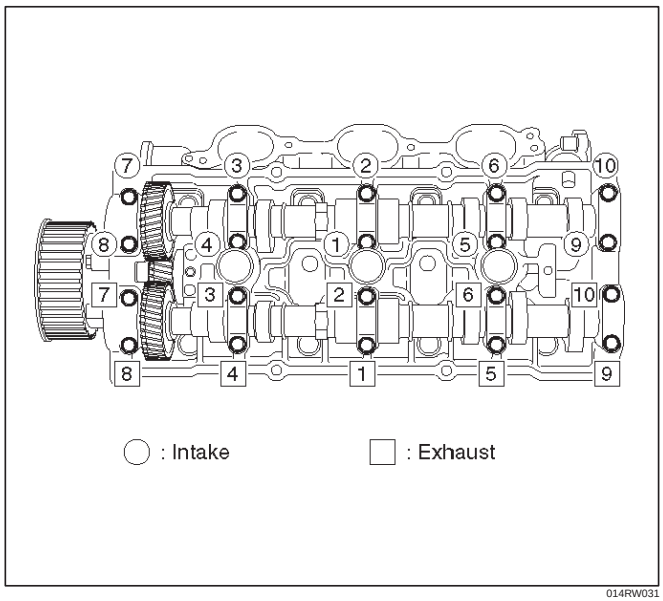

014RW031

8. If the oil seal requires replacement, use the 5-8840-2445-0 to install the oil seal.

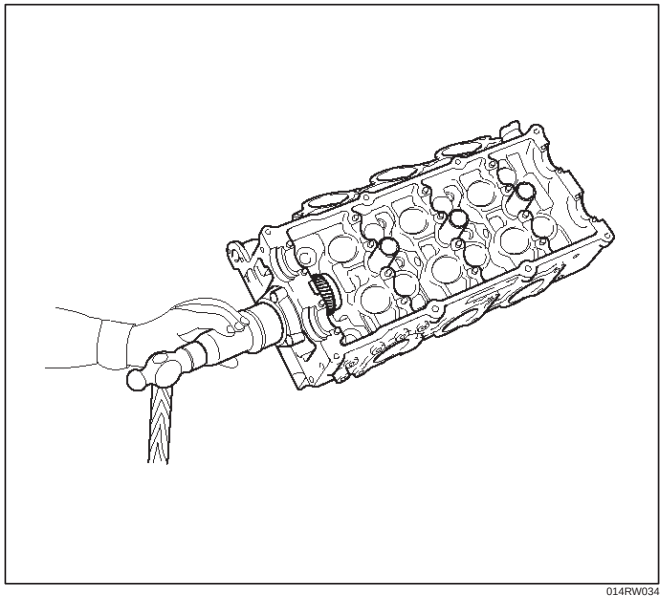

014RW034

9. If the camshaft end plug requires replacement, use the 5-8840-2445-0 to install the camshaft end plug.

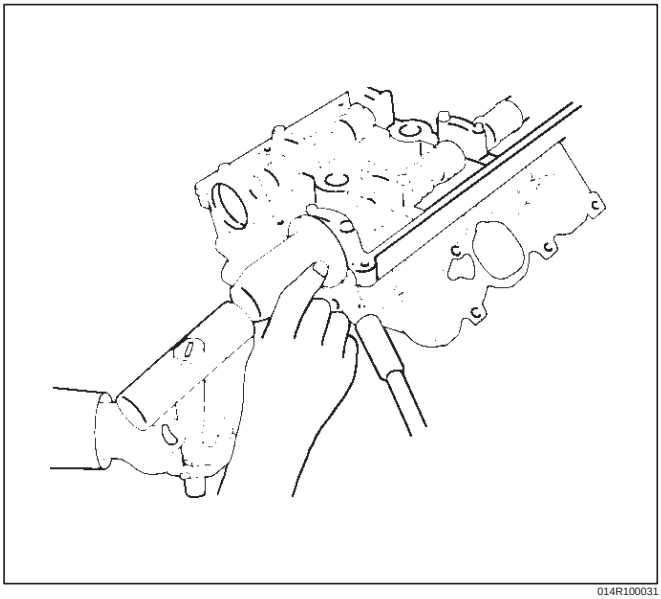

014R100031

10. Tighten bolt for camshaft drive gear pulley to the specified torque using the 5-8840-2447-0 universal holder.

Torque: 98 N·m (10.0 kg·m/72 lb ft)

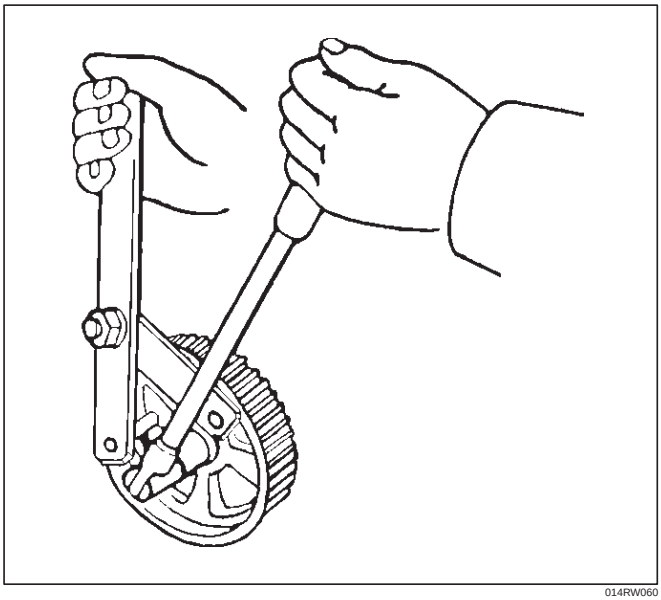

014RW060

Crankshaft

Crankshaft and Associated Parts

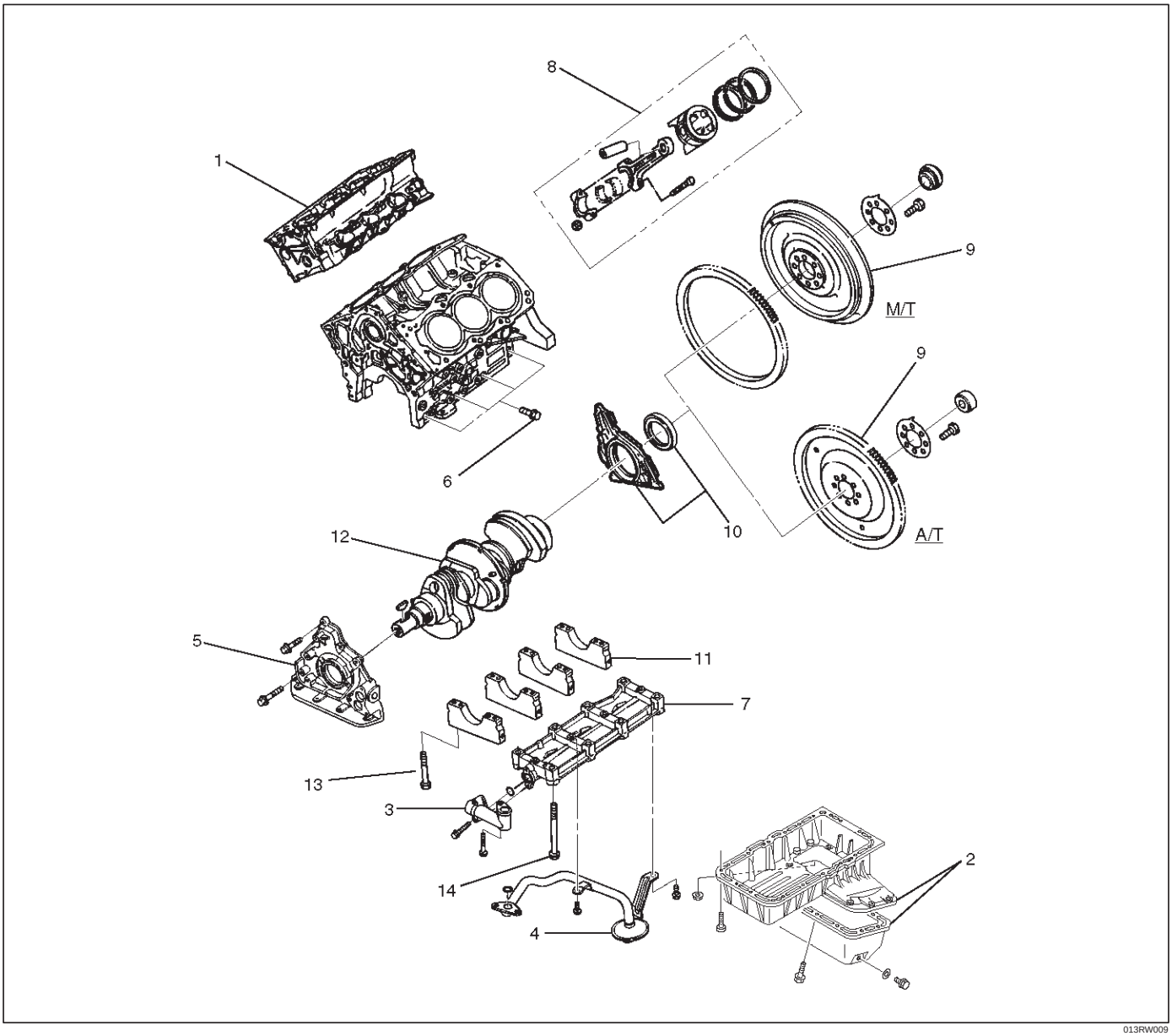

013RW009

Legend

(1) Cylinder Head Assembly
(2) Crankcase with Oil Pan
(3) Oil Pipe and O-ring
(4) Oil Strainer and O-ring
(5) Oil Pump Assembly
(6) Cylinder Block Side Bolts
(7) Oil Gallery
(8) Piston and Connecting Rod Assembly
(9) Flywheel
(10) Rear Oil Seal Retainer and Oil Seal
(11) Main Bearing Cap
(12) Crankshaft
(13) Main Bearing Cap Fixing Bolts
(14) Oil Gallery Fixing Bolts

Disassembly

1. Remove cylinder head assembly (1). Refer to “Cylinder Head” in this manual.
2. Remove crankcase with oil pan (2). Refer to “Oil Pan and Crankcase” in this manual.

CAUTION: Take care not to damage or deform the sealing flange surface of crankcase.

3. Remove oil pipe and O-ring (3).
4. Remove oil strainer and O-ring (4).
5. Remove oil pump assembly (5).
6. Remove crankcase side bolts (6).

7. Remove oil gallery (7).
8. Remove piston and connecting rod assembly (8). Refer to “Piston, Piston Ring and Connecting Rod” in this manual.
9. Remove flywheel (9).
10. Remove rear oil seal retainer (10).
11. Remove main bearing cap (11).
12. Remove crankshaft (12).

Inspection and Repair for Bearings

1. Inspect Crankshaft
   Set the dial indicator as shown in the illustration and measure the crankshaft thrust clearance. If the thrust clearance exceeds the specified limit, replace the thrust bearings as a set.

   Thrust Clearance

   Standard : 0.06 mm–0.24 mm (0.0024 in–0.0094 in)

   Limit : 0.30 mm (0.0118 in)

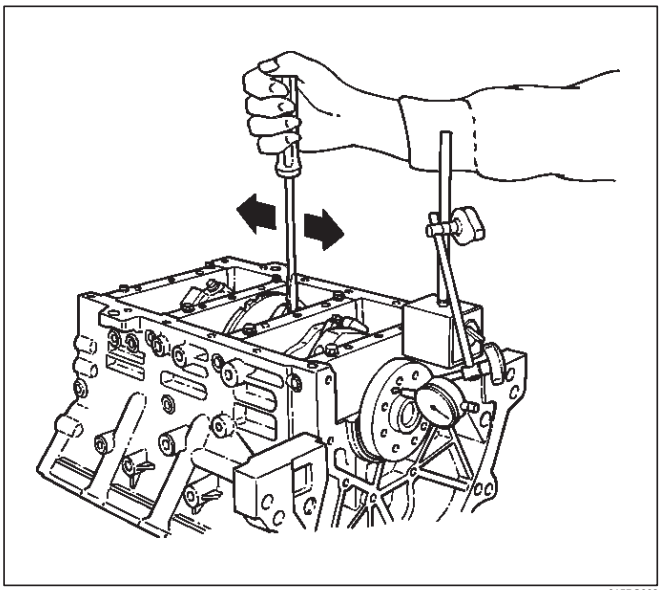

015RS003

Main Bearing Clearance

1. Remove the bearing caps and measure the oil clearance.
2. Remove the main bearing cap fixing bolts in the sequence shown in the illustration.
   Arrange the removed main bearing caps in the cylinder number order.
   Remove the main bearings.

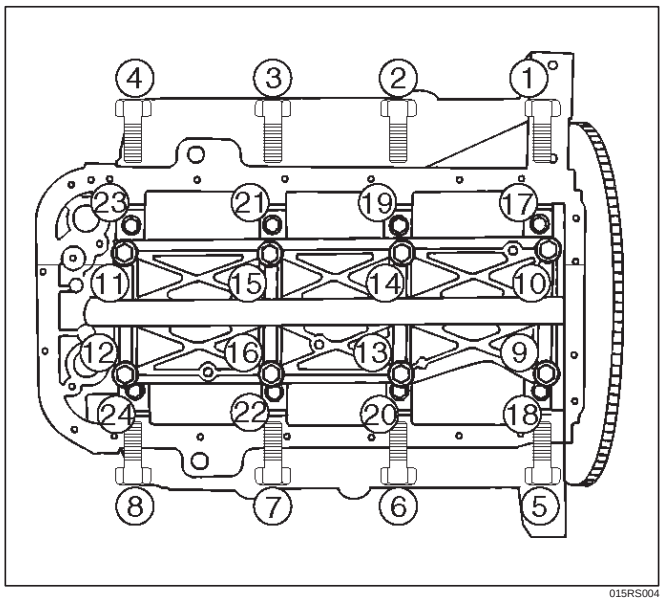

015RS004

3. Remove the crankshaft.
   Remove the main bearings.
4. Clean the upper and lower bearings as well as the crankshaft main journal.
5. Check the bearings for damage or excessive wear.
   The bearings must be replaced as a set if damage or excessive wear is discovered during inspection.
6. Set the upper bearings and the thrust washers to their original positions.
   Carefully install the crankshaft.
7. Set the lower bearings to the bearing cap original position.
8. Apply plastigage to the crankshaft journal unit as shown in the illustration.

NOTE: Do not set the plastigage on the oil hole.

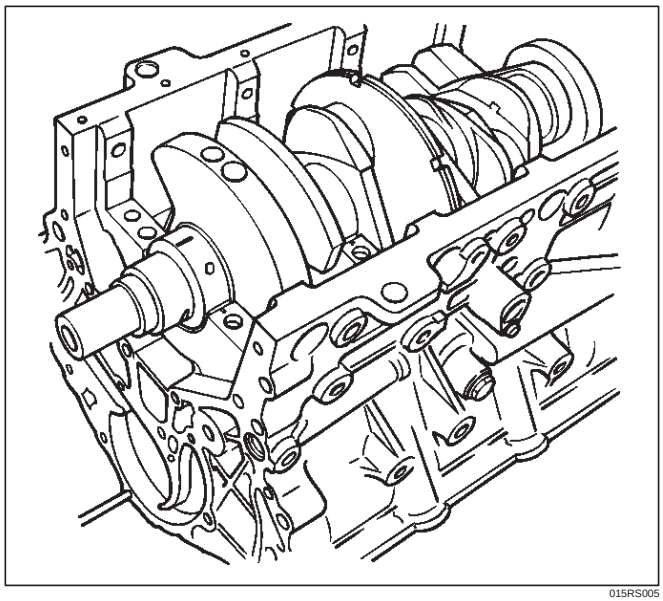

015RS005

9. Install main bearing caps, oil gallery and crank case bolts in the order shown, and tighten each bolt to the specified torque.

NOTE: Do not apply engine oil to the crank case side bolts.

Main bearing cap bolts.

Torque: 39 N·m (4.0 kg·m/29 lb ft)

Oil gallery fixing bolts.

Torque:

1st step: 29 N·m (3.0 kg·m/22 lb ft)

2nd step 55°~ 65°

Crank case side bolts

Torque : 39 N·m (4.0 kg·m/29lb ft)

NOTE: Do not allow the crankshaft to rotate.

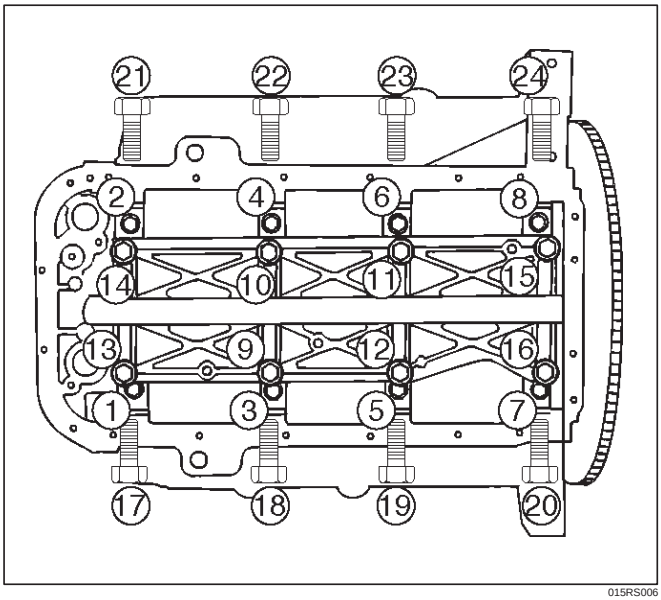

015RS006

10. Remove the main bearing caps in the sequence shown in the illustration.

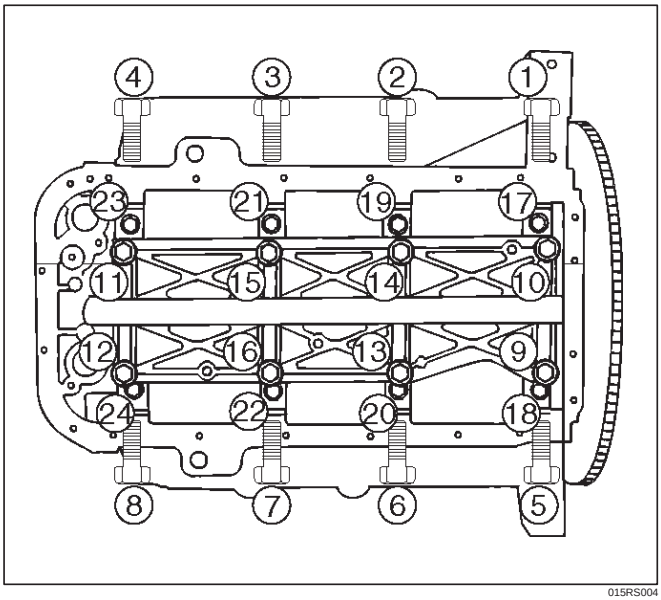

015RS004

11. Measure the plastigage width and determine the oil clearance. If the oil clearance exceeds the specified limit, replace the main bearings as a set and/or replace the crankshaft.

Standard : 0.019 mm–0.043 mm (0.0007 in–0.0017 in)

Limit : 0.08 mm (0.0031 in)

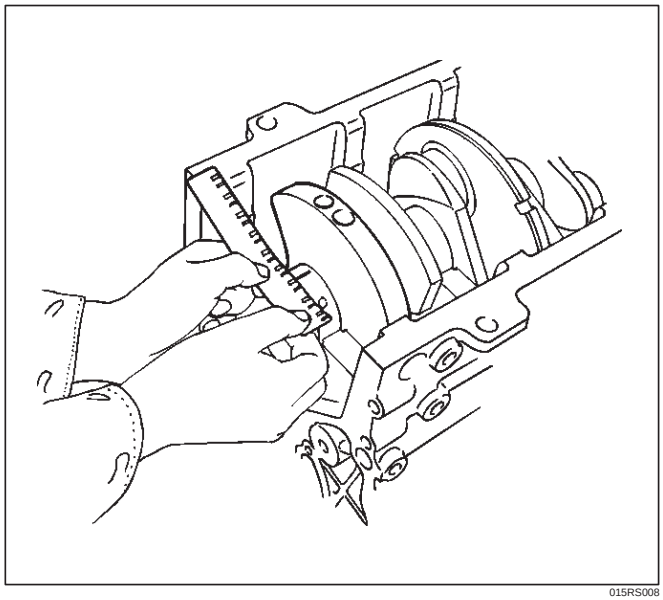

015RS008

12. Clean the plastigage from the bearings and the crankshaft.

Remove the crankshaft and the bearings.

Crankshaft Inspection

Inspect the surface of the crankshaft journal and crank pins for excessive wear and damage. Inspect the oil seal fitting surfaces for excessive wear and damage. Inspect the oil ports for obstructions.

Inspection and Repair for Crankshaft

1. Carefully set the crankshaft on the V–blocks. Slowly rotate the crankshaft and measure the runout. If the crankshaft runout exceeds the specified limit, the crankshaft must be replaced.

Runout : 0.04 mm (0.0016 in)

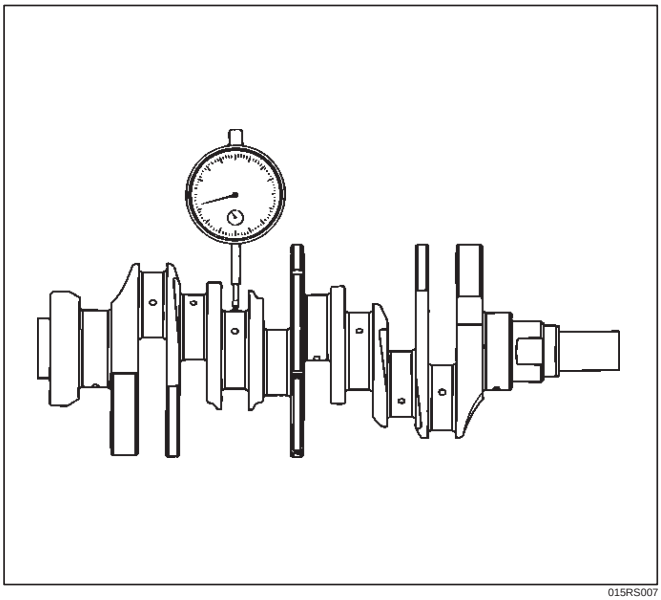

015RS007

2. Measure the diameter and the uneven wear of main journal and crank pin. If the crankshaft wear exceeds the specified limit, crankshaft must be replaced.

Main journal diameter : 63.918 mm–63.933 mm (2.5165 in–2.5170 in)

Crank pin diameter : 53.922 mm–53.937 mm (2.1229 in.–2.1235 in.)

Uneven wear limit : 0.005 mm (0.0002 in)

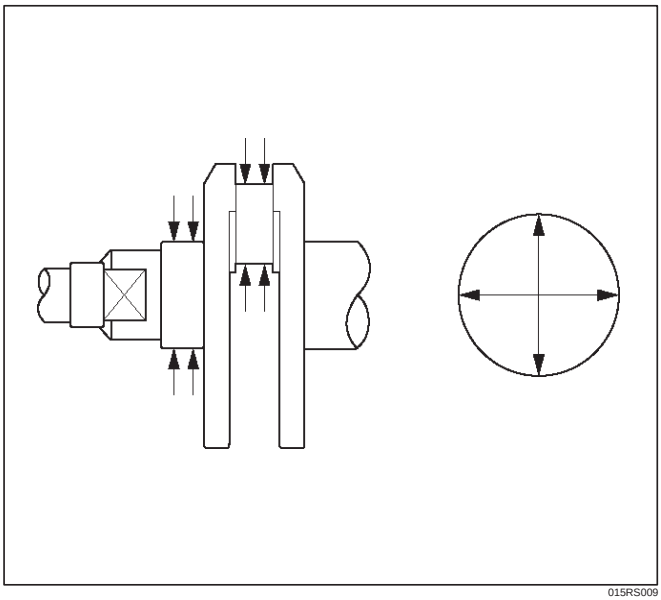

015RS009

Crankshaft Bearing Selection

When installing new crankshaft bearings or replacing bearings, refer to the selection table below. Select and install the new crankshaft bearings, paying close attention to the cylinder block journal hole.

1. Diameter size mark (1) and the crankshaft journal.

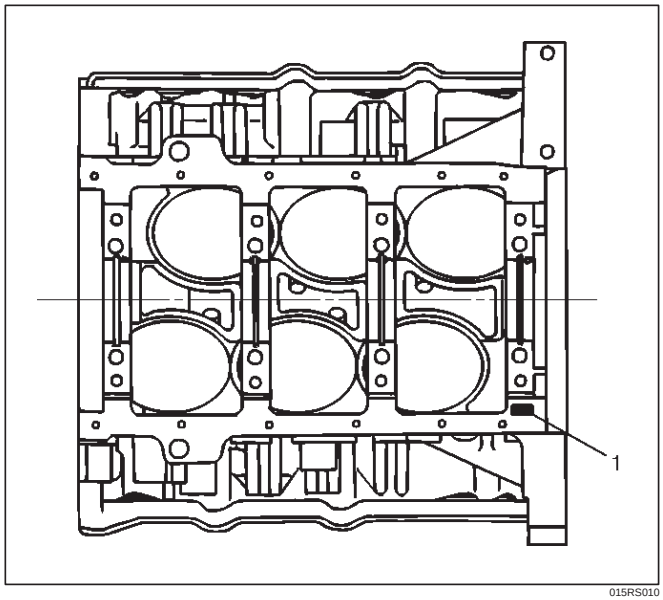

015RS010

2. Diameter size mark (1).
   The diameter size marks are stamped on the No.1 crankshaft balancer as shown in the illustration.

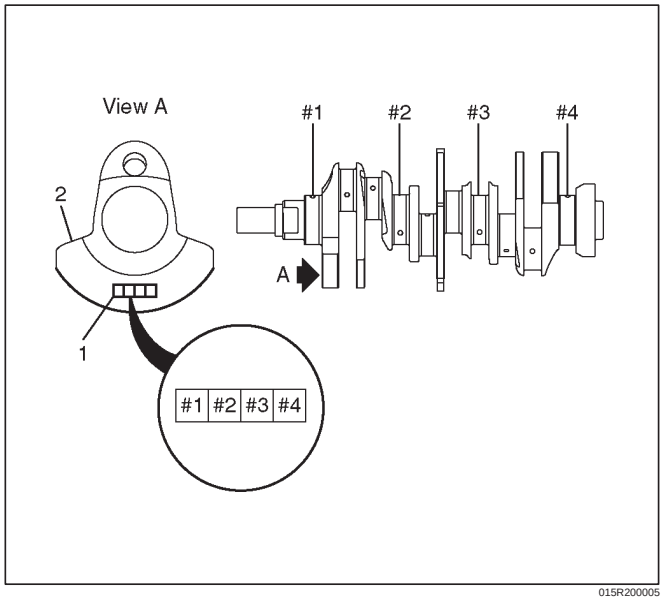

015R200005

NOTE: Take care to ensure the bearings are positioned correctly.

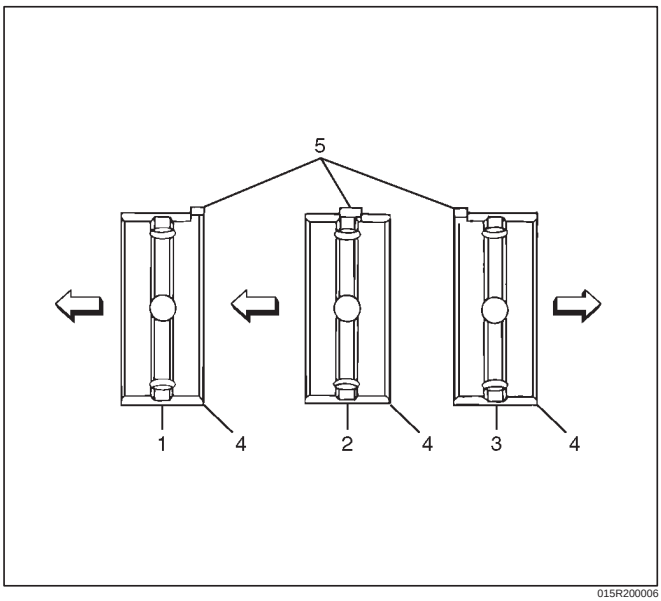

015R200006

Legend

(1) Number 1 and 4 main bearing upper and lower
(2) Number 2 and 3 main bearing upper
(3) Number 2 and 3 main bearing lower
(4) Size mark paint
(5) Tab

Size Mark (Cylinder block)	Main Bearing Bore Diameter	Crank Shaft Main Journal Diameter	Size Mark (Crankshaft)	Crank Shaft Bearing Size Mark paint	Crank Shaft Bearing Thickness	Oil Clearance (Reference)
1	68.994-69.000 mm (2.7163-2.7165 in)	63.918-63.925 mm (2.5165-2.5167 in)	2	Blue	2.527-2.530 mm (0.0995-0.0996 in)	0.019-0.043 mm (0.0007-0.0017 in)
		63.926-63.933 mm (2.5168-2.5170 in)	1	Brown	2.524-2.527 mm (0.0994-0.0995 in)	
2	68.987-68.993 mm (2.7160-2.7163 in)	63.918-63.925 mm (2.5165-2.5167 in)	2			
		63.926-63.933 mm (2.5168-2.5170 in)	1	Green	2.521-2.524 mm (0.0993-0.0994 in)	
3	68.980-68.986 mm (2.7157-2.7160 in)	63.918-63.925 mm (2.5165-2.5167 in)	2			
		63.926-63.933 mm (2.5168-2.5170 in)	1	Yellow	2.518-2.521 mm (0.0991-0.0993 in)	

Reassembly

1. Crankshaft (12)
   - Install the main bearings to the cylinder block and the main bearing caps.
   - Be sure that they are positioned correctly.
   - Apply new engine oil to the upper and lower main bearing faces.

NOTE: Do not apply engine oil to the main bearing back faces.

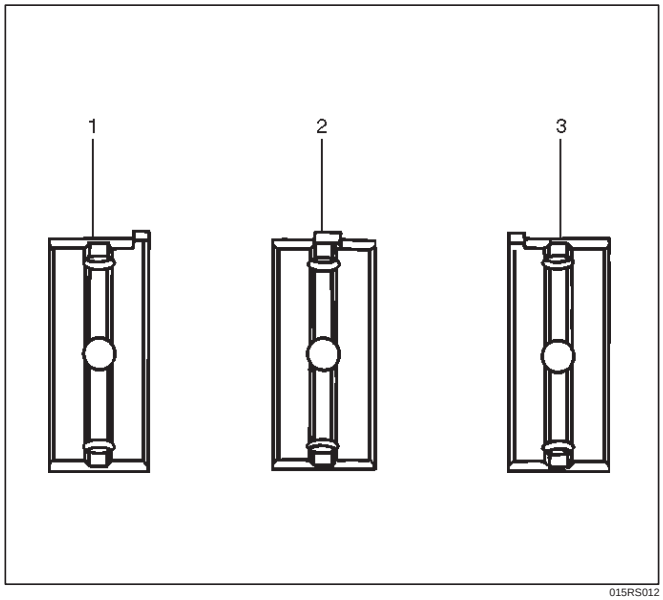

015RS012

- Carefully mount the crankshaft.
- Apply engine oil to the thrust washer.
- Assemble the thrust washer to the No.3 bearing journal. The oil grooves must face the crankshaft.

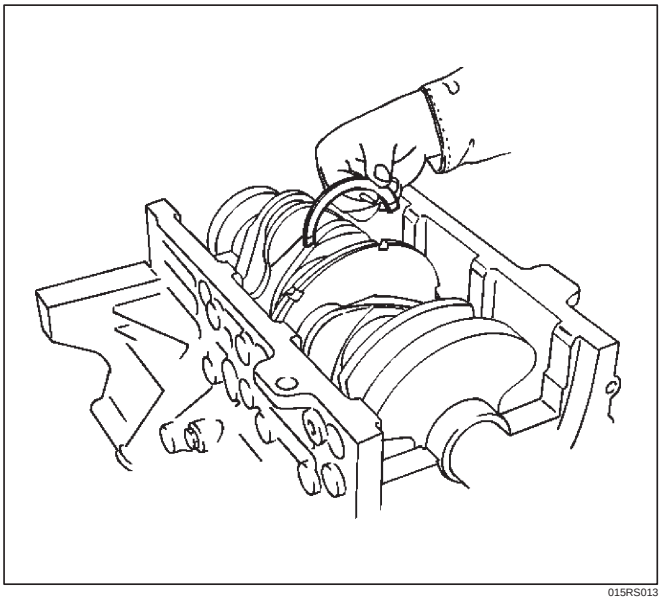

015RS013

2. Rear oil seal (10)
   - Remove the oil from the cylinder block and the retainer mounting surface.
   - Apply sealant (TB–1207B or equivalent) to the retainer mounting surface, following the pattern shown in the illustration.

     The retainer must be installed within 5 minutes after sealant application to prevent premature hardening of sealant.

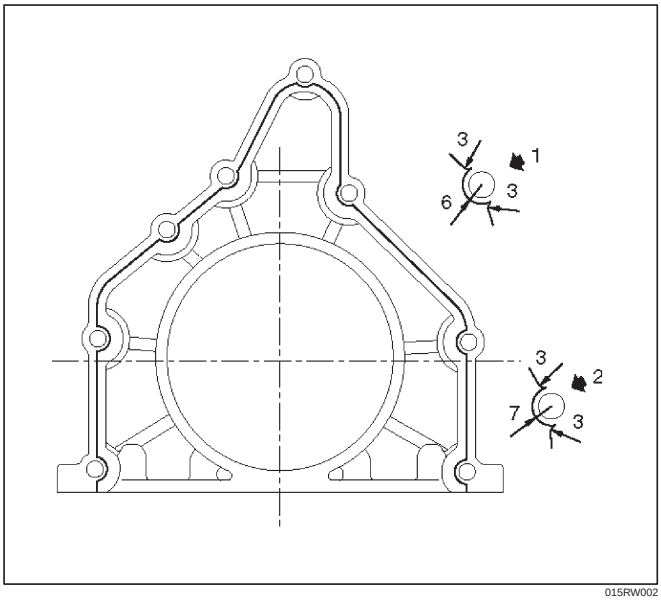

015RW002

Legend

(1) Around Bolt Holes

(2) Around Dowel Pin

- Apply engine oil to the oil seal lip.
- Align the cylinder block dowel pin holes with the rear retainer dowel pins.
- Tighten the rear retainer fixing bolts. New bolts should be used when installing rear retainer.

Torque: 18 N·m (1.8 kg·m/13 lb ft)

NOTE: Be very careful not to disengage the oil seal garter spring during installation of the rear retainer.

If the seal was removed from retainer for replacement, apply engine oil to the oil seal lip and install the oil seal using 5-8840-2286-0 oil seal installer.

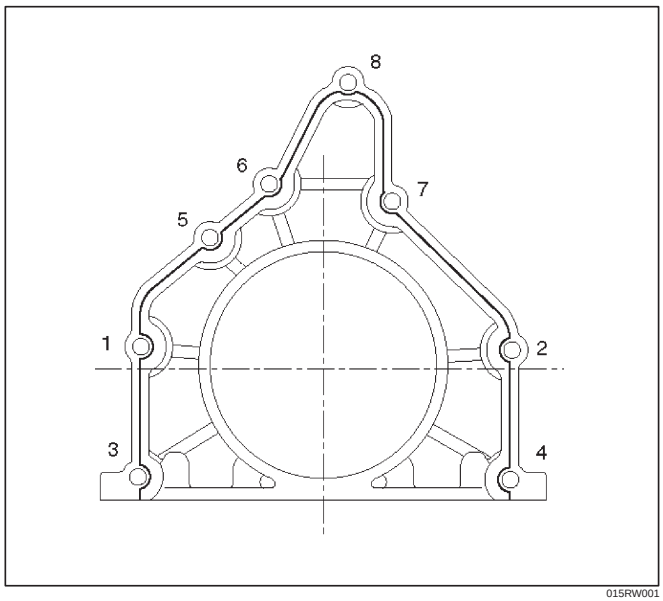

015RW001

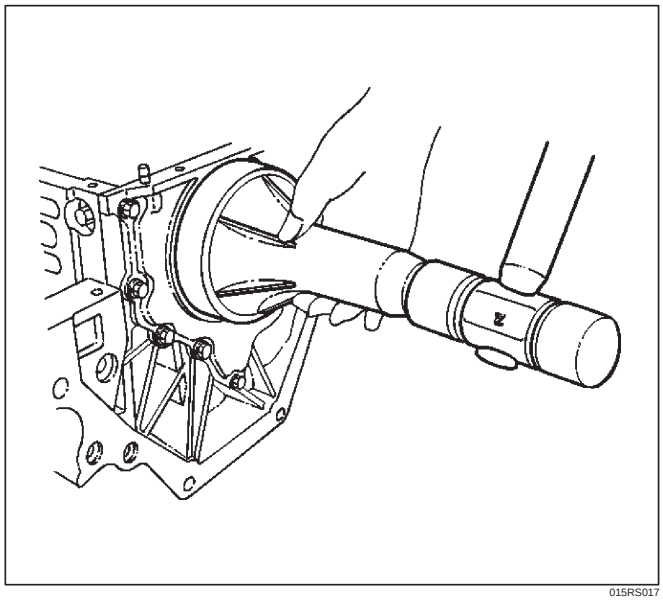

015RS017

3. Flywheel (9)
   1. Thoroughly clean and remove the oil from the threads of crankshaft.
   2. Remove the oil from the crankshaft and flywheel mounting faces.
   3. Mount the flywheel on the crankshaft and then install the washer.

4. Hold the crankshaft to prevent from rotating then install the bolts in the order shown to the specified torque.

Torque: 54 N·m (5.5 kg·m/40 lb ft)

NOTE: Do not reuse the bolt and do not apply oil or thread lock to the bolt.

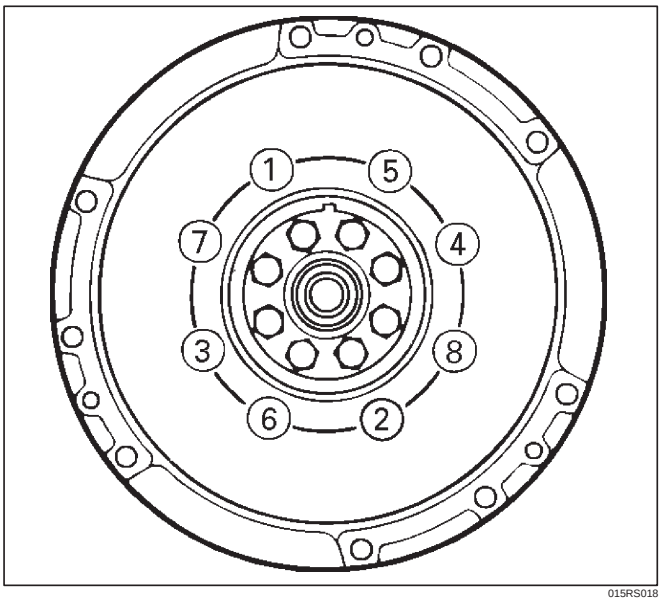

015RS018

4. Piston and connecting rod assembly (8)
   - Apply engine oil to the cylinder bores, the connecting rod bearings and the crankshaft pins. Check to see that the piston ring end gaps are correctly positioned.

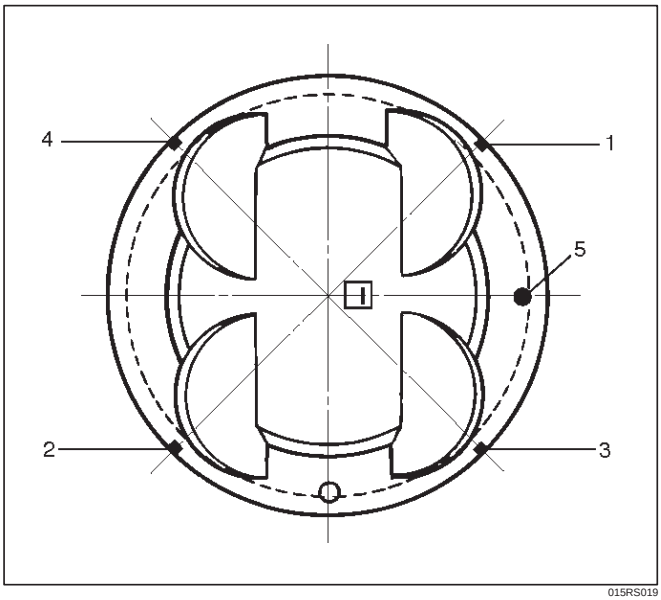

015RS019

Legend

(1) No.1 Compression Ring
(2) No.2 Compression Ring
(3) Oil Ring Side Rail Upper
(4) Oil Ring Side Rail Lower
(5) Piston Front Mark

- Insert the piston/connecting rod assemblies into each cylinder with the piston ring compressor. The front marks must be facing the front of the engine.
- Match the numbered caps with the numbers on the connecting rods. Align the punched marks on the connecting rods and caps.
- Apply engine oil to the threads and seating faces of the nuts.
- Tighten the nuts.

Torque: 54 N·m (5.5 kg·m/40 lb ft)

After tightening the cap nuts, check to see that the crankshaft rotates smoothly.

NOTE: Do not apply engine oil to the bearing back faces.

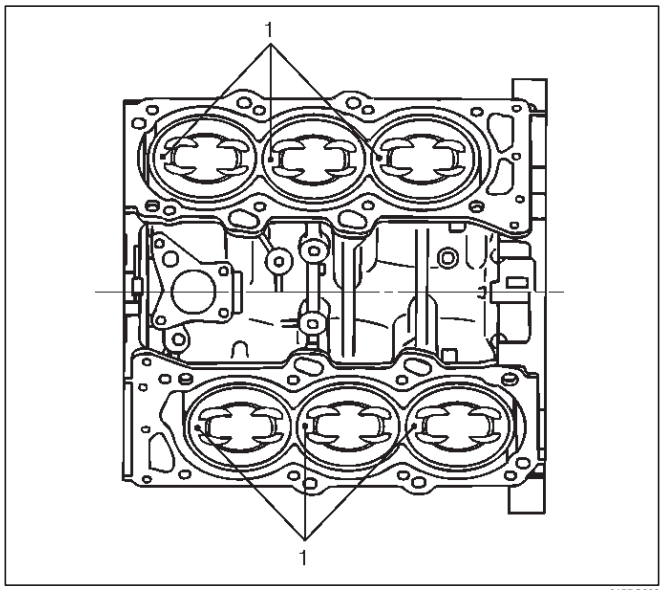

015RS020

5. Install oil gallery (7) and tighten the bolts in 2 steps, in the order shown.

1st step: 29 N·m (3.0 kg·m/22 lb ft)

2nd step: 55°~ 65°

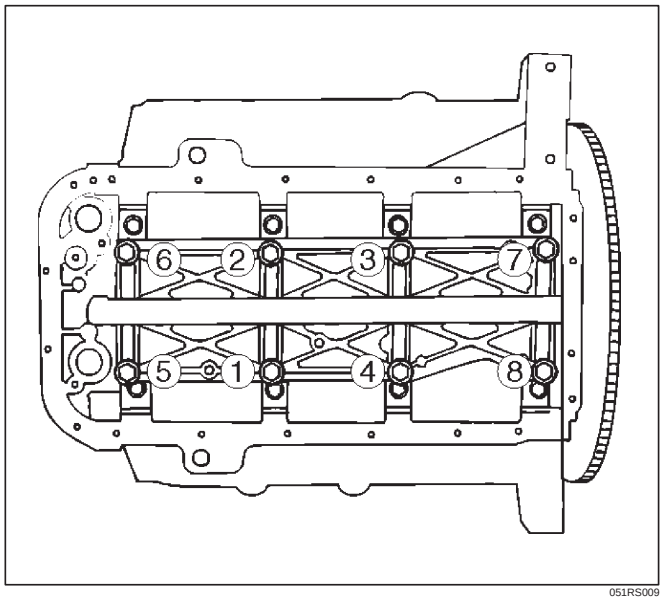

051RS009

6. Cylinder block side bolts (6)
   - Tighten all the bolts to the specified torque in the order shown.

NOTE: Do not apply engine oil to the crank case side bolts.

Torque: 39 N·m (4.0 kg·m/29 lb ft)

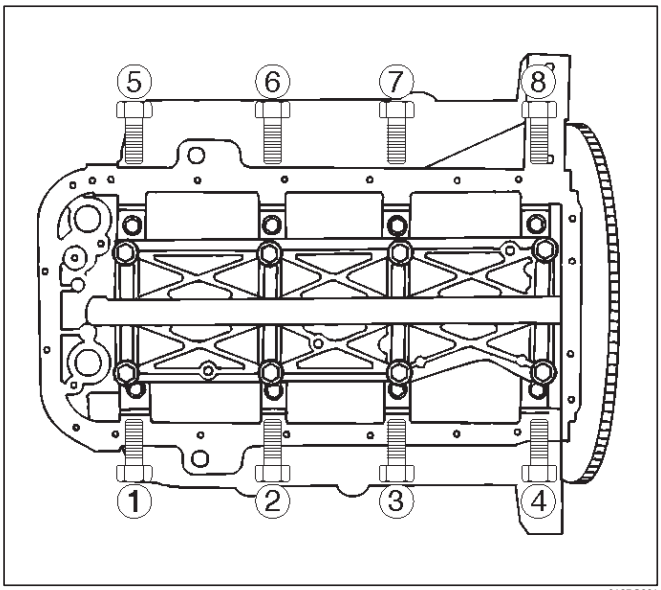

012RS001

7. Install oil pump assembly (5), refer to “Oil pump” in this manual.
8. Install oil strainer and O-ring (4).
9. Install oil pipe and O-ring (3) and tighten the bolts.

Torque: 25 N·m (2.6 kg·m/18 lb ft)

10. Install crankcase with oil pan (2).
    1. Completely remove all residual sealant, lubricant and moisture from the sealing surfaces. The surfaces must be perfectly dry.
    2. Apply a correct width bead of sealant (TB—1207C or its equivalent) to the contact surfaces of the oil pan. There must be no gaps in the bead.
    3. The crankcase assembly must be installed within 5 minutes after sealant application.
    4. Tighten the bolts and nuts to the specified torque.

Torque : 10 N·m (1.0 kg·m/87 lb in)

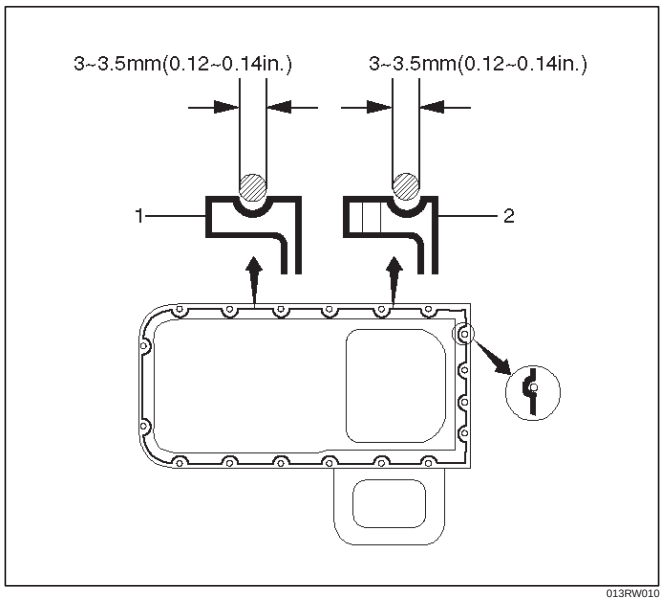

013RW010

Legend

(1) Portion Between Bolt Holes
(2) Bolt Hole Portion

11. Install cylinder head assembly, refer to “Cylinder head” in this manual.

Piston and Connecting Rod

Piston, Connecting Rod and Associate Parts

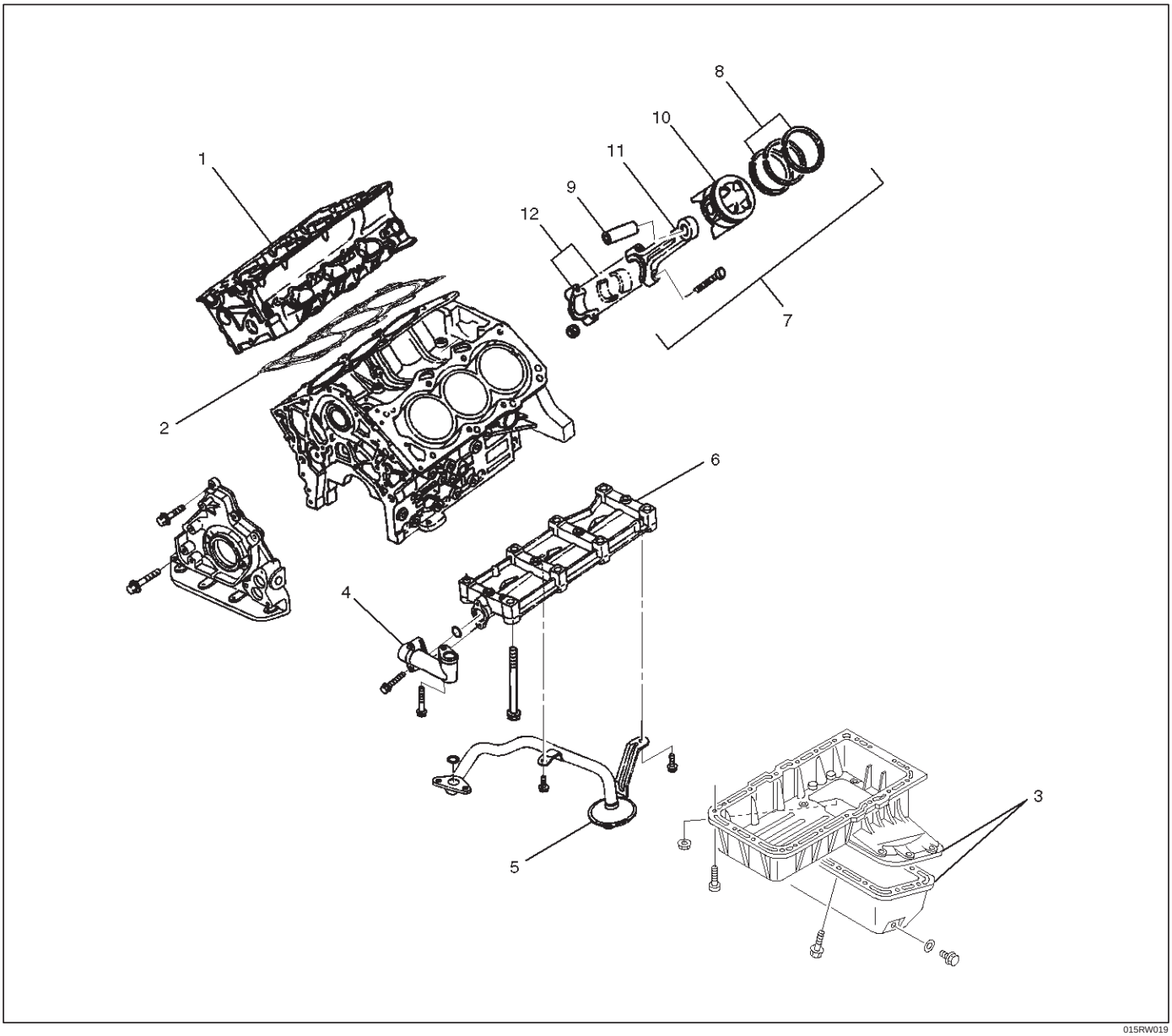

Legend

(1) Cylinder Head Assembly
(2) Cylinder Head Gasket
(3) Crankcase with Oil Pan
(4) Oil Pipe and O-ring
(5) Oil Strainer and O-ring
(6) Oil Gallery
(7) Piston and Connecting Rod Assembly
(8) Piston Ring
(9) Piston Pin
(10) Piston
(11) Connecting Rod
(12) Connecting Rod Cap

Disassembly

1. Remove cylinder head assembly (1). Refer to “Cylinder Head Removal” in this manual.
2. Remove cylinder head gasket (2).
3. Remove crankcase with oil pan (3). Refer to“Oil Pan and Crankcase” in this manual.
4. Remove oil pipe and O-ring (4).
5. Remove oil strainer and O-ring (5).
6. Remove oil gallery (6).
7. Remove connecting rod cap with connecting rod lower bearing (12).
8. Remove piston and connecting rod assembly (7).

NOTE: Before removing piston and connecting rod assembly, measure thrust clearance.

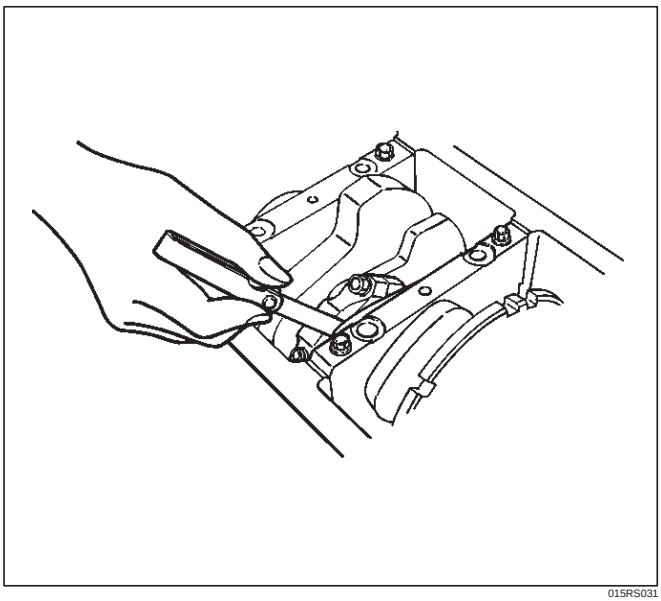

015RS031

- Remove any ridge or carbon build up from the top end of the cylinder.

9. Remove the piston rings (8) with a piston ring expander. Arrange the removed piston rings in the cylinder number order.

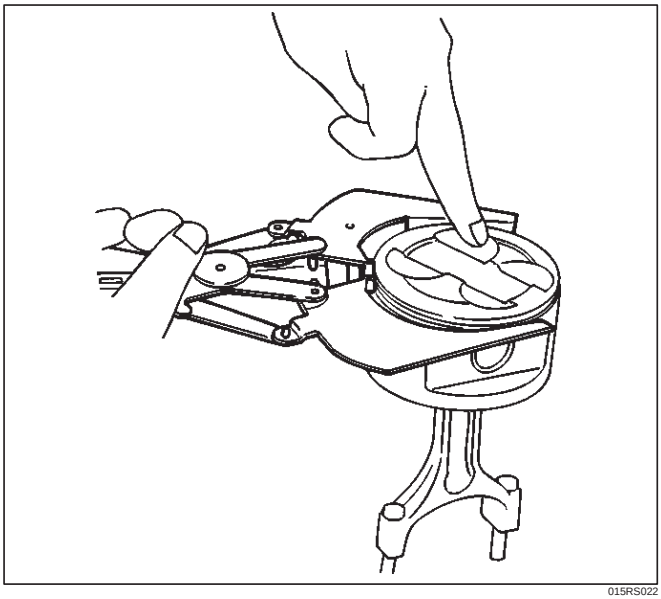

015RS022

10. Remove the piston pin (9) using 5-8840-0551-0 piston pin service set and piston support with a press.

NOTE: Keep the parts removed from each cylinder separate. All parts must be reinstalled in their original positions. Heating the connecting rod will permit easy removal of the piston pin.

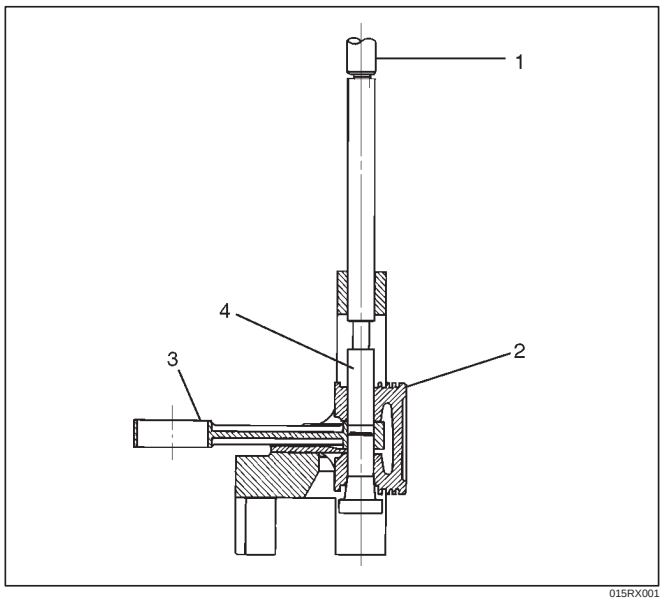

015RX001

Legend

(1) Press Ram
(2) Piston
(3) Connecting Rod
(4) Piston Pin

11. Piston (10)
12. Connecting rod (11)

Inspection and Repair

Pistons

Carefully clean away all the carbon adhering to the piston head and the piston ring grooves.

NOTE: Never use a wire brush to clean the pistons. Damage will result. Visually check each piston for cracking, scoring, and other signs of excessive wear. If any of the above conditions are found, the piston must be replaced.

Piston Diameter

1. Measure the piston outside diameter with micrometer at the piston grading position and a right angle to the piston pin.
   Piston grading position (from piston head)

   Piston grading position : 43.0 mm (1.6929 in)

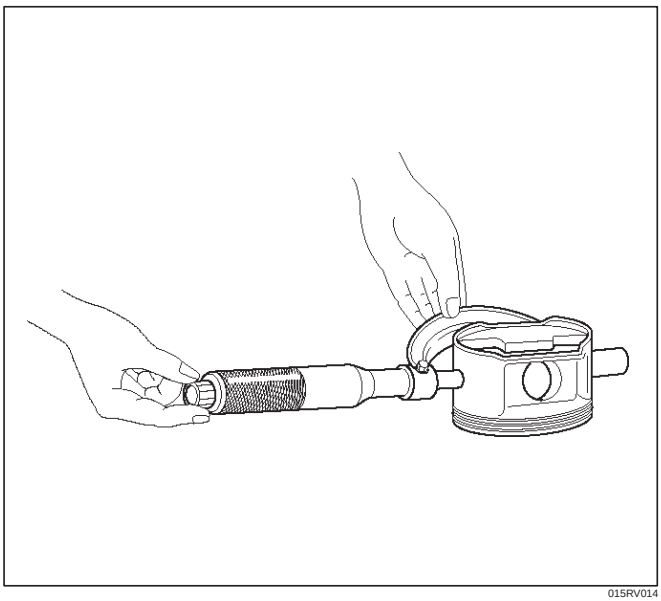

015RV014

The size mark (1) for piston outside diameter is represented as shown in Figure.

Outside Diameter

Size Mark A : 93.360 mm–93.370 mm (3.6756 in–3.6760 in)

Size Mark B : 93.371 mm–93.380 mm (3.6760 in–3.6764 in)

Size Mark C : 93.381 mm–93.390 mm (3.6764 in–3.6768 in)

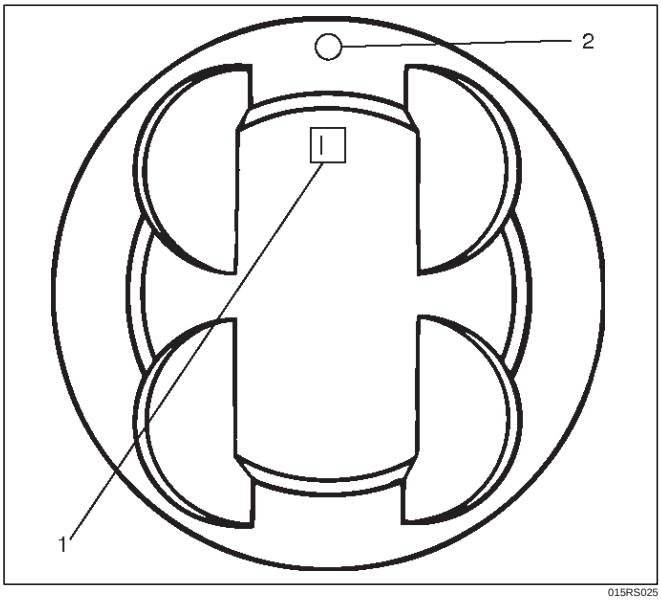

015RS025

Measure the cylinder bore inside diameter (refer to “Cylinder Block” in this manual).

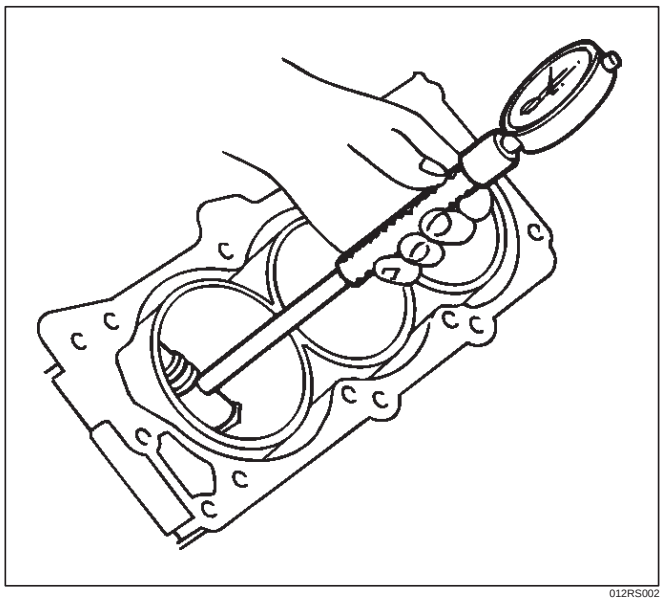

012RS002

Piston Rings

Any worn or damaged part discovered during engine overhaul must be replaced with a new one.

1. Ring end gap measurement
   - Insert the piston ring into the bore.
   - Push the ring by the piston, at a right angle to the wall, into the point at which the cylinder bore diameter is the smallest.
   - Measure the ring end gap.

Compression Ring

1st ring	
Standard:	**0.300 mm–0.400 mm (0.0118 in–0.0157 in)**
Limit:	**1.0 mm (0.0394 in)**
2nd ring	
Standard:	**0.450 mm–0.600 mm (0.0177 in–0.0236 in)**
Limit:	**1.2 mm (0.0472 in)**
Oil ring	
Standard:	**0.150 mm–0.450 mm (0.0059 in–0.0177 in)**
Limit:	**1.05 mm (0.0413 in)**

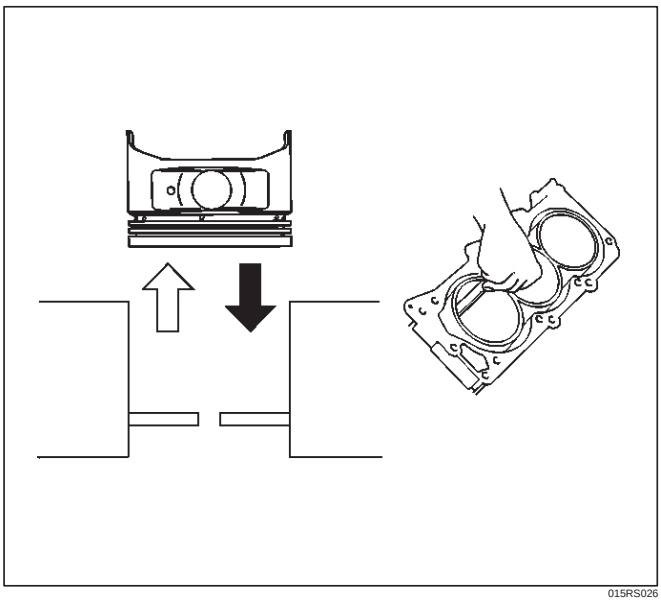

015RS026

- Positioning mark (1) is painted as shown in the illustration.

Marked T : No.1 Compression ring

Marked T2 : No.2 Compression ring

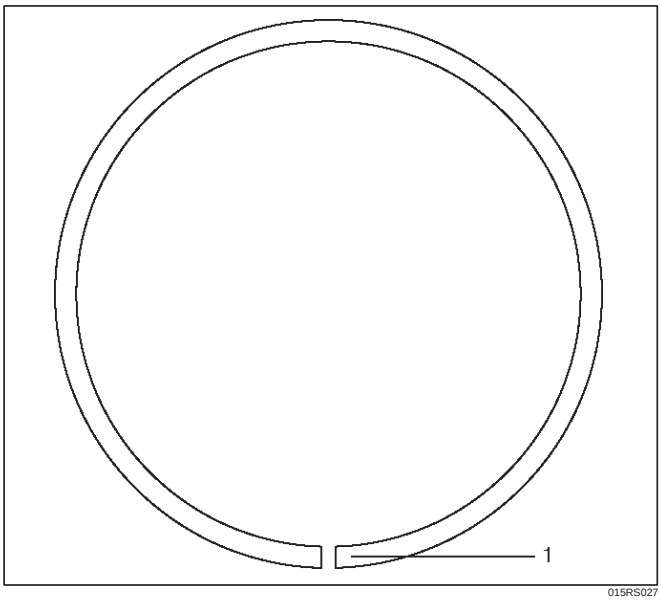

015RS027

2. Measure the clearance between the piston ring groove and the piston ring with a feeler gauge. If the piston ring groove / piston ring clearance exceeds the specified limit, the piston must be replaced.

Compression Ring Clearance

Standard : 0.025 mm–0.065 mm (0.0006 in.–0.0015 in)

Limit : 0.1mm (0.0059 in)

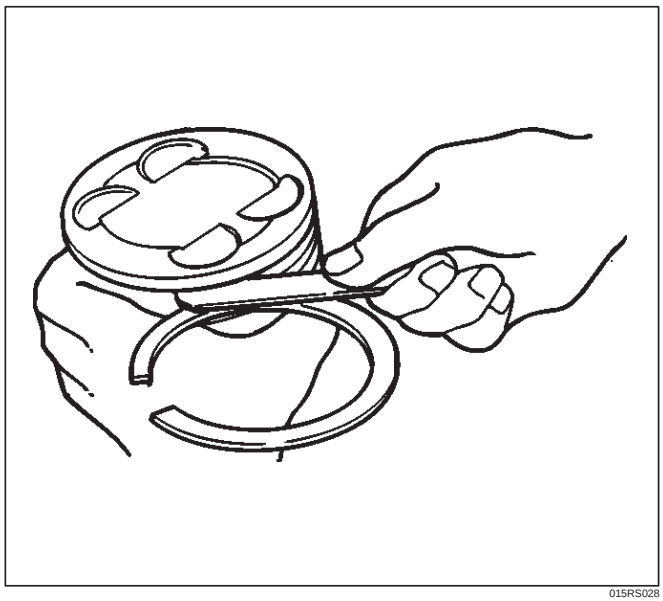

015RS028

Piston Pin

NOTE: Do not reuse the old piston pin.

1. Use a micrometer to measure the new piston pin outside diameter in both directions at three different positions.
2. Measure the inside diameter of the connecting rod small end. If the fitting interference between the small end and pin does not conform to the specified value, the connecting rod must be replaced.

Standard : 0.023 mm–0.038 mm (0.0009 in–0.0015 in)

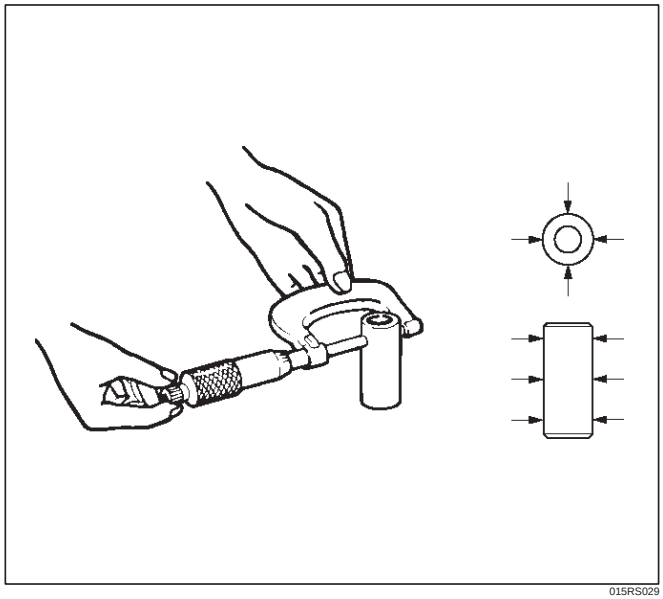

015RS029

3. Insert the new pin into the piston and rotate it. If the pin rotates smoothly with no backlash, the clearance is normal. If there is backlash or roughness, measure the clearance. If the clearance exceeds the specified limit, the piston must be replaced.

Clearance

Standard : 0.010 mm–0.017 mm (0.0004 in.–0.0007 in)

Limit : 0.040 mm (0.0016 in)

Connecting Rods

1. Check the connecting rod alignment If either the bend or the twist exceeds the specified limit, the connecting rod must be replaced.

Bend per 100 mm (3.937 in)

Limit: 0.15 (0.0059)

Twist per 100 mm (3.937 in)

Limit: 0.20 (0.0078)

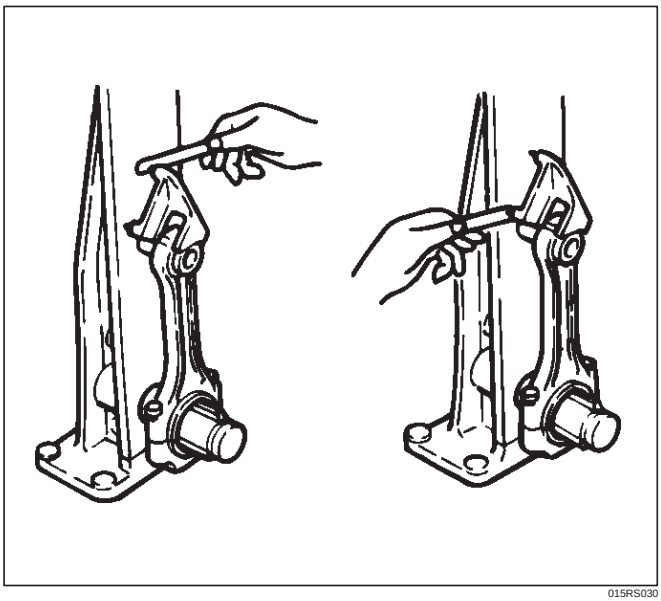

015RS030

2. Measure the connecting rod thrust clearance. Use a feeler gauge to measure the thrust clearance at the large end of the connecting rod If the clearance exceeds the specified limit, the connecting rod must be replaced.

Standard : 0.16 mm–0.35 mm (0.0063 in.–0.0138 in)

Limit : 0.40 mm (0.0157 in)

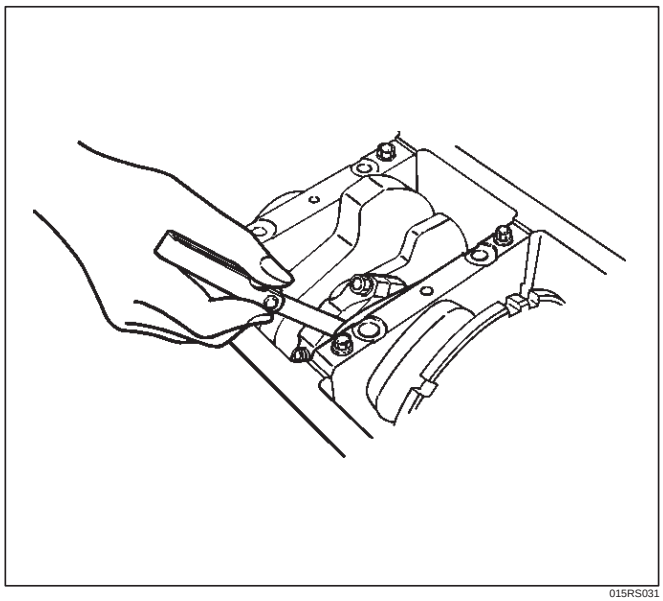

015RS031

3. Measure the oil clearance between the connecting rod and the crankshaft.
   1. Remove the connecting rod cap nuts and the rod caps (12).
      Arrange the removed rod caps in the cylinder number order.
   2. Clean the rod bearings and the crankshaft pins.
   3. Carefully check the rod bearings. If even one bearing is found to be damaged or badly worn, the entire bearing assembly must be replaced as a set. Reinstall the bearings in their original positions. Apply plastigage to the crank pin.

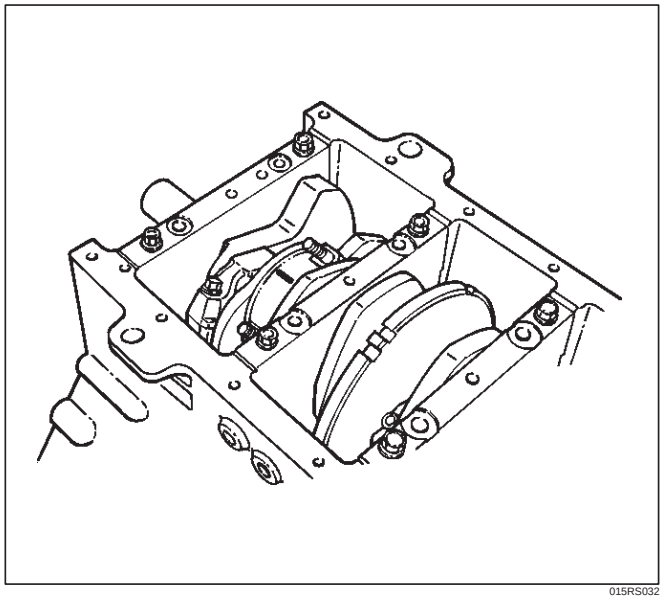

015RS032

   4. Reinstall the rod caps (12) to their original positions.
      Tighten the rod cap nuts.

Torque: 54 N·m (5.5 kg·m/40 lb ft)

NOTE: Do not allow the crankshaft to rotate.

5. Remove the rod caps.
6. Measure the width of the plastigage and determine the oil clearance. If the oil clearance exceeds the limit, replace the rod bearing as a set.

Standard : 0.019 mm–0.043 mm (0.0007 in–0.0017 in)

Limit : 0.08 mm (0.0031 in)

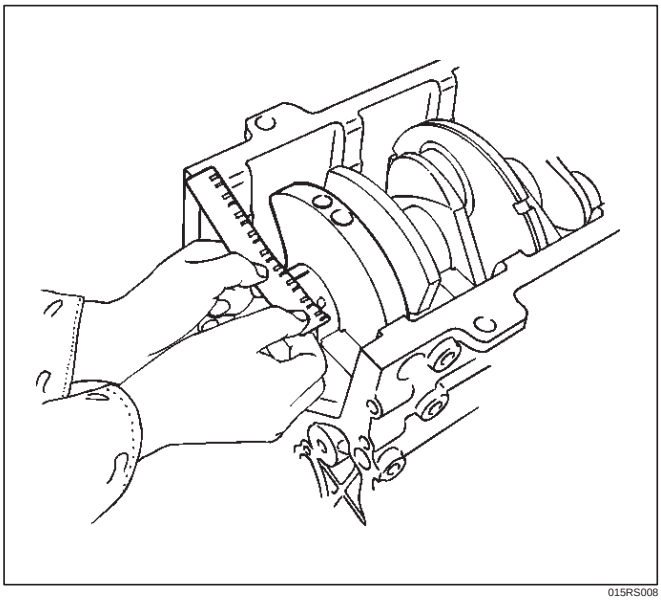

015RS008

7. Clean the plastigage from the bearings and the crankshaft pins.

Con–rod Bearing Selection

Select and install the new connecting rod bearings, paying close attention to the connecting rod big end diameter size mark (1).

NOTE: Take care not to confuse the alignment mark (2) and the size mark (1) during the installation procedure.

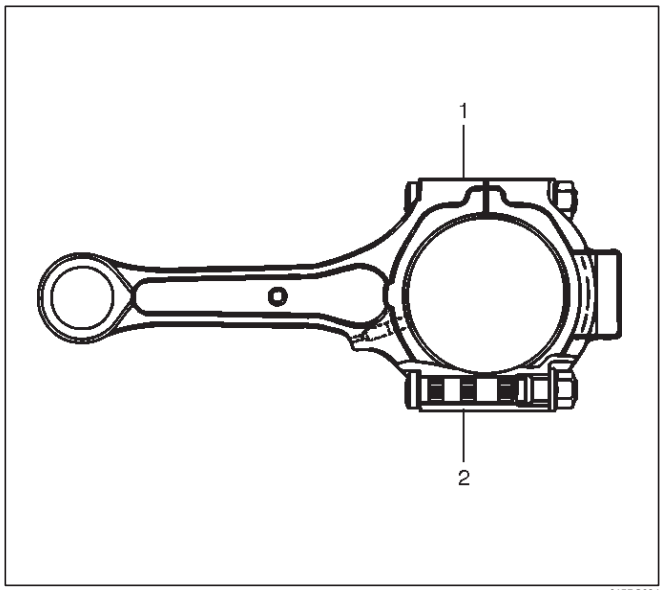

015RS034

1 Size Mark	Big end Bore Diameter	Crankshaft Pin Diameter	Connecting Rod Bearing Thickness (Reference)	Color of Size Mark	Oil Clearance (Reference)
A	56.994-57.000 mm (2.2439-2.2441 in)	53.922-53.937 mm (2.1229-2.1235 in)	1.512-1.516 mm (0.0595-0.0597 in)	Yellow	0.025-0.054 mm (0.0010-0.0021 in)
B	56.988-56.994 mm (2.2436-2.2439 in)		1.508-1.512 mm (0.0594-0.0595 in)	Green	0.027-0.056 mm (0.0011-0.0022 in)
C	56.982-56.988 mm (2.2434-2.2436 in)		1.504-1.508 mm (0.0592-0.0594 in)	Pink	0.029-0.058 mm (0.0011-0.0023 in)

Reassembly

1. Install connecting rod
2. Install piston
3. Install piston pin
   - Apply a thin coat of engine oil to the piston pin. Try to insert the piston pin into the piston pin hole with normal finger pressure.

NOTE: When changing piston / connecting rod combinations, do not change the piston / piston pin combination and do not reuse the old piston pin.

- Attach the piston to the connecting rod with the piston front mark and the connecting rod front mark on the same side.

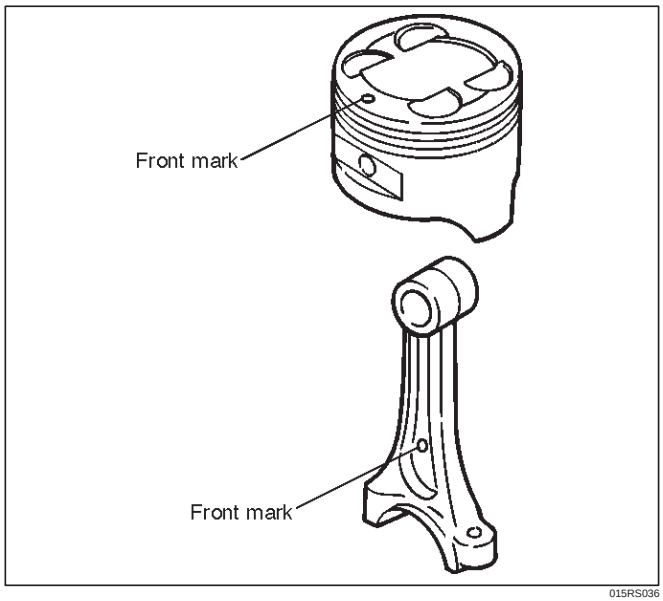

015RS036

- With 5-8840-0551-0 Piston pin service set and a press, press fit the piston pin.

NOTE: Heat the connecting rod small end to a suitable temperature to ensure smooth installation.

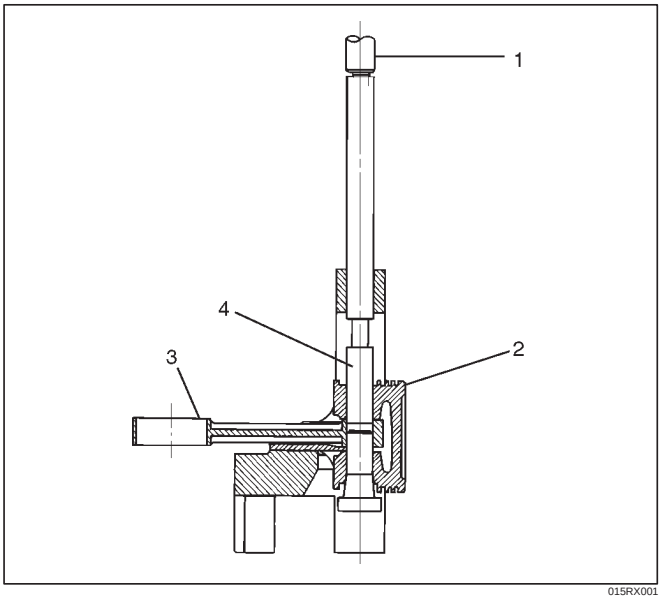

015RX001

Legend

(1) Press Ram
(2) Piston
(3) Connecting Rod
(4) Piston Pin

4. Install piston ring with the piston ring expander.
   - Install piston rings in the following sequence.

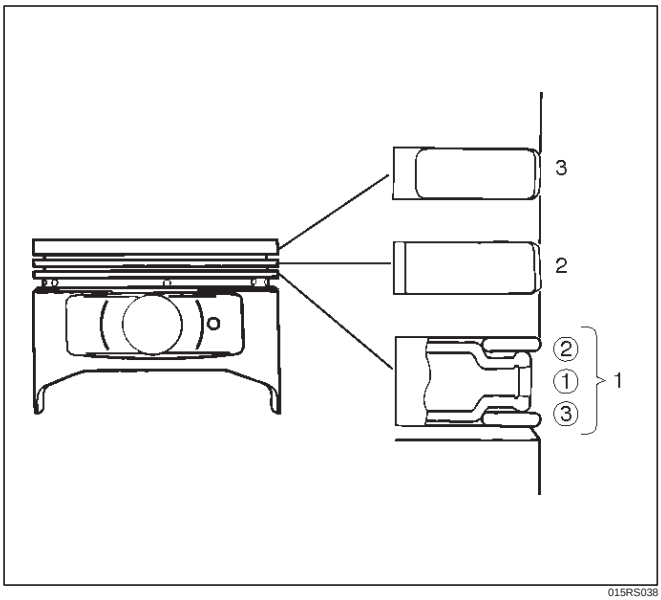

015RS038

1. Oil ring
   1. Expander ring
   2. Upper side rail
   3. Lower side rail
2. 2nd compression ring
3. 1st compression ring
   - The compression rings must be set with the T or T2 mark facing up.

Marked T : No.1 Compression ring

Marked T2 : No.2 Compression ring

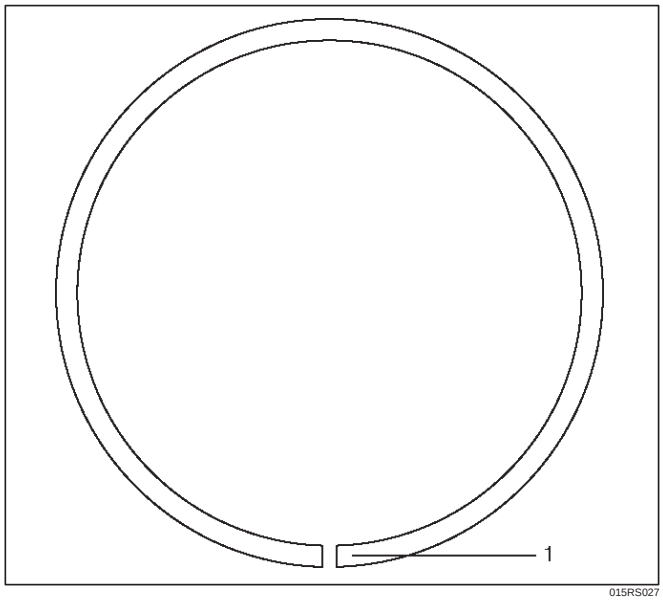

015RS027

- After installation, apply engine oil to the entire circumference of the piston rings. Check to see that all the rings rotate smoothly.

5. Install piston and connecting rod assembly.
   - Insert the bearings into the connecting rods and caps. Apply new engine oil to the bearing faces and nuts.
   - Tighten the connecting rod cap nuts

Torque : 54 N·m (5.5 kg·m/40 lb ft)

NOTE: Do not apply engine oil to the bearing back faces.

6. Oil gallery, refer to “Crankshaft and main bearing” in this manual.
7. Oil strainer and O-ring.
8. Oil pipe and O-ring.
9. Install crankcase with oil pan, refer to “Oil pan and Crankcase” in this manual.
10. Install cylinder head gasket.
11. Install Cylinder head assembly.
    - Refer to “Cylinder head” in this manual.

Cylinder Block

Cylinder Block and Associated Parts

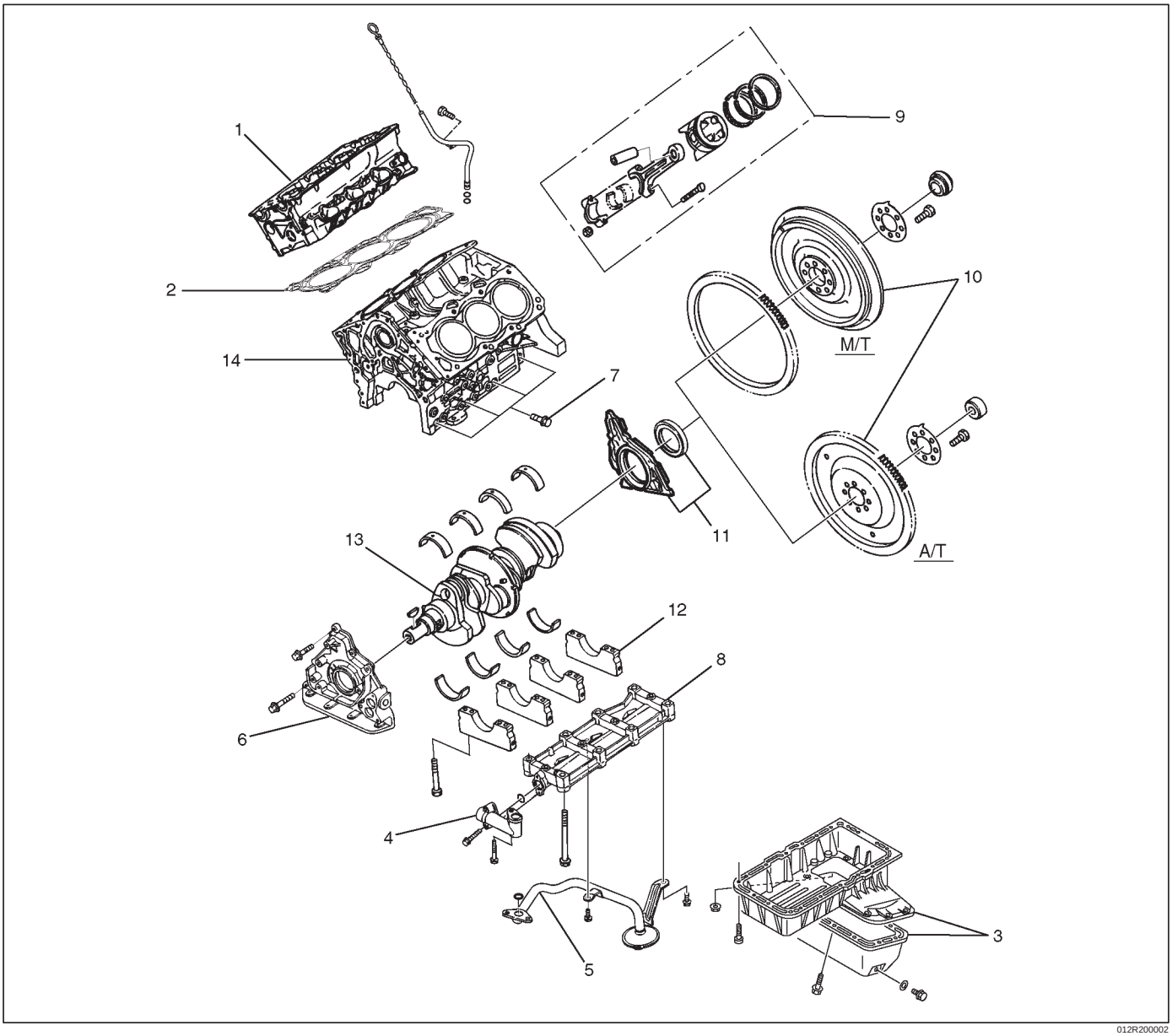

012R200002

Legend

(1) Cylinder Head Assembly
(2) Cylinder Head Gasket
(3) Crankcase with Oil Pan
(4) Oil Pipe and O-ring
(5) Oil Strainer and O-ring
(6) Oil Pump Assembly
(7) Cylinder Block Side Bolts
(8) Oil Gallery
(9) Piston and Connecting Rod Assembly
(10) Flywheel
(11) Rear Oil Seal Retainer Assembly
(12) Main Bearing Cap
(13) Crankshaft
(14) Cylinder Block

Disassembly

1. Remove cylinder head assembly.
2. Remove cylinder head gasket.
3. Remove crankcase with oil pan.
4. Remove oil pipe and O-ring.
5. Remove oil strainer and O-ring.
6. Remove oil pump assembly.
7. Remove crankcase side bolts.
8. Remove oil gallery.
9. Remove piston and connecting rod assembly.
10. Remove flywheel.

11. Remove rear oil seal retainer assembly.
12. Remove main bearing cap.
13. Remove crankshaft.
14. Remove cylinder block.

Inspection and Repair

1. Remove the cylinder head gasket and any other material adhering to the upper surface of the cylinder block. Be very careful not to allow any material to accidentally drop into the cylinder block. Be very careful not to scratch the cylinder block.
2. Carefully remove the oil pump, rear oil seal retainer, and crankcase assembly installation surface seal.
3. Wipe the cylinder block clean.
4. Visually inspect the cylinder block. If necessary, use a flaw detector to perform a dye penetrate and hydraulic (or air pressure) test. If cracking or other damage is discovered, the cylinder block must either be repaired or replaced.

Flatness

1. Using a straight–edge and feeler gauge, check that the upper surface of the cylinder block is not warped.

CAUTION: Be very careful not to allow any material to accidentally drop into the upper surface of the cylinder block. Be very careful not to scratch the upper surface of the cylinder block.

2. The cylinder block must be reground or replaced if the warpage exceeds the limit.

Warpage

Limit : 0.15 mm (0.0059 in)

Maximum repairable limit: 0.15 mm (0.0059 in)

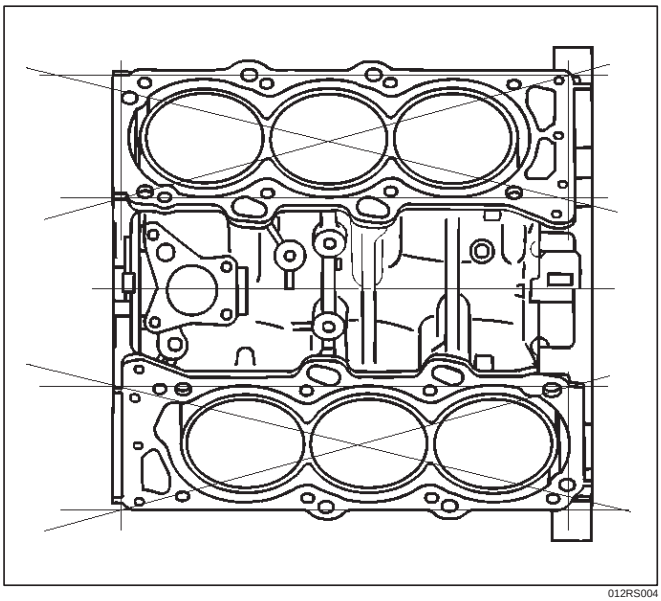

012RS004

Cylinder Bore

Use a cylinder gauge to measure the cylinder bore diameter in both the axial and thrust directions. Each measurement should be made at six points.

CAUTION: Be very careful not to allow any material to accidentally drop into the upper surface of the cylinder block. Be very careful not to scratch the upper surface of the cylinder block.

Cylinder Bore Inside Diameter

Limit : 93.530 mm (3.6823 in)

If the measurement exceed the specified limit, the cylinder block must be replaced.

Diameter

Grade A : 93.400 mm–93.410 mm (3.6772 in–3.6776 in)

Grade B : 93.411 mm–93.420 mm (3.6776 in–3.6779 in)

Grade C : 93.421 mm–93.430 mm (3.6780 in–3.6783 in)

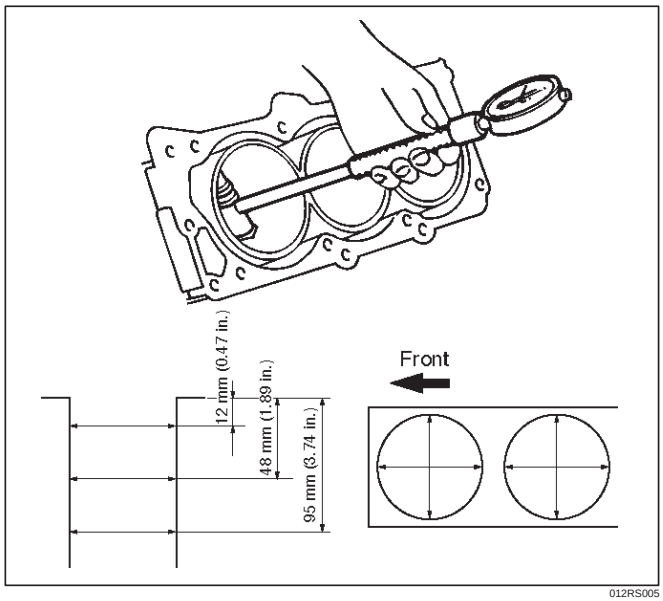

012RS005

NOTE: For information on piston diameter, please refer to the section ”Inspection of the Piston and Connecting Rod Assembly” in this manual.

- The ”Grade” mark (1) is stamped at the position illustrated.

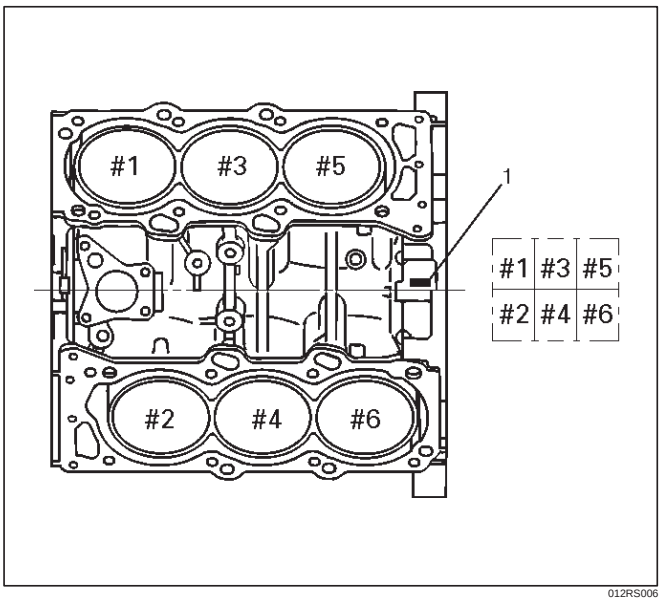

012RS006

Reassembly

1. Install cylinder block.
2. Install crankshaft.
   - Install the main bearings to the cylinder block and the main bearing caps.
   - Be sure that they are positioned correctly.
   - Apply new engine oil to the upper and lower main bearing faces.

NOTE: Do not apply engine oil to the bearing back faces.

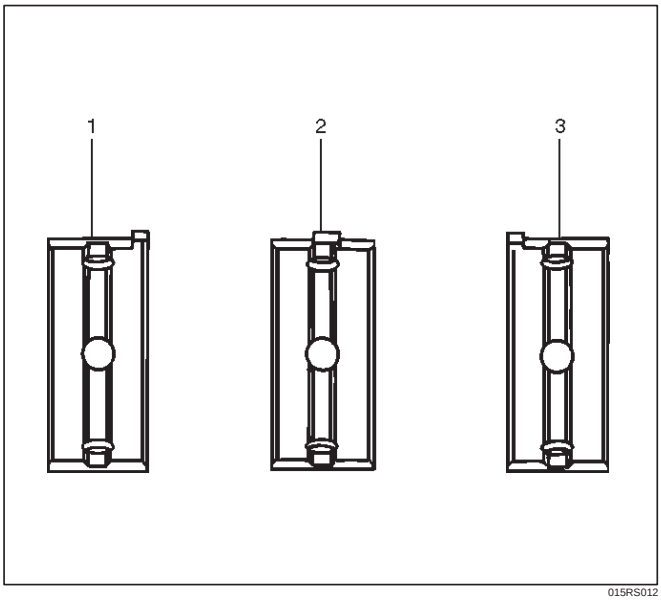

015RS012

Legend

(1) Number 1 and 4 main bearing upper and lower.
(2) Number 2 and 3 main bearing upper.
(3) Number 2 and 3 main bearing lower.

- Carefully mount the crankshaft.
- Apply engine oil to the thrust washer.
- Assemble the thrust washer to the No. 3 bearing journal. The oil grooves must face the crankshaft.

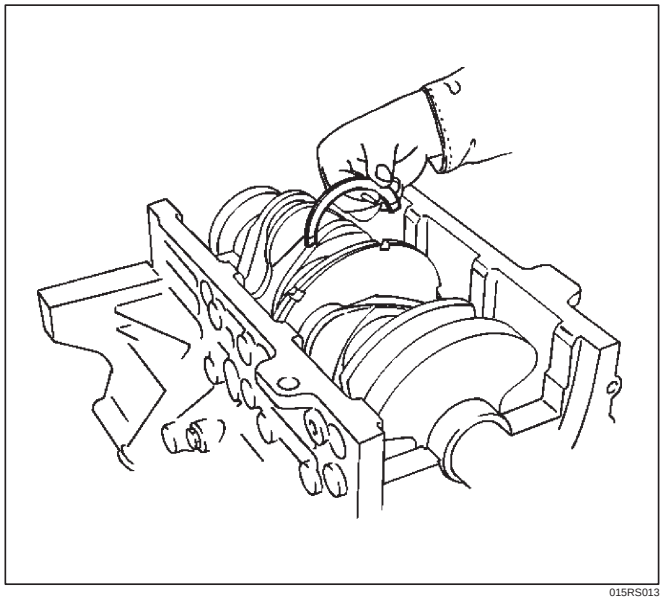

015RS013

3. Install rear oil seal retainer.
   - Remove oil on cylinder block and retainer fitting surface.
   - Apply sealant (TB1207B or equivalent) to retainer fitting surface as shown in illustration.
   - The oil seal retainer must be installed within 5 minutes after sealant application to prevent premature hardening of sealant.

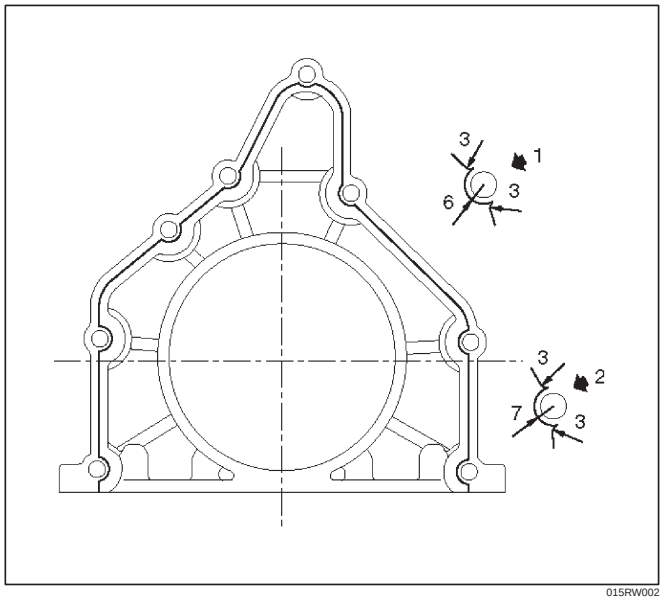

015RW002

Legend

(1) Around Bolt Holes
(2) Around Dowel Pin

- Apply engine oil to oil seal lip and align a dowel pin hole in the cylinder block with that in the retainer.
- Tighten retainer fixing bolts to the specified torque.

Torque: 25 N·m (2.5 kg·m/18 lb ft)

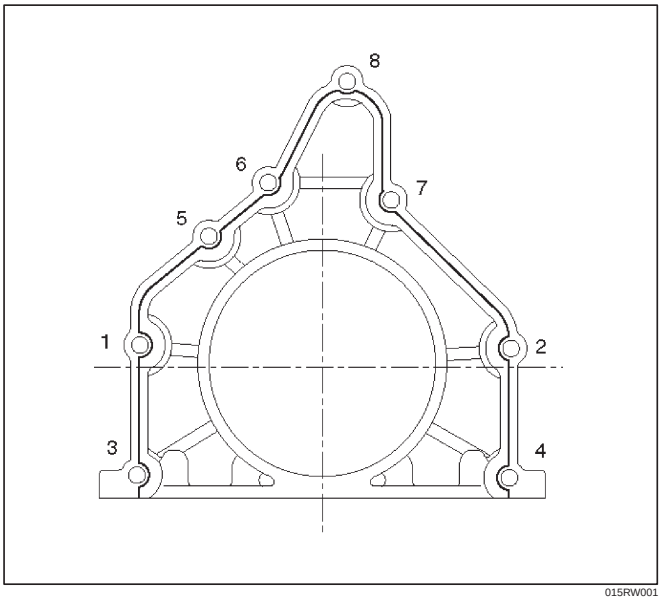

015RW001

4. Install flywheel
   1. Thoroughly clean and remove the oil from the threads of crankshaft.
   2. Remove the oil from the crankshaft and flywheel mounting faces.
   3. Mount the flywheel on the crankshaft and then install the washer.
   4. Holding the crankshaft stationary, tighten the flywheel bolts in the order shown.

Torque: 54 N·m (5.5 kg·m/40 lb ft)

NOTE: Do not reuse the bolts and do not apply oil or thread lock to the bolts.

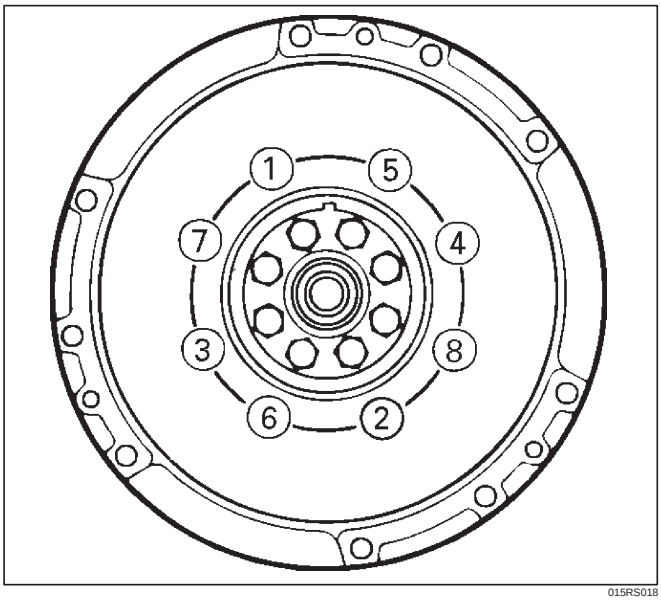

015RS018

5. Install piston and connecting rod assembly.
   - Apply engine oil to the cylinder bores, the connecting rod bearings and the crankshaft pins.

NOTE: Do not apply engine oil to the bearing back faces.

- Check to see that the piston ring end gaps are correctly positioned.

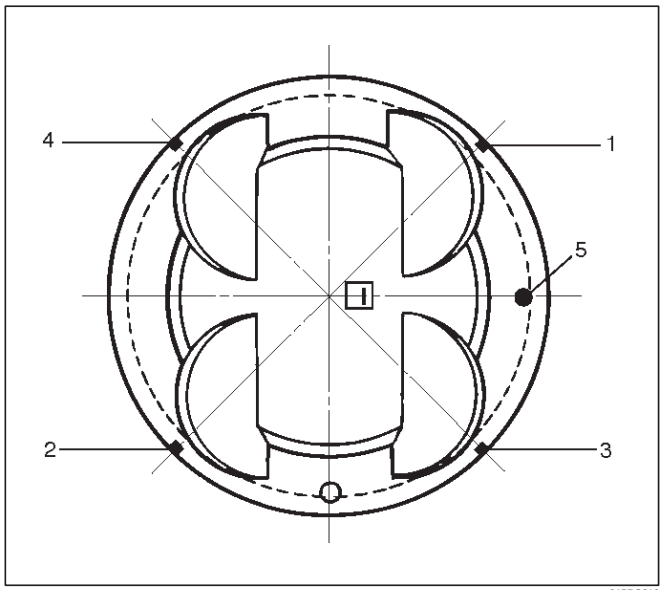

015RS019

Legend

(1) No.1 Compression Ring
(2) No.2 Compression Ring
(3) Oil Ring Side Rail Upper
(4) Oil Ring Side Rail Lower
(5) Piston Front Mark

- Insert the piston/connecting rod assemblies into each cylinder with the piston ring compressor.
- The front marks (1) must be facing the front of the engine.

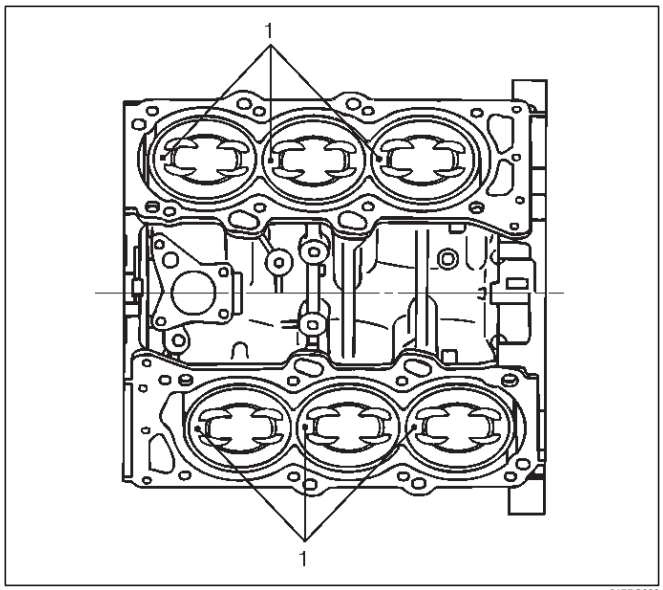

015RS020

6. Install oil gallery and tighten the bolts in 2 steps in the order shown.

   1st step : 29 N·m (3.0 kg·m/22 lb ft)

   2nd step : 55˚~ 65˚

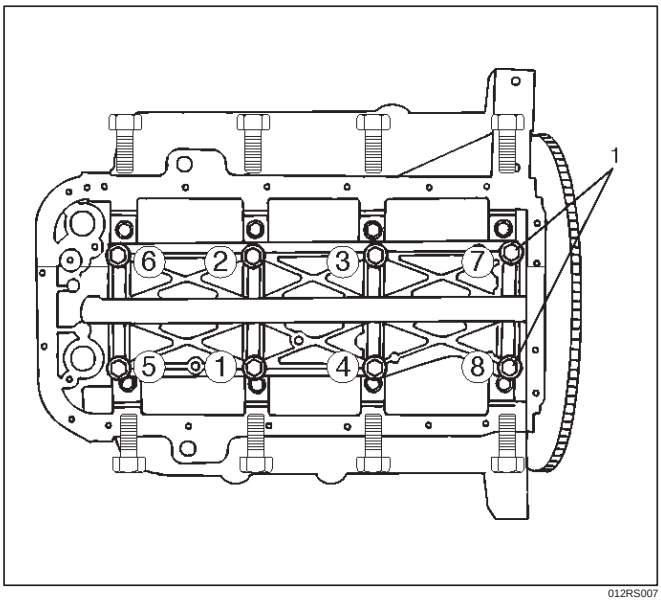

012RS007

7. Install cylinder block side bolts (1) and tighten crankcase bolts in sequence shown in the illustration.

   Torque : 39 N·m (3.0 kg·m/29 lb ft)

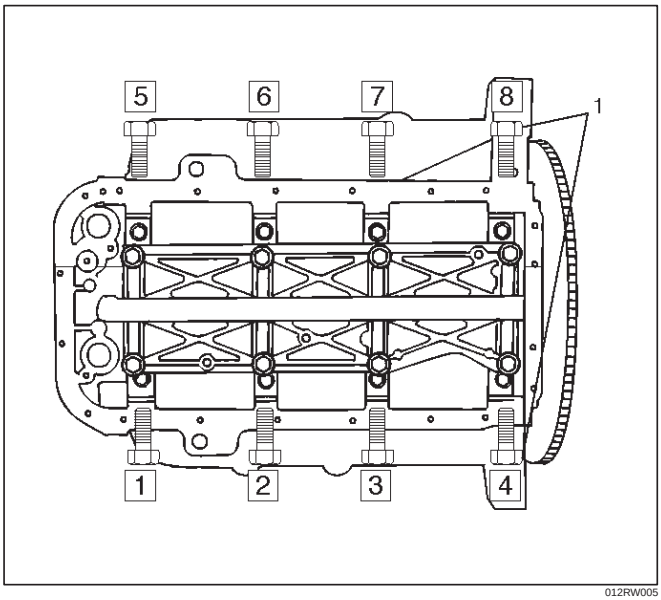

012RW005

8. Install oil pump assembly. Refer to “Oil Pump” in this manual.
9. Install oil strainer and O-ring.
10. Install oil pipe and O-ring.
11. Install crankcase with oil pan.
    1. Completely remove all residual sealant, lubricant and moisture from the sealing surfaces. The surfaces must be perfectly dry.
    2. Apply a correct width bead of sealant (TB– 1207C or its equivalent) to the contact surfaces of the crankcase. There must be no gaps in the bead.
    3. The oil pan must be installed within 5 minutes after sealant application to prevent premature hardening of sealant.
    4. Tighten the bolts and nuts to the specified torque.

    Torque : 10 N·m (1.0 kg·m/87 lb in)

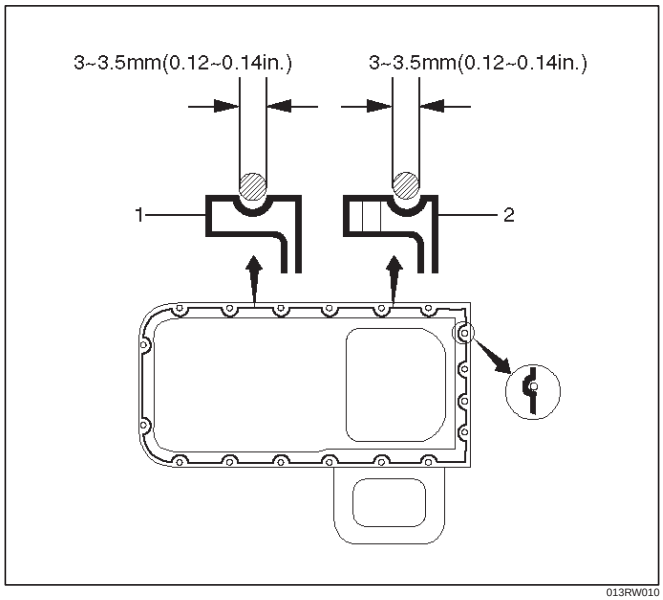

013RW010

Legend

(1) Portion Between Both Holes

(2) Bolt Hole Portions

12. Install cylinder head gasket.
13. Install cylinder head assembly. Refer to “Cylinder Head” in this manual.

Main Data and Specification

General Specification

Item	Specifications
	6VE1
Engine type, number of cylinders and arrangement	Water cooled, four cycle V6
Form of combustion chamber	Pent-roof type
Valve mechanism	4-Cams, 4-Valves, DOHC Gear & Belt Drive
Cylinder liner type	Casted in cylinder drive
Total piston displacement	3494 cc
Cylinder bore x stroke	93.4mm x 85mm (3.677 in x 3.346 in)
Compression ratio	9.1
Compression pressure at 300rpm	1.37 MPa (14.0 Kg/cm^2)
Engine idling speed (rpm)	Non adjustable (750)
Valve clearance	Intake: 0.28 mm (0.11 in)
	Exhaust: 0.30mm (0.12in)
Oil capacity	5.3 liters (5.6 US gt.)
Ignition timing	Non adjustable (20˚ BTDC at idle rpm)
Spark plug	PK16PR11, RC10PYP4, K16PR-P11
Plug gap	1.0 mm–1.1 mm(0.0394 in – 0.0433 in)

Torque Specifications

Ignition coil, Spark plug, Crankshaft position sensor and Under cover

N·m (kg·m/lb ft)

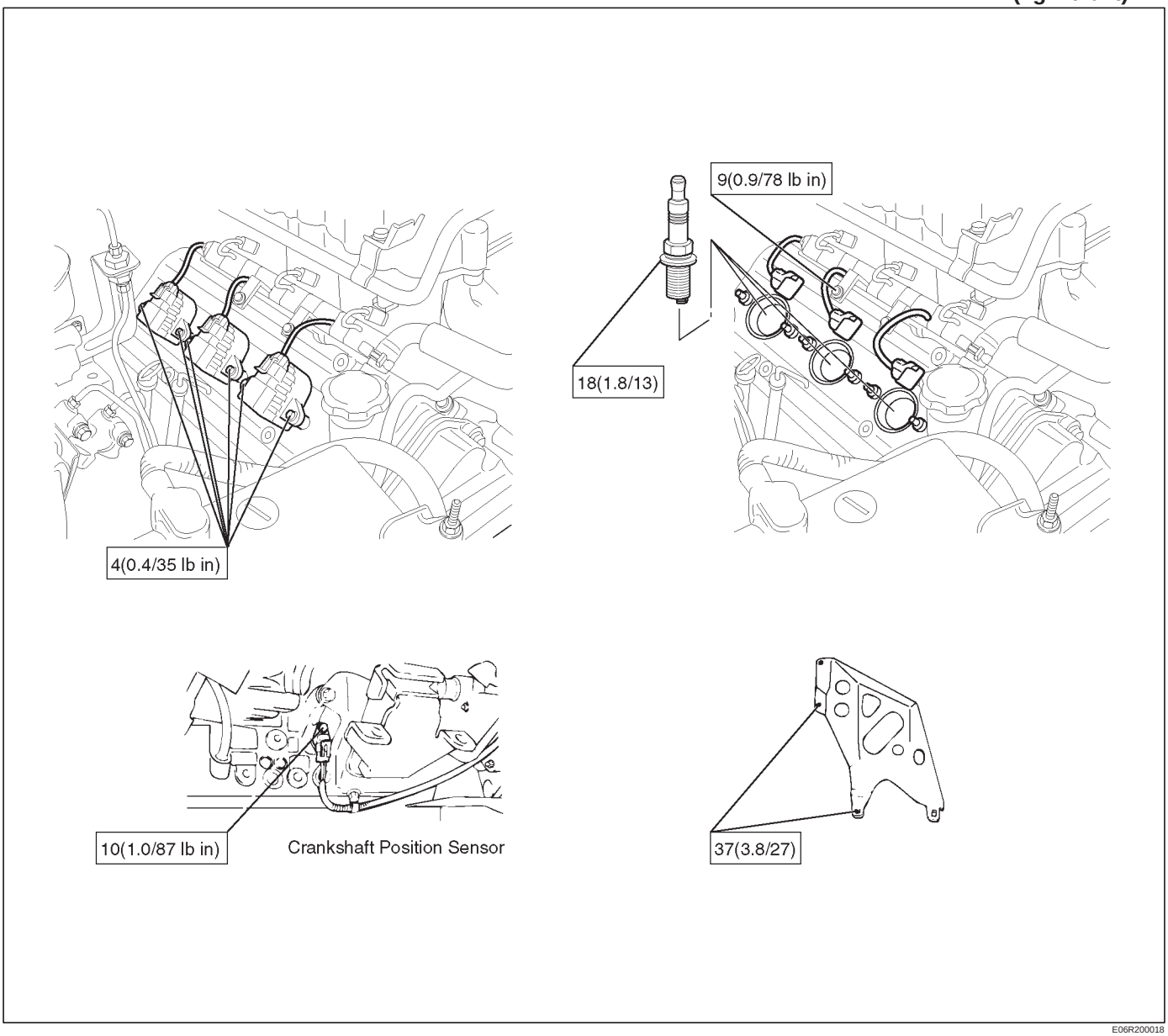

E06R200018

Cylinder head cover, Cylinder head, Camshaft bearing cap, Common chamber, EGR valve and EGR pipe, Ion sensing module

N·m (kg·m/lb ft)

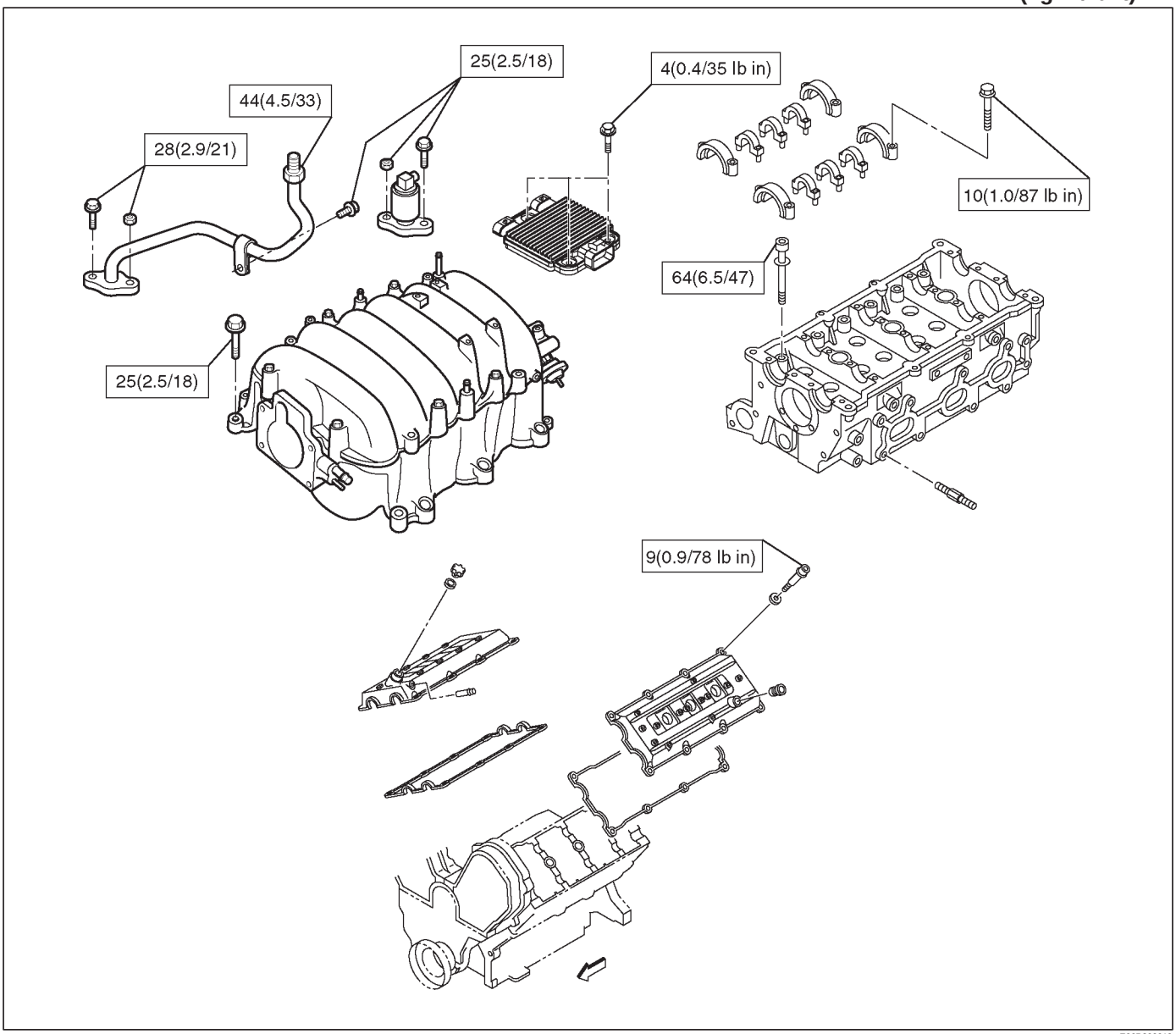

E06R200019

Crankshaft main bearing, Flywheel, Crankcase, Oil pan, Timing belt tensioner, Timing pulley, Timing belt cover, Oil pump, Oil gallery, Oil strainer and water pump

N·m (kg·m/lb ft)

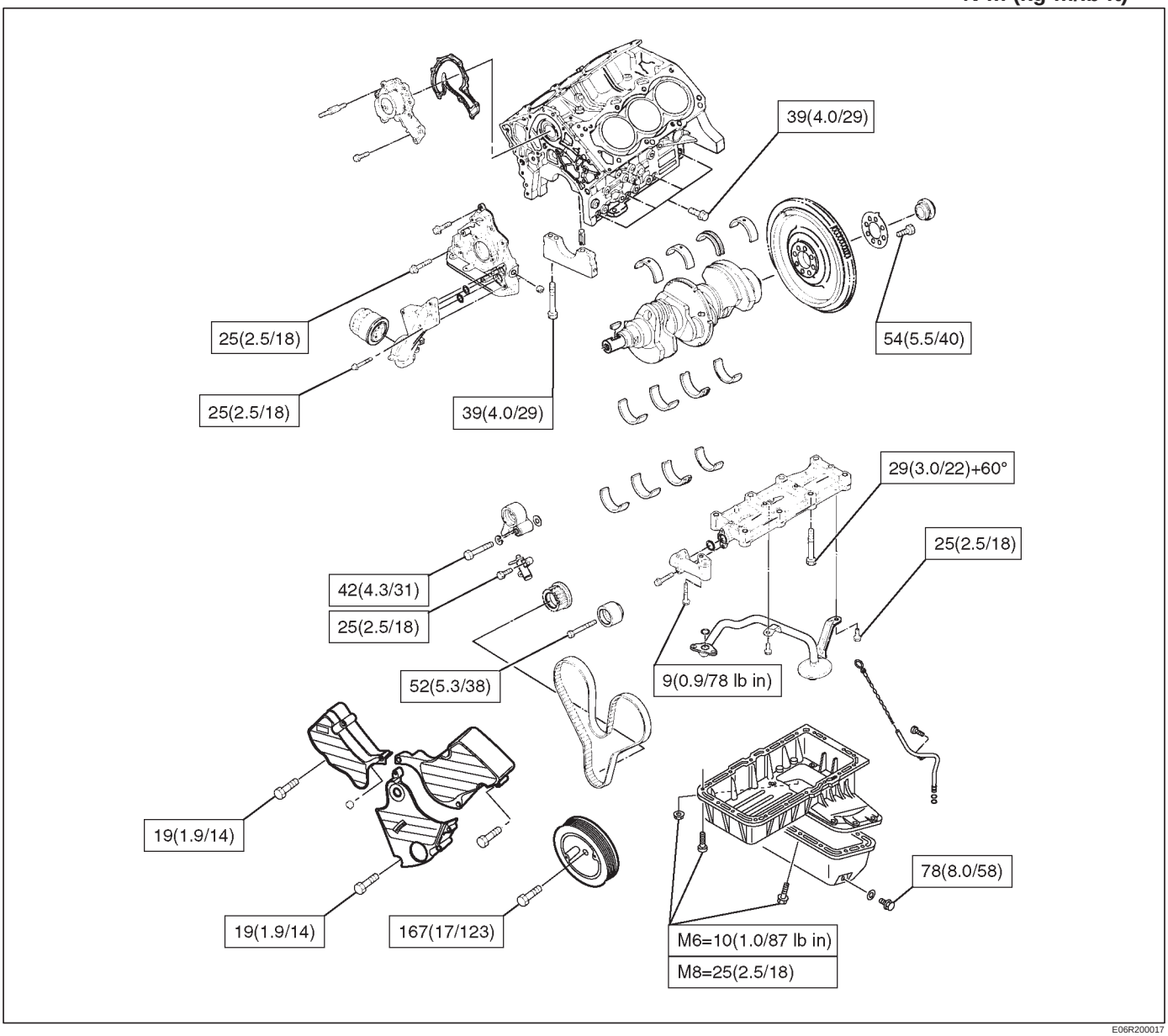

E06R200017

Connecting rod and Water pump

N·m (kg·m/lb ft)

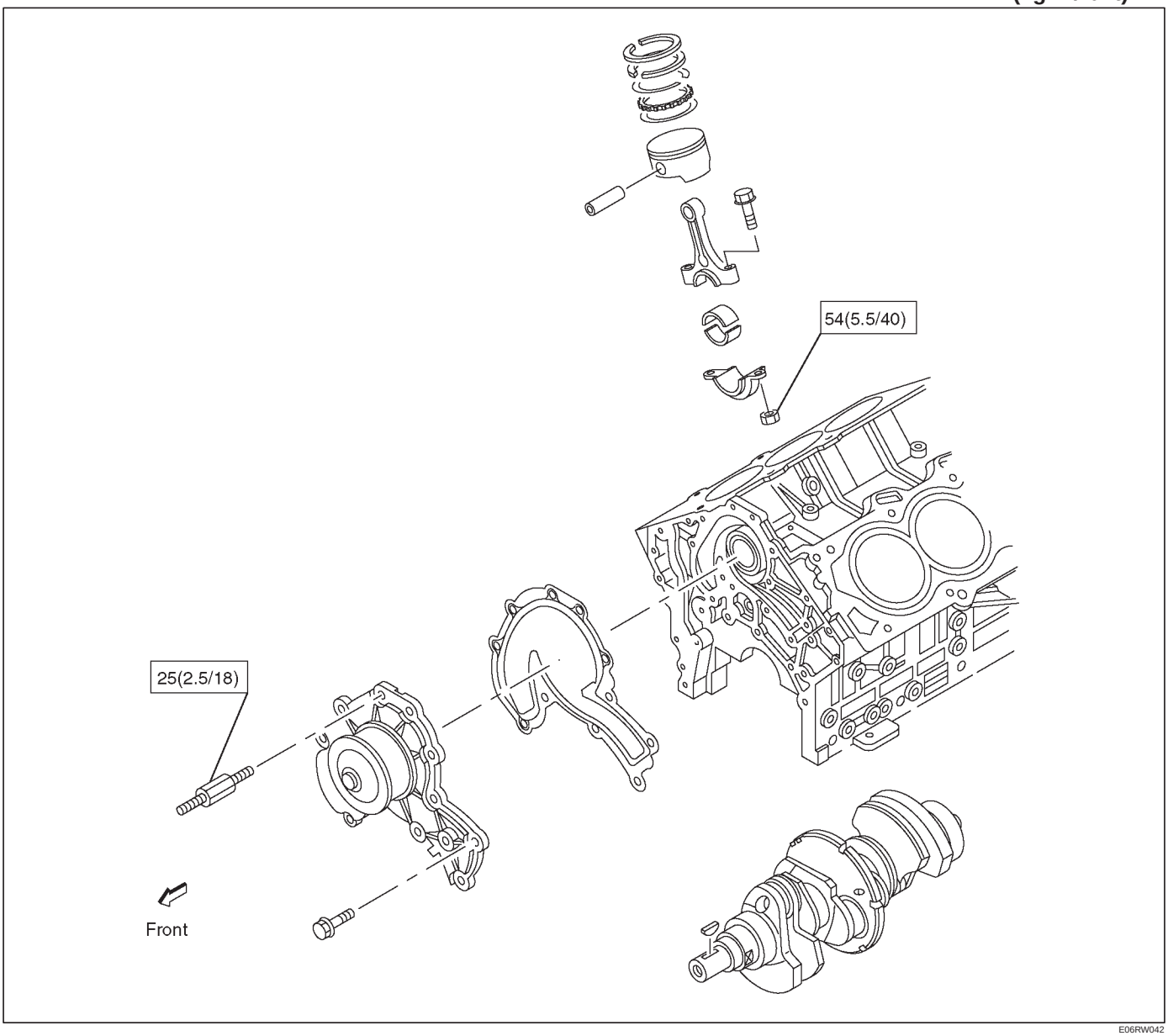

E06RW042

Engine mount

N·m (kg·m/lb ft)

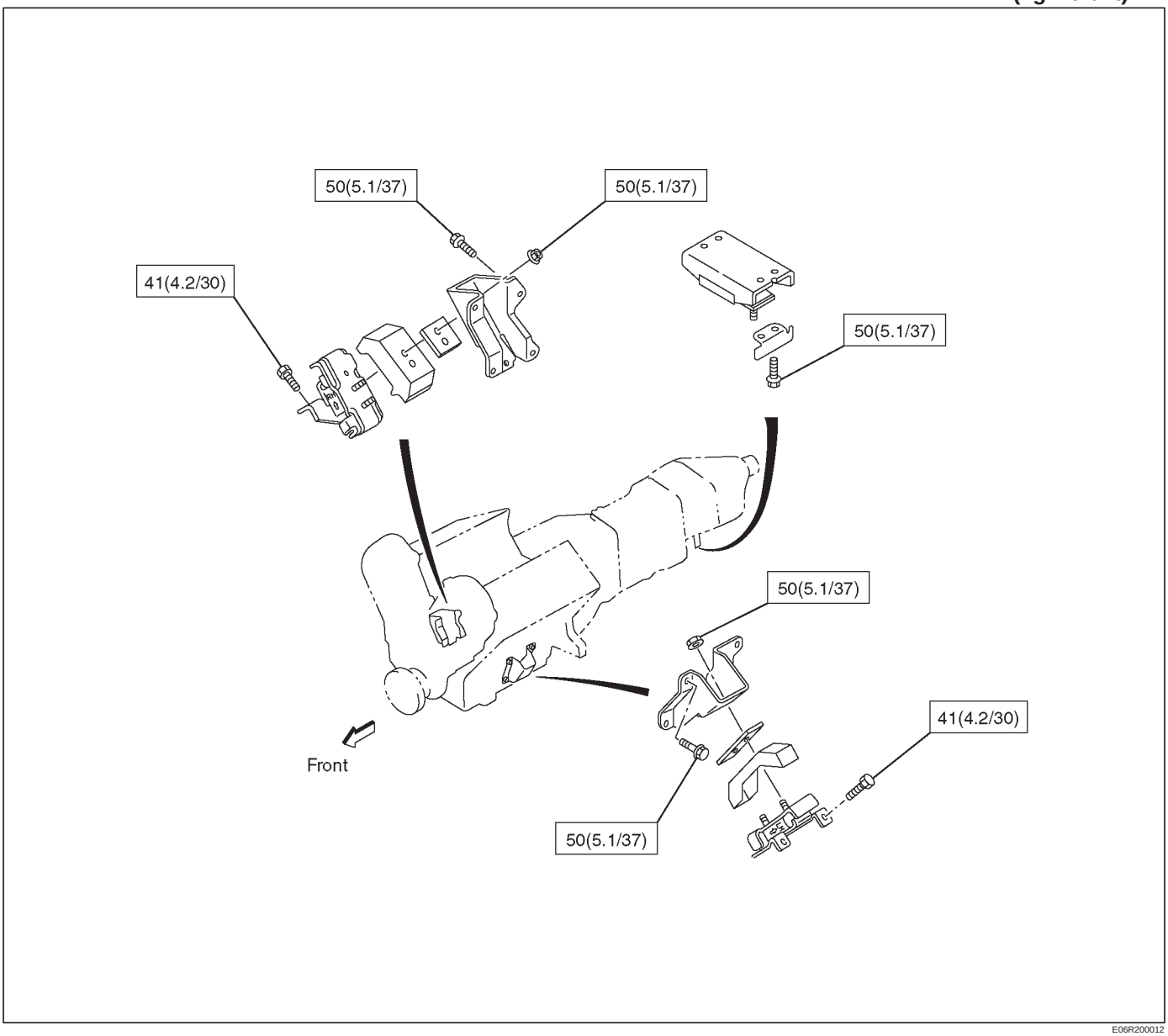

E06R200012

Special Tool

ILLUSTRATION	TOOL NO. TOOL NAME
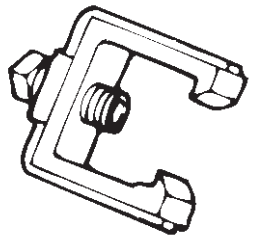 901RT033	**5–8840–0011–0** **(J–21687–02)** Remover; tie rod end
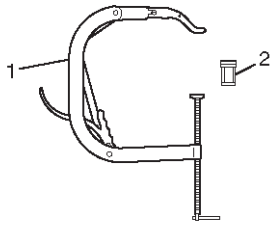 F06RW002	**5–8840–2441–0** Set Number of Valve Compressor **5–8840–2446–0** **(J–8062)** Compressor; Valve Spring (1) **5–8840–2547–0** **(J–42898)** Adapter; Compressor Valve Spring (2)
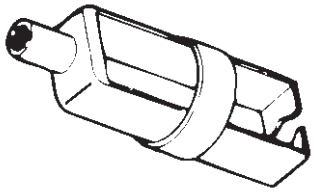 901RT036	**5–8840–0623–0** **(J–37281)** Remover; Oil controller
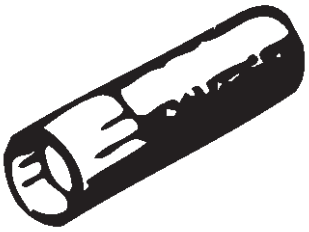 901RT037	**5–8840–0624–0** **(J–38537)** Installer; Oil controller
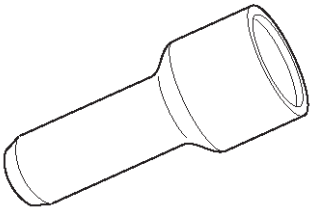 901RW171	**5–8840–2445–0** **(J–42985)** Installer; Camshaft oil seal
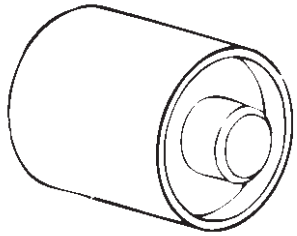 901RT040	**5–8840–2545–0** **(J–39206)** Installer; Pilot bearing

ILLUSTRATION	TOOL NO. TOOL NAME
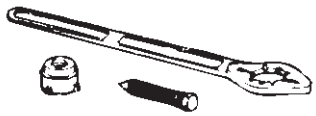 901RT041	**5–8840–0133–0** **(J–8614–01)** Holder; Crankshaft
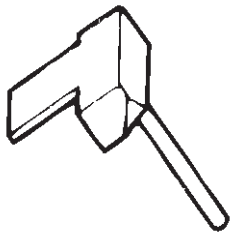 901RT042	**5–8840–2153–0** **(J–37228)** Seal cutter
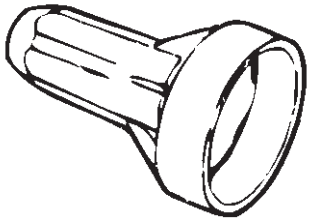 901RT043	**5–8840–2286–0** **(J–39201)** Installer; Real oil seal
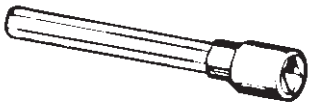 901RT046	**9–8511–4209–0** **(J–24239–1)** Cylinder head bolt wrench
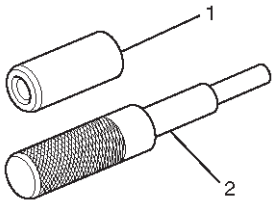 901RW182	**5–8840–2442–0** **(J–42899)** Replacer; Valve guide (set) (1,2) **5–8840–2548–0** **(J–42687)** Installer; Valve guide (1) **5–8840–2549–0** **(J–37985–1)** Remover; Valve guide (2)
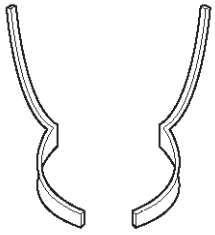 901RW109	**5–8840–2444–0** **(J–42689)** Adjusting Tool: Valve clearance

ILLUSTRATION	**TOOL NO.** TOOL NAME
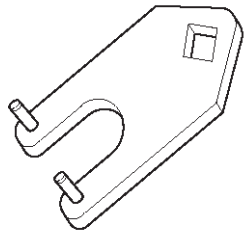 901RW110	**5–8840–2443–0** **(J–42686)** Lever; Gear spring
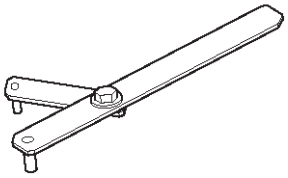 901RW115	**5–8840–2447–0** **(J–43041)** Holder; Universal
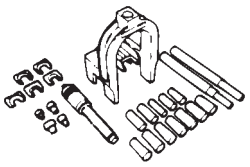 5884005510	**5–8840–0551–0** **(J–24086–C)** Service set; Piston pin

ENGINE

ENGINE COOLING

CONTENTS

Service Precaution 6B–1
General Description 6B–2
Diagnosis 6B–5
Draining and Refilling Cooling System 6B–6
Water Pump 6B–7
Water Pump and Associated Parts 6B–7
Removal 6B–7
Inspection 6B–7
Installation 6B–7
Thermostat 6B–8
Thermostat and Associated Parts 6B–8
Removal 6B–8
Inspection 6B–8
Installation 6B–8
Radiator 6B–9
Radiator and Associated Parts 6B–9
Removal 6B–9
Inspection 6B–10
Installation 6B–11
Drive Belt and Cooling Fan 6B–12
Drive Belt and Associated Parts 6B–12
Inspection 6B–12
Installation 6B–12
Main Data and Specifications 6B–13
Special Tool 6B–14

Service Precaution

WARNING: THIS VEHICLE HAS A SUPPLEMENTAL RESTRAINT SYSTEM (SRS). REFER TO THE SRS COMPONENT AND WIRING LOCATION VIEW IN ORDER TO DETERMINE WHETHER YOU ARE PERFORMING SERVICE ON OR NEAR THE SRS COMPONENTS OR THE SRS WIRING. WHEN YOU ARE PERFORMING SERVICE ON OR NEAR THE SRS COMPONENTS OR THE SRS WIRING, REFER TO THE SRS SERVICE INFORMATION. FAILURE TO FOLLOW WARNINGS COULD RESULT IN POSSIBLE AIR BAG DEPLOYMENT, PERSONAL INJURY, OR OTHERWISE UNNEEDED SRS SYSTEM REPAIRS.

CAUTION: Always use the correct fastener in the proper location. When you replace a fastener, use ONLY the exact part number for that application. ISUZU will call out those fasteners that require a replacement after removal. ISUZU will also call out the fasteners that require thread lockers or thread sealant. UNLESS OTHERWISE SPECIFIED, do not use supplemental coatings (Paints, greases, or other corrosion inhibitors) on threaded fasteners or fastener joint interfaces. Generally, such coatings adversely affect the fastener torque and the joint clamping force, and may damage the fastener. When you install fasteners, use the correct tightening sequence and specifications. Following these instructions can help you avoid damage to parts and systems.

General Description

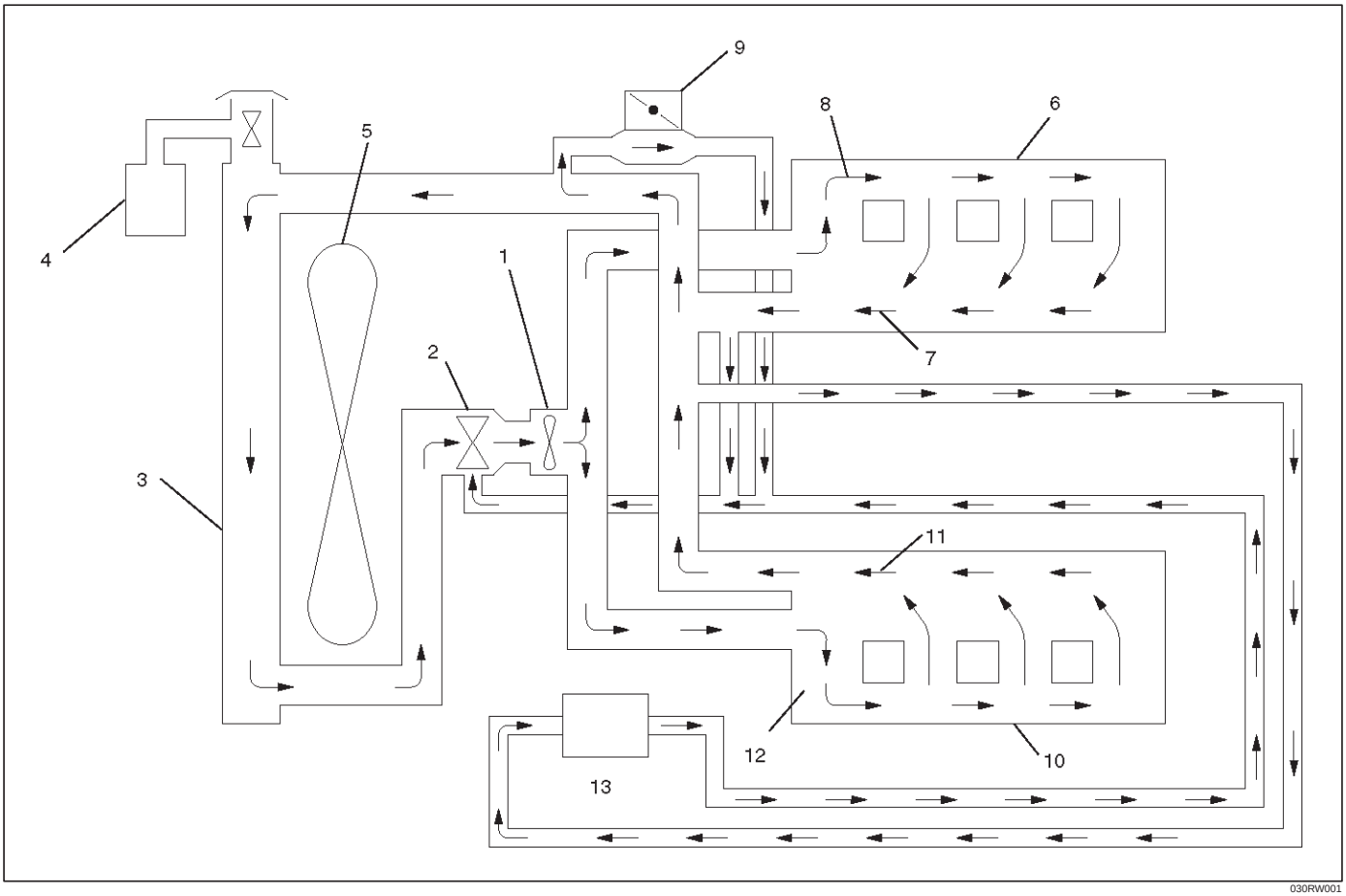

030RW001

Legend

(1) Water Pump
(2) Thermostat
(3) Radiator
(4) Reserve Tank
(5) Cooling Fan
(6) Cylinder Block
(7) Cylinder Head
(8) Right Bank
(9) Throttle Body
(10) Cylinder Block
(11) Cylinder Head
(12) Left Bank
(13) Heater

The cooling system is a pressurized Engine Coolant (EC) forced circulation type which consists of a water pump, thermostat cooling fan, radiator and other components. The automatic transmission fluid is cooled by the EC in radiator.

Water Pump

The EC pump is a centrifugal impeller type and is driven by a timing belt.

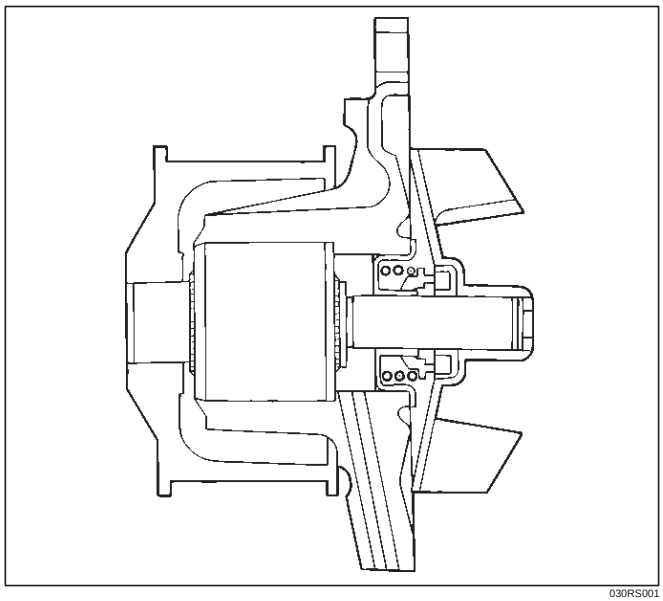

030RS001

Thermostat

The thermostat is a wax pellet type with a air hole(1) and is installed in the thermostat housing.

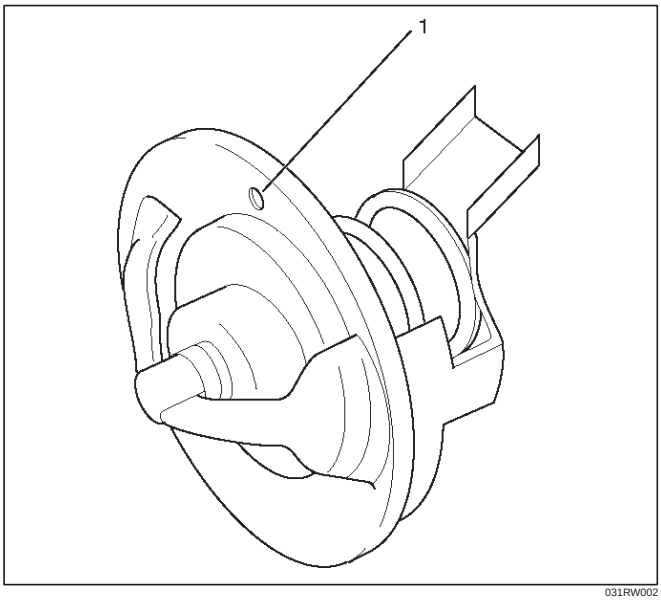

031RW002

Radiator

The radiator is a tube type with corrugated fins. In order to raise the boiling point of the coolant, the radiator is fitted with a cap in which the valve is operated at 93.3 ~ 122.7 kPa (0.95 ~ 1.25 kg/cm^2, 13.5 ~ 17.8 psi) pressure. (No oil cooler provided for M/T)

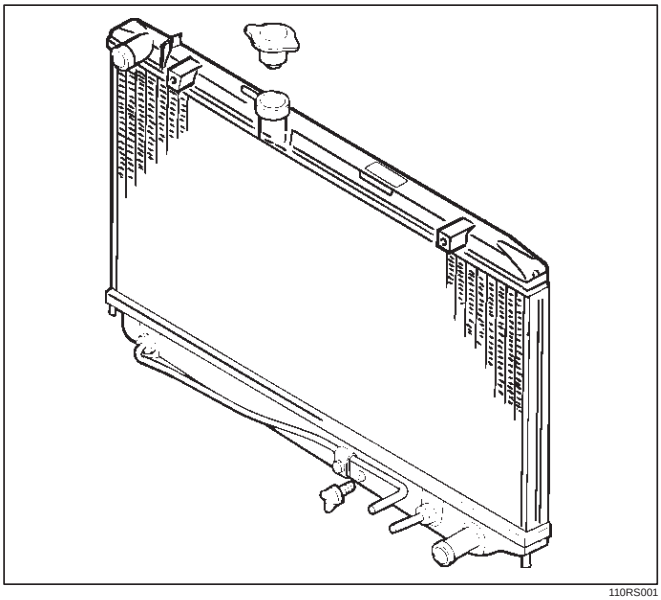

110RS001

Anti Freeze Solution

- Relation between the mixing ratio and freezing temperature of the EC varies with the ratio of anti–freeze solution in water. Proper mixing ratio can be determined by referring to the chart. Supplemental inhibitors or additives claiming to increase cooling capability that have not been specifically approved by Isuzu are not recommended for addition to the cooling system.
- Calculating mixing ratio

$$\text{Mixing ratio} = \frac{\text{Antifreeze solution (Lit/gal.)}}{\text{Antifreeze solution (Lit/gal.)} + \text{Water (Lit/gal.)}}$$

F06RW005

NOTE: Antifreeze solution + Water = Total cooling system capacity.

- **Total Cooling System Capacity**
- **M/T 8.8Lit (2.32Us gal)**
- **A/T 8.4Lit (2.22Us gal)**

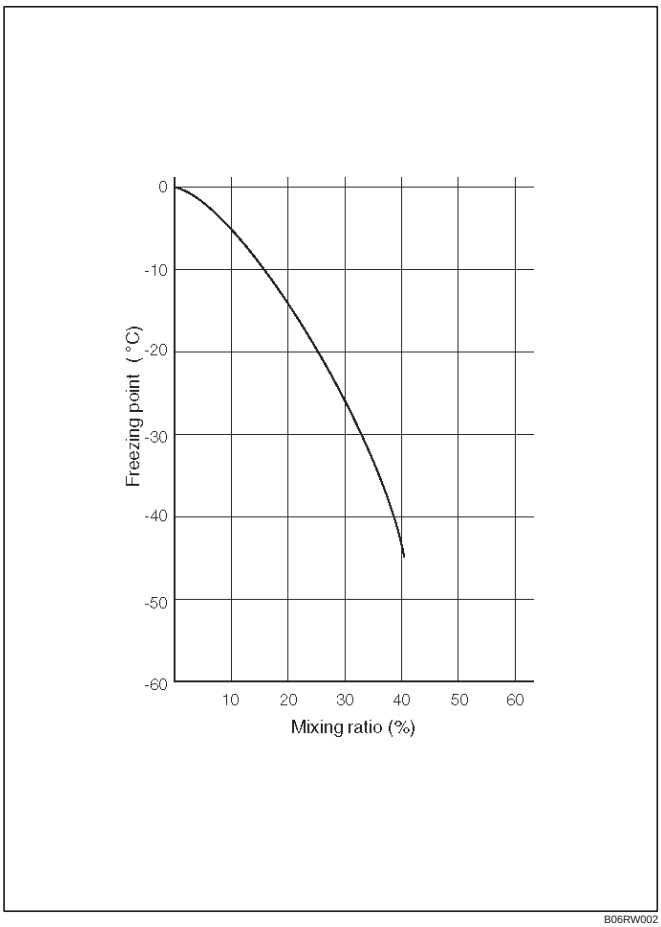

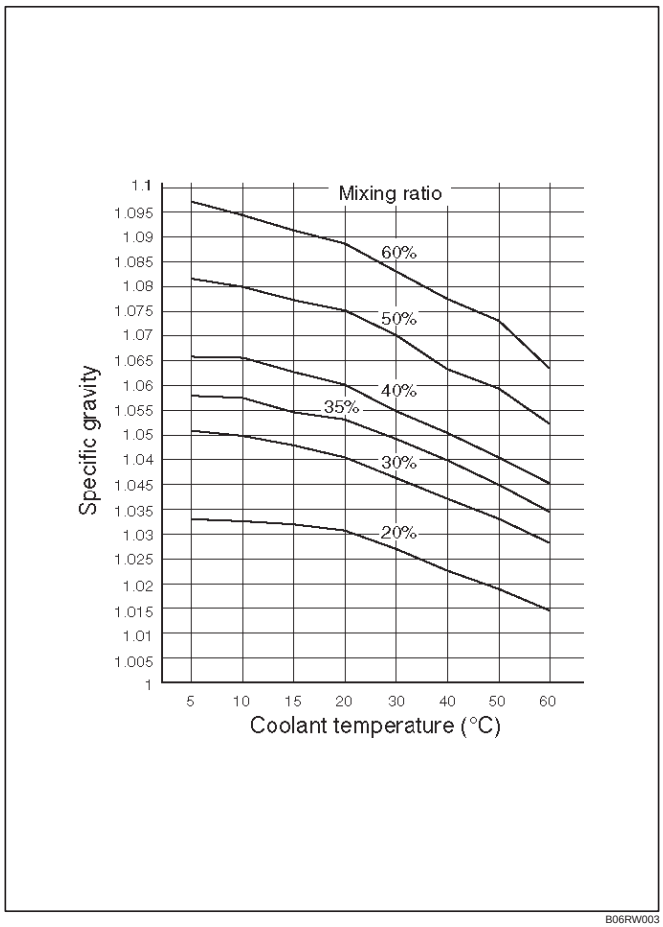

- Mixing ratio

  Check the specific gravity of engine coolant in the cooling system temperature ranges from 0˚C to 50˚C using a suction type hydrometer, then determine the density of the engine coolant by referring to the table.

NOTE:

1. Even in the areas where the atmospheric temperature is higher than 0˚C, be sure not to use antifreeze solution at a mixing ratio lower than 20% so that the inside of the engine may not be corroded.
2. If antifreeze solution is used at a mixing ratio higher than 60%, the specific heat of the coolant falls and the engine may be overheated. Moreover, antifreeze performance drop and the coolant may be frozen. The density of the solution must be adjusted as occasion calls.

Antifreeze solution lower than 20% may not have sufficient anticorrosive performance, and therefore, please never fail to adjust as occasion demands within the range of 20% to 60%.

Diagnosis

Engine Cooling Trouble

Condition	Possible cause	Correction
Engine overheating	Low Engine Coolant level	Replenish
	Incorrect fan installed	Replace
	Thermo meter unit faulty	Replace
	Faulty thermostat	Replace
	Faulty Engine Coolant temperature sensor	Repair or replace
	Clogged radiator	Clean or replace
	Faulty radiator cap	Replace
	Low engine oil level or use of improper engine oil	Replenish or change oil
	Clogged exhaust system	Clean exhaust system or replace faulty parts
	Faulty Throttle Position sensor	Replace throttle valve assembly
	Open or shorted Throttle Position sensor circuit	Repair or replace
	Damaged cylinder head gasket	Replace
Engine overcooling	Faulty thermostat	Replace
Engine slow to warm–up	Faulty thermostat	Replace
	Thermo unit faulty	Replace

Draining and Refilling Cooling System

Before draining the cooling system, inspect the system and perform any necessary service to ensure that it is clean, does not leak and is in proper working order. The engine coolant (EC) level should be between the “MIN” and “MAX” lines of reserve tank when the engine is cold. If low, check for leakage and add EC up to the “MAX” line. There should not be any excessive deposit of rust or scales around the radiator cap or radiator filler hole, and the EC should also be free from oil.
Replace the EC if excessively dirty.

1. Completely drain the cooling system by opening the drain plug (2) at the bottom of the radiator.

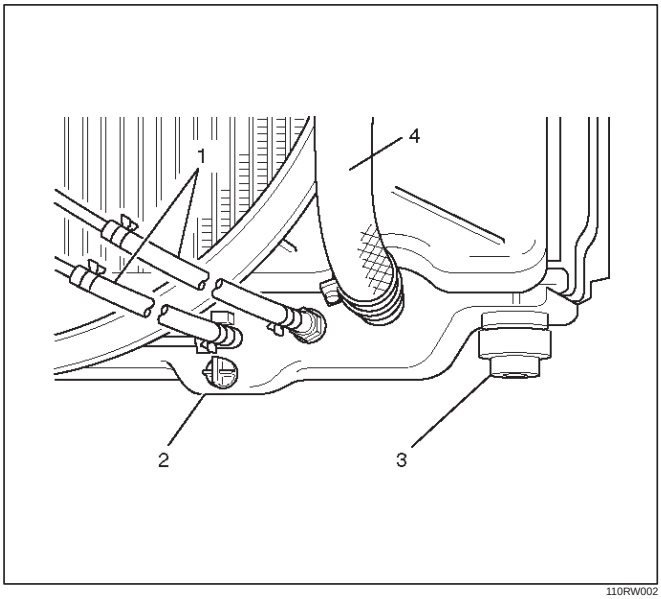

110RW002

2. Remove the radiator cap.

WARNING: TO AVOID THE DANGER OF BEING BURNED, DO NOT REMOVE THE CAP WHILE THE ENGINE AND RADIATOR ARE STILL HOT. SCALDING FLUID AND STEAM CAN BE BLOWN OUT UNDER PRESSURE.

3. Disconnect all hoses from the EC reserve tank.
   Scrub and clean the inside of the reserve tank with soap and water. Flush it well with clean water, then drain it. Install the reserve tank and hoses.
4. Refill the cooling system with the EC using a solution that is at least 50 percent antifreeze but no more than 70 percent antifreeze.
5. Fill the radiator to the base of the filler neck.
   Fill the EC reserve tank to “MAX” line when the engine is cold.
6. Block the drive wheels and firmly apply the parking brake. Shift an automatic transmission to “P” (Park) or a manual transmission to neutral.
7. Remove the radiator cap. Start the engine and warm it up at 2,500 ~ 3,000 rpm for about 30 minutes.
8. When the air comes out from the radiator filler neck and the EC level has gone down, replenish with the EC. Repeat this procedure until the EC level does not go down. Then stop the engine and install the radiator cap. Let the engine cool down.
9. After the engine has cooled, replenish with EC up to the “MAX” line of the reserve tank.
10. Start the engine. With the engine running at 3,000 rpm, make sure there is no running water sound from the heater core (behind the center console).
11. If the running water sound is heard, repeat steps 8 to 10.

Water Pump

Water Pump and Associated Parts

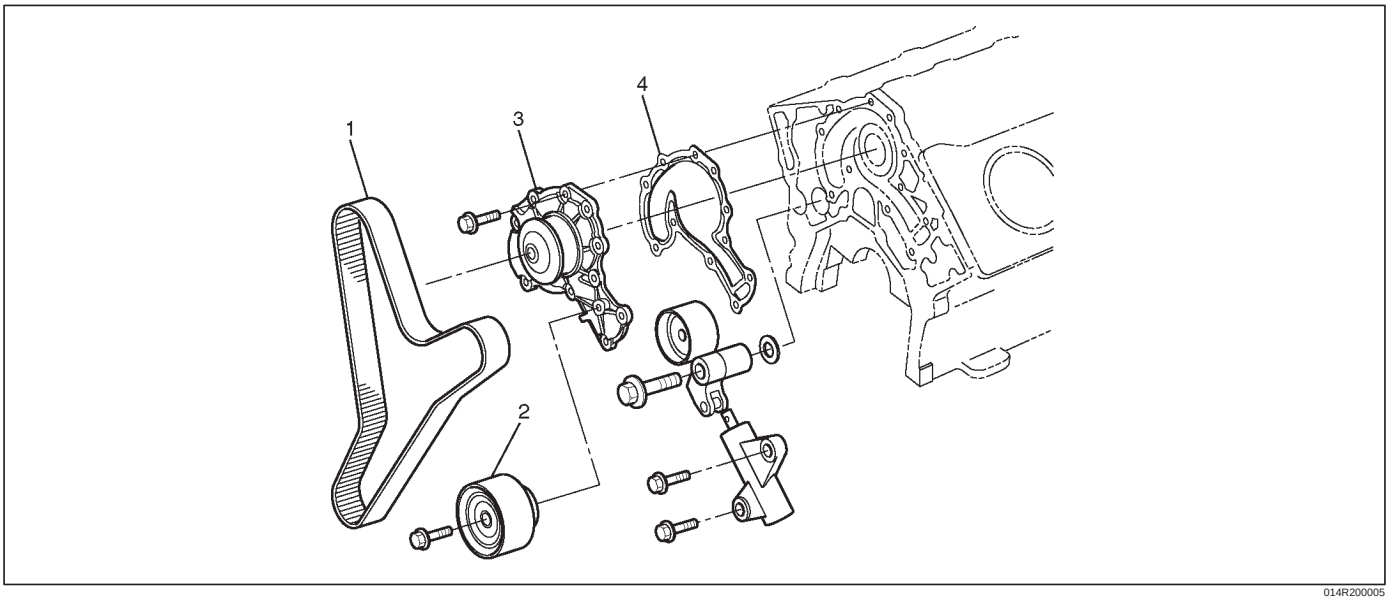

014R200005

Legend
(1) Timing Belt
(2) Idle Pulley
(3) Water Pump Assembly
(4) Gasket

Removal

1. Disconnect battery ground cable.
2. Drain coolant.
3. Radiator hose (on inlet pipe side).
4. Remove timing belt. Refer to “Timing Belt” in this manual.
5. Remove Idle pulley.
6. Remove water pump assembly.
7. Remove gasket.

Inspection

Make necessary repair and parts replacement if extreme wear or damage is found during inspection. Should any of the following problems occur, the entire water pump assembly must be replaced:

- Crack in the water pump body
- EC leakage from the seal unit
- Play or abnormal noise in the bearing
- Cracks or corrosion in the impeller.

Installation

1. Install gasket, clean the mating surface of gasket before installation.
2. Install water pump assembly and tighten bolts to the specified torque.

   Torque: 25 N·m (2.5 kg·m/18 lb ft)

   - Tightening order
     The tightening order are in the illustrate.

NOTE: To prevent the oil leakage, apply the LOCTITE 262 or an equivalent, to the arrow marked fixing bolt thread.

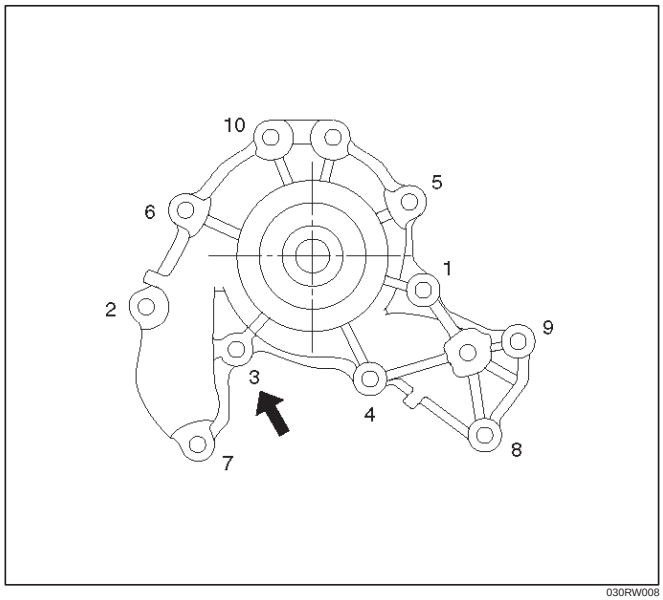

030RW008

3. Idle pulley
   - Install idle pulley and tighten bolt to the specified torque.

   Torque: 52 N·m (5.3 kg·m/38 lb ft)

4. Timing belt
   - Install timing belt. Refer to timing belt installation step in “Timing Belt” in this manual.
5. Connect radiator inlet hose and replenish EC.
6. Connect battery ground cable.

Thermostat

Thermostat and Associated Parts

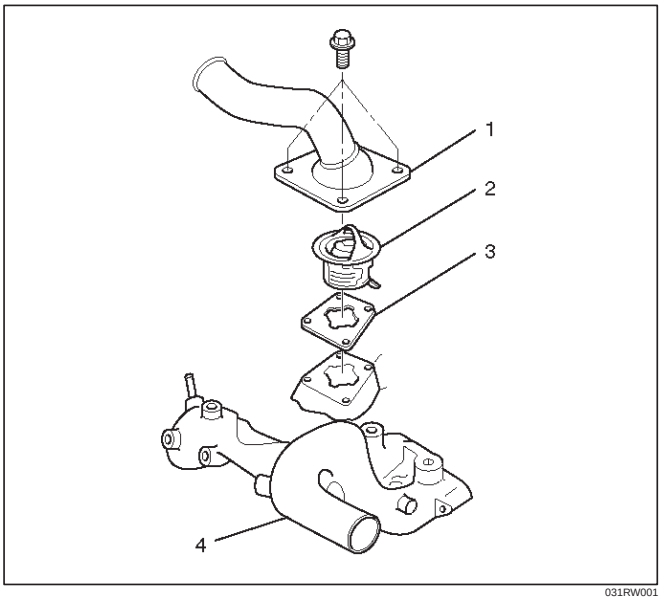

031RW001

Legend

(1) Thermostat Housing
(2) Thermostat
(3) Outlet Pipe

Removal

1. Disconnect battery ground cable.
2. Drain engine coolant from the radiator and engine.
3. Disconnect radiator hose from the inlet pipe.
4. Remove thermostat housing.
5. Remove thermostat(2).

Inspection

Suspend the thermostat in a water–filled container using thin wire. Place a thermometer next to the thermostat.
Do not directly heat the thermostat.
Gradually increase the water temperature. Stir the water so that the entire water is same temperature.

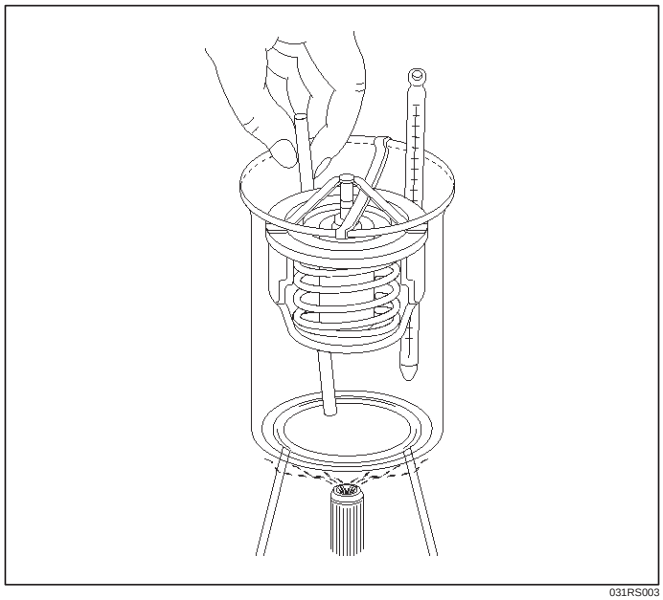

031RS003

Confirm the temperature when the valve first begins to open.

Valve opening temperature 74.5C ~ 78.5˚C (166.1˚F ~ 173.3˚F)

Confirm the temperature when the valve is fully opened.

Valve full open temperature and lift More than 8.5mm (0.33 in) at 90˚C (194˚F)

Make necessary repair and parts replacement if extreme wear or damage is found during inspection.

Installation

1. Install thermostat into the outlet pipe(4) making sure that the air hole is in the up position.
2. Install thermostat housing and tighten bolts to the specified torque.

   Torque: 25 N·m (2.5 kg·m/18 lb ft)

3. Installation rubber hose.
4. Replenish engine coolant (EC).
5. Start engine and check for EC leakage.

Radiator

Radiator and Associated Parts

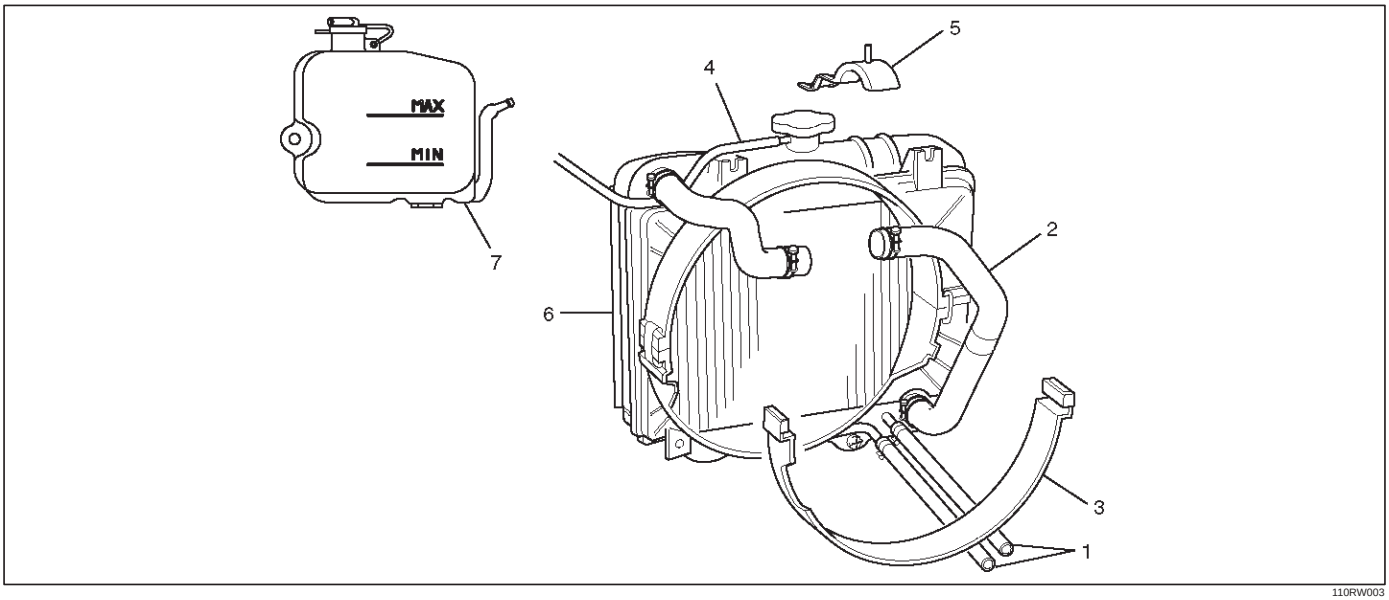

110RW003

Legend

(1) Oil Cooler Hose For Automatic Transmission
(2) Radiator Hose
(3) Fan Guide, Lower
(4) Reserve Tank Hose
(5) Bracket
(6) Radiator Assembly
(7) Reserve Tank

Removal

1. Disconnect battery ground cable.
2. Loosen a drain plug(2) to drain EC.
3. Disconnect oil cooler hose(1) on automatic transmission (A/T).
4. Disconnect radiator inlet hose and outlet hose from the engine.

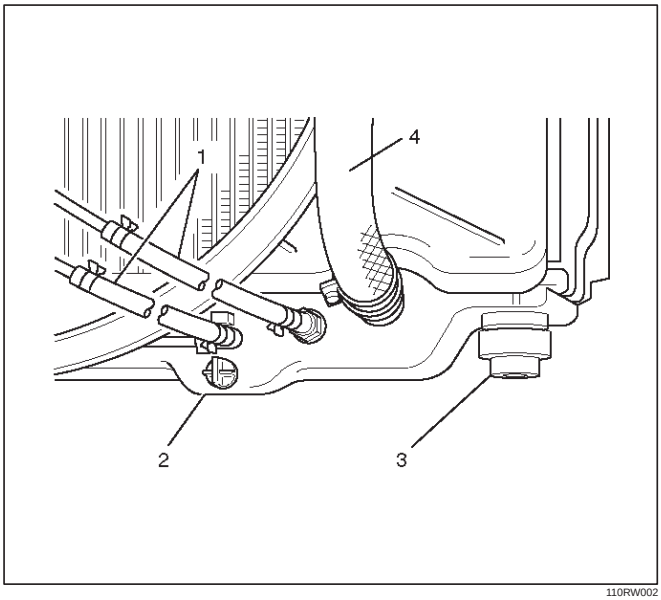

110RW002

5. Remove fan guide(1), clips(3) on both sides and the bottom lock, then remove lower fan guide(3) with fan shroud(4).

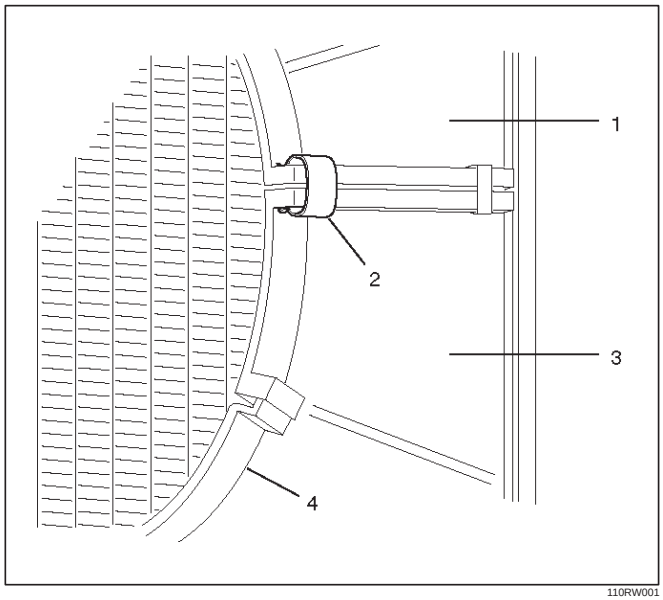

110RW001

6. Disconnect the reserve tank hose(4) from radiator.
7. Remove bracket(5).

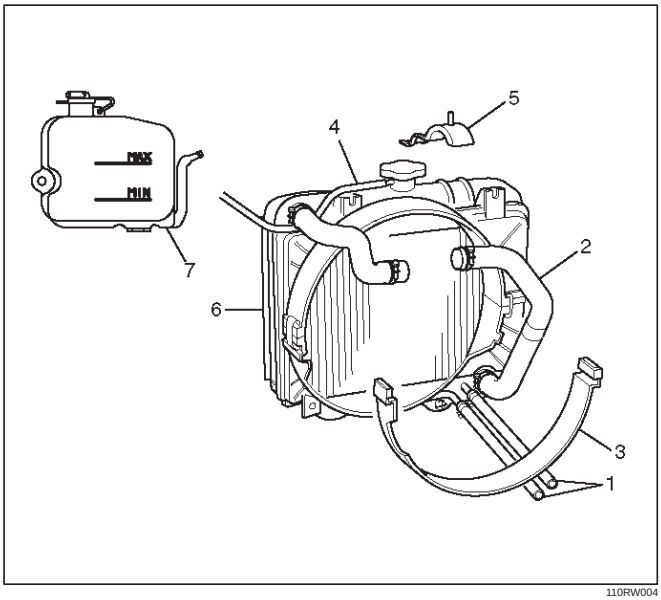

110RW004

8. Lift up and remove the radiator assembly with hose, taking care not to damage the radiator core with a fan blade.
9. Remove rubber cushions on both sides at the bottom.

Inspection

Radiator Cap

Measure the valve opening pressure of the pressurizing valve with a radiator filler cap tester.
Replace the cap if the valve opening pressure is outside the standard range.

Valve opening pressure 93.3 ~ 122.7 kPa (0.95 ~ 1.25 kg/cm^2, 13.5 ~ 17.8 psi)

Cap tester: 5-8840-0277-0
Adapter: 5-8840-2603-0
Check the condition of the vacuum valve in the center of the valve seat side of the cap. If considerable rust or dirt is found, or if the valve seat cannot be moved by hand, clean or replace the cap.

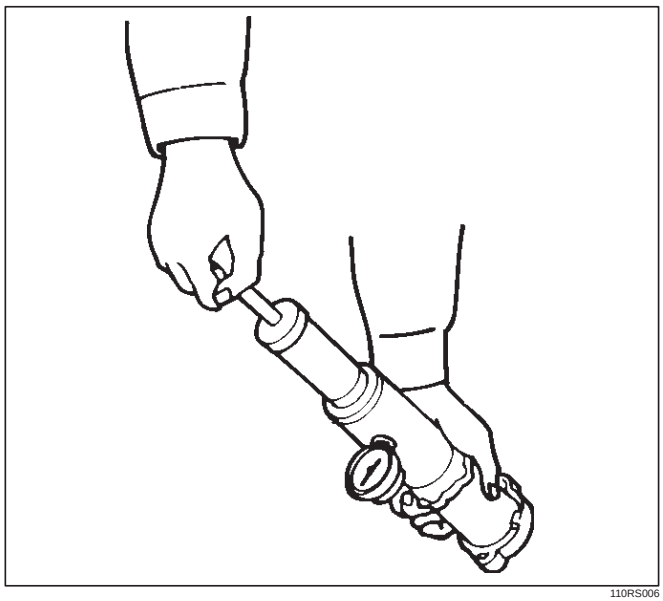
110RS006

Radiator Core

1. A bent fin may result in reduced ventilation and overheating may occur. All bent fins must be straightened. Pay close attention to the base of the fin when it is being straightened.
2. Remove all dust, bugs and other foreign material.

Flushing the Radiator

Thoroughly wash the inside of the radiator and the engine coolant passages with cold water and mild detergent. Remove all signs of scale and rust.

Cooling System Leakage Check

Use a radiator cap tester to force air into the radiator through the filler neck at the specified pressure of 196 kPa (2.0 kg/cm^2, 28.5 psi) with a cap tester:

- Leakage from the radiator
- Leakage from the coolant pump
- Leakage from the water hoses
- Check the rubber hoses for swelling.

Cap tester: 5-8840-0277-0
Adapter: 5-8840-2603-0

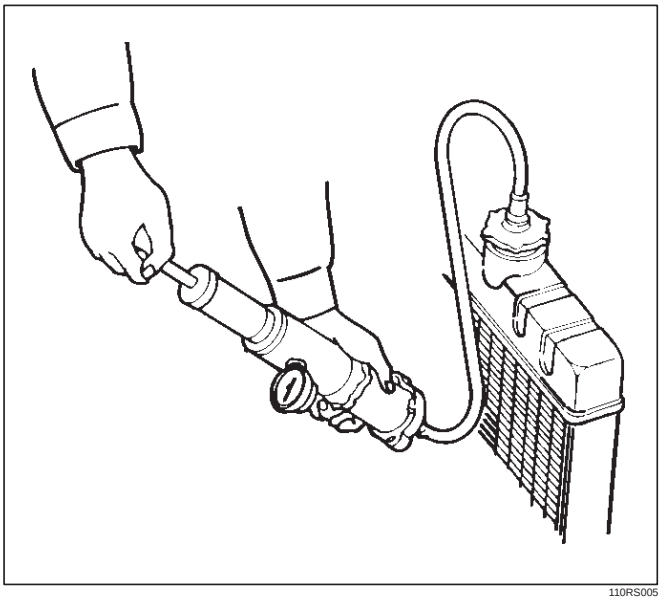

110RS005

Installation

1. Install rubber cushions on both sides of radiator bottom.
2. Install radiator assembly with hose, taking care not to damage the radiator core with a fan blade.
3. Install bracket (6) and support the radiator upper tank with the bracket (5) and secure the radiator.
4. Connect reserve tank hose (4).
5. Install lower fan guide (3).
6. Connect radiator inlet hose and outlet hose to the engine.
7. Connect oil cooler hose (1) to automatic transmission.

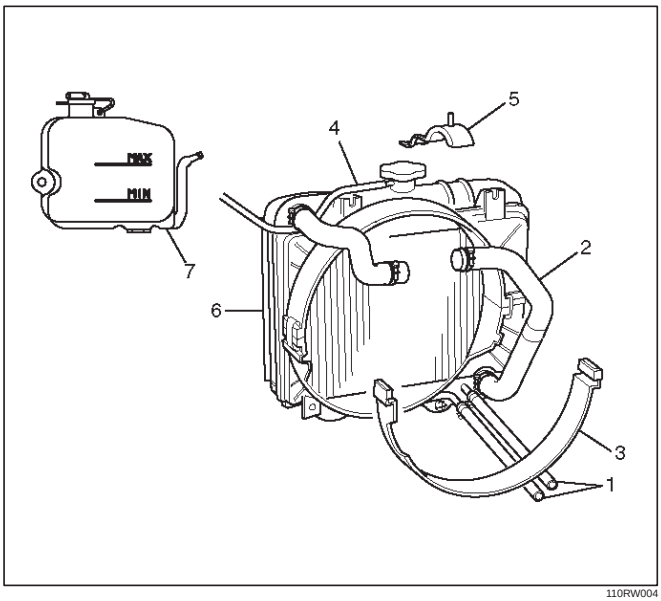

110RW004

8. Connect battery ground cable.
9. Pour engine coolant up to filler neck of radiator, and up to MAX mark of reserve tank.

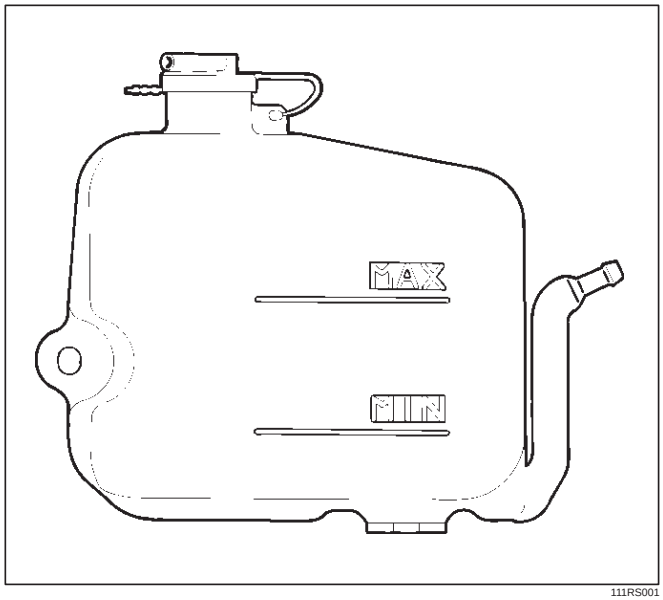

111RS001

Important operation (in case of 100% engine coolant change) procedure for filling with engine coolant.

Engine Coolant Filling Up Procedure

1. Make sure that the engine is cool.

WARNING: WHEN THE COOLANT IS HEATED TO A HIGH TEMPERATURE, BE SURE NOT TO LOOSEN OR REMOVE THE RADIATOR CAP. OTHERWISE YOU MIGHT GET SCALDED BY HOT VAPOR OR BOILING WATER. TO OPEN THE RADIATOR CAP, PUT A PIECE OF THICK CLOTH ON THE CAP AND LOOSEN THE CAP SLOWLY TO REDUCE THE PRESSURE WHEN THE COOLANT HAS BECOME COOLER.

2. Open radiator cap pour coolant up to filler neck.
3. Pour coolant into reservoir tank up to “MAX” line.
4. Tighten radiator cap and start the engine. After idling for 2 to 3 minutes, stop the engine and reopen radiator cap. If the water level is lower, replenish.
5. After replenish the coolant tighten radiator cap, warm up the engine at about 2000 rpm. Set heater adjustment to the highest temperature position, and let the coolant circulate also into heater water system.
6. Check to see the thermometer, continuously idling 5 minutes and stop the engine.
7. When the engine has been cooled, check filler neck for water level and replenish if required. Should extreme shortage of coolant is found, check the coolant system and reservoir tank hose for leakage.
8. Pour coolant into the reservoir tank up to “MAX” line.

Drive Belt and Cooling Fan

Drive Belt and Associated Parts

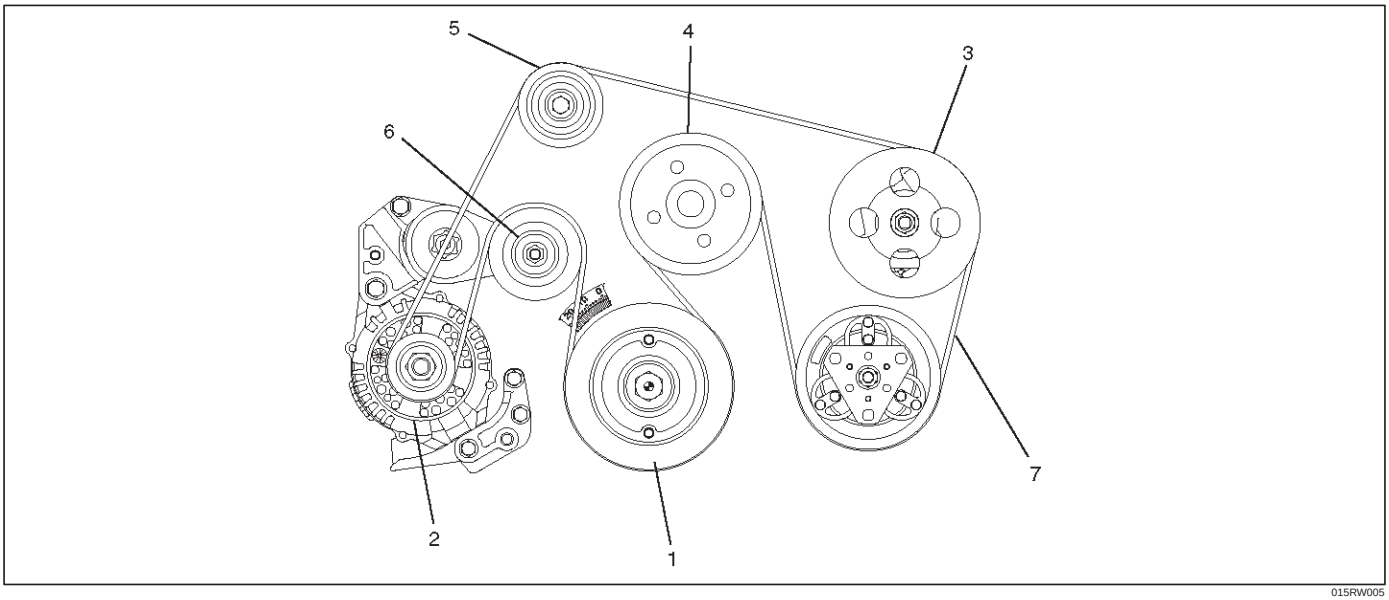

015RW005

Legend

(1) Crankshaft Pulley
(2) Generator
(3) Power Steering Pump
(4) Water Pump and Cooling Fan Pulley
(5) Idle Pulley
(6) Tension Pulley
(7) Drive Belt

The drive belt adjustment is not required as automatic drive belt tensioner is equipped.

Inspection

Check drive belt for wear or damage, and replace with a new one as necessary.

Installation

Install cooling fan assembly and tighten bolts/nuts to the specified torque.

Torque : 22 N·m (2.2 kg·m/16 lb ft) for fan pulley and fan bracket.

Torque : 10 N·m (1.0 kg·m/87 lb in) for fan and clutch assembly.

NOTE: Incorrect installation of a fan may cause the air for cooling to flow in the opposite direction, this resulting in the poor performance of the air-conditioner and a rise temperature in engine cooling water.

Main Data and Specifications

General Specifications

	M/T	A/T
Cooling system	Engine coolant forced circulation	
Radiator	(1 tube in row) Tube type corrugated (2 tube in row)	
Heat radiation capacity	68,000 kcal/h	77,000 kcal/h
Heat radiation area	9.445m^2 (0.878ft^2)	11.21m^2 (1.04ft^2)
Radiator front area	0.302m^2 (0.028ft^2)	
Radiator dry weight	3.8kg (8.8lb)	4.0kg (9.9lb)
Radiator cap valve opening pressure	93.3 ~ 122.7kpa (0.95 ~ 1.25 kg/cm^2, 13.5 ~ 17.8psi)	
Radiator coolant capacity	2.5lit (2.6U.S q.t.)	2.4lit (2.5U.S q.t.)
Engine coolant pump	Centrifugal impeller type	
Delivery	300 lit (79 U.S. gal)/min or more	
Pump speed	5000 ± 50 rpm	
Thermostat	Wax pellet type with air hole	
Valve opening temperature	74.5 ~ 78.5˚C (166.1 ~ 173.3˚F)	
Engine coolant total capacity	10.4lit (11.0U.S qt)	10.5lit (11.1U.S qt)

Torque Specifications

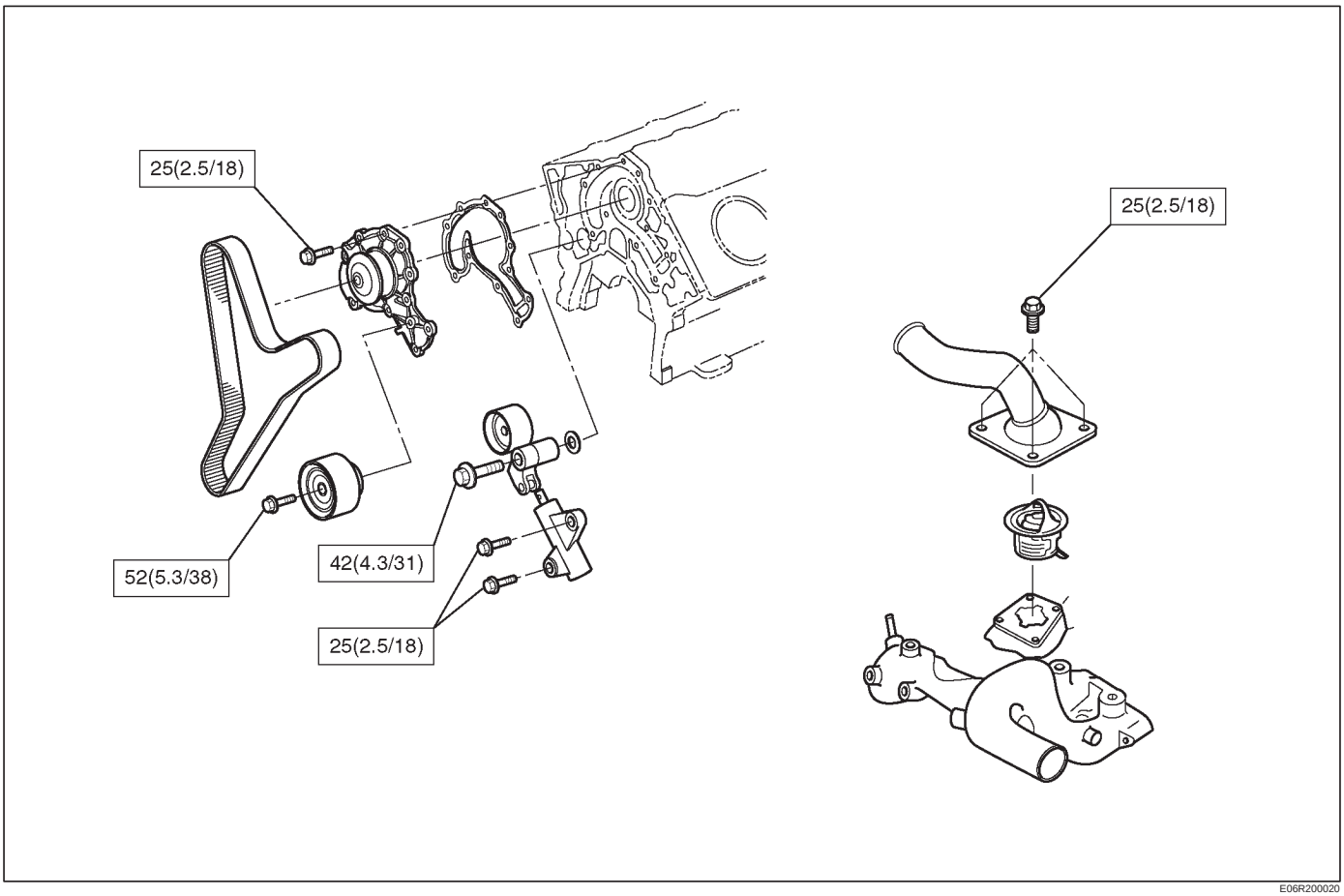

E06R200020

Special Tool

ILLUSTRATION	**TOOL NO.** TOOL NAME
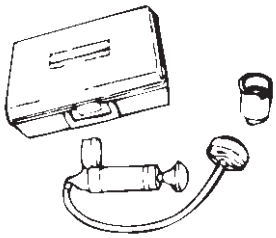	**5-8840-0277-0** **(J–24460–01)** Tester; radiator cap
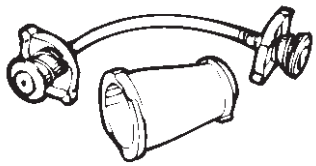	**5-8840-2603-0** **(J–33984–A)** Adapter; radiator cap

ENGINE

ENGINE FUEL

CONTENTS

Service Precaution 6C–1
General Description 6C–2
Fuel Metering 6C–3
Fuel Filter 6C–4
Fuel Filter and Associated Parts 6C–4
Removal 6C–4
Inspection 6C–4
Installation 6C–5
Inspection 6C–5
In–Tank Fuel Filter 6C–5
Fuel Pump Flow Test 6C–5
Fuel Pump 6C–6
Fuel Pump and Associated Parts 6C–6
Removal 6C–6
Installation 6C–6
Fuel Pump Relay 6C–7
General Description 6C–7
Fuel Tank 6C–7
Fuel Tank and Associated Parts 6C–7
Removal 6C–7
Installation 6C–8
Fuel Tube / Quick – Connect Fittings 6C–8
Precautions 6C–8
Cautions During Work 6C–8
Removal 6C–8
Reuse of Quick–Connector 6C–10
Assembling Advice 6C–10
Fuel Gauge Unit 6C–11
Fuel Gauge Unit and Associated Parts . . . 6C–11
Removal 6C–11
Installation 6C–11
Fuel Filler Cap 6C–12
General Description 6C–12
Inspection 6C–12
Main Data and Specifications 6C–13

Service Precaution

WARNING: THIS VEHICLE HAS A SUPPLEMENTAL RESTRAINT SYSTEM (SRS). REFER TO THE SRS COMPONENT AND WIRING LOCATION VIEW IN ORDER TO DETERMINE WHETHER YOU ARE PERFORMING SERVICE ON OR NEAR THE SRS COMPONENTS OR THE SRS WIRING. WHEN YOU ARE PERFORMING SERVICE ON OR NEAR THE SRS COMPONENTS OR THE SRS WIRING, REFER TO THE SRS SERVICE INFORMATION. FAILURE TO FOLLOW WARNINGS COULD RESULT IN POSSIBLE AIR BAG DEPLOYMENT, PERSONAL INJURY, OR OTHERWISE UNNEEDED SRS SYSTEM REPAIRS.

CAUTION: Always use the correct fastener in the proper location. When you replace a fastener, use ONLY the exact part number for that application. ISUZU will call out those fasteners that require a replacement after removal. ISUZU will also call out the fasteners that require thread lockers or thread sealant. UNLESS OTHERWISE SPECIFIED, do not use supplemental coatings (Paints, greases, or other corrosion inhibitors) on threaded fasteners or fastener joint interfaces. Generally, such coatings adversely affect the fastener torque and the joint clamping force, and may damage the fastener. When you install fasteners, use the correct tightening sequence and specifications. Following these instructions can help you avoid damage to parts and systems.

General Description

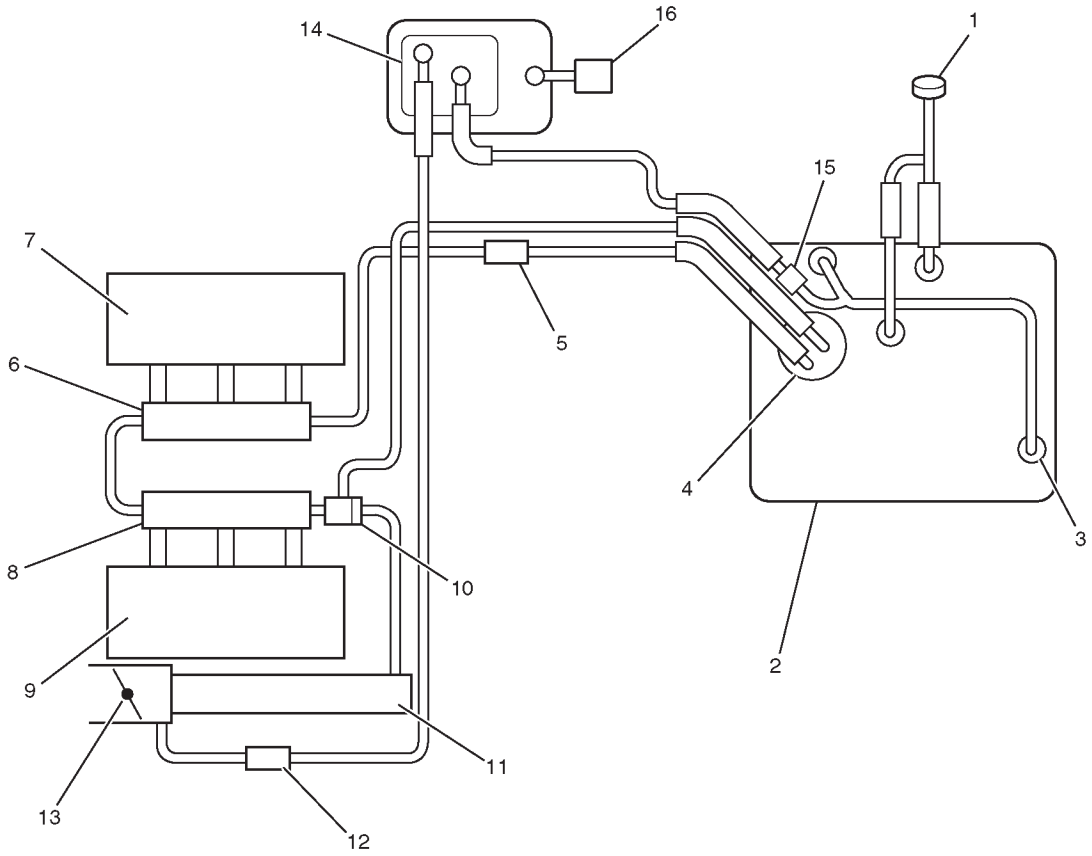

140R200031

Legend

(1) Fuel Filler Cap
(2) Fuel Tank
(3) Rollover Valve
(4) Fuel Pump
(5) Fuel Filter
(6) Fuel Rail Right
(7) Right Bank
(8) Fuel Rail Left
(9) Left Bank
(10) Fuel Pressure Control Valve
(11) Common Chamber
(12) Duty Solenoid Valve
(13) Throttle Valve
(14) Canister
(15) Control Valve
(16) Separator

When working on the fuel system, there are several things to keep in mind:

- Any time the fuel system is being worked on, disconnect the negative battery cable except for those tests where battery voltage is required.
- Always keep a dry chemical (Class B) fire extinguisher near the work area.
- Replace all pipes with the same pipe and fittings that were removed.
- Clean and inspect “O” rings. Replace if required.
- Always relieve the line pressure before servicing any fuel system components.
- Do not attempt repairs on the fuel system until you have read the instructions and checked the pictures relating to that repair.

- Adhere to all Notices and Cautions.

All gasoline engines are designed to use only unleaded gasoline. Unleaded gasoline must be used for proper emission control system operation.
Its use will also minimize spark plug fouling and extend engine oil life. Using leaded gasoline can damage the emission control system and could result in loss of emission warranty coverage.
All cars are equipped with an Evaporative Emission Control System. The purpose of the system is to minimize the escape of fuel vapors to the atmosphere.

Fuel Metering

The Engine Control Module (ECM) is in complete control of this fuel delivery system during normal driving conditions.
The intake manifold function, like that of a diesel, is used only to let air into the engine. The fuel is injected by separate injectors that are mounted over the intake manifold.
The Manifold Absolute Pressure (MAP) sensor measures the changes in the intake manifold pressure which result from engine load and speed changes, which the MAP sensor converts to a voltage output.
This sensor generates the voltage to change corresponding to the flow of the air drawn into the engine. The changing voltage is transformed into an electric signal and provided to the ECM.
With receipt of the signals sent from the MAP sensor, Intake Air Temperature sensor and others, the ECM determines an appropriate fuel injection pulse width feeding such information to the fuel injector valves to effect an appropriate air/fuel ratio.
The Multiport Fuel Injection system utilizes an injection system where the injectors turn on at every crankshaft revolution. The ECM controls the injector on time so that the correct amount of fuel is metered depending on driving conditions.
Two interchangeable “O” rings are used on the injector that must be replaced when the injectors are removed.
The fuel rail is attached to the top of the intake manifold and supplies fuel to all the injectors.
Fuel is recirculated through the rail continually while the engine is running. This removes air and vapors from the fuel as well as keeping the fuel cool during hot weather operation.
The fuel pressure control valve that is mounted on the fuel rail maintains a pressure differential across the injectors under all operating conditions. It is accomplished by controlling the amount of fuel that is recirculated back to the fuel tank based on engine demand.
See Section “Driveability and Emission” for more information and diagnosis.

Fuel Filter

Fuel Filter and Associated Parts

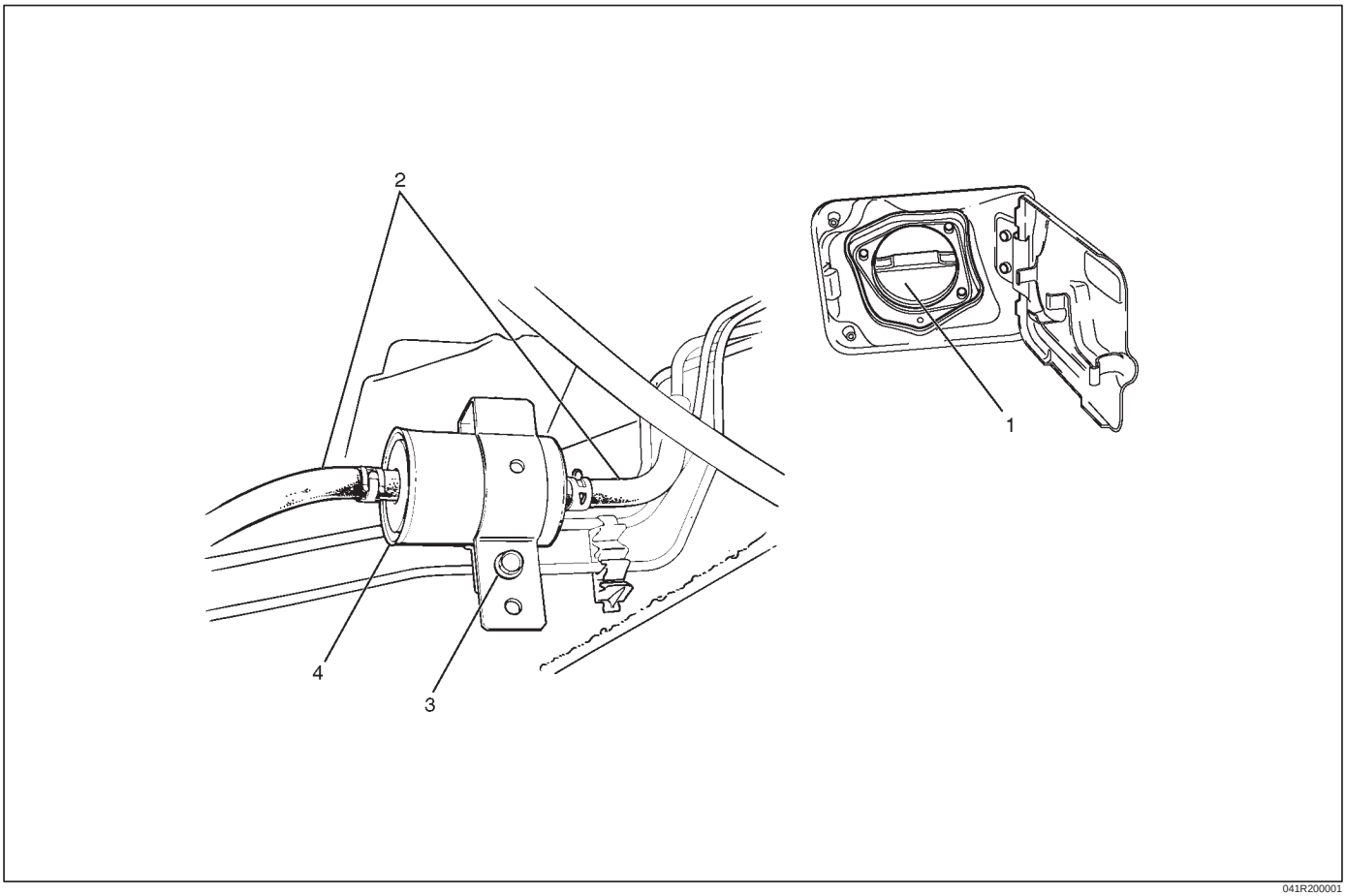

041R200001

Legend

(1) Fuel Filler Cap
(2) Fuel Hose
(3) Fuel Filter Fixing Bolt
(4) Fuel Filter

Removal

CAUTION: When repair to the fuel system has been completed, start engine and check the fuel system for loose connection or leakage. For the fuel system diagnosis, see Section “Driveability and Emission”.

1. Disconnect battery ground cable.
2. Remove Fuel filler cap(1).
3. Disconnect fuel hoses(2) from fuel filter on both engine side and fuel tank side.
4. Fuel filter fixing bolt(3).
   - Remove the fuel filter fixing bolt(3) on fuel filter holder.
5. Remove fuel filter(4).

Inspection

1. Replace the fuel filter if the fuel leaks from fuel filter body or if the fuel filter body itself is damaged.
2. Replace the filter if it is clogged with dirt or sediment.
3. Check the drain of receive rubber and if it is clogged with dust, clean it up with air.

Installation

1. Install the fuel filter in the proper direction.
2. Install fuel filter holder fixing bolt.
3. Connect fuel hoses on engine side(1) and fuel tank side(2).

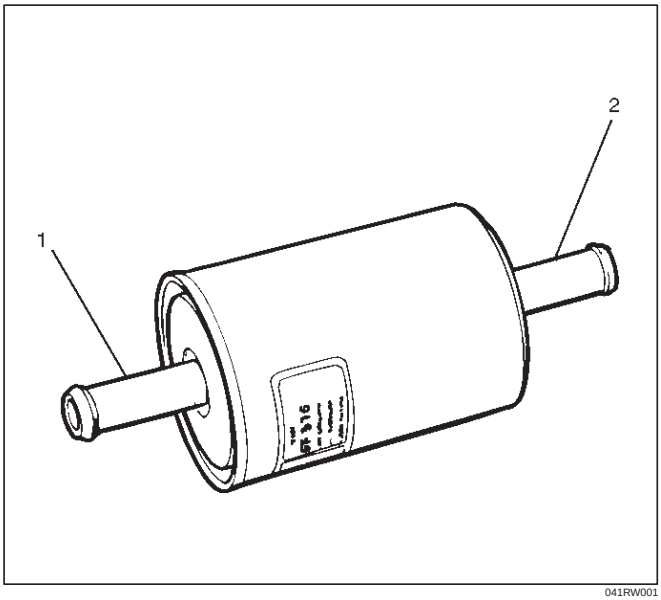

041RW001

4. Install fuel filler cap
5. Connect the battery ground cable.

Inspection

After installation, start engine and check for fuel leakage.

In–Tank Fuel Filter

The filter is located on the lower end of fuel pickup tube in the fuel tank. It prevents dirt from entering the fuel pipe and also stops water unless the filter is completely submerged in the water. It is a self cleaning type, not requiring scheduled maintenance. Excess water and sediment in the tank restricts fuel supply to the engine, resulting in engine stoppage. In such a case, the tank must be cleaned thoroughly.

Fuel Pump Flow Test

If reduction of fuel supply is suspected, perform the following checks:

1. Make sure that there is fuel in the tank.
2. With the engine running, check the fuel feed pipe and hose from fuel tank to injector for evidence of leakage. Retighten, if pipe or hose connection is loose. Also, check pipes and hoses for squashing or clogging.
3. Insert the hose from fuel feed pipe into a clean container, and check for fuel pump flow rate.
4. Connect the pump relay terminals with a jumper wire(1) as shown and start the fuel pump to measure delivery.

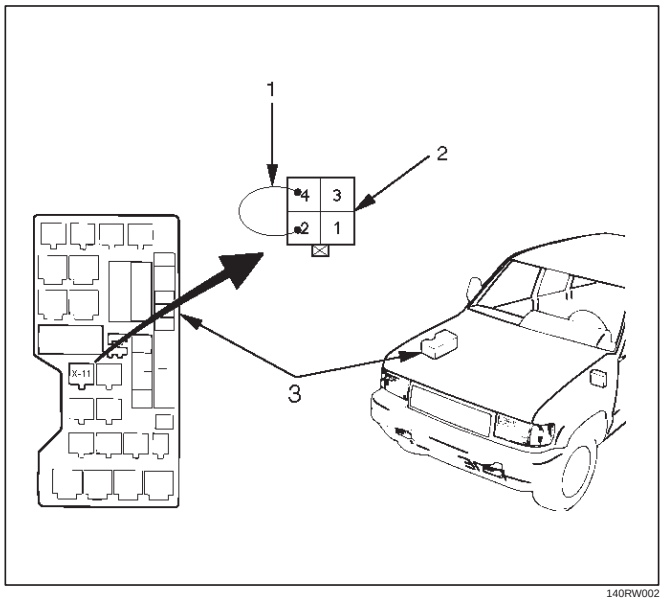

140RW002

CAUTION: Never generate sparks when connecting a jumper wire.

Delivery times	Delivery volum
15 seconds	0.38 liters minimum

If the measure value is out of standard, conduct the pressure test.

Pressure test

For the pressure test to the fuel system, see Section 6E “Fuel Control System”.

Fuel Pump

Fuel Pump and Associated Parts

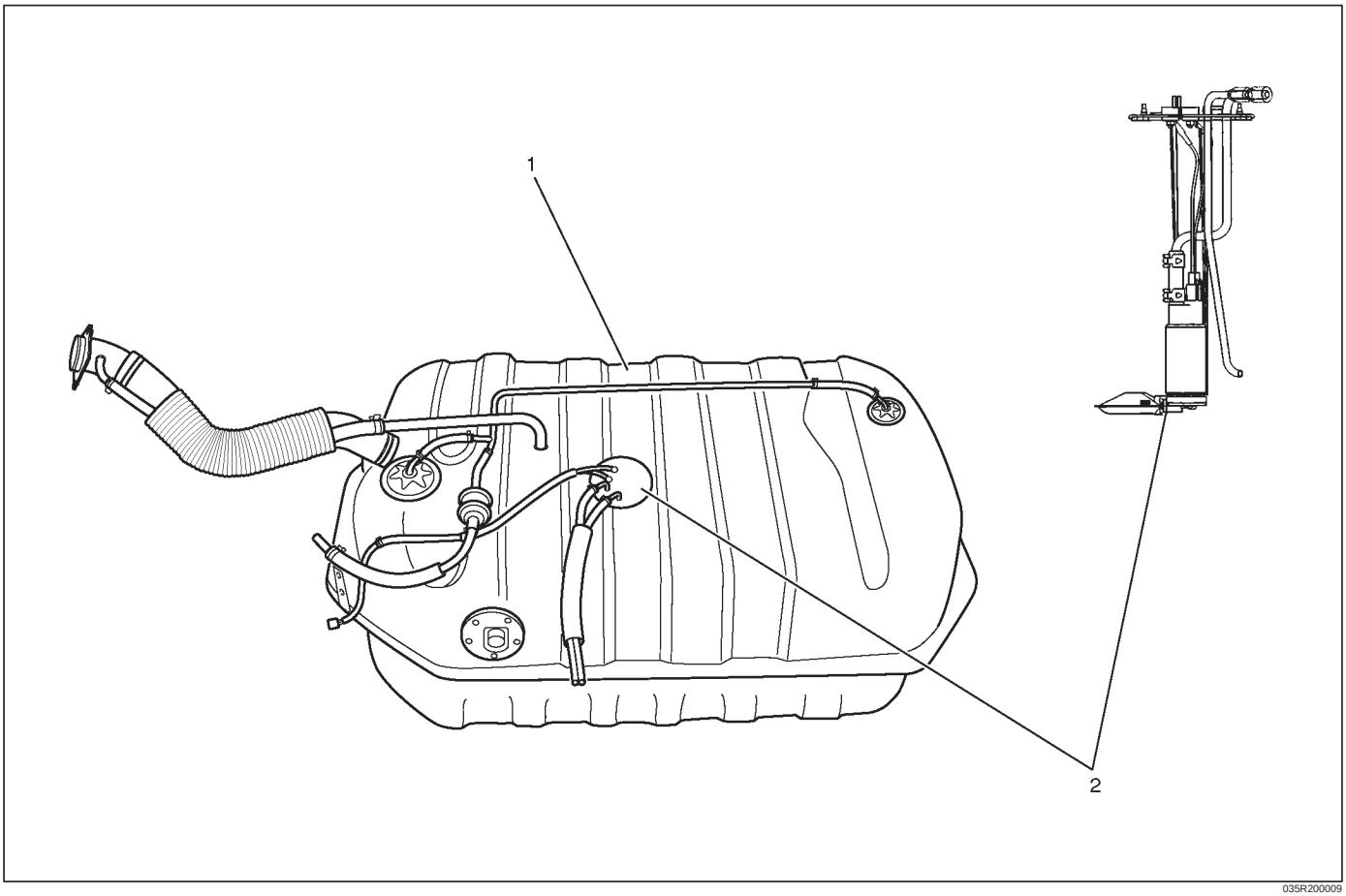

035R200009

Removal

CAUTION: When repair to the fuel system has been completed, start engine and check the fuel system for loose connection or leakage. For the fuel system diagnosis, see Section “Driveability and Emission”.

1. Disconnect battery ground cable.
2. Loosen fuel filler cap.
3. Drain fuel.
   Tighten drain plug to the specified torque after draining fuel.

   Torque: 20 N·m (2.0 Kg·m/14 lb ft) — M8
4. Remove fuel tank assembly(1). Refer to “Fuel Tank Removal” in this section.
5. Remove fuel pump (FP) assembly(2) fixing screws and remove the FP assembly.

NOTE: After removing FP, cover fuel tank to prevent any dust entering.

Installation

1. Install FP assembly(2).
2. Install fuel tank assembly(1). Refer to “Fuel Tank Installation”.
3. Fill the tank with fuel and tighten fuel filler cap.
4. Connect battery ground cable.

Fuel Pump Relay

General Description

In order to control the FP operation, the FP relay is provided. When the starter switch is turned to “ON” position, the FP relay operates the FP for 2 seconds.
When it is turned to “START” position, the Power Train Control Module (PCM) receives the reference pulse from the Ignition Control Module and it operates the relay, again causing the FP to feed fuel.

Fuel Tank

Fuel Tank and Associated Parts

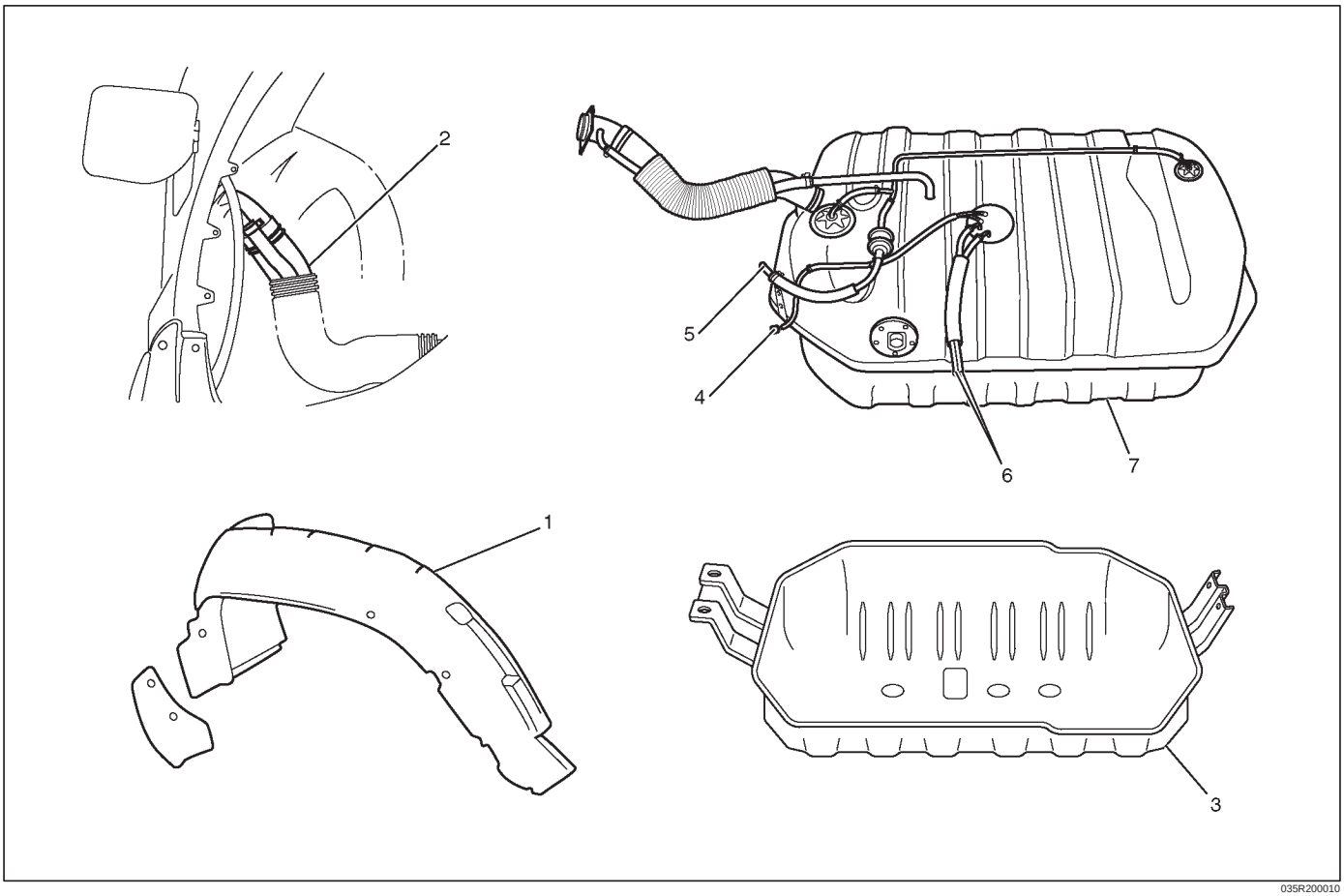

035R200010

Legend

(1) Fender Liner
(2) Fuel Filler Hose and Air Breather Hose
(3) Undercover
(4) Fuel Tank Wiring Connector
(5) Evapo Fuel Hose
(6) Fuel Feed Tube and Fuel Return Tube/Quick–Connect Fittings
(7) Fuel Tank

Removal

CAUTION: When repair to the fuel system has been completed, start engine and check the fuel system for loose connection or leakage. For the fuel system diagnosis, see Section “Driveability and Emission”.

1. Disconnect battery ground cable.
2. Loosen fuel filler cap.
3. Drain fuel.
   Tighten drain plug to the specified torque after draining fuel.

   Torque: 20 N·m (2.0 Kg·m/14 lb ft) — M8
4. Remove fender liner (1) of wheel well on rear right side.
5. Fuel filler hose, air breather hose and evapo hose (2).

6. Remove undercover fixing bolts on both sides and remove under cover(3).
7. Disconnect two fuel tank wiring connectors(4) on front right side of tank.
8. Disconnect evapo fuel hose(5).
9. Disconnect fuel feed tube and fuel return tube(6).

NOTE: Handling of the fuel tube, be sure to refer “Fuel Tube/Quick–Connect Fittings” in this section.

10. Remove fuel tank fixing bolts on both sides and remove fuel tank(7).

Installation

1. Install fuel tank(7).
   - Place a flange on right side of tank on the bracket.
   - Install a flange on left side on the bracket from the bottom, and tighten bolts to the specified torque.

   Torque: 36 N·m (3.7 Kg·m/27 lb ft)
2. Connect fuel feed tube and fuel return tube(6).
3. Connect evapo fuel hose(5).
4. Connect fuel tank wiring connector(4).
5. Install undercover(3).
6. Connect fuel filler hose, air breather hose and evapo hose(2).
7. Install fender liner(1).
   - Mount fender liner to the wheel well.
   - Fill the tank with fuel and tighten fuel filler cap.
   - Connect battery ground cable.

Fuel Tube / Quick – Connect Fittings

Precautions

- Lighting of Fires Prohibited.
- Keep flames away from your work area to prevent the inflammable from catching fire.
- Disconnect the battery negative cable to prevent shorting during work.
- When welding or conducting other heat-generating work on other parts, be sure to provide pretreatment to protect the piping system from thermal damage or spattering.

Cautions During Work

Do not expose the assembly to battery electrolyte or do not wipe the assembly with a cloth used to wipe off spilt battery electorolyte.
The piping wet with battery electrolyte cannot be used.
Be careful not to give a bending or twisting force to the piping during the work. If deformed, replace with a new piping.

Removal

1. Open the fuel cap to relieve the fuel pressure in the tank.
   If the fuel quick-connect fittings are dusty, clean with an air blower, etc. and then remove it.

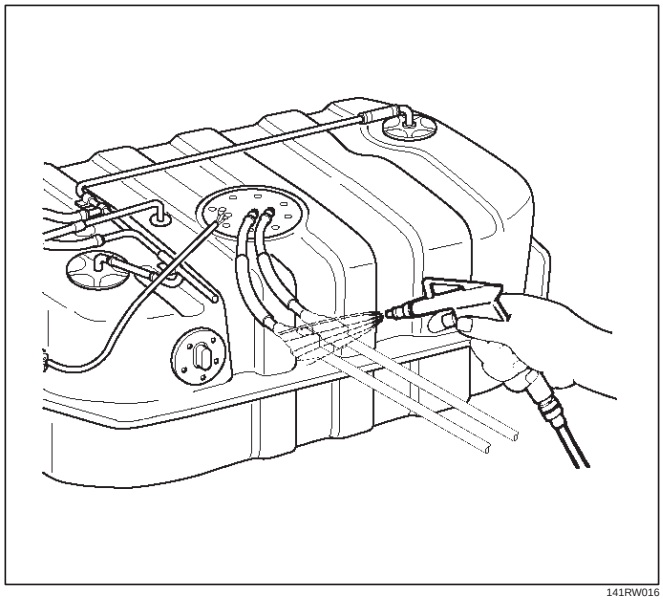

141RW016

As some pressure may remain in the piping, cover the connector with a cloth, etc. to prevent the splashing of fuel in the first disconnection of the piping.

2. For removal of the delivery pipe (feeding fuel to the engine), hold the connector in one hand, and hold the retainer tab with the other hand and pull out the connector, as illustrated. The pipe can be removed with the retainer attached.

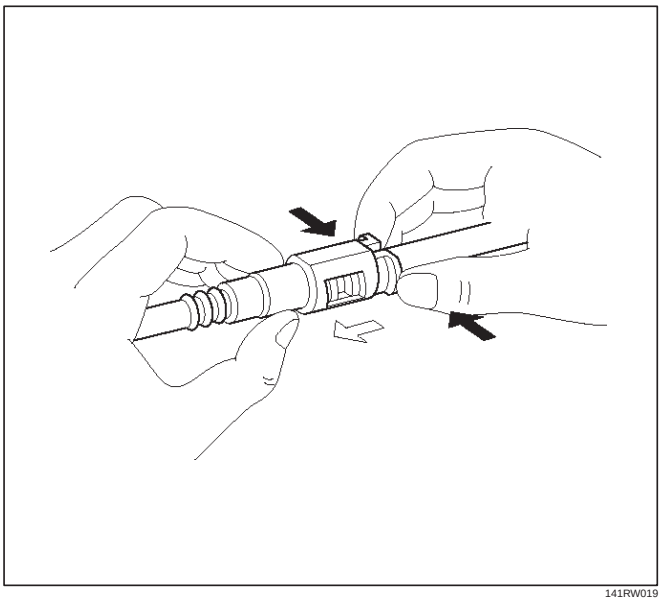

141RW019

3. For removal of the return pipe (returning fuel to the tank), hold the pipe in one hand, and pull out the connentor with the other hand while pressing the square relieve button of the retainer, as illustrated.

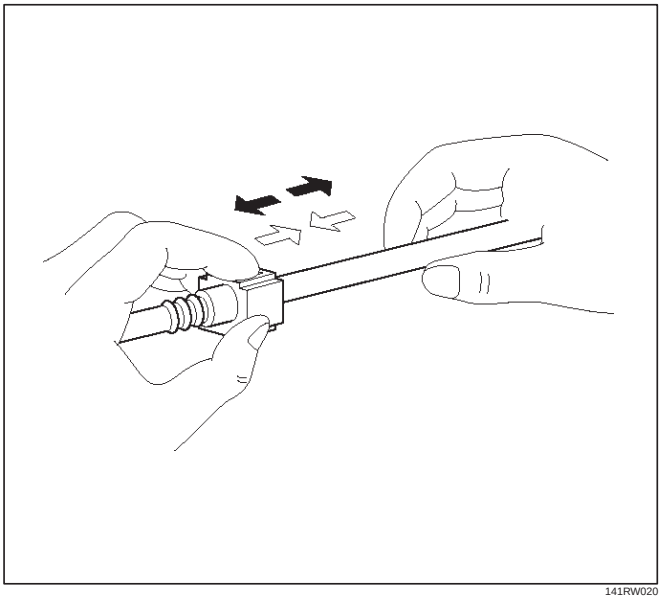

141RW020

NOTE: This work should be done by hands. Do not use any tools. Should the pipe can hardly be removed from the connector, use a lubricant (light oil) and/or push and pull the connector longitudinally until the pipe is removed.

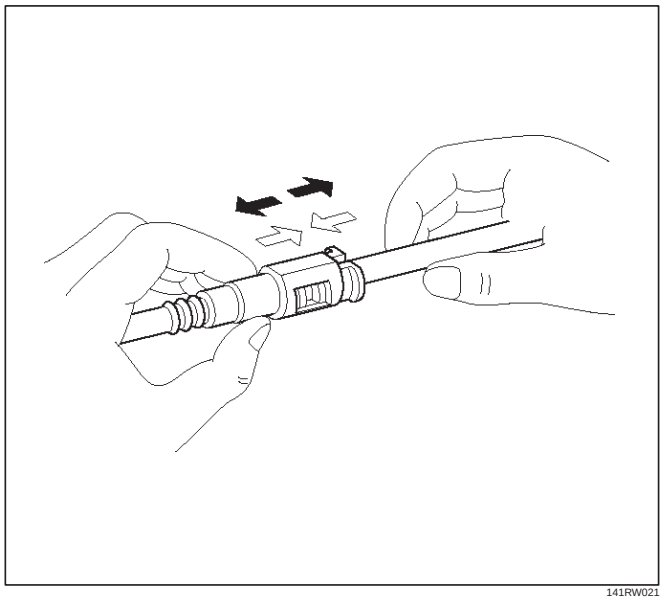

141RW021

When reusing the delivery pipe retainer, reuse without removing the retainer from the pipe. If the retainer is damaged or deformed, however, replace with a new retainer.

Cover the connectors removed with a plastic bag, etc. to prevent the entry of dust or rain water.

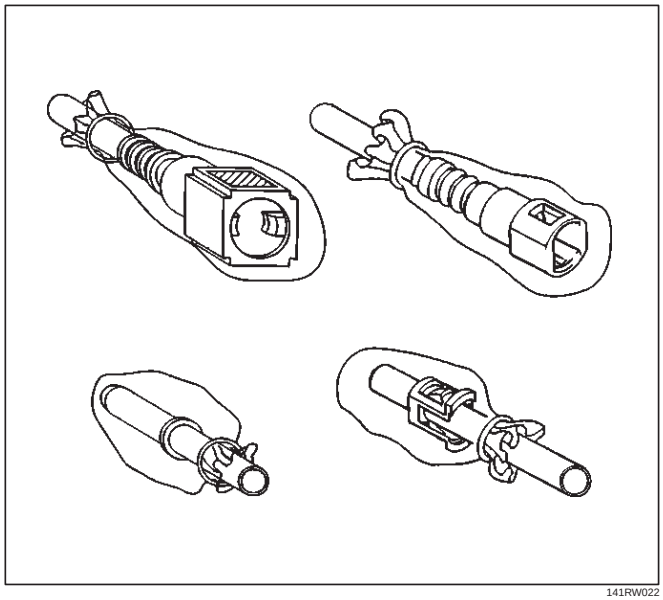

141RW022

Reuse of Quick–Connector

(Delivery Pipe)

- Replace the pipe and connector if scratch, dent or crack is found.
- Remove mud and dust from the pipe and make sure that the end including spool is free of defects, such as scratch, rust, and dent, which may cause poor sealability. If defective, replace with a new pipe.
- If the retainer removed according to the removal step above is attached to the pipe, clean and insert it straight into the quick-connector till it clicks. After it clicks, try pulling it out to make sure that it is not drawn and is securely locked.

NOTE: The retainer, once removed from the pipe, cannot be reused. Just replace with a new retainer. Insert the new retainer into the connector side until it clicks, and connect the pipe as inserting it into the retainer until it clicks.

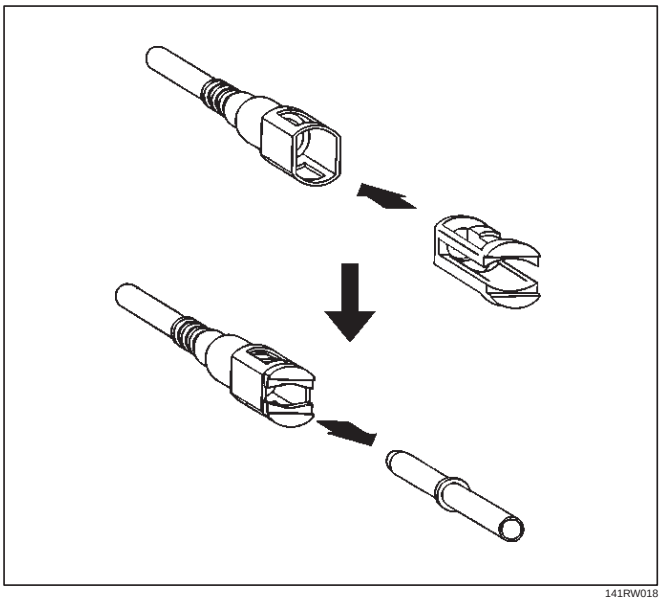

141RW018

(Return Pipe)

- Replace the pipe and connector if scratch, dent or crack is found.
- Remove mud or dust from the pipe and make sure that the end including spool is free from defects, such as scratch, rust, and dent, which may cause poor sealability. If defective, replace with a new pipe.
- After cleaning the pipe, insert it straight into the connector until it clicks. After it clicks, try pulling it out to make sure that it is not drawn and is securely locked.

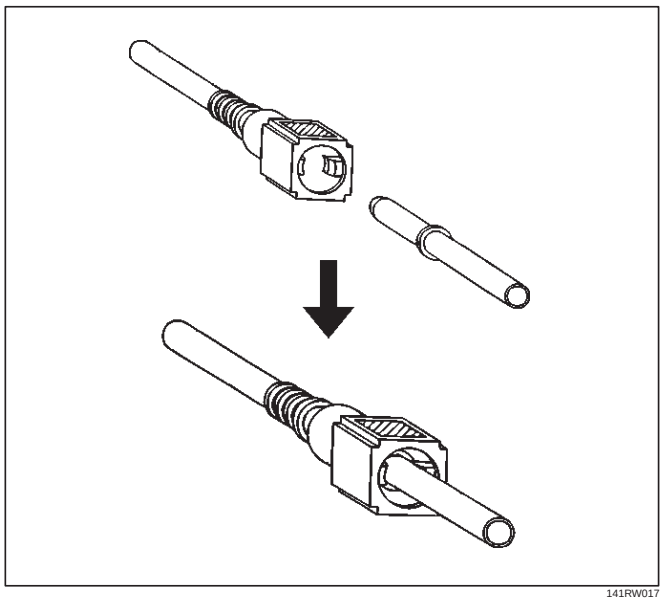

141RW017

Assembling Advice

Application of engine oil or light oil to the pipe facilitates connecting work. The work should be started immediately after lubrication, since dust may stick to the pipe surface to cause poor sealability if a long time passes after lubrication.

Test/Inspection After Assembling

1. Reconnect the battery negative cable.
2. Turn the ignition key to the “ON” position and check pump startup sound. As the pump is actuated to raise fuel pressure, check and see fuel leak from the piping system.
3. Make sure of no fuel leakage by conducting the above fuel leak check a few times.
4. Start the engine and make sure of stable idling speed and normal vehicle run.The entry of dust during the work may sometimes affect the fuel injection system.

Fuel Gauge Unit

Fuel Gauge Unit and Associated Parts

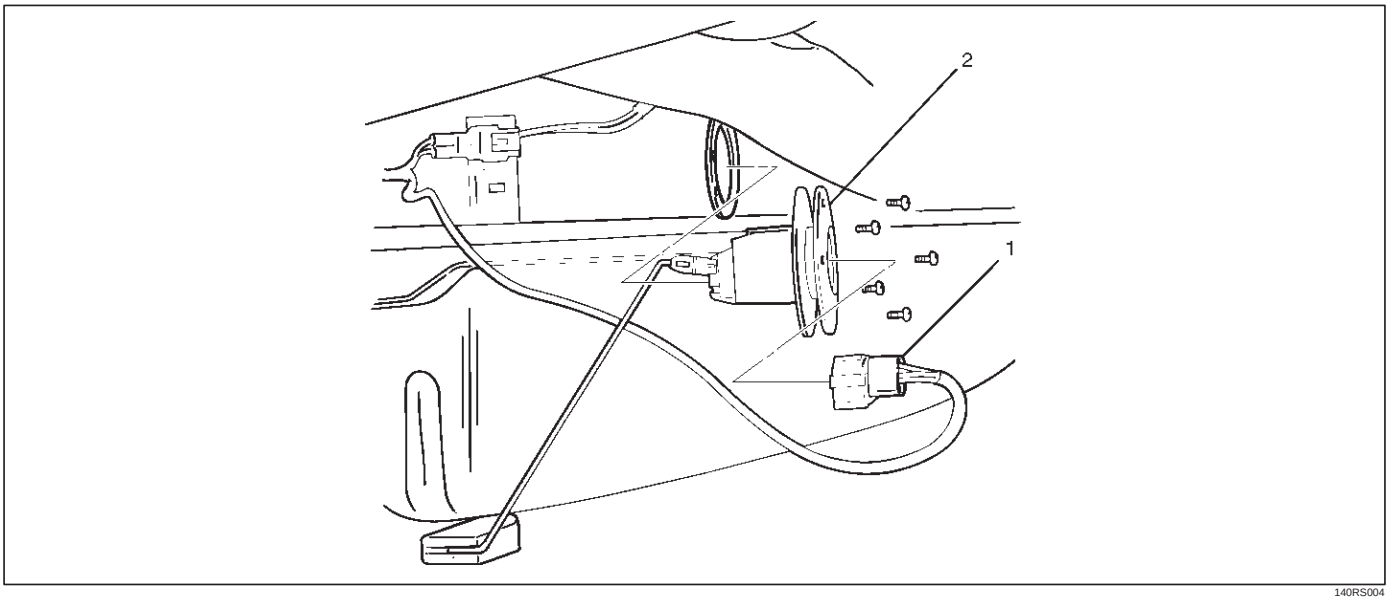

140RS004

Legend

(1) Wiring Connector
(2) Fuel Gauge Unit

Removal

CAUTION: When repair to the fuel system has been completed, start engine and check the fuel system for loose connection or leakage. For the fuel system diagnosis, see Section "Driveability and Emission".

1. Disconnect battery ground cable.
2. Loosen fuel filler cap.
3. Drain fuel.
   Tighten drain plug to the specified torque after draining fuel.

   Torque: 20 N·m (2.0 Kg·m/14 lb ft) — M8
4. Wiring connector
   - Disconnect wiring connector(1) from the unit.
5. Fuel gauge unit
   - Remove the fixing screws, then the fuel gauge unit(2).

NOTE: After removing fuel gauge unit, cover fuel tank to prevent any dust entering

Installation

1. Fuel gauge unit(2).
2. Wiring connector(1).
   - Connect the wiring connector to the fuel gauge unit.
   - Fill the tank with fuel and tighten fuel filler cap.
   - Connect battery ground cable.

Fuel Filler Cap

General Description

Fuel filler cap includes vacuum valve and pressure valve. In case any high vacuum and any high pressure happen in tank, each valve works to adjust the pressure to prevent the tank from being damaged.

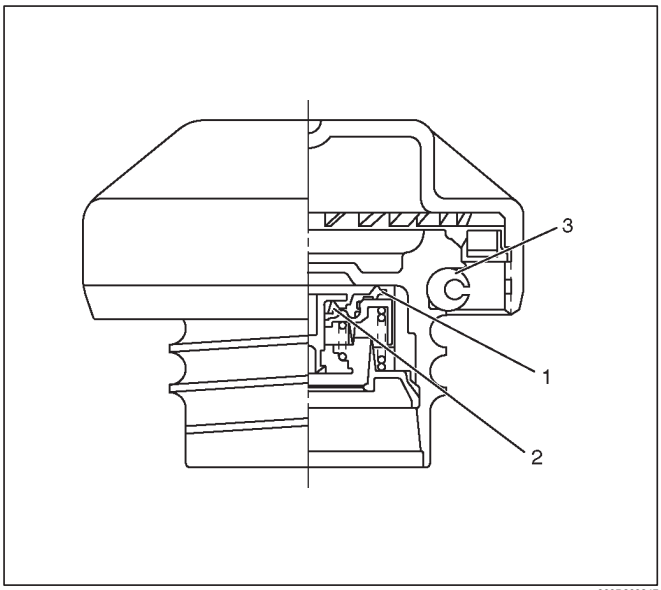

060R200247

Legend

(1) Vacuum Valve
(2) Pressure Valve
(3) Seal Ring

Inspection

Check the seal ring in the filler cap for presence of any abnormality and for seal condition.
Replace the filler cap, if abnormal.

CAUTION: The fuel filler cap valves have characteristics.

A defective valve, no valve at all or a valve with the wrong characteristics will do a lot of harm to engine operating characteristics; be sure to use the same fuel filler cap as installed in this vehicle.

Main Data and Specifications

Torque Specification

N·m (Kg·m/lb ft)

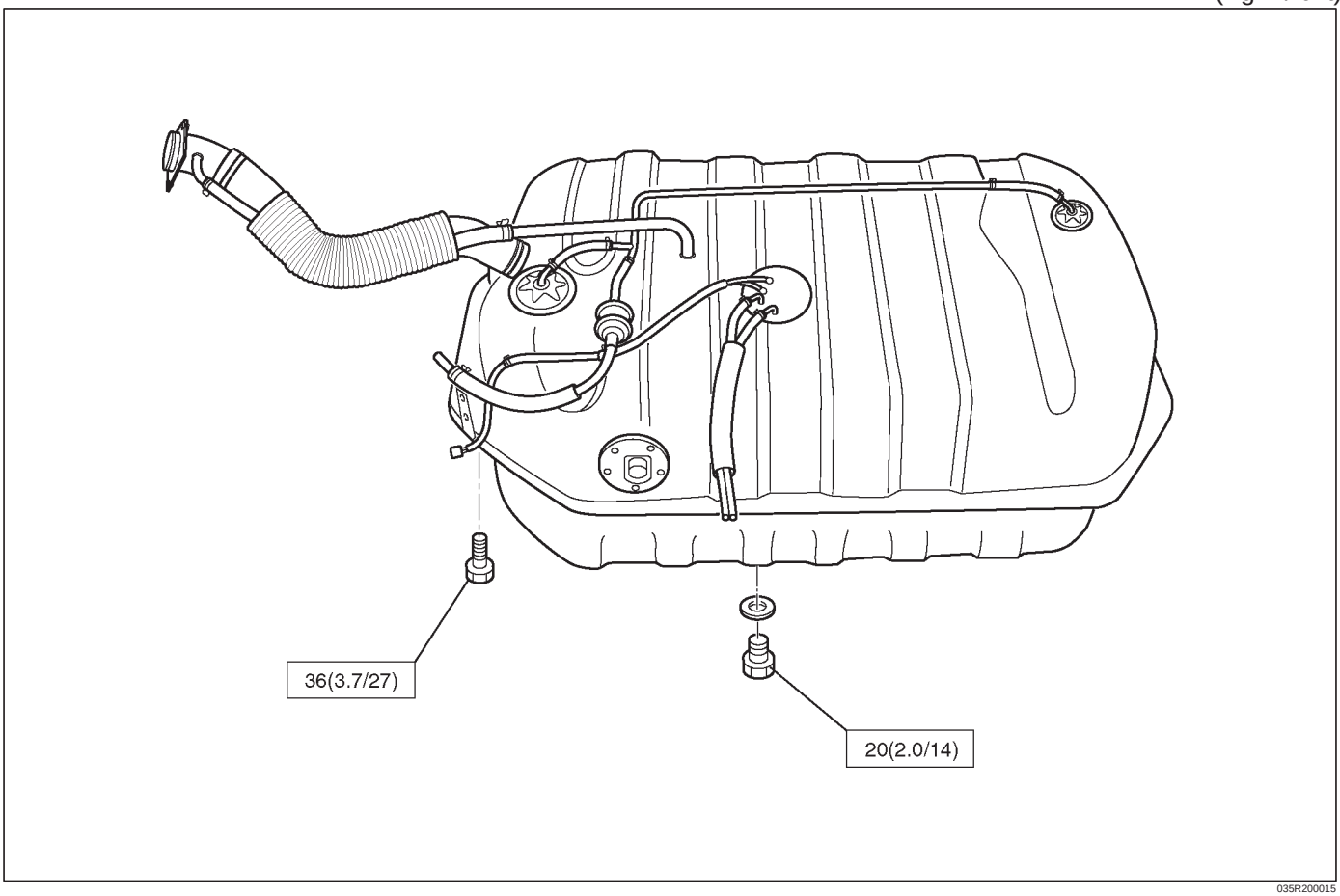

035R200015

ENGINE

ENGINE ELECTRICAL (6VE1 3.5L)

CONTENTS

Service Precaution 6D1–1
Battery 6D1–2
General Description 6D1–2
Diagnosis 6D1–2
Battery Charging 6D1–3
Jump Starting 6D1–3
Battery Removal 6D1–4
Battery Installation 6D1–4
Main Data and Specifications 6D1–5

Service Precaution

WARNING: THIS VEHICLE HAS A SUPPLEMENTAL RESTRAINT SYSTEM (SRS). REFER TO THE SRS COMPONENT AND WIRING LOCATION VIEW IN ORDER TO DETERMINE WHETHER YOU ARE PERFORMING SERVICE ON OR NEAR THE SRS COMPONENTS OR THE SRS WIRING. WHEN YOU ARE PERFORMING SERVICE ON OR NEAR THE SRS COMPONENTS OR THE SRS WIRING, REFER TO THE SRS SERVICE INFORMATION. FAILURE TO FOLLOW WARNINGS COULD RESULT IN POSSIBLE AIR BAG DEPLOYMENT, PERSONAL INJURY, OR OTHERWISE UNNEEDED SRS SYSTEM REPAIRS.

CAUTION: Always use the correct fastener in the proper location. When you replace a fastener, use ONLY the exact part number for that application. ISUZU will call out those fasteners that require a replacement after removal. ISUZU will also call out the fasteners that require thread lockers or thread sealant. UNLESS OTHERWISE SPECIFIED, do not use supplemental coatings (Paints, greases, or other corrosion inhibitors) on threaded fasteners or fastener joint interfaces. Generally, such coatings adversely affect the fastener torque and the joint clamping force, and may damage the fastener. When you install fasteners, use the correct tightening sequence and specifications. Following these instructions can help you avoid damage to parts and systems.

Battery

General Description

The battery is completely sealed except for the two small vent holes (2) on the side. These vent holes (2) permit the escape of small amounts of gas generated by the battery. This type of battery has the following advantages over conventional batteries:

1. There is no need to add water during the entire service life of the battery.
2. The battery is much less vulnerable to self discharge than a conventional type battery.

Diagnosis

1. Visual Inspection

Inspect the battery for obvious physical damage, such as a cracked or broken case, which would permit electrolyte loss.
Replace the battery if obvious physical damage is discovered during inspection.
Check for any other physical damage and correct it as necessary.

2. Hydrometer Check

There is a built–in hydrometer (Charge test indicator(1)) at the top of the battery. It is designed to be used during diagnostic procedures.
Before trying to read the hydrometer, carefully clean the upper battery surface.
If your work area is poorly lit, additional light may be necessary to read the hydrometer.

a. BLUE RING OR DOT VISIBLE(4) – Go to Step 3.
b. BLUE RING OR DOT NOT VISIBLE(3) – Replace the battery.

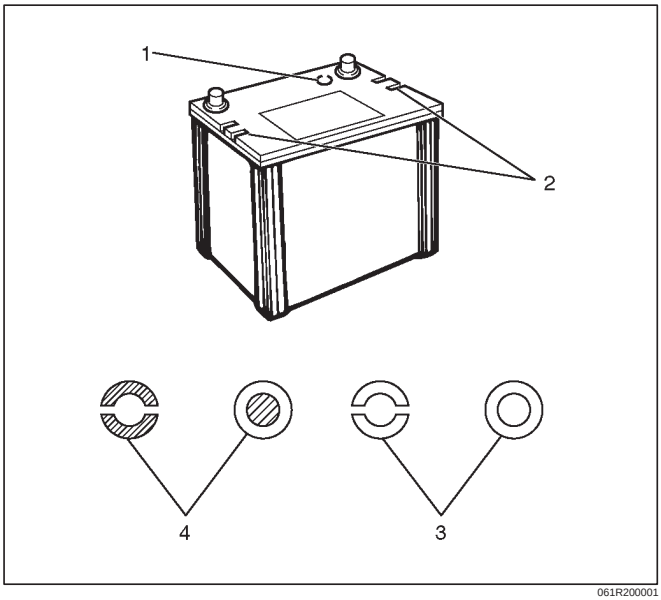

061R200001

3. Voltage Check

1. Put voltmeter test leads to battery terminals.
   a. VOLTAGE IS 12.4V OR ABOVE – Go to Step 4 Load Test.
   b. VOLTAGE IS UNDER 12.4V – Go to procedure (2) below.
2. Determine fast charge amperage from specification. (See Main Data and Specifications in this section).
   Fast charge battery for 30 minutes at amperage rate no higher than specified value.
   Take voltage and amperage readings after charge.
   a. VOLTAGE IS ABOVE 16V AT BELOW 1/3 OF AMPERAGE RATE – Replace battery.
   b. VOLTAGE IS ABOVE 16V AT ABOVE 1/3 OF AMPERAGE RATE – Drop charging voltage to 15V and charge for 10 – 15 hours. Then go to Step 4 Load Test.
   c. VOLTAGE IS BETWEEN 12V AND 16V – Continue charging at the same rate for an additional 3–1/2 hours. Then go to Step 4 Load Test.
   d. VOLTAGE BELOW 12V – Replace the Battery.

4. Load Test

1. Connect a voltmeter and a battery load tester across the battery terminals.
2. Apply 300 ampere load for 15 seconds to remove surface charge from the battery. Remove load.
3. Wait 15 seconds to let battery recover. Then apply specified load from specifications (See Main Data and Specifications in this section).
   Read voltage after 15 seconds, then remove load.
   a. VOLTAGE DOES NOT DROP BELOW THE MINIMUM LISTED IN THE TABLE – The battery is good and should be returned to service.
   b. VOLTAGE IS LESS THAN MINIMUM LISTED – Replace the battery.

ESTIMATED TEMPERATURE		MINIMUM VOLTAGE
°F	°C	V
70	21	9.6
60	16	9.5
50	10	9.4
40	4	9.3
30	–1	9.1
20	–7	8.9
10	–12	8.7
0	–18	8.5
The battery temperature must be estimated by feel and by the temperature the battery has been exposed to for the preceding few hours.		

Battery Charging

Observe the following safety precautions when charging the battery:

1. Never attempt to charge the battery when the fluid level is below the lower level line on the side of the battery. In this case, the battery must be replaced.
2. Pay close attention to the battery during charging procedure.

   Battery charging should be discontinued or the rate of charge reduced if the battery feels hot to the touch.

   Battery charging should be discontinued or the rate of charge reduced if the battery begins to gas or spew electrolyte from the vent holes.
3. In order to more easily view the hydrometer blue dot or ring, it may be necessary to jiggle or tilt the battery.
4. Battery temperature can have a great effect on battery charging capacity.
5. The sealed battery used on this vehicle may be either quick charged or slow charged in the same manner as other batteries.

   Whichever method you decide to use, be sure that you completely charge the battery. Never partially charge the battery.

Jump Starting

Jump Starting with an Auxiliary (Booster) Battery

CAUTION: Never push or tow the vehicle in an attempt to start it. Serious damage to the emission system as well as other vehicle parts will result.

Treat both the discharged battery and the booster battery with great care when using jumper cables. Carefully follow the jump starting procedure, being careful at all times to avoid sparking.

WARNING: FAILURE TO CAREFULLY FOLLOW THE JUMP STARTING PROCEDURE COULD RESULT IN THE FOLLOWING:

1. Serous personal injury, particularly to your eyes.
2. Property damage from a battery explosion, battery acid, or an electrical fire.
3. Damage to the electronic components of one or both vehicles particularly.

Never expose the battery to an open flame or electrical spark. Gas generated by the battery may catch fire or explode.

Remove any rings, watches, or other jewelry before working around the battery. Protect your eyes by wearing an approved set of goggles.

Never allow battery fluid to come in contact with your eyes or skin.

Never allow battery fluid to come in contact with fabrics or painted surfaces.

Battery fluid is a highly corrosive acid.

Should battery fluid come in contact with your eyes, skin, fabric, or a painted surface, immediately and thoroughly rinse the affected area with clean tap water.

Never allow metal tools or jumper cables to come in contact with the positive battery terminal, or any other metal surface of the vehicle. This will protect against a short circuit.

Always keep batteries out of reach of young children.

Jump Starting Procedure

1. Set the vehicle parking brake.

   If the vehicle is equipped with an automatic transmission, place the selector level in the “PARK” position.

   If the vehicle is equipped with a manual transmission, place the shift lever in the “NEUTRAL” position.

   Turn “OFF” the ignition.

   Turn “OFF” all lights and any other accessory requiring electrical power.
2. Look at the built–in hydrometer.

   If the indication area of the built–in hydrometer is completely clear, do not try to jump start.
3. Attach the end of one jumper cable to the positive terminal of the booster battery.

   Attach the other end of the same cable to the positive terminal of the discharged battery.

   Do not allow the vehicles to touch each other. This will cause a ground connection, effectively neutralizing the charging procedure.

   Be sure that the booster battery has a 12 volt rating.
4. Attach one end of the remaining cable to the negative terminal of the booster battery.

   Attach the other end of the same cable to a solid engine ground (such as the air conditioning compressor bracket or the generator mounting bracket) of the vehicle with the discharged battery.

   The ground connection must be at least 450 mm (18 in.) from the battery of the vehicle whose battery is being charged.

WARNING: NEVER ATTACH THE END OF THE JUMPER CABLE DIRECTLY TO THE NEGATIVE TERMINAL OF THE DEAD BATTERY.

5. Start the engine of the vehicle with the good battery.

   Make sure that all unnecessary electrical accessories have been turned “OFF”.
6. Start the engine of the vehicle with the dead battery.

7. To remove the jumper cables, follow the above directions in reverse order.
   Be sure to first disconnect the negative cable from the vehicle with the discharged battery.

Battery Removal

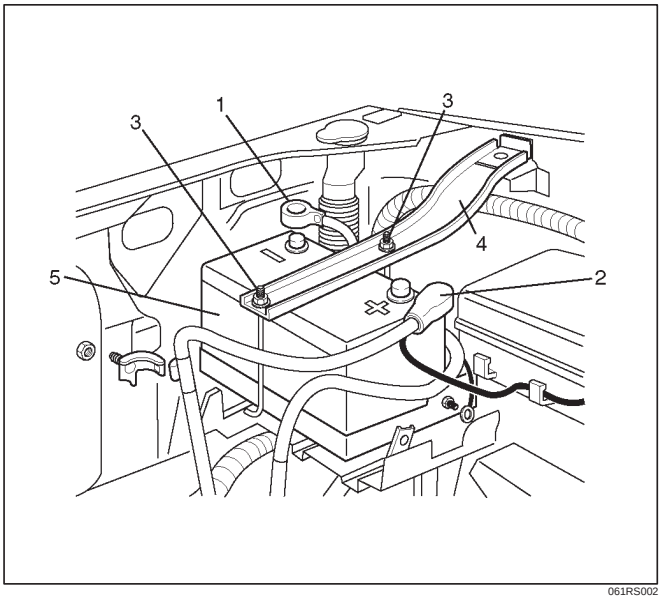

061RS002

1. Remove negative cable (1).
2. Remove positive cable (2).
3. Remove retainer screw and rods (3).
4. Remove retainer (4).
5. Remove battery (5).

Battery Installation

1. Install battery (5).
2. Install retainer (4).
3. Install retainer screw and rods (3).

NOTE: Make sure that the rod is hooked on the body side.

4. Install positive cable (2).
5. Install negative cable (1).

Main Data and Specifications

General Specifications

Model	24R–600
Voltage (V)	12
Cold–Cranking Performance (Amp)	600
Reserve Capacity (Min)	118
Load Test (Amp)	300
BCI Group No.	24

ENGINE

IGNITION SYSTEM (6VE1 3.5L)

CONTENTS

Service Precaution 6D2–1
General Description 6D2–2
Diagnosis 6D2–2
Ignition Coil 6D2–3
Removal 6D2–3
Inspection and Repair 6D2–3
Installation 6D2–3
Spark Plug 6D2–5
Removal 6D2–5
Inspection and Repair 6D2–5
Installation 6D2–5
Crankshaft Position Sensor 6D2–6
Removal 6D2–6
Installation 6D2–6
Main Data and Specifications 6D2–7

Service Precaution

WARNING: THIS VEHICLE HAS A SUPPLEMENTAL RESTRAINT SYSTEM (SRS). REFER TO THE SRS COMPONENT AND WIRING LOCATION VIEW IN ORDER TO DETERMINE WHETHER YOU ARE PERFORMING SERVICE ON OR NEAR THE SRS COMPONENTS OR THE SRS WIRING. WHEN YOU ARE PERFORMING SERVICE ON OR NEAR THE SRS COMPONENTS OR THE SRS WIRING, REFER TO THE SRS SERVICE INFORMATION. FAILURE TO FOLLOW WARNINGS COULD RESULT IN POSSIBLE AIR BAG DEPLOYMENT, PERSONAL INJURY, OR OTHERWISE UNNEEDED SRS SYSTEM REPAIRS.

CAUTION: Always use the correct fastener in the proper location. When you replace a fastener, use ONLY the exact part number for that application. ISUZU will call out those fasteners that require a replacement after removal. ISUZU will also call out the fasteners that require thread lockers or thread sealant. UNLESS OTHERWISE SPECIFIED, do not use supplemental coatings (Paints, greases, or other corrosion inhibitors) on threaded fasteners or fastener joint interfaces. Generally, such coatings adversely affect the fastener torque and the joint clamping force, and may damage the fastener. When you install fasteners, use the correct tightening sequence and specifications. Following these instructions can help you avoid damage to parts and systems.

General Description

Ignition is done by the electronic ignition (EI) that directly fires the spark plugs from ignition coils through spark plug wires without using a distributor. The firing orders are selected No.1, No.2, No.3, No.4, No.5, and No6.
Since the cylinder on exhaust stroke requires less energy to fire its ignition plug, energy from the ignition coils can be utilized to fire the mating cylinder on compression stroke. After additional 360˚ rotation, respective cylinder strokes are reversed.
The EI consists of six ignition coils,ignition control module, crank position sensor, powertrain control module (PCM) and other components.
The ignition coils are connected with the PCM by means of a 80 pin connector.
The ignition control module turns on/off the primary circuit of ignition coils, and also it controls the ignition timing at the engine speed below 538 rpm.
A notch in the timing disc on the crankshaft activates the crank position sensor which then sends information such as firing order and starting timing of each ignition coil to the PCM.
Further, the EI employs ignition control (IC) to control similar to a distributor system.
By receiving signals such as crank position,engine speed, water temperature and Manifold Absolute Pressure (MAP), the PCM controls the ignition timing.

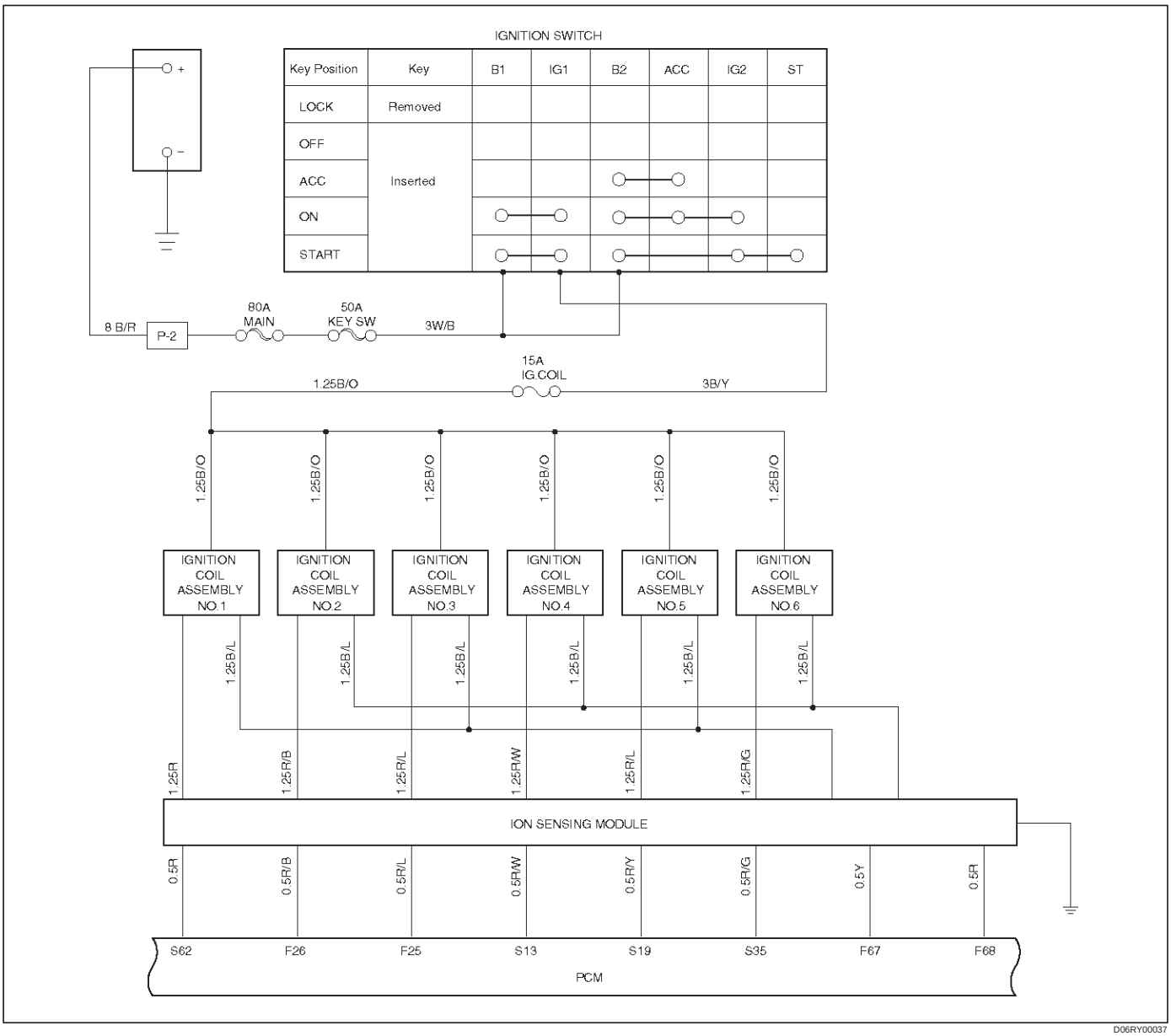

D06RY00037

Diagnosis

Refer to Section Drivability and Emissions for the diagnosis to electronic ignition system (EI system).

Ignition Coil

Removal

1. Disconnect battery ground cable.
2. Ignition coil connector and ignition coil.
   - Disconnect three connector from ignition coil.
   - Remove harness bracket bolt on cylinder head cover.
   - Remove fixing bolts on ignition coil.

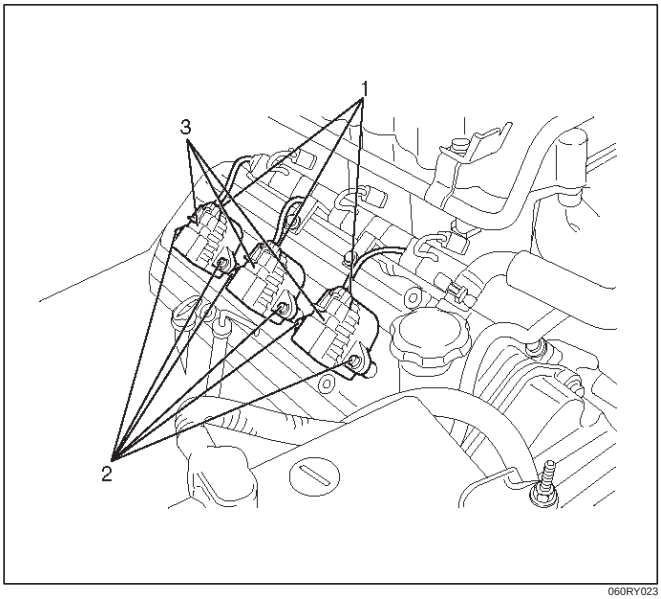

060RY023

Legend

(1) Ignition Coil Connector
(2) Bolt
(3) Ignition Coil Assembly

Inspection and Repair

Check the ignition coil assembly for insulation. Check terminals for corrosion or damage, and replace as necessary.
Measuring resistance of ignition coil assembly.

Terminal No.	Limit
1 to 2	Without 0 ohm or infinity maximum ohm.
1 to 3	Same as above
2 to 3	Same as above

Measure resistance of ignition coil assembly, and replace the ignition coil assembly if its value exceeds the standard.

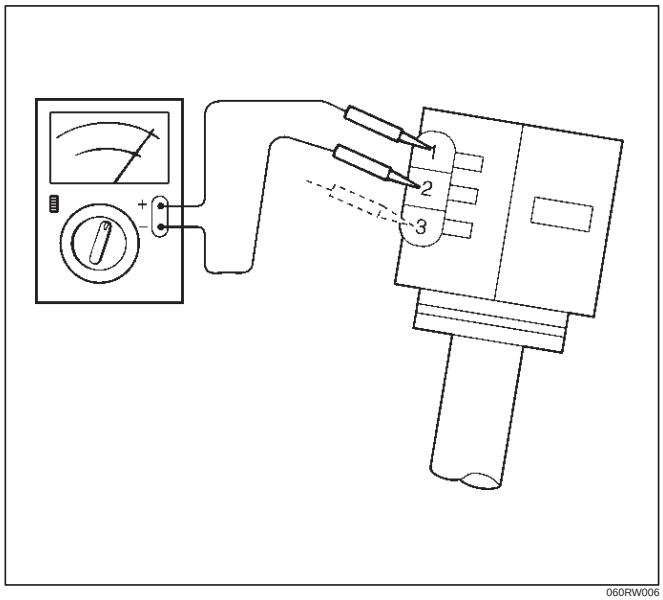

060RW006

Installation

1. Install the ignition coil assembly (3).
   Connect ignition coil connector (1) and ignition coil (3), then tighten bolt (2) to the specified torque.

   Torque: 4 N·m (0.4 kg·m/35 lb in)

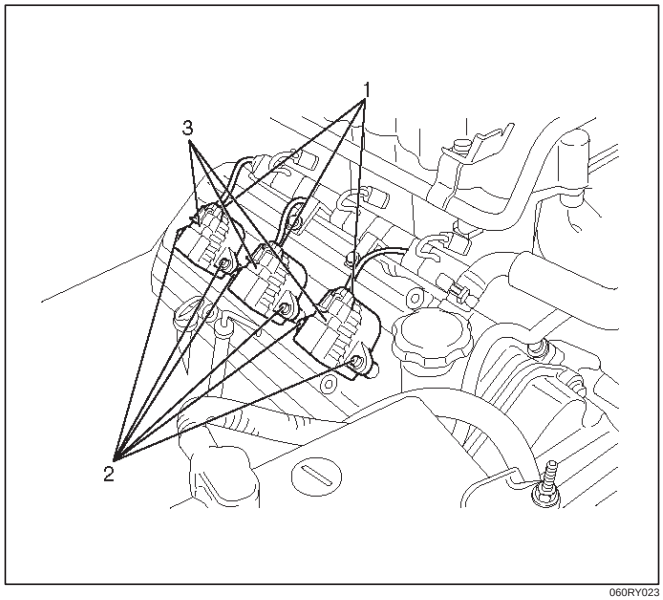

060RY023

CAUTION: Ignition coil assembly #6 is different from ignition coil assembly from #1 to #5. Ignition coil assembly #6 is short type. So, note it when installing ignition coil assembly of #6.

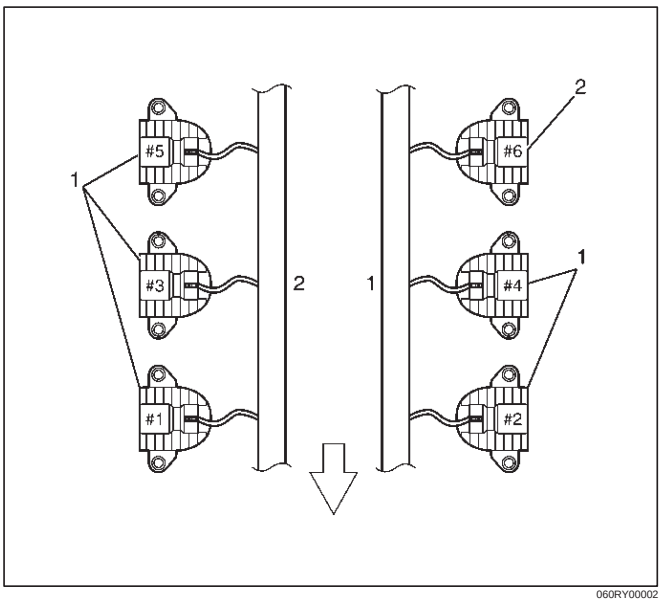

060RY00002

Legend

(1) Long type Ignition Coil Assemblies (#1 ~ #5)
(2) Short type Ignition Coil Assembly (#6)

2. Connect battery ground cable.

Spark Plug

Removal

1. Remove spark plugs.

Inspection and Repair

The spark plug affects entire engine performance and therefore its inspection is very important.

- Check electrode and insulator for presence of cracks, and replace if any.
- Check electrode for wear, replace if necessary.
- Check gasket for damage, replace if necessary.
- Measure insulation resistance with an ohmmeter, and replace if faulty.
- Check spark plug gap, Replace spark plugs if measured valve is out of standard.

Spark plug gap : 1.0 – 1.1 mm (0.4 – 0.043 in)

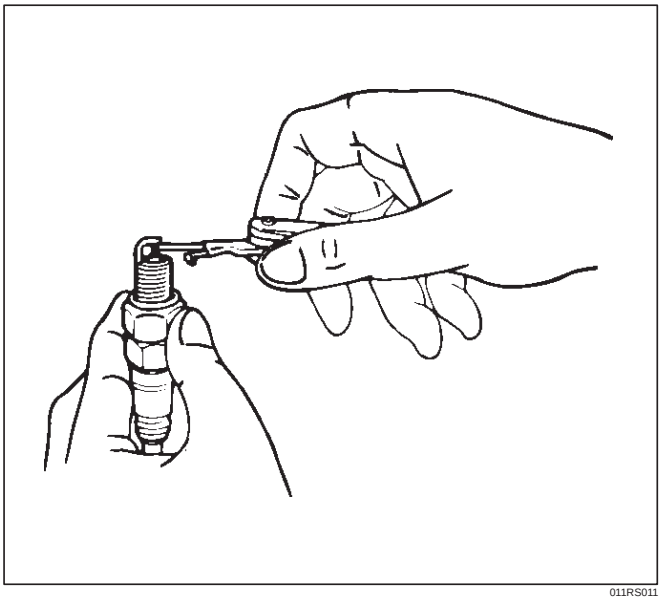

011RS011

NOTE:

- Do not adjust the spark plugs gap without new spark plugs.
- Do not damage to tip of spark plugs.
- Do not cleaning the spark plugs. If require the cleaning it due to heavy dirt, it is allowed only 20 seconds to be used spark plug cleaner.

- Check fuel and electrical systems if spark plug is extremely dirty.
- Use spark plugs having low heat value (hot type plug) if fuel and electrical systems are normal.
- Use spark plugs having high heat value (cold type plug) if insulator and electrode are extremely burned.

Sooty Spark Plugs

Much deposit of carbon or oil on the electrode and insulator of spark plug reduces the engine performance.

Possible causes:

- Too rich mixture
- Presence of oil in combustion chamber
- Incorrect spark plug gap

Burning Electrodes

This fault is characterized by scorched or heavily oxidized electrode or blistered insulator nose.

Possible causes:

- Too lean mixture
- Improper heat value

Measuring Insulation Resistance

- Measure insulation resistance using a 500 volt megaohm meter.
- Replace spark plugs if measured value is out of standard.

Insulation resistance: 50 MΩ or more

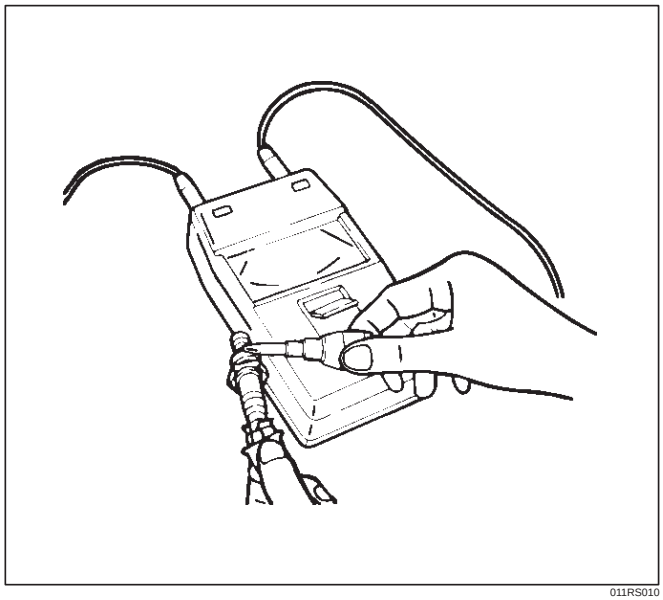

011RS010

Installation

1. Spark plugs
   - Tighten spark plugs to the specified torque.

Torque: 18 N·m (1.8 kg·m/13 lb ft)

Crankshaft Position Sensor

Removal

1. Disconnect battery ground cable
2. Wiring connector from crankshaft position sensor.
3. Remove crankshaft position sensor from cylinder block.

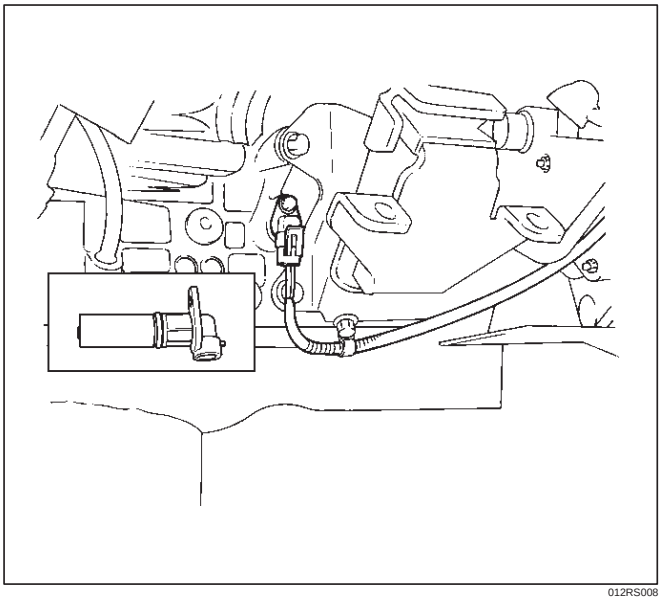

012RS008

Installation

1. Install crankshaft position sensor into the cylinder block.
   Before installation,apply small amount of engine oil to the O–ring.

   Torque: 10 N·m (1.0 kg·m/87 lb in)
2. Reconnect wiring connector to crankshaft position sensor.

Main Data and Specifications

General Specifications

Ignition System	
Ignition Form	Electronic Ignition System (El system) with Crankshaft position Sensor
Spark Plug	
Type	K16PR–P11 RC10PYP4 PK16PR11
Plug gap	1.0 mm – 1.1 mm (0.0394 in – 0.0433 in)
Torque	18 N·m (1.8 kg·m/13 lb ft)

Torque Specifications

N·m (kg·m/lb ft)

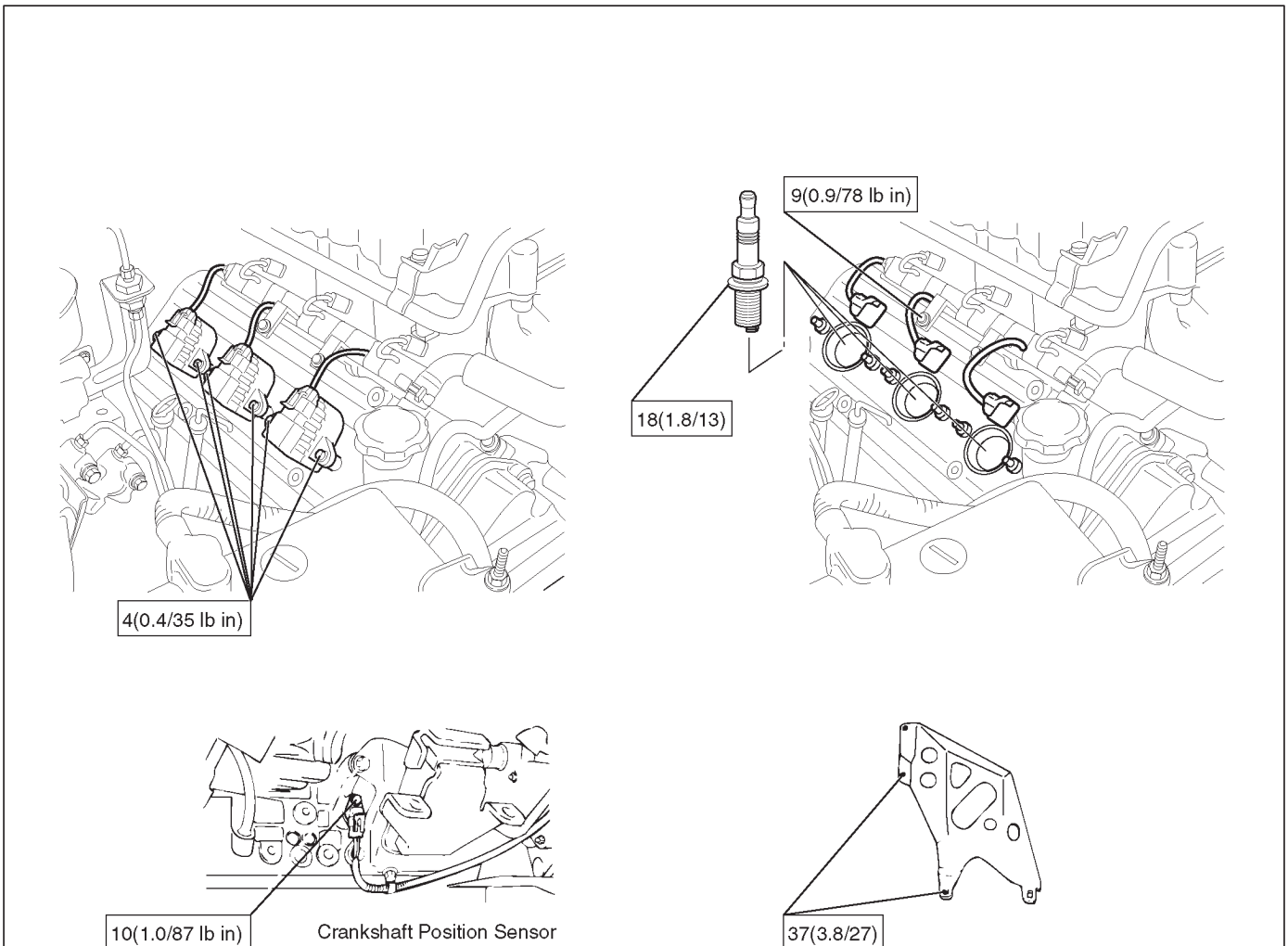

E06R200018

ENGINE

STARTING AND CHARGING SYSTEM

CONTENTS

Service Precaution 6D3–1
Starting System 6D3–2
General Description 6D3–2
Diagnosis 6D3–4
Starter 6D3–5
Removal 6D3–5
Installation 6D3–5
Disassembled View 6D3–6
Disassembly 6D3–7
Inspection and Repair 6D3–9
Reassembly 6D3–13
Main Data and Specifications 6D3–15
Charging System 6D3–18
General Description 6D3–18
General On–Vehicle Inspection 6D3–18
Generator 6D3–19
Removal 6D3–19
Inspection 6D3–19
Installation 6D3–19
Disassembled View 6D3–20
Disassembly 6D3–21
Inspection and Repair 6D3–23
Reassembly 6D3–25
Bench Test 6D3–25
Main Data and Specifications 6D3–27

Service Precaution

WARNING: THIS VEHICLE HAS A SUPPLEMENTAL RESTRAINT SYSTEM (SRS). REFER TO THE SRS COMPONENT AND WIRING LOCATION VIEW IN ORDER TO DETERMINE WHETHER YOU ARE PERFORMING SERVICE ON OR NEAR THE SRS COMPONENTS OR THE SRS WIRING. WHEN YOU ARE PERFORMING SERVICE ON OR NEAR THE SRS COMPONENTS OR THE SRS WIRING, REFER TO THE SRS SERVICE INFORMATION. FAILURE TO FOLLOW WARNINGS COULD RESULT IN POSSIBLE AIR BAG DEPLOYMENT, PERSONAL INJURY, OR OTHERWISE UNNEEDED SRS SYSTEM REPAIRS.

CAUTION: Always use the correct fastener in the proper location. When you replace a fastener, use ONLY the exact part number for that application. ISUZU will call out those fasteners that require a replacement after removal. ISUZU will also call out the fasteners that require thread lockers or thread sealant. UNLESS OTHERWISE SPECIFIED, do not use supplemental coatings (Paints, greases, or other corrosion inhibitors) on threaded fasteners or fastener joint interfaces. Generally, such coatings adversely affect the fastener torque and the joint clamping force, and may damage the fastener. When you install fasteners, use the correct tightening sequence and specifications. Following these instructions can help you avoid damage to parts and systems.

Starting System

General Description

Cranking Circuit

The cranking system consists of a battery, starter, starter switch, starter relay, etc. These main components are connected.

Starter

The cranking system employs a magnetic type reduction starter in which the motor shaft is also used as a pinion shaft. When the starter switch is turned on, the contacts of magnetic switch are closed, and the armature rotates. At the same time, the plunger is attracted, and the pinion is pushed forward by the shift lever to mesh with the ring gear.

Then, the ring gear runs to start the engine. When the engine starts and the starter switch is turned off, the plunger returns, the pinion is disengaged from the ring gear, and the armature stops rotation. When the engine speed is higher than the pinion, the pinion idles, so that the armature is not driven.

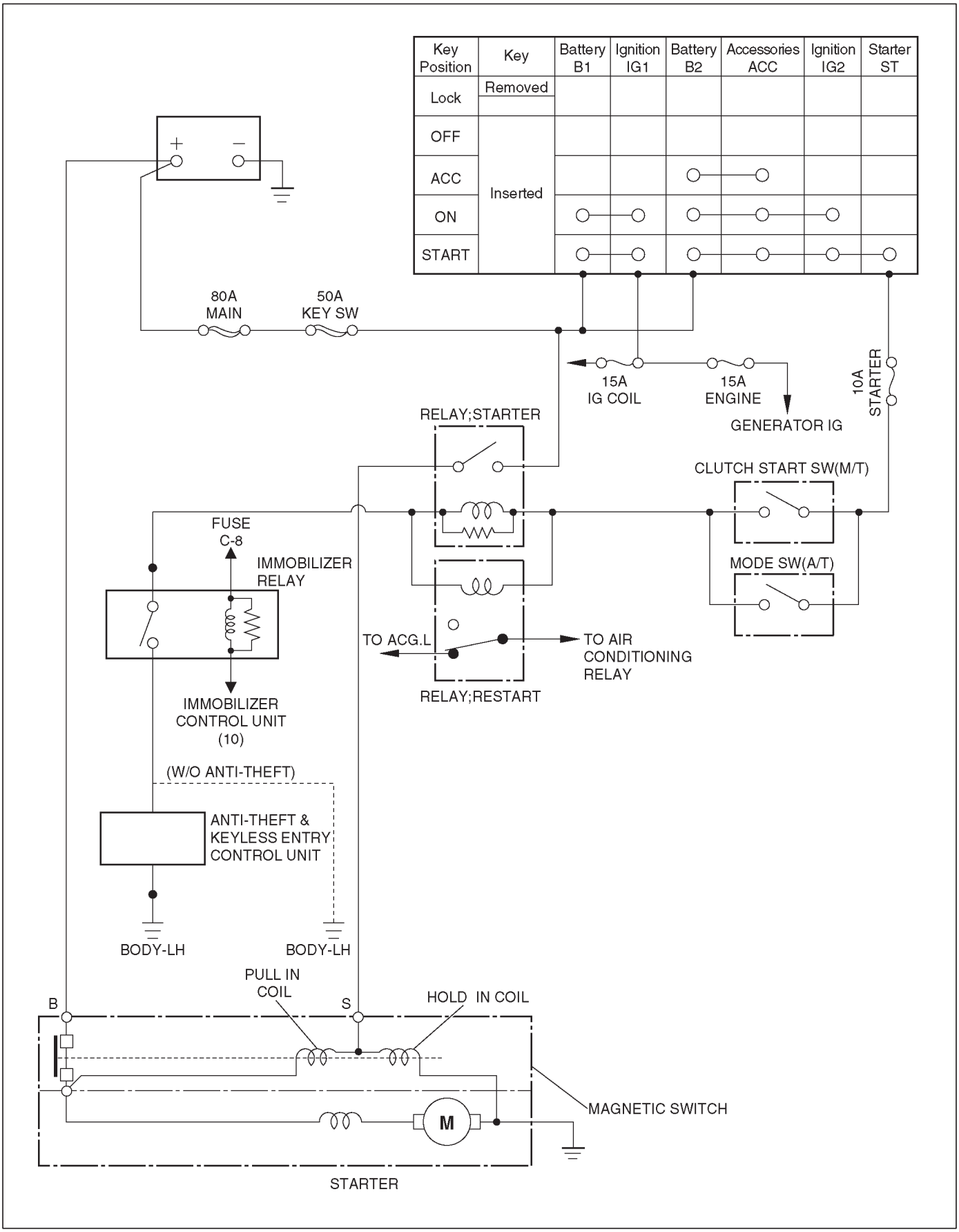
Key Position
Key
Battery B1
Ignition IG1
Battery B2
Accessories ACC
Ignition IG2
Starter ST
Lock
Removed
OFF
ACC
ON
START
Inserted
+
−
80A MAIN
50A KEY SW
15A IG COIL
15A ENGINE
GENERATOR IG
10A STARTER
RELAY;STARTER
CLUTCH START SW(M/T)
MODE SW(A/T)
FUSE C-8
IMMOBILIZER RELAY
TO ACG.L
TO AIR CONDITIONING RELAY
RELAY;RESTART
IMMOBILIZER CONTROL UNIT (10)
(W/O ANTI-THEFT)
ANTI-THEFT & KEYLESS ENTRY CONTROL UNIT
BODY-LH
BODY-LH
PULL IN COIL
HOLD IN COIL
B
S
M
MAGNETIC SWITCH
STARTER

C06R200008

Diagnosis

Condition	Possible cause	Correction
Starter does not run	Charging failure	Repair charging system
	Battery Failure	Replace Battery
	Terminal connection failure	Repair or replace terminal connector and/or wiring harness
	Starter switch failure	Repair or replace starter switch
	Starter failure	Repair or replace starter

Starter

Removal

1. Battery ground cable.
2. Disconnect Heated O_2 Sensor connector (1).
3. Remove exhaust front left pipe(2).

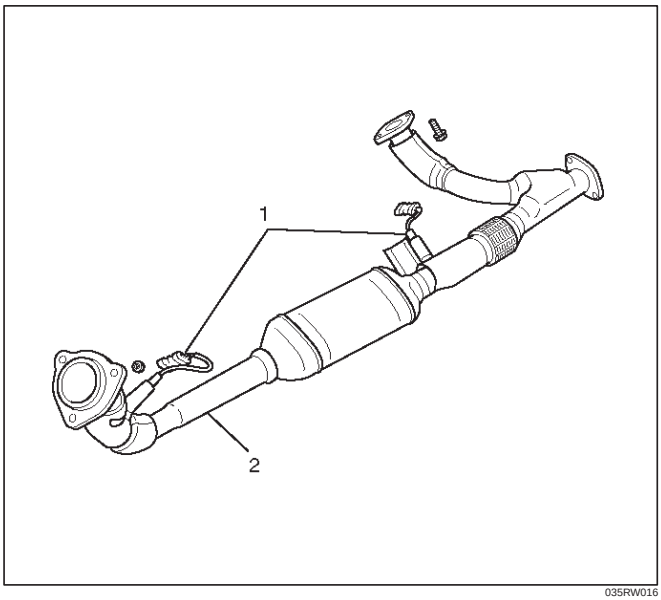

035RW016

4. Remove heat protector(3).
5. Disconnect starter wiring connector from terminals “B” and “S”(4).
6. Remove starter assembly mounting bolts on inside and outside(5).
7. Remove starter assembly toward the bottom of engine(6).

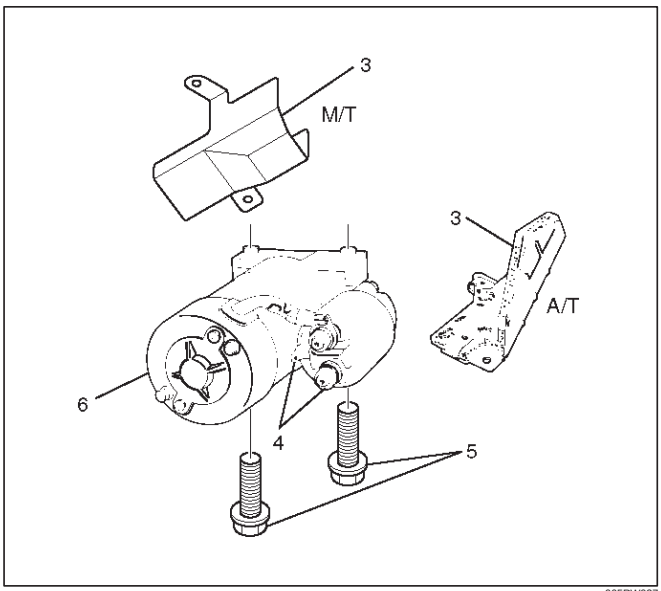

065RW027

Installation

1. Install starter assembly(6).
2. Install mounting bolts and tighten bolts to specified torque(5).

   Torque: 40 N·m (4.1 kg·m/30 lb ft)

3. Reconnect the connectors to terminals “B” and “S” and tighten Terminals “B” to specified torque.

   Torque: 9 N·m (0.9 kg·m/78 lb in)

4. Install heat protector(3).

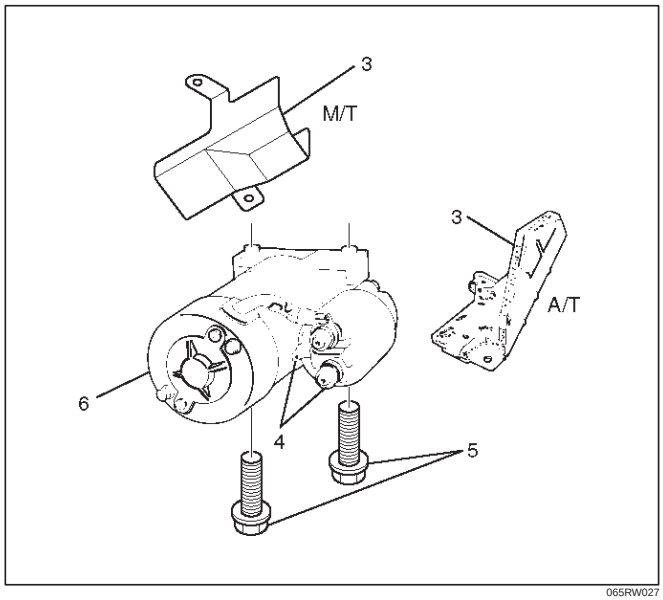

065RW027

5. Install exhaust front left pipe (2) and tighten bolts and nuts to specified torque.

   Stud Nuts

   Torque: 67 N·m (6.8 kg·m/49 lb ft)

   Nuts (Exhaust front left pipe–Right pipe)

   Torque: 57 N·m (5.8 kg·m/42 lb ft)

   Nuts (Exhaust front left pipe–Silencer)

   Torque: 43 N·m (4.4 kg·m/32 lb ft)

6. Connect Heated O_2 Sensor connector (1).

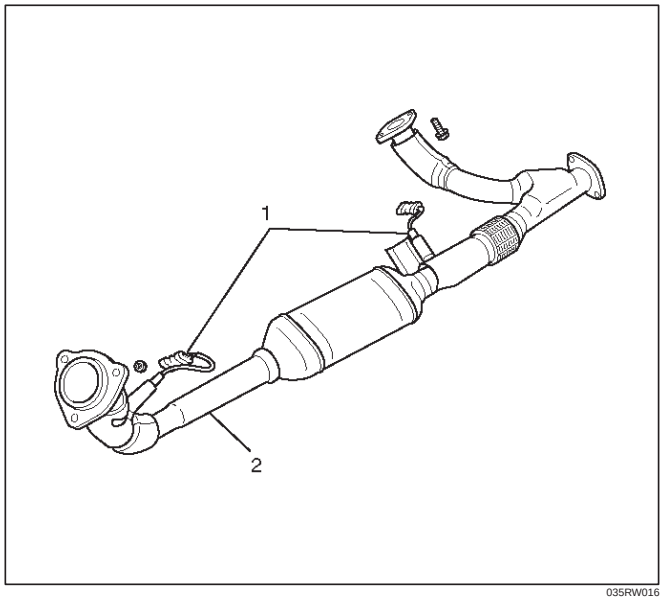

035RW016

7. Reconnect the battery ground cable.

Disassembled View

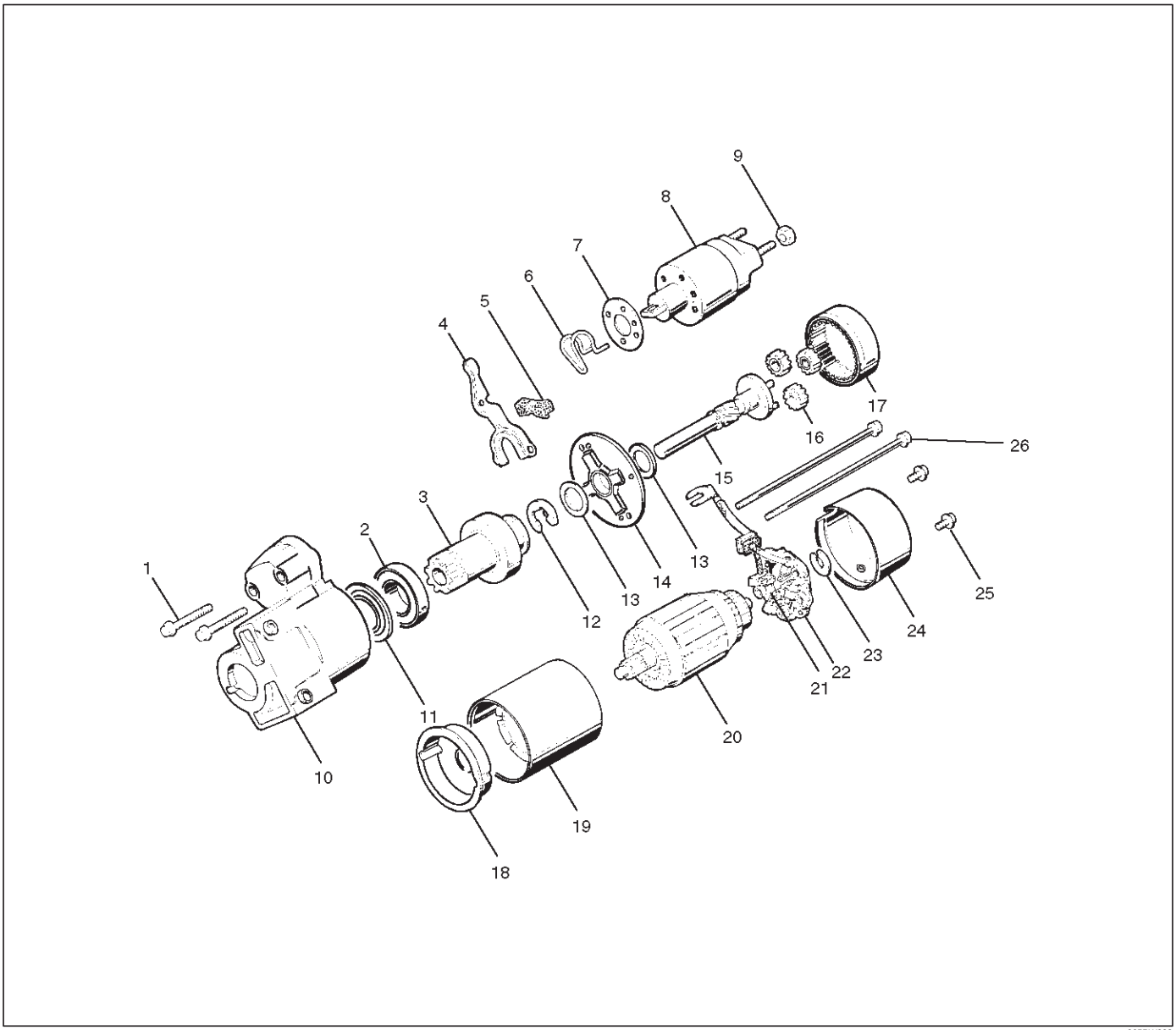

065RW002

Legend

(1) Bolt (2 pcs)
(2) Ball Bearing
(3) Pinion
(4) Shift Lever
(5) Dust Cover
(6) Torsion Spring
(7) Dust Cover
(8) Magnetic Switch
(9) Nut
(10) Gear Case
(11) Bearing Cover
(12) E–Ring
(13) Thrust Washer (2)
(14) Center Bracket
(15) Pinion Shaft
(16) Planet Gear (3)
(17) Internal Gear
(18) Center Bracket (A)
(19) Yoke Assembly
(20) Armature
(21) Brush
(22) Brush Holder
(23) Thrust Washer
(24) Rear Cover
(25) Screw (2 pcs)
(26) Through Bolt (2 pcs)

Disassembly

1. Loosen the nut(1) on terminal “M” of magnetic switch and disconnect the connector cable.
2. Remove bolt (2 pcs) (2).

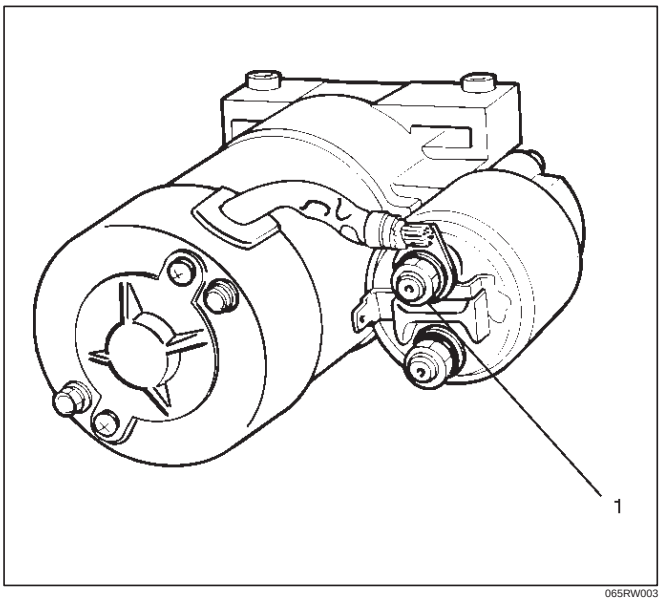

065RW003

3. Remove magnetic switch(5).
4. Remove dust cover(4).
5. Remove torsion spring bolts, then the magnetic switch assembly.
6. Remove torsion spring(3) from magnetic switch assembly(5).

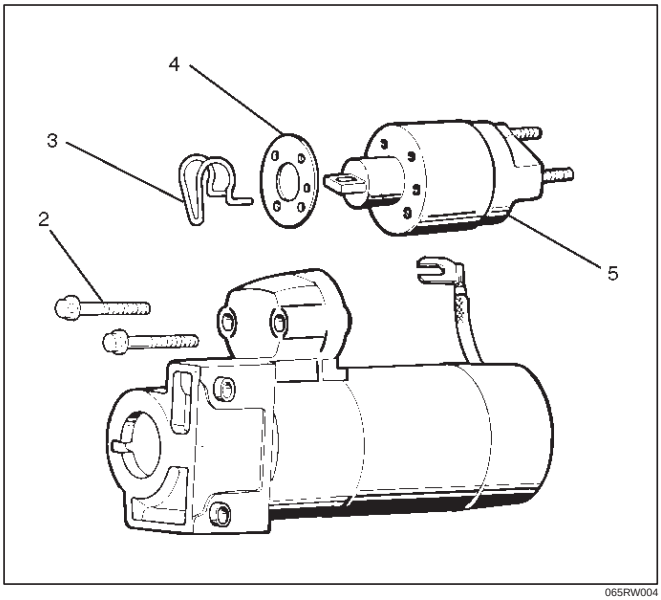

065RW004

7. Remove screw (2 pcs) (8).
8. Remove through bolt (2 pcs) (7).
9. Remove screws and through bolts, then the rear cover(9) then remove thrust washer(10).
10. Remove brush holder(6).

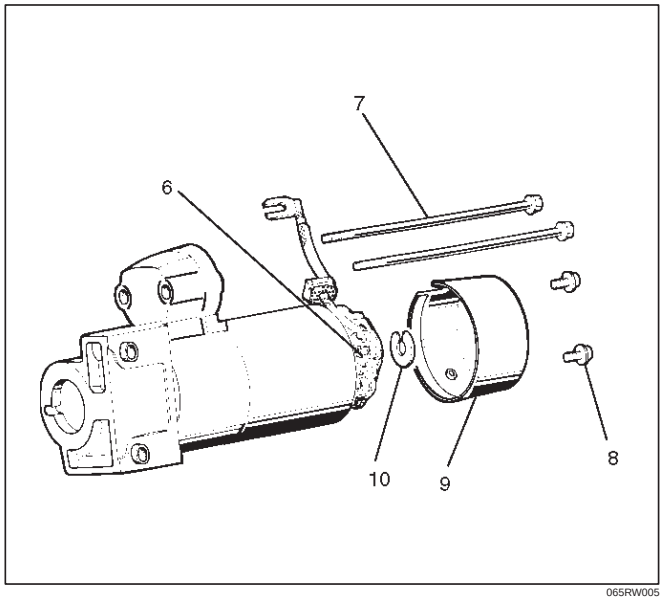

065RW005

11. Raise a brush spring to detach brushes (4 pcs) from the commutator face and pull off the brush holder(12) and brush(11).

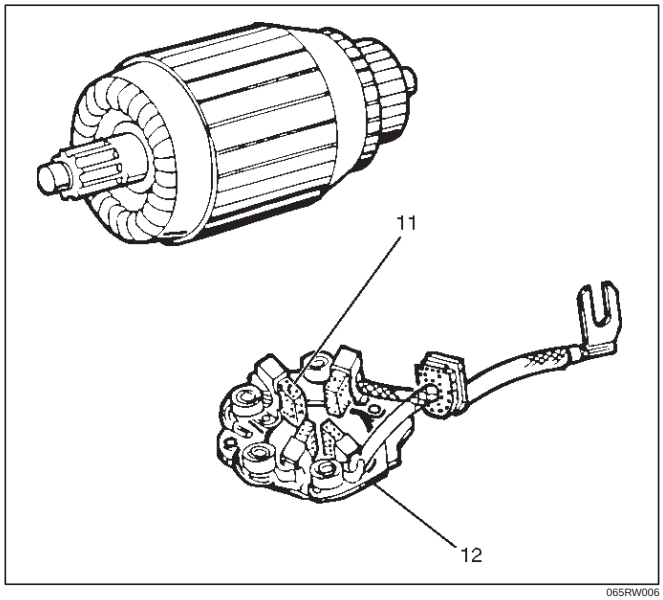

065RW006

12. Remove yoke assembly(14).
13. Remove armature(15).
14. Pull off the yoke assembly, then remove armature, washer and center bracket.(A) (13).

NOTE: In disassembling the yoke assembly, hold the armature and pull off slowly the yoke assembly. Because of strong magnetic force, avoid placing a metallic part near armature.

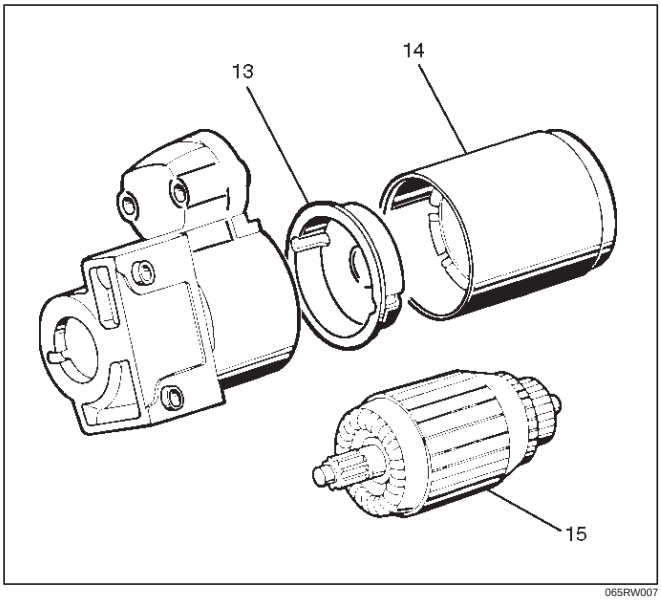

065RW007

15. Remove dust cover(17).
16. Remove a dust cover and shift lever(16) from the gear case.

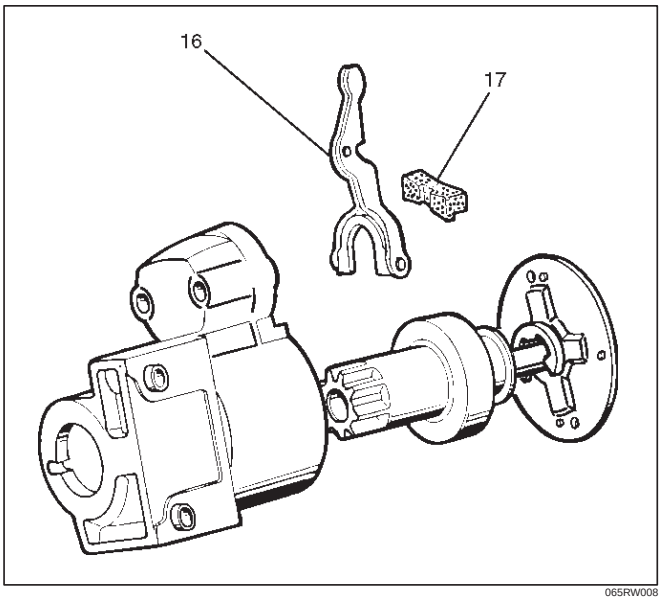

065RW008

17. Remove ball bearing(19).
18. Remove bearing cover(20).
19. Remove a ball bearing and bearing cover from the gear case(18).

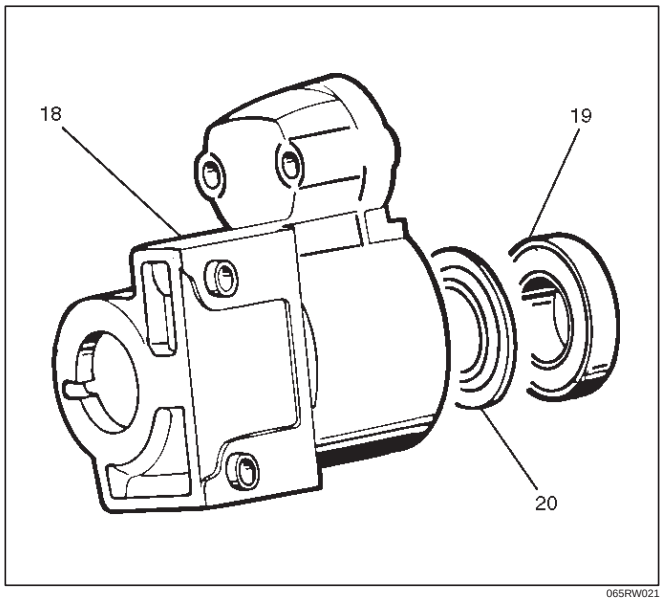

065RW021

20. Internal gear(21).
21. Remove internal gear and planet gear(3) (22).

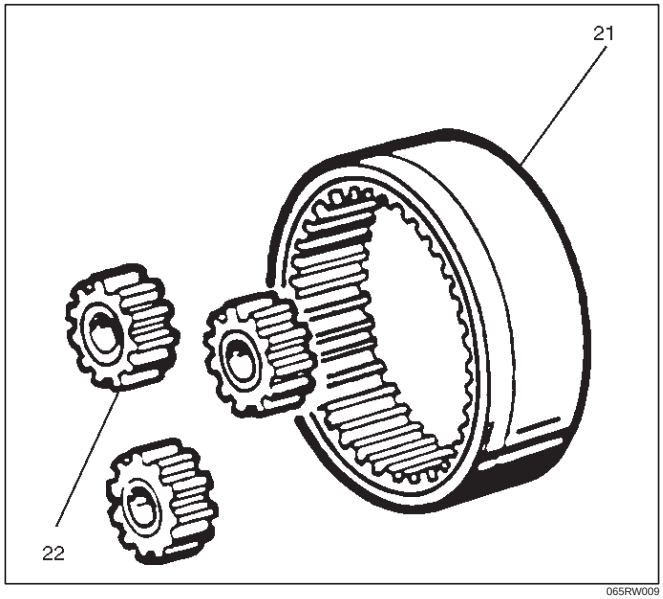

065RW009

22. Remove an E–ring(23) from the pinion shaft using a flat blade screwdriver.

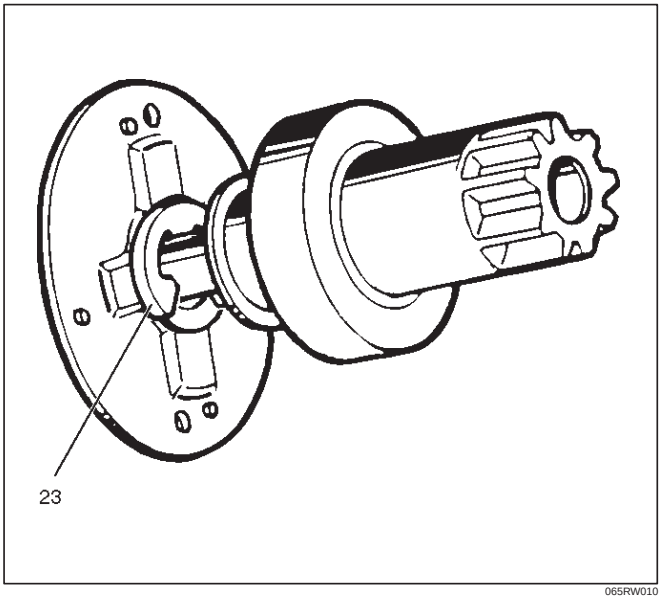

065RW010

23. Holding the pinion shaft, push pinion toward the center bracket. and turn the pinion clockwise or counterclockwise by one tooth of spline, then pull off the pinion.
24. Remove thrust washer(24).
25. Remove center bracket
26. Remove pinion shaft.

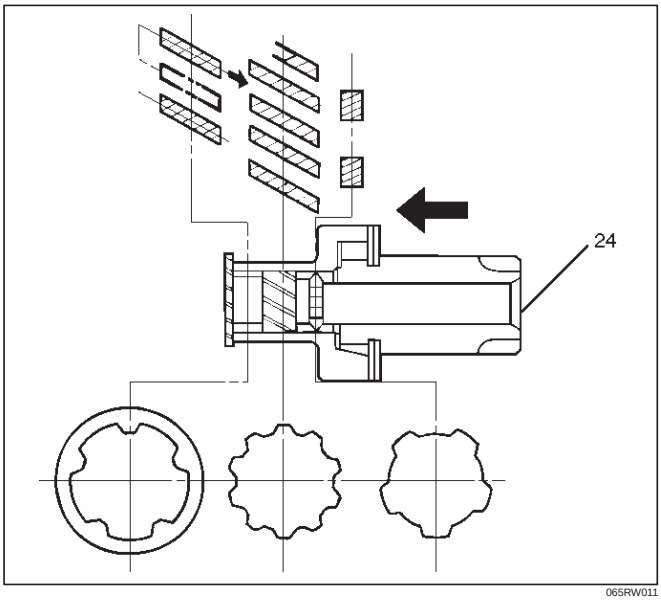

065RW011

Inspection and Repair

Repair or replace necessary parts if extreme wear or damage is found during inspection.

Armature

Measure the outer diameter of commutator, and replace with a new one if it is out of the limit.

Standard: 33.0 mm (1.30 in)

Limit: 32.0 mm (1.26 in)

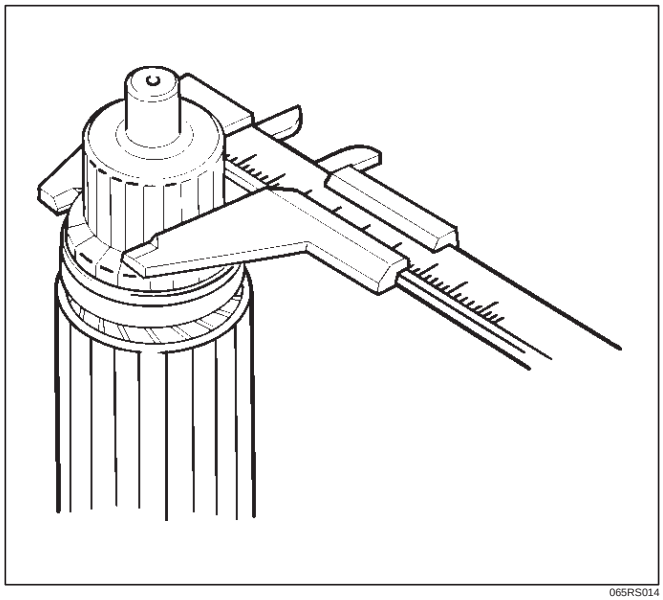

065RS014

Check for continuity between commutator and segment. Replace commutator if there is no continuity (i.e., disconnected).

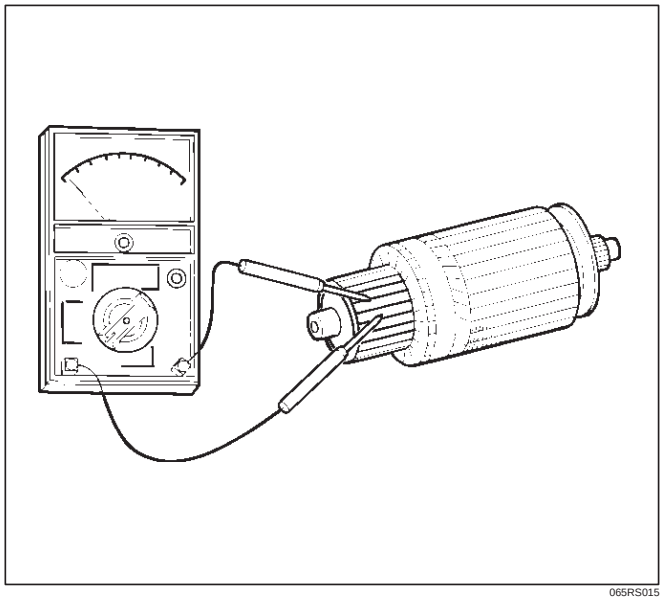

065RS015

Check for continuity between commutator and shaft. Also, check for continuity between commutator and armature core,armature core and shaft. Replace commutator if there is continuity (i.e., internally grounded).

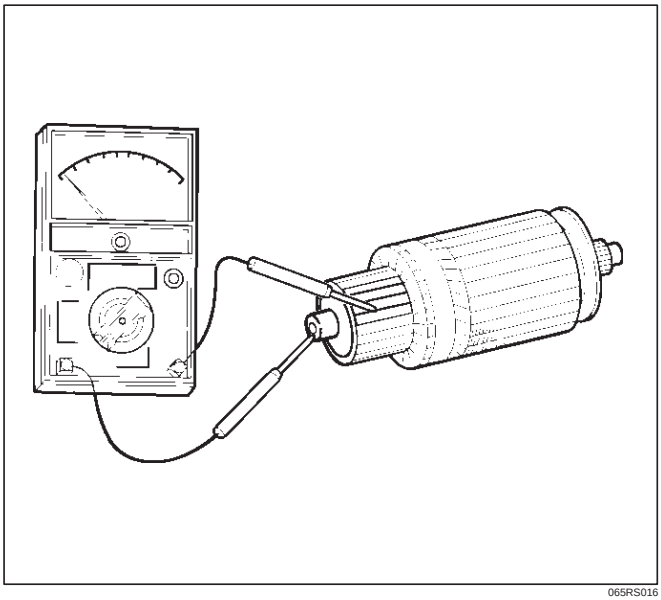

065RS016

Measure runout of armature core and commutator with a dial gauge. Repair or replace, if it exceeds the limit.

Armature

Standard: 0.05 mm (0.002 in) Max.

Limit: 0.10 mm (0.004 in)

Commutator

Standard: 0.05 mm (0.002 in) Max.

Limit: 0.10 mm (0.004 in)

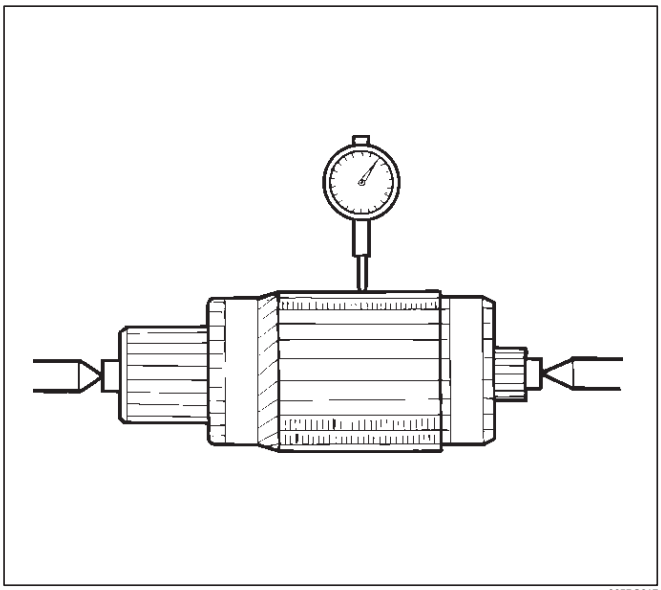

065RS017

Polish the commutator surface with sandpaper #500 to #600 if it is rough.

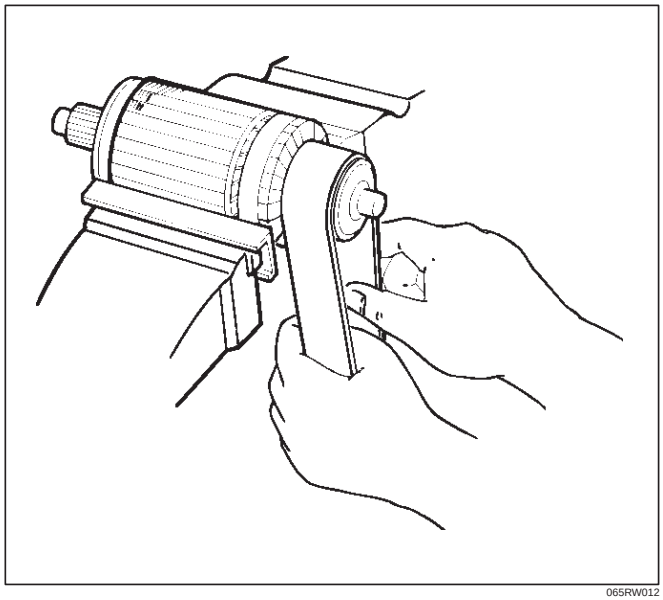

065RW012

Measure the depth of insulator in commutator. Repair, if it is below the limit.

Standard: 0.5 mm to 0.8 mm (0.02 in to 0.03 in)

Limit: 0.2 mm (0.008 in)

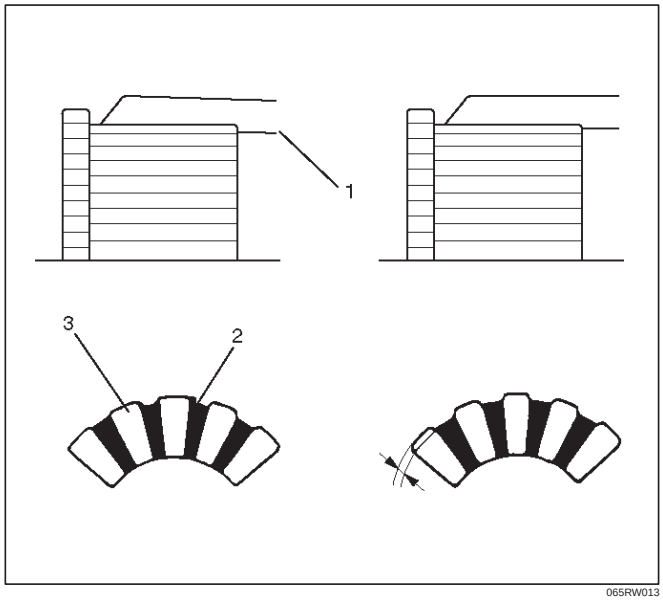

065RW013

Legend

(1) Steel Saw
(2) Insulator
(3) Commutator Segments

Brush

Measure the length of brush.
Replace with a new one, if it is below the limit.

Standard: 16 mm (0.63 in)

Limit: 11 mm (0.43 in)

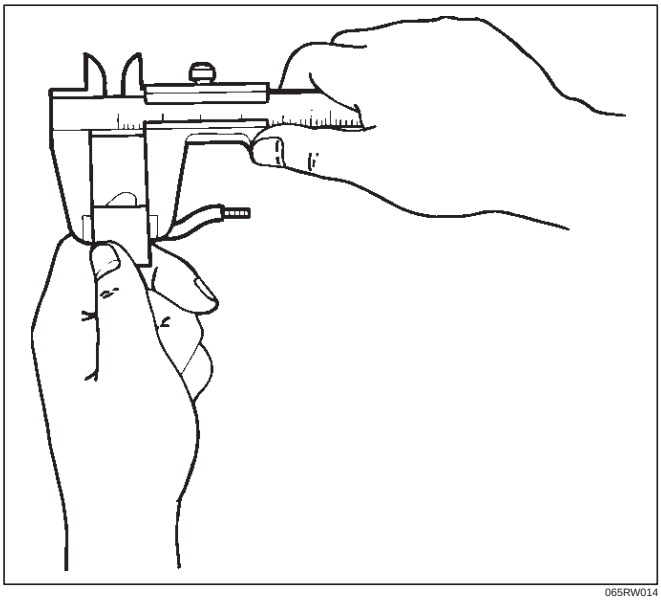

065RW014

Brush Holder

Check for continuity between brush holder (+) (4) and base (–). Replace, if there is continuity (i.e., insulation is broken).

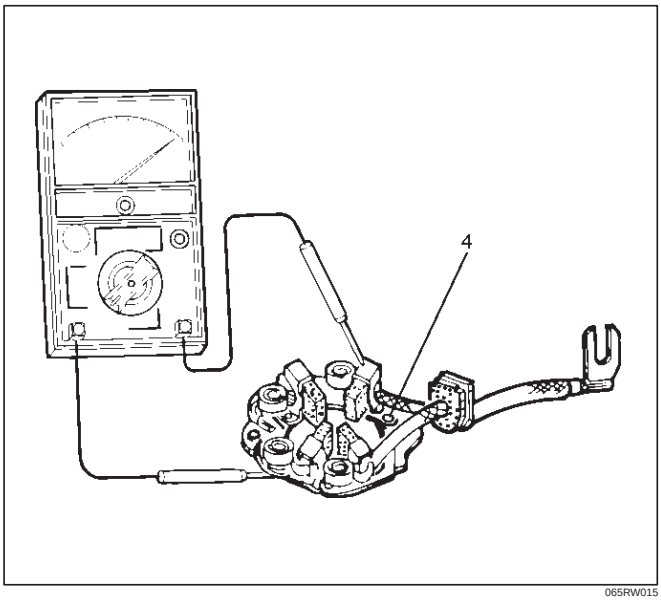

065RW015

Magnetic Switch

Check for continuity of shunt coil between terminals S and M.
Replace, if there is no continuity (i.e., coil is disconnected).

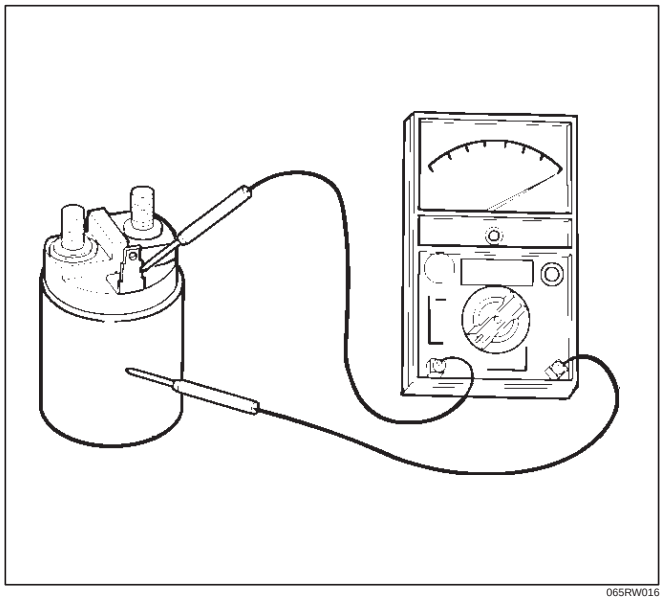

065RW016

Continuity of Series Coil

Check for continuity between terminals S and M.
Replace, if there is no continuity (i.e., coil is disconnected).

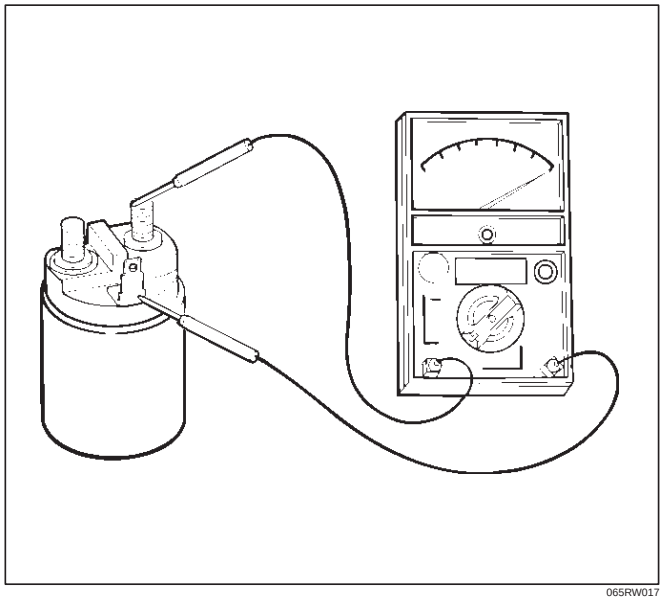

065RW017

Continuity of Contacts

With the plunger faced downward, push down the magnetic switch. In this state, check for continuity between terminals B and M. Replace, if there is no continuity (i.e., contacts are faulty).

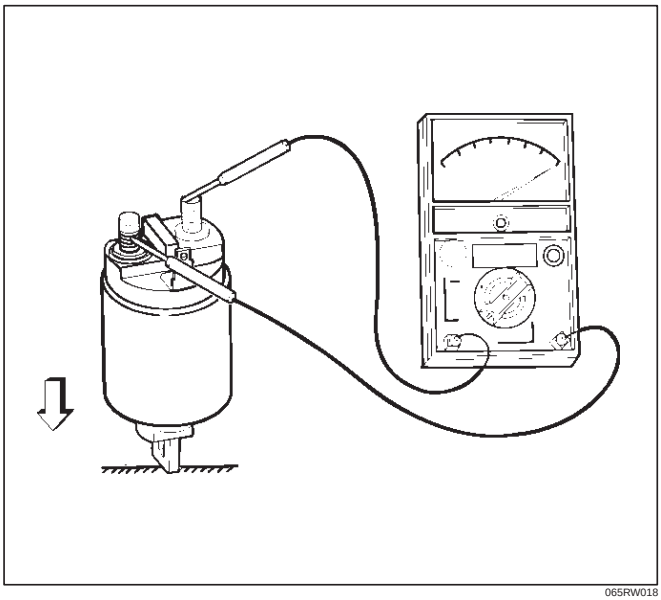

065RW018

Pinion

Check if the pinion rotates smoothly in drive direction by hand, or if it is locked when it is rotated in reverse. If not, replace the pinion.

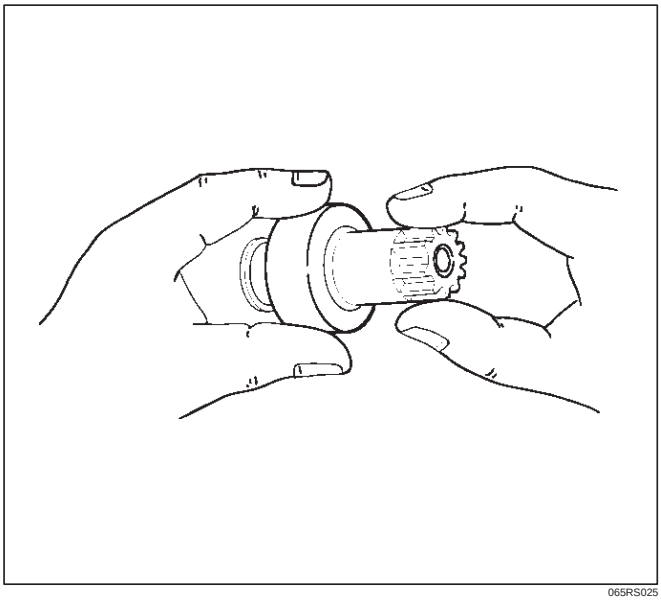

065RS025

Yoke Assembly

Check a magnet inside the yoke.
Replace the yoke assembly if it is broken.

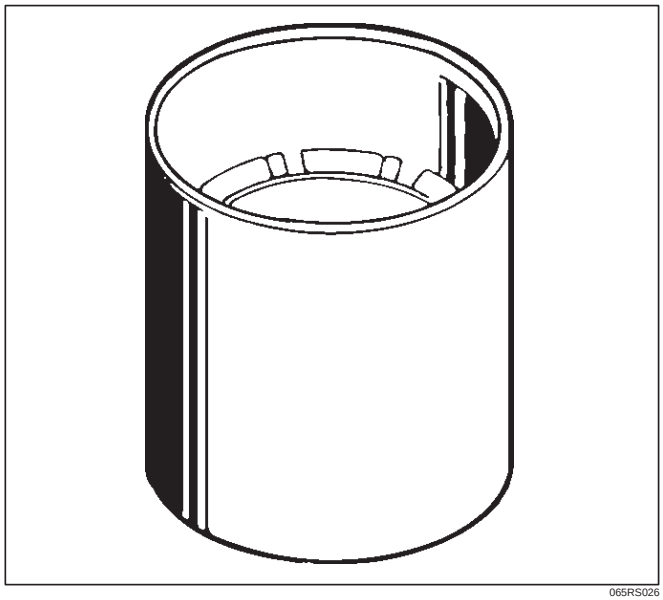

065RS026

Ball Bearing

Clamp the inner race of the ball bearing with your finger, and check for sticking or play when rotating the outer race.
Replace, if abnormality is found.

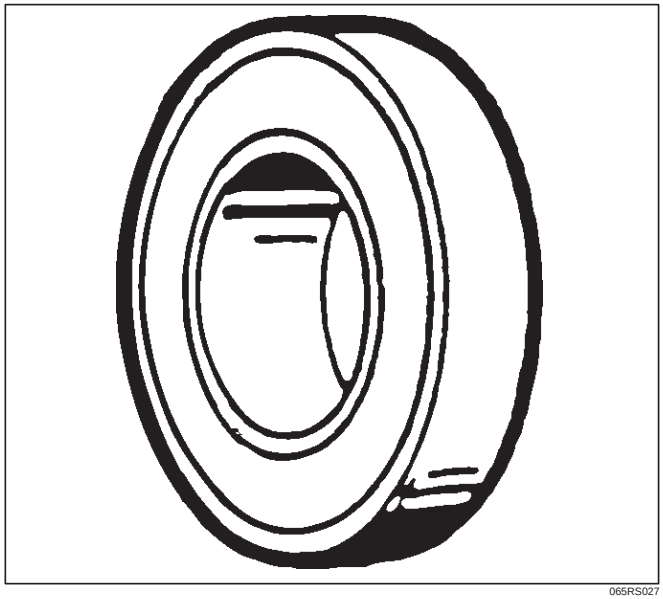

065RS027

Measure inner diameter of bushing in the rear cover, and replace if it exceeds the limit.

Standard: 12.50 mm to 12.527 mm (0.492 in to 0.4932 in)

Limit: 12.60 mm (0.4961 in)

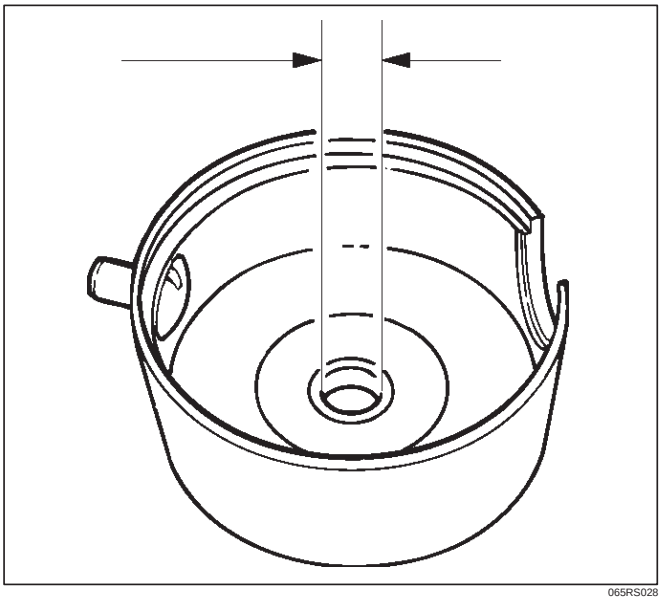

065RS028

Measure inner diameter of bushing in the center bracket (P), and replace if it exceeds the limit.

Standard: 18.01 mm to 18.127 mm (0.7091 in to 0.7137 in)

Limit: 18.15 mm (0.7146 in)

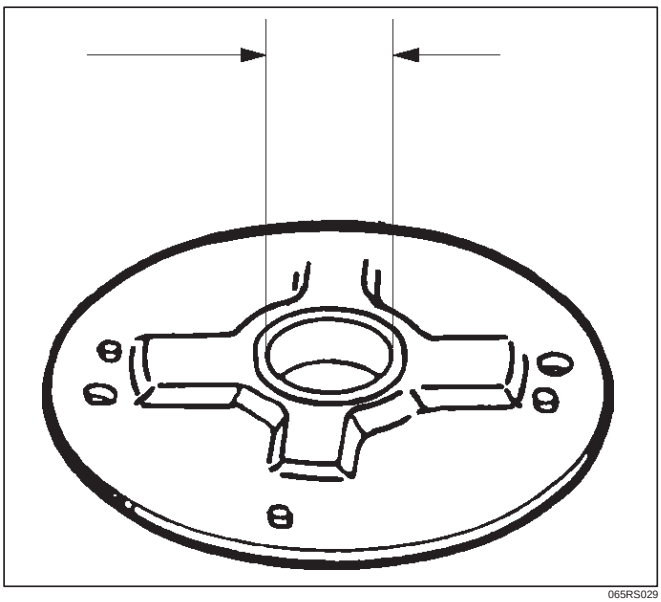

065RS029

Reassembly

To install, follow the removal steps in the reverse order, noting the following points:

Grease application places

- Bushing in rear cover and center bracket
- Gears in reduction gear
- Shift lever operating portion
- Sliding portion of pinion
- Plunger sliding portion of magnetic switch

Reassembling Yoke Assembly

Before reassembly, make sure that no metallic parts attach to the yoke assembly. Because of strong magnetic force, hold the yoke assembly and insert it slowly into the armature.

Torque

Torque for each part (See Torque Specifications in this section)

Pinion Jump–out Dimension

Connect the “+” cable of battery to terminal S and the “–” cable to terminal M. Turn the switch on, and measure pinion travel dimension in thrust direction from the jump–out position.

In measuring the dimension, pull the pinion out a little in the arrow direction.

Dimension(L): 0.05 mm to 1.5 mm (0.002 in to 0.06 in)

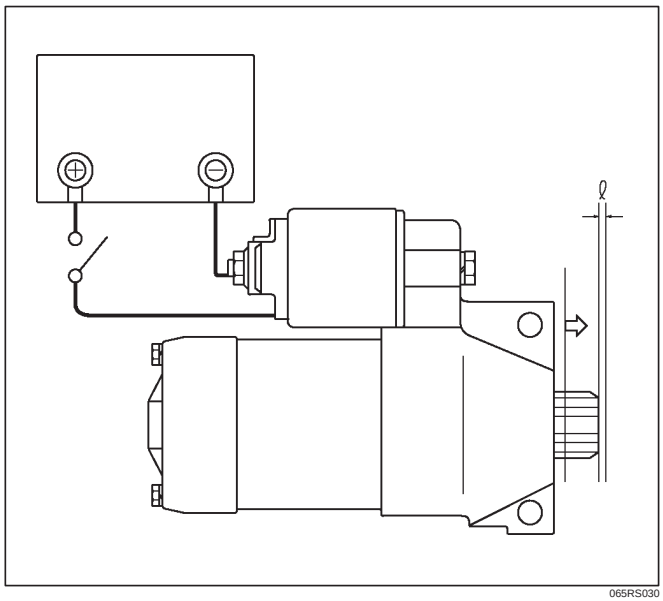

065RS030

If the measured value is out of standard, insert dust cover, or disassemble and adjust.

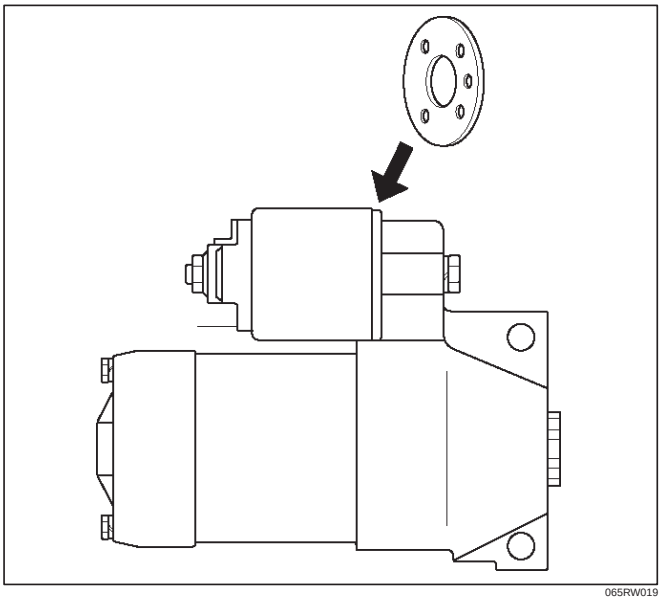

065RW019

Characteristic Test

For easily confirming the characteristics, conduct the no load test as follows:
Rating as short as 30 seconds requires rapid testing.
Fix the starter on the test bench, and wire as shown in illustration. When the switch is closed, the current flows and the starter runs under no load. At this time, measure current, voltage and speed to check if they satisfy the standard.

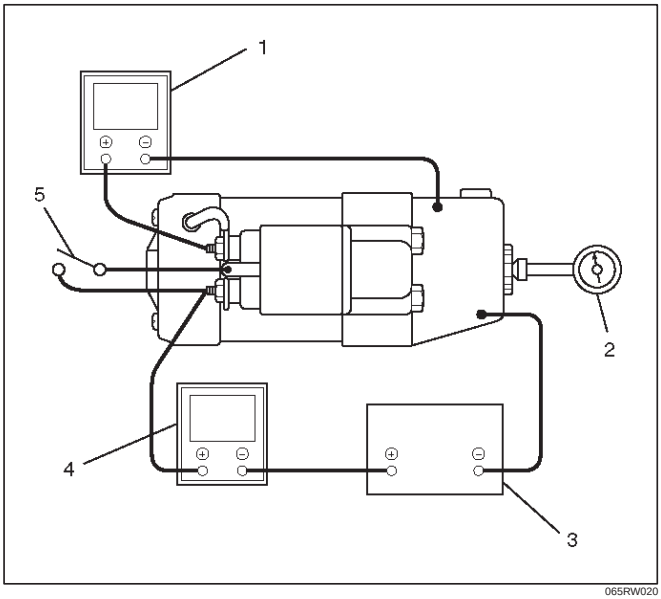

065RW020

Legend

(1) Volt Meter
(2) Tachometer
(3) Battery
(4) Ammeter
(5) Switch

Main Data and Specifications

General Specifications

Model	HITACHI GD003138
Rating	
Voltage	12 V
Output	1.4 Kw
Time	30 sec
Number of teeth of pinion	9
Rotating direction(as viewed from pinion)	Clockwise
Weight(approx.)	3.5 kg (7.6 lb)
No load characteristics	
Voltage /Current	11V/90A or less
Speed	2700rpm or more
Load characteristics	
Voltage/current	8.4V/250A
Torque	7.3 N·m(0.7 kg·m/64 lb·in.) or more
Speed	1200rpm or more
Locking characteristics	
Voltage/current	3V/750A or less
Torque	19 N·m(1.9 kg·m/14 lb ft) or more

Torque Specifications

N·m (kg·m/lb ft)

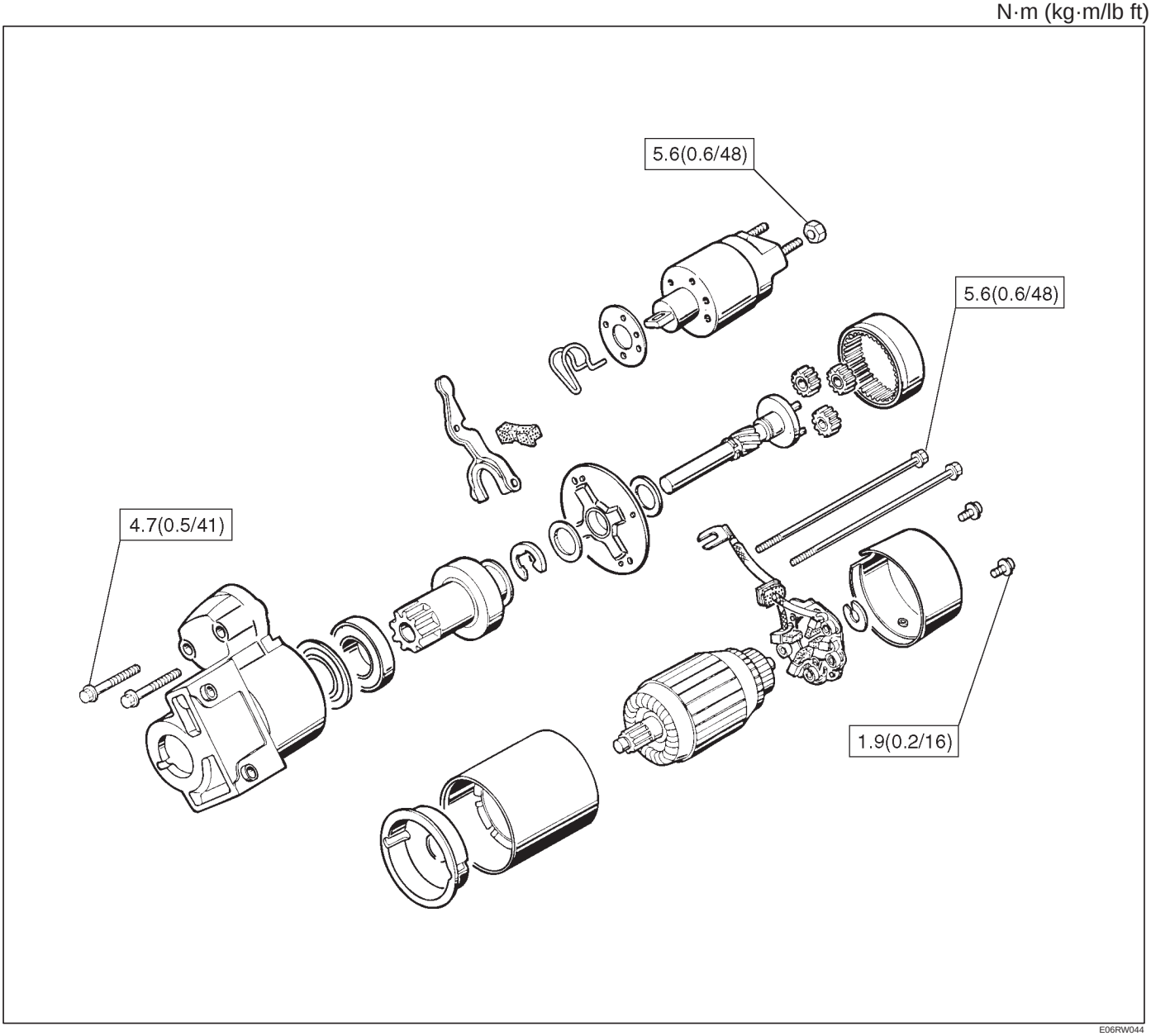

E06RW044

N·m (kg·m/lb ft)

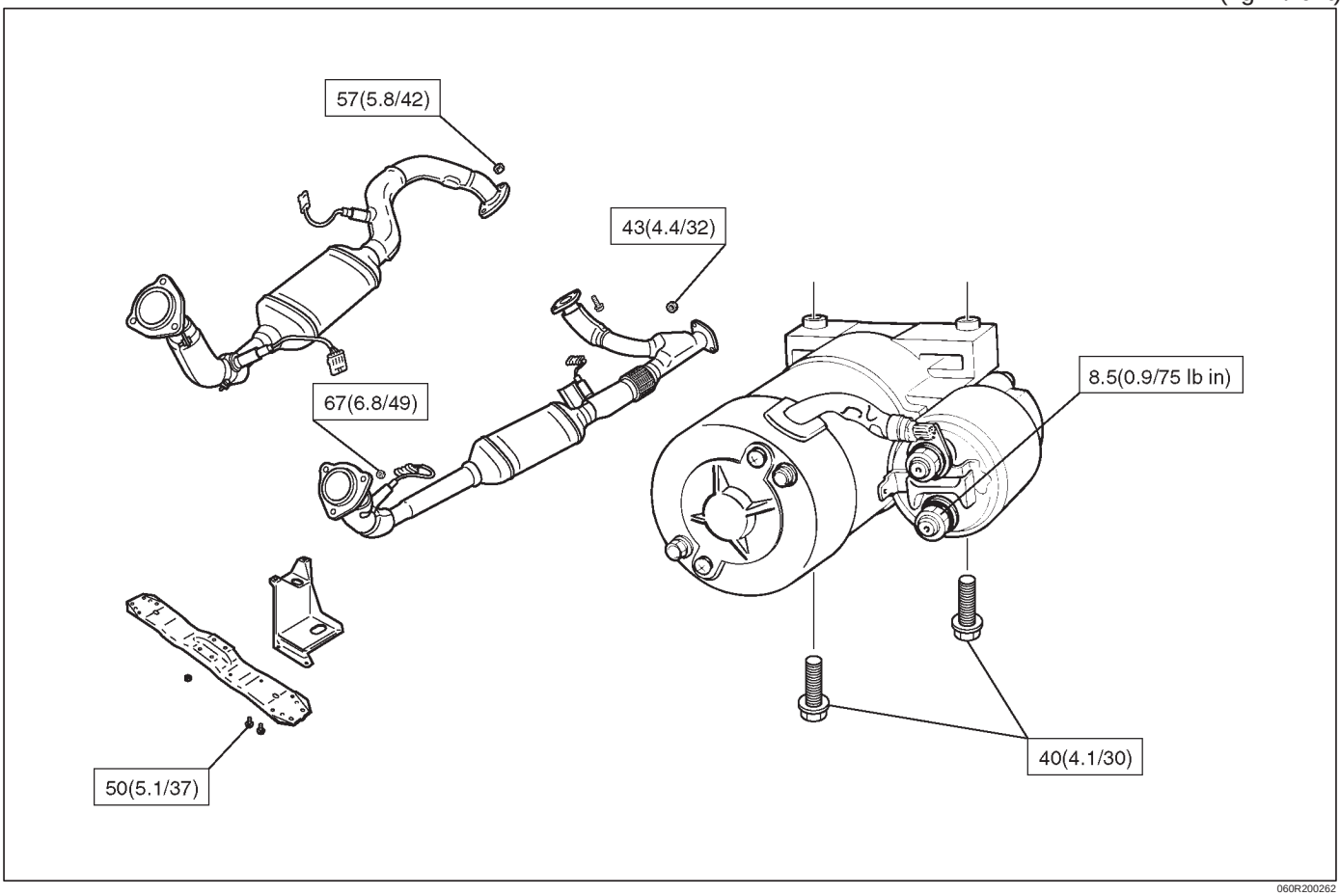

060R200262

Charging System

General Description

The IC integral regulator charging system and its main components are connected as shown in the illustration.
The regulator is a solid state type and it is mounted along with the brush holder assembly inside the generator installed on the rear end cover.
The generator does not require particular maintenance such as voltage adjustment.
The rectifier connected to the stator coil has eight diodes to transform AC voltage into DC voltage.
This DC voltage is connected to the output terminal of generator.

General On–Vehicle Inspection

The operating condition of charging system is indicated by the charge warning lamp. The warning lamp comes on when the starter switch is turned to “ON” position. The charging system operates normally if the lamp goes off when the engine starts.
If the warning lamp shows abnormality or if undercharged or overcharged battery condition is suspected, perform diagnosis by checking the charging system as follows:

1. Check visually the belt and wiring connector.
2. With the engine stopped, turn the stator switch to “ON” position and observe the warning lamp.

   If lamp does not come on:

   Disconnect wiring connector from generator, and ground the terminal “L” on connector side.

   If lamp comes on:

   Repair or replace the generator.

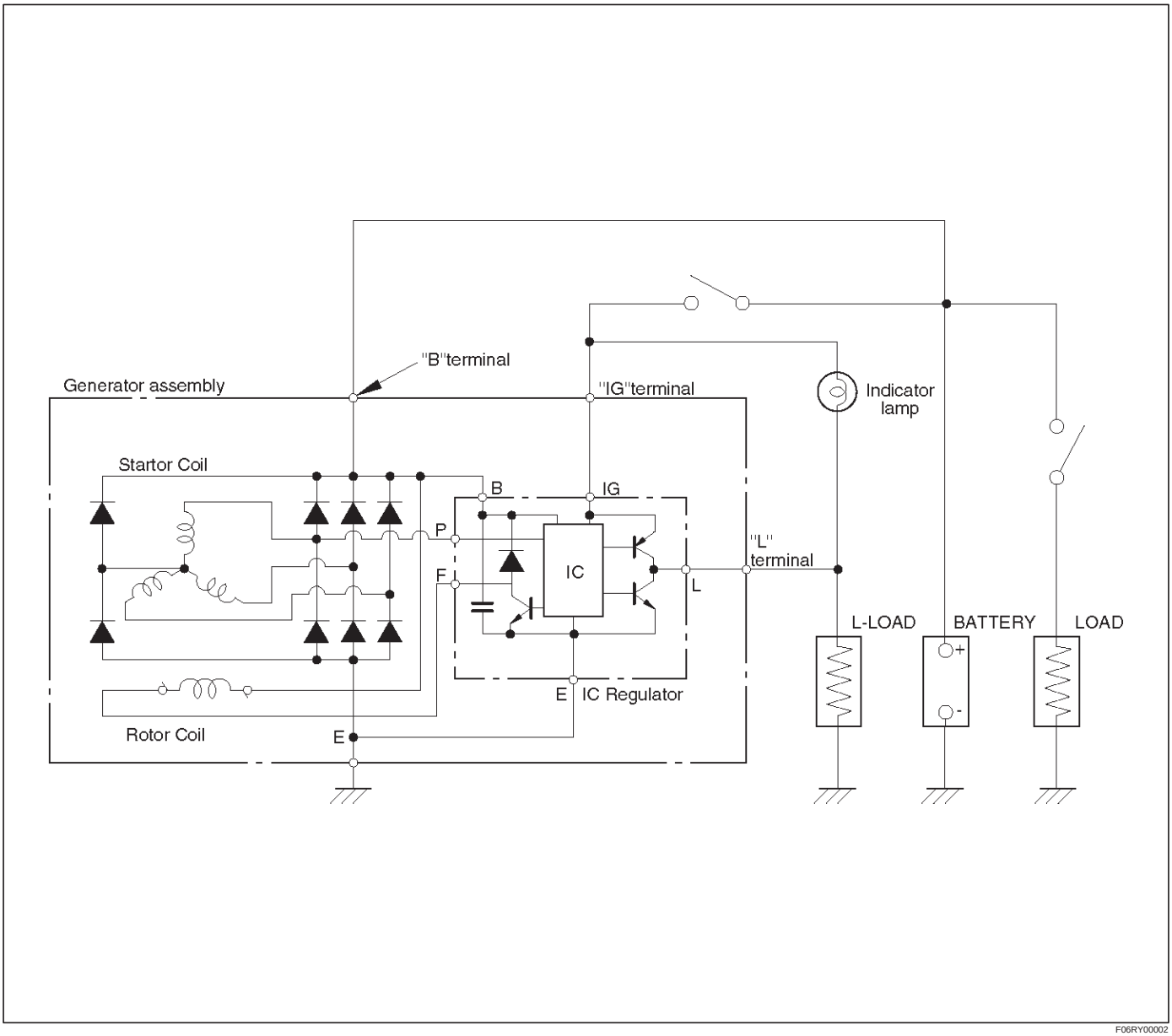

F06RY00002

Generator

Removal

1. Disconnect battery ground cable.
2. Move drive belt tensioner to loose side using wrench then remove drive belt (1).
3. Disconnect the wire from terminal “B” and disconnect the connector (4).
4. Remove generator fixing bolt (3).
5. Remove generator assembly (2).

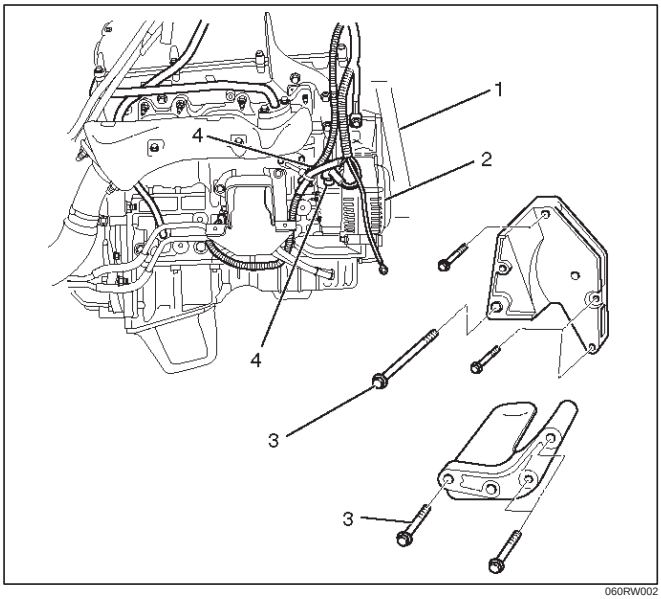

060RW002

Inspection

1. Disconnect the wiring connector from generator.
2. With the engine stopped, turn starter switch to “ON” and connect a voltmeter between connector terminal L (2) and ground or between terminal IG (1) and ground.

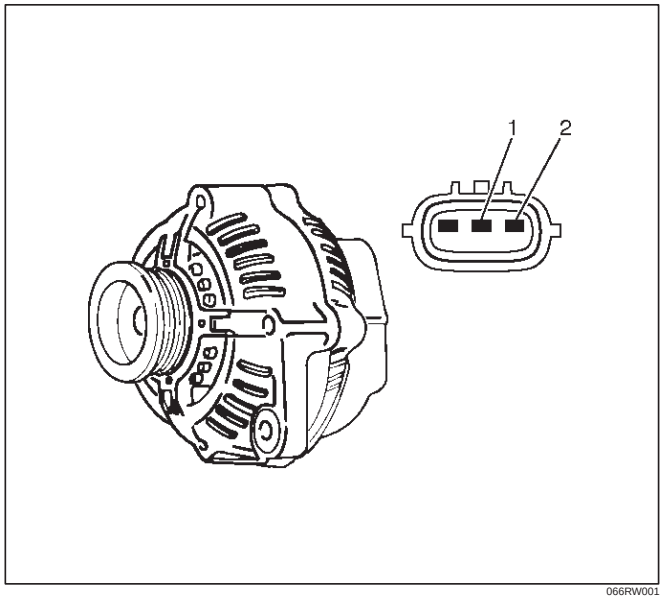

066RW001

If voltage is not present, the line between battery and connector is disconnected and so requires repair.

3. Reconnect the wiring connector to the generator, run the engine at middle speed, and turn off all electrical devices other than engine.
4. Measure battery voltage. If it exceeds 16V, repair or replace the generator.
5. Connect an ammeter to output terminal of generator, and measure output current under load by turning on the other electrical devices (eg., head lights). At this time, the voltage must not be less than 13V.

Installation

1. Install generator assembly to the position to be installed.
2. Install generator assembly and tighten the fixing bolts to the specified torque.

   Torque:

   M10 bolt: 41 N·m (4.2 kg·m/30 lb ft)

   M8 bolt: 21 N·m (2.1 kg·m/15 lb ft)
3. Connect wiring harness connector and direct terminal “B”.
4. Move drive belt tensioner to loose side using wrench, then install drive belt to normal position.
5. Reconnect battery ground cable.

Disassembled View

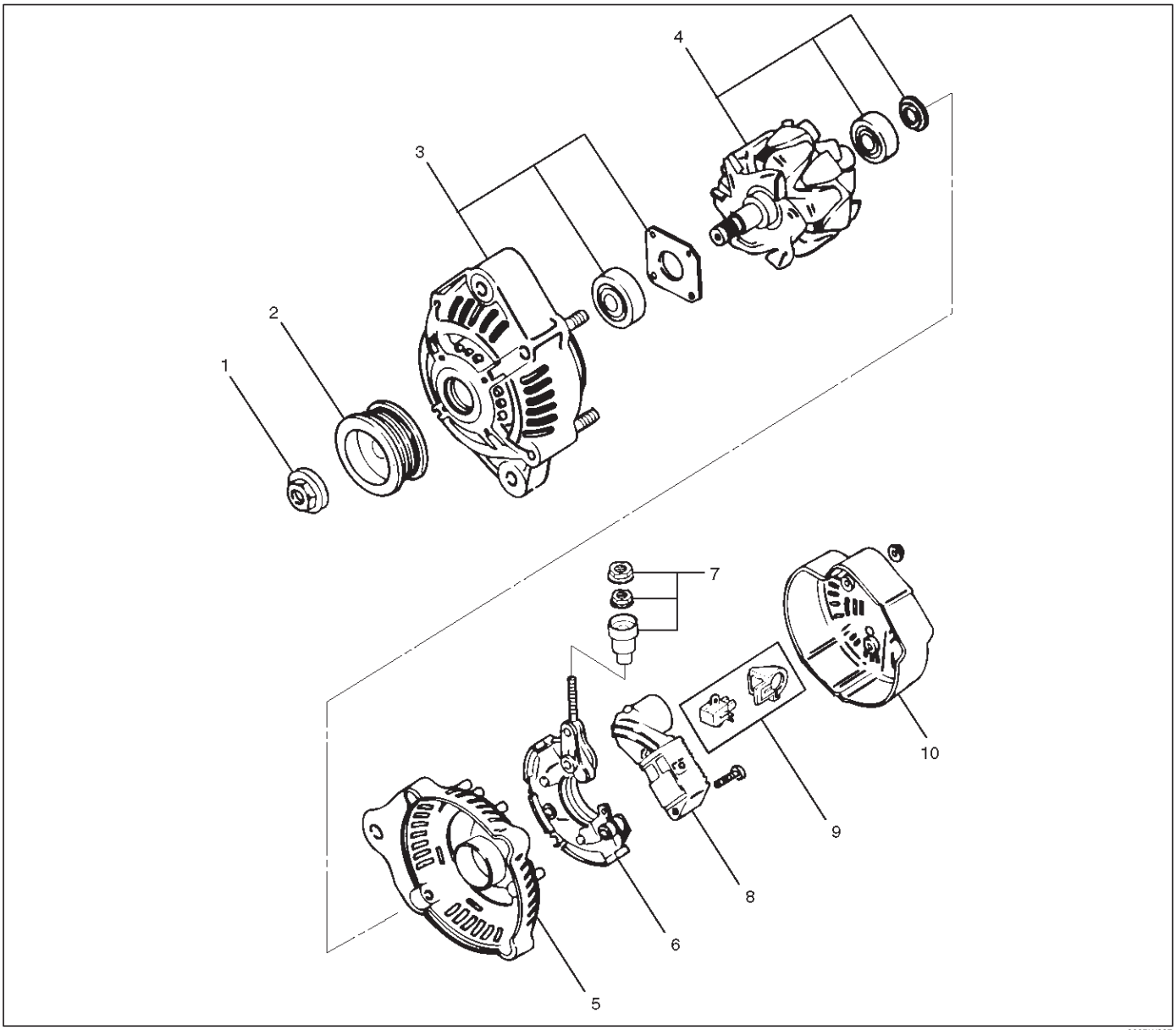

066RW007

Legend

(1) Pulley Nut
(2) Pulley
(3) Front Cover Assembly
(4) Rotor Assembly
(5) Rear End Cover
(6) Rectifier
(7) Terminal Insulator and Nut
(8) Regulator Assembly
(9) Brush Holder Assembly
(10) Rear Cover

Disassembly

1. Terminal insulator and nut(2).
2. Remove three nuts(1) on the rear cover and a nut on terminal B and insulator, then remove the rear cover(3).

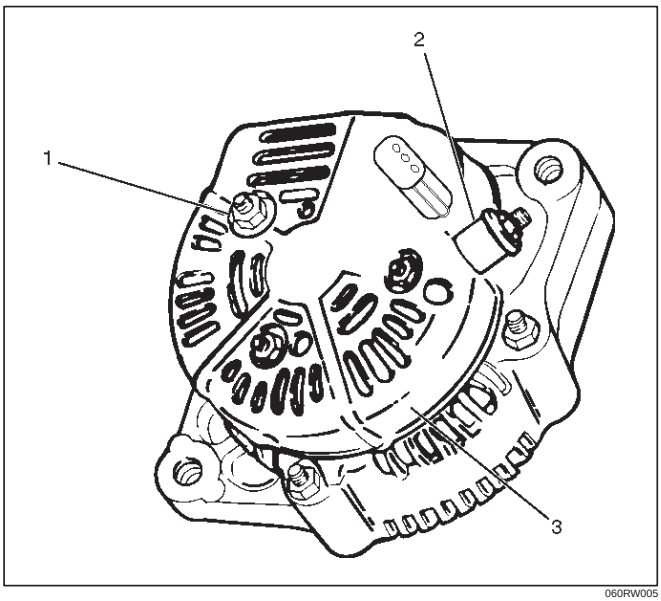

060RW005

3. Remove two screws that fix the brush holder(5) and rectifier, then remove the brush holder assembly(4).

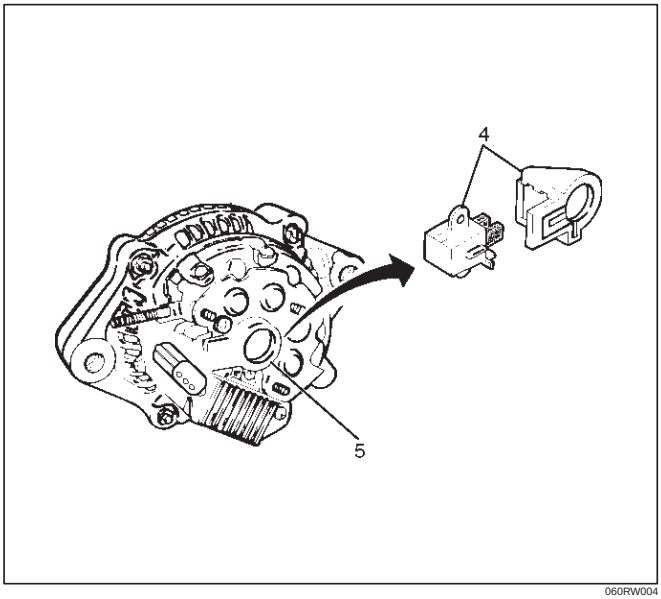

060RW004

4. Remove three screws on the IC regulator, then the IC regulator assembly(6).

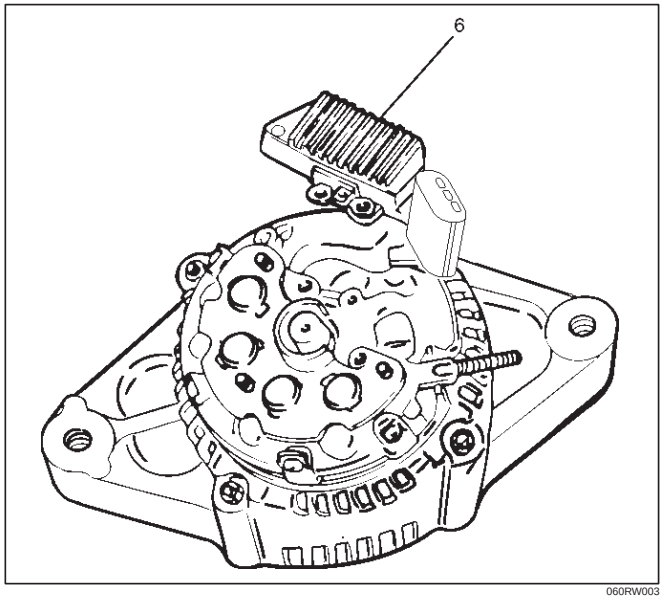

060RW003

5. Remove four screws that fix rectifier(7) and stator lead wires.

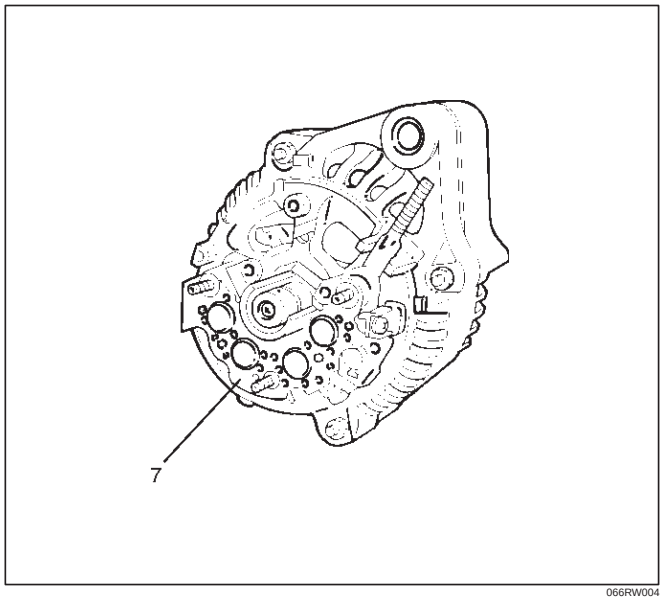

066RW004

6. Secure the pulley directly in the vise between two copper plates, and remove the nut and pulley.

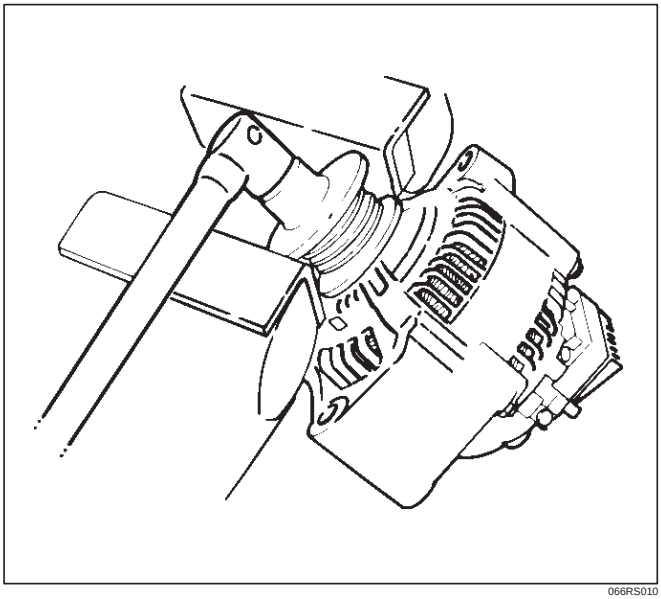

066RS010

7. Remove four nuts(8) that secure the front cover assembly and rear end cover, and an insulator(9).

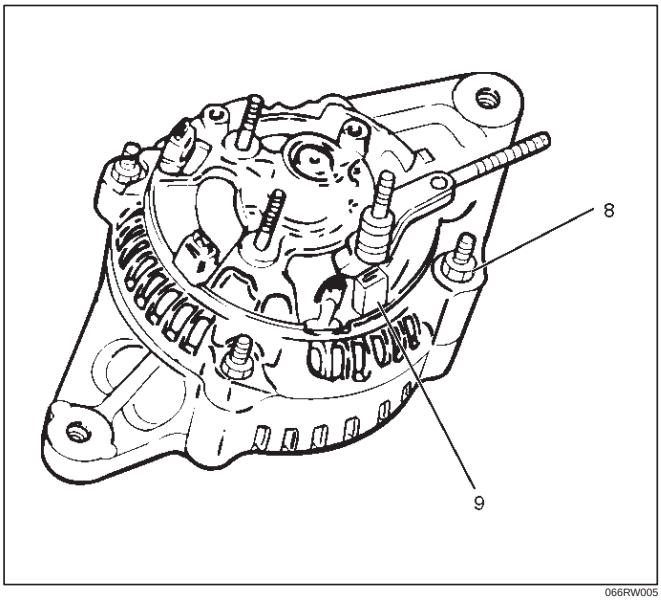

066RW005

8. Use the puller to remove the rear end cover.
9. Rotor assembly

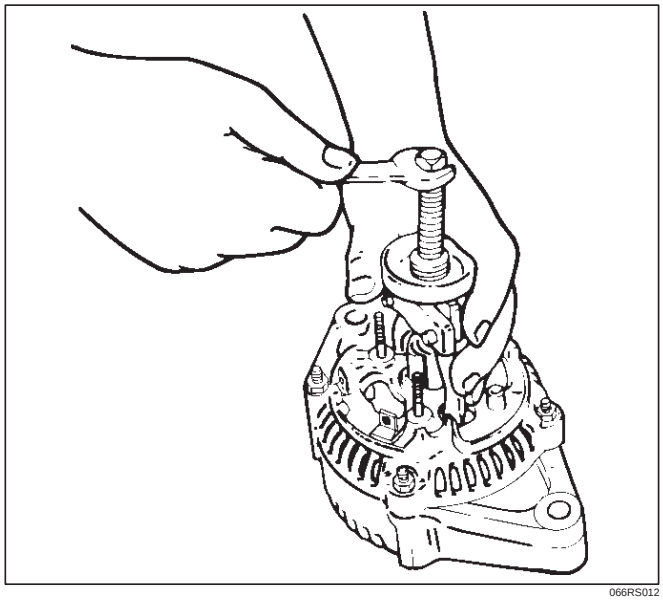

066RS012

10. Pull the rotor assembly(10) off the front cover assembly(12) using a bench press(11).

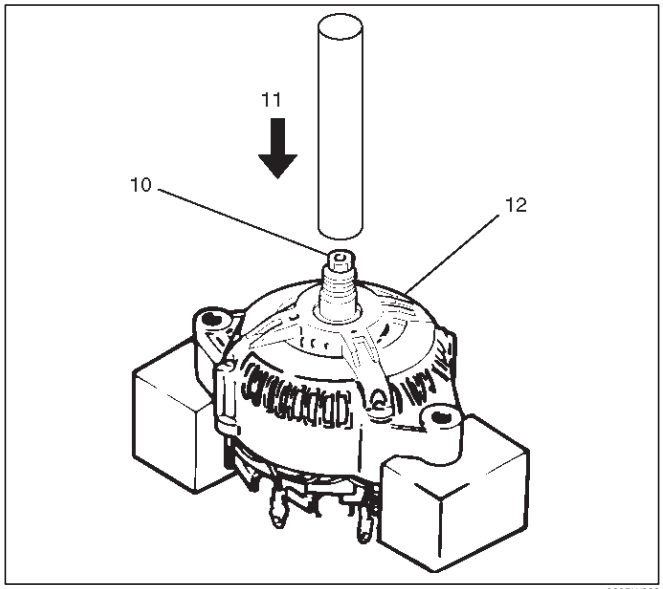

066RW006

Inspection and Repair

Repair or replace necessary parts if extreme wear or damage is found during inspection.

Rotor Assembly

1. Check the rotor slip ring surfaces for contamination and roughness. If rough, polish with #500—600 sandpaper.

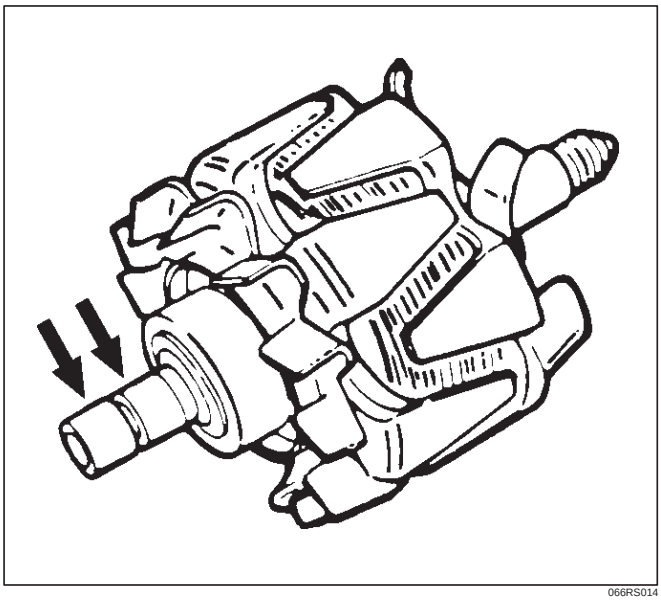

066RS014

2. Measure the slip ring diameter, and replace if it exceeds the limit.

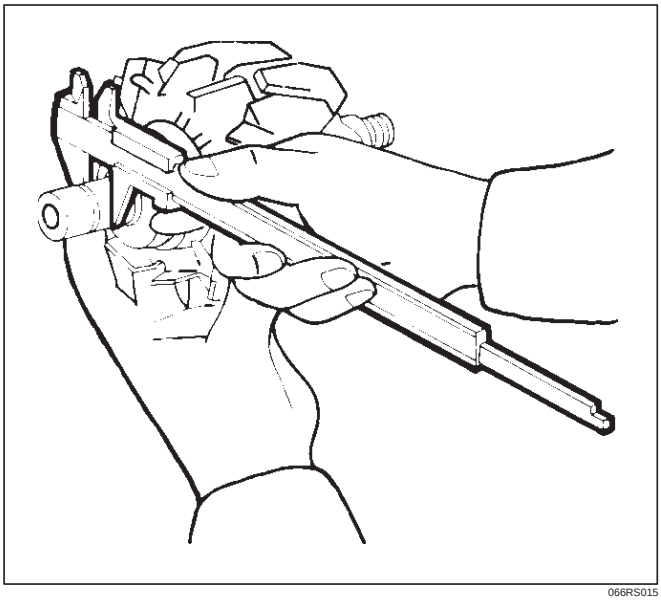

066RS015

3. Check resistance between slip rings, and replace if there is no continuity.

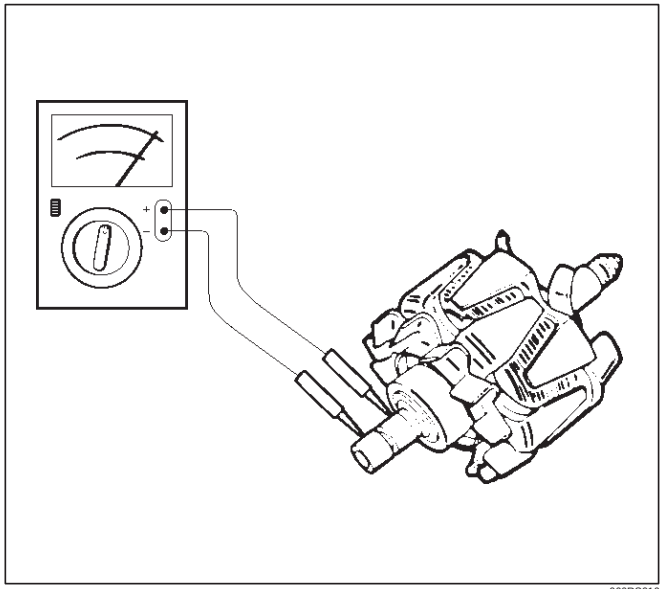

066RS016

4. Check for continuity between slip ring and rotor core. In case of continuity, replace the rotor assembly.

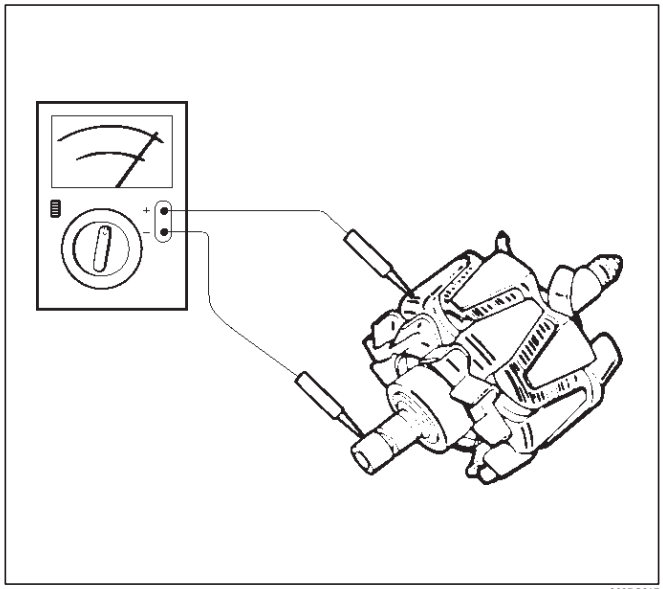

066RS017

Stator Coil

1. Measure resistance between respective phases.
2. Measure insulation resistance between stator coil and core with a mega–ohmmeter.
   If less than standard, replace the coil.

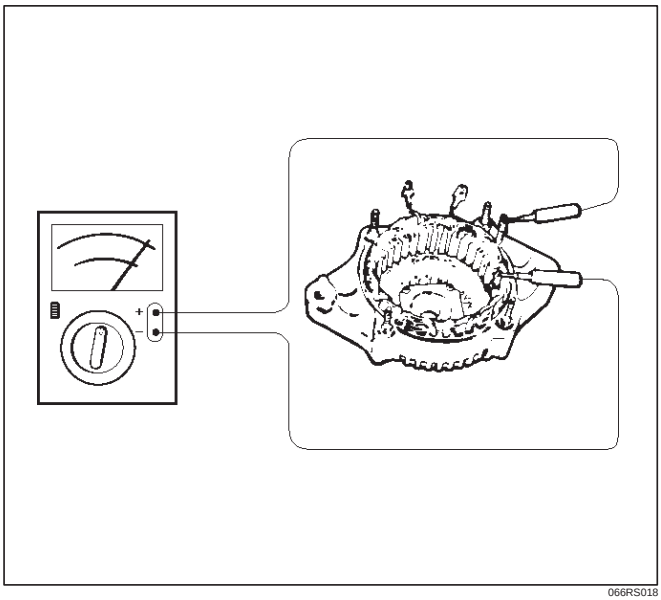

066RS018

Brush

Measure the brush length.
If more than limit, replace the brush.

Standard: 10.mm (0.4134 in)

Limit: 8.4.mm (0.3307 in)

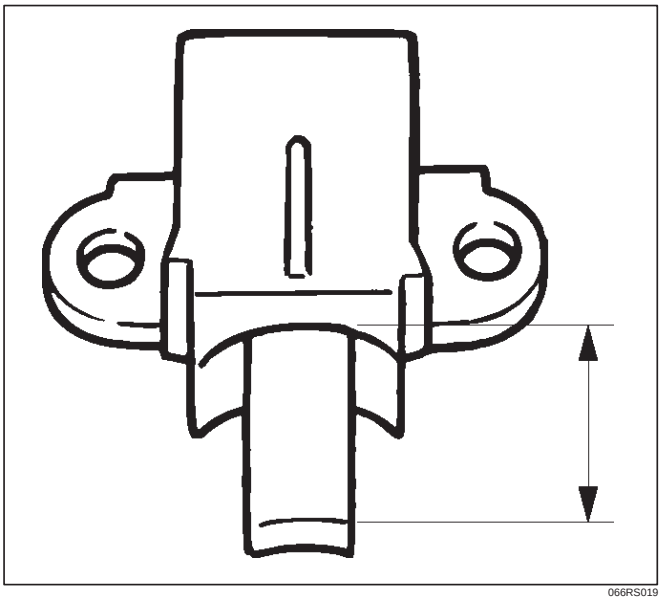

066RS019

Rectifier Assembly

Check for continuity across “P” and “E” in the × 100W range of multimeter.

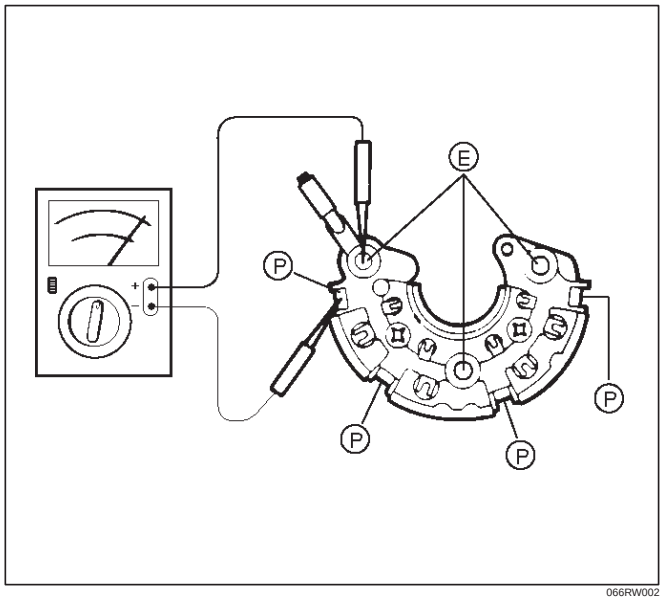

066RW002

Change polarity, and make sure that there is continuity in one direction, and not in the reverse direction. In case of continuity in both directions, replace the rectifier assembly.

IC Regulator Assembly

Check for continuity across “B” and “F” in the × 100W range of multimeter.

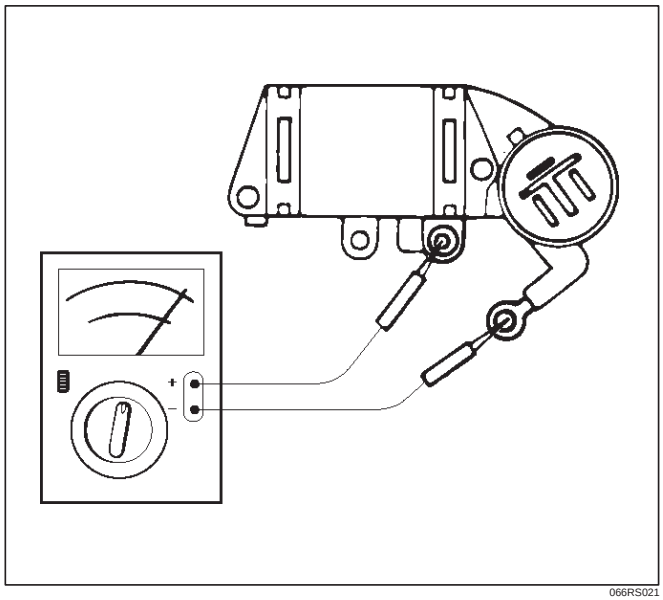

066RS021

Change polarity, and make sure that there is continuity in one direction, and not in the reverse direction. In case of continuity in both directions, replace the IC regulator assembly.

Reassembly

To reassemble, follow the disassembly steps in the reverse order, noting the following points:

1. Using a press with a socket wrench attached, reassemble rotor and rear end cover assembly in the front cover.

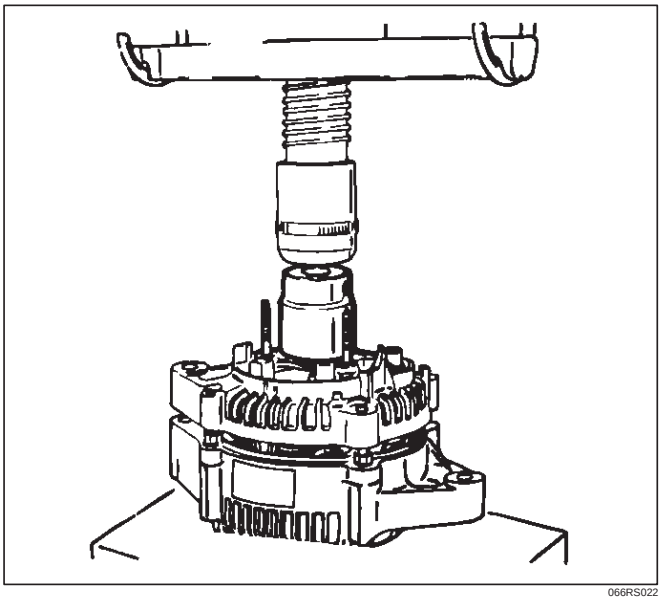

066RS022

2. Install pulley on the rotor.
   Secure the pulley directly in the vise between two copper plates, and tighten nut to the specified torque.

Torque: 111 N·m (11.3 kg·m/82 lb ft)

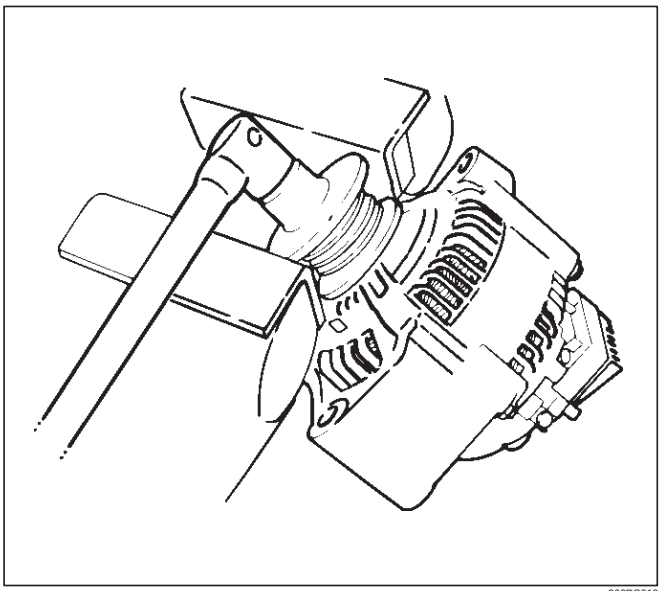

066RS010

Bench Test

Conduct a bench test of the generator.

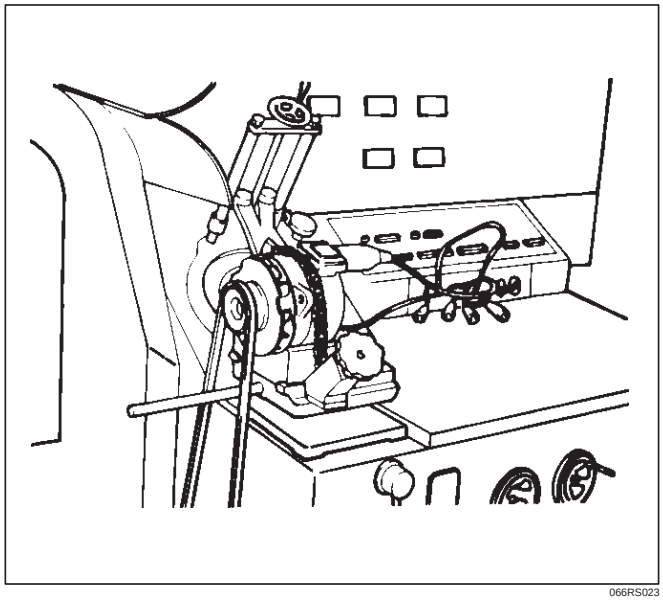

066RS023

Preparation

Remove generator from the vehicle (see “Generator removal”).

1. Secure generator to the bench test equipment and connect wires.
   Terminal “IG” for energization
   Terminal “L” for neutral (warning lamp)
   Terminal “B” for output

2. Conduct the generator characteristic test.
   Characteristics of generator are shown in illustration.
   Repair or replace the generator if its outputs are abnormal.

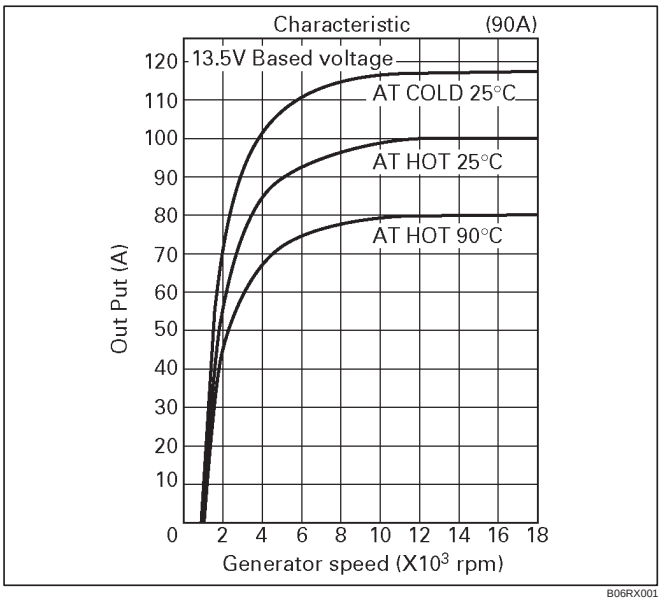

B06RX001

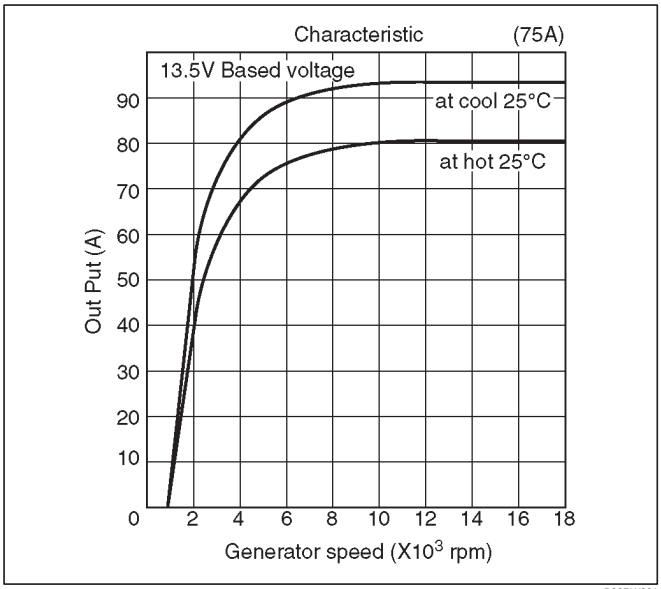

B06RW001

Main Data and Specifications

General Specifications

Parts Number (Nippon denso)	102211—5140	102211—1740
Model	ACHD15	ACJV74
Rated voltage	12 V	12 V
Rated output	75 A	90 A
Rotating direction (As viewed from pulled)	Clockwise	
Pulley effective diameter	57.5 mm (2.26 in)	
Weight	4.5 kg (9.9 lb)	5.1 kg (11.2 lb)

ENGINE

3.5L ENGINE DRIVEABILITY AND EMISSIONS

CONTENTS

Specifications 6E–6
Tightening Specifications 6E–6
Diagrams and Schematics 6E–7
PCM Wiring Diagram (1 of 7) 6E–7
PCM Wiring Diagram (2 of 7) 6E–8
PCM Wiring Diagram (3 of 7) 6E–9
PCM Wiring Diagram (4 of 7) 6E–10
PCM Wiring Diagram (5 of 7) 6E–11
PCM Wiring Diagram (6 of 7) 6E–12
PCM Wiring Diagram (7 of 7) 6E–13
PCM Pinouts 6E–14
PCM Pinout Table, 80-Way Blue Connector – Row “F1 ~ 20” 6E–14
PCM Pinout Table, 80-Way Blue Connector – Row “F20 ~ 40” 6E–15
PCM Pinout Table, 80-Way Blue Connector – Row “F41 ~ 60” 6E–17
PCM Pinout Table, 80-Way Blue Connector – Row “F61 ~ 80” 6E–19
PCM Pinout Table, 80-Way Red Connector – Row “S1 ~ 20” 6E–21
PCM Pinout Table, 80-Way Red Connector – Row “S21 ~ 40” 6E–23
PCM Pinout Table, 80-Way Red Connector – Row “S41 ~ 60” 6E–25
PCM Pinout Table, 80-Way Red Connector – Row “S61 ~ 80” 6E–27
Component Locators 6E–29
Undercarriage Component Locator 6E–31
Fuse and Relay Panel (Underhood Electrical Center) 6E–32
Sensors and Miscellaneous Component Locators 6E–33
Diagnosis 6E–35
Strategy-Based Diagnostics 6E–35
DTC Stored 6E–35
No DTC 6E–35
No Matching Symptom 6E–35
Intermittents 6E–35
No Trouble Found 6E–35
Verifying Vehicle Repair 6E–35
General Service Information 6E–36
OBD Serviceablity Issues 6E–36
Visual / Physical Engine Compartment Inspection 6E–36
Basic Knowledge of Tools Required 6E–36
Serial Data Communications 6E–37
Class 2 Serial Data Communications 6E–37
On-Board Diagnostic (OBD) 6E–37
On-Board Diagnostic Tests 6E–37
Comprehensive Component Monitor Diagnostic Operation 6E–37
Common OBD Terms 6E–38
The Diagnostic Executive 6E–38
DTC Types 6E–39
Verifying Vehicle Repair 6E–41
Reading Diagnostic Trouble Codes Using The Tech 2 Scan Tool 6E–41
Tech 2 . . . . . 6E–42
Tech 2 Features 6E–43
Getting Started 6E–43
Operating Procedure (For Example) 6E–44
DTC Modes 6E–45
DTC Information Mode 6E–45
Miscellaneous Test 6E–46
Lamps Test 6E–46
Relays Test 6E–48
EVAP Test 6E–49
Fuel System Test 6E–50
Instruments Test 6E–52
EGR Control Test 6E–53
Variable Intake Manifold Solenoid Test . . . 6E–54
Injector Balance Test 6E–55
Plotting Snapshot Graph 6E–56
Plotting Graph Flow Chart (Plotting graph after obtaining vehicle information) 6E–57
Flow Chart for Snapshot Replay (Plotting Graph) 6E–58
Primary System-Based Diagnostic 6E–59
Primary System-Based Diagnostic 6E–59
Fuel Control Heated Oxygen Sensor 6E–59
HO2S Heater 6E–59
Catalyst Monitor Heated Oxygen Sensors and Diagnostic Operation 6E–59
Misfire Monitor Diagnostic Operation 6E–60
Misfire Monitor Diagnostic Operation 6E–60
Misfire Counters 6E–60
Fuel Trim System Monitor Diagnostic Operation 6E–61
Fuel Trim System Monitor Diagnostic Operation 6E–61
Fuel Trim Cell Diagnostic Weights 6E–61
On-Board Diagnostic (OBD) System Check . 6E–62
Circuit Description 6E–62
Diagnostic Aids 6E–62

Test Description 6E–62
A/C Clutch Control Circuit Diagnosis 6E–65
Circuit Description 6E–65
Diagnostic Aids 6E–65
A/C Clutch Diagnosis 6E–66
Electronic Ignition System Diagnosis 6E–70
Visual Check of The Evaporative Emission Canister 6E–70
Fuel Metering System Check 6E–70
Fuel System Pressure Test 6E–70
Fuel Injector Coil Test Procedure and Fuel Injector Balance Test Procedure 6E–70
Test Description 6E–70
Injector Coil Test Procedure (Steps 1-6) and Injector Balance Test Procedure (Steps 7-11) 6E–71
Powertrain Control Module (PCM) Diagnosis 6E–75
Multiple PCM Information Sensor DTCs Set 6E–75
Circuit Description 6E–75
Diagnostic Aids 6E–75
Exhaust Gas Recirculation (EGR) Diagnosis 6E–78
Engine Tech 2 Data Definitions and Ranges 6E–78
Typical Scan Data Values 6E–80
Test Conditions 6E–80
No Malfunction Indicator Lamp (MIL) 6E–86
Circuit Description 6E–86
Diagnostic Aids 6E–86
Malfunction Indicator Lamp (MIL) “ON” Steady 6E–89
Circuit description 6E–89
Diagnostic Aids 6E–89
No Service Vehilce Soon (SVS) Lamp 6E–91
Circuit Description 6E–91
Diagnostic Aids 6E–91
Service Vehicle Soon (SVS) Lamp “ON” Steady 6E–94
Circuit description 6E–94
Diagnostic Aids 6E–94
Engine Cranks But Will Not Run 6E–96
Circuit Description 6E–98
Diagnostic Aids 6E–98
Test Description 6E–98
Fuel System Electrical Test 6E–103
Circuit Description 6E–104
Diagnostic Aids 6E–104
Test Description 6E–104
Fuel Pressure Relief Procedure 6E–104
Electric Throttle Control (ETC) System Check 6E–107
Circuit Description 6E–108
Diagnostic Aids 6E–108
Test Description 6E–108
Fuel System Diagnosis 6E–111
Circuit Description 6E–112
Test Description 6E–112
Fuel Pressure Relief Procedure 6E–113
Exhaust Gas Recirculation (EGR) System Check 6E–116
Circuit Description 6E–116
Manifold Absolute Pressure (MAP) Output Check 6E–118
Circuit Description 6E–118
Evaporative (EVAP) Emissions Canister Purge Valve Check 6E–120
Circuit Description 6E–120
Diagnostic Aids 6E–120
PCM Diagnostic Trouble Codes 6E–123
DTC P0101 MAF System Performance 6E–127
DTC P0102 MAF Sensor Circuit Low Frequency 6E–130
DTC P0103 MAF Sensor Circuit High Frequency 6E–133
DTC P0106 MAP System Performance 6E–135
DTC P0107 MAP Sensor Circuit Low Voltage 6E–138
DTC P0108 MAP Sensor Circuit High Voltage 6E–141
DTC P0112 IAT Sensor Circuit Low Voltage 6E–144
DTC P0113 IAT Sensor Circuit High Voltage 6E–147
DTC P0117 ECT Sensor Circuit Low Voltage 6E–150
DTC P0118 ECT Sensor Circuit High Voltage 6E–153
DTC P0131 HO2S Circuit Low Voltage Bank 1 Sensor 1 . . . . . 6E–156
DTC P0132 HO2S Circuit High Voltage Bank 1 Sensor 1 . . . . . 6E–159
DTC P0133 HO2S Slow Response Bank 1 Sensor 1 . . . . . 6E–162
DTC P0134 HO2S Circuit Insufficient Activity Bank 1 Sensor 1 . . . . . 6E–166
DTC P0135 HO2S Heater Circuit Bank 1 Sensor 1 . . . . . 6E–169
DTC P0137 HO2S Circuit Low Voltage Bank 1 Sensor 2 . . . . . 6E–172
DTC P0138 HO2S Circuit High Voltage Bank 1 Sensor 2 . . . . . 6E–175
DTC P0140 HO2S Circuit Insufficient Activity Bank 1 Sensor 2 . . . . . 6E–178
DTC P0141 HO2S Heater Circuit Bank 1 Sensor 2 . . . . . 6E–181
DTC P0151 HO2S Circuit Low Voltage Bank 2 Sensor 1 . . . . . 6E–184
DTC P0152 HO2S Circuit High Voltage Bank 2 Sensor 1 . . . . . 6E–187
DTC P0153 HO2S Slow Response Bank 2 Sensor 1 . . . . . 6E–190
DTC P0154 HO2S Circuit Insufficient Activity Bank 2 Sensor 1 . . . . . 6E–194

DTC P0155 HO2S Heater Circuit Open Bank 2 Sensor 1 . . . . . 6E–197
DTC P0157 HO2S Circuit Low Voltage Bank 2 Sensor 2 . . . . . 6E–200
DTC P0158 HO2S Circuit High Voltage Bank 2 Sensor 2 . . . . . 6E–203
DTC P0160 HO2S Circuit Insufficient Activity Bank 2 Sensor 2 . . . . . 6E–206
DTC P0161 HO2S Heater Circuit Bank 2 Sensor 2 . . . . . 6E–209
DTC P0171 Fuel Trim System Lean Bank 1 . 6E–212
DTC P0172 Fuel Trim System Rich Bank 1 . 6E–216
DTC P0174 Fuel Trim System Lean Bank 2 . 6E–220
DTC P0175 Fuel Trim System Rich Bank 2 . 6E–224
DTC P0201 Injector 1 Control Circuit 6E–228
DTC P0202 Injector 2 Control Circuit 6E–231
DTC P0203 Injector 3 Control Circuit 6E–234
DTC P0204 Injector 4 Control Circuit 6E–237
DTC P0205 Injector 5 Control Circuit 6E–240
DTC P0206 Injector 6 Control Circuit 6E–243
DTC P0300 Engine Misfire Detected 6E–246
DTC P0325 ION Sensing Module/ION Sensing Knock Intensity Circuit Fault 6E–250
DTC P0336 58X Reference Signal Circuit . . 6E–253
DTC P0337 CKP Sensor Circuit Low Frequency 6E–256
DTC P0351 Ignition 1 Control Circuit 6E–259
DTC P0352 Ignition 2 Control Circuit 6E–262
DTC P0353 Ignition 3 Control Circuit 6E–265
DTC P0354 Ignition 4 Control Circuit 6E–268
DTC P0355 Ignition 5 Control Circuit 6E–271
DTC P0356 Ignition 6 Control Circuit 6E–274
DTC P0401 EGR Flow Insufficient 6E–277
DTC P0402 EGR Pintle Crank Error 6E–280
DTC P0404 EGR Open Stuck 6E–282
DTC P0405 EGR Low Voltage 6E–284
DTC P0406 EGR High Voltage 6E–287
DTC P0420 TWC System Low Efficiency Bank 1 . . . . . 6E–290
DTC P0430 TWC System Low Efficiency Bank 2 . . . . . 6E–293
DTC P0444 EVAP Purge Control Circuit Open 6E–296
DTC P0445 EVAP Purge Control Circuit Short 6E–298
DTC P0502 VSS Circuit Low Input 6E–300
DTC P0506 Idle Air Control System Low RPM 6E–303
DTC P0507 Idle Air Control System High RPM 6E–306
DTC P0562 System Voltage Low 6E–309
DTC P0563 System Voltage High 6E–311
DTC P0565 Cruise Main Switch Circuit Error 6E–313
DTC P0566 Cruise Cancel Switch Circuit Error 6E–315
DTC P0567 Cruise Resume Switch Circuit Error 6E–317
DTC P0568 Cruise Set Switch Circuit Error . 6E–319
DTC P0571 No Brake Switch Signal 6E–321
DTC P0601 PCM Memory 6E–323
DTC P0602 PCM Programming Error 6E–325
DTC P0604 PCM RAM Error 6E–327
DTC P0606 PCM Internal Performance 6E–329
DTC P0660 VIM Solenoid Circuit Open 6E–331
DTC P0662 VIM Solenoid Circuit Short 6E–333
DTC P1106 MAP Sensor Circuit Intermittent High Voltage 6E–335
DTC P1107 MAP Circuit Intermittent Low Voltage 6E–337
DTC P1111 IAT Sensor Circuit Intermittent High Voltage 6E–339
DTC P1112 IAT Sensor Circuit Intermittent Low Voltage 6E–342
DTC P1114 ECT Sensor Circuit Intermittent Low Voltage 6E–344
DTC P1115 ECT Sensor Circuit Intermittent High Voltage 6E–346
DTC P1120-TPS 1 Throttle Position Sensor (TPS1) Circuit Fault 6E–349
DTC P1125 ETC (Electric throttle control) Limit Performance Mode 6E–352
DTC P1133 HO2S Insufficient Switching Bank 1 Sensor 1 . . . . . 6E–355
DTC P1134 HO2S Transition Time Ratio Bank 1 Sensor 1 . . . . . 6E–359
DTC P1153 HO2S Insufficient Switching Bank 2 Sensor 1 . . . . . 6E–363
DTC P1154 HO2S Circuit Transition Time Ratio Bank 2 Sensor 1 . . . . . 6E–367
DTC P1167 Fuel System Rich During Decel Fuel Cut Off (Bank 1) 6E–371
DTC P1169 Fuel System Rich During Decel Fuel Cut Off (Bank 2) 6E–373
DTC P1171 Fuel System Lean During Acceleration 6E–375
DTC P1220 Throttle Position Senser2 (TPS2) Circuit Fault 6E–378
DTC P1221 TPS1 – TPS2 correlation (Circuit Performance) 6E–381
DTC P1271 APS 1– 2 Correlation Error 6E–384
DTC P1272 APS 2 – 3 Correlation Error 6E–387
DTC P1273 APS 1 – 3 Correlation Error 6E–390
DTC P1275 APS 1 Circuit Fault 6E–393
DTC P1280 APS 2 Circuit Fault 6E–395
DTC P1285 APS 3 Circuit Fault 6E–397
DTC P1290 ETC Forced Idle Mode 6E–399
DTC P1295 Power Management Mode 6E–401
DTC P1299 ETC Forced Engine Shutdown Mode 6E–403

DTC P1310 ION Sensing Module Diagnosis 6E–405
DTC P1311 ION Sensing Module SEC Line 1 Circuit Fault 6E–408
DTC P1312 ION Sensing Module SEC Line 2 Circuit Fault 6E–411
DTC P1326 ION Sensing Module Combustion Quality Input Circuit Fault 6E–414
DTC P1340 ION Sensing Module Cylinder ID Fault (Cylinder Synchronization Fail) 6E–417
DTC P1404 EGR Stuck Closed 6E–420
DTC P1514 TPS - MAF Correlation Error . . . 6E–423
DTC P1515 Command - Actual TPS Correlation Error 6E–427
DTC P1516 Command - Actual TPS Correlation Error 6E–430
DTC P1523 Actuator Control Return Performance 6E–433
DTC P1574 Brake Switch No Operation 6E–436
DTC P1626 No response from immobilizer . 6E–438
DTC P1631 Received response was not correct 6E–440
DTC P1635 Reference Voltage # 1 Circuit Fault 6E–442
DTC P1636 PCM RAM Stack 6E–444
DTC P1639 Reference Voltage # 2 Circuit Fault 6E–445
DTC P1640 Driver-1-Output Circuit Fault (ODM) 6E–447
DTC P1648 Received incorrect security code 6E–449
DTC P1649 Security code & security key not programmed 6E–450
DTC P1650 Quad Driver Module “A” Fault . . 6E–452
Symptom Diagnosis 6E–455
Default Matrix Table 6E–484
On Vehicle Service Crankshaft Position (CKP) Sensor 6E–487
Engine Coolant Temperature (ECT) Sensor . 6E–487
Heated Oxygen Sensor (HO2S) 6E–488
Intake Air Temperature (IAT) Sensor 6E–491
ION Sensing Module 6E–491
Mass Air Flow (MAF) Sensor 6E–492
Manifold Absolute Pressure (MAP) Sensor . 6E–493
Malfunction Indicator Lamp (MIL) 6E–494
Reduced Power Lamp 6E–494
Powertrain Control Module (PCM) 6E–494
Service Precaution 6E–494
Removal Procedure 6E–494
Installation Procedure 6E–495
EEPROM 6E–496
Throttle Position (TP) Sensor 6E–496
Vehicle Speed Sensor (VSS) 6E–497
Air Cleaner/Air Filter 6E–498
Common Chamber 6E–498
Accelerator Pedal Replacement 6E–499
Accelerator Position Sensor Replacement . . 6E–500
Accelerator Position Sensor Adjustment 6E–500
Fuel Filler Cap 6E–501
Fuel Filter 6E–501
Fuel Gauge Unit 6E–503
Fuel Injectors 6E–503
Fuel Metering System 6E–504
Fuel Pump Assembly 6E–505
Fuel Pump Relay 6E–505
Fuel Rail Assembly 6E–506
Fuel Tank 6E–507
Throttle Body (TB) 6E–507
Electronic Ignition System 6E–509
Catalytic Converter 6E–510
Air Conditioning Thermo Relay 6E–510
EVAP Canister Hoses 6E–510
EVAP Canister 6E–511
EVAP Canister Purge Solenoid (Purge Duty Solenoid Valve) 6E–512
Fuel Tank Vent Valve (Vent Solenoid Valve) . 6E–512
Linear Exhaust Gas Recirculation (EGR) Valve 6E–513
Positive Crankcase Ventilation (PCV) Valve . 6E–514
PCV Valve 6E–514
Wiring and Connectors 6E–514
PCM Connectors and Terminals 6E–515
Wire Harness Repair: Twisted Shielded Cable 6E–515
Twisted Leads 6E–516
Weather-Pack Connector 6E–517
Com-Pack III 6E–518
Metri-Pack 6E–519
General Description (PCM and Sensors) . . . 6E–520
58X Reference PCM Input 6E–520
A/C Request Signal 6E–520
Crankshaft Position (CKP) Sensor 6E–520
Engine Coolant Temperature (ECT) Sensor 6E–520
Electrically Erasable Programmable Read Only Memory (EEPROM) 6E–520
Fuel Control Heated Oxygen Sensors 6E–520
Catalyst Monitor Heated Oxygen Sensors 6E–521
Intake Air Temperature (IAT) Sensor 6E–521
Linear Exhaust Gas Recirculation (EGR) Control 6E–522
Mass Air Flow (MAF) Sensor 6E–522
Manifold Absolute Pressure (MAP) Sensor 6E–522
Powertrain Control Module (PCM) 6E–523
PCM Function 6E–523
PCM Components 6E–523
PCM Voltage Description 6E–523
PCM Input/Outputs 6E–523
PCM Service Precautions 6E–524
Reprogramming The PCM 6E–524
Throttle Position (TP) Sensor 6E–524

Transmission Fluid Temperature (TFT) Sensor 6E–524
Transmission Range Switch (Mode Switch) 6E–524
Vehicle Speed Sensor (VSS) 6E–524
Use of Circuit Testing Tools 6E–524
Aftermarket Electrical and Vacuum Equipment 6E–525
Electrostatic Discharge Damage 6E–525
General Description (Air Induction) 6E–525
Air Induction System 6E–525
General Description (Fuel Metering) 6E–526
Acceleration Mode 6E–526
Battery Voltage Correction Mode 6E–526
Clear Flood Mode 6E–526
Deceleration Mode 6E–526
Engine Speed/Vehicle Speed/Fuel Disable Mode 6E–526
Fuel Cutoff Mode 6E–526
Fuel Injector 6E–526
Fuel Metering System Components 6E–526
Fuel Metering System Purpose 6E–526
Fuel Pressure Regulator 6E–527
Fuel Pump Electrical Circuit 6E–527
Fuel Rail 6E–527
Run Mode 6E–527
Starting Mode 6E–527
Throttle Body Unit 6E–528
General Description (Electronic Ignition System) 6E–528
Crankshaft Position (CKP) Sensor 6E–528
Electronic Ignition 6E–528
Ignition Coils 6E–528
Ignition Control 6E–528
Ignition Control PCM Output 6E–529
Powertrain Control Module (PCM) 6E–529
Spark Plug 6E–530
A/C Clutch Diagnosis 6E–531
A/C Clutch Circuit Operation 6E–531
A/C Clutch Circuit Purpose 6E–531
A/C Request Signal 6E–531
General Description (Exhaust Gas Recirculation (EGR) System) 6E–531
EGR Purpose 6E–531
Linear EGR Valve 6E–532
Linear EGR Control 6E–532
Linear EGR Valve Operation and Results of Incorrect Operation 6E–532
EGR Pintle Position Sensor 6E–532
General Description (Positive Crankcase Ventilation (PCV) System) 6E–532
Crankcase Ventilation System Purpose . . . 6E–532
Crankcase Ventilation System Operation . 6E–532
Special Tools 6E–534

Specifications

Tightening Specifications

Application	N·m	Lb Ft.	Lb In.
EGR Bolt	25	18	—
Engine Coolant Temperature Sensor	30	22	—
Fuel Pressure Regulator Attaching Screw	3	—	26
Fuel Rail Bolts	25	18	—
Fuel Tank Undercover Retaining Bolts	36	27	—
Heated Oxygen Sensor	55	40	—
Lower Intake Manifold to Engine Block Bolts	25	18	—
Lower Intake Manifold to Engine Block Nuts	25	18	—
Spark Plugs	18	13	—
Throttle Body Mounting Bolts	10	—	87
Common Chamber to Lower Intake Manifold Bolts	25	18	—
VSS Retaining Bolt	16	12	—

Diagrams and Schematics

PCM Wiring Diagram (1 of 7)

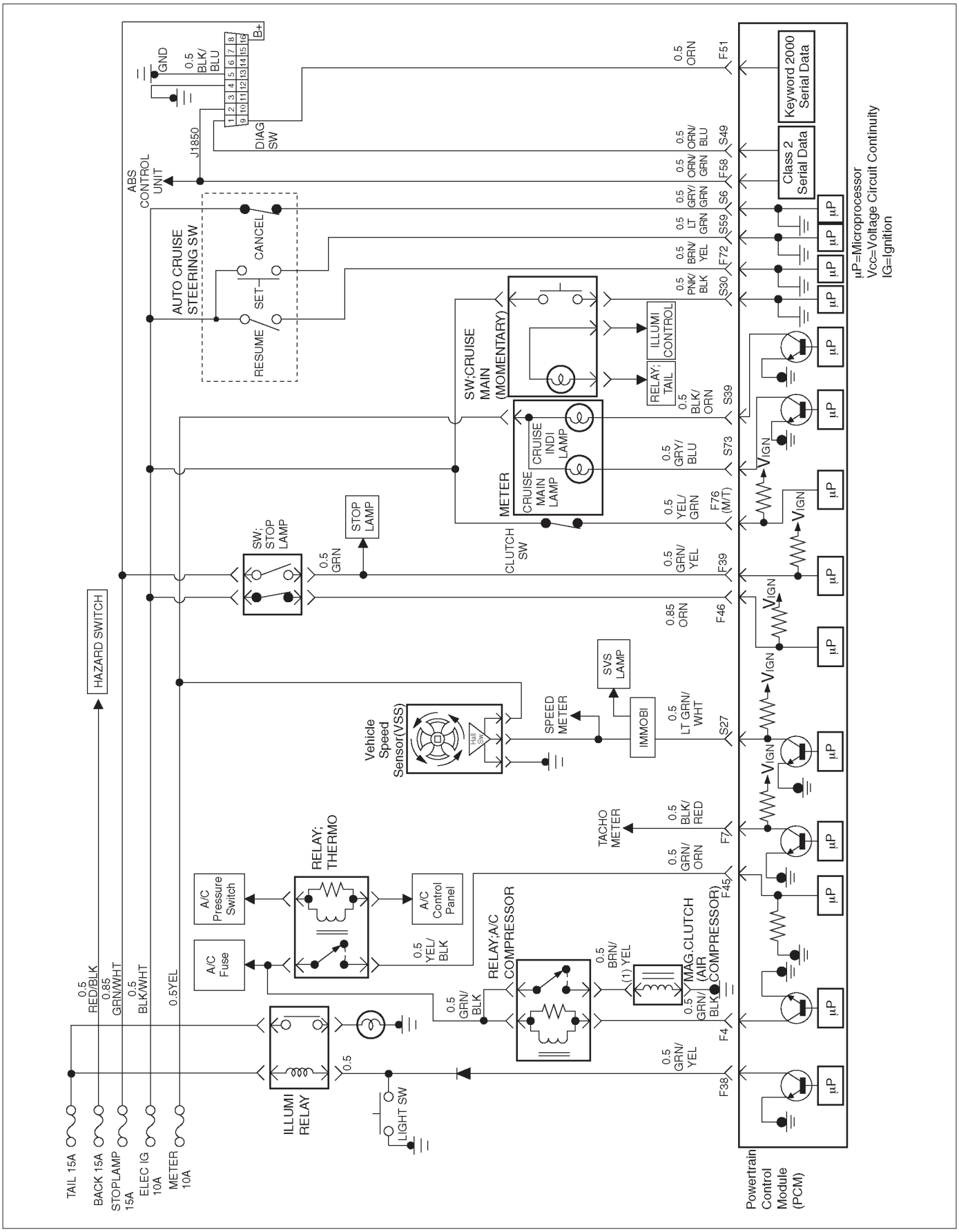

D06R200099

PCM Wiring Diagram (2 of 7)

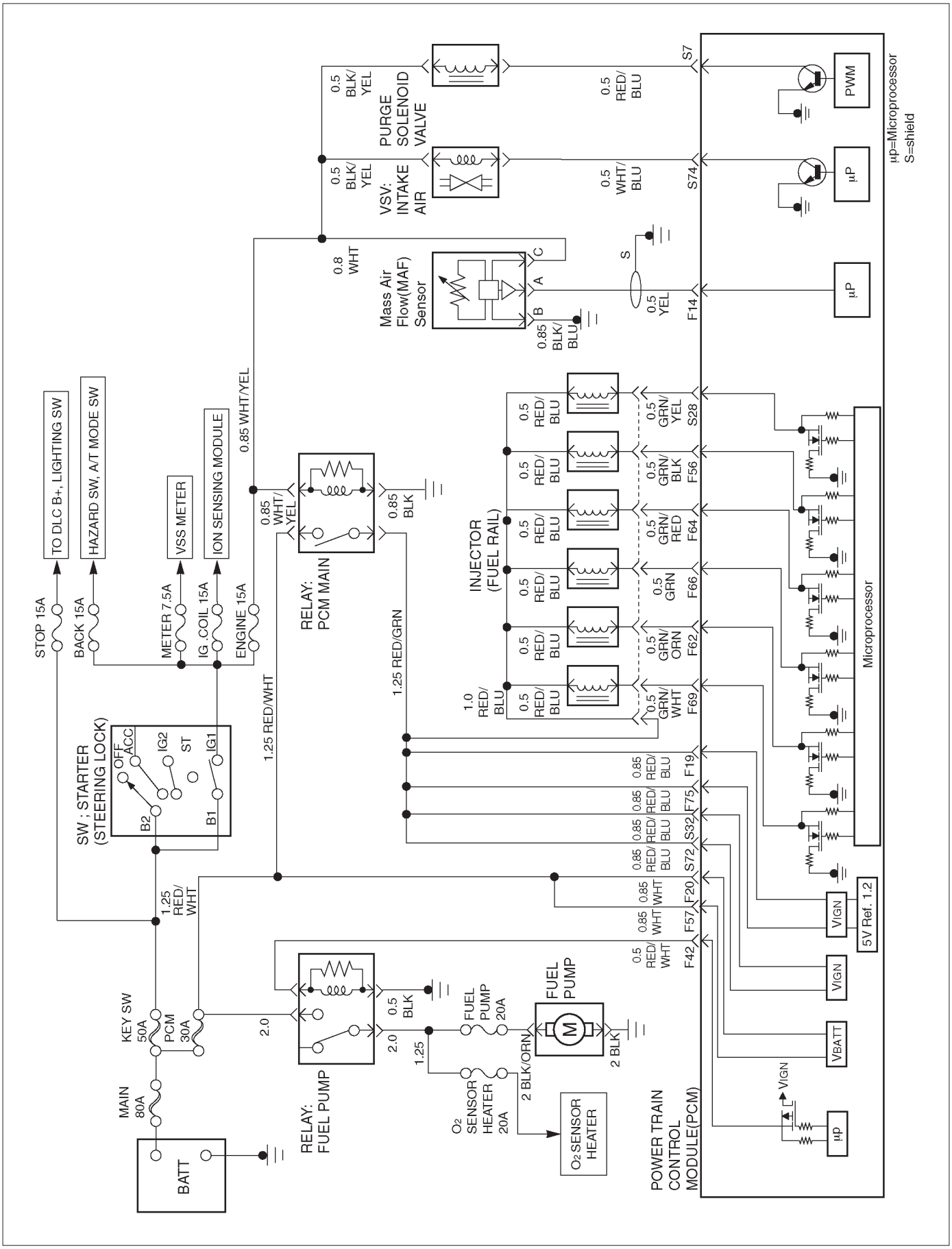

D06R200100

PCM Wiring Diagram (3 of 7)

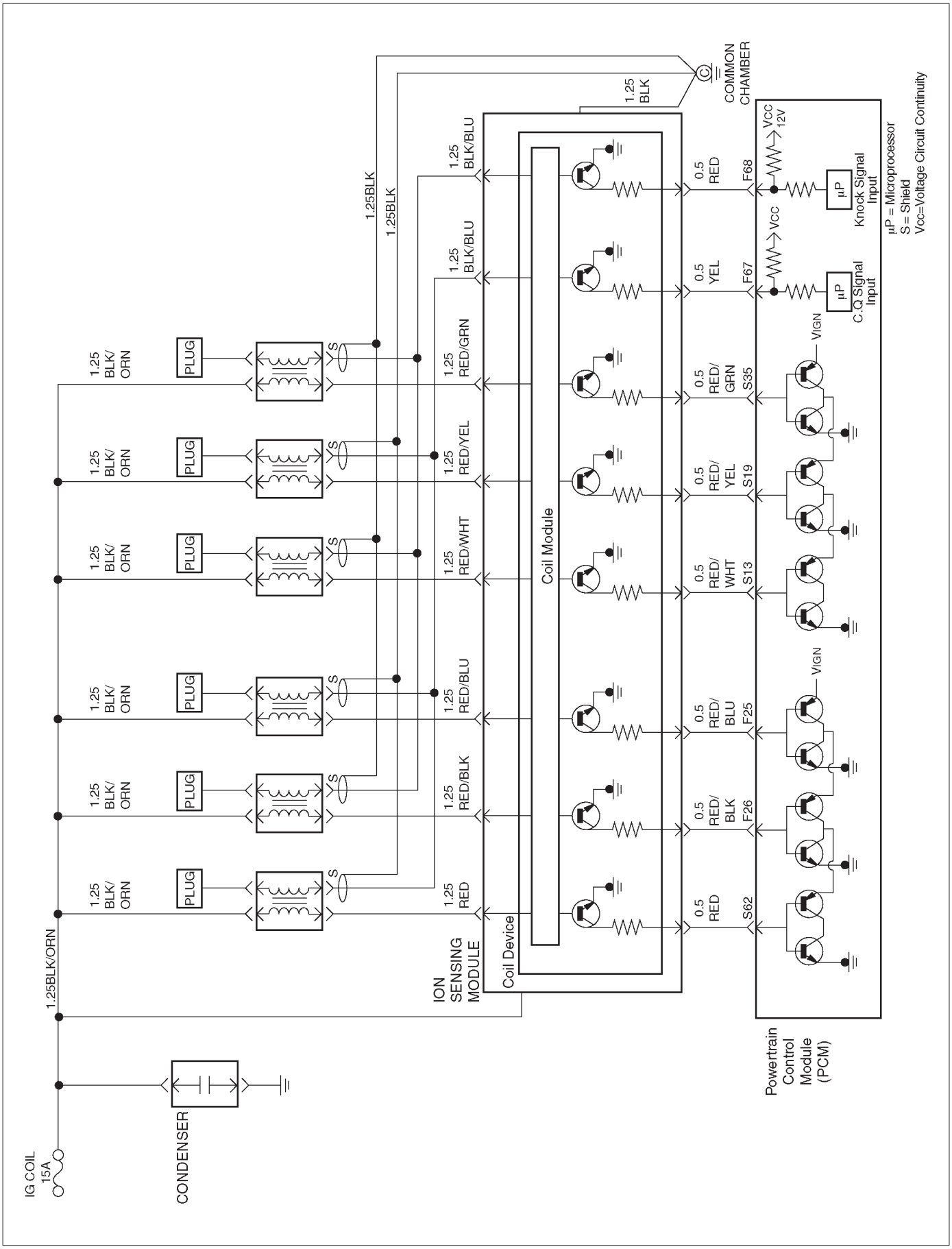

D06R200081

PCM Wiring Diagram (4 of 7)

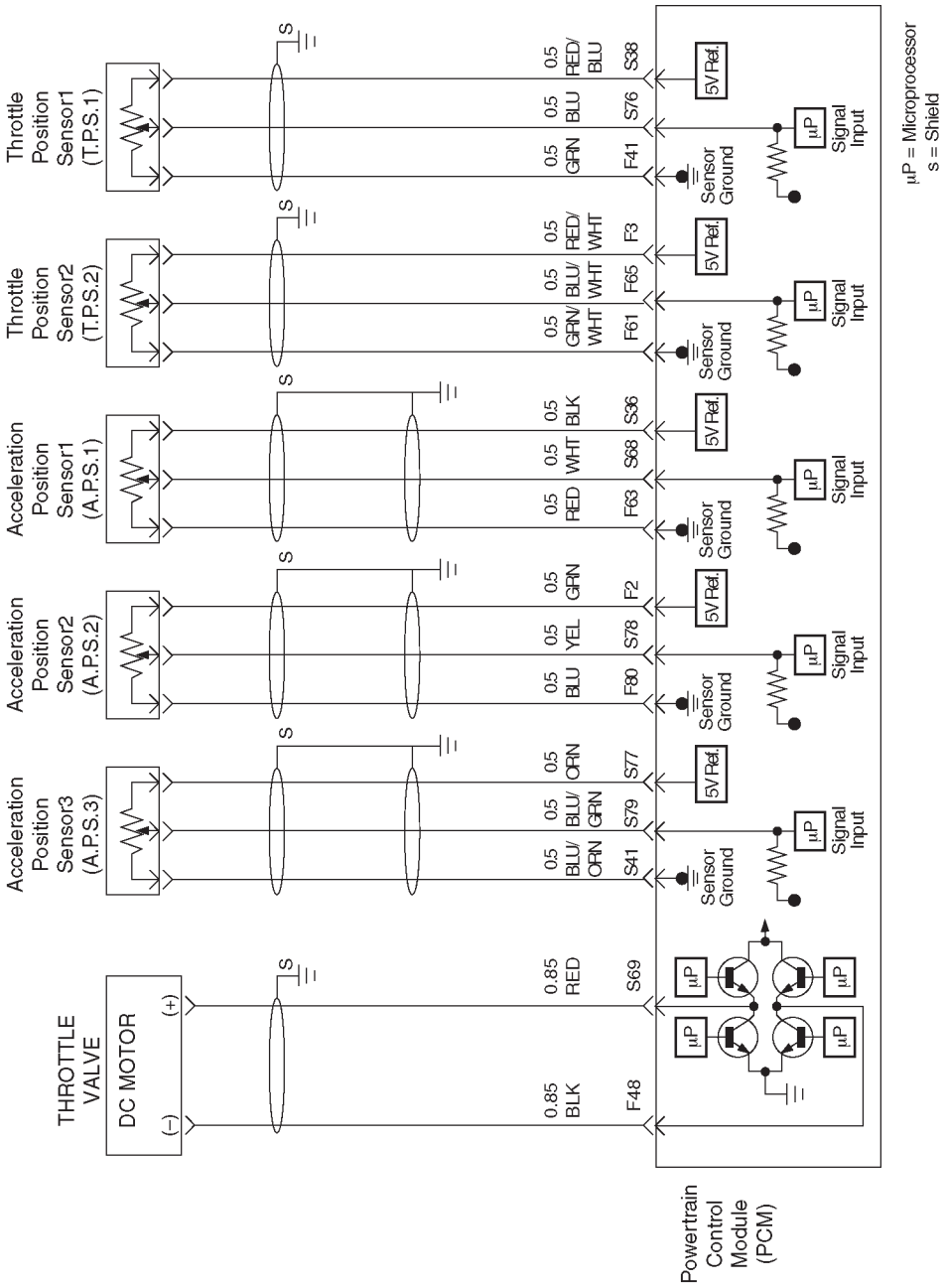

D06R200033

PCM Wiring Diagram (5 of 7)

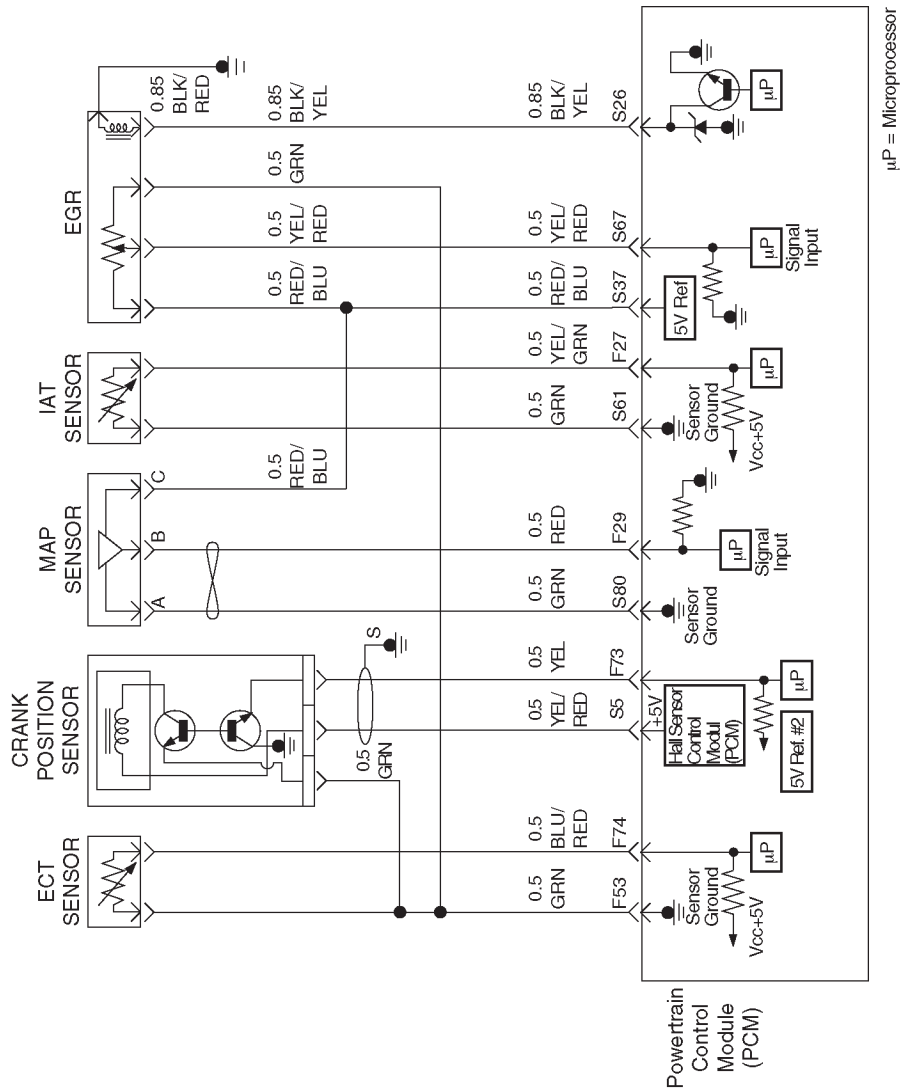

D06R200082

PCM Wiring Diagram (6 of 7)

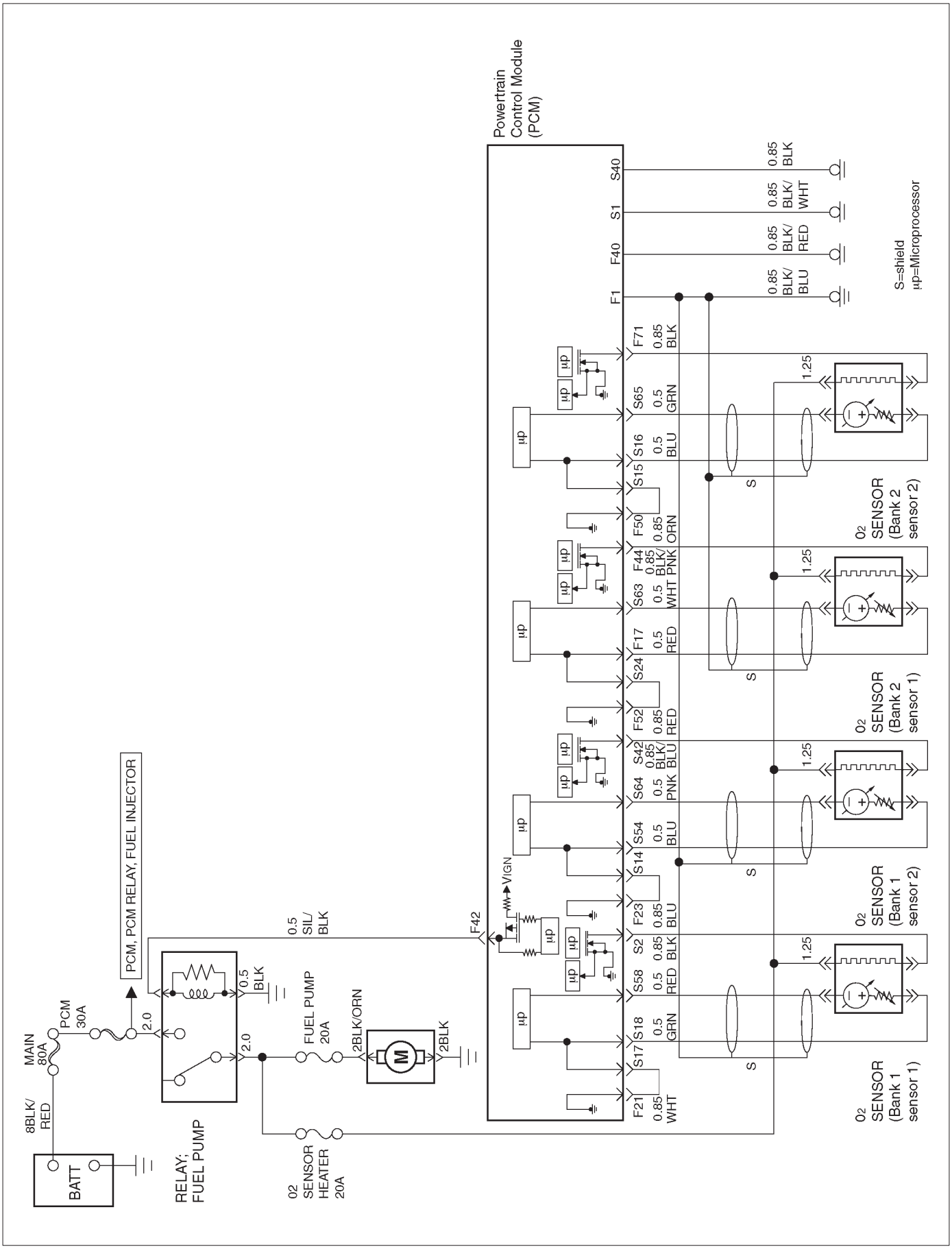

D06R200007

PCM Wiring Diagram (7 of 7)

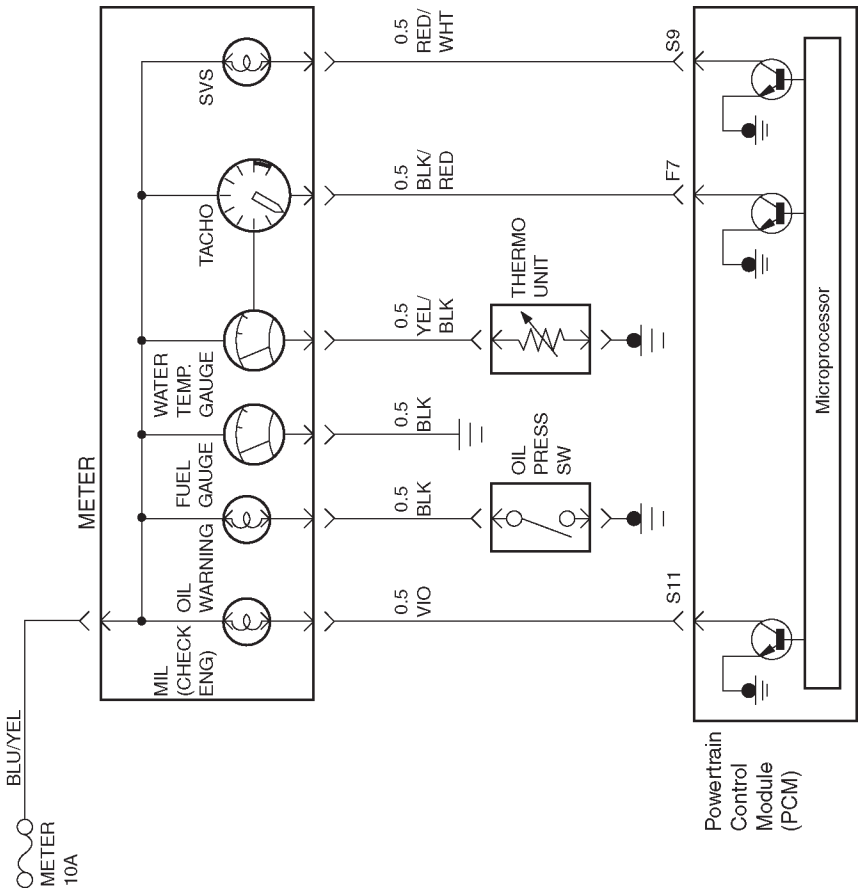

D06R200110

PCM Pinouts

PCM Pinout Table, 80-Way Blue Connector – Row “F1 ~ 20”

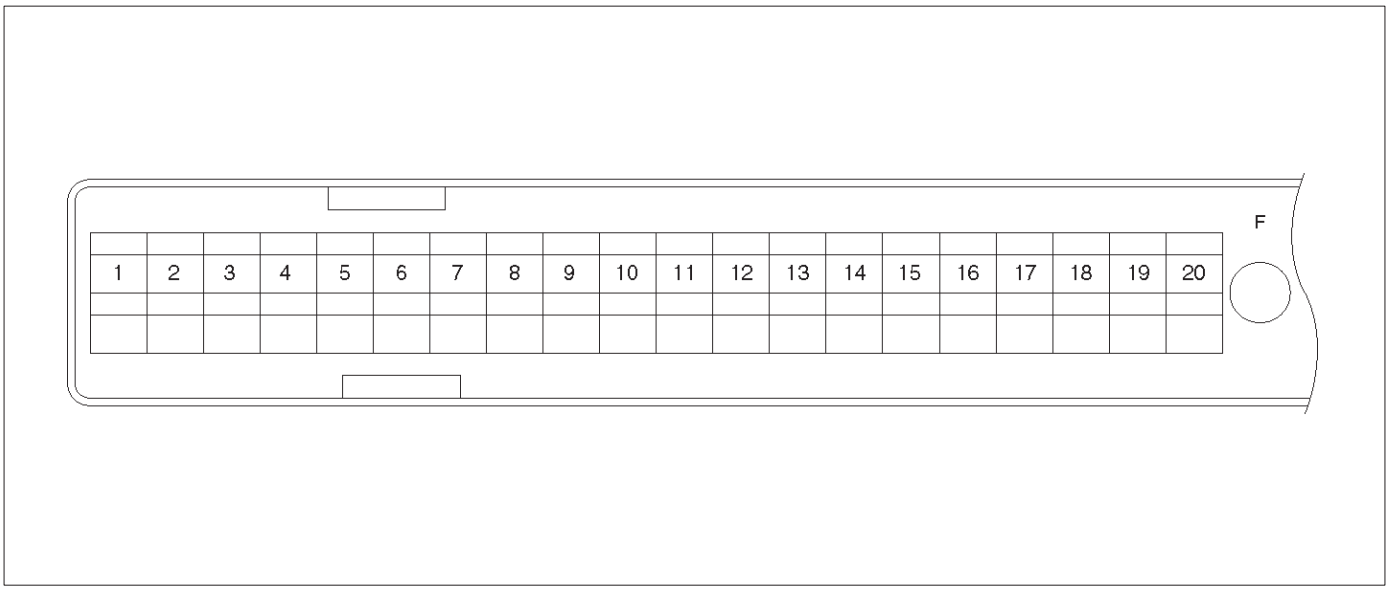

060RY00045

PIN	PIN Function	Wire Color	IGN ON	ENG RUN	Refer To
F1	PCM Ground	BLK/BLU	0.0V	0.0V	Chassis Electrical
F2	5Volt Referrence“2” (AP Sensor 2)	GRN	5.0V	5.0V	AP Sensor
F3	5Volt Referrence“2” (TP Sensor 2)	RED/WHT	5.0V	5.0V	AP Sensor
F4	A/C Clutch	GRN/BLK	B+(A/C off)	B+(A/C off)	General Description and Operation,A/C Cluch Circuit Opreation
F5	Mission Main Case	GRN/RED	0.0V	0.0V	4L30E T/Mission
F6	Not Used	—	—	—	—
F7	Tachometer	BLK/RED	8.8V	10.0V(at idle)	Chassis Electrical
F8	Not Used	—	—	—	—
F9	Not Used	—	—	—	—
F10	Not Used	—	—	—	—
F11	T.O.D	RED/WHT	—	—	—
F12	Not Used	—	—	—	—
F13	Not Used	—	—	—	—
F14	Mass Air Flow(MAF)	YEL	4.9V	4.2V	General Description, Mass Air Flow Sensor
F15	Not Used	—	—	—	—
F16	Not Used	—	—	—	—
F17	Bank 1 HO2S Low	RED	0.0V	0.1V	General Description and Operation, Catalyst Monitor HO2S 2
F18	Not Used	—	—	—	—
F19	Ignition Feed	RED/BLU	B+	B+	6D Section
F20	Ignition Feed	WHT	B+	B+	6D Section

PCM Pinout Table, 80-Way Blue Connector – Row “F20 ~ 40”

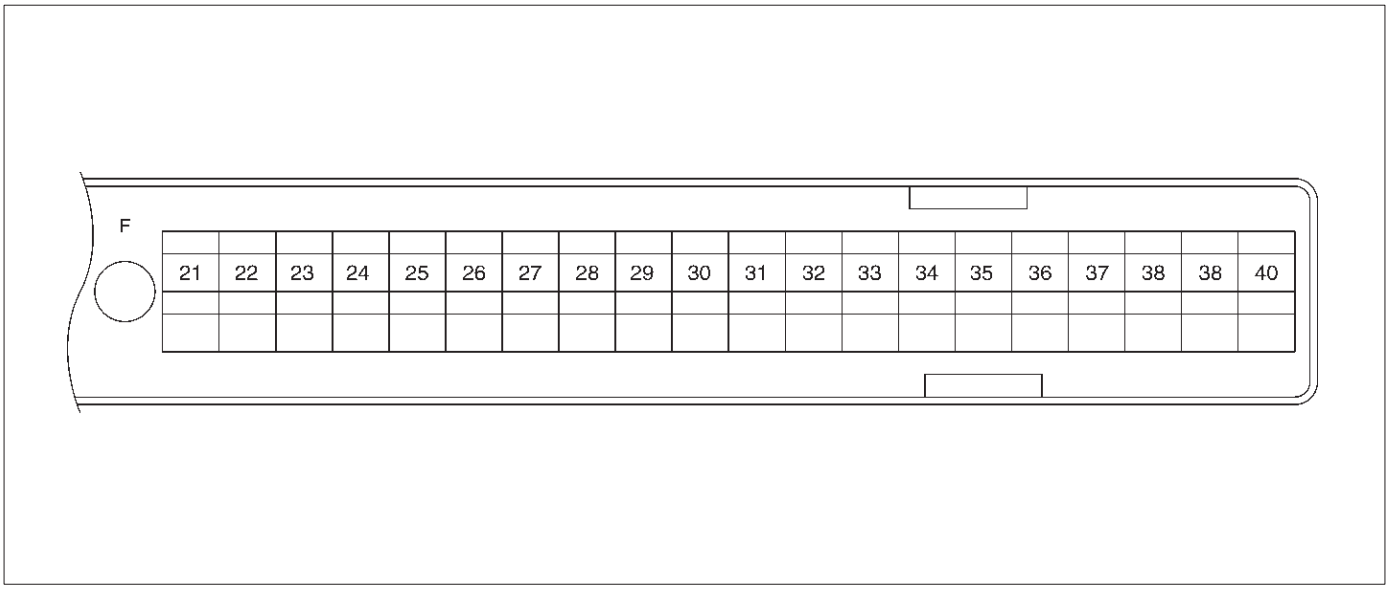

060RY00156

PIN	PIN Function	Wire Color	IGN ON	ENG RUN	Refer To
F21	Bank 1 HO2S 1 Ground	WHT	0.0V	0.0V	General Description and Operation, Catalyst Monitor HO2S 1
F22	Not Used	—	—	—	—
F23	Bank 2 HO2S 1 Ground	BLU	0.0V	0.0V	General Description and Operation, Catalyst Monitor HO2S 1
F24	Not Used	—	—	—	—
F25	ION Sensing Module	RED/BLU	1.555V	1.555V	General Description and Operation,ION Sensing Module
F26	ION Sensing Module	RED/BLK	1.555V	1.555V	General Description and Operation,ION Sensing Module
F27	Intake Air Temperature (IAT)Sensor	YEL/GRN	0.5–4.9V	0.5–4.9V	General Description and Operation, IAT
F28	Not Used	—	—	—	—
F29	Manifold Absolute Pressure(MAP)	RED	3.5V–4.9V (depends on altitude and barometric pressure)	0.6-1.3V	General Description and Operation, Manifold Absolute Pressure
F30	Not Used	—	—	—	—
F31	Not Used	—	—	—	—
F32	Power Lamp	GRN/WHT	B+	B+	4L30E T/Mission
F33	Not Used	—	—	—	—
F34	Winter Lamp	PNK/GRN	B+	B+	4L30E T/Mission
F35	Not Used	—	—	—	—
F36	Not Used	—	—	—	—
F37	Power Steering Pressure (PSP)	GRN/YEL	B+	B+	Power Steering
F38	Illuminated Switch	GRN/YEL	B+	B+	Chassis Electrical

PIN	PIN Function	Wire Color	IGN ON	ENG RUN	Refer To
F39	Brake Swich	GRN/YEL	0.0V	0.0V	4L30E T/Mission
F40	PCM Ground	BLK/RED	0.0V	0.0V	Chassis Electrical

PCM Pinout Table, 80-Way Blue Connector – Row “F41 ~ 60”

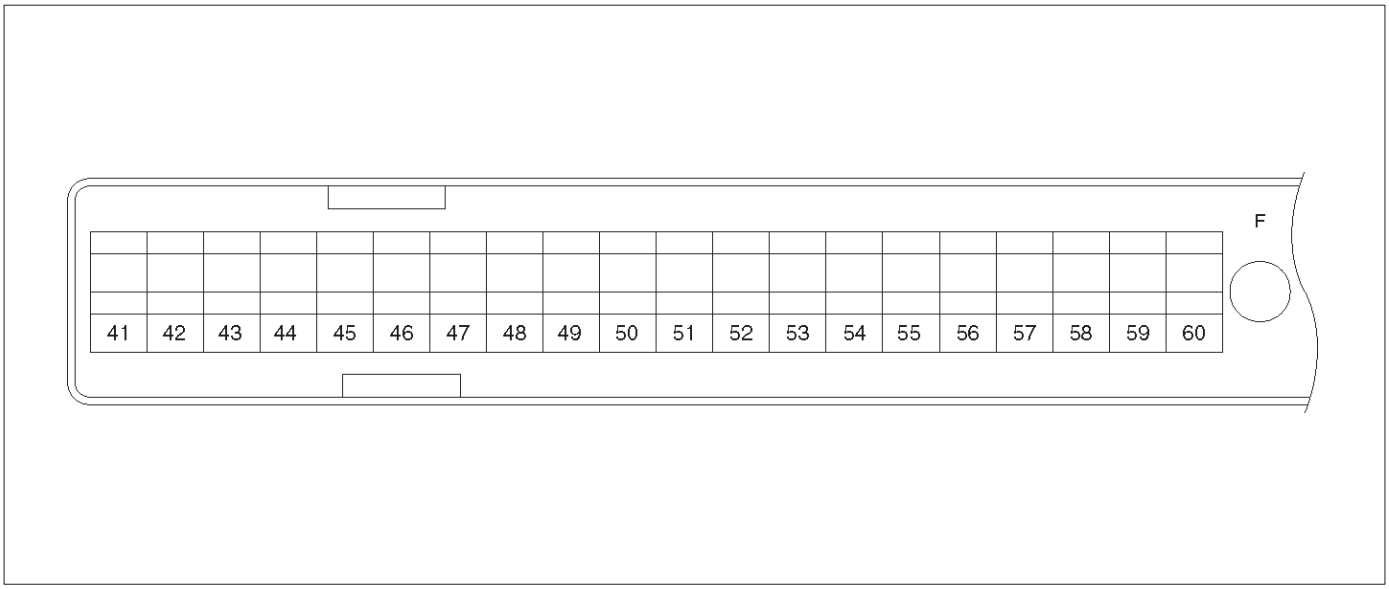

060RY00046

PIN	PIN Function	Wire Color	IGN ON	ENG RUN	Refer To
F41	Throttle Position(TP) 1 Sensor Ground	GRN	0.0V	0.0V	General Description and Operation,TPS
F42	Fuel Pump Relay	SIL/BLK	0.0V	B+	On Vehicle Service, Fuel Pump Relay
F43	Adaptor Case	VIO/RED	0.0V	0.0V	4L30E T/Mission
F44	Bank 1 HO2S 2 Heater Ground	BLK/PNK	0.0V	0.0V	General Description and Operation, Catalyst Monitor HO2S 2
F45	A/C Request	GRN/ORN	0.0V	0.0V	Chassis Electrical
F46	Auto Cruise Brake Switch	ORN	0.0V	0.0V	Chassis Electrical
F47	Adaptor Case	VIO/RED	B+	B+	4L30E T/Mission
F48	Throttle Valve DC Motor(–)	BLK	Duty Cycle	Duty Cycle	General Description and Operation, ETC
F49	Not Used	—	—	—	—
F50	Bank 2 HO2S 2 Ground	ORN	0.0V	0.0V	General Description and Operation, Catalyst Monitor HO2S 2
F51	DLC Serial Data	ORN	5.0V	5.0V	Chassis Electrical
F52	Bank 1 HO2S 2 Ground	RED	0.0V	0.0V	General Description and Operation, Catalyst Monitor HO2S 2
F53	ECT Ground	GRN	0.0V	0.0V	General Description and Operation,ECT Sensor
F54	Not Used	—	—	—	—
F55	Not Used	—	—	—	—
F56	Injector Cylinder #5	GRN/BLK	B+	B+	General Description and Operation,Fuel Injector
F57	Ignition Feed	WHT	B+	B+	Chassis Electrical
F58	Class 2 Data	ORN/GRN	0.0V	0.0V	General Description

PIN	PIN Function	Wire Color	IGN ON	ENG RUN	Refer To
F59	Not Used	—	—	—	—
F60	Not Used	—	—	—	—

PCM Pinout Table, 80-Way Blue Connector – Row “F61 ~ 80”

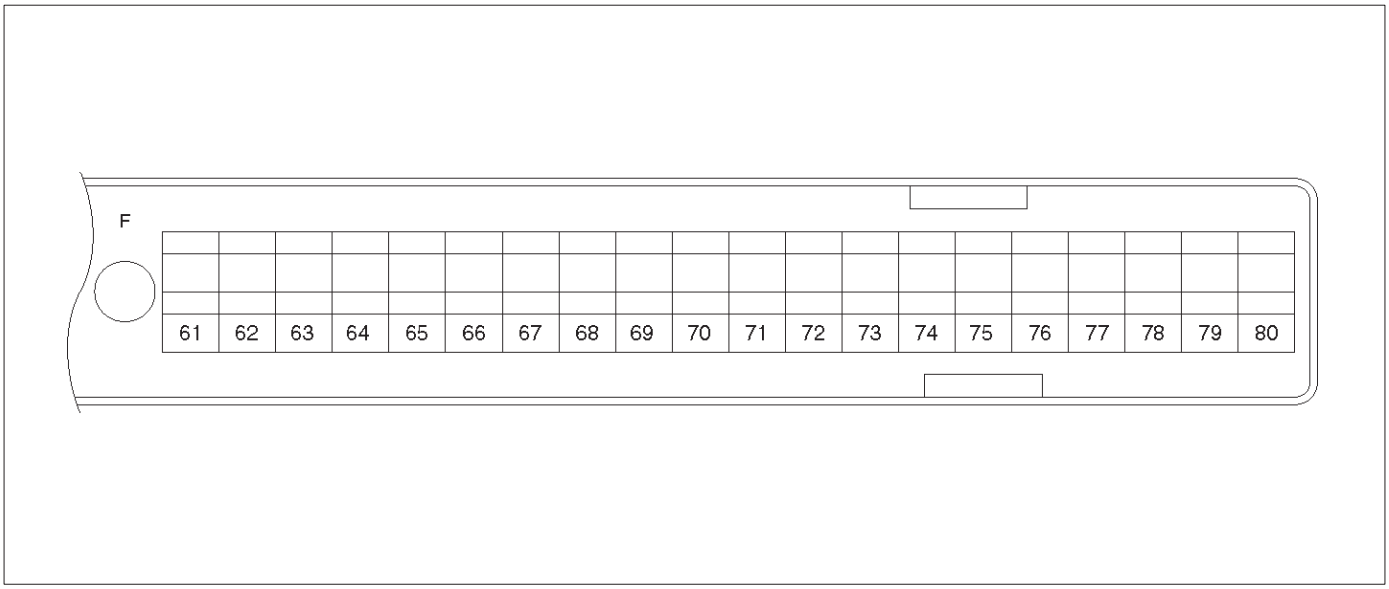

060RY00047

PIN	PIN Function	Wire Color	IGN ON	ENG RUN	Refer To
F61	Throttle Position(TP) 2 Sensor Ground	GRN/WHT	0.0V	0.0V	General Description and Operation,TPS
F62	Injector Cylinder #2	GRN/ORN	B+	B+	General Description and Operation,Fuel Injector
F63	AP Sensor 1 Sensor Ground	RED	0.0V	0.0V	General Description and Operation,APS
F64	Injector Cylinder #4	GRN/RED	B+	B+	General Description and Operation,Fuel Injector
F65	Throttle Psition(TP) 2 Sensor Signal	BLU/WHT	0.5–0.8V	0.8–0.8V (at idle)	General Description and Operation,TPS
F66	Injector Cylinder #3	GRN	B+	B+	General Description and Operation,Fuel Injector
F67	ION Sensing Module	YEL	1.555V	1.555V	General Description and Operation, ION Sensing Module
F68	ION Sensing Module	RED	1.555V	1.555V	General Description and Operation, ION Sensing Module
F69	Injector Cylinder #1	GRN/WHT	B+	B+	General Description and Operation,Fuel Injector
F70	Not Used	—	—	—	—
F71	Bank 2 HO2S 2 Heater Ground	BLK	0.0V	0.0V	General Description and Operation, Catalyst Monitor HO2S 2
F72	Auto Cruise Switch Resume	BRN/YEL	0.0V	0.0V	Chassis Electrical
F73	Cranshaft Position Sensor	YEL	0.3V	2.2V	General Description and Operation, CKP sensor
F74	ECT Sensor	BLU/RED	0.5–4.9V	0.5–4.9V	General Description and Operation, ECT Sensor
F75	Ignition Feed	RED/BLU	B+	B+	Chassis Electrical
F76	Clutch Switch(M/T only)	YEL/GRN	B+	B+	Manual T/Mission
	Mode Switch(A/T only)	YEL/GRN	B+	B+	4L30E T/Mission

PIN	PIN Function	Wire Color	IGN ON	ENG RUN	Refer To
F77	Mode Switch	BLU/WHT	B+	B+	4L30E T/Mission
F78	Mode Switch	BLU/BLK	B+	B+	4L30E T/Mission
F79	Mode Switch	BLU/YEL	B+	B+	4L30E T/Mission
F80	AP Sensor 2 Sensor Ground	BLU	0.0V	0.0V	General Description and Operation, APS

PCM Pinout Table, 80-Way Red Connector – Row “S1 ~ 20”

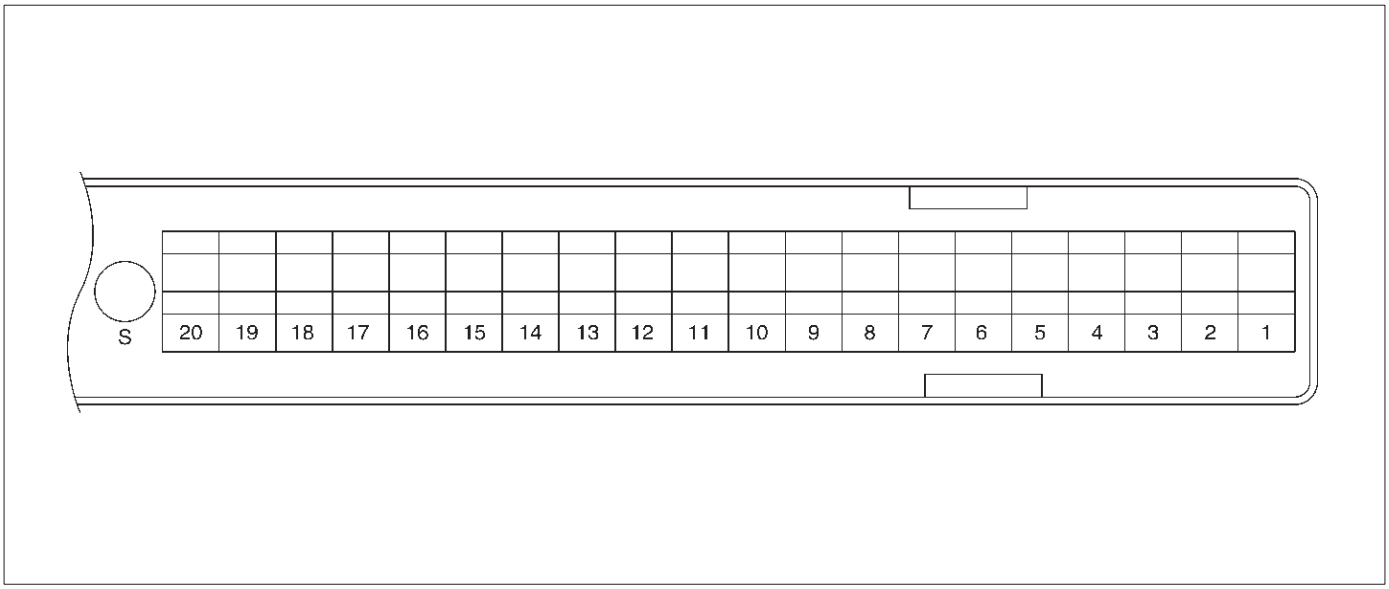

060RY00069

PIN	PIN Function	Wire Color	IGN ON	ENG RUN	Refer To
S1	PCM Ground	BLK/WHT	0.0V	0.0V	Chassis Electrical
S2	Bank 1 HO2S 1 Heater Ground	BLK	0.0V	0.0V	General Description and Operation, Catalyst Monitor HO2S
S3	Not Used	—	—	—	—
S4	ATF Warning Lamp	ORN/BLU	B+	B+	4L30E T/Mission
S5	5Volt Referrence“2” (CKP Sensor/CMP Sensor)	YEL/RED	5.0V	5.0V	Appropriate Sensor (CKP Sensor, CMP Sensor ,AP2 Sensor)
S6	Auto Cruise Switch Cancel	GRY/GRN	0.0V	0.0V	Chassis Electrical
S7	EVAP Parge Solenoid Valve	RED/BLU	B+	5.7V	General Description and Operation, EVAP Emission Control System
S8	Not Used	—	—	—	—
S9	SVS Lamp	RED/WHT	B+	B+	4L30E T/Mission
S10	Shift High(Band Apply)	BRN/YEL	B+	B+	4L30E T/Mission
S11	Malfunction Indicator (Check Engine) Lamp	VIO	0.0V	B+	Chassis Electrical
S12	Not Used	—	—	—	—
S13	ION Sensing Module	RED/WHT	1.555V	1.555V	General Description and Operation, ION Sensing Module
S14	Bank 2 HO2S 1 Ground Jump	BLU	0.0V	0.0V	General Description and Operation, Catalyst Monitor HO2S 1
S15	Bank 2 HO2S 2 Ground Jump	ORN	0.0V	0.0V	General Description and Operation, Catalyst Monitor HO2S 2
S16	Bank 2 HO2S 2 Low	BLU	0.0V	0.1V	General Description and Operation, Catalyst Monitor HO2S

PIN	PIN Function	Wire Color	IGN ON	ENG RUN	Refer To
S17	Bank 1 HO2S 1 Ground Jump	WHT	0.0V	0.0V	General Description and Operation, Catalyst Monitor HO2S 1
S18	Bank 1 HO2S 1 Low	GRN	0.0V	0.1V	General Description and Operation, Catalyst Monitor HO2S
S19	ION Sensing Module	RED/YEL	1.555V	1.555V	General Description and Operation, ION Sensing Module
S20	Transmission Fluid Temperature Sensor Ground	RED/WHT	0.0V	0.0V	4L30E T/Mission

PCM Pinout Table, 80-Way Red Connector – Row “S21 ~ 40”

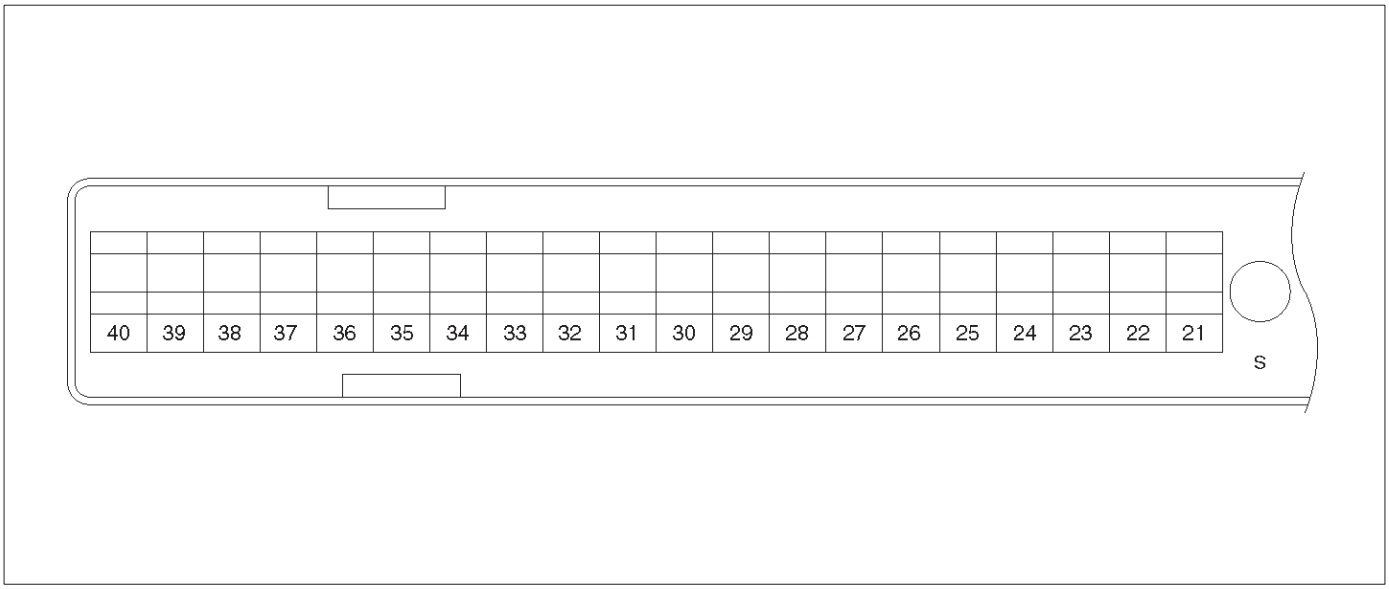

060RY00049

PIN	PIN Function	Wire Color	IGN ON	ENG RUN	Refer To
S21	Not Used	—	—	—	—
S22	Transmissin Output Speed Sensor	RED	0.0V	0.0V	4L30E T/Mission
S23	PCM Ground	BLK/RED	0.0V	0.0V	Chassis Electrical
S24	Bank 1 HO2S 2 Ground Jump	RED	0.0V	0.0V	General Description and Operation, Catalyst Monitor HO2S 2
S25	Not Used	—	—	—	—
S26	EGR Control Low	BLK/YEL	B+	B+	General Description and Operation, EGR Control
S27	VSS Input	Light GRN/WHT	0.0V	0.1V (at rest)	Chassis Electrical
S28	Injector Cylinder #6	GRN/YEL	B+	B+	General Description and Operation, Fuel Injector
S29	Winter Switch	VIO/GRN	B+	B+	4L30E T/Mission
S30	Auto Cruise Main Switch	PNK/BLK	0.0V	0.0V	Chassis Electrical
S31	Transmissin Range Signal“2–3”	GRN	0.0V	0.0V	4L30E T/Mission
S32	Ignition Feed	RED/BLU	B+	B+	Chassis Electrical
S33	TCC Solenoid	RED/BRN	0.0V	0.0V	T/Mission
S34	Not Used	—	—	—	—
S35	ION Sensing Module	RED/GRN	1.555V	1.555V	General Description and Operation, ION Sensing Module
S36	5Volt Referrence (AP Sensor 1)	BLK	5.0V	5.0V	AP Sensor
S37	5Volt Referrence (MAP Sensor/EGR Posistion Sensor)	RED/BLU	5.0V	5.0V	(MAP Sensor/EGR Posistion Sensor) Sensor
S38	5Volt Referrence (TP Sensor 1)	RED/BLU	5.0V	5.0V	TP Sensor

PIN	PIN Function	Wire Color	IGN ON	ENG RUN	Refer To
S39	Auto Cruise Lamp	BLK/ORN	0.0V	0.0V	Chassis Electrical
S40	PCM Ground	BLK	0.0V	0.0V	Chassis Electrical

PCM Pinout Table, 80-Way Red Connector – Row “S41 ~ 60”

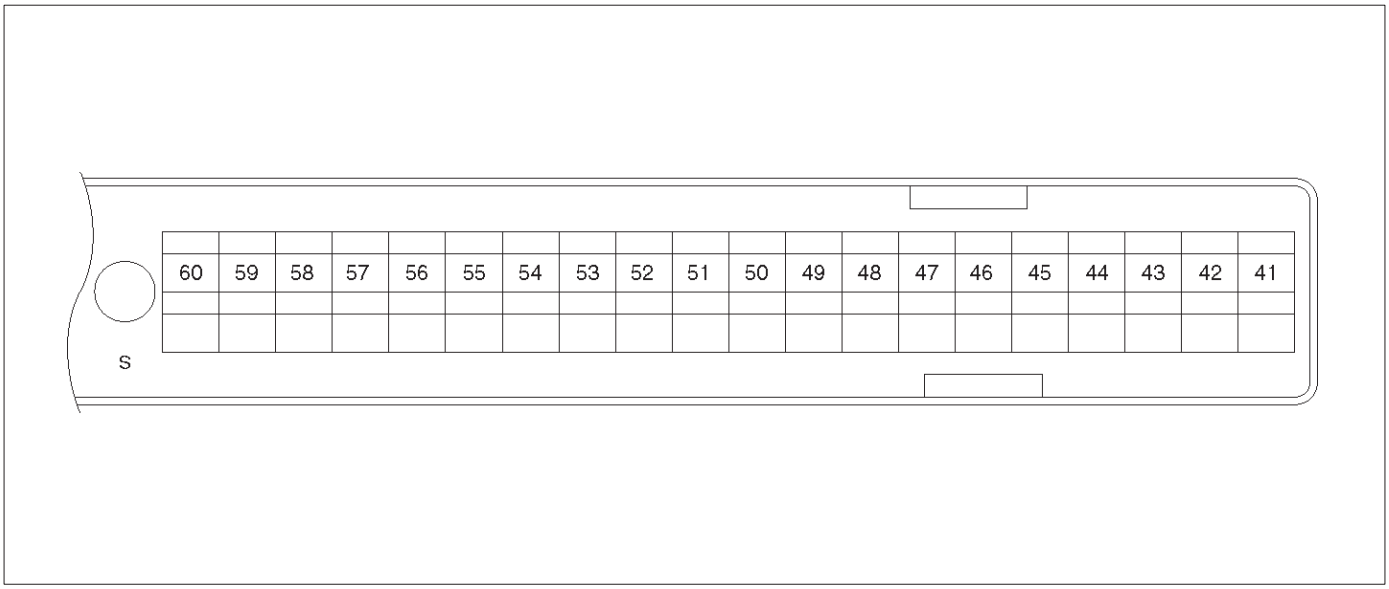

060RY00050

PIN	PIN Function	Wire Color	IGN ON	ENG RUN	Refer To
S41	AP Sensor 3 Sensor Ground	BLU/ORN	0.0V	0.0V	General Description and Operation, APS
S42	Bank 2 HO2S 1 Heater Ground	BLK	0.0V	0.0V	General Description and Operation, Catalyst Monitor HO2S
S43	Transmissin Range Signal“1–2” “3–4”	GRY/WHT	0.0V	0.0V	4L30E T/Mission
S44	Not Used	—	—	—	—
S45	Antilock Brake System (ABS) Off Switch	VIO/WHT	B+	B+	Antilock Brake System
S46	Not Used	—	—	—	—
S47	Water Temp Gauge	WHT/BLK	B+	B+	Chassis Electrical
S48	Fuel Gauge	YEL/RED	B+	B+	Chassis Electrical
S49	DLC	ORN/BLU	B+	B+	General Description
S50	Not Used	—	—	—	—
S51	TCC Solenoid	BRN/BLU	B+	B+	T/Mission
S52	Not Used	—	—	—	—
S53	Power Switch	VIO/RED	B+	B+	4L30E T/Mission
S54	Bank 2 HO2S 1 Low	BLU	0.0V	0.1V	General Description and Operation, Catalyst Monitor HO2S
S55	Transmissin Output Speed Sensor	WHT	0.0V	0.0V	4L30E T/Mission
S56	Not Used	—	—	—	—
S57	Not Used	—	—	—	—
S58	Bank 2 HO2S 1 High	RED	0.3V	0.1–0.9V	General Description and Operation, Catalyst Monitor HO2S

PIN	PIN Function	Wire Color	IGN ON	ENG RUN	Refer To
S59	Auto Cruise Steering Set Switch	Light GRN	0.0V	0.0V	Chassis Electrical
S60	Not Used	—	—	—	—

PCM Pinout Table, 80-Way Red Connector – Row “S61 ~ 80”

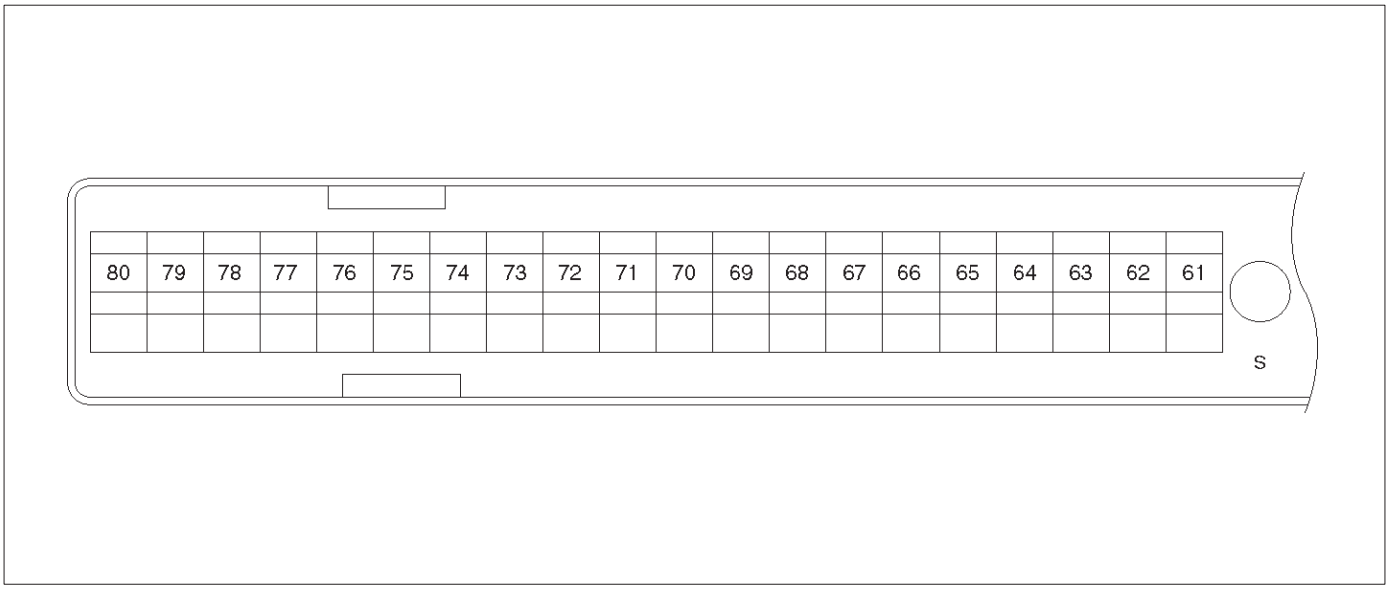

060RY00051

PIN	PIN Function	Wire Color	IGN ON	ENG RUN	Refer To
S61	Intake Air Temperature (IAT)Sensor Ground	GRN	0.0V	0.0V	General Description and Operation, IAT
S62	ION Sensing Module	RED	1.555V	1.555V	General Description and Operation, ION Sensing Module
S63	Bank 1 HO2S 2 High	WHT	0.3V	0.1–0.9V	General Description and Operation, Catalyst Monitor HO2S
S64	Bank 2 HO2S 1 High	PNK	0.3V	0.1–0.9V	General Description and Operation, Catalyst Monitor HO2S
S65	Bank 2 HO2S 2 High	GRN	0.3V	0.1–0.9V	General Description and Operation, Catalyst Monitor HO2S
S66	Transmission Fluid Temperature Sensor	RED/BLK	0.5–4.9V (depends on temperature)	0.5–4.9V (depends on temperature)	4L30E T/Mission
S67	Exhaust Gas Recirculation (EGR)	YEL/RED	0.6V	0.6V	General Description and Operation,EGR Control
S68	Accelerator Position(AP) Sensor 1	WHT	0.41–0.45V	0.41–0.45V	General Description and Operation,AP Sensor
S69	Throttle Valve DC Motor(+)	RED	Duty Cycle	Duty Cycle	General Description and Operation,ETC
S70	Not Used	—	—	—	—
S71	Not Used	—	—	—	—
S72	Ignition Feed for ETC	RED/BLU	B+	B+	Chassis Electrical
S73	Auto Cruise Main Lamp	GRY/BLU	B+	B+	Chassis Electrical
S74	Variable Intake Manifold	WHT/BLU	0.0V	B+(rpm 3600 over)	General Description
S75	Not Used	—	—	—	—
S76	Throttle Position(TP) 1 Sensor Signal	BLU	0.5–0.8V	0.5–0.8V (at idle)	General Description and Operation,TPS

PIN	PIN Function	Wire Color	IGN ON	ENG RUN	Refer To
S77	5Volt Referrence (AP Sensor 3)	ORN	5.0V	5.0V	Appropriate Sensor
S78	Accelerate Position(AP) Sensor 2	YEL	0.41–0.45V	0.41–0.45V	General Description and Operation,AP Sensor
S79	Accelerate Position(AP) Sensor 3	BLU/GRN	4.55–4.99V	0.41–0.45V	General Description and Operation,AP Sensor
S80	Manifold Absolute Pressure(MAP)	GRN	0V	0V	General Description and Operation, Manifold Absolute Pressure

Component Locators

Engine Component Locator

RHD

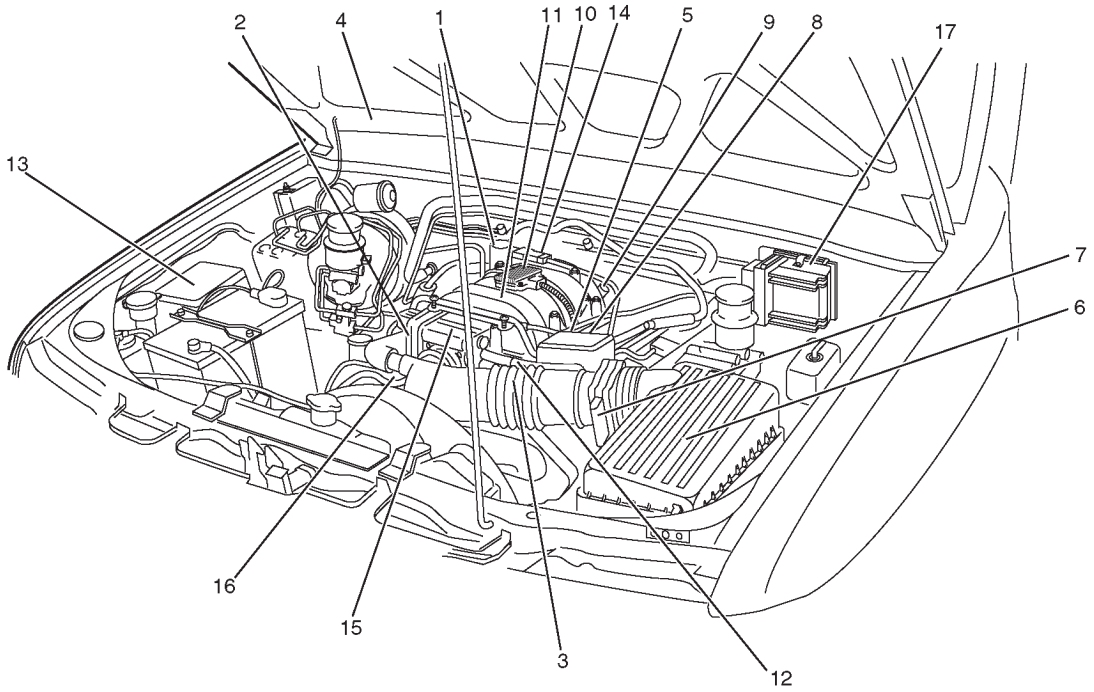

LHD

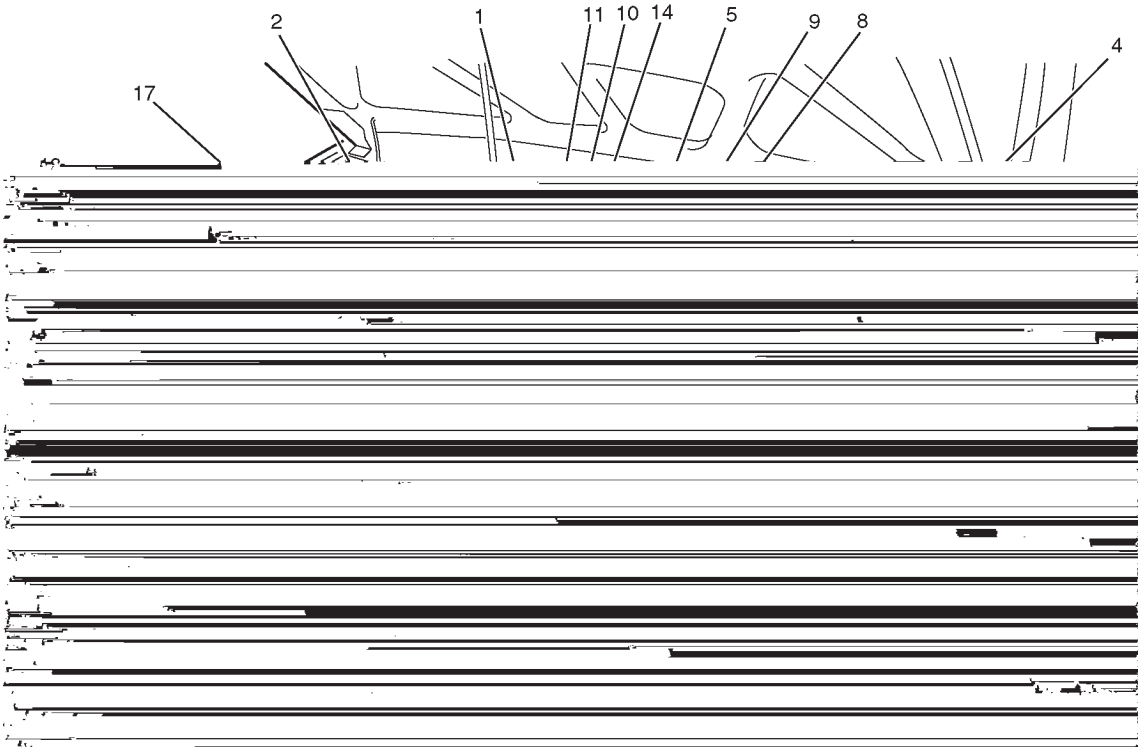

060R200222–X

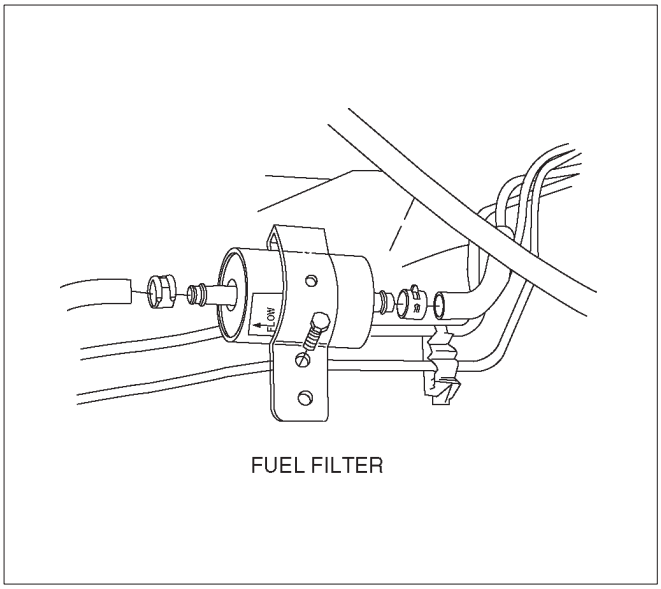

041RW004

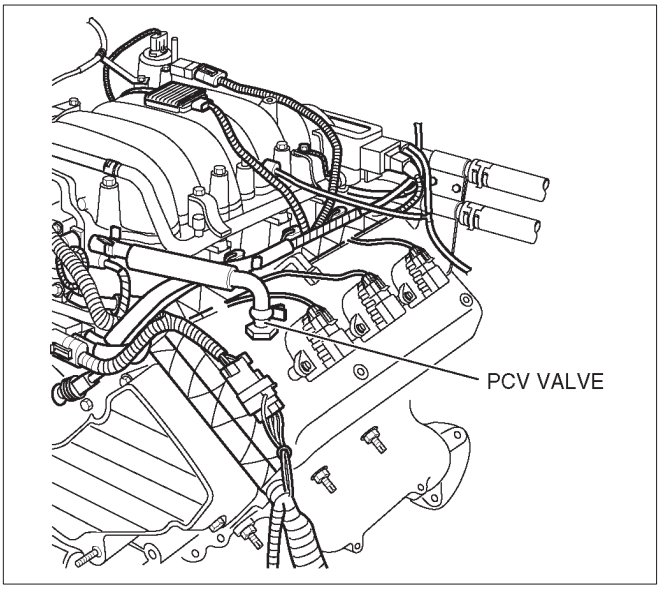

060R200208

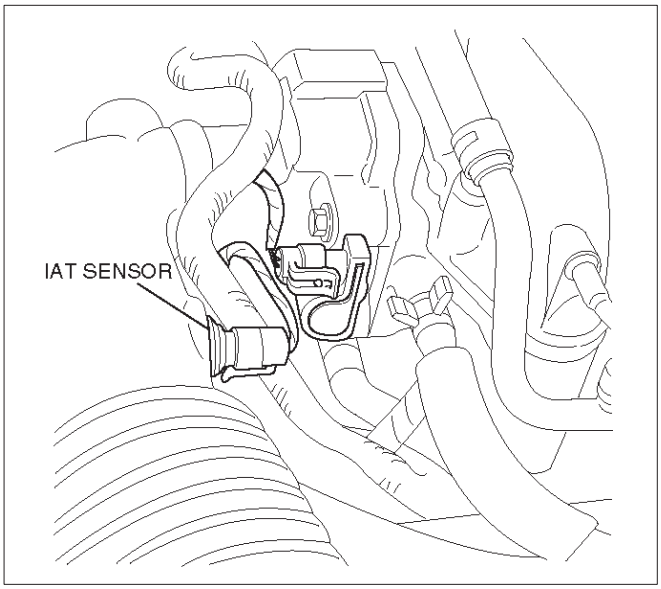

025RW005

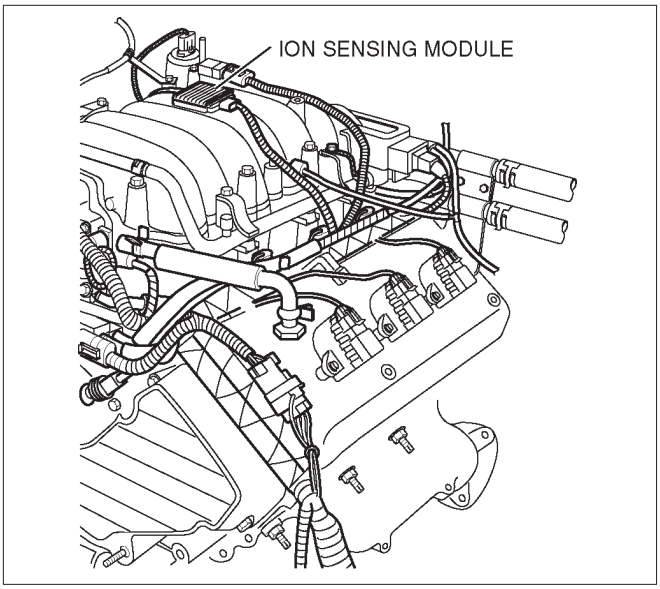

060R200209

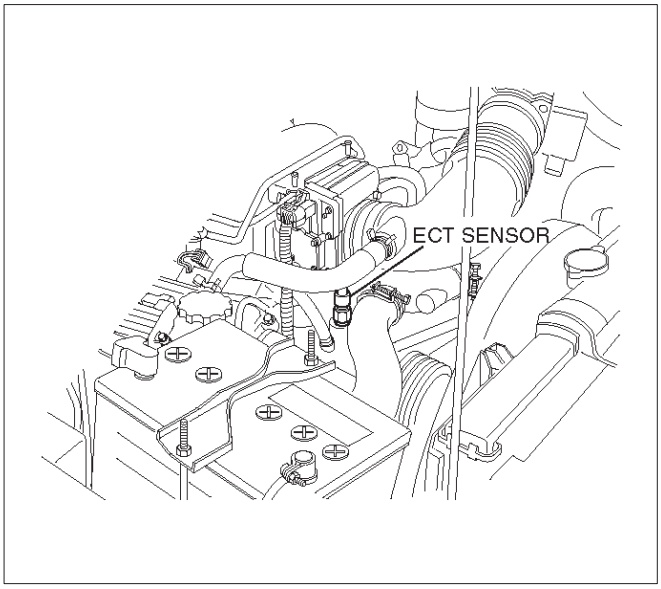

060RY00014

Diagnosis

Strategy-Based Diagnostics

Strategy-Based Diagnostics

The strategy-based diagnostic is a uniform approach to repair all Electrical/Electronic (E/E) systems. The diagnostic flow can always be used to resolve an E/E system problem and is a starting point when repairs are necessary. The following steps will instruct the technician how to proceed with a diagnosis:

1. Verify the customer complaint.
   - To verify the customer complaint, the technician should know the normal operation of the system.
2. Perform preliminary checks.
   - Conduct a thorough visual inspection.
   - Review the service history.
   - Detect unusual sounds or odors.
   - Gather diagnostic trouble code information to achieve an effective repair.
3. Check bulletins and other service information.
   - This includes videos, newsletters, etc.
4. Refer to service information (manual) system check(s).
   - “System checks” contain information on a system that may not be supported by one or more DTCs. System checks verify proper operation of the system. This will lead the technician in an organized approach to diagnostics.
5. Refer to service diagnostics.

DTC Stored

Follow the designated DTC chart exactly to make an effective repair.

No DTC

Select the symptom from the symptom tables. Follow the diagnostic paths or suggestions to complete the repair. You may refer to the applicable component/system check in the system checks.

No Matching Symptom

1. Analyze the complaint.
2. Develop a plan for diagnostics.
3. Utilize the wiring diagrams and the theory of operation.

Combine technician knowledge with efficient use of the available service information.

Intermittents

Conditions that are not always present are called intermittents. To resolve intermittents, perform the following steps:

1. Observe history DTCs, DTC modes, and freeze frame data.
2. Evaluate the symptoms and the conditions described by the customer.
3. Use a check sheet or other method to identify the circuit or electrical system component.
4. Follow the suggestions for intermittent diagnosis found in the service documentation.

Most Scan Tools, such as the Tech 2, have data-capturing capabilities that can assist in detecting intermittents.

No Trouble Found

This condition exists when the vehicle is found to operate normally. The condition described by the customer may be normal. Verify the customer complaint against another vehicle that is operating normally. The condition may be intermittent. Verify the complaint under the conditions described by the customer before releasing the vehicle.

1. Re-examine the complaint.
   When the complaint cannot be successfully found or isolated, a re-evaluation is necessary. The complaint should be re-verified and could be intermittent as defined in *Intermittents* section, or could be normal.
2. Repair and verify.
   After isolating the cause, the repairs should be made. Validate for proper operation and verify that the symptom has been corrected. This may involve road testing or other methods to verify that the complaint has been resolved under the following conditions:
   - Conditions noted by the customer.
   - If a DTC was diagnosed, verify a repair by duplicating conditions present when the DTC was set as noted in the Failure Records or Freeze Frame data.

Verifying Vehicle Repair

Verification of the vehicle repair will be more comprehensive for vehicles with OBD system diagnostics. Following a repair, the technician should perform the following steps:

IMPORTANT: Follow the steps below when you verify repairs on OBD systems. Failure to follow these steps could result in unnecessary repairs.

1. Review and record the Failure Records and the Freeze Frame data for the DTC which has been diagnosed (Freeze Frame data will only be stored for an A or B type diagnostic and only if the MIL(”Check Engine” lamp) has been requested).
2. Clear the DTC(S).
3. Operate the vehicle within conditions noted in the Failure Records and Freeze Frame data.
4. Monitor the DTC status information for the DTC which has been diagnosed until the diagnostic test associated with that DTC runs.

General Service Information

OBD Serviceablity Issues

With the introduction of OBD diagnostics across the entire passenger car and light-duty truck market in 1996, illumination of the MIL (“Check Engine” lamp) due to a non-vehicle fault could lead to misdiagnosis of the vehicle, increased warranty expense and customer dissatisfaction. The following list of non-vehicle faults does not include every possible fault and may not apply equally to all product lines.

Non-OEM Parts

All of the OBD diagnostics have been calibrated to run with OEM parts. Something as simple as a high-performance exhaust system that affects exhaust system back pressure could potentially interfere with the operation of the EGR valve and thereby turn on the MIL (“Check Engine” lamp). Small leaks in the exhaust system near the post catalyst oxygen sensor can also cause the MIL (“Check Engine” lamp) to turn on.
Aftermarket electronics, such as transceivers, stereos, and anti-theft devices, may radiate EMI into the control system if they are improperly installed. This may cause a false sensor reading and turn on the MIL (“Check Engine” lamp).

Environment

Temporary environmental conditions, such as localized flooding, will have an effect on the vehicle ignition system. If the ignition system is rain-soaked, it can temporarily cause engine misfire and turn on the MIL (“Check Engine” lamp).

Refueling

A new OBD diagnostic was introduced in 1996 on some vehicles. This diagnostic checks the integrity of the entire evaporative emission system. If the vehicle is restarted after refueling and the fuel cap is not secured correctly, the on-board diagnostic system will sense this as a system fault and turn on the MIL (“Check Engine” lamp) with a DTC P0440.

Vehicle Marshaling

The transportation of new vehicles from the assembly plant to the dealership can involve as many as 60 key cycles within 2 to 3 miles of driving. This type of operation contributes to the fuel fouling of the spark plugs and will turn on the MIL (“Check Engine” lamp) with a P0300 Misfire DTC.

Poor Vehicle Maintenance

The sensitivity of OBD diagnostics will cause the MIL (“Check Engine” lamp) to turn on if the vehicle is not maintained properly. Restricted air filters, fuel filters, and crankcase deposits due to lack of oil changes or improper oil viscosity can trigger actual vehicle faults that were not previously monitored prior to OBD. Poor vehicle maintenance can’t be classified as a “non-vehicle fault”, but with the sensitivity of OBD diagnostics, vehicle maintenance schedules must be more closely followed.

Related System Faults

Many of the OBD system diagnostics will not run if the PCM detects a fault on a related system or component. One example would be that if the PCM detected a Misfire fault, the diagnostics on the catalytic converter would be suspended until Misfire fault was repaired. If the Misfire fault was severe enough, the catalytic converter could be damaged due to overheating and would never set a Catalyst DTC until the Misfire fault was repaired and the Catalyst diagnostic was allowed to run to completion. If this happens, the customer may have to make two trips to the dealership in order to repair the vehicle.

Visual / Physical Engine Compartment Inspection

Perform a careful visual and physical engine compartment inspection when performing any diagnostic procedure or diagnosing the cause of an emission test failure. This can often lead to repairing a problem without further steps. Use the following guidelines when performing a visual/physical inspection:

- Inspect all vacuum hoses for pinches, cuts, disconnections, and proper routing.
- Inspect hoses that are difficult to see behind other components.
- Inspect all wires in the engine compartment for proper connections, burned or chafed spots, pinched wires, contact with sharp edges or contact with hot exhaust manifolds or pipes.

Basic Knowledge of Tools Required

NOTE: Lack of basic knowledge of this powertrain when performing diagnostic procedures could result in an incorrect diagnosis or damage to powertrain components. Do not attempt to diagnose a powertrain problem without this basic knowledge.

A basic understanding of hand tools is necessary to effectively use this section of the Service Manual.

Serial Data Communications

Class 2 Serial Data Communications

Government regulations require that all vehicle manufacturers establish a common communication system. This vehicle utilizes the “Class 2” communication system. Each bit of information can have one of two lengths: long or short. This allows vehicle wiring to be reduced by transmitting and receiving multiple signals over a single wire. The messages carried on Class 2 data streams are also prioritized. If two messages attempt to establish communications on the data line at the same time, only the message with higher priority will continue. The device with the lower priority message must wait. The most significant result of this regulation is that it provides Scan tool manufacturers with the capability to access data from any make or model vehicle that is sold. The data displayed on other Scan tools will appear the same, with some exceptions. Some Scan tools will only be able to display certain vehicle parameters as values that are a coded representation of the true or actual value. On this vehicle the Scan tool displays the actual values for vehicle parameters. It will not be necessary to perform any conversions from coded values to actual values.

On-Board Diagnostic (OBD)

On-Board Diagnostic Tests

A diagnostic test is a series of steps, the result of which is a pass or fail reported to the diagnostic executive. When a diagnostic test reports a pass result, the diagnostic executive records the following data:

- The diagnostic test has been completed since the last ignition cycle.
- The diagnostic test has passed during the current ignition cycle.
- The fault identified by the diagnostic test is not currently active.

When a diagnostic test reports a fail result, the diagnostic executive records the following data:

- The diagnostic test has been completed since the last ignition cycle.
- The fault identified by the diagnostic test is currently active.
- The fault has been active during this ignition cycle.
- The operating conditions at the time of the failure.

Remember, a fuel trim DTC may be triggered by a list of vehicle faults. Make use of all information available (other DTCs stored, rich or lean condition, etc.) when diagnosing a fuel trim fault.

Comprehensive Component Monitor Diagnostic Operation

Comprehensive component monitoring diagnostics are required to monitor emissions-related input and output powertrain components.

Input Components:

Input components are monitored for circuit continuity and out-of-range values. This includes rationality checking. Rationality checking refers to indicating a fault when the signal from a sensor does not seem reasonable, i.e. Throttle Position (TP) sensor that indicates high throttle position at low engine loads or MAP voltage. Input components may include, but are not limited to the following sensors:

- Vehicle Speed Sensor (VSS)
- Crankshaft Position (CKP) sensor
- Throttle Position (TP) sensor
- Engine Coolant Temperature (ECT) sensor
- Manifold Absolute Pressure (MAP) sensor
- Mass Air Flow (MAF) sensor

In addition to the circuit continuity and rationality check, the ECT sensor is monitored for its ability to achieve a steady state temperature to enable closed loop fuel control.

Output Components:

Output components are diagnosed for proper response to control module commands. Components where functional monitoring is not feasible will be monitored for circuit continuity and out-of-range values if applicable.

Output components to be monitored include, but are not limited to, the following circuits:

- Control module controlled EVAP Canister Purge Valve
- Electronic Transmission controls
- A/C relays
- VSS output
- MIL control
- Cruise control inhibit

Refer to PCM and Sensors in General Descriptions.

Passive and Active Diagnostic Tests

A passive test is a diagnostic test which simply monitors a vehicle system or component. Conversely, an active test, actually takes some sort of action when performing diagnostic functions, often in response to a failed passive test. For example, the EGR diagnostic active test will force the EGR valve open during closed throttle decel and/or force the EGR valve closed during a steady state. Either action should result in a change in manifold pressure.

Intrusive Diagnostic Tests

This is any on-board test run by the Diagnostic Management System which may have an effect on vehicle performance or emission levels.

Warm-Up Cycle

A warm-up cycle means that engine at temperature must reach a minimum of 70˚C (160˚F) *and* rise at least 22˚C (40˚F) over the course of a trip.

Freeze Frame

Freeze Frame is an element of the Diagnostic Management System which stores various vehicle information at the moment an emissions-related fault is stored in memory and when the MIL is commanded on. These data can help to identify the cause of a fault. Refer to *Storing And Erasing Freeze Frame Data* in this section for more detailed information.

Failure Records

Failure Records data is an enhancement of the OBD Freeze Frame feature. Failure Records store the same vehicle information as does Freeze Frame, but it will store that information for any fault which is stored in on-board memory, while Freeze Frame stores information only for emission-related faults that command the MIL on.

Common OBD Terms

Diagnostic

When used as a noun, the word diagnostic refers to any on-board test run by the vehicle's Diagnostic Management System. A diagnostic is simply a test run on a system or component to determine if the system or component is operating according to specification. There are many diagnostics, shown in the following list:

- Misfire
- Oxygen sensors
- Oxygen sensor heaters
- EGR
- Catalyst monitoring

Enable Criteria

The term "enable criteria" is engineering language for the conditions necessary for a given diagnostic test to run. Each diagnostic has a specific list of conditions which must be met before the diagnostic will run. "Enable criteria" is another way of saying "conditions required".

The enable criteria for each diagnostic is listed on the first page of the DTC description in Section 6E under the heading "Conditions for Setting the DTC". Enable criteria varies with each diagnostic, and typically includes, but is not limited to the following items:

- engine speed
- vehicle speed
- ECT
- MAF/MAP
- barometric pressure
- IAT
- TP
- high canister purge
- fuel trim
- TCC enabled
- A/C on

Trip

Technically, a trip is a key on-run-key off cycle in which all the enable criteria for a given diagnostic are met, allowing the diagnostic to run. Unfortunately, this concept is not quite that simple. A trip is official when all the enable criteria for a given diagnostic are met. But because the enable criteria vary from one diagnostic to another, the definition of trip varies as well. Some diagnostics are run when the vehicle is at operating temperature, some when the vehicle first starts up; some require that the vehicle be cruising at a steady highway speed, some run only when the vehicle is idle; some diagnostics function with the TCC disabled. Some run only immediately following a cold engine start-up.

A trip then, is defined as a key on-run-key off cycle in which the vehicle was operated in such a way as to satisfy the enabling criteria for a given diagnostic, and this diagnostic will consider this cycle to be one trip. However, another diagnostic with a different set of enable criteria (which were not met) during this driving event, would not consider it a trip. No trip will occur for that particular diagnostic until the vehicle is driven in such a way as to meet all the enable criteria.

The Diagnostic Executive

The Diagnostic Executive is a unique segment of software which is designed to coordinate and prioritize the diagnostic procedures as well as define the protocol for recording and displaying their results. The main responsibilities of the Diagnostic Executive are listed as the following:

- Commanding the MIL ("Check Engine" lamp) on and off
- DTC logging and clearing
- Freeze Frame data for the first emission related DTC recorded
- Non-emission related Service Lamp
- Operating conditions Failure Records buffer, (the number of records will vary)
- Current status information on each diagnostic
- System Status (I/M ready)

The Diagnostic Executive records DTCs and turns on the MIL when emission-related faults occur. It can also turn off the MIL if the conditions cease which caused the DTC to set.

Diagnostic Information

The diagnostic charts and functional checks are designed to locate a faulty circuit or component through a process of logical decisions. The charts are prepared with the requirement that the vehicle functioned correctly at the time of assembly and that there are no multiple faults present.

There is a continuous self-diagnosis on certain control functions. This diagnostic capability is complemented by the diagnostic procedures contained in this manual. The language of communicating the source of the malfunction is a system of diagnostic trouble codes. When a malfunction is detected by the control module, a diagnostic trouble code is set and the Malfunction Indicator Lamp (MIL) ("Check Engine" lamp) is illuminated.

Malfunction Indicator Lamp (MIL)

The Malfunction Indicator Lamp (MIL) looks the same as the MIL you are already familiar with ("Check Engine" lamp). However, OBD requires that it illuminate under a strict set of guide lines.

Basically, the MIL is turned on when the PCM detects a DTC that will impact vehicle emissions.

The MIL is under the control of the Diagnostic Executive. The MIL will be turned on if an emissions-related diagnostic test indicates a malfunction has occurred. It will stay on until the system or component passes the same test, for three consecutive trips, with no emissions related faults.

If the vehicle is experiencing a misfire malfunction which may cause damage to the Three-Way Catalytic Converter (TWC), the MIL will flash once per second. This will continue until the vehicle is outside of speed and load conditions which could cause possible catalyst damage, and the MIL will stop flashing and remain on steady.

Extinguishing the MIL

When the MIL is on, the Diagnostic Executive will turn off the MIL after *three(3) consecutive* trips that a "test passed" has been reported for the diagnostic test that originally caused the MIL to illuminate.

Although the MIL has been turned off, the DTC will remain in the PCM memory (both Freeze Frame and Failure Records) until *forty(40) warm-up cycles after no faults* have been completed.

If the MIL was set by either a fuel trim or misfire-related DTC, additional requirements must be met. In addition to the requirements stated in the previous paragraph, these requirements are as follows:

- The diagnostic tests that are passed must occur within 375 RPM of the RPM data stored at the time the last test failed.
- Plus or minus ten (10) percent of the engine load that was stored at the time the last failed.
- Similar engine temperature conditions (warmed up or warming up) as those stored at the time the last test failed.

Meeting these requirements ensures that the fault which turned on the MIL has been corrected.

The MIL ("Check Engine" lamp) is on the instrument panel and has the following function:

- It informs the driver that a fault affects vehicle emission levels has occurred and that the vehicle should be taken for service as soon as possible.
- As a bulb and system check, the MIL will come "ON" with the key "ON" and the engine not running. When the engine is started, the MIL will turn "OFF."
- When the MIL remains "ON" while the engine is running, or when a malfunction is suspected due to a driveability or emissions problem, a Powertrain On-Board Diagnostic (OBD) System Check must be performed. The procedures for these checks are given in On-Board Diagnostic (OBD) System Check. These checks will expose faults which may not be detected if other diagnostics are performed first.

DTC Types

Each DTC is directly related to a diagnostic test. The Diagnostic Management System sets DTC based on the failure of the tests during a trip or trips. Certain tests must fail two (2) consecutive trips before the DTC is set. The following are the four (4) types of DTCs and the characteristics of those codes:

- Type A
  - Emissions related
  - Requests illumination of the MIL of the first trip with a fail
  - Stores a History DTC on the first trip with a fail
  - Stores a Freeze Frame (if empty)
  - Stores a Fail Record
  - Updates the Fail Record each time the diagnostic test fails
- Type B
  - Emissions related
  - "Armed" after one (1) trip with a fail
  - "Disarmed" after one (1) trip with a pass
  - Requests illumination of the MIL on the *second consecutive trip* with a fail
  - Stores a History DTC on the second consecutive trip with a fail (The DTC will be armed after the first fail)
  - Stores a Freeze Frame on the second consecutive trip with a fail (if empty)
  - Stores a Fail Record when the first test fails (not dependent on *consecutive trip* fails)
  - Updates the Fail Record each time the diagnostic test fails

(Some special conditions apply to misfire and fuel trim DTCs)

- Type C (if the vehicle is so equipped)
  - Non-Emissions related
  - Requests illumination of the Service
  - Stores a History DTC on the *first trip* with a fail
  - *Does not* store a Freeze Frame
  - Stores Fail Record when test fails
  - Updates the Fail Record each time the diagnostic test fails
- Type D
  - Non-Emissions related
  - Not request illumination of any lamp
  - Stores a History DTC on the *first trip* with a fail
  - *Does not* store a Freeze Frame
  - Stores Fail Record when test fails

- Updates the Fail Record each time the diagnostic test fails

IMPORTANT: Only four Fail Records can be stored. Each Fail Record is for a different DTC. It is possible that there will not be Fail Records for every DTC if multiple DTCs are set.

Special Cases of Type B Diagnostic Tests

Unique to the misfire diagnostic, the Diagnostic Executive has the capability of alerting the vehicle operator to potentially damaging levels of misfire. If a misfire condition exists that could potentially damage the catalytic converter as a result of high misfire levels, the Diagnostic Executive will command the MIL to "flash" at a rate of once per second during those the time that the catalyst damaging misfire condition is present.

Fuel trim and misfire are special cases of *Type B* diagnostics. Each time a fuel trim or misfire malfunction is detected, engine load, engine speed, and engine coolant temperature are recorded.

When the ignition is turned off, the last reported set of conditions remain stored. During subsequent ignition cycles, the stored conditions are used as reference for similar conditions. If a malfunction occurs during two consecutive trips, the Diagnostic Executive treats the failure as a normal *Type B* diagnostic, and does not use the stored conditions. However, if a malfunction occurs on two non-consecutive trips, the stored conditions are compared with the current conditions. The MIL will then illuminate under the following conditions:

- When the engine load conditions are within 10% of the previous test that failed.
- Engine speed is within 375 rpm, of the previous test that failed.
- Engine coolant temperature is in the same range as the previous test that failed.

Storing and Erasing Freeze Frame Data and Failure Records

Government regulations require that engine operating conditions be captured whenever the MIL is illuminated. The data captured is called Freeze Frame data. The Freeze Frame data is very similar to a single record of operating conditions. Whenever the MIL is illuminated, the corresponding record of operating conditions is recorded to the Freeze Frame buffer.

Freeze Frame data can only be overwritten with data associated with a misfire or fuel trim malfunction. Data from these faults take precedence over data associated with any other fault. The Freeze Frame data will not be erased unless the associated history DTC is cleared.

Each time a diagnostic test reports a failure, the current engine operating conditions are recorded in the *Failure Records* buffer. A subsequent failure will update the recorded operating conditions. The following operating conditions for the diagnostic test which failed *typically* include the following parameters:

- Air Fuel Ratio
- Air Flow Rate
- Fuel Trim
- Engine Speed
- Engine Load
- Engine Coolant Temperature
- Vehicle Speed
- TP Angle
- AP Angle
- MAP/BARO
- Injector Base Pulse Width
- Loop Status

Intermittent Malfunction Indicator Lamp

In the case of an "intermittent" fault, the MIL ("Check Engine" lamp) may illuminate and then (after three trips) go "OFF". However, the corresponding diagnostic trouble code will be stored in memory. When unexpected diagnostic trouble codes appear, check for an intermittent malfunction.

A diagnostic trouble code may reset. Consult the "Diagnostic Aids" associated with the diagnostic trouble code. A physical inspection of the applicable sub-system most often will resolve the problem.

Data Link Connector (DLC)

The provision for communication with the control module is the Data Link Connector (DLC). It is located at the lower left of the instrument panel behind a small square cover. The DLC is used to connect to the Tech 2 Scan Tool. Some common uses of the Tech 2 are listed below:

- Identifying stored Diagnostic Trouble Codes (DTCs).
- Clearing DTCs.
- Performing output control tests.
- Reading serial data.

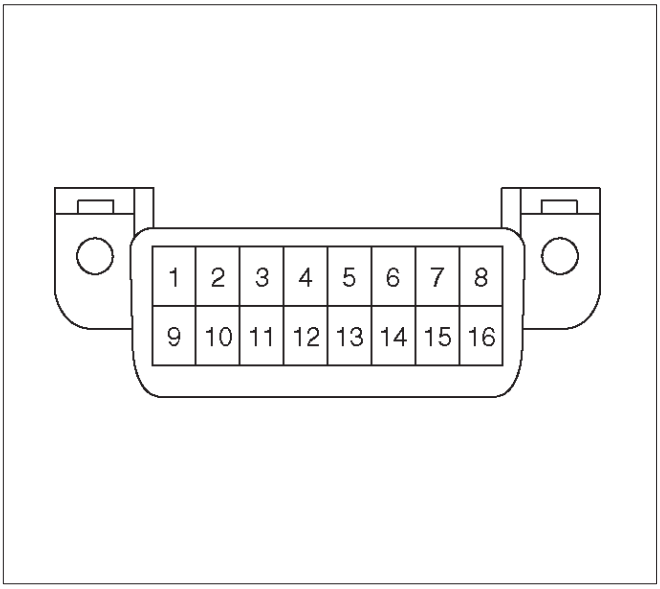

TS24064

Verifying Vehicle Repair

Verification of vehicle repair will be more comprehensive for vehicles with OBD system diagnostic. Following a repair, the technician should perform the following steps:

1. Review and record the Fail Records and/or Freeze Frame data for the DTC which has been diagnosed (Freeze Frame data will only be stored for an A or B type diagnostic and only if the MIL has been requested).
2. Clear DTC(s).
3. Operate the vehicle within conditions noted in the Fail Records and/or Freeze Frame data.
4. Monitor the DTC status information for the DTC which has been diagnosed until the diagnostic test associated with that DTC runs.

Following these steps are very important in verifying repairs on OBD systems. Failure to follow these steps could result in unnecessary repairs.

Reading Diagnostic Trouble Codes Using The Tech 2 Scan Tool

The procedure for reading diagnostic trouble code(s) is to use a diagnostic Scan Tool. When reading DTC(s), follow instructions supplied by tool manufacturer.

Clearing Diagnostic Trouble Codes

IMPORTANT: Do not clear DTCs unless directed to do so by the service information provided for each diagnostic procedure. When DTCs are cleared, the Freeze Frame and Failure Record data which may help diagnose an intermittent fault will also be erased from memory.

If the fault that caused the DTC to be stored into memory has been corrected, the Diagnostic Executive will begin to count the “warm-up” cycles with no further faults detected, the DTC will automatically be cleared from the PCM memory.

To clear Diagnostic Trouble Codes (DTCs), use the diagnostic Scan Tool “clear DTCs” or “clear information” function. When clearing DTCs follow instructions supplied by the tool manufacturer.

When a Scan Tool is not available, DTCs can also be cleared by disconnecting *one* of the following sources for at least thirty (30) seconds.

NOTE: To prevent system damage, the ignition key must be “OFF” when disconnecting or reconnecting battery power.

- The power source to the control module. Examples: fuse, pigtail at battery PCM connectors, etc.
- The negative battery cable. (Disconnecting the negative battery cable will result in the loss of other on-board memory data, such as preset radio tuning).

Tech 2

From 98 MY, Isuzu dealer service departments are recommended to use the Tech 2 Scan Tool. Please refer to the Tech 2 user guide.

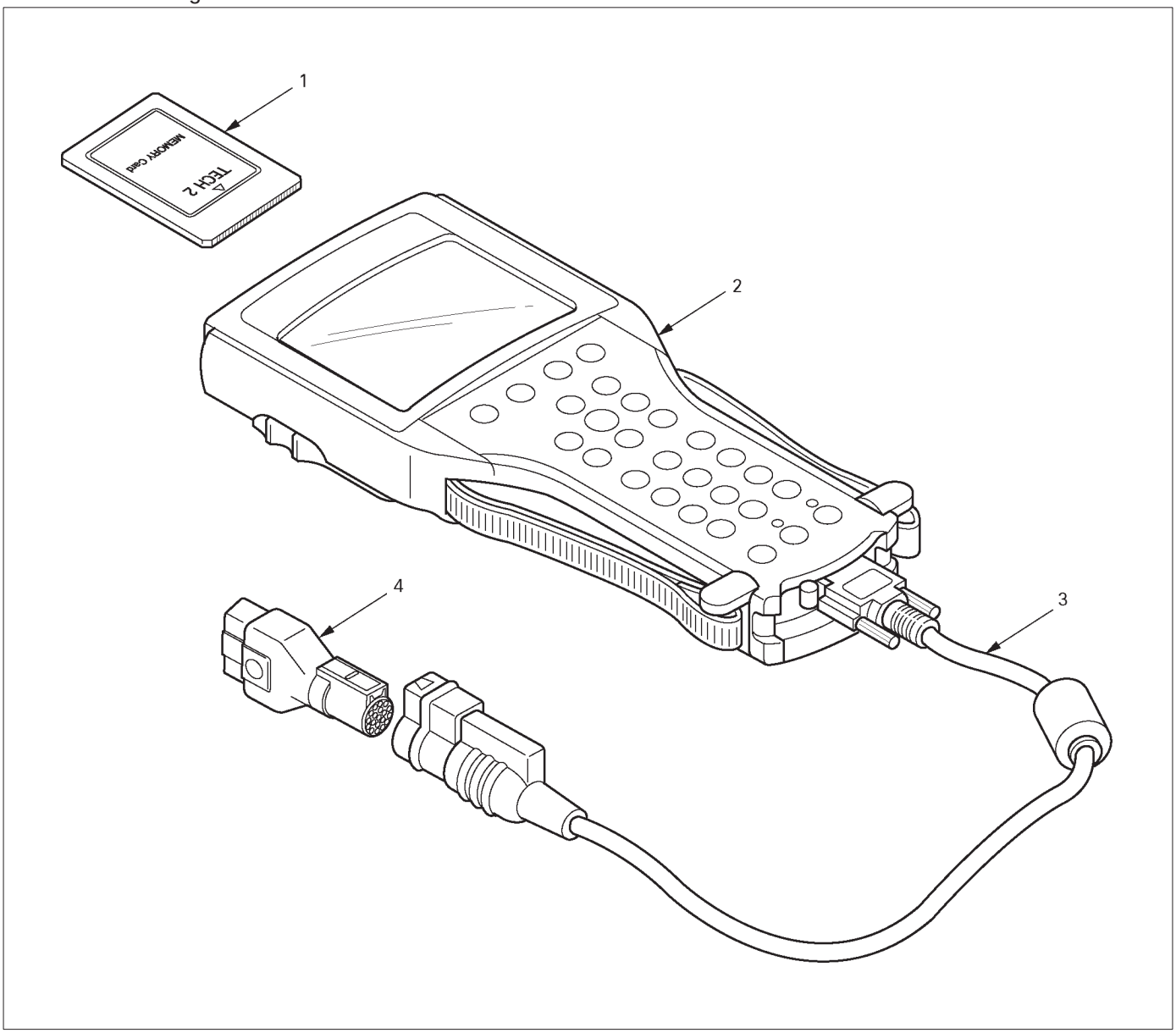

060M200031

Legend

(1) PCMCIA Card
(2) SAE 16/19 Adaptor
(3) DLC Cable
(4) Tech–2

Tech 2 Features

1. Tech 2 is a 12 volt system. Do not apply 24 volts.
2. After connecting and/or installing the Vehicle Communications Interface (VCI) module, PCMCIA card and DLC connector to the Tech 2, connect the tool to the vehicle DLC.
3. Make sure the Tech 2 is OFF when removing or installing the PCMCIA card.
4. The PCMCIA card has a capacity of 10 Megabytes which is 10 times greater than the memory of the Tech 1 Mass Storage Cartridge.
5. The Tech 2 has the capability of two snapshots.
6. The PCMCIA card is sensitive to magnetism and static electricity, so care should be taken in the handling of the card.
7. The Tech 2 can plot a graph when replaying a snapshot.
8. Always return to the Main Menu by pressing the EXIT key several times before shutting down.
9. To clear Diagnostic Trouble Codes (DTCs), open Application Menu and press “F1: Clear DTC Info”.

Getting Started

- Before operating the Isuzu PCMCIA card with the Tech 2, the following steps must be performed:

1. Insert the Isuzu system PCMCIA card (1) into the Tech 2 (5).
2. Connect the SAE 16/19 adapter (3) to the DLC cable (4).
3. Connect the DLC cable to the Tech 2 (5)
4. Make sure the vehicle ignition is off.
5. Connect the Tech 2 SAE 16/19 adapter to the vehicle DLC.
   1. For RHD model: Right front side in the console box.
   2. For LHD model: Left front side int the console box.

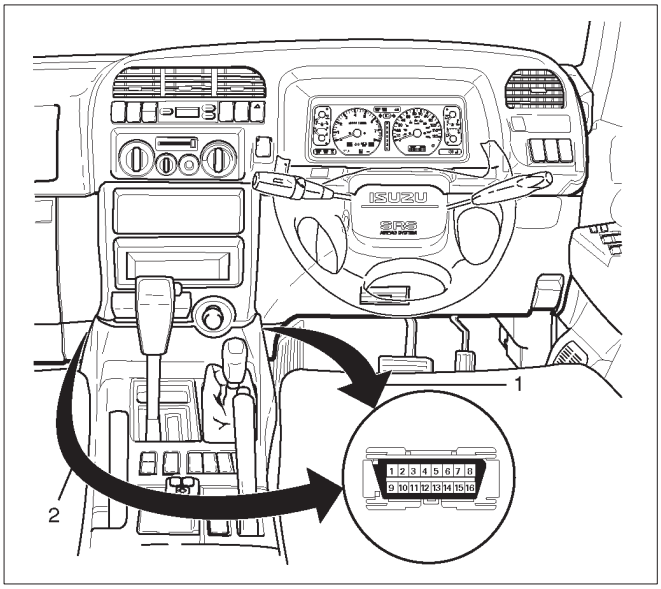

060RW220

6. Turn on the vehicle ignition.
7. Power the Tech 2 ON and verify the Tech 2 power up display.

060RW009

NOTE: The RS232 Loop back connector is only to use for diagnosis of Tech 2. Refer to user guide of the Tech 2.

Operating Procedure (For Example)

The power up screen is displayed when you power up the tester with the Isuzu systems PCMCIA card. Follow the operating procedure below.

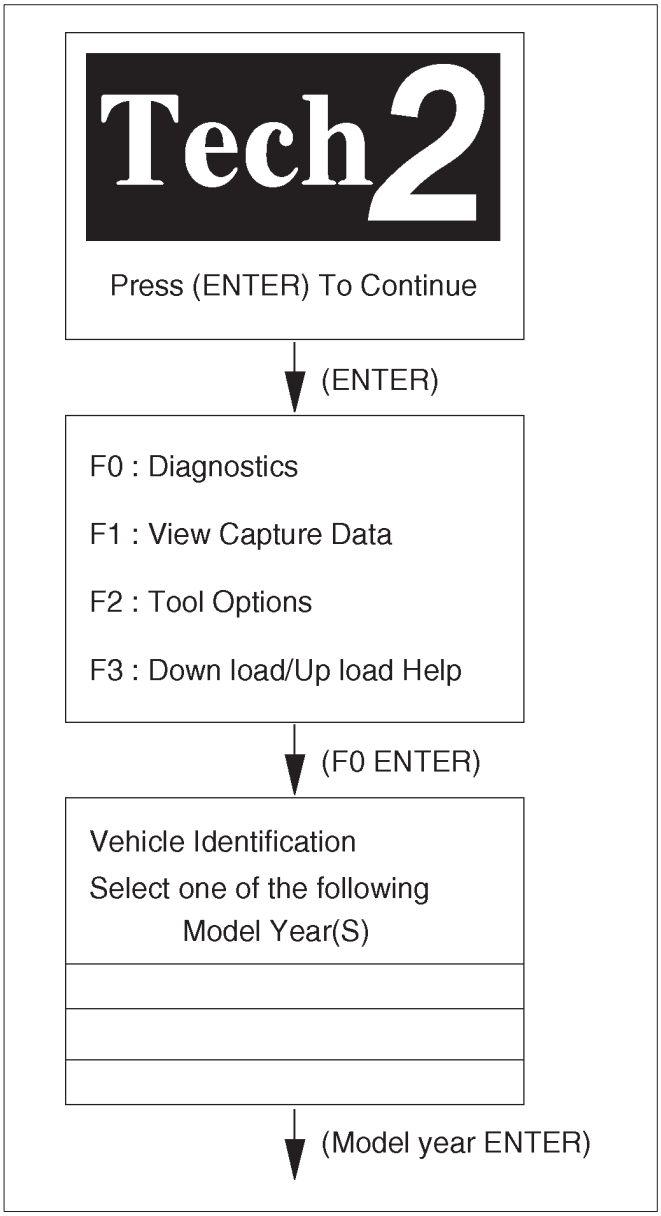

060R100102

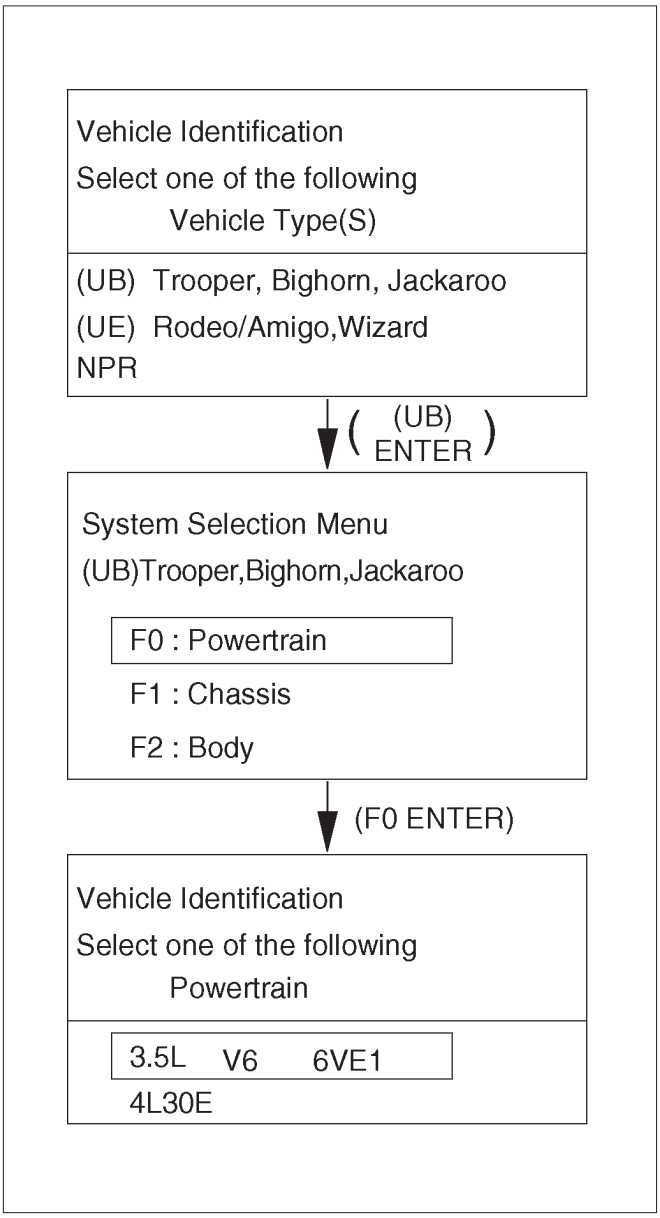

060R200202

Menu

- The following table shows which functions are used for the available equipment versions.

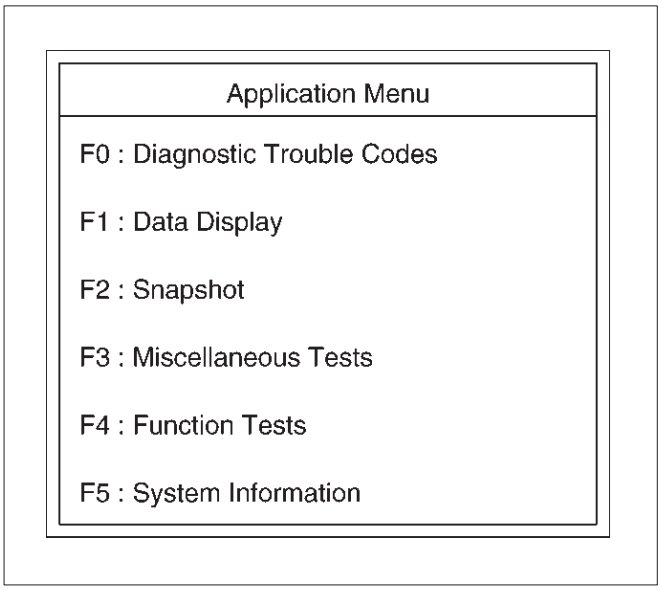

060R100018

DTC Modes

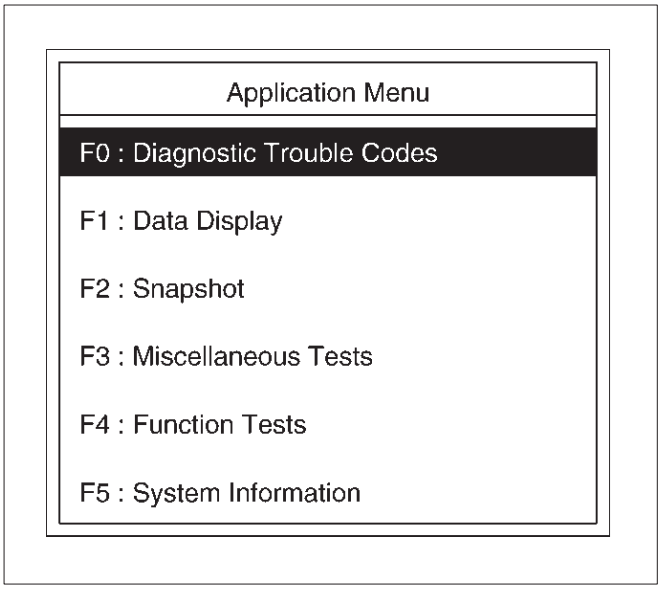

060R100077

On OBD vehicles there are options available in Tech 2 DTC mode to display the enhanced information available. After selecting DTC, the following menu appears:

1. Read DTC Info by Priority
2. Freeze Frame
3. Fail Records (not all applications)
4. DTC Info
5. Clear Info

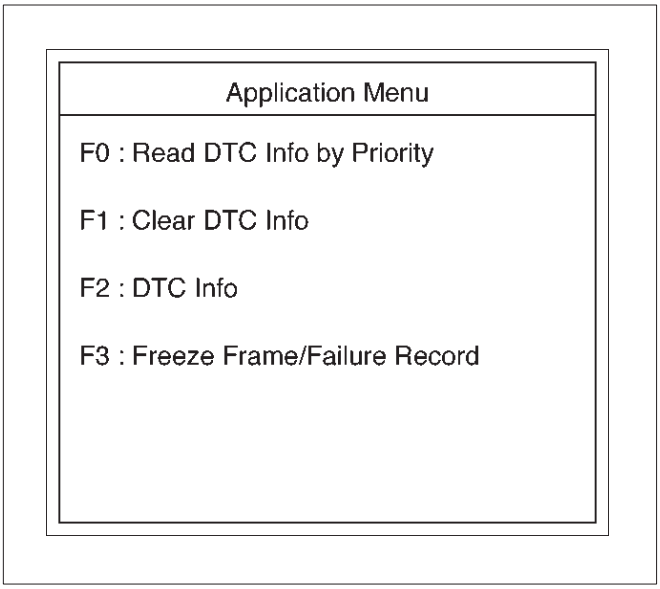

060RW223

The following is a brief description of each of the sub menus in DTC Info and DTC. The order in which they appear here is alphabetical and not necessarily the way they will appear on the Tech 2.

DTC Information Mode

Use the DTC info mode to search for a specific type of stored DTC information.

DTC Status

This selection will display any DTCs that have not run during the current ignition cycle or have reported a test failure during this ignition up to DTCs. DTC tests which run and pass will cause that DTC number to be removed from Tech 2 screen.

Fail This Ignition

This selection will display all DTCs that have failed during the present ignition cycle.

History

This selection will display only DTCs that are stored in the PCM's history memory. It will display all type A and B DTCs that have requested the MIL and have failed within the last 40 warm-up cycles. In addition, it will display all type C and type D DTCs that have failed within the last 40 warm-up cycles.

Last Test Failed

This selection will display only DTCs that have failed the last time the test run. The last test may have run during a previous ignition cycle if a type A or type B DTC is displayed. For type C and type D DTCs, the last failure must have occurred during the current ignition cycle to appear as Last Test Fail.

MILSVC or Message Request

This selection will display only DTCs that are requesting the MIL. Type C and type D DTCs cannot be displayed using this option. This selection will report type B DTCs only after the MIL has been requested.

Not Run Since Code Cleared

This option will display up to DTCs that have not run since the DTCs were last cleared. Since any displayed DTCs have not run, their condition (passing or failing) is unknown.

Test Failed Since Code Cleared

This selection will display all active and history DTCs that have reported a test failure since the last time DTCs were cleared. DTCs that last failed more than 40 warm-up cycles before this option is selected will not be displayed.

Miscellaneous Test

This test consists of eight menus-Lights, Relays, EVAP, Fuel System, Instruments, EGR Control, Variable Intake Manifold Solenoid, and Injector Balance Tests.
In these tests, Tech 2 sends operating signals to the systems to confirm their operations thereby to judge the normality of electric circuits.
To judge intermittent trouble,

1. Confirm DTC freeze frame data, and match the freeze frame data as test conditions with the data list displayed by Miscellaneous Test.
2. Confirm DTC setting conditions, and match the setting conditions as test conditions with the data list displayed by Miscellaneous Test.
3. Refer to the latest Service Bulletin.
   Check to see if the Latest software is released or not. Down load the LATEST PROGRAMMED SOFTWARE to the replacement PCM.

Lamps Test

This test is conducted check MIL, Up Shift Lamp, Low Fuel Lamp, Reduced Power Lamp and Cruise Control Lamp for its working.
Tech2 must be used for this test.
Test Procedure:

1. Connect Tech 2 to the vehicle DLC.
2. Run the Engine at idle.
3. Select F3: Miscellaneous Test in the Application Menu.

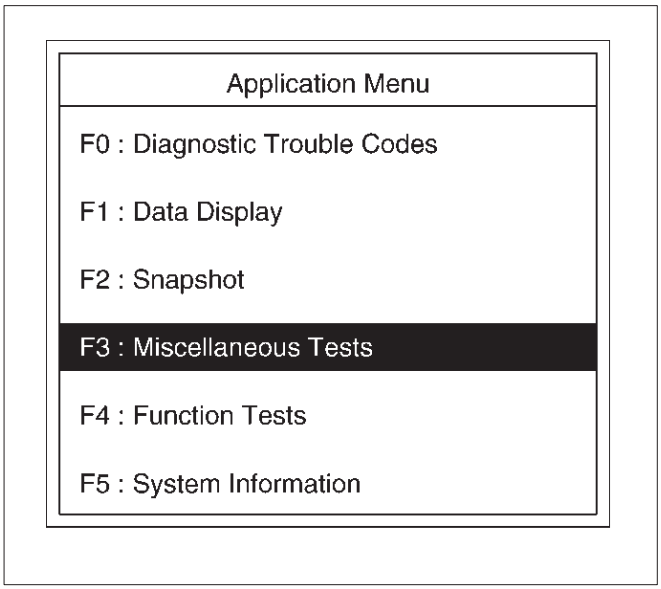

060R100078

4. Select F0:Lamps Test in the Miscellaneous Test.

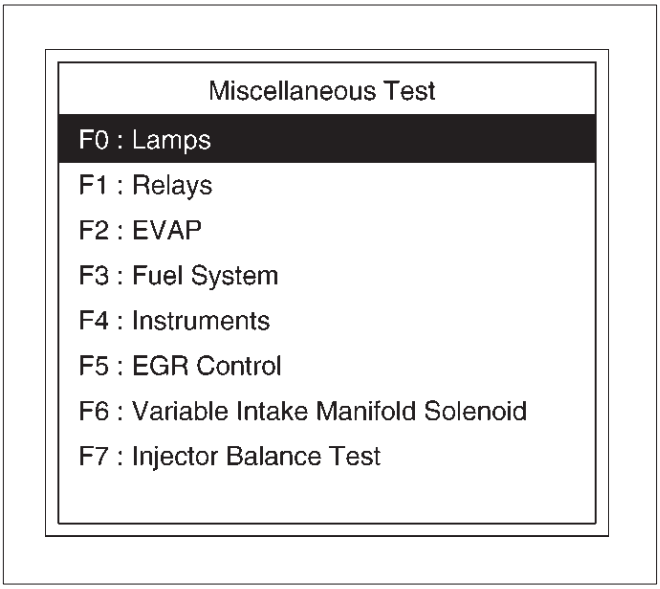

060RY00080

5. Select F0:Malfunction Indicator Lamp.

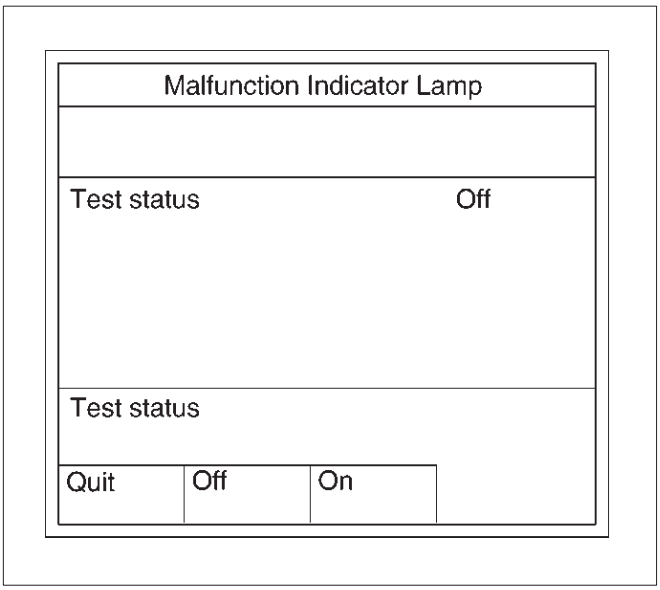

060RY00091

6. Push”On” soft key.
7. Make sure Lamp illuminates.
8. If lamp illuminates, the Lamp is operating correctly.

9. Select F2: Up Shift Lamp

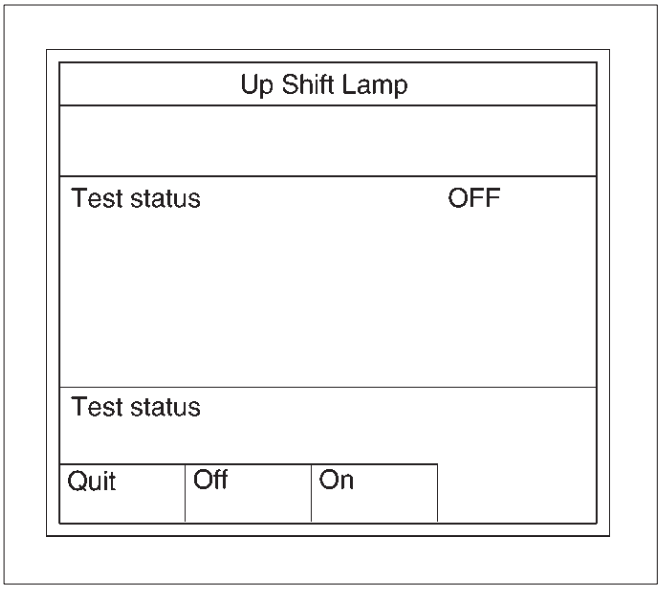

060RY00076

10. Push “On” soft key.
11. Make sure Lamp illuminates.
12. If Lamp illuminates, the Lamp is operating correctly.
13. Select F2:Low Fuel Lamp

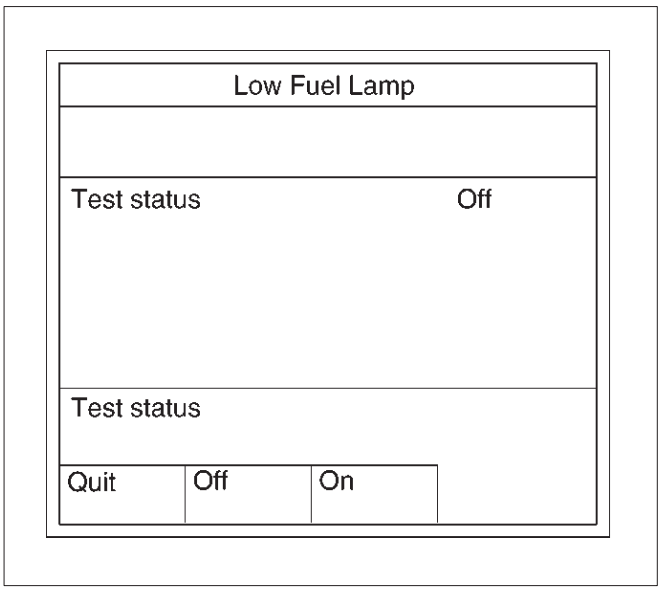

060RY00092

14. Push “On” soft key.
15. Make sure Lamp illuminates.
16. If Lamp illuminates, the Lamp is operating correctly.

17. Select F3:Reduced Power Lamp

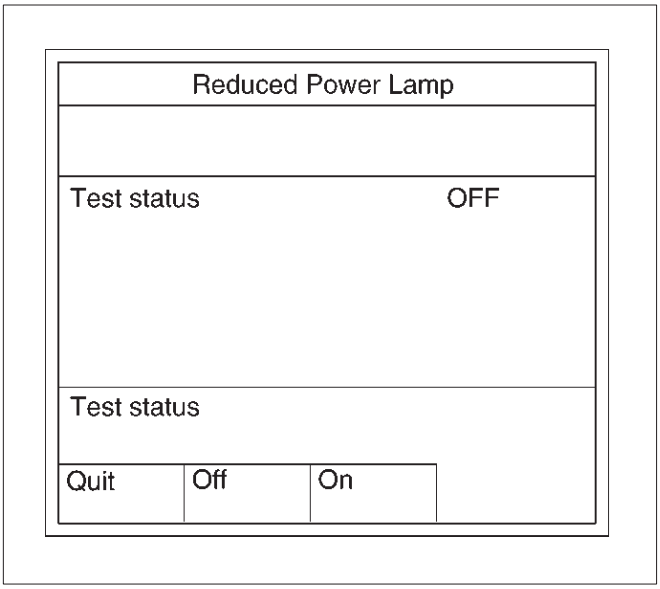

060RY00077

18. Push “On” soft key.
19. Make sure Lamp illuminates.
20. If Lamp illuminates, the Lamp is operating correctly.
21. Select F5:Cruise Control Lamp

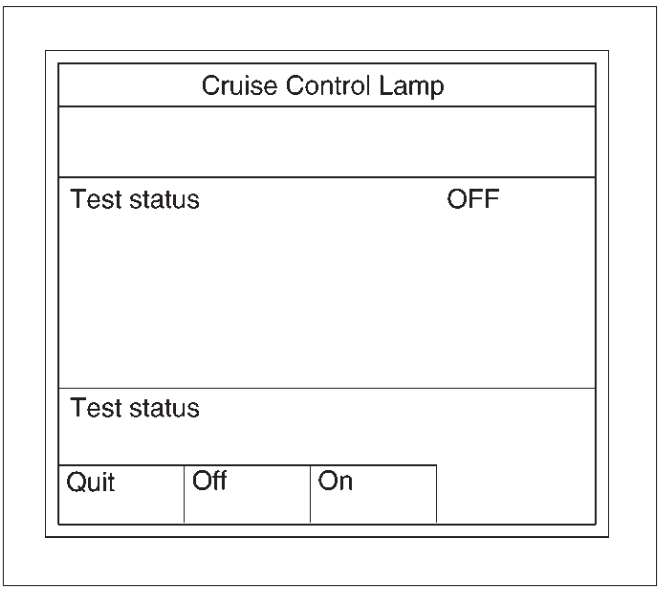

060RY00078

22. Push “On” soft key.
23. Make sure Lamp illuminates.
24. If Lamp illuminates, the Lamp is operating correctly.

Relays Test

This test is conducted to check Fuel Pump Relay and A/C Clutch for proper operation.
Tech 2 must be used for this test.
Test Procedure:

1. Connect Tech 2 to the vehicle DLC.
2. Ignition SW is “On”.
3. Select F3: Miscellaneous Test in the Application Menu.

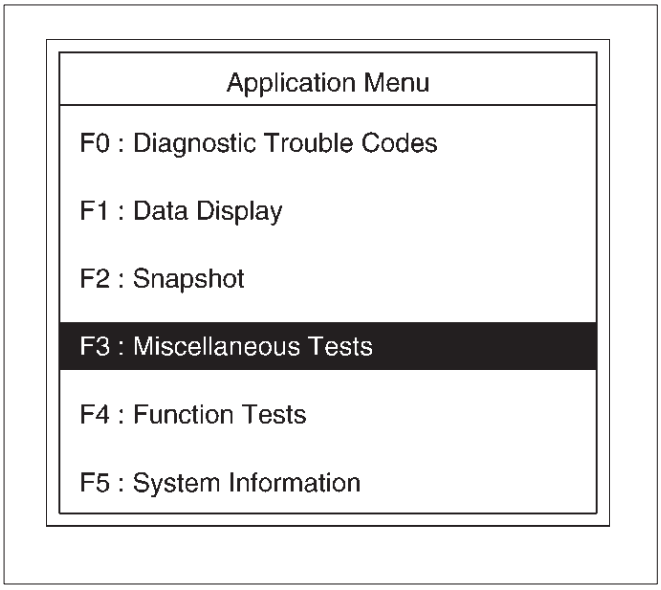

060R100078

4. Select F1:Relay Test in the Miscellaneous Test.

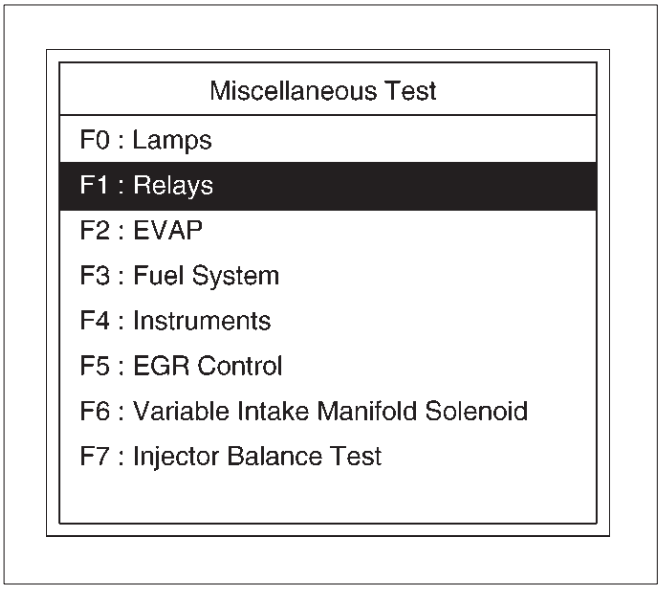

060RY00081

5. Select F0:Fuel Pump Relay.

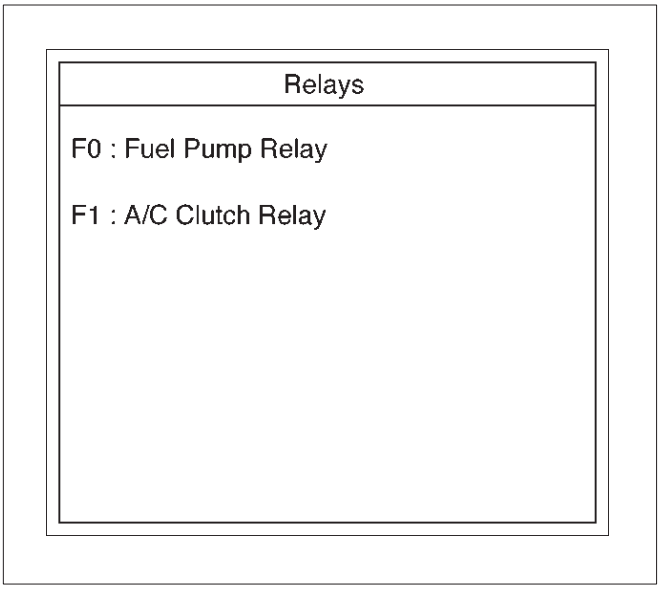

060RX021

6. Push “On” soft key.

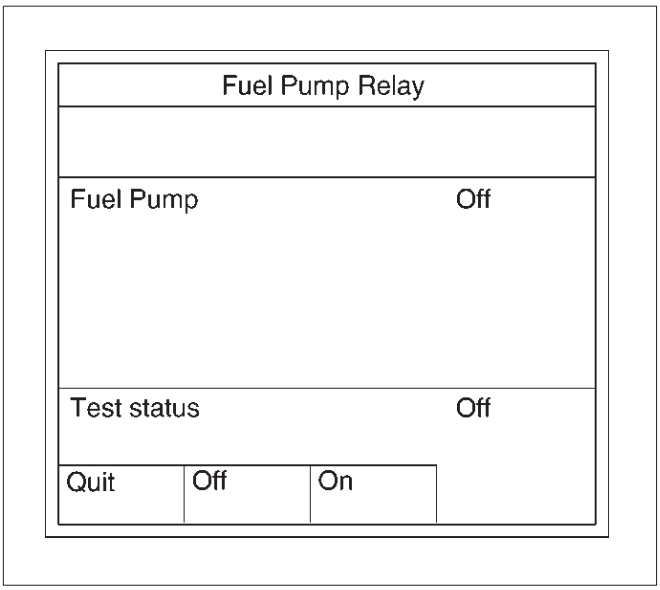

060RY00093

7. Control Fuel Pump Relay and check data list.
8. If the data list changes, the Fuel Pump Relay is normal.
9. Select F1:A/C Clutch Relay.
10. Run the Engine at idle.

11. Turn on Air Conditioning.

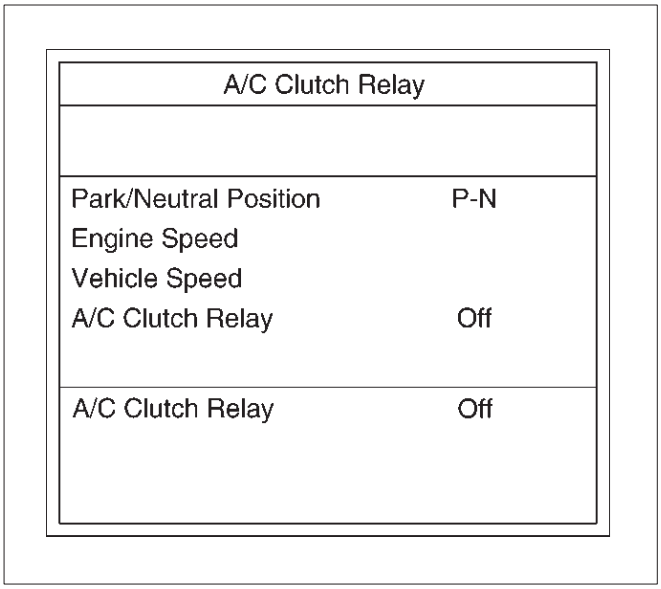

060RY00094

12. Turn “On” and “Off” A/C Switch.
13. Contol A/C Clutch Relay and check data list.
14. If the data list changes, the Fuel Pump Relay is normal.

EVAP Test

This test is conducted to check EVAP system for its power operation.
Tech 2 must be used for this test.
Test Procedure:

1. Connect Tech 2 to the vehicle DLC.
2. Run the Engine at idle.
3. Select F3: Miscellaneous Test in the Application Menu.

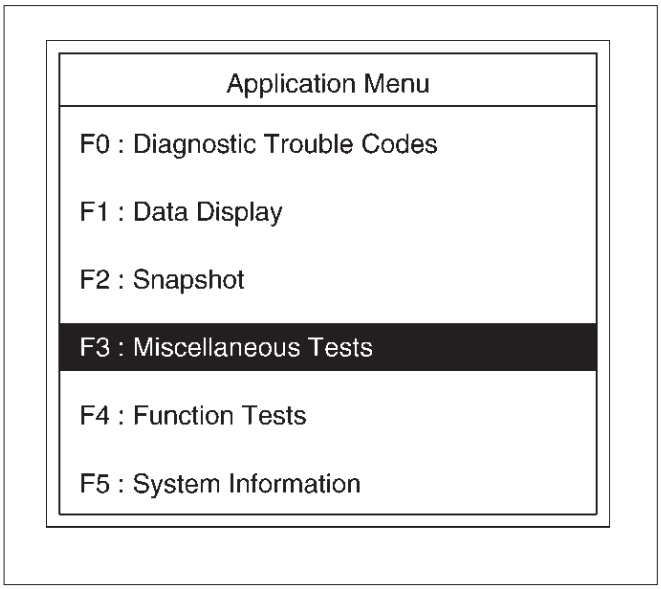

060R100078

4. Select F2: EVAP Test in the Miscellaneous Test.

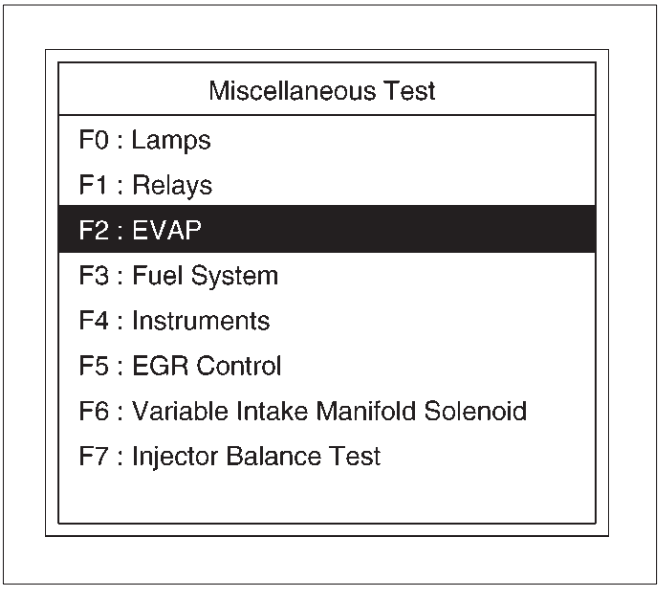

060RY00082

5. Select F0: Purge Solenoid.

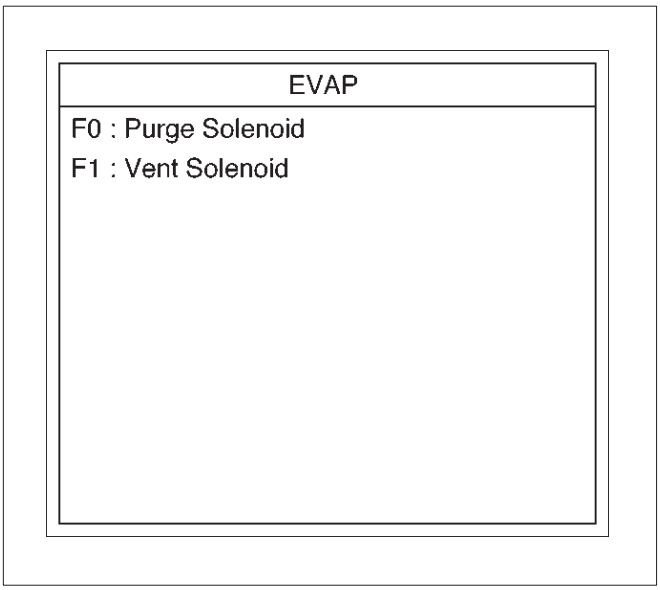

060RX025

6. Push “Decrease” or “Increase” soft key.

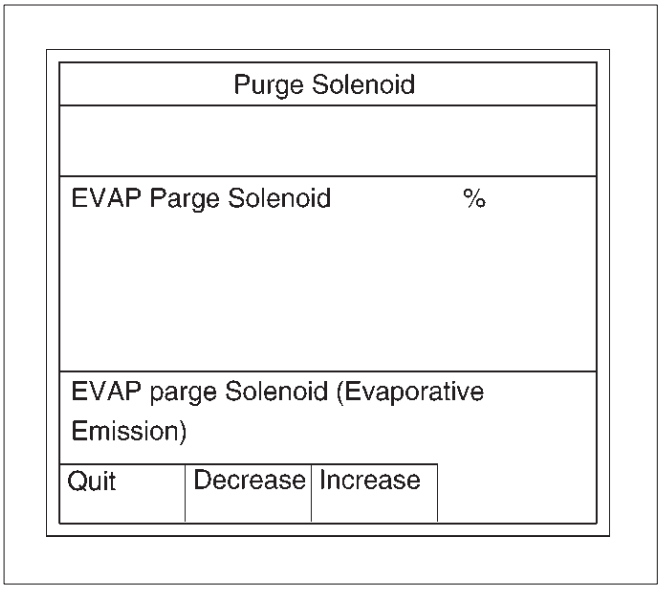

060RY00095

7. Control EVAP Purge Solenoid and check a data list.
8. If the data list changes, the Purge Solenoid is normal.

Fuel System Test

This test is conducted check Fuel system for proper operation.
Tech 2 must be used for this test.
Test Procedure:

1. Connect Tech 2 to the vehicle DLC.
2. Ignition SW is “On”.
3. Select F3: Miscellaneous Test in the Application Menu.

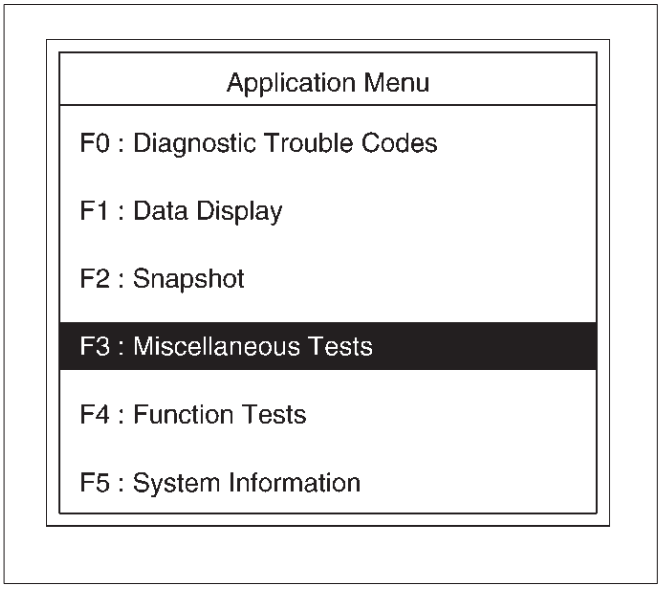

060R100078

4. Select F3: Fuel System in the Miscellaneous Menu.

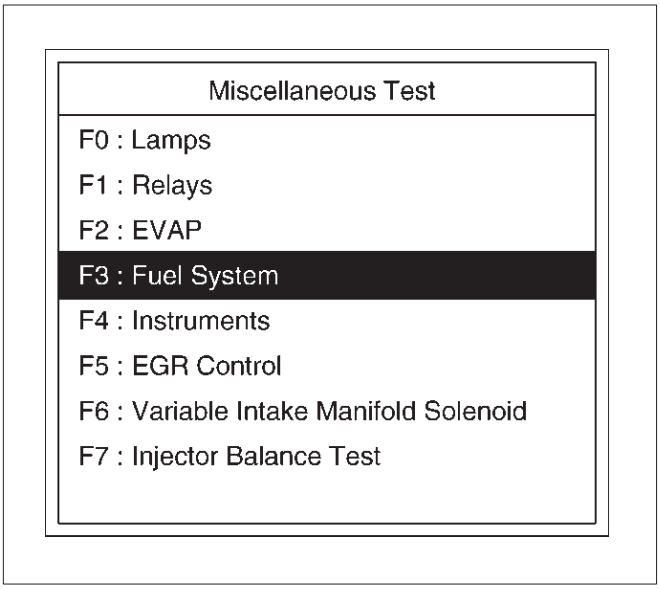

060RY00083

5. Select F0: Fuel Trim Enable.

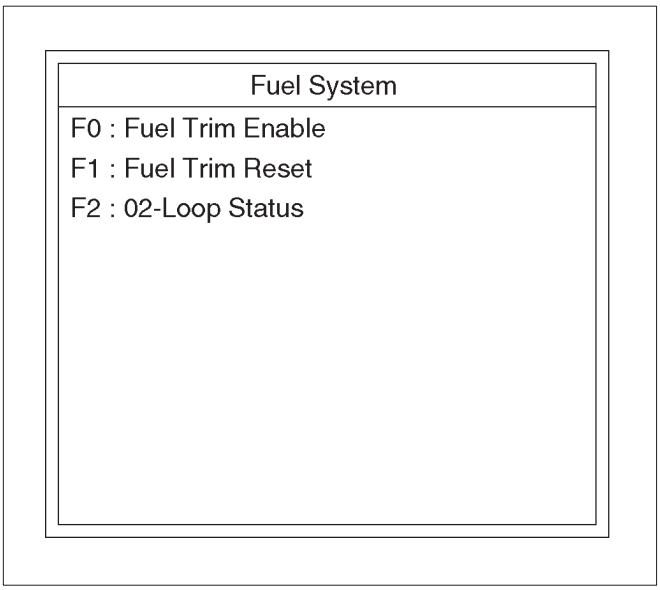

060R200071

6. Push “Disable” or “Enable” soft key.

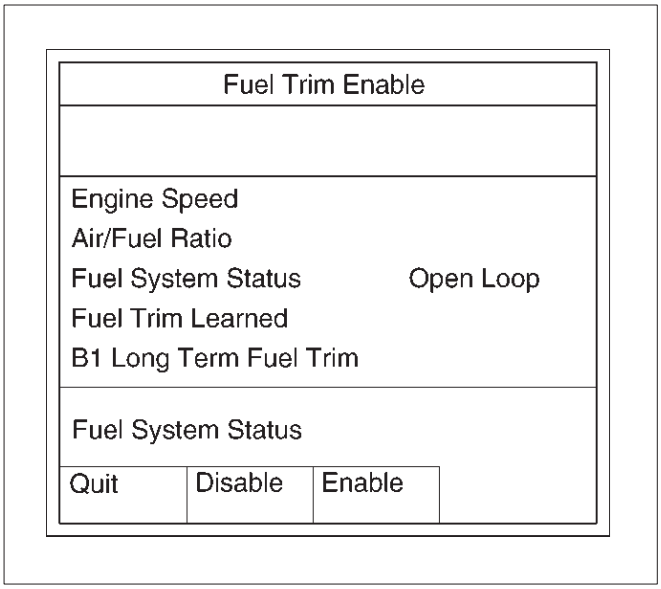

060RY00097

7. Control Fuel Trim and check data list.
8. If data list changes, the Fuel Trim is normal.
9. Select F1: Fuel Trim Reset.

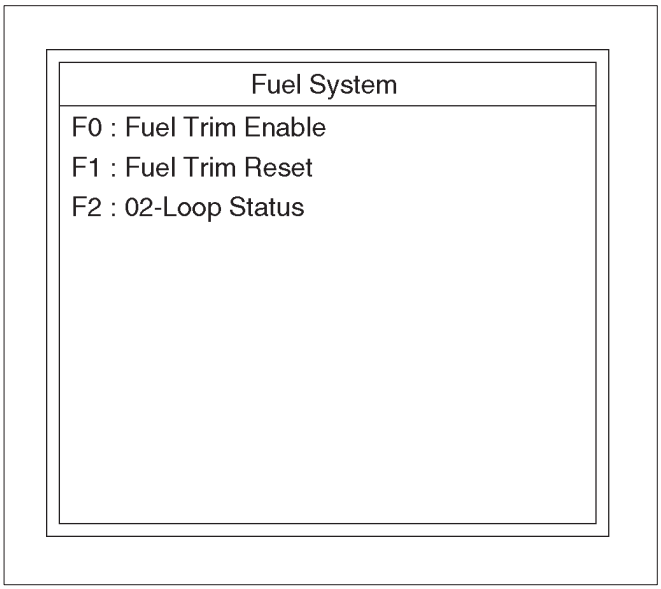

060R200071

10. Push “Reset” soft key.

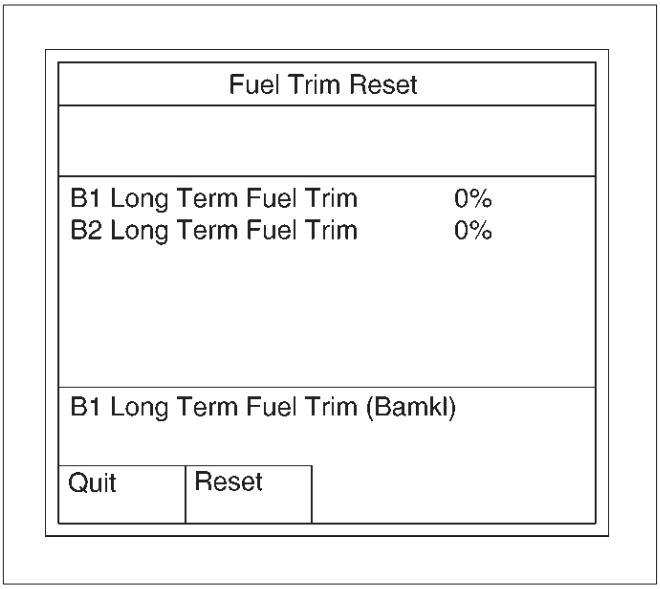

060RY00098

11. Select F2: O2-Loop status.

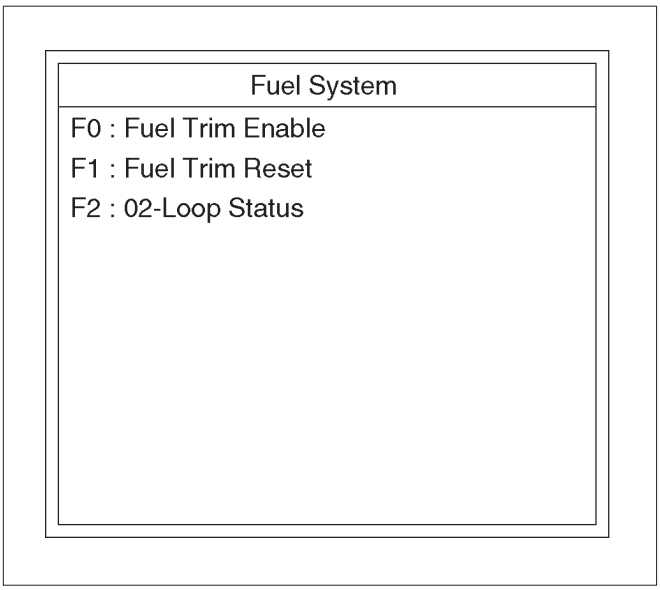

060R200071

12. This test is check the “Closed Loop Status” performance.

13. Push “Open Loop” or “Closed Loop” soft key.

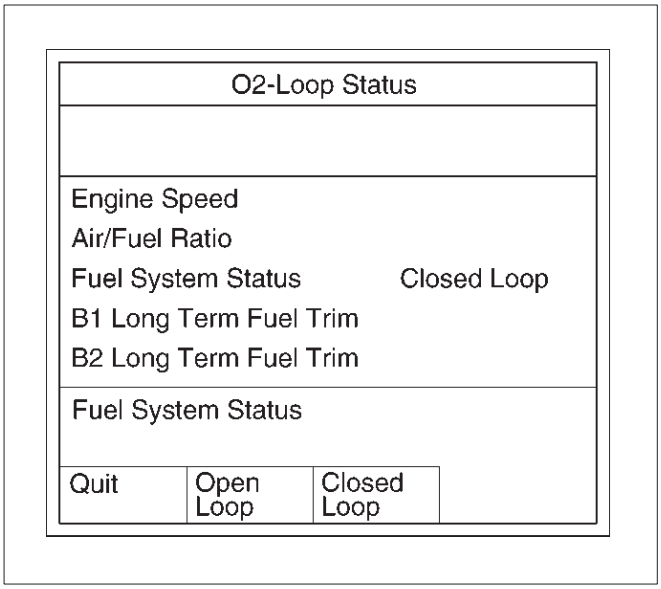

060RY00099

14. Control O2-Loop and check data list.
15. If data list changes, the O2-Loop is normal.

Instruments Test

This test is conducted check Instruments for proper operation.
Tech 2 must be used for this test.
Test Procedure:

1. Connect Tech 2 to the vehicle DLC.
2. Ignition SW is “On”.
3. Select F3: Miscellaneous Test in the Application Menu.

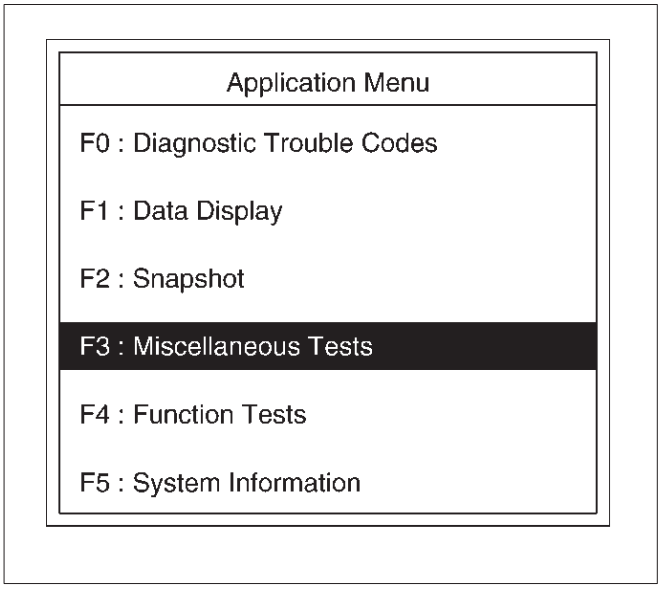

060R100078

4. Select F4: Instruments in the Miscellaneous Menu.

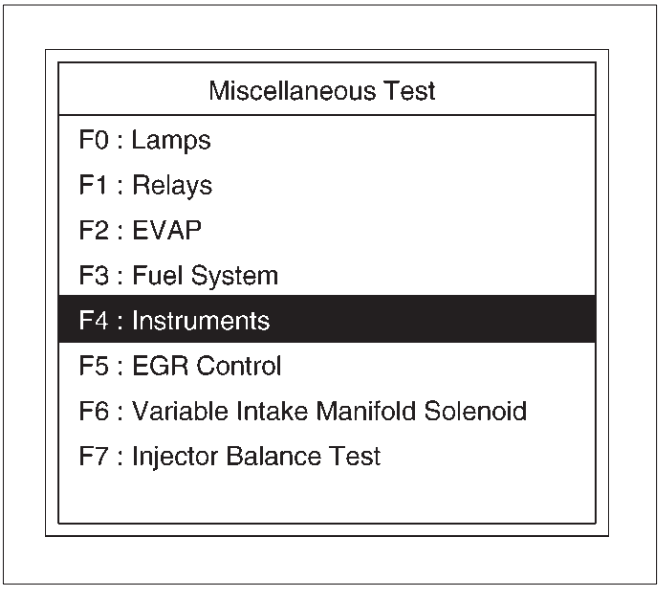

060RY00106

5. Select F0: Fuel Gauge level.

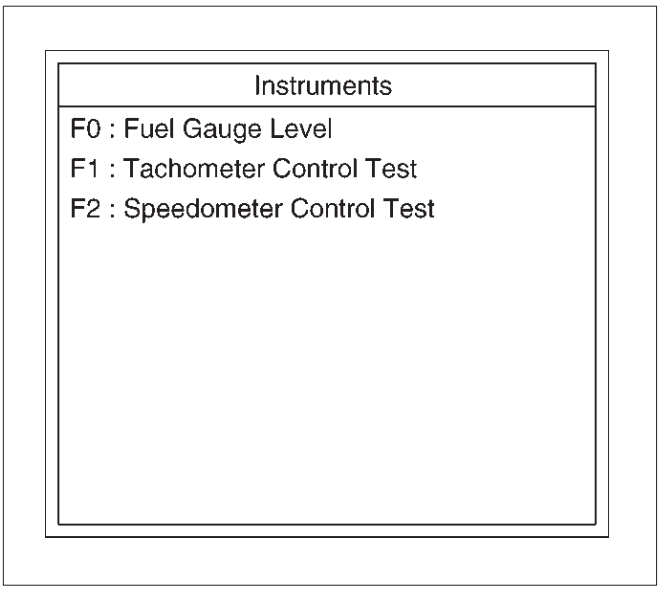

060RY00107

6. Push “Decrease” or “Increase” soft key.

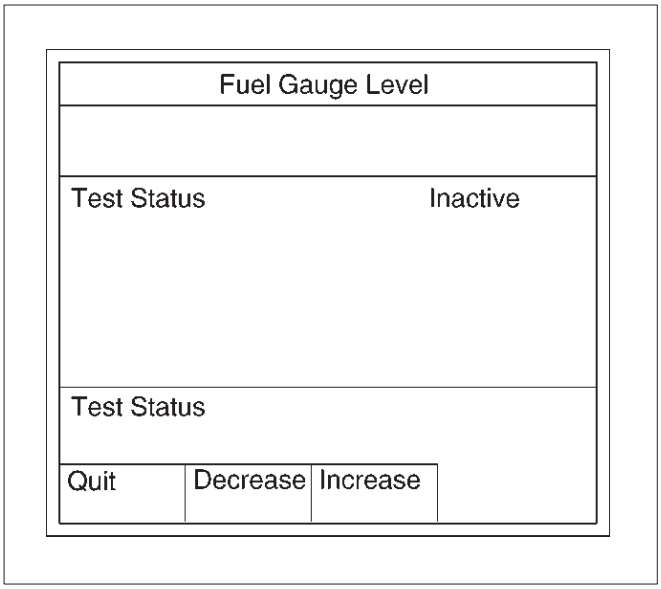

060RY00100

7. Control Fuel Level and check data list.
8. If data list and Fuel gauge meter changes, Fuel Gauge level is normal.
9. Select F1: Tachometer Control Test.

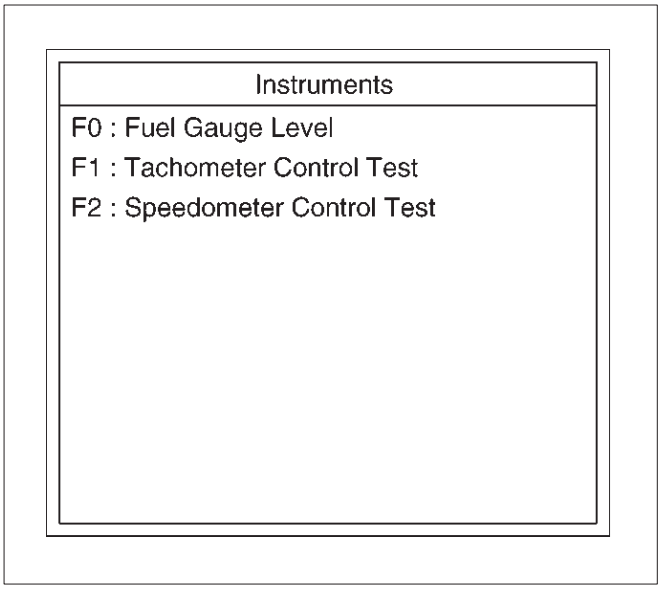

060RY00107

10. Push “Inactive” or “active” soft key.

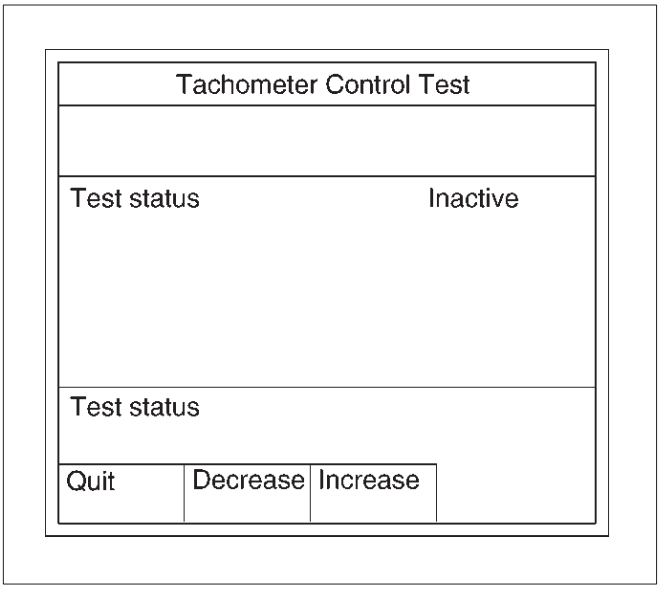

060RY00101

11. Control tachometer and data list.
12. If data list and meter changes, the tachometer control is normal.

EGR Control Test

This test is conducted check EGR valve for proper operation.
Tech 2 must be used for this test.
Test Procedure:

1. Connect Tech 2 to the vehicle DLC.
2. Run the Engine at idle.
3. Select F3: Miscellaneous Test in the Application Menu.

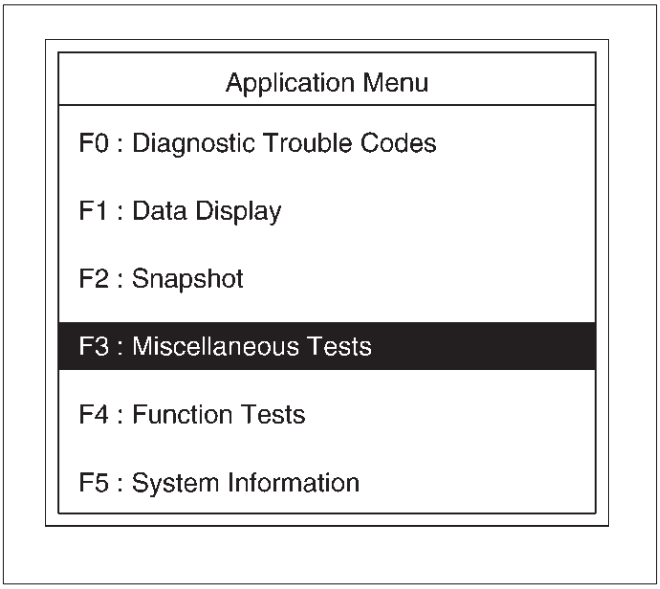

060R100078

4. Select F5: EGR Control Test in the Miscellaneous Test.

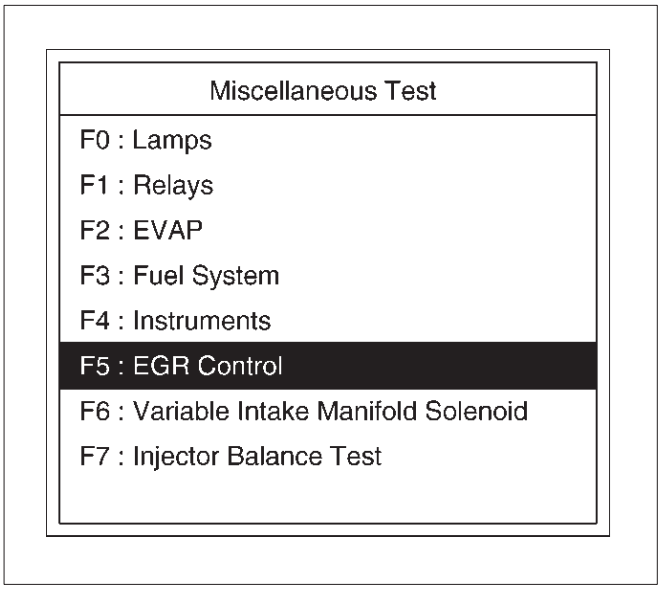

060RY00084

5. Control EGR Valve and check data list.

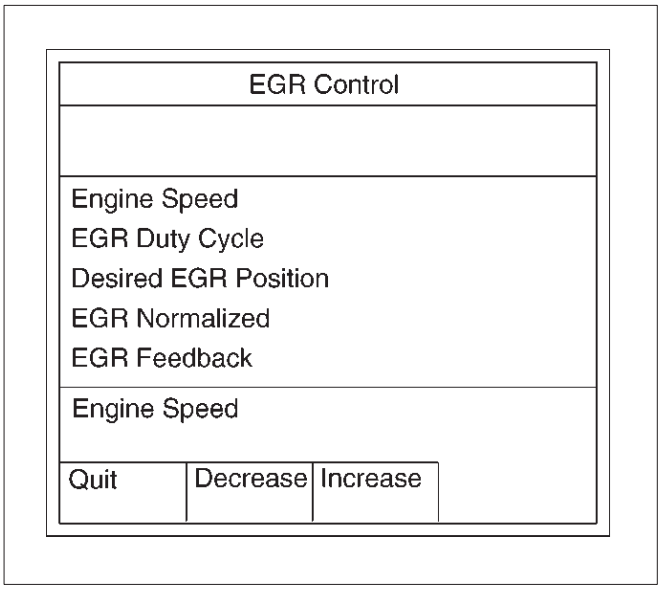

060RY00103

6. If data list changes, the EGR Control is normal.

Variable Intake Manifold Solenoid Test

This test is conducted check VIM Solenoid for proper operation.
Tech 2 must be used for this test.
Test Procedure:

1. Connect Tech 2 to the vehicle DLC.
2. Ignition SW is “On”.

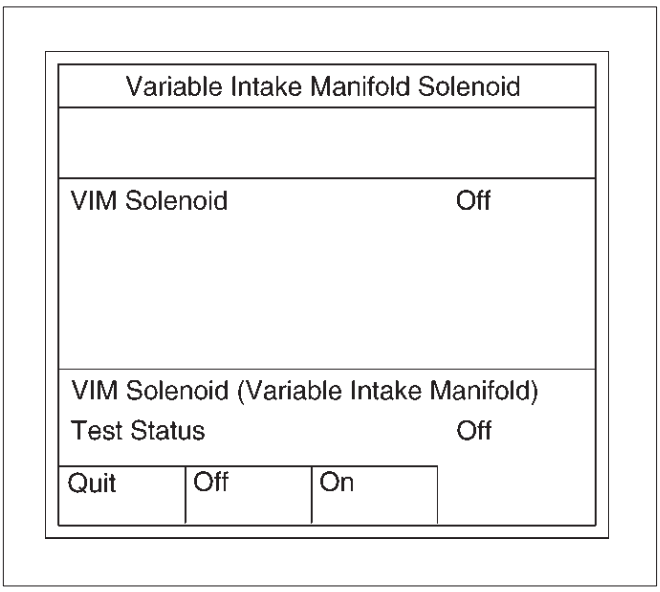

060RY00104

3. Select F3: Miscellaneous Test in the Application Menu.

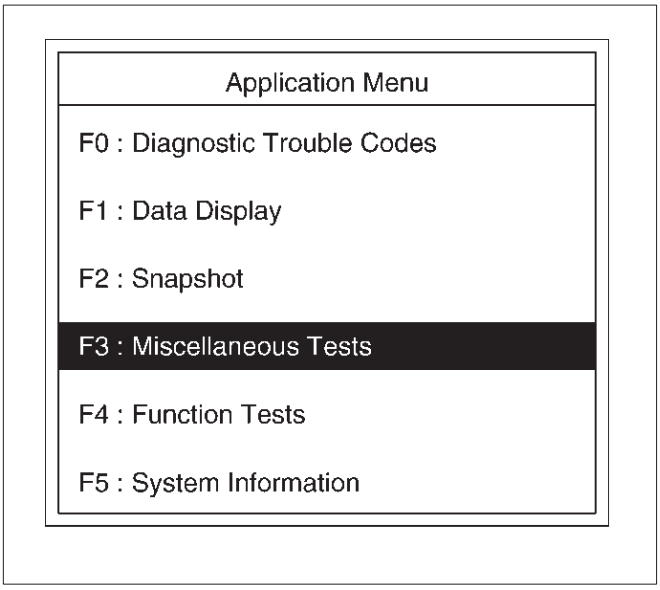

060R100078

4. Select F6: Variable Intake Manifold Solenoid Test.

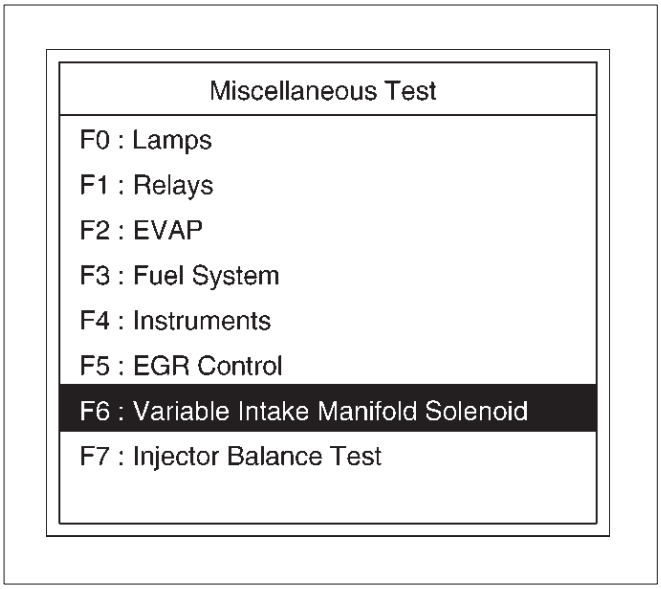

060RY00085

5. Push “On” or “Off” soft key.

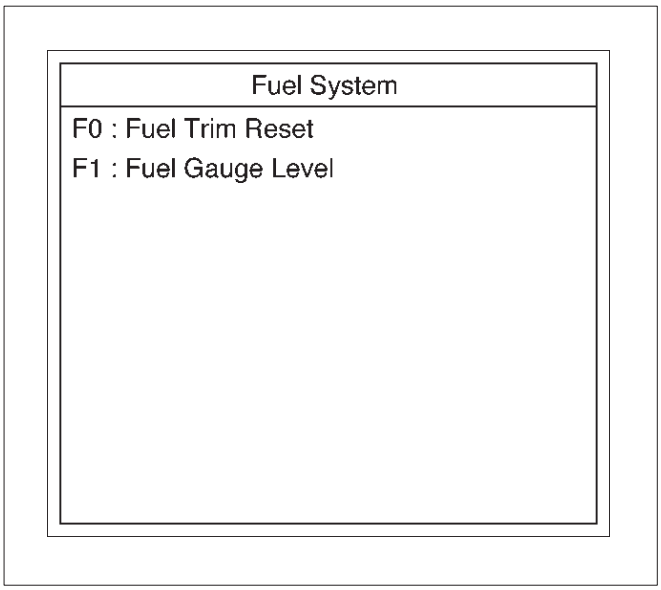

060RX028

6. Control VIM Solenoid check data list.
7. If data list changes, the VIM Solenoid is normal.

Injector Balance Test

This test is conducted to make sure the appropriate electric signals are being sent to injectors Nos. 1–6.
Tech 2 must be used for this test.
Test Procedure:

1. Connect Tech 2 to the vehicle DLC.
2. Run the Engine at idle.
3. Select F3: Miscellaneous Test in the Application Menu.

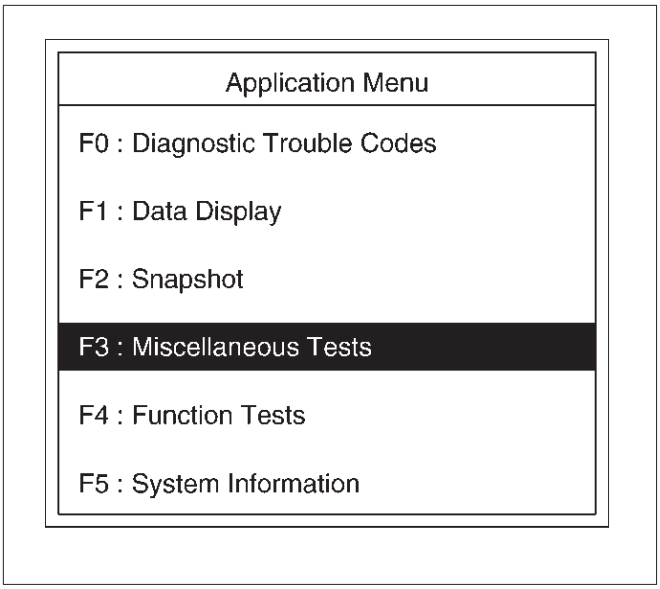

060R100078

4. Select F7: Injector Balance Test in the Miscellaneous Test.

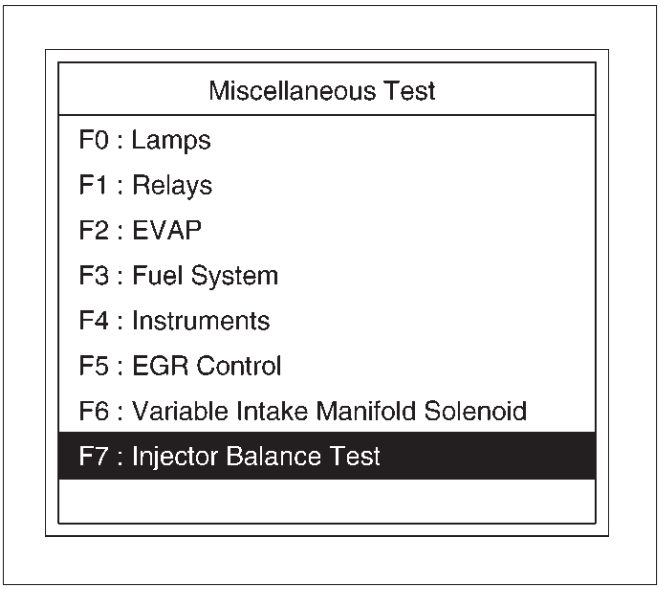

060RY00086

5. Select injector number and push “injector off” soft key.

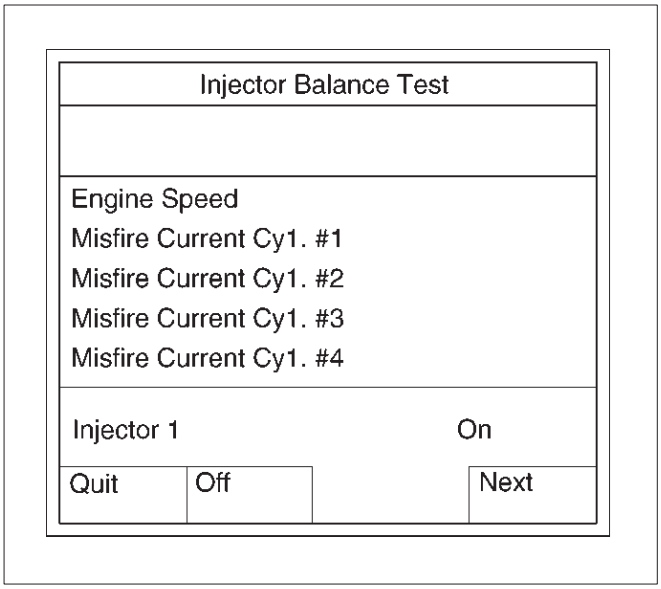

060RY00105

6. Make sure of engine speed change.
7. If engine speed changes, the injector electric circuit is normal.
   If engine speed does not change, the injector electric circuit or the injector itself is not normal.

Plotting Snapshot Graph

This test selects several necessary items from the data list to plot graphs and makes data comparison on a long term basis. It is an effective test particularly in emission related evaluations.

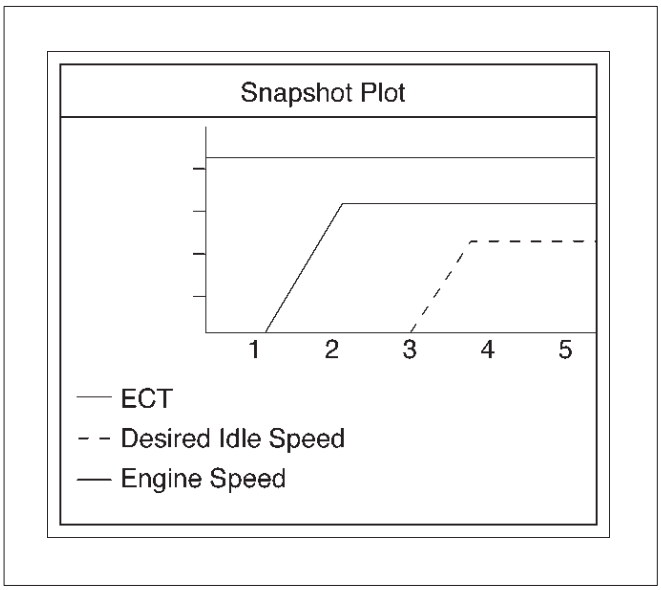

060RX037

For trouble diagnosis, you can collect graphic data (snap shot) directly from the vehicle.
You can replay the snapshot data as needed. Therefore, accurate diagnosis is possible, even though the vehicle is not available.

Plotting Graph Flow Chart (Plotting graph after obtaining vehicle information)

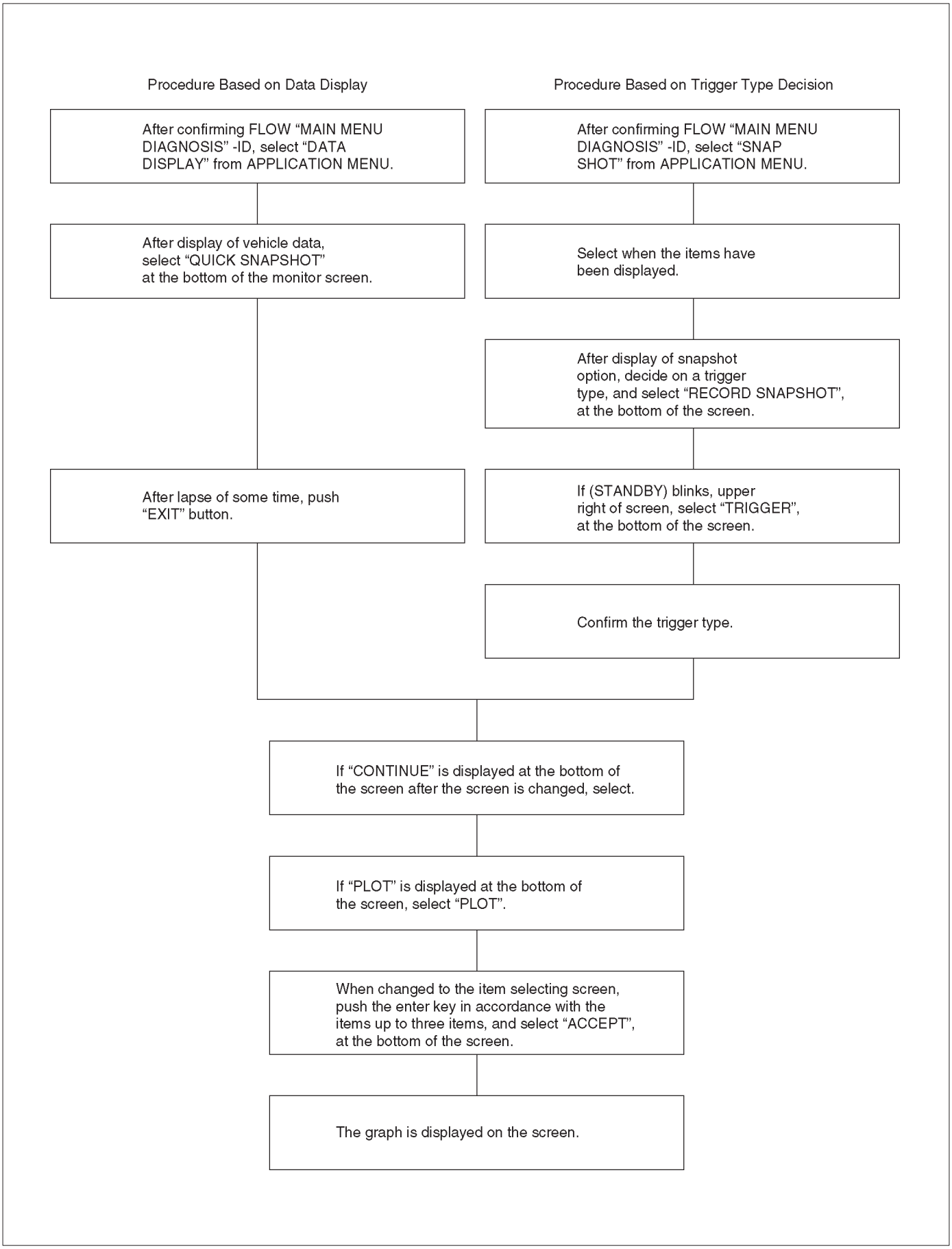

060R200070

Flow Chart for Snapshot Replay (Plotting Graph)

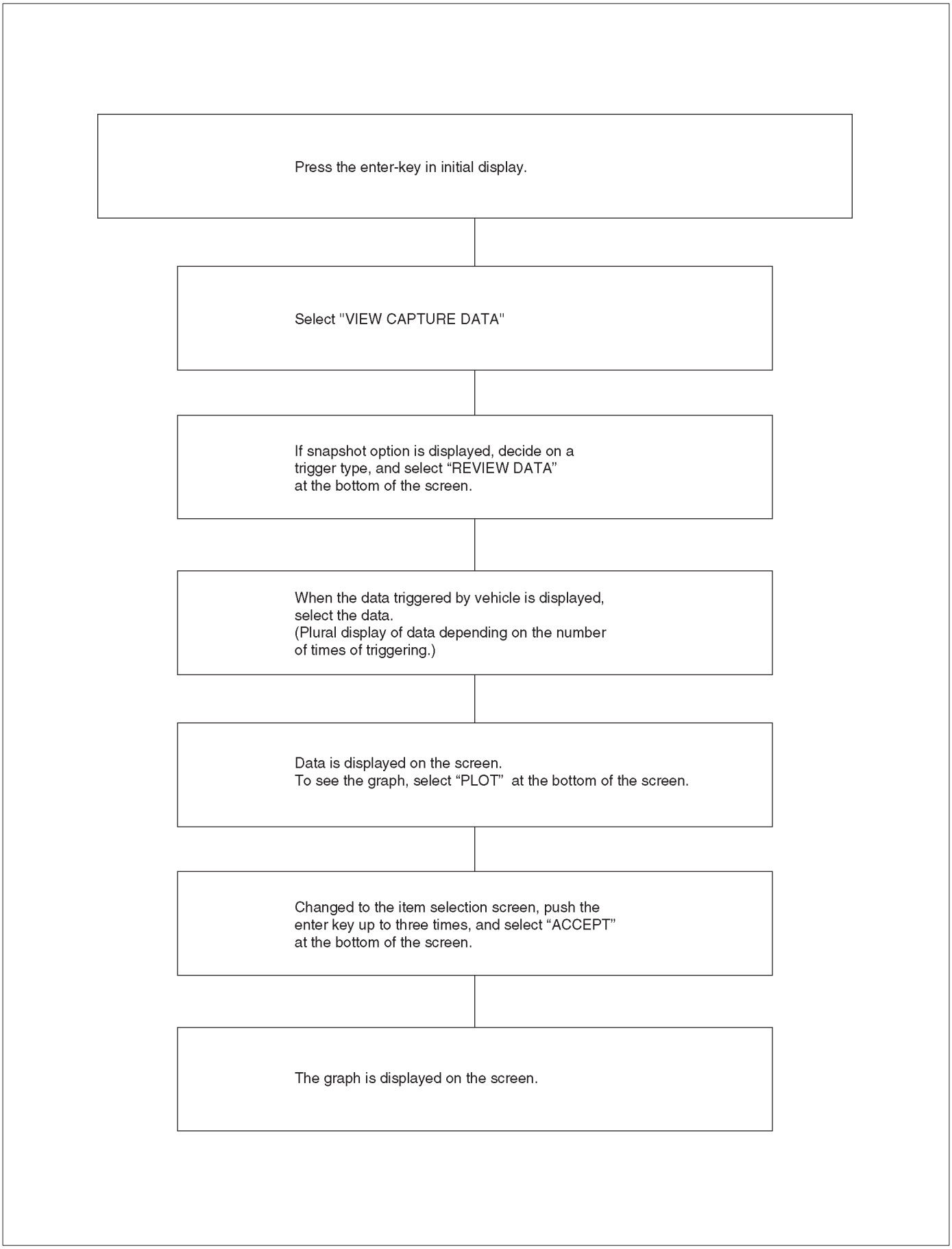

060R200072

Primary System-Based Diagnostic

Primary System-Based Diagnostic

There are primary system-based diagnostics which evaluate system operation and its effect on vehicle emissions. The primary system-based diagnostics are listed below with a brief description of the diagnostic function:

Oxygen Sensor Diagnosis

The fuel control heated oxygen sensors (Bank 1 HO2S 1 and Bank 2 HO2S 1) are diagnosed for the following conditions:

- Heater performance (time to activity on cold start)
- Slow response
- Response time (time to switch R/L or L/R)
- Inactive signal (output steady at bias voltage – approx. 450 mV)
- Signal fixed high
- Signal fixed low

The catalyst monitor heated oxygen sensors (Bank 1 HO2S 2 and Bank 2 HO2S 2) are diagnosed for the following conditions:

- Heater performance (time to activity on cold start).
- Signal fixed low during steady state conditions or power enrichment (hard acceleration when a rich mixture should be indicated).
- Signal fixed high during steady state conditions or deceleration mode (deceleration when a lean mixture should be indicated).
- Inactive sensor (output steady at approx. 438 mV).

If the oxygen sensor pigtail wiring, connector or terminal are damaged, the entire oxygen sensor assembly must be replaced. DO NOT attempt to repair the wiring, connector or terminals. In order for the sensor to function properly, it must have clean reference air provided to it. This clean air reference is obtained by way of the oxygen sensor wire(s). Any attempt to repair the wires, connector or terminals could result in the obstruction of the reference air and degrade oxygen sensor performance. Refer to *On-Vehicle Service, Heated Oxygen Sensors* in this section.

Fuel Control Heated Oxygen Sensor

The main function of the fuel control heated oxygen sensors is to provide the control module with exhaust stream oxygen content information to allow proper fueling and maintain emissions within mandated levels. After it reaches operating temperature, the sensor will generate a voltage, inversely proportional to the amount of oxygen present in the exhaust gases. The control module uses the signal voltage from the fuel control heated oxygen sensors while in closed loop to adjust fuel injector pulse width. While in closed loop, the PCM can adjust fuel delivery to maintain an air/fuel ratio which allows the best combination of emission control and driveability. The fuel control heated oxygen sensors are also used to determine catalyst efficiency.

HO2S Heater

Heated oxygen sensors are used to minimize the amount of time required for closed loop fuel control to begin operation and to allow accurate catalyst monitoring. The oxygen sensor heater greatly decreases the amount of time required for fuel control sensors (Bank 1 HO2S 1 and Bank2 HO2S 1) to become active. Oxygen sensor heaters are required by catalyst monitor and sensor (Bank 1 HO2S 2 and Bank 2 HO2S 2) to maintain a sufficiently high temperature which allows accurate exhaust oxygen content readings further away from the engine.

Catalyst Monitor Heated Oxygen Sensors and Diagnostic Operation

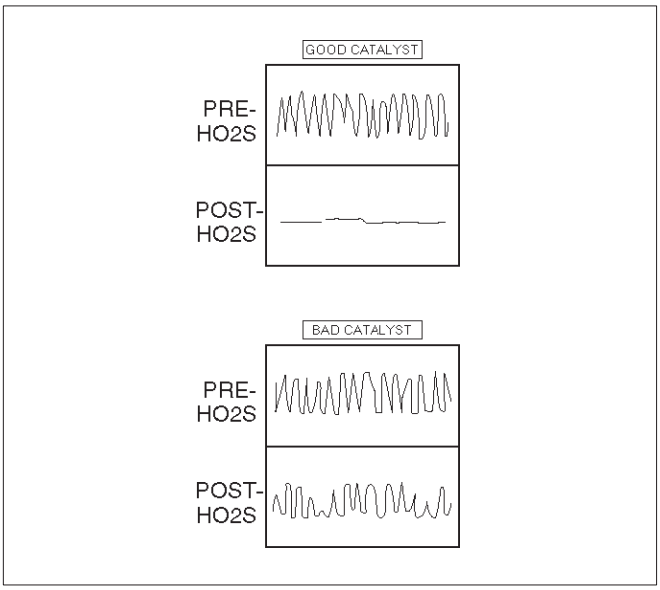

TS24067

To control emissions of hydrocarbons (HC), carbon monoxide (CO), and oxides of nitrogen (NOx), a three-way catalytic converter is used. The catalyst within the converter promotes a chemical reaction which oxidizes the HC and CO present in the exhaust gas, converting them into harmless water vapor and carbon dioxide. The catalyst also reduces NOx, converting it to nitrogen. The PCM has the ability to monitor this process using the pre-catalyst and post-catalyst heated oxygen sensors. The pre-catalyst sensor produces an output signal which indicates the amount of oxygen present in the exhaust gas entering the three-way catalytic converter. The post-catalyst sensor produces an output signal which indicates the oxygen storage capacity of the catalyst; this in turn indicates the catalyst's ability to convert exhaust gases efficiently. If the catalyst is operating efficiently, the pre-catalyst signal will be far more active than that produced by the post-catalyst sensor.

In addition to catalyst monitoring, the heated oxygen sensors have a limited role in controlling fuel delivery. If the sensor signal indicates a high or low oxygen content for an extended period of time while in closed loop, the PCM will adjust the fuel delivery slightly to compensate.

- For the 3.5L w/automatic transmission, the pre-catalyst sensors are designated Bank 1 HO2S 1 and Bank 2 HO2S 1. The post-catalyst sensors are Bank 1 HO2S 2 and Bank 2 HO2S 2.

Catalyst Monitor Outputs

The catalyst monitor diagnostic is sensitive to the following conditions:

- Exhaust leaks
- HO2S contamination
- Alternate fuels

Exhaust system leaks may cause the following:

- Preventing a degraded catalyst from failing the diagnostic.
- Causing a false failure for a normally functioning catalyst.
- Preventing the diagnostic from running.

Some of the contaminants that may be encountered are phosphorus, lead, silica, and sulfur. The presence of these contaminants will prevent the TWC diagnostic from functioning properly.

Three-Way Catalyst Oxygen Storage Capacity

The Three-Way catalyst (TWC) must be monitored for efficiency. To accomplish this, the control module monitors the pre-catalyst HO2S and post-catalyst HO2S oxygen sensors. When the TWC is operating properly, the post-catalyst oxygen sensor will have significantly less activity than the pre-catalyst oxygen sensor. The TWC stores and releases oxygen as needed during its normal reduction and oxidation process. The control module will calculate the oxygen storage capacity using the difference between the pre-catalyst and post catalyst oxygen sensor's voltage levels. If the activity of the post-catalyst oxygen sensor approaches that of the pre-catalyst oxygen sensor, the catalyst's efficiency is degraded.

Stepped or staged testing level allow the control module to statistically filter test information. This prevents falsely passing or falsely failing the oxygen storage capacity test. The calculations performed by the on-board diagnostic system are very complex. For this reason, post catalyst oxygen sensor activity should not be used to determine oxygen storage capacity unless directed by the service manual.

Two stages are used to monitor catalyst efficiency. Failure of the first stage will indicate that the catalyst requires further testing to determine catalyst efficiency. The seconds stage then looks at the inputs for the pre and post catalyst HO2S sensors more closely before determining if the catalyst is indeed degraded. This further statistical processing is done to increase the accuracy of oxygen storage capacity type monitoring. Failing the first (stage 1) test DOES NOT indicate a failed catalyst. The catalyst may be marginal or the fuel sulfur content could be very high.

Aftermarket HO2S characteristics may be different from the original equipment manufacturer sensor. This may lead to a false pass or a false fail of the catalyst monitor diagnostic. Similarly, if an aftermarket catalyst does not contain the same amount of cerium as the original part, the correlation between oxygen storage and conversion efficiency may be altered enough to set a false DTC.

Misfire Monitor Diagnostic Operation

Misfire Monitor Diagnostic Operation

Misfire is monitored as a function of the combustion quality (CQ) signals generated from the ignition current sense system. Combustion signals represent the degree of combustion in each cylinder. Misfire is detected when the combustion signal is below a predetermined value.

The misfire ratio is calculated once every 100 engine cycles. For example, on a 6-cylinder engine, 600 ignition plug sparks occur every 100 cycles and if a misfire occurs 12 times during that time, the misfire is $12/600 \times 100 = 2$ %.

Misfire Counters

Whenever a cylinder misfires, the misfire diagnostic counts the misfire and notes the crankshaft position at the time the misfire occurred. These "misfire counters" are basically a file on each engine cylinder. A current and a history misfire counter are maintained for each cylinder. The misfire current counters (Misfire Cur #1-6) indicate the number of firing events out of the last 100 cylinder firing events which were misfires. The misfire current counter will display real time data without a misfire DTC stored. The misfire history counters (Misfire Hist #1-6) indicate the total number of cylinder firing events which were misfires. The misfire history counters will display 0 until the misfire diagnostic has failed and a DTC P0300 is set. Once the misfire DTC P0300 is set, the misfire history counters will be updated every 100 cylinder firing events. A misfire counter is maintained for each cylinder. If the misfire diagnostic reports a failure, the diagnostic executive reviews all of the misfire counters before reporting DTC. This way, the diagnostic executive reports the most current information.

When crankshaft rotation is erratic, a misfire condition will be detected. Because of this erratic condition, the data that is collected by the diagnostic can sometimes incorrectly identify which cylinder is misfiring. Misfires are counted from more than one cylinder. Cylinder #1 has the majority of counted misfires. In this case, the Misfire Counters would identify cylinder #1 as the misfiring cylinder. The misfires in the other counters were just background noise caused by the erratic misfire rotation of the crankshaft. If the number of accumulated misfires is sufficient for the diagnostic to identify a true misfire, the diagnostic will set DTC P0300 – Misfire Detected.

Use diagnostic equipment to monitor misfire counter data on OBD-compliant vehicles. Knowing which specific cylinder(s) misfired can lead to the root cause, even when dealing with a multiple cylinder misfire. Using the information in the misfire counters, identify which cylinders are misfiring. If the counter indicate cylinders

numbers 1 and 4 misfired, look for a circuit or component common to both cylinders number 1 and 4.
Misfire counter information is located in the “Eng”. menu, “Misfire Data” sub-menu of the data list.
The misfire diagnostic may indicate a fault due to a temporary fault not necessarily caused by a vehicle emission system malfunction. Examples include the following items:

- Contaminated fuel
- Low fuel
- Fuel-fouled spark plugs
- Basic engine fault

Fuel Trim System Monitor Diagnostic Operation

Fuel Trim System Monitor Diagnostic Operation

This system monitors the averages of short-term and long-term fuel trim values. If these fuel trim values stay at their limits for a calibrated period of time, a malfunction is indicated. The fuel trim diagnostic compares the averages of short-term fuel trim values and long-term fuel trim values to rich and lean thresholds. If either value is within the thresholds, a pass is recorded. If both values are outside their thresholds, a rich or lean DTC will be recorded.
The fuel trim system diagnostic also conducts an intrusive test. This test determines if a rich condition is being caused by excessive fuel vapor from the EVAP canister. In order to meet OBD requirements, the control module uses weighted fuel trim cells to determine the need to set a fuel trim DTC. A fuel trim DTC can only be set if fuel trim counts in the weighted fuel trim cells exceed specifications. This means that the vehicle could have a fuel trim problem which is causing a problem under certain conditions (i.e., engine idle high due to a small vacuum leak or rough idle due to a large vacuum leak) while it operates fine at other times. No fuel trim DTC would set (although an engine idle speed DTC or HO2S DTC may set). Use the Tech 2 to observe fuel trim counts while the problem is occurring.
A fuel trim DTC may be triggered by a number of vehicle faults. Make use of all information available (other DTCs stored, rich or lean condition, etc.) when diagnosing a fuel trim fault.

Fuel Trim Cell Diagnostic Weights

No fuel trim DTC will set regardless of the fuel trim counts in cell 0 unless the fuel trim counts in the weighted cells are also outside specifications. This means that the vehicle could have a fuel trim problem which is causing a problem under certain conditions (i.e. engine idle high due to a small vacuum leak or rough due to a large vacuum leak) while it operates fine at other times. No fuel trim DTC would set (although an engine idle speed DTC or HO2S DTC may set). Use the Tech 2 to observe fuel trim counts while the problem is occurring.

On-Board Diagnostic (OBD) System Check

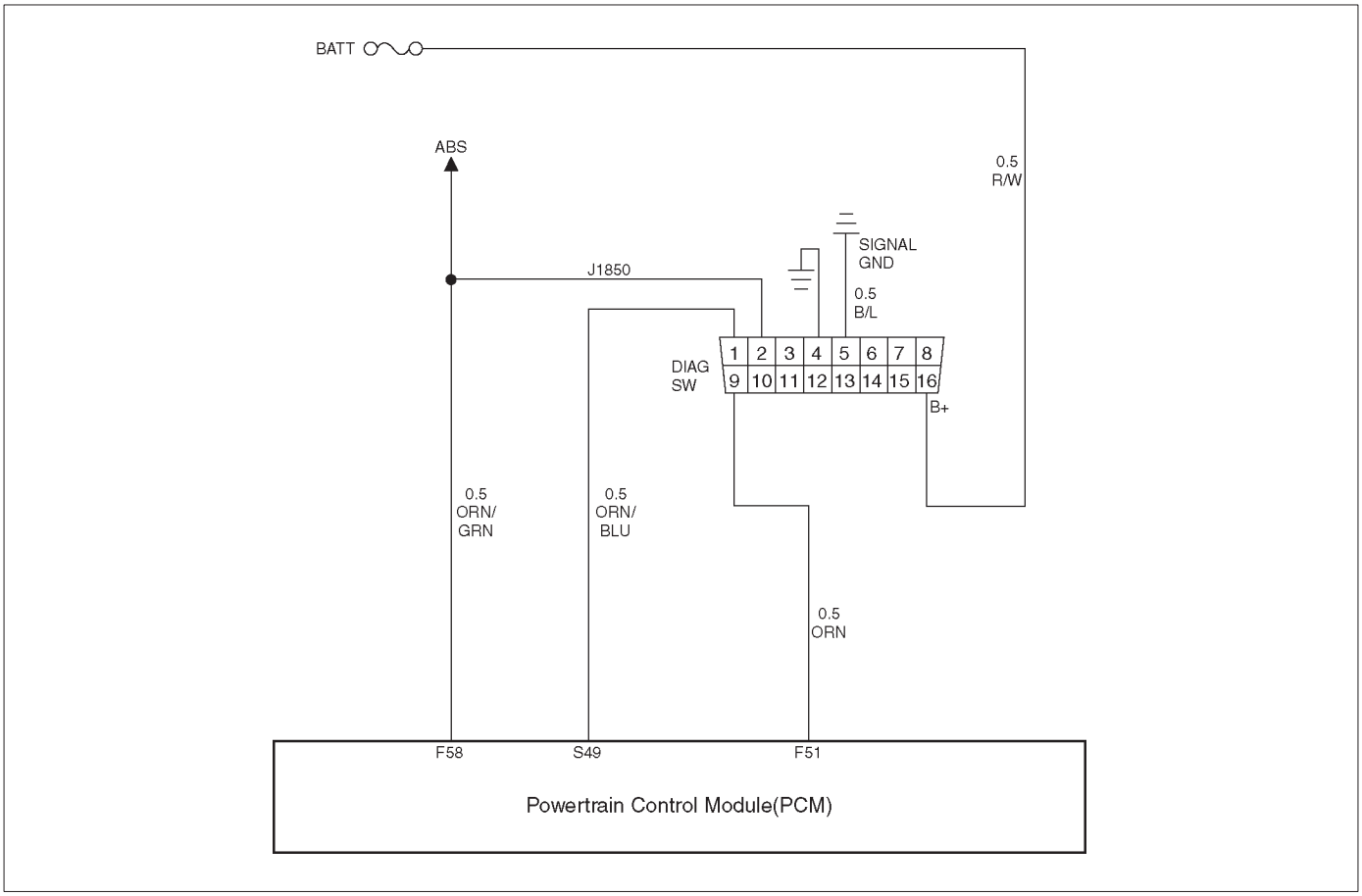

D06RY00053

Circuit Description

The on-board diagnostic system check is the starting point for any driveability complaint diagnosis. Before using this procedure, perform a careful visual/physical check of the PCM and engine grounds for cleanliness and tightness.

The on-board diagnostic system check is an organized approach to identifying a problem created by an electronic engine control system malfunction.

Diagnostic Aids

An intermittent may be caused by a poor connection, rubbed–through wire insulation or a wire broken inside the insulation. Check for poor connections or a damaged harness. Inspect the PCM harness and connector for improper mating, broken locks, improperly formed or damaged terminals, poor terminal-to-wire connection, and damaged harness.

Test Description

Number(s) below refer to the step number(s) on the Diagnostic Chart:

2. The MIL (“Check Engine lamp”) should be “ON” steady with the ignition “ON ” and the engine “OFF”. If not, the “No MIL” chart should be used to isolate the malfunction.

3. The SVS (“Service Vehicle Soon”) lamp should be “ON” steady with the ignition “ON ”and the engine “OFF”. If not, the “No SVS lamp”chart should be used to isolate the malfunction.

4. Checks the Class 2 data circuit and ensures that the PCM is able to transmit serial data.

5. This test ensures that the PCM is capable of controlling the MIL (“Check Engine lamp”) and the MIL (“Check Engine lamp”) driver circuit is not shorted to ground.

6. This test ensures that the PCM is capable of controlling the SVS (“Service Vehicle Soon”) lamp and the SVS (“Service Vehicle Soon”) lamp driver circuit is not shorted to ground.

8. Check the DTCs (System ,Volts Supply circuit).

9. Check the DTCs (PCM{Software} detect Errors).

12. If the engine will not start, the Cranks But Will Not Run chart should be used to diagnose the condition.

15. A Tech 2 parameter which is not within the typical range may help to isolate the area which is causing the problem.

16. This vehicle is equipped with a PCM which utilizes an electrically erasable programmable read only memory (EEPROM). When the PCM is replaced, the new PCM must be programmed. Refer to *PCM Replacement and Programming Procedures in Powertrain Control Module (PCM) and Sensors* of this section.

11. If the starter motor will not start, the starter control system chart should be used to diagnose the condition.

On-Board Diagnostic (OBD) System Check

Step	Action	Value(s)	Yes	No
1	1. Ignition “ON”, engine “OFF”. 2. Observe the Service Vehicle Soon (SVS) lamp. Is the SVS lamp flashing?	—	Refer to *Immobilizer System Workshop Manual*	Go to *Step 2*
2	1. Ignition “ON”, engine “OFF”. 2. Observe the malfunction indicator lamp (MIL or “Check Engine lamp”). Is the MIL (“Check Engine lamp”)“ON”?	—	Go to *Step 3*	Go to *No MIL(“Check Engine lamp”)*
3	1. Ignition “ON”, engine “OFF”. 2. Observe the SVS (“Service Vehicle Soon”) lamp. Is the SVS (“Service Vehicle Soon”) lamp “ON”?	—	Go to *Step 4*	Go to *No SVS (“Service Vehicle Soon”) lamp*
4	1. Ignition “OFF”. 2. Install Tech 2. 3. Ignition “ON”. 4. Attempt to display PCM engine data with the Tech 2. Does the Tech 2 display PCM data?	—	Go to *Step 5*	Go to *Step 13*
5	1. Using the Tech 2 output tests function, select MIL (“Check Engine lamp”) control and command the MIL (“Check Engine Lamp”) “OFF”. 2. Observe the MIL (“Check Engine lamp”). Did the MIL (“Check Engine lamp”) turn “OFF”?	—	Go to *Step 6*	Go to *MIL(“Check Engine lamp”) On Steady*
6	1. Using the Tech 2 output tests function, select RPL (“Reduced Power lamp”) control and command the RPL (“Reduced Power lamp”) “OFF”. 2. Observe the SVS (“Service Vehicle Soon”) lamp. Did the SVS (“Service Vehicle Soon”) lamp turn “OFF”?	—	Go to *Step 7*	Go to *SVS (“Service Vehicle Soon”) lamp On Steady*
7	Select “Display DTCs” with the Tech 2. Are any DTCs stored?	—	Go to *Step 8*	Go to *Step 12*
8	Stored DTCs. P0562, P0563, P0601, P0602, P0604, P0606, P1625, P1635, P1639, P1640, P1650 Are the applicable DTCs stored?	—	Go to *applicable DTC table*	Go to *Step 9*
9	Stored DTCs. P1514, P1515, P1516, P1523, P1125, P1290, P1295, P1299 Are the applicable DTCs stored?	—	Go to *applicable DTC table*	Go to *Step 10*
10	Stored DTCs. 1. P0425, P0106, P0107, P1107, P0401, P1404, P0405, P1120, P1221, P1515, P1516, P1275, P1635, P1271, P1273, P1285, P1272 2. P0336, P0337, P1220, P1515, P1221, P1516, P1280, P1639, P1271, P1272 Are the applicable DTCs stored?	—	Go to *“Multiple PCM Information sensor DTCs Set”*	Go to *Step 11*

On-Board Diagnostic (OBD) System Check (Cont'd)

Step	Action	Value(s)	Yes	No
11	Attempt to crank the starter motor Did the starter motor crank?	—	Go to *Step 11*	Go to *Starter control system*
12	Attempt to start the engine. Did the engine start and continue to run?	—	Go to *Step 7*	Go to *Cranks But Will Not Run*
13	Compare PCM data values displayed on the Tech 2 to the typical engine scan data values. Are the displayed values normal or close to the typical values?	—	Go to *Symptom*	Refer to *indicated Component System Checks*
14	1. Ignition "OFF", disconnect the PCM. 2. Ignition "ON", engine "OFF". 3. Check the Class 2 data circuit for an open, short to ground, or short to voltage. Also, check the DLC ignition feed circuit for an open or short to ground and the DLC ground circuit for an open. 4. If a problem is found, repair as necessary. Was a problem found?	—	Go to *Step 3*	Go to *Step 15*
15	1. Attempt to reprogram the PCM. Refer to *Powertrain Control Module (PCM) in On-Vehicle Service.* 2. Attempt to display PCM data with the Tech 2. Does the Tech 2 display PCM engine data?	—	Go to *Step 3*	Go to *Step 16*
16	Replace the PCM. **IMPORTANT:** The replacement PCM must be programmed. Refer to *ON-Vehicle Service in Power Control Module and Sensors for procedures.* And also refer to latest Service Bulletin. Check to see if the latest software is released or not. And then Down Load the LATEST PROGRAMMED SOFTWARE to the replacement PCM. Is the action complete?	—	Go to *Step 3*	—

A/C Clutch Control Circuit Diagnosis

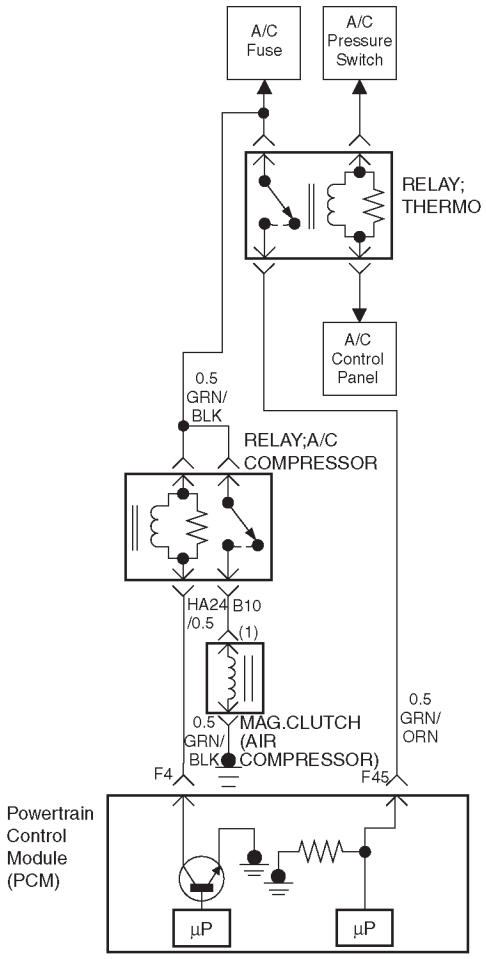

D06RY00159

Circuit Description

When air conditioning and blower fan are selected, and if the system has a sufficient refrigerant charge, a 12-volt signal is supplied to the A/C request input of the powertrain control module (PCM). The A/C request signal may be temporarily canceled during system operation by the electronic thermostat in the evaporator case. When the A/C request signal is received by the PCM, the PCM supplies a ground from the compressor clutch relay if the engine operating conditions are within acceptable ranges. With the A/C compressor relay energized, voltage is supplied to the compressor clutch coil.

The PCM will enable the compressor clutch to engage whenever A/C has been selected with the engine running, unless any of the following conditions are present:

- The throttle is greater than 90%.
- The ignition voltage is below 10.5 volts.
- The engine speed is greater than 4500 RPM for 5 seconds or 5400 RPM.
- The engine coolant temperature (ECT) is greater than 125 ˚C (257 ˚F).
- The intake air temperature (IAT) is less than 5˚C (41˚F).
- The power steering pressure switch signals a high pressure condition.

Diagnostic Aids

To diagnose an the intermittent fault, check for following conditions:

- Poor connection at the PCM–Inspect connections for backed-out terminals, improper mating, broken locks, improperly formed or damaged terminals, and poor terminal-to-wire connection.
- Damaged harness–Inspect the wiring harness for damage. If the harness appears to OK, observe the A/C clutch while moving connectors and wiring harnesses related to the A/C. A sudden clutch malfunction will indicate the source of the intermittent fault.

A/C Clutch Diagnosis

This chart should be used for diagnosing the electrical portion of the A/C compressor clutch circuit. A Tech 2 will be used in diagnosing the system. The Tech 2 has the ability to read the A/C request input to the PCM. The Tech 2 can display when the PCM has commanded the A/C clutch "ON". The Tech 2 should have the ability to override the A/C request signal and energize the A/C compressor relay.

Test Description

IMPORTANT: Do not engage the A/C compressor clutch with the engine running if an A/C mode is not selected at the A/C control switch.

The numbers below refer to the step numbers on the Diagnostic Chart:

3. This a test determine is the problem is with the refrigerant system. If the switch is open, A/C pressure gauges will be used to determine if the pressure switch is faulty or if the system is partially discharged or empty.
4. Although the normal complaint will be the A/C clutch failing to engage, it is possible for a short circuit to cause the clutch to run when A/C has not been selected. This step is a test for that condition.
7. There is an extremely low probability that both relays will fail at the same time, so the substitution process is one way to check the A/C Thermostat relay. Use a known good relay to do a substitution check.

A/C Clutch Control Circuit Diagnosis

Step	Action	Value(s)	Yes	No
1	Was the "On-Board Diagnostic (OBD) System Check" performed?	—	Go to *Step 2*	Go to *OBD System Check*
2	Are any other DTCs stored?	—	Go to the other DTC chart(s) first	Go to *Step 3*
3	1. Disconnect the electrical connector at the pressure switch located on the receiver/drier. 2. Use an ohmmeter to check continuity across the pressure switch. Is the pressure switch open?	—	Go to Air *Conditioning* to diagnose the cause of the open pressure switch	Go to *Step 4*
4	**IMPORTANT:** Before continuing with the diagnosis, the following conditions must be met: ● The intake air temperature must be greater than 15˚C. (60˚F). ● The engine coolant temperature must be less than 119˚C (246˚F). 1. A/C "OFF". 2. Start the engine and idle for 1 minute. 3. Observe the A/C compressor. Is the A/C compressor clutch engaged even though A/C has not been requested?	—	Go to *Step 37*	Go to *Step 5*
5	1. Idle the engine. 2. A/C "ON". 3. Blower "ON". 4. Observe the A/C compressor. Is the A/C compressor magnetic clutch engaged?	—	Check the Procedure Refer to *Diagnostic Aids*	Go to *Step 6*
6	1. Engine idling. 2. A/C "ON". 3. Blower "ON". 4. Observe the "A/C Request" display on the Tech 2. (Refer to the Miscellaneous test) Does the tool "A/C Request" display indicate "Yes"?	—	Go to *Step 26*	Go to *Step 7*

A/C Clutch Control Circuit Diagnosis (Cont'd)

Step	Action	Value(s)	Yes	No
7	Temporarily substitute the A/C compressor relay in place of the A/C thermostat relay, then repeat Step 5. Did the "A/C Request" display indicate "Yes"?	—	Go to *Step 8*	Go to *Step 9*
8	Replace the original A/C thermostat relay. Is the action complete?	—	Verify repair	—
9	Does the blower operate?	—	Go to *Step 10*	Go to *Step 11*
10	Repair the blower. Is the action complete?	—	Verify repair	—
11	Check for a faulty 10A A/C fuse in the underdash fuse panel. Was the 10A fuse OK?	—	Go to *Step 13*	Go to *Step 12*
12	Check for short circuit and make repairs if necessary. Replace the 10A A/C fuse. Is the action complete?	—	Verify repair	—
13	1. Remove the glove box to gain access to the A/C thermostat. 2. Disconnect the thermostat connector. 3. Attach a fused jumper between ground and the thermostat wire. 4. A/C "ON". 5. Blower "ON". Dose A/C request indicate "YES" on the Tech 2?	—	Go to *Step 14*	Go to *Step 17*
14	1. Ignition "ON". 2. Use a DVM to check voltage at the electronic A/C thermostat. Was voltage equal to the specified value?	B+	Go to *Step 17*	Go to *Step 15*
15	Check for open wire between the thermostat and the A/C switch. Was the wire open?	—	Go to *Step 16*	Go to *Step 17*
16	Repair the open wire between the thermostat and the A/C switch. Is the action complete?	—	Verify repair	—
17	Check for an open circuit between A/C thermostat relay and PCM A/C request terminal (F45). Was there an open circuit?	—	Go to *Step 18*	Go to *Step 19*
18	Repair the open circuit between the PCM and A/C thermostat relay. Is the action complete?	—	Verify repair	—
19	1. Ignition "ON". 2. Use a DVM to check voltage at the A/C pressure switch. Was voltage equal to the specified value?	B+	Go to *Step 21*	Go to *Step 20*
20	Repair the open circuit between the 10A A/C fuse and the pressure switch. Is the action complete?	—	Verify repair	—

A/C Clutch Control Circuit Diagnosis (Cont'd)

Step	Action	Value(s)	Yes	No
21	Use an ohmmeter to check continuity between the pressure switch and the A/C thermostat relay. Was the circuit open?	—	Go to *Step 22*	Go to *Step 23*
22	Repair the open circuit between the pressure switch and the A/C thermostat relay. Is the action complete?	—	Verify repair	—
23	Check for damaged pin or terminal at F45 of the PCM. Was a damaged pin or terminal found?	—	Go to *Step 24*	Go to *Step 25*
24	Repair the damaged pin or terminal. Is the action complete?	—	Verify repair	—
25	Replace the PCM. **IMPORTANT:** The replacement PCM must be programmed. Refer to *On-Vehicle Service* in *Powertrain Control Module Sensors for procedures.* And also refer to latest Service Bulletin. Check to see if the Latest software is released or not. And then Down Load the LATEST PROGRAMMED SOFTWARE to the replacement PCM. Is the action complete?	—	Verify repair	—
26	1. Remove the A/C compressor relay. 2. Ignition "ON". 3. Use a DVM to check voltage at both of the wires at the A/C compressor relay socket. Is the voltage equal to the specified value?	B+	Go to *Step 28*	Go to *Step 27*
27	Repair the faulty wire between the A/C fuse and the A/C compressor relay . Is the action complete?	—	Verify repair	—
28	1. A/C compressor relay removed. 2. Engine idling. 3. A/C "ON". 4. Blower "ON". 5. Use a DVM to measure voltage between the wire at the A/C compressor relay socket and battery±. Did the DVM indicate the specified value?	B+	Go to *Step 32*	Go to *Step 29*
29	Check for an open wire between PCM terminal F4 and the A/C compressor relay. Was the wire open?	—	Go to *Step 30*	Go to *Step 31*
30	Repair the open wire between the PCM and the A/C compressor relay. Is the action complete?	—	Verify repair	—
31	Check for a damaged pin or terminal at F4 of the PCM. Was a damaged pin or a terminal found?	—	Go to *Step 24*	Go to *Step 25*

A/C Clutch Control Circuit Diagnosis (Cont'd)

Step	Action	Value(s)	Yes	No
32	1. A/C compressor relay removed. 2. Connect a fused jumper at the A/C compressor relay socket with either wire. 3. Engine idling. 4. A/C "ON". 5. Blower "ON". Did the compressor magnetic clutch engage?	—	Go to *Step 33*	Go to *Step 34*
33	Repair the A/C compressor relay. Is the action complete?	—	Verify repair	—
34	Check for an open circuit between the A/C compressor relay and the A/C clutch. Was an open circuit found?	—	Go to *Step 35*	Go to *Step 36*
35	Repair the open circuit between the compressor Clutch and the A/C compressor relay. Is the action complete?	—	Verify repair	—
36	Service the compressor clutch or replace the compressor due to a faulty internal overheat switch. Is the action complete?	—	Verify repair	—
37	1. Remove the A/C compressor relay. 2. Idle the engine. Is the compressor clutch still engaged when A/C is not selected?	—	Go to *Step 38*	Go to *Step 39*
38	Repair the short to voltage between the A/C clutch and A/C compressor relay. Is the action complete?	—	Verify repair	—
39	1. Reinstall the A/C compressor relay. 2. Remove the A/C thermostat relay. 3. Engine idling. Is the compressor clutch still engaged when A/C is not selected?	—	Go to *Step 40*	Go to *Step 42*
40	Use a DVM to check for a short to ground between the A/C compressor relay and F4 of the PCM. Was a short detected?	—	Go to *Step 41*	Go to *Step 25*
41	Repair the short to ground between the PCM and A/C compressor relay. Is the action complete?	—	Verify repair	—
42	Repair the short to ground between the A/C thermostat relay and the electronic thermostat. Is the action complete?	—	Verify repair	—

Electronic Ignition System Diagnosis

If the engine cranks but will not run or immediately stalls, the Engine Cranks But Will Not Start chart must be used to determine if the failure is in the ignition system or the fuel system. If DTC P0300 through P0306, P0341, or P0336 is set, the appropriate diagnostic trouble code chart must be used for diagnosis.
If a misfire is being experienced with no DTC set, refer to the *Symptoms* section for diagnosis.

Visual Check of The Evaporative Emission Canister

- If the canister is cracked or damaged, replace the canister.
- If fuel is leaking from the canister, replace the canister and check hoses and hose routing.

Fuel Metering System Check

Some failures of the fuel metering system will result in an "Engine Cranks But Will Not Run" symptom. If this condition exists, refer to the *Cranks But Will Not Run* chart. This chart will determine if the problem is caused by the ignition system, the PCM, or the fuel pump electrical circuit.
Refer to *Fuel System Electrical Test* for the fuel system wiring schematic.
If there is a fuel delivery problem, refer to *Fuel System Diagnosis*, which diagnoses the fuel injectors, the fuel pressure regulator, and the fuel pump. If a malfunction occurs in the fuel metering system, it usually results in either a rich HO2S signal or a lean HO2S signal. This condition is indicated by the HO2S voltage, which causes the PCM to change the fuel calculation (fuel injector pulse width) based on the HO2S reading. Changes made to the fuel calculation will be indicated by a change in the long term fuel trim values which can be monitored with a Tech 2. Ideal long term fuel trim values are around 0%; for a lean HO2S signal, the PCM will add fuel, resulting in a fuel trim value above 0%. Some variations in fuel trim values are normal because all engines are not exactly the same. If the evaporative emission canister purge is "ON", the fuel trim may be as low as –38%. If the fuel trim values are greater than +23%, refer to *DTC P0131, DTC P0151, DTC P0171, and DTC 1171* for items which can cause a lean HO2S signal.

Fuel System Pressure Test

A fuel system pressure test is part of several of the diagnostic charts and symptom checks. To perform this test, refer to *Fuel Systems Diagnosis.*

Fuel Injector Coil Test Procedure and Fuel Injector Balance Test Procedure

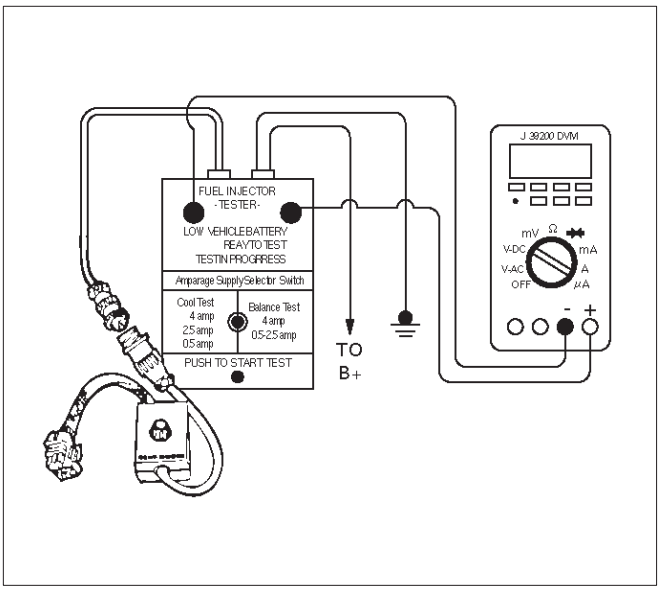

T32003

Test Description

Number(s) below refer to the step number(s) on the Diagnostic Chart:

2. Relieve the fuel pressure by connecting the J 34730-1 Fuel Pressure Gauge to the fuel pressure connection on the fuel rail.

CAUTION: In order to reduce the risk of fire and personal injury, wrap a shop towel around the fuel pressure connection. The towel will absorb any fuel leakage that occurs during the connection of the fuel pressure gauge. Place the towel in an approved container when the connection of the fuel pressure gauge is complete.

Place the fuel pressure gauge bleed hose in an approved gasoline container.

With the ignition switch "OFF", open the valve on the fuel pressure gauge.

3. Record the lowest voltage displayed by the DVM after the first second of the test. (During the first second, voltage displayed by the DVM may be inaccurate due to the initial current surge.)

Injector Specifications:

Resistance (Ohms)	Voltage Specification at 10˚C-35˚C (50˚F-95˚F)
11.8 – 12.6	5.7 – 6.6

- The voltage displayed by the DVM should be within the specified range.
- The voltage displayed by the DVM may increase throughout the test as the fuel injector windings warm and the resistance of the fuel injector windings changes.
- An erratic voltage reading (large fluctuations in voltage that do not stabilize) indicates an intermittent connection within the fuel injector.

5. Injector Specifications:

Highest Acceptable Voltage Reading Above/Below 35˚C/10˚C (95˚F/50˚F)	Acceptable Subtracted Value
9.5 Volts	0.6 Volts

7. The Fuel Injector Balance Test portion of this chart (Step 7 through Step 11) checks the mechanical (fuel delivery) portion of the fuel injector. An engine cool-down period of 10 minutes is necessary in order to avoid irregular fuel pressure readings due to “Hot Soak” fuel boiling.

Injector Coil Test Procedure (Steps 1-6) and Injector Balance Test Procedure (Steps 7-11)

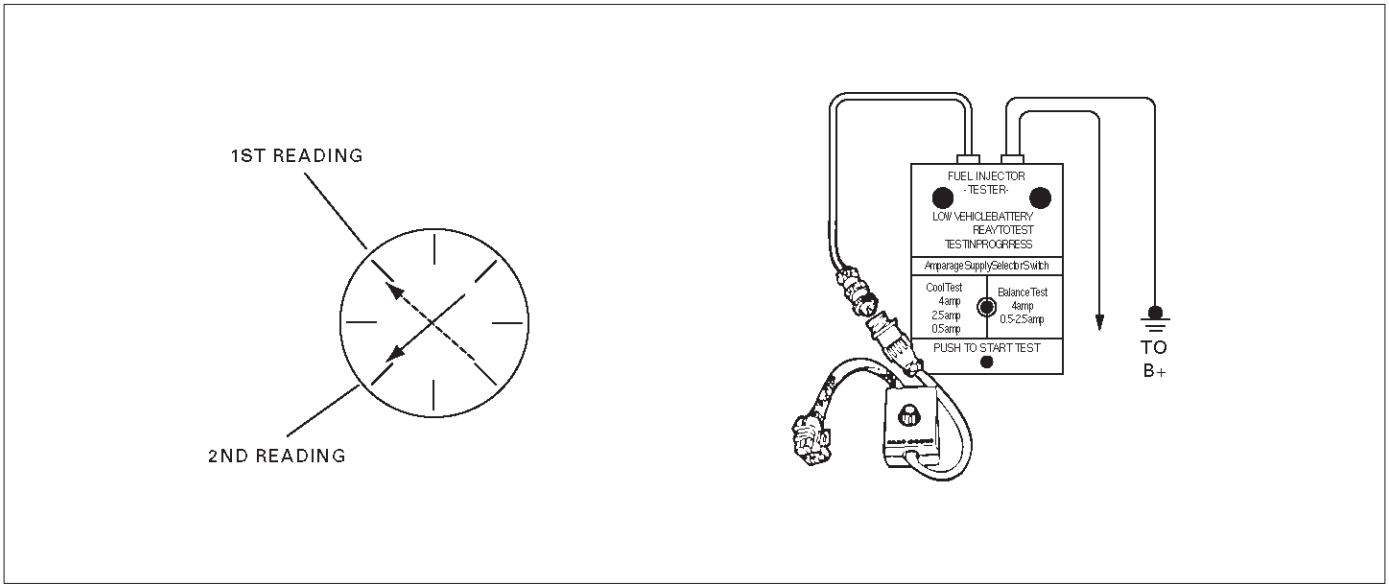

R262001

CYLINDER	1	2	3	4	5	6
1st Reading (1)	296 kPa (43 psi)	296 kPa (43 psi)	296 kPa (43 psi)	296 kPa (43 psi)	296 kPa (43 psi)	296 kPa (43 psi)
2nd Reading (2)	131 kPa (19 psi)	117 kPa (17 psi)	124 kPa (18 psi)	145 kPa (21 psi)	131 kPa (19 psi)	130 kPa (19 psi)
Amount of Drop (1st Reading–2nd Reading)	165 kPa (24 psi)	179 kPa (26 psi)	172 kPa (25 psi)	151 kPa (22 psi)	165 kPa (24 psi)	166 kPa (24 psi)
Av.drop = 166 kPa/24 psi ± 10 kPa/1.5 psi = 156 – 176 kPa or 22.5 – 25.5 psi	OK	Faulty, Rich (Too Much Fuel Drop)	OK	Faulty, Lean (Too Little Fuel Drop)	OK	OK

NOTE: These figures are examples only.

Injector Coil Test Procedure (Steps 1-6) and Injector Balance Test Procedure (Steps 7-11)

Step	Action	Value(s)	Yes	No
1	Was the “On-Board Diagnostic (OBD) System Check” performed?	—	Go to Step 2	Go to *OBD System Check*
2	1. Turn the engine “OFF”. NOTE: In order to prevent flooding of a single cylinder and possible engine damage, relieve the fuel pressure before performing the fuel injector coil test procedure. 2. Relieve the fuel pressure. Refer to *Test Description Number 2.* 3. Connect the J 39021-5V Fuel Injector Tester to B+ and ground, and to the J 39021-90 Injector Switch Box. 4. Connect the injector switch box to the grey fuel injector harness connector located on the front of the EVAP canister bracket. 5. Set the amperage supply selector switch on the fuel injector tester to the “Coil Test” 0.5 amp position. 6. Connect the leads from the J 39200 Digital Voltmeter (DVM) to the injector tester. Refer to the illustrations associated with the test description. 7. Set the DVM to the tenths scale (0.0). 8. Observe the engine coolant temperature. Is the engine coolant temperature within the specified values?	10˚C (50˚F) to 35˚C (95˚F)	Go to *Step 3*	Go to *Step 5*
3	1. Set injector switch box injector #1. 2. Press the “Push to Start Test” button on the fuel injector tester. 3. Observe the voltage reading on the DVM. **IMPORTANT:** The voltage reading may rise during the test. 4. Record the lowest voltage observed after the first second of the test. 5. Set the injector switch box to the next injector and repeat steps 2, 3, and 4. Did any fuel injector have an erratic voltage reading (large fluctuations in voltage that did not stabilize) or a voltage reading outside of the specified values?	5.7-6.6 V	Go to *Step 4*	Go to *Step 7*
4	Replace the faulty fuel injector(s). Refer to *Fuel Injector.* Is the action complete?	—	Go to *Step 7*	—

Injector Coil Test Procedure (Steps 1-6) and Injector Balance Test Procedure (Steps 7-11) (Cont'd)

Step	Action	Value(s)	Yes	No
5	1. Set injector switch box injector #1. 2. Press the "Push to Start Test" button on the fuel injector tester. 3. Observe the voltage reading on the DVM. **IMPORTANT:** The voltage reading may rise during the test. 4. Record the lowest voltage observed after the first second of the test. 5. Set the injector switch box to the next injector and repeat steps 2, 3, and 4. Did any fuel injector have an erratic voltage reading (large fluctuations in voltage that did not stabilize) or a voltage reading above the specified value?	9.5 V	Go to *Step 4*	Go to *Step 6*
6	1. Identify the highest voltage reading recorded (other than those above 9.5 V). 2. Subtract the voltage reading of each injector from the highest voltage selected in step 1. Repeat until you have a subtracted value for each injector. For any injector, is the subtracted Value in step 2 greater than the specified value?	0.6 V	Go to *Step 4*	Go to *Step 7*
7	**CAUTION: In order to reduce the risk of fire and personal injury, wrap a shop towel around the fuel pressure connection. The towel will absorb any fuel leakage that occurs during the connection of the fuel pressure gauge. Place the towel in an approved container when the connection of the fuel pressure gauge is complete.** 1. Connect the J 34730-1 Fuel Pressure Gauge to the fuel pressure test port. 2. Energize the fuel pump using the Tech 2. 3. Place the bleed hose of the fuel pressure gauge into an approved gasoline container. 4. Bleed the air out of the fuel pressure gauge. 5. With the fuel pump running, observe the reading on the fuel pressure gauge. Is the fuel pressure within the specified values?	296-376 kPa (43-55 psi)	Go to *Step 8*	Go to *Fuel System Diagnosis*
8	Turn the fuel pump "OFF". Does the fuel pressure remain constant?	—	Go to *Step 9*	Go to *Fuel System Diagnosis*

Injector Coil Test Procedure (Steps 1-6) and Injector Balance Test Procedure (Steps 7-11) (Cont'd)

Step	Action	Value(s)	Yes	No
9	1. Connect the J 39021-5V Fuel Injector Tester and J 39021-90 Injector Switch Box the fuel injector harness connector. 2. Set the amperage supply selector switch on the fuel injector tester to the "Balance Test" 0.5–2.5 amp position. 3. Using the Tech 2 turn the fuel pump "ON" then "OFF" in order to pressurize the fuel system. 4. Record the fuel pressure indicated by the fuel pressure gauge after the fuel pressure stabilizes. This is the first pressure reading. 5. Energize the fuel injector by depressing the "Push to Start Test" button on the fuel injector tester. 6. Record the fuel pressure indicated by the fuel pressure gauge after the fuel pressure gauge needle has stopped moving. This is the second pressure reading. 7. Repeat steps 1 through 6 for each fuel injector. 8. Subtract the second pressure reading from the first pressure reading for one fuel injector. The result is the pressure drop value. 9. Obtain a pressure drop value for each fuel injector. 10. Add all of the individual pressure drop values. This is the total pressure drop. 11. Divide the total pressure drop by the number of fuel injectors. This is the average pressure drop. Does any fuel injector have a pressure drop value that is either higher than the average pressure drop or lower than the average pressure drop by the specified value?	10 kPa (1.5 psi)	Go to *Step 10*	Go to *OBD System Check*
10	Re-test any fuel injector that does not meet the specification. Refer to the procedure in step 9. NOTE: Do not repeat any portion of this test before running the engine in order to prevent the engine from flooding. Does any fuel injector still have a pressure drop value that is either higher than the average pressure drop or lower than the average pressure drop by the specified value?	10 kPa (1.5 psi)	Go to *Step 11*	Go to *Symptoms*
11	Replace the faulty fuel injector(s). Refer to *Fuel Injector.* Is the action complete?	—	Verify repair	—

Powertrain Control Module (PCM) Diagnosis

To read and clear diagnostic trouble codes, use a Tech 2.

IMPORTANT: Use of a Tech 2 is recommended to clear diagnostic trouble codes from the PCM memory. Diagnostic trouble codes can also be cleared by turning the ignition "OFF" and disconnecting the battery power from the PCM for 30 seconds. Turning off the ignition and disconnecting the battery power from the PCM will cause all diagnostic information in the PCM memory to be cleared. Therefore, all the diagnostic tests will have to be re-run.

Since the PCM can have a failure which may affect only one circuit, following the diagnostic procedures in this section will determine which circuit has a problem and where it is.

If a diagnostic chart indicates that the PCM connections or the PCM is the cause of a problem, and the PCM is replaced, but this does not correct the problem, one of the following may be the reason:

- There is a problem with the PCM terminal connections. The terminals may have to be removed from the connector in order to check them properly.
- EEPROM program is not correct for the application. Incorrect components or reprogramming the PCM with the wrong EEPROM program may cause a malfunction and may or may not set a DTC.
- The problem is intermittent. This means that the problem is not present at the time the system is being checked. In this case, refer to the *Symptoms* portion of the manual and make a careful physical inspection of all component and wiring associated with the affected system.
- There is a shorted solenoid, relay coil, or harness. Solenoids and relays are turned "ON" and "OFF" by the PCM using internal electronic switches called drivers. A shorted solenoid, relay coil, or harness will not damage the PCM but will cause the solenoid or relay to be inoperative.

Multiple PCM Information Sensor DTCs Set

Circuit Description

The powertrain control module (PCM) monitors various sensors to determine the engine operating conditions.

The PCM controls fuel delivery, spark advance, transmission operation, and emission control device operation based on the sensor inputs.

The PCM provides a sensor ground to all of the sensors.

The PCM applies 5 volts through a pull–up resistor, and determines the status of the following sensors by monitoring the voltage present between the 5–volt supply and the resistor:

- The engine coolant temperature (ECT) sensor
- The intake air temperature (IAT) sensor
- The transmission fluid temperature (TFT) sensor

The PCM provides the following sensors with a 5–volt reference and a sensor ground signal:

1

- The exhaust gas recirculating (EGR) pintle position sensor
- The manifold absolute pressure (MAP) sensor
- The throttle position (TP) sensor 1
- The acceleration position (AP) sensor 1
- The acceleration position (AP) sensor 3
- The Vapor Pressure Sensor

2

- The Crank position (CKP) sensor
- The throttle position (TP) sensor 2
- The acceleration position (AP) sensor 2

The PCM monitors the separate feedback signals from these sensors in order to determine their operating status.

Diagnostic Aids

IMPORTANT: Be sure to inspect PCM and engine grounds for being secure and clean.

A short to voltage in one of the sensor input circuits may cause one or more of the following DTCs to be set:

- P0425
- P0108, P1106
- P0406
- P1120, P1515, P1221, P1516, P1635
- P1275, P1639, P1271, P1273
- P1285, P1272, P1273
- P0336, P0337
- P1220, P1515, P1221, P1515, P1516
- P1280, P1271, P1272

IMPORTANT: If a sensor input circuit has been shorted to voltage, ensure that the sensor is not damaged. A damaged sensor will continue to indicate a high or low voltage after the affected circuit has been repaired. If the sensor has been damaged, replace it.

An open in the sensor ground circuit between the PCM and the splice will cause one or more of the following DTCs to be set:

- P0425
- P0108, P1106
- P0406
- P1120, P1515, P1221, P1516, P1635
- P1275, P1639, P1271, P1273
- P1285, P1272, P1273
- P0336, P0337
- P1220, P1515, P1221, P1515, P1516
- P1280, P1271, P1272

A short to ground in the 5–volt reference A or B circuit will cause one or more of the following DTCs to be set:

- P0453
- P0106, P0107, P1107
- P0401, P1404, P0405
- P1120, P1515, P1221, P1516, P1635

- P1275, P1639, P1271, P1273
- P1285, P1272, P1273
- P0336, P0337
- P1220, P1515, P1221, P1515, P1516
- P1280, P1271, P1272

Check for the following conditions:

- **Poor connection at PCM.** Inspect the harness connectors for backed–out terminals, improper mating, broken locks, improperly formed or damage terminals, and a poor terminal–to–wire connection.
- **Damaged harness.** Inspect the wiring harness for damage. If the harness is not damaged, observe an affected sensor fs displayed value on the Tech 2 with the ignition “ON” and the engine “OFF” while you move the connectors and the wiring harnesses related to the following sensors:
  - MAP Sensor
  - EGR
  - TPS1/TPS2
  - APS1/APS2/APS3
  - CKP

Multiple PCM Information Sensor DTCs Set

Step	Action	Value(s)	Yes	No
1	Was the “On-Board (OBD) System Check” performed?	—	Go to *Step 2*	Go to *OBD System Check*
2	1. Turn the ignition “OFF”, disconnect the PCM. 2. Turn the ignition “ON”, check the 5 volt reference 1 and 2 circuit for the following conditions: • A poor connection at the PCM. • An open between the PCM connector and the splice. • A short to ground. • A short to voltage. Is there an open or short?	—	Go to *Step 3*	Go to *Step 4*
3	Repair the open or short. Is the action complete?	—	Verify repair	—
4	Check the sensor ground circuit for the following conditions: • A poor connection at the PCM or the affected sensors. • An open between the PCM connector and the affected sensors. Is there an open or a poor connection?	—	Go to *Step 5*	Go to *Step 6*
5	Repair the open or the poor connection. Is the action complete?	—	Verify repair	—
6	Following below the DTCs stored: P1635, P1639	—	Go to *applicable DTC table*	Go to *Step 7*
7	Measure the resistance below the items: • Between EGR sensor supply circuit and MAP Sensor supply circuit. • Between EGR Sensor supply circuit and PCM harness connector. (5Volt supply circuit) Is the resistance near the specified value?	—	Go to *Step 9*	Go to *Step 8*
8	Locate and repair the open circuit in the MAP or EGR sensor supply circuit. Is the action complete?	—	Verify repair	—

Multiple PCM Information Sensor DTCs Set (Cont'd)

Step	Action	Value(s)	Yes	No
9	1. Disconnect the CKP, ECT and EGR sensor connector. 2. Ignition "ON". 3. Measure the resistance of the blow areas: ● CKP sensor GND circuit. ● ECT sensor GND circuit. ● EGR sensor GND circuit. Does the voltage resistance near the specified value?	—	Go to *Step 11*	Go to *Step 10*
10	Locate and repair the short circuit in the CKP or EGR or ECT sensor signal or GND circuit. Is the action complete?	—	Verify repair	—
11	1. Disconnect the CKP sensor connector. 2. Ignition "ON". 3. Measure the voltage of the blow areas: ● CKP sensor shield circuit. Does the voltage resistance near the specified value?	—	Go to *Step 13*	Go to *Step 12*
12	Locate and repair the short circuit in the CKP sensor shield circuit. Is the action complete?	—	Verify repair	—
13	Are more of the following items for DTCs stored? EGR, ECT, MAP, CKP, TPS, APS	—	Go to *applicable DTC table*	Go to *Step 14*
14	Replace the PCM. The replacement PCM must be programmed. Refer to *ON-Vehicle Service in Power Control Module and Sensors for procedures.* And also refer to latest Service Bulletin. Check to see if the latest software is released or not. And then Down Load the LATEST PROGRAMMED SOFTWARE to the replacement PCM. Is the action complete?	—	Go to *OBD System Check*	—

Exhaust Gas Recirculation (EGR) Diagnosis

An EGR flow check diagnosis of the linear EGR system is covered by DTC P0401. Pintle position error diagnosis is covered by DTC P0402, P0404, P1404, P0405, P0406. If EGR diagnostic trouble codes P0401 and/or P0402, P0404, P1404, P0405, P0406 are encountered, refer to the DTC charts.

Engine Tech 2 Data Definitions and Ranges

A/C CLUTCH – Tech 2 Displays ON or OFF –
Indicates whether the PCM has commanded the A/C clutch ON. Used in A/C system diagnostic.

A/C REQUEST — Tech 2 Displays YES or NO —
Indicates the state of the A/C request input circuit from the HVAC controls. The PCM uses the A/C request signal to determine whether A/C compressor operation is being requested.

AIR/FUEL RATIO — Tech 2 Range 0.0-25.5 —
Air/fuel ratio indicates the PCM commanded value. In closed loop, the air/fuel ratio should normally be displayed around “14.6-14.7”. A lower air/fuel ratio indicates a richer commanded mixture, which may be seen during power enrichment or TWC protection modes. A higher air/fuel ratio indicates a leaner commanded mixture. This can be seen during deceleration fuel mode.

AP1 —Tech 2 Range 0%-100% —
AP (accelerator pedal) angle is computed by the PCM from the AP sensor voltage. AP angle should display “11-15%” at idle and “85-89%” at wide open throttle.

AP2 —Tech 2 Range 0%-100% —
AP (accelerator pedal) angle is computed by the PCM from the AP sensor voltage. AP angle should display “85-89%” at idle and “11-15%” at wide open throttle.

AP3 —Tech 2 Range 0%-100% —
AP (accelerator pedal) angle is computed by the PCM from the AP sensor voltage. AP angle should display “85-89%” at idle and “32-36%” at wide open throttle.

BAROMETRIC PRESSURE — Tech 2 Range 10-105 kPa/0.00-5.00 Volts —
The barometric pressure reading is determined from the MAP sensor signal monitored during key up and wide open throttle (WOT) conditions. The barometric pressure is used to compensate for altitude differences and is normally displayed around “61-104” depending on altitude and barometric pressure.

CHECK TRANS LAMP — AUTO TRANSMISSION —
Indicates the need to check for a DTC with the Tech 2 when the lamp is flashing 0.2 seconds ON and 0.2 seconds OFF.

DESIRED EGR POS. — Tech 2 Range 0%-100% —
Represents the EGR pintle position that the PCM is commanding.

DESIRED IDLE — Tech 2 Range 0-3187 RPM —
The idle speed that the PCM is commanding. The PCM will compensate for various engine loads based on engine coolant temperature, to keep the engine at the desired speed.

ECT — (Engine Coolant Temperature) Tech 2 Range –40˚C to 151˚C (–40˚F to 304˚F) —
The engine coolant temperature (ECT) is mounted in the coolant stream and sends engine temperature information to the PCM. The PCM applies 5 volts to the ECT sensor circuit. The sensor is a thermistor which changes internal resistance as temperature changes. When the sensor is cold (high resistance), the PCM monitors a high signal voltage and interprets that as a cold engine. As the sensor warms (decreasing resistance), the voltage signal will decrease and the PCM will interpret the lower voltage as a warm engine.

EGR DUTY CYCLE — Tech 2 Range 0%-100% —
Represents the EGR valve driver PWM signal from the PCM. A duty cycle of 0% indicates that no EGR flow is being commanded; a 100% duty cycle indicates maximum EGR flow commanded.

EGR FEEDBACK — Tech 2 Range 0.00-5.00 Volts —
Indicates the EGR pintle position sensor signal voltage being monitored by the PCM. A low voltage indicates a fully extended pintle (closed valve); a voltage near 5 volts indicates a retracted pintle (open valve).

ENGINE LOAD — Tech 2 Range 0%-100% —
Engine load is calculated by the PCM from engine speed and MAF sensor readings. Engine load should increase with an increase in RPM or air flow.

ENGINE RUN TIME — Tech 2 Range 00:00:00-99:99:99 Hrs:Min:Sec —
Indicates the time elapsed since the engine was started. If the engine is stopped, engine run time will be reset to 00:00:00.

ENGINE SPEED — Range 0-9999 RPM —
Engine speed is computed by the PCM from the 58X reference input. It should remain close to desired idle under various engine loads with engine idling.

EVAP PURGE PWM — Tech 2 Range 0%-100% —
Represents the PCM commanded PWM duty cycle of the EVAP purge solenoid valve. “0%” displayed indicates no purge; “100%” displayed indicates full purge.

FUEL PUMP — Tech 2 Displays ON or OFF —
Indicates the PCM commanded state of the fuel pump relay driver circuit.

HO2S BANK 1, SEN. 1 — Tech 2 Range 0-1132 mV —
Represents the fuel control exhaust oxygen sensor output voltage. Should fluctuate constantly within a range between 10 mV (lean exhaust) and 1000 mV (rich exhaust) while operating in closed loop.

HO2S BANK 1, SEN. 2 — Tech 2 Range 0-1000mV —
Monitors the exhaust oxygen sensor output voltage. The PCM monitors the operating efficiency of catalytic converter by comparing the output voltages of sensor 1 and sensor 2 in this bank. If the catalytic converter is operating efficiently, the output voltage of sensor 1 will give a greater fluctuation than that of sensor 2. If the PCM detects an abnormal level of voltage fluctuation from sensor 2, a DTC P0420 will be set, indicating that the catalytic converter for this bank is no longer operating efficiently.

HO2S BANK2, SEN. 1 —Tech 2 Range 0-1132 mV—
Represents the fuel control exhaust oxygen sensor output voltage. Should fluctuate constantly within a range between 10mV (lean exhaust) and 1000 mV (rich exhaust) while operating in closed loop.

HO2S BANK 2, SEN. 2—Tech 2 Range 0-1000 mV—
Monitors the exhaust oxygen sensor output voltage. The PCM monitors the operating efficiency of catalytic converter by comparing the output voltages of sensor 1 and sensor 2 in this bank. If the catalytic converter is operating efficiently, the output voltage of sensor 1 will have a greater fluctuation than that of sensor 2. If the PCM detects an abnormal level of voltage fluctuation from sensor 2, a DTC P0430 will be set, indicating that the catalytic converter for this bank is no longer operating efficiently.

HO2S BANK 1, SEN. 1—Tech 2 Displays NOT READY or READY—
Indicates the status of the exhaust oxygen sensor. The Tech 2 will indicate that the exhaust oxygen sensor is ready when the PCM detects a fluctuating HO2S voltage sufficient to allow closed loop operation. This will not occur unless the exhaust oxygen sensor is warmed up.

HO2S BANK 2, SEN. 1 — Tech 2 Displays NOT READY or READY —
Indicates the status of the exhaust oxygen sensor. The Tech 2 will indicate that the exhaust oxygen sensor is ready when the PCM detects a fluctuating HO2S voltage sufficient to allow closed loop operation. This will not occur unless the exhaust oxygen sensor is warmed up.

HO2S WARM UP TIME BANK 1, SEN. 1/BANK 1, SEN 2/BANK 2 SEN. 1/BANK 2 SEN. 2 — Tech 2 Range 00:00:00-99:99:99 HRS:MIN:SEC —
Indicates warm-up time for each HO2S. The HO2S warm-up time is used for the HO2S heater test. The PCM will run the heater test only after a cold start (determined by engine coolant and intake air temperature at the time of start-up) and only once during an ignition cycle. When the engine is started the PCM will monitor the HO2S voltage. When the HO2S voltage indicates a sufficiently active sensor, the PCM looks at how much time has elapsed since start-up. If the PCM determines that tool much time was required for the HO2S to become active, a DTC will set. If the engine was warm when started, HO2S warm-up will the display “00:00:00”.

IAT (INTAKE AIR TEMPERATURE) — Tech 2 Range –40˚C to 151˚C (–40˚F to 304˚F) —
The PCM converts the resistance of the intake air temperature sensor to degrees. Intake air temperature (IAT) is used by the PCM to adjust fuel delivery and spark timing according to incoming air density.

IGNITION 1 — Tech 2 Range 0-25.5 Volts —
This represents the system voltage measured by the PCM at its ignition feed.

INJ. PULSE BANK 1/INJ. PULSE BANK 2 — Tech 2 Range 0-1000 msec. —
Indicates the amount of time the PCM is commanding each injector “ON” during each engine cycle. A longer injector pulse width will cause more fuel to be delivered. Injector pulse width should increase with increased engine load.

LONG TERM FUEL TRIM BANK 1/BANK 2 —
The long term fuel trim is derived from the short term fuel trim values and represents a long term correction of fuel delivery for the bank in question. A value of 0% indicates that fuel delivery requires no compensation to maintain the PCM commanded air/fuel ratio. A negative value significantly below 0% indicates that the fuel system is rich and fuel delivery is being reduced (decreased injector pulse width). A positive value significantly greater than 0% indicates that a lean condition exists and the PCM is compensating by adding fuel (increased injector pulse width). Because long term fuel trim tends to follow short term fuel trim, a value in the negative range due to canister purge at idle should not be considered unusual. Fuel trim values at maximum authority may indicate an excessively rich or lean system.

Fuel System STATUS — Tech 2 Displays OPEN or CLOSED —
“CLOSED” indicates that the PCM is controlling fuel delivery according to oxygen sensor voltage. In “OPEN” the PCM ignores the oxygen sensor voltage and bases the amount of fuel to be delivered on TP sensor, engine coolant, and MAF sensor inputs only.

MAF — Tech 2 Range 0.0-512 gm/s —
MAF (mass air flow) is the MAF input frequency converted to grams of air per second. This indicates the amount of air entering the engine.

MAP — Tech 2 Range 10-105 kPa (0.00-4.97 Volts) —
The manifold absolute pressure (MAP) sensor measures the change in the intake manifold pressure from engine load, EGR flow, and speed changes. As intake manifold pressure increases, intake vacuum decreases, resulting in a higher MAP sensor voltage and kPa reading. The MAP sensor signal is used to monitor intake manifold pressure changes during the EGR flow test, to update the BARO reading, and as an enabling factor for several of the diagnostics.

MIL — Tech 2 Displays ON or OFF —
Indicates the PCM commanded state of the malfunction indicator lamp.

MISFIRE CUR. CYL. #1 /#2 /#3 /#4 / #5 / #6 — Tech 2 Range 0-255 Counts —
The misfire current counters increase at a rate according to the number of the possible misfires being detected on each cylinder. The counters may normally display some activity, but the activity should be nearly equal for all the cylinders.

MISFIRE CUR. CYL. #1 /#2 /#3 /#4 / #5 / #6 — Tech 2 Range 0-65535 Counts —
The misfire history counters display the relative level of misfire that has been detected on each cylinder. The misfire history counters will not update or show any activity until a misfire DTC (P0300) has become active.

MISFIRE FAILURES SINCE FIRST FAIL — Tech 2 Range 0-65535 Counts —
Indicates the number of 200 crankshaft revolution sample periods during which the level of misfire was sufficiently high to report a fail.

MISFIRE PASSES SINCE FIRST FAIL — Tech 2 Range 0-65535 Counts —
Indicates the number of 200 crankshaft revolution sample periods during which the level of misfire was sufficiently low to report a pass.

POWER ENRICHMENT — Tech 2 Displays ACTIVE or INACTIVE —
"ACTIVE" displayed indicates that the PCM has detected conditions appropriate to operate in power enrichment mode. The PCM will command power enrichment mode when a large increase in throttle position and load is detected. While in power enrichment mode, the PCM will increase the amount of fuel delivered by entering open loop and increasing the injector pulse width. This is done to prevent a possible sag or hesitation from occurring during acceleration.

SPARK — Tech 2 Range –64˚ to 64˚ —
Displays the amount of spark advance being commanded by the PCM on the IC circuit.

START-UP ECT — Tech 2 Range –40˚C to 151˚C (–40˚F to 304˚F) —
Indicates the engine coolant temperature at the time that the vehicle was started. Used by the HO2S diagnostic to determine if the last start-up was a cold start.

START-UP IAT — Tech 2 Range –40˚C to 151˚C (–40˚F to 304˚F) —
Indicates the intake air temperature at the time that the vehicle was started. Used by the HO2S diagnostic to determine if the last start-up was a cold start.

TOTAL MISFIRE CURRENT COUNT — Tech 2 Range 0-255 —
Indicates the total number of cylinder firing events that were detected as being misfires during the last 200 crankshaft revolution sample period.

TP1 — Tech 2 Range 0%-100% —
TP (throttle position) angle is computed by the PCM from the TP sensor voltage. TP angle should display "6-12%" at idle and "79-83%" at wide open throttle.

TP2 — Tech 2 Range 0%-100% —
TP (throttle position) angle is computed by the PCM from the TP sensor voltage. TP angle should display "88-94%" at idle and "19-23%" at wide open throttle.

CATALYST PROTECTION MODE — Tech 2 Displays YES or NO —
"YES" displayed indicates that the PCM has detected conditions appropriate to operate in TWC protection mode. The PCM will decrease the air/fuel ratio to a value that depends on mass air flow (higher mass air flow = lower air/fuel ratio).

UPSHIFT LAMP (MANUAL TRANSMISSION)
VEHICLE SPEED — Tech 2 Range 0-255 km/h (0-155 mph) —
The vehicle speed sensor signal is converted into km/h and mph for display.

WEAK CYLINDER — Tech 2 Displays Cylinder Number —
This indicates that the PCM has detected crankshaft speed variations that indicate 2% or more cylinder firing events are misfires.

Typical Scan Data Values

Use the Typical Scan Data Values Table only after the On-Board Diagnostic System Check has been completed, no DTC(s) were noted, and you have determined that the on-board diagnostics are functioning properly. Tech 2 values from a properly-running engine may be used for comparison with the engine you are diagnosing. The typical scan data values represent values that would be seen on a normally-running engine.

NOTE: A Tech 2 that displays faulty data should not be used, and the problem should be reported to the Tech 2 manufacturer. Use of a faulty Tech 2 can result in misdiagnosis and unnecessary replacement of parts.

Only the parameters listed below are referred to in this service manual for use in diagnosis. For further information on using the Tech 2 to diagnose the PCM and related sensors, refer to the applicable reference section listed below. If all values are within the typical range described below, refer to the *Symptoms* section for diagnosis.

Test Conditions

Engine running, lower radiator hose hot, transmission in park or neutral, closed loop, accessories off, brake not applied and air conditioning off.

3.5L V-6 Engine (Automatic and Manual Transmission)

Tech 2 Parameter	Data List	Units Displayed	Typical Data Values (IDLE)	Typical Data Values (2500 RPM)	Refer To
A/C Clutch Relay	Engine	On/Off	Off	Off	General Description and Operation, A/C Clutch Circuit Operation
A/C Request	Engine	Yes/No	No	No	General Description and Operation, A/C Request Signal
Air/Fuel Ratio	Engine	Ratio: _ to 1	14.6–14.7	14.6–14.7	General Description and Operation, Fuel System Metering Purpose
APP Sensor1	Engine	Percent	11–15	16–24	General Description and Operation
APP Sensor2	Engine	Percent	85–89	74–82	General Description and Operation
APP Sensor3	Engine	Percent	85–89	76–84	General Description and Operation
Barometric Pressure	Engine	kPa	61-104 (depends on altitude and barometric pressure)	61-104 (depends on altitude and barometric pressure)	General Description and Operation
Brake Light Switch	Engine	Open 0V/Closed 12V	Open 0V	Open 0V	Refer to Section 5
Check Trans Lamp (**Auto Trans**)	Engine	On/Off	Off	Off	4L30-E Automatic Transmission Diagnosis
Cruise Main Switch	Engine	Active/Inactive	Inactive	Inactive	Refer to Section 10
Cruise Set Switch	Engine	Active/Inactive	Inactive	Inactive	Refer to Section 10
Cruise Cancel Switch	Engine	Active/Inactive	Inactive	Inactive	Refer to Section 10
Cruise Resume Switch	Engine	Active/Inactive	Inactive	Inactive	Refer to Section 10
Decel Fuel Cutoff	Engine	Active/Inactive	Inactive	Inactive	General Description and Operation, Deceleration Mode
Desired EGR Position	Engine	Percent	0%	0%	General Description and Operation, EGR Pintle Position Sensor
Desired Idle Speed	Engine	RPM	700	800	General Description and Operation
ECT (Engine Coolant Temp)	Engine	Degrees C, Degrees F	80-100˚C (176-212˚F)	80-100˚C (176-212˚F)	General Description and Operation, Engine Coolant Temperature (ECT) Sensor
EGR Closed Pintle Position	Engine	Steps	20-40	20-40	General Description and Operation, EGR Pintle Position Sensor

Tech 2 Parameter	Data List	Units Displayed	Typical Data Values (IDLE)	Typical Data Values (2500 RPM)	Refer To
EGR Duty Cycle	Engine	Percent	0%	0%	General Description and Operation, Linear EGR Operation and Results of Incorrect Operation
EGR Feedback	Engine	Volts	0.45-0.80	0.45-0.80	—
EGR Normalized	Engine	Percent	0%	0%	—
Engine Load	Engine	Percent	2.0% - 5.5%	8.0% - 16.0%	General Description and Operation, Mass Air Flow (MAF) Sensor
Time From Start	Engine	Sec	Varies. Resets at each engine start.	Varies. Resets at each engine start.	—
Engine Speed	Engine	RPM	Within –50 to +100 of “Desired Idle”	Actual engine speed	—
EVAP Purge Solenoid	Engine	Percent	0%	0%	Diagnosis, EVAP Emission Canister Purge Valve Check
EVAP Vent Valve	Engine	On/Off	—	—	—
Fuel System Status	Engine	Open Loop/Closed Loop	Closed Loop	Closed Loop	General Description
Fuel Level	Engine	Percent	—	—	—
Fuel Level Sensor	Engine	Volts	—	—	—
Fuel Tank (Vapor) Pressure Sensor	Engine	Volts	—	—	—
		in. H2O	—	—	—
Fuel Pump	Engine	On/Off	On	On	Engine Fuel
HO2S Bank 1 Sen.1 (millivolts)	O2 Sensor Data	Millivolts	50-950 changing quickly	50-950, always changing quickly	General Description and Operation, Fuel control HO2S
HO2S Bank 1 Sen.2 (millivolts) (**Auto Trans**)	O2 Sensor Data	Millivolts	200-700 changing slowly	250-650 changing slowly	General Description and Operation, Fuel Metering System
HO2S Bank 1 Sen.2 (millivolts) (**Manual Trans**)	O2 Sensor Data	Millivolts	50-950 changing quickly	50-950 changing quickly	General Description and Operation, Fuel Metering System
HO2S Bank 1 Sen.3 (millivolts) (**Manual Trans**)	O2 Sensor Data	Millivolts	200-700 changing slowly	250-650 changing slowly	General Description and Operation, Catalyst Monitor Heated Oxygen Sensor (Manual Trans)
HO2S Bank 2 Sen.1 (millivolts)	O2 Sensor Data	Millivolts	50-950 changing quickly	50-950 changing quickly	General Description and Operation, Fuel Control HO2S

Tech 2 Parameter	Data List	Units Displayed	Typical Data Values (IDLE)	Typical Data Values (2500 RPM)	Refer To
HO2S Bank 2 Sen.2 (millivolts) (**Auto trans**)	O2 Sensor Data	Millivolts	200-700 changing slowly	250-650 changing slowly	General Description and Operation, Fuel Metering System
HO2S Bank 1 Sen.1 (ready/not ready)	O2 Sensor Data	Ready Yes/No	Ready Yes	Ready Yes	General Description and Operation, Fuel Control HO2S; DTC: P0135
HO2S Bank 2 Sen.1 (ready/not ready)	O2 Sensor Data	Ready Yes/No	Ready Yes	Ready Yes	General Description and Operation, Fuel Control HO2S
HO2S Warm-Up Time Bank 1 Sen.1	O2 Sensor Data	Seconds	25-45	25-45	General Description and Operation, Fuel Control HO2S
HO2S Warm-Up Time Bank 1 Sen.2	O2 Sensor Data	Seconds	60-100	60-100	General Description and Operation, Fuel Control HO2S
HO2S Warm-Up Time Bank 2 Sen.1	O2 Sensor Data	Seconds	25-45	25-45	General Description and Operation, Fuel Control HO2S
HO2S Warm-Up Time Bank 2 Sen.2	O2 Sensor Data	Seconds	60-100	60-100	General Description and Operation, Catalyst Monitor Heated Oxygen Sensor (Auto Trans)
IAT (Intake Air Temp)	Engine	Degrees C, Degrees F	0-100˚C, depends on underhood temperature	0-80˚C, depends on underhood temperature	General Description and Operation, Intake Air Temperature (IAT) Sensor
Illumination Switch	Engine	Closed 0V/Open 12V	Closed 0V	Closed 0V	Refer to Section 8
Ignition Voltage	Engine	Volts	12.8-14.1	12.8-14.1	General Description and Operation, Electronic Ignition System
Inj. Pulse Bank 1	Engine	Milliseconds	2.0-4.0	2.5-4.0	General Description, Fuel Metering, Fuel Injector
Inj. Pulse Bank 2	Engine	Milliseconds	2.0-4.0	2.5-4.0	General Description, Fuel Metering, Fuel Injector
Knock Present	Engine	No/Yes	No	No	General Description and ION Sensing Module
Knock Signal	Engine	Percent	1~4	1~4	General Description and ION Sensing Module
Knock Sensor Retard	Engine	˚CA	0	0	General Description and ION Sensing Module
Knock Counter	Engine	Counts	—	—	General Description
Long Term FT Bank 1 (Long Term Fuel Trim)	Misfire	Counts and Percentage	100 to 150 counts, –22% to +17%	100 to 150 counts, –22% to +17%	Diagnosis, Fuel Trim System Monitor; DTCs: P0171, P0172
Long Term FT Bank 2 (Long Term Fuel Trim)	Misfire	Counts and Percentage	100 to 150 counts, –22% to +17%	100 to 150 counts, –22% to +17%	Diagnosis, Fuel Trim System Monitor; DTCs: P0171

Tech 2 Parameter	Data List	Units Displayed	Typical Data Values (IDLE)	Typical Data Values (2500 RPM)	Refer To
MAF (Mass Air Flow)	Engine	Grams per second	3.0-7.0	12-20	General Description and Operation, MAF; DTCs: P101, P0102, P0103
MAP kPa (Manifold Absolute Pressure)	Engine	Kilopascals	25-35	20-30	General Description and Operation, Manifold Absolute Pressure (MAP) Sensor; DTCs: P0106, P0107, P0108
		Volts	0.8-1.3	0.5-1.0	
MIL	Engine	On/Off	Off	Off	On-Board Diagnostic System Check
Misfire Cur. Cyl #1	Misfire	Counts	0-2	0-2	DTC P0300
Misfire Cur. Cyl #2	Misfire	Counts	0-2	0-2	DTC P0300
Misfire Cur. Cyl #3	Misfire	Counts	0-2	0-2	DTC P0300
Misfire Cur. Cyl #4	Misfire	Counts	0-2	0-2	DTC P0300
Misfire Cur. Cyl #5	Misfire	Counts	0-2	0-2	DTC P0300
Misfire Cur. Cyl #6	Misfire	Counts	0-2	0-2	DTC P0300
Misfire Hist. Cyl #1	Misfire	Counts	0	0	DTC P0300
Misfire Hist. Cyl #2	Misfire	Counts	0	0	DTC P0300
Misfire Hist. Cyl #3	Misfire	Counts	0	0	DTC P0300
Misfire Hist. Cyl #4	Misfire	Counts	0	0	DTC P0300
Misfire Hist. Cyl #5	Misfire	Counts	0	0	DTC P0300
Misfire Hist. Cyl #6	Misfire	Counts	0	0	DTC P0300
Misfire Failures Since First Fail	Misfire	Counts	0	0	DTC P0300
Misfire Passes Since First Fail	Misfire	Counts	0	0	DTC P0300
PNP (Park/Neutral Position)	Engine	P-N / R-D-3-2-L	P-N	P-N	4L30-E Automatic Transmission Diagnosis
Power Enrichment	Engine	NO/YES	NO	NO	General Description and Operation, Acceleration Mode
PSP Switch (Power Steering Pressure)	Engine	Normal/Hi	Normal Pressure	Normal Pressure	Refer to 2A Section
Spark (Advance)	Engine	Degrees Before Top Dead Center	15-22	34-44	General Description and Operation, Electronic Ignition System

Tech 2 Parameter	Data List	Units Displayed	Typical Data Values (IDLE)	Typical Data Values (2500 RPM)	Refer To
Start-Up ECT (Engine Coolant Temp)	Engine	Degrees C, Degrees F	Depends on engine coolant temperature at time of start-up	Depends on engine coolant temperature at time of start-up	General Description and Operation, Engine Coolant Temperature (ECT) Sensor
Start-Up IAT (Intake Air Temp)	Engine	Degrees C, Degrees F	Depends on intake air temperature at time of start-up	Depends on intake air temperature at time of start-up	General Description and Operation, Intake Air Temperature (IAT) Sensor
TCC Cruise Brake Switch	Engine	Active/Inactive	Active	Active	Refer to Section 10
Total Misfire Current Count	Misfire	Counts	0-5	0-5	DTC P0300
TP Sensor 1 (Throttle Position Sensor 1)	Engine	Percentage	6–12	12–16	General Description and Operation, Throttle Position (TP) Sensor
TP Sensor 2 (Throttle Position Sensor 2)	Engine	Percentage	88–94	86–90	General Description and Operation, Throttle Position (TP) Sensor
Throttle at Idle	Engine	No/Yes	Yes	No	General Description and Operation, Throttle Position (TP) Sensor
Upshift Lamp (manual trans)	Engine	On/Off	Off	Off	Manual Transmission
Vehicle Speed	Engine	MPH / km/h	0	0	4L30-E Automatic Transmission Diagnosis
Weak Cylinder	Misfire	Cylinder #	—	—	DTC P0300

No Malfunction Indicator Lamp (MIL)

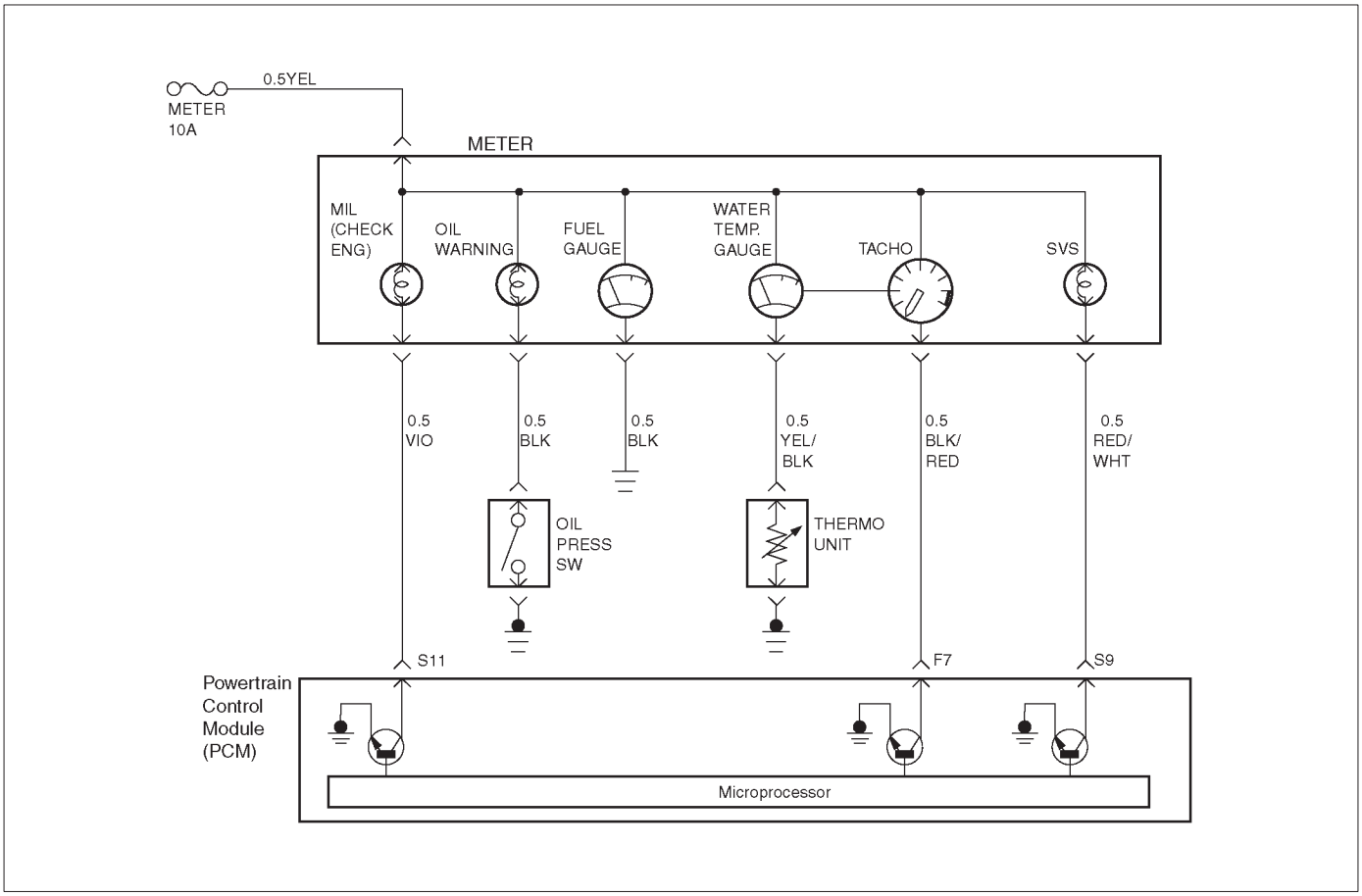

D06R200111

Circuit Description

The “Check Engine” lamp (MIL) should always be illuminated and steady with the ignition “ON” and the engine stopped. Ignition feed voltage is supplied to the MIL bulb through the meter fuse. The powertrain control module (PCM) turns the MIL “ON” by grounding the MIL driver circuit.

Diagnostic Aids

An intermittent MIL may be cased by a poor connection, rubbed-through wire insulation, or a wire broken inside the insulation. Check for the following items:

- Inspect the PCM harness and connections for improper mating, broken locks, improperly formed or damaged terminals, poor terminal-to-wire connection, and damaged harness.
- If the engine runs OK, check for a faulty light bulb, an open in the MIL driver circuit, or an open in the instrument cluster ignition feed.
- If the engine cranks but will not run, check for an open PCM ignition or battery feed, or a poor PCM to engine ground.

Test Description

Number(s) below refer to the step number(s) on the Diagnostic Chart.

2. A “No MIL” condition accompanied by a no-start condition suggests a faulty PCM ignition feed or battery feed circuit.

9. Using a test light connected to B+, probe each of the PCM ground terminals to ensure that a good ground is present. Refer to *PCM Terminal End View* for terminal locations of the PCM ground circuits.

12. In this step, temporarily substitute a known good relay for the PCM relay. The horn relay is nearby, and it can be verified as “good” simply by honking the horn. Replace the horn relay after completing this step.

17. This vehicle is equipped with a PCM which utilizes an electrically erasable programmable read only memory (EEPROM). When the PCM is replaced, the new PCM must be programmed. Refer to *PCM Replacement and Programming Procedures Powertrain Control Module (PCM) and Sensors.*

No Malfunction Indicator Lamp (MIL)

Step	Action	Value(s)	Yes	No
1	Was the “On-Board Diagnostic (OBD) System Check” performed?	—	Go to *Step 2*	Go to *OBD System Check*
2	Attempt to start the engine. Does the engine start?	—	Go to *Step 3*	Go to *Step 6*
3	Check the meter fuse for the instrument cluster ignition feed circuit. Is the fuse OK?	—	Go to *Step 4*	Go to *Step 16*
4	Ignition “ON”, probe the ignition feed circuit at the cluster connector with a test light to ground. Is the test light “ON”?	—	Go to *Step 5*	Go to *Step 13*
5	1. Ignition “OFF”. 2. Disconnect the PCM. 3. Jumper the MIL driver circuit at the PCM connector to ground. 4. Ignition “ON”. Is the MIL “ON”?	—	Go to *Step 10*	Go to *Step 11*
6	Check the PCM ignition feed and battery feed fuses (15 A engine fuse and 15 A PCM fuse). Are both fuses OK?	—	Go to *Step 7*	Go to *Step 15*
7	1. Ignition “OFF”. 2. Disconnect the PCM. 3. Ignition “ON”. 4. Probe the ignition feed circuit at the PCM harness connector with a test light to ground. Is the test light “ON”?	—	Go to *Step 8*	Go to *Step 12*
8	Probe the battery feed circuit at the PCM harness connector with a test light to ground. Is the test light “ON”?	—	Go to *Step 9*	Go to *Step 14*
9	Check for a faulty PCM ground connection. Was a problem found?	—	Verify repair	Go to *Step 10*
10	Check for damaged terminals at the PCM. Was a problem found?	—	Verify repair	Go to *Step 17*
11	Check for an open MIL driver circuit between the PCM and the MIL. Was a problem found?	—	Verify repair	Go to *Step 18*
12	Substitute a known “good” relay for the PCM main relay. Was the malfunction fixed?	—	Verify repair	Go to *Step 13*
13	Repair the open in the ignition feed circuit. Is the action complete?	—	Verify repair	—
14	Locate and repair the open PCM battery feed circuit. Is the action complete?	—	Verify repair	—

No Malfunction Indicator Lamp (MIL) (Cont'd)

Step	Action	Value(s)	Yes	No
15	Locate and repair the short to ground in the PCM ignition feed circuit or PCM battery feed circuit. Is the action complete?	—	Verify repair	—
16	Locate and repair the short to ground in the ignition feed circuit to the instrument cluster, and replace the fuse. Is the action complete?	—	Verify repair	—
17	Replace the PCM. **IMPORTANT:** The replacement PCM must be programmed. Refer to *PCM* in *ON-Vehicle Service* for procedures. And also refer to latest Service Bulletin. Check to see if the Latest software is released or not. And then Down Load the LATEST PROGRAMMED SOFTWARE to the replacement PCM. Is the action complete?	—	Verify repair	—
18	Check the MIL driver circuit for a poor connection at the instrument panel connector. Was a problem found?	—	Verify repair	Go to *Instrument Panel* in *Electrical Diagnosis*

Malfunction Indicator Lamp (MIL) “ON” Steady

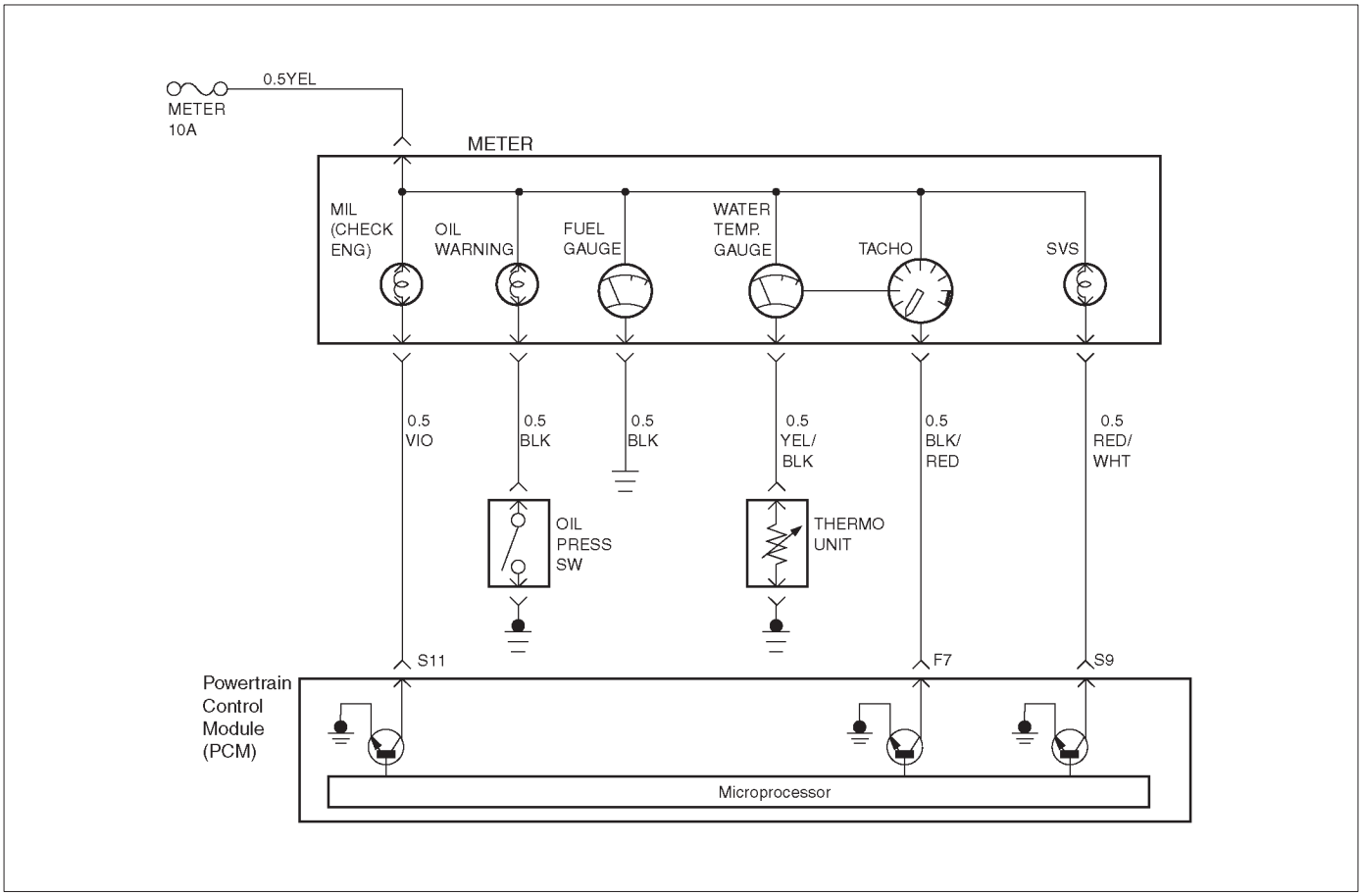

D06R200111

Circuit description

The malfunction indicator lamp (MIL) should always be illuminated and steady with ignition “ON” and the engine stopped. Ignition feed voltage is supplied directly to the MIL indicator. The powertrain control module (PCM) turns the MIL “ON” by grounding the MIL driver circuit. The MIL should not remain “ON” with the engine running and no DTC(s) set. A steady MIL with the engine running and no DTC(s) suggests a short to ground in the MIL driver circuit.

Diagnostic Aids

An intermittent may be caused by a poor connection, rubbed-through wire insulation, or a wire broken inside the insulation. Check for the following items:

- Poor connection or damaged harness – Inspect the PCM harness and connectors for improper mating, broken locks, improperly formed or damaged terminals, poor terminal-to-wire connection, and damaged harness.

Test Description

Number(s) below refer to the step number(s) on the Diagnostic Chart.

2. If the MIL does not remain “ON” when the PCM is disconnected, the MIL driver wiring is not faulty.
3. If the MIL driver circuit is OK, the instrument panel cluster is faulty.
6. This vehicle is equipped with a PCM which utilizes an electrically erasable programmable read only memory (EEPROM). When the PCM is replaced, the new PCM must be programmed. Refer to *PCM Replacement and Programming Procedures* in *Powertrain Control Module (PCM) and Sensors.*

Malfunction Indicator Lamp (MIL) “ON” Steady

Step	Action	Value(s)	Yes	No
1	Was the “On-Board diagnostic (OBD) System Check” performed?	—	Go to *Step 2*	Go to *OBD System Check*
2	1. Ignition “OFF”, disconnect PCM. 2. Ignition “ON”, observe the MIL (Service Engine Soon lamp). Is the MIL “ON”?	—	Go to *Step 3*	Go to *Step 5*
3	1. Ignition “OFF”, disconnect the instrument panel cluster. 2. Check the MIL driver circuit between the PCM and the instrument panel cluster for a short to ground. 3. If a problem is found, repair as necessary. Was the MIL driver circuit shorted to ground?	—	Go to *OBD System Check*	Go to *Step 4*
4	Replace the instrument panel cluster. Is the action complete?	—	Go to *OBD System Check*	—
5	1. Ignition “OFF”, reconnect the PCM. 2. Ignition “ON”, reprogram the EEPROM. Refer to *On-Vehicle Service* in *Powertrain Control Module and Sensors* for procedures. 3. Using the Tech 2 output controls function, select MIL dash lamp control and command the MIL “OFF”. (Refer to the Miscellaneous test) Did the MIL turn “OFF”?	—	Go to *OBD System Check*	Go to *Step 6*
6	Replace the PCM. **IMPORTANT:** The replacement PCM must be programmed. Refer to *On-Vehicle Service* in *Powertrain Control Module and Sensors for procedures.* And also refer to latest Service Bulletin. Check to see if the Latest software is released or not. And then Down Load the LATEST PROGRAMMED SOFTWARE to the replacement PCM. Is the action complete?	—	Go to *OBD System Check*	—

No Service Vehilce Soon (SVS) Lamp

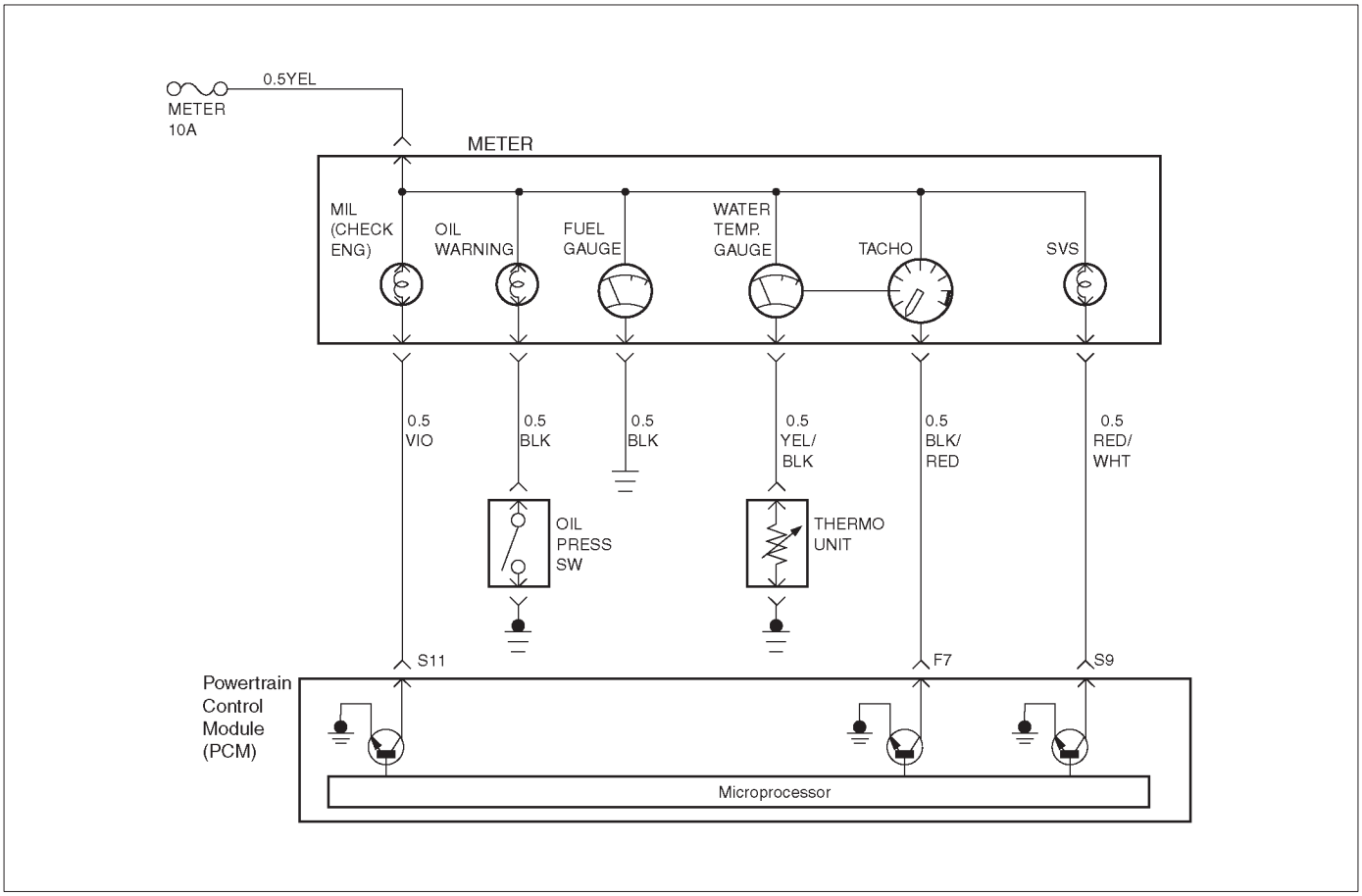

D06R200111

Circuit Description

The Service Vehicle Soon (SVS) lamp is a lamp which added the function of Immobi warning to the Reduced Power Lamp (RPL).

The SVS lamp should always be illminated and steady with the ignition “ON” and the engine stopped. Ignition feed voltage is supplied to the SVS lamp bulb through the meter fuse. The powertrain control module (PCM) turns the SVS lamp “ON” by grounding the SVS lamp driver circuit.

Diagnostic Aids

An intermittent SVS lamp may be cased by a poor connection, rubbed-through wire insulation, or a wire broken inside the insulation. Check for the following items:

- Inspect the PCM harness and connections for improper mating, broken locks, improperly formed or damaged terminals, poor terminal-to-wire connection, and damaged harness.
- If the engine runs OK, check for a faulty light bulb, an open in the SVS lamp driver circuit, or an open in the instrument cluster ignition feed.
- If the engine cranks but will not run, check for an open PCM ignition or battery feed, or a poor PCM to engine ground.

Test Description

Number(s) below refer to the step number(s) on the Diagnostic Chart.

2. A “No SVS lamp” condition accompanied by a no-start condition suggests a faulty PCM ignition feed or battery feed circuit.

9. Using a test light connected to B+, probe each of the PCM ground terminals to ensure that a good ground is present. Refer to *PCM Terminal End View* for terminal locations of the PCM ground circuits.

12. In this step, temporarily substitute a known good relay for the PCM relay. The horn relay is nearby, and it can be verified as “good” simply by honking the horn. Replace the horn relay after completing this step.

17. This vehicle is equipped with a PCM which utilizes an electrically erasable programmable read only memory (EEPROM). When the PCM is replaced, the new PCM must be programmed. Refer to *PCM Replacement and Programming Procedures Powertrain Control Module (PCM) and Sensors.*

No Service Vehicle Soon (SVS) Lamp

Step	Action	Value(s)	Yes	No
1	Was the “On-Board Diagnostic (OBD) System Check” performed?	—	Go to *Step 2*	Go to *OBD System Check*
2	Attempt to start the engine. Does the engine start?	—	Go to *Step 3*	Go to *Step 6*
3	Check the meter fuse for the instrument cluster ignition feed circuit. Is the fuse OK?	—	Go to *Step 4*	Go to *Step 16*
4	Ignition “ON”, probe the ignition feed circuit at the cluster connector with a test light to ground. Is the test light “ON”?	—	Go to *Step 5*	Go to *Step 13*
5	1. Ignition “OFF”. 2. Disconnect the PCM. 3. Jumper the SVS lamp driver circuit at the PCM connector to ground. 4. Ignition “ON”. Is the SVS lamp “ON”?	—	Go to *Step 10*	Go to *Step 11*
6	Check the PCM ignition feed and battery feed fuses (15 A engine fuse and 15 A PCM fuse). Are both fuses OK?	—	Go to *Step 7*	Go to *Step 15*
7	1. Ignition “OFF”. 2. Disconnect the PCM. 3. Ignition “ON”. 4. Probe the ignition feed circuit at the PCM harness connector with a test light to ground. Is the test light “ON”?	—	Go to *Step 8*	Go to *Step 12*
8	Probe the battery feed circuit at the PCM harness connector with a test light to ground. Is the test light “ON”?	—	Go to *Step 9*	Go to *Step 14*
9	Check for a faulty PCM ground connection. Was a problem found?	—	Verify repair	Go to *Step 10*
10	Check for damaged terminals at the PCM. Was a problem found?	—	Verify repair	Go to *Step 17*
11	Check for an open SVS lamp driver circuit between the PCM and the SVS lamp. Was a problem found?	—	Verify repair	Go to *Step 18*
12	Substitute a known “good” relay for the PCM main relay. Was the malfunction fixed?	—	Verify repair	Go to *Step 13*
13	Repair the open in the ignition feed circuit. Is the action complete?	—	Verify repair	—
14	Locate and repair the open PCM battery feed circuit. Is the action complete?	—	Verify repair	—

No Service Vehicle Soon (SVS) Lamp (Cont'd)

Step	Action	Value(s)	Yes	No
15	Locate and repair the short to ground in the PCM ignition feed circuit or PCM battery feed circuit. Is the action complete?	—	Verify repair	—
16	Locate and repair the short to ground in the ignition feed circuit to the instrument cluster, and replace the fuse. Is the action complete?	—	Verify repair	—
17	Replace the PCM. **IMPORTANT:** The replacement PCM must be programmed. Refer to *PCM* in *ON-Vehicle Service* for procedures. And also refer to latest Service Bulletin. Check to see if the Latest software is released or not. And then Down Load the LATEST PROGRAMMED SOFTWARE to the replacement PCM. Is the action complete?	—	Verify repair	—
18	Check the SVS lamp driver circuit for a poor connection at the instrument panel connector. Was a problem found?	—	Verify repair	Go to *Instrument Panel* in *Electrical Diagnosis*

Service Vehicle Soon (SVS) Lamp “ON” Steady

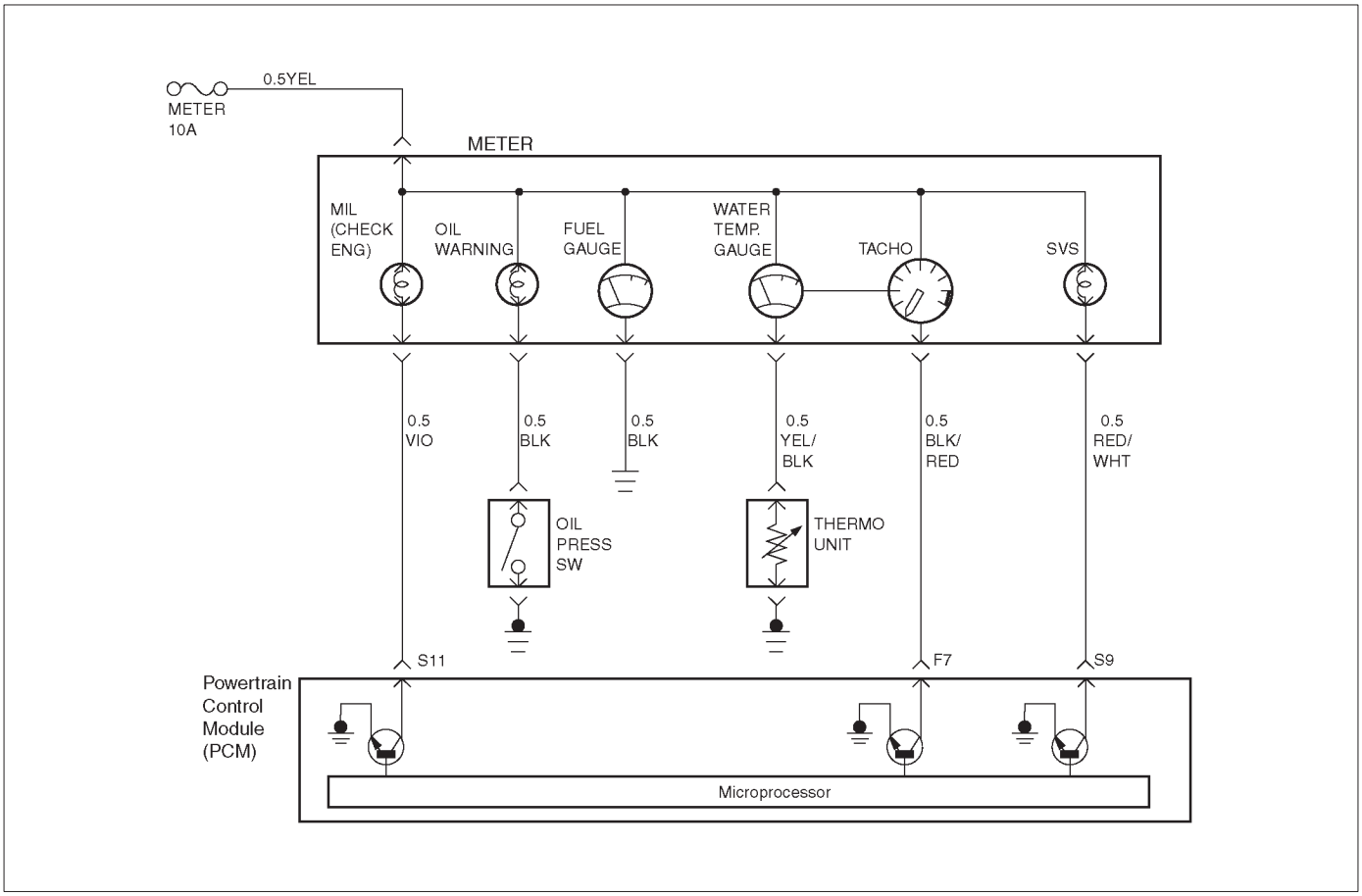

D06R200111

Circuit description

The Service Vehicle Soon (SVS) lamp is a lamp which added the function of immobi warning to the Reduced Power Lamp (RPL).

The SVS lamp should always be illminated and steady with ignition “ON” and the engine stopped. Ignition feed voltage is supplied directly to the SVS lamp indicator. The powertrain control module (PCM) turns the SVS lamp “ON” by grounding the SVS lamp driver circuit.

The RPL should not remain “ON” with the engine running and no DTC(s) set. A steady SVS lamp with the engine running and no DTC(s) suggests a short to ground in the SVS lamp driver circuit.

Diagnostic Aids

An intermittent may be caused by a poor connection, rubbed-through wire insulation, or a wire broken inside the insulation. Check for the following items:

- Poor connection or damaged harness – Inspect the PCM harness and connectors for improper mating, broken locks, improperly formed or damaged terminals, poor terminal-to-wire connection, and damaged harness.

Test Description

Number(s) below refer to the step number(s) on the Diagnostic Chart.

2. If the SVS lamp does not remain “ON” when the PCM is disconnected, the SVS lamp driver wiring is not faulty.
3. If the SVS lamp driver circuit is OK, the instrument panel cluster is faulty.
6. This vehicle is equipped with a PCM which utilizes an electrically erasable programmable read only memory (EEPROM). When the PCM is replaced, the new PCM must be programmed. Refer to *PCM Replacement and Programming Procedures* in *Powertrain Control Module (PCM) and Sensors.*

Service Vehicle Soon (SVS) Lamp “ON” Steady

Step	Action	Value(s)	Yes	No
1	Was the “On-Board diagnostic (OBD) System Check” performed?	—	Go to *Step 2*	Go to *OBD System Check*
2	1. Ignition “OFF”, disconnect PCM. 2. Ignition “ON”, observe the SVS lamp. Is the SVS lamp “ON”?	—	Go to *Step 3*	Go to *Step 5*
3	1. Ignition “OFF”, disconnect the instrument panel cluster. 2. Check the SVS lamp driver circuit between the PCM and the instrument panel cluster for a short to ground. 3. If a problem is found, repair as necessary. Was the SVS lamp driver circuit shorted to ground?	—	Go to *OBD System Check*	Go to *Step 4*
4	Replace the instrument panel cluster. Is the action complete?	—	Go to *OBD System Check*	—
5	1. Ignition “OFF”, reconnect the PCM. 2. Ignition “ON”, reprogram the EEPROM. Refer to *On-Vehicle Service* in *Powertrain Control Module and Sensors* for procedures. 3. Using the Tech 2 output controls function, select RPL dash lamp control and command the RPL (SVS lamp) “OFF”. (Refer to the Miscellaneous test) Did the SVS lamp turn “OFF”?	—	Go to *OBD System Check*	Go to *Step 6*
6	Replace the PCM. **IMPORTANT:** The replacement PCM must be programmed. Refer to *On-Vehicle Service* in *Powertrain Control Module and Sensors for procedures.* And also refer to latest Service Bulletin. Check to see if the Latest software is released or not. And then Down Load the LATEST PROGRAMMED SOFTWARE to the replacement PCM. Is the action complete?	—	Go to *OBD System Check*	—

Engine Cranks But Will Not Run

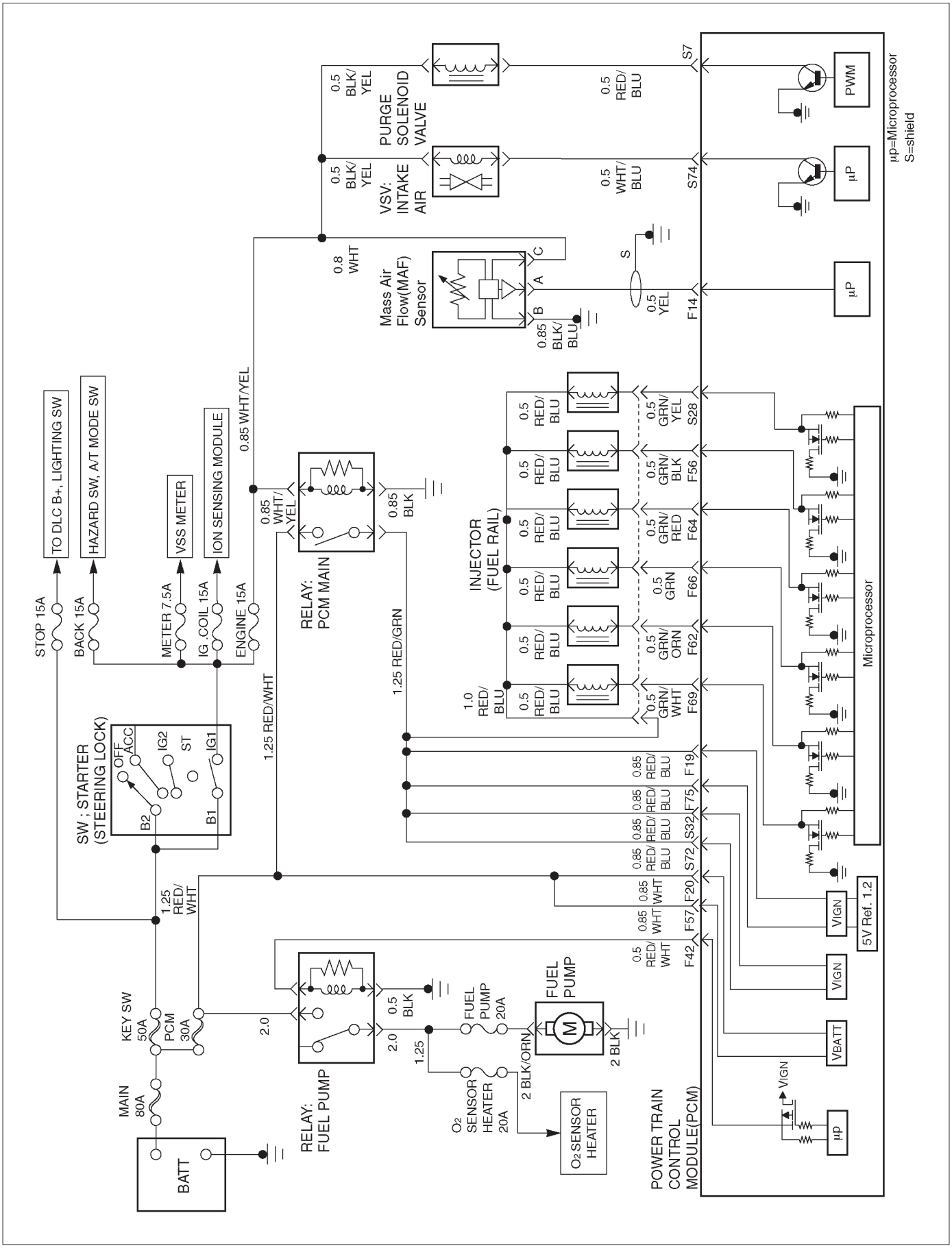

D06R200100

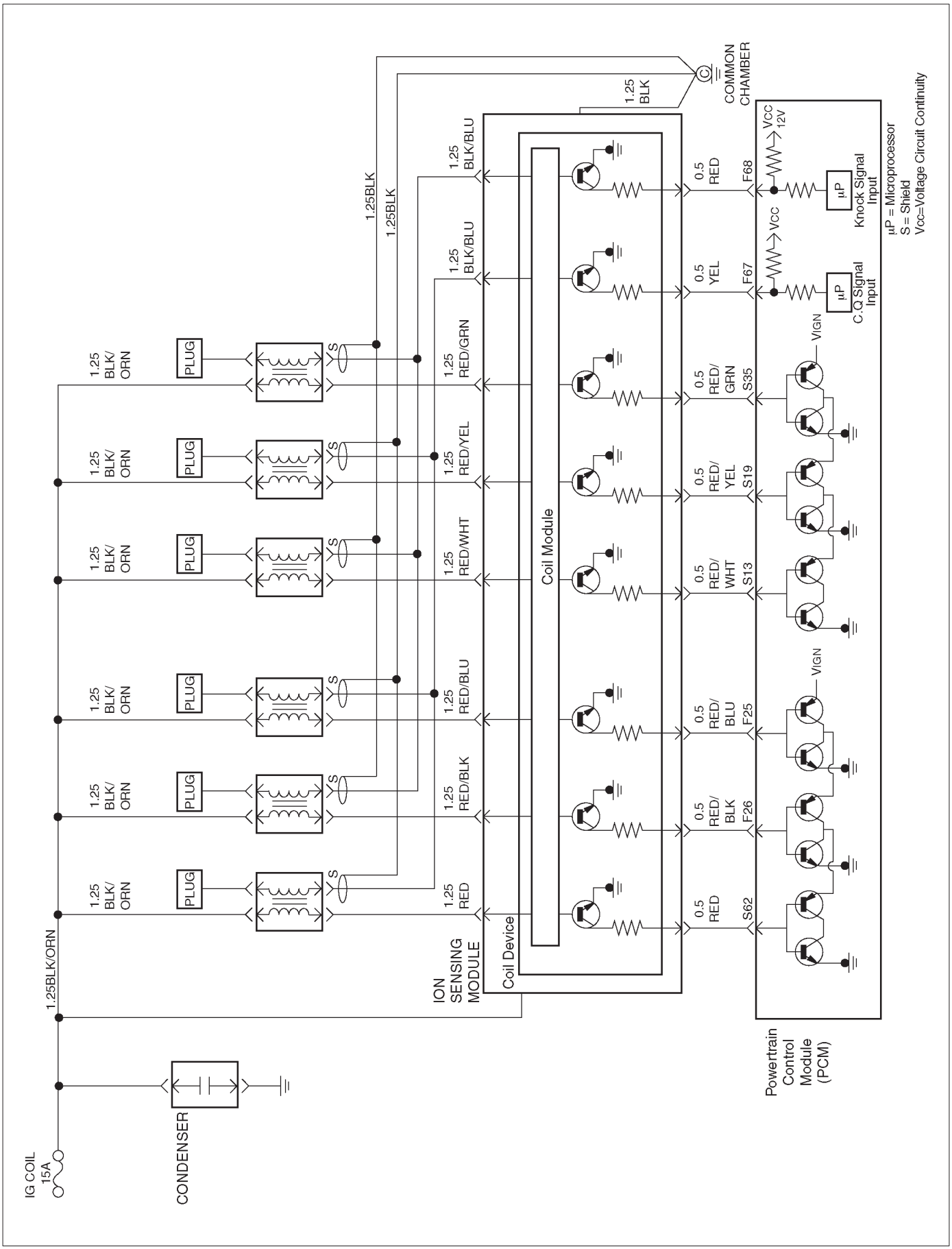
IG COIL
15A
CONDENSER
1.25BLK/ORN
1.25 BLK/ ORN
PLUG
S
1.25BLK
1.25 BLK
COMMON CHAMBER
1.25 BLK/BLU
1.25 RED/GRN
1.25 RED/YEL
1.25 RED/WHT
1.25 RED/BLU
1.25 RED/BLK
1.25 RED
ION SENSING MODULE
Coil Device
Coil Module
0.5 RED
0.5 YEL
0.5 RED/ GRN
0.5 RED/ YEL
0.5 RED/ WHT
0.5 RED/ BLU
0.5 RED/ BLK
0.5 RED
F68
F67
S35
S19
S13
F25
F26
S62
VCC 12V
VCC
μP
Knock Signal Input
C.Q Signal Input
VIGN
Powertrain Control Module (PCM)
μP = Microprocessor
S = Shield
Vcc=Voltage Circuit Continuity

D06R200081

Circuit Description

The electronic Ignition system uses a coil -at-plug method of spark distribution. In this type of ignition system, the powertrain control module (PCM) triggers the correct driver outside the Ignition Current Sense System (ICSS), which then triggers the correct ignition coil based on the 58X signal received from the crankshaft position sensor (CKP). The spark plug connected to the coil fires when the ICSS opens the ground circuit for the coil's primary circuit.

During crank, the PCM monitors the CKP 58X signal. The CKP signal is used to determine which cylinder will fire first. After the CKP 58X signal has been processed by the PCM, it will command all six injectors to allow a priming shot of fuel for all the cylinders. After the priming, the injectors are left "OFF" during the next six 58X reference pulses from the CKP. This allows each cylinder a chance to use the fuel from the priming shot. During this waiting been received by the PCM. The ION sensor signal allows the PCM to operate the injectors sequentially based on camshaft position. If the camshaft position signal is not present at start - up, the PCM will begin sequential fuel delivery with a 1 -in-6 chance that fuel delivery is correct. The engine will run without a ION sensor signal, but will set a DTC code.

Diagnostic Aids

An intermittent problem may be caused by a poor connection, rubbed - through wire insulation or a wire broken inside the insulation. Check for the following items:

- Poor connection or damaged harness-Inspect the PCM harness and connectors for improper mating, broken locks, improperly formed or damaged terminals, poor terminal-to-wire connection, and damaged harness.
- Faulty engine coolant temperature sensor-Using a Tech 2, compare engine coolant temperature with intake air temperature on a completely cool engine. Engine coolant temperature should be within 10 ˚ C of intake air temperature. If not, replace the ECT sensor.

Test Description

Number(s) below refer to the step number(s) on the Diagnostic Chart.

5. An obvious cause of low fuel pressure would be an empty fuel tank.
6. The engine will easily start and run if a few injectors are disabled. It is not necessary to test all injectors at this time since this step is only a test to verify that all of the injectors have not been disabled by fuel contamination.
7. A blinking test light verifies that the PCM is monitoring the 58X crankshaft reference signal and is capable of activating the injectors. If there is an open or shorted driver circuit, DTCs 201 – 206 and a misfire DTC 300 – 306 should be set.
19. By using a spark tester, each ignition coil's ability to produce 25,000 volts is verified.
25. If there is an open or shorted driver circuit, DTCs 201 – 206 and a misfire DTC 301 – 306 should be set. All six injector driver circuits can be checked at one time without removing the intake manifold if a J 39021 – 95 test light is available. This is the alternative procedure:
    - With the ignition "OFF", disconnect the gray connector located at the rear of the air filter, attached to a bracket on the purge canister.
    - Connect test light J 39021 – 95 to the connector. Do any of the light constantly illuminate or fail to blink when the engine is cranked? If so, repair the short or open circuit, or replace the PCM if indicated.

This procedure only tests the driver circuit as far as the test connection, so step 31 is added to test the circuit all the way to the injector.

Engine Cranks But Will Not Run

Step	Action	Value(s)	Yes	No
1	Was the "On-Board Diagnostic (OBD) System Check" performed?	—	Go to *Step 2*	Go to *OBD System Check*
2	Check the ignition coil fuse, the engine fuse, and the PCM fuse. Was a fuse blown?	—	Go to *Step 3*	Go to *Step 4*
3	Check for a short to ground and replace the fuse. Is the action complete?	—	Verify repair	—

Engine Cranks But Will Not Run (Cont'd)

Step	Action	Value(s)	Yes	No
4	1. Ignition "OFF", install a fuel pressure gauge at the test fitting on the fuel supply line in the engine compartment. (Use a shop cloth to absorb any fuel leakage while making the connection.) 2. Ignition "ON", observe the fuel pressure. Is the fuel pressure within the specified values, and does it hold steady?	285 - 375 kPa (43 – 55 psi)	Go to *Step 6*	Go to *Step 5*
5	Is any fuel pressure indicated?	—	Go to *Fuel System Electrical Test*	Go to *Fuel System Diagnosis*
6	Install the switch box J 39021–2 at the injector test connector and activate an injector. Did the fuel pressure drop when the injector was activated?	—	Go to *Step 7*	Go to *Step 18*
7	Install an injector test light at the #2 cylinder injector harness connector. Does the light blink when the engine is cranked?	—	Go to *Step 8*	Go to *Step 24*
8	1. Ignition " OFF". 2. Disconnect the 11-pin connector at the ION sensing module. 3. With a test light to B + , probe each of the 6 exposed ION sensing module pins, one at a time, while the engine is cranked. (Use the gray narrow Metri - Pak © flexible female connector from the J - 35616 kit to make the pin accessible.) Does the light flash at each pin when the engine is cranked?	—	Go to *Step 12*	Go to *Step 9*
9	1. Remove the 4-pin connector at the ION sensing module. 2. Ignition " ON". 3. Use a test light at the harness connector to verify that the module is being supplied with B + and ground. Was a problem found?	—	Go to *Step 10*	Go to *Step 11*
10	Repair the open ignition feed circuit or ground circuit to the ION sensing module. Is the action complete?	—	Verify repair	—
11	Repair the ION sensing module. Is the action complete?	—	Verify repair	—
12	1. Reconnect the ION sensing module 11-pin connector. 2. Remove the electrical connector from each coil. 3. With a test light to B+, probe each of the coil connectors at the wire which runs to the ION sensing module. Does the light flash at each coil connector when the engine is cranked?	—	Go to *Step 14*	Go to *Step 13*
13	Check for an open circuit between the coil and ION sensing module. Is the action complete?	—	Verify repair	—

Engine Cranks But Will Not Run (Cont'd)

Step	Action	Value(s)	Yes	No
14	1. Ignition "ON". 2. While the coil connectors are disconnected, touch each coil connector's ignition feed terminal with a grounded test light (the ignition feed wire is YEL tracer). Did the test light illuminate?	—	Go to *Step 16*	Go to *Step 15*
15	Repair the open ignition feed circuit. Is the action complete?	—	Verify repair	—
16	While the coil connectors are disconnected, touch each connector's secondary ground terminal with a test light to B +. (The ground wires are black.) Did the test light illuminate at each coil connector?	—	Go to *Step 18*	Go to *Step 17*
17	Repair the open secondary ground circuit. Is the action complete?	—	Verify repair	—
18	1. Test the fuel for contamination. 2. If a problem is found, clean the fuel system and correct the contaminated fuel condition as necessary. Replace the fuel filter and replace any injectors that are not delivering fuel (see Injector Balance Test). Was a problem found?	—	Verify repair	Go to *Step 19*
19	1. Remove any ignition coil and install a spark tester at the spark plug end of the coil. 2. Observe the tester while the engine is cranking. Was a crisp, blue spark observed? Only one or two sparks followed by no result is considered the same as "No Spark".	—	Go to *Step 21*	Go to *Step 20*
20	Replace the ignition coil, and return to Step 19 to test the remaining coils. Is the action complete?	—	Verify repair	—
21	Repeat Step 19 for each coil. Remove only one coil at a time, and reinstall each coil on its spark plug after testing, but do not refasten coils with screws at this time. After all coils have passed the spark test, does the engine start?	—	Refasten all coils with their screws	Go to *Step 22*
22	1. Remove the spark plugs from all cylinders. 2. Visually inspect the spark plug electrodes. 3. Replace any spark plugs with loose or missing electrodes or cracked insulators. Did your inspection reveal any spark plugs exhibiting excessive fouling?	—	Correct the fouling condition	Go to *Step 23*

Engine Cranks But Will Not Run (Cont'd)

Step	Action	Value(s)	Yes	No
23	Refer to *Engine Mechanical Diagnosis* to diagnose the following conditions: ● Faulty or incorrect camshaft drive belts ● Leaking or sticky valves or rings ● Excessive valve deposits ● Weak valve springs ● Incorrect valve timing ● Leaking head gasket Is the action complete?	—	Verify repair	Go to *Step 25*
24	Observe the "Engine Speed" data display on the Tech 2 while cranking the engine. Is the engine RPM indicated?	—	Go to *Step 25*	Go to *Step 34*
25	1. Disconnect the 7-pin gray connector at the rear of the air filter beneath the point where the air duct attaches to the MAF sensor. 2. Ignition "ON". 3. Using a test light connected to ground, probe the ignition terminal at the PCM (female) side of the 7-pin connector. Is the test light "ON"?	—	Go to *Step 26*	Go to *Step 32*
26	1. At the PCM (female) side of the connector, connect a test light between the ignition + terminal and one of the injector driver circuits at the same connector. 2. Ignition "ON". 3. Observe the test light, and repeat the test for each injector driver circuit. Did the test light stay on when checking any of the 6 injector driver circuits?	—	Go to *Step 27*	Go to *Step 29*
27	1. Ignition "OFF", disconnect the PCM. 2. Ignition "ON", observe the test light. Is the test light "ON"?	—	Go to *Step 28*	Go to *Step 33*
28	Locate and repair the short to ground in the injector driver circuit. Is the action complete?	—	Verify repair	—
29	1. Using the same test location as in step 26, connect a test light between the ignition terminal and one of the driver circuits. 2. Crank the engine and observe the test light. 3. Repeat for each injector driver circuit. Did the light blink during the test for each circuit?	—	Go to *Step 31*	Go to *Step 30*
30	Check for an open injector driver circuit. Was a problem found?	—	Verify repair	Go to *Step 33*

Engine Cranks But Will Not Run (Cont'd)

Step	Action	Value(s)	Yes	No
31	1. At the injector (male) side of the gray connector mentioned in step 25, connect an ohmmeter between the ignition pin and one of the driver circuit pins. 2. Check for continuity in the circuit. 3. Repeat for each injector circuit. The readings should be approximately equal to the specified value for injector resistance. Was a problem found?	12.5 Ω	Verify repair	Go to *Step 8*
32	Repair the ignition feed circuit. Is the action complete?	—	Verify repair	—
33	Replace the PCM. **IMPORTANT:** The replacement PCM must be programmed. Refer to *ON-Vehicle Service in Power Control Module and Sensors for procedures.* And also refer to latest Service Bulletin. Check to see if the latest software is released or not. And then Down Load the LATEST PROGRAMMED SOFTWARE to the replacement PCM. Is the action complete?	—	Verify repair	—
34	1. Raise the vehicle and disconnect the CKP sensor harness. 2. Ignition "ON". 3. With a test light to ground, probe the harness ignition feed terminal. Did the light illuminate?	—	Go to *Step 36*	Go to *Step 35*
35	Check the ignition feed wire between the sensor and the PCM for a short to ground or open circuit. Is the action complete?	—	Verify repair	—
36	1. Ignition "ON". 2. At the CKP harness connector, connect a test light between the ignition and ground terminals. Did the light illuminate?	—	Go to *Step 38*	Go to *Step 37*
37	Check the sensor ground circuit for an open or short to voltage. Is the action complete?	—	Verify repair	—
38	Check the signal circuit between the sensor and the PCM for a short to ground, short to voltage, or an open. Was a problem found?	—	Verify repair	Go to *Step 39*
39	Replace the CKP position sensor. Is the action complete?	—	Verify repair	Go to *Step 33*

Fuel System Electrical Test

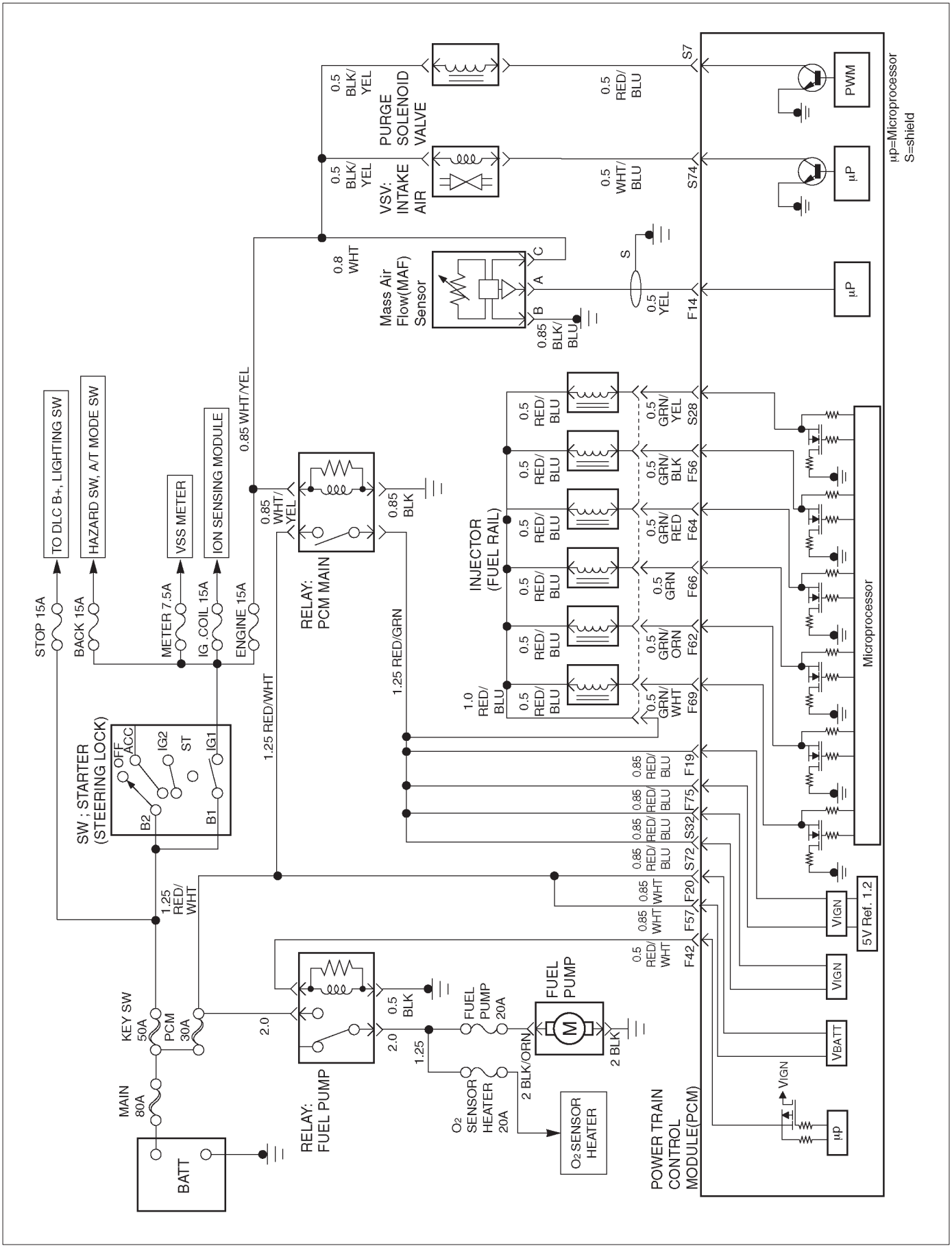

D06R200100

Circuit Description

When the ignition switch is first turned “ON”, the powertrain control module (PCM) energizes the fuel pump relay which applies power to the in-tank fuel pump. The fuel pump relay will remain “ON” as long as the engine is running or cranking and the PCM is receiving 58X crankshaft position pulses. If no 58X crankshaft position pulses are present, the PCM de-energizes the fuel pump relay within 2 seconds after the ignition is turned “ON” or the engine is stopped.

The fuel pump delivers fuel to the fuel rail and injectors, then to the fuel pressure regulator. The fuel pressure regulator controls fuel pressure by allowing excess fuel to be returned to the fuel tank. With the engine stopped and ignition “ON”, the fuel pump can be turned “ON” by using a command by the Tech 2.

Diagnostic Aids

An intermittent may be caused by a poor connection, rubbed-through wire insulation, or a wire broken inside the insulation. Check for the following items:

- Poor connection or damaged harness – Inspect the PCM harness and connectors for improper mating, broken locks, improperly formed or damaged terminals, poor terminal-to-wire connection, and damaged harness.

Test Description

Number(s) below refer to the step number(s) on the Diagnostic Chart.

2. If the fuel pump is operating but incorrect pressure is noted, the fuel pump wiring is OK and the “Fuel System Pressure Test” chart should be used for diagnosis.

CAUTION: To reduce the risk of fire and personal injury:

- **It is necessary to relieve fuel system pressure before connecting a fuel pressure gauge. Refer to Fuel Pressure Relief Procedure, below.**
- **A small amount of fuel may be released when disconnecting the fuel lines. Cover fuel line fittings with a shop towel before disconnecting, to catch any fuel that may leak out. Place the towel in an approved container when the procedure is completed.**

Fuel Pressure Relief Procedure

1. Remove the fuel cap.
2. Remove the fuel pump relay from the underhood relay center.
3. Start the engine and allow it to stall.
4. Crank the engine for an additional 3 seconds.

Fuel Gauge Installation

1. Remove the shoulder fitting cap.
2. Install fuel gauge J 34730-1 to the fuel feed line located in front of and above the right side valve train cover .
3. Reinstall the fuel pump relay.

Fuel System Electrical Test

Step	Action	Value(s)	Yes	No
1	Was the “On-Board Diagnostic (OBD) System Check” performed?	—	Go to *Step 2*	Go to *OBD System Check*
2	1. Read the “Caution” above. 2. Relieve the fuel system pressure and install the fuel pump pressure gauge to the test fitting. 3. Ignition ON, Engine is Off. 4. Use a Tech 2 to command the fuel pump “ON”. (Refer to the Miscellaneous Test.) Is there an immediate pressure build-up which indicates the pump is running?	—	Go to *Step 3*	Go to *Step 4*
3	1. Verify that the pump is not running by removing the fuel filler cap and listening. 2. Command the pump “ON” with the Tech 2. Did the pump turn “OFF” after 2 seconds?	—	Test completed	Go to *Step 12*
4	1. Ignition “OFF”. 2. Remove the fuel pump relay. 3. Using a test light connected to ground, probe the battery feed to the relay. Did the light illuminate?	—	Go to *Step 6*	Go to *Step 5*
5	Repair short or open battery feed to fuel pump relay. Is the action complete?	—	Verify repair	—
6	1. Connect a test light between the two wires that connect to the fuel pump relay pull-in coil. 2. Ignition “ON”. Did the test light illuminate for 2 seconds and then turn off?	—	Go to *Step 12*	Go to *Step 7*
7	1. With a test light connected to battery (–), probe the fuel pump relay connector at the wire which runs from the relay pull-in coil to the PCM. 2. Ignition “ON”. Did the test light illuminate for 2 seconds and then turn off?	—	Go to *Step 8*	Go to *Step 9*
8	Locate and repair open in the fuel pump relay ground circuit. Is the action complete?	—	Verify repair	—
9	Check for short or open between the PCM and the fuel pump relay. Was a problem found?	—	Verify repair	Go to *Step 10*
10	1. Check the fuel pump relay circuit for a poor terminal connection at the PCM. 2. If a problem is found, replace terminal as necessary. Was a problem found?	—	Verify repair	Go to *Step 11*

Fuel System Electrical Test (Cont'd)

Step	Action	Value(s)	Yes	No
11	Replace the PCM. **IMPORTANT:** The replacement PCM must be programmed. Refer to *On-Vehicle Service* in *Powertrain Control Module and Sensors for procedures.* And also refer to latest Service Bulletin. Check to see if the Latest software is released or not. And then Down Load the LATEST PROGRAMMED SOFTWARE to the replacement PCM. Is the action complete?	—	Verify repair	—
12	1. Reconnect the fuel pump relay. 2. Disconnect the fuel pump electrical connector at the fuel tank. 3. Using a test light connected to ground, probe the fuel pump feed wire (harness side). 4. Command the fuel pump "ON" with a Tech 2. Did the light illuminate for 2 seconds?	—	Go to *Step 15*	Go to *Step 13*
13	1. Honk the horn to verify that the horn relay is functioning. 2. Substitute the horn relay for the fuel pump relay. 3. Leave the test light connected as in step 12. 4. Command the fuel pump "ON" with the Tech 2. Did the test light illuminate for 2 seconds when the fuel pump was commanded "ON"?	—	Go to *Step 17*	Go to *Step 14*
14	1. Re-connect the horn relay in its proper location. 2. Check for a short circuit, blown fuse or open circuit between the relay and the fuel tank. Is the action complete?	—	Verify repair	—
15	1. With the fuel pump electrical connector at the fuel tank disconnected, connect a test light between the feed wire and the ground wire (harness side). 2. Command the fuel pump "ON" with a Tech 2. Did the test light illuminate for 2 seconds?	—	Go to *Step 18*	Go to *Step 16*
16	Repair the open circuit in the fuel pump ground wire. Is the action complete?	—	Verify repair	—
17	1. Re-connect the horn relay in its proper location. 2. Replace the fuel pump relay. Is the action complete?	—	Verify repair	—
18	Replace the fuel pump. Is the action complete?	—	Verify repair	—

Electric Throttle Control (ETC) System Check

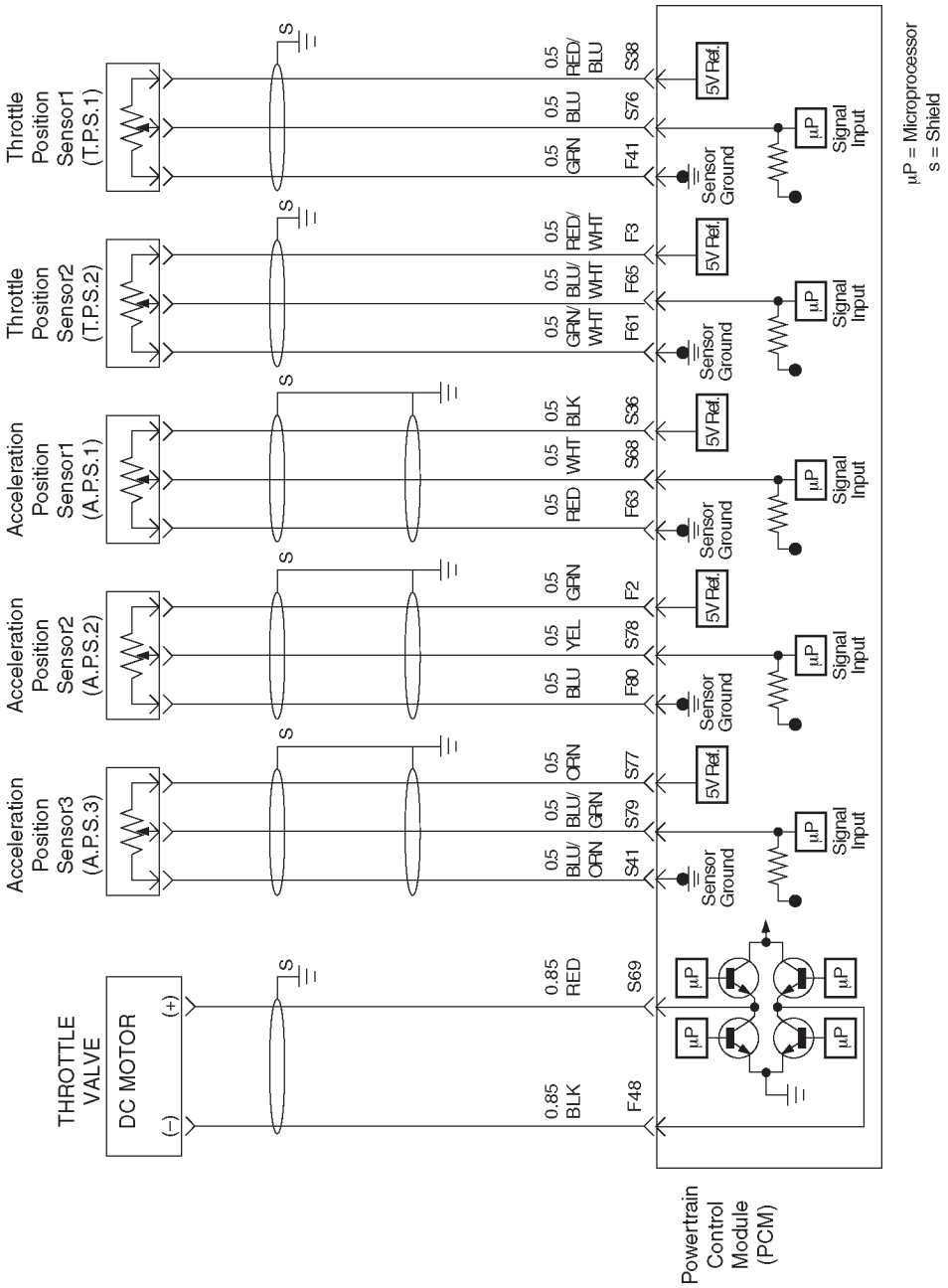

D06R200033

Circuit Description

- The powertrain control module (PCM) controls engine speed by adjusting the position of the throttle control valve (DC motor). The throttle motor is a DC motor driven by one coil. The PCM applies current to the DC motor coil in PWM (%) to adjust the throttle valve into a passage in the throttle body to allow air flow. This method allows highly accurate control of engine speed and quick response to changes in engine load.
- The acceleration position (AP) sensor circuit provides a voltage signal relative to acceleration pedal angle.

  The acceleration pedal angle will vary about 13% at idle position to about 87% at wide open throttle(WOT).

  APS signal is used to determine which DC motor will adjust throttle position.

  After the APS signal has been processed by the PCM, it will command DC motor to allow movement of throttle position.

Diagnostic Aids

- An intermittent may be caused by a poor connection, rubbed-through wire insulation or a wire broken inside the insulation. Check for poor connections or a damaged harness. Inspect the PCM harness and connector for improper mating, broken locks, improperly formed or damaged terminals, poor terminal-to-wire connection, and damaged harness.
- Throttle body – Check for objects blocking the DC motor or throttle bore, excessive deposits in the ETC passage and on the valve spring, and excessive deposits in the throttle bore and on the throttle valve plate.
- Acceleration pedal – Check for objects blocking the AP sensor or pedal arm with spring, excessive deposits in the acceleration pedal arm and on the acceleration pedal and lacking the pedal stopper rabber.

Test Description

Number(s) below refer to the step number(s) on the Diagnostic Chart:

2. Visually/physically inspect for the following throttle valve conditions.
3. Visually/physically inspect for the following acceleration pedal conditions.
5. Check the following circuits for throttle valve and DC moter. Check the following TP sensor resistance and DC motor.
6. Check the following circuits for acceleration pedal. Check the following AP sensor resistance.
7. Following DTC: Error for ETC system.

Electric Throttle Control (ETC) System Check

Step	Action	Value(s)	Yes	No
1	Was the “On-Board Diagnostic (OBD) System Check” performed?	—	Go to *Step 2*	Go to *OBD System Check*
2	Visually/physically inspect for the following conditions: ● Throttle body tampering. ● Restricted intake throttle system. Check for a possible collapsed air intake duct, restricted air filter element, or foreign objects blocking the air intake system. ● Throttle body: Check for objects blocking the throttle passage or throttle bore, excessive deposits in the throttle passage and on the throttle valve, and excessive deposits in the throttle bore and on the throttle plate. ● Throttle body with lever: When check for objects to send round the throttle spring lever that lever is smooth movement by less than 9 l·bm{1.0 N·m}, and spring lever has not excessive play. ● Throttle function: Check for the throttle function. When ignition switch “ON” that throttle lever is smooth operated by step on the acceleration pedal. Did any of the above require a repair?	—	Refer to *appropriate section for on-vehicle service*	Go to *Step 3*

Electric Throttle Control (ETC) System Check (Cont'd)

Step	Action	Value(s)	Yes	No
3	Visually/physically inspect for the following conditions: ● Acceleration pedal tampering. ● Acceleration pedal : Check for objects blocking the spring or pedal arm. ● Acceleration pedal : For check for objects to move the acceleration pedal that pedal is smooth movement, and acceleration pedal arm has not excessive play. Did any of the above require a repair?	—	Refer to *appropriate section for on-vehicle service*	Go to *Step 4*
4	1. Check for a poor connection at the throttle body harness connector. 2. Check for a poor connection at the acceleration position sensor harness connector. 3. If a problem is found, replace faulty terminals as necessary. Was a problem found?	—	Verify repair	Go to *Step 5*
5	Check the following circuits for an open, short to voltage, short to ground, or poor connection at the PCM: ● Throttle position sensor 1 circuit. ● Throttle position sensor 2 circuit. ● Throttle DC motor circuit. ● Throttle position sensor resistance. ● Throttle DC motor resistance. If a problem is found, repair as necessary. Was a problem found?	TPS, DC mortor 1–7kΩ TPS, DC mortor change resistance 0.3–100Ω	Verify repair	Go to *Step 6*
6	Check the following circuits for an open, short to voltage, short to ground, or poor connection at the PCM: ● Acceleration position sensor 1 circuit. ● Acceleration position sensor 2 circuit. ● Acceleration position sensor 3 circuit. ● Acceleration position sensor resistance. If a problem is found, repair as necessary. Was the prblem found?	Vcc–GND AP1 2.6–4kΩ AP2 2.6–4kΩ AP3 4.2–6.4kΩ	Verify repair	Go to *Step 7*
7	Following below the DTCs stored: P1120, P1220, P1221, P1271, P1272, P1273, P1275, P1280, P1285, P1514, P1515, P1516, P1523	—	Go to *applicable DTC table*	Go to *Step 8*

Electric Throttle Control (ETC) System Check (Cont'd)

Step	Action	Value(s)	Yes	No
8	1. Warming up the engine until the ECT rise at 80˚C 2. Ignition "OFF". 3. Insall the Tech 2. 4. Ignition "ON" but not engine run. 5. Check the value for APS and TPS. NOTE: The value check of TPS must be performed in less than 15 seconds. Was a problem found?	Closed throttle APS1 = 11~15% APS2 = 85~89% APS3 = 85~89% TPS1 = 6~12% TPS2 = 88~94% Wide open throttle APS1 = 85~89% APS2 = 11~15% APS3 = 32~36% TPS1 = 79~83% TPS2 = 19~23%	Go to *Step 9*	System O.K.
9	1. Replace the faulty sensor. 2. Re–check the value for APS and TPS Refer to the procedure in step 8. Was the problem found?	—	Go to *Step 10*	Verify repair
10	Replace the PCM. **IMPORTANT:** The replacement PCM must be programmed. Refer to *On–Vehicle Service* in *Powertrain Control Module and Sensors for Procedures*. And also refer to letest Service Bulletin. Check to see if the Latest software is releasec or not. And then Down Load the LATEST PROGRAMMED SOFTWARE to the replacement PCM.	—	Verify repair	—

Fuel System Diagnosis

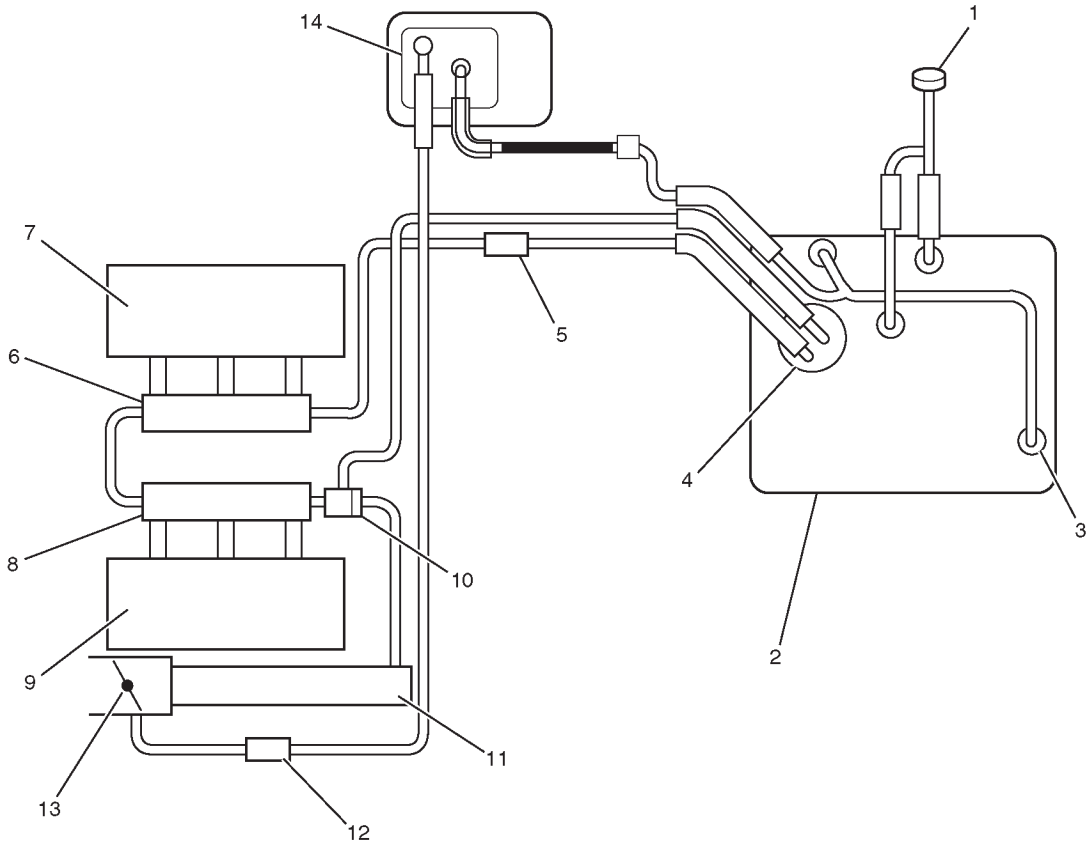

060R200193

Legend

(1) Fuel Filler Cap
(2) Fuel Tank
(3) Rollover Valve
(4) Fuel Pump
(5) Fule Filter
(6) Fuel Rail Right
(7) Right Bank
(8) Fuel Rail Left
(9) Left Bank
(10) Fuel Pressure Control Valve
(11) Common Chamber
(12) Duty Solenoid Valve
(13) Throttle Valve
(14) Canister

Circuit Description

When the ignition switch is turned "ON", the powertrain control module (PCM) will turn "ON" the in-tank fuel pump. The in-tank fuel pump will remain "ON" as long as the engine is cranking or running and the PCM is receiving 58X crankshaft position pulses. If there are no 58X crankshaft position pulses, the PCM will turn the in-tank fuel pump "OFF" 2 seconds after the ignition switch is turned "ON" or 2 seconds after the engine stops running. The in-tank fuel pump is an electric pump within an integral reservoir. The in-tank fuel pump supplies fuel through an in-line fuel filter to the fuel rail assembly. The fuel pump is designed to provide fuel at a pressure above the pressure needed by the fuel injectors. A fuel pressure regulator, attached to the fuel rail, keeps the fuel available to the fuel injectors at a regulated pressure. Unused fuel is returned to the fuel tank by a separate fuel return line.

Test Description

Number(s) below refer to the step number(s) on the Diagnostic Chart.

2. Connect the fuel pressure gauge to the fuel feed line as shown in the fuel system illustration. Wrap a shop towel around the fuel pressure connection in order to absorb any fuel leakage that may occur when installing the fuel pressure gauge. With the ignition switch "ON" and the fuel pump running, the fuel pressure indicated by the fuel pressure gauge should be 333-376 kPa (48-55 psi). This pressure is controlled by the amount of pressure the spring inside the fuel pressure regulator can provide.

3. A fuel system that cannot maintain a constant fuel pressure has a leak in one or more of the following areas:
   - The fuel pump check valve.
   - The fuel pump flex line.
   - The valve or valve seat within the fuel pressure regulator.
   - The fuel injector(s).

4. Fuel pressure that drops off during acceleration, cruise, or hard cornering may case a lean condition. A lean condition can cause a loss of power, surging, or misfire. A lean condition can be diagnosed using a Tech 2. If an extremely lean condition occurs, the oxygen sensor(s) will stop toggling. The oxygen sensor output voltage(s) will drop below 500 mV. Also, the fuel injector pulse width will increase.

IMPORTANT: Make sure the fuel system is not operating in the "Fuel Cut-Off Mode".

When the engine is at idle, the manifold pressure is low (high vacuum). This low pressure (high vacuum) is applied to the fuel pressure regulator diaphragm. The low pressure (high vacuum) will offset the pressure being applied to the fuel pressure regulator diaphragm by the spring inside the fuel pressure regulator. When this happens, the result is lower fuel pressure. The fuel pressure at idle will vary slightly as the barometric pressure changes, but the fuel pressure at idle should always be less than the fuel pressure noted in step 2 with the engine "OFF".

16. Check the spark plug associated with a particular fuel injector for fouling or saturation in order to determine if that particular fuel injector is leaking. If checking the spark plug associated with a particular fuel injector for fouling or saturation does not determine that a particular fuel injector is leaking, use the following procedure:
    - Remove the fuel rail, but leave the fuel lines and injectors connected to the fuel rail. Refer to *Fuel Rail Assembly* in *On-Vehicle Service.*
    - Lift the fuel rail just enough to leave the fuel injector nozzles in the fuel injector ports.

CAUTION: In order to reduce the risk of fire and personal injury that may result from fuel spraying on the engine, verify that the fuel rail is positioned over the fuel injector ports and verify that the fuel injector retaining clips are intact.

- **Pressurize the fuel system by connecting a 10 amp fused jumper between B+ and the fuel pump relay connector.**
- **Visually and physically inspect the fuel injector nozzles for leaks.**

17. A rich condition may result from the fuel pressure being above 376 kPa (55 psi). A rich condition may cause a DTC P0132 or a DTC P0172 to set. Driveability conditions associated with rich conditions can include hard starting (followed by black smoke) and a strong sulfur smell in the exhaust.

20. This test determines if the high fuel pressure is due to a restricted fuel return line or if the high fuel pressure is due to a faulty fuel pressure regulator.

21. A lean condition may result from fuel pressure below 333 kPa (48 psi). A lean condition may cause a DTC P0131 or a DTC P0171 to set. Driveability conditions associated with lean conditions can include hard starting (when the engine is cold), hesitation, poor driveability, lack of power, surging , and misfiring.

22. Restricting the fuel return line causes the fuel pressure to rise above the regulated fuel pressure. Command the fuel pump "ON" with the Tech 2. The fuel pressure should rise above 376 kPa (55 psi) as the fuel return line becomes partially closed.

NOTE: Do not allow the fuel pressure to exceed 414 kPa (60 psi). Fuel pressure in excess of 414 kPa (60 psi) may damage the fuel pressure regulator.

CAUTION: To reduce the risk of fire and personal injury:

- **It is necessary to relieve fuel system pressure before connecting a fuel pressure gauge. Refer to Fuel Pressure Relief Procedure, below.**
- **A small amount of fuel may be released when disconnecting the fuel lines. Cover fuel line fittings with a shop towel before disconnecting, to catch any fuel that may leak out. Place the towel in an approved container when the procedure is completed.**

Fuel Pressure Relief Procedure

1. Remove the fuel cap.
2. Remove the fuel pump relay from the underhood relay center.
3. Start the engine and allow it to stall.
4. Crank the engine for an additional 3 seconds.

Fuel Gauge Installation

1. Remove the shoulder fitting cap.
2. Install fuel gauge J 34730-1 to the fuel feed line located in front of and above the right side valve train cover.
3. Reinstall the fuel pump relay.

Fuel System Diagnosis

Step	Action	Value(s)	Yes	No
1	Was the “On-Board Diagnostic (OBD) System Check” performed?	—	Go to *Step 2*	Go to *OBD System Check*
2	1. Turn the ignition “OFF”. 2. Turn the air conditioning system “OFF”. 3. Relieve fuel system pressure and install the fuel pressure gauge. 4. Turn the ignition “ON”. NOTE: The fuel pump will run for approximately 2 seconds. Use the Tech 2 to command the fuel pump “ON”. (Refer to the Miscellaneous Test.) 5. Observe the fuel pressure indicated by the fuel pressure gauge with the fuel pump running. Is the fuel pressure within the specified limits?	290-376 kPa (42-55 psi)	Go to *Step 3*	Go to *Step 17*
3	NOTE: The fuel pressure will drop when the fuel pump stops running, then it should stabilize and remain constant. Does the fuel pressure indicated by the fuel pressure gauge remain constant?	—	Go to *Step 4*	Go to *Step 12*
4	1. When the vehicle is at normal operation temperature, turn the ignition “ON” to build fuel pressure and observe the measurement on the gauge. 2. Start the engine and observe the fuel pressure gauge. Did the reading drop by the amount specified after the engine was started?	21-105 kPa (3-15 psi)	Go to *Step 5*	Go to *Step 9*
5	Is fuel pressure dropping off during acceleration, cruise, or hard cornering?	—	Go to *Step 6*	Check for improper fuel
6	Visually and physically inspect the following items for a restriction: ● The in-pipe fuel filter. ● The fuel feed line. Was a restriction found?	—	Verify repair	Go to *Step 7*
7	Remove the fuel tank and visually and physically inspect the following items: ● The fuel pump strainer for a restriction. ● The fuel line for a leak. ● Verify that the correct fuel pump is in the vehicle. Was a problem found in any of these areas?	—	Verify repair	Go to *Step 8*

Fuel System Diagnosis (Cont'd)

Step	Action	Value(s)	Yes	No
8	Replace the fuel pump. Is the action complete?	—	Verify repair	—
9	1. Disconnect the vacuum hose from the fuel pressure regulator. 2. With the engine idling, apply 12-14 inches of vacuum to the fuel pressure regulator. Does the fuel pressure indicated by the fuel pressure gauge drop by the amount specified?	21-105 kPa (3-15 psi)	Go to *Step 10*	Go to *Step 11*
10	Locate and repair the loss of vacuum to the fuel pressure regulator. Is the action complete?	—	Verify repair	—
11	Replace the fuel pressure regulator. Is the action complete?	—	Verify repair	—
12	1. Run the fuel pump with the Tech 2. 2. After pressure has built up, turn off the pump and clamp the supply hose shut with suitable locking pliers which will not damage the hose. Does the fuel pressure indicated by the fuel pressure gauge remain constant?	—	Go to *Step 13*	Go to *Step 15*
13	Visually inspect the fuel supply line and repair any leaks. Was a problem found?	—	Verify repair	Go to *Step 14*
14	Remove the fuel tank and inspect for leaky hose or in-tank fuel line. Was a problem found?	—	Verify repair	Go to *Step 8*
15	1. If the pliers are still clamped to the fuel supply hose, remove the locking pliers. 2. With suitable locking pliers, which will not damage the hose, clamp the fuel return line to prevent fuel from returning to the fuel tank. 3. Run the fuel pump with the Tech 2. 4. After pressure has built up, remove power to the pump. Does the fuel pressure indicated by the fuel pressure gauge remain constant?	—	Go to *Step 11*	Go to *Step 16*
16	Locate and replace any leaking fuel injector(s). Is the action complete?	—	Verify repair	—
17	Is the fuel pressure indicated by the fuel pressure gauge above the specified limit?	376 kPa (55 psi)	Go to *Step 18*	Go to *Step 21*

Fuel System Diagnosis (Cont'd)

Step	Action	Value(s)	Yes	No
18	1. Relieve the fuel pressure. Refer to the *Fuel Pressure Relief.* 2. Disconnect the fuel return line from the fuel rail. 3. Attach a length of flexible hose to the fuel rail return outlet passage. 4. Place the open end of the flexible hose into an approved gasoline container. 5. Run the fuel pump with the Tech 2. 6. Observe the fuel pressure indicated by the fuel pressure gauge with the fuel pump running. Is the fuel pressure within the specified limits?	290-376 kPa (42-55 psi)	Go to *Step 19*	Go to *Step 20*
19	Locate and correct the restriction in the fuel return line. Is the action complete?	—	Verify repair	—
20	Visually and physically inspect the fuel rail outlet passages for a restriction. Was a restriction found?	—	Verify repair	Go to *Step 11*
21	Is the fuel pressure indicated by the fuel pressure gauge above the specified value?	0 kPa (0 psi)	Go to *Step 22*	Go to *Step 23*
22	1. Command the fuel pump "ON" with the Tech 2. 2. Using suitable pliers which will not damage the fuel hose, gradually apply pressure with the pliers to pinch the flexible fuel return hose closed. **CAUTION: Do not let the fuel pressure exceed the second specified value.** Does the fuel pressure indicated by the fuel pressure gauge rise above the first specified value?	376 kPa (55 psi) 414 kPa (60 psi)	Go to *Step 11*	Go to *Step 7*
23	1. Command the fuel pump "ON" with the Tech 2. 2. Remove the fuel filler cap and listen for the sound of the fuel pump running. 3. Turn the pump off. Was the fuel pump running?	—	Go to *Step 7*	Go to *Fuel System Electrical Test Chart*

Exhaust Gas Recirculation (EGR) System Check

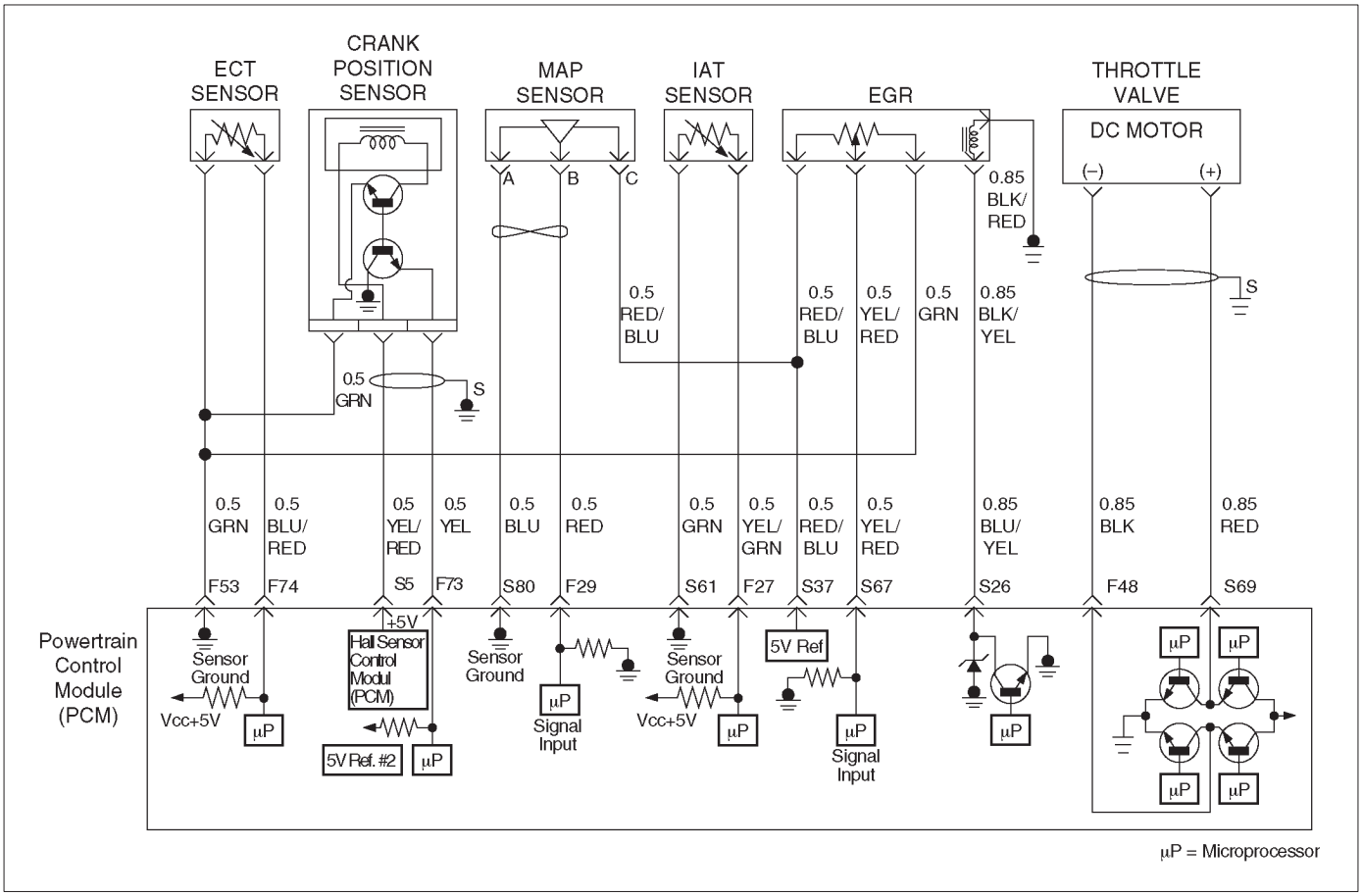

D06R200075

Circuit Description

A properly operation exhaust gas recirculation (EGR) system will directly affect the air/fuel requirements of the engine. Since the exhaust gas introduced into the air/fuel mixture is an inert gas (contains very little or no oxygen), less fuel is required to maintain a correct air/fuel ratio.

Introducing exhaust gas into the combustion chamber lowers combustion temperatures and reduces the formation of oxides of nitrogen (NOx) in the exhaust gas. Lower combustion temperatures also prevent detonation. If the EGR pintle were to stay closed, the inert exhaust gas would be replaced with air and the air/fuel mixture would be leaner. The powertrain control module (PCM) would compensate for the lean condition by adding fuel, resulting in higher long term fuel trim values.

Diagnostic Aids

The EGR valve chart is a check of the EGR system. An EGR pintle constantly in the closed position could cause detonation and high emissions of NOx. It could also result in high long term fuel trim values in the open throttle cell, but not in the closed throttle cell. An EGR pintle constantly in the open position would cause a rough idle. Also, an EGR mounted incorrectly (rotated 180˚) could cause rough idle. Check for the following items:

- EGR passages – Check for restricted or blocked EGR passages.
- Manifold absolute pressure sensor – A manifold absolute pressure sensor may shift in calibration enough to affect fuel delivery. Refer to *Manifold Absolute Pressure Output Check.*

Exhaust Gas Recirculation (EGR) System Check

Step	Action	Value(s)	Yes	No
1	Check the EGR valve for looseness. Is the EGR valve Loose?	—	Go to *Step 2*	Go to *Step 3*
2	Tighten the EGR valve. Is the action complete?	—	Verify repair	—
3	1. Place the transmission selector in Park or Neutral. 2. Start the engine and idle until warm. 3. Using a Tech 2, command EGR “50% ON”. (Refer to the Miscellaneous Test.) Does the engine idle rough and lose RPMs?	—	EGR system working properly. No problem found.	Go to *Step 4*
4	1. Engine “OFF”. 2. Ignition “ON”. 3. Using a test light to ground, check the EGR harness between the EGR valve and the ignition feed. Does the test light illuminate?	—	Go to *Step 6*	Go to *Step 5*
5	Repair the EGR harness ignition feed. Was the problem corrected?	—	Verify repair	Go to *Step 6*
6	1. Remove the EGR valve. 2. Visually and physically inspect the EGR valve pintle, valve passages and adapter for excessive deposits, obstructions or any restrictions. Does the EGR valve have excessive deposits, obstructions or any restrictions?	—	Go to *Step 7*	Go to *Step 8*
7	Clean or replace EGR system components as necessary. Was the problem corrected?	—	Verify repair	Go to *Step 8*
8	1. Ground the EGR valve metal case to battery (–). 2. Using a Tech 2, command EGR “ON” and observe the EGR valve pintle for movement. Does the EGR valve pintle move according to command?	—	Go to *Step 9*	Go to *DTC P1406 chart*
9	1. Remove the EGR inlet and outlet pipes from the intake and exhaust manifolds. 2. Visually and physically inspect manifold EGR ports and EGR inlet and outlet pipes for blockage or restriction caused by excessive deposits or other damage. Do the manifold EGR ports or inlet and outlet pipes have excessive deposits, obstructions, or any restrictions?	—	Go to *Step 10*	EGR system working properly. No problem found.
10	Clean or replace EGR system components as necessary. Is the action complete?	—	Verify repair	—

Manifold Absolute Pressure (MAP) Output Check

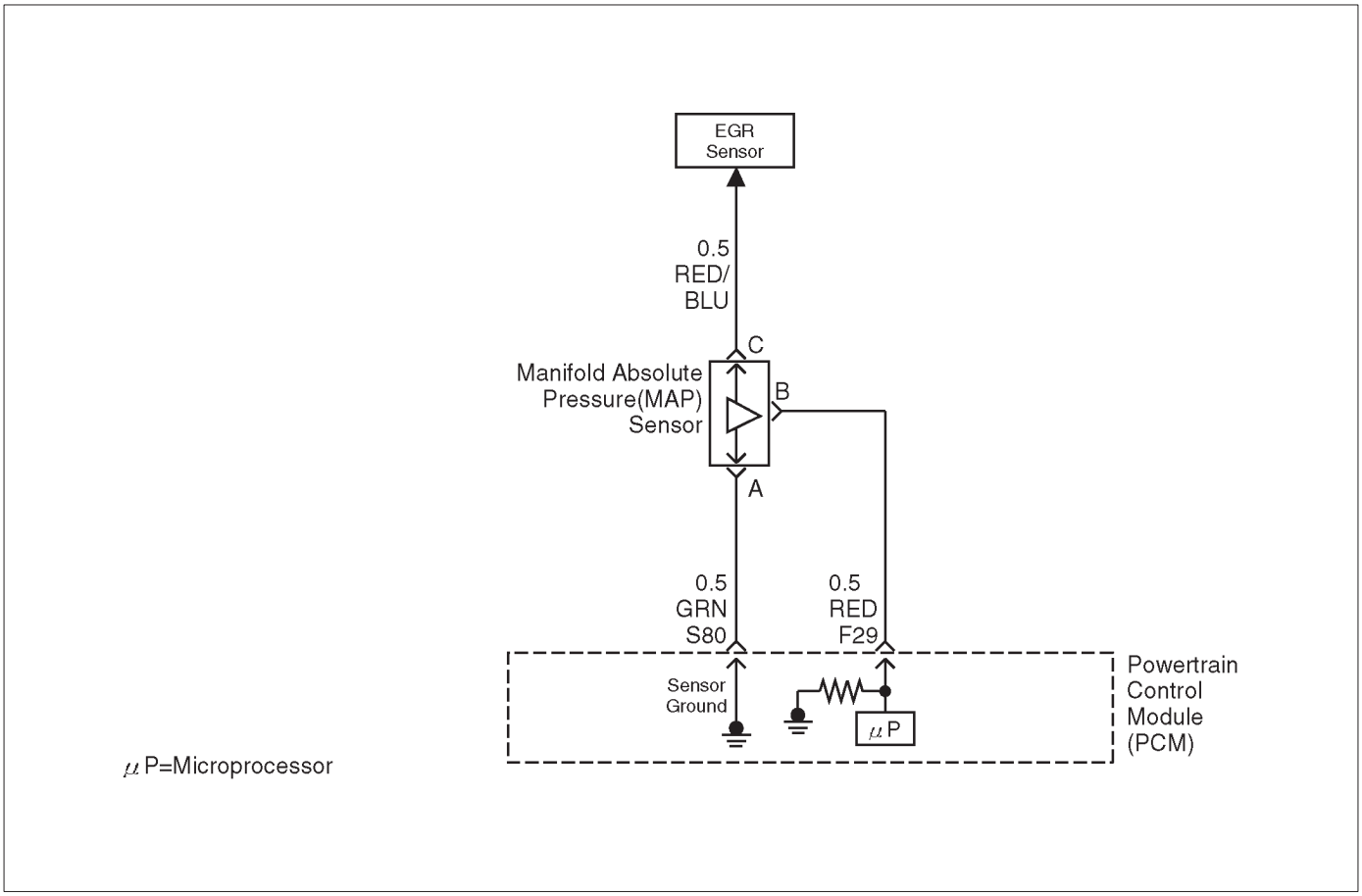

D06R200048

Circuit Description

The manifold absolute pressure (MAP) sensor measures the changes in the intake MAP which result from engine load (intake manifold vacuum) and engine speed changes; and converts these into a voltage output. The powertrain control module (PCM) sends a 5-volt reference voltage to the MAP sensor. As the MAP changes, the output voltage of the sensor also changes. By monitoring the sensor output voltage, the PCM knows the MAP. A lower pressure (low voltage) output voltage will be about 1-2 volts at idle. Higher pressure (high voltage) output voltage will be about 4-4.8 volts at wide open throttle. The MAP sensor is also used, under certain conditions, to measure barometric pressure, allowing the PCM to make adjustments for different altitudes. The PCM uses the MAP sensor to diagnose proper operation of the EGR system, in addition to other functions.

Test Description

IMPORTANT: Be sure to used the same diagnostic test equipment for all measurements.

The number(s) below refer to the step number(s) on the Diagnostic Chart.

2. Applying 34 kPa (10 inch Hg) vacuum to the MAP sensor should cause the voltage to be 1.5-2.1 volts less than the voltage at step 1. Upon applying vacuum to the sensor, the change in voltage should be instantaneous. A slow voltage change indicates a faulty sensor.
3. Check the vacuum hose to the sensor for leaking or restriction, Be sure that no other vacuum devices are connected to the MAP hose.

IMPORTANT: Make sure the electrical connector remains securely fastened.

4. Disconnect the sensor from the bracket. Twist the sensor with your hand to check for an intermittent connection. Output changes greater than 0.10 volt indicate a bad sensor.

Manifold Absolute Pressure (MAP) Output Check

Step	Action	Value(s)	Yes	No
1	1. Turn the ignition “OFF” and leave it “OFF” for 15 seconds. 2. Ignition “ON”. Don’t crank engine. 3. The Tech 2 should indicate a manifold absolute pressure (MAP) sensor voltage. 4. Compare this scan reading to scan reading of a known good vehicle obtained using the exact same procedure as in Steps 1-4. Is the voltage reading the same +/–0.40 volt?	—	Go to *Step 2*	Go to *Step 5*
2	1. Disconnect the vacuum hose at the MAP sensor and plug the hose. 2. Connect a hand vacuum pump to the MAP sensor. 3. Start the engine. 4. Apply 34 kPa (10 in.Hg) of vacuum and note the voltage change. Is the voltage change 1.5-2.1 volts less than Step 1?	—	Go to *Step 3*	Go to *Step 4*
3	Check the sensor cover for leakage or restriction. Does the hose supply vacuum to the MAP sensor only?	—	Go to *Step 5*	Go to *Step 4*
4	Repair the hose blockage. Is the action complete?	—	Verify repair	—
5	Check the sensor connection. Is the sensor connection good?	—	Go to *Step 6*	Go to *Step 7*
6	Refer to *On-Vehicle Service, MAP Sensor.* Is the action complete?	—	Verify repair	—
7	Repair the poor connection. Is the action complete?	—	Verify repair	—

Evaporative (EVAP) Emissions Canister Purge Valve Check

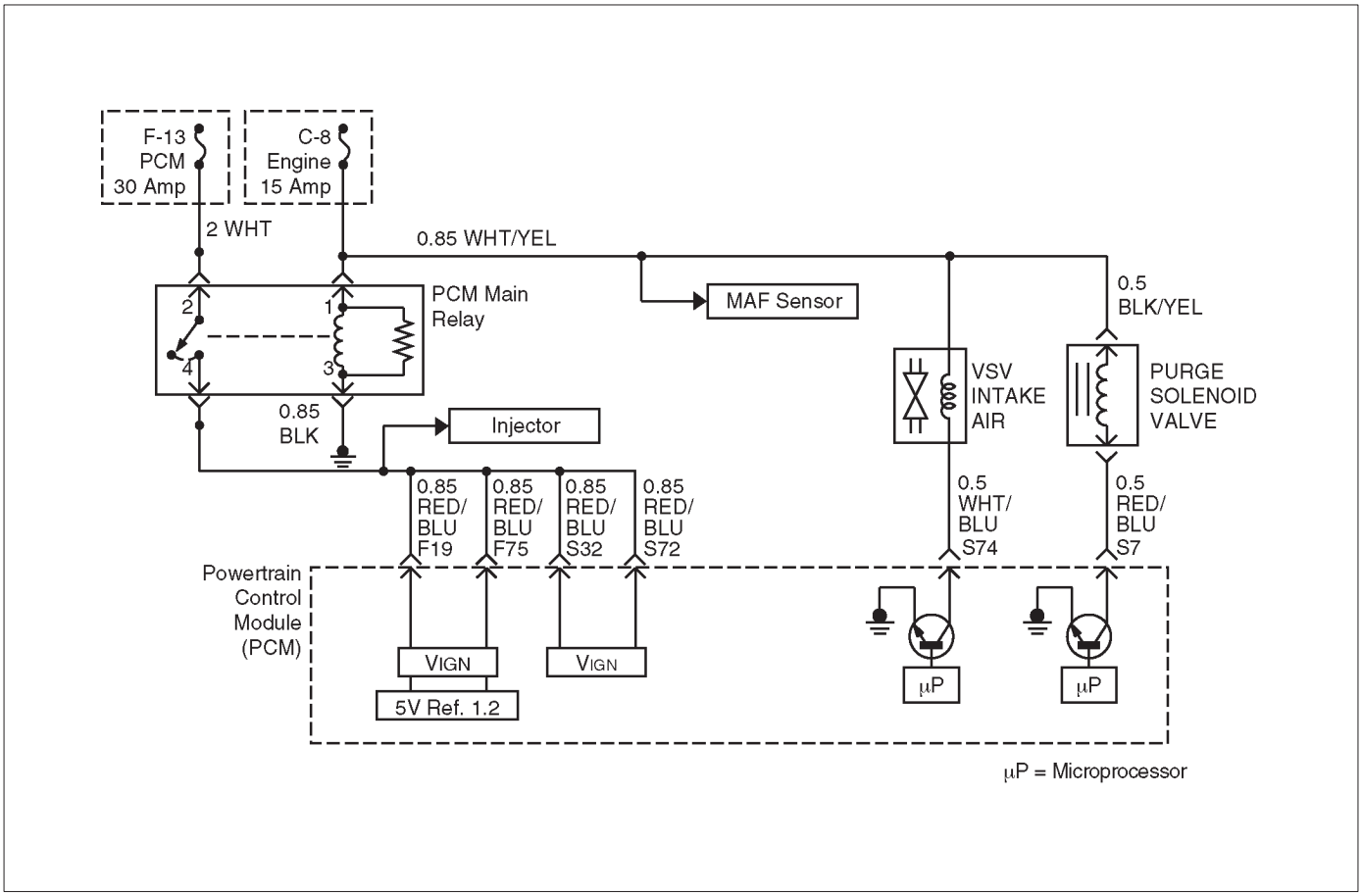

D06R200089

Circuit Description

Canister purge is controlled by a solenoid valve that allows manifold vacuum to purge the canister. The powertrain control module (PCM) supplies a ground to energize the solenoid valve (purge “ON”). The EVAP purge solenoid control is turned “ON” and “OFF” several times a second. The duty cycle (pulse width or “ON” time) is determined by engine operating conditions including load, throttle position, coolant temperature and ambient temperature. The duty cycle is calculated by the PCM and the purge solenoid is enabled when the appropriate conditions have been met:

- The engine run time after start is more than 60 seconds.
- The engine coolant temperature is above 30˚C (86˚F).
- The fuel control system is operating in the closed-loop mode.

Diagnostic Aids

- Make a visual check of vacuum hoses.
- Check the throttle body for cracks.
- Check the malfunction indicator lamp for a possible mechanical problem.

Test Description

The number(s) below refer to the step number(s) on the Diagnostic Chart.

1. Check to see if the solenoid is open or closed. The solenoid is normally de-energized in this step, so it should be closed.
2. This step checks to determine if the solenoid was open due to an electrical circuit problem or a defective solenoid.
3. This should normally energize the solenoid, opening the valve and allowing the vacuum to drop (purge “ON”).

Evaporative (EVAP) Emissions Canister Purge Valve Check

Step	Action	Value(s)	Yes	No
1	1. Ignition “OFF”. 2. Ignition “ON”, engine “OFF”. 3. At the throttle body, disconnect the hose that goes to the purge solenoid. 4. Using a hand vacuum pump with an attached vacuum gauge J 23738-A, apply vacuum (10 in. Hg or 34 kPa) to the solenoid. Does the solenoid hold the vacuum?	—	Go to *Step 3*	Go to *Step 2*
2	1. Disconnect the solenoid electrical connector. 2. As in Step 1, apply vacuum (10 in. Hg or 34 kPa) to the solenoid. Does the solenoid hold the vacuum?	—	Go to *Step 4*	Go to *Step 7*
3	1. At the throttle body, put a cap over the vacuum port where the hose was disconnected for testing. This is to prevent a vacuum leak when the engine is started. 2. Ignition “OFF”. 3. Install the Tech 2. 4. Apply vacuum to the purge solenoid with the hand vacuum pump. 5. Start the engine, run at 2500 RPM. 6. Using the Tech 2, select Powertrain, 3.5–V6 6VE1, F3: Misc. Tests, F2: EVAP Purge, F0: EVAP Purge. (Refer to the Misellaneous Test.) 7. Turn the purge solenoid “ON”. Did the vacuum drop when the purge was turned on?	—	Go to *Step 8*	Go to *Step 9*
4	Check for a short to ground in the S7 Pin wire. Is there a short?	—	Go to *Step 5*	Go to *Step 6*
5	Repair the short to ground. Is the action complete?	—	Verify repair	—
6	Replace the PCM. **IMPORTANT:** The replacement PCM must be programmed. Refer to *On-Vehicle Service*in *Powertrain Control Module and Sensors for procedures.* And also refer to latest Service Bulletin. Check to see if the Latest software is released or not. And then Down Load the LATEST PROGRAMMED SOFTWARE to the replacement PCM. Is the action complete?	—	Verify repair	—
7	Replace the faulty purge solenoid. Refer to *On-Vehicle Service, EVAP Canister Purge Solenoid.* Is the action complete?	—	Verify repair	—

Evaporative (EVAP) Emissions Canister Purge Valve Check (Cont'd)

Step	Action	Value(s)	Yes	No
8	1. Turn the ignition "OFF". 2. At the throttle body, install a vacuum gauge where the hose from the purge solenoid was disconnected for testing. 3. Start the engine. 4. Stabilize the engine speed at about 2500 RPM. 5. Momentarily snap the throttle open and let it return to idle. Is there approximately 10 in. Hg (34 kPa) of vacuum available at the EVAP emission canister purge solenoid?	—	No problem found in the EVAP emission canister purge valve check	Check the Procedure Refer to *Diagnostic Aids*
9	1. Disconnect the solenoid electrical connector. 2. Connect a test lamp between the harness terminals. Does the test lamp light?	—	Go to *Step 7*	Go to *Step 10*
10	Probe terminal A and terminal B with a test lamp to ground. Does the test lamp light on both terminals?	—	Go to *Step 11*	Go to *Step 12*
11	Repair the short to voltage in the S7 Pin wire. Is the action complete?	—	Verify repair	—
12	Does one of the terminals light the test lamp?	—	Go to *Step 13*	Go to *Step 14*
13	Check for an open in the S7 Pin wire between the purge solenoid and the PCM. Was there an open circuit?	—	Go to *Step 15*	Go to *Step 6*
14	Repair the open in the BLK/YEL wire. Is the action complete?	—	Verify repair	—
15	Repair the open in the S7 Pin wire. Is the action complete?	—	Verify repair	—

PCM Diagnostic Trouble Codes

The following table lists the diagnostic trouble codes supported by this vehicle application. If any DTCs not listed here are displayed by a Tech 2, the Tech 2 data may be faulty; notify the Tech 2 manufacturer of any DTCs displayed that are not included in the following table.

PCM Diagnostic Trouble Codes

DTC	Description	Type	Illuminate MIL (Check Engine Lamp)	Illuminate SVS (Service Vehicle Soon Lamp)
P0101	MAF System Performance	B	Yes	No
P0102	MAF Sensor Circuit Low Frequency	B	Yes	No
P0103	MAF Sensor Circuit High Frequency	B	Yes	No
P0106	MAP Rationality/Performance	B	Yes	No
P0107	MAP Circuit Low Input Voltage	B	Yes	No
P0108	MAP Circuit High Input Voltage	B	Yes	No
P0112	IAT Circuit Low Input Voltage	B	Yes	No
P0113	IAT Circuit High Input Voltage	B	Yes	No
P0117	ECT Circuit Low Input Voltage	B	Yes	No
P0118	ECT Circuit High Input Voltage	B	Yes	No
P0131	O2 Sensor Circuit Low Voltage (Bank 1 Sensor 1)	B	Yes	No
P0132	O2 Sensor Circuit High Voltage (Bank 1 Sensor 1)	B	Yes	No
P0133	O2 Sensor Circuit Slow Response (Bank 1 Sensor 1)	B	Yes	No
P0134	O2 Sensor Circuit No Activity Detected (Bank 1 Sensor 1)	B	Yes	No
P0135	O2 Sensor Heater Circuit (Bank 1 Sensor 1)	B	Yes	No
P0137	O2 Sensor Circuit Low Voltage (Bank 1 Sensor 2)	B	Yes	No
P0138	O2 Sensor Circuit High Voltage (Bank 1 Sensor 2)	B	Yes	No
P0140	O2 Sensor Circuit No Activity Detected (Bank 1 Sensor 2)	B	Yes	No
P0141	O2 Sensor Heater Circuit (Bank 1 Sensor 2)	B	Yes	No
P0151	O2 Sensor Circuit Low Voltage (Bank 2 Sensor 1)	B	Yes	No
P0152	O2 Sensor Circuit High Voltage (Bank 2 Sensor 1)	B	Yes	No
P0153	O2 Sensor Circuit Slow Response (Bank 2 Sensor 1)	B	Yes	No
P0154	O2 Sensor Circuit No Activity Detected (Bank 2 Sensor 1)	B	Yes	No
P0155	O2 Sensor Heater Circuit (Bank 2 Sensor 1)	B	Yes	No
P0157	O2 Sensor Circuit Low Voltage (Bank 2 Sensor 2)	B	Yes	No
P0158	O2 Sensor Circuit High Voltage (Bank 2 Sensor 2)	B	Yes	No
P0160	O2 Sensor Circuit No Activity Detected (Bank 2 Sensor 2)	B	Yes	No
P0161	O2 Sensor Heater Circuit (Bank 2 Sensor 2)	B	Yes	No
P0171	O2 Sensor – System too Lean (Bank 1)	B	Yes	No
P0172	O2 Sensor – System too Rich (Bank 1)	B	Yes	No
P0174	O2 Sensor – System too Lean (Bank 2)	B	Yes	No
P0175	O2 Sensor – System too Rich (Bank 2)	B	Yes	No
P0201	Injector 1 Control Circuit	A	Yes	No

DTC	Description	Type	Illuminate MIL (Check Engine Lamp)	Illuminate SVS (Service Vehicle Soon Lamp)
P0202	Injector 2 Control Circuit	A	Yes	No
P0203	Injector 3 Control Circuit	A	Yes	No
P0204	Injector 4 Control Circuit	A	Yes	No
P0205	Injector 5 Control Circuit	A	Yes	No
P0206	Injector 6 Control Circuit	A	Yes	No
P0300	Engine Misfire Detected	B	Yes	No
P0325	ION Sensing Module	B	Yes	No
P0336	CKP Sensor Circuit Range/Performance (58X)	B	Yes	No
P0337	CKP Sensor Circuit No signal (58X)	B	Yes	No
P0351	Ignition 1 Control Circuit	A	Yes	No
P0352	Ignition 2 Control Circuit	A	Yes	No
P0353	Ignition 3 Control Circuit	A	Yes	No
P0354	Ignition 4 Control Circuit	A	Yes	No
P0355	Ignition 5 Control Circuit	A	Yes	No
P0356	Ignition 6 Control Circuit	A	Yes	No
P0401	EGR Flow Insufficient	B	Yes	No
P0402	EGR Flow Excessive	B	Yes	No
P0404	EGR Range/Performance (Open Valve)	B	Yes	No
P0405	EGR Sensor Circuit Low Voltage	B	Yes	No
P0406	EGR Sensor Circuit High Voltage	B	Yes	No
P0420	Catalyst System Low Efficiency (Bank 1)	A	Yes	No
P0430	Catalyst System Low Efficiency (Bank 2)	A	Yes	No
P0444	EVAP Purge Control Circuit Open	D	No	No
P0445	EVAP Purge Control Circuit Short	D	No	No
P0502	No VSS Signal	B	Yes	No
P0506	Idle Speed Control RPM too Low	B	Yes	No
P0507	Idle Speed Control RPM too High	B	Yes	No
P0562	System Voltage is Low	D	No	No
P0563	System Voltage is High	B	Yes	No
P0565	Cruise Main Switch Circuit Error	D	No	No
P0566	Cruise Cancel Switch Circuit Error	D	No	No
P0567	Cruise Resume Switch Circuit Error	D	No	No
P0568	Cruise Set Switch Circuit Error	D	No	No
P0571	No Brake Switch Signal	D	No	No
P0601	PCM/ECM Memory Checksum	A	Yes	No
P0602	PCM/ECM Programming error	D	No	No
P0604	PCM/ECM RAM error	D	No	No
P0606	PCM/ECM Internal Performance	D	No	No
P0660	VIM Solenoid Circuit Open	D	No	No

DTC	Description	Type	Illuminate MIL (Check Engine Lamp)	Illuminate SVS (Service Vehicle Soon Lamp)
P0662	VIM Solenoid Circuit Short	D	No	No
P1106	MAP Circuit Intermittent High Voltage)	D	No	No
P1107	MAP Circuit Intermittent Low Input Voltage	D	No	No
P1111	IAT Circuit Intermittent High Voltage	D	No	No
P1112	IAT Circuit Intermittent Low Input Voltage	D	No	No
P1114	ECT Circuit Intermittent Low Voltage	D	No	No
P1115	ECT Circuit Intermittent High Voltage	D	No	No
P1120	TPS1 Circuit	B	Yes	No
P1125	ETC Limit Performance Mode	A	Yes	Yes
P1133	O2 Sensor – Too Few Rich/Lean and Lean/Rich Switches (Bank 1 Sensor 1)	B	Yes	No
P1134	O2 Sensor – Transition Switch Time ratio (Bank 1 Sensor 1)	B	Yes	No
P1153	O2 Sensor – Too Few Rich/Lean and Lean/Rich Switches (Bank 2 Sensor 1)	B	Yes	No
P1154	O2 Sensor – Transition Switch Time ratio (Bank 2 Sensor 1)	B	Yes	No
P1167	Fuel supply System RICH During Decel Fuel Cut Off (Bank 1)	D	No	No
P1169	Fuel supply System RICH During Decel Fuel Cut Off (Bank 2)	D	No	No
P1171	Fuel supply System Lean During Power Enrichment	D	No	No
P1220	TPS2 Circuit	B	Yes	No
P1221	TPS1–TPS2 Correlation (Circuit Performance)	D	No	No
P1271	APS1–APS2 Correlation (Circuit Performance)	D	No	No
P1272	APS2–APS3 Correlation (Circuit Performance)	D	No	No
P1273	APS1–APS3 Correlation (Circuit Performance)	D	No	No
P1275	APS1 Circuit	B	Yes	No
P1280	APS2 Circuit	B	Yes	No
P1285	APS3 Circuit	B	Yes	No
P1290	ETC Forced Idle Mode	A	Yes	Yes
P1295	ETC Power Management Mode	A	Yes	Yes
P1299	ETC Forced Engine Shutdown in Mode	A	Yes	Yes
P1310	ION Sensing Module Diagnostic	A	Yes	No
P1311	ION Sensing Module SEC 1 Line Circuit Fault	A	Yes	No
P1312	ION Sensing Module SEC 2 Line Circuit Fault	A	Yes	No
P1326	ION Sensing Module Combustion Quality circuit	A	Yes	No
P1340	ION Sensing Module – Cylinder Synchronization	B	Yes	No
P1404	EGR Range/Performance (Closed Valve)	B	Yes	No
P1514	TPS–MAF Correlation	A	Yes	No
P1515	Command–Acrual TPS Correlation	A	Yes	No
P1516	Command–Acrual TPS Correlation Error	A	Yes	No
P1523	Throttle Actuator Control Return Performance	D	No	No
P1574	Brake Switch No Operation	D	No	No

DTC	Description	Type	Illuminate MIL (Check Engine Lamp)	Illuminate SVS (Service Vehicle Soon Lamp)
P1626	No response from immobilizer	C	No	Yes
P1631	Recived response was not correct	C	No	Yes
P1635	Reference Voltage #1 Circuit	D	No	No
P1636	PCM RAM Stack	D	No	No
P1639	Reference Voltage #2 Circuit	D	No	No
P1640	ODM Output circuit Fault	D	No	No
P1648	Received incorrect security code	C	No	Yes
P1649	Security code & Security key not programmed	D	No	Yes
P1650	QDM Output Circuit Fault	D	No	No

Diagnostic Trouble Code (DTC) P0101 MAF System Performance

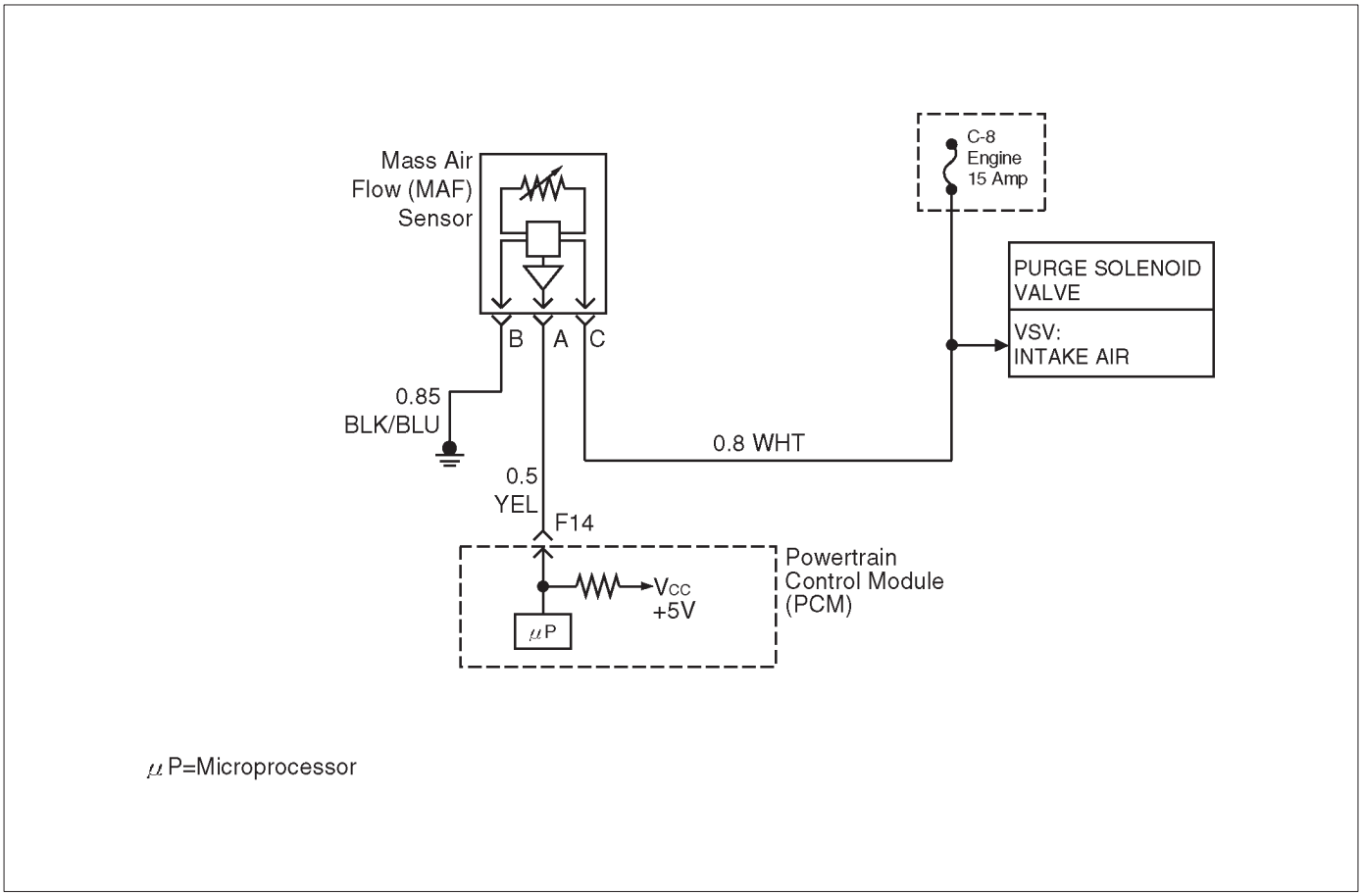

D06R200047

Circuit Description

The mass air flow (MAF) sensor measures the amount of air which passes through it into the engine during a given time. The powertrain control module (PCM) uses the mass air flow information to monitor engine operating conditions for fuel delivery calculations. A large quantity of air entering the engine indicates an acceleration or high load situation, while a small quantity or air indicates deceleration or idle.

The MAF sensor produces a frequency signal which can be monitored using a Tech 2. The frequency will vary within a range of around 3 to 7g/s at idle. DTC P0101 will be set if the signal from the MAF sensor does not match a predicted value based on throttle position and engine RPM.

Conditions for setting the DTC

- The engine is running.
- No TP sensor and MAP sensor DTCs are set.
- No MAF frequency DTCs are set.
- System voltage is between 11.5 volts and 16 volts.

Action Taken When the DTC Sets

- The PCM will ON the MIL after second trip with detected fault.
- The PCM calculates an air flow value based on idle air control valve position, throttle position, RPM and barometric pressure.
- The PCM will store condition which were present when the DTC was set as Freeze Frame and in the Failure Records data.

Conditions for Clearing the MIL/DTC

- The PCM will turn the MIL “OFF” on the third consecutive trip cycle during which the diagnostic has been run and the fault condition is no longer present.
- A history DTC P0101 will clear after 40 consecutive trip cycles during which the warm up cycles have occurred without a fault.
- DTC P0101 can be cleared using the Tech 2 “Clear Info” function or by disconnecting the PCM battery feed.

Diagnostic Aids

An intermittent may be caused by the following:

- Poor connections.
- Misrouted harness.
- Rubbed through wire insulation.
- Broken wire inside the insulation.
- The duct work at the MAF sensor for leaks.
- An engine vacuum leak.
- The PCV system for vacuum leaks.
- An incorrect PCV valve.
- The engine oil dip stick not fully seated.
- The engine oil fill cap loose or missing.

Check for the following conditions:

- Poor connection at PCM-Inspect harness connectors for backed out terminals, improper mating, broken

locks, improperly formed or damaged terminals, and poor terminal to wire connection.

- Damaged harness- Inspect the wiring harness for damage. If the harness appears to be OK, observe the Mass Air Flow (MAF) display on the Tech 2 while moving connectors and wiring harnesses related to the sensor.
- Plugged intake air duct or filter element
- A wide–open throttle acceleration from a stop should cause the mass air flow displayed on a Tech 2 to increase from about 3–6 g/s at idle to 100 g/s or greater at the time of the 1–2 shift. If not, check for a restriction.

A change in the display will indicate the location of the fault.

If DTC P0101 cannot be duplicated, the information included in the Failure Records data can be useful in determined vehicle mileage since the DTC was last set.

If it is determined that the DTC occurs intermittently, performing the DTC P001 Diagnostic Chart may isolate the cause of the fault.

DTC P0101 – MAF System Performance

Step	Action	Value(s)	Yes	No
1	Was the “On-Board Diagnostic (OBD) System Check” performed?	—	Go to *Step 2*	Go to *OBD System Check*
2	1. Ignition “OFF”. 2. Disconnect the Mass Air Flow (MAF) Sensor harness connector from the MAF Sensor. 3. Place an unpowered test lamp between the 12 volt signal circuit and the ground circuit, both at the MAF Sensor connector. 4. Ignition “ON”, Engine“OFF”. Did the test lamp illuminate?	—	Go to *Step 6*	Go to *Step 3*
3	1. Ignition “ON”, Engine “OFF”. 2. Using a Digital Voltmeter (DVM), check the 12 volt signal circuit for the correct voltage. Did the DVM indicate a value within the following range?	11.5 to 12.5 Volt	Go to *Step 5*	Go to *Step 4*
4	1. Ignition “OFF”. 2. Check the 12 volt signal circuit for the following conditions: • An open circuit • A short to ground Was the problem found?	—	Verify repair	—
5	Check the MAF ground circuit for the following conditions: • An open circuit • A short to voltage Was a problem found?	—	Verify repair	—
6	1. Ignition “OFF”. 2. Check the MAF Sensor signal circuit between the PCM and the MAF Sensor for the following conditions: • An open circuit • A short to ground • A short to battery voltage Was a problem found?	—	Verify repair	Go to *Step 7*

DTC P0101 – MAF System Performance (Cont'd)

Step	Action	Value(s)	Yes	No
7	1. Connect the MAF Sensor wiring harness connector to the MAF Sensor. 2. Connect the Tech 2 to the vehicle. 3. Place the Transmission in Park/Neutral, and fully apply the Parking Brake. 4. Start the engine. 5. Select the Mass Air Flow (MAF) parameter on the Tech 2. With the engine idling, does the Tech 2 display the following value(s)?	3 to 7 g/s	Go to *Step 8*	Go to *Step 9*
8	1. Ignition "OFF". 2. Disconnect the MAF sensor connector. 3. Ignition "ON", engine idling. 4. Using a Tech 2, monitor "MAF Frequency". Does the Tech 2 indication a "MAF Frequency" at the specified value?	0 g/s	Go to *Step 10*	Go to *Step 9*
9	Replace the MAF Sensor. Is the action complete?	—	Verify repair	—
10	Replace the PCM. **IMPORTANT:** The PCM must be reprogrammed. Refer to PCM reprogramming. And also refer to latest Service Bulletin. Check to see if the Latest software is released or not. And then Down Load the LATEST PROGRAMMED SOFTWARE to the replacement PCM. Is the action complete?	—	Verify repair	—

Diagnostic Trouble Code (DTC) P0102 MAF Sensor Circuit Low Frequency

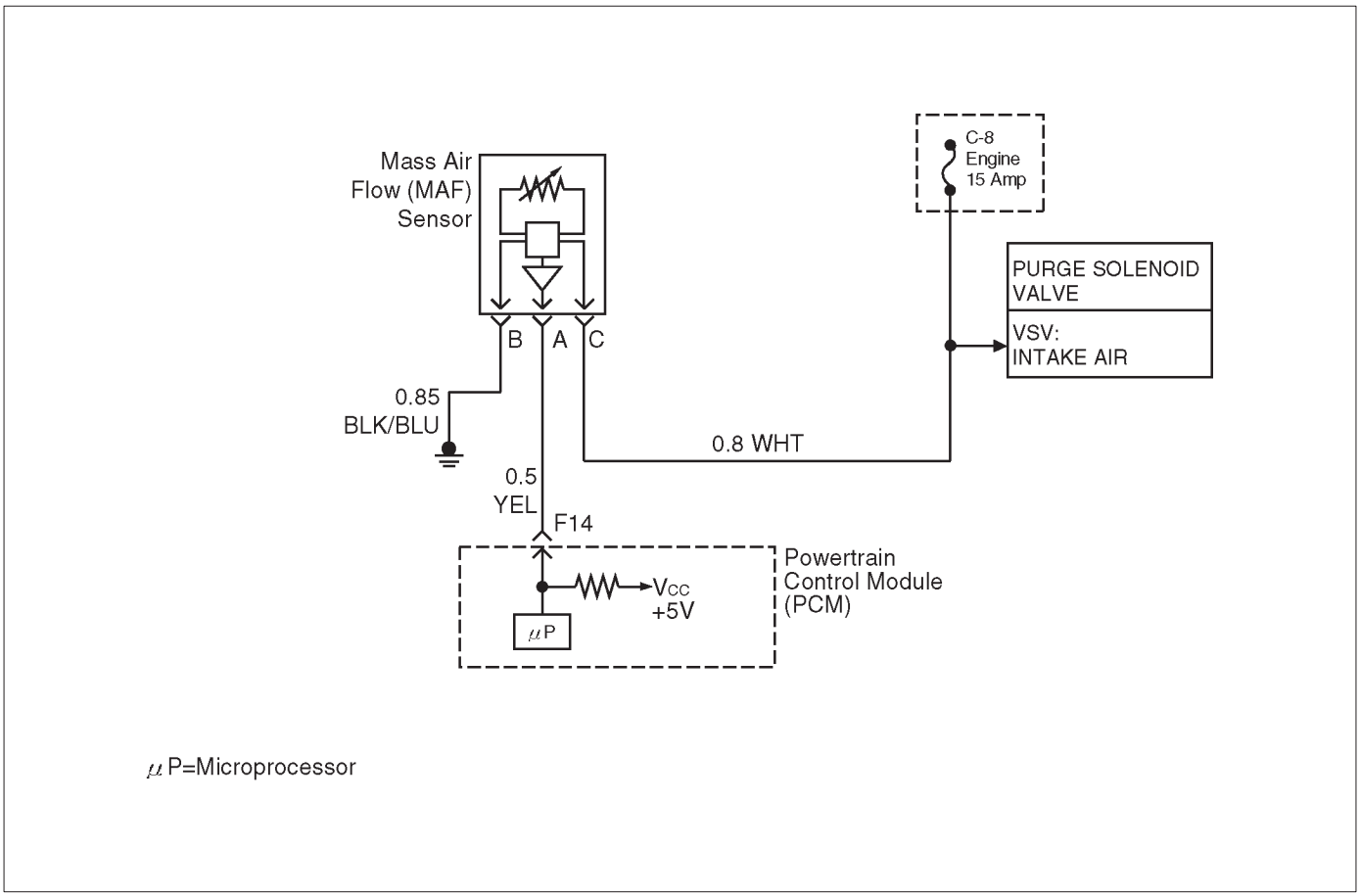

D06R200047

Circuit Description

The mass air flow (MAF) sensor measures the amount of air which passes through it into the engine during a given time. The powertrain control module (PCM) uses the mass air flow information to monitor engine operating conditions for fuel delivery calculations. A large quantity of air entering the engine indicates an acceleration or high load situation, while a small quantity of air indicates deceleration or idle.

The MAF sensor produces a frequency signal which can be monitored using a Tech 2. The frequency will vary within a range of around 3 to 7g/s at idle. DTC P0102 will be set if the signal from the MAF sensor is below the possible range of a normally operating MAF sensor.

Conditions for Setting the DTC

- The engine is running above 500 RPM for more than 10 seconds.
- System voltage is above 11.5 volts.
- MAF signal frequency is below 1.6g/s for a total of 50-percent of the last 1000 samples monitored. A sample is taken every cylinder event.

Action Taken When the DTC Sets

- The PCM will ON the MIL after second trip with detected fault.
- The PCM calculates an air flow value based on idle air control valve position, throttle position, RPM and barometric pressure.
- The PCM will store conditions which were present when the DTC was set as Freeze Frame and in the Failure Records data.

Conditions for Clearing the MIL/DTC

- The PCM will turn the MIL “OFF” on the third consecutive trip cycle during which the diagnostic has been run and the fault condition is no longer present.
- A history DTC P0102 will clear after 40 consecutive warm-up cycles have occurred without a fault.
- DTC P0102 can be cleared by using the Tech 2 “Clear Info” function or by disconnecting the PCM battery feed.

Diagnostic Aids

Check for the following conditions:

- Poor connection at PCM – Inspect harness connectors for backed-out terminals, improper mating, broken locks, improperly formed or damaged terminals, and poor terminal-to-wire connection.
- Misrouted harness – Inspect the MAF sensor harness to ensure that it is not routed too close to high voltage wires.
- Damaged harness – Inspect the wiring harness for damage. If the harness appears to be OK, observe the Tech 2 while moving connectors and wiring harnesses related to the MAF sensor. A change in the display will indicate the location of the fault.
- Plugged intake air duct or filter element – A wide-open throttle acceleration from a stop should cause the

mass air flow displayed on a Tech 2 to increase from about 3-6 g/second at idle to 100 g/second or greater at the time of the 1-2 shift. If not, check for a restriction.

If DTC P0102 cannot be duplicated, the information included in the Failure Records data can be useful in determining vehicle mileage since the DTC was last set.

Test Description

Number(s) below refer to the step number(s) on the Diagnostic Chart.

2. This step verifies that the problem is present at idle.
4. A voltage reading of less than 4 or over 5 volts at the MAF sensor signal circuit indicates a fault in the wiring or a poor connection.
5. This verifies that ignition feed voltage and a good ground are available at the MAF sensor.

DTC P0102 – MAF Sensor Circuit Low Frequency

Step	Action	Value(s)	Yes	No
1	Was the “On-Board Diagnostic (OBD) System Check” performed?	—	Go to *Step 2*	Go to *OBD System Check*
2	1. Start the engine. 2. With the engine idling, monitor “MAF Frequency” display on the Tech 2. Is the “MAF Frequency” below the specified value?	3-7 g/s	Go to *Step 3*	Go to *Step 5*
3	1. Ignition “ON”, engine “OFF”. 2. Review and record Tech 2 Failure Records data. 3. Operate the vehicle within Failure Records conditions as noted. 4. Using a Tech 2, monitor “DTC” info for DTC P0102. Does the Tech 2 indicate DTC P0102 failed this ignition?	—	Go to *Step 4*	Check the Procedure Refer to *Diagnostic Aids*
4	1. Ignition “OFF”. 2. Disconnect the MAF sensor connector. 3. Ignition “ON”, engine “OFF”. 4. Using a DVM, measure voltage between the MAF sensor signal circuit and battery ground. Is the voltage near the specified value?	11.5–12 V	Go to *Step 5*	Go to *Step 8*
5	Connect a test light between the MAF sensor ignition feed and ground circuits at the MAF sensor harness connector. Is the test light “ON”?	—	Go to *Step 7*	Go to *Step 6*
6	Connect a test light between the MAF sensor ignition feed circuit and battery ground. Is the test light “ON”?	—	Go to *Step 11*	Go to *Step 7*
7	1. Check for a poor connection at the MAF sensor. 2. If a poor connection is found, replace the faulty terminal(s). Was a poor connection found?	—	Verify repair	Go to *Step 12*
8	1. Ignition “OFF”. 2. Disconnect the MAF sensor. 3. Disconnect the PCM connector for the MAF signal circuit. 4. Ignition “ON”, engine “OFF”. 5. With the DVM, measure the voltage between the MAF signal terminal at the PCM and battery ground. Is the voltage under the specified value?	0 V	Go to *Step 9*	Go to *Step 10*

DTC P0102 – MAF Sensor Circuit Low Frequency (Cont'd)

Step	Action	Value(s)	Yes	No
9	1. Ignition "OFF". 2. Disconnect the PCM connector. 3. Ignition "ON". 4. Check the MAF sensor signal circuit for a short to 5 volts. Is the action complete?	—	Verify repair	—
10	1. Ignition "OFF". 2. Disconnect the PCM connector. 3. Ignition "ON". 4. Check the MAF sensor signal circuit between the PCM and the MAF sensor for an open, short to ground, or short to the MAF ground circuit. Is the action complete?	—	Verify repair	Go to *Step 13*
11	Locate and repair the open in the ground circuit to the MAF sensor. Is the action complete?	—	Verify repair	—
12	Locate and repair the open in the ignition feed circuit to the MAF sensor. Is the action complete?	—	Verify repair	—
13	Replace the MAF sensor. Is the action complete?	—	Verify repair	Go to *Step 14*
14	Replace the PCM. **IMPORTANT:** The replacement PCM must be programmed. Refer to *On-Vehicle Service* in *Powertrain Control Module and Sensors* for procedures. And also refer to latest Service Bulletin. Check to see if the Latest software is released or not. And then Down Load the LATEST PROGRAMMED SOFTWARE to the replacement PCM. Is the action complete?	—	Verify repair	—

Diagnostic Trouble Code (DTC)
P0103 MAF Sensor Circuit High Frequency

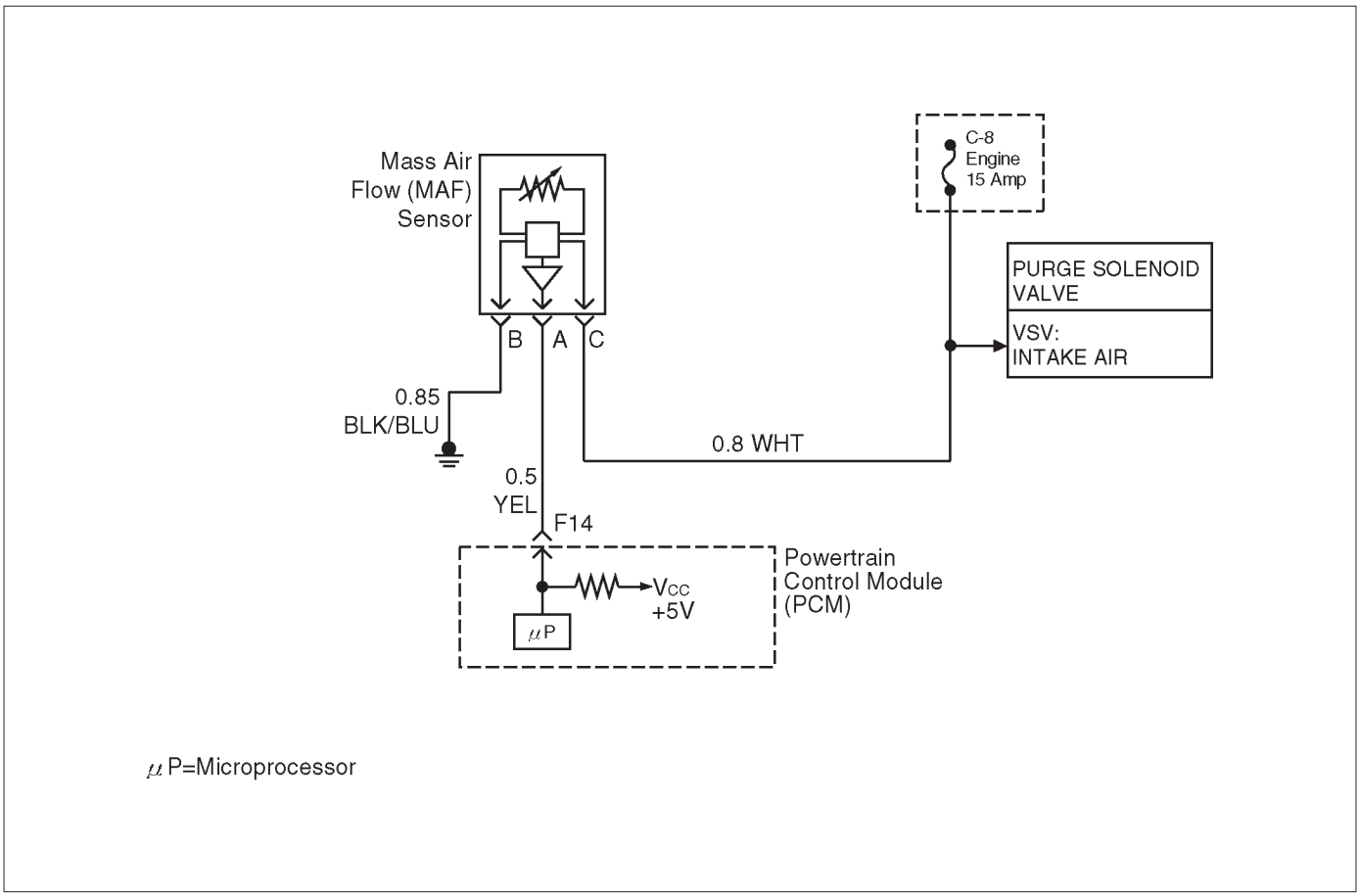

D06R200047

Circuit Description

The mass air flow (MAF) sensor measures the amount of air which passes through it into the engine during a given time. The powertrain control module (PCM) uses the mass air flow information to monitor engine operating conditions for fuel delivery calculations. A large quantity of air entering the engine indicates an acceleration or high load situation, while a small quantity of air indicates deceleration or idle.

The MAF sensor produces a frequency signal which can be monitored using a Tech 2. The frequency will vary within a range of around 3 to 7g/s at idle. DTC P0103 will be set if the signal from the MAF sensor is above the possible range of a normally operating MAF sensor.

Conditions for Setting the DTC

- The engine is running above 500 RPM for more than 10 seconds.
- System voltage is above 11.5 volts.
- MAF signal frequency is above 40g/s for a total of 50 percent of the last 200 samples monitored. A sample is taken every cylinder event.

Action Taken When the DTC Sets

- The PCM will ON the MIL after second trip with detected the fault.
- The PCM calculates an airflow value based on idle air control valve position, throttle position, RPM and barometric pressure.
- The PCM will store conditions which were present when the DTC was set as Freeze Frame and in the Failure Records data.

Conditions for clearing the MIL/DTC

- The PCM will turn the MIL “OFF” on the third consecutive trip cycle during which the diagnostic has been run and the fault condition is no longer present.
- A history DTC P0103 will clear after 40 consecutive warm-up cycles have occurred without a fault.
- DTC P0103 can be cleared by using the Tech 2 “Clear Info” function or by disconnecting the PCM battery feed.

Diagnostic Aids

If DTC P0103 cannot be duplicated, the information included in the Failure Records data can be useful in determining vehicle mileage since the DTC was last set.

Test Description

Number(s) below refer to the step number(s) on the Diagnostic Chart.

2. This step verifies that the problem is present at idle.

4. A frequency reading with the MAF sensor connector disconnected indicates an electromagnetic interference (EMI) related fault.

DTC P0103 – MAF Sensor Circuit High Frequency

Step	Action	Value(s)	Yes	No
1	Was the “On-Board Diagnostic (OBD) System Check” performed?	—	Go to *Step 2*	Go to *OBD System Check*
2	1. Ignition “ON”, engine “OFF”. 2. Review and record Tech 2 Failure Records data. 3. Operate the vehicle within Failure Records conditions as noted. 4. Using a Tech 2, monitor “DTC” info for DTC P0103. Does the Tech 2 indicate DTC P0103 failed this ignition?	—	Go to *Step 3*	Check the Procedure Refer to *Diagnostic Aids*
3	1. Start the engine. 2. With the engine idling, monitor “MAF Frequency” display on the Tech 2. Is “MAF Frequency” above the specified value?	3–7g/s	Go to *Step 4*	Go to *Step 7*
4	1. Ignition “OFF”. 2. Disconnect the MAF sensor connector. 3. Ignition “ON”, engine idling. 4. Using a Tech 2, monitor “MAF Frequency”. Does the Tech 2 indicate a “MAF Frequency” at the specified value?	0g/s	Go to *Step 5*	Go to *Step 6*
5	Replace the MAF sensor. Is the action complete?	—	Verify repair	Go to *Step 7*
6	1. Check the MAF harness for incorrect routing near high voltage components (solenoids, relays, motors). 2. If incorrect routing is found, correct the harness routing. Was a problem found?	—	Verify repair	Go to *Step 7*
7	Replace the PCM. **IMPORTANT:** The replacement PCM must be programmed. Refer to *On-Vehicle Service* in *Powertrain Control Module and Sensors* for procedures. And also refer to latest Service Bulletin. Check to see if the Latest software is released or not. And then Down Load the LATEST PROGRAMMED SOFTWARE to the replacement PCM. Is the action complete?	—	Verify repair	—

Diagnostic Trouble Code (DTC) P0106 MAP System Performance

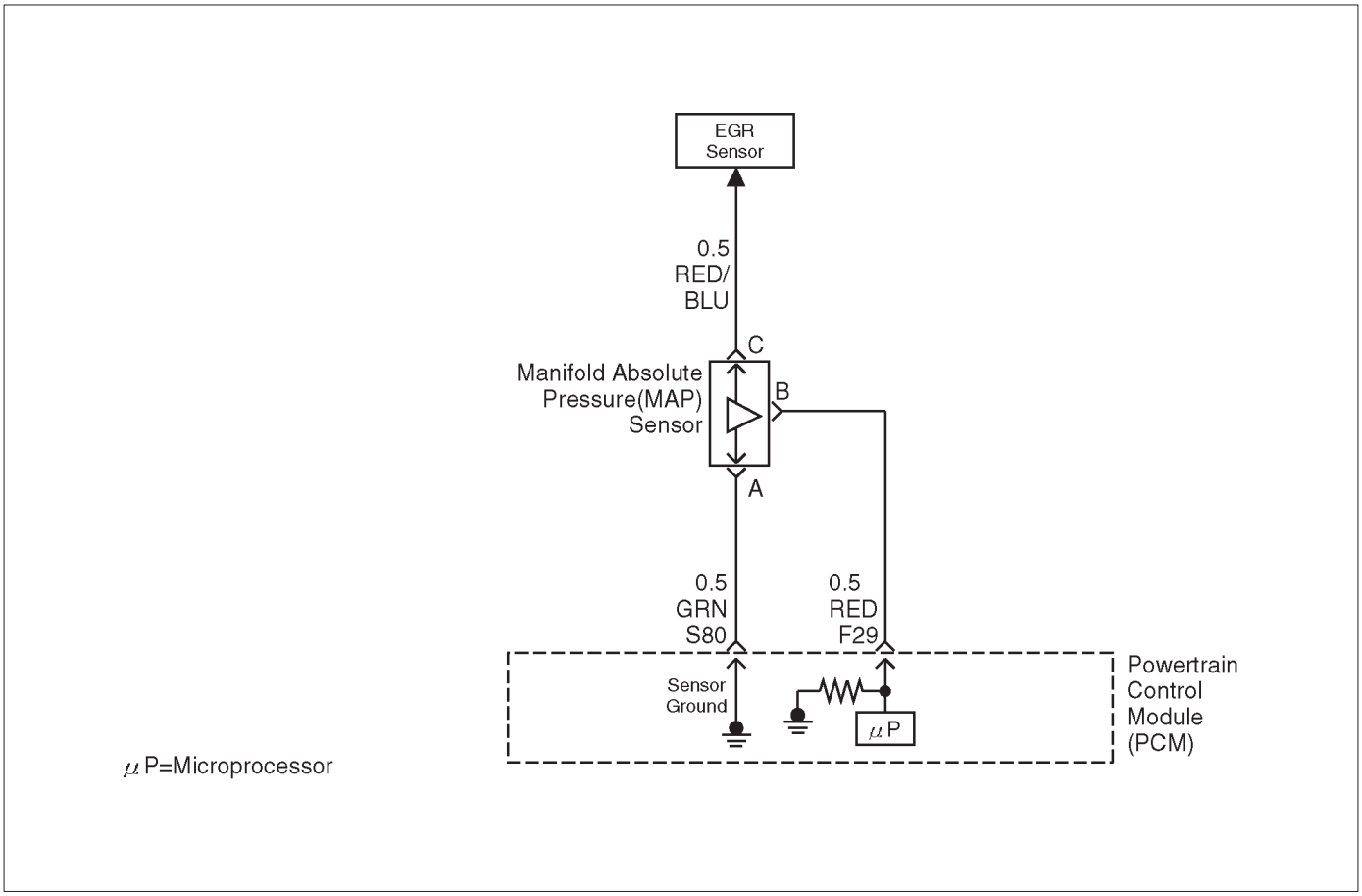

D06R200048

Circuit Description

The manifold absolute pressure (MAP) sensor responds to changes in intake manifold pressure (vacuum). The MAP sensor signal voltage to the powertrain control module (PCM) varies from below 2 volts at idle (high vacuum) to above 4 volts at wide-open throttle (low vacuum) at sea level.

The MAP sensor is used to determine manifold pressure changes while the linear exhaust gas recirculation (EGR) flow test diagnostic is being run (refer to DTC P0401), engine vacuum level for some other diagnostics, and barometric pressure (BARO). The PCM compares the MAP sensor signal to a calculated MAP based on throttle position and various engine load factors. If the PCM detects a MAP signal that varies excessively above or below the calculated value, DTC P0106 will set.

Conditions for Setting the DTC

- No TP sensor DTCs are present.
- Engine speed is steady, changing less then 100 RPM.
- Engine speed is between 1000 rpm and 4000 rpm.
- Throttle position is steady, throttle angle changes less than 1%.
- EGR flow rate is steady, changing less than 4%.
- No change in brake switch, A/C clutch, TCC or power steering pressure switch status.
- Above conditions are met for longer than 1 second.
- Actual MAP value varies more than 10 kPa.
- The MAP value must vary for a total of 10 seconds over a 20-second period of time that the samples were monitored.
- The failure must occur for 2 consecutive trips.

Action Taken When the DTC Sets

- The PCM will illuminate the malfunction indicator lamp (MIL) after the second consecutive trip in which the fault is detected.
- The PCM will default to a BARO value of 79.3 kPa.
- The PCM will store conditions which were present when the DTC was set as Freeze Frame and in the Failure Records data.

Conditions for Clearing the MIL/DTC

- The PCM will turn the MIL “OFF” on the third consecutive trip cycle during which the diagnostic has been run and the fault condition is no longer present.
- A history DTC P0106 will clear after 40 consecutive warm-up cycles have occurred without a fault.
- DTC P0106 can be cleared by using the Tech 2 “Clear Info” function or by disconnecting the PCM battery feed.

Diagnostic Aids

Check for the following conditions:

- Poor connection at PCM – Inspect harness connectors for backed-out terminals, improper mating, broken locks, improperly formed or damaged terminals, and poor terminal-to-wire connection.

- Damaged harness – Inspect the wiring harness for damage. If the harness appears to be OK, observe the MAP display on the Tech 2 while moving connectors and wiring harnesses related to the sensor. A change in the display will indicate the location of the fault.

If DTC P0106 cannot be duplicated, the information included in the Failure Records data can be useful in determining vehicle mileage since the DTC was last set. If it is determined that the DTC occurs intermittently, performing the DTC P1107 Diagnostic Chart may isolate the cause of the fault.

DTC P0106 – MAP System Performance

Step	Action	Value(s)	Yes	No
1	Was the “On-Board Diagnostic (OBD) System Check” performed?	—	Go to *Step 2*	Go to *OBD System Check*
2	1. Ignition “ON”, engine “OFF”. 2. Review and record Tech 2 Failure Records data. 3. Operate the vehicle within Failure Records conditions as noted. 4. Using a Tech 2, monitor “DTC” info for DTC P0106. Does the Tech 2 indicate DTC P0106 failed?	—	Go to *Step 4*	Go to *Step 3*
3	1. Check for the following conditions: • Vacuum hoses disconnected, damaged, or incorrectly routed • Intake manifold vacuum leaks • Vacuum leaks at throttle body • Vacuum leaks at EGR valve flange and pipes • Crankcase ventilation valve faulty, missing or incorrectly installed. 2. If a problem is found, repair as necessary. Was a problem found?	—	Verify repair	Check the Procedure Refer to *Diagnostic Aids*
4	1. Disconnect the MAP sensor electrical connector. 2. Observe the MAP value displayed on the Tech 2. Is the MAP value near the specified value?	11 kPa	Go to *Step 5*	Go to *Step 13*
5	1. Connect a test light between B+ and the MAP sensor signal circuit at the MAP sensor harness connector. 2. Observe the MAP value displayed on the Tech 2. Is the MAP value near the specified value?	100 kPa	Go to *Step 6*	Go to *Step 9*
6	1. Jumper the 5 volt reference circuit and the MAP signal circuit together at the MAP sensor harness connector. 2. Observe the MAP value displayed on the Tech 2. Is the MAP value near the specified value?	100 kPa	Go to *Step 7*	Go to *Step 8*
7	1. Ignition “OFF”. 2. Disconnect the PCM and check the sensor ground circuit for high resistance, an open between the PCM and the MAP sensor, or for a poor connection at the PCM. 3. If a problem is found, repair as necessary. Was a problem found?	—	Verify repair	Go to *Step 11*

DTC P0106 – MAP System Performance (Cont'd)

Step	Action	Value(s)	Yes	No
8	1. Check the 5 volt reference circuit for high resistance, an open between the PCM and the MAP sensor, or a poor connection at the PCM. 2. If a problem is found, repair as necessary. Was a problem found?	—	Verify repair	Go to *Step 10*
9	1. Ignition "OFF". 2. Disconnect the PCM, and check the MAP sensor signal circuit for high resistance, an open, a short to ground, or a short to the sensor ground circuit. 3. If a problem is found, repair as necessary. Was a problem found?	—	Verify repair	Go to *Step 10*
10	1. Check the MAP sensor signal circuit for a poor connection at the PCM. 2. If a problem is found, repair as necessary. Did the terminal require replacement?	—	Verify repair	Go to *Step 14*
11	1. Check for a poor connection at the MAP sensor. 2. If a problem is found, repair as necessary. Was a problem found?	—	Verify repair	Go to *Step 12*
12	Replace the MAP sensor. Is the action complete?	—	Verify repair	—
13	1. Ignition "OFF", disconnected the PCM. 2. Ignition "ON", check the MAP signal circuit for a short to voltage or a short to the 5 volt reference circuit. 3. If a problem is found, repair as necessary. Was a problem found?	—	Verify repair	Go to *Step 14*
14	Replace the PCM. **IMPORTANT:** The replacement PCM must be programmed. Refer to *On-Vehicle Service* in *Powertrain Control Module and Sensors* for procedures. And also refer to latest Service Bulletin. Check to see if the Latest software is released or not. And then Down Load the LATEST PROGRAMMED SOFTWARE to the replacement PCM. Is the action complete?	—	Verify repair	—

Diagnostic Trouble Code (DTC)
P0107 MAP Sensor Circuit Low Voltage

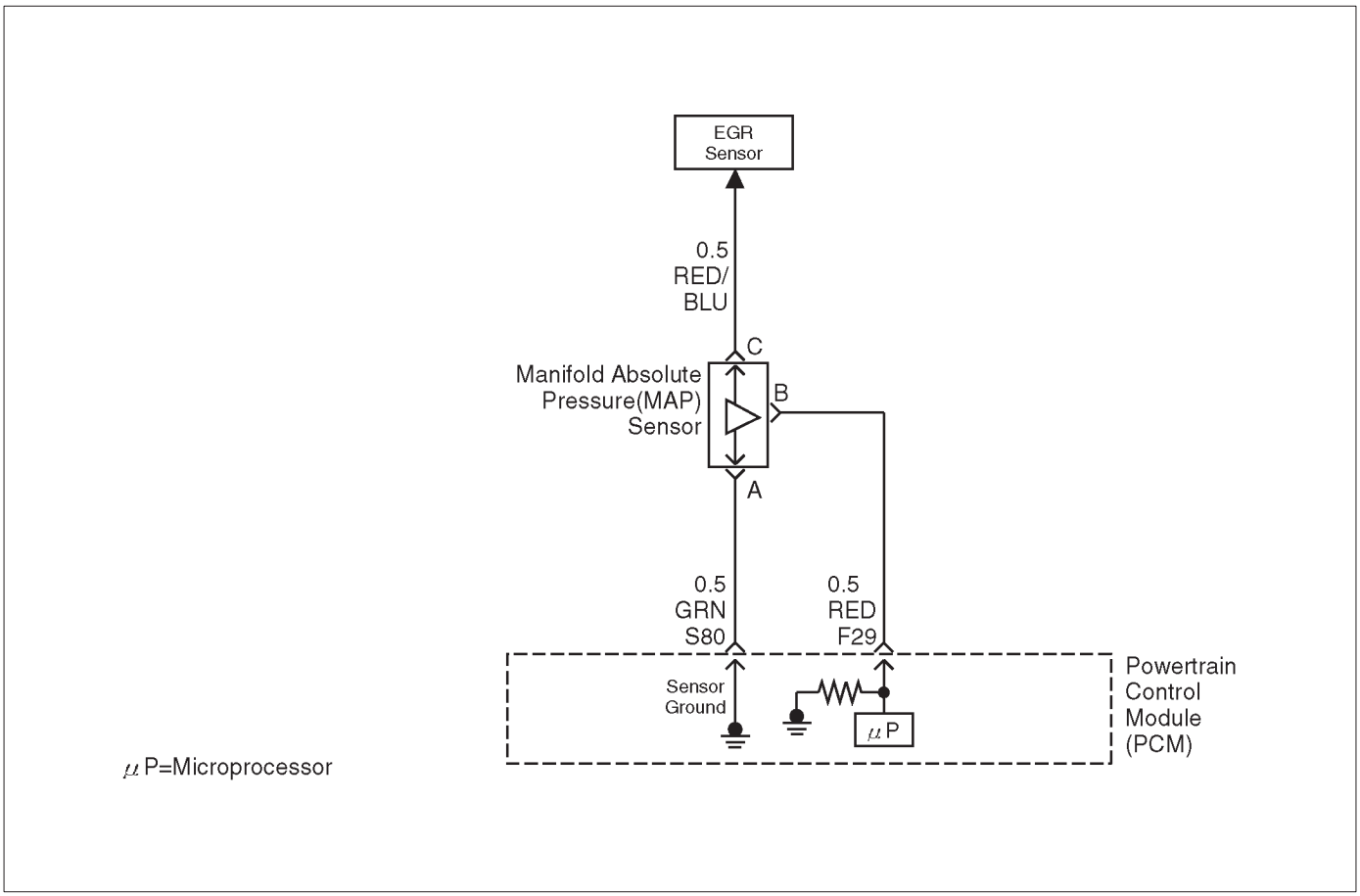

D06R200048

Circuit Description

The manifold absolute pressure (MAP) sensor responds to changes in intake manifold pressure (vacuum). The MAP sensor signal voltage to the powertrain control module (PCM) varies from below 2 volts at idle (high vacuum) to above 4 volts with the ignition “ON”, engine not running or at wide-open throttle (low vacuum).

The MAP sensor is used to determine manifold pressure changes while the exhaust gas recirculation (EGR) flow test diagnostic is being run (refer to *DTC P0401*), to determine engine vacuum level for some other diagnostics and to determine barometric pressure (BARO). The PCM monitors the MAP signals for voltages outside the normal range of the MAP sensor. If the PCM detects a MAP signal voltage that is excessively low, DTC P0107 will be set.

Conditions for Setting the DTC

- No TP sensor DTCs present.
- Engine is running.
- Throttle angle is above 1% if engine speed is less than 1000 RPM.
- Throttle angle is above 2% if engine speed is above 1000 RPM.
- The MAP sensor indicates manifold absolute pressure at or below 11 kPa for a total of approximately 10 seconds over a 16-second period.
- Ignition voltage more than 11 volts.

Action Taken When the DTC Sets

- The PCM will ON the MIL after second trip with detected fault.
- The PCM will default to a BARO value of 79.3 kPa.
- The PCM will store conditions which were present when the DTC was set as Freeze Frame and in the Failure Records data.

Conditions for Clearing the MIL/DTC

- The PCM will turn the MIL “OFF” on the third consecutive trip cycle during which the diagnostic has been run and the fault condition is no longer present.
- A history DTC P0107 will clear after 40 consecutive warm-up cycles have occurred without a fault.
- DTC P0107 can be cleared by using the Tech 2 “Clear Info” function or by disconnecting the PCM battery feed.

Diagnostic Aids

Check for the following conditions:

- Check for intermittent codes.
- The MAP sensor shares a 5 Volt reference with the EGR Sensor. If these codes are also set, it could indicate a problem with the 5 Volt reference circuit .
- Poor connection at PCM – Inspect harness connectors for backed-out terminals, improper mating, broken locks, improperly formed or damaged terminals, and poor terminal-to-wire connection.

- Damaged harness – Inspect the wiring harness for damage. If the harness appears to be OK, observe the MAP display on the Tech 2 while moving connectors and wiring harnesses related to the sensor. A change in the display will indicate the location of the fault.

If DTC P0107 cannot be duplicated, the information included in the Failure Records data can be useful in determining vehicle mileage since the DTC was last set. If it is determined that the DTC occurs intermittently, performing the DTC P0107 Diagnostic Chart may isolate the cause of the fault.

DTC P0107 – MAP Sensor Circuit Low Voltage

Step	Action	Value(s)	Yes	No
1	Was the “On-Board Diagnostic (OBD) System Check” performed?	—	Go to *Step 2*	Go to *OBD System Check*
2	1. Ignition “ON”, engine “OFF”. 2. With the throttle closed, observe the MAP value displayed on the Tech 2. Is the MAP value near the specified value?	5 V 100 kPa at sea level	Go to *Step 4*	Go to *Step 3*
3	1. Ignition “ON”, engine “OFF”. 2. Review and record Tech 2 Failure Records data. 3. Operate the vehicle within Failure Records conditions as noted. 4. Using a Tech 2, monitor “DTC” info for DTC P0107. Does the Tech 2 indicate DTC P0107 failed?	—	Go to *Step 4*	Check the Procedure Refer to *Diagnostic Aids*
4	1. Ignition “OFF”. 2. Disconnect the MAP sensor electrical connector. 3. Jumper the 5 volt reference circuit and the MAP signal together at the MAP sensor harness connector. 4. Ignition “ON”. 5. Observe the MAP value displayed on the Tech 2. Is the MAP value near the specified value? (If no, start with diagnosis chart for other sensors in the circuit and see if 5V returns.)	0 V 11 kPa	Go to *Step 10*	Go to *Step 5*
5	1. Disconnect the jumper. 2. Connect a test light between B+ and the MAP sensor signal circuit at the MAP sensor harness connector. 3. Observe the MAP value displayed on the Tech 2. Is the MAP value near the specified value.	5 V 100 kPa	Go to *Step 6*	Go to *Step 8*
6	1. Ignition “OFF”. 2. Disconnect the PCM and check the 5 volt reference circuit for an open or short to ground. 3. If the 5 volt reference circuit is open or shorted to ground, repair it as necessary. Was the 5 volt reference circuit open or shorted to ground?	—	Verify repair	Go to *Step 7*
7	Check the 5 volt reference circuit for a poor connection at the PCM and replace the terminal if necessary. Did the terminal require replacement?	—	Verify repair	Go to *Step 11*

DTC P0107 – MAP Sensor Circuit Low Voltage (Cont'd)

Step	Action	Value(s)	Yes	No
8	1. Ignition "OFF". 2. Disconnect the PCM, and check the MAP signal circuit for an open, short to ground, or short to the sensor ground circuit. 3. If the MAP sensor signal circuit is open or shorted to ground, repair it as necessary. Was the MAP signal circuit open or shorted to ground?	—	Verify repair	Go to *Step 9*
9	Check the MAP sensor signal circuit for a poor connection at the PCM and the MAP sensor; replace the terminal if necessary. Did the terminal require replacement?	—	Verify repair	Go to *Step 11*
10	Replace the MAP sensor. Is the action complete?	—	Verify repair	—
11	Replace the PCM. **IMPORTANT:** The replacement PCM must be programmed. Refer to *On-Vehicle Service* in *Powertrain Control Module and Sensors* for procedures. And also refer to latest Service Bulletin. Check to see if the Latest software is released or not. And then Down Load the LATEST PROGRAMMED SOFTWARE to the replacement PCM. Is the action complete?	—	Verify repair	—

Diagnostic Trouble Code (DTC) P0108 MAP Sensor Circuit High Voltage

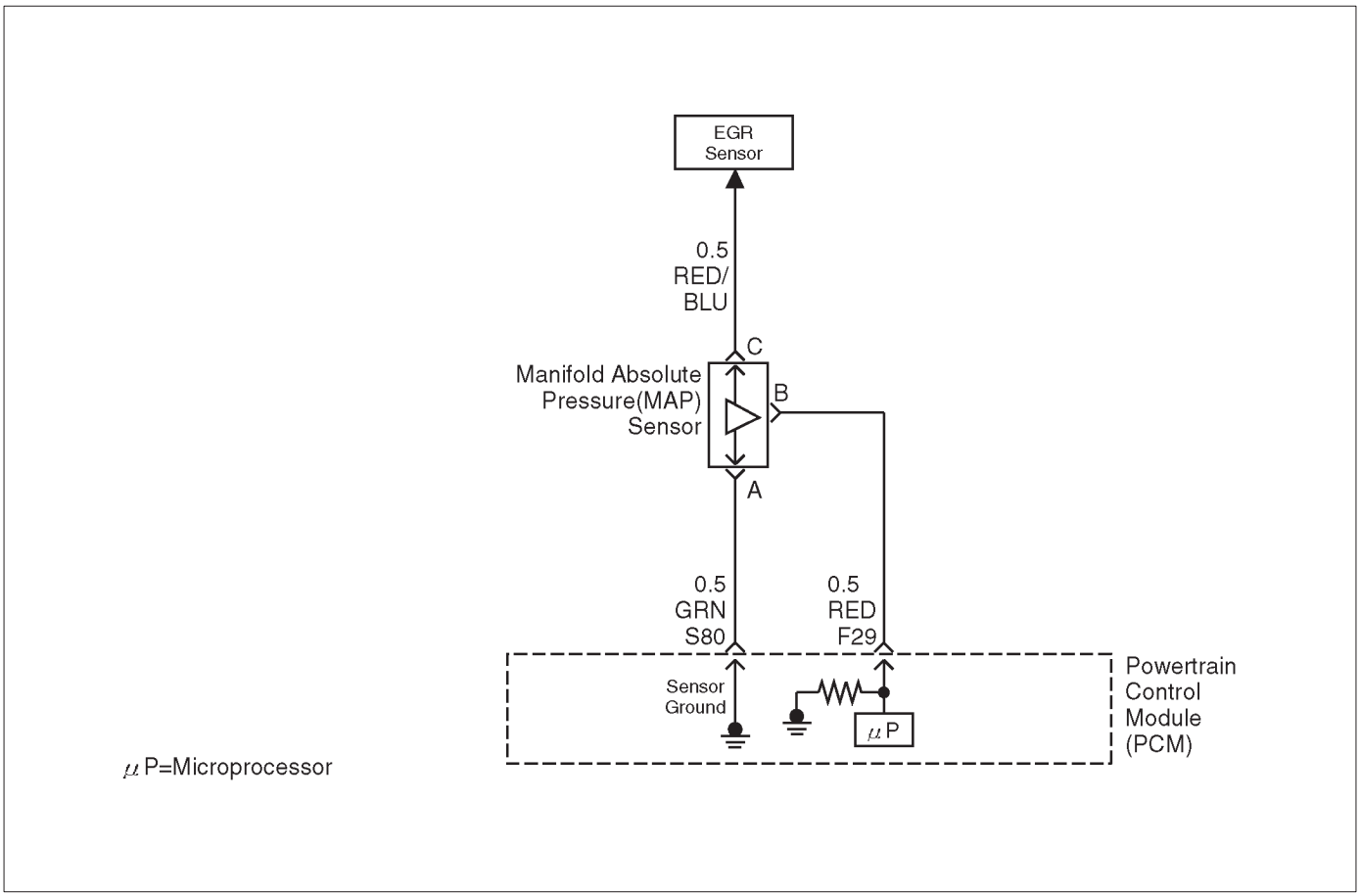

D06R200048

Circuit Description

The manifold absolute pressure (MAP) sensor responds to changes in intake manifold pressure (vacuum). The MAP sensor signal voltage to the powertrain control module (PCM) varies from below 2 volts at idle (high vacuum) to above 4 volts with the key “ON”, engine not running or at wide-open throttle (low vacuum).

The MAP sensor is used to determine manifold pressure changes while the linear EGR flow test diagnostic is being run (refer to *DTC P0401*), to determine engine vacuum level for some other diagnostics and to determine barometric pressure (BARO). The PCM monitors the MAP signals for voltages outside the normal range of the MAP sensor. If the PCM detects a MAP signal voltage that is excessively high, DTC P0108 will be set.

Conditions for Setting the DTC

- No TP sensor DTCs present.
- Engine is running for more than 10 seconds.
- Throttle position is below 3% if engine speed is below 1000 RPM.
- Throttle position is below 10% if engine speed is above 1000 RPM.
- The MAP sensor indicates an intermittent manifold absolute pressure above 80 kPa for a total of approximately 10 seconds over a 16-second period.

Action Taken When the DTC Sets

- The PCM will ON the MIL after second trip with detected fault.
- The PCM will default to a BARO value of 79.3 kPa.
- The PCM will store conditions which were present when the DTC was set as Freeze Frame and in the Failure Records data.

Conditions for Clearing the MIL/DTC

- The PCM will turn the MIL “OFF” on the third consecutive trip cycle during which the diagnostic has been run and the fault condition is no longer present.
- A history DTC P0108 will clear after 40 consecutive warm-up cycles have occurred without a fault.
- DTC P0108 can be cleared by using the Tech 2 “Clear Info” function or by disconnecting the PCM battery feed.

Diagnostic Aids

Check for the following conditions:

- The MAP sensor shares a 5 Volt reference with the EGR sensor. If these codes are also set, it could indicate a problem with the 5 Volt reference circuit.
- Poor connection at PCM – Inspect harness connectors for backed-out terminals, improper mating, broken locks, improperly formed or damaged terminals, and poor terminal-to-wire connection.
- Damaged harness – Inspect the wiring harness for damage. If the harness appears to be OK, observe the

MAP display on the Tech 2 while moving connectors and wiring harnesses related to the sensor. A change in the display will indicate the location of the fault.

If DTC P0108 cannot be duplicated, the information included in the Failure Records data can be useful in determining vehicle mileage since the DTC was last set. If it is determined that the DTC occurs intermittently, performing the DTC P1108 Diagnostic Chart may isolate the cause of the fault.

DTC P0108 – MAP Sensor Circuit High Voltage

Step	Action	Value(s)	Yes	No
1	Was the “On-Board Diagnostic (OBD) System Check” performed?	—	Go to *Step 2*	Go to *OBD System Check*
2	1. If the engine idle is rough, unstable or incorrect, repair the idle problem before using this chart. Refer to *Symptoms* section. 2. With the engine idling, note the MAP value on the Tech 2. Is the MAP reading above the specified value?	25–35 kPa	Go to *Step 4*	Go to *Step 3*
3	1. Ignition “ON”, engine “OFF”. 2. Review and record Tech 2 Failure Records data. 3. Operate the vehicle within Failure Records conditions as noted. 4. Using a Tech 2, monitor “DTC” info for DTC P0108. Does the Tech 2 indicate DTC P0108 failed this ignition?	—	Go to *Step 4*	Check the Procedure Refer to *Diagnostic Aids*
4	1. Ignition “OFF”. 2. Disconnect the MAP sensor electrical connector. 3. Ignition “ON”. 4. Note the MAP sensor voltage displayed on the Tech 2. (If no, start with diagnostic chart for other sensors in the circuit and see if 5V returns.) Is the MAP sensor voltage at the specified value?	11 kPa 0.0 V	Go to *Step 5*	Go to *Step 6*
5	Probe the sensor ground circuit with a test light to B+. Is the test light “ON”?	—	Go to *Step 7*	Go to *Step 9*
6	1. Check the MAP signal circuit for a short to voltage or a short to the 5 volt reference circuit. 2. If the MAP sensor signal circuit is shorted, repair circuit as necessary. Was the MAP sensor signal circuit shorted?	—	Verify repair	Go to *Step 11*
7	1. Check for a poor sensor ground terminal connection at the MAP sensor electrical connector. 2. If a problem is found, replace the faulty terminal. Did the terminal require replacement?	—	Verify repair	Go to *Step 8*
8	Check for a plugged or leaking vacuum supply to the MAP sensor. Is the vacuum supply plugged or leaking?	—	Verify repair	Go to *Step 12*
9	1. Check for a poor sensor ground terminal connection at the PCM. 2. If a problem is found, replace the faulty terminal. Did the terminal require replacement?	—	Verify repair	Go to *Step 10*

DTC P0108 – MAP Sensor Circuit High Voltage (Cont'd)

Step	Action	Value(s)	Yes	No
10	1. Check the continuity of the MAP sensor ground circuit. 2. If the MAP sensor ground circuit measures over 5 ohms, repair open or poor connection. Was a condition found and corrected?	—	Verify repair	Go to *Step 11*
11	Replace the PCM. **IMPORTANT:** The replacement PCM must be programmed. Refer to *On-Vehicle Service* in *Powertrain Control Module and Sensors* for procedures. And also refer to latest Service Bulletin. Check to see if the Latest software is released or not. And then Down Load the LATEST PROGRAMMED SOFTWARE to the replacement PCM. Is the action complete?	—	Verify Repair	—
12	Replace the MAP sensor. Is the action complete?	—	Verify repair	—

Diagnostic Trouble Code (DTC) P0112 IAT Sensor Circuit Low Voltage

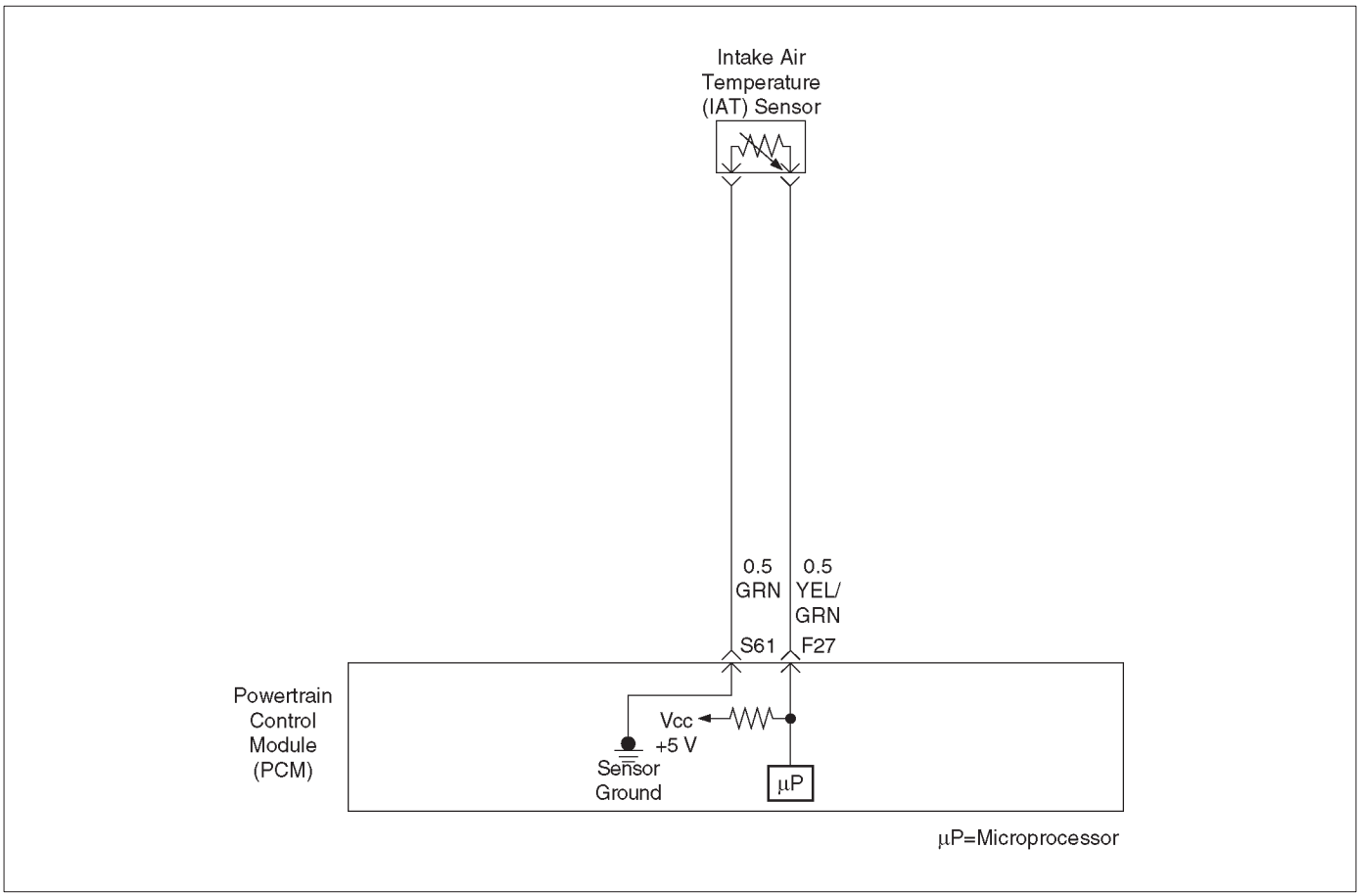

D06RY00168

Circuit Description

The intake air temperature (IAT) sensor is a thermistor which measures the temperature of the air entering the engine. The powertrain control module (PCM) applies 5 volts through a pull-up resistor to the IAT sensor. When the intake air is cold, the sensor resistance is high and the PCM will monitor a high signal voltage on the IAT signal circuit. If the intake air is warm, the sensor resistance is lower, causing the PCM to monitor a lower voltage. DTC P0112 will set when the PCM detects an excessively low signal voltage on the intake air temperature sensor signal circuit.

Conditions for Setting the DTC

- The engine has been running for over 15 seconds.
- Vehicle speed is greater than 30 mph (48 km/h) .
- IAT signal voltage indicates and intake air temperature greater than 148˚C (298˚F) (about 5 volts) for a total of 12.5 seconds over a 25-second period of time.

Action Taken When the DTC Sets

- The PCM will ON the MIL after second trip with detected fault.
- The PCM will store conditions which were present when the DTC was set as Freeze Frame and in the Failure Records data.

Conditions for Clearing the MIL/DTC

- The PCM will turn the MIL “OFF” on the third consecutive trip cycle during which the diagnostic has been run and the fault condition is no longer present.
- A history DTC P0112 will clear after 40 consecutive warm-up cycles have occurred without a fault.
- DTC P0112 can be cleared by using the Tech 2 “Clear Info” function or by disconnecting the PCM battery feed.

Diagnostic Aids

Check for the following conditions:

- Poor connection at PCM – Inspect harness connectors for backed-bout terminals, improper mating, broken locks, improperly formed or damaged terminals, and poor terminal-to-wire connection.
- Damaged harness – Inspect the wiring harness for damage. If the harness appears to be OK, observe the IAT display on the Tech 2 while moving connectors and wiring harnesses related to the IAT sensor. A change in the IAT display will indicate the location of the fault.

If DTC P0112 cannot be duplicated, the information included in the Failure Records data can be useful in determining vehicle mileage since the DTC was last set.

Test Description

Number(s) below refer to the step number(s) on the Diagnostic Chart:

2. Verifies that the fault is present.

3. If DTC P0112 can be repeated only by duplicating the Failure Records condition, refer to the *Temperature vs. Resistance Value* table. The table may be used to test the IAT sensor at various temperatures to evaluate the possibility of a "shifted" sensor that may be stored above or below a certain temperature. If this is the case, replace the IAT sensor. If the IAT sensor appears to be OK, the fault is intermittent; refer to *Diagnostic Aids*.

Intake Air Temperature Sensor

˚C	˚F	OHMS
Temperature vs. Resistance Values (approximate)		
100	212	177
80	176	332
60	140	667
45	113	1188
35	95	1802
25	77	2796
15	59	4450
5	41	7280
–5	23	12300
–15	5	21450
–30	–22	52700
–40	–40	100700

DTC P0112–IAT Sensor Circuit Low Voltage

Step	Action	Value(s)	Yes	No
1	Was the “On-Board Diagnostic (OBD) System Check” performed?	—	Go to *Step 2*	Go to *OBD System Check*
2	1. Ignition “ON”, engine “OFF”. 2. Using a Tech 2, monitor the intake air temperature (IAT). Is the intake air temperature greater than the specified value?	148˚C (283˚F)	Go to *Step 4*	Go to *Step 3*
3	1. Ignition “ON”, engine “OFF”. Review and record Tech 2 Failure Records data. 2. Operate the vehicle within Failure Records conditions as noted. 3. Using a Tech 2, monitor the “DTC” info for DTC P0112. Does the Tech 2 indicate DTC P0112 failed this ignition?	—	Refer to *Test Description*	Check the Procedure Refer to *Diagnostic Aids*
4	1. Ignition “OFF”. 2. Disconnect the IAT sensor electrical connector. 3. Ignition “ON”. 4. Observe the intake air temperature on the Tech 2. Is the intake air temperature below the specified value?	–38˚C (–36˚F)	Go to *Step 6*	Go to *Step 5*
5	1. Ignition “OFF”. 2. Disconnect the PCM electrical connectors. 3. Check the IAT sensor signal circuit for a short to ground. Is the IAT sensor signal circuit shorted to ground?	—	Verify repair	Go to *Step 7*
6	Replace the IAT sensor. Is the action complete?	—	Verify repair	—
7	Replace the PCM. **IMPORTANT:** The replacement PCM must be programmed. Refer to *On-Vehicle Service* in *Powertrain Control Module and Sensors* for procedures. And also refer to latest Service Bulletin. Check to see if the Latest software is released or not. And then Down Load the LATEST PROGRAMMED SOFTWARE to the replacement PCM. Is the action complete?	—	Verify repair	—

Diagnostic Trouble Code (DTC) P0113 IAT Sensor Circuit High Voltage

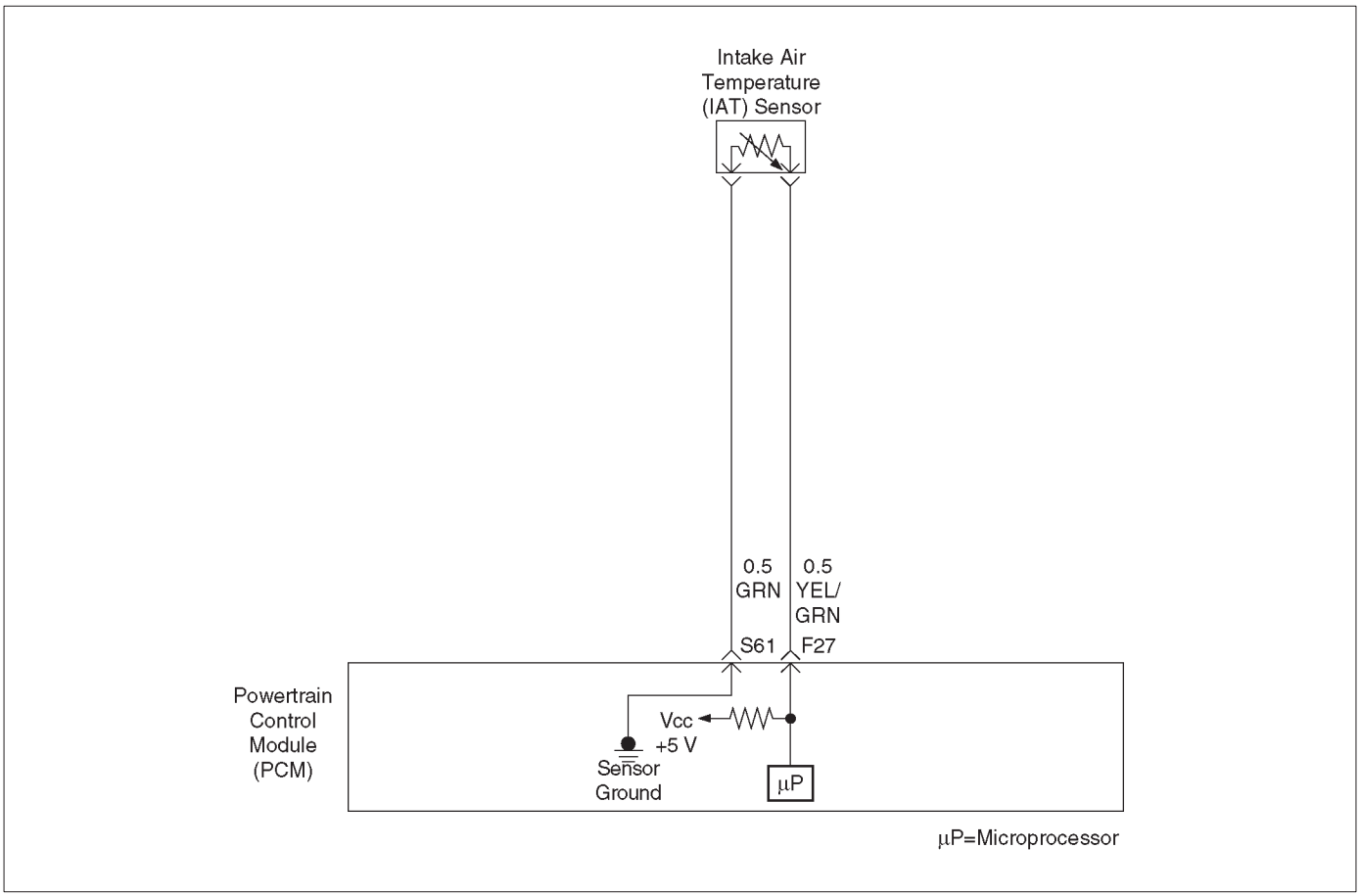

D06RY00168

Circuit Description

The intake air temperature (IAT) sensor is a thermistor which measures the temperature of the air entering the engine. The powertrain control module (PCM) applies 5 volts through a pull-up resistor to the IAT sensor. When the intake air is cold, the sensor resistance is high and the PCM will monitor a high signal voltage on the IAT signal circuit. If the intake air is warm, the sensor resistance is lower causing the PCM to monitor a lower voltage. DTC P0113 will set when the PCM detects an excessively high signal voltage on the intake air temperature sensor signal circuit.

Conditions for Setting the DTC

- The engine has been running for over 30 seconds.
- Vehicle speed is less than 20 mph (32 km/h).
- ECT signal temperature is above 60˚C (140˚F).
- Mass air flow is less then 20 g/second.
- IAT signal voltage indicates an intake air temperature less than –39˚C (–38˚F) for total of 12.5 seconds over a 25-second period.

Action Taken When the DTC Sets

- The PCM will ON the MIL after second trip with detected fault.
- The PCM will store conditions which were present when the DTC was set as Freeze Frame and in the Failure Records data.

Conditions for Clearing the MIL/DTC

- The PCM will turn the MIL “OFF” on the third consecutive trip cycle during which the diagnostic has been run and the fault condition is no longer present.
- A history DTC P0113 will clear after 40 consecutive warm-up cycles have occurred without a fault.
- DTC P0113 can be cleared by using the Tech 2 “Clear Info” function or by disconnecting the PCM battery feed.

Diagnostic Aids

Check for the following conditions:

- The IAT sensor shares a ground with the EGR position sensor and the TP sensor. Check the ground if these DTC’s are set.
- Poor connection at PCM – Inspect harness connectors for backed-out terminals, improper mating, broken locks, improperly formed or damaged terminals, and poor terminal-to-wire connection.
- Damaged harness – Inspect the wiring harness for damage. If the harness appears to be OK, observe the IAT display on the Tech 2 while moving connectors and wiring harnesses related to the IAT sensor. A change in the IAT display will indicate the location of the fault.

If DTC P0113 cannot be duplicated, the information included in the Failure Records data can be useful in determining vehicle mileage since the DTC was last set.

Test Description

Number(s) below refer to the step number(s) on the Diagnostic Chart:

2. Verifies that the fault is present.

3. If DTC P0113 can be repeated only by duplicating the Failure Records conditions, refer to the "Temperature vs. Resistance Values" table. The table may be used to test the IAT sensor at various temperatures to evaluate the possibility of a "shifted" sensor that may be open above or below a certain temperature. If this is the case, replace the IAT sensor. If the IAT sensor appears to be OK, the fault is intermittent; refer to *Diagnostic Aids*.

Intake Air Temperature Sensor

˚C	˚F	OHMS
Temperature vs. Resistance Values (approximate)		
100	212	177
80	176	332
60	140	667
45	113	1188
35	95	1802
25	77	2796
15	59	4450
5	41	7280
–5	23	12300
–15	5	21450
–30	–22	52700
–40	–40	100700

DTC P0113 –IAT Sensor Circuit High Voltage

Step	Action	Value(s)	Yes	No
1	Was the "On-Board Diagnostic (OBD) System Check" performed?	—	Go to *Step 2*	Go to *OBD System Check*
2	Ignition "ON", engine "OFF". Observe the "Intake Air Temp" display on the Tech 2. Is the "Intake Air Temp" below the specified value?	–38˚C (–36˚F)	Go to *Step 4*	Go to *Step 3*
3	1. Ignition "ON", engine "OFF". 2. Review and record Tech 2 Failure Records data parameters. 3. Operate the vehicle within Failure Records conditions as noted. 4. Using a Tech 2, monitor "DTC" info for DTC P0113. Does the Tech 2 indicate DTC P0113 failed?	—	Refer to *Test Description*	Check the Procedure Refer to *Diagnostic Aids*
4	1. Ignition "OFF". 2. Disconnect the IAT sensor electrical connector. 3. Jumper the IAT signal circuit and the sensor ground circuit together at the IAT sensor harness connector. 4. Ignition "ON". 5. Observe the "Intake Air Temp" display on the Tech 2. Is the "Intake Air Temp" at the specified value?	140˚C (284˚F)	Go to *Step 6*	Go to *Step 5*
5	1. Jumper the IAT signal circuit at the IAT sensor harness connector to chassis ground. 2. Observe the "Intake Air Temp" display on the Tech 2. Is the "Intake Air Temp" at the specified value?	140˚C (284˚F)	Go to *Step 7*	Go to *Step 8*

DTC P0113 –IAT Sensor Circuit High Voltage (Cont'd)

Step	Action	Value(s)	Yes	No
6	Check for poor connections at the IAT sensor and replace terminals if necessary. Did any terminals require replacement?	—	Verify repair	Go to *Step 10*
7	1. Ignition "OFF". 2. Disconnect the PCM, and check the IAT sensor ground circuit for an open. 3. If the IAT sensor ground circuit is open, repair it as necessary. Was the IAT sensor ground circuit open?	—	Verify repair	Go to *Step 9*
8	1. Ignition "OFF". 2. Disconnect the PCM, and check the IAT signal circuit for an open. 3. If the IAT sensor signal circuit is open, repair it as necessary. Was the IAT signal circuit open?	—	Verify repair	Go to *Step 9*
9	Check for a poor sensor ground or IAT signal circuit terminal connection at the PCM and replace terminal(s) if necessary. Did any of the terminals need to be replaced?	—	Verify repair	Go to *Step 11*
10	Replace the IAT sensor. Is the action complete?	—	Verify repair	—
11	Replace the PCM. **IMPORTANT:** The replacement PCM must be programmed. Refer to *On-Vehicle Service* in *Powertrain Control Module and Sensors* for procedures. And also refer to latest Service Bulletin. Check to see if the Latest software is released or not. And then Down Load the LATEST PROGRAMMED SOFTWARE to the replacement PCM. Is the action complete?	—	Verify repair	—

Diagnostic Trouble Code (DTC) P0117 ECT Sensor Circuit Low Voltage

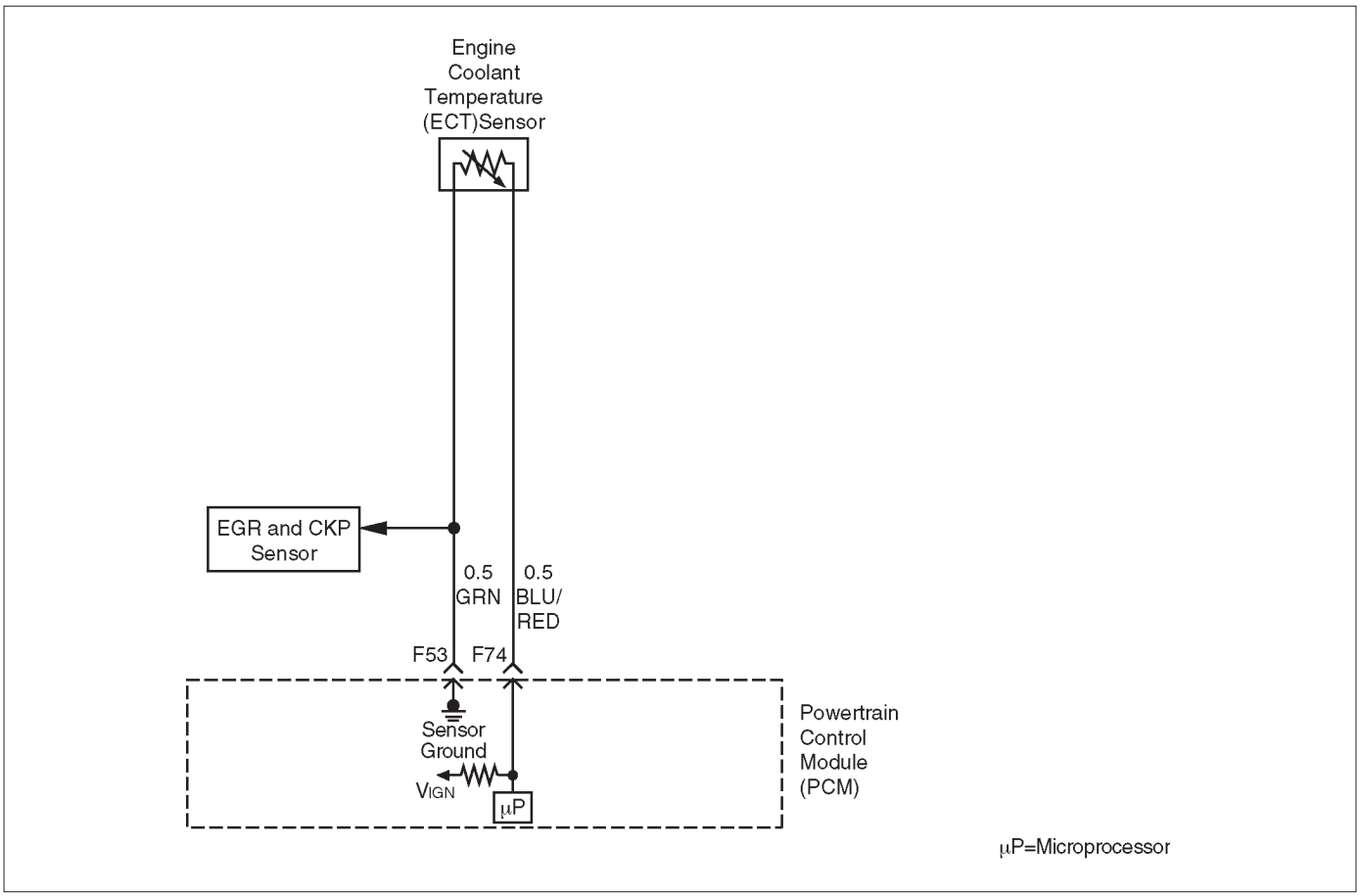

D06R200049

Circuit Description

The engine coolant temperature (ECT) sensor is a thermistor mounted on a coolant crossover pipe at the front of the engine. The powertrain control module (PCM) applies a voltage (about 5 volts) through a pull-up resistor to the ECT signal circuit. When the engine coolant is cold, the sensor (thermistor) resistance is high, therefore the PCM will measure a high signal voltage. As the engine coolant warms, the sensor resistance becomes lower, and the ECT signal voltage measured at the PCM drops. With a fully warmed-up engine, the ECT signal voltage should measure about 1.5 to 2.0 volts.

Conditions for Setting the DTC

- Engine running time is longer than 120 seconds.
- The ECT sensor signal indicates an engine coolant temperature greater than 150˚C (302˚F) (about 0.10 V) for a total of 50 seconds over a 100–second period.

Action Taken When the DTC Sets

- The PCM will ON the MIL after second trip with detected fault.
- The PCM will substitute the ECT reading with a default engine coolant temperature value. The default value is based on start-up intake air temperature and running time.
- The PCM will store conditions which were present when the DTC was set as Freeze Frame and in the Failure Records data.

Conditions for Clearing the MIL/DTC

- The PCM will turn the MIL “OFF” on the third consecutive trip cycle during which the diagnostic has been run and the fault condition is no longer present.
- A history DTC P0117 will clear after 40 consecutive warm-up cycles have occurred without a fault.
- DTC P0117 can be cleared by using the Tech 2 “Clear Info” function or by disconnecting the PCM battery feed.

Diagnostic Aids

Check for the following conditions:

- Poor connection at PCM – Inspect harness connectors for backed-out terminals, improper mating, broken locks, improperly formed or damaged terminals, and poor terminal-to-wire connection.
- Damaged harness – Inspect the wiring harness for damage. If the harness appears to be OK, observe the ECT display on the Tech 2 while moving connectors and wiring harnesses related to the ECT sensor. A change in the ECT display will indicate the location of the fault.

If DTC P0117 cannot be duplicated, the information included in the Failure Records data can be useful in determining vehicle mileage since the DTC was last set.

If it is determined that the DTC occurs intermittently, performing the DTC P1114 Diagnostic Chart may isolate the cause of the fault.

Test Description

Number(s) below refer to the step number(s) on the Diagnostic Chart.

2. Verifies that the fault is present.

3. If DTC P0117 can be repeated only by duplicating the Failure Records conditions, refer to the “Temperature vs. Resistance Values” table. The table may be used to test the ECT sensor at various temperatures to evaluate the possibility of a “shifted” sensor that may be shorted above or below a certain temperature. If this is the case, replace the ECT sensor. If the ECT sensor appears to be OK, the fault is intermittent; refer to *Diagnostic Aids*.

Engine Coolant Temperature Sensor

˚C	˚F	OHMS
Temperature vs. Resistance Values (approximate)		
100	212	177
80	176	332
60	140	667
45	113	1188
35	95	1802
25	77	2796
15	59	4450
5	41	7280
–5	23	12300
–15	5	21450
–30	–22	52700
–40	–40	100700

DTC P0117 – ECT Sensor Low Voltage

Step	Action	Value(s)	Yes	No
1	Was the “On-Board Diagnostic (OBD) System Check” performed?	—	Go to *Step 2*	Go to *OBD System Check*
2	1. Ignition “ON”, engine “OFF”. 2. Observe the “Eng Cool Temp” display on the Tech 2. Is the “Eng Cool Temp” below the specified value?	139˚C (282˚F)	Go to *Step 4*	Go to *Step 3*
3	1. Ignition “ON”, engine “OFF”. 2. Review and record Tech 2 Failure Records data. 3. Operate the vehicle within Failure Records conditions as noted. 4. Using a Tech 2, monitor “DTC” info for DTC P0117. Does the Tech 2 indicate DTC P0117 failed this ignition?	—	Go to *Step 4*	Check the Procedure Refer to *Diagnostic Aids*
4	1. Disconnect the ECT sensor electrical connector. 2. Observe the “Eng Cool Temp” display on the Tech 2. Is the “Eng Cool Temp” at the specified value?	–39˚C (–38˚F)	Go to *Step 6*	Go to *Step 5*
5	1. Ignition “OFF”. 2. Disconnect the PCM and check the ECT signal circuit for a short to ground or a short to the sensor ground circuit. 3. If the ECT signal circuit is shorted. repair it as necessary. Was the ECT signal circuit shorted to ground?	—	Verify repair	Go to *Step 7*
6	Replace the ECT sensor. Is the action complete?	—	Verify repair	—
7	Replace the PCM. **IMPORTANT:** The replacement PCM must be programmed. Refer to *On-Vehicle Service* in *Powertrain Control Module and Sensors* for procedures. And also refer to latest Service Bulletin. Check to see if the Latest software is released or not. And then Down Load the LATEST PROGRAMMED SOFTWARE to the replacement PCM. Is the action complete?	—	Verify repair	—

Diagnostic Trouble Code (DTC) P0118 ECT Sensor Circuit High Voltage

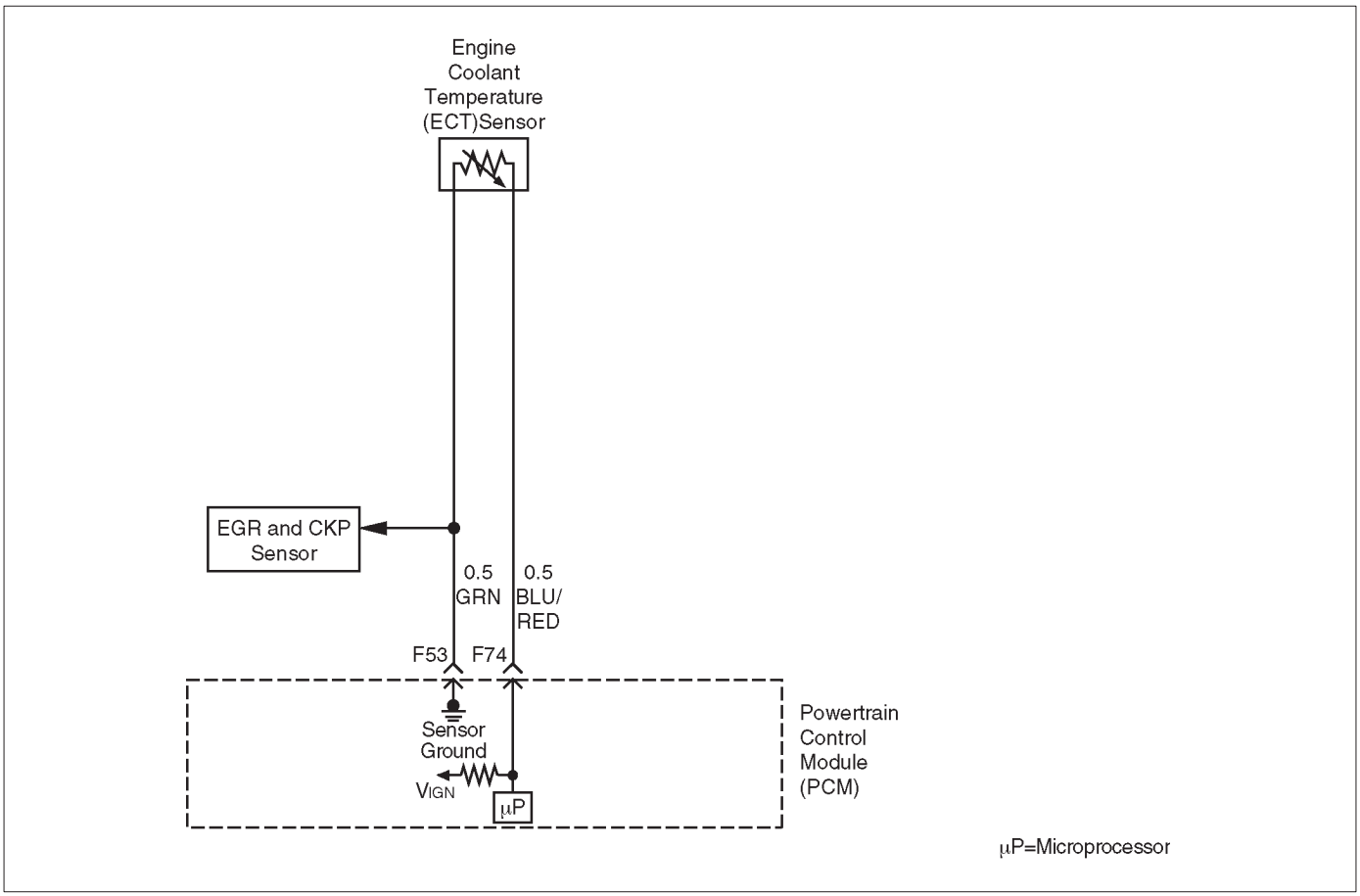

D06R200049

Circuit Description

The engine coolant temperature (ECT) sensor is a thermistor mounted in on a coolant crossover pipe at the front of the engine. The powertrain control module (PCM) applies a voltage (about 5 volts) through a pull-up resistor to the ECT signal circuit. When the engine coolant is cold, the sensor (thermistor) resistance is high, therefore the PCM will measure a high signal voltage. As the engine coolant warms, the sensor resistance becomes less, and the ECT signal voltage measured at the PCM drops. With a fully warmed-up engine, the ECT signal voltage should measure about 1.5 to 2.0 volts.

Conditions for Setting the DTC

- Engine running time is longer than 90 seconds.
- The ECT sensor signal indicates an engine coolant temperature of –39˚C (–38˚F) or less (about 5 volts) for a total of 50 seconds over a 100-second period.

Action Taken When the DTC Sets

- The PCM will ON the MIL after second trip with detected fault.
- The PCM will substitute the ECT reading with a default engine coolant temperature value. The default value is based on start-up intake air temperature and running time.
- The PCM will store conditions which were present when the DTC was set as Freeze Frame and in the Failure Records data.

Conditions for Clearing the MIL/DTC

- The PCM will turn the MIL “OFF” on the third consecutive trip cycle during which the diagnostic has been run and the fault condition is no longer present.
- A history DTC P0118 will clear after 40 consecutive warm-up cycles have occurred without a fault.
- DTC P0118 can be cleared by using the Tech 2 “Clear Info” function or by disconnecting the PCM battery feed.

Diagnostic Aids

Check for the following conditions:

The ECT shares a ground with the Transmission Fluid Temperature sensor, the Fuel Tank Pressure sensor, and the MAP sensor.

Check the ground if these DTCs are also set.

- Poor connection at PCM – Inspect harness connectors for backed-out terminals, improper mating, broken locks, improperly formed or damaged terminals, and poor terminal-to-wire connection.
- Damaged harness – Inspect the wiring harness for damage. If the harness appears to be OK, observe the ECT display on the Tech 2 while moving connectors and wiring harnesses related to the ECT sensor. A change in the ECT display will indicate the location of the fault.

If DTC P0118 cannot be duplicated, the information included in the Failure Records data can be useful in determining vehicle mileage since the DTC was last set. If it is determined that the DTC occurs intermittently,

performing the DTC P1115 Diagnostic Chart may isolate the cause of the fault.

Test Description

Number(s) below refer to the step number(s) on the Diagnostic Chart.

2. Verifies that the fault is present.

3. If DTC P0118 can be repeated only by duplicating the Failure Records conditions, refer to the "Temperature vs. Resistance Value" table. The table may be used to test the ECT sensor at various temperatures to evaluate the possibility of a "shifted" sensor that may be shorted above or below a certain temperature. If this is the case, replace the ECT sensor. If the ECT sensor appears to be OK, the fault is intermittent; refer to *Diagnostic Aids*.

Engine Coolant Temperature Sensor

˚C	˚F	OHMS
Temperature vs. Resistance Values (approximate)		
100	212	177
80	176	332
60	140	667
45	113	1188
35	95	1802
25	77	2796
15	59	4450
5	41	7280
–5	23	12300
–15	5	21450
–30	–22	52700
–40	–40	100700

DTC P0118 – ECT Sensor Circuit High Voltage

Step	Action	Value(s)	Yes	No
1	Was the "On-Board Diagnostic (OBD) System Check" performed?	—	Go to *Step 2*	Go to *OBD System Check*
2	1. Ignition "ON", engine "OFF". 2. Observe the "Eng Cool Temp" display on the Tech 2. Is the "Eng Cool Temp" below the specified value?	–39˚C (–38˚F)	Go to *Step 4*	Go to *Step 3*
3	1. Ignition "ON", engine "OFF". 2. Review and record Tech 2 Failure Records data. 3. Operate the vehicle within Failure Records conditions as noted. 4. Using a Tech 2, monitor the "DTC" info for DTC P0118. Does the Tech 2 indicate DTC P0118 failed?	—	Refer to *Test Description*	Check the Procedure Refer to *Diagnostic Aids*
4	1. Disconnect the ECT sensor electrical connector. 2. Jumper the ECT signal circuit and the sensor ground circuit together at the ECT sensor harness connector. 3. Observe the "Eng Cool Temp" display on the Tech 2. Is the "Eng Cool Temp" at the specified value?	140˚C (284˚F)	Go to *Step 6*	Go to *Step 5*
5	1. Jumper the ECT signal circuit at the ECT sensor harness connector to chassis ground. 2. Observe the "Eng Cool Temp" display on the Tech 2. Is the "Eng Cool Temp" at the specified value?	140˚C (284˚F)	Go to *Step 7*	Go to *Step 8*
6	Check for poor connections at the ECT sensor and replace terminals if necessary. Did any terminals require replacement?	—	Verify repair	Go to *Step 10*

DTC P0118 – ECT Sensor Circuit High Voltage (Cont'd)

Step	Action	Value(s)	Yes	No
7	1. Ignition "OFF". 2. Disconnect the PCM, and check the ECT sensor ground circuit for an open. 3. If the ECT sensor ground circuit is open, repair it as necessary. Was the ECT sensor ground circuit open?	—	Verify repair	Go to *Step 9*
8	1. Ignition "OFF". 2. Disconnect the PCM, and check the ECT signal circuit for an open. 3. If the ECT sensor signal circuit is open, repair it as necessary. Was the ECT signal circuit open?	—	Verify repair	Go to *Step 9*
9	Check for a poor sensor ground or ECT signal circuit terminal connection at the PCM and replace terminal(s) if necessary. Did any of the terminals need to be replaced?	—	Verify repair	Go to *Step 11*
10	Replace the ECT sensor. Is the action complete?	—	Verify repair	—
11	Replace the PCM. **IMPORTANT:** The replacement PCM must be programmed. Refer to *On-Vehicle Service* in *Powertrain Control Module and Sensors* for procedures. And also refer to latest Service Bulletin. Check to see if the Latest software is released or not. And then Down Load the LATEST PROGRAMMED SOFTWARE to the replacement PCM. Is the action complete?	—	Verify repair	—

Diagnostic Trouble Code (DTC)
P0131 HO2S Circuit Low Voltage Bank 1 Sensor 1

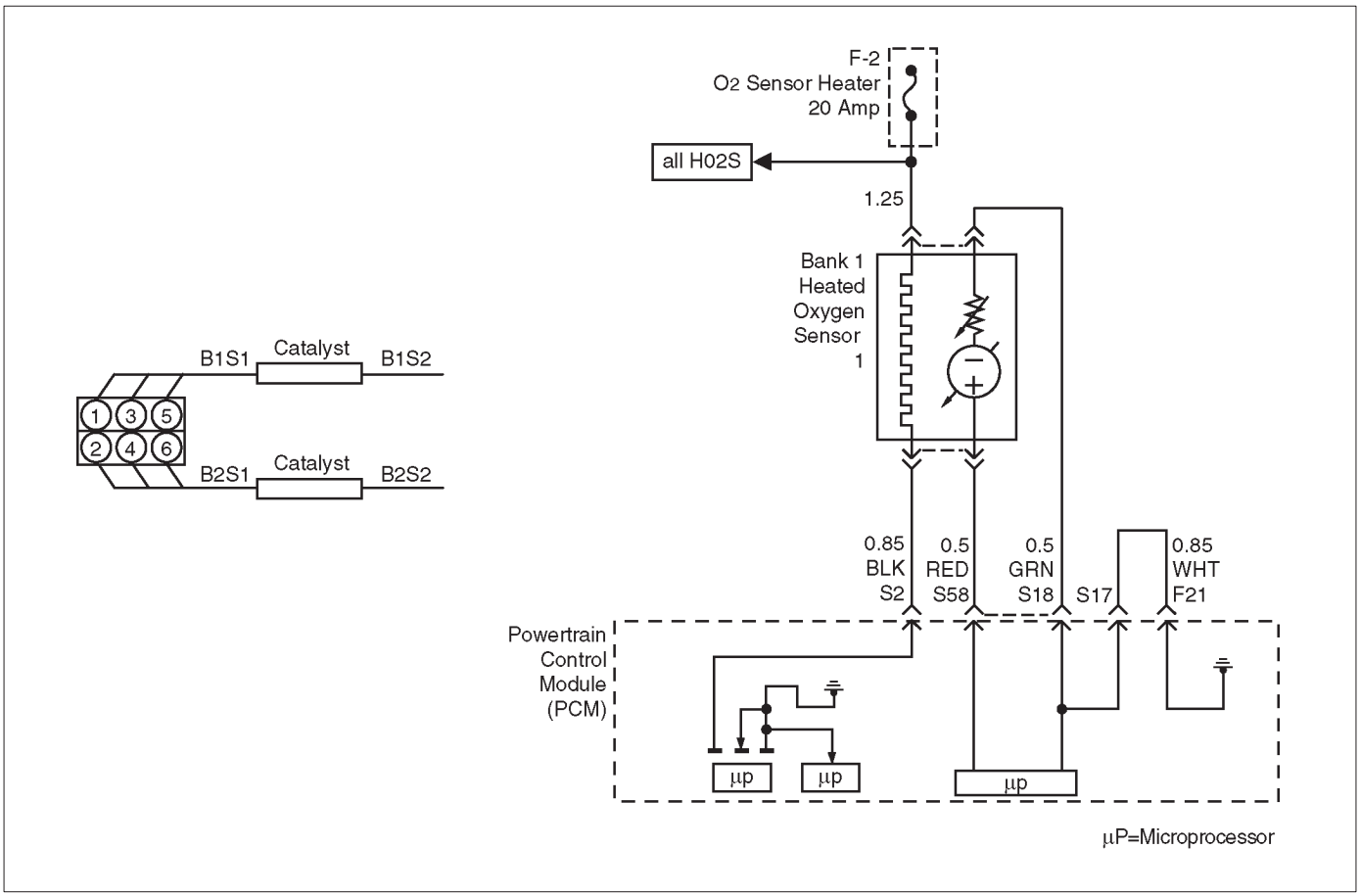

D06R200013

Circuit Description

The powertrain control module (PCM) supplies a bias voltage of about 450 mV between the heated oxygen sensor (HO2S) signal high and signal low circuits. When measured with a 10 megaohm digital voltmeter, this may display as low as 350 mV. The oxygen sensor varies the voltage within a range of about 1000 mV when the exhaust is rich, down through about 10 mV when exhaust is lean. The PCM constantly monitors the HO2S signal during “closed loop” operation and compensates for a rich or lean condition by decreasing or increasing injector pulse width as necessary. If the Bank 1 HO2S 1 voltage remains excessively low for an extended period of time, DTC P0131 will be set.

Conditions for Setting the DTC

- No related DTCs.
- Vehicle is operating in “closed loop”.
- Engine coolant temperature is above 60˚C (140˚F).
- “Closed loop” commanded air/fuel ratio is between 14.5 and 14.8.
- Bank 1 HO2S 1 signal voltage remains below 22 mV during normal “closed loop” operation for a total of 77 seconds over a 90-second period of time.

Action Taken When the DTC Sets

- The PCM will ON the MIL after second trip with detected fault.
- The PCM will store conditions which were present when the DTC was set as Freeze Frame and in the Failure Records data.
- “Open loop” fuel control will be in effect.

Conditions for Clearing the MIL/DTC

- The PCM will turn the MIL “OFF” on the third consecutive trip cycle during which the diagnostic has been run and the fault condition is no longer present.
- A history DTC P0131 will clear after 40 consecutive warm-up cycles have occurred without a fault.
- DTC P0131 can be cleared by using the Tech 2 “Clear Info” function or by disconnecting the PCM battery feed.

Diagnostic Aids

Check for the following conditions:

- Heated oxygen sensor wiring – The sensor pigtail may be routed incorrectly and contacting the exhaust system.
- Poor PCM to engine block grounds.
- Fuel pressure – The system will go lean if pressure is too low. The PCM can compensate for some decrease. However, If fuel pressure is too low, a DTC P0131 may be set. Refer to *Fuel System Diagnosis*.
- Lean injector(s) – Perform “Injector Balance Test”.
- Vacuum leaks – Check for disconnected or damaged vacuum hoses and for vacuum leaks at the intake manifold, throttle body, EGR system, and PCV system.

- Exhaust leaks – An exhaust leak may cause outside air to be pulled into the exhaust gas stream past the HO2S, causing the system to appear lean. Check for exhaust leaks that may cause a false lean condition to be indicated.
- MAF sensor – The system can go lean if the MAF sensor signal indicates an engine airflow measurement that is not correct. Disconnect the MAF sensor to see if the lean condition is corrected. If so, replace the MAF sensor.
- Fuel contamination – Water, even in small amounts, can be delivered to the fuel injectors. The water can cause a lean exhaust to be indicated. Excessive alcohol in the fuel can also cause this condition. Refer to *Fuel System Diagnosis* for the procedure to check for fuel contamination.
- If none of the above conditions are present, replace the affected HO2S.

Test Description

Number(s) below refer to step numbers on the diagnostic chart.

3. DTC P0131 failing during operation may indicate a condition described in the “Diagnostic Aids” above. If the DTC P0131 test passes while the Failure Records conditions are being duplicated, an intermittent condition is indicated.

Reviewing the Failure Records vehicle mileage since the diagnostic test last failed may help determine how often the condition that caused the DTC to be set occurs. This may assist in diagnosing the condition.

DTC P0131 –HO2S Circuit Low Voltage Bank 1 Sensor 1

Step	Action	Value(s)	Yes	No
1	Was the “On-Board Diagnostic (OBD) System Check” performed?	—	Go to *Step 2*	Go to *OBD System Check*
2	1. Install the Tech 2. 2. Run the engine at normal operating temperature. 3. Operate the vehicle within the parameters specified under “Conditions for Setting the DTC” criteria included in Diagnostic Support. 4. Using a Tech 2, monitor Bank 1 HO2S 1 voltage. Does the Bank 1 HO2S 1 voltage remain below the specified value?	22 mV	Go to *Step 4*	Go to *Step 3*
3	1. Ignition “ON”, engine “OFF”, review and record Tech 2 Failure Records data and note parameters. 2. Operate the vehicle within Failure Records conditions as noted. 3. Using a Tech 2, monitor “DTC” info for DTC P0131 until the DTC P0131 test runs. Note test result. Does Tech 2 indicate DTC P0131 failed this ignition?	—	Go to *Step 4*	Check the Procedure Refer to *Diagnostic Aids*
4	1. Turn the ignition “OFF”. 2. Disconnect the PCM. 3. Check the Bank 1 HO2S 1 high and low circuits for a short to ground or a short to the heater ground circuit. Are the Bank 1 HO2S 1 signal circuits shorted to ground?	—	Go to *Step 5*	Go to *Step 6*
5	Repair the Bank 1 HO2S 1 signal circuit. Is the action complete?	—	Verify repair	—
6	1. Turn the ignition “OFF”, HO2S 1 and PCM disconnected. 2. Check for short circuit between the high and low signal circuits. Was there continuity between the high and low circuits?	—	Go to *Step 7*	Go to *Step 8*
7	Repair the short between the high and low circuits. Is the action complete?	—	Verify repair	—

DTC P0131 –HO2S Circuit Low Voltage Bank 1 Sensor 1 (Cont'd)

Step	Action	Value(s)	Yes	No
8	1. Ignition "OFF". 2. Reconnect the PCM, leave the sensor disconnected. 3. Ignition "ON". Does the Tech 2 indicate Bank 1 HO2S 1 voltage between the specified values?	425-475 mV	Check the Procedure Refer to *Diagnostic Aids*	Go to *Step 9*
9	Replace the PCM. **IMPORTANT:** The replacement PCM must be programmed. Refer to *On-Vehicle Service* in *Powertrain Control Module and Sensors* for procedures. And also refer to latest Service Bulletin. Check to see if the Latest software is released or not. And then Down Load the LATEST PROGRAMMED SOFTWARE to the replacement PCM. Is the action complete?	—	Verify repair	—

Diagnostic Trouble Code (DTC)
P0132 HO2S Circuit High Voltage Bank 1 Sensor 1

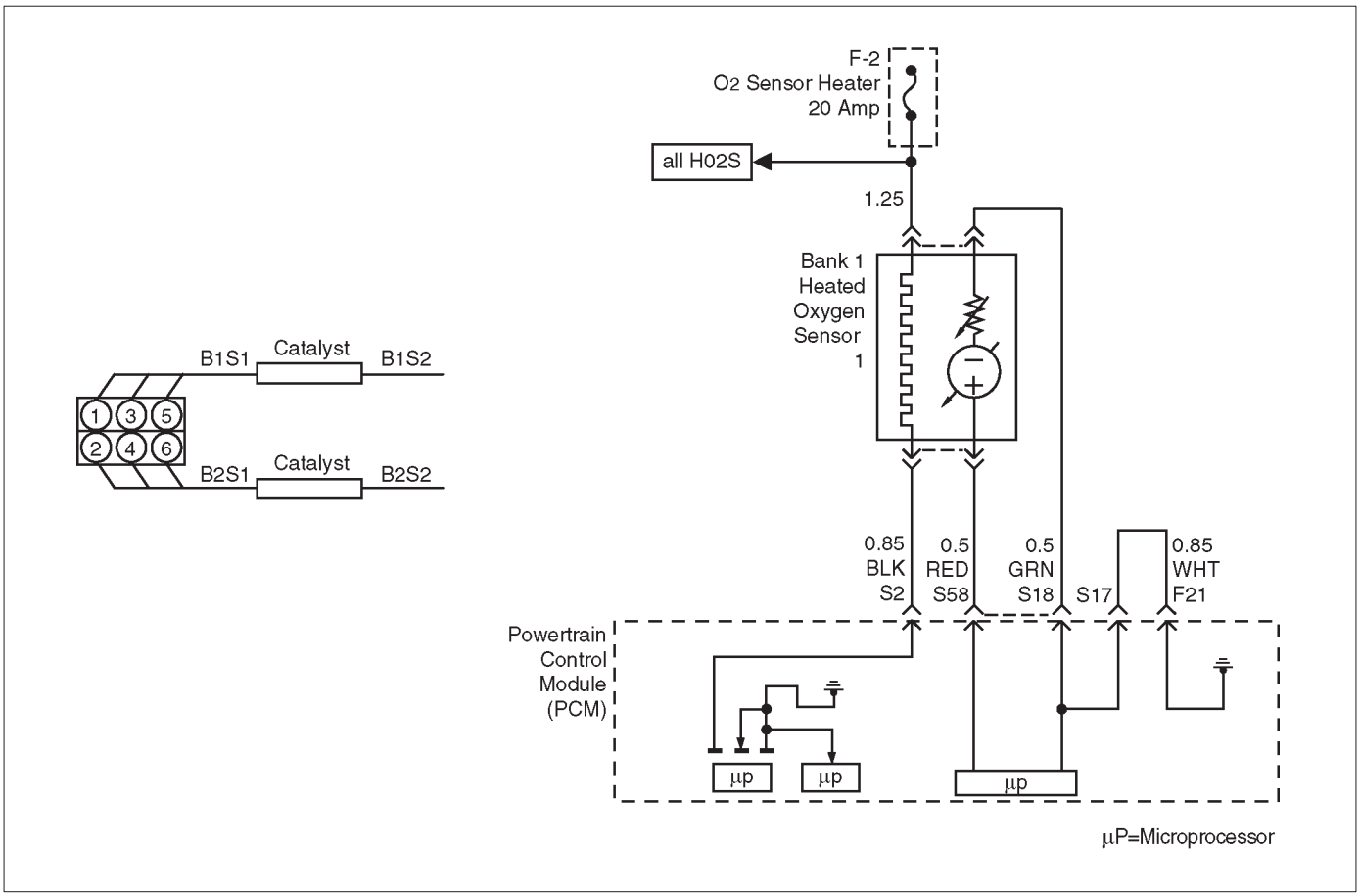

D06R200013

Circuit Description

The powertrain control module (PCM) supplies a bias voltage of about 450 mV between the heated oxygen sensor (HO2S) signal and low circuits. When measured with a 10 megaohm digital voltmeter, this may display as low as 320 mV. The oxygen sensor varies the voltage within a range of about 1000 mV when exhaust is rich, down through about 10 mV when exhaust is lean. The PCM constantly monitors the HO2S signal during "closed loop" operation and compensates for a rich or lean condition by decreasing or increasing injector pulse width as necessary. If the Bank 1 HO2S 1 voltage remains excessively high for an extended period of time, DTC P0132 will be set.

Conditions for Setting the DTC

- No related DTCs.
- Engine coolant temperature is above 60˚C (140˚F)
- "Closed loop" commanded air/fuel ratio is between 14.5 and 14.8.
- Bank 1 HO2S 1 signal voltage remains above 952 mV during normal "closed loop" operation for a total of 77 seconds over a 90-second period.

OR

- Bank 1 HO2S 1 signal voltage remains above 500 mV during "deceleration fuel cutoff mode" operation for 3 seconds.

Action Taken When the DTC Sets

- The PCM will ON the MIL after second trip with detected fault.
- The PCM will store conditions which were present when the DTC was set as Freeze Frame and in the Failure Records data.
- "Open loop" fuel control will be in effect.

Conditions for Clearing the MIL/DTC

- The PCM will turn the MIL "OFF" on the third consecutive trip cycle during which the diagnostic has been run and the fault condition is no longer present.
- A history DTC P0132 will clear after 40 consecutive warm-up cycles have occurred without a fault.
- DTC P0132 can be cleared by using the Tech 2 "Clear Info" function or by disconnecting the PCM battery feed.

Diagnostic Aids

Check the following items:

- Fuel pressure – The system will go rich if pressure is too high. The PCM can compensate for some increase. However, if fuel pressure is too high, a DTC P0132 may be set. Refer to *Fuel System Diagnosis*.
- Perform "Injector Balance Test" – Refer to *Fuel System Diagnosis*.

- Check the EVAP canister for fuel saturation – If full of fuel, check canister control and hoses. Refer to *Evaporative (EVAP) Emission Control System*.
- MAF sensor –The system can go rich if MAF sensor signal indicates an engine airflow measurement that is not correct. Disconnect the MAF sensor to see it the rich condition is corrected. If so, replace the MAF sensor.
- Check for a leak in the fuel pressure regulator diaphragm by checking the vacuum line to the regulator for the presence of fuel. There should be no fuel in the vacuum line.
- An intermittent TP sensor output will cause the system to go rich due to a false indication of the engine acceleration.
- Shorted Heated Oxygen Sensor (HO2S) –If the HO2S is internally shorted, the HO2S voltage displayed on the Tech 2 will be over 1 volt. Try disconnecting the affected HO2S with the key "ON", engine "OFF". If the displayed HO2S voltage changes from over 1000 mV to around 450 mV, replace the HO2S. Silicon contamination of the HO2S can also cause a high HO2S voltage to be indicated. This condition is indicated by a powdery deposit on the portion of the HO2S exposed to the exhaust stream. If contamination is noticed, replace the affected HO2S.
- Open HO2S Signal Circuit or Faulty HO2S–A poor connection or open in the HO2S signal circuit can cause the DTC to set during deceleration fuel mode. An HO2S which is faulty and not allowing a full voltage swing between the rich and lean thresholds can also cause this condition. Operate the vehicle by monitoring the HO2S voltage with a Tech 2. If the HO2S voltage is limited within a range between 300 mV to 600 mV, check the HO2S signal circuit wiring and associated terminal conditions.
- If none of the above conditions are present, replace the affected HO2S.

Test Description

Number(s) below refer to the step number(s) on the Diagnostic Chart.

3. DTC P0132 failing during "deceleration fuel cutoff mode" operation may indicate a condition described in the "Diagnostic Aids" above. If the DTC P0132 test passes while the Failure Records conditions are being duplicated, an intermittent condition is indicated.

Reviewing the Failure Records vehicle mileage since the diagnostic test last failed may help determine how often the condition that caused the DTC to be set occurs. This may assist in diagnosing the condition.

DTC P0132 – HO2S Circuit High Voltage Bank 1 Sensor 1

Step	Action	Value(s)	Yes	No
1	Was the "On-Board Diagnostic (OBD) System Check" performed?	—	Go to *Step 2*	Go to *OBD System Check*
2	1. Install the Tech 2. 2. Run the engine at operating temperature. 3. Operate the vehicle within parameters specified under "Conditions for Setting the DTC" included in Diagnostic Support. 4. Using a Tech 2, monitor Bank 1 HO2S 1 voltage. Does the Bank 1 HO2S 1 voltage remain above the specified value?	952 mV (500 mV in deceleration fuel cutoff mode)	Go to *Step 4*	Go to *Step 3*
3	1. Ignition "ON", review and record Tech 2 Failure Records data. 2. Operate the vehicle within Failure Records conditions as noted. 3. Using a Tech 2, monitor "DTC" info for DTC P0132 until the DTC P0132 test runs. 4. Note the test result. Does the Tech 2 indicate DTC P0132 failed this ignition?	—	Go to *Step 4*	Check the Procedure Refer to *Diagnostic Aids*
4	1. Ignition "OFF". 2. Disconnect Bank 1 HO2S 1. 3. Ignition "ON". 4. At HO2S Bank 1 Sensor 1 connector (PCM side) use a DVM to measure voltages at the high and low signal terminals. Are the voltages in the specified range?	3-4 V	Go to *Step 5*	Go to *Step 6*

DTC P0132 – HO2S Circuit High Voltage Bank 1 Sensor 1 (Cont'd)

Step	Action	Value(s)	Yes	No
5	Repair short to voltage in signal circuit. Is the action complete?	—	Verify repair	—
6	1. Ignition "ON", engine"OFF". 2. At Bank 1 HO2S 1 connector (PCM side) jumper both the HO2S high and low signal circuits (PCM side) to ground. 3. Using a Tech 2, monitor Bank 1 HO2S 1 voltage. Is Bank 1 HO2S 1 voltage below the specified value?	10 mV	Go to *Step 7*	Go to *Step 8*
7	1. Disconnect the jumpers to ground from Bank 1 HO2S 1 PCM-side connector. 2. With the HO2S 1 connector disconnected, monitor Bank 1 HO2S 1 voltage. Is Bank 1 HO2S 1 voltage between the specified values?	425-475 mV	Check the Procedure Refer to *Diagnostic Aids*	Go to *Step 8*
8	Replace the PCM. **IMPORTANT:** The replacement PCM must be programmed. Refer to *On-Vehicle Service* in *Powertrain Control Module and Sensors* for procedures. And also refer to latest Service Bulletin. Check to see if the Latest software is released or not. And then Down Load the LATEST PROGRAMMED SOFTWARE to the replacement PCM. Is the action complete?	—	Verify repair	—

Diagnostic Trouble Code (DTC) P0133 HO2S Slow Response Bank 1 Sensor 1

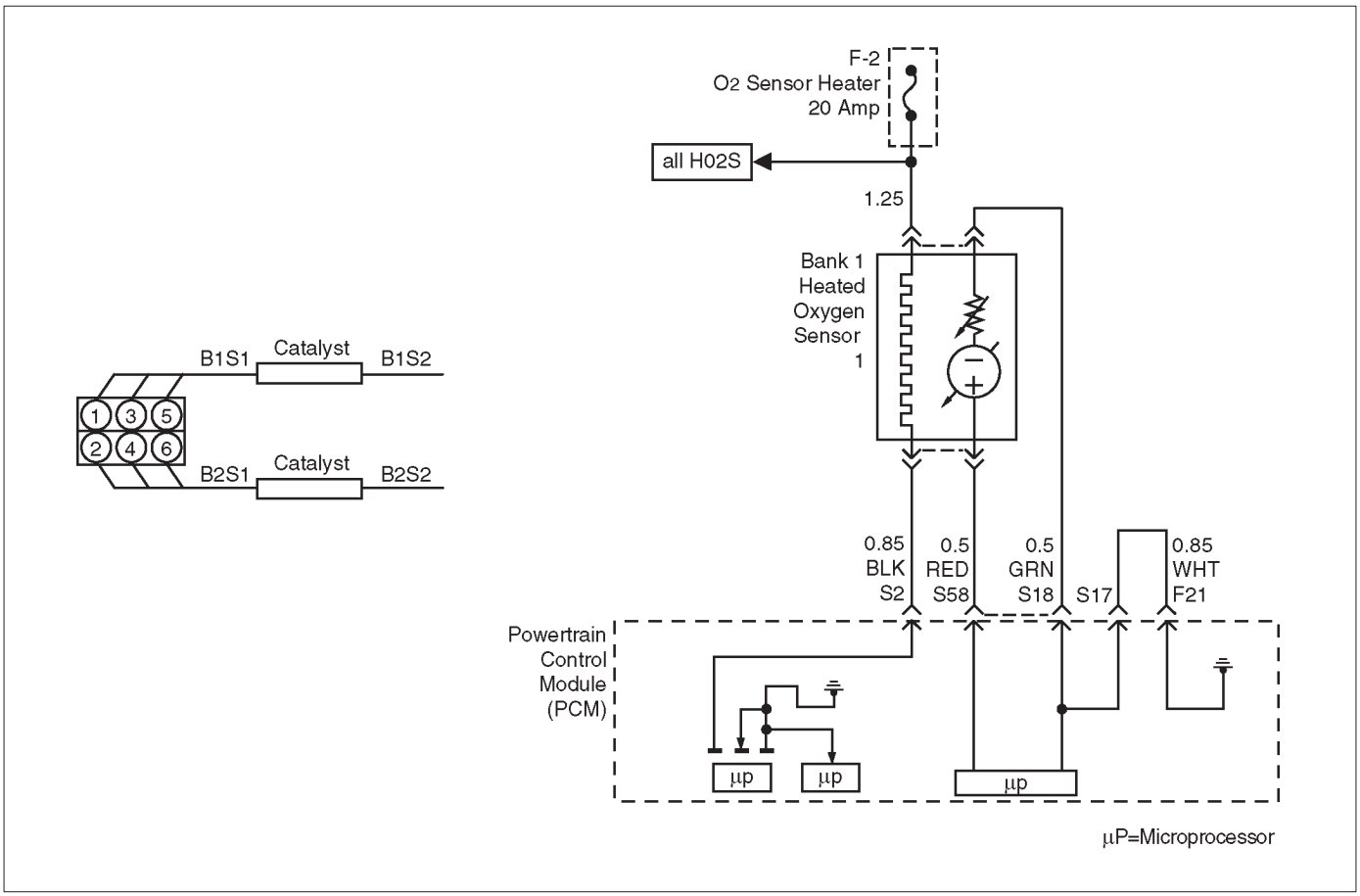

D06R200013

Circuit Description

The powertrain control module (PCM) continuously monitors the heated oxygen sensor (HO2S) activity for 90 seconds after "closed loop" has been enabled. During the monitoring period the PCM counts the number of times that a rich-to-lean and lean-to-rich response is indicated and adds the amount of time it took to complete all rich-to-lean transitions and lean-to-rich transitions. With this information, an average time for rich-to-lean and lean-to-rich transitions can be determined. If the average response time of either transition is too slow, a DTC P0133 will be set.

A lean-to-rich transition is indicated when the HO2S voltage changes from less than 300 mV to greater than 600 mV. A rich-to-lean transition is indicated when the HO2S voltage changes from more than 600 mV to less than 300 mV. An HO2S that responds too slowly is likely to be faulty and should be replaced.

Conditions for Setting the DTC

- No related DTCs.
- Engine coolant temperature (ETC) is above 60˚C (140˚F).
- Engine is operating in "closed loop".
- Engine has been running for at least 90 seconds.
- Engine speed is between 1500 RPM and 3000 RPM.
- Canister purge duty cycle is greater than 2%.
- Mass air flow is between 18 g/second and 42 g/second.
- All above conditions are met for 3 seconds.
- 90 seconds after "closed loop" has been enabled, Bank1 HO2S 1 average transition time between 300 mV and 600 mV is too slow. The lean-to-rich average transition response time was longer than 94 milliseconds or rich-to-lean average transition response time was longer than 105 milliseconds.

Action Taken When the DTC Sets

- The PCM will illuminate the malfunction indicator Lamp (MIL) after the second consecutive trip in which the fault is detected.
- The PCM will store conditions which were present when the DTC was set as Freeze Frame and in the Failure Records data.
- "Open loop" fuel control will be in effect.

Conditions for Clearing the MIL/DTC

- The PCM will turn the MIL "OFF" on the third consecutive trip cycle during which the diagnostic has been run and the fault condition is no longer present.
- A history DTC P0133 will clear after 40 consecutive warm-up cycles have occurred without a fault.
- DTC P0133 can be cleared by using the Tech 2 "Clear Info" function or by disconnecting the PCM battery feed.

Diagnostic Aids

Check for the following conditions:

- Poor connection at PCM – Inspect harness connectors for backed-out terminals, improper mating, broken locks, improperly formed or damaged terminals, and poor terminal-to-wire connection.
- Damaged harness – Inspect the wiring harness for damage. If the harness appears to be OK, observe the Bank 1 HO2S 1 display on the Tech 2 while moving connectors and wiring harnesses related to the sensor. A change in the display will indicate the location of the fault.

If DTC P0133 cannot be duplicated, reviewing the Failure Records vehicle mileage since the diagnostic test last failed may help determine how often the condition that caused the DTC to be set occurs. This may assist in diagnosing the condition.

Test Description

Number(s) below refer to the step number(s) on the Diagnostic Chart.

2. Verifies that the fault is currently present.

3. HO2S transition time, ratio mean volts and switching DTCs set for multiple sensors indicate probable contamination. Before replacing the sensors, isolate and correct the source of the contamination to avoid damaging the replacement sensors.

DTC P0133 – HO2S Slow Response Bank 1 Sensor 1

Step	Action	Value(s)	Yes	No
1	Was the “On-Board Diagnostic (OBD) System Check” performed?	—	Go to *Step 2*	Go to *OBD System Check*
2	NOTE: If any DTCs are set (expect P0153, P1133, P1134, P1153, and/or P1154), refer to those DTCs before proceeding with this diagnostic chart. 1. Install the Tech 2. 2. Idle the engine at normal operating temperature. 3. Operate the vehicle within parameters specified under “Conditions for Setting the DTC” included in Diagnostic Support. 4. Using a Tech 2, monitor “DTC” info for DTC P0133 until the DTC P0133 test runs. 5. Note the test result. Does the Tech 2 indicate DTC P0133 failed this ignition?	—	Go to *Step 3*	Check the Procedure Refer to *Diagnostic Aids*
3	Did the Tech 2 also indicate DTC P0153, P1133, P1134, P1153, and/or P1154 failed this ignition?	—	Go to *Step 17*	Go to *Step 4*
4	Check for leaks at the pipe joints. Are the joints leaking?	—	Go to *Step 5*	Go to *Step 6*
5	Tighten the U–bolt nuts at the leaking joints. Is the action complete?	—	Go to *Step 2*	—
6	Check for gaskets that are damaged or improperly installed. Are there damaged or misaligned gaskets?	—	Go to *Step 7*	Go to *Step 8*
7	1. Replace damaged gaskets. 2. Align the connections. 3. Tighten the connections. Is the action complete?	—	Go to *Step 2*	—
8	Check for loose exhaust flange connections. Are the flange connections loose?	—	Go to *Step 9*	Go to *Step 10*
9	Tighten the stud nuts or bolts to specifications. Is the action complete?	—	Go to *Step 2*	—
10	Check for burned or corroded exhaust pipes. Are the exhaust pipes burned or corroded?	—	Go to *Step 11*	Go to *Step 12*
11	Replace the exhaust pipes, as required. Is the action complete?	—	Go to *Step 2*	—
12	Check for leaks at the exhaust manifold. Are there leaks at the exhaust manifold?	—	Go to *Step 13*	Go to *Step 14*
13	Tighten the bolts to specifications to replace the manifold if necessary. Is the action complete?	—	Go to *Step 2*	—

DTC P0133 – HO2S Slow Response Bank 1 Sensor 1 (Cont'd)

Step	Action	Value(s)	Yes	No
14	Visually/physically inspect the following items: ● Ensure that the Bank 1 HO2S 1 is securely installed. ● Check for corrosion on terminals. ● Check terminal tension (at Bank 1 HO2S 1 and at the PCM). ● Check for damaged wiring. Was a problem found in any of the above areas?	—	Go to *Step 18*	Go to *Step 15*
15	1. Disconnect Bank 1 HO2S 1. 2. Ignition "ON". 3. Using a DVM at the PCM side of the HO2S 1 connector, measure the voltage between the high signal circuit and ground. Also measure the voltage between the low signal circuit and ground. Are both voltages in the specified range?	3-4 V	Go to *Step 16*	Go to *Step 19*
16	1. With Bank 1 HO2S 1 disconnected, jumper the high and low (PCM side) signal circuits to ground. 2. Ignition "ON". 3. Using a Tech 2, monitor the Bank 1 HO2S 1 voltage. Does the Tech 2 indicate less than 10 mV and immediately return to about 450 mV when the jumper is removed?	—	Go to *Step 21*	Go to *Step 22*
17	Replace the affected heated oxygen sensors. NOTE: Before replacing sensors, the cause of the contamination must be determined and corrected. ● Fuel contamination. ● Use of improper RTV sealant. ● Engine oil/coolant consumption. Is the action complete?	—	Verify repair	—
18	Repair condition as necessary. Is the action complete?	—	Verify repair	—
19	Check for faulty PCM connections or terminal damage. Is the action complete?	—	Verify repair	Go to *Step 20*
20	Repair open, short or grounded signal circuit. Is the action complete?	—	Verify repair	—
21	Replace Bank 1 HO2S 1. Is the action complete?	—	Verify repair	—
22	Replace the PCM. **IMPORTANT:** The replacement PCM must be programmed. Refer to *On-Vehicle Service* in *Powertrain Control Module and Sensors* for procedures. And also refer to latest Service Bulletin. Check to see if the Latest software is released or not. And then Down Load the LATEST PROGRAMMED SOFTWARE to the replacement PCM. Is the action complete?	—	Verify repair	—

Diagnostic Trouble Code (DTC) P0134 HO2S Circuit Insufficient Activity Bank 1 Sensor 1

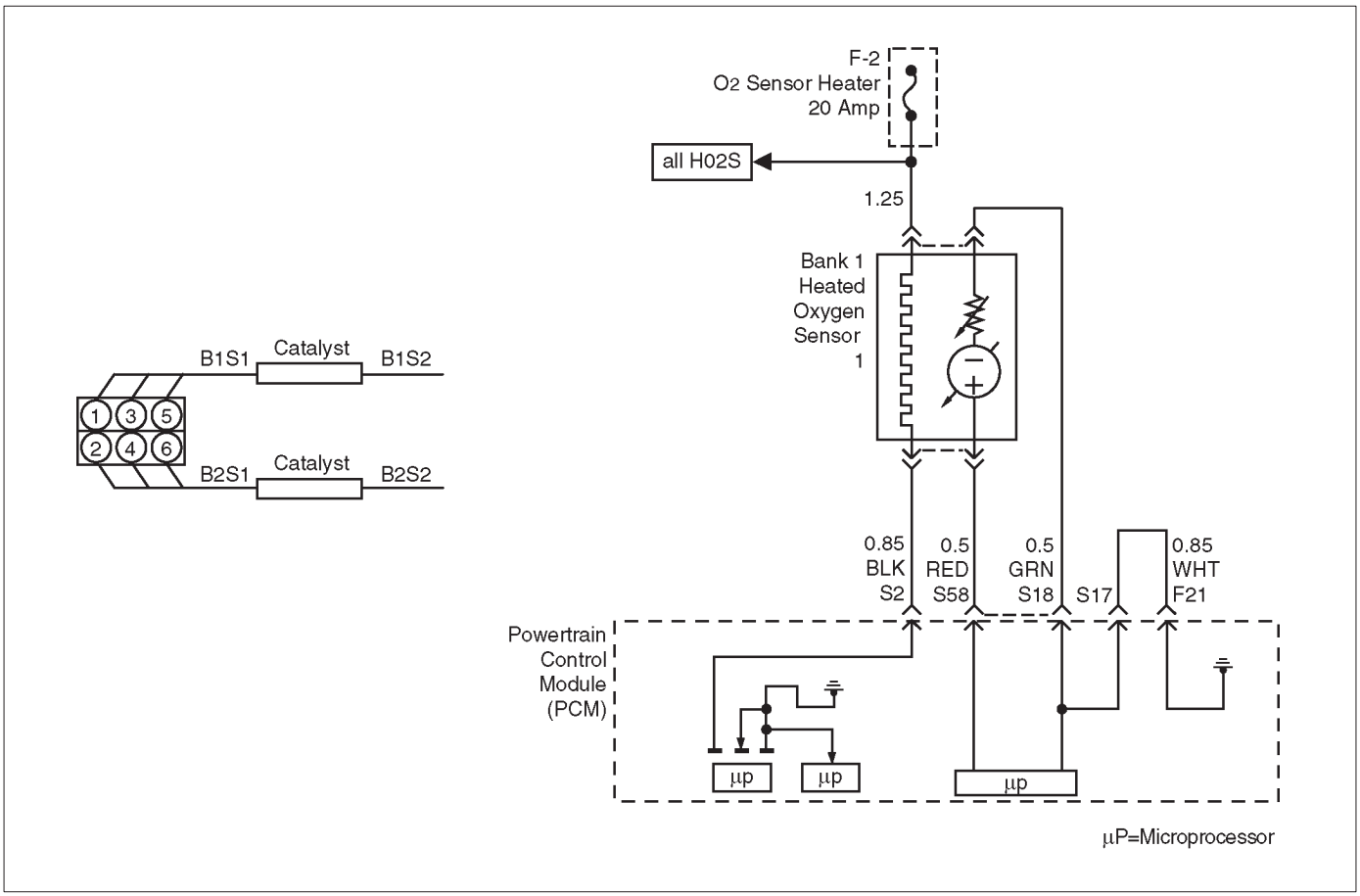

D06R200013

Circuit Description

- The powertrain control module (PCM) supplies a bias voltage of about 450 mV between the heated oxygen sensor (HO2S) high and low circuits. When measured with a 10 megaohm digital voltmeter, this may display as low as 320 mV. The oxygen sensor varies the voltage within a range of about 1000 mV when the exhaust is rich, down through about 10 mV when exhaust is lean. The PCM constantly monitors the HO2S signal during “closed loop” operation and compensates for a rich or lean condition by decreasing or increasing injector pulse width as necessary. If the Bank 1 HO2S 1 voltage remains at or near the 450 mV bias for an extended period of time, DTC P0134 will be set, indicating an open sensor signal or sensor low circuit.
- Heated oxygen sensors are used to minimize the amount of time required for “closed loop” fuel control operation and to allow accurate catalyst monitoring. The oxygen sensor heater greatly decreases the amount of time required for fuel control sensors Bank 1 HO2S 1 and Bank 2 HO2S 1 to become active.
- Oxygen sensor heaters are required by post-catalyst monitor sensors to maintain a sufficiently high temperature for accurate exhaust oxygen content readings further from the engine.

Conditions for Setting the DTC

- No related DTCs.
- Battery voltage is above 10 volts.
- The engine has been running for over 5 seconds.
- Engine coolant temperature (ETC) is above 60˚C (140˚F).
- Oxygen sensor heater has been determined to be functioning properly.
- Bank 1 HO2S 1 signal voltage remains between 400 mV and 500 mV for a total of 77 seconds over a 90-second period of time.

Action Take When the DTC Sets

- The PCM will ON the MIL after second trip with detected fault.
- The PCM will store conditions which were present when the DTC was set as Freeze Frame and in the Failure Records data.
- “Open loop” fuel control will be in effect.

Conditions for Clearing the MIL/DTC

- The PCM will turn the MIL “OFF” on the third consecutive trip cycle during which the diagnostic has been run and the fault condition is no longer present.
- A history DTC P0134 will clear after 40 consecutive warm-up cycles have occurred without a fault.
- DTC P0134 can be cleared by using the Tech 2 “Clear Info” function or by disconnecting the PCM battery feed.

Diagnostic Aids

Check for the following conditions:

- Poor connection or damaged harness – Inspect the harness connectors for backed-out terminals, improper mating, broken locks, improperly formed or damaged terminals, poor terminal-to-wire connection, and damaged harness.
- Faulty HO2S heater or heater circuit – With the ignition "ON", engine "OFF", after a cool down period, the HO2S 1 voltage displayed on the Tech 2 is normally 455-460 mV. A reading over 1000 mV indicates a signal line shorted to voltage. A reading under 5 mV indicates a signal line shorted to ground or signal lines shorted together. Disconnect the HO2S and connect a test light between the HO2S ignition feed and heater ground circuits. If the test light does not light for 2 seconds when the ignition is turned on, repair the open ignition feed or sensor ground circuit as necessary. If the test light lights and the HO2S signal and low circuits are OK, replace the HO2S.
- Intermittent test – With the Ignition "ON", monitor the HO2S signal voltage while moving the wiring harness and related connectors. If the fault is induced, the HO2S signal voltage will change. This may help isolate the location of the malfunction.

Test Description

Number(s) below refer to the step number(s) on the Diagnostic Chart.

3. If the DTC P0134 test passes while the Failure Records conditions are being duplicated, an intermittent conditions is indicated.

Reviewing the Failure Records vehicle mileage since the diagnostic test last failed may help determine how often the condition that caused the DTC to be set occurs. This may assist in diagnosing the condition.

DTC P0134 –HO2S Circuit Insufficient Activity Bank 1 Sensor 1

Step	Action	Value(s)	Yes	No
1	Was the "On-Board Diagnostic (OBD) System Check" performed?	—	Go to *Step 2*	Go to *OBD System Check*
2	1. Install the Tech 2. 2. Run the engine at operating temperature. 3. Operate the engine above 1200 RPM for two minutes. Does the Tech 2 indicate Bank 1 HO2S 1 voltage varying outside the specified values?	400-500 mV	Go to *Step 3*	Go to *Step 4*
3	1. Ignition "ON", engine "OFF", review and record Tech 2 Failure Records data and note parameters. 2. Operate the vehicle within Failure Records conditions as noted. 3. Using a Tech 2, monitor "DTC" info for DTC P0134 until the DTC P0134 test runs. 4. Note the test result. Does the Tech 2 indicate DTC P0134 failed this ignition?	—	Go to *Step 4*	Check the Procedure Refer to *Diagnostic Aids*
4	Check for a damaged harness. Was a problem found?	—	Verify repair	Go to *Step 5*
5	Check for poor Bank 1 HO2S 1 high and low circuit terminal connections at the Bank 1 HO2S 1 harness connector and replace terminal(s) if necessary. Did any terminals require replacement?	—	Verify repair	Go to *Step 6*
6	Check for poor Bank 1 HO2S 1 high and low circuit terminal connections at the PCM and replace terminals if necessary. Did any terminals require replacement?	—	Verify repair	Go to *Step 7*

DTC P0134 –HO2S Circuit Insufficient Activity Bank 1 Sensor 1 (Cont'd)

Step	Action	Value(s)	Yes	No
7	1. Ignition "OFF". 2. With the PCM disconnected, check continuity of the Bank 1 HO2S 1 high circuit. 3. If the Bank 1 HO2S 1 high circuit measures over 5.0 ohms, repair open or poor connection as necessary. Was a Bank 1 HO2S 1 high circuit problem found and corrected?	—	Verify repair	Go to *Step 8*
8	1. Ignition "OFF". 2. With the PCM disconnected, check continuity of the Bank 1 HO2S 1 low circuit. 3. If the Bank 1 HO2S 1 low circuit measures over 5 ohms, repair open or poor connection as necessary. Was a Bank 1 HO2S 1 low circuit problem found and corrected?	—	Verify repair	Go to *Step 9*
9	1. Ignition "ON", engine "OFF". 2. Disconnect Bank 1 HO2S 1 and jumper the HO2S high and low circuits (PCM side) to ground. 3. Using a Tech 2, monitor Bank 1 HO2S 1 voltage. Is Bank 1 HO2S 1 voltage in the specified range?	0-10 mV	Go to *Step 10*	Go to *Step 11*
10	Replace Bank 1 HO2S 1. Is the action complete?	—	Verify repair	—
11	Replace the PCM. **IMPORTANT:** The replacement PCM must be programmed. Refer to *On-Vehicle Service* in *Powertrain Control Module and Sensors* for procedures. And also refer to latest Service Bulletin. Check to see if the Latest software is released or not. And then Down Load the LATEST PROGRAMMED SOFTWARE to the replacement PCM. Is the action complete?	—	Verify repair	—

Diagnostic Trouble Code (DTC) P0135 HO2S Heater Circuit Bank 1 Sensor 1

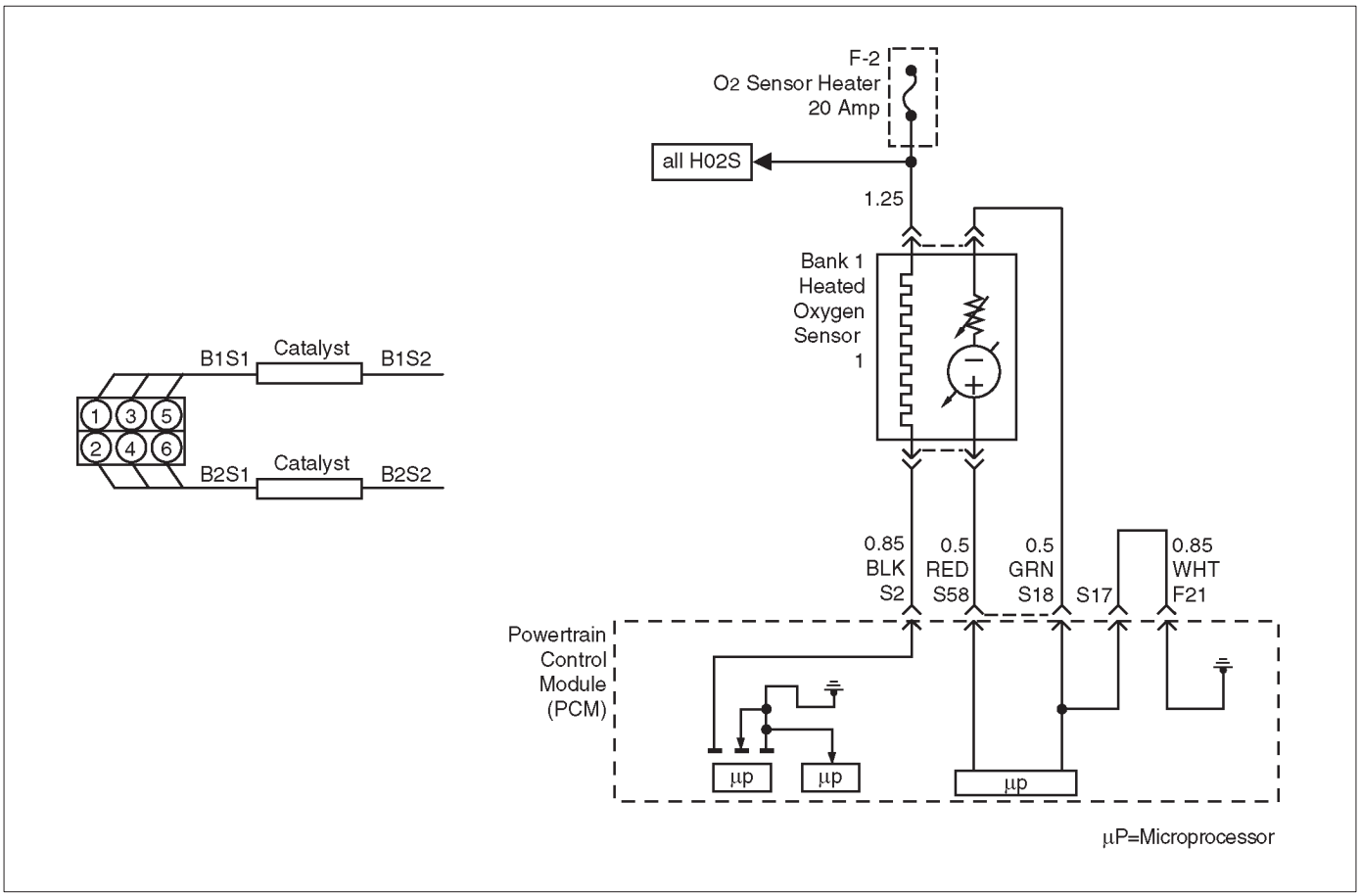

D06R200013

Circuit Description

Heated oxygen sensors are used to minimize the amount of time required for “closed loop” fuel control operation and to allow accurate catalyst monitoring. The oxygen sensor heater greatly decreases the amount of time required for fuel control sensors Bank 1 HO2S 1 and Bank 2 HO2S 1 to become active. Oxygen sensor heaters are required by post-catalyst monitor sensors to maintain a sufficiently high temperature which allows accurate exhaust oxygen content readings further from the engine. The powertrain control module (PCM) will run the heater test only after a cold start (determined by engine coolant and intake air temperature at the time of start-up) and only once during an ignition cycle. When the engine is started the PCM will monitor the HO2S voltage. When the HO2S voltage indicates a sufficiently active sensor, the PCM looks at how much time has elapsed since start-up. If the PCM determines that too much time was required for the Bank 1 HO2S 1 to become active, a DTC P0135 will set. The time it should take the HO2S to reach operating temperature is based on the accumulated amount of air that has passed through the MAF sensor and into the engine (more accumulated air flow = shorter time to HO2S activity).

Conditions for Setting the DTC

- The engine has been running for over 120 seconds.
- Heater signal is below 0.1A.
- Bank 1 HO2S 1 voltage does not change more than 150 mV from the bias voltage (between 400 mV and 500 mV) for a longer amount of time than it should. The maximum amount of time to come up to operating range is 150 seconds. This warm-up time depends on the engine coolant temperature at start-up and accumulate air flow since start-up.

Action Taken When the DTC Sets

- The PCM will illuminate the malfunction indicator lamp (MIL) after the second consecutive trip in which the fault is detected.
- The PCM will store conditions which were present when the DTC was set as Freeze Frame and in the Failure Records data.

Conditions for Clearing the MIL/DTC

- The PCM will turn the MIL “OFF” on the third consecutive trip cycle during which the diagnostic has been run and the fault condition is no longer present.
- A history DTC P0135 will clear after 40 consecutive warm-up cycles have occurred without a fault.
- DTC P0135 can be cleared by using the Tech 2 “Clear Info” function or by disconnecting the PCM battery feed.

Diagnostic Aids

Check for the following conditions:

- Poor connection at PCM – Inspect harness connectors for backed-out terminals, improper mating, broken locks, improperly formed or damaged terminals, and poor terminal-to-wire connection.
- Damaged harness – Inspect the wiring harness for damage. If the harness appears to be OK, observe the ECT display on the Tech 2 while moving connectors and wiring harnesses related to the sensor. A change in the display will indicate the location of the fault.

Reviewing the Failure Records vehicle mileage since the diagnostic test last failed may help determine how often the condition that caused the DTC to be set occurs. This may assist in diagnosing the condition.

Test Description

Number(s) below refer to the step number(s) on the Diagnostic Chart.

2. The HO2S should be allowed to cool before performing this test. If the HO2S heater is functioning, the signal voltage will gradually increase or decrease as the sensor element warms. If the heater is not functioning, the HO2S signal will remain near the 450 mV bias voltage.

4. Ensures that the ignition feed circuit to the HO2S is not open or shorted. The test light should be connected to a good chassis ground, in case the HO2S low or HO2S heater ground circuit is faulty.

5. Checks the HO2S heater ground circuit.

6. Checks or an open or shorted HO2S heater element.

10. An open HO2S signal or low circuit can cause the HO2S heater to appear faulty. Check these circuits before replacing the sensor.

DTC P0135 – HO2S Heater Circuit Bank 1 Sensor 1

Step	Action	Value(s)	Yes	No
1	Was the “On-Board Diagnostic (OBD) System Check” performed?	—	Go to *Step 2*	Go to *OBD System Check*
2	NOTE: If the engine has just been operating ,allow the engine to cool for at least 15 minutes before proceeding. 1. Remove the fuel pump relay. 2. Connect a fused jumper at the fuel pump relay socket, between the battery positive at the relay and the relay wire that leads to the fuel pump and HO2S fuses. 3. Ignition “OFF”. 4. Install a Tech 2. 5. Ignition “ON”, engine “OFF”. 6. Monitor the Bank 1 HO2S 1 voltage for several minutes. Did the HO2S voltage go from bias voltage to above or below the specified values?	Above 650 mV or below 250 mV	Check the Procedure Refer to *Diagnostic Aids*	Go to *Step 3*
3	Inspect the fuse for the Bank 1 HO2S 1 ignition feed. Is the fuse open?	—	Go to *Step 15*	Go to *Step 4*
4	1. Ignition “OFF”. 2. Raise the vehicle. 3. Disconnect the Bank 1 HO2S 1 electrical connector. 4. Using a test light connected to a good ground (do not use Bank 1 HO2S 1 heater ground or Bank 1 HO2S 1 low), probe the ignition feed circuit at the Bank 1 HO2S 1 electrical connector (PCM harness side). Does the test light illuminate?	—	Go to *Step 5*	Go to *Step 7*
5	Connect the test light between the Bank 1 HO2S 1 ignition feed and the Bank 1 HO2S 1 heater ground. Does the test light illuminate?	—	Go to *Step 6*	Go to *Step 8*

DTC P0135 – HO2S Heater Circuit Bank 1 Sensor 1 (Cont'd)

Step	Action	Value(s)	Yes	No
6	1. Allow the HO2S to cool for at least 15 minutes. 2. Using a DVM, measure the resistance between the Bank 1 HO2S 1 ignition feed and the Bank 1 HO2S 1 heater ground at the Bank 1 HO2S 1 pigtail. Is the HO2S heater resistance within the specified values?	3-6 ohms	Go to *Step 9*	Go to *Step 10*
7	Repair the open Bank 1 HO2S 1 ignition feed circuit to Bank 1 HO2S 1. Is the action complete?	—	Verify repair	—
8	Repair the open Bank 1 HO2S 1 heater ground circuit to Bank 1 HO2S 1. Is the action complete?	—	Verify repair	—
9	1. Check for a poor connection at the Bank 1 HO2S 1 harness terminals. 2. If a poor connection is found, replace terminals. Was a poor connection found?	—	Verify repair	Go to *Step 10*
10	Check for a poor Bank 1 HO2S 1 high or low circuit terminal connection at the Bank 1 HO2S 1 harness connector and replace terminal(s) if necessary. Did any terminals require replacement?	—	Verify repair	Go to *Step 11*
11	1. Ignition "OFF". 2. Disconnect the PCM and check the continuity of the Bank 1 HO2S 1 signal circuit and the Bank 1 HO2S 1 low circuit. 3. If the Bank 1 HO2S 1 high circuit or HO2S low circuit measures over 5 ohms, repair open or poor connection as necessary. Was a problem found?	—	Verify repair	Go to *Step 12*
12	Check for a poor Bank 1 HO2S 1 low circuit terminal connection at the PCM and replace the terminal if necessary. Did the terminal require replacement?	—	Verify repair	Go to *Step 13*
13	Check for a poor Bank 1 HO2S 1 high circuit terminal connection at the PCM and replace the terminal if necessary. Did the terminal require replacement?	—	Verify repair	Go to *Step 14*
14	Replace the Bank 1 HO2S 1. Is the action complete?	—	Verify repair	—
15	Locate and repair the short to ground in Bank 1 HO2S 1 ignition feed circuit and replace the fault fuse. Is the action complete?	—	Verify repair	—

Diagnostic Trouble Code (DTC) P0137 HO2S Circuit Low Voltage Bank 1 Sensor 2

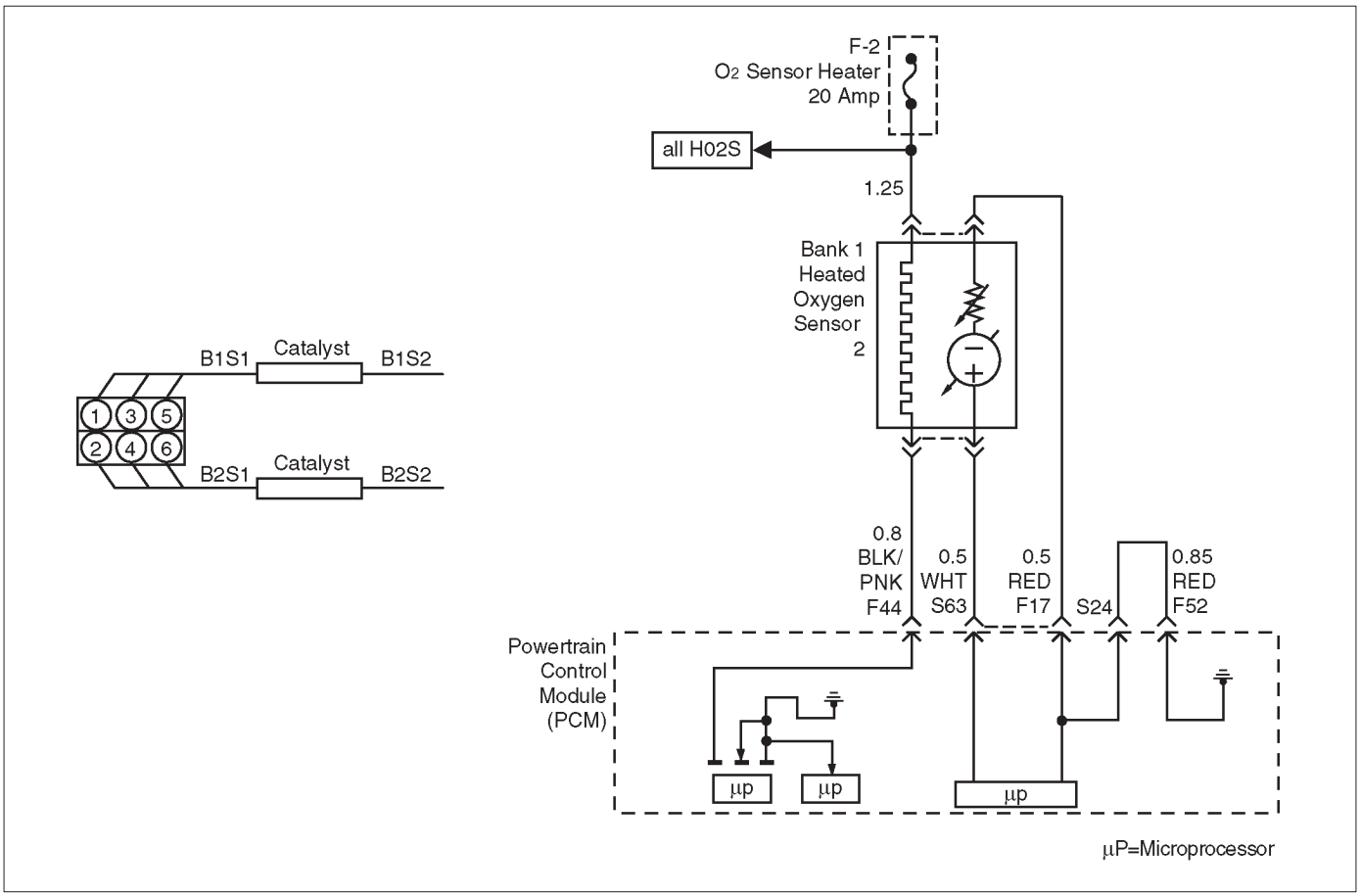

D06RY00173

Circuit Description

The powertrain control module (PCM) supplies bias voltage of about 450 mV between the heated oxygen sensor (HO2S) signal high and signal low circuits. When measured with a 10 megaohm impedance digital voltmeter, this may display as low as 350 mV. The oxygen sensor varies the voltage within a range of about 1000 mV when exhaust is rich, down through about 10 mV when the exhaust is lean. The PCM constantly monitors the HO2S signal during “closed loop” operation and compensates for a rich or lean condition by decreasing or increasing injector pulse width as necessary. If the Bank 1 HO2S 2 signal voltage remains excessively low for an extended period of time, DTC P0137 will be set.

Conditions for Setting the DTC

- No related DTCs.
- Engine is operating in “closed loop”.
- Engine coolant temperature is above 60˚C (140˚F).
- “Closed loop” commanded air/fuel ratio is between 14.5 and 14.8.
- Throttle angle is between 3% and 19%.
- Bank 1 HO2S 2 signal voltage remains below 22 mV during normal “closed loop” operation for a total of 106 seconds over a 125-second period of time.

OR

- Bank 1 HO2S 2 signal voltage remains below 400 mV during power enrichment mode fuel control operation for up to 5 seconds.

Action Taken When the DTC Sets

- The PCM will ON the MIL after second trip with detected fault.
- The PCM will store conditions which were present when the DTC set as Freeze Frame and in the Failure Records data.

Conditions for Clearing the MIL/DTC

- The PCM will turn the MIL “OFF” on the third consecutive trip cycle during which the diagnostic has been run and the fault condition is no longer present.
- A history DTC P0137 will clear after 40 consecutive warm-up cycles have occurred without a fault.
- DTC P0137 can be cleared by using the Tech 2 “Clear Info” function or by disconnecting the PCM battery feed.

Diagnostic Aids

Check for the following conditions:

- Heated oxygen sensor wiring – The sensor pigtail may be mispositioned and contacting the exhaust system.
- Poor PCM to engine grounds.
- Fuel pressure – A condition which causes a lean exhaust can cause DTC P0137 to set. The system will go lean if pressure is too low. The PCM can

compensate for some decrease. However, if fuel pressure is too low, a DTC P0137 may be set. Refer to *Fuel System Diagnosis*.

- Lean injector(s) – Perform “Injector Balance Test”.
- Vacuum leaks – Check for disconnected or damaged vacuum hoses and for vacuum leaks at the intake manifold, throttle body, EGR system, and PCV system.
- Exhaust leaks – An exhaust leak may cause outside air to be pulled into the exhaust gas stream past the HO2S, causing the DTC P0137 to set. Check for exhaust leaks near the Bank 1 HO2S 2 sensor.
- MAF sensor – The system can go lean if the MAF sensor signal indicates an engine airflow measurement that is not correct. Disconnect the MAF sensor to see if the lean condition is corrected. If so, replace the MAF sensor.
- Fuel contamination – Water, even in small amounts, can be delivered to the fuel injectors. The water can cause a lean exhaust to be indicated. Excessive alcohol in the fuel can also cause this condition. Refer to *Fuel System Diagnosis* for procedure to check for fuel contamination.
- If none of the above conditions are present, replace the affected HO2S.

Test Description

Number(s) below refer to the step number(s) on the Diagnostic Chart.

3. DTC P0137 failing during operation may indicate a condition described in the “Diagnostic Aids” above. If the DTC0137 test passes while the Failure Records conditions are being duplicated, an intermittent condition is indicated.

Reviewing the Failure Records vehicle mileage since the diagnostic test last failed may help determine how often the condition that caused the DTC to be set occurs. This may assist in diagnosing the condition.

DTC P0137 –HO2S Circuit Low Voltage Bank 1 Sensor 2

Step	Action	Value(s)	Yes	No
1	Was the “On-Board Diagnostic (OBD) System Check” performed?	—	Go to *Step 2*	Go to *OBD System Check*
2	1. Install the Tech 2. 2. Run the engine at operating temperature. 3. Operate the vehicle within the parameters specified under “Conditions for Setting the DTC” criteria included in Diagnostic Support. 4. Using a Tech 2, monitor Bank 1 HO2S 2 voltage. Does the Bank 1 HO2S voltage remain below the specified value?	22 mV	Go to *Step 4*	Go to *Step 3*
3	1. Ignition “ON”, engine “OFF”, review and record Tech 2 Failure Records data and note parameters. 2. Operate the vehicle within Failure Records conditions as noted. 3. Using a Tech 2, monitor “DTC” info for DTC P0137 until the DTC P0137 test runs. 4. Note the test result. Does the Tech 2 indicate DTC P0137 failed this ignition?	—	Go to *Step 4*	Check the Procedure Refer to *Diagnostic Aids*
4	1. Turn ignition “OFF”. 2. Disconnect the PCM. 3. Check the Bank 1 HO2S 2 high and low signal circuits for a short to ground or a short to the heater ground circuit. Were Bank 1 HO2S 2 signal circuits shorted?	—	Go to *Step 5*	Go to *Step 6*
5	Repair the Bank 1 HO2S 2 signal circuit. Is the action complete?	—	Verify repair	—
6	1. Ignition “OFF”. 2. Leave the PCM and HO2S 2 disconnected. 3. Check for continuity between the high and low signal circuits. Was there continuity between the high and low circuits?	—	Go to *Step 7*	Go to *Step 8*

DTC P0137 –HO2S Circuit Low Voltage Bank 1 Sensor 2 (Cont'd)

Step	Action	Value(s)	Yes	No
7	Repair the short between the high and low circuits. Is the action complete?	—	Verify repair	—
8	1. Ignition "OFF". 2. Reconnect the PCM, leave HO2S 2 disconnected. 3. Ignition "ON". Does the Tech 2 indicate Bank 1 HO2S 2 voltage near the specified value?	425-475 mV	Check the Procedure Refer to *Diagnostic Aids*	Go to *Step 9*
9	Replace the PCM. **IMPORTANT:** The replacement PCM must be programmed. Refer to *On-Vehicle Service* in *Powertrain Control Module and Sensors* for procedures. And also refer to latest Service Bulletin. Check to see if the Latest software is released or not. And then Down Load the LATEST PROGRAMMED SOFTWARE to the replacement PCM. Is the action complete?	—	Verify repair	—

Diagnostic Trouble Code (DTC) P0138 HO2S Circuit High Voltage Bank 1 Sensor 2

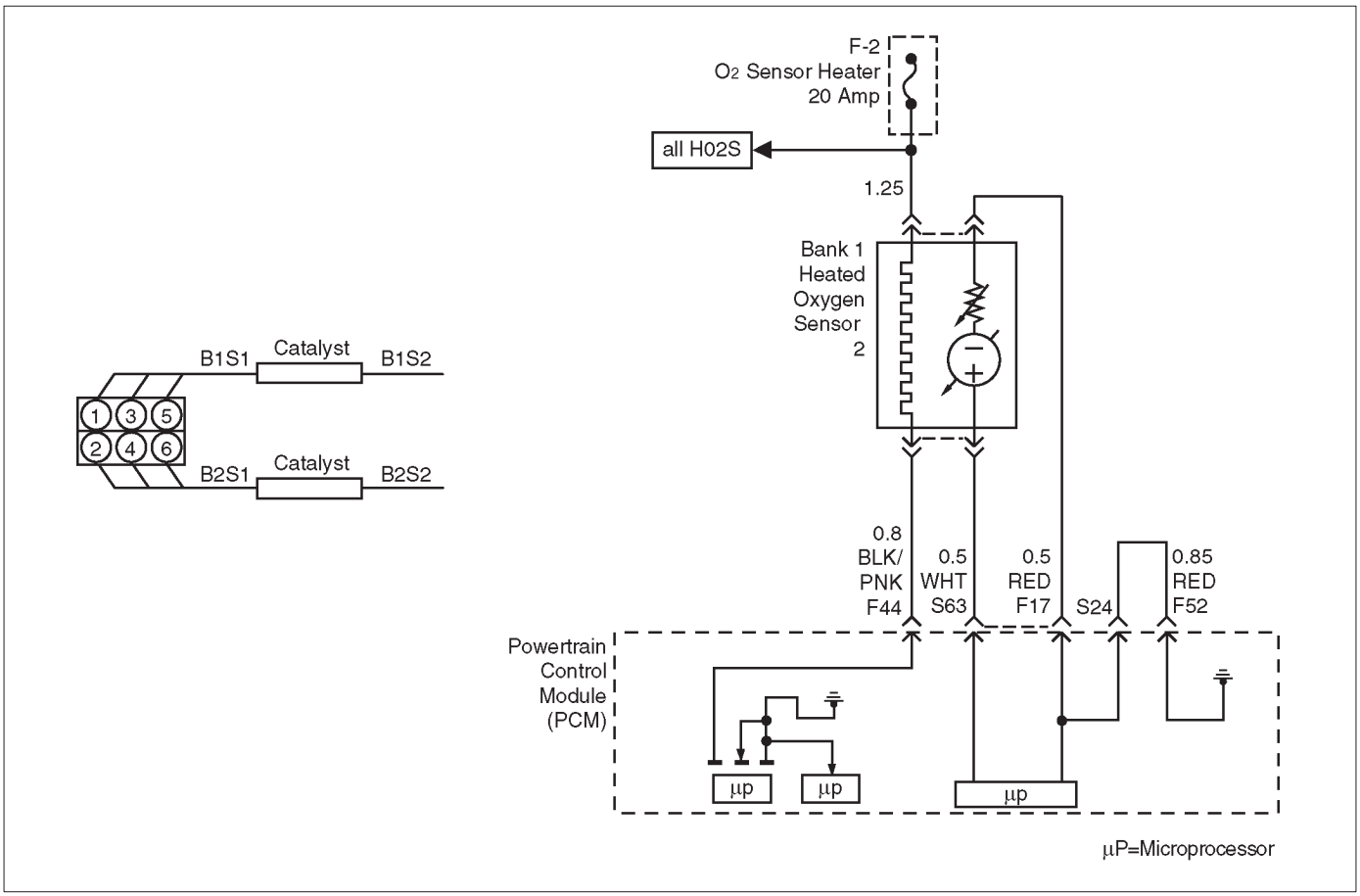

D06RY00173

Circuit Description

The powertrain control module (PCM) supplies bias voltage of about 450 mV between the heated oxygen sensor (HO2S) signal high and signal low circuits. When measured with a 10 megaohm digital voltmeter, this may display as low as 320 mV. The oxygen sensor varies the voltage within a range of about 1000 mV when exhaust is rich, down through about 10 mV when the exhaust is lean. The PCM constantly monitors the HO2S signal during “closed loop” operation and compensates for a rich or lean condition by decreasing or increasing injector pulse width as necessary. If the Bank 1 HO2S 2 voltage remains excessively high for an extended period of time, DTC P0138 will be set.

Conditions for Setting the DTC

- No related DTCs.
- Engine is operating in “closed loop”.
- “Closed loop” commanded air/fuel ratio is between 14.5 and 14.8.
- Engine coolant temperature is above 60˚C (140˚F).
- Throttle angle is between 3% and 19%.
- Bank 1 HO2S 2 signal voltage remains above 952 mV during normal “closed loop” operation for a total of 106 seconds over a 125-second period of time.

OR

- Bank 1 HO2S 2 signal voltage remains above 500 mV during deceleration fuel cut–off mode operation for up to 3 seconds.

Action Taken When the DTC Sets

- The PCM will ON the MIL after second trip with detected fault.
- The PCM will store conditions which were present when the DTC was set as Freeze Frame and in the Failure Records data.

Conditions for Clearing the MIL/DTC

- The PCM will turn the MIL “OFF” on the third consecutive trip cycle during which the diagnostic has been run and the fault condition is no longer present.
- A history DTC P0138 will clear after 40 consecutive warm-up cycles have occurred without a fault.
- DTC P0138 can be cleared by using the Tech 2 “Clear Info” function or by disconnecting the PCM battery feed.

Diagnostic Aids

Check for the following conditions:

- Fuel pressure – An excessively rich fuel mixture can cause a DTC P0138 to be set. Refer to *Fuel System Diagnosis*.
- Rich injector(s) – Perform “Injector Balance Test”.
- Leaking injector – Refer to *Fuel System Diagnosis*.

- Evaporative emissions (EVAP) canister purge – Check for fuel saturation. If full of fuel, check the canister control and hoses. Refer to *Evaporative Emission (EVAP) Control System*.
- MAF sensor –The system can go rich if the MAF sensor signal indicates an engine airflow measurement that is not correct. Disconnect the MAF sensor to see if the rich condition is corrected. If so, replace the MAF sensor.
- Check for a leak in fuel pressure regulator diaphragm by checking the vacuum line to the regulator for the presence of fuel. There should be no fuel in the vacuum line.
- TP sensor – An intermittent TP sensor output will cause the system to go rich, due to a false indication of the engine accelerating.
- Shorted Heated Oxygen Sensor (HO2S) – If the HO2S is internally shorted the HO2S voltage displayed on the Tech 2 will be over 1 volt. Try disconnecting the affected HO2S with the key "ON", engine "OFF". If the displayed HO2S voltage changes from over 1000 mV to around 450 mV, replace the HO2S. Silicon contamination of the HO2S can also cause a high HO2S voltage to be indicated. This condition is indicated by a powdery deposit on the portion of the HO2S exposed to the exhaust stream. If contamination is noticed, replace the affected HO2S.
- Open HO2S Signal Circuit of Faulty HO2S – A poor connection or open in the HO2S signal circuit can cause the DTC to set during deceleration fuel mode. An HO2S which is faulty and not allowing a full voltage swing between the rich and lean thresholds can also cause this condition. Operate the vehicle while monitoring the HO2S voltage with a Tech 2. If the HO2S voltage is limited within a range between 300 mV to 600 mV, check the HO2S signal and wiring and associated terminal connections.
- If none of the above conditions are present, replace the affected HO2S.

Test Description

Number(s) below refer to the step number(s) on the Diagnostic Chart.

3. DTC P0138 being set during deceleration fuel mode operation may indicate a condition described in the "Diagnostic Aids" above. If the DTC P0138 test passes while the Failure Records conditions are being duplicated, an intermittent condition is indicated.

Reviewing the Failure Records vehicle mileage since the diagnostic test last failed may help determine how often the condition that caused the DTC to be set occurs. This may assist in diagnosing the condition.

DTC P0138 – HO2S Circuit High Voltage Bank 1 Sensor 2

Step	Action	Value(s)	Yes	No
1	Was the "On-Board Diagnostic (OBD) System Check" performed?	—	Go to *Step 2*	Go to *OBD System Check*
2	1. Install the Tech 2. 2. Run the engine at operating temperature. 3. Operate the vehicle within the parameters specified under "Conditions for Setting the DTC" criteria included in Diagnostic Support. 4. Using a Tech 2, monitor Bank 1 HO2S 2 voltage. Does the Bank 1 HO2S voltage remain above the specified value?	952 mV (500 mV in deceleration fuel cutoff mode)	Go to *Step 4*	Go to *Step 3*
3	1. Ignition "ON", review and record Tech 2 Failure Records data. 2. Operate the vehicle within Failure Records conditions as noted. 3. Using a Tech 2, monitor "DTC" info for DTC P0138 until the DTC P0138 test runs. 4. Note the test result. Does the Tech 2 indicate DTC P0138 failed this ignition?	—	Go to *Step 4*	Check the Procedure Refer to *Diagnostic Aids*
4	1. Ignition "OFF". 2. Disconnect Bank 1 HO2S 1. 3. Ignition "ON". 4. At the HO2S Bank 1 Sensor 2 connector (PCM side), use a DVM to measure voltages at the high and low signal terminals. Are the voltages above the specified range?	3-4 V	Go to *Step 5*	Go to *Step 6*

DTC P0138 – HO2S Circuit High Voltage Bank 1 Sensor 2 (Cont'd)

Step	Action	Value(s)	Yes	No
5	Repair short to voltage in the signal circuit. Is the action complete?	—	Verify repair	—
6	1. Ignition "ON", engine"OFF". 2. At Bank 1 HO2S 2 connector (PCM side) jumper both the HO2S high and low signal circuits (PCM side) to ground. 3. Using a Tech 2, monitor Bank 1 HO2S 2 voltage. Is Bank 1 HO2S 2 voltage below the specified value?	10 mV	Go to *Step 7*	Go to *Step 8*
7	1. Disconnect the jumpers to ground from Bank 1 HO2S 2 PCM–side connector. 2. With the HO2S 2 connector disconnected, monitor BANK 1 HO2S 2 voltage. Is the Bank 1 HO2S 2 voltage between the specified values?	425-475 mV	Check the Procedure Refer to *Diagnostic Aids*	Go to *Step 8*
8	Replace the PCM. **IMPORTANT:** The replacement PCM must be programmed. Refer to *On-Vehicle Service* in *Powertrain Control Module and Sensors* for procedures. And also refer to latest Service Bulletin. Check to see if the Latest software is released or not. And then Down Load the LATEST PROGRAMMED SOFTWARE to the replacement PCM. Is the action complete?	—	Verify repair	—

Diagnostic Trouble Code(DTC)
P0140 HO2S Circuit Insufficient Activity Bank 1 Sensor 2

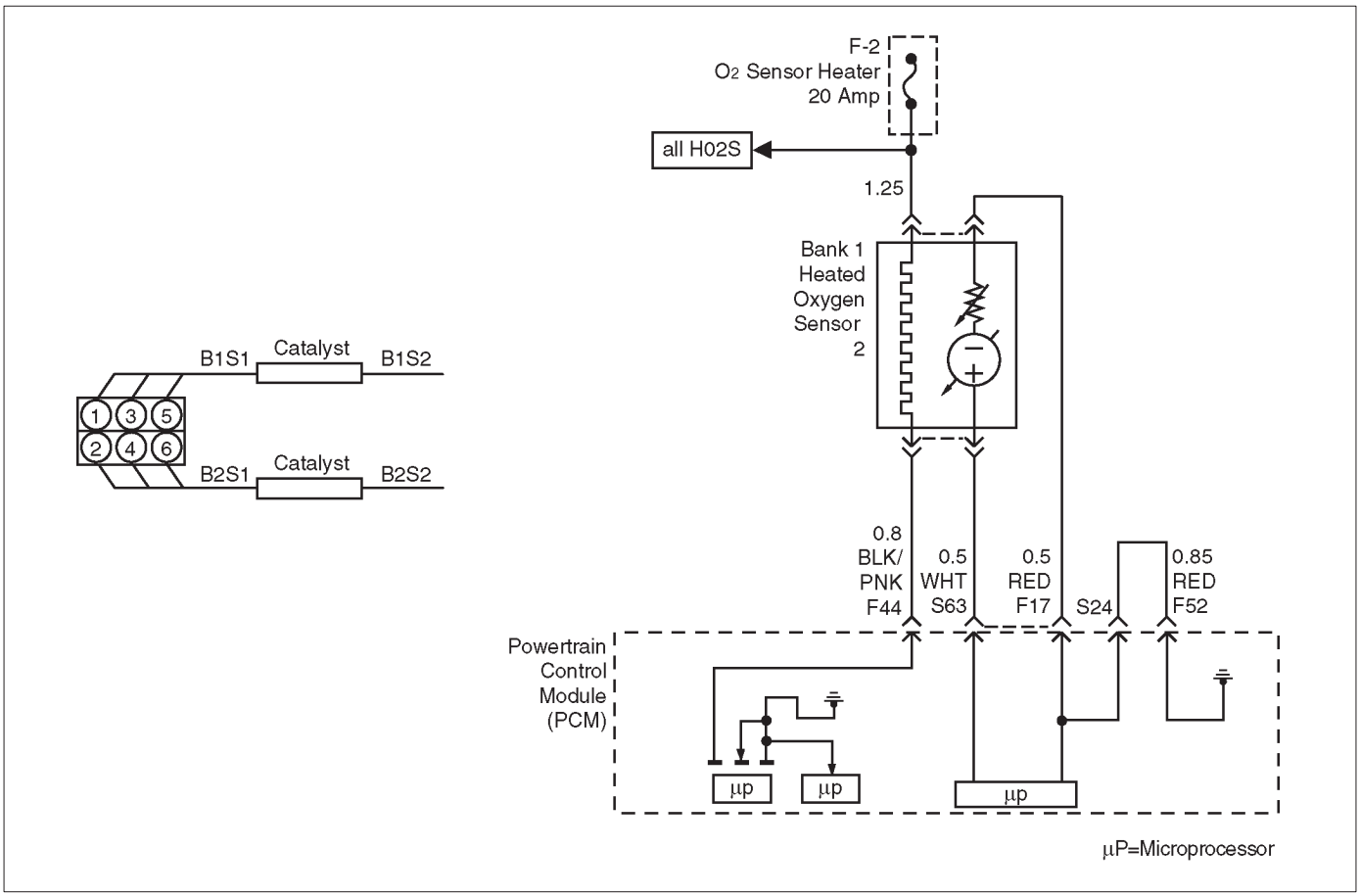

D06RY00173

Circuit Description

To control emissions of hydrocarbons (HC), carbon monoxide (CO), and oxides of nitrogen (NOx), a three-way catalytic converter is used. The catalyst within the converter promotes a chemical reaction which oxidizes the HC and CO present in the exhaust gas, converting them into harmless water vapor and carbon dioxide. The catalyst also reduces NOx, converting it to nitrogen. The powertrain control module (PCM) has the ability to monitor this process using the Bank 1 HO2S 1 and the Bank 1 HO2S 2 heated oxygen sensors. The Bank 1 HO2S 2 sensor produces an output signal which indicates the amount of oxygen present in the exhaust gas entering the three-way catalytic converter. The Bank 1 HO2S 2 sensor produces an output signal which indicates the oxygen storage capacity of the catalyst; this in turn indicates the catalyst's ability to convert exhaust gases efficiently. If catalyst is operating efficiently, the Bank 1 HO2S 1 signal will be far more active than that produced by the Bank 1 HO2S 2 sensor. If the Bank 1 HO2S 2 signal voltage remains between 400 mV and 500 mV for an extended period of time, DTC P0140 will be set. Heated oxygen sensors are used to minimize the amount of time required for "closed loop" fuel control operation and to allow accurate catalyst monitoring. The oxygen sensor heater greatly decreases the amount of time required for fuel control sensors Bank 1 HO2S 1 and Bank 2 HO2S 1 to become active. Oxygen sensor heaters are required by post-catalyst monitor sensors to maintain a sufficiently high temperature for accurate exhaust oxygen content readings further from the engine.

Conditions for Setting the DTC

- No related DTCs.
- Engine coolant temperature is above 60˚C (140˚F).
- The engine has been running for over 5 seconds.
- Oxygen sensor heater is functioning properly.
- Engine is operating in "closed loop"
- Bank 1 HO2S 2 signal voltage remains between 426 mV and 474 mV for a total of 106 seconds over a 125-second period of time.

Action Taken When the DTC Sets

- The PCM will ON the MIL after second trip with detected fault.
- The PCM will store conditions which were present when the DTC was set as Freeze Frame and in the Failure Records data.

Conditions for Cleaning the MIL/DTC

- The PCM will turn the MIL "OFF" on the third consecutive trip cycle during which the diagnostic has been run and the fault condition is no longer present.
- A history DTC P0140 will clear after 40 consecutive warm-up cycles have occurred without a fault.
- DTC P0140 can be cleared by using the Tech 2 "Clear Info" function or by disconnecting the PCM battery feed.

Diagnostic Aids

Check for the following conditions:

- Poor connection or damaged harness– Inspect the harness connectors for backed-out terminals, improper mating, broken locks, improperly formed or damaged terminals, poor terminal-to-wire connection, and damaged harness.
- Faulty HO2S heater or heater circuit–With the ignition“ON”, engine “OFF”, the HO2S voltage displayed on a Tech 2 should gradually drop to below 250 mV. If not, disconnect the HO2S and connect a test light between the HO2S ignition feed and heater ground circuits. If the test light does not light, repair the open ignition feed or sensor ground circuit as necessary. If the test light lights and the HO2S signal and low circuits are OK, replace the HO2S.
- Intermittent test–With the ignition “ON”, monitor the HO2S signal voltage while moving the wiring harness and related connectors. If the fault is induced, the HO2S signal voltage will change. This may help isolate the location of the malfunction.

Test Description

Number (s) below refer to the step number (s) on the Diagnostic Chart.

3. If the DTC P0140 test passes while the Failure Records conditions are being duplicated, an intermittent condition is indicated.

Reviewing the Failure Records vehicle mileage since the diagnostic test last failed may help determine how often the condition that caused the DTC to be set occurs. This may assist in diagnosing the condition.

DTC P0140 – HO2S Circuit Insufficient Activity BANK 1 SENSOR 2

Step	Action	Value(s)	Yes	No
1	Was the “On-Board Diagnostic (OBD) System Check” performed?	—	Go to *Step 2*	Go to *OBD System Check*
2	1. Install the Tech 2. 2. Run the engine at operating temperature. 3. Operate the engine above 1200 RPM for two minutes. Does the Tech 2 indicate Bank 1 HO2S 2 voltage varying outside the specified values?	425-475 mV	Go to *Step 3*	Go to *Step 4*
3	1. Ignition “ON”, engine “OFF”, review and record Tech 2 Failure Records data and note parameters. 2. Operate the vehicle within Failure Records conditions as noted. 3. Using a Tech 2, monitor “DTC” info for DTC P0140 until the DTC P0140 test runs. 4. Note the test result. Does the Tech 2 indicate DTC P0140 failed this ignition?	—	Go to *Step 4*	Check the Procedure Refer to *Diagnostic Aids*
4	Check for a damaged harness. Was a problem found?	—	Verify repair	Go to *Step 5*
5	Check for poor Bank 1 HO2S 2 high and low circuit terminal connections at the Bank 1 HO2S 2 harness connector and replace terminal(s) if necessary. Did any terminals require replacement?	—	Verify repair	Go to *Step 6*
6	Check for poor Bank 1 HO2S 2 high and low circuit terminal connections at the PCM and replace terminal(s) if necessary. Did any terminals require replacement?	—	Verify repair	Go to *Step 7*
7	1. Ignition “OFF”. 2. With the PCM disconnected, check continuity of the Bank 1 HO2S 2 high circuit. 3. If the Bank 1 HO2S 2 high circuit measures over 5.0 ohms, repair open or poor connection as necessary. Was a Bank 1 HO2S 2 high circuit problem found and corrected?	—	Verify repair	Go to *Step 8*

DTC P0140 – HO2S Circuit Insufficient Activity BANK 1 SENSOR 2 (Cont'd)

Step	Action	Value(s)	Yes	No
8	1. Ignition "OFF". 2. With the PCM disconnected, check continuity of the Bank 1 HO2S 2 high circuit. 3. If the Bank 1 HO2S 2 low circuit measures over 5.0 ohms, repair open or poor connection as necessary. Was a Bank 1 HO2S 2 low circuit problem found and corrected?	—	Verify repair	Go to *Step 9*
9	1. Ignition "ON", engine"OFF". 2. Disconnect Bank 1 HO2S 2 and jumper the HO2S high and low circuits (PCM side) to ground. 3. Using a Tech 2, monitor Bank 1 HO2S 2 voltage. Is Bank 1 HO2S 2 voltage in the specified range?	0-10 mV	Go to *Step 10*	Go to *Step 11*
10	Replace Bank 1 HO2S 2. Is the action complete?	—	Verify repair	—
11	Replace the PCM. **IMPORTANT:** The replacement PCM must be programmed. Refer to *On-Vehicle Service* in *Powertrain Control Module and Sensors* for procedures. And also refer to latest Service Bulletin. Check to see if the Latest software is released or not. And then Down Load the LATEST PROGRAMMED SOFTWARE to the replacement PCM. Is the action complete?	—	Verify repair	—

Diagnostic Trouble Code (DTC)
P0141 HO2S Heater Circuit Bank 1 Sensor 2

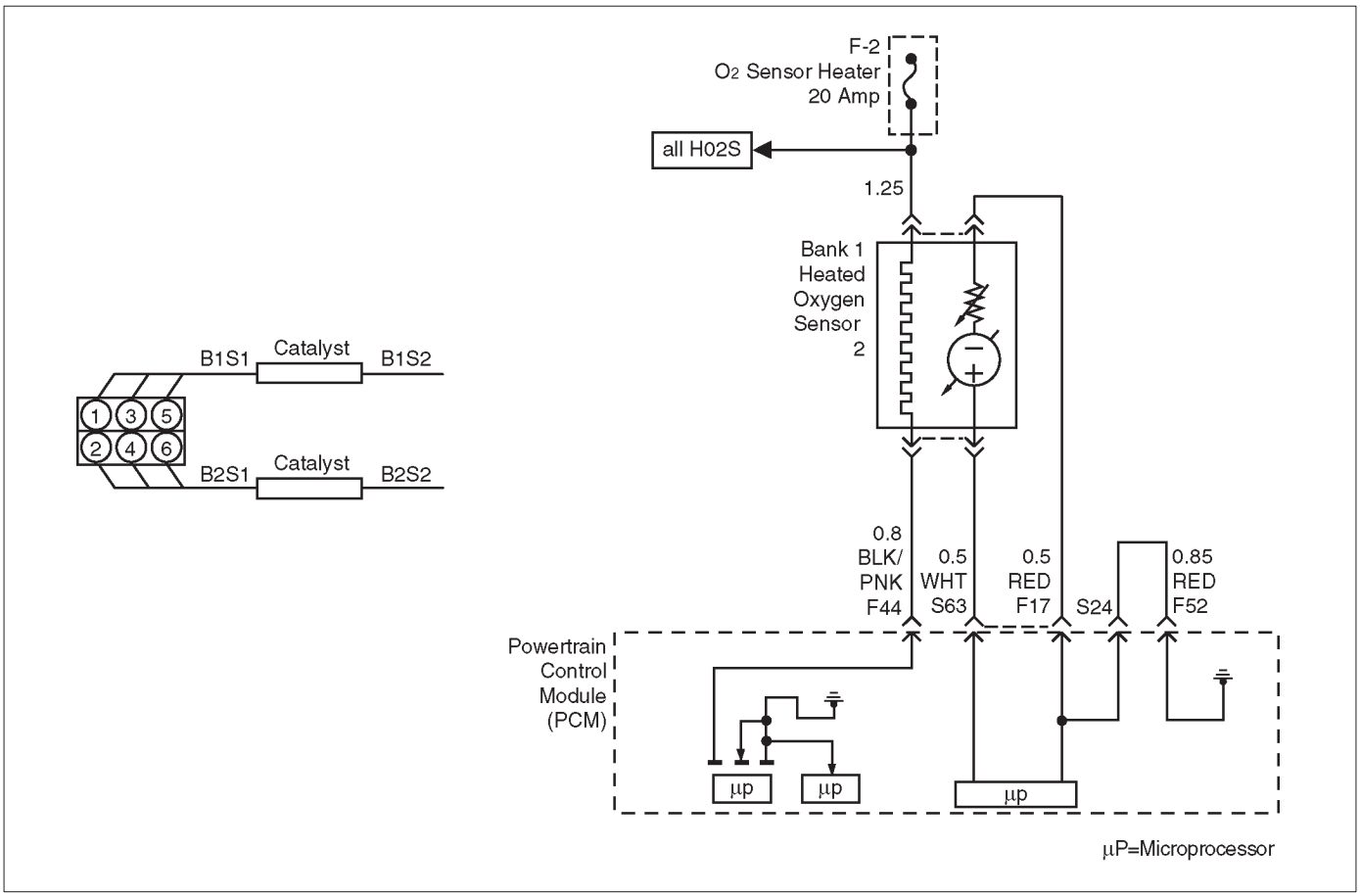

D06RY00173

Circuit Description

Heated oxygen sensors are used to minimize the amount of time required for closed loop fuel control operation and to allow accurate catalyst monitoring. The oxygen sensor heater greatly decreases the amount of time required for fuel control sensors Bank 1 HO2S 1 and Bank 2 HO2S 1 to become active. Oxygen sensor heaters are required by post-catalyst monitor sensors to maintain a sufficiently high temperature which allows accurate exhaust oxygen content readings further from the engine.

The powertrain control module (PCM) will run the heater test only after a cold start (determined by engine coolant and intake air temperature at the time of start-up) and only once during an ignition cycle. When the engine is started the PCM will monitor the HO2S voltage. When the Bank HO2S voltage indicates a sufficiently active sensor, the PCM looks at how much time has elapsed since start-up. If the PCM determines that too much time was required for the Bank 1 HO2S 2 to become active, a DTC P0141 will set. The time it should take the HO2S to reach operating temperature is based on the total amount of air that has passed through the MAF sensor and into the engine (more total airflow = shorter time to HO2S activity).

Conditions for Setting the DTC

- No related DTCs.
- The engine has been running for over 120 seconds.
- Ignition voltage is between 11 volts and 18 volts.
- Bank 1 HO2S 2 voltage does not change more than 150 mV from the bias voltage (between 400 mV–500 mV) for a longer amount of time than it should. The maximum amount of time to come up to operating range is 120 seconds. This warm-up time depends on the engine coolant temperature at start-up and accumulated air flow since start-up.

Action Taken When the DTC Sets

- The PCM will illuminate the malfunction indicator lamp (MIL) after the second consecutive trip in which the fault is detected.
- The PCM will store conditions which were present when the DTC was set as Freeze Frame and in the Failure Records data.

Conditions for Clearing the MIL/DTC

- The PCM will turn the MIL “OFF” on the third consecutive trip cycle during which the diagnostic has been run and the fault condition is no longer present.
- A history DTC P0141 will clear after 40 consecutive warm-up cycles have occurred without a fault.
- DTC P0141 can be cleared by using the Tech 2 “Clear Info” function or by disconnecting the PCM battery feed.

Diagnostic Aids

Check for the following conditions:

- Poor connection at PCM – Inspect harness connectors for backed-out terminals, improper mating, broken locks, improperly formed or damaged terminals, and poor terminal-to-wire connection.
- Damaged harness – Inspect the wiring harness for damage. If the harness appears to be OK, observe the display on the Tech 2 while moving connectors and wiring harnesses related to the sensor. A change in the display will indicate the location of the fault.

Reviewing the Failure Records vehicle mileage since the diagnostic test last failed may help determine how often the condition that caused the DTC to be set occurs. This may assist in diagnosing the condition.

Test Description

Number(s) below refer to the step number(s) on the Diagnostic Chart.

2. The HO2S should be allowed to cool before performing this test. If the HO2S heater is functioning, the signal voltage will gradually increase or decrease as the sensor element warms. If the heater is not functioning, the HO2S signal will remain near the 450 mV bias voltage.

4. This ensures that the ignition feed circuit to the HO2S is not open or shorted. The test light should be connected to a good chassis ground, in case the HO2S low or HO2S heater ground circuit is faulty.

5. This checks the HO2S heater ground circuit.

6. This checks for an open or shorted HO2S heater element.

11. An open HO2S signal or low circuit can cause the HO2S heater to appear faulty. Check these circuits before replacing the sensor.

DTC P0141 – HO2S Heater Circuit Bank 1 Sensor 2

Step	Action	Value(s)	Yes	No
1	Was the “On-Board Diagnostic (OBD) System Check” performed?	—	Go to *Step 2*	Go to *OBD System Check*
2	NOTE: If the engine has just been operating, allow the engine to cool for at least 15 minutes before proceeding. 1. Remove the fuel pump relay. 2. Connect a fused jumper at the fuel pump relay socket, between the battery positive at the relay and the relay wire that leads to the fuel pump and HO2S fuses. 3. Ignition “OFF”. 4. Install a Tech 2. 5. Ignition “ON”, engine “OFF”. 6. Monitor the Bank 1 HO2S 2 voltage for several minutes. Did the HO2S voltage go from bias voltage to above or below the specified values?	Above 650 mV or below 250 mV	Check the Procedure Refer to *Diagnostic Aids*	Go to *Step 3*
3	Inspect the fuse for Bank 1 HO2S 2 ignition feed. Is the fuse open?	—	Go to *Step 15*	Go to *Step 4*
4	1. Ignition “OFF”. 2. Raise the vehicle. 3. Disconnect the Bank 1 HO2S 2 electrical connector. 4. Using a test light connected to a good ground (do not use Bank 1 HO2S 2 heater ground or Bank 1 HO2S 2 low), probe the ignition feed circuit at the Bank 1 HO2S 2 electrical connector (PCM harness side). Does the test light illuminate?	—	Go to *Step 5*	Go to *Step 7*
5	Connect the test light between the Bank 1 HO2S 2 ignition feed and the Bank 1 HO2S 2 heater ground. Does the test light illuminate?	—	Go to *Step 6*	Go to *Step 8*

DTC P0141 – HO2S Heater Circuit Bank 1 Sensor 2 (Cont'd)

Step	Action	Value(s)	Yes	No
6	1. Allow the HO2S to cool for at least 15 minutes. 2. Using a DVM, measure the resistance between the Bank 1 HO2S 2 ignition feed and the Bank 1 HO2S 2 heater ground at the Bank 1 HO2S 2 pigtail. Is the HO2S resistance within the specified values?	3-6 ohms	Go to *Step 9*	Go to *Step 10*
7	Repair the open Bank 1 HO2S 2 ignition feed circuit to Bank 1 HO2S 2. Is the action complete?	—	Verify repair	—
8	Repair the open Bank 1 HO2S 2 heater ground circuit. Is the action complete?	—	Verify repair	—
9	1. Check for a poor connection at the Bank 1 HO2S 2 harness terminals. 2. If a poor connection is found, replace the terminals. Was a poor connection found?	—	Verify repair	Go to *Step 10*
10	1. Ignition "OFF". 2. Disconnect the PCM and check the continuity of the Bank 1 HO2S 2 signal circuit and the Bank 1 HO2S 2 low circuit. 3. If the Bank 1 HO2S 2 signal circuit or the HO2S low circuit measures over 5 ohms, repair the open or poor connection as necessary. Was a problem found?	—	Verify repair	Go to *Step 11*
11	1. Ignition "OFF". 2. Disconnect the PCM and check the continuity of the Bank 1 HO2S 1 signal circuit and the Bank 1 HO2S 1 low circuit. 3. If the Bank 1 HO2S 1 high circuit or the HO2S low circuit measures over 5 ohms, repair the open or poor connection as necessary. Was a problem found?	—	Verify repair	Go to *Step 12*
12	Check for a poor Bank 1 HO2S 2 low circuit terminal connection at the PCM and replace the terminal if necessary. Did the terminal require replacement?	—	Verify repair	Go to *Step 13*
13	Check for a poor Bank 1 HO2S 2 high circuit terminal connection at the PCM and replace the terminal if necessary. Did the terminal require replacement?	—	Verify repair	Go to *Step 14*
14	Replace Bank 1 HO2S 2. Is the action complete?	—	Verify repair	—
15	Locate and repair the short to ground in Bank 1 HO2S 2 ignition feed circuit and replace the faulty fuse. Is the action complete?	—	Verify repair	—

Diagnostic Trouble Code (DTC) P0151 HO2S Circuit Low Voltage Bank 2 Sensor 1

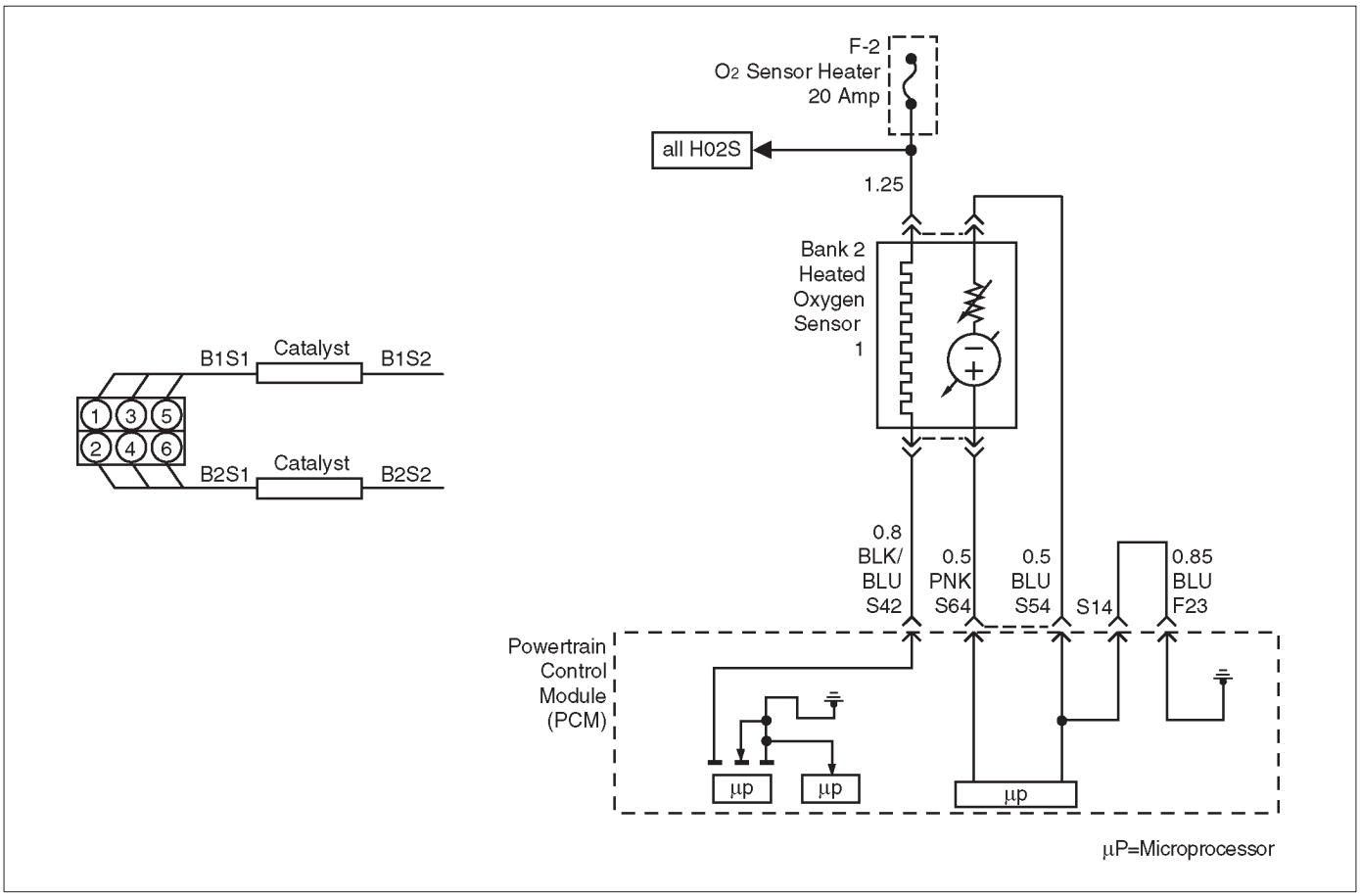

D06RY00175

Circuit Description

The powertrain control module (PCM) supplies a bias voltage of about 450 mV between the heated oxygen sensor (HO2S) signal high and signal low circuits. When measured with a 10 megaohm digital voltmeter, this may display as low as 320 mV. The oxygen sensor varies the voltage within a range of about 1000 mV when the exhaust is rich, down through about 10 mV when exhaust is lean. The PCM constantly monitors the HO2S signal during "closed loop" operation and compensates for a rich or lean condition by decreasing or increasing injector pulse width as necessary. If the Bank 2 HO2S 1 voltage remains excessively low for an extended period of time, DTC P0151 will be set.

Conditions for Setting the DTC

- No related DTCs.
- The engine is operating in "closed loop".
- Engine coolant temperature is above 60˚C (140˚F).
- "Closed loop" commanded air/fuel ratio is between 14.5 and 14.8.
- Bank 2 HO2S 1 signal voltage remains below 22 mV during normal "closed loop" operation for a total of 77 seconds over a 90-second period of time.

Action Taken When the DTC Sets

- The PCM will ON the MIL after second trip with detected fault.
- The PCM will store conditions which were present when the DTC was set as Freeze Frame and in the Failure Records data.
- "Open loop" fuel control will be in effect.

Conditions for Clearing the MIL/DTC

- The PCM will turn the MIL "OFF" on the third consecutive trip cycle during which the diagnostic has been run and the fault condition is no longer present.
- A history DTC P0151 will clear after 40 consecutive warm-up cycles have occurred without a fault.
- DTC P0151 can be cleared by using the Tech 2 "Clear Info" function or by disconnecting the PCM battery feed.

Diagnostic Aids

Check for the following conditions:

- Heated oxygen sensor wiring – The sensor pigtail may be mispositioned and contacting the exhaust system.
- Poor PCM to engine block grounds.
- Fuel pressure – The system will go lean if pressure is too low. The PCM can compensate for some decrease. However, if fuel pressure is too low, a DTC P0151 may be set. Refer to *Fuel System Diagnosis*.
- Lean injector(s) – Perform "Injector Balance Test".
- Vacuum leaks – Check for disconnected or damaged vacuum hoses and for vacuum leaks at the intake manifold, throttle body, EGR system, and PCV system.

- Exhaust leaks – An exhaust leak may cause outside air to be pulled into the exhaust gas stream past the HO2S, causing the system to appear lean. Check for exhaust leaks that may cause a false lean condition to be indicated.
- MAF sensor –The system can go lean if the MAF sensor signal indicates an engine airflow measurement that is not correct. Disconnect the MAF sensor to see if the lean condition is corrected. If so, replace the MAF sensor.
- Fuel contamination – Water, even in small amounts, can be delivered to the fuel injectors. The water can cause a lean exhaust to be indicated. Excessive alcohol in the fuel can also cause this condition. Refer to *Fuel System Diagnosis* for the procedure to check for fuel contamination.
- If none of the above conditions are present, replace the affected HO2S.

Test Description

Number(s) below refer to the step number(s) on the Diagnostic Chart.

3. DTC P0151 failing during operation may indicate a condition described in the “Diagnostic Aids” above. If the DTC P0151 test passes while the Failure Records conditions are being duplicated, an intermittent condition is indicate.

Reviewing the Failure Records vehicle mileage since the diagnostic test last failed may help determine how often the condition that caused the DTC to be set occurs. This may assist in diagnosing the condition.

DTC P0151 – HO2S Circuit Low Voltage Bank 2 Sensor 1

Step	Action	Value(s)	Yes	No
1	Was the “On-Board Diagnostic (OBD) System Check” performed?	—	Go to *Step 2*	Go to *OBD System Check*
2	1. Install the Tech 2. 2. Run the engine at operating temperature. 3. Operate the vehicle within the parameters specified under “Conditions for Setting the DTC” criteria included in Diagnostic Support. 4. Using a Tech 2, monitor Bank 2 HO2S 1 voltage. Does the Bank 2 HO2S 1 voltage remain below the specified value?	22 mV	Go to *Step 4*	Go to *Step 3*
3	1. Ignition “ON”, engine “OFF”, review and record Tech 2 Failure Records data and note parameters. 2. Operate the vehicle within Failure Records conditions as noted. 3. Using a Tech 2, monitor “DTC” info for DTC P0151 until the DTC P0151 test runs. 4. Note test result. Does the Tech 2 indicate DTC P0151 failed this ignition?	—	Go to *Step 4*	Check the Procedure Refer to *Diagnostic Aids*
4	1. Turn ignition “OFF”. 2. Disconnect the PCM. 3. Check the Bank 2 HO2S 1 high and low signal circuits for a short to ground or a short to the heater ground circuit. Were Bank 2 HO2S 1 signal circuits shorted?	—	Go to *Step 5*	Go to *Step 6*
5	Repair the Bank 2 HO2S 1 signal circuit. Is the action complete?	—	Verify repair	—
6	1. Ignition “OFF”. 2. Leave the PCM and HO2S 1 disconnected. 3. Check for continuity between the high and low signal circuits. Was there continuity between the high and low circuits?	—	Go to *Step 7*	Go to *Step 8*
7	Repair the short between the high and low circuits. Is the action complete?	—	Verify repair	—

DTC P0151 – HO2S Circuit Low Voltage Bank 2 Sensor 1 (Cont'd)

Step	Action	Value(s)	Yes	No
8	1. Ignition "OFF". 2. Reconnect the PCM, leave HO2S disconnected. 3. Ignition "ON". Does the Tech 2 indicate Bank 2 HO2S 1 voltage near the specified value?	425-475 mV	Check the Procedure Refer to *Diagnostic Aids*	Go to *Step 9*
9	Replace the PCM. **IMPORTANT:** The replacement PCM must be programmed. Refer to *On-Vehicle Service* in *Powertrain Control Module and Sensors* for procedures. And also refer to latest Service Bulletin. Check to see if the Latest software is released or not. And then Down Load the LATEST PROGRAMMED SOFTWARE to the replacement PCM. Is the action complete?	—	Verify repair	—

Diagnostic Trouble Code (DTC)
P0152 HO2S Circuit High Voltage Bank 2 Sensor 1

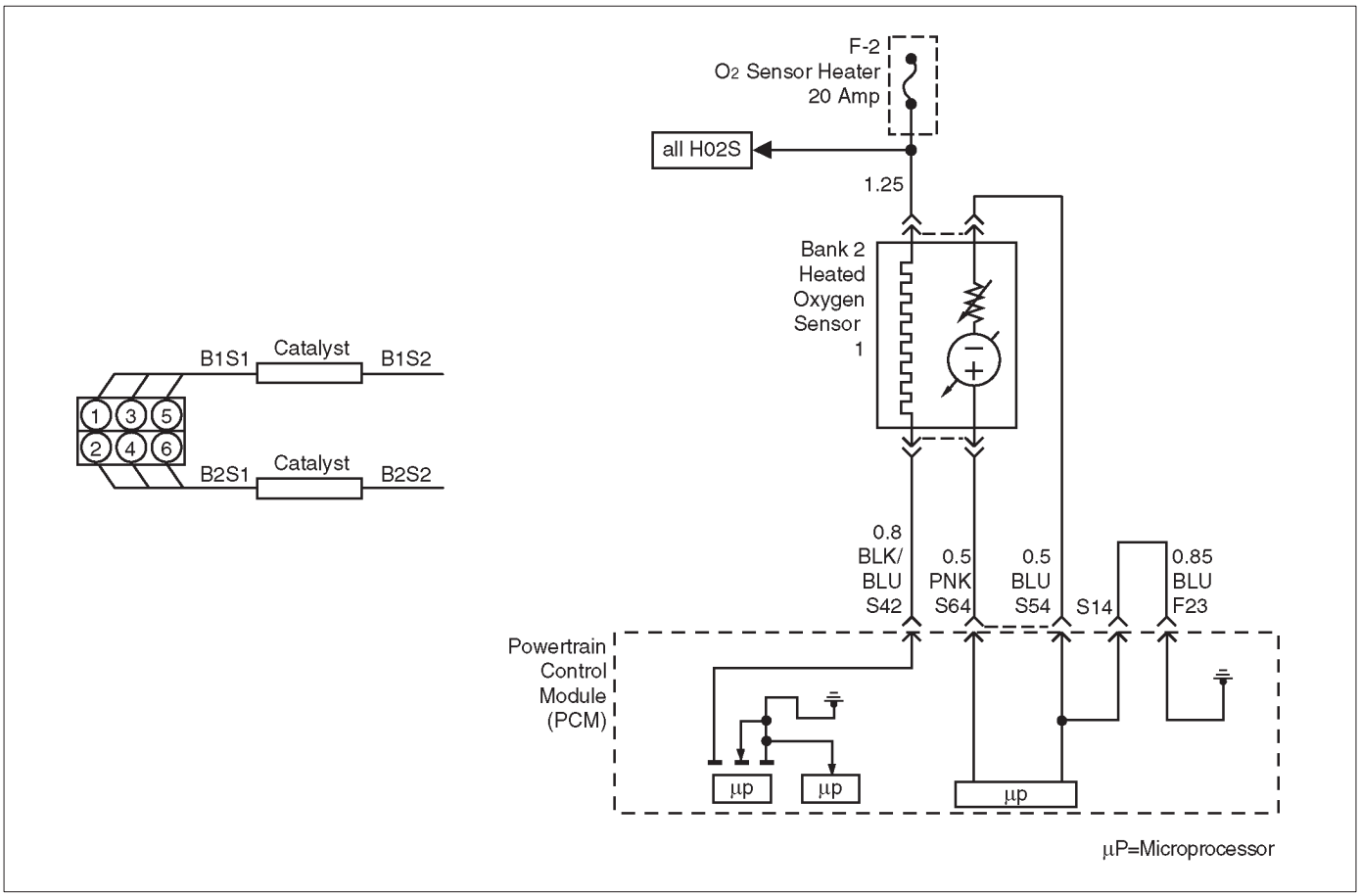

D06RY00175

Circuit Description

The powertrain control module (PCM) supplies a bias voltage of about 450 mV between the heated oxygen sensor (HO2S) signal high and signal low circuits. When measured with a 10 megaohm digital voltmeter, this may display as low as 320 mV. The oxygen sensor varies the voltage within a range of about 1000 mV when the exhaust is rich, down through about 10 mV when exhaust is lean. The PCM constantly monitors the HO2S signal during "closed loop" operation and compensates for a rich or lean condition by decreasing or increasing the injector pulse width as necessary. If the Bank 2 HO2S 1 voltage remains excessively high for an extended period of time, DTC P0152 will be set.

Conditions for Setting the DTC

- No related DTCs.
- The engine is operating in "closed loop".
- The engine coolant temperature is above 60˚C (140˚F).
- Bank 2 HO2S 1 signal voltage remains above 952 mV during normal "closed loop" operation for a total of 77 seconds over a 90-second period.

OR

- Bank 2 HO2S 1 signal voltage remains above 500 mV during deceleration fuel cutoff mode operation for up to 3 seconds.

Action Taken When the DTC Sets

- The PCM will "ON" the MIL after second trip with detected fault
- The PCM will store conditions which were present when the DTC was set as Freeze Frame and in the Failure Records data.
- "Open loop" fuel control will be in effect.

Conditions for Clearing the MIL/DTC

- The PCM will turn the MIL "OFF" on the third consecutive trip cycle during which the diagnostic has been run and the fault condition is no longer present.
- A history DTC P0152 will clear after 40 consecutive warm-up cycles have occurred without a fault.
- DTC P0152 can be cleared by using the Tech 2 "Clear Info" function or by disconnecting the PCM battery feed.

Diagnostic Aids

Check for the following conditions:

- Fuel pressure – The system will go rich if pressure is too high. The PCM can compensate for some increase. However, if fuel pressure is too high, a DTC P0152 may be set. Refer to *Fuel System Diagnosis*.
- Rich injector(s) – Perform "Injector Balance Test".
- Leaking injector – Refer to *Fuel System Diagnosis*.
- Evaporative emissions (EVAP) system – Check the canister for fuel saturation. If the canister is full of fuel,

check EVAP control system components and hoses. Refer to *Evaporative Emission (EVAP) Control System*.

- MAF sensor – The system can go rich if the MAF sensor signal indicates an engine airflow measurement that is not correct. Disconnect the MAF sensor to see if rich condition is corrected. If so, replace MAF sensor.
- Check for leaking fuel pressure regulator diaphragm by checking vacuum line to regulator for the presence of fuel. There should be no fuel in the vacuum line.
- TP sensor – An intermittent TP sensor output will cause the system to go rich, due to a false indication of the engine accelerating.
- Shorted Heated Oxygen Sensor (HO2S)– If the HO2S is internally shorted, the HO2S voltage displayed on the Tech 2 will be over 1 volt. Try disconnecting the affected HO2S with the key "ON", engine "OFF". If the displayed HO2S voltage changes from over 1000 mV to around 450 mV, replace the HO2S. Silicon contamination of the HO2S can cause a high HO2S voltage to be indicated. This condition is indicated by powdery deposit on the portion of the HO2S exposed to the exhaust stream. If contamination is noticed, replace the affected HO2S.
- Open HO2S Signal Circuit of Faulty HO2S– A poor connection or open in the HO2S signal circuit can cause the DTC to set during deceleration fuel mode. An HO2S which is faulty and not allowing a full voltage switch between the rich and lean thresholds can also cause the condition. Operate the vehicle while monitoring the HO2S voltage with a Tech 2. If the HO2S is limited within a range between 300 mV to 600 mV, check the HO2S signal circuit wiring and associated terminal connections.
- If none of the above conditions are present, replace the affected HO2S.

Test Description

Number(s) below refer to the step number(s) on the Diagnostic Chart.

3. DTC P0152 failing during deceleration fuel cutoff mode operation may indicate a condition described in the "Diagnostic Aids" above. If the DTC P0152 test passes while the Failure Records conditions are being duplicated, an intermittent condition is indicated.

Reviewing the Failure Records vehicle mileage since the diagnostic test last failed may help determine how often the condition that caused the DTC to be set occurs. This may assist in diagnosing the condition.

DTC P0152 – HO2S Circuit High Voltage Bank 2 Sensor 1

Step	Action	Value(s)	Yes	No
1	Was the "On-Board Diagnostic (OBD) System Check" performed?	—	Go to *Step 2*	Go to *OBD System Check*
2	1. Install the Tech 2. 2. Engine is at operating temperature. 3. Operate the vehicle within the parameters specified under "Conditions for Setting the DTC" criteria included in Diagnostic Support. 4. Using a Tech 2, monitor Bank 2 HO2S 1 voltage. Does the Bank 2 HO2S 1 voltage remain above the specified value?	952 mV (500 mV in deceleration fuel cut-off mode)	Go to *Step 4*	Go to *Step 3*
3	1. Ignition "ON". 2. Review and record Tech 2 Failure Records data. 3. Operate the vehicle within Failure Records conditions as noted. 4. Using a Tech 2, monitor "DTC" info for DTC P0152 until the DTC P0152 test runs. 5. Note the test result. Does the Tech 2 indicate DTC P0152 failed this ignition?	—	Go to *Step 4*	Check the Procedure Refer to *Diagnostic Aids*
4	1. Ignition "OFF". 2. Disconnect Bank 2 HO2S 1. 3. Ignition "ON". 4. At HO2S Bank 2 Sensor 1 connector (PCM side) use a DVM to measure voltages at the high and low signal terminals. Are the voltages in the specified range?	3-4 V	Go to *Step 5*	Go to *Step 6*

DTC P0152 – HO2S Circuit High Voltage Bank 2 Sensor 1 (Cont'd)

Step	Action	Value(s)	Yes	No
5	Repair short to voltage in signal circuit. Is the action complete?	—	Verify repair	—
6	1. Ignition "ON", engine"OFF". 2. At Bank 2 HO2S 1 connector (PCM side) jumper both the HO2S high and low signal circuits (PCM side) to ground. 3. Using a Tech 2, monitor Bank 2 HO2S 1 voltage. Is Bank 2 HO2S 1 voltage below the specified value?	10 mV	Go to *Step 7*	Go to *Step 8*
7	1. Disconnect the jumpers to ground from Bank 2 HO2S 1 PCM-side connector. 2. With the HO2S 1 connector disconnected, monitor Bank 2 HO2S 1 voltage. Is the Bank 2 HO2S 1 voltage between the specified values?	425-475 mV	Check the Procedure Refer to *Diagnostic Aids*	Go to *Step 8*
8	Replace the PCM. **IMPORTANT:** The replacement PCM must be programmed. Refer to *On-Vehicle Service* in *Powertrain Control Module and Sensors* for procedures. And also refer to latest Service Bulletin. Check to see if the Latest software is released or not. And then Down Load the LATEST PROGRAMMED SOFTWARE to the replacement PCM. Is the action complete?	—	Verify repair	—

Diagnostic Trouble Code (DTC) P0153 HO2S Slow Response Bank 2 Sensor 1

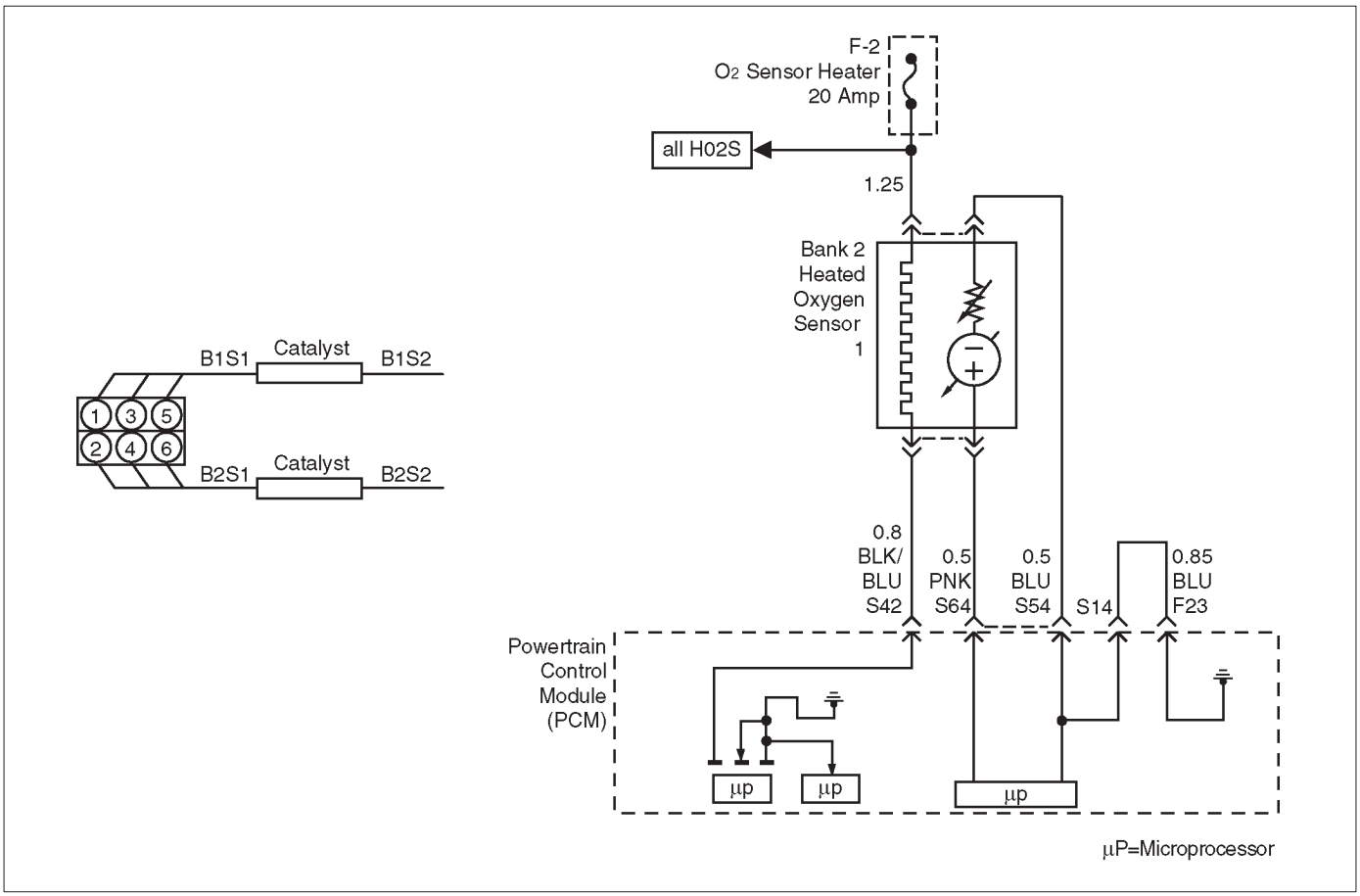

D06RY00175

Circuit Description

The powertrain control module (PCM) continuously monitors the heated oxygen sensor (HO2S) activity for 90 seconds after "closed loop" has been enabled. During the monitoring period the PCM counts the number of times that a rich-to-lean and lean-to-rich response is indicated and adds the amount of time it took to complete all rich-to-lean transitions and lean-to-rich transitions. With this information, an average time for rich-to-lean and lean-to-rich transitions can be determined. If the average response time of either transition is too slow, a DTC P0153 will be set.

A lean-to-rich transition is indicated when the HO2S voltage changes from less than 300 mV to greater than 600 mV. A rich-to-lean transition is indicated when the HO2S voltage changes from more than 600 mV to less than 300 mV. An HO2S that responds too slowly is likely to be faulty and should be replaced.

Conditions for Setting the DTC

- No related DTCs.
- Engine coolant temperature (ECT) is above 60˚C (140˚F).
- The engine is operating in "closed loop".
- Engine has been running for over 60 seconds.
- Canister purge duty cycle is above 2%.
- Engine speed is between 1500 RPM and 3000 RPM.
- Mass air flow is between 18 g/second and 42 g/second.
- All above conditions are met for 3 seconds.
- 90 seconds after "closed loop" has been enabled, Bank 2 HO2S 1 average transition time between 300 mV and 600 mV is too slow. The lean-to-rich average transition response time was longer than 94 milliseconds or the rich-to-lean average transition response time was longer than 105 milliseconds.

Action Taken When the DTC Sets

- The PCM will illuminate the malfunction indicator lamp (MIL) after the second consecutive trip in which the fault is detected.
- The PCM will store conditions which were present when the DTC set as Freeze Frame and in the Failure Records data.
- "Open loop" fuel control will be in effect.

Conditions for Clearing the MIL/DTC

- The PCM will turn the MIL "OFF" on the third consecutive trip cycle during which the diagnostic has been run and the fault condition is no longer present.
- A history DTC P0153 will clear after 40 consecutive warm-up cycles have occurred without a fault.
- DTC P0153 can be cleared by using the Tech 2 "Clear Info" function or by disconnecting the PCM battery feed.

Diagnostic Aids

Check for the following conditions:

- Poor connection at PCM – Inspect harness connectors for backed-out terminals, improper mating, broken locks, improperly formed or damaged terminals, and poor terminal-to-wire connection.
- Damaged harness – Inspect the wiring harness for damage. If the harness appears to be OK, observe the Bank 2 HO2S 1 display on the Tech 2 while moving connectors and wiring harnesses related to the sensor. A change in the display will indicate the location of the fault.

Reviewing the Failure Records vehicle mileage since the diagnostic test last failed may help determine how often the condition that caused the DTC to be set occurs. This may assist in diagnosing the condition.

Test Description

Number(s) below refer to the step number(s) on the Diagnostic Chart.

2. Verifies that the fault is currently present.

3. HO2S transition time, ratio mean volts and switching DTCs set for multiple sensors indicate probable contamination. Before replacing the sensors, isolate and correct the source of the contamination to avoid damaging the replacement sensors.

DTC P0153 – HO2S Slow Response Bank 2 Sensor 1

Step	Action	Value(s)	Yes	No
1	Was the “On-Board Diagnostic (OBD) System Check” performed?	—	Go to *Step 2*	Go to *OBD System Check*
2	NOTE: If any DTCs are set, (except P0133, P1133, P1134, P1153, and/or P1154), refer to those DTCs before proceeding with this diagnostic chart. 1. Install the Tech 2. 2. Idle the engine at operating temperature. 3. Operate the vehicle within parameters specified under “Conditions for Setting the DTC” criteria included in Diagnostic Support. 4. Using a Tech 2, monitor “DTC” info for DTC P0153 until the DTC P0153 test runs. 5. Note the test result. Does the Tech 2 indicate DTC P0153 failed this ignition?	—	Go to *Step 3*	Check the Procedure Refer to *Diagnostic Aids*
3	Did the Tech 2 also indicate DTC P0153, P1133, P1134, P1153, and/or P1154 test failed this ignition?	—	Go to *Step 17*	Go to *Step 4*
4	Check for leaks at the pipe joints. Are the joints leaking?	—	Go to *Step 5*	Go to *Step 6*
5	Tighten the U-bolt nuts at the leaking joint. Is your action complete?	—	Go to *Step 2*	—
6	Check for gaskets that are damage or improperly installed. Are there damaged or misaligned gaskets?	—	Go to *Step 7*	Go to *Step 8*
7	1. Replace the damaged gaskets. 2. Align the connections. 3. Tighten the connections. Is your action complete?	—	Go to *Step 2*	—
8	Check for loose exhaust flange connections. Are the flange connections loose?	—	Go to *Step 9*	Go to *Step 10*
9	Tighten the stud nuts or bolts to specifications. Is your action complete?	—	Go to *Step 2*	—
10	Check for burned or corroded exhaust pipes. Are the exhaust pipes burned or corroded?	—	Go to *Step 11*	Go to *Step 12*
11	Replace the exhaust pipes, as required. Is your action complete?	—	Go to *Step 2*	—
12	Check for leaks at the exhaust manifold. Are there leaks at the exhaust manifold?	—	Go to *Step 13*	Go to *Step 14*
13	Tighten the bolts to specifications or replace the manifold if necessary. Is your action complete?	—	Go to *Step 2*	—

DTC P0153 – HO2S Slow Response Bank 2 Sensor 1 (Cont'd)

Step	Action	Value(s)	Yes	No
14	1. Visually/physically inspect the following items: ● Ensure that the Bank 2 HO2S 1 is securely installed. ● Check for corrosion on terminals. ● Check terminal tension (at Bank 2 HO2S 1 and at the PCM). ● Check for damaged wiring. Was a problem found in any of the above areas?	—	Go to *Step 18*	Go to *Step 15*
15	1. Disconnect Bank 2 HO2S 1. 2. Ignition "ON". 3. Using a DVM at the PCM side of the HO2S 1 connector, measure the voltage between the high signal circuit and ground. Are both voltages in the specified range?	3-4 V	Go to *Step 16*	Go to *Step 19*
16	1. With Bank 2 HO2S 1 disconnected, jumper the high and low (PCM side) signal circuits to ground. 2. Ignition "ON". 3. Using a Tech 2, monitor the Bank 2 HO2S 1 voltage. Does the Tech 2 indicate less than 10 mV and immediately return to about 450 mV when the jumper is removed?	—	Go to *Step 21*	Go to *Step 22*
17	Replace the affected heated oxygen sensors. NOTE: Before replacing the sensors, the cause of the contamination must be determined and corrected. ● Fuel contamination. ● Use of improper RV sealant. ● Engine oil/coolant consumption. Is the action complete?	—	Verify repair	—
18	Repair condition as necessary. Is the action complete?	—	Verify repair	—
19	Check for faulty PCM connections or terminal damage. Is the action complete?	—	Verify repair	Go to *Step 20*
20	Repair open, short or grounded signal circuit. Is the action complete?	—	Verify repair	—
21	Replace Bank 2 HO2S 1. Is the action complete?	—	Verify repair	—
22	Replace the PCM. **IMPORTANT:** The replacement PCM must be programmed. Refer to *On-Vehicle Service* in *Powertrain Control Module and Sensors* for procedures. And also refer to latest Service Bulletin. Check to see if the Latest software is released or not. And then Down Load the LATEST PROGRAMMED SOFTWARE to the replacement PCM. Is the action complete?	—	Verify repair	—

Diagnostic Trouble Code (DTC) P0154 HO2S Circuit Insufficient Activity Bank 2 Sensor 1

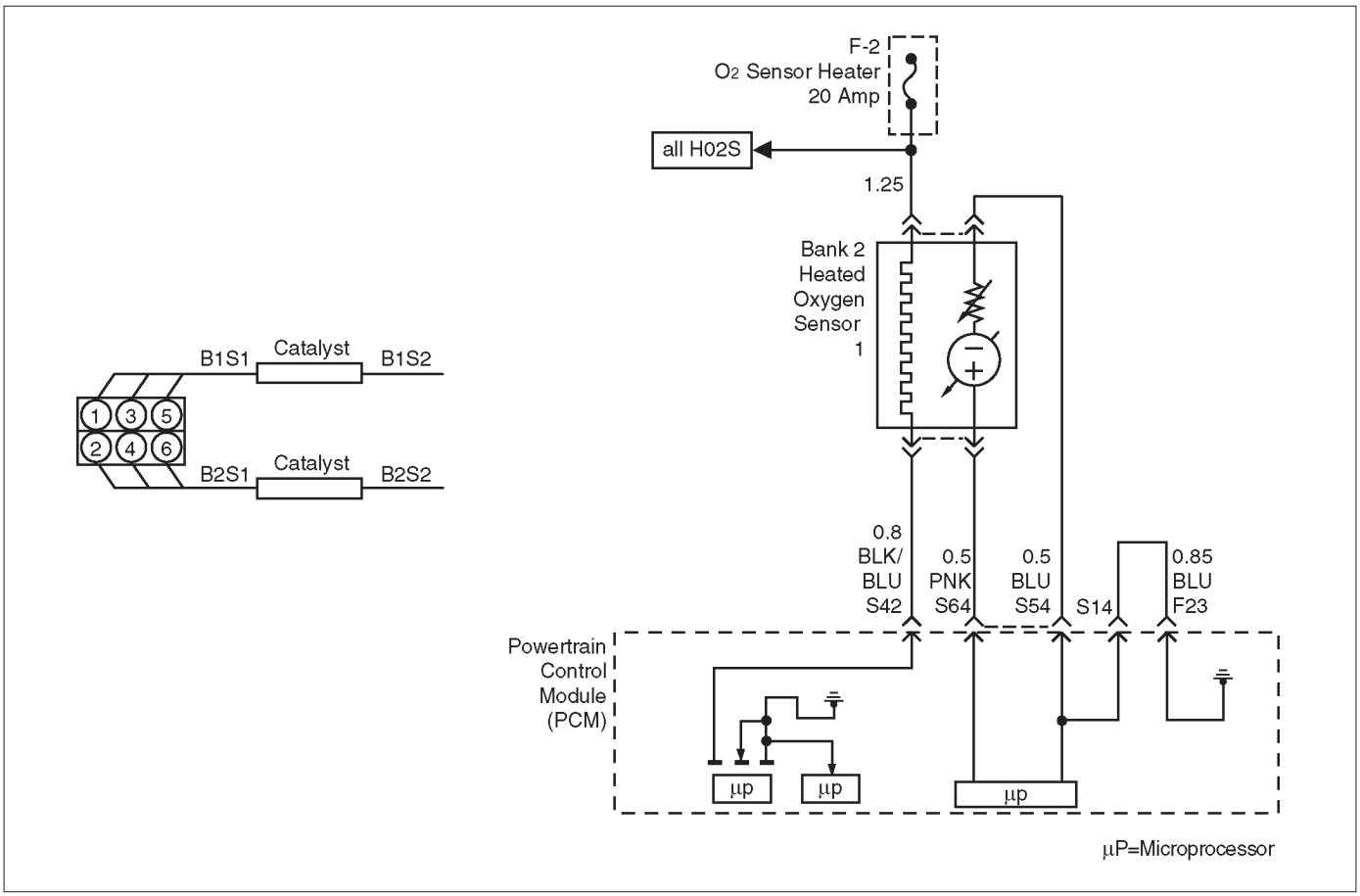

D06RY00175

Circuit Description

The powertrain control module (PCM) supplies a bias voltage of about 450 mV between the heated oxygen sensor (HO2S) high and low circuits. When measured with a 10 megaohm digital voltmeter, this may display as low as 320 mV. The oxygen sensor varies the voltage within a range of about 1000 mV when the exhaust is rich, down through about 10 mV when exhaust is lean. The PCM constantly monitors the HO2S signal during “closed loop” operation and compensates for a rich or lean condition by decreasing or increasing injector pulse width as necessary. If the Bank 2 HO2S 1 voltage remains at or near the 450 mV bias for an extended period of time, DTC P0154 will be set, indicating an open sensor signal or sensor low circuit.

Heated oxygen sensors are used to minimize the amount of time required for “closed loop” fuel control operation and to allow accurate catalyst monitoring. The oxygen sensor heater greatly decreases the amount of time required for fuel control sensors Bank 1 HO2S 1 and Bank 2 HO2S 1 to become active. Oxygen sensor heaters are required by post-catalyst monitor sensors to maintain a sufficiently high temperature for accurate exhaust oxygen content readings further from the engine.

Conditions for Setting the DTC

- No related DTCs.
- Engine coolant temperature is above 60˚C (140˚F).
- The engine has been running for over 5 seconds.
- Oxygen sensor heater is functioning properly.
- Bank 2 HO2S 1 signal voltage remains between 400 mV and 500 mV for a total of 77 seconds over a 90-second period of time.

Action Taken When the DTC Sets

- The PCM will ON the MIL after second trip with detected fault.
- The PCM will store conditions which were present when the DTC was set as Freeze Frame and in the Failure Records data.
- “Open loop” fuel control will be in effect.

Conditions for Clearing the MIL/DTC

- The PCM will turn the MIL “OFF” on the third consecutive trip cycle during which the diagnostic has been run and the fault condition is no longer present.
- A history DTC P0154 will clear after 40 consecutive warm-up cycles have occurred without a fault.
- DTC P0154 can be cleared by using the Tech 2 “Clear Info” function or by disconnecting the PCM battery feed.

Diagnostic Aids

Check for the following conditions:

- Poor connection or damaged harness – Inspect the harness connectors for backed-out terminals,

improper mating, broken locks, improperly formed or damaged terminals, poor terminal-to-wire-connection, and damaged harness.

- Faulty HO2S heater or heater circuit – With the ignition "ON", engine "OFF", the HO2S 1 voltage displayed on the Tech 2 is normally 455-460 mV. A reading over 1000 mV indicates a signal line shorted to voltage. A reading under 5 mV indicates a signal line shorted to ground or signal lines shorted together. If not, disconnect the HO2S and connect a test light between the HO2S ignition feed and heater ground circuits. If the test light does not light for 2 seconds when the ignition is turned on, repair the open ignition feed or sensor ground circuit as necessary. If the test light lights and the HO2S signal and low circuits are OK, replace the HO2S.
- Intermittent test – With the ignition "ON", monitor the HO2S signal voltage while moving the wiring harness and related connectors. If the fault is induced, the HO2S signal voltage will change. This may help isolate the location of the malfunction.

Test Description

Number(s) below refer to the step number(s) on the Diagnostic Chart.

3. If the DTC P0154 test passes while the Failure Records conditions are being duplicated, an intermittent condition is indicated.

Reviewing the Failure Records vehicle mileage since the diagnostic test last failed may help determine how often the condition that caused the DTC to be set occurs. This may assist in diagnosing the condition.

DTC P0154 –HO2S Circuit Insufficient Activity Bank 2 Sensor 1

Step	Action	Value(s)	Yes	No
1	Was the "On-Board Diagnostic (OBD) System Check" performed?	—	Go to *Step 2*	Go to *OBD System Check*
2	1. Install the Tech 2. 2. Run the engine at operating temperature. 3. Operate the engine above 1200 RPM for two minutes. Does the Tech 2 indicate Bank 2 HO2S 1 voltage varying outside the specified values?	400-500 mV	Go to *Step 3*	Go to *Step 4*
3	1. Ignition "ON", engine "OFF". 2. Review and record Tech 2 Failure Records data and note parameters. 3. Operate the vehicle within Failure Records conditions as noted. 4. Using a Tech 2, monitor "DTC" info for DTC P0154 until the DTC P0154 test runs. 5. Note the test result. Does the Tech 2 indicate DTC P0154 failed this ignition?	—	Go to *Step 4*	Check the Procedure Refer to *Diagnostic Aids*
4	Check for a damaged harness. Was a problem found?	—	Verify repair	Go to *Step 5*
5	Check for a poor Bank 2 HO2S 1 high and low circuit terminal connections at the Bank 2 HO2S 1 harness connector and replace terminal(s) if necessary. Did any terminals require replacement?	—	Verify repair	Go to *Step 6*
6	Check for a poor Bank 2 HO2S 1 high and low circuit terminal connections at the PCM and replace terminal(s) if necessary. Did the terminal require replacement?	—	Verify repair	Go to *Step 7*

DTC P0154 –HO2S Circuit Insufficient Activity Bank 2 Sensor 1 (Cont'd)

Step	Action	Value(s)	Yes	No
7	1. Ignition "OFF". 2. With the PCM disconnected, check continuity of the Bank 2 HO2S 1 high circuit. 3. If the Bank 2 HO2S 1 high circuit measures over 5.0 ohms, repair open or poor connection as necessary. Was a Bank 2 HO2S 1 high circuit problem found and corrected?	—	Verify repair	Go to *Step 8*
8	1. Ignition "OFF". 2. With the PCM disconnected, check continuity of the Bank 2 HO2S 1 low circuit. 3. If the Bank 2 HO2S 1 low circuit measures over 5.0 ohms, repair open or poor connection as necessary. Was a Bank 2 HO2S 1 low circuit problem found and corrected?	—	Verify repair	Go to *Step 9*
9	1. Ignition "ON", engine "OFF". 2. Disconnect Bank 2 HO2S 1 and jumper the HO2S high and low circuits (PCM side) to ground. 3. Using a Tech 2, monitor Bank 2 HO2S 1 voltage. Is the Bank 2 HO2S 1 voltage in the specified range?	0-10 mV	Go to *Step 10*	Go to *Step 11*
10	Replace Bank 2 HO2S 1. Is the action complete?	—	Verify repair	—
11	Replace the PCM. **IMPORTANT:** The replacement PCM must be programmed. Refer to *On-Vehicle Service* in *Powertrain Control Module and Sensors* for procedures. And also refer to latest Service Bulletin. Check to see if the Latest software is released or not. And then Down Load the LATEST PROGRAMMED SOFTWARE to the replacement PCM. Is the action complete?	—	Verify repair	—

Diagnostic Trouble Code (DTC)
P0155 HO2S Heater Circuit Open Bank 2 Sensor 1

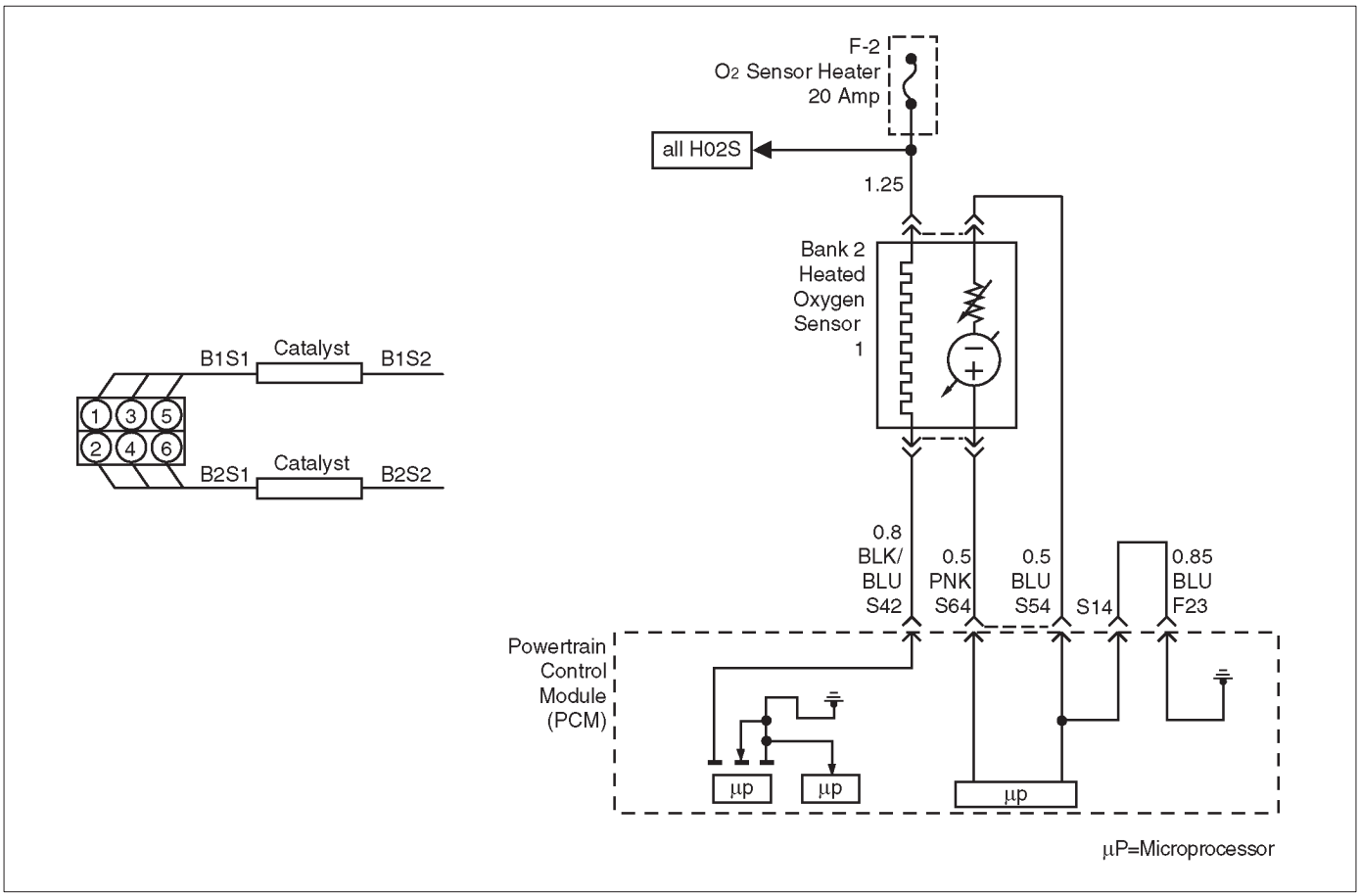

D06RY00175

Circuit Description

Heated oxygen sensors are used to minimize the amount of time required for closed loop fuel control operation and to allow accurate catalyst monitoring. The oxygen sensor heater greatly decreases the amount of time required for fuel control sensors Bank 1 HO2S 1 and Bank 2 HO2S 1 to become active. Oxygen sensor heaters are required by post-catalyst monitor sensors to maintain a sufficiently high temperature which allows accurate exhaust oxygen content readings further from the engine.

The powertrain control module (PCM) will run the heater test only after a cold start (determined by engine coolant and intake air temperature at the time of start-up) and only once during an ignition cycle. When the engine is started the PCM will monitor the HO2S voltage. When the Bank HO2S voltage indicates a sufficiently active sensor, the PCM looks at how much time has elapsed since start-up. If the PCM determines that too much time was required for the Bank 2 HO2S 1 to become active, a DTC P0155 will set. The time it should take the HO2S to reach operating temperature is based on the total amount of air that has passed through the mass air flow (MAF) sensor and into the engine (more total air flow = shorter time to HO2S activity).

Conditions for Setting the DTC

- No related DTCs.
- The engine has been running for over 120 seconds.
- Ignition voltage is between 11 volts and 18 volts.
- Heater signal is below 0.1A.
- Bank 1 HO2S 2 voltage does not change more than 150 mV from the bias voltage (between 400 mV-500 mV) for a longer amount of time than it should. The maximum amount of time to come up to operating range is 120 seconds. This warm-up time depends on the engine coolant temperature at start-up and accumulated air flow since start-up.

Action Taken When the DTC Sets

- The PCM will illuminate the malfunction indicator lamp (MIL) after the second consecutive trip in which the fault is detected.
- The PCM will store conditions which were present when the DTC was set as Freeze Frame and in the Failure Records data.

Conditions for Clearing the MIL/DTC

- The PCM will turn the MIL “OFF” on the third consecutive trip cycle during which the diagnostic has been run and the fault condition is no longer present.
- A history DTC P0155 will clear after 40 consecutive warm-up cycles have occurred without a fault.
- DTC P0155 can be cleared by using the Tech 2 “Clear info” function or by disconnecting the PCM battery feed.

Diagnostic Aids

Check for the following conditions:

- Poor connection at PCM – Inspect harness connectors for backed-out terminals, improper mating, broken locks, improperly formed or damaged terminals, and poor terminal-to-wire connection.
- Damaged harness – Inspect the wiring harness for damage. If the harness appears to be OK, observe the display on the Tech 2 while moving connectors and wiring harnesses related to the sensor. A change in the display will indicate the location of the fault.

Reviewing the Failure Records vehicle mileage since the diagnostic test last failed may help determine how often the condition that caused the DTC to be set occurs. This may assist in diagnosing the condition.

Test Description

Number(s) below refer to the step number(s) on the Diagnostic Chart.

2. The HO2S should be allowed to cool before performing this test. If the HO2S heater is functioning, the signal voltage will gradually increase or decrease as the sensor element warms. If the heater is not functioning, the HO2S signal will remain near the 450 mV bias voltage.

4. Ensures that the ignition feed circuit to the HO2S is not open or shorted. The test light should be connected to a good chassis ground, in case the HO2S low or HO2S heater ground circuit is faulty.

5. Checks the HO2S heater ground circuit.

6. Checks for an open or shorted HO2S heater element.

10. An open HO2S signal or low circuit can cause the HO2S heater to appear faulty. Check these circuits before replacing the sensor.

DTC P0155 – HO2S Heater Circuit Open Bank 2 Sensor 1

Step	Action	Value(s)	Yes	No
1	Was the “On-Board Diagnostic (OBD) System Check” performed?	—	Go to *Step 2*	Go to *OBD System Check*
2	NOTE: If the engine has just been operating, allow the engine to cool for at least 15 minutes before proceeding. 1. Remove the fuel pump relay. 2. Connect a fused jumper at the fuel pump relay socket, between the battery positive at the relay and the relay wire that leads to the fuel pump and HO2S fuses. 3. Ignition “OFF”. 4. Install a Tech 2. 5. Ignition “ON”, engine “OFF”. 6. Monitor the Bank 1 HO2S 1 voltage for several minutes. Did the HO2S voltage go from bias voltage to above or below the specified value?	Above 650 mV or below 250 mV	Check the Procedure Refer to *Diagnostic Aids*	Go to *Step 3*
3	Inspect the fuse for the Bank 2 HO2S 1 ignition feed. Is the fuse open?	—	Go to *Step 15*	Go to *Step 4*
4	1. Ignition “OFF”. 2. Raise the vehicle. 3. Disconnect the Bank 2 HO2S 1 electrical connector. 4. Using a test light connected to a known good ground (do not use Bank 2 HO2S 1 heater ground or Bank 2 HO2S 1 low), probe the ignition feed circuit at the Bank 2 HO2S 1 electrical connector (PCM harness side). Does the test light illuminate?	—	Go to *Step 5*	Go to *Step 7*
5	Connect the test light between Bank 2 HO2S 1 ignition feed and Bank 2 HO2S 1 heater ground. Does the test light illuminate?	—	Go to *Step 6*	Go to *Step 8*

DTC P0155 – HO2S Heater Circuit Open Bank 2 Sensor 1 (Cont'd)

Step	Action	Value(s)	Yes	No
6	1. Allow the HO2S to cool for at least 15 minutes. 2. Using a DVM, measure resistance between the Bank 2 HO2S 1 ignition feed and the Bank 2 HO2S 1 heater ground at the Bank 2 HO2S 1 pigtail. Is the HO2S resistance within the specified values?	3-6 ohms	Go to *Step 9*	Go to *Step 10*
7	Repair the open Bank 2 HO2S 1 ignition feed circuit to Bank 2 HO2S 1. Is the action complete?	—	Verify repair	—
8	Repair the open Bank 2 HO2S 1 heater ground circuit. Is the action complete?	—	Verify repair	—
9	1. Check for a poor connection at the Bank 2 HO2S 1 harness terminals. 2. If a poor connection is found, replace terminals. Was a poor connection found?	—	Verify repair	Go to *Step 10*
10	Check for a poor Bank 2 HO2S 1 signal or low circuit terminal connection at the Bank 2 HO2S 1 harness connector and replace terminal(s) if necessary. Did any terminals require replacement?	—	Verify repair	Go to *Step 11*
11	1. Ignition "OFF". 2. Disconnect the PCM and check the continuity of the Bank 2 HO2S 1 signal circuit and the Bank 2 HO2S 1 low circuit. 3. If the Bank 2 HO2S 1 signal circuit or HO2S low circuit measures over 5 ohms, repair open or poor connection as necessary. Was a problem found?	—	Verify repair	Go to *Step 12*
12	Check for a poor Bank 2 HO2S 1 low circuit terminal connection at the PCM and replace the terminal if necessary. Did the terminal require replacement?	—	Verify repair	Go to *Step 13*
13	Check for a poor Bank 2 HO2S 1 signal circuit terminal connection at the PCM and replace the terminal if necessary. Did the terminal require replacement?	—	Verify repair	Go to *Step 14*
14	Replace Bank 2 HO2S 1. Is the action complete?	—	Verify repair	—
15	Locate and repair short to ground in Bank 2 HO2S 1 ignition feed circuit and replace the faulty fuse. Is the action complete?	—	Verify repair	—

Diagnostic Trouble Code (DTC)
P0157 HO2S Circuit Low Voltage Bank 2 Sensor 2

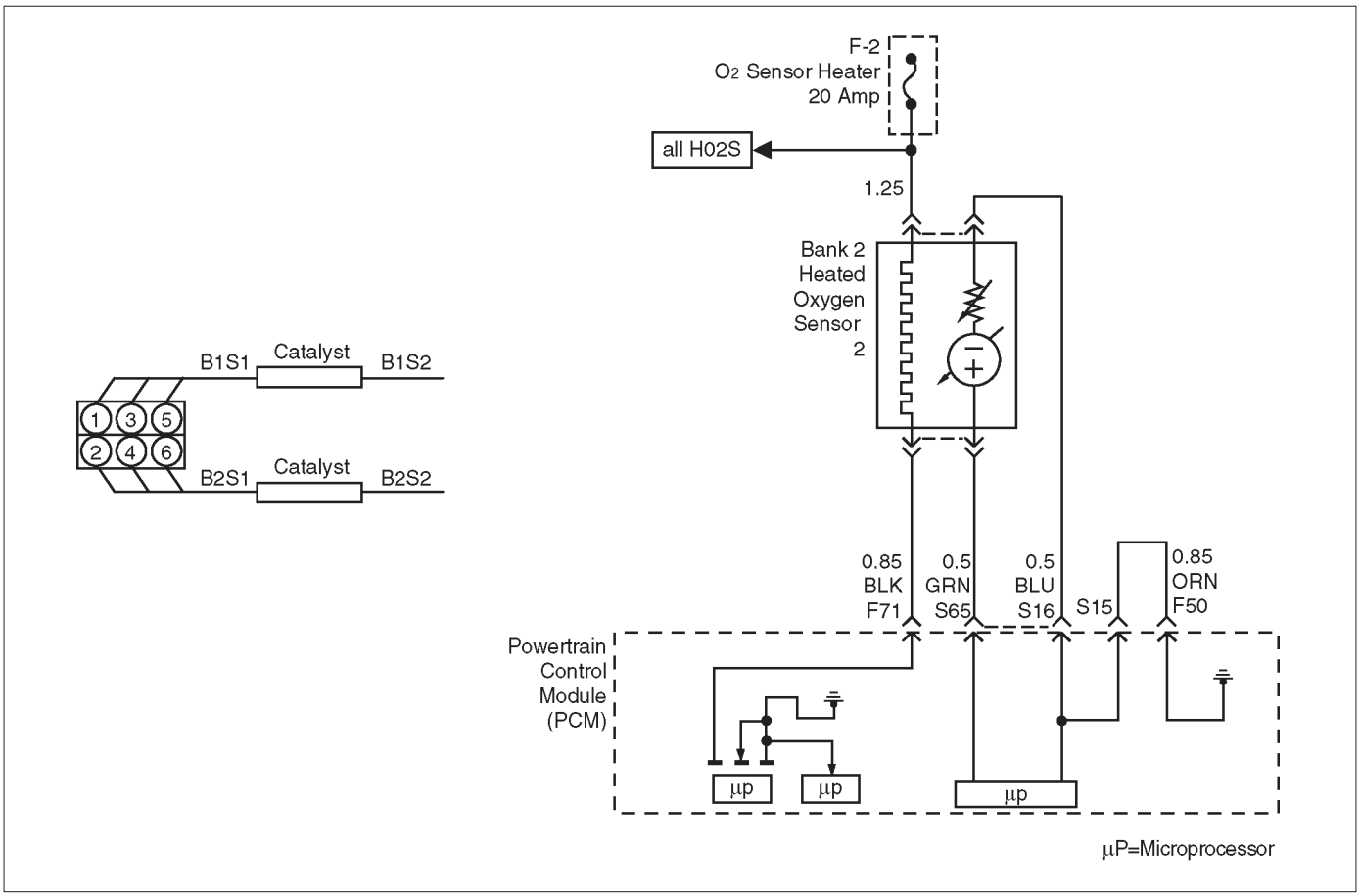

D06RY00177

Circuit Description

To control emissions of hydrocarbons (HC), carbon monoxide (CO), and oxides of nitrogen (NOx), a three-way catalytic converter is used. The catalyst within the converter promotes a chemical reaction which oxidizes the HC and CO present in the exhaust gas, converting them into harmless water vapor and carbon dioxide. The catalyst also reduces NOx, converting it to nitrogen. The powertrain control module (PCM) has the ability to monitor this process using the Bank 2 HO2S 1 and the Bank 2 HO2S 2 heated oxygen sensors. The Bank 2 HO2S 1 sensor produces an output signal which indicates the amount of oxygen present in the exhaust gas entering the three-way catalytic converter. The Bank 2 HO2S 2 sensor produces an output signal which indicates the oxygen storage capacity of the catalyst; this in turn indicates the catalyst's ability to convert exhaust gases efficiently. If the catalyst is operating efficiently, the Bank 2 HO2S 1 signal will be far more active than that produced by the Bank 2 HO2S 2 sensor. If the Bank 2 HO2S 2 signal voltage remains excessively low for an extended period of time, DTC P0157 will be set.

Conditions for Setting the DTC

- No related DTCs.
- The engine is operating in "closed loop".
- Engine coolant temperature is above 60˚C (140˚F).
- "Closed loop" commanded air/fuel ratio is between 14.5 and 14.8
- Bank 2 HO2S 2 signal voltage remains below 22 mV during normal "closed loop" operation for a total of 106 seconds over a 125-second period of time.

OR

- Bank 2 HO2S 2 signal voltage remains below 400 mV during "power enrichment" mode fuel control operation for up to 5 seconds.

Action Taken When the DTC Sets

- The PCM will ON the MIL after second trip with detected fault.
- The PCM will store conditions which were present when the DTC was set as Freeze Frame and in the Failure Records data.

Conditions for Clearing the MIL/DTC

- The PCM will turn the MIL "OFF" on the third consecutive trip cycle during which the diagnostic has been run and the fault condition is no longer present.
- A history DTC P0157 will clear after 40 consecutive warm-up cycles have occurred without a fault.
- DTC P0157 can be cleared by using the Tech 2 "Clear Info" function or by disconnecting the PCM battery feed.

Diagnostic Aids

Check for the following conditions:

- Heated oxygen sensor wiring – The sensor pigtail may be mispositioned and contacting the exhaust system.
- Poor PCM to engine grounds.
- Fuel pressure – A condition which causes a lean exhaust can cause DTC P0157 to set. The system will go lean if pressure is too low. The PCM can compensate for some decrease. However, if fuel pressure is too low, a DTC P0157 may be set. Refer to *Fuel System Diagnosis*.
- Lean injector(s) – Perform "Injector Balance Test".
- Vacuum leaks – Check for disconnected or damaged vacuum hoses and for vacuum leaks at the intake manifold, throttle body, EGR system, and PCV system.
- Exhaust leaks – An exhaust leak may cause outside air to be pulled into the exhaust gas stream past the HO2S, causing the DTC P0157 to set. Check for exhaust leaks near the Bank 1 HO2S 2 sensor.
- MAF sensor – The system can go lean if the MAF sensor signal indicates an engine airflow measurement that is not correct. Disconnect the MAF sensor to see if the condition is corrected. If so, replace the MAF sensor.
- Fuel contamination – Water, even in small amounts, can be delivered to the fuel injectors. The water can cause a lean exhaust to be indicated. Excessive alcohol in the fuel can also cause this condition. Refer to *Fuel System Diagnosis* for the procedure to check for fuel contamination.
- If none of above conditions are present, replace the affected HO2S 2.

Test Description

Number(s) below refer to the step number(s) on the Diagnostic Chart.

3. DTC P0157 failing during operation may indicate a condition described in the "Diagnostic Aids" above. If the DTC P0157 test passes while the Failure Records conditions are being duplicated, an intermittent condition is indicated.

DTC P0157 – HO2S Circuit Low Voltage Bank 2 Sensor 2

Step	Action	Value(s)	Yes	No
1	Was the "On-Board Diagnostic (OBD) System Check" performed?	—	Go to *Step 2*	Go to *OBD System Check*
2	1. Install the Tech 2. 2. Run the engine at operating temperature. 3. Operate the vehicle within the parameters specified under "Conditions for Setting the DTC" criteria included in Diagnostic Support. 4. Using a Tech 2, monitor Bank 2 HO2S 2 voltage. Does the Bank 2 HO2S 2 voltage remain below the specified value?	22 mV	Go to *Step 4*	Go to *Step 3*
3	1. Ignition "ON", engine "OFF". 2. Review and record Tech 2 Failure Records data and note parameters. 3. Operate the vehicle within Failure Records conditions as noted. 4. Using a Tech 2, monitor "DTC" info for DTC P0157 until the DTC P0157 test runs. 5. Note the test result. Does the Tech 2 indicate DTC P0157 failed this ignition?	—	Go to *Step 4*	Check the Procedure Refer to *Diagnostic Aids*
4	1. Turn the ignition "OFF". 2. Disconnect the PCM. 3. Check the Bank 2 HO2S 2 high and low signal circuits for a short to ground or a short to the heater ground circuit. Were Bank 2 HO2S 2 signal circuits shorted?	—	Go to *Step 5*	Go to *Step 6*
5	Repair the Bank 1 HO2S 2 signal circuit. Is the action complete?	—	Verify repair	—

DTC P0157 – HO2S Circuit Low Voltage Bank 2 Sensor 2 (Cont'd)

Step	Action	Value(s)	Yes	No
6	1. Ignition "OFF". 2. Leave the PCM and HO2S 2 disconnected. 3. Check for continuity between the high and low signal circuits. Was there continuity between the high and low circuits?	—	Go to *Step 7*	Go to *Step 8*
7	Repair the short between the high and low circuits. Is the action complete?	—	Verify repair	—
8	1. Ignition "OFF". 2. Reconnect the PCM, leave HO2S 2 disconnected. 3. Ignition "ON". Does the Tech 2 indicate Bank 2 HO2S 2 voltage near the specified value?	425-475 mV	Check the Procedure Refer to *Diagnostic Aids*	Go to *Step 9*
9	Replace the PCM. **IMPORTANT:** The replacement PCM must be programmed. Refer to *On-Vehicle Service* in *Powertrain Control Module and Sensors* for procedures. And also refer to the latest Service Bulletin. Check to see if the Latest software is released or not. And then Down Load the LATEST PROGRAMMED SOFTWARE to the replacement PCM. Is the action complete?	—	Verify repair	—

Diagnostic Trouble Code (DTC)
P0158 HO2S Circuit High Voltage Bank 2 Sensor 2

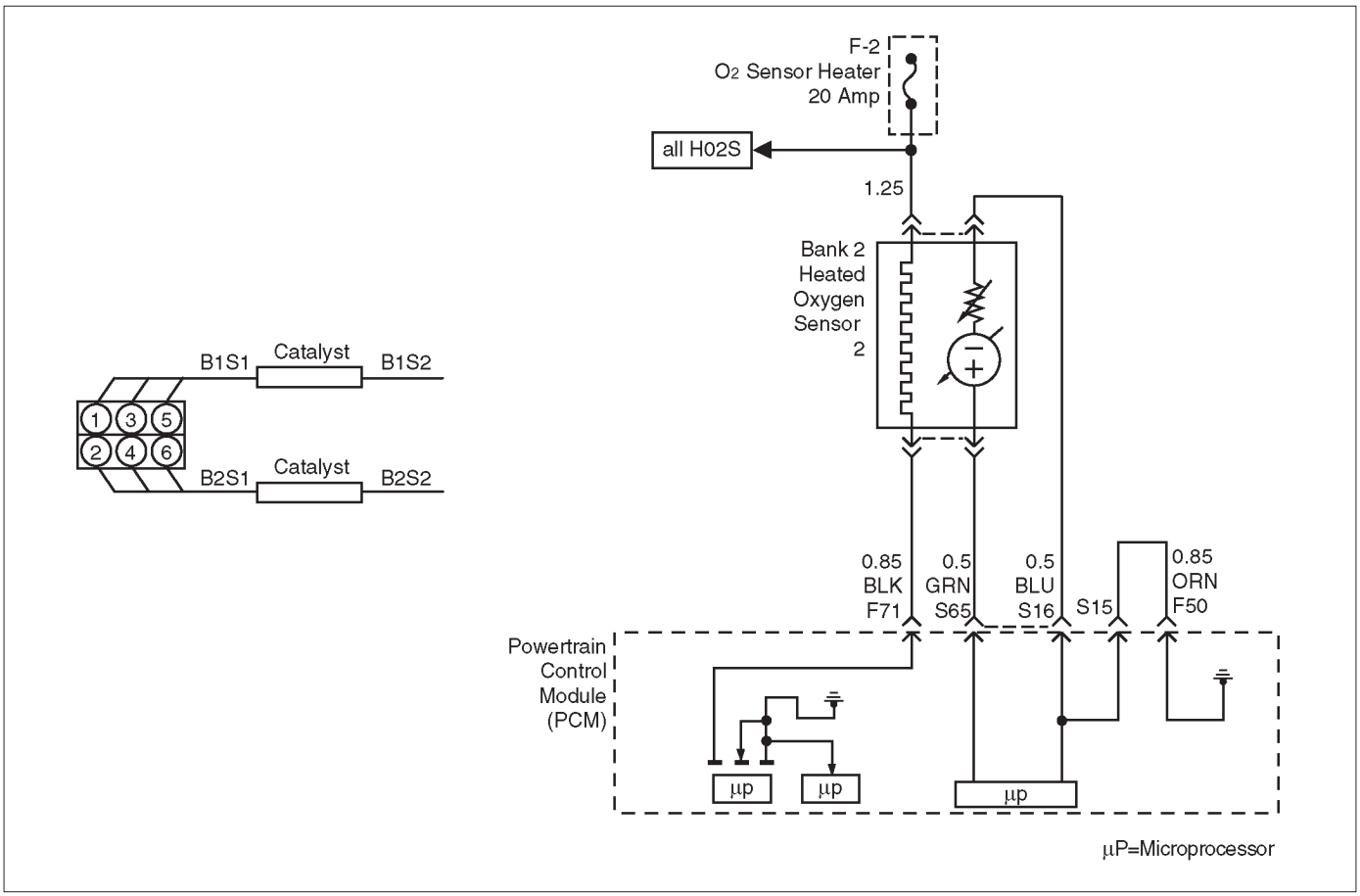

D06RY00177

Circuit Description

To control emissions of hydrocarbons (HC), carbon monoxide (CO), and oxides of nitrogen (NOx), a three-way catalytic converter is used. The catalyst within the converter promotes a chemical reaction which oxidizes the HC and CO present in the exhaust gas, converting them into harmless water vapor and carbon dioxide. The catalyst also reduces NOx, converting it to nitrogen. The powertrain control module (PCM) has the ability to monitor this process using the Bank 2 HO2S 1 and the Bank 2 HO2S 2 heated oxygen sensors. The Bank 2 HO2S 1 sensor produces an output signal which indicates the amount of oxygen present in the exhaust gas entering the three-way catalytic converter. The Bank 2 HO2S 2 sensor produces an output signal which indicates the oxygen storage capacity of the catalyst; this in turn indicates the catalyst's ability to convert exhaust gases efficiently. If the catalyst is operating efficiently, the Bank 2 HO2S 1 signal will be far more active than that produced by the Bank 2 HO2S 2 sensor. If the Bank 2 HO2S 2 signal voltage remains excessively high for an extended period of time, DTC P0158 will be set.

Conditions for Setting the DTC

- No related DTCs.
- Engine is operating in "closed loop".
- "Closed loop" commanded air/fuel ratio is between 14.5 and 14.8.
- Engine coolant temperature is above 60˚C (140˚F).
- Bank 2 HO2S 2 signal voltage remains above 952 mV during normal "closed loop" operation for a total of 106 seconds over a 125-second period.

OR

- Bank 2 HO2S 2 signal voltage remains above 500 mV during deceleration fuel cutoff mode operation for up to 3 seconds.

Action Taken When the DTC Sets

- The PCM will ON the MIL after second trip with detected fault.
- The PCM will store conditions which were present when the DTC was set as Freeze Frame and in the Failure Records data.

Conditions for Clearing the MIL/DTC

- The PCM will turn the MIL "OFF" on the third consecutive trip cycle during which the diagnostic has been run and the fault condition is no longer present.
- A history DTC P0158 will clear after 40 consecutive warm-up cycles have occurred without a fault.
- DTC P0158 can be cleared by using the Tech 2 "Clear Info" function or by disconnecting the PCM battery feed.

Diagnostic Aids

Check for the following conditions:

- Fuel pressure – An excessively rich fuel mixture can cause a DTC P0158 to be set. Refer to *Fuel System Diagnosis*.
- Rich injector(s) – Perform “Injector Balance Test”.
- Leaking injector – Refer to *Fuel System Diagnosis*.
- Evaporative emissions (EVAP) canister purge – Check for fuel saturation. If full of fuel, check canister control and hoses. Refer to *Evaporative Emission (EVAP) Control System*.
- MAF sensor –The system can go rich if the MAF sensor signal indicates an engine airflow measurement that is not correct. Disconnect the MAF sensor to see if a rich condition is corrected. If so, replace the MAF sensor.
- Check for a leaking fuel pressure regulator diaphragm by checking the vacuum line to the regulator for the presence of fuel. There should be no fuel in the vacuum line.
- TP sensor – An intermittent TP sensor output will cause the system to go rich, due to a false indication of the engine accelerating.
- Shorted Heated Oxygen Sensor (HO2S) – If the HO2S is internally shorted, the HO2S voltage displayed on the Tech 2 will be over 1 volt. Try disconnecting the affected HO2S with the key “ON”, engine “OFF”. If the displayed HO2S voltage changes from over 1000 mV to around 450 mV, replace the HO2S. Silicon contamination of the HO2S can also cause a high HO2S voltage to be indicated. This condition is indicated by a powdery deposit on the portion of the HO2S exposed to the exhaust stream. If contamination is noticed, replace the affected HO2S.
- Open HO2S signal or low circuit, or faulty HO2S – A poor connection or open in the HO2S signal or low circuit can cause the DTC to set during deceleration fuel cutoff mode operation. An HO2S which is faulty and does not allow full voltage swing between the rich and lean thresholds can also cause this condition. Operate the vehicle while monitoring the HO2S voltage with a Tech 2. If the HO2S voltage is limited within a range between 300 mV to 600 mV, check the HO2S signal and low circuit wiring and associated terminal connections. If the wiring and connections are OK, replace the HO2S.
- If none of above conditions are present, replace the affected HO2S.

Test Description

Number(s) below refer to the step number(s) on the Diagnostic Chart.

3. DTC P0158 being set during deceleration fuel cutoff mode operation may indicate a condition described in the “Diagnostic Aids” above. If the DTC P0158 test passes while the Failure Records conditions are being duplicated, an intermittent condition is indicated.

Reviewing the Failure Records vehicle mileage since the diagnostic test last failed may help determine how often the condition that caused the DTC to be set occurs. This may assist in diagnosing the condition.

DTC P0158 – HO2S Circuit High Voltage Bank 2 Sensor 2

Step	Action	Value(s)	Yes	No
1	Was the “On-Board Diagnostic (OBD) System Check” performed?	—	Go to *Step 2*	Go to *OBD System Check*
2	1. Install the Tech 2. 2. Run the engine at operating temperature. 3. Operate the vehicle within parameters specified under “Conditions for Setting the DTC” criteria included in Diagnostic Support. 4. Using a Tech 2, monitor Bank 2 HO2S 2 voltage. Does the Bank 2 HO2S 2 voltage remain above the specified value?	952 mV (500 mV in deceleration fuel cut-out mode)	Go to *Step 4*	Go to *Step 3*
3	1. Ignition “ON”. 2. Review and record Tech 2 Failure Records data. 3. Operate the vehicle within Failure Records conditions as noted. 4. Using a Tech 2, monitor “DTC” info for DTC P0158 until the DTC P0158 test runs. 5. Note the test result. Does the Tech 2 indicate DTC P0158 failed this ignition?	—	Go to *Step 4*	Check the Procedure Refer to *Diagnostic Aids*

DTC P0158 – HO2S Circuit High Voltage Bank 2 Sensor 2 (Cont'd)

Step	Action	Value(s)	Yes	No
4	1. Ignition "OFF". 2. Disconnect Bank 2 HO2S 2. 3. Ignition "ON". 4. At the HO2S Bank 2 Sensor 2 connector (PCM side), use a DVM to measure voltages at the high and low signal terminals. Are the voltages in the specified range?	3-4 V	Go to *Step 5*	Go to *Step 6*
5	Repair short to voltage in signal circuit. Is the action complete?	—	Verify repair	—
6	1. Ignition "ON", engine "OFF". 2. At Bank 2 HO2S 2 connector (PCM side) jumper both the HO2S high and low signal circuits (PCM side) to ground. 3. Using a Tech 2, monitor Bank 2 HO2S 2 voltage. Is Bank 2 HO2S 2 voltage below the specified value?	10 mV	Go to *Step 7*	Go to *Step 8*
7	1. Disconnect the jumpers to ground from Bank 2 HO2S 2 PCM-side connector. 2. With the HO2S 2 connector disconnected, monitor Bank 2 HO2S 2 voltage. Is Bank 2 HO2S 2 voltage between the specified values?	425-475 mV	Check the Procedure Refer to *Diagnostic Aids*	Go to *Step 8*
8	Replace the PCM. **IMPORTANT:** The replacement PCM must be programmed. Refer to *On-Vehicle Service* in *Powertrain Control Module and Sensors* for procedures. And also refer to the latest Service Bulletin. Check to see if the Latest software is released or not. And then Down Load the LATEST PROGRAMMED SOFTWARE to the replacement PCM. Is the action complete?	—	Verify repair	—

Diagnostic Trouble Code (DTC)
P0160 HO2S Circuit Insufficient Activity Bank 2 Sensor 2

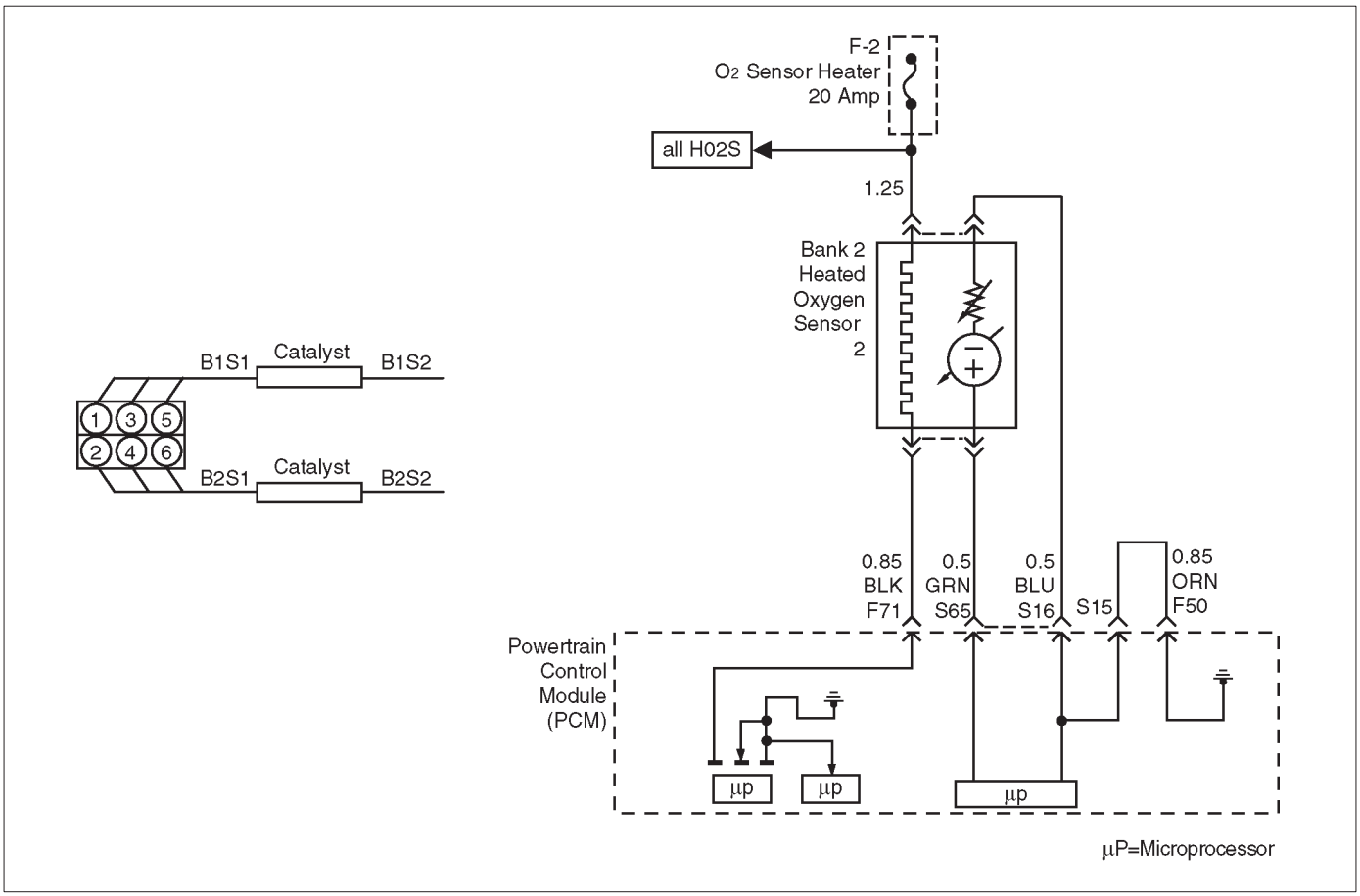

D06RY00177

Circuit Description

To control emissions of hydrocarbons (HC), carbon monoxide (CO), and oxides of nitrogen (NOx), a three-way catalytic converter is used. The catalyst within the converter promotes a chemical reaction which oxidizes the HC and CO present in the exhaust gas, converting them into harmless water vapor and carbon dioxide. The catalyst also reduces NOx, converting it to nitrogen. The powertrain control module (PCM) has the ability to monitor this process using the Bank 2 HO2S 1 and the Bank 2 HO2S 2 heated oxygen sensors. The Bank 2 HO2S 1 sensor produces an output signal which indicates the amount of oxygen present in the exhaust gas entering the three-way catalytic converter. The Bank 2 HO2S 2 sensor produces an output signal which indicates the oxygen storage capacity of the catalyst; this in turn indicates the catalyst's ability to convert exhaust gases efficiently. If the catalyst is operating efficiently, the Bank 2 HO2S 1 signal will be far more active than that produced by the Bank 2 HO2S 2 sensor. If the Bank 2 HO2S 2 signal voltage remains between 400 mV and 500 mV for an extended period of time, DTC P0160 will be set.

Heated Oxygen sensors are used to minimize the amount of time required for "closed loop" fuel control operation and allow accurate catalyst monitoring. The oxygen sensor heater greatly decreases the amount of time required for fuel control sensors Bank 1 HO2S 1 and Bank 2 HO2S 1 to become active. Oxygen sensor heaters are required by post-catalyst monitor sensors to maintain a sufficiently high temperature for accurate exhaust oxygen content readings further from the engine.

Conditions for Setting the DTC

- No related DTCs.
- Battery voltage is above 10 volts.
- The engine has been running for over 5 seconds.
- Oxygen sensor heater is functioning properly.
- Engine is in "closed loop" operation.
- Bank 2 HO2S 2 signal voltage remains between 426 mV and 474 mV for a total of 106 seconds over a 125-second period of time.

Action Taken When the DTC Sets

- The PCM will ON the MIL after second trip with detected fault.
- The PCM will store conditions which were present when the DTC was set as Freeze Frame and in the Failure Records data.

Conditions for Clearing the MIL/DTC

- The PCM will turn the MIL "OFF" on the third consecutive trip cycle during which the diagnostic has been run and the fault condition is no longer present.
- A history DTC P0160 will clear after 40 consecutive warm-up cycles have occurred without a fault.

- DTC P0160 can be cleared by using the Tech 2 “Clear Info” function or by disconnecting the PCM battery feed.

Diagnostic Aids

Check for the following conditions:

- Poor connection or damaged harness – Inspect the harness connectors for backed-out terminals, improper mating, broken locks, improperly formed or damaged terminals, poor terminal-to-wire connection, and damaged harness.
- Faulty HO2S heater or heater circuit – With the ignition “ON”, engine “OFF”, the HO2S voltage displayed on a Tech 2 should gradually drop to below 250 mV. If not, disconnect the HO2S and connect a test light between the HO2S ignition feed and heater ground circuits. If the test light does not light, repair the open ignition feed or sensor ground circuit as necessary. If the test light lights and the HO2S signal and low circuits are OK, replace the HO2S.
- Intermittent test – With the ignition “ON”, monitor the HO2S signal voltage while moving the wiring harness and related connectors. If the fault is induced, the HO2S signal voltage will change. This may help isolate the location of the malfunction.

Test Description

Number(s) below refer to the step number(s) on the Diagnostic Chart.

3. If the DTC P0160 test passes while the Failure Records conditions are being duplicated, an intermittent condition is indicated.

Reviewing the Failure Records vehicle mileage since the diagnostic test last failed may help determine how often the condition that caused the DTC to be set occurs. This may assist in diagnosing the condition.

DTC P0160 – HO2S Circuit Insufficient Activity Bank 2 Sensor 2

Step	Action	Value(s)	Yes	No
1	Was the “On-Board Diagnostic (OBD) System Check” performed?	—	Go to *Step 2*	Go to *OBD System Check*
2	1. Install the Tech 2. 2. Run the engine at operating temperature. 3. Operate the engine above 1200 RPM for two minutes. Does the Tech 2 indicate Bank 2 HO2S 2 voltage varying outside the specified values?	425-475 mV	Go to *Step 3*	Go to *Step 4*
3	1. Ignition “ON”, engine “OFF”, review and record Tech 2 Failure Records data and note parameters. 2. Operate the vehicle within Failure Records conditions as noted. 3. Using a Tech 2, monitor “DTC” info for DTC P0160 until the DTC P0160 test runs. 4. Note the test result. Does the Tech 2 indicate DTC P0160 failed this ignition?	—	Go to *Step 4*	Check the Procedure Refer to *Diagnostic Aids*
4	Check for a damaged harness. Was problem found?	—	Verify repair	Go to *Step 5*
5	Check for poor Bank 2 HO2S 2 high and low circuit terminal connections at the Bank 2 HO2S 2 harness connector and replace terminal(s) if necessary. Did either terminal require replacement?	—	Verify repair	Go to *Step 6*
6	Check for poor Bank 2 HO2S 2 high and low circuit terminal connections at the PCM and replace terminals if necessary. Did any terminals require replacement?	—	Verify repair	Go to *Step 7*

DTC P0160 – HO2S Circuit Insufficient Activity Bank 2 Sensor 2 (Cont'd)

Step	Action	Value(s)	Yes	No
7	1. Ignition "OFF". 2. With the PCM disconnected, check continuity of the Bank 2 HO2S 2 high circuit. 3. If the Bank 2 HO2S 2 high circuit measures over 5.0 ohms, repair open or poor connections as necessary. Was a Bank 2 HO2S 2 high circuit problem found and corrected?	—	Verify repair	Go to *Step 8*
8	1. Ignition "OFF". 2. With the PCM disconnected, check continuity of the Bank 2 HO2S 2 low circuit. 3. If the Bank 2 HO2S 2 low circuit measures over 5 ohms, repair open or poor connections as necessary. Was a Bank 2 HO2S 2 low circuit problem found and corrected?	—	Verify repair	Go to *Step 9*
9	1. Ignition "ON", engine "OFF". 2. Disconnect Bank 2 HO2S 2 and jumper the HO2S high and low circuits (PCM side) to ground. 3. Using a Tech 2, monitor Bank 2 HO2S 2 voltage. Is Bank 2 HO2S 2 voltage in the specified range?	0-10 mV	Go to *Step 10*	Go to *Step 11*
10	Replace Bank 2 HO2S 2. Is the action complete?	—	Verify repair	—
11	Replace the PCM. **IMPORTANT:** The replacement PCM must be programmed. Refer to *On-Vehicle Service* in *Powertrain Control Module and Sensors* for procedures. And also refer to the latest Service Bulletin. Check to see if the Latest software is released or not. And then Down Load the LATEST PROGRAMMED SOFTWARE to the replacement PCM. Is the action complete?	—	Verify repair	—

Diagnostic Trouble Code (DTC)
P0161 HO2S Heater Circuit Bank 2 Sensor 2

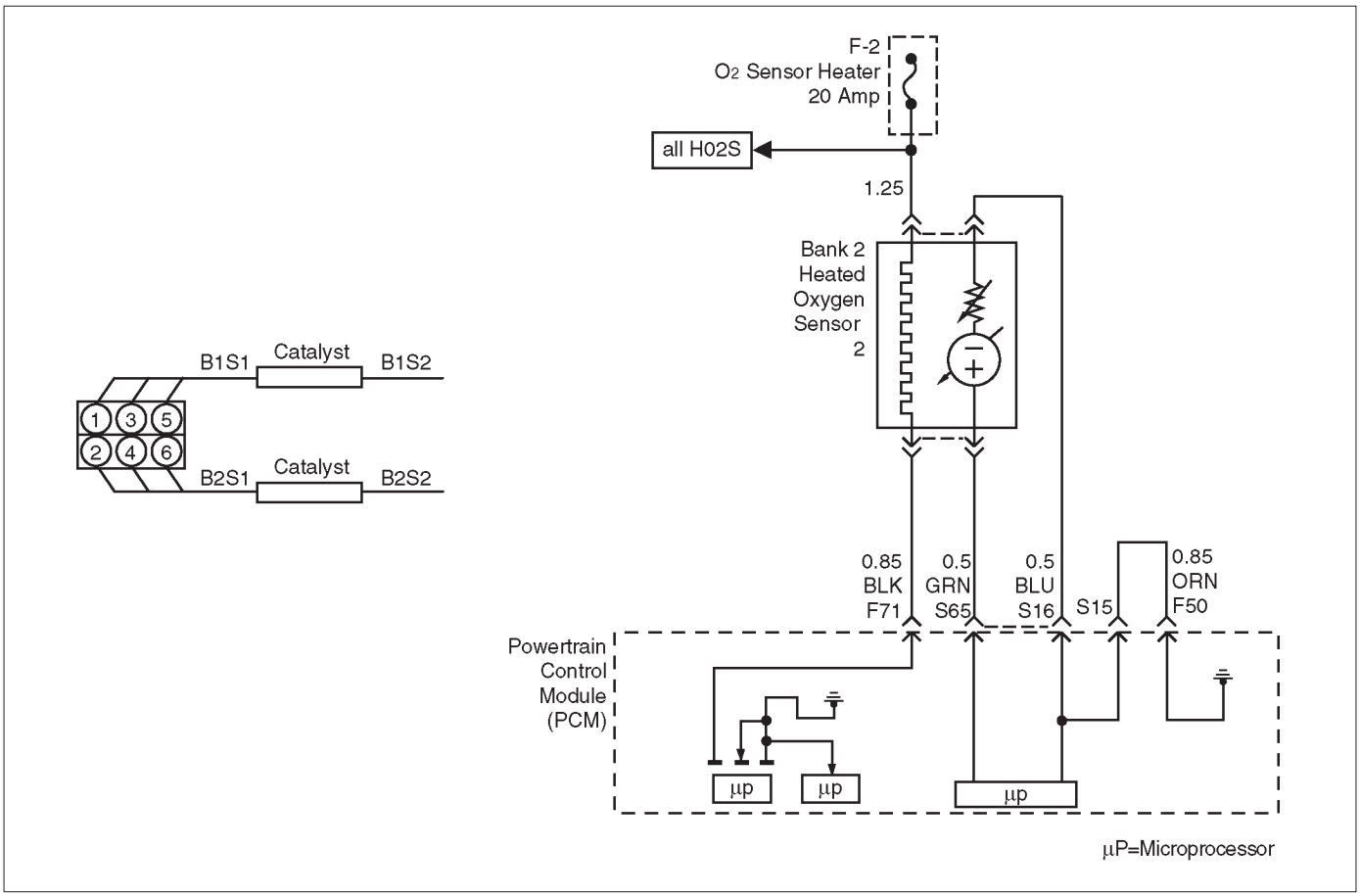

D06RY00177

Circuit Description

Heated oxygen sensors are used to minimize the amount of time required for “closed loop” fuel control operation and to allow accurate catalyst monitoring. The oxygen sensor heater greatly decreases the amount of time required for fuel control sensors Bank 1 HO2S 1 and Bank 2 HO2S 1 to become active. Oxygen sensor heaters are required by post-catalyst monitor sensors to maintain a sufficiently high temperature which allows accurate exhaust oxygen content readings further from the engine. The powertrain control module (PCM) will run the heater test only after a cold start (determined by engine coolant and intake air temperature at the time of start-up) and only once during an ignition cycle. When the engine is started, the PCM will monitor the HO2S voltage. When the Bank 2 HO2S 2 voltage indicates a sufficiently active sensor, the PCM looks at how much time has elapsed since start-up. If the PCM determines that too much time was required for the Bank 2 HO2S 2 to become active, a DTC P0161 will set. The time it should take the HO2S to reach operating temperature is based on the total amount of air that has passed through the MAF sensor and into the engine (more total air flow = shorter time to HO2S activity).

Conditions for Setting the DTC

- No related DTCs.
- The engine has been running for over 120 seconds.
- Ignition voltage is between 11 volts and 18 volts.
- Average mass air flow for the sample period is less than 23 g/second.
- Bank 2 HO2S 2 voltage does not change more than 150 mV from the bias voltage (between 400 mV-500 mV) for a longer amount of time than it should. The maximum amount of time to come up to operating range is 120 seconds. This warm-up time depends on the engine coolant temperature at start-up and accumulated air flow since start-up.

Action Taken When the DTC Sets

- The PCM will illuminate the malfunction indicator lamp (MIL) after the second consecutive trip in which the fault is detected.
- The PCM will store conditions which were present when the DTC was set as Freeze Frame and in the Failure Records data.

Conditions for Clearing the MIL/DTC

- The PCM will turn the MIL “OFF” on the third consecutive trip cycle during which the diagnostic has been run and the fault condition is no longer present.
- A history DTC P0161 will clear after 40 consecutive warm-up cycles have occurred without a fault.
- DTC P0161 can be cleared by using the Tech 2 “Clear Info” function or by disconnecting the PCM battery feed.

Diagnostic Aids

Check for the following conditions:

- Poor connection at PCM – Inspect harness connectors for backed-out terminals, improper mating, broken locks, improperly formed or damaged terminals, and poor terminal-to-wire connection.
- Damaged harness – Inspect the wiring harness for damage. If the harness appears to be OK, observe the display on the Tech 2 while moving connectors and wiring harnesses related to the sensor. A change in the display will indicate the location of the fault.

Reviewing the Failure Records vehicle mileage since the diagnostic test last failed may help determine how often the condition that caused the DTC to be set occurs. This may assist in diagnosing the condition.

Test Description

Number(s) below refer to the step number(s) on the Diagnostic Chart.

2. The HO2S should be allowed to cool before performing this test. If the HO2S heater is functioning, the signal voltage will gradually increase or decrease as the sensor element warms. If the heater is not functioning, the HO2S signal will remain near the 450 mV bias voltage.

4. This ensures that the ignition feed circuit to the HO2S is not open or shorted. The test light should be connected to a good chassis ground, in case the HO2S low or HO2S heater ground circuit is faulty.

5. This checks the HO2S heater ground circuit.

6. This checks for an open or shorted HO2S heater element.

11. An open HO2S signal or low circuit can cause the HO2S heater to appear faulty. Check these circuits before replacing the sensor.

DTC P0161 – HO2S Heater Circuit Bank 2 Sensor 2

Step	Action	Value(s)	Yes	No
1	Was the “On-Board Diagnostic (OBD) System Check” performed?	—	Go to *Step 2*	Go to *OBD System Check*
2	NOTE: If the engine has just been operating, allow the engine to cool for at least 15 minutes before proceeding. 1. Remove the fuel pump relay. 2. Connect a fused jumper at the fuel pump relay socket, between the battery positive at the relay and the relay wire that leads to the fuel pump and HO2S fuses. 3. Ignition “OFF”. 4. Install a Tech 2. 5. Ignition “ON”, engine “OFF”. 6. Monitor the Bank 2 HO2S 2 voltage for several minutes. Did the HO2S voltage go from bias voltage to above or below the specified values?	Above 650 mV or Below 250 mV	Check the Procedure Refer to *Diagnostic Aids*	Go to *Step 3*
3	Inspect the fuse for the Bank 2 HO2S 2 ignition feed. Is the fuse open?	—	Go to *Step 15*	Go to *Step 4*
4	1. Ignition “OFF”. 2. Raise the vehicle. 3. Disconnect the Bank 2 HO2S 2 electrical connector. 4. Using a test light connected to a known good ground (do not use Bank 2 HO2S 2 heater ground or Bank 2 HO2S 2 low), probe the ignition feed circuit at the Bank 2 HO2S 2 electrical connector (PCM harness side). Does the test light illuminate?	—	Go to *Step 5*	Go to *Step 7*
5	Connect the test light between the Bank 2 HO2S 2 ignition feed and the Bank 2 HO2S 2 heater ground. Does the test light illuminate?	—	Go to *Step 6*	Go to *Step 8*

DTC P0161 – HO2S Heater Circuit Bank 2 Sensor 2 (Cont'd)

Step	Action	Value(s)	Yes	No
6	1. Allow the HO2S to cool for at least 15 minutes. 2. Using a DVM, measure resistance between the Bank 2 HO2S 2 ignition feed and the Bank 2 HO2S 2 heater ground at the Bank 2 HO2S 2 pigtail. Is the HO2S resistance within the specified values?	3-6 ohms	Go to *Step 9*	Go to *Step 10*
7	Repair the open Bank 2 HO2S 2 ignition feed circuit to Bank 2 HO2S 2. Is the action complete?	—	Verify repair	—
8	Repair the open Bank 2 HO2S 2 heater ground circuit. Is the action complete?	—	Verify repair	—
9	1. Check for a poor connection at the Bank 2 HO2S 2 harness terminals. 2. If a poor connection is found, replace the terminals. Was a poor connection found?	—	Verify repair	Go to *Step 10*
10	1. Ignition "OFF". 2. Disconnect the PCM and check the continuity of the Bank 2 HO2S 2 signal circuit and the Bank 2 HO2S 2 low circuit. 3. If the Bank 2 HO2S 2 signal circuit or HO2S low circuit measures over 5 ohms, repair the open or poor connection as necessary. Was a problem found?	—	Verify repair	Go to *Step 11*
11	1. Ignition "OFF". 2. Disconnect the PCM and check the continuity of the Bank 2 HO2S 2 signal circuit and the Bank 2 HO2S 2 low circuit. 3. If the Bank 2 HO2S 2 signal circuit or HO2S low circuit measures over 5 ohms, repair the open or poor connection as necessary. Was a problem found?	—	Verify repair	Go to *Step 12*
12	Check for a poor Bank 2 HO2S 2 low circuit terminal connection at the PCM and replace the terminal if necessary. Did the terminal require replacement?	—	Verify repair	Go to *Step 13*
13	Check for a poor Bank 2 HO2S 2 high circuit terminal connection at the PCM and replace the terminal if necessary. Did the terminal require replacement?	—	Verify repair	Go to *Step 14*
14	Replace Bank 2 HO2S 2. Is the action complete?	—	Verify repair	—
15	Locate and repair the short to ground in the Bank 2 HO2S 2 ignition feed circuit and replace the faulty fuse. Is the action complete?	—	Verify repair	—

Diagnostic Trouble Code (DTC)
P0171 Fuel Trim System Lean Bank 1

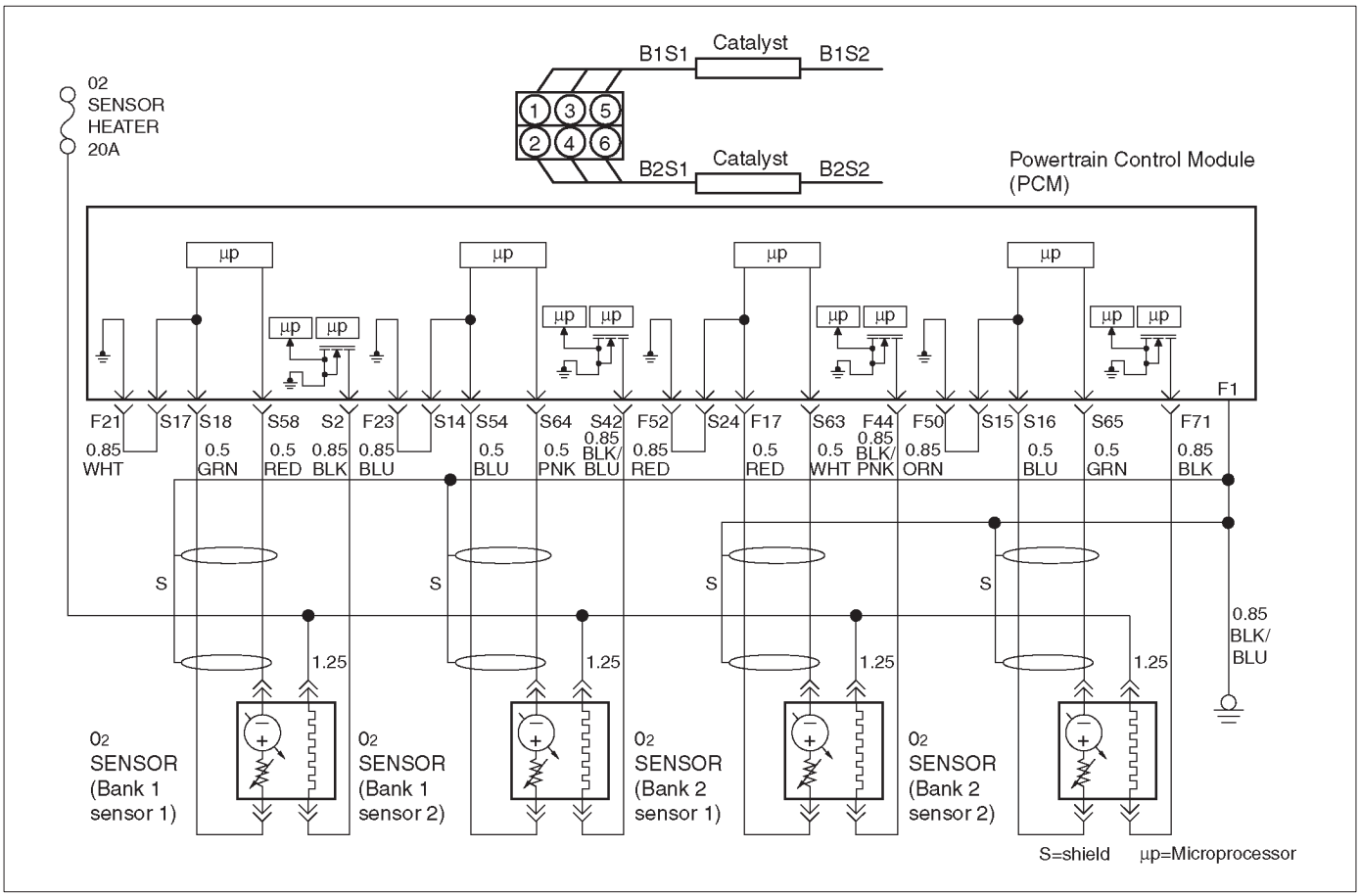

D06R200010

Circuit Description

To provide the best possible combination of driveability, fuel economy, and emission control, a “closed loop” air/fuel metering system is used. While in “closed loop”, the powertrain control module (PCM) monitors the Bank 1 HO2S 1 and Bank 2 HO2S 1 signals and adjusts fuel delivery based upon the HO2S signal voltages. A change made to fuel delivery will be indicated by the long and short term fuel trim values which can be monitored with a Tech 2. Ideal fuel trim values are around 0%; if the HO2S signals are indicating a lean condition the PCM will add fuel, resulting in fuel trim values above 0%. If a rich condition is detected, the fuel trim values will be below 0%, indicating that the PCM is reducing the amount of fuel delivered. If an excessively lean condition is detected on Bank 1, the PCM will set DTC P0171.

The PCM’s maximum authority to control long term fuel trim allows a range between –15% (automatic transmission) or –12% (manual transmission) and +20%. The PCM monitors fuel trim under various engine speed/load fuel trim cells before determining the status of the fuel trim diagnostic.

Conditions for Setting the DTC

- None of the following: EGR DTCs, HO2S DTCs, (response, transition, open, low volts, no activity), MAF DTCs, TP sensor DTCs, MAP DTCs, IAT DTCs, canister purge DTCs, EVAP DTCs, injector circuit DTCs, or misfire DTCs.
- Engine coolant temperature is between 6˚C (42.8˚F) and 105˚C (221˚F).
- Intake air temperature is between –40˚C (–40˚F) and 120˚C (248˚F).
- Manifold absolute pressure is between 24 kPa and 99 kPa.
- Throttle angle is steady below 95%.
- Vehicle speed is below 136 km/h (85 mph).
- Engine speed is between 400 and 6,000 RPM.
- Barometric pressure is greater than 72.5 kPa.
- Mass air flow is between 2 g/second and 200 g/second.
- Ignition voltage is above 9.5 volts.
- Fuel system is in “closed loop”.
- Canister purge duty cycle is greater than 0% if on.

Action Taken When the DTC Sets

- The PCM will illuminate the malfunction indicator lamp (MIL) after the second consecutive trip in which the fault is detected.
- The PCM will store conditions which were present when the DTC was set as Freeze Frame and in the Failure Records data.

Conditions for Clearing the MIL/DTC

- The PCM will turn the MIL “OFF” on the third consecutive trip cycle during which the diagnostic has been run and the fault condition is no longer present.
- A history DTC P0171 will clear after 40 consecutive warm-up cycles have occurred without a fault.
- DTC P0171 can be cleared by using the Tech 2 “Clear Info” function or by disconnecting the PCM battery feed.

Diagnostic Aids

Check for the following conditions:

- Poor connection at PCM – Inspect harness connectors for backed-out terminals, improper mating, broken locks, improperly formed or damaged terminals, and poor terminal-to-wire connection.
- Damaged harness – Inspect the wiring harness for damage. If the harness appears to be OK, observe the Bank 1 HO2S 1 display on the Tech 2 while moving connectors and wiring harnesses related to the engine harness. A change in the display will indicate the location of the fault.

Reviewing the Failure Records vehicle mileage since the diagnostic test last failed may help determine how often the condition that caused the DTC to be set occurs. This may assist in diagnosing the condition.

Test Description

Number(s) below refer to the step number(s) on the Diagnostic Chart.

2. DTCs other than P0171 and P0174 may indicate a condition present which may cause a lean condition. If this is the case, repairing the condition which caused the other DTC will most likely correct the DTC P0171/P0174.

4. If the DTC P0171 test passes while the Failure Records conditions are being duplicated, the lean condition is intermittent. Refer to *Diagnostic Aids* or *Symptoms* for additional information on diagnosing intermittent problems.

DTC P0171 – Fuel Trim System Lean Bank 1

Step	Action	Value(s)	Yes	No
1	Was the “On-Board Diagnostic (OBD) System Check” performed?	—	Go to *Step 2*	Go to *OBD System Check*
2	Are any DTCs set other than P0171 and P0174?	—	Go to the applicable DTC charts and repair the other DTCs before proceeding with this chart	Go to *Step 3*
3	1. Start the engine and operate the vehicle in “closed loop”. 2. Observe the “BANK 1 L.T. FUEL TRIM” display on the Tech 2. Is the displayed value greater than the specified value?	L.T. Fuel Trim: +20%	Go to *Step 5*	Go to *Step 4*
4	1. Review and record the Tech 2 Failure Records data. 2. Clear the DTC P0171/P0174 and operate the vehicle to duplicate the Failure Records conditions. 3. Monitor the Tech 2 “DTC” info for DTC P0171 while operating the vehicle to duplicate the Failure Records conditions. 4. Continue operating the vehicle until the DTC P0171 test runs and note the test result. Does the Tech 2 indicate DTC P0171 failed this ignition?	—	Go to *Step 5*	The lean condition is not present. If a driveability symptom still exists, refer to *Symptoms* section.
5	Was DTC P0174 also set?	—	Go to *Step 6*	Go to *Step 15*
6	Visually and physically inspect the vacuum hoses for disconnections, splits, kinks, improper routing and improper connections and repair any problem found. Did your inspection reveal a problem requiring repair?	—	Verify repair	Go to *Step 7*
7	Visually and physically inspect the crankcase ventilation valve for proper installation and repair any problem found (refer to *Crankcase Ventilation System*). Did your inspection reveal a problem requiring repair?	—	Verify repair	Go to *Step 8*
8	1. Inspect the MAF sensor inlet screen for damage or for the presence of foreign objects which may partially block the air flow sample through the MAF sensor. 2. Correct any problem that is found as necessary. Did your inspection of the MAF sensor reveal a condition requiring repair?	—	Verify repair	Go to *Step 9*
9	Start the engine and note the idle quality. Is a high or unsteady idle being experienced?	—	Go to *Step 10*	Go to *Step11*
10	1. Visually and physically inspect the throttle body, intake manifold, EGR valve and the EGR feed pipe for vacuum leaks. 2. Repair any vacuum leaks as necessary. Did your inspection reveal a vacuum leak?	—	Verify repair	Go to *Step 11*

DTC P0171 – Fuel Trim System Lean Bank 1 (Cont'd)

Step	Action	Value(s)	Yes	No
11	Check the fuel for excessive water, alcohol, or other contaminants (see *Diagnosis* in *Engine Fuel* for the procedure) and correct the contaminated fuel condition if present (see *Engine Fuel*). Was the fuel contaminated?	—	Verify repair	Go to *Step 12*
12	1. Visually and physically inspect the PCM injector grounds, power grounds and sensor grounds to ensure that they are clean, tight, and in their proper locations. 2. If a faulty ground condition is present, correct it as necessary. Did your inspection reveal a condition requiring repair?	—	Verify repair	Go to *Step 13*
13	1. Disconnect the MAF sensor electrical connector. 2. Operate the vehicle in "closed loop" while monitoring the "BANK 1 S.T. FUEL TRIM" displayed on the Tech 2. Does "BANK 1 S.T. FUEL TRIM" value decrease to near the specified value?	0%	Go to *Step 19*	Go to *Step 14*
14	Perform the procedure in the "Fuel System Pressure Test" and repair fuel system problem if necessary. Did Fuel System Pressure Test isolate a condition requiring repair?	—	Verify repair	Go to *Step 15*
15	1. Visually and physically inspect the intake manifold, injector O-rings, EGR adapter, EGR valve and the EGR feed pipes for vacuum leaks. 2. Repair any problem that is found. Did your inspection reveal a problem?	—	Verify repair	Go to *Step 16*
16	Visually and physically inspect the Bank 1 exhaust manifold for leaks and loose or missing hardware and correct any problem found. Did your inspection reveal a problem?	—	Verify repair	Go to *Step 17*
17	Perform the "Injector Balance Test", and correct any problem found (refer to *Fuel Metering System*). Did Injector Balance Test isolate a problem?	—	Verify repair	Go to *Step 18*
18	1. Visually and physically inspect the Bank 1 HO2S 1 to ensure that it is installed securely and that the Bank 1 HO2S 1 pigtail and wiring harness are not contacting the exhaust or otherwise damaged. 2. If a problem is found, correct it as necessary. Did your inspection reveal a problem?	—	Verify repair	Check the Procedure Refer to *Diagnostic Aids*
19	Replace the MAF sensor. Is the action complete?	—	Verify repair	—

Diagnostic Trouble Code (DTC) P0172 Fuel Trim System Rich Bank 1

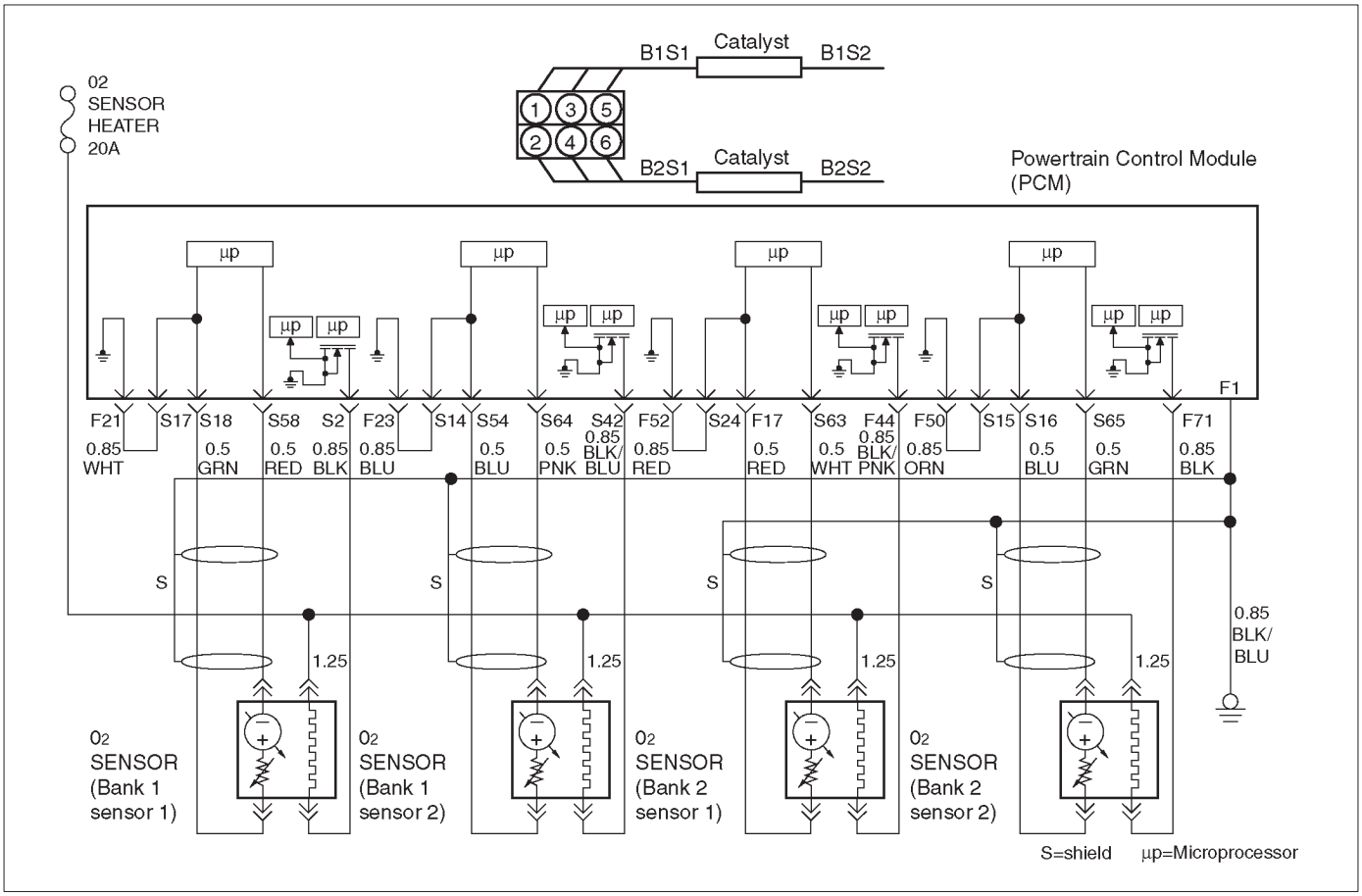

D06R200010

Circuit Description

To provide the best possible combination of driveability, fuel economy, and emission control, a “closed loop” air/fuel metering system is used. While in “closed loop”, the powertrain control module (PCM) monitors the Bank 1 heated oxygen sensors (HO2S) 1 and Bank 2 HO2S 1 signals and adjusts fuel delivery based upon the HO2S signal voltages. A change made to fuel delivery will be indicated by the long and short term fuel trim values which can be monitored with a Tech 2. Ideal fuel trim values are around 0%; if the HO2S signals are indicating a lean condition the PCM will add fuel, resulting in fuel trim values above 0%. If a rich condition is detected, the fuel trim values will be below 0%, indicating that the PCM is reducing the amount of fuel delivered. If an excessively rich condition is detected on Bank 1, the PCM will set DTC P0172.

The PCM’s maximum authority to control long term fuel trim allows a range between –15% (automatic transmission) or –12 (manual transmission) and +20%. The PCM’s maximum authority to control short term fuel trim allows a range between –11% and +20%. The PCM monitors fuel trim under various engine speed/load fuel trim cells before determining the status of the fuel trim diagnostic.

Conditions for Setting the DTC

- None of the following was set: EGR DTCs, HO2S DTCs, (response, transition, open, low volts, no activity), MAF DTCs, TPS DTCs, MAP DTCs, IAT DTCs, canister purge DTCs, EVAP DTCs, injector circuit DTCs, or misfire DTCs.
- Engine coolant temperature is between 6˚C (42.8˚F) and 105˚C (221˚F).
- Intake air temperature is between –40˚C (–40˚F) and 120˚C (248˚F).
- Manifold absolute pressure is between 24 kPa and 99 kPa.
- Throttle angle is steady below 95%.
- Vehicle speed is below 136 km/h (85 mph).
- Engine speed is between 400 and 6,000 RPM.
- Barometric pressure is greater than 72.5 kPa.
- Mass air flow is between 2 g/second and 200 g/second.
- Ignition voltage is above 9.5 volts.
- Fuel system is in “closed loop”.
- Canister purge duty cycle is greater than 0%, if “ON”.

Action Taken When the DTC Sets

- The PCM will illuminate the malfunction indicator lamp (MIL) after the second consecutive trip in which the fault is detected.
- The PCM will store conditions which were present when the DTC was set as Freeze Frame and in the Failure Records data.

Conditions for Clearing the MIL/DTC

- The PCM will turn the MIL “OFF” on the third consecutive trip cycle during which the diagnostic has been run and the fault condition is no longer present.

- A history DTC P0172 will clear after 40 consecutive warm-up cycles have occurred without a fault.
- DTC P0172 can be cleared by using the Tech 2 “Clear Info” function or by disconnecting the PCM battery feed.

Diagnostic Aids

Check for the following conditions:

- Poor connection at PCM – Inspect harness connectors for backed-out terminals, improper mating, broken locks, improperly formed or damaged terminals, and poor terminal-to-wire connection.
- Damaged harness – Inspect the wiring harness for damage. If the harness appears to be OK, observe the Bank 1 HO2S 1 display on the Tech 2 while moving connectors and wiring harnesses related to the engine harness. A change in the display will indicate the location of the fault.

Reviewing the Failure Records vehicle mileage since the diagnostic test last failed may help determine how often the condition that caused the DTC to be set occurs. This may assist in diagnosing the condition.

Test Description

Number(s) below refer to the step number(s) on the Diagnostic Chart.

2. DTCs other than P0172 and P0175 may indicate a condition present which may cause a lean condition. If this is the case, repairing the condition which caused the other DTC will most likely correct the DTC P0172/P0175.

4. If the DTC P0172 test passes while the Failure Records conditions are being duplicated, the rich condition is intermittent. Refer to *Diagnostic Aids* or *Symptoms* for additional information on diagnosing intermittent problems.

DTC P0172 – Fuel Trim System Rich Bank 1

Step	Action	Value(s)	Yes	No
1	Was the “On-Board Diagnostic (OBD) System Check” performed?	—	Go to *Step 2*	Go to *OBD System Check*
2	Are any DTCs set other than P0172 and P0175?	—	Go to the applicable DTC charts and repair the other DTCs before proceeding with this chart	Go to *Step 3*
3	1. Start the engine and operate the vehicle in “closed loop”. 2. Observe “B1 Long Term Fuel Trim” display on the Tech 2. Is the displayed value more negative than the specified value?	L.T. Fuel Trim: –15% (auto. trans.) OR –12% (man. trans.)	Go to *Step 5*	Go to *Step 4*
4	1. Review and record the Tech 2 Failure Records data. 2. Clear the DTC P0172/P0175 and operate the vehicle to duplicate the Failure Records conditions. 3. Monitor the Tech 2 “DTC” info for DTC P0172 while operating the vehicle to duplicate the Failure Records conditions. 4. Continue operating the vehicle until the DTC P0172 test runs and note test result. Does the Tech 2 indicate DTC P0172 failed this ignition?	—	Go to *Step 5*	The rich condition is not present. If a driveability symptom still exists, refer to *Symptoms*.
5	Is DTC P0175 also set?	—	Go to *Step 6*	Go to *Step 15*
6	Visually and physically inspect the air filter element and replace it if necessary. Did the air filter require replacement?	—	Verify repair	Go to *Step 7*
7	Visually and physically inspect the air intake duct for collapse or restriction and repair if necessary. Did your inspection reveal a condition requiring repair?	—	Verify repair	Go to *Step 8*

DTC P0172 – Fuel Trim System Rich Bank 1 (Cont'd)

Step	Action	Value(s)	Yes	No
8	Inspect the MAF sensor inlet screen for damage or for the presence of foreign objects which may partially block air flow through the screen and correct any problem found. Did your inspection of the MAF sensor reveal a condition requiring repair or replacement?	—	Verify repair	Go to *Step 9*
9	Start the engine and note the idle quality. Is a low or unsteady idle being experienced?	—	Go to *Step 10*	Go to *Step 11*
10	1. Ignition "OFF". 2. Physically inspect the throttle body bore and throttle plate for coking and foreign objects. 3. If a problem was found, repair as necessary. Did your inspection reveal a condition requiring repair?	—	Verify repair	Go to *Step 11*
11	1. Disconnect the vacuum hose from the fuel pressure regulator and inspect the hose for the presence of fuel. 2. If fuel is present in the vacuum hose, replace the fuel pressure regulator (refer to *Fuel Metering System*). Did the fuel pressure regulator require replacement?	—	Verify repair	Go to *Step 12*
12	Ignition "ON", engine "OFF", monitor the TP1 Angle display on the Tech 2 while slowly depressing the accelerator pedal. Does the TP Angle display increase steadily and evenly from minimum value at closed throttle to maximum value at wide-open throttle?	Minimum 8% Maximum 92%	Go to *Step 13*	Go to *Step 21*
13	1. Disconnect the MAF sensor electrical connector. 2. Operate the vehicle in "closed loop" while monitoring the "BANK 1 L.T. FUEL TRIM" and "BANK 1 S. T. FUEL TRIM" display on the Tech 2. Did both values change to near the specified value?	0%	Go to *Step 22*	Go to *Step 14*
14	1. Perform "Fuel System Pressure Test". 2. If Fuel System Pressure Test isolates a problem, repair as necessary (refer to *Engine Fuel* or *Fuel Metering System*). Did the Fuel System Pressure Test isolate a problem requiring repair?	—	Verify repair	Go to *Step 15*
15	1. Ignition "ON", engine "OFF". 2. Connect a test light between the harness connector terminals of canister purge solenoid. Is the test light on?	—	Go to *Step 16*	Go to *Step 19*
16	Check for short to ground in the wire (YEL/RED) between the canister purge solenoid and PCM terminal S-48. Was there a short to ground?	—	Go to *Step 17*	Go to *Step 18*
17	Repair the short to ground. Is the action complete?	—	Verify repair	—

DTC P0172 – Fuel Trim System Rich Bank 1 (Cont'd)

Step	Action	Value(s)	Yes	No
18	Replace the PCM. **IMPORTANT:** The replacement PCM must be programmed. Refer to *On-Vehicle Service* in *Powertrain Control Module and Sensors* for procedures. And also refer to the latest Service Bulletin. Check to see if the Latest software is released or not. And then Down Load the LATEST PROGRAMMED SOFTWARE to the replacement PCM. Is the action complete?	—	Verify repair	—
19	1. Perform the "Injector Balance Test". 2. If Injector Balance Test isolates a problem, repair as necessary (refer to *Fuel Metering System*). Did the Injector Balance Test isolate a problem requiring repair?	—	Verify repair	Go to *Step 20*
20	1. Remove and visually/physically inspect the Bank 1 HO2S 1 for silicon contamination. This will be indicated by a powdery deposit on the portion of the HO2S that is exposed to the exhaust stream. 2. If contamination is evident on the Bank 1 HO2S 1, replace the contaminated sensors. Did the sensor require replacement?	—	Verify repair	Check the Procedure Refer to *Diagnostic Aids*
21	1. Check the TP sensor mounting screws and tighten or replace them as necessary if they are loose or missing. 2. If the screws are OK, replace the TP sensor. Is the action complete?	—	Verify repair	—
22	Replace the MAF sensor. Is the action complete?	—	Verify repair	—

Diagnostic Trouble Code (DTC) P0174 Fuel Trim System Lean Bank 2

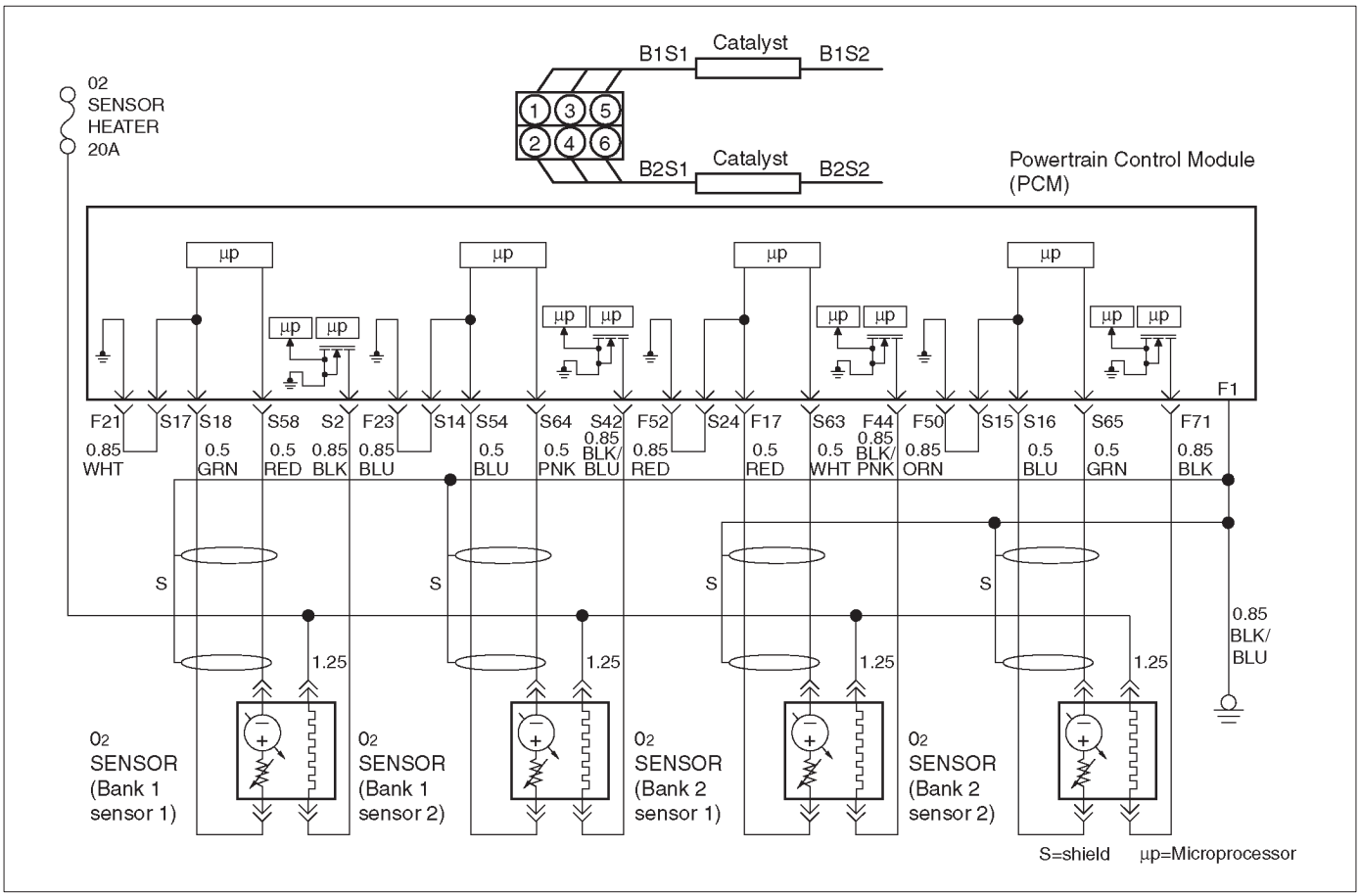

D06R200010

Circuit Description

To provide the best possible combination of driveability, fuel economy, and emission control, a “closed loop” air/fuel metering system is used. While in “closed loop”, the powertrain control module (PCM) monitors the Bank 1 HO2S 1 and Bank 2 HO2S 1 signals and adjusts fuel delivery based upon the HO2S signal voltages. A change made to fuel delivery will be indicated by the long and short term fuel trim values which can be monitored with a Tech 2. Ideal fuel trim values are around 0%; if the HO2S signals are indicating a lean condition the PCM will add fuel, resulting in fuel trim values above 0%. If a rich condition is detected, the fuel trim values will be below 0%, indicating that the PCM is reducing the amount of fuel delivered. If an excessively lean condition is detected on Bank 2, the PCM will set DTC P0174.

The PCM’s maximum authority to control long term fuel trim allows a range between –15%(automatic transmission) or –12%(manual transmission) and +20%. The PCM monitors fuel trim under various engine speed/load fuel trim cells before determining the status of the fuel trim diagnostic.

Conditions for Setting the DTC

- None of the following DTCs are set: idle system, EGR, HO2S, (response, transition, open, low volts, no activity), MAF, TP sensor, MAP, IAT, canister purge, EVAP, injector circuit, or misfire.
- Engine coolant temperature is between 6˚C (42.8˚F) and 105˚C (221˚F).
- Intake air temperature is between –40˚C (–40˚F) and 120˚C (248˚F).
- Manifold absolute pressure is between 24 kPa and 99 kPa.
- Throttle angle is steady between 3 and 95%.
- Vehicle speed is below 136 km/h (85 mph).
- Engine speed is between 400 and 6,000 RPM.
- Barometric pressure is greater than 72.5 kPa.
- Mass air flow is between 2 g/second and 200 g/second.
- Ignition voltage is above 9.5 volts.
- Fuel system is in “closed loop”.
- Canister purge duty cycle is greater than 0%, if “ON”.

Action Taken When the DTC Sets

- The PCM will illuminate the malfunction indicator lamp (MIL) after the second consecutive trip in which the failure is detected.
- The PCM will store conditions which were present when the DTC was set as Freeze Frame and in the Failure Records data.

Conditions for Clearing the MIL/DTC

- The PCM will turn the MIL “OFF” on the third consecutive trip cycle during which the diagnostic has been run and the fault condition is no longer present.

- A history DTC P0174 will clear after 40 consecutive warm-up cycles have occurred without a fault.
- DTC P0174 can be cleared by using the Tech 2 “Clear Info” function or by disconnecting the PCM battery feed.

Diagnostic Aids

Check for the following conditions:

- Poor connection at PCM – Inspect harness connectors for backed-out terminals, improper mating, broken locks, improperly formed or damaged terminals, and poor terminal-to-wire connection.
- Damaged harness – Inspect the wiring harness for damage. If the harness appears to be OK, observe the Bank 2 HO2S 1 display on the Tech 2 while moving connectors and wiring harnesses related to the engine harness. A change in the display will indicate the location of the fault.

Reviewing the Failure Records vehicle mileage since the diagnostic test last failed may help determine how often the condition that caused the DTC to be set occurs. This may assist in diagnosing the condition.

Test Description

Number(s) below refer to the step number(s) on the Diagnostic Chart.

2. DTCs other than P0171 and P0174 may indicate a condition present which may cause a lean condition. If this is the case, repairing the condition which caused the other DTC will most likely correct the DTC P0171/P0174.

4. If the DTC P0174 test passes while the Failure Records conditions are being duplicated, the lean condition is intermittent. Refer to *Diagnostic Aids* or *Symptoms* for additional information on diagnosing intermittent problems.

DTC P0174 – Fuel Trim System Lean Bank 2

Step	Action	Value(s)	Yes	No
1	Was the “On-Board Diagnostic (OBD) System Check” performed?	—	Go to *Step 2*	Go to *OBD System Check*
2	Are any DTCs set other than P0174 and P0171?	—	Go to the applicable DTC charts and repair the other DTCs before proceeding with this chart.	Go to *Step 3*
3	1. Start the engine and operate the vehicle in “closed loop”. 2. Observe the “BANK 2 L.T. FUEL TRIM” display on the Tech 2. Is the displayed values greater than the specified values?	L.T. Fuel Trim: +20%	Go to *Step 5*	Go to *Step 4*
4	1. Review and record Tech 2 Failure Records data. 2. Clear the DTC P0171/P0174 and operate the vehicle to duplicate the Failure Records conditions. 3. Monitor the Tech 2 “DTC” info for DTC P0174 while operating the vehicle to duplicate the Failure Records conditions. 4. Continue operating the vehicle until the DTC P0174 test runs. 5. Note the test result. Does the Tech 2 indicate DTC P0174 failed this ignition?	—	Go to *Step 5*	The lean condition is not present. If a driveability symptom still exists, refer to *Symptoms* section.
5	Was DTC P0171 also set?	—	Go to *Step 6*	Go to *Step 15*
6	Visually and physically inspect the vacuum hoses for disconnections, splits, kinks, improper routing and improper connections and repair any problem found. Did your inspection reveal a problem requiring repair?	—	Verify repair	Go to *Step 7*
7	Visually and physically inspect the crankcase ventilation valve for proper installation and repair any problem found (refer to *Crankcase Ventilation System*). Did your inspection reveal a problem requiring repair?	—	Verify repair	Go to *Step 8*
8	1. Inspect the MAF sensor inlet screen for damage or for the presence of foreign objects which may partially block the air flow sample through the MAF sensor. 2. Correct any problem that is found as necessary. Did your inspection of the MAF sensor reveal a condition requiring repair?	—	Verify repair	Go to *Step 9*
9	Start the engine and note the idle quality. Is a high or unsteady idle being experienced?	—	Go to *Step 10*	Go to *Step 11*

DTC P0174 – Fuel Trim System Lean Bank 2 (Cont'd)

Step	Action	Value(s)	Yes	No
10	1. Visually and physically inspect the throttle body, intake manifold, EGR valve and the EGR feed pipe for vacuum leaks. 2. Repair any vacuum leaks as necessary. Did your inspection reveal a vacuum leak?	—	Verify repair	Go to *Step 11*
11	Check the fuel for excessive water, alcohol, or other contaminants (see *Diagnosis* in *Engine Fuel* for procedure) and correct the contaminated fuel condition is present (see *Engine Fuel*). Was the fuel contaminated?	—	Verify repair	Go to *Step 12*
12	1. Visually and physically inspect the PCM injector grounds, power grounds and sensor grounds to ensure that they are clean, tight, and in their proper locations. 2. If a faulty ground condition is present, correct it as necessary. Did your inspection reveal a condition requiring repair?	—	Verify repair	Go to *Step 13*
13	1. Disconnect the MAF sensor electrical connector. 2. Operate the vehicle in "closed loop" while monitoring the "BANK 2 S.T. FUEL TRIM" displayed on the Tech 2. Does the "BANK 2 S.T. FUEL TRIM" value decrease to near the specified value?	0%	Go to *Step 19*	Go to *Step 14*
14	Perform the procedure in the "Fuel System Pressure Test" and repair fuel system problem if necessary. Did the Fuel System Pressure Test isolate a condition requiring repair?	—	Verify repair	Go to *Step 15*
15	1. Visually and physically inspect the intake manifold, injector O-rings, EGR adapter, EGR valve and the EGR feed pipes for vacuum leaks. 2. Repair any problem that is found. Did your inspection reveal a problem?	—	Verify repair	Go to *Step 16*
16	Visually and physically inspect the Bank 2 exhaust manifold for leaks and loose or missing hardware and correct any problem found. Did your inspection reveal a problem?	—	Verify repair	Go to *Step 17*
17	Perform the "Injector Balance Test" and correct any problem found (refer to *Fuel Metering System*). Did the Injector Balance Test isolate a problem?	—	Verify repair	Go to *Step 18*
18	1. Visually and physically inspect the Bank 2 HO2S 1 to ensure that it is installed securely and that the Bank 2 HO2S 1 pigtail and wiring harness are not contacting the exhaust or otherwise damaged. 2. If a problem is found, correct it as necessary. Did your inspection reveal a problem?	—	Verify repair	Check the Procedure Refer to *Diagnostic Aids*
19	Replace the MAF sensor. Is the action complete?	—	Verify repair	—

Diagnostic Trouble Code (DTC) P0175 Fuel Trim System Rich Bank 2

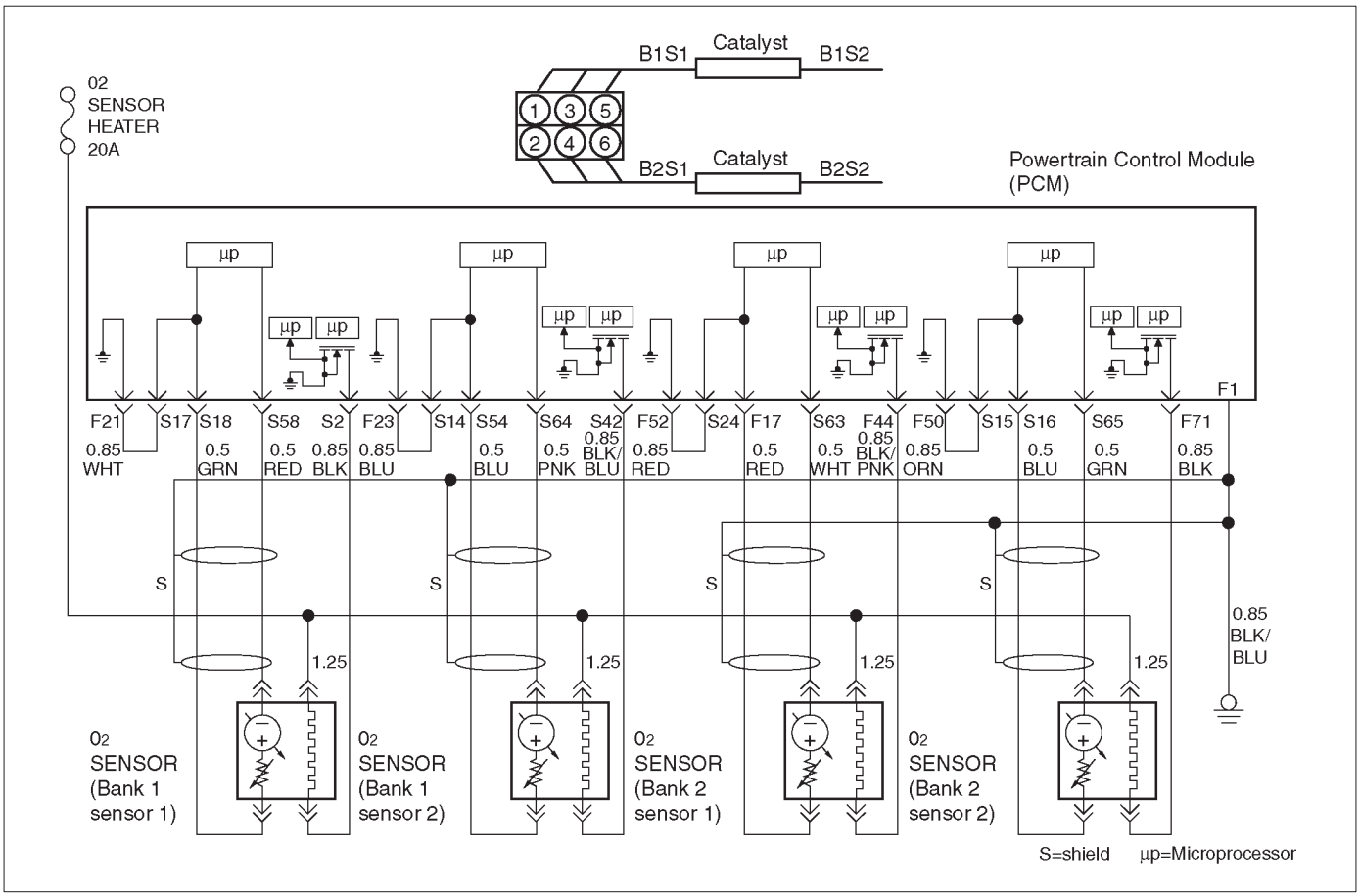

Circuit Description

To provide the best possible combination of driveability, fuel economy, and emission control, a “closed loop” air/fuel metering system is used. While in “closed loop”, the powertrain control module (PCM) monitors the Bank 1 HO2S 1 and Bank 2 HO2S 1 signals and adjusts fuel delivery based upon the HO2S signal voltages. A change made to fuel delivery will be indicated by the long and short term fuel trim values which can be monitored with a Tech 2. Ideal fuel trim values are around 0%; if the HO2S signals are indicating a lean condition the PCM will add fuel, resulting in fuel trim values above 0%. If a rich condition is detected, the fuel trim values will be below 0%, indicating that the PCM is reducing the amount of fuel delivered. If an excessively rich condition is detected on Bank 2, the PCM will set DTC P0175.

The PCM’s maximum authority to control long term fuel trim allows a range between –15%(automatic transmission) or –12%(manual transmission) and +20%. The PCM’s maximum authority to control short term fuel trim allows a range between –11% and +20%. The PCM monitors fuel trim under various engine speed/load fuel trim cells before determining the status of the fuel trim diagnostic.

Conditions for Setting the DTC

- None of the following DTCs are set: idle system, EGR, HO2S, (response, transition, open, low volts, no activity), MAF, TPS, MAP, IAT, canister purge, EVAP, injector circuit, or misfire.
- Engine coolant temperature is between 6˚C (42.8˚F) and 105˚C (221˚F).
- Intake air temperature is between –40˚C (–40˚F) and 120˚C (248˚F).
- Manifold absolute pressure is between 24 kPa and 99 kPa.
- Throttle angle is steady between 3 and 95%.
- Vehicle speed is below 136 km/h (85 mph).
- Engine speed is between 400 and 6,000 RPM.
- Barometric pressure is greater than 72.5 kPa.
- Mass air flow is between 2 g/second and 200 g/second.
- Ignition voltage is above 9.5 volts.
- Fuel system is in “closed loop”.

Action Taken When the DTC Sets

- The PCM will illuminate the malfunction indicator lamp (MIL) after the second consecutive trip in which the failure is detected.
- The PCM will store conditions which were present when the DTC was set as Freeze Frame and in the Failure Records data.

Conditions for Clearing the MIL/DTC

- The PCM will turn the MIL “OFF” on the third consecutive trip cycle during which the diagnostic has been run and the fault condition is no longer present.

- A history DTC P0175 will clear after 40 consecutive warm-up cycles have occurred without a fault.
- DTC P0175 can be cleared by using the Tech 2 “Clear Info” function or by disconnecting the PCM battery feed.

Diagnostic Aids

Check for the following conditions:

- Poor connection at PCM – Inspect harness connectors for backed -out terminals, improper mating, broken locks, improperly formed or damaged terminals, and poor terminal-to-wire connection.
- Damaged harness – Inspect the wiring harness for damage. If the harness appears to be OK, observe the Bank 2 HO2S 1 display on the Tech 2 while moving connectors and wiring harnesses related to the engine harness. A change in the display will indicate the location of the fault.

Reviewing the Failure Records Vehicle mileage since the diagnostic test last failed may help determine how often the condition that caused the DTC to be set occurs. This may assist in diagnosing the condition.

Test Description

Number(s) below refer to the step number(s) on the Diagnostic Chart.

2. DTCs other than P0172 and P0175 may indicate a condition present which may cause a lean condition. If this is the case, repairing the condition which caused the other DTC will most likely correct the DTC P0172/P0175.

4. If the DTC P0175 test passes while the Failure Records conditions are being duplicated, the rich condition is intermittent. Refer to *Diagnostic Aids* or *Symptoms* for additional information on diagnosing intermittent problems.

DTC P0175 – Fuel Trim System Rich Bank 2

Step	Action	Value(s)	Yes	No
1	Was the ”On-Board Diagnostic (OBD) System Check” performed?	—	Go to Step 2	Go to *OBD System Check*
2	Are any DTCs set other than P0172 and P0175?	—	Go to the applicable DTC charts and repair the other DTCs before proceeding with this chart.	Go to *Step 3*
3	1. Start the engine and operate the vehicle in “closed loop”. 2. Observe the “BANK 2 L.T. FUEL TRIM” display on the Tech 2. Is the displayed value more negative than the specified value?	L.T. Fuel Trim: –15% (auto. trans.) OR –12% (man. trans.)	Go to *Step 5*	Go to *Step 4*
4	1. Review and record the Tech 2 Failure Records data. 2. Clear the DTC P0172/P0175 and operate the vehicle to duplicate the Failure Records conditions. 3. Monitor the Tech 2 “DTC” info for DTC P0175 while operating the vehicle to duplicate the Failure Records conditions. 4. Continue operating the vehicle until the DTC P0175 test runs. 5. Note the test result. Does the Tech 2 indicate DTC P0175 failed this ignition?	—	Go to *Step 5*	The rich condition is not present. If a driveability symptom still exists, refer to *Symptoms*.
5	Was DTC P0172 also set?	—	Go to *Step 6*	Go to *Step 15*
6	Visually and physically inspect the air filter element and replace it if necessary. Did the air filter require replacement?	—	Verify repair	Go to *Step 7*

DTC P0175 – Fuel Trim System Rich Bank 2 (Cont'd)

Step	Action	Value(s)	Yes	No
7	Visually and physically inspect the air intake duct for collapse or restriction and repair if necessary. Did your inspection reveal a problem requiring repair?	—	Verify repair	Go to *Step 8*
8	Inspect the MAF sensor inlet screen for damage or for the presence of foreign objects which may partially block air flow through the screen and correct any problem found. Did your inspection of the MAF sensor reveal a condition requiring repair or replacement?	—	Verify repair	Go to *Step 9*
9	Start the engine and note the idle quality. Is a low or unsteady idle being experienced?	—	Go to *Step 10*	Go to *Step 11*
10	1. Turn the ignition off and physically inspect the throttle body bore, throttle plate, and IAC passages for coking and foreign objects. 2. If a problem was found, repair as necessary. Did your inspection reveal a condition requiring repair?	—	Verify repair	Go to *Step 11*
11	1. Disconnect the vacuum hose from the fuel pressure regulator and inspect the hose for the presence of fuel. 2. If fuel is present in the vacuum hose, replace the fuel pressure regulator (refer to *Fuel Metering System*). Did the fuel pressure regulator require replacement?	—	Verify repair	Go to *Step 12*
12	1. Ignition "ON", engine "OFF". 2. Monitor the TP Angle display on the Tech 2 while slowly depressing the accelerator pedal. Does the TP Angle display increase steadily and evenly from minimum value at closed throttle to maximum value at wide-open throttle?	Minimum 8% Maximum 92%	Go to *Step 13*	Go to *Step 21*
13	1. Disconnect the MAF sensor electrical connector. 2. Operate the vehicle in "closed loop" while monitoring the "BANK 2 L.T. FUEL TRIM" and "BANK 2 S.T. FUEL TRIM" display on the Tech 2. Did both values change to near the specified value?	0%	Go to *Step 22*	Go to *Step 14*
14	1. Perform the "Fuel System Pressure Test". 2. If Fuel System Pressure Test isolates a problem, repair as necessary (refer to *Engine Fuel* or *Fuel Metering System*). Did the Fuel System Pressure Test isolate a condition requiring repair?	—	Verify repair	Go to *Step 15*
15	1. Ignition "ON", engine "OFF". 2. Connect a test light between the harness connector terminals of canister purge solenoid. Is the test light on?	—	Go to *Step 16*	Go to *Step 19*
16	Check for short to ground in the wire (YEL/RED) between the canister purge solenoid and PCM terminal S-48. Was there a short to ground?	—	Go to *Step 17*	Go to *Step 18*

DTC P0175 – Fuel Trim System Rich Bank 2 (Cont'd)

Step	Action	Value(s)	Yes	No
17	Repair the short to ground. Is the action complete?	—	Verify repair	—
18	Replace the PCM. **IMPORTANT:** The replacement PCM must be programmed. Refer to *On-Vehicle Service* in *Powertrain Control Module and Sensors* for procedures. And also refer to the latest Service Bulletin. Check to see if the Latest software is released or not. And then Down Load the LATEST PROGRAMMED SOFTWARE to the replacement PCM. Is the action complete?	—	Verify repair	—
19	1. Perform the "Injector Balance Test". 2. If the Injector Balance Test isolates a problem, repair as necessary (refer to *Fuel Metering System*). Did the Injector Balance Test isolate a problem requiring repair?	—	Verify repair	Go to *Step 20*
20	1. Remove and visually/physically inspect the Bank 2 HO2S 1 for silicon contamination. This will be indicated by a powdery deposit on the portion of the HO2S that is exposed to the exhaust stream. 2. If contamination is evident on the Bank 2 HO2S 1, replace the contaminated sensor. Did the sensor require replacement?	—	Verify repair	Check the Procedure Refer to *Diagnostic Aids*
21	1. Check the TP sensor mounting screws and tighten or replace them as necessary if they are loose or missing. 2. If the screws are OK, replace the TP sensor. Is the action complete?	—	Verify repair	—
22	Replace the MAF sensor. Is the action complete?	—	Verify repair	—

Diagnostic Trouble Code (DTC) P0201 Injector 1 Control Circuit

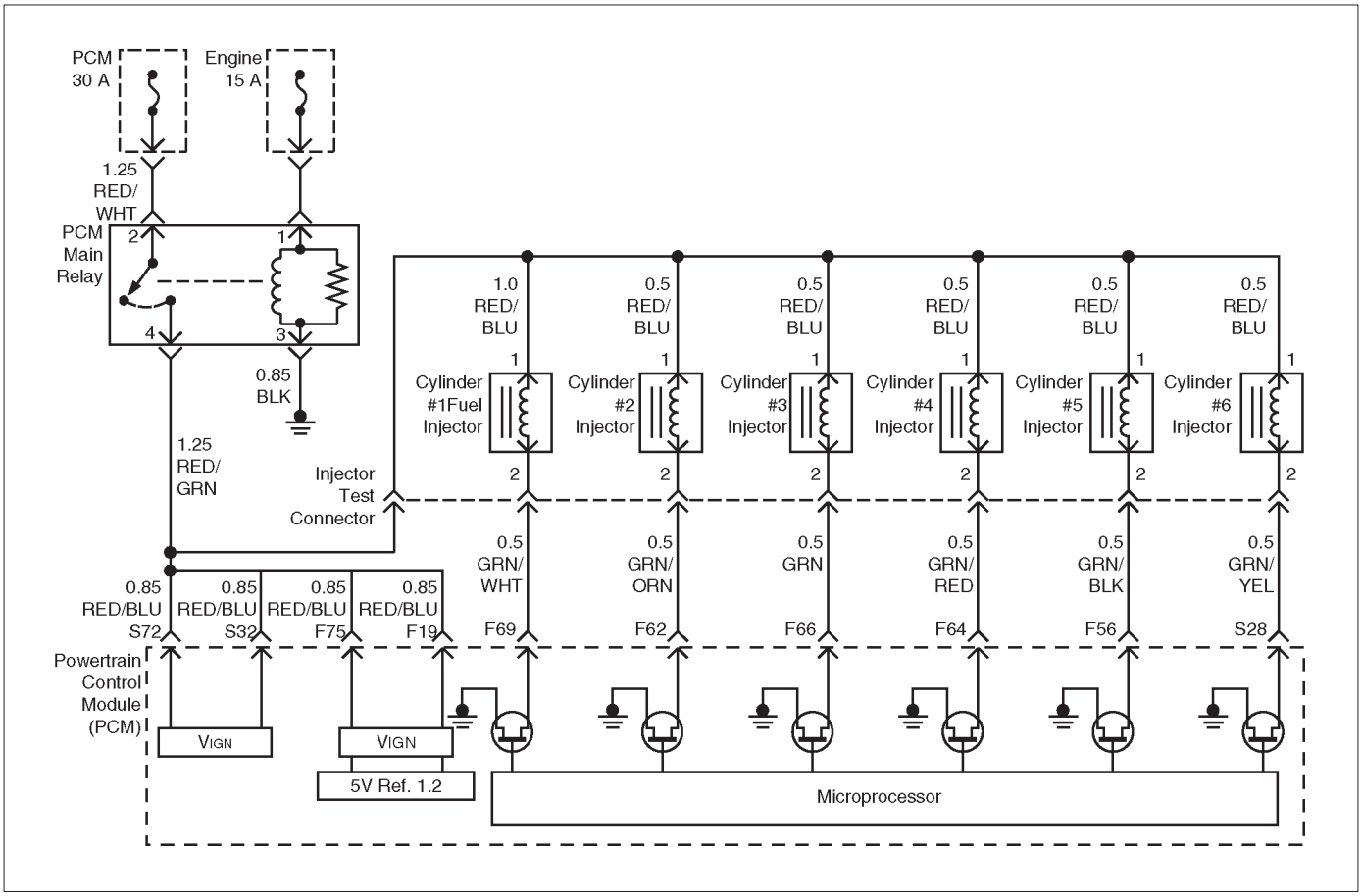

D06R200014

Circuit Description

The powertrain control module (PCM) has six individual injector driver circuits. Each controls an injector. When a driver circuit is grounded by the PCM, the injector is activated. The PCM monitors the current in each driver circuit. The voltage on each driver is monitored to detect a fault. If the voltage is not what the PCM expects to monitor on the circuit, a DTC is set. This DTC is also set if an injector driver is shorted to voltage or if there is an open circuit.

Conditions for Setting the DTC

- The battery voltage is more than 9 volts.
- Engine speed is more than 700 rpm.
- The engine is turning, determined by 58X crankshaft position input signal.
- The injector voltage does not equal the ignition voltage when the injector is commanded “OFF” or the injector voltage does not equal 0 volts when the injector is commanded “ON”.
- The above conditions are met for 5 seconds.

Action Taken When the DTC Sets

- The PCM will illuminate the malfunction indicator lamp (MIL) the first time the fault is detected.
- The PCM will store conditions which were present when the DTC was set as Freeze Frame and in the Failure Records data.

Conditions for Clearing the MIL/DTC

- The PCM will turn “OFF” the MIL on the third consecutive trip cycle in which the diagnostic has been run and the fault is no longer present.
- A history DTC P0201 will clear after 40 consecutive warm-up cycles occur without a fault.
- DTC P0201 can be cleared by using the Tech 2 “Clear Info” function or by disconnecting the PCM battery feed.

Diagnostic Aids

An injector driver circuit that is open or shorted to voltage will cause a DTC P0201 to set. It will also cause a misfire due to an inoperative injector. A misfire DTC will also be set indicating which cylinder is inoperative.

Long term and short term fuel trims that are excessively high or low are a good indication that an injector is faulty. Use Fuel Injector Coil Test Procedure to check for faulty injectors.

Test Description

The number(s) below refer to the step number(s) on the Diagnostic Chart.

3. This step determines if DTC P0201 is the result of a hard failure or an intermittent condition.

5. A special injector test connector is provided so that the injectors can be electrically tested without removal of the manifold. The test connector can be identified by the blue connector lock which is tethered to the wiring harness. If the light for cylinder 1 is “ON” steady before cranking the engine as well as while cranking the engine, then the injector driver circuit is shorted to ground.

   If the test light blinks while cranking, the PCM and the wiring to the injectors are OK. The Fuel Injector Coil Test Procedure will check if the injectors are faulty.

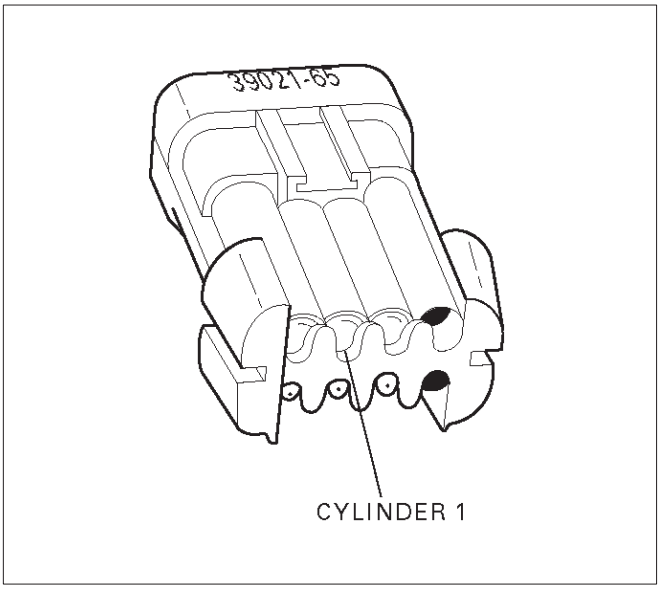

R321054

7. Because the test light was “ON” steady, voltage to the injector is OK, but the driver circuit is grounded at all times. This step determines if the circuit is shorted to ground or the PCM is faulty.

9. The reading should be about 12-14Ω.

10. Locating the open in the harness or in the injector will require removal of the manifold to provide access.

DTC P0201 – Injector 1 Control Circuit

Step	Action	Value(s)	Yes	No
1	Was the “On-Board Diagnostic (OBD) System Check” performed?	—	Go to *Step 2*	Go to *OBD System Check*
2	Will the engine start?	—	Go to *Step 3*	Go to *Engine Cranks But Will Not Run* chart
3	1. Install the Tech 2. Clear the DTC. 2. Idle the engine for one minute. Does DTC P0201 reset?	—	Go to *Step 5*	Go to *Step 4*
4	1. Review the Freeze Frame data with the ignition “ON” and the engine “OFF” and note the parameters. 2. Operate the vehicle within the Freeze Frame conditions as noted. Does P0201 reset?	—	Go to *Step 5*	Check the Procedure Go to *Diagnostic Aids*
5	1. Engine “OFF”. 2. Disconnect the injector connector. 3. Install an injector test light J-39021-65 on the injector test connector. 4. Crank the engine and note the light. Does the injector test light blink?	—	Go to *Fuel Injector Coil Test Procedure*	Go to *Step 6*

DTC P0201 – Injector 1 Control Circuit (Cont'd)

Step	Action	Value(s)	Yes	No
6	Note whether the injector test light for cylinder 1 was "OFF" or "ON" steady in step 5. Was the test light "ON" steady while cranking the engine?	—	Go to *Step 7*	Go to *Step 9*
7	1. Disconnect the PCM connector for the affected injectors. 2. With a test light connected to B+, probe the affected injector driver circuit. Does the test light illuminate?	—	Go to *Step 8*	Go to *Step 15*
8	Repair short to ground in the injector driver circuit. Is the action complete?	—	Go to *OBD System Check*	—
9	1. Disconnect the injector test connector. 2. At the injector side of the harness, connect an ohmmeter between the positive wire (red with blue tracer) and the wire for cylinder 1 (green with white tracer). Does the ohmmeter indicate continuity?	—	Go to *Step 11*	Go to *Step 10*
10	Repair the open injector harness wire or open injector. Is the action complete?	—	Verify repair	—
11	At the PCM side of the injector test connector, check the green/white wire for a short to voltage. Was there a short to voltage?	—	Go to *Step 12*	Go to *Step 13*
12	Repair the short to voltage. Is the action complete?	—	Verify repair	—
13	Check for an open circuit between the injector test connector and the PCM. Was there an open circuit?	—	Go to *Step 14*	Go to *Step 15*
14	Repair the open circuit. Is the action complete?	—	Verify repair	—
15	Replace the PCM. **IMPORTANT:** The replacement PCM must be programmed. Refer to *On-Vehicle Service* in *Powertrain Control Module and Sensors* for procedures. And also refer to the latest Service Bulletin. Check to see if the Latest software is released or not. And then Down Load the LATEST PROGRAMMED SOFTWARE to the replacement PCM. Is the action complete?	—	Verify repair	—

Diagnostic Trouble Code (DTC) P0202 Injector 2 Control Circuit

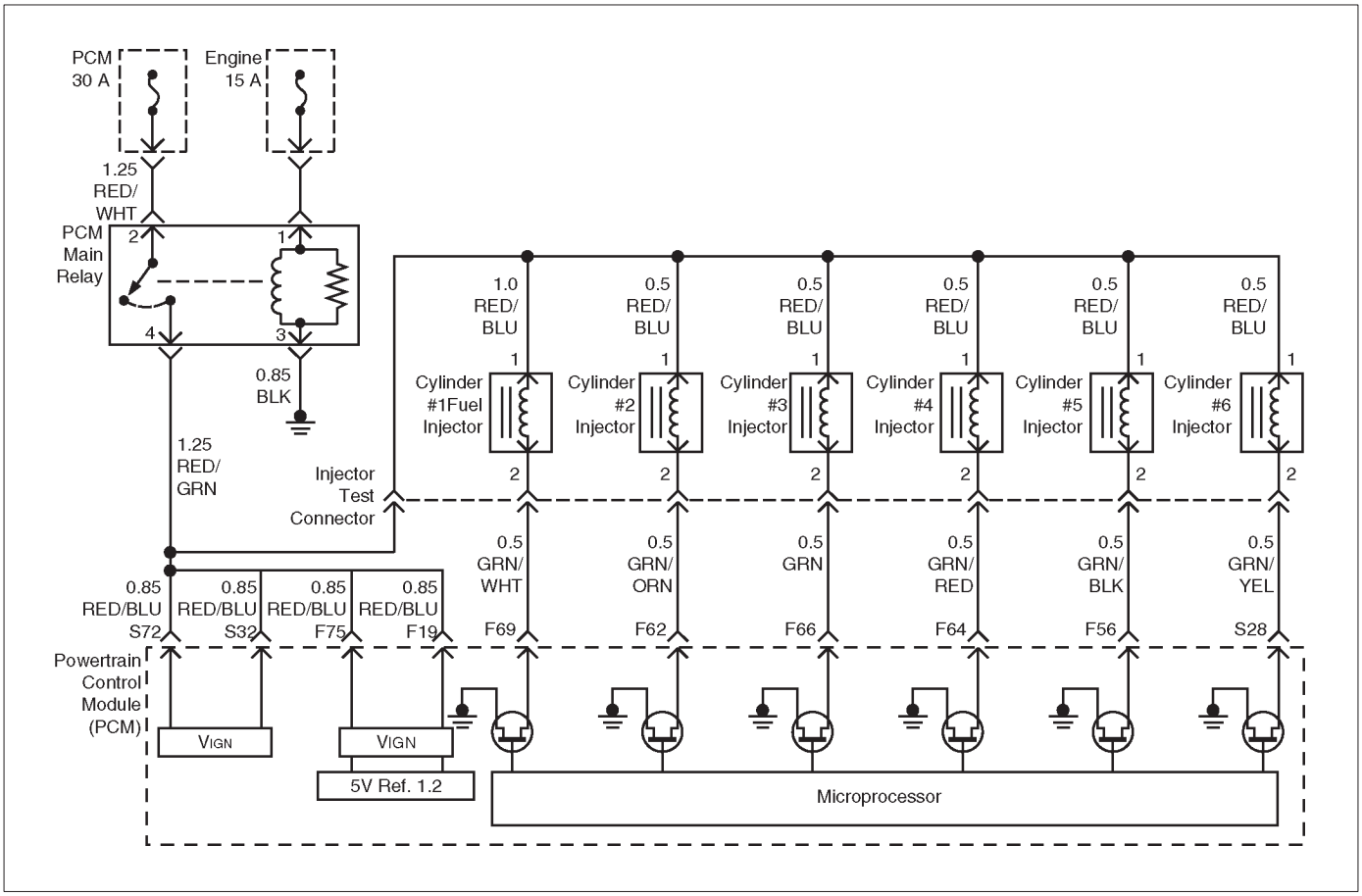

D06R200014

Circuit Description

The powertrain control module (PCM) has six individual injector driver circuits. Each controls an injector. When a driver circuit is grounded by the PCM, the injector is activated. The PCM monitors the current in each driver circuit. The voltage on each driver is monitored to detect a fault. If the voltage is not what the PCM expects to monitor on the circuit, a DTC is set. This DTC is also set if an injector driver is shorted to voltage or if there is an open circuit.

Conditions for Setting the DTC

- The battery voltage is more than 9 volts.
- Engine speed is more than 700 rpm.
- The engine is turning, determined by 58X crankshaft position input signal.
- The injector voltage does not equal the ignition voltage when the injector is commanded “OFF” or the injector voltage does not equal 0 volts when the injector is commanded “ON”.
- The above conditions are met for 5 seconds.

Action Taken When the DTC Sets

- The PCM will illuminate the malfunction indicator lamp (MIL) the first time the fault is detected.
- The PCM will store conditions which were present when the DTC was set as Freeze Frame and in the Failure Records data.

Conditions for Clearing the MIL/DTC

- The PCM will turn “OFF” the MIL on the third consecutive trip cycle in which the diagnostic has been run and the fault is no longer present.
- A history DTC P0202 will clear after 40 consecutive warm-up cycles occur without a fault.
- DTC P0202 can be cleared by using the Tech 2 “Clear Info” function or by disconnecting the PCM battery feed.

Diagnostic Aids

An injector driver circuit that is open or shorted to voltage will cause a DTC P0202 to set. It will also cause a misfire due to an inoperative injector. A misfire DTC will also be set indicating which cylinder is inoperative.

Long term and short term fuel trims that are excessively high or low are a good indication that an injector is faulty. Use Fuel Injector Coil Test Procedure to check for faulty injectors.

Test Description

The number(s) below refer to the step number(s) on the Diagnostic Chart.

3. This step determines if DTC P0202 is the result of a hard failure or an intermittent condition.

5. A special injector test connector is provided so that the injectors can be electrically tested without removal of the manifold. The test connector can be identified by the blue connector lock which is tethered to the wiring harness. If the light for cylinder 2 is “ON” steady before cranking the engine as well as while cranking the engine, then the injector driver circuit is shorted to ground.

   If the test light blinks while cranking, the PCM and the wiring to the injectors are OK. The Fuel Injector Coil Test Procedure will check if the injectors are faulty.

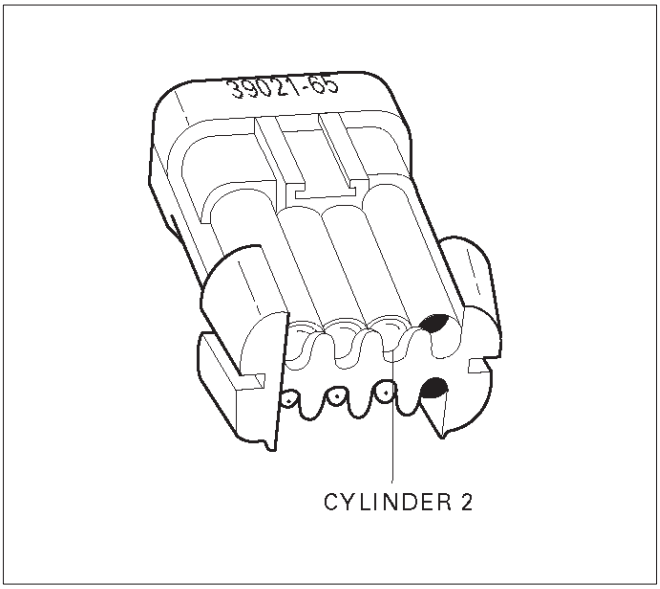

R321055

7. Because the test light was “ON” steady, voltage to the injector is OK, but the driver circuit is grounded at all times. This step determines if the circuit is shorted to ground or the PCM is faulty.

9. The reading should be about 12-14Ω.

10. Locating the open in the harness or in the injector will require removal of the manifold to provide access.

DTC P0202 – Injector 2 Control Circuit

Step	Action	Value(s)	Yes	No
1	Was the “On-Board Diagnostic (OBD) System Check” performed?	—	Go to *Step 2*	Go to *OBD System Check*
2	Will the engine start?	—	Go to *Step 3*	Go to *Engine Cranks But Will Not Run* chart
3	1. Install the Tech 2. Clear the DTC. 2. Idle the engine for one minute. Does DTC P0202 reset?	—	Go to *Step 5*	Go to *Step 4*
4	1. Review the Freeze Frame data with the ignition “ON” and the engine “OFF” and note the parameters. 2. Operate the vehicle within the Freeze Frame conditions as noted. Does P0202 reset?	—	Go to *Step 5*	Check the Procedure Go to *Diagnostic Aids*
5	1. Engine “OFF”. 2. Disconnect the injector test connector. 3. Install an injector test light J-39021-65 on injector connector. 4. Crank the engine and note the light. Does the cylinder 2 test light blink?	—	Go to *Fuel Injector Coil Test Procedure*	Go to *Step 6*

DTC P0202 – Injector 2 Control Circuit (Cont'd)

Step	Action	Value(s)	Yes	No
6	Note whether the injector test light for cylinder 2 was "OFF" or "ON" steady in step 5. Was the test light "ON" steady while cranking the engine?	—	Go to *Step 7*	Go to *Step 9*
7	1. Disconnect the PCM connector for the affected injectors. 2. With a test light connected to B+, probe the affected injector driver circuit. Does the test light illuminate?	—	Go to *Step 8*	Go to *Step 15*
8	Repair short to ground in the injector driver circuit. Is the action complete?	—	Go to *OBD System Check*	—
9	1. Disconnect the injector test connector. 2. At the injector side of the harness, connect an ohmmeter between the positive wire (red with blue tracer) and the wire for cylinder 2 (green with orange tracer). Does the ohmmeter indicate continuity?	—	Go to *Step 11*	Go to *Step 10*
10	Repair the open injector harness wire or open injector. Is the action complete?	—	Verify repair	—
11	At the PCM side of the injector test connector, check the green/orange wire for a short to voltage. Was there a short to voltage?	—	Go to *Step 12*	Go to *Step 13*
12	Repair the short to voltage. Is the action complete?	—	Verify repair	—
13	Check for an open circuit between the injector test connector and the PCM. Was there an open circuit?	—	Go to *Step 14*	Go to *Step 15*
14	Repair the open circuit. Is the action complete?	—	Verify repair	—
15	Replace the PCM. **IMPORTANT:** The replacement PCM must be programmed. Refer to *On-Vehicle Service* in *Powertrain Control Module and Sensors* for procedures. And also refer to the latest Service Bulletin. Check to see if the Latest software is released or not. And then Down Load the LATEST PROGRAMMED SOFTWARE to the replacement PCM. Is the action complete?	—	Verify repair	—

Diagnostic Trouble Code (DTC) P0203 Injector 3 Control Circuit

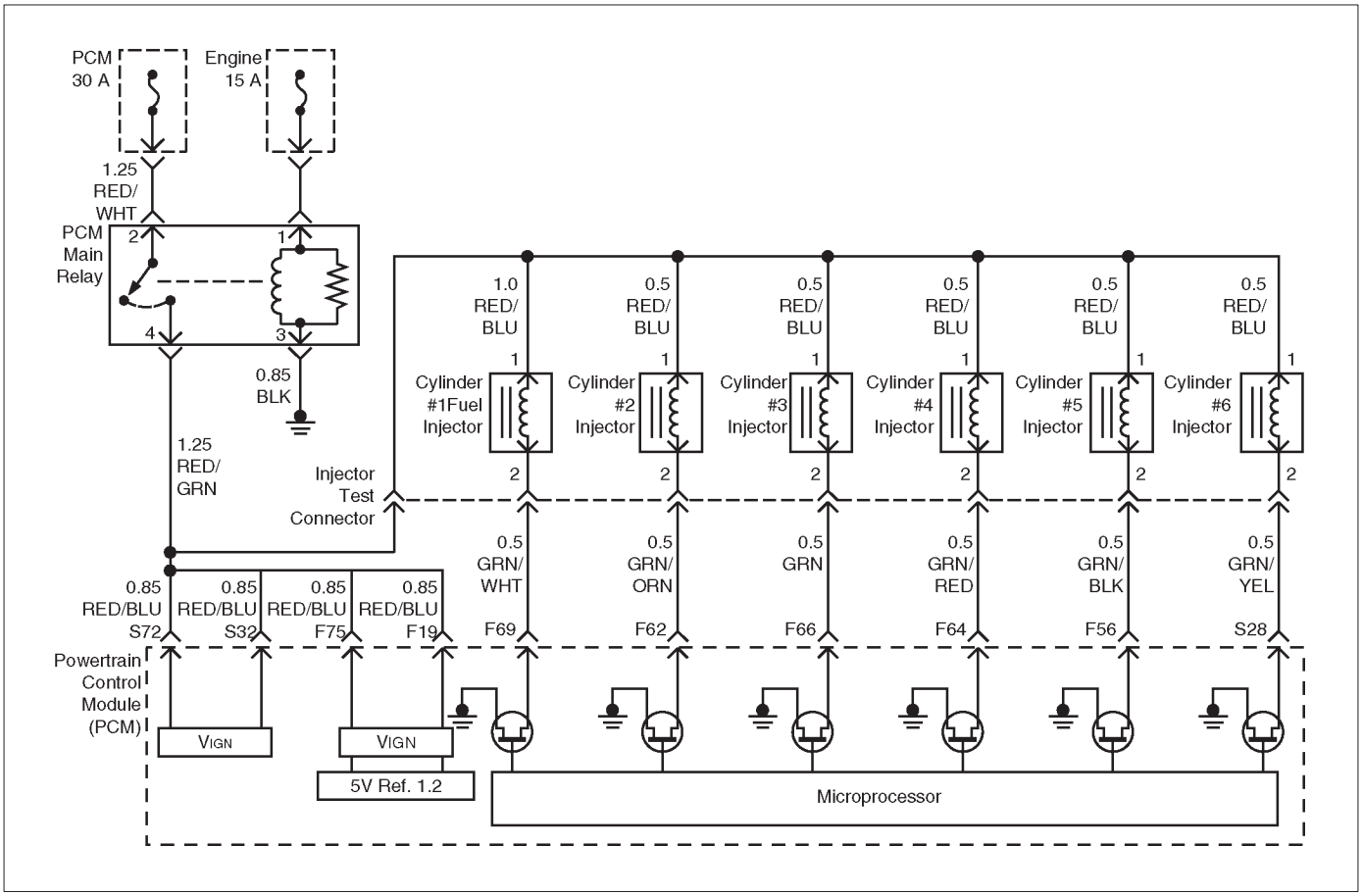

D06R200014

Circuit Description

The powertrain control module (PCM) has six individual injector driver circuits. Each controls an injector. When the driver circuit is grounded by the PCM, the injector is activated. The PCM monitors the current in each driver circuit. The voltage on each driver is monitored to detect a fault. If the voltage is not what the PCM expects to monitor on the circuit, a DTC is set. This DTC is also set if an injector driver is shorted to voltage or if there is an open circuit.

Conditions for Setting the DTC

- The battery voltage is more than 9 volts.
- Engine speed is more than 700 rpm.
- The engine is turning, determined by the 58X crankshaft position input signal.
- The injector voltage does not equal the ignition voltage when the injector is commanded “OFF” or the injector voltage does not equal 0 volts when the injector is commanded “ON”.
- The above conditions are met for 5 seconds.

Action Taken When the DTC Sets

- The PCM will illuminate the malfunction indicator lamp (MIL) the first time the fault is detected.
- The PCM will store conditions which were present when the DTC was set as Freeze Frame and in the Failure Records data.

Conditions for Clearing the MIL/DTC

- The PCM will turn “OFF” the MIL on the third consecutive trip cycle in which the diagnostic has been run and the fault is no longer present.
- A history DTC P0203 will clear after 40 consecutive warm-up cycles occur without a fault.
- DTC P0203 can be cleared by using the Tech 2 “Clear Info” function or by disconnecting the PCM battery feed.

Diagnostic Aids

An injector driver circuit that is open or shorted to voltage will cause a DTC P0203 to set. It will also cause a misfire due to an inoperative injector. A misfire DTC will also be set indicating which cylinder is inoperative.

Long term and short term fuel trims that are excessively high or low are a good indication that an injector is faulty. Use Fuel Injector Coil Test Procedure to check for faulty injectors.

Test Description

The number(s) below refer to the step number(s) on the Diagnostic Chart.

3. This step determines if DTC P0203 is the result of a hard failure or an intermittent condition.

5. A special injector test connector is provided so that the injectors can be electrically tested without removal of the manifold. The test connector can be identified by the blue connector lock which is tethered to the wiring harness. If the light for cylinder 3 is “ON” steady before cranking the engine as well as while cranking the engine, then the injector driver circuit is shorted to ground.

   If the test light blinks while cranking, the PCM and the wiring to the injectors are OK. The Fuel Injector Coil Test Procedure will check if the injectors are faulty.

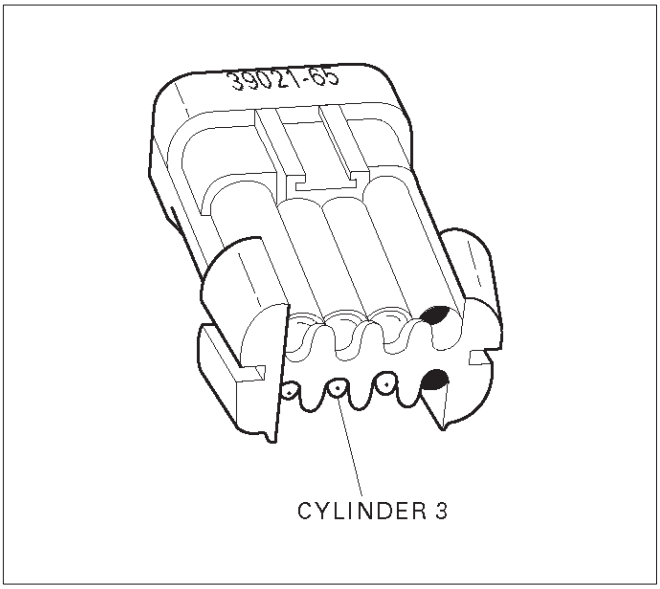

R321056

7. Because the test light was “ON” steady, voltage to the injector is OK, but the driver circuit is grounded at all times. This step determines if the circuit is shorted to ground or the PCM is faulty.

9. The reading should be about 12-14Ω.

10. Locating the open in the harness or in the injector will require removal of the manifold to provide access.

DTC P0203 – Injector 3 Control Circuit

Step	Action	Value(s)	Yes	No
1	Was the “On-Board Diagnostic (OBD) System Check” performed?	—	Go to *Step 2*	Go to *OBD System Check*
2	Will the engine start?	—	Go to *Step 3*	Go to *Engine Cranks But Will Not Run* chart
3	1. Install the Tech 2. Clear the DTC. 2. Idle the engine for one minute. Does DTC P0203 reset?	—	Go to *Step 5*	Go to *Step 4*
4	1. Review the Freeze Frame data with the ignition “ON” and the engine “OFF” and note the parameters. 2. Operate the vehicle within the Freeze Frame conditions as noted. Does P0203 reset?	—	Go to *Step 5*	Check the Procedure Go to *Diagnostic Aids*
5	1. Engine “OFF”. 2. Disconnect the injector test connector . 3. Install an injector test light J-39021-65 on injector connector. 4. Crank the engine and note the light. Does the cylinder 3 test light blink?	—	Go to *Fuel Injector Coil Test Procedure*	Go to *Step 6*

DTC P0203 – Injector 3 Control Circuit (Cont'd)

Step	Action	Value(s)	Yes	No
6	Note whether the injector test light for cylinder 3 was "OFF" or "ON" steady in step 5. Was the test light "ON" steady while cranking the engine?	—	Go to *Step 7*	Go to *Step 9*
7	1. Disconnect the PCM connector for the affected injectors. 2. With a test light connected to B+, probe the affected injector driver circuit. Does the test light illuminate?	—	Go to *Step 8*	Go to *Step 15*
8	Repair short to ground in the injector driver circuit. Is the action complete?	—	Go to *OBD System Check*	—
9	1. Disconnect the injector test connector. 2. At the injector side of the harness, connect an ohmmeter between the positive wire (red with blue tracer) and the wire for cylinder 3 (green). Does the ohmmeter indicate continuity?	—	Go to *Step 11*	Go to *Step 10*
10	Repair the open injector harness wire or open injector. Is the action complete?	—	Verify repair	—
11	At the PCM side of the injector test connector, check the green wire for a short to voltage. Was there a short to voltage?	—	Go to *Step 12*	Go to *Step 13*
12	Repair the short to voltage. Is the action complete?	—	Verify repair	—
13	Check for an open circuit between the injector test connector and the PCM. Was there an open circuit?	—	Go to *Step 14*	Go to *Step 15*
14	Repair the open circuit. Is the action complete?	—	Verify repair	—
15	Replace the PCM. **IMPORTANT:** The replacement PCM must be programmed. Refer to *On-Vehicle Service* in *Powertrain Control Module and Sensors* for procedures. And also refer to the latest Service Bulletin. Check to see if the Latest software is released or not. And then Down Load the LATEST PROGRAMMED SOFTWARE to the replacement PCM. Is the action complete?	—	Verify repair	—

Diagnostic Trouble Code (DTC) P0204 Injector 4 Control Circuit

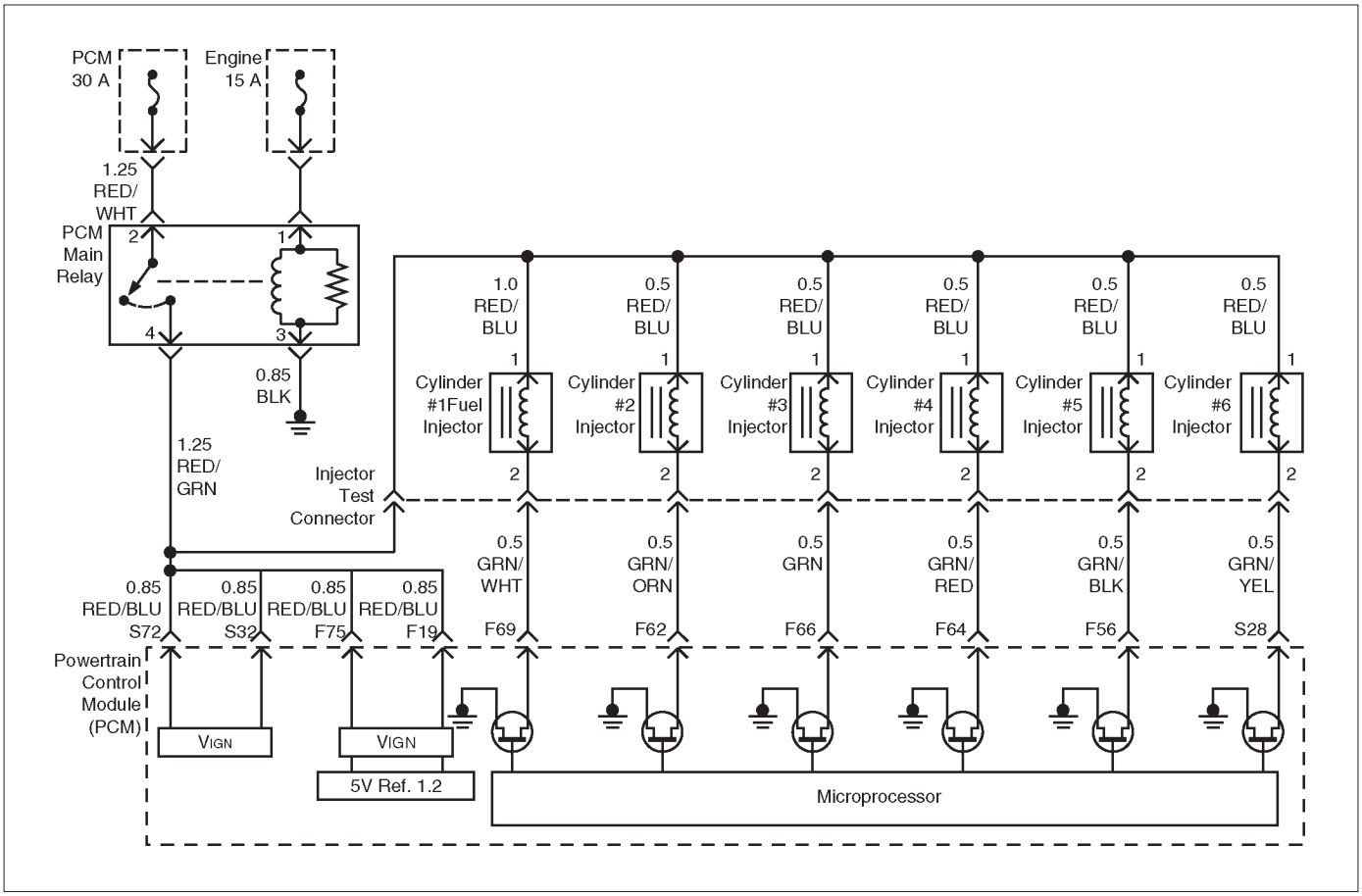

D06R200014

Circuit Description

The powertrain control module (PCM) has six individual injector driver circuits. Each controls an injector. When the driver circuit is grounded by the PCM, the injector is activated. The PCM monitors the current in each driver circuit. The voltage on each driver is monitored to detect a fault. If the voltage is not what the PCM expects to monitor on the circuit, a DTC is set. This DTC is also set if an injector driver is shorted to voltage or if there is an open circuit.

Conditions for Setting the DTC

- The battery voltage is more than 9 volts.
- Engine speed is more than 700 rpm.
- The engine is turning, determined by the 58X crankshaft position input signal.
- The injector voltage does not equal the ignition voltage when the injector is commanded “OFF” or the injector voltage does not equal 0 volts when the injector is commanded “ON”.
- The above conditions are met for 5 seconds.

Action Taken When the DTC Sets

- The PCM will illuminate the malfunction indicator lamp (MIL) the first time the fault is detected.
- The PCM will store conditions which were present when the DTC was set as Freeze Frame and in the Failure Records data.

Conditions for Clearing the MIL/DTC

- The PCM will turn “OFF” the MIL on the third consecutive trip cycle in which the diagnostic has been run and the fault is no longer present.
- A history DTC P0204 will clear after 40 consecutive warm-up cycles occur without a fault.
- DTC P0204 can be cleared by using the Tech 2 “Clear Info” function or by disconnecting the PCM battery feed.

Diagnostic Aids

An injector driver circuit that is open or shorted to voltage will cause a DTC P0204 to set. It will also cause a misfire due to an inoperative injector. A misfire DTC will also be set indicating which cylinder is inoperative.

Long term and short term fuel trims that are excessively high or low are a good indication that an injector is faulty. Use Fuel Injector Coil Test Procedure to check for faulty injectors.

Test Description

The number(s) below refer to the step number(s) on the Diagnostic Chart.

3. This step determines if DTC P0204 is the result of a hard failure or an intermittent condition.

5. A special injector test connector is provided so that the injectors can be electrically tested without removal of the manifold. The test connector can be identified by the blue connector lock which is tethered to the wiring harness. If the light for cylinder 4 is “ON” steady before cranking the engine as well as while cranking the engine, then the injector driver circuit is shorted to ground.

   If the test light blinks while cranking, the PCM and the wiring to the injectors are OK. The Fuel Injector Coil Test Procedure will check if the injectors are faulty.

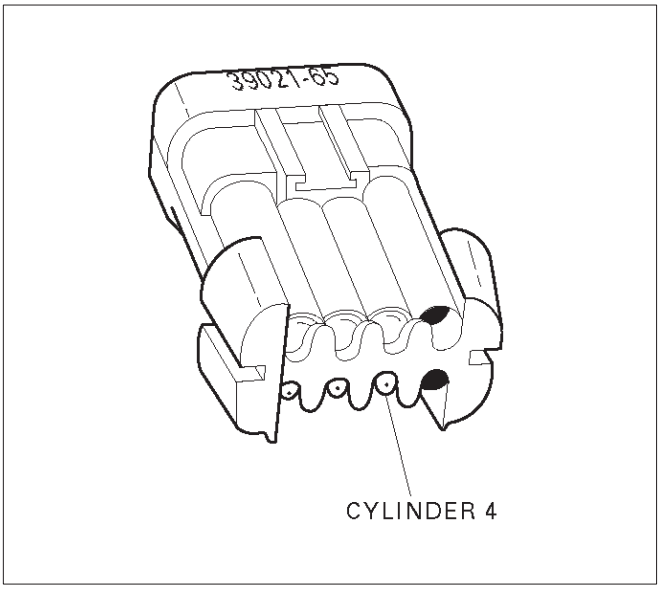

R321057

7. Because the test light was “ON” steady, voltage to the injector is OK, but the driver circuit is grounded at all times. This step determines if the circuit is shorted to ground or the PCM is faulty.

9. The reading should be about 12-14Ω.

10. Locating the open in the harness or in the injector will require removal of the manifold to provide access.

DTC P0204 – Injector 4 Control Circuit

Step	Action	Value(s)	Yes	No
1	Was the “On-Board Diagnostic (OBD) System Check” performed?	—	Go to *Step 2*	Go to *OBD System Check*
2	Will the engine start?	—	Go to *Step 3*	Go to *Engine Cranks But Will Not Run* chart
3	1. Install the Tech 2. Clear the DTC. 2. Idle the engine for one minute. Does DTC P0204 reset?	—	Go to *Step 5*	Go to *Step 4*
4	1. Review the Freeze Frame data with the ignition “ON” and the engine “OFF” and note the parameters. 2. Operate the vehicle within the Freeze Frame conditions as noted. Does P0204 reset?	—	Go to *Step 5*	Check the Procedure Go to *Diagnostic Aids*
5	1. Engine “OFF”. 2. Disconnect the injector test connector. 3. Install an injector test light J-39021-65 on injector connector. 4. Crank the engine and note the light. Does the cylinder 4 test light blink?	—	Go to *Fuel Injector Coil Test Procedure*	Go to Step 6

DTC P0204 – Injector 4 Control Circuit (Cont'd)

Step	Action	Value(s)	Yes	No
6	Note whether the injector test light for cylinder 4 was "OFF" or "ON" steady in step 5. Was the test light "ON" steady while cranking the engine?	—	Go to *Step 7*	Go to *Step 9*
7	1. Disconnect the PCM connector for the affected injectors. 2. With a test light connected to B+, probe the affected injector driver circuit. Does the test light illuminate?	—	Go to *Step 8*	Go to *Step 15*
8	Repair short to ground in the injector driver circuit. Is the action complete?	—	Go to *OBD System Check*	—
9	1. Disconnect the injector test connector. 2. At the injector side of the harness, connect an ohmmeter between the positive wire (red with blue tracer) and the wire for cylinder 4 (green/red). Does the ohmmeter indicate continuity?	—	Go to *Step 11*	Go to *Step 10*
10	Repair the open injector harness wire or open injector. Is the action complete?	—	Verify repair	—
11	At the PCM side of the injector test connector, check the green/red wire for a short to voltage. Was there a short to voltage?	—	Go to *Step 12*	Go to *Step 13*
12	Repair the short to voltage. Is the action complete?	—	Verify repair	—
13	Check for an open circuit between the injector test connector and the PCM. Was there an open circuit?	—	Go to *Step 14*	Go to *Step 15*
14	Repair the open circuit. Is the action complete?	—	Verify repair	—
15	Replace the PCM. **IMPORTANT:** The replacement PCM must be programmed. Refer to *On-Vehicle Service* in *Powertrain Control Module and Sensors* for procedures. And also refer to the latest Service Bulletin. Check to see if the Latest software is released or not. And then Down Load the LATEST PROGRAMMED SOFTWARE to the replacement PCM. Is the action complete?	—	Verify repair	—

Diagnostic Trouble Code (DTC) P0205 Injector 5 Control Circuit

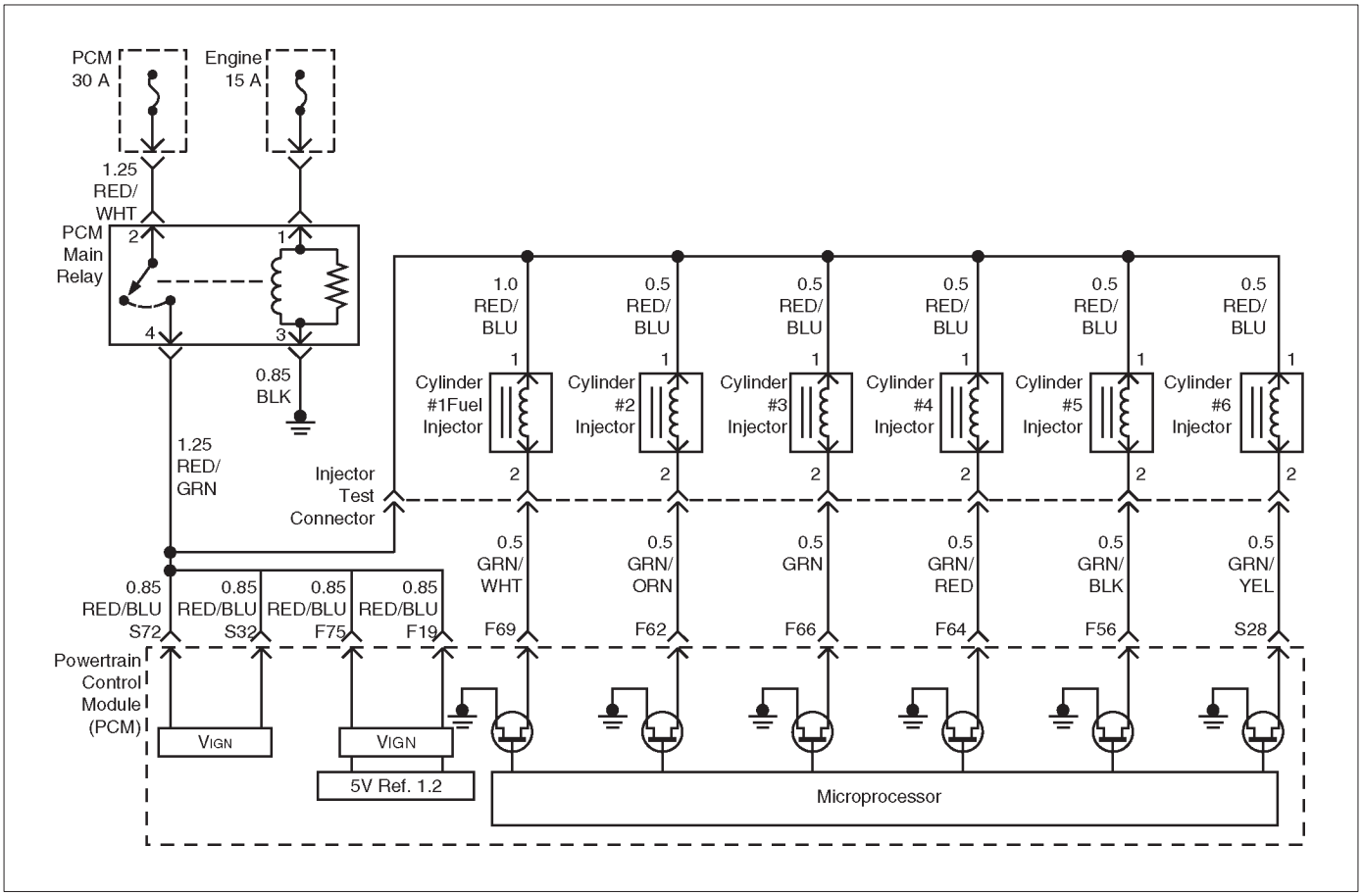

D06R200014

Circuit Description

The powertrain control module (PCM) has six individual injector driver circuits. Each controls an injector. When the driver circuit is grounded by the PCM, the injector is activated. The PCM monitors the current in each driver circuit. If the voltage is not what the PCM expects to monitor on the circuit, a DTC is set. This DTC is also set if an injector driver is shorted to voltage or if there is an open circuit.

Conditions for Setting the DTC

- The battery voltage is more than 9 volts.
- Engine speed is more than 700 rpm.
- The engine is turning, determined by the 58X crankshaft position input signal.
- The injector voltage does not equal the ignition voltage when the injector is commanded “OFF” or the injector voltage does not equal 0 volts when the injector is commanded “ON”.
- The above conditions are met for 5 seconds.

Action Taken When the DTC Sets

- The PCM will illuminate the malfunction indicator lamp (MIL) the first time the fault is detected.
- The PCM will store conditions which were present when the DTC was set as Freeze Frame and in the Failure Records data.

Conditions for Clearing the MIL/DTC

- The PCM will turn “OFF” the MIL on the third consecutive trip cycle in which the diagnostic has been run and the fault is no longer present.
- A history DTC P0205 will clear after 40 consecutive warm-up cycles occur without a fault.
- DTC P0205 can be cleared by using the Tech 2 “Clear Info” function or by disconnecting the PCM battery feed.

Diagnostic Aids

An injector driver circuit that is open or shorted to voltage will cause a DTC P0205 to set. It will also cause a misfire due to an inoperative injector. A misfire DTC will also be set indicating which cylinder is inoperative.

Long term and short term fuel trims that are excessively high or low are a good indication that an injector is faulty. Use Fuel Injector Coil Test Procedure to check for faulty injectors.

Test Description

The number(s) below refer to the step number(s) on the Diagnostic Chart.

3. This step determines if DTC P0205 is the result of a hard failure or an intermittent condition.

5. A special injector test connector is provided so that the injectors can be electrically tested without removal of the manifold.The test connector can be identified by the blue connector lock which is tethered to the wiring harness. If the light for cylinder 5 is “ON” steady before cranking the engine as well as while cranking the engine, then the injector driver circuit is shorted to ground.

   If the test light blinks while cranking, the PCM and the wiring to the injectors are OK. The Fuel Injector Coil Test Procedure will check if the injectors are faulty.

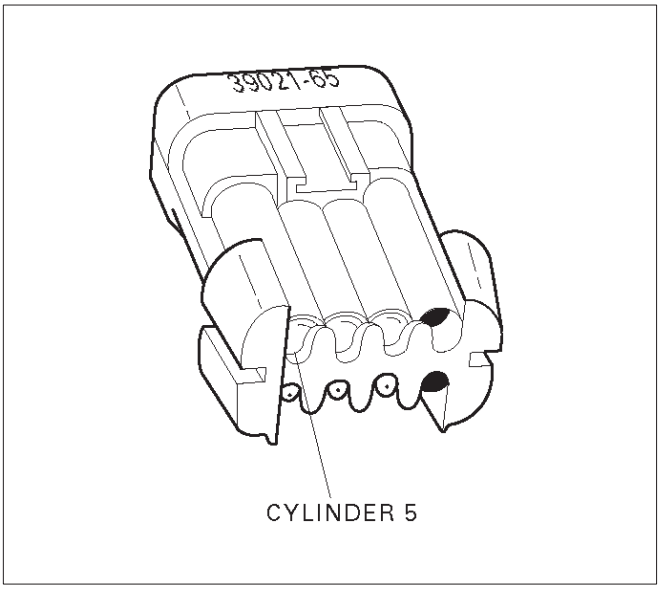

R321058

7. Because the test light was “ON” steady, voltage to the injector is OK, but the driver circuit is grounded at all times. This step determines if the circuit is shorted to ground or the PCM is faulty.

9. The reading should be about 12-14Ω.

10. Locating the open in the harness or in the injector will require removal of the manifold to provide access.

DTC P0205 – Injector 5 Control Circuit

Step	Action	Value(s)	Yes	No
1	Was the “On-Board Diagnostic (OBD) System Check” performed?	—	Go to *Step 2*	Go to *OBD System Check*
2	Will the engine start?	—	Go to *Step 3*	Go to *Engine Cranks But Will Not Run* chart
3	1. Install the Tech 2. Clear the DTC. 2. Idle the engine for one minute. Does DTC P0205 reset?	—	Go to *Step 5*	Go to *Step 4*
4	1. Review the Freeze Frame data with the ignition “ON” and the engine “OFF” and note the parameters. 2. Operate the vehicle within the Freeze Frame conditions as noted. Does P0205 reset?	—	Go to *Step 5*	Check the Procedure Go to *Diagnostic Aids*
5	1. Engine “OFF”. 2. Disconnect the injector test connector. 3. Install an injector test light J-39021-65 on injector connector. 4. Crank the engine and note the light. Does the cylinder 5 test light blink?	—	Go to *Fuel Injector Coil Test Procedure*	Go to *Step 6*

DTC P0205 – Injector 5 Control Circuit (Cont'd)

Step	Action	Value(s)	Yes	No
6	Note whether the injector test light for cylinder 5 was "OFF" or "ON" steady in step 5. Was the test light "ON" steady while cranking the engine?	—	Go to *Step 7*	Go to *Step 9*
7	1. Disconnect the PCM connector for the affected injectors. 2. With a test light connected to B+, probe the affected injector driver circuit. Does the test light illuminate?	—	Go to *Step 8*	Go to *Step 15*
8	Repair short to ground in the injector driver circuit. Is the action complete?	—	Go to *OBD System Check*	—
9	1. Disconnect the injector test connector. 2. At the injector side of the harness, connect an ohmmeter between the positive wire (red with blue tracer) and the wire for cylinder 5 (green with black tracer). Does the ohmmeter indicate continuity?	—	Go to *Step 11*	Go to *Step 10*
10	Repair the open injector harness wire or open injector. Is the action complete?	—	Verify repair	—
11	At the PCM side of the injector test connector, check the green/black wire for a short to voltage. Was there a short to voltage?	—	Go to *Step 12*	Go to *Step 13*
12	Repair the short to voltage. Is the action complete?	—	Verify repair	—
13	Check for an open circuit between the injector test connector and the PCM. Was there an open circuit?	—	Go to *Step 14*	Go to *Step 15*
14	Repair the open circuit. Is the action complete?	—	Verify repair	—
15	Replace the PCM. **IMPORTANT:** The replacement PCM must be programmed. Refer to *On-Vehicle Service* in *Powertrain Control Module and Sensors* for procedures. And also refer to the latest Service Bulletin. Check to see if the Latest software is released or not. And then Down Load the LATEST PROGRAMMED SOFTWARE to the replacement PCM. Is the action complete?	—	Verify repair	—

Diagnostic Trouble Code (DTC) P0206 Injector 6 Control Circuit

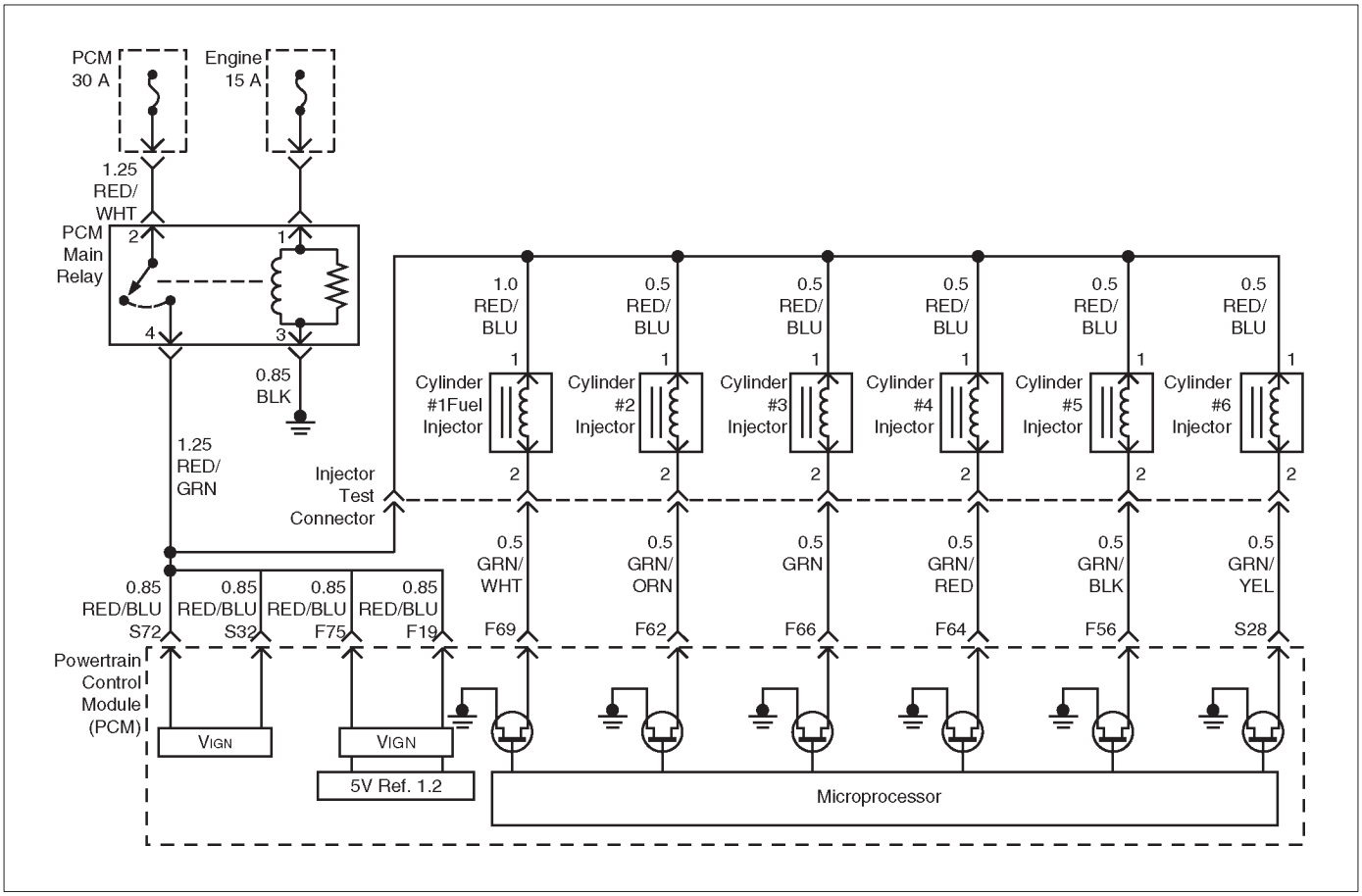

D06R200014

Circuit Description

The powertrain control module (PCM) has six individual injector driver circuits. Each controls an injector. When the driver circuit is grounded by the PCM, the injector is activated. The PCM monitors the current in each driver circuit. The voltage on each driver is monitored to detect a fault. If the voltage is not what the PCM expects to monitor on the circuit, a DTC is set. This DTC is also set if an injector driver is shorted to voltage or if there is an open circuit.

Conditions for Setting the DTC

- The battery voltage is more than 9 volts.
- Engine speed is more than 700 rpm.
- The engine is turning, determined by 58X crankshaft position input signal.
- The injector voltage does not equal the ignition voltage when the injector is commanded “OFF” or the injector voltage does not equal 0 volts when the injector is commanded “ON”.
- The above conditions are met for 5 seconds.

Action Taken When the DTC Sets

- The PCM will illuminate the malfunction indicator lamp (MIL) the first time the fault is detected.
- The PCM will store conditions which were present when the DTC was set as Freeze Frame and in the Failure Records data.

Conditions for Clearing the MIL/DTC

- The PCM will turn “OFF” the MIL on the third consecutive trip cycle in which the diagnostic has been run and the fault is no longer present.
- A history DTC P0206 will clear after 40 consecutive warm-up cycles occur without a fault.
- DTC P0206 can be cleared by using the Tech 2 “Clear Info” function or by disconnecting the PCM battery feed.

Diagnostic Aids

An injector driver circuit that is open or shorted to voltage will cause a DTC P0206 to set. It will also cause a misfire due to an inoperative injector. A misfire DTC will also be set indicating which cylinder is inoperative.

Long term and short term fuel trims that are excessively high or low are a good indication that an injector is faulty. Use Fuel Injector Coil Test Procedure to check for faulty injectors.

Test Description

The number(s) below refer to the step number(s) on the Diagnostic Chart.

3. This step determines if DTC P0206 is the result of a hard failure or an intermittent condition.

5. A special injector test connector is provided so that the injectors can be electrically tested without removal of the manifold.The test connector can be identified by the blue connector lock which is tethered to the wiring harness. If the light for cylinder 6 is “ON” steady before cranking the engine as well as while cranking the engine, then the injector driver circuit is shorted to ground.

   If the test light blinks while cranking, the PCM and the wiring to the injectors are OK. The Fuel Injector Coil Test Procedure will check if the injectors are faulty.

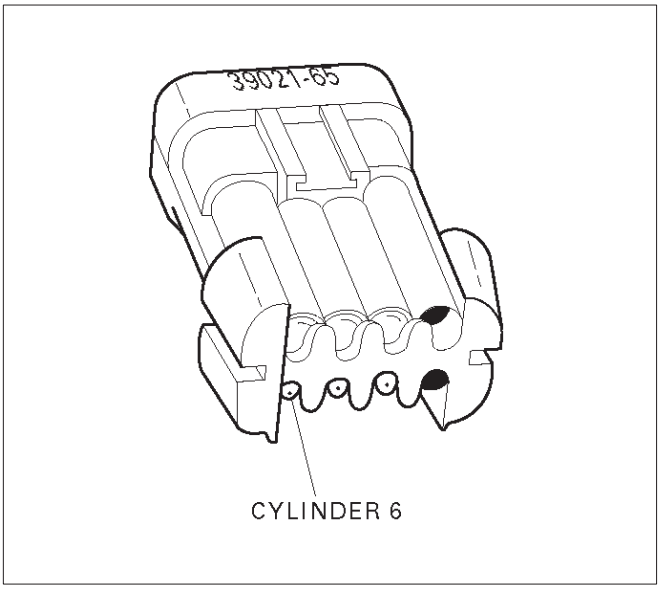

R321059

7. Because the test light was “ON” steady, voltage to the injector is OK, but the driver circuit is grounded at all times. This step determines if the circuit is shorted to ground or the PCM is faulty.

9. The reading should be about 12-14Ω.

10. Locating the open in the harness or in the injector will require removal of the manifold to provide access.

DTC P0206 – Injector 6 Control Circuit

Step	Action	Value(s)	Yes	No
1	Was the “On-Board Diagnostic (OBD) System Check” performed?	—	Go to *Step 2*	Go to *OBD System Check*
2	Will the engine start?	—	Go to *Step 3*	Go to *Engine Cranks But Will Not Run* chart
3	1. Install the Tech 2. Clear the DTC. 2. Idle the engine for one minute. Does DTC P0206 reset?	—	Go to *Step 5*	Go to *Step 4*
4	1. Review the Freeze Frame data with the ignition “ON” and the engine “OFF” and note the parameters. 2. Operate the vehicle within the Freeze Frame conditions as noted. Does P0206 reset?	—	Go to *Step 5*	Check the Procedure Go to *Diagnostic Aids*
5	1. Engine “OFF”. 2. Disconnect the injector test connector. 3. Install an injector test light J-39021-65 on injector connector. 4. Crank the engine and note the light. Does the cylinder 6 test light blink?	—	Go to *Fuel Injector Coil Test Procedure*	Go to *Step 6*

DTC P0206 – Injector 6 Control Circuit (Cont'd)

Step	Action	Value(s)	Yes	No
6	Note whether the injector test light for cylinder 6 was "OFF" or "ON" steady in step 5. Was the test light "ON" steady while cranking the engine?	—	Go to *Step 7*	Go to *Step 9*
7	1. Disconnect the PCM connector for the affected injectors. 2. With a test light connected to B+, probe the affected injector driver circuit. Does the test light illuminate?	—	Go to *Step 8*	Go to *Step 15*
8	Repair short to ground in the injector driver circuit. Is the action complete?	—	Go to *OBD System Check*	—
9	1. Disconnect the injector test connector. 2. At the injector side of the harness, connect an ohmmeter between the positive wire (red with blue tracer) and the wire for cylinder 6 (green with yellow tracer). Does the ohmmeter indicate continuity?	—	Go to *Step 11*	Go to *Step 10*
10	Repair the open injector harness wire or open injector Is the action complete?	—	Verify repair	—
11	At the PCM side of the injector test connector, check the green/yellow wire for a short to voltage. Was there a short to voltage?	—	Go to *Step 12*	Go to *Step 13*
12	Repair the short to voltage. Is the action complete?	—	Verify repair	—
13	Check for an open circuit between the injector test connector and the PCM. Was there an open circuit?	—	Go to *Step 14*	Go to *Step 15*
14	Repair the open circuit. Is the action complete?	—	Verify repair	—
15	Replace the PCM. **IMPORTANT:** The replacement PCM must be programmed. Refer to *On-Vehicle Service* in *Powertrain Control Module and Sensors* for procedures. And also refer to the latest Service Bulletin. Check to see if the Latest software is released or not. And then Down Load the LATEST PROGRAMMED SOFTWARE to the replacement PCM. Is the action complete?	—	Verify repair	—

Diagnostic Trouble Code (DTC) P0300 Engine Misfire Detected

Circuit Description

Misfire is monitored as a function of the combustion quality (CQ) signals generated from the ION Sensing Module. Combustion signals represent the degree of combustion in each cylinder. Misfire is detected when the combustion signal is below a predetermined value.

This DTC P0300 will determine if a multiple cylinder misfire is occurring by monitoring the Combustion Quality.

Conditions for Setting the DTC

- None of the following DTCs occur: TP sensor, MAF sensor, VSS, ECT sensor.
- The engine speed is between 600 and 6250 RPM.
- The system voltage is between 11 and 16 volts.
- The engine temperature sensor (ECT) indicates an engine temperature between –7˚C (20˚F) and 110˚C (230˚F).
- Throttle angle is steady and throttle changes less than 2% per 125 milliseconds.

Action Taken When the DTC Sets

- The PCM will ON the MIL after second trip with detected the fault.
- If the misfire is severe enough to cause possible catalyst damage, the PCM will flash the MIL for as long as the misfire remains at catalyst damaging levels.
- The PCM will disable the TCC operation.
- The PCM will store conditions which were present when the DTC was set as Freeze Frame and in the Failure Records data.

Conditions for Clearing the MIL/DTC

- The PCM will turn the MIL “OFF” on the third consecutive trip cycle in which the diagnostic has been run and the fault condition is no longer present.
- A history DTC P0300 will clear after 40 consecutive warm-up cycles occur without a fault.
- DTC P0300 can be cleared by using the Tech 2 “Clear Info” function or by disconnecting the PCM battery feed.

Diagnostic Aids

The Tech 2 display “Misfire Cur. #1 through #6” can be useful to determine whether the misfire is isolated to a single cylinder.

- Damaged or faulty ignition coil – Check for cracks or other damage.
- Substitute a known good coil – Swap the ignition coils and retest. If the misfire follows the coil, replace the ignition coil.

If the misfire is random, check for the following conditions:

- System grounds – Ensure all connections are clean and properly tightened.
- MAF – A mass air flow (MAF) sensor output that causes the PCM to sense a lower than normal air flow will cause a lean condition.
- Air induction system – Air leaks into the induction system which bypass the MAF sensor will cause a lean condition. Check for disconnected or damaged vacuum hoses, incorrectly installed or faulty PCV valve, or for vacuum leaks at the throttle body, EGR valve, and intake manifold mounting surfaces.
- Fuel pressure – Perform a fuel system pressure test. A faulty fuel pump, plugged filter, or faulty fuel system pressure regulator will contribute to a lean condition.
- Injector(s) – Perform an injector coil/balance test to locate faulty injector(s) contributing to a lean or flooding condition. In addition to the above test, check the condition of the injector O-rings.
- EGR – Check for a leaking valve, adapter, or feed pipes which will contribute to a lean condition or excessive EGR flow.
- Fuel quality – Using fuel with the wrong octane rating for the vehicle may cause driveability problems. Although alcohol-enhanced fuels may raise the octane rating, the fuel’s ability to turn into vapor in cold temperatures deteriorates. This may affect the cold driveability of the engine. The Reid Vapor Pressure of the fuel can also create problems in the fuel system, especially during the spring and fall when changes by the refineries may not coincide with changes in the weather.
- Vehicle marshalling – The transportation of new vehicles from the assembly plant to the dealership can involve as many as 60 key cycles within 2 to 3 miles of driving. This type of operation contributes to the fuel fouling of the spark plugs and will turn on the MIL with a P0300 Misfire DTC.

Reviewing the Failure Records vehicle mileage since the diagnostic test last failed may help determine how often the condition that caused the DTC to be set occurs. This may assist in diagnosing the condition.

DTC P0300 – Engine Misfire Detected

Step	Action	Value(s)	Yes	No
1	Was the “On-Board Diagnostic (OBD) System Check” performed?	—	Go to *Step 2*	Go to *OBD System Check*
2	1. Start the engine. Run the engine at idle. 2. Review and record the Tech 2 Freeze Frame data. 3. Operate the vehicle to duplicate the conditions present when the DTC was set (as defined by the Freeze Frame data). 4. Monitor the Tech 2 “Misfire Cur. #” display for each cylinder. Is “Misfire Cur. #” display increasing for any cylinder (indicating a misfire currently occurring)?	—	Go to *Step 3*	Check the Procedure Refer to *Diagnostic Aids*
3	1. Visually and physically inspect the vacuum hoses for splits, kinks, and improper connections. 2. If a problem is found, repair or replace the vacuum hoses as necessary. Did your inspection reveal a problem?	—	Verify repair	Go to *Step 4*
4	1. Visually and physically inspect the following areas for vacuum leaks: ● The intake manifold ● The injector O-rings ● The EGR adapter ● The EGR feed pipes ● ION Sensing Module 2. If a problem is found, repair the vacuum leak as necessary. Did your inspection reveal a vacuum leak?	—	Verify repair	Go to *Step 5*
5	1. Visually and physically inspect the crankcase ventilation valve for improper installation or damaged grommet. 2. If a problem is found, repair as necessary (refer to *Crankcase Ventilation System*). Did your inspection reveal a problem?	—	Verify repair	Go to *Step 6*
6	1. Inspect the MAF sensor inlet screen for damage or for the presence of foreign objects that may partially block the air flow sample through the MAF sensor. 2. If a problem is found, repair or replace the MAF sensor as necessary. Did your inspection of the MAF sensor reveal a condition requiring repair or replacement?	—	Verify repair	Go to *Step 7*
7	1. Remove the EGR valve and visually/physically inspect the valve to ensure that the pintle is not sticking partially open. Also, inspect the EGR valve pintle and seat for carbon deposits or burrs that may interfere with the pintle closing completely. 2. If a problem is found, clean the EGR valve pintle and seat or replace the EGR valve as necessary. Did your inspection reveal a problem?	—	Verify repair	Go to *Step 8*

DTC P0300 – Engine Misfire Detected (Cont'd)

Step	Action	Value(s)	Yes	No
8	1. Install a spark tester at the spark plug end of the ignition coil for a cylinder that indicated a misfire. 2. Crank the engine while observing the spark tester. A crisp, blue spark should be observed. Is adequate spark present?	—	Go to *Step 14*	Go to *Step 9*
9	1. Remove and visually/physically inspect the ignition coil(s) associated with the cylinders that were indicated as misfiring. Ensure that the coil(s) are free of cracks. 2. If a problem is found, replace the damaged ignition coil(s) as necessary. Did any ignition coils require replacement?	—	Verify repair	Go to *Step 10*
10	1. Remove the spark plugs from the cylinders that were indicated as misfiring. 2. Visually inspect the spark plug electrodes. Does your inspection reveal any spark plugs exhibiting excessive fouling?	—	Go to *Engine Mechanical Diagnosis*	Go to *Step 11*
11	1. Visually inspect the spark plug insulators for cracks, carbon tracking, or other damage. 2. If a problem is found, replace the faulty spark plug(s) as necessary. Did your inspection reveal a problem?	—	Verify repair	Go to *Step 12*
12	1. Disconnect the MAF sensor electrical connector. 2. Operate the vehicle in "closed loop" while monitoring the "BANK 1 L.T. FUEL TRIM" and "BANK 1 S.T. FUEL TRIM" display on the Tech 2. Do both values decrease below the specified values?	"BANK 1 L.T. FUEL TRIM" below +20%; "BANK 1 S.T. FUEL TRIM" below +50%	Go to *Step 13*	Replace the ignition coil of the affected cylinder
13	Replace the ignition coil control module. Is the action complete?	—	Verify repair	—
14	1. Visually and physically inspect the PCM injector grounds, power grounds and sensor grounds to ensure that they are clean, tight and in their proper locations. 2. If a problem is found, correct the faulty ground condition as necessary. Did your inspection reveal a poor ground?	—	Verify repair	Go to *Step 15*
15	1. Perform the "Fuel System Pressure Test" procedure. 2. If a problem is found, repair as necessary (refer to *Engine Fuel or Fuel Metering System*). Was a fuel system problem found?	—	Verify repair	Go to *Step 16*
16	1. Check the fuel for excessive water, alcohol, or other contaminants (refer to *Diagnosis* in *Engine Fuel* for procedure). 2. If a problem is found, correct the contaminated fuel condition as necessary. Was the fuel contaminated?	—	Verify repair	Go to *Step 17*

DTC P0300 – Engine Misfire Detected (Cont'd)

Step	Action	Value(s)	Yes	No
17	1. Perform the "Injector Coil/Balance Test". 2. If a problem is found, replace faulty injector(s) as necessary. Did any of the injectors require replacement?	—	Verify repair	Go to *Step 18*
18	1. Check for an engine mechanical problem. Refer to *Engine Mechanical Diagnosis* to diagnose the following conditions: ● A faulty or incorrect camshaft ● Leaking or sticky valves or rings ● Excessive valve deposits ● Weak valve springs ● Incorrect valve timing ● A leaking head gasket ● A loose or broken motor mount 2. If a problem is found, repair as necessary. Was a basic engine mechanical problem found and repaired?	—	Verify repair	Go to *Step 19*
19	1. Check for a transmission TCC problem. Refer to *4L30-E Automatic Transmission Diagnosis*. 2. If a problem is found, repair the transmission as necessary. Refer to *4L30-E Automatic Transmission Unit Repair*. Was a transmission problem found and repaired?	—	Verify repair	Go to *Step 20*
20	Replace the MAF sensor. Is the action complete?	—	Verify repair	—

Diagnostic Trouble Code (DTC)
P0325 ION Sensing Module/ION Sensing Knock Intensity Circuit Fault

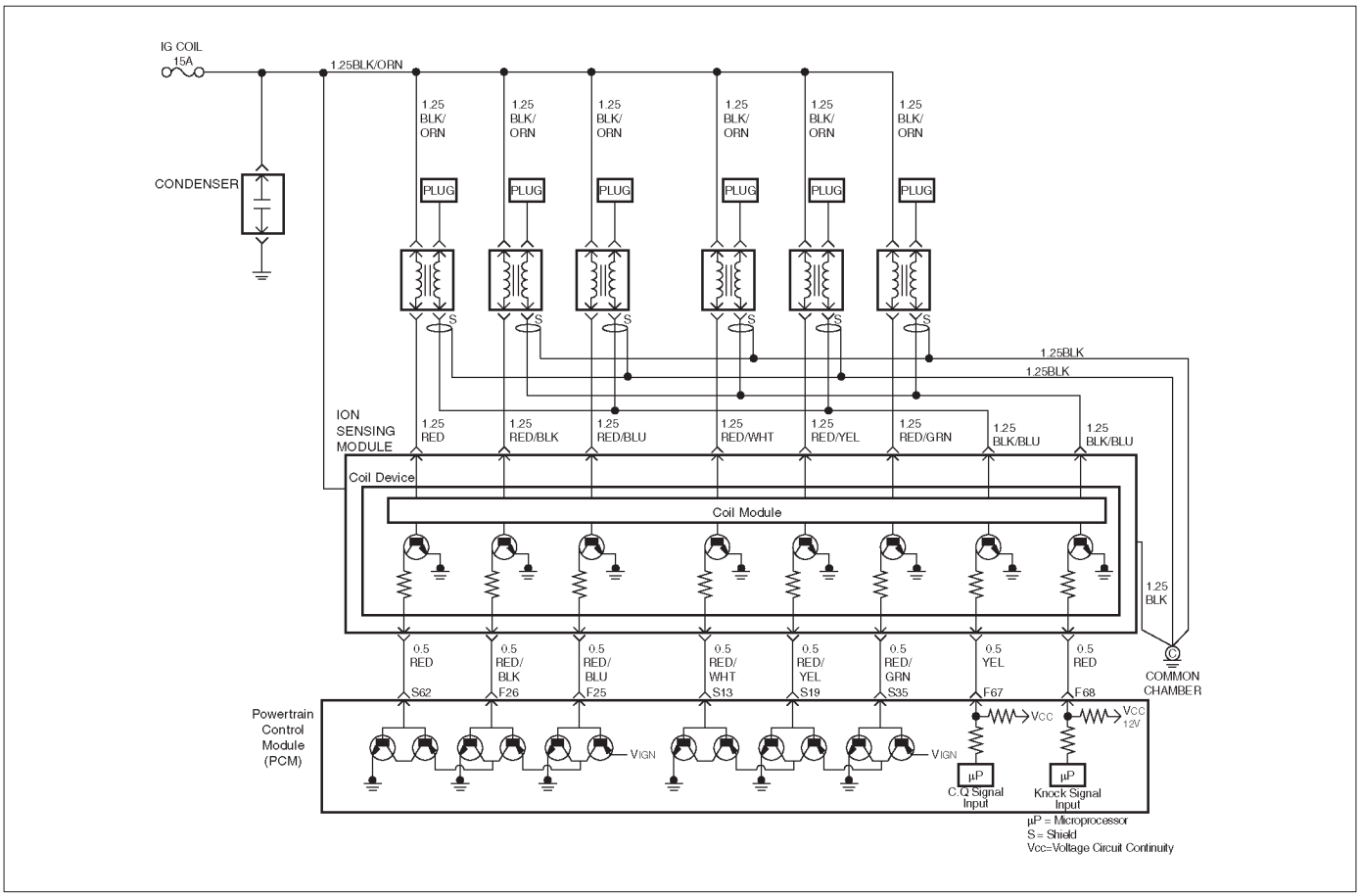

D06R200098

Circuit Description

The Power Control Module (PCM) checks the validity of the signals used in the ION Sensing module at the following engine operating conditions.

- The test is performed to evacuate the Knock Intensity (KI) signal pulse width if it is within a predetermined range. If the KI signal pulse width is out of the predetermined range, the fail counter will be incremented. If the failure counter exceeds the calibration, then test is complete and a failure will be reported. If the sample counter threshold is reached before the failure threshold, then the test is complete and a pass will be reported. This test will detect an open/short in the KI line circuit, ION module faults and analog input faults in the PCM.

Conditions for setting the DTC

- Ignition voltage is between 10volt and 16 volts.
- No Crank DTCs set.
- No EST DTCs set.
- No Misfire DTCs set.

Action Taken When the DTC Sets

- The PCM will ON the MIL after second trip with detected the fault.
- The PCM calculates an air flow value based on idle air control valve position, throttle position, RPM and barometric pressure.
- The PCM will store condition which were present when the DTC was set as Freeze Frame and in the Failure Records data.

Conditions for Clearing the MIL/DTC

- The PCM will turn the MIL “OFF” on the third consecutive trip cycle during which the diagnostic has been run and the fault condition is no longer present.
- A history DTC P0325 will clear after 40 consecutive trip cycles during which the warm up cycles have occurred without a fault.
- DTC P0325 can be cleared using the Tech2 “Clear Info” function or by disconnecting the PCM battery feed.

Diagnostic Aids

An intermittent may be caused by the following:

- Poor connections.
- Misrouted harness.
- Rubbed through wire insulation.
- Broken wire inside the insulation.

Check for the following conditions:

- Poor connection at PCM- Inspect harness connectors for backed out terminals, improper mating, broken locks, improperly formed or damaged terminals, and poor terminal to wire connection.
- Damaged harness-Inspect the wiring harness for damage.

If the harness appears to be OK, observe the Knock Present, Knock Sensor Noise Channel display on the Tech 2 while moving connectors and wiring harnesses related to the sensor.

A change in the display will indicate the location of the fault.

If DTC P0325 cannot be duplicated, the information included in the Failure Records data can be useful in determined vehicle mileage since the DTC was last set.

If it is determined that the DTC occurs intermittently, performing the DTC P0325 Diagnostic Chart may isolate the cause of the fault.

DTC P0325 - ION Sensing Module Knock Intensity Circuit Fault

Step	Action	Value(s)	Yes	No
1	Was the “On-Board (OBD) System Check” performed?	—	Go to *Step 2*	Go to *OBD System Check*
2	1. Ignition “ON”, engine “OFF”. 2. Review and record Tech 2 Failure Records data. 3. Operate the vehicle within Failure Records conditions as noted. 4. Using a Tech 2, monitor “DTC” info for DTC P0325. Does the Tech 2 indicate DTC P0325 failed this ignition?	—	Go to *Step 3*	Check the Procedure Refer to *Diagnostic Aids*
3	1. Ignition “OFF”. 2. Disconnect the ION sensing module. 3. Disconnect the PCM. Is the action complete?	—	Go to *Step 4*	—
4	Check the ION sensing harness between the PCM (F68) and ION sensing module circuit (RED Wire) at the KI line harness connector. Was a problem found?	—	Verify repair	Go to *Step 5*
5	1. Disconnect the ignition coil. Is the action complete?	—	Go to *Step 6*	—
6	Check the ION sensing harness for open or short circuit between the ignition coil and ION sensing module circuit at the harness connector. Was a problem found?	—	Verify repair	Go to *Step 7*
7	Check the following items; 1. Ignition coil and ignition coil circuit. 2. Ignition coil ground circuit for a poor connection. 3. If a problem is found, repair wiring harness as necessary. Was a problem found?	—	Verify repair	Go to *Step 8*
8	Replace the Ignition coil. Is the action complete?	—	Verify repair	Go to *Step 9*
9	Check the following items; 1. ION sensing module ground circuit for a poor connection. 2. If a problem is found, repair wiring harness as necessary. Was a problem found?	—	Go to *Step 10*	Go to *Step 11*
10	Repair wiring harness. Is the action complete?	—	Verify repair	Go to *Step 11*

DTC P0325 - ION Sensing Module Knock Intensity Circuit Fault (Cont'd)

Step	Action	Value(s)	Yes	No
11	Replace the ION Sensing module. Is the action complete?	—	Verify repair	Go to *Step 12*
12	Replace the PCM. **IMPORTANT:** The replacement PCM must be programmed. Refer to *ON-Vehicle Service in Power Control Module and Sensors for procedures.* And also refer to latest Service Bulletin. Check to see if the latest software is released or not .And then Down Load the LATEST PROGRAMMED SOFTWARE to the replacement PCM. Is the action complete?	—	Verify repair	—

Diagnostic Trouble Code (DTC) P0336 58X Reference Signal Circuit

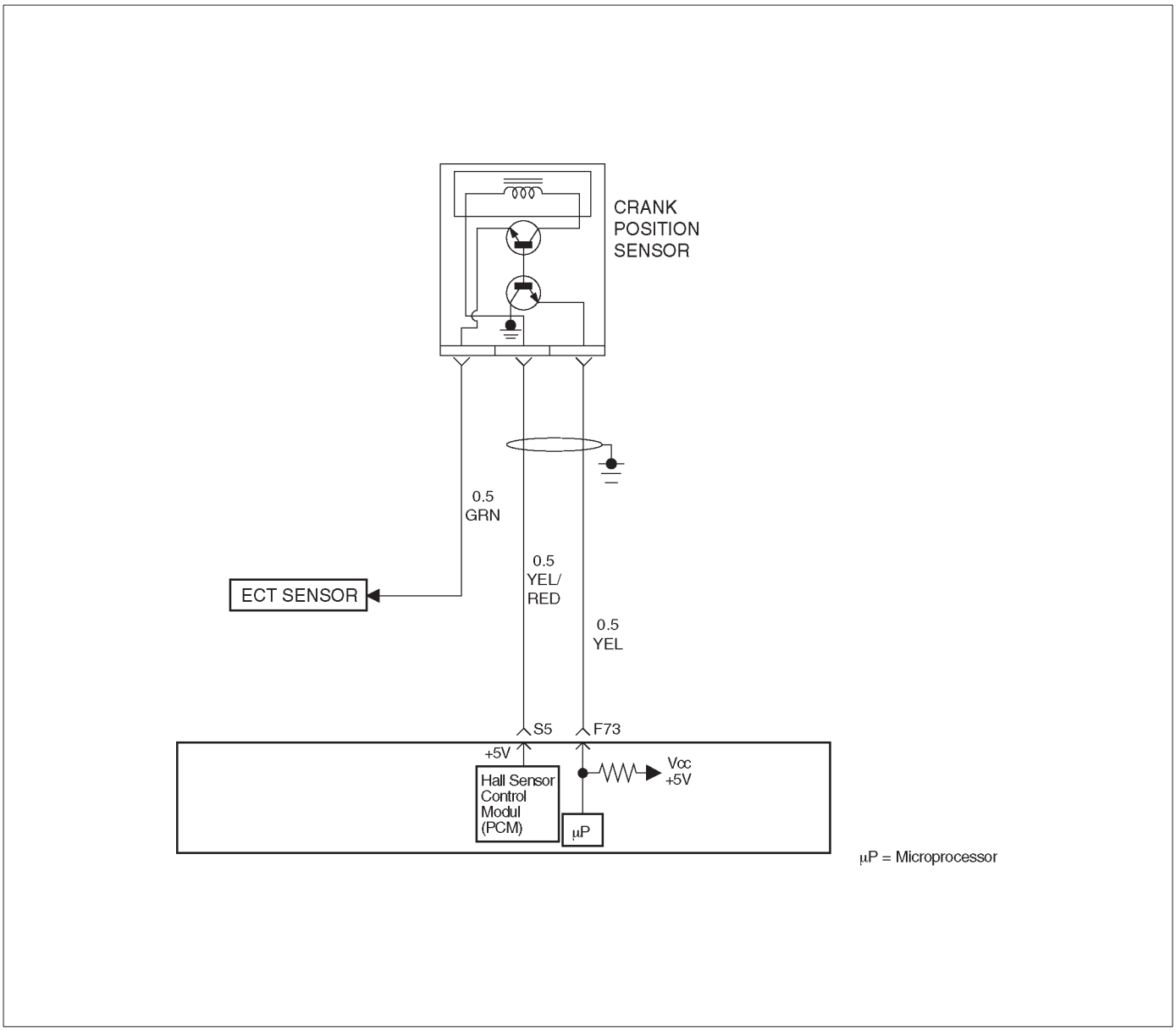

D06R200044

Circuit Description

The 58X reference signal is produced by the crankshaft position (CKP) sensor. During one crankshaft revolution, 58 crankshaft pulses will be produced. The powertrain control module (PCM) uses the 58X reference signal to calculate engine RPM and crankshaft position. The PCM constantly monitors the number of pulses on the 58X reference circuit. If the PCM receives an incorrect number of pulses on the 58X reference circuit, DTC P0336 will set.

Conditions for Setting the DTC

- Engine is running.
- Extra or missing pulse is detected between consecutive 58X reference pulses.
- Above condition is detected in 10 of 100 crankshaft rotations.

Action Taken When the DTC Sets

- The PCM will illuminate the malfunction indicator lamp (MIL) after the second consecutive trip in which the fault is detected.
- The PCM will store conditions which were present when the DTC was set as Freeze Frame and in the Failure Records data.

Conditions for Clearing the MIL/DTC

- The PCM will turn the MIL “OFF” on the third consecutive trip cycle during which the diagnostic has been run and the fault condition is no longer present.
- A history DTC P0336 will clear after 40 consecutive warm–up cycles have occurred without a fault.
- DTC P0336 can be cleared by using the Tech 2 “Clear Info” function or by disconnecting the PCM battery feed.

Diagnostic Aids

An intermittent may be caused by a poor connection, rubbed-through wire insulation or a wire broken inside the insulation. Check for:

- Poor connection - Inspect the PCM harness and connectors for improper mating, broken locks, improperly formed or damaged terminals, and poor terminal-to-wire connection.
- Damaged harness – Inspect the wiring harness for damage. If the harness appears to be OK, disconnect the PCM, turn the ignition on and observe a voltmeter connected to the 58X reference circuit at the PCM harness connector while moving connectors and wiring harnesses related to the PCM. A change in voltage will indicate the location of the fault.

Reviewing the Failure Records vehicle mileage since the diagnostic test last failed may help determine how often the condition that caused the DTC to be set occurs. This may assist in diagnosing the condition.

DTC P0336 – 58X Reference Signal Circuit

Step	Action	Value(s)	Yes	No
1	Was the “On-Board Diagnostic (OBD) System Check” performed?	—	Go to *Step 2*	Go to *OBD System Check*
2	Attempt to start the engine. Does the engine start?	—	Go to *Step 3*	Go to *“Engine Cranks But Will Not Run”* chart
3	1. Review and record Failure Records information. 2. Clear DTC P0336. 3. Start the engine and idle for 1 minute. 4. Observe DTCs. Is DTC P0336 set?	—	Go to *Step 4*	Check the Procedure Refer to **Diagnostic Aids**
4	1. Disconnect the PCM and CKP sensor. 2. Check for an open or a short to ground in the 58X reference circuit between the CKP sensor connector and the PCM harness connector. 3. If a problem is found, repair as necessary. Was a problem found?	—	Verify repair	Go to *Step 5*
5	1. Reconnect the PCM and CKP sensor. 2. Connect a DVM to measure voltage on the 58X reference circuit at the PCM connector. 3. Observe the voltage while cranking the engine. Is the voltage near the specified value?	2.5 V	Go to *Step 8*	Go to *Step 6*
6	Check the connections at the CKP sensor and replace the terminals if necessary. Did any terminals require replacement?	—	Verify repair	Go to *Step 7*
7	Replace the CKP sensor. Use caution to avoid any hot oil that may drip out. Is the action complete?	—	Verify repair	—

DTC P0336 – 58X Reference Signal Circuit (Cont'd)

Step	Action	Value(s)	Yes	No
8	Check connections at the PCM and replace the terminals if necessary. Did any terminals require replacement?	—	Verify repair	Go to *Step 9*
9	Replace the PCM. **IMPORTANT:** The replacement PCM must be programmed. Refer to *On-Vehicle Service* in *Powertrain Control Module and Sensors* for procedures. And also refer to latest Service Bulletin. Check to see if the Latest software is released or not. And then Down Load the LATEST PROGRAMMED SOFTWARE to the replacement PCM. Is the action complete?	—	Verify repair	—

Diagnostic Trouble Code (DTC) P0337 CKP Sensor Circuit Low Frequency

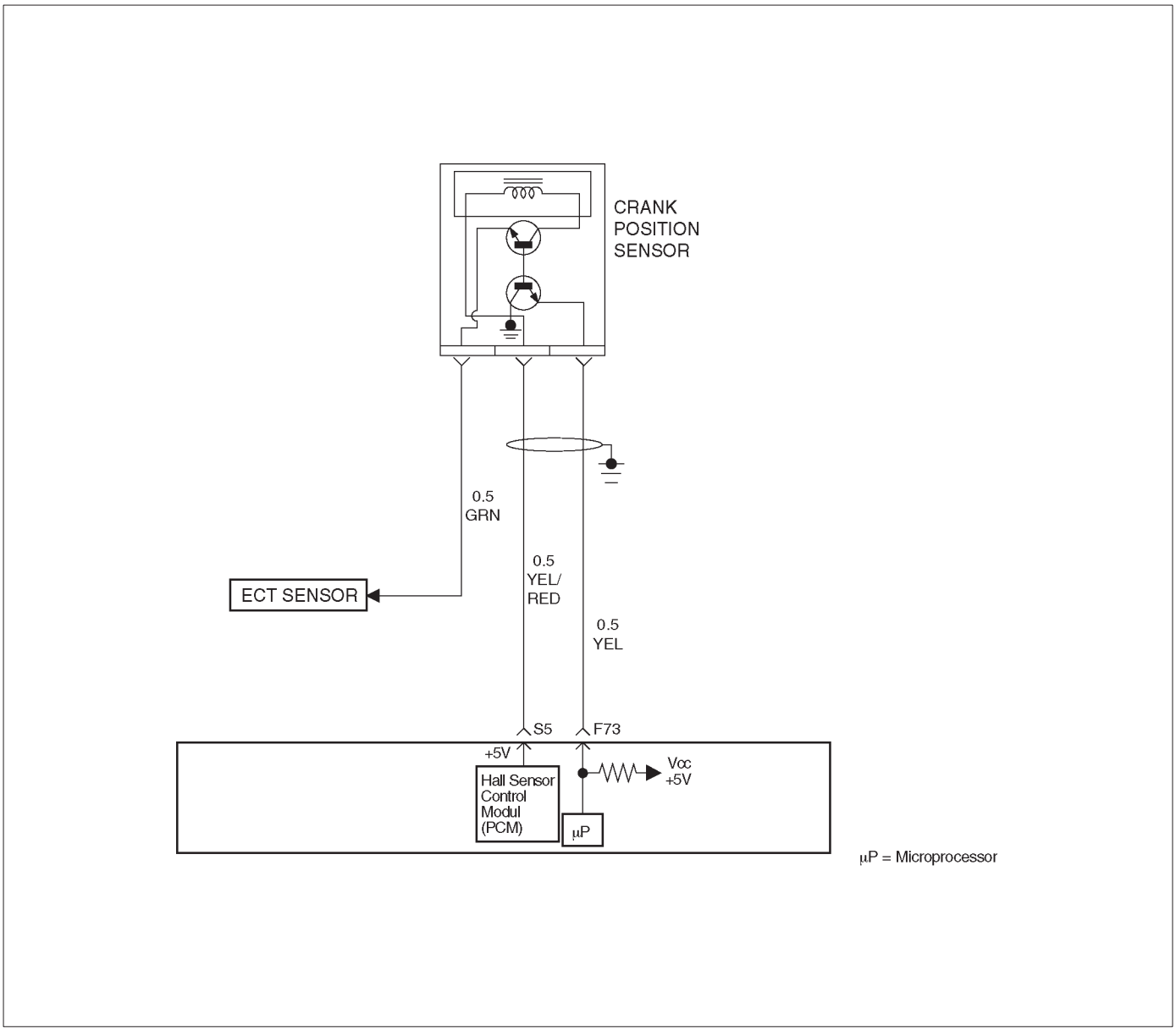

D06R200044

Circuit Description

The 58X reference signal is produced by the crankshaft position (CKP) sensor. During one crankshaft revolution, 58 crankshaft reference pulses will be produced. The powertrain control module (PCM) uses the 58X reference signal to calculate engine RPM and crankshaft position. The PCM constantly monitors the number of pulses on the 58X reference circuit. If the PCM does not receive pulses on the 58X reference circuit, DTC P0337 will set.

Conditions for Setting the DTC

- Engine cranking.
- Crankshaft position (CKP) sensor signal is not present between two cam pulses.
- CKP reference pulse is not detected within 8 CMP pulses.

Action Taken When the DTC Sets

- The PCM will illuminate the malfunction indicator lamp (MIL) after the second consecutive trip in which the fault is detected.
- The PCM will store conditions which were present when the DTC was set as Freeze Frame and in the Failure Records data.

Conditions for Clearing the MIL/DTC

- The PCM will turn the MIL “OFF” on the third consecutive trip cycle during which the diagnostic has been run and the fault condition is no longer present.
- A history DTC P0337 will clear after 40 consecutive warm-up cycles have occurred without a fault.
- DTC P0337 can be cleared by using the Tech 2 “Clear Info” function or by disconnecting the PCM battery feed.

Diagnostic Aids

An intermittent may be caused by a poor connection, rubbed-through wire insulation or a wire broken inside the insulation. Check for:

- Poor connection – Inspect the PCM harness and connectors for improper mating, broken locks, improperly formed or damaged terminals, and poor terminal-to-wire connection.
- Damaged harness – Inspect the wiring harness for damage. If the harness appears to be OK, disconnect the PCM, turn the ignition on and observe a voltmeter connected to the 58X reference circuit at the PCM harness connector while moving connectors and wiring harnesses related to the PCM. A change in voltage will indicate the location of the fault.

Reviewing the Failure Records vehicle mileage since the diagnostic test last failed may help determine how often the condition that caused the DTC to be set occurs. This may assist in diagnosing the condition.

DTC P0337 – CKP Sensor Circuit Low Frequency

Step	Action	Value(s)	Yes	No
1	Was the “On-Board Diagnostic (OBD) System Check” performed?	—	Go to *Step 2*	Go to *OBD System Check*
2	Attempt to start the engine. Does the engine start?	—	Go to *Step 3*	Go to *Chart 3*
3	1. Review and record Failure Records information. 2. Clear DTC P0337. 3. Start the engine and idle for 1 minute. 4. Observe DTCs. Is DTC P0337 set?	—	Go to *Step 4*	Check the Procedure Refer to *Diagnostic Aid*
4	1. Disconnect the CKP sensor. 2. Ignition “ON”. 3. Using a DVM, verify that 5 V reference and ground are being supplied at the sensor connector (PCM side). Are 4-6 volts and ground available at the sensor?	—	Go to *Step 7*	Go to *Step 5*
5	1. Ignition “ON”. 2. With a DVM, backprobe the PCM connector 5 V reference and ground connections. Are 5 V reference and ground available at the PCM?	—	Go to *Step 6*	Go to *Step 11*
6	Check 5 V reference or ground between the CKP sensor and PCM and repair the open circuit, short to ground or short to voltage. Is the action complete?	—	Verify repair	—
7	1. Ignition “OFF”. 2. Disconnect the PCM and CKP sensor. 3. Check for an open or a short to ground in the 58X reference circuit between the CKP sensor connector and the PCM harness connector. 4. If a problem is found, repair as necessary. Was a problem found?	—	Verify repair	Go to *Step 8*
8	1. Reconnect the PCM and CKP sensor. 2. Connect a DVM to measure voltage on the 58X reference circuit at the PCM connector. 3. Observe the voltage while cranking the engine. Is the voltage near the specified value?	2.5 V	Go to *Step 11*	Go to *Step 9*
9	Check the connections at the CKP sensor and replace the terminals if necessary. Did any terminals require replacement?	—	Verify repair	Go to *Step 10*

DTC P0337 – CKP Sensor Circuit Low Frequency (Cont'd)

Step	Action	Value(s)	Yes	No
10	Replace the CKP sensor. Use caution and avoid hot oil that may drip out. Is the action complete?	—	Verify repair	—
11	Check the connections at the PCM and replace the terminals if necessary. Did any terminals require replacement?	—	Verify repair	Go to *Step 12*
12	Replace the PCM. **IMPORTANT:** The replacement PCM must be programmed. Refer to *On-Vehicle Service* in *Powertrain Control Module and Sensors* for procedures. And also refer to latest Service Bulletin. Check to see if the Latest software is released or not. And then Down Load the LATEST PROGRAMMED SOFTWARE to the replacement PCM. Is the action complete?	—	Verify repair	—

Diagnostic Trouble Code (DTC) P0351 Ignition 1 Control Circuit

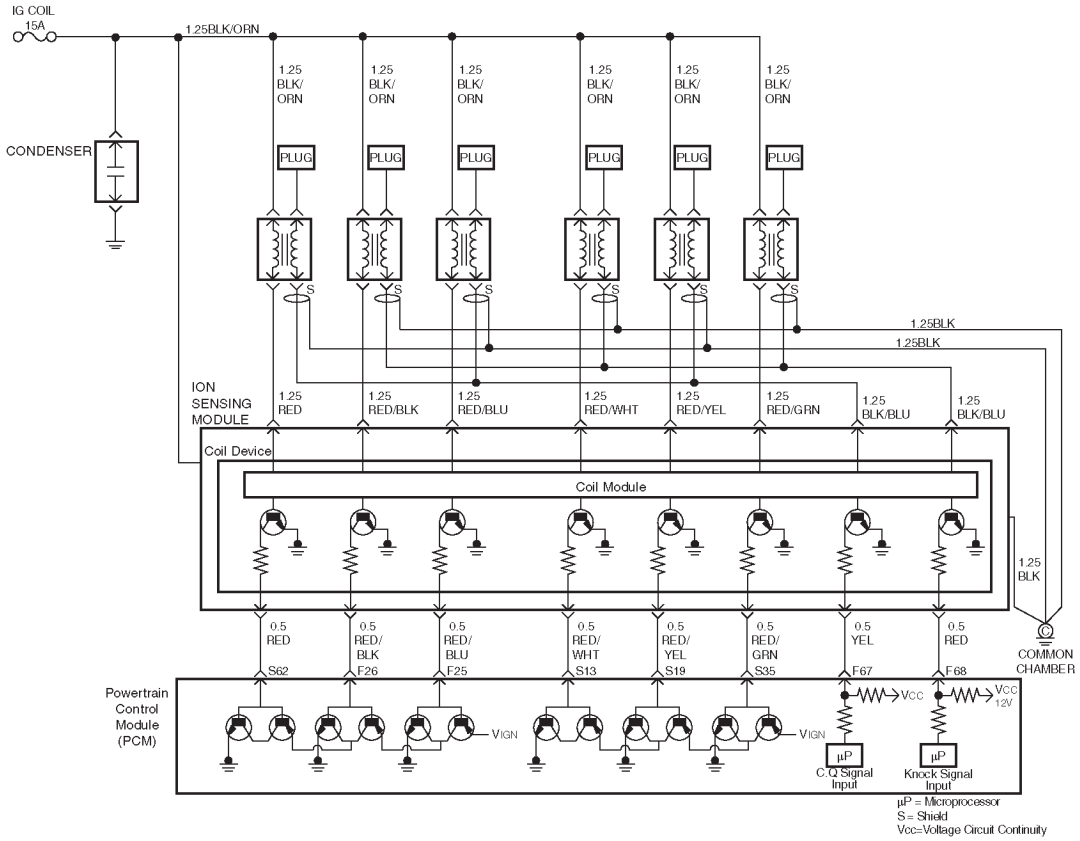

D06R200098

Circuit Description

ION Sensing Module has the function to energize and de-energize the primary ignition coil in response to signals from the PCM. The PCM controls ignition timing and dwell time.

This diagnosis detects open circuit or short-circuiting in the Ignition Electronic Spark Timing (EST) line by monitoring EST signals. A failure determination is made when the signal voltage remains higher or lower than the threshold for corresponding fault code beyond a predetermined time period.

When the PCM detects a problem on EST control circuit 1, it will set a DTC P0351.

Conditions for Setting the DTC

- The ignition is “ON”.
- The engine is running, determined by the 58X crankshaft position input signal.
- The output voltage is not equal to 5 volts when output is “ON”.
- The output voltage is not equal to 0 volts when output is “OFF”.
- Ten test failures occur within 10 samples of continuous spark events.

Action Taken When the DTC Sets

- The PCM will illuminate the malfunction indicator lamp (MIL) the first time the fault is detected.
- The PCM will store conditions which were present when the DTC was set as Freeze Frame and in the Failure Records data.

Conditions for Clearing the MIL/DTC

- The PCM will turn the MIL “OFF” on the third consecutive trip cycle in which the diagnostic has been run and the fault condition is no longer present.
- A history DTC P0351 will clear after 40 consecutive warm-up cycles occur without a fault.
- DTC P0351 can be cleared by using the Tech 2 “Clear Info” function or by disconnecting the PCM battery feed.

Diagnostic Aids

Check for the following conditions:

- Poor connection at PCM – Inspect the harness connectors for backed-out terminals, improper mating, broken locks, improperly formed or damaged terminals, and poor terminal-to-wire connections.
- Damaged harness – Inspect the wiring harness for damage. If the harness appears to be OK, observe the Tech 2 display related to DTC P0351 while moving the connector and wiring related to the ignition system. A change in the display will indicate the location of the fault.

Reviewing the Failure Records vehicle mileage since the diagnostic test last failed may help determine how often the condition that caused the DTC to be set occurs. This may assist in diagnosing the condition.

DTC P0351 – Ignition 1 Control Circuit

Step	Action	Value(s)	Yes	No
1	Was the “On-Board Diagnostic (OBD) System Check” performed?	—	Go to *Step 2*	Go to *OBD System Check*
2	1. Ignition “ON”, engine “OFF”. 2. Review and record Tech 2 Failure Records data. 3. Operate the vehicle within Failure Record conditions as noted. 4. Use a Tech 2 to monitor the “DTC” information for DTC P0351 until the DTC P0351 test runs. 5. Note the test result. Does the Tech 2 indicate DTC P0351 failed this ignition cycle?	—	Go to *Step 3*	Check the Procedure Go to *Diagnostic Aids*
3	Check for faulty connection at ignition coil. Was a problem found?	—	Verify repair	Go to *Step 4*
4	Check for faulty connection at PCM connector. Was a problem found?	—	Verify repair	Go to *Step 5*
5	1. Ignition “ON”, engine “OFF”. 2. Back probe the ignition control circuit 1 at the ION Sensing Module with a DVM. Is the voltage near the specified value?	25-55 mV	Go to *Step 6*	Go to *Step 9*
6	1. Ignition “ON”, engine running. 2. Back probe the ignition control circuit at the ION Sensing Module for the cylinder being tested. Is the voltage in the specified range, rapidly toggling back and forth to a reading 20-50 mV higher?	100-180 mV	Go to *Step 7*	Go to *Step 13*
7	1. Ignition “OFF”. 2. Disconnect the 3-pin and connector at the ignition coil. 3. Check ignition control circuit 1 voltage at the ignition coil connector while cranking the engine. Does the voltage measure between the specified values?	200-1200 mV	Go to *Step 8*	Go to *Step 11*
8	Replace the ignition coil. Is the action complete?	—	Verify repair	—
9	1. Ignition “OFF”. 2. Disconnect the PCM and the ignition coil. 3. Check ignition control circuit 1 for short to ground. Was a problem found?	—	Verify repair	Go to *Step 10*
10	Check ignition control circuit 1 for short to voltage. Was a problem found?	—	Verify repair	Go to *Step 13*

DTC P0351 – Ignition 1 Control Circuit (Cont'd)

Step	Action	Value(s)	Yes	No
11	Check for an open ignition control circuit 1. Was the ignition control circuit open?	—	Go to *Step 12*	Go to *Step 13*
12	Repair the open ignition control circuit. Is the action complete?	—	Verify repair	—
13	Replace the PCM. **IMPORTANT:** The replacement PCM must be programmed. Refer to *On-Vehicle Service* in *Powertrain Control Module and Sensors* for procedures. And also refer to latest Service Bulletin. Check to see if the Latest software is released or not. And then Down Load the LATEST PROGRAMMED SOFTWARE to the replacement PCM. Is the action complete?	—	Verify repair	—

Diagnostic Trouble Code (DTC) P0352 Ignition 2 Control Circuit

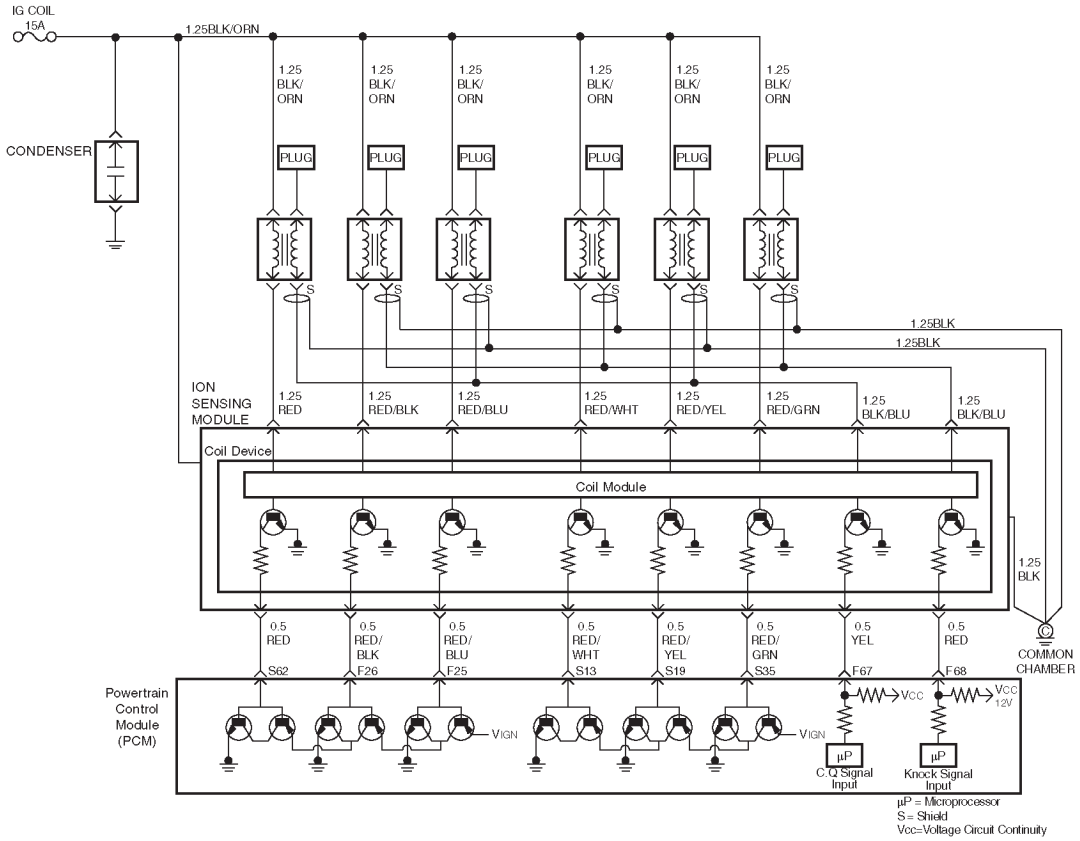

D06R200098

Circuit Description

ION Sensing Module has the function to energize and de-energize the primary ignition coil in response to signals from the PCM. The PCM controls ignition timing and dwell time.

This diagnosis detects open circuit or short-circuiting in the Ignition Electronic Spark Timing (EST) line by monitoring EST signals. A failure determination is made when the signal voltage remains higher or lower than the threshold for corresponding fault code beyond a predetermined time period.

When the PCM detects a problem on EST control circuit 2, it will set a DTC P0352.

Conditions for Setting the DTC

- The ignition is “ON”.
- The engine is running, determined by the 58 X crankshaft position input signal.
- The output voltage is not equal to 5 volts when output is “ON”.
- The output voltage is not equal to 0 volts when output is “OFF”.
- Ten test failures occur within 10 samples of continuous spark events.

Action Taken When the DTC Sets

- The PCM will illuminate the malfunction indicator lamp (MIL) the first time the fault is detected.
- The PCM will store conditions which were present when the DTC was set as Freeze Frame and in the Failure Records data.

Conditions for Clearing the MIL/DTC

- The PCM will turn the MIL “OFF” on the third consecutive trip cycle in which the diagnostic has been run and the fault condition is no longer present.
- A history DTC P0352 will clear after 40 consecutive warm-up cycles occur without a fault.
- DTC P0352 can be cleared by using the Tech 2 “Clear Info” function or by disconnecting the PCM battery feed.

Diagnostic Aids

Check for the following conditions:

- Poor connection at PCM – Inspect the harness connectors for backed-out terminals, improper mating, broken locks, improperly formed or damaged terminals, and poor terminal-to-wire connections.
- Damaged harness – Inspect the wiring harness for damage. If the harness appears to be OK, observe the Tech 2 display related to DTC P0352 while moving the connector and wiring related to the ignition system. A change in the display will indicate the location of the fault.

Reviewing the Failure Records vehicle mileage since the diagnostic test last failed may help determine how often the condition that caused the DTC to be set occurs. This may assist in diagnosing the condition.

DTC P0352 – Ignition 2 Control Circuit

Step	Action	Value(s)	Yes	No
1	Was the “On-Board Diagnostic (OBD) System Check” performed?	—	Go to *Step 2*	Go to *OBD System Check*
2	1. Ignition “ON”, engine “OFF”. 2. Review and record Tech 2 Failure Records data. 3. Operate the vehicle within Failure Record conditions as noted. 4. Use a Tech 2 to monitor the “DTC” information for DTC P0352 until the DTC P0352 test runs. 5. Note the test result. Does the Tech 2 indicate DTC P0352 failed this ignition cycle?	—	Go to *Step 3*	Check the Procedure Refer to *Diagnostic Aids*
3	Check for faulty connection at ignition coil. Was a problem found?	—	Verify repair	Go to *Step 4*
4	Check for faulty connection at PCM connector. Was a problem found?	—	Verify repair	Go to *Step 5*
5	1. Ignition “ON”, engine “OFF”. 2. Back probe the ignition control circuit 2 at the ION Sensing Module with a DVM . Is the voltage near the specified value?	25-55 mV	Go to *Step 6*	Go to *Step 9*
6	1. Ignition “ON”, engine running. 2. Back probe the ignition control circuit at the ION Sensing Module for the cylinder being tested. Is the voltage in the specified range, rapidly toggling back and forth to a reading 20-50 mV higher?	100-180 mV	Go to *Step 7*	Go to *Step 13*
7	1. Ignition “OFF”. 2. Disconnect the 3-pin connector at the ignition coil. 3. Check ignition control circuit 2 voltage at the ignition coil connector while cranking the engine connector. Does the voltage measure between the specified values?	200-1200 mV	Go to *Step 8*	Go to *Step 11*
8	Replace the ignition coil. Is the action complete?	—	Verify repair	—
9	1. Ignition “OFF”. 2. Disconnect the PCM and the ignition coil. 3. Check ignition control circuit 2 for short to ground. Was a problem found?	—	Verify repair	Go to *Step 10*
10	Check ignition control circuit 2 for short to voltage. Was a problem found?	—	Verify repair	Go to *Step 13*

DTC P0352 – Ignition 2 Control Circuit (Cont'd)

Step	Action	Value(s)	Yes	No
11	Check for an open ignition control circuit 2. Was the ignition control circuit open?	—	Go to *Step 12*	Go to *Step 13*
12	Repair the open ignition control circuit. Is the action complete?	—	Verify repair	—
13	Replace the PCM. **IMPORTANT:** The replacement PCM must be programmed. Refer to *On-Vehicle Service* in *Powertrain Control Module and Sensors* for procedures. And also refer to latest Service Bulletin. Check to see if the Latest software is released or not. And then Down Load the LATEST PROGRAMMED SOFTWARE to the replacement PCM. Is the action complete?	—	Verify repair	—

Diagnostic Trouble Code (DTC) P0353 Ignition 3 Control Circuit

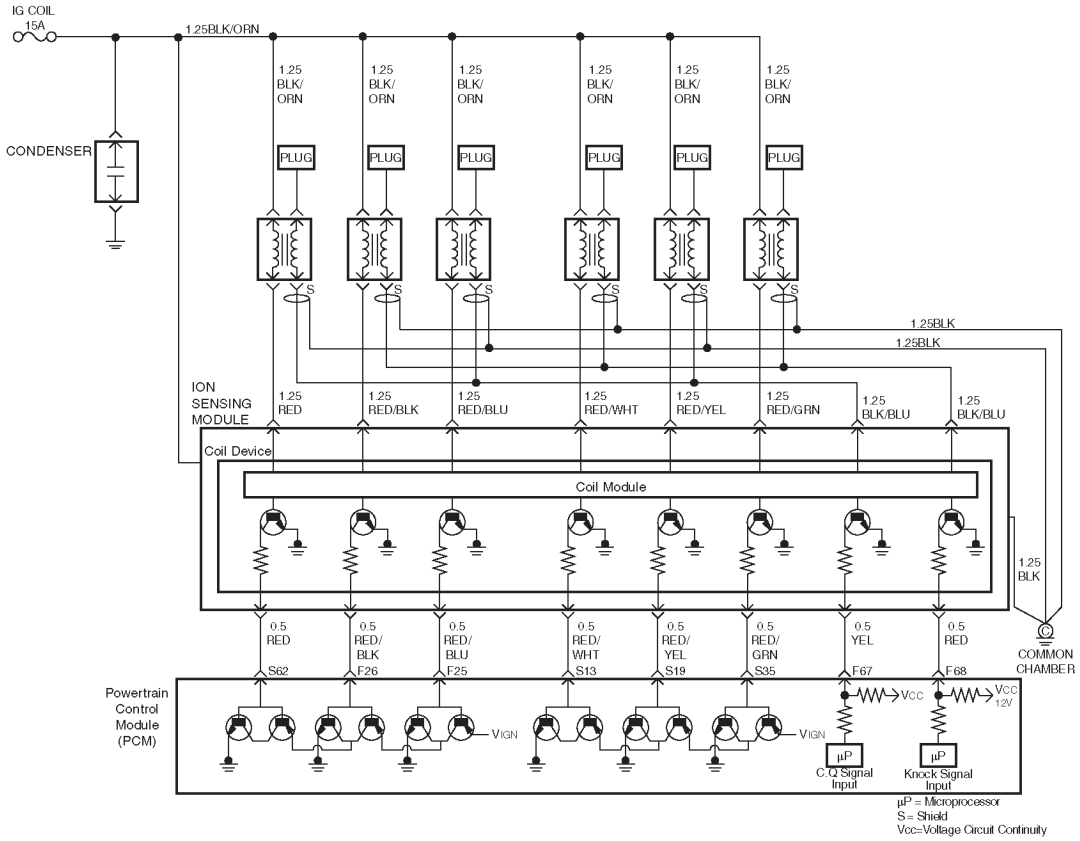

D06R200098

Circuit Description

ION Sensing Module has the function to energize and de-energize the primary ignition coil in response to signals from the PCM. The PCM controls ignition timing and dwell time.

This diagnosis detects open circuit or short-circuiting in the Ignition Electronic Spark Timing (EST) line by monitoring EST signals. A failure determination is made when the signal voltage remains higher or lower than the threshold for corresponding fault code beyond a predetermined time period.

When the PCM detects a problem on EST control circuit 3, it will set a DTC P0353.

Conditions for Setting the DTC

- The ignition is “ON”.
- The engine is running, determined by the 58X crankshaft position input signal.
- The output voltage is not equal to 5 volts when output is “ON”.
- The output voltage is not equal to 0 volts when output is “OFF”.
- Ten test failures occur within 10 samples of continuous spark events.

Action Taken When the DTC Sets

- The PCM will illuminate the malfunction indicator lamp (MIL) the first time the fault is detected.
- The PCM will store conditions which were present when the DTC was set as Freeze Frame and in the Failure Records data.

Conditions for Clearing the MIL/DTC

- The PCM will turn the MIL “OFF” on the third consecutive trip cycle in which the diagnostic has been run and the fault condition is no longer present.
- A history DTC P0353 will clear after 40 consecutive warm-up cycles occur without a fault.
- DTC P0353 can be cleared by using the Tech 2 “Clear Info” function or by disconnecting the PCM battery feed.

Diagnostic Aids

Check for the following conditions:

- Poor connection at PCM – Inspect the harness connectors for backed-out terminals, improper mating, broken locks, improperly formed or damaged terminals, and poor terminal-to-wire connections.
- Damaged harness – Inspect the wiring harness for damage. If the harness appears to be OK, observe the Tech 2 display related to DTC P0353 while moving the connector and wiring related to the ignition system. A change in the display will indicate the location of the fault.

Reviewing the Failure Records vehicle mileage since the diagnostic test last failed may help determine how often the condition that caused the DTC to be set occurs. This may assist in diagnosing the condition.

DTC P0353 – Ignition 3 Control Circuit

Step	Action	Value(s)	Yes	No
1	Was the “On-Board Diagnostic (OBD) System Check” performed?	—	Go to *Step 2*	Go to *OBD System Check*
2	1. Ignition “ON”, engine “OFF”. 2. Review and record Tech 2 Failure Records data. 3. Operate the vehicle within Failure Record conditions as noted. 4. Use a Tech 2 to monitor the “DTC” information for DTC P0353 until the DTC P0353 test runs. 5. Note the test result. Does the Tech 2 indicate DTC P0353 failed this ignition cycle?	—	Go to *Step 3*	Check the Procedure Refer to *Diagnostic Aids*
3	Check for faulty connection at ignition coil. Was a problem found?	—	Verify repair	Go to *Step 4*
4	Check for faulty connection at PCM connector. Was a problem found?	—	Verify repair	Go to *Step 5*
5	1. Ignition “ON”, engine “OFF”. 2. Back probe the ignition control circuit 3 at the ION Sensing Module with a DVM positive lead with the negative lead to ground. Is the voltage near the specified value?	25-55 mV	Go to *Step 6*	Go to *Step 9*
6	1. Ignition “ON”, engine running. 2. Back probe the ignition control circuit at the ION Sensing Module for the cylinder being tested. Is the voltage in the specified range, rapidly toggling back and forth to a reading 20-50 mV higher?	100-180 mV	Go to *Step 7*	Go to *Step 13*
7	1. Ignition “OFF”. 2. Disconnect the 3-pin connector at the ignition coil. 3. Check ignition control circuit 3 voltage at the ignition coil connector while cranking the engine. Does the voltage measure between the specified values?	200-1200 mV	Go to *Step 8*	Go to *Step 11*
8	Replace the ignition coil. Is the action complete?	—	Verify repair	—
9	1. Ignition “OFF”. 2. Disconnect the PCM and the ignition coil. 3. Check ignition control circuit 3 for short to ground. Was a problem found?	—	Verify repair	Go to *Step 10*
10	Check ignition control circuit 3 for short to voltage. Was a problem found?	—	Verify repair	Go to *Step 13*

DTC P0353 – Ignition 3 Control Circuit (Cont'd)

Step	Action	Value(s)	Yes	No
11	Check for an open ignition control circuit 3. Was the ignition control circuit open?	—	Go to *Step 12*	Go to *Step 13*
12	Repair the open ignition control circuit. Is the action complete?	—	Verify repair	—
13	Replace the PCM. **IMPORTANT:** The replacement PCM must be programmed. Refer to *On-Vehicle Service* in *Powertrain Control Module and Sensors* for procedures. And also refer to latest Service Bulletin. Check to see if the Latest software is released or not. And then Down Load the LATEST PROGRAMMED SOFTWARE to the replacement PCM. Is the action complete?	—	Verify repair	—

Diagnostic Trouble Code (DTC) P0354 Ignition 4 Control Circuit

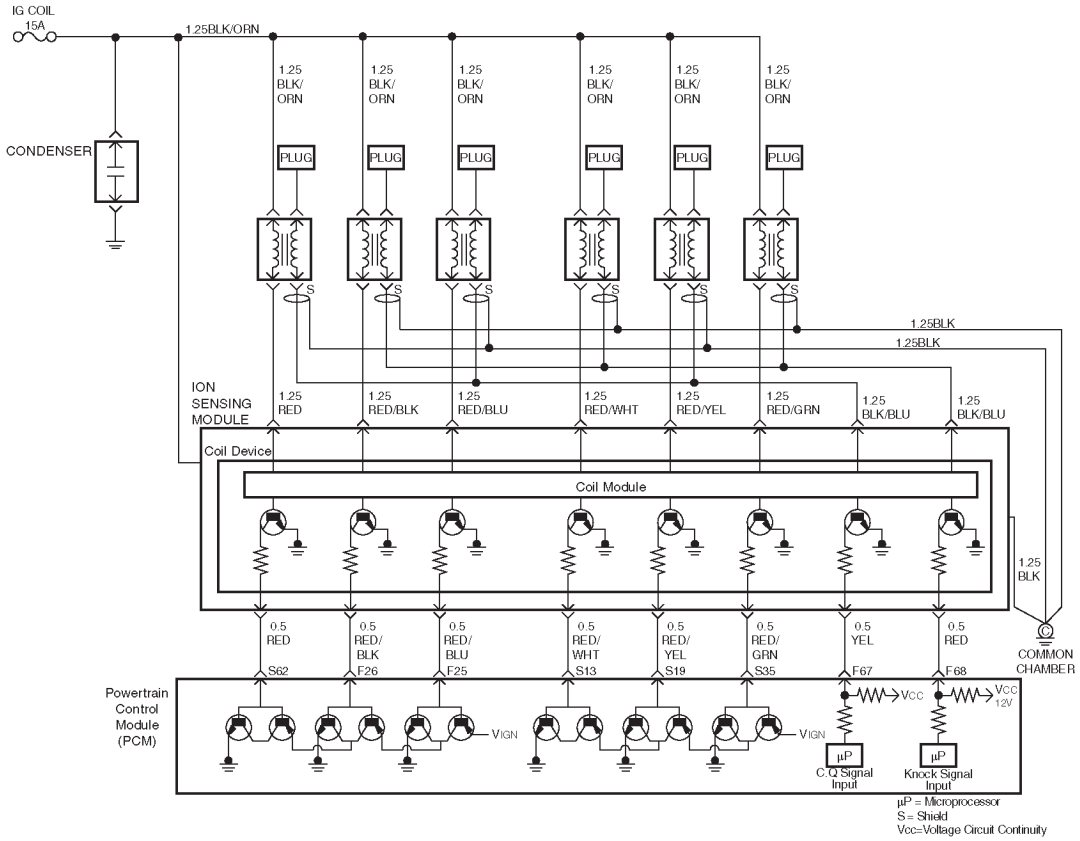

D06R200098

Circuit Description

ION Sensing Module has the function to energize and de-energize the primary ignition coil in response to signals from the PCM. The PCM controls ignition timing and dwell time.

This diagnosis detects open circuit or short-circuiting in the Ignition Electronic Spark Timing (EST) line by monitoring EST signals. A failure determination is made when the signal voltage remains higher or lower than the threshold for corresponding fault code beyond a predetermined time period.

When the PCM detects a problem on EST control circuit 4, it will set a DTC P0354.

Conditions for Setting the DTC

- The ignition is “ON”.
- The engine is running, determined by the 58X crankshaft position input signal.
- The output voltage is not equal to 5 volts when output is “ON”.
- The output voltage is not equal to 0 volts when output is “OFF”.
- Ten test failures occur within 10 samples of continuous spark events.

Action Taken When the DTC Sets

- The PCM will illuminate the malfunction indicator lamp (MIL) the first time the fault is detected.
- The PCM will store conditions which were present when the DTC was set as Freeze Frame and in the Failure Records data.

Conditions for Clearing the MIL/DTC

- The PCM will turn the MIL “OFF” on the third consecutive trip cycle in which the diagnostic has been run and the fault condition is no longer present.
- A history DTC P0354 will clear after 40 consecutive warm-up cycles occur without a fault.
- DTC P0354 can be cleared by using the Tech 2 “Clear Info” function or by disconnecting the PCM battery feed.

Diagnostic Aids

Check for the following conditions:

- Poor connection at PCM – Inspect the harness connectors for backed-out terminals, improper mating, broken locks, improperly formed or damaged terminals, and poor terminal-to-wire connections.
- Damaged harness – Inspect the wiring harness for damage. If the harness appears to be OK, observe the Tech 2 display related to DTC P0354 while moving the connector and wiring related to the ignition system. A change in the display will indicate the location of the fault.

Reviewing the Failure Records vehicle mileage since the diagnostic test last failed may help determine how often the condition that caused the DTC to be set occurs. This may assist in diagnosing the condition.

DTC P0354 – Ignition 4 Control Circuit

Step	Action	Value(s)	Yes	No
1	Was the “On-Board Diagnostic (OBD) System Check” performed?	—	Go to *Step 2*	Go to *OBD System Check*
2	1. Ignition “ON”, engine “OFF”. 2. Review and record Tech 2 Failure Records data. 3. Operate the vehicle within Failure Record conditions as noted. 4. Use a Tech 2 to monitor the “DTC” information for DTC P0354 until the DTC P0354 test runs. 5. Note the test result. Does the Tech 2 indicate DTC P0354 failed this ignition cycle?	—	Go to *Step 3*	Check the Procedure Refer to *Diagnostic Aids*
3	Check for faulty connection at ignition coil. Was a problem found?	—	Verify repair	Go to *Step 4*
4	Check for faulty connection at PCM connector. Was a problem found?	—	Verify repair	Go to *Step 5*
5	1. Ignition “ON”, engine “OFF”. 2. Back probe the ignition control circuit 4 at the ION Sensing with a DVM positive lead with the negative lead to ground. Is the voltage near the specified value?	25-55 mV	Go to *Step 6*	Go to *Step 9*
6	1. Ignition “ON”, engine running. 2. Back probe the ignition control circuit at the ION Sensing Module for the cylinder being tested. Is the voltage in the specified range, rapidly toggling back and forth to a reading 20-50 mV higher?	100-180 mV	Go to *Step 7*	Go to *Step 13*
7	1. Ignition “OFF”. 2. Disconnect the 3-pin connector at the ignition coil. 3. Check ignition control circuit 4 voltage at the ignition coil connector while cranking the engine. Does the voltage measure between the specified values?	200-1200 mV	Go to *Step 8*	Go to *Step 11*
8	Replace the ignition coil. Is the action complete?	—	Verify repair	—
9	1. Ignition “OFF”. 2. Disconnect the PCM and the ignition coil. 3. Check ignition control circuit 4 for short to ground. Was a problem found?	—	Verify repair	Go to *Step 10*
10	Check ignition control circuit 4 for short to voltage. Was a problem found?	—	Verify repair	Go to *Step 13*

DTC P0354 – Ignition 4 Control Circuit (Cont'd)

Step	Action	Value(s)	Yes	No
11	Check for an open ignition control circuit 4. Was the ignition control circuit open?	—	Go to *Step 12*	Go to *Step 13*
12	Repair the open in ignition control circuit. Is the action complete?	—	Verify repair	—
13	Replace the PCM. **IMPORTANT:** The replacement PCM must be programmed. Refer to *On-Vehicle Service* in *Powertrain Control Module and Sensors* for procedures. And also refer to latest Service Bulletin. Check to see if the Latest software is released or not. And then Down Load the LATEST PROGRAMMED SOFTWARE to the replacement PCM. Is the action complete?	—	Verify repair	—

Diagnostic Trouble Code (DTC) P0355 Ignition 5 Control Circuit

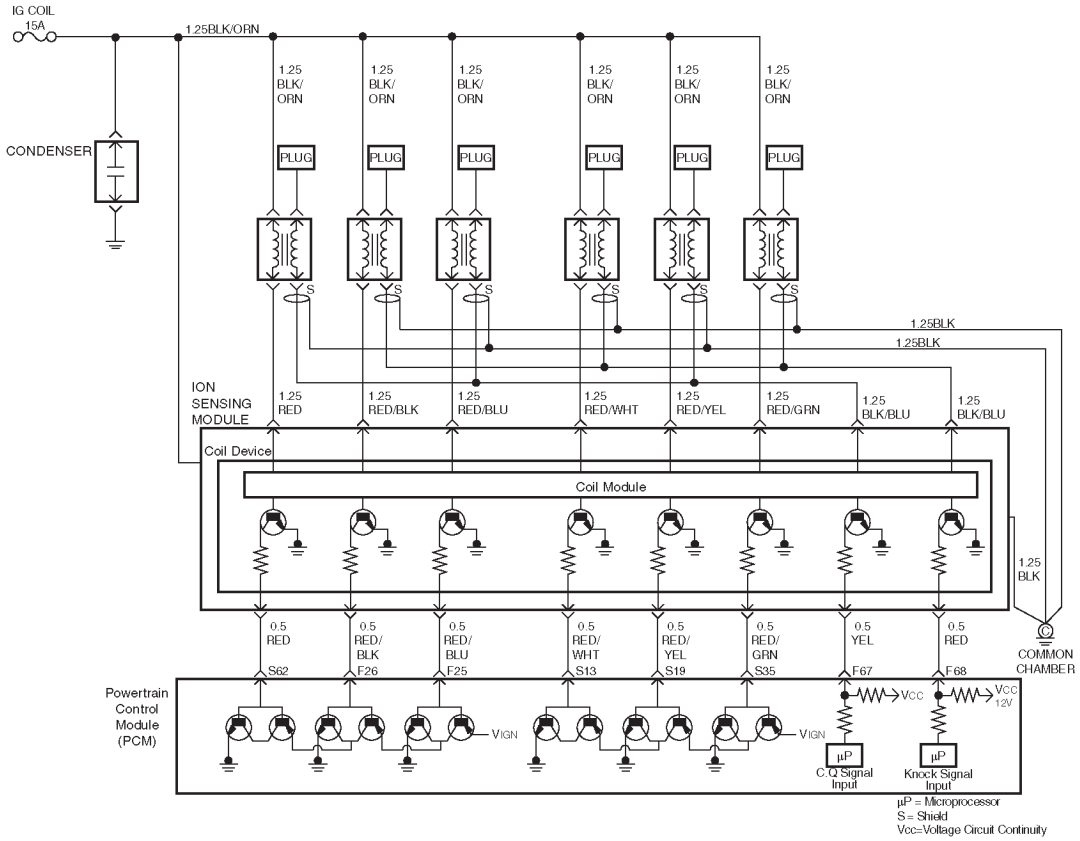

D06R200098

Circuit Description

ION Sensing Module has the function to energize and de-energize the primary ignition coil in response to signals from the PCM. The PCM controls ignition timing and dwell time.

This diagnosis detects open circuit or short-circuiting in the Ignition Electronic Spark Timing (EST) line by monitoring EST signals. A failure determination is made when the signal voltage remains higher or lower than the threshold for corresponding fault code beyond a predetermined time period.

When the PCM detects a problem on EST in control circuit 5, it will set a DTC P0355.

Conditions for Setting the DTC

- The ignition is “ON”.
- The engine is running, determined by the 58X crankshaft position input signal.
- The output voltage is not equal to 5 volts when output is “ON”.
- The output voltage is not equal to 0 volts when output is “OFF”.
- Ten test failures occur within 10 samples of continuous spark events.

Action Taken When the DTC Sets

- The PCM will illuminate the malfunction indicator lamp (MIL) the first time the fault is detected.
- The PCM will store conditions which were present when the DTC was set as Freeze Frame and in the Failure Records data.

Conditions for Clearing the MIL/DTC

- The PCM will turn the MIL “OFF” on the third consecutive trip cycle in which the diagnostic has been run and the fault condition is no longer present.
- A history DTC P0355 will clear after 40 consecutive warm-up cycles occur without a fault.
- DTC P0355 can be cleared by using the Tech 2 “Clear Info” function or by disconnecting the PCM battery feed.

Diagnostic Aids

Check for the following conditions:

- Poor connection at PCM – Inspect the harness connectors for backed-out terminals, improper mating, broken locks, improperly formed or damaged terminals, and poor terminal-to-wire connections.
- Damaged harness – Inspect the wiring harness for damage. If the harness appears to be OK, observe the Tech 2 display related to DTC P0355 while moving the connector and wiring related to the ignition system. A change in the display will indicate the location of the fault.

Reviewing the Failure Records vehicle mileage since the diagnostic test last failed may help determine how often the condition that caused the DTC to be set occurs. This may assist in diagnosing the condition.

DTC P0355 – Ignition 5 Control Circuit

Step	Action	Value(s)	Yes	No
1	Was the “On-Board Diagnostic (OBD) System Check” performed?	—	Go to *Step 2*	Go to *OBD System Check*
2	1. Ignition “ON”, engine “OFF”. 2. Review and record Tech 2 Failure Records data. 3. Operate the vehicle within Failure Record conditions as noted. 4. Use a Tech 2 to monitor the “DTC” information for DTC P0355 until the DTC P0355 test runs. 5. Note the test result. Does the Tech 2 indicate DTC P0355 failed this ignition cycle?	—	Go to *Step 3*	Check the Procedure Refer to *Diagnostic Aids*
3	Check for faulty connection at ignition coil. Was a problem found?	—	Verify repair	Go to *Step 4*
4	Check for faulty connection at PCM connector. Was a problem found?	—	Verify repair	Go to *Step 5*
5	1. Ignition “ON”, engine “OFF”. 2. Back probe the ignition control circuit 5 at the ION Sensing Module with a DVM positive lead with the negative lead to ground. Is the voltage near the specified value?	25-55 mV	Go to *Step 6*	Go to *Step 9*
6	1. Ignition “ON”, engine running. 2. Back probe the ignition control circuit at the ION Sensing Module for the cylinder being tested. Is the voltage in the specified range, rapidly toggling back and forth to a reading 20-50 mV higher?	100-180 mV	Go to *Step 7*	Go to *Step 13*
7	1. Ignition “OFF”. 2. Disconnect the 3-pin connector at the ignition coil. 3. Check ignition control circuit 5 voltage at the ignition coil connector while cranking the engine. Does the voltage measure between the specified values?	200-1200 mV	Go to *Step 8*	Go to *Step 11*
8	Replace the ignition coil. Is the action complete?	—	Verify repair	—
9	1. Ignition “OFF”. 2. Disconnect the PCM and the ignition coil. 3. Check ignition control circuit 5 for short to ground. Was a problem found?	—	Verify repair	Go to *Step 10*
10	Check ignition control circuit 5 for short to voltage. Was a problem found?	—	Verify repair	Go to *Step 13*

DTC P0355 – Ignition 5 Control Circuit (Cont'd)

Step	Action	Value(s)	Yes	No
11	Check for an open ignition control circuit 5. Was the ignition control circuit open?	—	Go to *Step 12*	Go to *Step 13*
12	Repair the open ignition control circuit. Is the action complete?	—	Verify repair	—
13	Replace the PCM. **IMPORTANT:** The replacement PCM must be programmed. Refer to *On-Vehicle Service* in *Powertrain Control Module and Sensors* for procedures. And also refer to latest Service Bulletin. Check to see if the Latest software is released or not. And then Down Load the LATEST PROGRAMMED SOFTWARE to the replacement PCM. Is the action complete?	—	Verify repair	—

Diagnostic Trouble Code (DTC) P0356 Ignition 6 Control Circuit

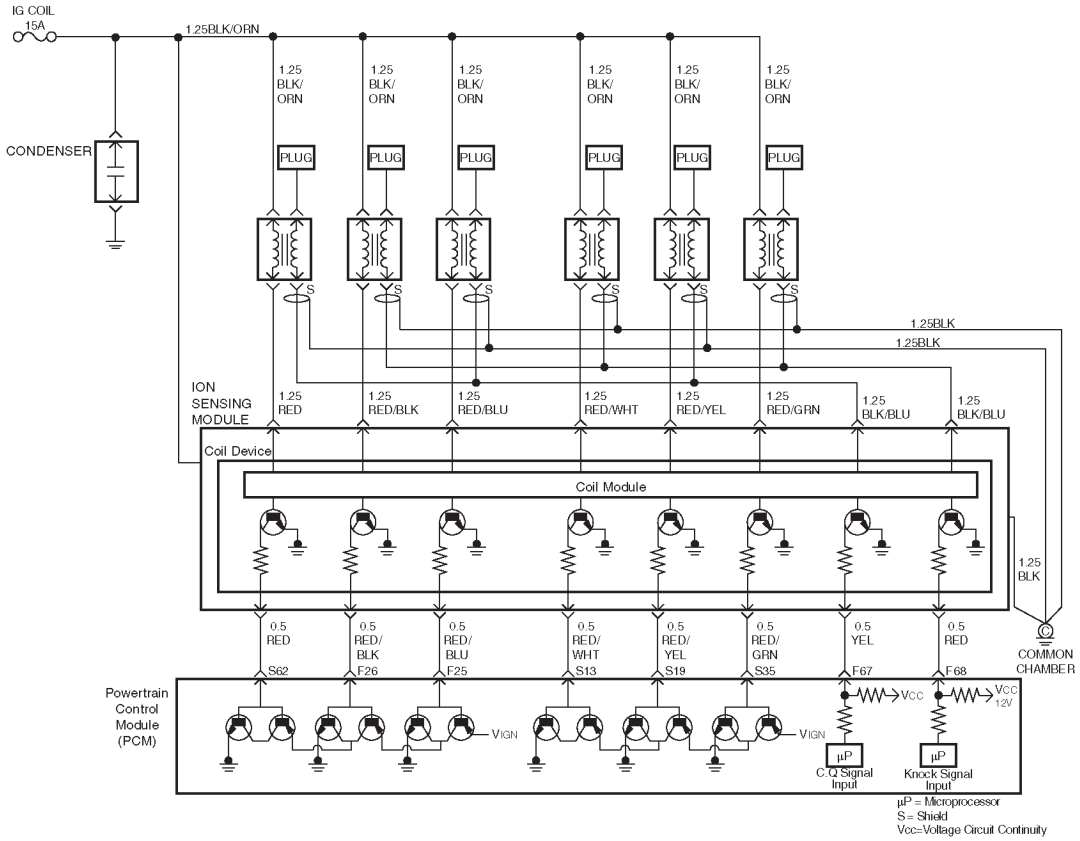

D06R200098

Circuit Description

ION Sensing Module has the function to energize and de-energize the primary ignition coil in response to signals from the PCM. The PCM controls ignition timing and dwell time.

This diagnosis detects open circuit or short-circuiting in the Ignition Electronic Spark Timing (EST) line by monitoring EST signals. A failure determination is made when the signal voltage remains higher or lower than the threshold for corresponding fault code beyond a predetermined time period.

When the PCM detects a problem on EST control circuit 6, it will set a DTC P0356.

Conditions for Setting the DTC

- The ignition is “ON”.
- The engine is running, determined by the 58X crankshaft position input signal.
- The output voltage is not equal to 5 volts when output is “ON”.
- The output voltage is not equal to 0 volts when output is “OFF”.
- Ten test failures occur within 10 samples of continuous circuit monitoring.

Action Taken When the DTC Sets

- The PCM will illuminate the malfunction indicator lamp (MIL) the first time the fault is detected.
- The PCM will store conditions which were present when the DTC was set as Freeze Frame and in the Failure Records data.

Conditions for Clearing the MIL/DTC

- The PCM will turn the MIL “OFF” on the third consecutive trip cycle in which the diagnostic has been run and the fault condition is no longer present.
- A history DTC P0356 will clear after 40 consecutive warm-up cycles occur without a fault.
- DTC P0356 can be cleared by using the Tech 2 “Clear Info” function or by disconnecting the PCM battery feed.

Diagnostic Aids

Check for the following conditions:

- Poor connection at PCM – Inspect the harness connectors for backed-out terminals, improper mating, broken locks, improperly formed or damaged terminals, and poor terminal-to-wire connections.
- Damaged harness – Inspect the wiring harness for damage. If the harness appears to be OK, observe the Tech 2 display related to DTC P0356 while moving the connector and wiring related to the ignition system. A change in the display will indicate the location of the fault.

Reviewing the Failure Records vehicle mileage since the diagnostic test last failed may help determine how often the condition that caused the DTC to be set occurs. This may assist in diagnosing the condition.

DTC P0356 – Ignition 6 Control Circuit

Step	Action	Value(s)	Yes	No
1	Was the “On-Board Diagnostic (OBD) System Check” performed?	—	Go to *Step 2*	Go to *OBD System Check*
2	1. Ignition “ON”, engine “OFF”. 2. Review and record Tech 2 Failure Records data. 3. Operate the vehicle within Failure Record conditions as noted. 4. Use a Tech 2 to monitor the “DTC” information for DTC P0356 until the DTC P0356 test runs. 5. Note the test result. Does the Tech 2 indicate DTC P0356 failed this ignition cycle?	—	Go to *Step 3*	Check the Procedure Refer to *Diagnostic Aids*
3	Check for faulty connection at ignition coil. Was a problem found?	—	Verify repair	Go to *Step 4*
4	Check for faulty connection at PCM connector. Was a problem found?	—	Verify repair	Go to *Step 5*
5	1. Ignition “ON”, engine “OFF”. 2. Back probe the ignition control circuit 6 at the ION Sensing Module with a DVM positive lead with the negative lead to ground. Is the voltage near the specified value?	25-55 mV	Go to *Step 6*	Go to *Step 9*
6	1. Ignition “ON”, engine running. 2. Back probe the ignition control circuit at the ION Sensing Module for the cylinder being tested. Is the voltage in the specified range, rapidly toggling back and forth to a reading 20-50 mV higher?	100-180 mV	Go to *Step 7*	Go to *Step 13*
7	1. Ignition “OFF”. 2. Disconnect the 3-pin connector at the ignition coil. 3. Check ignition control circuit 6 voltage at the ignition coil connector while cranking the engine. Does the voltage measure between the specified values?	200-1200 mV	Go to *Step 8*	Go to *Step 11*
8	Replace the ignition coil. Is the action complete?	—	Verify repair	—
9	1. Ignition “OFF”. 2. Disconnect the PCM and the ignition coil. 3. Check ignition control circuit 6 for short to ground. Was a problem found?	—	Verify repair	Go to *Step 10*
10	Check ignition control circuit 6 for short to voltage. Was a problem found?	—	Verify repair	Go to *Step 13*

DTC P0356 – Ignition 6 Control Circuit (Cont'd)

Step	Action	Value(s)	Yes	No
11	Check for an open ignition control circuit 6. Was the ignition control circuit open?	—	Go to *Step 12*	Go to *Step 13*
12	Repair the open ignition control circuit. Is the action complete?	—	Verify repair	—
13	Replace the PCM. **IMPORTANT:** The replacement PCM must be programmed. Refer to *On-Vehicle Service* in *Powertrain Control Module and Sensors* for procedures. And also refer to latest Service Bulletin. Check to see if the Latest software is released or not. And then Down Load the LATEST PROGRAMMED SOFTWARE to the replacement PCM. Is the action complete?	—	Verify repair	—

Diagnostic Trouble Code (DTC) P0401 EGR Flow Insufficient

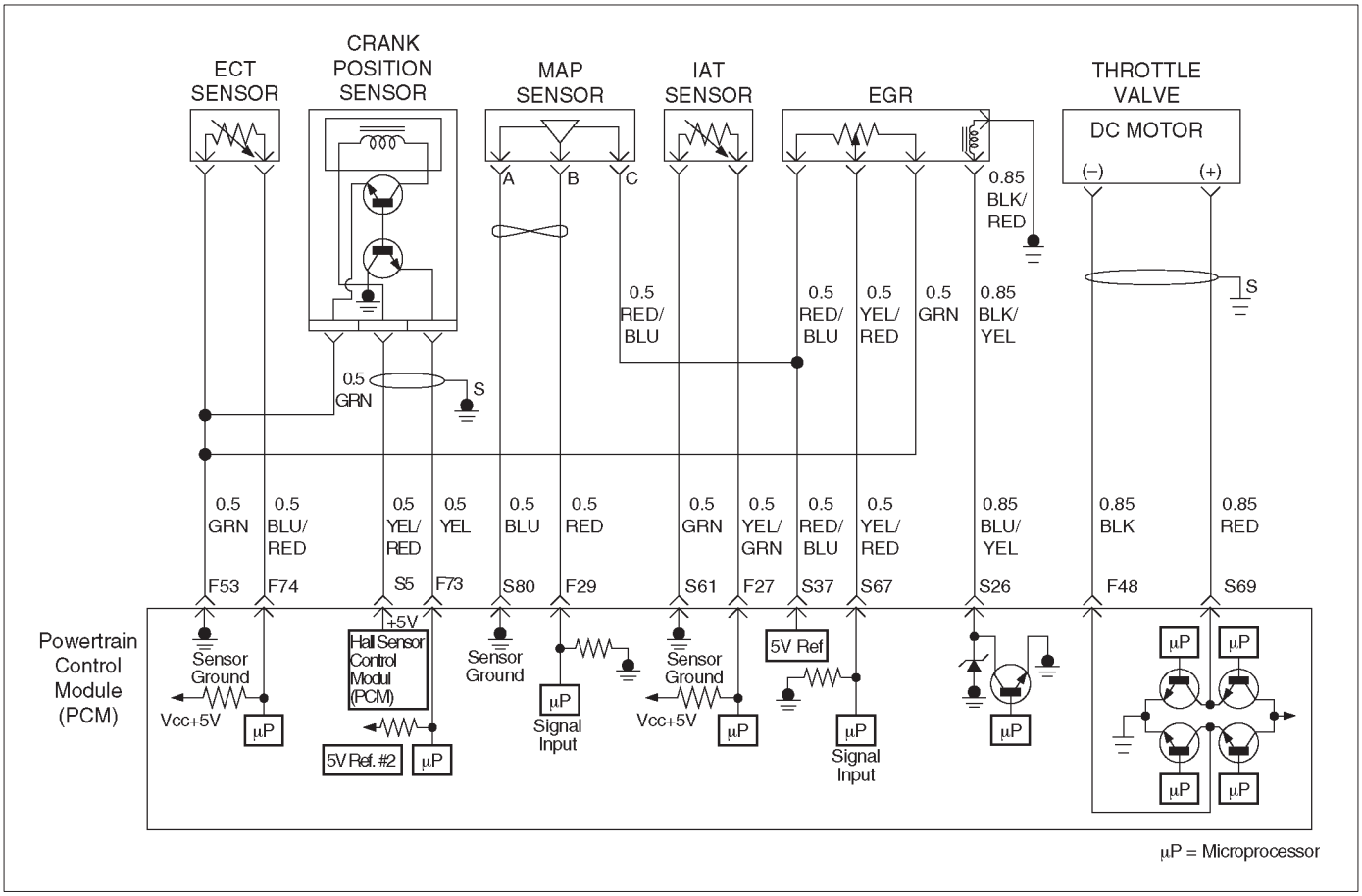

D06R200075

Circuit Description

The powertrain control module (PCM) tests the exhaust gas recirculation (EGR) system during deceleration by momentarily commanding the EGR valve to open while monitoring the manifold absolute pressure (MAP) sensor signal. When the EGR valve is opened, the PCM monitors the change in MAP input signal. The PCM compares the MAP change to a RPM vs. BARO table. When the PCM interprets the change in MAP to be out of limits, the PCM will set DTC P0401. The number of test samples required to accomplish this may vary according to the severity of the detected flow error.

Normally, the PCM will only allow one EGR flow test sample to be taken during an ignition cycle. To aid in verifying a repair, the PCM allows twelve test samples during the first ignition cycle following a Tech 2 “Clear Info” or a battery disconnect. Between nine and twelve samples should be sufficient for the PCM to determine adequate EGR flow and pass the EGR test.

Conditions for Setting the DTC

- No TP sensor, vehicle speed sensor (VSS), MAP sensor, IAT sensor, IAC, EGR Pintle Position sensor, ECT sensor, misfire, or automatic transmission DTCs set.
- Engine coolant temperature is greater than 60˚C (140˚F).
- Ignition voltage between 11.5 and 16 volts.
- Vehicle speed is greater than 24 km/h (15 mph).
- A/C clutch status is unchanged.
- TCC status is unchanged.

Start Test

- TP angle is less than 0.8%.
- EGR duty cycle is less than 1%.
- MAP is steady, changing less than 2 kPa.
- Engine speed is between 1100 RPM and 2000 RPM (M/T).
- MAP between 10 kPa and 40 kPa.
- Engine speed is between 900 RPM and 1500 rpm (A/T).

  The test will be aborted if the vehicle speed changes by more than 16 km/h (10 mph), engine speed changes by more than 100 RPM or the EGR is opened less than 95% of commanded position.
- The PCM will only run the EGR test during a closed throttle condition.
- The PCM will only run the EGR test at vehicle speeds above 24 km/h (15 mph).
- Several deceleration cycles will be necessary to run a sufficient number of EGR flow tests.

Action Taken When the DTC Sets

- The PCM will ON the MIL after second trip with detected fault.

- The PCM will store conditions which were present when the DTC was set as Freeze Frame and in the Failure Records data.

Diagnostic Aids

Check for the following conditions:

- Poor connection or damaged harness – Inspect the wiring harness for damage. If the harness appears to be OK, observe the Actual EGR Position display on the Tech 2 while moving connectors and wiring harnesses related to the EGR valve. A change in the display will indicate the location of the fault.
- Ensure EGR valve is correctly mounted. See *On-Vehicle Service*.

Reviewing the Failure Records vehicle mileage since the diagnostic test last failed may help determine how often the condition that caused the DTC to be set occurs. This may assist in diagnosing the condition.

NOTE: If the EGR valve shows signs of excessive heat, check the exhaust system for blockage (possibly a plugged catalytic converter) using the “Restricted Exhaust System Check”.

Test Description

Number(s) below refer to the step number(s) on the Diagnostic Chart

3. A malfunctioning MAP sensor can set an EGR DTC. The MAP sensor could send a constant signal which is not low enough to set a low MAP DTC. The constant signal from the MAP sensor also may not be high enough to set a high MAP DTC. This step verifies that the MAP sensor is responding.

DTC P0401 – EGR Flow Insufficient

Step	Action	Value(s)	Yes	No
1	Was the “On-Board Diagnostic (OBD) System Check” performed?	—	Go to *Step 2*	Go to *OBD System Check*
2	Is DTC P1404 also set?	—	Go to *DTC 1404*	Go to *Step 3*
3	1. Start the engine. 2. Monitor the MAP signal with a Tech 2 while idling. 3. While idling, jab the accelerator pedal about halfway down and immediately let the engine return to idle. Did the MAP value on the Tech 2 show an immediate large change?	—	Go to *Step 5*	Go to *Step 4*
4	Replace the MAP sensor. Is the action complete?	—	Verify repair	—
5	1. Inspect the exhaust system for modification of original installed parts or leaks. 2. If a problem was found, repair exhaust system as necessary. Was a condition present that required repair?	—	Go to *Step 8*	Go to *Step 6*
6	1. Remove the EGR valve. 2. Visually and physically inspect the pintle, valve passages and the adapter for excessive deposits or any kind of a restriction. 3. If a problem is found, clean or replace EGR system components as necessary. Was a condition present that required repair?	—	Go to *Step 8*	Go to *Step 7*
7	1. Remove the EGR inlet and outlet pipes from the exhaust manifold and the intake manifold. 2. Inspect the manifold EGR ports and the EGR inlet and outlet pipes for a blockage caused by excessive deposits or other damage. 3. If a problem is found, correct the condition as necessary. Was a condition present that required repair?	—	Go to *Step 8*	Check the Procedure Refer to *Diagnostic Aids*
8	1. Review and record the Tech 2 Failure Records data. 2. Clear DTC and monitor the Tech 2 System Info Screen while operating the vehicle as specified in “Diagnostic Aids”. 3. Using a Tech 2, monitor “DTC” info for DTC P0401 until the DTC P0401 test runs. 4. Note the test result. Does the Tech 2 indicate DTC P0401 failed this ignition?	—	—	Repair complete

Diagnostic Trouble Code (DTC) P0402 EGR Pintle Crank Error

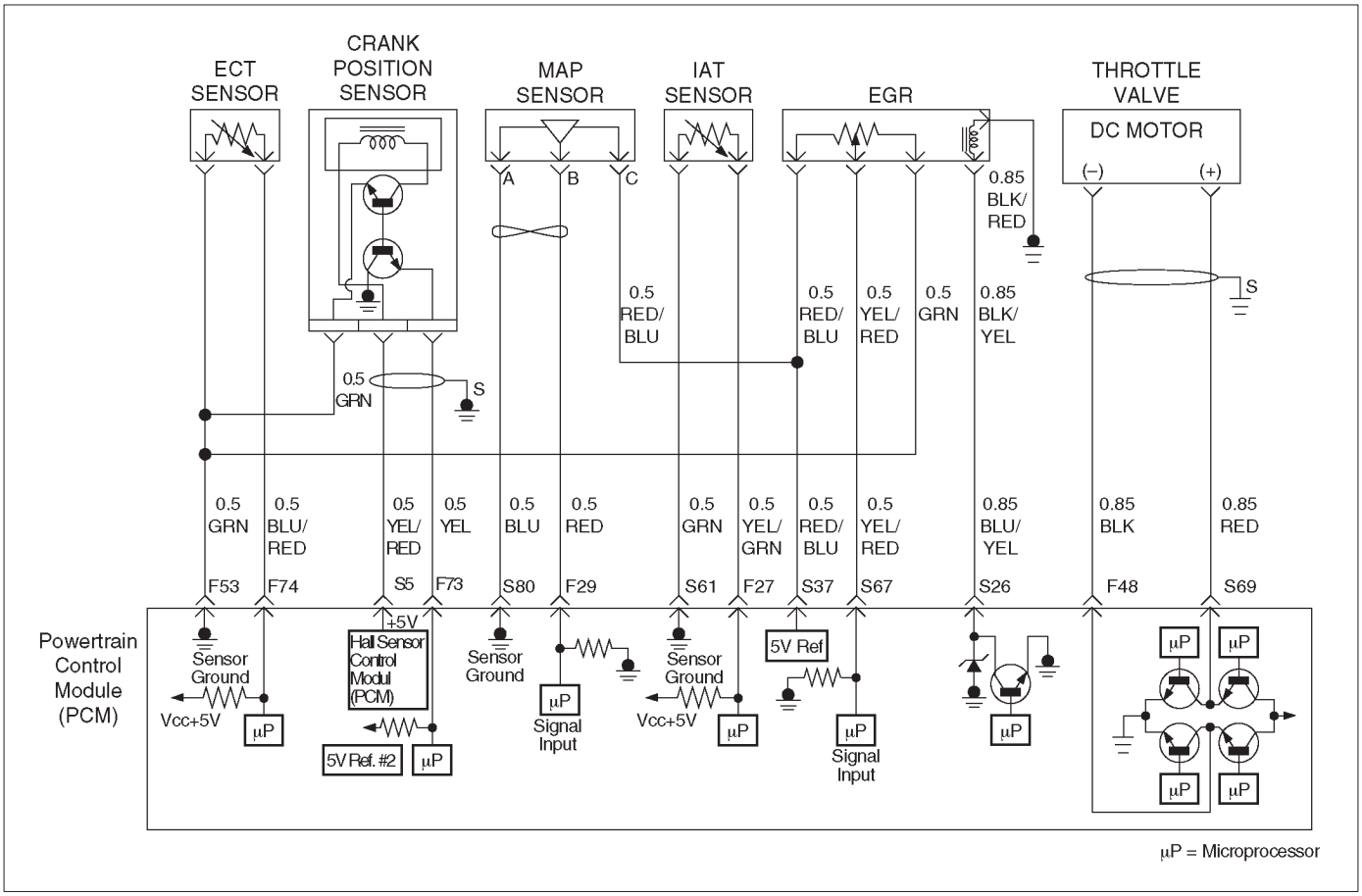

D06R200075

Circuit Description

The powertrain control module (PCM) monitors the EGR valve pintle position input to ensure that the valve responds properly to commands from the PCM, and to detect a fault if pintle position is stuck open. If the PCM detects a pintle position signal indicates more than 21.5% and more than for 625 msec during cranking, the PCM will set DTC P0402.

Conditions for Setting the DTC

- Ignition voltage is between 11 and 16 volts.
- At Engine revolution less than 600 RPM, EGR pintle position indicates more than 21.0% and more than for 625 msecs.

Action Taken When the DTC Sets

- The PCM will illuminate the malfunction indicator lamp (MIL) after the second consecutive trip in which the fault is detected.
- The PCM will store conditions which were present when the DTC was set as Freeze Frame and in Failure Records data.

Conditions for Clearing the MIL/DTC

- The PCM will turn the MIL “OFF” on the third consecutive trip cycle during which the diagnostic has been run and the fault condition is no longer present.
- A history DTC P0402 will clear after 40 consecutive warm-up cycles have occurred without a fault.
- DTC P0402 can be cleared by using the Tech 2 “Clear Info” function or by disconnecting the PCM battery feed.

Diagnostic Aids

Check for the following conditions:

- Foreign material on EGR valve between pintle and seat may cause EGR stuck open. Inspect foreign material in EGR valve.
- Excessive carbon deposit may cause unsmooth operation of EGR valve shaft. Inspect for carbon deposit and clean up inside of carbon deposit.
- Poor connection or damaged harness–inspect the wiring harness for damage If the harness appears to be OK, observe the EGR actual position display on the Tech 2 while moving connectors and wiring harnesses related to EGR valve. A change in the display will indicate the location of the fault.

NOTE: If the EGR valve shows signs of excessive heat, check the exhaust system for blockage (possibly a plugged catalytic converter) using the “Restricted Exhaust System Check”.

DTC P0402 – EGR Pintle Crank Open Error

Step	Action	Value(s)	Yes	No
1	Was the “On-Board Diagnostic (OBD) System Check” performed?	—	Go to *Step 2*	Go to *OBD System Check*
2	1. Ignition “ON”, engine “OFF”, review and record Tech 2 Failure Records data. 2. Operate the vehicle within Failure Records conditions as noted. 3. Using a Tech 2, monitor “DTC” info for DTC P0402 until the DTC P0402 test runs. Note the result. Does the Tech 2 indicates DTC P0402 failed this ignition?	—	Go to *Step 3*	Check the Procedure Refer to *Diagnostic Aids*
3	1. Disconnect the EGR valve harness connector. 2. Inspect the EGR valve and connectors for damaged pin or terminals. Were there any damaged pins or terminals?	—	Go to *Step 4*	Go to *Step 5*
4	Repair the damaged pin or terminal. Is the action complete?	—	Verify repair	—
5	1. Remove EGR valve from Engine. 2. Inspect EGR valve whether there is any foreign material between seat and pintle. Was any foreign material in EGR valve?	—	Go to *Step 6*	Go to *Step 7*
6	1. Remove EGR valve foreign material from EGR valve and clean up inside. 2. Visually inspect for damage of pintle and seat, which leakage may occur. Was there any severe damage which affects function?	—	Go to *Step 7*	Verify repair Go to *Step 8*
7	1. Reconnect. 2. Ignition “OFF”. 3. Install the Tech 2. 4. Run the engine at idle. 5. On Tech-II, select special function for EGR. 6. Use the “UP” arrow to increase the EGR from 0% to 40%. Did EGR work properly?	—	—	Go to *Step 8*
8	Replace the EGR valve. Does DTC P0402 still fail “DTC” test on the Tech 2?	—	Go to *Step 9*	Verify repair
9	Replace the PCM. Is the action complete?	—	Verify repair	—

Diagnostic Trouble Code (DTC) P0404 EGR Open Stuck

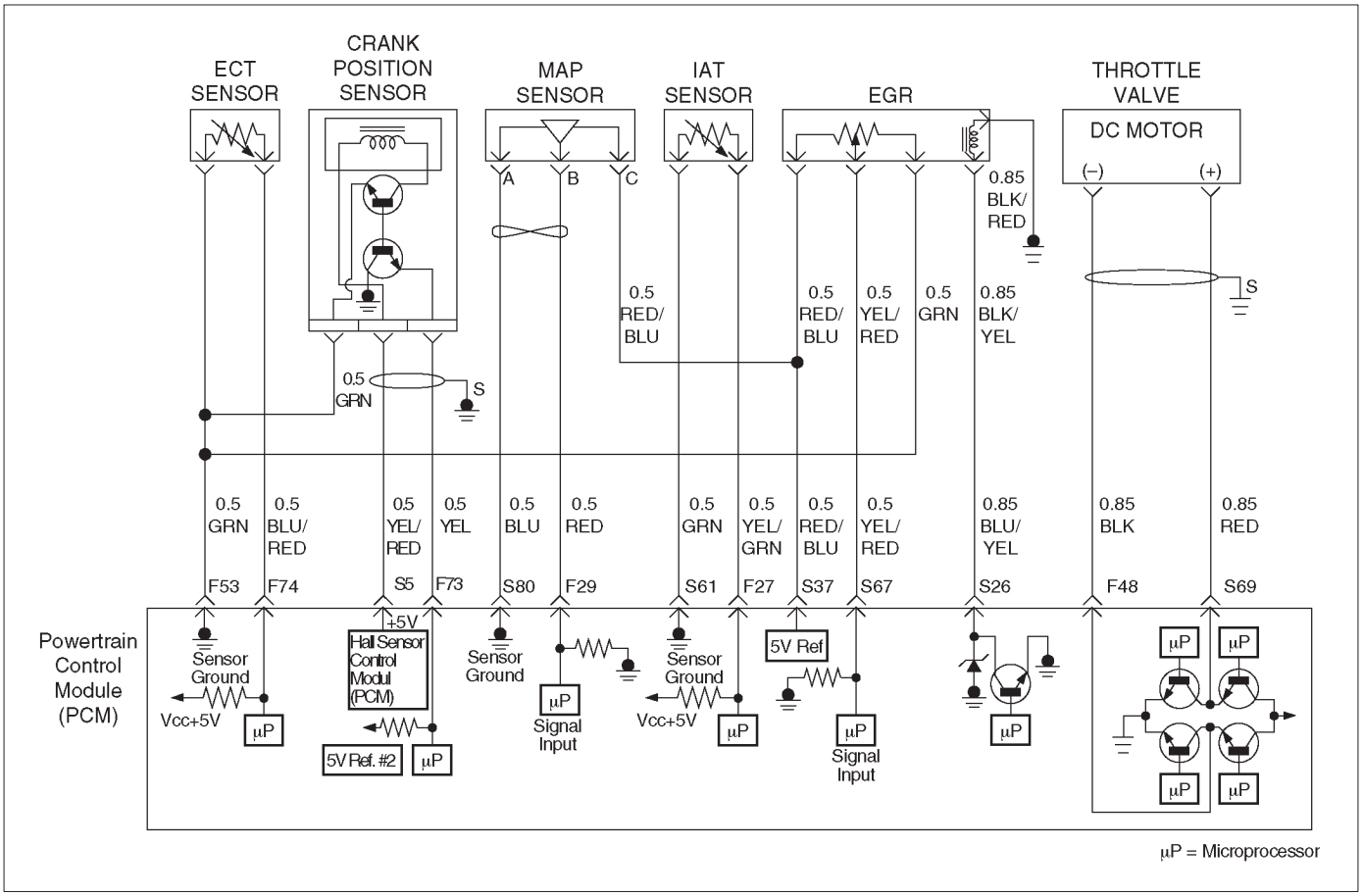

D06R200075

Circuit Description

The powertrain control module (PCM) monitors the EGR valve pintle position input to ensure that the valve responds properly to commands from the PCM, and to detect a fault if pintle position is different from commanded position. If the PCM detects a pintle position signal indicates more than 15 points different between current and commanded and more than 15 seconds, the PCM will set DTC P0404.

Conditions for Setting the DTC

- The engine is running.
- Ignition voltage is between 11 and 16 volts.
- Intake Air Temp is more than 3˚C (37.4˚F).
- Desire EGR position is less than 3%.
- The difference between desired EGR and current EGR is less than 3%.
- Difference EGR pintle position between current and commanded position becomes more than 15% and last more than 15 seconds, and this condition meets three times in a trip. Then it trigger, the PCM lights on.

Action Taken When the DTC Sets

- The PCM will ON the MIL after second trip with detected the fault.
- The PCM will store conditions which were present when the DTC was set as Freeze Frame and in Failure Records data.

Conditions for Clearing the MIL/DTC

- The PCM will turn the MIL “OFF” on the third consecutive trip cycle during which the diagnostic has been run and the fault condition is no longer present.
- A history DTC P0404 will clear after 40 consecutive warm-up cycles have occurred without a fault.
- DTC P0404 can be cleared by using the Tech 2 “Clear Info” function or by disconnecting the PCM battery feed.

Diagnostic Aids

Check for the following conditions:

- Excessive carbon deposit on EGR valve shaft may cause EGR stuck open or unsmooth operation. Those carbon deposit may occur by unusual port operation. Clean up carbon may make smooth function of EGR valve.
- Poor connection or damaged harness – Inspect the wiring harness for damage. If the harness appears to be OK, observe the EGR actual position display on the Tech 2 while moving connectors and wiring harnesses related to EGR valve. A change in the display will indicate the location of the fault.

DTC P0404 – EGR Open Stuck

Step	Action	Value(s)	Yes	No
1	Was the “On-Board Diagnostic (OBD) System Check” performed?	—	Go to *Step 2*	Go to *OBD System Check*
2	1. Ignition “ON”, engine “OFF”, review and record Tech 2 Failure Records Data. 2. Operate the vehicle within Failure Records conditions as noted. 3. Using a Tech 2, monitor “DTC” info for DTC P0404 until the DTC P0404 test runs. Note the result. Does the Tech 2 indicates DTC P0404 failed this ignition?	—	Go to *Step 3*	Check the Procedure Refer to *Diagnostic Aids*
3	1. Disconnect the EGR valve harness connector. 2. Inspect the EGR valve and connectors for damaged pin or terminals. Were there any damaged pins or terminals?	—	Go to *Step 4*	Go to *Step 5*
4	Repair the damaged pin or terminal.	—	Verify repair	Is the action complete?
5	1. Remove EGR valve from Engine. 2. Inspect EGR valve whether there is any excessive carbon deposit on EGR shaft. Was excessive carbon deposit on EGR valve shaft?	—	Go to *Step 6*	Go to *Step 7*
6	1. Clean up EGR valve shaft and inside of EGR valve. 2. Visually inspect damage of pintle and seat if is bent, leakage may occur. Was there any severe damage which affects function?	—	Go to *Step 8*	Verify repair Go to *Step 7*
7	1. Reconnect. 2. Ignition “OFF”. 3. Install the Tech 2. 4. Run the engine at idle. 5. On the Tech 2, select EGR Control Test. 6. Use the “UP” arrow to increase the EGR from 0% to 40%. Did EGR work properly?	—	—	Go to *Step 8*
8	Replace the EGR valve. Does DTC P0404 still fail “DTC” test on the Tech 2?	—	Go to *Step 9*	Verify repair
9	Replace the PCM. **IMPORTANT:** The replacement PCM must be programmed. Refer to *On-Vehicle Service* in *Powertrain Control Module and Sensors* for procedures. And also refer to latest Service Bulletin. Check to see if the Latest software is released or not. And then Down Load the LATEST PROGRAMMED SOFTWARE to the replacement PCM. Is the action complete?	—	Verify repair	—

Diagnostic Trouble Code (DTC) P0405 EGR Low Voltage

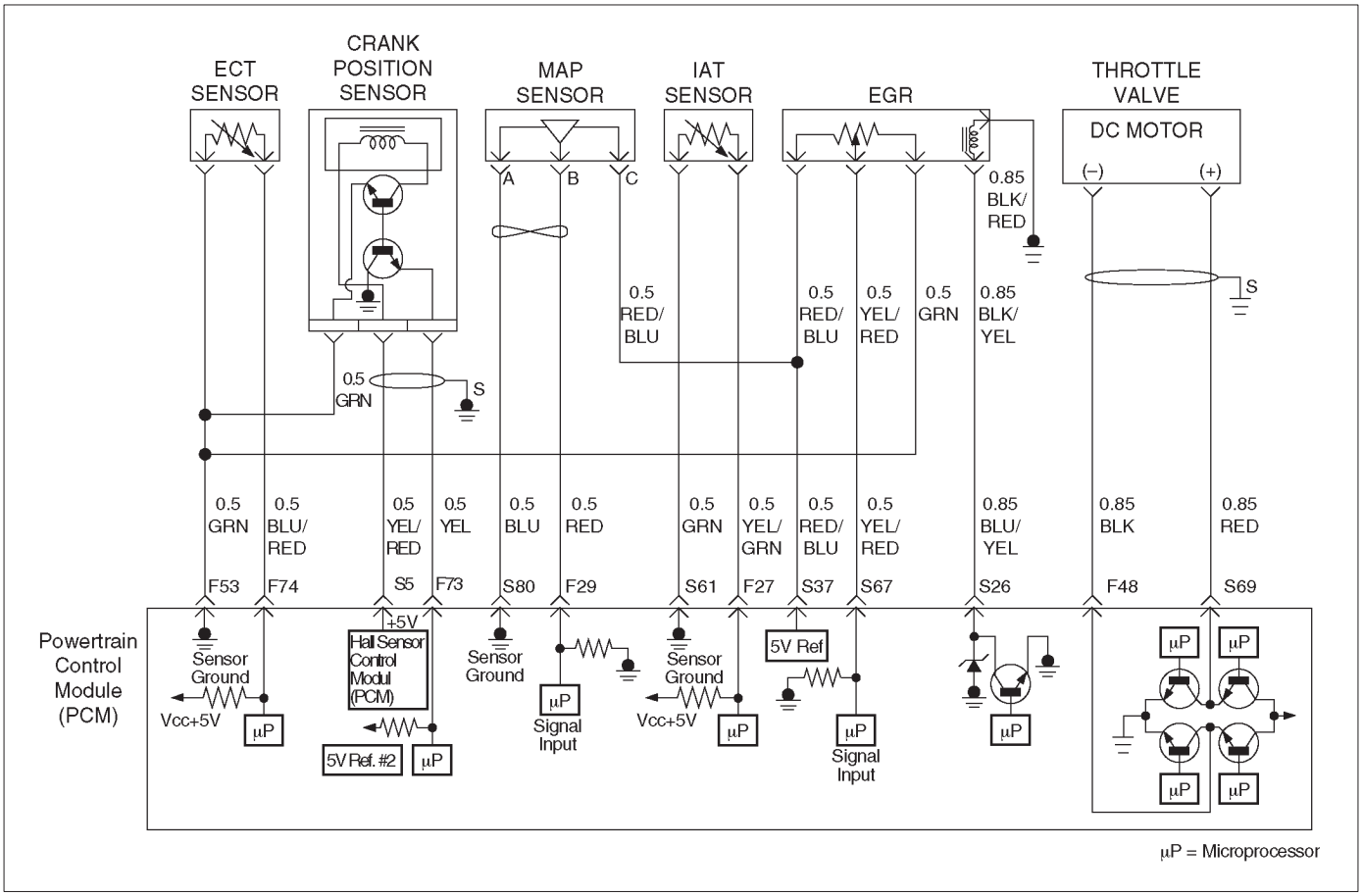

D06R200075

Circuit Description

The powertrain control module (PCM) monitors the EGR valve pintle position input to ensure that the valve responds properly to command from the PCM. If current pintle position voltage indicates less than 0.1 V and last more than 10 seconds, then the PCM will set DTC P0405.

Conditions for Setting the DTC

- Ignition voltage is between 11 and 16 volts.
- Intake Air Temp is more than 3˚C (37.4˚F).
- EGR pintle position is less than 2% and last more than 10 sec. Action taken when the DTC sets.

Action Taken When the DTC Sets

- The PCM will ON the MIL after second trip with detected the fault.
- The PCM will store conditions which were present when the DTC was set as Freeze Frame and in Failure Records data.

Conditions for Clearing the MIL/DTC

- The PCM will turn the MIL “OFF” on the third consecutive trip cycle during which the diagnostic has been run and the fault condition is no longer present.
- A history DTC P0402 will clear after 40 consecutive warm-up cycles have occurred without a fault.
- DTC P0405 can be cleared by using the Tech 2 “Clear Info” function or by disconnecting the PCM battery feed.

Diagnostic Aids

Check for the following conditions:

- Poor connection or damaged harness – Inspect the wiring harness for damage. If the harness appears to be OK, observe the EGR actual position display on the Tech 2 while moving connectors and wiring harnesses related to EGR valve. A change in the display will indicate the location of the fault.

DTC P0405 – EGR Low Voltage

Step	Action	Value(s)	Yes	No
1	Was the “On-Board Diagnostic (OBD) System Check” performed?	—	Go to *Step 2*	Go to *OBD System Check*
2	1. Ignition “ON”, engine “OFF”, review and record Tech 2 Failure Records Data. 2. Operate the vehicle within Failure Records conditions as noted. 3. Using a Tech 2, monitor “DTC” info for DTC P0405 until the DTC P0405 test runs. Note the result. Does the Tech 2 indicates DTC P0405 failed this ignition?	—	Go to *Step 3*	Check the Procedure Refer to *Diagnostic Aids*
3	1. Disconnect the EGR valve harness connector. 2. Inspect the EGR valve and connectors for damaged pin or terminals. Were there any damaged pins or terminals?	—	Go to *Step 4*	Go to *Step 5*
4	Repair the damaged pin or terminal. Is the action complete?	—	Verify repair	—
5	1. Disconnect the EGR harness connector. 2. Ignition “ON”. 3. At the EGR valve, use a DVM to check the voltage at the 5 volt reference wire (BLU/RED) and ground. Did the DVM indicate the specified value?	4–6 V	Go to *Step 6*	Go to *Step 7*
6	1. Disconnect the EGR harness connector. 2. Measure resistance between terminal 5 volt reference wire and ground. Was resistance in range?	5–5.5 KΩ	Go to *Step 10*	Go to *Step 17*
7	1. Ignition “ON”. 2. At the PCM connector, backprobe with a DVM at the 5 volt reference for the EGR valve. Did the DVM indicate the specified value?	4–6 V	Go to *Step 8*	Go to *Step 9*
8	Repair the open 5 volt reference circuit. Is the action complete?	—	Verify repair	—
9	Repair the damaged sensor ground wire. Is the action complete?	—	Verify repair	—
10	1. Disconnect the EGR harness 2. Use an ohmmeter to measure between the pintle position pin and the sensor ground pin on the EGR valve. NOTE: J-35616 Connector Test Adapter Kit may be useful for gaining access to the recessed pins on the valve. Was the ohmmeter reading approximately equal to the specified value?	1 to 1.25 KΩ	Go to *Step 13*	Go to *Step 17*
11	1. Ignition “ON”. 2. Backprobe with a DVM to measure voltage at EGR valve pintle position pin and sensor ground pin. Was voltage in range?	Less than 0.1 V	Go to *Step 17*	Go to *Step 12*

DTC P0405 – EGR Low Voltage (Cont'd)

Step	Action	Value(s)	Yes	No
12	1. Ignition "ON". 2. Backprobe with a DVM to measure voltage at PCM sensor ground pin and pintle position pin. Was voltage in range?	Less than 0.1 V	Go to *Step 13*	Go to *Step 18*
13	1. Ignition "OFF". 2. Disconnect the EGR harness. 3. Check short circuit between EGR pintle position circuit and EGR ground circuit. Was any short circuit?	—	Go to *Step 14*	Go to *Step 18*
14	Locate and repair the short to ground in the pintle position circuit Is the action complete?	—	Verify repair	—
15	1. Ignition "OFF". 2. Disconnect the PCM. 3. Ignition "ON". 4. Measure the voltage between the EGR pintle position circuit and ground. Is the measured voltage near the specified value?	Less than 0.1 V	Go to *Step 17*	Go to *Step 16*
16	Check for a short circuit between other wires and the pintle position circuit Is there any short circuit?	—	Repair short circuit and then Verify repair	Go to *Step 17*
17	Replace the EGR valve. Does DTC P1404 still fail "DTC test on the Tech 2?	—	Go to *Step 18*	Verify repair
18	Examine the PCM pin and terminal connection. Was there a damaged terminal?	—	Go to *Step 4*	Go to *Step 19*
19	Replace the PCM. **IMPORTANT:** The replacement PCM must be programmed. Refer to *On-Vehicle Service* in *Powertrain Control Module and Sensors* for procedures. And also refer to latest Service Bulletin. Check to see if the Latest software is released or not. And then Down Load the LATEST PROGRAMMED SOFTWARE to the replacement PCM. Is the action complete?	—	Verify repair	—

Diagnostic Trouble Code (DTC) P0406 EGR High Voltage

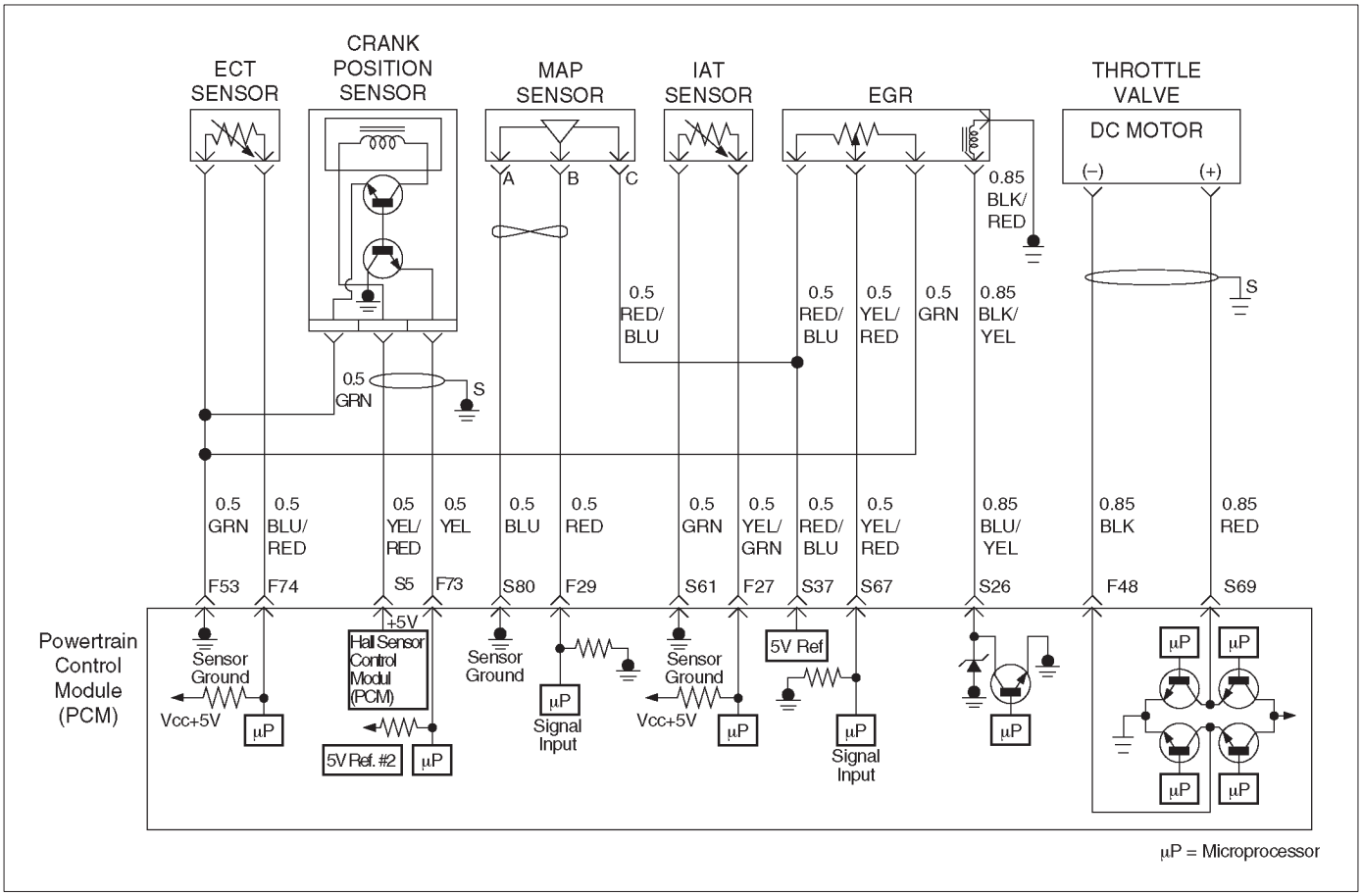

D06R200075

Circuit Description

The powertrain control module (PCM) monitors the EGR valve pintle position input to ensure that the valve responds properly to command from the PCM. If current pintle position voltage indicates more than 4.8 V and last more than 10 seconds, then the PCM will set DTC P0406.

Conditions for Setting the DTC

- Ignition voltage is between 11 and 16 volts.
- Intake Air temp is more than 3˚C (37.4˚F).
- EGR pintle position is more than 99% and last more than 10 sec.

Action Taken When the DTC Sets

- The PCM will ON the MIL after second trip with detected the fault.
- The PCM will store conditions which were present when the DTC was set as Freeze Frame and in Failure Records data.

Conditions for Clearing the MIL/DTC

- The PCM will turn the MIL “OFF” on the third consecutive trip cycle during which the diagnostic has been run and the fault condition is no longer present.
- A history DTC P0402 will clear after 40 consecutive warm-up cycles have occurred without a fault.
- DTC P0404 can be cleared by using the Tech 2 “Clear Info” function or by disconnecting the PCM battery feed.

Diagnostic Aids

Check for the following conditions:

- Poor connection or damaged harness – Inspect the wiring harness for damage. If the harness appears to be OK, observe the EGR actual position display on the Tech 2 while moving connectors and wiring harnesses related to EGR valve. A change in the display will indicate the location of the fault.

DTC P0406 – EGR High Voltage

Step	Action	Value(s)	Yes	No
1	Was the “On-Board Diagnostic (OBD) System Check” performed?	—	Go to *Step 2*	Go to *OBD System Check*
2	1. Ignition “ON”, engine “OFF”, review and record Tech 2 Failure Records Data. 2. Operate the vehicle within Failure Records conditions as noted. 3. Using a Tech 2, monitor “DTC” info for DTC P0406 until the DTC P0406 test runs. Note the result. Does the Tech 2 indicates DTC P0406 failed this ignition?	—	Go to *Step 3*	Check the Procedure Refer to *Diagnostic Aids*
3	1. Disconnect the EGR valve harness connector. 2. Inspect the EGR valve and connectors for damaged pin or terminals. Were there any damaged pins or terminals?	—	Go to *Step 4*	Go to *Step 5*
4	Repair the damaged pin or terminal. Is the action complete?	—	Verify repair	Is the action complete?
5	1. Disconnect the EGR harness connector. 2. Ignition “ON”. 3. At the EGR valve, use a DVM to check the voltage at the 5 volt reference wire (BLU/RED). Did the DVM indicate the specified value?	4–6 V	Go to *Step 8*	Go to *Step 6*
6	1. Ignition “ON”. 2. At the PCM connector, backprobe with a DVM at the 5 volt reference for the EGR valve. Did the DVM indicate the specified value?	4–6 V	Go to *Step 7*	Go to *Step 16*
7	Repair the open 5 volt reference circuit Is the action complete?	—	Verify repair	—
8	1. Ignition “OFF” 2. Disconnect the EGR harness. 3. Use a DVM to check for an resistance between 5 V reference and Sensor Ground at EGR sensor terminals. NOTE: J-35616 Connector Test Adapter Kit may be useful for gaining access to the recessed pins on the valve. Was the measured resistance in range?	5 to 5 KΩ	Go to *Step 9*	Go to *Step 15*
9	1. Ignition “OFF”. 2. Disconnect the EGR harness. 3. Use a DVM to check for an resistance between Sensor Ground and Signal Wire at EGR sensor terminal. Is there an open circuit?	—	Go to *Step 15*	Go to *Step 10*
10	1. Ignition “OFF”. 2. Disconnect the EGR harness at PCM connector. 3. Use a DVM to check for shorted wire between S37 and F53. Is there a shorted wire?	—	Go to *Step 14*	Go to *Step 11*

DTC P0406 – EGR High Voltage (Cont'd)

Step	Action	Value(s)	Yes	No
11	1. Ignition "ON". 2. Use a DVM to backprobe at terminal Connector of EGR valve for voltage. Was measured voltage more than 4.8 V?	more than 4.8 V	Go to *Step 12*	Go to *Step 12*
12	1. Ignition "ON". 2. Stay the EGR harness connected. 3. Check voltage by backprobing at PCM S37 terminal. Was voltage more than 4.8 V?	4.8 V	Go to *Step 16*	Go to *Step 13*
13	1. Locate short circuit at EGR harness between BLU/RED to GRY/RED or GRY/RED to YEL, BLU/RED. 2. Replace EGR harness. Is the action complete?	—	Verify repair	—
14	Replace EGR harness. Is the action complete?	—	Verify repair	—
15	Replace the EGR valve. Does DTC P1404 still fail "DTC test on the Tech 2?	—	Go to *Step 16*	Verify repair
16	Replace the PCM. **IMPORTANT:** The replacement PCM must be programmed. Refer to *On-Vehicle Service* in *Powertrain Control Module and Sensors* for procedures. And also refer to latest Service Bulletin. Check to see if the Latest software is released or not. And then Down Load the LATEST PROGRAMMED SOFTWARE to the replacement PCM. Is the action complete?	—	Verify repair	—

Diagnostic Trouble Code (DTC) P0420 TWC System Low Efficiency Bank 1

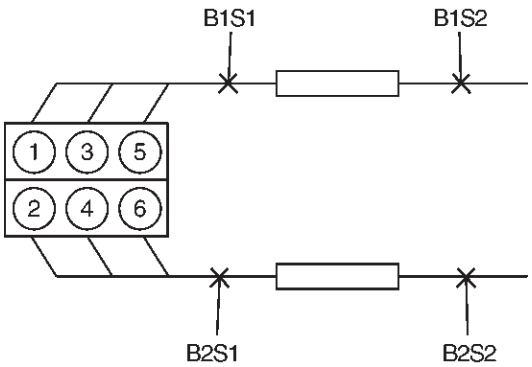

T321075

Circuit Description

To control emissions of hydrocarbons (HC), carbon monoxide (CO), and oxides of nitrogen (NOx), a three-way catalyst (TWC) is used. The catalyst promotes a chemical reaction which oxidizes the HC and CO present in the exhaust gas, converting them into harmless water vapor and carbon dioxide. The catalyst also reduces NOx, converting it to nitrogen. The powertrain control module (PCM) has the ability to monitor this process using the Bank 1 HO2S 1 and the Bank 1 HO2S 2 heated oxygen sensors. The Bank 1 HO2S 1 sensor produces an output signal which indicates the amount of oxygen present in the exhaust gas entering the three-way catalytic converter. The Bank 1 HO2S 2 sensor produces an output signal which indicates the oxygen storage capacity of the catalyst; this in turn indicates the catalyst's ability to convert exhaust gases efficiently. If the catalyst is operating efficiently, the Bank 1 HO2S 1 signal will be far more active than that produced by the Bank 1 HO2S 2 sensor. If the PCM detects a level of Bank 1 HO2S 2 activity that indicates the catalyst is no longer operating efficiently, DTC P0420 will be set.

Conditions for Setting the DTC

- No related DTCs.
- The engine is operating in "closed loop",
- Engine air load is below 99%.
- Engine coolant temperature is between 70˚C (158˚F) and 120˚C (248˚F).
- Mass air flow is between 2.5 g/second and 10 g/second.
- Engine speed is below 200 RPM.
- Catalyst temperature is above 350˚C (662˚F).
- The PCM determines that the catalyst's oxygen storage capacity is below the acceptable threshold.
- Intake Air Temperature is between –10˚C (14˚F) and 70˚C (158˚F).
- Throttle angle is less than 1.5%.
- Barometric Pressure is more than 72 kPa.

Action Taken When the DTC Sets

- The PCM will illuminate the malfunction indicator lamp (MIL) the first time the fault is detected.
- The PCM will store conditions which were present when the DTC was set as Freeze Frame and in the Failure Records data.

Conditions for Clearing the MIL/DTC

- The PCM will turn the MIL "OFF" on the third consecutive trip cycle during which the diagnostic has been run and the fault condition is no longer present.
- A history DTC P0420 will clear after 40 consecutive warm-up cycles have occurred without a fault.
- DTC P0420 can be cleared by using the Tech 2 "Clear Info" function or by disconnecting the PCM battery feed.

Diagnostic Aids

Check for the following conditions:

- Poor connection at PCM – Inspect harness connectors for backed-out terminals, improper mating, broken locks, improperly formed or damaged terminals, and poor terminal-to-wire connection.
- Damaged harness – Inspect the wiring harness for damage. If the harness appears to be OK, observe the display on the Tech 2 while moving connectors and wiring harnesses related to the sensor. A change in the display will indicate the location of the fault.

Reviewing the Failure Records vehicle mileage since the diagnostic test last failed may help determine how often the condition that caused the DTC to be set occurs. This may assist in diagnosing the condition.

The "TWC Monitor Test Counter" displayed on the Tech 2 may be used to monitor the progress of the TWC diagnostic. To complete the TWC diagnostic with a good catalyst, the counter must be allowed to increment to 49 samples and roll over to 0 at least twice. A failed catalyst

will require three or more 50-sample tests to report a failure.

Test Description

Number(s) below refer to the step number(s) on the Diagnostic Chart.

7. Difficulty completing the DTC P0420 “Status This Ign”, test may be encountered in areas where test conditions cannot be maintained easily, especially in urban areas. To minimize the amount of driving required to complete the DTC P0420 “Status This Ign”, test, use the following procedure:
   - Allow the engine to warm up completely.
   - With the vehicle in “Park”, monitor mass air flow on the Tech 2 and hold part throttle to maintain a reading of over 12 g/second for at least 2 minutes. This will achieve the “warm catalyst” required for running the test.
   - Operate the vehicle in second or third gear to remain in the DTC P0420 test conditions described in “Conditions for Setting the DTC” as much as possible. If you must stop the vehicle, maintain the “warm catalyst” criteria as follows:
     – Place the vehicle in “Park” or “Neutral”,
     – Hold part throttle to maintain a mass air flow reading of over 15 g/second for the duration of the stop.

DTC P0420 – TWC System Low Efficiency Bank 1

Step	Action	Value(s)	Yes	No
1	Was the “On-Board Diagnostic (OBD) System Check” performed?	—	Go to *Step 2*	Go to *OBD System Check*
2	Are any other DTCs set (such as P0140)?	—	Diagnose other DTC(s) first	Go to *Step 3*
3	1. Visually and physically inspect the three-way catalytic converter for damage. Check for the following: • dents • severe discoloration caused by excessive temperatures • holes • internal rattle caused by damaged catalyst 2. Also, ensure that the three-way catalytic converter is a proper original equipment manufacturer part. Did your inspection reveal a problem?	—	Go to *Step 6*	Go to *Step 4*
4	1. Visually and physically inspect the exhaust system between the three-way catalytic converter and the rear converter flange for leaks, damage, and loose or missing hardware. 2. If a problem is found, repair as necessary. Did your inspection reveal a problem?	—	Go to *Step 7* to verify repair	Go to *Step 5*
5	1. Visually and physically inspect the Bank 1 HO2S 2. 2. Ensure that the Bank 1 HO2S 2 is secure and that the pigtail and wiring harness is not contacting the exhaust pipe or is not otherwise damaged. 3. If a problem is found, repair as necessary. Did your inspection reveal a problem?	—	Go to *Step 7* to verify repair	Go to *Step 6*

DTC P0420 – TWC System Low Efficiency Bank 1 (Cont'd)

Step	Action	Value(s)	Yes	No
6	Replace the three-way catalytic converter. NOTE: Check for conditions which may cause catalyst damage (refer to *Diagnostic Aids*). Is the action complete?	—	Go to *Step 7* to verify repair	—
7	1. Review and record the Tech 2 Failure Records data. 2. Clear DTC P0420. 3. Start the engine and allow it to warm up until the engine coolant temperature monitored on the Tech 2 is above the specified value. 4. Run the engine to maintain the specified mass air flow range for at least 2 minutes. 5. Operate the vehicle to maintain DTC P0420 test conditions (refer to *DTC Test Description* in *Diagnostic Support* for detailed instructions). 6. Using a Tech 2, monitor "DTC" info for DTC P0420 until the DTC P0420 test runs. 7. Note the test result. Does the Tech 2 indicate DTC P0420 passed this ignition?	Engine coolant temp: greater than 60˚C (140˚F). Mass air flow: between 8 g/second and 50 g/second	Complete repair. If a driveability symptom still exists, refer to *Symptoms*.	Check the Procedure Refer to *Diagnostic Aids*

Diagnostic Trouble Code (DTC) P0430 TWC System Low Efficiency Bank 2

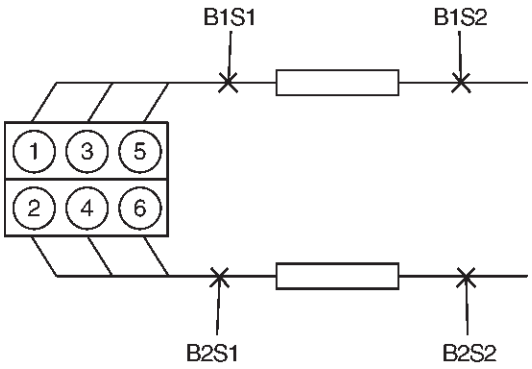

T321075

Circuit Description

To control emissions of hydrocarbons (HC), carbon monoxide (CO), and oxides of nitrogen (NOx), a three-way catalyst (TWC) is used. The catalyst promotes a chemical reaction which oxidizes the HC and CO present in the exhaust gas, converting them into harmless water vapor and carbon dioxide. The catalyst also reduces NOx, converting it to nitrogen. The powertrain control module (PCM) has the ability to monitor this process using the Bank 2 HO2S 1 and the Bank 2 HO2S 2 heated oxygen sensors. The Bank 2 HO2S 1 sensor produces an output signal which indicates the amount of oxygen present in the exhaust gas entering the three-way catalytic converter. The Bank 2 HO2S 2 sensor produces an output signal which indicates the oxygen storage capacity of the catalyst; this in turn indicates the catalyst's ability to convert exhaust gases efficiently. If the catalyst is operating efficiently, the Bank 2 HO2S 1 signal will be far more active than that produced by the Bank 2 HO2S 2 sensor. If the PCM detects a level of Bank 2 HO2S 2 activity that indicates the catalyst is no longer operating efficiently, DTC P0430 will be set.

Conditions for Setting the DTC

- No related DTCs.
- The engine is operating in "closed loop".
- Engine air load is below 99%.
- Engine coolant temperature is between 70˚C (158˚F) and 120˚C (248˚F).
- Mass air flow is between 2.5 g/second and 10 g/second.
- Change in engine load is below 8%.
- Engine speed is below 200 RPM.
- Catalyst temperature is above 350˚C (662˚F).
- The PCM determines that the catalyst's oxygen storage capacity is below the acceptable threshold.
- Intake air temperature is between –20˚C (4˚F) and 70˚C (158˚F).
- Throttle angle is less than 1.5%.
- Barometric Pressure is more than 72 kPa.

Action Taken When the DTC Sets

- The PCM will illuminate the malfunction indicator lamp (MIL) the first time the fault is detected.
- The PCM will store conditions which were present when the DTC was set as Freeze Frame and in the Failure Records data.

Conditions for Clearing the MIL/DTC

- The PCM will turn the MIL "OFF" on the third consecutive trip cycle during which the diagnostic has been run and the fault condition is no longer present.
- A history DTC P0430 will clear after 40 consecutive warm-up cycles have occurred without a fault.

- DTC P0430 can be cleared by using the Tech 2 “Clear Info” function or by disconnecting the PCM battery feed.

Diagnostic Aids

Check for the following conditions:

- Poor connection at PCM – Inspect harness connectors for backed-out terminals, improper mating, broken locks, improperly formed or damaged terminals, and poor terminal-to-wire connection.
- Damaged harness – Inspect the wiring harness for damage. If the harness appears to be OK, observe the display on the Tech 2 while moving connectors and wiring harnesses related to the sensor. A change in the display will indicate the location of the fault.

Reviewing the Failure Records vehicle mileage since the diagnostic test last failed may help determine how often the condition that caused the DTC to be set occurs. This may assist in diagnosing the condition.

Test Description

Number(s) below refer to the step number(s) on the Diagnostic Chart.

7. Difficulty completing the DTC P0430 “Status This Ign”, test may be encountered in areas where test conditions cannot be maintained easily, especially in urban areas. To minimize the amount of driving required to complete the DTC P0430 “Status This Ign”, test, use the following procedure:
   - Allow the engine to warm up completely.
   - With the vehicle in “Park”, monitor mass air flow on the Tech 2 and hold part throttle to maintain a reading of over 12 g/second for at least 2 minutes. This will achieve the “warm catalyst” required for running the test.
   - Operate the vehicle in second or third gear to remain in the DTC P0430 test conditions described in “Conditions for Setting the DTC” as much as possible. If you must stop the vehicle, maintain the “warm catalyst” criteria as follows:
     – Place the vehicle in “Park” or “Neutral”,
     – Hold part throttle to maintain a mass air flow reading of over 15 g/second for the duration of the stop.

The “TWC Monitor Test Counter” displayed on the Tech 2 may be used to monitor the progress of the TWC diagnostic. To complete the TWC diagnostic with a good catalyst, the counter must be allowed to increment to 49 samples and roll over to 0 at least twice.

DTC P0430 – TWC System Low Efficiency Bank 2

Step	Action	Value(s)	Yes	No
1	Was the “On-Board Diagnostic (OBD) System Check” performed?	—	Go to *Step 2*	Go to *OBD System Check*
2	Are any other DTCs set (such as P0160)?	—	Diagnose other DTC(s) first	Go to *Step 3*
3	1. Visually and physically inspect the three-way catalytic converter for damage. Check for the following: • dents • severe discoloration caused by excessive temperatures • holes • internal rattle caused by damaged catalyst 2. Also, ensure that the three-way catalytic converter is a proper original equipment manufacturer part. Did your inspection reveal a problem?	—	Go to *Step 6*	Go to *Step 4*
4	1. Visually and physically inspect the exhaust system between the three-way catalytic converter and the rear converter flange for leaks, damage, and loose or missing hardware. 2. If a problem is found, repair as necessary. Did your inspection reveal a problem?	—	Go to *Step 7* to verify repair	Go to *Step 5*

DTC P0430 – TWC System Low Efficiency Bank 2 (Cont'd)

Step	Action	Value(s)	Yes	No
5	1. Visually and physically inspect the Bank 2 HO2S 2. 2. Ensure that the Bank 2 HO2S 2 is secure and that the pigtail and wiring harness is not contacting the exhaust pipe or is not otherwise damaged. 3. If a problem is found, repair as necessary. Did your inspection reveal a problem?	—	Go to *Step 7* to verify repair	Go to *Step 6*
6	Replace the three-way catalytic converter. NOTE: Check for conditions which may cause catalyst damage (refer to *Diagnostic Aids*). Is the action complete?	—	Go to *Step 7* to verify repair	—
7	1. Review and record the Tech 2 Failure Records data. 2. Clear DTC P0430. 3. Start the engine and allow it to warm up until the engine coolant temperature monitored on the Tech 2 is above the specified value. 4. Run the engine to maintain the specified mass air flow range for at least 6 minutes. 5. Operate the vehicle to maintain DTC P0430 test conditions (refer to *DTC Test Description* in *Diagnostic Support* for detailed instructions). 6. Using a Tech 2, monitor "DTC" info for DTC P0430 until the DTC P0430 test runs. 7. Note the test result. Does the Tech 2 indicate DTC P0430 passed this ignition?	Engine coolant temp: greater than 70˚C (158˚F). Mass air flow: between 2.5 g/second and 10 g/second	Complete repair. If a driveability symptom still exists, refer to *Symptoms*.	Check the Procedure Refer to *Diagnostic Aids*

Diagnostic Trouble Code (DTC) P0444 EVAP Purge Control Circuit Open

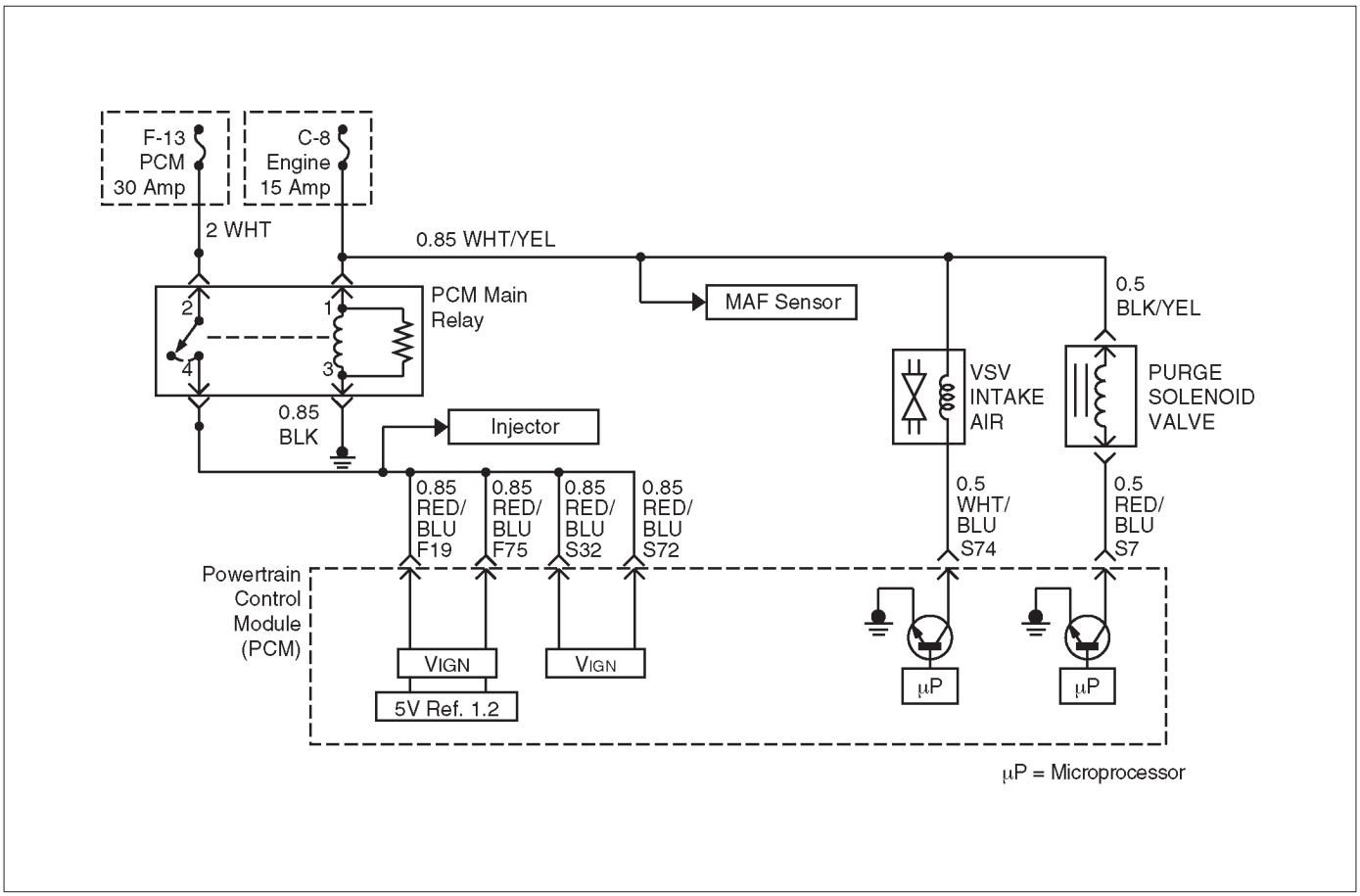

D06R200089

Circuit Description

The canister purge solenoid valve is controlled by the Power Train Control Module (PCM).The PCM monitors vacuum level via the fuel tank pressure sensor input.
At an appropriate time, the EVAP canister purge solenoid is “ON,” allowing engine vacuum to draw a small vacuum on the entire evaporative emissions system.

Conditions for setting the DTC

- The Ignition is “ON”.
- Engine is running.
- System voltage is between 11.5 volts and 16 volts.

Action Taken When the DTC Sets

- The PCM will ON the MIL after second trip with detected the fault.
- The PCM will store conditions which were present when the DTC set as Freeze Frame and in the Failure Records data.

Conditions for Clearing the MIL/DTC

- The PCM will turn the MIL “OFF” on the third consecutive trip cycle during which the diagnostic has been run and the fault condition is no longer present.
- A history DTC P0444 will clear after 40 consecutive trip cycles during which the warm up cycles have occurred without a fault.
- DTC P0444 can be cleared using the Tech 2 “Clear Info” function or by disconnecting the PCM battery feed.

Diagnostic Aids

An intermittent may be caused by the following:

- Poor connections.
- Mis routed harness.
- Rubbed through wire insulation.
- Broken wire inside the insulation.

Check for the following conditions:

- Poor connection at PCM-Inspect harness connectors for backed out terminals, improper mating, broken locks, improperly formed or damaged terminals, and poor terminal to wire connection.
- Damaged harness-Inspect the wiring harness for damage. If the harness appears to be OK, observe the EVAP purge solenoid display on the Tech 2 while moving connectors and wiring harnesses related to the sensor.

  A change in the display will indicate the location of the fault. If DTC P0444 cannot be duplicated, the information included in the Failure Records data can be useful in determined vehicle mileage since the DTC was last set.

  If it is determined that the DTC occurs intermittently, performing the DTC P0444 Diagnostic Chart may isolate the cause of the fault.

DTC P0444 EVAP Purge Control Circuit Open

Step	Action	Value(s)	Yes	No
1	Was the “On-Board (OBD) System Check” performed?	—	Go to *Step 2*	Go to *OBD System Check*
2	1. Install the Tech 2. 2. Ignition is “ON”, 3. Engine is “ON” and operate the accelerator pedal for 3 or 4 times. 4. Observe the EVAP purge solenoid reading on the Tech 2. Is the EVAP purge solenoid reading near the specified value?	More than 1%	Check the Procedure Refer to *Diagnostic Aids*	Go to *Step 3*
3	Check the power supply circuit. 1. Ignition is “OFF”. 2. Disconnect the canister purge solenoid valve. 3. Ignition is “ON”. 4. Using a DVM, measure at the EVAP purge solenoid connector between ground and voltage supply. Was the measurement near the specified value?	Battery voltage	Go to *Step 4*	Go to *Step 5*
4	Check the signal circuit for the EVAP purge solenoid. 1. Ignition is “OFF”. 2. Disconnect the canister purge solenoid valve. 3. Disconnect the PCM. 4. Check the circuit between EVAP purge solenoid connector and PCM connector. Is the problem found?	—	Go to *Step 5*	Go to *Step 6*
5	Repair the circuit as necessary. Is the action complete?	—	Verify repair	—
6	Check the canister purge solenoid valve. Using a DVM, measure resistance for purge solenoid valve connector terminal. Is the purge solenoid valve resistance within the specified values?	25–30 Ω (at 68˚F{20˚C})	Go to *Step 8*	Go to *Step 7*
7	Replace the canister purge solenoid valve. Is the action complete?	—	Verify repair	—
8	Replace the **IMPORTANT:** The replacement PCM must be programmed. Refer to *ON-Vehicle Service in Power Control Module and Sensors for procedures*. And also refer to latest Service Bulletin. Check to see if the latest software is released or not. And then Down Load the LATEST PROGRAMMED SOFTWARE to the replacement PCM. Is the action complete?	—	Verify repair	—

Diagnostic Trouble Code (DTC) P0445 EVAP Purge Control Circuit Short

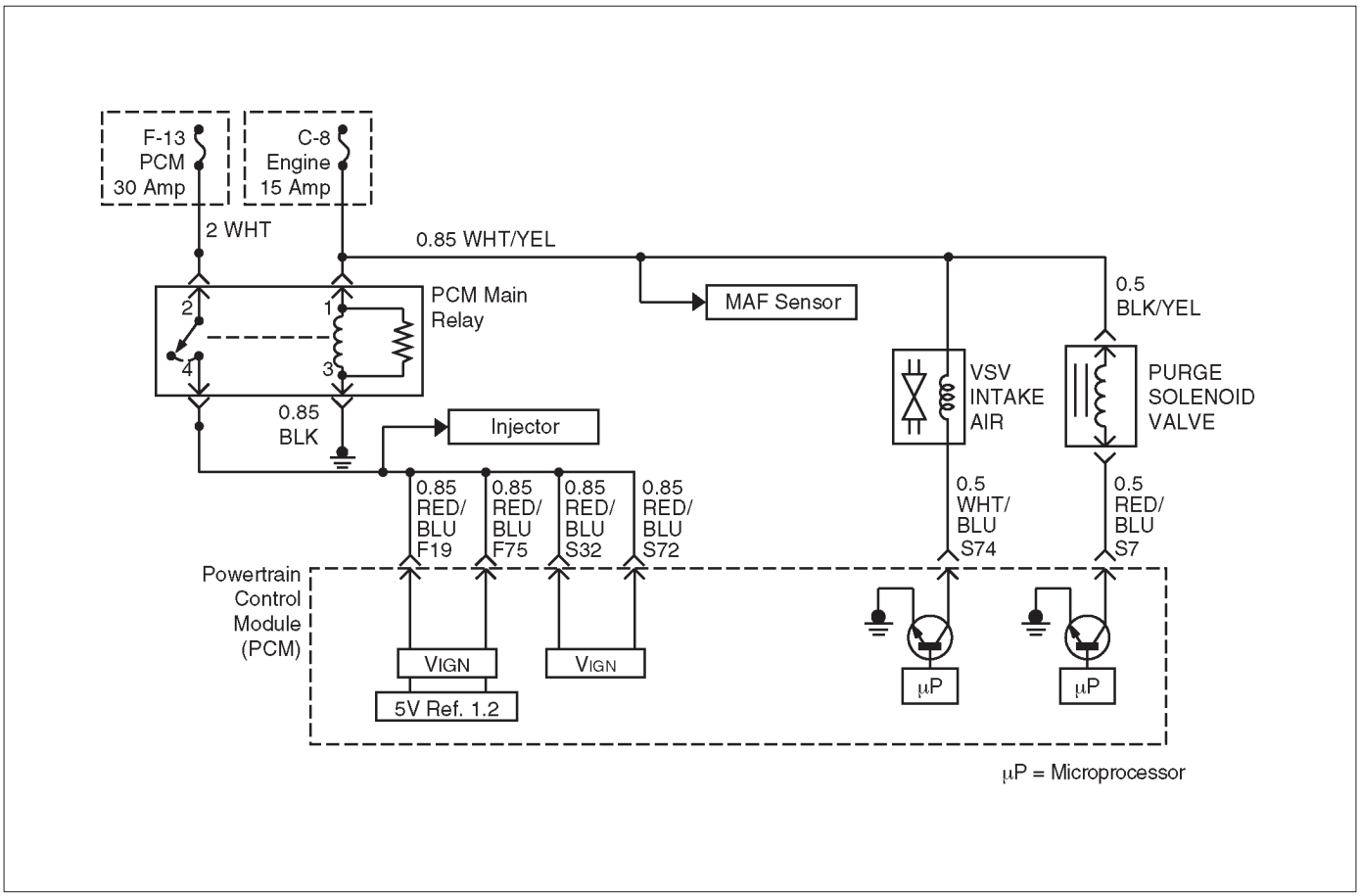

D06R200089

Circuit Description

The canister purge solenoid valve is controlled by the Power Train Control Module (PCM). The PCM monitors vacuum level via the fuel tank pressure sensor input.
At an appropriate time, the EVAP canister purge solenoid is “ON,” allowing engine vacuum to draw a small vacuum on the entire evaporative emissions system.

Conditions for setting the DTC

- The Ignition is “ON”.
- Engine is running.
- System voltage is between 11.5 volts and 16 volts.

Action Taken When the DTC Sets

- The PCM will ON the MIL after second trip with detected the fault.
- The PCM will store conditions which were present when the DTC set as Freeze Frame and in the Failure Records data.

Conditions for Clearing the MIL/DTC

- The PCM will turn the MIL “OFF” on the third consecutive trip cycle during which the diagnostic has been run and the fault condition is no longer present.
- A history DTC P0445 will clear after 40 consecutive trip cycles during which the warm up cycles have occurred without a fault.
- DTC P0445 can be cleared using the Tech 2 “Clear Info” function or by disconnecting the PCM battery feed.

Diagnostic Aids

An intermittent may be caused by the following:

- Poor connections.
- Misrouted harness.
- Rubbed through wire insulation.
- Broken wire inside the insulation.

Check for the following conditions:

- Poor connection at PCM-Inspect harness connectors for backed out terminals, improper mating, broken locks, improperly formed or damaged terminals, and poor terminal to wire connection.
- Damaged harness-Inspect the wiring harness for damage. If the harness appears to be OK, observe the EVAP purge solenoid display on the Tech 2 while moving connectors and wiring harnesses related to the sensor.

  A change in the display will indicate the location of the fault. If DTC P0445 cannot be duplicated, the information included in the Failure Records data can be useful in determined vehicle mileage since the DTC was last set.

  If it is determined that the DTC occurs intermittently, performing the DTC P0445 Diagnostic Chart may isolate the cause of the fault.

DTC P0445 EVAP Purge Control Circuit Short

Step	Action	Value(s)	Yes	No
1	Was the “On-Board (OBD) System Check” performed?	—	Go to *Step 2*	Go to *OBD System Check*
2	1. Install the Tech 2. 2. Ignition is “ON”, 3. Observe the EVAP purge solenoid reading on the Tech 2. Is the EVAP purge solenoid reading near the specified value?	0%	Check the Procedure Refer to *Diagnostic Aids*	Go to *Step 3*
3	Check the signal circuit for canister purge solenoid valve. 1. Ignition is “OFF”. 2. Disconnect the canister purge solenoid valve. 3. Disconnect the PCM. 4. Check the circuit between EVAP purge solenoid connector and PCM connector. Is the problem found?	—	Go to *Step 4*	Go to *Step 5*
4	Repair the circuit as necessary. Is the action complete?	—	Verify repair	—
5	Check the canister purge solenoid valve. Using a DVM, measure resistance for purge solenoid valve connector terminal. Is the purge solenoid valve resistance within the specified values?	25–30 (at 68˚F{20˚C})	Go to *Step 7*	Go to *Step 6*
6	Replace the canister purge solenoid valve. Is the action complete?	—	Verify repair	—
7	Replace the PCM. **IMPORTANT:** The replacement PCM must be programmed. Refer to *ON-Vehicle Service in Power Control Module and Sensors for procedures.* And also refer to latest Service Bulletin. Check to see if the latest software is released or not. And then Down Load the LATEST PROGRAMMED SOFTWARE to the replacement PCM. Is the action complete?	—	Verify repair	—

Diagnostic Trouble Code (DTC) P0502 VSS Circuit Low Input

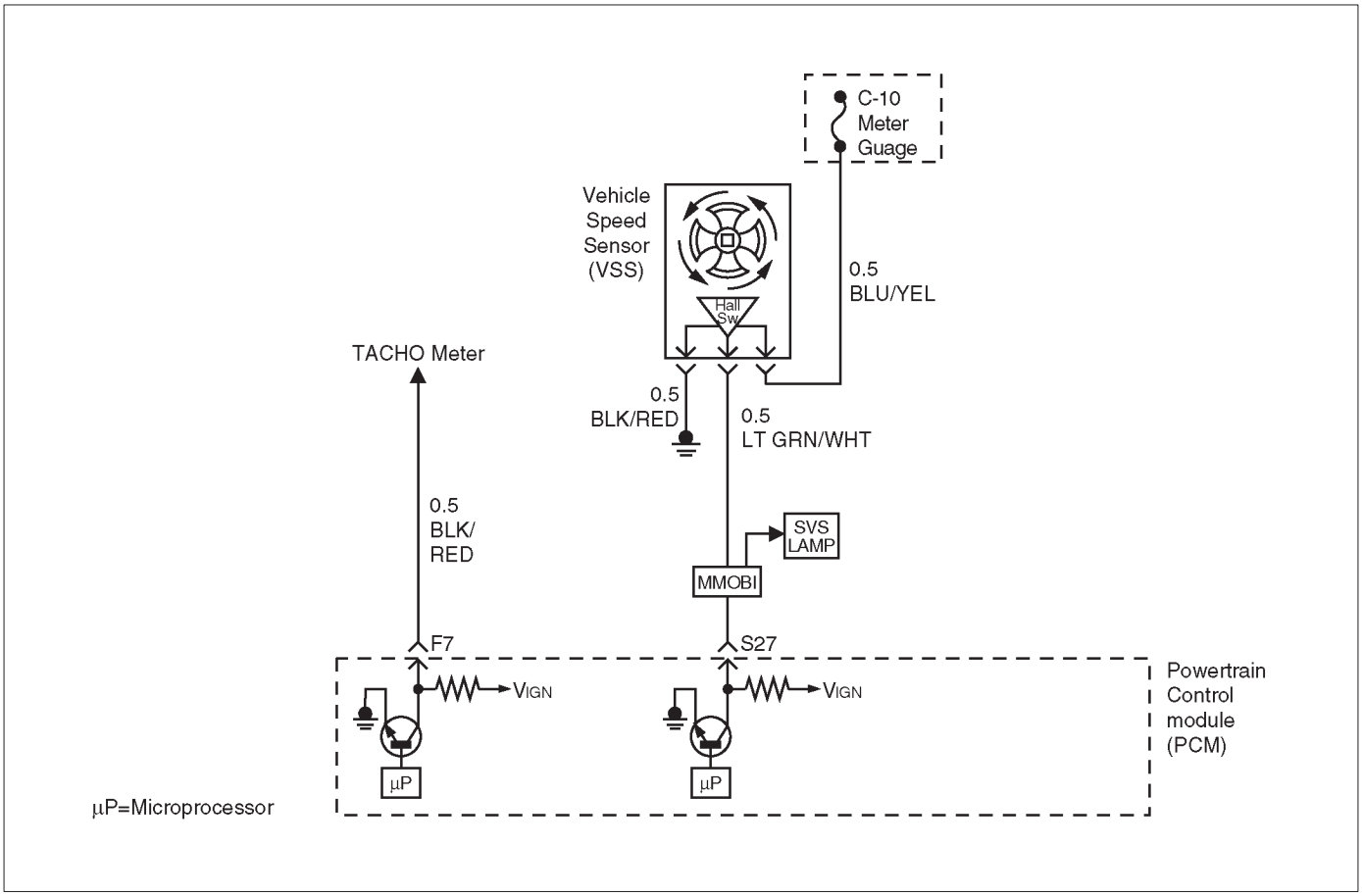

D06R200016

Circuit Description

The vehicle speed sensor has a magnet rotated by the transmission output shaft. Attached to the sensor is a hall effect circuit the interacts with the magnetic field treated by the rotating magnet. A 12-volt operating supply for the speed sensor hall circuit is supplied from the meter fuse. The VSS pulses to ground the 9-volt signal sent from the powertrain control module (PCM) on the reference circuit. The PCM interprets vehicle speed by the number of pulses to ground per second on the reference circuit.

Conditions for Setting the DTC

- Engine is running.
- Engine speed is between 1800 RPM and 2500 RPM.
- Throttle angle is between 10% and 40%.
- Engine load is greater than 50 kPa.
- PCM detects no VSS signal for 12.5 seconds over a period of 15 seconds.

Action Taken When the DTC Sets

- The PCM will ON the MIL after second trip with detected the fault.
- The PCM will store conditions which were present when the DTC was set as Freeze Frame and in the Failure Records data.

Conditions for Clearing the MIL/DTC

- The PCM will turn the MIL “OFF” on the third consecutive trip cycle during which the diagnostic has been run and the fault condition is no longer present.
- A history DTC P0502 will clear after 40 consecutive warm-up cycles have occurred without a fault.
- DTC P0502 can be cleared by using the Tech 2 “Clear Info” function or by disconnecting the PCM battery feed.

Test Description

Number(s) below refer to the step number(s) on the Diagnostic Chart.

10. To avoid backprobing the VSS and possibly damaging a seal or terminal, the VSS output can be tested at the point where the transmission harness connects to the engine harness. Power and ground are applied by jumpers to the VSS through the connectors which are located to the rear of the air cleaner assembly. The VSS signal is monitored with a DVM as the rear driveshaft turns. The wheels can be turned to rotate the driveshaft, or in 2-wheels-drive vehicles the driveshaft can be turned directly.

DTC P0502 – VSS Circuit Low Input

Step	Action	Value(s)	Yes	No
1	Was the “On-Board Diagnostic (OBD) System Check” performed?	—	Go to *Step 2*	Go to *OBD System Check*
2	Does the speedometer work?	—	Go to *Step 10*	Go to *Step 3*
3	1. Disconnect the VSS connector. 2. Ignition “ON”. 3. Using a test light to battery +, probe the connector ground wire. Did the light illuminate?	—	Go to *Step 5*	Go to *Step 4*
4	Repair the sensor ground. Is the action complete?	—	Verify repair	—
5	1. Ignition “ON”, sensor disconnected. 2. Using a DVM, measure at the VSS connector between ground and voltage supply. Was the measurement near the specified value?	Battery voltage	Go to *Step 7*	Go to *Step 6*
6	Repair the open or short to ground which may have blown the meter fuse. Is the action complete?	—	Verify repair	—
7	1. Ignition “ON”, VSS disconnected. 2. Using a DVM, measure at the VSS connector between ground and the wire from the speedometer. Was the measurement near the specified value?	7.5-8 V	Go to *Step 9*	Go to *Step 8*
8	Check for an open or short circuit between the speedometer and the VSS. Was an open or short circuit located?	—	Verify repair	Go to *Step 9*
9	Replace the speedometer. Is the action complete?	—	Verify repair	—

DTC P0502 – VSS Circuit Low Input (Cont'd)

Step	Action	Value(s)	Yes	No
10	1. Ignition "OFF". 2. Disconnect the MAF sensor. The connector attaches the VSS wires from the transmission harness to the left-side engine harness. 3. Disconnect the black 16-way connector. 4. Select a terminal adapter from kit J 35616 that can be used with a jumper to supply B+ to the blue wire with a yellow tracer (transmission side of the connector). 5. Use another terminal adapter to attach a voltmeter to the light-green wire with a white tracer (next to the wire in the previous step.) 6. Disconnect the blue connector next to the black 16-way connector, and locate the black/red tracer wire at one corner of the blue connector. The black/red wire is the VSS ground. Use a terminal adapter to attach a jumper to ground to the black/red VSS ground wire at the transmission side of the blue connector. 7. Raise the rear wheels off the ground with transmission in neutral. Does the DVM toggle back and forth between 0.6 V and 10 V as the wheels (and driveshaft) are rotated?	—	Go to *Step 11*	Go to *Step 12*
11	Replace the VSS. Is the action complete?	—	Verify repair	—
12	Check for an open or short between the PCM and the speedometer. Was a problem found?	—	Verify repair	Go to *Step 13*
13	Replace the PCM. **IMPORTANT:** The replacement PCM must be programmed. Refer to *On-Vehicle Service* in *Powertrain Control Module and Sensors* for procedures. And also refer to latest Service Bulletin. Check to see if the Latest software is released or not. And then Down Load the LATEST PROGRAMMED SOFTWARE to the replacement PCM. Is the action complete?	—	Verify repair	—

Diagnostic Trouble Code (DTC) P0506 Idle Air Control System Low RPM

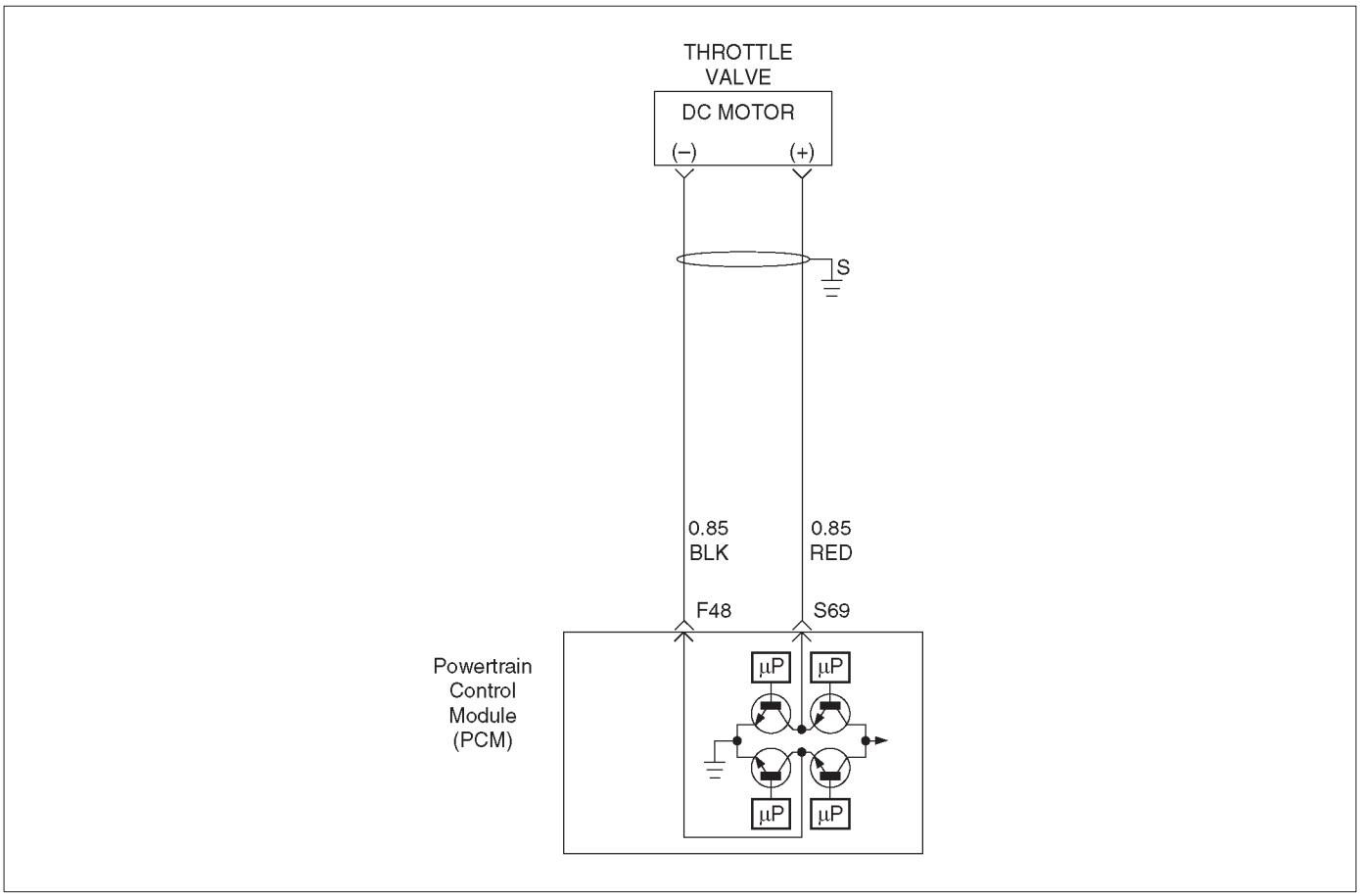

D06RY00158

Circuit Description

The powertrain control module (PCM) controls engine speed by adjusting the position of the throttle control valve (DC motor). The throttle motor is a DC motor driven by one coil. The PCM applies current to the DC motor coil in position (%) to adjustment the throttle valve into a passage in the throttle body to air flow. This method allows highly accurate control of engine speed and quick response to changes in engine load.

If the PCM detects a condition where too low of an idle speed is present and the PCM is unable to adjust idle speed by increasing the throttle position, DTC P0506 will set, indicating a problem with the idle control system.

Conditions for Setting the DTC

- No TPS, VSS, ECT, EGR, MAF, MAP, IAT, low voltage, fuel system, canister purge, injector control, or ignition control DTCs are set.
- MAP is less than 60 kPa.
- Canister purge duty cycle is above 10%.
- Engine running time is more than 125 seconds.
- Vehicle speed is less than 1 mph.
- Engine coolant temperature (ECT) is above 50˚C (122˚F).
- Ignition voltage is between 9.5 volts and 16.7 volts.
- The throttle is closed.
- EVAP purge duty cycle more than 10%.
- All conditions are met for 10 seconds.
- Barometric pressure is more than 74.5 kPa.
- Engine speed is more than 100-200 RPM lower than desired idle based upon coolant temperature.

Action Taken When the DTC Sets

- The PCM will illuminate the malfunction indicator lamp (MIL) after the second consecutive trip in which the fault is detected.
- The PCM will store conditions which were present when the DTC was set as Freeze Frame and in the Failure Records data.

Conditions for Clearing the MIL/DTC

- DTC P0506 can be cleared by using the Tech 2 “Clear Info” function or by disconnecting the PCM battery feed.

Diagnostic Aids

Check for the following conditions:

- Poor connection at PCM or throttle DC motor – Inspect harness connectors for backed-out terminals, improper mating, broken locks, improperly formed or damaged terminals, and poor terminal-to-wire connection.
- Damaged harness – Inspect the wiring harness for damage.

- Restricted air intake system – Check for a possible collapsed air intake duct, restricted air filter element, or foreign objects blocking the air intake system.
- Throttle body – Check for objects blocking the ETC passage or throttle bore, excessive deposits in the ETC passage and on the ETC position, and excessive deposits in the throttle bore and on the throttle plate.
- Large vacuum leak – Check for a condition that causes a large vacuum leak, such as an incorrectly installed or faulty PCV valve or brake booster hose disconnected.

Reviewing the Failure Records vehicle mileage since the diagnostic test last failed may help determine how often the condition that caused the DTC to be set occurs. This may assist in diagnosing the condition.

DTC P0506 – Idle Air Control System Low RPM

Step	Action	Value(s)	Yes	No
1	Was the "On-Board (OBD) System Check" performed?	—	Go to *Step 2*	Go to *OBD System Check*
2	Visually/physically inspect for the following conditions: ● Throttle body tampering. ● Restricted intake throttle system. Check for a possible collapsed air intake duct, restricted air filter element, or foreign objects blocking the air intake system. ● Throttle body: Check for objects blocking the throttle passage or throttle bore, excessive deposits in the throttle passage and on the throttle valve, and excessive deposits in the throttle bore and on the throttle plate. ● Throttle body with lever: Check for objects send round the throttle spring lever that lever is smooth movement, and spring lever has not excessive play Do any of the above require a repair?	—	Refer to *appropriate section for on–vehicle service*	Go to *Step 3*
3	Visually/physically inspect for the following conditions: ● Acceleration pedal tampering. ● Acceleration pedal : Check for objects blocking the spring or pedal arm. ● Acceleration pedal : Check for objects move the acceleration pedal that pedal is smooth movement, and acceleration pedal arm has not excessive play. Do any of the above require a repair?	—	Refer to *appropriatesection for on-vehicle service*	Go to *Step 4*
4	1. Check for a poor connection at the throttle body harness connector. 2. Check for a poor connection at the acceleration position sensor harness connector. 3. If a problem is found, replace faulty terminals as necessary. Was a problem found?	—	Verify repair	Go to *Step 5*
5	Check the following circuits for an open, short to voltage, short to ground, or poor connection at the PCM: ● Throttle position sensor 1 circuit. ● Throttle position sensor 2 circuit. ● Throttle DC motor circuit. ● Throttle position sensor resistance. ● Throttle DC motor resistance. ● If a problem is found, repair as necessary. Was a problem found?	Vcc-GND 1–7kΩ SIG-DND change resistance0.3 – 100Ω	Verify repair	Go to *Step 6*

DTC P0506 – Idle Air Control System Low RPM (Cont'd)

Step	Action	Value(s)	Yes	No
6	Replace the throttle valve. Is the action complete?	—	Go to *Step 7*	—
7	1. Check the following circuits for an open, short to voltage, short to ground, or poor connection at the PCM: Accelerator position sensor 1 circuit. Accelerator position sensor 2 circuit. Sensor resistance. 2. If a problem is found, repair as necessary. Was a problem found?	Vcc-GND 4–6kΩ SIG-DND change resistance	Verify repair	Go to *Step 8*
8	Replace the acceleration position sensor. Is the action complete?	—	Go to *Step 9*	—
9	Following below the DTCs stored: P1125, P1290, P1295, P1299	—	Go to *applicable DTC table*	Go to *Step 10*
10	Following below the DTCs stored:P1514, P1515, P1516, P1523, P1271, P1272, P1273	—	Go to *applicable DTC table*	Go to *Step 11*
11	Replace the PCM. **IMPORTANT:** The replacement PCM must be programmed. Refer to *On-Vehicle Service* in *Powertrain Control Module and Sensors* for procedures. And also refer to latest Service Bulletin. Check to see if the Latest software is released or not. And then Down Load the LATEST PROGRAMMED SOFTWARE to the replacement PCM. Is the action complete?	—	Verify repair	—

Diagnostic Trouble Code (DTC) P0507 Idle Air Control System High RPM

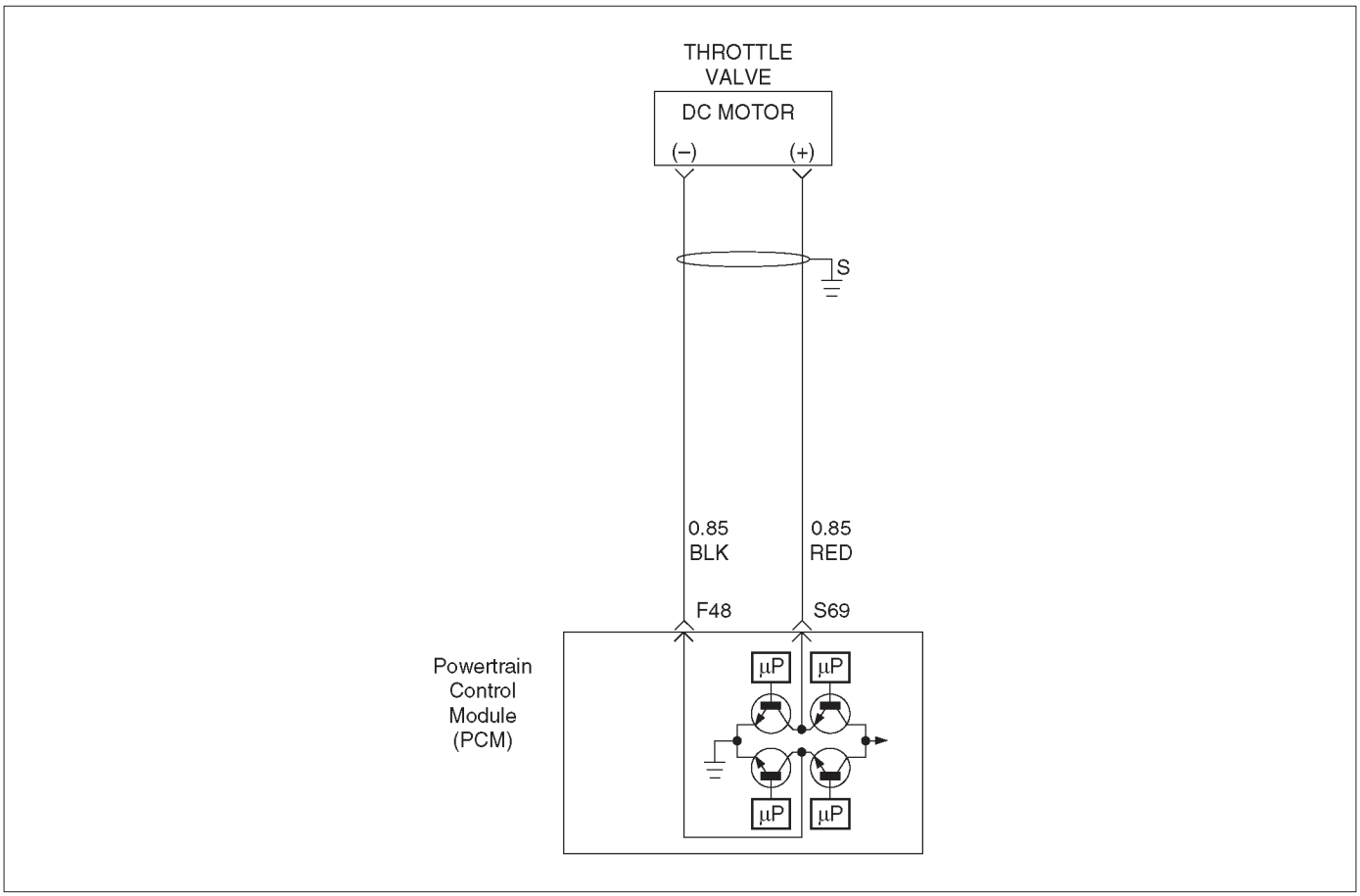

D06RY00158

Circuit Description

The powertrain control module (PCM) controls engine speed by adjusting the position of the throttle control valve (DC motor). The throttle motor is a DC motor driven by one coil. The PCM applies current to the DC motor coil in position (%) to adjustment the throttle valve into a passage in the throttle body to air flow. This method allows highly accurate control of engine speed and quick response to changes in engine load.

If the PCM detects a condition where too high of an idle speed is present and the PCM is unable to adjust idle speed by increasing the throttle position, DTC P0507 will set, indicating a problem with the idle control system.

Conditions for Setting the DTC

- No TPS, VSS, ECT, EGR, MAF, MAP, IAT, low voltage, fuel system, canister purge, injector control or ignition control DTCs are set.
- Barometric pressure is above 75 kPa.
- Canister purge duty cycle is above 10%.
- Engine running time is more than 125 seconds.
- Vehicle speed is less than 1 mph.
- Engine coolant temperature (ECT) is above 50˚C (122˚F).
- Ignition voltage is between 9.5 volts and 16.7 volts.
- The throttle is closed.
- EVAP purge duty cycle is more than 10%.
- All conditions are met for 10 seconds.
- Engine speed is more than 100-200 RPM higher than desired idle based upon coolant temperature.
- Barometric pressure is more than 74.5 kPa.

Action Taken When the DTC Sets

- The PCM will illuminate the malfunction indicator lamp (MIL) after the second consecutive trip in which the fault is detected.
- The PCM will store conditions which were present when the DTC was set as Freeze Frame and in the Failure Records data.

Conditions for Clearing the MIL/DTC

- The PCM will turn the MIL “OFF” on the third consecutive trip cycle during which the diagnostic has been run and the fault condition is no longer present.
- A history DTC P0507 will clear after 40 consecutive warm-up cycles have occurred without a fault.
- DTC P0507 can be cleared by using the Tech 2 “Clear Info” function or by disconnecting the PCM battery feed.

Diagnostic Aids

Check for the following conditions:

- Poor connection at PCM or throttle DC motor – Inspect harness connectors for backed-out terminals, improper mating, broken locks, improperly formed or

damaged terminals, and poor terminal-to-wire connection.

- Damaged harness – Inspect the wiring harness for damage.
- Vacuum leak – Check for a condition that causes a vacuum leak, such as disconnected or damaged hoses, leaks at EGR valve and EGR pipe to intake manifold, leak at the throttle body, a faulty or incorrectly installed PCV valve, leaks at the intake manifold, etc.
- Throttle body – Check for sticking throttle plate. Also inspect the air passage for deposits or objects which will not allow the ETC position to fully extend or properly seat.

If DTC P0507 cannot be duplicated, reviewing the Failure Records vehicle mileage since the diagnostic test last failed may help determine how often the condition that caused the DTC to be set occurs. This may assist in diagnosing the condition.

DTC P0507 – Idle Air Control System High RPM

Step	Action	Value(s)	Yes	No
1	Was the “On-Board (OBD) System Check” performed?	—	Go to *Step 2*	Go to *OBD System Check*
2	Visually/physically inspect for the following conditions: ● Throttle body tampering. ● Restricted intake throttle system. Check for a possible collapsed air intake duct, restricted air filter element, or foreign objects blocking the air intake system. ● Throttle body: Check for objects blocking the throttle passage or throttle bore, excessive deposits in the throttle passage and on the throttle valve, and excessive deposits in the throttle bore and on the throttle plate. ● Throttle body with lever: Check for objects send round the throttle spring lever that lever is smooth movement, and spring lever has not excessive play Do any of the above require a repair?	—	Refer to *appropriate section for on-vehicle service*	Go to *Step 4*
3	Visually/physically inspect for the following conditions: ● Accelerator pedal tampering. ● Accelerator pedal : Check for objects blocking the spring or pedal arm. ● Accelerator pedal : Check for objects move the accelerator pedal that pedal is smooth movement, and accelerator pedal arm has not excessive play. Do any of the above require a repair?	—	Refer to *appropriate section for on-vehicle service*	Go to *Step 3*
4	1. Check for a poor connection at the throttle body harness connector. 2. Check for a poor connection at the accelerator position sensor harness connector. 3. If a problem is found, replace faulty terminals as necessary. Was a problem found?	—	Verify repair	Go to *Step 5*

DTC P0507 – Idle Air Control System High RPM (Cont'd)

Step	Action	Value(s)	Yes	No
5	Check the following circuits for an open, short to voltage, short to ground, or poor connection at the PCM: ● Throttle position sensor 1 circuit. ● Throttle position sensor 2 circuit. ● Throttle DC motor circuit. ● Throttle position sensor resistance. ● Throttle DC motor resistance. ● If a problem is found, repair as necessary. Was a problem found?	Vcc-GND 1–7kΩ SIG-GND change resistance 0.3 – 100Ω	Verify repair	Go to *Step 6*
6	Replace the throttle valve. Is the action complete?	—	Go to *Step 7*	—
7	1. Check the following circuits for an open, short to voltage, short to ground, or poor connection at the PCM: ● Accelerator position sensor 1 circuit. ● Accelerator position sensor 2 circuit. ● Sensor 3 circuit. ● Sensor resistance. 2. If a problem is found, repair as necessary. Was a problem found?	Vcc-GND 4–6kΩ SIG-GND change resistance	Verify repair	Go to *Step 8*
8	Replace the accelerator position sensor. Is the action complete?	—	Go to *Step 9*	—
9	Stored DTCs: P1125, P1290, P1295, P1299	—	Go to *applicable DTC table*	Go to *Step 10*
10	Stored DTCs: P1514, P1515, P1516, P1523, P1271, P1272, P1273	—	Go to *applicable DTC table*	Go to *Step 11*
11	Replace the PCM. **IMPORTANT:** The replacement PCM must be programmed. Refer to *On-Vehicle Service* in *Powertrain Control Module and Sensors* for procedures. And also refer to latest Service Bulletin. Check to see if the Latest software is released or not. And then Down Load the LATEST PROGRAMMED SOFTWARE to the replacement PCM. Is the action complete?	—	Verify repair	—

Diagnostic Trouble Code (DTC) P0562 System Voltage Low

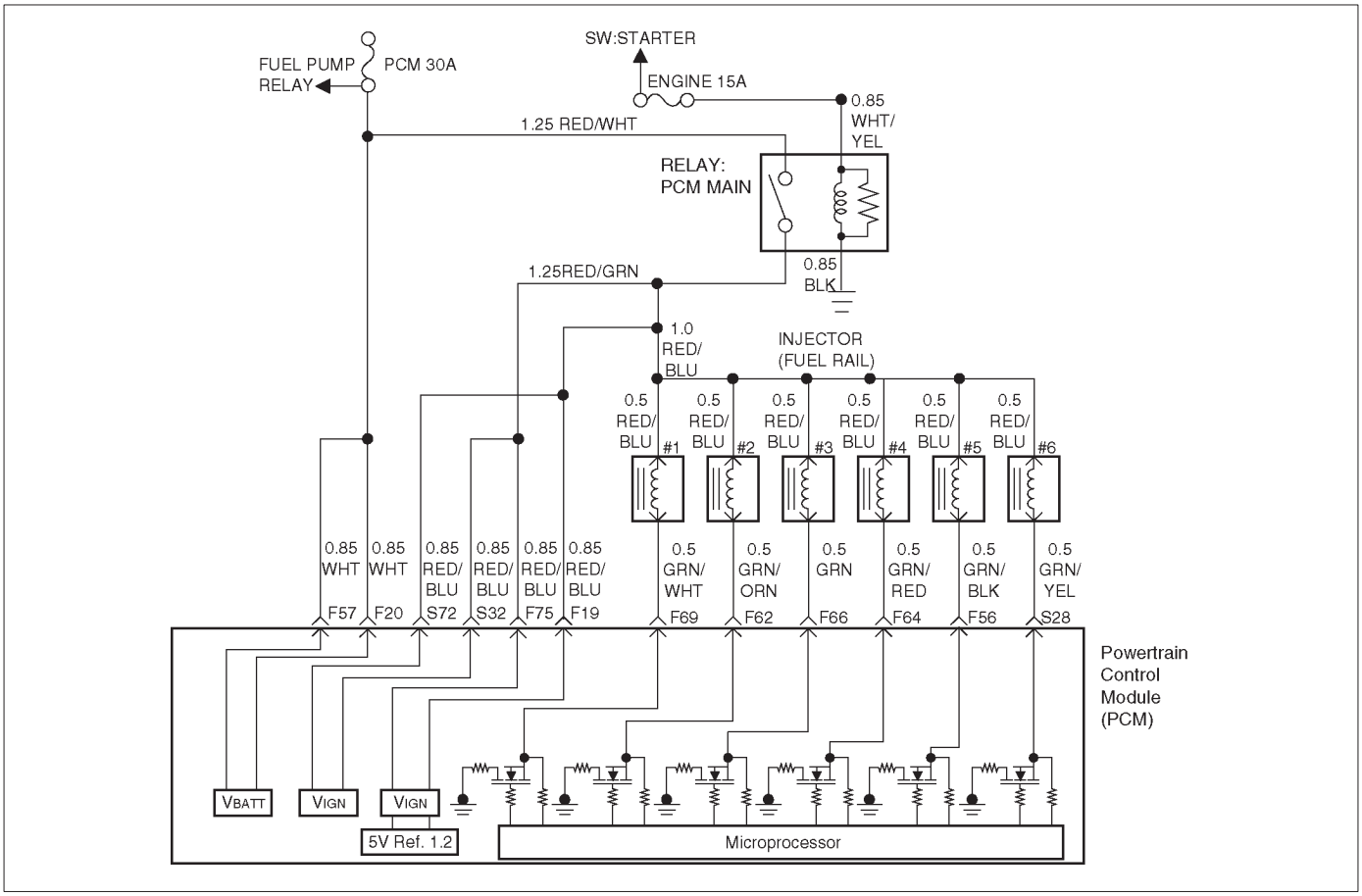

D06R200017

Circuit Description

The powertrain control module (PCM) monitors the system voltage on the ignition feed terminal to the PCM. A system voltage DTC will set whenever the voltage is below a calibrated value.

Conditions for Setting the DTC

- Ignition “ON”.
- System voltage is below 11.5 volts for 40 seconds.

Action Taken When the DTC Sets

- The PCM will not illuminate the malfunction indicator lamp (MIL).
- The PCM will store as Failure Records conditions which were present when the DTC was set. This information will not be stored as Freeze Frame data.

Conditions for Clearing the MIL/DTC

- A history DTC P0562 will clear after 40 consecutive warm-up cycles have occurred without a fault.
- DTC P0562 can be cleared by using the Tech 2 “Clear Info” function or by disconnecting the PCM battery feed.

Diagnostic Aids

If the DTC sets when an accessory is operated, check for a poor connection or excessive current draw.

DTC P0562 – System Voltage Low

Step	Action	Value(s)	Yes	No
1	Was the “On-Board Diagnostic (OBD) System Check” performed?	—	Go to *Step 2*	Go to *OBD System Check*
2	Using a DVM, measure the battery voltage at the battery. Is the battery voltage greater than the specified value?	11.5 V	Go to *Step 3*	Charge battery, then go to *Step 3*
3	1. Install a Tech 2. 2. Select “Ignition Volts” on the Tech 2. 3. Start the engine and raise the engine speed to the specified value. 4. Load the electrical system by turning on the headlights, high blower, etc. Is the ignition voltage approximately equal to the specified value?	2000 RPM 12.8-14.1 V	Go to *Step 4*	Go to *Starting/Charging*
4	1. Ignition “OFF”. 2. Disconnect the PCM connector at the PCM. 3. Using a DVM, measure the battery voltage at the PCM connector F-20 and F-57. Is it approximately equal to battery voltage?	—	Go to *Step 5*	Go to *Step 6*
5	1. Check for faulty connections at the PCM harness terminals. 2. Repair as necessary. Was a repair necessary?	—	Verify repair	Go to *Step 7*
6	Check for an open battery feed circuit to the PCM. Is the action complete?	—	Verify repair	Go to *Step 7*
7	Replace the PCM. **IMPORTANT:** The replacement PCM must be programmed. Refer to *On-Vehicle Service* in *Powertrain Control Module and Sensors* for procedures. And also refer to latest Service Bulletin. Check to see if the Latest software is released or not. And then Down Load the LATEST PROGRAMMED SOFTWARE to the replacement PCM. Is the action complete?	—	Verify repair	—

Diagnostic Trouble Code (DTC) P0563 System Voltage High

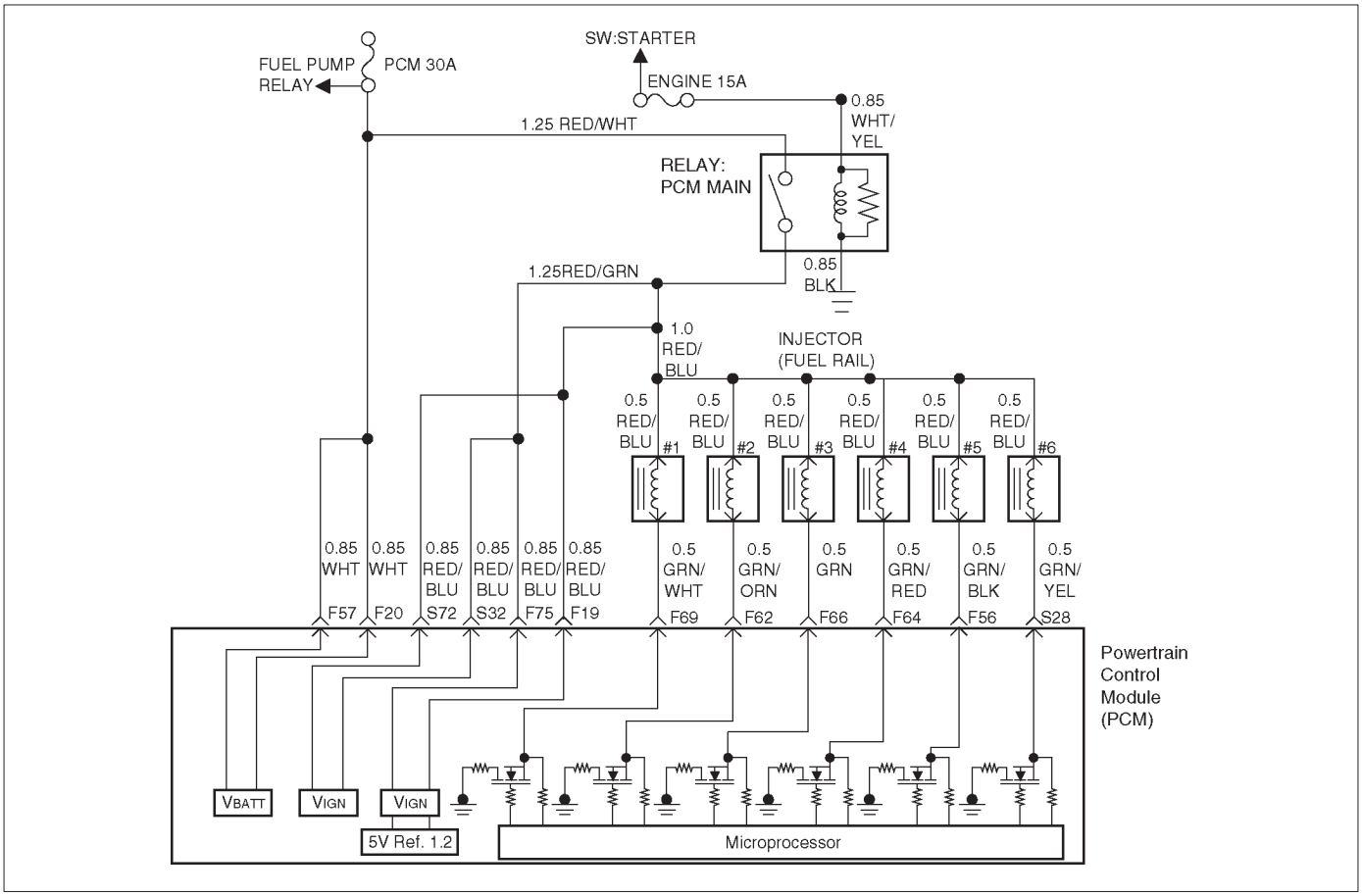

D06R200017

Circuit Description

The powertrain control module (PCM) monitors the system voltage on the ignition feed terminals to the PCM. A system voltage DTC will set whenever the voltage is above a calibrated value.

Conditions for Setting the DTC

- Ignition “ON”.
- System voltage is above 16 volts for 40 seconds.

Action Taken When the DTC Sets

- The PCM will ON the MIL after second trip with detected the fault.
- The PCM will store conditions which were present when the DTC was set as Freeze Frame and in the Failure Records data.

Conditions for Clearing the MIL/DTC

- A history DTC P0563 will clear after 40 consecutive warm-up cycles have occurred without a fault.
- DTC P0563 can be cleared by using the Tech 2 “Clear Info” function or by disconnecting the PCM battery feed.

Diagnostic Aids

If the DTC sets when an accessory is operated, check for a poor connection or excessive current draw.

DTC P0563 – System Voltage High

Step	Action	Value(s)	Yes	No
1	Was the “ON-Board Diagnostic (OBD) System Check” performed?	—	Go to *Step 2*	Go to *OBD System Check*
2	Using a DVM, measure the battery voltage at the battery. Is the battery voltage less than the specified value?	11.5 V	Go to *Step 3*	Go to *Step 4*
3	1. Charge the battery and clean the battery terminals. 2. Clean the battery ground cable connection if corrosion is indicated. Is the battery voltage less than the specified value?	11.5 V	Replace battery	Go to *Step 4*
4	1. Turn “OFF” all the accessories. 2. Install a Tech 2. 3. Select the ignition voltage parameter on the Tech 2. 4. Start the engine and raise the engine RPM to the specified value. Is the voltage more than 2.5 volts greater than the measurement taken in step 2 or 3?	2000 RPM	Go to *Starting/ Charging*	Go to *Step 5*
5	Replace the PCM. **IMPORTANT:** The replacement PCM must be programmed. Refer to *On-Vehicle Service* in *Powertrain Control Module and Sensors* for procedures. And also refer to latest Service Bulletin. Check to see if the Latest software is released or not. And then Down Load the LATEST PROGRAMMED SOFTWARE to the replacement PCM. Is the action complete?	—	Verify repair	—

Diagnostic Trouble Code (DTC)
P0565 Cruise Main Switch Circuit Error

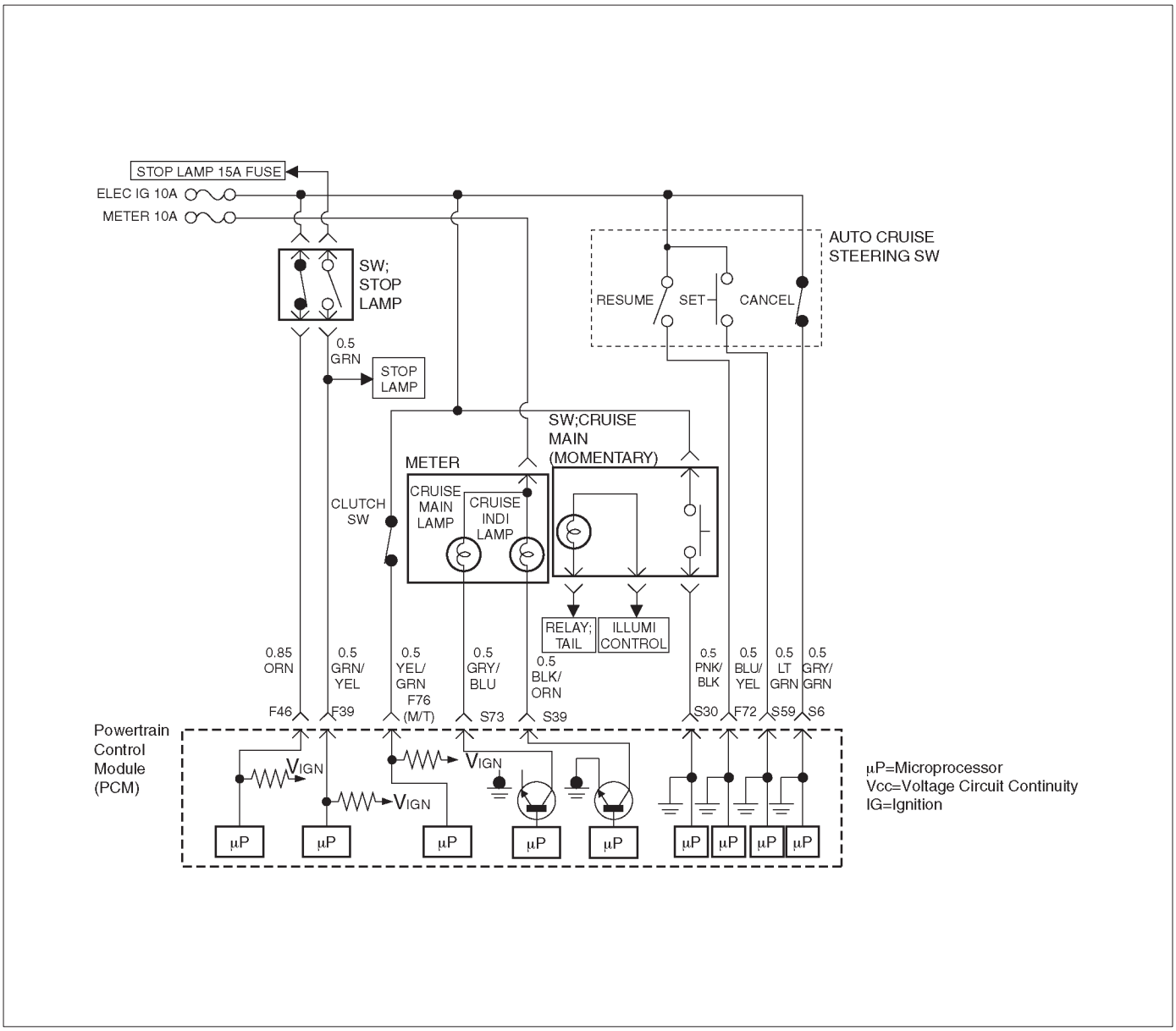

D06R200090

Circuit Description

The cruise control keeps the vehicle running at a fixed speed until a signal canceling this fixed speed is received. When the main switch is turned on with the vehicle in the running mode, the battery voltage is applied to power train control module(PCM). When a signal from the control switch is input to PCM while the vehicle is in this state, the cruise control system is activated. Also, while the PCM is operating, the “CRUISE MAIN” indicator light in the meter assembly lights up.

Conditions for setting the DTC

- The Ignition is “ON”.
- Engine is running.
- System voltage is between 11.5 volts and 16 volts.
- The switch contact remains on for 15 seconds or more.
- Noises are generated by poor switch contact 60 times within 1 second.

Action Taken When the DTC Sets

- The PCM will not illuminate the malfunction indicator lamp (MIL).
- The PCM will store conditions which were present when the DTC was set in the Failure Records data only.

Conditions for Clearing the MIL/DTC

- The PCM will turn the MIL “OFF” on the third consecutive trip cycle during which the diagnostic has been run and the fault condition is no longer present.
- A history DTC P0565 will clear after 40 consecutive trip cycle during which the warm up cycles have occurred without a fault.
- DTC P0565 can be cleared using the Tech 2 “Clear Info” function or by disconnecting the PCM battery feed.

Diagnostic Aids

An intermittent may be caused by the following:

- Poor connections.
- Mis routed harness.
- Rubbed through wire insulation.
- Broken wire inside the insulation.

Check for the following conditions:

- Poor connection at PCM-Inspect harness connectors for backed out terminals, improper mating, broken locks, improperly formed or damaged terminals, and poor terminal to wire connection.
- Damaged harness-Inspect the wiring harness for damage. If the harness appears to be OK, observe the cruise main switch display on the Tech 2 while moving connectors and wiring harnesses related to the sensor.

A change in the display will indicate the location of the fault.

If DTC P0565 cannot be duplicated, the information included n the Failure Records data can be useful in determined vehicle mileage since the DTC was last set.

If it is determined that the DTC occurs intermittently, performing the DTC P0565 Diagnostic Chart may isolate the cause of the fault.

DTC P0565 Cruise Main Switch Circuit Error

Step	Action	Value(s)	Yes	No
1	Was the “On-Board (OBD) System Check” performed?	—	Go to *Step 2*	Go to *OBD System Check*
2	1. Ignition “ON,” engine “ON.” 2. Observe the cruise main lamp in the switch. Is the cruise main lamp “ON?”	—	Go to *Step 3*	Go to *Step 4*
3	1. Push the auto cruise main switch. 2. Observe the cruise main lamp in the switch. Is the cruise main lamp “OFF?”	—	Check the Procedure Refer to *Diagnostic Aids*	Go to *Step 4*
4	Check the signal circuit for auto cruise main switch. 1. Ignition is “OFF”. 2. Disconnect the powertrain control module(PCM). 3. Disconnect the cruise main switch. Check for an open cruise main switch signal circuit between the PCM and the cruise main switch. Is a problem found?	—	Go to *Step 5*	Go to *Step 6*
5	Repair the auto cruise main switch signal circuit. Is the action complete?	—	Verify repair	—
6	Check the auto cruise main switch and lamp circuit. Is a problem found?	—	Go to *Step 7*	Go to *Step 8*
7	Repair or replace the auto cruise main switch and lamp circuit. Is the action complete?	—	Verify repair	—
8	Replace the PCM. **IMPORTANT:** The replacement PCM must be programmed. Refer to *ON-Vehicle Service in Power Control Module and Sensors for procedures.* And also refer to latest Service Bulletin. Check to see if the latest software is released or not. And then Down Load the LATEST PROGRAMMED SOFTWARE to the replacement PCM. Is the action complete?	—	Verify repair	—

Diagnostic Trouble Code (DTC)
P0566 Cruise Cancel Switch Circuit Error

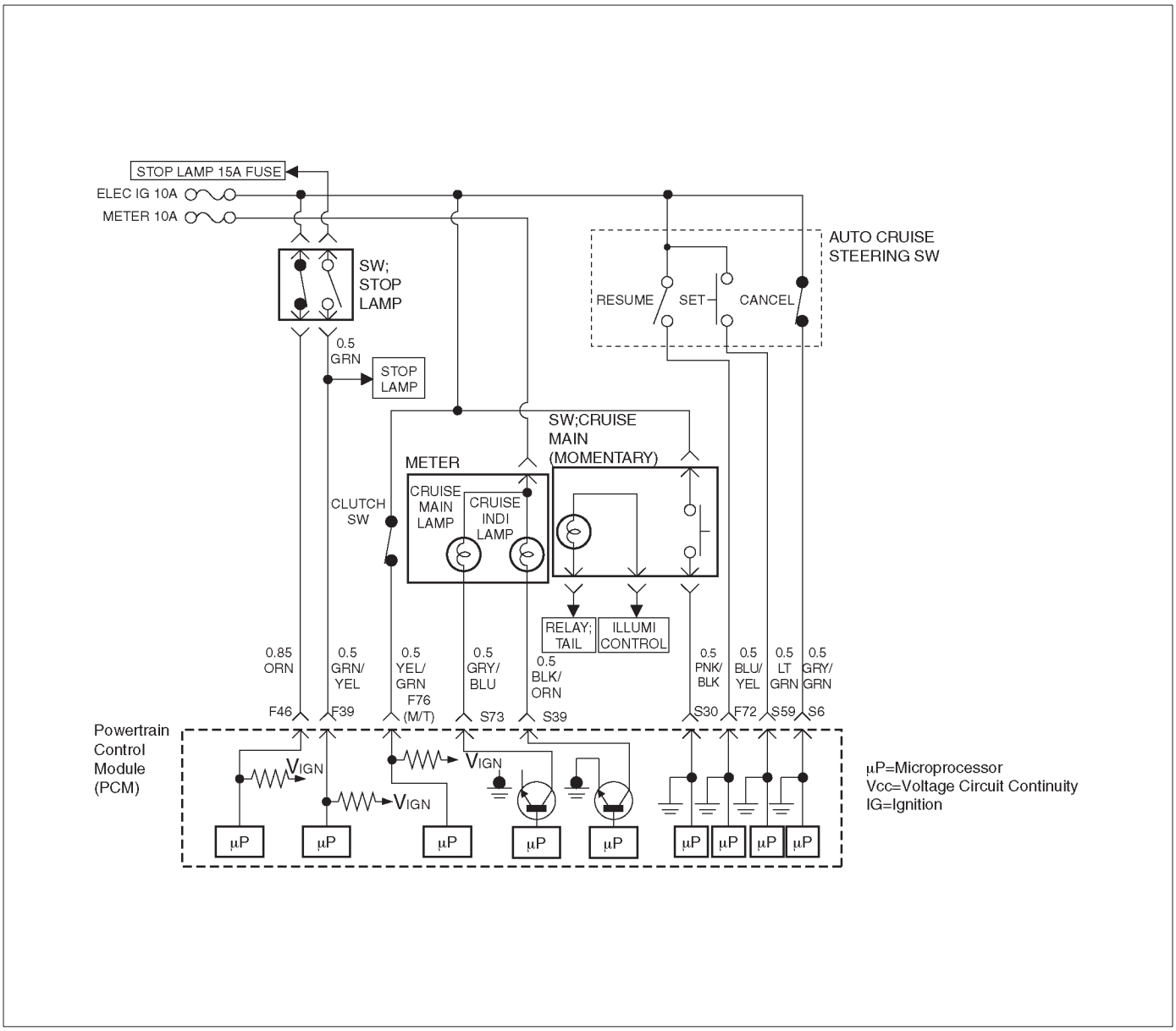

D06R200090

Circuit Description

The cruise control keeps the vehicle running at a fixed speed until a signal canceling this fixed speed is received. When the main switch is turned on with the vehicle in the running mode, the battery voltage is applied to powertrain control module(PCM). When a signal from the control switch is input to PCM while the vehicle is in this state, the cruise control system is activated. Also, while the PCM is operating, the “CRUISE MAIN” indicator light in the meter assembly lights up.
When the cancel switch is “ON”, cruise system is “OFF”.

Conditions for setting the DTC

- The Ignition is “ON”.
- Engine is running.
- System voltage is between 11.5 volts and 16 volts.
- The switch contact remains on for 40 seconds or more.
- Noises are generated by poor switch contact 100 times within 1.6 seconds.

Action Taken When the DTC Sets

- The PCM will not illuminate the malfunction indicator lamp (MIL).
- The PCM will store conditions which were present when the DTC was set in the Failure Records data only.

Conditions for Clearing the MIL/DTC

- The PCM will turn the MIL “OFF” on the third consecutive trip cycle during which the diagnostic has been run and the fault condition is no longer present.
- A history DTC P0566 will clear after 40 consecutive trip cycles during which the warm up cycles have occurred without a fault.

- DTC P0566 can be cleared using the Tech 2 “Clear Info” function or by disconnecting the PCM battery feed.

Diagnostic Aids

An intermittent may be caused by the following:

- Poor connections.
- Mis routed harness.
- Rubbed through wire insulation.
- Broken wire inside the insulation.

Check for the following conditions:

- Poor connection at PCM-Inspect harness connectors for backed out terminals, improper mating, broken locks, improperly formed or damaged terminals, and poor terminal to wire connection.
- Damaged harness-Inspect the wiring harness for damage. If the harness appears to be OK, observe the cruise cancel switch display on the Tech 2 while moving connectors and wiring harnesses related to the sensor.

  A change in the display will indicate the location of the fault. If DTC P0566 cannot be duplicated, the information included in the Failure Records data can be useful in determined vehicle mileage since the DTC was last set.

  If it is determined that the DTC occurs intermittently, performing the DTCP0566 Diagnostic Chart may isolate the cause of the fault.

DTC P0566 Cruise Cancel Switch Circuit Error

Step	Action	Value(s)	Yes	No
1	Was the “On-Board (OBD) System Check” performed?	—	Go to *Step 2*	Go to *OBD System Check*
2	Check the signal circuit for auto cruise cancel switch. 1. Ignition is “OFF”. 2. Disconnect the powertrain control module(PCM). 3. Disconnect the cruise cancel switch. Check for cruise cancel switch signal circuit between the PCM and the cruise cancel switch. Is a problem found?	—	Go to *Step 3*	Go to *Step 4*
3	Repair the main cruise cancel switch signal circuit. Is the action complete?	—	Verify repair	—
4	Check the auto cruise main switch. Is a problem found?	—	Go to *Step 5*	Go to *Step 6*
5	Repair or replace the main cruise main switch. Is the action complete?	—	Verify repair	—
6	Replace the PCM. **IMPORTANT:** The replacement PCM must be programmed. Refer to *ON-Vehicle Service in Power Control Module and Sensors for procedures.* And also refer to latest Service Bulletin. Check to see if the latest software is released or not. And then Down Load the LATEST PROGRAMMED SOFTWARE to the replacement PCM. Is the action complete?	—	Verify repair	—

Diagnostic Trouble Code (DTC)
P0567 Cruise Resume Switch Circuit Error

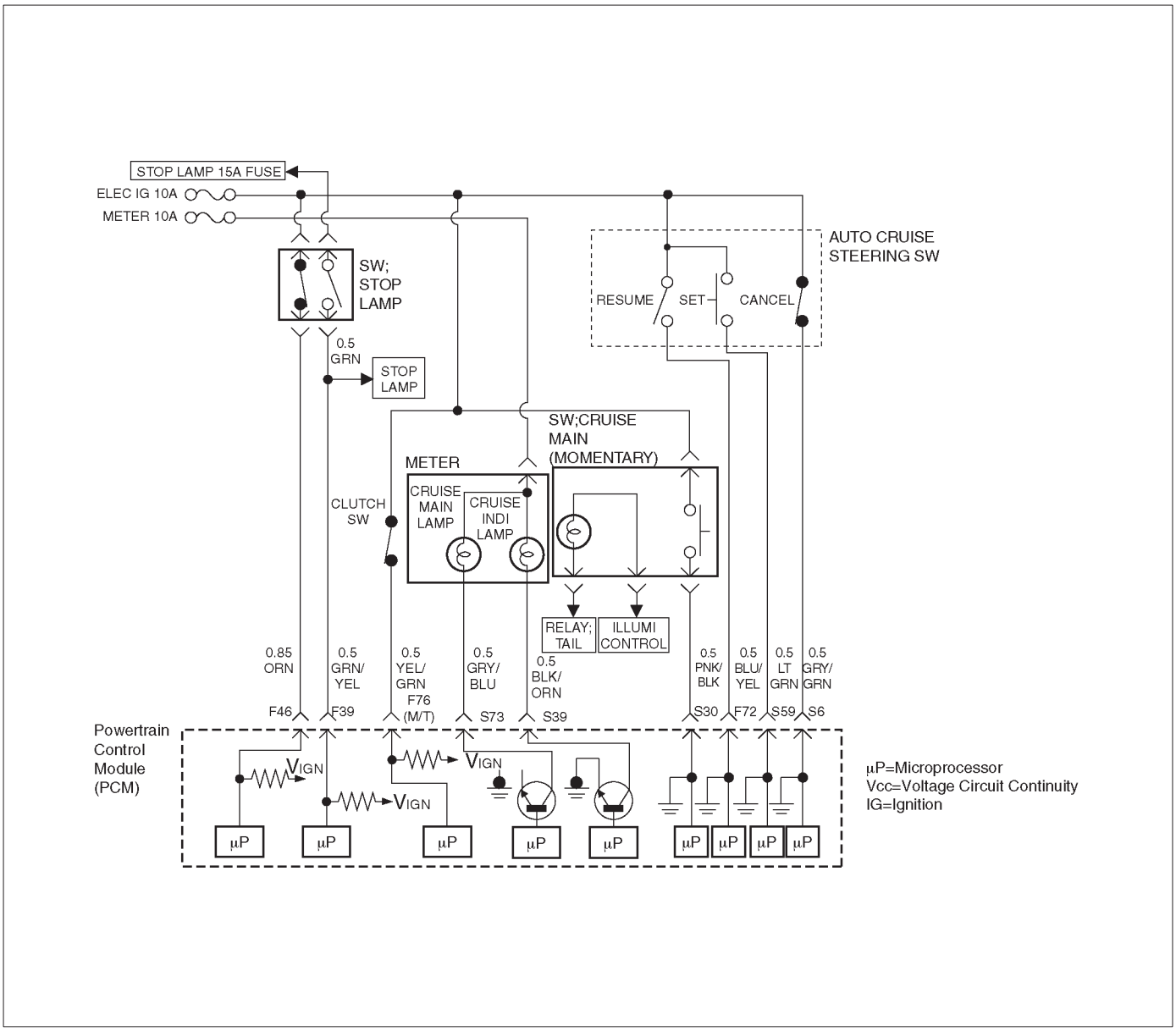

D06R200090

Circuit Description

The cruise control keeps the vehicle running at a fixed speed until a signal canceling this fixed speed is received. When the main switch is turned on with the vehicle in the running mode, the battery voltage is applied to powertrain control module(PCM). When a signal from the control switch is input to PCM while the vehicle is in this state, the cruise control system is activated. Also, while the PCM is operating, the “CRUISE MAIN” indicator light in the meter assembly lights up.
When the resume switch is “ON”, vehicle speed is reset to the previous set speed.

Conditions for setting the DTC

- The Ignition is “ON”.
- Engine is running.
- System voltage is between 11.5 volts and 16 volts.
- The switch contact remain on for 50 seconds or more.
- Noises are generated by poor switch contact 100 times within 1.6 seconds.

Action Taken When the DTC Sets

- The PCM will not illuminate the malfunction indicator lamp (MIL).
- The PCM will store conditions which were present when the DTC was set in the Failure Records data only.

Conditions for Clearing the MIL/DTC

- The PCM will turn the MIL “OFF” on the third consecutive trip cycle during which the diagnostic has been run and the fault condition is no longer present.
- A history DTC P0567 will clear after 40 consecutive trip cycles during which the warm up cycles have occurred without a fault.
- DTC P0567 can be cleared using the Tech 2 “Clear Info” function or by disconnecting the PCM battery feed.

Diagnostic Aids

An intermittent may be caused by the following:

- Poor connections.
- Misrouted harness.
- Rubbed through wire insulation.
- Broken wire inside the insulation.

Check for the following conditions:

- Poor connection at PCM-Inspect harness connectors for backed out terminals, improper mating, broken locks, improperly formed or damaged terminals, and poor terminal to wire connection.
- Damaged harness-Inspect the wiring harness for damage.

If the harness appears to be OK, observe the Cruise resume switch display on the Tech 2 while moving connectors and wiring harnesses related to the sensor.

A change in the display will indicate the location of the fault.

If DTC P0567 cannot be duplicated, the information included in the Failure Records data can be useful in determined vehicle mileage since the DTC was last set.

If it is determined that the DTC occurs intermittently, performing the DTCP0567 Diagnostic Chart may isolate the cause of the fault.

DTC P0567 Cruise Resume Switch Circuit Error

Step	Action	Value(s)	Yes	No
1	Was the “On-Board (OBD) System Check” performed?	—	Go to *Step 2*	Go to *OBD System Check*
2	Check the signal circuit for auto cruise resume switch. 1. Ignition is “OFF”. 2. Disconnect the powertrain control module (PCM). 3. Disconnect the cruise resume switch. Check for cruise resume switch signal circuit between the PCM and the cruise resume switch. Is a problem found?		Go to *Step 3*	Go to *Step 4*
3	Repair the main cruise resume switch signal circuit. Is the action complete?	—	Verify repair	—
4	Check the auto cruise resume switch. Is a problem found?	—	Go to *Step 5*	Go to *Step 6*
5	Repair or replace the main cruise resume switch. Is the action complete?	—	Verify repair	—
6	Replace the PCM. **IMPORTANT:** The replacement PCM must be programmed. Refer to *ON-Vehicle Service in Power Control Module and Sensors for procedures.* And also refer to latest Service Bulletin. Check to see if the latest software is released or not. And then Down Load the LATEST PROGRAMMED SOFTWARE to the replacement PCM. Is the action complete?	—	Verify repair	—

Diagnostic Trouble Code (DTC)
P0568 Cruise Set Switch Circuit Error

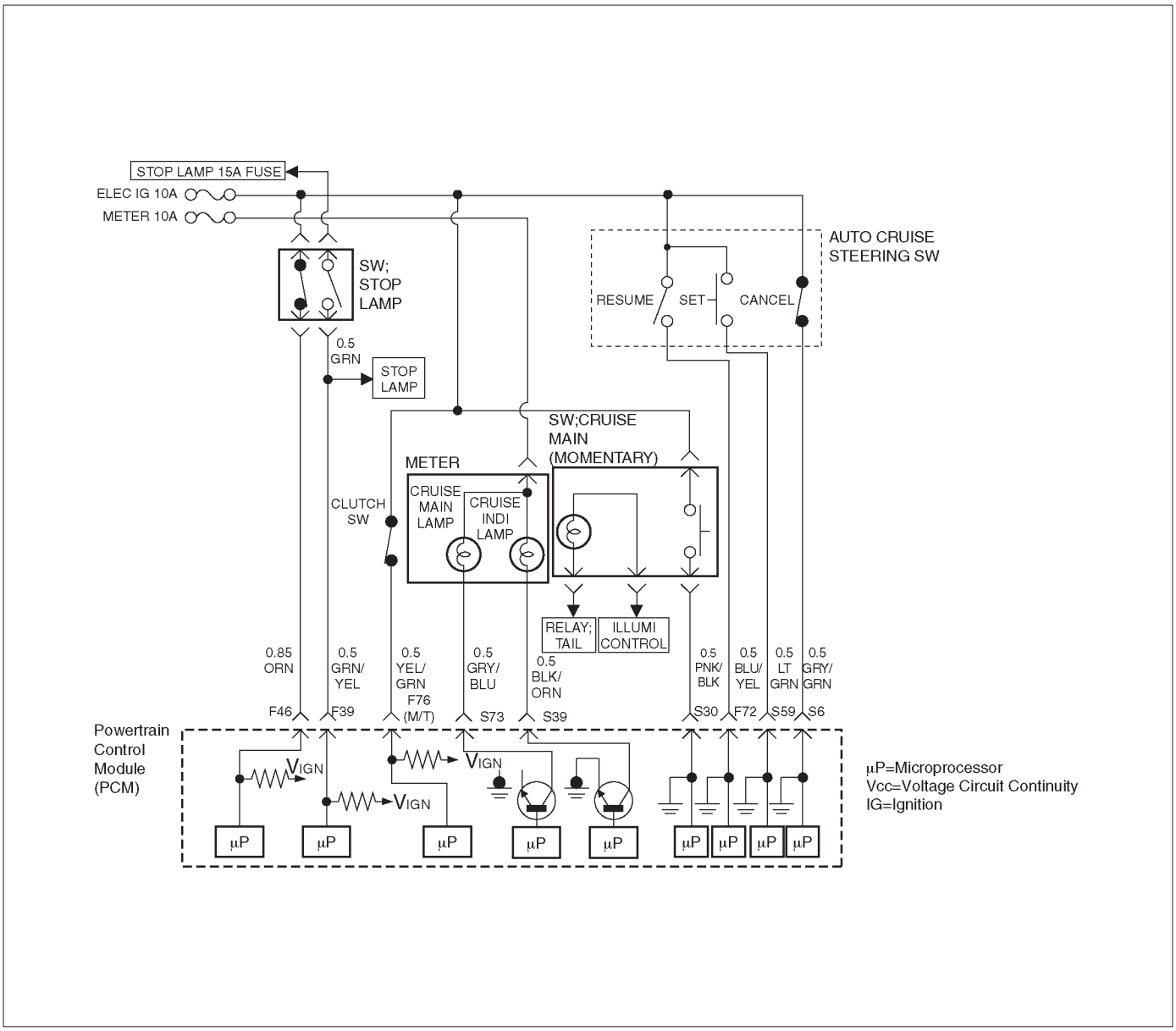

D06R200090

Circuit Description

The cruise control keeps the vehicle running at a fixed speed until a signal canceling this fixed speed is received. When the main switch is turned on with the vehicle in the running mode, the battery voltage is applied to powertrain control module (PCM). When a signal from the control switch is input to PCM while the vehicle is in this state, the cruise control system is activated. Also, while the PCM is operating, the “CRUISE MAIN” indicator light in the meter assembly lights up.
When the set switch is “ON”, vehicle speed is set.

Conditions for setting the DTC

- The Ignition is “ON”.
- Engine is running.
- System voltage is between 11.5 volts and 16 volts.
- The switch contact remain on for 120 seconds or more.
- Noises are generated by poor switch contact 100 times within 1.6 seconds.

Action Taken When the DTC Sets

- The PCM will not illuminate the malfunction indicator lamp (MIL).
- The PCM will store conditions which were present when the DTC was set in the Failure Records data only.

Conditions for Clearing the MIL/DTC

- The PCM will turn the MIL “OFF” on the third consecutive trip cycle during which the diagnostic has been run and the fault condition is no longer present.
- A history DTC P0568 will clear after 40 consecutive trip cycles during which the warm up cycles have occurred without a fault.

- DTC P0568 can be cleared using the Tech 2 “Clear Info” function or by disconnecting the PCM battery feed.

Diagnostic Aids

An intermittent may be caused by the following:

- Poor connections.
- Misrouted harness.
- Rubbed through wire insulation.
- Broken wire inside the insulation.

Check for the following conditions:

- Poor connection at PCM-Inspect harness connectors for backed out terminals, improper mating, broken locks, improperly formed or damaged terminals, and poor terminal to wire connection.
- Damaged harness–Inspect the wiring harness for damage. If the harness appears to be OK, observe the cruise set switch display on the Tech 2 while moving connectors and wiring harnesses related to the sensor.

  A change in the display will indicate the location of the fault.

  If DTC P0568 cannot be duplicated, the information included in the Failure Records data can be useful in determined vehicle mileage since the DTC was last set.

  If it is determined that the DTC occurs intermittently, performing the DTCP0568 Diagnostic Chart may isolate the cause of the fault.

DTC P0568 Cruise Set Switch Circuit Error

Step	Action	Value(s)	Yes	No
1	Was the “On-Board (OBD) System Check” performed?	—	Go to *Step 2*	Go to *OBD System Check*
2	1. Ignition “ON,” engine “ON.” 2. Observe the cruise indicator lamp in the meter. Is the cruise indicator lamp “ON?”	—	Go to *Step 3*	Go to *Step 4*
3	1. Push the auto cruise set switch. 2. Observe the cruise indicator lamp in the meter. Is the cruise indicator lamp “OFF ?”	—	Check the Procedure Refer to *Diagnostic Aids*	Go to *Step 5*
4	Check the signal circuit for auto cruise set switch. 1. Ignition is “OFF”. 2. Disconnect the powertrain control module (PCM). 3. Disconnect the cruise set switch. Check for cruise set switch signal circuit between the PCM and the cruise set switch. Is a problem found?		Go to *Step 5*	Go to *Step 6*
5	Repair the main cruise set switch signal circuit. Is the action complete?	—	Verify repair	—
6	Check the auto cruise set switch. Is a problem found?	—	Go to *Step 7*	Go to *Step 8*
7	Repair or replace the main cruise set switch. Is the action complete?	—	Verify repair	—
8	Replace the PCM. **IMPORTANT:** The replacement PCM must be programmed. Refer to *ON-Vehicle Service in Power Control Module and Sensors for procedures.* And also refer to latest Service Bulletin. Check to see if the latest software is released or not. And then Down Load the LATEST PROGRAMMED SOFTWARE to the replacement PCM. Is the action complete?	—	Verify repair	—

Diagnostic Trouble Code (DTC) P0571 No Brake Switch Signal

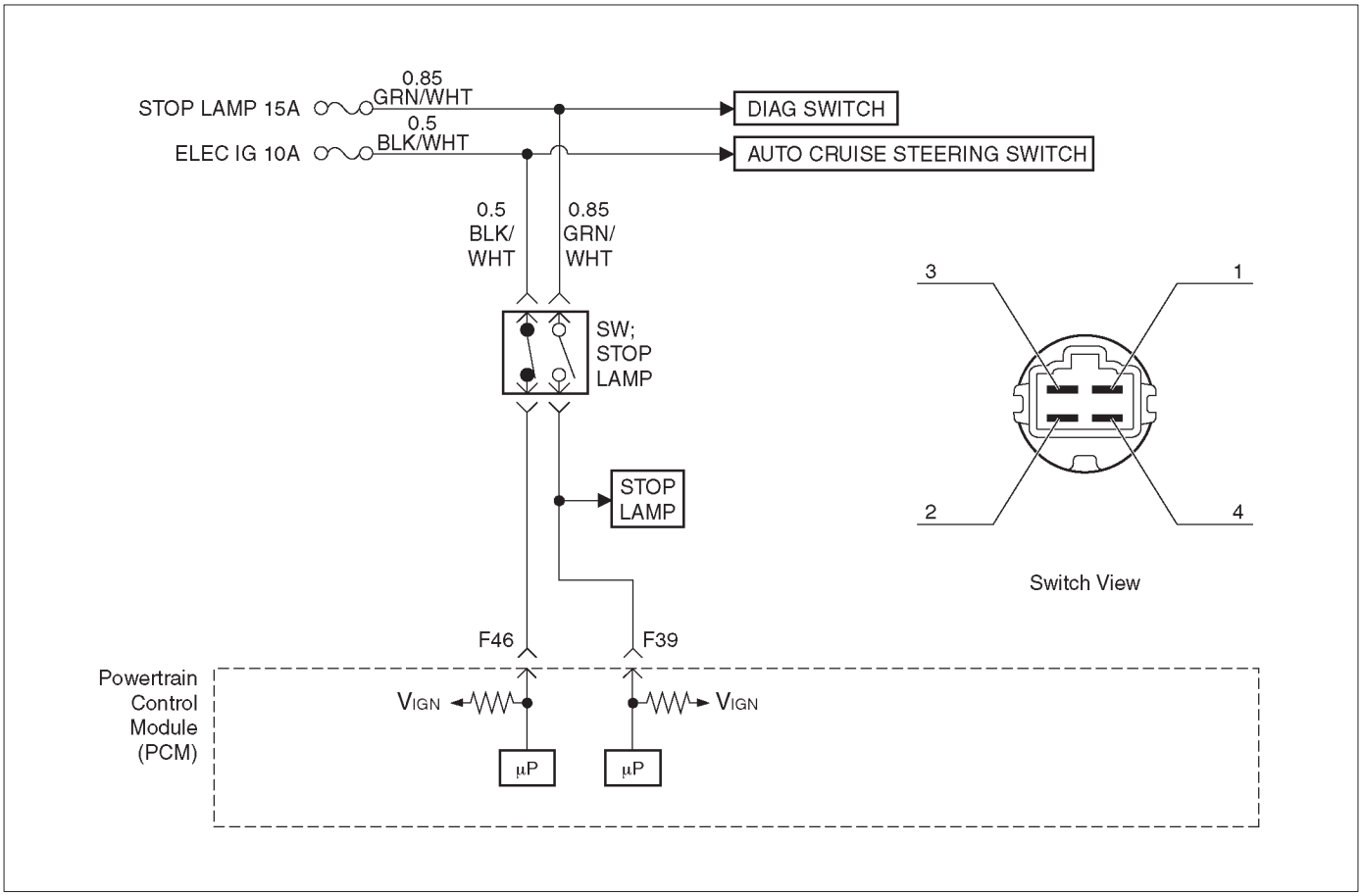

D06R200076

Circuit Description

The brake switch has 3 functions.

- Brake pedal operation check
- Brake light operation (On and off)
- Cruise control (Cancel)

The PCM receives vehicle speed and switch position signals from the brake switch. The PCM sets brake operating conditions in response to these signals.

If the brake switch is on, the brake system is in normal operation (cruise control cancelled).

Conditions for Setting the DTC

- Two brake switch signals not acknowledged after signal changed.
- VSS not defective.
- Engine is running.
- Vehicle speed above 20km/h.

Action Taken When the DTC Sets

- The PCM will not turn the malfunction indicator lamp (MIL) “ON”.
- The PCM will store conditions which were present when the DTC was set as Failure Records only. This information will not be stored as Freeze Frame data.

Conditions for Clearing the DTC

- DTC P0571 can be cleared by using the scan tool “Clear Info” function or by disconnecting the PCM battery feed.

Diagnostic Aids

- Damaged harness–Inspect the wiring harness for damage. If the harness appears to be OK, observe the fuel level display on the scan tool while moving connectors and wiring harnesses related to the sensor. A change in the display will indicate the location of the fault.

DTC P0571 No Brake Switch Signal

Step	Action	Value(s)	Yes	No
1	Was the “On-Board Diagnostic (OBD) System Check” performed?	—	Go to *Step 2*	Go to *OBD System Check*
2	1. Ignition “Off”. Engine “Off”. 2. Check following fuses. ● BACK 15A ● STOP LAMP 15A Was a problem found?	—	Verify repair	Go to *Step 3*
3	1. Make adjustment to the brake switch. The brake switch is installed to the brake pedal assembly. (Refer to *“Brake switch” in “10A CRUISE CONTROL SYSTEM”.*) Was the problem found?	—	Verify repair	Go to *Step 4*
4	1. Push the shaft at brake switch. 2. Check shaft operation for smooth movements. Was the problem found?	—	Verify repair	Go to *Step 5*
5	1. Disconnect the connector at brake switch. 2. Check following terminal pin at ohmmeter. (Leave the shaft position at brake switch. Don’t push it.) ● Between pin 1 and pin 2 ● Between pin 3 and pin 4 Was it specified value?	Between pin1 and pin2 is 0Ω, Between pin3 and pin4 is ∞Ω	Go to *Step 6*	Go to *Step 9*
6	1. Disconnect the connector at brake switch. 2. Check following terminal pin at ohmmeter. (Push the shaft position at brake switch and hold it) ● Between pin 1 and pin 2 ● Between pin 3 and pin 4 Was it specified value?	Between pin1 and pin2 is ∞Ω, Between pin3 and pin4 is 0Ω	Go to *Step 7*	Go to *Step 9*
7	1. Probe related circuits for open or short to ground. 2. If a problem was found, repair as necessary. Was a problem found?	—	Verify repair	Go to *Step 8*
8	1. Replace the ECM. **IMPORTANT:** The replacement PCM must be programmed. Refer to *On-Vehicle Service* in *Powertrain Control Module and Sensors* for procedures. And also refer to latest Service Bulletin. Check to see if the Latest software is released or not. And then Down Load the LATEST PROGRAMMED SOFTWARE to the replacement PCM. Was the action completed?	—	Verify repair	—
9	1. Replace the brake switch. Was the action completed?	—	Verify repair	—

Diagnostic Trouble Code (DTC) P0601 PCM Memory

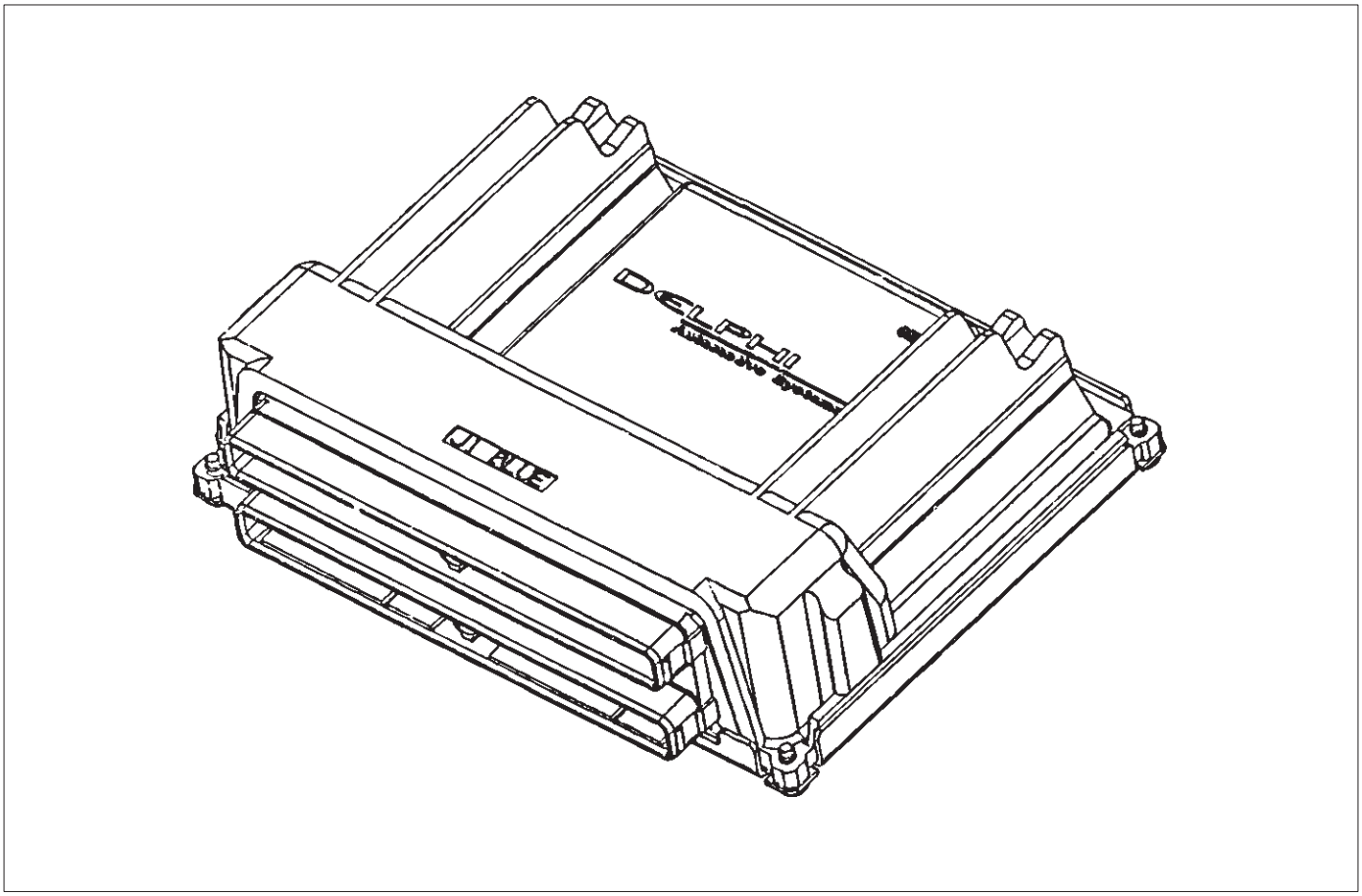

060RY014

Circuit Description

The powertrain control module (PCM) used in this vehicle utilizes an electrically erasable programmable read-only memory (EEPROM). The EEPROM contains program information and the calibrations required for engine, transmission, and powertrain diagnostics operation.
Unlike the PROM used in past applications, the EEPROM is not replaceable. When the PCM is replaced or a calibration update is required, the PCM must be programmed using a Tech 2. Refer to *On-Vehicle Service* in *Powertrain Control Module and Sensors* for the EEPROM programming procedure.

Conditions for Setting the DTC

- The PCM detects an internal program fault (check sum error).

Action Taken When the DTC Sets

- The PCM will illuminate the malfunction indicator lamp (MIL) the first time the fault is detected.
- The PCM will store conditions which were present when the DTC was set as Freeze Frame and in the Failure Records data.

Conditions for Clearing the MIL/DTC

- The PCM will turn the MIL “OFF” on the third consecutive trip cycle during which the diagnostic has been run and the fault condition is no longer present.
- A history DTC P0601 will clear after 40 consecutive warm-up cycles have occurred without a fault.
- DTC P0601 can be cleared by using the Tech 2 “Clear Info” function or by disconnecting the PCM battery feed.

Diagnostic Aids

- DTC P0601 indicates that the contents of the EEPROM have changed since the PCM was programmed. The only possible repair is PCM replacement. Remember to program the replacement PCM with the correct software and calibration for the vehicle.

DTC P0601 – PCM Memory

Step	Action	Value(s)	Yes	No
1	Was the “On-Board Diagnostic (OBD) System Check” performed?	—	Go to *Step 2*	Go to *OBD System Check*
2	Replace the PCM. **IMPORTANT:** The replacement PCM must be programmed. Refer to *On-Vehicle Service* in *Powertrain Control Module and Sensors* for procedures. And also refer to latest Service Bulletin. Check to see if the Latest software is released or not. And then Down Load the LATEST PROGRAMMED SOFTWARE to the replacement PCM. Is the action complete?	—	Verify repair	—

Diagnostic Trouble Code (DTC) P0602 PCM Programming Error

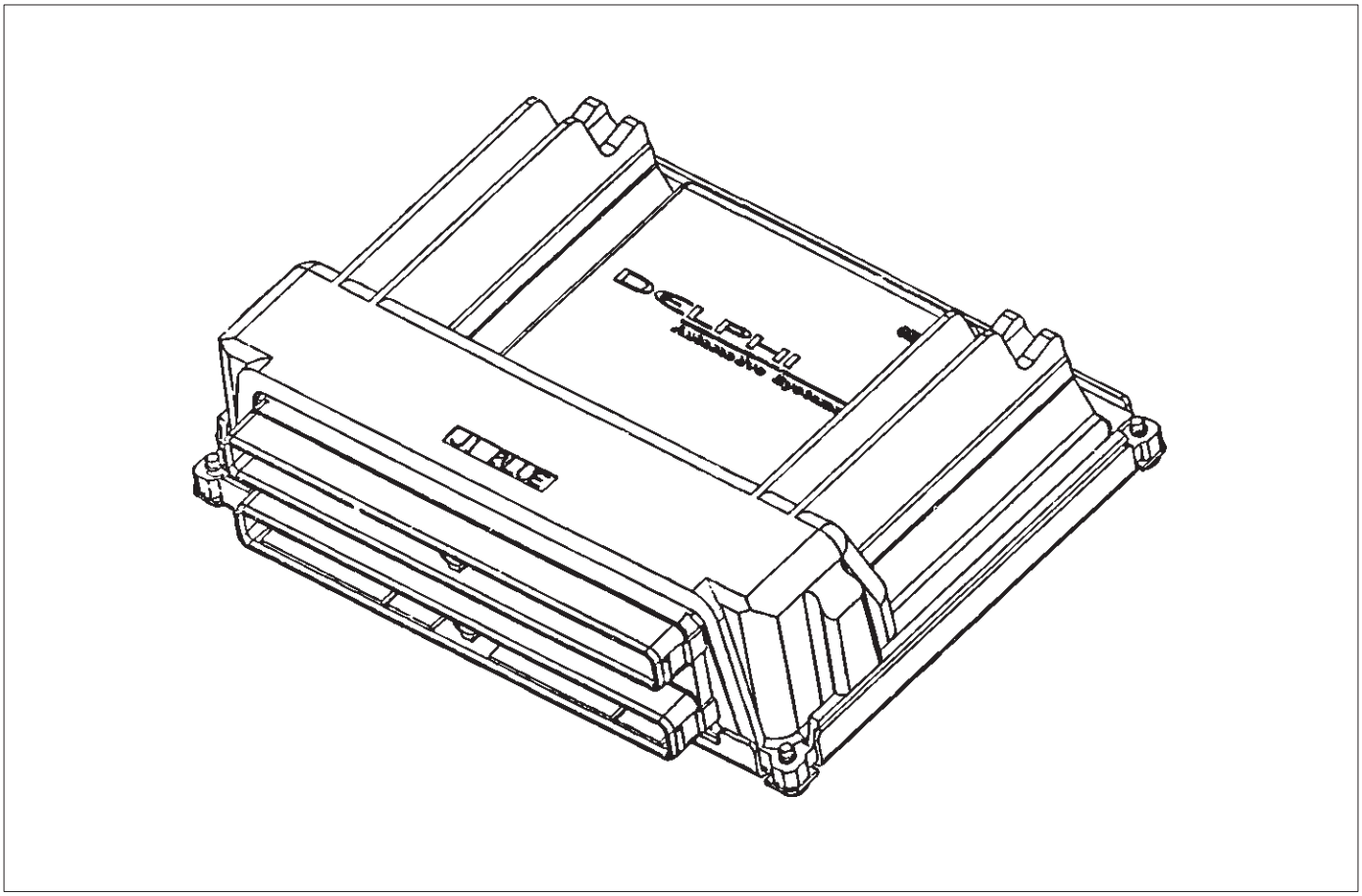

060RY014

Circuit Description

The powertrain control module (PCM) uses Main CPU and Watchdog CPU software/calibration.

Conditions for Setting the DTC

- This code detects inconsistencies between Main CPU and Watchdog CPU software/calibration.

Action Taken When the DTC Sets

- The PCM will not illuminate the malfunction indicator lamp (MIL).
- The PCM will store conditions which were present when the DTC was set in the Failure Records data only.

Conditions for Clearing the MIL/DTC

- The PCM will turn the MIL “OFF” on the third consecutive trip cycle during which the diagnostic has been run and the fault condition is no longer present.
- A history DTC P0602 will clear after 40 consecutive warm-up cycles have occurred without a fault.
- DTC P0602 can be cleared by using the Tech 2 “Clear Info” function or by disconnecting the PCM battery feed.

DTC P0602 – PCM Programming Error

Step	Action	Value(s)	Yes	No
1	Was the “On-Board Diagnostic (OBD) System Check” performed?	—	Go to *Step 2*	Go to *OBD System Check*
2	Replace the PCM. **IMPORTANT:** The replacement PCM must be programmed. Refer to *On-Vehicle Service* in *Powertrain Control Module and Sensors* for procedures. And also refer to latest Service Bulletin. Check to see if the Latest software is released or not. And then Down Load the LATEST PROGRAMMED SOFTWARE to the replacement PCM. Is the action complete?	—	Verify repair	—

Diagnostic Trouble Code (DTC) P0604 PCM RAM Error

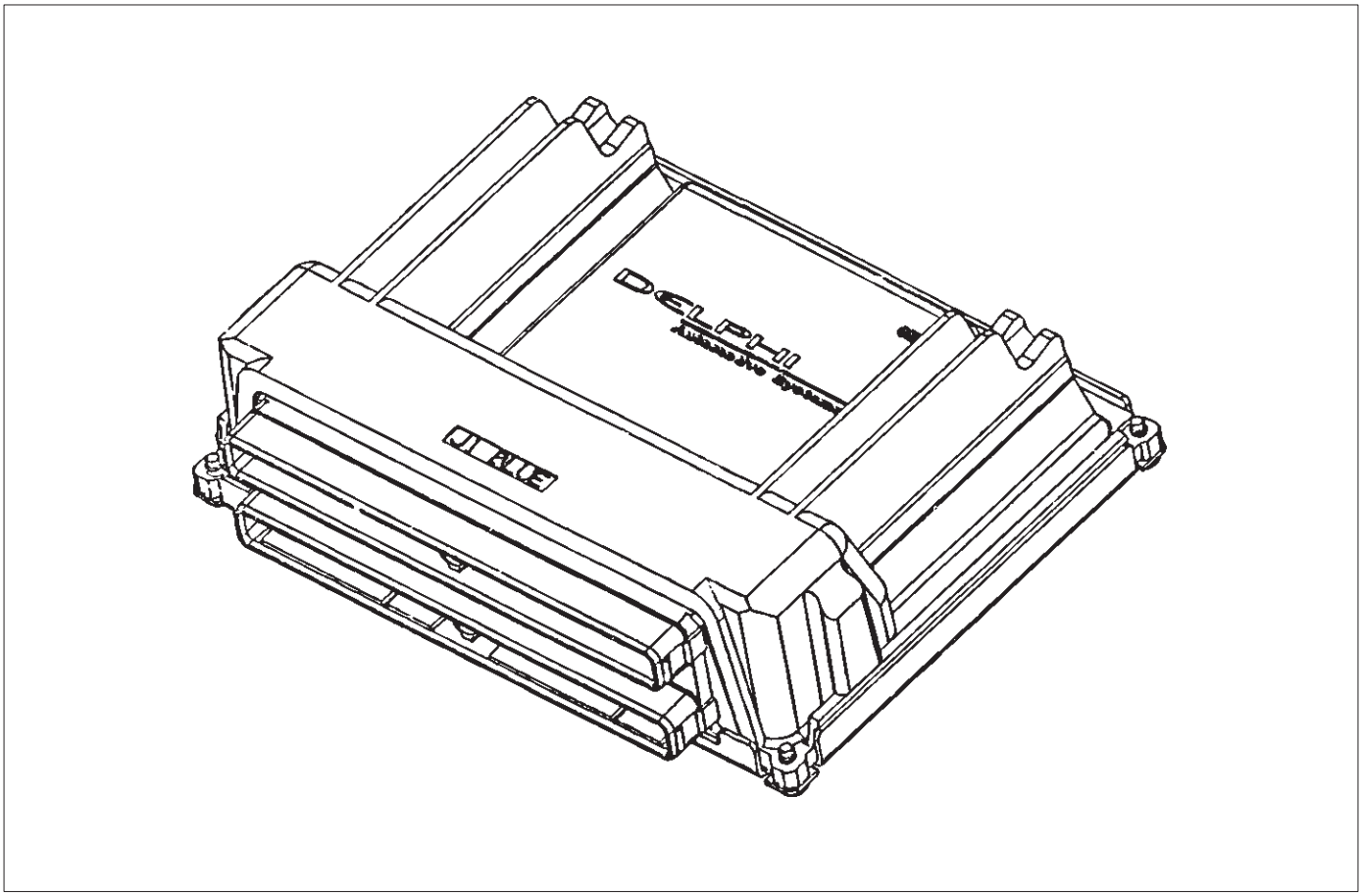

060RY014

Circuit Description

The powertrain control module (PCM) uses Main CPU RAM and Watchdog CPU RAM.

Conditions for Setting the DTC

- This code detects inconsistencies between Main CPU RAM and Watchdog CPU RAM.

Action Taken When the DTC Sets

- The PCM will not illuminate the malfunction indicator lamp (MIL).
- The PCM will store conditions which were present when the DTC was set in the Failure Records data only.

Conditions for Clearing the MIL/DTC

- The PCM will turn the MIL “OFF” on the third consecutive trip cycle during which the diagnostic has been run and the fault condition is no longer present.
- A history DTC P0604 will clear after 40 consecutive warm-up cycles have occurred without a fault.
- DTC P0604 can be cleared by using the Tech 2 “Clear Info” function or by disconnecting the PCM battery feed.

DTC P0604 – PCM RAM Error

Step	Action	Value(s)	Yes	No
1	Was the “On-Board Diagnostic (OBD) System Check” performed?	—	Go to *Step 2*	Go to *OBD System Check*
2	Replace the PCM. **IMPORTANT:** The replacement PCM must be programmed. Refer to *On-Vehicle Service* in *Powertrain Control Module and Sensors* for procedures. And also refer to latest Service Bulletin. Check to see if the Latest software is released or not. And then Down Load the LATEST PROGRAMMED SOFTWARE to the replacement PCM. Is the action complete?	—	Verify repair	—

Diagnostic Trouble Code (DTC) P0606 PCM Internal Performance

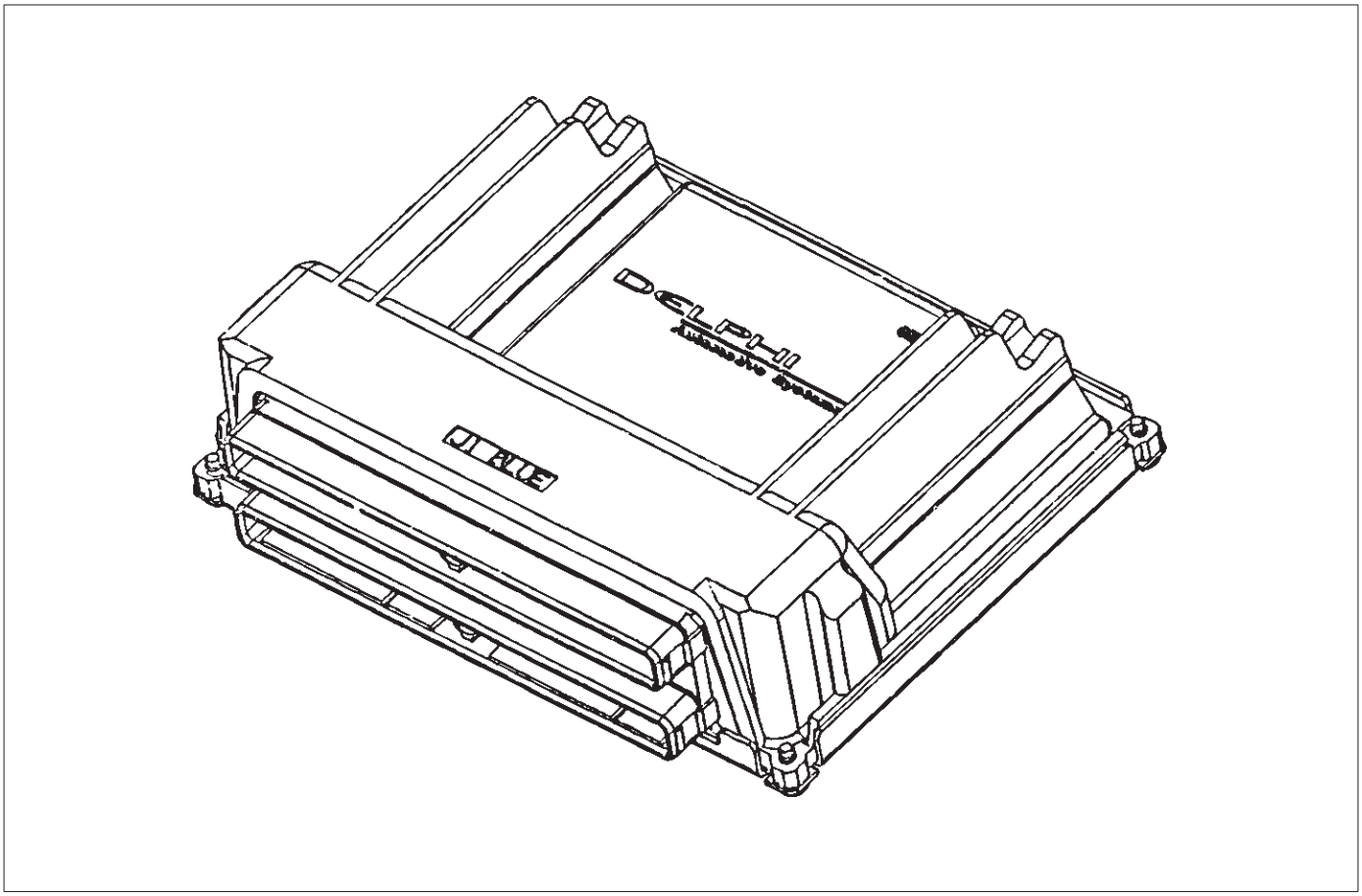

060RY014

Circuit Description

The input/output devices in the PCM include analog-to-digital converters, signal buffers, counters, and special drivers. The PCM controls most components with electronic switches which complete a ground circuit when turned “ON”. These switches are arranged in groups of 4 and 7, called either a surface-mounted quad driver module (QDM), which can independently control up to 4 output terminals, or QDMs which can independently control up to 7 outputs.

Conditions for Setting the DTC

- This code detects inconsistencies between Main CPU A/D converters and Watchdog CPU A/D converters.

Action Taken When the DTC Sets

- The PCM will not illuminate the malfunction indicator lamp (MIL).
- The PCM will store conditions which were present when the DTC was set in the Failure Records data only.

Conditions for Clearing the MIL/DTC

- The PCM will turn the MIL “OFF” on the third consecutive trip cycle during which the diagnostic has been run and the fault condition is no longer present.
- A history DTC P0606 will clear after 40 consecutive warm-up cycles have occurred without a fault.
- DTC P0606 can be cleared by using the Tech 2 “Clear Info” function or by disconnecting the PCM battery feed.

DTC P0606 – PCM Internal Performance

Step	Action	Value(s)	Yes	No
1	Was the “On-Board Diagnostic (OBD) System Check” performed?	—	Go to *Step 2*	Go to *OBD System Check*
2	Replace the PCM. **IMPORTANT:** The replacement PCM must be programmed. Refer to *On-Vehicle Service* in *Powertrain Control Module and Sensors* for procedures. And also refer to latest Service Bulletin. Check to see if the Latest software is released or not. And then Down Load the LATEST PROGRAMMED SOFTWARE to the replacement PCM. Is the action complete?	—	Verify repair	—

Diagnostic Trouble Code (DTC) P0660 VIM Solenoid Circuit Open

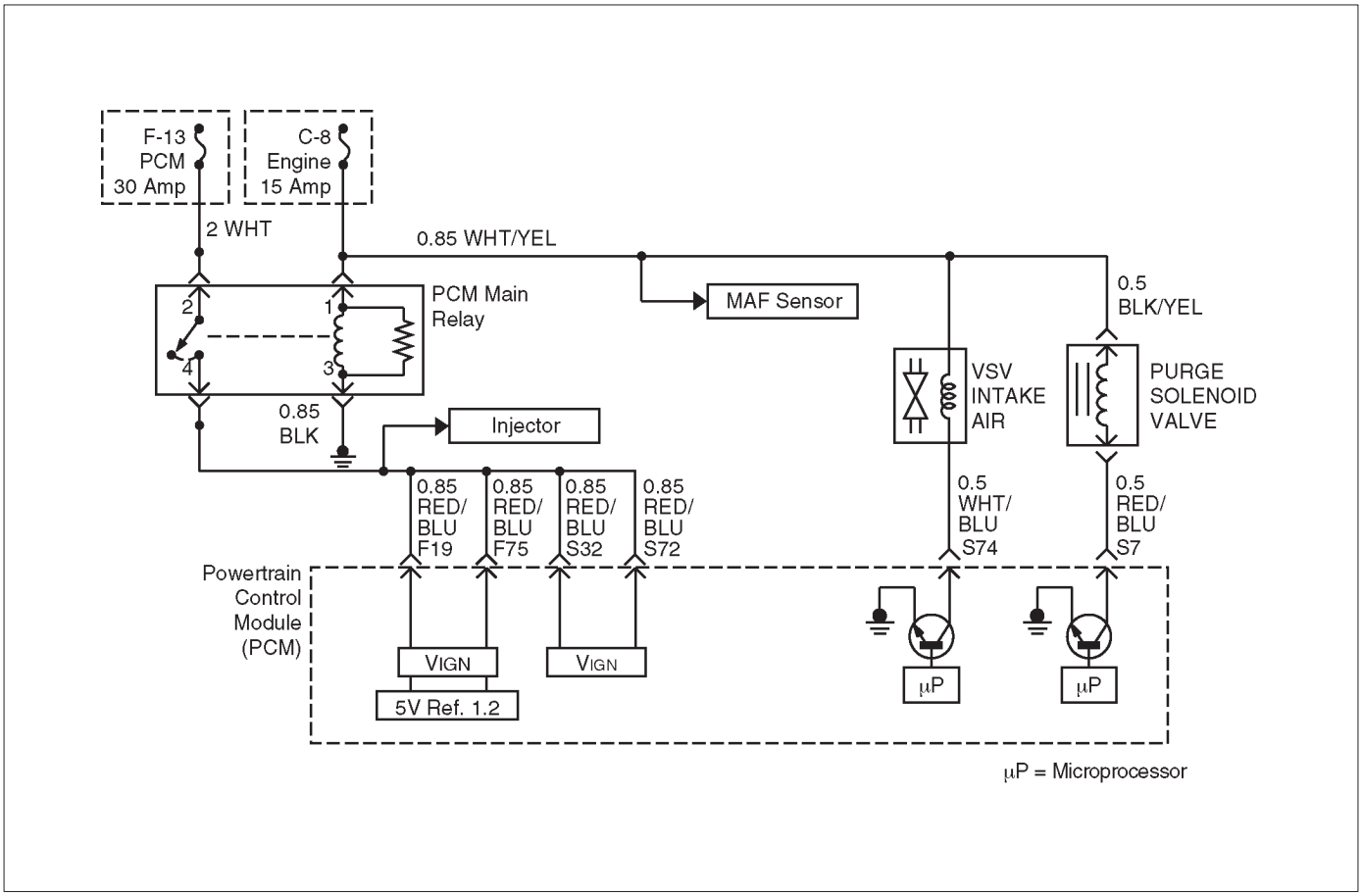

D06R200089

Circuit Description

The VIM (Variable Intake Manifold) solenoid (intake air VSV) circuit controls the induction control valve that the length of a port is switched. The VIM solenoid is controlled by the Power Train Control Module (PCM).
When the engine speed is less than 3600 RPM, the VIM solenoid is “ON” and when the engine speed is more than 3600 RPM, the VSV is “”OFF”. The induction control valve is closed at the VIM solenoid is “ON”, and it is opened at the VSV is “OFF”. If the VIM solenoid circuit is opened, DTC P0660 will set.

Conditions for Setting the DTC

- The Ignition is “ON”.
- Ignition voltage is more than 11V.
- There are 20 test failures within a 28–test sample.

Action Taken When the DTC Sets

- The PCM will not illuminate the malfunction indicator lamp (MIL).
- The PCM will store conditions which were present when the DTC was set in the Failure Records data only.

Conditions for Clearing the MIL/DTC

- The PCM will turn the MIL “OFF” on the third consecutive trip cycle during which the diagnostic has been run an the fault condition is no longer present.
- A history DTC P0660 will clear after 40 consecutive trip cycles during which the warm up cycles have occurs without a fault.

Diagnostic Aids

Check for following conditions:

- Poor connection at PCM – Inspect harness connectors for backed-out terminals, improper mating, broken locks, improperly formed or damaged terminals, and poor terminal to wire connection.
- Damaged harness – inspect the wiring harness to the solenoid and the fuel tank pressure sensor for an intermittent open short circuit.

DTC P0660 VIM Solenoid Circuit Open

Step	Action	Value(s)	Yes	No
1	Was the “On–Board Diagnostic (OBD) System Check” performed?	—	Go to *Step 2*	Go to *OBD System Check*
2	1. Check the DTC. Was the DTC for the Mass Air Flow (MAF) sensor or the purge duty solenoid valve stored?	—	Go to *Step 3*	Go to *Step 4*
3	1. Check the circuit between the ENGINE fuse and the MAD sensor or the Variable Intake Manifold solenoid (intake air VSV). 2. If a problem found, repair or replace as necessary. Was a problem found?	—	Verify repair	Check the Procedure Refer to *Diagnostic Aids*
4	1. Using the Tech 2, perform the “Variable Intake Manifold Test”. Refer to *Variable Intake Manifold Test* Was a problem found?	—	Go to *Step 7*	Go to *Step 5*
5	1. Using the Tech 2, command the VIM solenoid “ON” and “OFF”. 2. Observe working noise for the VIM solenoid. Was working noise detected?	—	Check the Procedure Refer to *Diagnostic Aids*	Go to *Step 6*
6	1. Replace the VIM solenoid. Is the action complete?	—	Verify repair	—
7	1. Check the circuit between the ENGINE fuse and the VIM solenoid. 2. If a problem found, repair or replace as necessary. Was a problem found?	—	Verify repair	Go to *Step 8*
8	1. Check the circuit between the PCM fuse and the VIM solenoid. 2. If a problem found, repair or replace as necessary. Was a problem found?	—	Verify repair	Go to *Step 9*
9	Replace the PCM. **IMPORTANT:** The replacement PCM must be programmed. Refer to *On-Vehicle Service* in *Powertrain Control Module and Sensors* for procedures. And also refer to latest Service Bulletin. Check to see if the Latest software is released or not. And then Down Load the LATEST PROGRAMMED SOFTWARE to the replacement PCM. Is the action complete?	—	Verify repair	—

Diagnostic Trouble Code (DTC) P0662 VIM Solenoid Circuit Short

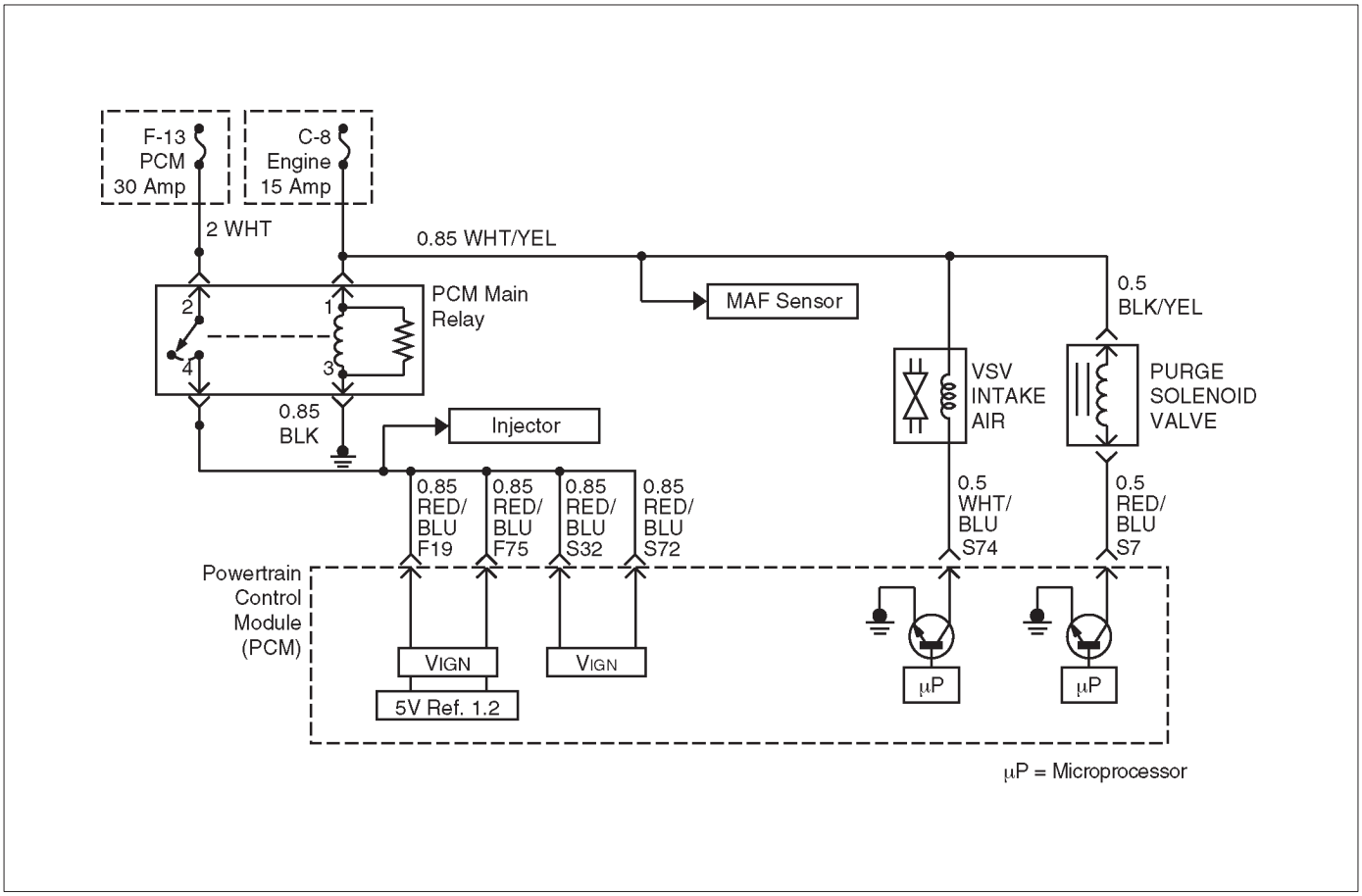

D06R200089

Circuit Description

The VIM (Variable Intake Manifold) solenoid (intake air VSV) circuit controls the induction control valve that the length of a port is switched. The VIM solenoid is controlled by the Power Train Control Module (PCM).
When the engine speed is less than 3600 RPM, the VIM solenoid is “ON” and when the engine speed is more than 3600 RPM, the VSV is “”OFF”. The induction control valve is closed at the VIM solenoid is “ON”, and it is opened at the VSV is “OFF”. If the VIM solenoid circuit is opened, DTC P0660 will set.

Conditions for Setting the DTC

- The Ignition is “ON”.
- Ignition voltage is more than 11V.
- There are 20 test failures within a 28–test sample.

Action Taken When the DTC Sets

- The PCM will not illuminate the malfunction indicator lamp (MIL).
- The PCM will store conditions which were present when the DTC was set in the Failure Records data only.

Conditions for Clearing the MIL/DTC

- The PCM will turn the MIL “OFF” on the third consecutive trip cycle during which the diagnostic has been run an the fault condition is no longer present.
- A history DTC P0660 will clear after 40 consecutive trip cycles during which the warm up cycles have occurs without a fault.

Diagnostic Aids

Check for following conditions:

- Poor connection at PCM – Inspect harness connectors for backed-out terminals, improper mating, broken locks, improperly formed or damaged terminals, and poor terminal to wire connection.
- Damaged harness – inspect the wiring harness to the solenoid and the fuel tank pressure sensor for an intermittent open short circuit.

DTC P0662 VIM Solenoid Circuit Short

Step	Action	Value(s)	Yes	No
1	Was the “On–Board Diagnostic (OBD) System Check” performed?	—	Go to *Step 2*	Go to *OBD System Check*
2	1. Check the DTC. Was the DTC for the Mass Air Flow (MAF) sensor or the purge duty solenoid valve stored?	—	Go to *Step 3*	Go to *Step 4*
3	1. Check the circuit between the ENGINE fuse and the MAD sensor or the Variable Intake Manifold solenoid (intake air VSV). 2. If a problem found, repair or replace as necessary. Was a problem found?	—	Verify repair	Check the Procedure Refer to *Diagnostic Aids*
4	1. Using the Tech 2, perform the “Variable Intake Manifold Test”. Refer to *Variable Intake Manifold Test* Was a problem found?	—	Go to *Step 7*	Go to *Step 5*
5	1. Using the Tech 2, command the VIM solenoid “ON” and “OFF”. 2. Observe working noise for the VIM solenoid. Was working noise detected?	—	Check the Procedure Refer to *Diagnostic Aids*	Go to *Step 6*
6	1. Replace the VIM solenoid. Is the action complete?	—	Verify repair	—
7	1. Check the circuit between the ENGINE fuse and the VIM solenoid. 2. If a problem found, repair or replace as necessary. Was a problem found?	—	Verify repair	Go to *Step 8*
8	1. Check the circuit between the PCM fuse and the VIM solenoid. 2. If a problem found, repair or replace as necessary. Was a problem found?	—	Verify repair	Go to *Step 9*
9	Replace the PCM. **IMPORTANT:** The replacement PCM must be programmed. Refer to *On-Vehicle Service* in *Powertrain Control Module and Sensors* for procedures. And also refer to latest Service Bulletin. Check to see if the Latest software is released or not. And then Down Load the LATEST PROGRAMMED SOFTWARE to the replacement PCM. Is the action complete?	—	Verify repair	—

Diagnostic Trouble Code (DTC)
P1106 MAP Sensor Circuit Intermittent High Voltage

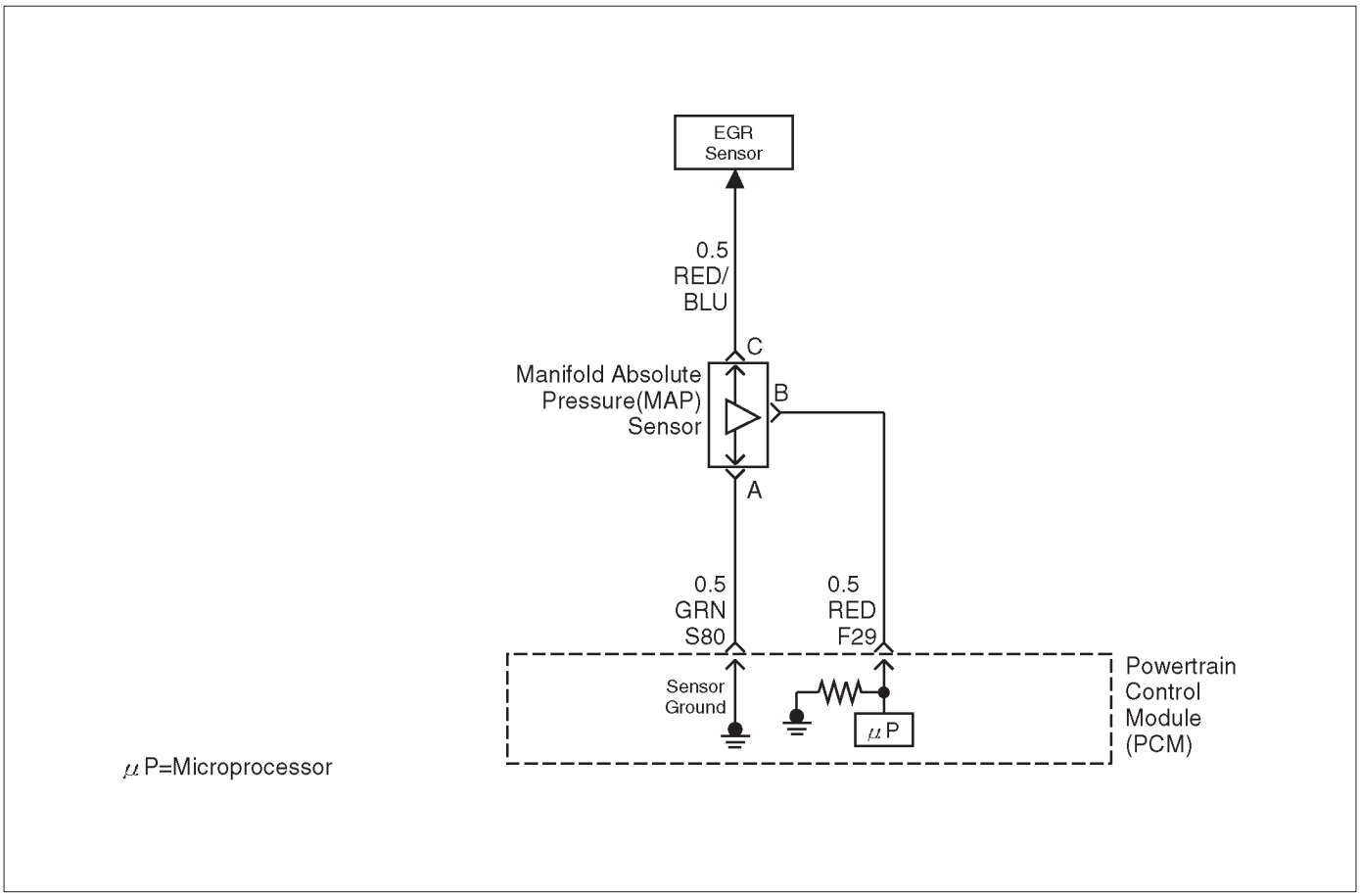

D06R200048

Circuit Description

The manifold absolute pressure (MAP) sensor responds to changes in intake manifold pressure (vacuum). The MAP sensor signal voltage to the PCM varies from below 2 volts at idle (high vacuum) to above 4 volts with the ignition “ON”, engine not running or at wide-open throttle (low vacuum).

The MAP sensor is used to determine manifold pressure changes while the liner EGR flow test diagnostic is being run (refer to *DTC P0401*), to determine engine vacuum level for some other diagnostics and to determine barometric pressure (BARO). The PCM compares the MAP sensor signal to a calculated MAP based on throttle position and various engine load factors. If the PCM detects a MAP signal that is intermittently above the calculated value, DTC P1106 will set.

Conditions for Setting the DTC

- No TP sensor DTCs are present.
- Engine is running for at least 10 seconds.
- Throttle angle is below 3% if engine speed is below 1000 RPM.
- Throttle angle is below 10% if engine speed is above 1000 RPM.
- The MAP sensor indicates an intermittent manifold absolute pressure above 80 kPa for a total of approximately 5 seconds over a 16-second period of time.

Action Taken When the DTC Sets

- The PCM will not illuminate the malfunction indicator lamp (MIL).
- The PCM will store conditions which were present when the DTC was set as Failure Records data only. This information will not be stored as Freeze Frame data.

Conditions for Clearing the MIL/DTC

- A history DTC P1106 will clear after 40 consecutive warm-up cycles have occurred without a fault.
- DTC P1106 can be cleared by using the Tech 2 “Clear Info” function or by disconnecting the PCM battery feed.

Diagnostic Aids

Check for the following conditions:

- Leaking or plugged vacuum supply line to the MAP sensor.
- Inspect PCM harness connectors for backed-out terminals, improper mating, broken locks, improperly formed or damaged terminals, and poor terminal-to-wire connection.
- Inspect the wiring harness for damage. If the harness appears to be OK, observe the MAP display on the Tech 2 while moving connectors and wiring harnesses related to the sensor. A change in the display will indicate the location of the fault.

Reviewing the Failure Records vehicle mileage since the diagnostic test last failed may help determine how often

the condition that caused the DTC to be set occurs. This may assist in diagnosing the condition.

- The MAP sensor shares a 5 Volt Reference with the Fuel Tank Pressure sensor. Check the 5 Volt reference if this DTC is also set.
- The MAP sensor shares a ground with the Fuel Tank Pressure sensor and the ECT Sensor. Check the ground if these other DTCs are also set.

DTC P1106 – MAP Sensor Circuit Intermittent High Voltage

Step	Action	Value(s)	Yes	No
1	Was the “On-Board Diagnostic (OBD) System Check” performed?	—	Go to *Step 2*	Go to *OBD System Check*
2	Is DTC P0108 also set?	—	Go to *DTC P0108* chart first	Go to *Step 3*
3	Are DTC P1111, P1115, and/or P1120 also set?	—	Go to *Step 6*	Go to *Step 4*
4	Check for a poor sensor ground circuit terminal connection at the MAP sensor. Was a problem found?	—	Go to *Step 9*	Go to *Step 5*
5	Check the MAP signal circuit between the MAP sensor connector and the PCM for an intermittent short to voltage. Was a problem found?	—	Go to *Step 10*	Go to *Step 8*
6	Check for an intermittent short to voltage on the 5 volt reference circuit between the PCM and the following components: ● MAP sensor ● EGR valve ● TP sensor Was a problem found?	—	Go to *Step 10*	Go to *Step 7*
7	Check for a poor sensor ground circuit terminal connection at the PCM. Was a problem found?	—	Go to *Step 9*	Go to *Step 8*
8	Check for an intermittent open or a faulty splice in the sensor ground circuit. Was a problem found?	—	Go to *Step 10*	Check the Procedure Refer to *Diagnostic Aids*
9	Replace the faulty harness connector terminal for the sensor ground circuit. Is the action complete?	—	Verify repair	—
10	Locate and repair the intermittent open/short circuit in the wiring harness as necessary. Is the action complete?	—	Verify repair	—

Diagnostic Trouble Code (DTC) P1107 MAP Circuit Intermittent Low Voltage

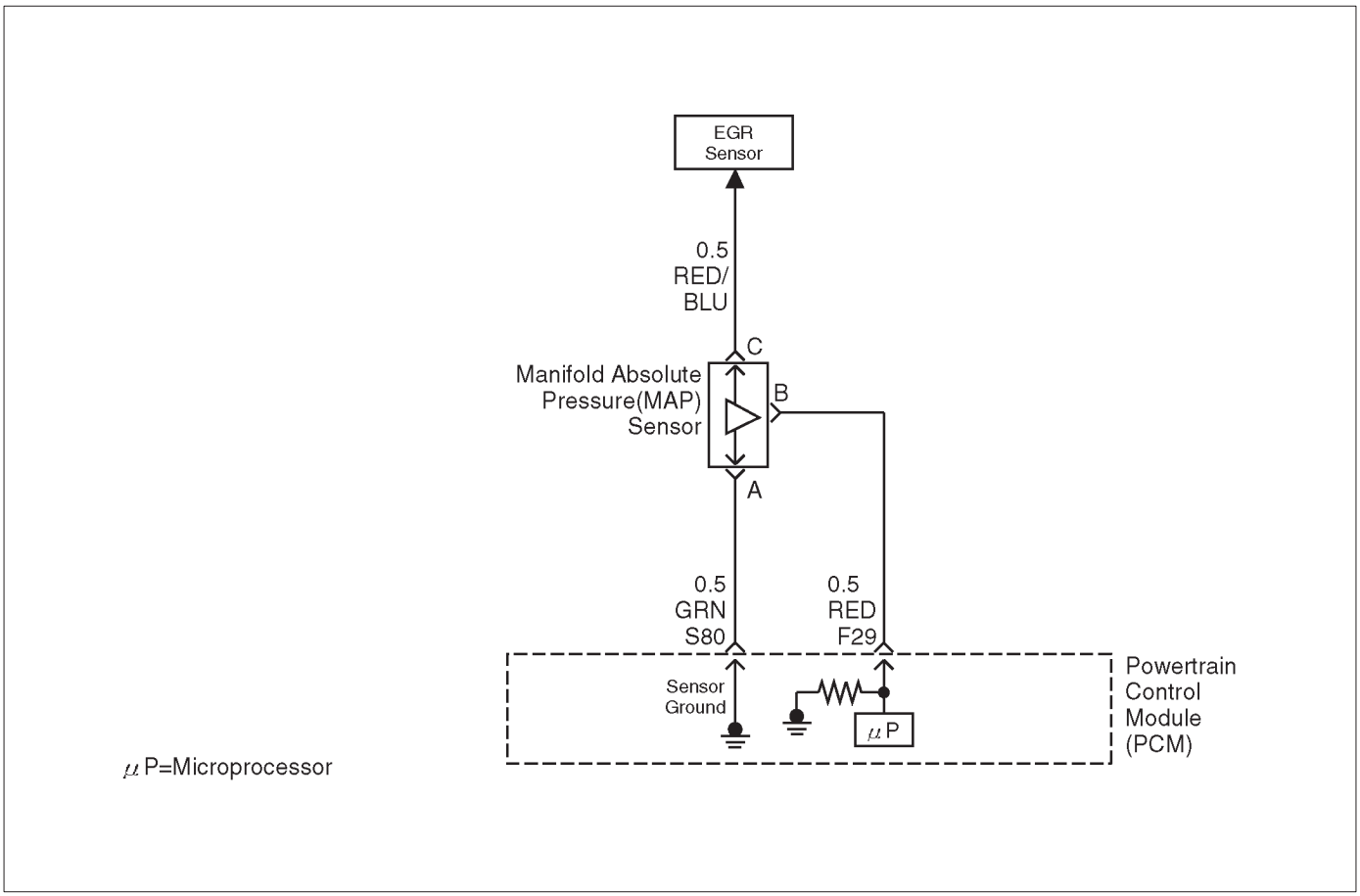

D06R200048

Circuit Description

The manifold absolute pressure (MAP) sensor responds to changes in intake manifold pressure (vacuum). The MAP sensor signal voltage to the powertrain control module (PCM) varies from below 2 volts at idle (high vacuum) to above 4 volts with the ignition “ON”, engine not running or at wide-open throttle (low vacuum).

The MAP sensor is used to determine manifold pressure changes while the linear EGR flow test diagnostic is being run (refer to *DTC P0401*), to determine engine vacuum level for some other diagnostics and to determine barometric pressure (BARO). The PCM compares the MAP sensor signal to a calculated MAP based on throttle position and various engine load factors. If the PCM detects a MAP signal that is intermittently below the calculated value, DTC P1107 will be set.

Conditions for Setting the DTC

- No TP sensor DTCs are present.
- Engine is running.
- Ignition voltage is more than 11 volts.
- Throttle angle is above 1% if engine speed is less than 1000 RPM.
- Throttle angle is above 3% if engine speed is above 1000 RPM.
- The MAP sensor indicates an intermittent manifold absolute pressure below 11 kPa for a total of approximately 5 seconds over a 16-second period of time.

Action Taken When the DTC Sets

- The PCM will not illuminate the malfunction indicator lamp (MIL).
- The PCM will store conditions which were present when the DTC was set as Failure Records data only. This information will not be stored as Freeze Frame data.

Conditions for Clearing the MIL/DTC

- A history DTC P1107 will Clear after 40 consecutive warm-up cycles have occurred without a fault.
- DTC P1107 can be cleared by using the Tech 2 “Clear Info” function or by disconnecting the PCM battery feed.

Diagnostic Aids

Check for the following conditions:

- Poor connection at PCM – Inspect harness connectors for backed-out terminals, improper mating, broken locks, improperly formed or damaged terminals, and poor terminal-to-wire connection.
- The MAP Sensor shares a 5 Volt reference with the EGR Valve. If these codes are also set, it could indicate a problem with the 5 Volt reference circuit or components itself.
- The MAP Sensor share a ground with the EGR Valve and the IAT Sensor.

- Damaged harness – Inspect the wiring harness for damage. If the harness appears to be OK, observe the MAP display on the Tech 2 while moving connectors and wiring harnesses related to the sensor. A change in the display will indicate the location of the fault.

Reviewing the Failure Records vehicle mileage since the diagnostic test last failed may help determine how often the condition that caused the DTC to be set occurs. This may assist in diagnosing the condition.

DTC P1107 – MAP Sensor Circuit Intermittent Low Voltage

Step	Action	Value(s)	Yes	No
1	Was the “On-Board Diagnostic (OBD) System Check” performed?	—	Go to *Step 2*	Go to *OBD System Check*
2	Is DTC P0108 also set?	—	Go to *DTC P0108* chart first	Go to *Step 3*
3	Are DTC P1111, P1115, and/or P1120 also set?	—	Go to *Step 6*	Go to *Step 4*
4	Check for a poor sensor ground circuit terminal connection at the MAP sensor. Was a problem found?	—	Go to *Step 9*	Go to *Step 5*
5	Check the MAP signal circuit between the MAP sensor connector and the PCM for an intermittent short to voltage. Was a problem found?	—	Go to *Step 10*	Go to *Step 8*
6	Check for an intermittent short to voltage on the 5 volt reference circuit between the PCM and the following components: ● MAP sensor ● EGR valve ● TP sensor Was a problem found?	—	Go to *Step 10*	Go to *Step 7*
7	Check for a poor sensor ground circuit terminal connection at the PCM. Was a problem found?	—	Go to *Step 9*	Go to *Step 8*
8	Check for an intermittent open or a faulty splice in the sensor ground circuit. Was a problem found?	—	Go to *Step 10*	Check the Procedure Refer to *Diagnostic Aids*
9	Replace the faulty harness connector terminal for the sensor ground circuit. Is the action complete?	—	Verify repair	—
10	Locate and repair the intermittent open/short circuit in the wiring harness as necessary. Is the action complete?	—	Verify repair	—

Diagnostic Trouble Code (DTC) P1111 IAT Sensor Circuit Intermittent High Voltage

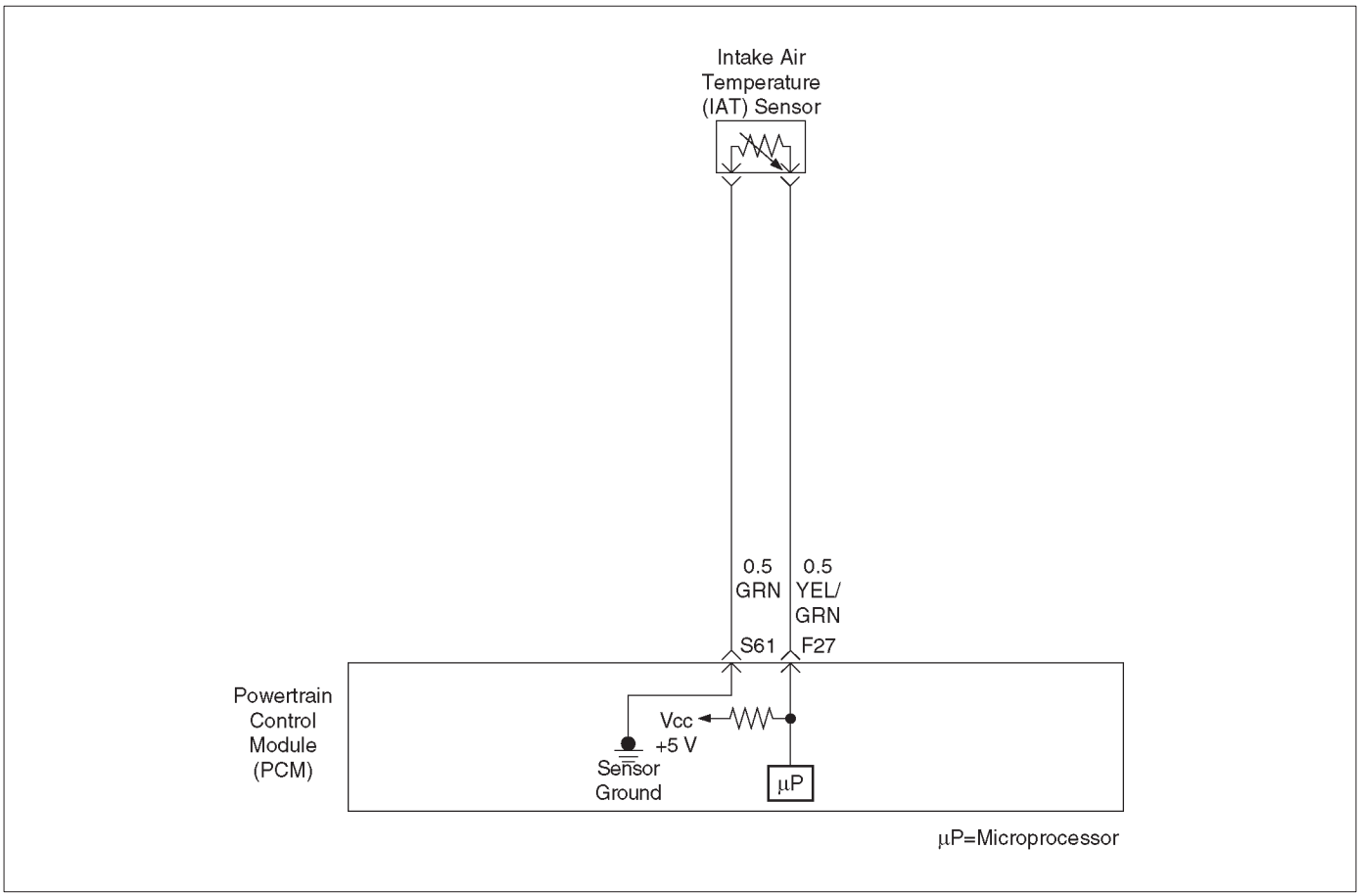

D06RY00168

Circuit Description

The intake air temperature (IAT) sensor is a thermistor which measures the temperature of the air entering the engine. The powertrain control module (PCM) applies 5 volts through a pull-up resistor to the IAT sensor. When the intake air is cold, the sensor resistance is high and the PCM will monitor a high signal voltage on the IAT signal circuit. If the intake air is warm, the sensor resistance is lower causing the PCM to monitor a lower voltage. DTC P1111 will set when the PCM intermittently detects an excessively high signal voltage on the intake air temperature sensor signal circuit.

Conditions for Setting the DTC

- The engine has been running for over 30 seconds.
- Vehicle speed is less than 32 km/h (20 mph).
- Engine coolant temperature is above 60˚C (140˚F).
- Mass air flow is less than 20g/second.
- IAT signal voltage indicates and intake air temperature intermittently less than –39˚C (–38˚F) (about 5 volts) for approximately 2.5 seconds over a 25-second period of time.

Action Taken When the DTC Sets

- The PCM will substitute a default value for intake air temperature.
- The PCM will store conditions which were present when the DTC set as Failure Records data only. This information will not be stored as Freeze Frame data.
- DTC P1111 does not illuminate the MIL.

Conditions for Clearing the MIL/DTC

- A history DTC P1111 will clear after 40 consecutive warm-up cycles have occurred without a fault.
- DTC P1111 can be cleared by using the Tech 2 “Clear Info” function or by disconnecting the PCM battery feed.

Diagnostic Aids

Check for the following conditions:

- Poor connection at PCM –Inspect harness connectors for backed-out terminals, improper mating, broken locks, improperly formed or damaged terminals, and poor terminal-to-wire connection.
- Damaged harness – Inspect the wiring harness for damage. If the harness appears to be OK, observe the IAT display on the Tech 2 while moving connectors and wiring harnesses related to the IAT sensor. A change in the IAT display will indicate the location of the fault.

Reviewing the Failure Records vehicle mileage since the diagnostic test last failed may help determine how often the condition that caused the DTC to be set occurs. This may assist in diagnosing the condition.

Intake Air Temperature Sensor

˚C	˚F	OHMS
Temperature vs. Resistance Values (approximate)		
100	212	177
80	176	332
60	140	667
45	113	1188
35	95	1802
25	77	2796
15	59	4450
5	41	7280
–5	23	12300
–15	5	21450
–30	–22	52700
–40	–40	100700

DTC P1111 –IAT Sensor Circuit Intermittent High Voltage

Step	Action	Value(s)	Yes	No
1	Was the “On-Board Diagnostic (OBD) System Check” performed?	—	Go to *Step 2*	Go to *OBD System Check*
2	Is DTC P0113 also set?	—	Go to *DTC P0113* chart first	Go to *Step 3*
3	Is DTC P1115, also set?	—	Go to *Step 6*	Go to *Step 4*
4	1. Check for a poor sensor ground circuit terminal connection at the IAT sensor. 2. If a problem is found, repair as necessary. Was a problem found?	—	Verify repair	Go to *Step 5*
5	1. Check for a poor IAT signal circuit terminal connection at the IAT sensor. 2. If a problem is found, repair as necessary. Was a problem found?	—	Verify repair	Go to *Step 6*
6	1. Check the IAT signal circuit between the IAT sensor connector and the PCM for an intermittent open. 2. If a problem is found, repair as necessary. Was a problem found?	—	Verify repair	Go to *Step 7*
7	1. Check the IAT signal circuit between the IAT sensor connector and the PCM for an intermittent short to voltage. 2. If a problem is found, repair as necessary. Was a problem found?	—	Verify repair	Go to *Step 8*
8	1. Check for a poor sensor ground circuit terminal connection at the PCM. 2. If a problem is found, repair as necessary. Was a problem found?	—	Verify repair	Go to *Step 9*
9	1. Check for an intermittent open or a faulty splice in the sensor ground circuit. 2. If a problem is found, repair as necessary. Was a problem found?	—	Verify repair	Check the Procedure Refer to *Diagnostic Aids*

Diagnostic Trouble Code (DTC) P1112 IAT Sensor Circuit Intermittent Low Voltage

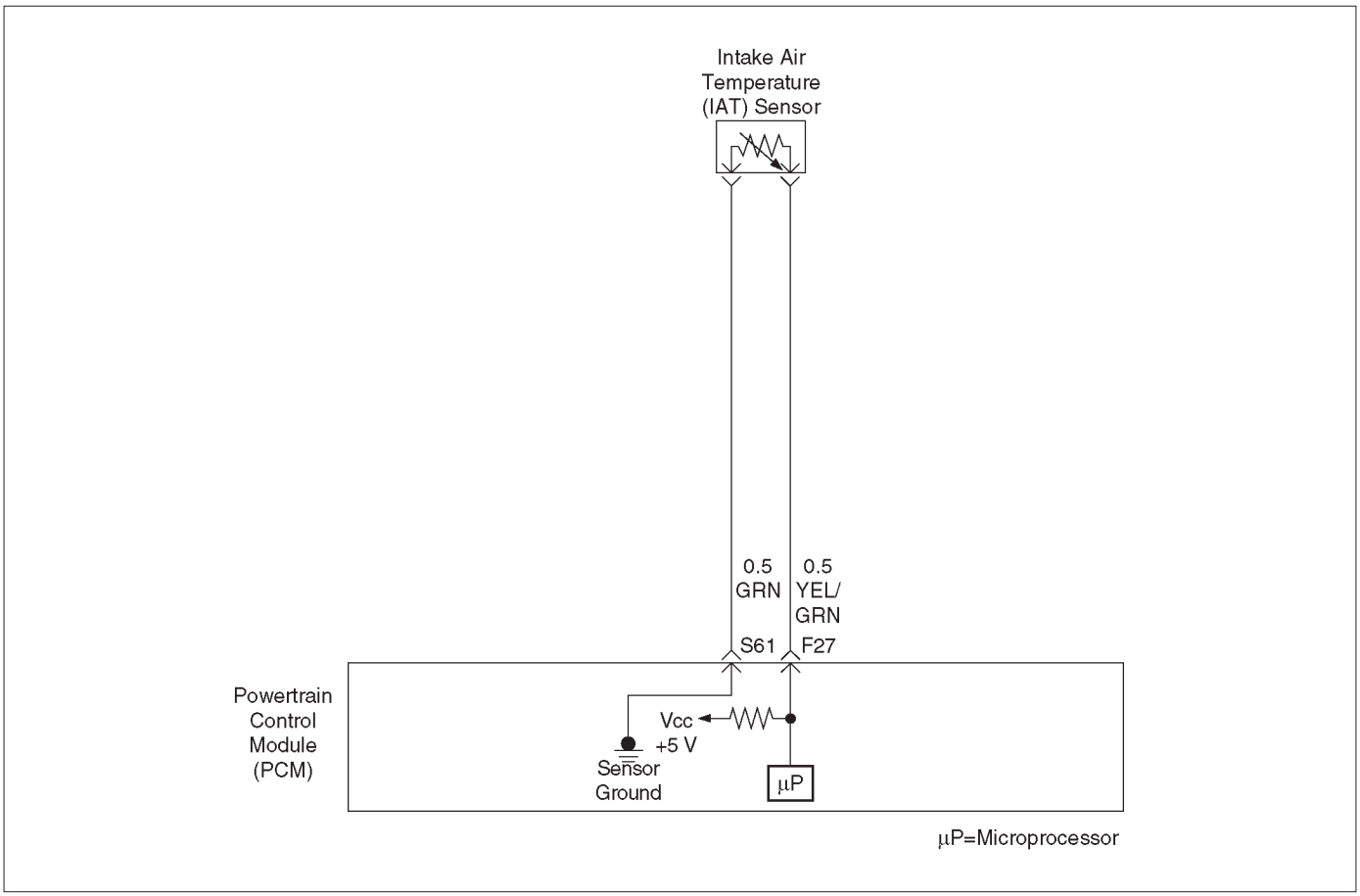

D06RY00168

Circuit Description

The intake air temperature (IAT) sensor is a thermistor which measures the temperature of the air entering the engine. The powertrain control module (PCM) applies 5 volts through a pull-up resistor to the IAT sensor. When the intake air is cold, the sensor resistance is high and the PCM will monitor a high signal voltage on the IAT signal circuit. If the intake air is warm, the sensor resistance becomes lower, causing the PCM to monitor a lower voltage. DTC P1112 will set when the PCM intermittently detects an excessively low signal voltage on the intake air temperature sensor signal circuit.

Conditions for Setting the DTC

- The engine has been running for over 15 seconds.
- Vehicle speed is greater than 48 km/h (30 mph).
- IAT signal voltage is greater than 148˚C (298˚F) (about 0.10 volt) for a total of 2.5 seconds over a 25-second period of time.

Action Taken When the DTC Sets

- The PCM will not illuminate the malfunction indicator lamp (MIL).
- The PCM will store conditions which were present when the DTC was set as Failure Records data only. This information will not be stored as Freeze Frame data.
- The PCM will substitute a default value for intake air temperature.

Conditions for Clearing the MIL/DTC

- A history DTC P1112 will clear after 40 consecutive warm-up cycles have occurred without a fault.
- DTC P1112 can be cleared by using the Tech 2 “Clear Info” function or by disconnecting the PCM battery feed.

Diagnostic Aids

Check for the following conditions:

- Poor connection at PCM – Inspect harness connectors for backed-out terminals, improper mating, broken locks, improperly formed or damaged terminals, and poor terminal-to-wire connection.
- Damaged harness – Inspect the wiring harness for damage. If the harness appears to be OK, observe the IAT display on the Tech 2 while moving connectors and wiring harnesses related to the IAT sensor. A change in the IAT display will indicate the location of the fault.

Reviewing the Failure Records vehicle mileage since the diagnostic test last failed may help determine how often the condition that caused the DTC to be set occurs. This may assist in diagnosing the condition.

Test Description

Number(s) below refer to the step number(s) on the Diagnostic Chart.

2. Verifies that the fault is present.
3. If DTC P1112 can be repeated only by duplicating the Failure Records conditions, refer to the "Temperature vs. Resistance Value Chart". The chart may be used to test the IAT sensor at various temperatures to evaluate the possibility of a "shifted" sensor that may be shorted above or below a certain temperature. If this is the case, replace the IAT sensor.

Intake Air Temperature Sensor

˚C	˚F	OHMS
Temperature vs. Resistance Values (approximate)		
100	212	177
80	176	332
60	140	667
45	113	1188
35	95	1802
25	77	2796
15	59	4450
5	41	7280
–5	23	12300
–15	5	21450
–30	–22	52700
–40	–40	100700

DTC P1112 – IAT Sensor Circuit Intermittent Low Voltage

Step	Action	Value(s)	Yes	No
1	Was the "On-Board Diagnostic (OBD) System Check" performed?	—	Go to *Step 2*	Go to *OBD System Check*
2	Is DTC P0112 also set?	—	Go to *DTC P0112* first	Go to *Step 3*
3	1. Check the IAT signal circuit between the IAT sensor connector and the PCM for an intermittent short to ground. 2. If a problem is found, repair as necessary. Was a problem found?	—	Verify repair	Check the Procedure Refer to *Diagnostic Aids*

Diagnostic Trouble Code (DTC) P1114 ECT Sensor Circuit Intermittent Low Voltage

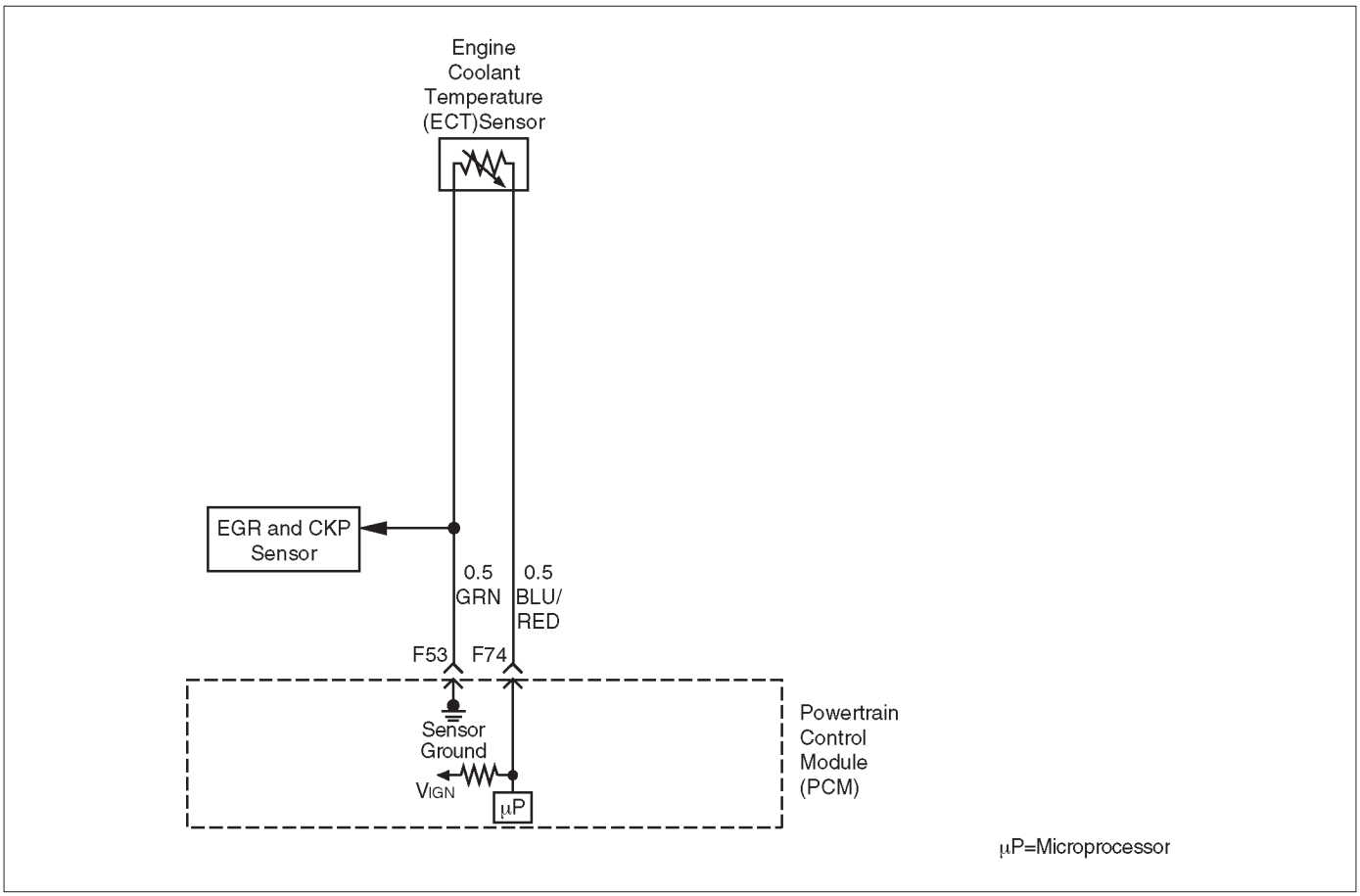

D06R200049

Circuit Description

The engine coolant temperature (ECT) sensor is a thermistor mounted in the engine coolant stream. The powertrain control module (PCM) applies a voltage (about 5.0 volts) through a pull-up resistor to the ECT signal circuit. When the engine coolant is cold, the sensor (thermistor) resistance is high, therefore the PCM will measure a high signal voltage. As the engine coolant warms, the sensor resistance becomes less, and the ECT signal voltage measured at the PCM drops. With a fully warmed up engine, the ECT signal voltage should measure about 1.5 to 2.0 volts. If the PCM detects an ECT signal that is intermittently below the range of the ECT sensor, DTC P1114 will set.

Conditions for Setting the DTC

- Engine run time longer than 120 seconds.
- The ECT sensor signal is intermittently greater than 150˚C (302˚F) (about 0.10 volt) for a total of 10 seconds over a 100-second period.

Action Taken When the DTC Sets

- The PCM will not illuminate the malfunction indicator lamp (MIL).
- The PCM will store conditions which were present when the DTC set as Failure Records data only. This information will not be stored as Freeze Frame data.

Conditions for Clearing the MIL/DTC

- A history DTC P1114 will clear after 40 consecutive warm-up cycles have occurred without a fault.
- DTC P1114 can be cleared by using the Tech 2 “Clear Info” function or by disconnecting the PCM battery feed.

Diagnostic Aids

Check for the following conditions:

- Poor connection at PCM – Inspect harness connectors for backed-out terminals, improper mating, broken locks, improperly formed or damaged terminals, and poor terminal-to-wire connection.
- Damaged harness – Inspect the wiring harness for damage. If the harness appears to be OK, observe the ECT display on the Tech 2 while moving connectors and wiring harnesses related to the ECT sensor. A change in the ECT display will indicate the location of the fault.

Reviewing the Failure Records vehicle mileage since the diagnostic test last failed may help determine how often

the condition that caused the DTC to be set occurs. This may assist in diagnosing the condition.

Engine Coolant Temperature Sensor

˚C	˚F	OHMS
Temperature vs. Resistance Values (approximate)		
100	212	177
80	176	332
60	140	667
45	113	1188
35	95	1802
25	77	2796
15	59	4450
5	41	7280
–5	23	12300
–15	5	21450
–30	–22	52700
–40	–40	100700

DTC P1114 – ECT Circuit Intermittent Low Voltage

Step	Action	Value(s)	Yes	No
1	Was the “On-Board Diagnostic (OBD) System Check” performed?	—	Go to *Step 2*	Go to *OBD System Check*
2	Is DTC P0117 also set?	—	Go to *DTC P0117* first	Go to *Step 3*
3	1. Check the ECT signal circuit between the ECT sensor connector and the PCM for an intermittent short to ground. 2. If a problem is found, repair as necessary. Was a problem found?	—	Verify repair	Check the Procedure Refer to *Diagnostic Aids*

Diagnostic Trouble Code (DTC) P1115 ECT Sensor Circuit Intermittent High Voltage

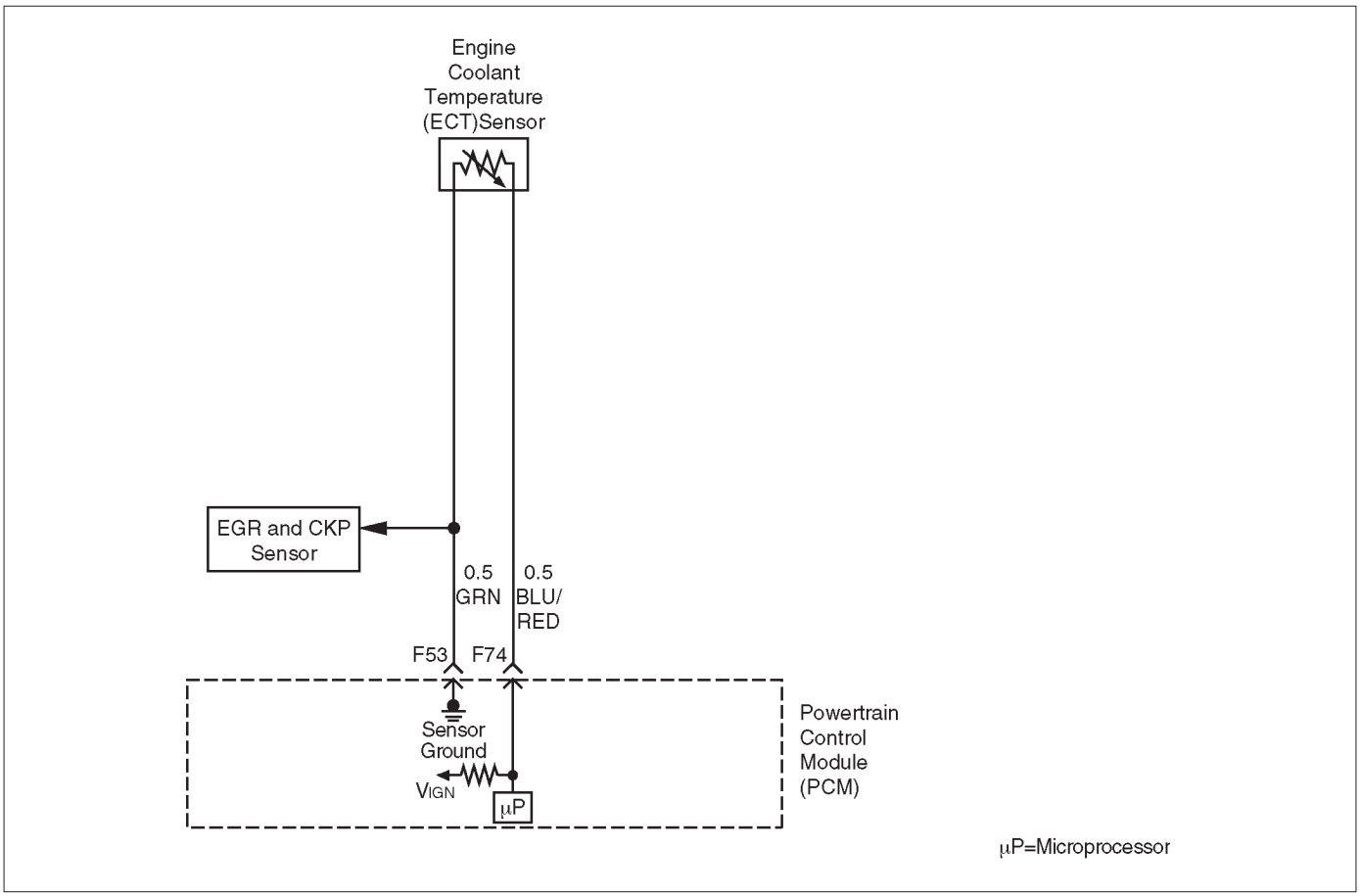

D06R200049

Circuit Description

The engine coolant temperature (ECT) sensor is a thermistor mounted in the engine coolant stream. The powertrain control module (PCM) applies a voltage (about 5.0 volts) through a pull-up resistor to the ECT signal circuit. When the engine coolant is cold, the sensor (thermistor) resistance is high, therefore the PCM will measure a high signal voltage. As the engine coolant warms, the sensor resistance becomes less, and the ECT signal voltage measured at the PCM drops. With a fully warmed up engine, the ECT signal voltage should measure about 1.5 to 2.0 volts. If the PCM detects an ECT signal that is intermittently above the range of the ECT sensor, DTC P1115 will set.

Conditions for Setting the DTC

- Engine running time longer than 90 seconds.
- The ECT sensor signal is intermittently greater than –39˚C (–38˚F) (about 5 volts) for a total of 10 seconds over a 100-second period.

Action Taken When the DTC Sets

- The PCM will not illuminate the malfunction indicator lamp (MIL).
- The PCM will store conditions which were present when the DTC was set as Failure Records data only. This information will not be stored as Freeze Frame data.

Conditions for Clearing the MIL/DTC

- A history DTC P1115 will clear after 40 consecutive warm-up cycles have occurred without a fault.
- DTC P1115 can be cleared by using the Tech 2 “Clear Info” function or by disconnecting the PCM battery feed.

Diagnostic Aids

Check for the following conditions:

- Poor connection at PCM – Inspect harness connectors for backed-out terminals, improper mating, broken locks, improperly formed or damaged terminals, and poor terminal-to-wire connection.
- Damaged harness – Inspect the wiring harness for damage. If the harness appears to be OK, observe the ECT display on the Tech 2 while moving connectors and wiring harnesses related to the ECT sensor. A change in the ECT display will indicate the location of the fault.

Reviewing the Failure Records vehicle mileage since the diagnostic test last failed may help determine how often

the condition that caused the DTC to be set occurs. This may assist in diagnosing the condition.

Engine Coolant Temperature Sensor

˚C	˚F	OHMS
Temperature vs. Resistance Values (approximate)		
100	212	177
80	176	332
60	140	667
45	113	1188
35	95	1802
25	77	2796
15	59	4450
5	41	7280
–5	23	12300
–15	5	21450
–30	–22	52700
–40	–40	100700

DTC P1115 – ECT Sensor Circuit Intermittent High Voltage

Step	Action	Value(s)	Yes	No
1	Was the “On-Board Diagnostic (OBD) System Check” performed?	—	Go to *Step 2*	Go to *OBD System Check*
2	Is DTC P0118 also set?	—	Go to *DTC P0118* chart first	Go to *Step 3*
3	Is DTC P1111 also set?	—	Go to *Step 8*	Go to *Step 4*
4	1. Check for a poor sensor ground circuit terminal connection at the ECT sensor. 2. If a problem is found, repair as necessary. Was a problem found?	—	Verify repair	Go to *Step 5*
5	1. Check for a poor ECT signal circuit terminal connection at the ECT sensor. 2. If a problem is found, repair as necessary. Was a problem found?	—	Verify repair	Go to *Step 6*
6	1. Check the ECT signal circuit between the ECT sensor connector and the PCM for an intermittent open. 2. If a problem is found, repair as necessary. Was a problem found?	—	Verify repair	Go to *Step 7*
7	1. Check the ECT signal circuit between the ECT sensor connector and the PCM for an intermittent short to voltage. 2. If a problem is found, repair as necessary. Was a problem found?	—	Verify repair	Go to *Step 8*
8	1. Check for a poor sensor ground circuit terminal connection at the PCM. 2. If a problem is found, repair as necessary. Was a problem found?	—	Verify repair	Go to *Step 9*
9	1. Check for an intermittent open or a faulty splice in the sensor ground circuit. 2. If a problem is found, repair as necessary. Was a problem found?	—	Verify repair	Check the Procedure Refer to *Diagnostic Aids*

Diagnostic Trouble Code(DTC)
P1120-TPS 1 Throttle Position Sensor (TPS1) Circuit Fault

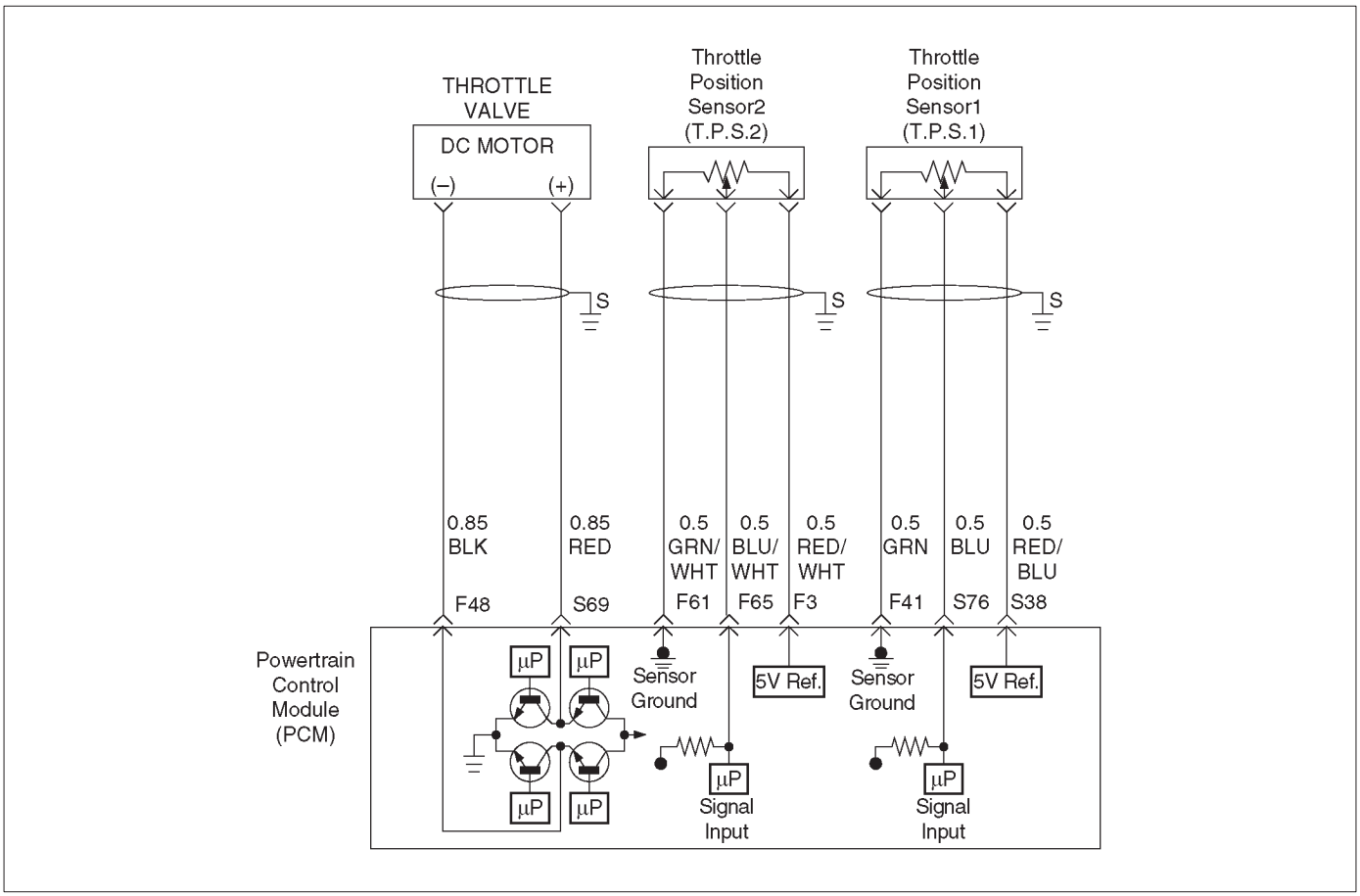

Circuit Description

- The throttle position (TP) sensor circuit provides a voltage signal relative to throttle blade angle.

  The throttle blade angle will vary about 8 % at closed throttle to about 92 % at wide open throttle(WOT).

  This code detects a continuous short to ground or high in either the cicuit or the sensor.

Conditions for setting the DTC

- The Ignition is “ON”.
- The throttle blade angle is less than 2.5 % or more tnan 97.5 % for 18 failres within 500 test samples (15.6m sec)

Action Taken When the DTC Sets

- The PCM will store condition which were present when the DTC was set as Freeze Frame and in the Failure Records data.

Conditions for Clearing the MIL/DTC

- The PCM will turn the MIL “OFF” on the third consecutive trip cycle during which the diagnostic has been run and the fault condition is no longer present.
- A histror DTC P1120 will clear after 40 cosecutive trip cycle during which the warm up cycles have occurred without a fault.
- DTC P1120 can be cleared using the Tech 2 “Clear Info” function or by disconnecting the PCM battery feed.

Diagnostic Aids

An intermittent may be caused by the following:

- Poor connectons.
- Mis routed harness.
- Rubbed through wire insulation.
- Broken wire inside the insulation.

Check for the following conditions:

- The MAP sensor shares a 5 Volt reference with the Fuel Tank Pressure, APS1, APS3 and EGR value.
- The MAP sensor shares a ground with the Fuel Tank Pressure, the ECT sensor, and the Transmission Fluid.
- Poor connection at PCM-Inspect harness connectors for backed out terminals, improper mating, broken locks, improperly formed or damaged terminals,and poor terminal to wire connection.
- Damaged harness-Inspect the wiring harness for damage. If the harness appears to be OK,observe the TPS 1 display on the Tech 2 while moving connectors and wiring harnesses related to the sensor.

  A change in the display will indicate the location of the fault.

If DTC P1120 cannot be duplicated,the information included in the Faillure Records data can be useful in determined vehicle mileage since the DTC was last set.

If it is determined that the DTC occurs intermittently, performing the DTC P1120 Diagnostic Chart may isolate the cause of the fault.

Diagnostic Trouble Code(DTC)P1120-TPS 1 Circuit Fault

Step	Action	Value(s)	Yes	No
1	Was the “On-Board(OBD)System Check” performed?	—	Go to *Step 2*	Go to *OBD System Check*
2	Was the “Electric Throttle Control (ETC) System Check” performed?	—	Go to *Step 3*	Go to *ETC System check*
3	1. Ignition “ON”, engine not running. 2. Observe the MAP reading on the Tech 2. Is the MAP reading less than the specified value?	100kPa	Go to *Step 4*	Go to *Step 7*
4	1. Disconnect the MAP sensor. 2. Connect a test 5 volt reference circuit and the MAP signal at the MAP sensor harness connector. 3. Observe the MAP reading on the Tech 2. Is the MAP reading less than the specified value? (If no, start with diagnosis chart forother sensors in the circuit and see if 5V returns.)	—	Go to *Step 6*	Go to *Step 5*
5	1. Check the MAP signal circuit between the PCM and MAP grund circuit. 2. If the MAP signal circuit is open or shoted, repair it as necessary. Was the MAP signal circuit open or shorted?	—	Verify repair	Go to *Step 13*
6	Replace the MAP sensor. Is the action complete?	—	Verify repair	—
7	1. Warming up the engine until the ECT rise at 80˚C 2. Ignition “OFF”. 3. Ignition “ON” but not engine run. 4. Observe the TP angle reading on the Tech 2 while alowly opening the throttle. NOTE: The value check of TPS must be performed in less than 15 seconds. Does the TP angle increase steadily and evenly from the closed throttle value to the wide open throttle value?	Closed throttle TPS1= 6~12% Wide open throttle TPS1= 79~83%	Go to *Step 8*	Go to *Step 9*
8	Was the DTC P1120 stored?	—	Go to *Step 13*	Check the procedure. Refer to *Diagnostic Aids*
9	1. Connect a DVM between the 5Volt reference circuit and the TP sensor ground circuit at the TP1sensor harness connector. 2. Observe the voltage using a DVM. Is the voltage near the specified value?	5V	Go to *Step 10*	Go to *Step 11*

Diagnostic Trouble Code(DTC)P1120-TPS 1 Circuit Fault (Cont'd)

Step	Action	Value(s)	Yes	No
10	Check the following items; 1. TP1 signal circuit for a short to voltage. 2. TP1 sensor ground circuit for high resistance between the PCM and the TP sensor. 3. TP1 sensor ground circuit for a poor connection. 4. If a problem is found,repair wiring harness as necessary. Was a problem found?	—	Verify repair	Go to *Step 11*
11	Check the following items; 1. TP signal circuit or 5 volt reference circuit for a poor connection. 2. TP signal circuit or 5 volt reference circuit for high resistance between the PCM and the TP sensor. 3. If a problem is found, repair wiring harness as necessary. Was a problem found?	—	Verify repair	Go to *Step 12*
12	Replace the TP sensor. Was a problem corrected?	—	Verify repair	Go to *Step 13*
13	Replace the PCM. **IMPORTANT:** The replacement PCM must be programmed. Refer to *ON-Vehicle Service in Power Control Module and Sensors for procedures.* And also refer to latest Service Bulletin. Check to see if the latest software is released or not. And then Down Load the LATEST PROGRMMED SOFTWARE to the replasement PCM. Is the action complete?	—	Verify repair	—

Diagnostic Trouble Code (DTC) P1125 ETC (Electric throttle control) Limit Performance Mode

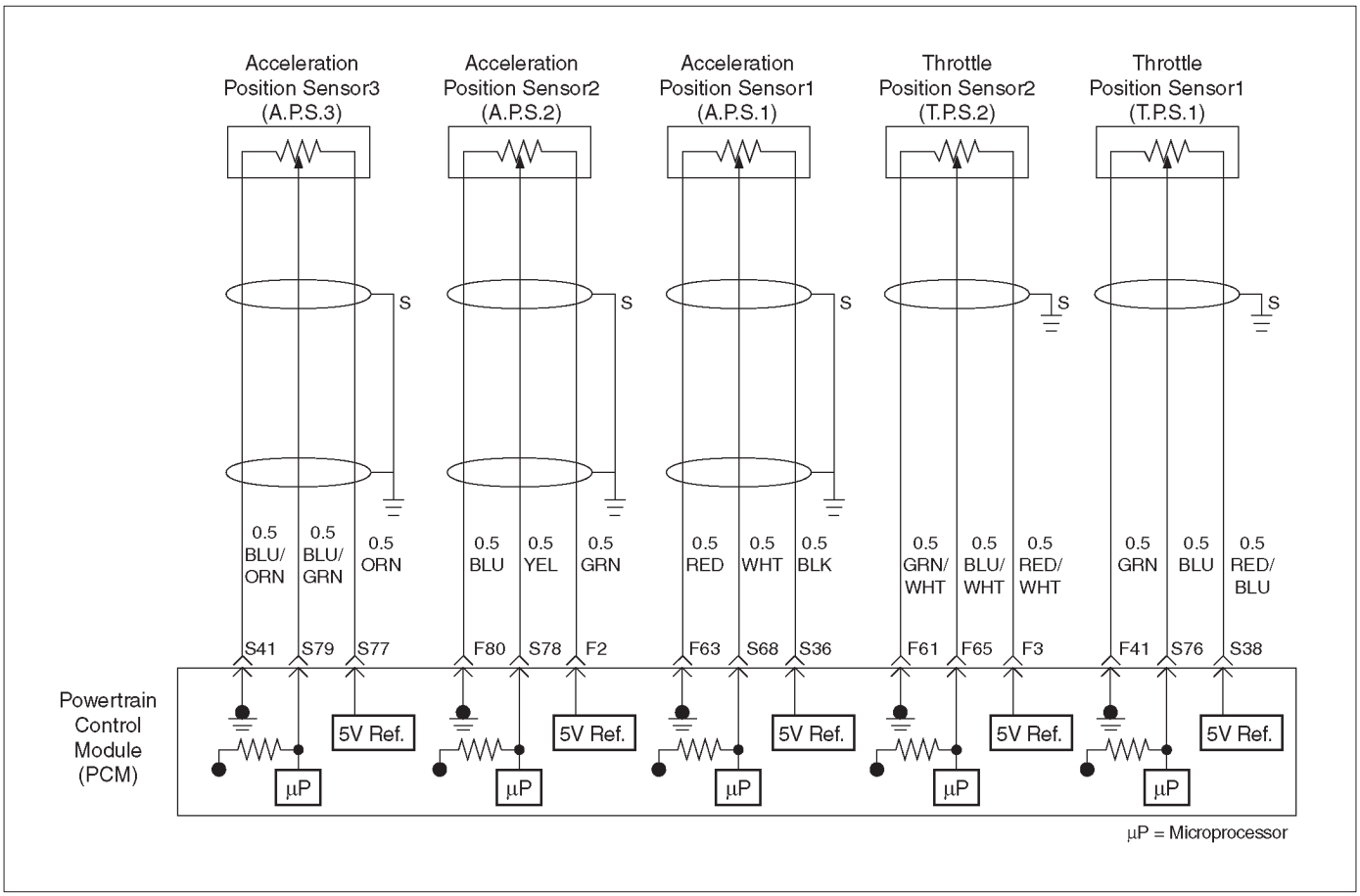

D06RY00157

Circuit Description

- The acceleration position (AP1) sensor circuit provides a voltage signal relative to acceleration pedal angle.

  The acceleration pedal angle will vary about 13 % at idle position to about 87 % at wide open throttle (WOT).

  This code detects if the system is in Limit Performance Mode (Fail safe Mode) and Multiple DTCs performance Mode.

Conditions for setting the DTC

- The Ignition is " ON".
- Limit Performance Mode is active. (Fail safe Mode)

Action Taken When the DTC Sets

- The PCM will store condition which were present when the DTC was set as Freeze Frame and in the Failure Records data.

Conditions for Clearing the MIL/DTC

- The PCM will turn the MIL "OFF" on the third consecutive trip cycle during which the diagnostic has been run and the fault condition is no longer present.
- A history DTC P1125 will clear after 40 cosecutive trip cycle during which the warm up cycles have occurred without a fault.
- DTC P1125 can be cleared using the Tech 2 "Clear Info" function or by disconnecting the PCM battery feed.

Diagnostic Aids

An intermittent may be caused by the following:

- Poor connectons.
- Mis routed harness.
- Rubbed through wire insulation.
- Broken wire inside the insulation.

Check for the following conditions:

- Poor connection at PCM-Inspect harness connectors for backed out terminals, improper mating, broken locks, improperly formed or damaged terminals,and poor terminal to wire connection.
- Damaged harness-Inspect the wiring harness for damage. If the harness appears to be OK, observe the APP sensor 1, APP sensor 2, APP sensor 3 display on the Tech 2 While moving connectors and wiring harnesses related to the sensor.

  A change in the display will indicate the location of the fault.

  If DTC P1125 cannot be duplicated,the information includedin the Faillure Records data can be useful in determined vehicle mileage since the DTC was last set.

  If it is determined that the DTC occurs intermittently,performing the DTC P1125 Diagnostic Chart may isolate the cause of the fault.

DTC P1125 – ETC Limit Performance Model

Step	Action	Value(s)	Yes	No
1	Was the “On-Board (OBD) System Check” performed?	—	Go to *Step 2*	Go to *OBD System Check*
2	1. Warming up the engine until the ECT rise at 80˚C 2. Ignition “OFF”. 3. Ignition ON” but not engine run. 4. Observe the AP angle reading on the Tech 2 while alowly opening the throttle. Does the AP angle increase steadily and evenly from the closed throttle value to the wide open throttle value?	Closed throttle APS1 = 11~15% APS2 = 85~89% APS3 = 85~89% Wide open throttle APS1 = 85~89% APS2 = 11~15% APS3 = 32~36%	Go to *Step 3*	Go to *Step 4*
3	Was the P1125 stored?	—	Go to *Step 8*	Check the procedure. Refer to *Diagnostic Aids*
4	1. Connect a DVM between the 5 Voltge supply circuit and the AP1, AP2 AND AP3 sensor ground circuit at the AP sensor harness connector. 2. Observe the voltage using a DVM. Is the voltage reading near the specified value?	5V	Go to *Step 5*	Go to *Step 6*
5	Check the following items; 1. AP1, AP2 or AP3 signal circuit for a short to voltage. 2. AP1, AP2 or AP3 sensor ground circuit for high resistance between the PCM and the AP sensor. 3. AP1, AP2 or AP3 sensor ground circuit for a poor connection. 4. If a problem is found, repair wiring harness as necessary. Was a problem found?	—	Verify repair	Go to *Step 6*
6	Check the following items; 1. AP1, AP2 or AP3 signal circuit or 5 volge supply circuit for a poor connection. 2. AP1, AP2 or AP3 signal circuit or 5 volge supply circuit for high resistance between the PCM and the AP1, AP2 or AP3 sensor. 3. If a problem is found, repair wiring harness as necessary. Was a problem found?	—	Verify repair	Go to *Step 7*

DTC P1125 – ETC Limit Performance Model (Cont'd)

Step	Action	Value(s)	Yes	No
7	Replace the AP sensor. Was a problem corrected?	—	Verify repair	Go to *Step 8*
8	Replace the PCM. **IMPORTANT:** The replacement PCM must be programmed.Refer to *ON-Vehicle Service in Power Control Module and Sensors for procedures.* And also refer to latest Service Bulletin. Check to see if the latest software is released or not. And then Down Load the LATEST PROGRAMMED SOFTWARE to the replasement PCM. Is the action complete?	—	Verify repair	—

Diagnostic Trouble Code (DTC)
P1133 HO2S Insufficient Switching Bank 1 Sensor 1

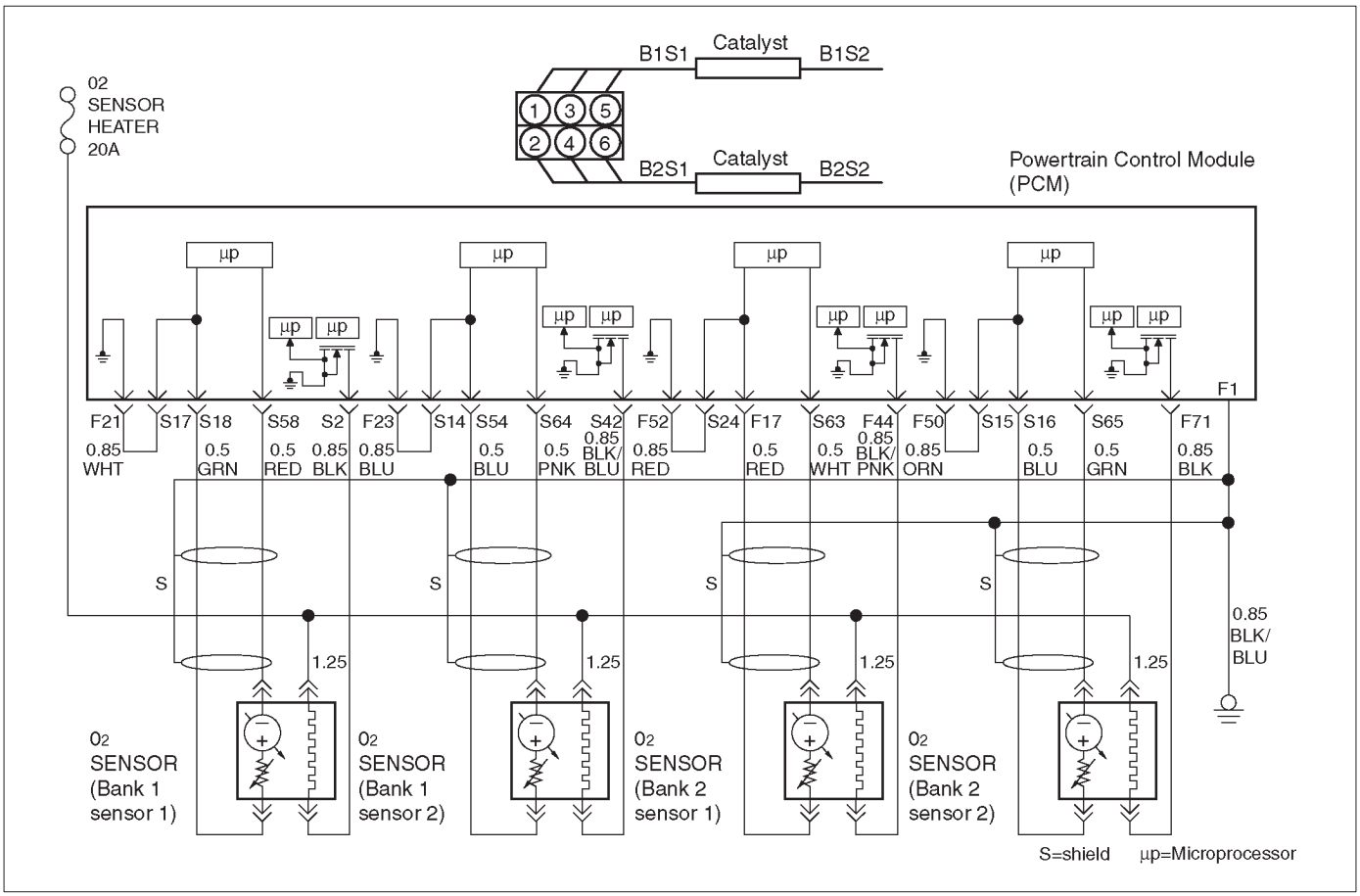

Circuit Description

The powertrain control module (PCM) monitors the heated oxygen sensor (HO2S) activity for 90 seconds after “closed loop” and stoichiometric operation have been enabled. During this test period the PCM counts the number of times that the HO2S signal voltage crosses the rich-to-lean and lean-to-rich threshold. If the PCM determines that the HO2S did not switch enough times, DTC P1133 will be set.

A lean-to-rich switch is determined when the HO2S voltage changes above and below 450 mV.

Heated oxygen sensors are used to minimize the amount of time required for “closed loop” fuel control operation and to allow accurate catalyst monitoring. The oxygen sensor heater greatly decreases the amount of time required for fuel control sensors Bank 1 HO2S 1 and Bank 2 HO2S 1 to become active. Oxygen sensor heaters are required by post-catalyst monitor sensors to maintain a sufficiently high temperature for accurate exhaust oxygen content readings further from the engine.

Conditions for Setting the DTC

- Engine coolant temperature (ECT) is above 60˚C (140˚F).
- Engine is operating in “closed loop”.
- The engine has been running at least one minute.
- Canister purge duty cycle is greater than 2%.
- Engine speed is between 1500 RPM and 3000 RPM.
- Mass air flow (MAF) is between 9 g/second and 42 g/second.
- Above conditions are present for 3 seconds.
- 90 seconds after “closed loop” and stoichiometric operation have been achieved, the PCM monitors the oxygen sensor as it switches above and below 450 mV. If fewer than 23 rich-to-lean and lean-to-rich switches are detected, DTC P1133 will be set.

Action Taken When the DTC Sets

- The PCM will illuminate the malfunction indicator lamp (MIL) after the second consecutive trip in which the fault is detected.
- ”Open loop” fuel control will be in effect.
- The PCM will store conditions which were present when the DTC was set as Freeze Frame and in the Failure Records data.

Conditions for Clearing the MIL/DTC

- The PCM will turn the MIL “OFF” on the third consecutive trip cycle during which the diagnostic has been run and the fault condition is no longer present.
- A history DTC P1133 will clear after 40 consecutive warm-up cycles have occurred without a fault.
- DTC P1133 can be cleared by using Tech 2 “Clear Info” function or by disconnecting the PCM battery feed.

Diagnostic Aids

A malfunction in the HO2S heater ignition feed or ground circuit may cause a DTC P1133 to set. Check HO2S heater circuitry for intermittent faults or poor connections. If connections and wiring are OK and DTC P1133 continues to set, replace the Bank 1 HO2S 1.
Reviewing the Failure Records vehicle mileage since the diagnostic test last failed may help to determine how often the condition that caused the DTC to be set occurs. This may assist in diagnosing the condition.

Test Description

Number(s) below refer to the step number(s) on the Diagnostic Chart.

3. A condition that affects other heated oxygen sensors indicates probable contamination. To avoid damaging the replacement sensors, correct the condition which caused the contamination before replacing the affected sensors.

5. This step checks for conditions which may cause the heated oxygen sensor to appear faulty. Correct any of the described conditions if present.

11. To avoid damaging replacement sensors, correct the condition which caused the contamination before replacing the affected sensors.

DTC P1133 – HO2S Insufficient Switching Bank 1 Sensor 1

Step	Action	Value(s)	Yes	No
1	Was the “On-Board Diagnostic (OBD) System Check” performed?	—	Go to *Step 2*	Go to *OBD System Check*
2	**IMPORTANT:** If any DTCs are set (except P1153 or P1154) refer to those DTCs before proceeding with this diagnostic chart. 1. Engine idling at operating temperature. 2. Operating the vehicle within parameters specified under “Conditions for Setting the DTC” criteria included in Diagnostic Support. 3. Using a Tech 2, monitor “DTC” info for DTC P1133 until the DTC P1133 test runs. 4. Note the test result. Does the Tech 2 indicate DTC P1133 failed this ignition?	—	Go to *Step 3*	Check the Procedure Refer to *Diagnostic Aids*
3	Did the Tech 2 also indicate that the P1153 or P1154 tests failed?	—	Go to *Step 20*	Go to *Step 4*
4	Check for leaks at the exhaust pipe joints. Are the joints leaking?	—	Go to *Step 5*	Go to *Step 6*
5	Tighten the bolt/nuts at the leaking joints. Is your action complete?	—	Go to *Step 2*	—
6	Check for gaskets that are damaged or improperly installed. Are there damaged or misaligned gaskets?	—	Go to *Step 7*	Go to *Step 8*
7	1. Replace the damaged gaskets. 2. Align the connections. 3. Tighten the connections. Is your action complete?	—	Go to *Step 2*	—
8	Check for loose exhaust flange connections. Are the flange connections loose?	—	Go to *Step 9*	Go to *Step 10*
9	Tighten the stud nuts or bolts to specifications. Is your action complete?	—	Go to *Step 2*	—
10	Check for burned or corroded exhaust pipes. Are the exhaust pipes burned or corroded?	—	Go to *Step 11*	Go to *Step 12*

DTC P1133 – HO2S Insufficient Switching Bank 1 Sensor 1 (Cont'd)

Step	Action	Value(s)	Yes	No
11	Replace the exhaust pipes, as required. Is your action complete?	—	Go to *Step 2*	—
12	Check for leaks at the exhaust manifold. Are there leaks at the exhaust manifold?	—	Go to *Step 13*	Go to *Step 14*
13	Tighten the bolts to specifications or replace the manifold if necessary. Is your action complete?	—	Go to *Step 2*	—
14	Visually/physically inspect the following items: ● Ensure that the Bank 1 HO2S 1 is securely installed. ● Check for corrosion on the terminals. ● Check the terminals at Bank 1 HO2S 1 and at the PCM. ● Check for damaged wiring. Was a problem found in any of the above areas?	—	Verify repair	Go to *Step 15*
15	1. Disconnect Bank 1 HO2S 1. 2. Ignition "ON". 3. Using a DVM at the PCM side of the connector, check the voltage between the high signal circuit and ground. Also measure between the low signal circuit and ground. Are both voltages in the specified range?	3-4 mV	Go to *Step 18*	Go to *Step 16*
16	1. Ignition "OFF". 2. Check for damage to PCM pins or terminals. Was a problem found.	—	Verify repair	Go to *Step 17*
17	Check for a short to voltage or ground or an open in the signal circuit. Was a problem found?	—	Verify repair	Go to *Step 18*
18	1. Ignition "OFF". 2. Disconnect the PCM connector. 3. With the HO2S disconnected, check for high and low signal circuits shorted together between the PCM and HO2S. Was a problem found?	—	Verify repair	Go to *Step 19*
19	With the PCM connected and Bank 1 HO2S 1 disconnected from the harness, check Bank 1 HO2S 1 with a Tech 2. Is the voltage in the specified range?	425-475 mV	Go to *Step 21*	Go to *Step 22*
20	Replace the affected heated oxygen sensors. NOTE: Before replacing the sensors, the cause of the contamination must be determined and corrected. ● Fuel contamination ● Use of improper RTV sealant. ● Engine oil/coolant consumption. Is the action complete?	—	Verify repair	—

DTC P1133 – HO2S Insufficient Switching Bank 1 Sensor 1 (Cont'd)

Step	Action	Value(s)	Yes	No
21	Replace Bank 1 HO2S 1. Is the action complete?	—	Verify repair	—
22	Replace the PCM. **IMPORTANT:** The replacement PCM must be programmed. Refer to *On-Vehicle Service* in *Powertrain Control Module and Sensors* for procedures. And also refer to latest Service Bulletin. Check to see if the Latest software is released or not. And then Down Load the LATEST PROGRAMMED SOFTWARE to the replacement PCM. Is the action complete?	—	Verify repair	—

Diagnostic Trouble Code (DTC)
P1134 HO2S Transition Time Ratio Bank 1 Sensor 1

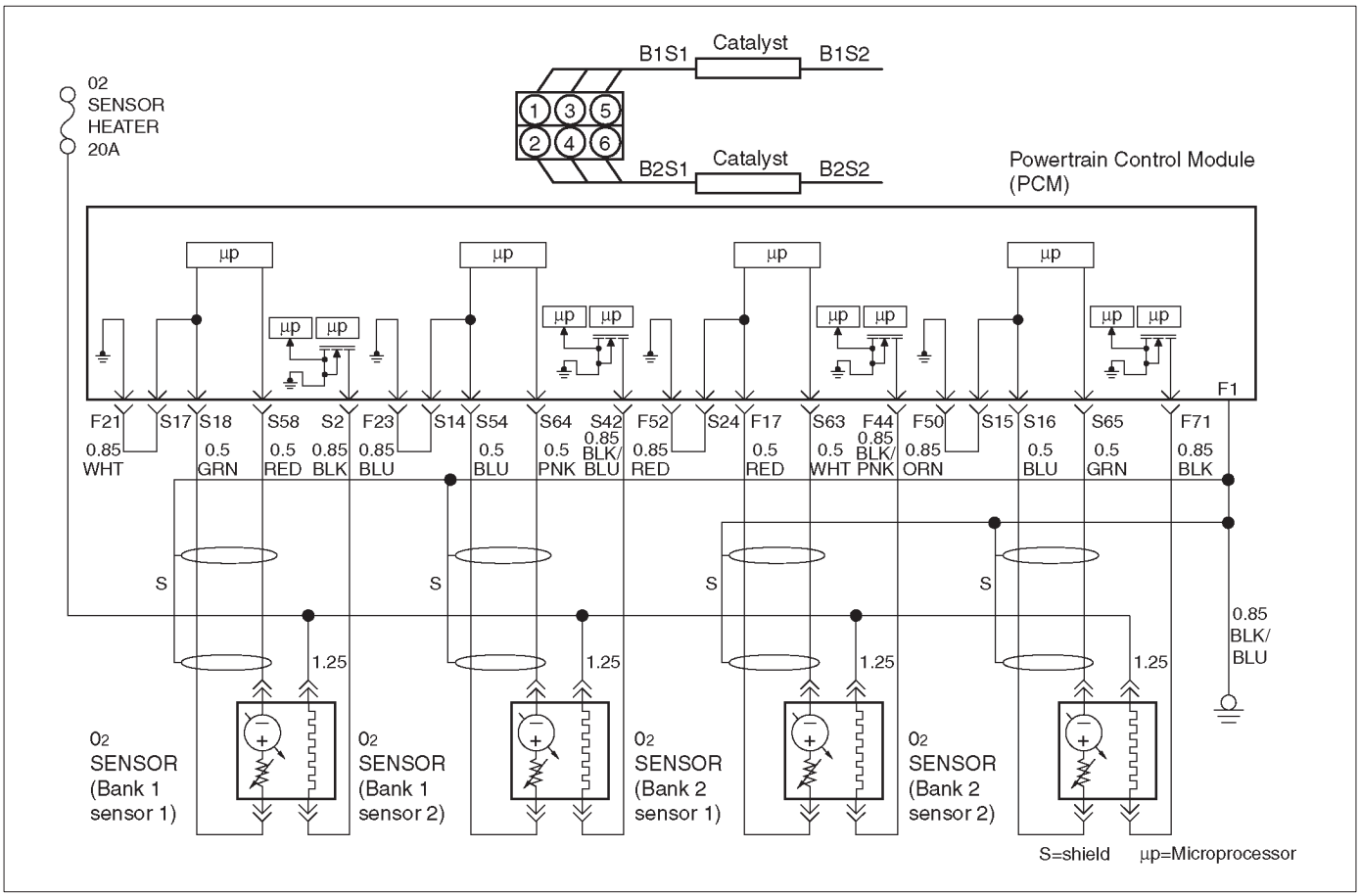

D06R200010

Circuit Description

The powertrain control module (PCM) monitors the heated oxygen sensor (HO2S) activity for 90 seconds after “closed loop” and stoichiometric operation have been established. During the monitoring period the PCM counts the number of times that the HO2S responds from rich-to-lean and from lean-to-rich and adds the amount of time it took to complete all transitions. With this information, an average time for all transitions can be determined. The PCM then divides the rich-to-lean average by the lean-to-rich average to obtain a ratio. If the HO2S transition time ratio is not within this range, DTC P1134 will be set, indicating that the oxygen sensor is not responding as expected to changes in exhaust oxygen content.

Conditions for Setting the DTC

- No related DTCs.
- Engine coolant temperature (ECT) is above 60˚C (140˚F).
- Engine is operating in “closed loop”,
- The engine has been running at least one minute.
- Canister purge duty cycle is greater than 2%.
- Engine speed is between 1500 RPM and 3000 RPM.
- Mass air flow (MAF) is between 18 g/second and 42 g/second.
- Above conditions are present for a 3-second monitoring period.
- 90 seconds after “closed loop” and stoichiometric operation have been enabled, Bank 1 HO2S 1 transition ratio between lean-to-rich and rich-to-lean is less than 0.44 or greater than 3.8.

Action Taken When the DTC Sets

- The PCM will illuminate the malfunction indicator lamp (MIL) after second consecutive trip in which the fault is detected.
- ”Open loop” fuel control will be in effect.
- The PCM will store conditions which were present when the DTC was set as Freeze Frame and in the Failure Records data.

Conditions for Clearing the MIL/DTC

- The PCM will turn the MIL “OFF” on the third consecutive trip cycle during which the diagnostic has been run and the fault condition is no longer present.
- A history DTC P1134 will clear after 40 consecutive warm-up cycles have occurred without a fault.
- DTC P1134 can be cleared by using the Tech 2 “Clear Info” function or by disconnecting the PCM battery feed.

Diagnostic Aids

A malfunction in the HO2S heater ignition feed or ground circuit may cause a DTC P1134 to set. Check HO2S heater circuitry for intermittent faults or poor connections. If connections and wiring are OK and DTC P1134 continues to set, replace the Bank 1 HO2S 1.

Reviewing the Failure Records vehicle mileage since the diagnostic test last failed may help determine how often the condition that caused the DTC to be set occurs. This may assist in diagnosing the condition.

Test Description

Number(s) below refer to the step number(s) on the Diagnostic Chart.

3. A condition that affects other heated oxygen sensors indicates probable contamination. To avoid damaging replacement sensors, correct the condition which caused the contamination before replacing the affected sensors.
5. This step checks for conditions which may cause the heated oxygen sensor to appear faulty. Correct any of the described conditions if present.
8. To avoid damaging replacement sensors, correct the condition which caused the contamination before replacing the affected sensors.

DTC P1134 – HO2S Transition Time Ratio Bank 1 Sensor 1

Step	Action	Value(s)	Yes	No
1	Was the “On-Board Diagnostic (OBD) System Check” performed?	—	Go to *Step 2*	Go to *OBD System Check*
2	**IMPORTANT:** If any DTCs are set (except P1153 and/or P1154), refer to those DTCs before proceeding with this diagnostic chart. 1. Idle the engine at operating temperature. 2. Operate the vehicle within parameters specified under “Conditions for Setting the DTC” criteria included in Diagnostic Support. 3. Using a Tech 2, monitor “DTC” info for DTC P1134 until the DTC P1134 test runs. 4. Note the test result. Does Tech 2 indicate DTC 1134 failed this ignition?	—	Go to *Step 3*	Check the Procedure Refer to *Diagnostic Aids*
3	Did the Tech 2 also indicate P1153, and/or P1154 test failed?	—	Go to *Step 17*	Go to *Step 4*
4	Check for leaks at the exhaust pipe joints. Are the joints leaking?	—	Go to *Step 5*	Go to *Step 6*
5	Tighten the U-bolt nuts at the leaking joints. Is your action complete?	—	Go to *Step 2*	—
6	Check for gaskets that are damaged or improperly installed. Are there damaged or misaligned gaskets?	—	Go to *Step 7*	Go to *Step 8*
7	1. Replace the damaged gaskets. 2. Align the connections. 3. Tighten the connections. Is your action complete?	—	Go to *Step 2*	—
8	Check for loose exhaust flange connections. Are the flange connections loose?	—	Go to *Step 9*	Go to *Step 10*
9	Tighten the stud nuts or bolts to specifications. Is your action complete?	—	Go to *Step 2*	—
10	Check for burned or corroded exhaust pipes. Are the exhaust pipes burned or corroded?	—	Go to *Step 11*	Go to *Step 12*
11	Replace the exhaust pipes, as required. Is your action complete?	—	Go to *Step 2*	—

DTC P1134 – HO2S Transition Time Ratio Bank 1 Sensor 1 (Cont'd)

Step	Action	Value(s)	Yes	No
12	Check for leaks at the exhaust manifold. Are there leaks at the exhaust manifold?	—	Go to *Step 13*	Go to *Step 14*
13	Tighten the bolts to specifications or replace the manifold if necessary. Is your action complete?	—	Go to *Step 2*	—
14	Visually/physically inspect the following items: ● Ensure that the Bank 1 HO2S 1 is securely installed. ● Check for corrosion on terminals. ● Check the terminal tension (at Bank 1 HO2S 1 and at the PCM). ● Check for damaged wiring. Was a problem found in any of the above areas?	—	Go to *Step 18*	Go to *Step 15*
15	1. Disconnect Bank 1 HO2S 1. 2. Ignition "ON". 3. Using a DVM at the PCM side of the HO2S 1 connector, measure the voltage between the high signal circuit and ground. 4. Also measure the voltage between the low signal circuit and ground. Are both voltages in the specified range?	3-4V	Go to *Step 16*	Go to *Step 19*
16	1. With Bank 1 HO2S 1 disconnected, jumper the high and low (PCM side) signal circuits to ground. 2. Ignition "ON". 3. Using a Tech 2, monitor the Bank 1 HO2S 1 voltage. Does the Tech 2 indicate less than 10 mV and immediately return to about 450 mV when the jumper is removed?	—	Go to *Step 21*	Go to *Step 22*
17	Replace affected heated oxygen sensors. NOTE: Before replacing sensors, the cause of the contamination must be determined and corrected. ● Fuel contamination. ● Use of improper RTV sealant. ● Engine oil/coolant consumption. Is the action complete?	—	Verify repair	—
18	Repair condition as necessary. Is the action complete?	—	Verify repair	—
19	Check for faulty PCM connections or terminal damage. Is the action complete?	—	Verify repair	Go to *Step 20*
20	Repair open, short or grounded signal circuit. Is the action complete?	—	Verify repair	Go to *Step 7*

DTC P1134 – HO2S Transition Time Ratio Bank 1 Sensor 1 (Cont'd)

Step	Action	Value(s)	Yes	No
21	Replace Bank 1 HO2S 1. Is the action complete?	—	Verify repair	—
22	Replace the PCM. **IMPORTANT:** The replacement PCM must be programmed. Refer to *On-Vehicle Service* in *Powertrain Control Module and Sensors* for procedures. And also refer to latest Service Bulletin. Check to see if the Latest software is released or not. And then Down Load the LATEST PROGRAMMED SOFTWARE to the replacement PCM. Is the action complete?	—	Verify repair	—

Diagnostic Trouble Code (DTC)
P1153 HO2S Insufficient Switching Bank 2 Sensor 1

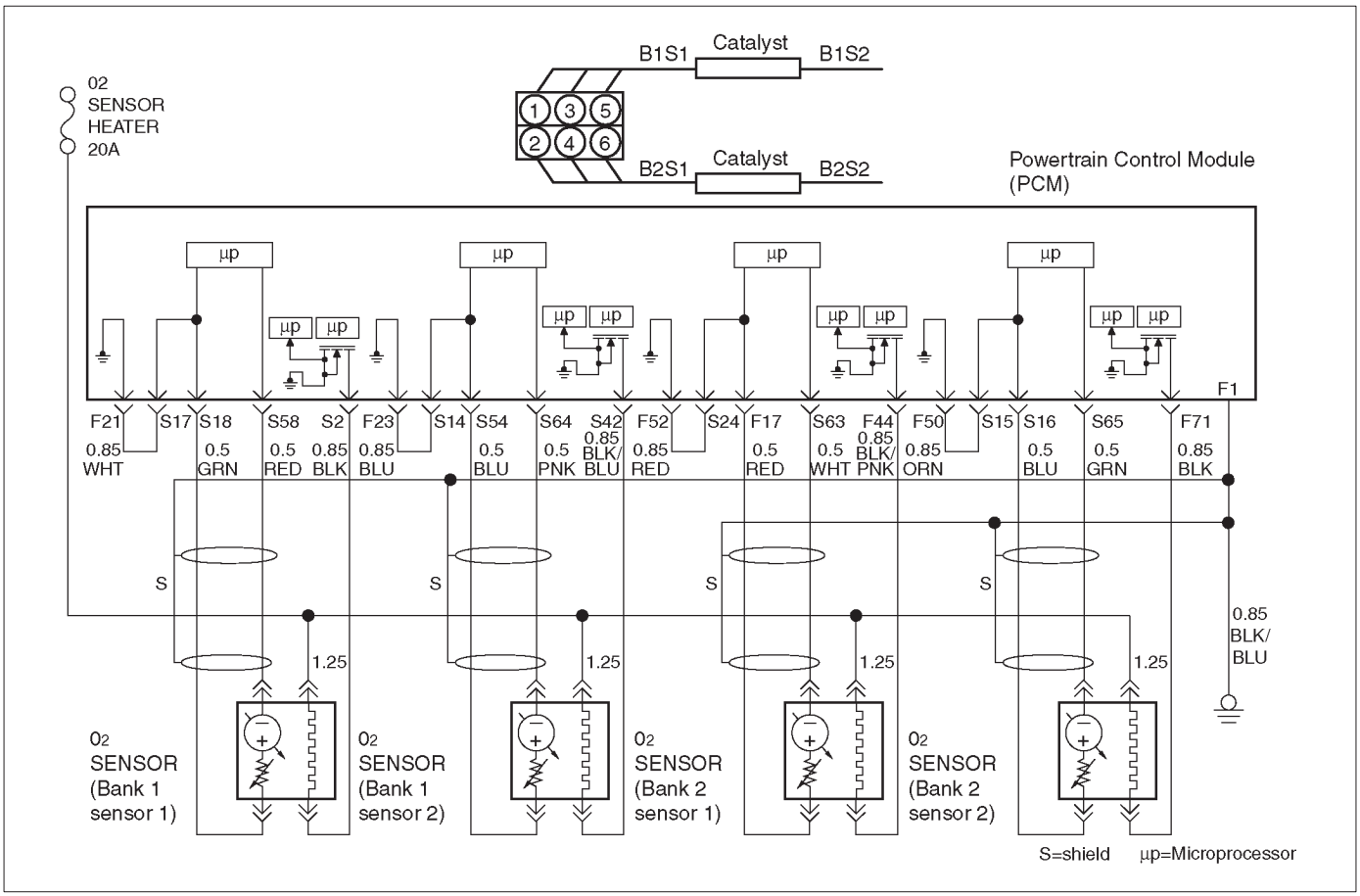

D06R200010

Circuit Description

The powertrain control module (PCM) monitors the heated oxygen sensor (HO2S) activity for 90 seconds after “closed loop” and stoichiometric operation have been enabled. During this test period the PCM counts the number of times that the HO2S signal voltage crosses the rich-to-lean and lean-to-rich thresholds. If the PCM determines that the HO2S did not switch enough times, DTC P1153 will be set.

A lean-to-rich switch is determined when the HO2S voltage changes above and below 450 mV.

Heated oxygen sensors are used to minimize the amount of time required for “closed loop” fuel control operation and to allow accurate catalyst monitoring. The oxygen sensor heater greatly decreases the amount of time required for fuel control sensors Bank 1 HO2S 1 and Bank 2 HO2S 1 to become active. Oxygen sensor heaters are required by post-catalyst monitor sensors to maintain a sufficiently high temperature for accurate exhaust oxygen content readings further from the engine.

Conditions for Setting the DTC

- The engine is operating in “closed loop”,
- Engine coolant temperature (ECT) is above 60˚C (140˚F).
- The engine has been running for over 60 seconds.
- Canister purge duty cycle is greater than 2%.
- Engine speed is between 1500 RPM and 3000 RPM.
- Mass air flow is between 8 g/second and 42 g/second.
- Above conditions are present for a 3 seconds.
- 90 seconds after “closed loop” and stoichiometric operation have been enabled, the PCM monitors the oxygen sensor switching above and below 450 mV. If fewer than 27 rich-to-lean and lean-to-rich switches for Bank 2 HO2S 1 are detected, DTC P1153 will set.

Action Taken When the DTC Sets

- The PCM will illuminate the malfunction indicator lamp (MIL) after the second consecutive trip in which the fault is detected.
- ”Open loop” fuel control will be in effect.
- The PCM will store conditions which were present when the DTC was set as Freeze Frame and in the Failure Records data.

Conditions for Clearing the MIL/DTC

- The PCM will turn the MIL “OFF” on the third consecutive trip cycle during which the diagnostic has been run and the fault condition is no longer present.
- A history DTC P1153 will clear after 40 consecutive warm-up cycles have occurred without a fault.
- DTC P1153 can be cleared by using the Tech 2 “Clear Info” function or by disconnecting the PCM battery feed.

Diagnostic Aids

A malfunction in the HO2S heater ignition feed or ground circuit may cause a DTC P1153 to set. Check HO2S heater circuitry for intermittent faults or poor connections. If connections and wiring are OK and DTC P1153 continues to set, replace the Bank 2 HO2S 1.
Reviewing the Failure Records vehicle mileage since the diagnostic test last failed may help determine how often the condition that caused the DTC to be set occurs. This may assist in diagnosing the condition.

Test Description

Number(s) below refer to the step number(s) on the Diagnostic Chart.

3. A condition that affects other heated oxygen sensors indicates probable contamination. To avoid damaging replacement sensors, correct the condition which caused the contamination before replacing the affected sensors.
5. This step checks for conditions which may cause the heated oxygen sensor to appear faulty. Correct any of the described conditions if present.
8. To avoid damaging replacement sensors, correct the condition which caused the contamination before replacing the affected sensors.

DTC P1153 – HO2S Insufficient Switching Bank 2 Sensor 1

Step	Action	Value(s)	Yes	No
1	Was the “On-Board Diagnostic (OBD) System Check” performed?	—	Go to *Step 2*	Go to *OBD System Check*
2	**IMPORTANT:** If any DTCs are set, (except P1133 and/or P1134), refer to those DTCs before proceeding with this diagnostic chart. 1. Idle the engine at operating temperature. 2. Operate the vehicle within parameters specified under “Conditions for Setting the DTC” criteria included in Diagnostic Support. 3. Using a Tech 2, monitor “DTC” info for DTC P1153 until the DTC P1153 test runs. Note the test result. Does Tech 2 indicate DTC failed this ignition?	—	Go to *Step 3*	Check the Procedure Refer to *Diagnostic Aids*
3	Did the Tech 2 also indicate P1133 and/or P1134 test failed?	—	Go to *Step 20*	Go to *Step 4*
4	Check for leaks at the exhaust pipe joints. Are the joints leaking?	—	Go to *Step 5*	Go to *Step 6*
5	Tighten the U-bolt nuts at the leaking joints. Is your action complete?	—	Go to *Step 2*	—
6	Check for gaskets that are damaged or improperly installed. Are there damaged or misaligned gaskets?	—	Go to *Step 7*	Go to *Step 8*
7	1. Replace the damaged gaskets. 2. Align the connections. 3. Tighten the connections. Is your action complete?	—	Go to *Step 2*	—
8	Check for loose exhaust flange connections. Are the flange connections loose?	—	Go to *Step 9*	Go to *Step 10*
9	Tighten the stud nuts or bolts to specifications. Is your action complete?	—	Go to *Step 2*	—
10	Check for burned or corroded exhaust pipes. Are the exhaust pipes burned or corroded?	—	Go to *Step 11*	Go to *Step 12*

DTC P1153 – HO2S Insufficient Switching Bank 2 Sensor 1 (Cont'd)

Step	Action	Value(s)	Yes	No
11	Replace the exhaust pipes, as required. Is your action complete?	—	Go to *Step 2*	—
12	Check for leaks at the exhaust manifold. Are there leaks at the exhaust manifold?	—	Go to *Step 13*	Go to *Step 14*
13	Tighten the bolts to specifications or replace the manifold if necessary. Is your action complete?	—	Go to *Step 2*	—
14	Visually/physically inspect the following items: ● Ensure that the Bank 2 HO2S 1 is securely installed. ● Check for corrosion on terminals. ● Check the terminal tension at Bank 2 HO2S 1 and at the PCM. ● Check for damaged wiring. Was a problem found in any of the above areas?	—	Verify repair	Go to *Step 15*
15	1. Disconnect Bank 2 HO2S 1. 2. Ignition "ON". 3. Using a DVM at the PCM side of the connector, check the voltage between the high signal circuit and ground. Also measure between the low signal circuit and ground. Are both voltages in the specified range?	3-4V	Go to *Step 18*	Go to *Step 16*
16	1. Ignition "ON". 2. Check for damage to PCM pins or terminals. Was a problem found?	—	Verify repair	Go to *Step 17*
17	Check for short to voltage or ground or an open in the signal circuit. Was a problem found?	—	Verify repair	Go to *Step 18*
18	1. Ignition "OFF". 2. Disconnect the PCM connector. 3. With HO2S disconnected, check for high and low signal circuits shorted together between the PCM and HO2S. Was a problem found?	—	Verify repair	Go to *Step 19*
19	With the PCM connected and Bank 2 HO2S 1 disconnected from the harness, check Bank 2 HO2S 1 with a Tech 2. Is the voltage in the specified range?	425-475 mV	Go to *Step 21*	Go to *Step 22*
20	Replace affected heated oxygen sensors. NOTE: Before replacing sensors, the cause of the contamination must be determined and corrected. ● Fuel contamination. ● Use of improper RTV sealant. ● Engine oil/coolant consumption. Is the action complete?	—	Verify repair	—

DTC P1153 – HO2S Insufficient Switching Bank 2 Sensor 1 (Cont'd)

Step	Action	Value(s)	Yes	No
21	Replace Bank 2 HO2S 1. Is the action complete?	—	Verify repair	—
22	Replace the PCM. **IMPORTANT:** The replacement PCM must be programmed. Refer to *On-Vehicle Service* in *Powertrain Control Module and Sensors* for procedures. And also refer to latest Service Bulletin. Check to see if the Latest software is released or not. And then Down Load the LATEST PROGRAMMED SOFTWARE to the replacement PCM. Is the action complete?	—	Verify repair	—

Diagnostic Trouble Code (DTC)
P1154 HO2S Circuit Transition Time Ratio Bank 2 Sensor 1

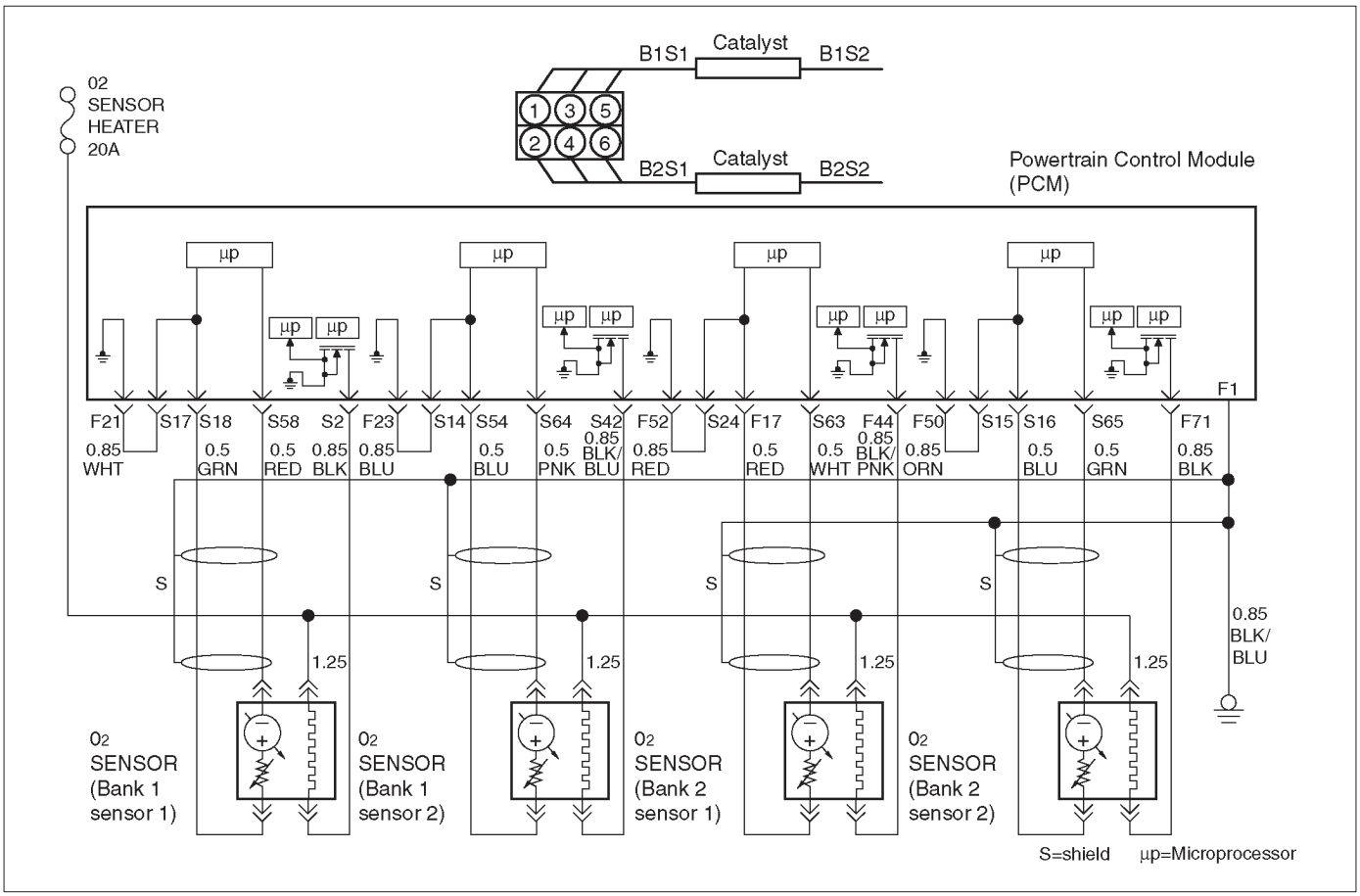

D06R200010

Circuit Description

The powertrain control module (PCM) monitors the heated oxygen sensor (HO2S) activity for 90 seconds after “closed loop” and stoichiometric operation have been enabled. During the monitor period the PCM counts the number of times that the HO2S responds from rich-to-lean and from lean-to-rich and adds the amount of time it took to complete all transitions. With this information, an average time for all transitions can be determined. The PCM then divides the rich-to-lean average by the lean-to-rich average to obtain a ratio. If the HO2S transition time ratio is not within this range, DTC P1154 will be set, indicating that the oxygen sensor is not responding as expected to changes in exhaust oxygen content.

Conditions for Setting the DTC

- No related DTCs.
- Engine coolant temperature (ETC) is above 60˚C (140˚F).
- The engine is operating in “closed loop”,
- The engine has been running at least one minute.
- Canister purge duty cycle is greater than 2%.
- Engine speed is between 1500 RPM and 3000 RPM.
- Mass air flow is between 18 g/second and 42 g/second.
- Above conditions are present for a 3-second monitoring period.
- 90 seconds after “closed loop” and stoichiometric operation have been enabled, Bank 2 HO2S 1 transition ratio between lean to rich and rich to lean is less than 0.44 or greater than 3.8.

Action Taken When the DTC Sets

- The PCM will illuminate the malfunction indicator lamp (MIL) after the second consecutive trip in which the fault is detected.
- ”Open loop” fuel control will be in effect.
- The PCM will store conditions which were present when the DTC was set as Freeze Frame and in the Failure Records data.

Conditions for Clearing the MIL/DTC

- The PCM will turn the MIL “OFF” on the third consecutive trip cycle during which the diagnostic has been run and the fault condition is no longer present.
- A history DTC P1154 will clear after 40 consecutive warm-up cycles have occurred without a fault.
- DTC P1154 can be cleared by using the Tech 2 “Clear Info” function or by disconnecting the PCM battery feed.

Diagnostic Aids

A multifunction in the HO2S heater ignition feed or ground circuit may cause a DTC P1154 to set. Check HO2S heater circuitry for intermittent faults or poor connections.

If connections and wiring are OK and DTC P1154 continues to set, replace the Bank 2 HO2S 1.
Reviewing the Failure Records vehicle mileage since the diagnostic test last failed may help determine how often the condition that caused the DTC to be set occurs. This may assist in diagnosing the condition.

Test Description

Number(s) below refer to the step number(s) on the Diagnostic Chart.

3. A condition that affects other heated oxygen sensors indicates probable contamination. To avoid damaging replacement sensors, correct the condition which caused the contamination before replacing the affected sensors.

5. This step checks for conditions which may cause the heated oxygen sensor to appear faulty. Correct any of the described conditions if present.

8. To avoid damaging replacement sensors, correct the condition which caused the contamination before replacing the affected sensors.

DTC P1154 – HO2S Transition Time Ratio Bank 2 Sensor 1

Step	Action	Value(s)	Yes	No
1	Was the “On-Board Diagnostic (OBD) System Check” performed?	—	Go to *Step 2*	Go to *OBD System Check*
2	**IMPORTANT:** If any other DTCs are set (except P1133 and/or P1134), refer to those DTCs before proceeding with this diagnostic chart. 1. Idle the engine at operating temperature. 2. Operate the vehicle within parameters specified under “Conditions for Setting the DTC” criteria included in Diagnostic Support. 3. Using a Tech 2, monitor “DTC” info for DTC P1154 until the DTC P1154 test runs. Note the test result. Does Tech 2 indicate DTC failed this ignition?	—	Go to *Step 3*	Check the Procedure Refer to *Diagnostic Aids*
3	Did the Tech 2 also indicate P1133, and/or P1134 test failed?	—	Go to *Step 17*	Go to *Step 4*
4	Check for leaks at the exhaust pipe joints. Are the joints leaking?	—	Go to *Step 5*	Go to *Step 6*
5	Tighten the U-bolt nuts at the leaking joints. Is your action complete?	—	Go to *Step 2*	—
6	Check for gaskets that are damaged or improperly installed. Are there damaged or misaligned gaskets?	—	Go to *Step 7*	Go to *Step 8*
7	1. Replace the damaged gaskets. 2. Align the connections. 3. Tighten the connections. Is your action complete?	—	Go to *Step 2*	—
8	Check for loose exhaust flange connections. Are the flange connections loose?	—	Go to *Step 9*	Go to *Step 10*
9	Tighten the stud nuts or bolts to specifications. Is your action complete?	—	Go to *Step 2*	—
10	Check for burned or corroded exhaust pipes. Are the exhaust pipes burned or corroded?	—	Go to *Step 11*	Go to *Step 12*
11	Replace the exhaust pipes, as required. Is your action complete?	—	Go to *Step 2*	—

DTC P1154 – HO2S Transition Time Ratio Bank 2 Sensor 1 (Cont'd)

Step	Action	Value(s)	Yes	No
12	Check for leaks at the exhaust manifold. Are there leaks at the exhaust manifold?	—	Go to *Step 13*	Go to *Step 14*
13	Tighten the bolts to specifications or replace the manifold if necessary. Is your action complete?	—	Go to *Step 2*	—
14	Visually/physically inspect the following items: ● Ensure that the Bank 2 HO2S 1 is securely installed. ● Check for corrosion on terminals. ● Check terminal tension (at Bank 2 HO2S 1 and at the PCM). ● Check for damaged wiring. Was a problem found in any of the above areas?	—	Go to *Step 18*	Go to *Step 15*
15	1. Disconnect Bank 2 HO2S 1. 2. Ignition "ON". 3. Using a DVM at the PCM side of the HO2S 1 connector, measure the voltage between the high signal circuit and ground. Also measure the voltage between the low signal circuit and ground. Are both voltages in the specified range?	3-4 V	Go to *Step 16*	Go to *Step 19*
16	1. With Bank 2 HO2S 1 disconnected, jumper the high and low (PCM side) signal circuits to ground. 2. Ignition "ON". 3. Using a Tech 2, monitor the Bank 2 HO2S 1 voltage. Does the Tech 2 indicate less than 10 mV and immediately return to about 450 mV when the jumper is removed?	—	Go to *Step 21*	Go to *Step 22*
17	Replace affected heated oxygen sensors. NOTE: Before replacing sensors, the cause of the contamination must be determined and corrected. ● Fuel contamination. ● Use of improper RTV sealant. ● Engine oil/coolant consumption. Is the action complete?	—	Verify repair	—
18	Repair condition as necessary. Is the action complete?	—	Verify repair	—
19	Check for faulty PCM connections or terminal damage. Is the action complete?	—	Verify repair	Go to *Step 20*
20	Repair open, short or grounded signal circuit. Is the action complete?	—	Verify repair	—

DTC P1154 – HO2S Transition Time Ratio Bank 2 Sensor 1 (Cont'd)

Step	Action	Value(s)	Yes	No
21	Replace Bank 2 HO2S 1. Is the action complete?	—	Verify repair	—
22	Replace the PCM. **IMPORTANT:** The replacement PCM must be programmed. Refer to *On-Vehicle Service* in *Powertrain Control Module and Sensors* for procedures. And also refer to latest Service Bulletin. Check to see if the Latest software is released or not. And then Down Load the LATEST PROGRAMMED SOFTWARE to the replacement PCM. Is the action complete?	—	Verify repair	—

Diagnostic Trouble Code (DTC)
P1167 Fuel System Rich During Decel Fuel Cut Off (Bank 1)

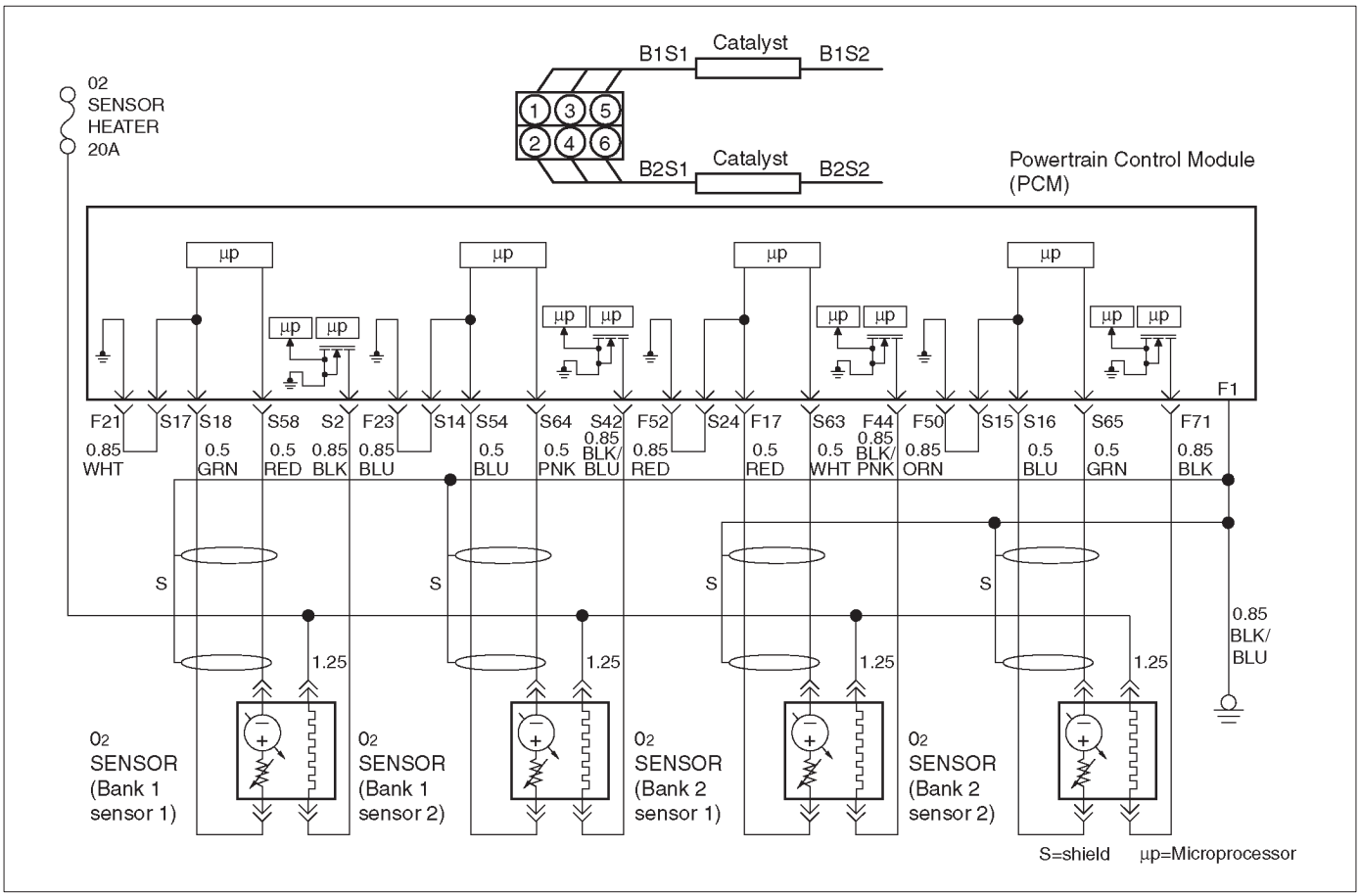

Circuit Description

The powertrain control module (PCM) continuously monitors the heated oxygen sensor (HO2S) activity for 90 seconds after “closed loop” has been enabled. During the monitoring period the powertrain control module (PCM) counts the number of times a rich to lean response is indicated and adds the amount of time it look to complete all rich to lean transitions and lean to rich transitions.
This code detects if Bank1 O2 sensor indicated rich exhaust while in Decel Fuel Cut Off (DFCO) for fuel control sensors.

Conditions for setting the DTC

- No related DTCs.
- The engine coolant temperature is more than 60 ˚C (140 ˚F).
- Engine is operating in “closed loop” power enrichment mode for 3 seconds.
- While in “power enrichment” mode the oxygen sensor voltage remains more than 600mV in DFCO.

Action Taken When the DTC Sets

- The PCM will not illuminate the malfunction malfunction indicator lamp (MIL).
- The PCM will store conditions which were present when the DTC was set as Failure Records only. This information will not be stored as Freeze Frame data.

Conditions for Clearing the MIL/DTC

- A history DTC P1167 will clear after 40 consecutive trip cycles during which the warm up cycles have occurred without a fault.
- DTC P1167 can be cleared using the Tech 2 “Clear Info” function or by disconnecting the PCM battery feed.

Diagnostic Aids

- Check for faulty fuel injectors and fuel pump.

Diagnostic Trouble Code (DTC)
P1167 Fuel System Rich During Decel Fuel Cut Off (Bank1)

Step	Action	Value(s)	Yes	No
1	Was the “On-Board (OBD) System Check” performed?	—	Go to *Step 2*	Go to *OBD System Check*
2	Are any component related DTCs set?		Go to *component DTC charts*	Go to *Step 3*
3	1. Place the transmission in Park. 2. Using a Tech 2, HO2S 1 voltage while running warm engine 75 ˚C – 95 ˚C (167 ˚F – 203 ˚F) at 1200 RPM. 3. HO2S 1 voltages should vary within the specified range. (100 – 900mV) 4. Quickly open the wide open the throttle for a few seconds. Did the voltage suddenly rise toward the low end of the specified range?	100 – 600 mV	Go to *OBD System Check*	Go to *Step 4*
4	1. Disconnect the fuel pump relay and crank the engine to relieve the fuel pressure. 2. Install the fuel pressure gauge. 3. Start the engine and idle at normal operating temperature. 4. Disconnect the vacuum line going to the fuel pressure regulator. With the engine running, is the fuel pressure within the specified range?	280 – 325Kpa (41 – 46psi)	Go to *OBD System Check*	Go to *Step 5*
5	1. Ignition “OFF”. 2. Remove the fuel pump relay and replace it with a fused jumper which will connect the relay’s battery terminal to the terminal leading to the fuel pump fuse. 3. While the fuel pump is operating, use pliers to slowly close the return line (do not exceed the first specified value). Using the pliers to restrict the return line, can the fuel pressure be manipulated to exceed the second value? Is the fuel pressure gauge reading near the specified value?	325KPa (46psi) 414KPa (60psi)	Check the Procedure Refer to *Diagnostic Aids*	Go to *Step 6*
6	Check the following items; ● Faulty fuel pump ● Incorrect fuel pump ● Incorrect fuel being used ● Cold fuel If a problem is found, repair as necessary. Was a problem found?	—	Verify repair	—

Diagnostic Trouble Code (DTC)
P1169 Fuel System Rich During Decel Fuel Cut Off (Bank 2)

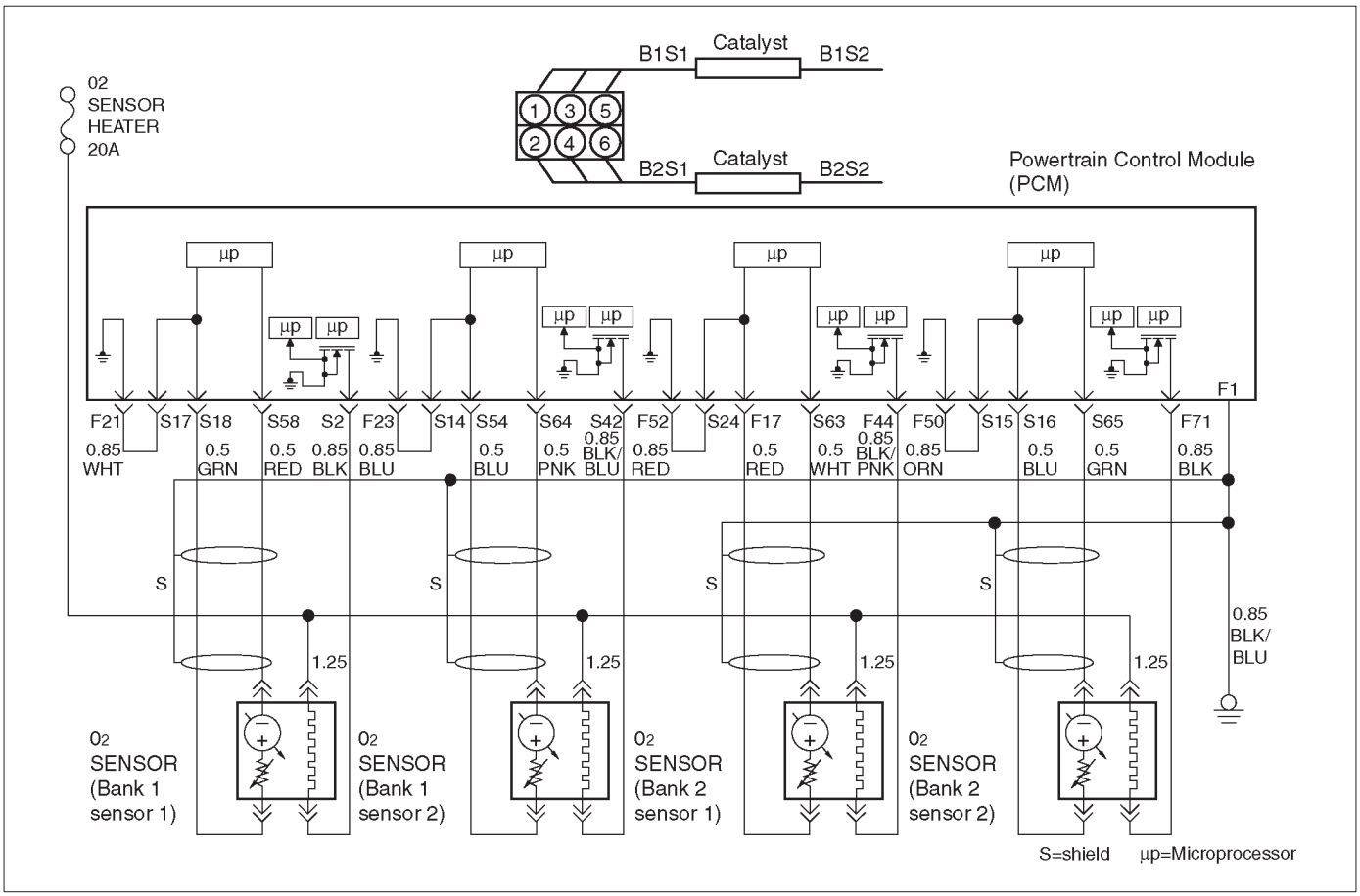

D06R200010

Circuit Description

The powertrain control module(PCM) continuously monitors the heated oxygen sensor (HO2S) activity for 90 seconds after “closed loop” has been enabled. During the monitoring period the powertrain control module (PCM) counts the number of times a rich to lean response is indicated and adds the amount of time it look to complete all rich to lean transitions and lean to rich transitions.

This code detects if Bank2 sensor indicated rich exhaust while in Decel Fuel Cut Off (DFCO) for fuel control sensors.

Conditions for setting the DTC

- No related DTCs.
- The engine coolant temperature is more than 60 ˚C (140 ˚F).
- Engine is operating in “closed loop” power enrichment mode for 3 seconds.
- While in “power enrichment” mode the oxygen sensor voltage remains more than 600mV in DFCO.

Action Taken When the DTC Sets

- The PCM will not illuminate the malfunction malfunction indicator lamp(MIL).
- The PCM will store conditions which were present when the DTC was set as Failure Records only. This information will not be stored as Freeze Frame data.

Conditions for Clearing the MIL/DTC

- A history DTC P1169 will clear after 40 consecutive trip cycles during which the warm up cycles have occurred without a fault.
- DTC P1169 can be cleared using the Tech 2 “Clear Info” function or by disconnecting the PCM battery feed.

Diagnostic Aids

- Check for faulty fuel injectors and fuel pump.
- Check the pressure regulator.

Diagnostic Trouble Code (DTC)
P1169 Fuel System Rich During Decel Fuel Cut Off (Bank2)

Step	Action	Value(s)	Yes	No
1	Was the “On-Board (OBD) System Check” performed?	—	Go to *Step 2*	Go to *OBD System Check*
2	Are any component related DTCs set?		Go to *component DTC charts*	Go to *Step 3*
3	1. Place the transmission in Park. 2. Using a Tech 2, HO2S 2 voltage while running warm engine75 C – 95 C (167 F – 203 F) at 1200 RPM. 3. HO2S 1 voltages should vary within the specified range. (100 – 900mV) 4. Quickly open the wide open the throttle for a few seconds. Did the voltage suddenly rise toward the low end of the specified range?	100 – 600 mV	Go to *OBD System Check*	Go to *Step 4*
4	1. Disconnect the fuel pump relay and crank the engine to relieve the fuel pressure. 2. Install the fuel pressure gauge. 3. Start the engine and idle at normal operating temperature. 4. Disconnect the vacuum line going to the fuel pressure regulator. With the engine running, is the fuel pressure within the specified range?	280 – 325Kpa (41 – 46psi)	Go to *OBD System Check*	Go to *Step 5*
5	1. Ignition “OFF”. 2. Remove the fuel pump relay and replace it with a fused jumper which will connect the relay’s battery terminal to the terminal leading to the fuel pump fuse. 3. While the fuel pump is operating, use pliers to slowly close the return line (do not exceed the first specified value). Using the pliers to restrict the return line, can the fuel pressure be manipulated to exceed the second value? Is the fuel pressure gauge reading near the specified value?	325KPa (46psi) 414KPa (60psi)	Check the Procedure Refer to *Diagnostic Aids*	Go to *Step 6*
6	Check the following items; ● Faulty fuel pump ● Incorrect fuel pump ● Incorrect fuel being used ● Cold fuel. If a problem is found, repair one as necessary. Was a problem found?	—	Verify repair	—

Diagnostic Trouble Code (DTC) P1171 Fuel System Lean During Acceleration

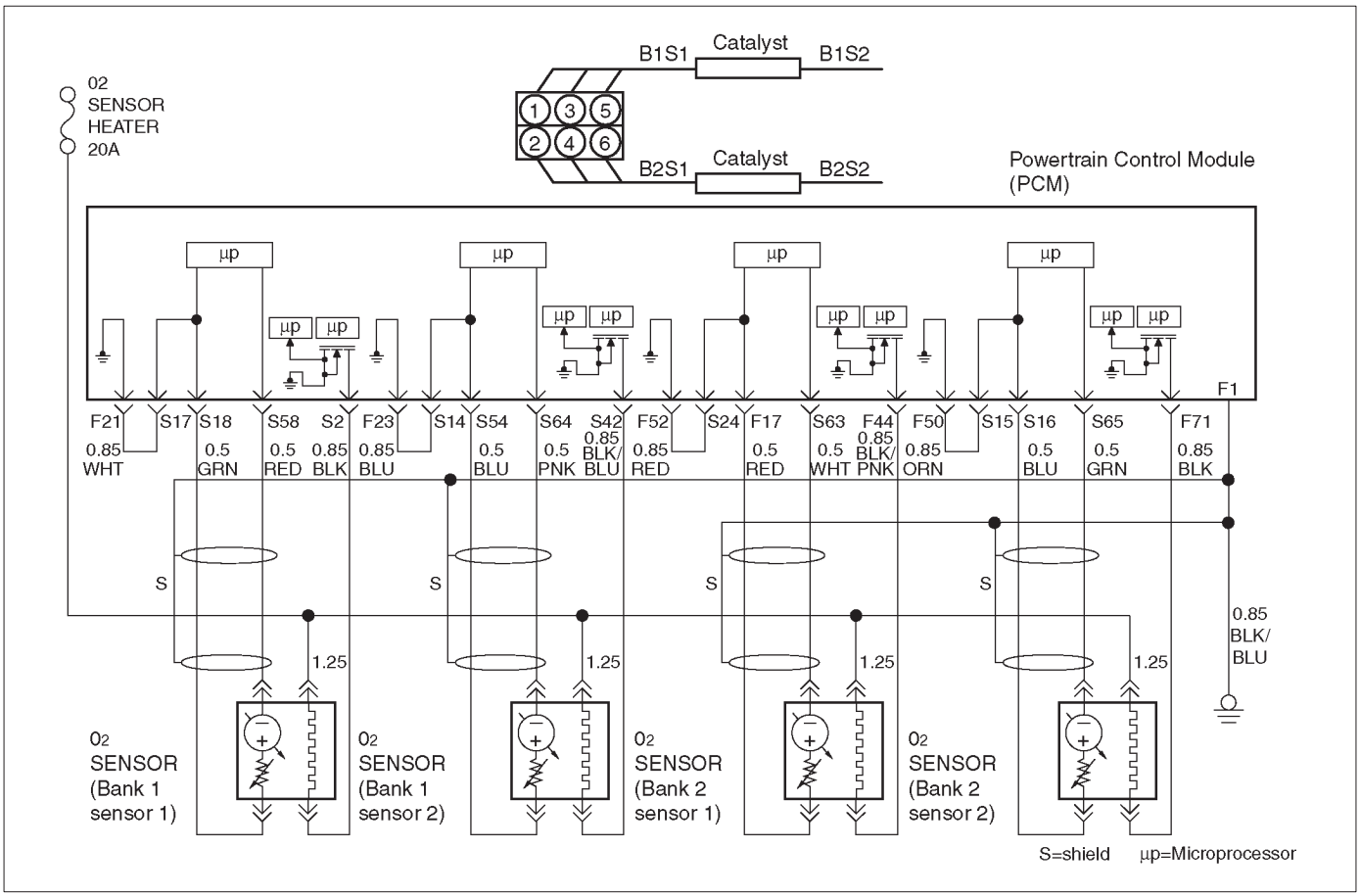

D06R200010

Circuit Description

The powertrain control module (PCM) internal circuitry can identify if the vehicle fuel system is capable of supplying adequate amounts of fuel during heavy acceleration (power enrichment). The PCM monitors the voltage of the oxygen sensor during power enrichment. When a power enrichment mode of operation is requested during "closed loop" operation (by heavy acceleration), the PCM will provide more fuel to the engine. Under these conditions the PCM should detect a "rich" condition (high oxygen sensor voltage). If this "rich" exhaust is not detected at this time, a DTC P1171 will set. A plugged fuel filter, restricted fuel line, restricted in-tank filter or defective fuel pump can prevent adequate amounts of fuel from being supplied during power enrichment mode.

Conditions for Setting the DTC

- No related DTCs.
- Engine is operating in "closed loop power enrichment" mode for 3 seconds.
- Engine coolant temperature is above 60˚C (140˚F).
- While in "power enrichment" mode the oxygen sensor voltage remains below 400 mV for 3 seconds.

Action Taken When the DTC Sets

- The PCM will not turn the malfunction indicator lamp (MIL) "ON".
- The PCM will store conditions which were present when the DTC was set as Failure Records only. This information will not be stored as Freeze Frame data.

Conditions for Clearing the MIL/DTC

- The PCM will turn the MIL "OFF" on the third consecutive trip cycle during which the diagnostic has been run and the fault condition is no longer present.
- A history DTC P1171 will clear after 40 consecutive warm-up cycles have occurred without a fault.
- DTC P1171 can be cleared by using the Tech 2 "Clear Info" function or by disconnecting the PCM battery feed.

Diagnostic Aids

- A restricted fuel filter or fuel line, restricted in-tank filter, or a defective fuel pump may supply adequate amounts of fuel at idle, but may not be able to supply enough fuel during heavy acceleration.
- Water or alcohol in the fuel may cause low HO2S voltage during acceleration.
- Check for faulty or plugged fuel injector(s).
- Check for low fuel.

Test Description

Number(s) below refer to the step number(s) on the Diagnostic Chart.

4. When the engine is idling or at steady cruise, the HO2S voltage should vary from between approximately 100 mV to 900 mV. It is possible to measure a satisfactory fuel pressure at idle even though the pressure may drop at high flow requirements. It may be necessary to watch fuel pressure at high engine load.
5. Wrap a shop towel around the fuel pressure connector to absorb any small amount of fuel leakage that may occur when installing gauge. Ignition “ON”, pump pressure should be 280-320 kPa.
7. Add Caution, Use correct pliers so damage to fuel lines will not occur.

DTC P1171 – Fuel System Lean During Acceleration

Step	Action	Value(s)	Yes	No
1	Was the “On-Board Diagnostic (OBD) System Check” performed?	—	Go to *Step 2*	Go to *OBD System Check*
2	Are any component-related DTCs set?	—	Go to component DTC charts	Go to *Step 3*
3	1. Check the vehicle’s fuel tank for an adequate amount of fuel. 2. Add fuel to the vehicle’s fuel tank if the tank is almost empty. Was fuel added to the vehicle’s fuel tank?	—	Go to *Step 4*	Go to *Step 5*
4	1. Place the transmission in park. 2. Using a Tech 2, observe HO2S 1 voltage while running warm engine 75˚C-95˚C (167˚F-203˚F) at 1200 RPM. 3. HO2S 1 voltage should vary within the specified range. 4. Quickly open the throttle too halfway for a few seconds. Did the voltage suddenly rise toward the high end of the specified range?	100-900 mV	Go to *Fuel System Electrical Test*	Go to *Step 5*
5	1. Disconnect the fuel pump relay and crank the engine to relieve the fuel pressure. 2. Install the fuel pressure gauge. 3. Start the engine and idle at normal operating temperature. 4. Disconnect the vacuum line going to the fuel pressure regulator. With the engine running, is the fuel pressure within the specified range?	280-325 kPa (41-46 psi)	Go to *OBD System Check*	Go to *Step 6*
6	Check for restricted fuel lines or restricted in-line filter. Was a problem found?	—	Verify repair	Go to *Step 7*

DTC P1171 – Fuel System Lean During Acceleration (Cont'd)

Step	Action	Value(s)	Yes	No
7	1. Ignition "OFF". 2. Remove the fuel pump relay and replace it with a fused jumper which will connect the relay's battery terminal to the terminal leading to the fuel pump fuse. 3. While the fuel pump is operating, use pliers to slowly close the return line (do not exceed the first specified value). Using the pliers to restrict the return line, can the fuel pressure be manipulated to exceed the second specified value?	325 kPa (46 psi) 414 kPa (60 psi)	Check the Procedure Refer to *Diagnostic Aids*	Go to *Step 8*
8	Check for: ● Faulty fuel pump ● Restricted fuel pump strainer (sock) ● Incorrect fuel pump ● Incorrect fuel being used ● Hot fuel Is the action complete?	—	Verify repair	—

Diagnostic Trouble Code (DTC)
P1220 Throttle Position Senser2 (TPS2) Circuit Fault

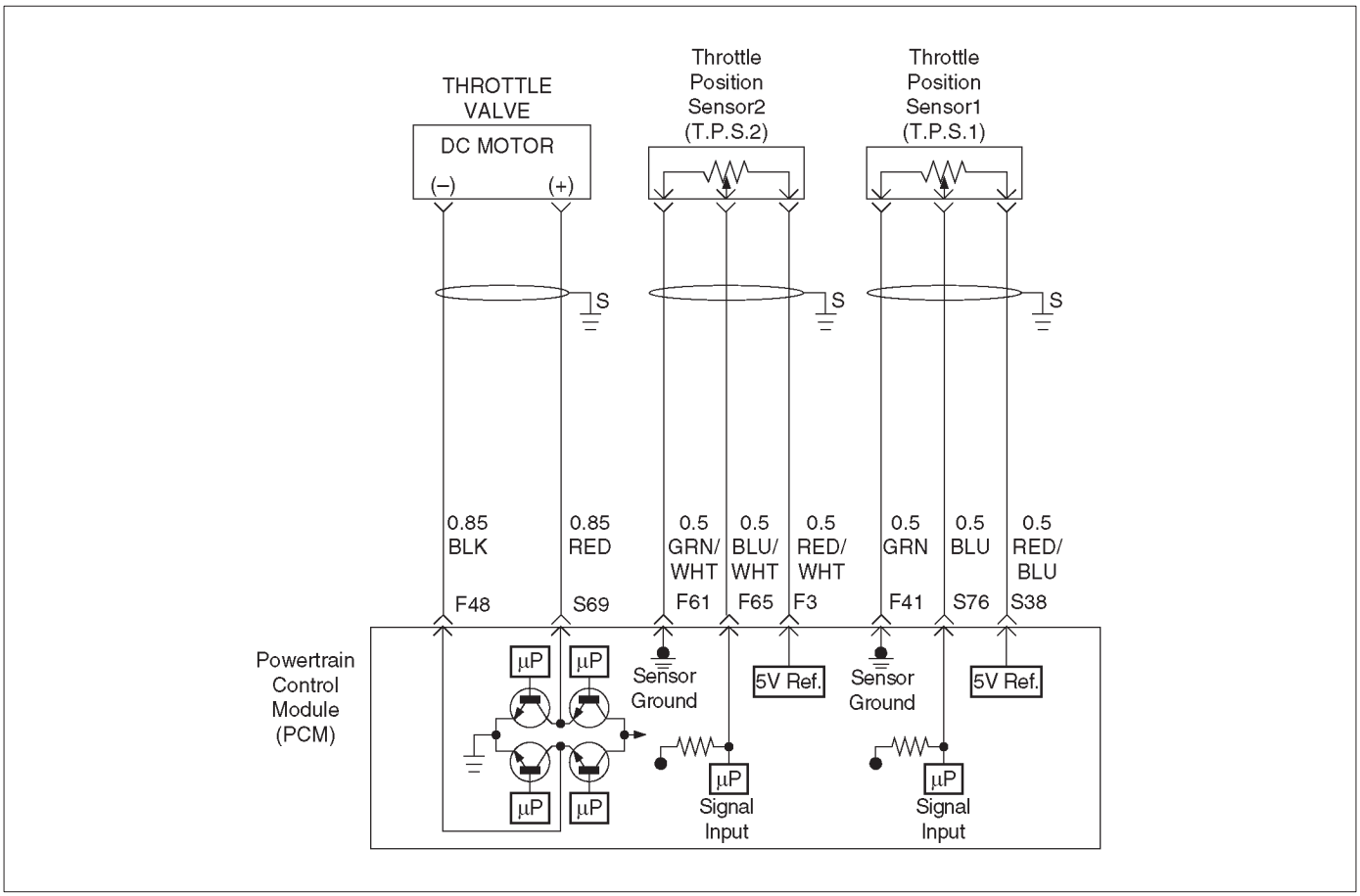

D06RY00088

Circuit Description

- The throttle position (TP2) sensor circuit provides a voltage signal relative to throttle blade angle.

  The throttle blade angle will vary about 8 % at closed throttle to about 92 % at wide open throttle (WOT).

  This code detects a continuous short to ground or high in either the cicuit or the sensor.

Conditions for setting the DTC

- The Ignition is “ON”.
- The throttle blade angle is less than 2.5 % or more tnan 97.5 % for 18 failres within 500 test samples (15.6m sec).

Action Taken When the DTC Sets

- The PCM will store condition which were present when the DTC was set as Freeze Frame and in the Failure Records data.

Conditions for Clearing the MIL/DTC

- The PCM will turn the MIL “OFF” on the third consecutive trip cycle during which the diagnostic has been run and the fault condtion is no longer present.
- A history DTC P1120 will clear after 40 consecutive trip cycle during which the warm up cycles have occurred without a fault.
- DTC P1120 can be cleared using the Tech2 “Clear Info” function or by disconnecting the PCM battery feed.

Diagnostic Aids

An intermittent may be caused by the following:

- Poor connectons.
- Mis routed harness.
- Rubbed through wire insulation.
- Broken wire inside the insulation.

Check for the following conditions:

- The CKP sensor shares 5 Volt reference with the TP sensor 2. If these codes are also set, it could indicate a problem with the 5 Volt reference curcuit.
- Poor connection at PCM-Inspect harness connectors for backed out terminals,improper mating,broken locks, improperly formed or damaged terminals,and poor terminal to wire connection.
- Damaged harness–Inspect the wiring harness for damage. If the harness appears to be OK,observe the TP sensor display on the Tech 2 while moving connectors and wiring harnesses related to the sensor.

  A change in the display will indicate the location of the fault. If DTC P1120 cannot be duplicated,the information included in the Faillure Records data can be useful in determined vehicle mileage since the DTC was last set.

  If it is determined that the DTC occurs intermittently,performing the DTC

P1120 Diagnostic Chart may isolate the cause of the fault.

DTC P1220-TPS 2 Circuit Fault

Step	Action	Value(s)	Yes	No
1	Was the “On-Board (OBD) System Check” performed?	—	Go to *Step 2*	Go to *OBD System Check*
2	Was the “Electric Throttle Control (ETC) System Check” performed?	—	Go to *Step 3*	Go to *ETC System Check*
3	1. Disconnect the CKP sensor. 2. Connect a test 5 volt reference circuit and the CKP signal at the CKP sensor harness connector. 3. Observe the CKP reading on the DVM. Is the CKP reading less than the specified value? (If no, start with diagnosis chart for other sensors in the circuit and see if 5V returns.)	5V	Go to *Step 5*	Go to *Step 4*
4	1. Check the CKP signal circuit between the PCM and CKP ground circuit. 2. If the CKP signal circuit is open or shorted, repair as necessary. Was the CKP signal circuit open or shorted?	—	Verify repair	Go to *Step 16*
5	Replace the CKP sensor. Is the action complete?	—	Verify repair	—
6	1. Ignition “ON”, engine not running. 2. Observe the AP2 reading on the Tech2. Is the AP2 reading less than the specified value?	Closed throttle APS2 = 85~89% Wide open throttle APS2 = 11~15%	Go to *Step 7*	Go to *Step 10*
7	1. Disconnect the AP sensor 2. 2. Connect the Tech2 5 Volt reference circuit and the AP2 signal at the Ap2 sensor harness connector. 3. Observe the AP2 reading on the Tech 2. Is the AP2 reading less than the specified value? (If no, start with diagnosis chart forother sensors in the circuit and see if 5V returns.)	—	Go to *Step 9*	Go to *Step 8*
8	1. Check the Ap2 sensor signal circuit between the PCM and AP2 sensor grund circuit. 2. If the AP2 sensor signal circuit open or shoted, repair it as necessary. Was the AP2 sensor signal circuit open or shorted?	—	Verify repair	Go to *Step 16*
9	Replace the AP sensor 2. Is the action complete?	—	Verify repair	—

DTC P1220-TPS 2 Circuit Fault (Cont'd)

Step	Action	Value(s)	Yes	No
10	1. Warming up the engine until the ECT rise at 80˚C 2. Ignition "OFF". 3. Ignition "ON" but not engine run. 4. Observe the TP angle reading on the Tech 2 while alowly opening the throttle. NOTE: The value check of TPS must be performed in less than 15 seconds. Does the TP angle increase steadily and evenly from the closed throttle value to the wide open throttle value?	Closed throttle TPS2= 88~94% Wide open throttle TPS2= 19~23%	Go to *Step 11*	Go to *Step 12*
11	Was the DTC P1220 stored?	—	Go to *Step 16*	Check the procedure. Refer to *Diagnostic Aids*
12	1. Connect a DVM between the 5Volt reference circuit and the TP2 sensor ground circuit at the TPsensor harness connector. 2. Observe the voltage using a DVM. Is the voltage near the specified value?	5V	Go to *Step 13*	Go to *Step 16*
13	Check the following items; 1. TP2 signal circuit for a short to voltage. 2. TP2 sensor ground circuit for high resistance between the PCM and the TP2 sensor. 3. TP2 sensor ground circuit for a poor connection. 4. If a problem is found,repair wiring harness as necessary. Was a problem found?	—	Verify repair	Go to *Step 14*
14	Check the following items; 1. TP2 signal circuit or 5 volt reference circuit for a poor connection. 2. TP2 signal circuit or 5 volt reference circuit for high resistance between the PCM and the TP sensor. 3. If a problem is found, repair wiring harness as necessary. Was a problem found?	—	Verify repair	Go to *Step 15*
15	Replace the TP sensor. Was a problem corrected?	—	Verify repair	Go to *Step 16*
16	Replace the PCM. **IMPORTANT:** The replacement PCM must be programmed. Refer to *ON-Vehicle Service in Power Control Module and Sensors for procedures.* And also refer to latest Service Bulletin. Check to see if the latest software is released or not. And then Down Load the LATEST PROGRAMMED SOFTWARE to the replasement PCM. Is the action complete?	—	Verify repair	—

Diagnosis Truble Code(DTC)
P1221 TPS1 – TPS2 correlation(Circuit Performance)

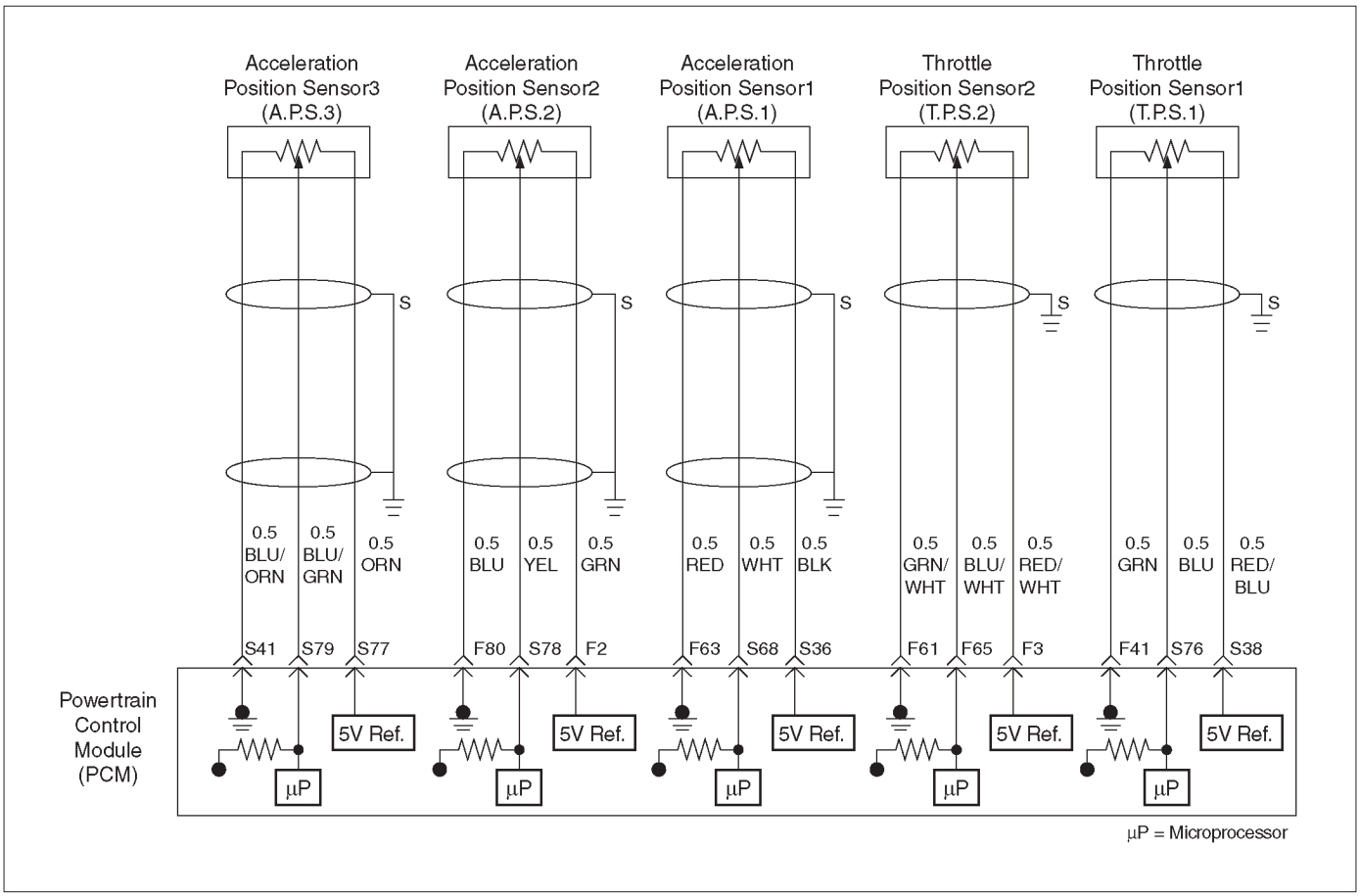

D06RY00157

Circuit Description

- The powertrain control module (PCM) controls engine speed by adjusting the position of the throttle control valve (DC motor). The throttle motor is a DC motor driven by one coil. The PCM applies current to DC motor coil in steps (%) to adjustment the valve into a passage in the throttle body to air flow.

  This method allows highly accurate control of engine speed and quick response to changes in engine load.
- The acceleration position (AP) sensor circuit provides a voltage signal relative to acceleration pedal angle.

  The acceleration pedal angle (AP1) will vary about 13% at idle position to about 87% at open throttle(WOT).

  APS signal is used to determine which DC will adjusting throttle position.

  After the APS signal has been processed by the PCM, it will command DC motor to allow a move of throttle position.
- Acceleration pedal – Check for objects blocking the AP sensor or pedal arm with spring, and excessive deposits in the acceleration pedal arm and on the acceleration pedal.

Diagnostic Aids

- An intermittent may be caused by a poor connection, rubbed–through wire insulation or a wire broken inside the insulation. Check for poor connections or a damaged harness. Inspect the PCM harness and connector for improper mating, broken locks, improperly formed or damaged terminals, poor terminal-to-wire connection, and damaged harness.
- Throttle body – Check for objects blocking the DC motor or throttle bore, excessive deposits in the ETC passage and on the valve spring, and excessive deposits in the throttle bore and on the throttle valve plate.

Diagnosis Truble Code(DTC)
P1221 TPS1 – TPS2 correlation(Circuit Perfoemance)

Step	Action	Value(s)	Yes	No
1	Was the “On-Board (OBD) System Check”performed?	—	Go to *Step 2*	Go to *OBD System Check*
2	Was the “Electric Throttle Control (ETC) System Check” performed?	—	Go to *Step 3*	Go to *ETC System Check*
3	Following below the DTCs stored: P1120,P1220 Do any of the above require a repair?	—	Go to *applicable DTC table*	Go to *Step 4*
4	1. Warming up the engine until the ECT rise at 80˚C 2. Ignition “OFF”. 3. Ignition “ON” but not engine run. 4. Observe the TP angle reading on the Tech 2 while alowly opening the throttle. NOTE: The value check of TPS must be performed in less than 15 seconds. Does the TP angle increase steadily and evenly from the closed throttle value to the wide open throttle value?	Closed throttle TPS1= 6~12% TPS2= 88~94% Wide open throttle TPS1= 79~83% TPS2= 19~23%	Go to *Step 5*	Go to *Step 6*
5	Was the DTC P1221 stored?	—	Go to *Step 9*	Check the procedure. Refer to *Diagnostic Aids*
6	1. Check the following items; ● TPS1 and TPS2 signal curcuit for a short to boltag or GND. ● TPS1 and TPS2 sensor ground curcuit for high resistance between the PCM and TP sensors. ● TPS1 and TPS2 5 volt reference curcuit for high risistance between the PCM and TP sensors. 2. If aproblem found, repair wiring harness as necessary. Was a problem found?	—	Verify repair	Go to *Step 7*
7	1. Re–observe the TP angle reading on the Tech 2 while slowly operating the acceleration pedal. Does the TP angle increase steadily and eventry from the closed throttle value to the wide open throttle value?	Closed throttle TPS1= 6~12% TPS2= 88~94% Wide open throttle TPS1= 79~83% TPS2= 19~23%	Verify repair	Go to *Step 8*

Diagnosis Truble Code(DTC)
P1221 TPS1 – TPS2 correlation(Circuit Perfoemance) (Cont'd)

Step	Action	Value(s)	Yes	No
8	1. Replace the TP sensor. Was a problem corrected?	—	Verify repair	Go to *Step 9*
9	Replace the PCM. **IMPORTANT:** The replacement PCM must be programmed. Refer to ON–Vehicle Service in Power Control Module and Sensors for procedures. And also refer to latest Service Bulletin. Check to see if the latest software is released or not. And then Down Load the LATEST PROGRAMMED SOFTWARE to the replacement PCM. Is the adtion complete?	—	Verify repair	—

Diagnostic Trouble Code (DTC) P1271 APS 1– 2 Correlation Error

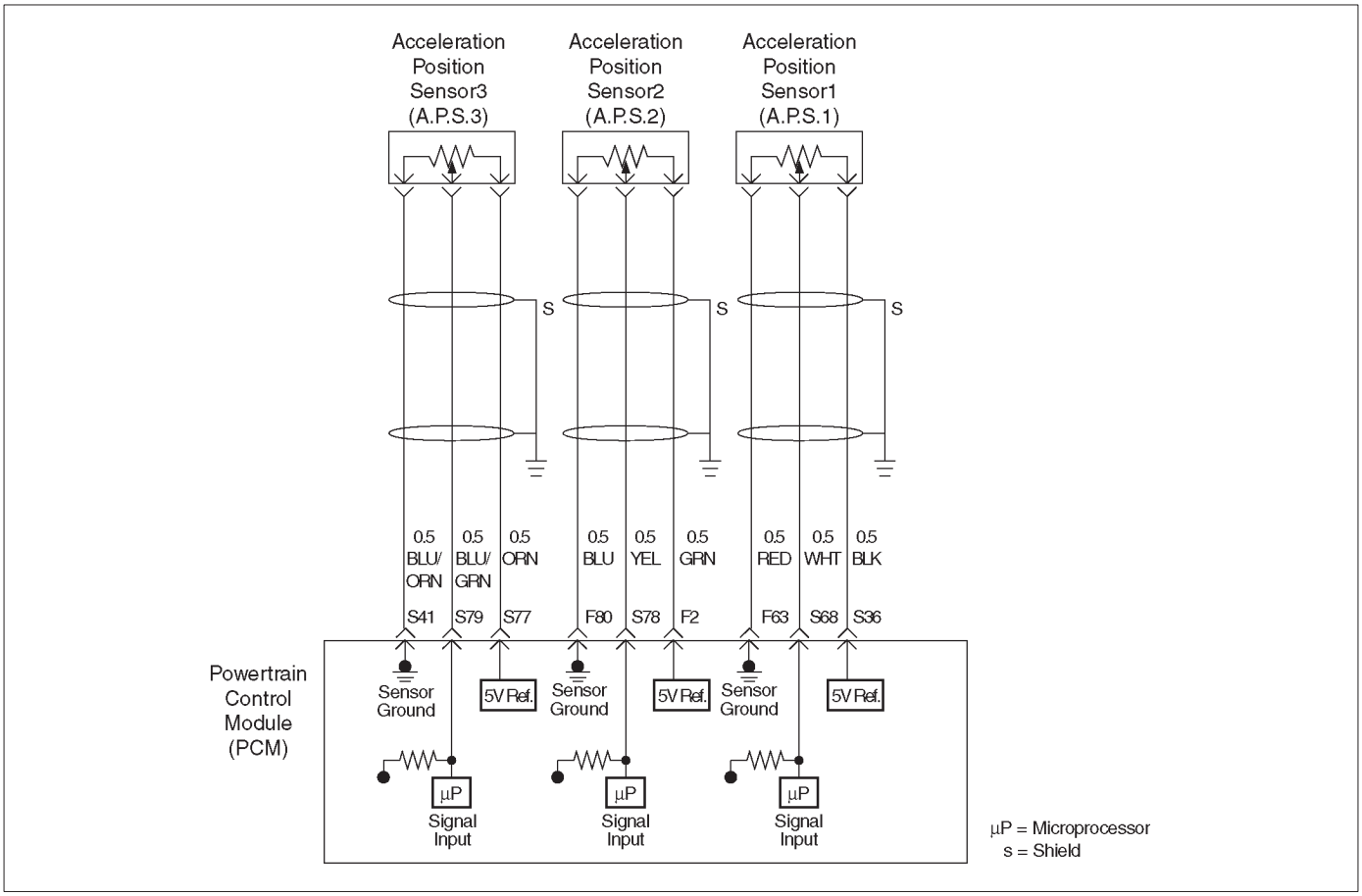

D06RY00075

Circuit Description

- The acceleration position (AP) sensor circuit provides a voltage signal relative to acceleration pedal angle.

  The acceleration pedal angle (AP1) will vary about 13% at idle position to about 87% at wide open throttle(WOT).

  This code detects a correlation error between APS1 and APS2.

Conditions for setting the DTC

- The Ignition is “ON”.
- The acceleration pedal angle difference is less than 4.5 % between ASP1 and APS2 for 50 counts within 50 test samples (15.6 m sec).

Action Taken When the DTC Sets

- The PCM will store condition which were present when the DTC was set as Freeze Frame and in the Failure Records data.

Conditions for Clearing the MIL/DTC

- The PCM will turn the MIL “OFF” on the third consecutive trip cycle during which the diagnostic has been run and the fault condition is no longer present.
- A history DTC P1271 will clear after 40 consecutive trip cycle during which the warm up cycles have occurred without a fault.
- DTC P1271 can be cleared using the Tech 2 “Clear Info” function or by disconnecting the PCM battery feed.

Diagnostic Aids

An intermittent may be caused by the following:

- Poor connectons.
- Mis routed harness.
- Rubbed through wire insulation.
- Broken wire inside the insulation.

Check for the following conditions:

- Poor connection at PCM-Inspect harness connectors for backed out terminals, improper mating, broken locks, improperly formed or damaged terminals, and poor terminal to wire connection.
- Damaged harness-Inspect the wiring harness for damage. If the harness appears to be OK, observe the APP sensor 1, APP sensor 2 display on the Tech 2 while moving connectors and wiring harnesses related to the sensor.

  A change in the display will indicate the location of the fault. If DTC P1271 cannot be duplicated,the information included in the Faillure Records data can be useful in determined vehicle mileage since the DTC was last set.

  If it is determined that the DTC occurs intermittently, performing the DTC P1271 Diagnostic Chart may isolate the cause of the fault.

DTC P1271 – APS 1– 2 Correlation Error

Step	Action	Value(s)	Yes	No
1	Was the “On-Board (OBD) System Check” performed?	—	Go to *Step 2*	Go to *OBD System Check*
2	Was the “Electric Throttle Control (ETC) System Check” performed?	—	Go to *Step 3*	Go to *ETC System Check*
3	1. Warming up the engine until the ECT rise at 80˚C 2. Ignition “OFF”. 3. Ignition ON” but not engine run. 4. Observe the AP angle reading on the Tech 2 while alowly opening the throttle. Does the AP angle increase steadily and evenly from the closed throttle value to the wide open throttle value?	Closed throttle APS1 = 11~15% APS2 = 85~89% Wide open throttle APS1 = 85~89% APS2 = 11~15%	Go to *Step 4*	Go to *Step 5*
4	Was the DTC P1271 stored?	—	Go to *Step 9*	Check the procedure. Refer to *Diagnositec Aids*
5	1. Connect a test light between the 5 Voltge supply circuit and the AP sensor signal circuit at the AP1, AP2 sensor harness connector. 2. Observe the AP sensor reading on the Tech 2. Is the AP sensor reading near the specified value?	5V	Go to *Step 6*	Go to *Step 7*
6	Check the following items; 1. AP1and AP2 signal circuit for a short to voltage. 2. AP1and AP2 sensor ground circuit for high resistance between the PCM and the AP sensor. 3. AP1and AP2 sensor ground circuit for a poor connection. 4. If a problem is found, repair wiring harness as necessary. Was a problem found?	—	Verify repair	Go to *Step 7*
7	Check the following items; 1. AP1and AP2 signal circuit or 5 volge supply circuit for a poor connection. 2. AP1and AP2 signal circuit or 5 volge supply circuit for high resistance between the PCM and the AP1 and AP2 sensor. 3. If a problem is found,repair wiring harness as necessary. Was a problem found?	—	Verify repair	Go to *Step 8*

DTC P1271 – APS 1– 2 Correlation Error (Cont'd)

Step	Action	Value(s)	Yes	No
8	Replace the AP sensor. Was a problem corrected?	—	Verify repair	Go to *Step 9*
9	Replace the PCM. **IMPORTANT:** The replacement PCM must be programmed. Refer to *ON-Vehicle Service in Power Control Module and Sensors for procedures.* And also refer to latest Service Bulletin. Check to see if the latest software is released ornot. And then Down Load the LATEST PROGRAMMED SOFTWARE to the replasement PCM. Is the action complete?	—	Verify repair	—

Diagnostic Trouble Code (DTC) P1272 APS 2 – 3 Correlation Error

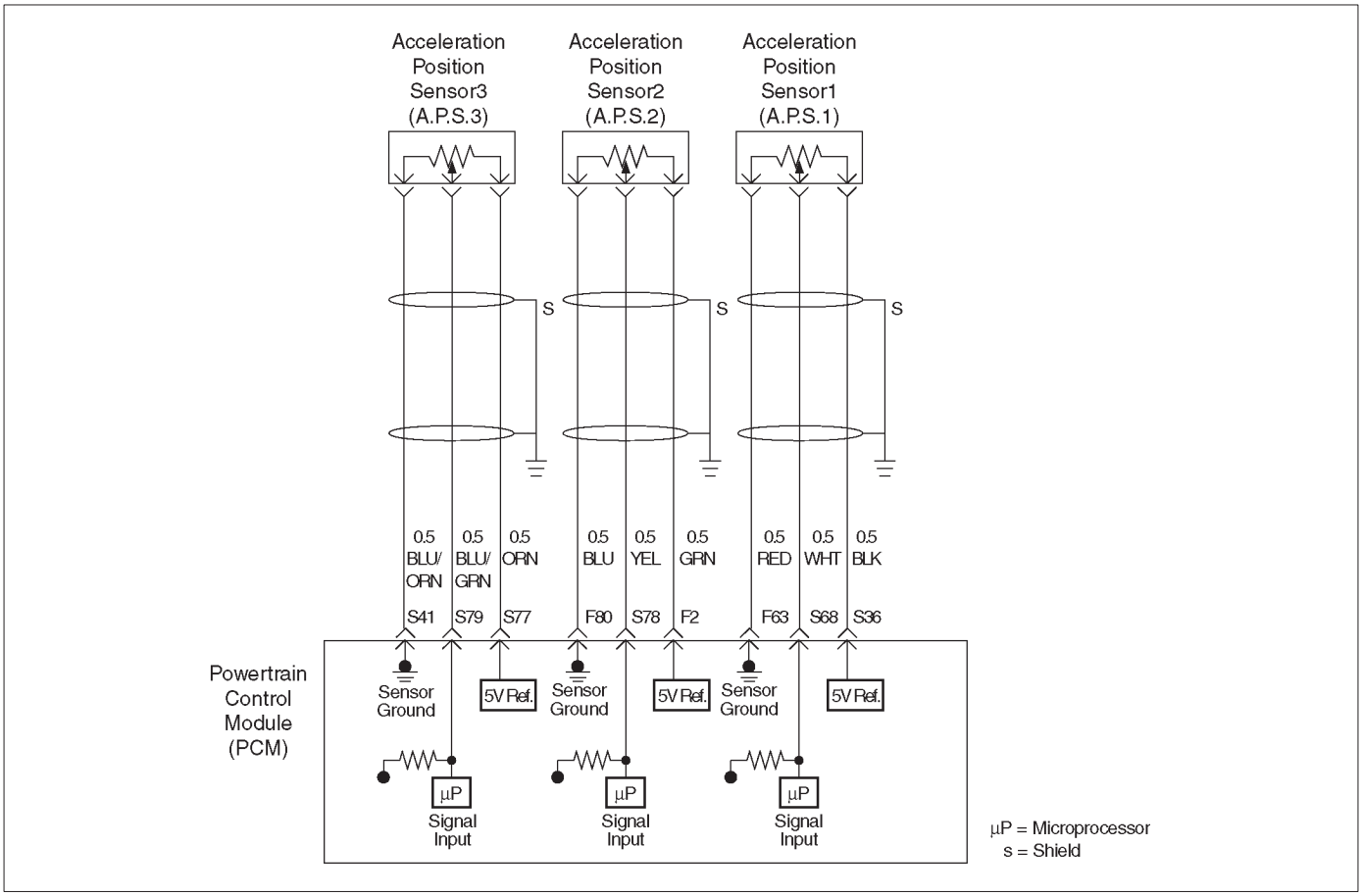

D06RY00075

Circuit Description

- The acceleration position (AP) sensor circuit provides a voltage signal relative to acceleration pedal angle.

  The acceleration pedal angle (AP2) will vary about 87 % at idle position to about 13 % at wide open throttle (WOT).

  This code detects a correlation error betweenAPS2 and APS3.

Conditions for setting the DTC

- The Ignition is “ON”.
- The acceleration pedal angle difference is less than 4.5 % between ASP2 and APS3 for 50 counts within 50 test samples (15.6 m sec).

Action Taken When the DTC Sets

- The PCM will store condition which were present when the DTC was set as Freeze Frame and in the Failure Records data.

Conditions for Clearing the MIL/DTC

- The PCM will turn the MIL “OFF” on the third consecutive trip cycle during which the diagnostic has been run and the fault condition is no longer present.
- A history DTC P1272 will clear after 40 consecutive trip cycle during which the warm up cycles have occurred without a fault.
- DTC P1272 can be cleared using the Tech 2 “Clear Info” function or by disconnecting the PCM battery feed.

Diagnostic Aids

An intermittent may be caused by the following:

- Poor connectons.
- Mis routed harness.
- Rubbed through wire insulation.
- Broken wire inside the insulation.

Check for the following conditions:

- Poor connection at PCM-Inspect harness connectors for backed out terminals,improper mating,broken locks, improperly formed or damaged terminals,and poor terminal to wire connection.
- Damaged harness-Inspect the wiring harness for damage. If the harness appears to be OK, observe the APP sensor 2, APP sensor 3 display on the Tech 2 while moving connectors and wiring harnesses related to the sensor.

  A change in the display will indicate the location of the fault. If DTC P1272 cannot be duplicated, the information includedin the Faillure Records data can be useful in determined vehicle mileage since the DTC was last set.

  If it is determined that the DTC occurs intermittently, performing the DTC

P1272 Diagnostic Chart may isolate the cause of the fault.

DTC P1272 – APS 2 – 3 Correlation Error

Step	Action	Value(s)	Yes	No
1	Was the “On-Board (OBD) System Check” performed?	—	Go to *Step 2*	Go to *OBD System Check*
2	Was the “Electric Throttle Control (ETC) System Check” performed?	—	Go to *Step 3*	Go to *ETC System Check*
3	1. Warming up the engine until the ECT rise at 80˚C 2. Ignition “OFF”. 3. Ignition ON” but not engine run. 4. Observe the AP angle reading on the Tech 2 while alowly opening the throttle. Does the AP angle increase steadily and evenly from the closed throttle value to the wide open throttle value?	Closed throttle APS2 = 85~89% APS3 = 85~89% Wide open throttle APS2 = 11~15% APS3 = 32~36%	Go to *Step 4*	Go to *Step 5*
4	Was the DTC P1272 stored?	—	Go to *Step 9*	Check the procedure.Refer to *Diagnositc Aids*
5	1. Connect a test light between the 5 Voltge supply circuit and the AP sensor signal circuit at the AP2 and AP3 sensor harness connector. 2. Observe the AP sensor reading on the Tech 2. Is the AP sensor reading near the specified value?	5V	Go to *Step 6*	Go to *Step 7*
6	Check the following items; 1. AP2 and AP3 signal circuit for a short to voltage. 2. AP2 and AP3 sensor ground circuit for high resistance between the PCM and the AP sensor. 3. AP2 and AP3 sensor ground circuit for a poor connection. 4. If a problem is found,repair wiring harness as necessary. Was a problem found?	—	Verify repair	Go to *Step 7*
7	Check the following items; 1. AP2 and AP3 signal circuit or 5 volge supply circuit for a poor connection. 2. AP2 and AP3 signal circuit or 5 volge supply circuit for high resistance between the PCM and the AP2 and AP3 sensor. 3. If a problem is found, repair wiring harness as necessary. Was a problem found?	—	Verify repair	Go to *Step 8*

DTC P1272 – APS 2 – 3 Correlation Error (Cont'd)

Step	Action	Value(s)	Yes	No
8	Replace the AP sensor. Was a probelm corrected?	—	Verify repair	Go to *Step 9*
9	Replace the PCM. **IMPORTANT:** The replacement PCM must be programmed. Refer to *ON-Vehicle Service in Power Control Module and Sensors for procedures.* And also refer to latest Service Bulletin. Check to see if the latest software is released or not. And then Down Load the LATEST PROGRAMMED SOFTWARE to the replacement PCM. Is the action complete?	—	Verify repair	—

Diagnostic Trouble Code (DTC) P1273 APS 1 – 3 Correlation Error

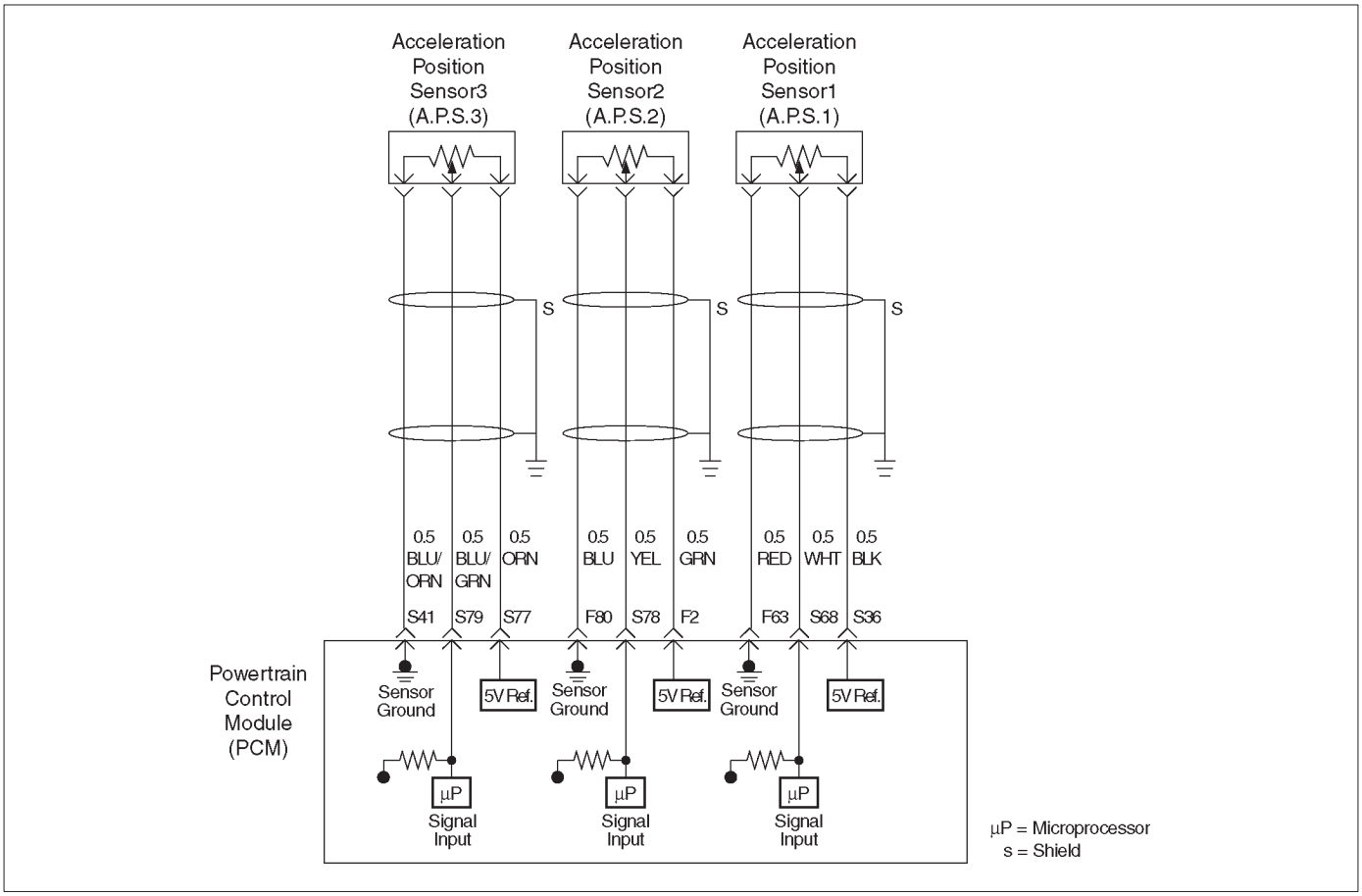

D06RY00075

Circuit Description

- The acceleration position (AP) sensor circuit provides a voltage signal relative to acceleration pedal angle.

  The acceleration pedal angle (AP1) will vary about 13 % at idle position to about 87 % at wide open throttle (WOT).

  This code detects a correlation error between APS1 and APS3.

Conditions for setting the DTC

- The Ignition is “ON”.
- The acceleration pedal angle difference is less than 4.5 % between ASP1 and APS3 for 50 counts within 50 test samples (15.6 m sec).

Action Taken When the DTC Sets

- The PCM will store condition which were present when the DTC was set as Freeze Frame and in the Failure Records data.

Conditions for Clearing the MIL/DTC

- The PCM will turn the MIL “OFF” on the third consecutive trip cycle during which the diagnostic has been run and the fault condition is no longer present.
- A history DTC P1273 will clear after 40 consecutive trip cycle during which the warm up cycles have occurred without a fault.
- DTC P1273 can be cleared using the Tech 2 “Clear Info” function or by disconnecting the PCM battery feed.

Diagnostic Aids

An intermittent may be caused by the following:

- Poor connectons.
- Mis routed harness.
- Rubbed through wire insulation.
- Broken wire inside the insulation.

Check for the following conditions:

- Poor connection at PCM-Inspect harness connectors for backed out terminals, improper mating, broken locks, improperly formed or damaged terminals,and poor terminal to wire connection.
- Damaged harness-Inspect the wiring harness for damage. If the harness appears to be OK,observe the APP sensor 1, APP sensor 3 display on the Tech 2 while moving connectors and wiring harnesses related to the sensor.

  A change in the display will indicate the location of the fault. If DTC P1273 cannot be duplicated,the information included in the Faillure Records data can be useful in determined vehicle mileage since the DTC was last set.

  If it is determined that the DTC occurs intermittently,performing the DTC

P1273 Diagnostic Chart may isolate the cause of the fault.

DTC P1273 – APS 1 – 3 Correlation Error

Step	Action	Value(s)	Yes	No
1	Was the “On-Board (OBD) System Check” performed?	—	Go to *Step 2*	Go to *OBD System Check*
2	Was the “Electric Throttle Control (ETC) System Check” performed?	—	Go to *Step 3*	Go to *ETC System Check*
3	1. Warming up the engine until the ECT rise at 80˚C 2. Ignition “OFF”. 3. Ignition ON” but not engine run. 4. Observe the AP angle reading on the Tech 2 while alowly opening the throttle. Does the AP angle increase steadily and evenly from the closed throttle value to the wide open throttle value?	Closed throttle APS1 = 11~15% APS3 = 85~89% Wide open throttle APS1 = 85~89% APS3 = 32~36%	Go to *Step 4*	Go to *Step 5*
4	Was the DTC P1273 stored?	—	Go to *Step 9*	Check the procedure. Refer to *Diagnostic Aids*
5	1. Connect a test light between the 5 Voltge supply circuit and the AP sensor signal circuit at the AP1 and AP3 sensor harness connector. 2. Observe the AP sensor reading on the Tech 2. Is the AP sensor reading near the specified value?	5V	Go to *Step 6*	Go to *Step 7*
6	Check the following items; 1. AP1 and AP3 signal circuit for a short to voltage. 2. AP1 and AP3 sensor ground circuit for high resistance between the PCM and the AP sensor. 3. AP1 and AP3 sensor ground circuit for a poor connection. 4. If a problem is found, repair wiring harness as necessary. Was a problem found?	—	Verify repair	Go to *Step 7*
7	Check the following items; 1. AP1 and AP3 signal circuit or 5 volge supply circuit for a poor connection. 2. AP1 and AP3 signal circuit or 5 volge supply circuit for high resistance between the PCM and the AP1 and AP3 sensor. 3. If a problem is found, repair wiring harness as necessary. Was a problem found?	—	Verify repair	Go to *Step 8*

DTC P1273 – APS 1 – 3 Correlation Error (Cont'd)

Step	Action	Value(s)	Yes	No
8	Replace the AP sensor. Was a problem corrected?	—	Verify repair	Go to *Step 9*
9	Replace the PCM. **IMPORTANT:** The replacement PCM must be programmed. Refer to *ON-Vehicle Service in Power Control Module and Sensors for procedures.* And also refer to latest Service Bulletin. Check to see if the latest software is released ornot. And then Down Load the LATEST PROGRAMMED SOFTWARE to the replasement PCM. Is the action complete?	—	Verify repair	—

Diagnostic Trouble Code (DTC) P1275 APS 1 Circuit Fault

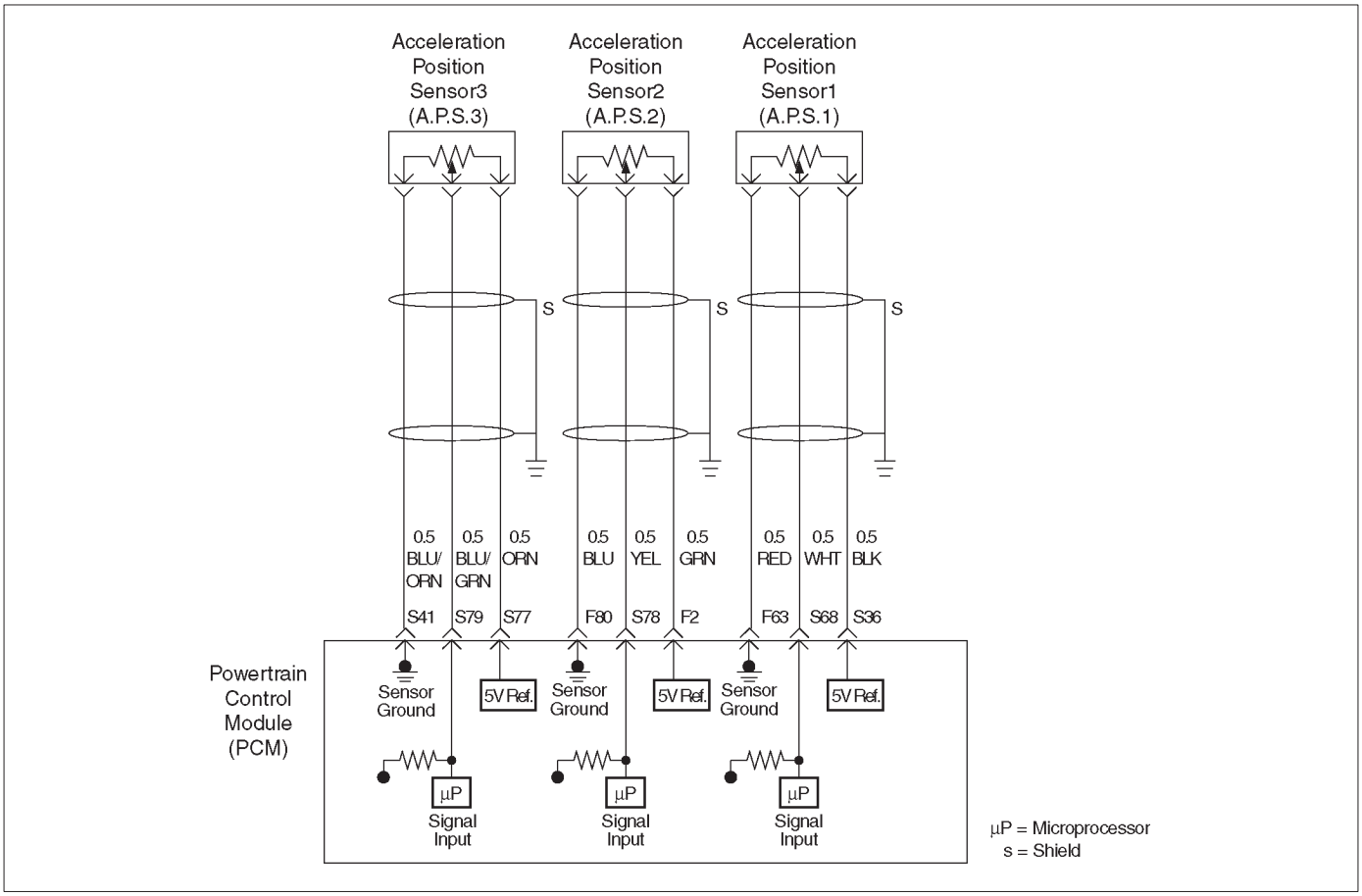

D06RY00075

Circuit Description

- The acceleration position (AP) sensor circuit provides a voltage signal relative to acceleration pedal angle.

  The acceleration pedal angle (AP1) will vary about 13 % at idle position to about 87 % at wide open throttle (WOT).

  This code detects a continuous short to ground or high in either the cicuit or the sensor.

Conditions for setting the DTC

- The Ignition is “ON”.
- The acceleration pedal angle is less than 2.5 % or more than 97 % for 12 counts within 500 test samples.

Action Taken When the DTC Sets

- The PCM will store condition which werepresent when the DTC was set as Freeze Frame and in the Failure Records data.

Conditions for Clearing the MIL/DTC

- The PCM will turn the MIL “OFF” on the third consecutive trip cycle during which the diagnostic has been run and the fault condition is no longer present.
- A history DTC P1275 will clear after 40 consecutive trip cycle during which the warm up cycles have occurred without a fault.
- DTC P1275 can be cleared using the Tech 2 “Clear Info” function or by disconnecting the PCM battery feed.

Diagnostic Aids

An intermittent may be caused by the following:

- Poor connectons.
- Mis routed harness.
- Rubbed through wire insulation.
- Broken wire inside the insulation.

Check for the following conditions:

- The MAP sensor shares a 5 Volt reference with the Fuel Tank Pressure, APS1, APS3 and EGR value.
- The MAP sensor shares a ground with the Fuel Tank Pressure, the ECT sensor, and the Transmission Fluid.
- Poor connection at PCM-Inspect harness connectors for backed out terminals, improper mating, broken locks, improperly formed or damaged terminals,and poor terminal to wire connection.
- Damaged harness-Inspect the wiring harness for damage. If the harness appears to be OK,observe the APP sensor 1 display on the Tech 2 while moving connectors and wiring harnesses related to the sensor.

  A change in the display will indicate the location of the fault. If DTC P1275 cannot be duplicated,the information included in the Faillure Records data can be useful in determined vehicle mileage since the DTC was last set.

  If it is determined that the DTC occurs intermittently, performing the DTC

P1275 Diagnostic Chart may isolate the cause of the fault.

DTC P1275 – APS 1 Circuit Fault

Step	Action	Value(s)	Yes	No
1	Was the “On-Board (OBD) System Check” performed?	—	Go to *Step 2*	Go to *OBD System Check*
2	1. Warming up the engine until the ECT rise at 80˚C 2. Ignition “OFF”. 3. Ignition ON” but not engine run. 4. Observe the AP angle reading on the Tech 2 while alowly opening the throttle. Does the AP angle increase steadily and evenly from the closed throttle value to the wide open throttle value?	Closed throttle APS1 = 11~15% Wide open throttle APS1 = 85~89%	Go to *Step 3*	Go to *Step 4*
3	Was the DTC P1275 sotred?	—	Go to *Step 8*	Check the procedure. Refer to *Diagnostic Aids*
4	1. Connect a test light between the 5 Voltge supply circuit and the AP1 sensor signal circuit at the AP sensor harness connector. 2. Observe the AP sensor reading on the Tech 2. Is the AP sensor reading near the specified value?	5V	Go to *Step 5*	Go to *Step 6*
5	Check the following items; 1. AP1 signal circuit for a short to voltage. 2. AP1 sensor ground circuit for high resistance between the PCM and the AP sensor. 3. AP1 sensor ground circuit for a poor connection. 4. If a problem is found,repair wiring harness as necessary. Was a problem found?	—	Verify repair	Go to *Step 6*
6	Check the following items; 1. AP1 signal circuit or 5 volge supply circuit for a poor connection. 2. AP1 signal circuit or 5 volge supply circuit for high resistance between the PCM and the AP1 sensor. 3. If a problem is found, repair wiring harness as necessary. Was a problem found?	—	Verify repair	Go to *Step 7*
7	Replace the AP sensor. Was a problem corrected?	—	Verify repair	Go to *Step 8*
8	Replace the PCM. **IMPORTANT:** The replacement PCM must be programmed. Refer to *ON-Vehicle Service in Power Control Module and Sensors for procedures.* And also refer to latest Service Bulletin. Check to see if the latest software is released or not. And then Down Load the LATEST PROGRAMMED SOFTWARE to the replacement PCM. Is the action complete?	—	Verify repair	—

Diagnostic Trouble Code (DTC) P1280 APS 2 Circuit Fault

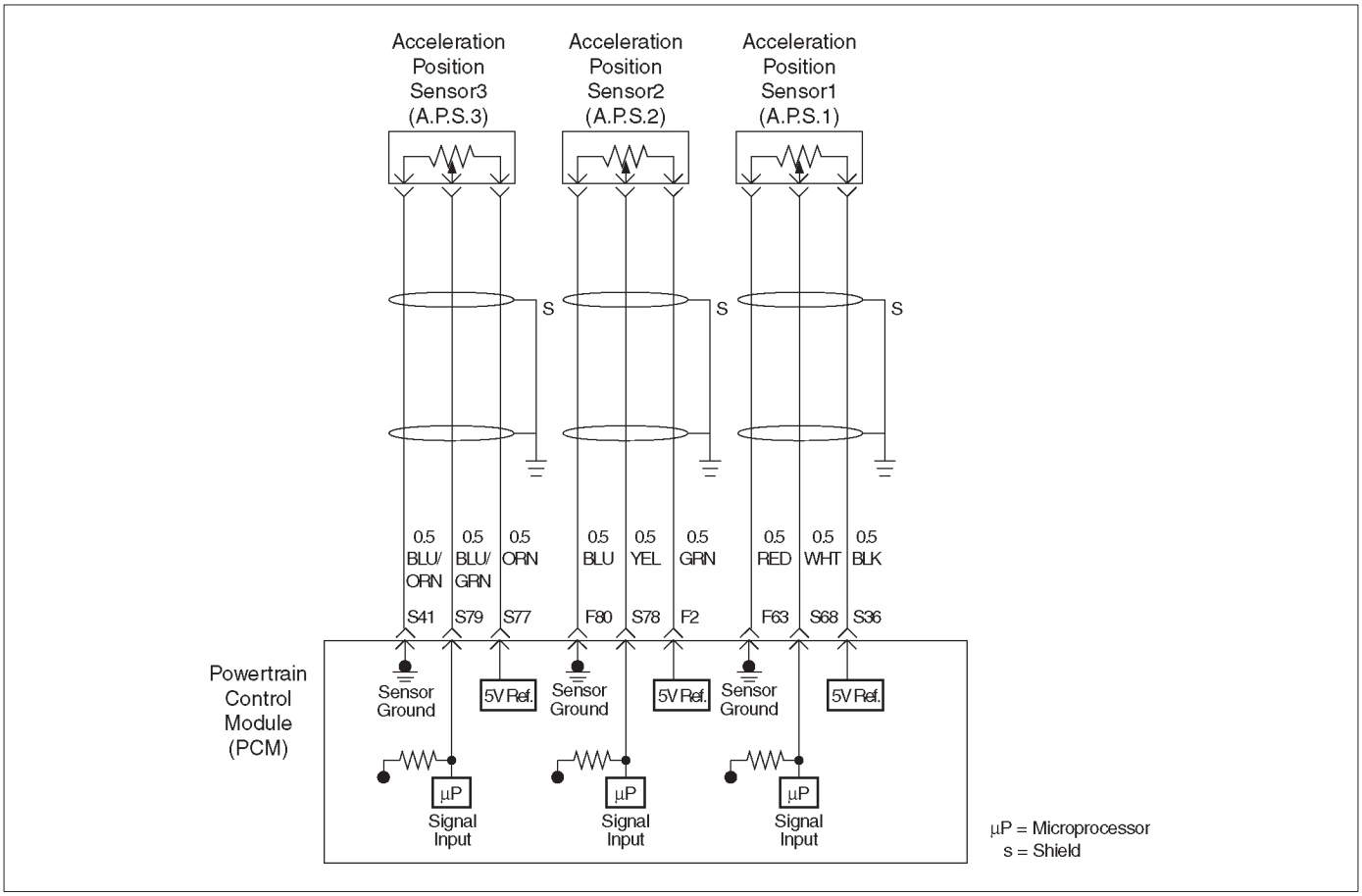

D06RY00075

Circuit Description

- The acceleration position (AP) sensor circuit provides a voltage signal relative to acceleration pedal angle.

  The acceleration pedal angle (AP2) will vary about 87 % at idle position to about 13 % at wide open throttle(WOT).

  This code detects a continuous short to ground or high in either the cicuit or the sensor.

Conditions for setting the DTC

- The Ignition is “ON”.
- The acceleration pedal angle is less than 2.5 % or more than 97 % for 12 counts within 500 test samples.

Action Taken When the DTC Sets

- The PCM will store condition which were present when the DTC was set as Freeze Frame and in the Failure Records data.

Conditions for Clearing the MIL/DTC

- The PCM will turn the MIL “OFF” on the third consecutive trip cycle during which the diagnostic has been run and the fault condition is no longer present.
- A history DTC P1280 will clear after 40 consecutive trip cycle during which the warm up cycles have occurred without a fault.
- DTC P1280 can be cleared using the Tech 2 “Clear Info” function or by disconnecting the PCM battery feed.

Diagnostic Aids

An intermittent may be caused by the following:

- Poor connectons.
- Mis routed harness.
- Rubbed through wire insulation.
- Broken wire inside the insulation.

Check for the following conditions:

- Poor connection at PCM-Inspect harness connectors for backed out terminals, improper mating, broken locks, improperly formed or damaged terminals,and poor terminal to wire connection.
- Damaged harness-Inspect the wiring harness for damage. If the harness appears to be OK, observe the APP sensor 2 display on the Tech 2 while moving connectors and wiring harnesses related to the sensor.

  A change in the display will indicate the location of the fault. If DTC P1280 cannot be duplicated, the information included in the Faillure Records data can be useful in determined vehicle mileage since the DTC was last set.

  If it is determined that the DTC occurs intermittently, performing the DTC

P1280 Diagnostic Chart may isolate the cause of the fault.

DTC P1280 - APS 2 Circuit Fault

Step	Action	Value(s)	Yes	No
1	Was the “On-Board (OBD) System Check” performed?	—	Go to *Step 2*	Go to *OBD System Check*
2	1. Warming up the engine until the ECT rise at 80˚C 2. Ignition “OFF”. 3. Ignition ON” but not engine run. 4. Observe the AP angle reading on the Tech 2 while alowly opening the throttle. Does the AP angle increase steadily and evenly from the closed throttle value to the wide open throttle value?	Closed throttle APS2 = 85~89% Wide open throttle APS2 = 11~15%	Go to *Step 3*	Go to *Step 4*
3	Was the DTC P1280 stored?	—	Check the procedure. Go to *Step 8*	Refer to *Diagnostid Aids*
4	1. Connect a test light between the 5 Voltge supply circuit and the AP2 sensor signal circuit at the AP sensor harness connector. 2. Observe the AP sensor reading on the Tech 2. Is the AP sensor reading near the specified value?	5V	Go to *Step 5*	Go to *Step 6*
5	Check the following items; 1. AP2 signal circuit for a short to voltage. 2. AP2 sensor ground circuit for high resistance between the PCM and the AP sensor. 3. AP2 sensor ground circuit for a poor connection. 4. If a problem is found, repair wiring harness as necessary. Was a problem found?	—	Verify repair	Go to *Step 6*
6	Check the following items; 1. AP2 signal circuit or 5 volge supply circuit for a poor connection. 2. AP2 signal circuit or 5 volge supply circuit for high resistance between the PCM and the AP2 sensor. 3. If a problem is found, repair wiring harness as necessary. Was a problem found?	—	Verify repair	Go to *Step 7*
7	Replace the AP sensor. Was a problem corrected?	—	Verify repair	Go to *Step 8*
8	Replace the PCM. **IMPORTANT:** The replacement PCM must be programmed.Refer to *ON-Vehicle Service in Power Control Module and Sensors for procedures.* And also refer to latest Service Bulletin. Check to see if the latest software is released or not. And then Down Load the LATEST PROGRAMMED SOFTWARE to the replasement PCM. Is the action complete?	—	Verify repair	—

Diagnostic Trouble Code (DTC) P1285 APS 3 Circuit Fault

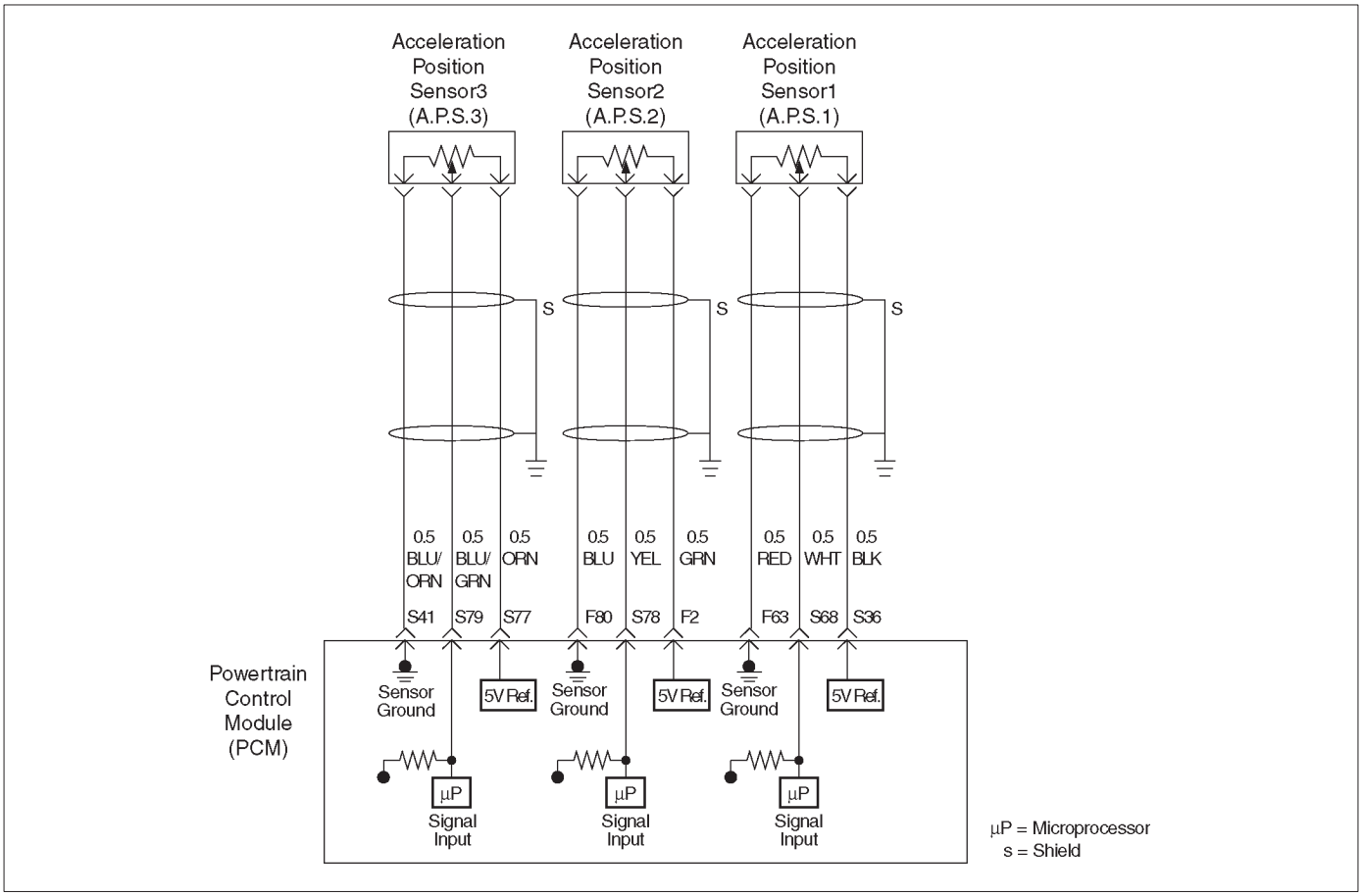

D06RY00075

Circuit Description

- The acceleration position (AP) sensor circuit provides a voltage signal relative to acceleration pedal angle.

  The acceleration pedal angle (AP3) will vary about 87 % at idle position to about 34 % at wide open throttle(WOT).

  This code detects a continuous short to ground or high in either the circuit or the sensor.

Conditions for setting the DTC

- The Ignition is “ON”.
- The acceleration pedal angle is less than 2.5 % or more than 97 % for 12 counts within 500 test samples.

Action Taken When the DTC Sets

- The PCM will store condition which were present when the DTC was set as Freeze Frame and in the Failure Records data.

Conditions for Clearing the MIL/DTC

- The PCM will turn the MIL “OFF” on the third consecutive trip cycle during which the diagnostic has been run and the fault condition is no longer present.
- A history DTC P1285 will clear after 40 consecutive trip cycle during which the warm up cycles have occurred without a fault.
- DTC P1285 can be cleared using the Tech 2 “Clear Info” function or by disconnecting the PCM battery feed.

Diagnostic Aids

An intermittent may be caused by the following:

- Poor connectons.
- Mis routed harness.
- Rubbed through wire insulation.
- Broken wire inside the insulation.

Check for the following conditions:

- The MAP sensor shares a 5 Volt reference with the Fuel Tank Pressure, APS1, APS3 and EGR value.
- The MAP sensor shares a ground with the Fuel Tank Pressure, the ECT sensor, and the Transmission Fluid.
- Poor connection at PCM-Inspect harness connectors for backed out terminals, improper mating, broken locks, improperly formed or damaged terminals,and poor terminal to wire connection.
- Damaged harness-Inspect the wiring harness for damage. If the harness appears to be OK, observe the APP sensor 3 display on the Tech 2 while moving connectors and wiring harnesses related to the sensor.

  A change in the display will indicate the location of the fault. If DTC P1285 cannot be duplicated, the information included in the Faillure Records data can be useful in determined vehicle mileage since the DTC was last set.

  If it is determined that the DTC occurs intermittently, performing the DTC

P1285 Diagnostic Chart may isolate the cause of the fault.

DTC P1285 – APS 3 Circuit Fault

Step	Action	Value(s)	Yes	No
1	Was the “On-Board (OBD) System Check” performed?	—	Go to *Step 2*	Go to *OBD System Check*
2	1. Warming up the engine until the ECT rise at 80˚C 2. Ignition “OFF”. 3. Ignition ON” but not engine run. 4. Observe the AP angle reading on the Tech 2 while alowly opening the throttle. Does the AP angle increase steadily and evenly from the closed throttle value to the wide open throttle value?	Closed throttle APS3 = 85~89% Wide open throttle APS3 = 32~36%	Go to *Step 3*	Go to *Step 4*
3	Was the DTC P1285 stored?	—	Go to *Step 8*	Check the procedure. Refer to *Diagnostic Aids*
4	1. Connect a test light between the 5 Voltge supply circuit and the AP3 sensor signal circuit at the AP sensor harness connector. 2. Observe the AP sensor reading on the Tech 2. Is the AP sensor reading near the specified value?	5V	Go to *Step 5*	Go to *Step 6*
5	1. Check the following items; AP3 signal circuit for a short to voltage. 2. AP3 sensor ground circuit for high resistance between the PCM and the AP sensor. 3. AP3 sensor ground circuit for a poor connection. 4. If a problem is found, repair wiring harness as necessary. Was a problem found?	—	Verify repair	Go to *Step 6*
6	Check the following items; 1. AP3 signal circuit or 5 volge supply circuit for a poor connection. 2. AP3 signal circuit or 5 volge supply circuit for high resistance between the PCM and the AP3 sensor. 3. If a problem is found, repair wiring harness as necessary. Was a problem found?	—	Verify repair	Go to *Step 7*
7	Replace the AP sensor. Was a problem corrected	—	Verify repair	Go to *Step 8*
8	Replace the PCM. **IMPORTANT:** The replacement PCM must be programmed. Refer to *ON-Vehicle Service in Power Control Module and Sensors for procedures.* And also refer to latest Service Bulletin. Check to see if the latest software is released ornot. And then Down Load the LATEST PROGRAMMED SOFTWARE to the replasement PCM. Is the action complete?	—	Verify repair	—

Diagnostic Trouble Code (DTC) P1290 ETC Forced Idle Mode

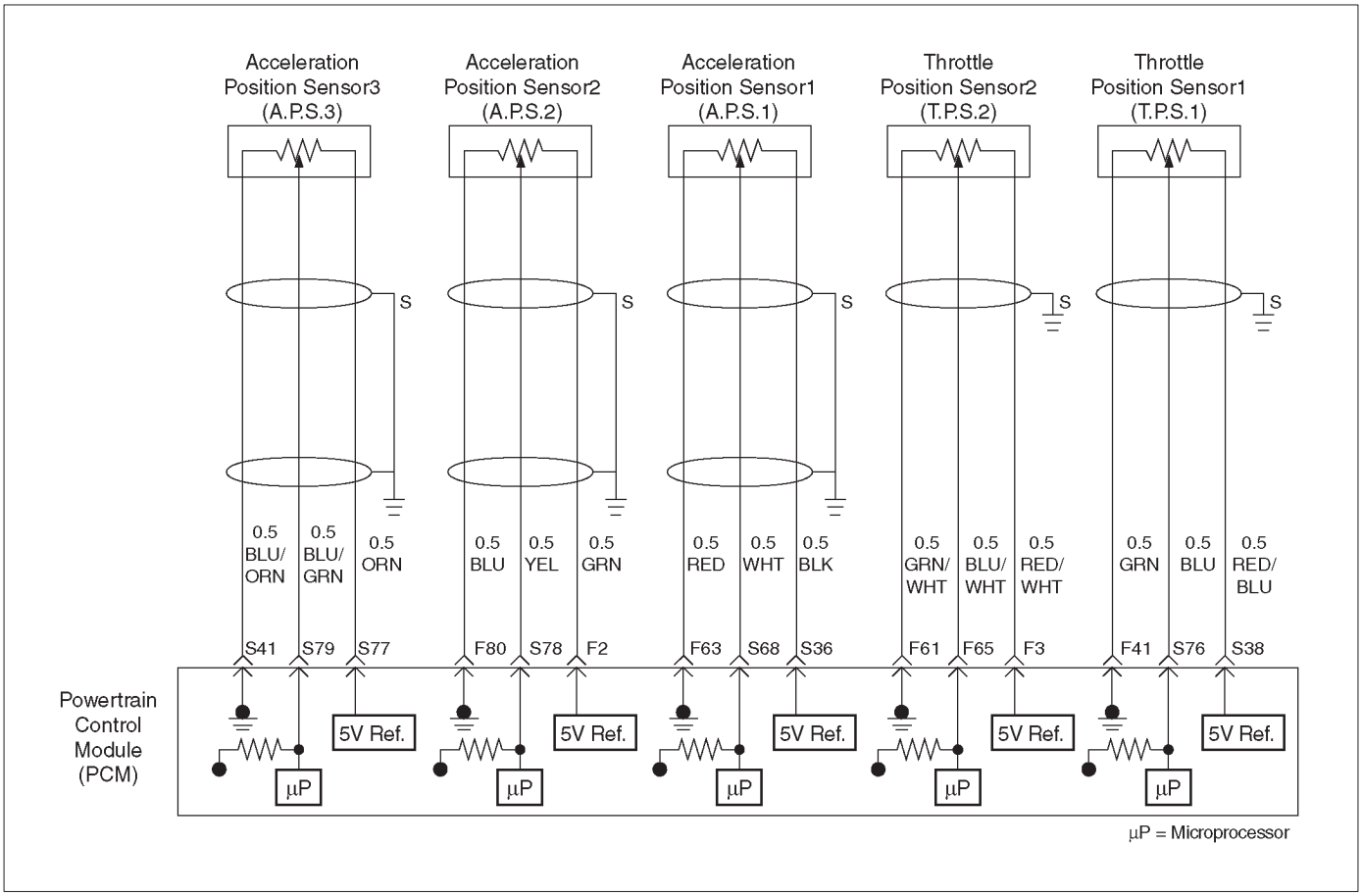

D06RY00157

Circuit Description

- The acceleration position (AP) sensor circuit provides a voltage signal relative to acceleration pedal angle.

  The acceleration pedal angle (AP1) will vary about 13 % at idle position to about 87 % at wide open throttle (WOT).

  This code detects that if the systm is in Forced Idle Mode. (Fail safe Mode)

Conditions for setting the DTC

- The Ignition is “ON”.
- Forced Idle Mode is active. (Fail safe Mode)

Action Taken When the DTC Sets

- The PCM will store condition which were present when the DTC was set as Freeze Frame and in the Failure Records data.

Conditions for Clearing the MIL/DTC

- The PCM will turn the MIL “OFF” on the third consecutive trip cycle during which the diagnostic has been run and the fault condtion is no longer present.
- A history DTC P1290 will clear after 40 cosecutive trip cycle during which the warm up cycles have occurred without a fault.
- DTC P1290 can be cleared using the Tech 2 “Clear Info” function or by disconnecting the PCM battery feed.

Diagnostic Aids

An intermittent may be caused by the following:

- Poor connections.
- Mis routed harness.
- Rubbed through wire insulation.
- Broken wire inside the insulation.

Check for the following conditions:

- Poor connection at PCM-Inspect harness connectors for backed out terminals, improper mating, broken locks, improperly formed or damaged terminals, and poor terminal to wire connection.
- Damaged harness-Inspect the wiring harness for damage. If the harness appears to be OK, observe the APP sensor 1, APP sensor 2, APP sensor 3 display on the Tech 2 while moving connectors and wiring harnesses related to the sensor.

  A change in the display will indicate the location of the fault. If DTC P1290 cannot be duplicated, the information included in the Faillure Records data can be useful in determined vehicle mileage since the DTC was last set.

  If it is determined that the DTC occurs intermittently, performing the DTC

P1290 Diagnostic Chart may isolate the cause of the fault.

DTC P1290 - ETC Forced Idle Mode

Step	Action	Value(s)	Yes	No
1	Was the “On - Board (OBD) System Check” performed?	—	Go to *Step 2*	Go to *OBD System Check*
2	1. Check for a poor conection at the AP1,AP2,AP3 sensor harness conector. 2. If a problem found, repair as necessary. Was a problem found ?	—	Verify repair	Go to *Step 3*
3	1. Check the curcuit between the PCM and each terminal of AP1,AP2 and AP3 sensor. 2. If the curcuit is open or shorted, repair it as necessary. Was the curcuit open or short?	—	Vefiry repair	Go to *Step 4*
4	Replace the AP sensor. Is the action complate?	—	Go to *Step 5*	—
5	1. Warming up the engine until the ECT rise at 80˚C 2. Ignition “OFF”. 3. Ignition ON” but not engine run. 4. Observe the AP angle reading on the Tech 2 while alowly opening the throttle. Does the AP angle increase steadily and evenly from the closed throttle value to the wide open throttle value?	Closed throttle APS1 = 11~15% APS2 = 85~89% APS3 = 85~89% Wide open throttle APS1 = 85~89 APS2 = 11~15% APS3 = 32~36%	—	Go to *Step 6*
6	Replace the PCM; The replacement PCM must be programmed. Refer to *ON–Vehicle Service in Power Control Module and Sensors for procedures.* And also refer to latest Service Bulletin. Check to see if the latest software is released or not. And then Down Load the LATEST PROGRAMMED SOFTWARE to the replasement PCM. Is the action complate?	—	Verify repair	—

Diagnostic Trouble Code (DTC) P1295 Power Management Mode

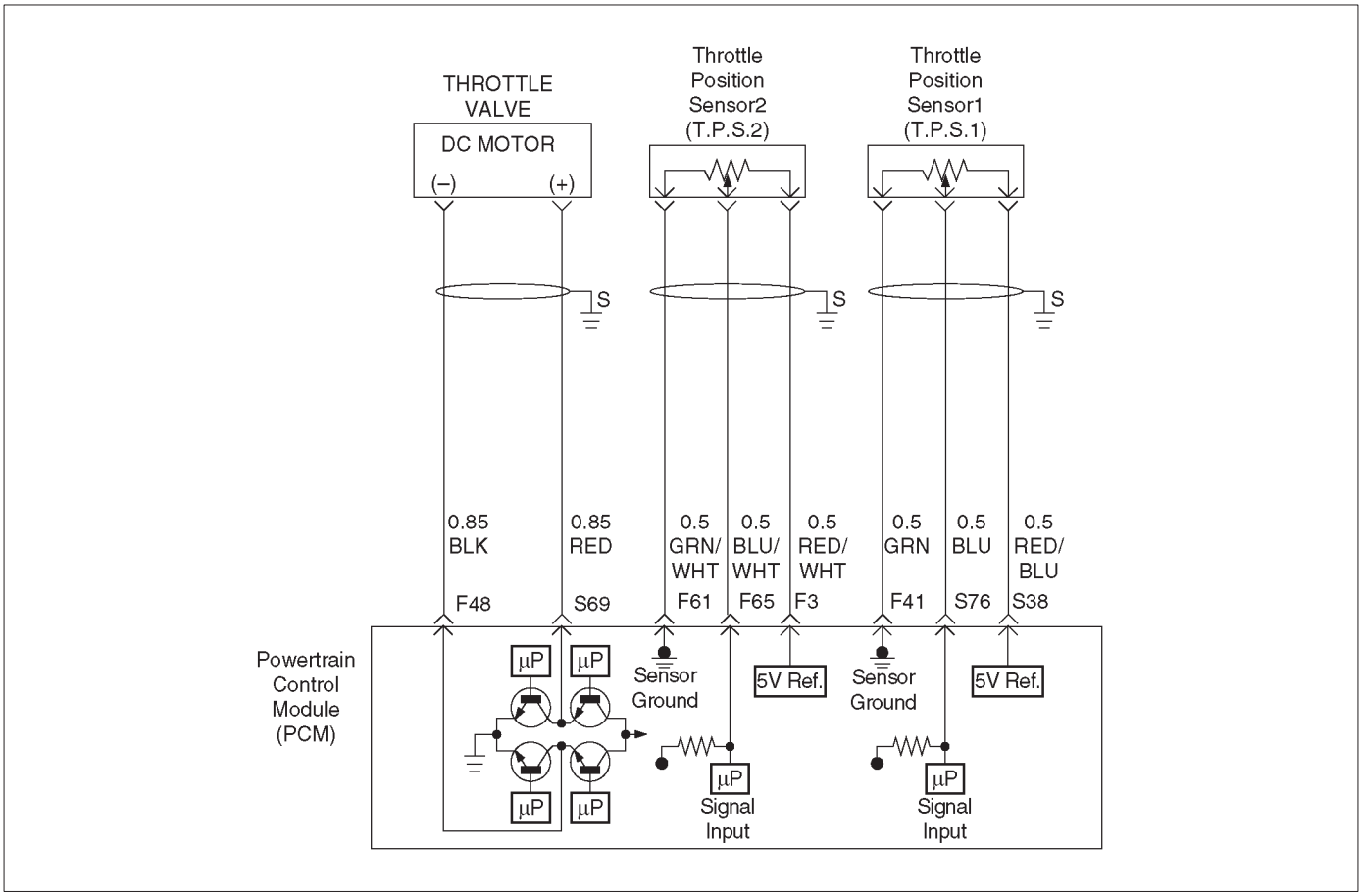

D06RY00088

Circuit Description

- The throttle position (TP) sensor circuit provides a voltage signal relative to throttle position (blade angle).

  The throttle blade angle will vary about 8 % at closed throttle to about 92 % at wide open throttle (WOT).
- The DC motor circuit provides a voltage signal relative to command throttle position (blade angle).
- The mass air flow (MAF) sensor measures the amount of air which passes through it into the engine during a given time. The powertrain Control Module (PCM) uses the mass air flow information to monitor engine operating conditions for fuel delivery calculations.

  A large quantitiy of air entering the engine indicates an accleration or high load situation, while a small quantity or air indicates deceleration or idle.

  The MAF sensor produces a frequency signal which can be monitored using a Tech 2. The frequency will vary within a range of around 4 to 7g/s at idle to around 25 to 40g/s at maximum engine load.
- This DTC ditects that if the systm is in PowerManagement Mode.(Fail safe Mode)

Conditions for setting the DTC

- The ignition is “ON”.
- Power Management Mode is active. (Fail safe Mode)

Action Taken When the DTC Sets

- The PCM will illuminate the malfunction indicator lamp (MIL) the first time the fault is detected.
- The PCM calculates an air flow value based on idle air control valve position, throttle position, RPM and barometric pressure.
- The PCM will store condition which were present when the DTC was set as Freeze Frame and in the Failure Records data.

Conditions for Clearing the MIL/DTC

- The PCM will turn the MIL “OFF” on the third consecutive trip cycle during which the diagnostic has been run and the fault condtion is no longer present.
- A history DTC P1295 will clear after 40 cosecutive trip cycle during which the warm up cycles have occurred without a fault.
- DTC P1295 can be cleared using the Tech 2 “Clear Info” function or by disconnecting the PCM battery feed.

Diagnostic Aids

An intermittent may be caused by the following:

- Poor connectons.
- Mis routed harness.
- Rubbed through wire insulation.
- Broken wire inside the insulation.

Check for the following conditions:

- Poor connection at PCM-Inspect harness connectors for backed out terminals, improper mating, broken locks, improperly formed or damaged terminals,and poor terminal to wire connection.
- Damaged harness-Inspect the wiring harness for damage. If the harness appears to be OK, observe the

TP sensor 1, TP sensor 2 display on the Tech 2 while moving connectors and wiring harnesses related to the sensor.

A change in the display will indicate the location of the fault.If DTC P1295 cannot be duplicated, the information included in the Faillure Records data can be useful in determined vehicle mileage since the DTC was last set.

If it is determined that the DTC occurs intermittently, performing the DTC

P1295 Diagnostic Chart may isolate the cause of the fault.

DTC P1295 - Power Management Mode

Step	Action	Value(s)	Yes	No
1	Was the “On-Board (OBD) System Check” performed?	—	Go to *Step 2*	Go to *OBD System Check*
2	Was the “Electric Throttle Control (ETC) System Check” performed?	—	Go to *Step 3*	Go to *ETC System Check*
3	1. Warming up the engine until the ECT rise at 80˚C 2. Ignition “OFF”. 3. Ignition “ON” but not engine run. 4. Observe the TP angle reading on the Tech 2 while alowly opening the throttle. NOTE: The value check of TPS must be performed in less than 15 seconds. Does the TP angle increase steadily and evenly from the closed throttle value to the wide open throttle value?	Closed throttle TPS1= 6~12% TPS2= 88~94% Wide open throttle TPS1= 79~83% TPS2= 19~23%	Go to *Step 4*	Go to *Step 5*
4	Was the DTC P1295 stored?	—	Go to *Step 9*	Check the procedure. Refer to *Diagnostic Aids*
5	1. Check the curcuit between the PCM and each terminal of TP1 and TP2 sensor. Was the curcuit open or shorted?	—	Verify repair	Go to *Step 7*
6	1. Repair the faulty wiring harness. Was a problem corrected?	—	Verify repair	Go to *Step 7*
7	1. Ignition “On”, engine “Off”. 2. Operate the throttle lever by hand (Don’t operate the acceleration pedal). Was the DTC P1515 or P1516 stored?	—	Go to *Step 9*	Go to *Step 8*
8	1. Replace the TP sensor. Was a problem corrected?	—	Verify repair	Go to *Step 9*
9	Replace the PCM. **IMPORTANT:** The replacement PCM must be programmed. Refer to ON–Vehicle Service in Power Control Module and Sensors for procedures. And also refer to latest Service Bulletin. Check to see if the latest software is released or not. And then Down Load the LATEST PROGRAMMED SOFTWARE to the replacement PCM. Is the adtion complete?	—	Varify repair	—

Diagnostic Trouble Code (DTC)
P1299 ETC Forced Engine Shutdown Mode

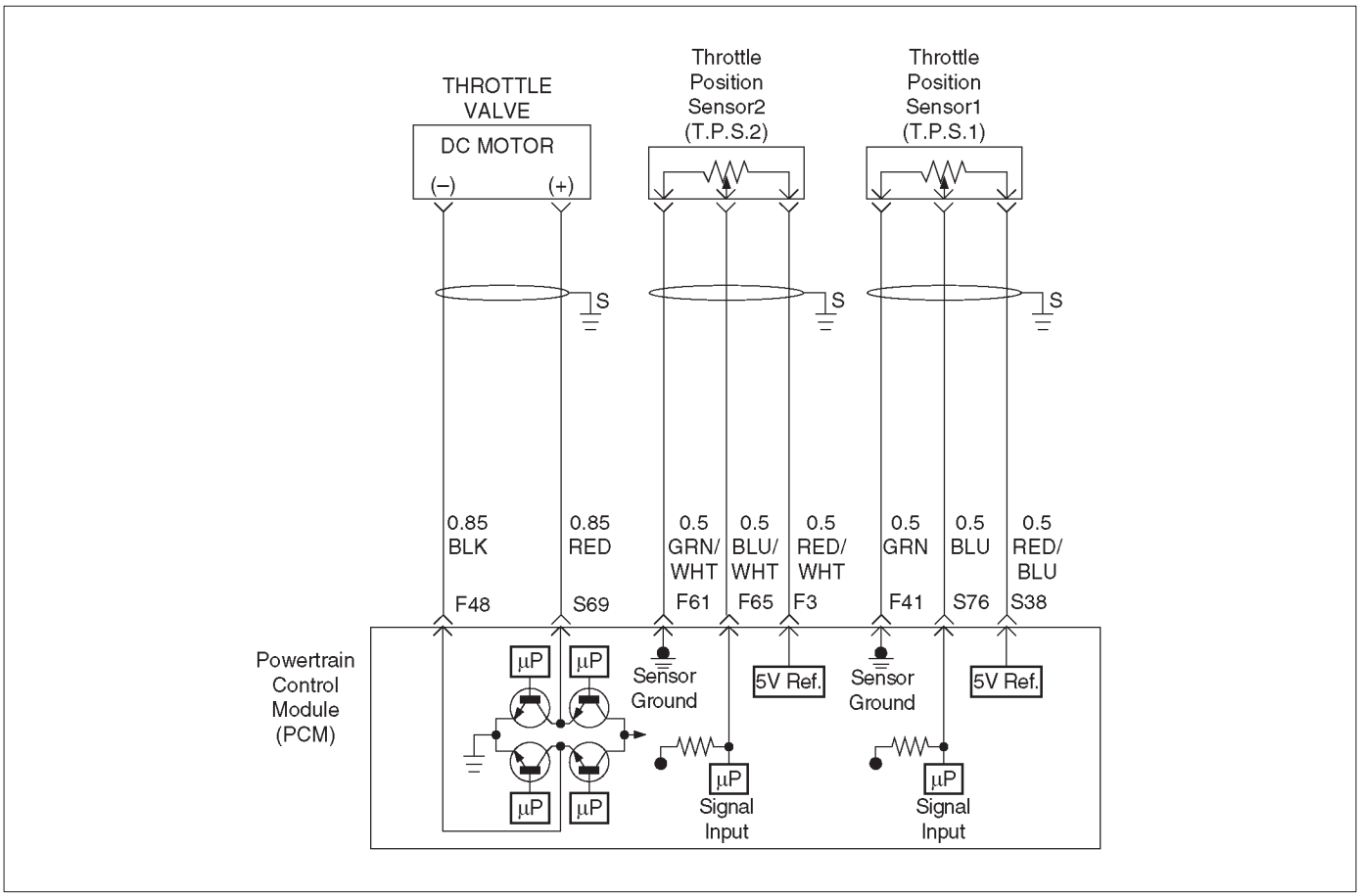

Circuit Description

- The throttle position sensor circuit provides a voltage signal relative to throttle position (blade angle).

  The throttle blade angle will vary about 8% at closed throttle to about 92% at wide open throttle(WOT).
- The DC motor circuit provides a voltage signal relative to command throttle position (blade angle).
- The mass air flow (MAF) sensor measures the amount of air which passes through it into the engine during a given time. The powertrain Control Module (PCM) uses the mass air flow information to monitor engine operating conditions for fuel delivery calculations. A laege quantitiy of air entering the engine indicates an accleration or high load situation, while a small quantity or air indicates deceleration or idle.

  The MAF sensor produces a frequency signal which can be monitored using a Tech 2. The frequency will vary within a range of around 4 to 7g/s at idle to around 25 to 40g/s at maximum engine load.
- This DTC ditects if the system is in ECT Forced Engine Shutdown Mode.(Fail safe Mode)

Conditions for setting the DTC

- The ignition is “ON”.
- ECT Forced Engine Shutdown Mode is active. (Fail safe Mode)

Action Taken When the DTC Sets

- The PCM will store condition which were present when the DTC was set as Freeze Frame and in the Failure Records data.

Conditions for Clearing the MIL/DTC

- The PCM will turn the MIL “OFF” on the third consecutive trip cycle during which the diagnostic has been run and the fault condtion is no longer present.
- A history DTC P1299 will clear after 40 cosecutive trip cycle during which the warm up cycles have occurred without a fault.
- DTC P1299 can be cleared using the Tech 2 “Clear Info” function or by disconnecting the PCM battery feed.

Diagnostic Aids

An intermittent may be caused by the following:

- Poor connections.
- Mis routed harness.
- Rubbed through wire insulation.
- Broken wire inside the insulation.

Check for the following conditions:

- Poor connection at PCM-Inspect harness connectors for backed out terminals, improper mating, broken locks, improperly formed or damaged terminals,and poor terminal to wire connection.
- Damaged harness-Inspect the wiring harness for damage. If the harness appears to be OK, observe the

TP sensor 1, TP sensor 2 display on the Tech 2 while moving connectors and wiring harnesses related to the sensor.

A change in the display will indicate the location of the fault. If DTC P1299 cannot be duplicated, the information included in the Faillure Records data can be useful in determined vehicle mileage since the DTC was last set.

If it is determined that the DTC occurs intermittently, performing the DTC P1299 Diagnostic Chart may isolate the cause of the fault.

DTC P1299 - ETC Forced Engine Shutdown Mode

Step	Action	Value(s)	Yes	No
1	Was the “On-Board (OBD) System Check” performed?	—	Go to *Step 2*	Go to *OBD System Check*
2	Was the “Electric Throttle Control (ETC) System Check” performed?	—	Go to *Step 3*	Go to *ETC System Check*
3	1. Warming up the engine until the ECT rise at 80˚C 2. Ignition “OFF”. 3. Ignition “ON” but not engine run. 4. Observe the TP angle reading on the Tech 2 while alowly opening the throttle. NOTE: The value check of TPS must be performed in less than 15 seconds. Does the TP angle increase steadily and evenly from the closed throttle value to the wide open throttle value?	Closed throttle TPS1= 6~12% TPS2= 88~94% Wide open throttle TPS1= 79~83% TPS2= 19~23%	Go to *Step 4*	Go to *Step 5*
4	Was the DTC P1299 stored?	—	Go to *Step 9*	Check the procedure. Refer to *Diagnostic Aids*
5	1. Check the curcuit between the PCM and each terminal of TP1 and TP2 sensor. Was the curcuit open or shorted?	—	Verify repair	Go to *Step 7*
6	1. Repair the faulty wiring harness. Was a problem corrected?	—	Verify repair	Go to *Step 7*
7	1. Ignition “On”, engine “Off”. 2. Operate the throttle lever by hand (Don’t operate the acceleration pedal). Was the DTC P1515 or P1516 stored?	—	Go to *Step 9*	Go to *Step 8*
8	1. Replace the TP sensor. Was a problem corrected?	—	Verify repair	Go to *Step 9*
9	Replace the PCM. **IMPORTANT:** The replacement PCM must be programmed. Refer to ON–Vehicle Service in Power Control Module and Sensors for procedures. And also refer to latest Service Bulletin. Check to see if the latest software is released or not. And then Down Load the LATEST PROGRAMMED SOFTWARE to the replacement PCM. Is the adtion complete?	—	Varify repair	—

Diagnostic Trouble Code (DTC) P1310 ION Sensing Module Diagnosis

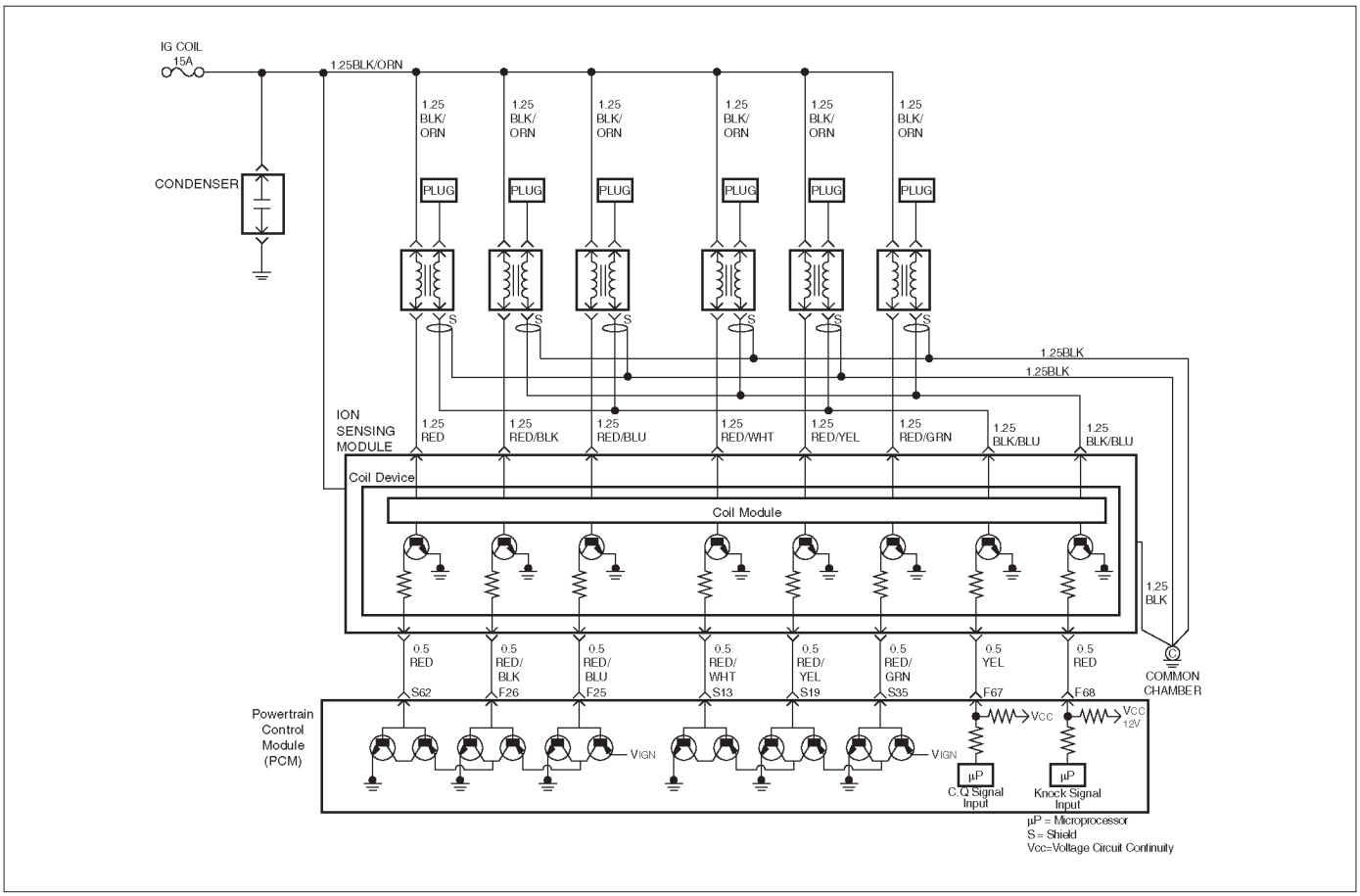

D06R200098

Circuit Description

The Power Control Module (PCM) checks the validity of the signals used in the ION Sensing module at the following engine operating conditions.

- The Deceleration Fuel Cut Off (DFCO) test is performed to evaluate the Combustion Quality (CQ) signal pulse width
- If it is below a predetermined value, the value it is expected to be during DFCO conditions. If the CQ signal pulse width is above the predetermined threshold, the fail counter will be incremented. If the failure counter exceeds the calibration, then the test is complete and a failure will be reported.
- The Power Enrichment (PE) test is performed to evaluate the Combustion Quality (CQ) signal pulse width
- If it is below a predetermined value, the value is expected to be during PE conditions.

  If the CQ signal pulse width is above the predetermined threshold, the fail counter will be incremented. If the failure counter exceeds the calibration, then the test is complete and a failure will be reported.
- The Combustion Quality (CQ) test is performed to check if inappropriate (CQ) signal status were detected. If missing CQ pulses or multiple CQ pulses or CQ pulse width calculation errors were detected, the fail counter will be incremented. If the failure counter exceeds the calibration, then the test is complete and a failure will be reported.

Conditions for setting the DTC

- Ignition voltage is between 10volt and 16 volts.
- MAP sensor signal is between 26kPa and 100 kPa.
- Fuel level is more than 19%.
- Engine speed is between 650rpm and 6500rpm.
- No Crank DTCs set.
- No System voltage DTCs set.

Action Taken When the DTC Sets

- The PCM will illuminate the malfunction indicator lamp (MIL) the first time the fault is detected.
- The PCM calculates an air flow value based on idle air control valve position, throttle position, RPM and barometric pressure.
- The PCM will store conditions which were present when the DTC was set as Freeze Frame and in the Failure Records data.

Conditions for Clearing the MIL/DTC

- The PCM will turn the MIL “OFF” on the third consecutive trip cycle during which the diagnostic has been run and the fault condition is no longer present.
- A history DTC P1310 will clear after 40 consecutive trip cycle during which the warm up cycles have occurred without a fault.
- DTC P1310 can be cleared using the Tech 2 “Clear Info” function or by disconnecting the PCM battery feed.

Diagnostic Aids

An intermittent may be caused by the following:

- Poor connections.
- Misrouted harness.
- Rubbed through wire insulation.
- Broken wire inside the insulation.

Check for the following conditions:

- Poor connection at PCM-Inspect harness connectors for backed out terminals, improper mating, broken locks, improperly formed or damaged terminals, and poor terminal to wire connection.
- Damaged harness-Inspect the wiring harness for damage. If the harness appears to be OK, observe the moving connectors and wiring harnesses related to the sensor.

  A change in the display will indicate the location of the fault. If DTC P1310 cannot be duplicated, the information included in the Failure Records data can be useful in determined vehicle mileage since the DTC was last set.

  If it is determined that the DTC occurs intermittently, performing the DTC P1310 Diagnostic Chart may isolate the cause of the fault.

DTC P1310 - ION Sensing Module Diagnostic

Step	Action	Value(s)	Yes	No
1	Was the “On-Board (OBD) System Check” performed?	—	Go to *Step 2*	Go to *OBD System Check*
2	1. Ignition “ON”, engine “OFF”. 2. Review and record Tech 2 Failure Records data. 3. Operate the vehicle within Failure Records conditions as noted. 4. Using a Tech 2, monitor “DTC” info for DTC P1310. Does the Tech 2 indicate DTC P1310 failed this ignition?	—	Go to *Step 3*	Check the Procedure Refer to *Diagnostic Aids*
3	1. Ignition “OFF”. 2. Disconnect the ION Sensing module. 3. Disconnect the PCM. Is the action complete?	—	Go to *Step 4*	Go to *Step 3*
4	Check the ION Sensing harness between the PCM and ION Sensing module circuit harness connector. Was a problem found?	—	Verify repair	Go to *Step 6*
5	1. Disconnect the ignition coil. Is the action complete?	—	Go to *Step 6*	Go to *Step 5*
6	Check the ION Sensing harness between the ignition coil and ION Sensing module circuit at the ION Sensing Module harness connector. Was a problem found?	—	Verify repair	Go to *Step 7*
7	Check the following items; 1. Ignition coil and ignition coil circuit. 2. Ignition coil ground circuit for a poor connection. 3. If a problem is found, repair wiring harness as necessary. Was a problem found?	—	Verify repair	Go to *Step 8*
8	Replace the Ignition coil. Is the action complete?	—	Verify repair	Go to *Step 9*
9	Check the following items; 1. ION Sensing module ground circuit for a poor connection. 2. If a problem is found, repair wiring harness as necessary. Was a problem found?	—	Verify repair	Go to *Step 10*

DTC P1310 - ION Sensing Module Diagnostic (Cont'd)

Step	Action	Value(s)	Yes	No
10	Replace the ION Sensing module. Is the action complete?	—	Verify repair	Go to *Step 11*
11	Replace the PCM. **IMPORTANT:** The replacement PCM must be programmed. Refer to *ON-Vehicle Service in Power Control Module and Sensors for procedures.* And also refer to latest Service Bulletin. Check to see if the latest software is released or not. And then Down Load the LATEST PROGRAMMED SOFTWARE to the replacement PCM. Is the action complete?	—	Verify repair	—

Diagnostic Trouble Code (DTC)
P1311 ION Sensing Module SEC Line 1 Circuit Fault

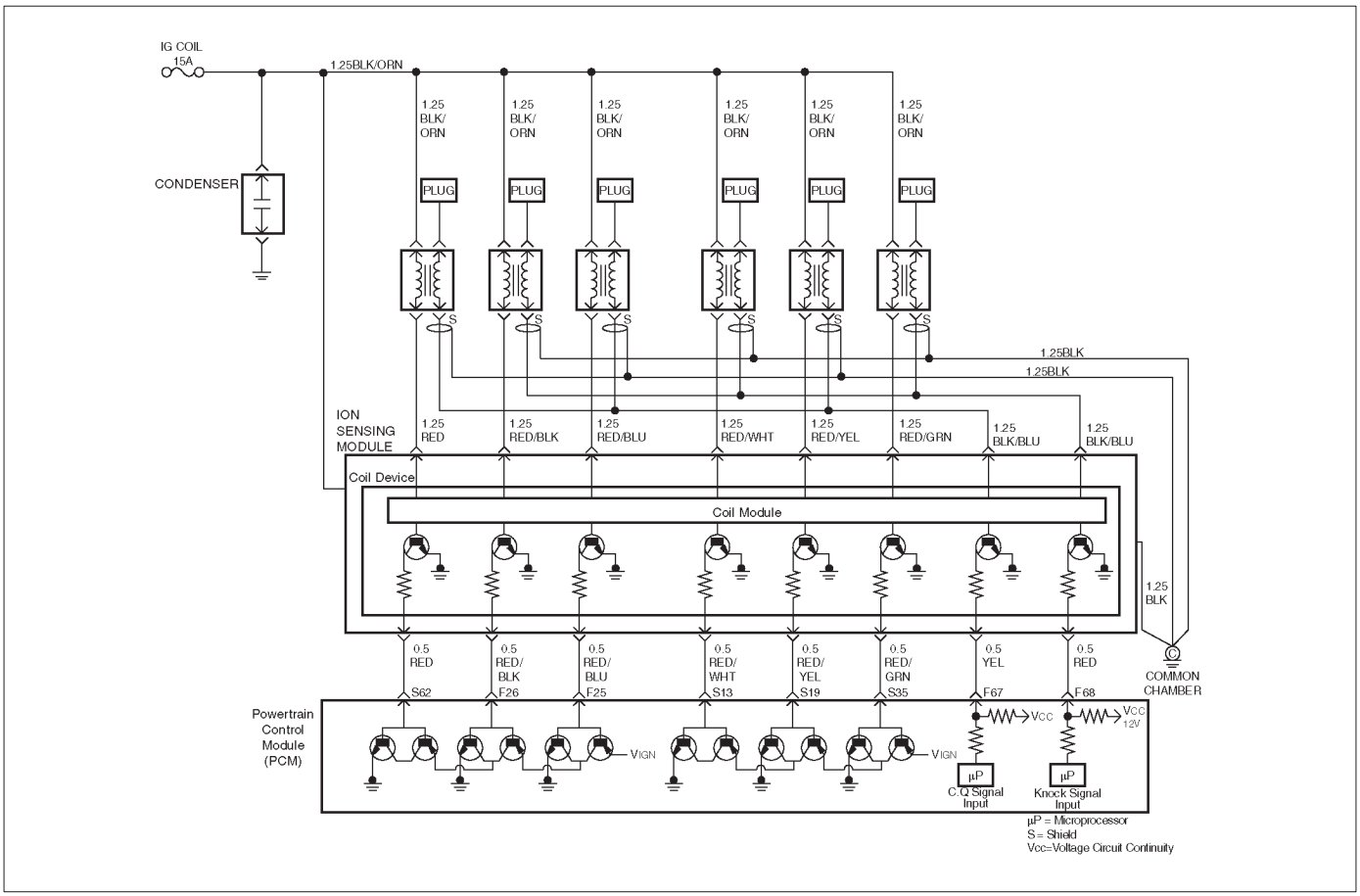

D06R200098

Circuit Description

- The Power Control Module (PCM) will compare the secondary current reading to predetermined maximum and minimum thresholds.

  If the secondary current signal pulse width is out of the predetermined range, the fail counter will be incremented. If the failure counter exceeds the calibration, then the PCM is complete and a failure will be reported. If the sample counter threshold is reached before the failure threshold, then the PCM is complete and pass will be reported.

  This PCM will detect an open/short circuit in the secondary current sense input circuit, misfire on the entire bank for the secondary current sense input circuit, coil failure, and same internal Ignition Current Sense System (ICSS) module faults.

Conditions for setting the DTC

- Ignition voltage is between 10volt and 16 volts.
- MAP sensor signal is between 26kPa and 100 kPa.
- Fuel level is more than 19%.
- Engine speed is between 650rpm and 6500rpm.
- ION Sensing Module circuit is open or shorted signals on the SEC 1 line.

Action Taken When the DTC Sets

- The PCM will illuminate the malfunction indicator lamp (MIL) the first time the fault is detected.
- The PCM calculates an air flow value based on idle air control valve position, throttle position, RPM and barometric pressure.
- The PCM will store conditions which were present when the DTC was set as Freeze Frame and in the Failure Records data.

Conditions for Clearing the MIL/DTC

- The PCM will turn the MIL “OFF” on the third consecutive trip cycle during which the diagnostic has been run and the fault condition is no longer present.
- A history DTC P1311 will clear after 40 consecutive trip cycles during which the warm up cycles have occurred without a fault.
- DTC P1311 can be cleared using the Tech 2 “Clear Info” function or by disconnecting the PCM battery feed.

Diagnostic Aids

An intermittent may be caused by the following:

- Poor connections.
- Misrouted harness.
- Rubbed through wire insulation.
- Broken wire inside the insulation.

Check for the following conditions:

- Poor connection at PCM-Inspect harness connectors for backed out terminals, improper mating, broken locks, improperly formed or damaged terminals, and poor terminal to wire connection.
- Damaged harness-Inspect the wiring harness for damage. If the harness appears to be OK, observe the moving connectors and wiring harnesses related to the sensor.
- A change in the display will indicate the location of the fault. If DTC P1311 cannot be duplicated, the information included in the Failure Records data can be useful in determining vehicle mileage since the DTC was last set.
- If it is determined that the DTC occurs intermittently, performing the DTC P1311 Diagnostic Chart may isolate the cause of the fault.

DTC P1311 - ION Sensing Module SEC Line 1 Circuit Fault

Step	Action	Value(s)	Yes	No
1	Was the “On-Board (OBD) System Check” performed?	—	Go to *Step 2*	Go to *OBD System Check*
2	1. Ignition “ON”, engine “OFF”. 2. Review and record Tech 2 Failure Records data. 3. Operate the vehicle within Failure Records conditions as noted. 4. Using a Tech 2, monitor “DTC” info for DTC P1311. Does the Tech 2 indicate DTC P1311 failed this ignition?	—	Go to *Step 3*	Check the Procedure Refer to *Diagnostic Aids*
3	1. Ignition “OFF”. 2. Disconnect the ION Sensing module. 3. Disconnect the PCM. Is the action complete?	—	Go to *Step 4*	Go to *Step 3*
4	Check the ION Sensing module harness between the PCM and ION Sensing module circuit at the ION Sensing module harness connector. Was a problem found?	—	Verify repair	Go to *Step 5*
5	1. Disconnect the ignition coil. Is the action complete?	—	Go to *Step 6*	Go to *Step 5*
6	Check the ION Sensing module harness between the ignition coil and ION Sensing module circuit at the SEC line 1 harness connector. Was a problem found?	—	Verify repair	Go to *Step 7*
7	Check the following items; 1. Ignition coil and ignition coil circuit. 2. Ignition coil ground circuit for a poor connection. 3. If a problem is found, repair wiring harness as necessary. Was a problem found?	—	Verify repair	Go to *Step 8*
8	Replace the Ignition coil. Is the action complete?	—	Verify repair	Go to *Step 9*
9	Check the following items; 1. ION Sensing module ground circuit for a poor connection. 2. If a problem is found, repair wiring harness as necessary. Was a problem found?	—	Verify repair	Go to *Step 10*

DTC P1311 - ION Sensing Module SEC Line 1 Circuit Fault (Cont'd)

Step	Action	Value(s)	Yes	No
10	Replace the ION Sensing module. Is the action complete?	—	Verify repair	Go to *Step 11*
11	Replace the PCM. **IMPORTANT:** The replacement PCM must be programmed. Refer to *ON-Vehicle Service in Power Control Module and Sensors for procedures.* And also refer to latest Service Bulletin. Check to see if the latest software is released or not. And then Down Load the LATEST PROGRAMMED SOFTWARE to the replacement PCM. Is the action complete?	—	Verify repair	—

Diagnostic Trouble Code (DTC)
P1312 ION Sensing Module SEC Line 2 Circuit Fault

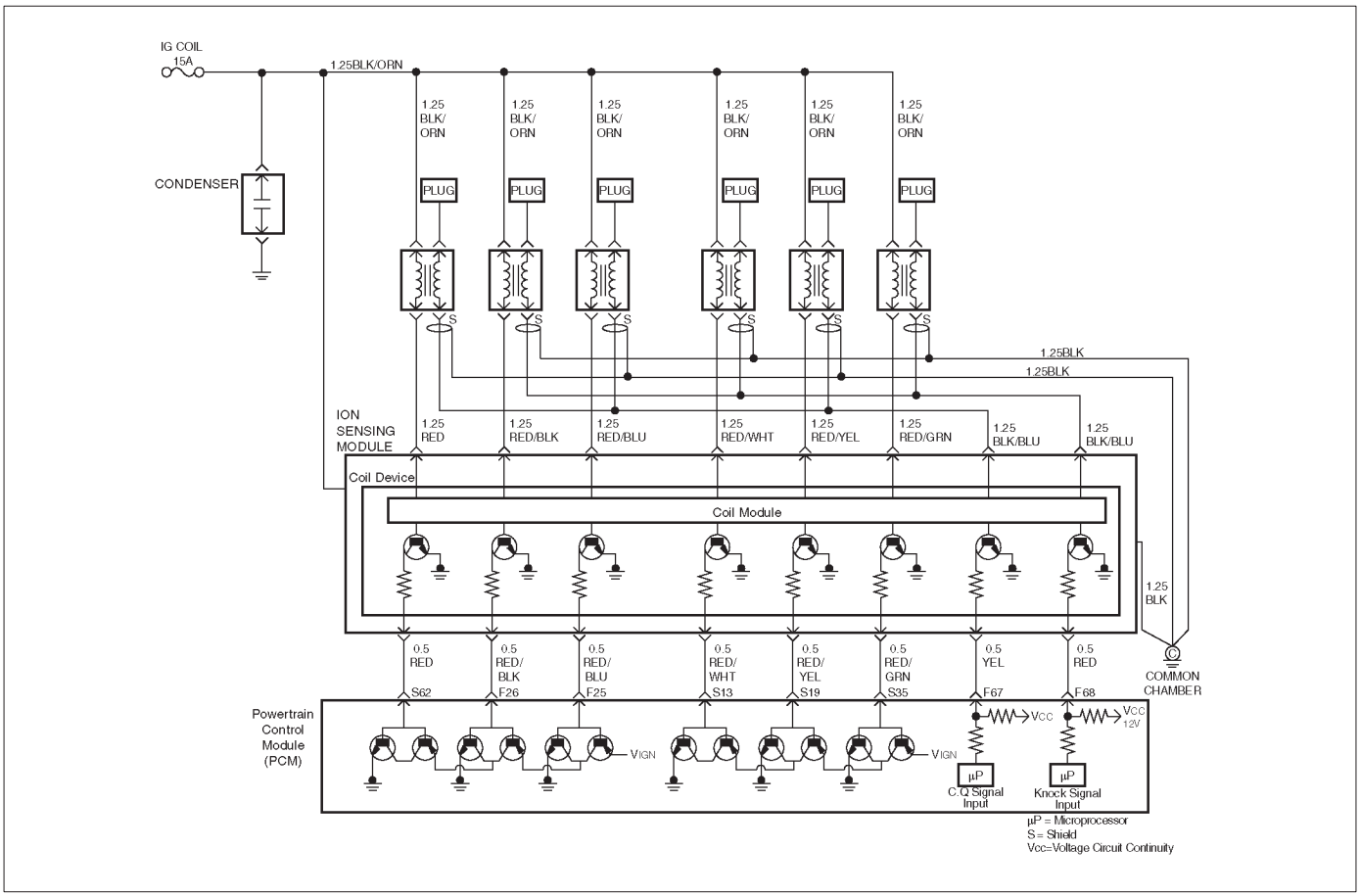

D06R200098

Circuit Description

- The Power Control Module (PCM) will compare the secondary current reading to predetermined maximum and minimum thresholds.

  If the secondary current signal pulse width is out of the predetermined range, the fail counter will be incremented. If the fail counter exceeds the calibration, then the PCM is complete and a failure will be reported. If the sample counter threshold is reached before the failure threshold, then the PCM is complete and pass will be reported.

  This PCM will detect an open/short circuit in the secondary current sense input circuit, misfire on the entire bank for the secondary current sense input circuit, coil failure, and same internal Ignition Current Sense System (ICSS) module faults.

Conditions for setting the DTC

- Ignition voltage is between 10volt and 16 volts.
- MAP sensor signal is between 26kPa and 100 kPa.
- Fuel level is more than 19%.
- Engine speed is between 650rpm and 6500rpm.
- ION Sensing Module circuit is open or shorted signals on the SEC 2 line.

Action Taken When the DTC Sets

- The PCM will illuminate the malfunction indicator lamp (MIL) the first time the fault is detected.
- The PCM calculates an air flow value based on idle air control valve position, throttle position, RPM and barometric pressure.
- The PCM will store conditions which were present when the DTC was set as Freeze Frame and in the Failure Records data.

Conditions for Clearing the MIL/DTC

- The PCM will turn the MIL “OFF” on the third consecutive trip cycle during which the diagnostic has been run and the fault condition is no longer present.
- A history DTC P1312 will clear after 40 consecutive trip cycles during which the warm up cycles have occurred without a fault.
- DTC P1312 can be cleared using the Tech 2 “Clear Info” function or by disconnecting the PCM battery feed.

Diagnostic Aids

An intermittent may be caused by the following:

- Poor connections.
- Misrouted harness.
- Rubbed through wire insulation.
- Broken wire inside the insulation.

Check for the following conditions:

- Poor connection at PCM-Inspect harness connectors for backed out terminals, improper mating, broken locks, improperly formed or damaged terminals, and poor terminal to wire connection.
- Damaged harness-Inspect the wiring harness for damage. If the harness appears to be OK, observe the moving connectors and wiring harnesses related to the sensor.

A change in the display will indicate the location of the fault. If DTC P1312 cannot be duplicated, the information included in the Failure Records data can be useful in determining vehicle mileage since the DTC was last set.

If it is determined that the DTC occurs intermittently, performing the DTC P1312 Diagnostic Chart may isolate the cause of the fault.

DTC P1312 - ION Sensing Module SEC Line 2 Circuit Fault

Step	Action	Value(s)	Yes	No
1	Was the “On-Board (OBD) System Check” performed?	—	Go to *Step 2*	Go to *OBD System Check*
2	1. Ignition “ON”, engine “OFF”. 2. Review and record Tech 2 Failure Records data. 3. Operate the vehicle within Failure Records conditions as noted. 4. Using a Tech 2, monitor “DTC” info for DTC P1312. Does the Tech 2 indicate DTC P1312 failed this ignition?	—	Go to *Step 3*	Check the Procedure Refer to *Diagnostic Aids*
3	1. Ignition “OFF”. 2. Disconnect the ION Sensing module. 3. Disconnect the PCM. Is the action complete?	—	Go to *Step 4*	Go to *Step 3*
4	Check the ION Sensing module harness between the PCM and ICSS module circuit at the ION Sensing Module harness connector. Was a problem found?	—	Verify repair	Go to *Step 5*
5	1. Disconnect the ignition coil. Is the action complete?	—	Go to *Step 6*	Go to *Step 5*
6	Check the ION Sensing module harness between the ignition coil and ION Sensing module circuit at the SEC line 2 harness connector. Was a problem found?	—	Verify repair	Go to *Step 7*
7	Check the following items; 1. Ignition coil and ignition coil circuit. 2. Ignition coil ground circuit for a poor connection. 3. If a problem is found, repair wiring harness as necessary. Was a problem found?	—	Verify repair	Go to *Step 8*
8	Replace the Ignition coil. Is the action complete?	—	Verify repair	Go to *Step 9*
9	Check the following items; 1. ION Sensing module ground circuit for a poor connection. 2. If a problem is found, repair wiring harness as necessary. Was a problem found?	—	Verify repair	Go to *Step 10*

DTC P1312 - ION Sensing Module SEC Line 2 Circuit Fault (Cont'd)

Step	Action	Value(s)	Yes	No
10	Replace the ION Sensing module. Is the action complete?	—	Verify repair	Go to *Step 11*
11	Replace the PCM. **IMPORTANT:** The replacement PCM must be programmed. Refer to *ON-Vehicle Service in Power Control Module and Sensors for procedures.* And also refer to latest Service Bulletin. Check to see if the latest software is released or not. And then Down Load the LATEST PROGRAMMED SOFTWARE to the replacement PCM. Is the action complete?	—	Verify repair	—

Diagnostic Trouble Code (DTC)
P1326 ION Sensing Module Combustion Quality Input Circuit Fault

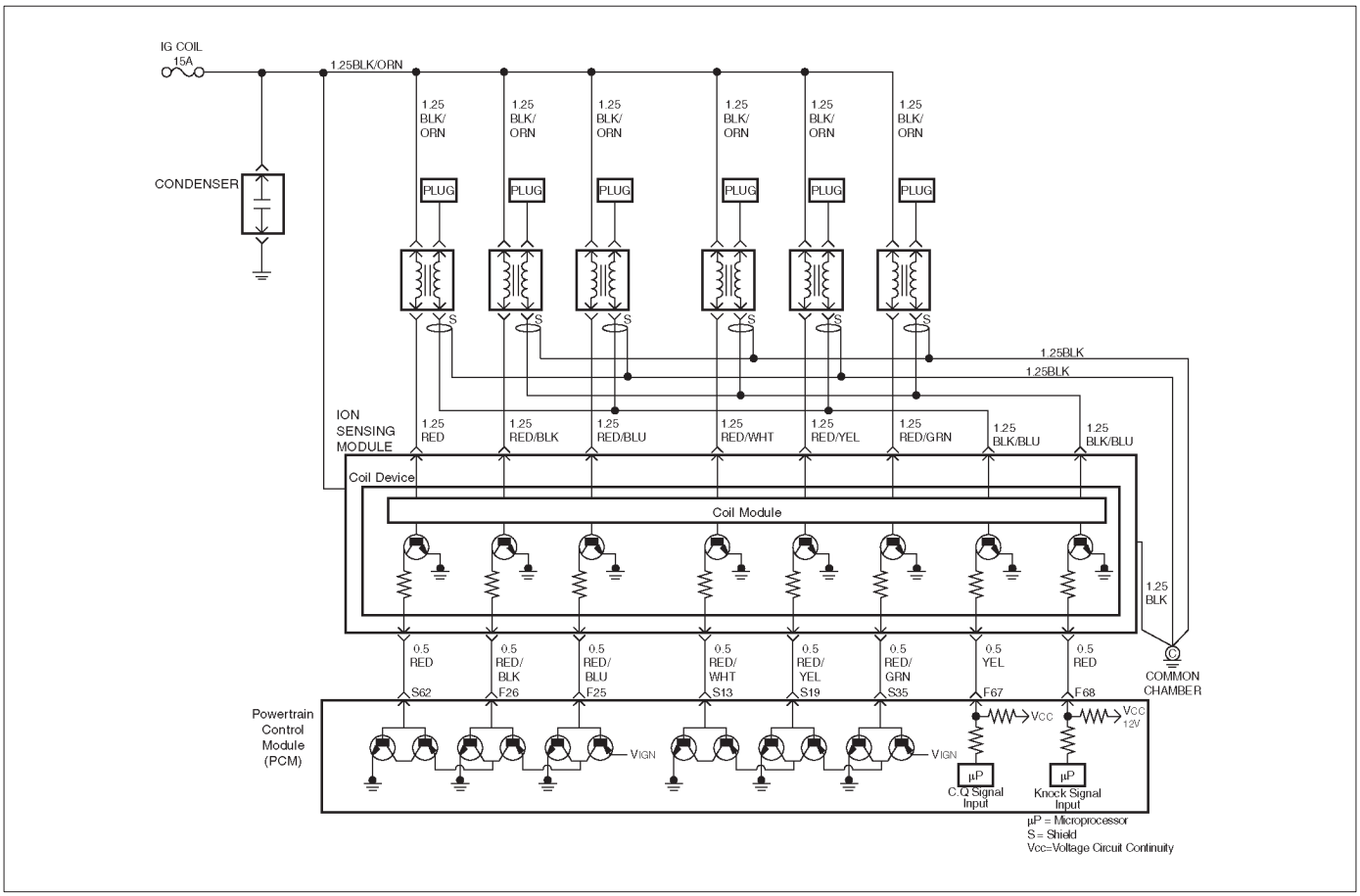

D06R200098

Circuit Description

The Power Control Module (PCM) checks the validity of the signals used in the ION Sensing module at the following engine operating conditions.

- The test is performed to evacuate the Combustion Quality (CQ) signal pulse width if it is within a predetermined range. If the CQ signal pulse width is out of the predetermined range, the fail counter will be incremented. If the failure counter exceeds the calibration, then test is complete and a failure will be reported. If the sample counter threshold is reached before the failure threshold, then the test is complete and a pass will be reported. This test will detect an open/short in the CQ line circuit, ION Sensing module faults and analog input faults in the PCM.

Conditions for setting the DTC

- Ignition voltage is between 10volt and 16 volts.
- No Crank DTCs set.
- No cylinder ID DTCs set.

Action Taken When the DTC Sets

- The PCM will illuminate the malfunction indicator lamp (MIL) the first time the fault is detected.
- The PCM calculates an air flow value based on idle air control valve position, throttle position, RPM and barometric pressure.
- The PCM will store conditions which were present when the DTC was set as Freeze Frame and in the Failure Records data.

Conditions for Clearing the MIL/DTC

- The PCM will turn the MIL “OFF” on the third consecutive trip cycle during which the diagnostic has been run and the fault condition is no longer present.
- A history DTC P1326 will clear after 40 consecutive trip cycles during which the warm up cycles have occurred without a fault.
- DTC P1326 can be cleared using the Tech 2 “Clear Info” function or by disconnecting the PCM battery feed.

Diagnostic Aids

An intermittent may be caused by the following:

- Poor connections.
- Misrouted harness.
- Rubbed through wire insulation.
- Broken wire inside the insulation.

Check for the following conditions:

- Poor connection at PCM-Inspect harness connectors for backed out terminals, improper mating, broken locks, improperly formed or damaged terminals, and poor terminal to wire connection.
- Damaged harness-Inspect the wiring harness for damage. If the harness appears to be OK, observe the moving connectors and wiring harnesses related to the sensor.

  A change in the display will indicate the location of the fault. If DTC P1326 cannot be duplicated, the information included in the Failure Records data can

be useful in determined vehicle mileage since the DTC was last set.

If it is determined that the DTC occurs intermittently, performing the DTC P1326 Diagnostic Chart may isolate the cause of the fault.

DTC P1326 - ION Sensing Module Combustion

Step	Action	Value(s)	Yes	No
1	Was the “On-Board (OBD) System Check” performed?	—	Go to *Step 2*	Go to *OBD System Check*
2	1. Ignition “ON”, engine “OFF”. 2. Review and record Tech 2 Failure Records data. 3. Operate the vehicle within Failure Records conditions as noted. 4. Using a Tech 2, monitor “DTC” info for DTC P1326. Does the Tech 2 indicate DTC P1326 failed this ignition?	—	Go to *Step 3*	Check the Procedure Refer to *Diagnostic Aids*
3	1. Ignition “OFF”. 2. Disconnect the ION Sensing module. 3. Disconnect the PCM. Is the action complete?	—	Go to *Step 4*	Go to *Step 3*
4	Check the ION Sensing module harness between the PCM and ION Sensing module circuit at the QC line harness connector. Was a problem found?	—	Verify repair	Go to *Step 5*
5	1. Disconnect the ignition coil. Is the action complete?	—	Go to *Step 6*	Go to *Step 5*
6	Check the ION Sensing module harness between the ignition coil and ICSS module circuit at the ION Sensing Module harness connector. Was a problem found?	—	Verify repair	Go to *Step 7*
7	Check the following items; 1. Ignition coil and ignition coil circuit. 2. Ignition coil ground circuit for a poor connection. 3. If a problem is found, repair wiring harness as necessary. Was a problem found?	—	Verify repair	Go to *Step 8*
8	Replace the Ignition coil. Is the action complete?	—	Verify repair	Go to *Step 9*
9	Check the following items; 1. ION Sensing module ground circuit for a poor connection. 2. If a problem is found, repair wiring harness as necessary. Was a problem found?	—	Verify repair	Go to *Step 10*

DTC P1326 - ION Sensing Module Combustion (Cont'd)

Step	Action	Value(s)	Yes	No
10	Replace the ION Sensing module. Is the action complete?	—	Verify repair	Go to *Step 11*
11	Replace the PCM. **IMPORTANT:** The replacement PCM must be programmed. Refer to *ON-Vehicle Service in Power Control Module and Sensors for procedures.* And also refer to latest Service Bulletin .Check to see if the latest software is released or not. And then Down Load the LATEST PROGRAMMED SOFTWARE to the replacement PCM. Is the action complete?	—	Verify repair	—

Diagnostic Trouble Code (DTC) P1340 ION Sensing Module Cylinder ID Fault (Cylinder Synchronization Fail)

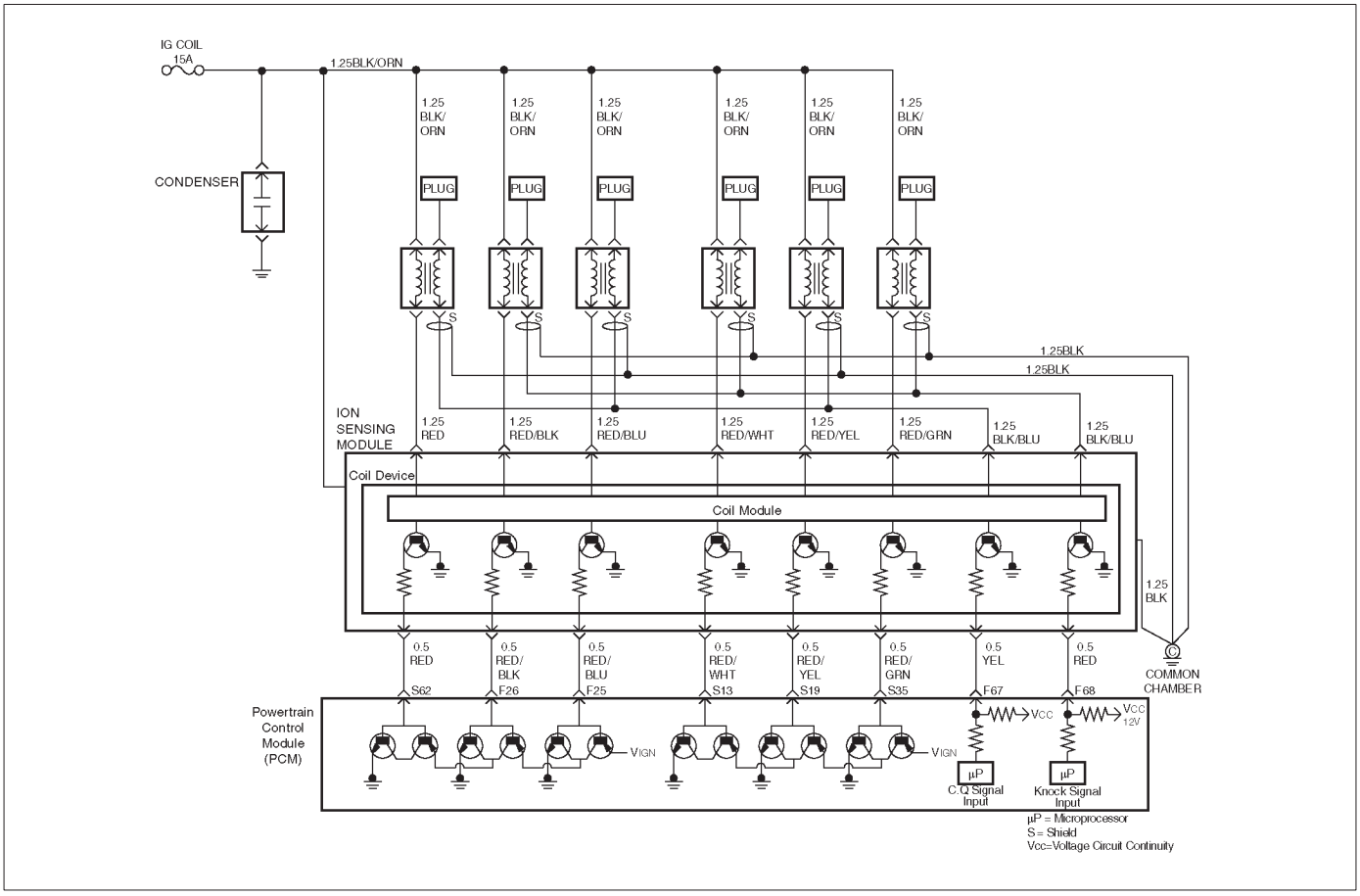

D06R200098

Circuit Description

The Power Control Module (PCM) checks the validity of the signals used in the ION Sensing module at the following engine operating conditions.

- This test will return a fault if the cylinder synchronization routine has not been completed after a predetermined number of events after crank. This test will detect fault that will prevent the PCM from synchronization, such as Knock Signal (KI) - Combustion Quality (CQ) lines being swapped, shorted spark plugs, ION Sensing module faults, an PCM hardware faults.

Conditions for setting the DTC

- Ignition voltage is between 11volts and 16 volts.
- Engine speed is between 650rpm and 6250rpm.
- No ECT DTCs set.
- No injector DTCs set.
- No Fuel Trim DTCs set.
- No Misfire DTCs set.
- No system voltage DTCs set.

Action Taken When the DTC Sets

- The PCM will ON the MIL after second trip with detected the fault.
- The PCM calculates an air flow value based on idle air control valve position, throttle position, RPM and barometric pressure.
- The PCM will store conditions which were present when the DTC was set as Freeze Frame and in the Failure Records data.

Conditions for Clearing the MIL/DTC

- The PCM will turn the MIL “OFF” on the third consecutive trip cycle during which the diagnostic has been run and the fault condition is no longer present.
- A history DTC P1340 will clear after 40 consecutive trip cycles during which the warm up cycles have occurred without a fault.
- DTC P1340 can be cleared using the Tech 2 “Clear Info” function or by disconnecting the PCM battery feed.

Diagnostic Aids

An intermittent may be caused by the following:

- Poor connections.
- Misrouted harness.
- Rubbed through wire insulation.
- Broken wire inside the insulation.

Check for the following conditions:

- Poor connection at PCM-Inspect harness connectors for backed out terminals, improper mating, broken

locks, improperly formed or damaged terminals, and poor terminal to wire connection.

- Damaged harness–Inspect the wiring harness for damage. If the harness appears to be OK, observe the moving connectors and wiring harnesses related to the sensor.

  A change in the display will indicate the location of the fault. If DTC P1340 cannot be duplicated, the information included in the Failure Records data can be useful in determining vehicle mileage since the DTC was last set.

  If it is determined that the DTC occurs intermittently, performing the DTC P1340 Diagnostic Chart may isolate the cause of the fault.

DTC P1340 - ION Sensing Module Cylinder ID Fault (Cylinder Synchronization Fail)

Step	Action	Value(s)	Yes	No
1	Was the “On-Board (OBD) System Check” performed?	—	Go to *Step 2*	Go to *OBD System Check*
2	1. Ignition “ON”, engine “OFF”. 2. Review and record Tech 2 Failure Records data. 3. Operate the vehicle within Failure Records conditions as noted. 4. Using a Tech 2, monitor “ DTC” info for DTC P1340. Does the Tech 2 indicate DTC P1340 failed this ignition?	—	Go to *Step 3*	Check the Procedure Refer to *Diagnostic Aids*
3	1. Ignition “OFF”. 2. Disconnect the ION Sensing module. 3. Disconnect the PCM. Is the action complete?	—	Go to *Step 4*	Go to *Step 3*
4	Check the ION Sensing module harness between the PCM and ICSS module circuit at the QC line harness connector. Was a problem found?	—	Verify repair	Go to *Step 5*
5	1. Disconnect the ignition coil. Is the action complete?	—	Go to *Step 6*	Go to *Step 5*
6	Check the ION Sensing module harness between the ignition coil and ION Sensing module circuit at the ION Sensing Module harness connector. Was a problem found?	—	Verify repair	Go to *Step 7*
7	Check the following items; 1. Ignition coil and ignition coil circuit. 2. Ignition coil ground circuit for a poor connection. 3. If a problem is found, repair wiring harness as necessary. Was a problem found?	—	Verify repair	Go to *Step 8*
8	Replace the Ignition coil. Is the action complete?	—	Verify repair	Go to *Step 9*
9	Check the following items; 1. ION Sensing module ground circuit for a poor connection. 2. If a problem is found, repair wiring harness as necessary. Was a problem found?	—	Verify repair	Go to *Step 10*

DTC P1340 - ION Sensing Module Cylinder ID Fault (Cylinder Synchronization Fail) (Cont'd)

Step	Action	Value(s)	Yes	No
10	Replace the ION Sensing module. Is the action complete?	—	Verify repair	Go to *Step 11*
11	Replace the PCM. **IMPORTANT:** The replacement PCM must be programmed. Refer to *ON-Vehicle Service in Power Control Module and Sensors for procedures.* And also refer to latest Service Bulletin. Check to see if the latest software is released or not. And then Down Load the LATEST PROGRAMMED SOFTWARE to the replacement PCM. Is the action complete?	—	Verify repair	—

Diagnostic Trouble Code (DTC) P1404 EGR Stuck Closed

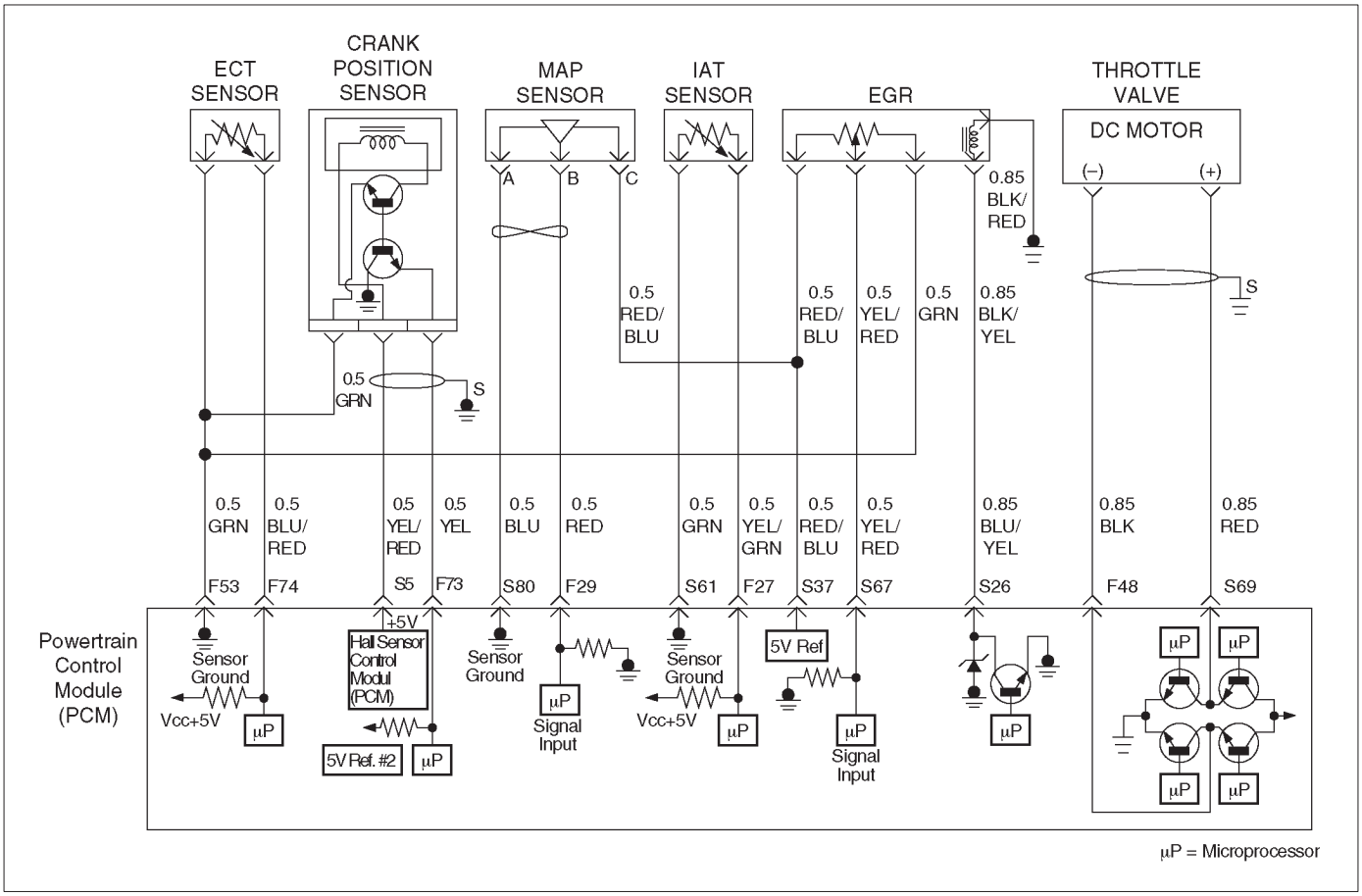

D06R200075

Circuit Description

The powertrain control module (PCM) monitors the EGR valve pintle position input to ensure that the valve responds properly to commands from the PCM, and to detect a fault if current pintle zero position is different from the learned zero position. If the PCM detects a pintle position signal indicates more than 30 % different between current zero position and the learned zero position for more than 5 seconds, and this condition exists 3 times during trip, then the PCM will set DTC P1404.

Conditions for Setting the DTC

- Ignition voltage is between 11 and 16 volts.
- Intake Air temp is more than 3˚C.
- Desired EGR position is more than 3 %.
- Difference of EGR pintle position between current and the learned zero is more than 30 % for more than 5 seconds, and exists three times to the above condition during a trip the PCM will set DTC 1404. Then it trigger the PCM light on.

Action Taken When the DTC Sets

- The PCM will illuminate the malfunction indicator lamp (MIL) after consecutive 2nd trip in which the fault is detected.
- The PCM will store conditions which were present when the DTC was set as Freeze Frame and in Failure Records data.

Conditions for Clearing the MIL/DTC

- The PCM will turn the MIL “OFF” on the third consecutive trip cycle during which the diagnostic has been run and the fault condition is no longer present.
- A history DTC P1404 will clear after 40 consecutive warm-up cycles have occurred without a fault.
- DTC P1404 can be cleared by using the Tech 2 “Clear Info” function or by disconnecting the PCM battery feed.

Diagnostic Aids

Check for the following conditions:

- Excessive carbon deposit on EGR valve shaft and/or foreign material may cause the EGR valve not to fully seat. The carbon deposit may occur by unusual port operation. Remove foreign material and/or excessive carbon deposit on EGR valve shaft and to allow the EGR valve to be fully seated.
- Poor connection or damaged harness – Inspect the wiring harness for damage.

Reviewing the Failure Records vehicle mileage since the diagnostic test last failed may help determine how often the condition that caused the DTC to be set occurs. This may assist in diagnosing the condition.

DTC P1404 – EGR Stuck Closed

Step	Action	Value(s)	Yes	No
1	Was the “On-Board Diagnostic (OBD) System Check” performed?	—	Go to *Step 2*	Go to *OBD System Check*
2	1. Ignition “ON”, engine “OFF”, review and record Tech 2 Failure Records Data. 2. Operate the vehicle within Failure Records conditions as noted. 3. Using a Tech 2, monitor “DTC inf.” for DTC P1404 until the DTC P1404 test runs. Note the result. Does the Tech 2 indicates DTC P1404 failed this ignition?	—	Go to *Step 3*	Check the Procedure Refer to *Diagnostic Aids*
3	1. Disconnect the EGR valve harness connector. 2. Inspect the EGR valve and connectors for damaged pin or terminals. Were there any damaged pins or terminals?	—	Go to *Step 4*	Go to *Step 5*
4	Repair the damaged pin or terminal. Is the action complete?	—	Verify repair	—
5	1. Remove EGR valve from Engine. 2. Inspect EGR valve for any excessive carbon deposit on EGR shaft. 3. Inspect for any foreign material inside of EGR valve. Was excessive carbon deposit on EGR valve shaft and/or foreign material in EGR valve ?	—	Go to *Step 6*	Go to *Step 7*
6	1. Clean up EGR valve shaft and inside of EGR valve. 2. Remove foreign material from EGR valve. 3. Visually inspect damage of pintle and seat to see if it is bent. If damaged, leakage may occur. Was there any severe damage which affects function?	—	Go to *Step 9*	Verify repair Go to *Step 7*
7	1. Install the EGR valve. 2. Ignition “OFF”. 3. Install the Tech 2. 4. Run the engine at idle. 5. On the Tech 2, select EGR Control Test. 6. Use the “UP” arrow to increase the EGR from 0% to 40%. Did EGR work properly?	—	Verify repair	Go to *Step 8*
8	1. Reset the learned zero EGR valve position. 2. Repeat step 7. Did EGR work properly?	—	Verify repair	Go to *Step 9*

DTC P1404 – EGR Stuck Closed (Cont'd)

Step	Action	Value(s)	Yes	No
9	Replace the EGR valve. Does DTC P1404 still fail "DTC" test on the Tech 2?	—	Go to *Step 10*	Verify repair
10	Replace the PCM. **IMPORTANT:** The replacement PCM must be programmed. Refer to *On-Vehicle Service* in *Powertrain Control Module and Sensors* for procedures. And also refer to latest Service Bulletin. Check to see if the Latest software is released or not. And then Down Load the LATEST PROGRAMMED SOFTWARE to the replacement PCM. Is the action complete?	—	Verify repair	—

Diagnostic Trouble Code (DTC) P1514 TPS - MAF Correlation Error

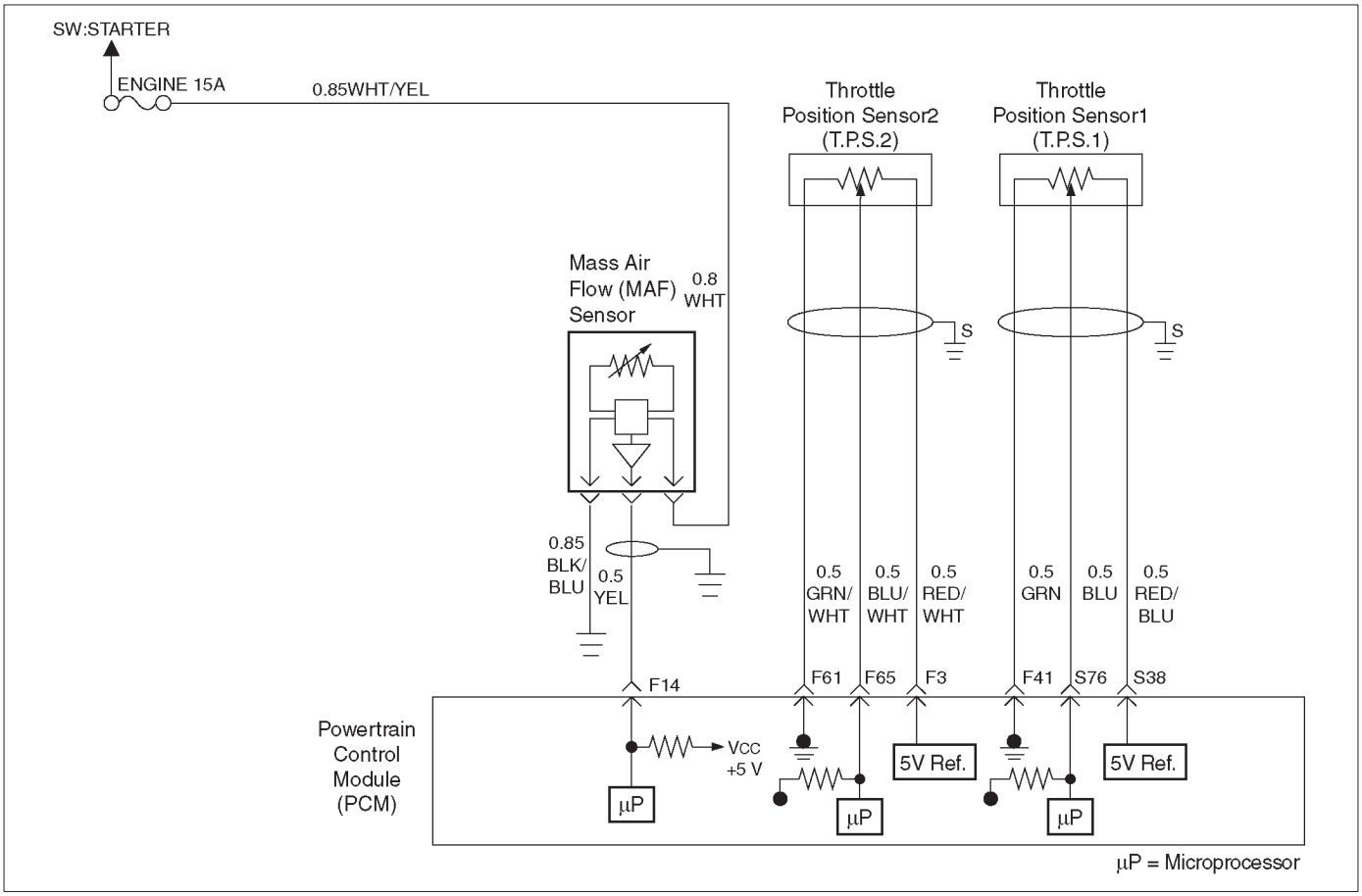

D06RY00090

Circuit Description

- The throttle position (TP) sensor circuit provides a voltage signal relative to throttle blade angle.

  The throttle blade angle will vary about 8 % at closed throttle to about 92 % at wide open throttle (WOT).
- The mass air flow (MAF) sensor measures the amount of air which passes through it into the engine during a given time. The powertrain Control Module (PCM) uses the mass air flow information to monitor engine operating conditions for fuel delivery calculations.

  A large quantitiy of air entering the engine indicates an accleration or high load situation, while a small quantity or air indicates deceleration or idle.

  The MAF sensor produces a frequency signal which can be monitored using a Tech 2. The frequency will vary within a range of around 4 to 7g/s at idle to around 25 to 40g/s at maximum engine load.

Conditions for setting the DTC

- The engine is running.
- No MAF sensor DTCs are set.
- Throttle actuation mode is not off.
- MAF reading-ETC estimated air flow is less than 40g/s for 250 failres within test 1000 test samples (15.6 m sec).

Action Taken When the DTC Sets

- The PCM will illuminate the malfunction indicator lamp (MIL) the first time the fault is detected.
- The PCM calculates an air flow value based on idle air control valve position, throttle position, RPM and barometric pressure.
- The PCM will store condition which were present when the DTC was set as Freeze Frame and in the Failure Records data.

Conditions for Clearing the MIL/DTC

- The PCM will turn the MIL “OFF” on the third consecutive trip cycle during which the diagnostic has been run and the fault condtion is no longer present.
- A history DTC P1514 will clear after 40 cosecutive trip cycle during which the warm up cycles have occurred without a fault.
- DTC P1514 can be cleared using the Tech 2 “Clear Info” function or by disconnecting the PCM battery feed.

Diagnostic Aids

An intermittent may be caused by the following:

- Poor connectons.
- Mis routed harness.
- Rubbed through wire insulation.
- Broken wire inside the insulation.

Check for the following conditions:

- Poor connection at PCM - Inspect harness connectors for backed out terminals, improper mating,broken locks, improperly formed or damaged terminals,and poor terminal to wire connection.
- Damaged harness - Inspect the wiring harness for damage. If the harness appears to be OK, observe the

Mass Air Flow, TP sensor 1, TP sensor 2 display on the Tech 2 while moving connectors and wiring harnesses related to the sensor.

- Plugged intake air duct or filter element
- A wide - open throttle acceleration from a stop should cause the mass air flow displayed on a Tech 2 to increase from about 3 – 7 g/s at idle to 100 g/s or greater at the time of the 1 – 2 shift. If not, check for a restriction.

A change in the display will indicate the location of the fault. If DTC P1514 cannot be duplicated, the information included in the Faillure Records data can be useful in determined vehicle mileage since the DTC was last set.

If it is determined that the DTC occurs intermittently, performing the DTC P1514 Diagnostic Chart may isolate the cause of the fault.

DTC P1514 - TPS-MAF Correlation Error

Step	Action	Value(s)	Yes	No
1	Was the “On-Board (OBD) System Check” performed?	—	Go to *Step 2*	Go to *OBD System Check*
2	Was the “Electric Throttle Control (ETC) System Check” performed?	—	Go to *Step 3*	Go to *ETC System Check*
3	1. Ignition “ON,” engine “OFF.” 2. Review and record Tech 2 Failure Records data. 3. Operate the vehicle within Failure Records conditions as noted. 4. Using a Tech 2, monitor “DTC” info for DTC P1514. Does the Tech 2 indicate DTC P1514 failed this ignition?	—	Go to *Step 4*	Check the procedure. Refer to *Diagnostic Aids*
4	1. Start the engine. 2. With the engine idling, monitor “MAF Frequency” display on the Tech 2. Is the “MAF Frequency” below the specified value?	3 ~ 7 g/s	Go to *Step 5*	Go to *Step 8*
5	1. Ignition “OFF.” 2. Disconnect the MAF sensor connector. 3. Ignition “ON,” engine idling. 4. Using a Tech 2, monitor “MAF Frequency.” Does the Tech 2 indicate a “MAF Frequency” at the specified value?	0g/s	Go to *Step 6*	Go to *Step 7*
6	Replace the MAF sensor. Is the action complete?	—	Verify repair	—
7	1. Check the MAF harness for incorrect routing near high voltage components (solenoids, relays, motors). 2. If incorrect routing is found, correct the harness routing. Was a problem found?	—	Verify repair	Go to *Step 8*
8	1. With the engine idling, monitor “MAF Frequency.” display on the Tech 2. 2. Quickly snap open throttle to wide open throttle while under a road load and record value. Does the Tech 2 indicate a “MAF Frequency” at thespecified value?	3 ~ 7 g/s	Go to *Step 6*	Go to *Step 9*
9	1. Ignition“ON”, engine not running. 2. Observe the MAP reading on the Tech 2. Is the MAP reading less than the specified value?	100 kPa	Go to *Step 10*	Go to *Step 13*

DTC P1514 - TPS-MAF Correlation Error (Cont'd)

Step	Action	Value(s)	Yes	No
10	1. Disconnect the MAP sensor. 2. Connect a test 5 volt reference circuit and the MAP signal at the MAP sensor harness connector. 3. Observe the MAP reading on the Tech 2. Is the MAP reading less than the specified value? (If no, start with diagnosis chart for other sensors in the circuit and see if 5Vreturns.)	5V	Go to *Step 11*	Go to *Step 18*
11	1. Check the MAP signal circuit between the PCM and MAP ground circuit. 2. If the MAP signal circuit is open or shoted, repair it as necessary. Was the MAP signal circuit open or shorted?	—	Verify repair	Go to *Step 12*
12	Replace the MAP sensor. Is the action complete?	—	Verify repair	—
13	1. Warming up the engine until the ECT rise at 80˚C 2. Ignition "OFF". 3. Ignition "ON" but not engine run. 4. Observe the TP angle reading on the Tech 2 while alowly opening the throttle. NOTE: The value check of TPS must be performed in less than 15 seconds. Does the TP angle increase steadily and evenly from the closed throttle value to the wide open throttle value?	Closed throttle TPS1= 6~12% TPS2= 88~94% Wide open throttle TPS1= 79~83% TPS2= 19~23%	Go to *Step 18*	Go to *Step 14*
14	1. Connect a DVM between the 5Volt reference circuit and the TP1 and TP2 sensor ground circuit at the TP sensor harness connector. 2. Observe the voltage using a DVM. Is the voltage near the specified value?	5V	Go to *Step 15*	Go to *Step 18*
15	Check the following items; 1. TP1 and TP2 signal circuit for a short to voltage. 2. TP1 and TP2 sensor ground circuit for high resistance between the PCM and the TP sensor. 3. TP1 and TP2 sensor ground circuit for a poor connection. 4. If a problem is found, repair wiring harness as necessary. Was a problem found?	—	Verify repair	Go to *Step 16*
16	Check the following items; 1. TP1and TP2 signal circuit or 5 volt reference circuit for a poor connection. 2. TP1 and TP2 signal circuit or 5 volt reference circuit for high resistance between the PCM and the TP1and TP2 sensor. 3. If a problem is found, repair wiring harness as necessary. Was a problem found?	—	Verify repair	Go to *Step 17*

DTC P1514 - TPS-MAF Correlation Error (Cont'd)

Step	Action	Value(s)	Yes	No
17	Replace the TP sensor. Was a problem corrected?	—	Verify repair	Go to *Step 18*
18	Replace the PCM. **IMPORTANT:** The replacement PCM must be programmed. Refer to *ON-Vehicle Service in Power Control Module and Sensors for procedures.* And also refer to latest Service Bulletin.Check to see if the latest software is released or not. And then Down Load the LATEST PROGRAMMED SOFTWARE to the replasement PCM. Is the action complete?	—	Verify repair	—

Diagnostic Trouble Code (DTC)
P1515 Command - Actual TPS Correlation Error

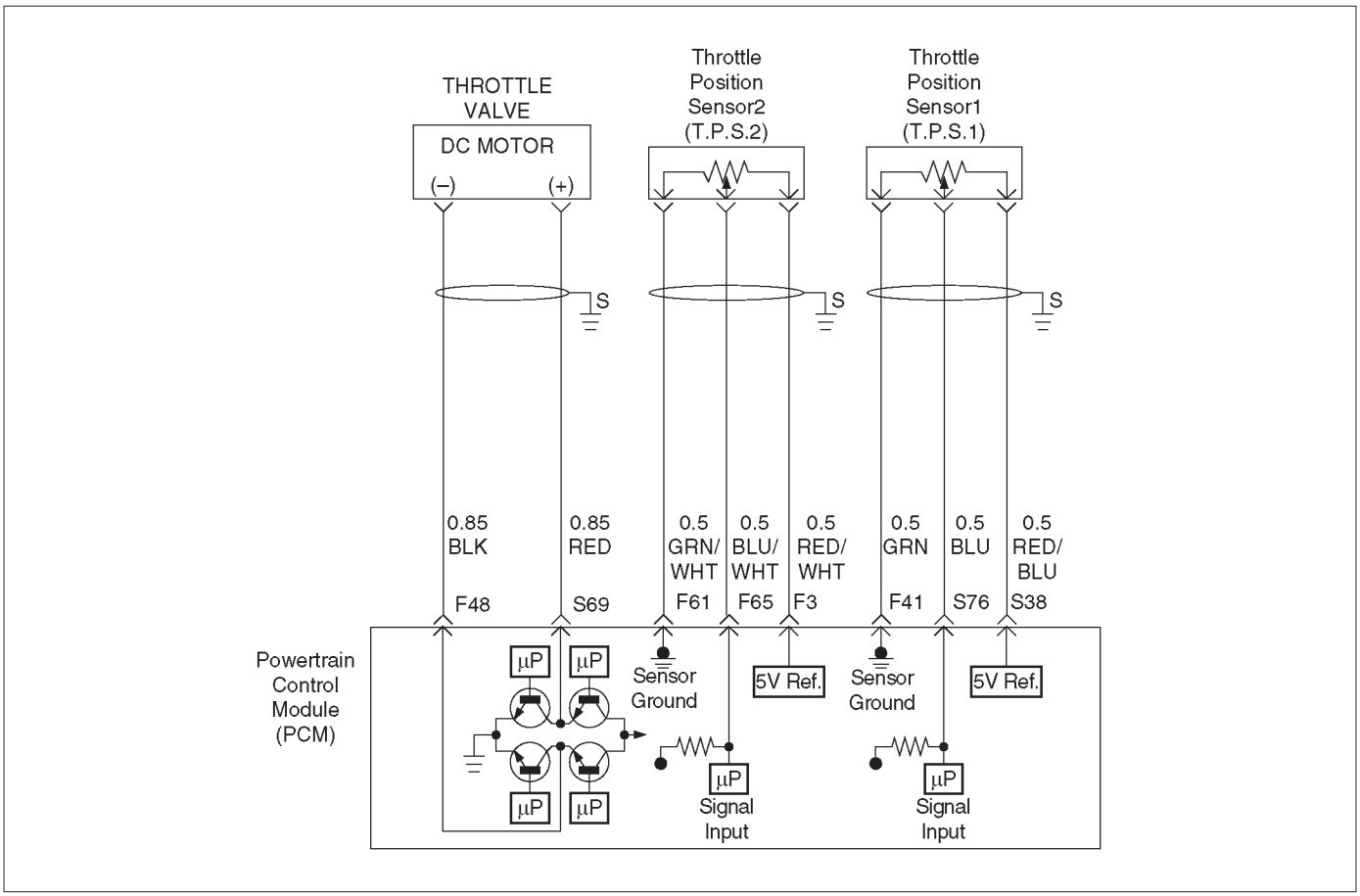

D06RY00088

Circuit Description

- The throttle position (TP) sensor circuit provides a voltage signal relative to throttle position (blade angle).

  The throttle blade angle will vary about 8 % at closed throttle to about 92 % at wide open throttle(WOT).
- The DC motor circuit provides a voltage signal relative to command throttle position (blade angle).
- This DTC ditects the difference between actual throttle position and command throttle position.

Conditions for setting the DTC

- The ignition is “ON”.
- Throttle actuation mode is normal.
- Command Throttle position - Actual Throttle position is more than + 5 % for 100 counts within test 1000 test samples (15.6 m sec) else Actual Throttle position is less than + 40 % and Command Throttle position - Actual Throttle position is more than - 5 % or Command Throttle position - Actual Throttle position is more than - 20 % for 150 failres within test 1000 test samples (15.6 m sec).

Action Taken When the DTC Sets

- The PCM will illuminate the malfunction indicator lamp (MIL) the first time the fault is detected.
- The PCM calculates an air flow value based on idle air control valve position, throttle position, RPM and barometric pressure.
- The PCM will store condition which were present when the DTC was set as Freeze Frame and in the Failure Records data.

Conditions for Clearing the MIL/DTC

- The PCM will turn the MIL “OFF” on the third consecutive trip cycle during which the diagnostic has been run and the fault condtion is no longer present.
- A history DTC P1515 will clear after 40 cosecutive trip cycle during which the warm up cycles have occurred without a fault.
- DTC P1515 can be cleared using the Tech 2 “Clear Info” function or by disconnecting the PCM battery feed.

Diagnostic Aids

An intermittent may be caused by the following:

- Poor connectons.
- Mis routed harness.
- Rubbed through wire insulation.
- Broken wire inside the insulation.

Check for the following conditions:

- Poor connection at PCM-Inspect harness connectors for backed out terminals, mproper mating, locks, improperly formed or damaged terminals, and poor terminal to wire connection.
- Damaged harness-Inspect the wiring harness for damage. If the harness appears to be OK, observe the TP sensor 1, TP sensor 2 display on the Tech2 while

moving connectors and wiring harnesses related to the sensor.

A change in the display will indicate the location of the fault. If DTC P1515 cannot be duplicated, the information included in the Faillure Records data can be useful in determined vehicle mileage since the DTC was last set.

If it is determined that the DTC occurs intermittently, performing the DTC P1515 Diagnostic Chart may isolate the cause of the fault.

DTC P1515 - Command - Actual TPS Correlation Error

Step	Action	Value(s)	Yes	No
1	Was the “On-Board (OBD) System Check” performed?	—	Go to *Step 2*	Go to *OBD System Check*
2	Was the “Electric Throttle Control (ETC) System Check” performed?	—	Go to *Step 3*	Go to *ETC System Check*
3	1. Ignition “On,” engine “Off.” 2. Operate the throttle lever by hand (Don’t operate the acceleration pedal). Was the DTC P1515 or P1516 stored?	—	Go to *Step 4*	Go to *Step 6*
4	1. Check the DC mortor harness between the PCM and DC mortor curcuit at the DC mortor harness connector. 2. If a problem found, repair wiring harness as necessary. Was a problem found?	—	Verify repair	Go to *Step 5*
5	1. Replace the throttle assembly (DC mortor). Is the action complete?	—	Verify repair	—
6	1. Warming up the engine until the ECT rise at 80˚C 2. Ignition “OFF”. 3. Ignition “ON” but not engine run. 4. Observe the TP angle reading on the Tech 2 while alowly opening the throttle. NOTE: The value check of TPS must be performed in less than 15 seconds. Does the TP angle increase steadily and evenly from the closed throttle value to the wide open throttle value?	Closed throttle TPS1= 6~12% TPS2= 88~94% Wide open throttle TPS1= 79~83% TPS2= 19~23%	Go to *Step 10*	Go to *Step 7*
7	Check the following items; 1. TP1 and TP2 signal circuit for a short to voltage. 2. TP1 and TP2 sensor ground circuit for high resistance between the PCM and the TP sensor. 3. TP1and TP2 sensor ground circuit for a poor connection. 4. If a problem is found,repair wiring harness as necessary. Was a problem found?	—	Verify repair	Go to *Step 8*

DTC P1515 - Command - Actual TPS Correlation Error (Cont'd)

Step	Action	Value(s)	Yes	No
8	Check the following items; 1. TP1 and TP2 signal circuit or 5 volt reference circuit for a poor connection. 2. TP1 and TP2 signal circuit or 5 volt reference circuit for high resistance between the PCM and the TP1 and TP2 sensor. 3. If a problem is found, repair wiring harness as necessary. Was a problem found?	—	Verify repair	Go to *Step 9*
9	Replace the TP sensor. Was a problem found?	—	Verify repair	Go to *Step 10*
10	Replace the PCM. **IMPORTANT:** The replacement PCM must be programmed. Refer to *ON-Vehicle Service in Power Control Module and Sensors for procedures.* And also refer to latest Service Bulletin. Check to see if the latest software is released or not. And then Down Load the LATEST PROGRAMMED SOFTWARE to the replasement PCM. Is the action complete?	—	Verify repair	—

Diagnostic Trouble Code (DTC)
P1516 Command - Actual TPS Correlation Error

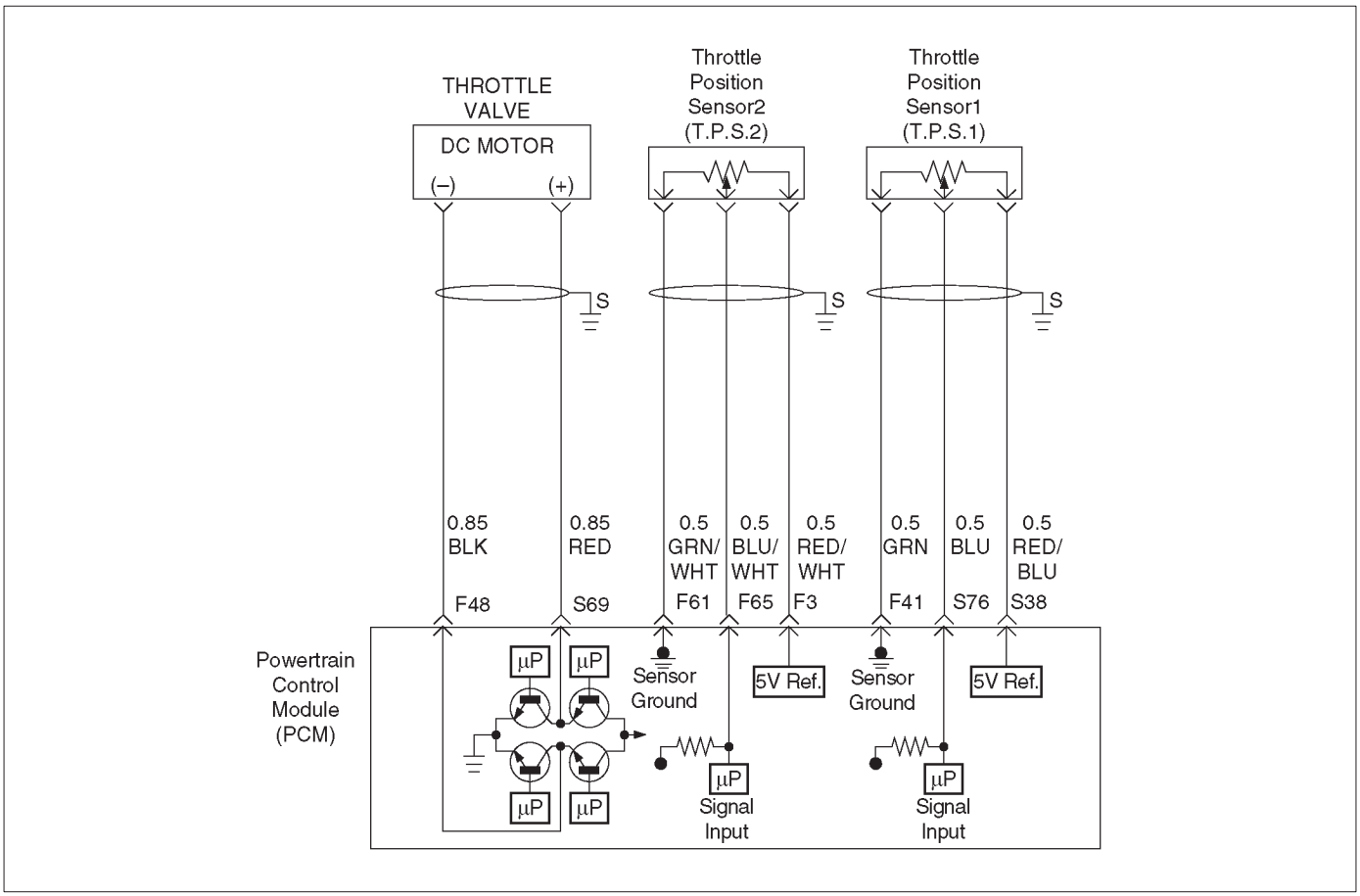

Circuit Description

- The throttle position (TP) sensor circuit provides a voltage signal relative to throttle position (blade angle). The throttle blade angle will vary about 8% at closed throttle to about 92 % at wide open throttle (WOT).
- The DC motor circuit provides a voltage signal relative to command throttle position (blade angle).
- This DTC detects the dufference between actual throttle position and command throttle position in steady state.

Conditions for setting the DTC

- The ignition is “ON”.
- Throttle Actuation mode is normal.
- Command Throttle position-Actual Throttle positionis less than 8 % when desird TPS is sutudy wihtin 0.5 %for 30 second within test samples (30 second)

Action Taken When the DTC Sets

- The PCM will illuminate the malfunction indicator lamp (MIL) the first time the fault is detected.
- The PCM calculates an air flow value based on idle air control valve position, throttle position, RPM and barometric pressure.
- The PCM will store condition which were present when the DTC was set as Freeze Frame and in the Failure Records data.

Conditions for Clearing the MIL/DTC

- The PCM will turn the MIL “OFF” on the third consecutive trip cycle during which the diagnostic has been run and the fault condtion is no longer present.
- A history DTC P1516 will clear after 40 cosecutive trip cycle during which the warm up cycles have occurred without a fault.
- DTC P1516 can be cleared using the Tech 2 “Clear Info” function or by disconnecting the PCM battery feed.

Diagnostic Aids

An intermittent may be caused by the following:

- Poor connectons.
- Mis routed harness.
- Rubbed through wire insulation.
- Broken wire inside the insulation.

Check for the following conditions:

- Poor connection at PCM-Inspect harness connectors for backed out terminals, improper mating, broken locks, improperly formed or damaged terminals, and poor terminal to wire connection.
- Damaged harness - Inspect the wiring harness for damage. If the harness appears to be OK, observe the TP sensor 1, TP sensor 2 display on the Tech2 while moving connectors and wiring harnesses related to the sensor.

A change in the display will indicate the location of the fault. If DTC P1516 cannot be duplicated, the information included in the Faillure Records data can be useful in determined vehicle mileage since the DTC was last set.

If it is determined that the DTC occurs intermittently, performing the DTC P1516 Diagnostic Chart may isolate the cause of the fault.

DTC P1516 - Command - Actual TPS Correlation Error

Step	Action	Value(s)	Yes	No
1	Was the “On-Board (OBD) System Check” performed?	—	Go to *Step 2*	Go to *OBD System Check*
2	Was the “Electric Throttle Control (ETC) System Check” performed?	—	Go to *Step 3*	Go to *ETC System Check*
3	1. Ignition “On,” engine “Off.” 2. Operate the throttle lever by hand (Don’t operate the acceleration pedal). Was the DTC P1515 or P1516 stored?	—	Go to *Step 4*	Go to *Step 6*
4	1. Check the DC mortor harness between the PCM and DC mortor curcuit at the DC mortor harness connector. 2. If a problem found, repair wiring harness as necessary. Was a problem found?	—	Verify repair	Go to *Step 5*
5	Replace the throttle assembly (DC mortor). Is the action complete?	—	Verify repair	—
6	1. Warming up the engine until the ECT rise at 80˚C 2. Ignition “OFF”. 3. Ignition “ON” but not engine run. 4. Observe the TP angle reading on the Tech 2 while alowly opening the throttle. NOTE: The value check of TPS must be performed in less than 15 seconds. Does the TP angle increase steadily and evenly from the closed throttle value to the wide open throttle value?	Closed throttle TPS1= 6~12% TPS2= 88~94% Wide open throttle TPS1= 79~83% TPS2= 19~23%	Go to *Step 10*	Go to *Step 7*
7	Check the following items; 1. TP1 and TP2 signal circuit for a short to voltage. 2. TP1 and TP2 sensor ground circuit for high resistance between the PCM and the TP sensor. 3. TP1and TP2 sensor ground circuit for a poor connection. 4. If a problem is found,repair wiring harness as necessary. Was a problem found?	—	Verify repair	Go to *Step 8*

DTC P1516 - Command - Actual TPS Correlation Error (Cont'd)

Step	Action	Value(s)	Yes	No
8	Check the following items; 1. TP1 and TP2 signal circuit or 5 volt reference circuit for a poor connection. 2. TP1 and TP2 signal circuit or 5 volt reference circuit for high resistance between the PCM and the TP1 and TP2 sensor. 3. If a problem is found, repair wiring harness as necessary. Was a problem found?	—	Verify repair	Go to *Step 9*
9	Replace the TP sensor. Was a problem found?	—	Verify repair	Go to *Step 10*
10	Replace the PCM. **IMPORTANT:** The replacement PCM must be programmed. Refer to *ON-Vehicle Service in Power Control Module and Sensors for procedures.* And also refer to latest Service Bulletin. Check to see if the latest software is released or not. And then Down Load the LATEST PROGRAMMED SOFTWARE to the replasement PCM. Is the action complete?	—	Verify repair	—

Diagnostic Trouble Code (DTC) P1523 Actuator Control Return Performance

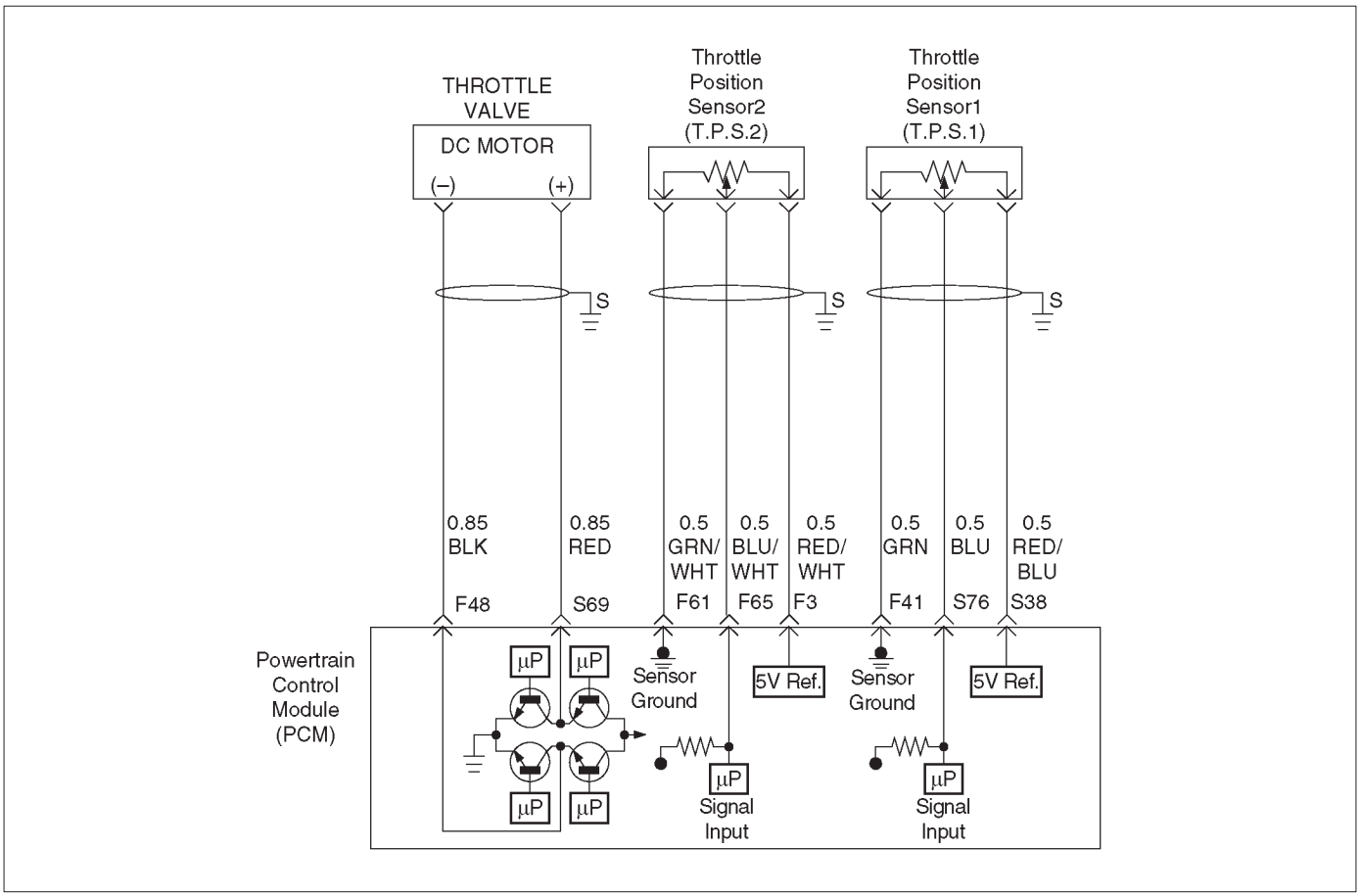

Circuit Description

- The throttle position (TP) sensor circuit provides a voltage signal relative to throttle position (blade angle).

  The throttle blade angle will vary about 8 % at closed throttle to about 92 % at wide open throttle(WOT).
- The DC motor circuit provides a voltage signal relative to command throttle position (blade angle).
- This DTC ditects if the throttle return to the default position at key on, steady state.

Conditions for setting the DTC

- The ignition is “ON”.
- Normalized TPS is less than 7 % or Normalized TPS is more than 25 %.

Action Taken When the DTC Sets

- The PCM will store condition which were present when the DTC was set as Freeze Frame and in the Failure Records data.

Conditions for Clearing the MIL/DTC

- The PCM will turn the MIL “OFF” on the third consecutive trip cycle during which the diagnostic has been run and the fault condtion is no longer present.
- A history DTC P1523 will clear after 40 cosecutive trip cycle during which the warm up cycles have occurred without a fault.
- DTC P1523 can be cleared using the Tech 2 “Clear Info” function or by disconnecting the PCM battery feed.

Diagnostic Aids

An intermittent may be caused by the following:

- Poor connectons.
- Mis routed harness.
- Rubbed through wire insulation.
- Broken wire inside the insulation.

Check for the following conditions:

- Poor connection at PCM-Inspect harness connectors for backed out terminals, improper mating, broken locks, improperly formed or damaged terminals, and poor terminal to wire connection.
- Throttle function: Check for the throttle function. When ignition switch “ON” that throttle lever is smooth operated by step on the acceleration pedal.
- Damaged harness-Inspect the wiring harness for damage. If the harness appears to be OK, observe the TP sensor 1, TP sensor 2 display on the Tech 2 while moving connectors and wiring harnesses related to the sensor.

  A change in the display will indicate the location of the fault. If DTC P1523 cannot be duplicated, the information included in the Faillure Records data can be useful in determined vehicle mileage since the DTC was last set.

If it is determined that the DTC occurs intermittently, performing the DTC P1523 Diagnostic Chart may isolate the cause of the fault.

DTC P1523 - Actuator Control Return Performance

Step	Action	Value(s)	Yes	No
1	Was the “On-Board (OBD) System Check” performed?	—	Go to *Step 2*	Go to *OBD System Check*
2	Was the “Electric Throttle Control (ETC) System Check” performed?	—	Go to *Step 3*	Go to *ETC System Check*
3	1. Warming up the engine until the ECT rise at 80˚C 2. Ignition “OFF”. 3. Ignition “ON” but not engine run. 4. Observe the TP angle reading on the Tech 2 while alowly opening the throttle. NOTE: The value check of TPS must be performed in less than 15 seconds. Does the TP angle increase steadily and evenly from the closed throttle value to the wide open throttle value?	Closed throttle TPS1= 6~12% TPS2= 88~94% Wide open throttle TPS1= 79~83% TPS2= 19~23%	Go to *Step 7*	Go to *Step 4*
4	1. Ignition “OFF.” 2. Disconnect the DC motor. Is the DC motor reading near the specified value?	0.3 ~ 100 Ω	Go to *Step 5*	Go to *Step 6*
5	1. Check the DC motor harness between the PCM and DC Motor circuit at the DC motor harness connector. 2. If a problem is found, repair wiring harness as necessary. Was a problem found?	—	Verify repair	Go to *Step 8*
6	Replace the throttle assembly (DC motor). Is the action complete?	—	Verify repair	Go to *Step 5*
7	Was the DTC P1523 stored?	—	Go to *Step 12*	Check the procedure. Refer to *Diagnostic Aids*
8	1. Connect a DVM between the 5Volt reference circuit and the TP1 and TP2 sensor ground circuit at the TP sensor harness connector. 2. Observe the voltage using a DVM. Is the voltage near the specified value?	5V	Go to *Step 9*	Go to *Step 10*
9	Check the following items; 1. TP1 and TP2 signal circuit for a short to voltage. 2. TP1 and TP2 sensor ground circuit for high resistance between the PCM and the TP sensor. 3. TP1and TP2 sensor ground circuit for a poor connection. 4. If a problem is found, repair wiring harness as necessary. Was a problem found?	—	Verify repair	Go to *Step 10*

DTC P1523 - Actuator Control Return Performance (Cont'd)

Step	Action	Value(s)	Yes	No
10	Check the following items; 1. TP1and TP2 signal circuit or 5 volt reference circuit for a poor connection. 2. TP1 and TP2 signal circuit or 5 volt reference circuit for high resistance between the PCM and the TP1and TP2 sensor. 3. If a problem is found, repair wiring harness as necessary. Was a problem found?	—	Verify repair	Go to *Step 11*
11	Replace the TP sensor. Was a problem found?	—	Verify repair	—
12	Replace the PCM. **IMPORTANT:** The replacement PCM must be programmed. Refer to *ON-Vehicle Service in Power Control Module and Sensors for procedures.* And also refer to latest Service Bulletin. Check to see if the latest software is released or not. And then Down Load the LATEST PROGRAMMED SOFTWARE to the replasement PCM. Is the action complete?	—	Verify repair	—

Diagnostic Trouble Code (DTC) P1574 Brake Switch No Operation

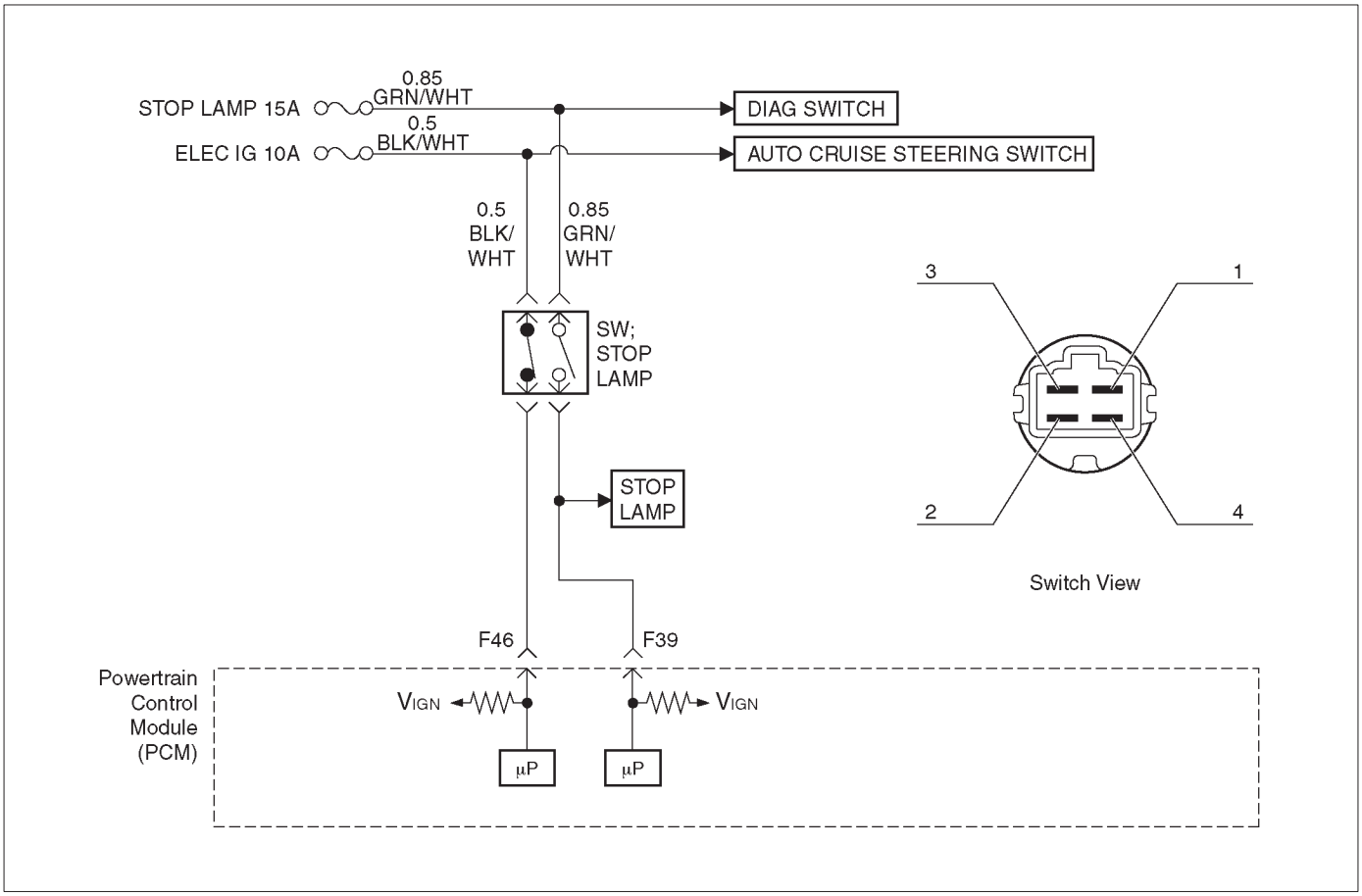

D06R200076

Circuit Description

The brake switch has 3 functions.

- Brake pedal operation check
- Brake light operation (On and off)
- Cruise control (Cancel)

The PCM receives vehicle speed and switch position signals from the brake switch. The PCM sets brake operating conditions in response to these signals.

If the brake switch is on, the brake system is in normal operation (cruise control cancelled).

Conditions for Setting the DTC

- Two break switch signals do not acknowledge after signal changed.
- Switch does not change during accelerating vehicle or decelerating.
- VSS is not fault.
- Engine is running.

Action Taken When the DTC Sets

- The PCM will not turn the malfunction indicator lamp (MIL) “ON”.
- The PCM will store conditions which were present when the DTC was set as Failure Records only. This information will not be stored as Freeze Frame data.

Conditions for Clearing the DTC

- DTC P1574 can be cleared by using the scan tool “Clear Info” function or by disconnecting the PCM battery feed.

Diagnostic Aids

- Damaged harness–Inspect the wiring harness for damage. If the harness appears to be OK, observe the fuel level display on the scan tool while moving connectors and wiring harnesses related to the sensor. A change in the display will indicate the location of the fault.

DTC P1574 Brake Switch No Operation

Step	Action	Value(s)	Yes	No
1	Was the “On-Board Diagnostic (OBD) System Check” performed?	—	Go to *Step 2*	Go to *OBD System Check*
2	1. Ignition “Off”. Engine “Off”. 2. Check following fuses. ● BACK 15A ● STOP LAMP 15A 3. If a problem found repair as necessary. Was a problem found?	—	Verify repair	Go to *Step 3*
3	1. Make adjustment to the brake switch. (Refer to *“Brake switch” in “10A CRUISE CONTROL SYSTEM”.*) 2. If a problem found repair as necessary. Was the problem found?	—	Verify repair	Go to *Step 4*
4	1. Push the shaft on brake switch. 2. Check shaft operation for smooth movement. 3. If a problem found repair as necessary. Was the problem found?	—	Verify repair	Go to *Step 5*
5	1. Disconnect the connector at brake switch. 2. Check following terminal pin by ohmmeter. (Leave the shaft position at brake switch. Don’t push it.) ● Between pin 1 and pin 2 ● Between pin 3 and pin 4 Was it specified value?	Between pin1 and pin2 is 0Ω, Between pin3 and pin4 is ∞Ω	Go to *Step 6*	Go to *Step 9*
6	1. Disconnect the connector at brake switch. 2. Check following terminal pin at ohmmeter. (Don’t press the button of the brake switch.) ● Between pin 1 and pin 2 ● Between pin 3 and pin 4 Was it specified value?	Between pin1 and pin2 is ∞Ω, Between pin3 and pin4 is 0Ω	Go to *Step 7*	Go to *Step 9*
7	1. Probe related circuits for open or short to ground. 2. If a problem was found, repair as necessary. Was a problem found?	—	Verify repair	Go to *Step 8*
8	1. Replace the PCM. **IMPORTANT:** The replacement PCM must be programmed. Refer to *On-Vehicle Service* in *Powertrain Control Module and Sensors* for procedures. And also refer to latest Service Bulletin. Check to see if the Latest software is released or not. And then Down Load the LATEST PROGRAMMED SOFTWARE to the replacement PCM. Was the action completed?	—	Verify repair	—
9	1. Replace the brake switch. Was the action completed?	—	Verify repair	—

Diagnostic Trouble Code (DTC) P1626 No response from immobilizer

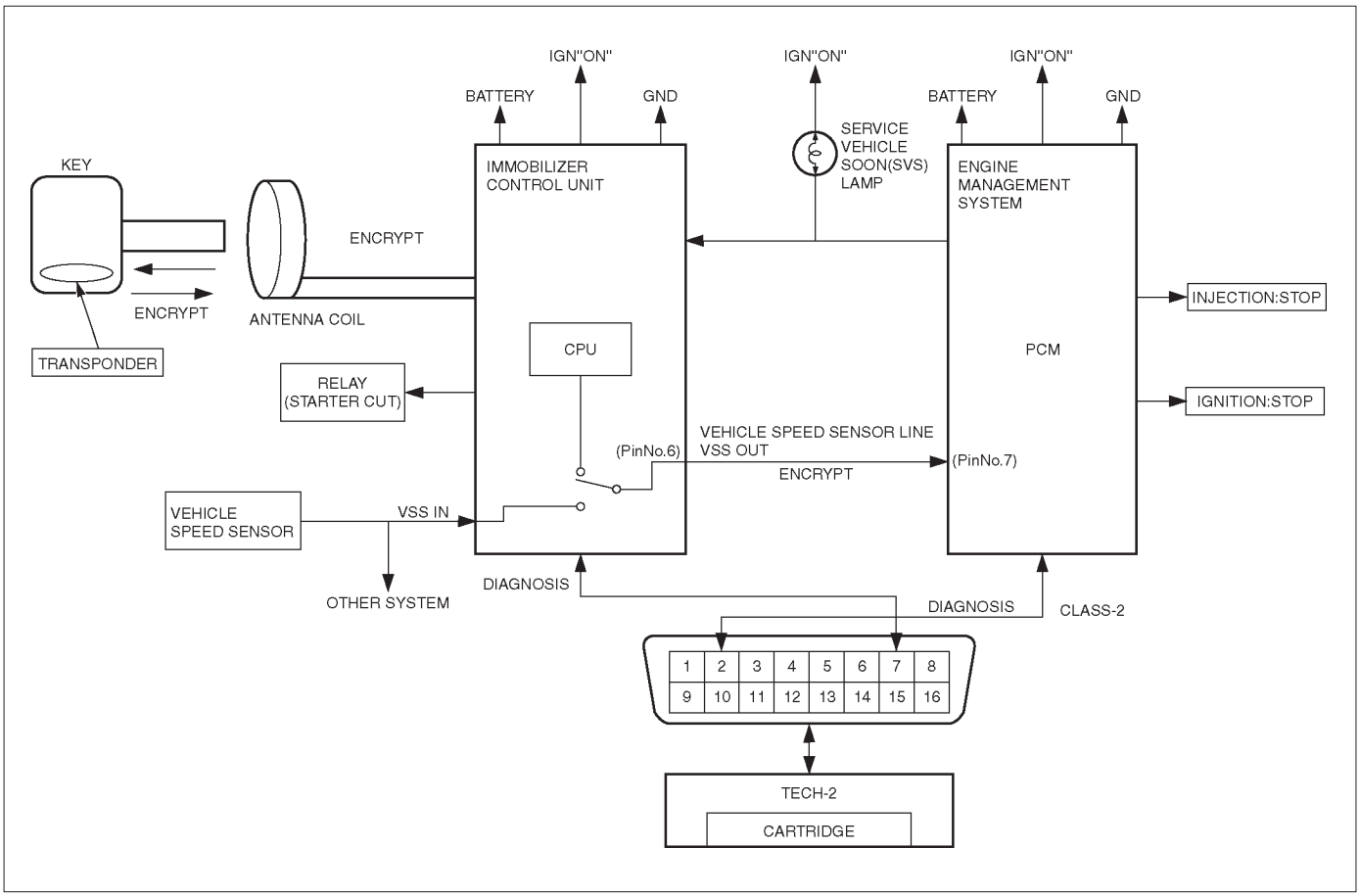

D06R200118

Circuit Description

The PCM decides whether that is an abnomality in the immobilizer control system. DTC P1626 or are recorded by the PCM when no response from immobilizer.

Condition for Setting the DTC

- No response from immobizer.

Action Taken When the DTC sets

- Flashing the SVS lamp
- The Engine does not start.

Condition for Clearing the MIL/DTC

- Use clear DTC information with Tech 2. (Refer to *the immobilizer workshop manual.*) (ISUZU UES Immobilizer system)

Diagnostic Aids

Check for the following conditions:

- Poor connection at PCM and ImmobilizerInspect harness connectors for backed out terminals, improper mating, broken locks, improperly formed or damaged terminals, and poor terminal to wire connection.
- Damaged harness-Inspect the wiring harness for damage, If the harness appears to be OK, disconnect the PCM and Immobilizer, turn the ignition “ON” and observe a voltmeter connected to the suspect driver circuit at the PCM and Immobilizer harnass connector while moving connectors and wiring harnesses relates to the SVS lamp.

  A change in voltage will indicate the location of the fault.

DTC P1626-No response from immobilizer

Step	Action	Value(s)	Yes	No
1	Was the “On-Board Diagnostic (OBD) system Check” performed?	—	Go to *Step 2*	Go to *OBD system check*
2	Using the Tech 2 system selection menu, select Body function. Does the Tech 2 display B**** appear?	—	Refer to *“Immobilizer workshop manual”*	Go to *Step 3*
3	Does the Tech 2 display DTC P1626 appear?	—	Go to *Step 4*	Refer to *Diagnostic Aids*
4	1. Check the Circuit for Immobilizer system. 2. Disconnect the VEHICLE SPEED SENSOR LINE VSS OUT harness. 3. Check the circuit open or short voltage between the Pin No.7 and Pin No.6 by DMM. If a problem found, repair as necessary. Was a problem found?	—	Verify repair	Go to *Step 5*
5	Replace the PCM. **IMPORTANT:** The replacement PCM must be programmed. Refer to *On-Vehicle Service* in *Powertrain Control Module and Sensors* for procedures, and immobilizer system workshop manual. And also refer to latest Service Bulletin. Check to see if the Latest software is released or not. And then Down Load the LATEST PROGRAMMED SOFTWARE to the replacement PCM. Is the action complete?	—	Verify repair	—

Diagnostic Trouble Code (DTC)
P1631 Received response was not correct

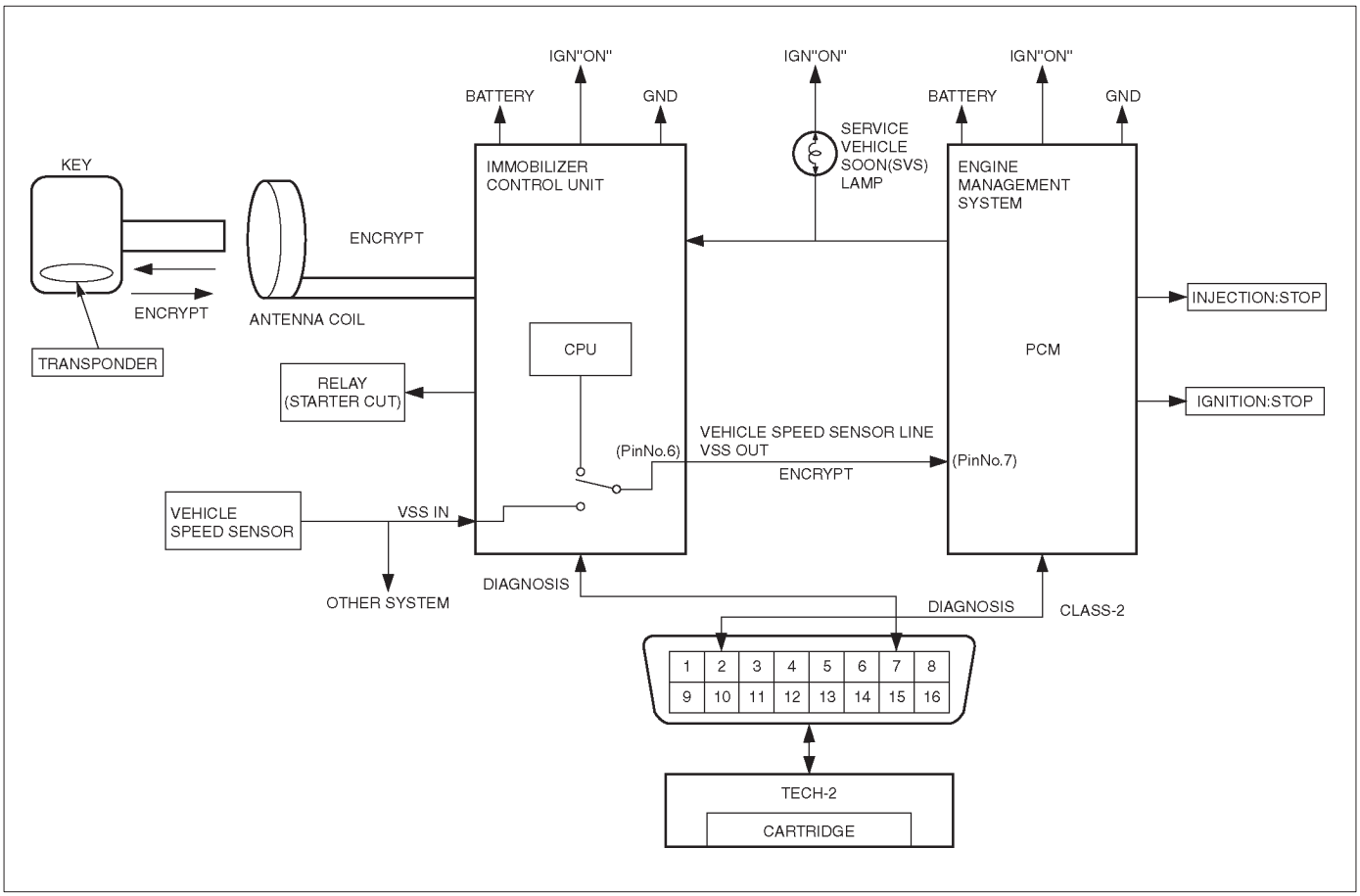

D06R200118

Circuit Description

The PCM decides whether that is an abnomality in the immobilizer control system. DTC P1631 are recorded by the PCM when received response was not correct.

Condition for Setting the DTC

- Received response was not correct.

Action Taken When the DTC Sets

- Flashing the SVS lamp.
- The engine does not start.

Condition for Clearing the MIL/DTC

- Use clear DTC information with Tech 2. (Refer to *the immobilizer workshop manual.*) (ISUZU UES Immobilizer system)

Diagnostic Aids

Check for the following conditions:

- Poor connection at PCM and ImmobilizerInspect harness connectors for backed out terminals, improper mating, broken locks, improperly formed or damaged terminals, and poor terminal to wire connection.
- Damaged harness-Inspect the wiring harness for damage, If the harness appears to be OK, disconnect the PCM and Immobilizer, turn the ignition “ON” and observe a voltmeter connected to the suspect driver circuit at the PCM and Immobilizer harnass connector while moving connectors and wiring harnesses relates to the SVS lamp.

  A change in voltage will indicate the location of the fault.

DTC P1631 Received response was not correct

Step	Action	Value(s)	Yes	No
1	Was the “On-Board Diagnostic (OBD) system Check” performed?	—	Go to *Step 2*	Go to *OBD system check*
2	Replace the PCM. **IMPORTANT:** The replacement PCM must be programmed. Refer to *On-Vehicle Service* in *Powertrain Control Module and Sensors* for procedures, and immobilizer system workshop manual. And also refer to latest Service Bulletin. Check to see if the Latest software is released or not. And then Down Load the LATEST PROGRAMMED SOFTWARE to the replacement PCM. Is the action complete?	—	Verify repair	—

Diagnostic Trouble Code (DTC) P1635 Reference Voltage # 1 Circuit Fault

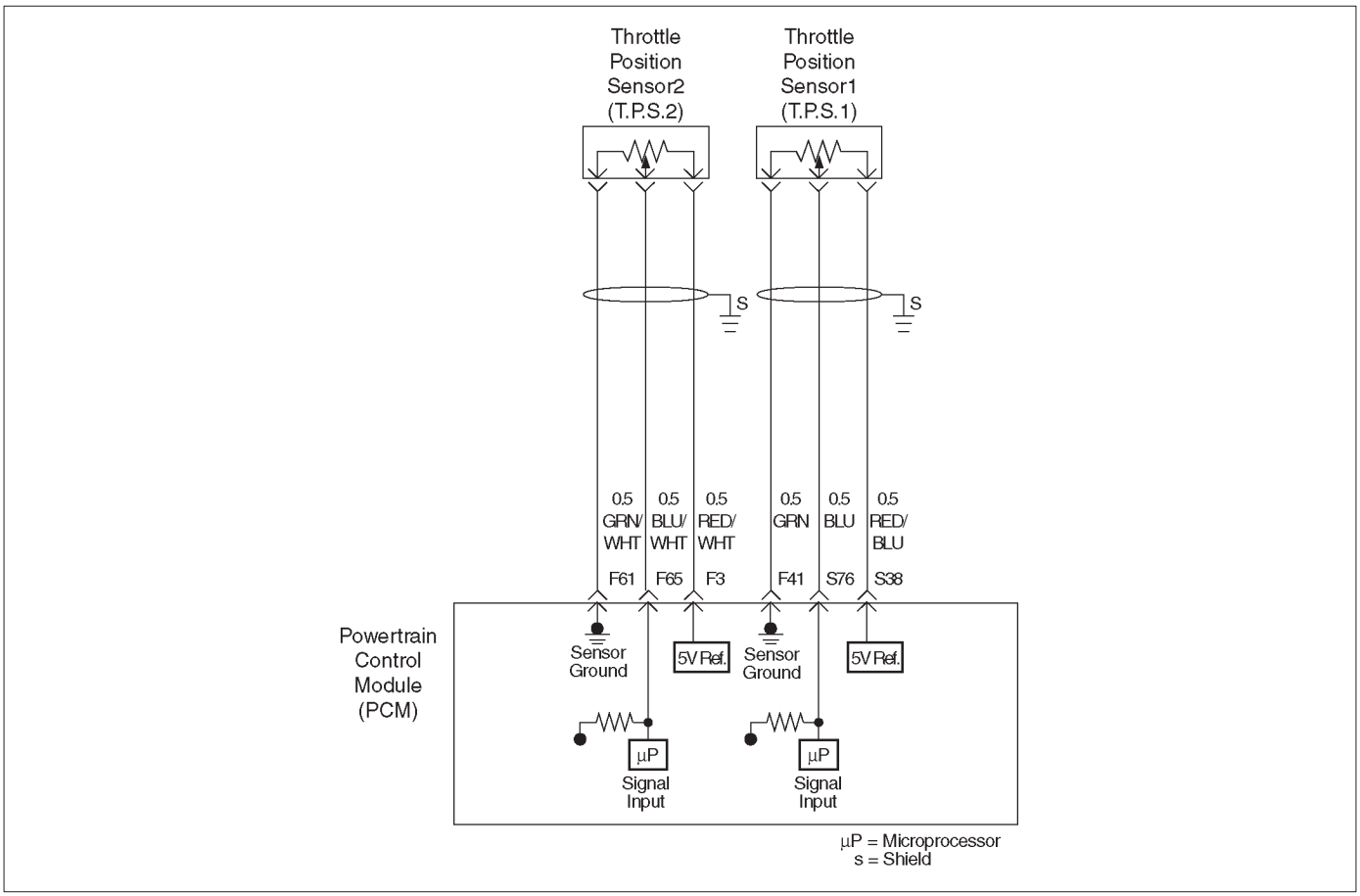

D06RY00077

Circuit Description

The TP sensor # 1 shares a 5 Volt reference with the PCM.

If the PCM detects the 5 Volt reference for the TP sensor # 1 is failure, DTCP1635 will be set.

Conditions for setting the DTC

- The ignition is “ON”.
- The 5 Volt reference voltage for the TP sensor # 1 is less than 4 volts.
- The 5 Volt reference voltage for the TP sensor # 1 is more than 5 volts.

Action Taken When the DTC Sets

- The PCM will not illuminate the malfunction indicator lamp (MIL) .
- The PCM will store condition which were present when the DTC was set as Freeze Frame and in the Failure Records data.

Conditions for Clearing the MIL/DTC

- The PCM will turn the MIL “OFF” on the third consecutive trip cycle during which the diagnostic has been run and the fault condtion is no longer present.
- A history DTC P1635 will clear after 40 cosecutive trip cycle during which the warm up cycles have occurred without a fault.
- DTC P1635 can be cleared using the Tech 2 “Clear Info” function or by disconnecting the PCM battery feed. Tech2 “ Clear Info” function or by disconnecting the PCM battery feed.

Diagnostic Trouble Code (DTC)
P1635 Reference Voltage # 1 Circuit Fault

Step	Action	Value(s)	Yes	No
1	Was the “On-Board(OBD)System Check” performed?	—	Go to *Step 2*	Go to *OBD System Check*
2	1. Connect a DVM between the 5volt reference curcuit and the TP1 and TP2 sensor ground curcuit. 2. Check the voltage using a DVM. Is the voltage near the specified value?	5V	Varify repair	Go to *Step 3*
3	1. Check the TPS1and TPS2 5 volt reference curcuit. 2. If the curcuit is open or shorted, repair it as necessary. Was the curcuit open or short?	—	Varify repair	Go to *Step 4*
4	1. Check the TP1 and TP2 sensor ground curcuit. 2. If the curcuit is open or shorted, repair it as necessary. Was the curcuit open or short?	—	Varify repair	Go to *Step 5*
5	1. Observe the battery voltage and circuit. 2. If a problem found, repair it as necessary. Was a problem found?	—	Verify repair	Go to *Step 6*
6	Replace the PCM. **IMPORTANT:** The replacement PCM must be programmed. Refer to ON–Vehicle Service in Power Control Module and Sensors for procedures. And also refer to latest Service Bulletin. Check to see if the latest software is released or not. And then Down Load the LATEST PROGRAMMED SOFTWARE to the replacement PCM. Is the adtion complete?	—	Verify repair	—

Diagnostic Trouble Code (DTC) P1636 PCM RAM Stack

Circuit Description

The powertrain control module (PCM) monitors unexpected PCM reset. This will not turn on MIL light on, only record code DTC P1636.

Conditions for Setting the DTC

- Clock or COP (Computer Operating Properly) reset.

Action Taken When the DTC Sets

- The PCM will not illuminate the malfunction indicator lamp (MIL).
- The PCM will store conditions which were present when the DTC was set as Failure Records only. This information will not be stored as Freeze Frame data.

Conditions for Clearing the MIL/DTC

- The PCM will turn the MIL “OFF” on the third consecutive trip cycle during which the diagnostic has been run and the fault condition is no longer present.
- A history DTC P1636 will clear after 40 consecutive warm-up cycles have occurred without a fault.
- DTC P1636 can be cleared by using the Tech 2 “Clear Info” function or by disconnecting the PCM battery feed.

Diagnostic Aids

Check for the following conditions:

- P1636 stored alone does not need diagnosis. Clear DTC code.

DTC P1636 – PCM RAM Stack

Step	Action	Value(s)	Yes	No
1	Was the “On-Board Diagnostic (OBD) System Check” performed?	—	Go to Step 2	Go to *OBD System Check*
2	1. Ignition is “ON”. 2. Install the Tech 2. 3. Start the engine and let it Idle. 4. On the Tech 2, select “DTC info”. Does the Tech 2 indicate DTC P1636 failed?	—	Go to *Step 3*	Check the Procedure Refer to *Diagnostic Aids*
3	1. Ignition is “ON”. 2. Clear DTC P1636 by using the Tech 2 “Clear Info”. 3. Start the engine and let it Idle. 4. On the Tech 2, select “DTC info”. Does the Tech 2 indicate DTC P1636 failed?	—	Go to *Step 4*	Check the Procedure Refer to *Diagnostic Aids*
4	1. Check for aftermarket electronics, such as transceiver, stereos, and anti theft devices. They may radiate EMI into the control system if they are improperly installed. (This may cause a false sensor reading and turn on the MIL.) 2. If a problem is found, repair as necessary. Was a problem found?	—	Verify repair	—

Diagnostic Trouble Code (DTC)
P1639 Reference Voltage # 2 Circuit Fault

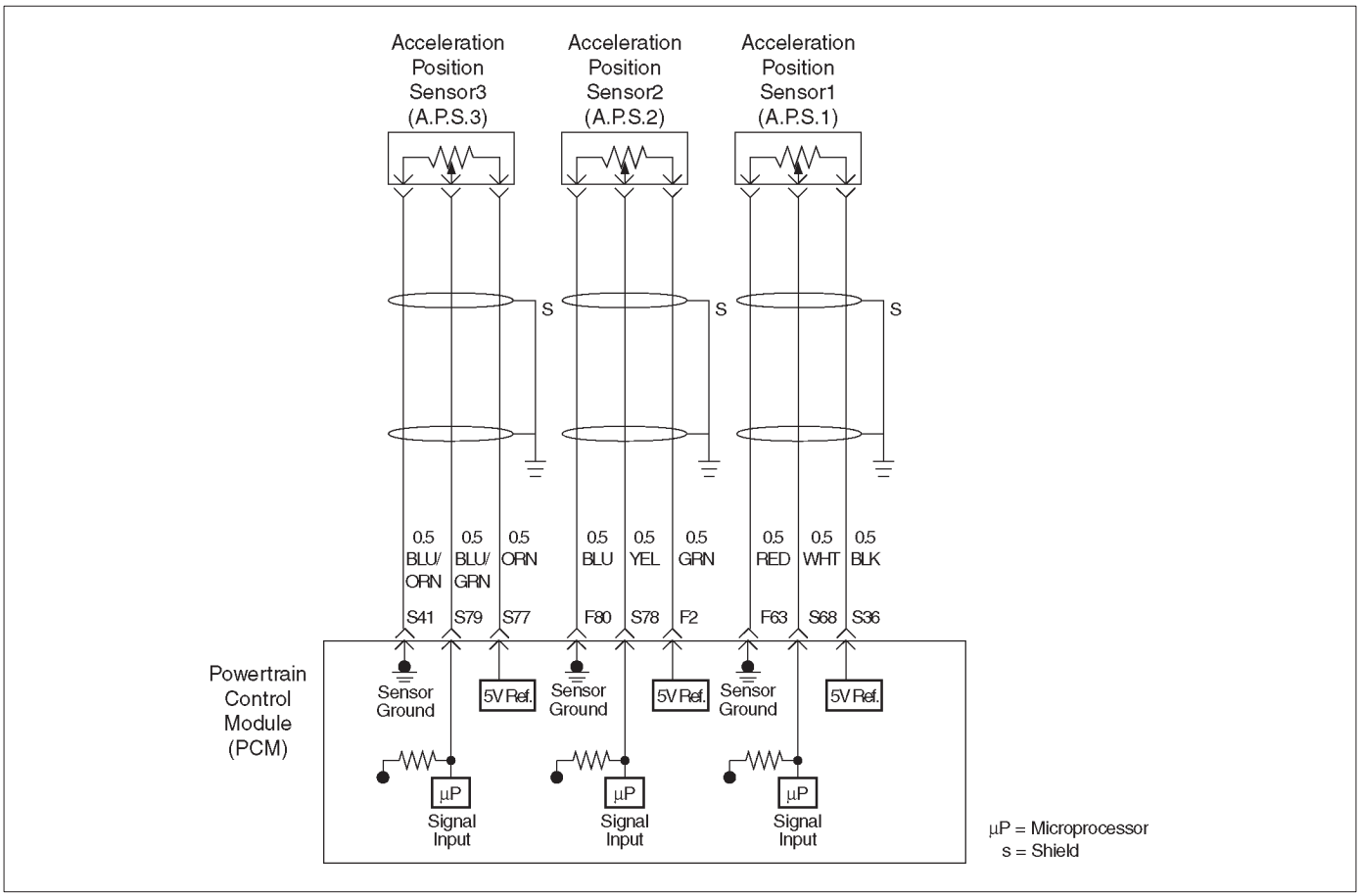

D06RY00075

Circuit Description

The TP sensor # 1 shares a 5 Volt reference with the PCM.
If the PCM detects the 5 Volt reference for the AP sensor # 1 is failure, DTCP1635 will be set.

Conditions for setting the DTC

- The ignition is “ON”.
- The 5 Volt reference voltage for the AP sensor # 1 is less than 4 volts.
- The 5 Volt reference voltage for the AP sensor # 1 is more than 5 volts.

Action Taken When the DTC Sets

- The PCM will not illuminate the malfunction indicator lamp (MIL) .
- The PCM will store condition which were present when the DTC was set as Freeze Frame and in the Failure Records data.

Conditions for Clearing the MIL/DTC

- The PCM will turn the MIL “OFF” on the third consecutive trip cycle during which the diagnostic has been run and the fault condtion is no longer present.
- A history DTC P1639 will clear after 40 cosecutive trip cycle during which the warm up cycles have occurred without a fault.
- DTC P1639 can be cleared using the Tech 2 “Clear Info” function or by disconnecting the PCM battery feed. Tech2 “ Clear Info” function or by disconnecting the PCM battery feed.

Diagnostic Trouble Code (DTC)
P1639 Reference Voltage # 2 Circuit Fault

Step	Action	Value(s)	Yes	No
1	Was the “On-Board(OBD)System Check” performed?	—	Go to *Step 2*	Go to *OBD System Check*
2	1. Connect a DVM between the 5volt reference curcuit and the AP1, AP2 and AP3 sensor ground curcuit. 2. Check the voltage using a DVM. Is the voltage near the specified value?	5V	Varify repair	Go to *Step 3*
3	1. Check the APS1, APS2 and APS3 5 volt reference curcuit. 2. If the curcuit is open or shorted, repair it as necessary. Was the curcuit open or short?	—	Varify repair	Go to *Step 4*
4	1. Check the AP1, AP2 and AP3 sensor ground curcuit. 2. If the curcuit is open or shorted, repair it as necessary. Was the curcuit open or short?	—	Varify repair	Go to *Step 5*
5	1. Observe the battery voltage and circuit. 2. If a problem found, repair it as necessary. Was a problem found?	—	Verify repair	Go to *Step 6*
6	Replace the PCM. **IMPORTANT:** The replacement PCM must be programmed. Refer to ON–Vehicle Service in Power Control Module and Sensors for procedures. And also refer to latest Service Bulletin. Check to see if the latest software is released or not. And then Down Load the LATEST PROGRAMMED SOFTWARE to the replacement PCM. Is the adtion complete?	—	Verify repair	—

Diagnostic Trouble Code (DTC) P1640 Driver-1-Output Circuit Fault (ODM)

Circuit Description

Output driver modules (ODMs) are used by the powertrain control module (PCM) to turn “ON” many of the current-driven devices that are needed to control various engine and transmission functions. Each ODM is capable of controlling up to 7 separate outputs by applying ground to the device which the PCM is commanding “ON”.

Unlike the Quad Driver Modules (QDMs) used in prior model years, ODMs have the capability of diagnosing each output circuit individually. DTC P1640 set indicates an improper voltage level has been detected on an ODM output.

Since A/C is an option, No A/C will cause the air conditioning clutch relay output to always fail. If a fault is seen on the air conditioning clutch relay output, it will not be logged as a fault until the A/C request input interrupts a high voltage, indicating that A/C has been installed.

Conditions for Setting the DTC

- Ignition “ON”.
- Engine running.
- Ignition voltage is above 13.2 volts for 4 seconds.
- Output voltage does not equal ignition voltage when output is “OFF” or output voltage is not less than 1 volt when output is “ON”.
- Above conditions occur for at least 1 second.

Action Taken When the DTC Sets

- The PCM will not illuminate the malfunction indicator lamp (MIL).
- The PCM will store conditions which were present when the DTC was set as Failure Records only. This information will not be stored as Freeze Frame data.

Conditions for Clearing the MIL/DTC

- A history DTC P1640 will clear after 40 consecutive warm-up cycles occur without a fault.
- DTC P1640 can be cleared by using the Tech 2 “Clear Info” function or by disconnecting the PCM battery feed.

Diagnostic Aids

Check for the following conditions:

- Poor connection at PCM – Inspect harness connectors for backed-out terminals, improper mating, broken locks, improperly formed or damaged terminals, and poor terminal-to-wire connection.
- Damaged harness – Inspect the wiring harness for damage, If the harness appears to be OK, disconnect the PCM, turn the ignition “ON” and observe a voltmeter connected to the suspect driver circuit at the PCM harness connector while moving connectors and wiring harnesses related to the MIL. A change in voltage will indicate the location of the fault.
- Poor connection at component – Examine for damaged connectors, unplugged connector, or damaged terminals at the following locations: Instrument cluster harness, canister purge solenoid, A/C clutch relay. An open ignition feed circuit at any of these components will cause DTC P1640 to be set.

Reviewing the Failure Records vehicle mileage since the diagnostic test last failed may help determine how often the condition that caused the DTC to be set occurs. This may assist in diagnosing the condition.

DTC P1640 – Driver-1-Output Circuit Fault (ODM)

Step	Action	Value(s)	Yes	No
1	Was the “On-Board Diagnostic (OBD) System Check” performed?	—	Go to *Step 2*	Go to *OBD System Check*
2	Check the fuse for the driver circuit that was shown as faulty. Was the fuse blown?	—	Go to *Step 3*	Go to *Step 4*
3	1. Check for a short to ground between the fuse and the affected component. 2. Replace the fuse after making any necessary repairs. Is the action complete?	—	Verify repair	—
4	Disconnect the PCM connector for the affected driver circuit. Is there any damage to the PCM pin or connector?	—	Go to *Step 5*	Go to *Step 6*
5	Repair the damaged pin or terminal. Is the action complete?	—	Verify repair	—
6	Were either of the lamp circuits for “Check Engine” or “Check Trans” indicated as faulty by the Tech 2?	—	Go to *Step 7*	Go to *Step 13*

DTC P1640 – Driver-1-Output Circuit Fault (ODM) (Cont'd)

Step	Action	Value(s)	Yes	No
7	1. Leave the PCM connector for the lamp driver circuit disconnected. 2. Ignition "ON". 3. Using a DVM, check the voltage at the PCM connector for the affected lamp driver circuit. Was the voltage equal to the specified value?	B+	Go to *Step 15*	Go to *Step 8*
8	1. Ignition "ON". 2. Check for battery voltage at the fuse for the affected lamp circuit. Was battery voltage available at the fuse?	—	Go to *Step 10*	Go to *Step 9*
9	Repair the open circuit between the ignition switch and the fuse. Is the action complete?	—	Verify repair	—
10	1. Ignition "OFF". 2. Disconnect the PCM connector for the affected driver terminal. 3. Connect an ohmmeter between a good ground and the PCM connector for the affected driver. Did the ohmmeter indicate continuity?	—	Go to *Step 11*	Go to *Step 12*
11	Repair the short to ground between the affected component and its PCM driver terminal. Is the action complete?	—	Verify repair	—
12	Repair the open circuit between the fuse and the PCM driver terminal for the affected circuit. Is the action complete?	—	Verify repair	—
13	1. Connect the PCM. 2. Start the engine and let it idle. 3. Backprobe the affected terminal at the PCM with a DVM. Was the voltage equal to the specified value?	+B	Go to *Step 15*	Go to *Step 14*
14	1. Run the engine at idle. 2. Check for battery voltage at the fuse for the affected circuit. Was battery voltage available at the fuse?	—	Go to *Step 10*	Go to *Step 9*
15	Replace the PCM. **IMPORTANT:** The replacement PCM must be programmed. Refer to *On-Vehicle Service* in *Powertrain Control Module and Sensors* for procedures. And also refer to latest Service Bulletin. Check to see if the Latest software is released or not. And then Down Load the LATEST PROGRAMMED SOFTWARE to the replacement PCM. Is the action complete?	—	Verify repair	—

Diagnostic Trouble Code (DTC) P1648 Received incorrect security code

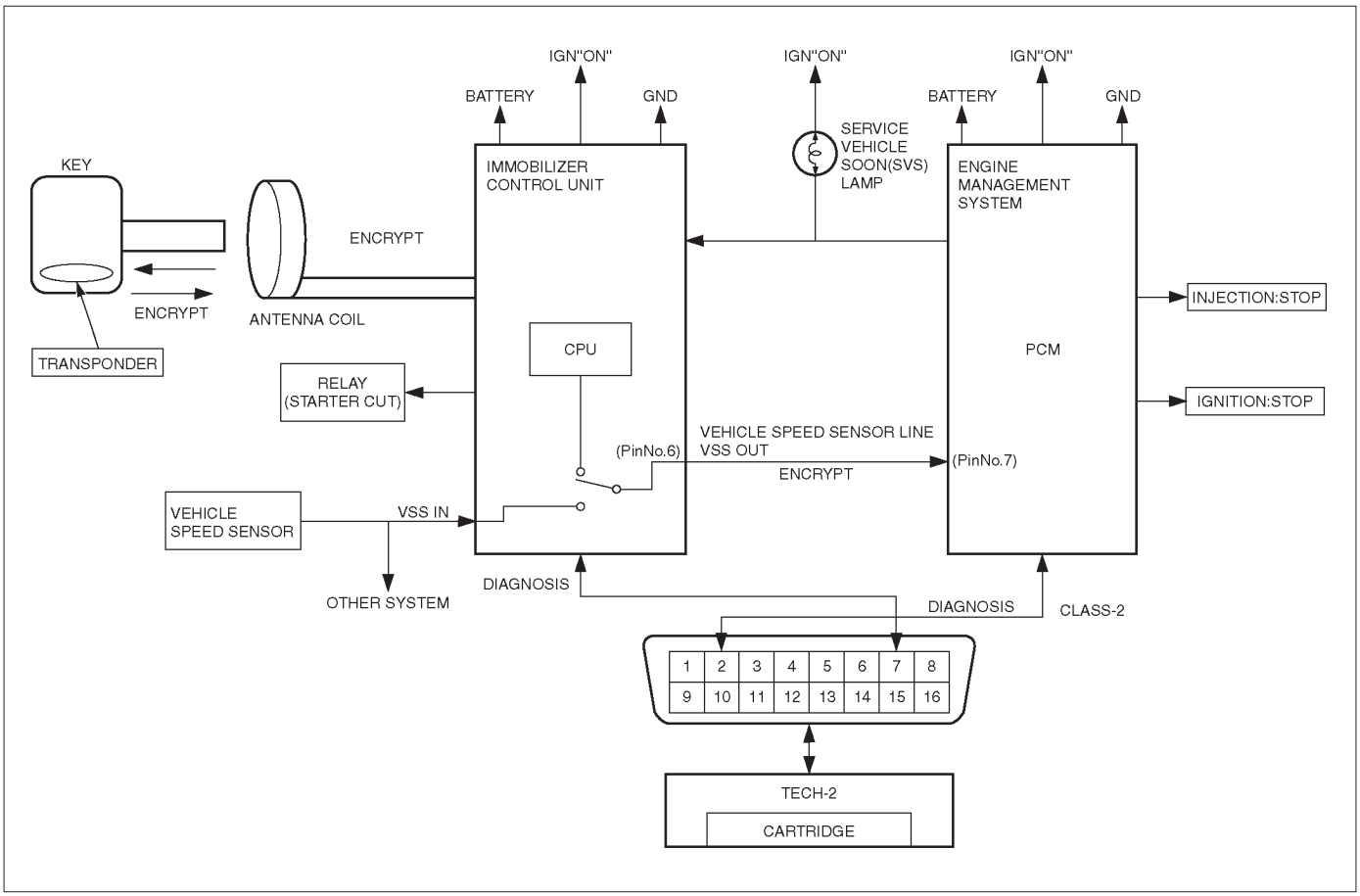

D06R200118

Circuit Description

The PCM decides whether that is an abnomality in the immobilizer control system. DTC P1648 are recorded by the PCM when received incorrect security code.

Condition for Setting the DTC

- Received incorrect security code.

Action Taken When the DTC Sets

- Flashing the SVS lamp.
- The engine does not start.

Condition for Clearing the MIL/DTC

- Use clear DTC information with Tech 2. (Refer to *the immobilizer workshop manual.*) (ISUZU UES Immobilizer system)

Diagnostic Aids

Check for the following conditions:

- Poor connection at PCM and ImmobilizerInspect harness connectors for backed out terminals, improper mating, broken locks, improperly formed or damaged terminals, and poor terminal to wire connection.
- Damaged harness-Inspect the wiring harness for damage, If the harness appears to be OK, disconnect the PCM and Immobilizer, turn the ignition “ON” and observe a voltmeter connected to the suspect driver circuit at the PCM and Immobilizer harnass connector while moving connectors and wiring harnesses relates to the SVS lamp.

  A change in voltage will indicate the location of the fault.

DTC P1648-Received incorrect security code

Step	Action	Value(s)	Yes	No
1	Was the “On-Board Diagnostic (OBD) system Check” performed?	—	Go to *Step 2*	Go to *OBD system check*
2	Recheck the security code. Is the action complete?	—	Verify repair	—

Diagnostic Trouble code (DTC)
P1649 Security code & security key not programmed

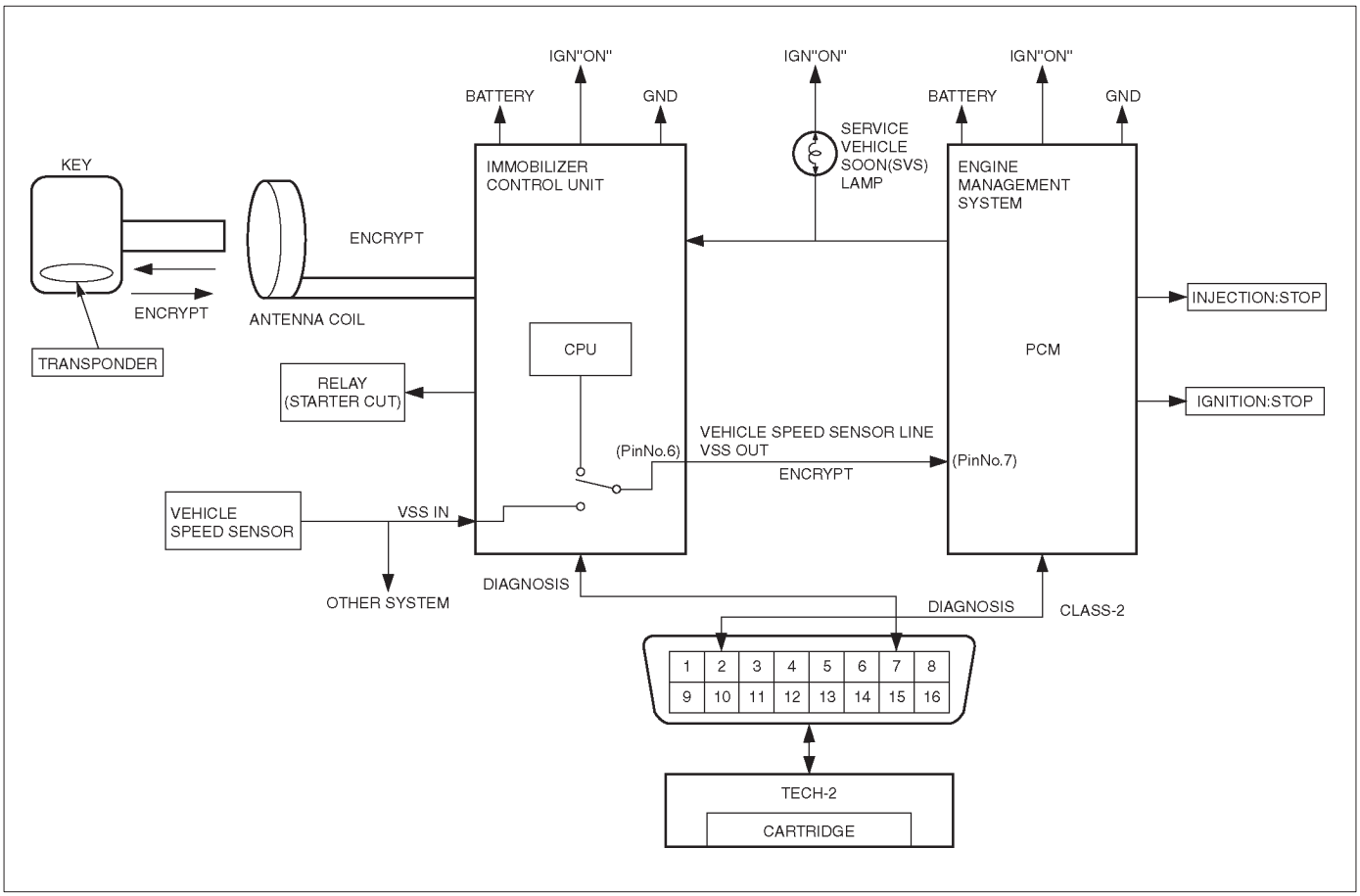

D06R200118

Circuit Description

The PCM decides whether that is an abnomality in the immobilizer control system. DTC P1649 are recorded by the PCM when security code & secret key not programmed.

Condition for Setting the DTC

- Security code & secret key not programmed.

Action Taken When the DTC Sets

- Flashing the SVS lamp.
- The engine does not start.

In case replacement PCM/ECM, Action Taken When the DTC Sets

- Flashing the MIL.

Condition for Clearing the MIL/DTC

- Use clear DTC information with Tech 2. (Refer to *the immobilizer workshop manual.*) (ISUZU UES Immobilizer system)

Diagnostic Aids

Check for the following conditions:

- Poor connection at PCM and ImmobilizerInspect harness connectors for backed out terminals, improper mating, broken locks, improperly formed or damaged terminals, and poor terminal to wire connection.
- Damaged harness-Inspect the wiring harness for damage, If the harness appears to be OK, disconnect the PCM and Immobilizer, turn the ignition “ON” and observe a voltmeter connected to the suspect driver circuit at the PCM and Immobilizer harnass connector while moving connectors and wiring harnesses relates to the SVS lamp.

  A change in voltage will indicate the location of the fault.

DTC P1649 Recurity code & secret key not programmed

Step	Action	Value(s)	Yes	No
1	Was the “On-Board Diagnostic (OBD) system Check” performed?	—	Go to *Step 2*	Go to *OBD system check*
2	Using the Tech 2 system selection menu, select Body function. Does the Tech 2 display B**** appear?	—	Refer to *“Immobilizer workshop manual”*	Go to *Step 3*
3	**IMPORTANT:** The replacement PCM must be programmed. Refer to *On-Vehicle Service* in *Powertrain Control Module and Sensors* for procedures, and immobilizer system workshop manual. And also refer to latest Service Bulletin. Check to see if the Latest software is released or not. And then Down Load the LATEST PROGRAMMED SOFTWARE to the replacement PCM. Is the action complete?	—	Go to *Step 4*	—
4	Does the Tech 2 display P1649 appear?	—	Go to *Step 3*	Verify repair

Diagnostic Trouble Code (DTC) P1650 Quad Driver Module “A” Fault

Circuit Description

The Quad Driver Module (QDMs) are used by the powertrain control module (PCM) to turn “ON” current–driven devices that are needed to control two engine functions. The PCM monitors open or short circuit of either of Canister Control Purge (CCP) Vent solenoid or Variable Intake Manifold (VIM).

Conditions for Setting the DTC

- Ignition “ON”.
- Engine running.
- Ignition voltage.
- Output voltage does not equal voltage and is not less than 1 volt when out put is “ON”.
- Above conditions occur for at least 0.5 second.

Action Taken When the DTC Sets

- The PCM will not illuminate the malfunction indicator lamp (MIL).
- The PCM will store conditions which were present when the DTC was set as Failure Records only. This information will not be stored as Freeze Frame data.

Conditions for Clearing the MIL/DTC

- The PCM will turn the MIL “OFF” on the third consecutive trip cycle during which the diagnostic has been run and the fault condition is no longer present.
- A history DTC P1650 will clear after 40 consecutive warm-up cycles have occurred without a fault.
- DTC P1650 can be cleared by using the Tech 2 “Clear Info” function or by disconnecting the PCM battery feed.

Diagnostic Aids

Check for the following conditions:

- Poor connection at PCM – Inspect harness connectors for backed-out terminals, improper mating, broken locks, improperly formed or damaged terminals, and poor terminal-to-wire connection.
- Damaged harness – Inspect the wiring harness for damage, If the harness appears to be OK, disconnect the PCM, turn the ignition “ON” and observe a voltmeter connected to the suspect driver circuit at the PCM harness connector while moving connectors and wiring harnesses relates to the MIL. A change in voltage will indicate the location of the fault.
- Poor connection at component – Examine for damaged connectors, unplugged connector, or damaged terminals at the following locations: canister purge solenoid, fuel level sensor. An open ignition feed circuit at any of these components will cause DTC P1650 to be set.

Reviewing the Failure Records vehicle mileage since the diagnostic test last failed may help determine how often the condition that caused the DTC to be set occurs. This may assist in diagnosing the condition.

The following PCM pins are controlled by Quad driver modules (QDMs):

- S74 – VIM
- S48 – Canister control purge

Test Description

Number(s) below refer to the step number(s) on the Diagnostic Chart.

4. The Tech 2 Driver Module Status indicates the PCM pin that is affected.

9. The Tech 2 may indicate “short circuit” even when the problem is an open circuit. The cause of an open circuit may be in the component itself.

11. A short to ground on the ignition side of the component will blow the fuse. Since the fuse was checked in Step 2, a short to ground would be between the affected component and the PCM.

DTC P1650 – Quad Driver Module (QDM) Fault

Step	Action	Value(s)	Yes	No
1	Was the “On-Board Diagnostic (OBD) System Check” performed?	—	Go to *Step 2*	Go to *OBD System Check*
2	Check the fuse for the driver circuit that was shown as faulty. Was the fuse blown?	—	Go to *Step 3*	Go to *Step 4*
3	1. Check for a short to ground between the fuse and the affected component. 2. Replace the fuse after making any necessary repairs. Is the action complete?	—	Verify repair	—
4	Disconnect the PCM connector for the affected driver circuit. Is there any damage to the PCM pin or connector?	—	Go to *Step 5*	Go to *Step 6*
5	Repair the damaged pin or terminal. Is the action complete?	—	Verify repair	—
6	Were either of the lamp circuits for “Check Engine” or “Check Trans”. indicated as faulty by the Tech 2?	—	Go to *Step 7*	Go to *Step 13*
7	1. Leave the PCM connector for the lamp driver circuit disconnected. 2. Ignition “ON”. 3. Using a DVM, check the voltage at the PCM connector for the affected lamp driver circuit. Was the voltage equal to the specified value?	B+	Go to *Step 15*	Go to *Step 8*
8	1. Ignition “ON”. 2. Check for battery voltage at the fuse for the affected lamp circuit. Was battery voltage available at the fuse?	—	Go to *Step 10*	Go to *Step 9*
9	Repair the open circuit between the ignition switch and the fuse. Is the action complete?	—	Verify repair	—
10	1. Ignition “OFF”. 2. Disconnect the PCM connector for the affected driver terminal. 3. Connect an ohmmeter between a good ground and the PCM connector for the affected driver. Did the ohmmeter indicate continuity?	—	Go to *Step 11*	Go to *Step 12*
11	Repair the short to ground between the affected component and its PCM driver terminal. Is the action complete?	—	Verify repair	—
12	Repair the open circuit between the fuse and the PCM driver terminal for the affected circuit. Is the action complete?	—	Verify repair	—

DTC P1650 – Quad Driver Module (QDM) Fault (Cont'd)

Step	Action	Value(s)	Yes	No
13	1. Connect the PCM. 2. Start the engine and let it idle. 3. Backprobe the affected terminal at the PCM with a DVM. Was the voltage equal to the specified value?	+B	Go to *Step 15*	Go to *Step 14*
14	1. Run the engine at idle. 2. Check for battery voltage at the fuse for the affected circuit. Was battery voltage available at the fuse?	—	Go to *Step 10*	Go to *Step 9*
15	Replace the PCM. **IMPORTANT:** The replacement PCM must be programmed. Refer to *On-Vehicle Service* in *Powertrain Control Module and Sensors* for procedures. And also refer to latest Service Bulletin. Check to see if the Latest software is released or not. And then Down Load the LATEST PROGRAMMED SOFTWARE to the replacement PCM. Is the action complete?	—	Verify repair	—

Symptom Diagnosis

Preliminary Checks

Before using this section, perform the "On-Board Diagnostic (OBD) System Check" and verify all of the following items:

- The powertrain control module (PCM), and malfunction indicator lamp (MIL) (Check Engine lamp) and Reduced Power Lamp (RPL) are operating correctly.
- There are no DTC(s) stored.
- Tech 2 data is within normal operating range. Refer to *Typical Scan Data Values*.
- Verify the customer complaint and locate the correct symptom in the table of contents. Perform the procedure included in the symptom chart.

Visual/Physical Check

Several of the symptom procedures call for a careful visual/physical check. This can lead to correcting a problem without further checks and can save valuable time.

This check should include the following items:

- PCM grounds for cleanliness, tightness and proper location.
- Vacuum hoses for splits, kinks, and proper connections, as shown on the "Vehicle Emission Control Information" label. Check thoroughly for any type of leak or restriction.
- Air intake ducts for collapsed or damaged areas.
- Air leaks at throttle body mounting area, mass air flow (MAF) sensor and intake manifold sealing surfaces.
- Ignition components for cracking, hardness, and carbon tracking.
- Wiring for proper connections, pinches and cuts.

Intermittents

IMPORTANT: An intermittent problem may or may not turn on the malfunction indicator lamp (MIL) or store a DTC. DO NOT use the Diagnostic Trouble Code (DTC) charts for intermittent problems. The fault must be present to locate the problem.

Most intermittent problems are caused by faulty electrical connections or wiring. Perform a careful visual/physical check for the following conditions:

- Poor mating of the connector halves or a terminal not fully seated in the connector (backed out).
- Improperly formed or damaged terminal.
- All connector terminals in the problem circuit should be carefully checked for proper contact tension.
- Poor terminal-to-wire connection. This requires removing the terminal from the connector body to check.

Road test the vehicle with a J 39200 Digital Multimeter connected to a suspected circuit. An abnormal voltage when the malfunction occurs is a good indication that there is a fault in the circuit being monitored.

Use a Tech 2 to help detect intermittent conditions. The scan tool has several features that can be used to locate an intermittent condition. Use the following feature to find intermittent faults:

- Using a Tech 2's "Freeze Frame" buffer or "Failure Records" buffer can aid in locating an intermittent condition. Review and record the information in the freeze frame or failure record associated with the intermittent DTC being diagnosed. The vehicle can be driven within the conditions that were present when the DTC originally set.

To check for loss of diagnostic code memory, disconnect the MAP sensor and idle the engine until the MIL (Check Engine lamp) comes on. DTC P0107 should be stored and kept in memory when the ignition is turned "OFF". If not, the PCM is faulty. When this test is completed, make sure that you clear the DTC P0107 from memory.

An intermittent MIL (Check Engine lamp) with no stored DTC may be caused by the following:

- Ignition coil shorted to ground and arcing.
- MIL (Check Engine lamp) wire to PCM shorted to ground.
- Poor PCM grounds. Refer to the PCM wiring diagrams.

Check for improper installation of electrical options such as lights, cellular phones, etc. Check all wires from the PCM to the ignition coils for poor connections.

Check for an open diode across the A/C compressor clutch and check for other open diodes (refer to wiring diagrams in *Electrical Diagnosis*).

If problem has not been found, refer to *PCM Connector Symptom* tables.

- Check the "Calibration ID" of the PCM, and compare it with the latest Isuzu service bulletins and/or Isuzu EEPROM reprogramming equipment to determine if an update to the PCM's reprogrammable memory has been released. To check the "Calibration ID", connect the Tech 2, then look for "Powertrain", then select "Calibration ID". This identifies the contents of the reprogrammable software and calibration contained in the PCM. If the "Calibration ID" is not the most current available, it is advisable to reprogram the PCM's EEPROM memory, which may either help identify a hard-to-find problem or may fix the problem.
- Calibration ID (example)

Part number	9377709
Broadcast Code	CYYD
Identifier	801

Hard Start Symptom

Step	Action	Value(s)	Yes	No
1	**DEFINITION:** Engine cranks, but does not start for a long time. Does eventually run, or may start but immediately stall. Was the “On-Board Diagnostic (OBD) System Check” performed?	—	Go to *Step 2*	Go to *OBD System Check*
2	Was the “Electric Throttle Control (ETC) System Check” performed?	—	Go to *Step 3*	Go to *ETC System Check*
3	1. Perform a bulletin search. 2. If a bulletin that addresses the symptom is found, correct the condition as instructed in the bulletin. Was a bulletin found that addresses the symptom?	—	Verify repair	Go to *Step 4*
4	Was a visual/physical check performed?	—	Go to *Step 5*	Go to *Visual/ Physical Check*
5	Check engine coolant temperature (ECT) sensor for shift in value. After 8 hours with the hood up and the engine not running, connect the Tech 2. With the ignition “ON” and the engine not running, compare engine coolant temperature to intake air temperature. Are ECT and IAT within the specified value of each other?	± 5˚C (± 9˚F)	Go to *Step 9*	Go to *Step 6*
6	1. Using a Tech 2, display the engine coolant temperature and note the value. 2. Check the resistance of the engine coolant temperature sensor. 3. Refer to *Engine Coolant Temperature Sensor Temperature vs. Resistance* chart on *DTC P0118 Diagnostic Support* for resistance specifications. Is the resistance value near the resistance for the temperature noted?	—	Go to *Step 8*	Go to *Step 7*
7	Replace the ECT sensor. Is the action complete?	—	Verify repair	—
8	Locate and repair high resistance or poor connection in the ECT signal circuit or the ECT sensor ground. Is the action complete?	—	Verify repair	—
9	1. Check for a faulty, plugged, or incorrectly installed PCV valve. 2. If a problem is found, repair as necessary. Was a problem found?	—	Verify repair	Go to *Step 10*
10	1. Check for water- or alcohol-contaminated fuel. 2. If a problem is found, repair as necessary. Was a problem found?	—	Verify repair	Go to *Step 11*
11	1. Perform the procedure in *Fuel System Pressure Test*. 2. If a problem is found, repair as necessary. Was a problem found?	—	Verify repair	Go to *Step 12*

Hard Start Symptom (Cont'd)

Step	Action	Value(s)	Yes	No
12	1. Check for proper ignition voltage output with spark tester J 26792 (ST-125). Refer to *Electric Ignition System* for procedure. 2. If a problem is found, repair as necessary. Was a problem found?	—	Verify repair	Go to *Step 13*
13	1. Remove spark plugs. Check for wet plugs, cracks, wear, improper gap, burned electrodes, or heavy deposits. Refer to *Electronic Ignition System*. NOTE: If spark plugs are gas or oil fouled, the cause of the fouling must be determined before replacing the spark plugs. 2. If a problem is found, repair as necessary. Was a problem found?	—	Verify repair	Go to *Step 14*
14	1. Check for a loose ignition coil ground and ION Sensing module circuit. 2. If a problem is found, repair as necessary. Was a problem found?	—	Verify repair	Go to *Step 15*
15	1. Remove the ignition coils and check the ignition coils for cracks or carbon tracking. 2. If a problem is found, replace affected coil(s) as necessary. Was a problem found?	—	Verify repair	Go to *Step 16*
16	1. Check for the following engine mechanical problems (refer to *Engine Mechanical*): • Low compression • Leaking cylinder head gaskets • Worn or incorrect camshaft • Camshaft drive belt slipped or stripped 2. If a problem is found, repair as necessary. Was a problem found?	—	Verify repair	Go to *Step 17*
17	1. Review all diagnostic procedures within this table. 2. If all procedures have been completed and no malfunctions have been found, review/inspect the following: • Visual/physical inspection • Tech 2 data • Freeze Frame data/Failure Records buffer • All electrical connections within a suspected circuit and/or system. 3. If a problem is found, repair as necessary. Was a problem found?	—	Verify repair	Contact Technical Assistance

Surges and/or Chuggles Symptom

Step	Action	Value(s)	Yes	No
1	**DEFINITION:** Engine power variation under steady throttle or cruise. Feels like the vehicle speeds up and slows down with no change in the accelerator pedal. Was the “On-Board Diagnostic (OBD) System Check” performed?	—	Go to *Step 2*	Go to *OBD System Check*
2	Was the “Electric Throttle Control (ETC) System Check” performed?	—	Go to *Step 3*	Go to *ETC System Check*
3	1. Perform a bulletin search. 2. If a bulletin that addresses the symptom is found, correct the condition as instructed in the bulletin. Was a bulletin found that addresses the symptom?	—	Verify repair	Go to *Step 4*
4	Was a visual/physical check performed?	—	Go to *Step 5*	Go to *Visual/ Physical Check*
5	Be sure that the driver understands transmission torque converter clutch and A/C compressor operation as explained in the owner’s manual. Inform the customer how the TCC and the A/C clutch operate. Is the customer experiencing a normal condition?	—	System OK	Go to *Step 6*
6	1. Check the fuel control heated oxygen sensors (HO2S, B1S1 and B2S1). The fuel control heated oxygen sensors (HO2S) should respond quickly to different throttle positions. If they don’t, check them for silicone or other contaminants from fuel or use of improper RTV sealant. The sensors may have a white powdery coating. Silicon contamination causes a high but false HO2S signal voltage (rich exhaust indication). The PCM will then reduce the amount of fuel delivered to the engine, causing a severe driveability problem. For more information, refer to *Powertrain Control Module (PCM) and Sensors*. 2. If a problem is found, repair as necessary. Was a problem found?	—	Verify repair	Go to *Step 7*
7	1. Check the fuel pressure. Refer to *Fuel System Pressure Test*. 2. If a problem is found, repair as necessary. Was a problem found?	—	Verify repair	Go to *Step 8*
8	Monitor the long term fuel trim on the Tech 2. Is the long term fuel trim significantly in the negative range (rich condition)?	—	Go to *Step 9*	Go to *Step 10*
9	1. Check items that can cause the engine to run rich. Refer to *Diagnostic Aids* in *DTC P0172 Diagnostic Support*. 2. If a problem is found, repair as necessary. Was a problem found?	—	Go to *Step 11*	Verify repair

Surges and/or Chuggles Symptom (Cont'd)

Step	Action	Value(s)	Yes	No
10	1. Check items that can cause the engine to run lean. Refer to *Diagnostic Aids* in *DTC P0171*. 2. If a problem is found, repair as necessary. Was a problem found?	—	Go to *Step 11*	Verify repair
11	1. Check for proper ignition voltage output with spark tester J 26792 (ST-125). Refer to *Electric Ignition System* for procedure. 2. If a problem is found, repair as necessary. Was a problem found?	—	Verify repair	Go to *Step 12*
12	1. Check for a loose ignition coil ground and ION Sensing module circuit. 2. If a problem is found, repair as necessary. Was a problem found?	—	Verify repair	Go to *Step 13*
13	1. Check the ignition coils for cracks or carbon tracking. 2. If a problem is found, repair as necessary. Was a problem found?	—	Verify repair	Go to *Step 15*
14	1. Remove the spark plugs and check for wet plugs, cracks, wear, improper gap, burned electrodes, or heavy deposits. Refer to *Electronic Ignition System*. NOTE: If spark plugs are gas or oil fouled, the cause of the fouling must be determined before replacing the spark plugs. 2. If a problem is found, repair as necessary. Was a problem found?	—	Verify repair	Go to *Step 15*
15	1. Check the injector connections. 2. If any of the injector connectors are connected to an incorrect cylinder, correct as necessary. Was a problem found?	—	Verify repair	Go to *Step 16*
16	1. Check PCM grounds for the cleanliness, tightness and proper locations. Refer to the PCM wiring diagrams in *Electrical Diagnosis*. 2. If a problem is found, repair as necessary. Was a problem found?	—	Verify repair	Go to *Step 17*
17	1. Check MAF sensor connections. 2. If a problem is found, replace the faulty terminals as necessary. Refer to *Electrical Diagnosis* for wiring repair procedures. Was a problem found?	—	Verify repair	Go to *Step 18*
18	1. Visually/physically check vacuum hoses for splits, kinks, and proper connections and routing as shown on the "Vehicle Emission Control Information" label. 2. If a problem is found, repair as necessary. Was a problem found?	—	Verify repair	Go to *Step 19*

Surges and/or Chuggles Symptom (Cont'd)

Step	Action	Value(s)	Yes	No
19	1. Check the exhaust system for possible restriction: ● Inspect the exhaust system for damaged or collapsed pipes. ● Inspect the muffler for heat distress or possible internal failure. ● Check for a possible plugged three-way catalytic converter by checking the exhaust system back pressure. Refer to *Restricted Exhaust System Check*. 2. If a problem is found, repair as necessary. Was a problem found?	—	Verify repair	Go to *Step 20*
20	1. Review all diagnostic procedures within this table. 2. If all procedures have been completed and no malfunctions have been found, review/inspect the following: ● Visual/physical inspection ● Tech 2 data ● Freeze Frame data/Failure Records buffer ● All electrical connections within a suspected circuit and/or system. 3. If a problem is found, repair as necessary. Was a problem found?	—	Verify repair	Contact Technical Assistance

Lack of Power, Sluggish, or Spongy Symptoms

Step	Action	Value(s)	Yes	No
1	**DEFINITION:** Engine delivers less than expected power. Little or no increase in speed when accelerator pedal is pushed down part-way. Was the “On-Board Diagnostic (OBD) System Check” performed?	—	Go to *Step 2*	Go to *OBD System Check*
2	Was the “Electric Throttle Control (ETC) System Check” performed?	—	Go to *Step 3*	Go to *ETC System Check*
3	1. Perform a bulletin search. 2. If a bulletin that addresses the symptom is found, correct the condition as instructed in the bulletin. Was a bulletin found that addresses the symptom?	—	Verify repair	Go to *Step 4*
4	Was a visual/physical check performed?	—	Go to *Step 5*	Go to *Visual/ Physical Check*
5	1. Remove and check the air filter element for dirt or restrictions. Refer to *Air Intake System* in *ON-Vehicle Service*. 2. Replace the air filter element if necessary. Was a repair required?	—	Verify repair	Go to *Step 6*
6	1. Check for low fuel pressure. Refer to *Fuel System Pressure Test*. 2. If a problem is found, repair as necessary. Was a problem found?	—	Verify repair	Go to *Step 7*
7	1. Check for water- or alcohol-contaminated fuel. 2. If a problem is found, repair as necessary. Was a problem found?	—	Verify repair	Go to *Step 8*
8	1. Install the Tech 2. 2. Run the engine at idle. 3. On the Tech 2, select F3: Miscellaneous Test, F6: Variable Intake Manifold. 4. Repeat Switch ON or OFF of VIM solenoid valve by using the Tech 2. 5. Check to see if the actuator works normally. 6. If a problem is found, repair as necessary. Was a problem found?	—	Verify repair	Go to *Step 9*
9	1. Check for proper ignition voltage output with spark tester J 26792 (ST-125). Refer to *Electronic Ignition System* for procedure. 2. If a problem is found, repair as necessary. Was a problem found?	—	Verify repair	Go to *Step 10*

Lack of Power, Sluggish, or Spongy Symptoms (Cont'd)

Step	Action	Value(s)	Yes	No
10	1. Remove the spark plugs and check for wet plugs, cracks, wear, improper gap, burned electrodes, or heavy deposits. Refer to *Electronic Ignition System*. NOTE: If spark plugs are gas or oil fouled, the cause of the fouling must be determined before replacing the spark plugs. 2. If a problem is found, repair as necessary. Was a problem found?	—	Verify repair	Go to *Step 11*
11	1. Check the ignition coils for cracks or carbon tracking. 2. If a problem is found, repair as necessary. Was a problem found?	—	Verify repair	Go to *Step 12*
12	1. Check the PCM grounds for cleanliness, tightness and proper locations. Refer to the PCM wiring diagrams in *Electrical Diagnosis*. 2. If a problem is found, repair as necessary. Was a problem found?	—	Verify repair	Go to *Step 13*
13	1. Check the exhaust system for possible restriction: • Inspect the exhaust system for damaged or collapsed pipes. • Inspect the muffler for heat distress or possible internal failure. • Check for a possible plugged three-way catalytic converter by checking the exhaust system back pressure. Refer to *Restricted Exhaust System Check*. 2. If a problem is found, repair as necessary. Was a problem found?	—	Verify repair	Go to *Step 15*
14	1. Check the torque converter clutch (TCC) for proper operation. Refer to *4L30-E Transmission Diagnosis*. 2. If a problem is found, repair as necessary. Was a problem found?	—	Verify repair	Go to *Step 15*
15	1. Check for an engine mechanical problem. Check for low compression, incorrect or worn camshaft, loose timing belt, etc. Refer to *Engine Mechanical*. 2. If a problem is found, repair as necessary. Was a problem found?	—	Verify repair	Go to *Step 16*
16	1. Review all diagnostic procedures within this table. 2. If all procedures have been completed and no malfunctions have been found, review/inspect the following: • Visual/physical inspection • Tech 2 data • Freeze Frame data/Failure Records buffer • All electrical connections within a suspected circuit and/or system. 3. If a problem is found, repair as necessary. Was a problem found?	—	Verify repair	Contact Technical Assistance

Detonation/Sparks Knock Symptoms

Step	Action	Value(s)	Yes	No
1	**DEFINITION:** A mild to severe ping, usually worse under acceleration. The engine makes sharp metallic knocks that change with throttle opening. Was the “On-Board Diagnostic (OBD) System Check” performed?	—	Go to *Step 2*	Go to *OBD System Check*
2	1. Perform a bulletin search. 2. If a bulletin that addresses the symptom is found, correct the condition as instructed in the bulletin. Was a bulletin found that addresses the symptom?	—	Verify repair	Go to *Step 3*
3	Was a visual/physical check performed?	—	Go to *Step 4*	Go to *Visual/ Physical Check*
4	If Tech 2 readings are normal (refer to *Typical Scan Values*) and there are no engine mechanical faults, fill the fuel tank with a known quality gasoline that has a minimum octane rating of 87 and re-evaluate the vehicle performance. Is detonation present?	—	Go to *Step 5*	Verify repair
5	1. Check the transmission range switch circuit. Use a Tech 2 and be sure the Tech 2 indicates that the vehicle is in drive with the gear selector in drive or overdrive. 2. If a problem is found, diagnose and repair the transmission range switch as necessary (refer to *4L30-E Automatic Transmission Diagnosis*). Was a problem found?	—	Verify repair	Go to *Step 6*
6	1. Check TCC operation. Refer to *4L30-E Transmission Diagnosis*. 2. If a problem is found, repair as necessary. Was a problem found?	—	Verify repair	Go to *Step 7*
7	1. Check for obvious overheating problems: • Low engine coolant. • Restricted air flow to radiator, or restricted water flow through radiator. • Correct coolant solution should be a 50/50 mix of approved antifreeze/coolant and water. Refer to *Engine Cooling*. • EGR operation. Refer to *DTC P0401*. • ION sensing module fault. 2. If a problem is found, repair as necessary. Was a problem found?	—	Verify repair	Go to *Step 8*
8	1. Ignition “OFF”. 2. Disconnect the ION sensing module. 3. Disconnect the PCM. Is the action complete?	—	Go to *Step 9*	—
9	Check the ION sensing harness between the PCM (F68) and ION sensing module circuit (RED Wire) at the KI line harness connector. Was a problem found?	—	Verify repair	Go to *Step 10*

Detonation/Sparks Knock Symptoms (Cont'd)

Step	Action	Value(s)	Yes	No
10	1. Disconnect the ignition coil. Is the action complete?	—	Go to *Step 11*	—
11	Check the ION sensing harness between the ignition coil and ION sensing module circuit at the DC motor harness connector. Was a problem found?	—	Verify repair	Go to *Step 12*
12	Check the following items; 1. Ignition coil and ignition coil circuit. 2. Ignition coil ground circuit for a poor connection. 3. If a problem is found, repair wiring harness as necessary. Was a problem found?	—	Verify repair	Go to *Step 13*
13	Replace the Ignition coil. Is the action complete?	—	Verify repair	Go to *Step 14*
14	Check the following items; 1. ION sensing module ground circuit for a poor connection. 2. If a problem is found, repair wiring harness as necessary. Was a problem found?	—	Go to *Step 10*	Go to *Step 15*
15	Replace the ION sensing module. Is the action complete?	—	Verify repair	Go to *Step 16*
16	1. Check fuel pressure. Refer to Chart Fuel System Pressure Test. 2. If a problem is found, repair as necessary. Was a problem found?	—	Verify repair	Go to *Step 17*
17	1. Check items that can cause an engine to run lean (long term fuel trim significantly in the positive range). For a lean condition, refer to *Diagnostic Aids* in *DTC P0171 Diagnostic Support*. 2. If a problem is found, repair as necessary. Was a problem found?	—	Verify repair	Go to *Step 18*
18	1. Spark plugs for proper heat range. Refer to *General Information*. 2. If incorrect spark plugs are installed, replace spark plugs as necessary. Did any spark plugs require replacement?	—	Verify repair	Go to *Step 19*
19	1. Remove excessive carbon buildup with a top engine cleaner. Refer to instructions on the top engine cleaner can. 2. Re-evaluate vehicle performance. Is detonation still present?	—	Go to *Step 20*	Verify repair

Detonation/Sparks Knock Symptoms (Cont'd)

Step	Action	Value(s)	Yes	No
20	1. Check for an engine mechanical problem. Perform a cylinder compression check. Refer to *Engine Mechanical*. 2. If a problem is found, repair as necessary. Was a problem found?	—	Verify repair	Go to *Step 21*
21	1. Review all diagnostic procedures within this table. 2. If all procedures have been completed and no malfunctions have been found, review/inspect the following: ● Visual/physical inspection ● Tech 2 data ● Freeze Frame data/Failure Records buffer ● All electrical connections within a suspected circuit and/or system. 3. If a problem is found, repair as necessary. Was a problem found?	—	Verify repair	Contact Technical Assistance

Rough, Unstable, or Incorrect Idle, Stalling Symptom

Step	Action	Value(s)	Yes	No
1	**DEFINITION:** Engine runs unevenly at idle. If severe, the engine or vehicle may shake. Engine idle speed may vary in RPM. Either condition may be severe enough to stall the engine. Was the “On-Board Diagnostic (OBD) System Check” performed?	—	Go to *Step 2*	Go to *OBD System Check*
2	Was the “Electric Throttle Control (ETC) System Check” performed?	—	Go to *Step 3*	Go to *ETC System Check*
3	1. Perform a bulletin search. 2. If a bulletin that addresses the symptom is found, correct the condition as instructed in the bulletin. Was a bulletin found that addresses the symptom?	—	Go to *Step 14*	Go to *Step 4*
4	Was a visual/physical check performed?	—	Go to *Step 5*	Go to *Visual/ Physical Check*
5	1. Check the PCM grounds for cleanliness, tightness and proper routing. Refer to the PCM wiring diagrams in *Electrical Diagnosis*. 2. If a problem is found, repair as necessary. Was a problem found?	—	Verify repair	Go to *Step 6*
6	Observe the long term fuel trim on the Tech 2. Is the long term fuel trim significantly in the negative range (rich condition)?	—	Go to *Step 7*	Go to *Step 8*
7	1. Check items that can cause the engine to run rich. Refer to *Diagnostic Aids* in *DTC P0172 Diagnostic Support*. 2. If a problem is found, repair as necessary. Was a problem found?	—	Verify repair	Go to *Step 10*
8	Is the long term fuel trim significantly in the positive range (lean condition)?	—	Go to *Step 9*	Go to *Step 10*
9	1. Check items that can cause the engine to run lean. Refer to *Diagnostic Aids* in *DTC P0171 Diagnostic Support*. 2. If a problem is found, repair as necessary. Was a problem found?	—	Verify repair	Go to *Step 10*
10	1. Check for incorrect idle speed. Ensure that the following conditions are present: ● The engine is fully warm. ● The accessories are “OFF”. 2. Using a Tech 2, monitor the Engine Speed. Is the Engine Speed within the specified values?	Desired Idle Speed	Go to *Step 12*	Go to *Step 11*

Rough, Unstable, or Incorrect Idle, Stalling Symptom (Cont'd)

Step	Action	Value(s)	Yes	No
11	1. Visually/physically inspect for the following conditions: ● Restricted air intake system. Check for a possible collapsed air intake duct, restricted air filter element, or foreign objects blocking the air intake system. ● Large vacuum leak. Check for a condition that causes a large vacuum leak, such as an incorrectly installed or faulty crankcase ventilation valve or a disconnected brake booster hose. 2. If a problem is found, repair as necessary. Was a problem found?	—	Verify repair	Go to *Step 9*
12	Check the injector connections. If any of the injectors are connected to an incorrect cylinder, correct as necessary. Was a problem found?	—	Verify repair	Go to *Step 13*
13	1. Perform the "Injector Coil/Balance Test" in *Fuel Metering System*. 2. If a problem is found, repair as necessary. Was a problem found?	—	Verify repair	Go to *Step 14*
14	1. Check for fuel in the pressure regulator vacuum hose. 2. If fuel is present, replace the fuel pressure regulator assembly. Refer to *Fuel Metering System*. 3. If a problem is found, repair as necessary. Was a problem found?	—	Verify repair	Go to *Step 15*
15	1. Check for proper ignition voltage output with spark tester J 26792 (ST-125). Refer to *Electronic Ignition System* for the procedure. 2. If a problem is found, repair as necessary. Was a problem found?	—	Verify repair	Go to *Step 16*
16	1. Remove spark plugs. Check for wet plugs, cracks, wear, improper gap, burned electrodes, or heavy deposits. Refer to *Electronic Ignition System*. NOTE: If spark plugs are gas or oil fouled, the cause of the fouling must be determined before replacing the spark plugs. 2. If a problem is found, repair as necessary. Was a problem found?	—	Verify repair	Go to *Step 17*
17	1. Check for a loose ignition coil ground and ION Sensing Module circuit. 2. If a problem is found, repair as necessary. Was a problem found?	—	Verify repair	Go to *Step 18*
18	1. Check ignition coils for cracks or carbon tracking. 2. If a problem is found, repair as necessary. Was a problem found?	—	Verify repair	Go to *Step 19*

Rough, Unstable, or Incorrect Idle, Stalling Symptom (Cont'd)

Step	Action	Value(s)	Yes	No
19	Using a Tech 2, monitor the throttle position 1 and 2 angle with the engine idling. Is the TP angle at the specified value and steady?	8 ~ 10%	Go to *Step 20*	Refer to *DTC* for further diagnosis
20	1. Check the positive crankcase ventilation (PCV) valve for proper operation. Refer to *Crankcase Ventilation System*. 2. If a problem is found, repair as necessary. Was a problem found?	—	Verify repair	Go to *Step 21*
21	1. Check the transmission range switch circuit. Use a Tech 2 and be sure the Tech 2 indicates that the vehicle is in drive with the gear selector in drive or overdrive. 2. If a problem is found, diagnose and repair the transmission range switch as necessary (refer to *4L30-E Automatic Transmission Diagnosis*). Was a problem found?	—	Verify repair	Go to *Step 22*
22	1. Check for the following engine mechanical items. Refer to *Engine Mechanical* for diagnosis procedures: ● Low compression ● Sticking or leaking valves ● Worn camshaft lobe(s) ● Camshaft drive belt slipped or stripped ● Incorrect valve timing ● Worn rocker arms ● Broken valve springs 2. If a problem is found, repair as necessary. Was a problem found?	—	Verify repair	Go to *Step 23*
23	1. Check for faulty motor mounts. Refer to *Engine Mechanical* for inspection of mounts. 2. If a problem is found, repair as necessary. Was a problem found?	—	Verify repair	Go to *Step 24*
24	1. Review all diagnostic procedures within this table. 2. If all procedures have been completed and no malfunctions have been found, review/inspect the following: ● Visual/physical inspection ● Tech 2 data ● Freeze Frame data/Failure Records buffer ● All electrical connections within a suspected circuit and/or system. 3. If a problem is found, repair as necessary. Was a problem found?	—	Verify repair	Contact Technical Assistance

Poor Fuel Economy Symptom

Step	Action	Value(s)	Yes	No
1	**DEFINITION:** Fuel economy, as measured by an actual road test, is noticeably lower than expected. Also, economy is noticeably lower than it was on this vehicle at one time, as previously shown by an actual road test. (Non-standard tires will cause odometer readings to be incorrect, and that may cause fuel economy to appear poor when it is actually normal.) Was the "On-Board Diagnostic (OBD) System Check" performed?	—	Go to *Step 2*	Go to *OBD System Check*
2	1. Perform a bulletin search. 2. If a bulletin that addresses the symptom is found, correct the condition as instructed in the bulletin. Was a bulletin found that addresses the symptom?	—	Verify repair	Go to *Step 3*
3	Was a visual/physical check performed?	—	Go to *Step 4*	Go to *Visual/ Physical Check*
4	Check owner's driving habits. ● Is the A/C "ON" full time (defroster mode "ON")? ● Are tires at the correct pressure? ● Are excessively heavy loads being carried? ● Is acceleration too much, too often? Was a problem found?	—	Go to *Step 5*	Go to *Step 6*
5	Review the items in Step 4 with the customer and advise as necessary. Is the action complete?	—	System OK	—
6	1. Visually/physically check: Vacuum hoses for splits, kinks, and improper connections and routing as shown on the "Vehicle Emission Control Information" label. 2. If a problem is found, repair as necessary. Was a problem found?	—	Verify repair	Go to *Step 7*
7	1. Remove and check the air filter element for dirt or for restrictions. Refer to *Air Intake System*. 2. Replace the air filter element if necessary. Was a repair required?	—	Verify repair	Go to *Step 8*
8	1. Remove spark plugs and check for wet plugs, cracks, wear, improper gap, burned electrodes, or heavy deposits. Refer to *Spark Plug Replacement*. NOTE: If spark plugs are gas or oil fouled, the cause of the fouling must be determined before replacing the spark plugs. 2. If a problem is found, repair as necessary. Was a problem found?	—	Verify repair	Go to *Step 9*
9	1. Check for low engine coolant level. Refer to *Engine Cooling*. 2. If a problem is found, repair as necessary. Was a problem found?	—	Verify repair	Go to *Step 10*

Poor Fuel Economy Symptom (Cont'd)

Step	Action	Value(s)	Yes	No
10	1. Check for an incorrect or faulty engine thermostat. Refer to *Engine Cooling*. 2. If a problem is found, repair as necessary. Was a problem found?	—	Verify repair	Go to *Step 11*
11	1. Check for low engine compression. Refer to *Engine Mechanical*. 2. If a problem is found, repair as necessary. Was a problem found?	—	Verify repair	Go to *Step 12*
12	1. Check the TCC operation. Refer to *4L30-E Transmission Diagnosis*. 2. If a problem is found, repair as necessary. Was a problem found?	—	Verify repair	Go to *Step 13*
13	1. Check the exhaust system for possible restriction: ● Inspect the exhaust system for damaged or collapsed pipes. ● Inspect the muffler for heat distress or possible internal failure. ● Check for a possible plugged three-way catalytic converter by checking the exhaust system back pressure. Refer to *Restricted Exhaust System Check*. 2. If a problem is found, repair as necessary. Was a problem found?	—	Verify repair	Go to *Step 14*
14	Check for proper calibration of the speedometer. Does the speed indicated on the speedometer closely match the vehicle speed displayed on the Tech 2?	—	Go to *Step 16*	Go to *Step 15*
15	Diagnose and repair an inaccurate speedometer condition as necessary. Refer to *Vehicle Speed Sensor* in *Electrical Diagnosis*. Was a problem found?	—	Verify repair	—
16	1. Check the air intake system and the crankcase for air leaks. Refer to *Air Intake System* and *Crankcase Ventilation System*. 2. If a problem is found, repair as necessary. Was a problem found?	—	Verify repair	Go to *Step 17*
17	1. Review all diagnostic procedures within this table. 2. When all procedures have been completed and no malfunctions have been found, review/inspect the following: ● Visual/physical inspection ● Tech 2 data ● Freeze Frame data/Failure Records buffer ● All connections within a suspected circuit and/or system. 3. If a problem is found, repair as necessary. Was a problem found?	—	Verify repair	Go to *Step 18*
18	Perform the procedure in *Fuel System Pressure Test*. Was the fuel pressure normal?	—	Contact Technical Assistance	Verify repair

Excessive Exhaust Emissions or Odors Symptom

Step	Action	Value(s)	Yes	No
1	**DEFINITION:** Vehicle fails an emission test. Vehicle has excessive "rotten egg" smell. (Excessive odors do not necessarily indicate excessive emissions.) Was the "On-Board Diagnostic (OBD) System Check" performed?	—	Go to *Step 2*	Go to *OBD System Check*
2	1. Perform a bulletin search. 2. If a bulletin that addresses the symptom is found, correct the condition as instructed in the bulletin. Was a bulletin found that addresses the symptom?	—	Go to *Step 13*	Go to *Step 3*
3	Was a thorough visual/physical check performed?	—	Go to *Step 4*	Go to *Visual/ Physical Check*
4	1. Check for vacuum leaks. Check vacuum lines, intake manifold, throttle body, etc. 2. If a problem is found, repair as necessary. Were any vacuum leaks located?	—	Go to *Step 13*	Go to *Step 5*
5	1. Check the fuel cap for proper installation. 2. Secure the fuel cap if necessary. Was the fuel cap installed properly?	—	Go to *Step 6*	Go to *Step 13*
6	1. Check the fuel pressure. Perform the procedure in *Fuel System Pressure Test*. 2. If a problem is found, repair as necessary. Was a problem found?	—	Go to *Step 13*	Go to *Step 7*
7	1. Check for a faulty, plugged, or incorrectly installed crankcase ventilation valve; also check the crankcase ventilation system for plugging. 2. If a problem is found, repair as necessary. Was a problem found?	—	Go to *Step 13*	Go to *Step 8*
8	1. Check the injector connections. 2. If any of the injectors are connected to an incorrect cylinder, correct as necessary. Was a problem found?	—	Go to *Step 13*	Go to *Step 9*
9	1. Perform the "Injector Coil/Balance Test" in *Fuel Metering System*. 2. If a problem is found, repair as necessary. Was a problem found?	—	Go to *Step 13*	Go to *Step 10*
10	1. Refer to *Engine Cooling* for cooling system diagnosis. 2. If a problem is found, repair as necessary. Was a problem found?	—	Go to *Step 13*	Go to *Step 11*
11	1. Check EVAP canister for fuel loading. Refer to *Evaporative Emission Control System*. 2. If a problem is found, repair as necessary. Was a problem found?	—	Go to *Step 13*	Go to *Step 12*

Excessive Exhaust Emissions or Odors Symptom (Cont'd)

Step	Action	Value(s)	Yes	No
12	1. Remove excessive carbon buildup with a top engine cleaner. Refer to the instructions on the top engine cleaner can. 2. Perform the exhaust emission test. Does the vehicle pass the test?	—	System OK	Go to *Step 14*
13	Perform the exhaust emission test. Does the vehicle pass the test?	—	System OK	Go to *Step 14*
14	Does the exhaust emission test indicate excessive CO and HC levels or is long term fuel trim significantly in the negative range (rich condition)?	—	Go to *Step 15*	Go to *Step 16*
15	1. Check items that can cause the engine to run rich. Refer to *Diagnostic Aids* in *DTC P0172 Diagnostic Support*. Make any necessary repairs. 2. Perform the exhaust emission test. Does the vehicle pass the test?	—	System OK	Go to *Step 17*
16	1. Check items that can cause the engine to run lean. Refer to *Diagnostic Aids* in *DTC P0171 Diagnostic Support*. Make any necessary repairs. 2. Perform the exhaust emission test. Does the vehicle pass the test?	—	System OK	Go to *Step 17*
17	1. Check the EGR system (refer to *DTC P0401*). 2. If a problem is found, repair as necessary. Was a problem found?	—	Go to *Step 13*	Go to *Step 18*
18	1. Check for an engine mechanical problem. Perform a cylinder compression check (refer to *Engine Mechanical*). 2. If a problem is found, repair as necessary. Was a problem found?	—	Go to *Step 13*	Go to *Step 19*
19	1. Review all diagnostic procedures within this table. 2. If all procedures have been completed and no malfunctions have been found, review/inspect the following: • Visual/physical inspection • Tech 2 data • Freeze Frame data/Failure Records butter • All electrical connections within a suspected circuit and/or system. 3. If a problem is found, repair as necessary. Was a problem found?	—	Verify repair	Contact Technical Assistance

Dieseling, Run-On Symptom

Step	Action	Value(s)	Yes	No
1	**DEFINITION:** Engine continues to run after key is turned “OFF,” but runs very rough. If engine runs smooth, check ignition switch and adjustment. Was the “On-Board Diagnostic (OBD) System Check” performed?	—	Go to *Step 2*	Go to *OBD System Check*
2	1. Perform a bulletin search. 2. If a bulletin that addresses the symptom is found, correct the condition as instructed in the bulletin. Was a bulletin found that addresses the symptom?	—	Verify repair	Go to *Step 3*
3	Was a visual/physical check performed?	—	Go to *Step 4*	Go to *Visual/ Physical Check*
4	1. Check for a short between B+ and any of the ignition feed circuits. 2. If a problem is found, repair as necessary. Was a problem found?	—	Verify repair	Go to *Step 5*
5	1. Review all diagnostic procedures within this table. 2. If all procedures have been completed and no malfunctions have been found, review/inspect the following: ● Visual/physical inspection ● Tech 2 data ● Freeze Frame data/Failure Records butter ● All electrical connections within a suspected circuit and/or system 3. If a problem is found, repair as necessary. Was a problem found?	—	Verify repair	Contact Technical Assistance

Backfire Symptom

Step	Action	Value(s)	Yes	No
1	**DEFINITION:** Fuel ignites in the intake manifold, or in the exhaust system, making a loud popping noise. Was the “On-Board Diagnostic (OBD) System Check” performed?	—	Go to *Step 2*	Go to *OBD System Check*
2	1. Perform a bulletin search. 2. If a bulletin that addresses the symptom is found, correct the condition as instructed in the bulletin. Was a bulletin found that addresses the symptom?	—	Verify repair	Go to *Step 3*
3	Was a visual/physical check performed?	—	Go to *Step 4*	Go to *Visual/ Physical Check*
4	1. Check for proper ignition voltage coil output with spark tester J 26792 (ST-125). Refer to *Electric Ignition System* for procedure. 2. If a problem is found, repair as necessary. Was a problem found?	—	Verify repair	Go to *Step 5*
5	1. Remove spark plugs and check for wet plugs, cracks, wear, improper gap, burned electrodes, or heavy deposits. Refer to *Electronic Ignition System*. NOTE: If spark plugs are gas or oil fouled, the cause of the fouling must be determined before replacing the spark plugs. Refer to *DTC P0172* to determine the cause of a rich condition or *Engine Mechanical* for an oil fouling condition. 2. If a problem is found, repair as necessary. Was a problem found?	—	Verify repair	Go to *Step 6*
6	1. Visually/physically inspect the ignition coils for cracks. 2. If a problem is found, repair as necessary. Was a problem found?	—	Verify repair	Go to *Step 7*
7	1. Check for an intermittent ignition system malfunction: ● Intermittent CKP 58X signal. ● Intermittent ignition feed circuit or sensor ground circuit to the crankshaft position sensor. 2. If a problem is found, repair as necessary. Was a problem found?	—	Verify repair	Go to *Step 8*
8	1. Check the fuel pressure. Refer to *Fuel System Pressure Test*. 2. If a problem is found, repair as necessary. Was a problem found?	—	Verify repair	Go to *Step 9*

Backfire Symptom (Cont'd)

Step	Action	Value(s)	Yes	No
9	1. Check for the following engine mechanical conditions. Refer to *Engine Mechanical* for diagnosis procedures: ● Low compression ● Sticking or leaking valves ● Worn camshaft lobe(s) ● Camshaft drive belt slipped or stripped ● Incorrect valve timing 2. If a problem is found, repair as necessary. Was a problem found?	—	Verify repair	Go to *Step 10*
10	1. Check the intake and exhaust manifold(s) for casting flash. Refer to *Engine Mechanical*. 2. If a problem is found, repair as necessary. Was a problem found?	—	Verify repair	Go to *Step 11*
11	1. Review all diagnostic procedures within this table. 2. If all procedures have been completed and no malfunctions have been found, review/inspect the following: ● Visual/physical inspection ● Tech 2 data ● Freeze Frame data/Failure Records butter ● All electrical connections within a suspected circuit and/or system. 3. If a problem is found, repair as necessary. Was a problem found?	—	Verify repair	Contact Technical Assistance

Cuts Out, Misses Symptom

Step	Action	Value(s)	Yes	No
1	**DEFINITION:** Steady pulsation or jerking that follows engine speed; usually more pronounced as engine load increases. Was the “On-Board Diagnostic (OBD) System Check” performed?	—	Go to *Step 2*	Go to *OBD System Check*
2	1. Perform a bulletin search. 2. If a bulletin that addresses the symptom is found, correct the condition as instructed in the bulletin. Was a bulletin found that addresses the symptom?	—	Go to *Step 14*	Go to *Step 3*
3	Was a visual/physical check performed?	—	Go to *Step 4*	Go to *Visual/ Physical Check*
4	Was the “Electric Throttle Control (ETC) System Check” performed?	—	Go to *Step 5*	Go to *ETC System Check*
5	1. Check the PCM grounds for clearness, tightness and proper routing. Refer to the PCM wiring diagrams in *Electrical Diagnosis*. 2. If a problem is found, repair as necessary. Was a problem found?	—	Verify repair	Go to *Step 6*
6	Observe the long term fuel trim on the Tech 2. Is the long term fuel trim significantly in the negative range (rich condition)?	—	Go to *Step 7*	Go to *Step 8*
7	1. Check items that can cause the engine to run rich. Refer to *Diagnostic Aids* in *DTC P0172 Diagnostic Support*. 2. If a problem is found, repair as necessary. Was a problem found?	—	Verify repair	Go to *Step 10*
8	Is the long term fuel trim significantly in the positive range (lean condition)?	—	Go to *Step 9*	Go to *Step 10*
9	1. Check items that can cause the engine to run lean. Refer to *Diagnostic Aids* in *DTC P0171 Diagnostic Support*. 2. If a problem is found, repair as necessary. Was a problem found?	—	Verify repair	Go to *Step 10*
10	1. Check for incorrect idle speed. Ensure that the following conditions are present: ● The engine is fully warm. ● The accessories are “off”. 2. Using a Tech 2, monitor the Engine Speed. Is the Engine Speed within the specified values?	Desired Idle Speed	Go to *Step 12*	Go to *Step 11*

Cuts Out, Misses Symptom (Cont'd)

Step	Action	Value(s)	Yes	No
11	1. Visually/physically inspect for the following conditions: ● Restricted air intake system. Check for a possible collapsed air intake duct, restricted air filter element, or foreign objects blocking the air intake system. ● Large vacuum leak. Check for a condition that causes a large vacuum leak, such as an incorrectly installed or faulty PCV valve or brake booster hose disconnected . 2. If a problem is found, repair as necessary. Was a problem found?	—	Verify repair	Go to *Step 9*
12	Check the injector connections. If any of the injectors are connected to an incorrect cylinder, correct as necessary. Was a problem found?	—	Verify repair	Go to *Step 13*
13	1. Perform the "Injector Coil/Balance Test" in *Fuel Metering System*. 2. If a problem is found, repair as necessary. Was a problem found?	—	Verify repair	Go to *Step 14*
14	1. Check for fuel in the pressure regulator vacuum hose. 2. If fuel is present, replace the fuel pressure regulator assembly. Refer to *Fuel Metering System*. 3. If a problem is found, repair as necessary. Was a problem found?	—	Verify repair	Go to *Step 15*
15	1. Check for proper ignition voltage output with spark tester J 26792 (ST-125). Refer to *Electronic Ignition System* for the procedure. 2. If a problem is found, repair as necessary. Was a problem found?	—	Verify repair	Go to *Step 16*
16	1. Remove spark plugs. Check for wet plugs, cracks, wear, improper gap, burned electrodes, or heavy deposits. Refer to *Electronic Ignition System*. NOTE: If spark plugs are gas or oil fouled, the cause of the fouling must be determined before replacing the spark plugs. 2. If a problem is found, repair as necessary. Was a problem found?	—	Verify repair	Go to *Step 17*
17	1. Check for a loose ignition coil ground and ION Sensing module circuit. 2. If a problem is found, repair as necessary. Was a problem found?	—	Verify repair	Go to *Step 18*
18	1. Check ignition coils for cracks or carbon tracking. 2. If a problem is found, repair as necessary. Was a problem found?	—	Verify repair	Go to *Step 19*
19	Using a Tech 2, monitor the TP 1, 2 angle with the engine idling. Is the TP angle at the specified value and steady?	8 ~ 10%	Go to *Step 20*	Refer to *DTC P0123* for further diagnosis

Cuts Out, Misses Symptom (Cont'd)

Step	Action	Value(s)	Yes	No
20	1. Check the PCV valve for proper operation. Refer to *Crankcase Ventilation System*. 2. If a problem is found, repair as necessary. Was a problem found?	—	Verify repair	Go to *Step 21*
21	1. Check the transmission range switch circuit. Use a Tech 2 and be sure the Tech 2 indicates that the vehicle is in drive with the gear selector in drive or overdrive. 2. If a problem is found, diagnose and repair the transmission range switch as necessary (refer to *4L30-E Automatic Transmission Diagnosis*). Was a problem found?	—	Verify repair	Go to *Step 22*
22	1. Check the following engine mechanical items. Refer to *Engine Mechanical* for diagnosis procedures: ● Low compression ● Sticking or leaking valves ● Worn camshaft lobe(s) ● Camshaft drive belt slipped or stripped ● Incorrect valve timing ● Worn rocker arms ● Broken valve springs 2. If a problem is found, repair as necessary. Was a problem found?	—	Verify repair	Go to *Step 23*
23	1. Check for faulty motor mounts. Refer to *Engine Mechanical* for inspection of mounts. 2. If a problem is found, repair as necessary. Was a problem found?	—	Verify repair	Go to *Step 24*
24	1. Review all diagnostic procedures within this table. 2. If all procedures have been completed and no malfunctions have been found, review/inspect the following: ● Visual/physical inspection ● Tech 2 data ● Freeze Frame data/Failure Records butter ● All electrical connections within a suspected circuit and/or system 3. If a problem is found, repair as necessary. Was a problem found?	—	Verify repair	Contact Technical Assistance

Hesitation, Sag, Stumble Symptom

Step	Action	Value(s)	Yes	No
1	**DEFINITION:** Momentary lack of response as the accelerator is pushed down. Can occur at any vehicle speed. Usually most pronounced when first trying to make the vehicle move, as from a stop sign. May cause the engine to stall if severe enough. Was the "On-Board Diagnostic (OBD) System Check" performed?	—	Go to *Step 2*	Go to *OBD System Check*
2	Was the "Electric Throttle Control (ETC) System Check" performed?	—	Go to *Step 3*	Go to *ETC System Check*
3	1. Perform a bulletin search. 2. If a bulletin that addresses the symptom is found, correct the condition as instructed in the bulletin. Was a bulletin found that addresses the symptom?	—	Verify repair	Go to *Step 4*
4	Was a visual/physical check performed?	—	Go to *Step 5*	Go to *Visual/ Physical Check*
5	1. Check the fuel control heated oxygen sensors (HO2S, B1S1 and B2S1). The fuel control heated oxygen sensors (HO2S) should respond quickly to different throttle positions. If they don't, check them for silicon or other contaminants from fuel or use of improper RTV sealant. The sensors may have a white powdery coating. Silicon contamination causes a high but false HO2S signal voltage (rich exhaust indication). The PCM will then reduce the amount of fuel delivered to the engine, causing a severe driveability problem. For more information, refer to *Powertrain Control Module (PCM) and Sensors*. 2. If a problem is found, repair as necessary. Was a problem found?	—	Verify repair	Go to *Step 6*
6	1. Check the fuel pressure. Refer to *Fuel System Pressure Test.* 2. If a problem is found, repair as necessary. Was a problem found?	—	Verify repair	Go to *Step 7*
7	Observe the TP 1, 2 angle display on the Tech 2 while slowly increasing accelerator pedal depression. Does the TP angle display steadily increase from 8 ~ 10% at closed throttle to 90 ~ 92% at WOT?	—	Go to *Step 8*	Go to *Step 9*
8	Monitor the long term fuel trim on the Tech 2. Is the long term fuel trim significantly in the negative range (rich condition)?	—	Go to *Step 9*	Go to *Step 10*
9	1. Check items that can cause the engine to run rich. Refer to *Diagnostic Aids* in *DTC P0172 Diagnostic Support*. 2. If a problem is found, repair as necessary. Was a problem found?	—	Verify repair	Go to *Step 11*

Hesitation, Sag, Stumble Symptom (Cont'd)

Step	Action	Value(s)	Yes	No
10	1. Check items that can cause the engine to run lean. Refer to *Diagnostic Aids* in *DTC P0171 Diagnostic Support*. 2. If a problem is found, repair as necessary. Was a problem found?	—	Verify repair	Go to *Step 11*
11	1. Check for proper ignition voltage output with spark tester J 26792 (ST-125). Refer to *Electronic Ignition System* for the procedure. 2. If a problem is found, repair as necessary. Was a problem found?	—	Verify repair	Go to *Step 12*
12	1. Check for a loose ignition coil ground and ION Sensing module circuit. 2. If a problem is found, repair as necessary. Was a problem found?	—	Verify repair	Go to *Step 13*
13	1. Check the ignition coils for cracks or carbon tracking. 2. If a problem is found, repair as necessary. Was a problem found?	—	Verify repair	Go to *Step 14*
14	1. Remove spark plugs and check for wet plugs, cracks, wear, improper gap, burned electrodes, or heavy deposits. Refer to *Electronic Ignition System*. NOTE: If spark plugs are gas or oil fouled, the cause of the fouling must be determined before replacing the spark plugs. 2. If a problem is found, repair as necessary. Was a problem found?	—	Verify repair	Go to *Step 15*
15	1. Check the PCM grounds for clearness, tightness and proper routing. Refer to the PCM wiring diagrams in Electrical Diagnosis. 2. If a problem is found, repair as necessary. Was a problem found?	—	Verify repair	Go to *Step 16*
16	1. Check the MAF sensor connections. 2. If a problem is found, replace the faulty terminals as necessary. Refer to *Electrical Diagnosis* for wiring repair procedures. Was a problem found?	—	Verify repair	Go to *Step 17*

Hesitation, Sag, Stumble Symptom (Cont'd)

Step	Action	Value(s)	Yes	No
17	1. Visually/physically check vacuum hoses for splits, kinks, and proper connections and routing as shown on the "Vehicle Emission Control Information" label. 2. If a problem is found, repair as necessary. Was a problem found?	—	Verify repair	Go to *Step 18*
18	1. Review all diagnostic procedures within this table. 2. If all procedures have been completed and no malfunctions have been found, review/inspect the following: ● Visual/physical inspection ● Tech 2 data ● Freeze Frame data/Failure Records butter ● All electrical connections within a suspected circuit and/or system 3. If a problem is found, repair as necessary. Was a problem found?	—	Verify repair	Contact Technical Assistance

Bank 1 Restricted Exhaust System Check

Step	Action	Value(s)	Yes	No
1	Was the “On-Board Diagnostic (OBD) System Check” performed?	—	Go to *Step 2*	Go to *OBD System Check*
2	1. Remove the Bank 1 HO2S 2. 2. Install the Exhaust Backpressure Tester (BT-8515-V or equivalent) in place of the Bank 1 HO2S 2. 3. Run the engine at normal operating temperature. 4. Increase the engine speed to 2000 RPM and allow 10 seconds for pressure to build. 5. Observe the exhaust system backpressure reading on the gauge. Does the reading exceed the amount in the value column?	8.62 kPa (1.25 psi)	Go to *Step 3*	Go to *Step 4*
3	Repair the restriction in the exhaust system after the catalytic converter. Possible faults include: ● Collapsed pipe ● Heat distress ● Internal muffler failure Is the action complete?	—	Verify repair	—
4	1. Install the Bank 1 HO2S 2. 2. Install the Exhaust Backpressure Tester in place of Bank 1 HO2S 1. 3. Run the engine at normal operating temperature. 4. Increase the engine speed to 2000 RPM and allow 10 seconds for pressure to build. 5. Observe the exhaust system backpressure reading on the gauge. Does the reading exceed the amount in the value column?	8.62 kPa (1.25 psi)	Go to *Step 5*	No trouble found. If a driveability symptom exists, refer to symptom charts
5	Repair the restriction in the catalytic converter. Is the action complete?	—	Verify repair	—

NOTE: DTCs will be set by running the vehicle to normal operating temperature after a cold start with the O2 sensor disconnected. After performing these tests, use the Tech 2 to erase the DTCs that were set by the lack of O2 sensor activity.

Bank 2 Restricted Exhaust System Check

Step	Action	Value(s)	Yes	No
1	Was the “On-Board Diagnostic (OBD) System Check” performed?	—	Go to *Step 2*	Go to *OBD System Check*
2	1. Remove the Bank 2 HO2S 2. 2. Install the Exhaust Backpressure Tester (BT-8515-V or equivalent) in place of the Bank 2 HO2S 2. 3. Run the engine at normal operating temperature. 4. Increase the engine speed to 2000 RPM and allow 10 seconds for pressure to build. 5. Observe the exhaust system backpressure reading on the gauge. Does the reading exceed the amount in the value column?	8.62 kPa (1.25 psi)	Go to *Step 3*	Go to *Step 4*
3	Repair the restriction in the exhaust system after the catalytic converter. Possible faults include: ● Collapsed pipe ● Heat distress ● Internal muffler failure Is the action complete?	—	Verify repair	—
4	1. Install the Bank 2 HO2S 2. 2. Install the Exhaust Back pressure Tester in place of Bank 1 HO2S 1. 3. Run the engine at normal operating temperature. 4. Increase the engine speed to 2000 RPM and allow 10 seconds for pressure to build. 5. Observe the exhaust system backpressure reading on the gauge. Does the reading exceed the amount in the value column?	8.62 kPa (1.25 psi)	Go to *Step 5*	No trouble found. If a driveability symptom exists, refer to symptom charts
5	Repair the restriction in the catalytic converter. Is the action complete?	—	Verify repair	—

NOTE: DTCs will be set by running the vehicle to normal operating temperature after a cold start with the O2 sensor disconnected. After performing these tests, use the Tech 2 to erase the DTCs that were set by the lack of O2 sensor activity.

Default Matrix Table

Service Procedure Default Strategy

A referral strategy has been established to assist the technician with additional information when the cause of the failure cannot be determined. If no problem is found after performing diagnostics, then refer to the default matrix table for further diagnostic information.

Default Matrix Table

Strategy Based Diagnostic Charts	Initial Diagnosis	Default Section(s)
On-Board Diagnostic (OBD) System Check	Vehicle does not enter diagnostics.	Chassis Electrical
On-Board Diagnostic (OBD) System Check	Vehicle enters diagnostics and communicates with the Tech 2. MIL is “ON” in diagnostics. Engine does not start and run.	Ignition System Check
On-Board Diagnostic (OBD) System Check	Engine starts and runs, no PCM codes set. Customer complains of vibration.	—
On-Board Diagnostic (OBD) System Check	Engine starts and runs, no PCM codes set. Customer complains of harsh or soft shift, poor performance, delayed or no engagement into drive or reverse, transmission fluid leak, transmission noise or vibration, or improper TCC operation.	Automatic Transmission
PCM Power and Ground Check	On-Board Diagnostic (OBD) System Check.	Chassis Electrical
PCM Power and Ground Check	On-Board Diagnostic (OBD) System Check. PCM power and ground circuits OK. Data link voltage incorrect.	Chassis Electrical
On-Board Diagnostic (OBD) System Check	Engine starts and runs, no PCM codes set. Customer complains of harsh or soft shift, poor performance, delayed or no engagement into drive or reverse, transmission fluid leak, transmission noise or vibration, or improper TCC operation.	Automatic Transmission

Symptoms	Initial Diagnosis	Default Section(s)
Intermittents	1. On-board Diagnostic (OBD) system check. 2. Careful visual/physical inspections.	Chassis Electrical
Hard Starts	1. OBD system check. 2. ETC system check. 3. Sensors (ECT, MAP, MAF, TP) ; MAP output chart. 4. Fuel system electrical test, fuel system diagnosis. 5. Ignition system.	Engine Mechanical, Ignition System Check, Exhaust System Diagnosis

Symptoms	Initial Diagnosis	Default Section(s)
Surges and/or Chuggles	1. OBD system check. 2. ETC system check. 3. Heated oxygen sensors. 4. Fuel system diagnosis. 5. Ignition system.	Calibration ID/Service Bulletins, Ignition System Check, Generator Output, Exhaust System Diagnosis, 4L30-E System Test
Lack of Power, Sluggish or Spongy	1. OBD system check. 2. ETC system check. 3. Fuel system diagnosis. 4. Ignition system. 5. EGR operation. 6. EGR system check.	Refer to *Exhaust System* in *Engine Exhaust*, TCC Operation, Calibration ID/Service Bulletins
Detonation/Spark Knock	1. OBD system check. 2. Transmission range switch. 3. EGR operation. 4. EGR system check. 5. TCC operation. 6. Fuel system diagnosis. 7. Ignition system. 8. ION sensing module check.	TCC operation, Cooling System, Ignition System Check, Calibration ID/Service Bulletins
Rough, Unstable, or Incorrect Idle, Stalling	1. OBD system check. 2. ETC system check. 3. Fuel injector and fuel injector balance test. 4. EVAP emission canister purge valve check. 5. Ignition system. 6. EGR operation.	MAP Output Check, Throttle Linkage, EGR System Check, A/C Clutch Control Circuit Diagnosis, Crankcase Ventilation System, Calibration ID/Service Bulletins, Generator Output Voltage (refer to *Chassis Electrical*), Exhaust Diagnosis
Poor Fuel Economy	1. OBD system check. 2. Careful visual/physical inspection. 3. Ignition system. 4. Cooling system.	TCC Operation, Exhaust System (refer to *Engine Exhaust*)
Hesitation, Sag, Stumble	1. OBD system check. 2. ETC system check. 3. TP. 4. MAP output check. 5. Fuel system diagnosis. 6. Fuel injector and fuel injector balance test. 7. EVAP emission canister purge valve. 8. Ignition system.	EGR Operation, EGR System Check, Generator Output Voltage (refer to *Chassis Electrical*), Calibration ID/Service Bulletins, Ignition System Check
Cuts Out, Misses	1. OBD system check. 2. Cylinder balance test. 3. ETC system check.	Ignition System Check
Engine Cranks But Will Not Run	1. OBD system check.	Fuel System Electrical Diagnosis, Fuel System Diagnosis, Fuel Injector and Fuel Injector Balance Test.

Symptoms	Initial Diagnosis	Default Section(s)
Excessive Exhaust Emissions or Odors	1. OBD system check. 2. Emission test. 3. Cooling system. 4. Fuel system diagnosis. 5. Fuel injector and fuel injector balance test. 6. EVAP emission canister purge valve. 7. Crankcase ventilation system. 8. Ignition system. 9. MAP output check.	EGR System Check, Exhaust Diagnosis, Calibration ID/Service Bulletins
Dieseling, Run-On	1. OBD system check. 2. Careful visual/physical inspection. 3. Fuel system diagnosis.	—
Backfire	1. OBD system check. 2. Ignition system. 3. Fuel system diagnosis. 4. Fuel injector and fuel injector balance test. 5. EGR operation, EGR system check.	Exhaust System Diagnosis, Intake Casting Flash, Ignition System Check
Misfire	1. OBD system check. 2. Ignition system. 3. Fuel system diagnosis. 4. Fuel injector and fuel injector balance test.	Vibrations, Transmission, Driveshaft and Axle
Catalyst Monitor	1. OBD system check. 2. Careful visual/physical inspection. 3. Heated oxygen sensors.	Exhaust System
Fuel Trim	1. OBD system check. 2. Careful visual/physical inspection. 3. Fuel system diagnosis. 4. Heated oxygen sensors, MAF sensors.	Exhaust System Intake Air System
Evaporative Emissions	1. OBD system check. 2. Careful visual/physical inspection. 3. Fuel system diagnosis.	—
Heated Oxygen Sensors	1. OBD system check. 2. Careful visual/physical inspection.	Exhaust System

On Vehicle Service Crankshaft Position (CKP) Sensor

Removal Procedure

1. Disconnect the negative battery cable.
2. Disconnect the electrical connector to the CKP sensor.
3. Remove one bolt and the CKP sensor from the right side of the engine block, just behind the mount.

NOTE: Use caution to avoid any hot oil that might drip out.

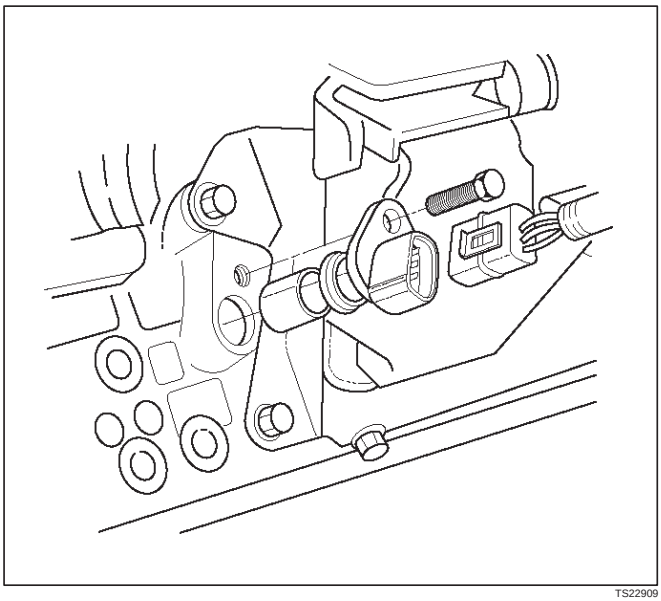

TS22909

Inspection Procedure

1. Inspect the sensor O-ring for cracks or leaks.
2. Replace the O-ring if it is worn or damaged.
3. Lubricate the new O-ring with engine oil.
4. Install the lubricated O-ring.

Installation Procedure

1. Install the CKP sensor in the engine block.
2. Install the CKP sensor mounting bolt.

Tighten

- **Tighten the mounting bolt to 9 N·m (78 lb in.).**

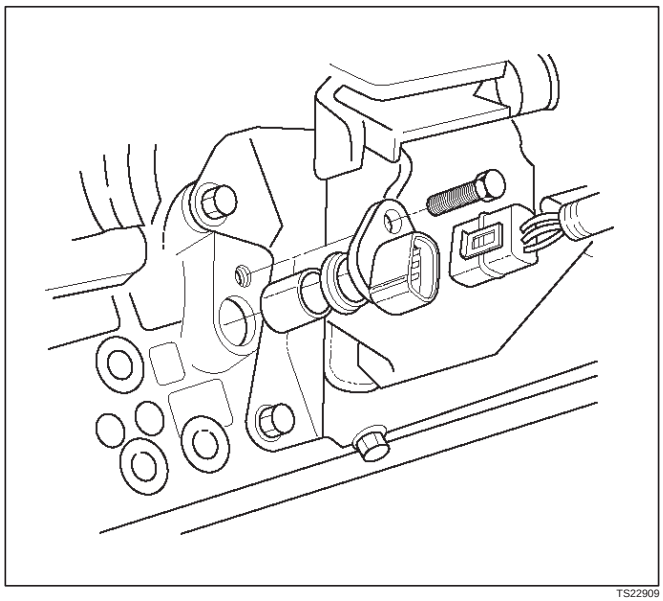

TS22909

3. Connect the electrical connector to the CKP sensor.
4. Connect the negative battery cable.

Engine Coolant Temperature (ECT) Sensor

Removal Procedure

NOTE: Care must be taken when handling the engine coolant temperature (ECT) sensor. Damage to the ECT sensor will affect proper operation of the fuel injection system.

1. Disconnect the negative battery cable.
2. Drain the radiator coolant. Refer to *Draining and Refilling Cooling System* in *Engine Cooling* section.
3. Disconnect the electrical connector.

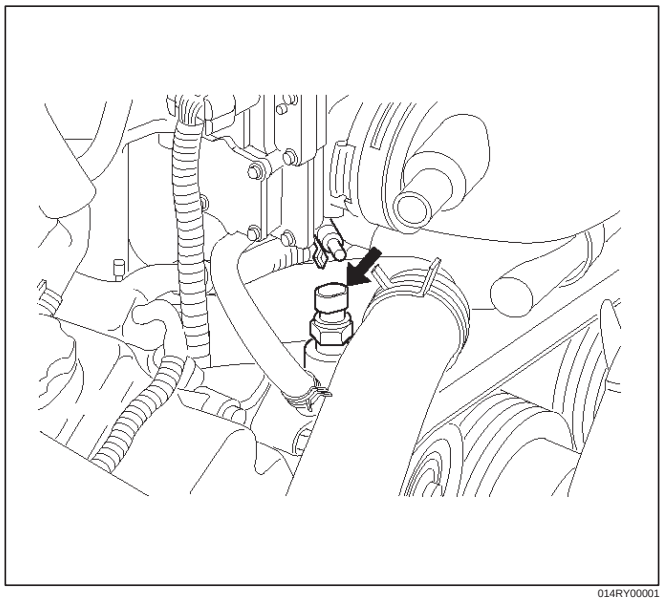

014RY00001

4. Remove the ECT sensor from the coolant crossover.

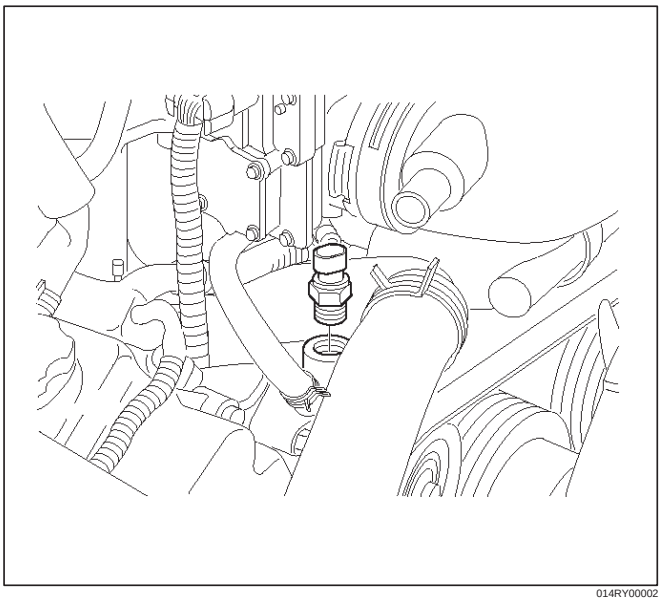

014RY00002

Installation Procedure

1. Apply sealer or the equivalent to the threads of the ECT sensor.
2. Install the ECT sensor in the coolant crossover.

Tighten

- **Tighten the ECT sensor to 30 N·m (22 lb ft.).**

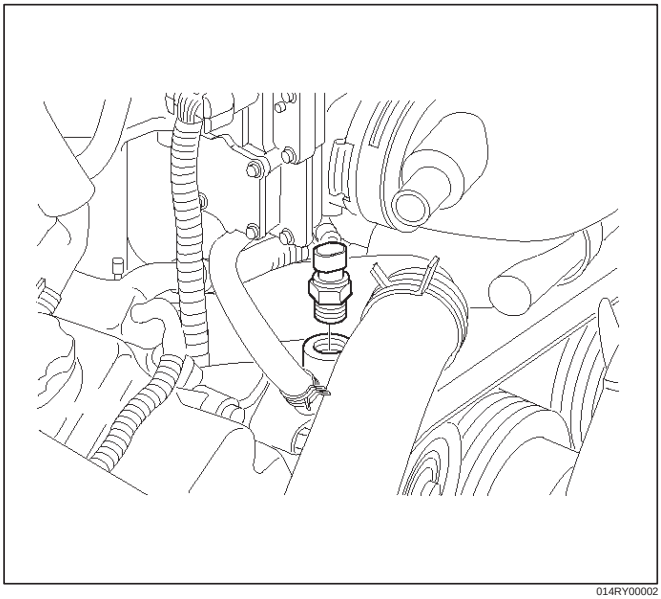

014RY00002

3. Connect the electrical connector.

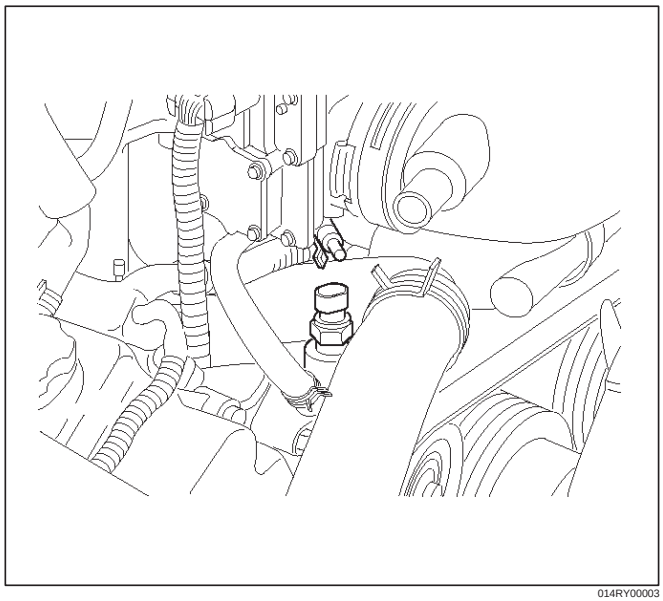

014RY00003

4. Fill the radiator with coolant. Refer to *Draining and Refilling Cooling System* in *Engine Cooling* section.
5. Connect the negative battery cable.

Heated Oxygen Sensor (HO2S)

Removal Procedure

1. Disconnect the negative battery cable.
2. Locate the four oxygen sensors.

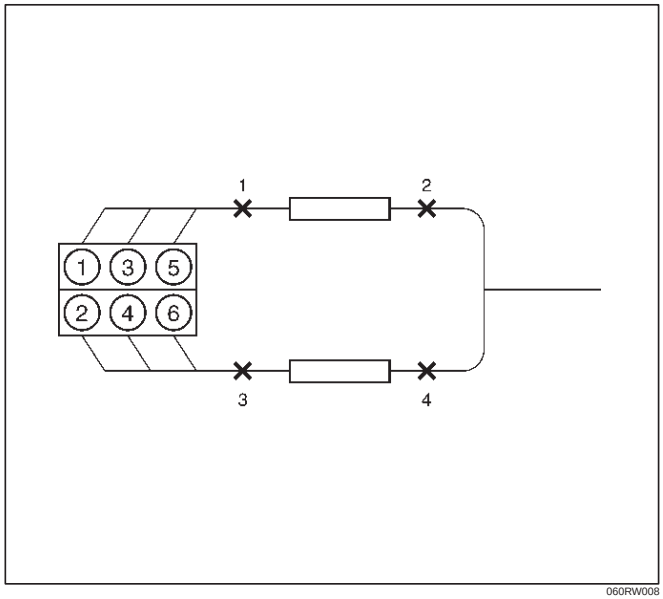

060RW008

- Bank 1 sensor 1 is mounted on the exhaust pipe ahead of the right-hand catalytic converter.

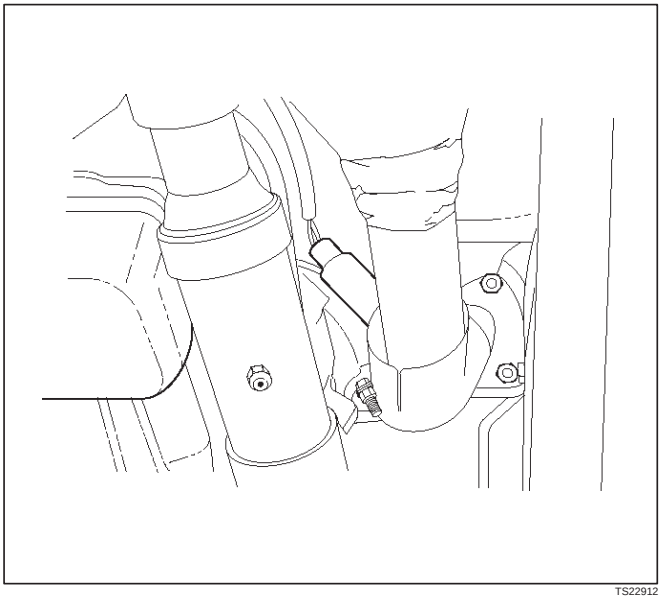

TS22912

- Bank 1 sensor 2 is mounted behind the right-hand catalytic converter.

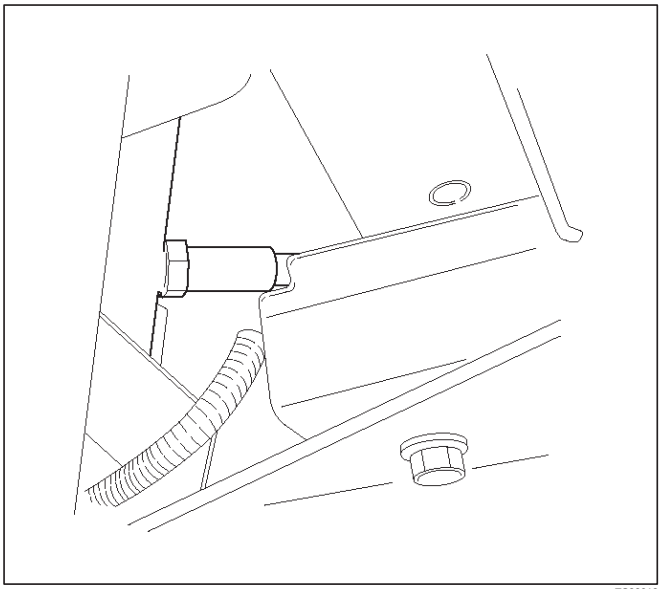

TS22913

- Bank 2 sensor 1 is mounted on the exhaust pipe ahead of the left-hand catalytic converter.

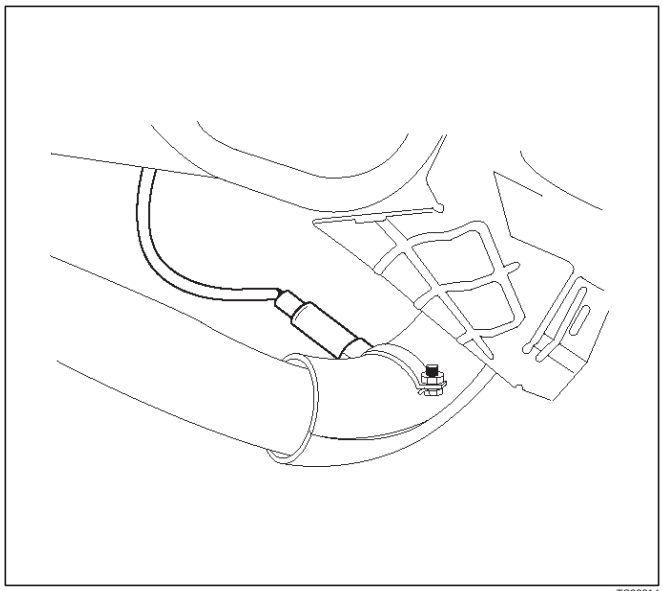

TS22914

- Bank 2 sensor 2 is mounted behind the left-hand catalytic converter.

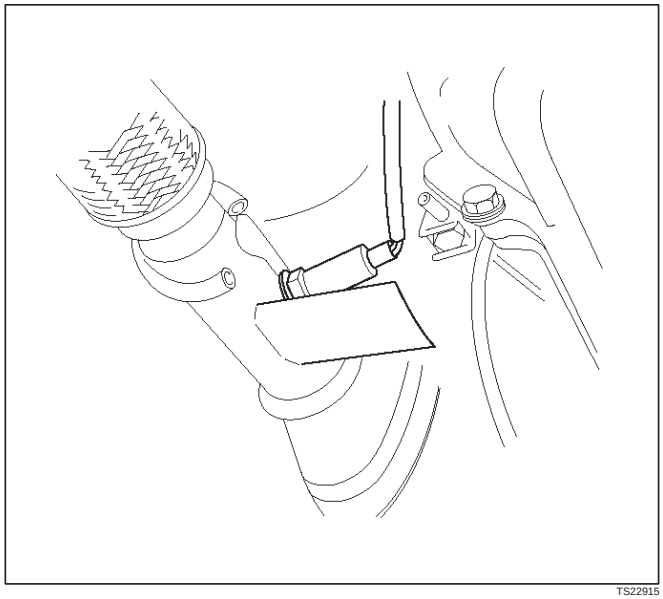

TS22915

3. Disconnect the pigtail from the wiring harness.

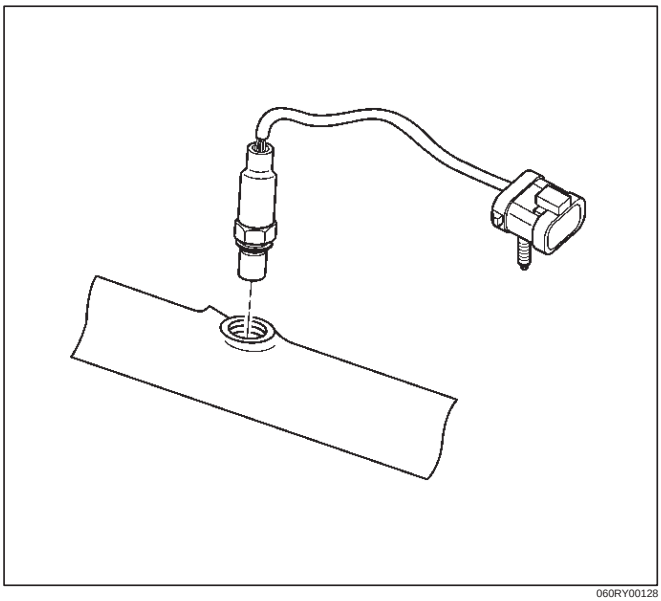

060RY00128

IMPORTANT: The pigtail is permanently attached to the sensor. Be careful not to pull the wires out.

NOTE: Do not use a torch to remove an HO2S unless the sensor is being replaced. Using a torch could damage the sensor.

4. Remove the sensor from the exhaust pipe.
   - Because of the expansion and contraction of the metal in the exhaust system over time, this may be difficult if the engine temperature is below 48˚C (120˚F).

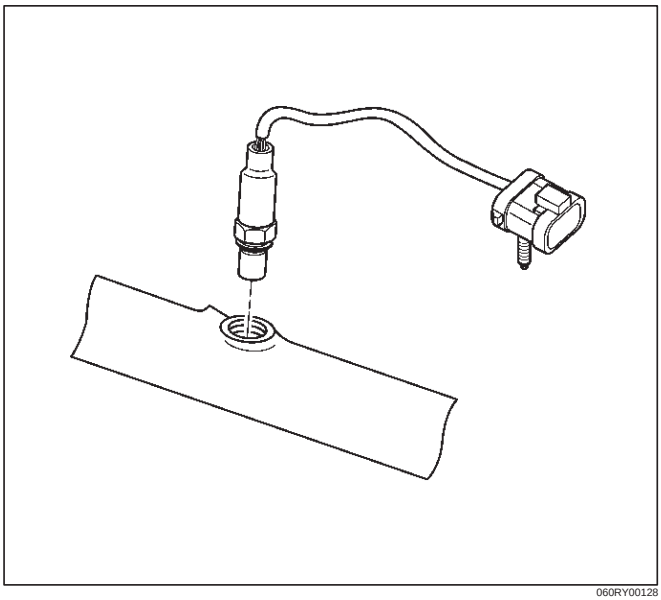

060RY00128

Inspection Procedure

All four sensors are identical. Inspect each in the same way.

1. Inspect the pigtail and the electrical connector for grease, dirt, corrosion, and bare wires or worn insulation.
2. Inspect the louvered end of the sensor for grease, dirt, or other contaminations.

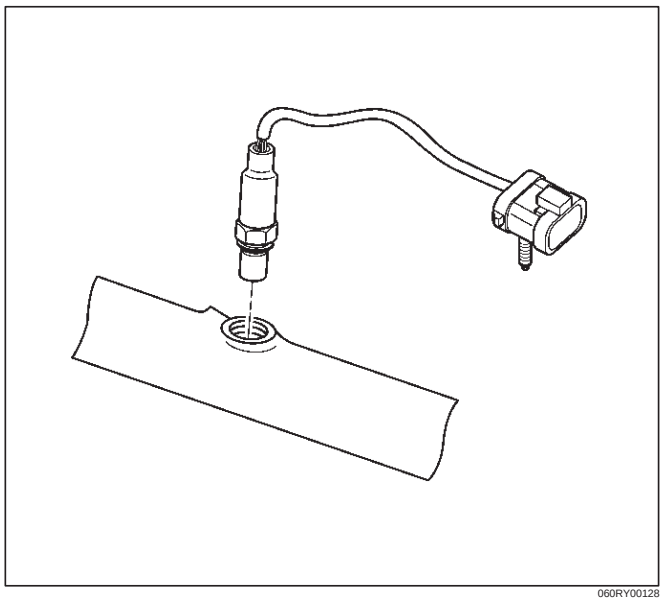

060RY00128

Installation Procedure

IMPORTANT:

- There is a special anti-seize compound on the HO2S threads. This compound consists of glass beads suspended in a liquid graphite solution. The graphite burns away with engine heat, but the glass beads will remain, making the sensor easier to remove.
- New or service sensors will already have the compound applied to the threads. If a sensor is removed and is to be reinstalled for any reason, the threads must have anti-seize compound applied.

1. Apply anti-seize compound or the equivalent to the threads of the oxygen sensor, if necessary.
2. Install the oxygen sensor on the exhaust pipe in its original position.

Tighten

- **Tighten the oxygen sensor to 55 N·m (40 lb ft.).**

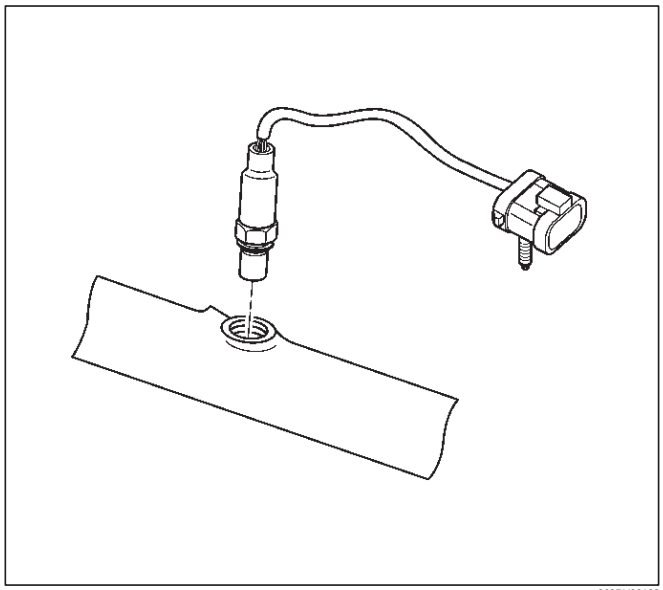

060RY00128

3. Connect the pigtail to the wiring harness.
4. Connect the negative battery cable.

Intake Air Temperature (IAT) Sensor

Removal Procedure

1. Disconnect the negative battery cable.
2. Remove the engine cover
3. The IAT sensor is located in the intake air duct, behind the throttle body.
4. Disconnect the electrical connector from the IAT sensor.

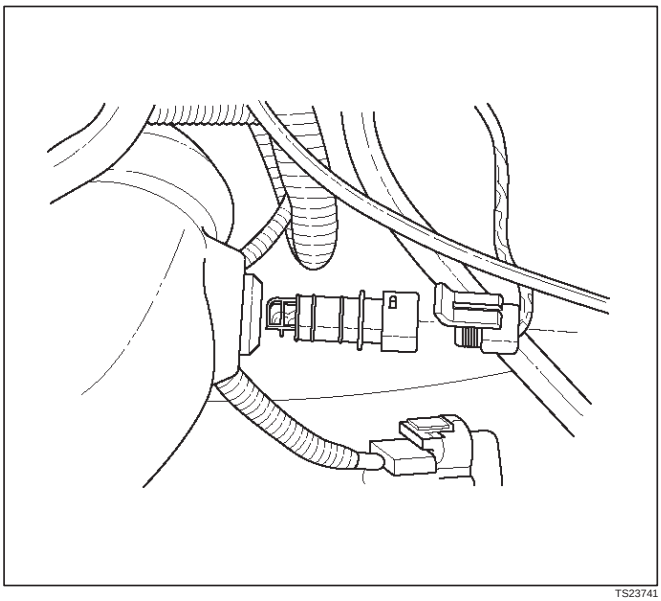

TS23741

5. Remove the IAT sensor from the intake air duct by using a rocking motion while pulling the sensor.

Installation Procedure

1. Install the IAT sensor into the grommet in the intake air duct.
2. Correct the IAT electrical connector.

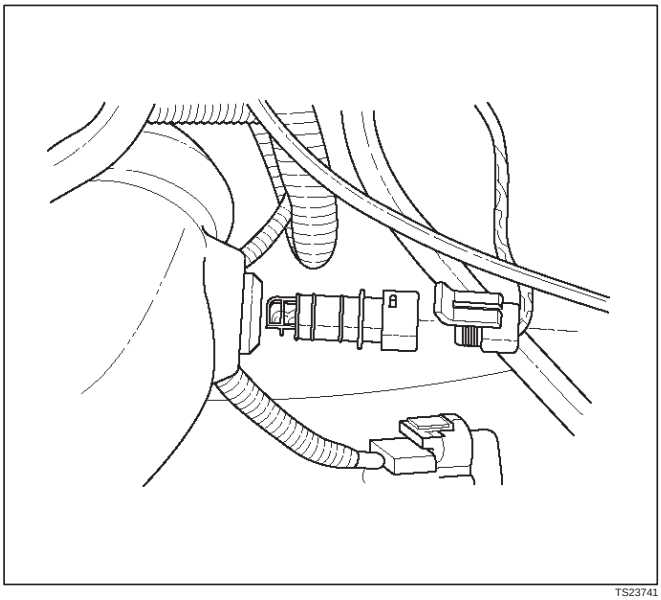

TS23741

3. Install the engine cover.
4. Connect the negative battery cable.

ION Sensing Module

Removal Procedure

1. Disconnect the negative battery cable.
2. Disconnect the ION sensing module connector.
3. Remove the bolts and the ION sensing module from the common chamber.

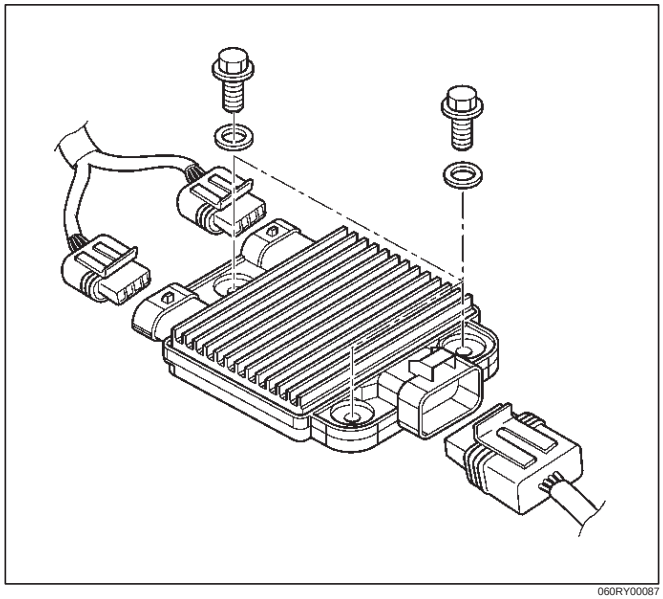

060RY00087

Installation Procedure

1. Install the ION sensing module on the common chamber with the bolts.

Tighten

- **Tighten the ION sensing module to 4 N·m (35 lb in.).**

2. Connect the ION sensing module connectors as shown in the illustration.

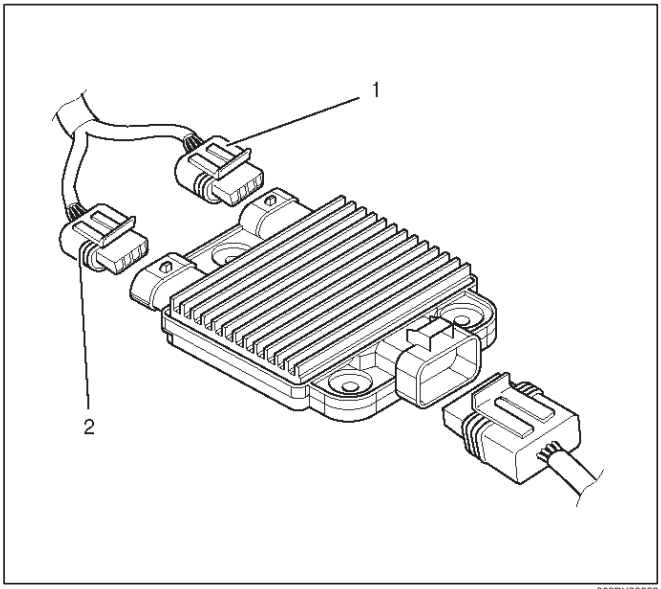

060RY00003

Legend

(1) Green Color Connector
(2) Blue Color Connector

3. Connect the negative battery cable.

Mass Air Flow (MAF) Sensor

Removal Procedure

1. Disconnect the negative battery cable.
2. Disconnect the electrical connector from the MAF sensor.

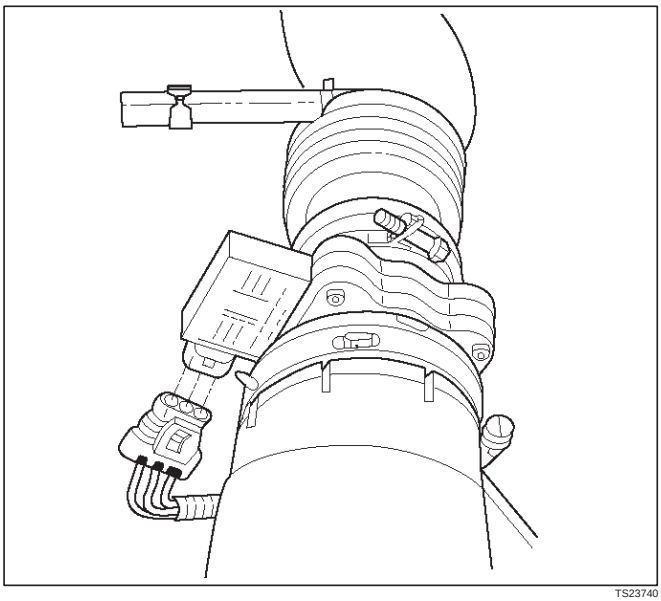

TS23740

3. Loosen the clamps which secure the intake air duct and the air cleaner to the MAF sensor.
4. Remove the intake air duct from the MAF sensor.
5. Remove the MAF sensor from the air cleaner.

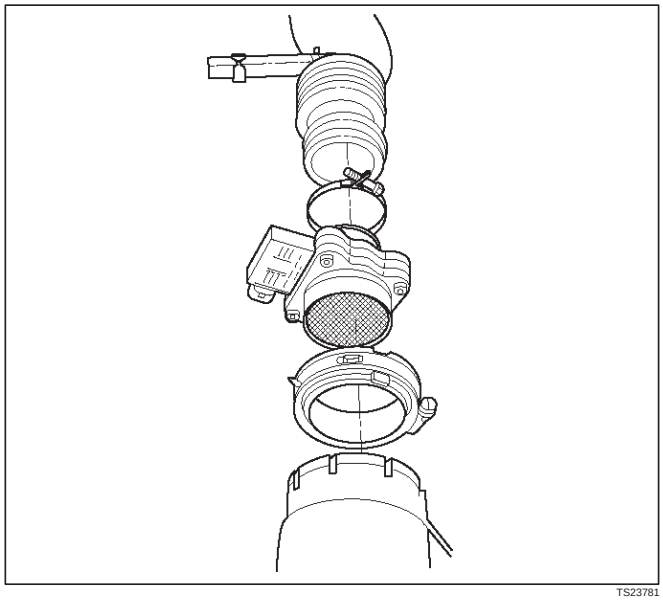

TS23781

Installation Procedure

1. Install the MAF sensor on the air cleaner with the clamp.
2. Install the intake air duct and the clamp on the MAF sensor.

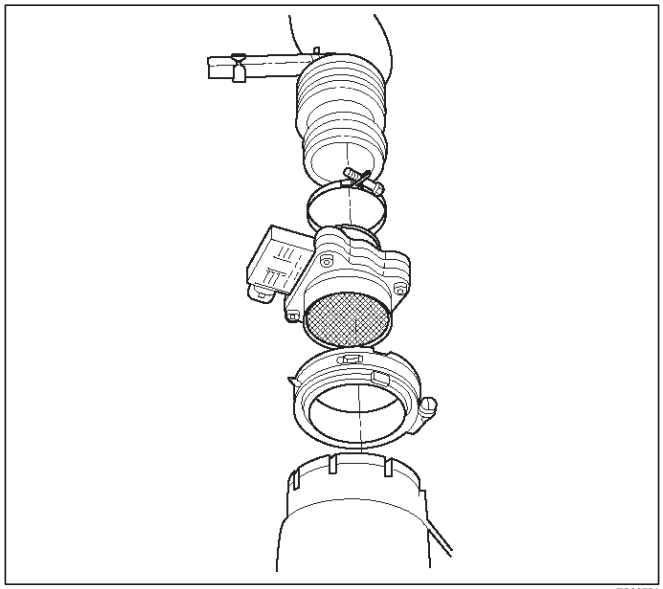

TS23781

3. Tighten the clamps to secure the MAF sensor to the intake air duct and the air cleaner.
4. Connect the MAF electrical connector.
5. Connect the negative battery cable.

Manifold Absolute Pressure (MAP) Sensor

Removal Procedure

1. Disconnect the negative battery cable.
2. Disconnect the electrical connector from the MAP sensor.

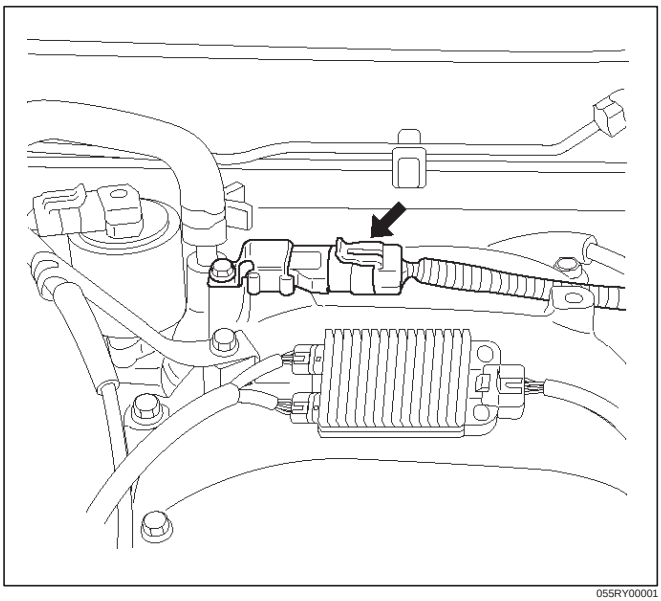

055RY00001

3. Remove the bolt securing the MAP sensor to the mounting bracket on the common chamber.
4. Remove the MAP sensor from the mounting bracket.

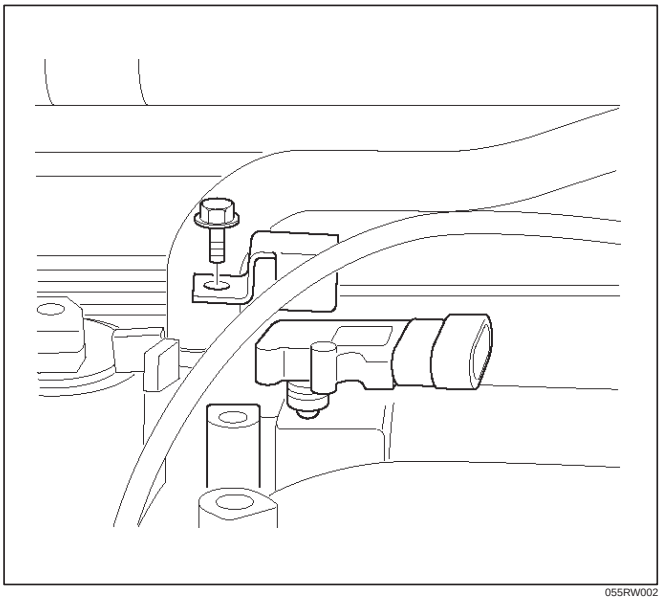

055RW002

Installation Procedure

1. Install the MAP sensor in the mounting bracket.

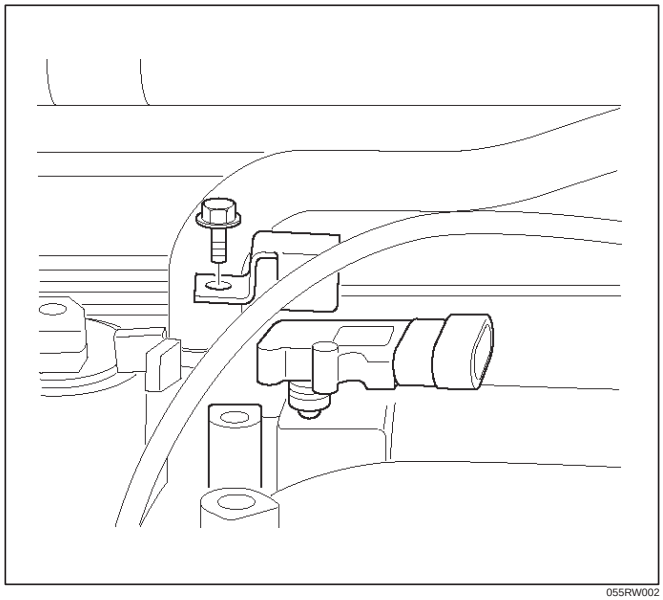

055RW002

2. Install the mounting bracket retaining bolt on the common chamber.

Tighten

- **Tighten the bolt to 20 N·m (12 lb ft.).**

3. Connect the MAP electrical connector.

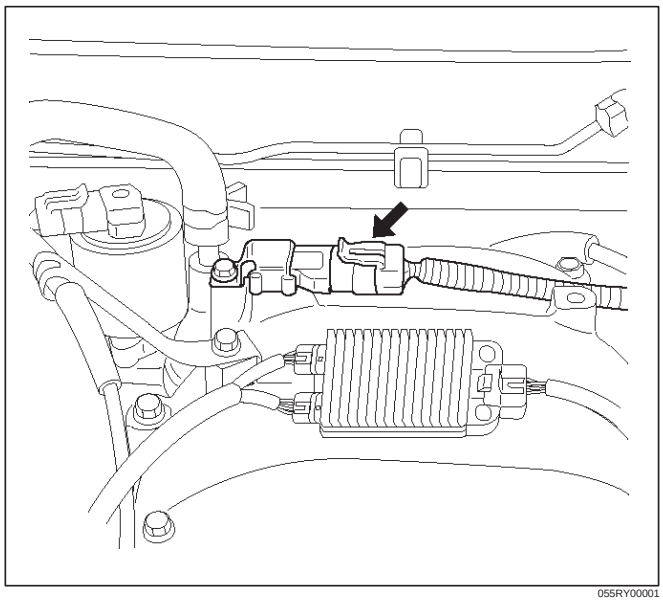

055RY00001

4. Connect the negative battery cable.

Malfunction Indicator Lamp (MIL)

Removal and Installation Procedure

Refer to Warning light bulb, indicator light valve, illumination light bulb, A/T indicator light bulb in Meter and Gauge.

Reduced Power Lamp

The reduced power lamp (RPL) turns on when the ignition key is moved to the ON position. It should turn off in approximately 3 seconds or immediately after the engine starts.
If the RPL turns on during vehicle operation, a vehicle system failure resulting in reduced engine output is indicated.
If both the reduced RPL and the check engine light turn on, a serious problem affecting vehicle performance is indicated.
Refer to the *OBD system check NO and RPL "ON" steady* in this manual.

Powertrain Control Module (PCM)

Service Precaution

NOTE: To prevent possible electrostatic discharge damage to the PCM, do not touch the connector pins or soldered components on the circuit board.

Electrostatic Discharge (ESD) Damage

Electronic components used in the control systems are often designed to carry very low voltage. Electronic components are susceptible to damage caused by electrostatic discharge. Less than 100 volts of static electricity can cause damage to some electronic components. By comparison, it takes as much as 4,000 volts for a person to even feel the zap of a static discharge.
There are several ways for a person to become statically charged. The most common methods of charging are by friction and by induction. An example of charging by friction is a person sliding across a car seat.
Charging by induction occurs when a person with well insulated shoes stands near a highly charged object and momentarily touches ground. Charges of the same polarity are drained off leaving the person highly charged with the opposite polarity. Static charges can cause damage, therefore, it is important to use care when handling and testing electronic components.

NOTE: To prevent possible Electrostatic Discharge damage, follow these guidelines:

- Do not touch the control module connector pins or soldered components on the control module circuit board.
- Do not open the replacement part package until the part is ready to be installed.
- Before removing the part from the package, ground the package to a known good ground on the vehicle.
- If the part has been handled while sliding across the seat, or while sitting down from a standing position, or while walking a distance, touch a known good ground before installing the part.

NOTE: To prevent internal PCM damage, the ignition must be in the "OFF" position in order to disconnect or reconnect power to the PCM (for example: battery cable, PCM pigtail, PCM fuse, jumper cables, etc.).

IMPORTANT: When replacing the production PCM with a service PCM, it is important to transfer the broadcast code and production PCM number to the service PCM label. This will allow positive identification of PCM parts throughout the service life of the vehicle. Do not record this information on the metal PCM cover.

IMPORTANT: The ignition should always be in the "OFF" position in order to install or remove the PCM connectors.

Service of the PCM should normally consist of either replacement of the PCM or EEPROM programming. If the diagnostic procedures call for the PCM to be replaced, the PCM should be checked first to ensure it is the correct part. If it is, remove the faulty PCM and install the new service PCM.

The service PCM EEPROM will not be programmed. DTC P0601 indicates the check sum error.

Removal Procedure

1. Disconnect the negative battery cable.
2. Block the wheels.
3. Remove the two screws from the PCM electrical connectors.
4. Disconnect the PCM electrical connectors.

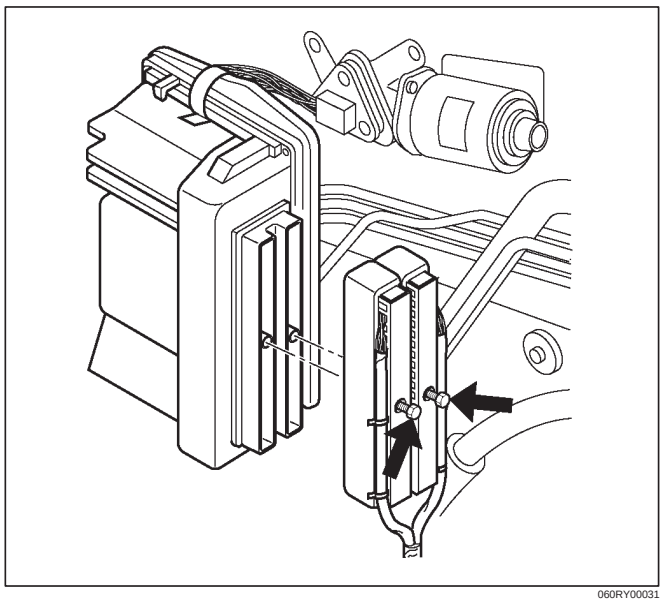

060RY00031

5. After removing the clip which fixes the PCM to the bracket, remove PCM.

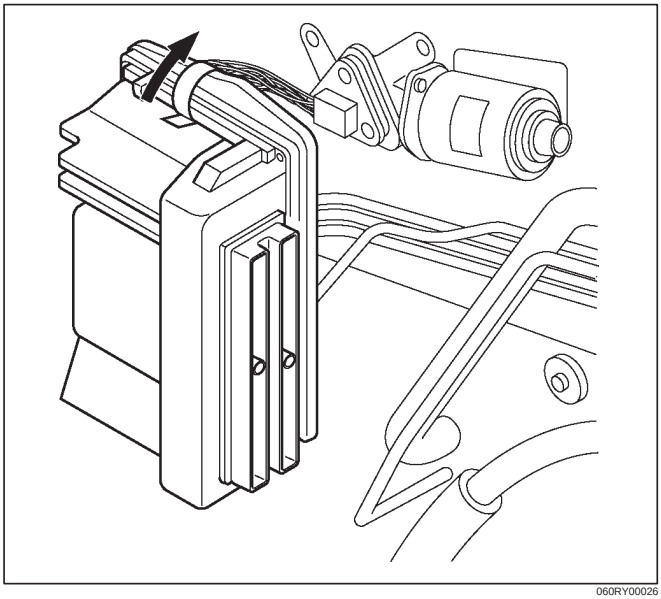

060RY00026

Installation Procedure

1. Install the PCM to bracket and fix with the clip.

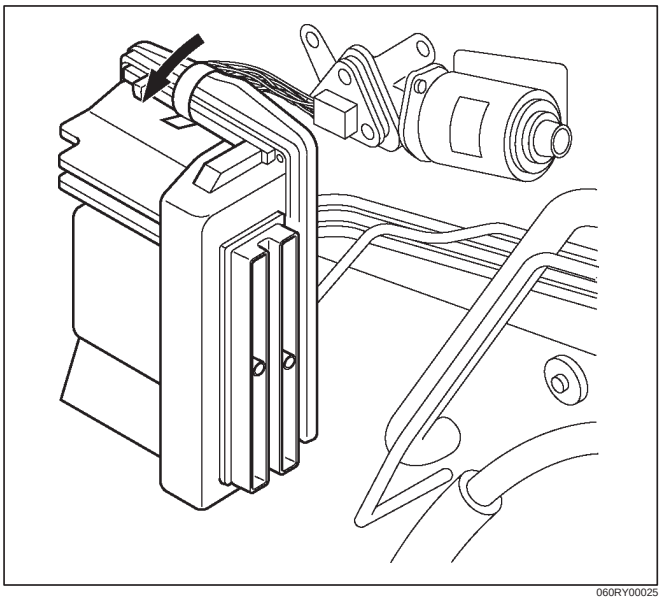

060RY00025

2. Connect the PCM electrical connectors.
3. Install the two screws to PCM electrical connectors.

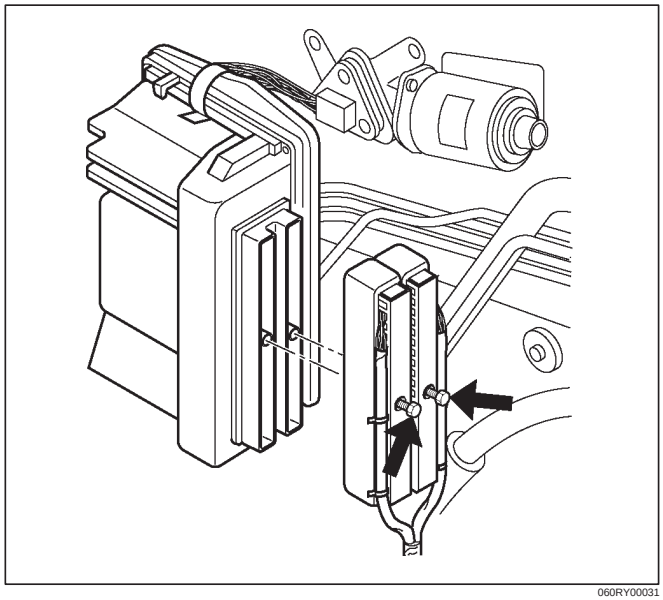

060RY00031

EEPROM

General Description

The Electronically Erasable Programmable Read Only Memory (EEPROM) is a permanent memory that is physically soldered within the PCM. The EEPROM contains program and calibration information that the PCM needs to control powertrain operation.

EEPROM Programming

1. Set-up – Ensure that the following conditions have been met:
   - The battery is fully charged.
   - The ignition is “ON.”
   - The Vehicle Interface Module cable connection at the DLC is secure.
2. Program the PCM using the latest software matching the vehicle. Refer to up-to-date Techline equipment user’s instructions.
3. If the PCM fails to program, proceed as follows:
   - Ensure that all PCM connections are OK.
   - Check the Techline equipment for the latest software version.
   - Attempt to program the PCM. If the PCM still cannot be programmed properly, replace the PCM. The replacement PCM must be programmed.

Functional Check

1. Perform the On-Board Diagnostic System Check.
2. Start the engine and run for one minute.
3. Scan for DTCs using the Tech 2.

Throttle Position (TP) Sensor

Removal Procedure

1. Disconnect the negative battery cable.
2. Disconnect the TPS electrical connector.
3. Remove the bolts and the TP sensor from the throttle body.

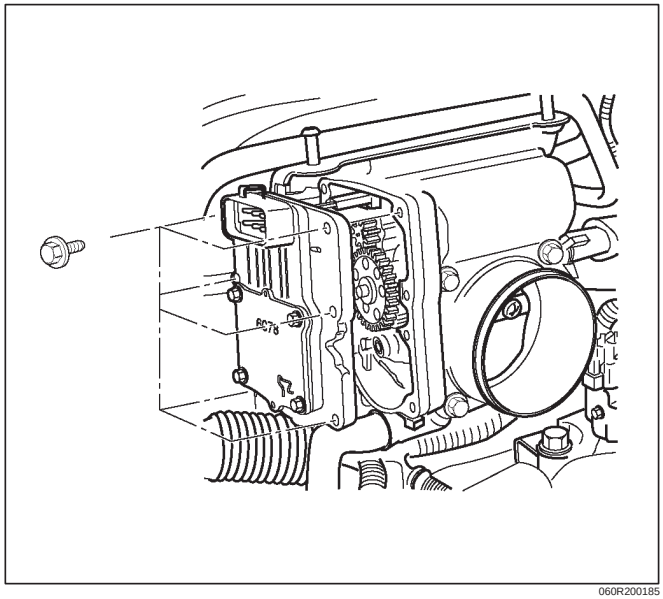

060R200185

NOTE: Do not clean the TP sensor by soaking it in solvent. The sensor will be damaged as a result.

Function Check

Use a Tech 2 to check the TP sensor output voltage at closed throttle.

- The voltage should be TP1 about 0.4V, TP2 about 4.6V and TP3 about 4.6V.
- If the reading is abnormal value, check the throttle shaft to see if it is binding.

Installation Procedure

1. Install the TP sensor on the throttle body with the bolts.

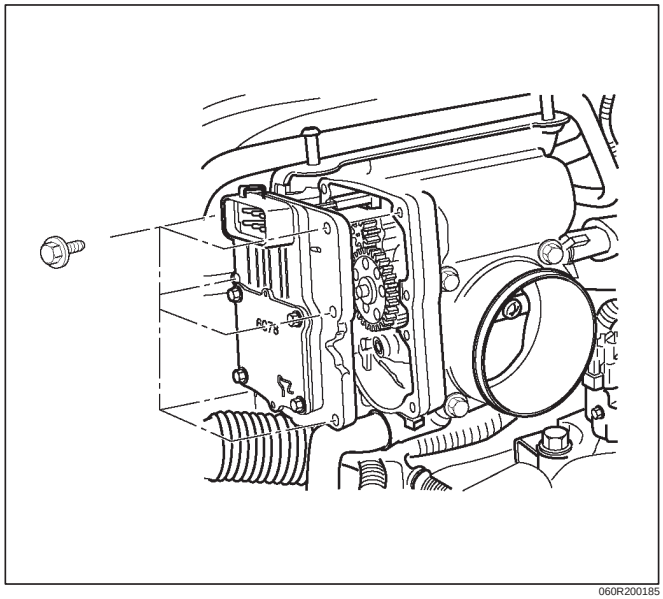

060R200185

2. Connect the TP electrical connector.
3. Install the negative battery cable.

Vehicle Speed Sensor (VSS)

Removal Procedure

CAUTION: The VSS is located on the right side of the transfer case just ahead of the rear propeller shaft and very close to the exhaust pipes for 4WD and on the extension cover for 2WD. Be sure that the exhaust pipes are cool enough to touch before trying to remove the VSS. If the pipes are hot, you could be burned.

1. Disconnect the negative battery cable.
2. Disconnect the VSS electrical connector.

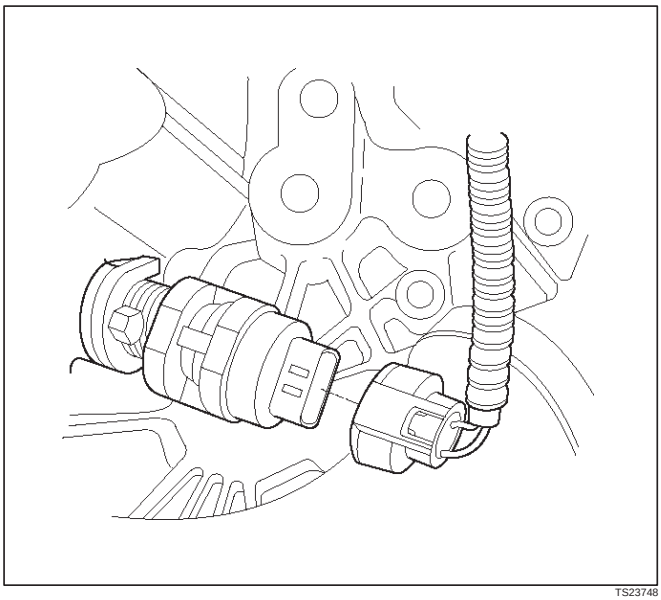

TS23748

3. Remove the bolt and the clamp securing the VSS in place.

IMPORTANT: Have a container ready to catch any fluid that leaks out when the VSS is removed from the transfer case for 4WD and on the extension cover for 2WD.

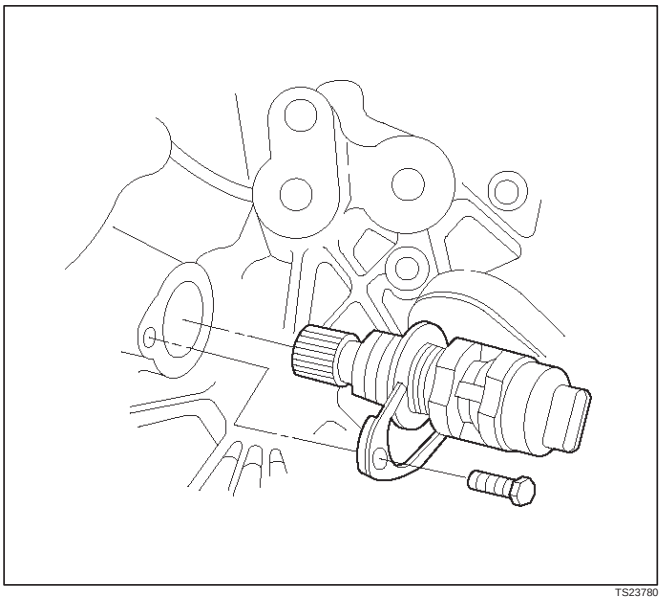

TS23780

4. Remove the VSS from the transfer case by wiggling it slightly and pulling it straight out.

Inspection Procedure

1. Inspect the electrical connector for signs of corrosion or warping. Replace the VSS if the electrical connector is corroded or warped.
2. Inspect the VSS driven gear for chips, breaks, or worn condition. Replace the VSS if the driven gear is chipped, broken or worn.
3. Inspect the O-ring for wear, nicks, tears, or looseness. Replace the O-ring if necessary.

Installation Procedure

1. Install the VSS in the transfer case with the notch for the connector facing the rear.
2. Secure the VSS in place with the clamp and the bolt.

Tighten

- **Tighten the bolt to 16 N·m (12 lb ft.).**

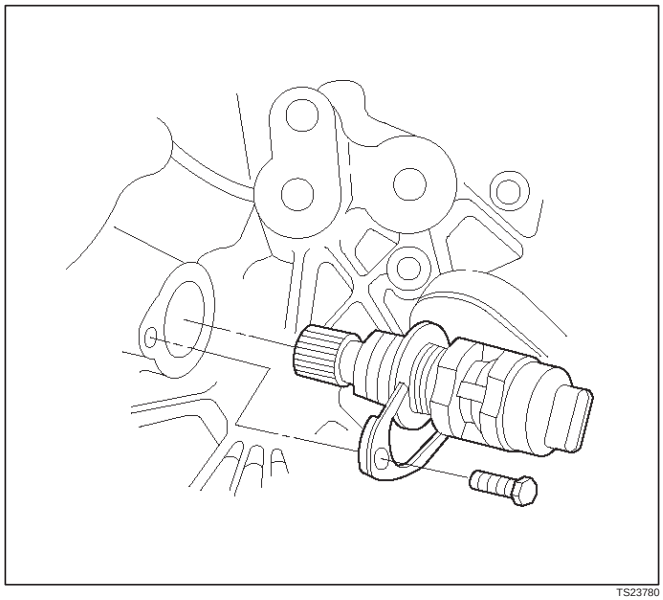

TS23780

3. Connect the VSS electrical connector.

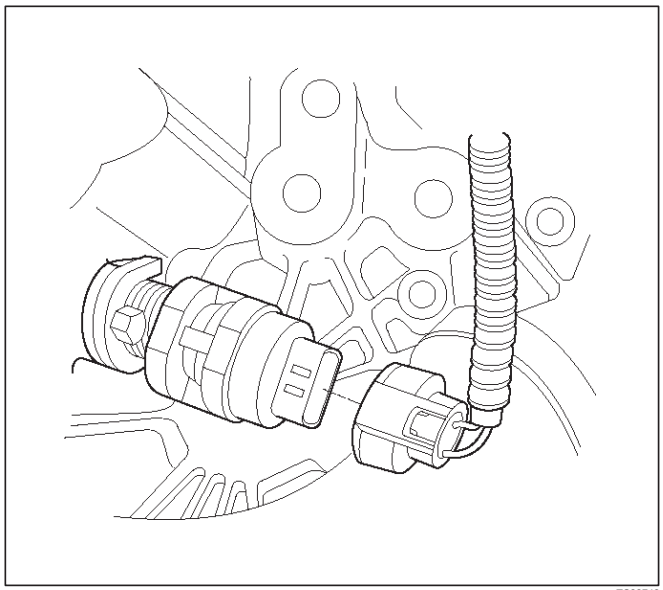

TS23748

4. Check the transfer case oil level. Add fluid if necessary.
5. Connect the negative battery cable.

Air Cleaner/Air Filter

Removal Procedure

1. Loosen the clamp between the air cleaner lid and the mass air flow sensor.

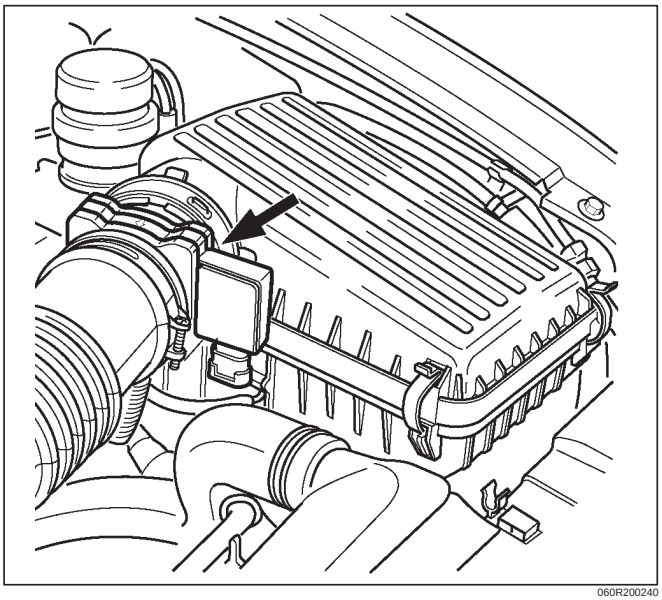

060R200240

2. Release the four latches securing the lid to the air cleaner housing.
3. Remove the air cleaner lid.
4. Remove the air filter element.
5. Remove the retaining bolts and the air cleaner housing from the vehicle.

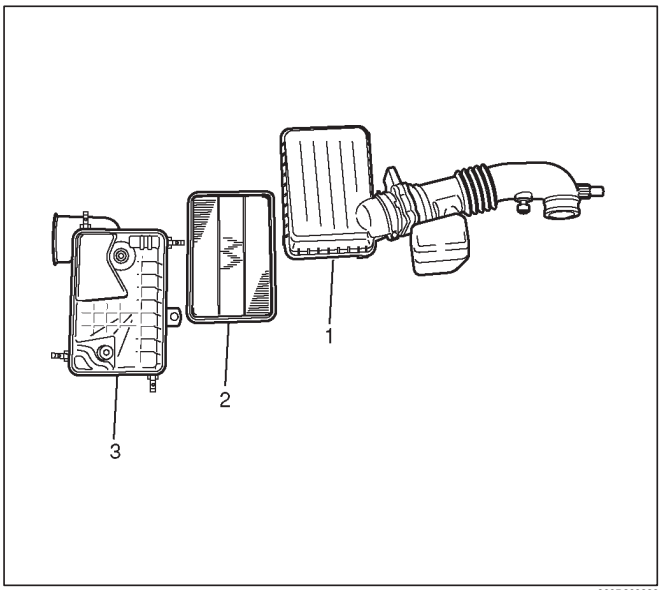

060R200220

Legend

(1) Air Cleaner Lid
(2) Air Filter Element
(3) Air Cleaner Housing

Installation Procedure

1. Install the air cleaner housing in the vehicle with the retaining bolts.
2. Install the air filter element in the air cleaner housing.
3. Install the air cleaner lid on the MAF sensor and the air cleaner housing.

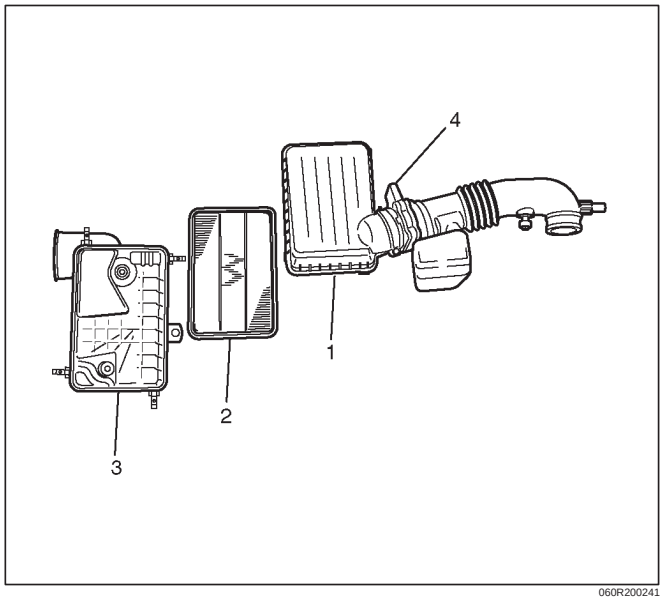

060R200241

Legend

(1) Air Cleaner Lid
(2) Air Filter Element
(3) Air Cleaner Housing
(4) Mass Air Flow Sensor

4. Tighten the clamp and secure the four latches between the lid and the air cleaner housing.

Common Chamber

Removal and Installation Procedure

Refer to Common Chamber in Engine Mechanical section.

Accelerator Pedal Replacement

Removal Procedure

1. Disconnect the negative battery cable.
2. Disconnect the electrical harness from the accelerator position sensor.

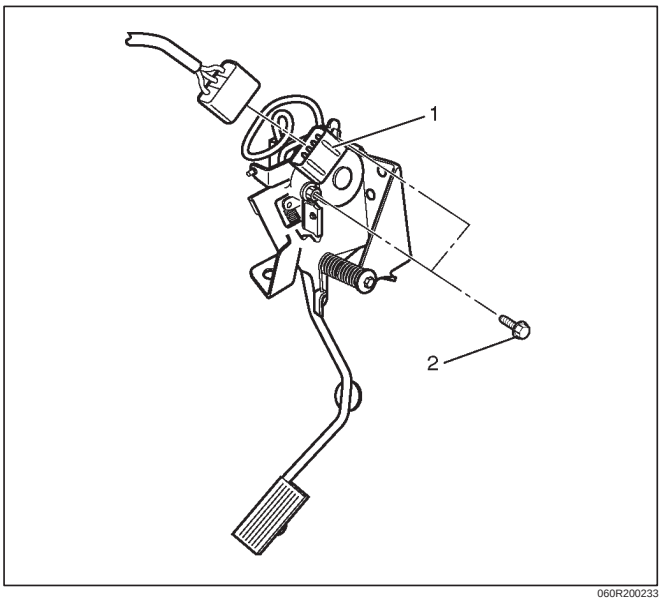

060R200233

Legend

(1) Accelerator Position Sensor
(2) Accelerator Pedal Assembly

3. Remove the two screws from the accelerator pedal assembly.

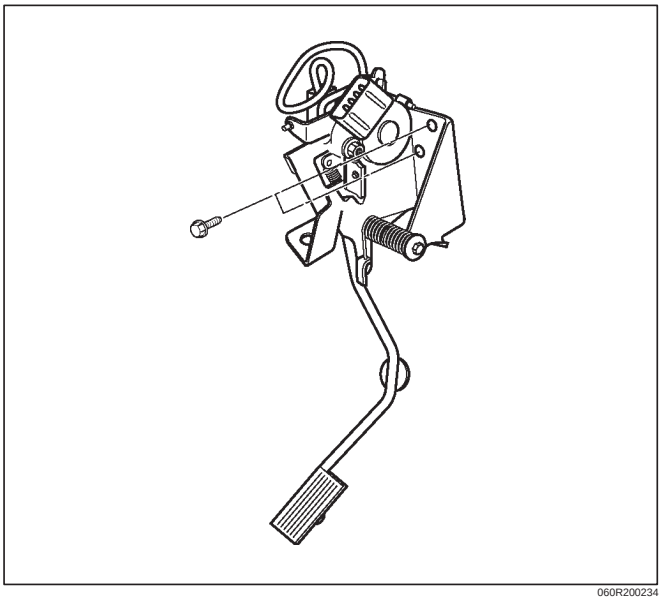

060R200234

4. Remove the accelerator pedal assembly from the bulkhead.

Installation Procedure

1. Install the accelerator pedal assembly on the bulkhead.
2. Install the two screws to the accelerator pedal assembly.

Tighten

- **Tighten the screws to 22 N·m (16 lb ft.).**

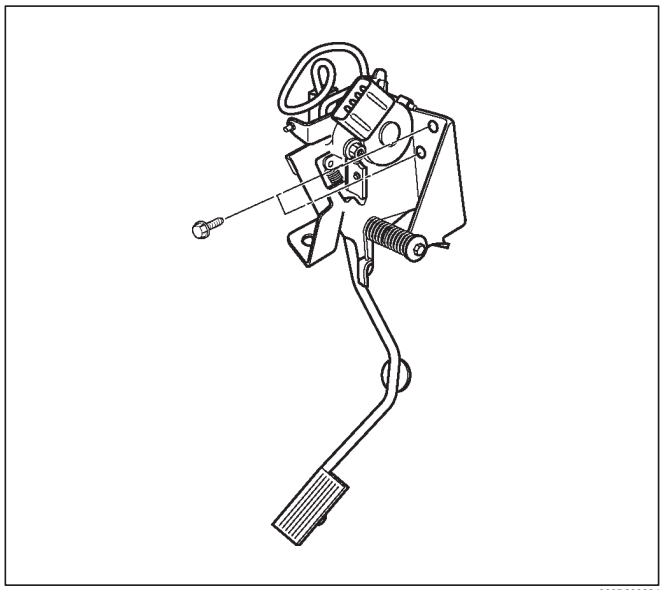

060R200234

3. Connect the electrical harness to the accelerator position sensor.

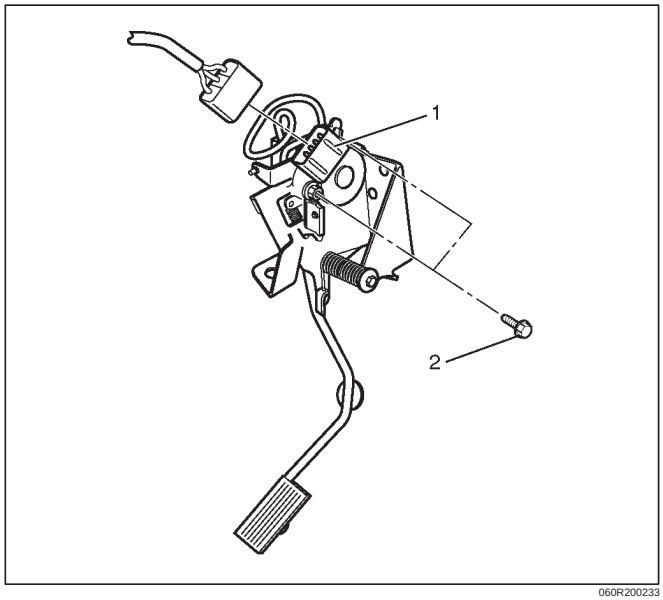

060R200233

Legend

(1) Accelerator Position Sensor
(2) Accelerator Pedal Assembly

4. Install the negative battery cable.

Accelerator Position Sensor Replacement

CAUTION: Remove the Accelerator (A) pedal assembly as a unit to have it serviced. Do not remove the Accelerator Position (AP) sensor on the A pedal. If the AP sensor is removed for emergency cause, refer to following items as necessary.

Removal Procedure

1. Disconnect the negative battery cable.
2. Disconnect the electrical harness from the AP sensor.

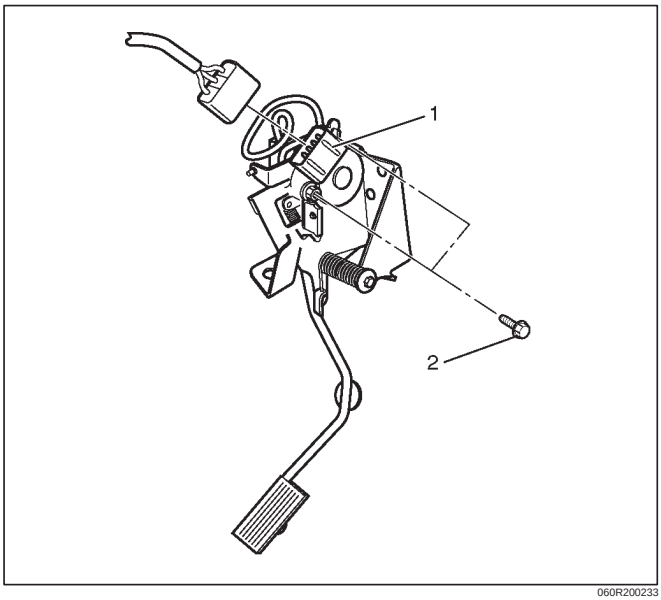

060R200233

Legend
(1) AP Sensor
(2) A Pedal Assembly

3. Remove the AP sensor.

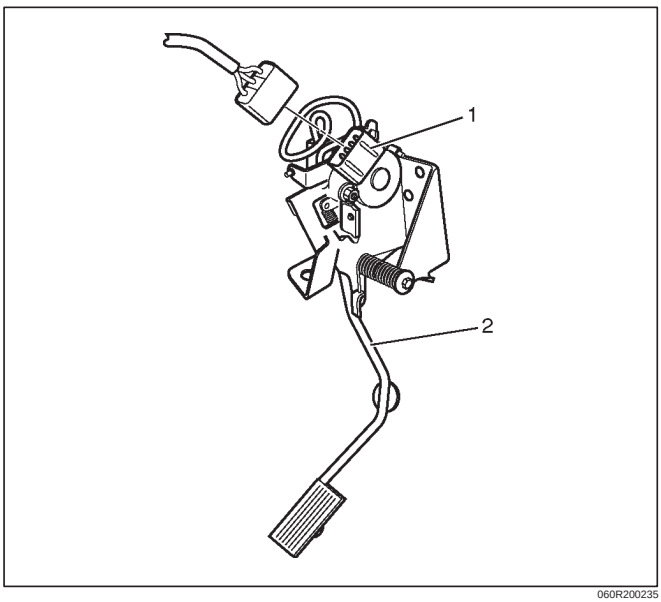

060R200235

Legend
(1) AP Sensor
(2) AP Screw

4. Remove all grease residues from the Accelerator Position Sensor mounting
5. Clean all connector pins with contact cleaner. Use LOCTITE® / Permatex Electrical Contact Cleaner, or equivalent.

NOTE: Do not use brake cleaner or carburetor spray.

Installation Procedure

1. Install the accelerator position (AP) sensor to bolts with accelerator (A) pedal.
2. Connect the connector to AP sensor.
3. Install the negative battery cable.

Accelerator Position Sensor Adjustment

AP sensor is controled three maltiple control system, and adjust the idle position and WOT position are between A and B for AP sensor 1, AP sensor 2, and AP sensor 3. Refer to *“How to adjust for AP sensor”.*

Removal Procedure

1. Disconnect the negative battery cable.
2. Disconnect the electrical harness from the AP sensor.

How To Adjust For AP Sensor

1. Connect the Tech 2 to DLC on vehicle.
2. Ignition “ON,” engine “OFF.”.
3. Display the APS date list. Check the following item for AP position (%).

	AP position (%)	
	Idle position A	WOT position B
APS1	11 – 15%	85 – 89%
APS2	85 – 89%	11 – 15%
APS3	85 – 89%	32 – 36%

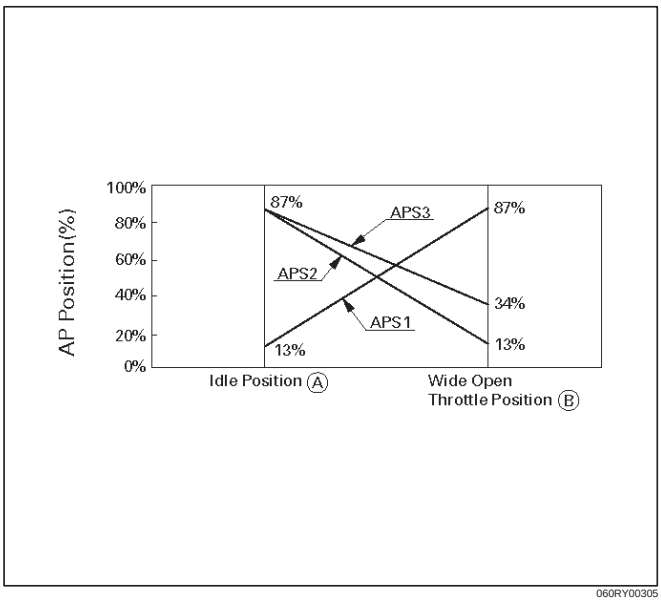

060RY00305

4. If the problem was found, adjust as necessary.

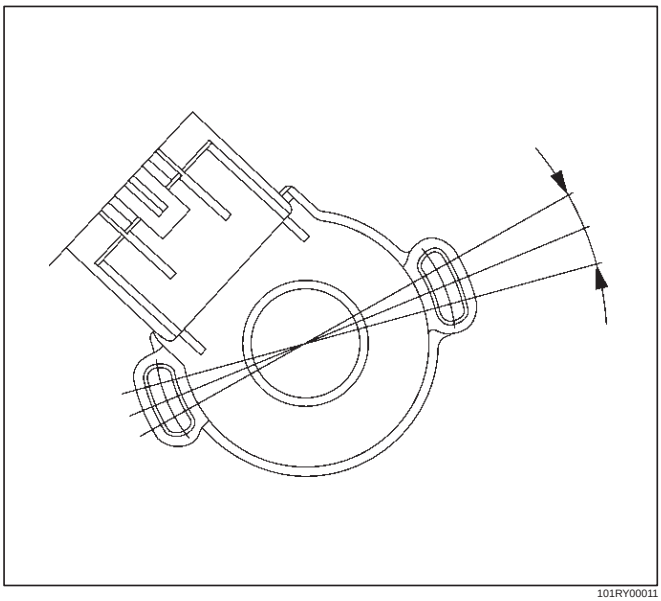

101RY00011

Fuel Filler Cap

General Description

The fuel filler cap includes a vacuum valve and a pressure valve.
If high vacuum or high pressure occurs in the fuel tank, each valve works to adjust the pressure in order to prevent damage to the tank.

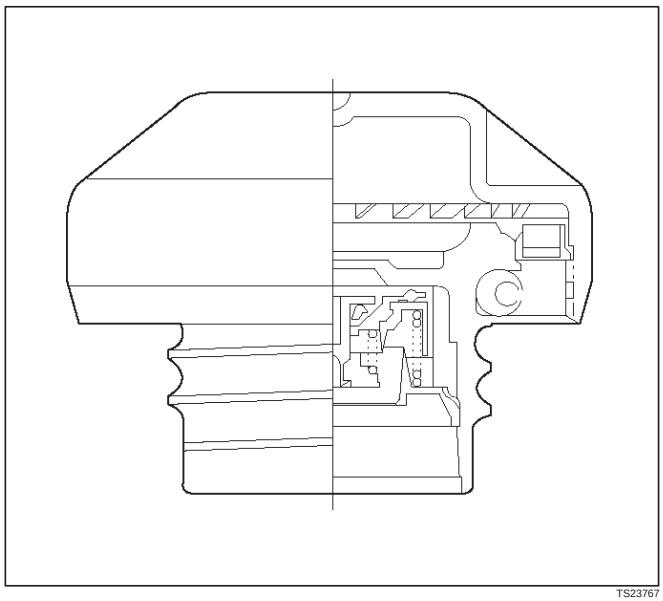

TS23767

Inspection Procedure

NOTE: Replace the fuel filler cap with the same type of filler cap that was originally installed on the vehicle.

- Check the seal ring in the filler cap for any abnormality and for seal condition.
- Replace the filler cap if any abnormality is found.

Fuel Filter

Removal Procedure

1. Disconnect the negative battery cable.
2. Remove the fuel filler cap.

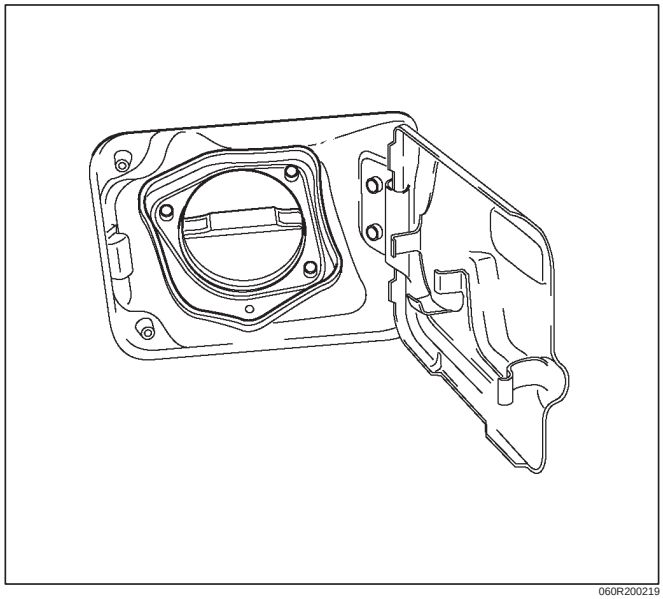

060R200219

3. Disconnect the fuel hose from the fuel filter on the engine side.
4. Disconnect the fuel hose from the fuel filter on the fuel tank side.
5. Remove the bolt on the fuel filter holder.

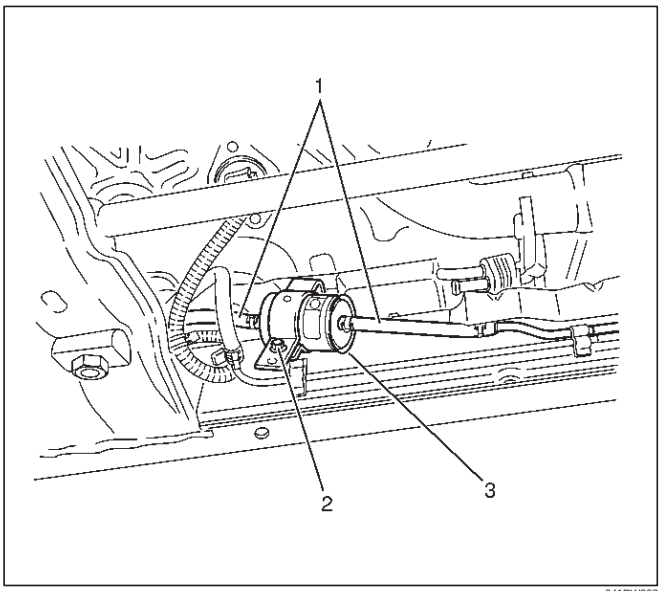

041RW003

Legend
(1) Fuel Hose
(2) Fuel Filter Fixing Bolt
(3) Fuel Filter

6. Remove the fuel filter.

Inspection Procedure

1. Replace the fuel filter when the following occur:
   - Fuel leaks from the fuel filter body.
   - The fuel filter body is damaged.
   - The fuel filter is clogged with dirt or sediment.
2. If the drain hole is clogged, clean the drain.

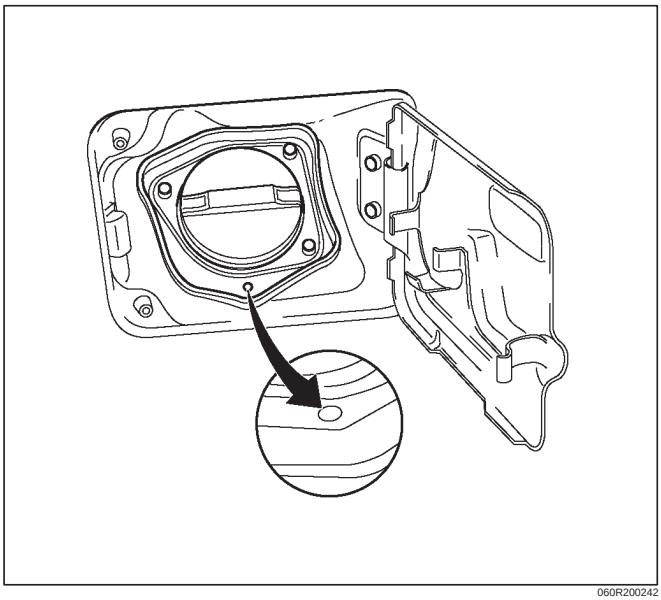

060R200242

Installation Procedure

1. Install the fuel filter in the correct direction.
2. Install the bolt on the fuel filter holder.

Tighten
- **Tighten the screws to 20 N·m (14 lb ft.).**

3. Connect the fuel hose on the engine side.
4. Connect the fuel hose on the fuel tank side.

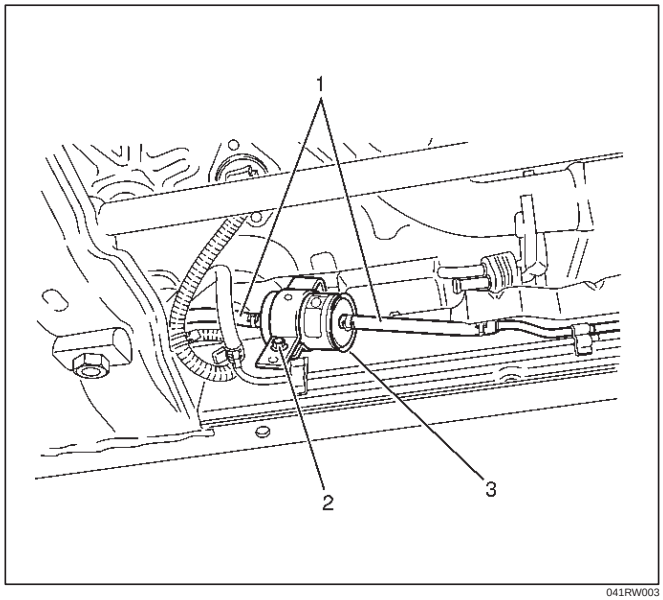

041RW003

Legend
(1) Fuel Hose
(2) Fuel Filter Fixing Bolt
(3) Fuel Filter

5. Install the fuel filler cap.

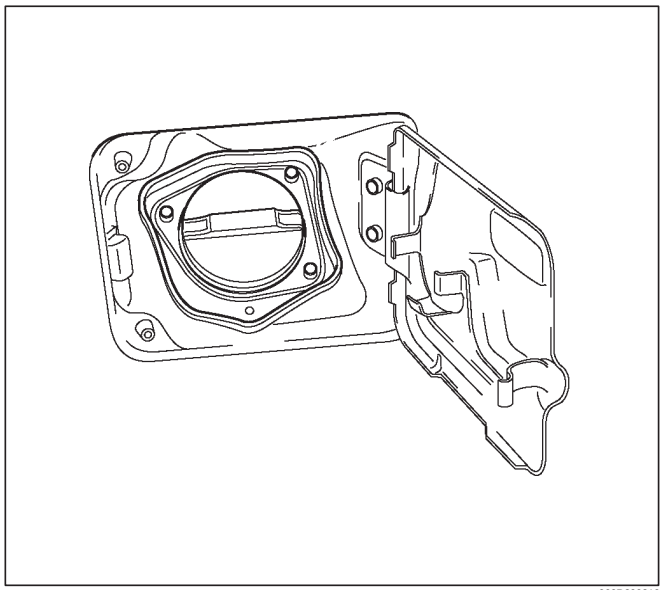

060R200219

6. Connect the negative battery cable.

Fuel Gauge Unit

Removal Procedure

Refer to *Fuel Tank* section.

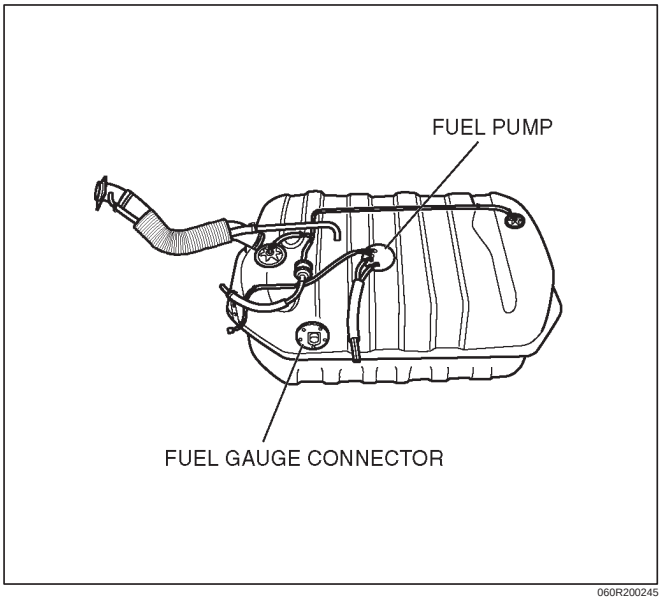

060R200245

Fuel Injectors

Removal Procedure

NOTE: If the fuel injectors are leaking, the engine oil may be contaminated with fuel. Check the oil for signs of contamination and change the oil and the filter if necessary.

NOTE: Use care in removing the fuel injectors in order to prevent damage to the fuel injector electrical connector pins or the fuel injector nozzles. The fuel injector is an electrical component and should not be immersed in any type of cleaner as this may damage the fuel injector.

IMPORTANT: Fuel injectors are serviced as a complete assembly only.

1. Disconnect the negative battery cable.
2. Remove the common chamber. Refer to *Common Chamber in Engine Mechanical* section.
3. Remove the fuel rail. Refer to *Fuel Rail* section.

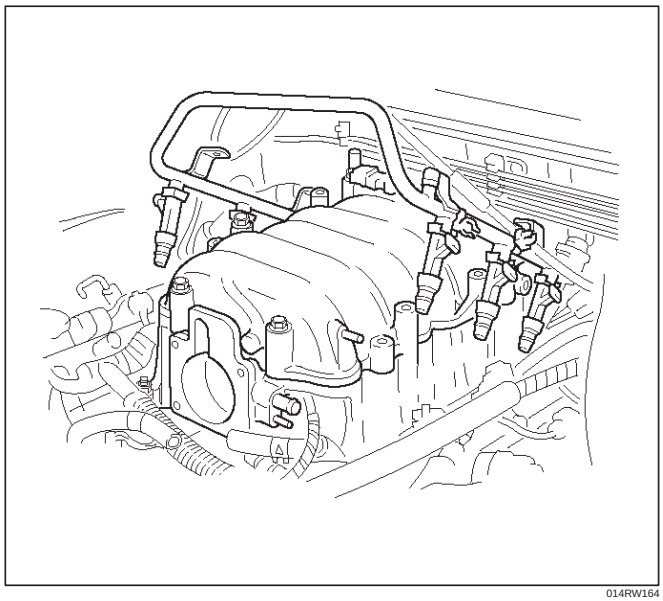

014RW164

4. Remove the injector retainer clip.

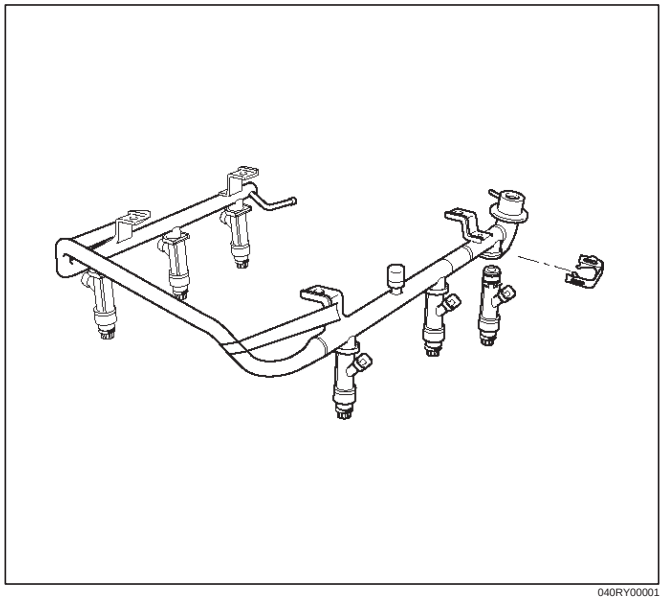

040RY00001

5. Remove the fuel injector assembly.
6. Remove the O-ring from the fuel injector.
7. Remove the O-ring backup from the fuel injector .

Inspection Procedure

1. Inspect the O-rings for cracks or leaks.
2. Replace worn or damaged O-rings.
3. Lubricate the new O-rings with engine oil before installation.

Installation Procedure

1. Install the O-ring backup on the fuel injector.
2. Install the new O-ring on the fuel injector.

3. Install the fuel injector on the fuel rail.

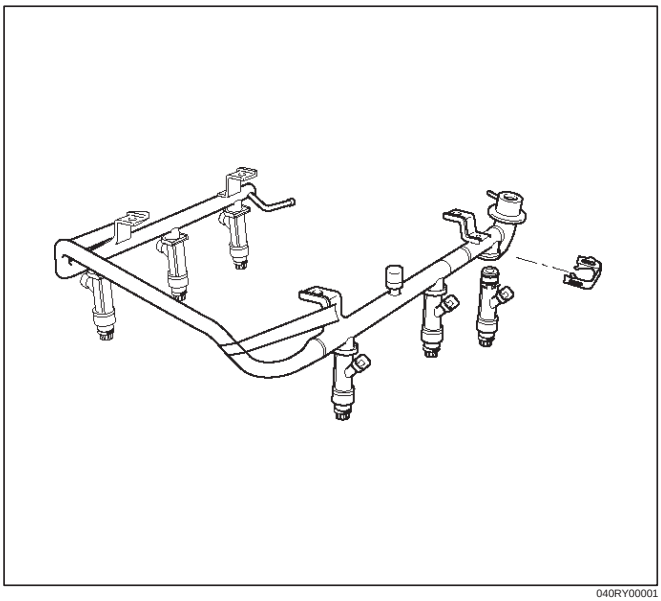

040RY00001

4. Use new fuel injector retainer clips to retain the fuel injector to the fuel rail.
5. Coat the end of the fuel injector with gasoline.
6. Install the fuel rail. Refer to *Fuel Rail* section.

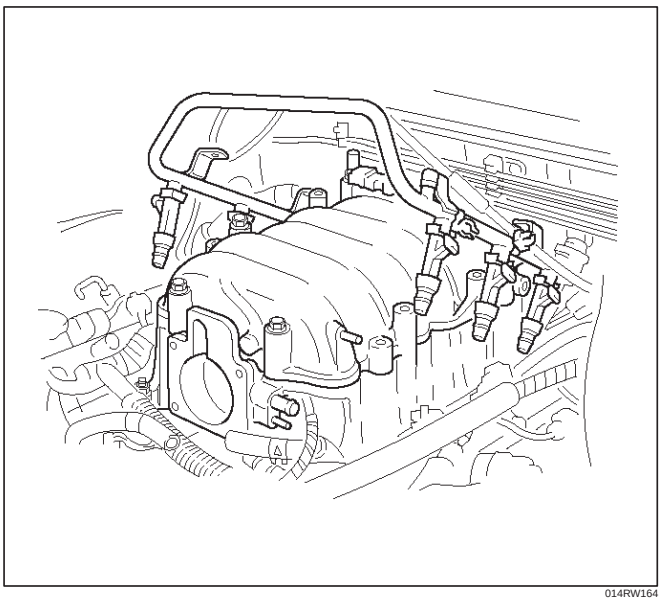

014RW164

7. Install the common chamber. Refer to *Common Chamber in Engine Mechanical* section.
8. Install the engine cover.
9. Connect the negative battery cable.

Fuel Metering System

Fuel Pressure Relief Procedure

CAUTION: To reduce the risk of fire and personal injury, there are necessary to relieve the fuel system pressure before filler and gauge unit servicing the fuel system components.

CAUTION: After relieving the system pressure, a small amount of fuel may be released when servicing fuel lines or connections. Reduce the chance of personal injury by covering the fuel line fittings with a shop towel before you disconnect the fittings. The towels will absorb any fuel that may leak out. When the disconnect is completed, place the towel in an approved container.

1. Remove the fuel cap.
2. Remove the fuel pump relay from the underhood relay box. Refer to *Fuel Pump Relay* section.

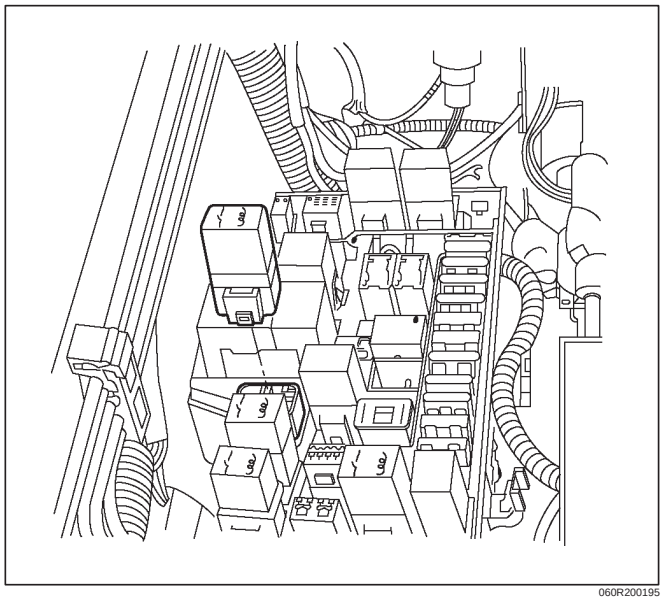

060R200195

3. Start the engine and allow it to stall.
4. Crank the engine for 30 seconds.
5. Disconnect the negative battery cable.

Fuel Pump Assembly

Removal Procedure

Refer to *Fuel Tank* section.

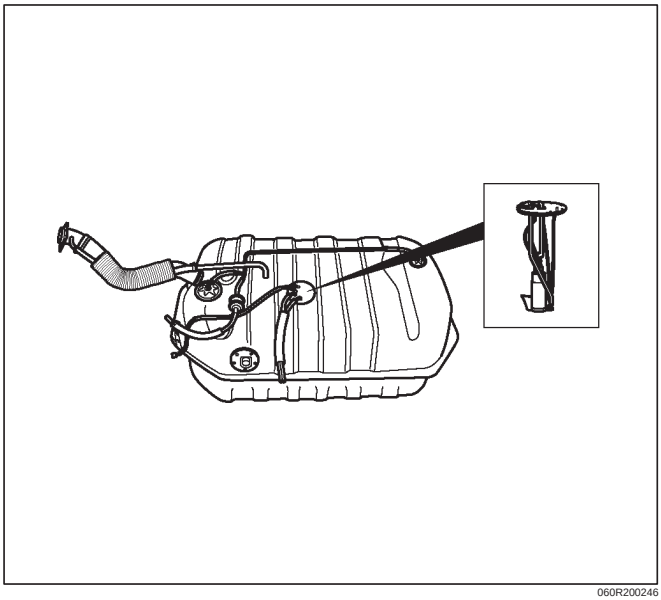

060R200246

Fuel Pump Relay

Removal Procedure

1. Remove the fuse and relay box cover from under the hood.
2. Consult the diagram on the cover to determine which is the correct relay.
3. Insert a small screwdriver into the catch slot on the forward side of the fuel pump relay.
   - The screwdriver blade will release the catch inside.

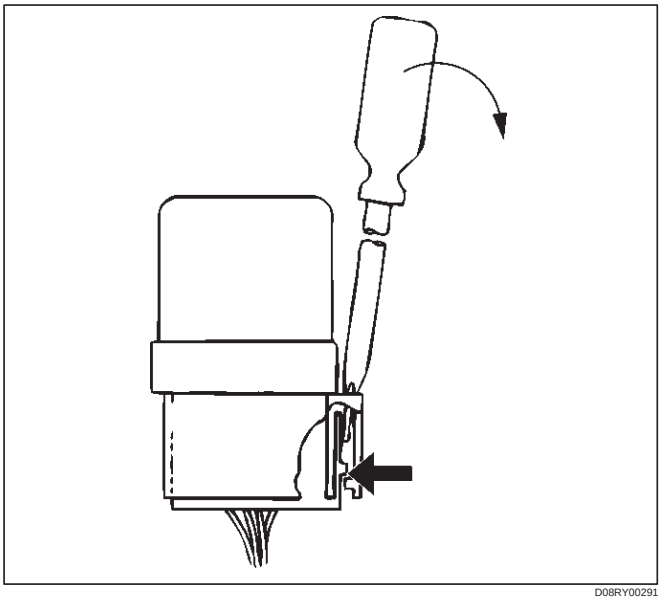

D08RY00291

4. Pull the relay straight up and out of the fuse and relay box.

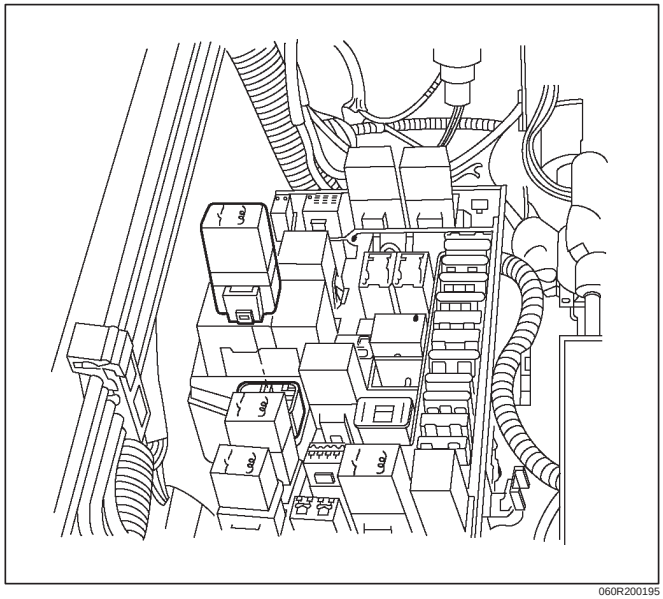

060R200195

Installation Procedure

1. Insert the relay into the correct place in the fuse and relay box with the catch slot facing forward.
2. Press down until the catch engages.
   - An audible “click” will be heard.

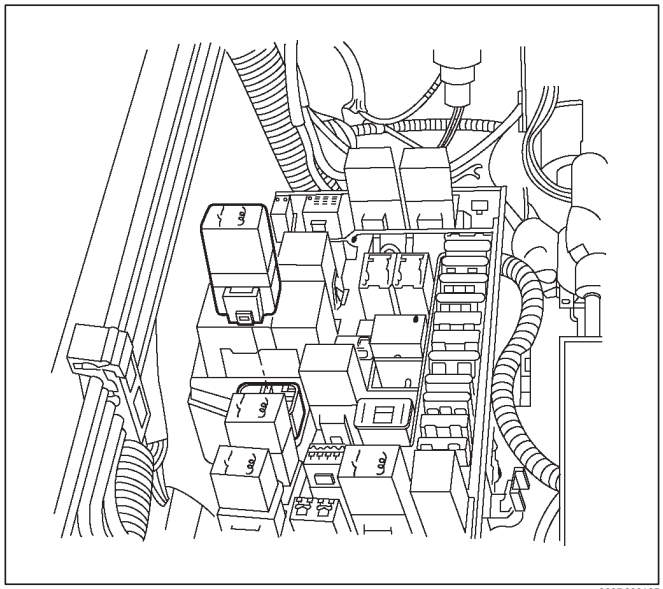

060R200195

3. Install the fuse and relay box cover.

Fuel Rail Assembly

Removal Procedure

NOTE:

- Do not attempt to remove the fuel inlet fitting on the fuel rail. It is staked in place. Removing the fuel inlet fitting will result in damage to the fuel rail or the internal O-ring seal.
- Use care when removing the fuel rail assembly in order to prevent damage to the injector electrical connector terminals and the injector spray tips.
- Fittings should be capped and holes plugged during servicing to prevent dirt and other contaminants from entering open lines and passages.

IMPORTANT: An eight-digit identification number is stamped on the side of the fuel rail. Refer to this number when you service the fuel rail or when a replacement part is required.

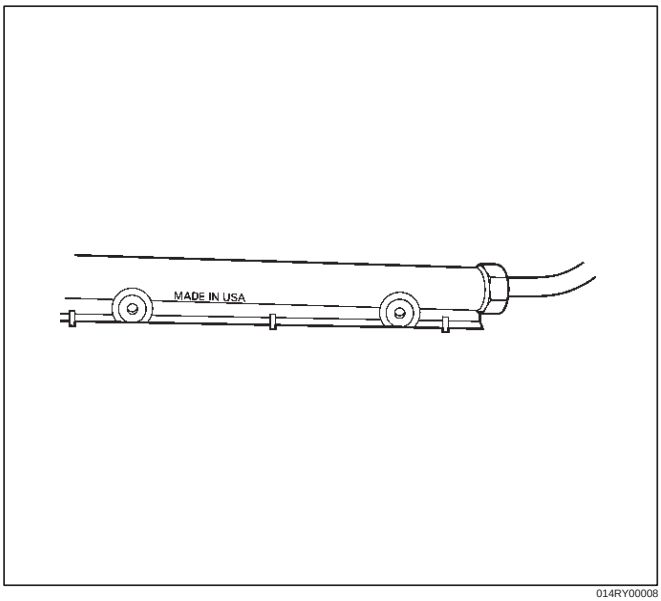

014RY00008

Before removal, the fuel rail assembly may be cleaned with a spray type engine cleaner. Follow the spray package instructions. Do not immerse the fuel rails in liquid cleaning solvent.

1. Depressurize the fuel system. Refer to Fuel Pressure Relief Procedure in this Section.
2. Disconnect the negative battery cable.
3. Remove the engine cover.
4. Disconnect the throttle position sensor electrical connector from throttle body.
5. Disconnect the connectors from manifold absolute pressure sensor, solenoid valve, electric vacuum sensing valve.
6. Disconnect the vacuum hose on canister VSV and positive crankcase ventilation hose.
7. Remove the common chamber. Refer to the common chamber in Engine Mechanical section.
   1. Lift up carefully on the fuel injectors. Do not separate the fuel injectors from the fuel rail.
   2. If an injector becomes separated from the fuel rail, the infector O-ring seals and the retainer clip must be replaced.
   3. Drain residual fuel into an approved container.

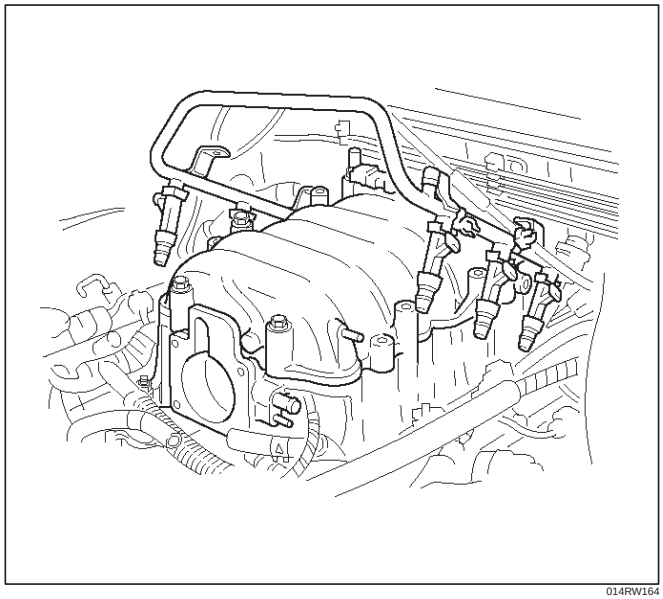

014RW164

8. If removal of the fuel pressure regulator is necessary, refer to *Fuel Pressure Regulator* section.
9. If removal of the fuel injectors is necessary, refer to *Fuel Injectors* section.

Installation Procedure

1. If the fuel injectors were removed, install them. Refer to *Fuel Injectors* section.
2. If the fuel pressure regulator was removed, install it. Refer to *Fuel Pressure Regulator* section.
3. Install the common chamber. Refer to common chamber in engine Mechanical section.

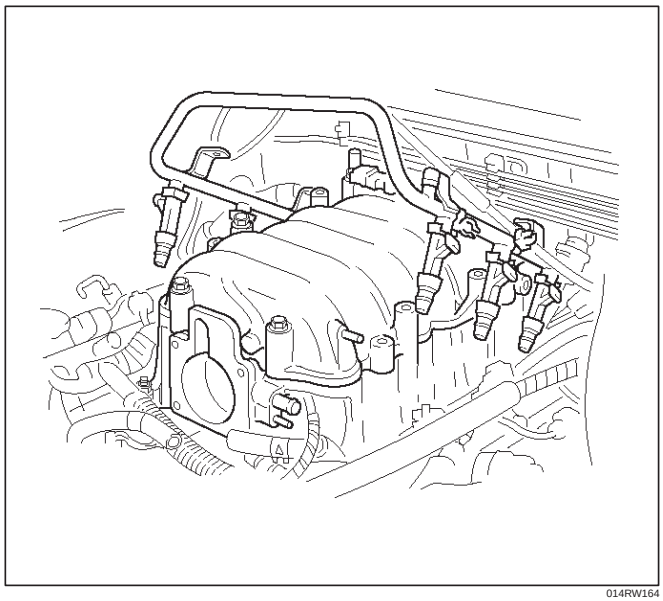

014RW164

4. Connect the vacuum hose on Canister VSV and positive crankcase ventilation hose.

5. Connect the connectors to manifold absolute pressure sensor, solenoid valve, electric vacuum sensing valve.
6. Connect the throttle position sensor electrical connector to throttle body.
7. Install the engine cover.
8. Connect the negative battery cable.
9. Crank the engine until it starts. Cranking the engine may take longer than usual due to trapped air in the fuel rail and in the injectors.

Fuel Tank

Removal Procedure

Refer to *Fuel Tank* section.

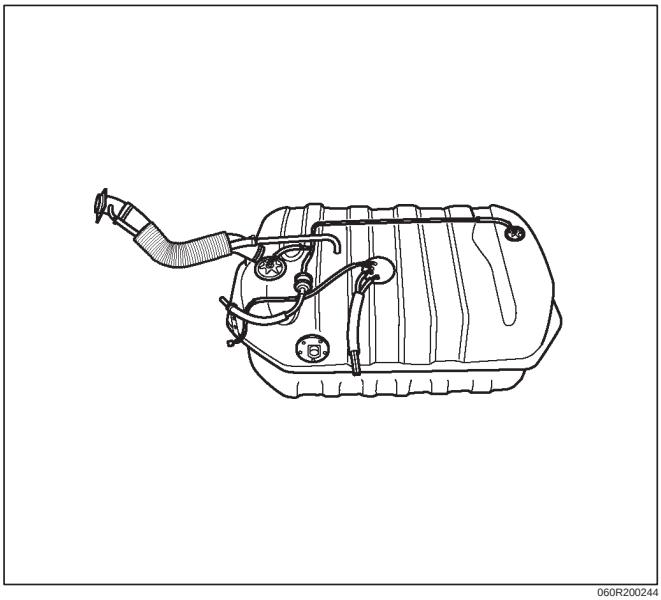

060R200244

Throttle Body (TB)

Removal Procedure

1. Disconnect the negative battery cable.
2. Drain the cooling system. Refer to *Cooling System* section.
3. Disconnect the electrical connectors:
   - Throttle position (TP) sensor.
   - Intake air temperature (IAT) sensor. Refer to *Intake Air Temperature Sensor* section.

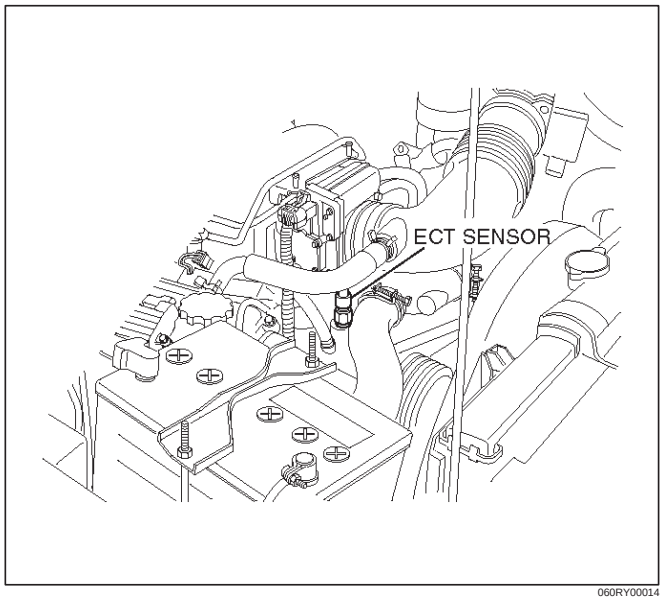

060RY00014

4. Disconnect the vacuum hose below the air horn.
5. Remove the intake air duct clamp.
6. Disconnect the intake air duct.
7. Disconnect the coolant lines from the throttle body.
8. Remove the bolts from the common chamber.
9. Remove the throttle body from the common chamber.
10. Remove the gasket from the common chamber.

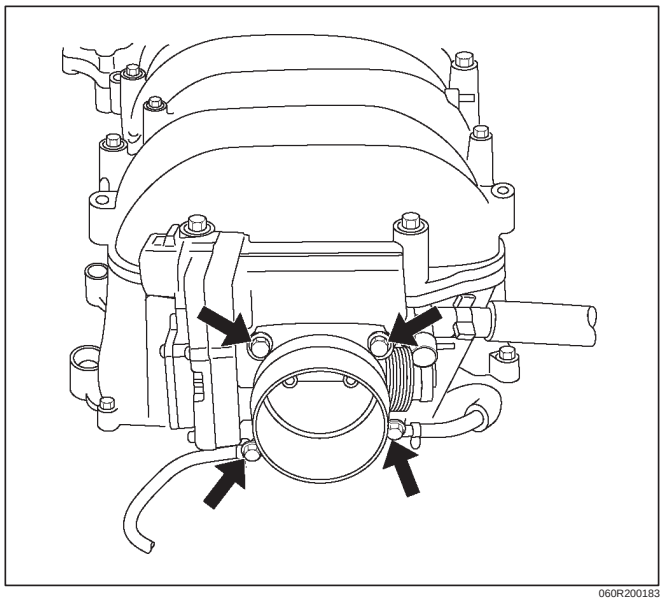

060R200183

11. Remove the TP sensor. Refer to *Throttle Position (TP) Sensor* section.

Inspection Procedure

NOTE: Do not use solvent of any type when you clean the gasket surfaces on the intake manifold and the throttle body assembly. The gasket surfaces and the throttle body assembly may be damaged as a result.

- If the throttle body gasket needs to be replaced, remove any gasket material that may be stuck to the mating surfaces of the manifold.
- Do not leave any scratches in the aluminum casting.

Installation Procedure

1. Install the TP sensor. Refer to *Throttle Position (TP) Sensor* section.
2. Install the gasket on the common chamber.
3. Install the throttle body on the common chamber.
4. Secure the gasket and the throttle body with the four bolts.
   - The vacuum lines must be properly routed under the throttle body before tightening the mounting bolts.

Tighten

- **Tighten the throttle body mounting bolts to 10 N·m (87 lb in).**

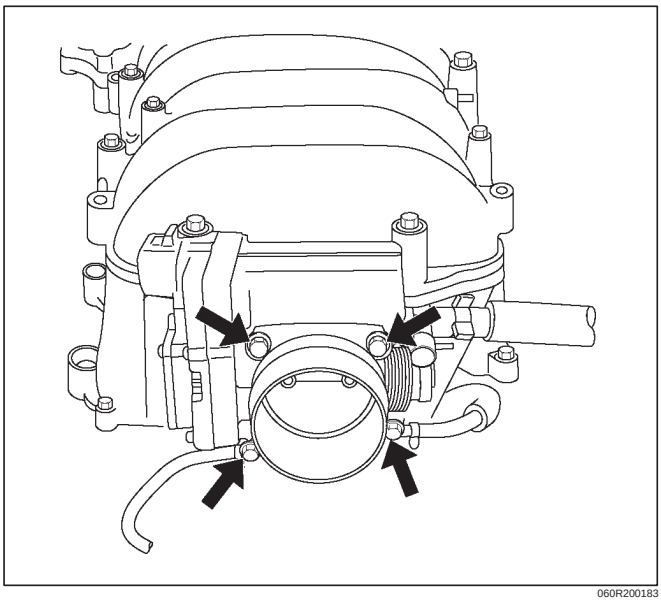

060R200183

5. Install the coolant lines.
6. Connect all the vacuum lines.
7. Install the intake air duct.
8. Tighten the intake air duct clamp.
9. Connect all the electrical connectors:
   - Throttle position (TP) sensor.
   - Intake air temperature (IAT) sensor. Refer to *Intake Air Temperature Sensor* section.

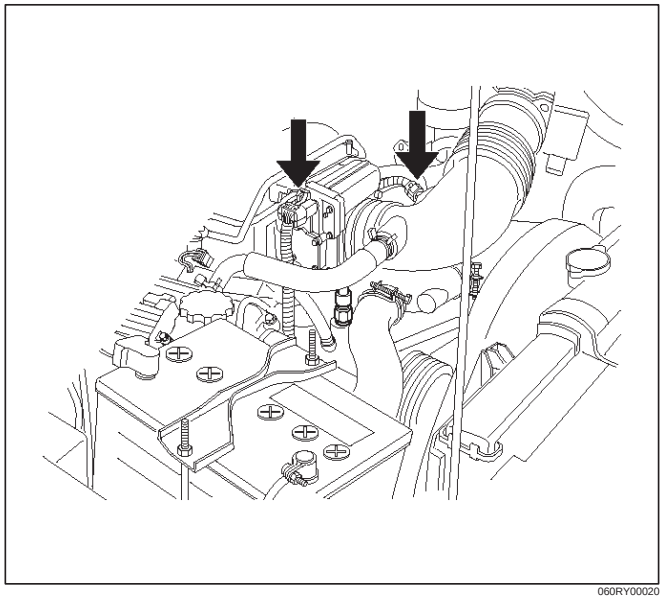

060RY00020

10. Install the accelerator cable assembly. Refer to *Accelerator Cable in Engine Speed Control System* section.
11. Fill the cooling system. Refer to *Cooling System* section.
12. Install the negative battery cable.

Electronic Ignition System

Removal Procedure

1. Disconnect the negative battery cable.
2. Disconnect the ignition coil connector at the ignition coil assemblies.
3. Remove the two screws that secure the ignition coil assemblies to the rocker cover.

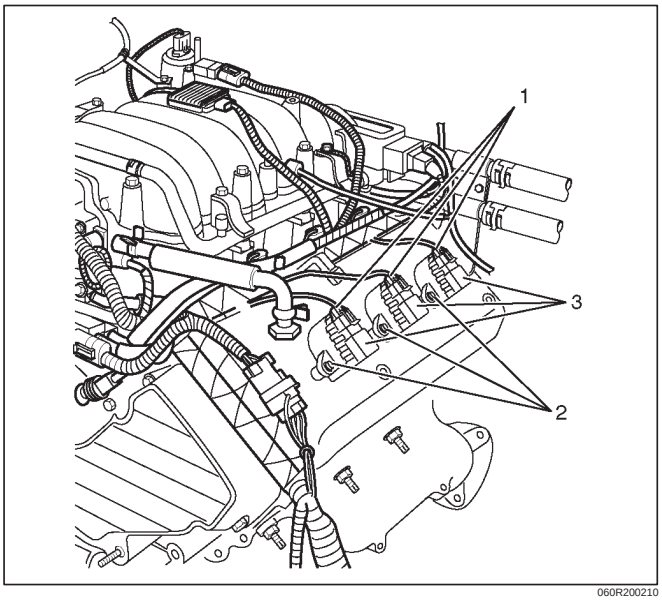

060R200210

Legend

(1) Ignition Coil Connectors
(2) Bolts
(3) Ignition Coil Assemblies

4. Remove the ignition coil assemblies and the spark plug boot from the spark plug.
   - Twist the ignition coil assemblies while pulling it straight up.
5. Use the appropriate spark plug socket in order to remove the spark plug from the engine.

Installation Procedure

NOTE: The plug must thread smoothly into the cylinder head and be fully seated. Use a thread chaser if necessary to clean the threads in the cylinder head. Cross-threading or failure to fully seat the spark plug can cause plug overheating, exhaust blow-by gases, or thread damage. Do not overtighten the spark plugs. Over tightening can cause aluminum threads to strip.

1. Install the spark plug in the engine. Use the appropriate spark plug socket.

   Tighten

   - **Tighten the spark plug to 18 N·m (13 lb ft.).**
2. Install the ignition coil assemblies and spark plug boot over the spark plug.

CAUTION: Ignition coil assembly #6 is different from ignition coil assembly #1 to #5. Ignition coil assemblies #6 is short type. Be careful it when installing ignition coil assembly of #6.

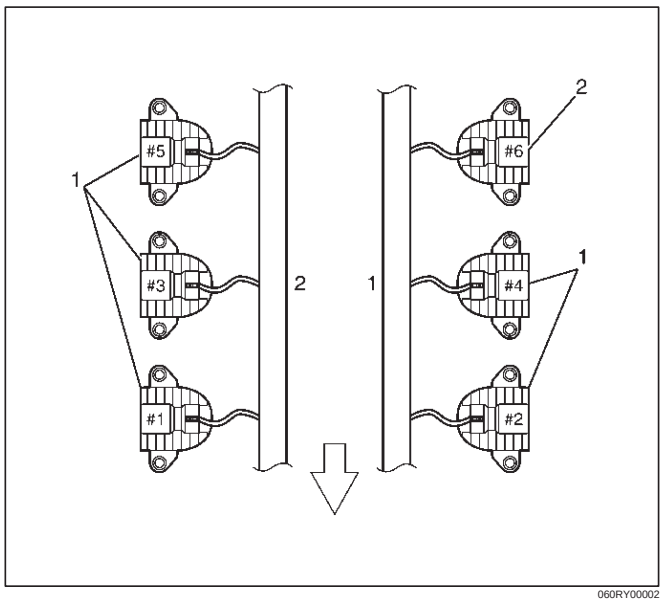

060RY00002

Legend

(1) Long Type Ignition Coil Assemblies (#1 ~ #5)
(2) Short Type Ignition Coil Assembly (#6)

3. Install ignition coil assemblies and tighten the fixing bolts to the specified torque.

   Torque: 4 N·m (35.4 lb in)

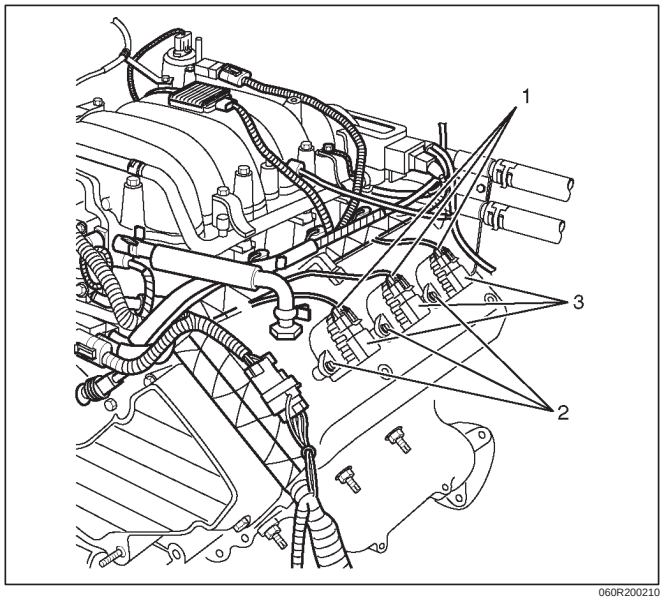

060R200210

Legend

(1) Ignition Coil Connectors
(2) Bolts
(3) Ignition Coil Assemblies

4. Connect the ignition coil connector at the ignition coil assemblies.
5. Connect the negative battery cable.

Catalytic Converter

Removal and Installation Procedure

Refer to *Engine Exhaust in Engine* section.

Air Conditioning Thermo Relay

Removal Procedure

1. Remove the fuse and relay box cover from under the hood.
2. Consult the diagram on the cover to determine which is the correct relay.
3. Insert a small screwdriver into the catch slot on the forward side of the fuel pump relay.
   - The screwdriver blade will release the catch inside.

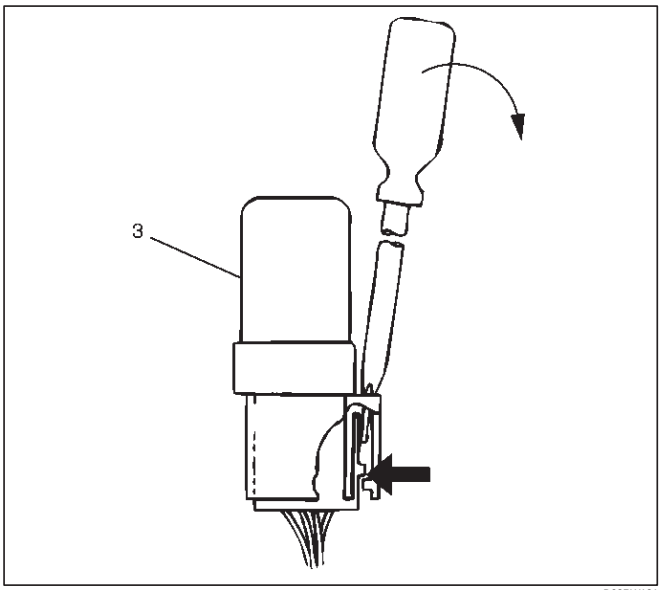

D08RW131

4. Pull the relay straight up and out of the fuse and relay box.

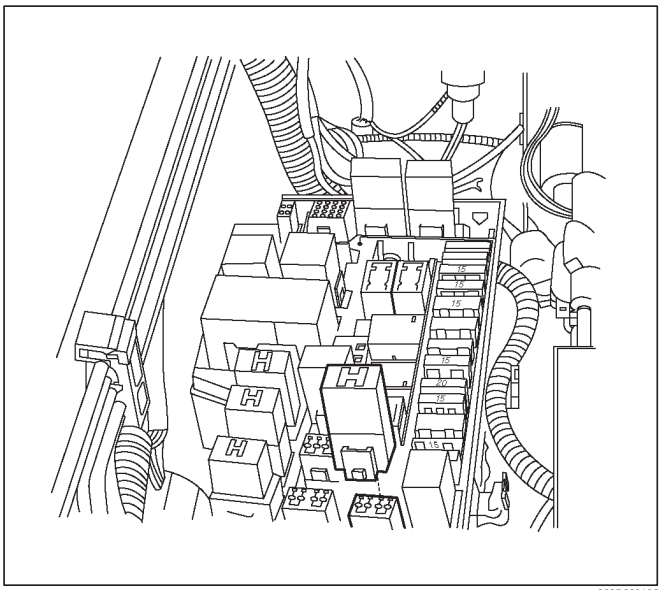

060R200196

Installation Procedure

1. Insert the relay into the correct place in the fuse and relay box with the catch slot facing forward.
2. Press down until the catch engages.
   - An audible “click” will be heard.
3. Install the fuse and relay box cover.

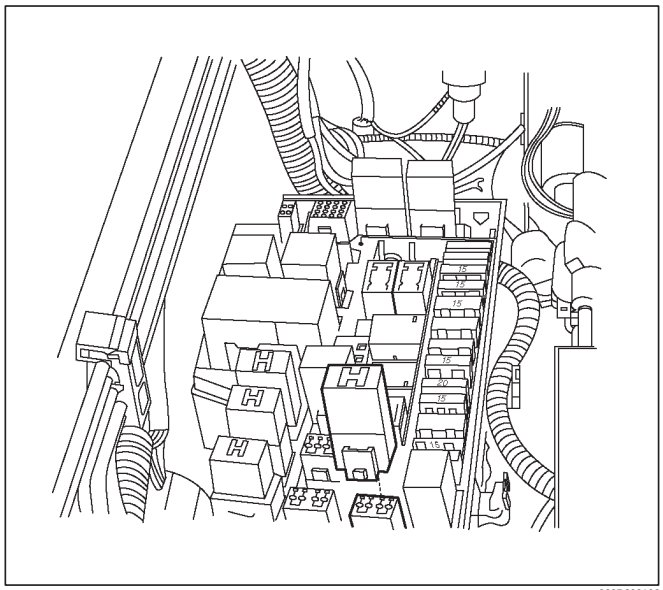

060R200196

EVAP Canister Hoses

Service Information

To view the routing of the EVAP canister hoses, refer to *Vehicle Emission Control Information* in *Diagnosis*. Use 6148M or equivalent when you replace the EVAP canister hoses.

EVAP Canister

Removal Procedure

1. Disconnect the negative battery cable.
2. Disconnect the three hoses from the EVAP canister.

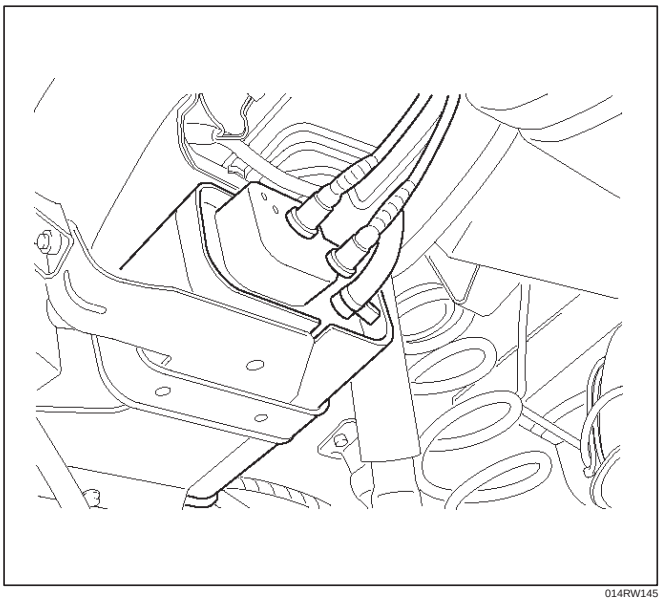

014RW145

3. Disconnect the fuel vapor connector and the purge hose from the EVAP canister vent solenoid.

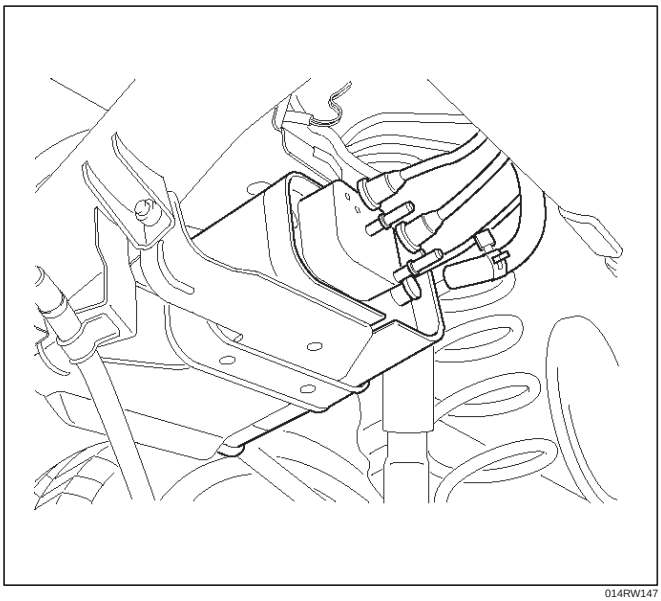

014RW147

4. Remove the retaining two bolts on the mounting bracket and slide the canister out of mounting bracket.

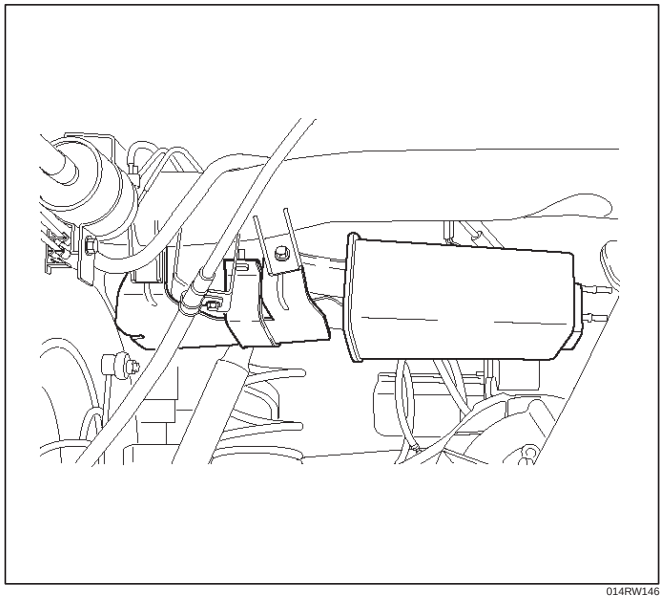

014RW146

Inspection Procedure

1. Inspect the hoses for cracks and leaks.
2. Inspect the canister for a damaged case.

Installation Procedure

1. Slide the canister into mounting bracket and install the mounting bracket two bolts.

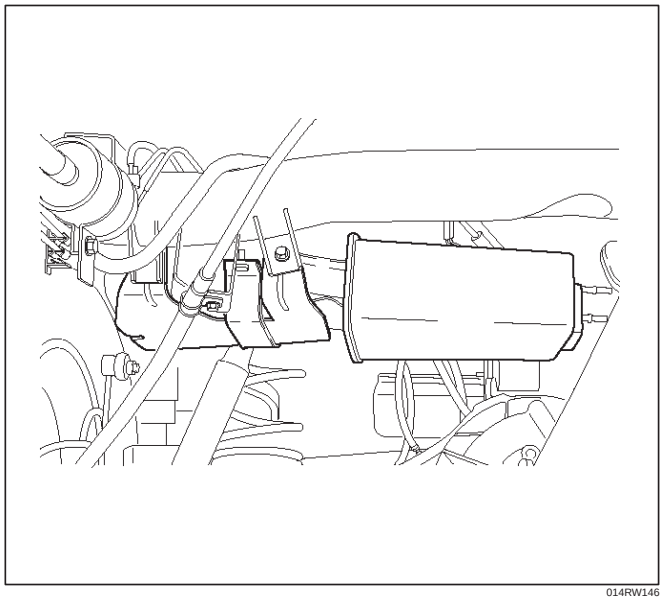

014RW146

2. Connect the fuel vapor connector to the EVAP canister vent solenoid.
3. Connect the three hoses to the EVAP canister.

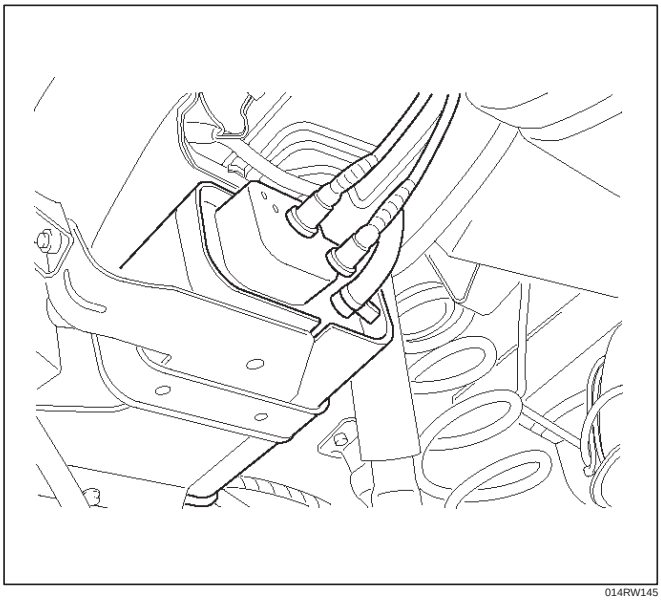

014RW145

4. Disconnect the negative battery cable.

EVAP Canister Purge Solenoid (Purge Duty Solenoid Valve)

Removal Procedure

1. Disconnect the negative battery cable.
2. Disconnect the electrical connector from the EVAP canister purge solenoid.
3. Disconnect the vacuum hoses from the EVAP canister purge solenoid.

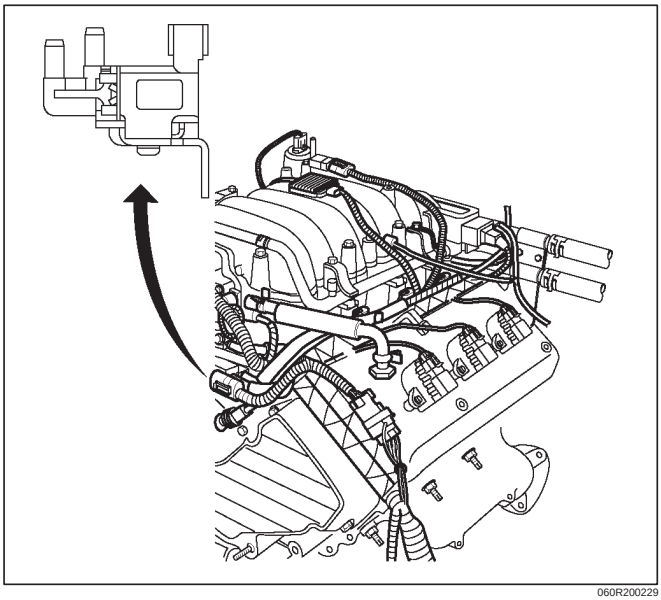

060R200229

4. Remove the EVAP canister purge solenoid retaining bolt from the common chamber.
5. Remove the EVAP canister purge solenoid.

Installation Procedure

1. Install the EVAP canister purge solenoid on the upper intake manifold.
2. Install the EVAP canister purge solenoid retaining bolt.

Tighten

- **Tighten the bolts to 20 N·m (16 lb ft.).**

3. Connect the vacuum hoses to the EVAP canister purge solenoid.
4. Connect the electrical connector to the EVAP canister purge solenoid.

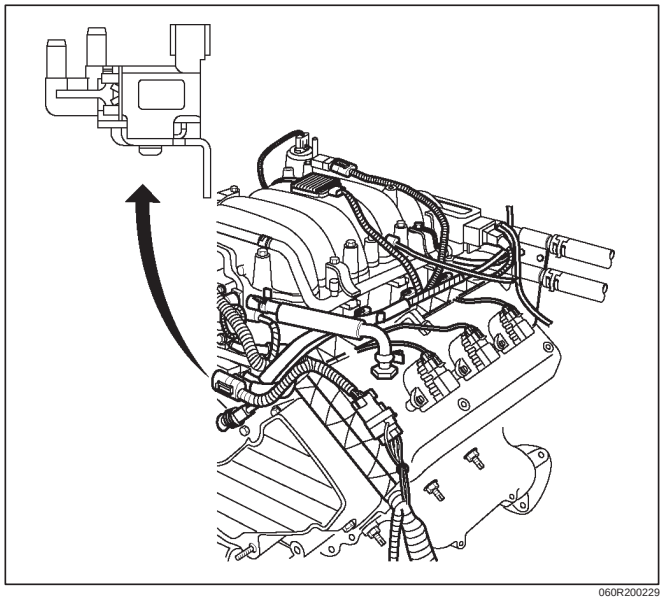

060R200229

Fuel Tank Vent Valve (Vent Solenoid Valve)

Removal and Installation Procedure

Refer to *Fuel Pump* section.

Linear Exhaust Gas Recirculation (EGR) Valve

Removal Procedure

1. Disconnect the negative battery cable.
2. Disconnect the electrical connector at the EGR valve.

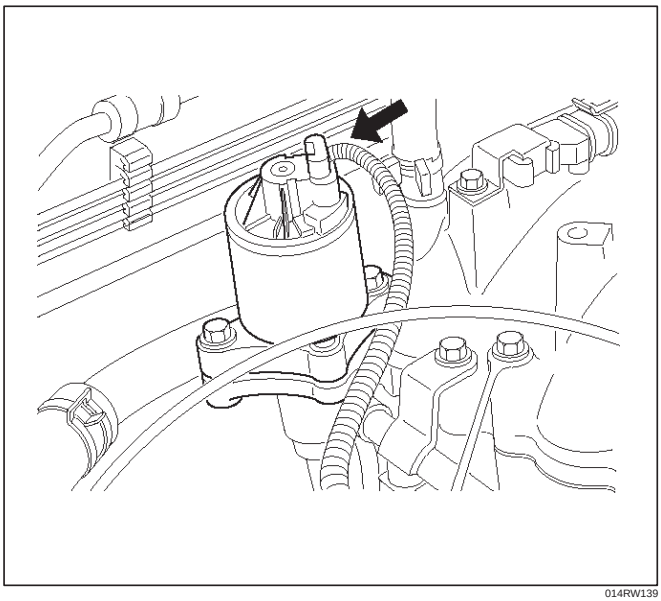

014RW139

3. Remove the bolts from the common chamber.

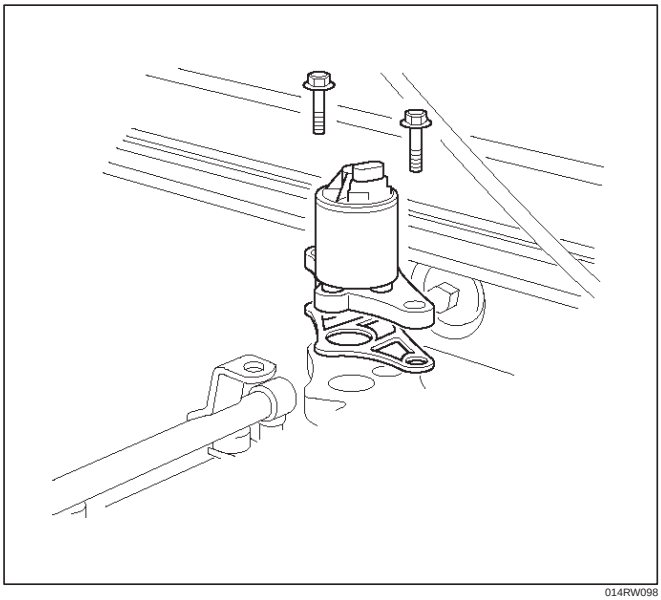

014RW098

4. Remove the EGR valve from the common chamber manifold.
5. Remove the gasket from the common chamber manifold.

Installation Procedure

1. Install the gasket on the common chamber.
2. Install the EGR valve on the common chamber.
3. Secure the EGR valve and the gasket with the bolts.

   Torque: 25 N·m (18 lb ft)

NOTE: It is possible to install the EGR valve rotated 180° from the correct position. Make sure that the base of the valve is placed so that it aligns with the mounting flange.

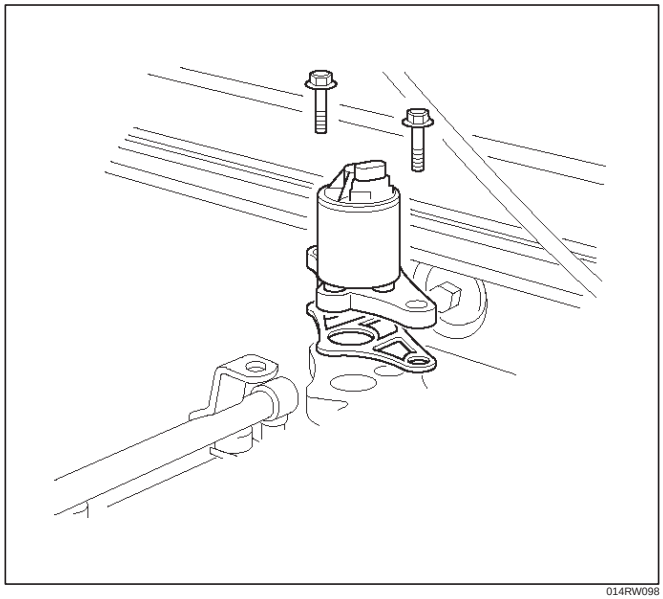

014RW098

4. Connect the electrical connector at the EGR valve.

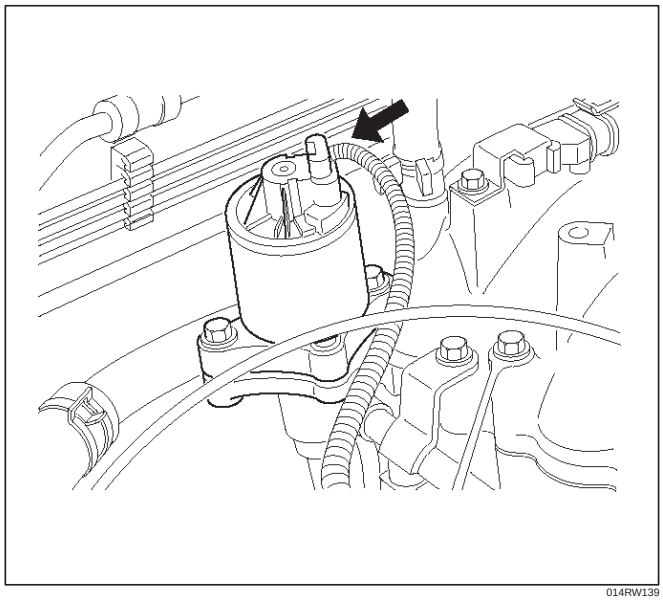

014RW139

5. Connect the negative battery cable.

Positive Crankcase Ventilation (PCV) Valve

Removal Procedure

1. Remove the vacuum hose at the PCV valve.
   - Slide the clamp back to release the hose.
2. Pull the PCV valve from the rubber grommet in the right valve cover.

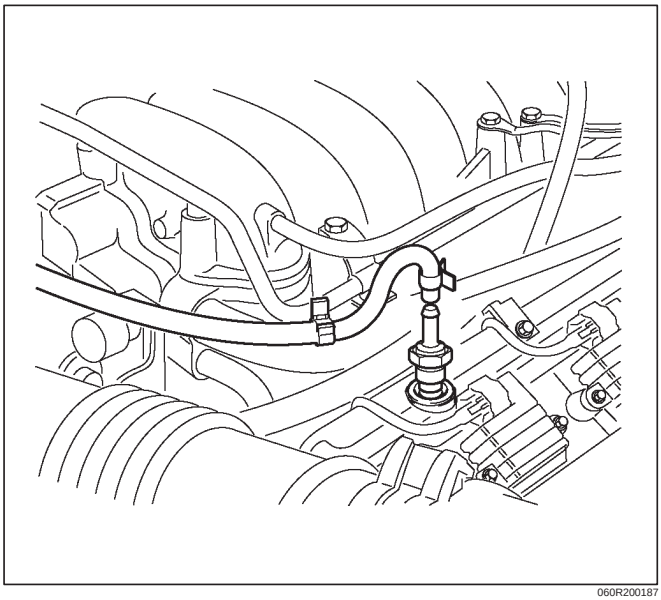

060R200187

Inspection Procedure

Before inspecting the PCV valve, make sure that the hoses are connected properly and are in good condition. Also check that the oil pan and rocker cover gaskets are sealing properly.

PCV Valve

1. Run the engine at normal operating temperature.
2. Disconnect the valve from the rocker cover.
   RESULT: A hissing noise should be heard from the valve. If no noise is heard, the PCV valve or hose is plugged.
3. Remove the PCV valve from the engine.
   a. Blow air into the rocker cover side of the valve.
   RESULT: Air should pass freely.
   b. Blow air into the air cleaner side of the valve.
   RESULT: Air should not pass through the valve.
4. Re-install the PCV valve and remove the oil filler cap.
   RESULT: A small vacuum should be felt at the oil filler hole.

Installation Procedure

1. Push the PCV valve into the rubber grommet in the left valve cover.
2. Install the vacuum hose on the PCV valve and secure the vacuum hose with the clamp.

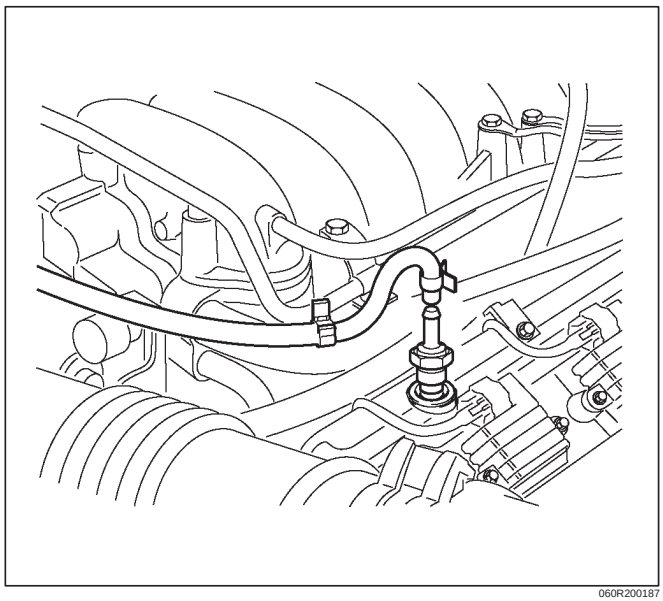

060R200187

Wiring and Connectors

Wiring Harness Service

The control module harness electrically connects the control module to the various solenoids, switches and sensors in the vehicle engine compartment and passenger compartment.
Replace wire harnesses with the proper part number replacement.
Because of the low amperage and voltage levels utilized in powertrain control systems, it is essential that all wiring in environmentally exposed areas be repaired with crimp and seal splice sleeves.
The following wire harness repair information is intended as a general guideline only. Refer to *Chassis Electrical* section for all wire harness repair procedures.

Connectors and Terminals

Use care when probing a connector and when replacing terminals. It is possible to short between opposite terminals. Damage to components could result. Always use jumper wires between connectors for circuit checking. NEVER probe through Weather-Pack seals. Use an appropriate connector test adapter kit which contains an assortment of flexible connectors used to probe terminals during diagnosis. Use an appropriate fuse remover and test tool for removing a fuse and to adapt the fuse holder to a meter for diagnosis.
Open circuits are often difficult to locate by sight because oxidation or terminal misalignment are hidden by the connectors. Merely wiggling a connector on a sensor, or in the wiring harness, may temporarily correct the open circuit. Intermittent problems may also be caused by oxidized or loose connections.
Be certain of the type of connector/terminal before making any connector or terminal repair. Weather-Pack and Com-Pack III terminals look similar, but are serviced differently.

PCM Connectors and Terminals

Removal Procedure

1. Remove the connector terminal retainer.
2. Push the wire connected to the affected terminal through the connector face so that the terminal is exposed.
3. Service the terminal as necessary.

Installation Procedure

1. Bend the tab on the connector to allow the terminal to be pulled into position within the connector.
2. Pull carefully on the wire to install the connector terminal retainer.

Wire Harness Repair: Twisted Shielded Cable

Removal Procedure

1. Remove the outer jacket.
2. Unwrap the aluminum/mylar tape. Do not remove the mylar.

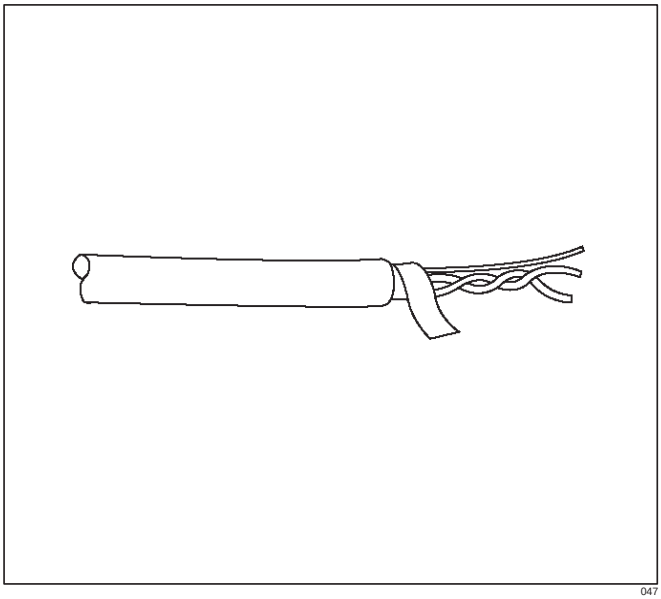

047

3. Untwist the conductors.
4. Strip the insulation as necessary.

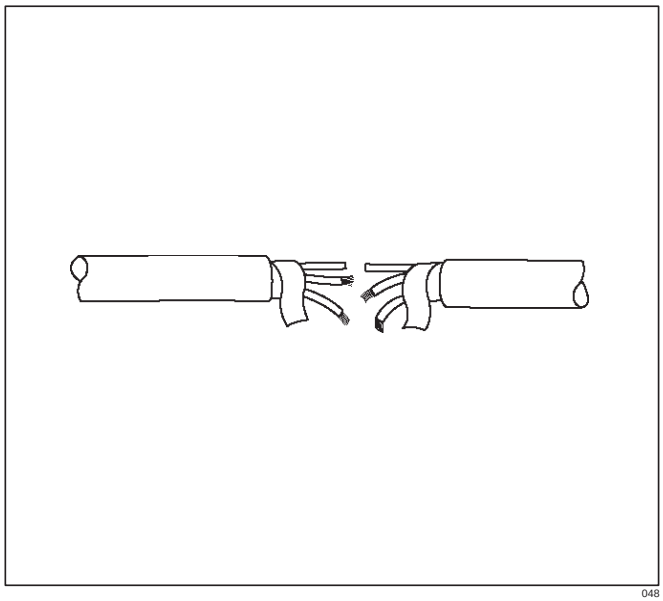

048

Installation Procedure

1. Splice the wires using splice clips and rosin core solder.
2. Wrap each splice to insulate.
3. Wrap the splice with mylar and with the drain (uninsulated) wire.

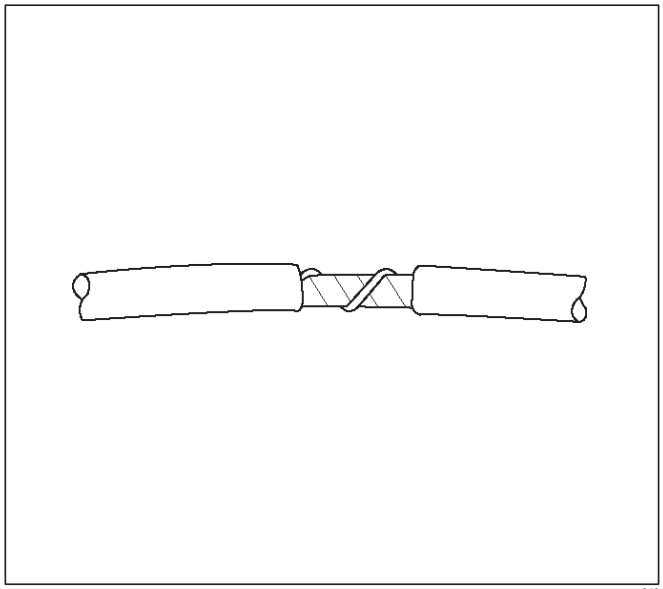

049

4. Tape over the whole bundle to secure.

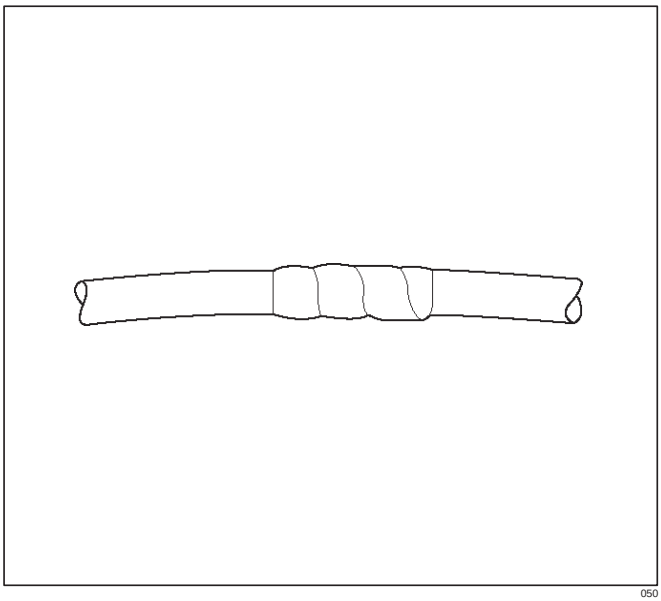

050

Twisted Leads

Removal Procedure

1. Locate the damaged wire.
2. Remove the insulation as required.

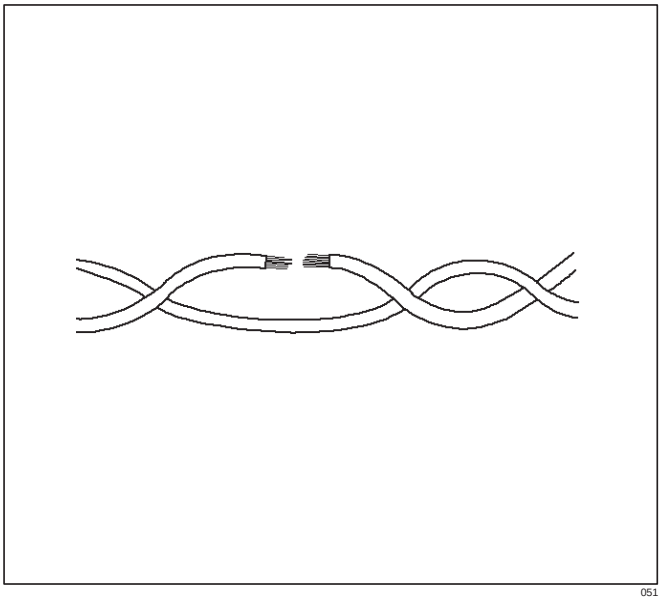

051

Installation Procedure

1. Use splice clips and rosin core solder in order to splice the two wires together.

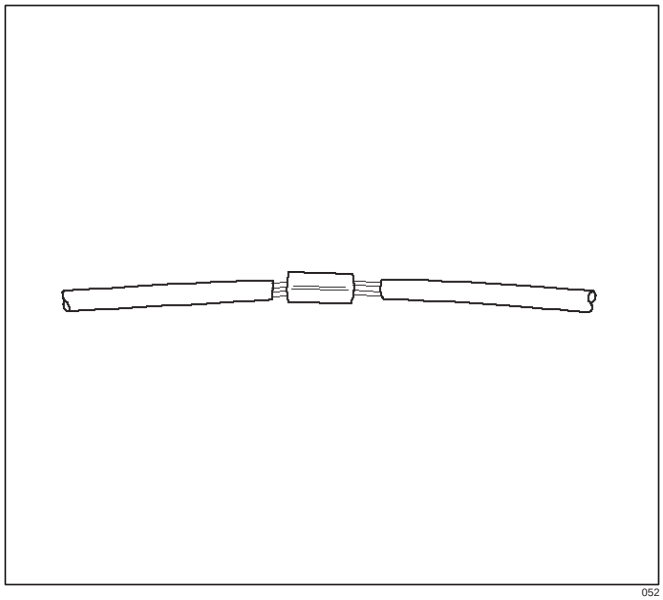

052

2. Cover the splice with tape in order to insulate it from the other wires.

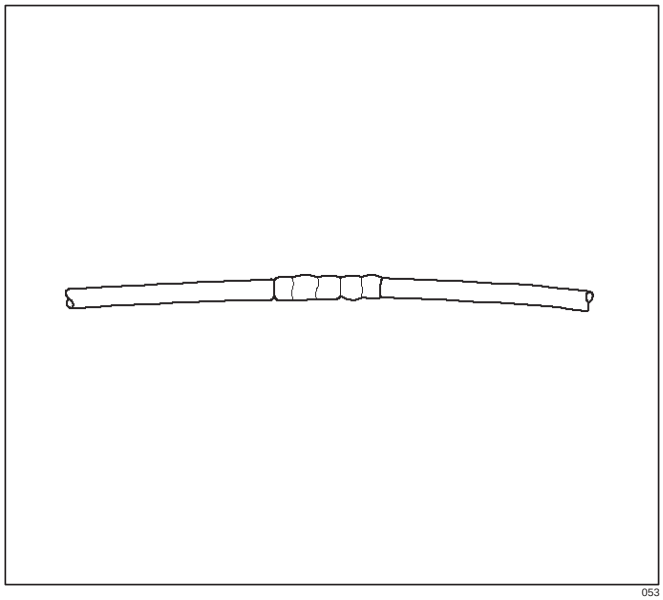

053

3. Twist the wires as they were before starting this procedure.

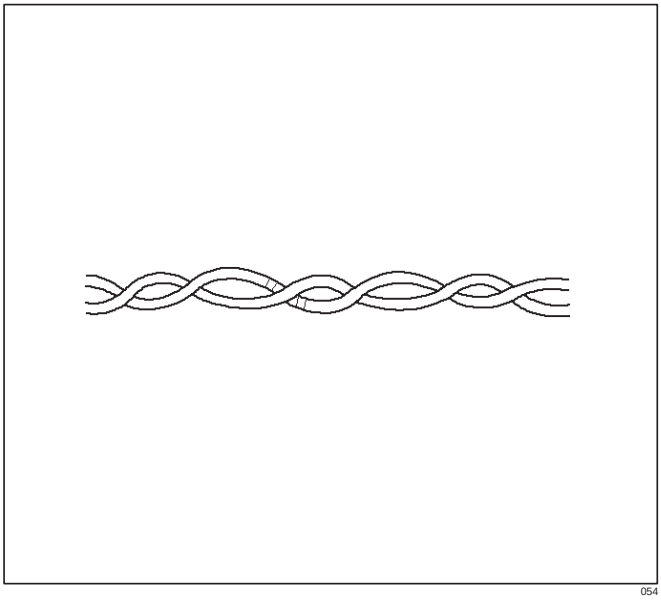

054

4. Tape the wires with electrical tape. Hold in place.

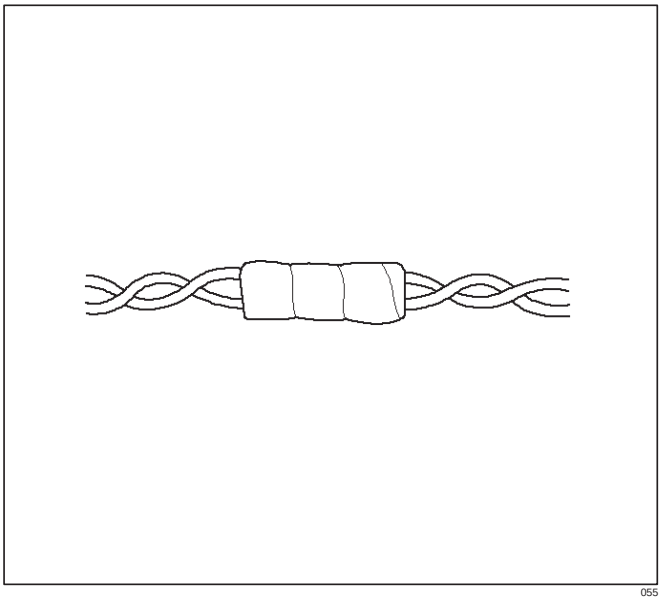

055

Weather-Pack Connector

Tools Required

J 28742-A Weather-Pack II Terminal Remover

Removal Procedure

A Weather-Pack connector can be identified by a rubber seal at the rear of the connector. This engine room connector protects against moisture and dirt, which could form oxidation and deposits on the terminals. This protection is important, because of the low voltage and the low amperage found in the electronic systems.

1. Open the secondary lock hinge on the connector.

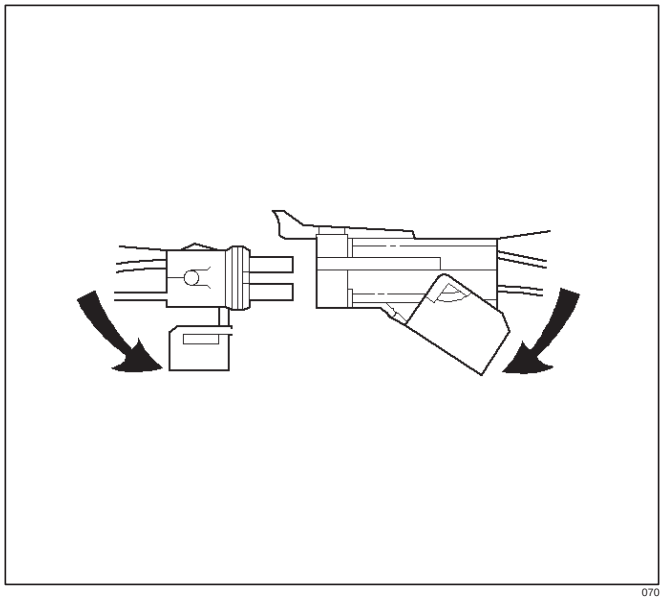

070

2. Use tool J 28742-A or the equivalent to remove the pin and the sleeve terminals. Push on J 28742-A to release.

NOTE: Do the use an ordinary pick or the terminal may be bent or deformed. Unlike standard blade terminals, these terminals cannot be straightened after they have been improperly bent.

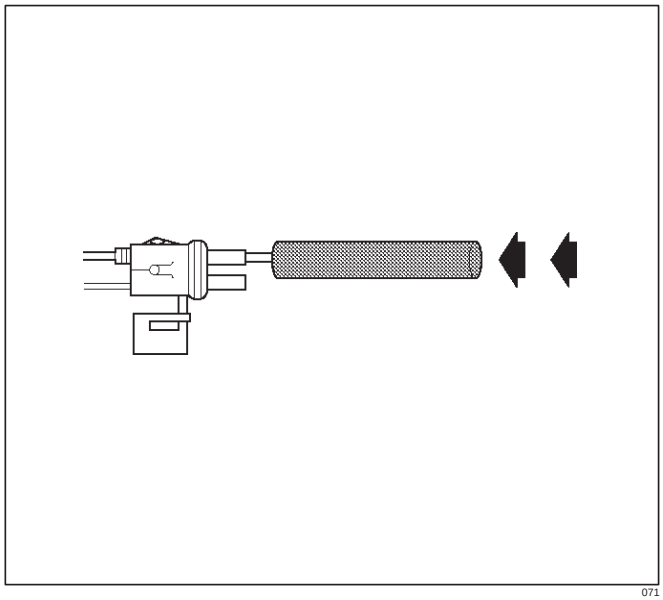

071

3. Cut the wire immediately behind the cable seal.

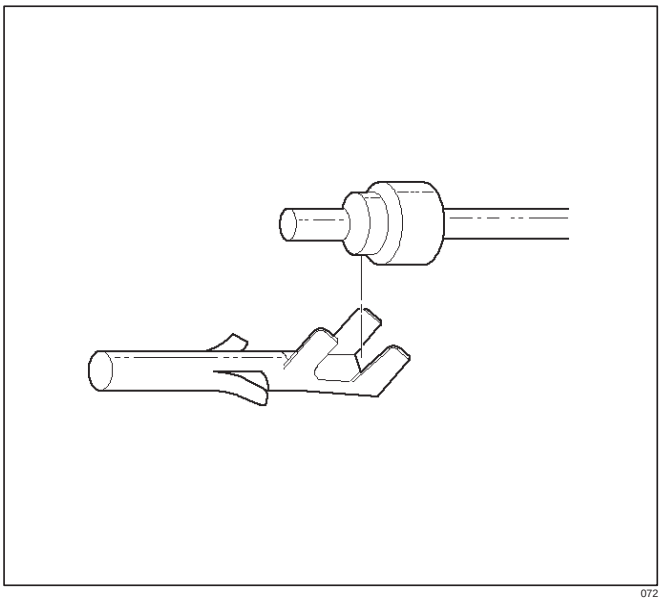

072

Installation Procedure

Make certain the connectors are properly seated and all of the sealing rings are in place when you reconnect the leads. The secondary lock hinge provides a backup locking feature for the connector. The secondary lock hinge is used for added reliability. This flap should retain the terminals even if the small terminal lock tangs are not positioned properly.

Do not replace the Weather-Pack connections with standard connections. Read the instructions provided with the Weather-Pack connector and terminal packages.

1. Replace the terminal.
2. Slip the new seal onto the wire.
3. Strip 5 mm (0.2”) of insulation from the wire.
4. Crimp the terminal over the wire and the seal.

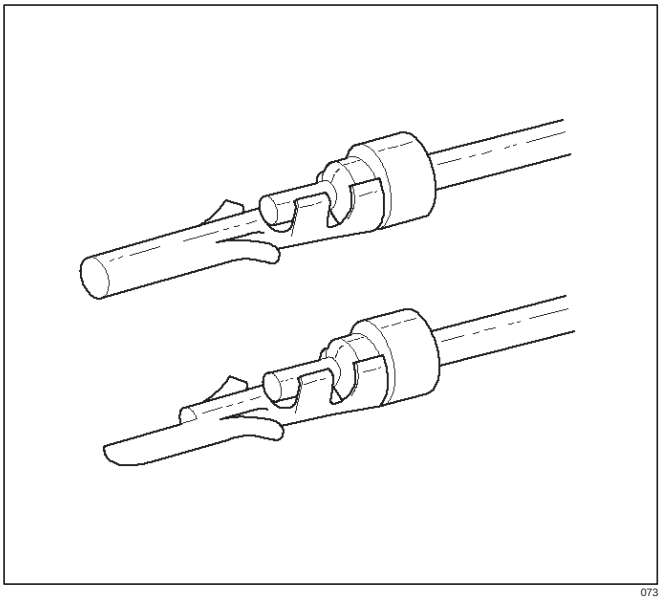

073

5. Push the terminal and the connector to engage the locking tangs.

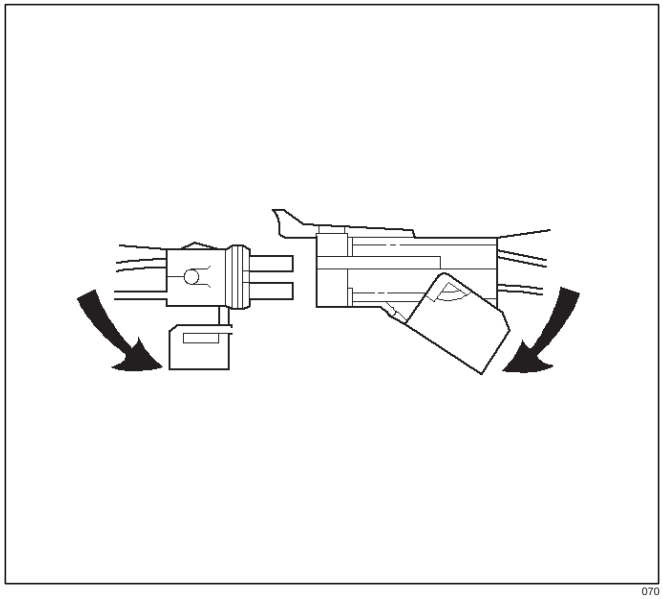

070

6. Close the secondary locking hinge.

Com-Pack III

General Information

The Com-Pack III terminal looks similar to some Weather-Pack terminals. This terminal is not sealed and is used where resistance to the environment is not required. Use the standard method when repairing a terminal. Do not use the Weather-Pack terminal tool J 28742-A or equivalent. These will damage the terminals.

Metri-Pack

Tools Required

J 35689 Terminal Remover

Removal Procedure

Some connectors use terminals called Metri-Pack Series 150. These may be used at the engine coolant temperature (ECT) sensor.

1. Slide the seal (1) back on the wire.
2. Insert the J 35689 tool or equivalent (3) in order to release the terminal locking tang (2).

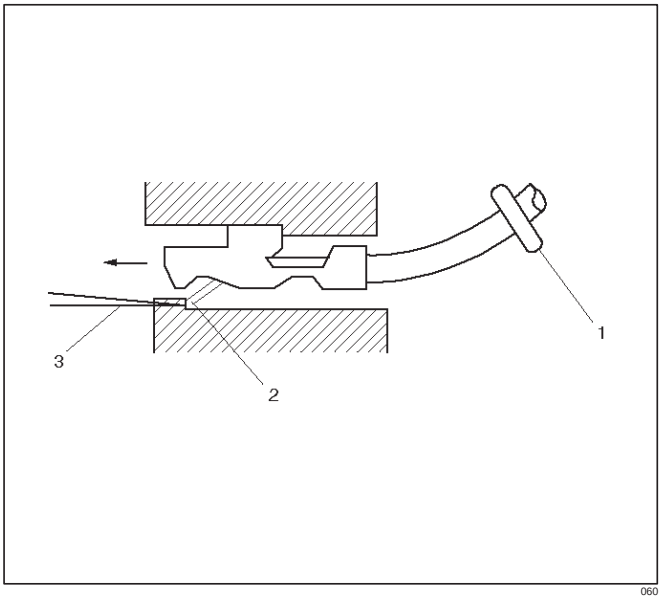

3. Push the wire and the terminal out through the connector. If you reuse the terminal, reshape the locking tang.

Installation Procedure

Metri-Pack terminals are also referred to as “pull-to-seat” terminals.

1. In order to install a terminal on a wire, the wire must be inserted through the seal (2) and through the connector (3).
2. The terminal (1) is then crimped onto the wire.

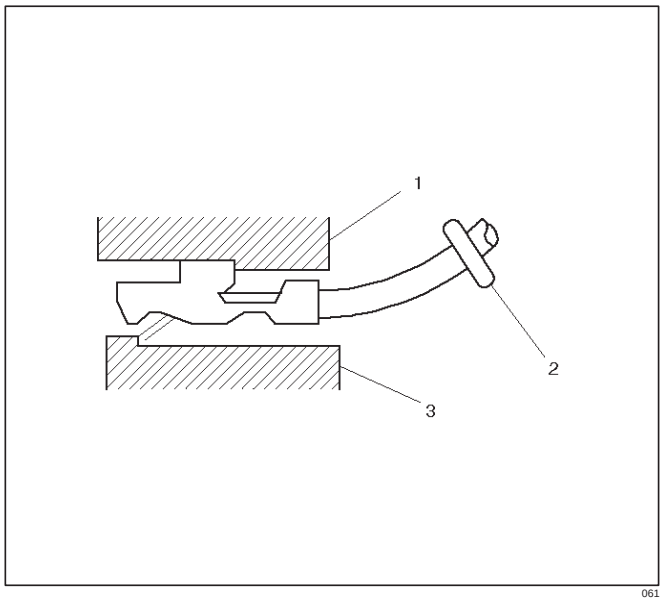

3. Then the terminal is pulled back into the connector to seat it in place.

General Description (PCM and Sensors)

58X Reference PCM Input

The powertrain control module (PCM) uses this signal from the crankshaft position (CKP) sensor to calculate engine RPM and crankshaft position at all engine speeds. The PCM also uses the pulses on this circuit to initiate injector pulses. If the PCM receives no pulses on this circuit, DTC P0337 will set. The engine will not start and run without using the 58X reference signal.

A/C Request Signal

This signal tells the PCM when the A/C mode is selected at the A/C control head. The PCM uses this to adjust the idle speed before turning “ON” the A/C clutch. The A/C compressor will be inoperative if this signal is not available to the PCM.
Refer to *A/C Clutch Circuit Diagnosis* section for A/C wiring diagrams and diagnosis for the A/C electrical system.

Crankshaft Position (CKP) Sensor

The crankshaft position (CKP) sensor provides a signal used by the powertrain control module (PCM) to calculate the ignition sequence. The CKP sensor initiates the 58X reference pulses which the PCM uses to calculate RPM and crankshaft position.
Refer to *Electronic Ignition System* section for additional information.

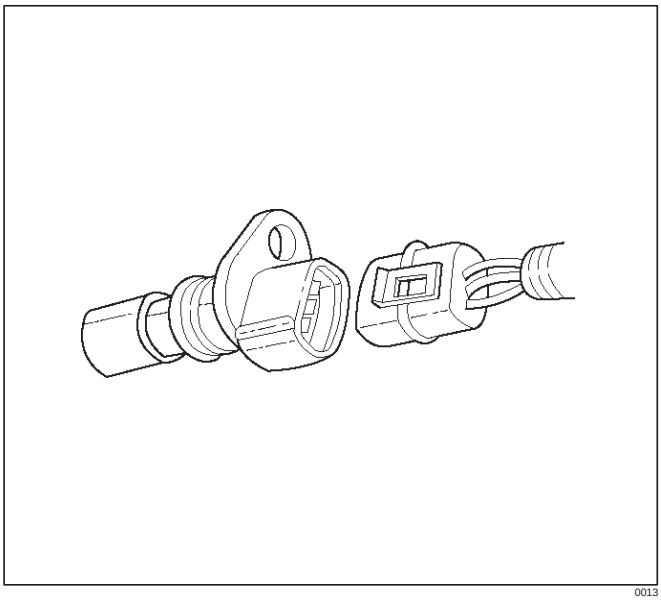

0013

Engine Coolant Temperature (ECT) Sensor

The engine coolant temperature (ECT) sensor is a thermistor (a resistor which changes value based on temperature) mounted in the engine coolant stream. Low coolant temperature produces a high resistance of 100,000 ohms at –40˚C (–40˚F). High temperature causes a low resistance of 70 ohms at 130˚C (266˚F). The PCM supplies a 5-volt signal to the ECT sensor through resistors in the PCM and measures the voltage. The signal voltage will be high when the engine is cold and low when the engine is hot. By measuring the voltage, the PCM calculates the engine coolant temperature. Engine coolant temperature affects most of the systems that the PCM controls.
The Tech 2 displays engine coolant temperature in degrees. After engine start-up, the temperature should rise steadily to about 85˚C (185˚F). It then stabilizes when the thermostat opens. If the engine has not been run for several hours (overnight), the engine coolant temperature and intake air temperature displays should be close to each other. A hard fault in the engine coolant sensor circuit will set DTC P0177 or DTC P0118. An intermittent fault will set a DTC P1114 or P1115.

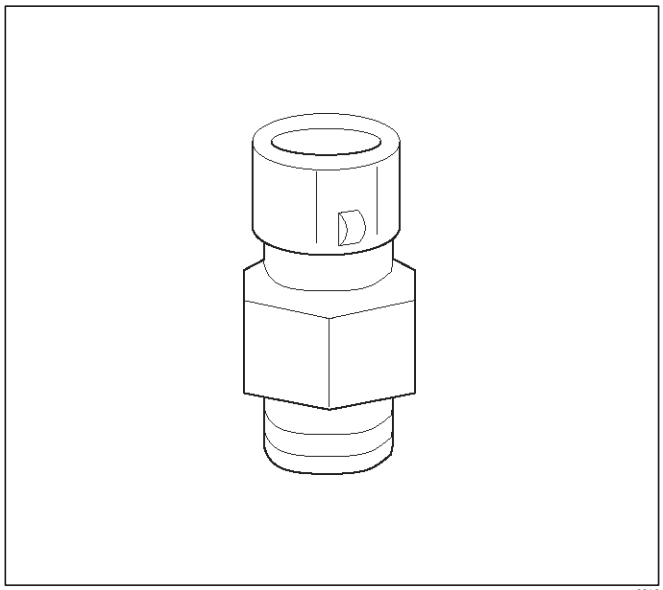

0016

Electrically Erasable Programmable Read Only Memory (EEPROM)

The electrically erasable programmable read only memory (EEPROM) is a permanent memory chip that is physically soldered within the PCM. The EEPROM contains the program and the calibration information that the PCM needs to control powertrain operation.
Unlike the PROM used in past applications, the EEPROM is not replaceable. If the PCM is replaced, the new PCM will need to be programmed. Equipment containing the correct program and calibration for the vehicle is required to program the PCM.

Fuel Control Heated Oxygen Sensors

The fuel control heated oxygen sensors (Bank 1 HO2S 1 and Bank 2 HO2S 1) are mounted in the exhaust stream where they can monitor the oxygen content of the exhaust gas. The oxygen present in the exhaust gas reacts with the sensor to produce a voltage output. This voltage should constantly fluctuate from approximately 100 mV to 900 mV. The heated oxygen sensor voltage can be monitored with a Tech 2. By monitoring the voltage output of the oxygen sensor, the PCM calculates the pulse width command for the injectors to produce the proper combustion chamber mixture.

- Low HO2S voltage is a lean mixture which will result in a rich command to compensate.
- High HO2S voltage is a rich mixture which will result in a lean command to compensate.

An open Bank 1 HO2S 1 signal circuit will set a DTC P0134 and the Tech 2 will display a constant voltage between 400-500 mV. A constant voltage below 300 mV in the sensor circuit (circuit grounded) will set DTC P0131. A constant voltage above 800 mV in the circuit will set DTC P0132. Faults in the Bank 2 HO2S 1 signal circuit will cause DTC 0154 (open circuit), DTC P0151 (grounded circuit), or DTC P0152 (signal voltage high) to set. A fault in the Bank 1 HO2S 1 heater circuit will cause DTC P0135 to set. A fault in the Bank 2 HO2S 1 heater circuit will cause DTC P0155 to set. The PCM can also detect HO2S response problems. If the response time of an HO2S is determined to be too slow, the PCM will store a DTC that indicates degraded HO2S performance.

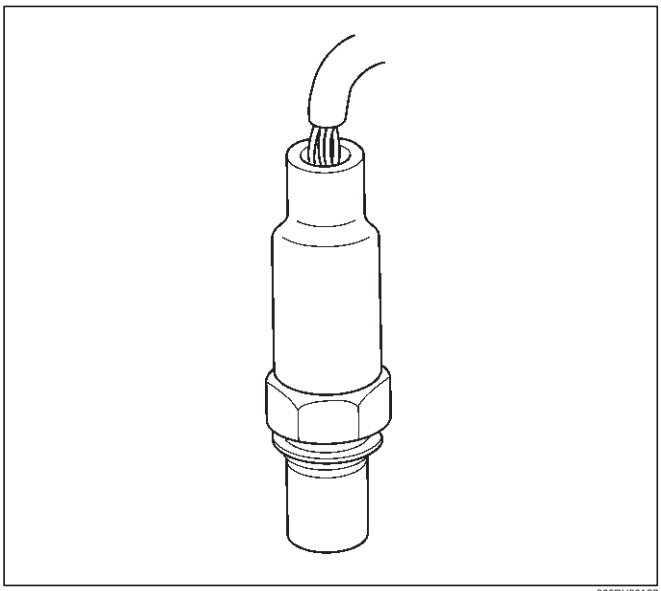

060RY00127

Catalyst Monitor Heated Oxygen Sensors

Three-way catalytic converters are used to control emissions of hydrocarbons (HC), carbon monoxide (CO), and oxides of nitrogen (NOx). The catalyst within the converters promotes a chemical reaction. This reaction oxidizes the HC and CO present in the exhaust gas and converts them into harmless water vapor and carbon dioxide. The catalyst also reduces NOx by converting it to nitrogen. The PCM can monitor this process using the Bank 1 HO2S 2 and the Bank 2 HO2S 2 heated oxygen sensors. The Bank 1 HO2S 1 and the Bank 2 HO2S 1 sensors produce an output signal which indicates the amount of oxygen present in the exhaust gas entering the three-way catalytic converter. The Bank 1 HO2S 2 and the Bank 2 HO2S 2 sensors produce an output signal which indicates the oxygen storage capacity of the catalyst. This indicates the catalyst's ability to efficiently convert exhaust gases. If the catalyst is operating efficiently, the Bank 1 HO2S 1 and the Bank 2 HO2S 1 signals will be more active than the signals produced by the Bank 1 HO2S 2 and the Bank 2 HO2S 2 sensors.

The catalyst monitor sensors operate the same as the fuel control sensors. The Bank 1 HO2S 2 and the Bank 2 HO2S 2 sensors' main function is catalyst monitoring, but they also have a limited role in fuel control. If a sensor output indicates a voltage either above or below the 450 mV bias voltage for an extended period of time, the PCM will make a slight adjustment to fuel trim to ensure that fuel delivery is correct for catalyst monitoring.

A problem with the Bank 1 HO2S 2 signal circuit will set DTC P0137, P0138, or P0140, depending on the specific condition. A problem with the Bank 2 HO2S 2 signal circuit will set DTC P0157, P0158, or P0160, depending on the specific condition. A fault in the heated oxygen sensor heater element or its ignition feed or ground will result in lower sensor response. This may cause incorrect catalyst monitor diagnostic results.

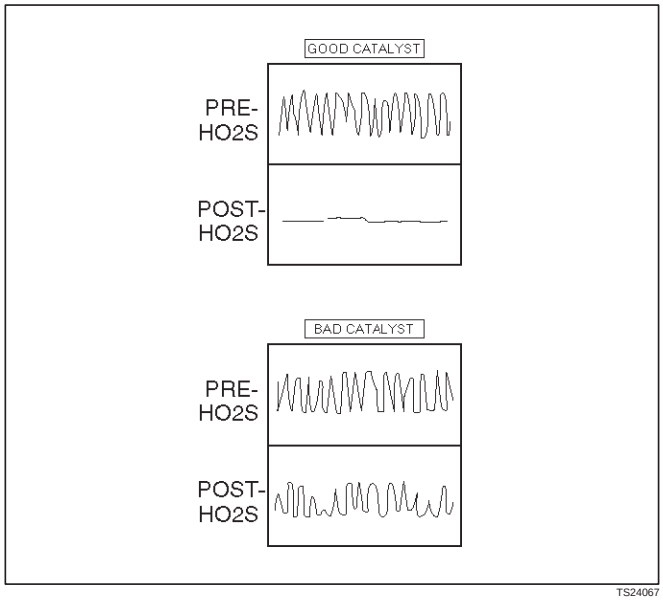

TS24067

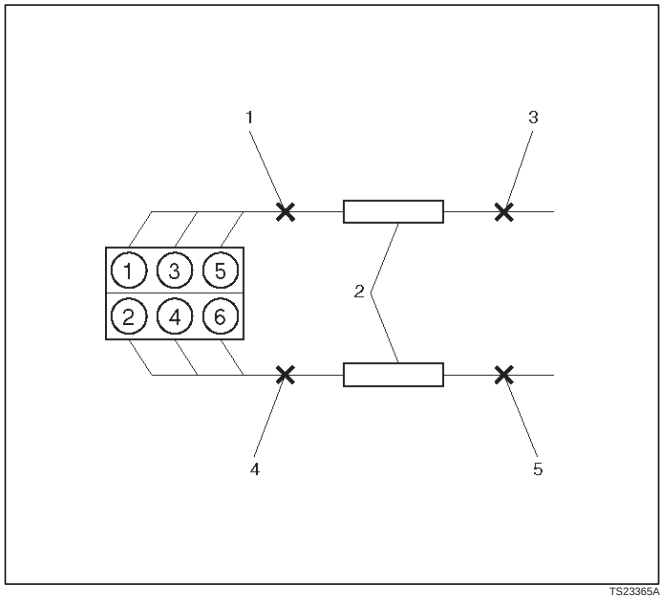

TS23365A

Legend

(1) Bank 1 Sensor 1 (Fuel Control)
(2) Catalytic Converter
(3) Bank 1 Sensor 2 (Catalyst Monitor)
(4) Bank 2 Sensor 1 (Fuel Control)
(5) Bank 2 Sensor 2 (Catalyst Monitor)

Intake Air Temperature (IAT) Sensor

The intake air temperature (IAT) sensor is a thermistor which changes its resistance based on the temperature of air entering the engine. Low temperature produces a high

resistance of 100,000 ohms at –40˚C (–40˚F). High temperature causes low resistance of 70 ohms at 130˚C (266˚F) . The PCM supplies a 5-volt signal to the sensor through a resistor in the PCM and monitors the signal voltage. The voltage will be high when the incoming air is cold. The voltage will be low when the incoming air is hot. By measuring the voltage, the PCM calculates the incoming air temperature. The IAT sensor signal is used to adjust spark timing according to the incoming air density.

The Tech 2 displays the temperature of the air entering the engine. The temperature should read close to the ambient air temperature when the engine is cold and rise as underhood temperature increases. If the engine has not been run for several hours (overnight), the IAT sensor temperature and engine coolant temperature should read close to each other. A fault in the IAT sensor circuit will set DTC P0112 or DTC P0113.

Linear Exhaust Gas Recirculation (EGR) Control

The PCM monitors the exhaust gas recirculation (EGR) actual position and adjusts the pintle position accordingly. The PCM uses information from the following sensors to control the pintle position:

- Engine coolant temperature (ECT) sensor.
- Throttle position (TP) sensor.
- Mass air flow (MAF) sensor.

Mass Air Flow (MAF) Sensor

The mass air flow (MAF) sensor measures the difference between the volume and the quantity of air that enters the engine. “Volume” means the size of the space to be filled. “Quantity” means the number of air molecules that will fit into the space. This information is important to the PCM because heavier, denser air will hold more fuel than lighter, thinner air. The PCM adjusts the air/fuel ratio as needed depending on the MAF value. The Tech 2 reads the MAF value and displays it in terms of grams per second (gm/s). At idle, the Tech 2 should read between 4-7 gm/s on a fully warmed up engine. Values should change quickly on acceleration. Values should remain stable at any given RPM. A failure in the MAF sensor or circuit will set DTC P0101, DTC P0102, or DTC P0103.

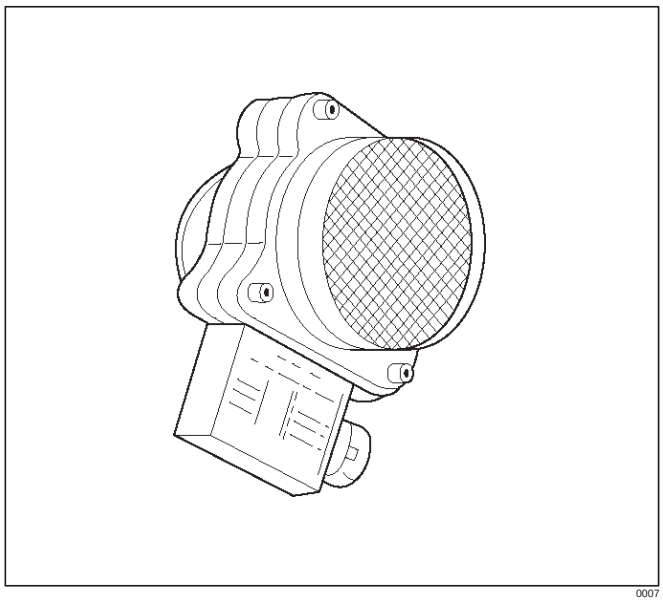

0007

Manifold Absolute Pressure (MAP) Sensor

The manifold absolute pressure (MAP) sensor responds to changes in intake manifold pressure (vacuum). The MAP sensor signal voltage to the PCM varies from below 2 volts at idle (high vacuum) to above 4 volts with the ignition ON, engine not running or at wide-open throttle (low vacuum).

The MAP sensor is used to determine the following:

- Manifold pressure changes while the linear EGR flow test diagnostic is being run. Refer to *DTC P0401*.
- Barometric pressure (BARO).

If the PCM detects a voltage that is lower than the possible range of the MAP sensor, DTC P0107 will be set. A signal voltage higher than the possible range of the sensor will set DTC P0108. An intermittent low or high voltage will set DTC P1107, respectively. The PCM can detect a shifted MAP sensor. The PCM compares the MAP sensor signal to a calculated MAP based on throttle position and various engine load factors. If the PCM detects a MAP signal that varies excessively above or below the calculated value, DTC P0106 will set.

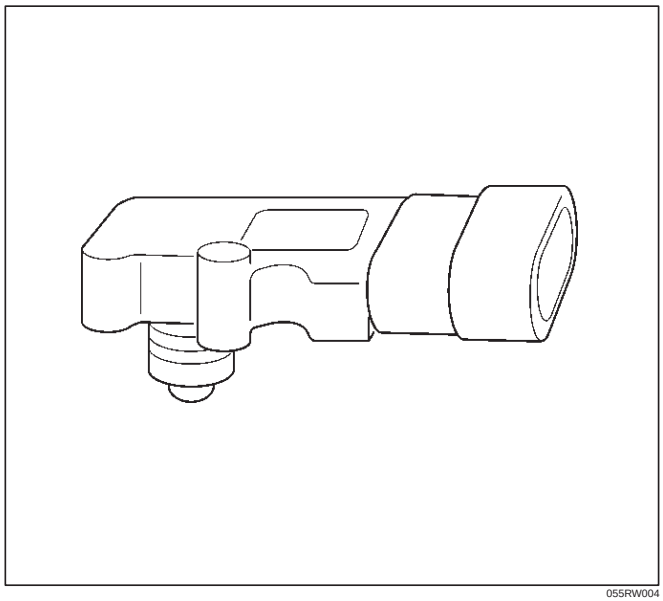

055RW004

Powertrain Control Module (PCM)

The powertrain control module (PCM) is located in the passenger compartment below the center console. The PCM controls the following:

- Fuel metering system.
- Transmission shifting (automatic transmission only).
- Ignition timing.
- On-board diagnostics for powertrain functions.

The PCM constantly observes the information from various sensors. The PCM controls the systems that affect vehicle performance. The PCM performs the diagnostic function of the system. It can recognize operational problems, alert the driver through the MIL (Check Engine lamp), and store diagnostic trouble codes (DTCs). DTCs identify the problem areas to aid the technician in making repairs.

PCM Function

The PCM supplies either 5 or 12 volts to power various sensors or switches. The power is supplied through resistances in the PCM which are so high in value that a test light will not light when connected to the circuit. In some cases, even an ordinary shop voltmeter will not give an accurate reading because its resistance is too low. Therefore, a digital voltmeter with at least 10 megohms input impedance is required to ensure accurate voltage readings. Tool J 39200 meets this requirement. The PCM controls output circuits such as the injectors, fan relays, etc., by controlling the ground or the power feed circuit through transistors or through either of the following two devices:

- Output Driver Module (ODM)
- Quad Driver Module (QDM)

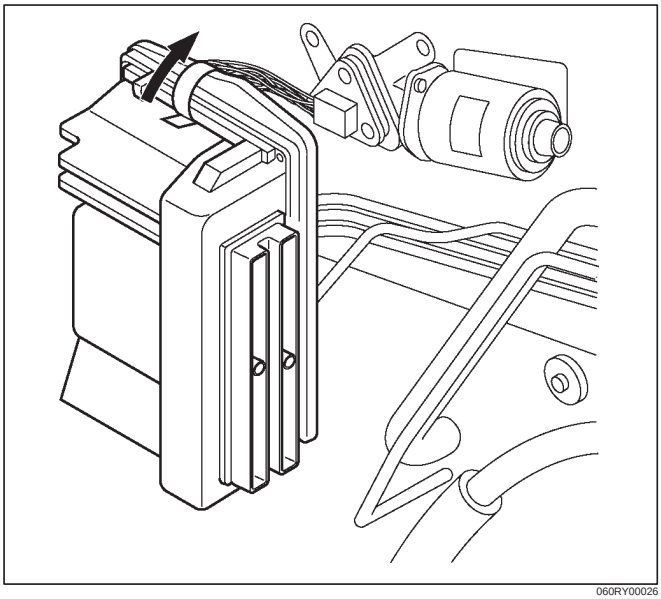

060RY00026

PCM Components

The PCM is designed to maintain exhaust emission levels to government mandated standards while providing excellent driveability and fuel efficiency. The PCM monitors numerous engine and vehicle functions via electronic sensors such as the throttle position (TP) sensor, heated oxygen sensor (HO2S), and vehicle speed sensor (VSS). The PCM also controls certain engine operations through the following:

- Fuel injector control
- Ignition control module
- ION sensing module
- Automatic transmission shift functions
- Cruise control
- Evaporative emission (EVAP) purge
- A/C clutch control

PCM Voltage Description

The PCM supplies a buffered voltage to various switches and sensors. It can do this because resistance in the PCM is so high in value that a test light may not illuminate when connected to the circuit. An ordinary shop voltmeter may not give an accurate reading because the voltmeter input impedance is too low. Use a 10-megohm input impedance digital voltmeter (such as J 39200) to assure accurate voltage readings.

The input/output devices in the PCM include analog-to-digital converters, signal buffers, counters, and special drivers. The PCM controls most components with electronic switches which complete a ground circuit when turned “ON.” These switches are arranged in groups of 4 and 7, called either a surface-mounted quad driver module (QDM), which can independently control up to 4 output terminals, or QDMs which can independently control up to 7 outputs. Not all outputs are always used.

PCM Input/Outputs

Inputs – Operating Conditions Read

- Air Conditioning “ON” or “OFF”
- Engine Coolant Temperature
- Crankshaft Position
- Exhaust Oxygen Content
- Electronic Ignition
- Manifold Absolute Pressure
- Battery Voltage
- Throttle Position
- Vehicle Speed
- Fuel Pump Voltage
- Power Steering Pressure
- Intake Air Temperature
- Mass Air Flow
- Engine Knock
- Acceleration Position

Outputs – Systems Controlled

- EVAP Canister Purge
- Exhaust Gas Recirculation (EGR)
- Ignition Control
- Fuel Control
- ION Sensing Module
- Electric Fuel Pump
- Air Conditioning

- Diagnostics
  - Malfunction Indicator Lamp
  - Data Link Connector (DLC)
  - Data Output
- Transmission Control Module

PCM Service Precautions

The PCM is designed to withstand normal current draws associated with vehicle operation. Avoid overloading any circuit. When testing for opens and shorts, do not ground or apply voltage to any of the PCM's circuits unless instructed to do so. These circuits should only be tested using digital voltmeter J 39200. The PCM should remain connected to the PCM or to a recommended breakout box.

Reprogramming The PCM

Reprogramming of the PCM is done without removing it from the vehicle . This provides a flexible and cost-effective method of making changes in software calibrations.
Refer to the latest Techline information on reprogramming or flashing procedures.

Throttle Position (TP) Sensor

The throttle position (TP) sensor is a potentiometer connected to the throttle shaft on the throttle body. The PCM monitors the voltage on the signal line and calculates throttle position. As the throttle valve angle is changed (accelerator pedal moved), the TP sensor signal also changes. At a closed throttle position, the output of the TP1 sensor is low. As the throttle valve opens, the output increases so that at wide open throttle (WOT), the output voltage should be above 92% (Tech 2 Display).
The PCM calculates fuel delivery based on throttle valve angle (driver demand). A broken or loose TP sensor may cause intermittent bursts of fuel from an injector and unstable idle because the PCM thinks the throttle is moving.

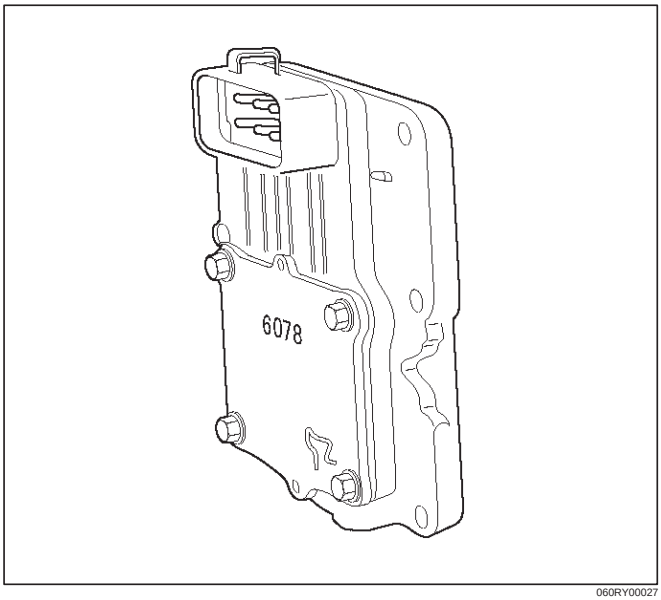

060RY00027

Transmission Fluid Temperature (TFT) Sensor

The transmission fluid temperature sensor is a thermistor which changes its resistance based on the temperature of the transmission fluid. For a complete description of the TFT sensor, refer to *4L30-E Automatic Transmission Diagnosis* section.
A failure in the TFT sensor or associated wiring will cause DTC P0712 or DTC P0713 to set. In this case, engine coolant temperature will be substituted for the TFT sensor value and the transmission will operate normally.

Transmission Range Switch (Mode Switch)

IMPORTANT: The vehicle should not be driven with the transmission range switch disconnected; idle quality will be affected.

The four inputs from the transmission range switch indicate to the PCM which position is selected by the transmission selector lever. This information is used for ignition timing, EVAP canister purge, EGR operation.
For more information on the transmission on the transmission range switch, refer to *4L30-E Automatic Transmission* section.

Vehicle Speed Sensor (VSS)

The PCM determines the speed of the vehicle by converting a pulsing voltage signal from the vehicle speed sensor (VSS) into miles per hour. The PCM uses this signal to operate the cruise control, speedometer, and the TCC and shift solenoids in the transmission. For more information on the TCC and shift solenoids, refer to *4L30-E Automatic Transmission* section.

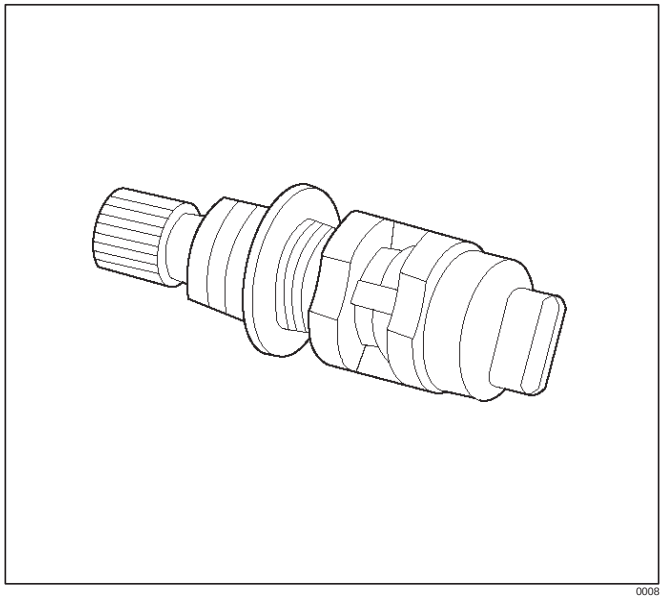

0008

Use of Circuit Testing Tools

Do not use a test light to diagnose the powertrain electrical systems unless specifically instructed by the diagnostic procedures. Use Connector Test Adapter Kit J 35616 whenever diagnostic procedures call for probing connectors.

Aftermarket Electrical and Vacuum Equipment

Aftermarket (add-on) electrical and vacuum equipment is defined as any equipment which connects to the vehicle's electrical or vacuum systems that is installed on a vehicle after it leaves the factory. No allowances have been made in the vehicle design for this type of equipment.

NOTE: No add-on vacuum equipment should be added to this vehicle.

NOTE: Add-on electrical equipment must only be connected to the vehicle's electrical system at the battery (power and ground).

Add-on electrical equipment, even when installed to these guidelines, may still cause the powertrain system to malfunction. This may also include equipment not connected to the vehicle electrical system such as portable telephones and radios. Therefore, the first step in diagnosing any powertrain problem is to eliminate all aftermarket electrical equipment from the vehicle. After this is done, if the problem still exists, it may be diagnosed in the normal manner.

Electrostatic Discharge Damage

Electronic components used in the PCM are often designed to carry very low voltage. Electronic components are susceptible to damage caused by electrostatic discharge. Less than 100 volts of static electricity can cause damage to some electronic components. By comparison, it takes as much as 4000 volts for a person to feel even the zap of a static discharge.

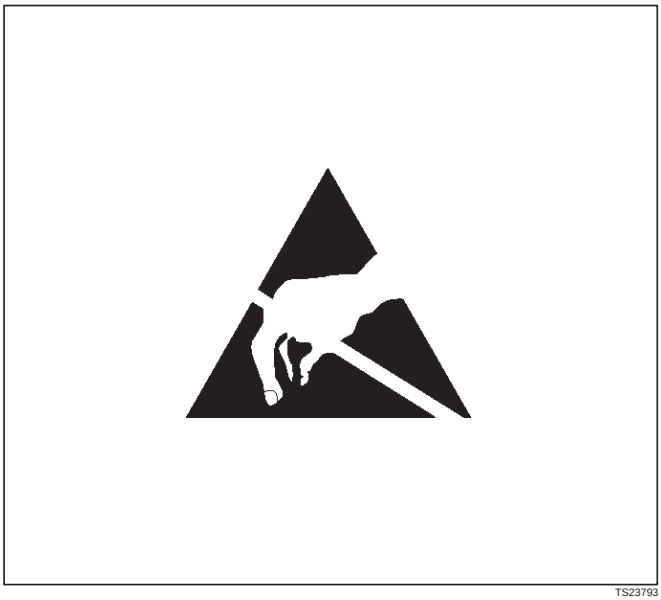

TS23793

There are several ways for a person to become statically charged. The most common methods of charging are by friction and induction.

- An example of charging by friction is a person sliding across a vehicle seat.
- Charge by induction occurs when a person with well insulated shoes stands near a highly charged object and momentary touches ground. Charges of the same polarity are drained off leaving the person highly charged with the opposite polarity. Static charges can cause damage, therefore it is important to use care when handling and testing electronic components.

NOTE: To prevent possible electrostatic discharge damage, follow these guidelines:

- Do not touch the PCM connector pins or soldered components on the PCM circuit board.
- Do not open the replacement part package until the part is ready to be installed.
- Before removing the part from the package, ground the package to a known good ground on the vehicle.
- If the part has been handled while sliding across the seat, while sitting down from a standing position, or while walking a distance, touch a known good ground before installing the part.

General Description (Air Induction)

Air Induction System

The air induction system filters contaminants from the outside air, and directs the progress of the air as it is drawn into the engine. A remote-mounted air cleaner prevents dirt and debris in the air from entering the engine. The air duct assembly routes filtered air to the throttle body. Air enters the engine by to following steps:

1. Through the throttle body.
2. Into the common chamber.
3. Through the cylinder head intake ports.
4. Into the cylinders.

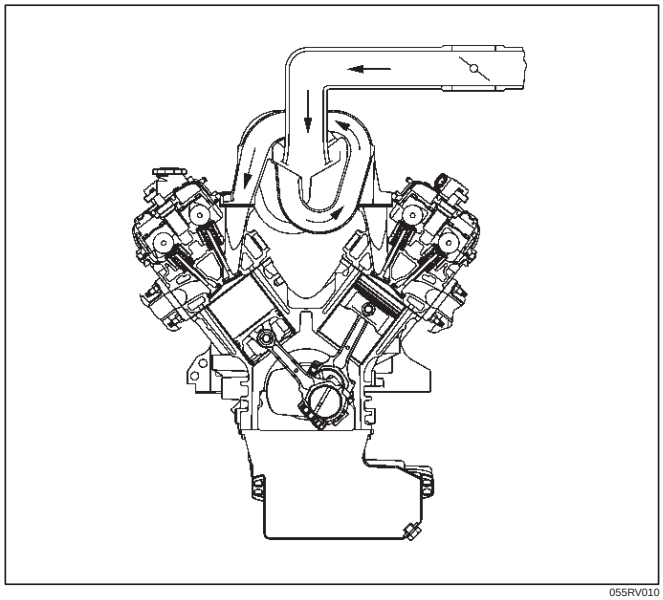

055RV010

General Description (Fuel Metering)

Acceleration Mode

The PCM provides extra fuel when it detects a rapid increase in the throttle position and the air flow.

Battery Voltage Correction Mode

When battery voltage is low, the PCM will compensate for the weak spark by increasing the following:

- The amount of fuel delivered.
- The idle RPM.
- Ignition dwell time.

Clear Flood Mode

Clear a flooded engine by pushing the accelerator pedal down all the way. The PCM then de-energizes the fuel injectors. The PCM holds the fuel injectors de-energized as long as the throttle remains above 80% and the engine speed is below 800 RPM. If the throttle position becomes less than 80%, the PCM again begins to pulse the injectors “ON” and “OFF,” allowing fuel into the cylinders.

Deceleration Mode

The PCM reduces the amount of fuel injected when it detects a decrease in the throttle position and the air flow. When deceleration is very fast, the PCM may cut off fuel completely for short periods.

Engine Speed/Vehicle Speed/Fuel Disable Mode

The PCM monitors engine speed. It turns off the fuel injectors when the engine speed increases above 6400 RPM. The fuel injectors are turned back on when engine speed decreases below 6150 RPM.

Fuel Cutoff Mode

No fuel is delivered by the fuel injectors when the ignition is “OFF.” This prevents engine run-on. In addition, the PCM suspends fuel delivery if no reference pulses are detected (engine not running) to prevent engine flooding.

Fuel Injector

The sequential multiport fuel injection (SFI) fuel injector is a solenoid-operated device controlled by the PCM. The PCM energizes the solenoid, which opens a valve to allow fuel delivery.

The fuel is injected under pressure in a conical spray pattern at the opening of the intake valve. Excess fuel not used by the injectors passes through the fuel pressure regulator before being returned to the fuel tank.

A fuel injector which is stuck partly open will cause a loss of fuel pressure after engine shut down, causing long crank times.

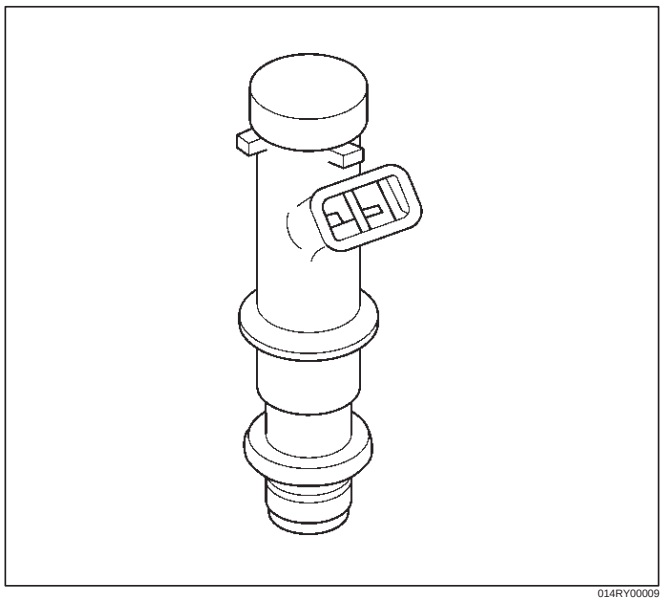

014RY00009

Fuel Metering System Components

The fuel metering system is made up of the following parts:

- The fuel injectors.
- The throttle body.
- The fuel rail.
- The fuel pressure regulator.
- The PCM.
- The crankshaft position (CKP) sensor.
- The ION sensing module.
- The fuel pump.
- The fuel pump relay.

Basic System Operation

The fuel metering system starts with the fuel in the fuel tank. An electric fuel pump, located in the fuel tank, pumps fuel to the fuel rail through an in-line fuel filter. The pump is designed to provide fuel at a pressure above the pressure needed by the injectors. A fuel pressure regulator in the fuel rail keeps fuel available to the fuel injectors at a constant pressure. A return line delivers unused fuel back to the fuel tank. Refer to *Section 6C* for further information on the fuel tank, line filter, and fuel pipes.

Fuel Metering System Purpose

The basic function of the air/fuel metering system is to control the air/fuel delivery to the engine. Fuel is delivered to the engine by individual fuel injectors mounted in the intake manifold near each intake valve.

The main control sensor is the heated oxygen sensor (HO2S) located in the exhaust system. The HO2S tells the PCM how much oxygen is in the exhaust gas. The PCM changes the air/fuel ratio to the engine by controlling the amount of time that fuel injector is “ON.” The best mixture to minimize exhaust emissions is 14.7 parts of air to 1 part of gasoline by weight, which allows the catalytic converter to operate most efficiently. Because of the constant measuring and adjusting of the air/fuel ratio, the fuel injection system is called a “closed loop” system.

The PCM monitors signals from several sensors in order to determine the fuel needs of the engine. Fuel is delivered under one of several conditions called “modes.” All modes are controlled by the PCM.

Fuel Pressure Regulator

The fuel pressure regulator is a diaphragm-operated relief valve mounted on the fuel rail with fuel pump pressure on one side and manifold pressure on the other side. The fuel pressure regulator maintains the fuel pressure available to the injector at three times barometric pressure adjusted for engine load. It may be serviced separtely.

If the pressure is too low, poor performance and a DTC P0131, DTC P0151,DTC P0171 or DTC P1171 will be the result. If the pressure is too high, excessive odor and/or a DTC P0132, DTC P0152,DTC P0172 will be the result. Refer to *Fuel System Diagnosis* for information on diagnosing fuel pressure conditions.

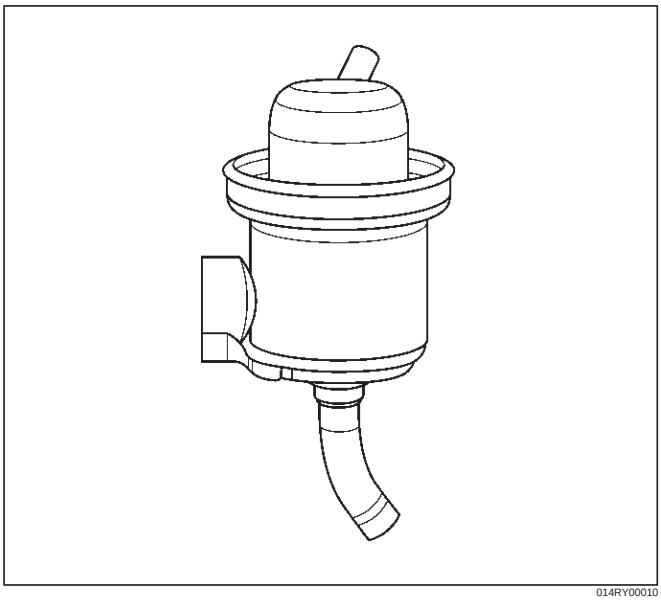

014RY00010

Fuel Pump Electrical Circuit

When the key is first turned “ON,” the PCM energizes the fuel pump relay for two seconds to build up the fuel pressure quickly. If the engine is not started within two seconds, the PCM shuts the fuel pump off and waits until the engine is cranked. When the engine is cranked and the 58 X crankshaft position signal has been detected by the PCM, the PCM supplies 12 volts to the fuel pump relay to energize the electric in-tank fuel pump.

An inoperative fuel pump will cause a “no-start” condition. A fuel pump which does not provide enough pressure will result in poor performance.

Fuel Rail

The fuel rail is mounted to the top of the engine and distributes fuel to the individual injectors. Fuel is delivered to the fuel inlet tube of the fuel rail by the fuel lines. The fuel goes through the fuel rail to the fuel pressure regulator. The fuel pressure regulator maintains a constant fuel pressure at the injectors. Remaining fuel is then returned to the fuel tank.

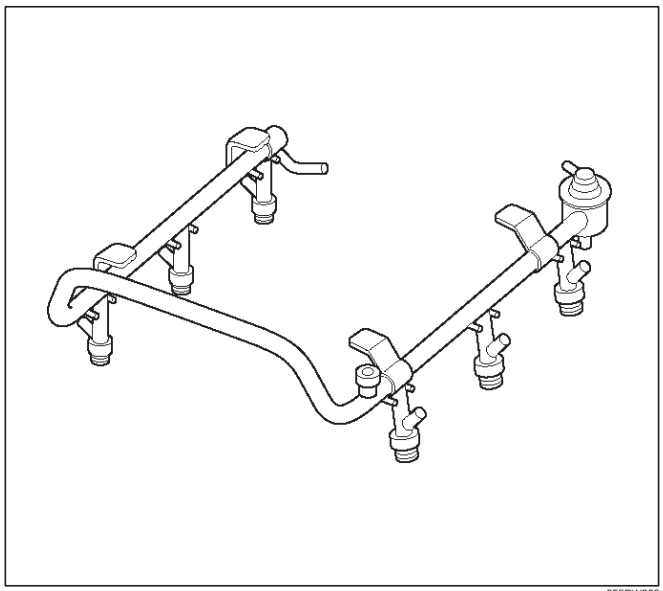

055RW009

Run Mode

The run mode has the following two conditions:

- Open loop
- Closed loop

When the engine is first started the system is in “open loop” operation. In “open loop,” the PCM ignores the signal from the heated oxygen sensor (HO2S). It calculates the air/fuel ratio based on inputs from the TP, ECT, and MAF sensors.

The system remains in “open loop” until the following conditions are met:

- The HO2S has a varying voltage output showing that it is hot enough to operate properly (this depends on temperature).
- The ECT has reached a specified temperature.
- A specific amount of time has elapsed since starting the engine.
- Engine speed has been greater than a specified RPM since start-up.

The specific values for the above conditions vary with different engines and are stored in the programmable read only memory (PROM). When these conditions are met, the system enters “closed loop” operation. In “closed loop,” the PCM calculates the air/fuel ratio (injector on-time) based on the signal from the HO2S. This allows the air/fuel ratio to stay very close to 14.7:1.

Starting Mode

When the ignition is first turned “ON,” the PCM energizes the fuel pump relay for two seconds to allow the fuel pump to build up pressure. The PCM then checks the engine coolant temperature (ECT) sensor and the throttle position (TP) sensor to determine the proper air/fuel ratio for starting.

The PCM controls the amount of fuel delivered in the starting mode by adjusting how long the fuel injectors are energized by pulsing the injectors for very short times.

Throttle Body Unit

The throttle body has a throttle plate to control the amount of air delivered to the engine. The TP sensor are also mounted on the throttle body. Vacuum ports located behind the throttle plate provide the vacuum signals needed by various components.
Engine coolant is directed through a coolant cavity in the throttle body to warm the throttle valve and to prevent icing.

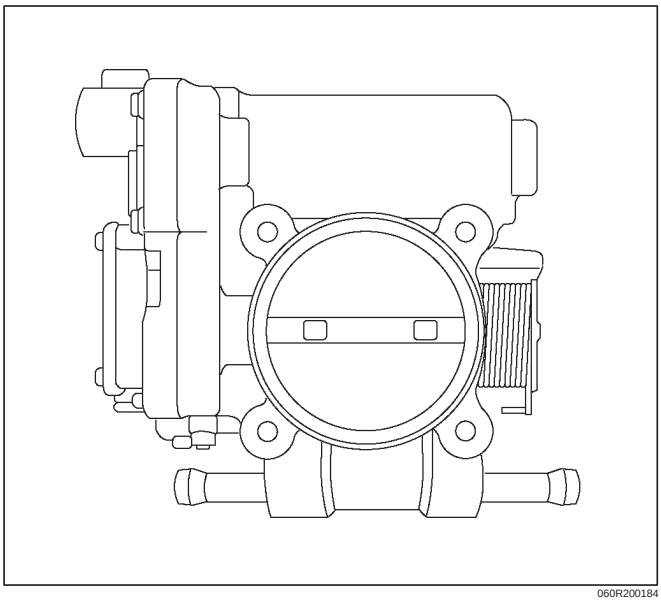

060R200184

General Description (Electronic Ignition System)

Crankshaft Position (CKP) Sensor

The crankshaft position (CKP) sensor provides a signal used by the powertrain control module (PCM) to calculate the ignition sequence. The sensor initiates the 58X reference pulses which the PCM uses to calculate RPM and crankshaft position. Refer to *Electronic Ignition System* section for additional information.

Electronic Ignition

The electronic ignition system controls fuel combustion by providing a spark to ignite the compressed air/fuel mixture at the correct time. To provide optimum engine performance, fuel economy, and control of exhaust emissions, the PCM controls the spark advance of the ignition system. Electronic ignition has the following advantages over a mechanical distributor system:

- No moving parts.
- Less maintenance.
- Remote mounting capability.
- No mechanical load on the engine.
- More coil cooldown time between firing events.
- Elimination of mechanical timing adjustments.
- Increased available ignition coil saturation time.

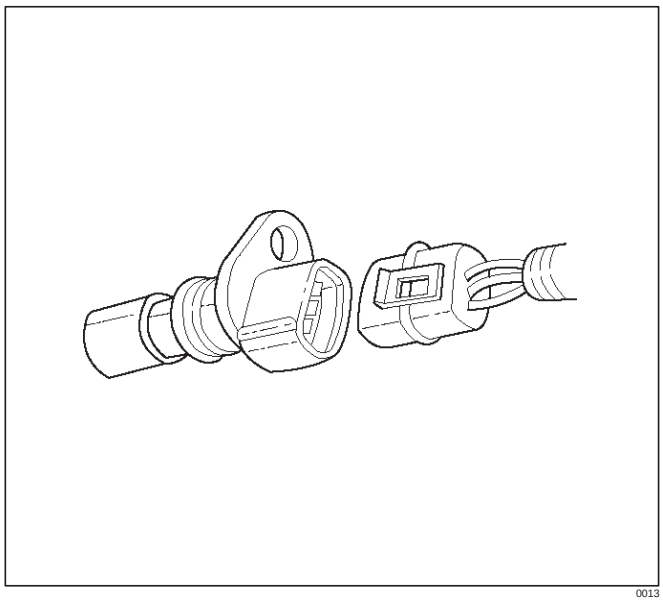

0013

Ignition Coils

A separate coil-at-plug module is located at each spark plug. The coil-at-plug module is attached to the engine with two screws. It is installed directly to the spark plug by an electrical contact inside a rubber boot. A three-way connector provides 12-volt primary supply from the 15-amp ignition fuse, a ground-switching trigger line from the PCM, and a ground.

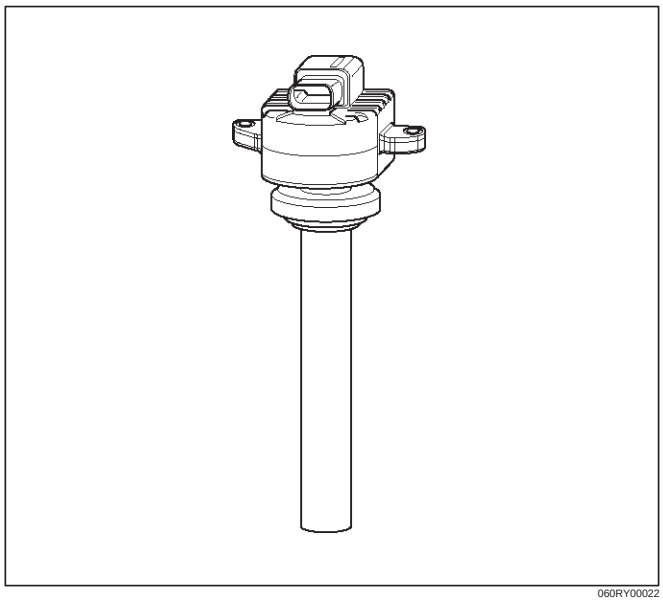

060RY00022

Ignition Control

The ignition control (IC) spark timing is the PCM's method of controlling the spark advance and the ignition dwell. The IC spark advance and the ignition dwell are calculated by the PCM using the following inputs:

- Engine speed.
- Crankshaft position (58X reference).
- Engine coolant temperature (ECT) sensor.
- Throttle position (TP) sensor.
- ION sensing module.
- Park/Neutral position (PRNDL input).

- Vehicle speed (vehicle speed sensor).
- PCM and ignition system supply voltage.
- The crankshaft position (CKP) sensor sends the PCM a 58X signal related to the exact position of the crankshaft.

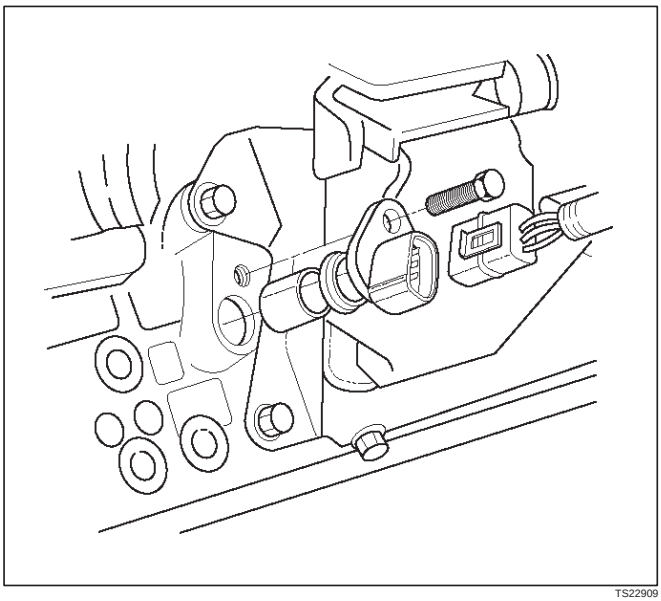

TS22909

Based on these sensor signals and engine load information, the PCM sends 5V to each ignition coil.

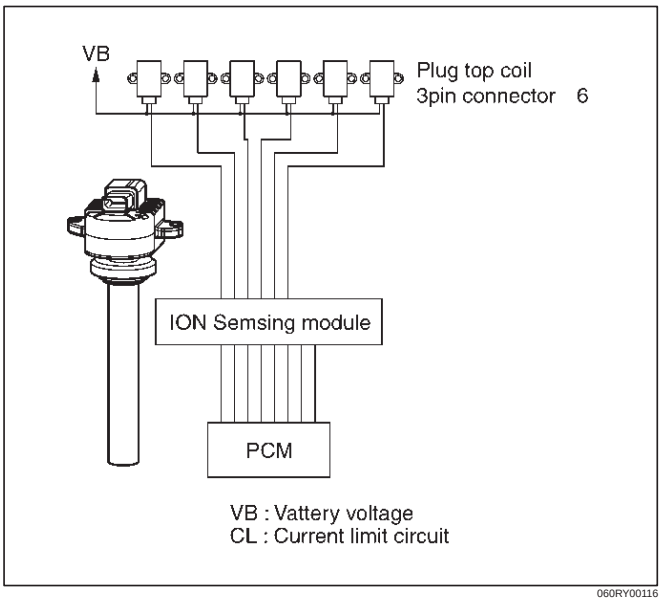

060RY00116

This module has the function to energize and de-energize the primary ignition coil in response to signals from the PCM. The Throttle PCM controls ignition timing and dwell time.

Continuity and out-or-range value check:

This diagnosis detects open circuit or short-circuiting in the Electronic Spark Timing (EST) line by monitoring EST signals. A failure determination is made when the signal voltage remains higher or lower than the threshold for corresponding fault code beyond a predetermined time period.

Diagnosis enabling conditions are as follows:

- RPM is higher than the specified threshold.
- EST line is enabled.

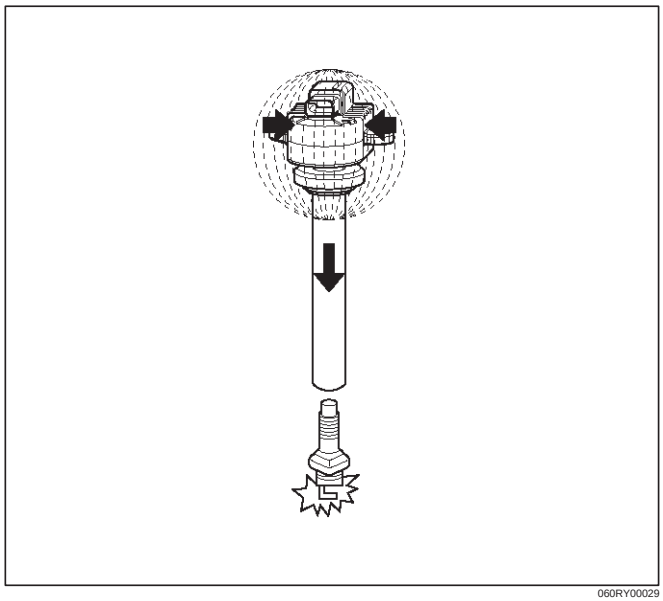

060RY00029

Ignition Control PCM Output

The PCM provides a zero volt (actually about 100 mV to 200 mV) or a 5-volt output signal to the ignition control (IC) module. Each spark plug has its own primary and secondary ignition coil assembly (”coil-at-plug”) located at the spark plug itself. When the ignition coil receives the 5-volt signal from the PCM, it provides a ground path for the B+ supply to the primary side of the coil-at -plug module. When the PCM shuts off the 5-volt signal to the ION sensing module, the ground path for the primary coil is broken. The magnetic field collapses and induces a high voltage secondary impulse which fires the spark plug and ignites the air/fuel mixture.

The circuit between the PCM and the ignition coil is monitored for open circuits, shorts to voltage, and shorts to ground. If the PCM detects one of these events, it will set one of the following DTCs:

- P0351: Ignition coil Fault on Cylinder #1
- P0352: Ignition coil Fault on Cylinder #2
- P0353: Ignition coil Fault on Cylinder #3
- P0354: Ignition coil Fault on Cylinder #4
- P0355: Ignition coil Fault on Cylinder #5
- P0356: Ignition coil Fault on Cylinder #6

Powertrain Control Module (PCM)

The PCM is responsible for maintaining proper spark and fuel injection timing for all driving conditions. To provide optimum driveability and emissions, the PCM monitors the input signals from the following components in order to calculate spark timing:

- Engine coolant temperature (ECT) sensor.
- Intake air temperature (IAT) sensor.
- Mass air flow (MAF) sensor.
- PRNDL input from transmission range switch.
- Throttle position (TP) sensor.
- Vehicle speed sensor (VSS) .

- Crankshaft position (CKP) sensor.

Spark Plug

Although worn or dirty spark plugs may give satisfactory operation at idling speed, they frequency fail at higher engine speeds. Faulty spark plugs may cause poor fuel economy, power loss, loss of speed, hard starting and generally poor engine performance. Follow the scheduled maintenance service recommendations to ensure satisfactory spark plug performance. Refer to *Maintenance and Lubrication* section.

Normal spark plug operation will result in brown to grayish-tan deposits appearing on the insulator portion of the spark plug. A small amount of red-brown, yellow, and white powdery material may also be present on the insulator tip around the center electrode. These deposits are normal combustion by-products of fuels and lubricating oils with additives. Some electrode wear will also occur. Engines which are not running properly are often referred to as “misfiring.” This means the ignition spark is not igniting the air/fuel mixture at the proper time. While other ignition and fuel system causes must also be considered, possible causes include ignition system conditions which allow the spark voltage to reach ground in some other manner than by jumping across the air gap at the tip of the spark plug, leaving the air/fuel mixture unburned. Refer to *DTC P0300*. Misfiring may also occur when the tip of the spark plug becomes overheated and ignites the mixture before the spark jumps. This is referred to as “pre-ignition.”

Spark plugs may also misfire due to fouling, excessive gap, or a cracked or broken insulator. If misfiring occurs before the recommended replacement interval, locate and correct the cause.

Carbon fouling of the spark plug is indicated by dry, black carbon (soot) deposits on the portion of the spark plug in the cylinder. Excessive idling and slow speeds under light engine loads can keep the spark plug temperatures so low that these deposits are not burned off. Very rich fuel mixtures or poor ignition system output may also be the cause. Refer to DTC P0172.

Oil fouling of the spark plug is indicated by wet oily deposits on the portion of the spark plug in the cylinder, usually with little electrode wear. This may be caused by oil during break-in of new or newly overhauled engines.

Deposit fouling of the spark plug occurs when the normal red-brown, yellow or white deposits of combustion by products become sufficient to cause misfiring. In some cases, these deposits may melt and form a shiny glaze on the insulator around the center electrode. If the fouling is found in only one or two cylinders, valve stem clearances or intake valve seals may be allowing excess lubricating oil to enter the cylinder, particularly if the deposits are heavier on the side of the spark plug facing the intake valve.

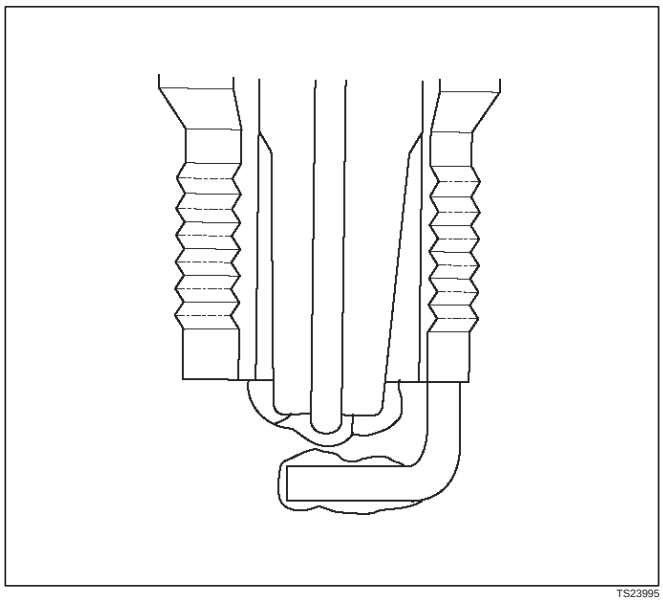

TS23995

Excessive gap means that the air space between the center and the side electrodes at the bottom of the spark plug is too wide for consistent firing. This may be due to improper gap adjustment or to excessive wear of the electrode during use. A spark plug gap that is too small may cause an unstable idle condition. Excessive gap wear can be an indication of continuous operation at high speeds or with engine loads, causing the spark to run too hot. Another possible cause is an excessively lean fuel mixture.

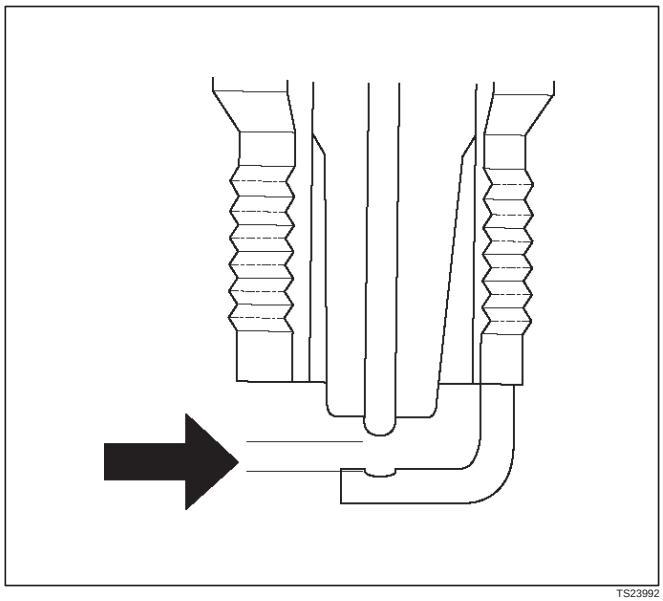

TS23992

Low or high spark plug installation torque or improper seating can result in the spark plug running too hot and can cause excessive center electrode wear. The plug and the cylinder head seats must be in good contact for proper heat transfer and spark plug cooling. Dirty or damaged threads in the head or on the spark plug can keep it from seating even though the proper torque is applied. Once spark plugs are properly seated, tighten them to the torque shown in the Specifications Table. Low torque may result in poor contact of the seats due to a loose spark plug. Overtightening may cause the spark plug shell to be stretched and will result in poor contact

between the seats. In extreme cases, exhaust blow-by and damage beyond simple gap wear may occur.
Cracked or broken insulators may be the result of improper installation, damage during spark plug re-gapping, or heat shock to the insulator material. Upper insulators can be broken when a poorly fitting tool is used during installation or removal, when the spark plug is hit from the outside, or is dropped on a hard surface. Cracks in the upper insulator may be inside the shell and not visible. Also, the breakage may not cause problems until oil or moisture penetrates the crack later.

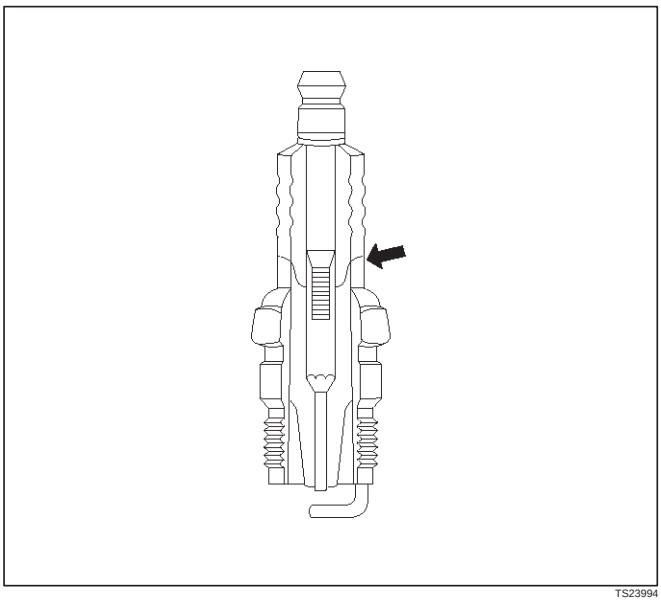

TS23994

A/C Clutch Diagnosis

A/C Clutch Circuit Operation

A 12-volt signal is supplied to the A/C request input of the PCM when the A/C is selected through the A/C control switch.
The A/C compressor clutch relay is controlled through the PCM. This allows the PCM to modify the idle air control position prior to the A/C clutch engagement for better idle quality. If the engine operating conditions are within their specified calibrated acceptable ranges, the PCM will enable the A/C compressor relay. This is done by providing a ground path for the A/C relay coil within the PCM. When the A/C compressor relay is enabled, battery voltage is supplied to the compressor clutch coil. The PCM will enable the A/C compressor clutch whenever the engine is running and the A/C has been requested. The PCM will not enable the A/C compressor clutch if any of the following conditions are met:

- The throttle is greater than 90%.
- The engine speed is greater than 6315 RPM.
- The ECT is greater than 119˚C (246˚F).
- The IAT is less than 5˚C (41˚F).
- The throttle is more than 80% open.

A/C Clutch Circuit Purpose

The A/C compressor operation is controlled by the powertrain control module (PCM) for the following reasons:

- It improvises idle quality during compressor clutch engagement.
- It improvises wide open throttle (WOT) performance.
- It provides A/C compressor protection from operation with incorrect refrigerant pressures.

The A/C electrical system consists of the following components:

- The A/C control head.
- The A/C refrigerant pressure switches.
- The A/C compressor clutch.
- The A/C compressor clutch relay.
- The PCM.

A/C Request Signal

This signal tells the PCM when the A/C mode is selected at the A/C control head. The PCM uses this to adjust the idle speed before turning on the A/C clutch. The A/C compressor will be inoperative if this signal is not available to the PCM.
Refer to *A/C Clutch Circuit Diagnosis* section for A/C wiring diagrams and diagnosis for A/C electrical system.

General Description (Exhaust Gas Recirculation (EGR) System)

EGR Purpose

The exhaust gas recirculation (EGR) system is use to reduce emission levels of oxides of nitrogen (NOx). NOx emission levels are caused by a high combustion temperature. The EGR system lowers the NOx emission levels by decreasing the combustion temperature.

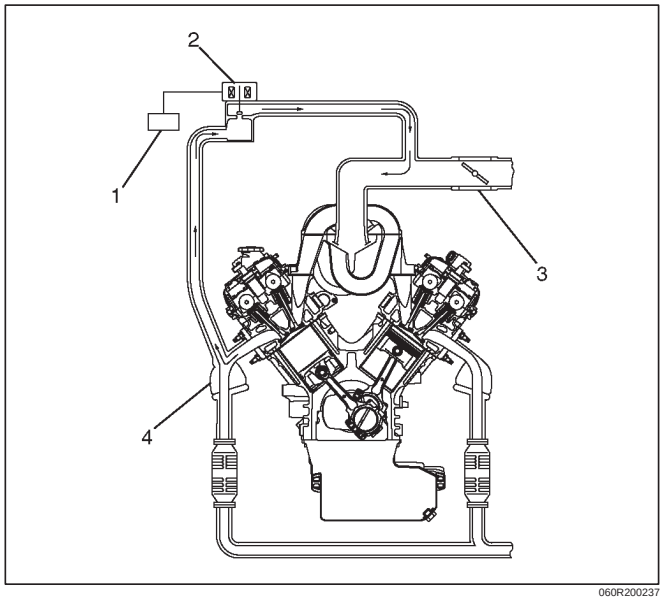

060R200237

Linear EGR Valve

The main element of the system is the linear EGR valve. The EGR valve feeds small amounts of exhaust gas back into the combustion chamber. The fuel/air mixture will be diluted and combustion temperatures reduced.

Linear EGR Control

The PCM monitors the EGR actual positron and adjusts the pintle position accordingly. The uses information from the following sensors to control the pintle position:

- Engine coolant temperature (ECT) sensor.
- Throttle position (TP) sensor.
- Mass air flow (MAF) sensor.

Linear EGR Valve Operation and Results of Incorrect Operation

The linear EGR valve is designed to accurately supply EGR to the engine independent of intake manifold vacuum. The valve controls EGR flow from the exhaust to the intake manifold through an orifice with a PCM controlled pintle. During operation, the PCM controls pintle position by monitoring the pintle position feedback signal. The feedback signal can be monitored with a Tech 2 as “Actual EGR Pos.” “Actual EGR Pos.” should always be near the commanded EGR position (”Desired EGR Pos.”). If a problem with the EGR system will not allow the PCM to control the pintle position properly, DTC P1406 will set. The PCM also tests for EGR flow. If incorrect flow is detected, DTC P0401 will set. If DTCs P0401 and/or P1406 are set, refer to the DTC charts.

The linear EGR valve is usually activated under the following conditions:

- Warm engine operation.
- Above-idle speed.

Too much EGR flow at idle, cruise or cold operation may cause any of the following conditions to occur:

- Engine stalls after a cold start.
- Engine stalls at idle after deceleration.
- Vehicle surges during cruise.
- Rough idle.
- DTC P0300 (misfire detected).

Too little or no EGR flow may allow combustion temperatures to get too high. This could cause:

- Spark knock (detonation).
- Engine overheating.
- Emission test failure.
- DTC P0401 (EGR flow test).
- Poor fuel economy.

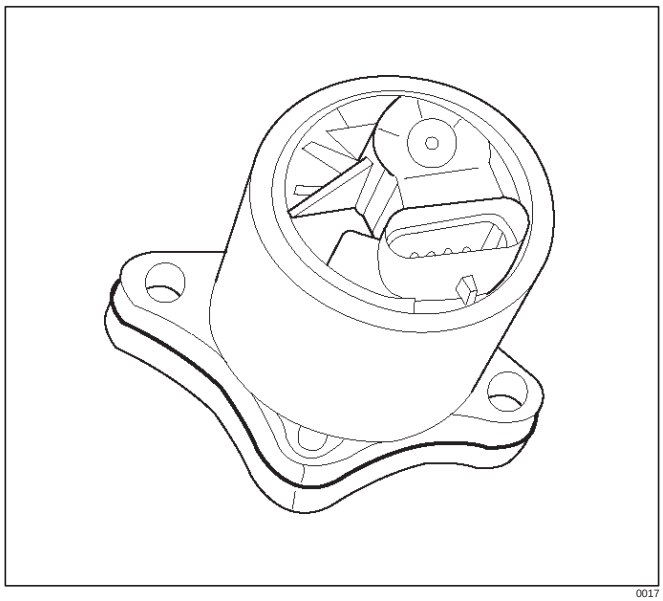

EGR Pintle Position Sensor

The PCM monitors the EGR valve pintle position input to endure that the valve responds properly to commands from the PCM and to detect a fault if the pintle position sensor and control circuits are open or shorted. If the PCM detects a pintle position signal voltage outside the normal range of the pintle position sensor, or a signal voltage that is not within a tolerance considered acceptable for proper EGR system operation, the PCM will set DTC P1406.

General Description (Positive Crankcase Ventilation (PCV) System)

Crankcase Ventilation System Purpose

The crankcase ventilation system is use to consume crankcase vapors in the combustion process instead of venting them to the atmosphere. Fresh air from the throttle body is supplied to the crankcase and mixed with blow-by gases. This mixture is then passed through the positive crankcase ventilation (PCV) valve into the common chamber.

Crankcase Ventilation System Operation

The primary control is through the positive crankcase ventilation (PCV) valve. The PCV valve meters the flow at a rate that depends on the intake vacuum. The PCV valve restricts the flow when the inlet vacuum is highest. In addition, the PCV valve can seal the common chamber off in case of sudden high pressure in the crankcase.

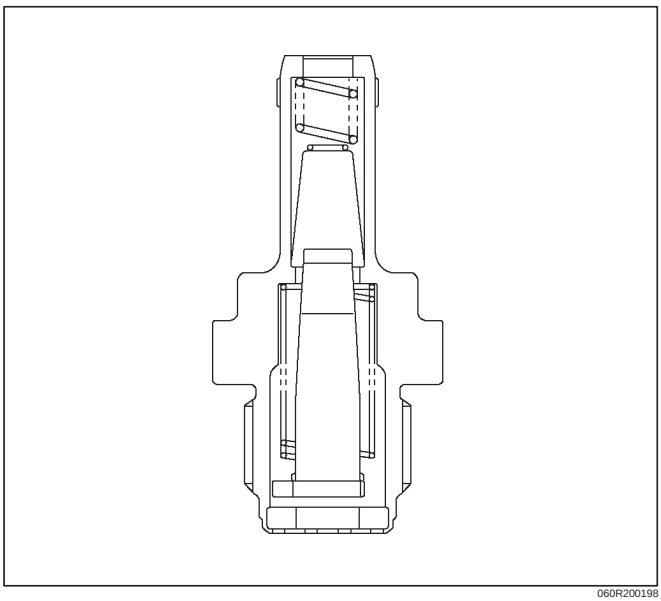

060R200198

While the engine is running, exhaust fuses and small amounts of the fuel/air mixture escape past the piston rings and enter the crankcase. These gases are mixed with clean air entering through a tube from the air intake duct.

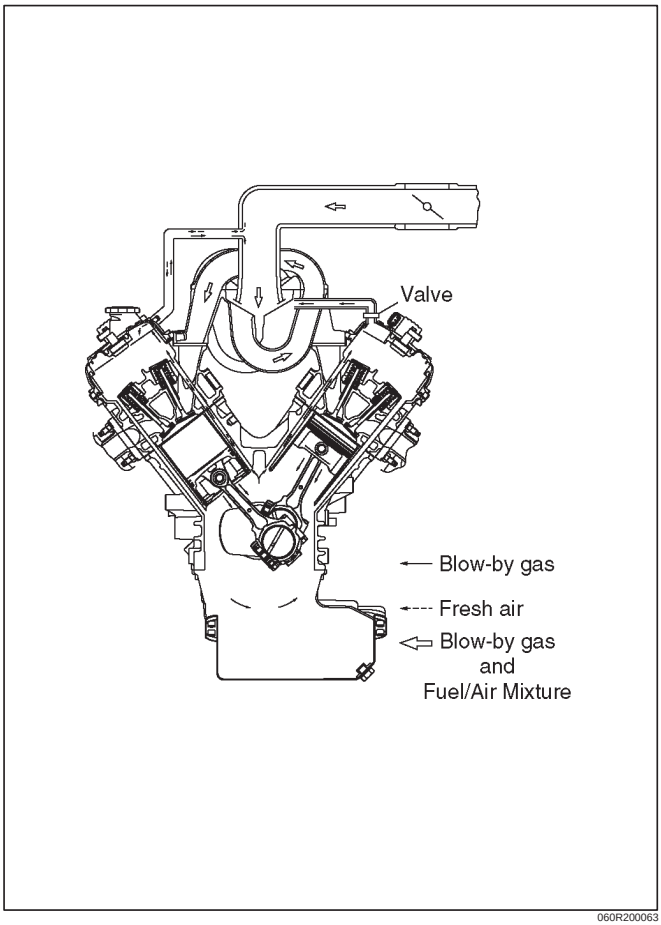

060R200063

During normal, part-throttle operation, the system is designed to allow crankcase gases to flow through the PCV valve into the throttle body to be consumed by normal combustion.

A plugged valve or PCV hose may cause the following conditions:

- Rough idle.
- Stalling of slow idle speed.
- Oil leaks.
- Sludge in the engine.

A leaking PCV hose would cause:

- Rough idle.
- Stalling.
- High idle speed.

Special Tools

ILLUSTRATION	**TOOL NO.** TOOL NAME
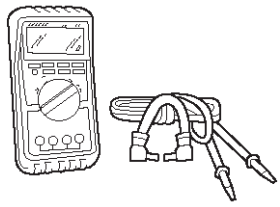	5-8840-0285-0 **(J 39200)** High Impedance Multimeter (Digital Voltmeter – DVM)
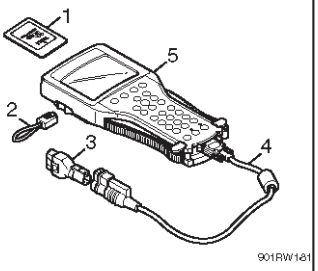	(1) PCMCIA Card (2) RS232 Loop Back Connector (3) SAE 16/19 Adapter (4) DLC Cable (5) TECH–2
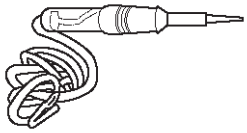	5-8840-0607-0 **(J 34142-B)** Unpowered Test Light
	5-8840-0385-0 **(J 35616-A/BT-8637)** Connector Test Adapter Kit
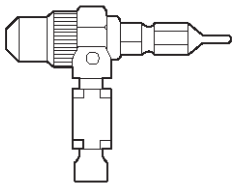	5-8840-0383-0 **(J 26792/BT-7220-1)** Spark Tester
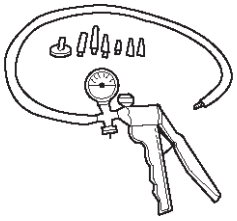	5-8840-0279-0 **(J 23738-A)** Vacuum Pump with Gauge or common tool

ILLUSTRATION	**TOOL NO.** TOOL NAME
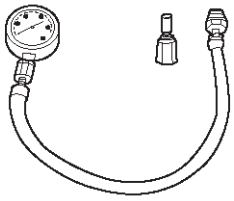	**BT-8515** Exhaust Back Pressure Tester or common tool
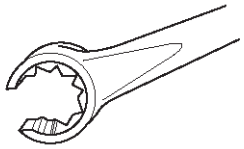	5-8840-2640-0 **(J 39194-B)** Heated Oxygen Sensor Wrench
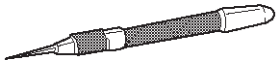	5-8840-0632-0 **(J 35689-A)** Terminal Remover
	5-8840-0388-0 **(J 28742-A)** Weather Pack II Terminal Remover
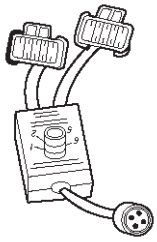	5-8840-2635-0 **(J 39021-90)** Injector Switch Box
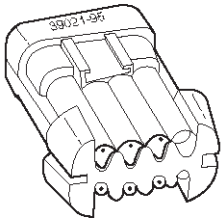	5-8840-2636-0 **(J 39021-65)** Injector Test Light

ENGINE

ENGINE EXHAUST

CONTENTS

General Description 6F–2
Front Exhaust Pipe 6F–3
Front Exhaust Pipe and Associated Parts . 6F–3
Removal 6F–3
Installation 6F–3
Three Way Catalytic Converter LH 6F–4
Removal 6F–4
Installation 6F–4
Three Way Catalytic Converter RH 6F–5
Removal 6F–5
Installation 6F–5
Exhaust Silencer 6F–6
Exhaust Silencer and Associated Parts . . . 6F–6
Removal 6F–6
Installation 6F–7
Rear Exhaust pipe 6F–8
Rear Exhaust pipe and Associated Parts . 6F–8
Removal 6F–8
Installation 6F–8
Main Data and Specifications 6F–9

General Description

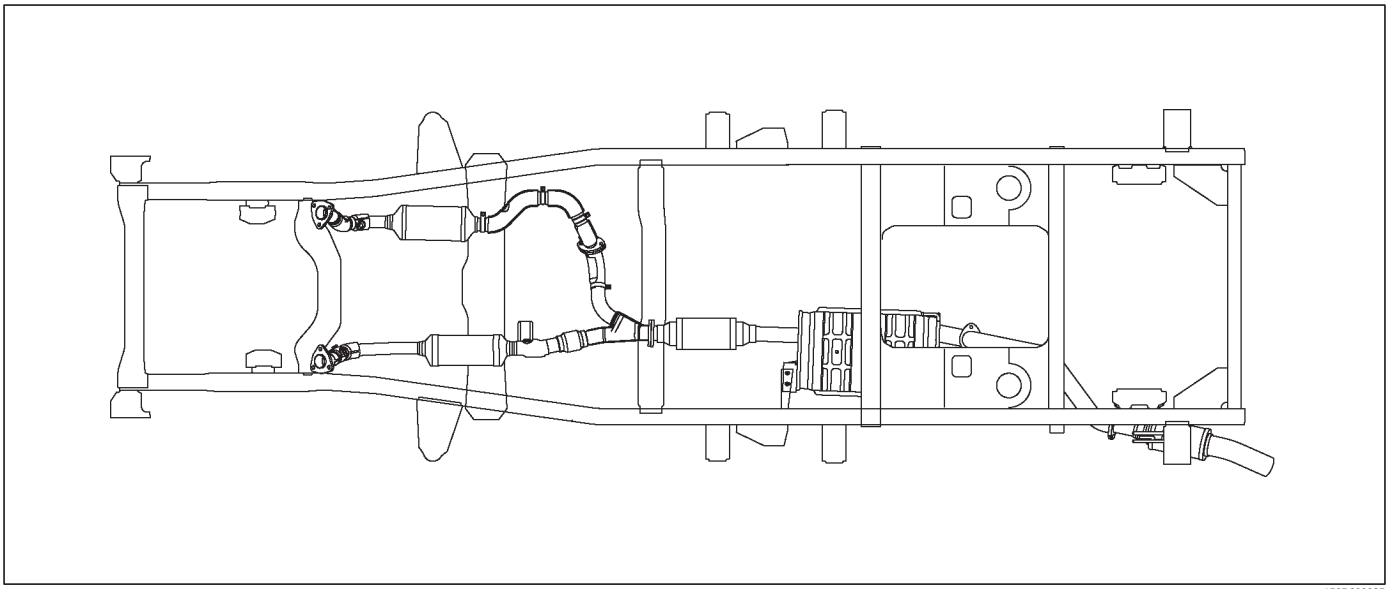

150R200025

When inspecting or replacing exhaust system components, make sure there is adequate clearance from all points on the underbody to prevent overheating the floor pan and possible damage to the passenger compartment insulation and trim materials.

Check complete exhaust system and nearby body areas and rear compartment lid for broken, damaged, missing or mispositioned parts, open seams, holes, loose connections or other deterioration which could permit exhaust fumes to seep into the rear compartment or passenger compartment. Dust or water in the rear compartment may be an indication of a problem in one of these areas. Any faulty areas should be corrected immediately.

Hangers

Various types of hangers are used to support exhaust system(s). These include conventional rubber straps, rubber rings, and rubber blocks.

The installation of exhaust system supports is very important, as improperly installed supports can cause annoying vibrations which can be difficult to diagnose.

Three Way Catalytic Converter

The three way catalytic converter is an emission control device added to the exhaust system to reduce pollutants from the exhaust gas stream.

CAUTION: The catalytic converter requires the use of unleaded fuel only.

Periodic maintenance of the exhaust system is not required. If the vehicle is raised for other service, it is advisable to check the condition of the complete exhaust system.

A dual bed monolith catalytic converter is used in combination with three way catalytic converter.

Catalytic Types:

Three way (Reduction/Oxidation) catalyst

The catalyst coating on the three way (reduction) converter contains platinum and rhodium which lowers the levels of nitrous oxide (NOx) as well as hydrocarbons (HC) and carbon monoxide (Co).

Gasket

The gasket must be replaced whenever a new exhaust pipe, muffler or catalytic converter is installed.

Front Exhaust Pipe

Front Exhaust Pipe and Associated Parts

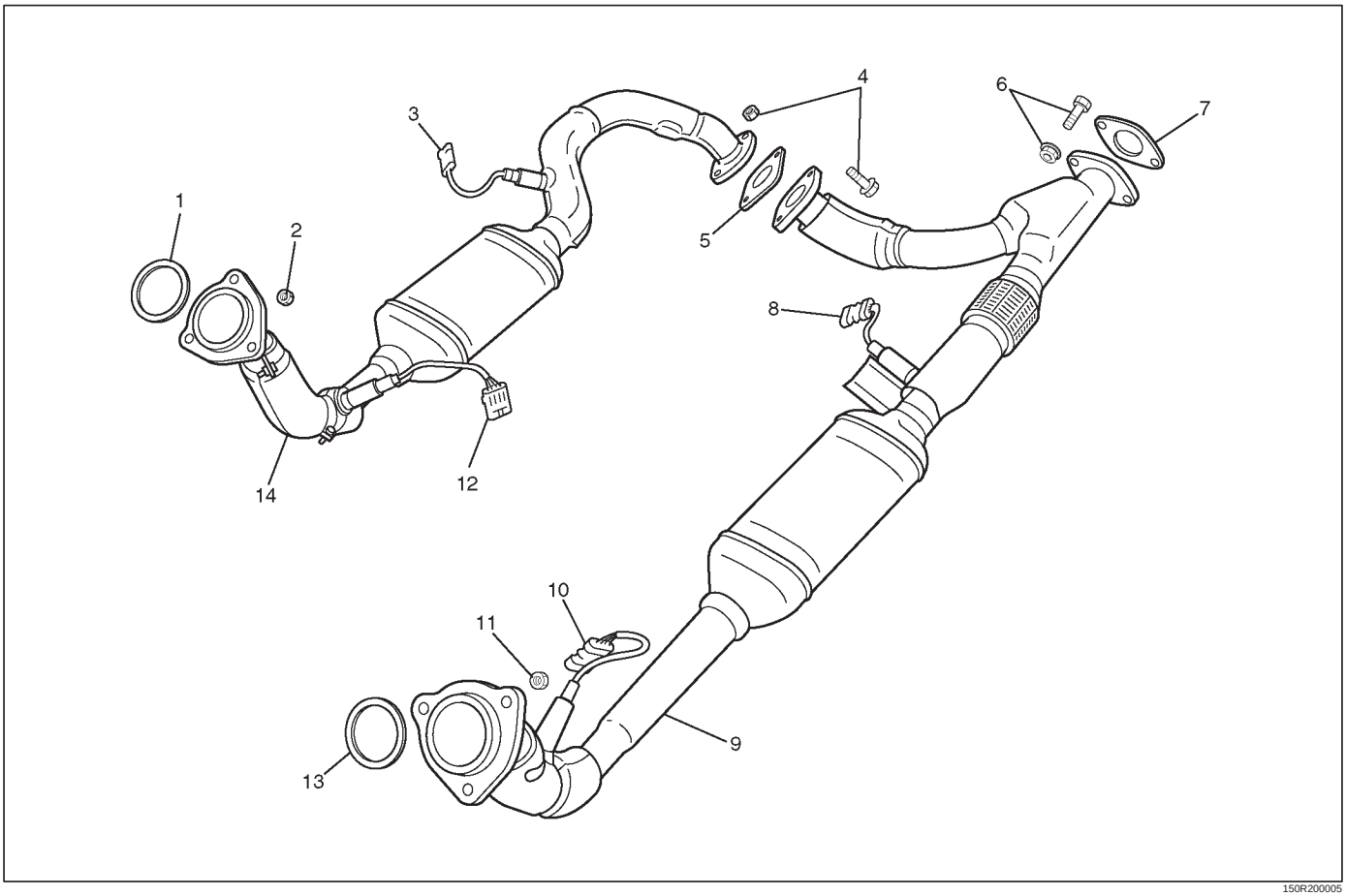

150R200005

Legend

(1) Gasket
(2) Front Exhaust Pipe RH Fixing Nuts
(3) O_2 Sensor Harness Connector
(4) Front Exhaust Pipe RH Fixing Bolts and Nuts
(5) Gasket
(6) Front Exhaust Pipe Fixing Bolts and Nuts
(7) Gasket
(8) O_2 Sensor Harness Connector
(9) Front Exhaust Pipe LH
(10) O_2 Sensor Harness Connector
(11) Front Exhaust Pipe LH Fixing Nuts
(12) O_2 Sensor Harness Connector
(13) Gasket
(14) Front Exhaust Pipe RH

Removal

1. Disconnect battery ground cable.
2. Raise the vehicle and support with suitable safety stands.
3. Disconnect O_2 sensor harness connector (3)(8)(10)(12).
4. Remove front exhaust pipe fixing bolts and nuts (4)(6).
5. Remove front exhaust pipe fixing three stud nuts (2)(11) from exhaust manifold.
6. Remove front exhaust pipe (9)(14).

Installation

1. Install front exhaust pipe (9)(14) and tighten three stud nuts (2)(11) and two nuts (4)(6) to the specified torque.

   Torque

   Stud Nuts : 67 N·m (6.8 kg·m/49 lb ft)

   Nuts(4) : 57 N·m (5.8 kg·m/42 lb ft)

   Nuts(6) : 43 N·m (4.4 kg·m/32 lb ft)
2. Reconnect O_2 sensor harness connector (3)(8)(10)(12).

Three Way Catalytic Converter LH

Removal

1. Disconnect battery ground cable.
2. Raise the vehicle and support with suitable safety stands.
3. Disconnect front O_2 sensor harness connector and rear O_2 sensor harness connector (3)(4).
4. Remove exhaust front pipe fixing three stud nuts (2) from exhaust manifold side and two nuts (6)(7) from rear end of exhaust front pipe (9).

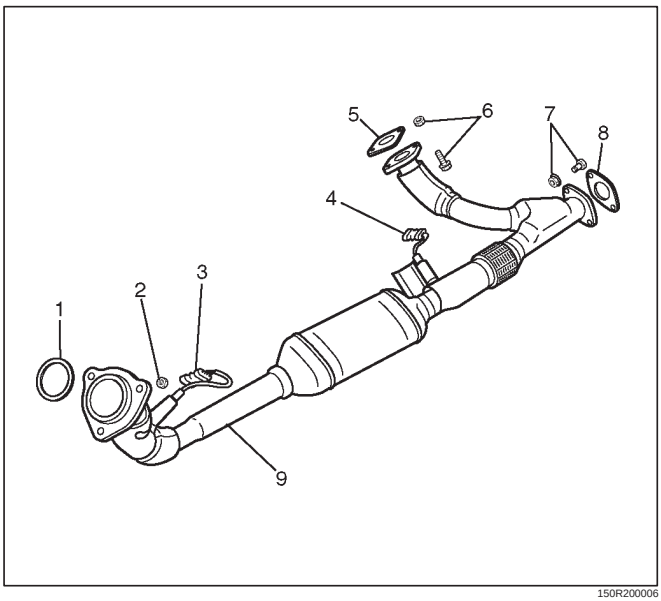

150R200006

Legend

(1) Gasket
(2) Front Exhaust Pipe Fixing Three Stud Nuts
(3) O_2 Sensor Harness Connector
(4) O_2 Sensor Harness Connector
(5) Gasket
(6) Front Exhaust Pipe RH Fixing Bolts and Nuts
(7) Front Exhaust Pipe Fixing Bolts and Nuts
(8) Gasket
(9) Front Exhaust Pipe LH

Installation

1. Install exhaust front pipe (9) and tighten three studs nuts (2) and two nuts (6)(7) to the specified torque.

   Torque

   Stud nuts : 67 N·m (6.8 kg·m/49 lb ft)

   Nuts(6) : 57 N·m (5.8 kg·m/42 lb ft)

   Nuts(7) : 43 N·m (4.4 kg·m/32 lb ft)
2. Reconnect O_2 sensor harness connector (3)(4).

Three Way Catalytic Converter RH

Removal

1. Disconnect battery ground cable.
2. Raise the vehicle and support with suitable safety stands.
3. Remove torsion bar. Refer to removal procedure in Front Suspension section.
4. Disconnect front O_2 sensor harness connector (6) and rear O_2 sensor harness connector (3).
5. Remove front exhaust pipe fixing bolts and nuts (4).
6. Remove three stud nuts (2) from exhaust manifold then remove the exhaust front pipe (7).

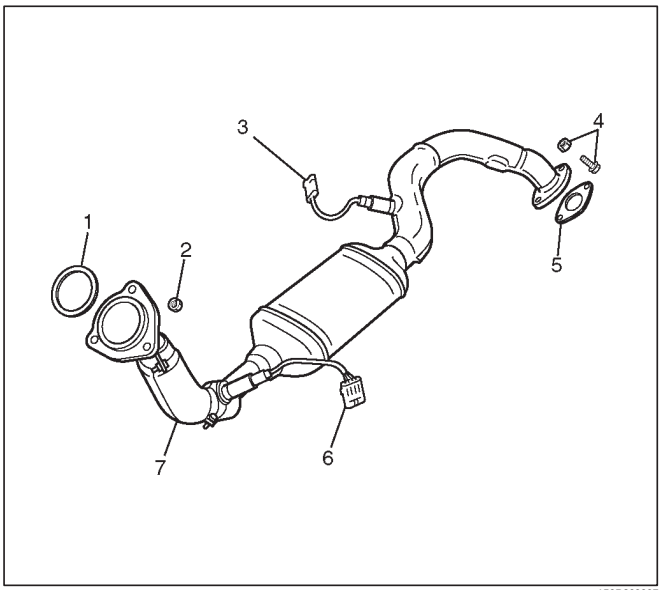

150R200007

Legend

(1) Gasket
(2) Front Exhaust Pipe Fixing Three Stud Nuts
(3) O_2 Sensor Harness Connector
(4) Front Exhaust Pipe Fixing Bolts and Nuts
(5) Gasket
(6) O_2 Sensor Harness Connector
(7) Front Exhaust Pipe RH

Installation

1. Install front exhaust pipe (7) and tighten three stud nuts (2) and two nuts (4) to the specified torque.

   Torque

   Stud nuts : 67 N·m (6.8 kg·m/49 lb ft)

   Nuts : 57 N·m (5.8 kg·m/42 lb ft)
2. Install the torsion bar and readjust the vehicle height. Refer to the installation and vehicle height adjustment instructions in the Front Suspension Section.

Exhaust Silencer

Exhaust Silencer and Associated Parts

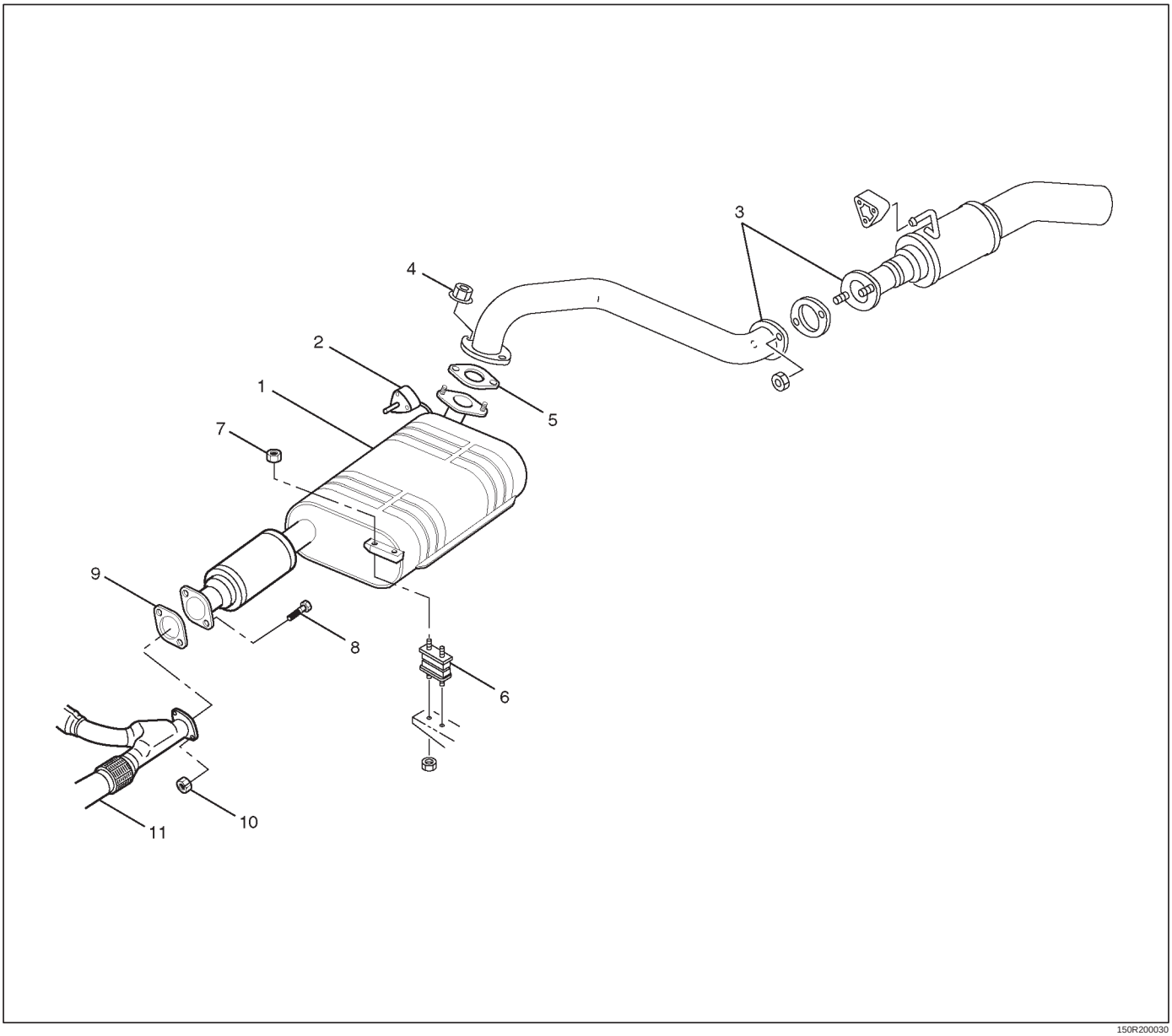

150R200030

Legend

(1) Exhaust Silencer
(2) Mounting Rubber
(3) Rear Exhaust Pipe
(4) Rear Exhaust Pipe Nuts
(5) Gasket
(6) Rubber Support
(7) Nut
(8) Exhaust Silencer Fixing Bolts
(9) Gasket
(10) Exhaust Silencer Fixing Nuts
(11) Exhuast Front Pipe

Removal

1. Disconnect battery ground cable.
2. Raise the vehicle and support with suitable safety stands.
3. Remove rear exhaust pipe (3). Refer to Rear Exhaust Pipe in this section
4. Remove exhaust silencer fixing bolts (8) then disconnect exhaust silencer from front exhaust pipe (11).

5. Remove exhaust silencer mounting nuts (7) from rubber support (6) chassis side then remove exhaust silencer (1).

Installation

1. Install the exhaust silencer (1) and tighten two nuts (12) to the specified torque.

   Nuts: 16 N·m (1.6 kg·m/12 lb ft)

2. Install the exhaust silencer and tighten two bolts (8) on front exhaust pipe to specified torque.

   Bolts: 43 N·m (4.4 kg·m/32 lb ft)

3. Install the rear exhaust pipe (3) and tighten on exhaust silencer to specified torque.

   Nuts: 43 N·m (4.4 kg·m/32 lb ft)

Rear Exhaust pipe

Rear Exhaust pipe and Associated Parts

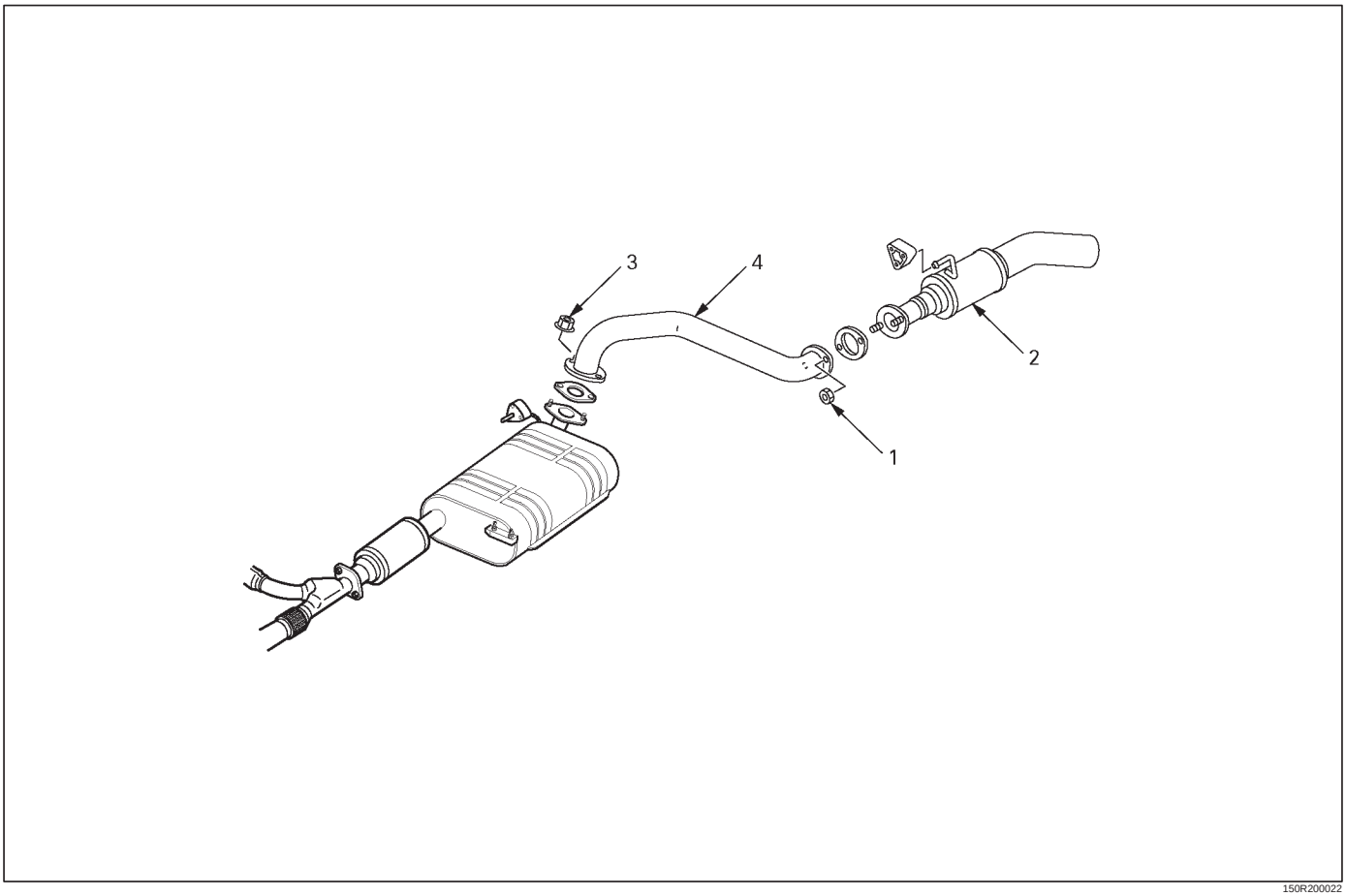

150R200022

Legend

(1) Tail Pipe Fixing Nuts
(2) Taile Pipe
(3) Rear Exhaust Pipe Fixing Nuts
(4) Rear Exhaust Pipe

Removal

1. Disconnect battery ground cable.
2. Raise the vehicle and support with suitable safety stands.
3. Remove tail pipe fixing nuts (1), then remove the tail pipe (2).
4. Remove rear exhaust pipe fixing nuts (3), then remove the rear exhaust pipe (4).

Installation

1. Install the rear exhaust pipe (4) and tighten two nuts (3) on exhaust silencer to specified torque.

   Nuts: 43 N·m (4.4 kg·m/32 lbft)

2. Install the tail pipe (2) and tighten two nuts (1) on rear exhaust pipe to specified torque.

   Nuts: 57 N·m (5.8 kg·m/42 lb ft)

Main Data and Specifications

Torque Specifications

N·m (kg·m/lb ft)

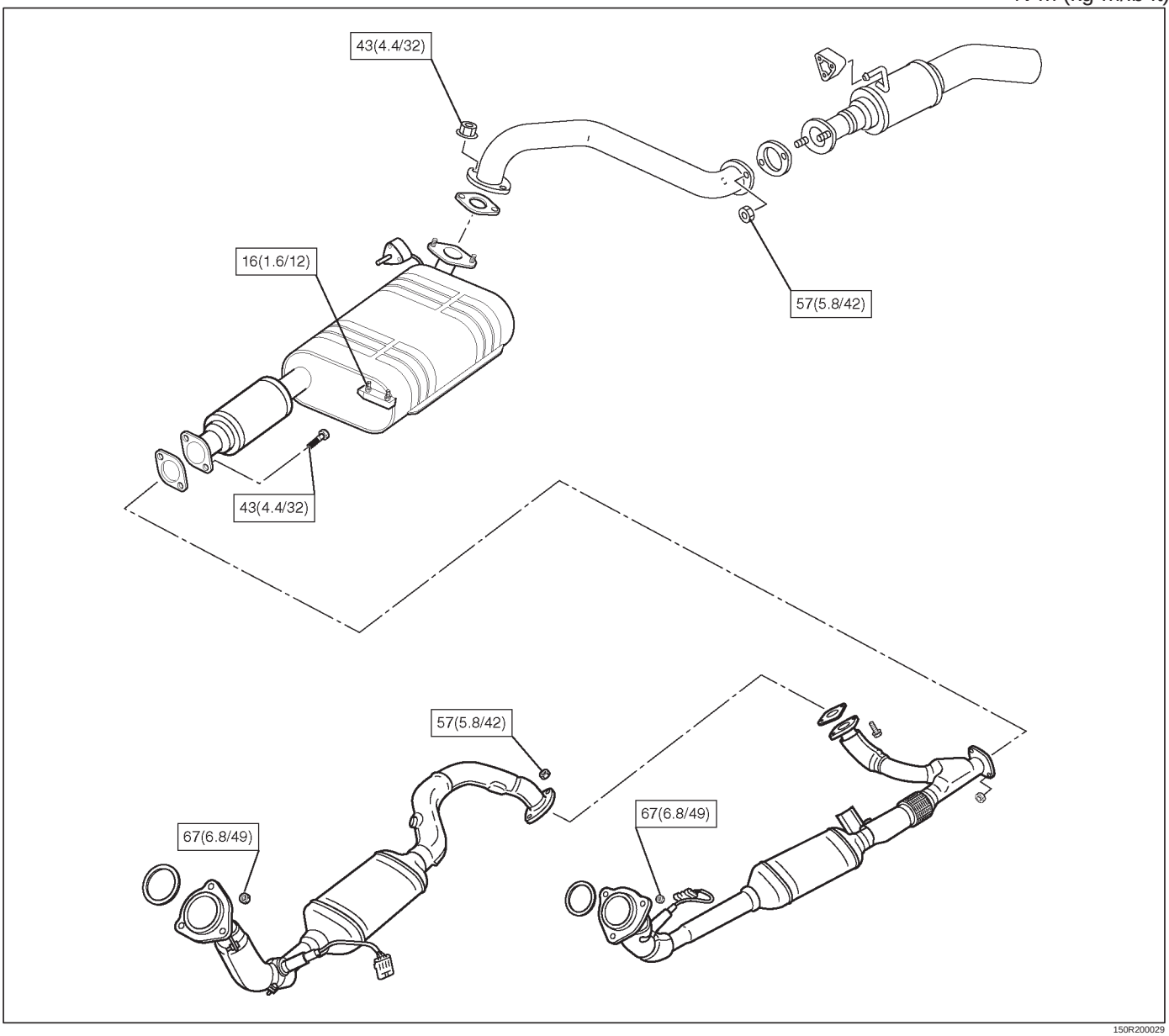

150R200029

ENGINE

ENGINE LUBRICATION

CONTENTS

Service Precaution 6G–1
General Description 6G–2
Oil Pump 6G–3
Oil Pump and Associated Parts 6G–3
Oil Pump and Associated Parts 6G–4
Inspection and Repair 6G–4
Reassembly 6G–5
Oil Pan and Crankcase 6G–7
Removal 6G–7
Installation 6G–7
Oil Pump 6G–10
Removal 6G–10
Installation 6G–10
Oil Pump Oil Seal 6G–12
Removal 6G–12
Installation 6G–12
Oil Filter 6G–13
Removal 6G–13
Installation 6G–13
Main Data and Specification 6G–14
Special Tool 6G–15

Service Precaution

WARNING: THIS VEHICLE HAS A SUPPLEMENTAL RESTRAINT SYSTEM (SRS). REFER TO THE SRS COMPONENT AND WIRING LOCATION VIEW IN ORDER TO DETERMINE WHETHER YOU ARE PERFORMING SERVICE ON OR NEAR THE SRS COMPONENTS OR THE SRS WIRING. WHEN YOU ARE PERFORMING SERVICE ON OR NEAR THE SRS COMPONENTS OR THE SRS WIRING, REFER TO THE SRS SERVICE INFORMATION. FAILURE TO FOLLOW WARNINGS COULD RESULT IN POSSIBLE AIR BAG DEPLOYMENT, PERSONAL INJURY, OR OTHERWISE UNNEEDED SRS SYSTEM REPAIRS.

CAUTION: Always use the correct fastener in the proper location. When you replace a fastener, use ONLY the exact part number for that application. ISUZU will call out those fasteners that require a replacement after removal. ISUZU will also call out the fasteners that require thread lockers or thread sealant. UNLESS OTHERWISE SPECIFIED, do not use supplemental coatings (Paints, greases, or other corrosion inhibitors) on threaded fasteners or fastener joint interfaces. Generally, such coatings adversely affect the fastener torque and the joint clamping force, and may damage the fastener. When you install fasteners, use the correct tightening sequence and specifications. Following these instructions can help you avoid damage to parts and systems.

General Description

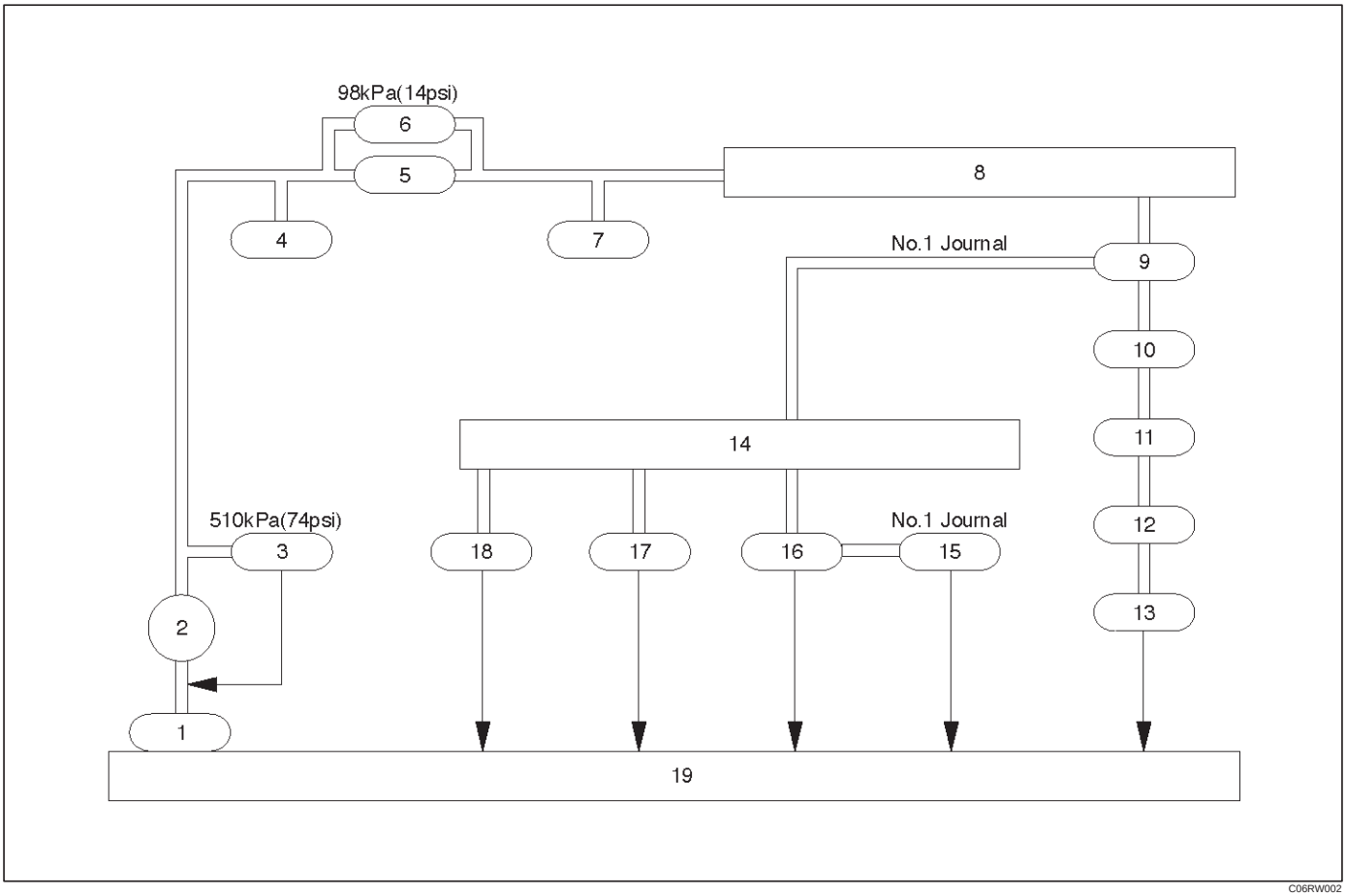

Legend

(1) Oil Strainer
(2) Oil Pump
(3) Relief Valve
(4) Oil Pressure Switch
(5) Oil Filter
(6) Safety Valve
(7) Oil Pressure Unit
(8) Oil Gallery
(9) Crankshaft Bearing
(10) Crankshaft
(11) Connecting Rod Bearing
(12) Connecting Rod
(13) Piston
(14) Oil Gallery; Cylinder Head
(15) Camshaft
(16) Camshaft Journal
(17) Front Journal; Camshaft Drive Gear
(18) Rear Journal; Camshaft Drive Gear
(19) Oil Pan

Oil Pump

Oil Pump and Associated Parts

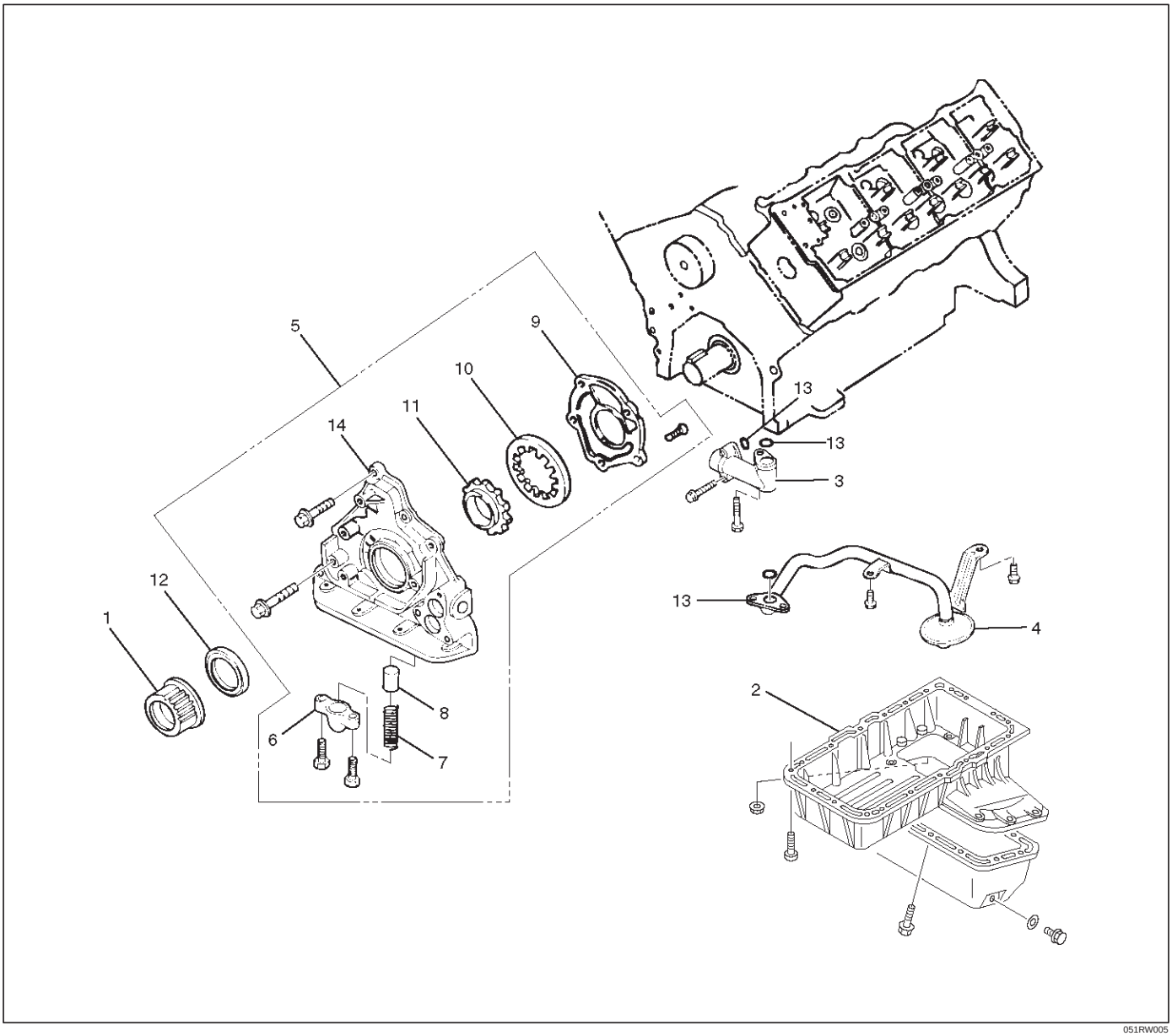

051RW005

Legend

(1) Crankshaft Timing Pulley
(2) Crankcase with Oil Pan
(3) Oil Pipe
(4) Oil Strainer
(5) Oil Pump Assembly
(6) Plug
(7) Spring
(8) Relief Valve
(9) Oil Pump Cover
(10) Driven Gear
(11) Drive Gear
(12) Oil Seal
(13) O-ring
(14) Oil Pump Body

Oil Pump and Associated Parts

1. Remove crankshaft timing pulley.
2. Remove crankcase with oil pan.
3. Remove oil pipe.
4. Remove oil strainer.
5. Remove oil pump assembly.
6. Remove plug.
7. Remove spring.
8. Remove relief valve.
9. Remove oil pump cover.
10. Remove driven gear.
11. Remove drive gear.
12. Remove oil seal.
13. Remove O-ring.

Inspection and Repair

CAUTION: Make necessary correction or parts replacement if wear, damage or any other abnormal conditions are found during inspection.

Relief Valve (8)

- Check to see that the relief valve slides freely.
- The oil pump must be replaced if the relief valve does not slide freely.
- Replace the spring and/or the oil pump assembly (5) if the spring is damaged or badly worn.

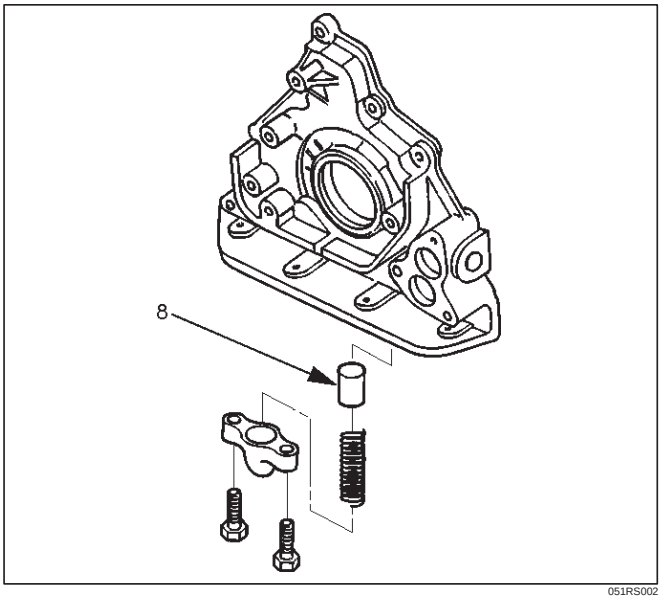

051RS002

Body (14) and Gears (10, 11)

The pump assembly must be replaced if one or more of the conditions below is discovered during inspection.

- Badly worn or damaged driven gear (10).
- Badly worn drive gear (11) driving face.
- Badly scratched or scored body sliding face (14) or driven gear (10).
- Badly worn or damaged gear teeth.

Measure the clearance between the body and the driven gear with a feeler gauge.

Standard : 0.10 mm–0.18 mm (0.0039 in.–0.0070 in)

Limit : 0.20mm (0.0079 in)

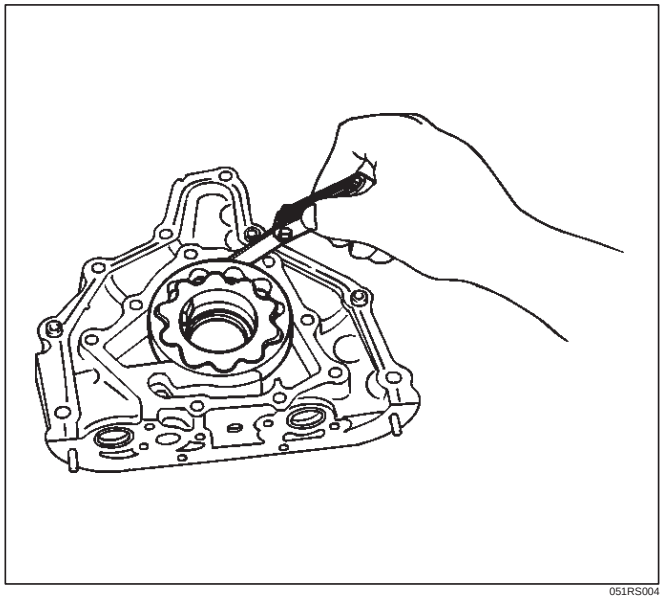

051RS004

- Measure the clearance between the drive gear and driven gear with a feeler gauge.

Standard : 0.11 mm–0.24 mm (0.0043 in–0.0094 in)

Limit : 0.35mm (0.0138 in)

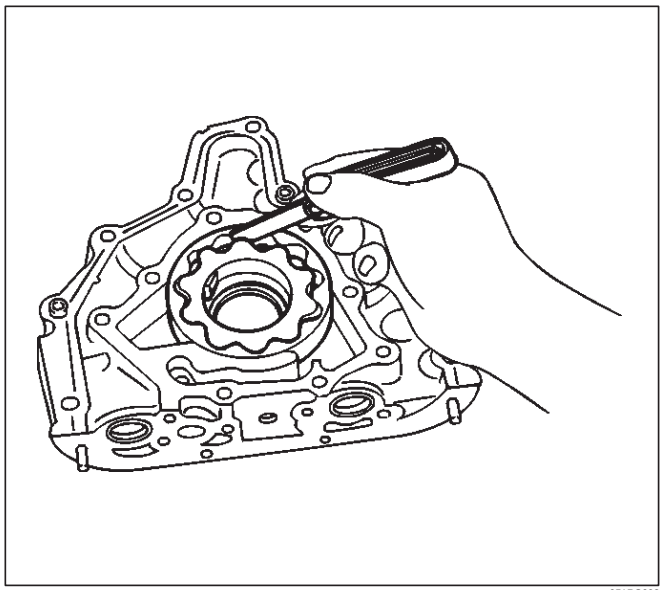

051RS003

- Measure the side clearance with a precision straight edge and a feeler gauge.

Clearance

Standard : 0.03 mm–0.09 mm (0.0011 in–0.0035 in)

Limit : 0.15mm (0.0059 in)

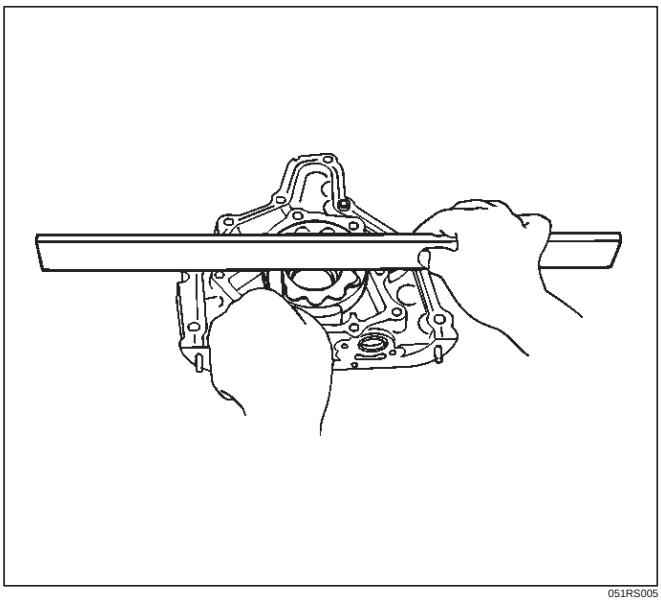

051RS005

Oil Strainer

Check the oil strainer for cracking and scoring. If cracking and scoring are found, the oil strainer must be replaced.

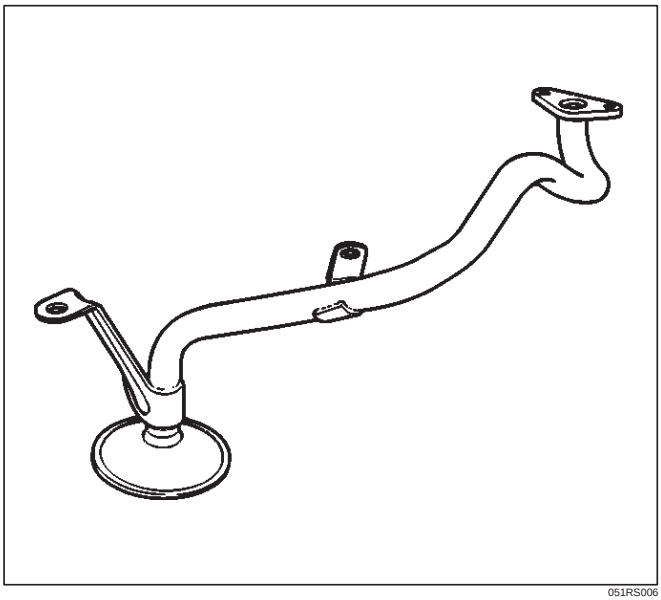

051RS006

Reassembly

1. Install drive gear (11).
2. Install driven gear (10).
3. Install oil pump cover (9) and first, loosely tighten all of the attaching screws. Next, tighten the attaching screws to the specified torque.

   Torque : 10 N·m (1.0 Kg·m/89 lb in)

   After installation, check that the gear rotates smoothly.
4. Install relief valve (8) and apply engine oil to the relief valve and spring (7).
5. Install spring (7).
6. Install the plug (6).

   Torque : 8 N·m (0.8 Kg·m/69 lb in)

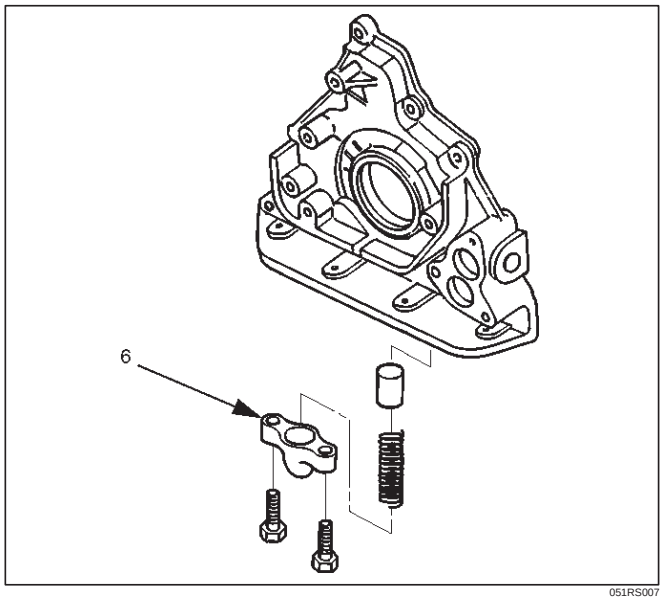

051RS007

7. Install oil pump assembly (5).
   - Carefully remove any oil from the cylinder body and the pump. Apply sealant (TB–1207B or equivalent) to the pump fitting face as shown in illustration. Take care that sealant is not applied to oil port surfaces. The oil pump assembly must be installed within 5 minutes after sealant application before the sealant hardens.

CAUTION: Do not apply an excessive amount of sealant to the contact surface. Applying too much sealant will overflow the contact surfaces. This could cause serious damage to the engine.

- **Attach oil pump assembly to cylinder body.**
- **Tighten the oil pump fixing bolts.**

  Torque : 25 N·m (2.5 Kg·m/18 lb·ft)

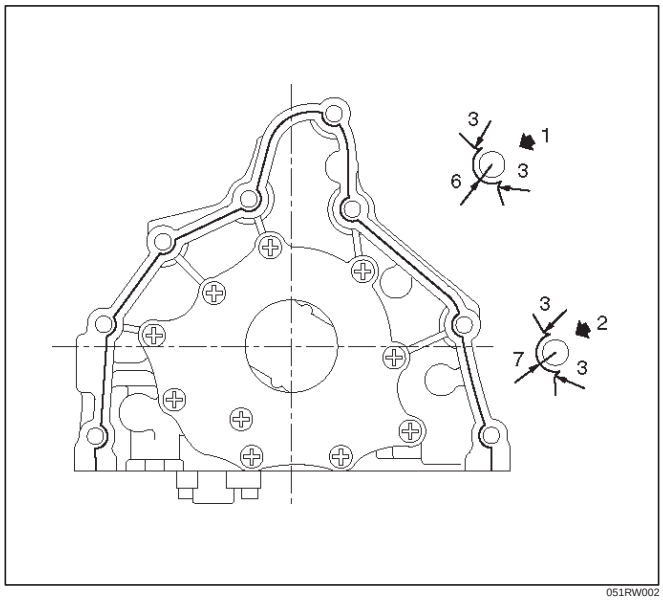

051RW002

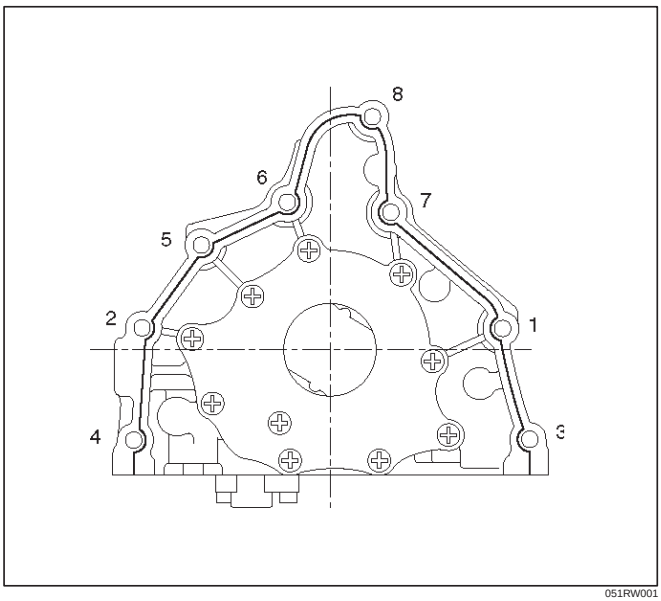

051RW001

Legend

(1) Around Bolt Holes
(2) Around Dowel Pin

8. Install the new oil seal (12). Apply engine oil to the oil seal lip before installation then use 5–8840–2287–0 oil seal Installer, install oil seal.

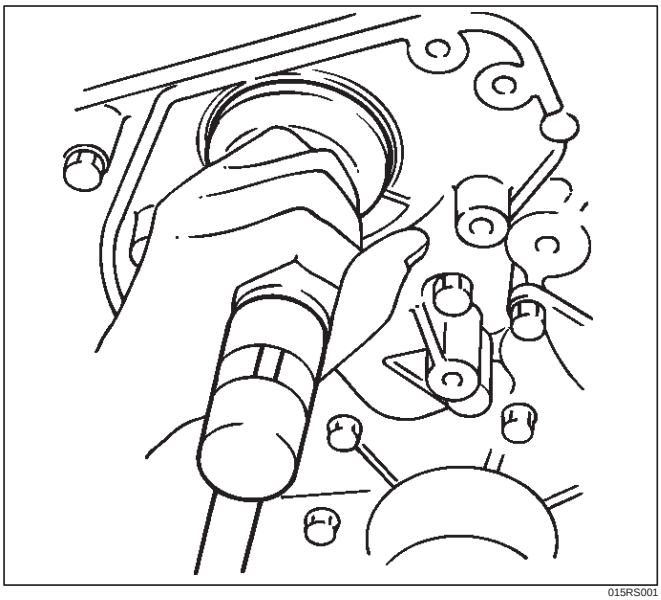

015RS001

9. Install oil strainer (4) with O-ring (13).
   Torque: 25 N·m (2.5 Kg·m/18 lb ft)
10. Install oil pipe (3) with O-ring (13).
   Torque: 25 N·m (2.5 Kg·m/18 lb ft)
11. Install crankcase with oil pan (2).
   - Remove oil on crankcase mounting surface and dry the surface.
   - Apply a proper 4.5 mm (0.7 in) wide bead of sealant (TB1207C or equivalent) to the crankcase mounting surface. The bead must be continuous.
   - The crankcase must be installed within 5 minutes after sealant application before the sealant hardens.
   - Tighten fixing bolts to the specified torque.

   Torque : 10 N·m (1.0 Kg·m/89 lb in)

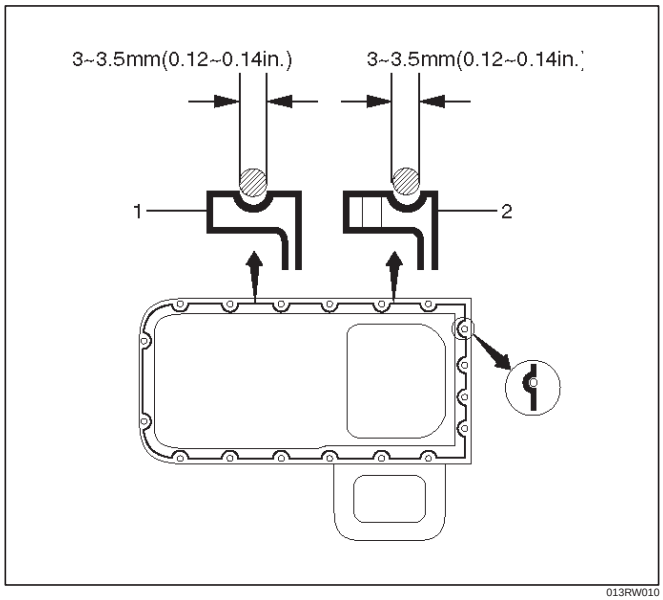

013RW010

12. Install crankshaft timing pulley.

Oil Pan and Crankcase

Removal

1. Disconnect battery ground cable.
2. Drain engine oil.
3. Lift vehicle by supporting the frame.
4. Remove front wheels.
5. Remove oil level dipstick from level gauge tube.
6. Remove stone guard.
7. Remove radiator under fan shroud.
8. Remove suspension cross member fixing bolts, 2 pcs each per side and remove suspension cross member.
9. Remove pitman arm and relay lever assembly, using the 5–8840–2005–0 remover, remove pitman arm from the steering unit and remove four fixing bolts for relay lever assembly.
10. Remove axle housing assembly four fixing bolts from housing isolator side and mounting bolts from wheel side. At this time support the axle with a garage jack and remove axle housing assembly.
11. Remove oil pan fixing bolts.
12. Remove oil pan, using 5–8840–2153–0 sealer cutter, remove oil pan.

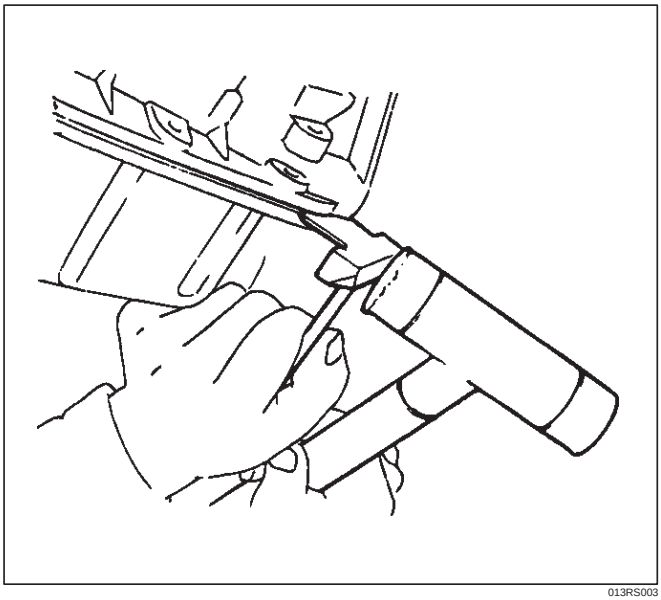

013RS003

13. Remove crankcase fixing bolts.
14. Remove crankcase, using 5–8840–2153–0 sealer cutter, remove crankcase.

NOTE: Do not deform or damage the flange of oil pan and crankcase.

Replace the oil pan and/or crankcase if deformed or damaged.

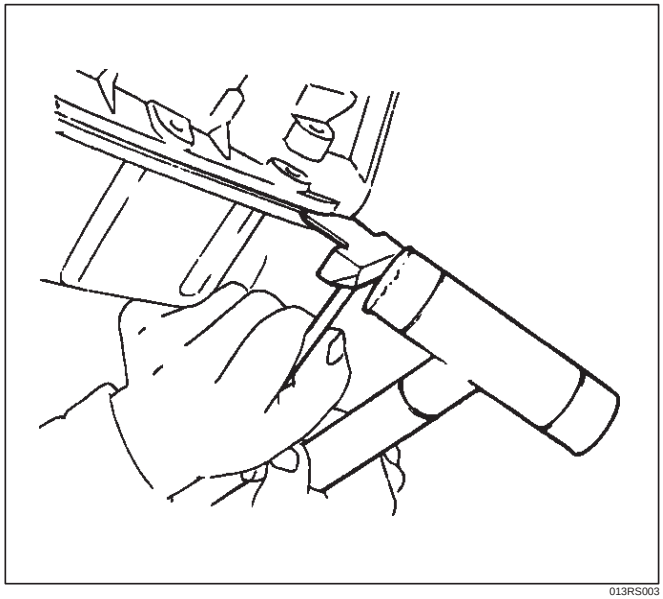

013RS003

Installation

1. Install crankcase.
   1. Remove residual sealant, lubricant and moisture from mounting surface, then dry thoroughly.
   2. Properly apply a 4.5 mm (0.7 in) wide bead of sealant (TB-1207C or equivalent) to mounting surface of crankcase.

      Sealant beat must be continuous.
      - The crankcase must be installed within 5 minutes after sealant application before the sealant hardens.

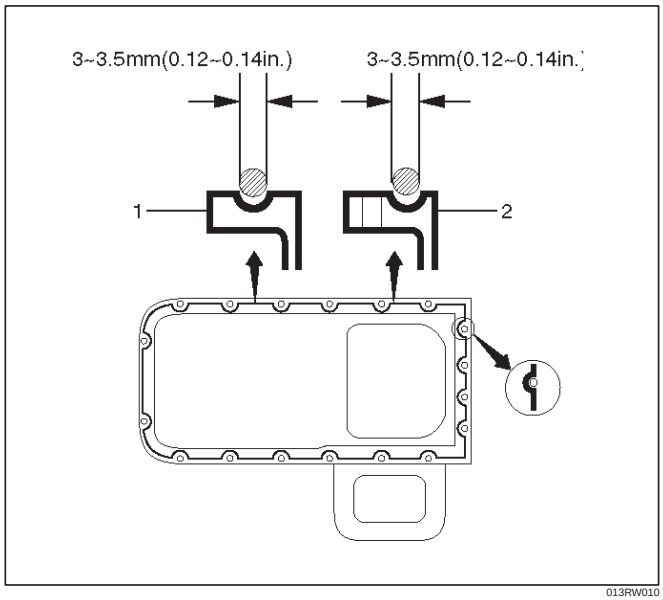

013RW010

3. Install crankcase, tighten crankcase fixing bolts to the specified torque.

Torque : 10 N·m (1.0 Kg·m/89 lb in)

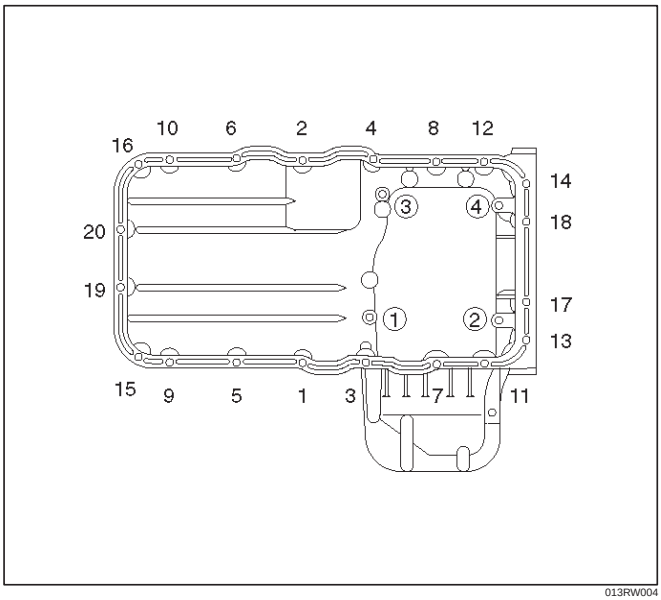

013RW004

2. Install oil pan
   1. Remove residual sealant, lubricant and moisture from mounting surface, then dry thoroughly.
   2. Properly apply a 4.5 mm (07 in) wide bead of sealant (TB-1207C or equivalent) to mounting surface of oil pan.

      Sealant beat must be continuous.
      - The crankcase must be installed within 5 minutes after sealant application befor the sealant hardens.

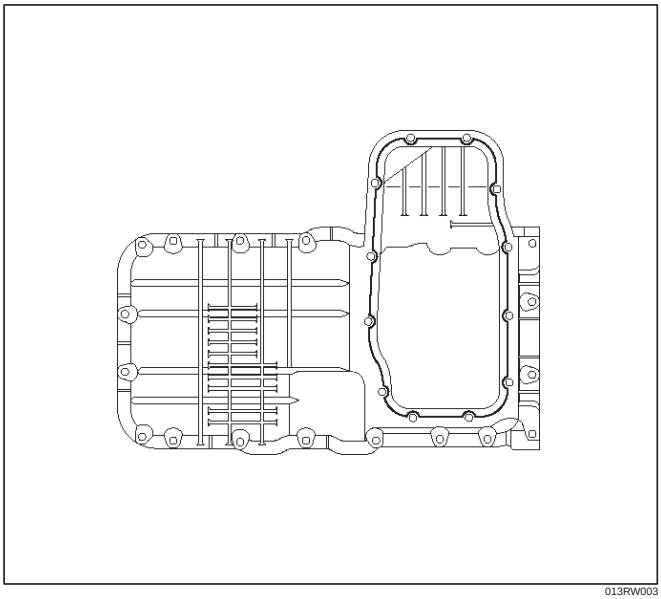

013RW003

3. Install oil pan, tighten oil pan fixing bolts to the specified torque.

Torque : 25 N·m (2.5 Kg·m/18 lb ft)

3. Install axle housing assembly and tighten fixing bolts to the specified torque.

Axle case bolts

Torque : 82 N·m (8.4 Kg·m/60 lb ft)

Mounting bolts

Torque : 152 N·m (15.5 Kg·m/112 lb ft)

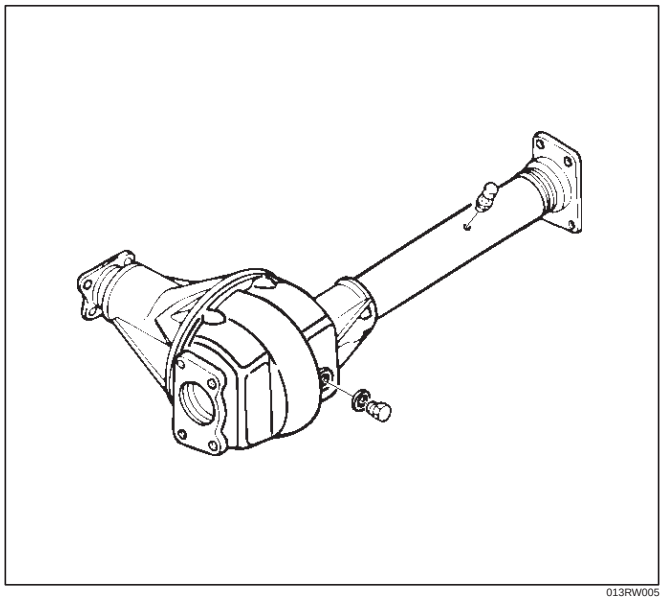

013RW005

4. Install relay lever assembly and tighten fixing bolts.

Torque: 44 N·m (4.5 Kg·m/32 lb ft)

5. Engage teeth of pitman arm and steering unit, and tighten nut to the specified torque.

Torque : 216 N·m (22.0 Kg·m/159 lb ft)

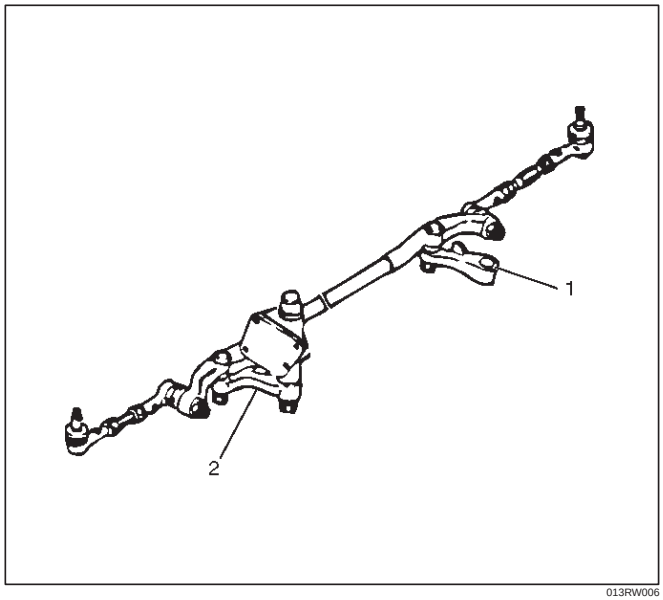

013RW006

Legend

(1) Pitman Arm
(2) Relay Lever

6. Install suspension cross member and tighten fixing bolts to the specified torque.

Torque : 78 N·m (8.0 Kg·m/58 lb ft)

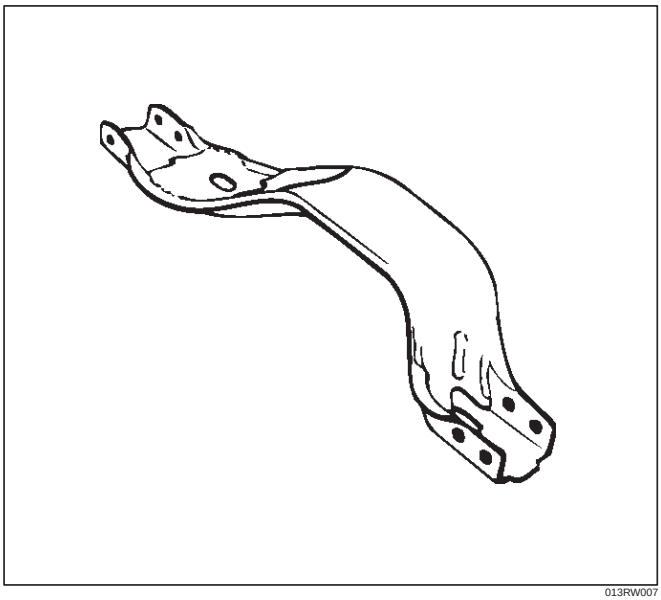

013RW007

7. Install radiator under fan shroud.
8. Install stone guard.
9. Install engine oil level dipstick.
10. Fill engine oil until full level on engine oil gauge dipstick.

Oil Pump

Removal

1. Disconnect battery ground cable.
2. Drain engine oil.
3. Remove crankcase assembly.
   - Refer to removal procedure for Oil Pan and Crankcase in this manual.
4. Remove crankshaft pulley.
   - Refer to removal procedure for Crankshaft Pulley in this manual.
5. Remove timing belt.
   - Refer to removal procedure for Timing Belt in this manual.
6. Remove timing pulley from crankshaft.
7. Remove four fixing bolts from oil filter assembly.
8. Remove oil strainer fixing bolts, remove oil strainer assembly with O-ring.
9. Remove three bolts from oil pipe and O-ring.
10. Remove eight oil pump fixing bolts, then oil pump assembly.
11. Remove sealant from mounting surface of oil pump assembly, cylinder block and take care not to damage mounting surfaces of oil pump and cylinder block.

Installation

1. Install oil pump assembly
   - Apply sealant (TB-1207B or equivalent) to the oil pump mounting surfaces as shown in the illustration.
   - The oil pump assembly must be installed within 5 minutes after sealant application before the sealant hardens.

NOTE: Do not apply sealant to the oil ports.

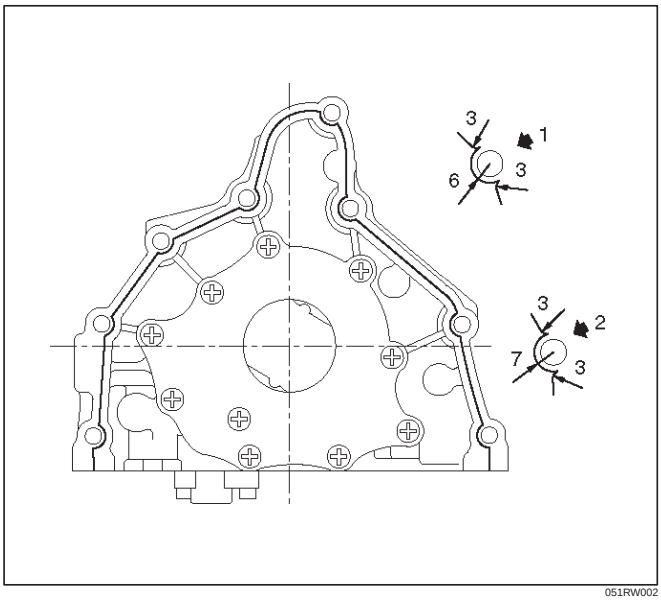

051RW002

- Use 5–8840–2287–0 installer when installing new oil seal.

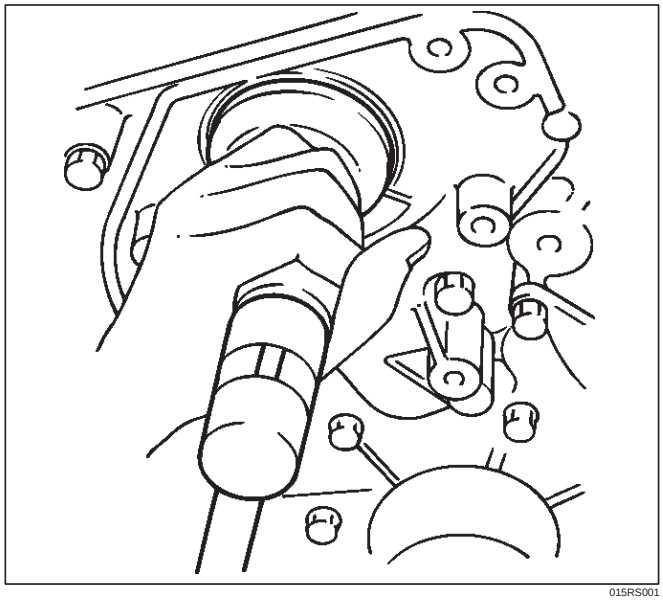

015RS001

- Apply engine oil to oil seal lip.
- Install oil pump assembly to the cylinder block.

NOTE: Do not damage oil seal during installation of oil pump assembly.

- Tighten fixing bolts to the specified torque.

Torque : 25 N·m (2.5 Kg·m/18 lb ft)

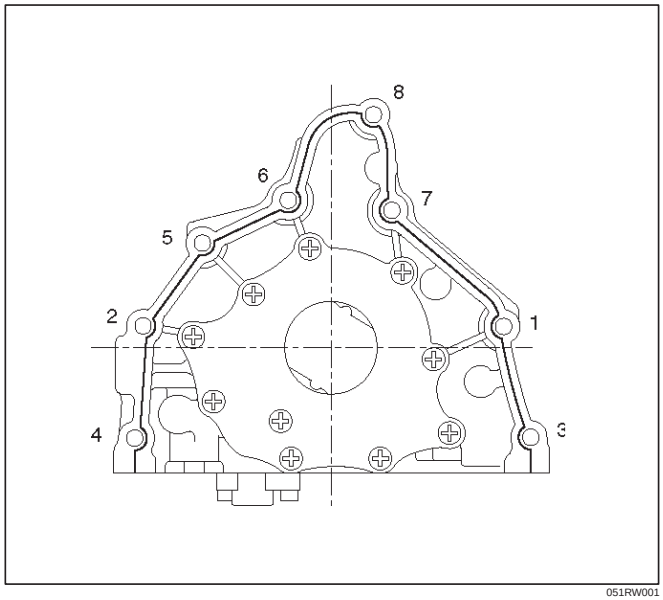

051RW001

2. Install oil pipe with O-ring, tighten fixing bolt to the specified torque.

   Torque : 10 N·m (1.0 Kg·m/89 lb in)

3. Install oil strainer with O-ring, tighten fixing bolt to the specified torque.

   Torque : 25 N·m (2.5 Kg·m/18 lb ft)

4. Install oil filter assembly and tighten bolts to the specified torque.

Torque : 25 N·m (2.5 Kg·m/18 lb ft)

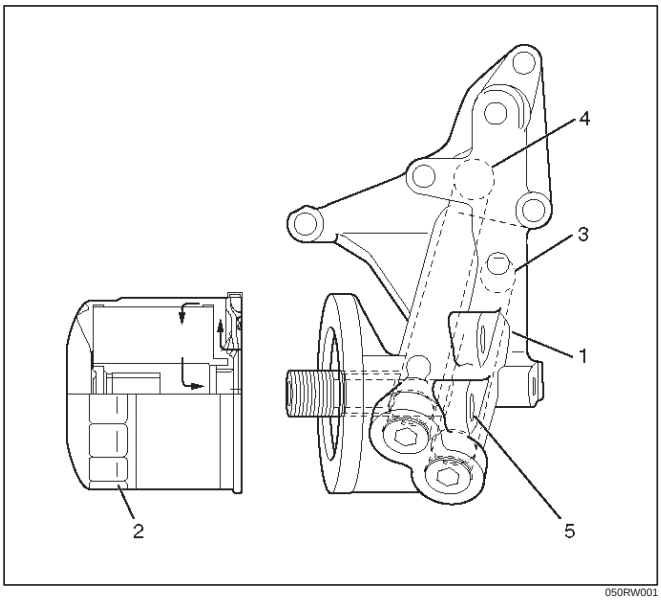

050RW001

Legend

(1) Oil Pump
(2) Oil Filter
(3) Oil Gallery
(4) From Oil Filter
(5) To Oil Filter

5. Install timing pulley on crankshaft.
   Install timing belt.
   - Refer to installation procedure for Timing Belt in this manual.
6. Install crankshaft pulley.
   - Refer to install procedure for Crankshaft Pulley in this manual.
7. Install crankcase assembly.
   - Refer to installation procedure for Oil Pan and Crankcase in this manual.
8. Refill engine oil until full level on engine oil dipstick.

Oil Pump Oil Seal

Removal

1. Disconnect battery ground cable.
2. Drain engine oil.
3. Remove crankshaft pulley.
   - Refer to removal procedure for Crankshaft Pulley in this manual.
4. Remove timing belt.
   - Refer to removal procedure for Timing Belt in this manual.
5. Remove timing pulley from crankshaft.
6. Remove oil pump oil seal using a sealer puller.

NOTE: Take care not to damage sealing surfaces of oil pump and crankshaft when removing oil seal.

Installation

1. Install oil pump oil seal, apply engine oil to oil seal lip, then install oil seal using 5–8840–2287–0 installer.

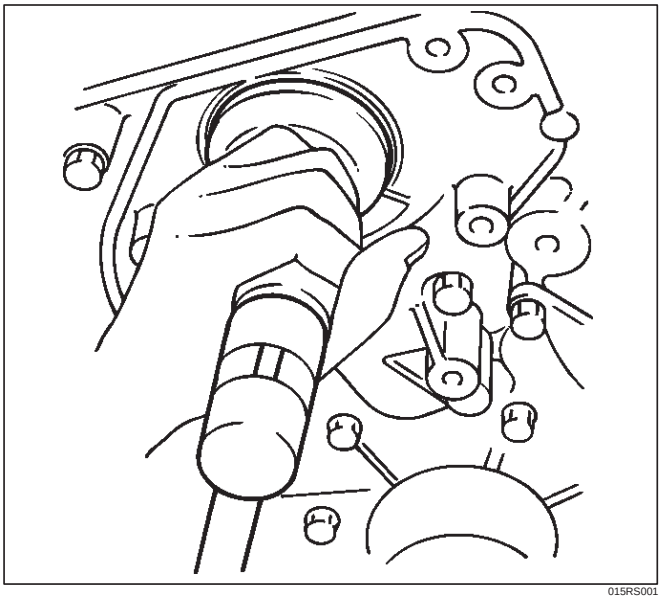

015RS001

2. Install timing pulley to crankshaft.
3. Install timing belt.
   - Refer to installation procedure for Timing Belt in this manual.
4. Install crankshaft pulley.
   - Refer to installation procedure for Crankshaft Pulley in this manual.
5. Refill engine oil until full level.

Oil Filter

Removal

1. Disconnect battery ground cable.
2. Drain engine oil.
3. Remove oil filter using 5-8840-0203-0 filter wrench.

Installation

1. Clean filter fitting surface and apply small amount of engine oil to sealing surface.
2. Install oil filter cartridge by hand until it comes in contact with sealing surface then rotate additional 2/3 turn to tighten using 5-8840-0203-0 filter wrench.

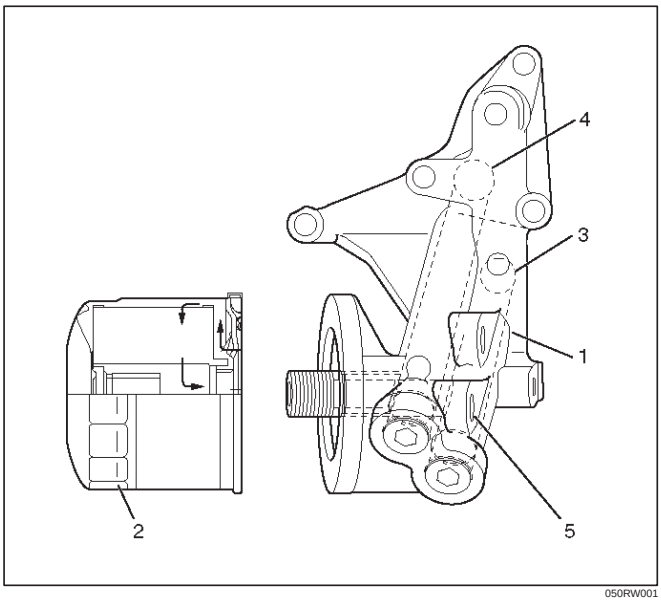

050RW001

Legend

(1) Oil Pump
(2) Oil Filter
(3) Oil Gallery
(4) From Filter
(5) To Filter

3. Fill engine oil until full level on dipstick.
4. Reconnect battery ground cable.

Main Data and Specification

General Specification

Item	Specifications
	6VE1
Oil capacity	5.3 liters

Torque Specifications

Crankcase, Oil pan, Timing belt tensioner, Timing pulley, timing belt cover, Oil pump, Oil gallery, Oil strainer

N·m (kg·m/lb ft)

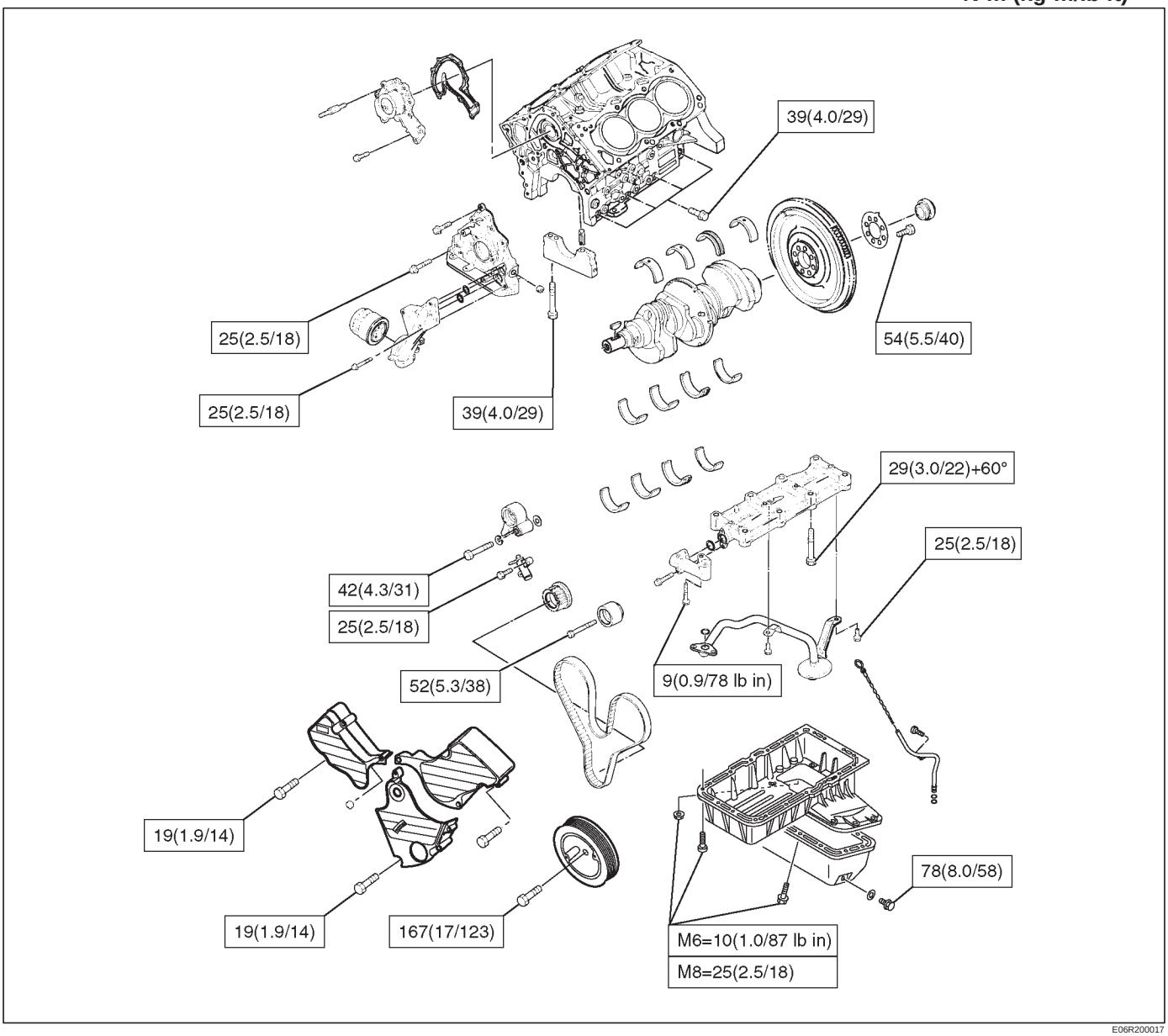

E06R200017

Special Tool

ILLUSTRATION	**TOOL NO.** TOOL NAME
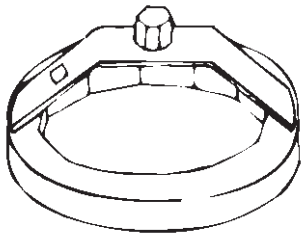 901RT034	**5–8840–0203–0** **(J–36390)** Wrench; Oil filter
901RT038	**5–8840–2005–0** **(J–29107)** Universal pitman arm puller
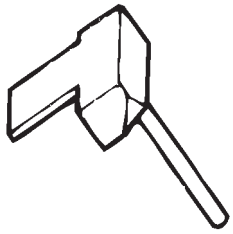 901RT042	**5–8840–2153–0** **(J–37228)** Seal cutter
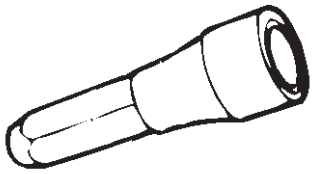 901RT044	**5–8840–2287–0** **(J–39202)** Installer; Oil pump oil seal

ENGINE

ENGINE SPEED CONTROL SYSTEM

CONTENTS

Service Precaution 6H–1
Accelerator Pedal 6H–2
Accelerator Pedal and Associated Parts . . 6H–2
Removal 6H–2
Installation 6H–2

Service Precaution

WARNING: THIS VEHICLE HAS A SUPPLEMENTAL RESTRAINT SYSTEM (SRS). REFER TO THE SRS COMPONENT AND WIRING LOCATION VIEW IN ORDER TO DETERMINE WHETHER YOU ARE PERFORMING SERVICE ON OR NEAR THE SRS COMPONENTS OR THE SRS WIRING. WHEN YOU ARE PERFORMING SERVICE ON OR NEAR THE SRS COMPONENTS OR THE SRS WIRING, REFER TO THE SRS SERVICE INFORMATION. FAILURE TO FOLLOW WARNINGS COULD RESULT IN POSSIBLE AIR BAG DEPLOYMENT, PERSONAL INJURY, OR OTHERWISE UNNEEDED SRS SYSTEM REPAIRS.

CAUTION: Always use the correct fastener in the proper location. When you replace a fastener, use ONLY the exact part number for that application. ISUZU will call out those fasteners that require a replacement after removal. ISUZU will also call out the fasteners that require thread lockers or thread sealant. UNLESS OTHERWISE SPECIFIED, do not use supplemental coatings (Paints, greases, or other corrosion inhibitors) on threaded fasteners or fastener joint interfaces. Generally, such coatings adversely affect the fastener torque and the joint clamping force, and may damage the fastener. When you install fasteners, use the correct tightening sequence and specifications. Following these instructions can help you avoid damage to parts and systems.

Accelerator Pedal

Accelerator Pedal and Associated Parts

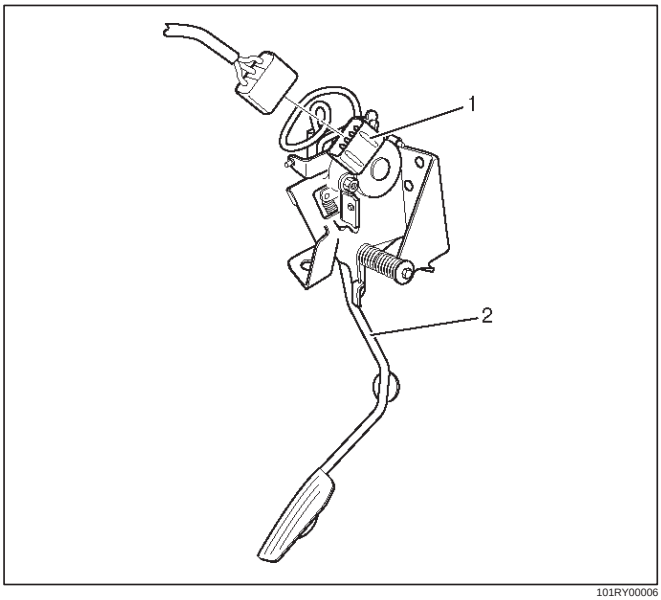

101RY00006

Legend

(1) Accelerator Position Sensor
(2) Accelerator Pedal Assembly

Removal

1. Disconnect battery ground cable.
2. Disconnect Accelerator position (AP) sensor (1) connector from Accelerator pedal assembly.
3. Remove Accelerator pedal assembly (2).

Installation

1. Install Accelerator pedal assembly (2).
2. Connect AP sensor (1) harness connector.
3. Connect battery ground cable.

ENGINE

INDUCTION

CONTENTS

Service Precaution 6J–1
Air Cleaner Element 6J–2
Removal 6J–2
Inspection 6J–2
Installation 6J–2

Service Precaution

WARNING: THIS VEHICLE HAS A SUPPLEMENTAL RESTRAINT SYSTEM (SRS). REFER TO THE SRS COMPONENT AND WIRING LOCATION VIEW IN ORDER TO DETERMINE WHETHER YOU ARE PERFORMING SERVICE ON OR NEAR THE SRS COMPONENTS OR THE SRS WIRING. WHEN YOU ARE PERFORMING SERVICE ON OR NEAR THE SRS COMPONENTS OR THE SRS WIRING, REFER TO THE SRS SERVICE INFORMATION. FAILURE TO FOLLOW WARNINGS COULD RESULT IN POSSIBLE AIR BAG DEPLOYMENT, PERSONAL INJURY, OR OTHERWISE UNNEEDED SRS SYSTEM REPAIRS.

CAUTION: Always use the correct fastener in the proper location. When you replace a fastener, use ONLY the exact part number for that application. ISUZU will call out those fasteners that require a replacement after removal. ISUZU will also call out the fasteners that require thread lockers or thread sealant. UNLESS OTHERWISE SPECIFIED, do not use supplemental coatings (Paints, greases, or other corrosion inhibitors) on threaded fasteners or fastener joint interfaces. Generally, such coatings adversely affect the fastener torque and the joint clamping force, and may damage the fastener. When you install fasteners, use the correct tightening sequence and specifications. Following these instructions can help you avoid damage to parts and systems.

Air Cleaner Element

Removal

1. Remove positive ventilation hose from connector(1).
2. Remove intake air temperature sensor(2).
3. Remove air flow sensor(3).
4. Remove air cleaner duct cover(4).
5. Remove air cleaner element(5).

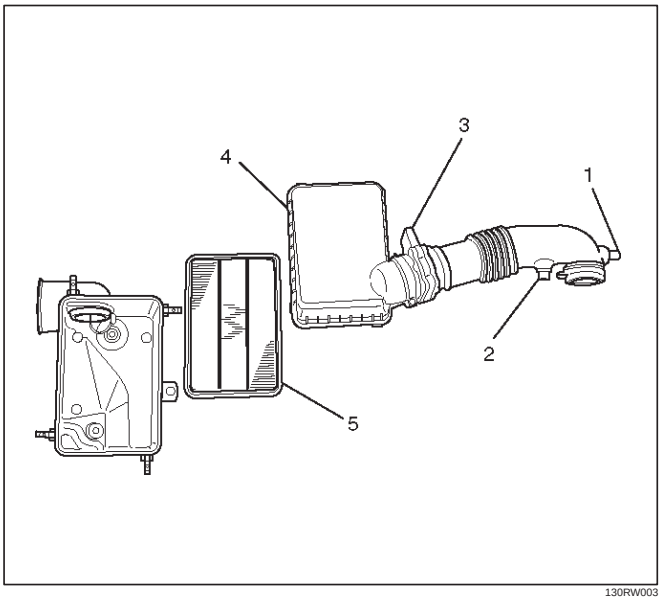

130RW003

Inspection

Check the air cleaner element for damage or dust clogging. Replace if it is damaged, or clean if it is clogged.

Cleaning Method

Tap the air cleaner element gently so as not to damage the paper element, or clean the element by blowing with compressed air of about 490 kPa (71 psi) from the clean side if it is extremely dirty.

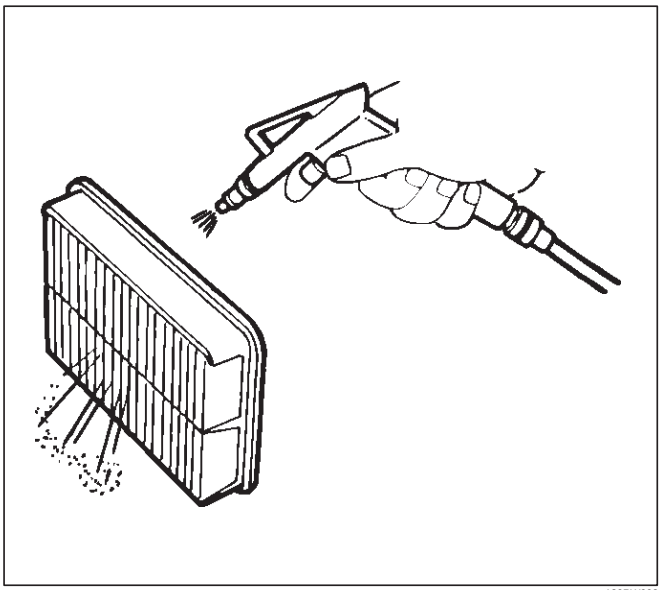

130RW002

Installation

1. Install air cleaner element(5).
2. Attach the air cleaner duct cover (4) to the body completely, then clamp it with the clip.
3. Install mass air flow sensor(3).
4. Install air temperature sensor(2).
5. Connect positive crankcase ventilation hose to connector(1).

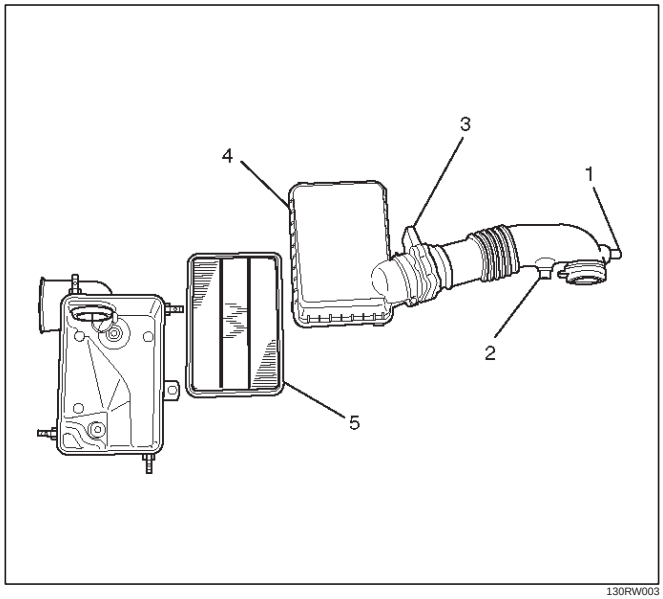

130RW003

ENGINE

ENGINE MECHANICAL

CONTENTS

General Description 6A–2
Service Information 6A–3
Service Standard 6A–6
Servicing 6A–9
Tightening Torque 6A–14
Special Tools 6A–25
Engine Assembly 6A–28
Engine Mount (RH) 6A–30
Engine Mount (LH). 6A–31
Intercooler 6A–32
Cylinder Head Cover 6A–33
Intake Manifold 6A–35
Exhaust Manifold 6A–36
Turbocharger 6A–38
Cylinder Head 6A–41
Cylinder Head Gasket 6A–43
Camshaft. 6A–47
Timing Gear. 6A–52
Valve Stem Seal, Valve Spring and Adjuster. . 6A–60
Valve Clearance Adjustment. 6A–67
Oil Rail and Injector 6A–69
Crank Case 6A–72
Crankshaft. 6A–74
Piston and Connecting Rod 6A–84
Cylinder Block 6A–92
Oil Pump Assembly 6A–98
Oil Filter Cartridge 6A–99
Oil Cooler 6A–99

GENERAL DESCRIPTION

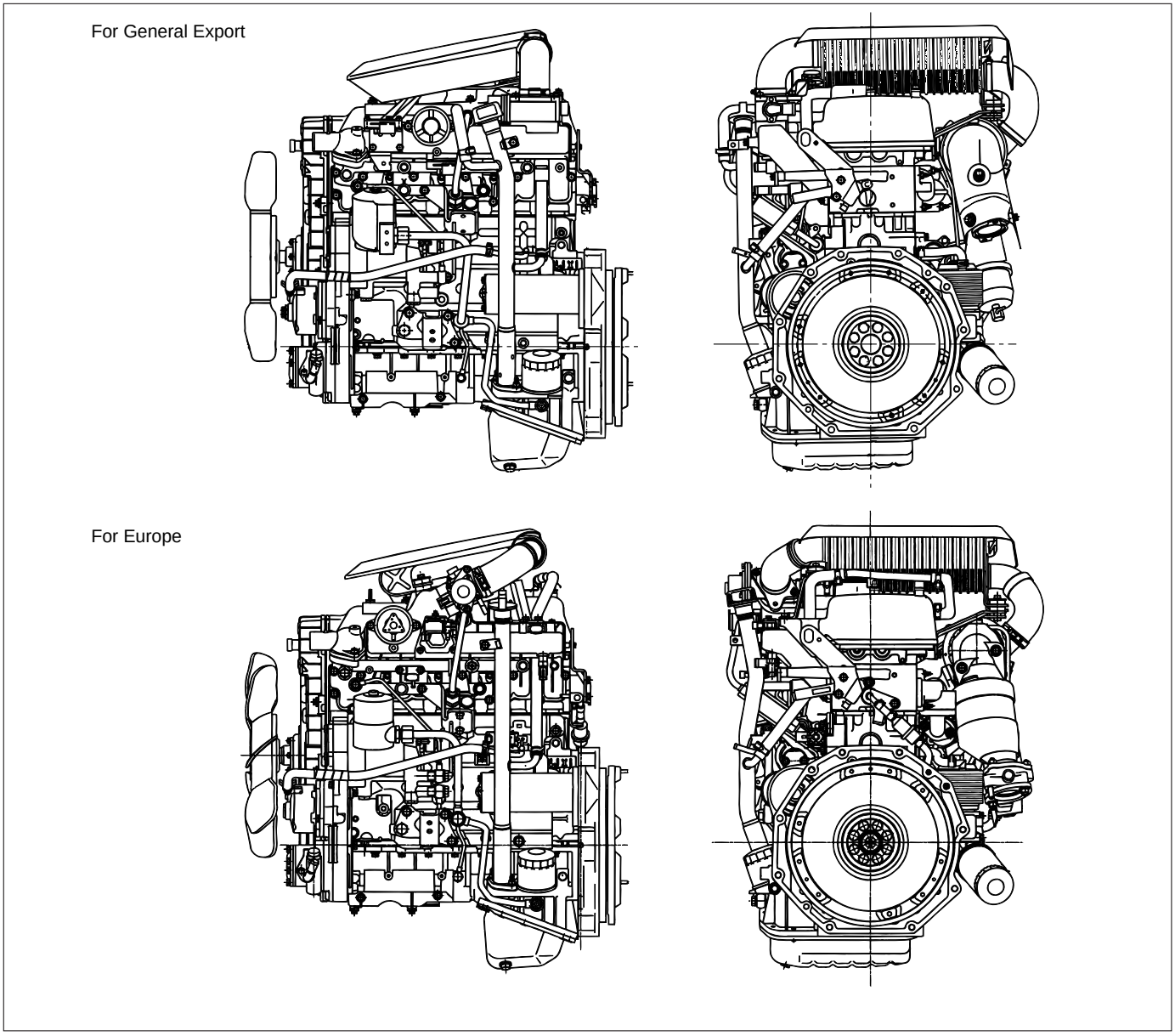

F06R200004

Cylinder Head Gasket

The cylinder head gasket is laminated steel sheets.
Three grades of the gasket according to the measured piston head projection from the cylinder block are provided to give the engine a minimum compression ratio fluctuation.

Tightening Method for Special Bolt

The cylinder head fixing bolts, flywheel bolts and connecting rod cap fixing bolts are tightened by the angular Tightening Method.

Piston

Auto-thermatic pistons having steel struts with a 0.4 mm offset from the piston pin center line, are applied to reduce thermal expansion and resulting engine noise when the engine is cold.

Bearings

The crankshaft bearings and connecting rod bearings are of aluminum having a high bearing surface.
These bearings are especially sensitive to foreign material such as metal scraps. So, it is very important that the oil ports and other related surfaces are kept clean and free of foreign material.
Crankshaft bearings are selected for optimum bearing and journal clearance which reduces vebration and noise.

Crankshaft

As tufftriding (Nitrizing treatment) is applied to increase crankshaft strength, crankpins and journals should not be reground.

Piston Cooling

An oiling jet device for piston cooling is provided in the lubricating oil circuit from the cylinder block oil gallery via a check valve.
Take care not to damage any oiling jet when removing and installing piston and connecting assembly.

Fuel Injection System

The injection system is oil rail type.

Quick On Start 4 System

QOS4 preheating system which features a quick-on glow plug with thermometer control of the glowing time and the afterglow time function, is applied.

SERVICE INFORMATION

MAIN DATA AND SPECIFICATION

Engine type			Diesel, four cycle water cooled inline
Camshaft type			DOHC
Number of cylinders			4
Bore x stroke		(mm)	95.4 x 104.9
Total piston displacement		(cc)	2999
Compression ratio		(to 1)	19.0
			For Europe : 18.5
Engine weight (dry)		N (kg/lb)	2492 (254/560) (A/T)
			For Europe : 2422 (247/545) (A/T)
			2649 (270/593) (M/T)
			For Europe : 2697 (275/606) (M/T)
Engine idling speed (Reference)		RPM	720
Compression pressure		kpa (kg/cm^2/psi)-rpm	3040 (31/441)-200
Firing order			1–3–4–2
VALVE SYSTEM			
Intake valves	open at:		B.T.D.C. 3°
	close at:		A.B.D.C. 58°
Exhaust valves	open at:		B.B.D.C. 57°
	close at:		A.T.D.C. 5°
Valve clearance (at cold)		mm (in)	
	intake:		0.15 (0.006)
	exhaust:		0.25 (0.01)
Oil filter			Full flow and bypass combined type
Oil capacity (Original factory fill or rebuilt engine)			9.0 liters (7.9 US quarts)
Oil capacity (Service change)			
with filter change			6.0 liters (6.3 US quarts)
without filter change			5.0 liters (5.3 US quarts)
Oil cooler			Water cooled type
Inter cooler			Air cooled type
Turbocharger method			
Control method			Wastegate control
Lubrication			Pressurized control
Cooling method			Coolant cooled

Engine Cooling

Cooling system		Coolant forced circulation
Radiator		(2 tube in row) Tube type corrugated
Heat radiation capacity	J/h (kcal/h)	318 x 10^6 (76000)
Heat radiation area	m^2 (ft^2)	15.63 (1.454)
Front area	m^2 (ft^2)	0.309 (2.029)
Dry weight	N (kg/lb)	83 (8.5/18.7)
Radiator cap		
Valve opening pressure	kPa (kg/cm^2 / psi)	93.3 – 122.7 (0.95 – 1.25/13.5 – 17.8)
Coolant capacity	lit (Imp.qt./US qt.)	M/T 2.5 (2.2/2.6) A/T 2.4 (2.1/2.5)
Coolant pump		Centrifugal impeller type
Pulley ratio	(to 1)	1.2
Coolant total capacity	lit (Imp.qt./US qt.)	9.3 (8.2/9.8) For Europe: 9.8 (8.6/10.4)

Starting System

Model		HITACHI S14-0
Rating		
Voltage	V	12
Output	kW	2.8
Time	sec	30
Number of teeth of pinion		9
Rotating direction (as viewed from pinion)		Clockwise
Weight (approx.)	N(kg/lb)	49 (5.0/11)
No-load characteristics		
Voltage/current	V/A	11/160 or less
Speed	rpm	4000 or more
Load characteristics		
Voltage/current	V/A	8.76/300
Torque	N·m(kg·m/lb·ft)	7.4 (0.75/5.4) or more
Speed	rpm	1700 or more
Locking characteristics		
Voltage/current	V/A	2.5/1100 or less
Torque	N·m(kg·m/lb·ft)	18.6 (1.9/14) or more

Charging System

Model (HITACHI)		LR190-750B	LR1100 – 731
Rated voltage	V	12	
Rated output	A	90	100
Rotation direction (As viewed from pulled)		Clockwise	
Pulley effective diameter	mm (in)	69 (2.72)	
Weight	N (kg/lb)	52 (5.3/11.7)	

SERVICE STANDARD

Engine

mm (in)

Parts	Items		Service standard	Service limit	Remarks
Cylinder Head	Cylinder head lower surface for flatness		0.075 (0.0030) or less	0.50 (0.0197)	
	Cylinder head height		95.0 (3.740)	—	Cannot be reground
Valve Spring	Free height		45.7 (1.8)	44.8 (1.765)	
	Squareness		—	1.6 (0.063)	
	Spring tension (when assembled)	N(lb)	241 (54.2)	210 (47.22)	
Valve and Valve guide	Diameter of Valve stem	IN	6.959 – 6.977 (0.27 – 0.272)	6.92 (0.270)	
		EX	6.692 – 6.970 (0.271 – 0.272)	6.90 (0.269)	
	Valve and valve guide clearance	IN	0.023 – 0.056 (0.0009 – 0.0022)	0.19 (0.0074)	
		EX	0.03 – 0.063 (0.0011 – 0.0024)	0.20 (0.0079)	
	Valve guide upper end height (Measured from the Cylinder head upper face)		8.0 (0.312)	—	
	Valve guide margin		1.1 (0.0433)	1.6 (0.0630)	
	Valve thickness	IN	1.2 (0.0472)	1.1 (0.0433)	
		EX	1.2 (0.0472)	1.1 (0.0433)	
	Valve seat contact surface angle		45°	—	
	Valve seat contact width	IN	2.1 (0.0827)	2.6 (0.1024)	
		EX	2.1 (0.0827)	2.6 (0.1024)	
Camshaft	End play		0.08 (0.00314)	2.0 (0.00797)	
	Cam lobe height	IN	46.67 (1.8374)	46.57 (1.8335)	
		EX	46.77 (1.8413)	46.67 (1.8374)	
	Journal diameter		29.939 – 29.960 (1.167 – 1.168)	29.84 (1.1748)	
	Runout		0.02 (0.0008) or less	0.10 (0.0039)	
	Camshaft oil clearance		0.40 – 0.082 (0.0016 – 0.0032)	0.12 (0.0047)	

mm (in)

Parts	Items	Service standard	Service limit	Remarks
Tappet	Outside diameter	32.977 – 32.990 (1.2983 – 1.2988)	32.950 (1.2972)	
	Oil clearance	0.01 – 0.039 (0.0004 – 0.0015)	0.10 (0.0039)	
Crankshaft	Thrust clearance	0.04 – 0.20 (0.0016 – 0.0079)	0.30 (0.00118)	
	Main bearing oil clearance	0.037 – 0.068 (0.0015 – 0.0027)	0.11 (0.0043)	
	Crankshaft runout	0.05 (0.0020) or less	0.08 (0.0031)	
	Main journal diameter	69.917 – 69.932 (2.7526 – 2.7532)	69.91 (2.7524)	Uneven wear limit 0.05 (0.002)
	Crank pin diameter	52.915 – 52.930 (2.0933 – 2.0839)	52.90 (2.0827)	Uneven wear limit 0.08 (0.0031)
Piston, Piston pin, Piston ring and Connecting rod	Piston diameter	95.320 – 95.349 (3.7527 – 3.7539)	—	
	Piston clearance	0.11 – 0.92 (0.0043 – 0.0362)	—	
	Piston ring gap 1st	0.25 – 0.40 (0.0098 – 0.0157)	1.5 (0.0590)	
	2nd	0.20 – 0.35 (0.0079 – 0.0138)	1.5 (0.0590)	
	Oil	0.10 – 0.30 (0.0039 – 0.0118)	1.5 (0.0590)	
	Piston ring clearance 1st/2nd	0.05 – 0.09 (0.0020 – 0.0035)	0.15 (0.0059)	
	Oil	0.03 – 0.07 (0.00118 – 0.00276)	0.15 (0.0059)	
	Piston pin diameter	30.995 – 31.000 (1.203 – 1.205)	30.97 (1.2078)	
	Piston pin clearance (Between connecting rod and piston pin)	0.008 – 0.020 (0.0003 – 0.00079)	0.05 (0.0020)	
	Piston pin clearance (Between piston and piston pin)	0.005 – 0.018 (0.0002 – 0.0007)	0.04 (0.0016)	
	Connecting rod alignment Bend	0.08 (0.031) or less	0.20 (0.00787)	Per 100 (3.94)
	Twist	0.05 (0.0020) or less	0.15 (0.0059)	Per 100 (3.94)
	Connecting rod thrust clearance	0.230 (0.0091)	0.35 (0.0138)	
	Oil clearance (Between crank pin and Connecting rod)	0.022 – 0.042 (0.0009 – 0.0017)	0.0060 (0.0024)	

mm (in)

Parts	Items	Service standard	Service limit	Remarks
Cylinder Block	Warpage (Upper surface of the cylinder block)	—	0.20 (0.0079)	
	Cylinder bore diameter	95.421 – 95.450 (3.7567 – 3.7579)		

Engine Cooling

mm (in)

Parts	Items	Service standard	Service limit	Remarks
Thermostat	Valve opening temperature	83 – 87°C (181 – 189°F)		
	Valve full open temperature and lift	More than 9.5 (0.374) at 100°C (212°F)		
Radiator cap	Valve opening pressure	88.2 – 117.6 kPa (12.8 –17.0 psi)		

SERVICING

Servicing refers to general maintenance procedures to be performed by qualified service personnel.

MODEL IDENTIFICATION

Engine Serial Number

The engine number is stamped on the rear left hand side of the cylinder body.

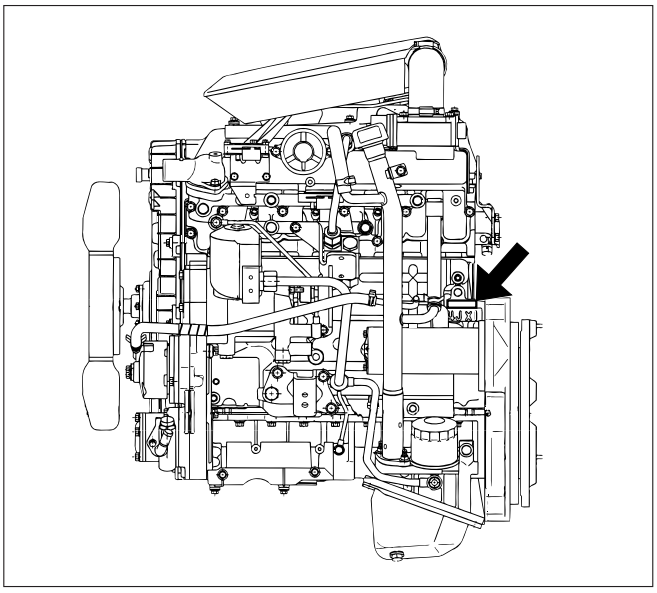

012RW115

AIR CLEANER

Oil Wetted (Viscous) Type Paper Element.

The air cleaner has an oil wetted paper element. No servicing is required until the replacement interval is reached.
Never attempt to clean the element, no matter how dirty it may appear. The element is designed to provide normal filtering efficiency until it becomes due for replacement.
Refer to the Item “Service and Maintenance” in the Owner’s and Driver’s Manual for general service information.

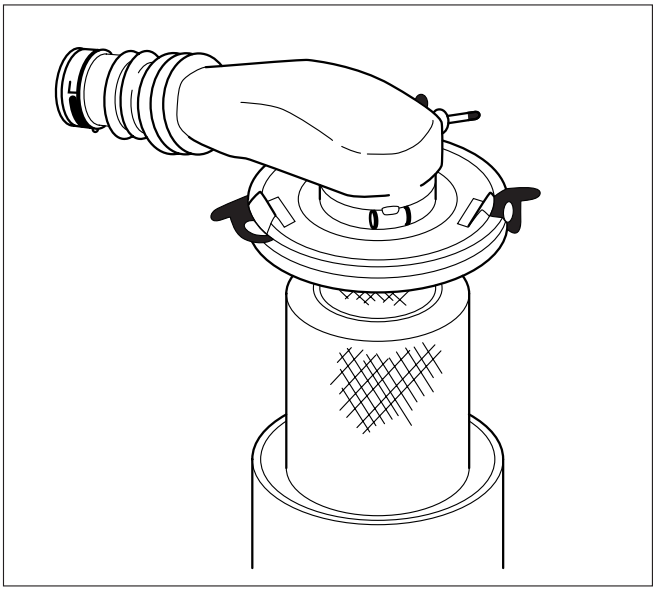

012RW062

LUBRICATING SYSTEM

Main Oil Filter (Cartridge Type Paper Element)

Replacement Procedure

1. Loosen the drain plug to drain the engine oil.
2. Wait a few minutes and then retighten the drain plug.
3. Loosen the used oil filter (2) by turning it counter-clockwise with the filter wrench.
4. Clean the oil filer gasket fitting face.
   This will allow the new oil filter to seat properly.
5. Apply a light coat of engine oil to the O-ring.
6. Turn the new oil filter until the filter O-ring is fitted against the sealing face.
7. Use the filter wrench to turn the filter additional one and 1/4 turns.
   Filter Wrench: 5-5540-0203-0

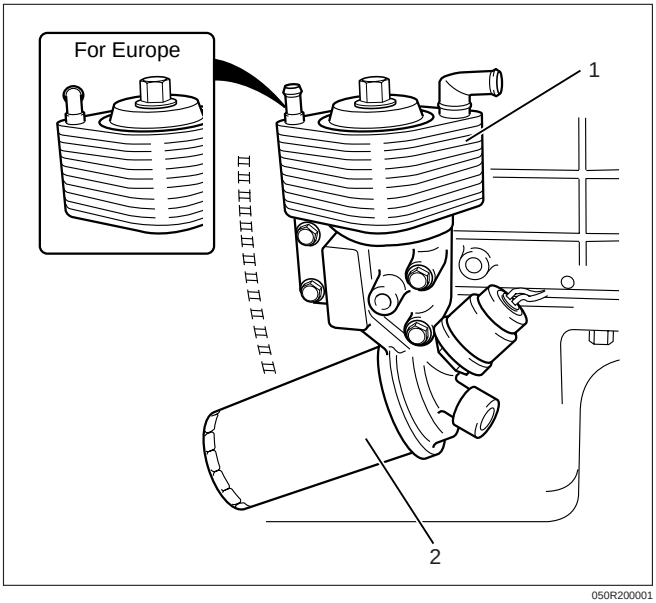

050R200001

8. Check the engine oil level and replenish to the specified level if required.
9. Start the engine and check for oil leakage from the main oil filter.

FUEL SYSTEM

Fuel filter

Replacement Procedure

1. Loosen the used fuel filter by turning it counterclockwise with the filter wrench.
   Filter Wrench : 5-8840-0203-0

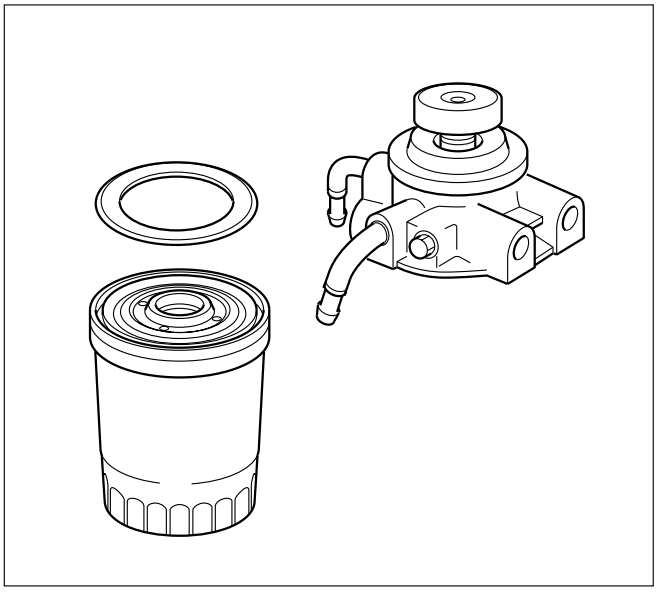

012RW112

2. Clean the filter cover fitting faces.
   This will allow the new fuel filter to seat properly.

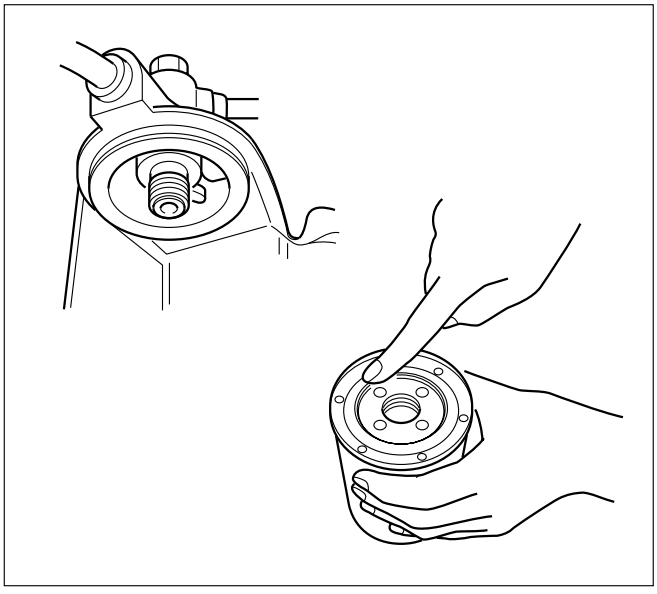

012RW078

3. Apply a light coat of engine oil to the O-ring.
4. Turn the fuel filter until the sealing face comes in contact with the O-ring.
5. Turn the fuel filter with a filter wrench 2/3 of a turn until sealed.
   Filter Wrench: 5-8840-0203-0

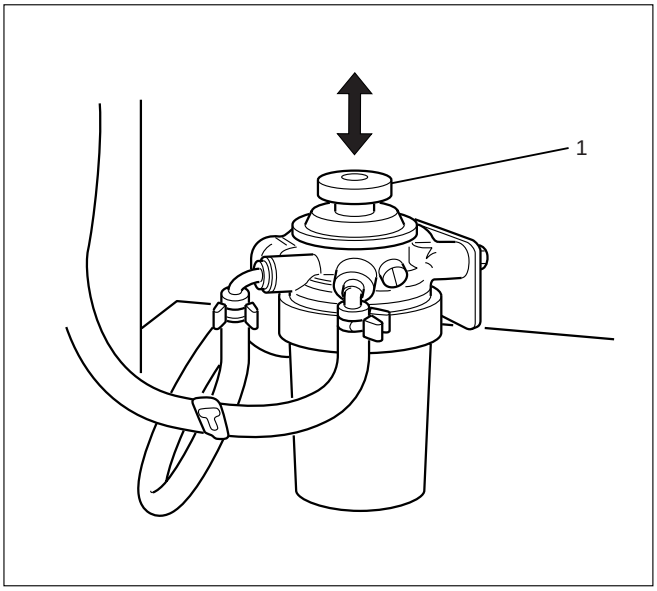

012RW111

Legend
(1) Priming pump

6. Operate the priming pump until the air is discharged completely from fuel system.

NOTE: The use of an Isuzu genuine fuel filter is strongly recommended.

COOLING SYSTEM

Coolant Level

Check the coolant level and replenish the radiator reserve tank as necessary.
If the coolant level falls below the "'MIN" line, carefully check the cooling system for leakage. Then add enough coolant to bring the level up to the "MAX" line.

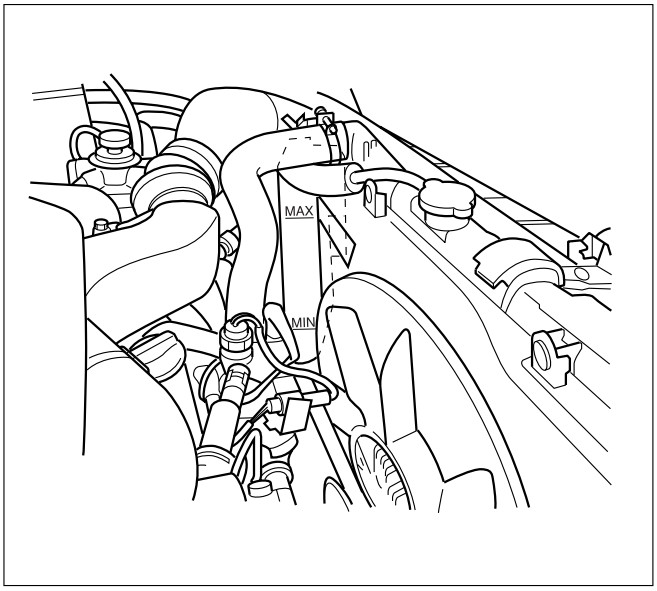

012RW080

NOTE: Do not overfill the reserve tank.

Remove the radiator filler cap only when absolutely necessary.
Always check the coolant level when the engine is cold.
Always refer to the chart at the left to determine the correct cooling water to antifreeze solution mixing ratio.

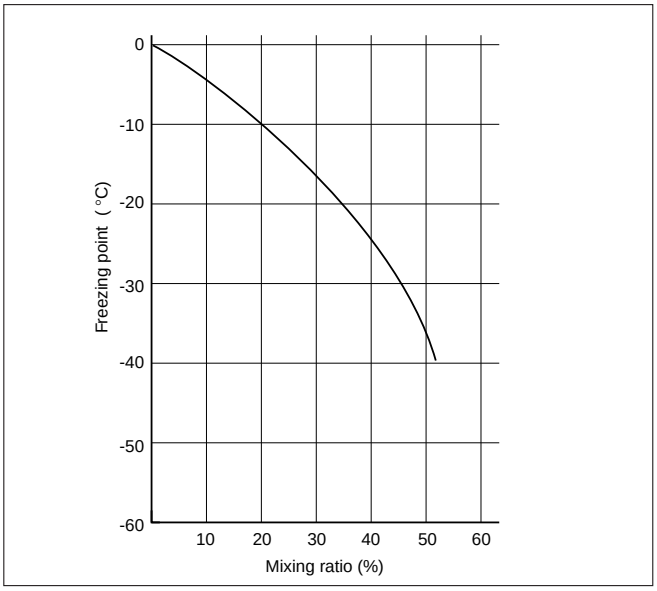

111RW002

Cooling System Inspection

Install a radiator filler cap tester to the radiator. Apply testing pressure to the cooling system to check for leakage.
The testing pressure must not exceed the specified pressure.

Testing Pressure: 196 kPa (2 kg/cm^2/28.45 psi)

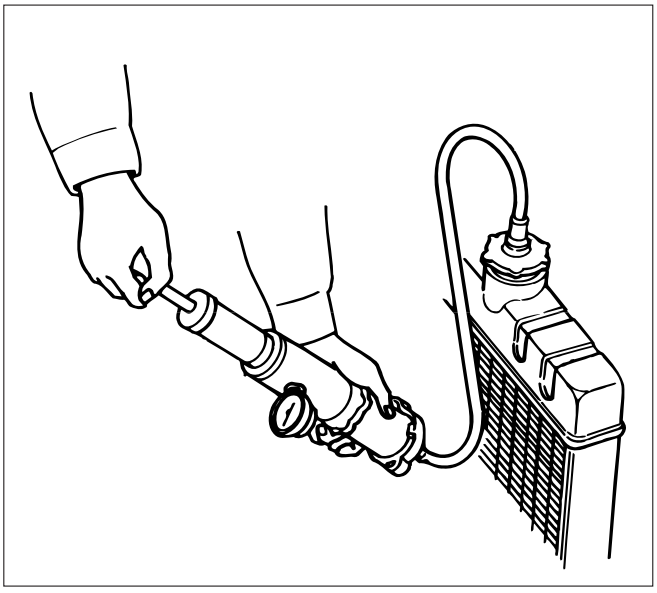

110RS005

Radiator Cap Inspection

The radiator filler cap is designed to maintain coolant pressure in the cooling system at 103 kPa (1.05 kg/cm^2/15 psi).
Check the radiator filler cap with a radiator filler cap tester.

The radiator filler cap must be replaced if it fails to hold the specified pressure during the test procedure.

Radiator Filler Cap Pressure Valve: 88.2 – 117.6 kPa (0.899 – 1.199 kg/cm^2/12.8 – 17.1 psi)

Negative Valve (Reference): 1.0 – 3.9 kPa (0.01 – 0.04 kg/cm^2/0.14 – 0.57 psi)

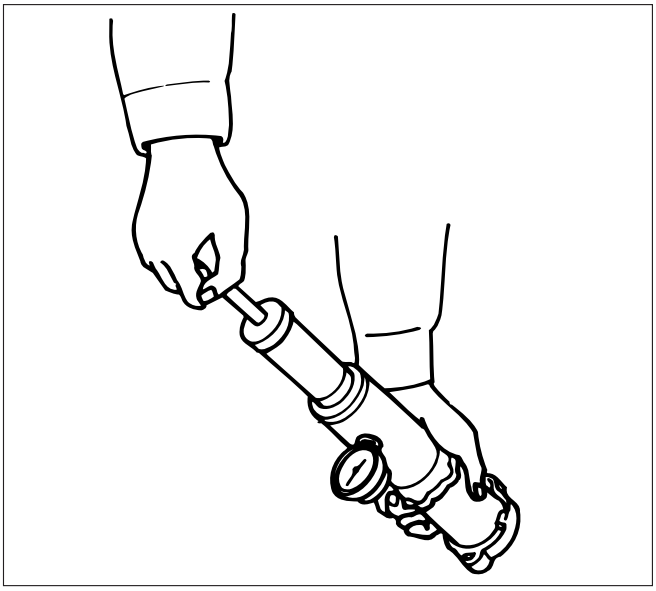

110RS006

Thermostat Operating Test

1. Completely submerge the thermostat in water.
2. Heat the water.
   Stir the water constantly to avoid direct heat being applied to the thermostat.
3. Check the thermostat initial opening temperature.
   Thermostat Initial Opening Temperature: 83 – 87°C (181 – 189°F)
4. Check the thermostat full opening temperature.
   Thermostat Full Opening Temperature: 100°C (212°F)

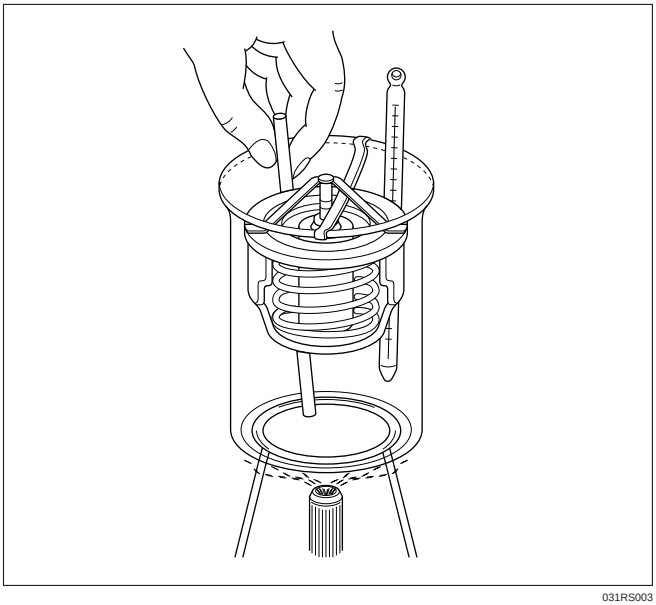

031RS003

Valve Lift at Fully Open Position: 9.5 mm (0.374 in)

Drive Belt Adjustment

Check the drive belt tension
Depress the drive belt mid-portion with a 98 N (10 kg/ 22 lb) force.

Drive Belt Deflection: 10 mm (0.39 in)

Check the drive belt for cracking and other damage.

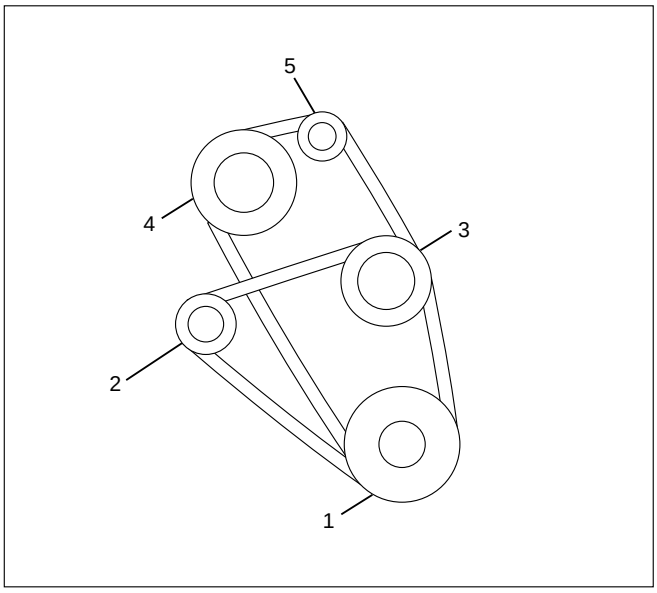

012RW110

Legend
(1) Crankshaft pulley
(2) Generator pulley
(3) Cooling fan pulley
(4) A/C compressor pulley
(5) Belt tensioner pulley

Cooling Fan Pulley Drive Belt

Fan belt tension is adjusted by moving the generator.
Depress the drive belt mid-portion with a 98 N (10 kg/ 22 lb) force.

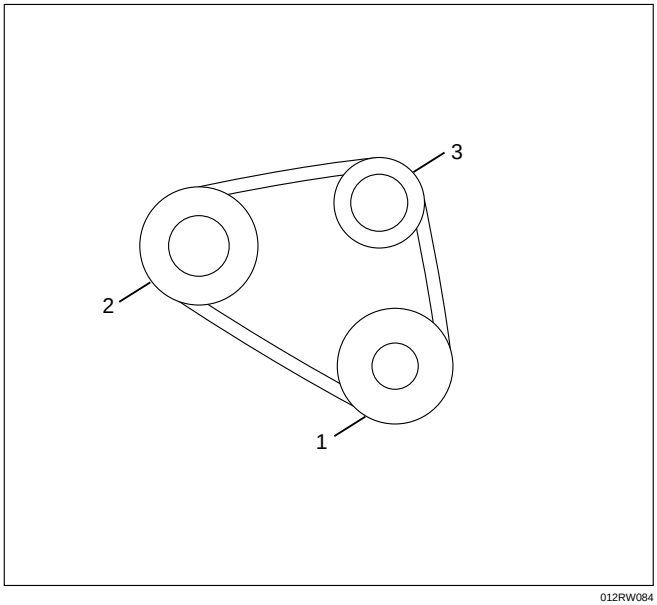

012RW084

Legend
(1) Crankshaft pulley
(2) Generator pulley
(3) Cooling fan pulley

Compressor Pulley Drive Belt

Move the tensioner pulley as required to adjust the compressor drive belt tension.
Depress the drive belt mid-portion with a 98 N (10 kg/ 22 lb) force.

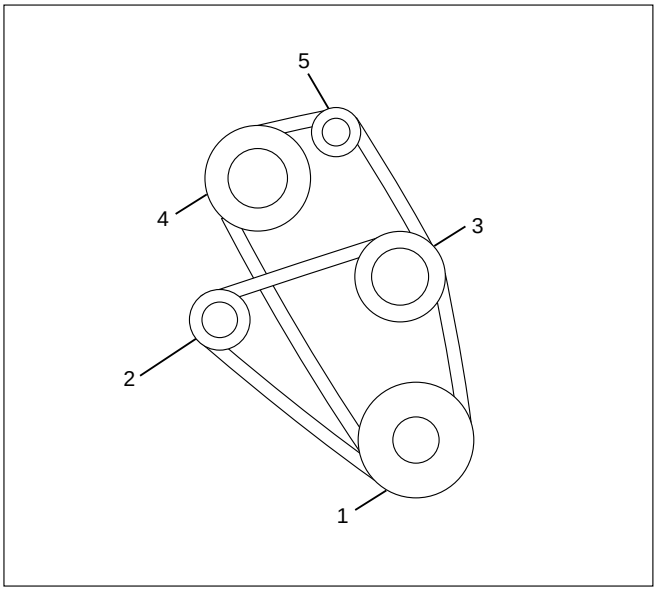

012RW110

Legend
(1) Crankshaft pulley
(2) Generator pulley
(3) Cooling fan pulley
(4) A/C compressor pulley
(5) Belt tensioner pulley

VALVE CLEARANCE ADJUSTMENT

1. Install 2.80 mm valve adjuster (shim) first when reassembling the engine.
   Thickness mark faces down.
2. Measure the valve clearance after installing cam carrier assy with camshafts.
3. Change the adjuster using a special tool when the clearance is out of tolerance.
   Valve Clearance Adjusting Tool: 5-8840-2590-0

VALVE CLEARANCE (When cold condition)

Inlet	0.15 ± 0.05 mm
Exh	0.25 ± 0.05 mm

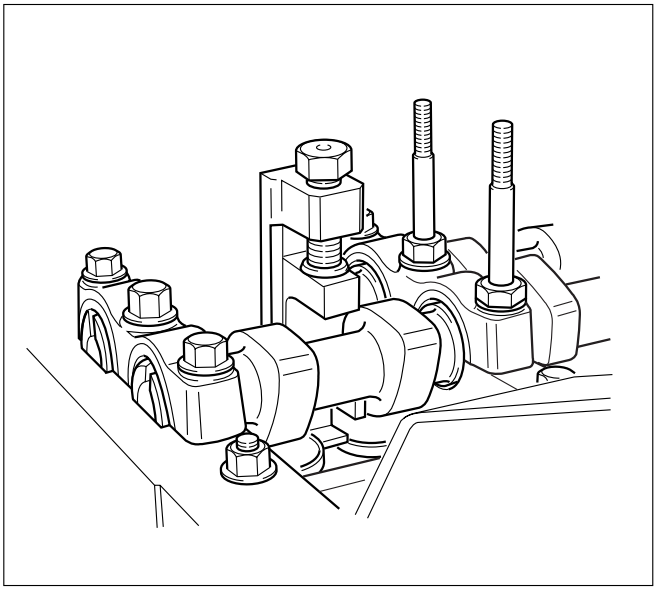

014RW150

COMPRESSION PRESSURE MEASUREMENT

1. Start the engine and allow it to idle until the coolant temperature reaches 70 – 80°C (158 – 176°F).
2. Remove the following parts.
   - Glow plugs
   - Fuel cut solenoid connector
   - QOS (Quick-On Start System) fuse in the fuse box.
3. Set the adapter and compression gauge to the No. 1 cylinder glow plug hole.
   Compression Gauge
   (with Adapter): 5-8840-2008-0
4. Turn the engine over with the starter motor and take the compression gauge reading.

   Compression Pressure at 200 rpm

   Standard: 3040 kPa (31 kg/cm^2/441 psi)

   Limit: 2160 kPa (22 kg/cm^2/313 psi)
5. Repeat the procedure (Steps 3 and 4) for the remaining cylinders.

QUICK-ON START 4 SYSTEM

Quick-On Start System Inspection Procedure

1. Disconnect the ECT-sensor connection around the thermostat outlet pipe.
2. Turn the starter switch to the “ON” position.
   If the Quick-On Start 4 System is operating properly, the glow relay will make a clicking sound within seven seconds after the starter switch is turned on.
3. Measure the glow plug terminal voltage with a circuit tester immediately after turning the starter switch to the “ON” position.

   Glow Plug Terminal Voltage: approx. 12V

NOTE: Electrical power to the quick-on start system will be cut after the starter has remained in the “ON” position for twenty seconds.
Turn the starter switch to the “OFF” position and back to the “ON” position.
This will reset the Quick-On Start 4 System.

TIGHTENING TORQUE

Timing Gear Case, Timing Gear

N·m (kg·m/lb·ft)

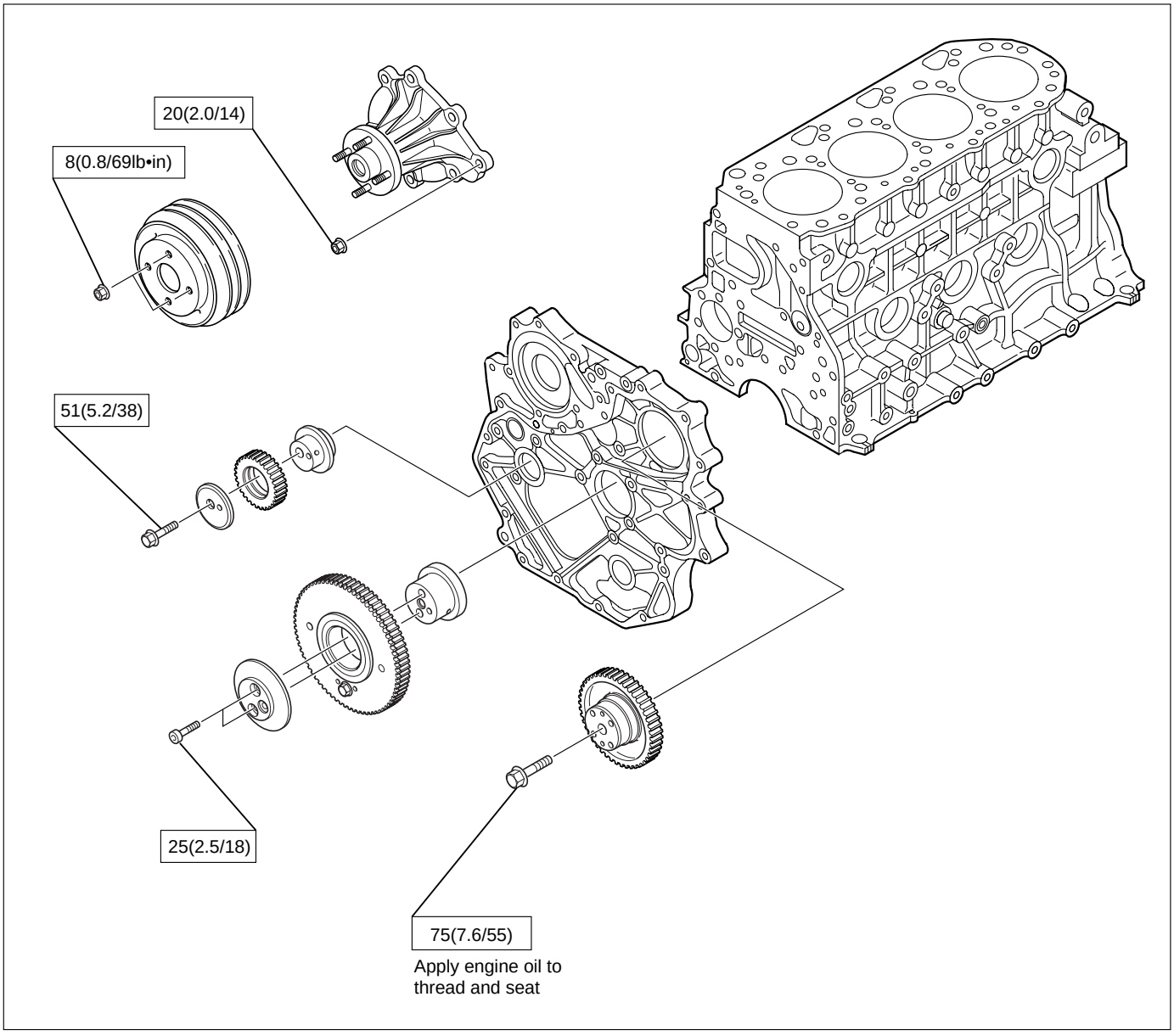

020R200001

Cylinder Head, Flywheel, Crank Case, Oil Pan

N·m (kg·m/lb·ft)

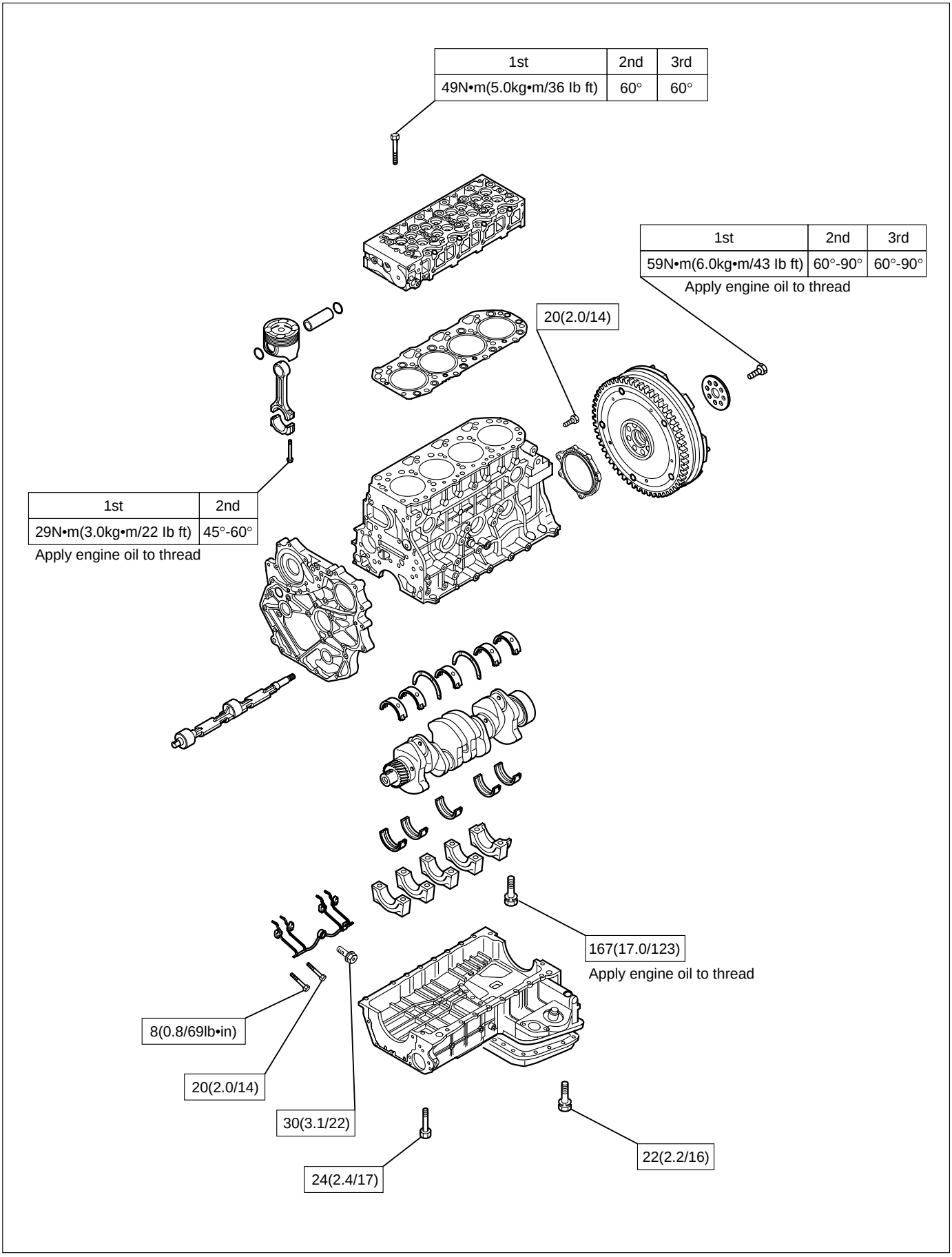

012R200008

Intake / Exhaust Manifold

N·m (kg·m/lb·ft)

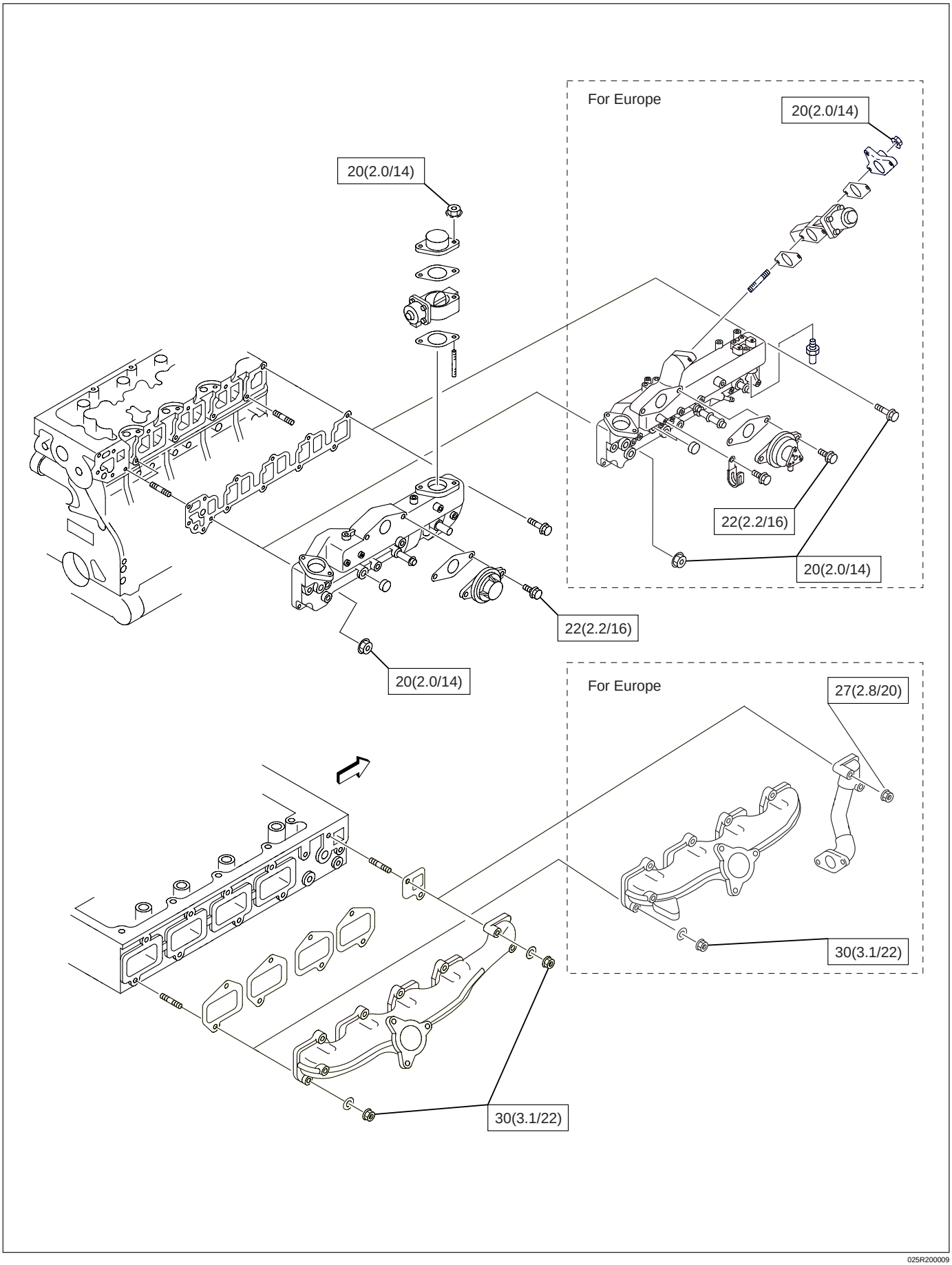

025R200009

Timing Pulley

N·m (kg·m/lb·ft)

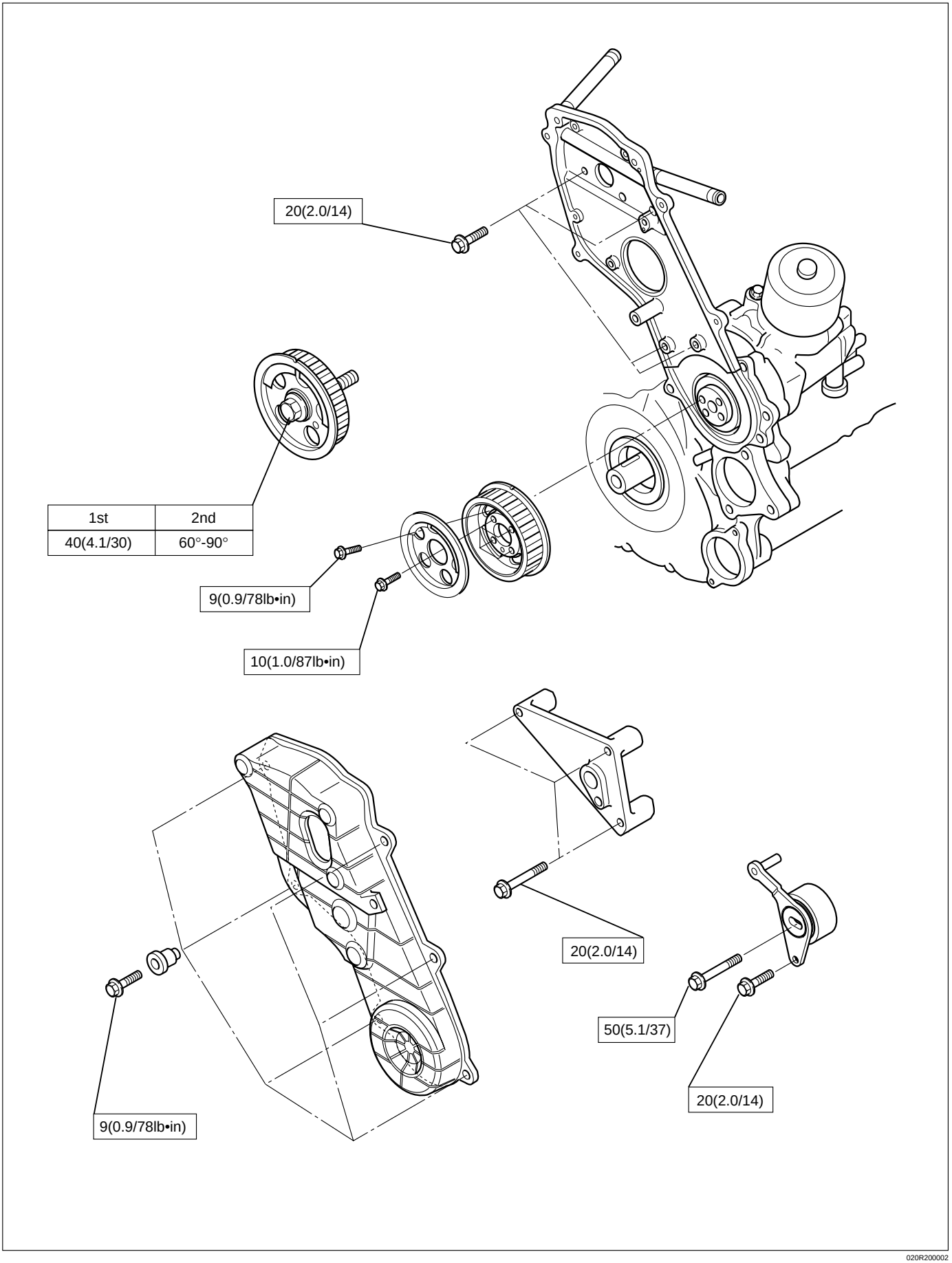

020R200002

Engine Electricals

N·m (kg·m/lb·ft)

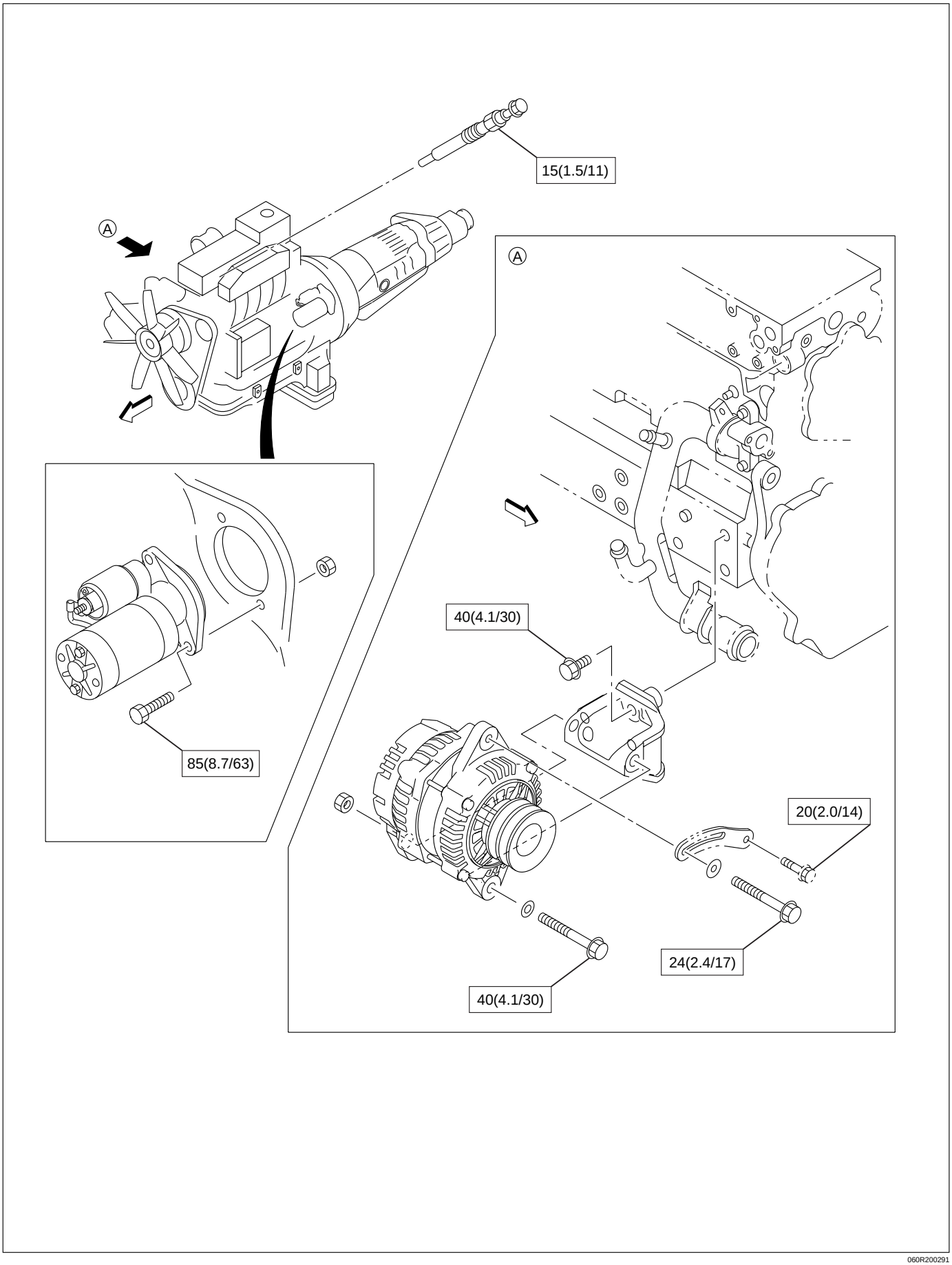

Injector

N·m (kg·m/lb·ft)

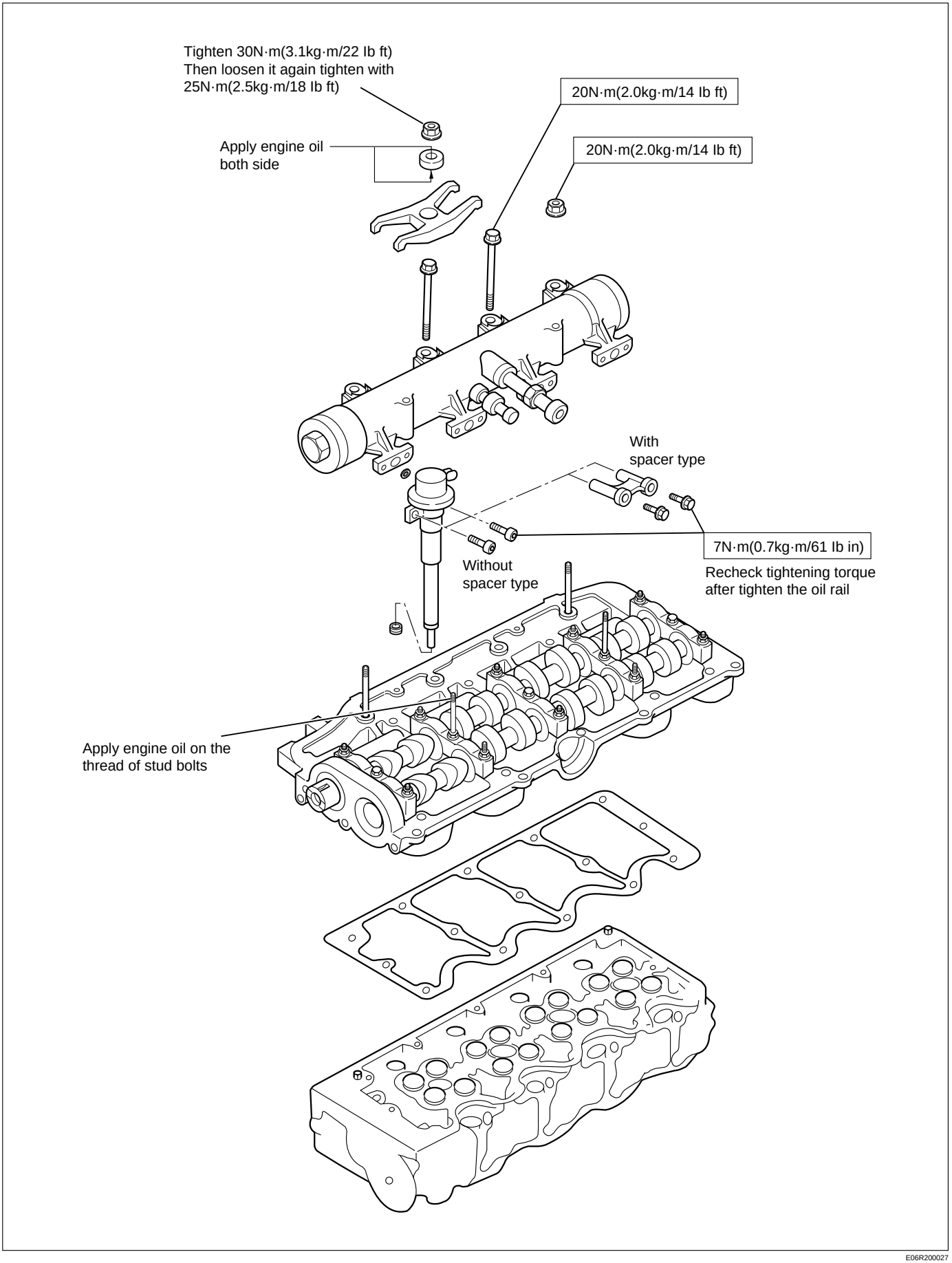

E06R200027

High Pressure Oil Pipe

N·m (kg·m/lb·ft)

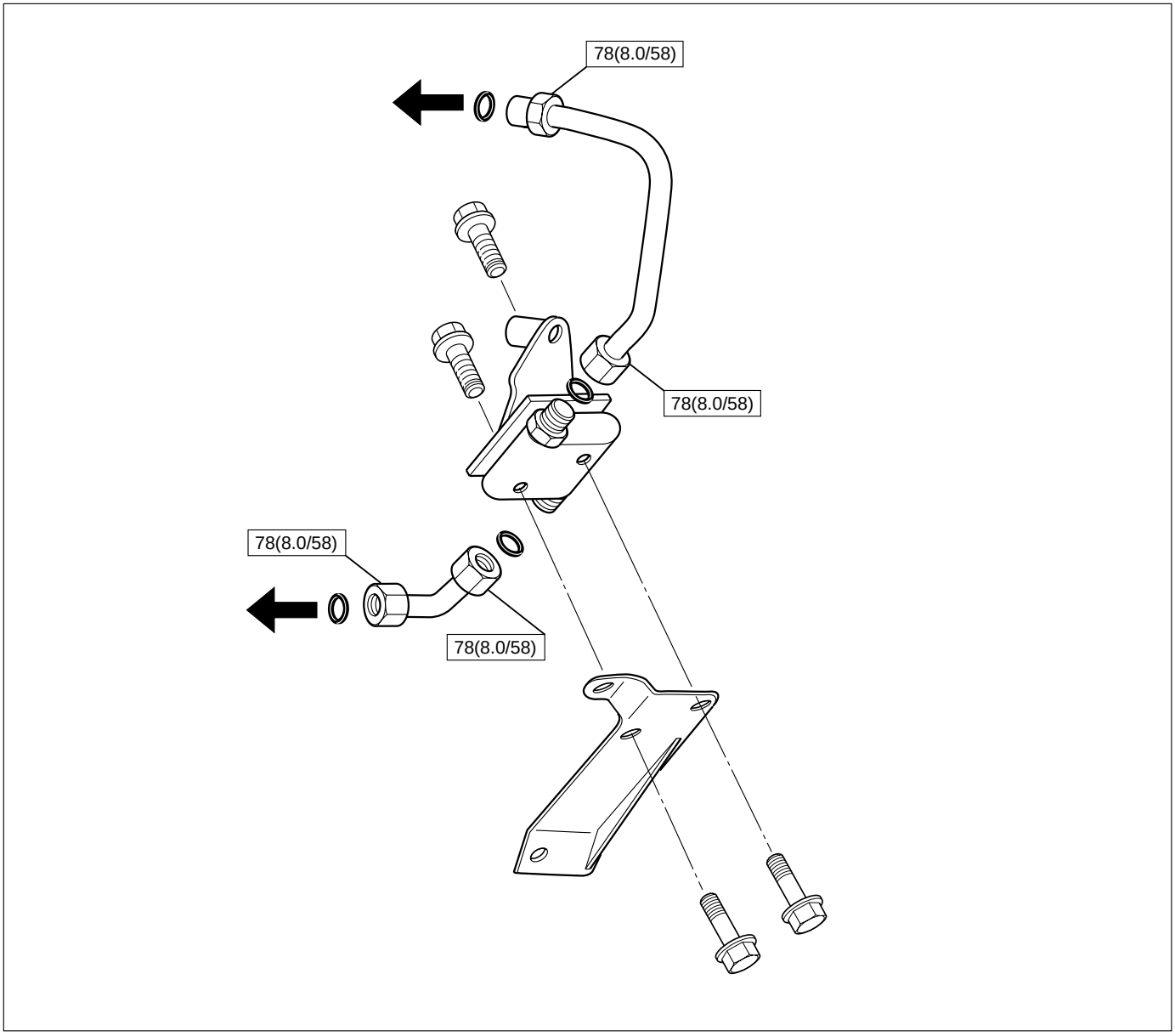

052R200003

Air Duct and Intercooler (For General Export)

N·m (kg·m/lb·ft)

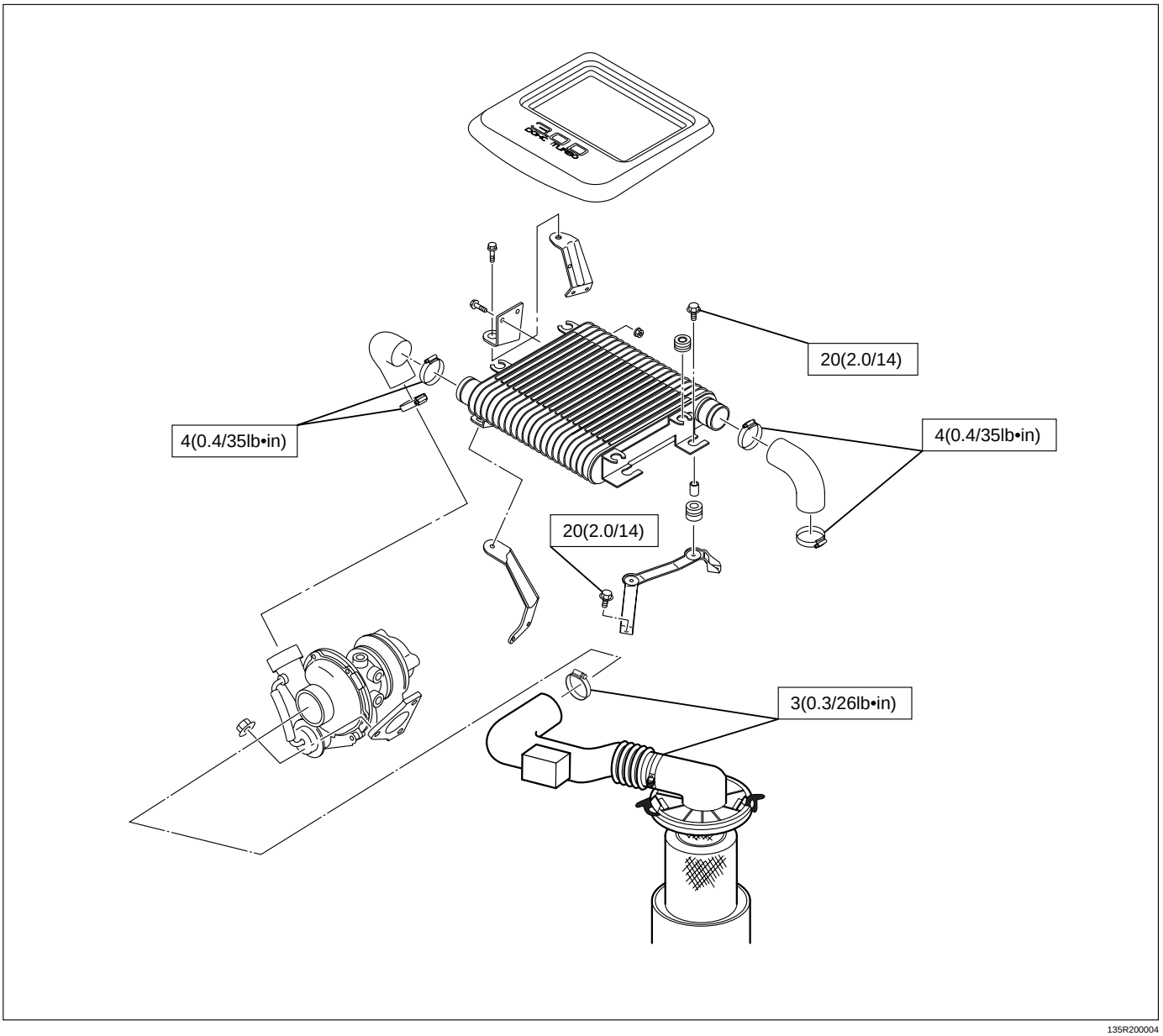

135R200004

Air Duct and Intercooler (For Europe)

N·m (kg·m/lb·ft)

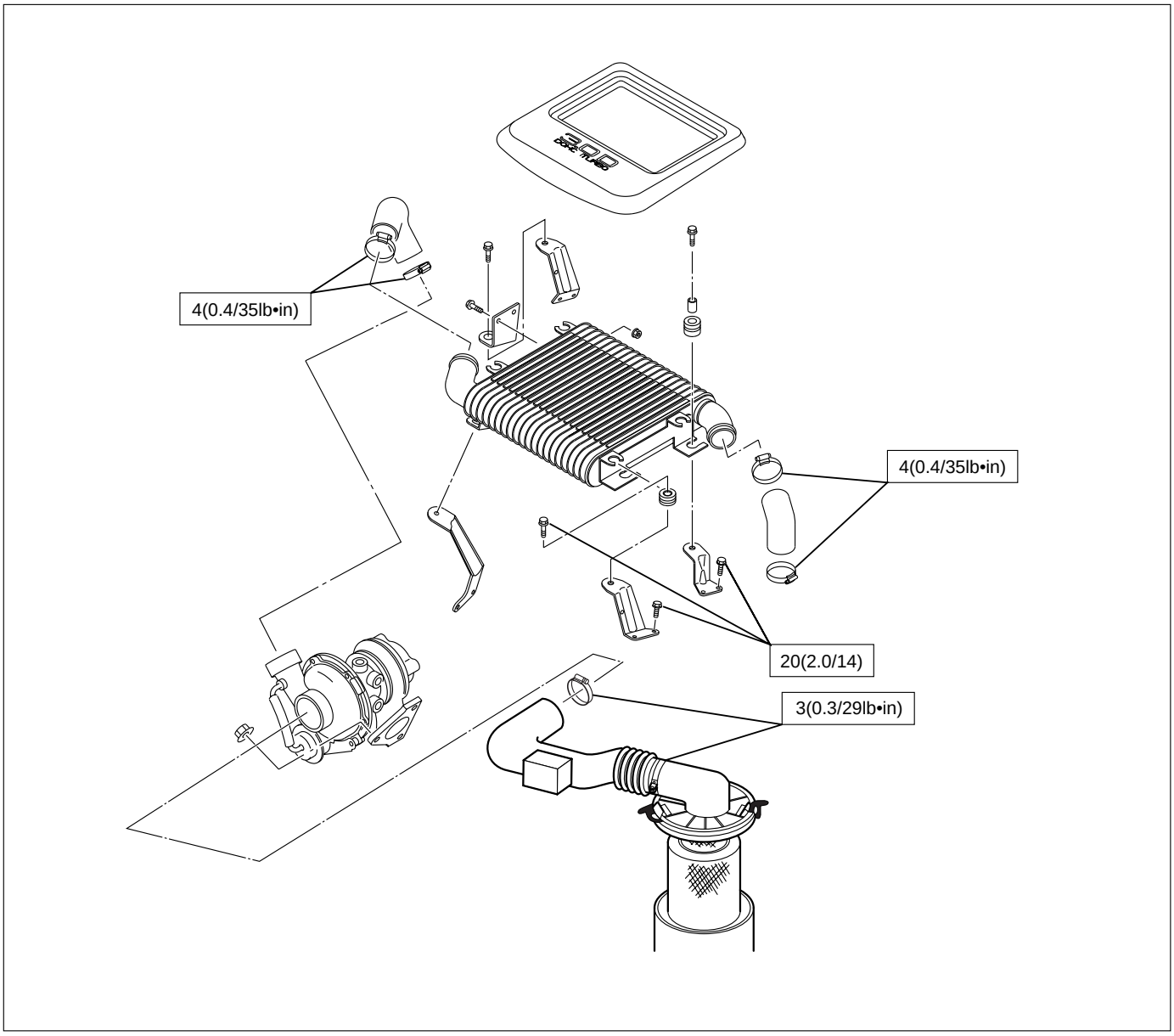

135R200005

Engine Mount Bracket

N·m (kg·m/lb·ft)

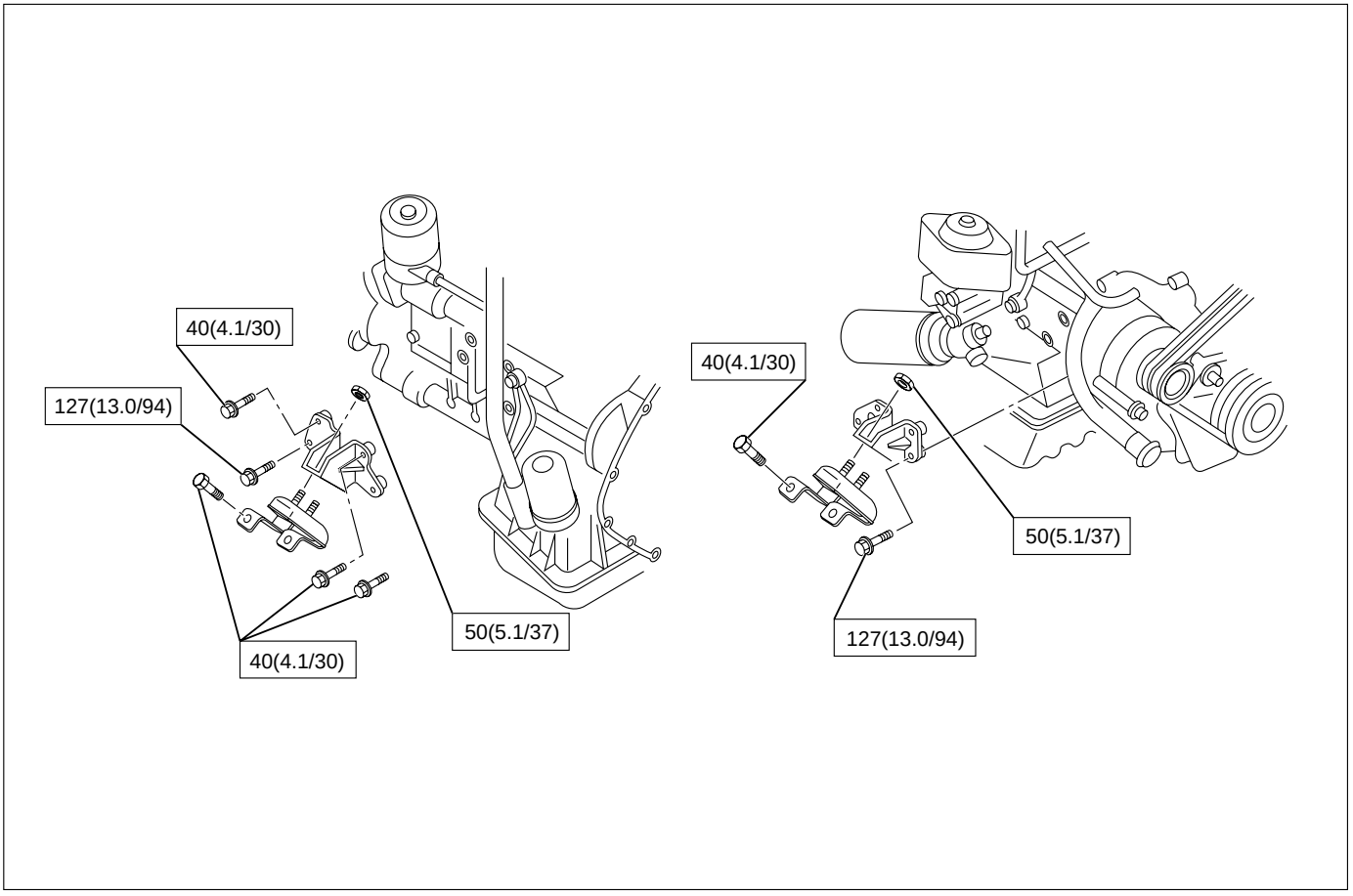

022R200002

Exhaust System

N·m (kg·m/lb·ft)

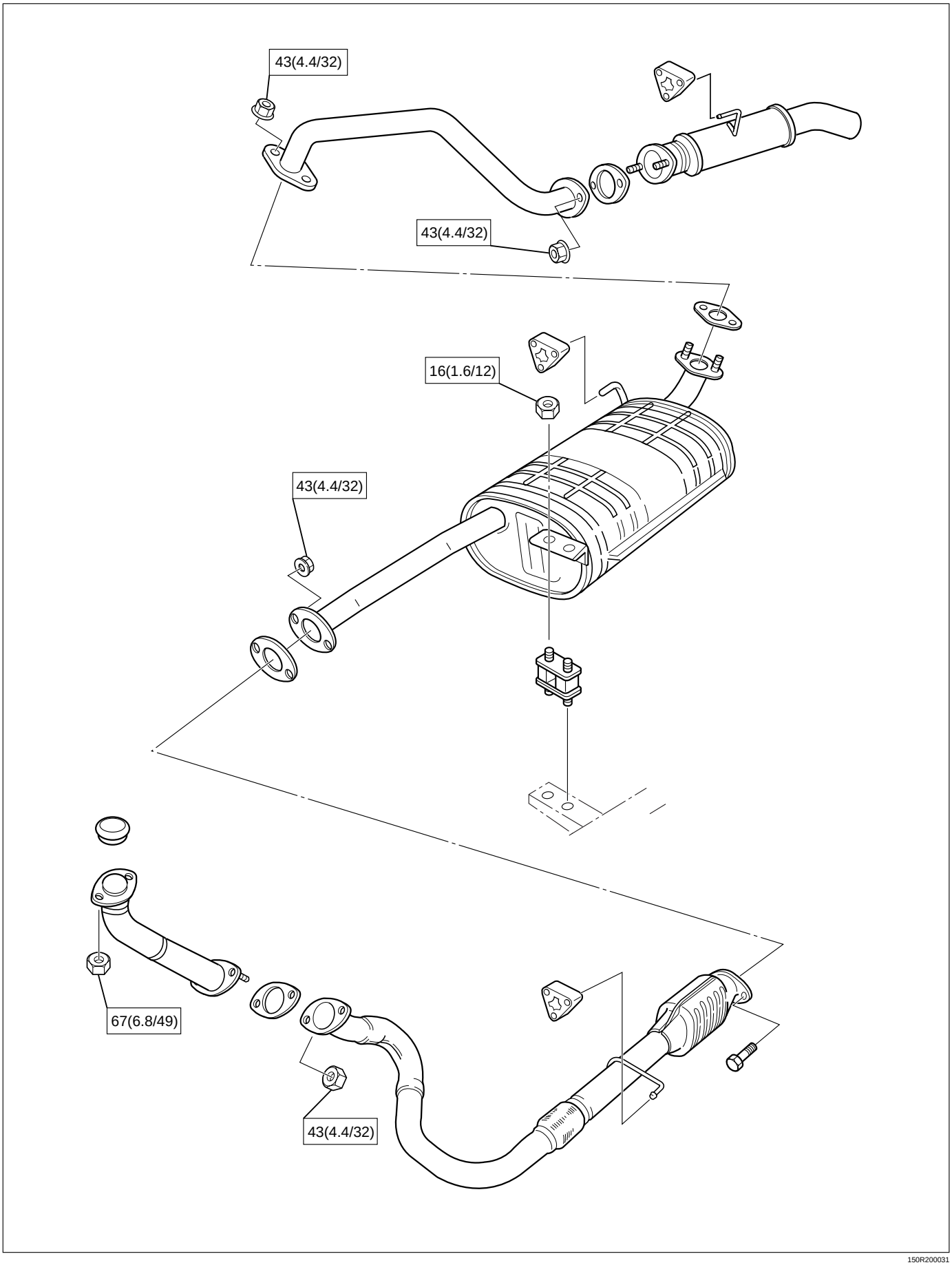

150R200031

SPECIAL TOOLS

Illustration	Tool No.	Tool Name
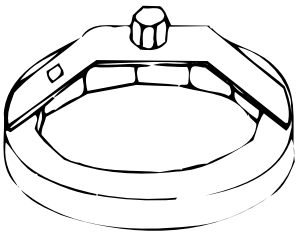 901RT034	5-8840-0203-0	Filter Wrench
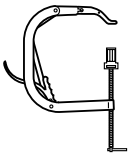 F06RV038	5-8840-2441-0	Valve Spring Compressor
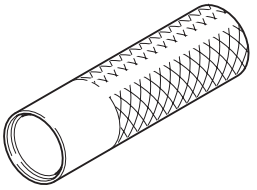 5884020330	5-8840-2033-0	Stem Seal Installer
901LX017	5-8840-9018-0	Piston Ring Compressor
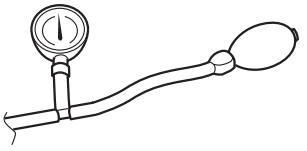 901RX00001	5-8840-0075-0	Turbocharger Pressure Gauge
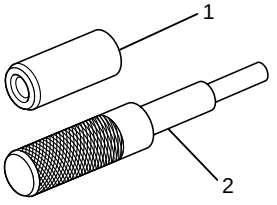 901RW182	9-8523-1212-0	Valve Guide Replacer

SPECIAL TOOLS

Illustration	Tool No.	Tool Name
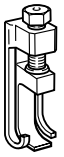 F06RW057	5-8840-2590-0	Valve Clearance Adjusting Tool
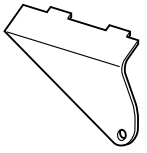 F06RW056	5-8840-2592-0	Camshaft Stopper
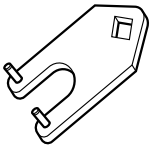 F06RV037	5-8840-2591-0	Camshaft Gear Tool
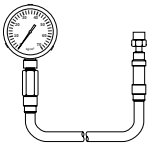 901LX057	5-8840-2675-0	Compression Gauge
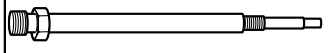 901LX056	5-8531-7002-0	Adapter: Compression Gauge
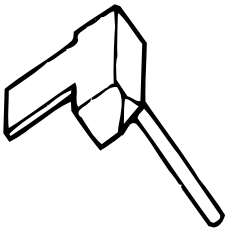 901RT042	5-8840-2153-0	Seal Cutter

SPECIAL TOOLS

Illustration	Tool No.	Tool Name
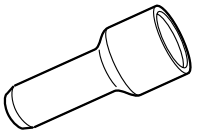 901RV061	9-8522-0021-0	Crankshaft Gear Installer
901LX030	5-8840-0266-0	Angle Gauge
901LX040	5-8840-2360-0	Rear Oil Seal Remover
901LX025	5-8840-2359-0	Rear Oil Seal Installer
901LX039	5-8840-2061-0	Front Oil Seal Installer

ENGINE ASSEMBLY

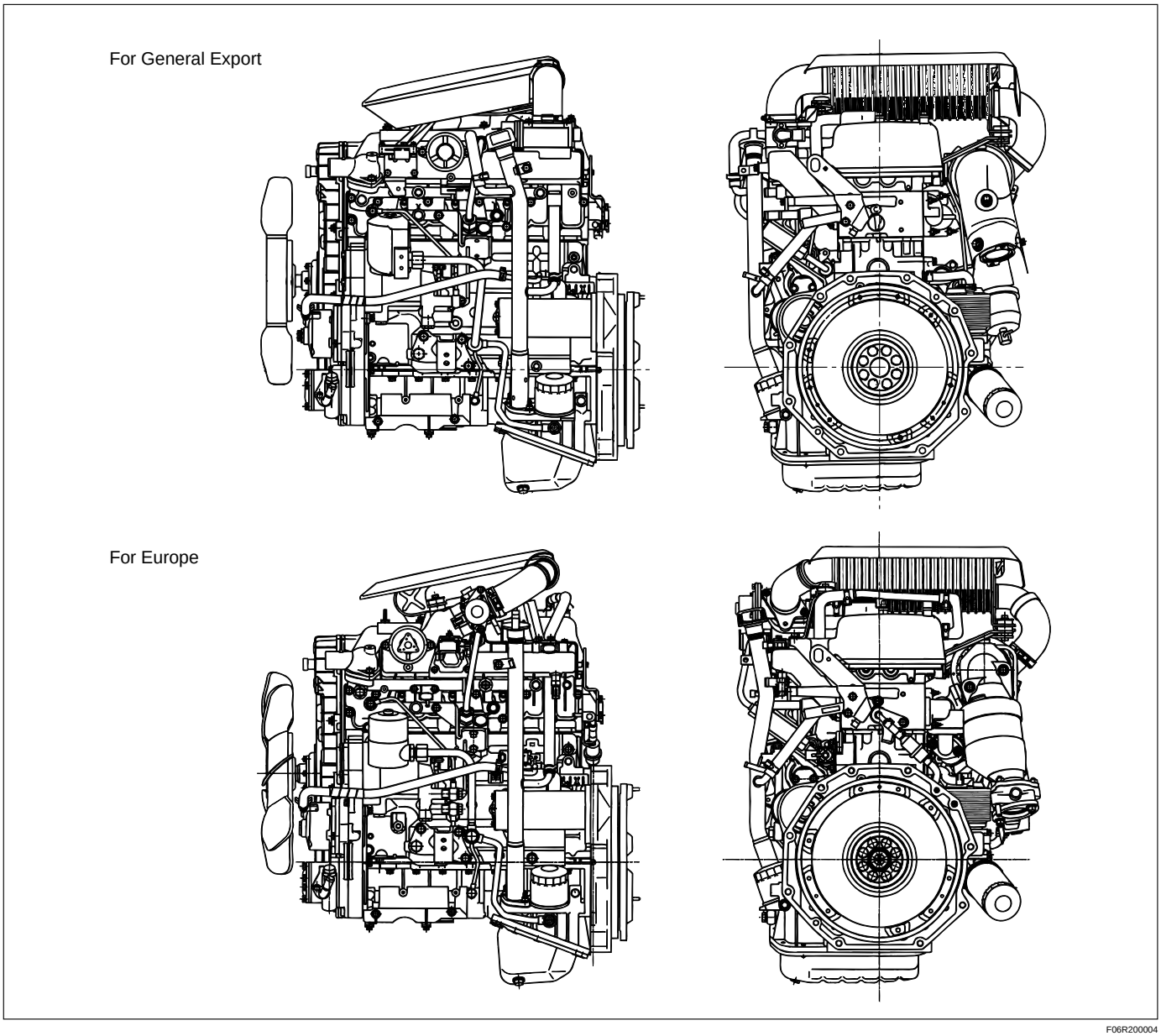

F06R200004

REMOVAL

1. Remove battery.
2. Drain engine coolant
3. Disconnect window washer hose and remove engine hood.
4. Radiator Hose
   1) Disconnect upper and lower hoses from engine side.
5. Fan Shroud
   1) Disengage clips and remove upper and lower fan shrouds.
6. Cooling Fan Assembly
   1) Remove cooling fan assembly fixing nuts, cooling fan assembly.
7. Radiator Assembly
   1) Remove bracket and radiator assembly.
8. Air Cleaner Cover & Air Duct
9. Intercooler Assembly
   1) Refer to “Intercooler” in this manual.
10. Engine Ground Cable
    1) Disconnect ground cable from A/C compressor bracket.
11. AC Generator Harness
    1) Disconnect B terminal and harness connector from AC generator.
12. A/C Compressor Assembly
    1) Disconnect magnetic clutch harness connector.
    2) Remove A/C compressor fixing bolt (rear under side of compressor).
    3) Remove fixing bolts (upper and front lower side of compressor) and set A/C compressor assembly with pipe lines on battery carrier.

13 Vacuum Hose
   1) Disconnect vacuum hose from vacuum pump.
14. Starter Harness
   1) Disconnect B terminal and put cable harness close to chassis side.
   2) Disconnect S terminal connector.
15. Engine Harness
   1) Disconnect engine harness close to engine side.
16. Fuel Pipe
   1) Remove fuel pipe from fuel pump and take care not to spill fuel and let dust enter.
17. Engine Ground Cable
   1) Disconnect ground cable from left rear side of timing gear case.
18. Vacuum Hose: Vacuum Tank
   Disconnect vacuum hose from vacuum pump side.
19. Glow Plug Harness
20. Transmission Assembly
   1) Set transmission support tool under the transmission.
   2) Remove transmission rear mount.
   3) Remove transmission fixing bolt from rear of engine assembly except two bolts.
   4) Carefully hang up engine assembly with a hoist.
   5) Remove remaining two transmission fixing bolts.
   6) Remove transmission assembly.
   7) Remove heater hose.
   8) Disconnect wire harness connector for shift on the fly.
   9) Remove vacuum hose.
21. Prepare Engine Stand
22. Engine Assembly
   1) Remove engine mount fixing bolts.
   2) Carefully hang up the engine assembly.
   3) Take out the engine assembly making sure not to damage the brake oil pipe and other pipe etc.

INSTALLATION

1. Engine assembly
   1) Install engine in mounting position by using hoist.
2. Transmission Assembly
   1) Refer to transmission installation steps in section 7.
3. Engine Mounting
   1) After all fixing bolts (left: two bolts, rights: two bolts) were inserted in every hole, tighten fixing bolts to the specified torque.
   Torque: 40 N·m (4.1 kg·m/30 lb·ft)
4. Glow Plug Harness
5. Vacuum Hose
   1) Connect Vacuum Hose to Vacuum Pump
6. Engine Ground Cable
7. Fuel Pipe
   1) Install fuel pipe to fuel pump.
8. Engine Harness
9. Starter Harness
10. A/C Compressor Assembly
   1) Tighten temporarily the fixing bolts (upper and front lower sides of compressor.)
   2) Tighten fixing bolt (rear under side of compressor) to the specified torque.
   3) Tighten fixing bolts (front upper and lower sides of compressor) to the specified torque.
   Torque: 40 N·m (4.1 kg·m/30 lb·ft)

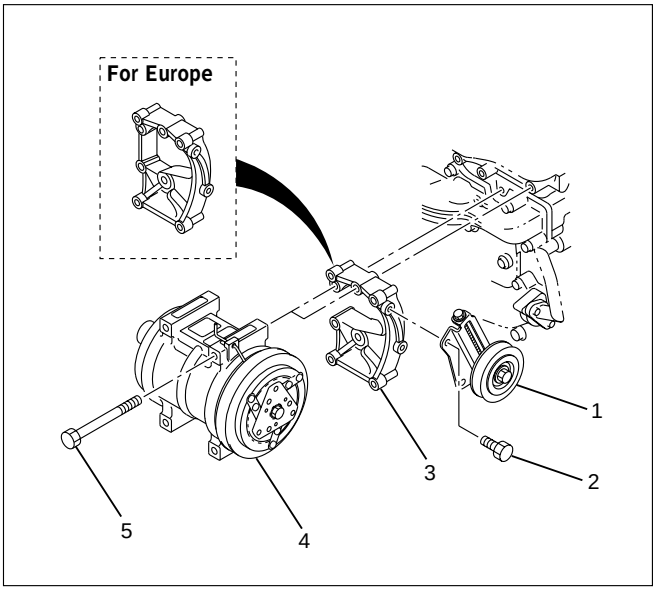

F06R200005

Legend
(1) Tensioner
(2) Bolt
(3) Bracket
(4) A/C compressor
(5) Bolt

11. A.C Generator Harness
12. Engine Ground Cable
   1) Tighten ground cable to A/C compressor bracket.
13. Air Cleaner cover & Duct
14. Intercooler Assembly
   1) Refer to “Intercooler” in this manual.
15. Radiator Assembly
   1) Install rubber cushion in under left and right part of radiator and position radiator.
   2) Fix radiator with bracket.
16. Cooling Fan Assembly
   1) Install cooling fan assembly and tighten fixing bolts to the specified torque.
   Torque: 8 N·m (0.8 kg·m/69 lb in)
17. Fan Shroud
18. Radiator Hose
   1) Connect upper and lower hose to engine side.
   2) Pour coolant into radiator.
19. Install battery.
20. Connect window washer hose and install engine hood.

ENGINE MOUNT (RH)

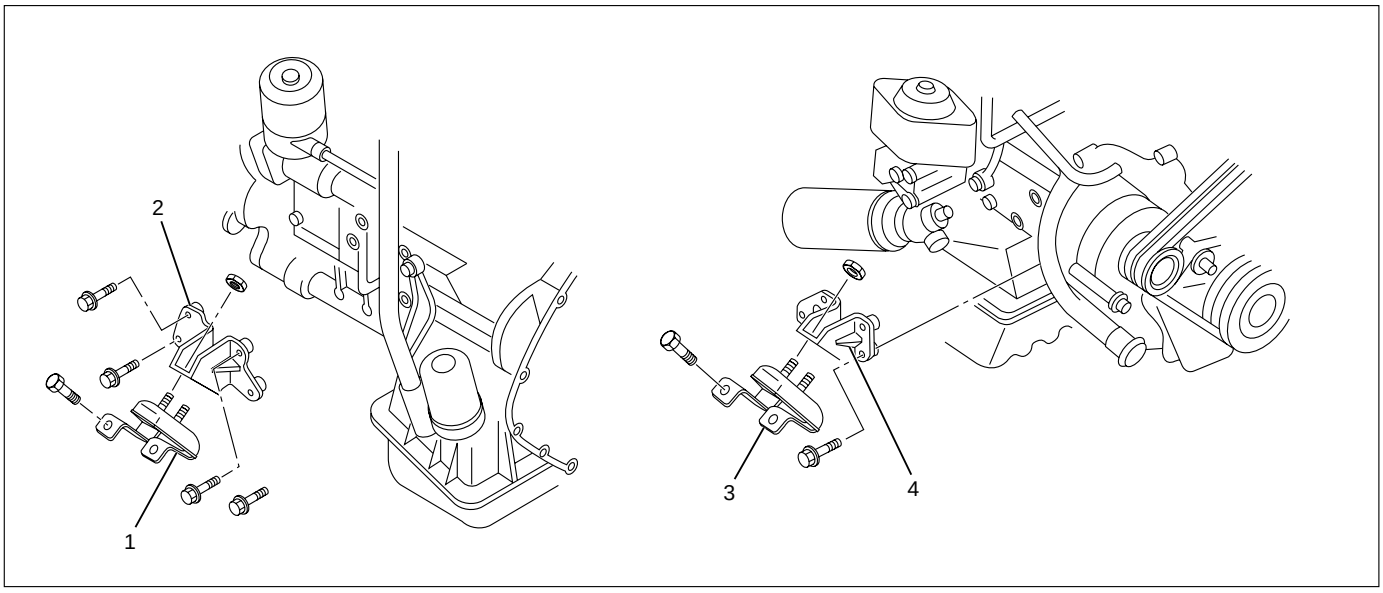

022RW018

Legend

(1) Rubber Engine Mount (LH)
(2) Engine Mounting Bracket (LH)
(3) Rubber Engine Mount (RH)
(4) Engine Mounting Bracket (RH)

REMOVAL

1. Disconnect battery ground cable
2. Hang the engine assembly.
3. Rubber engine mount.
   1) Remove bolts from chassis frame bracket.
   2) Remove nuts from rubber engine mount and engine mounting bracket.
4. Remove bolt which is fixed between engine and mounting bracket then remove the engine mounting bracket.

INSTALLATION

- Tighten the fixing bolts to the specified torque.

1. Engine mounting bracket to cylinder block.

Torque : 40 N·m (4.1 kg·m/30 lb ft) (for M10)
127 N·m (13.0 kg·m/94 lb ft) (for M14)

2. Rubber engine mount to chassis frame and engine mounting bracket.

Torque :40 N·m (4.1 kg·m/30 lb ft)

ENGINE MOUNT (LH)

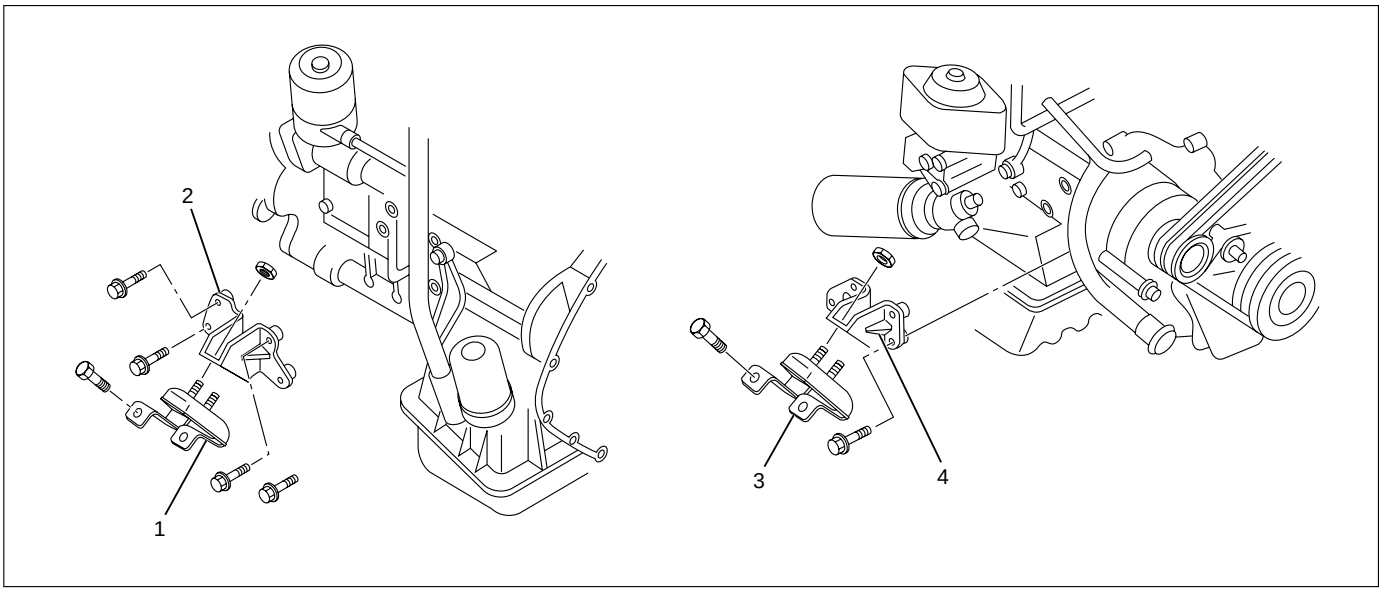

022RW018

Legend

(1) Rubber Engine Mount (LH)
(2) Engine Mounting Bracket (LH)
(3) Rubber Engine Mount (RH)
(4) Engine Mounting Bracket (RH)

REMOVAL

1. Disconnect battery ground cable
2. Hang the engine assembly.
3. Rubber engine mount.
   1) Remove bolts from chassis frame bracket.
   2) Remove nuts from rubber engine mount and engine mounting bracket.
4. Remove bolt which is fixed between engine and mounting bracket then remove the engine mounting bracket.

INSTALLATION

- Tighten the fixing bolts to the specified torque.

1. Engine mounting bracket to cylinder block.

Torque : 40 N·m (4.1 kg·m/30 lb ft) (for M10)
127 N·m (13.0 kg·m/94 lb ft) (for M14)

2. Rubber engine mount to chassis frame and engine mounting bracket.

Torque :40 N·m (4.1 kg·m/30 lb ft)

INTERCOOLER

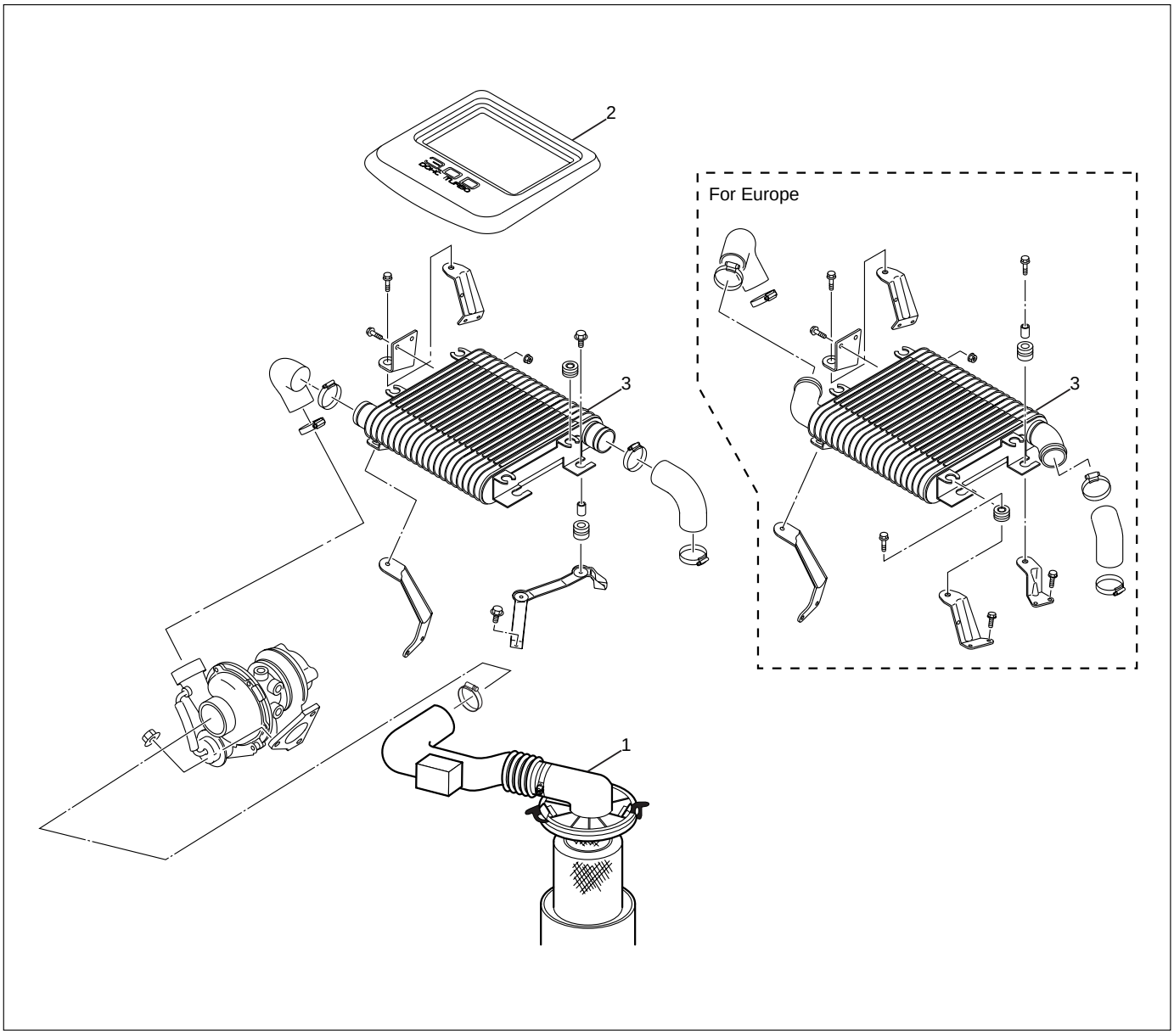

135R200003

Legend

(1) Air Cleaner Cover & Air Duct
(2) Intercooler Cover
(3) Intercooler Assembly

REMOVAL

1. Disconnect the battery ground cable.
2. Remove air cleaner cover and air duct.
3. Remove intercooler cover.
4. Remove intercooler assembly.
   1) Remove rubber hose from between intercooler outlet and intake manifold inlet.
   2) Remove rubber hose from between turbocharger outlet and intercooler inlet.
   3) Remove intercooler assembly fixing bolts from the bracket, remove intercooler assembly.

INSTALLATION

1. Intercooler assembly
   1) Connect outlet hose to intake manifold.

Torque : 4 N·m (0.4 kg·m/35 lb in)

   2) Connect inlet hose from turbocharger to intercooler.

Torque : 4 N·m (0.4 kg·m/35 lb in)

   3) Install intercooler and tighten fixing bolts to the specified torque.

Torque : 20 N·m (2.0 kg·m/14 lb ft)

2. Install intercooler cover.
3. Install air cleaner cover and air duct.
4. Connect the battery ground cable.

CYLINDER HEAD COVER

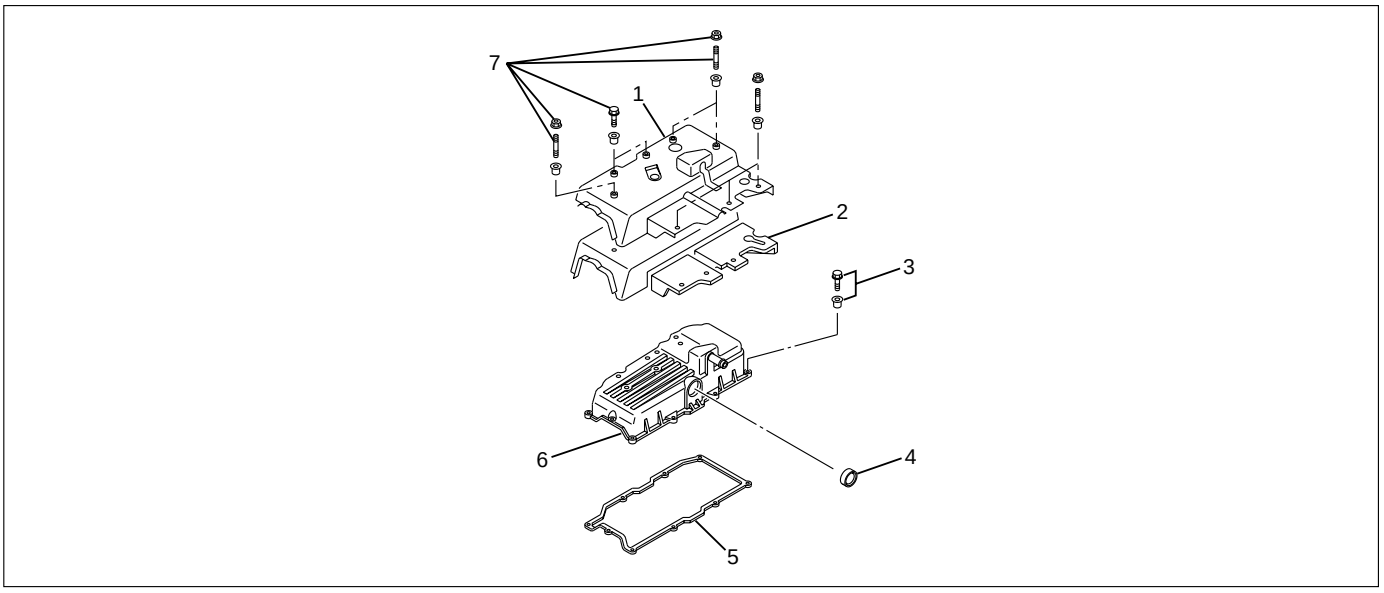

010R200006

Legend

(1) Noise Insulator Cover
(2) Insulator
(3) Bolt
(4) Oil Seal
(5) Gasket
(6) Cylinder Head Cover
(7) Bolt

REMOVAL

1. Disconnect battery ground cable.
2. Remove clip, remove air cleaner cover and air duct.
3. Remove intercooler assembly.
   Refer to “Intercooler” in this manual.
4. Remove PCV hose.
5. Remove bolts which fix noise insulator cover then remove noise insulator cover and insulator.
6. Remove high pressure oil pipe at cylinder head side.
   Take care when removing the injector oil pipe, because sometimes, during removal, your hand can be injured by the remaining high pressure oil.

INSTALLATION

1. Cylinder head cover.
   1) Install the cylinder head cover gasket to cylinder head cover.
   2) The gasket must be set perfectly with no loose areas.
   3) Apply liquid gasket (TB1207B or equivalent) to the rubber seal of the camshaft end, injector harness gasket area and No. 1 camshaft bracket.

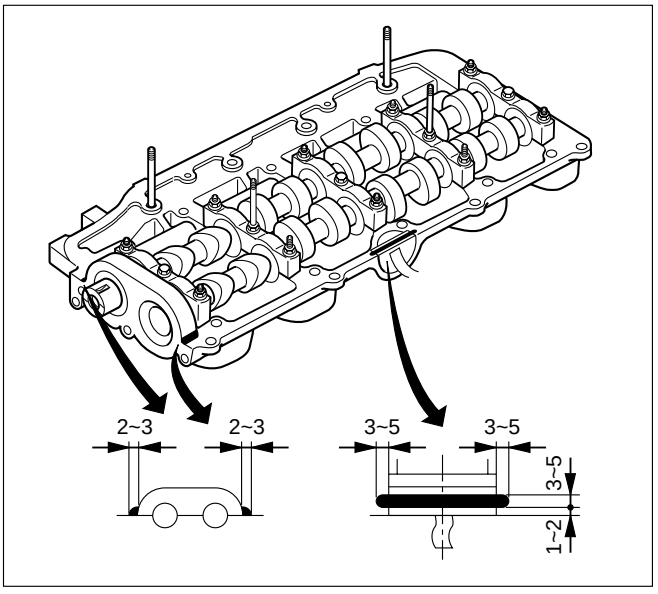

012RW119

   4) Tighten cylinder head cover fixing bolts to the specified torque.

Torque : 9 N·m (0.9 kg·m/78 lb in)

2. Fill with about 300 cc of engine oil from the high pressure oil pipe installation port of the oil rail using an oil rail filler. If assembled without filling the oil rail with oil, the time for starting the engine will be longer.
3. Install the high pressure oil pipe immediately and tighten the sleeve nut to the specified torque.

Torque : 78 N·m (8.0 kg·m/58 lb ft)

NOTE: Do not scratch the oil seal on the cylinder head during installation of the high pressure oil pipe.

4. Install the noise insulator and its cover on the cylinder head cover.

NOTE: Do not catch the injector harness with the noise insulator cover.

5. Connect the PCV hose.
6. Install the intercooler assembly.
   Refer to “Intercooler” in this manual.
7. Install air cleaner cover and air duct.
8. Connect battery ground cable.

INTAKE MANIFOLD

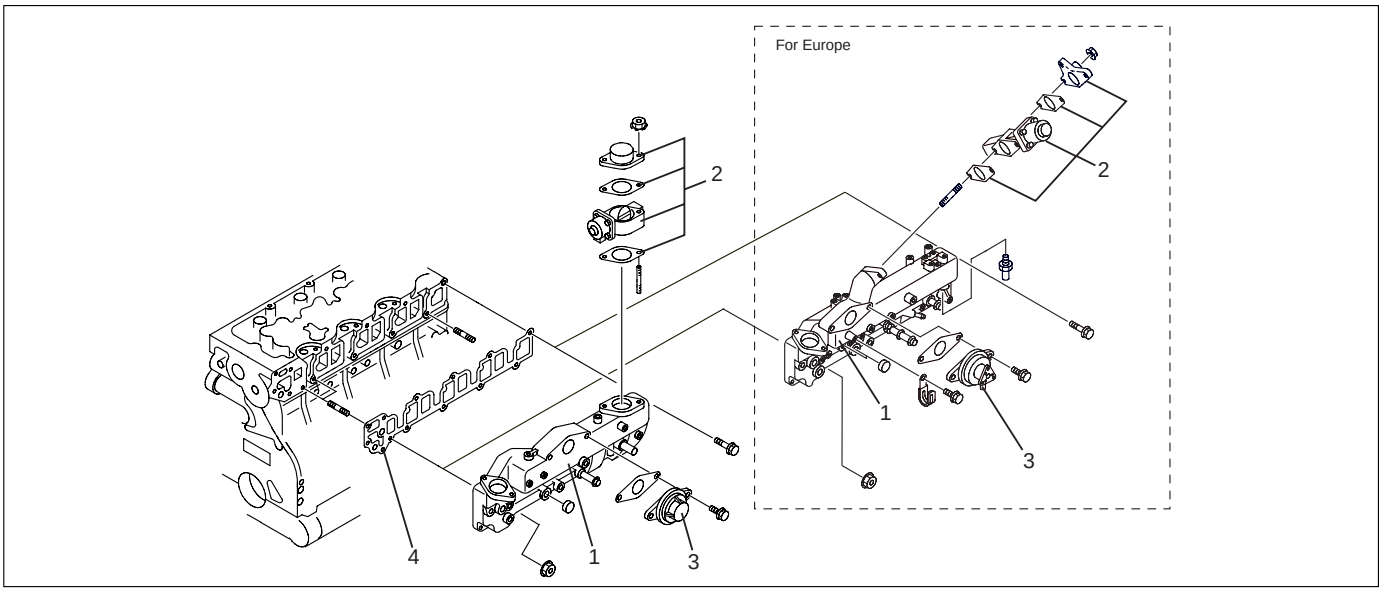

025R200005

Legend

(1) Intake Manifold
(2) Throttle Valve Assembly
(3) EGR Valve
(4) Gasket

REMOVAL

1. Drain engine coolant and disconnect water hose from thermostat hosing.
2. Remove intercooler assembly
   Refer to “Intercooler” in this manual.
3. Remove bracket bolt of oil level gauge guide tube.
4. Remove PCV Hose.
5. Remove hoses from EGR, EGR vacuum sensor and inlet/outlet of heater.
6. Disconnect harness connector form MAP sensor, EGR vacuum sensor, ETC sensor, water temperature unit, IAT sensor and EVRV.
7. Remove high pressure oil pipe.
8. Remove the two way valve.
9. Remove fuel pipe from between intake manifold and high pressure oil pump.
10. Remove fixing bolts and nuts on the intake manifold, then remove the intake manifold assembly.

INSTALLATION

1. Install the intake manifold, tighten bolts and nuts to the specified torque.

Torque : 20 N·m (2.0 kg·m/14 lb ft) for bolt and nut

2. Install the fuel pipe and tighten to the specified torque.

Torque :
M16 bolt (apply engine oil) 4 N·m (0.4 kg·m/35 lb in)
Cap nut (M10) 13N·m (1.3 kg·m/113 lb in)
Fuel pipe (M10 apply engine oil) 14 N·m (1.4 kg·m/122 lb in)

3. Install two way valve.

Torque : 20 N·m (2.0 kg·m/14 lb ft)

4. Fill with about 300 cc of engine oil from the high pressure oil pipe installation port of the oil rail using an oil filler. If assembled without filling the oil rail with oil, the time for starting the engine will be longer.
5. Install the high pressure oil pipe immediately and tighten the sleeve nut to the specified torque.

Torque : 78 N·m (8.0 kg·m/58 lb ft)

6. Reconnect harness connector to MAP sensor, EGR vacuum sensor, ETC sensor, Water temperature unit, IAT sensor and EVRV.
7. Connect the hoses to EGR valve, EGR vacuum sensor, and water inlet/outlet pipe for heater.
8. Connect PCV hose.
9. Install the oil level gauge guide tube and tighten bracket bolt.
10. Install the intercooler assembly.
    Refer to “Intercooler” in this manual.
11. Connect the hose to the thermostat housing and fill with engine coolant.

EXHAUST MANIFOLD

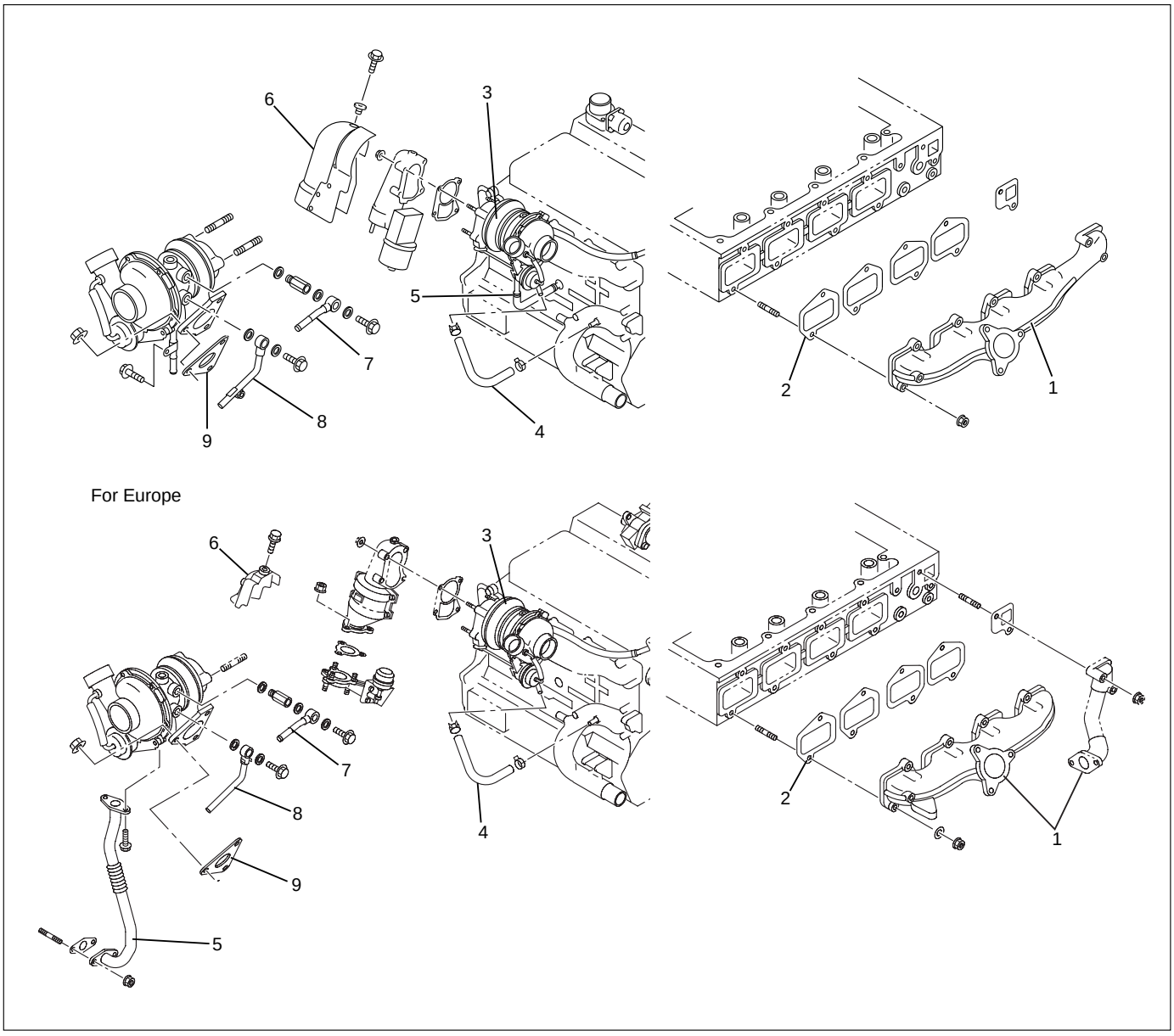

025R200004

Legend

(1) Exhaust Manifold
(2) Gasket
(3) Turbocharger Assembly
(4) Water Hose
(5) Water Hose
(6) Heat Protector
(7) Oil Pipe
(8) Oil Pipe
(9) Gasket

REMOVAL

1. Remove the hose from both turbocharger outlet and intake manifold inlet side, then remove intercooler assembly.
2. Loosen belt tensioner, remove A/C compressor assembly.
3. Remove heat protector from turbocharger.
4. Remove water hoses and oil pipes from turbocharger.
5. Remove turbocharger assembly from exhaust manifold.
6. Remove exhaust manifold fixing nuts, then remove exhaust manifold.

INSTALLATION

1. Install gasket on the exhaust manifold and tighten to the specified torque.

Torque : 30 N·m (3.1 kg·m/22 lb ft)

2. Install turbocharger on the exhaust manifold.

Torque : 27 N·m (2.8 kg·m/20 lb ft)

3. Install water hoses and oil pipes.
4. Install heat protector to turbocharger.

Torque : 9 N·m (0.9 kg·m/78 lb in)

5. Install A/C compressor assembly and readjust belt tensioner.
6. Install the intercooler assembly in the normal position.

   Connect both hoses to turbocharger and intake manifold.

TURBOCHARGER

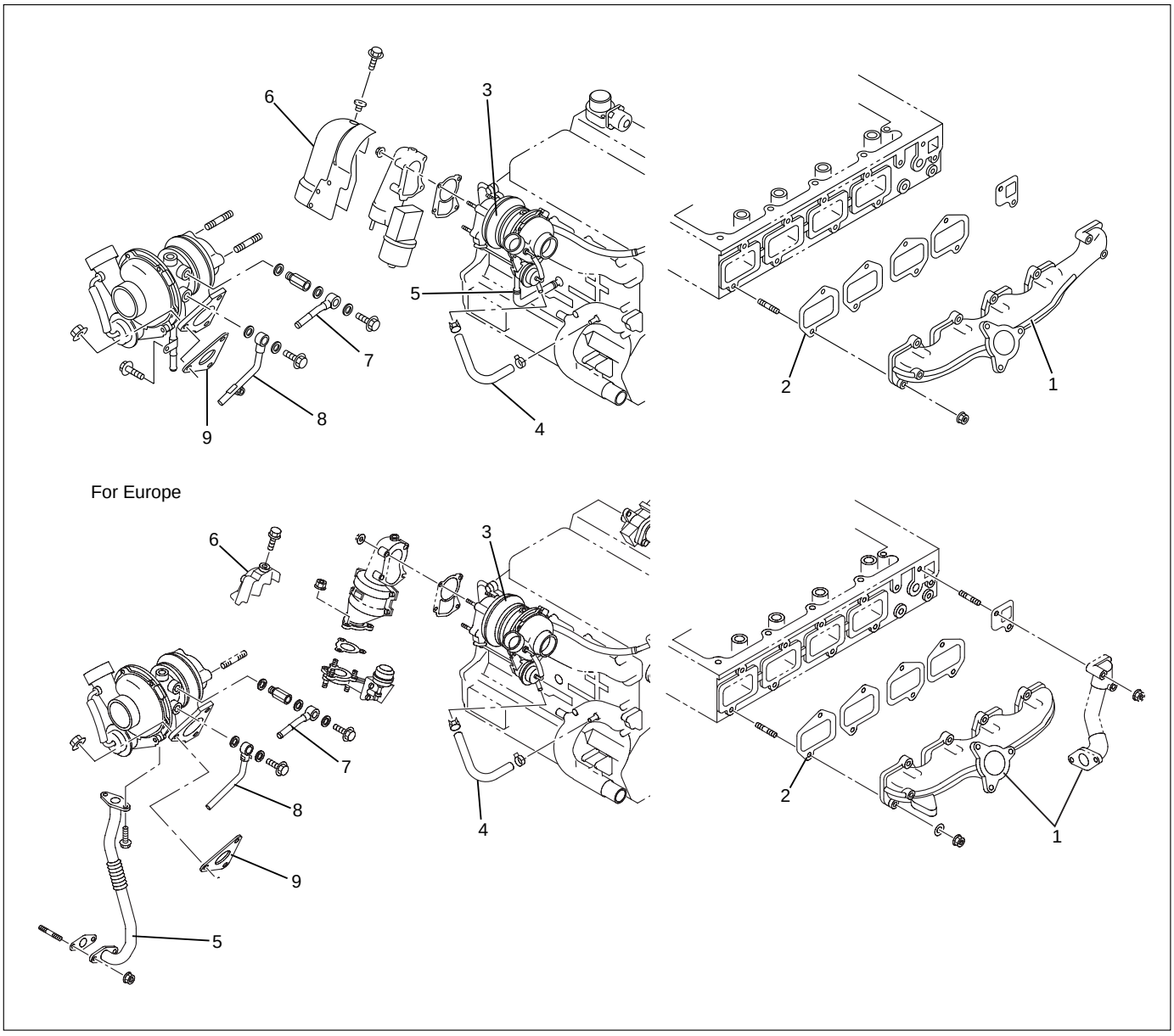

025R200004

Legend

(1) Exhaust Manifold
(2) Gasket
(3) Turbocharger Assembly
(4) Water Hose
(5) Water Hose
(6) Heat Protector
(7) Oil Pipe
(8) Oil Pipe
(9) Gasket

REMOVAL

1. Remove battery.
2. Drain engine coolant.
3. Remove air cleaner cover with air duct.
4. Remove intercooler assembly.
   Refer to “Intercooler” in this manual.
5. Remove water pipe for turbocharger inlet.
6. Remove oil pipe for turbocharger.
   1) Remove eye bolt from turbocharger.
   2) Plug oil port on the turbocharger to prevent entry of foreign materials.
7. Remove oil drain pipe from turbocharger.
8. Remove water outlet pipe.
9. Remove heat protector.
10. Remove exhaust adaptor.
11. Remove turbocharger assembly from exhaust manifold.

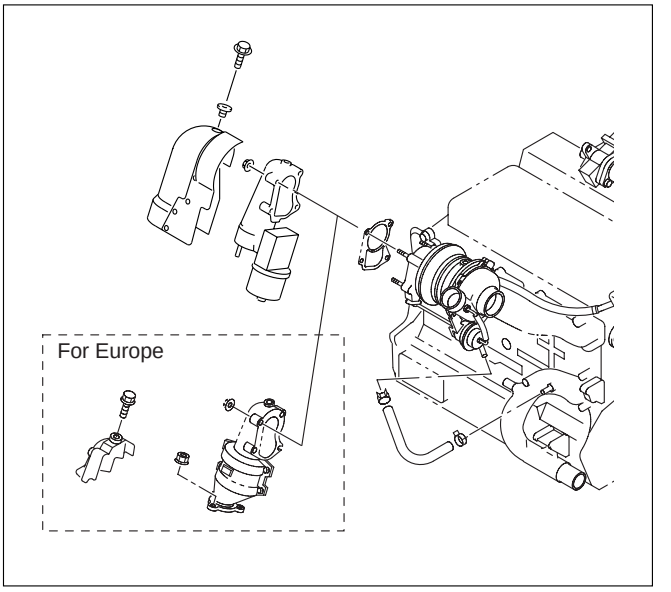

025R200006

INSTALLATION

1. Install turbocharger assembly to exhaust manifold, tighten to the specified torque.

Torque : 27 N·m (2.8 kg·m/20 lb ft)

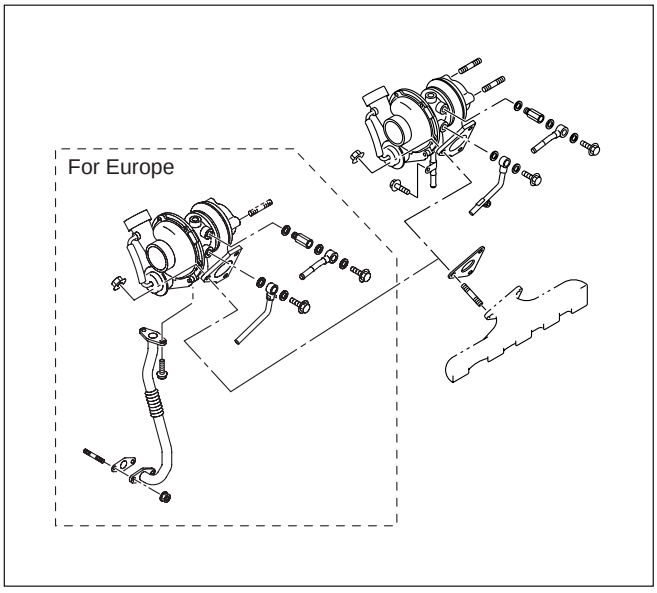

025R200007

2. Install exhaust adaptor.

Torque : 27 N·m (2.8 kg·m/20 lb ft)

3. Install heat protector.
4. Install water outlet pipe with gasket.

Torque : 20 N·m (2.0 kg·m/14 lb ft)

5. Install turbocharger oil drain pipe.

Torque : 9 N·m (0.9 kg·m/78 lb in)

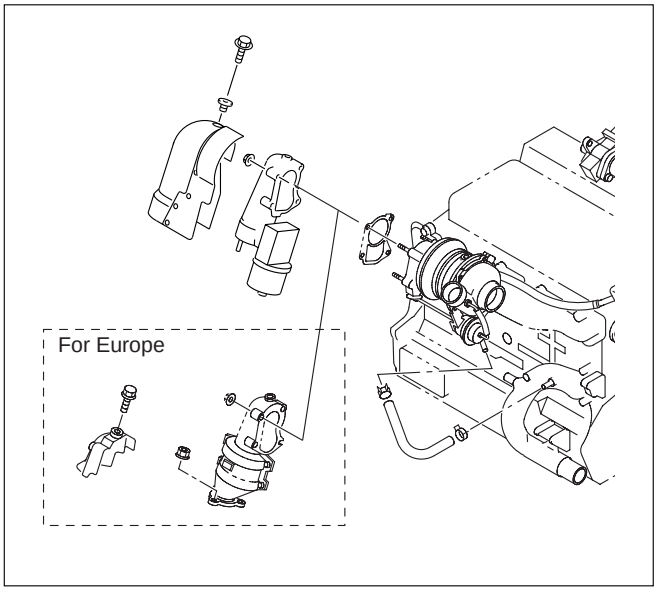

025R200006

6. Install oil supply pipe to turbocharger.
   1) Fill with 100 cc engine oil at the turbocharger oil supply hole before installing the oil pipe.
   2) Turn the turbocharger by hand to lubricate turbocharger shaft.
   3) Install oil supply pipe with new gasket to the turbocharger and tighten oil supply pipe bolts to the specified torque.

Torque : 22 N·m (2.2 kg·m/16 lb ft) for M10
54 N·m (5.5 kg·m/40 lb ft) for M14

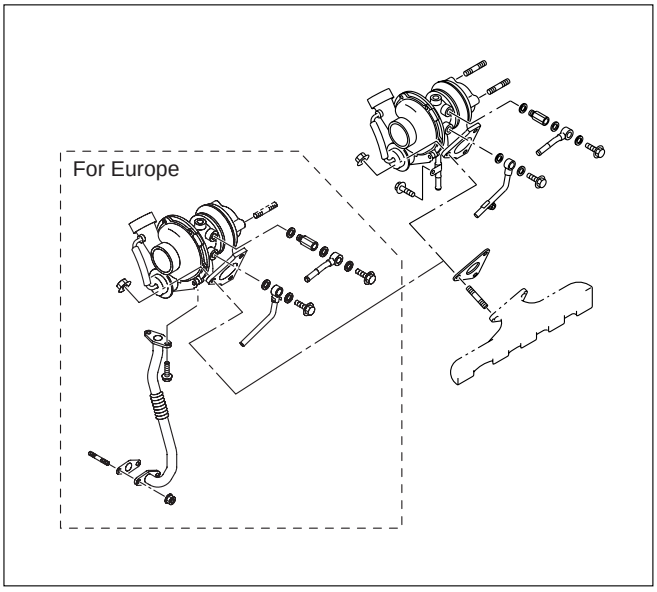

025R200007

7. Install water inlet pipe with new gasket, tighten to the specified torque.

Torque : 20 N·m (2.0 kg·m/14 lb ft)

8. Install intercooler assembly.
   Refer to “Intercooler” in this manual.
9. Install air cleaner cover with air duct, connect both side hoses.
10. Fill with engine coolant.
11. Install the battery and connect battery cables.

CYLINDER HEAD

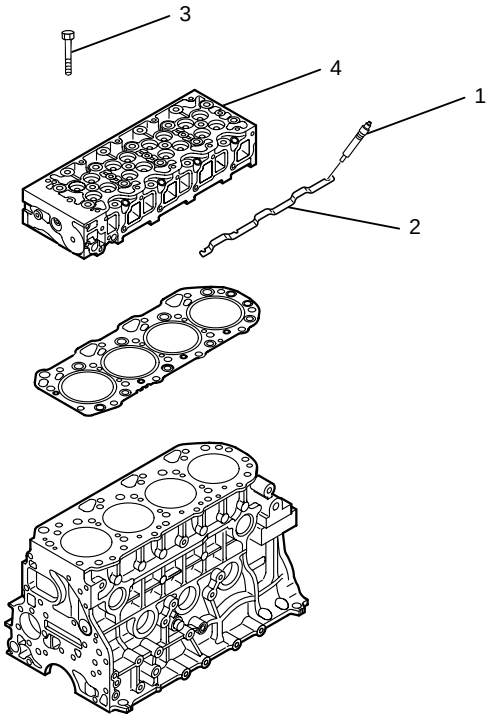

012RW096

Legend

(1) Glow Plug
(2) Plate
(3) Cylinder Head Bolt
(4) Cylinder Head

NOTE:

- During disassembly, be sure that the valve train components are kept together and identified so that they can be re-installed in their original locations.
- Before removing the cylinder head from the engine and before disassembling the valve mechanism, do a compression test and note the results.

DISASSEMBLY

1. Injector Assy
2. Glow Plug and Glow Plug Connector
3. Cylinder Head Assembly
   - Refer to “Cylinder Head Gasket”

CLEAN

- Cylinder head
  Carefully remove all varnish, soot and carbon on the bare metal. Do not use a motorized wire brush on any gasket sealing surface.

INSPECTION AND REPAIR

Make the necessary adjustments, repairs, and part replacements if excessive wear or damage is discovered during inspection.

1. Cylinder head gasket and mating surfaces for leaks, corrosion and blow-by. If the gasket has failed, determine the cause;
   – Improper installation
   – Loosen or warped cylinder head
   – Insufficient torque on head bolts
   – Warped cylinder block surface

2. Cylinder head for cracks, especially between valve seats and in the exhaust ports.
3. Cylinder head deck for corrosion, sand particles in head and porosity.

CAUTION: Do not attempt to weld the cylinder head. Replace it.

4. Cylinder head lower surface for flatness.

   Use a straight edge and a feeler gauge to measure the cylinder head lower surface warpage.

   If the measured values exceed the specified limit, the cylinder head must be replaced.

   Cylinder Head Lower Face Warpage:
   Standard: 0.075 mm (0.0029 in) or less
   Limit: 0.2 mm (0.0079 in)

   Cylinder Head Height:
   Standard: 95 mm (3.740 in)

5. Water jacket sealing plugs seating surfaces.
6. Use a straight edge and a feeler gauge to measure the manifold cylinder head fitting face warpage.

   If the measured values exceed the specified limit, the manifold must be replaced.

   Exhaust Manifold Warpage:
   Standard: 0.05 mm (0.0020 in) or less
   Limit: 0.20 mm (0.0079 in)

CAUTION: Do not attempt to weld the cylinder head. Replace it.

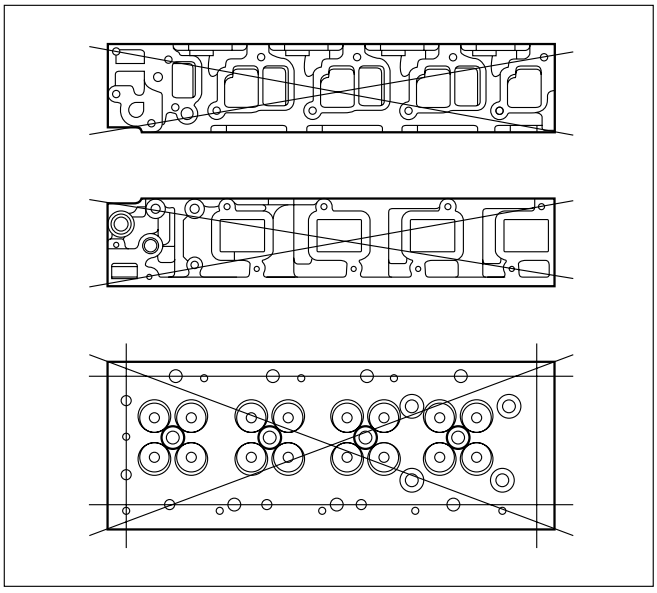

011RW006

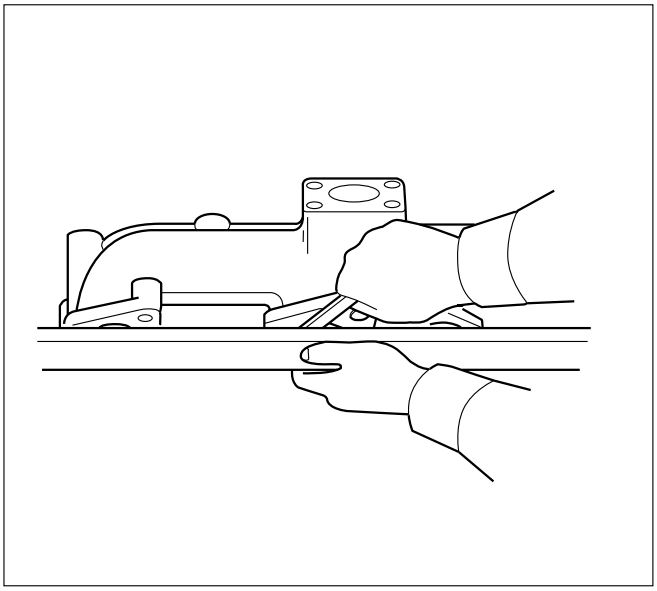

012RW053

REASSEMBLY

1. Cylinder Head
   - Refer to “Cylinder Head Gasket”.
2. Glow Plug and Glow Plug Connector
   - Tighten glow plugs.

   Torque: 15 N·m (1.5 kg·m/11 lb ft)

CYLINDER HEAD GASKET

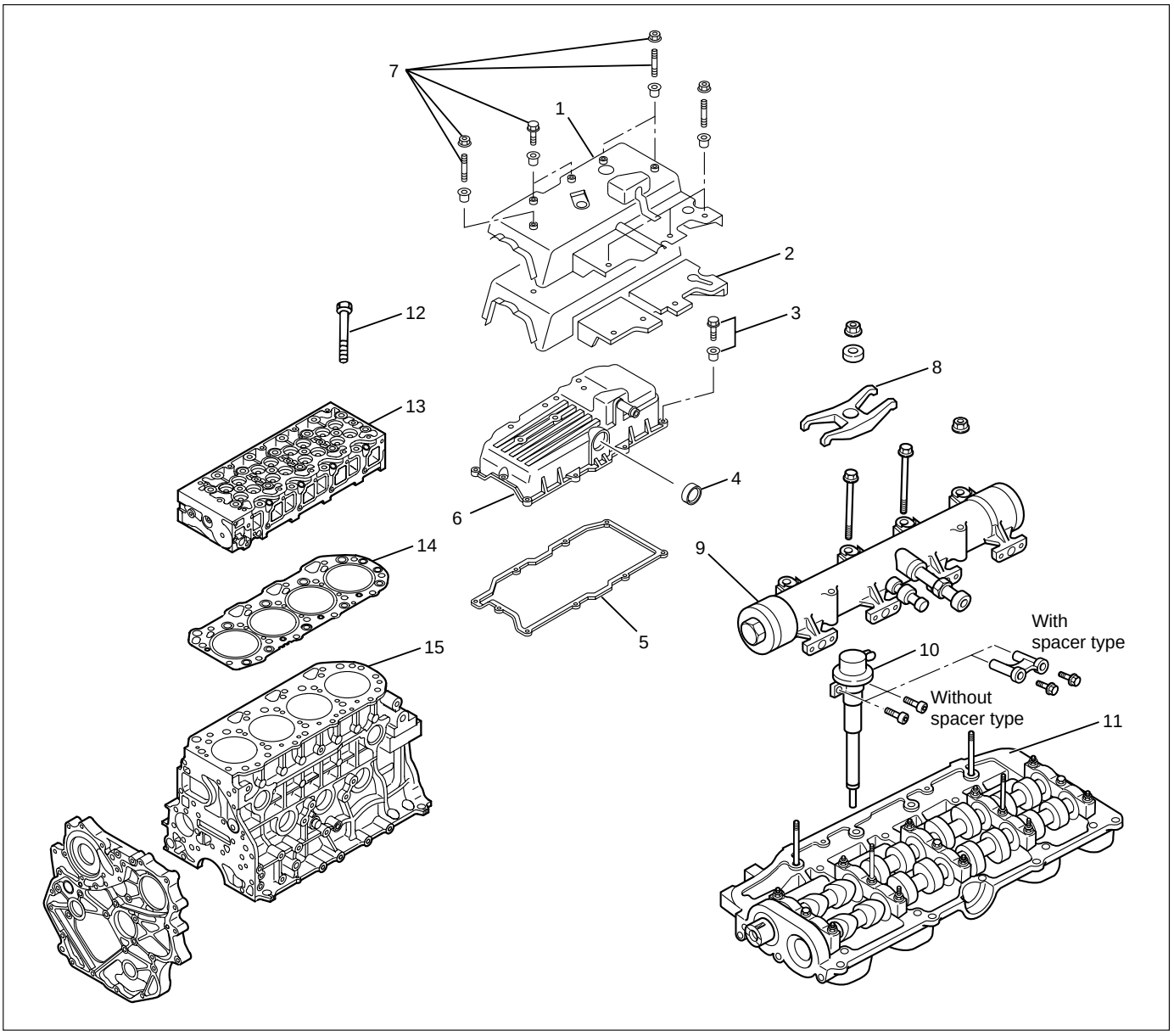

011R200002

Legend

(1) Cylinder Head Noise Insulator Cover
(2) Insulator
(3) Bolt and Gasket
(4) Oil Seal
(5) Gasket
(6) Cylinder Head Cover
(7) Bolt, Stud and Rubber Mounting
(8) Injector Clamp
(9) Oil Rail
(10) Injector Assembly
(11) Camshaft Carrier
(12) Cylinder Head Bolt
(13) Cylinder Head Assembly
(14) Cylinder Head Gasket
(15) Cylinder Block

REMOVAL

1. Disconnect battery ground cable.
2. Drain engine coolant.
3. Remove air cleaner and air duct.
4. Remove intercooler assembly.
   Refer to “Intercooler” in this manual.
5. Remove oil level gauge guide assembly.
6. Remove PCV hose.
7. Remove EGR vacuum hose.
8. Disconnect harness connector around the cylinder head.
9. Remove A/C compressor assembly.
10. Remove A/C compressor bracket.
11. Remove generator assembly and take out fan belt.
12. Remove heat protector and remove valve assembly.
13. Remove water hose and oil pipe from turbocharger.
14. Remove turbocharger assembly.
15. Remove water hose between thermostat and radiator.
16. Remove cylinder head noise insulator cover.

NOTE: Do not make damage to the harness.

17. Remove high pressure pipe.
18. Remove timing belt cover.
19. Remove CMP sensor bracket.
20. Remove timing belt tensioner and remove timing belt.
21. Remove camshaft pulley.
22. Remove front plate.
23. Remove water pipe between cylinder head and water pump.
24. Remove fuel pipe between fuel pump and intake manifold.
25. Remove fuel return pipe.
26. Remove intake manifold assembly.
27. Disconnect glow plug wiring and remove glow plug.
28. Remove cylinder head cover.
29. Drain oil from oil rail.
30. Disconnect injector harness connector.
31. Disconnect harness connector from oil pressure sensor and oil temperature sensor on the oil rail.
32. Disconnect injector harness assembly.
33. Remove injector clamp.
34. Remove injector spacer (If equipped.).
35. Remove injector assembly.
36. Remove oil rail assembly.
37. Remove camshaft carrier.
38. Remove cylinder head assembly.
39. Remove cylinder gasket.

INSTALLATION

1. Install cylinder head gasket with top mark up.

NOTE: Determine cylinder head gasket grade by measuring projection of piston head.

2. Selection cylinder head gasket.
   1) Measure the piston head projection by dial gauge.

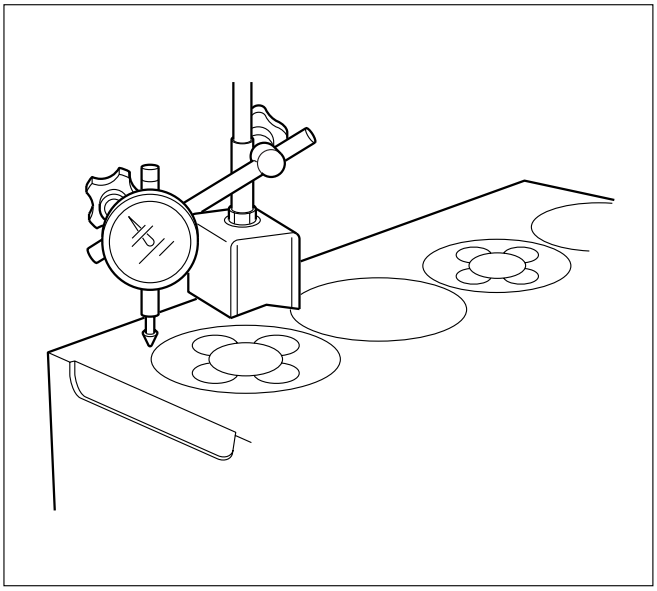

012RW073

   2) Measure the projection of piston head at the nearest possible point to the cylinder bore.
   3) Obtain the largest measurement from among all cylinders.
   4) Determine cylinder head gasket grade by maximum value of measuring projection of piston head.

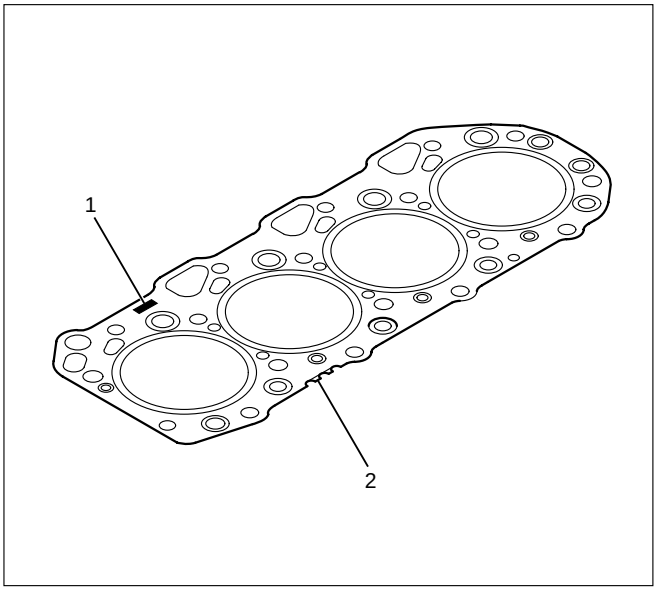

011RW043

Legend
(1) Top Mark
(2) Grade Mark

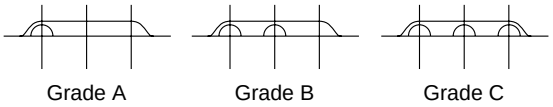

011RW042

Cylinder head gasket and piston projection mm

Grade	Piston projection	Gasket thickness
A	more 0.333 to less 0.383	1.35
B	more 0.383 to less 0.433	1.40
C	more 0.433 to less 0.483	1.45

CAUTION:
- **The projection of each piston should be 0.333 mm or more and less than 0.483 mm.**
- **Maximum difference in projection between pistons should be less than 0.1 mm.**
- **If the piston projection is without standard, reassemble the engine all over again.**

3. Install cylinder head assembly, tighten bolts by angular tightening method.

Torque:

1st step; 49 N·m (5.0 kg·m/36 lb ft)
2nd step; 60°
3rd step; 60°

CAUTION: The cylinder head bolts cannot be reused.

4. Install camshaft carrier assembly.
   Refer to “Camshaft” in this manual.
5. Install oil rail and injector assembly.
   Refer to “Oil rail and injector” in this manual.
6. Install injector harness to connect harness connector.

Note: Apply liquid gasket (TB 1207B or equivalent) to the rubber seal of the camshaft end, injector harness gasket area and No. 1 camshaft bracket. Refer to the Cylinder head cover.

7. Install cylinder head cover.

Torque: 9 N·m (0.9 kg·m/78 lb in)

8. Install glow plug to tighten specified torque.

Torque: 15 N·m (1.5 kg·m/11 lb ft) and connect glow plug harness.

9. Install intake manifold.

Torque: 20 N·m (2.0 kg·m/14 lb ft)

10. Install fuel return pipe.
11. Install fuel pipe in between fuel pump and intake manifold.
12. Install water pipe in between cylinder head and water pump.
    Tighten flange bolt to the specified torque.

Torque: 20 N·m (2.0 kg·m/14 lb ft)

13. Install front plate.

Torque: 20 N·m (2.0 kg·m/14 lb ft)

14. Install camshaft pulley, tighten with angular tightening method.

    1st step 40 N·m (4.1 kg·m/30 lb ft)
    2nd step 60°

NOTE: Apply engine oil to camshaft pulley bolt.

15. Align timing mark oil pump pulley and camshaft pulley to front plate then put the timing belt and tighten tensioner bolt.

Torque: 20 N·m (2.0 kg·m/14 lb ft) for M8
50 N·m (5.1 kg·m/37 lb ft)

16. Install CMP sensor bracket.
17. Install timing belt cover.

Torque: 9 N·m (0.9 kg·m/78 lb in)

18. Fill with about 300 cc of engine oil from the high pressure oil pipe installing port of oil rail using an oil filler.
    If assembled without filling the oil rail with oil, the time for engine start will be longer.
19. Immediately install high pressure oil pipe to tighten with specified torque.

Torque: 78 N·m (8.0 kg·m/58 lb ft)

20. Install cylinder head noise insulator cover.

Torque: 9 N·m (0.9 kg·m/78 lb in)

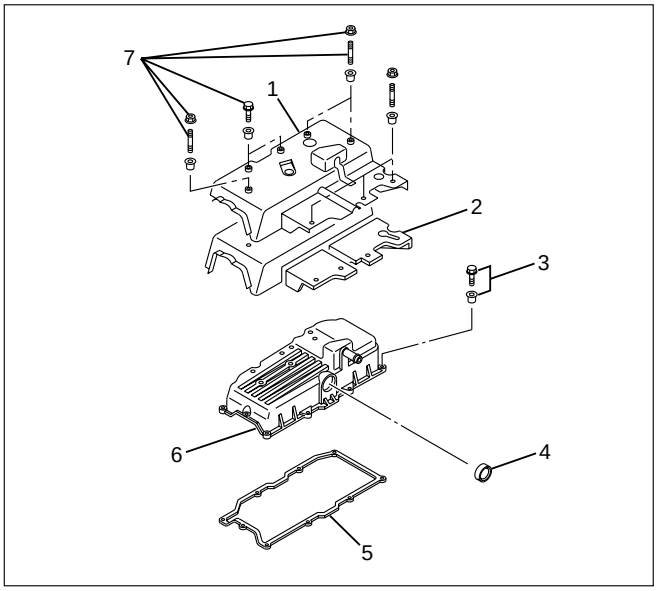

010R200006

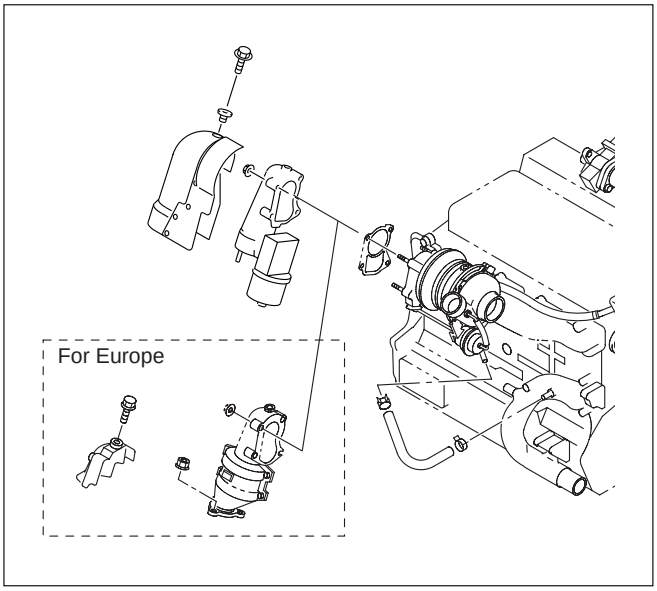

025R200006

Legend

(1) Cylinder Head Noise Insulator Cover
(2) Insulator
(3) Bolt
(4) Oil Seal
(5) Gasket
(6) Cylinder Head Cover
(7) Bolt, Stud and Rubber Mounting

21. Install water hose between thermostat and radiator.
22. Install turbocharger assembly to exhaust manifold.

Torque: 27 N·m (2.8 kg·m/20 lb ft)

23. Install water hose and oil pipe for turbocharger.

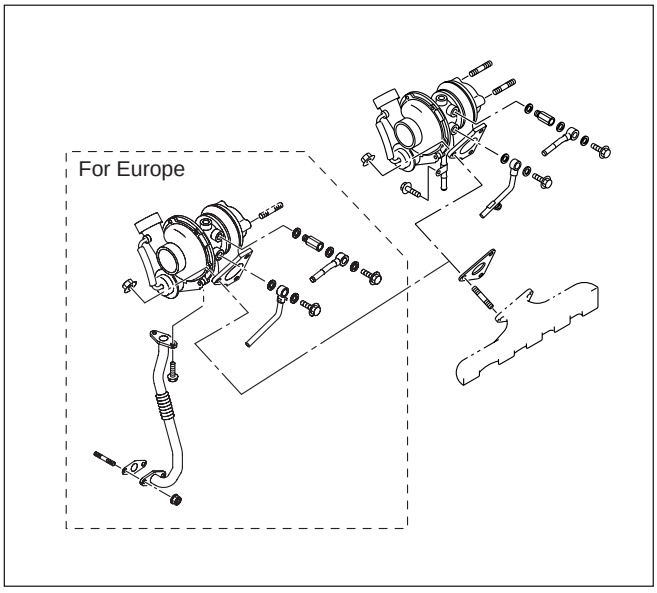

025R200007

24. Install exhaust valve assembly and heat protector.

Torque: 57 N·m (5.8 kg·m/42 lb ft) for valve

Torque: 9 N·m (0.9 kg·m/78 lb in) for heat protector

25. Install generator assembly.

Torque: 40 N·m (4.1 kg·m/30 lb ft) for ACG bracket

Torque: 40 N·m (4.1 kg·m/30 lb ft) between ACG and bracket

Torque: 20 N·m (2.0 kg·m/14 lb ft) between ACG and adjuster plate

26. Fix the A/C compressor bracket and install A/C compressor.

Torque: 46 N·m (4.7 kg·m/34 lb ft) for A/C bracket

Torque: 20 N·m (2.0 kg·m/14 lb ft) for belt tensioner

27. Reconnect harness connector around cylinder head.
28. Connect EGR vacuum hose.
29. Install oil level gauge guide assembly.
    Tighten nuts lower portion and tighten bolt.

Torque: 20 N·m (2.0 kg·m/14 lb ft)

30. Install intercooler assembly.
    Refer to “Intercooler” in this manual.
31. Install air duct between air cleaner and turbocharger.
32. Fill engine coolant.
33. Reconnect battery.

CAMSHAFT

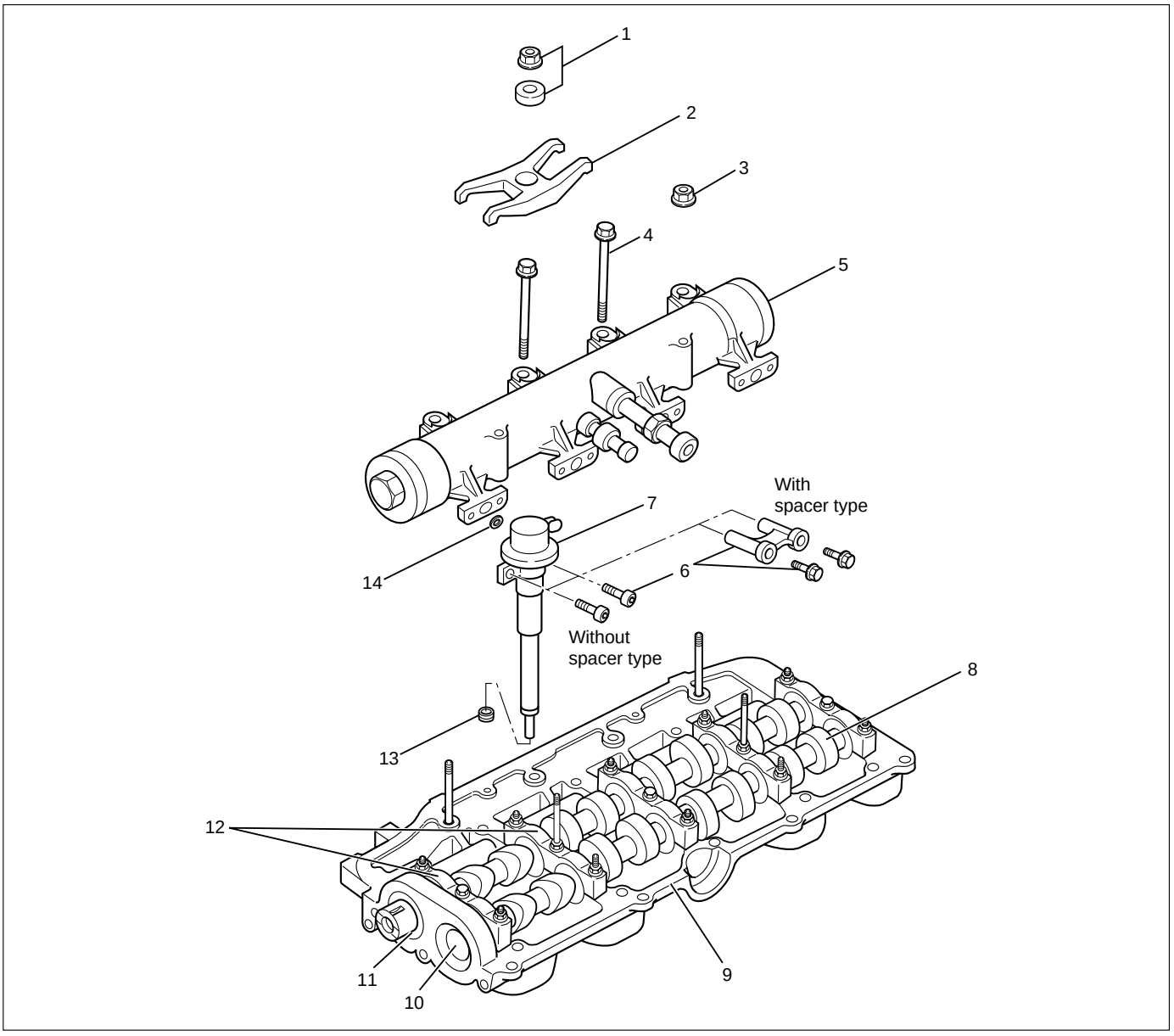

012R200004

Legend

(1) Nut and Washer
(2) Injector Clamp
(3) Nut
(4) Bolt
(5) Oil Rail Assembly
(6) Spacer (If equipped) and Bolt
(7) Injector Assembly
(8) Camshaft
(9) Camshaft Carrier
(10) Plug
(11) Oil Seal
(12) Camshaft Bracket
(13) Gasket
(14) Gasket

DISASSEMBLY

1. Injector clamp
2. Injector assembly
3. Oil rail assembly
4. Camshaft bracket
5. Camshaft
6. Oil seal
7. Plug

NOTE: Before starting disassembly above, drain oil from oil rail to prevent oil from entering the cylinder.

REASSEMBLY

1. Camshaft
   1) Before reassembling the camshaft to the camshaft carrier, align the holes between the main gear and the sub gear on the intake side of the camshaft gear with a special tool.
   2) Set lock pin to gear holes from sub gear side.

   Camshaft Gear Tool: 5-8840-2591-0

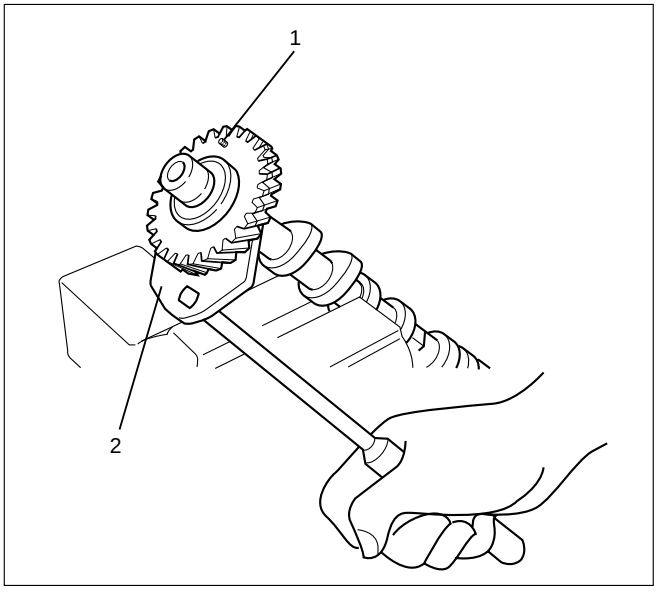

014RW183

Legend
(1) Locking pin
(2) Special tool

   3) Apply engine oil to the camshaft gear tooth.
   4) Apply engine oil to the journal on the camshaft carrier.
   5) Align the timing mark on the intake and exhaust camshaft gear and put on the camshaft carrier.

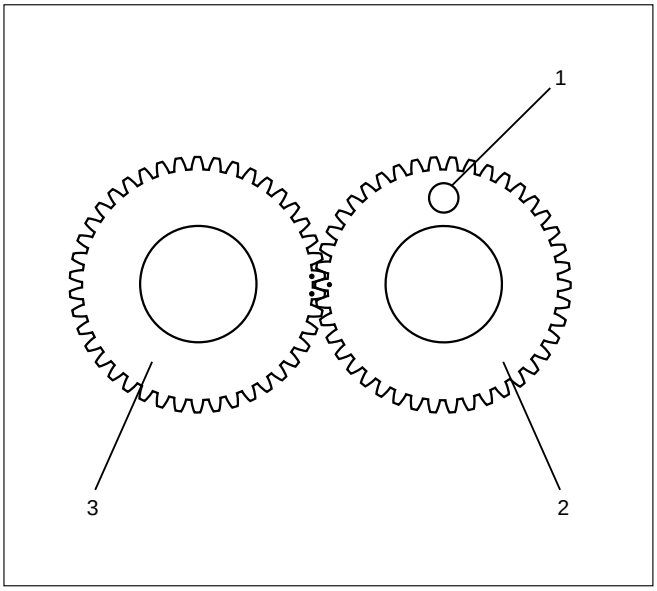

014RW184

Legend
(1) Locking pin
(2) Intake side camshaft gear
(3) Exhaust side camshaft gear

   6) Apply liquid gasket (TB1207B or equivalent) to No. 1 camshaft bracket matching surface.
   7) Set No. 1 to No. 5 camshaft bracket on camshaft carrier.
   8) Temporarily tighten bracket bolts B and C.

Temporal Torque: 20 N·m (2.0 kg·m/14 lb ft)

   9) Put gasket on the cylinder head.
   10) Install camshaft carrier onto the cylinder head and tighten bolts to specified torque.

Torque: A; 22 N·m (2.2 kg·m/16 lb ft)
B; 38 N·m (3.9 kg·m/28 lb ft)
C; 22 N·m (2.2 kg·m/16 lb ft)
D; 38 N·m (3.9 kg·m/28 lb ft)

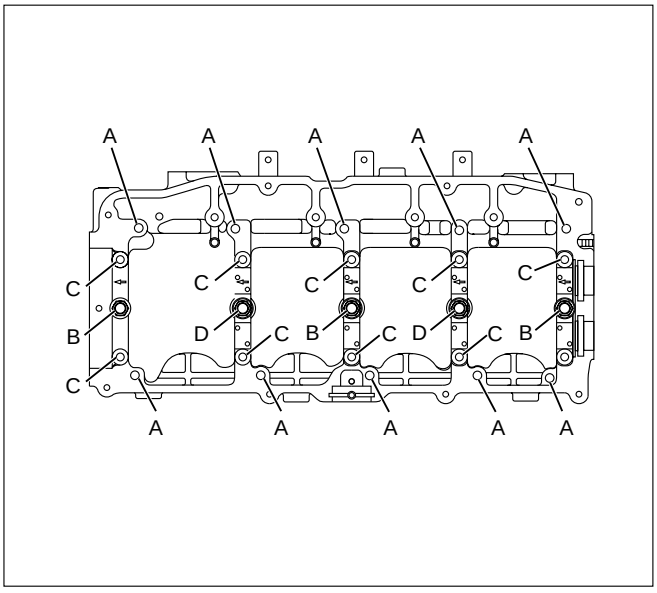

011RW035

- Remove locking pin.

INSPECTION AND REPAIR

Make the necessary adjustments, repairs, and part replacements if excessive wear or damage is discovered during inspection.

1. Camshaft Journal diameter
   1) Use a micrometer to measure each camshaft journal diameter in two directions (1) and (2). If the measured value is less than the specified limit, the camshaft must be replaced.

Standard: 29.939 – 29.96 mm (1.1787 – 1.1795 in)
Limit: 29.84 mm (1.17 in)

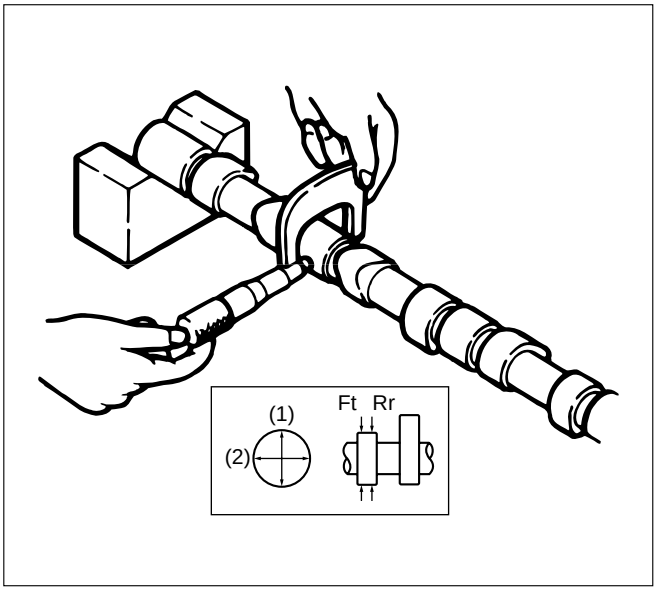

014RW179

2. Cam Height
   1) Measure the cam height (H) with a micrometer. If the measured value is less than the specified limit, the camshaft must be replaced.

Standard: IN 46.62 mm (1.8354 in)
EX 46.72 mm (1.8394 in)

Limit: IN 46.57 mm (1.8335 in)
EX 46.67 mm (1.8374 in)

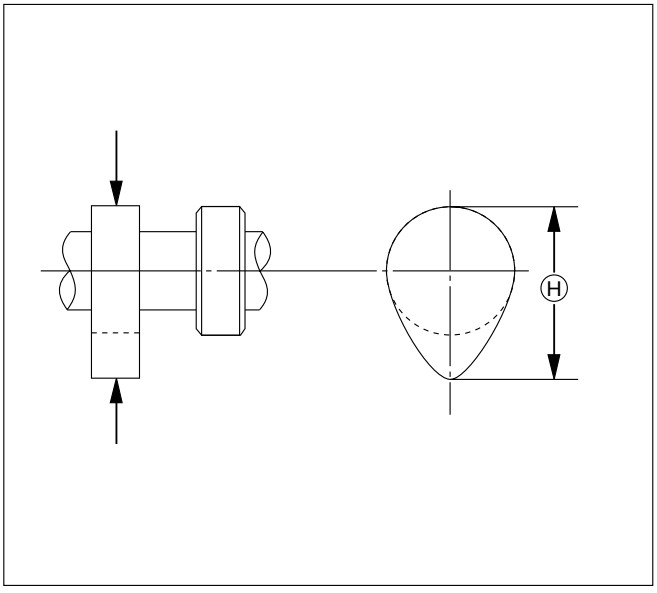

012RW059

3. Cam Run-Out
   1) Mount the camshaft on V-blocks.
   2) Measure the cam height (H) with a micrometer. If the measured value is less than the specified limit, the camshaft must be replaced.

Standard: 0.02 mm (0.0008 in) or less
Limit: 0.10 mm (0.0039 in)

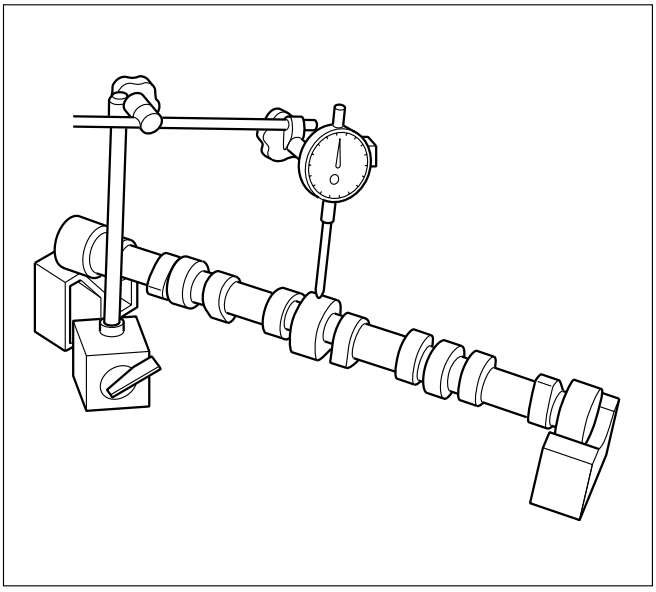

014RW171

4. Camshaft oil clearance
   1) Clean the camshaft, camshaft bracket and camshaft carrier.
   2) Put camshaft carrier on the cylinder head.
   3) Put camshaft on the camshaft carrier.
   4) Put plastigauge on the camshaft journal.
   5) Install camshaft bracket to original position and tighten bolts to specified torque in the numerical order shown in the illustration.

Torque: A; 22 N·m (2.2 kg·m/16 lb ft)
B; 38 N·m (3.9 kg·m/28 lb ft)
C; 22 N·m (2.2 kg·m/16 lb ft)
D; 38 N·m (3.9 kg·m/28 lb ft)

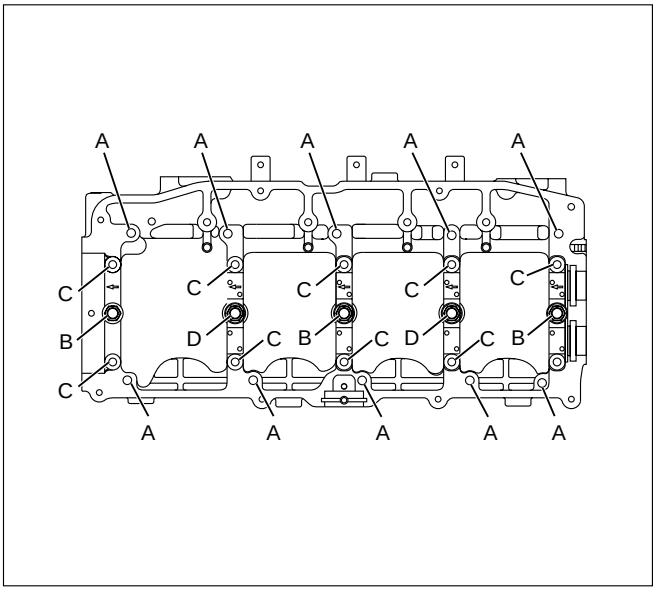

110RW035

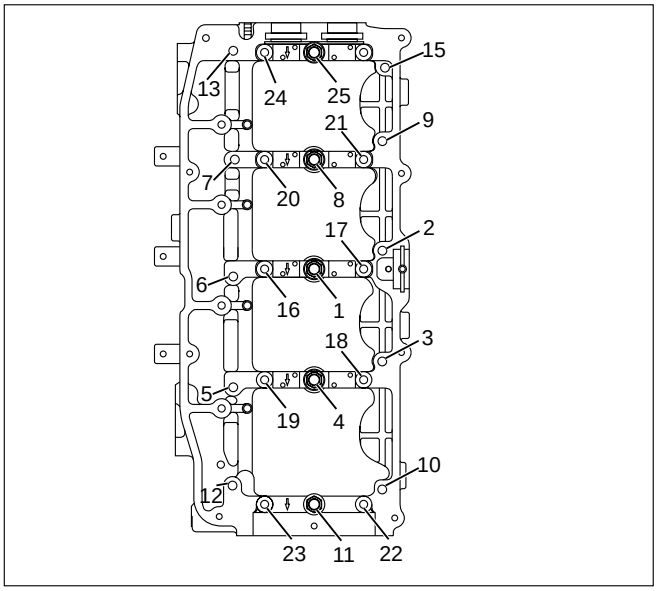

011RW041

NOTE: Do not allow the camshaft to rotate.

6) Remove the camshaft bracket and measure the plastigauge width and determine the oil clearance. If the oil clearance exceeds the specified limit, replace the camshaft carrier and/or camshaft.

Oil clearance.

Standard: 0.040 – 0.082 mm (0.0016 – 0.0032 in)
Limit: 0.12 mm (0.0047 in)

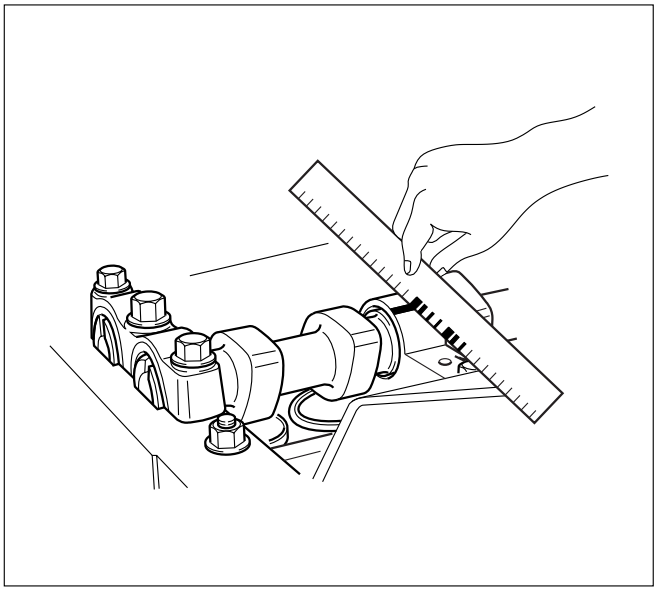

014RW185

7) Clean the plastigauge from the camshaft bracket and camshaft carrier.

5. Camshaft thrust clearance.
   1) Clean the camshaft, camshaft bracket and camshaft carrier.
   2) Put camshaft carrier on the cylinder head.
   3) Put camshaft on the camshaft carrier.
   4) Put plastigauge on the camshaft journal.
   5) Install camshaft bracket to original position and tighten bolts to specified torque in the numerical order shown in the illustration.

Torque: A; 22 N·m (2.2 kg·m/16 lb ft)
B; 38 N·m (3.9 kg·m/28 lb ft)
C; 22 N·m (2.2 kg·m/16 lb ft)
D; 38 N·m (3.9 kg·m/28 lb ft)

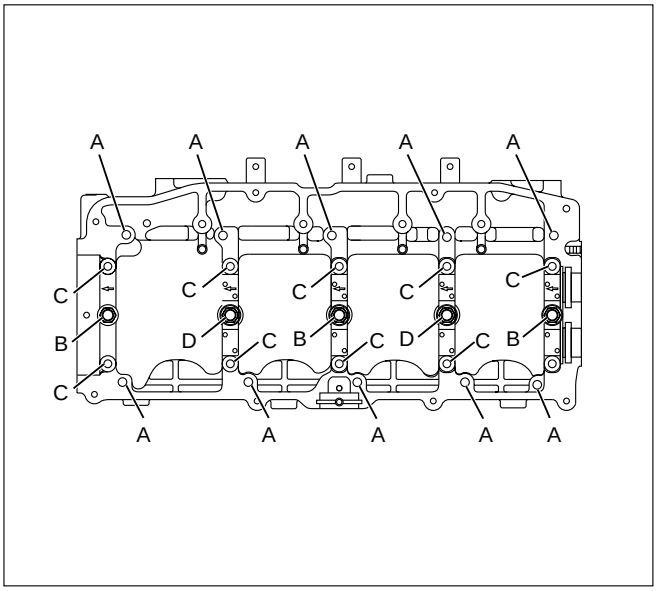

011RW035

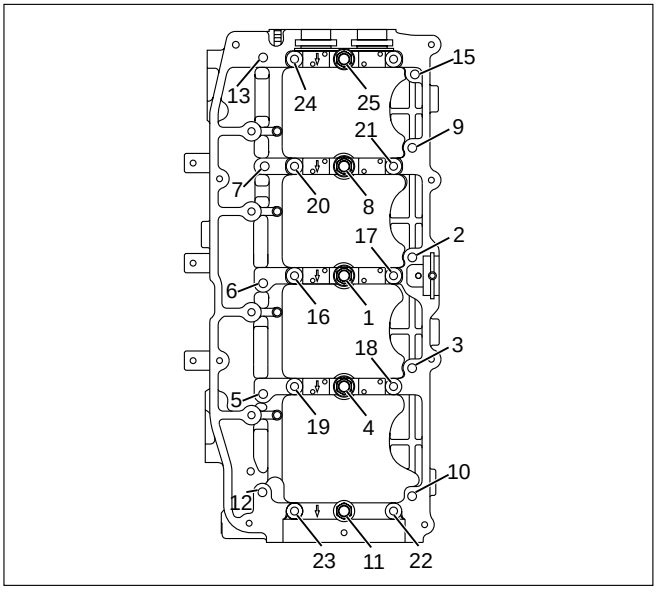

011RW041

6) Use a dial indicator to measure the camshaft thrust clearance. If the camshaft thrust clearance exceeds the specified limit, replace the camshaft carrier and/or camshaft.

Camshaft thrust clearance

Standard: 0.1 mm (0.0002 in)
Limit: 0.2 mm (0.0078 in)

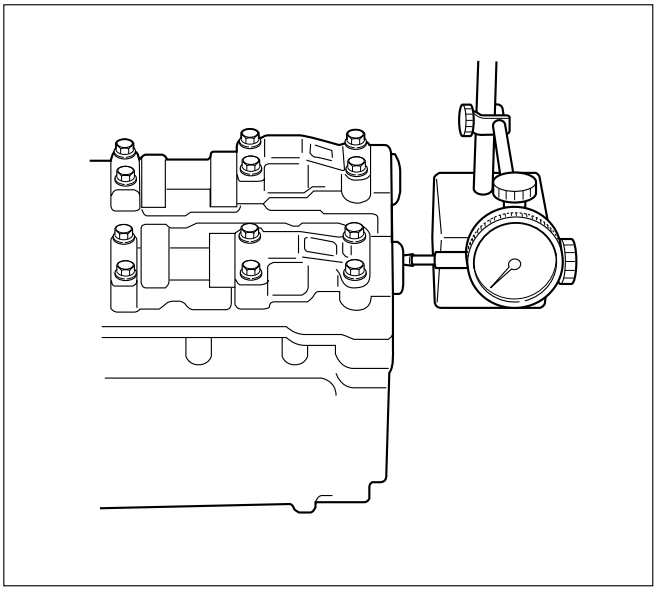

014RW001

TIMING GEAR

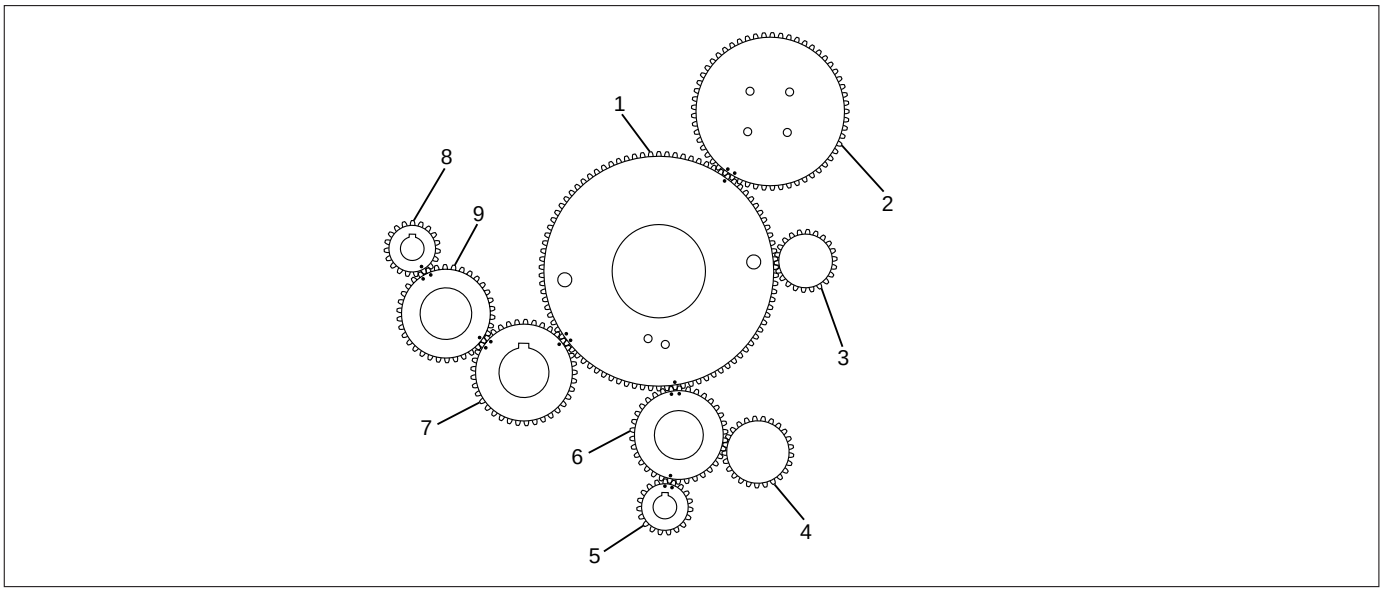

020RW028

Legend
(1) Idle Gear A
(2) High Pressure Oil Pump Gear
(3) Vacuum Pump Gear
(4) Power Steering Pump Gear
(5) Balance Gear LH
(6) Idle Gear C
(7) Crankshaft Gear
(8) Balance Gear RH
(9) Idle Gear B

REMOVAL

1. Loosen fixing bolt for generator and remove generator assembly.
2. Remove fixing nuts, then remove cooling fan assembly and fan pulley.
3. Remove crankshaft damper pulley.
4. Belt cover
   1) Disconnect harness connector of CMP (camshaft position) sensor.
   2) Remove CMP sensor.
   3) Remove belt cover.
5. Loosen belt tensioner to remove timing belt.
6. Remove camshaft pulley.
7. Remove high pressure oil pump pulley.
8. Remove front plate.
9. Remove vacuum pump.
10. Remove power steering pump.
11. Remove timing gear case cover assembly.
12. Idle gear A.
    1) Set two bolts to sub gear of idle gear A and turn it to align the tooth of idle gear A then lock them by bolt as show in the illustration.
    2) Remove idle gear A fixing bolts.
    3) Remove idle gear A.

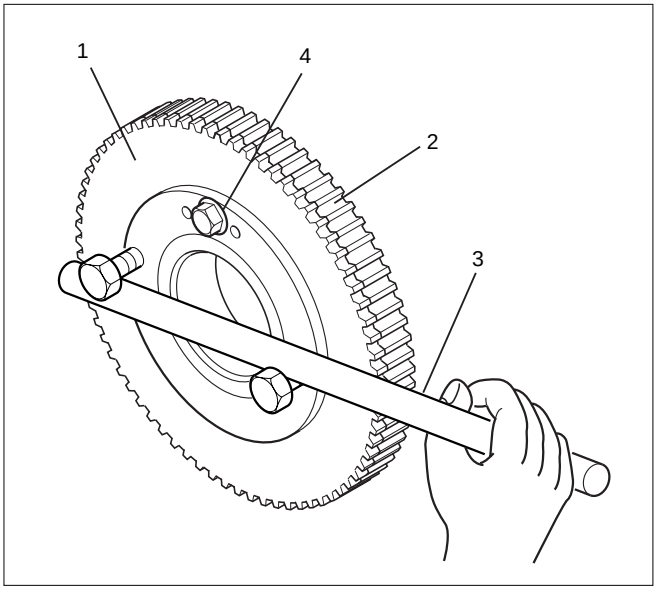

014RW177

Legend
(1) Sub-Gear
(2) Main Gear
(3) Bar
(4) Locking Bolt

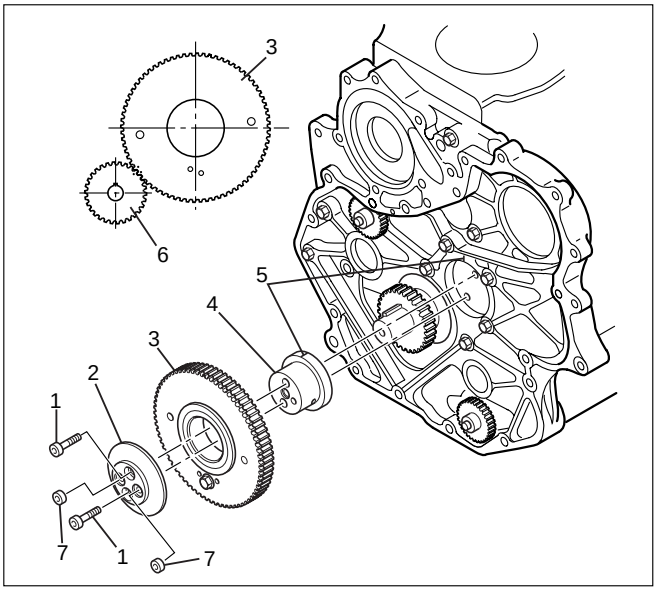

014R200007

Legend
(1) Bolt
(2) Retainer
(3) Idle Gear A
(4) Idle Gear A Shaft
(5) Align Mark
(6) Crankshaft Gear
(7) O-Ring

13. Idle gear C
    1) Use the special tool on idle gear C, turning the sub gear to align the teeth, then set lock pin.
    2) Remove idle gear C fixing bolt then remove the idle gear C with flange.

    Camshaft Gear Tool : 5-8840-2591-0

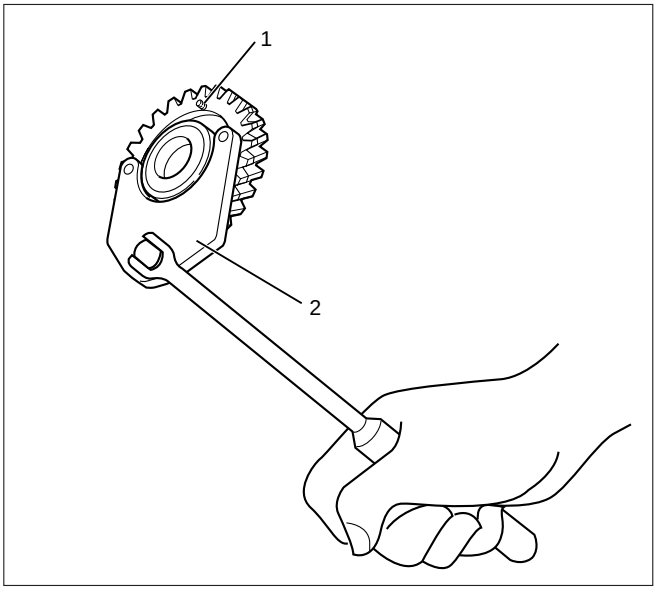

014RW181

Legend
(1) Lock pin
(2) Camshaft Gear Tool

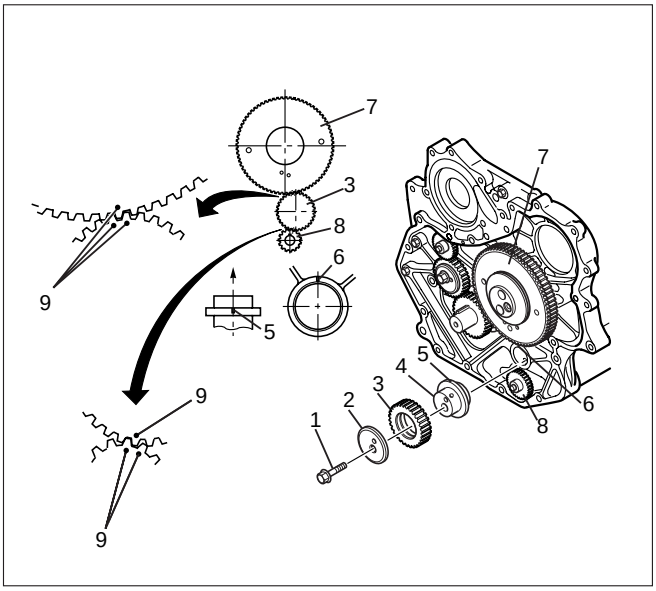

014RW175

Legend
(1) Bolt
(2) Retainer
(3) Idle Gear C
(4) Idle Gear C Shaft
(5) Align Mark
(6) Align Mark
(7) Idle Gear A
(8) Balance Shaft Gear LH
(9) Timing Mark

14. Idle gear B
    1) Loosen idle gear B fixing bolt to remove idle gear B with flange.

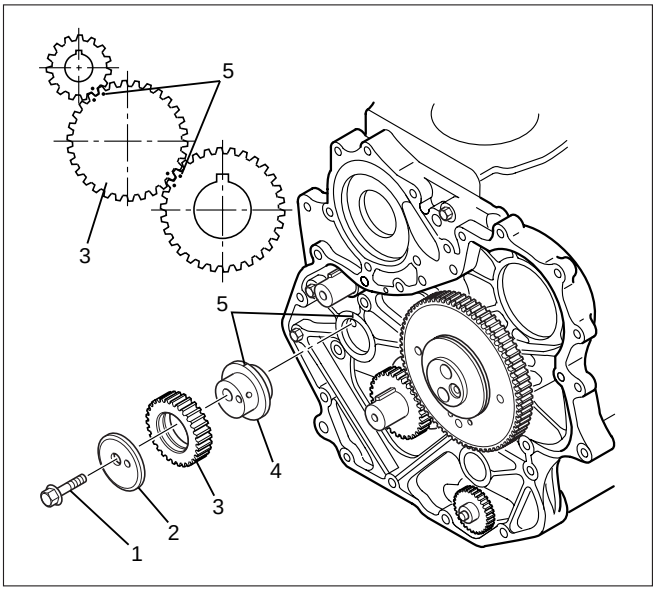

014R200008

Legend
(1) Bolt
(2) Retainer
(3) Idle Gear B
(4) Idle Gear B Shaft
(5) Align Mark

15. High pressure oil pump
    1) Remove oil pump gear fixing bolt then remove oil pump.

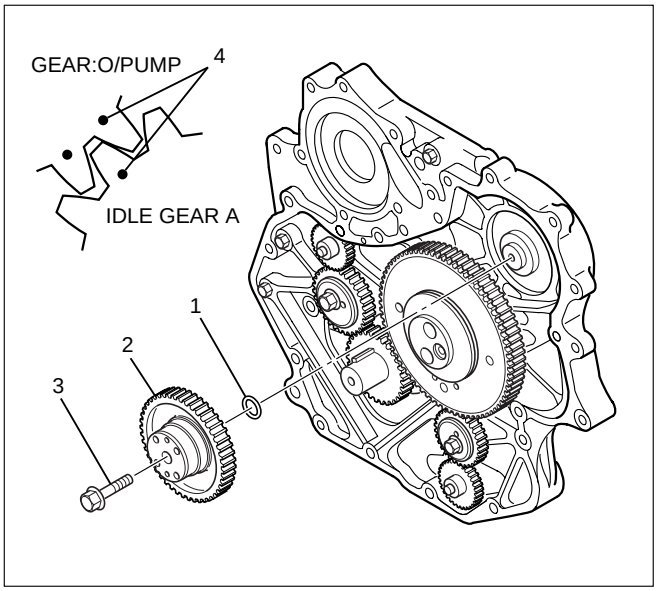

040RW005

Legend
(1) O-Ring
(2) High Pressure Oil Pump Gear
(3) Bolt
(4) Timing Mark

16. Remove balance shaft gear LH. and RH.
17. Remove crankshaft gear.

INSTALLATION

1. Crankshaft gear
    1) Force key into the crankshaft and insert crankshaft gear with the crankshaft gear key groove set on the key.

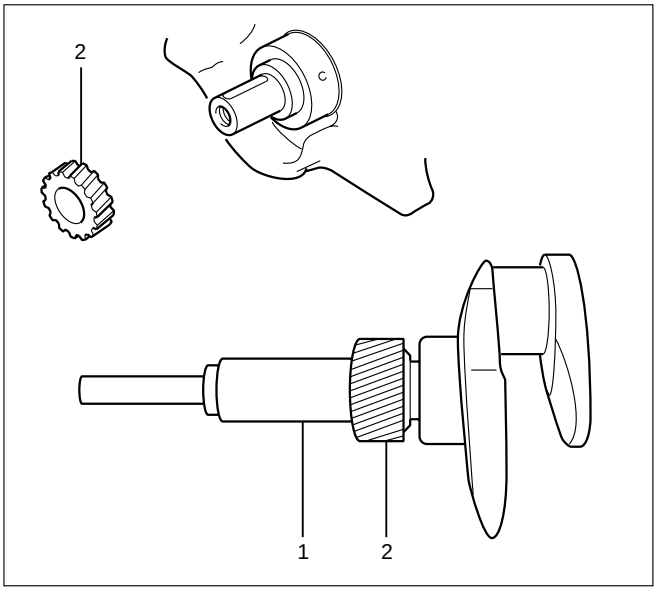

012RW066

Legend
(1) Crankshaft Gear Installer
(2) Crankshaft Gear

2. Balance shaft gear
    1) Install the balance shaft gear RH to balance shaft, tighten center bolt to the specified torque.

Torque : 32 N·m (3.3 kg·m/24 lb ft)

    2) Install thrust plate for balance shaft LH before installing the balance shaft gear LH.

Torque : 25 N·m (2.5 kg·m/18 lb ft)

    3) Install balance shaft gear LH to balance shaft, tighten center bolt to the specified torque.

Torque : 32 N·m (3.3 kg·m/24 lb ft)

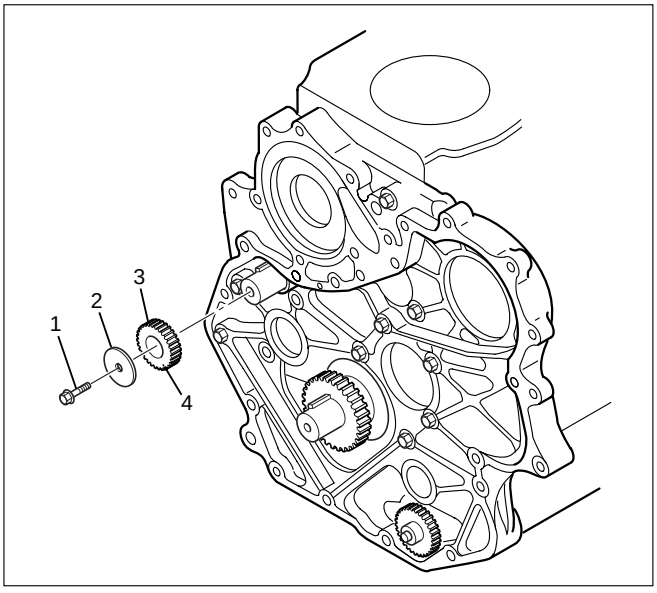

014RW173

Legend
(1) Center Bolt
(2) Plate
(3) Balance Shaft Gear RH
(4) Timing Mark

3. Idle gear A
   1) Insert idle gear A shaft to align alignment mark between idle gear A shaft and timing gear case.
   2) Apply engine oil to the shaft surface.
   3) Install the idle gear A to align the timing mark with the crankshaft gear.
   4) Install the flange, tighten bolts to the specified torque.

Torque: 25 N·m (2.5 kg·m/18 lb ft)

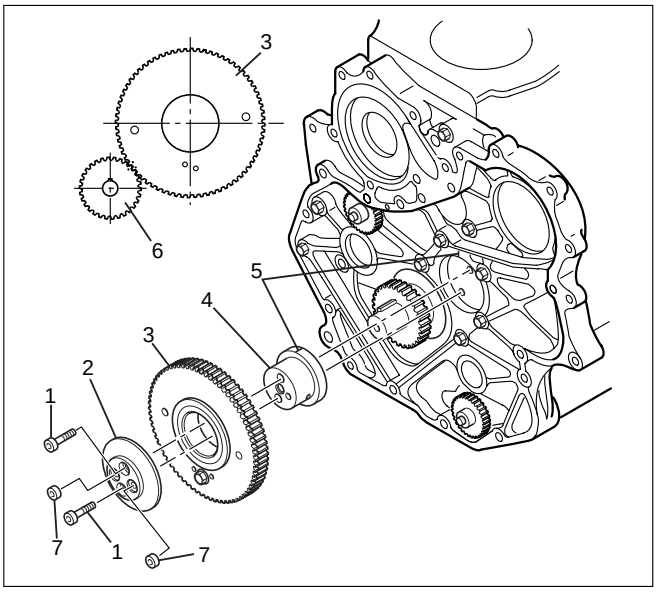

014R200007

Legend
(1) Bolt
(2) Retainer
(3) Idle Gear A
(4) Idle Gear A Shaft
(5) Align Mark
(6) Crankshaft Gear
(7) O-Ring

NOTE: Conform not difference timing marks between each others.

4. Idle gear C
   1) Insert idle gear C shaft to align alignment mark between idle gear C shaft and timing gear case.
   2) Apply engine oil to the shaft surface.
   3) Align timing mark on idle gear C with balance shaft gear LH and idle gear A timing marks, then insert idle gear C.
   4) Set position of idle gear C flange with a dowel pin, tighten bolt to the specified torque.

Torque: 25 N·m (2.5 kg·m/18 lb ft)

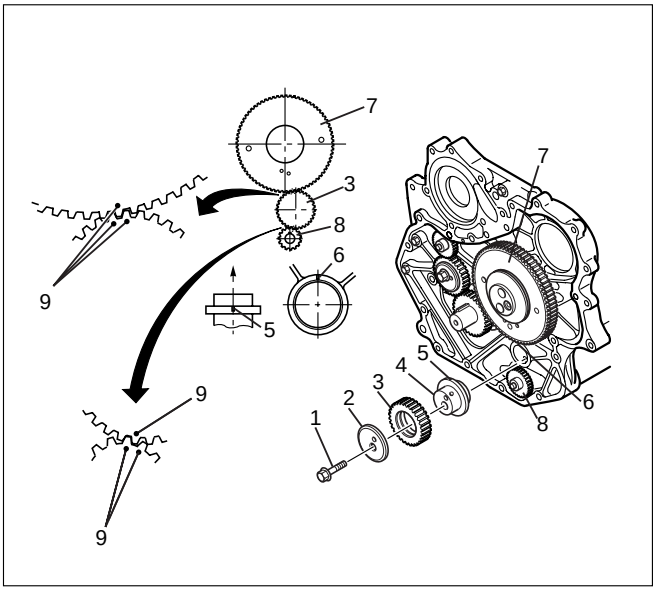

014RW175

Legend
(1) Bolt
(2) Retainer
(3) Idle Gear C
(4) Idle Gear C Shaft
(5) Align Mark
(6) Align Mark
(7) Idle Gear A
(8) Balance Shaft Gear LH
(9) Timing Mark

5. Idle gear B
   1) Insert idle gear B shaft to align alignment mark between idle gear B shaft and timing gear case.
   2) Apply engine oil to the shaft surface.
   3) Align timing mark on idle gear B with balance shaft gear RH and crankshaft gear timing marks, then insert idle gear B.
   4) Install flange and tighten the bolt to the specified torque.

Torque: 51 N·m (5.2 kg·m/38 lb ft)

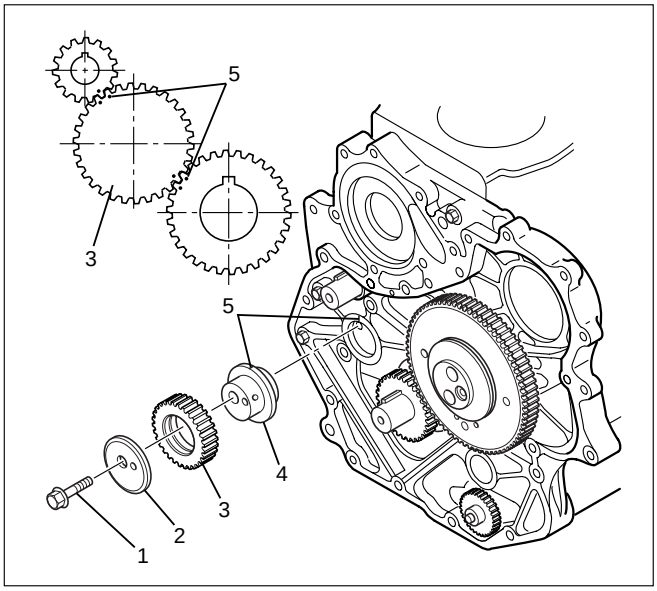

014R200008

Legend
(1) Bolt
(2) Retainer
(3) Idle Gear B
(4) Idle Gear B Shaft
(5) Align Mark

6. High pressure oil pump
   1) Install O-ring on the high pressure oil pump.
   2) Install the high pressure oil pump to the timing gear case, tighten the nut to the specified torque. Apply Loctite No. 262 to the stud bolts.

Torque: 20 N·m (2.0 kg·m/14 lb ft)

NOTE: Be sure to set O-ring completely.

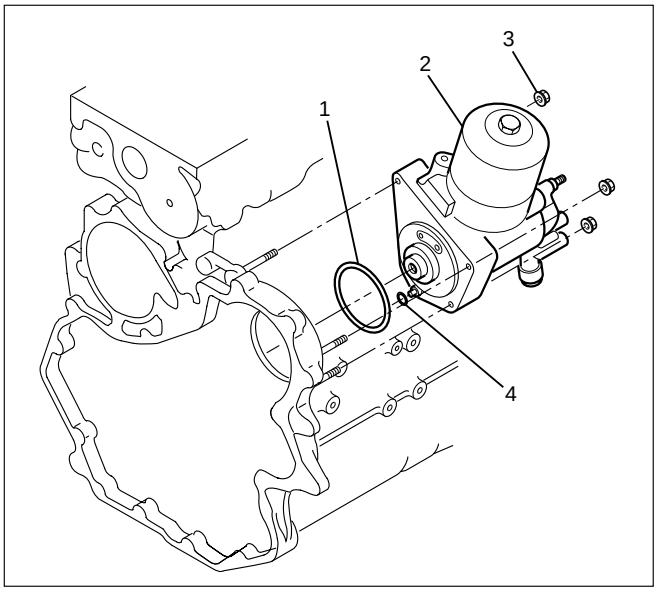

040RW007

Legend
(1) O-ring (large)
(2) High pressure oil pump
(3) Nut
(4) O-ring (small)

7. High pressure oil pump
   1) Install O-ring on the oil pump shaft with grease and install the gear with the idle gear A timing mark set at the oil pump gear timing mark.
   2) Tighten center bolt to the specified torque.

Torque: 75 N·m (7.6 kg·m / 55 lb ft)

NOTE: Be sure to align timing marks with each other.

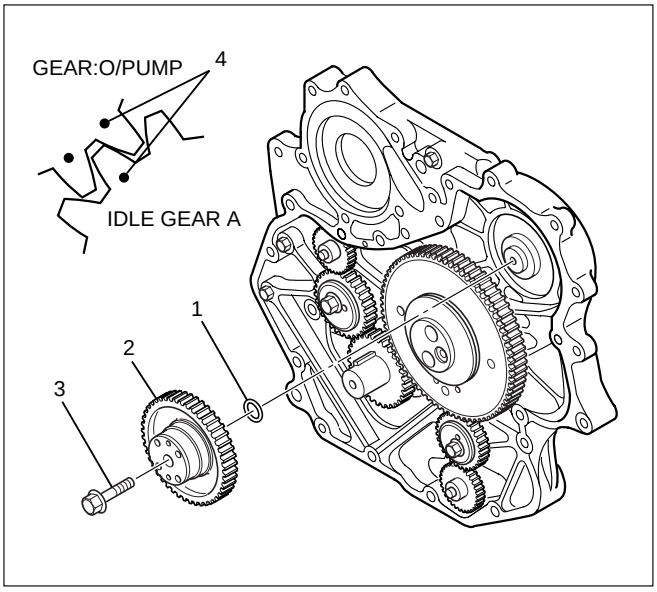

040RW005

Legend
(1) O-ring
(2) High Pressure Oil Pump Gear
(3) Center Bolt
(4) Timing Mark

8. Remove lock from idle gear.
   1) Remove lock bolt from idle gear A and remove lock pin from idle gear C.
9. Timing gear case assembly
   1) Clean fixing surface of timing gear case.
   2) Install the gasket on the idle gear rear side end.
   3) Apply liquid gasket (TB1207C or equivalent) to the timing gear case fitting surface.

NOTE: Be sure to apply liquid gasket evenly.

   4) Install timing gear case and tighten bolts to the specified torque.

Torque: 20 N·m (2.0 kg·m / 14 lb ft)

NOTE: Must install within 5 minutes after applying liquid gasket.

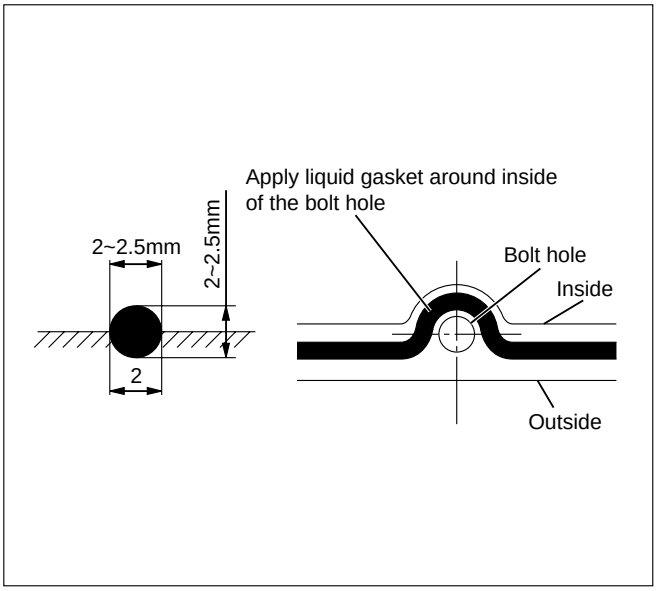

F06HX00001

10. Vacuum pump
    1) Install vacuum pump and tighten bolts to specified torque.

Torque: 25 N·m (2.5 kg·m / 18 lb ft)

    2) Install noise insulator cover.

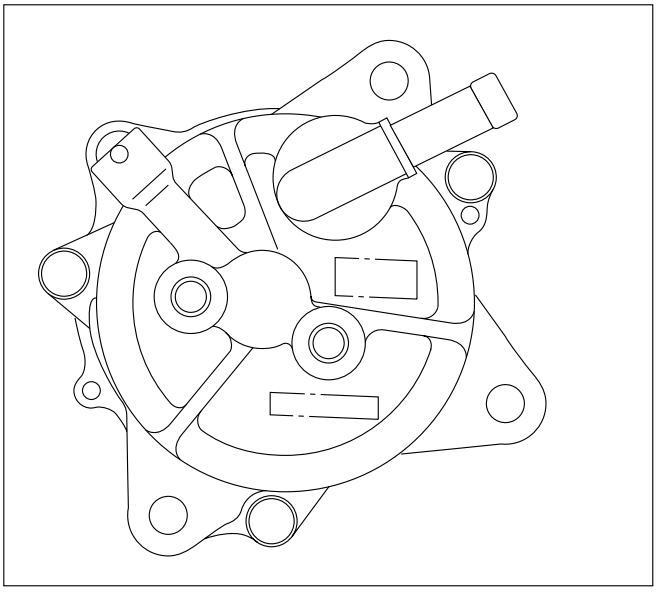

052RW001

11. Power steering pump (P/S)
    1) Install P/S pump.

Torque: 22 N·m (2.2 kg·m / 16 lb ft)

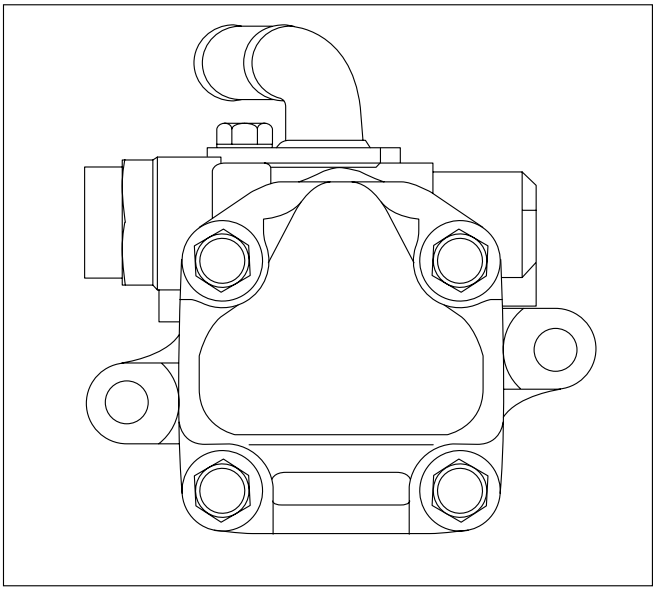

430RW017

12. Install front plate.

Torque: 20 N·m (2.0 kg·m / 14 lb ft)

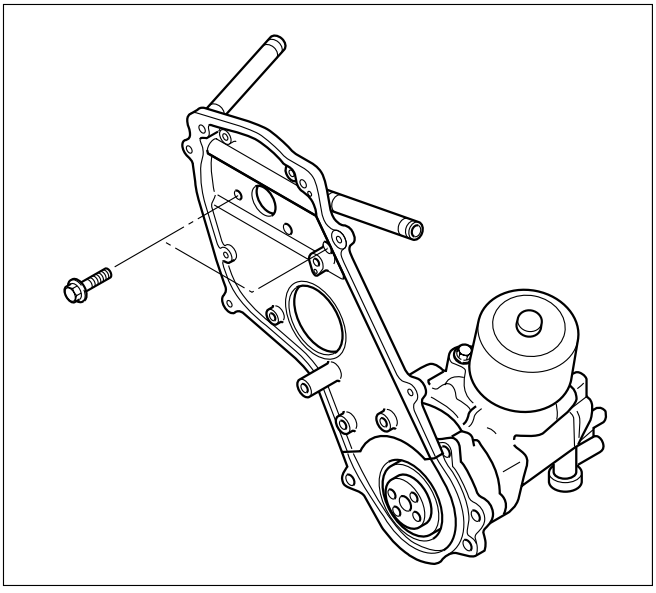

012RW035

13. High pressure oil pump pulley.
    1) Install oil pump pulley and tighten to specified torque.

Torque:10 N·m (1.0 kg·m / 87 lb in)

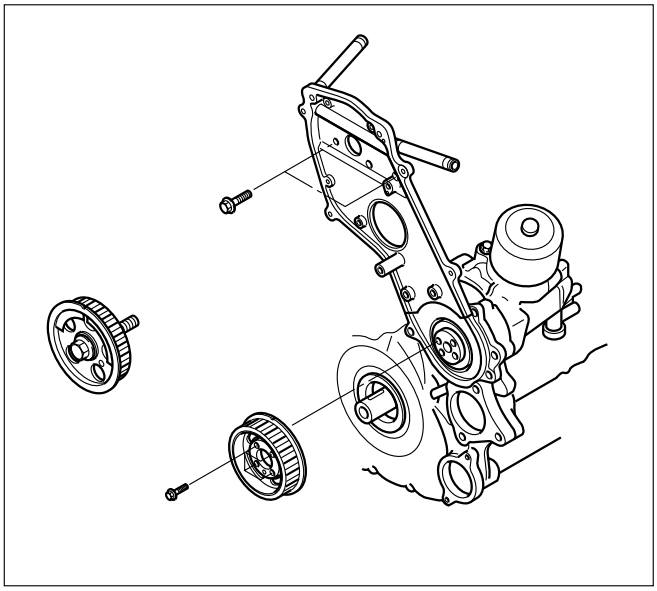

012RW036

14. Camshaft pulley
    1) Align TDC mark with crankshaft pulley and gear case cover.
    2) Set camshaft stopper on the end of intake and exhaust camshaft.

    Camshaft Stopper: 5-8840-2592-0

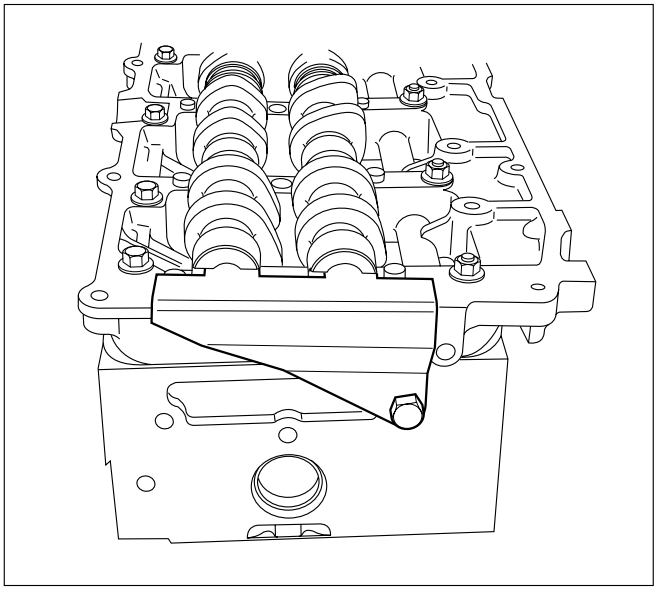

012RW099

    3) Install key to camshaft and install camshaft pulley.
    4) Apply engine oil to camshaft pulley fixing bolt and tighten bolt with angular tightening method.

First step: 40 N·m (4.1 kg·m / 30 lb ft)
Second step: 60° to 90°

15. Timing belt
    1) Install tensioner and tighten the bolt temporarily.
    2) Align timing mark with camshaft pulley timing mark and timing gear case timing mark.
    3) Set No.1 cylinder TDC position.
    4) Install the timing belt in the following order camshaft pulley, oil pump pulley, tensioner.

NOTE:

1) It is recommended for easy installation that the belt be secured with a double clip after it is installed to each pulley.
2) The “ISUZU” mark should be read from the front of the engine when installing the timing belt.

    5) Install the belt tensioner.
    6) Conform not phase difference each pulley.
    7) Tension the timing belt with two turns of the crankshaft.
    8) Tighten the tensioner bolt in order A to B to the specified torque.

Torque: Bolt A 50 N·m (5.1 kg·m/37 lb ft)
Bolt B 20 N·m (2.0 kg·m/14 lb ft)

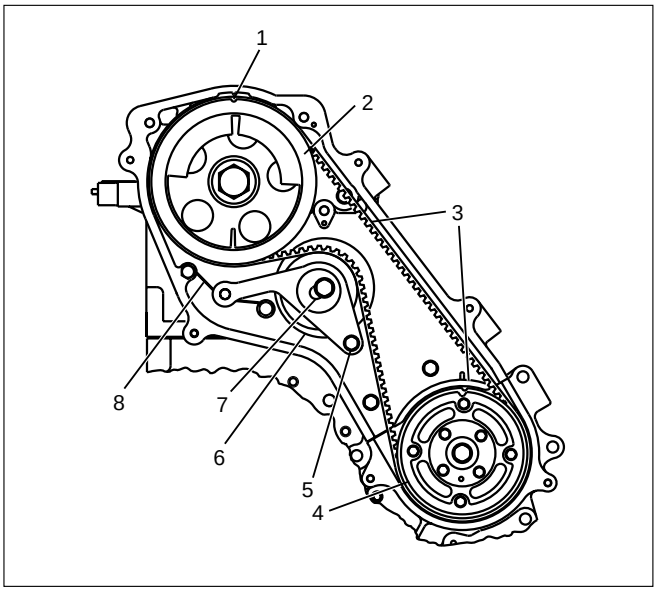

F06R200006

Legend
(1) Align Mark
(2) Camshaft Pulley
(3) Timing Belt
(4) Oil Pump Pulley
(5) Tension Bolt B
(6) Tensioner Assy
(7) Tensioner Bolt A
(8) Tensioner Spring

16. CMP sensor bracket
    1) Install CMP sensor bracket and tighten bolt to the specified torque.

Torque: 20 N·m (2.0 kg·m / 14 lb ft)

17. Timing belt cover
    1) Install timing belt cover and tighten bolt to the specified torque.

Torque: 9 N·m (0.9 kg·m / 78 lb in)

    2) Tighten CMP sensor to the specified torque.

Torque: 9 N·m (0.9 kg·m / 78 lb in)

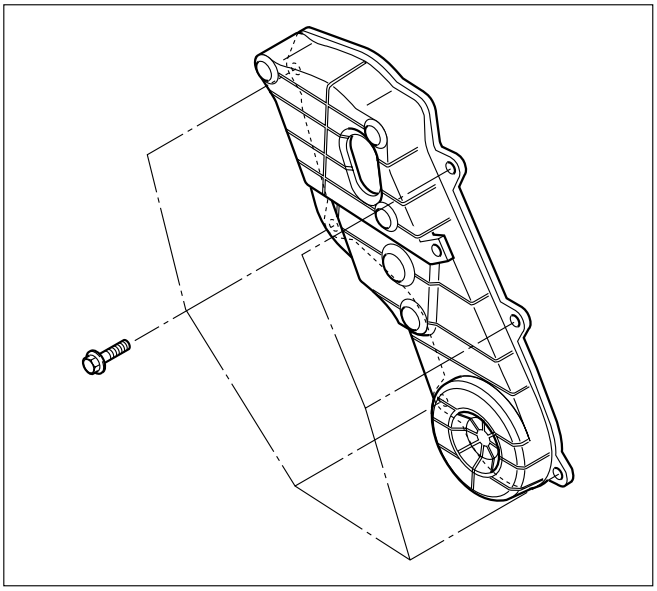

012RW039

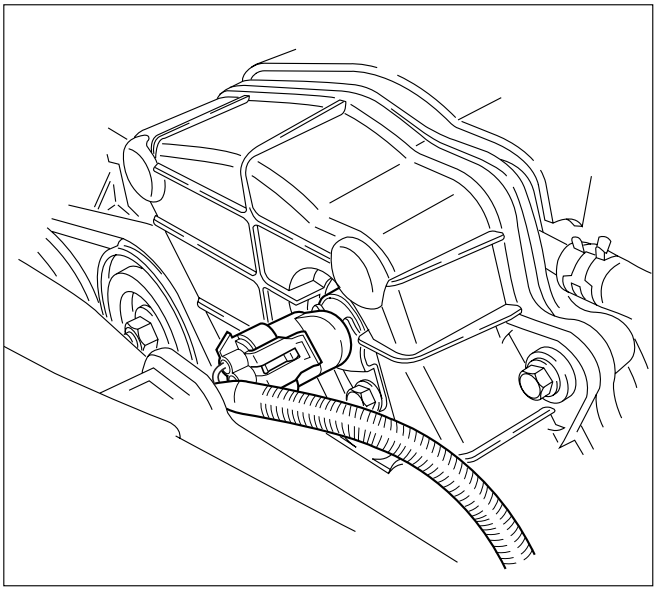

014RW163

18. Crankshaft damper pulley
    1) Insert damper pulley with the crankshaft key groove set on the key.
    2) Tighten damper pulley bolt to the specified torque.

Torque: 216 N·m (22 kg·m / 159 lb ft)

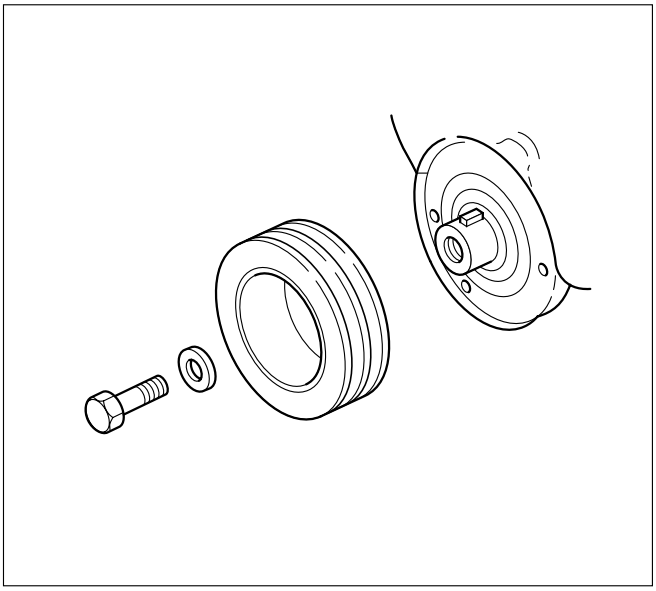

012RW032

19. Cooling fan Assembly
    1) Install the cooling fan assembly to the fan pulley, tighten the nuts to the specified torque.

Torque: 8 N·m (0.8 kg·m / 69 lb in)

20. AC generator drive belt.
    1) Temporarily tighten generator fixing bolts and belt tensioner adjustment plate.
    2) Tension the generator drive belt then tighten the generator fixing bolt.

Torque: 40 N·m (4.1 kg·m / 30 lb ft)

    3) Tighten the belt tensioner adjustment plate bolt.

Torque: 20 N·m (2.0 kg·m / 14 lb ft)

VALVE STEM SEAL, VALVE SPRING AND ADJUSTER

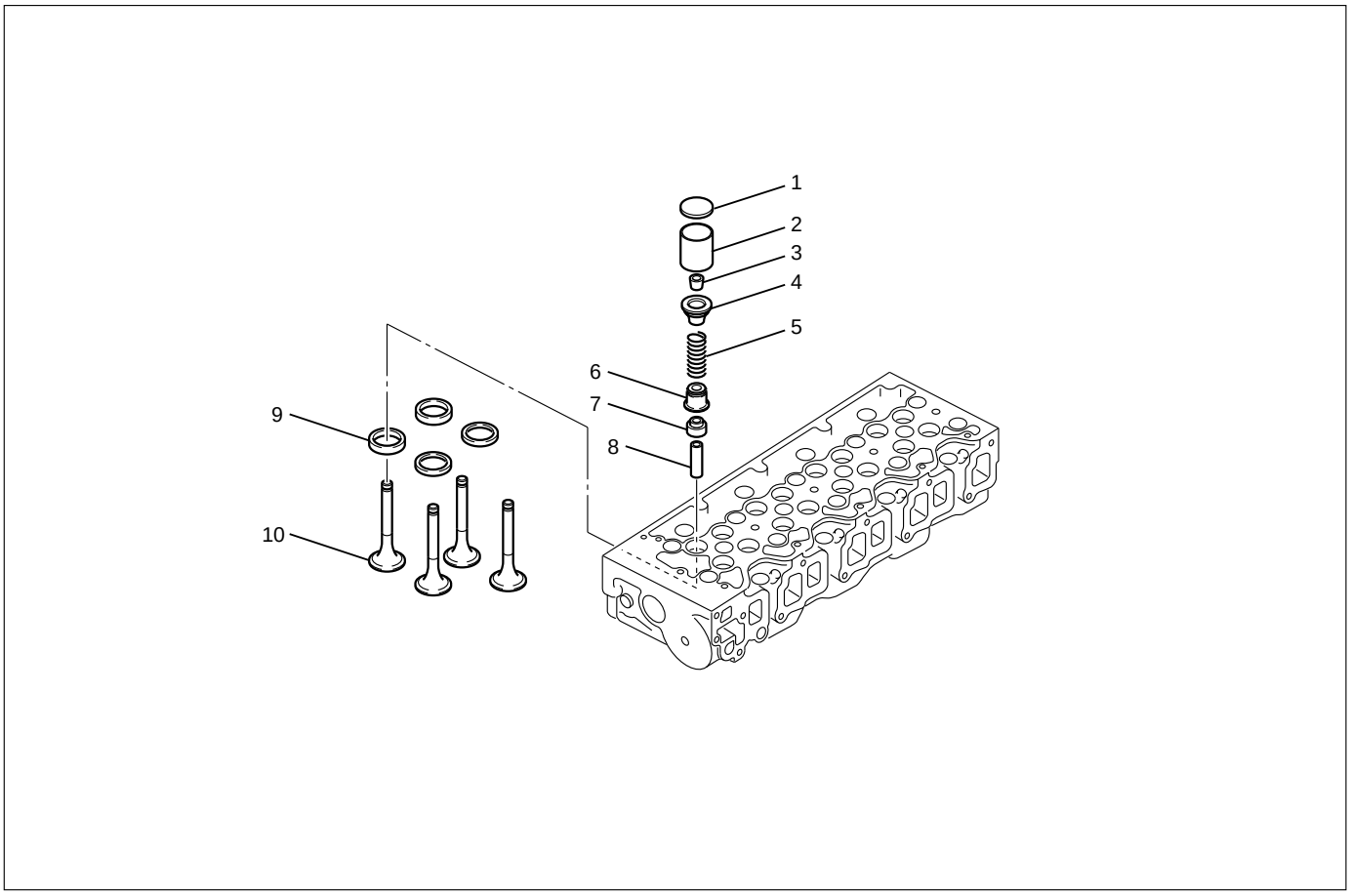

011RW031

Legend

(1) Adjuster
(2) Tappet
(3) Split Collar
(4) Spring Seat Upper
(5) Valve Spring
(6) Spring Seat Lower
(7) Valve Stem Seal
(8) Valve Guide
(9) Valve Seat
(10) Valve

REMOVAL

1. Disconnect battery ground cable.
2. Drain engine coolant.
3. Remove the air duct from between air cleaner and turbocharger.
4. Remove intercooler assembly.
   Refer to “Intercooler” in this manual.
5. Remove oil level gauge guide assembly.
6. Disconnect PCV hose.
7. Disconnect EGR vacuum hose.
8. Disconnect harness connectors around the cylinder head such as the injector, CMP sensor, MAP sensor, EGR sensor, EVRV, IAT sensor, A/C compressor, TP stepping motor, TP sensor and fuel temperature sensor etc.
9. Remove A/C compressor assembly.
10. Remove A/C compressor bracket.
11. Remove generator assembly and take out drive belt.
12. Remove heat protector, remove exhaust valve assembly.
13. Remove water cooling hose and lubrication pipe for turbocharger.
14. Remove turbocharger assembly.
15. Remove hose between thermostat and radiator.
16. Remove noise insulator cover of cylinder head.

NOTE: Do not damage injector harness.

17. Remove high pressure oil pipe.
18. Remove timing belt cover.
19. Remove CMP sensor bracket.
20. Remove timing belt tensioner then remove timing belt.
21. Remove camshaft pulley.
22. Remove front plate.
23. Remove engine coolant pipe between cylinder head and water pump.

24. Remove fuel pipe between fuel pump and intake manifold.
25. Remove fuel return pipe from rear of cylinder head.
26. Remove intake manifold assembly.
27. Disconnect glow plug harness and remove glow plug.
28. Remove cylinder head cover.
29. Remove injector harness connector.
30. Disconnect harness connector from oil pressure sensor and oil temperature sensor on the oil rail.
31. Remove injector harness assembly.
32. Remove injector clamp.
33. Remove injector is fixed bolts.
34. Remove injector assembly.
35. Remove oil rail.
36. Remove camshaft carrier assembly with camshaft.
37. Remove cylinder head assembly.
38. Disassemble valve spring according to the following method.
    1) Use valve spring compressor then remove split collars.
    2) Valve spring compressor: 5-8840-2441-0

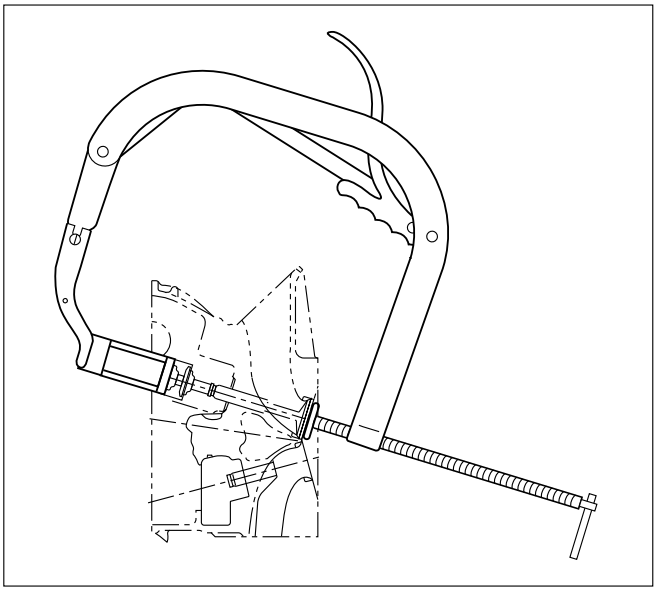

014rw042

NOTE: Put removed valve spring in order of cylinder number.

39. Valve stem seal.
    1) Use a screwdriver or pliers to remove valve stem seal.

NOTE: Do not reuse removed valve stem seal.

INSPECTION AND REPAIR

Make the necessary adjustments, repairs and part replacements if excessive wear or damage is discovered during inspection.

Valve spring

CAUTION: Visually inspect the valve springs and replace them if damage or abnormal wear is evident.

1. Free height
    1) Measure the free height of the springs. The springs must be replaced if the height is below the specified limit.

Standard: 45.85 mm (1.8051in)
Limit: 43.9 mm (1.7283 in)

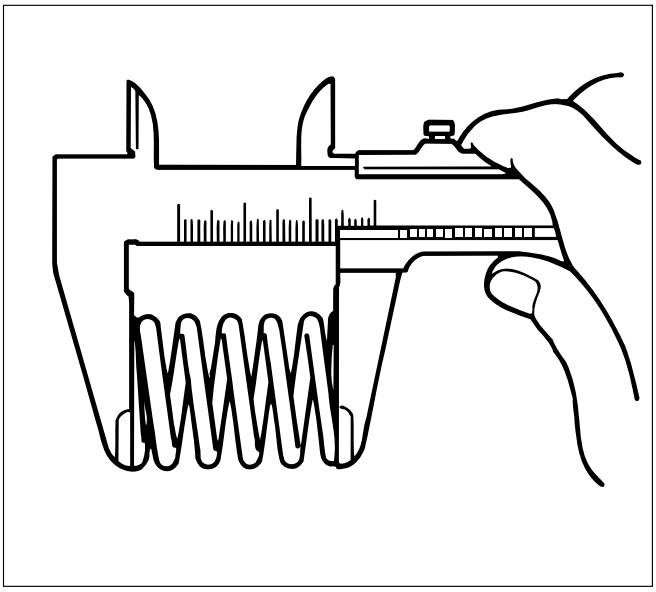

014rs004

2. Squareness
    1) Measure the valve spring squareness with a steel square.
    2) Replace the valve springs if the measured value exceeds the specified limit.

Limit: 1.6 mm (0.063 in)

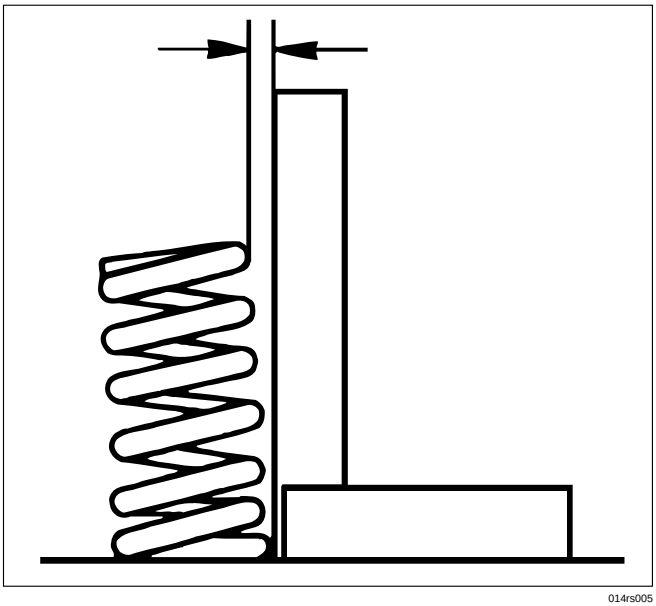

014rs005

3. Spring tension
   1) Use a spring tester to compress the springs to the installed height. Measure the compressed spring tension.
   2) Replace the springs if the measured tension is below the specified limit.

Standard: 236.0 N (24 kg/53 lb)
Limit: 205.0 N (21 kg/46 lb)

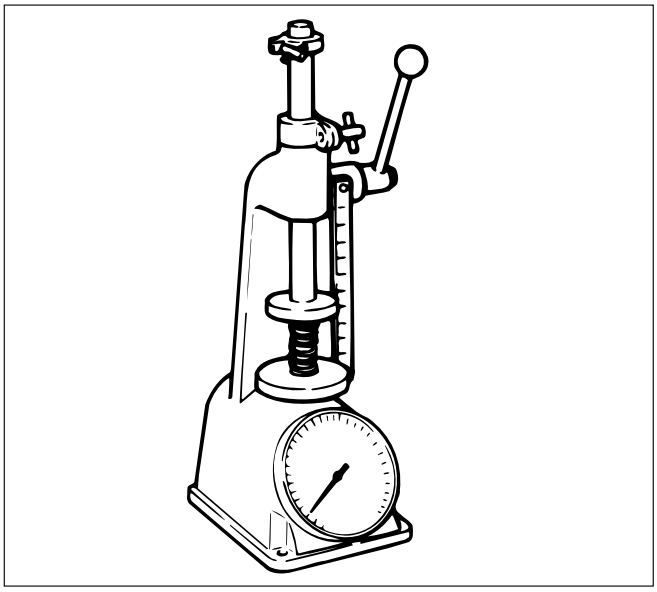

014RS006

Valve Guide

CAUTION: Taking care not to damage the valve seat contact surface, when removing carbon adhering to the valve head.
Carefully inspect the valve stem for scratching or abnormal wear. If these conditions are present, the valve and the valve guide must be replaced as a set.

1. Valve Guide Clearance
   1) Measure the valve stem diameter with a micrometer.

      If the valve stem diameter is less than the specified limit, the valve and the valve guide must be replaced as a set.

Diameter of Valve stem:Inlet

Standard: 6.959 – 6.977 mm (0.2740 – 0.2747 in)
Limit: 6.92 mm (0.2724 in)

Diameter of Valve stem:Exhaust

Standard: 6.952 – 6.97 mm (0.2737 – 0.2744 in)
Limit: 6.90 mm (0.2717 in)

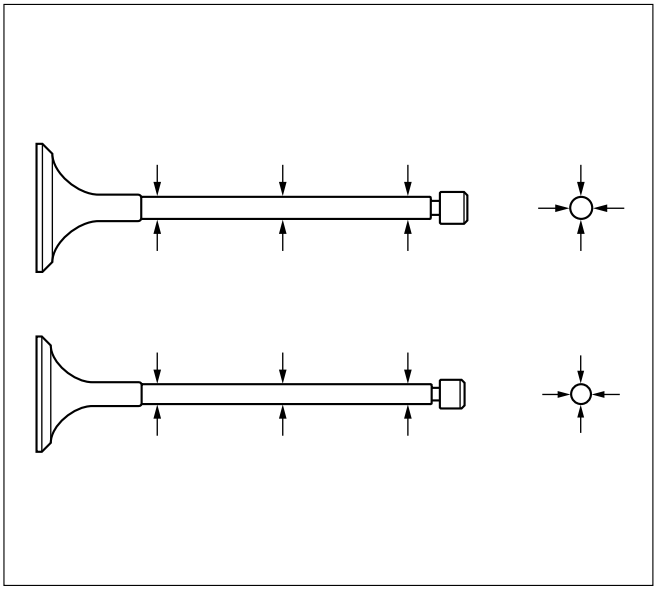

014RS007

   2) Measure the inside diameter of the valve guide with a micrometer.
   3) Subtract the measured outer diameter of the valve stem from the measured inner diameter of the valve guide.

      If the valve exceeds the specified limit, the valve and the valve guide must be replaced as a set.

Inlet clearance

Standard: 0.023 – 0.053 mm (0.0009 – 0.0021 in)
Limit: 0.19 mm (0.0075 in)

Exhaust clearance

Standard: 0.03 – 0.063 mm (0.0012 – 0.0025 in)
Limit: 0.20 mm (0.0079 in)

Valve Guide Replacement

1. Using the special tool, drive out the valve guide from the combustion chamber side.
   Valve guide replacer: 9-8523-1212-0

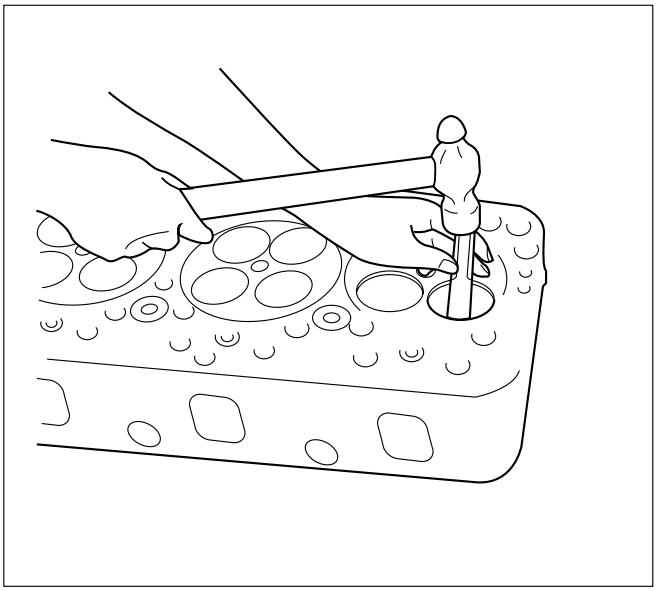

011RW001

2. Apply engine oil to the outside of the valve guide.
   Using the special tool, drive in a new valve guide from cylinder head upper face side, and check the valve guide height.
   Valve guide replacer: 9-8523-1212-0
   Height: 8.0 mm (0.315 in)

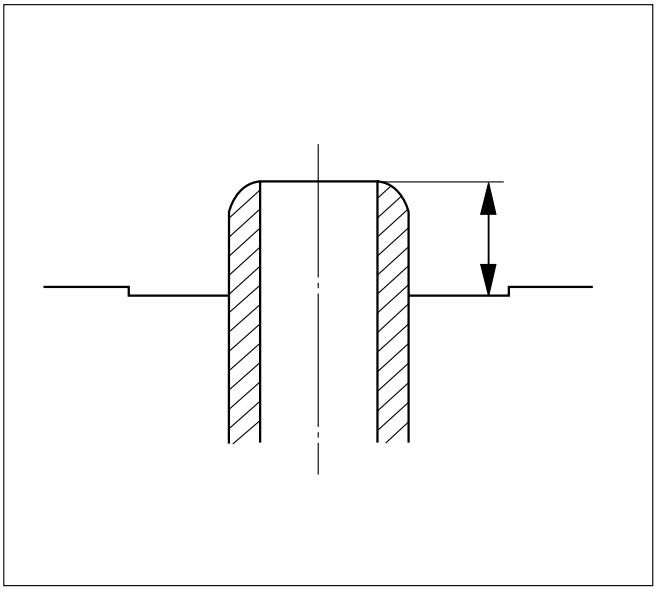

012RW052

NOTE: If the valve guide has been removed, both the valve and the valve guide must be replaced as a set.

Valve Thickness

1. Measure the valve thickness.
2. If the measured value is less than the specified limit, the valve and the valve guide must be replaced as a set.

Inlet

Standard: 1.2 mm (0.0472 in)
Limit: 1.1 mm (0.0433 in)

Exhaust

Standard: 1.2 mm (0.0472 in)
Limit: 1.1 mm (0.0433 in)

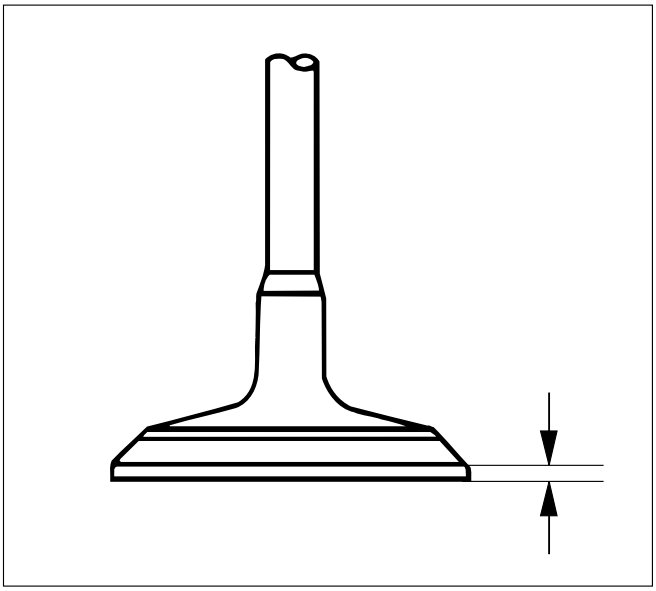

012RW060

Contact surface angle on valve seat on valve

1. Measure contact surface angle on valve seat.
2. If the measured value exceeds the limit, replace valve, valve guide and valve seat as a set.
   Standard: 68°

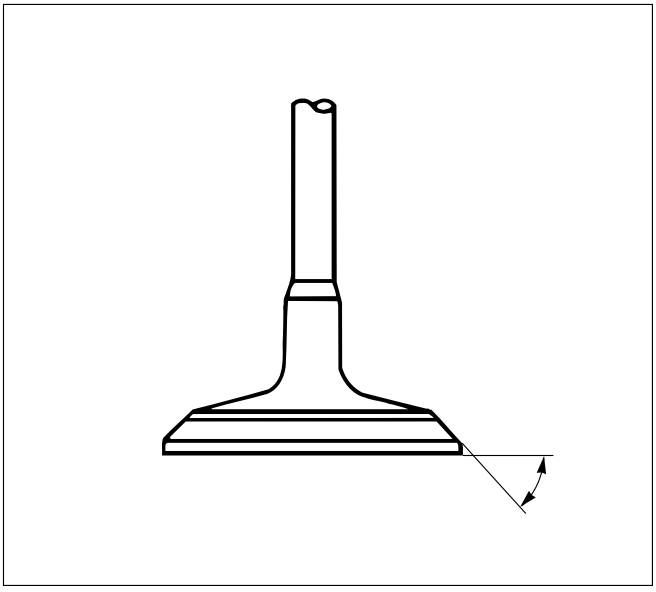

014RW018

Valve Depression

1. Measure the valve stem height from the upper surface of the cylinder head as shown in the illustration.

Standard:
Intake side 35.59 mm (1.4012 in)
Exhaust side 35.49 mm (1.3972 in)

Limit:
Intake side 35.74 mm (1.4071 in)
Exhaust side 35.64 mm (1.4031 in)

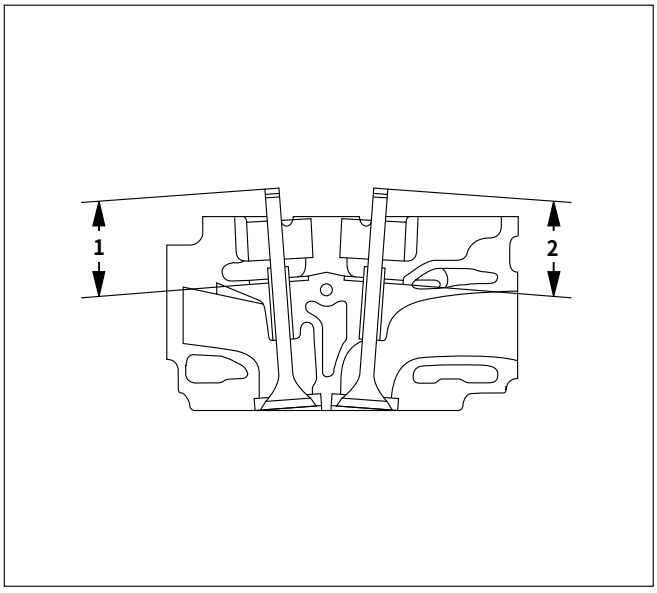

011RW044

Legend
(1) Intake Side
(2) Exhaust Side

Valve Contact Width

1. Check the valve contact faces for roughness and unevenness. Make the valve contact surfaces smooth.
2. Measure the valve contact width.
   If the measured value exceeds the specified limit, the valve seat insert must be replaced.

Inlet
Standard: 2.1 mm (0.0827 in)
Limit: 2.6 mm (0.1024 in)

Exhaust
Standard: 2.0 mm (0.0787 in)
Limit: 2.5 mm (0.0984 in)

Valve Seat Insert Replacement

Valve Seat Insert Removal

1. Arc weld the entire inside circumference of the valve seat insert.

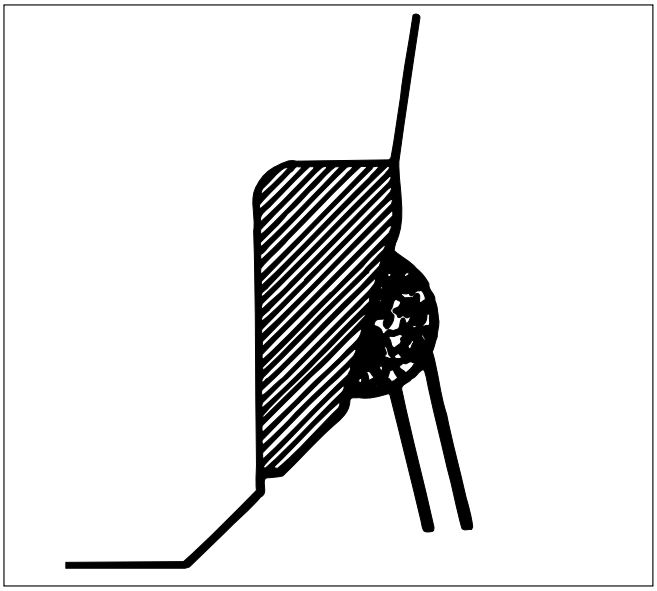

014RS015

2. Allow the valve seat insert to cool for a few minutes. This will invite contraction and make removal of the valve seat insert easier.
3. Use a screwdriver to pry the valve seat insert free. Take care not to damage the cylinder head.
4. Carefully remove carbon and other foreign material from the cylinder head insert bore.

Valve Seat Insert Installation

1. Carefully place the attachment (1) (having a smaller outside diameter than the valve seat insert) on the valve seat insert (2).

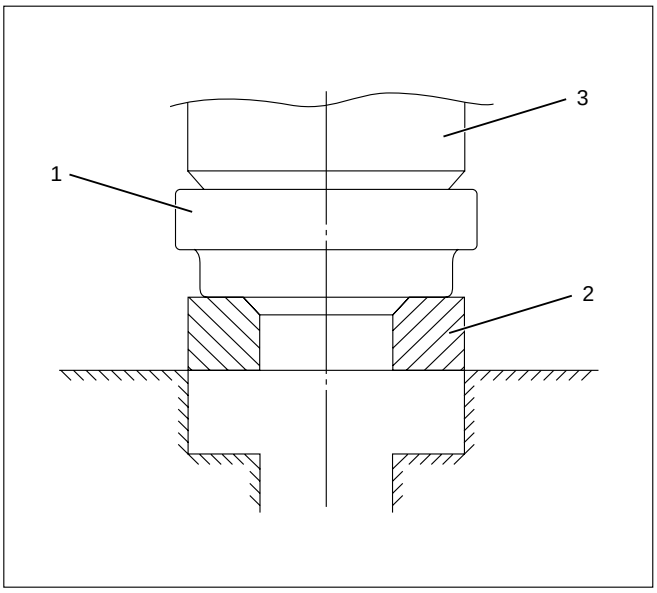

012RW055

Legend
(1) Attachment
(2) Valve Seat Insert
(3) Bench Press

NOTE: The smooth side of the attachment must contact the valve seat insert.

2. Use a bench press (3) to gradually apply pressure to the attachment and press the valve seat insert into place.

Note: Do not apply an excessive amount of pressure with the bench press. Damage to the valve seat insert will result.

Valve Seat Insert Correction

1. Remove the carbon from the valve seat insert surface.
2. Use a valve cutter (15°, 45° and 75° blades) to minimize scratches and other rough areas. This will bring the contact width back to the standard value. Remove only the scratches and rough areas. Do not cut away too much. Take care not to cut away unblemished areas of the valve seat surface.

   Valve Seat Angle: 45°

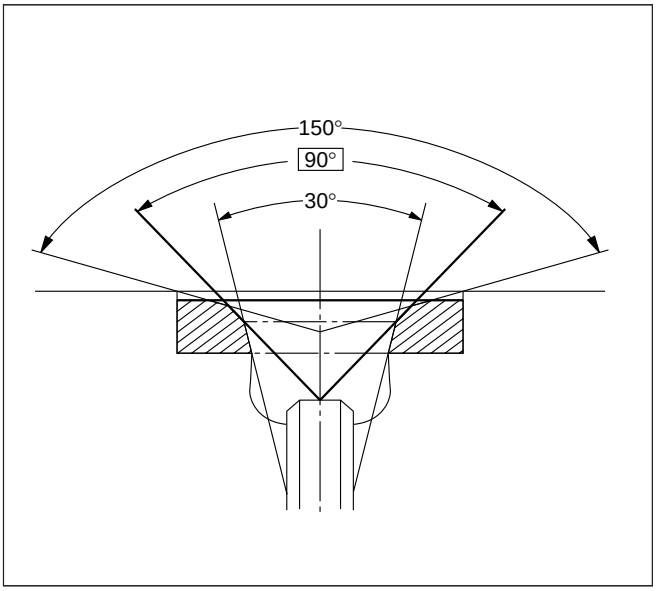

012RW056

NOTE: Use an adjustable valve cutter pilot.
Do not allow the valve cutter pilot to wobble inside the valve guide.

3. Apply abrasive compound to the valve seat insert surface.
4. Insert the valve into the valve guide.
5. Turn the valve while tapping it to fit the valve seat insert.
6. Check that the valve contract width is correct.
7. Check that the valve seat insert surface is in contact with the entire circumference of the valve.

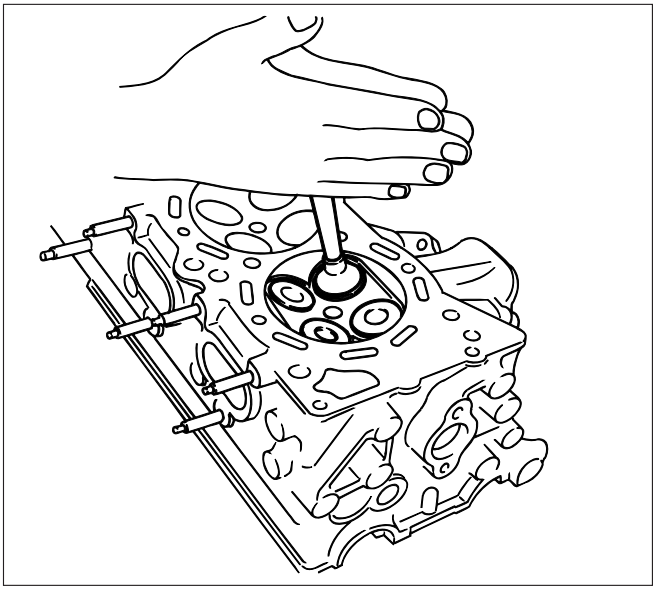

014RS014

INSTALLATION

1. Valve stem seal
   1) Use the special tool to install the stem seal to the valve guide.

   Stem Seal Installer: 5-8840-2033-0
2. Valve spring.
   1) Install the lower valve seat spring, valve spring, then the upper valve spring seat.
   2) Use valve spring compressor to compress the spring then install the split collar.

   Valve spring compressor: 5-8840-2441-0

NOTE: Make sure the split collar installs completely.

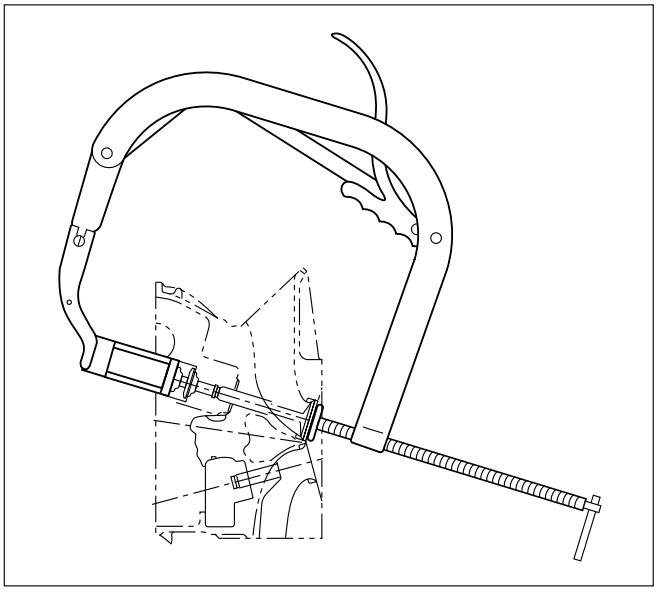

014RW042

3. Install cylinder head assembly.
   Refer to “Cylinder Head” in this manual.
4. Install the camshaft carrier with camshaft.
   Refer to “Camshaft” in this manual.
5. Install oil rail assembly.
   Refer to “Oil rail and injector” in this manual.
6. Install injector assembly.
   Refer to “Oil rail and injector” in this manual.
7. Install the injector harness assembly.
   Refer to “Injector” in this manual.
8. Reconnect harness connecter to oil pressure sensor and oil temperature sensor on the oil rail.
9. Reconnect Injector harness connecter to injector.
   Refer to “Injector” in this manual.
10. Install cylinder head cover with gasket.
    Refer to “Cylinder Head Cover” in this manual.
11. Install glow plug with specified torque.

Torque: 15 N·m (1.5 kg·m / 11 lb ft)

12. Install the intake manifold assembly.
    Refer to “Intake Manifold” in this manual.
13. Install the fuel pipe.
14. Install the water pipe between the cylinder head and water pump.

Torque: 20 N·m (2.0 k·m / 14 lb ft)

15. Install the front plate.
16. Install the camshaft pulley.
    Refer to “Timing Gear” in this manual.
17. Install timing belt and set the tensioner.
    Refer to “Timing Belt” in this manual.
18. Install CMP sensor bracket.

Torque: 20 N·m (2.0 kg·m / 14 lb ft)

19. Install timing belt cover.

Torque: 9 N·m (0.9 kg·m / 78 lb in)

20. Fill the oil rail with engine oil then immediately install the high pressure oil pipe with the specified torque.

Torque: 78 N·m (8.0 kg·m / 58 lb ft)

21. Install the noise insulator cover.
22. Reconnect hose between thermostat and radiator.
23. Install turbocharger assembly.
    Refer to “Turbocharger” in this manual.
24. Install water hose and oil pipe for turbocharger.
    Refer to “Turbocharger” in this manual.
25. Install the valve assembly and install heat protector.
26. Install generator and set the fan belts.
27. Install A/C compressor bracket, compressor assembly and set drive belt.
28. Reconnect harness connector around cylinder head.
29. Reconnect vacuum hose to EGR valve.
30. Reconnect PCV hose.
31. Install oil level gauge guide assembly.
32. Install intercooler assembly.
    Refer to “Intercooler” in this manual.
33. Install the air duct assembly.
34. Fill engine coolant.
35. Connect battery ground cable.

VALVE CLEARANCE ADJUSTMENT

NOTE:

1. Valve clearance should be inspected and adjusted while the engine is cool.
2. The tightening of the camshaft bearing cap and camshaft carrier assembly should be checked before inspecting and adjusting valve clearance.

INSPECTION

1. Remove cylinder head noise insulator cover and cylinder head cover.
   Refer to “Cylinder Head” in this manual.
2. Disconnect all harness connecters of the injector and remove harness assembly.
3. Drain oil from oil rail assembly.
4. Remove injector clamp nuts and fixing bolts to take out injector assembly.
5. Loosen oil rail bolts, remove oil rail assembly.
6. Set cylinder No.1 to the TDC at the compression stroke. Make sure that there is play in cylinder No.1 tappets on inlet and exhaust sides and that there is no play in cylinder No.4 tappets.
7. Measure valve clearance at No.1 TDC (Refer to the black circles indicated in the illustration).

Standard Valve clearance:

Intake valve: 0.15 mm (0.0059 in) ± 0.05 mm (0.0020 in)
Exhaust valve: 0.25 mm (0.0098 in) ± 0.05 mm (0.0020 in)

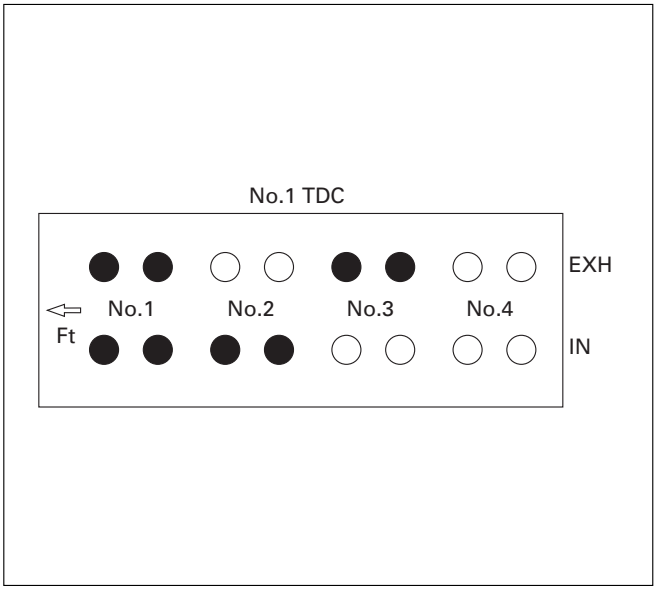

011RW045

8. Turn the crankshaft one turn to set No.4 cylinder TDC at the compression stroke.
9. Measure valve clearance at No.4 TDC (Refer to the black circles indicated in the illustration).

Standard Valve clearance:

Intake valve: 0.15 mm (0.0059 in) ± 0.05 mm (0.0020 in)
Exhaust valve: 0.25 mm (0.0098 in) ± 0.05 mm (0.0020 in)

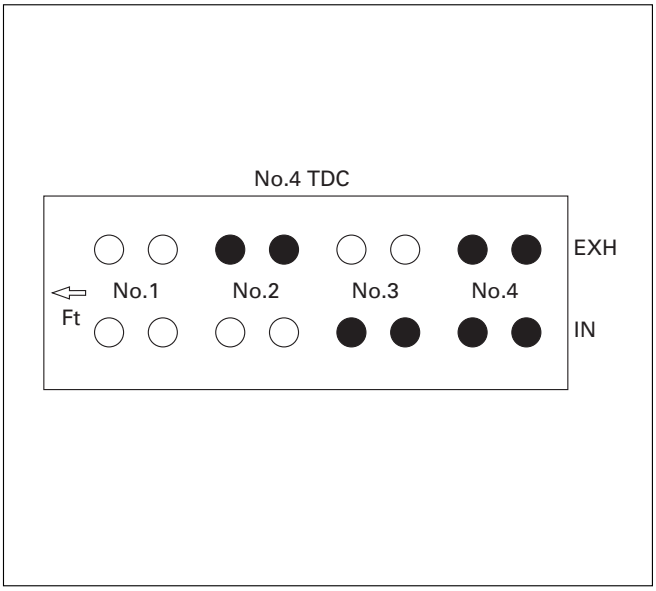

011RW046

10. If measured value is outside standard value, readjust the valve clearance.

ADJUSTMENT

For valve clearance adjustment, follow the procedure given below.

1. Set cylinder No.1 or No.4 to the TDC at the compression stroke.
   Set the valve clearance adjusting tool on the tappet requiring adjustment.
   After making sure of the correct setting of the special tool, depress the tappet by turning the bolt.
   Valve Clearance Adjusting Tool: 5-8840-2590-0

NOTE: Before depressing the tappet, set the tappet notch in the direction where adjuster can be easily taken out.

2. Take out the adjuster using a small screw driver and finger magnet.

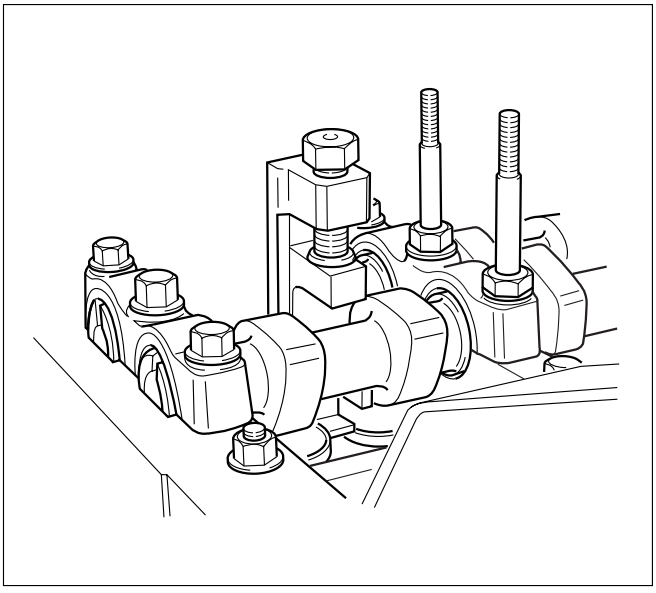

014RW150

3. Determine the thickness of the adjuster as follows.
   1) Measure the thickness of the removed adjuster with a micrometer.
   2) Calculate the thickness of a new adjuster.

   Calculation
   TA: Thickness of new adjuster
   M: Valve clearance measurement.
   TO: Thickness of the removed adjuster
   For intake side: TA=TO+(M–0.15) mm
   For exhaust side: TA=TO+(M–0.25) mm

   Select a new adjuster whose thickness is as close to the estimated value as possible.
4. Install oil rail and tighten it temporarily.
5. Install injector assembly.

NOTE:

1) Do not forget to insert the O-ring between injector and oil rail.
2) Install the injector to the same position as before removal.

6. Install the injector fixing bolts and temporarily tighten.
7. Install the injector clamp and tighten temporarily.
8. Tighten injector fixing bolts to the specified torque.

Torque: 6.5 N·m (0.7 kg·m / 61 lb in)

9. Tighten injector clamp nut to the specified torque with special method.

Torque: 30 N·m (3.1 kg·m /22 lb ft) then loosen one turn and tighten again to specified torque.

Torque: 25 N·m (2.5 kg·m / 18 lb ft)

10. Tighten oil rail to the specified torque.

Torque: 20 N·m (2.0 kg·m / 14 lb ft)

11. Install injector harness and reconnect connector.
12. Install cylinder head cover.
    Refer to”Cylinder Head” in this manual.
13. Fill with about 300cc of engine oil at the high pressure oil pipe installation port on the oil rail using an oil filler.
    If assembled without filling the oil rail with oil, the time for engine starting will be longer.
14. Immediately install high pressure oil pipe to tighten with specified torque.

Torque: 78 N·m (8.0 kg·m / 58 lb ft)

15. Install cylinder head noise insulator cover.
    Refer to “Cylinder Head” in this manual.

OIL RAIL AND INJECTOR

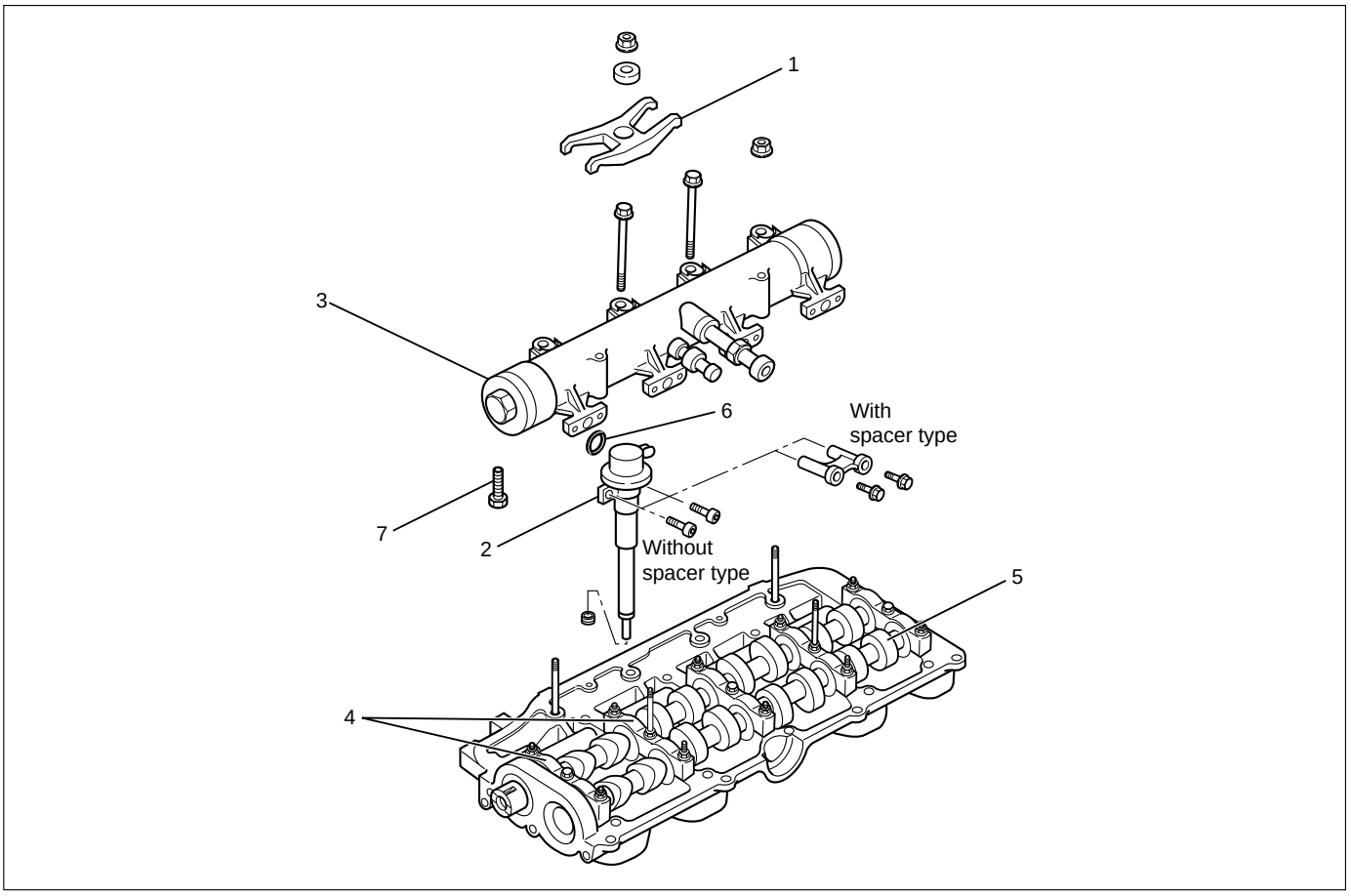

012R200005

Legend

(1) Injector Clamp
(2) Injector Assembly
(3) Oil Rail Assembly
(4) Camshaft Bracket
(5) Camshaft
(6) O-Ring
(7) Drain Plug

REMOVAL

Prior to removal, be sure to confirm and record the group code of the injector installed using Tech2.

1. Disconnect battery ground cable.
2. Remove air cleaner cover and air duct.
3. Remove intercooler.
   Refer to “Intercooler” in this manual.
4. Remove PCV hose and pipe.
5. Remove cylinder head noise insulator cover.
6. Remove high pressure oil pipe.

CAUTION:

1) Sleeve nut should be loosened with cloth tied around it to prevent oil from spurting due to the remaining pressure.

2) The high pressure pipe should be disconnected with a cloth tied around the intake manifold glow plug to prevent oil from flowing out of the oil rail.

7. Loosen eye bolt of fuel pipe at fuel pump side.

NOTE: Cloth should be put around the loosened eye bolt to prevent fuel from flowing out.

8. Remove fuel return hose at chassis side.
9. Remove PCV hose to cylinder head cover.
10. Remove cylinder head cover.
11. Drain the oil from oil rail assembly.
12. Record the identification marking of injector for each cylinder which is indicated on the upper portion of injector.
    There are nine kinds of identification marking available, one alphabet letter and one numeral letter.
    In case three kinds of markings are given, one alphabet letter (sometimes printed) and one numeral letter, top priority is given to the one alphabet letter and one numeral letter.

(For example)
If you find identification marking “A”, “RA” and “2” on the injector, you can use injector grade “A”. (The “RA” is sometimes printed, but can be ignored)

Grade \ Identification Marking	One Alphabet Letter	One Numeral Letter
A	A	1
	A	2
	A	3
B	B	1
	B	2
	B	3
C	C	1
	C	2
	C	3

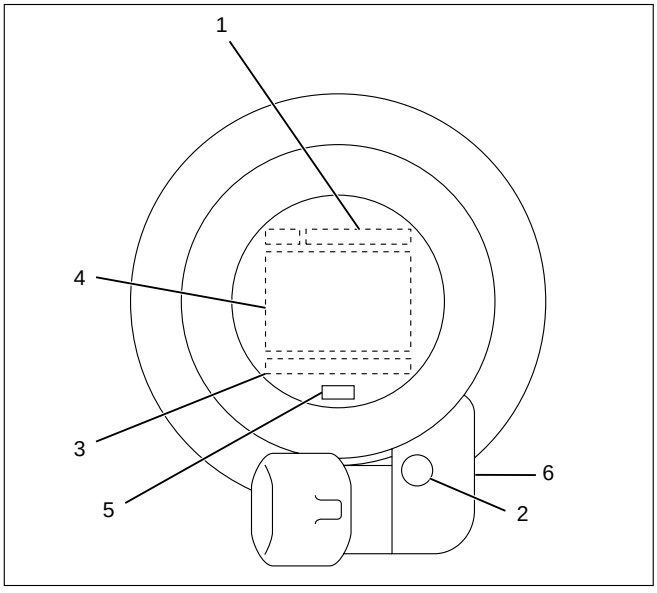

055RW021-1

Legend
(1) Part Number
(2) Two Alphabet Letter
(3) Serial Number
(4) Bar Code
(5) One Alphabet Letter
(6) One Numeral Letter

13. Remove harness connector from each injector.
14. Loosen nuts and bolts for oil rail.
15. Remove injector fixing bolts.
16. Remove injector clamp.
17. Remove injector assembly.

NOTE: Do not drop O-ring

INSTALLATION

1. Install oil rail, tighten temporarily
2. Install injector assembly.

NOTE: Do not forget to install O-ring between injector and oil rail.

3. Apply oil and install injector fixing bolts, tighten temporarily.
4. Apply oil and install injector clamp, tighten nut temporarily.
5. Tighten injector bolts to the specified torque.

Torque: 7 N·m (0.7 kg·m / 61 lb in)

6. Tighten injector clamp nut to the specified torque with special method.

Torque: 30 N·m (3.1 kg·m / 22 lb ft) then loose a time again tighten as following torque.

Torque: 25 N·m (2.5 kg·m / 18 lb ft)

7. Tighten oil rail to the specified torque.

Torque: 20 N·m (2.0 kg·m / 14 lb ft)

8. Install injector harness assembly, reconnect harness connecter to injector.
9. Record the identification marking of injector for each cylinder that is indicated on the upper portion of injector.

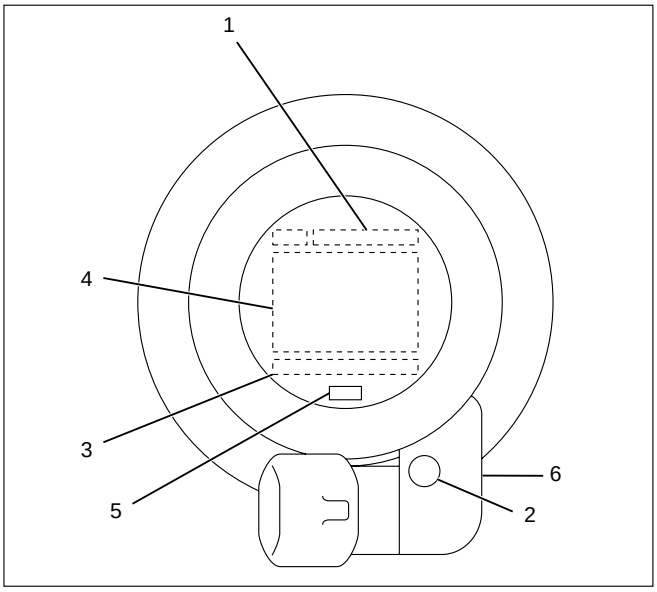

055RW021-1

Legend
(1) Part Number
(2) Two Alphabet Letter
(3) Serial Number
(4) Bar Code
(5) One Alphabet Letter
(6) One Numeral Letter

10. Install cylinder head assembly.
    Refer to “Cylinder Head” in this manual.
11. Fill with about 300cc of engine oil from the high pressure oil pipe at the high pressure oil pipe installation port on the oil rail using an oil filler.
    If assembled without filling the oil rail with oil, the

time for engine starting will be longer.

12. Immediately install high pressure oil pipe and tighten to specified torque.

Torque: 78 N·m (8.0 kg·m / 58 lb ft)

13. Install cylinder head noise insulator cover.
    Refer to “Cylinder Head” in this manual.
14. Install intercooler assembly.
    Refer to “Intercooler” in this manual.
15. Install air cleaner cover and air duct.
16. Use TECH2 to rewrite injector data to ECM.
    For rewriting method refer to section “Data Programming in Case of ECM Change” of 6E 4JX1 engine driveability and emissions in this manual.

NOTE:

1) On completion of servicing, bleed air from the engine inside fuel passage by means of the priming pump. (The priming pump should be operated more times than in the case of conventional engines.)
2) As air is in the oil rail, it takes more time to start the engine. Rough idling may occur while the air is being bled completely after starting the engine, but it does not indicate trouble.

   The air will be bled and normal engine status will be reached while the vehicle is driven for about 5 km or engine is operated for about 5 minutes at 1500 to 2000 rpm.
3) The injector spare part will be provided for group number B1, B2 and B3 only.

CRANK CASE

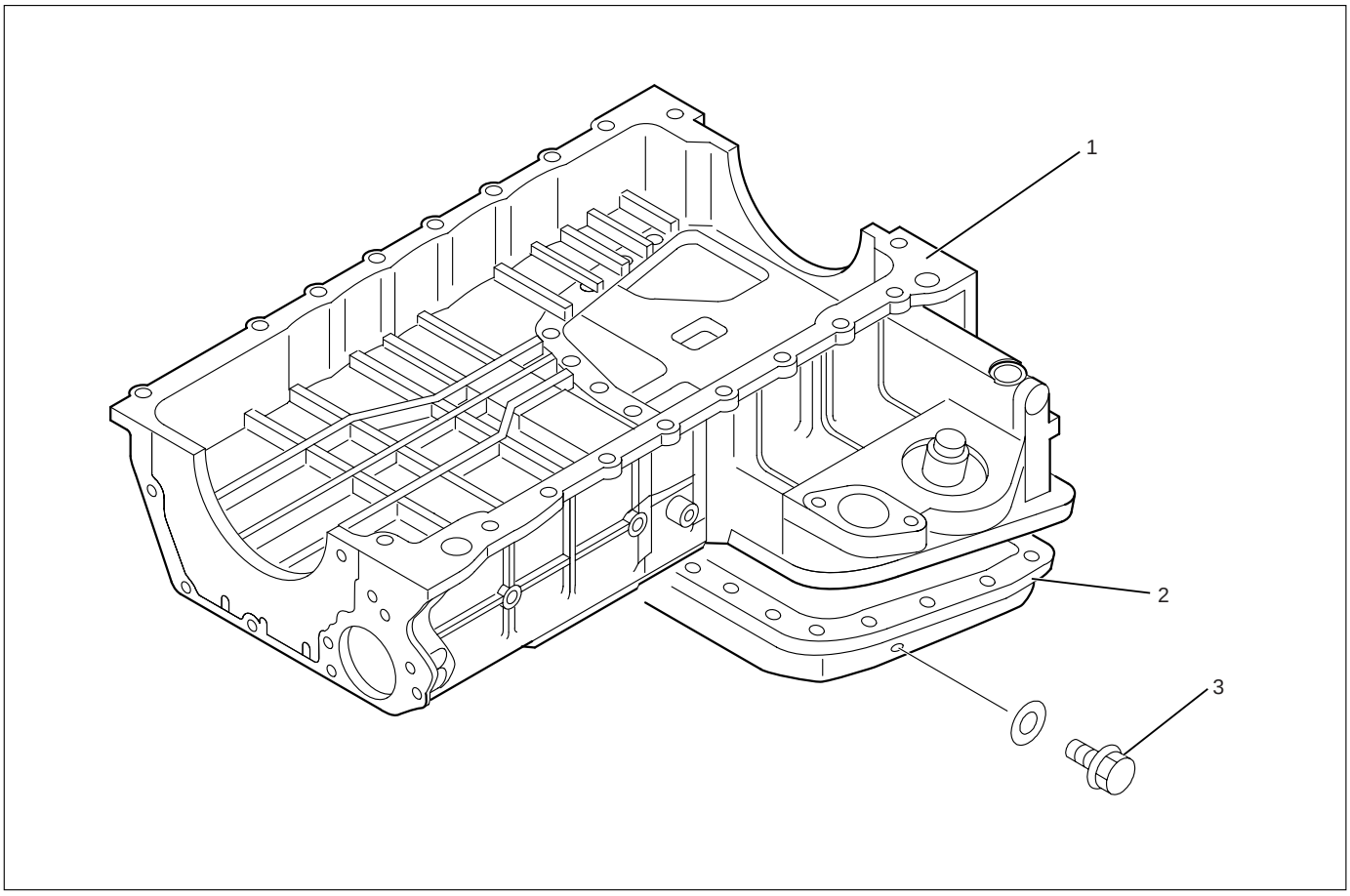

012RW029

Legend
(1) Crank Case
(2) Oil Pan
(3) Drain Plug

REMOVAL

1. Drain engine oil.
2. Remove transmission assembly.
3. Remove crankshaft damper pulley.
4. Remove timing belt cover, timing belt, pulley and front plate.
5. Remove timing gear case cover.
6. Remove timing gears.

NOTE: Do not forget to set lock bolt for idle gear A and lock pin for idle gear C.

7. Remove timing gear case.
8. Remove oil level gauge guide assembly.
9. Remove flywheel assembly.

CAUTION:

1) The flywheel heavy; be careful not to drop it.

2) Be careful no to let it slip because the hexagon of the bolt is thin.

10. Remove rear plate (for A/T) or flywheel housing (for MT).
11. Remove retainer.

NOTE:
1) Be careful not to damage the oil seal; it can be reused.
2) Inspect installation portion for distortion and flow on the slinger; also inspect for flow on the oil seal lip.
3) If there is some flow oil seal/slinger, replace a set.

12. Remove bolts from thrust plate of balance shaft LH then remove balance shaft.
13. Loosen crank case fixing bolts.
14. Use seal cutter to take off the liquid gasket.
    Seal cutter: 5-8840-2153-0
15. Remove crank case assembly.

CAUTION:
Do not give shock to crank case for prevention take off applied vibration insulation material on the crank case.

INSTALLATION

1. Install relief valve (if it was removed).

Torque: 30 N·m (3.1 kg·m / 22 lb ft)

2. Apply oil and insert O-ring to strainer, install strainer and tighten to specified torque.

Torque: 20 N·m (2.0 kg·m / 14 lb ft)

3. Apply liquid gasket (TB1207B or equivalent) to surface of oil pan and tighten bolt to the specified torque.

Torque: 22 N·m (2.2 kg·m / 16 lb ft)

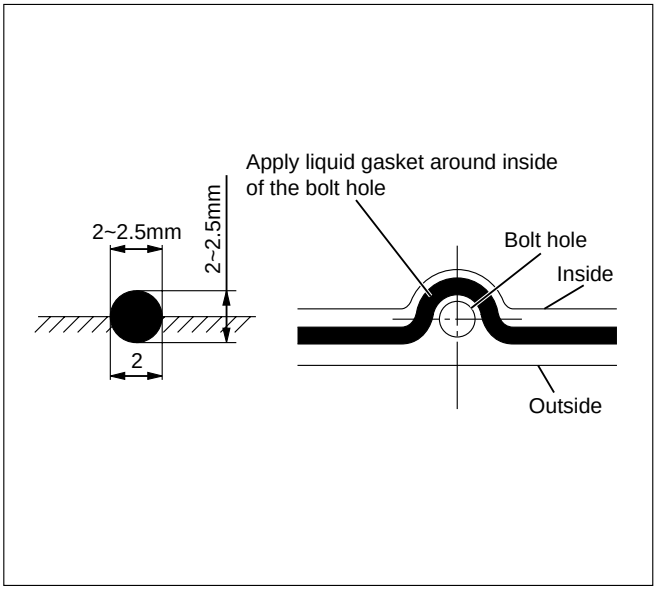

F06HX00001

4. Apply engine oil to the balance shaft (left) and insert it into crank case.

NOTE:
- Do not damage bearing when inserting the balance shaft.
- Make sure it rotates smoothly.

5. Tighten thrust plate of balance shaft LH.

Torque: 25 N·m (2.5 kg·m / 18 lb ft)

6. Set O-ring port of oil gallery on the cylinder block.
7. Apply liquid gasket (TB1207C or equivalent) to crankcase fixing surface then tighten bolts to the specified torque.

Torque: 24 N·m (2.4 kg·m / 17 lb ft)

NOTE: Make sure there is no oil, dust or scratches on the surface coated with liquid gasket and mount within five minutes of gasket application.

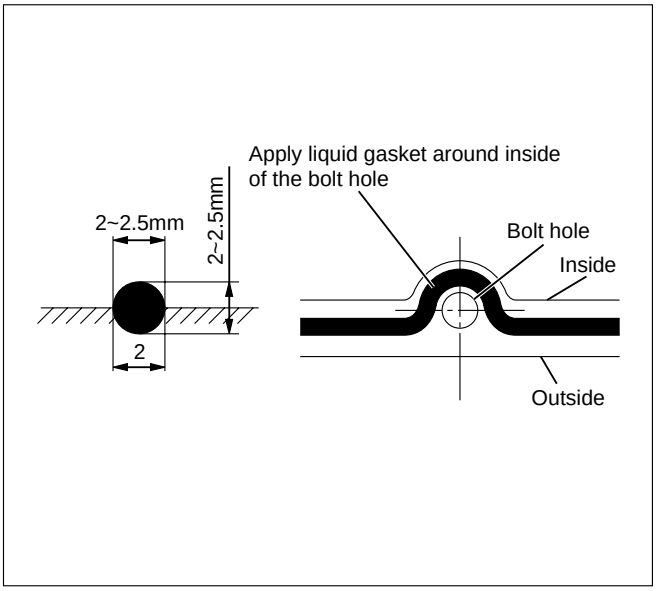

F06HX00001

8. Install retainer with oil seal.
9. Install rear plate (A/T) or flywheel housing (MT), tighten bolt to the specified torque.

Torque: 97 N·m 9.9 kg·m / 72 lb ft)

10. Install flywheel assembly with applied engine oil to the bolt, tighten the bolt using angular tightening method.

1st step: 59 N·m (6.0 kg·m / 43 lb ft)
2nd step: 60° to 90°
3rd step: 60° to 90°

11. Install oil level gauge guide assembly.
12. Install timing gear case.

Torque: 20 N·m (2.0 kg·m / 14 lb ft)

13. Install timing gears
    Refer to “Timing Gear” in this manual.
14. Remove lock bolt from idle gear A and remove lock pin from idle gear C.
15. Install timing gear case cover.

Torque: 20 N·m (2.0 kg·m / 14 lb ft)

16. Install oil pump pulley.

Torque: 10 N·m (1.0 kg·m / 87 lb in)

17. Install camshaft pulley tighten bolt with angular tightening method.

Torque:
1st step: 40 N·m (4.1 kg·m / 30 lb ft)
2nd step: 60° to 90°

18. Install timing belt and belt tensioner.
    Refer to “Timing Gear” in this manual.
19. Install crankshaft damper pulley.

Torque: 216 N·m (22 kg·m / 159 lb ft)

20. Fill engine oil.

CRANKSHAFT

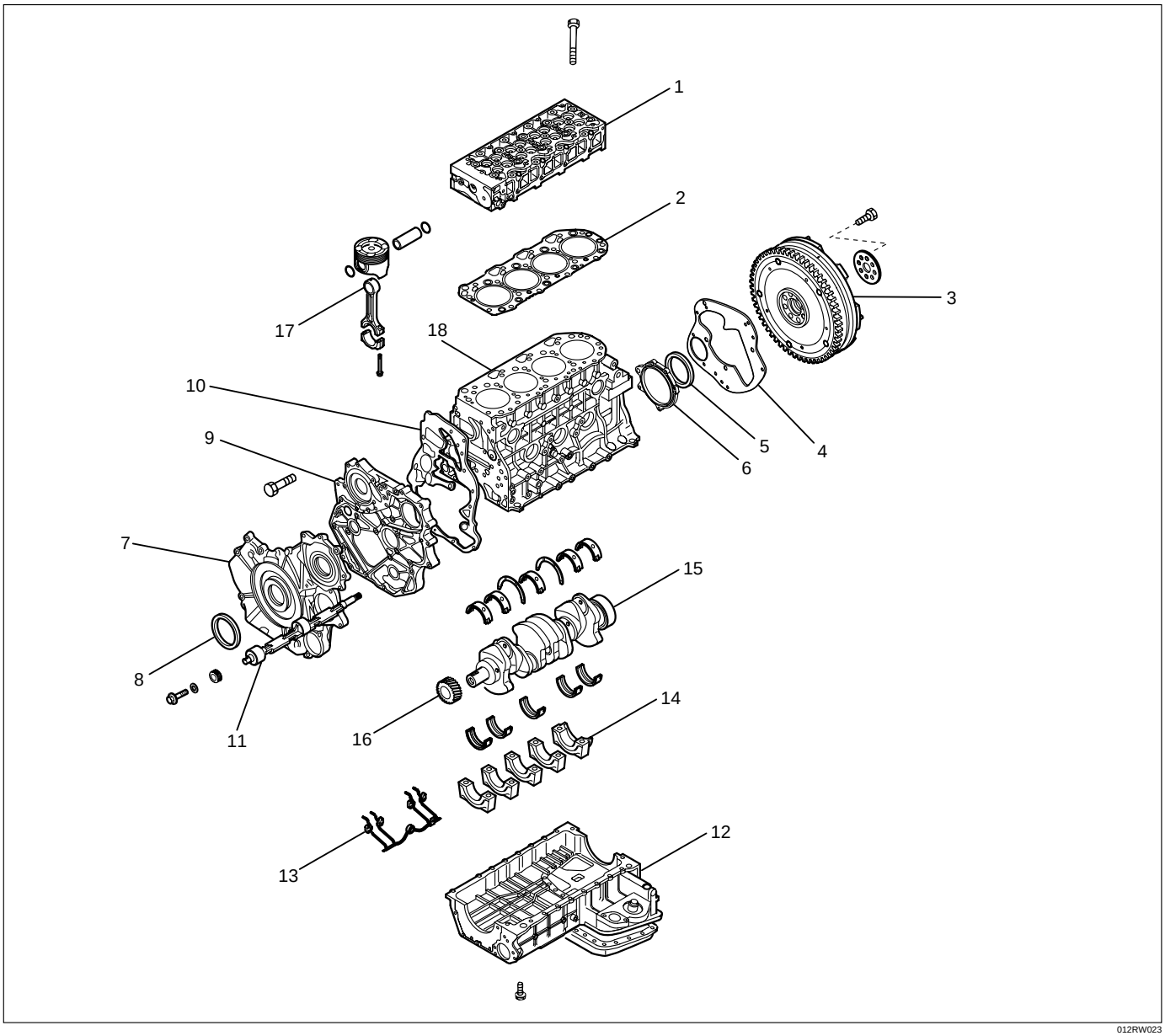

Legend

(1) Cylinder Head
(2) Cylinder Head Gasket
(3) Flywheel
(4) Cylinder Block Rear Plate (for A/T) or Flywheel Housing (for M/T)
(5) Crankshaft Rear Oil Seal
(6) Retainer
(7) Timing Gear Case
(8) Crankshaft Front Oil Seal
(9) Timing Gear Case
(10) Gasket
(11) Balance Shaft
(12) Crank Case
(13) Piston Cooling Oil Pipe
(14) Main Bearing Cap
(15) Crankshaft
(16) Crankshaft Timing Gear
(17) Piston and Connecting Rod Assembly
(18) Cylinder Block

DISASSEMBLY

1. Cylinder Head
   1) Refer to “Cylinder head” in this manual.
2. Crankshaft Front Oil Seal
   1) Use a plastic hammer and a screwdriver to tap around the oil seal to free it from the gear case cover.

      Take care not to damage the oil seal fitting surfaces.
3. Crankshaft Timing Gear
4. Timing Gear Case
5. Flywheel
6. Cylinder Block Rear Plate
7. Crankshaft Rear Oil Seal
   1) Use special tool to remove the crankshaft rear oil seal.

      Oil Seal Remover: 5-8840-2360-0

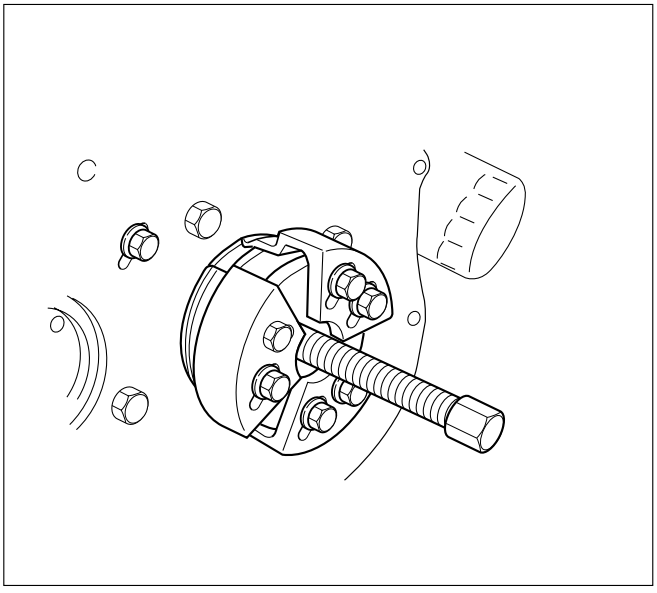

015LV002

8. Crank Case
9. Piston Cooling Oil Pipe
10. Piston and Connecting Rod Assembly
11. Main Bearing Cap Assembly
12. Crankshaft

INSPECTION AND REPAIR

Make the necessary adjustments, repairs, and part replacements if excessive wear or damage is discovered during inspection.

1. Crankshaft Thrust clearance

   Set the dial indicator as shown in the illustration and measure the crankshaft thrust clearance.
   If the thrust clearance exceeds the specified limit, replace the thrust bearing as a set.

Standard : 0.04 – 0.20 mm (0.0016 – 0.0079 in)
Limit: 0.30 mm (0.0118 in)

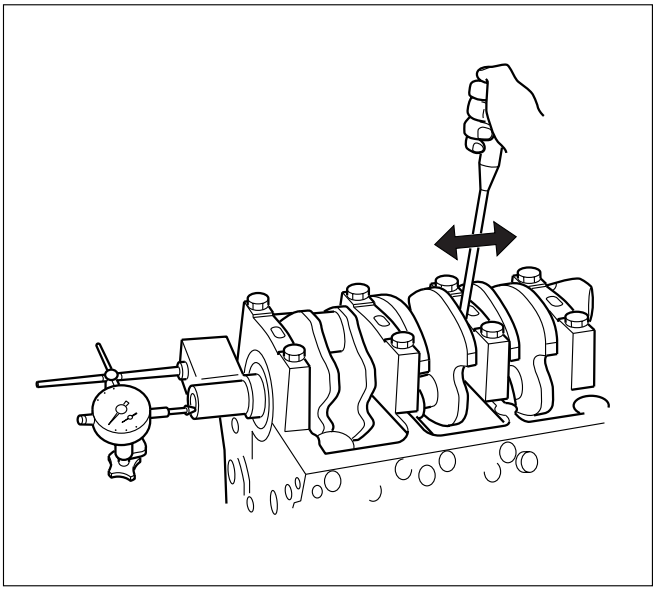

012RW063

2. Main bearing clearance
   1) Remove the main bearing caps in the sequence shown in the illustration.

      Arrange the removed main bearing caps in the cylinder number order.

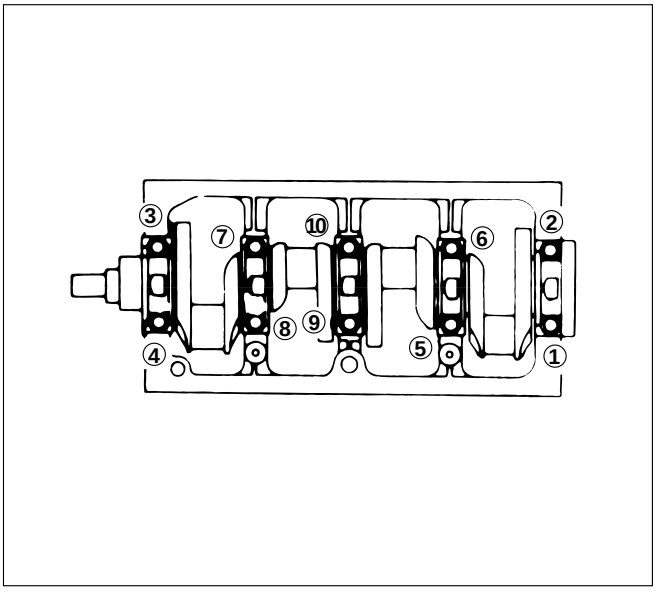

012RW026

   2) Remove the crankshaft. Remove the main bearings.
   3) Clean the upper and lower bearings as well as the crankshaft main journal.
   4) Check the bearings for damage or excessive wear.

      The bearings must be replaced as a set if damage or excessive wear is discovered during inspection.
   5) Set the upper bearings and the thrust washers to their original positions. Carefully install the crankshaft.
   6) Set the lower bearings to the bearing cap original position.

7) Apply plastigage to the crankshaft journal unit as shown in the illustration.

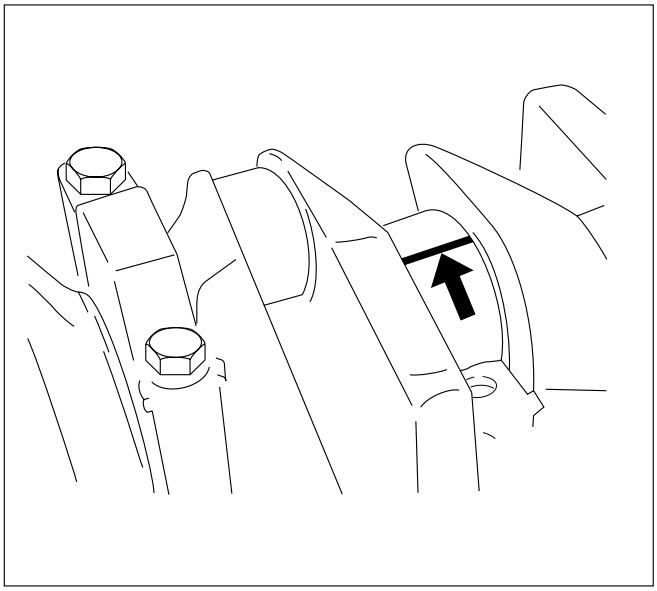

014RW055

8) Install the main bearing caps. Apply engine oil to the bolt threads and the seats. Tighten the bolts to the specified torque.

Torque: 167 N·m (17 kg·m/123 lb ft)

NOTE: Do not allow the crankshaft to rotate.

9) Remove the main bearing caps.
10) Measure the plastigage width and determine the oil clearance. If the oil clearance exceeds the specified limit, replace the main bearings as a set and/or replace the crankshaft.

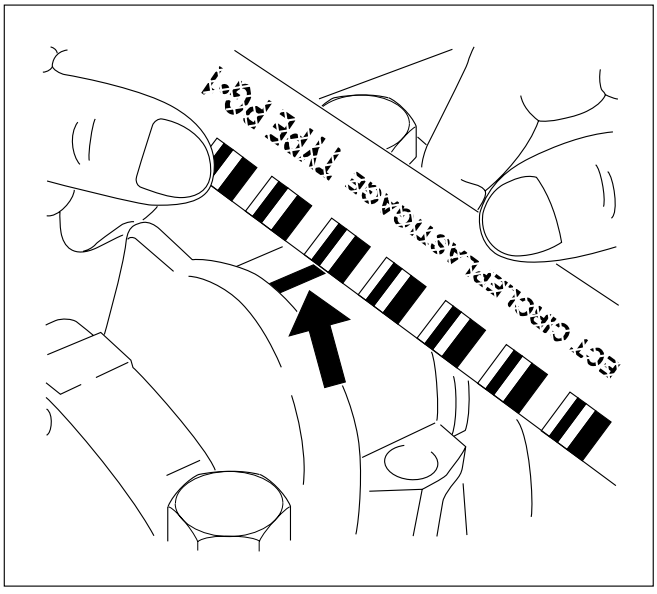

014RW077

11) Clean the plastigage from the bearings and the crankshaft.

    Remove the crankshaft and the bearings.

Standard: 0.031 – 0.063 mm (0.0012 – 0.0025 in)
Limit: 0.11 mm (0.0043 in)

3. Run-out
   1) Carefully set the crankshaft on the V-blocks.

      Slowly rotate the crankshaft and measure the runout. If the crankshaft runout exceeds the specified limit, the crankshaft must be replaced.

Standard: 0.05 mm (0.0020 in) or less
Limit: 0.08 mm (0.0031 in)

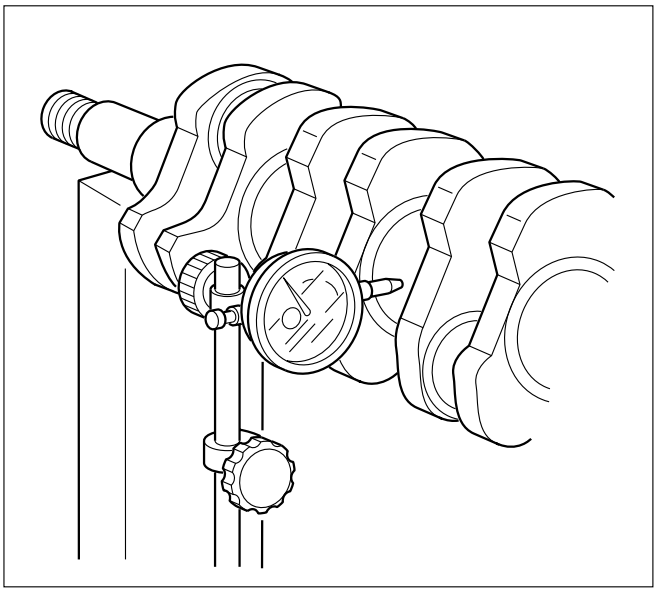

012RW068

Measure the diameter and the uneven wear of main journal and crank pin.

If the crankshaft wear exceeds the specified limit, crankshaft must be replaced.

Main journal diameter

Standard: 69.917 – 69.932 mm (2.7526 – 2.7532 in)
Limit: 69.91 mm (2.7524 in)

Crank pin diameter

Standard: 52.915 – 52.930 mm (2.0833 – 2.0839 in)
Limit: 52.90 mm (2.0827 in)

Uneven wear limit

Standard: 0.05 mm (0.0020 in) or less
Limit: 0.08 mm (0.0031 in)

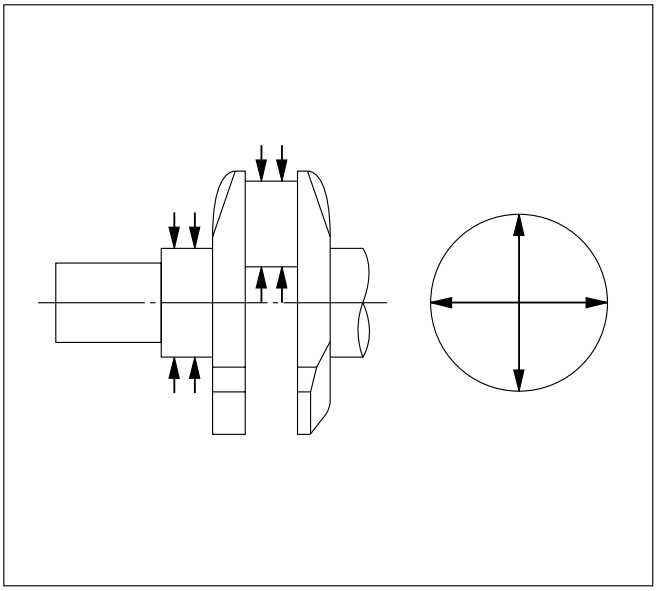

012RW045

Crankshaft inspection

Inspect the surface of the crankshaft journals and crank pins for excessive wear and damage.
Inspect the oil seal fitting surfaces for excessive wear and damage.
Inspect the oil ports for obstructions.

Crankshaft tufftriding inspection

1. Use an organic cleaner to thoroughly clean the crankshaft. There must be no traces of on the surfaces to be inspected.
2. Prepare a 5 – 10% solution of ammonium cupric chloride (dissolved in distilled water).
3. Use a syringe to apply the solution to the surface to be inspected.

   Hold the surface to be inspected perfectly horizontal to prevent the solution from running.

NOTE: Do not allow the solution to come in contact with the oil ports and their surrounding area (Approximately 10 mm).

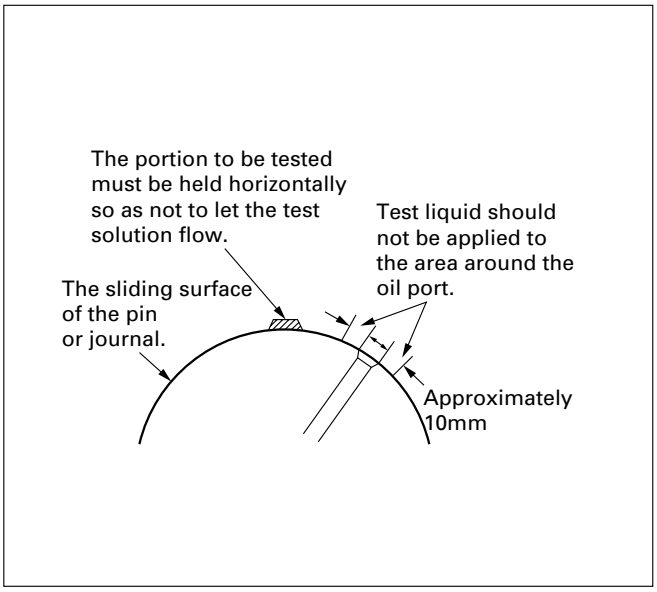

F06MV020

Judgment

1. Wait for thirty or forty seconds.

   If there is no discoloration after thirty or forty seconds, the crankshaft is usable.

   If discoloration appears (the surface being tested will become the color of copper), the crankshaft must be replaced.
2. Steam clean the crankshaft surface immediately after completing the test.

NOTE: The ammonium cupric chloride solution is highly corrosive. Because of this, it is imperative that the surfaces being tested be cleaned immediately after completing the test.

CRANKSHAFT BEARING SECTION

When installing new crankshaft bearings, refer to the selection table below.
Select and install the new crankshaft bearings, paying close attention to the cylinder body journal hole diameter grade mark and the crankshaft journal diameter grade mark.

NOTE: Although all upper journal bearings (cylinder body side) have oil grooves and holes, all lower bearings (bearing cap side) have no groove and hole. Play close attention to the distinction during the installation procedure.

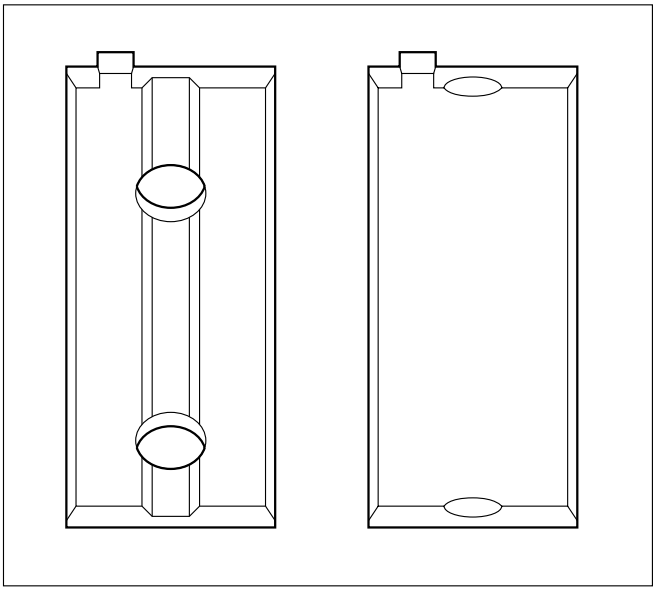

012RW038

Crankshaft Bearing Bore Grade Mark Position

Crankshaft bearing bore grade marks 1 or 2 are stamped on the rear right hand side of the cylinder body.

Example:

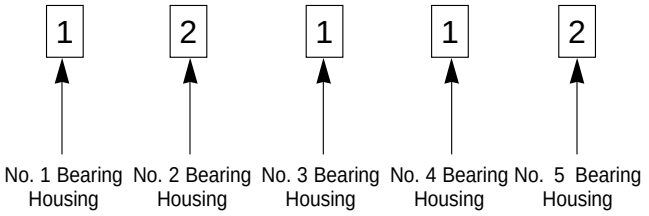

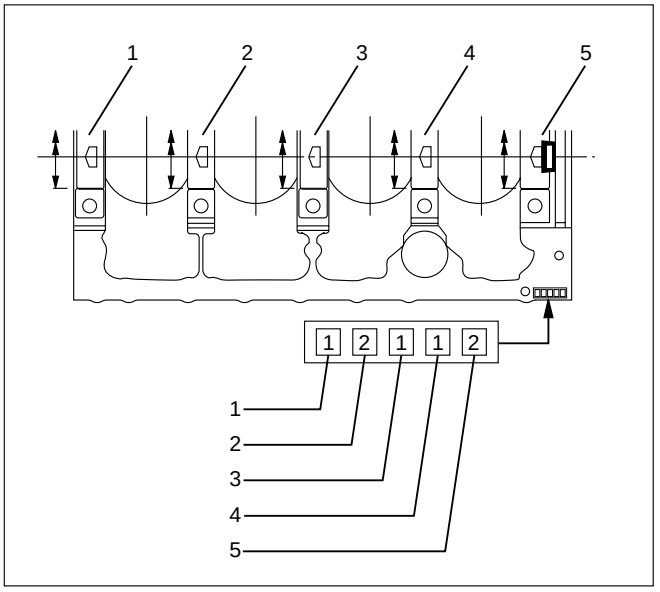

012RW114

Legend

(1) No. 1 Main bearing bore grade
(2) No. 2 Main bearing bore grade
(3) No. 3 Main bearing bore grade
(4) No. 4 Main bearing bore grade
(5) No. 5 Main bearing bore grade

Crankshaft Journal Grade Mark Position

The crankshaft journal grade marks (1 or –) are stamped on each crankshaft journal wave.
The crankshaft journal and bearing clearance must be the same for each position after installation of the crankshaft and the crankshaft bearings.

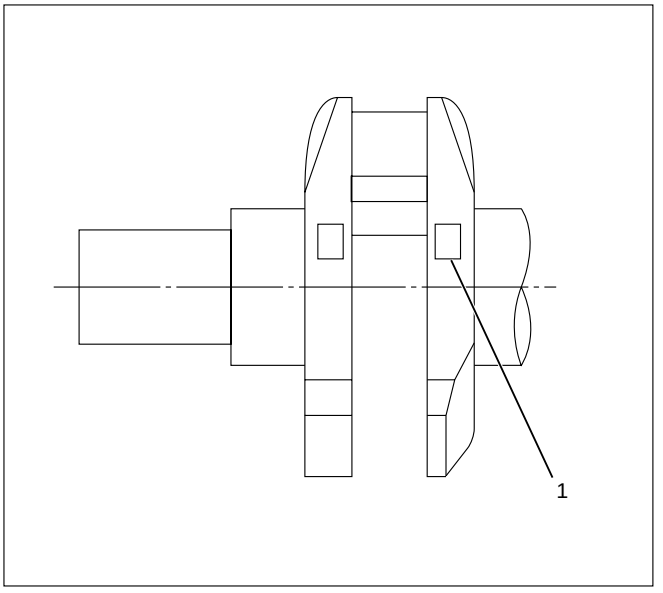

015RW078

Legend

(1) Crankshaft journal outside diameter grade

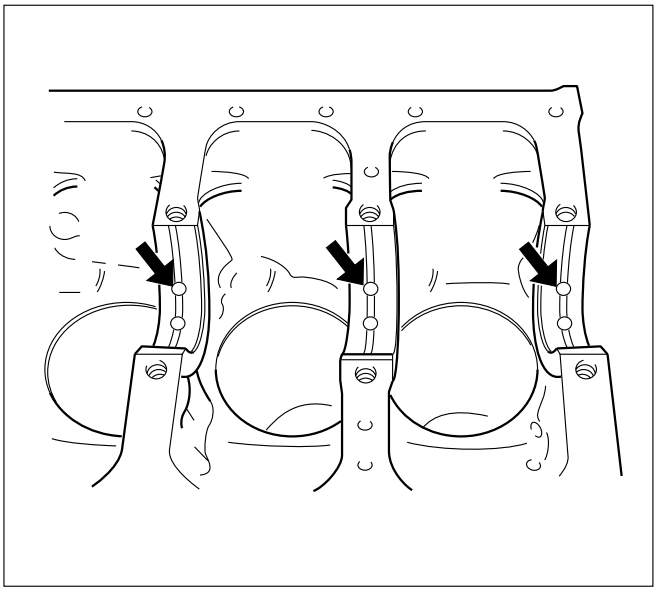

012RW069

Main Bearing Bore Diameter mm(in)		Crankshaft Main Journal Diameter mm(in)		Crankshaft Bearing	Oil Clearance mm(in)
Grade	Inside Diameter	Grade	Outside Diameter		
1	73.992 – 74.000 (2.9131 – 2.9134)	1 or -	69.927 – 69.932 (2.7530 – 2.7532)	4	0.045 – 0.061 (0.0018 – 0.0024)
		2 or - -	69.922 – 69.927 (2.7528 – 2.7530)	4	0.050 – 0.066 (0.0020 – 0.0026)
		3 or - - -	69.917 – 69.922 (2.7526 – 2.7528)	5	0.052 – 0.068 (0.0020 – 0.0027)
2	73.983 – 73.992 (2.9127 – 2.9131)	1 or -	69.927 – 69.932 (2.7530 – 2.7532)	2	0.042 – 0.059 (0.0017 – 0.0023)
		2 or - -	69.922 – 69.927 (2.7528 – 2.7530)	3	0.044 – 0.061 (0.0017 – 0.0024)
		3 or - - -	69.917 – 69.922 (2.7526 – 2.7528)	4	0.046 – 0.063 (0.0018 – 0.0025)
3	73.975 – 73.983 (2.9124 – 2.9127)	1 or -	69.927 – 69.932 (2.7530 – 2.7532)	1	0.037 – 0.053 (0.0015 – 0.0021)
		2 or - -	69.922 – 69.927 (2.7528 – 2.7530)	2	0.039 – 0.055 (0.0015 – 0.0022)
		3 or - - -	69.917 – 69.922 (2.7526 – 2.7528)	2	0.044 – 0.060 (0.0017 – 0.0024)

REASSEMBLY

1. Crankshaft
   1) Install the main bearings to the cylinder body and the main bearing caps.
   2) Be sure that they are positioned correctly.
   3) Apply new engine oil to the upper and lower main bearing faces.
   4) Carefully mount the crankshaft.
   5) Apply engine oil to the thrust washer.
   6) Assemble the thrust washer to the No. 3 bearing journal. The oil grooves must face the crankshaft.

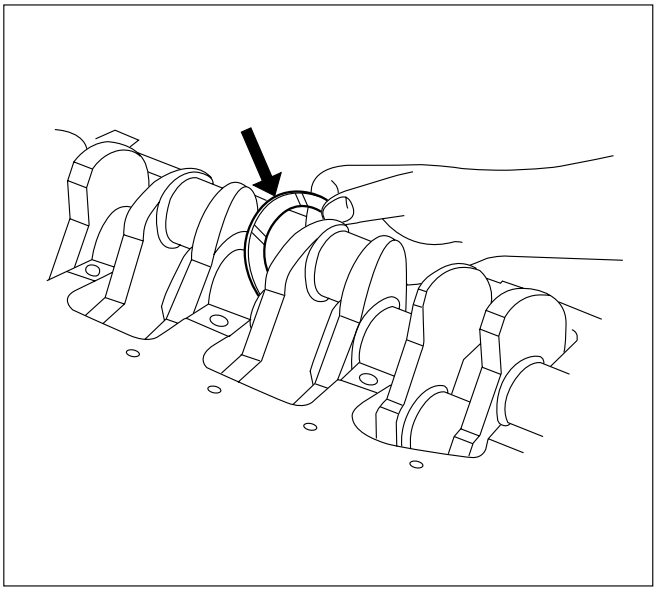

012RW047

   7) Install the bearing caps with the bearing cap head arrow mark facing the front of the engine.
   8) Apply engine oil to the main bearing cap bolts.
   9) Tighten the main bearing cap bolts to the specified torque a little at a time in the sequence shown in the illustration.

Torque: 167 N·m (17.0 kg·m/123 lb ft)

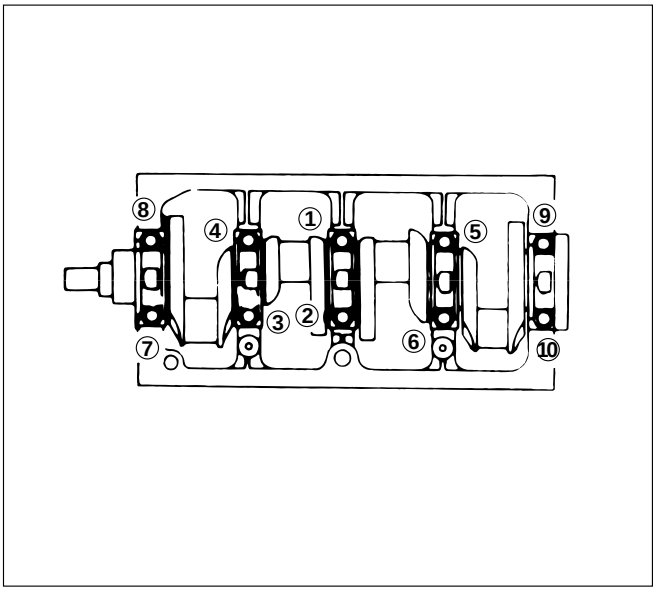

012RW027

NOTE: Check to see that the crankshaft turns smoothly by rotating it manually.

2. Piston and Connecting Rod Assembly
   1) Apply engine oil to the cylinder bores, the connecting rod bearings and the crankshaft pins and each piston ring and piston.
   2) Align the front mark (2) of piston and front mark (3) of connecting rod then assemble them.

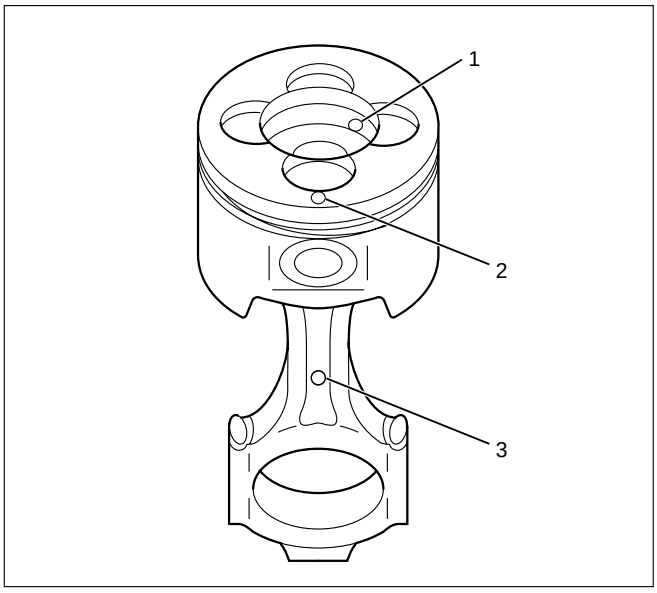

015RW051

   3) The N mark of the piston ring is faced toward the top, check to see that the piston ring end gap is correctly positioned.

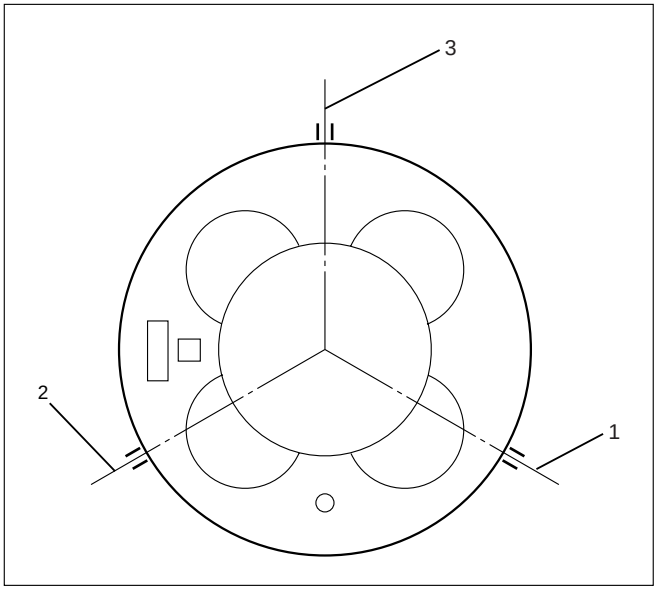

015RW083

Legend
(1) 1st piston ring end gap
(2) 2nd piston ring end gap
(3) Oil ring end gap

   4) Insert the piston/connecting rod assemblies into each cylinder with the piston ring compressor.

      The front marks must be facing the front of the engine.

      Piston Ring Compressor: 5-8840-9018-0
   5) Match the numbered caps with the numbers on the connecting rods. Align the punched marks on the connecting rods and caps.
   6) Apply engine oil to the threads and seating faces of the nuts.
   7) Tighten the cap nuts in 2 steps, using angular tightening method as shown in the following specifications.

1st step: 29 N·m (3.0 kg·m/22 lb ft)
2nd step: 45°– 60°

After tightening the cap nuts, check to see that the crankshaft rotates smoothly

3. Piston Cooling Oil Pipe

   If the piston cooling oil pipe is forcibly assembled, the end of the oil jet may bend. It could make it impossible to supply oil to the piston cooling holes, which will sometimes cause piston seizure.

   Sufficient care should be taken to pipe assembly work.

   1) Tighten the bolt and oil jet plug to the specified torque.

Torque:

M6: 8 N·m (0.8 kg·m/69 lb in)
M8: 20 N·m (2.0 kg·m/14 lb ft)

Oiling Jet Plug: 30 N·m (3.1 kg·m/22 lb ft)

4. Crank case
   1) Refer to “Crank case” in this manual.
5. Apply liquid gasket (TB-1207C or equivalent) to retainer then install it to rear end of cylinder block within 5 minutes.
6. Crankshaft Rear Oil Seal
   1) Tighten the adapter to the crankshaft rear and section with 2 bolts.
   2) Insert the oil seal into the peripheral section of the adapter.

NOTE: Apply oil to the oil seal lip.

   3) Insert the sleeve into the adapter and tighten it with a bolt (M12 x 1.75L = 70) until the adapter hits the sleeve.
   4) Remove the adapter and the sleeve.
   5) Check the dimension of the oil seal setting from rear end of crankshaft.

Standard Dimension = 12.5 ± 0.3 mm

Oil Seal Installer: 5-8840-2359-0

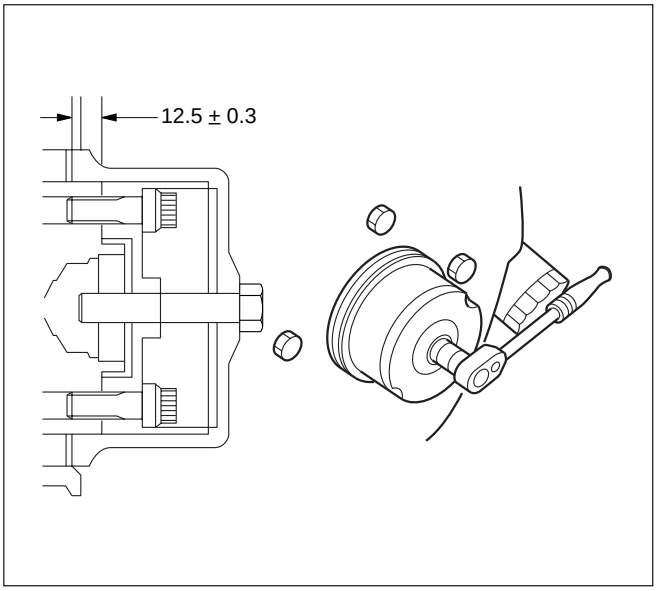

012RW067

7. Cylinder Block Rear Plate (A/T)
   Align the rear plate with the cylinder block dowel pins.
   Tighten the rear plate to the specified torque.

Torque: 97 N·m (9.9 kg·m/72 lb ft)

8. Flywheel housing (M/T)
   Align the flywheel housing with the cylinder block dowel pins.
   Tighten the bolt to the specified torque.

Torque: 97 N·m (9.9 kg·m/72 lb ft)

9. Flywheel
   1) Thoroughly clean and remove the oil from the threads of crankshaft and flywheel fixing surface.
   2) Mount the flywheel on the crankshaft and then install the washer.
   3) Align the timing mark, cut out on the flywheel is at lowest position for M/T model and identification hole on the boss is highest position for A/T model when cylinder No. 1 is at the TDC.

For M/T Model

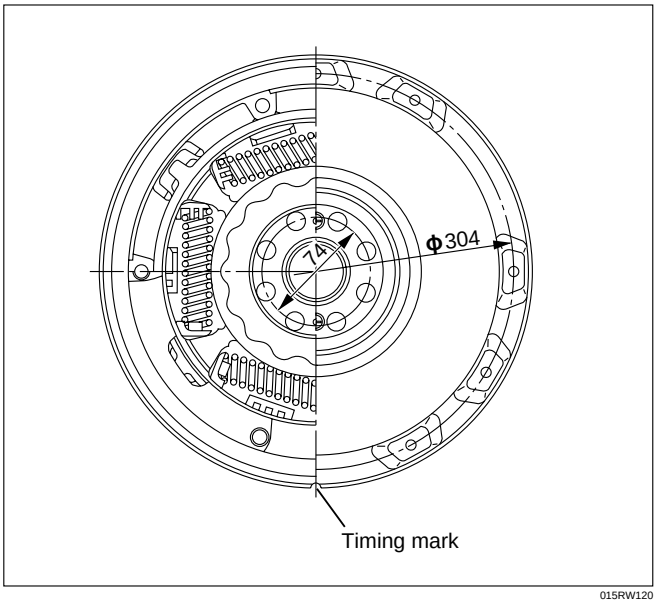

015RW120

For A/T model

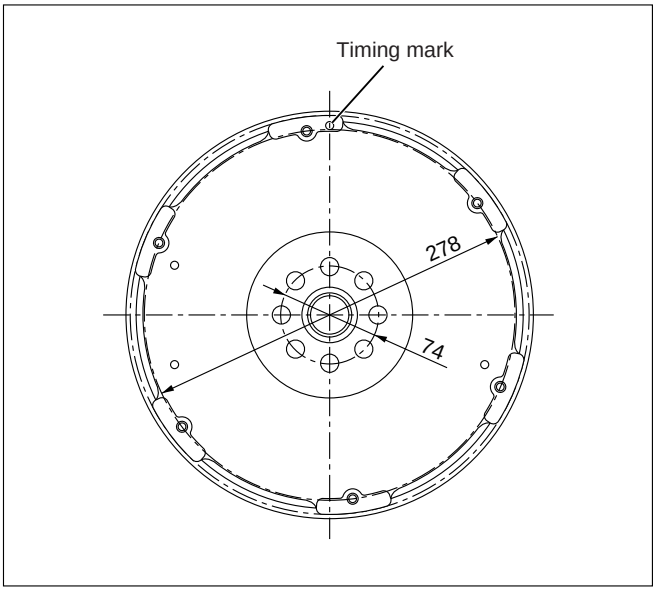

015RW121

   4) Tighten the flywheel bolts in 2 steps using angular tightening method.

Torque: 1st step 59 N·m (6.0 kg·m/43 lb ft)
Torque: 2nd step 60° – 90°
Torque: 3rd step 60° – 90°

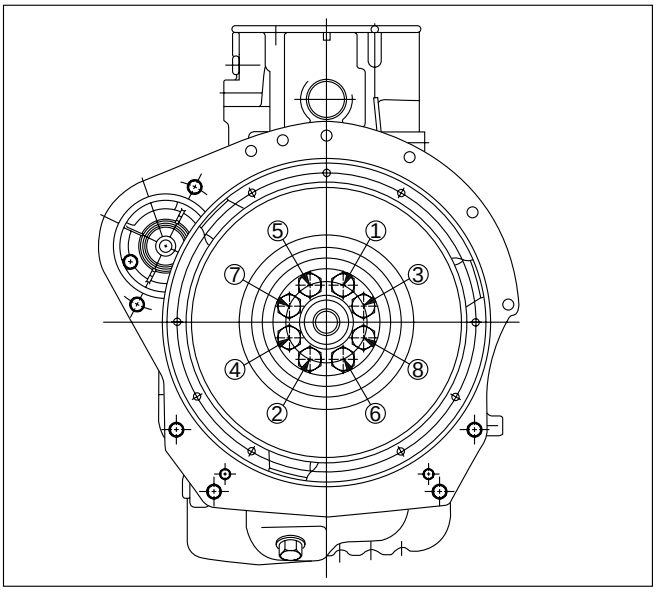

201RW021

10. Timing Gear Case
    1) Cut away the gasket protruding between the cylinder block and the crank case fitting surfaces (as shown in the illustration).

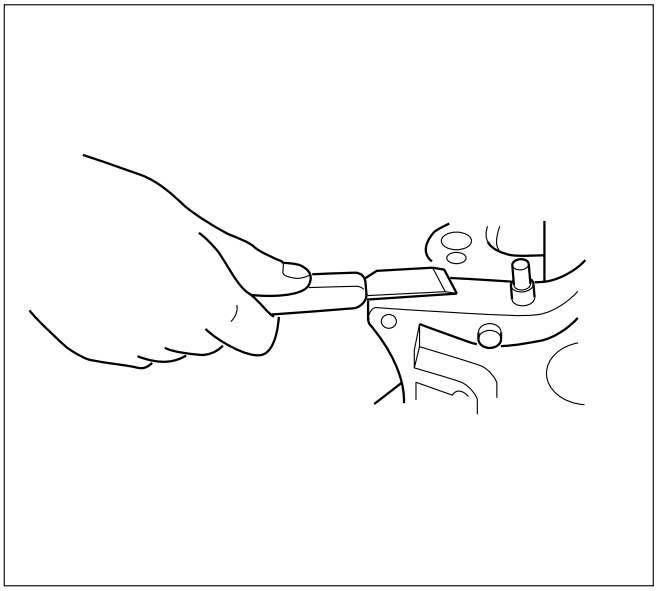

012RW064

2) Apply liquid gasket (TB1207B or equivalent) between the cylinder block and the crankcase fitting surfaces.
3) Install the timing gear case to the cylinder body.
4) Tighten the timing gear case bolt together with the timing gear case gasket to the specified torque.

Torque: 20 N·m (2.0 kg·m/14 lb·ft)

11. Crankshaft Gear
    1) Set key to crankshaft key groove.
    2) The timing mark on the crankshaft gear must be facing outward.
    3) Use the crankshaft gear installer to install the crankshaft gear.

       Crankshaft installer: 9-8522-0021-0

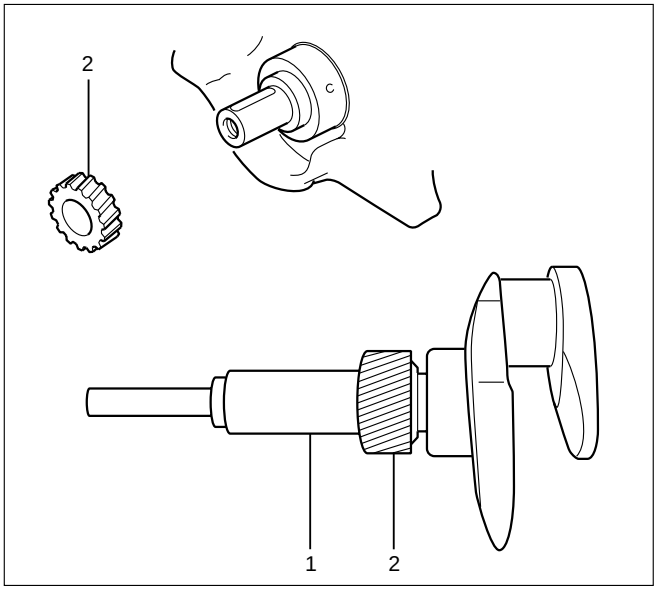

012RW066

Legend
(1) Crankshaft Gear Installer
(2) Crankshaft Gear

12. Installation of the Timing Gear
    1) Align teeth on the scissors gear and lock them before install timing gear.
    2) Align timing marks on each timing gear and assemble them.
    3) Refer to timing gear detail in this manual.

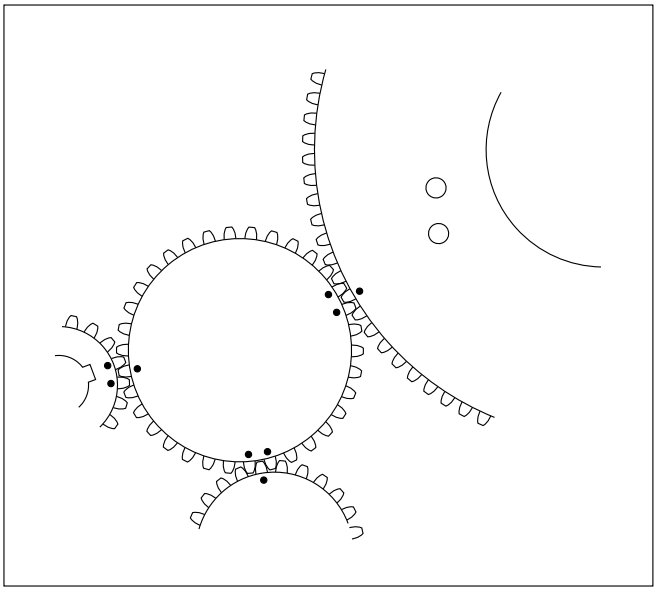

012RW024

13. Timing Gear Case Cover
    1) Remove lock bolt from idle gear A and remove lock pin from idle gear C.
    2) Install oil pump gear oil seal before assembling timing gear case cover.
    3) Clean fitting surface and apply liquid gasket (TB1207C or equivalent) to fitting surface.

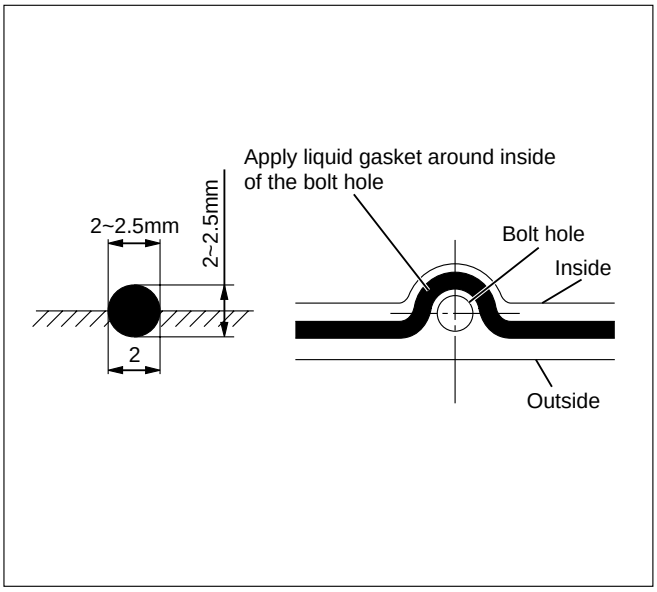

F06HX00001

4) Tighten bolts to specified torque.

Torque: 20 N·m (2.0 kg·m/14 lb ft)

14. Crankshaft Front Oil Seal
    1) Set oil seal with special tool.
    2) Install front oil seal to timing gear case cover.

    Crankshaft Front Oil Seal Installer: 5-8840-2061-0

NOTE: Apply oil to the oil seal lip.

    3) Remove special tool and check oil seal position from front surface of timing gear case.

Oil Seal Position: 0.5 – 2.5 mm (0.0197 – 0.0984 in)

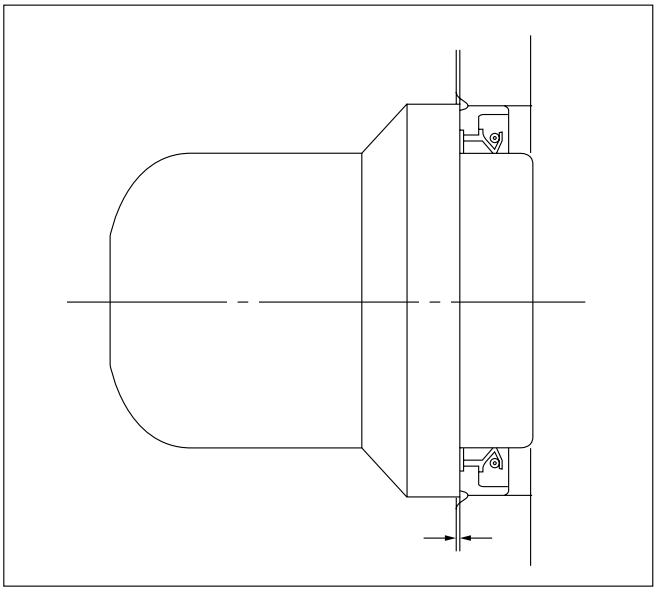

015RW074

15. Cylinder Head
    1) Refer to “Cylinder head” in this manual.

PISTON AND CONNECTING ROD

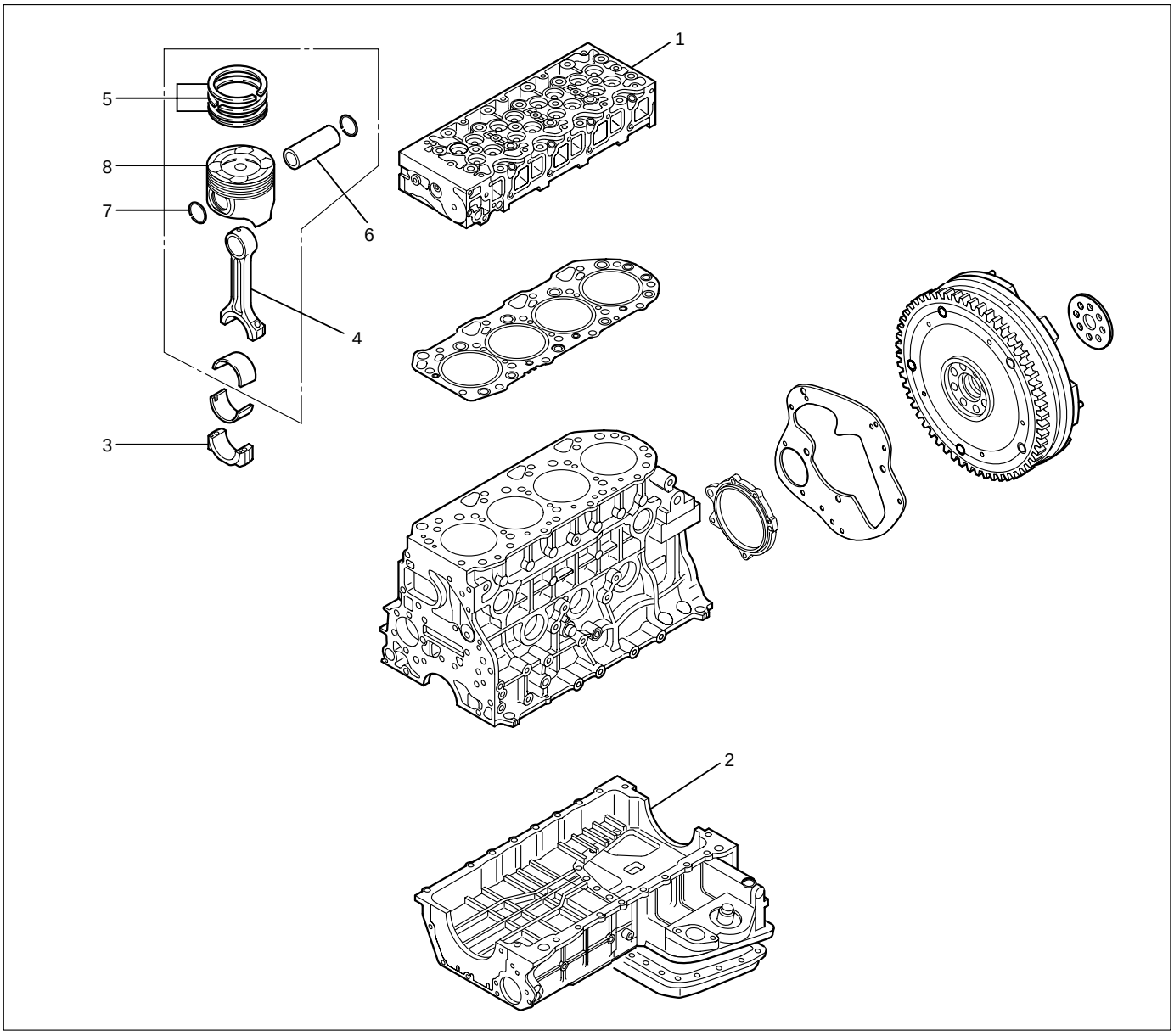

012RW061

Legend

(1) Cylinder Head Assembly
(2) Crank Case
(3) Connecting Rod Bearing Cap
(4) Connecting Rod
(5) Piston Ring
(6) Piston Pin
(7) Piston Pin Snap Ring
(8) Piston

DISASSEMBLY

1. Cylinder Head Assembly
   1) Refer to “Cylinder head” in this manual.
2. Crank Case Assembly
   1) Refer to “Crank Case” in this manual.
3. Connecting Rod Bearing Cap
4. Piston and Connecting Rod
   1) Remove carbon deposits from the upper portion of the cylinder wall with a scraper before removing the piston and connecting rod.
5. Piston Ring
   Remove the piston rings with a piston ring expander.
   Arrange the removed piston rings in the cylinder number order.

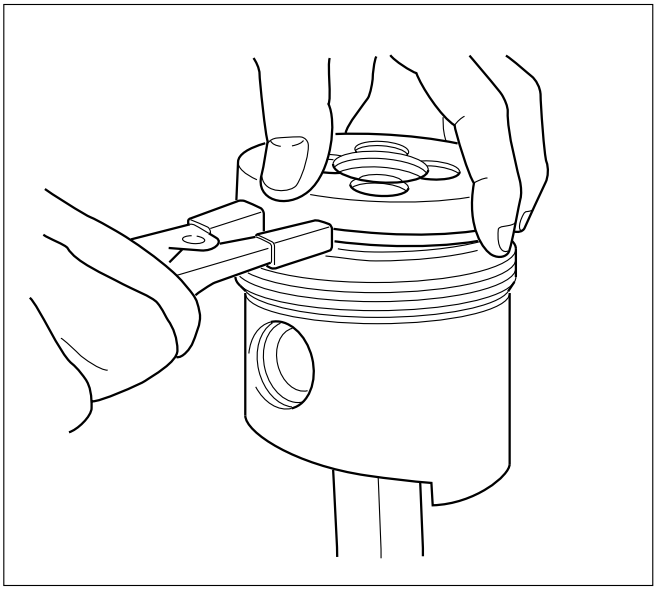

015RW082

6. Piston Pin Snap Ring
   1) Use a pair of pliers to remove the piston pin snap rings.

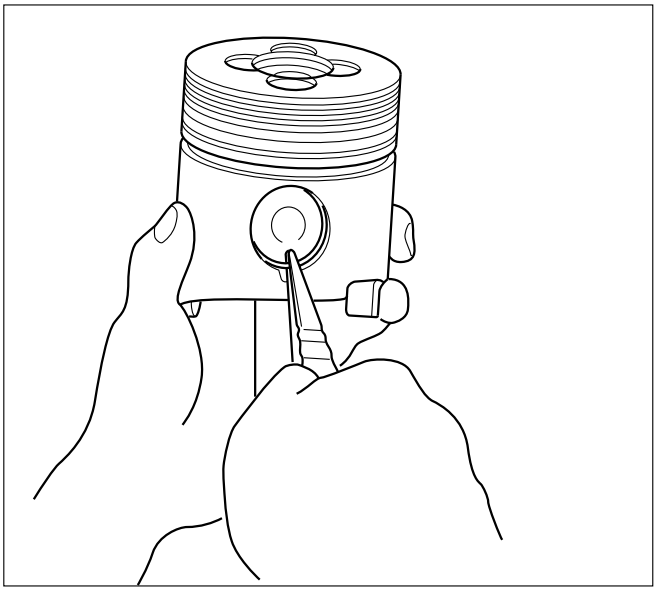

015RW077

7. Piston Pin
   1) Remove piston pin from piston assembly.

NOTE: Keep the parts removed from each cylinder separate. All parts must be reinstalled in their original positions.

8. Piston
9. Connecting Rod

INSPECTION AND REPAIR

PISTON AND PISTON RING

Pistons

Carefully clean away all the carbon adhering to the piston head and the piston ring grooves.

NOTE: Never use a wire brush to clean the pistons. Damage will result. Visually check each piston for cracking, scoring, and other signs of excessive wear. If any of the above conditions are present, the piston must be replaced.

Piston Diameter

1. Measure the piston outside diameter with micrometer at the piston grading position.
   Piston Grading Position: 69.75 mm (2.7461 in) from piston head

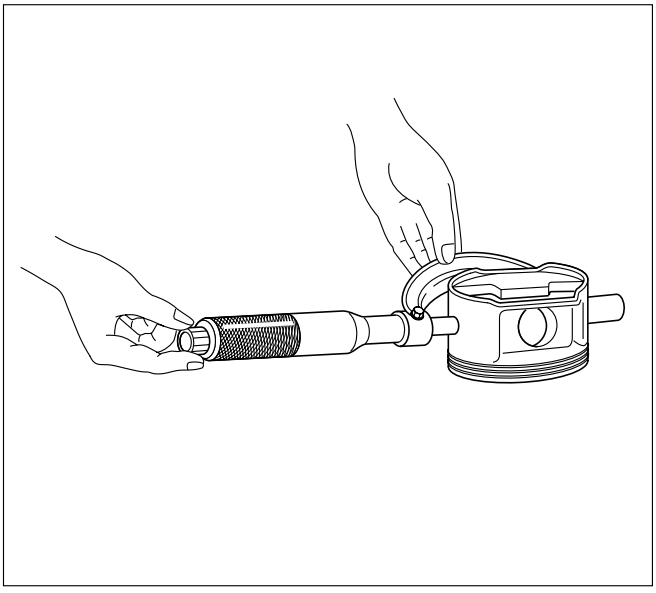

015LV014

Piston Outside Diameter mm(in)

Grade Mark	Outside Diameter
A	95.320 – 95.329 (3.7527 – 3.7531)
B	95.330 – 95.339 (3.7531 – 3.7535)
C	95.340 – 95.349 (3.7535 – 3.7539)

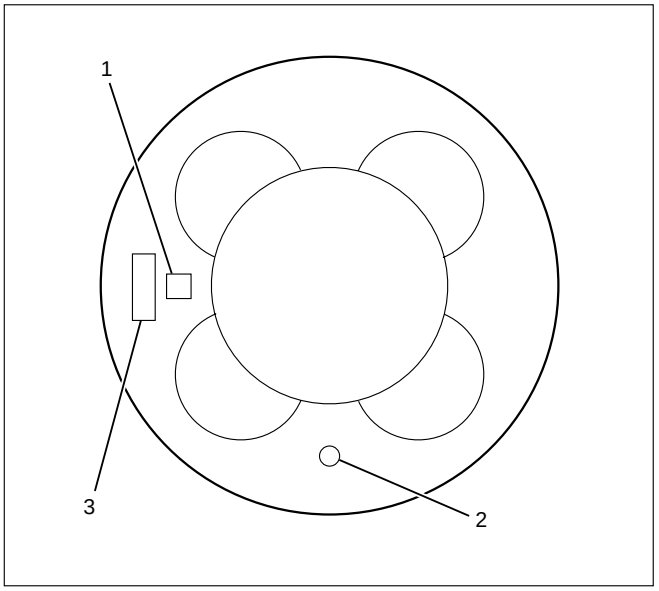

015RW080

Legend
(1) Piston Grade
(2) Piston Front Mark
(3) Part Number

The grade for piston outside diameter is stamped on the piston head.

Measure the cylinder bore diameter at measuring points.

If the piston clearance does not conform to the specified value, the pistons most be replaced.

Piston Clearance:
0.092 – 0.110 mm (0.0036 – 0.0043 in)

Cylinder Bore Diameter mm(in)

Grade Mark	Cylinder Bore Diameter
A	95.421 – 95.430 (3.7567 – 3.7571)
B	95.431 – 95.440 (3.7571 – 3.7575)
C	95.441 – 95.450 (3.7575 – 3.7579)

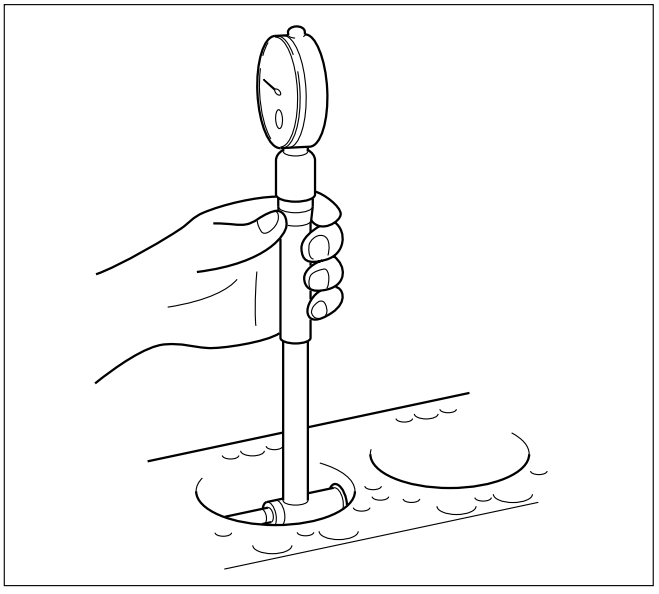

012RW071

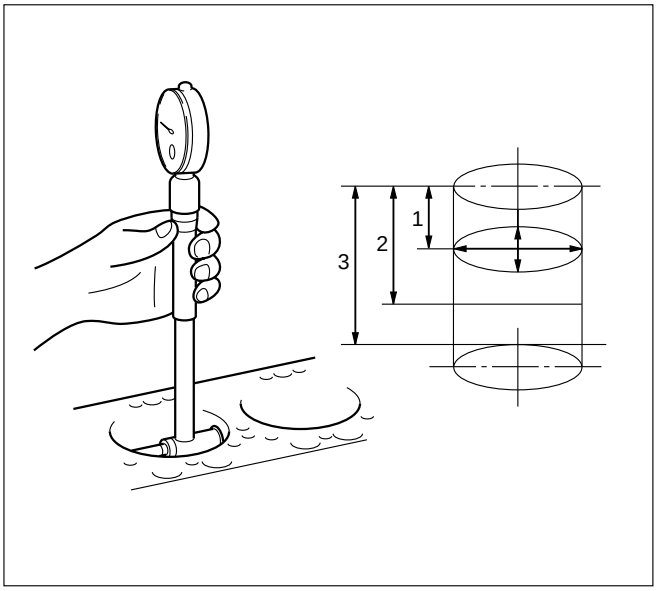

012RW117

Legend
Measuring point 1 = 20 mm
2 = 90 mm
3 = 160 mm

Piston rings

Any worn or damaged part discovered during engine overhaul must be replaced with a new one.

1. Ring end gap measurement
   1) Insert the piston ring into the cylinder bore.

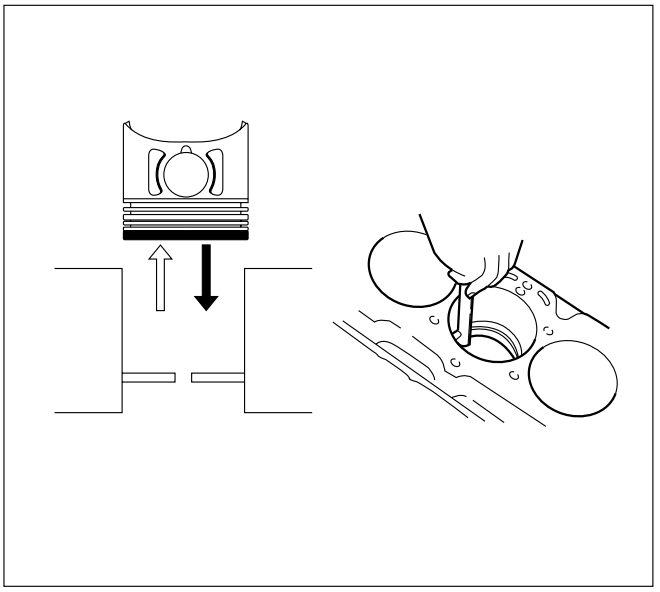

012RW051

   2) Push the ring by the piston, at the right angle to the wall, into the point at which the cylinder bore diameter is the smallest.
   3) Measure the ring end gap.

NOTE: The piston ring is stamped with a discerning mark on the upper face of piston ring.

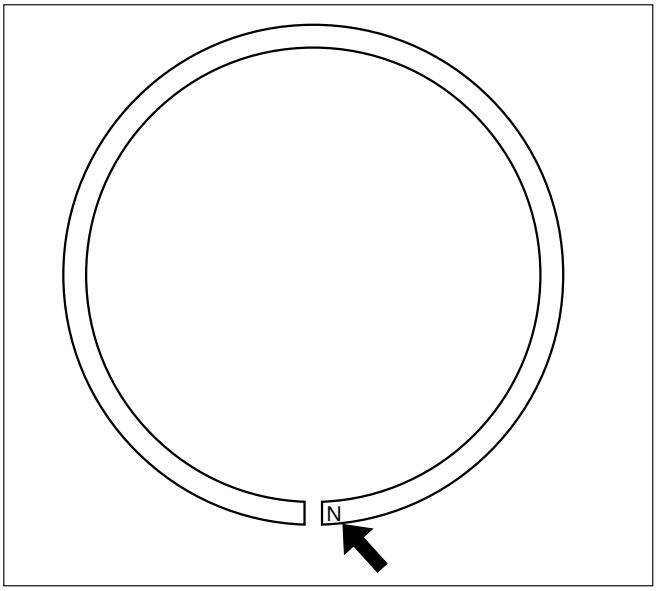

012RW037

Discerning Mark

Piston Ring	Discerning Mark
1st compression ring	1N
2nd compression ring	2N

Ring End Gap mm(in)

Piston Ring	Standard Gap	Limit
1st compression ring	0.25 – 0.40 (0.0098 – 0.0157)	1.5 (0.0590)
2nd compression ring	0.20 – 0.35 (0.0079 – 0.0138)	
Oil ring	0.10 – 0.30 (0.0039 – 0.0118)	

2. Measure the clearance between the piston ring groove and the piston ring with a feeler gauge. If the piston ring groove/piston ring clearance exceeds the specified limit, the piston and/or piston rings must be replaced.

mm(in)

		Standard	Limit
Compression ring	1st	0.05 – 0.09 (0.0020 – 0.0035)	0.15 (0.0059)
	2nd	0.05 – 0.09 (0.0020 – 0.0035)	
Oil ring		0.03 – 0.07 (0.0012 – 0.0028)	

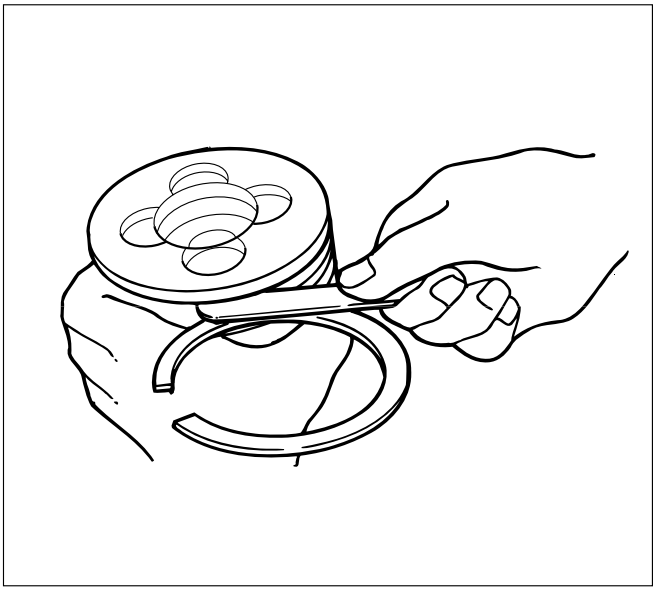

015RW076

Piston pin

Visually inspect the piston pin for cracks, flaws, and other damage and replace if necessary.

1. Use a micrometer to measure the piston pin outside diameter in both directions at three different positions. If the measurement exceeds the specified limit, the piston pin must be replaced.

Standard: 30.995 – 31.000 mm (1.2212 – 1.2214 in)
Limit: 30.97 mm (1.2202 in)

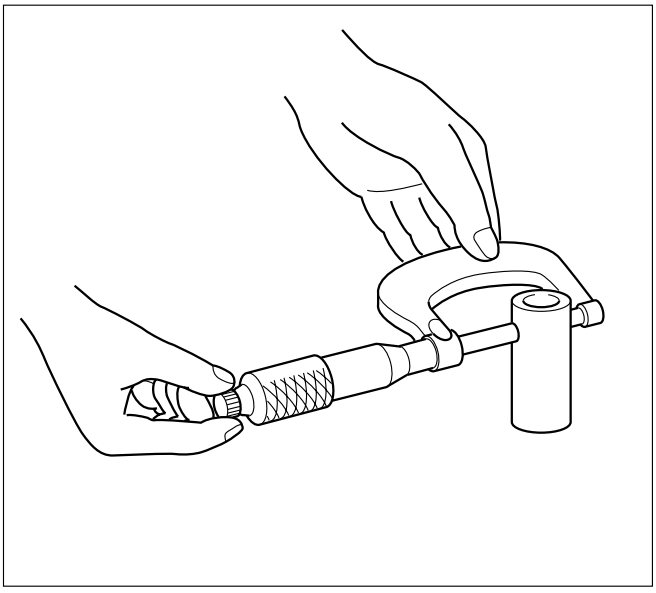

012RW082

2. Measure the inside diameter of the connecting rod small end. If the clearance between the small end and pin does not conform to the specified value, the connecting rod or bushing and pin must be replaced.

Standard: 0.008 – 0.020 mm (0.0003 – 0.0008 in)
Limit: 0.05 mm (0.0020 in)

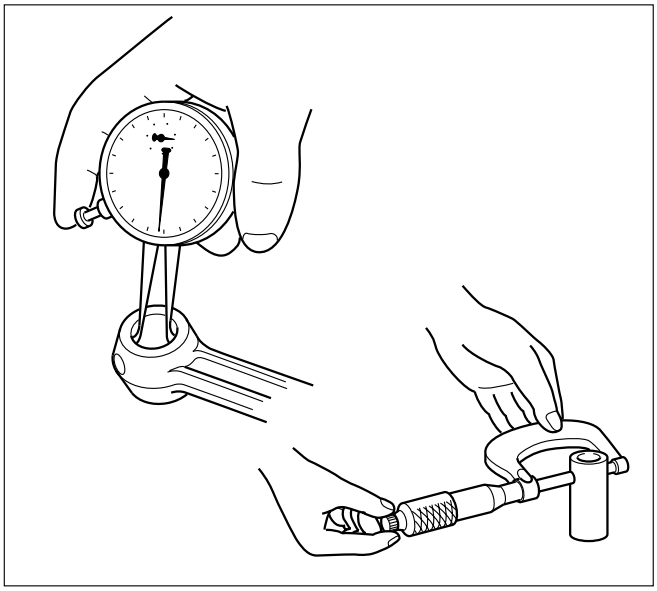

012RW074

3. Insert the piston pin into the piston and rotate it. If the pin rotates smoothly with no backlash, the clearance is normal. If there is backlash or roughness, measure the clearance. If the clearance exceeds the specified limit, the piston and the piston pin must be replaced.

Standard: 0.005 – 0.018 mm (0.0002 – 0.0007 in)
Limit: 0.04 mm (0.0016 in)

Bushing replacement

Removal: Use a suitable bar and bench press or hammer

Installation: Align the bushing with a connecting rod oil port. After installing a new bushing, finish the bushing bore with a pin hole grinder.

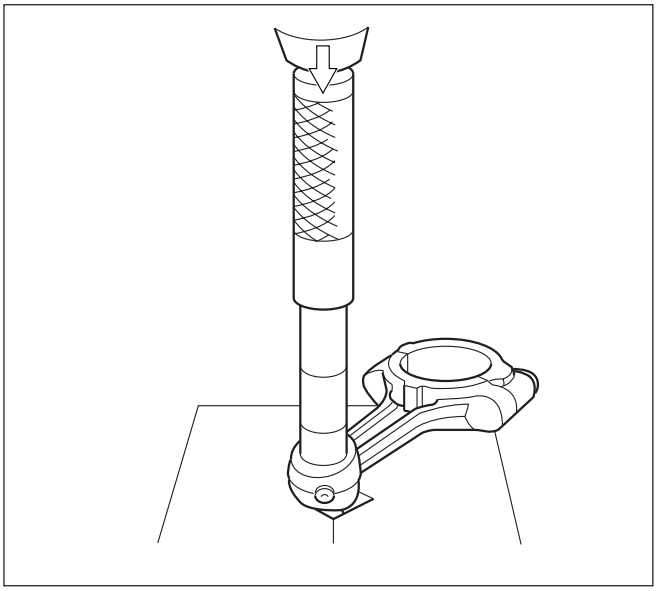

012RW123

Connecting rods

1. Check the connecting rod alignment with a connecting rod aligner.

   If either the bend or the twist exceeds the specified limit, the connecting rod must be replaced.

   Bend per 100 mm (3.937 in)
   Standard: 0.08 mm (0.0031 in) or less
   Limit: 0.20 mm (0.0079 in)

   Twist per 100 mm (3.937 in)
   Standard: 0.05 mm (0.0020 in) or less
   Limit: 0.15 mm (0.0059 in)

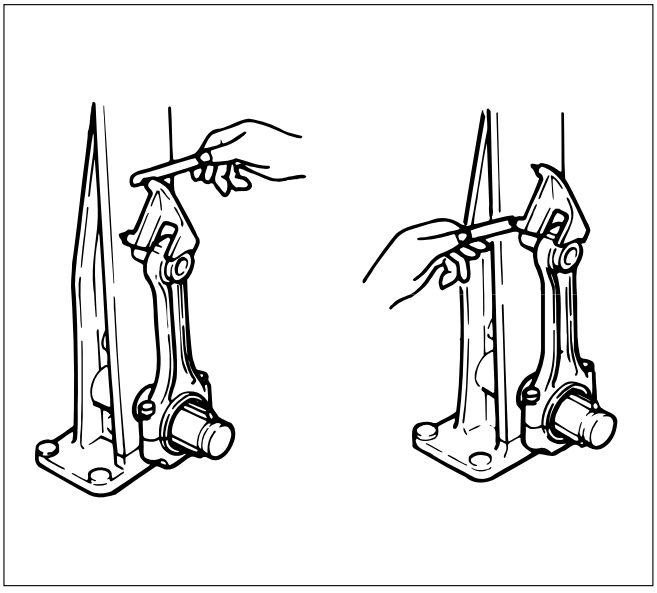

012RW001

2. Measure the connecting rod thrust clearance.

   Use a feeler gauge to measure the thrust clearance at the big end of the connecting rod.

   If the clearance exceeds the specified limit, the connecting rod must be replaced.

   Standard: 0.230 mm (0.0091 in)
   Limit: 0.350 mm (0.0138 in)

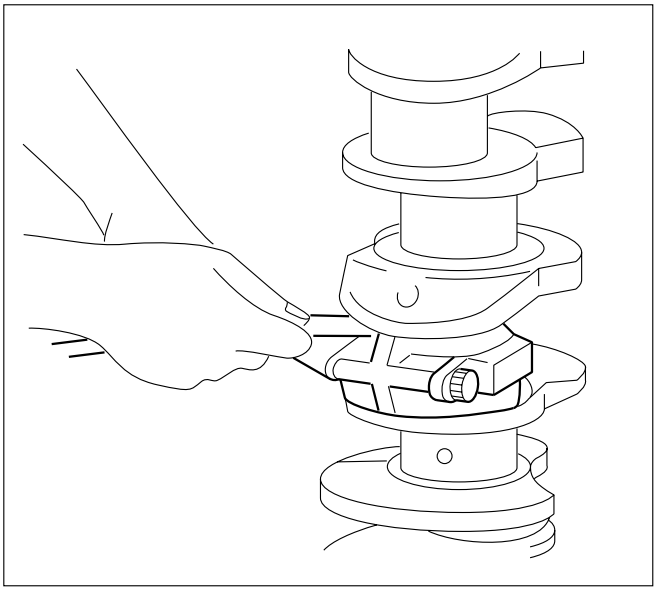

012RW075

3. Measure the oil clearance between the connecting rod and the crankshaft.
   1) Remove the connecting rod cap nuts and the rod caps.

      Arrange the removed rod caps in the cylinder number order.
   2) Clean the rod bearings and the crankshaft pins.
   3) Carefully check the rod bearings.

      If even one bearing is found to be damaged or badly worn, the entire bearing assembly must be replaced as a set. Reinstall the bearings in their original positions.

      Apply plastigage to the crank pin.

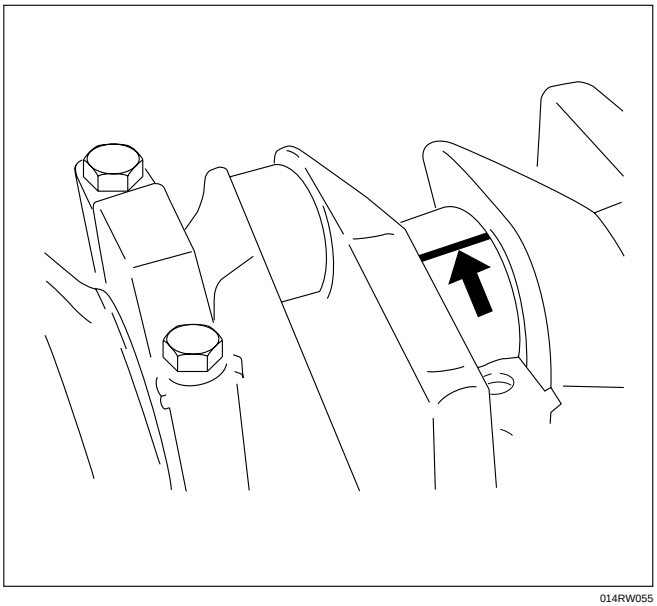

014RW055

   4) Reinstall the rod caps to their original positions.
   5) Tighten the cap nuts in 2 steps, using angular tightening method as shown in the following specifications.

1st step: 29 N·m (3.0 kg·m/22 lb ft)
2nd step: 45°– 60°

NOTE: Do not allow the crankshaft to rotate

   6) Remove the rod caps.
   7) Measure the smallest width of the plastigage and determine the oil clearance. If the oil clearance exceeds the limit, replace the rod bearings as a set.
   8) Clean the plastigage from the bearings and the crankshaft pins

Standard: 0.022 – 0.042 mm (0.0009 – 0.0017 in)
Limit: 0.100 mm (0.0039 in)

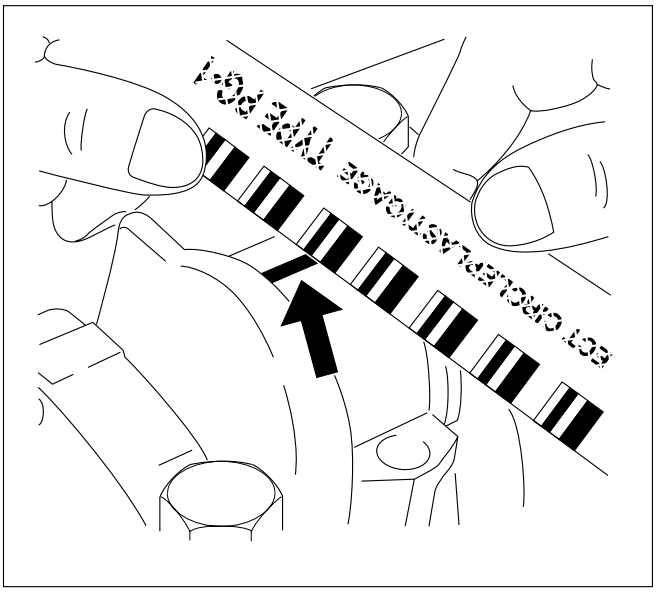

014RW077

REASSEMBLY

1. Connecting Rod
2. Piston
3. Piston Pin
   1) Apply a coat of engine oil to the piston pin and the piston pin hole.
4. Piston Pin Snap Ring
   1) Try to insert the piston pin into the piston pin hole with normal finger pressure.
   2) Weight each piston and connecting rod assembly.
   3) Select piston and connecting rod combinations so that the weight variation of the different four assemblies is held within the specified limits.

Variance in weight after assembly: Less than 3g (0.1058 oz)

NOTE: When changing piston/connecting rod combinations, do not change the piston/piston pin combination.

   4) Attach the piston to the connecting rod with the piston front mark (2) and the connecting rod front mark (3) on the same side.

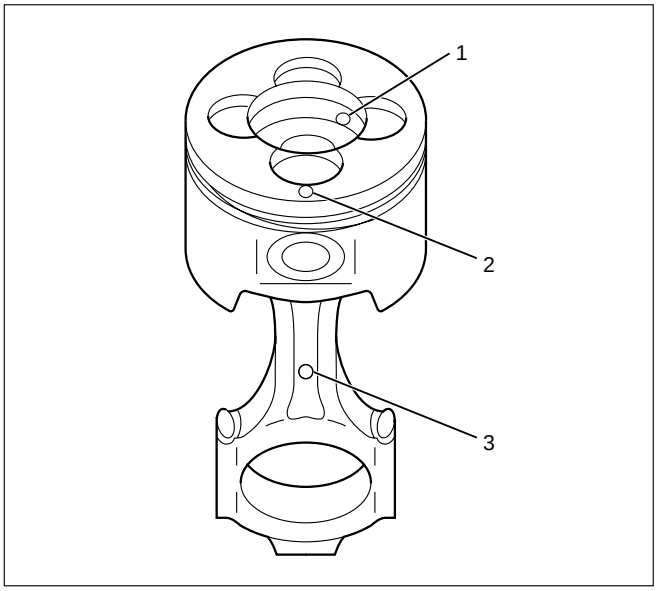

015RW051

5. Piston Ring
   1) Install the piston rings with the piston ring expander.
      The compression ring must be set with the 1N, 2N mark facing up.
   2) Discerning mark is stamped as shown in the illustration (1).

Marked 1N: 1st compression ring

Marked 2N: 2nd compression ring

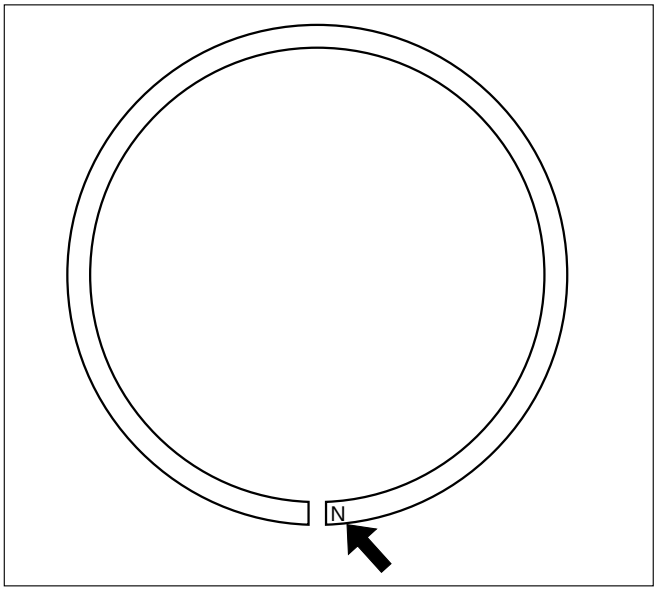

012RW037

   3) Install piston rings in the following sequence.

1) Oil ring
   (1) After installing the expander ring then assemble the oil ring.
2) 2nd compression ring
3) 1st compression ring
   1) The compression ring must be set with the 1N or 2N mark facing up.
   2) 1st compression ring:1N
   3) 2nd compression ring: 2N
   4) After installation, apply engine oil to the entire circumference of the piston rings.
      Check to see that all the rings rotate smoothly.

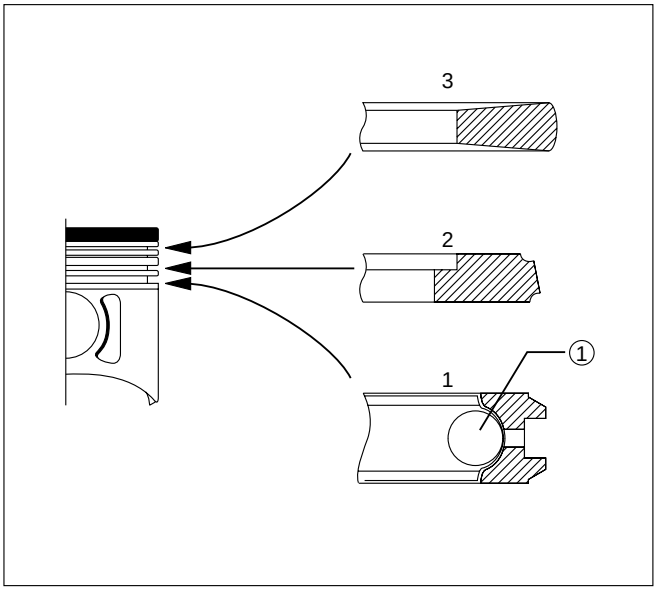

012RW058

   5) Insert the bearings into the connecting rods and caps.
      Apply new engine oil to the bearing faces.
      Cap side bearings have no oil hole.
      Connecting rod side bearing's oil hole should be aligned with oil hole on the connecting rod.

6. Piston and Connecting Rod
   1) Apply engine oil to the cylinder bores, the connecting rod bearings and the crankshaft pins.
   2) Check to see that the piston ring end gaps are correctly positioned.

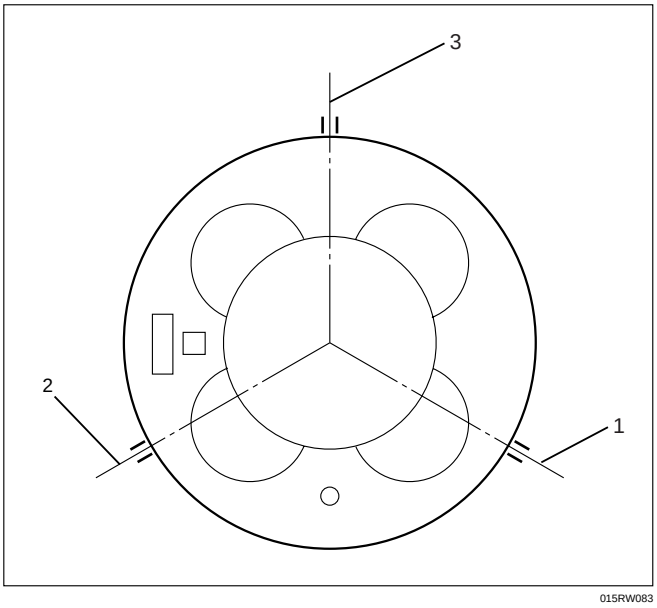

Legend
(1) 1st compressor ring gap
(2) 2nd compressor ring gap
(3) Oil ring gap

3) Insert the piston/connecting rod assemblies into each cylinder with the piston ring compressor.
4) The front marks must be facing the front of the engine.

Piston Ring Compressor : 5-8840-9018-0

7. Connecting Rod Bearing Cap
   1) Apply engine oil to thread and seat of bearing cap bolts.
   2) Tighten the cap bolts in 2 steps, using angular tightening method as shown in the following specifications.

1st step: 29 N·m (3.0 kg·m/22 lb ft)
2nd step: 45°– 60°

After tightening the cap bolts, check to see that the crankshaft rotates smoothly.

8. Crank Case Assembly
   1) Refer to “Crank Case” in this manual.
9. Cylinder Head Assembly
   1) Refer to “Cylinder head” in this manual.

CYLINDER BLOCK

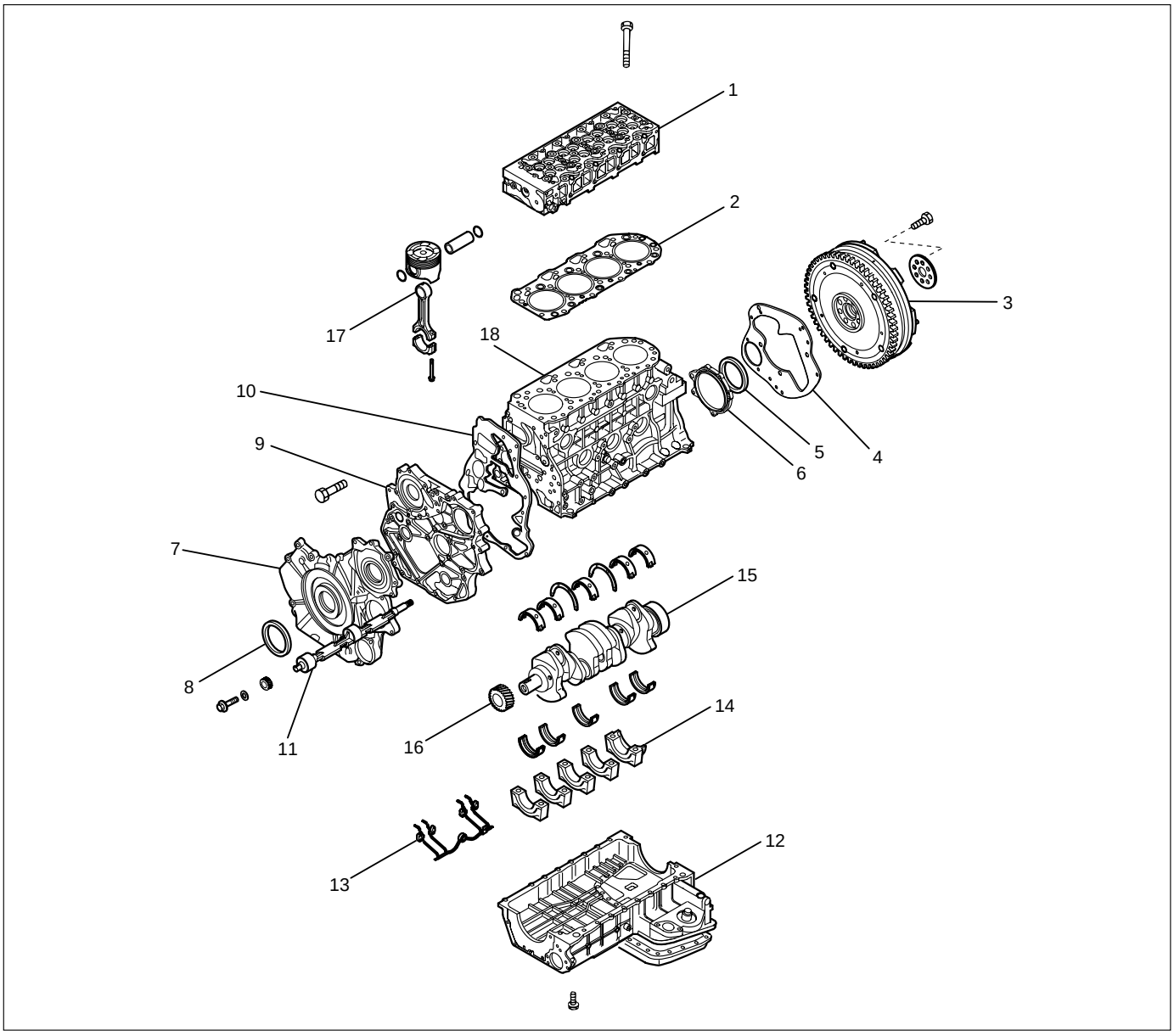

012RW023

Legend

(1) Cylinder Head
(2) Cylinder Head Gasket
(3) Flywheel
(4) Cylinder Block Rear Plate (A/T)
Flywheel Housing (M/T)
(5) Crankshaft Rear Oil Seal
(6) Retainer
(7) Timing Gear Case Cover
(8) Crankshaft Front Oil Seal
(9) Timing Gear Case
(10) Gasket
(11) Balance Shaft
(12) Crank Case
(13) Piston Cooling Oil Pipe
(14) Main Bearing Cap
(15) Crankshaft
(16) Crankshaft Timing Gear
(17) Piston and Connecting Rod Assembly
(18) Cylinder Block

DISASSEMBLY

1. Cylinder Head Assembly
   Refer to “Cylinder Head” in this manual.
2. Cylinder Head Gasket.
3. Flywheel
4. Cylinder Block Rear Plate (A/T), or Flywheel housing (M/T).
5. Crankshaft Rear Oil Seal.
   Install the special tool as shown in the illustration and remove the oil seal.
   Oil Seal Remover: 5-8840-2360-0

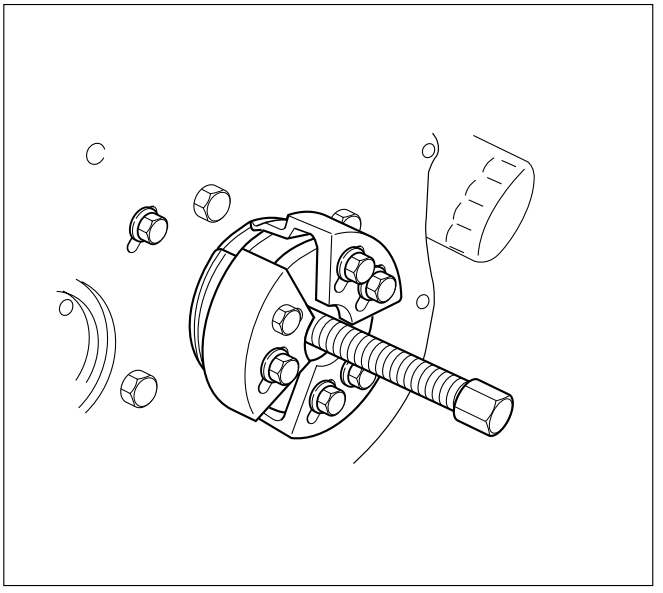

015RV002

6. Retainer
7. Timing Gear Case Cover
8. Crankshaft Front Oil Seal
   1) Use a plastic hammer and a screwdriver to tap around the oil seal to free it from the gear case cover.
9. Timing Gears
   Refer to “Timing Gear” in this manual.
10. Timing gear case
11. Gasket
12. Balance shaft (right)
13. Crank case assembly
14. Piston cooling oil pipe
15. Piston assembly
16. Main bearing cap
17. Crankshaft assembly
18. Cylinder block side cover right and left
19. Cylinder block

INSPECTION AND REPAIR

Make the necessary adjustments, repairs, and part replacements if excessive wear or damage is discovered during inspection.

1. Remove the cylinder head gasket and any other material adhering to the upper surface of the cylinder block.
   Be very careful not to allow any material to accidentally drop into the cylinder block.
   Be very careful not to scratch the cylinder block.
2. Carefully remove liquid gasket, which was used when assembled, from gear case, rear oil seal retainer and crank case.
3. Wipe the cylinder block clean and visually check it.
4. Use a straight edge and a feeler gauge to measure the four sides and the two diagonals of the cylinder block upper face.
   If the measured values exceed the limit, the cylinder block must be replaced.

Limit: 0.20 mm (0.0079 in)

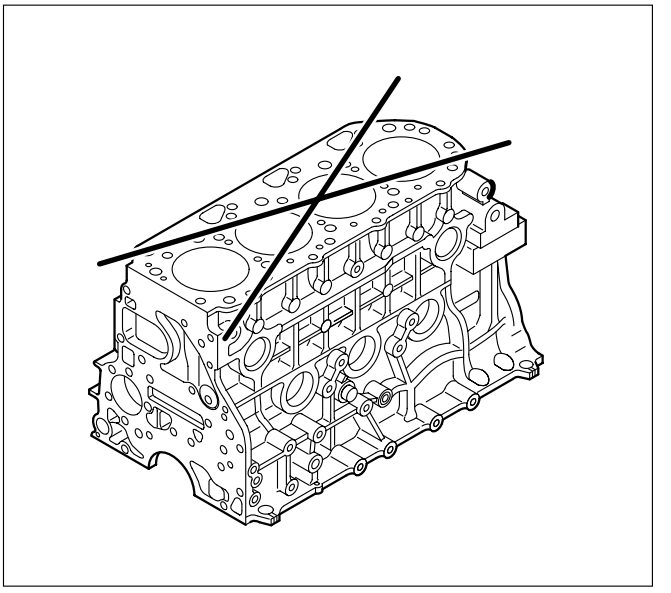

012RW122

Cylinder Bore Measurement

1. Use a cylinder gauge to measure the cylinder bore measuring direction for thrust and radial at measuring points.

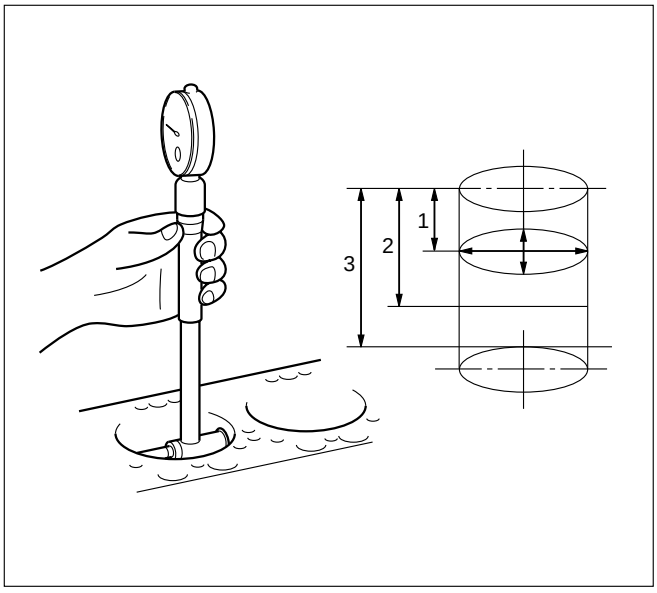

012RW117

Legend

Measuring Point 1; 20 mm
2; 90 mm
3; 160 mm

2. Select the right piston grade by the averaged cylinder bore measurement (maximum and minimum value eliminated).

Cylinder bore diameter mm(in)

Grade mark	Standard
A	95.421 – 95.430 (3.7567 – 3.7571)
B	95.431 – 95.440 (3.7571 – 3.7575)
C	95.441 – 95.450 (3.7575 – 3.7579)

3. If measured values exceed the limit, replace or adjust the cylinder block honing or boring.

Limit 95.950 mm (3.7776 in)

4. Boring of the cylinder bore is allowed until it is 0.5 mm (0.0197 in) diameter and oversized piston is available as a service part.

Boring Cylinder Block

1. Use an oversized piston on the basis of above mentioned cylinder using the largest inside diameter.
2. Measure the piston outside diameter at right angles with piston pin at a piston grade measuring point 69.75 mm (2.7461 in) from piston top surface and calculate a inside diameter for cylinder boring.
3. Calculation of cylinder bore boring.

   D + C – H (mm)

   D; Outside diameter piston (mm)

   C; Clearance between Cylinder bore and piston 0.092 – 0.110 mm (0.0036 – 0.0043 in)

   H; Honing allowance Less than 0.03 mm (0.0012 in)

   The oversize pistons are available three grades.
4. Honing the cylinder bore after boring.
5. Measure cylinder bore after honing.

   Difference between each cylinder bore

Less than 0.02 mm (0.0008 in)

Cylinder bore and piston grade (After boring) mm(in)

Grade Mark	Oversize Piston	Bore
	Outside Diameter	Diameter
A	95.820 – 95.829 (3.7724 – 3.7728)	95.921 – 95.930 (3.7764 – 3.7768)
B	95.830 – 95.839 (3.7728 – 3.7732)	95.931 – 95.940 (3.7768 – 3.7772)
C	95.840 – 95.849 (3.7732 – 3.7736)	95.941 – 95.950 (3.7772 – 3.7776)

REASSEMBLY

1. Cylinder Block
2. Piston Cooling Oil Pipe
   1) Fix the cooling jet pipes with knock pins on the cylinder block.
   2) Install the oil pipe for piston cooling in the cylinder block, tightening a relief valve (1) and four joint bolts (2) to the specified torque.

      If oil jet pipe is forcibly assembled, the end of oil jet may bend. It could make it impossible to supply oil to the piston cooling hole, sometimes causing piston seizure.

      Sufficient care should be taken to pipe assembly work.

Oil pipe fixing bolts

M8: 20 N·m (2.0 kg·m/14 lb ft)
M6: 8 N·m (0.8 kg·m/69 lb in)

Relief valve fixing bolts : 30 N·m (3.1 kg·m/22 lb ft)

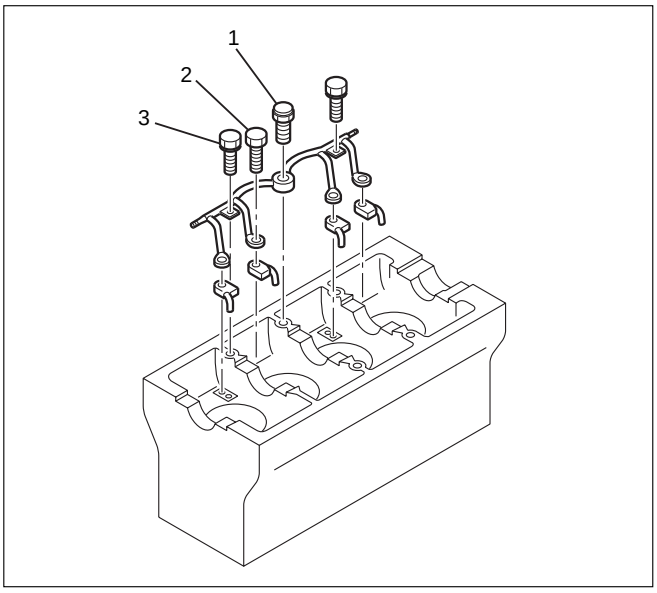

012RW076

CAUTION: After installing the piston assembly, check and see that there is appropriate clearance between pistons and oil jet pipes by rotating crankshaft slowly.

3. Crankshaft
   1) Install the main bearings to the cylinder body and the main bearing caps.
   2) Be sure that they are positioned correctly.
   3) Apply new engine oil to the upper and lower main bearing faces.
   4) Carefully mount the crankshaft.

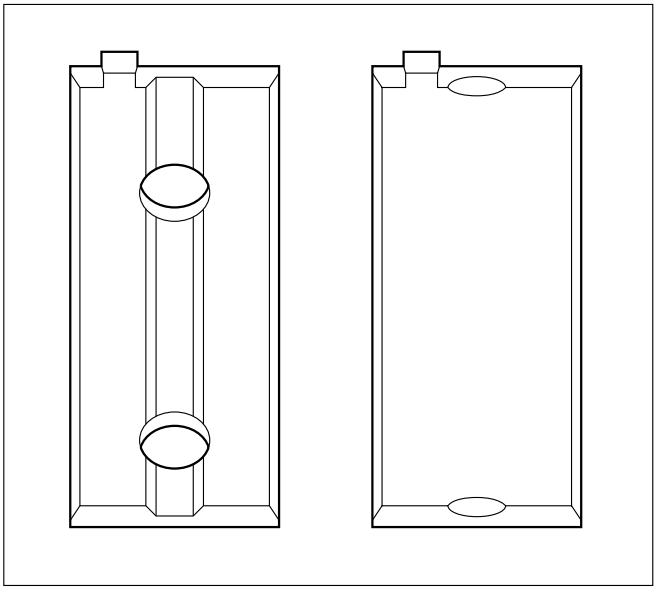

012RW038

   5) Apply engine oil to the thrust washer.
   6) Assemble the thrust washer to the No. 3 bearing journal. The oil grooves must face the crankshaft.

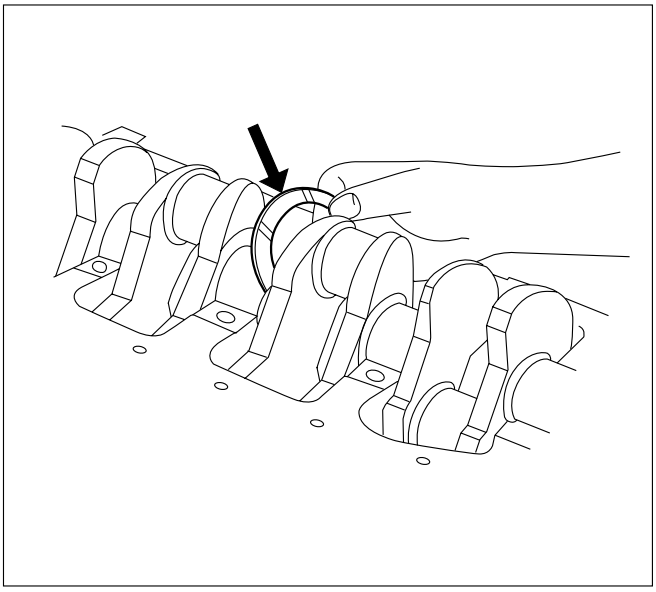

012RW047

4. Main Bearing Cap Assembly
   1) Install the main bearing caps with the main bearing cap head arrow mark facing the front of the engine.

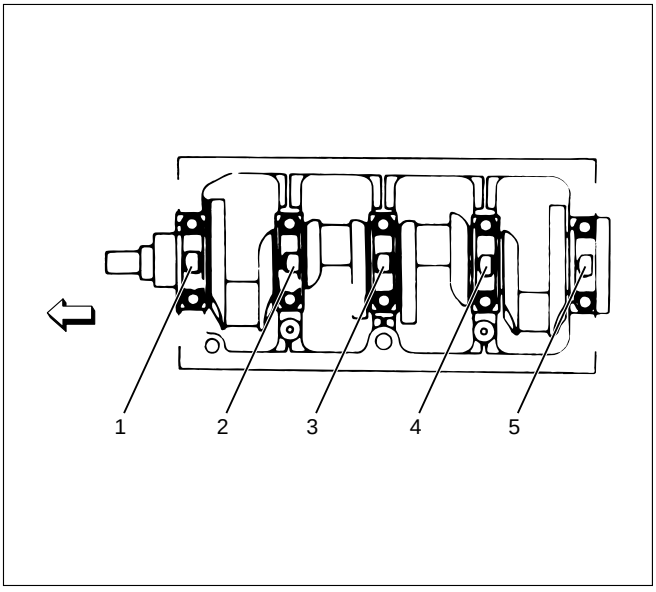

012RW025

   2) Apply engine oil to the main bearing cap bolts.
   3) Tighten the main bearing cap bolts to the specified torque a little at a time in the sequence shown in the illustration.

Torque: 167 N·m (17.0 kg·m/123 lb ft)

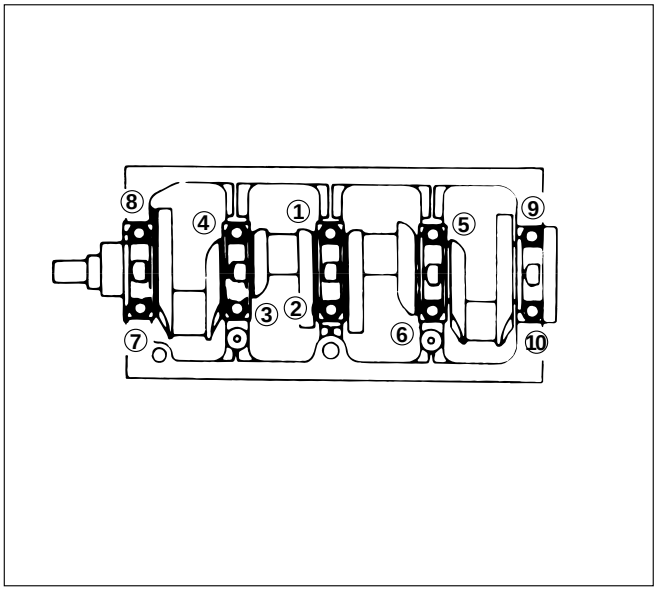

012RW027

NOTE: Check to see that the crankshaft turns smoothly by rotating it manually.

4. Piston Assembly
   1) Refer to “Piston and connecting rod” in this manual.
5. Cylinder Block Side Cover Right and Left
6. Balance Shaft Right.
   Apply new engine oil to the balance shaft (right) and insert it into cylinder block.
7. Timing Gear Case
   1) Cut out the liquid gasket forced out from between the contact surface of cylinder block and crankshaft.

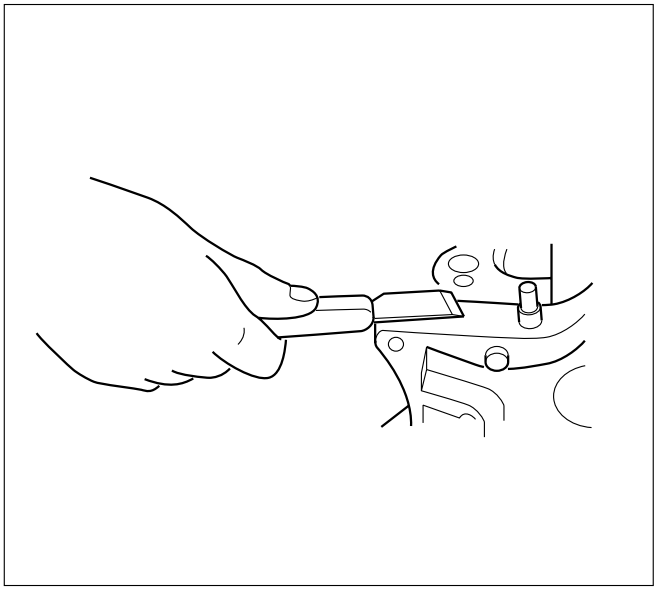

012RW064

   2) Apply liquid gasket (TB1207B or equivalent) to the fitting surface of the cylinder block and crankcase.
   3) Install timing gear case with gasket to cylinder block and tighten to specified torque.

Torque: 20 N·m (2.0 kg·m/14 lb ft)

8. Crankshaft Gear
   Force key into crankshaft and force in crankshaft gear along the key groove using a special tool (1) with the crank gear (2) timing mark facing outside.

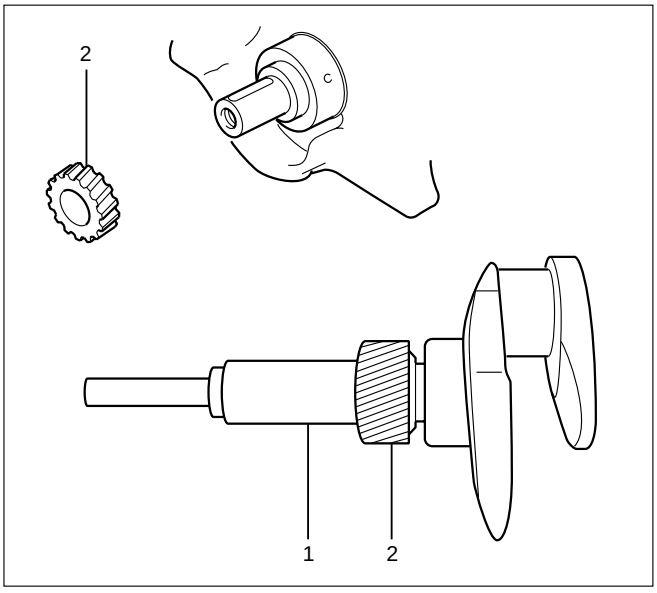

012RW066

9. Install timing gear align the timing mark on each timing gear.
   For alignment of timing marks refer to “Timing Gear” in this manual.

NOTE: Remove the locking bolt or pin from idle gear A and idle gear C.

10. Assembling the gear case cover.
    1) Install the oil seal on the oil pump assembly before installing the gear case cover.
    2) Apply liquid gasket to timing gear case.

NOTE: Be sure to apply liquid gasket evenly.

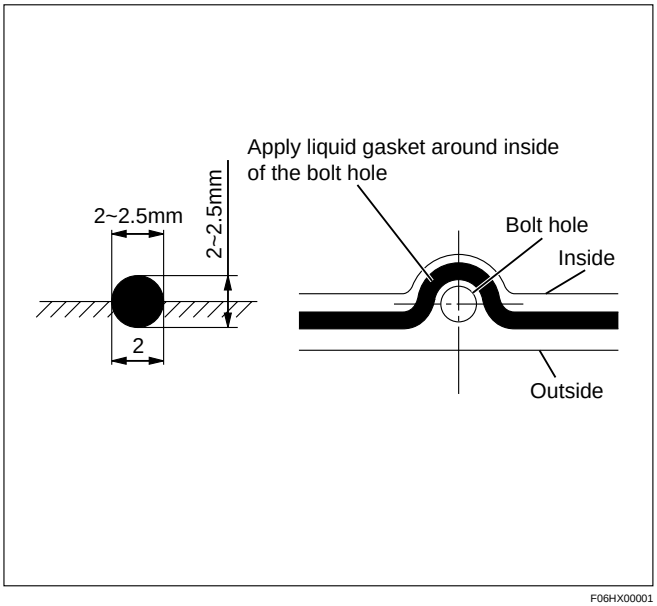

F06HX00001

11. Use the special tool to install the crankshaft front oil seal to timing gear case.
    Front Oil Seal Installer: 5-8840-2061-0

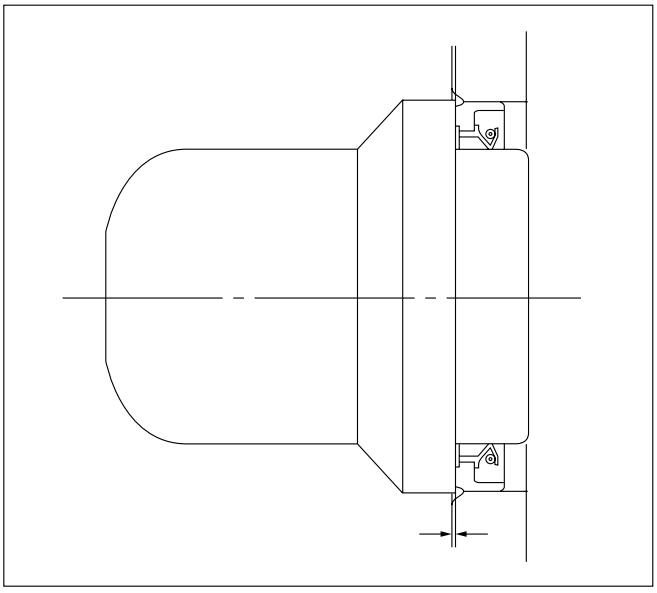

015RW074

1) Check fit-of the oil seal and gear case cover at the front end.

Standard: 0.5 – 2.5 mm (0.0197 – 0.0984 in)

NOTE: Apply engine oil to oil seal lip before installation of the seal.

12. Install the oil pan assembly to original position and tighten to specified torque.

Torque: 22 N·m (2.2 kg·m/16 lb ft)

13. Crankshaft Rear Oil Seal
    1) Tighten the adapter to the crankshaft rear end with 2 bolts.
    2) Insert the oil seal into the adapter.

NOTE: Apply oil to oil seal lip.

    3) Insert the sleeve into the adapter and tighten it with a bolt (M12 x 1.75L = 70) until the adapter hits the sleeve.
    4) Remove the adapter and the sleeve.
    5) With the seal pressed in, check the dimension of the oil seal outside end and crankshaft end.

Standard Dimension = 12.5 ± 0.3 mm

Oil Seal Installer: 5-8840-2359-0

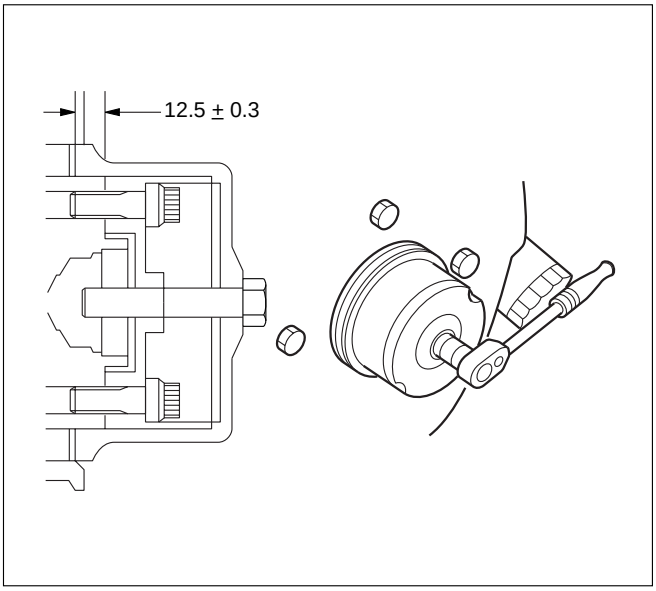

012RW067

14. Cylinder Block Rear Plate (A/T Model)
    1) Tighten the cylinder block rear plate fixing bolts to the specified torque.

Torque: 97 N·m (9.9 kg·m/72 lb ft)

15. Flywheel Housing (M/T Model)
    1) Install flywheel housing aligned with the dowel pin on the cylinder block.
    2) Tighten the flywheel housing fixing bolts to the specified torque.

Torque: 97 N·m (9.9 kg·m/72 lb ft)

16. Flywheel
    1) Refer to “Crankshaft” in this manual.
17. Cylinder Head Assembly
    1) Refer to “Cylinder Head” in this manual.

OIL PUMP ASSEMBLY

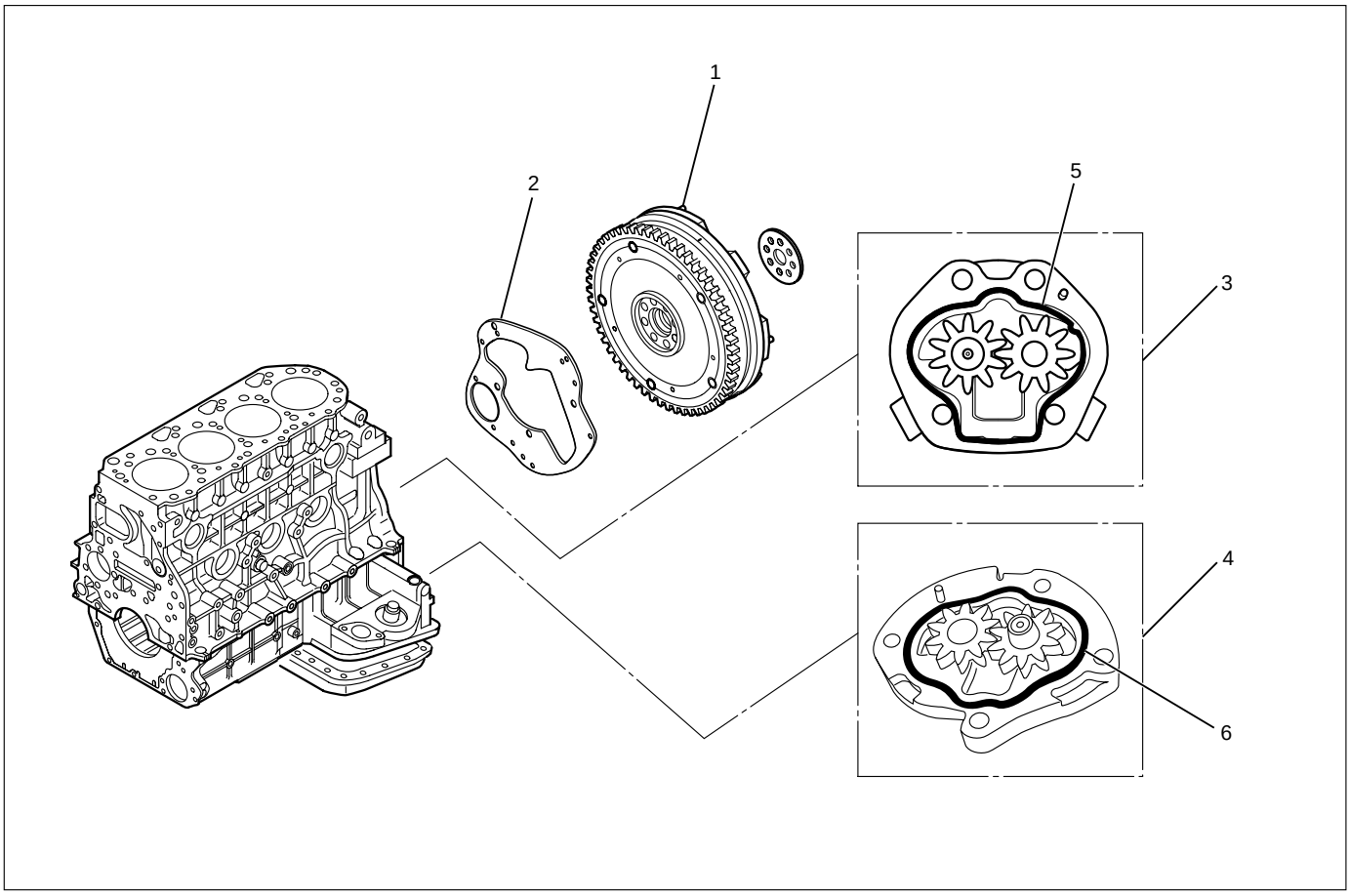

012RW097

Legend

(1) Flywheel
(2) Rear Plate (A/T)
(3) First Oil Pump Assembly
(4) Second Oil Pump Assembly
(5) O-Ring (For first oil pump)
(6) O-Ring (For second oil pump)

REMOVAL

1. Disconnect battery ground cable
2. Lift up car
3. Drain engine oil

NOTE: Install drain plug with new gasket.

4. Flywheel
5. Rear Plate (A/T) or Flywheel Housing (M/T)
6. First Oil Pump Assembly and Second Oil Pump Assembly
   1) Remove oil pump assembly from cylinder block and crankcase.

INSTALLATION

1. First oil pump assembly
   1) Set O-ring to oil pump.
   2) Install oil pump drive gear to the rear end of the balance shaft RH.
   3) Apply engine oil to pump gear, install pump gear to rear end of cylinder block with specified torque.

Torque: 20 N·m (2.0 kg·m/14 lb ft)

2. Second oil pump assembly
   1) Set O-ring to oil pump.
   2) Install oil pump drive gear to the rear end of the balance shaft LH.
   3) Apply engine oil to pump gear, install pump gear to rear end of crank case with specified torque.

Torque: 20 N·m (2.0 kg·m/14 lb ft)

3. Install rear plate (A/T) or flywheel housing (M/T)

Torque: 97 N·m (9.9 kg·m/72 lb ft)

4. Install flywheel
   1) Apply engine oil to bolt and tighten with angular tightening method.

1st step:	**59 N·m (6.0 kg·m/43 lb ft)**
2nd step:	**60° to 90°**
3rd step:	**60° to 90°**

OIL FILTER CARTRIDGE

REMOVAL

1. Place a receptacle beneath the oil filter to contain the drained oil.
2. Remove the oil filter cartridge using filter wrench.
   Filter wrench : 5-8840-0203-0

INSTALLATION

1, Lightly apply oil to the O-ring of oil filter cartridge.
2. Turn the new oil filter cartridge by hand until the sealing face is fitted against the O-ring.
3. Use the filter wrench to turn the oil filter an additional one and 1/8 turns.
4. Start the engine and check for oil leakage from oil filter.

OIL COOLER

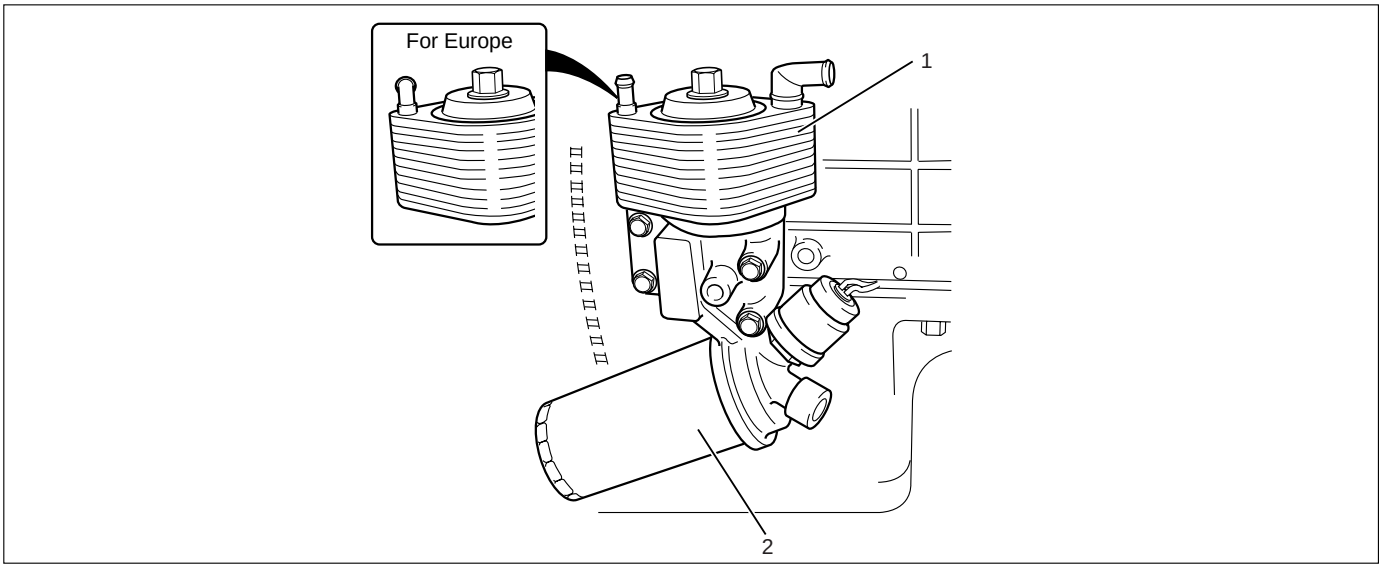

050R200001

Legend
(1) Oil Cooler Assembly
(2) Oil Filter Cartridge

REMOVAL

1. Disconnect battery ground cable
2. Drain engine coolant
3. Remove front exhaust pipe
4. Remove heat protector
5. Remove exhaust valve assembly
6. Oil cooler assembly
   1) Remove water hoses from inlet and outlet pipe.
   2) Put rag beneath side of oil cooler to prevent oil leaking.
   3) Remove fixing bolts and oil cooler assembly.

INSTALLATION

1. Oil Cooler
   1) Tighten oil cooler fixing bolt to the specified torque and connect water hose.

Torque: 29 N·m (3.0 kg·m/22 lb ft)

2. Exh. Valve Assembly
   1) Install exhaust valve assembly with gasket and tighten fixing bolts to the specified torque.

Torque: 57 N·m (5.8 kg·m/42 lb ft)

3. Heat Protector
4. Front Exhaust Pipe
   1) Install front exhaust pipe and tighten fixing bolts to the specified torque.

Exh. Valve Side: 67 N·m (6.8 kg·m/49 lb ft)
Intermediate Pipe Side: 43 N·m (4.4 kg·m/32 lb ft)

5. Fill engine coolant.
6. Connect battery ground cable.
7. Start engine and check for oil and water leakage carefully.

ENGINE COOLING

CONTENTS

General Description 6B–2
On-Vehicle Service 6B–6
Water Pump 6B–6
Thermostat 6B–7
Radiator 6B–9
Drive Belt Adjustment 6B–11

GENERAL DESCRIPTION

COOLANT FLOW

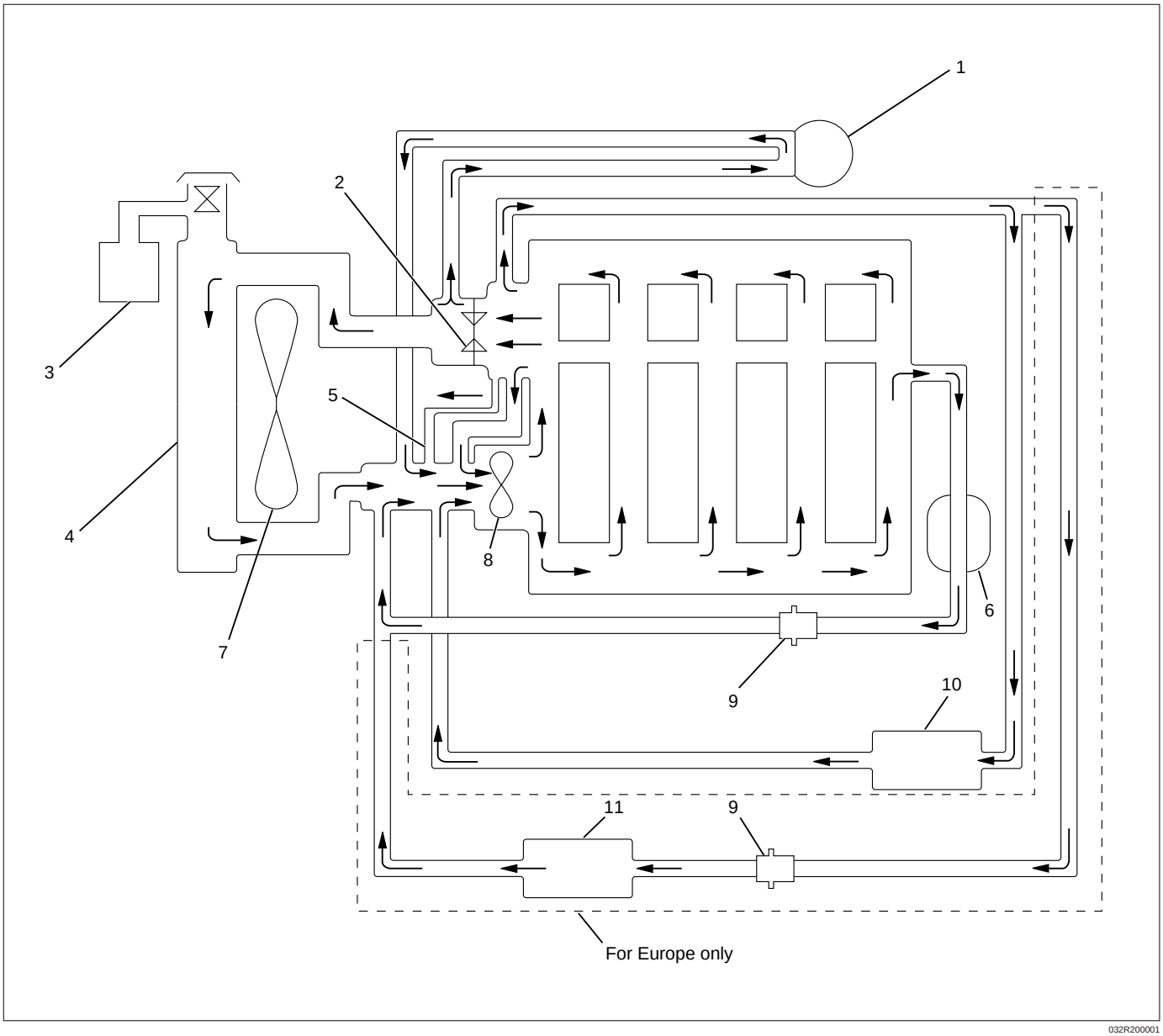

032R200001

Legend

(1) Turbocharger
(2) Thermostat
(3) Reservoir Tank
(4) Radiator
(5) Bypass
(6) Oil Cooler
(7) Cooling fan
(8) Water Pump
(9) Thermo Valve
(10) Car Heater
(11) EGR Cooler

The cooling system is a pressurized coolant forced circulation type which consists of water pump, thermostat, cooling fan, radiator and other components.

The circulating coolant cools the lubricating oil in the oil cooler and turbocharger.

WATER PUMP

The coolant pump is a centrifugal impeller type and is driven by V type drive belt.

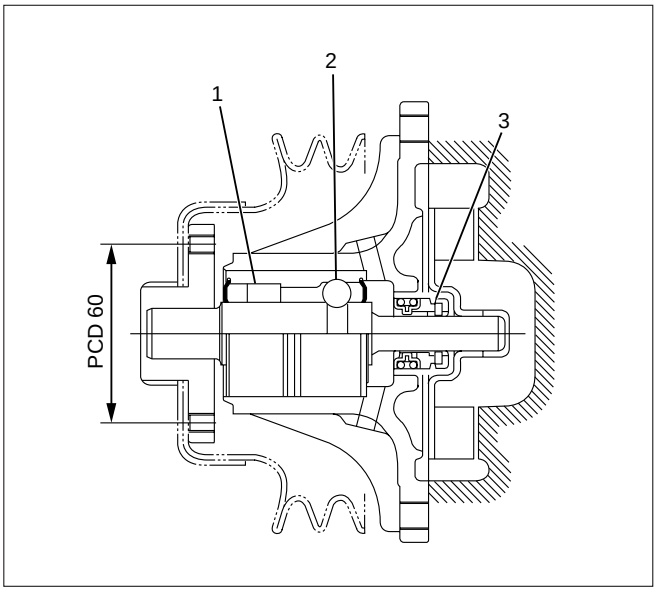

A06RW024

Legend
(1) Roller Bearing
(2) Ball Bearing
(3) Seal Unit

THERMOSTAT

The thermostat is a wax pellet type with a jiggle valve and is installed in the thermostat housing.

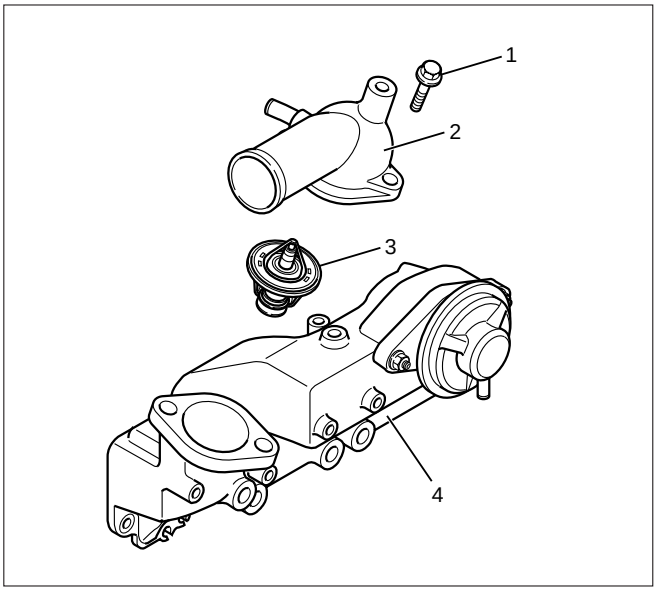

032RW002

Legend
(1) Bolt
(2) Thermostat Housing
(3) Thermostat
(4) Intake Manifold

RADIATOR

The radiator is a tube type with corrugated fins. In order to raise the boiling point of coolant, the radiator is fitted with a cap in which the valve is operated under the pressure.

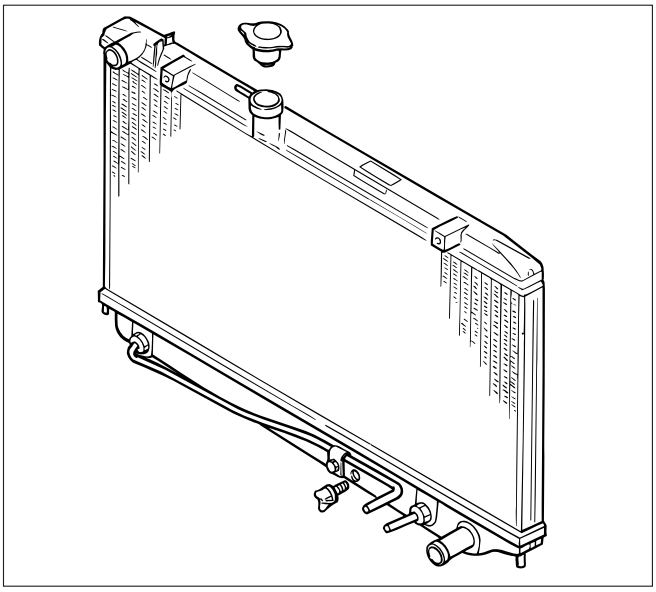

110RS001

ANTI-FREEZE SOLUTION

- Relation between Mixing ratio and Freezing point

  Freezing temperature of the engine coolant varies with the ratio of anti-freeze solution in water.

  Proper mixing ratio can be determined by refering to the chart. Supplemental inhibitors or additives claiming to increase cooling capability that have not been specifically approved by Isuzu are not recommended for addition to the cooling system.

- Calculation of mixing ratio

  Mixing ratio (%)

$$= \frac{\text{Anti-freeze solution (Lit/qt.)}}{\text{Anti-freeze solution (Lit/qt.) + Water (Lit/qt.)}} \times 100$$

  For example

  In case total coolant capacity = 10 ℓ

  It is necessary to mix about 35% anti-freeze solution at ambient temperature minus 20°C.

  Capacity of anti-freeze solution:

$$\frac{35}{100} \times 10 = 3.5\ \ell$$

  Water capacity: 10 ℓ – 3.5 ℓ = 6.5 ℓ

  Therefore, you prepare the water 6.5 ℓ and anti-freeze solution 3.5 ℓ, then mix them to get total 10 ℓ coolant.

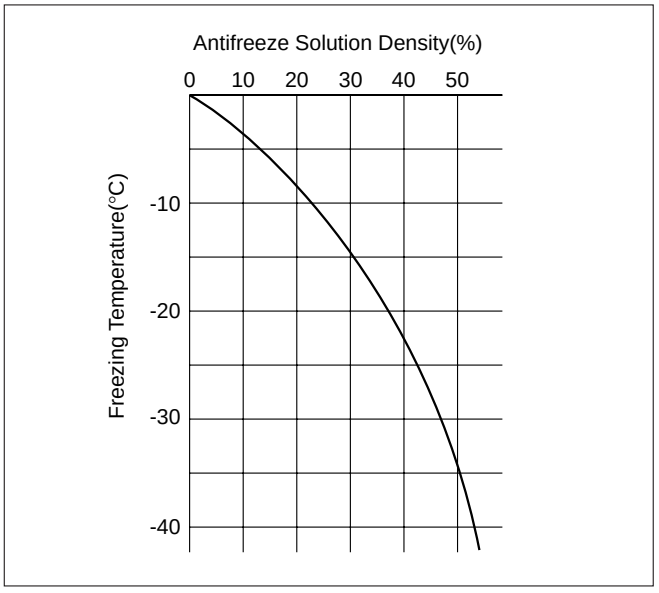

B06RW018

- Mixing ratio

  Check the specific gravity of engine coolant in the cooling system in temperature ranges from 0° C to 50° C using a suction type hydrometer, then determine the density of the coolant by referring to the table at below.

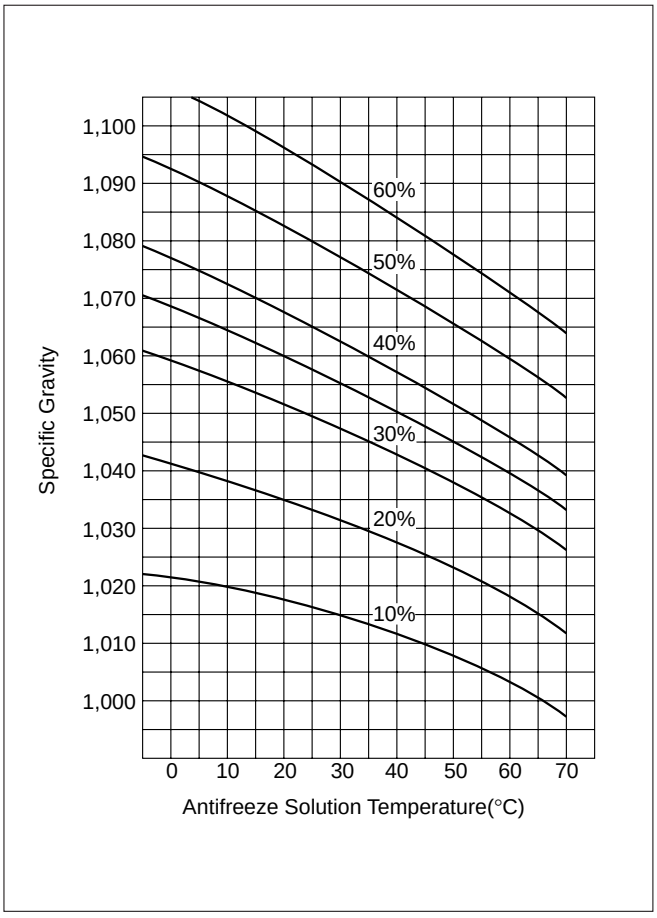

B06RW017

ENGINE COOLANT CHANGE PROCEDURE

1. To change engine coolant, make sure that the engine is cool.

WARNING:
When the coolant is heated to a high temperature, be sure not to loosen or remove the radiator cap. Otherwise you might get scalded by hot vapor or boiling water. To open the radiator cap, put a piece of thick cloth on the cap and loosen the cap slowly to reduce the pressure once the coolant has become cooler.

2. Open radiator cap and drain the cooling system by loosening the drain valve on the radiator and on the cylinder body.

NOTE: For best results it is suggested that the engine cooling system be flushed at least once a year. It is advisable to flush the interior of the cooling system including the radiator before using anti-freeze (ethylene-glycol based).
Replace damaged rubber hoses as the engine anti-freeze coolant is liable to leak out even minor cracks.
Isuzu recommends using Isuzu genuine anti-freeze (ethylene-glycol based) or equivalent, for the cooling system and not add any inhibitors or additives.

CAUTION:
A failure to correctly fill the engine cooling system in changing or topping off coolant may sometimes cause the coolant to overflow from the filler neck even before the engine and radiator are completely full.
If the engine runs under this condition, shortage of coolant may possibly result in engine overheating. To avoid such trouble, the following precautions should be taken in filling the system.

3. To refill engine coolant, pour coolant up to filler neck using a filling hose which is smaller in outside diameter than the filler neck. Otherwise air between the filler neck and the filling hose will block entry, preventing the system from completely filling up.
4. Keep a filling rate of 9 liter/min. or less. Filling over this maximum rate may force air inside the engine and radiator.

   And also, the coolant overflow will increase, making it difficult to determine whether or not the system is completely full.
5. After filling the system full, pull out the filling hose and check to see if air trapped in the system is dislodged and the coolant level goes down. Should the coolant level go down, repeat topping-off until there is no more drop in the coolant level.
6. Directly after filling the radiator, fill the reservoir to the maximum level.
7. Install and tighten radiator cap and start the engine. After idling for 2 to 3 minutes, stop the engine and reopen radiator cap. If the water level is lower, replenish.

WARNING:
When the coolant is heated to a high temperature, be sure not to loosen or remove the radiator cap. Otherwise you might get scalded by hot vapor or boiling water. To open the radiator cap, put a piece of thick cloth on the cap and loosen the cap slowly to reduce the pressure once the coolant has become cooler.

8. After tightening radiator cap, warm up the engine at about 2,000 rpm.

   Set heater adjustment to the highest temperature position, and let the coolant circulate also into heater water system.
9. Check to see the thermostat has opened by the needle position of a water thermometer, conduct a 5-minute idle again and stop the engine.
10. When the engine has been cooled, check filler neck for water level and replenish if required. Should extreme shortage of coolant be found, check the coolant system and reservoir tank hose for leakage.
11. Fill the coolant into the reservoir tank up to “MAX” line.

ON-VEHICLE SERVICE

WATER PUMP

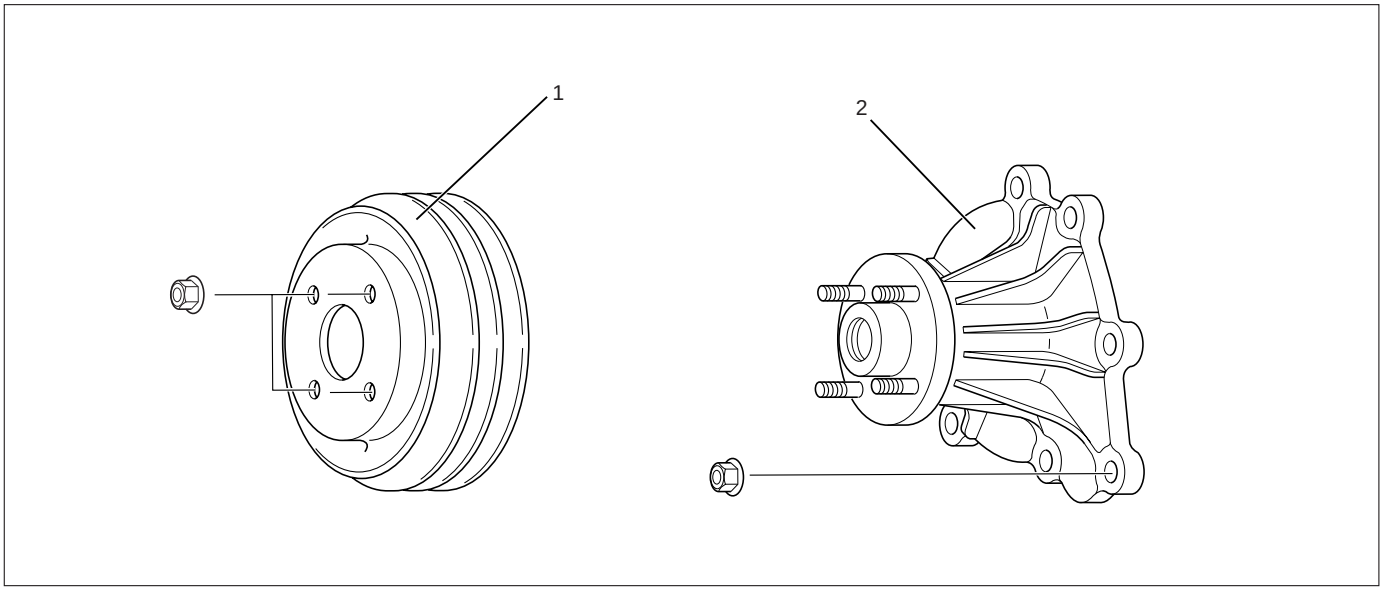

030RW009

Legend
(1) Fan Pulley
(2) Water Pump Assembly

REMOVAL

1. Drain coolant.
2. AC Generator Drive Belt
   1) Loosen AC Generator mounting bolt, adjust plate lock bolt, and remove the drive belt.
3. Cooling Fan Assembly
   1) Remove lock nut and take out cooling fan assembly with cooling fan clutch.
4. Water Pump Assembly

INSPECTION

Make necessary repair and parts replacement if excessive wear or damage is found during inspection. Should any of the following problems occur, the entire water pump assembly must be replaced.

1) Cracks in the water pump body
2) Coolant leakage from the seal unit
3) Excessive play in radial direction or abnormal noise
4) Excessive play in thrust direction
   Limit : 0.2mm (0.008in) or less
5) Cracks or corrosion in the impeller

INSTALLATION

1. Gasket
   1) Set gasket to gear case.
2. Water Pump Assembly
   1) Install water pump assembly, and tighten to specified torque.

Torque: 20 N·m (2.0 kg·m/14 lb ft)

3. Cooling Fan Assembly
   1) Install cooling fan assembly, and tighten to specified torque.

Torque: 8 N·m (0.8 kg·m/5.8 lb ft)

4. AC Generator Drive Belt
   1) Install AC Generator drive belt and adjust belt tension.

Torque: 40 N·m (4.1 kg·m/29.7 lb ft)
For ACG to bracket

20 N·m (2.0 kg·m/14.5 lb ft)
For ACG to adjust plate

5. Fill coolant to specified capacity.

THERMOSTAT

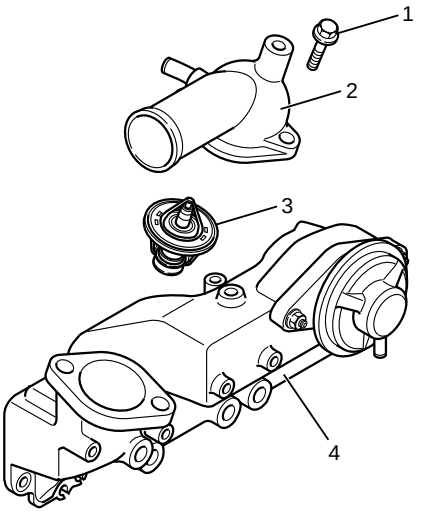

035RW002

Legend

(1) Bolt
(2) Thermostat Housing
(3) Thermostat
(4) Intake Manifold

REMOVAL

1. Disconnect battery ground cable.
2. Drain coolant from the radiator and engine.
3. Thermostat housing
   1) Remove mounting bolt and remove thermostat housing together with radiator hose.
4. Gasket
5. Thermostat

INSPECTION

Make necessary repair and parts replacement if excessive wear or damage is found during inspection.
Submerge the thermostat assembly in the water.
Place wooden blocks on the bottom of the water container.
Do not heat the thermostat directly.
Gradually increase the water temperature. Stir the water so that the entire water is the same temperature.

1) Make sure that valve begins to open at the specified temperature.

Valve Opening Temperature: 85°C (185°F)

2) Make sure that valve opens fully at the specified temperature.

Valve Full Open Temperature: 100°C (212°F)

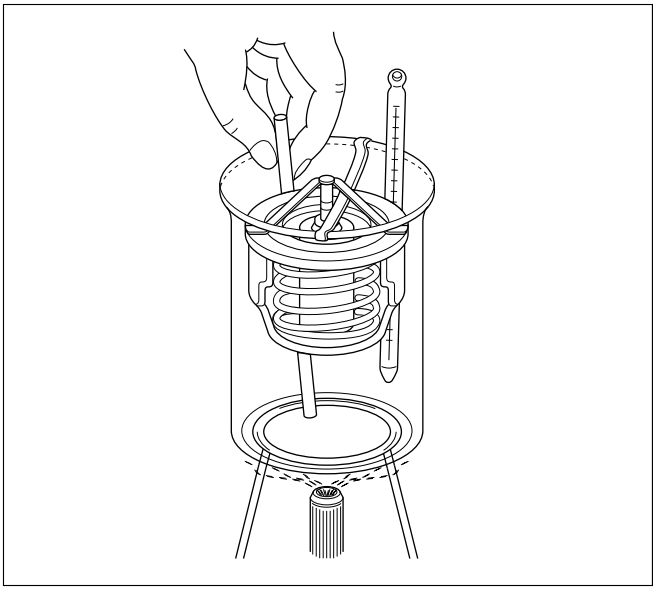

031RS003

INSTALLATION

1. Thermostat
   1) The jiggle valve of the thermostat must face the cylinder head side.
2. Gasket
3. Install thermostat housing and tighten bolt to the specified torque.

Torque: 20 N·m (2.0 kg·m/14 lb ft)

4. Reconnect water hose
   1) Fill coolant to full level.
   2) Reconnect battery ground cable.
5. Start the engine check for coolant leakage.

RADIATOR

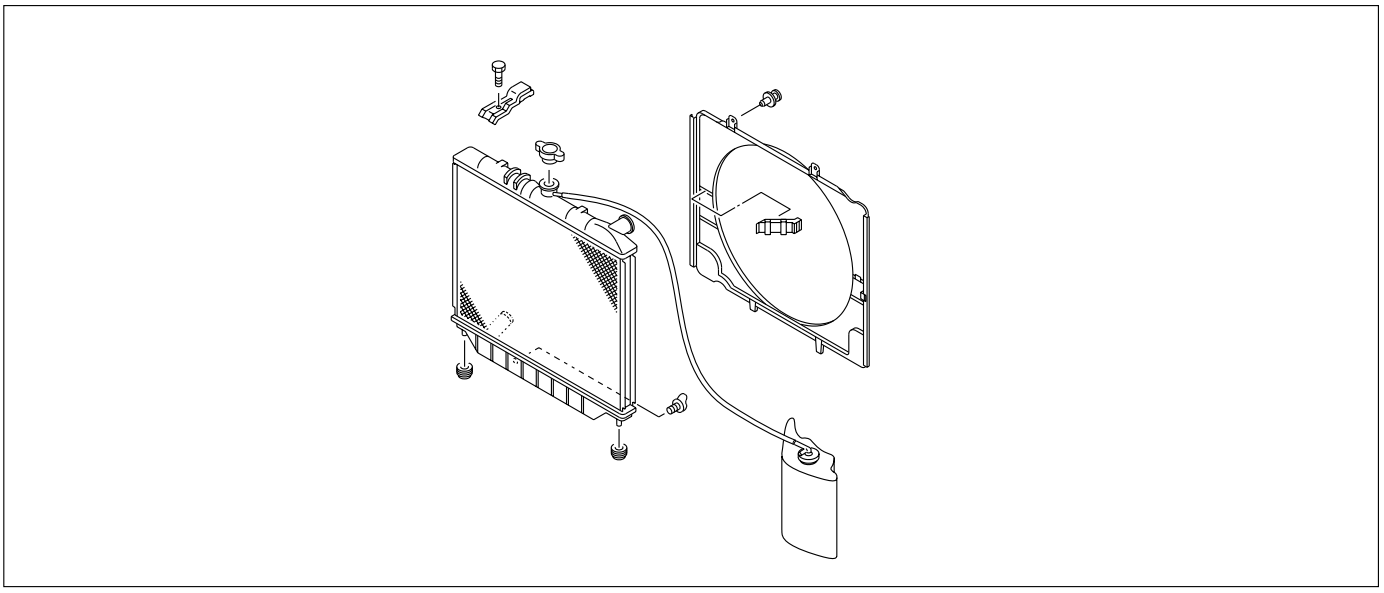

110RW017

REMOVAL

1. Disconnect battery ground cable
2. Loosen drain plug to drain coolant.
3. Radiator Hose
   1) Disconnect lower hose and upper hose from the engine.
4. Fan Guide
   1) Remove clips on both sides and the bottom lock.
5. Reservoir Tank Hose
   1) Disconnect the hose from radiator.
6. Bracket
7. Radiator Assembly
   1) Remove the radiator assembly upward by the hoses taking care not to damage the radiator core by the fan blade.
   2) Remove rubber cushions on both sides of the bottom.

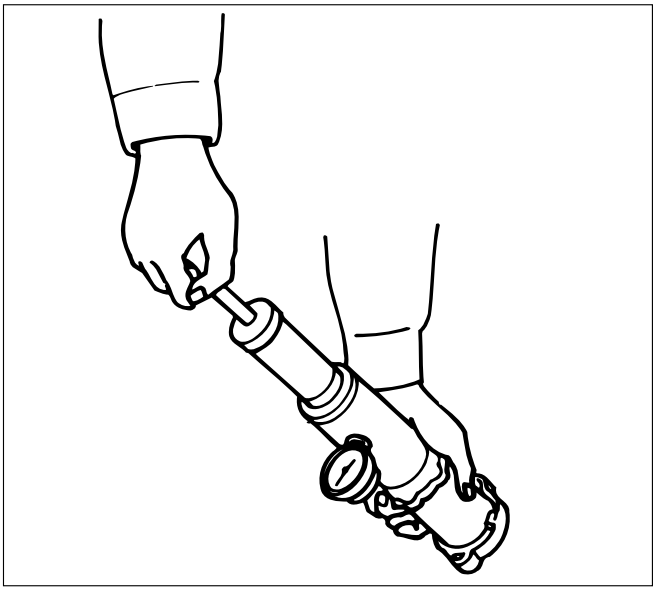

110RS006

INSPECTION

Radiator Cap

1) Measure the valve opening pressure with the radiator cap tester. Replace the radiator cap if it exceeds the standard.

Valve opening pressure: 93.2 – 122.7 kPa (0.95 – 1.25 kg/cm^2 / 13.5 – 17.8 psi)

Check the condition of the negative pressure valve in the center of the valve seat side of the cap. If the valve seat does not move smoothly due to rust or dust, clean and replace the radiator cap.

Radiator Core

1) Deformed radiator fins could reduce radiation effects, resulting in overheating. Straighten the fins. In such a case, take care not to damage the fin roots.
2) Remove dust and other foreign materials.

Flushing the Radiator

1) Wash the inside of radiator and the coolant passage with water and a neutral detergent. Remove all scales and rust.

Checking for Coolant Leakage

1) Check the cooling system for leakage with the radiator cap tester by applying 196.0 kPa (28.4 psi) air pressure from filler neck to inside the radiator.

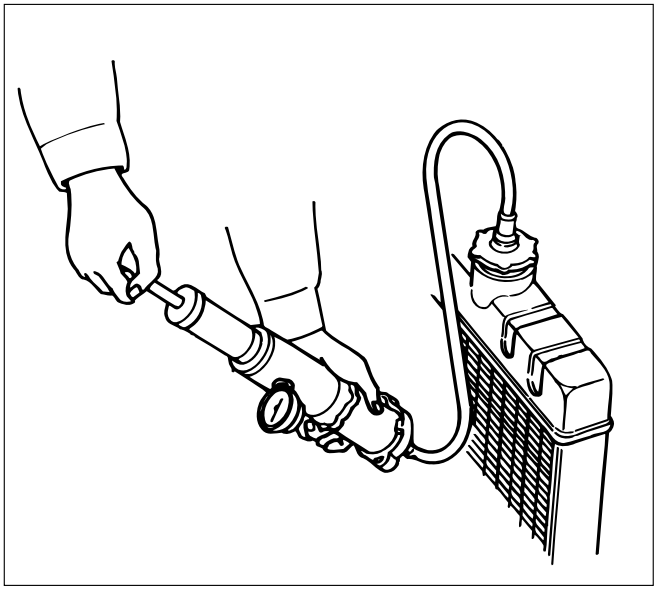

110RS005

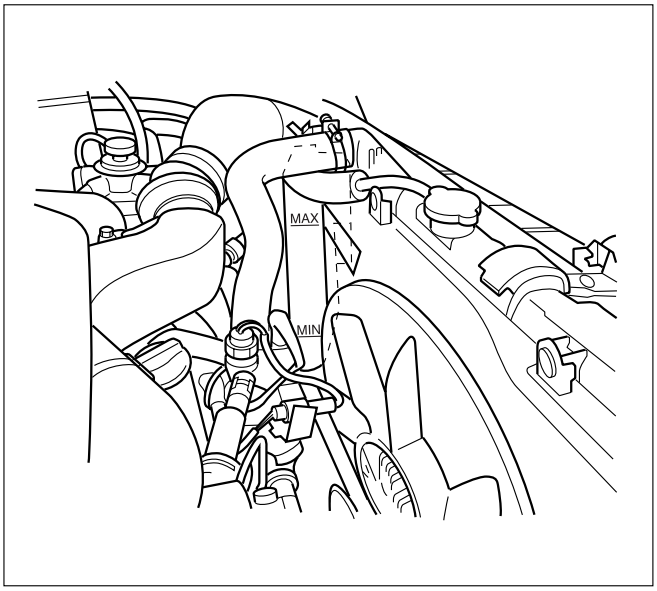

012RW080

INSTALLATION

1. Radiator Assembly
   1) Install rubber cushions on both sides of radiator bottom.
   2) Install radiator assembly with hose, taking care not to damage the radiator core by a fan blade.
2. Bracket
   1) Support the radiator upper tank with the bracket and fix the radiator.
3. Reserve Tank Hose
4. Fan Guide, Lower
5. Radiator Hose
   1) Connect inlet hose and outlet hose to the engine.
   2) Connect battery ground cable.
   3) Pour coolant up to filler neck of radiator, and up to MAX mark of reserve tank.
   4) Start engine to warm up, and check for coolant level. Replenish coolant if it does not reach the radiator filler neck, and tighten the cap completely.

DRIVE BELT ADJUSTMENT

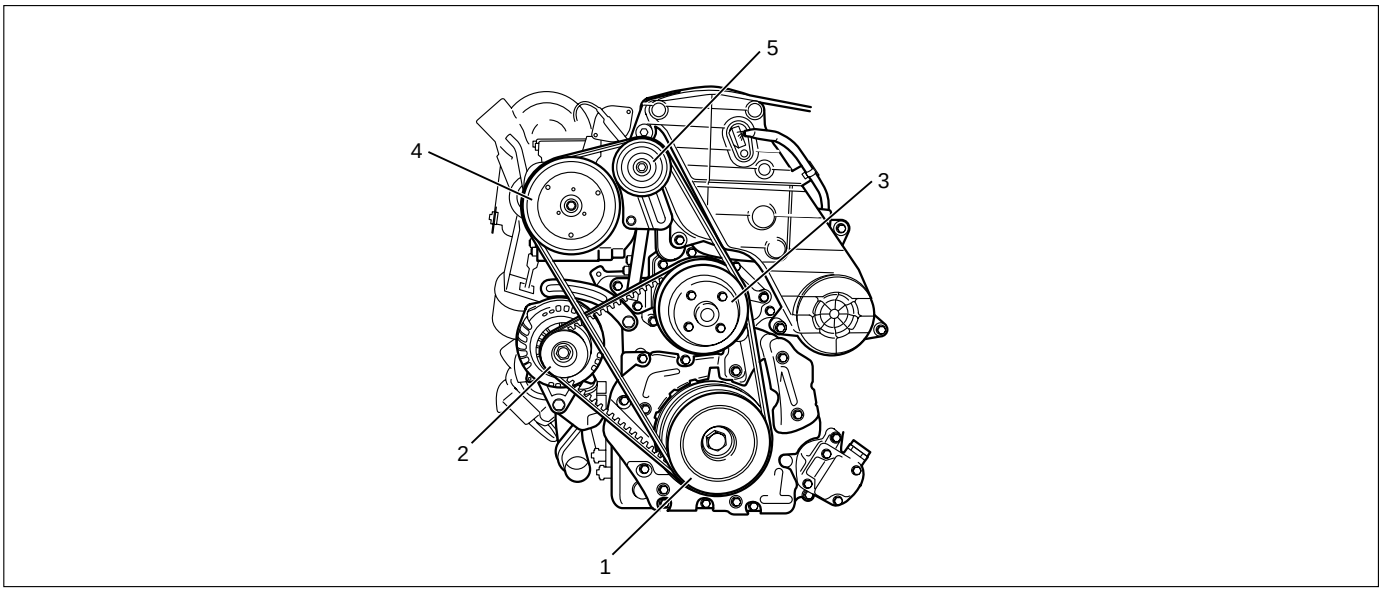

012RW085

Legend
(1) Crankshaft Pulley
(2) A.C. Generator
(3) Cooling Fan Pulley
(4) A/C Compressor
(5) Belt Tensioner Pulley

INSPECTION

Check drive belts for wear or damage, and replace with new ones as necessary. Check belts for tension, and adjust as necessary.

1) Check drive belt tension.
2) Push the middle of belt with a force of 98 N (10 kg/22 lb) and check each belt for deflection.

Standard deflection:

For A.C. generator & fan pulley drive belt
Initial tension : 8 – 12 mm (0.31 – 0.47 in)
Tension at readjustment : Same as above.

For A/C compressor drive belt
Initial tension : 7 – 10 mm (0.28 – 0.38 in)
Tension at readjustment : 5 – 8 mm (0.20 – 0.31 in)

TENSION ADJUSTMENT

1) Loosen AC generator mounting bolt to move AC generator, adjust belt tension and tighten to the specified torque.

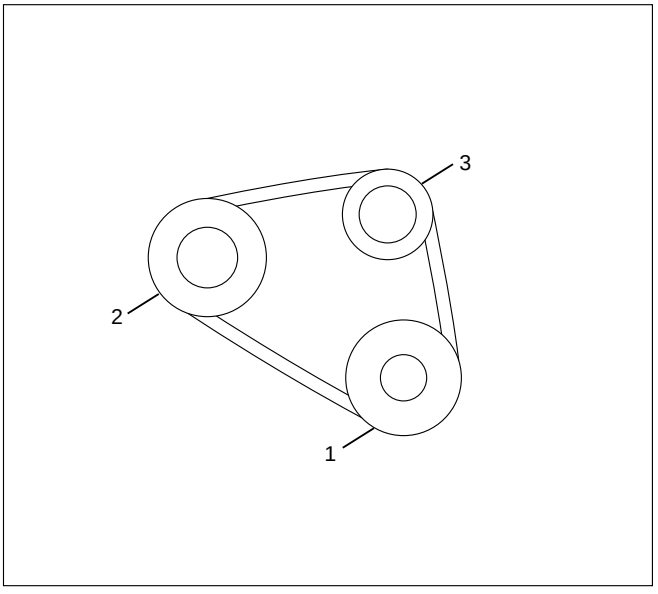

012RW084

Legend
(1) Crankshaft Pulley
(2) A.C. Generator Pulley
(3) Cooling Fan Pulley

Torque:

For A.C. Generator fixing bolt
40 N·m (4.1 kg·m/30 lb ft)

For Adjusting plate fixing bolt
24 N·m (2.4 kg·m/17 lb ft)

For Adjusting plate lock bolt
20 N·m (2.0 kg·m/14 lb ft)

2) Adjust the A/C compressor drive belt by tightening the belt tensioner bolt.

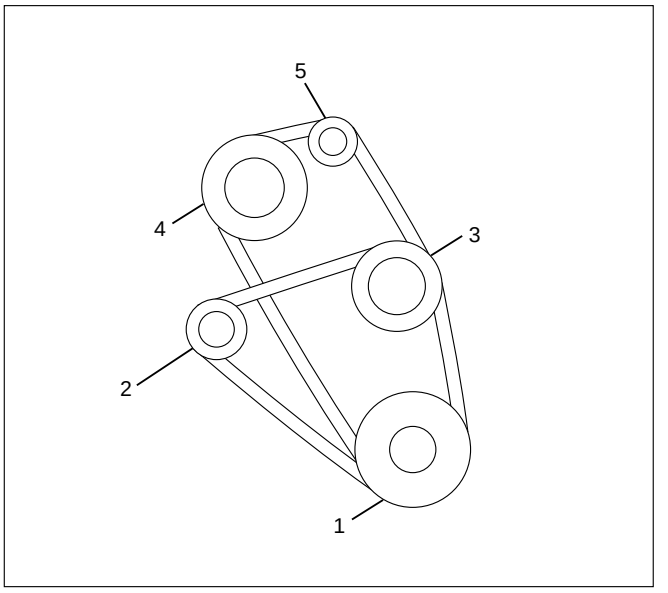

012RW110

Legend

(1) Crankshaft Pulley
(2) A.C. Generator Pulley
(3) Cooling Fan Pulley
(4) A/C Compressor Pulley
(5) Belt Tensioner Pulley

ENGINE FUEL

CONTENTS

General Description 6C–1
On-Vehicle Service 6C–7
Fuel Filter Assembly 6C–7
Fuel Filter Cartridge 6C–7
Injector 6C–9
Fuel Pump Pipe 6C–13
High Pressure Oil Pump 6C–15
Fuel Tank 6C–20
Fuel Gauge Unit 6C–21
Fuel Filler Cap 6C–21

GENERAL DESCRIPTION

To realize the compatibility between low exhaust emission and high engine output, an HEUI (Hydraulically actuated Electronically controlled Unit Injector) system, has been introduced. This system is comprised of a hydraulic system, fuel system, and electronic control system, using a high-pressure oil pump in place of the conventional fuel injection pump. The oil pressurized by means of this pump and by signals from the ECM (Electronic Control Module) actuates the fuel injector provided for each cylinder. Inside of the fuel injector, fuel pressure is increased due to the high-pressure oil. The ECM detects the driving state of the vehicle, forms, signals sent by engine and other part sensors, which determines the optimum fuel injection amount and timing, thus controlling the fuel injectors. Thus high engine output, good fuel economy, and low exhaust emission are realized.

When working on the fuel system, there are several things to keep in mind:

1) Any time the fuel system is being worked on, disconnect the negative battery cable except for those tests where battery voltage is required.
2) Always keep a dry chemical (Class B) fire extinguisher near the work area.
3) Replace all pipes with the same pipe and fittings that were removed.

   Clean and inspect “O” rings. Replace where required.
4) Always relieve the line pressure before servicing any fuel system components.
5) Do not attempt repairs on the fuel system until you have read the instructions and checked the pictures relating to that repair.
6) After maintenance work, push priming pump and send enough fuel to the fuel system before starting the engine.

NOTE: In comparison with the conventional engine, the capacity of fuel passage in the 4JX1 engine is larger. It takes the priming pump more time to fill the engine with fuel.

FUEL FLOW

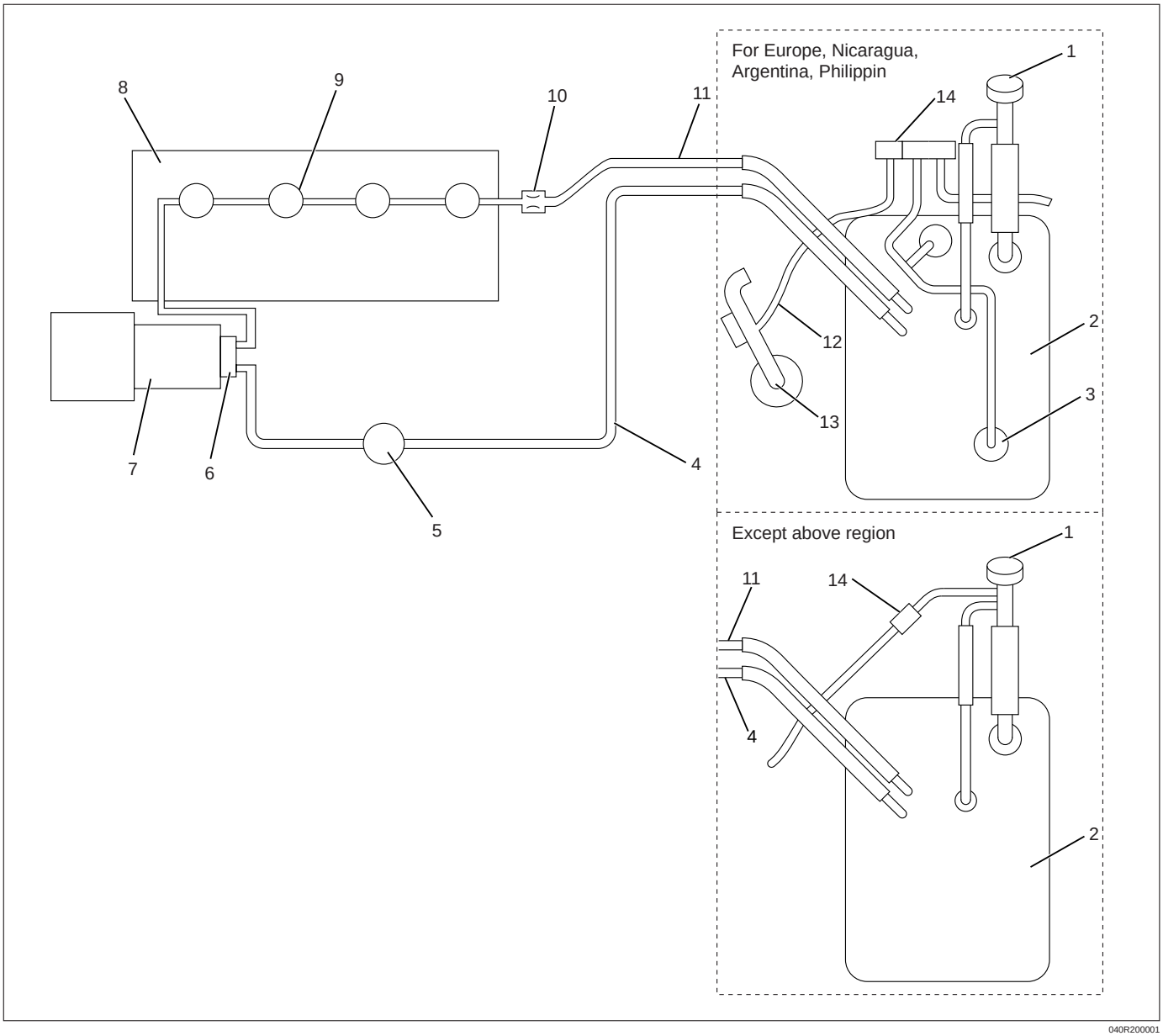

040R200001

Legend

(1) Fuel Filler Cap
(2) Fuel Tank
(3) Rollover Valve
(4) Fuel Supply Pipe
(5) Fuel Filter with Priming Pump
(6) Fuel Pump
(7) High Pressure Oil Pump
(8) Cylinder Head
(9) Injector
(10) Orifice
(11) Fuel Return Pipe
(12) Fuel Tank Pressure Release Hose
(13) Intake Air Duct
(14) Fuel Tank Pressure Control Valve

FUEL PUMP

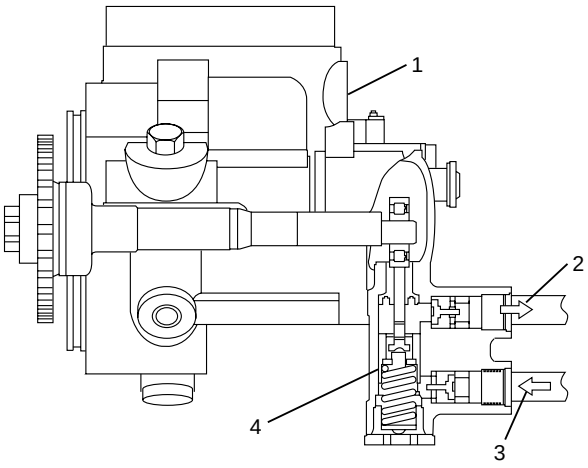

140RW041

Legend

(1) High Pressure Oil Pump
(2) To Injector
(3) From Fuel Tank
(4) Fuel Pump

HIGH PRESSURE OIL PUMP, OIL FLOW

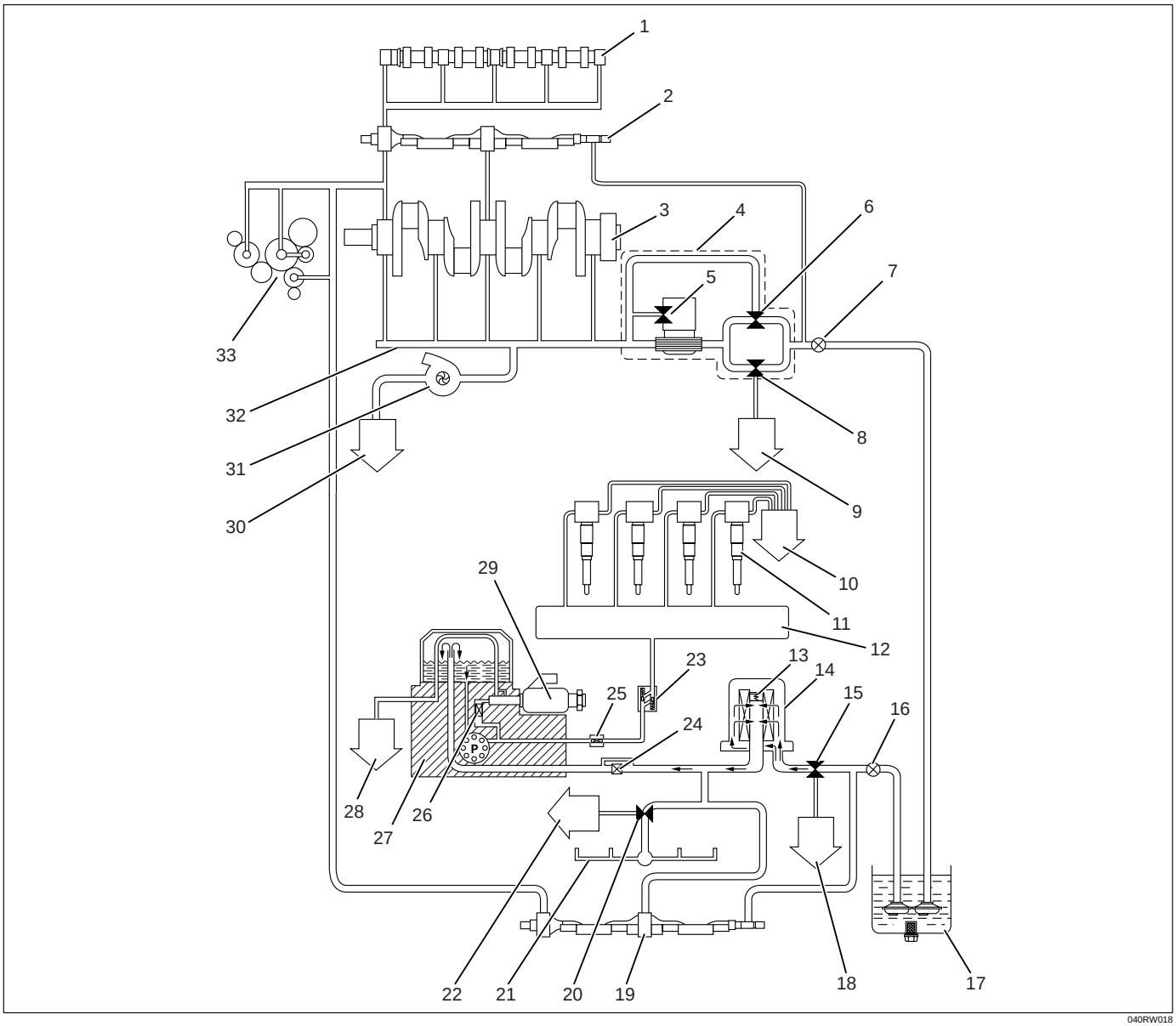

Legend

(1) Camshaft
(2) Balance Shaft
(3) Crankshaft
(4) Oil Cooler and Oil Filter Assembly
(5) Oil Filter Relief Valve 98 Kpa (1 kg/cm^2/14.2 Psi)
(6) Oil Cooler Relief Valve 245 Kpa (2.5 kg/cm^2/ 36 Psi)
(7) First Oil Pump
(8) Main Oil Relief Valve 588 Kpa (6 kg/cm^2/ 85 Psi)
(9) To Oil Pan
(10) To Oil Pan
(11) Injector
(12) Oil Rail
(13) Sub Oil Filter Relief Valve 98 Kpa (1 kg/cm^2/ 14.2 Psi)
(14) Sub Oil Filter
(15) Relief Valve 588 Kpa (6 kg/cm^2/ 85 Psi)
(16) Second Oil Pump
(17) Oil Pan
(18) To Oil Pan
(19) Balance Shaft
(20) Cooling Jet Relief Valve 245 Kpa (2.5 kg/cm^2/ 36 Psi)
(21) Cooling Jet
(22) To Oil Pan
(23) Two Way Check Valve
(24) Nipple Filter
(25) Edge Filter
(26) Edge Filter
(27) High Pressure Oil Pump Assembly
(28) To Oil Pan
(29) Pressure Control Valve
(30) To Oil Pan
(31) Turbocharger
(32) Oil Gallery
(33) Timing Gear Train

FUEL FILTER

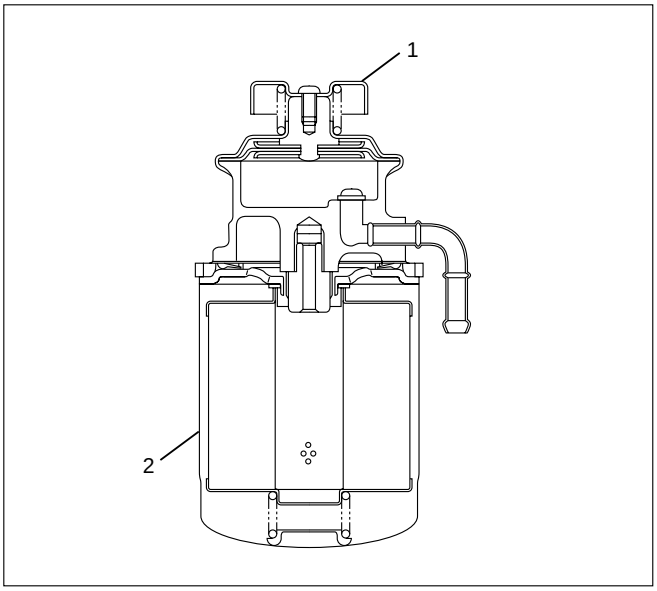

041RW017

Legend
(1) Priming Pump
(2) Fuel Filter Cartridge

A cartridge type fuel filter is used along with the piston type fuel pump on the high pressure oil pump.
The fuel filter removes foreign material from the fuel before it reaches the fuel pump.
A diaphragm type priming pump is installed at the top of the fuel filter. It is used during the air bleeding procedures.

INJECTOR ASSEMBLY

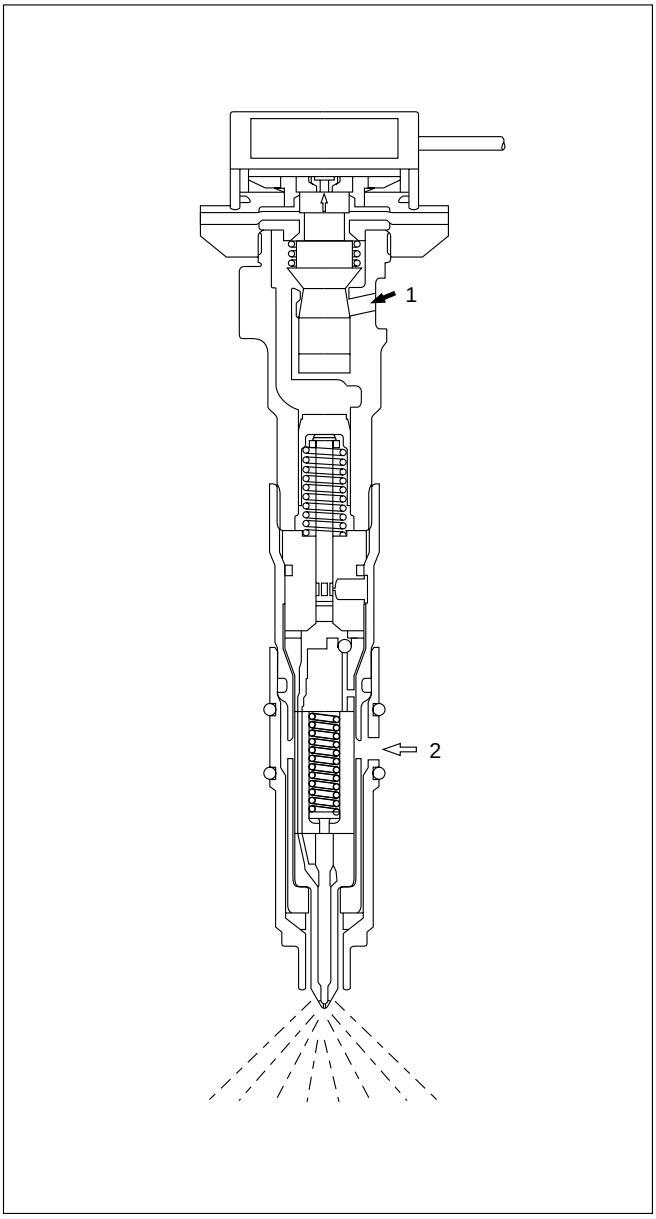

055RW018

Legend
(1) Oil Passage
(2) Fuel Passage

1. Construction of Fuel Injector

   The fuel injector is comprised of the solenoid section, hydraulic line, and fuel line. Fuel injection is controlled by the continuity time signal and continuity start timing signal sent by the ECM (Electronic Control Module) to the solenoid.

2. Working of Fuel Injector

   1) The ECM detects the working of the engine from its input signals, such as engine speed accelerator throttle opening, and engine coolant temperature, sending the optimal signals to the solenoid.

2) With the current carried to the solenoid, a poppet valve is opened by means of an armature to let high-pressure engine oil into the injector.
3) Under the oil pressure, the piston and plunger are depressed to compress the fuel. The pressure of the compressed fuel is increased over the pressure of high-pressure engine oil by the ratio (about 7 : 1) of piston top to plunger bottom.
4) The injection nozzle end needle is lifted under the increased pressure of the fuel for fuel injection.
5) With current stopped from the ECM, the poppet valve is closed which holds up the high-pressure engine oil and lets the oil used to compress fuel out of the injector through its drain hole.

ON-VEHICLE SERVICE

FUEL FILTER ASSEMBLY

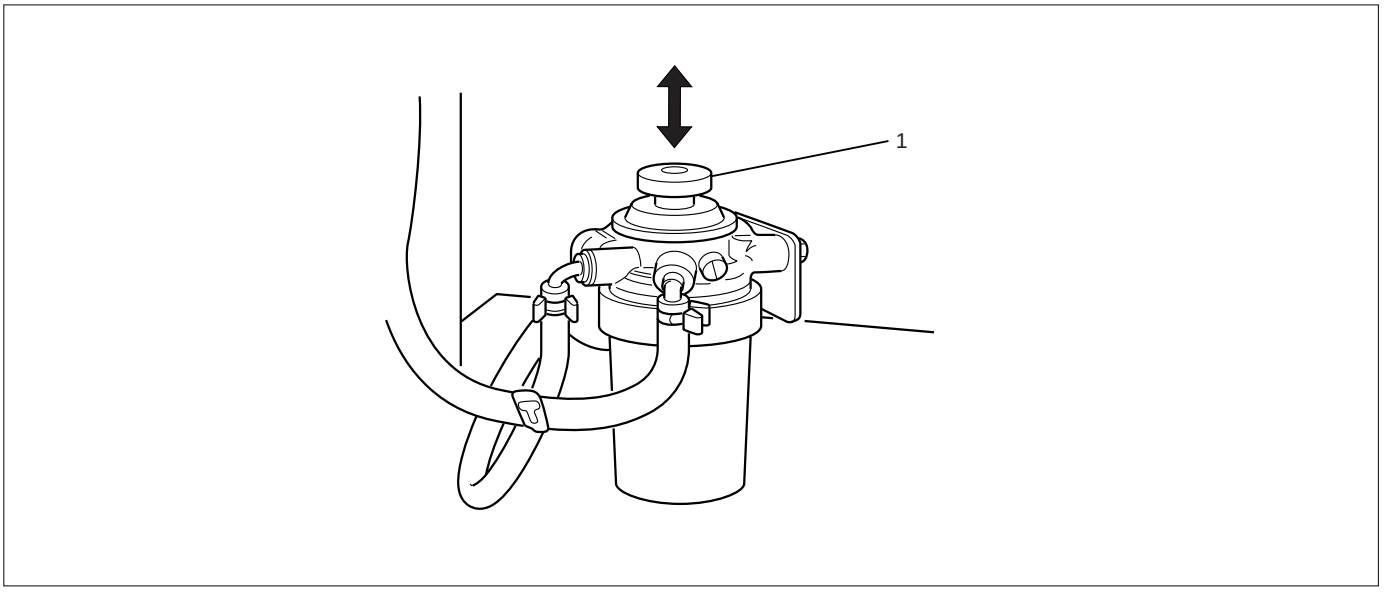

012RW111

Legend
(1) Priming Pump

REMOVAL

1. Disconnect battery ground cable.
2. Fuel Filler cap
3. Fuel Hose
   1) Disconnect fuel hose from filter body.
      Plug the hose ends to prevent fuel spillage.
4. Remove the Bolt on Fuel Filter Bracket
5. Remove Fuel Filter Assembly

INSTALLATION

1. Install the fuel filter assembly
2. Tighten the Fuel Filter Bracket Fixing Bolt
3. Fuel Hose
   1) Connect hoses to filter body.
4. Fuel Filler Cap
   1) Connect the battery ground cable.
   2) Feed fuel to the fuel pump by priming, and bleed the air from fuel system.

FUEL FILTER CARTRIDGE

DISASSEMBLY

1. Drain fuel completely from the fuel filter.
2. Protect the filter body with cloth and lightly grip with a vise.
3. Remove the cartridge using a filter wrench.
   Filter wrench: 5-8840-0203-0

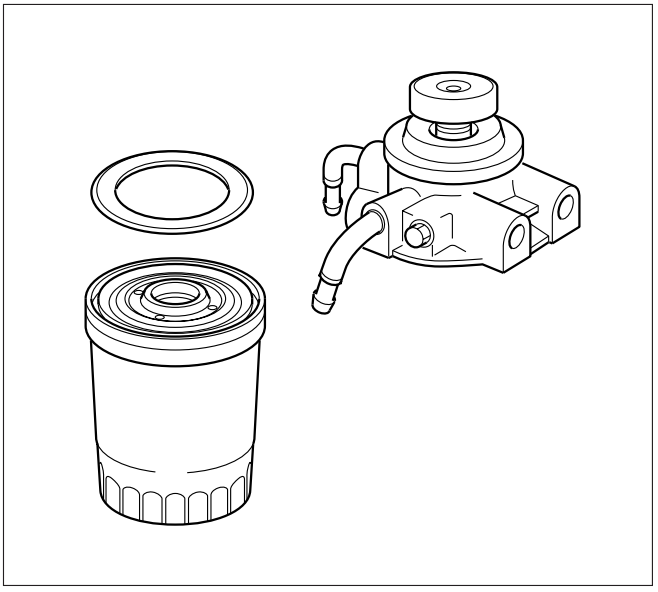

012RW112

REASSEMBLY

1. Clean the cartridge mounting surface of the filter body so that the cartridge can be secured.
   Apply engine oil thinly to new cartridge O-ring.
2. To facilitate bleeding, fill the new cartridge with light oil.
3. Tighten the cartridge until O-ring comes in contact with the seal, taking care not to spill the light oil.
4. Retighten 1/3 – 2/3 using a filter wrench.
   Filter wrench: 5-8840-0203-0

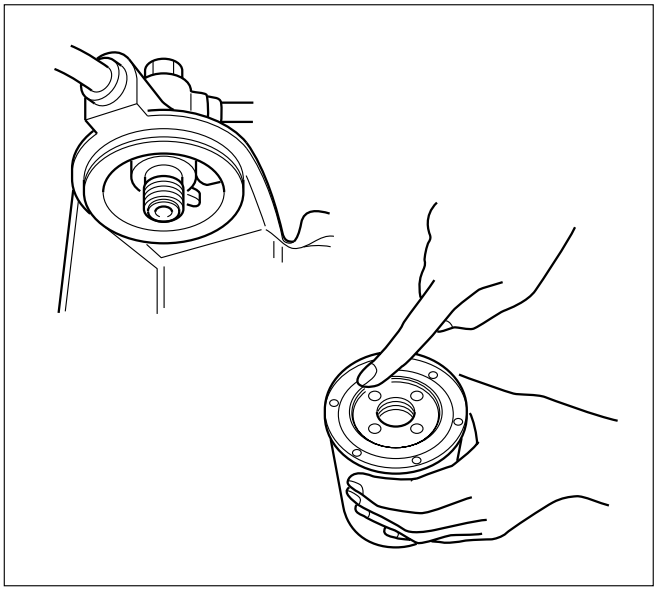

012RW078

Bleeding

1. Loosen air bleeding plug.
2. Operate priming pump to bleed the air in the fuel line.
3. Operate the priming pump until the fuel is overflow from air bleeding plug.
4. Tighten the air bleeding plug.
5. Start the engine, and if it is not started in 10 seconds or less, repeat the bleeding steps.
6. Make sure of no fuel leakage, and tighten the priming pump.

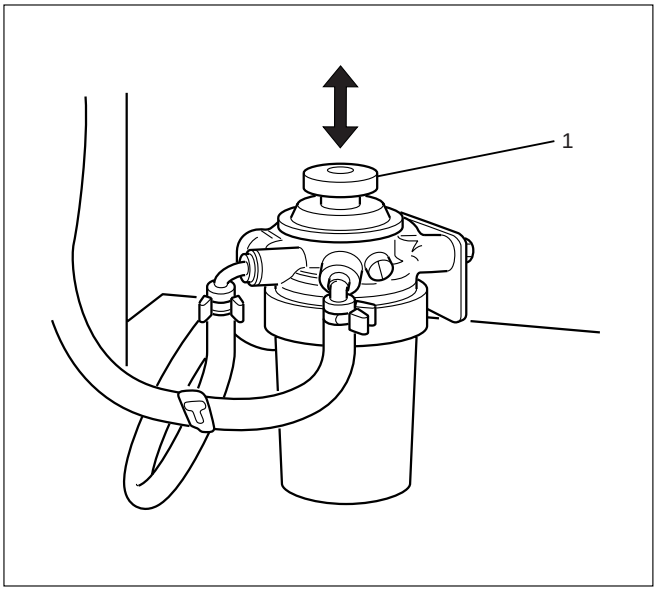

012RW111

Legend
(1) Priming Pump

NOTE: In comparison with the conventional engine, the capacity of fuel passage in the 4JX1 engine is larger. It takes the priming pump more time to fill the engine with fuel.

INJECTOR

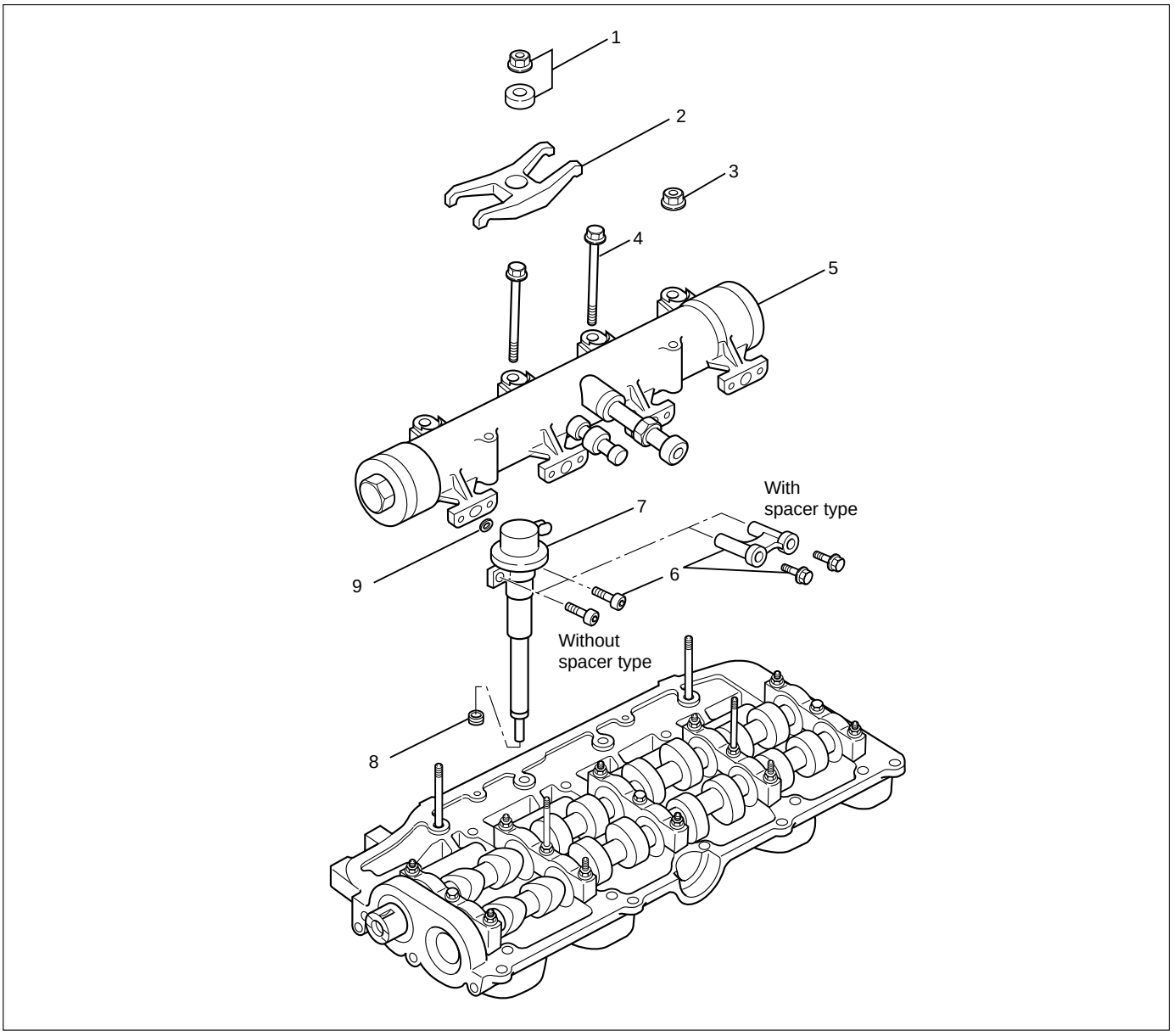

012R200006

Legend

(1) Nut and Washer
(2) Injector Clamp
(3) Nut
(4) Bolt
(5) Oil Rail Assembly
(6) Spacer (If equipped) and Bolt
(7) Injector Assembly
(8) Gasket
(9) O-Ring

REMOVAL

Prior to removal, be sure to confirm and record the group code of the injector installed using Tech2.

1. Disconnect battery ground cable.
2. Remove air cleaner cover and air duct.
3. Remove intercooler.
   Refer to “Intercooler” in this manual.
4. Remove PCV hose and pipe.
5. Remove cylinder head noise insulator cover.
6. Remove high pressure oil pipe.

CAUTION:

1) Sleeve nut should be loosened with cloth tied around to prevent oil from spurting due to the remaining pressure.

2) High oil pressure pipe should be disconnected with cloth tied around the intake manifold glow plug to prevent oil from flowing out of the oil rail.

7. Loosen eye bolt of fuel pipe at fuel pump side.

NOTE: Cloth should be put around the loosened eye bolt to prevent fuel from flowing out.

8. Remove fuel return hose at chassis side.
9. Remove PCV hose to cylinder head cover.
10. Remove cylinder head cover.
11. Drain the oil from oil rail assembly.

NOTE: Do not drop O-ring

12. Record the grade code of injector for each cylinder that is indicated on the upper portion of injector.
    There are nine kinds of grade code available, one alphabet letter and one numeral letter.

Grade code

Category number
A – 1
A – 2
A – 3
B – 1
B – 2
B – 3
C – 1
C – 2
C – 3

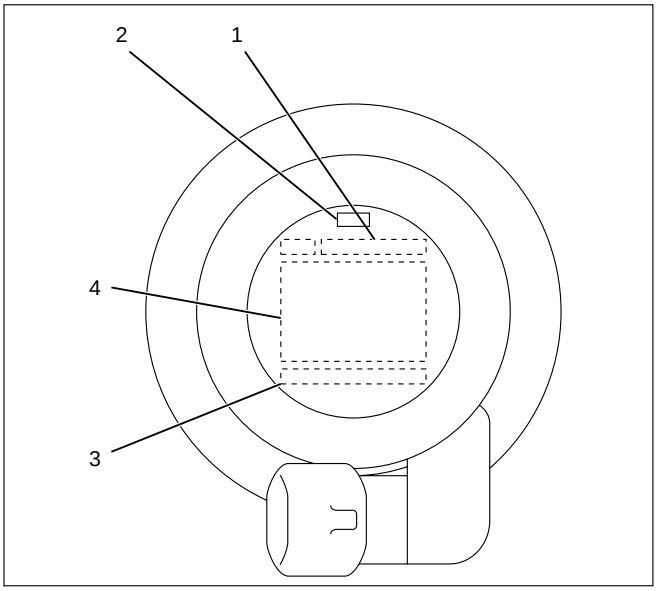

Legend
(1) Part Number
(2) Category Number (Grade code)
(3) Serial Number
(4) Bar Code

13. Remove harness connector from each injector.
14. Loosen nuts and bolts for oil rail.
15. Remove injector fixing bolts.
16. Remove injector clamp.
17. Remove injector assembly.

INSTALLATION

1. Install oil rail, tighten temporarily
2. Install injector assembly.

NOTE:

1) Do not forget to install O-ring between injector and oil rail.
2) Use new O-ring
3) Clean O-ring groove and fitting surface of parts.
4) Apply engine oil to O-ring.

3. Install injector fixing bolts, tighten temporarily.
4. Install injector clamp, tighten nut temporarily.
   · Apply engine oil to washer both side.
5. Tighten injector fixing bolts to the specified torque.

Torque: 7 N·m (0.7 kg·m / 61 lb in)

6. Tighten injector clamp nut to the specified torque with special method.

Torque: 30 N·m (3.1 kg·m / 22 lb ft) then loosen a time again tighten as following torque.

Torque: 25 N·m (2.5 kg·m / 18 lb ft)

7. Tighten oil rail to the specified torque.

Torque: 20 N·m (2.0 kg·m / 14 lb ft)

8. Install injector harness assembly, reconnect harness connecter to injector.
9. Record the identification marking of injector for each cylinder that is indicated on the upper portion of injector.

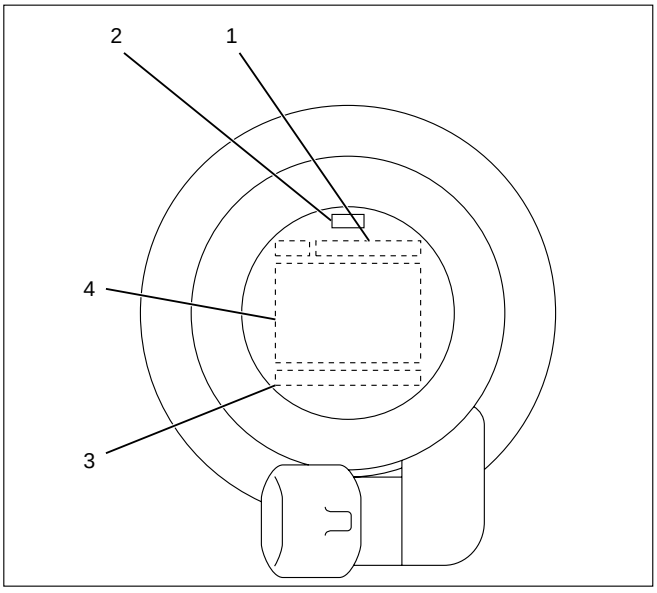

055RW00001

Legend
(1) Part Number
(2) Category Number (Grade code)
(3) Serial Number
(4) Bar Code

10. Install cylinder head assembly.
    Refer to “Cylinder Head” in this manual.
11. Fill with about 300cc of engine oil from the high pressure oil pipe installation port of the oil rail using an oil filler.
    If assembled without filling the oil rail with oil, the time for engine starting will be longer.
12. Immediately install high pressure oil pipe and tighten to specified torque.

Torque: 78 N·m (8.0 kg·m / 58 lb ft)

13. Install cylinder head noise insulator cover.
    Refer to “Cylinder Head” in this manual.
14. Install intercooler assembly.
    Refer to “Intercooler” in this manual.
15. Install air cleaner cover and air duct.
16. Use TECH2 to rewrite injector data to ECM.
    For rewriting method refer to section “Data Programming in Case of ECM Change” of section 6E 4JX1 engine driveability and emissions in this manual.

NOTE:
1) On completion of servicing, bleed air from the engine inside fuel passage by means of the priming pump. (The priming pump should be operated more times than in the case of conventional engines.)
2) As air is in the oil rail, it takes more time to start the engine. Rough idling may occur while the air is being bled completely after engine start, but it does not indicate trouble.
   The air will be bled and normal engine status will be reached while the vehicle is driven for about 5 km or engine is operated for about 5 minutes at 1500 to 2000 rpm.
3) The injector spare part will be provided for group number B1, B2 and B3 only.

Injector Grade code Programming (Injector Change)

In case of an injector change, the injector grade code (category number) must be programmed by Tech-2.

Programming Procedure

1. Connect the Tech-2 to the vehicle DLC.
2. Turn the starter switch to the “ON” position.
3. Select the “Diagnosis” from the Main menu.
4. Select the “Programming” from the Application menu.

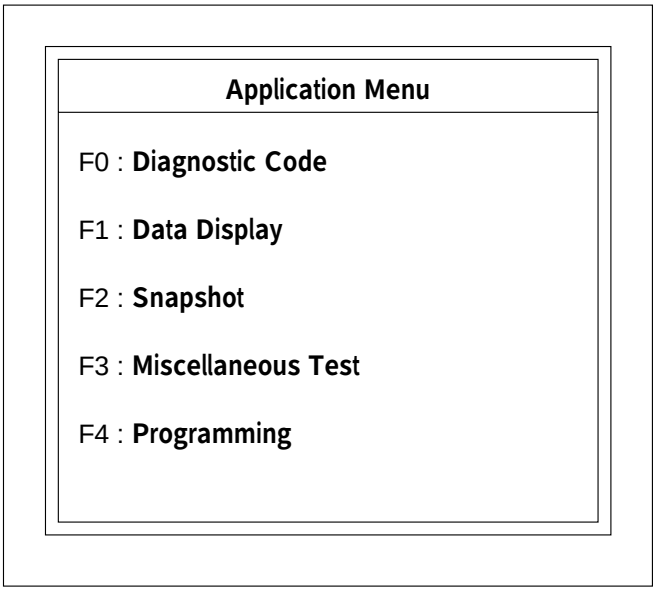

035RW00002

5. Select “Programming Trim Date” from Programming menu.
6. Select the injector change from Programming Trim Date menu.
7. Select the cylinder number which changed injector.

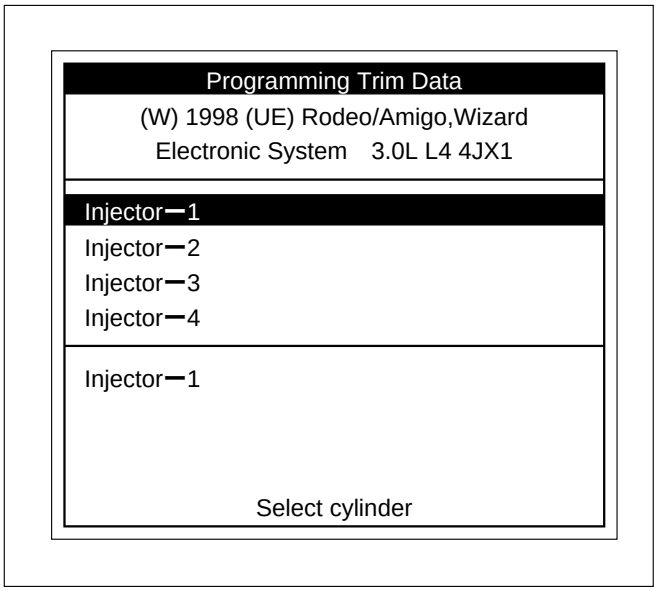

035RW00003

8. Appoint and select the grade code (Category number) of injector.

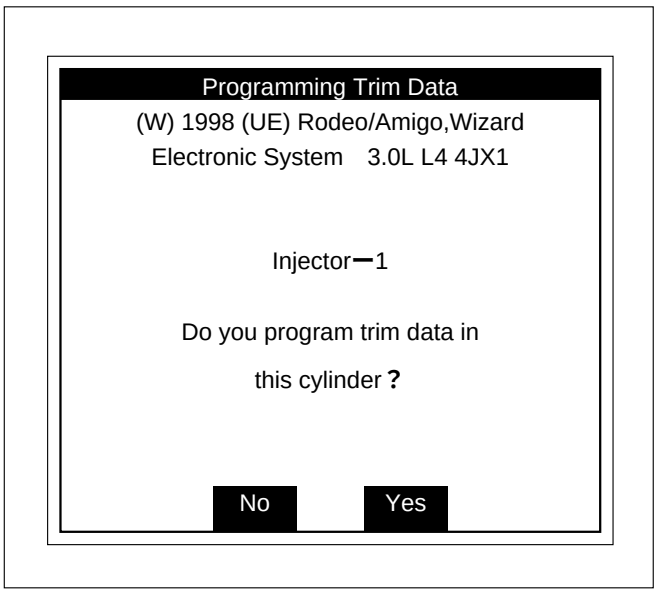

035RW00004

9. Confirm the completion of injector programming.

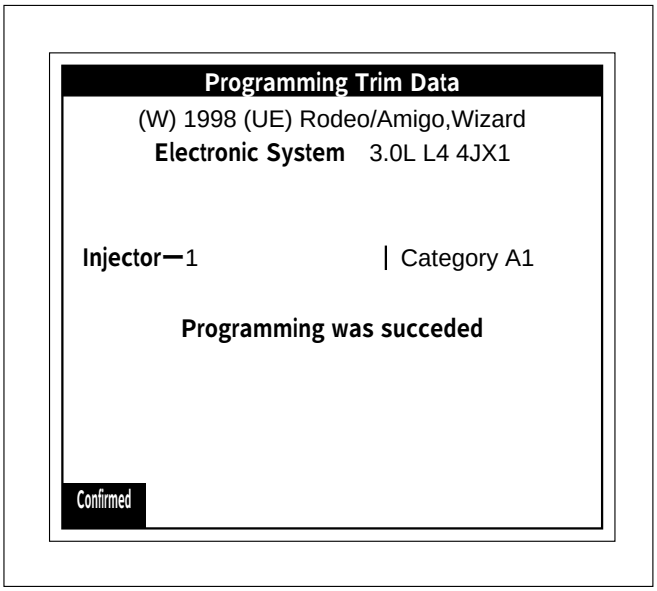

035RW00005

Note; The injector grade code (category number) is indicated on the new (service part) injector.

FUEL PUMP PIPE

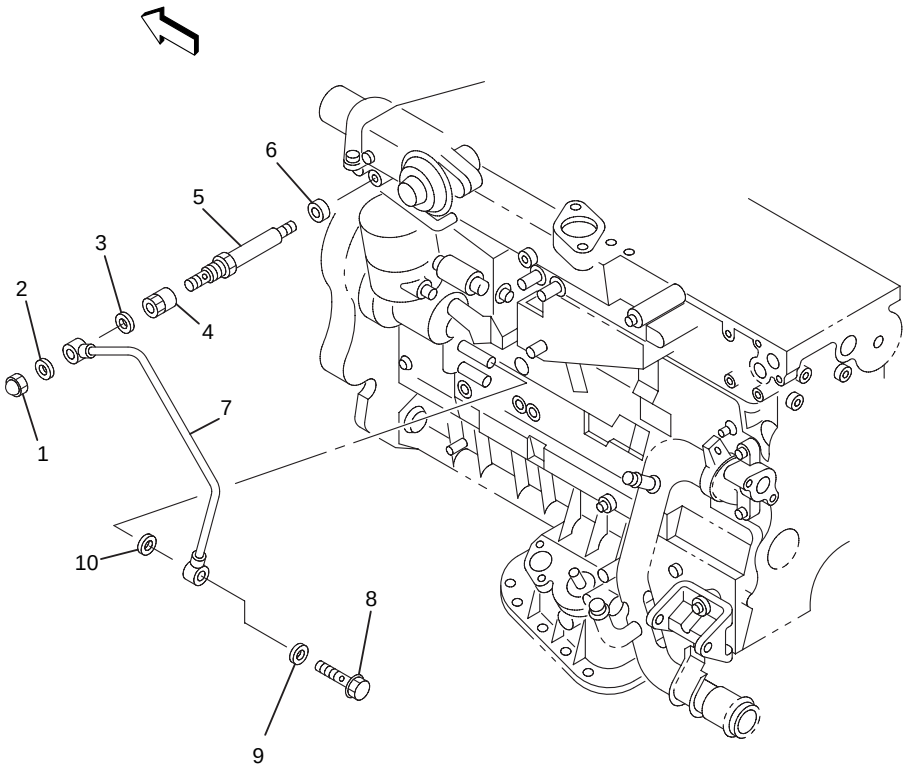

040R200002

Legend

(1) Cap Nut
(2) Gasket
(3) Gasket
(4) Pipe Nut
(5) Adapter
(6) Gasket
(7) Fuel Pump Pipe
(8) Eye Bolt
(9) Gasket
(10) Gasket

REMOVAL

1. Remove eye bolt.
2. Remove cap nut.

NOTE: The eye bolt and cap nut should be disconnected with cloth tied around them to prevent flowing out of fuel.

3. Remove fuel pump pipe.
4. Remove pipe nut.
5. Remove adapter.

INSTALLATION

1. Apply engine oil to the thread, then install adapter with new gasket.

Torque : 13 N·m (1.3 kg·m/113 lb in)

NOTE: Be careful not to enter the foreign material.

2. Apply engine oil to the thread, then install pipe nut.

Torque : 14 N·m (1.4 kg·m/122 lb in)

NOTE: Do not apply oil to cap nut side.

3. Install fuel pump pipe, new gaskets and cap nut to adapter temporarily. Do not tighten the cap nut.
4. Install eye bolt with new gasket then tighten to specified torque.

Torque : 30 N·m (3.1 kg·m/22 lb ft)

NOTE:
1) Do not apply oil to the eye bolt.
2) Do not bend the fuel pump pipe.

5. Tifhten cap nut to specified torque.

Torque : 13 N·m (1.3 kg·m/113 lb in)

NOTE: Do not apply oil to the cap nut.

6. Start the engine, check that the fuel leakage is not found.

HIGH PRESSURE OIL PUMP

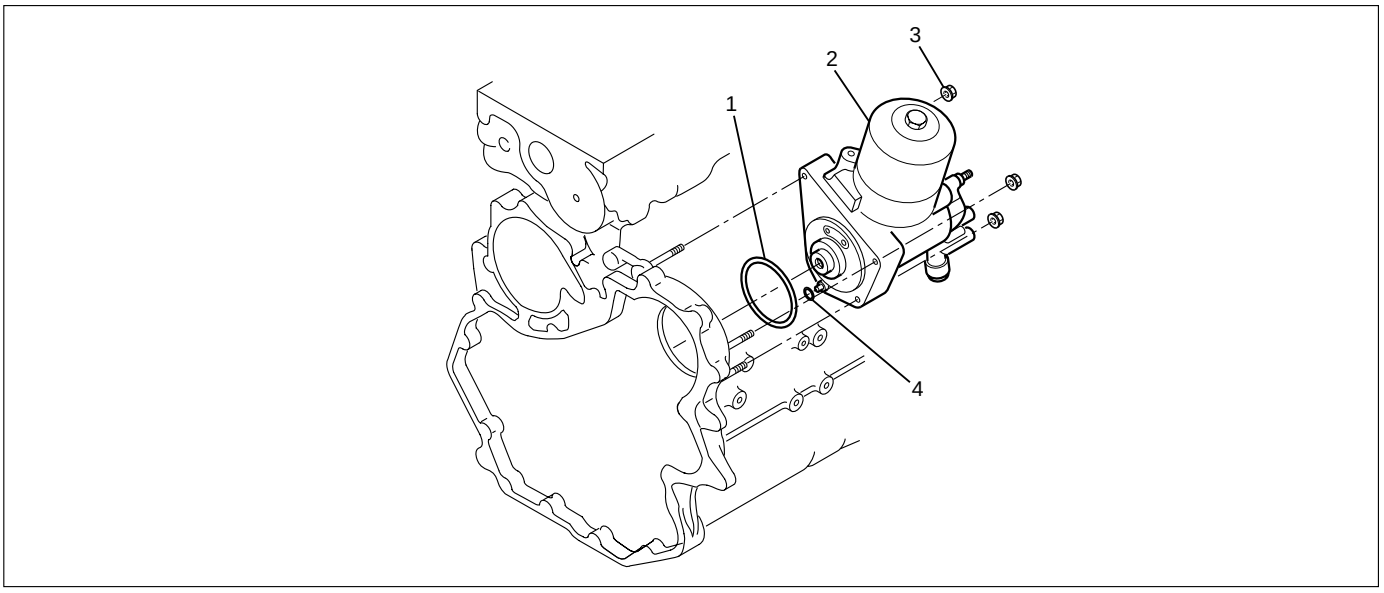

040RW007

Legend
(1) O-Ring
(2) High Pressure Oil Pump Assembly
(3) Nut
(4) O-Ring

REMOVAL

1. Disconnect battery ground cable.
2. Remove air cleaner cover and air duct
3. Intercooler assembly
   Refer to “Intercooler” in this manual.
4. Remove high pressure oil pipe
5. Timing belt cover
   Disconnect CMP sensor cable.
   Remove CMP sensor bracket.
6. Tensioner
7. Timing Belt
8. Remove high pressure oil pump timing pulley
9. Remove crankshaft damper pulley
10. Remove timing gear case cover
11. Remove idle gear A
    Before removing idle gear A, set two bolts to the sub gear of idle gear A and turn it to align the teeth of idle gear A main gear.
    Then lock them by bolts as shown in the illustration.

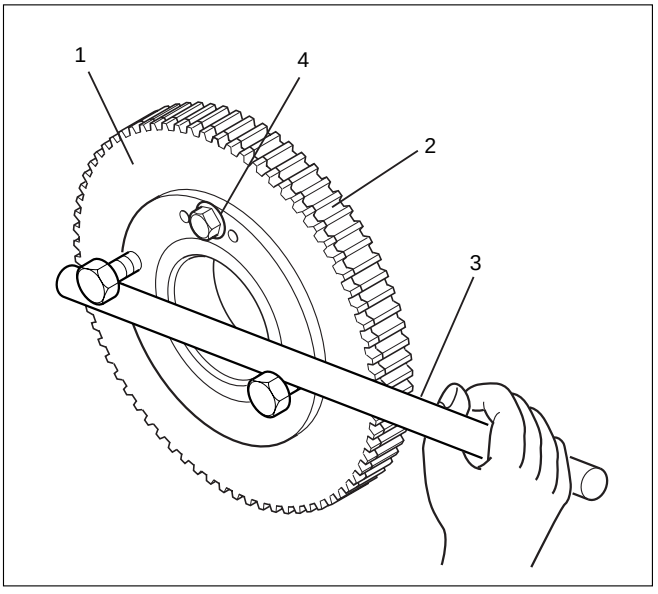

014RW177

Legend
(1) Idle gear A sub gear
(2) Idle gear A main gear
(3) Bar
(4) Lock bolt

12. Remove high pressure oil pump
13. Remove high pressure oil pump assembly

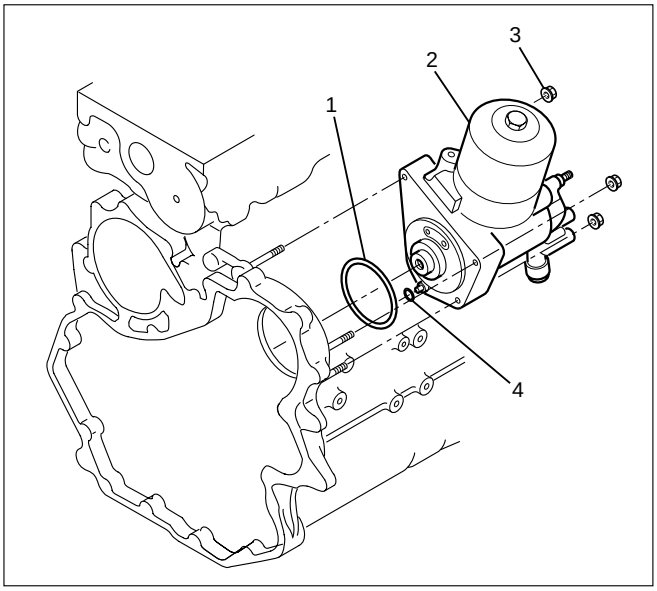

040RW007

Legend

(1) O-ring
(2) High pressure oil pump
(3) Nut
(4) O-ring

INSPECTION AND REPAIR

The high pressure oil pump is made precisely, therefore, disassembly is not recommended.

INSTALLATION

1. Set O-ring to high pressure oil pump assembly.
   Apply Loctite No. 262 to the stud bolts.
   Install the pump assembly into the rear of timing gear case.
   Tighten nut to specified torque.

Torque: 20 N·m (2.0 kg·m/14 lb ft)

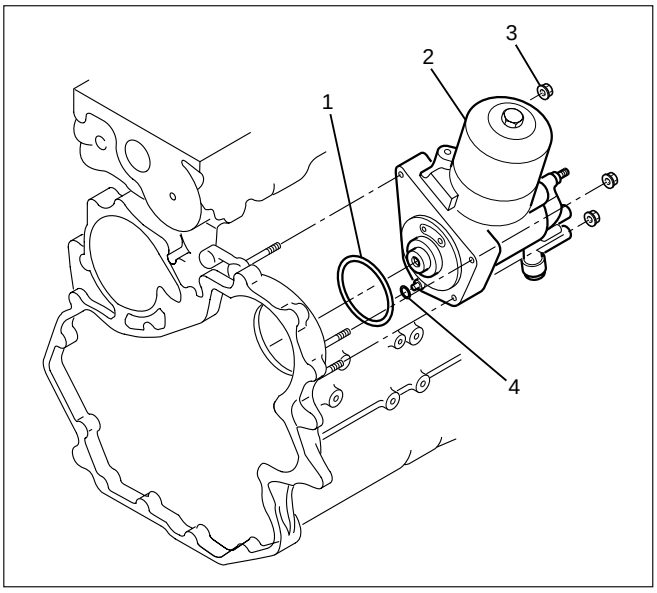

040RW007

Legend
(1) O-ring
(2) High Pressure Oil Pump Assembly
(3) Nuts
(4) O-ring

2. Tighten high pressure oil pump assembly bracket together with two way valve bracket.

Torque: 27 N·m (2.8 kg·m/20 lb ft)

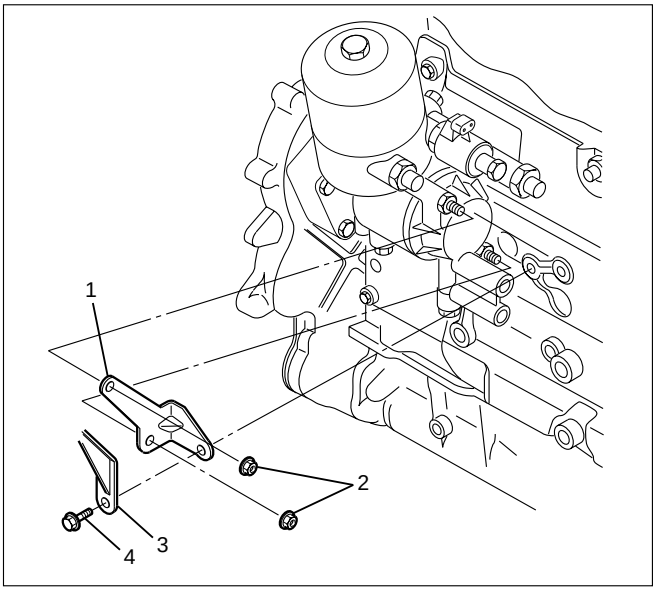

040RW006

Legend
(1) High Pressure Oil Pump Assembly
(2) Nut
(3) Two Way Valve Bracket
(4) Bolt

3. Install the pump gear to align timing mark with idle gear A.
   Tighten high pressure pump gear fixing bolt to the specified torque.
   Apply engine oil to thread and seat of bolt.

Torque: 75 N·m (7.6 kg·m/55 lb ft)

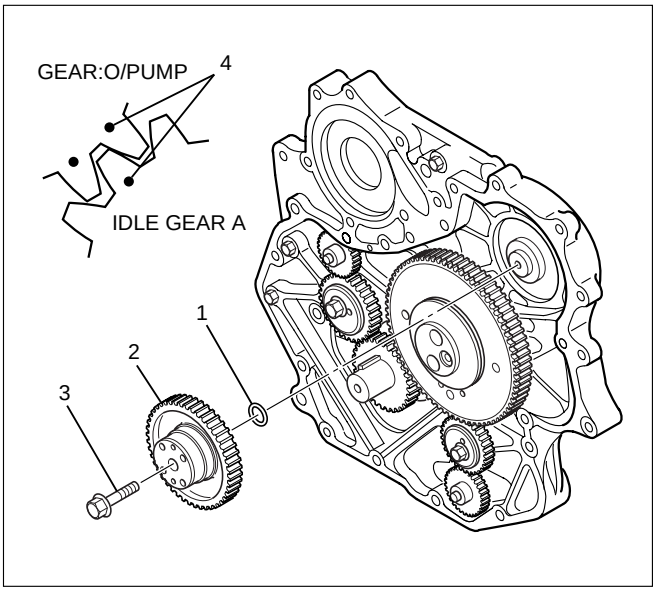

040RW005

Legend
(1) O-ring
(2) Pump Gear
(3) Bolt
(4) Timing Mark

4. Remove lock bolt of idle gear A.
5. Install timing gear case cover.
   Refer to “Timing gear” in this manual.
6. Install front plate.

Torque: 20 N·m (2.0 kg·m/14 lb ft)

7. Install timing pulley of high pressure oil pump.

Torque: 10 N·m (1.0 kg·m/87 lb in)

8. Install timing belt and tighten timing belt tensioner assembly.
   Refer to “Cylinder head” in this manual.

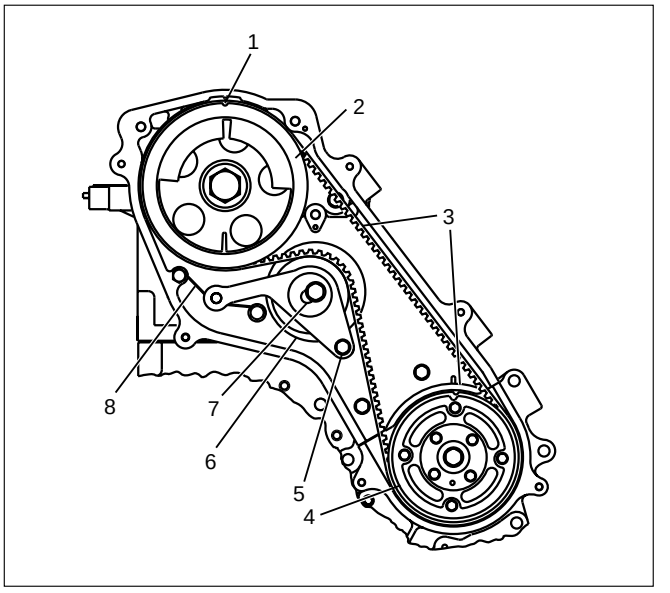

F06R200006

Legend

(1) Align Mark
(2) Camshaft Pulley
(3) Timing Belt
(4) High Pressure Oil Pump Pulley
(5) Tensioner Bolt B
(6) Tensioner Assembly
(7) Tensioner Bolt A
(8) Tensioner Spring

9. Install CMP sensor bracket.

Torque: 20 N·m (2.0 kg·m/14 lb ft)

10. Connect CMP sensor cable.
11. Install timing belt cover.

Torque: 9 N·m (0.9 kg·m/78 lb in)

12. Fill with about 300 cc of engine oil from the high pressure oil pipe installation port of the oil rail using an oil filler.
    If assembled without filling the oil rail with oil, the time for engine starting will be longer.
13. Immediately install high pressure oil pipe and tighten to specified torque.

NOTE:

1) Use new O-ring.
2) Clean O-ring groove and fitting surface of parts.
3) Apply engine oil to O-ring.

Torque: 78 N·m (8.0 kg·m/58 lb ft)

14. Install the crankshaft damper pulley with specified torque.

Torque: 216 N·m (22 kg·m/159 lb ft)

15. Install the intercooler assembly.
    Refer to “Intercooler” in this manual.
16. Install air cleaner cover and air duct.

HIGH PRESSURE OIL PIPE INSTALLATION

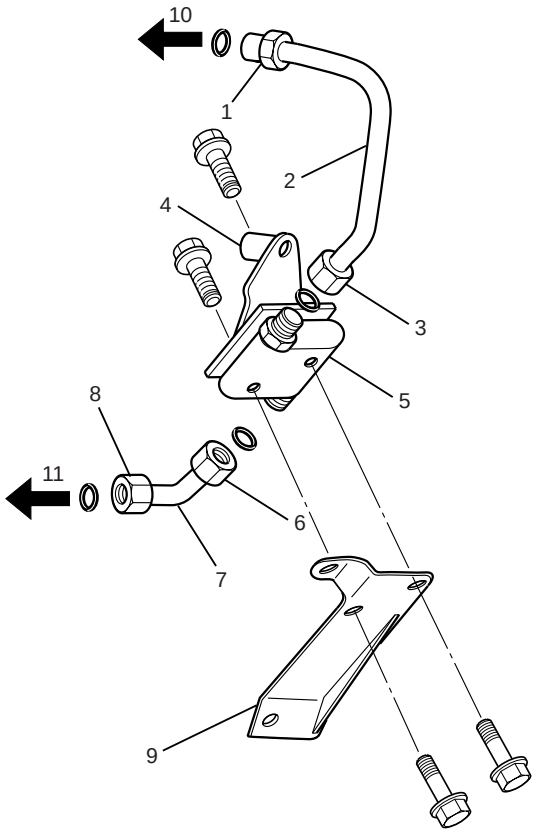

052R200001

Legend

(1) Union Nut F
(2) Pipe B
(3) Union Nut E
(4) Upper Bracket
(5) Two Way Valve
(6) Union Nut D
(7) Pipe A
(8) Union Nut C
(9) Lower Bracket
(10) To Oil Rail
(11) To High Pressure Oil Pump

1. Install upper bracket to two way valve, tighten them temporarily.
2. Install pipe A to two way valve, tighten pipe A temporarily with union nut D.
3. Install two way valve assembly to cylinder block, tighgten with union nut C temporarily.
4. Install pipe B to two way valve, tighten union nut E and union nut F temporarily.
5. Tighten upper bracket to specified torque.

Torque : 20 N·m (2.0 kg·m/14 lb ft)

6. Tighten union nut in the following order, union nut C, D, F, and E to the specified torque.

Torque : 78 N·m (8.0 kg·m/58 lb ft)

7. Tighten lower bracket to the specified torque.

Torque : 20 N·m (2.0 kg·m/14 lb ft)

NOTE: Wash inside pipe, inside union nut and O-ring seal surface to remove engine oil and foreign materials.

FUEL TANK

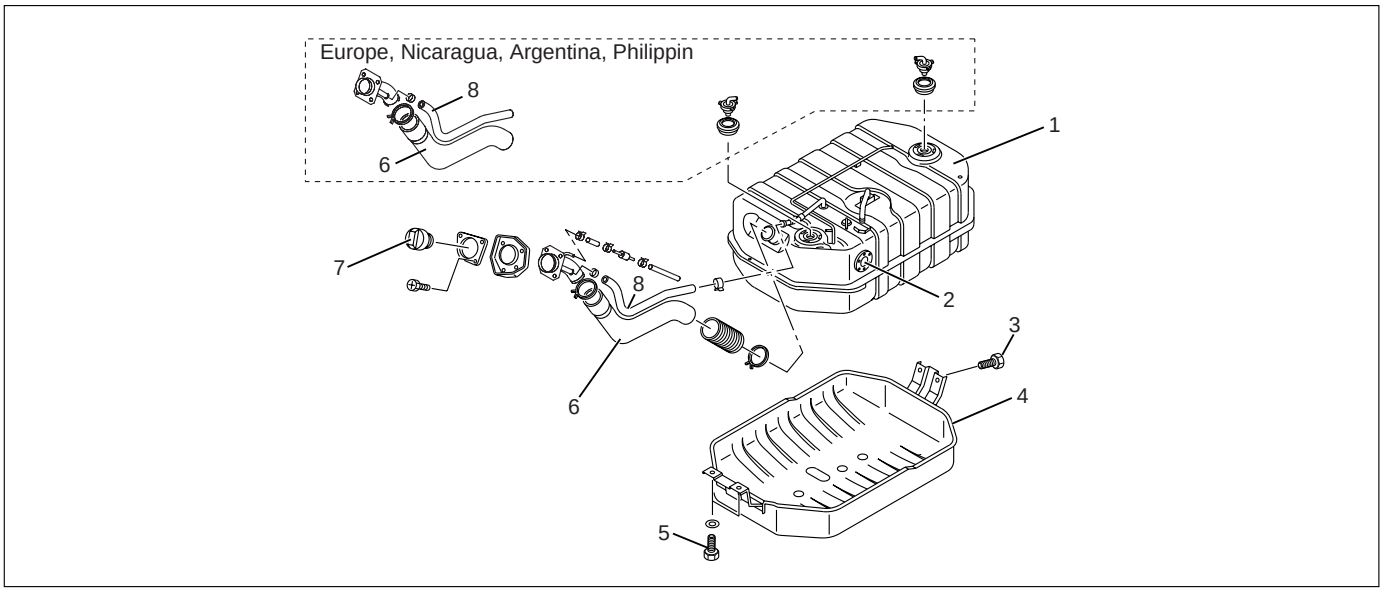

140R200032

Legend

(1) Fuel Tank Assembly
(2) Gauge Unit
(3) Bolt
(4) Under Cover
(5) Bolt
(6) Fuel Filler Hose
(7) Fuel Filler Cap
(8) Breather Hose

REMOVAL

1. Disconnect battery ground cable.
2. Remove fuel filler cap.
3. Drain fuel.
   After drain the fuel tighten the drain plug with specified torque.

Torque : 20 N·m (2.0 kg·m/14 lb ft)

4. Remove fuel filler hose and let air pull off hose.
5. Remove breather hose.
6. Remove fuel feed hose and fuel return hose.
7. Disconnect harness connector from fuel gauge unit.
8. Remove under cover.
9. Remove fuel tank assembly.

INSTALLATION

1. Fuel tank assembly.
   1) Place a flange on right side of tank on the bracket.
   2) Install a flange to left side of the bracket from the bottom, and tighten bolts to the specified torque.

Torque : 36 N·m (3.7 kg·m/27 lb ft)

2. Install fuel hose and fuel return hose.
3. Install the breather hose.
4. Reconnect harness connector to fuel gauge unit.
5. Install under cover.
6. Install fuel filler hose and let air pull off hose.
7. Fill fuel tank with fuel and tighten filler cap.
8. Reconnect battery ground cable.

FUEL GAUGE UNIT

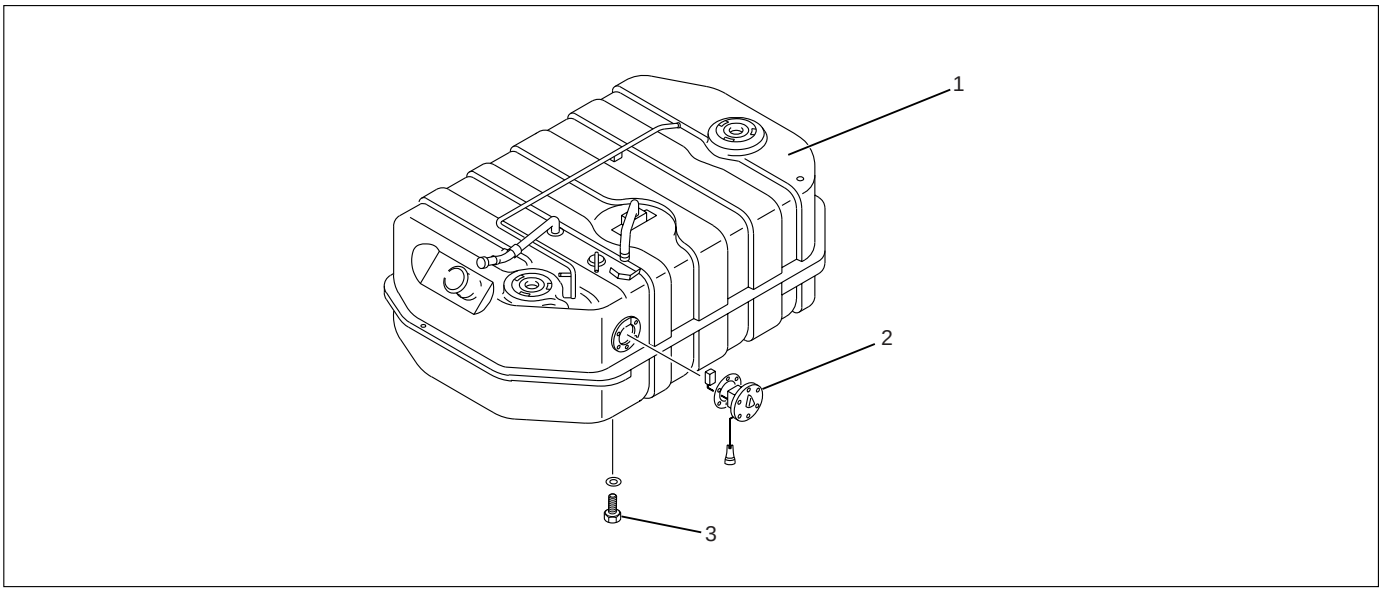

140R200033

Legend
(1) Fuel Tank Assembly
(2) Fuel Gauge Unit
(3) Drain Plug

REMOVAL

1. Disconnect battery ground cable.
2. Loosen fuel filler cap.
3. Drain fuel.
   After drain the fuel tighten the drain plug with specified torque.

Torque : 20 N·m (2.0 kg·m/14 lb ft)

4. Disconnect harness connector from fuel gauge unit.
5. Fuel Gauge Unit
   1) Remove the fixing screws, then the fuel gauge unit.

INSTALLATION

1. Fuel Gauge Unit
2. Connect the harness connector to the fuel gage unit.
3. Fill the tank with fuel and tighten fuel filler cap.
4. Connect battery ground cable.

FUEL FILLER CAP

The fuel filler cap contains a vacuum valve. If a negative pressure develops in the fuel tank, the external valve of the fuel filler cap opens to allow the fresh air to flow into the fuel tank through the vacuum valve.

INSPECTION

Check the seal ring in the filler cap for presence of any abnormality and for seal condition.
Replace the filler cap, if abnormal.

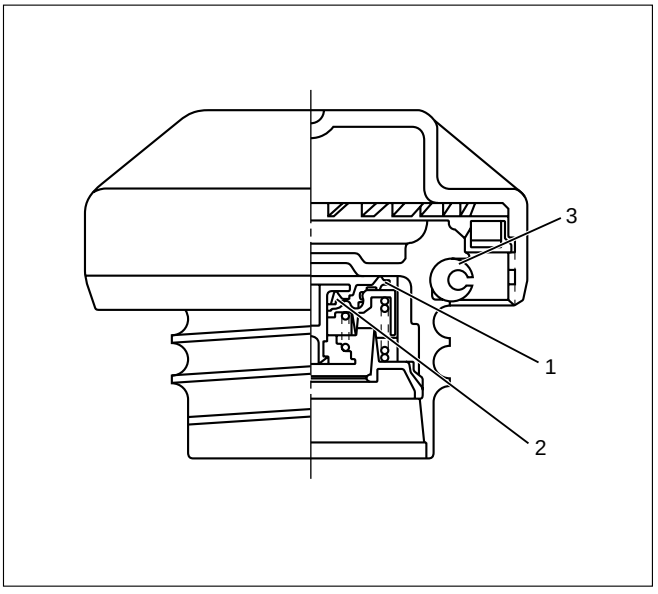

060R200247

Legend
(1) Vacuum Valve
(2) Pressure Valve
(3) Seal Ring

MEMO

ENGINE ELECTRICAL

CONTENTS

Battery 6D–1
General Description 6D–1
Diagnosis 6D–1
On Vehicle Service 6D–3
Main Data and Specification 6D–4
Starting System 6D–5
General Description 6D–5
On Vehicle Service 6D–7
Starter 6D–7
Unit Repair 6D–8
Charging System 6D–15
General Description 6D–15
Diagnosis 6D–16
Unit Repair 6D–17
Main Data and Specification 6D–22
QOS4 Preheating System 6D–23
General Description 6D–23
System Diagram 6D–23
Inspection of QOS4 System Operation . . 6D–24

BATTERY
GENERAL DESCRIPTION

There are six battery fluid caps at the top of the battery. These are covered by a paper label.
The battery is completely sealed except for the six small vent holes at the side. These vent holes permit the escape of small amounts of gas generated by the battery.
This type of battery has the following advantages over conventional batteries:

1. There is no need to add water during the entire service life of the battery.
2. The battery protects itself against overcharging.
   The battery will refuse to accept an excessive charge.
   (A conventional battery will accept an excessive charge, resulting in gassing and loss of battery fluid.)
3. The battery is much less vulnerable to self-discharge than a conventional type battery.

DIAGNOSIS

1. VISUAL INSPECTION (Step 1)

Inspect the battery for obvious physical damage, such as a cracked or broken case, which would permit electrolyte loss.
Replace the battery if obvious physical damage is discovered during inspection.
Check for any other physical damage and correct it as necessary. If not, proceed to Step 2.

2. HYDROMETER CHECK (Step 2)

There is a built-in hydrometer (Charge test indicator) at the top of the battery. It is designed to be used during diagnostic procedures.
Before trying to read the hydrometer, carefully clean the upper battery surface.
If your work area is poorly lit, additional light may be necessary to read the hydrometer.

a. BLUE RING OR DOT VISIBLE – Go to Step 4.
b. BLUE RING OR DOT NOT VISIBLE – Go to Step 3.

3. FLUID LEVEL CHECK (Step 3)

The fluid level should be between the upper level line and lower level line on side of the battery.

a. CORRECT FLUID LEVEL – Charge the battery.
b. BELOW LOWER LEVEL – Replace battery.

4. VOLTAGE CHECK (Step 4)

(1) Put voltmeter test leads to battery terminals.
   a. VOLTAGE IS 12.4V OR ABOVE – Go to Step 5.
   b. VOLTAGE IS UNDER 12.4V – Go to procedure (2) below.
(2) Determine fast charge amperage from specification. (See Main Data and Specifications in this section.)
   Fast charge battery for 30 minutes at amperage rate no higher than specified value.
   Take voltage and amperage readings after charge.
   a. VOLTAGE IS ABOVE 16V AT BELOW 1/3 OF AMPERAGE RATE – Replace battery.

b. VOLTAGE IS ABOVE 16V AT ABOVE 1/3 OF AMPERAGE RATE – Drop charging voltage to 15V and charge for 10 – 15 hours.

Then go to Step 5.

c. VOLTAGE IS BETWEEN 12V AND 16V – Continue charging at the same rate for an additional 3-1/2 hours. Then go to Step 5.

d. VOLTAGE IS BELOW 12V – Replace battery.

5. LOAD TEST (Step 5)

(1) Connect a voltmeter and a battery load tester across the battery terminals.

(2) Apply 300 ampere load for 15 seconds to remove surface charge from the battery.

Remove load.

(3) Wait 15 seconds to let battery recover. Then apply specified load from specifications (See Main Data and Specifications in this section).

Read voltage after 15 seconds, then remove load.

a. VOLTAGE DOES NOT DROP BELOW THE MINIMUM LISTED IN FOLLOWING TABLE – The battery is good and should be returned to service.

b. VOLTAGE IS LESS THAN MINIMUM LISTED – Replace battery.

ESTIMATED TEMPERATURE		MINIMUM VOLTAGE
°F	°C	
70	21	9.6
60	16	9.5
50	10	9.4
40	4	9.3
30	–1	9.1
20	–7	8.9
10	–12	8.7
0	–18	8.5
The battery temperature must be estimated by feel and by the temperature the battery has been exposed to for the preceding few hours.		

ON-VEHICLE SERVICE

BATTERY CHARGING

Observe the following safety precautions when charging the battery:

1. Never attempt to charge the battery when the fluid level is below the lower level line on the side of the battery. In this case, the battery must be replaced.
2. Pay close attention to the battery during the charging procedure.

   Battery charging should be discontinued or the rate of charge reduced if the battery feels hot to the touch.

   Battery charging should be discontinued or the rate of charge reduced if the battery begins to gas or spew electrolyte from the vent holes.
3. In order to more easily view the hydrometer blue dot or ring, it may be necessary to jiggle or tilt the battery.
4. Battery temperature can have a great effect on battery charging capacity.
5. The sealed battery used on this vehicle may be either quick-charged or slow-charged in the same manner as other batteries.

   Whichever method you decide to use, be sure that you completely charge the battery. Never partially charge the battery.

JUMP STARTING

JUMP STARTING WITH AN AUXILIARY (BOOSTER) BATTERY

CAUTION: Never push or tow the vehicle in an attempt to start it. Serious damage to the emission system as well as other vehicle parts will result.

Treat both the discharged battery and the booster battery with great care when using jumper cables. Carefully follow the jump starting procedure, being careful at all times to avoid sparking.

WARNING: Failure to carefully follow the jump starting procedure could result in the following:

1. **Serious personal injury, particularly to your eyes.**
2. **Property damage from a battery explosion, battery acid, or an electrical fire.**
3. **Damage to the electronic components of one or both vehicles.**

Never expose the battery to an open flame or electrical spark. Gas generated by the battery may catch fire or explode. Remove any rings, watches, or other jewelry before working around the battery. Protect your eyes by wearing an approved set of goggles.
Never allow battery fluid to come in contact with your eyes or skin.
Never allow battery fluid to come in contact with fabrics or painted surfaces.
Battery fluid is a highly corrosive acid.
Should battery fluid come in contact with your eyes, skin, fabric, or a painted surface, immediately and thoroughly rinse the affected area with clean tap water.
Never allow metal tools or jumper cables to come in contact with the positive battery terminal, or any other metal surface of the vehicle. This will protect against a short circuit.
Always keep batteries out of the reach of young children.

JUMP STARTING PROCEDURE

1. Set the vehicle parking brake.

   If the vehicle is equipped with an automatic transmission, place the selector lever in the “PARK” position.

   If the vehicle is equipped with a manual transmission place the shift lever in the “NEUTRAL” position.

   Turn “OFF” the ignition.

   Turn “OFF” all lights and any other accessory requiring electrical power.
2. Look at the built-in hydrometer.

   If the indication area of the built-in hydrometer is completely clear, do not try to jump start.
3. Attach the end of one jumper cable to the positive terminal of the booster battery.

   Attach the other end of the same cable to the positive terminal of the discharged battery.

   Do not allow the vehicles to touch each other.

   This will cause a ground connection, effectively neutralizing the charging procedure.

   Be sure that the booster battery has a 12 volt rating.
4. Attach one end of the remaining cable to the negative terminal of the booster battery.

   Attach the other end of the same cable to a solid engine ground (such as the A/C compressor bracket or the generator mounting bracket) of the vehicle with the discharged battery.

   This ground connection must be at least 450 mm (18 in) from the battery of the vehicle whose battery is being charged.

WARNING: Never attach the end of the jumper cable directly to the negative terminal of the dead battery.

5. Start the engine of the vehicle with the good battery.

   Make sure that all unnecessary electrical accessories have been turned “OFF”.
6. Start the engine of the vehicle with the dead battery.
7. To remove the jumper cables, follow the above directions in the reverse order.

   Be sure to first disconnect the negative cable from the vehicle with the discharged battery.

REMOVAL AND INSTALLATION OF THE BATTERY

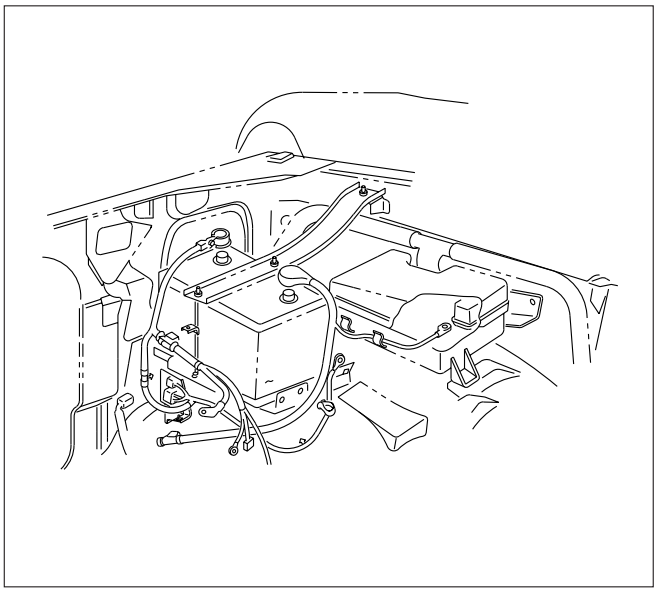

065RW029

REMOVAL

1. Negative cable
2. Positive cable
3. Retainer screw and rods
4. Retainer
5. Battery

INSTALLATION

To install the battery, follow the removal procedure in the reverse order, noting the following points:

1. Make sure that the rod is hooked on the body side.

MAIN DATA AND SPECIFICATIONS

Model (JIS)	80D26R–MF	75D26R–MF
Voltage (V)	12	12
Cold-Cranking Performance (Amp)	582	490
Reserve Capacity (Min)	133	123
Load Test (Amp)	300	300
Fast Charge Maximum Amperage (Amp)	6.5	6.5

STARTING SYTEM

GENERAL DESCRIPTION

STARTING CIRCUIT

The cranking system consists of a battery, starter, starter switch, starter relay, etc. and these main components are connected as shown in the illustration.

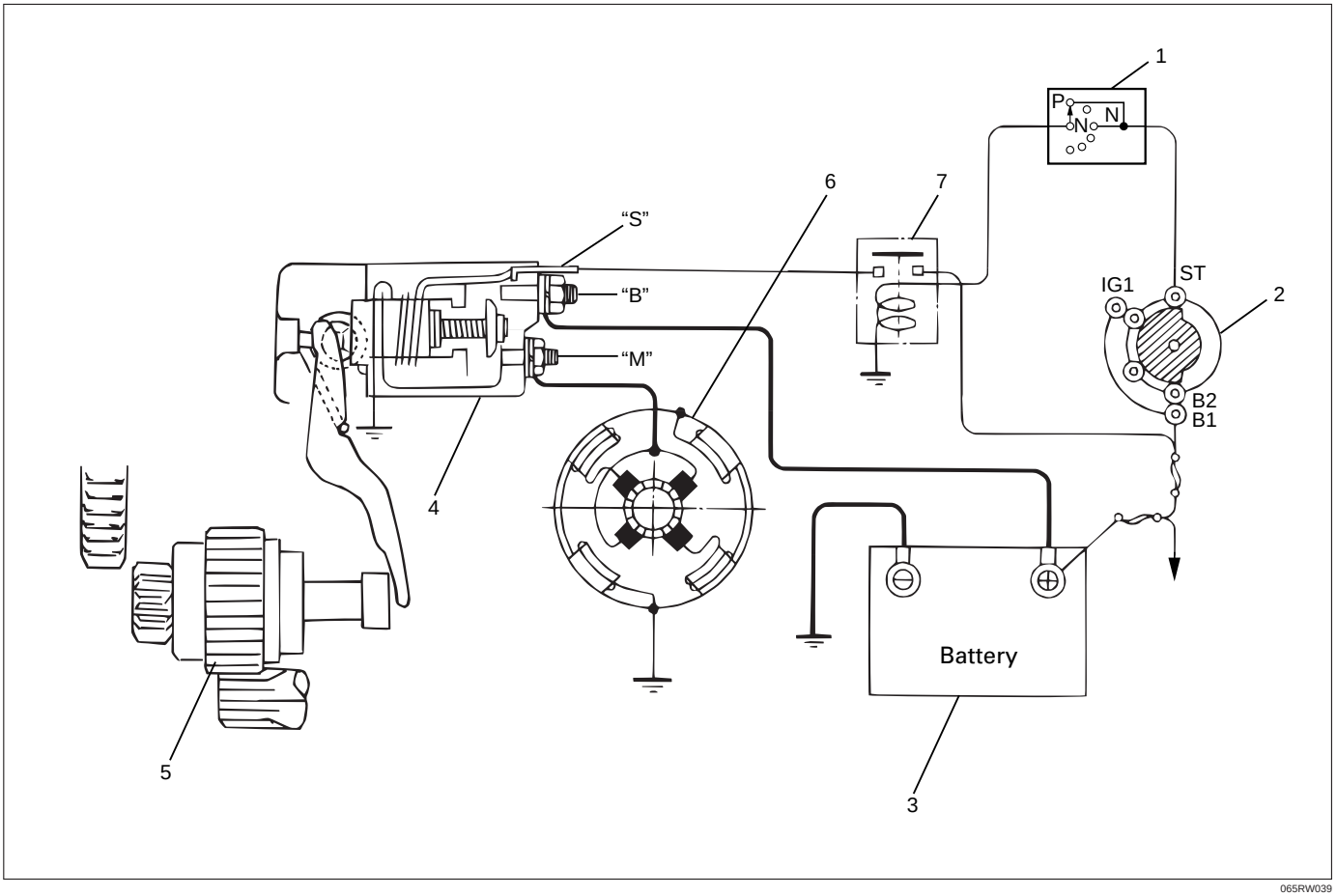

065RW039

Legend

(1) Inhibitor Switch
(2) Starter Switch
(3) Battery
(4) Magnetic Switch
(5) Pinion Clutch
(6) Starter Motor
(7) Starter Relay

STARTER

The starting system employs a magnetic type reduction starter in which the motor shaft is also used as a pinion shaft. When the starter switch is turned on, the contacts of the magnetic switch are closed, and the armature rotates. At the same time, the plunger is activated, and the pinion is pushed forward by the shift lever to mesh with ring gear.

Then, the ring gear runs to start the engine. When the engine starts and the starter switch is turned off, the plunger returns, the pinion is disengaged from the ring gear, and the armature stops rotation. When the engine speed is higher than the pinion, the pinion idles, so that the armature is not driven.

RELATION BETWEEN STARTER SWITCH AND STARTER

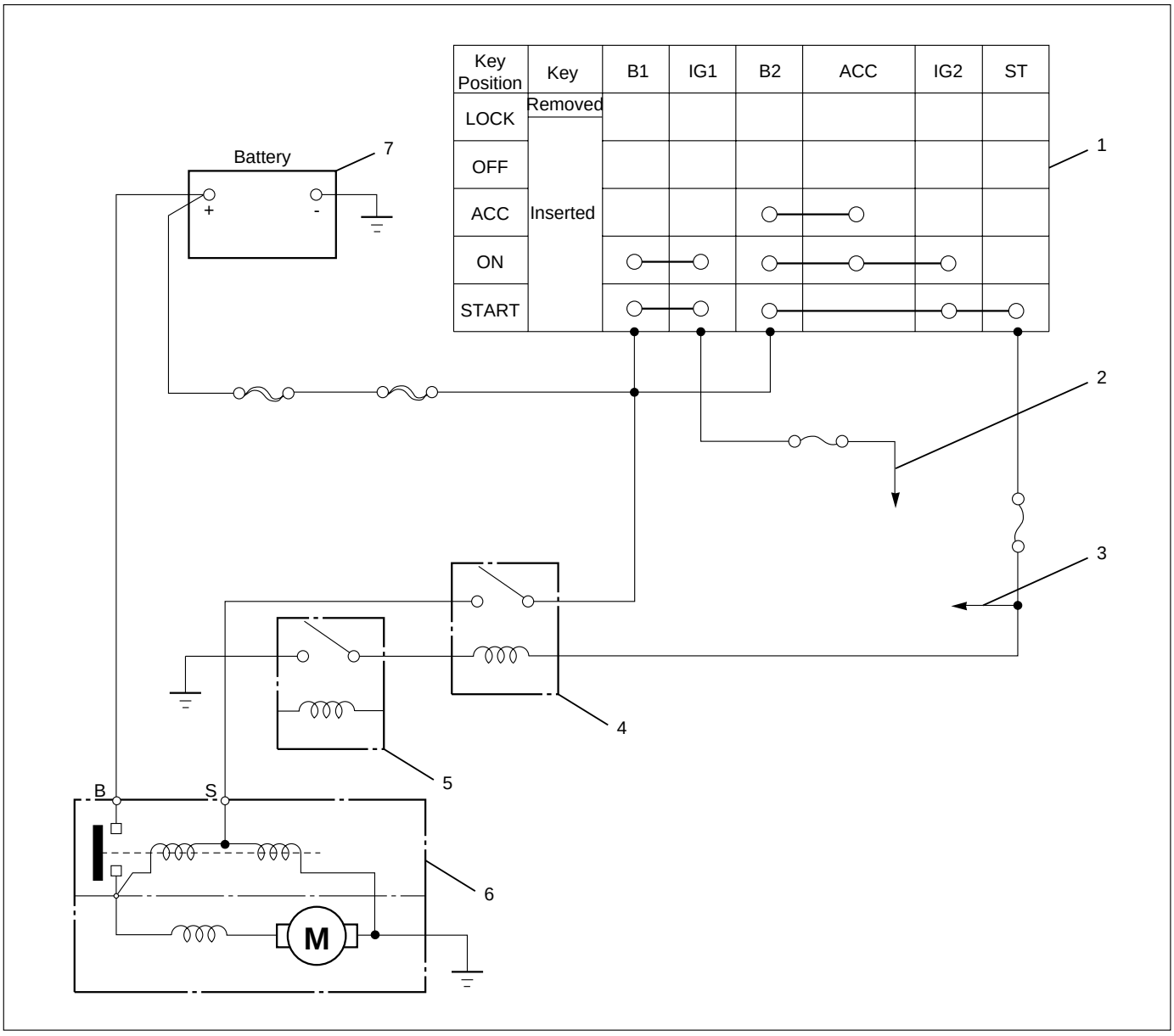

Legend

(1) Starter Switch
(2) To Generator
(3) To QOS4 Control
(4) Starter Relay
(5) Immobilizer Relay (for Europe)
(6) Magnetic Switch
(7) Battery

ON-VEHICLE SERVICE

STARTER

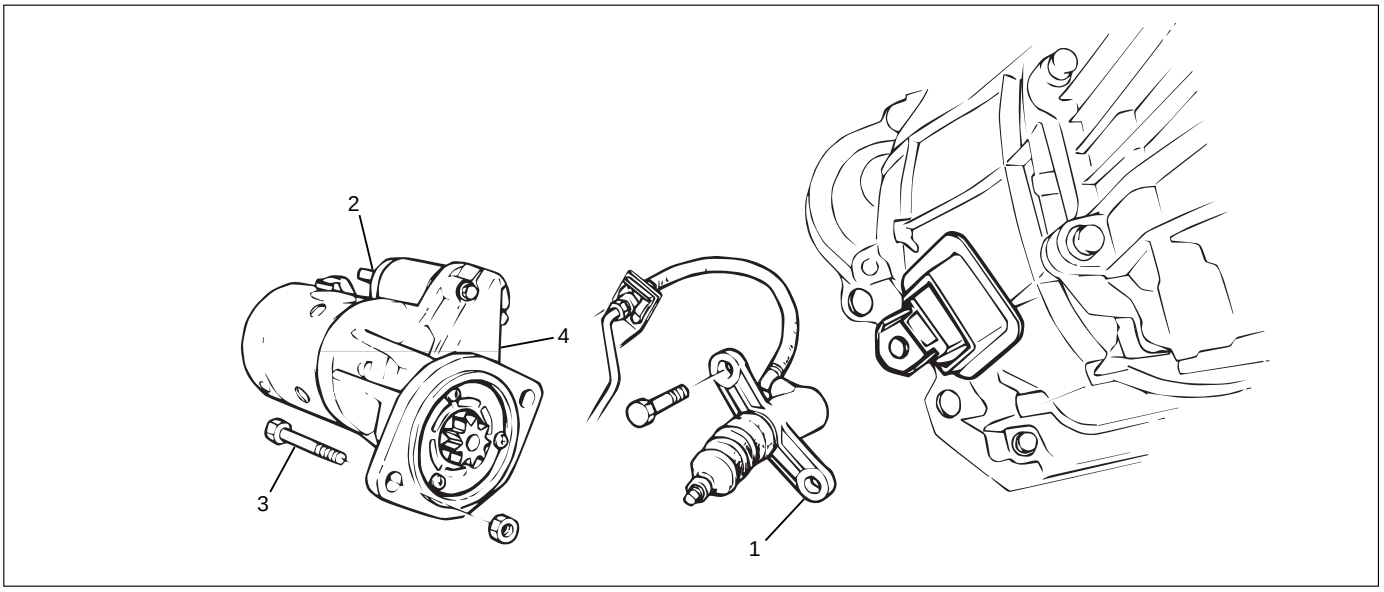

065RW00003

Legend
(1) Clutch Slave Cylinder
(2) Magnetic Switch
(3) Bolt
(4) Starter Assembly

REMOVAL

1 Battery ground cable
2 Remove the slave cylinder and bind with wire it to the frame.
3 Disconnect the connector from terminals “B” and “S”.
4. Remove mounting bolts
5. Remove starter assembly

INSTALLATION

1. Install starter assembly, tighten the fixing bolt and nut to the specified torque.

Torque: 85 N·m (8.7 kg·m/63 lb ft)

2. Reconnect the starter terminals.

CAUTION: When installing the starter motor wiring, do not allow the S-circuit wiring to obstruct the B-circuit terminal.

Install the wiring exactly as shown on the attached illustration.

If S-circuit wiring obstructs the B-circuit terminal, harness cover breakage and short circuiting may occur.

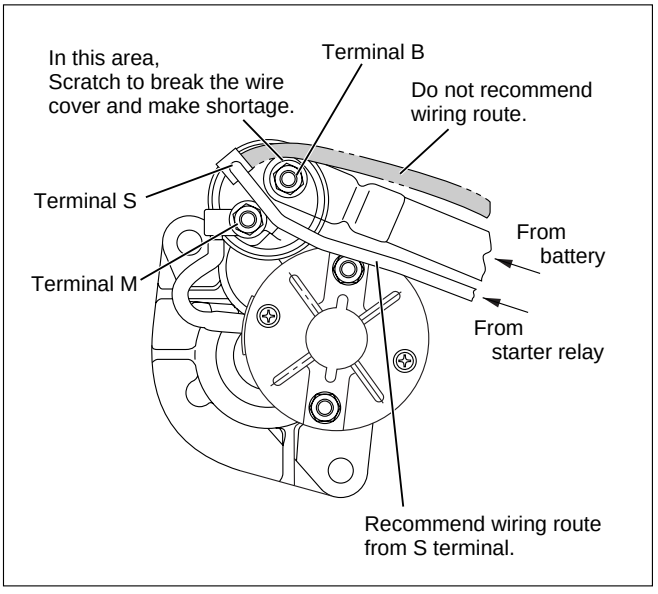

065RW00002

2-1. Install the wire harness from the battery to the terminal “B” with tightening torque 8.6 N·m (0.88 kg·m/6.4 lb·ft).
2-2. Cover the terminal “B” together with wire harness.
2-3. Connect the wire harness from starter relay to the terminal “S”.

3. Install the clutch slave cylinder, tighten the fixing bolt and nut to the specified torque.

Torque: 78 N·m (8.0 kg·m/58 lb·ft)

UNIT REPAIR

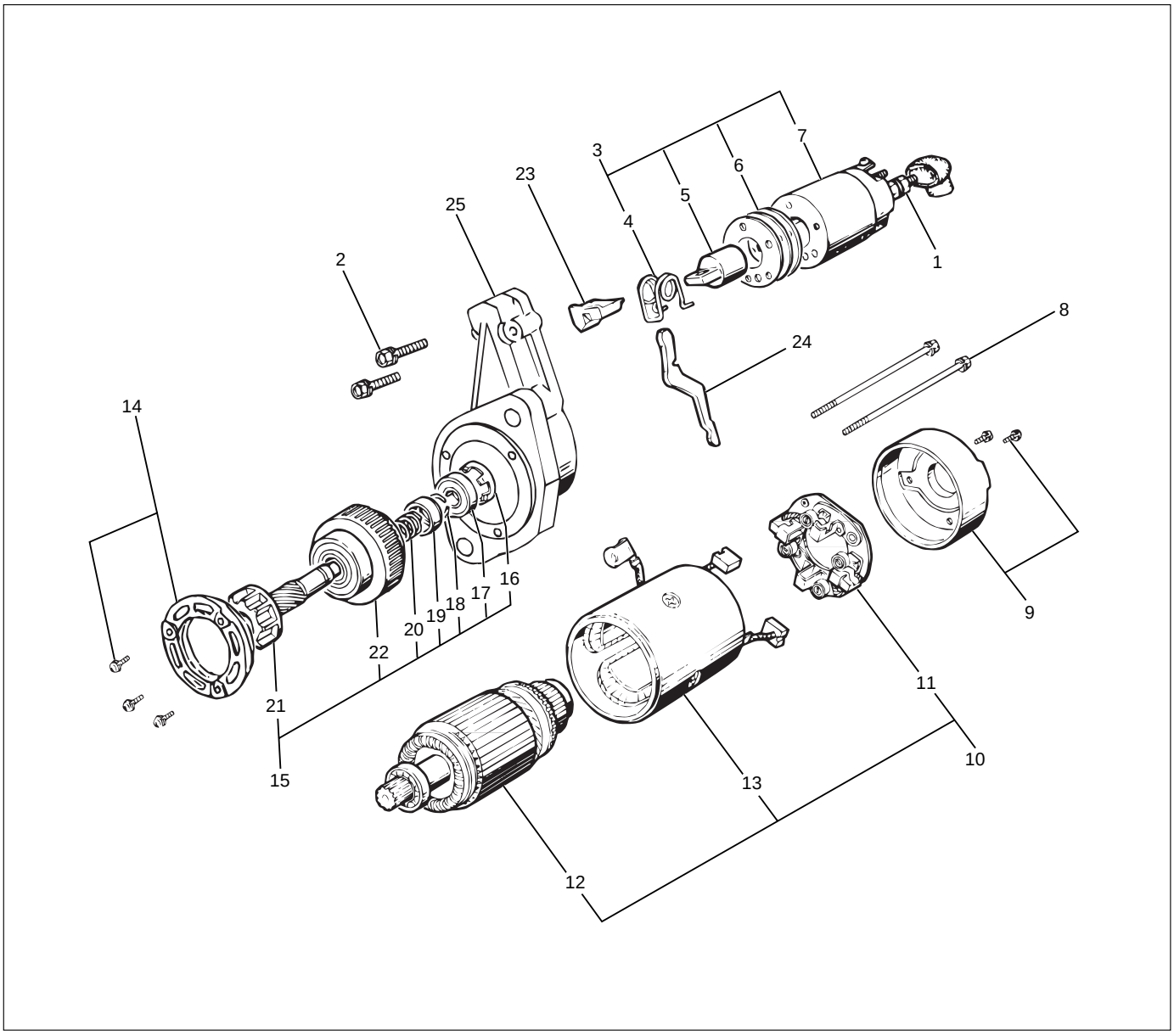

065RW040

Legend

(1) Terminal
(2) Bolt
(3) Magnetic Switch
(4) Torsion Spring
(5) Plunger
(6) Shim
(7) Magnetic Switch
(8) Through Bolt
(9) Rear Cover
(10) Motor Assembly
(11) Brush Holder
(12) Armature
(13) Yoke Assembly
(14) Bearing Retainer
(15) Pinion Assembly
(16) Bearing Holder
(17) Bearing
(18) Clip
(19) Stopper
(20) Spring
(21) Pinion Shaft
(22) Clutch
(23) Dust Cover
(24) Shift Lever
(25) Gear Case

DISASSEMBLY

1. Terminal Nut
   1) Loosen the nut on terminal “M” of magnetic switch and disconnect the connector cable.

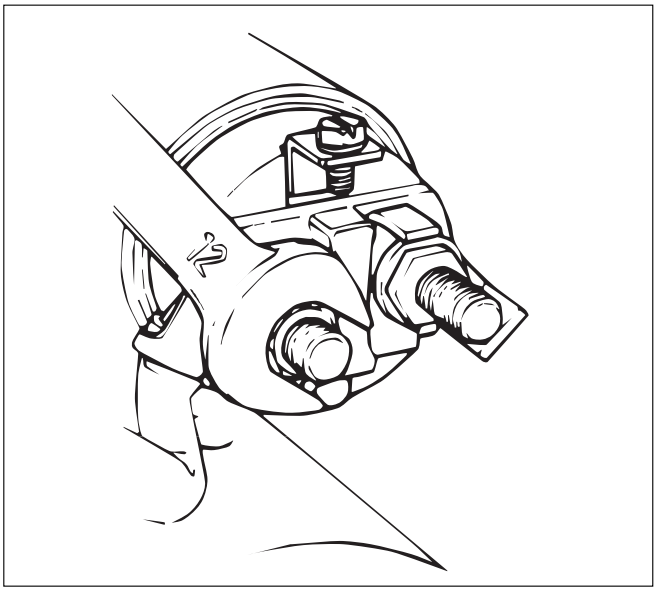

065RW044

2. Bolt (2 pcs)
3. Magnetic Switch Assembly
4. Torsion Spring
   1) Remove torsion spring from magnetic switch assembly.
5. Plunger
6. Shim
7. Magnetic Switch
8. Through Bolt
9. Rear Cover
   1) Remove the through bolts, then remove the rear cover.

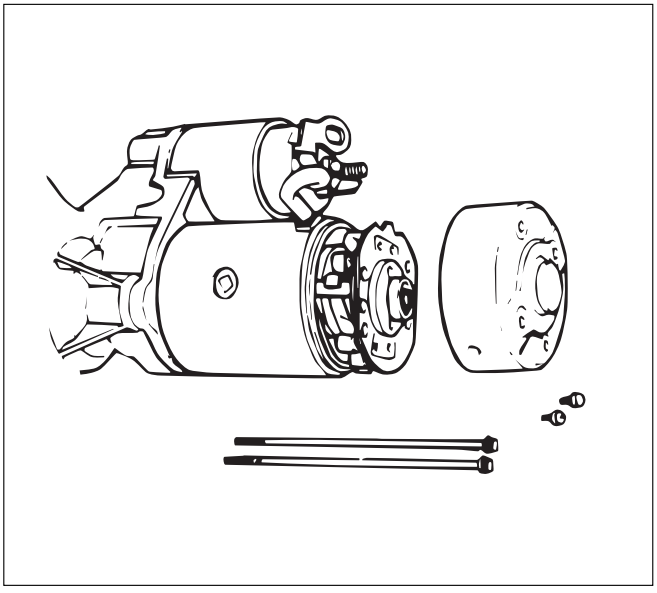

065RW043

10. Motor Assembly
11. Brush Holder
    1) Raise a brush spring to detach the negative side of the brushes (2 pcs) from the commutator face and remove the positive side of brushes (2 pcs) from the positive side of brushes (2 pcs) from the brush holder.

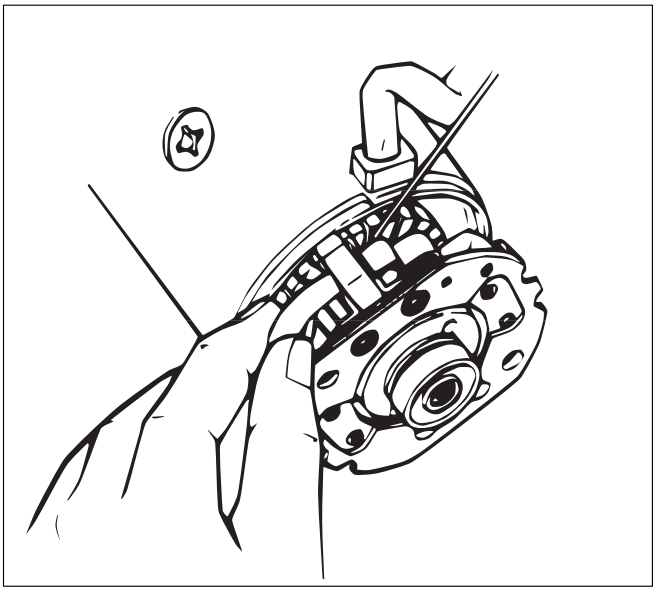

065RW042

12. Armature
13. Yoke Assembly
14. Bearing Retainer
15. Pinion Assembly
16. Bearing Holder
17. Bearing
18. Pinion Stopper Clip
    1) Remove the stopper clip using a screw driver of equivalent size.
19. Pinion Stopper
20. Return Spring
21. Pinion Shaft
22. Clutch
23. Dust Cover
24. Shift Lever
25. Gear Case

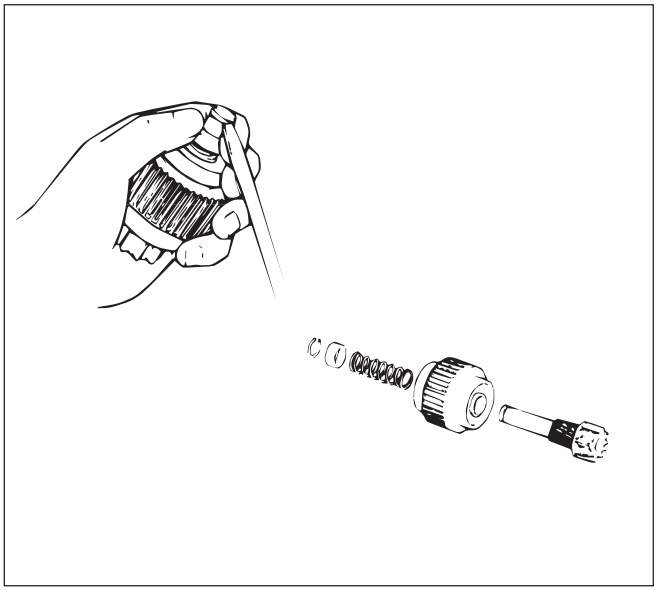

065RW041

INSPECTION AND REPAIR

Repair or replace necessary parts if extreme wear or damage is found during inspection.

Armature

1) Measure the outer diameter of commutator, and replace with a new one if it is out of the limit.

Standard: 38.0 mm (1.50 in)
Limit: 36.5 mm (1.44 in)

2) Check for continuity between commutator and segments. Replace commutator if there is no continuity (i.e., disconnected).

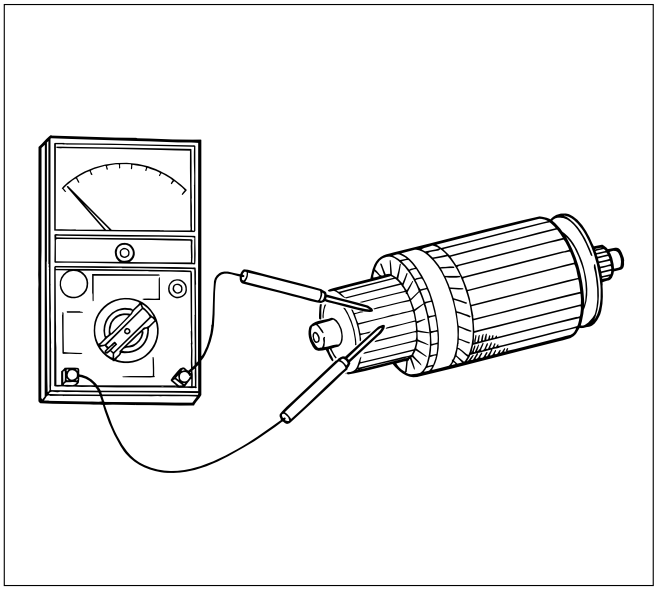

065RS015

3) Check for continuity between commutator and shaft. Also, check for continuity between commutator and armature core, armature core and shaft. Replace commutator if there is continuity (i.e., internally grounded).

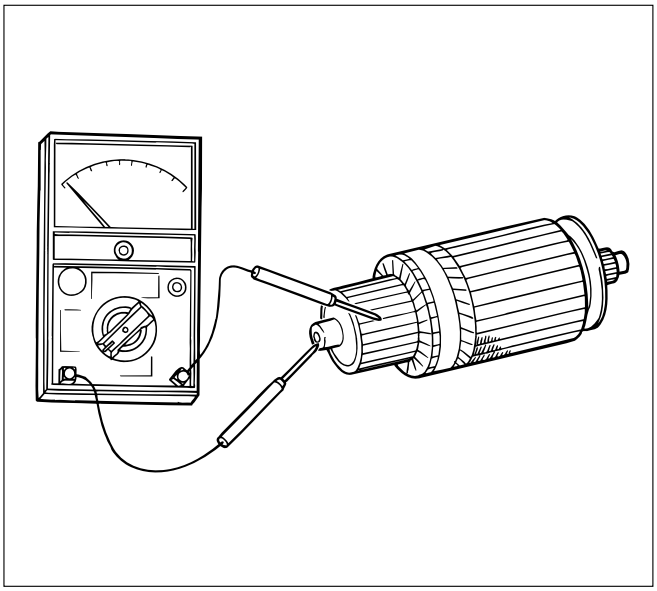

065RS016

4) Measure runout of armature core and commutator with a dial gage. Repair or replace, if it exceeds the limit.

Armature

Standard: 0.05 mm (0.002 in) Max.
Limit: 0.1 mm (0.004 in)

Commutator

Standard: 0.05 mm (0.002 in) Max.
Limit: 0.1 mm (0.004 in)

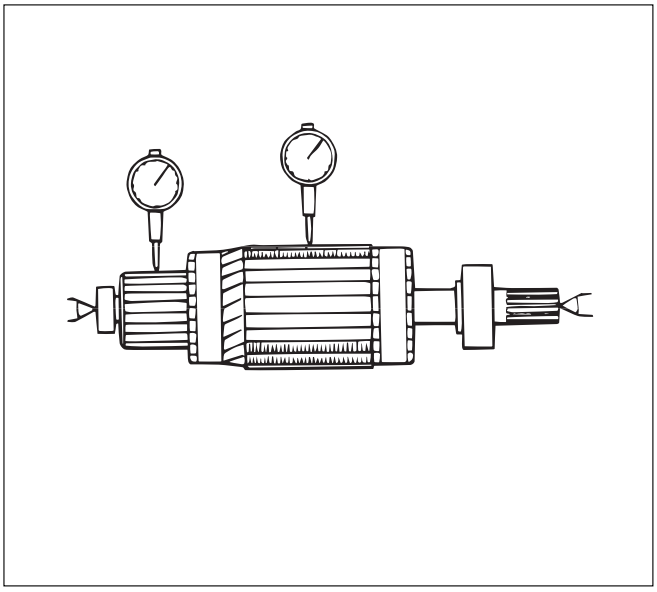

045RW045

5) Polish the commutator surface with sand paper #500 to #600 if it is rough.

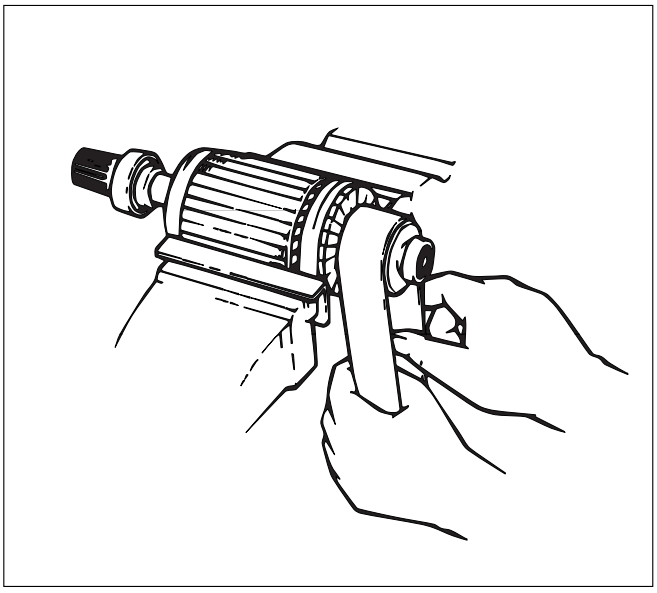

065RW105

6) Measure the depth of insulator in commutator. Repair, if it is below the limit.

Standard: 0.5 – 0.8 mm (0.02 – 0.03 in)

Limit: 0.2 mm (0.008 in)

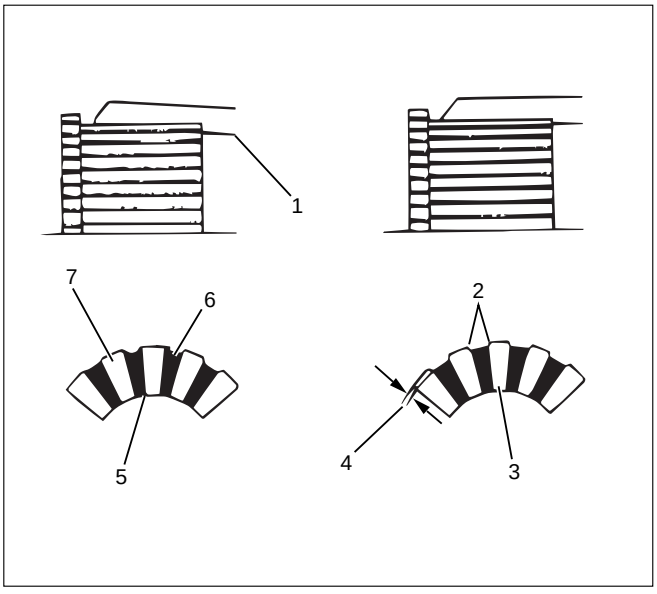

065RW102

Legend

(1) Steel Saw
(2) Chamfer
(3) Correct Condition
(4) Depth of Insulator
(5) Incorrect Condition
(6) Insulator
(7) Commutator Segment

Brush

1) Measure the length of brush.
   Replace with a new one, if it is below the limit.

Standard: 18.0 mm (0.71 in)

Limit: 11.0 mm (0.43 in)

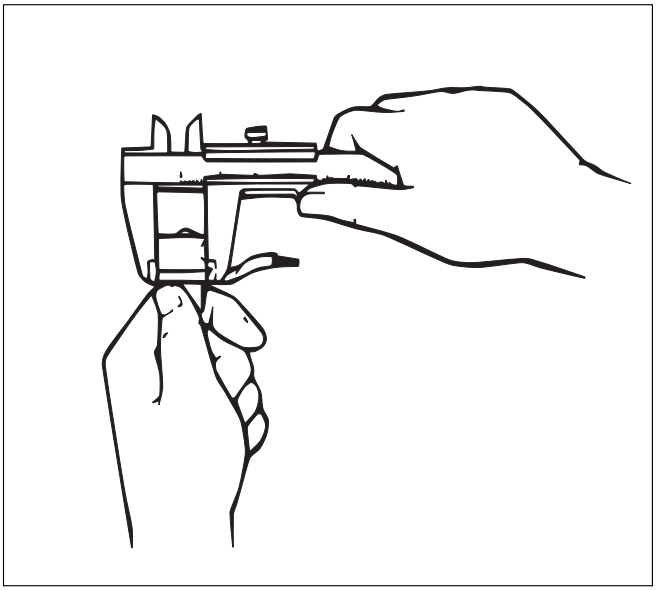

065RW103

Brush holder

1) Check for continuity between brush holder (+) and base (–). Replace, if there is continuity (i.e., insulation is broken).

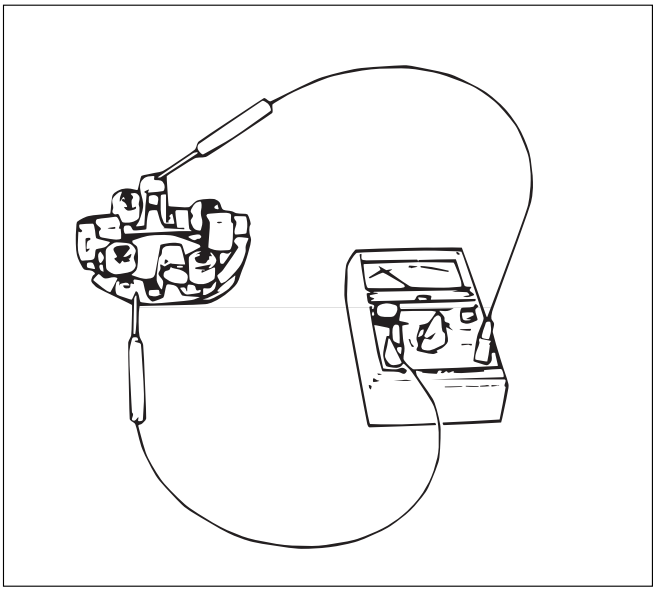

065RW104

2) Inspect the brush springs for wear, damage or other abnormal conditions.

Standard: 28 – 35 N (2.9 – 3.6 kg/6.4 – 7.9 lb)

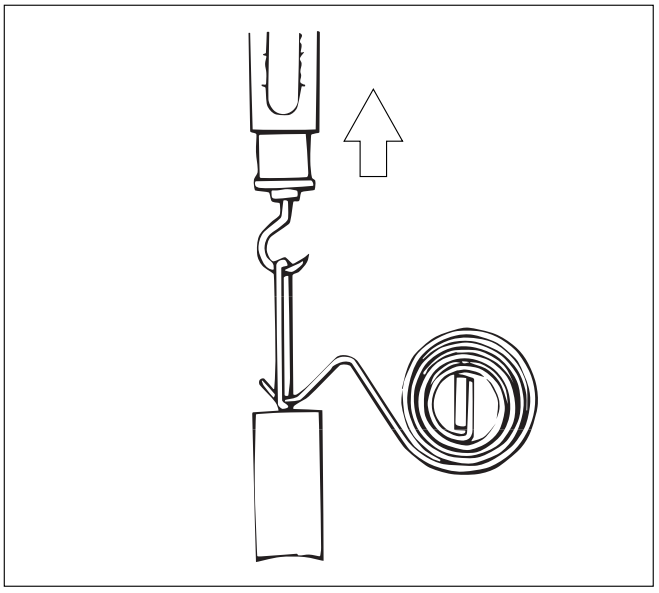

065RW052

Magnetic switch

1) Continuity of shunt coil

   Check for continuity between terminals S and coil case.

   Replace, if there is not continuity (i.e., coil is disconnected.)

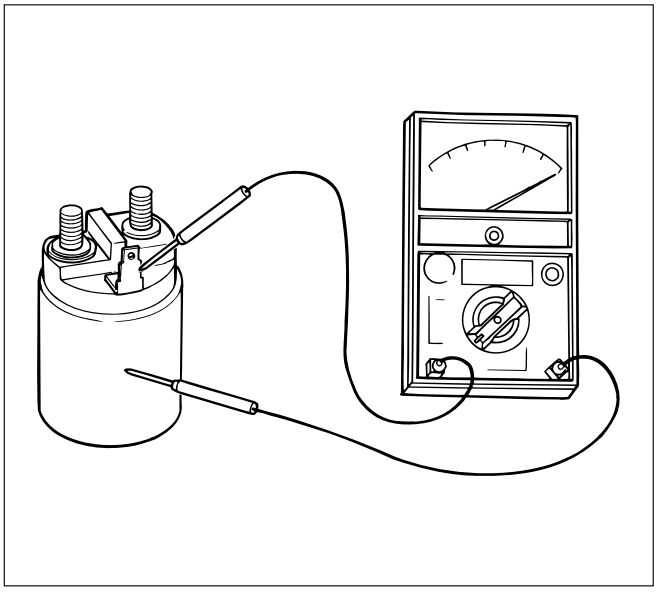

065RW016

2) Continuity of series coil

   Check for continuity between terminals S and M.

   Replace, if there is no continuity (i.e., coil is disconnected).

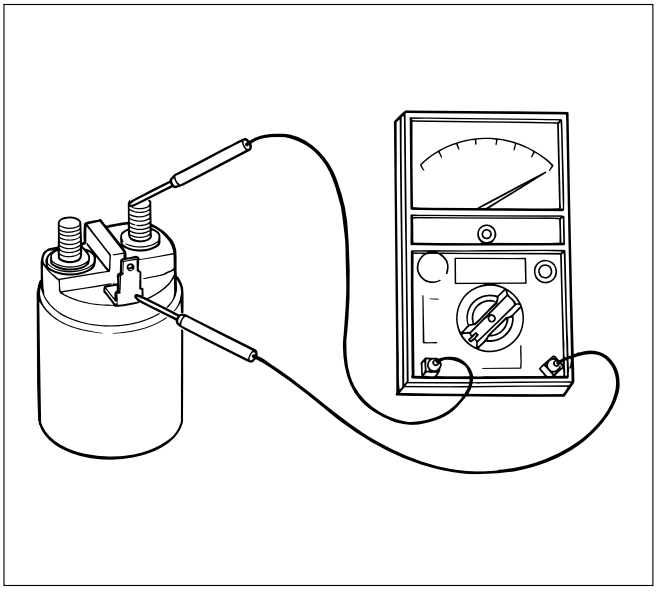

065RW017

3) Continuity of contacts

   With the plunger faced downward, push down the magnetic switch. In this state, check for continuity between terminals B and M. Replace, if there is no continuity (i.e., contacts are faulty).

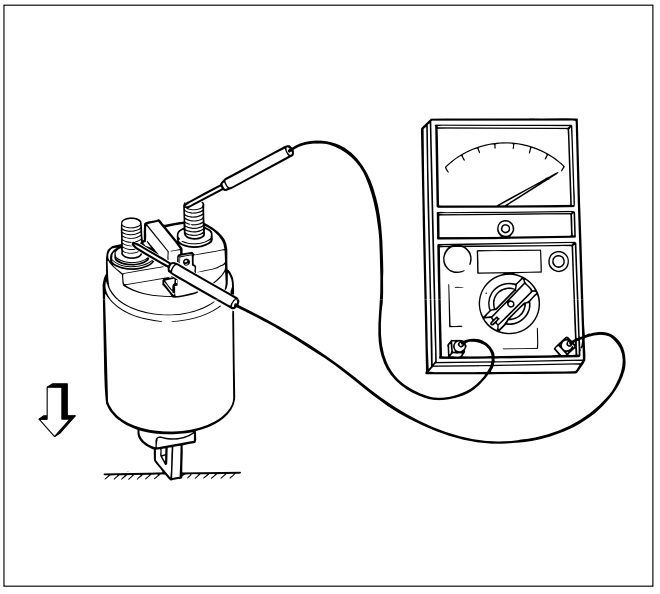

065RW018

Pinion

1) Check by hand to see if the pinion rotates smoothly in the dirve direction, or if it is locked when it is rotated reversely.
   If not, replace the pinion.

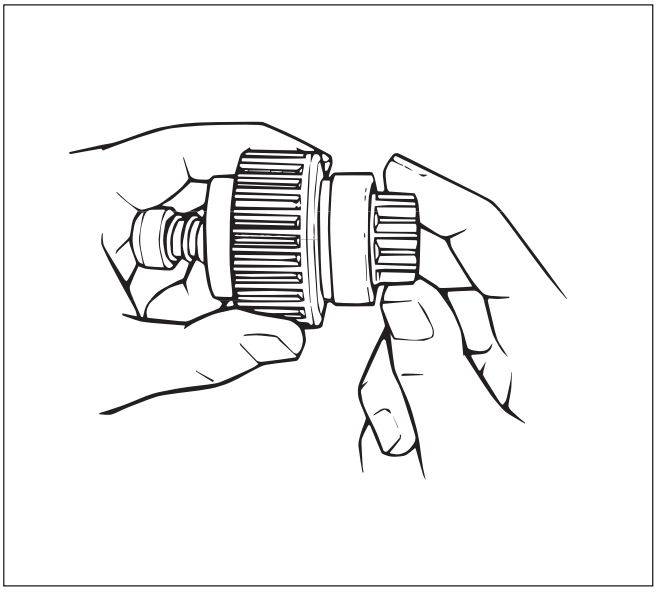

065RW048

Yoke assembly

1) Check the magnet inside the yoke.
   Replace the yoke assembly if it is broken.

REASSEMBLY

To install, follow the removal steps in the reverse order, noting the following points:

Grease application places

1) Gears in reduction gear
2) Shift lever operating portion
3) Sliding potion of pinion
4) Plunger sliding portion of magnetic switch

Pinion jump-out dimension

1) Connect the (+) cable of battery to terminal S and the (–) cable to terminal M. Turn the switch on, and measure pinion travel dimension “L” in thrust direction from the jump-out position.

In measuring the dimension, pull the pinion out a little in the arrow direction.

Dimension L: 0.3 – 1.5 mm (0.01 – 0.06 in)

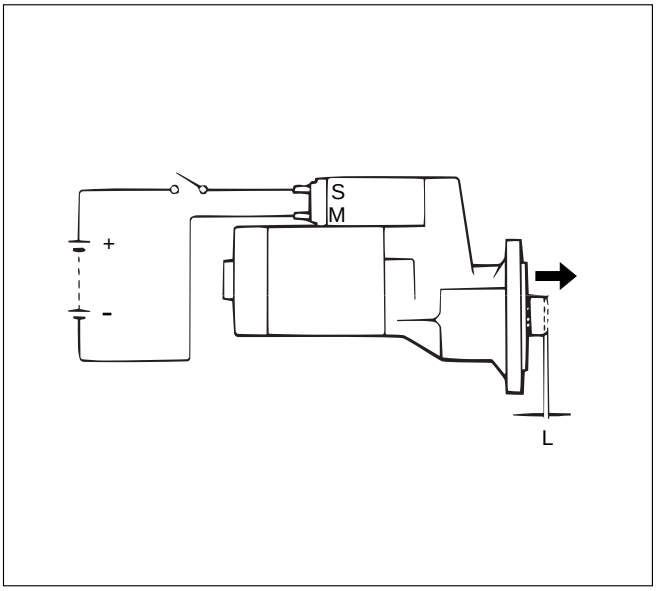

065RW054

If the measured value is out of standard, adjust the of shims.

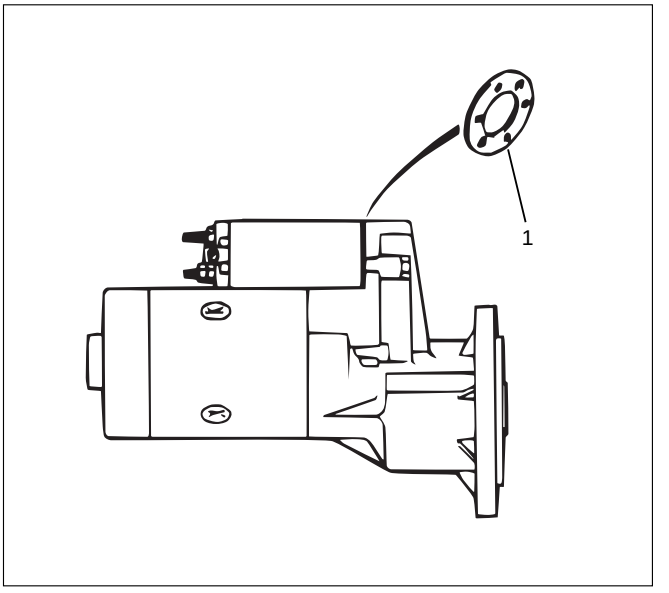

065RW053

Legend
(1) Shim

MAGNETIC SWITCH

Pull-out test

Connect the magnetic switch to the battery as shown. The negative side to the “M” terminal and the magnetic switch body (housing); the positive side to the “S” terminal. If the pinion has been ejected, the pull-in coil is satisfactory.

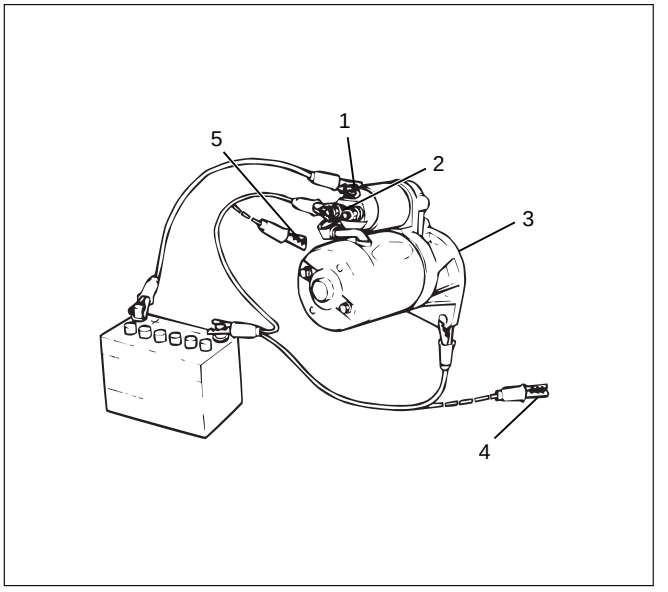

065RW055

Legend
(1) Terminal “S”
(2) Terminal “M”
(3) Starter
(4) For Return Test
(5) For Hold-In Test

Hold-in test

1. Next disconnect the “M” terminal.
2. The pinion should remain in the ejected position.

Return test

When the switch body is disconnected, the pinion should return quickly.

CHARGING SYSTEM

GENERAL DESCRIPTION

The charging system is the IC integral regulator charging system and its main components are connected as shown in Figure.
The regulator is a solid state type and it is mounted along with the brush holder assembly inside the generator installed on the rear end cover.

The generator does not require particular maintenance such as voltage adjustment. The rectifier connected to the stator coil has nine diodes to transform A.C. voltage into D.C. voltage. This D.C. voltage is connected to the output terminal of generator.

GENERATOR

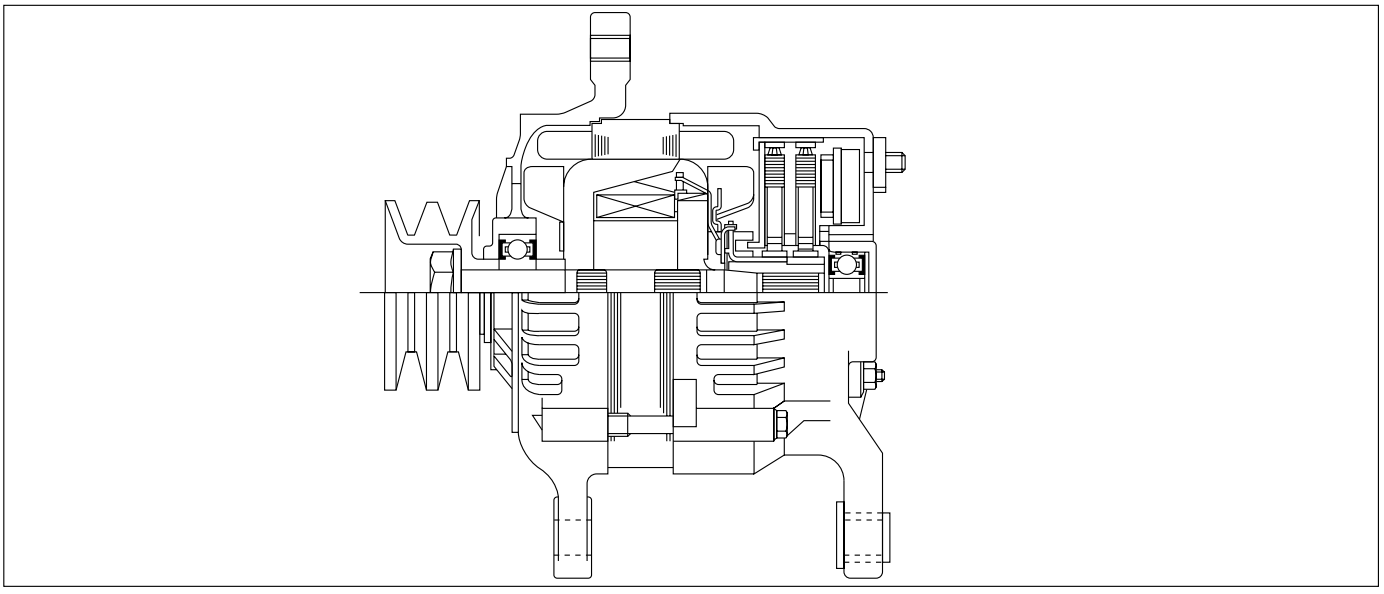

A06RW001

CHARGING CIRCUIT

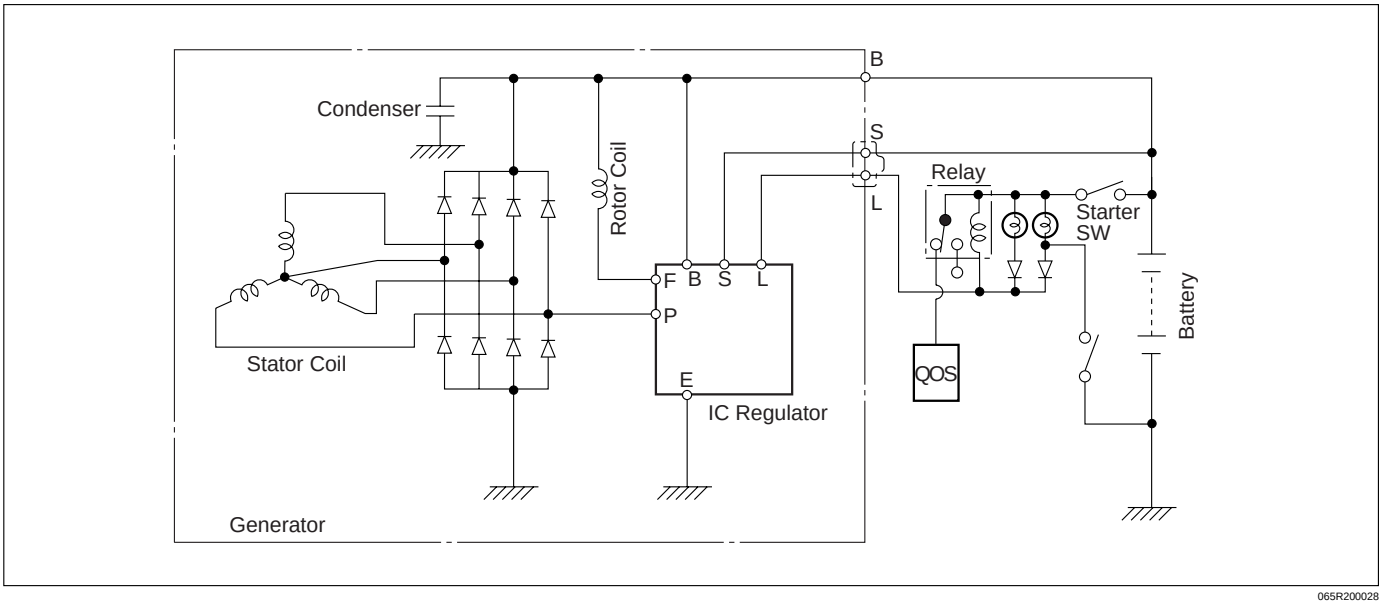

065R200028

DIAGNOSIS

GENERAL ON-VEHICLE INSPECTION

The operating condition of the charging system is indicated by the charge warning lamp. The warning lamp comes on when the starter swtich is turned to “ON” position. The charging system operates normally if the lamp goes off when the engine starts. If the warning lamp shows abnormality or if undercharged or overcharged battery condition is suspected, perform diagnosis by checking the charging system as follows:

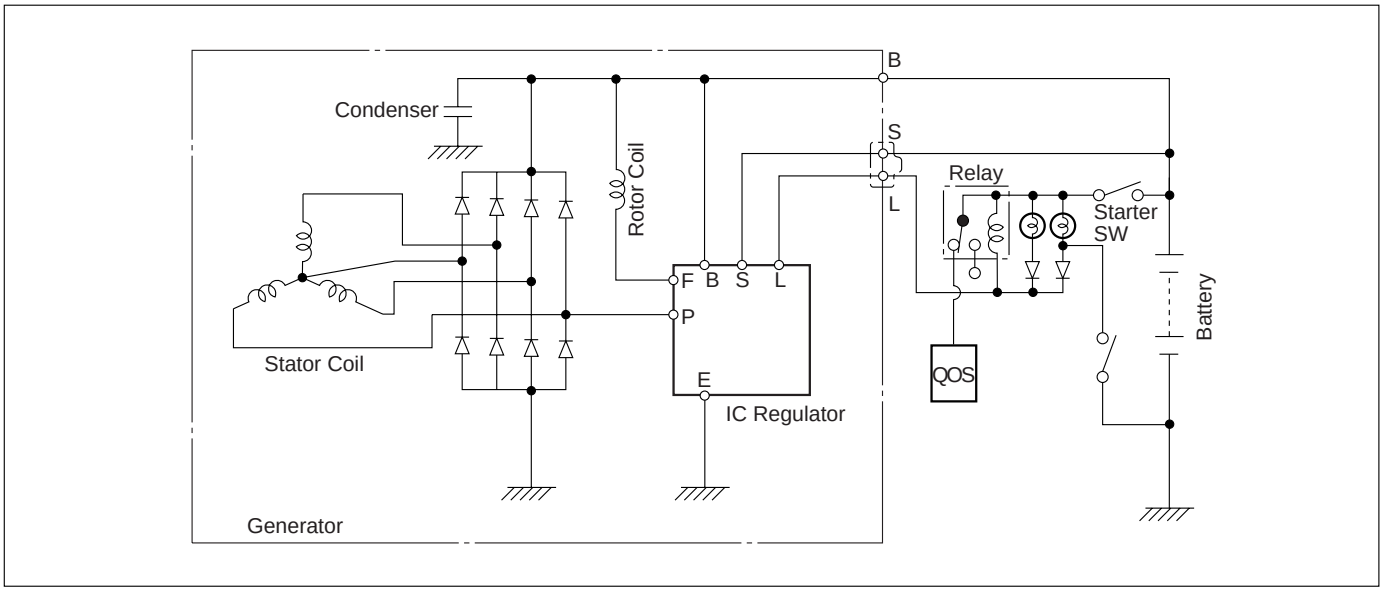

065R200028

1. Check visually the belt and wiring connector.
2. With the engine in stop status, turn the starter switch to “ON” position and observe the warning lamp.
   1) If lamp does not come on:
      Disconnect wiring connector from generator, and ground terminal “L” on connector side.
   2) If lamp comes on:
      Repair or replace the generator.

UNIT REPAIR

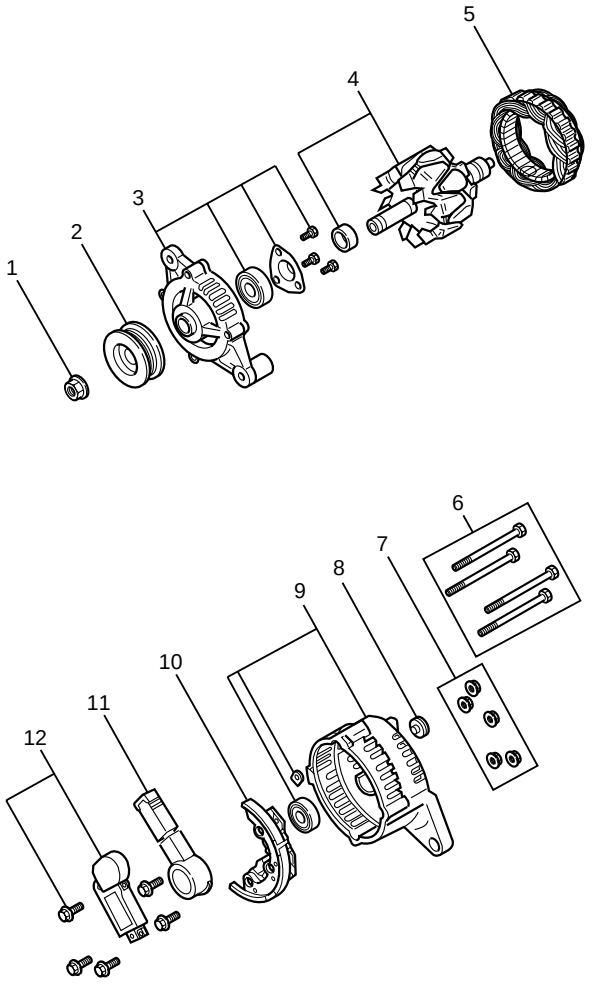

066RW022

Legend

(1) Pulley Nut
(2) Pulley
(3) Front Cover Assembly
(4) Rotor Assembly
(5) Stator Assembly
(6) Through Bolt
(7) Nut
(8) Terminal Insulator Plate
(9) Rear Cover Assembly
(10) Diode
(11) Brush Holder
(12) Regulator Assembly

DISASSEMBLY

1. Remove the through bolt.

   Insert the tip of a pry bar into the gaps between the front cover and the stator core.

   Pry apart and separate the front cover, rotor, the rear cover and stator.

NOTE: Take care not to scratch or otherwise damage the stator coil with pry bar.

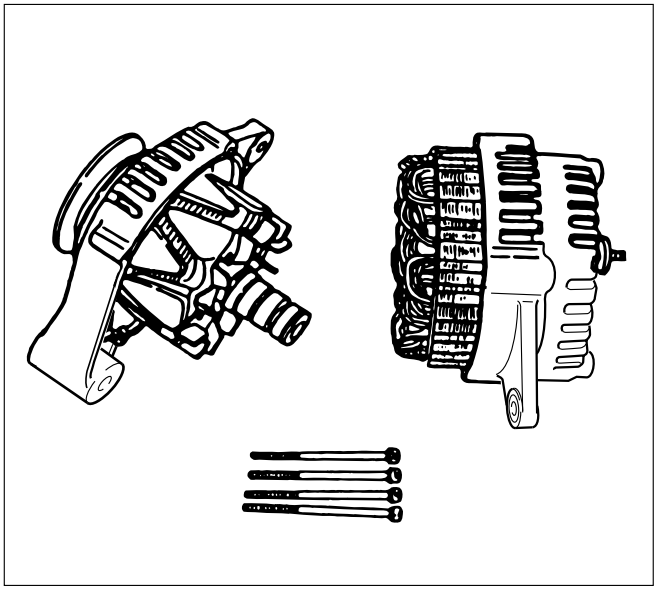

F06RT021

2. Clamp the rotor in a vise and then remove the nut and pulley.
3. Remove the rotor assembly from front cover.

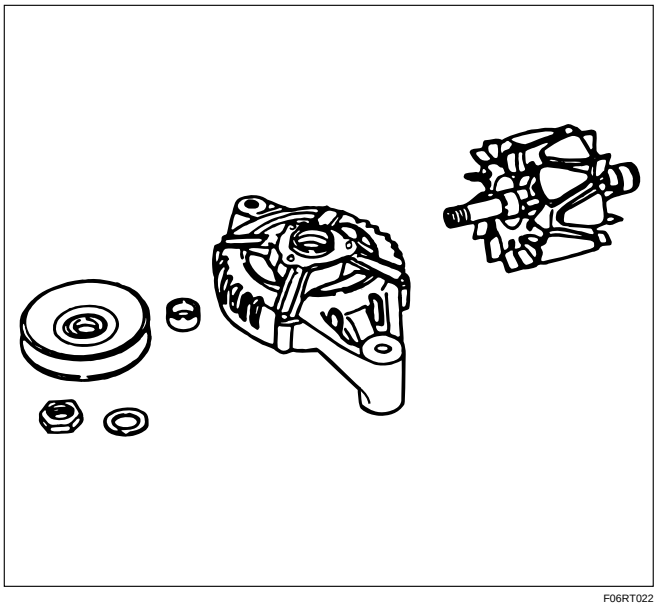

F06RT022

4. Remove screws with bearing retainer from front cover and remove bearing.

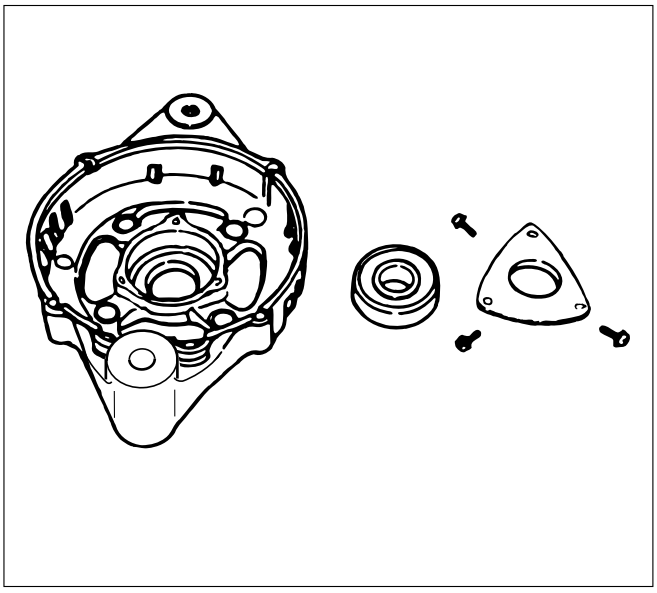

F06RT023

5. Remove the mounting nuts holding the “B ” terminal, the diode, and the brush holder.
6. Separate the rear cover from the stator.

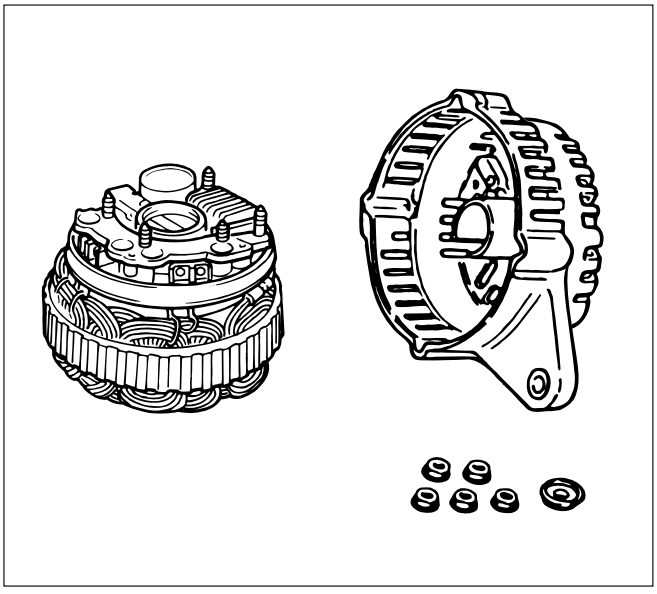

F06RT024

7. Remove bolts which secure stator terminal to rectifier terminal, and remove stator.

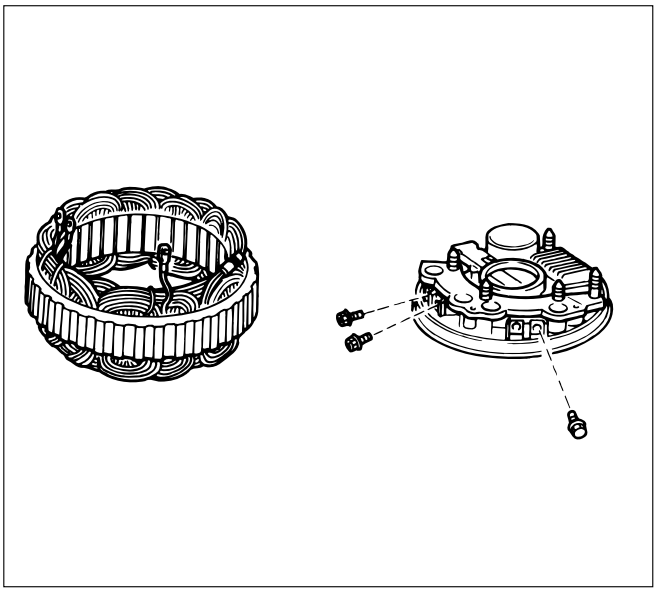

066RS030

8. Remove Bolts which secure regulator, rectifier and brush-holder, and separate these parts.

NOTE: Do not apply a shock or load to regulator, rectifier and brush holder.

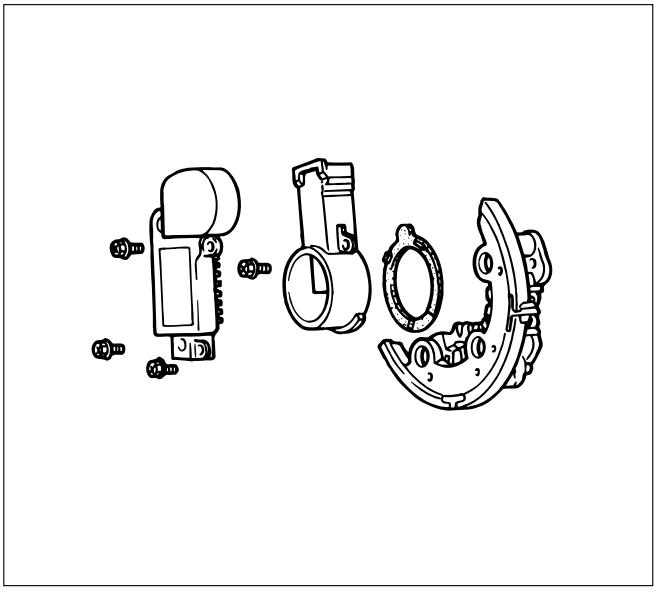

066RW025

INSPECTION AND REPAIR

Repair or replace necessary parts if extreme wear or damage is found during inspection.

Rotor Assembly

1. Check the face of the slip rings for contamination and roughness. If found to be scored, dress with a fine sandpaper (#500 – 600). If found to be contaminated, clean with a cloth saturated with alcohol.
2. Measure the outside diameter of the slip rings.

Standard: 27 mm (1.06 in)
Limit: 26 mm (1.02 in)

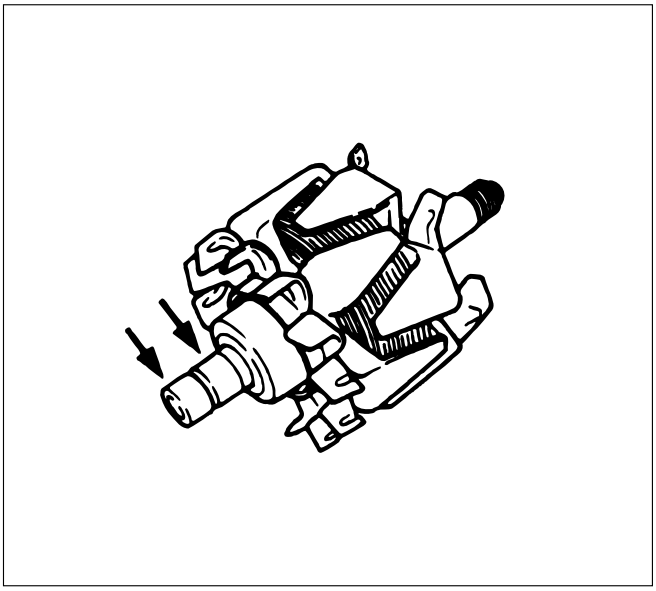

066RS032

3. Check resistance between slip rings, and replace if there is no continuity.

Standard: 3.75 Ω or less

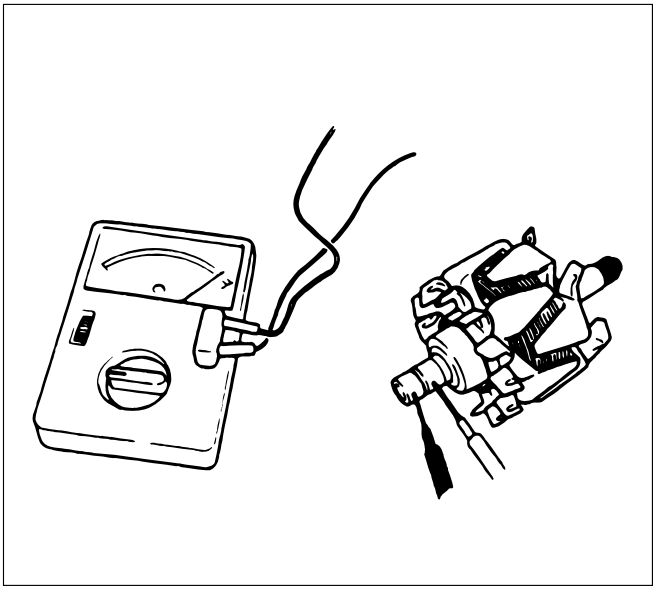

066RS033

4. Check for continuity between slip ring and rotor core.
   In case of continuity, replace the rotor assembly.

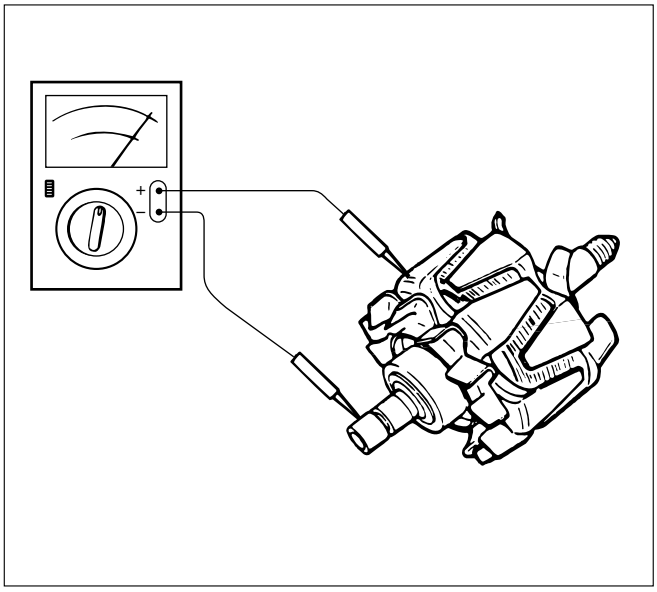

066RS017

Stator Coil

1. Check for continuity across the stator coils. If no continuity exists, replace the coils.
   Resistance value at 20°C

Standard: Approx 0.07Ω

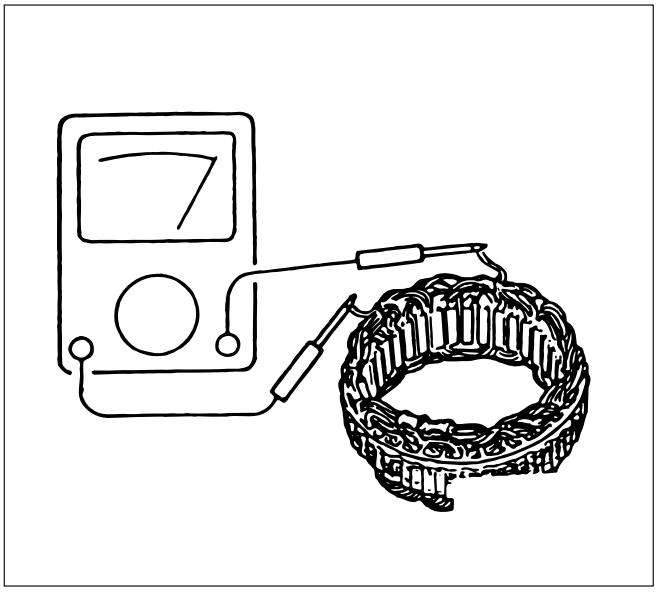

066RS034

2. Check for continuity across one of the stator coils and stator core. If a continuity exists, replace the coil.

Standard: More than 1MΩ

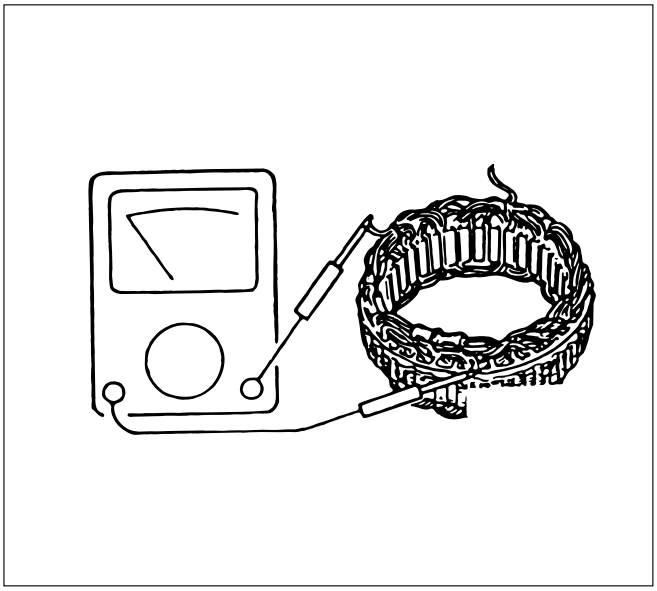

066RS035

Brush

Measure the brush length.
If more than limit, replace the brush.

Standard: 18.0 mm (0.709 in)
Limit: 5.5 mm (0.217 in)

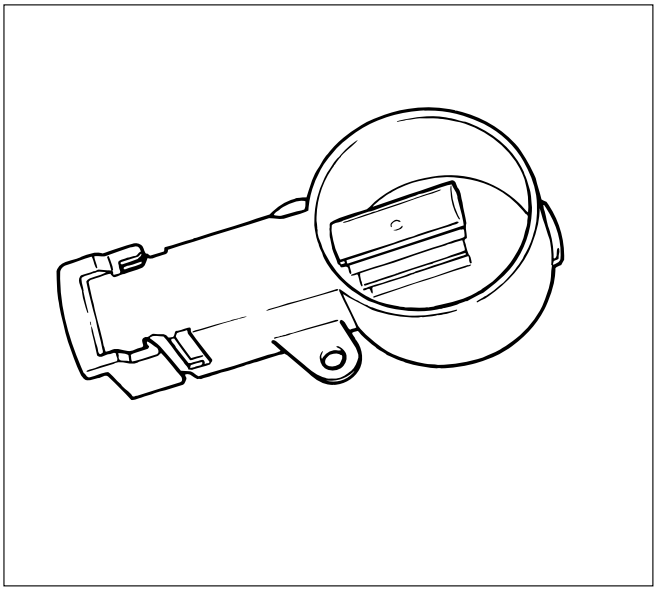

066RW024

Rectifier Assembly

1. Measure the resistance between each diode terminal and aluminum diode fin in forward and reverse directions with the connection of the tester leads switched. The diodes are normal if resistance is nearly zero ohms in one direction and is infinitely high in the other direction.
2. If a diode has no resistance or equal resistance in both directions, it is defective and should be replaced together with the holder.

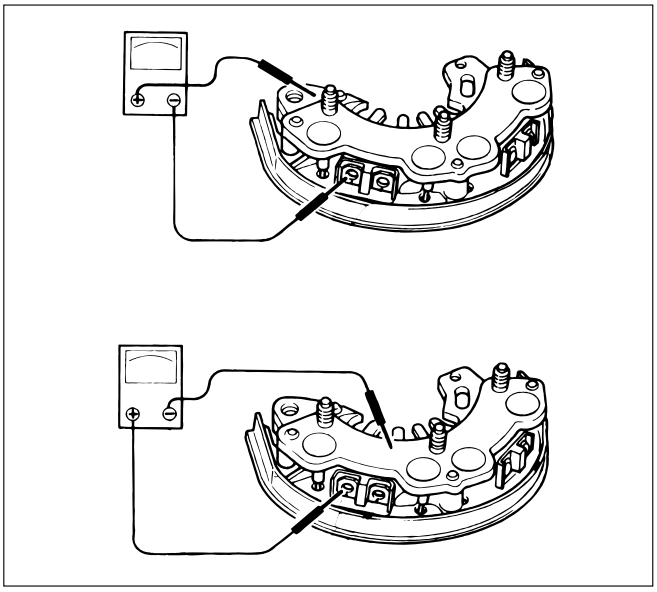

066RS036

IC Regulator Assembly

Connect a variable resistor, two 12V batteries, a fixed resistor, and a voltmeter to the IC regulator as shown in illustration.

a. Measuring equipment specifications
1. Fixed resistor (R1) : 10 Ohms / 3W
2. Variable resistor (Rv) : 0 – 300 Ohms / 12W
3. Batteries (BAT1, BAT2) : 12V (2 Batteries)
4. DC voltmeter : 0 – 50V / 0.5 steps (4 Check points)

b. Measuring procedure
1. Measure the voltage “V1” across the first battery (BAT1). If the reading is between 10 and 13 volts, the battery is normal.
2. Measure the voltage “V3” across both the batteries (BAT1, BAT2). If the reading is between 20 and 26 bolts, the batteries are normal.
3. Gradually increase the resistance of the variable resistor from zero. Measure the voltage “V2” (the voltage across the F and E terminals).

   Check to see that the voltage across “V1” changes at this time. If there is no change, the voltage regulator is faulty and must be replaced.
4. Measure the voltage at “V4” (the voltage across the variable resistor center tap and terminal E with the variable resistor resistance held constant). The measure voltage should be within the specified (14.4 ± 0.3 volts) limits. If it is not, the regulator must be replaced.

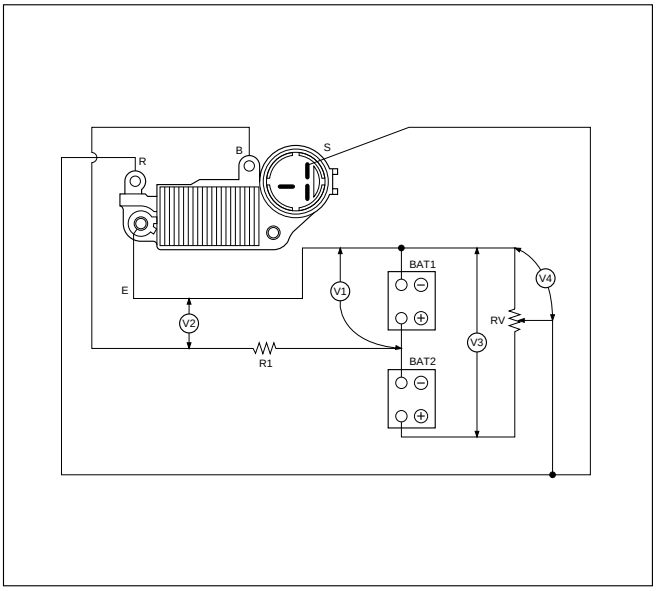

066RW029

Reassembly

To reassemble, follow the disassembly steps in the reverse order, noting the following points:

NOTE:

1) Never make battery connections with polarities reversed, or battery will be shorted via the diodes. This will cause damage to the diodes.
2) Do not connect generator B terminal to ground; it is connected directly to the battery.

   This cable will burn if it is connected to ground.
3) Make sure to disconnect the positive (+) terminal of the battery when quick-charging battery.

   Diodes may be damaged due to abnormal pulse voltage generated by the quick charger.
4) When reassembling the front section to rear section, insert a stiff wire into hole in the rear face of the rear cover from the outboard side to support the brush in raised position, then insert the front section to which rotor is assembled.
5) Reassemble parts carefully to be sure they fit into their original position, paying attention to the insulated portions.
6) Wipe insulating tubes, washers and plates clean and install them in position carefully to avoid getting oil or grease on them.

1. Using a press with a socket wrench attached, reassemble rotor and rear end cover assembly in the front cover.

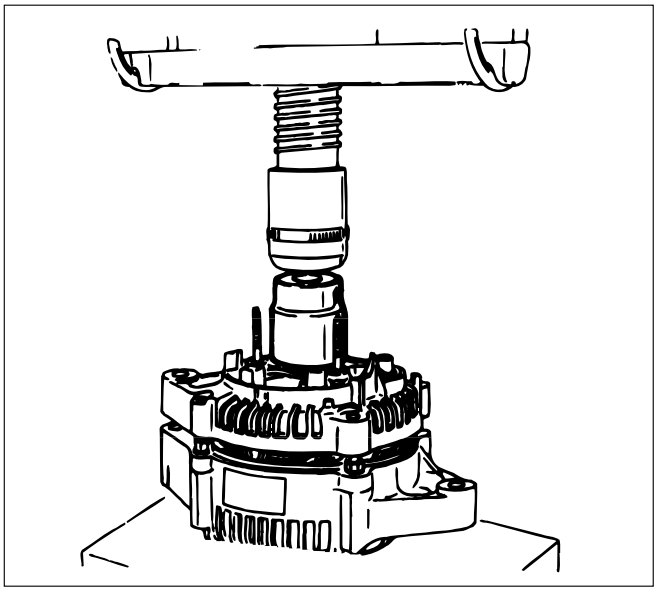

066RS022

2. Install pulley on the rotor.
   Secure the pulley directly in the vise between two copper plates, and tighten nut to the specified torque.

Torque: 111 N·m (11.3 kg·m / 82 lb ft)

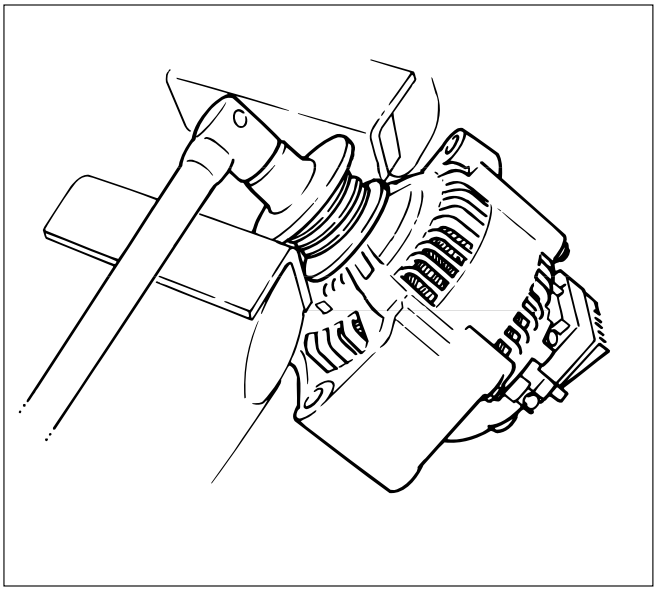

066RS010

MAIN DATA AND SPECIFICATIONS

General Specifications

Model		LR190-750B	LR-1100-731
Battery voltage	V	12	
Rated output	A	90	100
Direction of rotation (as viewed from pulley side)		Clockwise	
Rated rotation speed	rpm	5,000	
Maximum speed	rpm	18,000	

QOS4 PREHEATING SYSTEM

GENERAL DESCRIPTION

QOS4 preheating system features a quick-on glow plug with thermometer control of the glowing time and the afterglow time function.

The system consists of the ECM, indicator lamp, ECT sensor, vehicle speed sensor, relay and temperature self-control type glow plugs.

With the employment of the ECT sensor, the glow time changes according to the engine coolant temperature, thus allowing optimum starting conditions to be obtained.

The after glow time function is controlled by ECM.

NOTE:
Refer to DTC P0380 and P0381 of 6E section.

SYSTEM DIAGRAM

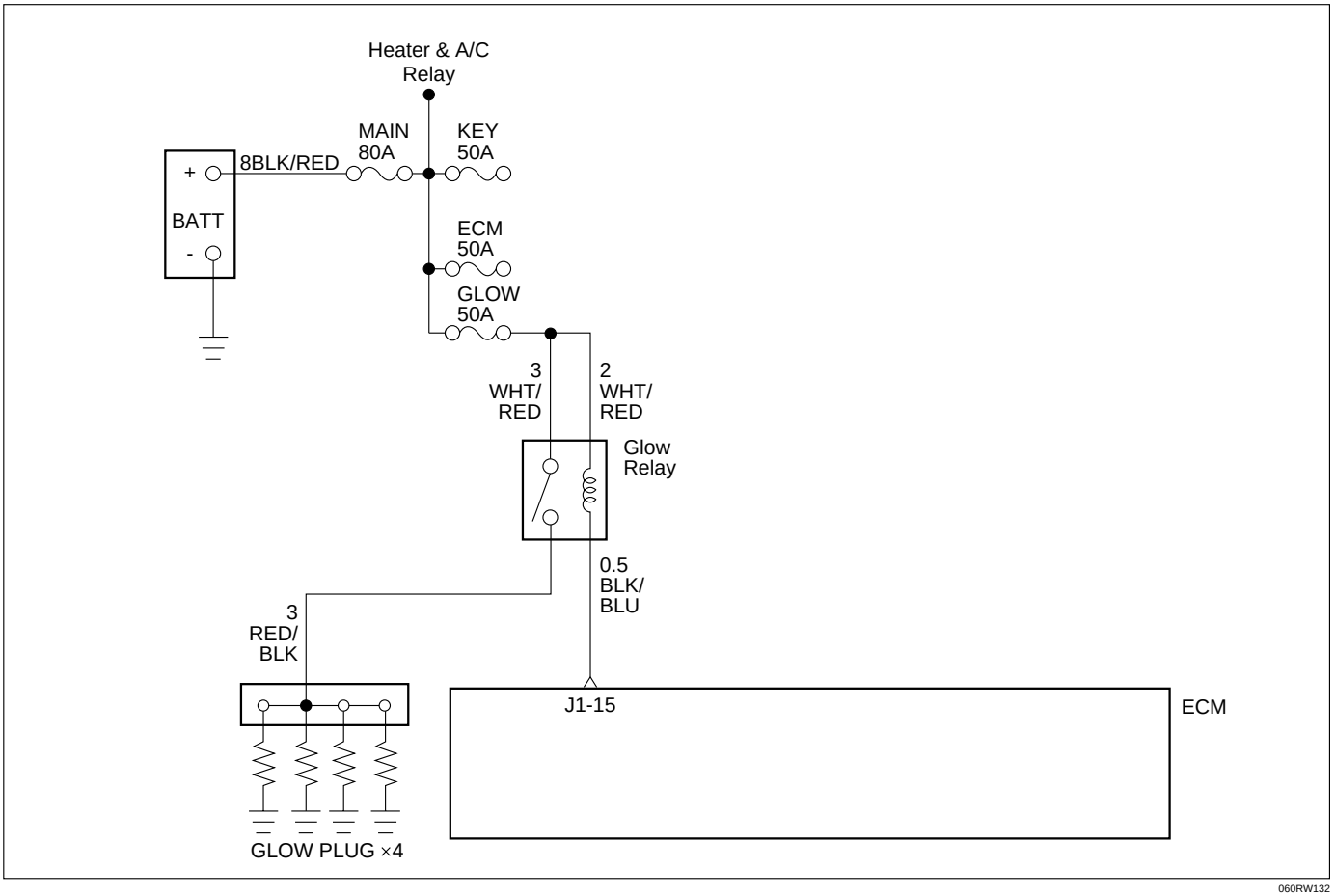

060RW132

INSPECTION ON QOS4 SYSTEM OPERATION

1 Inspection on Quick Heating Operation

1. Disconnect ECT-sensor connection on the thermostat housing

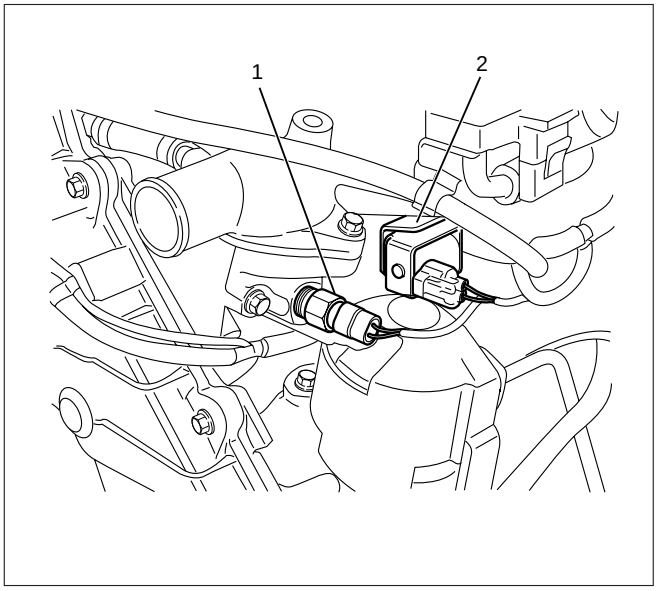

060RW166

Legend
(1) ECT Sensor
(2) EVRV

2. Connect the circuit tester between glow plug and engine earth.
3. Inspect the following items with starter switch set to ON position (but do not start the engine).
   1) The glow indicator shall light for about 5 sec.
   2) The circuit tester shall indicate power supply voltage for 180 sec.
   If above specifications are not satisfied, inspect wire harness, glow relay and ECT-sensor. If satisfied, inspect glow plug.

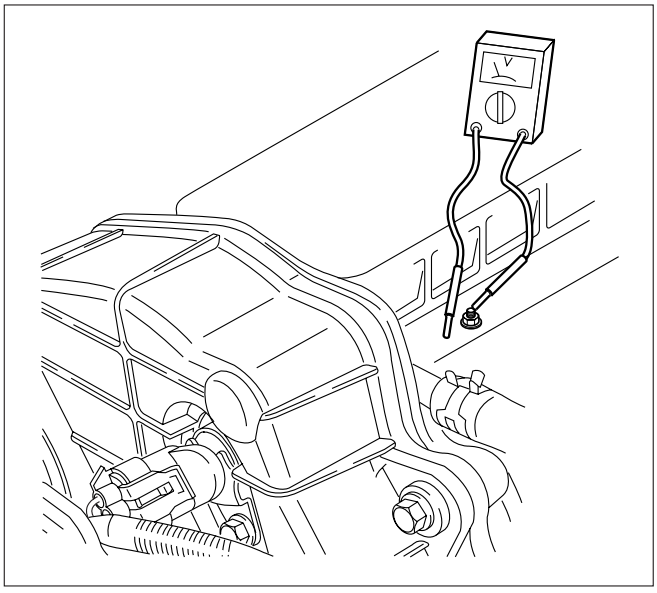

065RW035

2 Inspection on Afterglow Operation

1. Disconnect ECT-sensor connection on the thermostat housing

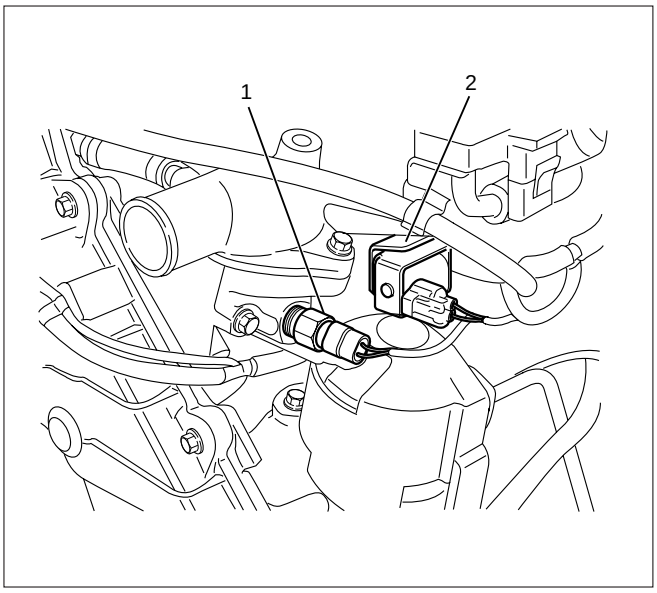

060RW166

Legend
(1) ECT Sensor
(2) EVRV

2. Connect the circuit tester between glow plug and engine earth.
3. Inspect the following item with the engine started.
   1) The circuit tester shall indicate about 12 volts after 180 seconds of engine start.
   - If above specifications are not satisfied, inspect battery voltage, engine earth, wiring harness, glow plug, and ECM.

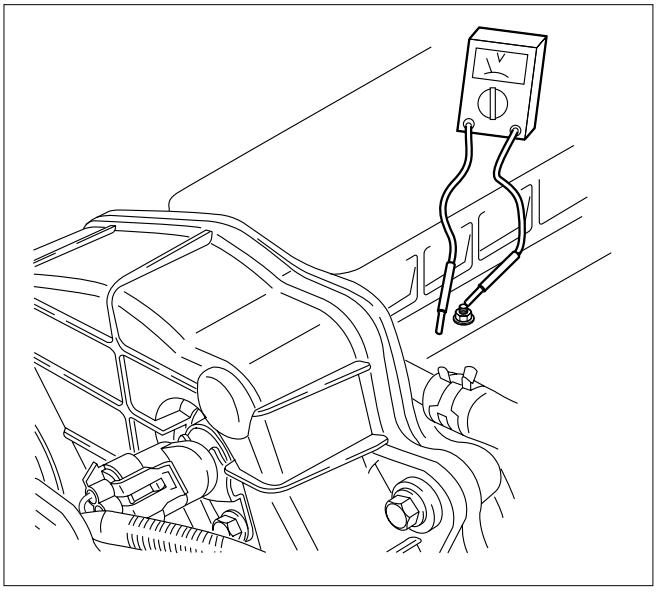

065RW035

ECT SENSOR

Measure the resistance depending on the water temperature.

Temperature (°C)	Current (mA)	Resistance (kΩ)
20 ± 1	1.0	2.0 – 3.0
50 ± 1	1.0	0.6 – 1.0

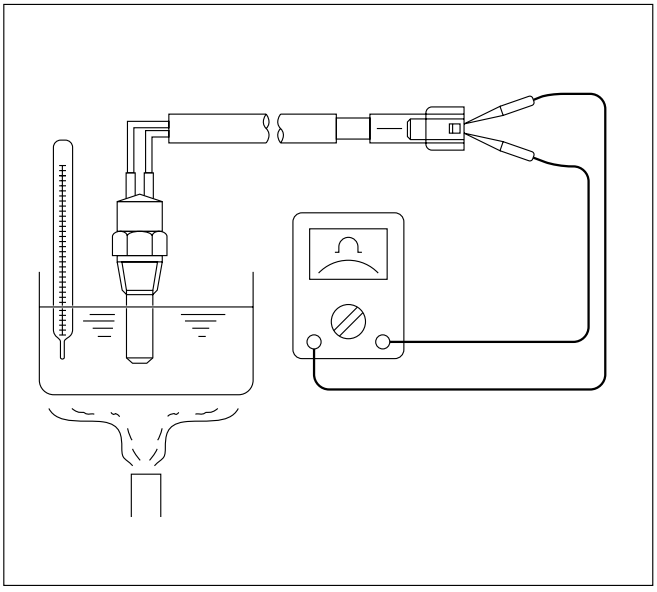

065RW058

When installing the ECT sensor, apply sealant (Loctite #262 or equivalent) to prevent water leakage.

Torque: 8 N·m (0.8 kg·m/69 lb in)

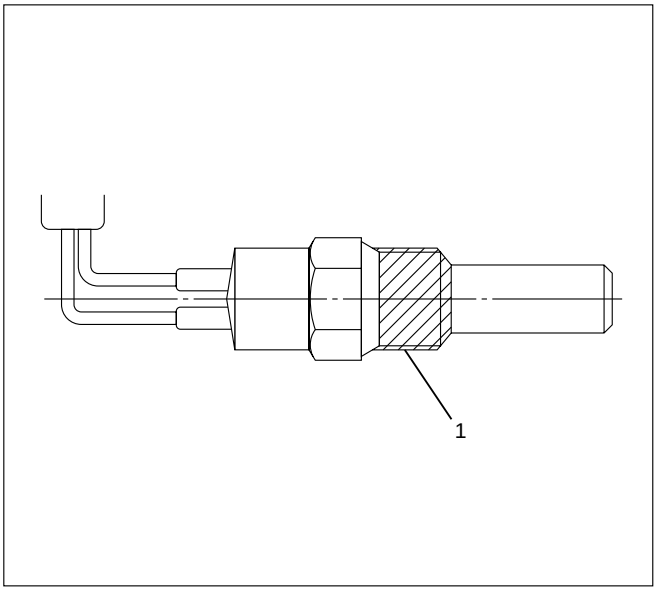

065RW060

Legend
(1) Sealing Material

GLOW PLUG

Inspect the resistance

Resistance at normal temperature: 0.8 – 1.0 Ω

Torque: 23 N·m (2.3 kg·m/17 lb·ft)

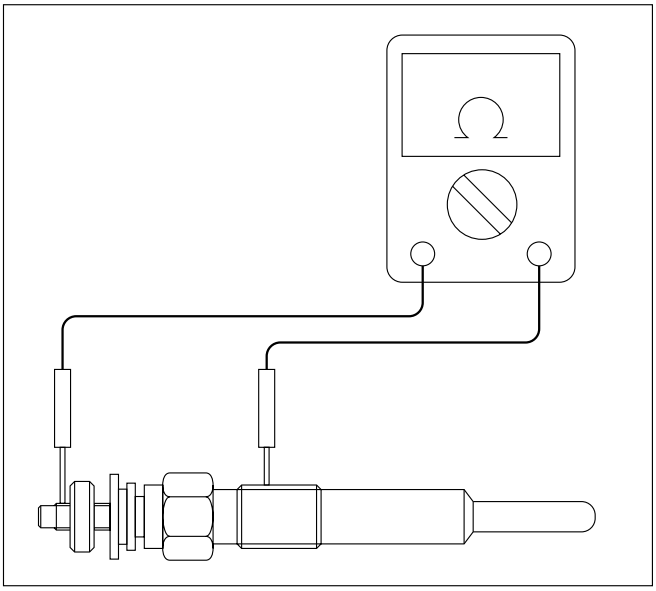

065RW061

GLOW PLUG RELAY

Inspect the continuity

(2) – (4)	No Continuity
(1) – (3)	Continuity

If battery voltage is applied to the terminal between (1) – (3)

(2) – (4)	Continuity

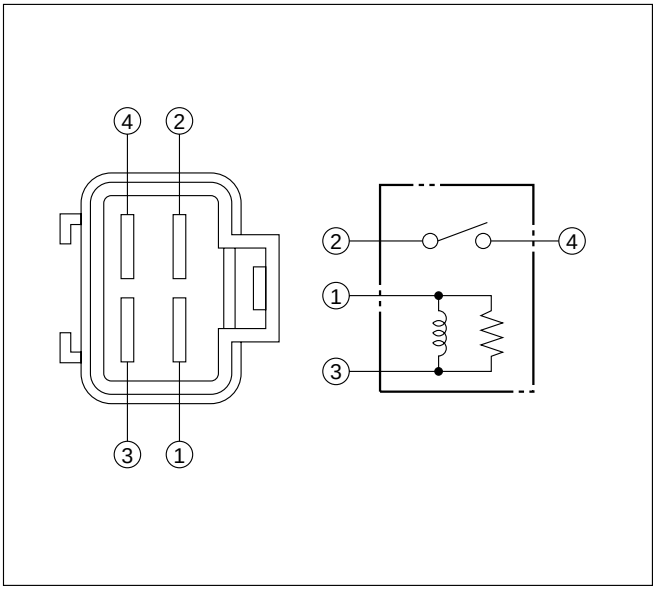

065RW037

MEMO

4JX1–TC 3.0L ENGINE DRIVEABILITY AND EMISSIONS

CONTENTS

Specification 6E–7
Tightening Specifications 6E–7
Diagrams and Schematics 6E–8
ECM Wiring Diagram (1 of 6) 6E–8
ECM Wiring Diagram (2 of 6) 6E–9
ECM Wiring Diagram (3 of 6) 6E–10
ECM Wiring Diagram (4 of 6) 6E–11
ECM Wiring Diagram (5 of 6) 6E–12
ECM Wiring Diagram (6 of 6) 6E–13
ECM Pinouts 6E–14
ECM Pinout Table, 32-Way Connector – J1 RED – Upper 6E–14
ECM Pinout Table, 32-Way Connector – J1 RED – Lower 6E–15
ECM Pinout Table, 32-Way Connector – J2 BLUE – Upper 6E–16
ECM Pinout Table, 32-Way Connector – J2 BLUE – Lower 6E–17
ECM Pinout Table, 5-Way Connector – J3 6E–18
Component Locator 6E–19
Sensors and Miscellaneous Component Locators 6E–21
Abbreviations Charts 6E–23
Diagnosis 6E–24
Strategy-Based Diagnostics 6E–24
Strategy-Based Diagnostics 6E–24
DTC Stored 6E–24
No DTC 6E–24
No Matching Symptom 6E–24
Intermittents 6E–24
No Trouble Found 6E–24
Verifying Vehicle Repair 6E–24
General Service Information 6E–25
Serviceability Issues 6E–25
Visual/Physical Engine Compartment Inspection 6E–25
Basic Knowledge of Tools Required 6E–25
Serial Data Communications 6E–25
Class II Serial Data Communications 6E–25
On-Board Diagnostic (OBD) 6E–25
On-Board Diagnostic Tests 6E–25
Comprehensive Component Monitor Diagnostic Operation 6E–25
Common OBD Terms 6E–26
The Diagnostic Executive 6E–26
DTC Types 6E–26
Verifying Vehicle Repair 6E–27
Reading Flash Diagnostic Trouble Codes . 6E–27
Reading Diagnostic Trouble Codes Using a TECH 2 . . . . . 6E–28
Tech 2 Scan Tool 6E–29
Getting Started 6E–30
DTC Modes 6E–32
DTC Information Mode 6E–32
Injector Test 6E–32
EGR Valve Test 6E–32
Rail Pressure Control Valve Test 6E–32
Injector Balance Test 6E–32
Data Programming in Case of ECM Change 6E–32
Rail Pressure Sensor Programming 6E–33
Injector Group Sign Programming (Injector Change) 6E–33
On-Board Diagnostic (OBD) System Check . 6E–35
Circuit Description 6E–37
Diagnostic Aids 6E–37
Engine Control Module ECM Diagnosis 6E–39
Multiple ECM Information Sensor DTCS Set 6E–39
Circuit Description 6E–39
Diagnostic Aids 6E–39
EGR (Exhaust Gas Recirculation) Diagnosis 6E–41
Tech 2 Data Definitions and Ranges 6E–41
Typical Scan Data Values 6E–41
Test Conditions 6E–41
4JX1-TC Engine (Automatic and Manual Transmission) 6E–42
No Malfunction Indicator Lamp (MIL) 6E–44
Circuit Description 6E–44
Diagnostic Aids 6E–44
Malfunction Indicator Lamp (MIL) “ON” Steady 6E–47
Circuit description 6E–47
Diagnostic Aids 6E–47
Engine Cranks But Will Not Run 6E–49
Circuit Description 6E–49
Diagnostic Aids 6E–49
Exhaust Gas Recirculation (EGR) System Check 6E–52
Circuit Description 6E–52
ECM Diagnostic Trouble Codes 6E–54
ECM Diagnostic Trouble Codes 6E–54
Diagnostic Trouble Code (DTC) P0107 (Flash DTC 34)
MAP Sensor Circuit Low Voltage 6E–56

Circuit Description 6E–56
Action Taken When the DTC Sets 6E–56
Conditions for Clearing the MIL/DTC 6E–56
Diagnostic Aids 6E–56
Diagnostic Trouble Code (DTC) P0108 (Flash DTC 34) MAP Sensor Circuit High Voltage 6E–58
Circuit Description 6E–58
Action Taken When the DTC Sets 6E–58
Conditions for Clearing the MIL/DTC 6E–58
Diagnostic Aids 6E–58
Diagnostic Trouble Code (DTC) P0112 (Flash DTC 23) IAT Sensor Circuit Low Voltage 6E–60
Circuit Description 6E–60
Action Taken When the DTC Sets 6E–60
Conditions for Clearing the MIL/DTC 6E–60
Diagnostic Aids 6E–60
Test Description 6E–61
Intake Air Temperature Sensor 6E–61
Diagnostic Trouble Code (DTC) P0113 (Flash DTC 23) IAT Sensor Circuit High Voltage 6E–62
Circuit Description 6E–62
Action Taken When the DTC Sets 6E–62
Conditions for Clearing the MIL/DTC 6E–62
Diagnostic Aids 6E–62
Test Description 6E–63
Manifold Air Temperature Sensor 6E–63
Diagnostic Trouble Code (DTC) P0117 (Flash DTC 14) ECT Sensor Low Voltage . 6E–65
Circuit Description 6E–65
Action Taken When the DTC Sets 6E–65
Conditions for Clearing the MIL/DTC 6E–65
Diagnostic Aids 6E–65
Test Description 6E–65
Engine Coolant Temperature Sensor 6E–66
Diagnostic Trouble Code (DTC) P0118 (Flash DTC 14) ECT Sensor High Voltage . 6E–67
Circuit Description 6E–67
Action Taken When the DTC Sets 6E–67
Conditions for Clearing the MIL/DTC 6E–67
Diagnostic Aids 6E–67
Test Description 6E–68
Engine Coolant Temperature Sensor 6E–68
Diagnostic Trouble Code (DTC) P0121 (Flash DTC 33) AP Sensor Rationality 6E–70
Circuit Description 6E–70
Action Taken When the DTC Sets 6E–70
Conditions for Clearing the MIL/DTC 6E–70
Diagnostic Aids 6E–70
Diagnostic Trouble Code (DTC) P0122 (Flash DTC 21) AP Sensor Low Voltage . . . 6E–72
Circuit Description 6E–72
Action Taken When the DTC Sets 6E–72
Conditions for Clearing the MIL/DTC 6E–72
Diagnostic Aids 6E–72
Diagnostic Trouble Code (DTC) P0123 (Flash DTC 21) AP Sensor High Voltage . . . 6E–75
Circuit Description 6E–75
Action Taken When the DTC Sets 6E–75
Conditions for Clearing the MIL/DTC 6E–75
Diagnostic Aids 6E–75
Test Description 6E–75
Diagnostic Trouble Code (DTC) P0182 (Flash DTC 15) FT Sensor Low Voltage . . . 6E–78
Circuit Description 6E–78
Action Taken When the DTC Sets 6E–78
Conditions for Clearing the MIL/DTC 6E–78
Diagnostic Aids 6E–78
Test Description 6E–78
Diagnostic Trouble Code (DTC) P0183 (Flash DTC 15) FT Sensor High Voltage . . . 6E–80
Circuit Description 6E–80
Action Taken When the DTC Sets 6E–80
Conditions for Clearing the MIL/DTC 6E–80
Diagnostic Aids 6E–80
Test Description 6E–80
Diagnostic Trouble Code (DTC) P0192 (Flash DTC 63) Rail Pressure Sensor Low Voltage 6E–82
Circuit Description 6E–82
Action Taken When the DTC Sets 6E–82
Conditions for Clearing the MIL/DTC 6E–82
Diagnostic Aids 6E–82
Diagnostic Trouble Code (DTC) P0193 (Flash DTC 63) Rail Pressure Sensor High Voltage 6E–84
Circuit Description 6E–84
Action Taken When the DTC Sets 6E–84
Conditions for Clearing the MIL/DTC 6E–84
Diagnostic Aids 6E–84
Diagnostic Trouble Code (DTC) P1193 (Flash DTC 64) RPCV Circuit Open/Short . . 6E–86
Circuit Description 6E–86
Action Taken When the DTC Sets 6E–86
Conditions for Clearing the MIL/DTC 6E–86
Diagnostic Aids 6E–86
Diagnostic Trouble Code (DTC) P1194 (Flash DTC 61) Rail Pressure System Low Voltage 6E–88
Circuit Description 6E–88
Action Taken When the DTC Sets 6E–88
Conditions for Clearing the MIL/DTC 6E–88
Diagnostic Aids 6E–88
Diagnostic Trouble Code (DTC) P1195 (Flash DTC 61) Rail Pressure System High Voltage 6E–90
Circuit Description 6E–90

Action Taken When the DTC Sets 6E–90
Conditions for Clearing the MIL/DTC 6E–90
Diagnostic Aids 6E–90
Diagnostic Trouble Code (DTC) P1196 (Flash DTC 62) Rail Pressure System High Warning 6E–92
Circuit Description 6E–93
Action Taken When the DTC Sets 6E–93
Conditions for Clearing the MIL/DTC 6E–93
Diagnostic Aids 6E–93
Test Description 6E–93
Diagnostic Trouble Code (DTC) P0197 (Flash DTC 16) Oil Temp Sensor Low Voltage 6E–94
Circuit Description 6E–94
Action Taken When the DTC Sets 6E–94
Conditions for Clearing the MIL/DTC 6E–94
Diagnostic Aids 6E–94
Test Description 6E–95
Engine Oil Temperature Sensor 6E–95
Diagnostic Trouble Code (DTC) P0198 (Flash DTC 16) Oil Temp Sensor High Voltage 6E–96
Circuit Description 6E–96
Action Taken When the DTC Sets 6E–96
Conditions for Clearing the MIL/DTC 6E–96
Diagnostic Aids 6E–96
Test Description 6E–97
Engine Oil Temperature Sensor 6E–97
Diagnostic Trouble Code (DTC) P0201 (Flash DTC 51) Injector # 1 Circuit Fault ... 6E–99
Circuit Description 6E–99
Action Taken When the DTC Sets 6E–99
Conditions for Clearing the MIL/DTC 6E–99
Diagnostic Aids 6E–99
Test Description 6E–99
Injector Test 6E–99
Diagnostic Trouble Code (DTC) P0202 (Flash DTC 52) Injector # 2 Circuit Fault ... 6E–101
Circuit Description 6E–101
Action Taken When the DTC Sets 6E–101
Conditions for Clearing the MIL/DTC 6E–101
Diagnostic Aids 6E–101
Test Description 6E–101
Injector Test 6E–101
Diagnostic Trouble Code (DTC) P0203 (Flash DTC 52) Injector # 3 Circuit Fault ... 6E–103
Circuit Description 6E–103
Action Taken When the DTC Sets 6E–103
Conditions for Clearing the MIL/DTC 6E–103
Diagnostic Aids 6E–103
Test Description 6E–103
Injector Test 6E–103
Diagnostic Trouble Code (DTC) P0204 (Flash DTC 54) Injector # 4 Circuit Fault ... 6E–105
Circuit Description 6E–105
Action Taken When the DTC Sets 6E–105
Conditions for Clearing the MIL/DTC 6E–105
Diagnostic Aids 6E–105
Test Description 6E–105
Injector Test 6E–105
Diagnostic Trouble Code (DTC) P0217 (Flash DTC 22) High Coolant Temp Waring 6E–107
Circuit Description 6E–107
Action Taken When the DTC Sets 6E–107
Conditions for Clearing the MIL/DTC 6E–107
Diagnostic Aids 6E–107
Test Description 6E–107
Diagnostic Trouble Code (DTC) P1217 (Flash DTC 36) High Oil Temp Warning 6E–109
Circuit Description 6E–109
Action Taken When the DTC Sets 6E–109
Conditions for Clearing the MIL/DTC 6E–109
Diagnostic Aids 6E–109
Diagnostic Trouble Code (DTC) P0219 (Flash DTC 11) Engine Over Speed Warning 6E–111
Circuit Description 6E–111
Action Taken When the DTC Sets 6E–111
Conditions for Clearing the MIL/DTC 6E–111
Diagnostic Aids 6E–111
Diagnostic Trouble Code (DTC) P0336 (Flash DTC 43) CKP (Crank Position) Sensor Out of Synchro 6E–114
Circuit Description 6E–114
Action Taken When the DTC Sets 6E–114
Conditions for Clearing the MIL/DTC 6E–114
Diagnostic Aids 6E–114
Diagnostic Trouble Code (DTC) P0337 (Flash DTC 43) CKP (Crank Position) Sensor No Signal 6E–116
Circuit Description 6E–116
Action Taken When the DTC Sets 6E–116
Conditions for Clearing the MIL/DTC 6E–116
Diagnostic Aids 6E–116
Diagnostic Trouble Code (DTC) P0341 (Flash DTC 41) CMP (Cam Position) Sensor Out of Synchro 6E–119
Circuit Description 6E–119
Action Taken When the DTC Sets 6E–119
Conditions for Clearing the MIL/DTC 6E–119
Diagnostic Aids 6E–119
Test Description 6E–119
Diagnostic Trouble Code (DTC) P0342 (Flash DTC 41) CMP (Cam Position) Sensor No Signal 6E–122
Circuit Description 6E–122
Action Taken When the DTC Sets 6E–122
Conditions for Clearing the MIL/DTC 6E–122

Diagnostic Aids 6E–122
Test Description 6E–122
Diagnostic Trouble Code (DTC) P0380 (Flash DTC 66) Glow Relay Circuit Open/Short 6E–126
Circuit Description 6E–126
Action Taken When the DTC Sets 6E–126
Conditions for Clearing the MIL/DTC 6E–126
Diagnostic Aids 6E–126
Diagnostic Trouble Code (DTC) P0381 (Flash DTC 67) Glow Lamp Circuit Open/Short 6E–128
Circuit Description 6E–128
Action Taken When the DTC Sets 6E–128
Conditions for Clearing the MIL/DTC 6E–128
Diagnostic Aids 6E–128
Diagnostic Trouble Code (DTC) P1403 (Flash DTC 32) EGR EVRV Fault 6E–130
Circuit Description 6E–130
Diagnostic Aids 6E–130
Test Description 6E–130
Diagnostic Trouble Code (DTC) P1404 (Flash DTC 31) EGR VSV Circuit 6E–132
Circuit Description 6E–132
Diagnostic Aids 6E–132
Diagnostic Trouble Code (DTC) P0405 (Flash DTC 26) EGR Pressure Sensor Low Voltage 6E–134
Action Taken When the DTC Sets 6E–134
Conditions for Clearing the MIL/DTC 6E–134
Diagnostic Aids 6E–134
Diagnostic Trouble Code (DTC) P1405 (Flash DTC 37) EGR EVRV Circuit Open/Short 6E–136
Circuit Description 6E–136
Action Taken When the DTC Sets 6E–136
Conditions for Clearing the MIL/DTC 6E–136
Diagnostic Aids 6E–136
Diagnostic Trouble Code (DTC) P0406 (Flash DTC 26) EGR Pressure Sensor High Voltage 6E–138
Action Taken When the DTC Sets 6E–138
Conditions for Clearing the MIL/DTC 6E–138
Diagnostic Aids 6E–138
Diagnostic Trouble Code (DTC) P0475 (Flash DTC 71) EXH #1 VSV Circuit 6E–140
Circuit Description 6E–140
Action Taken When the DTC Sets 6E–140
Conditions for Clearing the MIL/DTC 6E–140
Diagnostic Aids 6E–140
Diagnostic Trouble Code (DTC) P1475 (Flash DTC 71) EXH #2 VSV Circuit Open/Short 6E–142
Circuit Description 6E–142
Action Taken When the DTC Sets 6E–142
Conditions for Clearing the MIL/DTC 6E–142
Diagnostic Aids 6E–142
Diagnostic Trouble Code (DTC) P1485 (Flash DTC 74) ITP (Intake Thorottle Position) Sensor Low Voltage 6E–144
Circuit Description 6E–144
Action Taken When the DTC Sets 6E–144
Conditions for Clearing the MIL/DTC 6E–144
Diagnostic Aids 6E–144
Diagnostic Trouble Code (DTC) P1486 (Flash DTC 74) ITP (Intake Throttle Position) Sensor High Voltage 6E–146
Circuit Description 6E–146
Action Taken When the DTC Sets 6E–146
Conditions for Clearing the MIL/DTC 6E–146
Diagnostic Aids 6E–146
Diagnostic Trouble Code (DTC) P1487 (Flash DTC 73) Intake Throttle System Circuit Open/Start 6E–148
Circuit Description 6E–148
Action Taken When the DTC Sets 6E–148
Conditions for Clearing the MIL/DTC 6E–148
Diagnostic Aids 6E–148
Diagnostic Trouble Code (DTC) P1488 (Flash DTC 72) Intake Throttle Motor Control Circuit Signal Gap 6E–150
Circuit Description 6E–150
Action Taken When the DTC Sets 6E–150
Conditions for Clearing the MIL/DTC 6E–150
Diagnostic Aids 6E–150
Diagnostic Trouble Code (DTC) P0502 (Flash DTC 24) VSS (Vehicle Speed Sensor) No Signal 6E–152
Circuit Description 6E–152
Action Taken When the DTC Sets 6E–152
Conditions for Clearing the MIL/DTC 6E–152
Test Description 6E–153
Diagnostic Trouble Code (DTC) P0510 (Flash DTC 75) Idle SW Malfunction, Open Circuit 6E–155
Circuit Description 6E–155
Action Taken When the DTC Sets 6E–155
Conditions for Clearing the MIL/DTC 6E–155
Diagnostic Aids 6E–155
Diagnostic Trouble Code (DTC) P1510 (Flash DTC 75) Idle SW Malfunction Short Circuit 6E–157
Circuit Description 6E–157
Action Taken When the DTC Sets 6E–157
Conditions for Clearing the MIL/DTC 6E–157
Diagnostic Aids 6E–157
Diagnostic Trouble Code (DTC) P0562 (Flash DTC 35) System Voltage Too Low . . 6E–159
Circuit Description 6E–159
Action Taken When the DTC Sets 6E–159

Conditions for Clearing the MIL/DTC 6E–159
Diagnostic Aids 6E–159
Diagnostic Trouble Code (DTC) P1562 (Flash DTC 35) System Voltage Too Low at Cranking 6E–160
Circuit Description 6E–160
Action Taken When the DTC Sets 6E–160
Conditions for Clearing the MIL/DTC 6E–160
Diagnostic Aids 6E–160
Diagnostic Trouble Code (DTC) P1587 (Flash DTC 25) Brake SW Malfunction 6E–161
Circuit Description 6E–161
Action Taken When the DTC Sets 6E–161
Conditions for Clearing the MIL/DTC 6E–161
Diagnostic Aids 6E–161
Diagnostic Trouble Code (DTC) P1588 (Flash DTC 25) Brake SW Malfunction 6E–163
Circuit Description 6E–163
Action Taken When the DTC Sets 6E–163
Conditions for Clearing the MIL/DTC 6E–163
Diagnostic Aids 6E–163
Diagnostic Trouble Code (DTC) P0601 (Flash DTC 55) ECM Checksum Error 6E–165
Action Taken When the DTC Sets 6E–165
Conditions for Clearing the MIL/DTC 6E–165
Diagnostic Aids 6E–165
Diagnostic Trouble Code (DTC) P0650 (Flash DTC 77) Check Engine Lam Circuit Open/Short 6E–166
Circuit Description 6E–166
Action Taken When the DTC Sets 6E–166
Conditions for Clearing the MIL/DTC 6E–166
Diagnostic Aids 6E–166
Diagnostic Trouble Code (DTC) P0654 (Flash DTC 27) Tachometer Circuit Open/Short 6E–168
Circuit Description 6E–168
Action Taken When the DTC Sets 6E–168
Conditions for Clearing the MIL/DTC 6E–168
Diagnostic Aids 6E–168
Diagnostic Trouble Code (DTC) P1655 (Flash DTC 17) Thermo Relay Circuit Open/Short 6E–170
Circuit Description 6E–170
Action Taken When the DTC Sets 6E–170
Conditions for Clearing the MIL/DTC 6E–170
Diagnostic Aids 6E–170
Diagnostic Trouble Code (DTC) P1657 (Flash DTC 76) ECM Main Relay Circuit Open/Short 6E–172
Circuit Description 6E–172
Action Taken When the DTC Sets 6E–172
Conditions for Clearing the MIL/DTC 6E–172
Diagnostic Aids 6E–172
Diagnostic Trouble Code (DTC) P1589 (Flash DTC 47) Transmission SW Circuit Open/Short 6E–174
Circuit Description 6E–174
Action Taken When the DTC Sets 6E–174
Conditions for Clearing the MIL/DTC 6E–174
Diagnostic Aids 6E–174
Symptom Diagnosis 6E–176
Default Matrix Table 6E–199
On–Vehicle Service Camshaft Position (CMP) Sensor 6E–201
Removal Procedure 6E–201
Inspection Procedure 6E–201
Installation Procedure 6E–201
Crankshaft Position (CKP) Sensor 6E–202
Removal Procedure 6E–202
Installation Procedure 6E–202
Engine Coolant Temperature (ECT) Sensor . 6E–203
Removal Procedure 6E–203
Installation Procedure 6E–203
Intake Air Temperature (IAT) Sensor 6E–203
Removal Procedure 6E–203
Installation Procedure 6E–204
Manifold Absolute Pressure (MAP) Sensor . 6E–204
Removal Procedure 6E–204
Installation Procedure 6E–205
Oil Temperature (OT) Sensor 6E–205
Removal Procedure 6E–205
Installation Procedure 6E–206
Malfunction Indicator Lamp (MIL) 6E–206
Removal and Installation Procedure 6E–206
Engine Control Module (ECM) 6E–206
Service Precaution 6E–206
Electrostatic Discharge (ESD) Damage ... 6E–206
Removal Procedure 6E–207
Installation Procedure 6E–208
EEPROM 6E–208
General Description 6E–208
Functional Check 6E–208
Intake Throttle Position (ITP) Sensor 6E–208
Removal Procedure 6E–208
Function Check 6E–209
Installation Procedure 6E–209
Vehicle Speed Sensor (VSS) 6E–210
Removal Procedure 6E–210
Inspection Procedure 6E–210
Installation Procedure 6E–210
Air Cleaner/Air Filter 6E–211
Removal Procedure 6E–211
Installation Procedure 6E–211
Accel Position (AP) Sensor 6E–211
Removal Procedure 6E–211
Installation Procedure 6E–212
Accelerator Pedal Replacement 6E–212

Removal Procedure 6E–212
Installation Procedure 6E–212
Fuel Filter Cap 6E–213
General Description 6E–213
Inspection Procedure 6E–213
Fuel Filter 6E–213
Removal and Installation Procedure 6E–213
Fuel Gauge Unit 6E–213
Removal Procedure 6E–213
Installation Procedure 6E–214
Fuel Injectors 6E–214
Removal and Installation Procedure 6E–214
Fuel Temperature Sensor 6E–214
Removal Procedure 6E–214
Installation Procedure 6E–215
Rail Pressure (RP) Sensor 6E–216
Removal Procedure 6E–216
Installation Procedure 6E–216
Fuel Tank 6E–216
Removal Procedure 6E–216
Throttle Body (TB) 6E–217
Removal Procedure 6E–217
Installation Procedure 6E–217
Air Conditioning (A/C) Relay 6E–217
Removal Procedure 6E–217
Installation Procedure 6E–217
Exhaust Gas Recirculation (EGR) Vacuum Switch Valve (VSV) 6E–217
Removal Procedure 6E–217
Installation Procedure 6E–218
Electronic Vacuum Regurating Valve (EVRV) 6E–219
Removal Procedure 6E–219
Installation Procedure 6E–220
Wiring and Connectors 6E–220
Wiring Harness Service 6E–220
Connectors and Terminals 6E–220
Wire Harness Repair: Twisted Shielded Cable 6E–220
Removal Procedure 6E–220
Installation Procedure 6E–221
Twisted Leads 6E–221
Removal Procedure 6E–221
Installation Procedure 6E–222
Weather-Pack Connector 6E–223
Tools Required 6E–223
Removal Procedure 6E–223
Installation Procedure 6E–223
Com-Pack III 6E–224
General Information 6E–224
Metri-Pack 6E–224
Tools Required 6E–224
Removal Procedure 6E–224
Installation Procedure 6E–224
General Description (ECM and Sensors) 6E–225
57X Reference ECM Input 6E–225
A/C Request Signal 6E–225
Crankshaft Position (CKP) Sensor 6E–225
Camshaft Position (CMP) Sensor and Signal 6E–225
Engine Coolant Temperature (ECT) Sensor 6E–225
Electrically Erasable Programmable Read Only Memory (EEPROM) 6E–225
Intake Air Temperature (IAT) Sensor 6E–225
Manifold Absolute Pressure (MAP) Sensor 6E–226
Engine Control Module (ECM) 6E–226
ECM Function 6E–226
ECM Components 6E–226
ECM Voltage Description 6E–226
ECM Input/Outputs 6E–226
ECM Service Precautions 6E–227
Intake Throttle Position (ITP) Sensor 6E–227
Transmission Range Switch 6E–227
Accelerator Position Sensor (AP) 6E–227
Aftermarket Electrical and Vacuum Equipment 6E–227
Electrostatic Discharge Damage 6E–227
General Description (Air Induction) 6E–228
Air Induction System 6E–228
General Description (Fuel Metering) 6E–228
Deceleration Mode 6E–228
Fuel Injector 6E–228
Fuel Metering System Components 6E–228
A/C Clutch Diagnosis 6E–228
A/C Request Signal 6E–228
General Description Exhaust Gas Recirculation (EGR) System 6E–228
EGR Purpose 6E–228
Fuse and Relay Panel (Underhood Electrical Center) RHD 6E–229
Fuse and Relay Panel (Underhood Electrical Center) LHD 6E–230

Specification

Tightening Specifications

Application	N·m	Kg·m	Lb Ft.	Lb In.
Camshaft Position Sensor Retaining Screw	9	0.9	—	78
Crankshaft Position Sensor Mounting Bolt	9	0.9	—	78
Engine Coolant Temperature Sensor	19	1.9	14	—
Throttle Body Mounting Nuts	20	2.0	14	—
VSS Retaining Bolt	16	1.6	12	—
MAP Sensor Screw	4	0.4	—	35
EGR VSV Bolts	8	0.8	—	69
Fuel Temp Sensor	19	1.9	14	—
Oil Temp Sensor Bolt	19	1.9	14	—
Rail Pressure Sensor Bolt	20	2.0	14	—

Diagrams and Schematics

ECM Wiring Diagram (1 of 6)

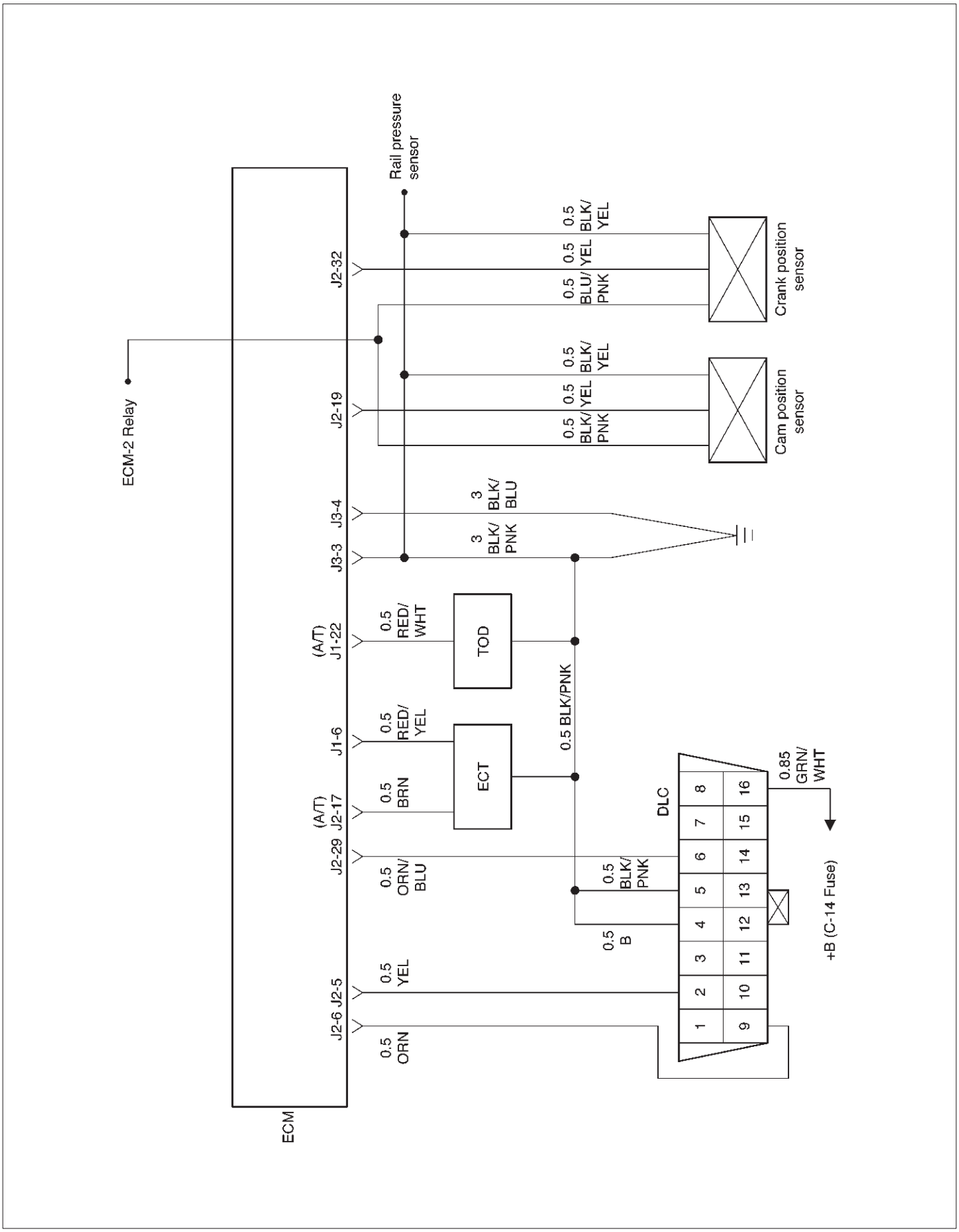

060RW127

ECM Wiring Diagram (2 of 6)

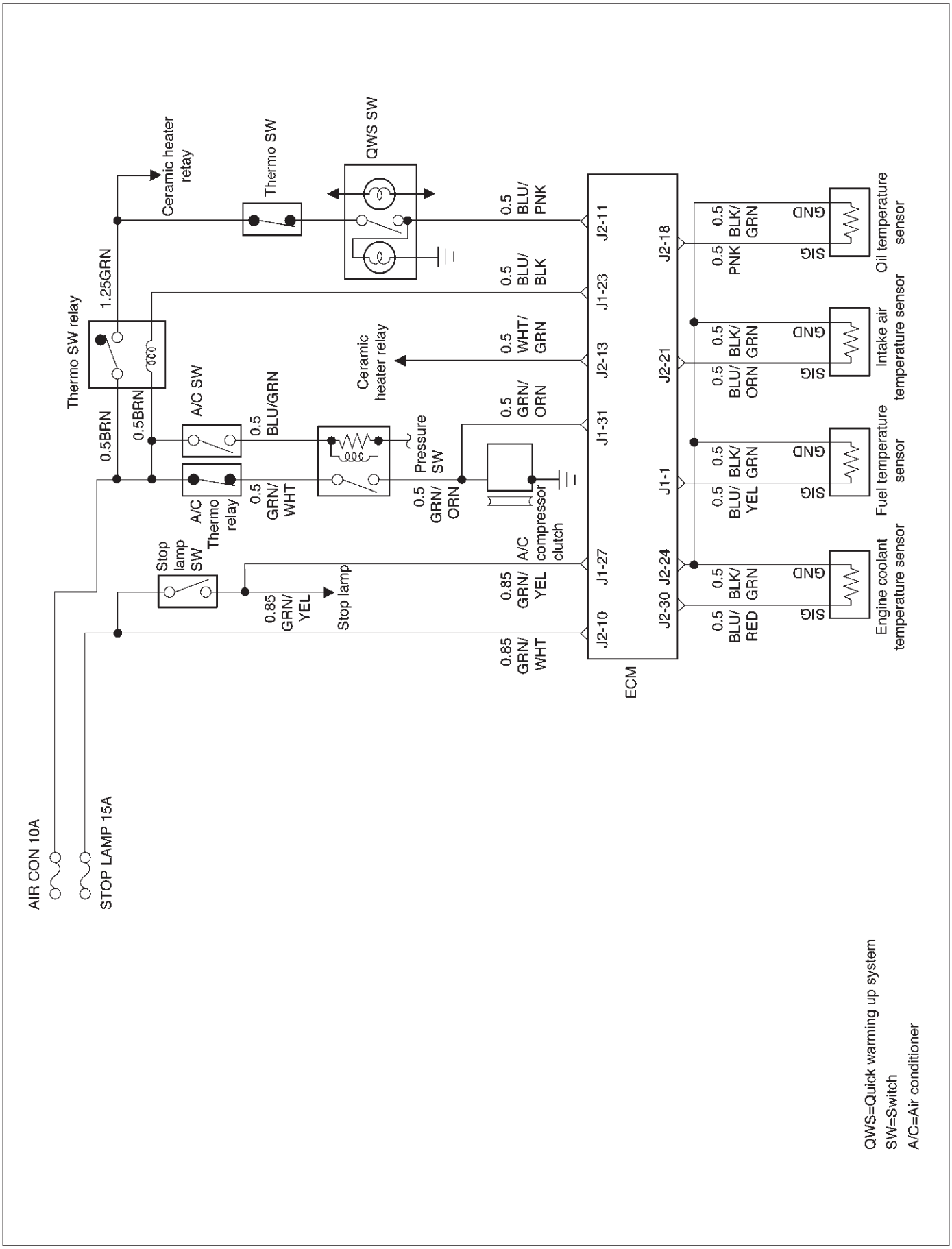

060RW125

ECM Wiring Diagram (3 of 6)

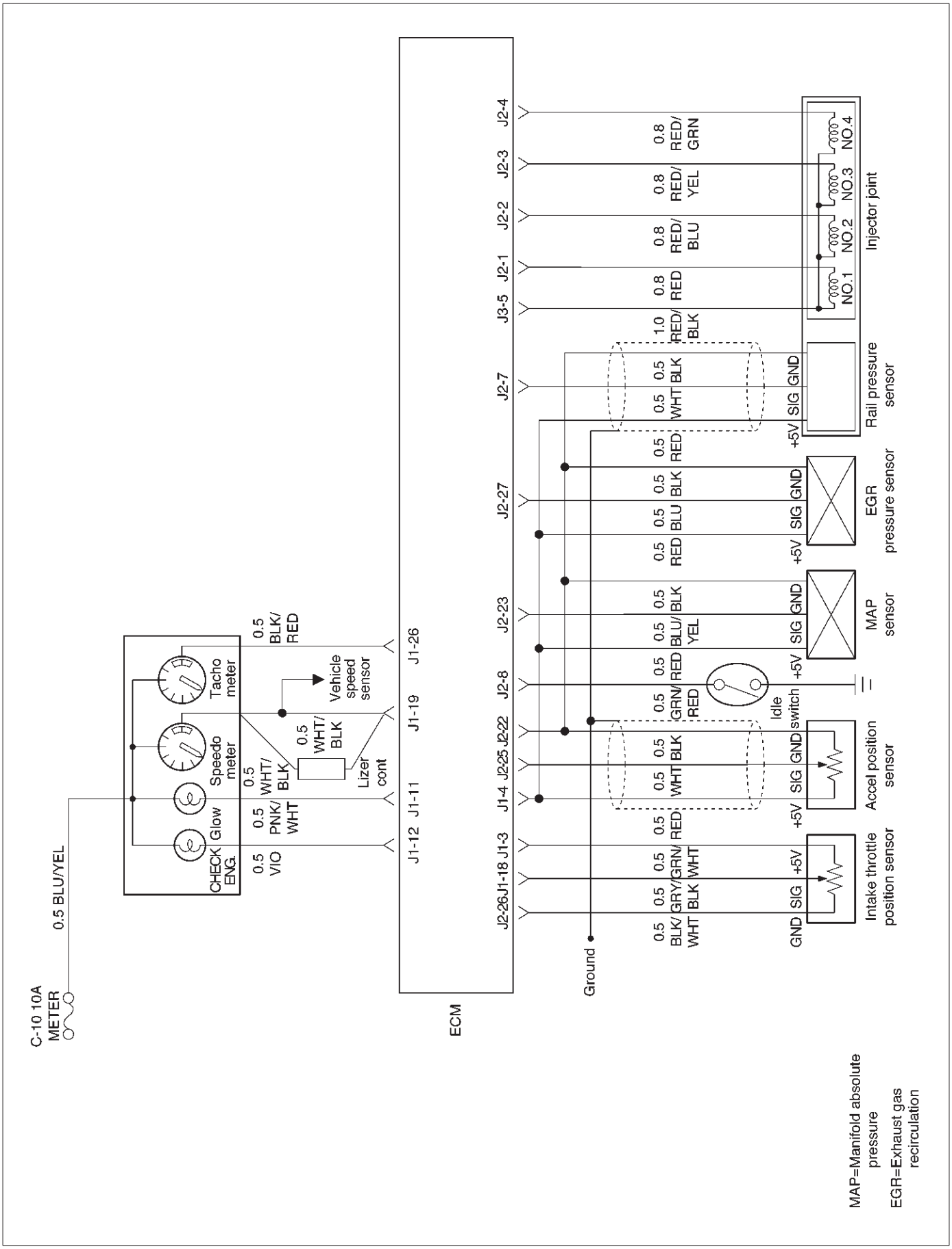

060RW126

ECM Wiring Diagram (4 of 6)

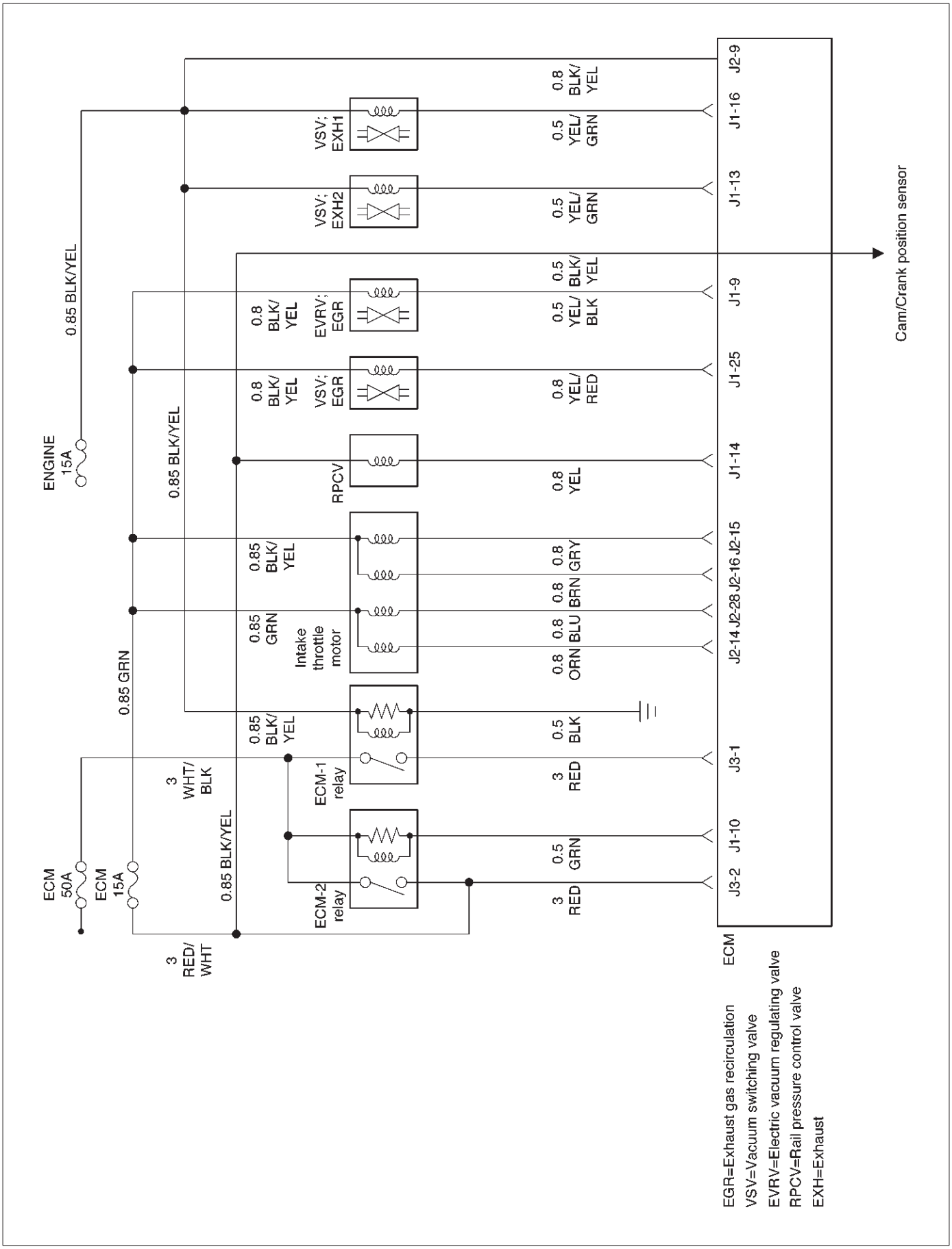

060RW128

ECM Wiring Diagram (5 of 6)

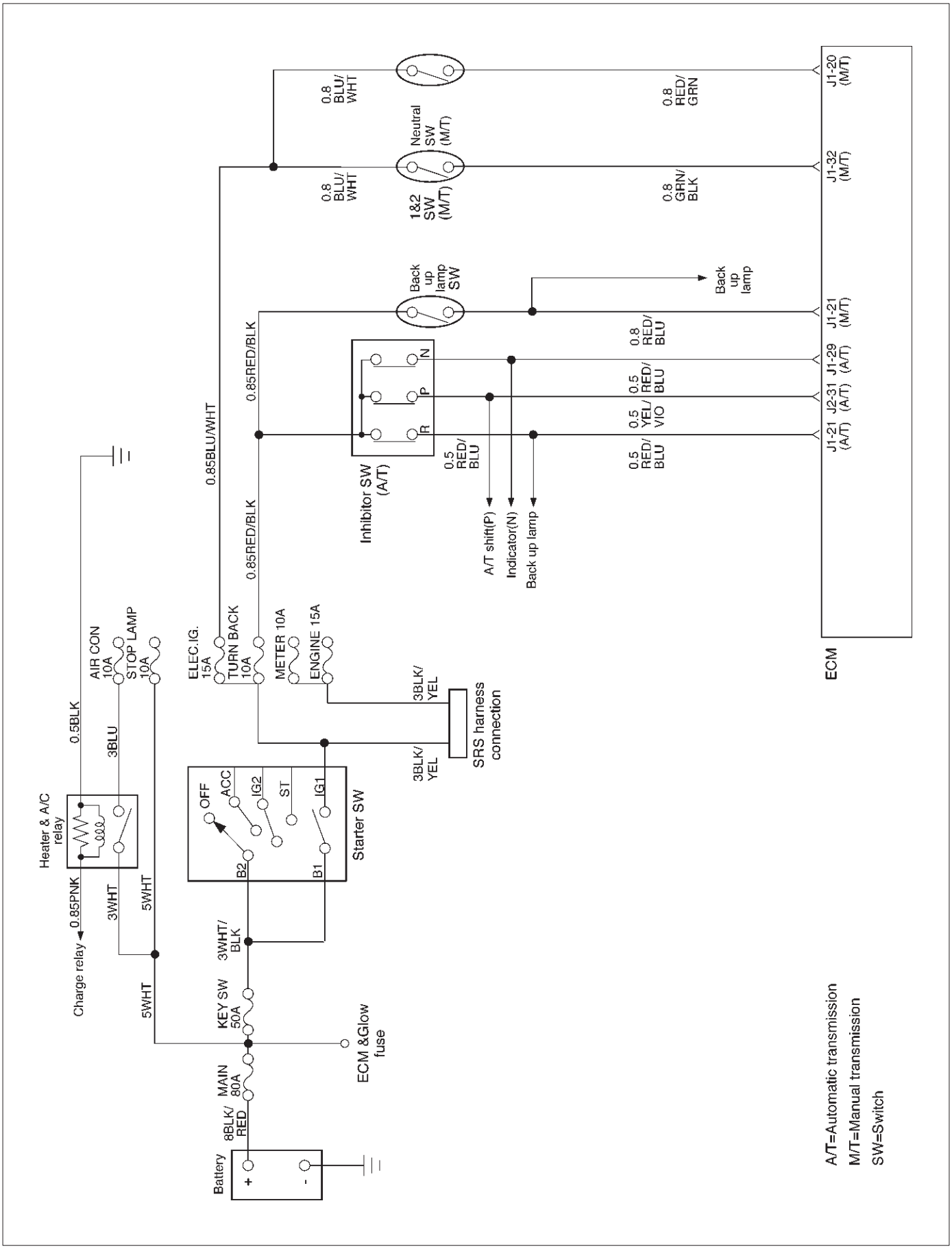

060RW123

ECM Wiring Diagram (6 of 6)

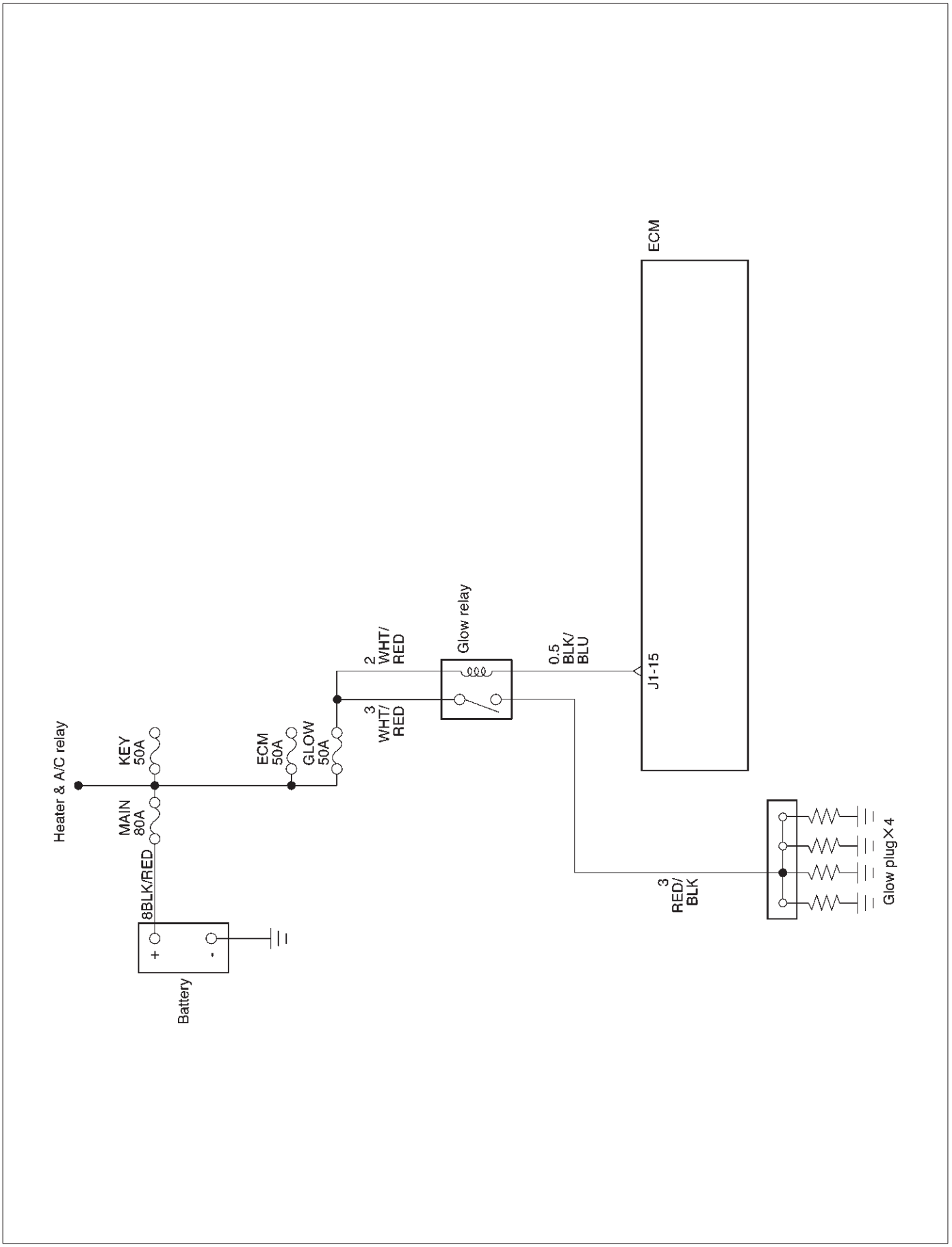

060RW124

ECM Pinouts

ECM Pinout Table, 32-Way Connector – J1 RED – Upper

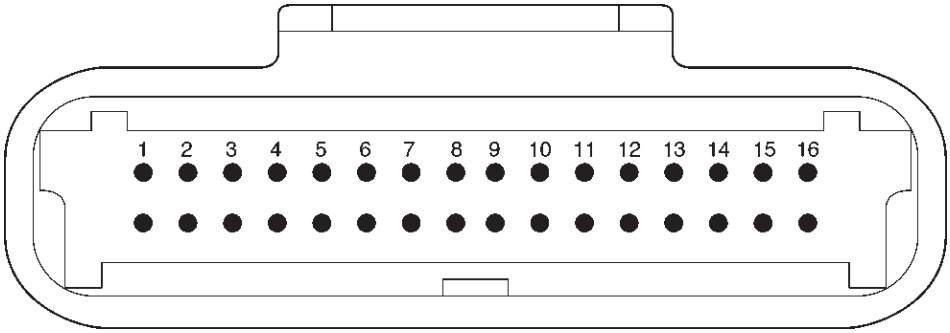

060RW138

J1 – RED	
PIN	SIGNAL
1	FUEL TEMPERATURE
2	SPARE ANALOG 1
3	+5VB1
4	+5VB2
5	SPARE ANALOG 3
6	ACCEL POS OUT 1
7	NOT USED
8	SPARE OUT 2 (TCC)
9	EVRV (EGR)
10	IGN RELAY
11	GLOW PLUG LAMP
12	DIAGNOSTIC LAMP
13	VSV (EXHAUST #2)
14	RAIL PRESS CNTRL VALVE
15	GLOW PLUG RELAY
16	VSV (EXHAUST #1)

ECM Pinout Table, 32-Way Connector – J1 RED – Lower

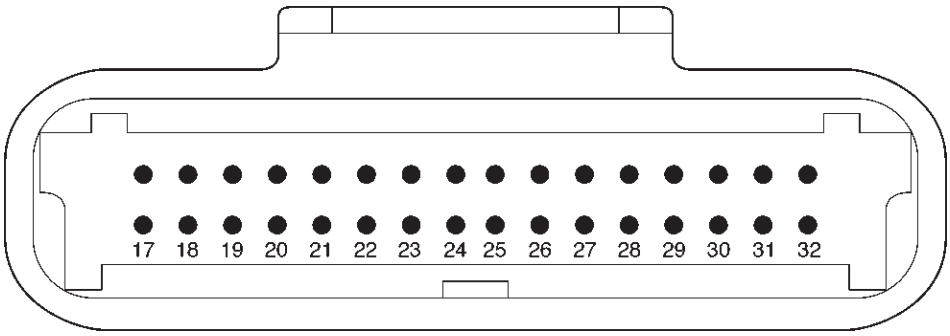

060RW137

J1 – RED	
PIN	SIGNAL
17	SPARE ANALOG 4
18	INTAKE SM POSITION
19	VEHICLE SPEED
20	MT NEUTRAL
21	REVERSE SW
22	ACCEL POS OUT 2
23	THERMO SW RELAY
24	SPARE OUT 3 (TURBO)
25	VSV (EGR)
26	TACHOMETER 1
27	BRAKE SW 1
28	NOT USED (BRAKE 2)
29	A/T NEUTRAL SW
30	NO CONNECTION
31	AC REQUEST SW
32	AT SOLENOID

ECM Pinout Table, 32-Way Connector – J2 BLUE – Upper

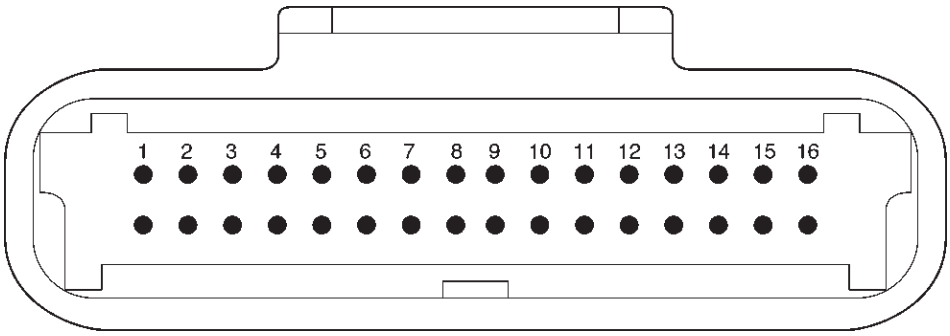

060RW138

J2 – BLUE	
PIN	SIGNAL
1	INJECTOR A RTN
2	INJECTOR B RTN
3	INJECTOR C RTN
4	INJECTOR D RTN
5	CLASS 2
6	SDATA
7	RAIL OIL PRESSURE
8	IDLE SW
9	IGN SW
10	BATTERY
11	QUICK WARM REQ. SW
12	PARTIAL IDLE SW
13	CERAMIC HTR REQUEST SW
14	INTAKE SW S2B
15	INTAKE SW S1T
16	INTAKE SW S1B

ECM Pinout Table, 32-Way Connector – J2 BLUE – Lower

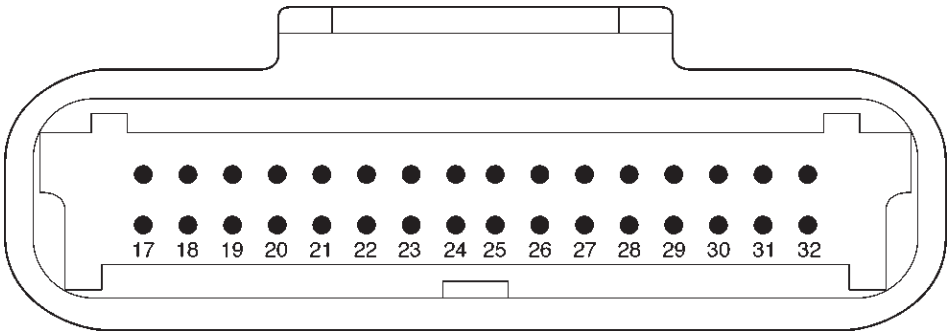

060RW137

J2 – BLUE	
PIN	SIGNAL
17	COOLANT TEMP OUT
18	OIL TEMPERATURE
19	TDC/CAM
20	SPARE ANALOG 2
21	INTAKE AIR TEMPERATURE
22	+5VRTN2
23	BOOST/INLET PRESSURE
24	+5VRTN3
25	ACCELERATOR POSITION
26	+5VRTN1
27	EGR VACUUM PRESSURE
28	INTAKE SM S2T
29	DIAGNOSTIC REQUEST SW
30	COOLANT TEMPERATURE
31	A/T PARK SW
32	CRANKSHAFT

ECM Pinout Table, 5-Way Connector – J3

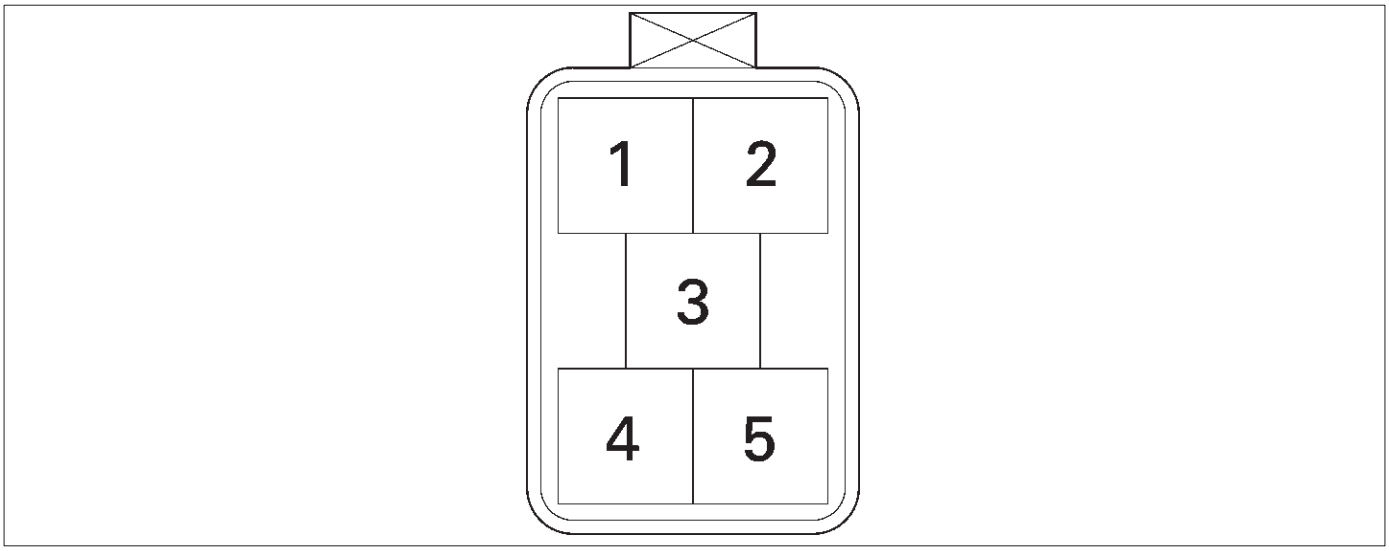

060RW139

J3	
PIN	SIGNAL
1	IGNITION
2	IGNITION
3	PWR GND
4	PWR GND
5	INJECTOR H1

Component Locator

Engine Component Locator Table

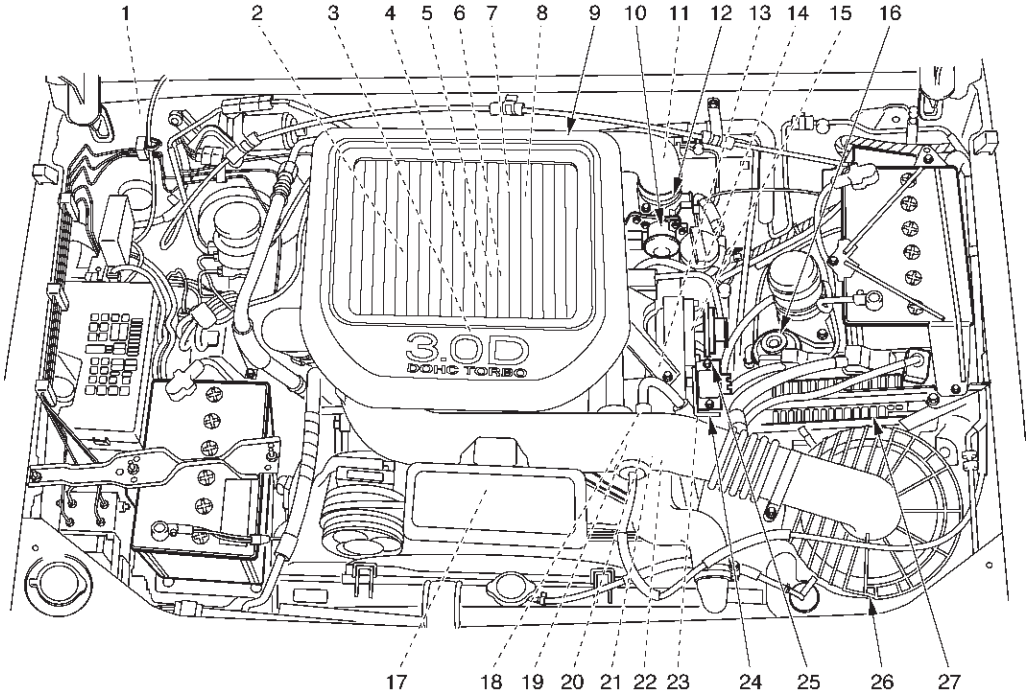

F06RW051

Number	Name	Location
1	AP (Accelerator Pedal Position) Sensor	AP Bracket
2	CKP (Crankshaft Position) Sensor	Inside the right front flywheel Housing
3	Oil Rail	Mounted on the camshaft carrier
4	Oil (Rail) Pressure Sensor	Mounted on the Oil Rail
5	OT (Oil Temperature) Sensor	Mounted on the Oil Rail
6	Fuel Injector	In the Cylinder Head Cover
7	Fuel Return Orifice	Inside the Cylinder Head
8	FT (Fuel Temperature) Sensor	Fuel Return Adaptor
9	Intercooler	On the Cylinder Head Cover
10	Intake Throttle Motor	Behind the Intake Manifold
11	Intake Throttle	Behind the Intake Manifold
12	2 Way Check Valve	Below the Intake Manifold
13	VSV (Vacuum Switching Valve)	At the left Cylinder Body
14	EGR Pressure Sensor	Below the Intake Manifold
15	Fuel Filter	At the left Engine Room
16	CMP (Camshaft Position) Sensor	On the forward of Timing Gear Case
17	IAT (Intake Air Temperature) Sensor	Below the Intake Manifold
18	ECT (Engine Coolant Temperature)	Thermostat Housing
19	High Pressure Oil Pump	On the back Timing Gear Case

Number	Name	Location
20	Rail Pressure Control Valve	In the High Pressure Oil Pump
21	Fuel Pump	In the High Pressure Oil Pump
22	EVRV	On the Intake Manifold
23	MAP (Manifold Absolute Pressure) Sensor	On the Intake Manifold
24	EGR Valve	On the Intake Manifold
25	Air Cleaner	At the left Engine Room
26	ECM	Behind the Air Cleaner

Sensors and Miscellaneous Component Locators

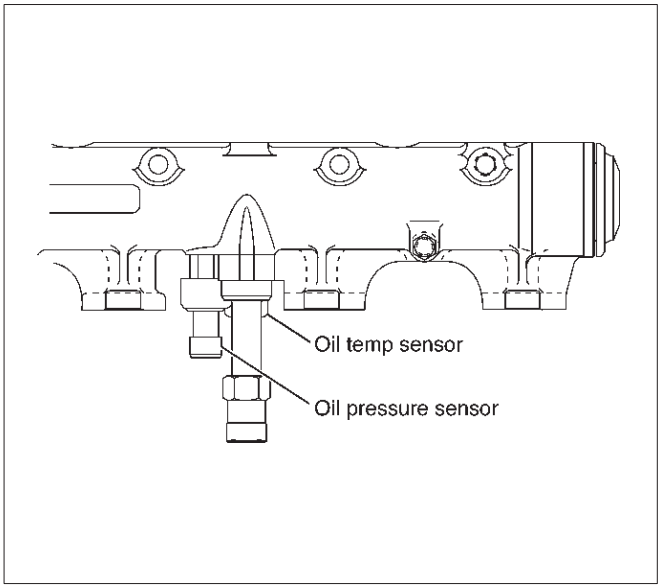

035RW115

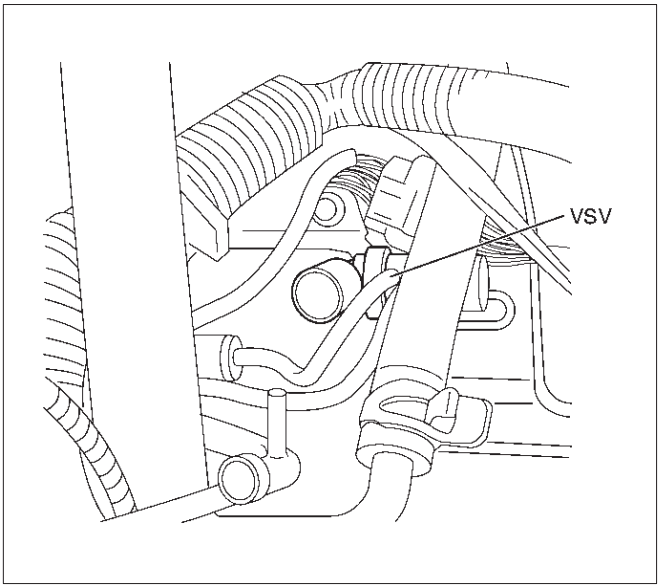

035RW118

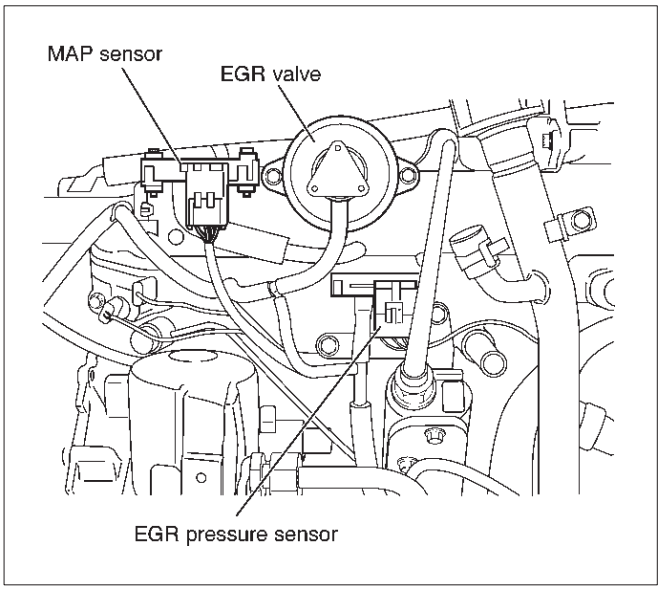

035RW117

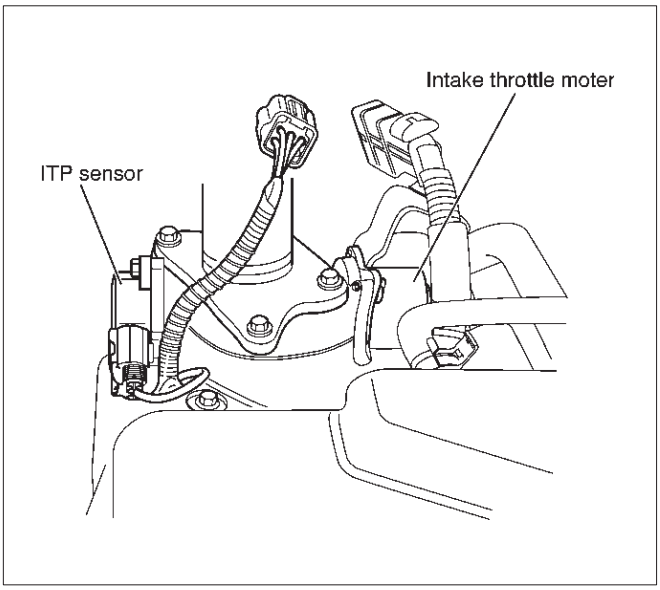

035RW119

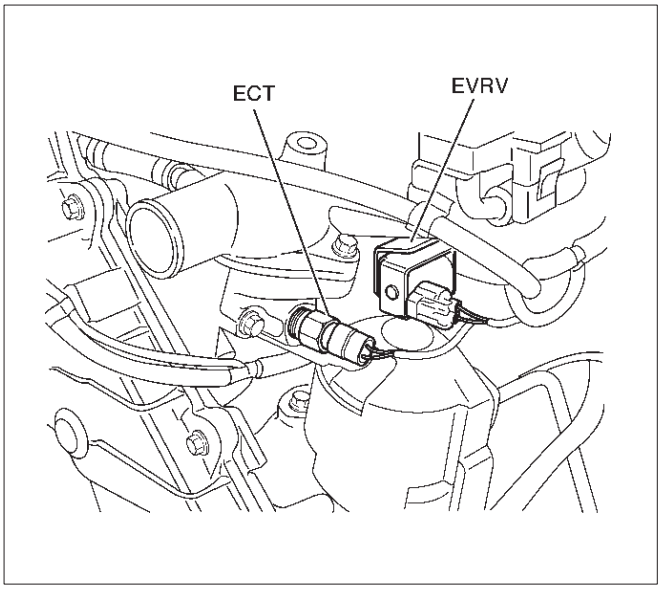

060RW179

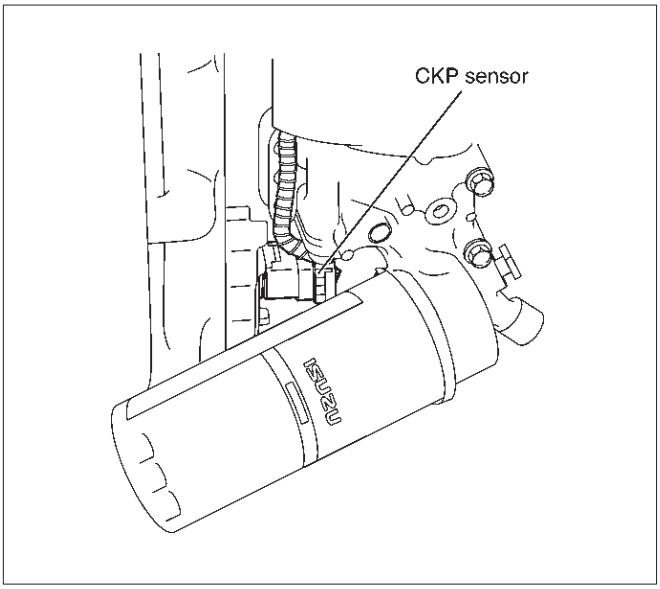

035RW120

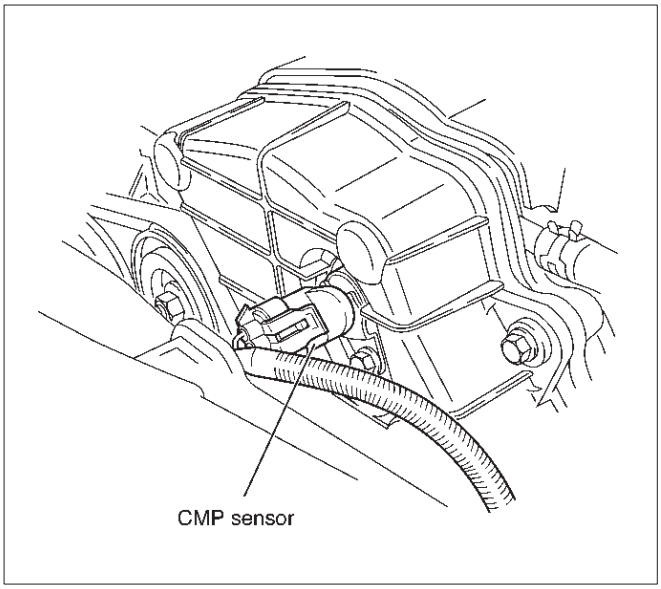

035RW121

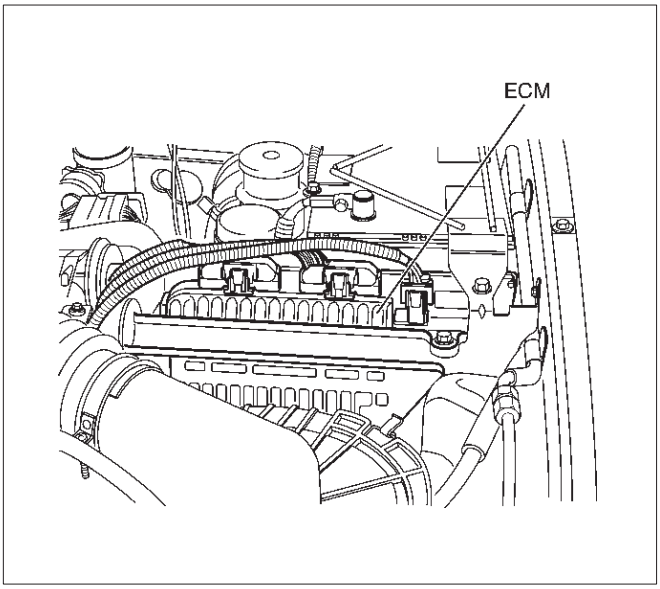

035RW107

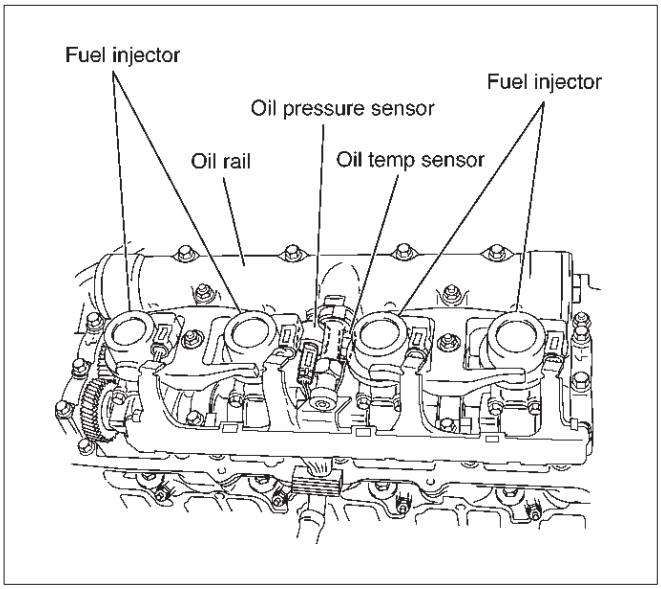

035RW122

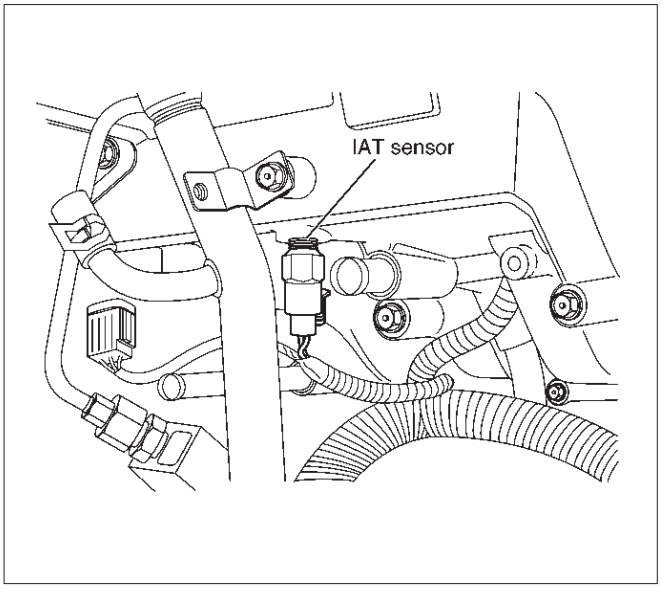

035RW116

Abbreviations Charts

List of abbreviations which may be used in this section.

Abbreviations	Term	Abbreviations	Term
A/C	Air Conditioner	BLK	Black
A/T	Automatic Transmission	BLU	Blue
ACC	Accessory	BRN	Brown
AP	Accel Position	GRN	Green
ASM	Assembly	GRY	Gray
CKP	Crank Position	LT BLU	Light Blue
CMP	Cam Position	LT GRN	Light Green
DLC	Data Link Connector	ORN	Orange
DTC	Diagnosis Trouble Code	PNK	Pink
DVM	Digital Volt Meter	RED	Red
ECM	Engine Control Module	VIO	Violet
ECT	Engine Coolant Temperature	WHT	White
EGR	Exhaust Gas Recircuration	YEL	Yellow
EVRV	Electric Vacuum Regulating Valve		
EXH	Exhaust		
FT	Fuel Temperature		
IAT	Intake Air Temperature		
IG	Ignition		
ITP	Intake Throttle Position		
M/T	Manual Transmission		
MAP	Manifold Absolute Pressure		
MIL	Mulfunction Indicator Lamp		
OBD	On-Board Diagnostic		
OT	Oil Temperature		
QOS	Quick on Start System		
QWS	Quick Warming-Up System		
RP	Rail Pressure		
RPCV	Rail Pressure Control Valve		
SRS	Supplemental Restraint System		
ST	Start		
SW	Switch		
TEMP	Temperature		
TOD	Torque on Demand		
VSS	Vehicle Speed Sensor		
VSV	Vacuum Switching Valve		
HEUI	Hydraulically Actuated Electronically Controlled Unit Injector		

Diagnosis

Strategy-Based Diagnostics

Strategy-Based Diagnostics

The strategy-based diagnostic is a uniform approach to repair all Electrical/Electronic (E/E) systems. The diagnostic flow can always be used to resolve an E/E system problem and is a starting point when repairs are necessary. The following steps will instruct the technician how to proceed with a diagnosis:

1. Verify the customer complaint.
   - To verify the customer complaint, the technician should know the normal operation of the system.
2. Perform preliminary checks.
   - Conduct a thorough visual inspection.
   - Review the service history.
   - Detect unusual sounds or odors.
   - Gather diagnostic trouble code information to achieve an effective repair.
3. Check bulletins and other service information.
   - This includes videos, newsletters, etc.
4. Refer to service information (manual) system check(s).
   - “System checks” contain information on a system that may not be supported by one or more DTCs. System checks verify proper operation of the system. This will lead the technician in an organized approach to diagnostics.
5. Refer to service diagnostics.

DTC Stored

Follow the designated DTC chart exactly to make an effective repair.

No DTC

Select the symptom from the symptom tables. Follow the diagnostic paths or suggestions to complete the repair. You may refer to the applicable component/system check in the system checks.

No Matching Symptom

1. Analyze the complaint.
2. Develop a plan for diagnostics.
3. Utilize the wiring diagrams and the theory of operation.

Call technical assistance for similar cases where repair history may be available. Combine technician knowledge with efficient use of the available service information.

Intermittents

Conditions that are not always present are called intermittents. To resolve intermittents, perform the following steps:

1. Observe history DTCs, DTC modes, and freezeframe data.
2. Evaluate the symptoms and the conditions described by the customer.
3. Use a check sheet or other method to identify the circuit or electrical system component.
4. Follow the suggestions for intermittent diagnosis found in the service documentation.

Most scan tools, such as the Tech 2 and the DVM, have data-capturing capabilities that can assist in detecting intermittents.

No Trouble Found

This condition exists when the vehicle is found to operate normally. The condition described by the customer may be normal. Verify the customer complaint against another vehicle that is operating normally. The condition may be intermittent. Verify the complaint under the conditions described by the customer before releasing the vehicle.

1. Re-examine the complaint.
   When the complaint cannot be successfully found or isolated, a re-evaluation is necessary. The complaint should be re-verified and could be intermittent as defined in *Intermittents*, or could be normal.
2. Repair and verify.
   After isolating the cause, the repairs should be made. Validate for proper operation and verify that the symptom has been corrected. This may involve road testing or other methods to verify that the complaint has been resolved under the following conditions:
   - Conditions noted by the customer.
   - If a DTC was diagnosed, verify a repair by duplicating conditions present when the DTC was set as noted in the Failure Records or Freeze Frame data.

Verifying Vehicle Repair

Verification of the vehicle repair will be more comprehensive for vehicles with OBD system diagnostics. Following a repair, the technician should perform the following steps:

IMPORTANT: Follow the steps below when you verify repairs on OBD systems. Failure to follow these steps could result in unnecessary repairs.

1. Review and record the Failure Records and the Freeze Frame data for the DTC which has been diagnosed (Freeze Frame data will only be stored for the MIL (“Check Engine” lamp) has been requested).
2. Clear the DTC(s).
3. Operate the vehicle within conditions noted in the Failure Records and Freeze Frame data.
4. Monitor the DTC status information for the specific DTC which has been diagnosed until the diagnostic test associated with that DTC runs.

General Service Information

Serviceability Issues

Non-OEM Parts

All of the OBD diagnostics have been calibrated to run with OEM parts. Accordingly, if commercially sold sensor or switch is installed, it makes a wrong diagnosis and turn on the MIL (“Check Engine” lamp).

Aftermarket electronics, such as cellular phones, stereos, and anti-theft devices, may radiate EMI into the control system if they are improperly installed. This may cause a false sensor reading and turn on the MIL (“Check Engine” lamp).

Poor Vehicle Maintenance

The sensitivity of OBD diagnostics will cause the MIL (“Check Engine” lamp) to turn on if the vehicle is not maintained properly. Restricted oil filters, fuel filters, and crankcase deposits due to lack of oil changes or improper oil viscosity can trigger actual vehicle faults that were not previously monitored prior to OBD. Poor vehicle maintenance can not be classified as a “non-vehicle fault”, but with the sensitivity of OBD diagnostics, vehicle maintenance schedules must be more closely followed.

Related System Faults

Many of the OBD system diagnostics will not run if the ECM detects a fault on a related system or component.

Visual/Physical Engine Compartment Inspection

Perform a careful visual and physical engine compartment inspection when performing any diagnostic procedure or diagnosing the cause of an emission test failure. This can often lead to repairing a problem without further steps. Use the following guidelines when performing a visual/physical inspection:

- Inspect all vacuum hoses for punches, cuts, disconnects, and correct routing.
- Inspect hoses that are difficult to see behind other components.
- Inspect all wires in the engine compartment for proper connections, burned or chafed spots, pinched wires, contact with sharp edges or contact with hot exhaust manifolds or pipes.

Basic Knowledge of Tools Required

NOTE: Lack of basic knowledge of this powertrain when performing diagnostic procedures could result in an incorrect diagnosis or damage to powertrain components. Do not attempt to diagnose a powertrain problem without this basic knowledge.

A basic understanding of hand tools is necessary to effectively use this section of the Service Manual.

Serial Data Communications

Class II Serial Data Communications

This vehicle utilizes the “Class II” communication system. Each bit of information can have one of two lengths: long or short. This allows vehicle wiring to be reduced by transmitting and receiving multiple signals over a single wire. The messages carried on Class II data streams are also prioritized. If two messages attempt to establish communications on the data line at the same time, only the message with higher priority will continue. The device with the lower priority message must wait.

On this vehicle the Tech 2 displays the actual values for vehicle parameters. It will not be necessary to perform any conversions from coded values to actual values.

On-Board Diagnostic (OBD)

On-Board Diagnostic Tests

A diagnostic test is a series of steps, the result of which is a pass or fail reported to the diagnostic executive. When a diagnostic test reports a pass result, the diagnostic executive records the following data:

- The diagnostic test has been completed since the last ignition cycle.
- The diagnostic test has passed during the current ignition cycle.
- The fault identified by the diagnostic test is not currently active.

When a diagnostic test reports a fail result, the diagnostic executive records the following data:

- The diagnostic test has been completed since the last ignition cycle.
- The fault identified by the diagnostic test is currently active.
- The fault has been active during this ignition cycle.
- The operating conditions at the time of the failure.

Comprehensive Component Monitor Diagnostic Operation

Comprehensive component monitoring diagnostics are required to operate engine properly.

Input Components:

Input components are monitored for circuit continuity and out-of-range values. This includes rationality checking. Rationality checking refers to indicating a fault when the signal from a sensor does not seem reasonable. Accel Position (AP) sensor that indicates high throttle position at low engine loads or MAP voltage. Input components may include, but are not limited to the following sensors:

- Intake Air Temperature (IAT) Sensor
- Crankshaft Position (CKP) Sensor
- Intake throttle Position (ITP) Sensor
- Engine Coolant Temperature (ECT) Sensor
- Camshaft Position (CMP) Sensor
- Manifold absolute Pressure (MAP) Sensor
- Accel Position Sensor
- Fuel Temp Sensor
- Rail Pressure Sensor
- Oil Temp Sensor
- EGR Pressure Sensor
- Vehicle Speed Sensor

Output Components:

Output components are diagnosed for proper response to control module commands. Components where functional monitoring is not feasible will be monitored for circuit continuity and out-of-range values if applicable.
Output components to be monitored include, but are not limited to, the following circuit:

- EGR VSV
- EGR EVRV
- Electronic Transmission controls
- Injector
- Intake throttle
- Glow plug
- MIL control

Refer to ECM and Sensors in General Descriptions.

Passive and Active Diagnostic Tests

A passive test is a diagnostic test which simply monitors a vehicle system or component. Conversely, an active test, actually takes some sort of action when performing diagnostic functions, often in response to a failed passive test.

Intrusive Diagnostic Tests

This is any on-board test run by the Diagnostic Management System which may have an effect on vehicle performance or emission levels.

Warm-Up Cycle

A warm-up cycle means that engine at temperature must reach a minimum of 70˚C (160˚F) *and* rise at least 22˚C (40˚F) over the course of a trip.

Freeze Frame

Freeze Frame is an element of the Diagnostic Management System which stores various vehicle information at the moment an emissions-related fault is stored in memory and when the MIL is commanded on. These data can help to identify the cause of a fault. Refer to *Storing And Erasing Freeze Fame Data* for more detailed information.

Failure Records

Failure Records data is an enhancement of the OBD Freeze Frame feature. Failure Records store the same vehicle information as does Freeze Frame, but it will store that information for any fault which is stored in on-board memory, while Freeze Frame stores information only for emission-related faults that command the MIL on.

Common OBD Terms

Diagnostic

When used as a noun, the word diagnostic refers to any on-board test run by the vehicle's Diagnostic Management System. A diagnostic is simply a test run on a system or component to determine if the system or component is operating according to specification. There are many diagnostics, shown in the following list:

- EGR
- engine speed
- vehicle speed
- ECT
- MAP
- VSV
- IAT
- ITP
- AP
- FT (Fuel Temp)
- RP (Rail Pressure)
- OT (Oil Temp)
- EGR EVRV
- Idle SW
- Brake SW

The Diagnostic Executive

The Diagnostic Executive is a unique segment of software which is designed to coordinate and prioritize the diagnostic procedures as well as define the protocol for recording and displaying their results. The main responsibilities of the Diagnostic Executive are listed as follows:

- Commanding the MIL ("Check Engine" lamp) on and off
- DTC logging and clearing
- Freeze Frame data for the first emission related DTC recorded
- Current status information on each diagnostic

Diagnostic Information

The diagnostic charts and functional checks are designed to locate a faulty circuit or component through a process of logical decisions. The charts are prepared with the requirement that the vehicle functioned correctly at the time of assembly and that there are not multiple faults present.
There is a continuous self-diagnosis on certain control functions. This diagnostic capability is complemented by the diagnostic procedures contained in this manual. The language of communicating the source of the malfunction is a system of diagnostic trouble codes. When a malfunction is detected by the control module, a diagnostic trouble code is set and the Malfunction Indicator Lamp (MIL) ("Check Engine" lamp) is illuminated.

Malfunction Indicator Lamp (MIL)

The Malfunction Indicator Lamp (MIL) looks the same as the MIL you are already familiar with "Check Engine" lamp.
Basically, the MIL is turned on when the ECM detects a DTC that will impact the vehicle emissions.

- When the MIL remains "ON" while the engine is running, or when a malfunction is suspected due to a driveability or emissions problem, a Powertrain On-Board Diagnostic (OBD) System Check must be performed. The procedures for these checks are given in On-Board Diagnostic (OBD) System Check. These checks will expose faults which may not be detected if other diagnostics are performed first.

DTC Types

Characteristic of Code

- Non-Emissions related
- Dose not request illumination of any lamp
- Stores a History DTC on the *first trip* with a fail
- Stores Fail Record when test fails
- Updates the Fail Record each time the diagnostic test fails

Storing and Erasing Freeze Frame Data and Failure Records

The data captured is called Freeze Frame data. The Freeze Frame data is very similar to a single record of operating conditions. Whenever the MIL is illuminated, the corresponding record of operating conditions is recorded to the Freeze Frame buffer.

Data from these faults take precedence over data associated with any other fault. The Freeze Frame data will not be erased unless the associated history DTC is cleared.

Each time a diagnostic test reports a failure, the current engine operating conditions are recorded in the *Failure Records* buffer. A subsequent failure will update the recorded operating conditions. The following operating conditions for the diagnostic test which failed *typically* include the following parameters:

- Engine Speed
- Engine Load
- Engine Coolant Temperature
- Vehicle Speed
- Intake Throttle Position
- MAP
- Injector Base Pulse Width
- Loop Status

Data Link Connector (DLC)

The provision for communication with the contorl module is the Data Link Connector (DLC). It is located at behind the lower front instrument panel. The DLC is used to connect to a Tech 2. Some common uses of the Tech 2 are listed below:

- Identifying stored Diagnostic Trouble Codes (DTCs).
- Clearing DTCs.
- Performing out put control tests.
- Reading serial data.

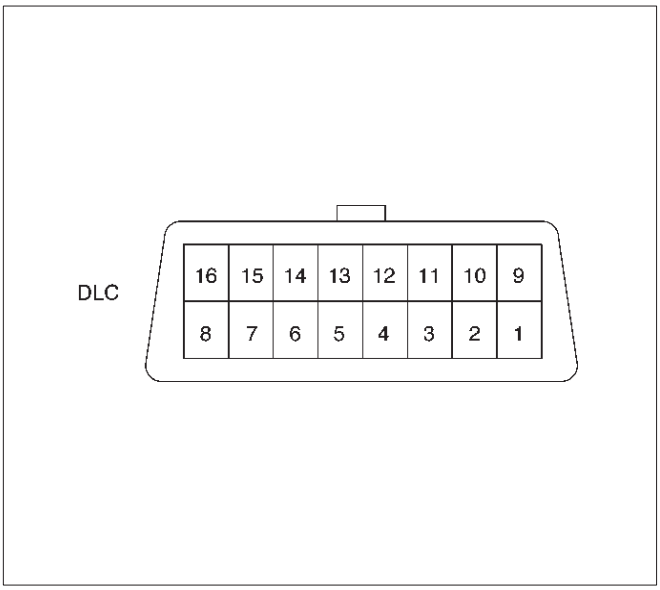

060RW046

Verifying Vehicle Repair

Verification of vehicle repair will be more comprehensive for vehicles with OBD system diagnostic. Following a repair, the technician should perform the following steps:

1. Review and record the Fail Records and/or Freeze Frame data for the DTC which has been diagnosed.
2. Clear DTC(s).
3. Operate the vehicle within conditions noted in the Fail Records and/or Freeze Frame data.
4. Monitor the DTC status information for the specific DTC which has been diagnosed until the diagnostic test associated with that DTC runs.

Following these steps are very important in verifying repairs on OBD systems. Failure to follow these steps could result in unnecessary repairs.

Reading Flash Diagnostic Trouble Codes

The provision for communicating with the Engine Control Module (ECM) is the Data Link Connector (DLC). The DLC is located in the front console box. It is used in the assembly plant to receive information in checking that the engine is operating properly before it leaves the plant.

The diagnostic trouble code(s) (DTCs) stored in the ECM's memory can be read either through a hand-held diagnostic scanner plugged into the DLC or by counting the number of flashes of the "Check Engine" Malfunction Indicator Lamp (MIL) when the diagnostic test terminal of the DLC is grounded. The DLC terminal "6" (diagnostic request) is pulled "Low" (grounded) by jumpering to DLC terminal "4", which is a ground wire.

This will signal the ECM that you want to "flash" DTC(s), if any are present. Once terminals "4" and "6" have been connected, the ignition switch must be moved to the "ON" position, with the engine not running.

The "Check Engine"MIL will indicate a DTC three times if a DTC is present. If more than one DTC has been stored

in the ECM's memory, the DTC(s) will be output from the lowest to the highest, with each DTC being displayed three times.
The DTC display will continue as long as the DLC is shorted.

Reading Diagnostic Trouble Codes Using a TECH 2

The procedure for reading diagnostic trouble code(s) is to used a diagnostic Tech 2. When reading DTC(s), follow instructions supplied by Tech 2 manufacturer.
For the 1998 model year, Isuzu dealer service departments will continue to use Tech 2.

Clearing Diagnostic Trouble Codes

IMPORTANT: Do not clear DTCs unless directed to do so by the service information provided for each diagnostic procedure. When DTCs are cleared, the Freeze Frame and Failure Record data which may help diagnose an intermittent fault will also be erased from memory.

If the fault that caused the DTC to be stored into memory has been corrected, the Diagnostic Executive will begin to count the "warm-up" cycles with no further faults detected, the DTC will automatically be cleared from the ECM memory.

To clear Diagnostic Trouble Codes (DTCs), use the Tech 2 "clear DTCs" or "clear information" function. When clearing DTCs follow instructions supplied by the Tech 2 manufacturer.
When a Tech 2 is not available, DTCs can also be cleared by disconnecting *one* of the following sources for at least thirty (30) seconds.

NOTE: To prevent system damage, the ignition key must be "OFF" when disconnecting or reconnecting battery power.

- The power source to the control module. Examples: fuse, pigtail at battery ECM connectors etc.
- The negative battery cable. (Disconnecting the negative battery cable will result in the loss of other on-board memory data, such as preset radio tuning).

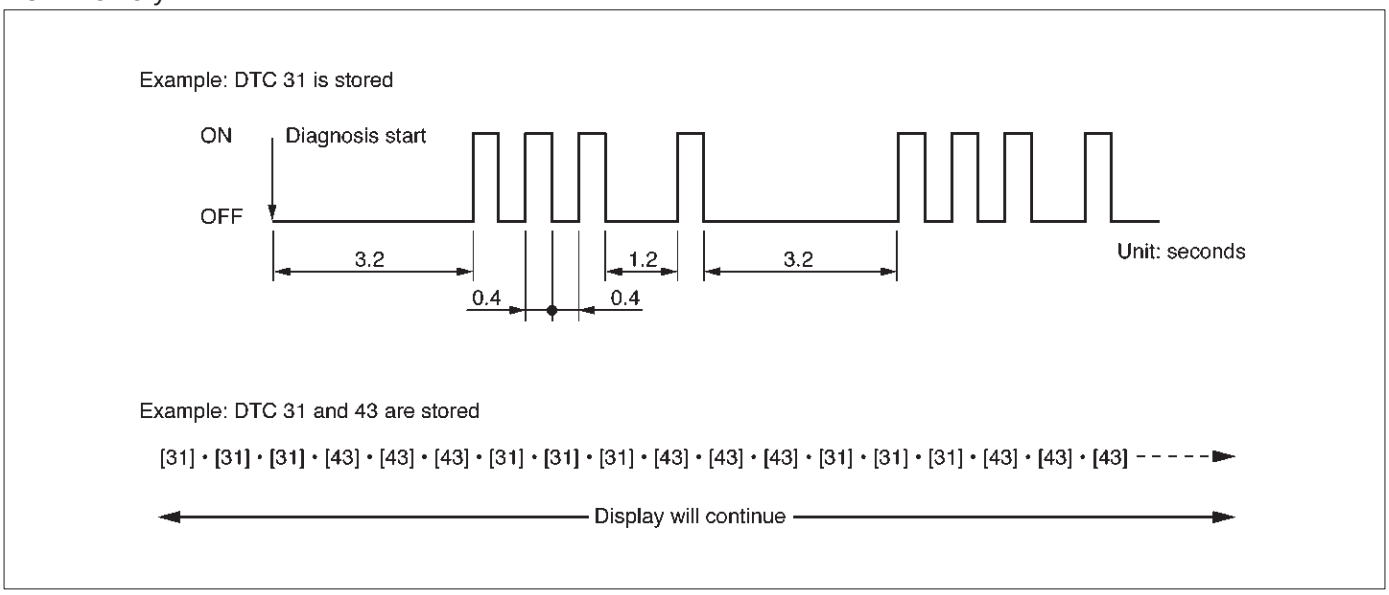

060RW169

Tech 2 Scan Tool

From 98 MY, Isuzu dealer service departments are recommended to use Tech 2. Please refer to Tech 2 user guide.

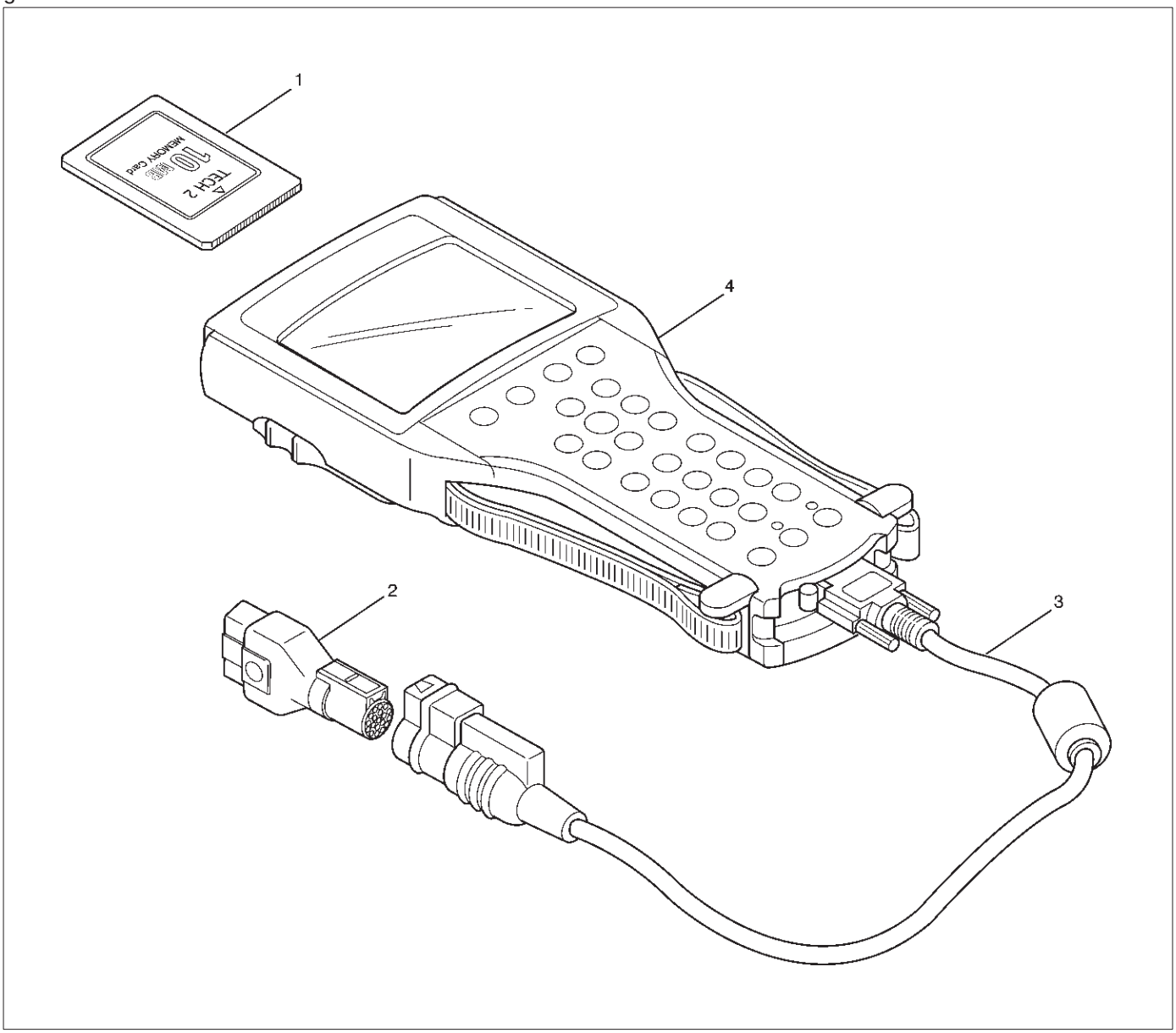

901RW257

Legend

(1) PCMCIA Card
(2) SAE 16/19 Adaptor
(3) DLC Cable
(4) Tech–2

Getting Started

- Before operating the Isuzu PCMCIA card with the Tech 2, the following steps must be performed:

1. The Isuzu 98 System PCMCIA card (1) inserts into the Tech 2 (5).
2. Connect the SAE 16/19 adapter (3) to the DLC cable (4).
3. Connect the DLC cable to the Tech 2 (5)
4. Make sure the vehicle ignition is off.
5. Connect the Tech 2 SAE 16/19 adapter to the vehicle DLC.
6. The vehicle ignition turns on.
7. Verify the Tech 2 power up display.

012RW105

NOTE: The RS232 Loop back connector is only to use for diagnosis of Tech 2 and refer to user guide of the Tech 2.

Operating Procedure

The power up screen is displayed when you power up the tester with the Isuzu systems PCMCIA card. Follow the operating procedure below.

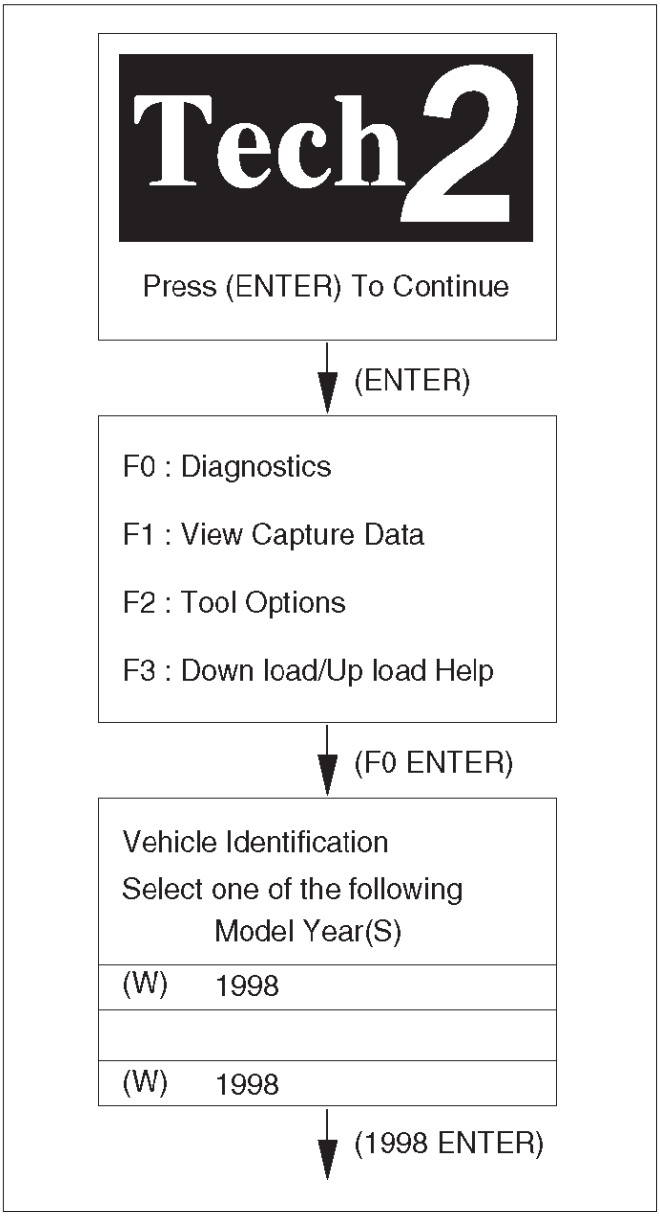

060RW014

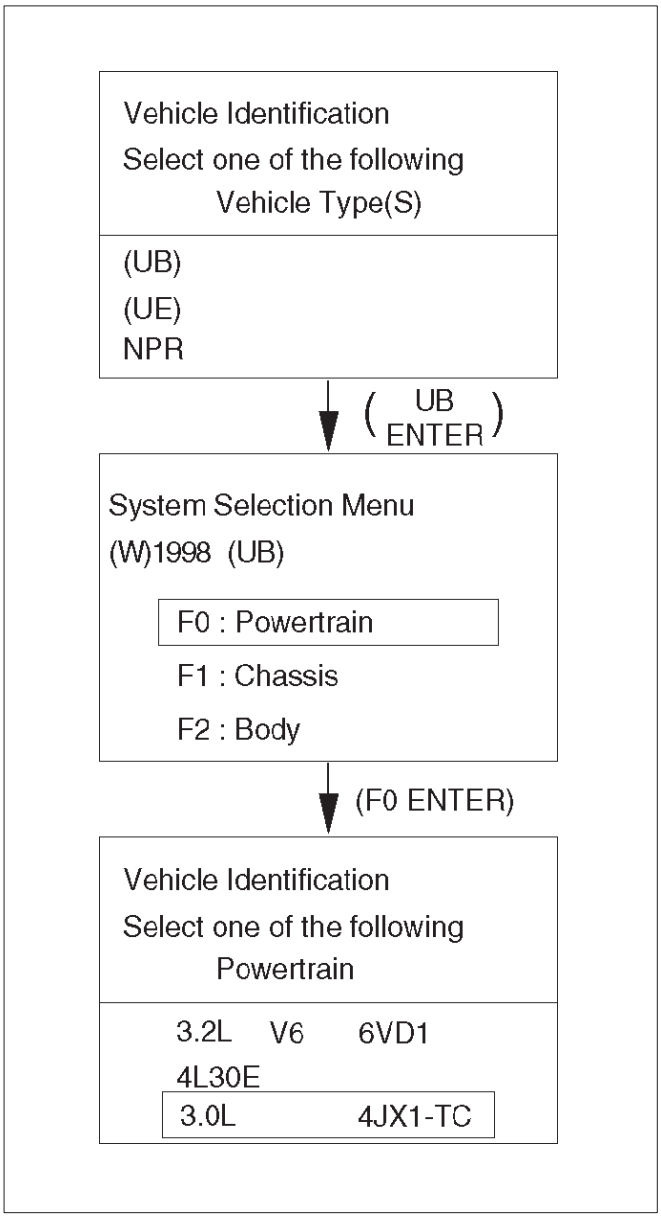

060RW120

Menu

- The following table shows, which functions are used the available equipment versions.

F0: Diagnostic Trouble Codes	
	F0: Read DTC Info Ordered By Priority
	F1: Read DTC Info As Stored By ECU
	F2: Clear DTC Information
	F3: Freeze Frame / Failure Records
F1: Data Display	
F2: Snapshot	
F3: Actuator Tests	
	F0: Checklight
	F1: Glow Time Lamp
	F2: EGR Switching Valve
	F3: Exhaust Switching Valve 1
	F4: Exhaust Switching Valve 2
F4: Miscellaneous Tests	
	F0: Throttle Motor Control
	F1: Rail Pressure Control
	F2: EGR Regulating Valve Control
	F3: Rail Pressure Control Valve
	F4: Injector Balance Test
F5: Programming	
	F0: Injector Calibration
	(F1: Rail Pressure Calibration)

DTC Modes

There are three options available in the Tech 2 DTC mode to display the enhanced information available. A description of the new modes, DTC Info, follows. After selecting DTC, the following menu appears:

- DTC Info
- Clear Info
- Read DTC Info Ordered By Priority

The following is a brief description of each of the sub menus in DTC Info. The order in which they appear here is alphabetical and not necessarily the way they will appear on the Tech 2.

DTC Information Mode

Use the DTC info mode to search for a specific type of stored DTC information.The service manual may instruct the technician to test for DTCs in a certain manner. Always follow published service procedures.

Fail This Ignition

This selection will display all DTCs that have failed during the present ignition cycle.

History

This selection will display only DTCs that are stored in the ECM's history memory. It will not display Type B DTCs that have not requested the MIL ("Check Engine" lamp). It will display all type A and B DTCs that have requested the MIL and have failed within the last 40 warm-up cycles. In addition, it will display all type C and type D DTCs that have failed within the last 40 warm-up cycles.

MIL SVC or Message Requested

This selection will display only DTCs that are requesting the MIL. Type C and type D DTCs cannot be displayed using this option. This selection will report type B DTCs only after the MIL has been requested.

Test Failed Since Code Cleared

This selection will display all active and history DTCs that have reported a test failure since the last time DTCs were cleared.

Injector Test

This test is conducted to make it sure that appropriate electric signals are being sent to injectors Nos. 1 – 4. Tech–2 must be used for this test.

Test Procedure:

1. Connect Tech–2 to the vehicle DLC.
2. Set Ignition Switch to the "ON" position.
3. Select Control Test.
4. Select Injector Test.
5. Send instructions to each injector(Switch on), making sure of injector working noise.

NOTE: If injector working noise (Clink) can hardly be confirmed, remove the engine head cover noise insulation.

Refer to Section 6A.

6. In the injector whose working noise has been confirmed, its electric circuit can be regarded as normal.
   As for the injector whose working noise has not been confirmed, its electric circuit or the injector proper is faulty.

EGR Valve Test

This test is conducted to check EGR valve for its working. This test needs Tech–2.

Test Procedure

1. Connect Tech–2 to vehicle DLC.
2. Switch on the engine.
3. Select "DIAGNOSIS" from the main menu.
4. Select Miscellaneous Test.
5. Select EGR Valve.
6. Instruct EGR Valve to check a data list.
7. If change in the data list shows a normal valve, the working of EGR Valve can be judged to be normal.

Rail Pressure Control Valve Test

This test is conducted to check RPC valve for its working. This test needs Tech–2.

Test Procedure

1. Connect Tech–2 to vehicle DLC.
2. Switch on the engine.
3. Select "DIAGNOSIS" from the main menu.
4. Select Miscellaneous Test.
5. Select Rail Pressure Control Valve.
6. Instruct RPC Valve to check a data list.
7. If change in the data list shows a normal valve, the working of RPC Valve can be judged to be normal.

Injector Balance Test

This test is conducted to make it sure that appropriate electric signals are being sent to injectors Nos. 1-4, when the engine is idling.
This test needs Tech–2.

Test Procedure

1. Connect Tech–2 to vehicle DLC.
2. The engine is running at idling condition.
3. Select "DIAGNOSIS" from the main menu.
4. Select Miscellaneous Test.
5. Select the injector Balance Test.
6. Send instructions to each injector(Switch On), making sure change of the engine vibration.
7. In the injector whose change of the vibration has been confirmed, it's electric circuit can be regarded as normal.

Data Programming in Case of ECM Change

When replacing ECM, it is necessary to confirm and record the group sign of injector beforehand. For this confirmation.

Tech–2 must be used. After ECM change, the recorded group sign should be programmed. Oil pressure sensor data also should be programmed.

- Group Sign Confirmation Procedure
  1 Connect Tech–2 to vehicle DLC.
  2 Turn Ignition Switch to the “ON” position.
  3 Select “DIAGNOSIS” from the main menu.
  4 Select programming.
  5 Select Read/store Trim Data.
  6 Confirm and record the group sign of injector.
- ECM Change
- Programming Procedure for Injector Group Sign
  1 Connect Tech–2 to vehicle DLC.
  2 Turn Ignition Switch to the “ON” position.
  3 Select “DIAGNOSIS” from the main menu.
  4 Select programming.
  5 Select ECM change.
  6 Select cylinder.
  7 Program Injector Group Sign.
  8 Confirm the completion of Injector programming.
- Programming Procedure for Oil Pressure Sensor
  1 Connect Tech–2 to vehicle DLC.
  2 Turn Ignition Switch to the “ON” position.
  3 Select “DIAGNOSIS” from the main menu.
  4 Select programming.

Rail Pressure Sensor Programming

Rail pressure sensor replacement must be programmed. This programming needs Tech–2.

Programing Procedure

1. Connect Tech–2 to vehicle DLC.
2. Turn Ignition Switch to the “ON” position.
3. Select “DIAGNOSIS” from the main menu.
4. Select Programming.
5. Select Oil Pressure Sensor change.
6. Execute Oil Pressure Sensor Program.
7. Confirm the completion of Oil Pressure Sensor Program.

Injector Group Sign Programming (Injector Change)

In case of Injector change, injector group sign must be programmed.
This programming needs Tech–2.

Programing Procedure

1. Connect Tech–2 to vehicle DLC.
2. Turn Ignition Switch to the “ON” position.
3. Select “DIAGNOSIS” from the main menu.
4. Select Programming.
5. Select Injector change.
6. Select the cylinder changed.
7. Appoint and select Injector Group Sign.
8. Confirm the completion of Injector programming.

Fuel Injection System

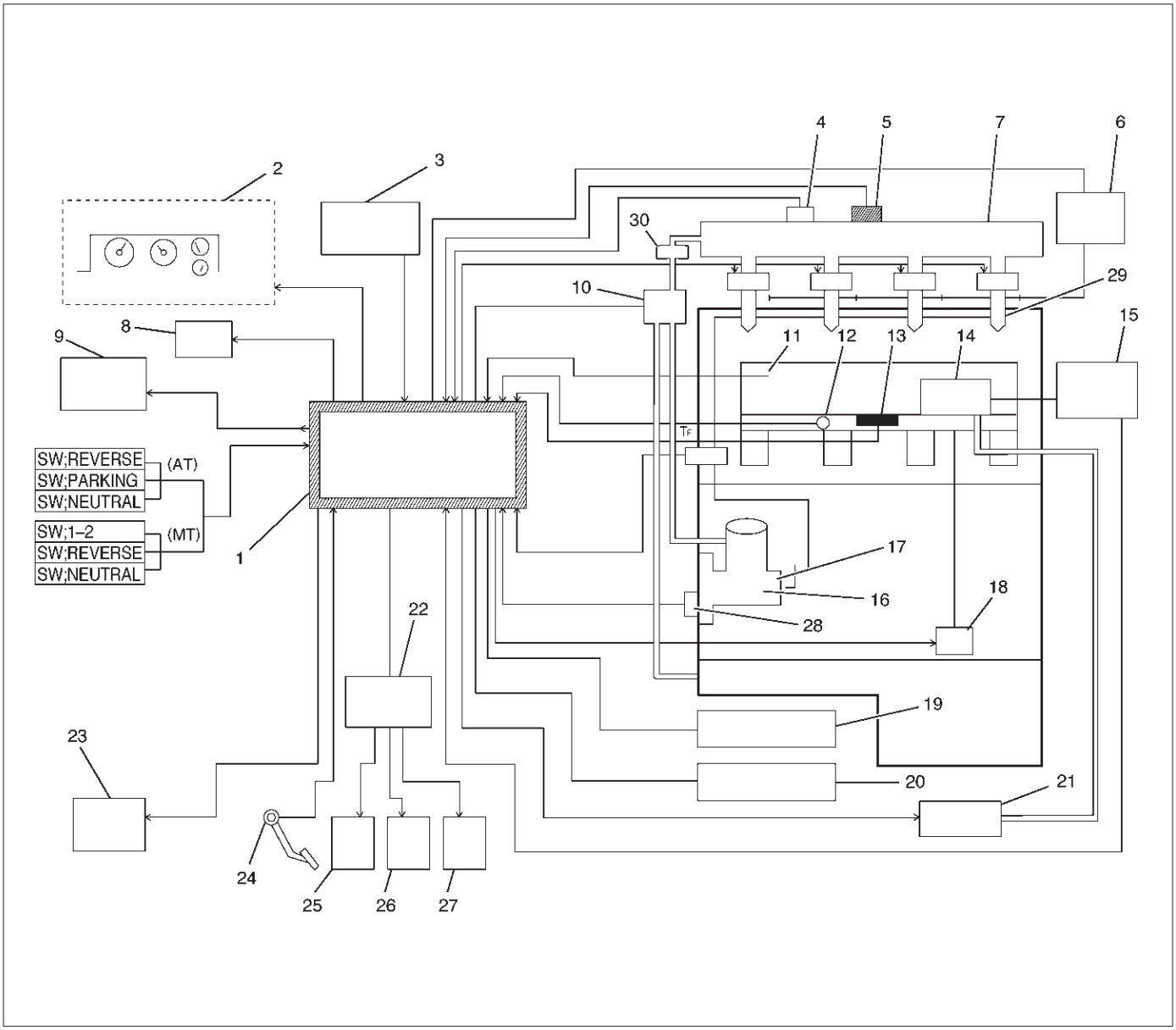

060RW178

Legend

(1) ECM
(2) Meter Panel
(3) Battery
(4) Oil Temp Sensor
(5) Rail Pressure Sensor
(6) Glow Relay
(7) Oil Rail
(8) Tech–2
(9) A/C Comp Relay
(10) RPCV
(11) Intake Air Temp Sensor
(12) Engine Coolant Temp Sensor
(13) MAP Sensor
(14) EGR Valve
(15) EGR Pressure Sensor
(16) High Pressure Oil Pump
(17) Fuel Pump
(18) VSV
(19) EXH Throttle VSV1
(20) EXH Throttle VSV2
(21) EVRV
(22) Engine Harness Connector
(23) QWS Relay
(24) APS
(25) T.O.D
(26) ECT
(27) OBD
(28) TDC
(29) Injector
(30) Edge Filter

Guid to the System

- Fuel Injection system is an HEUI (Hydraulically Actuated, Electronically Controlled, Unit, Injector) type. In this type of injector system, the oil pressurized by means of High Pressure Oil Pump (16) is fed through Rail Pressure Control Valve (10) and Oil Rail (7) to Injector (29) from which fuel is injected under this oil pressure.
  For diagnosis, therefore, the Rail Pressure as well as the Electric Circuit must be inspected.

On-Board Diagnostic (OBD) System Check

A Group

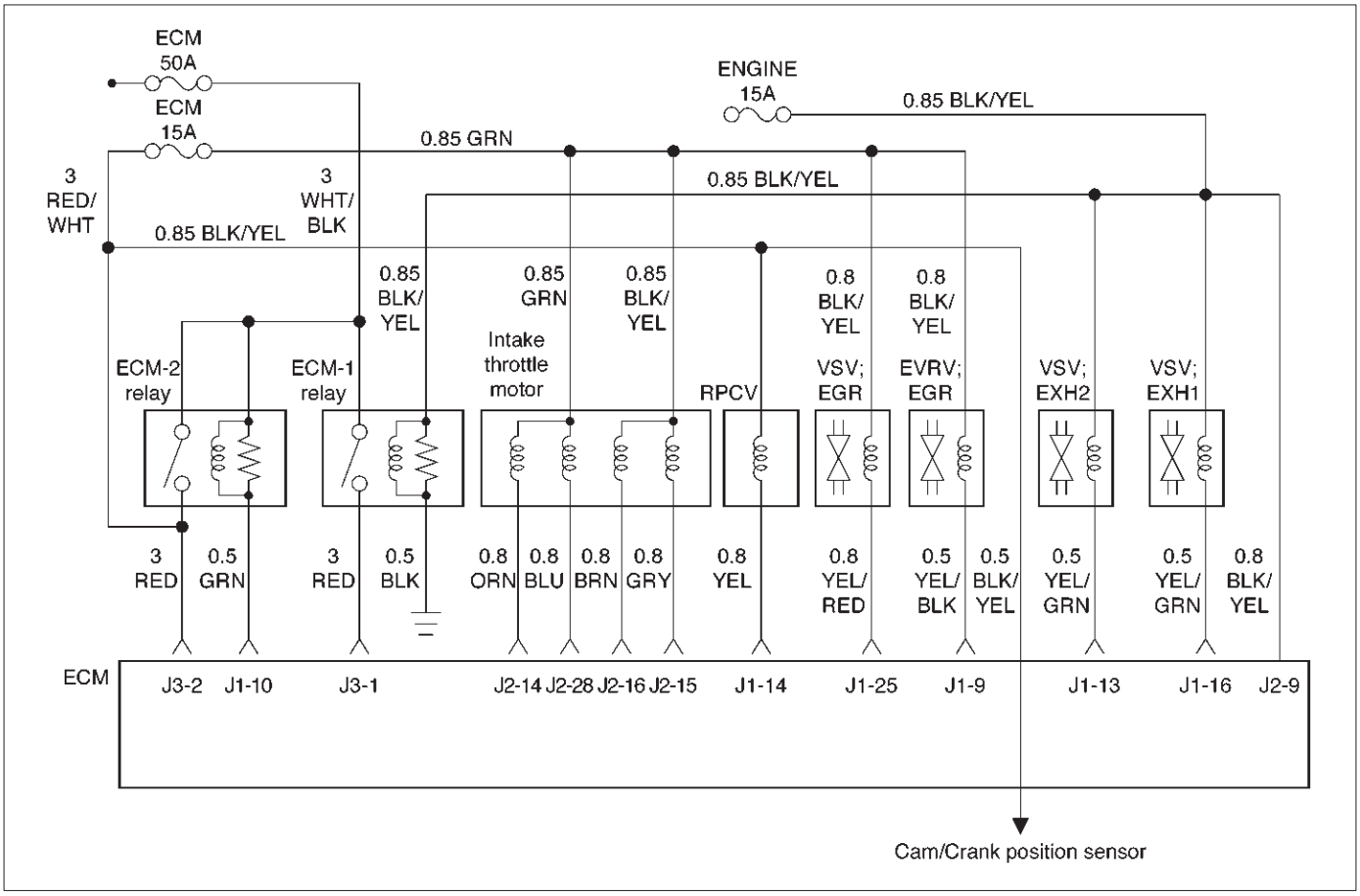

060RW135

B Group

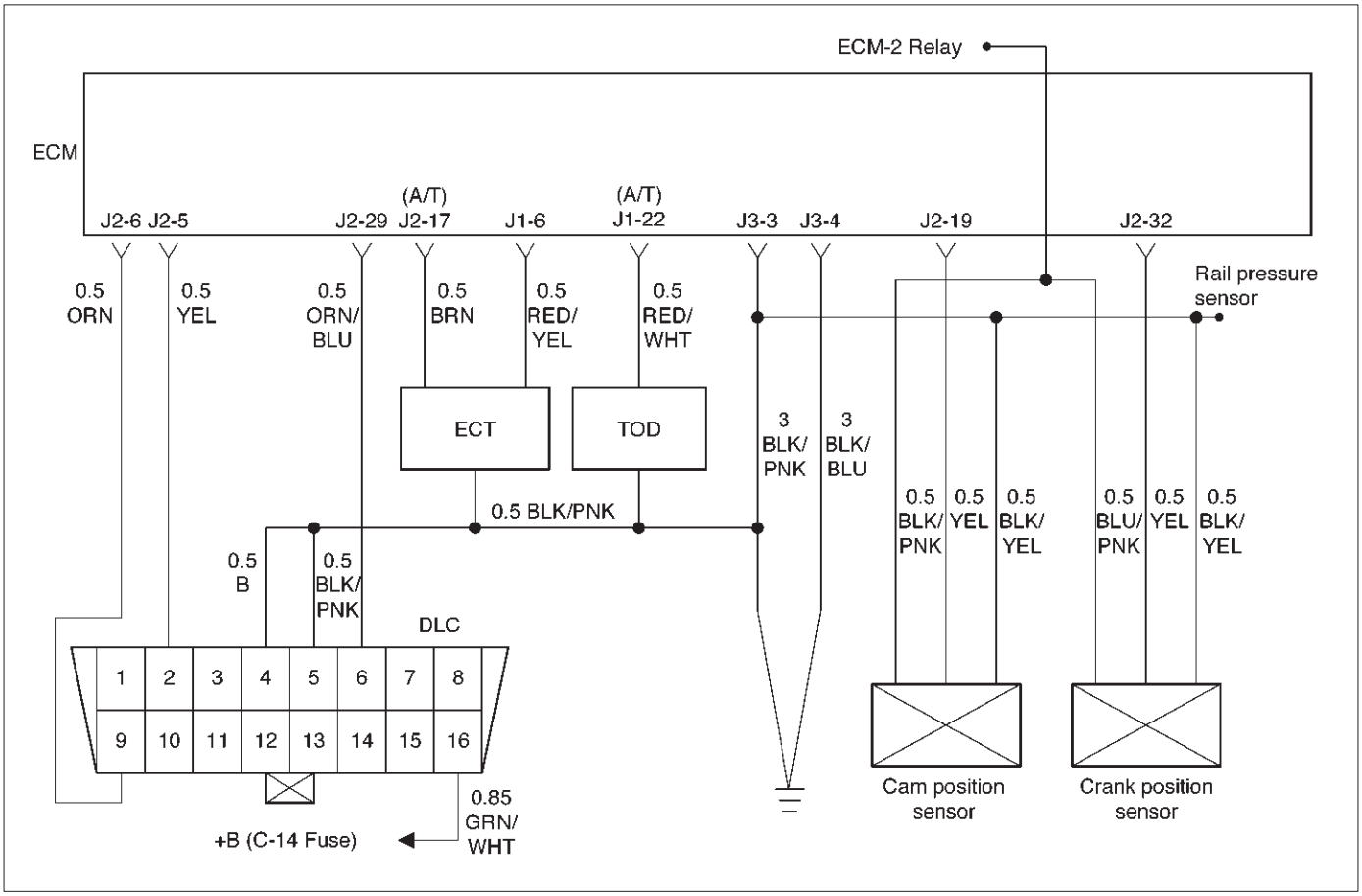

060RW133

C Group

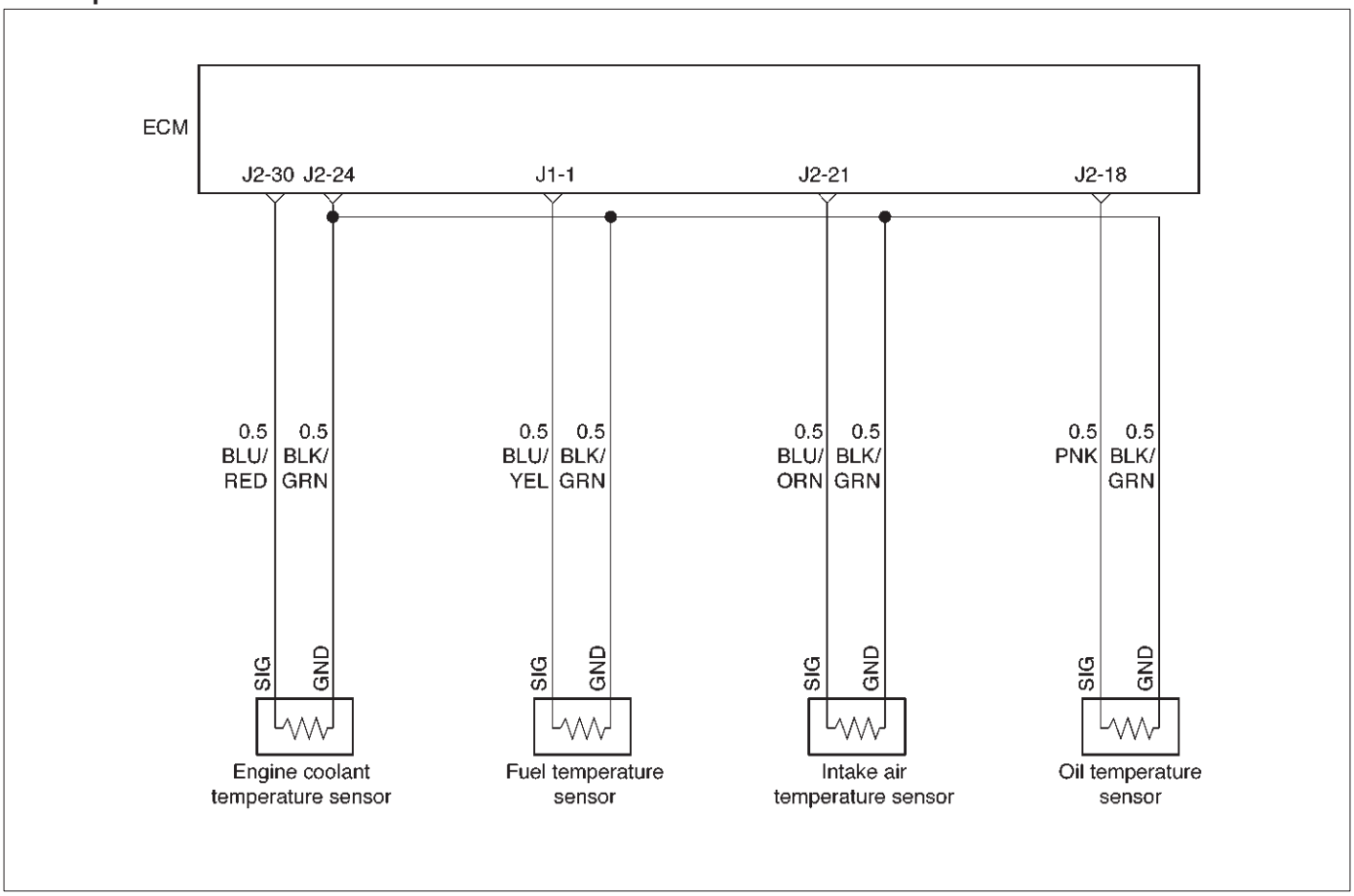

060RW129

D Group

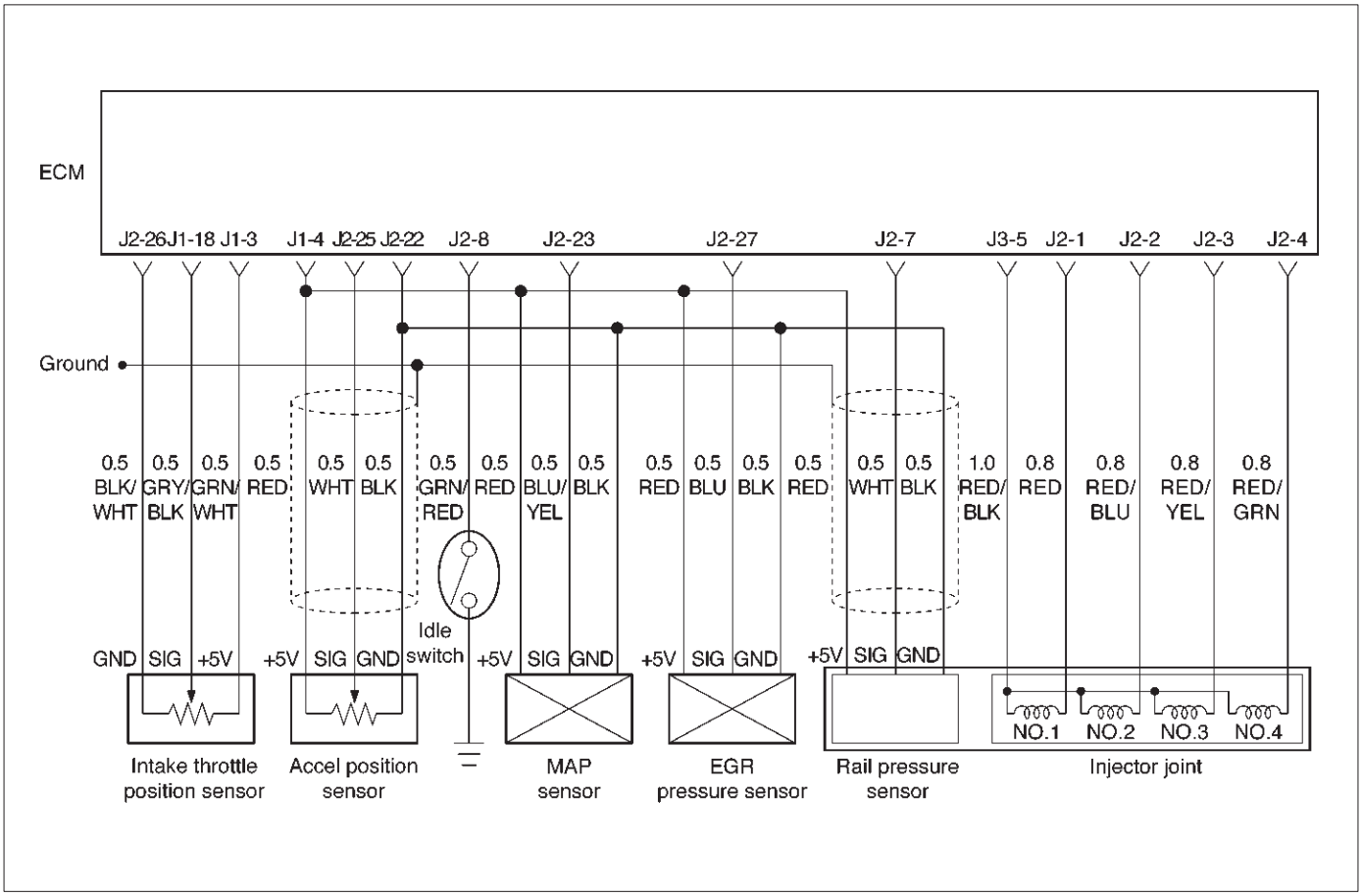

060RW134

Circuit Description

The on-board diagnostic system check is the starting point for any driveability complaint diagnosis. Before using this procedure, perform a careful visual/physical check of the ECM and engine grounds for cleanliness and tightness.

The on-board diagnostic system check is an organized approach to identifying a problem created by an electronic engine control system malfunction.

Diagnostic Aids

An intermittent may be caused by a poor connection, rubbed-through wire insulation or a wire broken inside the insulation. Check for poor connections or a damaged harness. Inspect the ECM harness and connector for improper mating, broken locks, improperly formed or damaged terminals, poor terminal-to-wire connection, and damaged harness.

Test Description

Number(s) below refer to the step number(s) on the Diagnostic Chart:

1. The MIL (“Check Engine” lamp) should be “ON” steady with the ignition “ON”/engine “OFF.” If not, Chart A-1 should be used to isolate the malfunction.
2. Checks the Class 2 data circuit and ensures that the ECM is able to transmit serial data.
3. This test ensures that the ECM is capable of controlling the MIL (“Check Engine” lamp) and the MIL (“Check Engine” lamp) driver circuit is not shorted to ground.
4. If the engine will not start, the *Cranks But Will Not Run* chart should be used to diagnose the condition.
7. A Tech 2 parameter which is not within the typical range may help to isolate the area which is causing the problem.
9. When the ECM is replaced, the characteristic data of injector and rail pressure sensor should be inputted.

On- Board Diagnostic (OBD) System Check

Step	Action	Value(s)	Yes	No
1	1. Ignition “ON,” engine “OFF.” 2. Observe the malfunction indicator lamp (MIL or “Check Engine” lamp). Is the MIL (“Check Engine” lamp)“ON?”	—	Go to *Step 2*	Go to *No MIL (“Check Engine” lamp)*
2	1. Ignition “OFF.” 2. Install a Tech 2. 3. Ignition “ON.” 4. Attempt to display ECM engine data with the Tech 2. Does the Tech 2 display ECM data?	—	Go to *Step 3*	Go to *Step 8*
3	1. Using the Tech 2 output tests function, select MIL (“Check Engine” lamp) dash lamp control and command the MIL (“Check Engine” lamp) “OFF.” 2. Observe the MIL (“Check Engine” lamp). Did the MIL (“Check Engine” lamp) turn “OFF?”	—	Go to *Step 4*	Go to *MIL (“Check Engine” lamp) On Steady*
4	Attempt to start the engine. Did the engine start and continue to run?	—	Go to *Step 5*	Go to *Cranks But Will Not Run*
5	Select “Display DTCs” with the Tech 2. Are any DTCs stored?	—	Go to *Step 6*	Go to *Step 7*
6	Are two or more of the following DTCs stored? A Group; P0337, P0342, P1193, P1404, P1405, P1488 B Group; P0337, P0342 C Group; P0112, P0117, P0182, P0197 D Group; P0107, P0405, P1194, P1485	—	Go to *Chart*, “Multiple ECM Information Sensor DTCs Set”	Go to applicable DTC table
7	Compare ECM data values displayed on the Tech 2 to the typical engine scan data values. Are the displayed values normal or close to the typical values?	—	Go to *Step 8*	Refer to indicated *Component System Checks*
8	1. Ignition “OFF,” disconnect the ECM. 2. Ignition “ON,” engine “OFF.” 3. Check the Class 2 data circuit for an open, short to ground, or short to voltage. Also, check the DLC ignition feed circuit for an open or short to ground and the DLC ground circuit for an open. 4. If a problem is found, repair as necessary. Was a problem found?	—	Go to *Step 2*	Go to *Step 9*
9	Check the Tech 2 on other vehicle. Was Tech 2 abnormal?	—	Go to *Step 11*	Go to *Step 10*
10	Replace the ECM (Refer to the Data Programming in Case of ECM change). Is the action complete?	—	Go to *Step 2*	—
11	Repair the Tech 2 or prepare another Tech 2. Is the action complete?	—	Go to *Step 2*	—

Engine Control Module ECM Diagnosis

To read and clear diagnostic trouble codes, use a Tech 2.

IMPORTANT: Use of a Tech 2 is recommended to clear diagnostic trouble codes from the ECM memory. Diagnostic trouble codes can also be cleared by turning the ignition "OFF" and disconnecting the battery power from the ECM for 30 seconds. Turning off the ignition and disconnecting the battery power from the ECM will cause all diagnostic information in the ECM memory to be cleared. Therefore, all the diagnostic tests will have to be re-run.

Since the ECM can have a failure which may affect only one circuit, following the diagnostic procedures in this section will determine which circuit has a problem and where it is.

If a diagnostic chart indicates that the ECM connections or the ECM is the cause of a problem, and the ECM is replaced, but this does not correct the problem, one of the following may be the reason:

- There is a problem with the ECM terminal connections. The terminals may have to be removed from the connector in order to check them properly.
- The problem is intermittent. This means that the problem is not present at the time the system is being checked. In this case, refer to the *Symptoms* portion of the manual and make a careful physical inspection of all components and wiring associated with the affected system.
- There is a shorted solenoid, relay coil, or harness. Solenoids and relays are turned "ON" and "OFF" by the ECM using internal electronic switches called drivers. A shorted solenoid, relay coil, or harness will not damage the ECM but will cause the solenoid or relay to be inoperative.

Multiple ECM Information Sensor DTCS Set

Circuit Description

The Engine Control Module ECM monitors various sensors to determine the engine operating conditions. The ECM controls fuel delivery, spark advance, transmission operation, and emission control device operation based on the sensor inputs.

The ECM provides a sensor ground to all of the sensors. The ECM applies 5 volts through a pull-up resistor, and determines the status of the following sensors by monitoring the voltage present between the 5-volt supply and the resistor:

- The fuel temperature (FT) sensor
- The engine coolant temperature (ECT) sensor
- The Intake air temperature (IAT) sensor

The ECM provides the following sensors with a 5-volt reference and a sensor ground signal:

- The Intake throttle position sensor
- The manifold absolute pressure sensor
- The rail pressure sensor
- The accelerator position sensor
- The oil temperature sensor
- The camshaft position sensor
- The crankshaft position sensor
- The EGR pressure sensor

The ECM monitors the signals from these sensors in order to determine their operating status.

Diagnostic Aids

IMPORTANT: Be sure to inspect ECM and engine grounds for being secure and clean.

A short to voltage in one of the sensor input circuits may cause one or more of the following DTCs to be set:

- P0337
- P0342
- P1193
- P1404
- P1405
- P1488

IMPORTANT: If a sensor input circuit has been shorted to voltage, ensure that the sensor is not damaged. A damaged sensor will continue to indicate a high or low voltage after the affected circuit has been repaired. If the sensor has been damaged, replace it.

An open in the sensor ground circuit between the ECM and the splice will cause one or more of the following DTCs to be set:

- P0337
- P0342
- P0117

A short to ground in the 5-volt reference A or B circuit will cause one or more of the following DTCs to be set:

- P0112
- P0117
- P0182
- P0197

An open in the 5-volt reference circuit A, between the ECM and the splice will cause one or more of the following DTCs to be set:

- P0107
- P0405
- P1194
- P0122

An open in the 5-volt reference circuit B, between the ECM and the splice will cause one or more of the following DTCs to be set:

- P1485

Check for the following conditions:

- **Poor connection at ECM.** Inspect the harness connectors for backed-out terminals, improper mating, broken locks, improperly formed or damage terminals, and a poor terminal-to-wire connection.
- **Damaged harness.** Inspect the wiring harness for damage. If the harness is not damaged, observe an affected sensor's displayed value on the Tech 2 with the ignition "ON" and the engine "OFF" while you move the connectors and the wiring harnesses related to the following sensors:
  - ECT Sensor

- MAP Sensor
- CMP Sensor
- CKP Sensor
- EGR Pressure Sensor
- EGR VSV
- RPCV
- IAT Sensor
- Intake Throttle Motor
- Fuel Temperature Sensor
- Oil Temperature Sensor
- Rail Pressure Sensor

Multiple ECM Information Sensor DTCs Set

Step	Action	Value(s)	Yes	No
1	Was the “On-Board Diagnostic (OBD) System Check” performed?	—	Go to *Step 2*	Go to *OBD System Check*
2	1. Turn the ignition “OFF,” disconnect the ECM. 2. Turn the ignition “ON,” check the 5 volt reference D circuit for the following conditions: ● D poor connection at the ECM. ● An open between the ECM connector and the splice. ● D short to ground. ● D short to voltage. Is there an open or short?	—	Go to *Step 3*	Go to *Step 4*
3	Repair the open or short. Is the action complete?	—	Verify repair	—
4	Check the sensor ground circuit for the following conditions: ● A poor connection at the ECM or the affected sensors. ● An open between the ECM connector and the affected sensors. Is there an open or a poor connection?	—	Go to *Step 5*	Go to *Step 6*
5	Repair the open or the poor connection. Is the action complete?	—	Verify repair	Go to *Step 6*
6	Replace the ECM (Refer to the Data Programming in Case of ECM change). Is the action complete?	—	Go to *OBD System Check*	—

EGR (Exhaust Gas Recirculation) Diagnosis

- A diagnosis of the EGR system is covered by DTC P1403.
- EGR VSV circuit diagnosis is covered by DTC P1404.
- EGR pressure sensor diagnosis is covered by DTC P405 and/or P406.
- EGR EVRV circuit diagnosis is covered by DTC P1405. Refer to the DTC charts.

Tech 2 Data Definitions and Ranges

A/C CLUTCH–Tech 2 Displays ON or OFF–
Indicates whether the A/C has commanded the A/C clutch ON.

MAP kPa — Tech 2 Range 10-105 kPa/0.00-5.00 Volts —
The manifold absolute pressure reading is determined from the MAP sensor signal monitored during key up and wide open throttle (WOT) conditions. The manifold absolute pressure is used to compensate for altitude differences and is normally displayed around “61-104” depending on altitude and manifold absolute pressure.

CMP ACT. COUNTER –Cam Position

DESIRED IDLE — Tech 2 Range 0-3187 RPM —
The idle speed that the ECM is commanding. The ECM will compensate for various engine loads based on engine coolant temperature, to keep the engine at the desired speed.

ECT — (Engine Coolant Temperature) Tech 2 Range –40˚C to 151˚C (–40˚F to 304˚F) —
The engine coolant temperature (ECT) is mounted in the coolant stream and sends engine temperature information to the ECM. The ECM applies 5 volts to the ECT sensor circuit. The sensor is a thermistor which changes internal resistance as temperature changes. When the sensor is cold (high resistance), the ECM monitors a high signal voltage and interprets that as a cold engine. As the sensor warms (decreasing resistance), the voltage signal will decrease and the ECM will interpret the lower voltage as a warm engine.

ENGINE RUN TIME — Tech 2 Range 00:00:00-99:99:99 Hrs:Min:Sec —
Indicates the time elapsed since the engine was started. If the engine is stopped, engine run time will be reset to 00:00:00.

ENGINE SPEED — Range 0-9999 RPM —
Engine speed is computed by the ECM from the 57X reference input. It should remain close to desired idle under various engine loads with engine idling.

Air Intake Valve meter POSITION — Tech 2 Range 0-100 % —

IAT (INTAKE AIR TEMPERATURE)— Tech 2 Range –40˚C to 151˚C (–40˚F to 304˚F) —
The ECM converts the resistance of the intake air temperature sensor to degrees. Intake air temperature (IAT) is used by the ECM to adjust fuel delivery and spark timing according to incoming air density.

MAP — Tech 2 Range 10-105 kPa (0.00-4.97 Volts)—
The manifold absolute pressure (MAP) sensor measures the change in the boost pressure.

MIL — Tech 2 Displays ON or OFF —
Indicates the ECM commanded state of the malfunction indicator lamp.

AP — Tech 2 Range 0%-100% —
AP (Accelerator position) angle is computed by the ECM from the AP sensor voltage. AP angle should display “0%” at idle and “100%” at wide open throttle.

AP SENSOR — Tech 2 Range 0.00-5.00 Volts —
The voltage being monitored by the ECM on the AP sensor signal circuit.

VEHICLE SPEED—Tech 2 Range 0-255 km/h (0-155 mph)–
The vehicle speed sensor signal is converted into km/h and mph for display.

Typical Scan Data Values

Use the Typical Scan Data Values Table only after the On-Board Diagnostic System Check has been completed, no DTC(s) were noted, and you have determined that the on-board diagnostics are functioning properly. Tech 2 values from a properly-running engine may be used for comparison with the engine you are diagnosing. The typical scan data values represent values that would be seen on a normally-running engine.

NOTE: A Tech 2 that displays faulty data should not be used, and the problem should be reported to the Tech 2 manufacturer. Use of a faulty Tech 2 can result in misdiagnosis and unnecessary replacement of parts.

Only the parameters listed below are referred to in this service manual for use in diagnosis. For further information on using the Tech 2 to diagnose the ECM and related sensors, refer to the applicable reference section listed below. If all values are within the typical range described below, refer to the *Symptoms* section for diagnosis.

Test Conditions

Engine running, lower radiator hose hot, transmission in park or neutral, accessaries off, brake not applied and air conditioning off.

4JX1-TC Engine (Automatic and Manual Transmission)

Tech 2 Parameter	Data List	Units Displayed	Typical Data Values (IDLE)	Typical Data Values (2500 RPM)	Refer To
Battery Voltage	Engine	Volts	12.5 ~ 14.5	13 ~ 15	General Description
Ignition Status	Engine	On/Off	On	On	General Description
Ignition Relay[2]	Engine	On/Off	On	On	General Description
Idle Switch	Engine	Inactive/ Active	—	—	DTC P0510, P1510
Manifold Absolute Pressure	Engine	KPa	96 ~ 106	110 ~ 150	General Description DTC P0107, P0108
Rail Oil Pressure	Engine	MPa	3.5 ~ 5	4.5 ~ 10	General Description DTC P0192, P0193
Desired Rail Oil Pressure	Engine	MPa	4 ~ 5	5 ~ 9	General Description DTC P0192, P0193
Fuel Temperature	Engine	˚C (˚F)	75 ~ 85	75 ~ 85	DTC P0182, P0183
Quick Warming Switch	Engine	On/Off	Off	Off	DTC P0380
Thermo Relay	Engine	On/Off	—	—	DTC P1655
Actual EGR Pressure	Engine	KPa	58 ~ 60	M/T 63 ~ 66 A/T 95 ~ 105	DTC P0405, P0406
Barometric Pressure	Engine	KPa	98 ~ 102	98 ~ 102	General Description
Relative EGR Pressure	Engine	KPa	–38 ~ –45	M/T –34 ~ –37 A/T 0	General Description
Desired EGR Pressure	Engine	KPa	–43 ~ –40	M/T 36 A/T 0	General Description
Brake Switch	Engine	Inactive/ Active	—	—	DTC P1588
Gear	Engine	—	—	—	—
Vehicle Speed	Engine	Km/h	0	0	Transmission Diagnosis
Rail Pressure Control Valve	Engine	%	17 ~ 22	18 ~ 27	DTC P1193
EGR Status	Engine	Disable/ Enable	Enable	M/T Enable A/T Disable	General Description
EGR Switching Valve	Engine	On/Off	—	—	General Description
Throttle Motor Position Sensor	Engine	Volts	3.1 ~ 3.9	0.2 ~ 0.9	DTC P1485, P1486, P1487
Throttle Motor Position	Engine	Steps	0 ~ 1.0	0 ~ 1.0	DTC P1488
Delirered Fuel Quantity	Engine	mm 3/st	6 ~ 10	6 ~ 12	General Description
Injector Status	Engine	Disable/ Enable	Enable	Enable	DTC P0201, P0202, P0203, P0204, General Description
Injector Pulse Width	Engine	ms	0.9 ~ 1.25	0.7 ~ 1.1	General Description
Injector Start Offset	Engine	˚CA	—	—	General Description

Tech 2 Parameter	Data List	Units Displayed	Typical Data Values (IDLE)	Typical Data Values (2500 RPM)	Refer To
Exhaust VSV1	Engine	On/Off	Off	Off	DTC P0475
Exhaust VSV2	Engine	On/Off	Off	Off	DTC P1475
Decelevation Fuel Cut Off	Engine	Inactive/ Active	—	—	General Description
Glow Time Lamp	Engine	On/Off	Off	Off	DTC P0381
Glow Time Relay	Engine	On/Off	Off	Off	DTC P0380
Diagnostic Request	Engine	Inactive 12V/ Active 0V	—	—	General Description
A/C Clutch	Engine	On/Off	Off	Off	General Description
Desired Idle	Engine	RPM	720	—	General Description
ECT (Engine Coolant Temp)	Engine	˚C (˚F)	80 ~ 90	80 ~ 90	General Description ECT
Engine Speed	Engine	RPM	720	2500	DTC P0219
MAT (Intake Air Temp)	Engine	˚C (˚F)	65 ~ 80	65 ~ 80	DTC P0112, P0113
MAP KPa (Manifold Absolute Pressure)	Engine	Kilopascals	—	—	General Description DTC P0107, P0108
MIL	Engine	On/Off	Off	Off	General Description
AP (Accel Position)	Engine	Percent	0	8 ~14	DTC P0121, P0122, P0123
AP (Accel Position)	Engine	Volts	0.25 ~ 0.45	0.8 ~ 1.0	DTC P0121, P0122, P0123
Rail Oil Temperature	Engine	˚C (˚F)	—	—	DTC P0197, P0198
Desired Throttle Motor Position	Engine	Steps	—	—	—
Learned Idle Fuel Quantity	Engine	mm 3/st	—	—	—

No Malfunction Indicator Lamp (MIL)

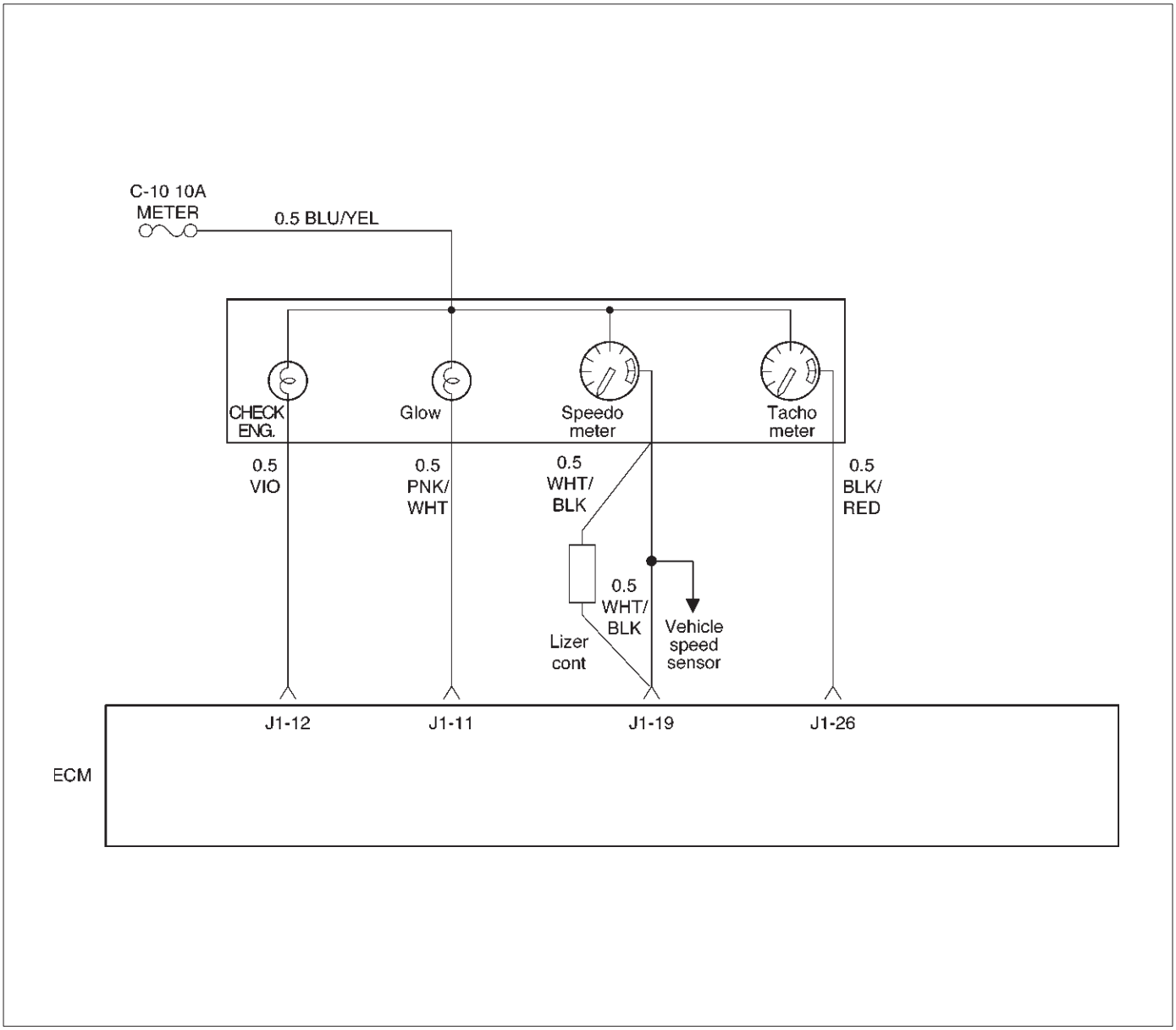

060RW136

Circuit Description

The “Check Engine” lamp (MIL) should always be illuminated and steady with the ignition “ON” and the engine stopped. Ignition feed voltage is supplied to the MIL bulb through the meter fuse. The Engine Control Module ECM turns the MIL “ON” by grounding the MIL driver circuit.

Diagnostic Aids

An intermittent MIL may be cause by a poor connection, rubbed-through wire insulation, or a wire broken inside the insulation. Check for the following items:

- Inspect the ECM harness and connections for improper mating, broken locks, improperly formed or damaged terminals, poor terminal-to-wire connection, and damaged harness.
- If the engine runs OK, check for a faulty light bulb, an open in the MIL driver circuit, or an open in the instrument cluster ignition feed.
- If the engine cranks but will not run, check for an open ECM ignition or battery feed, or a poor ECM to engine ground.

Test Description

Number(s) below refer to the step number(s) on the Diagnostic Chart.

2. A “No MIL” condition accompanied by a no-start condition suggests a faulty ECM ignition feed or battery feed circuit.

9. Using a test light connected to B+, probe each of the ECM ground terminals to ensure that a good ground is present. Refer to *ECM Terminal End View* for terminal locations of the ECM ground circuits.

12. In this step, temporarily substitute a known good relay for the ECM relay. The horn relay is nearby, and it can be verified as “good” simply by honking the horn. Replace the horn relay after completing this step.

No Malfunction Indicator Lamp (MIL)

Step	Action	Value(s)	Yes	No
1	Was the “On-Board Diagnostic (OBD) System Check” performed?	—	Go to *Step 2*	Go to *OBD System Check*
2	Attempt to start the engine. Does the engine start?	—	Go to *Step 3*	Go to *Step 6*
3	Check the meter fuse for the instrument cluster ignition feed circuit. Is the fuse OK?	—	Go to *Step 4*	Go to *Step 16*
4	Ignition “ON,” probe the ignition feed circuit at the cluster connector with a test light to ground. Is the test light “ON?”	—	Go to *Step 5*	Go to *Step 13*
5	1. Ignition “OFF.” 2. Disconnect the ECM. 3. Jumper the MIL driver circuit at the ECM connector to ground. 4. Ignition “ON.” Is the MIL “ON?”	—	Go to *Step 10*	Go to *Step 11*
6	Check the ECM ignition feed and battery feed fuses (15 A engine fuse and 15 A ECM fuse). Are both fuses OK?	—	Go to *Step 7*	Go to *Step 15*
7	1. Ignition “OFF.” 2. Disconnect the ECM. 3. Ignition “ON.” 4. Probe the ignition feed circuit at the ECM harness connector with a test light to ground. Is the test light “ON?”	—	Go to *Step 8*	Go to *Step 12*
8	Probe the battery feed circuit at the ECM harness connector with a test light to ground. Is the test light “ON?”	—	Go to *Step 9*	Go to *Step 14*
9	Check for a faulty ECM ground connection. Was a problem found?	—	Verify repair	Go to *Step 10*
10	Check for damaged terminals at the ECM. Was a problem found?	—	Verify repair	Go to *Step 17*
11	Check for an open MIL driver circuit between the ECM and the MIL. Was a problem found?	—	Verify repair	Go to *Step 18*
12	Substitute a known “good” relay for the ECM main relay. Was the malfunction fixed?	—	Verify repair	Go to *Step 13*
13	Repair the open in the ignition feed circuit. Is the action complete?	—	Verify repair	—
14	Locate and repair the open ECM battery feed circuit. Is the action complete?	—	Verify repair	—

No Malfunction Indicator Lamp (MIL) (Cont'd)

Step	Action	Value(s)	Yes	No
15	Locate and repair the short to ground in the ECM ignition feed circuit or ECM battery feed circuit. Is the action complete?	—	Verify repair	—
16	Locate and repair the short to ground in the ignition feed circuit to the instrument cluster, and replace the fuse. Is the action complete?	—	Verify repair	—
17	Replace the ECM (Refer to the Data Programming in Case of ECM change). Is the action complete?	—	Verify repair	—
18	Check the MIL driver circuit for a poor connection at the instrument panel connector. Was a problem found?	—	Verify repair	Go to *Instrument Panel* in *Electrical Diagnosis*

Malfunction Indicator Lamp (MIL) “ON” Steady

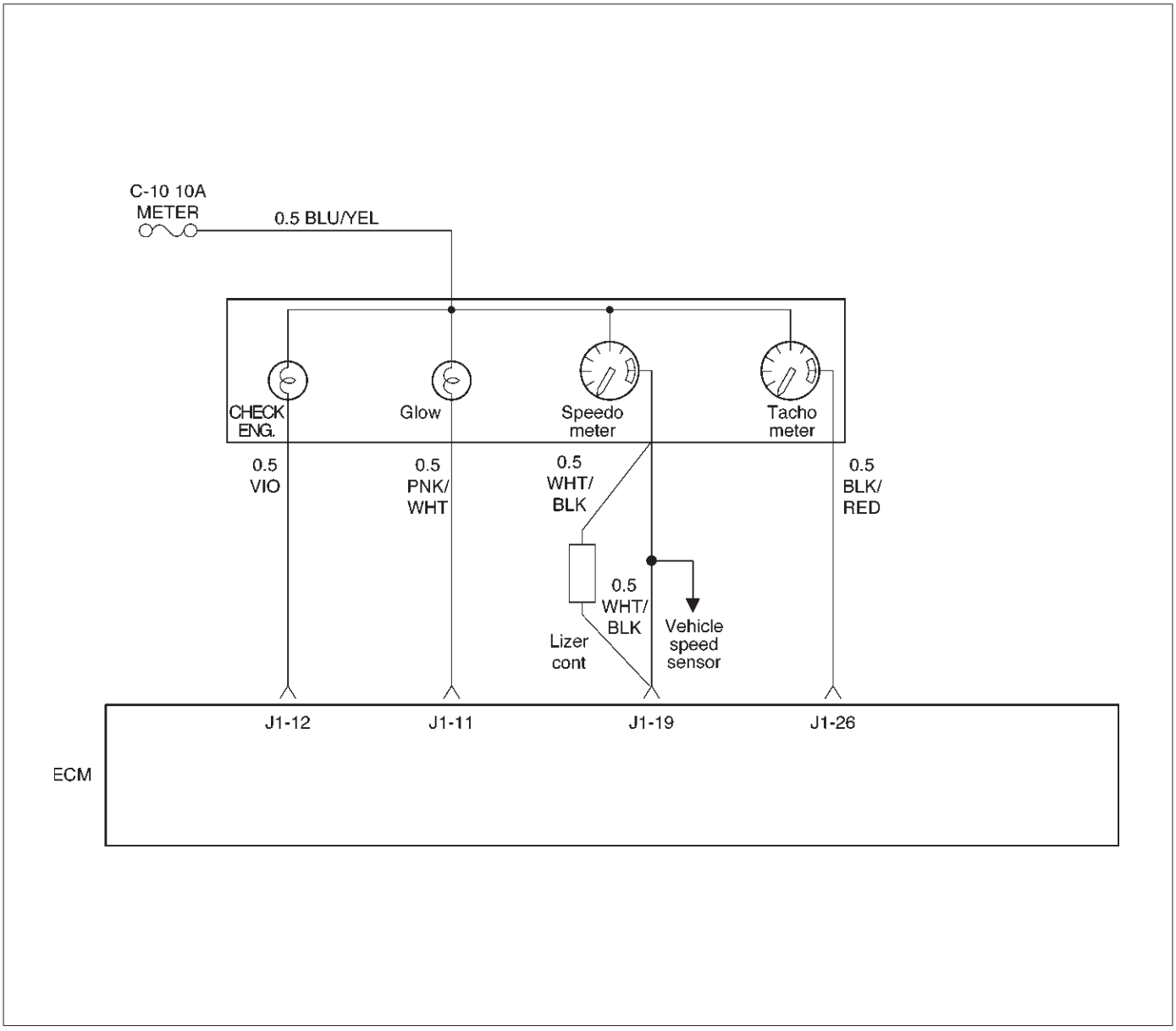

060RW136

Circuit description

The “Check Engine” lamp (MIL) should always be illuminated and steady with ignition “ON” and the engine stopped. Ignition feed voltage is supplied directly to the MIL indicator. The Engine Control Module ECM turns the MIL “ON” by grounding the MIL driver circuit.
The MIL should not remain “ON” with the engine running and no DTC(s) set. A steady MIL with the engine running and no DTC(s) suggests a short to ground in the MIL driver circuit.

Diagnostic Aids

An intermittent may be caused by a poor connection, rubbed–through wire insulation, or a wire broken inside the insulation. Check for the following items:

- Poor connection or damaged harness – Inspect the ECM harness and connectors for improper mating, broken locks, improperly formed or damaged terminals, poor terminal-to-wire connection, and damaged harness.

Test Description

Number(s) below refer to the step number(s) on the Diagnostic Chart.

2. If the MIL does not remain “ON” when the ECM is disconnected, the MIL driver wiring is not faulty.
3. If the MIL driver circuit is OK, the instrument panel cluster is faulty.

Malfunction Indicator Lamp (MIL) “ON” Steady

Step	Action	Value(s)	Yes	No
1	Was the “On-Board diagnostic (OBD) System Check” performed?	—	Go to *Step 2*	Go to *OBD System Check*
2	1. Ignition “OFF,” disconnect ECM. 2. Ignition “ON,” observe the MIL (CHECK ENGINE lamp). Is the MIL “ON?”	—	Go to *Step 3*	Go to *Step 5*
3	1. Ignition “OFF,” disconnect the instrument panel cluster. 2. Check the MIL driver circuit between the ECM and the instrument panel cluster for a short to ground. 3. If a problem is found, repair as necessary. Was the MIL driver circuit shorted to ground?	—	Go to *OBD System Check*	Go to *Step 4*
4	Replace the instrument panel cluster. Is the action complete?	—	Go to *OBD System Check*	—
5	1. Ignition “OFF,” reconnect the ECM. 2. Ignition “ON,” reprogram the ECM. Refer to *On-Vehicle Service* in *Engine Control Module and Sensor* for procedures. 3. Using the Tech 2 output controls function, select MIL dash lamp control and command the MIL “OFF.” Did the MIL turn “OFF?”	—	Go to *OBD System Check*	Go to *Step 6*
6	Replace the ECM (Refer to the Data Programming in Case of ECM change). Is the action complete?	—	Go to *OBD System Check*	—

Engine Cranks But Will Not Run

Circuit Description

In this type of injector system, the Engine Control Module (ECM) triggers the correct driver inside the injector, which then triggers the correct injector based on the 57X signal received from the crankshaft position sensor (CKP).
During crank, the ECM monitors the CKP 57X signal. The CKP signal is used to determine which cylinder will fire first. After the CKP 57X signal has been processed by the ECM, it will command all four injectors to allow a priming shot of fuel for all the cylinders. After the priming, the injectors are left "OFF" during the next four 57X reference pulses from the CKP. This allows each cylinder a chance to use the fuel from the priming shot. During this waiting period, a camshaft position (CMP) signal pulse will have been received by the ECM. The CMP signal allows the ECM to operate the injectors sequentially based on camshaft position. If the camshaft position signal is not present at start-up, the ECM will begin sequential fuel delivery with a 1-in-4 chance that fuel delivery is correct. The engine will run without a CMP signal, but will set a DTC code.

Diagnostic Aids

An intermittent problem may be caused by a poor connection, rubbed-through wire insulation or a wire broken inside the insulation. Check for the following items:

- Poor connection or damaged harness – Inspect the ECM harness and connectors for improper mating, broken locks, improperly formed or damaged terminals, poor terminal-to-wore connection, and damaged harness.
- Faulty engine coolant temperature sensor – Using a Tech 2, compare engine coolant temperature with manifold air temperature on a completely cool engine.

Test Description

Number(s) below refer to the step number(s) on the Diagnostic Chart.

4. An obvious cause of low fuel pressure would be an empty fuel tank.
5. The engine will easily start and run if a few injectors are disabled. It is not necessary to test all injectors at this time since this step is only a test to verify that all of the injectors have not been disabled by fuel contamination.
8. If there is an open or shorted driver circuit, DTCs 0201-0204 should be set.

Engine Cranks But Will Not Run

Step	Action	Value(s)	Yes	No
1	Was the "On-Board Diagnostic (OBD) System Check" performed?	—	Go to *Step 2*	Go to *OBD System Check*
2	Check the 15 A injector fuse, the 15 A engine device fuse, and the 15A ECM fuse. Was a fuse blown?	—	Go to *Step 3*	Go to *Step 4*
3	Check for a short to ground and replace the fuse. Is the action complete?	—	Verify repair	—
4	Is fuel tank empty?	—	Fill the fuel tank	Go to *Step 5*
5	Is the right fuel using?	—	Go to *Step 6*	Replace the fuel
6	Is the right engine oil using?	—	Go to *Step 7*	Replace the engine oil
7	Using the Tech–2. Is DTC P0192 or P0193 set? (Check rail pressure system)	—	Go to *DTC P0192 or DTC P0193*	Go to *Step 8*
8	Using the Tech–2. Is DTC P0201 – P0204 set? (Check inject circuit fault)	—	Go to *DTC P0201 – P0204*	Go to *Step 9*
9	Using the Tech–2. Is DTC P1657 set? (Check ECM Main relay)	—	Go to *DTC P1657*	Go to *Step 10*

Engine Cranks But Will Not Run (Cont'd)

Step	Action	Value(s)	Yes	No
10	Refer to *Engine Mechanical Diagnosis* to diagnose the following conditions: ● Faulty camshaft drive belts ● Leaking or sticky valves or rings ● Excessive valve deposits ● Weak valve springs ● Incorrect valve timing ● Leaking head gasket Is the action complete?	—	Verify repair	Go to *Step 11*
11	Observe the "Engine Speed" data display on the Tech 2 while cranking the engine. Is the engine RPM indicated? (If the Tech 2 is normally powered from the cigarette lighter socket, and if the Tech 2 display goes blank while cranking the engine, it will be necessary to power the Tech 2 directly from the vehicle battery.)	—	Go to *Step 12*	Go to *Step 17*
12	1. At the ECM (female) side of the connector mentioned in step, connect a test light between the ignition + terminal and one of the injector driver circuits at the same connector. 2. Ignition "ON." 3. Observe the test light, and repeat the test for each injector driver circuit by oscilloscope. Did the test light stay on when checking any of the 4 injector driver circuits?	—	Go to *Step 13*	Go to *Step 15*
13	1. Ignition "OFF," disconnect the ECM. 2. Ignition "ON," observe the test light. Is the test light "ON?"	—	Go to *Step 14*	Go to *Step 16*
14	Locate and repair the short to ground in the injector driver circuit. Is the action complete?	—	Verify repair	—
15	Check for an open injector driver circuit. Was a problem found?	—	Verify repair	Go to *Step 16*
16	Replace the ECM (Refer to the Data Programming in Case of ECM change). Is the action complete?	—	Verify repair	—
17	1. Raise the vehicle and disconnect the CKP sensor harness. 2. Ignition "ON." 3. With a test light to ground, probe the harness ignition feed terminal. Did the light illuminate?	—	Go to *Step 19*	Go to *Step 18*
18	Check the ignition feed wire between the sensor and the ECM for a short to ground or open circuit. Is the action complete?	—	Verify repair	—

Engine Cranks But Will Not Run (Cont'd)

Step	Action	Value(s)	Yes	No
19	1. Ignition "ON." 2. At the CKP harness connector, connect a test light between the ignition and ground terminals. Did the light illuminate?	—	Go to *Step 21*	Go to *Step 20*
20	Check the sensor ground circuit for an open or short to voltage. Is the action complete?	—	Verify repair	—
21	Check the signal circuit between the sensor and the ECM for a short to ground, short to voltage, or an open. Was a problem found?	—	Verify repair	Go to *Step 22*
22	Replace the CKP sensor. Is the action complete?	—	Verify repair	Go to *Step 16*

Exhaust Gas Recirculation (EGR) System Check

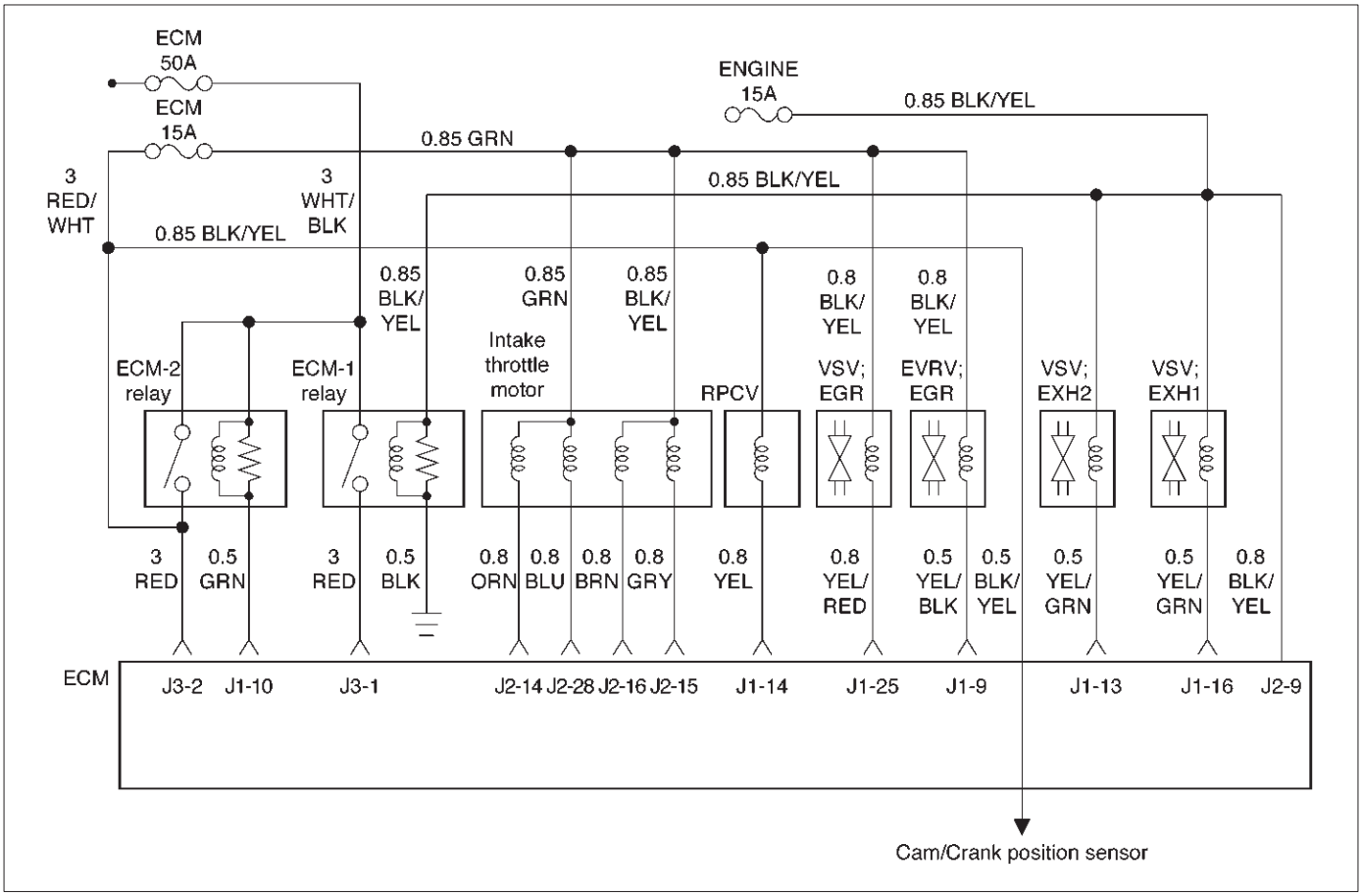

060RW135

Circuit Description

Introducing exhaust gas into the combustion chamber lowers combustion temperatures and reduces the formation of oxides of nitrogen (NOx) in the exhaust gas. Lower combustion temperatures also prevent detonation.

Diagnostic Aids

The EGR valve chart is a check of the EGR system. An EGR pintle constantly in the closed position could cause detonation and high emissions of NOx. An EGR pintle constantly in the open position would cause a rough idle.

System Check

Step	Action	Value(s)	Yes	No
1	Move the valve up and down to check the slide resistance. Is the slide resistance large?	—	Go to *Step 8*	Go to *Step 2*
2	1. Set the transmission at “Park” or “Neutral”. 2. Put the engine in warming-up operation by idling. (The engine temperature should be 80˚C or more) 3. Disconnect the vacuum hose from the EGR valve. 4. Apply a vacuum of 250 mmHg to the EGR valve by the vacuum pump (mighty pack). Does the vibration due to engine operation become larger?	—	Go to *Step 3*	Go to *Step 9*
3	1. Check if there is not any damage on the vacuum hose from the vacuum pump to the EGR valve. 2. Install the vacuum pump (mighty pack) to the EGR valve. Does the vacuum became 250 mmHg or more at that time?	250 mmHg or more	Go to *Step 4*	Go to *Step 8*
4	Install the EGR valve and the vacuum hose formally and increase the engine revolution speed to 3000 rpm. Can both EGR valve 1 and EGR valve 2 be opened and closed?	—	The system is normal	Go to *Step 5*
5	Measure the resistance of the VSV: EGR coil. Is the resistance value in the range of 30 Ω to 50 Ω?	30 ~ 50 Ω	Go to *Step 6*	Go to *Step 10*
6	Measure the resistance of the EVRV: EGR coil. Is the resistance value in the range of 10 Ω to 13 Ω?	10 ~ 13 Ω	Go to *Step 7*	Go to *Step 11*
7	Was the harness open or poor connection?	—	Go to *Step 12*	Go to *Step 13*
8	Replace the EGR valve ASM. Is the action complete?	—	Verify repair	—
9	Clean or replace the EGR valve ASM. Is the action complete?	—	Verify repair	—
10	Replace the EGR VSV. Is the action complete?	—	Verify repair	—
11	Replace the EGR EVSV. Is the action complete?	—	Verify repair	—
12	Repair the harness. Is the action complete?	—	Verify repair	—
13	Replace the ECM (Refer to the Data Programming in Case of ECM change). Is the action complete?	—	Verify repair	—

ECM Diagnostic Trouble Codes

The following table lists the diagnostic trouble codes supported a Tech 2 and to flash.If any DTCs not listed here are displayed by a Tech 2, the Tech 2 data may be faulty; notify the Tech 2 manufacturer of any DTCs displayed that are not included in the following table.

ECM Diagnostic Trouble Codes

DTC using a Tech 2	Flash DTC	Description	MIL
P0107	34	MAP Sensor Low Voltage	ON
P0108	34	MAP Sensor High Voltage	ON
P0112	23	Intake Air temp Sensor Low Voltage	ON
P0113	23	Intake Air temp Sensor High Voltage	ON
P0117	14	Engine Coolant Temp Sensor Low Voltage	ON
P0118	14	Engine Coolant Temp Sensor High Voltage	ON
P0121	33	Accel Position Sensor Rationality	ON
P0122	21	Accel Position Sensor Low Voltage	ON
P0123	21	Accel Position Sensor High Voltage	ON
P0182	15	Fuel Temp Sensor Low Voltage	ON
P0183	15	Fuel Temp Sensor High Voltage	ON
P0192	63	Rail Pressure Sensor Low Voltage	ON
P0193	63	Rail Pressure Sensor High Voltage	ON
P1193	64	RPCV Circuit Open/Short	—
P1194	61	Rail Pressure System Low Voltage	ON
P1195	61	Rail Pressure System High Voltage	ON
P1196	62	Rail Pressure System High Warning	ON
P0197	16	Oil Temp sensor Low Voltage	ON
P0198	16	Oil Temp sensor High Voltage	ON
P0201	51	Injector #1 Circuit Fault	ON
P0202	52	Injector #2 Circuit Fault	ON
P0203	53	Injector #3 Circuit Fault	ON
P0204	54	Injector #4 Circuit Fault	ON
P0217	22	High Coolant Temp Warning	ON
P1217	36	High Oil Temp Warning	ON
P0219	11	Engine Over Speed Warning	ON
P0336	43	Crank Position Sensor Out of Syncro	ON
P0337	43	Crank Position Sensor No Signal	ON
P0341	41	Cam Position Sensor Out of Syncro	ON
P0342	41	Cam Position Sensor No Signal	ON
P0380	66	Glow Relay Circuit Open/Short	—
P0381	67	Glow Lamp Circuit Open/Short	—
P1403	32	EGR EVRV Fault	—
P1404	31	EGR VSV Circuit	—
P0405	26	EGR Pressure Sensor Low Voltage	ON
P1405	37	EGR EVRV Circuit Open/Short	—
P0406	26	EGR Pressure Sensor High Voltage	ON

DTC using a Tech 2	Flash DTC	Description	MIL
P0475	71	EXH #1 VSV Circuit Open/Short	—
P1475	71	EXH #2 VSV Circuit Open/Short	—
P1485	74	Intake Throttle Position Sensor Low Voltage	ON
P1486	74	Intake Throttle Position Sensor High Voltage	ON
P1487	73	Intake Throttle System Circuit Open/Short	ON
P1488	72	Intake Throttle Motor Control Circuit Signal Gap	—
P0502	24	Vehicle Speed Sensor No Signal	ON
P0510	75	Idle SW Malfunction, Open Circuit	ON
P1510	75	Idle SW Malfunction, Short Circuit	ON
P0562	35	System Voltage Too Low	ON
P1562	35	System Voltage Too Low at Cranking	ON
P1587	25	Brake SW Malfunction [B]	—
P1588	25	Brake SW Malfunction [A]	ON
P0601	55	ECM Checksum Error	ON
P1626	56	Immobilizer No Signal	ON
P1631	56	Immobilizer Wrong Signal	ON
P1648	56	No Security Code Entered	ON
P1649	56	Immobilizer Function not Programmed	ON
P0650	77	Check Engine Lamp Circuit Open/Short	—
P0654	27	Techometer Circuit Open/Short	—
P1655	17	Thermo Relay Circuit Open/Short	—
P1657	76	ECM Main Relay Circuit Open/Short	—
P1589	47	TransMission SW Circuit Open/Short	—

Diagnostic Trouble Code (DTC) P0107 (Flash DTC 34) MAP Sensor Circuit Low Voltage

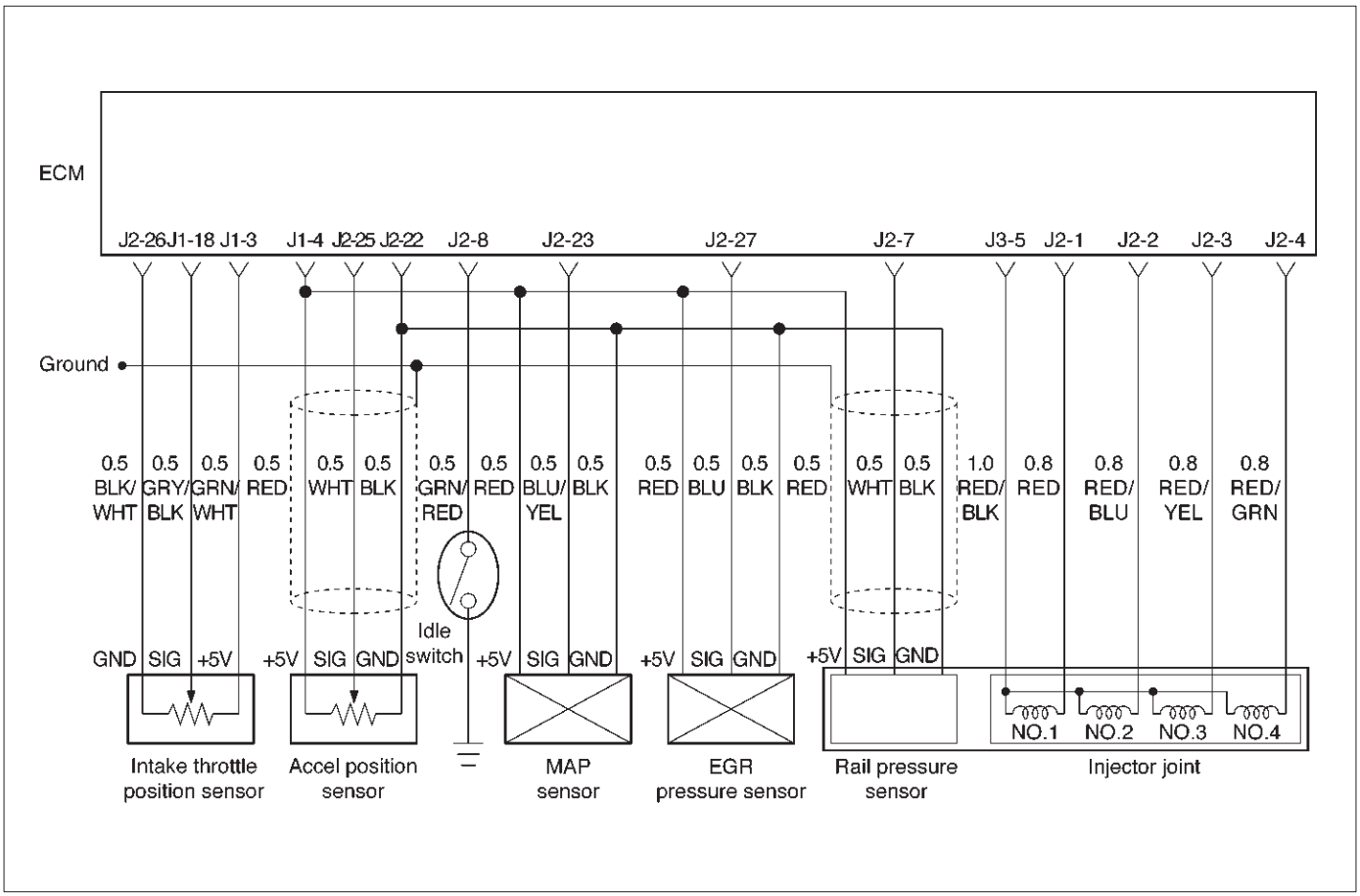

060RW134

Circuit Description

The manifold absolute pressure (MAP) sensor responds to changes in intake manifold pressure (vacuum).
The ECM monitors the MAP signals for voltages outside the normal range of the MAP sensor. If the ECM detects a MAP signal voltage that is excessively low, DTC P0107 will be set.

Action Taken When the DTC Sets

- The ECM will illuminate the malfunction indicator lamp (MIL) the first time the fault is detected.
- The ECM will store conditions which were present when the DTC was set as Freeze Frame and in the Failure Records data.

Conditions for Clearing the MIL/DTC

- DTC P0107 can be cleared by using the Tech 2 “Clear Info” function or by disconnecting the ECM battery feed.

Diagnostic Aids

Check for the following conditions:

- Turn on the ignition switch and stop the engine. At this time, the boost pressure will be equal to the atmospheric pressure and the signal voltage will increase.
- Check for intermittent codes.
- The MAP sensor shares a ground with the ECT sensor, and the Transmission Fluid Temperature sensor.
- Poor connection at ECM – Inspect harness connectors for backed-out terminals, improper mating, broken locks, improperly formed or damaged terminals, and poor terminal-to-wire connection.
- Damaged harness – Inspect the wiring harness for damage. If the harness appears to be OK, observe the MAP display on the Tech 2 while moving connectors and wiring harnesses related to the sensor. A change in the display will indicate the location of the fault.

If DTC P0107 cannot be duplicated, the information included in the Failure Records data can be useful in determining vehicle mileage since the DTC was last set. If it is determined that the DTC occurs intermittently, performing the DTC P0107 Diagnostic Chart may isolate the cause of the fault.

DTC P0107 – MAP Sensor Circuit Low Voltage

Step	Action	Value(s)	Yes	No
1	Was the “On-Board Diagnostic (OBD) System Check” performed?	—	Go to *Step 2*	Go to *OBD System Check*
2	Put the engine into an idling status. Is the MAP voltage value displayed on the Tech 2 below the specified value?	0.25 V	Go to *Step 3*	Refer to *Diagnostic Aids* and *Symptom Diagnosis*
3	1. Turn off the ignition switch. 2. Remove the sensor connector connection. 3. Jumper between harness pins “red” and “blue” wires. 4. Turn on the ignition switch “ON”. Is the MAP voltage reading above the specified value?	4 V	Go to *Step 5*	Go to *Step 4*
4	1. Turn off the ignition switch. 2. Remove the jumper wire. 3. Connect the relay & solenoid checker (5-8840-0386-0) to the battery voltage, then check the MAP signal circuit (blue wire). 4. Turn on the ignition switch. Is the value displayed on the Tech 2 above the specified value?	4 V	Go to *Step 6*	Go to *Step 7*
5	Check the terminal connection at the MAP sensor and repair or replace terminal if necessary. Is the action complete?	—	Verify repair	—
6	Repair the 5V power circuit (red) harness or Replace the ECM (Refer to the Data Programming in Case of ECM change). Is the action complete?	—	Verify repair	—
7	Repair the signal circuit (blue) harness or Replace the ECM (Refer to the Data Programming in Case of ECM change). Is the action complete?	—	Verify repair	—

Diagnostic Trouble Code (DTC) P0108 (Flash DTC 34) MAP Sensor Circuit High Voltage

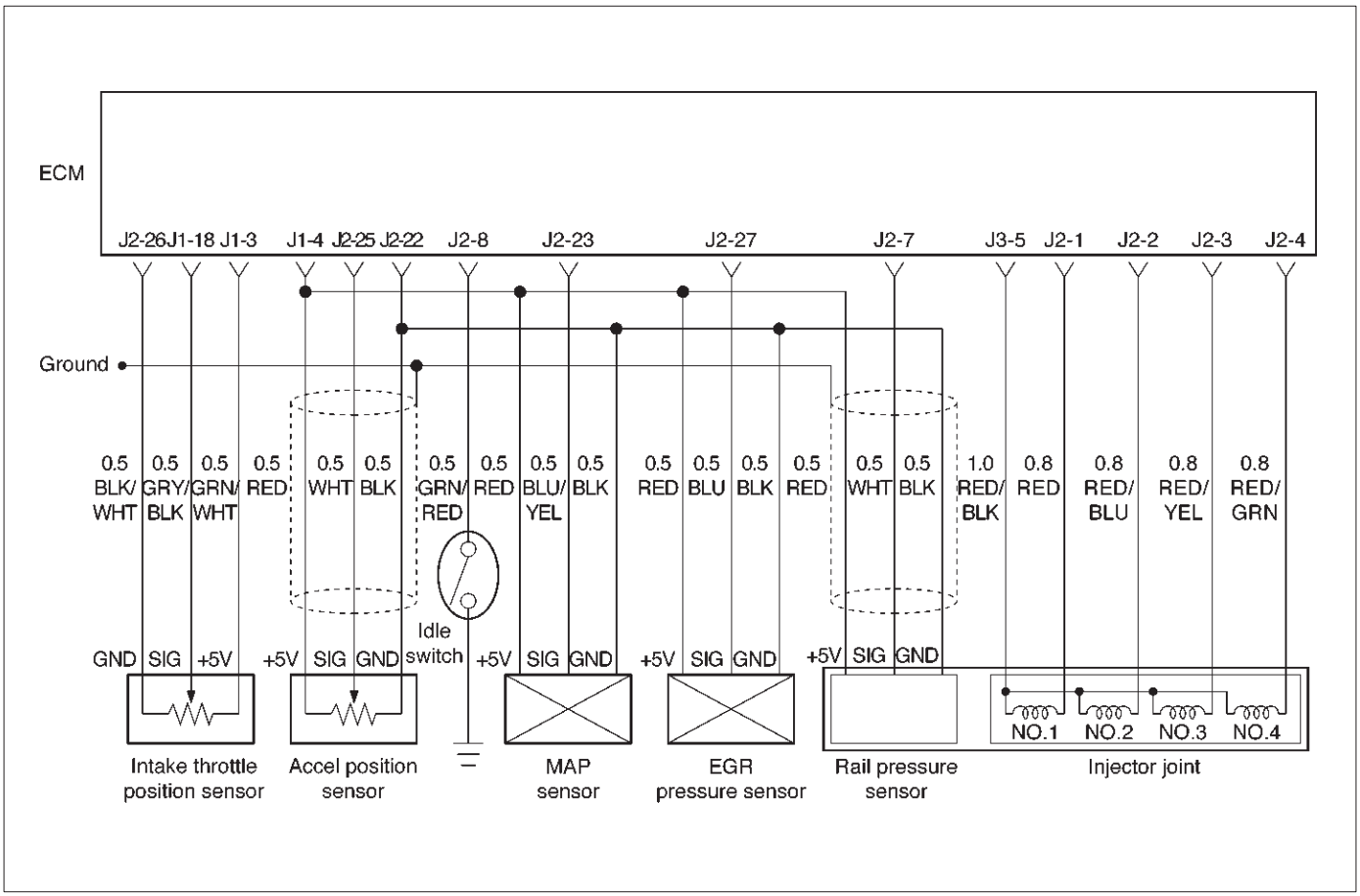

060RW134

Circuit Description

The manifold absolute pressure (MAP) sensor responds to changes in intake manifold pressure (vacuum).
The ECM monitors the MAP signals for voltages outside the normal range of the MAP sensor. If the ECM detects a MAP signal voltage that is excessively high, DTC P0108 will be set.

Action Taken When the DTC Sets

- The ECM will illuminate the malfunction indicator lamp (MIL) the first time the fault is detected.
- The ECM will store conditions which were present when the DTC was set as Freeze Frame and in the Failure Records data.

Conditions for Clearing the MIL/DTC

- DTC P0108 can be cleared by using the Tech 2 “Clear Info” function or by disconnecting the ECM battery feed.

Diagnostic Aids

Check for the following conditions:

- Turn on the ignition switch and stop the engine. At this time, the boost pressure will be equal to the atmospheric pressure and the signal voltage will increase.
- Poor connection at ECM – Inspect harness connectors for backed-out terminals, improper mating, broken locks, improperly formed or damaged terminals, and poor terminal-to-wire connection.
- Damaged harness – Inspect the wiring harness for damage. If the harness appears to be OK, observe the MAP display on the Tech 2 while moving connectors and wiring harnesses related to the sensor. A change in the display will indicate the location of the fault.

If DTC P0108 cannot be duplicated, the information included in the Failure Records data can be useful in determining vehicle mileage since the DTC was last set. If it is determined that the DTC occurs intermittently.

Sensor Circuit High Voltage

Step	Action	Value(s)	Yes	No
1	Was the “On-Board Diagnostic (OBD) System Check” performed?	—	Go to *Step 2*	Go to *OBD System Check*
2	Put the engine into an idling status. Is the MAP voltage value displayed on the Tech 2 above the specified value?	4 V	Go to *Step 3*	Go to *Step 4*
3	1. Turn off the ignition switch. 2. Remove the sensor connector connection. 3. Turn on the ignition switch “ON”. Is the MAP voltage value displayed on the Tech 2 below the specified value?	1 V	Go to *Step 5*	Go to *Step 6*
4	Is the MAP voltage value displayed on the Tech 2 below the specified value?	1 V	Refer to *Chart P0107*	Refer to *Diagnostic Aids* and *Symptom Diagnosis*
5	Connect the relay and solenoid checker (5-8840-0386-0) to the battery voltage, then check the sensor grounding circuit. Does the checker lamp come on?	—	Go to *Step 7*	Go to *Step 8*
6	A voltage short circuit occurs in the MAP signal circuit or this circuit is shorted with the 5V power circuit. Repair the harness or Replace the ECM (Refer to the Data Programming in Case of ECM change). Is the action complete?	—	Verify repair	—
7	Replace the MAP sensor hose or the MAP sensor. Is the action complete?	—	Verify repair	—
8	Repair the harness for open ground circuit. Is the action complete?	—	Verify repair	—

Diagnostic Trouble Code (DTC) P0112 (Flash DTC 23) IAT Sensor Circuit Low Voltage

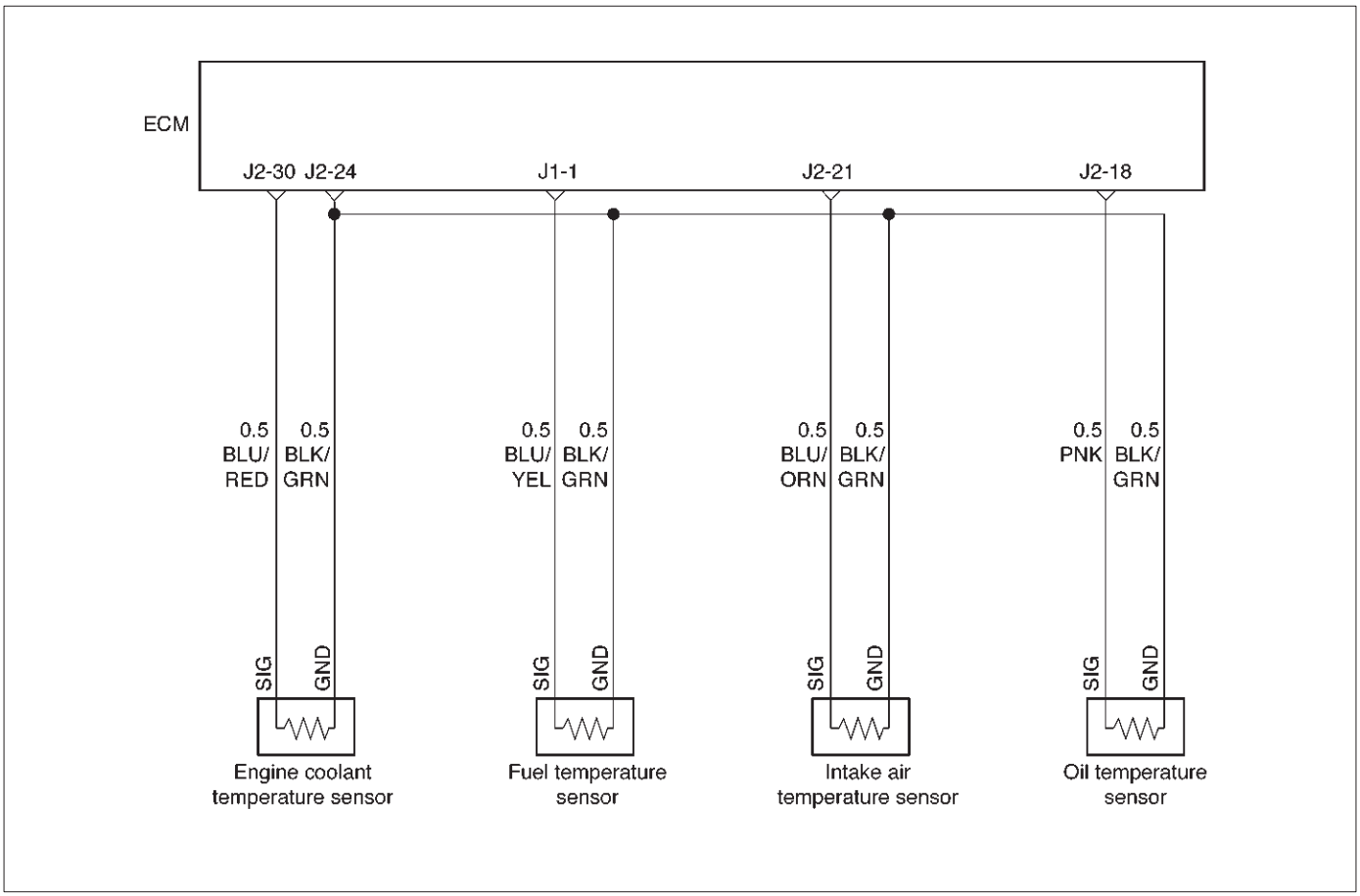

060RW129

Circuit Description

The Intake air temperature (IAT) sensor is a thermistor which measures the temperature of the air entering the engine. The Engine Control Module ECM applies 5 volts through a pull-up resistor to the IAT sensor. When the intake air is cold, the sensor resistance is high and the ECM will monitor a high signal voltage on the IAT signal circuit. If the intake air is warm, the sensor resistance is lower, causing the ECM to monitor a lower voltage. DTC P0112 will set when the ECM detects an excessively low signal voltage on the Intake air temperature sensor signal circuit.

Action Taken When the DTC Sets

- The ECM will illuminate the malfunction indicator lamp (MIL) the first time the fault is detected.
- The ECM will store conditions which were present when the DTC was set as Freeze Frame and in the Failure Records data.

Conditions for Clearing the MIL/DTC

- DTC P0112 can be cleared by using the Tech 2 “Clear Info” function or by disconnecting the ECM battery feed.

Diagnostic Aids

Check for the following conditions:

- Poor connection at ECM – Inspect harness connectors for backed-out terminals, improper mating, broken locks, improperly formed or damaged terminals, and poor terminal-to-wire connection.
- Damaged harness – Inspect the wiring harness for damage. If the harness appears to be OK, observe the IAT display on the Tech 2 while moving connectors and wiring harnesses related to the IAT sensor. A change in the IAT display will indicate the location of the fault.

If DTC P0112 cannot be duplicated, the information included in the Failure Records data can be useful in determining vehicle mileage since the DTC was last set.

Test Description

Number(s) below refer to the step number(s) on the Diagnostic Chart:

2. Verifies that the fault is present.
3. If DTC P0112 can be repeated only by duplicating the Failure Records condition, refer to the *Temperature vs. Resistance Value* table. The table may be used to test the IAT sensor at various temperatures to evaluate the possibility of a "shifted" sensor that may be stored above or below a certain temperature. If this is the case, replace the IAT sensor. If the IAT sensor appears to be OK, the fault is intermittent; refer to *Diagnostic Aids*.

Intake Air Temperature Sensor

˚C	˚F	Ohms
Temperature vs. Resistance Values (approximate)		
25	77	2796
15	59	4450
5	41	7280

DTC P0112 – IAT Sensor Low Voltage

Step	Action	Value(s)	Yes	No
1	Was the "On-Board Diagnostic (OBD) System Check" performed?	—	Go to *Step 2*	Go to *OBD System Check*
2	1. Ignition "ON," engine "OFF." 2. Using a Tech 2, monitor the intake air temperature (IAT). Is the intake air temperature greater than the specified value?	148˚C (283˚F)	Go to *Step 4*	Go to *Step 3*
3	1. Ignition "ON," engine "OFF." Review and record Tech 2 Failure Records data. 2. Operate the vehicle within Failure Records conditions as noted. 3. Using a Tech 2, monitor the " DTC" info for DTC P0112. Does the Tech 2 indicate DTC P0112 failed this ignition?	—	Refer to *Test Description*	Refer to *Diagnostic Aids*
4	1. Ignition "OFF." 2. Disconnect the IAT sensor electrical connector. 3. Ignition "ON." 4. Observe the manifold air temperature on the Tech 2. Is the manifold air temperature below the specified value?	–38˚C (–36˚F)	Go to *Step 6*	Go to *Step 5*
5	1. Ignition "OFF." 2. Disconnect the ECM electrical connectors. 3. Check the IAT sensor signal circuit for a short to ground. Is the IAT sensor signal circuit shorted to ground?	—	Verify repair	Go to *Step 7*
6	Replace the IAT sensor. Is the action complete?	—	Verify repair	—
7	Replace the ECM (Refer to the Data Programming in Case of ECM change). Is the action complete?	—	Verify repair	—

Diagnostic Trouble Code (DTC) P0113 (Flash DTC 23) IAT Sensor Circuit High Voltage

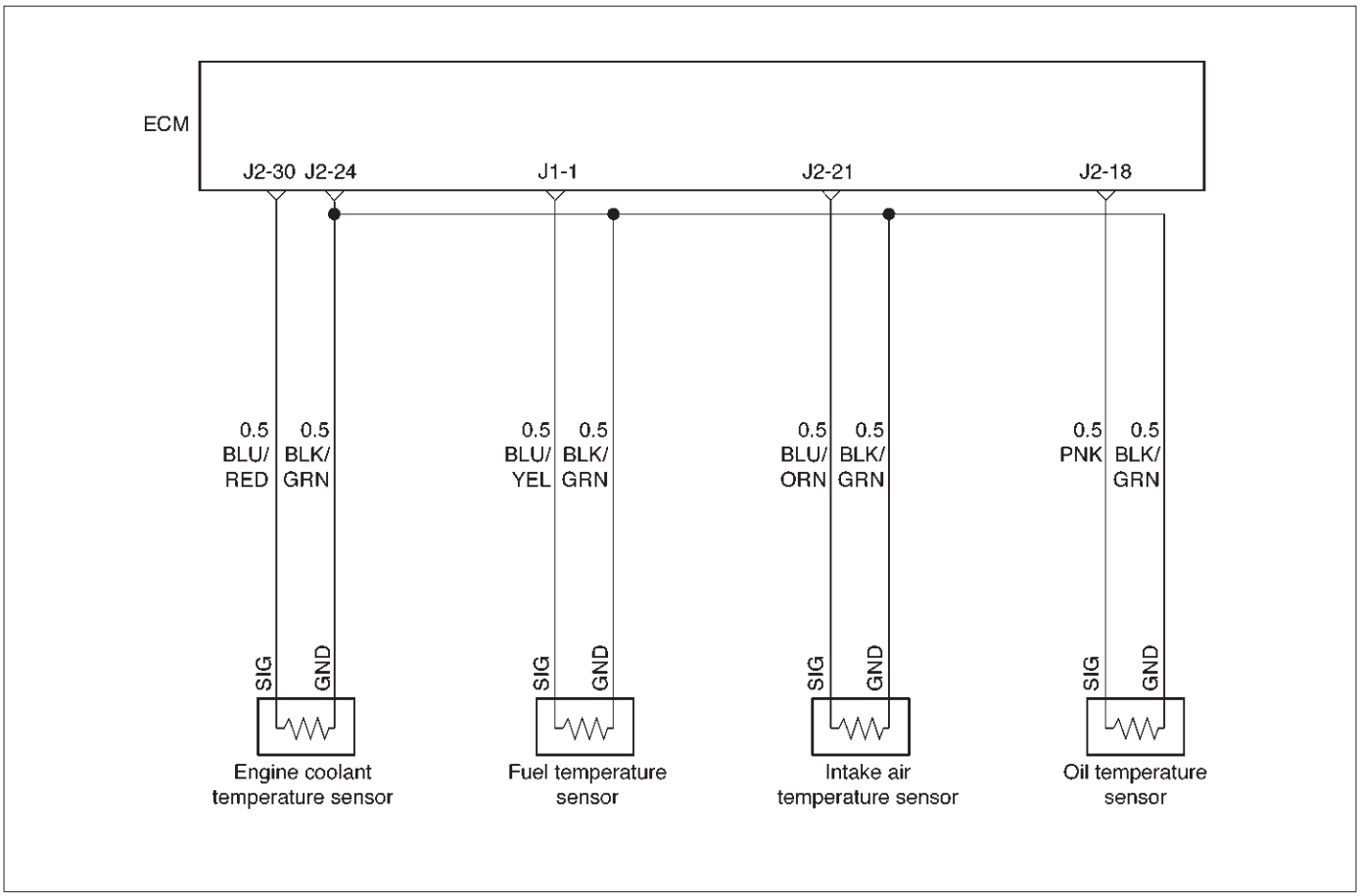

060RW129

Circuit Description

The intake air temperature (IAT) sensor is a thermistor which measures the temperature of the air entering the engine. The Engine Control Module ECM applies 5 volts through a pull-up resistor to the IAT sensor. When the intake air is cold, the sensor resistance is high and the ECM will monitor a high signal voltage on the IAT signal circuit. If the intake air is warm, the sensor resistance is lower causing the ECM to monitor a lower voltage. DTC P0113 will set when the ECM detects an excessively high signal voltage on the intake air temperature sensor signal circuit.

Action Taken When the DTC Sets

- The ECM will illuminate the malfunction indicator lamp (MIL) the first time the fault is detected.
- The ECM will store conditions which were present when the DTC was set as Freeze Frame and in the Failure Records data.

Conditions for Clearing the MIL/DTC

- DTC P0113 can be cleared by using the Tech 2 “Clear Info” function or by disconnecting the ECM battery feed.

Diagnostic Aids

Check for the following conditions:

- Poor connection at ECM – Inspect harness connectors for backed-out terminals, improper mating, broken locks, improperly formed or damaged terminals, and poor terminal-to-wire connection.
- Damaged harness – Inspect the wiring harness for damage. If the harness appears to be OK, observe the IAT display on the Tech 2 while moving connectors and wiring harnesses related to the IAT sensor. A change in the IAT display will indicate the location of the fault.

If DTC P0113 cannot be duplicated, the information included in the Failure Records data can be useful in determining vehicle mileage since the DTC was last set.

Test Description

Number(s) below refer to the step number(s) on the Diagnostic Chart:

2. Verifies that the fault is present.
3. If DTC P0113 can be repeated only by duplicating the Failure Records conditions, refer to the "Temperature vs. Resistance Values" table. The table may be used to test the MAT sensor at various temperatures to evaluate the possibility of a "shifted" sensor that may be open above or below a certain temperature. If this is the case, replace the MAT sensor. If the MAT sensor appears to be OK, the fault is intermittent; refer to *Diagnostic Aids*.

Manifold Air Temperature Sensor

˚C	˚F	Ohms
Temperature vs. Resistance Values (approximate)		
25	77	2796
15	59	4450
5	41	7280

DTC P0113 –IAT Sensor Circuit High Voltage

Step	Action	Value(s)	Yes	No
1	Was the "On-Board Diagnostic (OBD) System Check" performed?	—	Go to *Step 2*	Go to *OBD System Check*
2	Ignition "ON," engine "OFF." Observe the "Intake Air Temp" display on the Tech 2. Is the "Intake Air Temp" below the specified value?	–38˚C (–36˚F)	Go to *Step 4*	Go to *Step 3*
3	1. Ignition "ON," engine "OFF." 2. Review and record Tech 2 Failure Records data parameters. 3. Operate the vehicle within Failure Records conditions as noted. 4. Using a Tech 2, monitor " DTC" info for DTC P0113. Does the Tech 2 indicate DTC P0113 failed?	—	Refer to *Test Description*	Refer to *Diagnostic Aids*
4	1. Ignition "OFF." 2. Disconnect the IAT sensor electrical connector. 3. Jumper the IAT signal circuit and the sensor ground circuit together at the IAT sensor harness connector. 4. Ignition "ON." 5. Observe the "Intake Air Temp" display on the Tech 2. Is the "Intake Air Temp" at the specified value?	140˚C (284˚F)	Go to *Step 6*	Go to *Step 5*
5	1. Jumper the IAT signal circuit at the IAT sensor harness connector to chassis ground. 2. Observe the "Intake Air Temp" display on the Tech 2. Is the "Intake Air Temp" at the specified value?	140˚C (284˚F)	Go to *Step 7*	Go to *Step 8*
6	Check for poor connections at the IAT sensor and replace terminals if necessary. Did any terminals require replacement?	—	Verify repair	Go to *Step 10*
7	1. Ignition "OFF." 2. Disconnect the ECM, and check the IAT sensor ground circuit for an open. 3. If the IAT sensor ground circuit is open, repair it as necessary. Was the IAT sensor ground circuit open?	—	Verify repair	Go to *Step 9*

DTC P0113 –IAT Sensor Circuit High Voltage (Cont'd)

Step	Action	Value(s)	Yes	No
8	1. Ignition "OFF." 2. Disconnect the ECM, and check the IAT signal circuit for an open. 3. If the IAT sensor signal circuit is open, repair it as necessary. Was the IAT signal circuit open?	—	Verify repair	Go to *Step 9*
9	Check for a poor sensor ground or IAT signal circuit terminal connection at the ECM and replace terminal(s) if necessary. Did any of the terminals need to be replaced?	—	Verify repair	Go to *Step 11*
10	Replace the IAT sensor. Is the action complete?	—	Verify repair	—
11	Replace the ECM (Refer to the Data Programming in Case of ECM change). Is the action complete?	—	Verify repair	—

Diagnostic Trouble Code (DTC) P0117 (Flash DTC 14) ECT Sensor Low Voltage

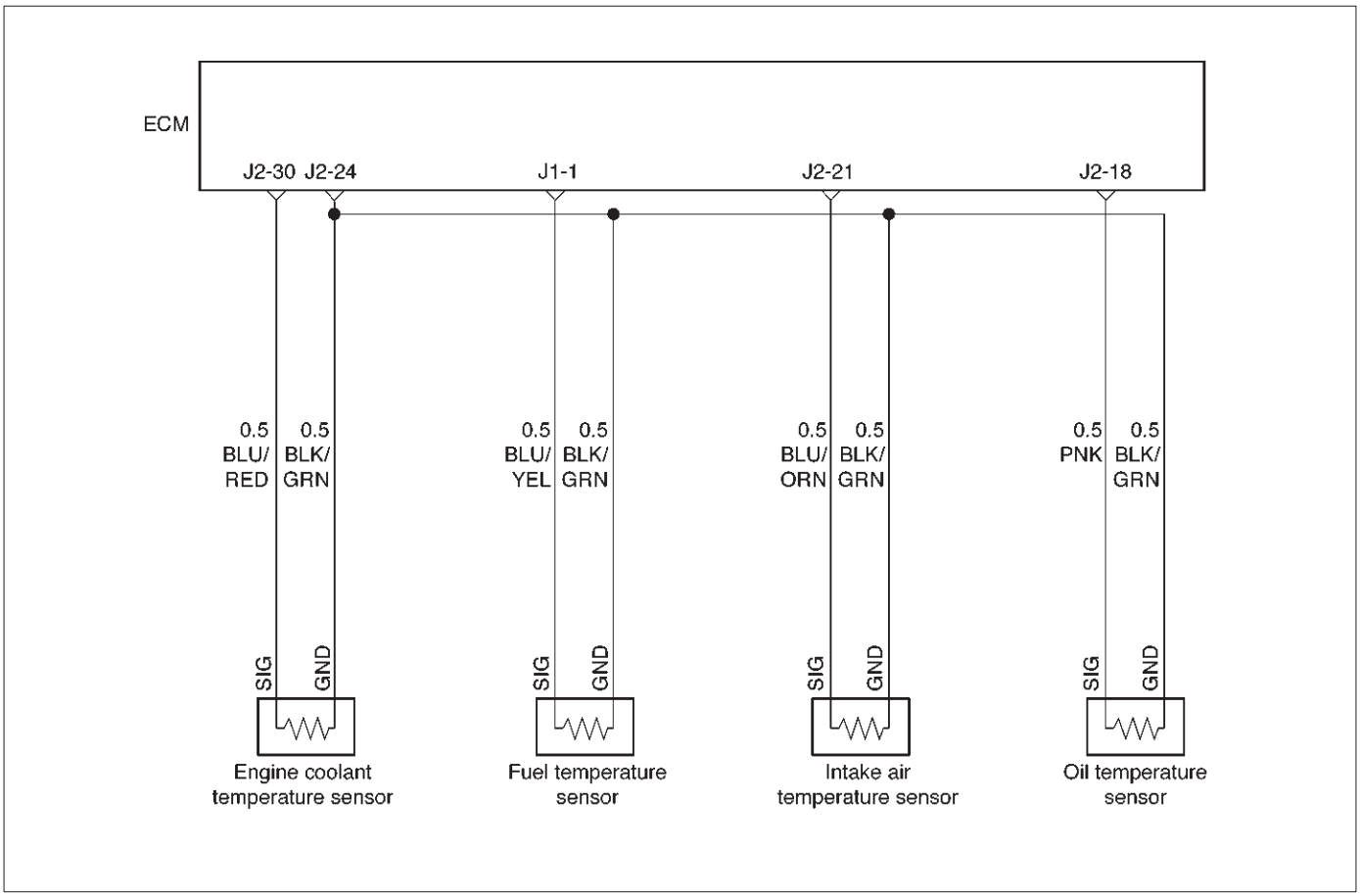

060RW129

Circuit Description

The engine coolant temperature (ECT) sensor is a thermistor mounted on a coolant crossover pipe at the rear of the engine. The Engine Control Module ECM applies a voltage (about 5 volts) through a pull-up resistor to the ECT signal circuit. When the engine coolant is cold, the sensor (thermistor) resistance is high, therefore the ECM will measure a high signal voltage. As the engine coolant warms, the sensor resistance becomes lower, and the ECT signal voltage measured at the ECM drops.

Action Taken When the DTC Sets

- The ECM will store conditions which were present when the DTC was set as Freeze Frame and in the Failure Records data.

Conditions for Clearing the MIL/DTC

- DTC P0117 can be cleared by using the Tech 2 “Clear Info” function or by disconnecting the ECM battery feed.

Diagnostic Aids

Check for the following conditions:

- Poor connection at ECM – Inspect harness connectors for backed-out terminals, improper mating, broken locks, improperly formed or damaged terminals, and poor terminal-to-wire connection.
- Damaged harness – Inspect the wiring harness for damage. If the harness appears to be OK, observe the ECT display on the Tech 2 while moving connectors and wiring harnesses related to the ECT sensor. A change in the ECT display will indicate the location of the fault.

If DTC P0117 cannot be duplicated, the information included in the Failure Records data can be useful in determining vehicle mileage since the DTC was last set. If it is determined that the DTC occurs intermittently.

Test Description

Number(s) below refer to the step number(s) on the Diagnostic Chart.

2. Verifies that the fault is present.
3. If DTC P0117 can be repeated only by duplicating the Failure Records conditions, refer to the “Temperature vs. Resistance Values” table. The table may be used to test the ECT sensor at various temperatures to evaluate the possibility of a “shifted” sensor that may be shorted above or below a certain temperature. If this is the case, replace the ECT sensor. If the ECT sensor appears to be OK, the fault is intermittent; refer to *Diagnostic Aids*.

Engine Coolant Temperature Sensor

˚C	˚F	Ohms
Temperature vs. Resistance Values (approximate)		
25	77	2796
15	59	4450

DTC P0117 – ECT Sensor Low Voltage

Step	Action	Value(s)	Yes	No
1	Was the “On-Board Diagnostic (OBD) System Check” performed?	—	Go to *Step 2*	Go to *OBD System Check*
2	1. Ignition “ON,” engine “OFF.” 2. Observe the “Eng Cool Temp” display on the Tech 2. Is the “Eng Cool Temp” below the specified value?	139˚C (282˚F)	Go to *Step 4*	Go to *Step 3*
3	1. Ignition “ON,” engine “OFF.” 2. Review and record Tech 2 Failure Records data. 3. Operate the vehicle within Failure Records conditions as noted. 4. Using a Tech 2, monitor “ DTC” info for DTC P0117. Does the Tech 2 indicate DTC P0117 failed this ignition?	—	Go to *Step 4*	Refer to *Diagnostic Aids*
4	1. Disconnect the ECT sensor electrical connector. 2. Observe the “Eng Cool Temp” display on the Tech 2. Is the “Eng Cool Temp” at the specified value?	–39˚C (–38˚F)	Go to *Step 6*	Go to *Step 5*
5	1. Ignition “OFF.” 2. Disconnect the ECM and check the ECT signal circuit for a short to ground or a short to the sensor ground circuit. 3. If the ECT signal circuit is shorted. repair it as necessary. Was the ECT signal circuit shorted to ground?	—	Verify repair	Go to *Step 7*
6	Replace the ECT sensor. Is the action complete?	—	Verify repair	—
7	Replace the ECM (Refer to the Data Programming in Case of ECM change). Is the action complete?	—	Verify repair	—

Diagnostic Trouble Code (DTC) P0118 (Flash DTC 14) ECT Sensor High Voltage

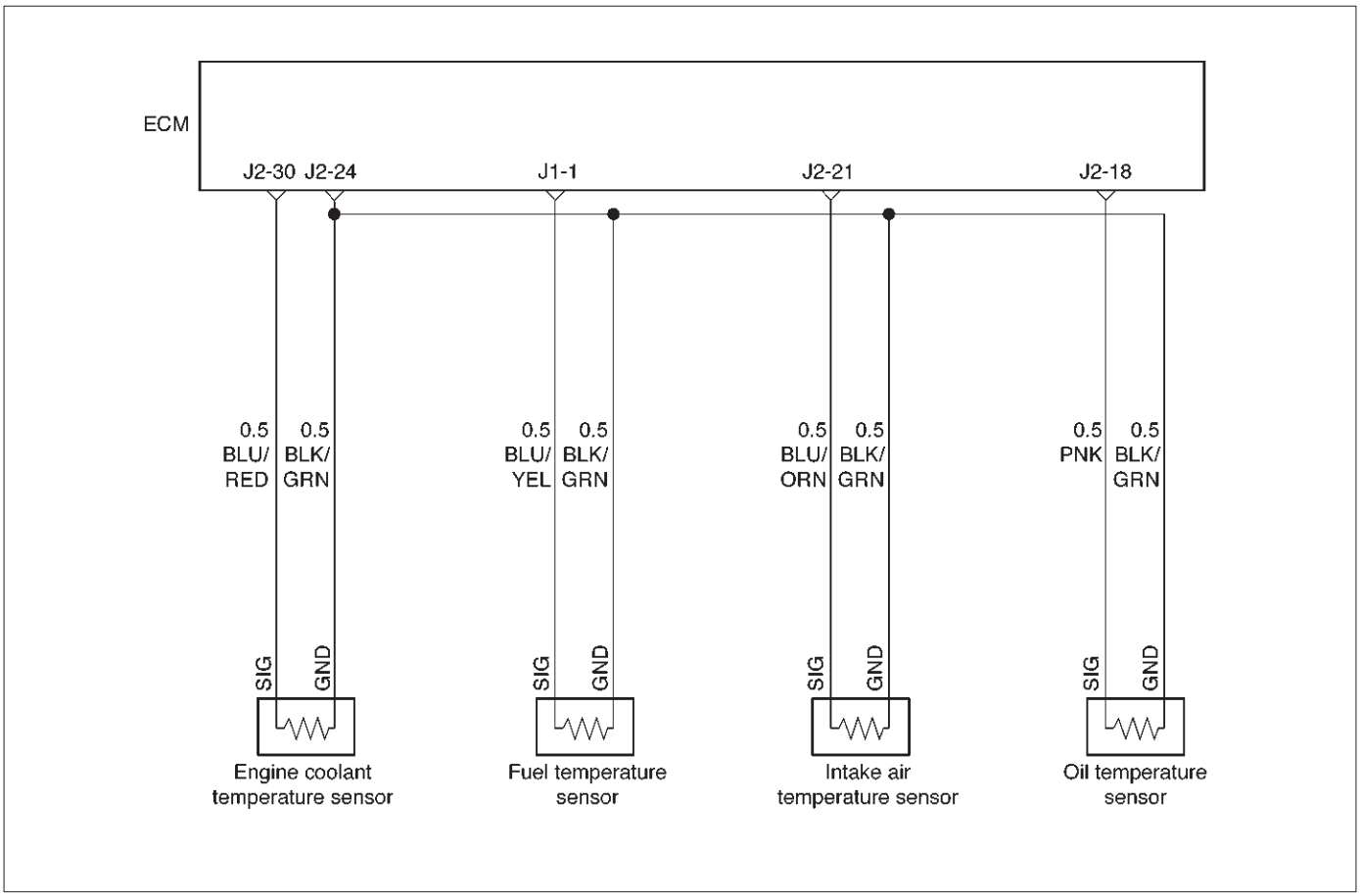

060RW129

Circuit Description

The engine coolant temperature (ECT) sensor is a thermistor mounted in on a coolant crossover pipe at the rear of the engine. The Engine Control Module ECM applies a voltage (about 5 volts) through a pull-up resistor to the ECT signal circuit. When the engine coolant is cold, the sensor (thermistor) resistance is high, therefore the ECM will measure a high signal voltage. As the engine coolant warms, the sensor resistance becomes less, and the ECT signal voltage measured at the ECM drops.

Action Taken When the DTC Sets

- The ECM will store conditions which were present when the DTC was set as Freeze Frame and in the Failure Records data.

Conditions for Clearing the MIL/DTC

- DTC P0118 can be cleared by using the Tech 2 “Clear Info” function or by disconnecting the ECM battery feed.

Diagnostic Aids

Check for the following conditions:

- Poor connection at ECM – Inspect harness connectors for backed-out terminals, improper mating, broken locks, improperly formed or damaged terminals, and poor terminal-to-wire connection.
- Damaged harness – Inspect the wiring harness for damage. If the harness appears to be OK, observe the ECT display on the Tech 2 while moving connectors and wiring harnesses related to the ECT sensor. A change in the ECT display will indicate the location of the fault.

If DTC P0118 cannot be duplicated, the information included in the Failure Records data can be useful in determining vehicle mileage since the DTC was last set.

Test Description

Number(s) below refer to the step number(s) on the Diagnostic Chart.

2. Verifies that the fault is present.

3. If DTC P0118 can be repeated only by duplicating the Failure Records conditions, refer to the "Temperature vs. Resistance Value" table. The table may be used to test the ECT sensor at various temperatures to evaluate the possibility of a "shifted" sensor that may be shorted above or below a certain temperature. If this is the case, replace the ECT sensor. If the ECT sensor appears to be OK, the fault is intermittent; refer to *Diagnostic Aids*.

Engine Coolant Temperature Sensor

˚C	˚F	Ohms
Temperature vs. Resistance Values (approximate)		
80	176	332
25	77	2796
15	59	4450

DTC P0118 – ECT Sensor High Voltage

Step	Action	Value(s)	Yes	No
1	Was the "On-Board Diagnostic (OBD) System Check" performed?	—	Go to *Step 2*	Go to *OBD System Check*
2	1. Ignition "ON," engine "OFF." 2. Observe the "Eng Cool Temp" display on the Tech 2. Is the "Eng Cool Temp" below the specified value?	–39˚C (–38˚F)	Go to *Step 4*	Go to *Step 3*
3	1. Ignition "ON," engine "OFF." 2. Review and record Tech 2 Failure Records data. 3. Operate the vehicle within Failure Records conditions as noted. 4. Using a Tech 2, monitor the " DTC" info for DTC P0118. Does the Tech 2 indicate DTC P0118 failed?	—	Refer to *Test Description*	Refer to *Diagnostic Aids*
4	1. Disconnect the ECT sensor electrical connector. 2. Jumper the ECT signal circuit and the sensor ground circuit together at the ECT sensor harness connector. 3. Observe the "Eng Cool Temp" display on the Tech 2. Is the "Eng Cool Temp" at the specified value?	140˚C (284˚F)	Go to *Step 6*	Go to *Step 5*
5	1. Jumper the ECT signal circuit at the ECT sensor harness connector to chassis ground. 2. Observe the "Eng Cool Temp" display on the Tech 2. Is the "Eng Cool Temp" at the specified value?	140˚C (284˚F)	Go to *Step 7*	Go to *Step 8*
6	Check for poor connections at the ECT sensor and replace terminals if necessary. Did any terminals require replacement?	—	Verify repair	Go to *Step 10*
7	1. Ignition "OFF." 2. Disconnect the ECM, and check the ECT sensor ground circuit for an open. 3. If the ECT sensor ground circuit is open, repair it as necessary. Was the ECT sensor ground circuit open?	—	Verify repair	Go to *Step 9*

DTC P0118 – ECT Sensor High Voltage (Cont'd)

Step	Action	Value(s)	Yes	No
8	1. Ignition "OFF." 2. Disconnect the ECM, and check the ECT signal circuit for an open. 3. If the ECT sensor signal circuit is open, repair it as necessary. Was the ECT signal circuit open?	—	Verify repair	Go to *Step 9*
9	Check for a poor sensor ground or ECT signal circuit terminal connection at the ECM and replace terminal(s) if necessary. Did any of the terminals need to be replaced?	—	Verify repair	Go to *Step 11*
10	Replace the ECT sensor. Is the action complete?	—	Verify repair	—
11	Replace the ECM (Refer to the Data Programming in Case of ECM change). Is the action complete?	—	Verify repair	—

Diagnostic Trouble Code (DTC) P0121 (Flash DTC 33) AP Sensor Rationality

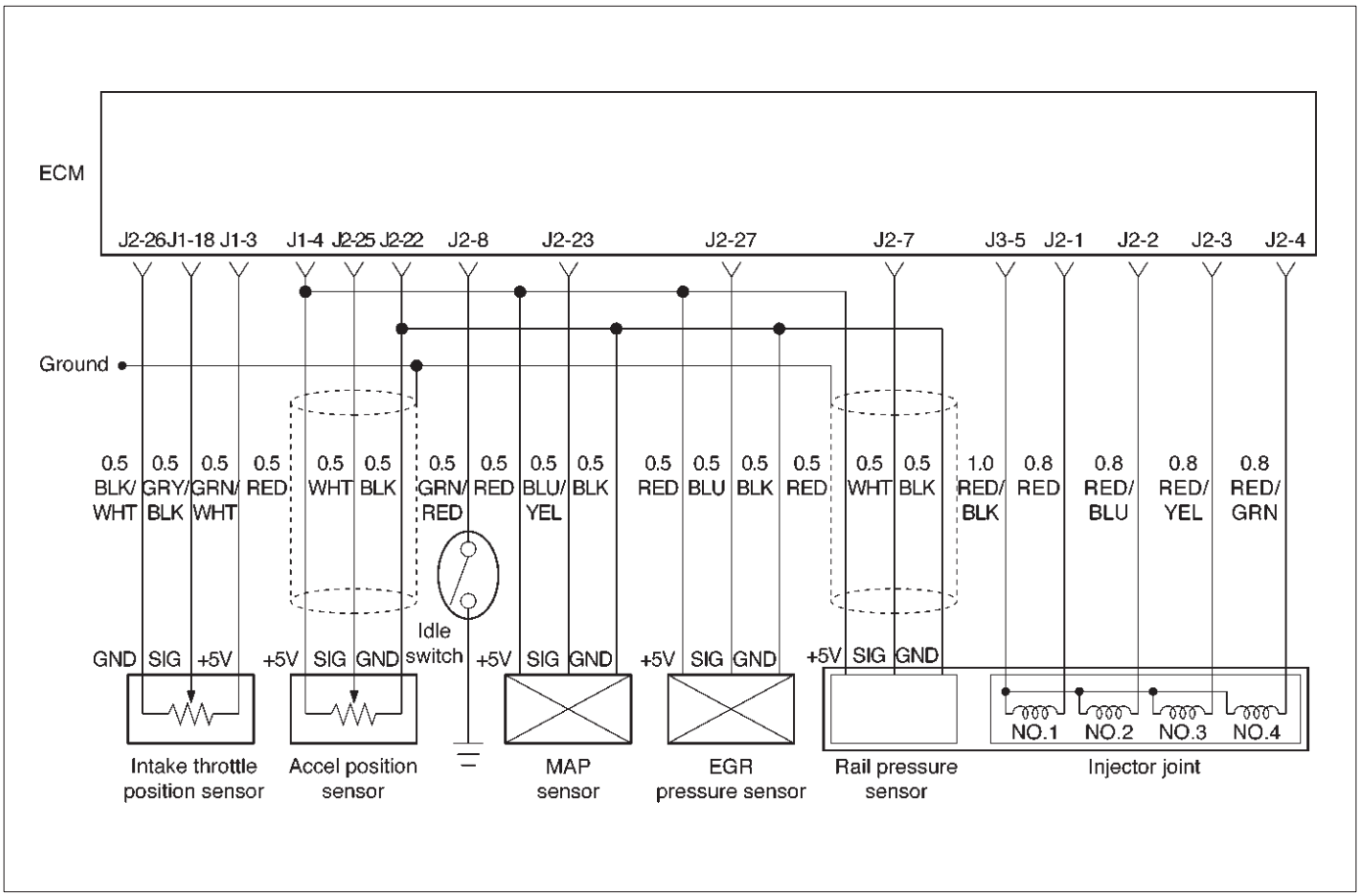

060RW134

Circuit Description

The accel position (AP) sensor circuit provides a voltage signal that changes relative to throttle blade angle.
The AP signal is one of the most important inputs used by the Engine Control Module ECM for fuel volume control and many of the ECM-controlled outputs. If the ECM detects an out-of-range condition, DTC P0121 will set.

Action Taken When the DTC Sets

- The ECM will illuminate the malfunction indicator lamp (MIL) after fault is detected.
- The ECM will store conditions which were present when the DTC was set as Freeze Frame and in the Failure Records data.

Conditions for Clearing the MIL/DTC

- DTC P0121 can be cleared by using the Tech 2 “Clear info ” function or by disconnecting the ECM battery feed.

Diagnostic Aids

Check for the following conditions:

- Poor connection at ECM – Inspect harness connectors for backed-out terminals, improper mating, broken locks improperly formed or damaged terminals, and poor terminal-to-wire connection.
- Damaged harness – Inspect the wiring harness for damage. If the harness appears to be OK, observe the ECT display on the Tech 2 while moving connectors and wiring harnesses related to the sensor. A change in the display will indicate the location of the fault.

If DTC P0121 cannot be duplicated, the information included in the Failure Records data can be useful in determining vehicle mileage since the DTC was last set.

DTC P0121 –AP Sensor Rationality

Step	Action	Value(s)	Yes	No
1	Was the “On-Board Diagnostic (OBD) System Check” performed?	—	Go to *Step 2*	Go to *OBD System Check*
2	Check the Idle SW. Was the Idle SW circuit open or darmage?	—	Replace the Idle SW circuit	Go to *Step 3*
3	Observe the AP angle reading on the Tech 2 while slowly opening the throttle. Does the AP angle increase steadily and evenly from the closed throttle value to the wide open throttle value?	Closed throttle = 0% Wide open throttle = 100%	Refer to *Diagnostic Aids*	Go to *Step 4*
4	1. Disconnect the AP sensor. 2. Observe the AP sensor reading on the Tech 2. Is the AP sensor reading near the specified value?	0 V	Go to *Step 5*	Go to *Step 6*
5	1. Connect a test light between the 5 volt reference “J2” circuit and the AP sensor signal circuit at the AP sensor harness connector. 2. Observe the AP sensor reading on the Tech 2. Is the AP sensor reading at the specified value?	5 V	Go to *Step 8*	Go to *Step 7*
6	Check the following items: 1. AP signal circuit for a short to voltage. 2. AP sensor ground circuit for high resistance between the ECM and the AP sensor. 3. AP sensor ground circuit for a poor connection. 4. If a problem is found, repair wiring harness as necessary. Was a problem found?	—	Verify repair	Go to *Step 9*
7	Check the following items: 1. AP signal circuit or 5 volt reference “J2” circuit for a poor connection. 2. AP signal circuit or 5 volt reference “J2” circuit for high resistance between the ECM and the AP sensor. 3. If a problem is found, repair wiring harness as necessary. Was a problem found?	—	Verify repair	Go to *Step 9*
8	Replace the AP sensor. Is the action complete?	—	Verify repair	—
9	Replace the ECM (Refer to the Data Programming in Case of ECM change). Is the action complete?	—	Verify repair	—

Diagnostic Trouble Code (DTC) P0122 (Flash DTC 21)
AP Sensor Low Voltage

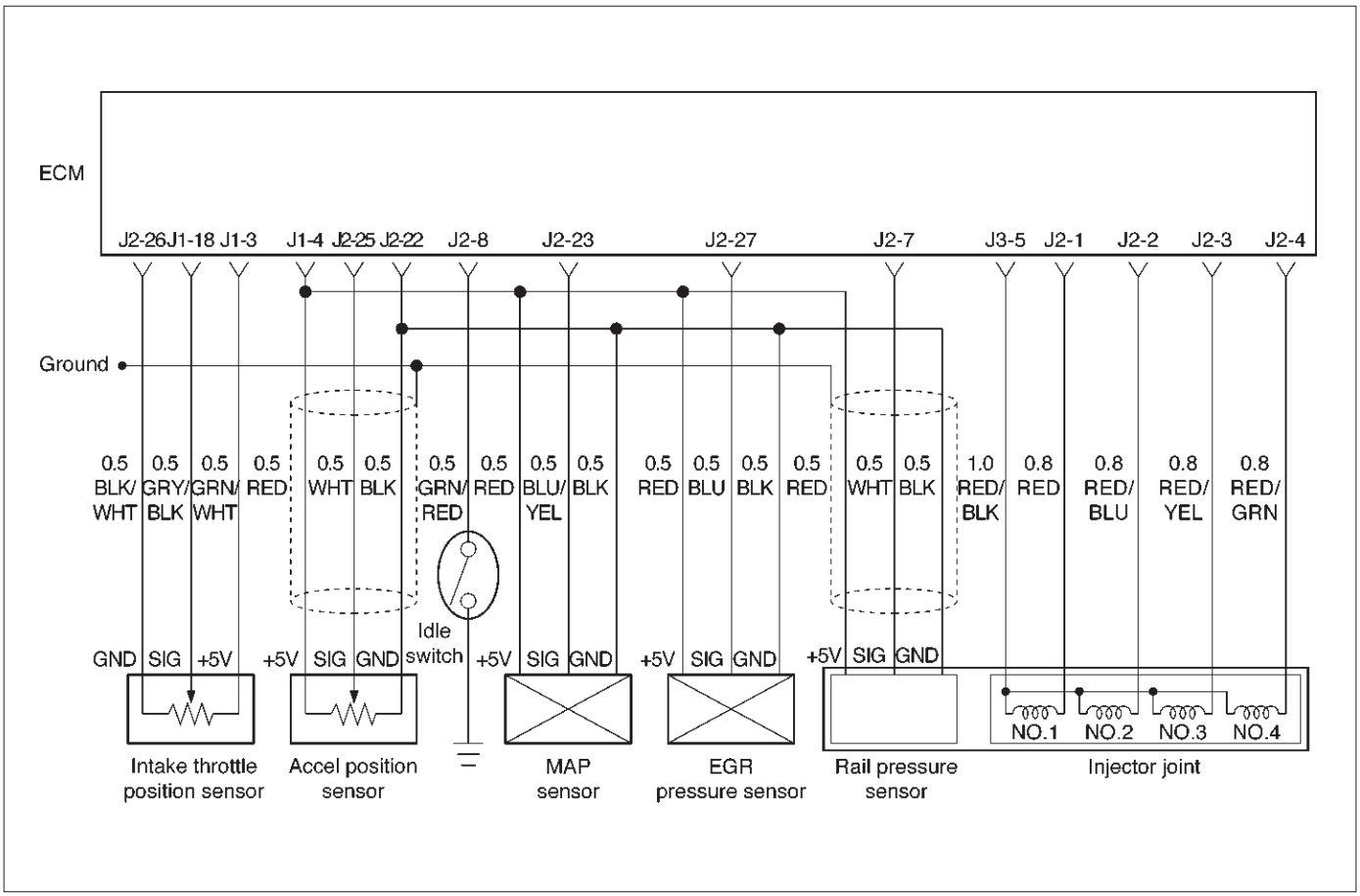

060RW134

Circuit Description

The accelerator position (AP) sensor circuit provides a voltage signal that changes relative to throttle blade angle.

The AP signal is used by the Engine Control Module ECM for fuel volume control and many of the ECM-controlled outputs.

Action Taken When the DTC Sets

- The ECM will store conditions which were present when the DTC was set as Freeze Frame and in the Failure Records data.

Conditions for Clearing the MIL/DTC

- DTC P0122 can be cleared by using the Tech 2 “Clear Info” function or by disconnecting the ECM battery feed.

Diagnostic Aids

Check for the following conditions:

- Poor connection at ECM – Inspect harness connectors for backed-out terminals, improper mating, broken locks, improperly formed or damaged terminals, and poor terminal-to-wire connection.
- Damaged harness – Inspect the wiring harness for damage. If the harness appears to be OK, observe the throttle position display on the Tech 2 while moving connectors and wiring harnesses related to the TP sensor. A change in the display will indicate the location of the fault.

If DTC P0122 cannot be duplicated, the information included in the Failure Records data can be useful in determining vehicle mileage since the DTC was last set.

DTC P0122 –AP Sensor Low Voltage

Step	Action	Value(s)	Yes	No
1	Was the “On-Board Diagnostic (OBD) System Check” performed?	—	Go to *Step 2*	Go to *OBD System Check*
2	Check the AP sensor signal circuit. Was the AP sensor signal circuit open or darmage?	—	Replace the APS circuit	Go to *Step 3*

DTC P0122 –AP Sensor Low Voltage (Cont'd)

Step	Action	Value(s)	Yes	No
3	1. Ignition "ON," engine "OFF." 2. With the throttle closed, observe the "AP Sensor" display on the Tech 2. Is the "AP Sensor" below the specified value?	0.1 V	Go to *Step 5*	Go to *Step 4*
4	1. Ignition "ON," engine "OFF." 2. Review and record Tech 2 Failure Records data. 3. Operate the vehicle within Failure Records conditions as noted. 4. Using a Tech 2, monitor the "DTC" info for DTC P0122. Does the Tech 2 indicate DTC P0122 failed?	—	Go to *Step 5*	Refer to *Diagnostic Aids*
5	1. Ignition "OFF." 2. Disconnect the AP sensor electrical connector. 3. Jumper the 5 volt reference "J2" circuit and the AP signal together at the AP sensor harness connector. 4. Ignition "ON." Observe the "AP Sensor" display on the Tech 2. Is the "AP Sensor" at the specified value?	5 V	Go to *Step 11*	Go to *Step 6*
6	1. Disconnect jumper. 2. Connect a test light between B+ and the AP sensor signal circuit at the AP sensor harness connector. Observe the "AP Sensor" display on the Tech 2. Is the "AP Sensor" at the specified value?	5 V	Go to *Step 7*	Go to *Step 9*
7	1. Ignition "OFF." 2. Disconnect the ECM and check the 5 volt reference "A" circuit for an open or short to ground. 3. If the 5 volt reference "J2" circuit is open or shorted to ground, repair it as necessary. Was the 5 volt reference "J2" circuit open or shorted to ground?	—	Verify repair	Go to *Step 8*
8	Check the 5 volt reference "J2" circuit for a poor connection at the ECM and replace the terminal if necessary. Did the terminal require replacement?	—	Verify repair	Go to *Step 13*
9	1. Ignition "OFF." 2. Disconnect the ECM, and check the AP signal circuit for an open, short to ground, or short to the sensor ground circuit. 3. If the AP sensor signal circuit is open or shorted to ground, repair it as necessary. Was the AP signal circuit open or shorted to ground?	—	Verify repair	Go to *Step 10*
10	Check the AP sensor signal circuit for a poor connection at the ECM and replace the terminal if necessary. Did the terminal require replacement?	—	Verify repair	Go to *Step 13*
11	Check the AP sensor signal circuit for a poor connection at the AP sensor and replace the terminal if necessary. Did the terminal require replacement?	—	Verify repair	Go to *Step 12*

DTC P0122 –AP Sensor Low Voltage (Cont'd)

Step	Action	Value(s)	Yes	No
12	Replace the AP sensor. Is the action complete?	—	Verify repair	—
13	Replace the ECM (Refer to the Data Programming in Case of ECM change). Is the action complete?	—	Verify repair	—

Diagnostic Trouble Code (DTC) P0123 (Flash DTC 21) AP Sensor High Voltage

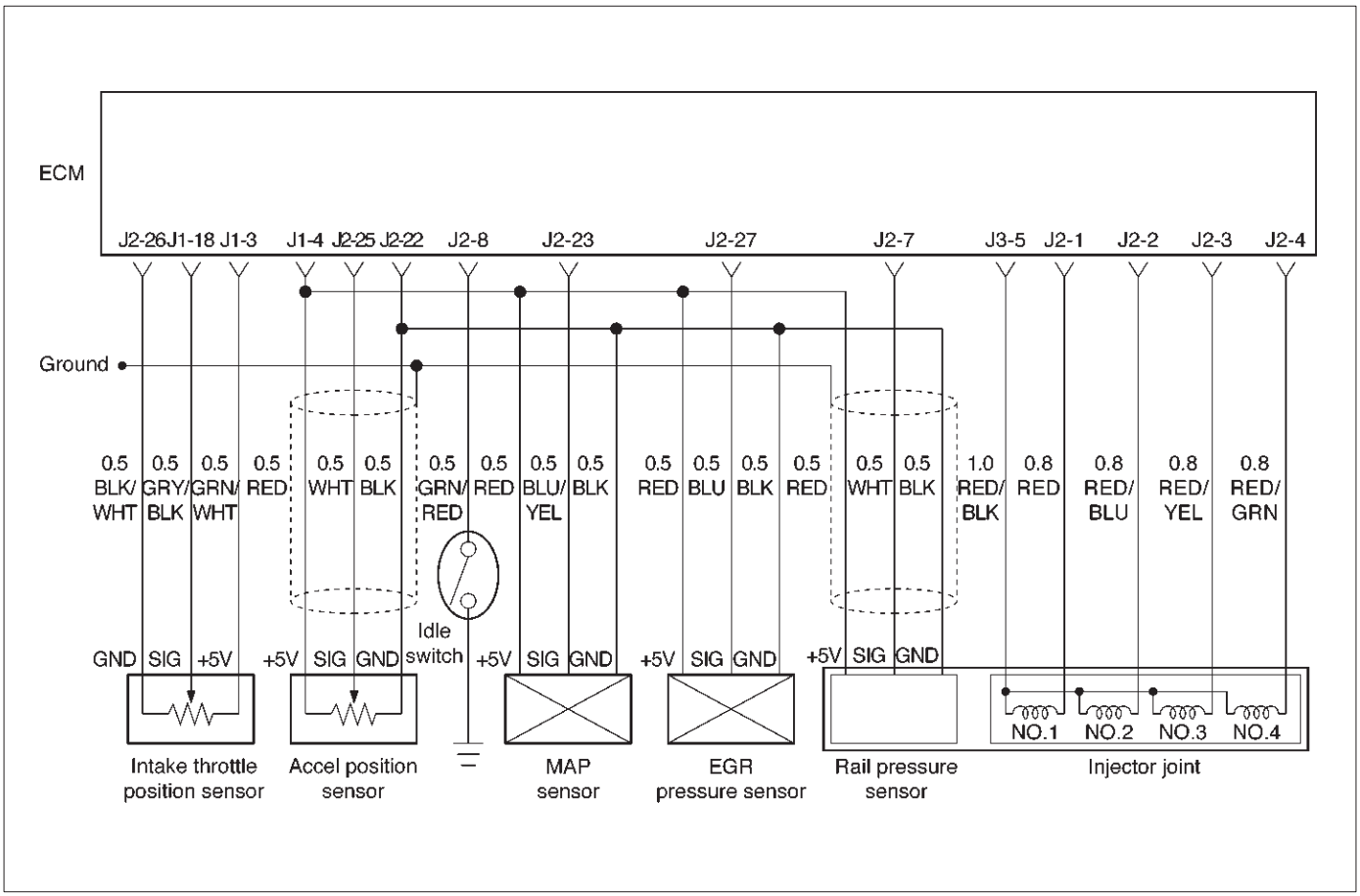

060RW134

Circuit Description

The accelerator position (AP) sensor circuit provides a voltage signal that changes relative to throttle blade angle.

The TP signal is one of the most important inputs used by the Engine Control Module ECM for fuel volume control and many of the ECM-controlled outputs.

Action Taken When the DTC Sets

- The ECM will store conditions which were present when the DTC was set as Freeze Frame and in the Failure Records data.

Conditions for Clearing the MIL/DTC

- DTC P0123 can be cleared by using the Tech 2 “Clear Info” function or by disconnecting the ECM battery feed.

Diagnostic Aids

Check for the following conditions:

- Poor connection at ECM – Inspect harness connectors for backed-out terminals, improper mating, broken locks, improperly formed or damaged terminals, and poor terminal-to-wire connection.
- Damaged harness – Inspect the wiring harness for damage. If the harness appears to be OK, observe the AP sensor display on the Tech 2 while moving connectors and wiring harnesses related to the TP sensor. A change in the display will indicate the location of the fault.
- Faulty AP sensor – With the ignition key “ON,” engine “OFF,” observe the AP sensor display on the Tech 2 while slowly depressing the accelerator to wide open throttle. If a voltage over 4.88 volts is seen at any point in normal accelerator travel, replace the AP sensor.

If DTC P0123 cannot be duplicated, the information included in the Failure Records data can be useful in determining vehicle mileage since the DTC was last set.

Test Description

Number (s) below refer to the step number(s) on the Diagnostic Chart.

8. Components that share the AP sensor 5 volt reference “A” circuit include the following device:

DTC P0123 – AP Sensor High Voltage

Step	Action	Value(s)	Yes	No
1	Was the “On-Board Diagnostic (OBD) System Check” performed?	—	Go to *Step 2*	Go to *OBD System Check*
2	Check the AP sensor signal circuit. Was the AP sensor signal circuit open or darmage?	—	Replace the APS circuit	Go to *Step 3*
3	1. Ignition “ON,” engine “OFF.” 2. With the throttle closed, observe the “AP Sensor” display on the Tech 2. Is the “AP Sensor” above the specified value?	4.5 V	Go to *Step 5*	Go to *Step 4*
4	1. Ignition “ON,” engine “OFF.” 2. Review and record Tech 2 Failure Records data. 3. Operate the vehicle within Failure Records conditions as noted. 4. Using a Tech 2, monitor “DTC” info for DTC P0123. Does the Tech 2 indicate DTC P0123 failed.	—	Go to *Step 5*	Refer to *Diagnostic Aids*
5	1. Disconnect the AP sensor electrical connector. 2. Observe the “AP Sensor” display on the Tech 2. Is the “AP Sensor” near the specified value?	0 V	Go to *Step 6*	Go to *Step 7*
6	Probe the sensor ground circuit at the AP sensor harness connector with a test light connected to B+. Is the test light “ON?”	—	Go to *Step 8*	Go to *Step 11*
7	1. Ignition “OFF,” disconnect the ECM. 2. Ignition “ON,” engine “OFF.” 3. Check for a short to voltage on the AP sensor signal circuit. 4. If the AP sensor signal circuit is shorted, repair it as necessary. Was the AP sensor signal circuit shorted?	—	Verify repair	Go to *Step 13*
8	1. Ignition “ON.” 2. Monitor the “AP Sensor” Tech 2 display while disconnecting each of the components that share the 5 volt reference “J2” circuit (one at a time). 3. If the “AP Sensor” Tech 2 display changes, replace the component that caused the display to change when disconnected. Does disconnecting any of these components cause the “AP Sensor” display to change?	—	Verify repair	Go to *Step 9*
9	1. Ignition “OFF,” disconnect the ECM. 2. Ignition “ON,” engine “OFF.” 3. Check for a short to B+ on the 5 volt reference “A” circuit. 4. If the 5 volt reference “J2” circuit is shorted, repair it as necessary. Was the 5 volt reference “J2” circuit shorted?	—	Verify repair	Go to *Step 10*
10	Check for poor electrical connections at the AP sensor and replace terminals if necessary. Did any terminals require replacement?	—	Verify repair	Go to *Step 12*

DTC P0123 – AP Sensor High Voltage (Cont'd)

Step	Action	Value(s)	Yes	No
11	1. Ignition "OFF." 2. Disconnect the ECM, and check for an open sensor ground circuit to the AP sensor. 3. If a problem is found, repair it as necessary. Was the sensor ground circuit to the AP sensor open?	—	Verify repair	Go to *Step 13*
12	Replace the AP sensor. Is the action complete?	—	Verify repair	—
13	Replace the ECM (Refer to the Data Programming in Case of ECM change). Is the action complete?	—	Verify repair	—

Diagnostic Trouble Code (DTC) P0182 (Flash DTC 15) FT Sensor Low Voltage

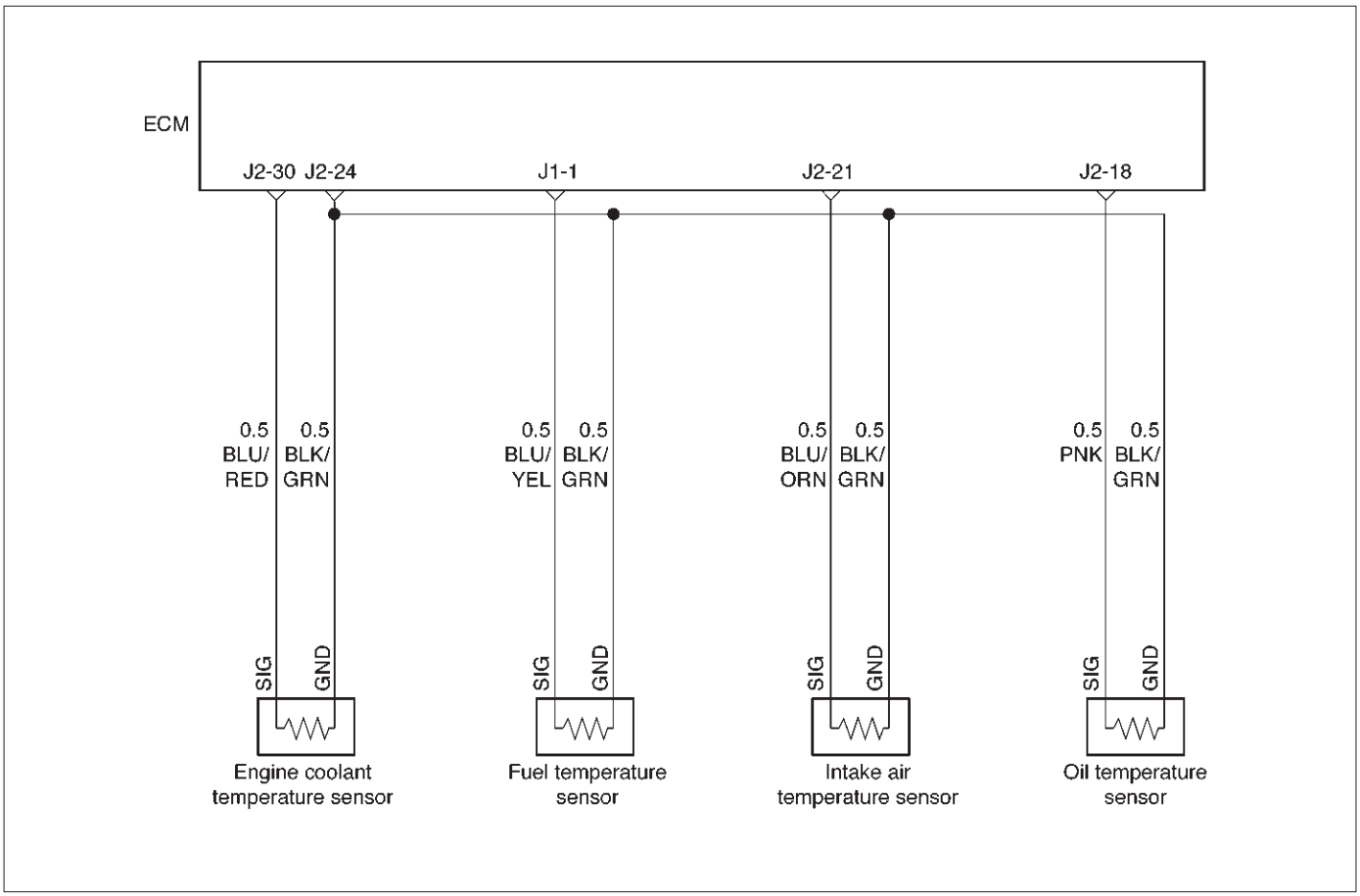

060RW129

Circuit Description

The fuel temperature (FT) sensor is a thermistor mounted on a coolant crossover pipe at the rear of the engine. The Engine Control Module ECM applies a voltage (about 5 volts) through a pull-up resistor to the FT signal circuit. When the fuel is cold, the sensor (thermistor) resistance is high, therefore the ECM will measure a high signal voltage. As the fuel warms, the sensor resistance becomes lower, and the FT signal voltage measured at the ECM drops.

Action Taken When the DTC Sets

- The ECM will store conditions which were present when the DTC was set as Freeze Frame and in the Failure Records data.

Conditions for Clearing the MIL/DTC

- DTC P0182 can be cleared by using the Tech 2 “Clear Info” function or by disconnecting the ECM battery feed.

Diagnostic Aids

Check for the following conditions:

- Poor connection at ECM – Inspect harness connectors for backed-out terminals, improper mating, broken locks, improperly formed or damaged terminals, and poor terminal-to-wire connection.
- Damaged harness – Inspect the wiring harness for damage. If the harness appears to be OK, observe the FT display on the Tech 2 while moving connectors and wiring harnesses related to the FT sensor. A change in the FT display will indicate the location of the fault.

If DTC P0182 cannot be duplicated, the information included in the Failure Records data can be useful in determining vehicle mileage since the DTC was last set. If it is determined that the DTC occurs intermittently.

Test Description

Number(s) below refer to the step number(s) on the Diagnostic Chart.

2. Verifies that the fault is present.

DTC P0182 – FT Sensor Low Voltage

Step	Action	Value(s)	Yes	No
1	Was the “On-Board Diagnostic (OBD) System Check” performed?	—	Go to *Step 2*	Go to *OBD System Check*
2	1. Ignition “ON,” engine “OFF.” 2. Observe the “Fuel Temp” display on the Tech 2. Is the “Fuel Temp” below the specified value?	139˚C (282˚F)	Go to *Step 4*	Go to *Step 3*
3	1. Ignition “ON,” engine “OFF.” 2. Review and record Tech 2 Failure Records data. 3. Operate the vehicle within Failure Records conditions as noted. 4. Using a Tech 2, monitor “ DTC” info for DTC P0182. Does the Tech 2 indicate DTC P0182 failed this ignition?	—	Go to *Step 4*	Refer to *Diagnostic Aids*
4	1. Disconnect the FT sensor electrical connector. 2. Observe the “Fuel Temp” display on the Tech 2. Is the “Fuel Temp” at the specified value?	–39˚C (–38˚F)	Go to *Step 6*	Go to *Step 5*
5	1. Ignition “OFF.” 2. Disconnect the ECM and check the FT signal circuit for a short to ground or a short to the sensor ground circuit. 3. If the FT signal circuit is shorted. repair it as necessary. Was the FT signal circuit shorted to ground?	—	Verify repair	Go to *Step 7*
6	Replace the FT sensor. Is the action complete?	—	Verify repair	—
7	Replace the ECM (Refer to the Data Programming in Case of ECM change). Is the action complete?	—	Verify repair	—

Diagnostic Trouble Code (DTC) P0183 (Flash DTC 15) FT Sensor High Voltage

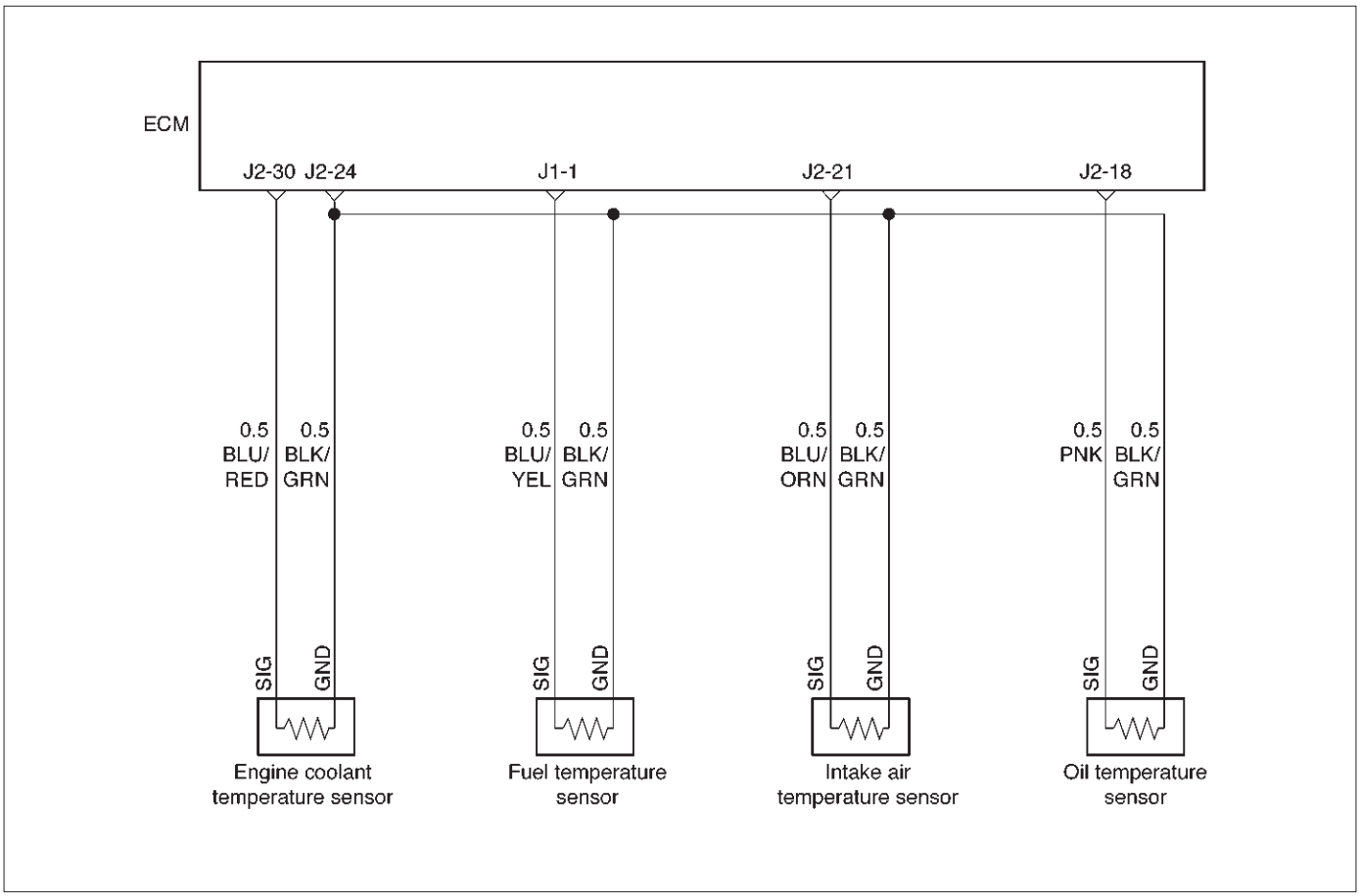

060RW129

Circuit Description

The fuel temperature (FT) sensor is a thermistor mounted in on a coolant crossover pipe at the rear of the engine. The Engine Control Module ECM applies a voltage (about 5 volts) through a pull-up resistor to the FT signal circuit. When the fuel is cold, the sensor (thermistor) resistance is high, therefore the ECM will measure a high signal voltage. As the fuel warms, the sensor resistance becomes less, and the FT signal voltage measured at the ECM drops.

Action Taken When the DTC Sets

- The ECM will store conditions which were present when the DTC was set as Freeze Frame and in the Failure Records data.

Conditions for Clearing the MIL/DTC

- DTC P0183 can be cleared by using the Tech 2 “Clear Info” function or by disconnecting the ECM battery feed.

Diagnostic Aids

Check for the following conditions:

- Poor connection at ECM – Inspect harness connectors for backed-out terminals, improper mating, broken locks, improperly formed or damaged terminals, and poor terminal-to-wire connection.
- Damaged harness – Inspect the wiring harness for damage. If the harness appears to be OK, observe the FT display on the Tech 2 while moving connectors and wiring harnesses related to the FT sensor. A change in the FT display will indicate the location of the fault.

If DTC P0182 cannot be duplicated, the information included in the Failure Records data can be useful in determining vehicle mileage since the DTC was last set.

Test Description

Number(s) below refer to the step number(s) on the Diagnostic Chart.

2. Verifies that the fault is present.

DTC P0183 – FT Sensor High Voltage

Step	Action	Value(s)	Yes	No
1	Was the “On-Board Diagnostic (OBD) System Check” performed?	—	Go to *Step 2*	Go to *OBD System Check*
2	1. Ignition “ON,” engine “OFF.” 2. Observe the “Fuel Temp” display on the Tech 2. Is the “Fuel Temp” below the specified value?	–39˚C (–38˚F)	Go to *Step 4*	Go to *Step 3*
3	1. Ignition “ON,” engine “OFF.” 2. Review and record Tech 2 Failure Records data. 3. Operate the vehicle within Failure Records conditions as noted. 4. Using a Tech 2, monitor the “ DTC” info for DTC P0183. Does the Tech 2 indicate DTC P0183 failed?	—	Refer to *Test Description*	Refer to *Diagnostic Aids*
4	1. Disconnect the FT sensor electrical connector. 2. Jumper the FT signal circuit and the sensor ground circuit together at the FT sensor harness connector. 3. Observe the “Fuel Temp” display on the Tech 2. Is the “Fuel Temp” at the specified value?	140˚C (284˚F)	Go to *Step 6*	Go to *Step 5*
5	1. Jumper the FT signal circuit at the FT sensor harness connector to chassis ground. 2. Observe the “Fuel Temp” display on the Tech 2. Is the “Fuel Temp” at the specified value?	140˚C (284˚F)	Go to *Step 7*	Go to *Step 8*
6	Check for poor connections at the FT sensor and replace terminals if necessary. Did any terminals require replacement?	—	Verify repair	Go to *Step 10*
7	1. Ignition “OFF.” 2. Disconnect the ECM, and check the FT sensor ground circuit for an open. 3. If the FT sensor ground circuit is open, repair it as necessary. Was the FT sensor ground circuit open?	—	Verify repair	Go to *Step 9*
8	1. Ignition “OFF.” 2. Disconnect the ECM, and check the FT signal circuit for an open. 3. If the FT sensor signal circuit is open, repair it as necessary. Was the FT signal circuit open?	—	Verify repair	Go to *Step 9*
9	Check for a poor sensor ground or FT signal circuit terminal connection at the ECM and replace terminal(s) if necessary. Did any of the terminals need to be replaced?	—	Verify repair	Go to *Step 11*
10	Replace the FT sensor. Is the action complete?	—	Verify repair	—
11	Replace the ECM (Refer to the Data Programming in Case of ECM change). Is the action complete?	—	Verify repair	—

Diagnostic Trouble Code (DTC) P0192 (Flash DTC 63) Rail Pressure Sensor Low Voltage

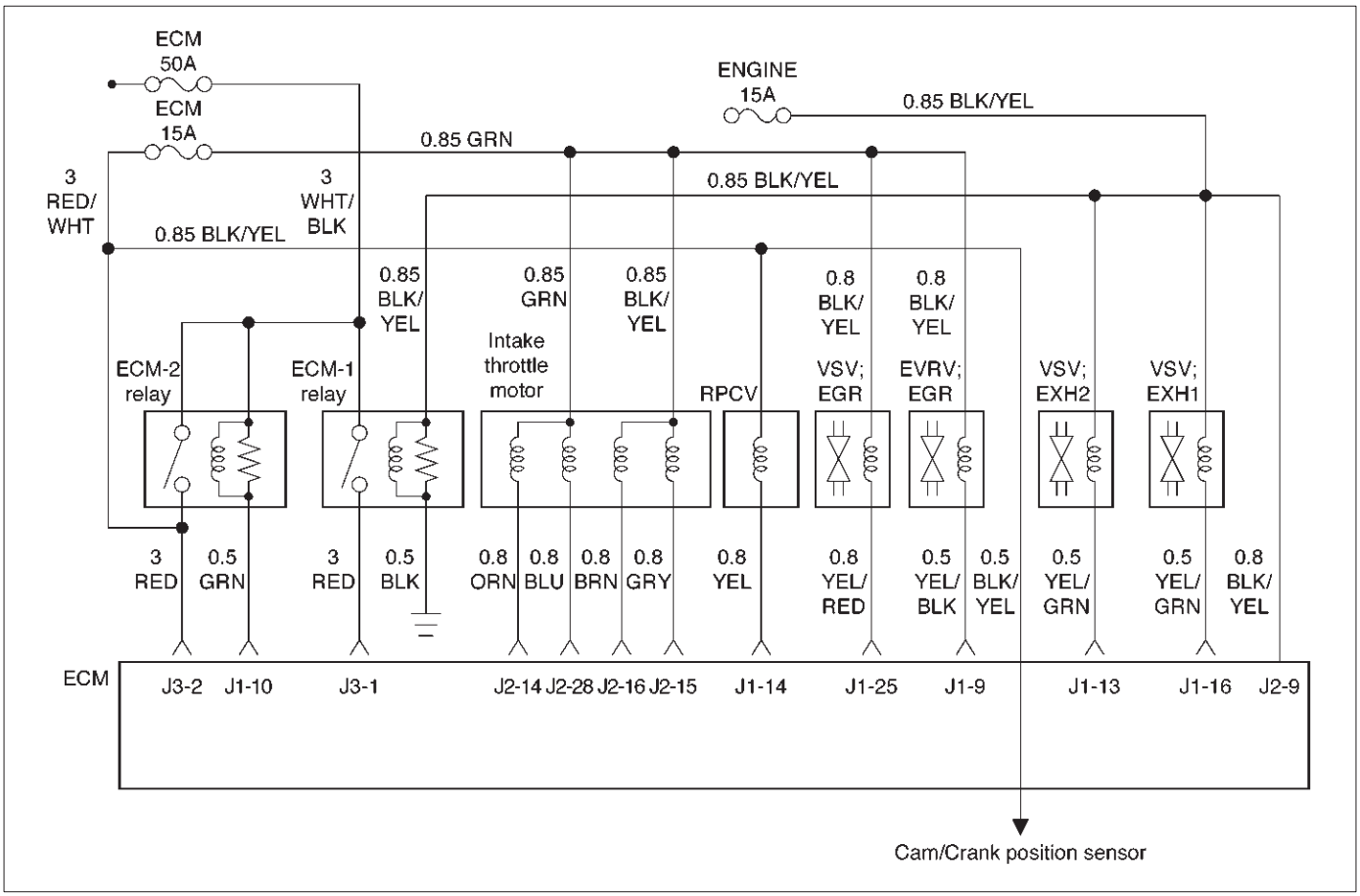

060RW135

Circuit Description

The rail pressure (RP) sensor responds to changes in oil manifold pressure.

The ECM monitors the RP signals for voltages outside the normal range of the RP sensor. If the ECM detects a RP signal voltage that is excessively low, DTC P0192 will be set.

Action Taken When the DTC Sets

- The ECM will store conditions which were present when the DTC was set as Freeze Frame and in the Failure Records data.

Conditions for Clearing the MIL/DTC

- DTC P0192 can be cleared by using the Tech 2 “Clear Info” function or by disconnecting the ECM battery feed.

Diagnostic Aids

Check for the following conditions:

- Poor connection at ECM – Inspect harness connectors for backed-out terminals, improper mating, broken locks, improperly formed or damaged terminals, and poor terminal-to-wire connection.
- Damaged harness – Inspect the wiring harness for damage. If the harness appears to be OK, observe the RP display on the Tech 2 while moving connectors and wiring harnesses related to the sensor. A change in the display will indicate the location of the fault.

If DTC P0192 cannot be duplicated, the information included in the Failure Records data can be useful in determining vehicle mileage since the DTC was last set. If it is determined that the DTC occurs intermittently, performing the DTC P0192 Diagnostic Chart may isolate the cause of the fault.

DTC P0192 – RP Sensor Low Voltage

Step	Action	Value(s)	Yes	No
1	Was the “On-Board Diagnostic (OBD) System Check” performed?	—	Go to *Step 2*	Go to *OBD System Check*
2	1. Ignition “ON,” engine “OFF.” 2. Review and record Tech 2 Failure Records data. 3. Operate the vehicle within Failure Records conditions as noted. 4. Using a Tech 2, monitor “DTC” info for DTC P0192. Does the Tech 2 indicate DTC P0192 failed?	—	Go to *Step 3*	Refer to *Diagnostic Aids*
3	Check the RP sensor signal circuit. Was the RP sensor signal circuit open or darmage?	—	Replace the RP circuit.	Go to *Step 4*
4	1. Ignition “OFF.” 2. Disconnect the ECM and check the 5 volt reference “J1” circuit for an open or short to ground. 3. If the 5 volt reference “J1” circuit is open or shorted to ground, repair it as necessary. Was the 5 volt reference “J1” circuit open or shorted to ground?	—	Verify repair	Go to *Step 5*
5	Check the 5 volt reference “J1” circuit for a poor connection at the ECM and replace the terminal if necessary. Did the terminal require replacement?	—	Verify repair	Go to *Step 6*
6	1. Ignition “OFF.” 2. Disconnect the ECM, and check the RP signal circuit for an open, short to ground, or short to the sensor ground circuit. 3. If the RP sensor signal circuit is open or shorted to ground, repair it as necessary. Was the RP signal circuit open or shorted to ground?	—	Verify repair	Go to *Step 7*
7	Check the RP sensor signal circuit for a poor connection at the ECM and the RP sensor; replace the terminal if necessary. Did the terminal require replacement?	—	Verify repair	Go to *Step 8*
8	Replace the RP sensor (Refer to the RP sensor programming). Is the action complete?	—	Verify repair	Go to *Step 9*
9	Replace the ECM (Refer to the Data Programming in Case of ECM change). Is the action complete?	—	Verify repair	—

Diagnostic Trouble Code (DTC) P0193 (Flash DTC 63) Rail Pressure Sensor High Voltage

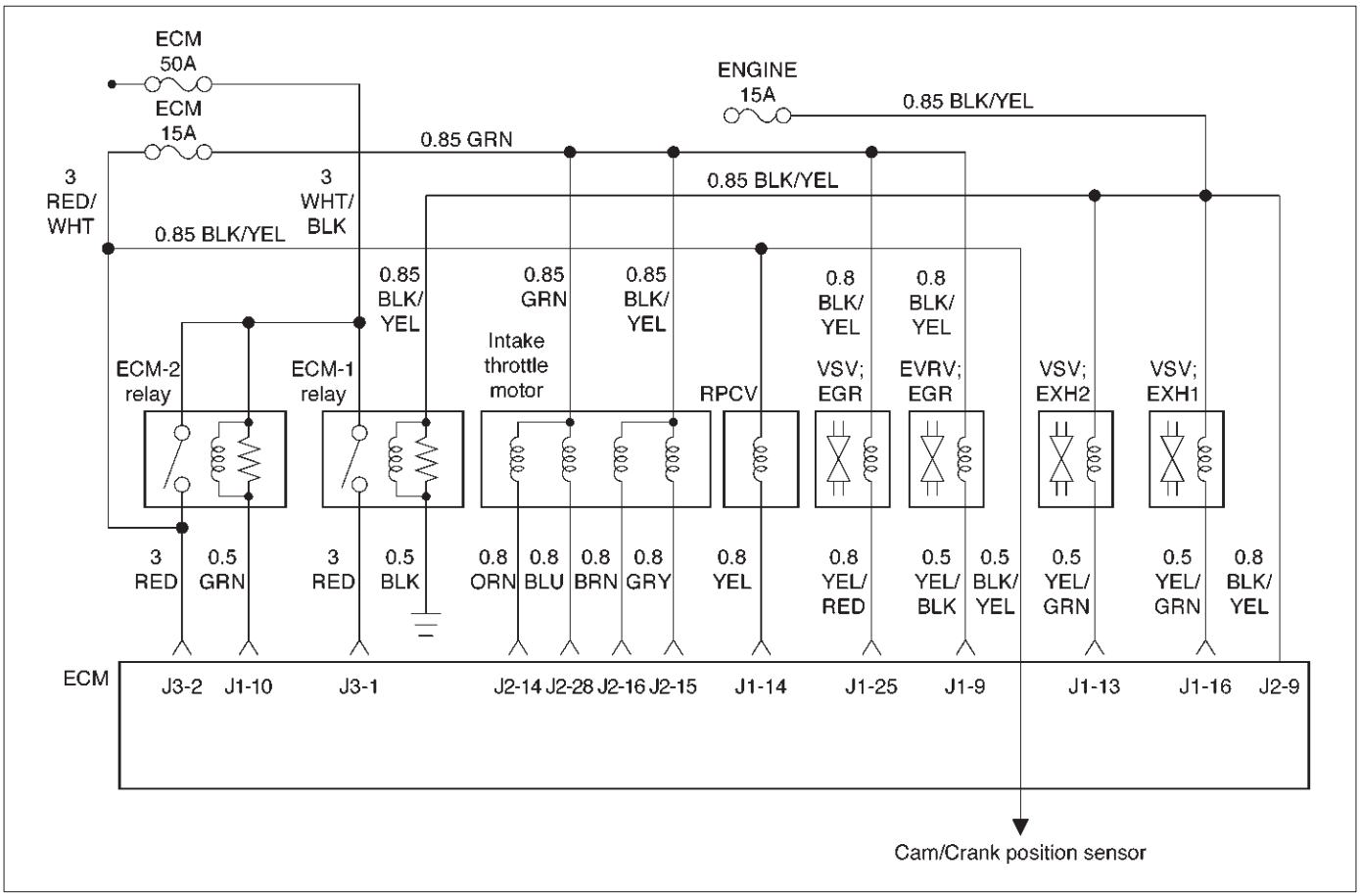

060RW135

Circuit Description

The rail pressure (RP) sensor responds to changes in oil manifold pressure.

The ECM monitors the RP signals for voltages outside the normal range of the RP sensor. If the ECM detects a RP signal voltage that is excessively high, DTC P0193 will be set.

Action Taken When the DTC Sets

- The ECM will store conditions which were present when the DTC was set as Freeze Frame and in the Failure Records data.

Conditions for Clearing the MIL/DTC

- DTC P0193 can be cleared by using the Tech 2 “Clear Info” function or by disconnecting the ECM battery feed.

Diagnostic Aids

Check for the following conditions:

- Poor connection at ECM – Inspect harness connectors for backed-out terminals, improper mating, broken locks, improperly formed or damaged terminals, and poor terminal-to-wire connection.
- Damaged harness – Inspect the wiring harness for damage. If the harness appears to be OK, observe the RP display on the Tech 2 while moving connectors and wiring harnesses related to the sensor. A change in the display will indicate the location of the fault.

If DTC P0193 cannot be duplicated, the information included in the Failure Records data can be useful in determining vehicle mileage since the DTC was last set. If it is determined that the DTC occurs intermittently, performing the DTC P0193 Diagnostic Chart may isolate the cause of the fault.

DTC P0193 – RP Sensor High Voltage

Step	Action	Value(s)	Yes	No
1	Was the “On-Board Diagnostic (OBD) System Check” performed?	—	Go to *Step 2*	Go to *OBD System Check*
2	1. Ignition “ON,” engine “OFF.” 2. Review and record Tech 2 Failure Records data. 3. Operate the vehicle within Failure Records conditions as noted. 4. Using a Tech 2, monitor “ DTC” info for DTC P0108. Does the Tech 2 indicate DTC P0108 failed this ignition?	—	Go to *Step 3*	Refer to *Diagnostic Aids*
3	Check the RP sensor signal circuit. Was the RP sensor signal circuit open or darmage?	—	Replace the RP circuit	Go to *Step 4*
4	Probe the sensor ground circuit with a test light to B+. Is the test light “ON?”	—	Go to *Step 5*	Go to *Step 7*
5	1. Check the RP signal circuit for a short to voltage or a short to the 5 volt reference “J1” circuit. 2. If the RP sensor signal circuit is shorted, repair circuit as necessary. Was the RP sensor signal circuit shorted?	—	Verify repair	Go to *Step 6*
6	1. Check for a poor sensor ground terminal connection at the RP sensor electrical connector. 2. If a problem if found, replace the faulty terminal. Did the terminal require replacement?	—	Verify repair	Go to *Step 7*
7	1. Check for a poor sensor ground terminal connection at the ECM. 2. If a problem is found, replace the faulty terminal. Did the terminal require replacement?	—	Verify repair	Go to *Step 8*
8	1. Check the continuity of the RP sensor ground circuit. 2. If the RP sensor ground circuit measures over 5 ohms, repair open or poor connection. Was a condition found and corrected?	—	Verify repair	Go to *Step 9*
9	Replace the ECM (Refer to the Data Programming in Case of ECM change). Is the action complete?	—	Verify Repair	—

Diagnostic Trouble Code (DTC) P1193 (Flash DTC 64) RPCV Circuit Open/Short

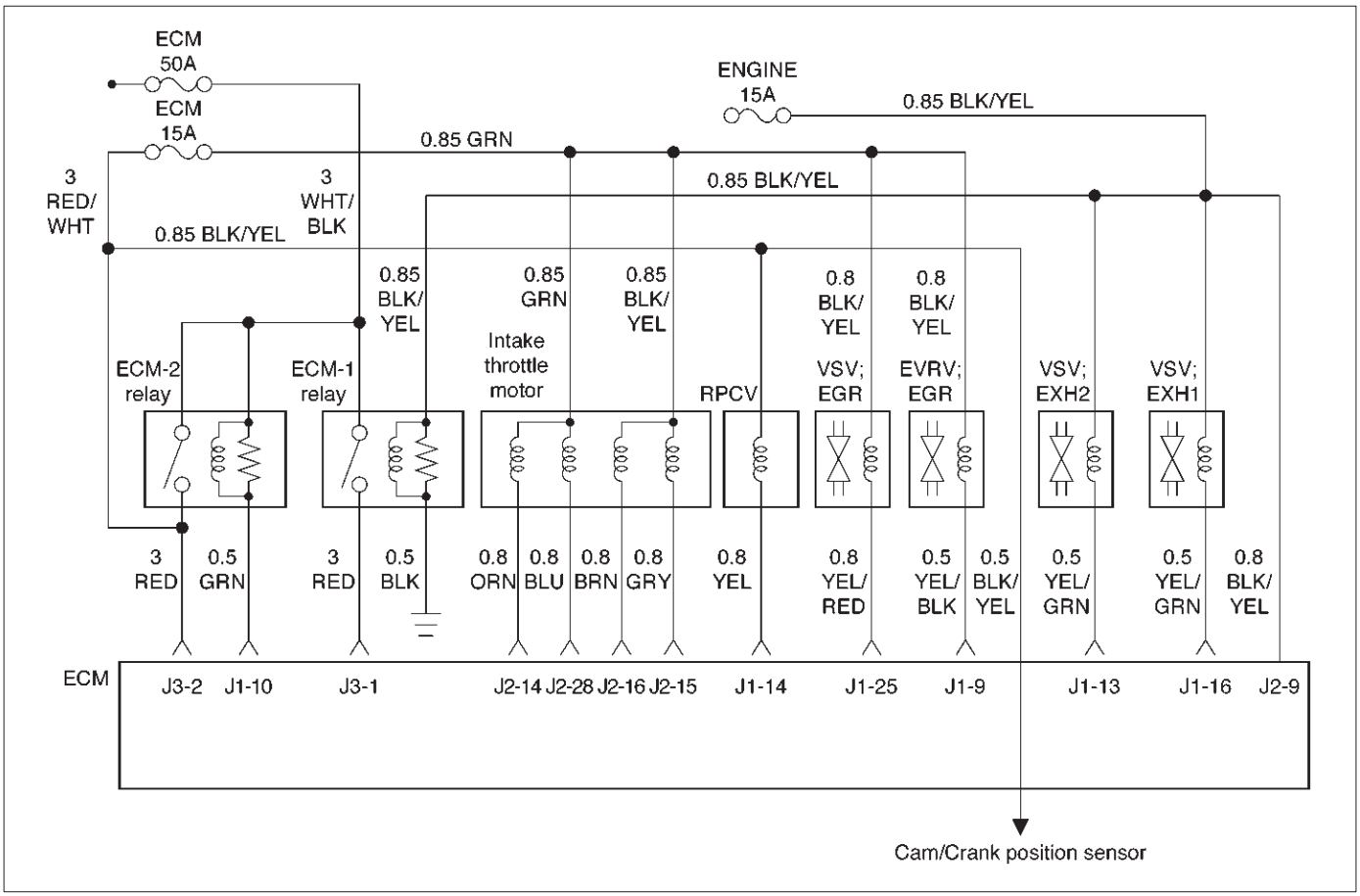

060RW135

Circuit Description

The rail pressure control valve (RPCV) is built in the high pressure oil circuit.
RPCV is an important device which is used to control oil pressure in the HEUI system.
The circuit receives current through Engine 15A fuse from the battery, current flowing in the order of RPCV.

Action Taken When the DTC Sets

- The ECM will store conditions which were present when the DTC was set as Freeze Frame and in the Failure Records data.

Conditions for Clearing the MIL/DTC

- DTC P1193 can be cleared by using the Tech 2 “Clear Info” function or by disconnecting the ECM battery feed.

Diagnostic Aids

Check for the following conditions:

- Poor connection at ECM – Inspect harness connectors for backed-out terminals, improper mating, broken locks, improperly formed or damaged terminals, and poor terminal-to-wire connection.
- Damaged harness – Inspect the wiring harness for damage. If the harness appears to be OK, observe the RPCV display on the Tech 2 while moving connectors and wiring harnesses related to the RPCV. A change in the RPCV display will indicate the location of the fault.

If DTC P1193 cannot be duplicated, the information included in the Failure Records data can be useful in determining vehicle mileage since the DTC was last set. If it is determined that the DTC occurs intermittently.

DTC P1193 – RPCV Circuit Open/Short

Step	Action	Value(s)	Yes	No
1	Was the “On-Board Diagnostic (OBD) System Check” performed?	—	Go to *Step 2*	Go to *OBD System Check*
2	1. Ignition “ON,” engine “ON.” 2. Observe the “Rail Oil Pressure” display on the Tech 2. Is the “Rail Oil Pressure” below the specified value?	3.5 ~ 5 Mpa	Go to *Step 4*	Go to *Step 3*
3	Replace the RPCV. Is the action complete?	—	Go to *Step 2*	—
4	1. Engine “On”. 2. Using the Tech 2, operate “RPCV”. 3. Check the combustion noise. Was the combustion noise change?	—	—	Go to *Step 5*
5	Check the RPCV circuit. (Fuse 15A to J1-14) Was the RPCV circuit damaged?	—	Go to *Step 6*	Go to *Step 7*
6	Repair the RPCV circuit. Is the action complete?	—	Verify repair	—
7	Replace the ECM (Refer to the Data Programming in Case of ECM change). Is the action complete?	—	Verify repair	Go to *Step 8*
8	Replace the high pressure oil pump. Is the action complete?	—	Verify repair	—

Diagnostic Trouble Code (DTC) P1194 (Flash DTC 61) Rail Pressure System Low Voltage

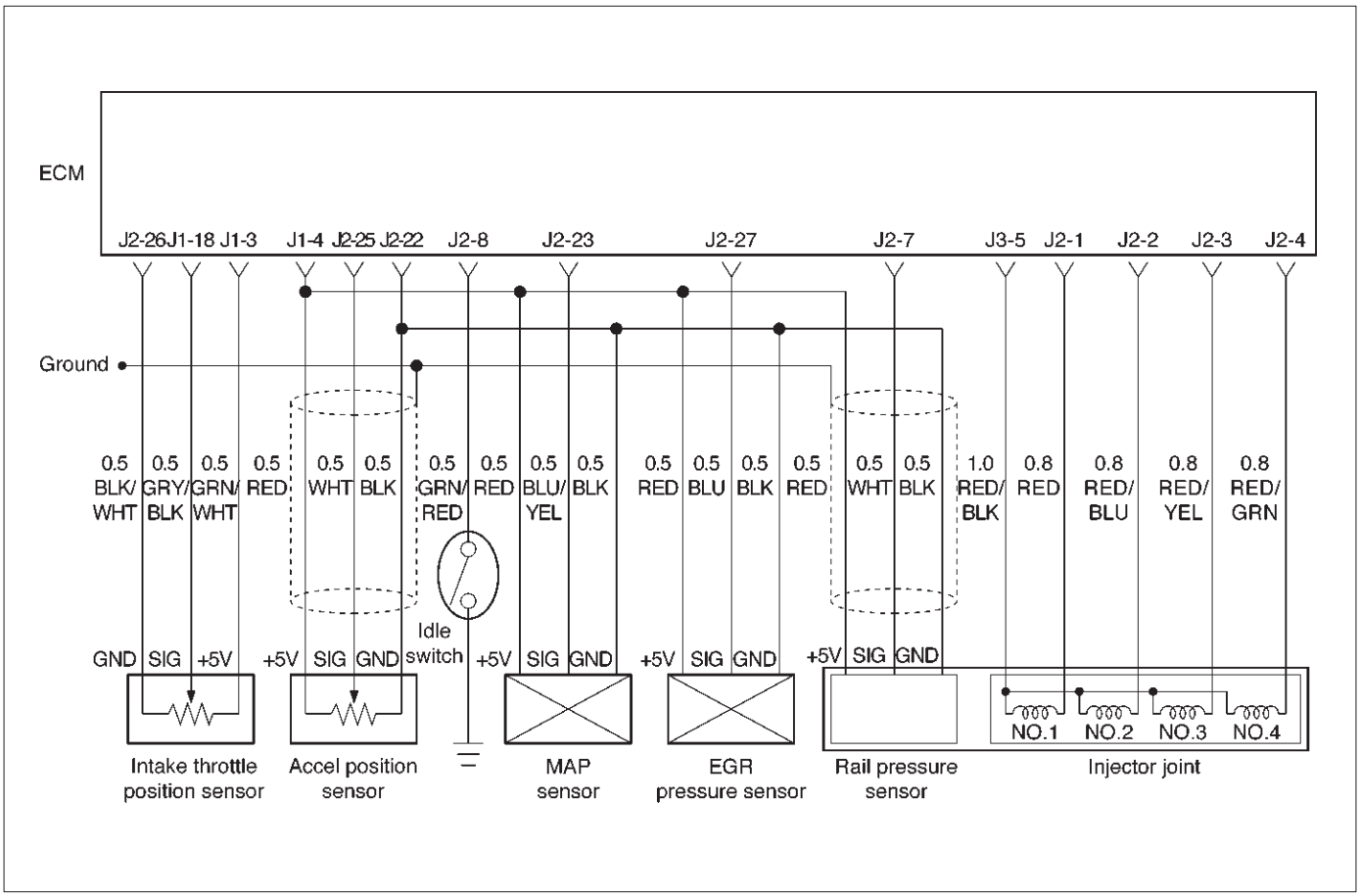

060RW134

Circuit Description

The rail pressure (RP) sensor responds to changes in oil rail pressure.

The ECM monitors the RP signals for voltages outside the normal range of the RP sensor. If the ECM detects a RP signal voltage that is excessively low, DTC P1194 will be set.

Action Taken When the DTC Sets

- The ECM will store conditions which were present when the DTC was set as Freeze Frame and in the Failure Records data.

Conditions for Clearing the MIL/DTC

- DTC P1194 can be cleared by using the Tech 2 “Clear Info” function or by disconnecting the ECM battery feed.

Diagnostic Aids

Check for the following conditions:

- Check for intermittent codes.
- Poor connection at ECM – Inspect harness connectors for backed-out terminals, improper mating, broken locks, improperly formed or damaged terminals, and poor terminal-to-wire connection.
- Damaged harness – Inspect the wiring harness for damage. If the harness appears to be OK, observe the MAP display on the Tech 2 while moving connectors and wiring harnesses related to the sensor. A change in the display will indicate the location of the fault.

If DTC P1194 cannot be duplicated, the information included in the Failure Records data can be useful in determining vehicle mileage since the DTC was last set. If it is determined that the DTC occurs intermittently, performing the DTC P1194 Diagnostic Chart may isolate the cause of the fault.

DTC P1194 – RP System Low Voltage

Step	Action	Value(s)	Yes	No
1	Was the “On-Board Diagnostic (OBD) System Check” performed?	—	Go to *Step 2*	Go to *OBD System Check*
2	1. Engine is running. 2. Review and record Tech 2 Failure Records data. 3. Operate the vehicle within Failure Records conditions as noted. 4. Using a Tech 2, monitor “DTC” info for DTC P1194. Does the Tech 2 indicate DTC P1194 failed?	—	Go to *Step 3*	Refer to *Diagnostic Aids*
3	Connect a test light between B+ and the RP sensor signal circuit at the RP sensor harness connector. Is the RP value near the specified value.	5 V	Go to *Step 4*	Go to *Step 6*
4	1. Ignition “OFF.” 2. Disconnect the ECM and check the 5 volt reference “J2” circuit for an open or short to ground. 3. If the 5 volt reference “J2” circuit is open or shorted to ground, repair it as necessary. Was the 5 volt reference “J2” circuit open or shorted to ground?	—	Verify repair	Go to *Step 5*
5	Check the 5 volt reference “J2” circuit for a poor connection at the ECM and replace the terminal if necessary. Did the terminal require replacement?	—	Verify repair	Go to *Step 6*
6	1. Ignition “OFF.” 2. Disconnect the ECM, and check the RP signal circuit for an open, short to ground, or short to the sensor ground circuit. 3. If the RP sensor signal circuit is open or shorted to ground, repair it as necessary. Was the RP signal circuit open or shorted to ground?	—	Verify repair	Go to *Step 7*
7	Check the RP sensor signal circuit for a poor connection at the ECM and the RP sensor; replace the terminal if necessary. Did the terminal require replacement?	—	Verify repair	Go to *Step 8*
8	Replace the ECM (Refer to the Data Programming in Case of ECM change). Is the action complete?	—	Verify repair	Go to *Step 9*
9	Check the 2 way valve. Was the 2 way valve darmage?	—	Replace the 2 way valve	Go to *Step 10*
10	Replace the RPCV. Is the action complete?	—	Verify repair	Go to *Step 11*
11	Replace the RP sensor. Is the action complete?	—	Verify repair	—

Diagnostic Trouble Code (DTC) P1195 (Flash DTC 61) Rail Pressure System High Voltage

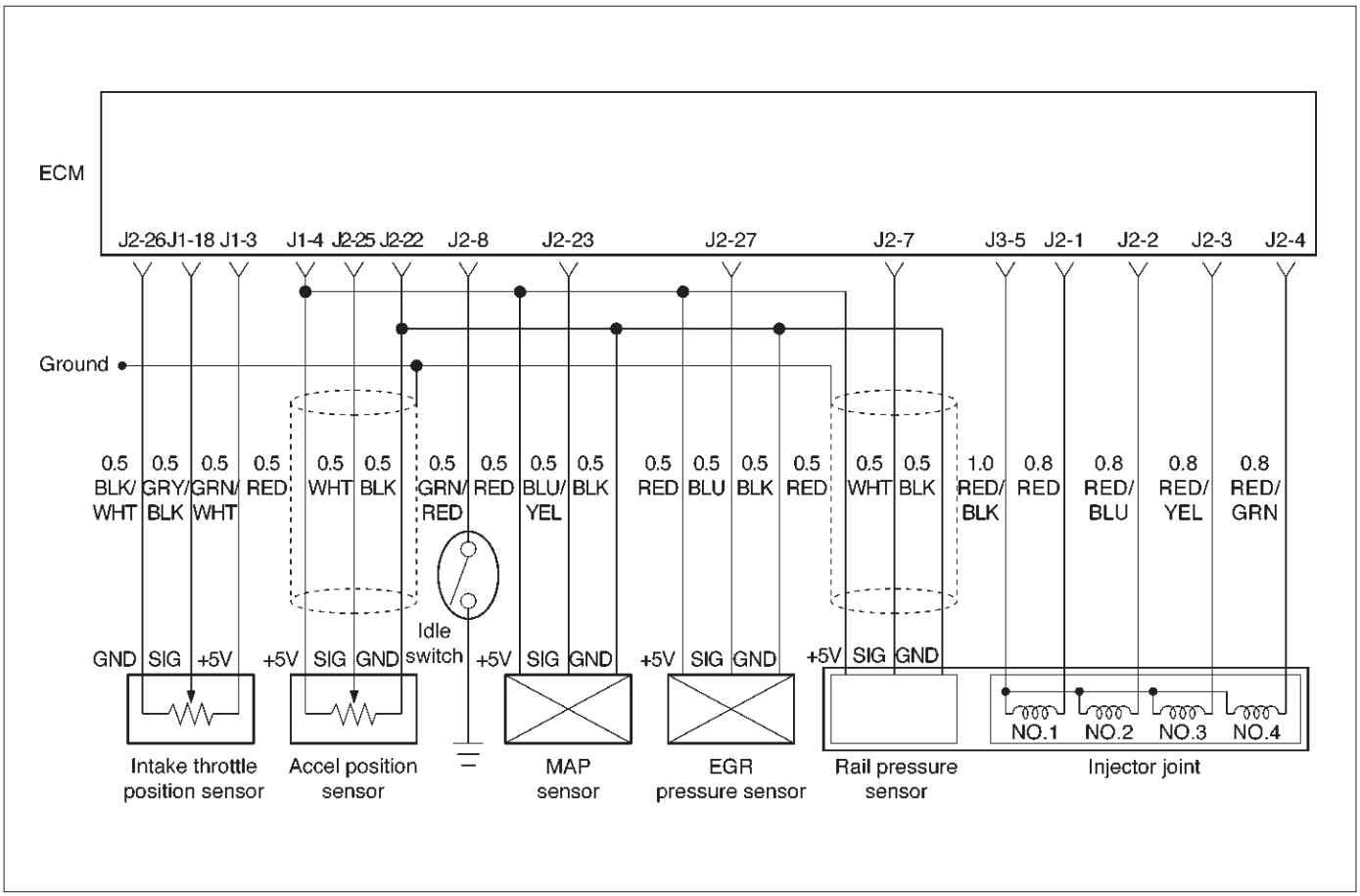

060RW134

Circuit Description

The rail pressure (RP) sensor responds to changes in oil rail pressure.

The ECM monitors the RP signals for voltages outside the normal range of the RP sensor. If the ECM detects a RP signal voltage that is excessively low, DTC P1195 will be set.

Action Taken When the DTC Sets

- The ECM will store conditions which were present when the DTC was set as Freeze Frame and in the Failure Records data.

Conditions for Clearing the MIL/DTC

- DTC P1195 can be cleared by using the Tech 2 “Clear Info” function or by disconnecting the ECM battery feed.

Diagnostic Aids

Check for the following conditions:

- Check for intermittent codes.
- Poor connection at ECM – Inspect harness connectors for backed-out terminals, improper mating, broken locks, improperly formed or damaged terminals, and poor terminal-to-wire connection.
- Damaged harness – Inspect the wiring harness for damage. If the harness appears to be OK, observe the MAP display on the Tech 2 while moving connectors and wiring harnesses related to the sensor. A change in the display will indicate the location of the fault.

If DTC P1195 cannot be duplicated, the information included in the Failure Records data can be useful in determining vehicle mileage since the DTC was last set. If it is determined that the DTC occurs intermittently, performing the DTC P1195 Diagnostic Chart may isolate the cause of the fault.

DTC P1195 – RP System High Voltage

Step	Action	Value(s)	Yes	No
1	Was the “On-Board Diagnostic (OBD) System Check” performed?	—	Go to *Step 2*	Go to *OBD System Check*
2	1. Engine is running. 2. Review and record Tech 2 Failure Records data. 3. Operate the vehicle within Failure Records conditions as noted. 4. Using a Tech 2, monitor “DTC” info for DTC P1195. Does the Tech 2 indicate DTC P1195 failed?	—	Go to *Step 3*	Refer to *Diagnostic Aids*
3	Connect a test light between B+ and the RP sensor signal circuit at the RP sensor harness connector. Is the RP value near the specified value.	0 V	Go to *Step 4*	Go to *Step 6*
4	1. Ignition “OFF.” 2. Disconnect the ECM and check the ground circuit for an open. Was the ground circuit open?	—	Verify repair	Go to *Step 5*
5	Check the ground circuit for a poor connection at the ECM and replace the terminal if necessary. Did the terminal require replacement?	—	Verify repair	Go to *Step 6*
6	Check the RP sensor signal circuit for a poor connection at the ECM and the RP sensor; replace the terminal if necessary. Did the terminal require replacement?	—	Verify repair	Go to *Step 7*
7	Replace the ECM (Refer to the Data Programming in Case of ECM change). Is the action complete?	—	Verify repair	Go to *Step 8*
8	Check the 2 way valve. Was the 2 way valve darmage?	—	Replace the 2 way valve	Go to *Step 9*
9	Replace the RPCV. Is the action complete?	—	Verify repair	Go to *Step 10*
10	Replace the RP sensor. Is the action complete?	—	Verify repair	—

Diagnostic Trouble Code (DTC) P1196 (Flash DTC 62) Rail Pressure System High Warning

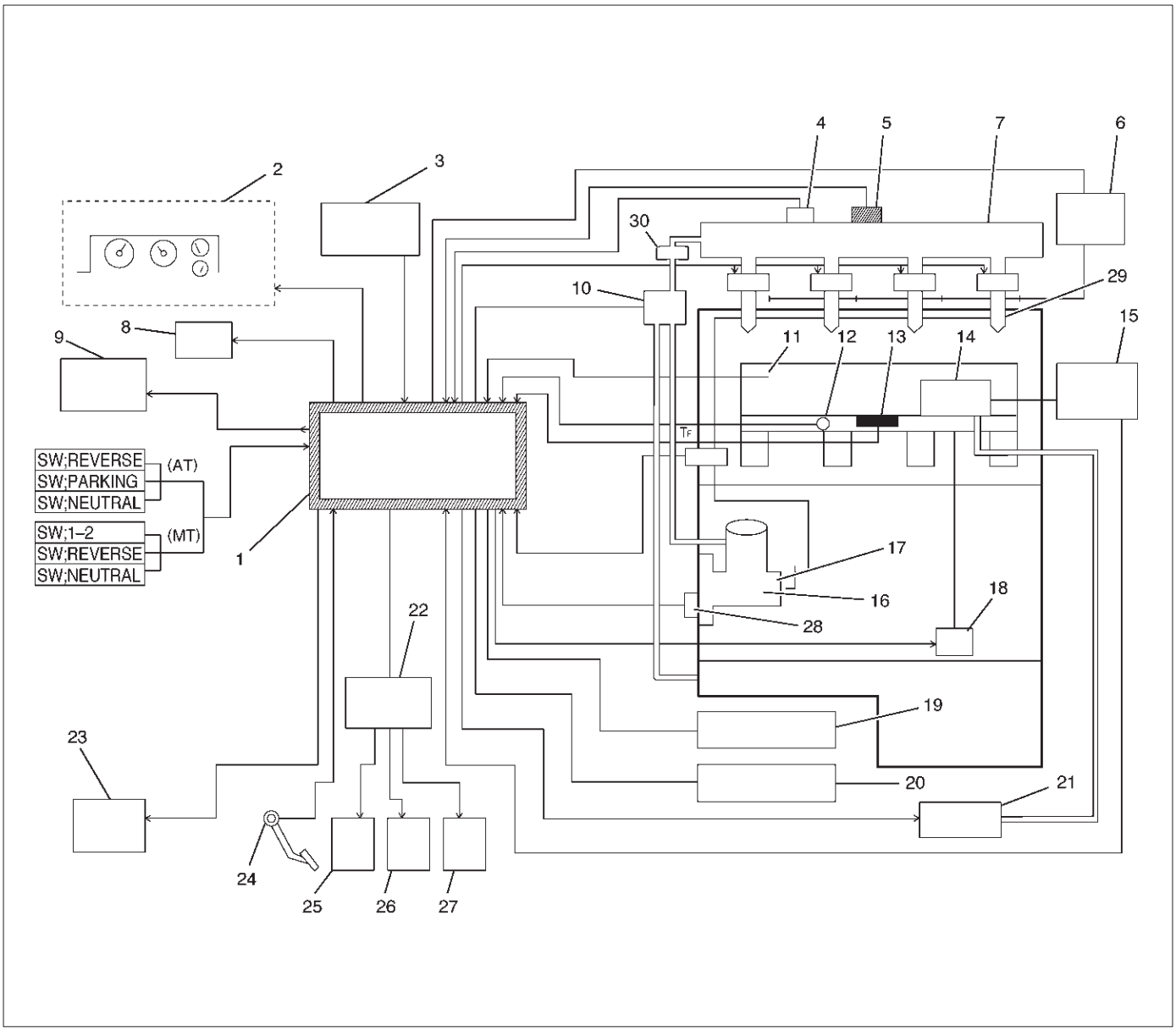

060RW178

Legend

(1) ECM
(2) Meter Panel
(3) Battery
(4) Oil Temp Sensor
(5) Rail Pressure Sensor
(6) Glow Relay
(7) Oil Rail
(8) Tech–2
(9) A/C Comp Relay
(10) RPCV
(11) Intake Air Temp Sensor
(12) Engine Coolant Temp Sensor
(13) MAP Sensor
(14) EGR Valve
(15) EGR Pressure Sensor
(16) High Pressure Oil Pump
(17) Fuel Pump
(18) VSV
(19) EXH Throttle VSV1
(20) EXH Throttle VSV2
(21) EVRV
(22) Engine Harness Connector
(23) QWS Relay
(24) AP Sensor
(25) T.O.D
(26) ECT
(27) OBD
(28) TDC
(29) Injector
(30) Edge Filter

Circuit Description

The rail pressure control valve (RPCV) is built in the high pressure oil circuit.
RPCV is an important device which is used to control oil pressure in the HEUI system.
The circuit receives current through Engine 15A fuse from the battery, current flowing in the order of RPCV.

Action Taken When the DTC Sets

- The ECM will store conditions which were present when the DTC was set as Freeze Frame and in the Failure Records data.

Conditions for Clearing the MIL/DTC

- DTC P1196 can be cleared by using the Tech 2 “Clear Info” function or by disconnecting the ECM battery feed.

Diagnostic Aids

Check for the following conditions:

- Poor connection at ECM – Inspect harness connectors for backed-out terminals, improper mating, broken locks, improperly formed or damaged terminals, and poor terminal-to-wire connection.
- Damaged harness – Inspect the wiring harness for damage. If the harness appears to be OK, observe the Rail Pressure Control display on the Tech 2 while moving connectors and wiring harnesses related to the Rail Pressure Control. A change in the Rail Pressure Control display will indicate the location of the fault.

If DTC P1196 cannot be duplicated, the information included in the Failure Records data can be useful in determining vehicle mileage since the DTC was last set. If it is determined that the DTC occurs intermittently.

Test Description

Number(s) below refer to the step number(s) on the Diagnostic Chart.

2. Verifies that the fault is present.

DTC P1196 – RP System High Warning

Step	Action	Value(s)	Yes	No
1	Was the “On-Board Diagnostic (OBD) System Check” performed?	—	Go to *Step 2*	Go to *OBD System Check*
2	1. Engine is running. 2. Observe the “Rail Pressure Control” display on the Tech 2. Is the action correct?	—	Go to *Step 4*	Go to *Step 3*
3	Replace the RPCV. Is the action complete?	—	Verify repair	Go to *Step 4*
4	1. Engine is running. 2. Review and record Tech 2 Failure Records data. 3. Operate the vehicle within Failure Records conditions as noted. 4. Using a Tech 2, monitor “ DTC” info for DTC P1196. Does the Tech 2 indicate DTC P1196 failed this ignition?	—	Go to *Step 5*	—
5	1. Check the 2 way valve. 2. Observe the “RP Control” display on the Tech 2. Is the action correct?	—	Go to *Step 4*	Go to *Step 6*
6	Replace the 2 way valve. Is the action complete?	—	Verify repair	—

Diagnostic Trouble Code (DTC) P0197 (Flash DTC 16) Oil Temp Sensor Low Voltage

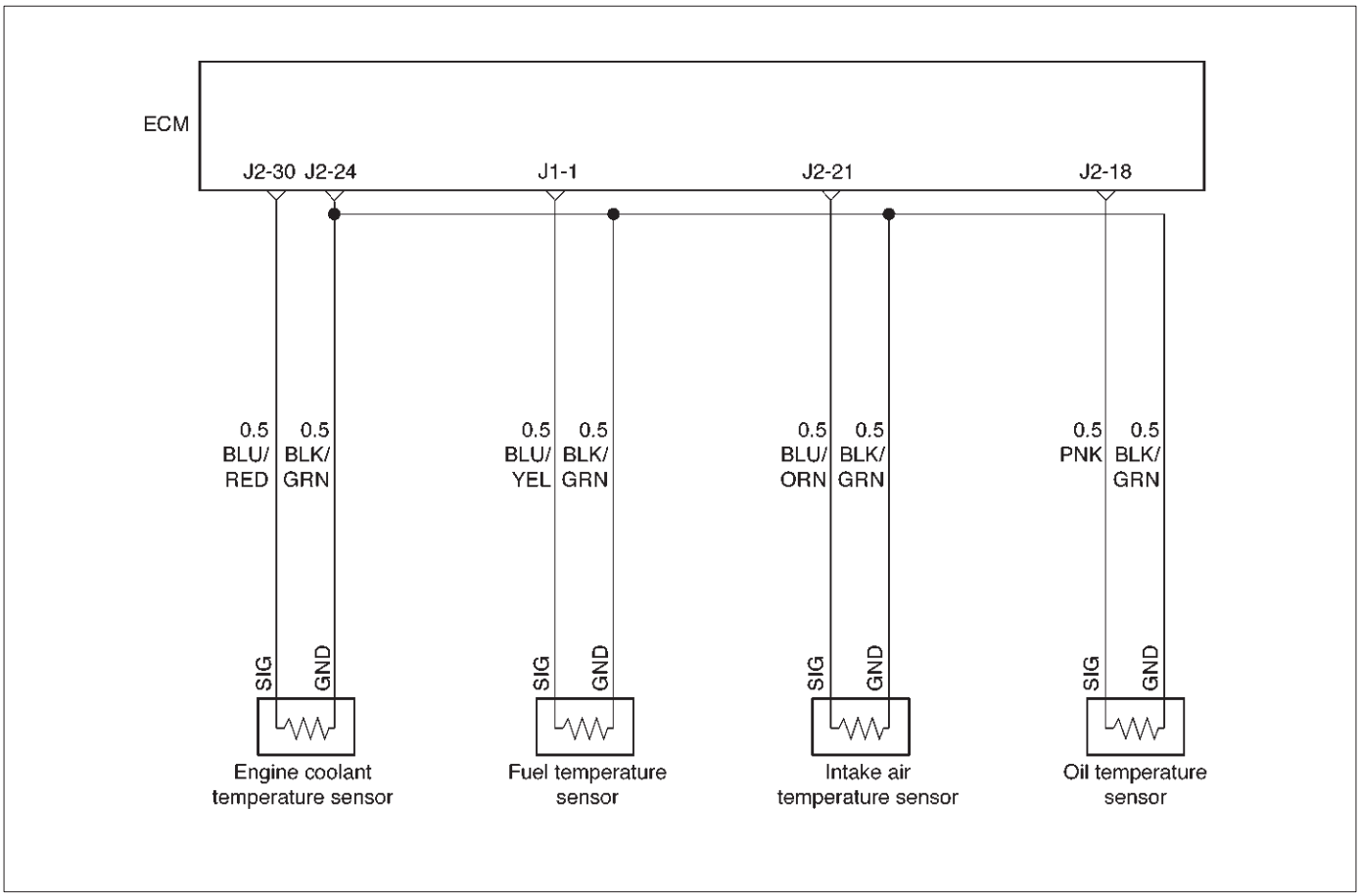

060RW129

Circuit Description

The engine oil temperature (OT) sensor is a thermistor mounted in the oil rail. The Engine Control Module ECM applies a voltage (about 5 volts) through a pull-up resistor to the ECT signal circuit. When the engine oil is cold, the sensor (thermistor) resistance is high, therefore the ECM will measure a high signal voltage. As the engine oil warms, the sensor resistance becomes lower, and the OT signal voltage measured at the ECM drops.

Action Taken When the DTC Sets

- The ECM will store conditions which were present when the DTC was set as Freeze Frame and in the Failure Records data.

Conditions for Clearing the MIL/DTC

- DTC P0197 can be cleared by using the Tech 2 “Clear Info” function or by disconnecting the ECM battery feed.

Diagnostic Aids

Check for the following conditions:

- Poor connection at ECM – Inspect harness connectors for backed-out terminals, improper mating, broken locks, improperly formed or damaged terminals, and poor terminal-to-wire connection.
- Damaged harness – Inspect the wiring harness for damage. If the harness appears to be OK, observe the OT display on the Tech 2 while moving connectors and wiring harnesses related to the OT sensor. A change in the OT display will indicate the location of the fault.

If DTC P0197 cannot be duplicated, the information included in the Failure Records data can be useful in determining vehicle mileage since the DTC was last set. If it is determined that the DTC occurs intermittently.

Test Description

Number(s) below refer to the step number(s) on the Diagnostic Chart.

2. Verifies that the fault is present.

3. If DTC P0197 can be repeated only by duplicating the Failure Records conditions, refer to the "Temperature vs. Resistance Values" table. The table may be used to test the OT sensor at various temperatures to evaluate the possibility of a "shifted" sensor that may be shorted above or below a certain temperature. If this is the case, replace the OT sensor. If the OT sensor appears to be OK, the fault is intermittent; refer to *Diagnostic Aids*.

Engine Oil Temperature Sensor

˚C	˚F	Ohms
Temperature vs. Resistance Values (approximate)		
80	176	332
25	77	2796
15	59	4450

DTC P0197 – OT Sensor Low Voltage

Step	Action	Value(s)	Yes	No
1	Was the "On-Board Diagnostic (OBD) System Check" performed?	—	Go to *Step 2*	Go to *OBD System Check*
2	1. Ignition "ON," engine "OFF." 2. Observe the "Eng Oil Temp" display on the Tech 2. Is the "Eng Oil Temp" below the specified value?	139˚C (282˚F)	Go to *Step 4*	Go to *Step 3*
3	1. Ignition "ON," engine "OFF." 2. Review and record Tech 2 Failure Records data. 3. Operate the vehicle within Failure Records conditions as noted. 4. Using a Tech 2, monitor " DTC" info for DTC P0197. Does the Tech 2 indicate DTC P0197 failed this ignition?	—	Go to *Step 4*	Refer to *Diagnostic Aids*
4	1. Disconnect the OT sensor electrical connector. 2. Observe the "Eng Oil Temp" display on the Tech 2. Is the "Eng Oil Temp" at the specified value?	–39˚C (–38˚F)	Go to *Step 6*	Go to *Step 5*
5	1. Ignition "OFF." 2. Disconnect the ECM and check the OT signal circuit for a short to ground or a short to the sensor ground circuit. 3. If the OT signal circuit is shorted. repair it as necessary. Was the OT signal circuit shorted to ground?	—	Verify repair	Go to *Step 7*
6	Replace the OT sensor. Is the action complete?	—	Verify repair	—
7	Replace the ECM (Refer to the Data Programming in Case of ECM change). Is the action complete?	—	Verify repair	—

Diagnostic Trouble Code (DTC) P0198 (Flash DTC 16) Oil Temp Sensor High Voltage

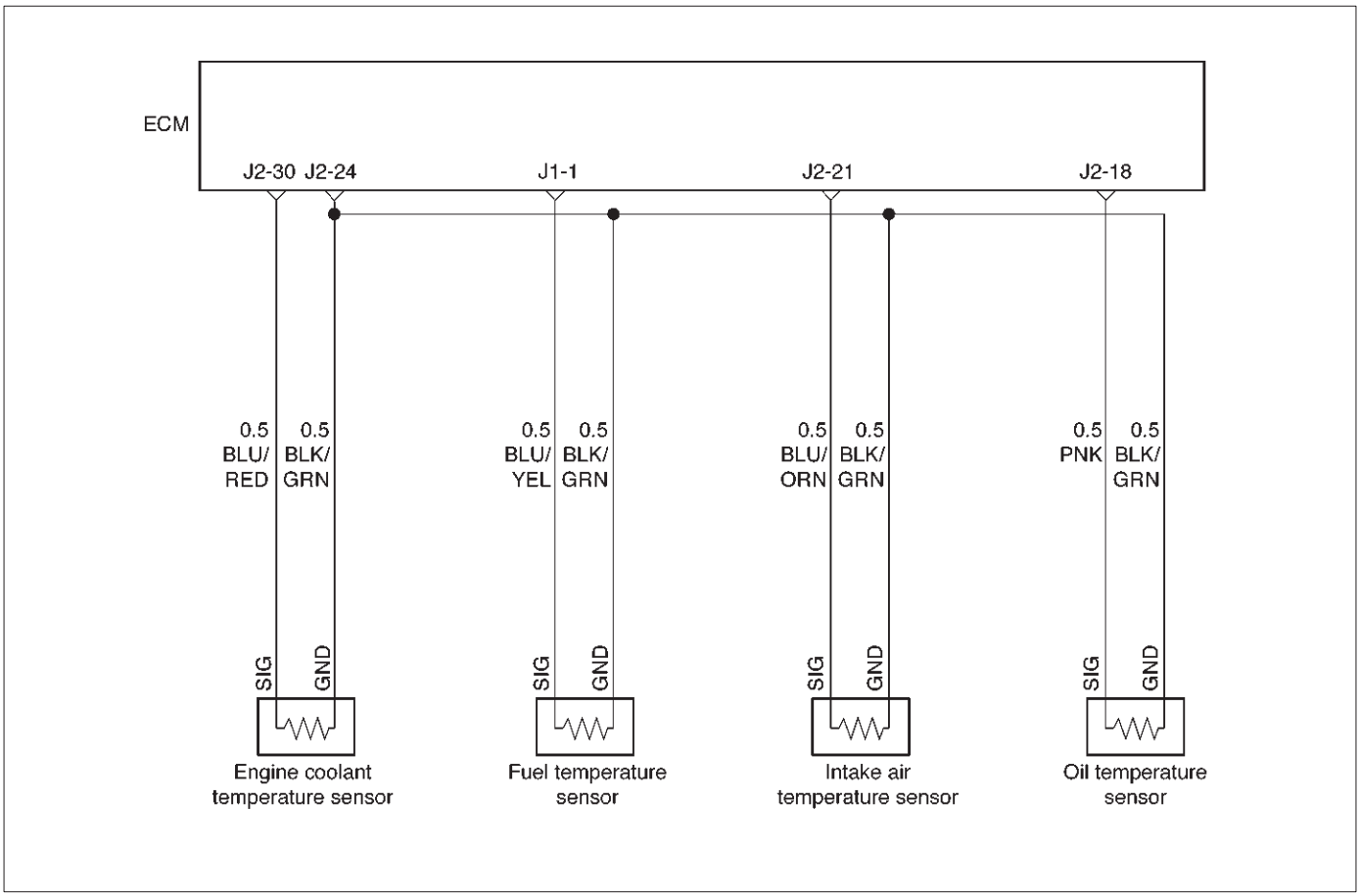

060RW129

Circuit Description

The engine oil temperature (OT) sensor is a thermistor mounted in the oil rail. The Engine Control Module ECM applies a voltage (about 5 volts) through a pull-up resistor to the ECT signal circuit. When the engine oil is cold, the sensor (thermistor) resistance is high, therefore the ECM will measure a high signal voltage. As the engine oil warms, the sensor resistance becomes lower, and the OT signal voltage measured at the ECM drops.

Action Taken When the DTC Sets

- The ECM will store conditions which were present when the DTC was set as Freeze Frame and in the Failure Records data.

Conditions for Clearing the MIL/DTC

- DTC P0198 can be cleared by using the Tech 2 “Clear Info” function or by disconnecting the ECM battery feed.

Diagnostic Aids

Check for the following conditions:

- Poor connection at ECM – Inspect harness connectors for backed-out terminals, improper mating, broken locks, improperly formed or damaged terminals, and poor terminal-to-wire connection.
- Damaged harness – Inspect the wiring harness for damage. If the harness appears to be OK, observe the OT display on the Tech 2 while moving connectors and wiring harnesses related to the OT sensor. A change in the OT display will indicate the location of the fault.

If DTC P0198 cannot be duplicated, the information included in the Failure Records data can be useful in determining vehicle mileage since the DTC was last set. If it is determined that the DTC occurs intermittently.

Test Description

Number(s) below refer to the step number(s) on the Diagnostic Chart.

2. Verifies that the fault is present.

3. If DTC P0198 can be repeated only by duplicating the Failure Records conditions, refer to the "Temperature vs. Resistance Value" table. The table may be used to test the OT sensor at various temperatures to evaluate the possibility of a "shifted" sensor that may be shorted above or below a certain temperature. If this is the case, replace the OT sensor. If the OT sensor appears to be OK, the fault is intermittent; refer to *Diagnostic Aids*.

Engine Oil Temperature Sensor

˚C	˚F	Ohms
Temperature vs. Resistance Values (approximate)		
80	176	332
25	77	2796
15	59	4450

DTC P0198 – OT Sensor High Voltage

Step	Action	Value(s)	Yes	No
1	Was the "On-Board Diagnostic (OBD) System Check" performed?	—	Go to *Step 2*	Go to *OBD System Check*
2	1. Ignition "ON," engine "OFF." 2. Observe the "Eng Oil Temp" display on the Tech 2. Is the "Eng Oil Temp" below the specified value?	–39˚C (–38˚F)	Go to *Step 4*	Go to *Step 3*
3	1. Ignition "ON," engine "OFF." 2. Review and record Tech 2 Failure Records data. 3. Operate the vehicle within Failure Records conditions as noted. 4. Using a Tech 2, monitor the " DTC" info for DTC P0198. Does the Tech 2 indicate DTC P0198 failed?	—	Refer to *Test Description*	Refer to *Diagnostic Aids*
4	1. Disconnect the OT sensor electrical connector. 2. Jumper the OT signal circuit and the sensor ground circuit together at the OT sensor harness connector. 3. Observe the "Eng Oil Temp" display on the Tech 2. Is the "Eng Oil Temp" at the specified value?	140˚C (284˚F)	Go to *Step 6*	Go to *Step 5*
5	1. Jumper the OT signal circuit at the OT sensor harness connector to chassis ground. 2. Observe the "Eng Oil Temp" display on the Tech 2. Is the "Eng Oil Temp" at the specified value?	140˚C (284˚F)	Go to *Step 7*	Go to *Step 8*
6	Check for poor connections at the OT sensor and replace terminals if necessary. Did any terminals require replacement?	—	Verify repair	Go to *Step 10*
7	1. Ignition "OFF." 2. Disconnect the ECM, and check the OT sensor ground circuit for an open. 3. If the OT sensor ground circuit is open, repair it as necessary. Was the OT sensor ground circuit open?	—	Verify repair	Go to *Step 9*

DTC P0198 – OT Sensor High Voltage (Cont'd)

Step	Action	Value(s)	Yes	No
8	1. Ignition "OFF." 2. Disconnect the OT, and check the OT signal circuit for an open. 3. If the OT sensor signal circuit is open, repair it as necessary. Was the OT signal circuit open?	—	Verify repair	Go to *Step 9*
9	Check for a poor sensor ground or OT signal circuit terminal connection at the ECM and replace terminal(s) if necessary. Did any of the terminals need to be replaced?	—	Verify repair	Go to *Step 11*
10	Replace the ECT sensor. Is the action complete?	—	Verify repair	—
11	Replace the ECM (Refer to the Data Programming in Case of ECM change). Is the action complete?	—	Verify repair	—

Diagnostic Trouble Code (DTC) P0201 (Flash DTC 51) Injector # 1 Circuit Fault

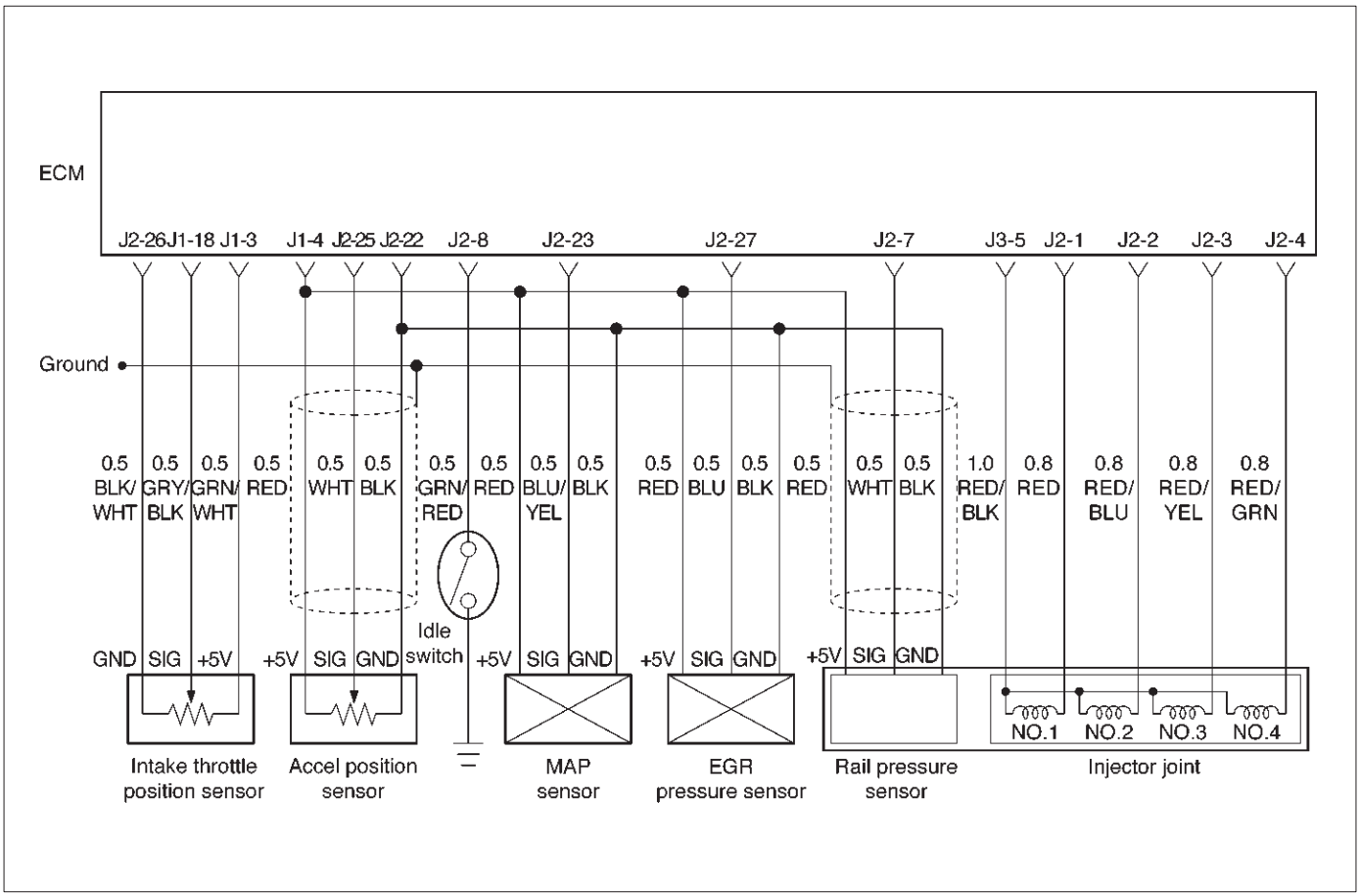

060RW134

Circuit Description

The Engine Control Module ECM has four individual injector driver circuits. Each controls an injector. When a driver circuit is grounded by the ECM, the injector is activated. The ECM monitors the current in each driver circuit. The voltage on each driver is monitored to detect a fault. If the voltage is not what the ECM expects to monitor on the circuit, a DTC is set. This DTC is also set if an injector driver is shorted to voltage or if there is an open circuit.

Action Taken When the DTC Sets

- The ECM will store conditions which were present when the DTC was set as Freeze Frame and in the Failure Records data.

Conditions for Clearing the MIL/DTC

- DTC P0201 can be cleared by using the Tech 2 “Clear Info” function or by disconnecting the ECM battery feed.

Diagnostic Aids

An injector driver circuit that is open or shorted to voltage will cause a DTC P0201 to set.

Test Description

The number(s) below refer to the step number(s) on the Diagnostic Chart.

3. This step determines if DTC P0201 is the result of a hard failure or an intermittent condition.

Injector Test

This test is conducted to make it sure that appropriate electric signals are being sent to injectors Nos. 1–4. Tech–2 must be used for this test.

Test Procedure:

1. Connect Tech–2 to the vehicle DLC.
2. Set Ignition Switch to the “ON” position.
3. Select Control Test.
4. Select Injector Test.
5. Send instructions to each injector (Switch on), making sure of injector working noise.

NOTE: If injector working noise (Clink) can hardly be confirmed, remove the engine head cover noise insulation.

Refer to Section 6A.

6. In the injector whose working noise has been confirmed, its electric circuit can be regarded as normal.

   As for the injector whose working noise has not been confirmed, its electric circuit or the injector proper is faulty.

DTC P0201 – Injector # 1 Circuit Fault

Step	Action	Value(s)	Yes	No
1	Was the “On-Board Diagnostic (OBD) System Check” performed?	—	Go to *Step 2*	Go to *OBD System Check*
2	Will the engine start?	—	Go to *Step 3*	Go to *Engine Cranks But Will Not Run* chart
3	1. Install the Tech 2. Clear the DTC. 2. Idle the engine for one minute. Does DTC P0201 reset?	—	Go to *Step 5*	Go to *Step 4*
4	1. Review the Freeze Frame data with the ignition “ON” and the engine “OFF” and note the parameters. 2. Operate the vehicle within the Freeze Frame conditions as noted. Does P0201 reset?	—	Go to *Step 5*	—
5	Check the Injector test. Does the working noise confirm?	—	Go to *Step 6*	Go to *Step 7*
6	1. Install the Tech 2. Clear the DTC. 2. Idle the engine for one minute. Dose DTC P0201 reset?	—	Verify repair	Go to *Step 7*
7	Check for an open circuit between the injector connector and the ECM. Was there an open circuit?	—	Go to *Step 8*	Go to *Step 9*
8	Repair the open circuit. Is the action complete?	—	Verify repair	—
9	Replace the ECM (Refer to the Data Programming in Case of ECM change). Is the action complete?	—	Verify repair	Go to *Step 10*
10	Replace the Injector (Refer to the Injector Group Sign Programming). Is the action complete?	—	Verify repair	—

Diagnostic Trouble Code (DTC) P0202 (Flash DTC 52) Injector # 2 Circuit Fault

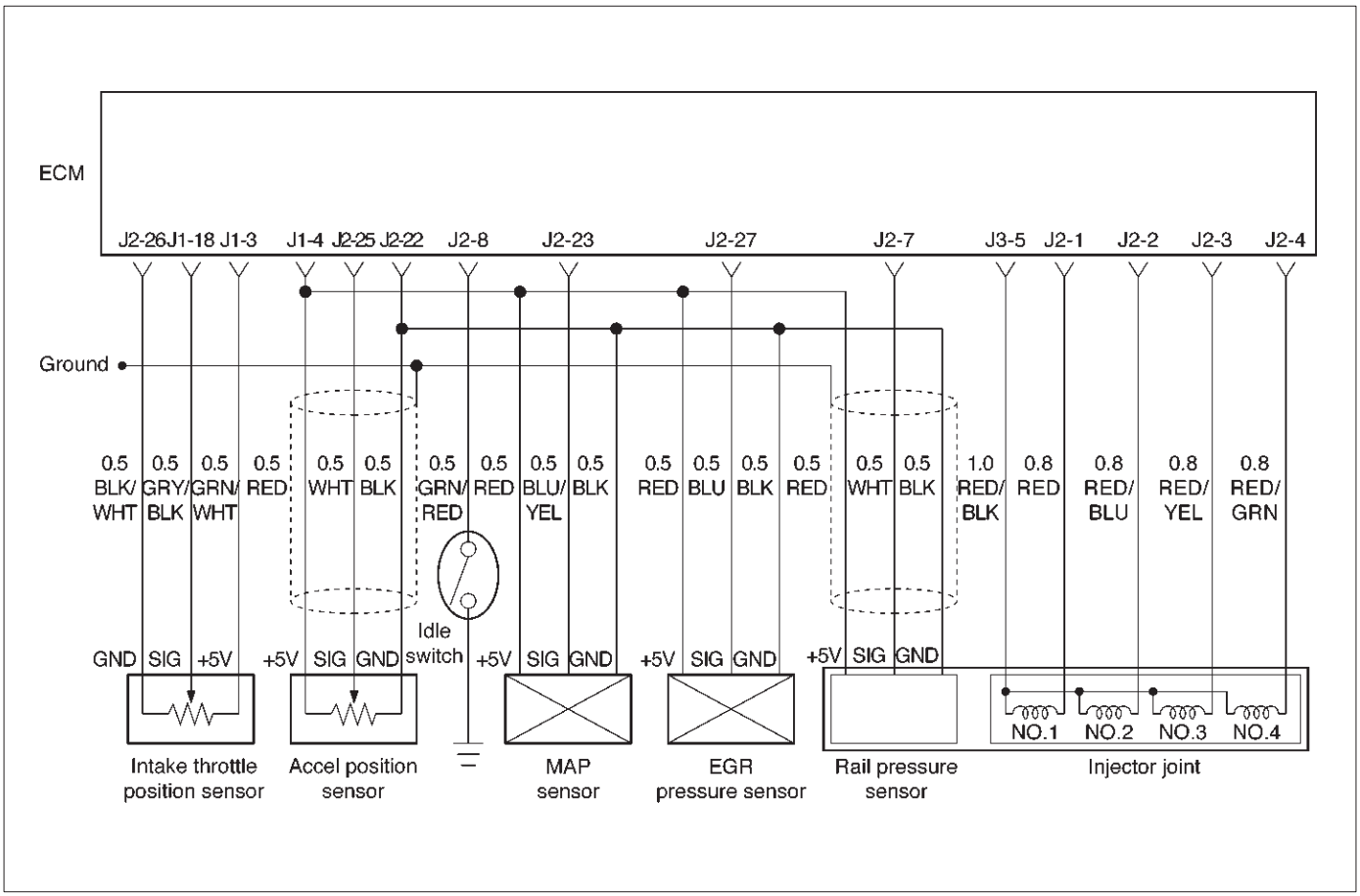

060RW134

Circuit Description

The Engine Control Module ECM has four individual injector driver circuits. Each controls an injector. When a driver circuit is grounded by the ECM, the injector is activated. The ECM monitors the current in each driver circuit. The voltage on each driver is monitored to detect a fault. If the voltage is not what the ECM expects to monitor on the circuit, a DTC is set. This DTC is also set if an injector driver is shorted to voltage or if there is an open circuit.

Action Taken When the DTC Sets

- The ECM will store conditions which were present when the DTC was set as Freeze Frame and in the Failure Records data.

Conditions for Clearing the MIL/DTC

- DTC P0202 can be cleared by using the Tech 2 “Clear Info” function or by disconnecting the ECM battery feed.

Diagnostic Aids

An injector driver circuit that is open or shorted to voltage will cause a DTC P0202 to set.

Test Description

The number(s) below refer to the step number(s) on the Diagnostic Chart.

3. This step determines if DTC P0202 is the result of a hard failure or an intermittent condition.

Injector Test

This test is conducted to make it sure that appropriate electric signals are being sent to injectors Nos. 1–4. Tech–2 must be used for this test.

Test Procedure:

1. Connect Tech–2 to the vehicle DLC.
2. Set Ignition Switch to the “ON” position.
3. Select Control Test.
4. Select Injector Test.
5. Send instructions to each injector (Switch on), making sure of injector working noise.

NOTE: If injector working noise (Clink) can hardly be confirmed, remove the engine head cover noise insulation.

Refer to Section 6A.

6. In the injector whose working noise has been confirmed, its electric circuit can be regarded as normal.

   As for the injector whose working noise has not been confirmed, its electric circuit or the injector proper is faulty.

DTC P0202 – Injector # 2 Circuit Fault

Step	Action	Value(s)	Yes	No
1	Was the “On-Board Diagnostic (OBD) System Check” performed?	—	Go to *Step 2*	Go to *OBD System Check*
2	Will the engine start?	—	Go to *Step 3*	Go to *Engine Cranks But Will Not Run* chart
3	1. Install the Tech 2. Clear the DTC. 2. Idle the engine for one minute. Does DTC P0202 reset?	—	Go to *Step 5*	Go to *Step 4*
4	1. Review the Freeze Frame data with the ignition “ON” and the engine “OFF” and note the parameters. 2. Operate the vehicle within the Freeze Frame conditions as noted. Does P0202 reset?	—	Go to *Step 5*	—
5	Check the Injector test. Does the working noise confirm?	—	Go to *Step 6*	Go to *Step 7*
6	1. Install the Tech 2. Clear the DTC. 2. Idle the engine for one minute. Dose DTC P0202 reset?	—	Verify repair	Go to *Step 7*
7	Check for an open circuit between the injector connector and the ECM. Was there an open circuit?	—	Go to *Step 8*	Go to *Step 9*
8	Repair the open circuit. Is the action complete?	—	Verify repair	—
9	Replace the ECM (Refer to the Data Programming in Case of ECM change). Is the action complete?	—	Verify repair	Go to *Step 10*
10	Replace the Injector (Refer to the Injector Group Sign Programming). Is the action complete?	—	Verify repair	—

Diagnostic Trouble Code (DTC) P0203 (Flash DTC 52) Injector # 3 Circuit Fault

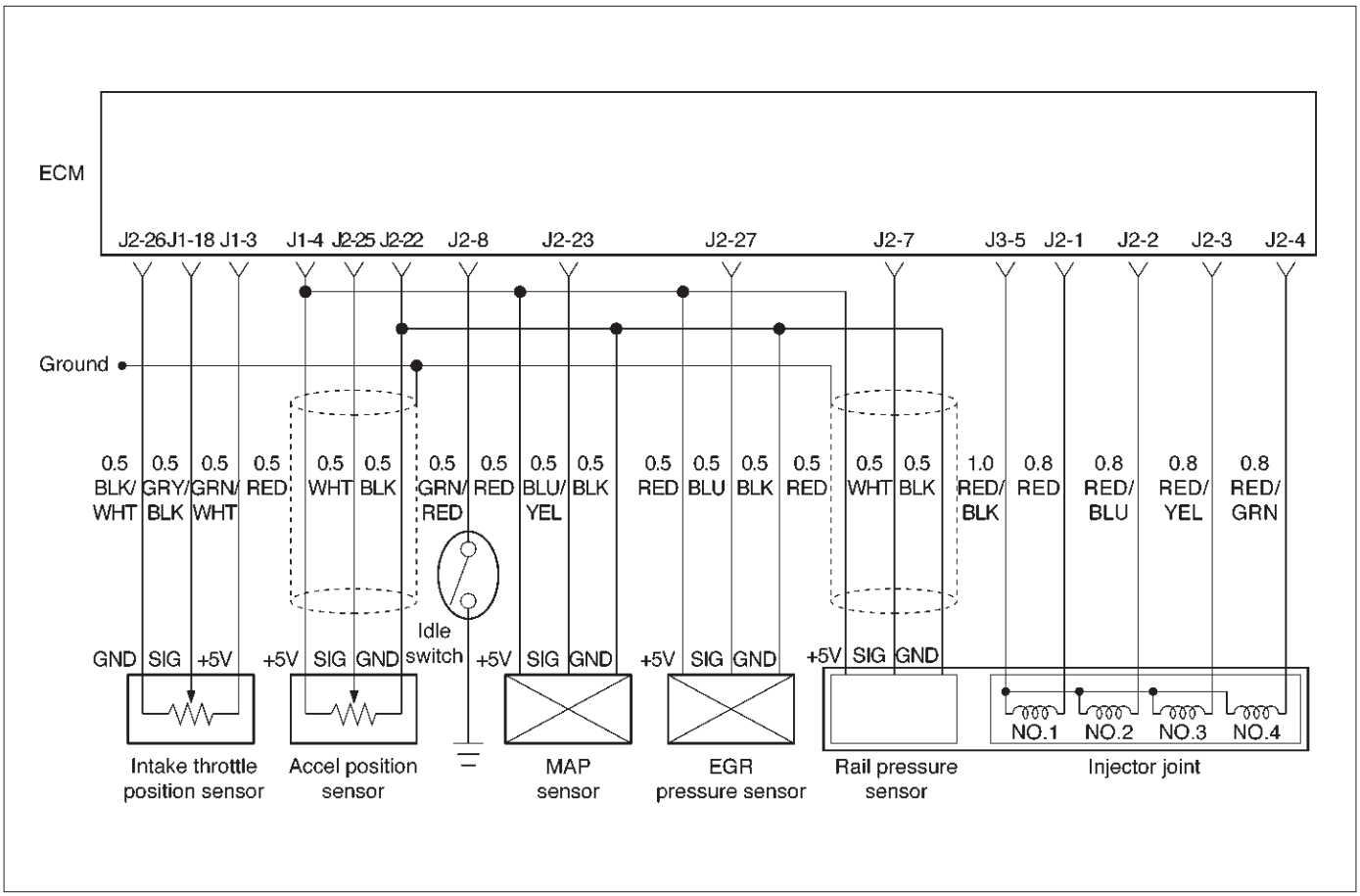

060RW134

Circuit Description

The Engine Control Module ECM has four individual injector driver circuits. Each controls an injector. When the driver circuit is grounded by the ECM, the injector is activated. The ECM monitors the current in each driver circuit. The voltage on each driver is monitored to detect a fault. If the voltage is not what the ECM expects to monitor on the circuit, a DTC is set. This DTC is also set if an injector driver is shorted to voltage or if there is an open circuit.

Action Taken When the DTC Sets

- The ECM will store conditions which were present when the DTC was set as Freeze Frame and in the Failure Records data.

Conditions for Clearing the MIL/DTC

- DTC P0203 can be cleared by using the Tech 2 “Clear Info” function or by disconnecting the ECM battery feed.

Diagnostic Aids

An injector driver circuit that is open or shorted to voltage will cause a DTC P0203 to set.

Test Description

The number(s) below refer to the step number(s) on the Diagnostic Chart.

3. This step determines if DTC P0203 is the result of a hard failure or an intermittent condition.

Injector Test

This test is conducted to make it sure that appropriate electric signals are being sent to injectors Nos. 1–4. Tech–2 must be used for this test.

Test Procedure:

1. Connect Tech–2 to the vehicle DLC.
2. Set Ignition Switch to the “ON” position.
3. Select Control Test.
4. Select Injector Test.
5. Send instructions to each injector (Switch on), making sure of injector working noise.

NOTE: If injector working noise (Clink) can hardly be confirmed, remove the engine head cover noise insulation.

Refer to Section 6A.

6. In the injector whose working noise has been confirmed, its electric circuit can be regarded as normal.

   As for the injector whose working noise has not been confirmed, its electric circuit or the injector proper is faulty.

DTC P0203 – Injector # 3 Circuit Fault

Step	Action	Value(s)	Yes	No
1	Was the “On-Board Diagnostic (OBD) System Check” performed?	—	Go to *Step 2*	Go to *OBD System Check*
2	Will the engine start?	—	Go to *Step 3*	Go to *Engine Cranks But Will Not Run* chart
3	1. Install the Tech 2. Clear the DTC. 2. Idle the engine for one minute. Does DTC P0203 reset?	—	Go to *Step 5*	Go to *Step 4*
4	1. Review the Freeze Frame data with the ignition “ON” and the engine “OFF” and note the parameters. 2. Operate the vehicle within the Freeze Frame conditions as noted. Does P0203 reset?	—	Go to *Step 5*	—
5	Check the Injector test. Does the working noise confirm?	—	Go to *Step 6*	Go to *Step 7*
6	1. Install the Tech 2. Clear the DTC. 2. Idle the engine for one minute. Dose DTC P0203 reset?	—	Verify repair	Go to *Step 7*
7	Check for an open circuit between the injector connector and the ECM. Was there an open circuit?	—	Go to *Step 8*	Go to *Step 9*
8	Repair the open circuit. Is the action complete?	—	Verify repair	—
9	Replace the ECM (Refer to the Data Programming in Case of ECM change). Is the action complete?	—	Verify repair	Go to *Step 10*
10	Replace the Injector (Refer to the Injector Group Sign Programming). Is the action complete?	—	Verify repair	—

Diagnostic Trouble Code (DTC) P0204 (Flash DTC 54) Injector # 4 Circuit Fault

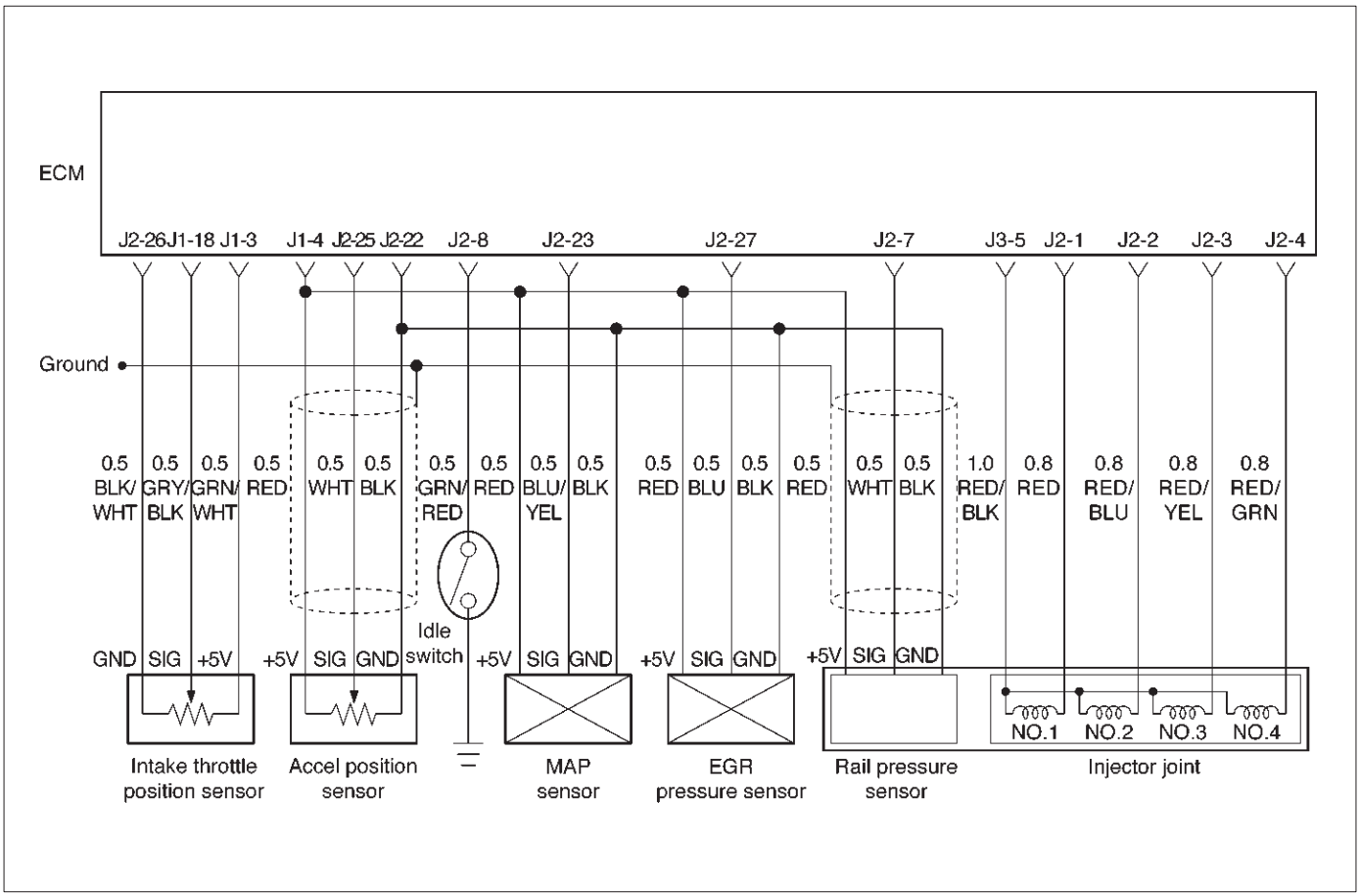

060RW134

Circuit Description

The Engine Control Module ECM has four individual injector driver circuits. Each controls an injector. When the driver circuit is grounded by the ECM, the injector is activated. The ECM monitors the current in each driver circuit. The voltage on each driver is monitored to detect a fault. If the voltage is not what the ECM expects to monitor on the circuit, a DTC is set. This DTC is also set if an injector driver is shorted to voltage or if there is an open circuit.

Action Taken When the DTC Sets

- The ECM will store conditions which were present when the DTC was set as Freeze Frame and in the Failure Records data.

Conditions for Clearing the MIL/DTC

- DTC P0204 can be cleared by using the Tech 2 “Clear Info” function or by disconnecting the ECM battery feed.

Diagnostic Aids

An injector driver circuit that is open or shorted to voltage will cause a DTC P0204 to set.

Test Description

The number(s) below refer to the step number(s) on the Diagnostic Chart.

3. This step determines if DTC P0204 is the result of a hard failure or an intermittent condition.

Injector Test

This test is conducted to make it sure that appropriate electric signals are being sent to injectors Nos. 1–4. Tech–2 must be used for this test.

Test Procedure:

1. Connect Tech–2 to the vehicle DLC.
2. Set Ignition Switch to the “ON” position.
3. Select Control Test.
4. Select Injector Test.
5. Send instructions to each injector (Switch on), making sure of injector working noise.

NOTE: If injector working noise (Clink) can hardly be confirmed, remove the engine head cover noise insulation.

Refer to Section 6A.

6. In the injector whose working noise has been confirmed, its electric circuit can be regarded as normal.

   As for the injector whose working noise has not been confirmed, its electric circuit or the injector proper is faulty.

DTC P0204 – Injector #4 Circuit Fault

Step	Action	Value(s)	Yes	No
1	Was the “On-Board Diagnostic (OBD) System Check” performed?	—	Go to *Step 2*	Go to *OBD System Check*
2	Will the engine start?	—	Go to *Step 3*	Go to *Engine Cranks But Will Not Run* chart
3	1. Install the Tech 2. Clear the DTC. 2. Idle the engine for one minute. Does DTC P0204 reset?	—	Go to *Step 5*	Go to *Step 4*
4	1. Review the Freeze Frame data with the ignition “ON” and the engine “OFF” and note the parameters. 2. Operate the vehicle within the Freeze Frame conditions as noted. Does P0204 reset?	—	Go to *Step 5*	—
5	Check the Injector test. Does the working noise confirm?	—	Go to *Step 6*	Go to *Step 7*
6	1. Install the Tech 2. Clear the DTC. 2. Idle the engine for one minute. Dose DTC P0204 reset?	—	Verify repair	Go to *Step 7*
7	Check for an open circuit between the injector connector and the ECM. Was there an open circuit?	—	Go to *Step 8*	Go to *Step 9*
8	Repair the open circuit. Is the action complete?	—	Verify repair	—
9	Is the action complete?	—	Verify repair	Go to *Step 10*
10	Replace the Injector (Refer to the Injector Group Sign Programming). Is the action complete?	—	Verify repair	—

Diagnostic Trouble Code (DTC) P0217 (Flash DTC 22) High Coolant Temp Waring

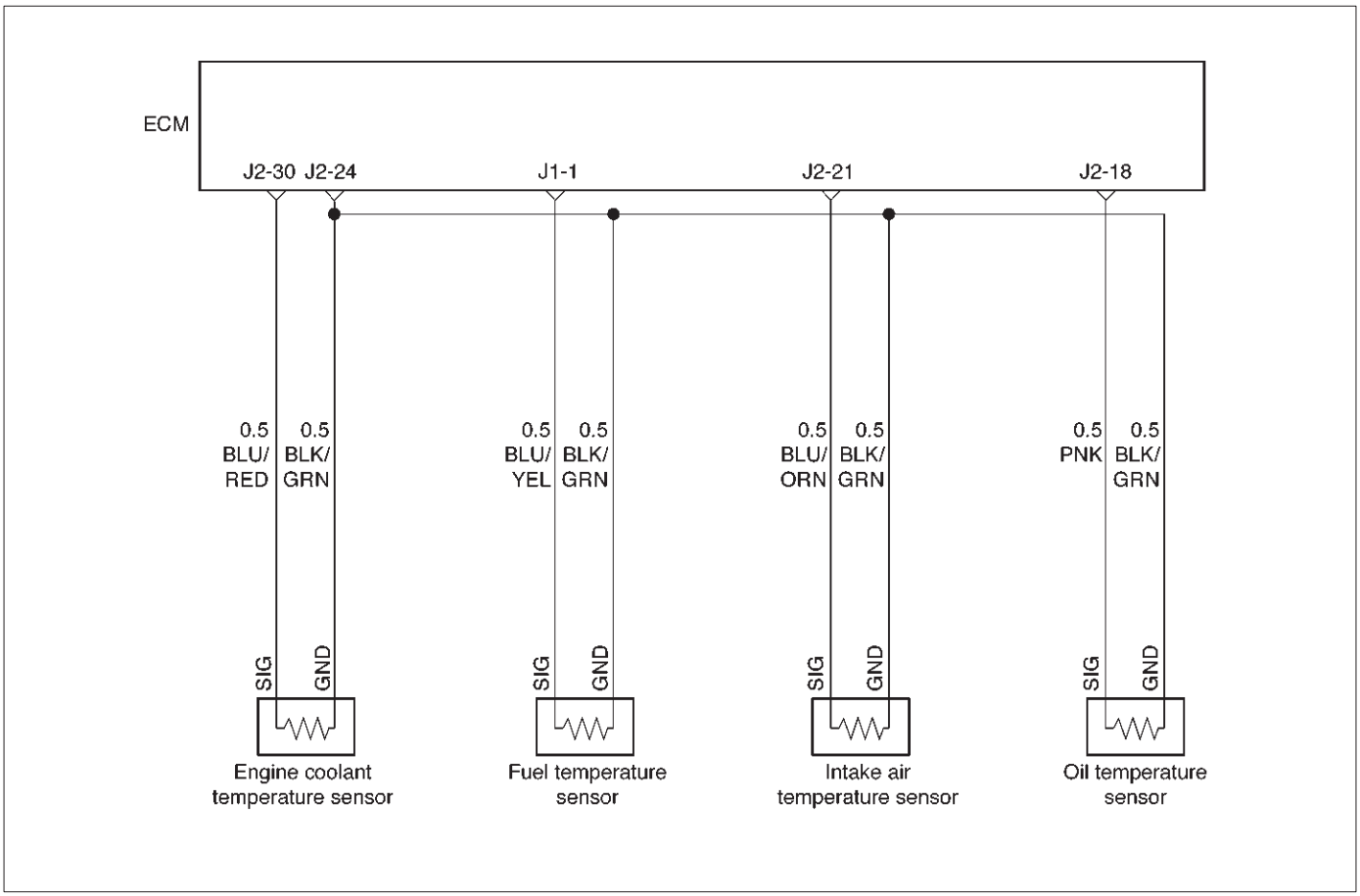

060RW129

Circuit Description

The engine coolant temperature (ECT) sensor is a thermistor mounted on a coolant crossover pipe at the rear of the engine. The Engine Control Module ECM applies a voltage (about 5 volts) through a pull-up resistor to the ECT signal circuit. When the engine coolant is cold, the sensor (thermistor) resistance is high, therefore the ECM will measure a high signal voltage. As the engine coolant warms, the sensor resistance becomes lower, and the ECT signal voltage measured at the ECM drops.

Action Taken When the DTC Sets

- The ECM will store conditions which were present when the DTC was set as Freeze Frame and in the Failure Records data.

Conditions for Clearing the MIL/DTC

- DTC P0217 can be cleared by using the Tech 2 “Clear Info” function or by disconnecting the ECM battery feed.

Diagnostic Aids

Check for the following conditions:

- Poor connection at ECM – Inspect harness connectors for backed-out terminals, improper mating, broken locks, improperly formed or damaged terminals, and poor terminal-to-wire connection.
- Damaged harness – Inspect the wiring harness for damage. If the harness appears to be OK, observe the ECT display on the Tech 2 while moving connectors and wiring harnesses related to the ECT sensor. A change in the ECT display will indicate the location of the fault.

If DTC P0217 cannot be duplicated, the information included in the Failure Records data can be useful in determining vehicle mileage since the DTC was last set. If it is determined that the DTC occurs intermittently.

Test Description

Number(s) below refer to the step number(s) on the Diagnostic Chart.

2. Verifies that the fault is present.
3. If DTC P0117 can be repeated only by duplicating the Failure Records conditions, refer to the “Temperature vs. Resistance Values” table. The table may be used to test the ECT sensor at various temperatures to evaluate the possibility of a “shifted” sensor that may be shorted above or below a certain temperature. If this is the case, replace the ECT sensor. If the ECT sensor appears to be OK, the fault is intermittent; refer to *Diagnostic Aids*.

DTC P0217 – High Coolant Temp Waring

Step	Action	Value(s)	Yes	No
1	Was the “On-Board Diagnostic (OBD) System Check” performed?	—	Go to *Step 2*	Go to *OBD System Check*
2	1. Ignition “ON,” engine “OFF.” 2. Observe the “Eng Cool Temp” display on the Tech 2. Is the “Eng Cool Temp” below the specified value?	110˚C	Go to *Step 6*	Go to *Step 3*
3	Check the engine coolant quantity Was the engine coolant appropriate quantity?	—	Go to *Step 6*	Go to *Step 4*
4	Check a leak from EC circuit. Was the EC leaked from EC circuit?	—	Go to *Step 5*	Go to *Step 6*
5	Repair the EC circuit. Is the action complete?	—	Verify repair	—
6	1. Ignition “ON,” engine “OFF.” 2. Review and record Tech 2 Failure Records data. 3. Operate the vehicle within Failure Records conditions as noted. 4. Using a Tech 2, monitor “ DTC” info for DTC P0217. Does the Tech 2 indicate DTC P0217 failed this ignition?	—	Go to *Step 7*	—
7	1. Ignition “OFF”. 2. Check the Thermostat. 3. If the Thermostat is damaged, repair it as necessary. Was the Thermostat damaged?	—	Go to *Step 8*	Go to *Step 9*
8	Replace the Thermostat. Is the action complete?	—	Verify repair	—
9	1. Check the Radiator. 2. If the Radiator is damaged, repair it as necessary. Was the Radiator damaged?	—	Go to *Step 10*	Go to *Step 11*
10	Repair the Radiator. Is the action complete?	—	Verify repair	—
11	1. Check the EC circuit in the Engine. 2. Observe the “Eng Data List” display on the Tech 2. 3. If the EC circuit in the Engine is damaged, repair it as necessary. Was the EC circuit damaged?	Refer to Data List	Go to *Step 12*	Go to *Step 6*
12	Repair the EC circuit. Is the action complete?	—	Verify repair	—

Diagnostic Trouble Code (DTC) P1217 (Flash DTC 36) High Oil Temp Warning

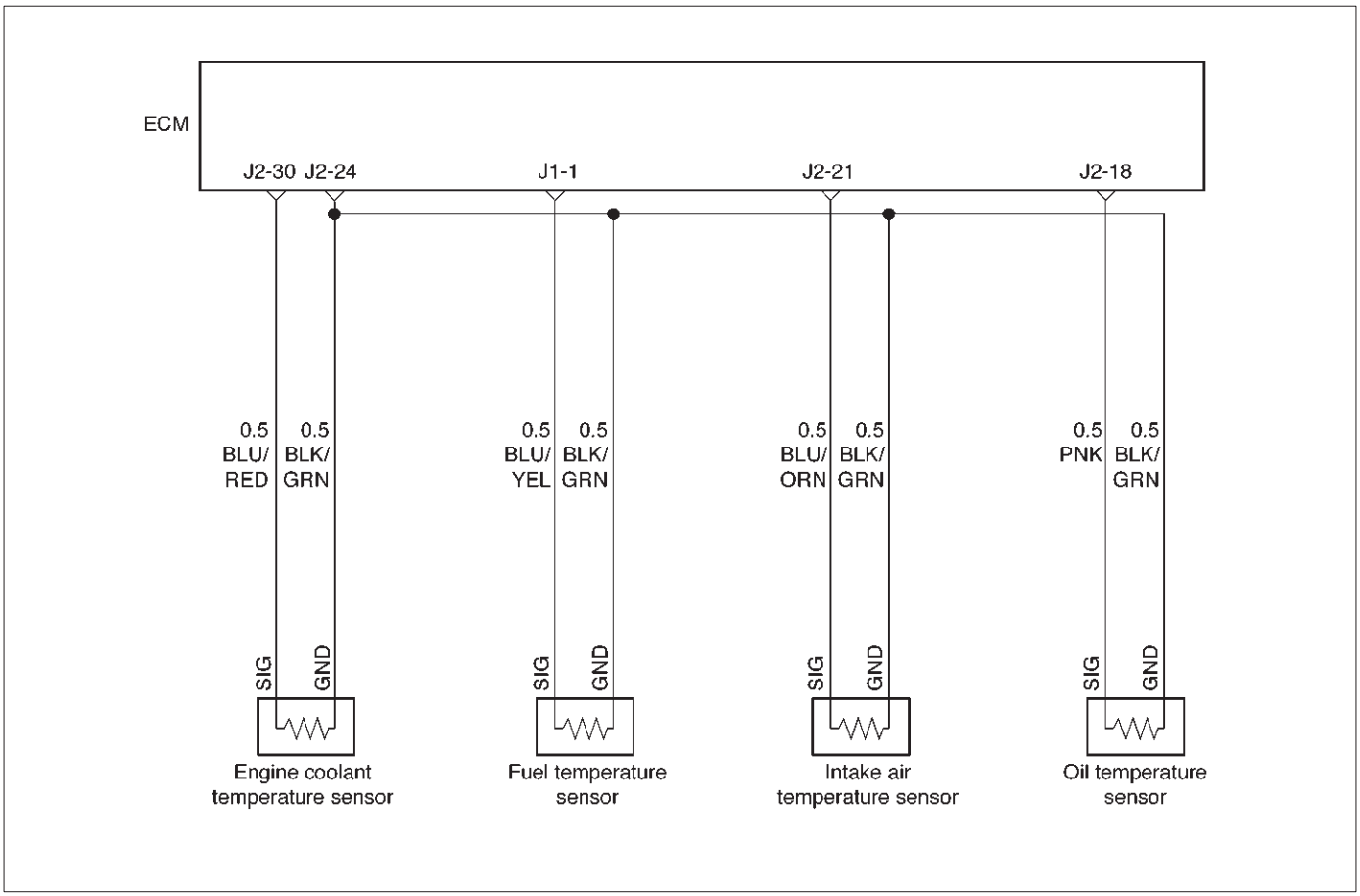

060RW129

Circuit Description

The engine oil temperature (OT) sensor is a thermistor mounted on a oil manifold. The Engine Control Module ECM applies a voltage (about 5 volts) through a pull-up resistor to the OT signal circuit. When the engine oil is cold, the sensor (thermistor) resistance is high, therefore the ECM will measure a high signal voltage. As the engine oil warms, the sensor resistance becomes lower, and the OT signal voltage measured at the ECM drops.

Action Taken When the DTC Sets

- The ECM will store conditions which were present when the DTC was set as Freeze Frame and in the Failure Records data.

Conditions for Clearing the MIL/DTC

- DTC P1217 can be cleared by using the Tech 2 “Clear Info” function or by disconnecting the ECM battery feed.

Diagnostic Aids

Check for the following conditions:

- Poor connection at ECM – Inspect harness connectors for backed-out terminals, improper mating, broken locks, improperly formed or damaged terminals, and poor terminal-to-wire connection.
- Damaged harness – Inspect the wiring harness for damage.
- High Oil Temperature Warning may sometimes be given due to High Coolant Temp Warning. On this occasion, recognize DTC P0217 and give priority to High Coolant Temp Warning.

DTC P1217 – High Oil Temp Warning

Step	Action	Value(s)	Yes	No
1	Was the “On-Board Diagnostic (OBD) System Check” performed?	—	Go to *Step 2*	Go to *OBD System Check*
2	1. Ignition “ON,” engine “OFF.” 2. Observe the “Eng Cool Temp” display on the Tech 2. Is the “Eng Cool Temp” below the specified value?	139˚C (282˚F)	Go to *Step 4*	Go to *Step 3*
3	1. Ignition “ON,” engine “OFF.” 2. Review and record Tech 2 Failure Records data. 3. Using a Tech 2, monitor “ DTC” info for DTC P0217. Does the Tech 2 indicate DTC P0217 failed this ignition?	—	Go to *Step 4*	Refer to *Diagnostic Aids*
4	1. Ignition “ON,” engine “OFF.” 2. Review and record Tech 2 Failure Records data. 3. Operate the vehicle within Failure Records conditions as noted. 4. Using a Tech 2, monitor “ DTC” info for DTC P1217. Does the Tech 2 indicate DTC P1217 failed this ignition?	—	Go to *Step 5*	Refer to *Diagnostic Aids*
5	1. Measure the engine oil quantity by oil level gage. 2. If the engine oil is shortage, fill up it as necessary. Was the engine oil is shortaged?	—	Verify repair	Go to *Step 6*
6	Replace the oil temp sensor. Is the action complete?	—	Verify repair	Go to *Step 7*
7	Replace the oil cooler. Is the action complete?	—	Verify repair	—

Diagnostic Trouble Code (DTC) P0219 (Flash DTC 11) Engine Over Speed Warning

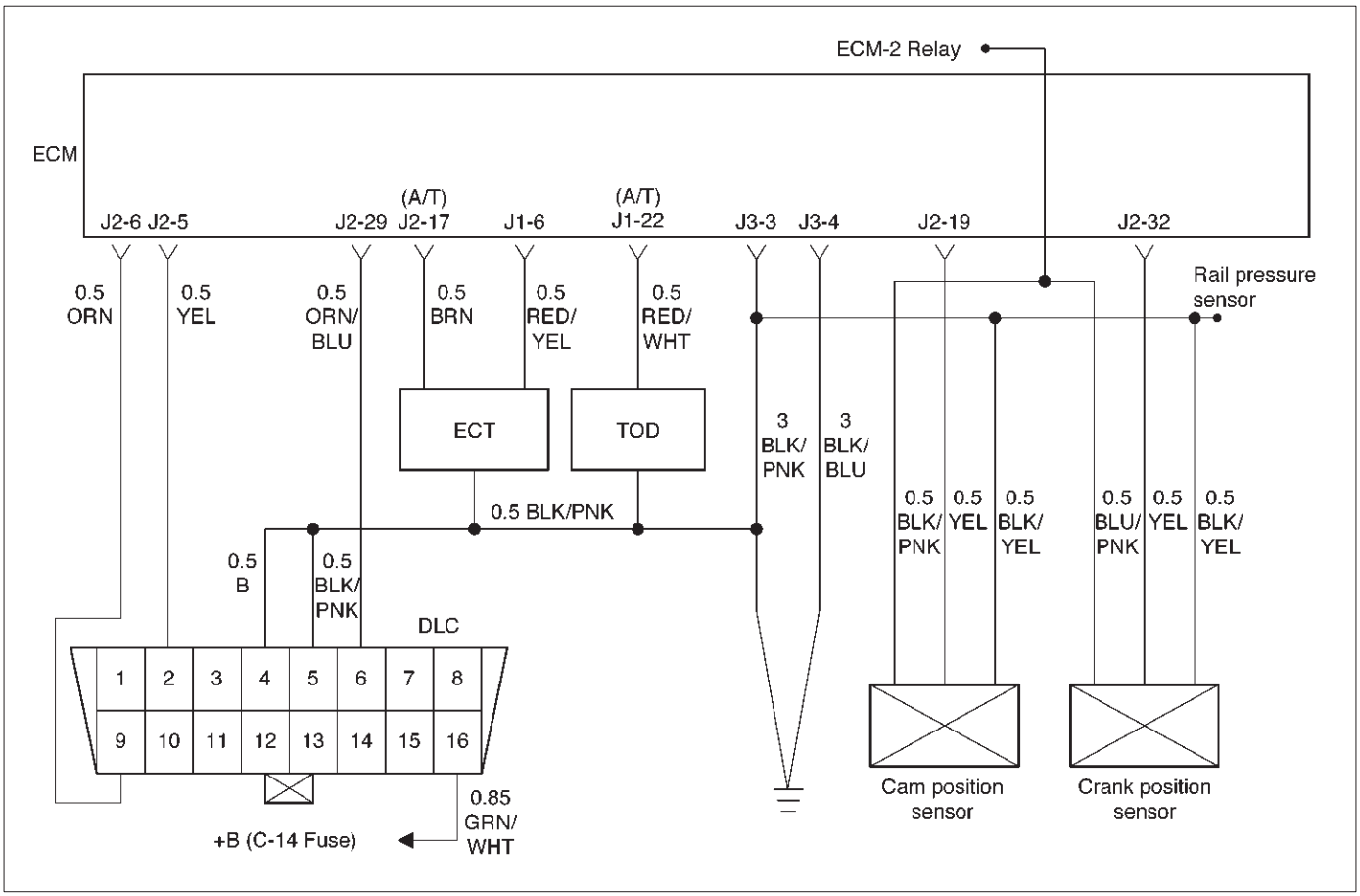

060RW133

Circuit Description

The CKP reference signal is produced by the crankshaft position (CKP) sensor. During one crankshaft revolution, CKP crankshaft reference pulses will be produced. The Engine Control Module ECM uses the CKP reference signal to calculate engine RPM and crankshaft position.

Action Taken When the DTC Sets

- The ECM will store conditions which were present when the DTC was set as Freeze Frame and in the Failure Records data.

Conditions for Clearing the MIL/DTC

- DTC P0219 can be cleared by using the Tech 2 “Clear Info” function or by disconnecting the ECM battery feed.

Diagnostic Aids

Check for:

- Poor connection – Inspect the CKP harness and connectors for improper mating, broken locks, improperly formed or damaged terminals, and poor terminal-to-wire connection.
- Damaged X57 – Inspect the X57 for damage.

DTC P0219 – Engine Over Speed Warning

Step	Action	Value(s)	Yes	No
1	Was the “On-Board Diagnostic (OBD) System Check” performed?	—	Go to *Step 2*	Go to *OBD System Check*
2	Check the responsibility. Was the driver responsibility?	—	Go to *Step 3*	Go to *Chart 4*

DTC P0219 – Engine Over Speed Warning (Cont'd)

Step	Action	Value(s)	Yes	No
3	1. Review and record Failure Records information. 2. Clear DTC P0219. 3. Start the engine and idle for 1 minute. 4. Observe DTCs. Is DTC P0219 set?	—	Go to *Step 4*	—
4	Observe the AP value displayed on the Tech 2. Is the AP value near the specified value?	(Idling 720 r.p .m) 0 %	Go to *Step 3*	Go to *Step 5*
5	Observe the Engine speed displayed on the Tech 2. Is the Engine speed near the specified value?	(Idling) 720 r. p.m	Go to *Step 7*	Go to *Step 6*
6	1. Check the CKP sensor. 2. Ignition "ON." 3. Using a DVM, verify that 5 V reference and ground are being supplied at the sensor connector (ECM side). Are 4-6 volts and ground available at the sensor?	—	Go to *Step 9*	Go to *Step 7*
7	1. Ignition "ON." 2. With a DVM, backprobe the ECM connector 5 V reference and ground connections. Are 5 V reference and ground available at the ECM?	—	Go to *Step 8*	Go to *Step 13*
8	Check 5 V reference or ground between the CKP sensor and ECM and repair the open circuit, short to ground or short to voltage. Is the action complete?	—	Verify repair	—
9	1. Ignition "OFF." 2. Disconnect the ECM and CKP sensor. 3. Check for an open or a short to ground in the CKP reference circuit between the CKP sensor connector and the ECM harness connector. 4. If a problem is found, repair as necessary. Was a problem found?	—	Verify repair	Go to *Step 10*
10	1. Reconnect the ECM and CKP sensor. 2. Connect a DVM to measure voltage on the CKP reference circuit at the ECM connector. 3. Observe the voltage while cranking the engine. Is the voltage near the specified value?	2.5 V	Go to *Step 13*	Go to *Step 11*
11	Check the connections at the CKP sensor and replace the terminals if necessary. Did any terminals require replacement?	—	Verify repair	Go to *Step 12*
12	Replace the CKP sensor. Is the action complete?	—	Verify repair	—
13	Check the connections at the ECM and replace the terminals if necessary. Did any terminals require replacement?	—	Verify repair	Go to *Step 14*

DTC P0219 – Engine Over Speed Warning (Cont'd)

Step	Action	Value(s)	Yes	No
14	Check the X57 signal plate. Is the X57 signal plate damage?	—	Go to *Step 15*	Go to *Step 3*
15	Replace the X57 signal plate. Is the action complete?	—	Verify repair	Go to *Step 2*

Diagnostic Trouble Code (DTC) P0336 (Flash DTC 43) CKP (Crank Position) Sensor Out of Synchro

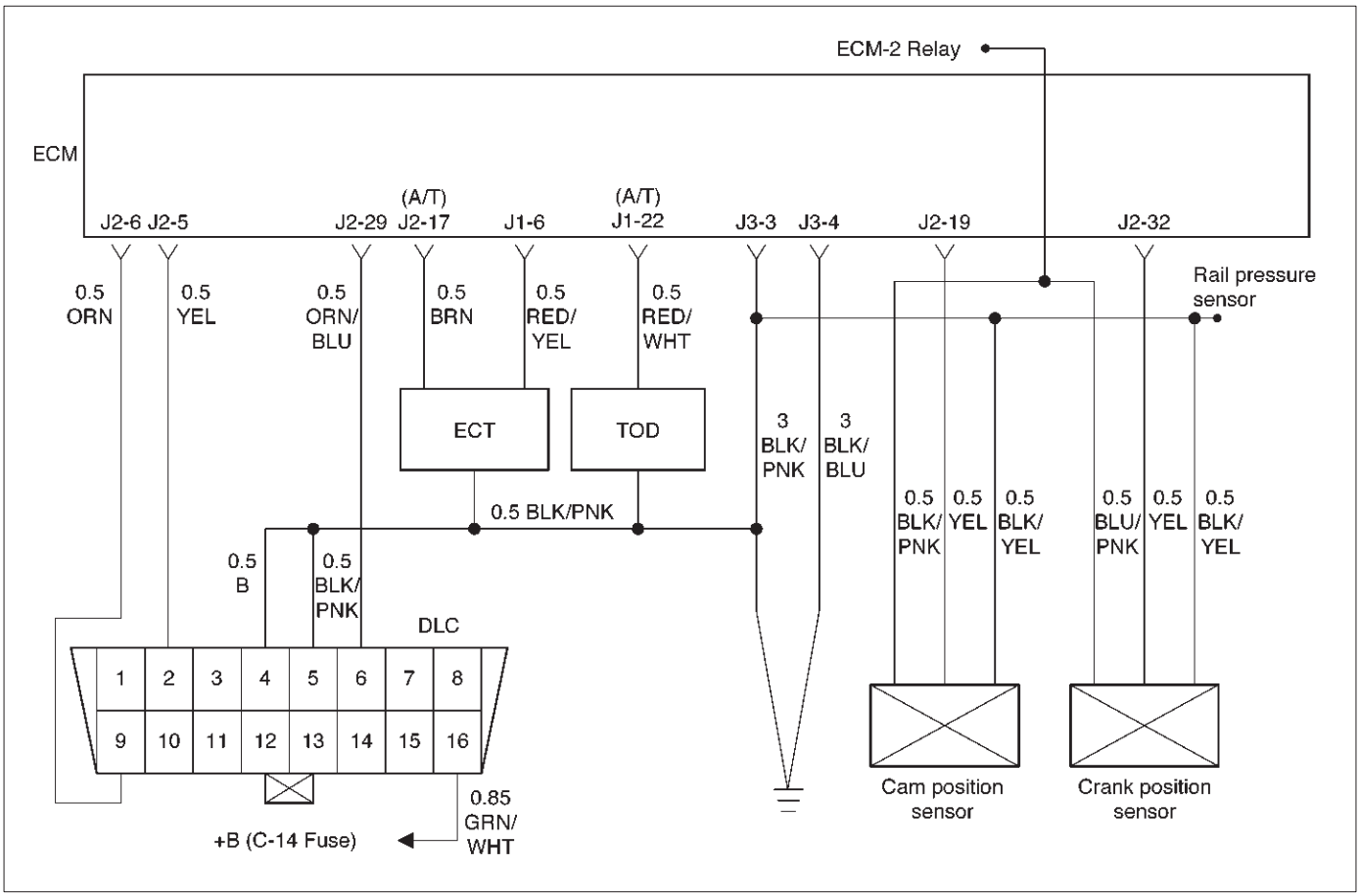

Circuit Description

The CKP reference signal is produced by the crankshaft position (CKP) sensor. During one crankshaft revolution, crankshaft pulses will be produced. The Engine Control Module ECM uses the CKP reference signal to calculate engine RPM and crankshaft position. If the ECM receives an incorrect number of pulses on the CKP reference circuit, DTC P0336 will set.

Action Taken When the DTC Sets

- The ECM will store conditions which were present when the DTC was set as Freeze Frame and in the Failure Records data.

Conditions for Clearing the MIL/DTC

- DTC P0336 can be cleared by using the Tech 2 “Clear Info” function or by disconnecting the ECM battery feed.

Diagnostic Aids

An intermittent may be caused by a poor connection, rubbed–through wire insulation or a wire broken inside the insulation. Check for:

- Poor connection – Inspect the ECM harness and connectors for improper mating, broken locks, improperly formed or damaged terminals, and poor terminal-to-wire connection.
- Damaged harness – Inspect the wiring harness for damage. If the harness appears to be OK, disconnect the ECM, turn the ignition on and observe a voltmeter connected to the CKP reference circuit at the ECM harness connector while moving connectors and wiring harnesses related to the ECM. A change in voltage will indicate the location of the fault.

Reviewing the Failure Records vehicle mileage since the diagnostic test last failed may help determine how often the condition that caused the DTC to be set occurs. This may assist in diagnosing the condition.

DTC P0336 – CKP Sensor Out of Synchro

Step	Action	Value(s)	Yes	No
1	Was the “On-Board Diagnostic (OBD) System Check” performed?	—	Go to *Step 2*	Go to *OBD System Check*
2	Attempt to start the engine. Does the engine start?	—	Go to *Step 3*	Go to *“Engine Cranks But Will Not Run”* chart
3	1. Review and record Failure Records information. 2. Clear DTC P0336. 3. Start the engine and idle for 1 minute. 4. Observe DTCs. Is DTC P0336 set?	—	Go to *Step 4*	Refer to Diagnostic Aids
4	1. Disconnect the ECM and CKP sensor. 2. Check for an open or a short to ground in the CKP reference circuit between the CKP sensor connector and the ECM harness connector. 3. If a problem is found, repair as necessary. Was a problem found?	—	Verify repair	Go to *Step 5*
5	1. Reconnect the ECM and CKP sensor. 2. Connect a DVM to measure voltage on the CKP reference circuit at the ECM connector. 3. Observe the voltage while cranking the engine. Is the voltage near the specified value?	2.5 V	Go to *Step 8*	Go to *Step 6*
6	Check the connections at the CKP sensor and replace the terminals if necessary. Did any terminals require replacement?	—	Verify repair	Go to *Step 7*
7	Replace the CKP sensor. Is the action complete?	—	Verify repair	Go to *Step 8*
8	Check connections at the ECM and replace the terminals if necessary. Did any terminals require replacement?	—	Verify repair	Go to *Step 9*
9	Replace the ECM (Refer to the Data Programming in Case of ECM change). Is the action complete?	—	Verify repair	—

Diagnostic Trouble Code (DTC) P0337 (Flash DTC 43) CKP (Crank Position) Sensor No Signal

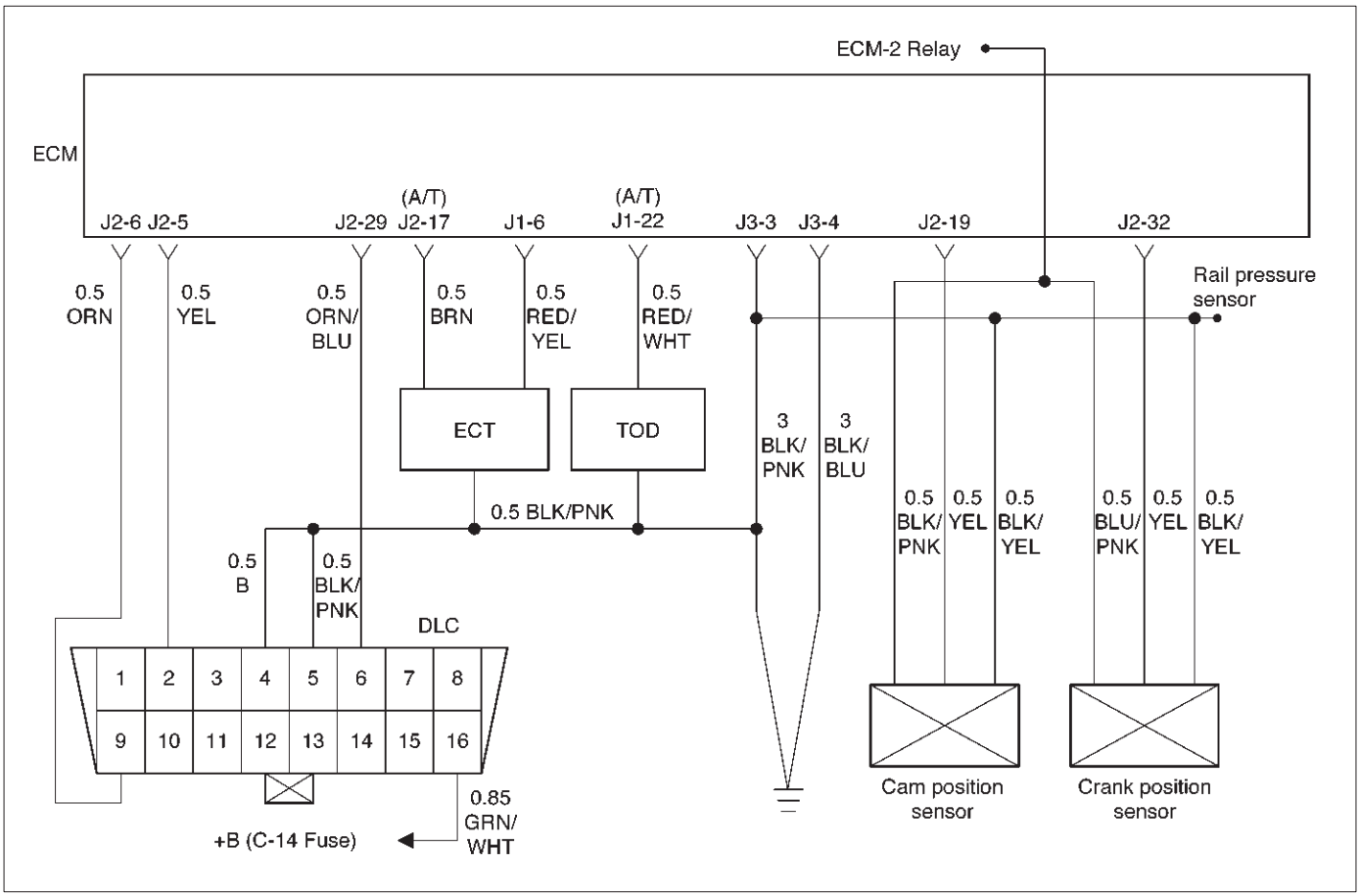

Circuit Description

The CKP reference signal is produced by the crankshaft position (CKP) sensor. During one crankshaft revolution, CKP crankshaft reference pulses will be produced. The Engine Control Module ECM uses the CKP reference signal to calculate engine RPM and crankshaft position. If the ECM does not receive pulses on the CKP reference circuit, DTC P0337 will set.

Action Taken When the DTC Sets

- The ECM will store conditions which were present when the DTC was set as Freeze Frame and in the Failure Records data.

Conditions for Clearing the MIL/DTC

- DTC P0337 can be cleared by using the Tech 2 “Clear Info” function or by disconnecting the ECM battery feed.

Diagnostic Aids

An intermittent may be caused by a poor connection, rubbed-through wire insulation or a wire broken inside the insulation. Check for:

- Poor connection – Inspect the ECM harness and connectors for improper mating, broken locks, improperly formed or damaged terminals, and poor terminal-to-wire connection.
- Damaged harness – Inspect the wiring harness for damage. If the harness appears to be OK, disconnect the ECM, turn the ignition on and observe a voltmeter connected to the CKP reference circuit at the ECM harness connector while moving connectors and wiring harnesses related to the ICM. A change in voltage will indicate the location of the fault.

Reviewing the Failure Records vehicle mileage since the diagnostic test last failed may help determine how often the condition that caused the DTC to be set occurs. This may assist in diagnosing the condition.

DTC P0337 – CKP Sensor No Signal

Step	Action	Value(s)	Yes	No
1	Was the “On-Board Diagnostic (OBD) System Check” performed?	—	Go to *Step 2*	Go to *OBD System Check*
2	Attempt to start the engine. Does the engine start?	—	Go to *Step 3*	Go to *Chart 3*
3	1. Review and record Failure Records information. 2. Clear DTC P0337. 3. Start the engine and idle for 1 minute. 4. Observe DTCs. Is DTC P0337 set?	—	Go to *Step 4*	Refer to *Diagnostic Aid*
4	1. Disconnect the CKP sensor. 2. Ignition “ON.” 3. Using a DVM, verify that 5 V reference and ground are being supplied at the sensor connector (ECM side). Are 4-6 volts and ground available at the sensor?	—	Go to *Step 7*	Go to *Step 5*
5	1. Ignition “ON.” 2. With a DVM, backprobe the ECM connector 5 V reference and ground connections. Are 5 V reference and ground available at the ECM?	—	Go to *Step 6*	Go to *Step 11*
6	Check 5 V reference or ground between the CKP sensor and ECM and repair the open circuit, short to ground or short to voltage. Is the action complete?	—	Verify repair	—
7	1. Ignition “OFF.” 2. Disconnect the ECM and CKP sensor. 3. Check for an open or a short to ground in the CKP reference circuit between the CKP sensor connector and the ECM harness connector. 4. If a problem is found, repair as necessary. Was a problem found?	—	Verify repair	Go to *Step 8*
8	1. Reconnect the ECM and CKP sensor. 2. Connect a DVM to measure voltage on the CKP reference circuit at the ECM connector. 3. Observe the voltage while cranking the engine. Is the voltage near the specified value?	2.5 V	Go to *Step 11*	Go to *Step 9*
9	Check the connections at the CKP sensor and replace the terminals if necessary. Did any terminals require replacement?	—	Verify repair	Go to *Step 10*
10	Replace the CKP sensor. Use caution and avoid hot oil that may drip out. Is the action complete?	—	Verify repair	—

DTC P0337 – CKP Sensor No Signal (Cont'd)

Step	Action	Value(s)	Yes	No
11	Check the connections at the ECM and replace the terminals if necessary. Did any terminals require replacement?	—	Verify repair	Go to *Step 12*
12	Replace the ECM (Refer to the Data Programming in Case of ECM change). Is the action complete?	—	Verify repair	—

Diagnostic Trouble Code (DTC) P0341 (Flash DTC 41) CMP (Cam Position) Sensor Out of Synchro

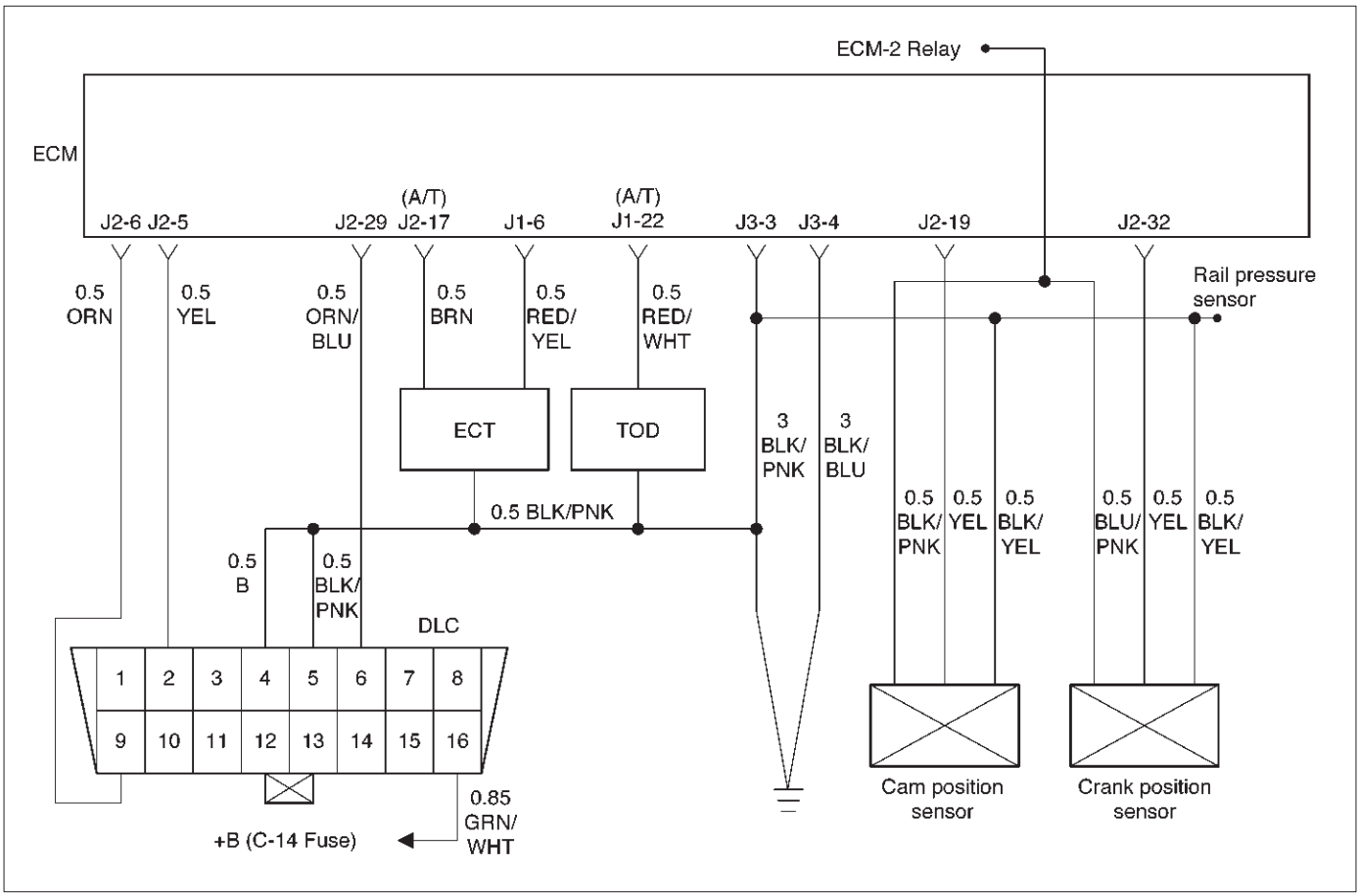

060RW133

Circuit Description

The CMP signal is produced by the camshaft position (CMP) sensor pulses when the engine is running and crankshaft position (CKP) sync pulses are also being received. The Engine Control Module ECM uses the CMP signal pulses to initiate sequential fuel injection. If the ECM receives an incorrect number of pulses on the CMP reference circuit, DTC P0341 will set.

Action Taken When the DTC Sets

- The ECM will store conditions which were present when the DTC was set as Freeze Frame and in the Failure Records data.

Conditions for Clearing the MIL/DTC

- DTC P0341 can be cleared by using the Tech 2 “Clear Info” function or by disconnecting the ECM battery feed.

Diagnostic Aids

An intermittent may be caused by a poor connection, rubbed–through wire insulation or a wire broken inside the insulation. Check for:

- Poor connection — Inspect the ECM harness and connectors for improper mating, broken locks, improperly formed or damaged terminals, and poor terminal-to-wire connection.
- Damaged harness — Inspect the wiring harness for damage. If the harness appears to be OK, disconnect the ECM, turn the ignition on and observe a voltmeter connected to the CMP signal circuit at the ECM harness connector while moving connectors and wiring harnesses related to the ICM and the CMP sensor. A change in voltage will indicate the location of the fault.

Reviewing the Failure Records vehicle mileage since the diagnostic test last failed may help determine how often the condition that caused the DTC to be set occurs. This may assist in diagnosing the condition.

Test Description

Number(s) below refer to the step number(s) on the Diagnostic Chart.

2. Ensures that the fault is present.

12. Determines whether the fault is being caused by a missing camshaft magnet or a faulty sensor. The voltage measured in this step should read around 4 volts, toggling to near 0 volts when the CMP sensor interfaces with the camshaft magnet.

DTC P0341 —CMP Sensor Out of Synchro

Step	Action	Value(s)	Yes	No
1	Was the “On-Board Diagnostic (OBD) System Check” performed?	—	Go to *Step 2*	Go to *OBD System Check*
2	1. Ignition “ON.” 2. Review and record Tech 2 Failure Records data. 3. Operate the vehicle within Failure Records conditions as noted. 4. Using a Tech 2, monitor “DTC” info for DTC P0341 until the DTC P0341 test runs. 5. Note the test result. Does the Tech 2 indicate DTC P0341 failed this ignition?	—	Go to *Step 3*	Refer to *Diagnostic Aids*
3	1. Disconnect the CMP sensor. 2. Measure the voltage between the sensor feed circuit and the sensor ground circuit at the CMP sensor harness connector. Does the voltage measure near the specified value?	4-6 V	Go to *Step 4*	Go to *Step 5*
4	Measure the voltage between the CMP sensor signal circuit and the sensor ground circuit at the CMP sensor harness connector. Does the voltage measure near the specified value?	4-6 V	Go to *Step 11*	Go to *Step 8*
5	If the voltage measured in step 3 was less than 4-6 volts, proceed directly to step 6 without completing this step. If the voltage in step 3 was greater than 4-6 V, repair the short to voltage in the CMP feed circuit. Is the action complete?	—	Verify repair	—
6	1. Check for poor connections at the camshaft position sensor. 2. If a problem is found, repair it as necessary. Was a problem found?	—	Verify repair	Go to *Step 7*
7	1. Ignition “OFF,” disconnect the ECM and the CMP sensor. 2. Check the following circuits for an open between the ignition control module and the CMP sensor: ● The sensor feed circuit. 3. If a problem is found, repair as necessary. Was a problem found?	—	Verify repair	Go to *Step 9*
8	1. Ignition “OFF,” disconnect the ECM (leave the CMP sensor disconnected). 2. Ignition “ON,” check the following circuits: ● The CMP sensor signal circuit for an open or a short to voltage. ● The CMP sensor input signal circuit for a short to ground. 3. If a problem is found, repair it as necessary. Was a problem found?	—	Verify repair	Go to *Step 9*
9	Check for a short or open in the sensor ground circuit. Was a problem found?	—	Verify repair	Go to *Step 10*

DTC P0341 —CMP Sensor Out of Synchro (Cont'd)

Step	Action	Value(s)	Yes	No
10	1. Check for poor connections at the ECM. 2. If a problem is found, repair it as necessary. Was a problem found?	—	Verify repair	Go to *Step 11*
11	Backprobe the ECM connector with a DVM to monitor voltage on the camshaft position input signal circuit while cranking the engine with the sensor connected. (Use rubber band, tape, or an assistant to keep the DVM lead in contact with the sensor terminal during this test.) Does the voltage toggle between the specified values?	4-0 V	Go to *Step 15*	Go to *Step 12*
12	1. Remove the CMP sensor from the engine front cover (leave the sensor wiring connected). 2. Place a magnet on the CMP sensor. (If you use a magnet that is too small to cover the face of the sensor, test on every part of the sensor face because only a small area will respond to this test.) Does the DVM display a voltage near the specified value?	0 V	Go to *Step 13*	Go to *Step 14*
13	Replace the faulty or missing camshaft position sensor magnet. Is the action complete?	—	Verify repair	—
14	Replace the camshaft position sensor. Is the action complete?	—	Verify repair	—
15	Replace the ECM (Refer to the Data Programming in Case of ECM change). Is the action complete?	—	Verify repair	—

Diagnostic Trouble Code (DTC) P0342 (Flash DTC 41) CMP (Cam Position) Sensor No Signal

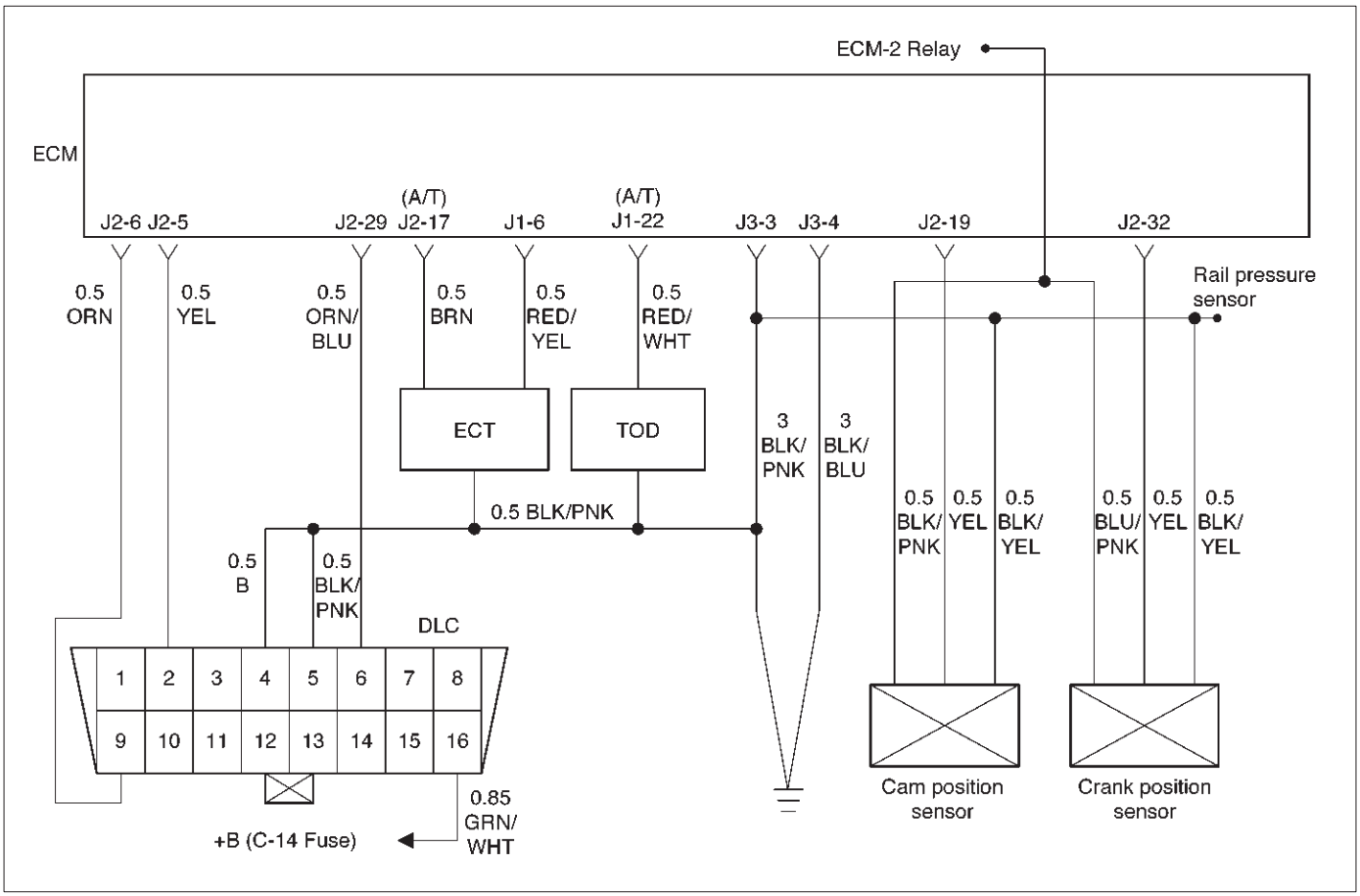

060RW133

Circuit Description

The CMP signal produced by the camshaft position (CMP) sensor pulses when the engine is running and crankshaft position (CKP) synchro pulses are also being received. The hall type CMP sensor and the CKP sensor share 5 V and ground connections at the Engine Control Module ECM. The third wire at the sensor is a signal circuit to the ECM. The ECM uses the CMP signal pulses to initiate sequential fuel injection. If the ECM does not receive pulses on the CMP reference circuit, DTC P0342 will set.

Action Taken When the DTC Sets

- The ECM will store conditions which were present when the DTC was set as Freeze Frame and in the Failure Records data.

Conditions for Clearing the MIL/DTC

- DTC P0342 can be cleared by using the Tech 2 “Clear Info” function or by disconnecting the ECM battery feed.

Diagnostic Aids

An intermittent may be caused by a poor connection, rubbed-through wire insulation or a wire broken inside the insulation. Check for:

- Poor connection – Inspect the ECM harness and connectors for improper mating, broken locks, improperly formed or damaged terminals, and poor terminal to wire connection.
- Damaged harness – Inspect the wiring harness for damage. If the harness appears to be OK, disconnect the ECM, turn the ignition on and observe a voltmeter connected to the CMP signal circuit at the ECM harness connector while moving connectors and wiring harnesses related to the ICM and the CMP sensor. A change in voltage will indicate the location of the fault.

Test Description

Number(s) below refer to the step number(s) on the Diagnostic Chart.

2. Ensures that the fault is present.

14. Determines whether the fault is being caused by a missing camshaft magnet or a faulty ECM. The voltage measured in this step should read around 4 volts, toggling to near 0 volts when the CMP sensor interfaces with the camshaft magnet.

DTC P0342 —CMP Sensor No Signal

Step	Action	Value(s)	Yes	No
1	Was the “On-Board Diagnostic (OBD) System Check” performed?	—	Go to *Step 2*	Go to *OBD System Check*
2	1. Ignition “ON.” 2. Review and record Tech 2 Failure Records data. 3. Operate the vehicle within Failure Records conditions as noted. 4. Using a Tech 2, monitor “Specific DTC” information for DTC P0342 until the DTC P0342 test runs. 5. Note test result. Does the Tech 2 indicate DTC P0342 failed this ignition?	—	Go to *Step 3*	Refer to *Diagnostic Aids*
3	1. Ignition “ON.” 2. Disconnect the CMP sensor. 3. Measure the voltage between the sensor feed circuit and the sensor ground circuit at the CMP sensor harness connector. Does the voltage measure near the specified value?	4-6 V	Go to *Step 7*	Go to *Step 4*
4	1. Ignition “OFF,” disconnect the ECM and the CMP sensor. 2. Check for poor connections at the camshaft position sensor. 3. If a problem is found, repair it as necessary. Was a problem found?	—	Verify repair	Go to *Step 5*
5	1. Check for poor connections at the ECM. 2. If a problem is found, repair it as necessary. Was a problem found?	—	Verify repair	Go to *Step 6*
6	1. Check the following circuits between the ECM and the CMP sensor: ● The sensor feed circuit. Open or short to ground? ● The sensor ground circuit. Open or short to voltage? 2. If a problem is found, repair as necessary. Was a problem found?	—	Verify repair	—
7	1. Ignition “ON,” engine “OFF.” 2. Measure the voltage between the CMP sensor signal circuit and the sensor ground circuit at the CMP sensor harness connector. Does the voltage measure near the specified value?	4-6 V	Go to *Step 8*	Go to *Step 9*

DTC P0342 —CMP Sensor No Signal (Cont'd)

Step	Action	Value(s)	Yes	No
8	1. Turn the ignition "OFF." 2. Disconnect the ECM and connect a DVM to monitor voltage on the camshaft position signal circuit at the ECM connector. 3. Ignition "ON." 4. Monitor the voltage display on the DVM while repeatedly touching the CMP sensor signal circuit at the CMP sensor connector with a test light to ground. Does the DVM voltage display switch between 0 and approximately 5 volts when the test light is touched to the CMP sensor signal circuit?	—	Go to *Step 12*	Go to *Step 9*
9	1. Ignition "OFF." 2. Leave the ECM disconnected. 3. Ignition "ON." 4. Probe the camshaft position signal circuit at the ECM connector with a test light to B+. 5. If the test light is "ON," locate and repair the short to ground in the camshaft position input signal circuit. Was either circuit shorted to ground?	—	Verify repair	Go to *Step 10*
10	1. Ignition "OFF." 2. Leave the ECM disconnected. 3. Ignition "ON." 4. Probe the camshaft position signal circuit with a test light to ground. 5. If the test light is "ON," locate and repair the short to voltage in the camshaft position input signal circuit. Was the test light "ON"?	—	Verify repair	Go to *Step 11*
11	1. Ignition "OFF," disconnect the ECM (leave the CMP sensor disconnected). 2. Ignition "ON," check the following circuit: ● The CMP sensor signal circuit for an open. 3. If a problem is found, repair it as necessary. Was a problem found?	—	Verify repair	—
12	1. Ignition "ON." 2. Remove the CMP sensor from the engine front cover (leave the sensor wiring connected). 3. Place a magnet on the CMP sensor. If you use a magnet that is too small to cover the face of the sensor, test on every part of the sensor face because only a small area will respond to this test. Does the DVM display a voltage near the specified value?	0 V	Go to *Step 14*	Go to *Step 13*
13	Replace the camshaft position sensor. Is the action complete?	—	Verify repair	—
14	1. Reinstall the CMP sensor to the engine front cover. 2. Observe the DVM connected to monitor voltage on the camshaft position signal circuit while cranking the engine. Does the voltage toggle between the specified values?	4-0 V	Go to *Step 15*	Go to *Step 16*

DTC P0342 —CMP Sensor No Signal (Cont'd)

Step	Action	Value(s)	Yes	No
15	Replace the ECM (Refer to the Data Programming in Case of ECM change). Is the action complete?	—	Verify repair	—
16	Replace faulty or missing camshaft magnet. Is the action complete?	—	Verify repair	—

Diagnostic Trouble Code (DTC) P0380 (Flash DTC 66) Glow Relay Circuit Open/Short

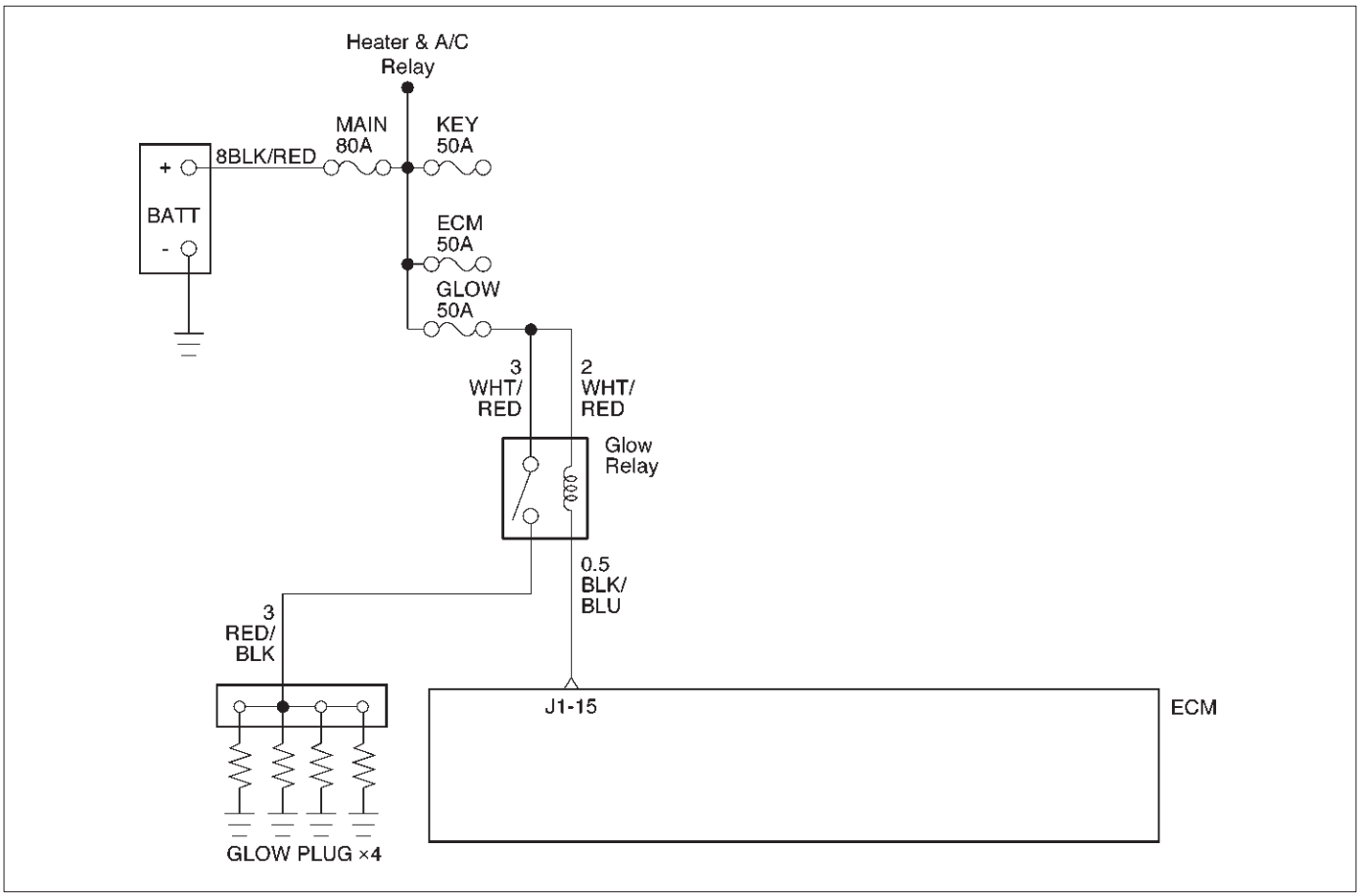

060RW132

Circuit Description

Glow relay circuit receives current through Glow 50A fuse from the battery. Glow relay is circuited to Glow plug.

Action Taken When the DTC Sets

- The ECM will store conditions which were present when the DTC was set as Freeze Frame and in the Failure Records data.

Conditions for Clearing the MIL/DTC

- DTC P0380 can be cleared by using the Tech 2 “Clear Info” function or by disconnecting the ECM battery feed.

Diagnostic Aids

An intermittent may be caused by a poor connection, rubbed-through wire insulation or a wire broken inside the insulation. Check for:

- Poor connection – Inspect the ECM harness and connectors for improper mating, broken locks, improperly formed or damaged terminals, and poor terminal-to-wire connection.
- Damaged harness – Inspect the wiring harness for damage.

DTC P0380 – Glow Relay Circuit Open/Short

Step	Action	Value(s)	Yes	No
1	Was the “On-Board Diagnostic (OBD) System Check” performed?	—	Go to *Step 2*	Go to *OBD System Check*
2	Attempt to start the engine. Does the engine start?	—	Go to *Step 3*	Go to *Chart 3*
3	1. Review and record Failure Records information. 2. Clear DTC P0380. 3. Start the engine and idle for 1 minute. 4. Observe DTCs. Is DTC P0380 set?	—	Go to *Step 4*	Refer to *Diagnostic Aid*
4	Check the glow fuse 50A. Is the glow fuse 50A damage?	—	Go to *Step 5*	Go to *Step 6*
5	Replace the glow fuse 50A. Is the action complete?	—	Verify repair	Go to *Step 6*
6	1. Ignition “OFF.” 2. Check for an open or a short to ground in the Glow relay circuit between the Glow relay connector and the ECM harness connector. 3. If a problem is found, repair as necessary. Was a problem found?	—	Verify repair	Go to *Step 7*
7	Check the connections at the Glow relay and replace the terminals if necessary. Did any terminals require replacement?	—	Verify repair	Go to *Step 8*
8	Replace the Glow relay. Is the action complete?	—	Verify repair	Go to *Step 9*
9	Check the connections at the ECM and replace the terminals if necessary. Did any terminals require replacement?	—	Verify repair	Go to *Step 10*
10	Replace the ECM (Refer to the Data Programming in Case of ECM change). Is the action complete?	—	Verify repair	—

Diagnostic Trouble Code (DTC) P0381 (Flash DTC 67) Glow Lamp Circuit Open/Short

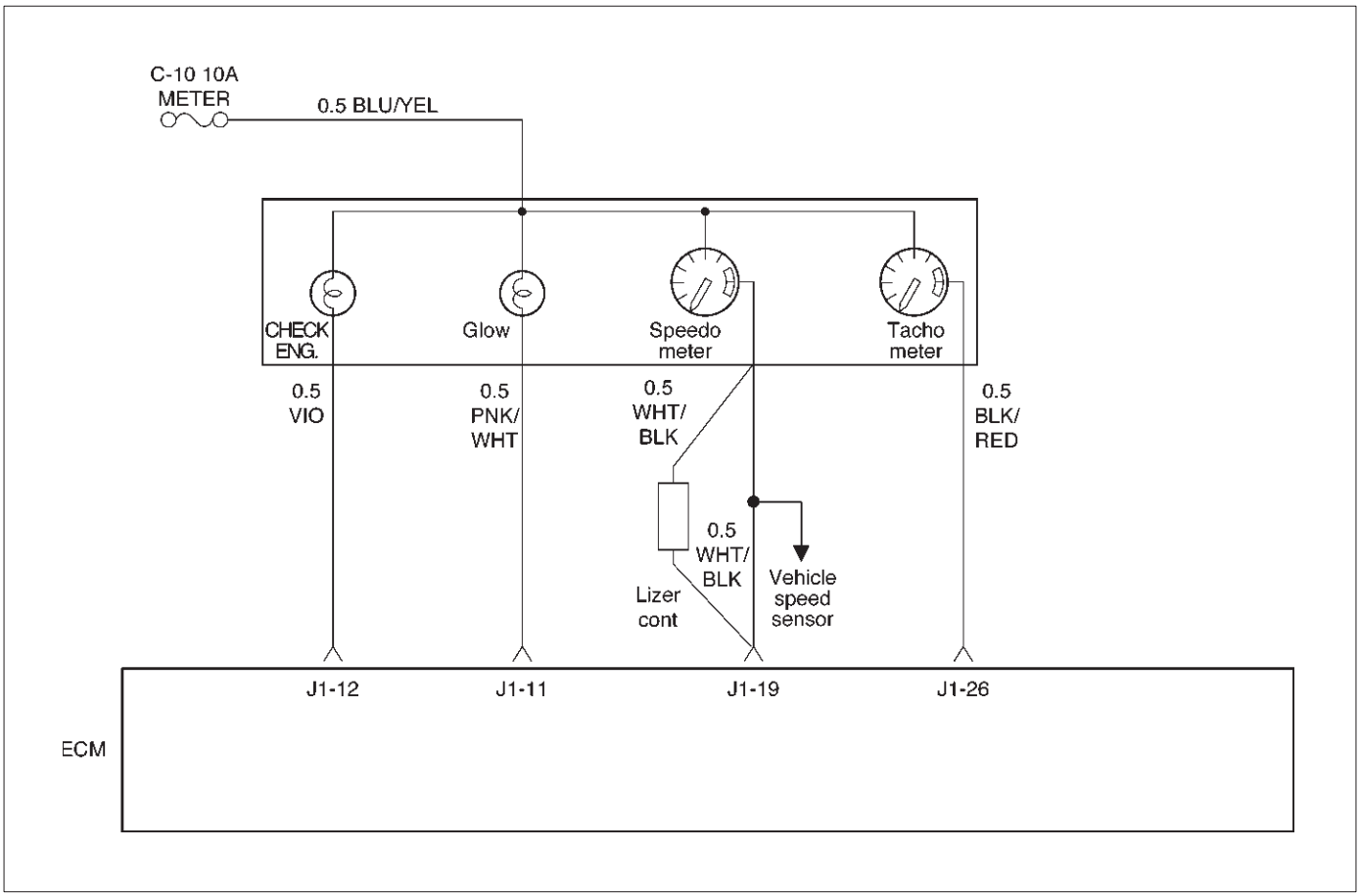

060RW136

Circuit Description

Glow Lamp Circuit receives current through Meter 10A fuse, Glow lamp being circuited to ECM.

Action Taken When the DTC Sets

- The ECM will store conditions which were present when the DTC was set as Freeze Frame and in the Failure Records data.

Conditions for Clearing the MIL/DTC

- DTC P0381 can be cleared by using the Tech 2 “Clear Info” function or by disconnecting the ECM battery feed.

Diagnostic Aids

An intermittent may be caused by a poor connection, rubbed-through wire insulation or a wire broken inside the insulation. Check for:

- Poor connection – Inspect the ECM harness and connectors for improper mating, broken locks, improperly formed or damaged terminals, and poor terminal-to-wire connection.
- Damaged harness – Inspect the wiring harness for damage.

DTC P0381 – Glow Lamp Circuit Open/Short

Step	Action	Value(s)	Yes	No
1	Was the “On-Board Diagnostic (OBD) System Check” performed?	—	Go to *Step 2*	Go to *OBD System Check*
2	1. Review and record Failure Records information. 2. Clear DTC P0381. 3. Observe DTCs. Is DTC P0381 set?	—	Go to *Step 3*	Refer to *Diagnostic Aid*
3	1. Ignition “OFF.” 2. Remove the Meter assembly. 3. Check for an open or a short to ground in the Glow Lamp circuit. 4. If a problem is found, repair as necessary. (On electric bulb of the Glow Lamp, The Glow Lamp harness circuit) Was a problem found?	—	Refer to the Meter in Electric section 8	Go to *Step 4*
4	Check the connections at the ECM and replace the terminals if necessary. Did any terminals require replacement?	—	Verify repair	Go to *Step 5*
5	Replace the ECM (Refer to the Data Programming in Case of ECM change). Is the action complete?	—	Verify repair	—

Diagnostic Trouble Code (DTC) P1403 (Flash DTC 32) EGR EVRV Fault

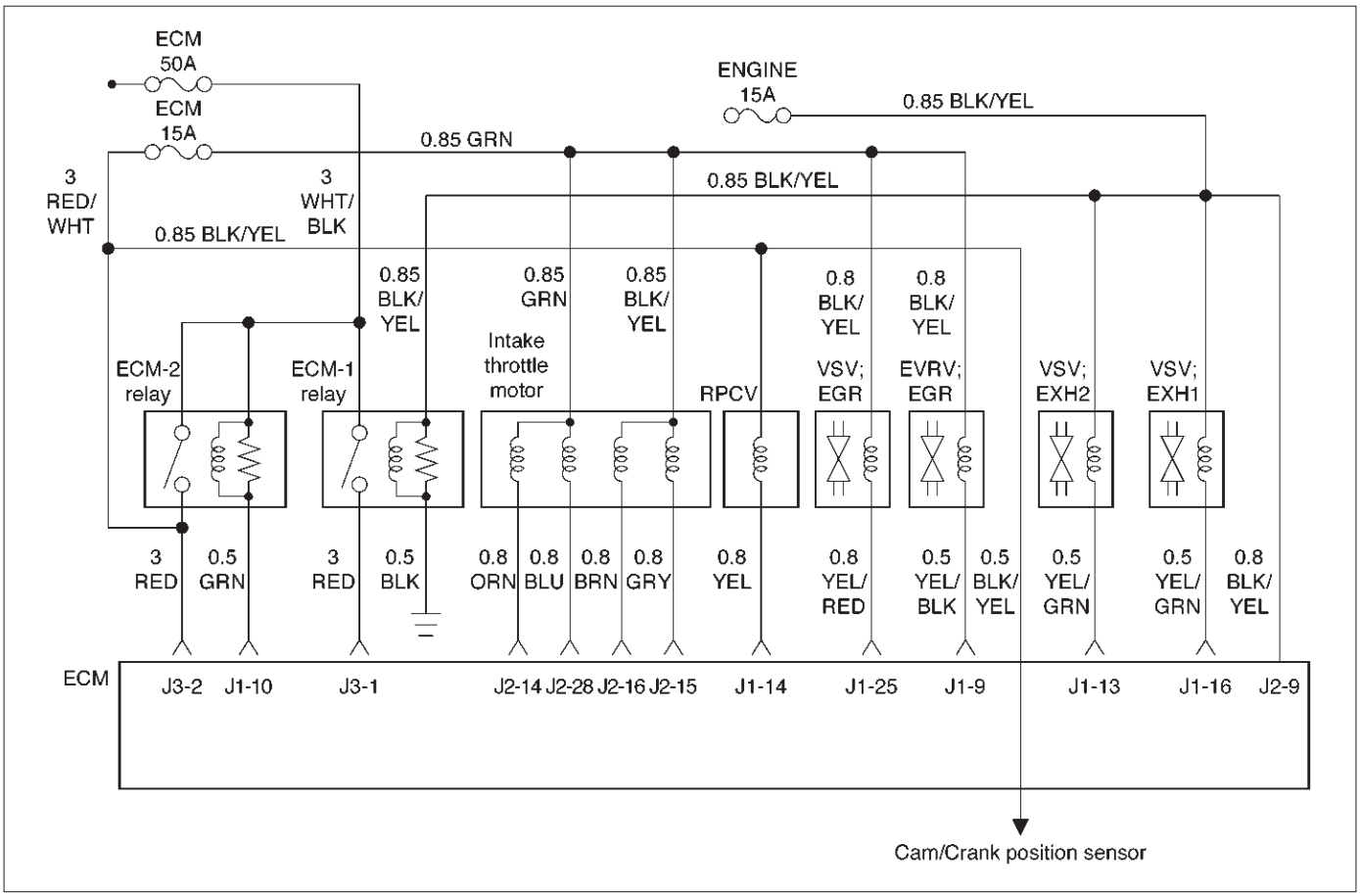

060RW135

Circuit Description

EGR EVRV Circuit has a common power source in parallel with EGR, VSV, RPCV, and Intake Throttle Motor. This may cause multiple DTCs. On such occasion, refer to “Multiple ECM Information sensor DTCs Set”.

Diagnostic Aids

Check for the following conditions:

- Poor connection or damaged EVRV – Inspect the wiring harness for damage.
- Ensure EVRV is correctly mounted. See *On-Vehicle Service*.

Reviewing the Failure Records vehicle mileage since the diagnostic test last failed may help determine how often the condition that caused the DTC to be set occurs. This may assist in diagnosing the condition.

Test Description

Number(s) below refer to the step number(s) on the Diagnostic Chart

3. A malfunctioning MAP sensor can set an EGR DTC. The MAP sensor could send a constant signal which is not low enough to set a low MAP DTC. The constant signal from the MAP sensor also may not be high enough to set a high MAP DTC. This step verifies that the MAP sensor is responding.

DTC P1403 – EGR EVRV Fault

Step	Action	Value(s)	Yes	No
1	Was the “On-Board Diagnostic (OBD) System Check” performed?	—	Go to *Step 2*	Go to *OBD System Check*
2	Check the EVRV circuit. Was the EVRV circuit darmage?	—	Replace the EVRV circuit	Go to *Step 3*
3	1. Start the engine. 2. Monitor the MAP signal with a scan tool while idling. 3. While idling, jab the accelerator pedal about halfway down and immediately let the engine return to idle. Did the MAP value on the scan tool show an immediate large change?	—	Go to *Step 5*	Go to *Step 4*
4	Replace the MAP sensor. Is the action complete?	—	Verify repair	—
5	1. Inspect the exhaust system for modification of original installed parts or leaks. 2. If a problem was found, repair exhaust system as necessary. Was a condition present that required repair?	—	Go to *Step 8*	Go to *Step 6*
6	1. Remove the EGR valve. 2. Visually and physically inspect the pintle, valve passages and the adapter for excessive deposits or any kind of a restriction. 3. If a problem is found, clean or replace EGR system components as necessary. Was a condition present that required repair?	—	Go to *Step 8*	Go to *Step 7*
7	1. Inspect the EGR passages for a blockage caused by excessive deposits or other damage. 2. If a problem is found, correct the condition as necessary. Was a condition present that required repair?	—	Go to *Step 8*	Refer to *Diagnostic Aids*
8	1. Review and record the scan tool Failure Records data. 2. Clear DTC and monitor the scan tool System Info Screen while operating the vehicle as specified in “Diagnostic Aids.” 3. Using a scan tool, monitor “DTC” info for DTC P1403 until the DTC P1403 test runs. 4. Note the test result. Does the scan tool indicate DTC P1403 failed this ignition?	—	Go to the last step completed in this diagnostic chart	Repair complete

Diagnostic Trouble Code (DTC) P1404 (Flash DTC 31)
EGR VSV Circuit

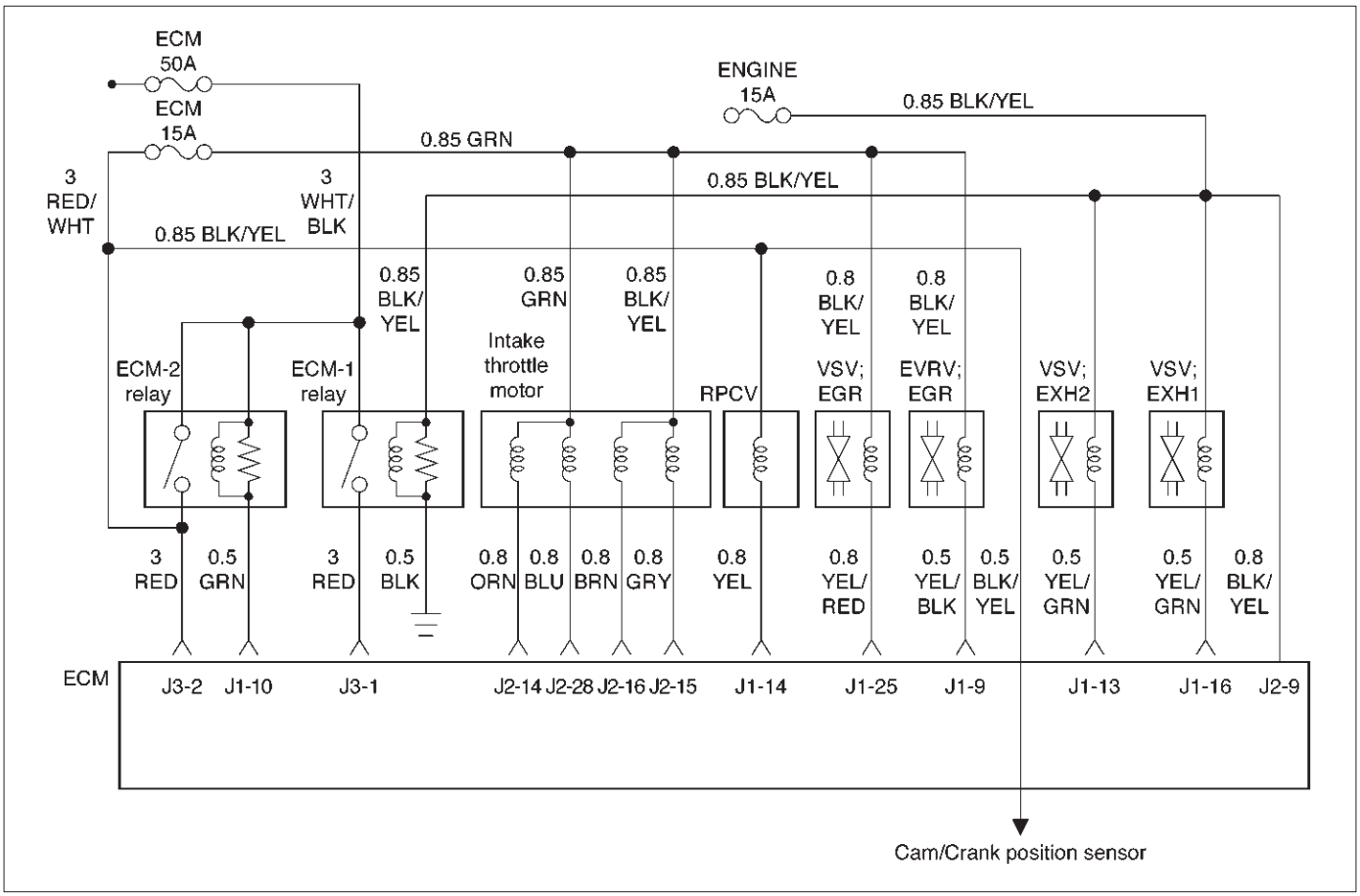

060RW135

Circuit Description

The Engine control module (ECM) monitors the EGR valve input to ensure that the valve responds properly to commands from the ECM, and to detect a fault if VSV is stuck open. When the VSV is fixing at closed and opening the ECM will set DTC P1404.

Diagnostic Aids

Check for the following conditions:

- Poor connection or damaged VSV–inspect the wiring harness for damage.

DTC P1404 – EGR VSV Circuit

Step	Action	Value(s)	Yes	No
1	Was the “On-Board Diagnostic (OBD) System Check” performed?	—	Go to *Step 2*	Go to *OBD System Check*
2	1. Ignition “ON”, engine “OFF”, review and record scan tool Failure Records data. 2. Operate the vehicle within Failure Records conditions as noted. 3. Using a scan tool, monitor “Specific DTC” info for DTC P1404 until the DTC P1404 test runs. Note the result. Does the scan tool indicates DTC P1404 failed this ignition?	—	Go to *Step 3*	Refer to *Diagnostic Aids*

DTC P1404 – EGR VSV Circuit (Cont'd)

Step	Action	Value(s)	Yes	No
3	Check the VSV circuit. Was the VSV circuit open or darmage?	—	Go to *Step 4*	Go to *Step 5*
4	Repair the opened VSV circuit or VSV. Is the action complete?	—	Verify repair	—

Diagnostic Trouble Code (DTC) P0405 (Flash DTC 26) EGR Pressure Sensor Low Voltage

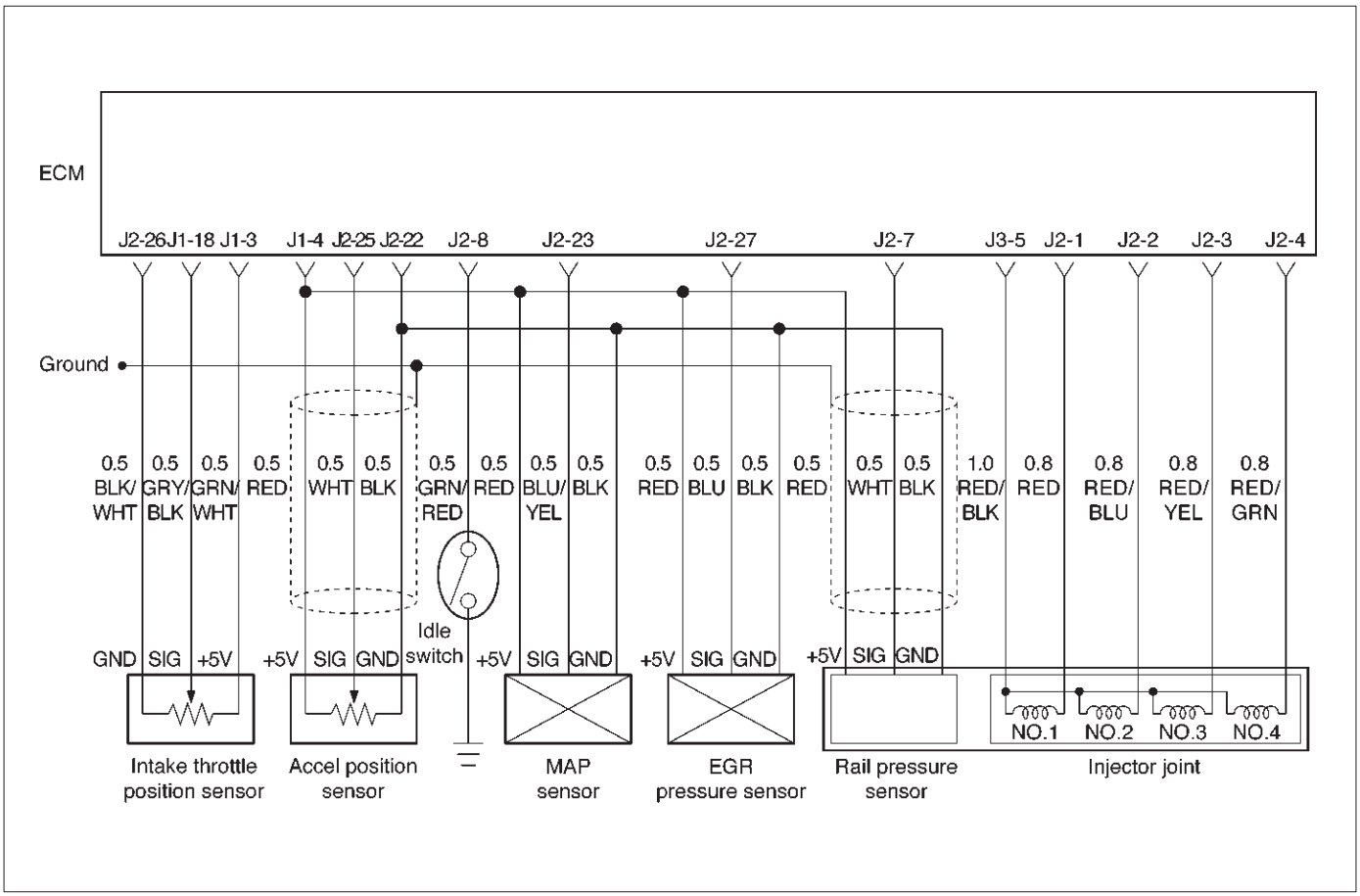

060RW134

Action Taken When the DTC Sets

- The ECM will illuminate the malfunction indicator lamp (MIL) as soon as failure detected.
- The ECM will store conditions which were present when the DTC was set as Freeze Frame and in Failure Records data.

Conditions for Clearing the MIL/DTC

- DTC P0405 can be cleared by using the scan tool “Clear Info” function or by disconnecting the ECM battery feed.

Diagnostic Aids

Check for the following conditions:

- Poor connection or damaged harness – Inspect the wiring harness for damage.

DTC P0405 – EGR Pressure Sensor Low Voltage

Step	Action	Value(s)	Yes	No
1	Was the “On-Board Diagnostic (OBD) System Check” performed?	—	Go to *Step 2*	Go to *OBD System Check*
2	Put the engine into an idling status. Is the EGR pressure sensor voltage value displayed on the Tech 2 below the specified value?	0.25 V	Go to *Step 3*	Refer to *Diagnostic Aids* and *Symptom Diagnosis*

DTC P0405 – EGR Pressure Sensor Low Voltage (Cont'd)

Step	Action	Value(s)	Yes	No
3	1. Turn off the ignition switch. 2. Remove the sensor connector connection. 3. Jumper between harness pins "red" and "blue" wires. 4. Turn on the ignition switch "ON". Is the EGR pressure sensor voltage reading above the specified value?	4 V	Go to *Step 5*	Go to *Step 4*
4	1. Turn off the ignition switch. 2. Remove the jumper wire. 3. Connect the relay & solenoid checker (5-8840-0386-0) to the battery voltage, then check the EGR pressure sensor signal circuit (blue wire). 4. Turn on the ignition switch. Is the value displayed on the Tech 2 above the specified value?	4 V	Go to *Step 6*	Go to *Step 7*
5	Check the terminal connection at the EGR pressure sensor and repair or replace terminal if necessary. Is the action complete?	—	Verify repair	—
6	Repair the 5V power circuit (red) harness or Replace the ECM (Refer to the Data Programming in Case of ECM change). Is the action complete?	—	Verify repair	—
7	Repair the signal circuit (blue) harness or Replace the ECM (Refer to the Data Programming in Case of ECM change). Is the action complete?	—	Verify repair	—

Diagnostic Trouble Code (DTC) P1405 (Flash DTC 37) EGR EVRV Circuit Open/Short

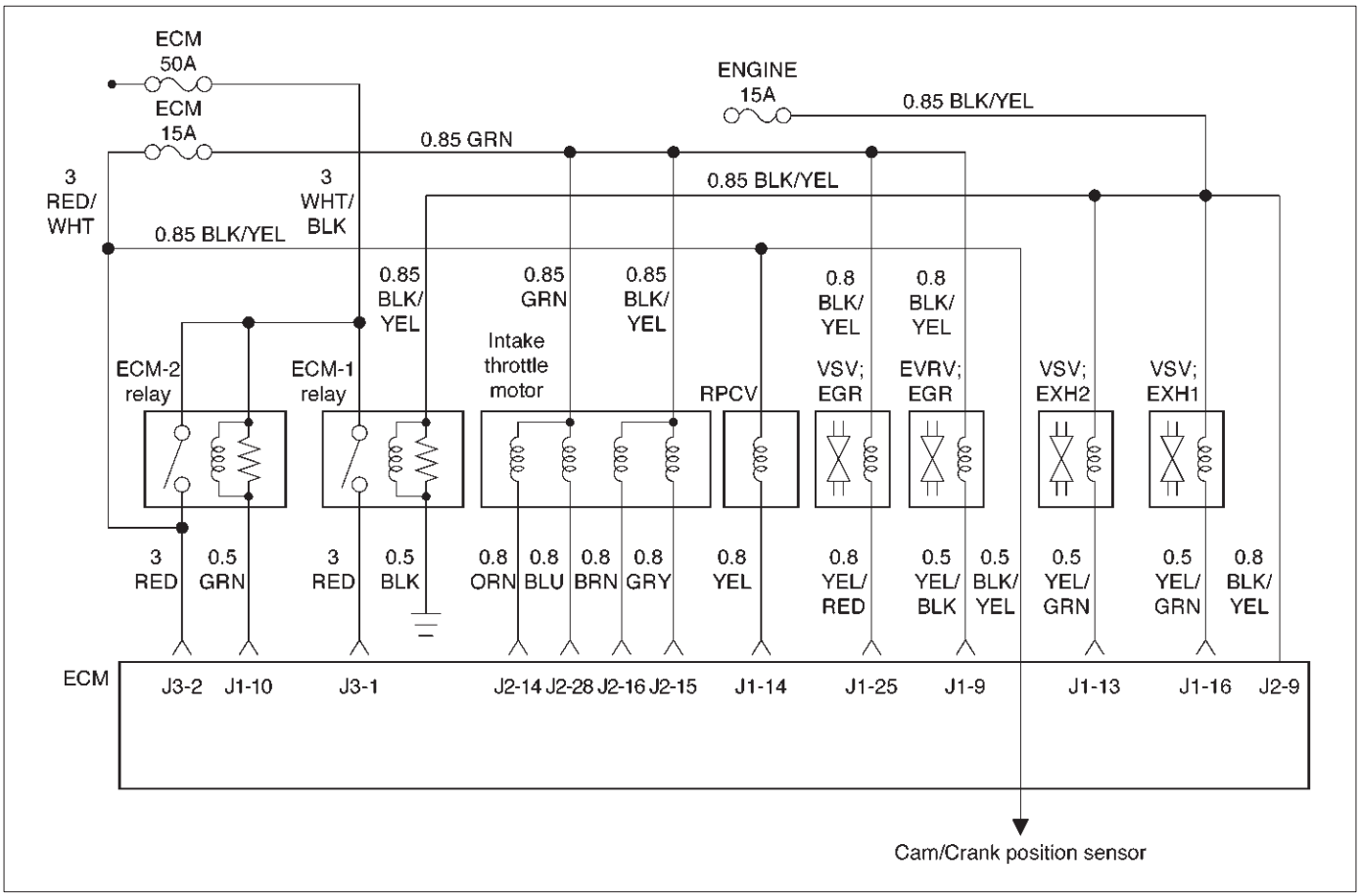

060RW135

Circuit Description

EGR EVRV Circuit has a common power source in parallel with EGR, VSV, RPCV, and Intake Throttle Motor. This may cause multiple DTCs. On such occasion, refer to “Multiple ECM Information Sensor DTCs Set”.

Action Taken When the DTC Sets

- The ECM will store conditions which were present when the DTC was set as Freeze Frame and in the Failure Records data.

Conditions for Clearing the MIL/DTC

- DTC P1405 can be cleared by using the Tech 2 “Clear Info” function or by disconnecting the ECM battery feed.

Diagnostic Aids

An intermittent may be caused by a poor connection, rubbed-through wire insulation or a wire broken inside the insulation. Check for:

- Poor connection – Inspect the ECM harness and connectors for improper mating, broken locks, improperly formed or damaged terminals, and poor terminal-to-wire connection.
- Damaged harness – Inspect the wiring harness for damage.

DTC P1405 – EGR EVRV Circuit Open/Short

Step	Action	Value(s)	Yes	No
1	Was the “On-Board Diagnostic (OBD) System Check” performed?	—	Go to *Step 2*	Go to *OBD System Check*
2	1. Review and record Failure Records information. 2. Clear DTC P1405. 3. Start the engine and idle for 1 minute. 4. Observe DTCs. Is DTC P1405 set?	—	Go to *Step 3*	Refer to *Diagnostic Aid*
3	1. Ignition “OFF.” 2. Disconnect the EVRV. 3. Check for an open or a short to ground in the EVRV circuit between the EVRV connector and the ECM harness connector. 4. If a problem is found, repair as necessary. Was a problem found?	—	Verify repair	Go to *Step 4*
4	Check the connections at the EVRV and replace the terminals if necessary. Did any terminals require replacement?	—	Verify repair	Go to *Step 5*
5	Check the connections at the ECM and replace the terminals if necessary. Did any terminals require replacement?	—	Verify repair	Go to *Step 6*
6	Replace the EVRV. Is the action complete?	—	Verify repair	Go to *Step 7*
7	Replace the ECM (Refer to the Data Programming in Case of ECM change). Is the action complete?	—	Verify repair	—

Diagnostic Trouble Code (DTC) P0406 (Flash DTC 26) EGR Pressure Sensor High Voltage

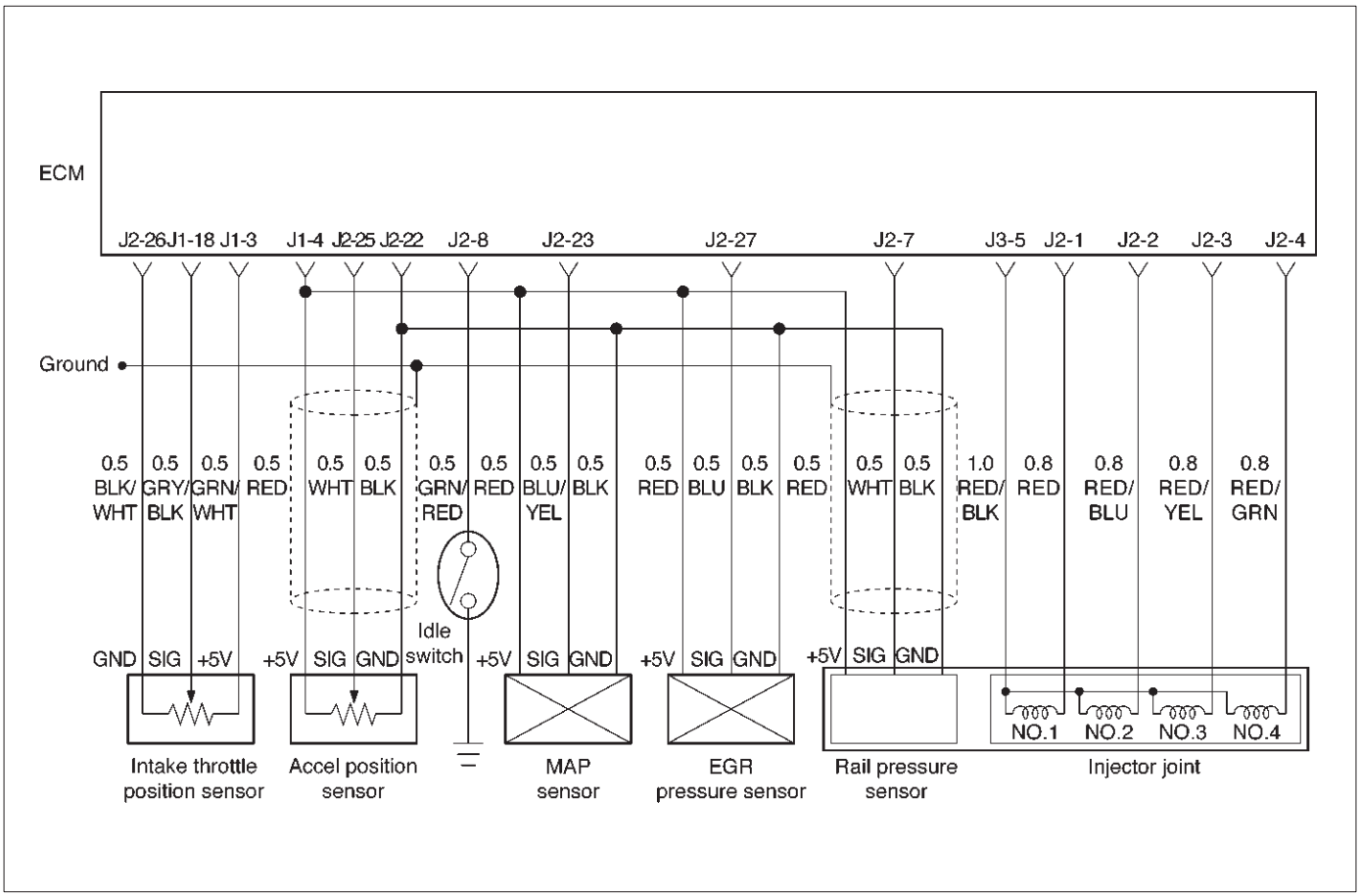

060RW134

Action Taken When the DTC Sets

- The ECM will illuminate the malfunction indicator lamp (MIL) as soon as failure detected.
- The ECM will store conditions which were present when the DTC was set as Freeze Frame and in Failure Records data.

Conditions for Clearing the MIL/DTC

- DTC P0404 can be cleared by using the scan tool “Clear Info” function or by disconnecting the ECM battery feed.

Diagnostic Aids

Check for the following conditions:

- Poor connection or damaged harness – Inspect the wiring harness for damage.

DTC P0406 – EGR Pressure Sensor High Voltage

Step	Action	Value(s)	Yes	No
1	Was the “On-Board Diagnostic (OBD) System Check” performed?	—	Go to *Step 2*	Go to *OBD System Check*
2	Put the engine into an idling status. Is the EGR pressure sensor voltage value displayed on the Tech 2 above the specified value?	4 V	Go to *Step 3*	Go to *Step 4*
3	1. Turn off the ignition switch. 2. Remove the sensor connector connection. 3. Turn on the ignition switch “ON”. Is the EGR pressure sensor voltage value displayed on the Tech 2 below the specified value?	1 V	Go to *Step 5*	Go to *Step 6*

DTC P0406 – EGR Pressure Sensor High Voltage (Cont'd)

Step	Action	Value(s)	Yes	No
4	Is the EGR pressure sensor voltage value displayed on the Tech 2 below the specified value?	1 V	Refer to *Chart P0107*	Refer to *Diagnostic Aids* and *Symptom Diagnosis*
5	Connect the relay and solenoid checker (5-8840-0386-0) to the battery voltage, then check the sensor grounding circuit. Does the checker lamp come on?	—	Go to *Step 7*	Go to *Step 8*
6	A voltage short circuit occurs in the MAP signal circuit or this circuit is shorted with the 5V power circuit. Repair the harness or Replace the ECM (Refer to the Data Programming in Case of ECM change). Is the action complete?	—	Verify repair	—
7	Replace the EGR pressure sensor hose or the EGR pressure sensor. Is the action complete?	—	Verify repair	—
8	Repair the harness for open ground circuit. Is the action complete?	—	Verify repair	—

Diagnostic Trouble Code (DTC) P0475 (Flash DTC 71) EXH #1 VSV Circuit

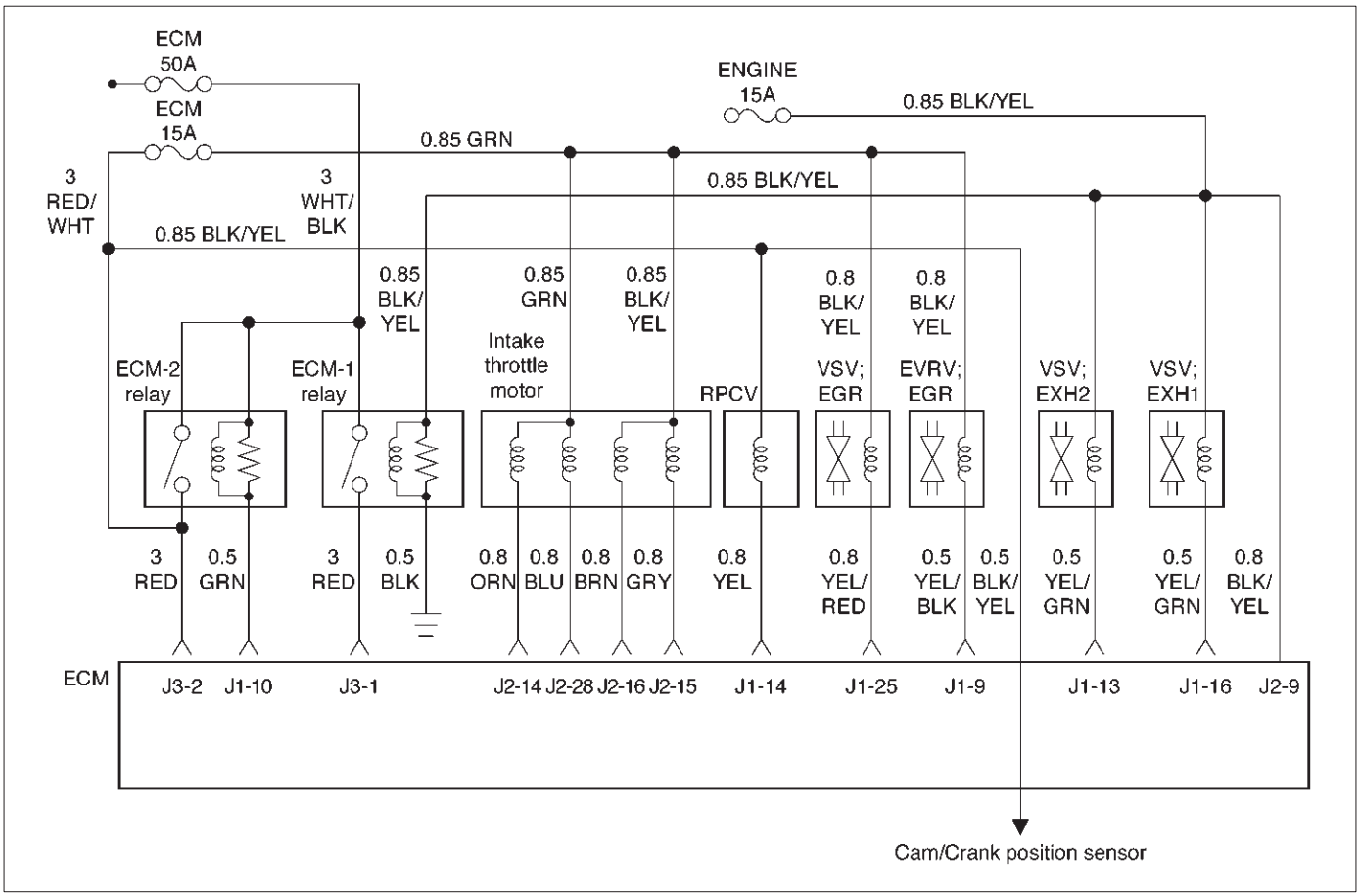

060RW135

Circuit Description

EXH. #1, #2 VSV Circuit receives current through Engine 15A fuse, #1 and #2 being connected in parallel.

Action Taken When the DTC Sets

- The ECM will illuminate the malfunction indicator lamp (MIL) the first time the fault is detected.
- The ECM will store conditions which were present when the DTC was set as Freeze Frame and in the Failure Records data.

Conditions for Clearing the MIL/DTC

- DTC P0475 can be cleared by using the Tech 2 “Clear Info” function or by disconnecting the ECM battery feed.

Diagnostic Aids

Check for the following conditions:

- Poor connection at ECM – Inspect harness connectors for backed-out terminals, improper mating, broken locks, improperly formed or damaged terminals, and poor terminal-to-wire connection.
- Damaged harness – Inspect the wiring harness for damage.

DTC P0475 – EXH #1 VSV Circuit Open/Short

Step	Action	Value(s)	Yes	No
1	Was the “On-Board Diagnostic (OBD) System Check” performed?	—	Go to *Step 2*	Go to *OBD System Check*
2	1. Ignition “ON,” engine “OFF.” Review and record Tech 2 Failure Records data. 2. Operate the vehicle within Failure Records conditions as noted. 3. Using a Tech 2, monitor the “ DTC” info for DTC P0475. Does the Tech 2 indicate DTC P0475 failed this ignition?	—	Go to *Step 3*	Refer to *Diagnostic Aids*
3	1. Ignition “OFF.” 2. Disconnect the EXH #1 VSV connectors. 3. Check the EXH #1 VSV circuit for a short to ground. Is the EXH #1 VSV circuit shorted to ground?	—	Verify repair	Go to *Step 4*
4	Replace the EXH #1 VSV. Is the action complete?	—	Verify repair	Go to *Step 5*
5	1. Ignition “ON,” engine “OFF.” Review and record Tech 2 Failure Records data. 2. Operate the vehicle within Failure Records conditions as noted. 3. Using a Tech 2, monitor the “ DTC” info for DTC P0475. Does the Tech 2 indicate DTC P0475 failed this ignition?	—	Go to *Step 6*	—
6	Replace the ECM (Refer to the Data Programming in Case of ECM change). Is the action complete?	—	Verify repair	—

Diagnostic Trouble Code (DTC) P1475 (Flash DTC 71) EXH #2 VSV Circuit Open/Short

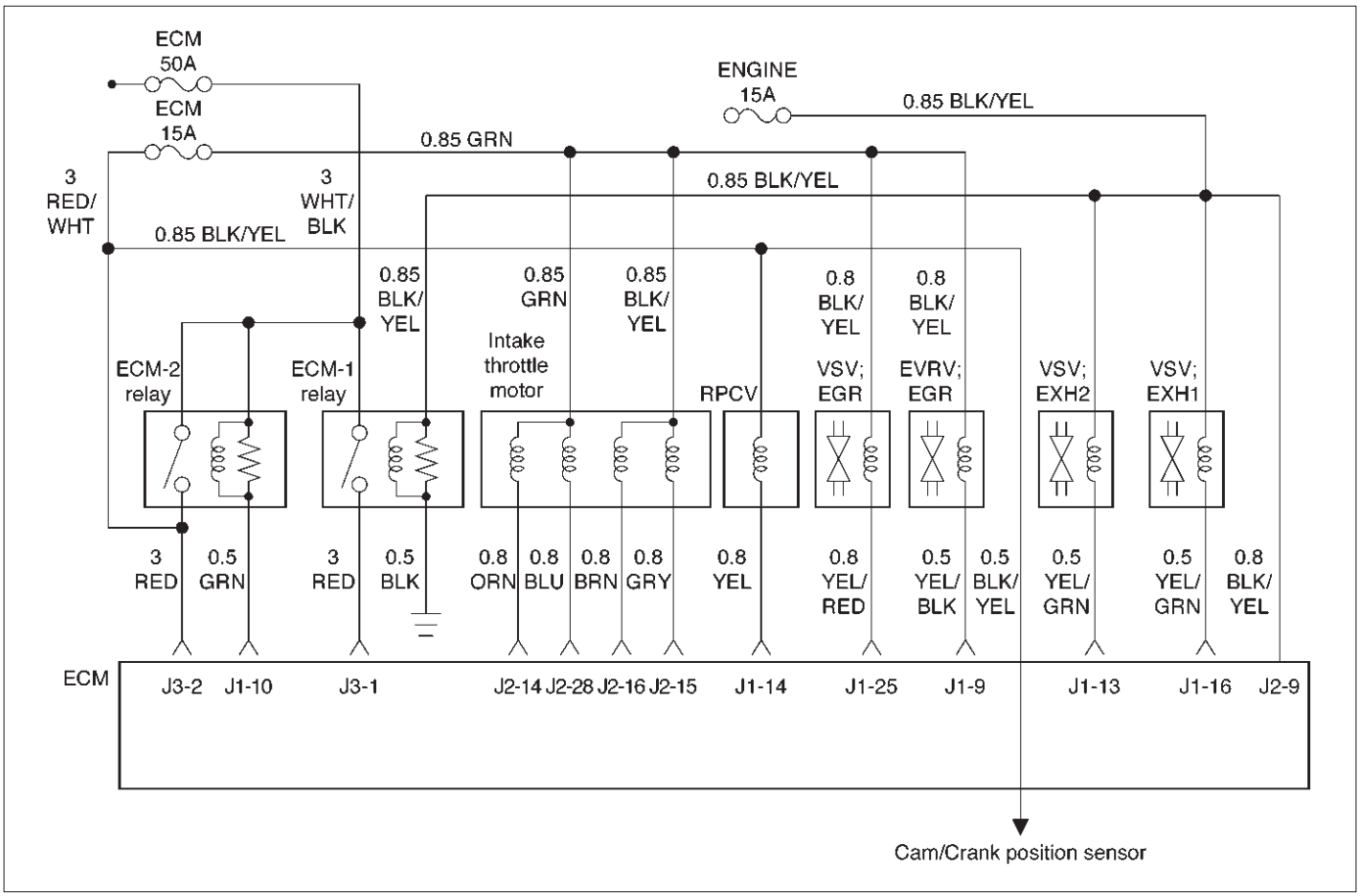

060RW135

Circuit Description

EXH. #1, #2 VSV Circuit receives current through Engine 15A fuse, #1 and #2 being connected in parallel.

Action Taken When the DTC Sets

- The ECM will illuminate the malfunction indicator lamp (MIL) the first time the fault is detected.
- The ECM will store conditions which were present when the DTC was set as Freeze Frame and in the Failure Records data.

Conditions for Clearing the MIL/DTC

- DTC P1475 can be cleared by using the Tech 2 “Clear Info” function or by disconnecting the ECM battery feed.

Diagnostic Aids

Check for the following conditions:

- Poor connection at ECM – Inspect harness connectors for backed-out terminals, improper mating, broken locks, improperly formed or damaged terminals, and poor terminal-to-wire connection.
- Damaged harness – Inspect the wiring harness for damage.

DTC P1475 – EXH #2 VSV Circuit Open/Short

Step	Action	Value(s)	Yes	No
1	Was the “On-Board Diagnostic (OBD) System Check” performed?	—	Go to *Step 2*	Go to *OBD System Check*
2	1. Ignition “ON,” engine “OFF.” Review and record Tech 2 Failure Records data. 2. Operate the vehicle within Failure Records conditions as noted. 3. Using a Tech 2, monitor the “ DTC” info for DTC P1475. Does the Tech 2 indicate DTC P1475 failed this ignition?	—	Go to *Step 3*	Refer to *Diagnostic Aids*
3	1. Ignition “OFF.” 2. Disconnect the EXH #2 connectors. 3. Check the EXH #2 circuit for a short to ground. Is the EXH #2 circuit shorted to ground?	—	Verify repair	Go to *Step 4*
4	Replace the EXH #2 VSV. Is the action complete?	—	Verify repair	Go to *Step 5*
5	1. Ignition “ON,” engine “OFF.” Review and record Tech 2 Failure Records data. 2. Operate the vehicle within Failure Records conditions as noted. 3. Using a Tech 2, monitor the “ DTC” info for DTC P1475. Does the Tech 2 indicate DTC P1475 failed this ignition?	—	Go to *Step 6*	—
6	Replace the ECM (Refer to the Data Programming in Case of ECM change). Is the action complete?	—	Verify repair	—

Diagnostic Trouble Code (DTC) P1485 (Flash DTC 74) ITP (Intake Thorottle Position) Sensor Low Voltage

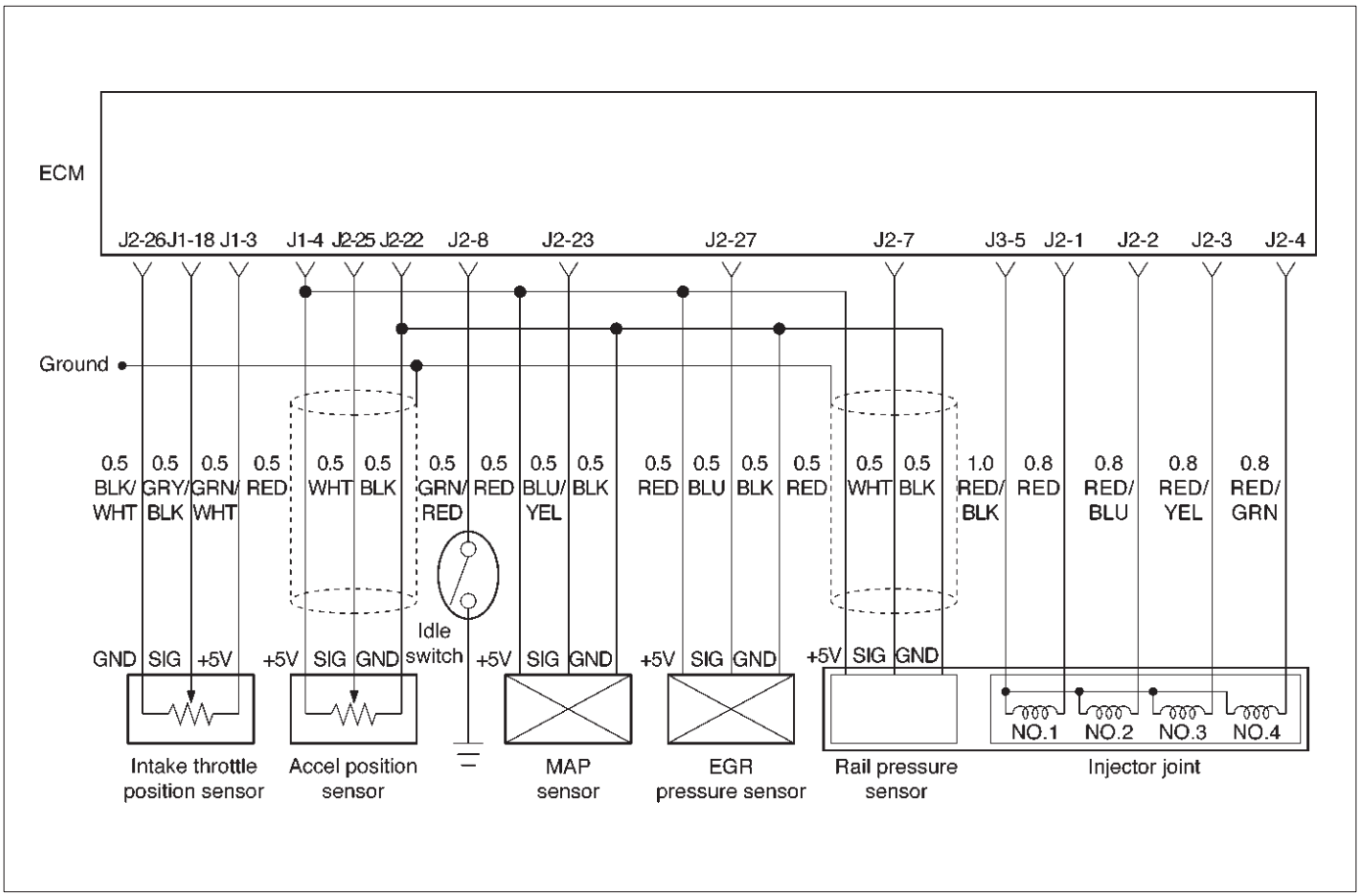

060RW134

Circuit Description

The intake throttle position (ITP) sensor circuit provides a voltage signal that changes relative to throttle blade angle.

Action Taken When the DTC Sets

- The ECM will illuminate the malfunction indicator lamp (MIL) the first time the fault is detected.
- The ECM will store conditions which were present when the DTC was set as Freeze Frame and in the Failure Records data.

Conditions for Clearing the MIL/DTC

- DTC P1485 can be cleared by using the Tech 2 “Clear Info” function or by disconnecting the ECM battery feed.

Diagnostic Aids

Check for the following conditions:

- Poor connection at ECM – Inspect harness connectors for backed-out terminals, improper mating, broken locks, improperly formed or damaged terminals, and poor terminal-to-wire connection.
- Damaged harness – Inspect the wiring harness for damage.

  If the harness appears to be OK, observe the throttle position display on the Tech 2 while moving connectors and wiring harnesses related to the ITP sensor. A change in the display will indicate the location of the fault.

If DTC P1485 cannot be duplicated, the information included in the Failure Records data can be useful in determining vehicle mileage since the DTC was last set.

DTC P1485 –ITP Sensor Low Voltage

Step	Action	Value(s)	Yes	No
1	Was the “On-Board Diagnostic (OBD) System Check” performed?	—	Go to *Step 2*	Go to *OBD System Check*
2	1. Ignition “ON,” engine “OFF.” 2. With the throttle closed by the hand, observe the “ITP Sensor” display on the Tech 2. Is the “ITP Sensor” below the specified value?	0.22 V	Go to *Step 4*	Go to *Step 3*

DTC P1485 –ITP Sensor Low Voltage (Cont'd)

Step	Action	Value(s)	Yes	No
3	1. Ignition "ON," engine "OFF." 2. Review and record Tech 2 Failure Records data. 3. Operate the vehicle within Failure Records conditions as noted. 4. Using a Tech 2, monitor the "DTC" info for DTC P1485. Does the Tech 2 indicate DTC P1485 failed?	—	Go to *Step 4*	Refer to *Diagnostic Aids*
4	Check the ITP sensor signal circuit for a poor connection at the ECM and replace the terminal if necessary. Did the terminal require replacement?	—	Verify repair	Go to *Step 5*
5	1. Ignition "ON," engine "OFF." 2. Review and record Tech 2 Failure Records data. 3. Operate the vehicle within Failure Records conditions as noted. 4. Using a Tech 2 monitor the "Specific DTC" info for DTC P1485. Dose the Tech 2 indicate DTC P1485 failed?	—	Go to *Step 6*	Refer to *Diagnostic Aids*
6	Replace the intake throttle. Is the action complete?	—	Verify repair	Go to *Step 7*
7	Replace the ECM (Refer to the Data Programming in Case of ECM change). Is the action complete?	—	Verify repair	—

Diagnostic Trouble Code (DTC) P1486 (Flash DTC 74) ITP (Intake Throttle Position) Sensor High Voltage

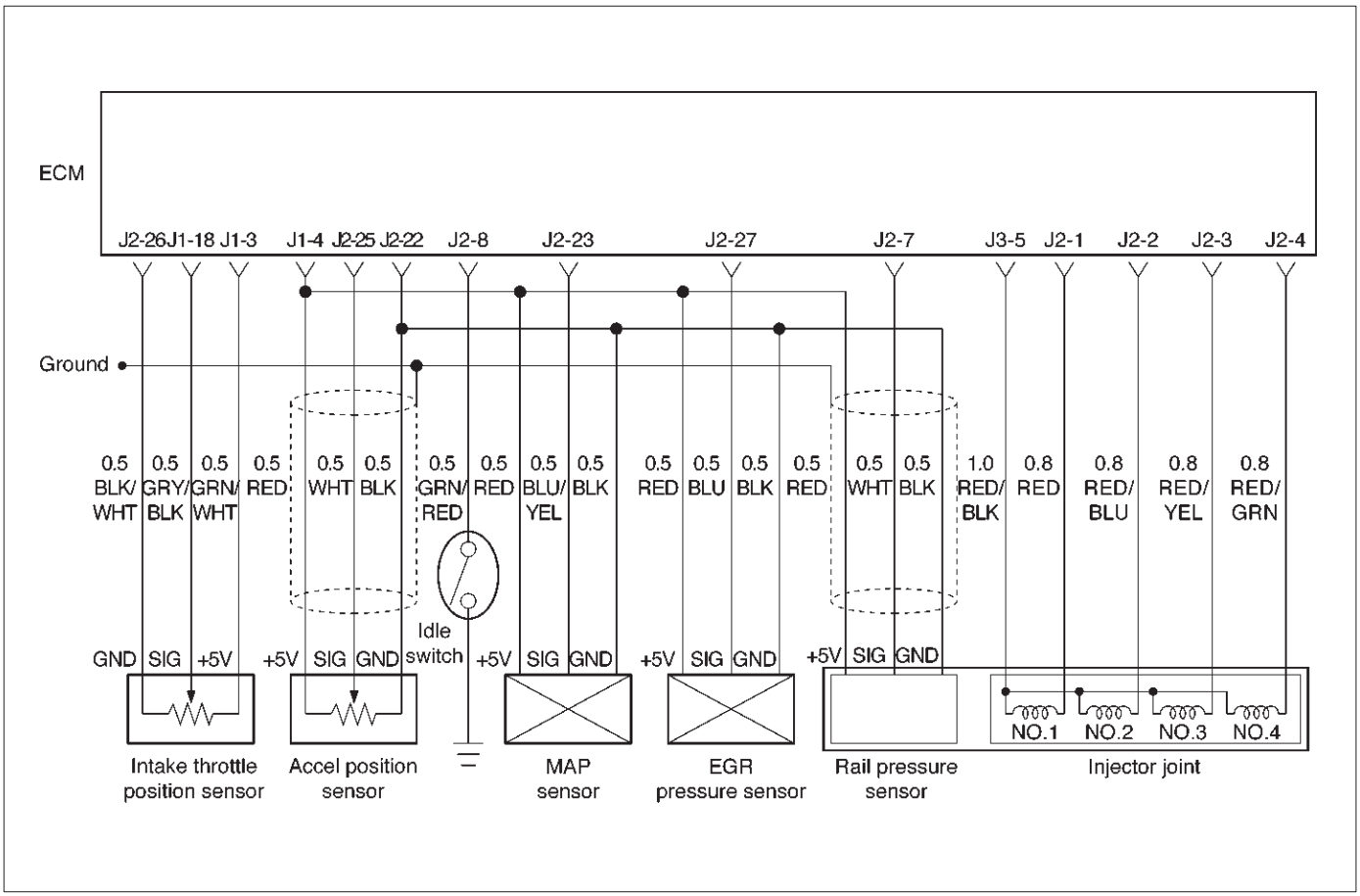

060RW134

Circuit Description

The intake throttle position (ITP) sensor circuit provides a voltage signal that changes relative to throttle blade angle.

Action Taken When the DTC Sets

- The ECM will illuminate the malfunction indicator lamp (MIL) the first time the fault is detected.
- The ECM will store conditions which were present when the DTC was set as Freeze Frame and in the Failure Records data.

Conditions for Clearing the MIL/DTC

- DTC P1486 can be cleared by using the Tech 2 “Clear Info” function or by disconnecting the ECM battery feed.

Diagnostic Aids

Check for the following conditions:

- Poor connection at ECM – Inspect harness connectors for backed-out terminals, improper mating, broken locks, improperly formed or damaged terminals, and poor terminal-to-wire connection.
- Damaged harness – Inspect the wiring harness for damage. If the harness appears to be OK, observe the ITP sensor display on the Tech 2 while moving connectors and wiring harnesses related to the TP sensor. A change in the display will indicate the location of the fault.
- Faulty TP sensor – With the ignition key “ON,” engine “OFF,” observe the TP sensor display on the Tech 2 while slowly depressing the accelerator to wide open throttle.

If DTC P1486 cannot be duplicated, the information included in the Failure Records data can be useful in determining vehicle mileage since the DTC was last set.

DTC P1486 – ITP Sensor High Voltage

Step	Action	Value(s)	Yes	No
1	Was the “On-Board Diagnostic (OBD) System Check” performed?	—	Go to *Step 2*	Go to *OBD System Check*
2	1. Ignition “ON,” engine “OFF.” 2. With the throttle closed by the hand, observe the “ITP Sensor” display on the Tech 2. Is the “ITP Sensor” above the specified value?	4.88 V	Go to *Step 4*	Go to *Step 3*
3	1. Ignition “ON,” engine “OFF.” 2. Review and record Tech 2 Failure Records data. 3. Operate the vehicle within Failure Records conditions as noted. 4. Using a Tech 2, monitor “DTC” info for DTC P1486. Does the Tech 2 indicate DTC P1486 failed.	—	Go to *Step 4*	Refer to *Diagnostic Aids*
4	Check for poor electrical connections at the ITP sensor and replace terminals if necessary. Did any terminals require replacement?	—	Verify repair	Go to *Step 5*
5	1. Ignition “ON,” engine “OFF.” 2. Review and record Tech 2 Failure Records data. 3. Operate the vehicle within Failure Records conditions as noted. 4. Using a Tech 2 monitor the “DTC” info for DTC P1486. Dose the Tech 2 indicate DTC P1486 failed.	—	Go to *Step 6*	Refer to *Diagnostic Aids*
6	Replace the intake throttle. Is the action complete?	—	Verify repair	Go to *Step 7*
7	Replace the ECM (Refer to the Data Programming in Case of ECM change). Is the action complete?	—	Verify repair	—

Diagnostic Trouble Code (DTC) P1487 (Flash DTC 73) Intake Throttle System Circuit Open/Start

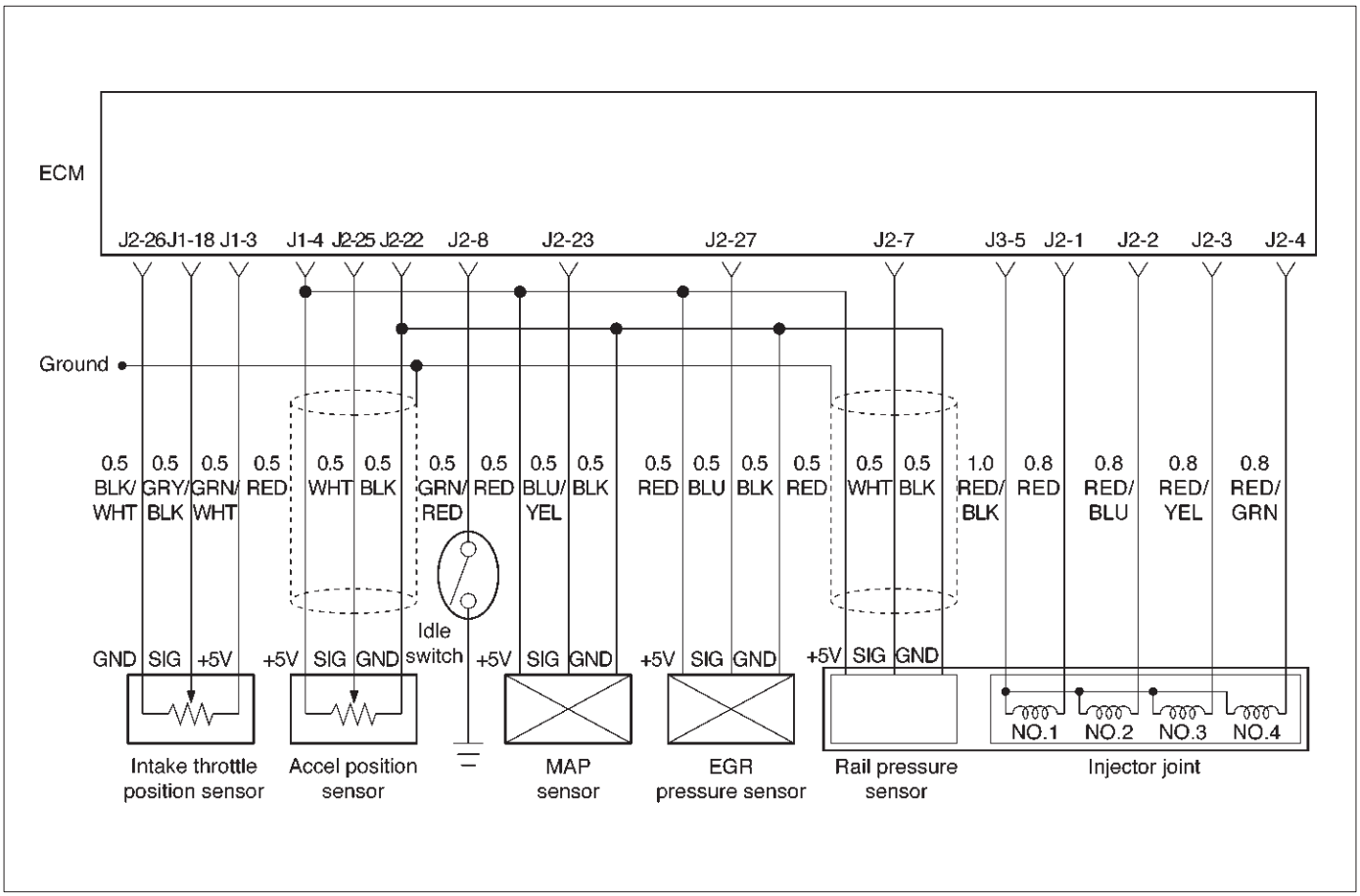

060RW134

Circuit Description

The intake throttle position (ITP) sensor circuit provides a voltage signal that changes relative to throttle blade angle.

Action Taken When the DTC Sets

- The ECM will illuminate the malfunction indicator lamp (MIL) the first time the fault is detected.
- The ECM will store conditions which were present when the DTC was set as Freeze Frame and in the Failure Records data.

Conditions for Clearing the MIL/DTC

- DTC P1487 can be cleared by using the Tech 2 “Clear Info” function or by disconnecting the ECM battery feed.

Diagnostic Aids

Check for the following conditions:

- Poor connection at ECM – Inspect harness connectors for backed-out terminals, improper mating, broken locks, improperly formed or damaged terminals, and poor terminal-to-wire connection.
- Damaged harness – Inspect the wiring harness for damage. If the harness appears to be OK, observe the throttle position display on the Tech 2 while moving connectors and wiring harnesses related to the ITP sensor. A change in the display will indicate the location of the fault.

If DTC P1487 cannot be duplicated, the information included in the Failure Records data can be useful in determining vehicle mileage since the DTC was last set.

DTC P1487 – Intake Throttle System Circuit Open/Short

Step	Action	Value(s)	Yes	No
1	Was the “On-Board Diagnostic (OBD) System Check” performed?	—	Go to *Step 2*	Go to *OBD System Check*
2	1. Ignition “ON,” engine “OFF.” 2. Review and record Tech 2 Failure Records data. 3. Operate the vehicle within Failure Records conditions as noted. 4. Using a Tech 2, monitor the “DTC” info for DTC P1487. Does the Tech 2 indicate DTC P1487 failed?	—	Go to *Step 3*	Refer to *Diagnostic Aids*
3	Check the ITP circuit for a poor connection at the ECM and ITP and replace the terminal if necessary. Did the terminal require replacement?	—	Verify repair	Go to *Step 4*
4	1. Ignition “ON,” engine “OFF.” 2. Operate the throttle by the hand. Is the action complete?	—	Verify repair	Go to *Step 5*
5	Replace the ITP Assembly. Is the action complete?	—	Verify repair	Go to *Step 6*
6	Replace the ECM (Refer to the Data Programming in Case of ECM change). Is the action complete?	—	Verify repair	—

Diagnostic Trouble Code (DTC) P1488 (Flash DTC 72) Intake Throttle Motor Control Circuit Signal Gap

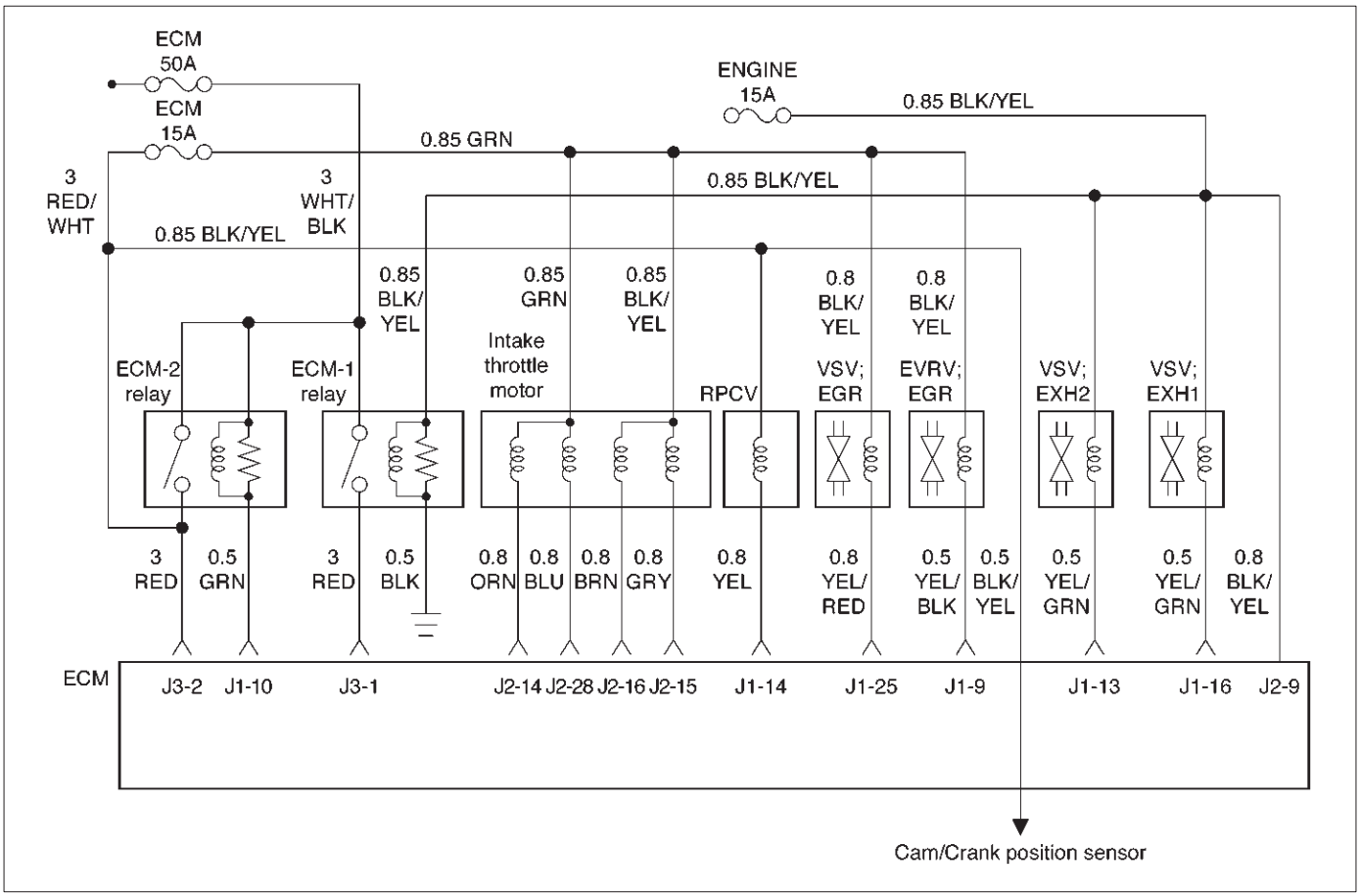

060RW135

Circuit Description

The Intake throttle position (ITP) sensor circuit provides a voltage signal that changes relative to throttle blade angle.

Action Taken When the DTC Sets

- The ECM will store conditions which were present when the DTC was set as Freeze Frame and in the Failure Records data.

Conditions for Clearing the MIL/DTC

- DTC P1488 can be cleared by using the Tech 2 “Clear Info” function or by disconnecting the ECM battery feed.

Diagnostic Aids

Check for the following conditions:

- Poor connection at ECM – Inspect harness connectors for backed-out terminals, improper mating, broken locks, improperly formed or damaged terminals, and poor terminal-to-wire connection.
- Damaged harness – Inspect the wiring harness for damage. If the harness appears to be OK, observe the throttle position display on the Tech 2 while moving connectors and wiring harnesses related to the ITP sensor. A change in the display will indicate the location of the fault.

If DTC P1488 cannot be duplicated, the information included in the Failure Records data can be useful in determining vehicle mileage since the DTC was last set.

DTC P1488 – Intake Throttle Motor Control Circuit Signal Gap

Step	Action	Value(s)	Yes	No
1	Was the “On-Board Diagnostic (OBD) System Check” performed?	—	Go to *Step 2*	Go to *OBD System Check*
2	1. Ignition “ON,” engine “OFF.” 2. With the throttle closed, observe the “ITP Sensor” display on the Tech 2. Is the “ITP Sensor” below the specified value?	0.22 V	Go to *Step 4*	Go to *Step 3*
3	1. Ignition “ON,” engine “OFF.” 2. Review and record Tech 2 Failure Records data. 3. Operate the vehicle within Failure Records conditions as noted. 4. Using a Tech 2, monitor the “Specific DTC” info for DTC P1488. Does the Tech 2 indicate DTC P1488 failed?	—	Go to *Step 4*	Refer to *Diagnostic Aids*
4	Check the ITP circuit for a poor connection at the ECM and replace the terminal if necessary. Did the terminal require replacement?	—	Verify repair	Go to *Step 5*
5	Check the Intake throttle motor circuit for a poor connection and replace the terminal if necessary. Did the terminal require replacement?	—	Verify repair	Go to *Step 6*
6	Check the ITP Assembly for a poor connection at the TP sensor and fasten the ITP Assembly if necessary. Did the ITP Assembly require repair?	—	Verify repair	Go to *Step 7*
7	Replace the ECM (Refer to the Data Programming in Case of ECM change). Is the action complete?	—	Verify repair	—

Diagnostic Trouble Code (DTC) P0502 (Flash DTC 24) VSS (Vehicle Speed Sensor) No Signal

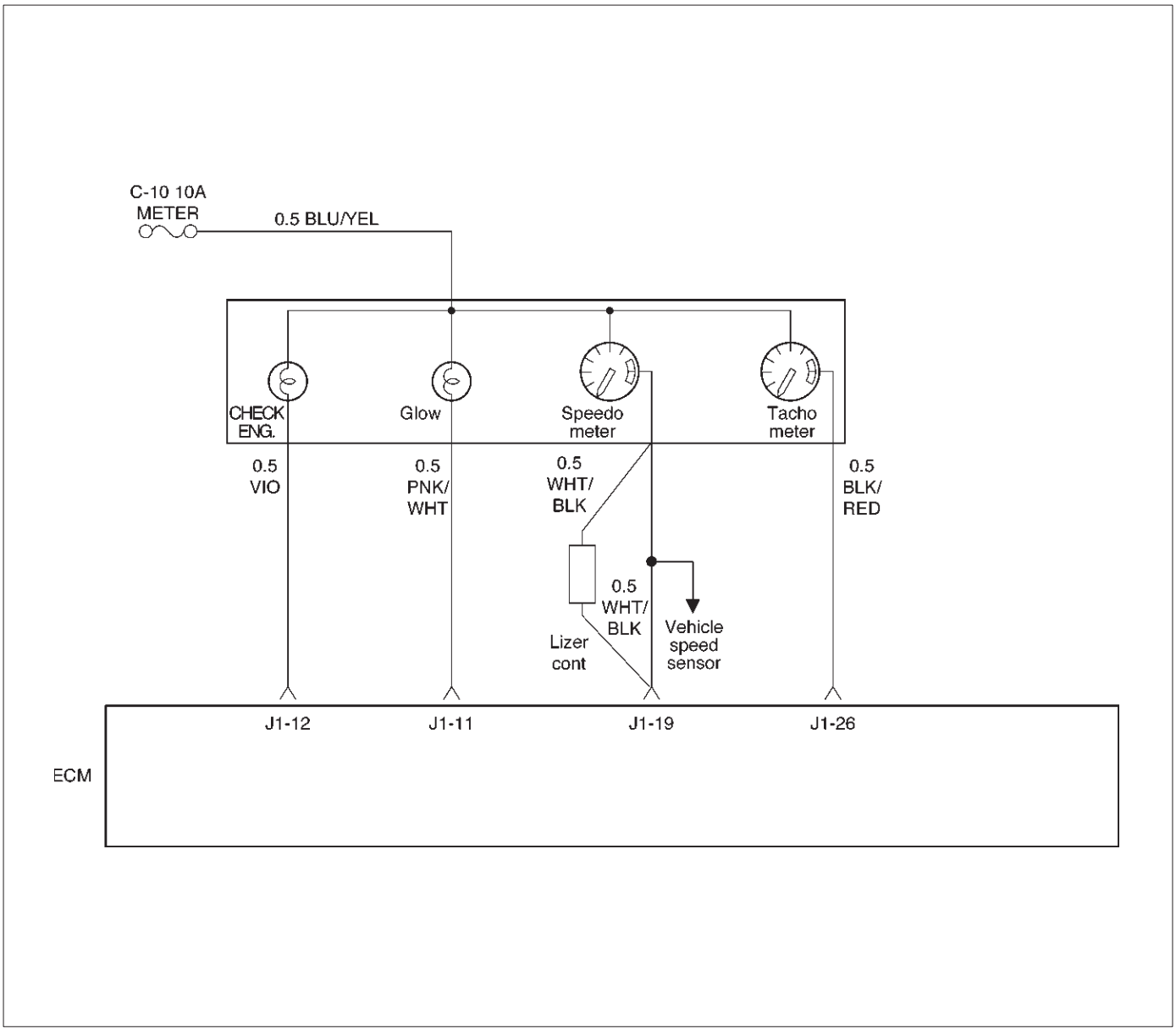

060RW136

Circuit Description

The vehicle speed sensor has a magnet rotated by the transmission output shaft. Attached to the sensor is a hall effect circuit the interacts with the magnetic field treated by the rotating magnet. A 12-volt operating supply for the speed sensor hall circuit is supplied from the meter fuse. The VSS pulses to ground the 9-volt signal sent from the engine control module (ECM) on the reference circuit. The ECM interprets vehicle speed by the number of pulses to ground per second on the reference circuit.

Action Taken When the DTC Sets

- The ECM will illuminate the malfunction indicator lamp (MIL) the first time the fault is detected.
- The ECM will store conditions which were present when the DTC was set as Freeze Frame and in the Failure Records data.

Conditions for Clearing the MIL/DTC

- DTC P0502 can be cleared by using the Tech 2 “Clear Info” function or by disconnecting the ECM battery feed.

Test Description

Number(s) below refer to the step number(s) on the Diagnostic Chart.

10. To avoid backprobing the VSS and possibly damaging a seal or terminal, the VSS output can be tested at the point where the transmission harness connected to the engine harness. The green 16-way connector is adjacent to a blue 16-way connector, and it can be easily accessed by removing the air cleaner assembly. The green 16-way connector is separated, and battery voltage is applied to the VSS through the yellow wire at one corner of the connector. The VSS output can be monitored with a DVM connected to the blue wire with a black tracer. The two wires are next to each other in the 16-way connector . The test connections are made on the transmission side of the connector, the side that is not clipped to the body sheetmetal.
11. The speedometer-to-ECM VSS signal wire is spliced to a wire leading to the cruise control module. If a short to ground or voltage is found between the ECM and speedometer, it could be located between the splice and the cruise control module.

DTC P0502 –VSS No Signal

Step	Action	Value(s)	Yes	No
1	Was the “On-Board Diagnostic (OBD) System Check” performed?	—	Go to *Step 2*	Go to *OBD System Check*
2	Does the speedometer work?	—	Go to *Step 10*	Go to *Step 3*
3	1. Disconnect the VSS connector. 2. Ignition “ON.” 3. Using a test light to battery +, probe the connector ground wire. Did the light illuminate?	—	Go to *Step 5*	Go to *Step 4*
4	Repair the sensor ground. Is the action complete?	—	Verify repair	—
5	1. Ignition “ON,” sensor disconnected. 2. Using a DVM, measure at the VSS connector between ground and voltage supply. Was the measurement near the specified value?	Battery voltage	Go to *Step 7*	Go to *Step 6*
6	Repair the open or short to ground which may have blown the meter fuse. Is the action complete?	—	Verify repair	—
7	1. Ignition “ON,” VSS disconnected. 2. Using a DVM, measure at the VSS connector between ground and the blue/black wire from the speedometer. Was the measurement near the specified value?	7.5-8 V	Go to *Step 9*	Go to *Step 8*
8	Check for an open or short circuit between the speedometer and the VSS. Was an open or short circuit located?	—	Verify repair	Go to *Step 9*
9	Replace the VSS. Is the action complete?	—	Verify repair	Go to *Step 10*
10	Replace the speedometer. Is the action complete?	—	Verify repair	Go to *Step 11*

DTC P0502 –VSS No Signal (Cont'd)

Step	Action	Value(s)	Yes	No
11	Check for an open or short between the ECM and the speedometer. Was a problem found?	—	Verify repair	Go to *Step 12*
12	Replace the ECM (Refer to the Data Programming in Case of ECM change). Is the action complete?	—	Verify repair	—

Diagnostic Trouble Code (DTC) P0510 (Flash DTC 75) Idle SW Malfunction, Open Circuit

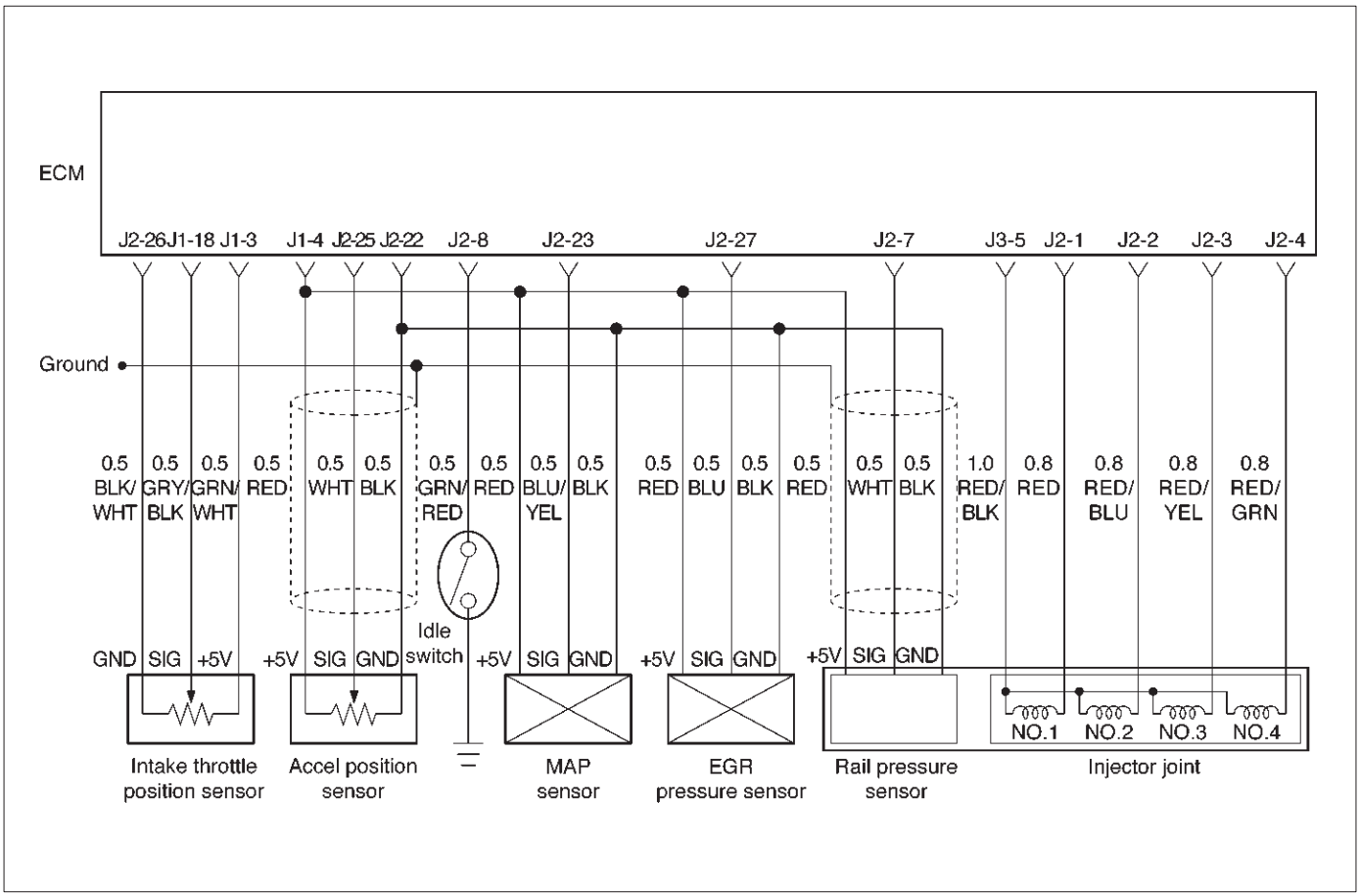

060RW134

Circuit Description

The idle switch signal is used by the Engine Control Module ECM for fuel control.

Action Taken When the DTC Sets

- The ECM will illuminate the malfunction indicator lamp (MIL) the first time the fault is detected.
- The ECM will store conditions which were present when the DTC was set as Freeze Frame and in the Failure Records data.

Conditions for Clearing the MIL/DTC

- DTC P0510 can be cleared by using the Tech 2 “Clear Info” function or by disconnecting the ECM battery feed.

Diagnostic Aids

Check for the following conditions:

- Poor connection at ECM – Inspect harness connectors for backed-out terminals, improper mating, broken locks, improperly formed or damaged terminals, and poor terminal-to-wire connection.
- Damaged harness – Inspect the wiring harness for damage. If the harness appears to be OK, observe the Idle SW display on the Tech 2 while moving connectors and wiring harnesses related to the Idle SW.

If DTC P0510 cannot be duplicated, the information included in the Failure Records data can be useful in determining vehicle mileage since the DTC was last set.

DTC P0510 – Idle SW Malfunction, Open Circuit

Step	Action	Value(s)	Yes	No
1	Was the “On-Board Diagnostic (OBD) System Check” performed?	—	Go to *Step 2*	Go to *OBD System Check*
2	1. Ignition “ON,” engine “OFF.” 2. Review and record Tech 2 Failure Records data. 3. Operate the vehicle within Failure Records conditions as noted. 4. Using a Tech 2, monitor the “DTC” info for DTC P0510. Does the Tech 2 indicate DTC P0510 failed?	—	Go to *Step 4*	Refer to *Diagnostic Aids*
3	Check the Idle SW circuit for a poor connection and repair the terminal if necessary. Did the terminal require repair?	—	Verify repair	Go to *Step 4*
4	1. Ignition “ON.” 2. Operate the accel pedal, and check the data list “ON OFF” on the Tech 2. Is the data list correct?	—	Verify repair	Go to *Step 5*
5	Replace the Idle SW. Is the action complete?	—	Verify repair	—

Diagnostic Trouble Code (DTC) P1510 (Flash DTC 75) Idle SW Malfunction Short Circuit

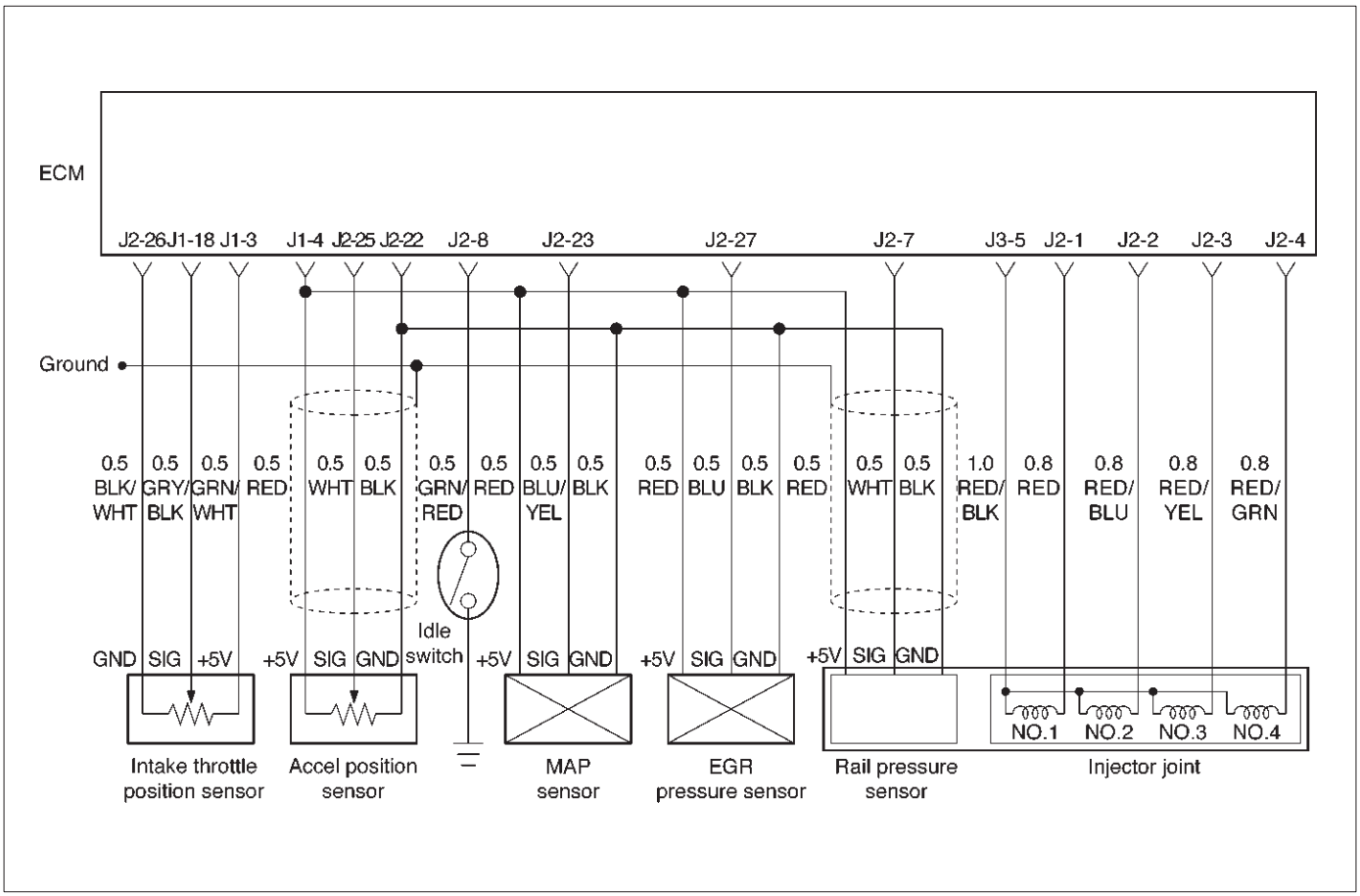

060RW134

Circuit Description

The idle switch signal is used by the Engine Control Module ECM for fuel control.

Action Taken When the DTC Sets

- The ECM will illuminate the malfunction indicator lamp (MIL) the first time the fault is detected.
- The ECM will store conditions which were present when the DTC was set as Freeze Frame and in the Failure Records data.

Conditions for Clearing the MIL/DTC

- DTC P1510 can be cleared by using the Tech 2 “Clear Info” function or by disconnecting the ECM battery feed.

Diagnostic Aids

Check for the following conditions:

- Poor connection at ECM – Inspect harness connectors for backed-out terminals, improper mating, broken locks, improperly formed or damaged terminals, and poor terminal-to-wire connection.
- Damaged harness – Inspect the wiring harness for damage. If the harness appears to be OK, observe the Idle SW display on the Tech 2 while moving connectors and wiring harnesses related to the Idle SW.

If DTC P0122 cannot be duplicated, the information included in the Failure Records data can be useful in determining vehicle mileage since the DTC was last set.

DTC P1510 – Idle SW Malfunction, Short Circuit

Step	Action	Value(s)	Yes	No
1	Was the “On-Board Diagnostic (OBD) System Check” performed?	—	Go to *Step 2*	Go to *OBD System Check*
2	1. Ignition “ON,” engine “OFF.” 2. Review and record Tech 2 Failure Records data. 3. Operate the vehicle within Failure Records conditions as noted. 4. Using a Tech 2, monitor the “DTC” info for DTC P1510. Does the Tech 2 indicate DTC P1510 failed?	—	Go to *Step 4*	Refer to *Diagnostic Aids*
3	Check the Idle SW circuit for a poor connection and repair the terminal if necessary. Did the terminal require repair?	—	Verify repair	Go to *Step 4*
4	1. Ignition “ON.” 2. Operate the accel pedal, and check the data list “ON OFF” on the Tech 2. Is the data list correct?	—	Verify repair	Go to *Step 5*
5	Replace the Idle SW. Is the action complete?	—	Verify repair	—

Diagnostic Trouble Code (DTC) P0562 (Flash DTC 35) System Voltage Too Low

Circuit Description

The engine control module (ECM) monitors the system voltage on the ignition feed terminals to the ECM. A system voltage DTC will set whenever the voltage is above a calibrated value.

Action Taken When the DTC Sets

- The ECM will not illuminate the malfunction indicator lamp (MIL).
- The ECM will store as Failure Records only conditions which were present when the DTC was set. This information will not be stored as Freeze Frame data.

Conditions for Clearing the MIL/DTC

- DTC P0563 can be cleared by using the Tech 2 “Clear Info” function or by disconnecting the ECM battery feed.

Diagnostic Aids

If the DTC sets when an accessory is operated, check for a poor connection or defective accessory.

DTC P0562 – System Voltage Too Low

Step	Action	Value(s)	Yes	No
1	Was the “On-Board Diagnostic (OBD) System Check” performed?	—	Go to *Step 2*	Go to *OBD System Check*
2	Using a DVM, measure the battery voltage at the battery. Is the battery voltage greater than the specified value?	11.5 V	Go to *Step 3*	Charge battery, then go to *Step 3*
3	1. Install a Tech 2. 2. Select “Ignition Volts” on the Tech 2. 3. Start the engine and raise the engine speed to the specified value. 4. Load the electrical system by turning on the headlights, high blower, etc. Is the ignition voltage approximately equal to the specified value?	2000 RPM 12.8-14.1 V	Go to *Step 4*	Go to *Starting/ Charging*
4	1. Ignition “OFF.” 2. Disconnect the ECM connector at the ECM. 3. Using a DVM, measure the battery voltage at the ECM connector. Is it approximately equal to battery voltage?	—	Check for excessive current draw with ignition “OFF,” engine “OFF.”	Go to *Step 5*
5	1. Check for faulty connections at the ECM harness terminals. 2. Repair as necessary. Was a repair necessary?	—	Verify repair	Go to *Step 6*
6	Check for an open battery feed circuit to the ECM. Is the action complete?	—	Verify repair	Go to *Step 7*
7	Replace the ECM (Refer to the Data Programming in Case of ECM change). Is the action complete?	—	Verify repair	—

Diagnostic Trouble Code (DTC) P1562 (Flash DTC 35) System Voltage Too Low at Cranking

Circuit Description

The engine control module (ECM) monitors the system voltage on the ignition feed terminals to the ECM. A system voltage DTC will set whenever the voltage is above a calibrated value.

Action Taken When the DTC Sets

- The ECM will illuminate the malfunction indicator lamp (MIL) at the first time of the fault is detected.

Conditions for Clearing the MIL/DTC

- DTC P0563 can be cleared by using the Tech 2 “Clear Info” function or by disconnecting the ECM battery feed.

Diagnostic Aids

If the DTC sets when an accessory is operated, check for a poor connection or defective accessory.

DTC P1562 – System Voltage Too Low at Cranking

Step	Action	Value(s)	Yes	No
1	Was the “On-Board Diagnostic (OBD) System Check” performed?	—	Go to *Step 2*	Go to *OBD System Check*
2	Using a DVM, measure the battery voltage at the battery. Is the battery voltage less than the specified value?	11.5 V	Go to *Step 3*	Go to *Step 4*
3	1. Charge the battery and clean the battery terminals. 2. Clean the battery ground cable connection if corrosion is indicated. Is the battery voltage less than the specified value?	11.5 V	Replace battery	Go to *Step 4*
4	1. Turn “OFF” all the accessories. 2. Install a Tech 2. 3. Select the ignition voltage parameter on the Tech 2. 4. Start the engine and raise the engine RPM to the specified value. Is the voltage more than 2.5 volts greater than the measurement taken in step 2 or 3?	2000 RPM	Go to *Starting/Charging*	Go to *Step 5*
5	Replace the ECM (Refer to the Data Programming in Case of ECM change). Is the action complete?	—	Verify repair	—

Diagnostic Trouble Code (DTC) P1587 (Flash DTC 25) Brake SW Malfunction

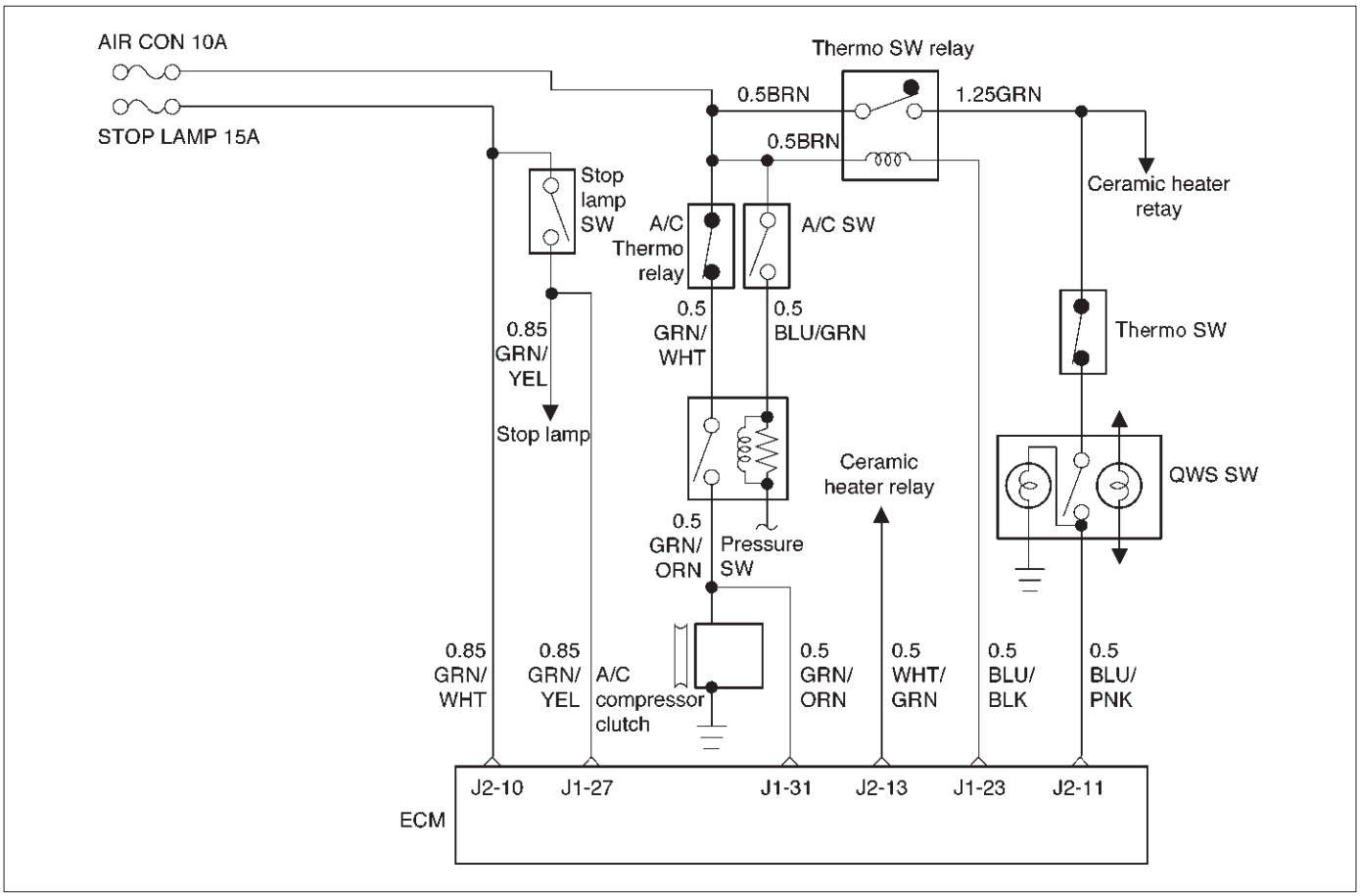

060RW130

Circuit Description

Brake Stop Lamp SW Circuit receives through Stop Lamp 10A fuse from the battery.

Action Taken When the DTC Sets

- The ECM will store conditions which were present when the DTC was set as Freeze Frame and in the Failure Records data.

Conditions for Clearing the MIL/DTC

- DTC P1587 can be cleared by using the Tech 2 “Clear Info” function or by disconnecting the ECM battery feed.

Diagnostic Aids

Check for the following conditions:

- Poor connection at ECM – Inspect harness connectors for backed-out terminals, improper mating, broken locks, improperly formed or damaged terminals, and poor terminal-to-wire connection.
- Damaged harness – Inspect the wiring harness for damage. If the harness appears to be OK, observe the Brake SW display on the Tech 2 while moving connectors and wiring harnesses related to the Brake SW. A change in the display will indicate the location of the fault.

If DTC P1587 cannot be duplicated, the information included in the Failure Records data can be useful in determining vehicle mileage since the DTC was last set.

DTC P1587 – Brake SW Malfunction

Step	Action	Value(s)	Yes	No
1	Was the “On-Board Diagnostic (OBD) System Check” performed?	—	Go to *Step 2*	Go to *OBD System Check*
2	1. Ignition “ON,” engine “OFF.” 2. Review and record Tech 2 Failure Records data. 3. Operate the vehicle within Failure Records conditions as noted. 4. Using a Tech 2, monitor the “DTC” info for DTC P1587. Does the Tech 2 indicate DTC P1587 failed?	—	Go to *Step 3*	Refer to *Diagnostic Aids*
3	Check the Brake SW circuit for a poor connection and replace the terminal if necessary. Did the terminal require replacement?	—	Verify repair	Go to *Step 4*
4	Replace the Brake SW. Is the action complete?	—	Verify repair	—

Diagnostic Trouble Code (DTC) P1588 (Flash DTC 25) Brake SW Malfunction

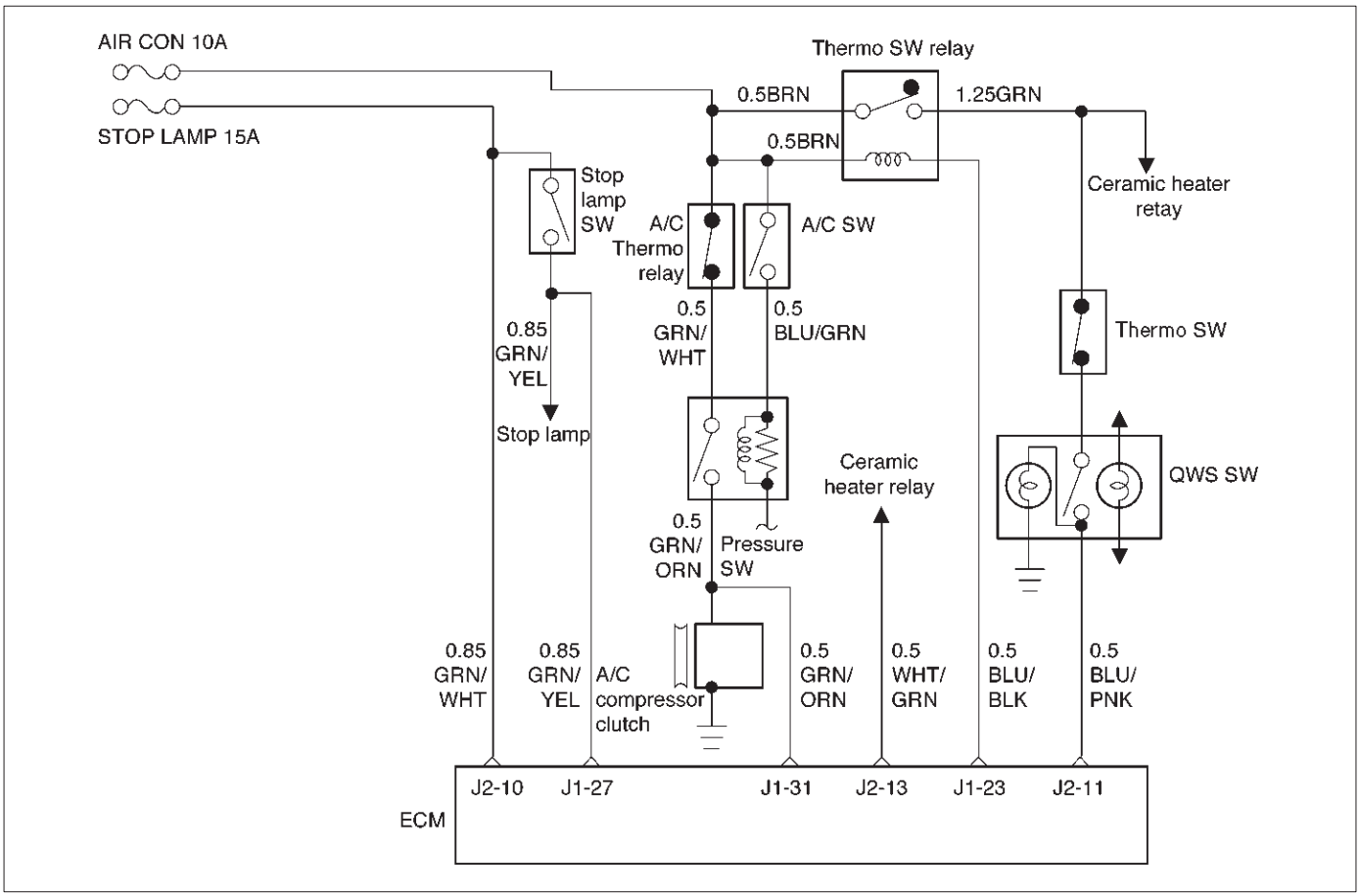

060RW130

Circuit Description

Brake Stop Lamp SW Circuit receives through Stop Lamp 10A fuse from the battery.

Action Taken When the DTC Sets

- The ECM will illuminate the malfunction indicator lamp (MIL) the first time the fault is detected.
- The ECM will store conditions which were present when the DTC was set as Freeze Frame and in the Failure Records data.

Conditions for Clearing the MIL/DTC

- DTC P1588 can be cleared by using the Tech 2 “Clear Info” function or by disconnecting the ECM battery feed.

Diagnostic Aids

Check for the following conditions:

- Poor connection at ECM – Inspect harness connectors for backed-out terminals, improper mating, broken locks, improperly formed or damaged terminals, and poor terminal-to-wire connection.
- Damaged harness – Inspect the wiring harness for damage. If the harness appears to be OK, observe the Brake SW display on the Tech 2 while moving connectors and wiring harnesses related to the Brake SW. A change in the display will indicate the location of the fault.

If DTC P1588 cannot be duplicated, the information included in the Failure Records data can be useful in determining vehicle mileage since the DTC was last set.

DTC P1588 – Brake SW Malfunction

Step	Action	Value(s)	Yes	No
1	Was the “On-Board Diagnostic (OBD) System Check” performed?	—	Go to *Step 2*	Go to *OBD System Check*
2	1. Ignition “ON,” engine “OFF.” 2. Review and record Tech 2 Failure Records data. 3. Operate the vehicle within Failure Records conditions as noted. 4. Using a Tech 2, monitor the “DTC” info for DTC P1588. Does the Tech 2 indicate DTC P1588 failed?	—	Go to *Step 3*	Refer to *Diagnostic Aids*
3	Check the Brake SW circuit for a poor connection and replace the terminal if necessary. Did the terminal require replacement?	—	Verify repair	Go to *Step 4*
4	Replace the Brake SW. Is the action complete?	—	Verify repair	—

Diagnostic Trouble Code (DTC) P0601 (Flash DTC 55) ECM Checksum Error

Action Taken When the DTC Sets

- The ECM will not illuminate the malfunction indicator lamp (MIL).
- The ECM will store conditions which were present when the DTC was set in the Failure Records data only.

Conditions for Clearing the MIL/DTC

- DTC P0601 can be cleared by using the Tech 2 “Clear Info” function or by disconnecting the ECM battery feed.

Diagnostic Aids

- DTC P0601 indicates that the contents of the EEPROM have changed since the ECM was programmed. The only possible repair is ECM replacement. Remember to program the replacement ECM with the correct software and calibration for the vehicle.

DTC P0601 – ECM Checksum Error

Step	Action	Value(s)	Yes	No
1	Was the “On-Board Diagnostic (OBD) System Check” performed?	—	Go to *Step 2*	Go to *OBD System Check*
2	Replace the ECM (Refer to the Data Programming in Case of ECM change). Is the action complete?	—	Verify repair	—

Diagnostic Trouble Code (DTC) P0650 (Flash DTC 77) Check Engine Lamp Circuit Open/Short

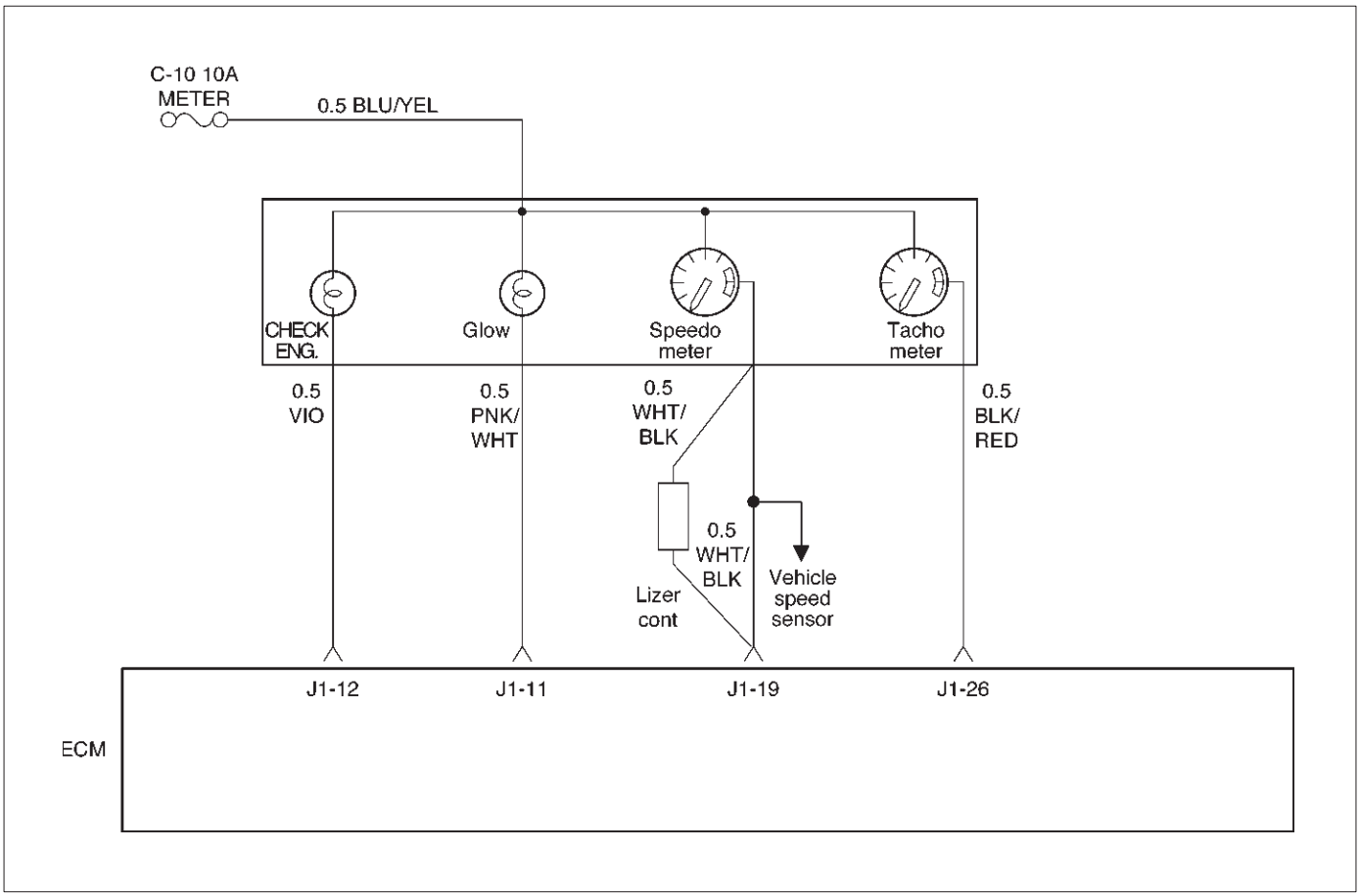

060RW136

Circuit Description

The check engine lamp circuit receives through Meter 10A fuse the battery, current flowing in the order of Meter and check engine lamp.

Action Taken When the DTC Sets

- The ECM will illuminate the malfunction indicator lamp (MIL) the first time the fault is detected.
- The ECM will store conditions which were present when the DTC was set as Freeze Frame and in the Failure Records data.

Conditions for Clearing the MIL/DTC

- DTC P0650 can be cleared by using the Tech 2 “Clear Info” function or by disconnecting the ECM battery feed.

Diagnostic Aids

Check for the following conditions:

- Poor connection at ECM – Inspect harness connectors for backed-out terminals, improper mating, broken locks, improperly formed or damaged terminals, and poor terminal-to-wire connection.
- Damaged harness – Inspect the wiring harness for damage. If the harness appears to be OK, observe the lamp test display on the Tech 2 while moving connectors and wiring harnesses related to the check engine lamp. A change in the display will indicate the location of the fault.

If the Tech 2 indicate DTCs P0650 and P0381, check the meter circuit necessarily.

DTC P0650 – Check Engine Lamp Open/Short

Step	Action	Value(s)	Yes	No
1	Was the “On-Board Diagnostic (OBD) System Check” performed?	—	Go to *Step 2*	Go to *OBD System Check*
2	1. Ignition “ON,” engine “OFF.” 2. Observe the “Lamp Test” display on the Tech 2. Is the “Lamp Test” operating?	—	Refer to *Diagnostic Aids*	Go to *Step 3*
3	1. Ignition “ON,” engine “OFF.” 2. Review and record Tech 2 Failure Records data. 3. Operate the vehicle within Failure Records conditions as noted. 4. Using a Tech 2, monitor the “DTC” info for DTC P0650. 5. If the Tech 2 indicate DTCs P0650 and P0381, check the meter circuit necessarily. Does the Tech 2 indicate DTC P0650 failed?	—	Go to *Step 4*	Refer to *Diagnostic Aids*
4	Check the Check Engine Lamp circuit for a poor connection at the Meter and replace the bulb if necessary. Did the bulb require replacement?	—	Verify repair	Go to *Step 5*
5	Using the Tech 2. Does the Tech 2 indicate DTC P0650 failed?	—	Go to *Step 6*	—
6	Check the Meter circuit for a poor connection. Did the Meter require repair?	—	Verify repair	Go to *Step 7*
7	Replace the ECM (Refer to the Data Programming in Case of ECM change). Is the action complete?	—	Verify repair	—

Diagnostic Trouble Code (DTC) P0654 (Flash DTC 27) Tachometer Circuit Open/Short

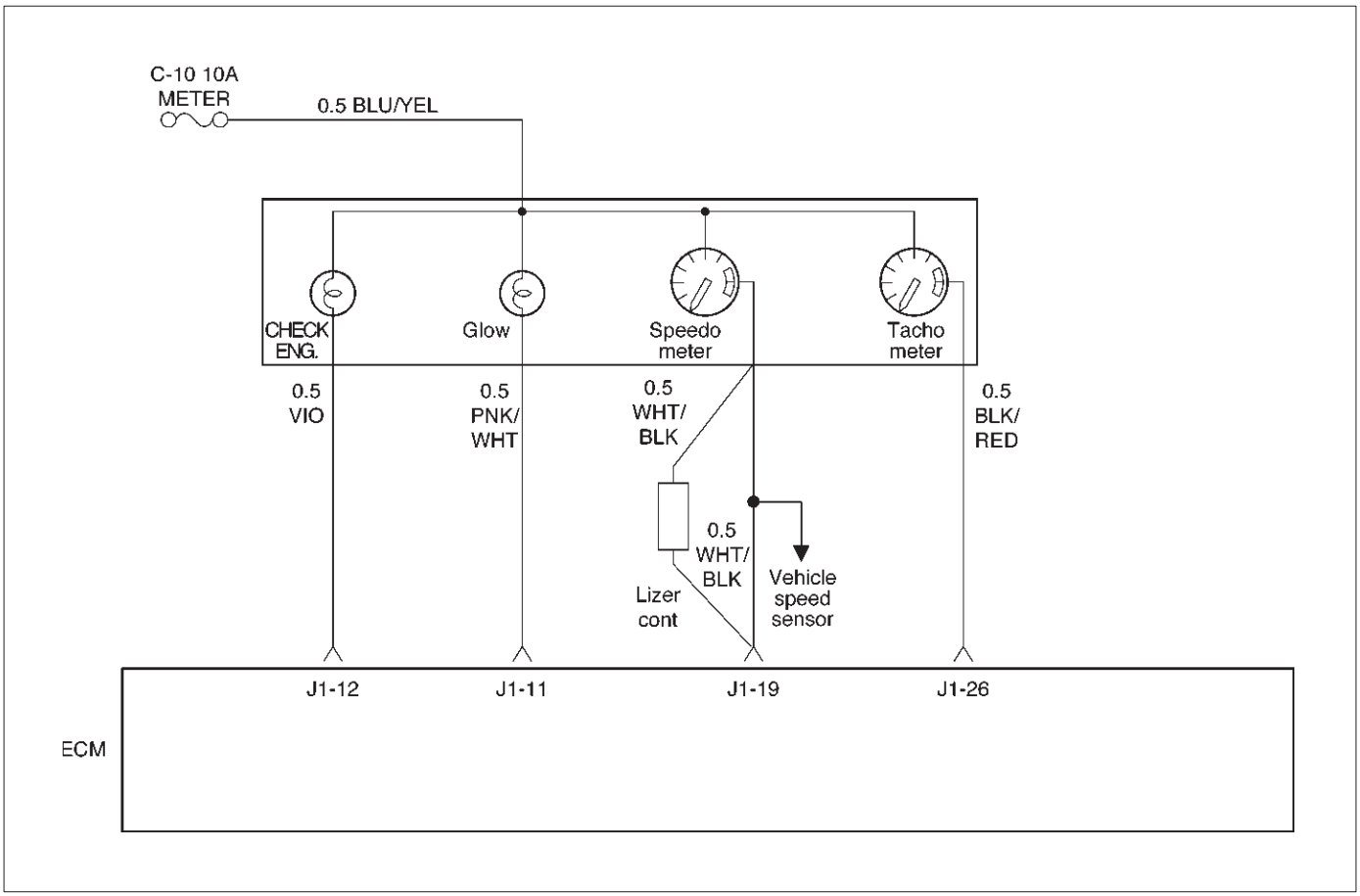

060RW136

Circuit Description

The Tach Meter circuit receives through Meter 10A fuse from the battery, current flowing in the order of Mater and the Tach Meter.

Action Taken When the DTC Sets

- The ECM will illuminate the malfunction indicator lamp (MIL) the first time the fault is detected.
- The ECM will store conditions which were present when the DTC was set as Freeze Frame and in the Failure Records data.

Conditions for Clearing the MIL/DTC

- DTC P0650 can be cleared by using the Tech 2 “Clear Info” function or by disconnecting the ECM battery feed.

Diagnostic Aids

Check for the following conditions:

- Poor connection at ECM – Inspect harness connectors for backed-out terminals, improper mating, broken locks, improperly formed or damaged terminals, and poor terminal-to-wire connection.
- Damaged harness – Inspect the wiring harness for damage.
- If the Tech 2 indicat DTCs 0654, P0650 and P0381, Check the meter circuit necessarily.

DTC P0654 – Tachometer Circuit Open/Short

Step	Action	Value(s)	Yes	No
1	Was the “On-Board Diagnostic (OBD) System Check” performed?	—	Go to *Step 2*	Go to *OBD System Check*
2	1. Ignition “ON,” engine “OFF.” 2. Review and record Tech 2 Failure Records data. 3. Operate the vehicle within Failure Records conditions as noted. 4. Using a Tech 2, monitor the “DTC” info for DTC P654. Does the Tech 2 indicate DTC P0654 failed?	—	Go to *Step 3*	Refer to *Diagnostic Aids*
3	Check the Tach meter circuit for a poor connection at the Meter and replace the terminal if necessary. Did the terminal require replacement?	—	Verify repair	Go to *Step 4*
4	Using the Tech 2. Does the Tech 2 indicate DTC P0654 failed?	—	Verify repair	Go to *Step 5*
5	Check the Tach Meter circuit for a poor connection. Did the terminal require replacement?	—	Verify repair	Go to *Step 6*
6	Replace the tachometer. Is the action complete?	—	Verify repair	Go to *Step 7*
7	Replace the ECM (Refer to the Data Programming in Case of ECM change). Is the action complete?	—	Verify repair	—

Diagnostic Trouble Code (DTC) P1655 (Flash DTC 17) Thermo Relay Circuit Open/Short

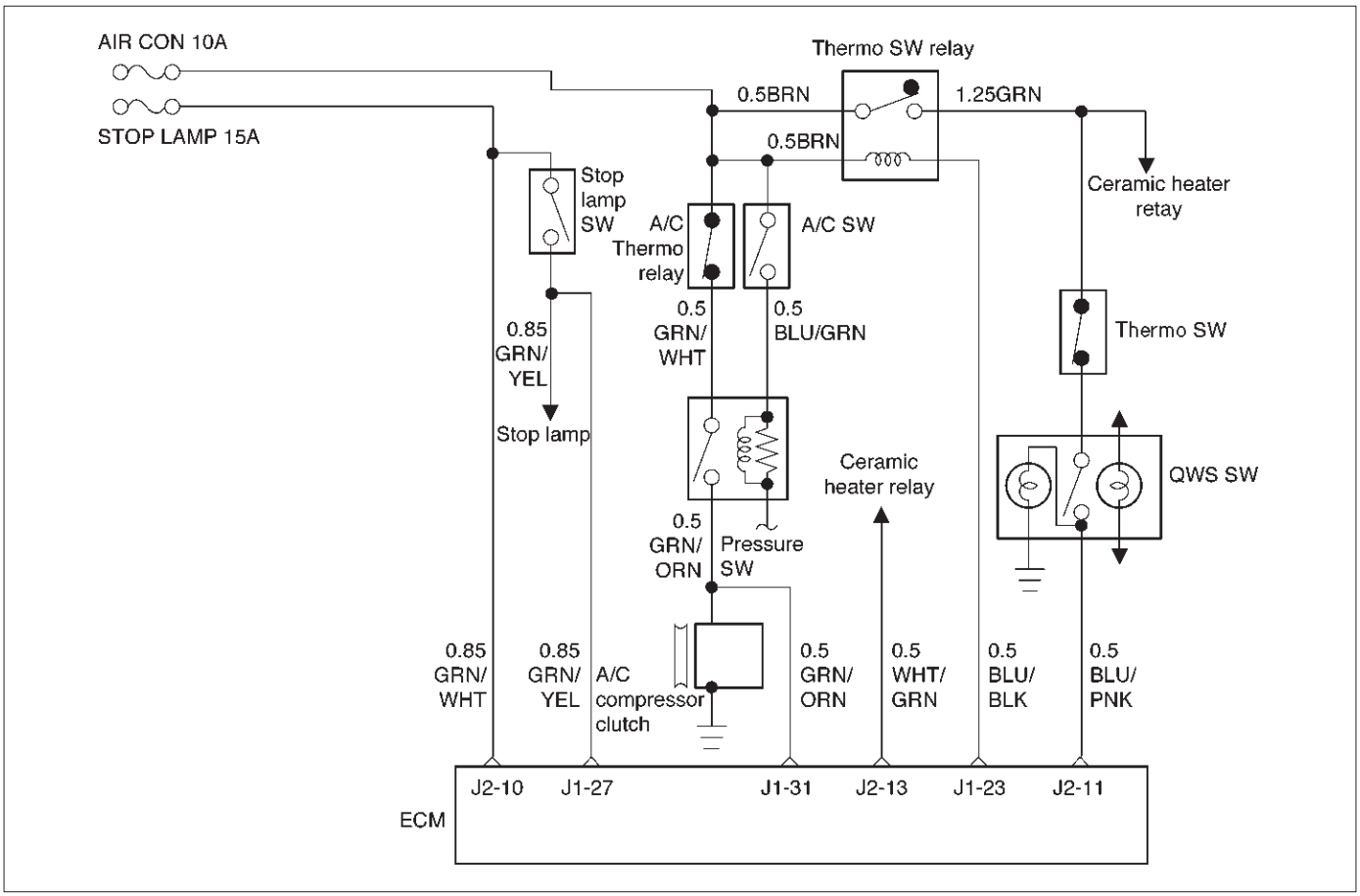

060RW130

Circuit Description

The thermo relay circuit receives current through air con 10A fuse from the battery, current flowing in the order of the thermo relay and thermo SW.

Action Taken When the DTC Sets

- The ECM will illuminate the malfunction indicator lamp (MIL) the first time the fault is detected.
- The ECM will store conditions which were present when the DTC was set as Freeze Frame and in the Failure Records data.

Conditions for Clearing the MIL/DTC

- DTC P1655 can be cleared by using the Tech 2 “Clear Info” function or by disconnecting the ECM battery feed.

Diagnostic Aids

Check for the following conditions:

- Poor connection at ECM – Inspect harness connectors for backed-out terminals, improper mating, broken locks, improperly formed or damaged terminals, and poor terminal-to-wire connection.
- Damaged harness – Inspect the wiring harness for damage.

DTC P1655 – Thermo Relay Circuit Open/Short

Step	Action	Value(s)	Yes	No
1	Was the “On-Board Diagnostic (OBD) System Check” performed?	—	Go to *Step 2*	Go to *OBD System Check*
2	1. Ignition “ON,” engine “OFF.” 2. Observe the “Batteri Voltage” display on the Tech 2. Is the “Batteri Voltage” below the specified value?	11 V	Go to *Step 4*	Go to *Step 3*
3	1. Ignition “ON,” engine “OFF.” 2. Review and record Tech 2 Failure Records data. 3. Operate the vehicle within Failure Records conditions as noted. 4. Using a Tech 2, monitor the “Specific DTC” info for DTC P1655. Does the Tech 2 indicate DTC P1655 failed?	—	Go to *Step 4*	Refer to *Diagnostic Aids*
4	Check the Thermo Relay circuit for a poor connection and replace the terminal if necessary. Did the terminal require replacement?	—	Verify repair	Go to *Step 5*
5	Check the Thermo Relay for damage. Did the Thermo Relay require replacement?	—	Verify repair	Go to *Step 6*
6	Check the Thermo Relay circuit for a poor connection at the ECM and replace the terminal if necessary. Did the terminal require replacement?	—	Verify repair	Go to *Step 7*
7	Replace the ECM (Refer to the Data Programming in Case of ECM change). Is the action complete?	—	Verify repair	—

Diagnostic Trouble Code (DTC) P1657 (Flash DTC 76) ECM Main Relay Circuit Open/Short

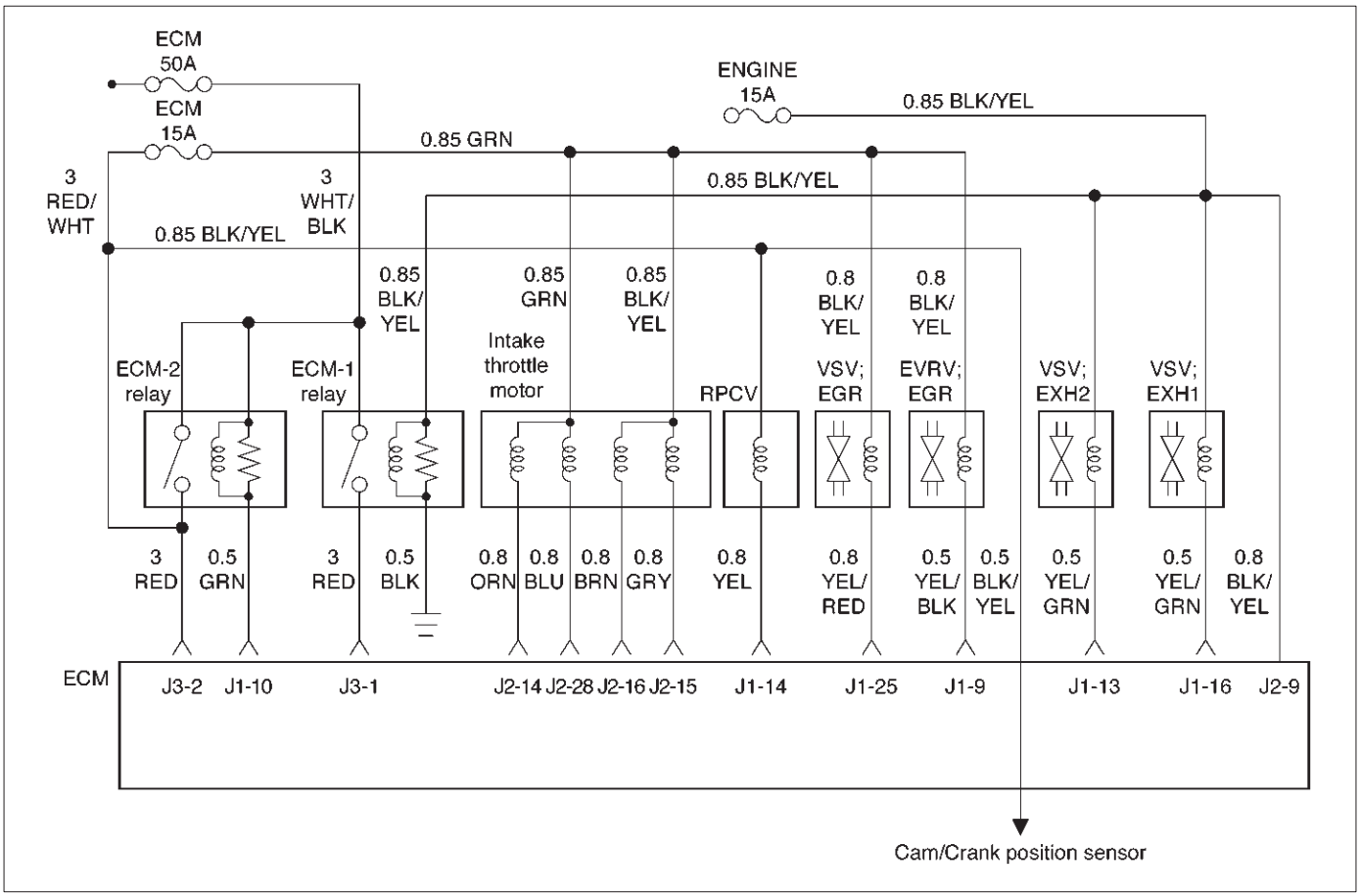

060RW135

Circuit Description

The ECM main relay circuit receives current through ECM 50A fuse from the battery, current flowing in the order of the ECM main relay and ECM.

Action Taken When the DTC Sets

- The ECM will illuminate the malfunction indicator lamp (MIL) the first time the fault is detected.
- The ECM will store conditions which were present when the DTC was set as Freeze Frame and in the Failure Records data.

Conditions for Clearing the MIL/DTC

- DTC P1657 can be cleared by using the Tech 2 “Clear Info” function or by disconnecting the ECM battery feed.

Diagnostic Aids

Check for the following conditions:

- Poor connection at ECM – Inspect harness connectors for backed-out terminals, improper mating, broken locks, improperly formed or damaged terminals, and poor terminal-to-wire connection.
- Damaged harness – Inspect the wiring harness for damage.

DTC P1657 – ECM Main Relay Circuit Open/Short

Step	Action	Value(s)	Yes	No
1	Was the “On-Board Diagnostic (OBD) System Check” performed?	—	Go to *Step 2*	Go to *OBD System Check*
2	1. Check the Fuse 50A·ECM and 15A·Eng. 2. If the Fuse is open, replace it as necessary. Was the Fuse open?	—	Verify repair	Go to *Step 3*
3	1. Ignition “ON,” engine “OFF.” 2. Review and record Tech 2 Failure Records data. 3. Operate the vehicle within Failure Records conditions as noted. 4. Using a Tech 2, monitor the “DTC” info for DTC P1657. Does the Tech 2 indicate DTC P1657 failed?	—	Go to *Step 4*	Refer to *Diagnostic Aids*
4	Check the ECM Main Relay circuit between the Fuse and the ECM Main Relay for a poor connection and repair the terminal if necessary. Did the terminal require repair?	—	Verify repair	Go to *Step 5*
5	Check the ECM Main Relay for a damage and Replace the ECM (Refer to the Data Programming in Case of ECM change) Main Relay if necessary. Did the ECM Main Relay require replacement?	—	Verify repair	Go to *Step 6*
6	Check the ECM Main Relay circuit for a poor connection at the ECM and replace the terminal if necessary. Did the terminal require replacement?	—	Verify repair	Go to *Step 7*
7	Check the ECM Main Relay Ground circuit for a poor connection and repair the terminal if necessary. Did the terminal require repair?	—	Verify repair	Go to *Step 8*
8	Check the ECM Main Relay power circuit for a poor connection and repair the terminal if necessary. Did the terminal require repair?	—	Verify repair	Go to *Step 9*
9	Replace the ECM (Refer to the Data Programming in Case of ECM change) Main Relay. Is the action complete?	—	Verify repair	Go to *Step 10*
10	Replace the ECM (Refer to the Data Programming in Case of ECM change). Is the action complete?	—	Verify repair	—

Diagnostic Trouble Code (DTC) P1589 (Flash DTC 47) Transmission SW Circuit Open/Short

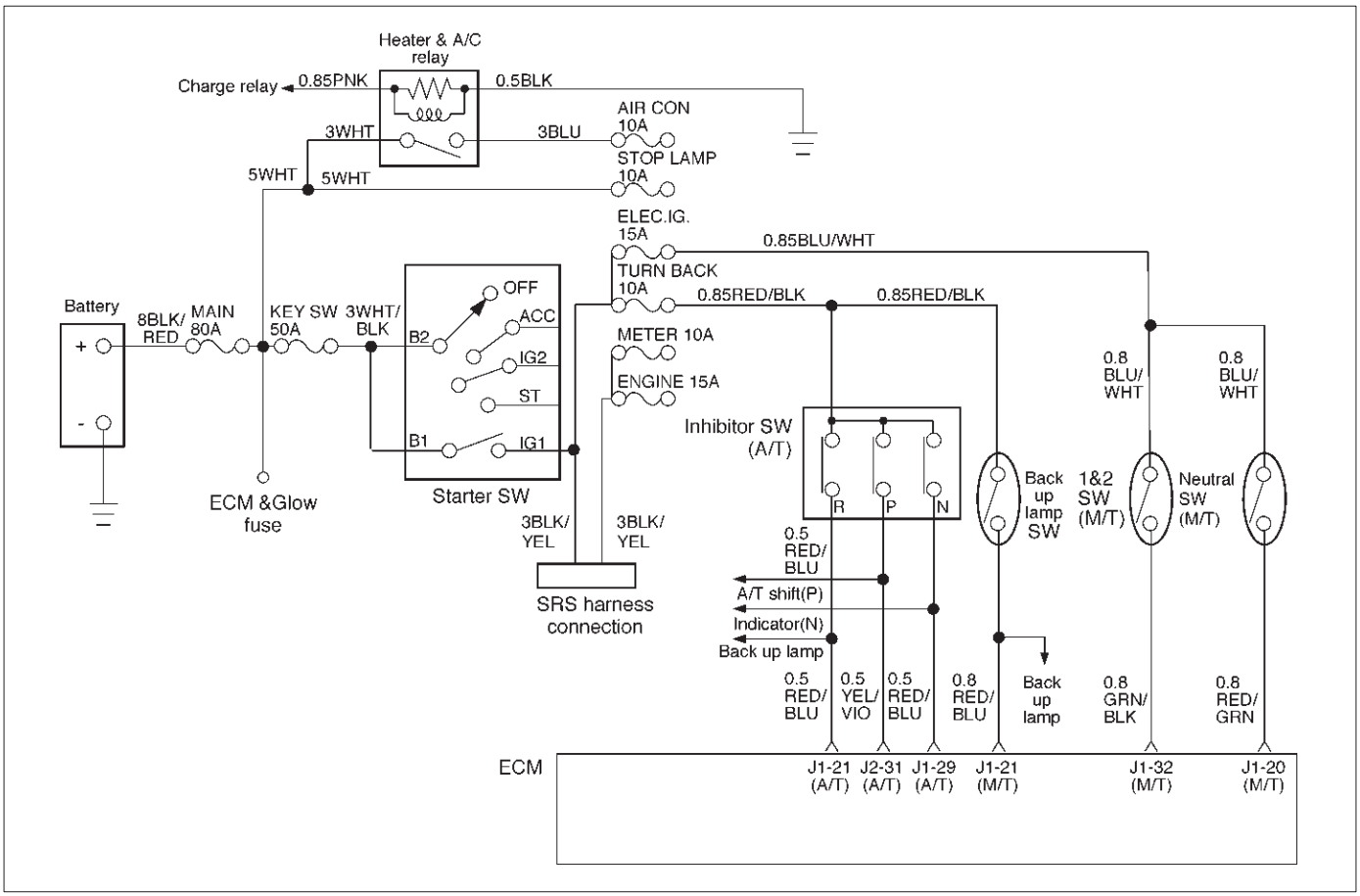

060RW131

Circuit Description

The trans mission SW circuit receives current through ELEC IG 10A fuse from the battery, current flowing in the order of the trans mission SW and ECM.

Action Taken When the DTC Sets

- The ECM will illuminate the malfunction indicator lamp (MIL) the first time the fault is detected.
- The ECM will store conditions which were present when the DTC was set as Freeze Frame and in the Failure Records data.

Conditions for Clearing the MIL/DTC

- DTC P1589 can be cleared by using the Tech 2 “Clear Info” function or by disconnecting the ECM battery feed.

Diagnostic Aids

Check for the following conditions:

- Poor connection at ECM – Inspect harness connectors for backed-out terminals, improper mating, broken locks, improperly formed or damaged terminals, and poor terminal-to-wire connection.
- Damaged harness – Inspect the wiring harness for damage. If the harness appears to be OK, observe the throttle position display on the Tech 2 while moving connectors and wiring harnesses related to the TP sensor. A change in the display will indicate the location of the fault.

If DTC P1589 cannot be duplicated, the information included in the Failure Records data can be useful in determining vehicle mileage since the DTC was last set.

DTC P1589 – Transmission Circuit Open/Short

Step	Action	Value(s)	Yes	No
1	Was the “On-Board Diagnostic (OBD) System Check” performed?	—	Go to *Step 2*	Go to *OBD System Check*
2	Check the Fuse 10A for a open circuit and replace the Fuse if necessary. Did the Fuse require replacement?	—	Verify repair	Go to *Step 3*

DTC P1589 – Transmission Circuit Open/Short (Cont'd)

Step	Action	Value(s)	Yes	No
3	1. Ignition "ON," engine "OFF." 2. Review and record Tech 2 Failure Records data. 3. Operate the vehicle within Failure Records conditions as noted. 4. Using a Tech 2, monitor the "DTC" info for DTC P1589. Does the Tech 2 indicate DTC P1589 failed?	—	Go to *Step 4 (A/T)* Go to *Step 6 (M/T)*	Refer to *Diagnostic Aids*
4	Check the Indicator Lamp correct indicated for a correct indication on the Meter. (A/T only) Did the Indicator Lamp correct indicated?	—	Go to *Step 5*	Go to *Step 8*
5	Check the Trans Mission SW signal circuit for a poor connection at the ECM and replace the terminal if necessary. Did the terminal require replacement?	—	Verify repair	Go to *Step 8*
6	Check the Trans Mission SW circuit for a poor connection at the Trans Mission SW and replace the terminal if necessary. Did the terminal require replacement?	—	Verify repair	Go to *Step 7*
7	Replace the Trans Mission SW. Is the action complete?	—	Verify repair	Go to *Step 8*
8	Replace the ECM (Refer to the Data Programming in Case of ECM change). Is the action complete?	—	Verify repair	—

Symptom Diagnosis

Preliminary Checks

Before using this section, perform the “On–Board Diagnostic (OBD) System Check” and verify all of the following items:

- The powertrain control module (ECM) and malfunction indicator lamp (MIL) (CHECK ENGINE lamp) are operating correctly.
- There are no DTC(s) stored.
- Tech–2 data is within normal operating range. Refer to *Typical Scan Data Values*.
- Verify the customer complaint and locate the correct symptom in the table of contents. Perform the procedure included in the symptom chart.

Visual/Physical Check

Several of the symptom procedures call for a careful visual/physical check. This can lead to correcting a problem without further checks and can save valuable time.

This check should include the following items:

- ECM grounds for cleanliness, tightness and proper location.
- Vacuum hoses for splits, kinks, and proper connections, as shown on the “Vehicle Emission Control Information” label. Check thoroughly for any type of leak or restriction.
- Air intake ducts for collapsed or damaged areas.
- Injector wires for cracking, hardness, and carbon tracking.
- Wiring for proper connections, pinches and cuts.

Intermittents

IMPORTANT: An intermittent problem may or may not turn on the malfunction indicator lamp (MIL) or store a DTC. DO NOT use the Diagnostic Trouble Code (DTC) charts for intermittent problems. The fault must be present to locate the problem.

Most intermittent problems are caused by faulty electrical connections or wiring. Perform a careful visual/physical check for the following conditions:

- Poor mating of the connector halves or a terminal not fully seated in the connector (backed out).
- Improperly formed or damaged terminal.
- All connector terminals in the problem circuit should be carefully checked for proper contact tension.
- Poor terminal–to–wire connection. This requires removing the terminal from the connector body to check.

Road test the vehicle with a Digital Multimeter (5-8840-0285-0) connected to a suspected circuit. An abnormal voltage when the malfunction occurs is a good indication that there is a fault in the circuit being monitored.

Use a scan tool to help detect intermittent conditions. The scan tools have several features that can be used to locate an intermittent condition. Use the following feature to find intermittent faults:

- Using a Tech–2 “Freeze Frame” buffer or “Failure Records” buffer can aid in locating an intermittent condition. Review and record the information in the freeze frame or failure record associated with the intermittent DTC being diagnosed. The vehicle can be driven within the conditions that were present when the DTC originally set.

To check for loss of diagnostic code memory, disconnect the MAP sensor and idle the engine until the MIL (CHECK ENGINE lamp) comes on. DTC P0107 should be stored and kept in memory when the ignition is turned “OFF.” If not, the ECM is faulty. When this test is completed, make sure that you clear the DTC P0107 from memory.

An intermittent MIL (CHECK ENGINE lamp) with no stored DTC may be caused by the following:

- MIL (CHECK ENGINE lamp) wire to ECM shorted to ground.
- Poor ECM grounds. Refer to the ECM wiring diagrams.

Check for improper installation of electrical options such as lights, cellular phones, etc.

Check for an open diode across the A/C compressor clutch and check for other open diodes (refer to wiring diagrams in *Electrical Diagnosis*).

If problem has not been found, refer to *ECM Connector Symptom* tables.

Hard Start Symptom

Step	Action	Value(s)	Yes	No
1	**DEFINITION:** Engine cranks, but does not start for a long time. Does eventually run, or may start but immediately stalls. Was the “On-Board Diagnostic (OBD) System Check” performed?	—	Go to *Step 2*	Go to *OBD System Check*
2	1. Perform a bulletin search. 2. If a bulletin that addresses the symptom is found, correct the condition as instructed in the bulletin. Was a bulletin found that addresses the symptom?	—	Verify repair	Go to *Step 3*
3	Was a visual/physical check performed?	—	Go to *Step 4*	Go to *Visual/Physical Check*
4	Check engine coolant temperature (ECT) sensor for shift in value. After 8 hours with the hood up and the engine not running, connect the scan tool. With the ignition “ON” and the engine not running, compare engine coolant temperature to manifold air temperature. Are ECT and MAT within the specified value of each other?	± 5˚C (± 9˚F)	Go to *Step 8*	Go to *Step 5*
5	1. Using Tech–2, display the engine coolant temperature and note the value. 2. Check the resistance of the engine coolant temperature sensor. 3. Refer to *Engine Coolant Temperature Sensor Temperature vs. Resistance* chart on *DTC P0118 Diagnostic Support* for resistance specifications. Is the resistance value near the resistance for the temperature noted?	—	Go to *Step 7*	Go to *Step 6*
6	Replace the ECT sensor. Is the action complete?	—	Verify repair	—
7	Locate and repair high resistance or poor connection in the ECT signal circuit or the ECT sensor ground. Is the action complete?	—	Verify repair	—
8	1. Injector Test Operate the each injector by Tech 2 with the ignition “ON” and check if the working noise confirm. 2. If a problem is found, check the harness or replace the injector. Is the action complete?	—	Verify repair	Go to *Step 9*
9	Check the oil rail pressure by Tech 2 at the cranking. Is the pressure near the specified value?	Less than 3 MPa	Go to *Step 10*	Go to *Step 11*
10	Check the oil leakage on the high oil pressure line. If the oil leakage is found, repair as necessary. Was the oil leakage found?	—	Verify repair	Go to *Step 11*
11	1. Check for water-or alcohol-contaminated fuel. 2. If a problem is found, repair as necessary. Was a problem found?	—	Verify repair	Go to *Step 12*

Hard Start Symptom (Cont'd)

Step	Action	Value(s)	Yes	No
12	1. Check the battery voltage. 2. If a problem is found, repair as necessary. Was a problem found?	—	Verify repair	Go to *Step 13*
13	1. Check for the following engine mechanical problems (Refer to *Engine Mechanical*): ● Low compression ● Leaking cylinder head gaskets ● Worn or incorrect camshaft ● Camshaft drive belt slipped or stripped 2. If a problem is found, repair as necessary. Was a problem found?	—	Verify repair	Go to *Step 14*
14	1. Review all diagnostic procedures within this table. 2. If all procedures have been completed and no malfunctions have been found, review/inspect the following: ● Visual/physical inspection ● Tech–2 data ● Freeze Frame data/Failure Records buffer ● All electrical connections within a suspected circuit and/or system. 3. If a problem is found, repair as necessary. Was a problem found?	—	Verify repair	Contact Technical Assistance

Surges and/or Chuggles Symptom

Step	Action	Value(s)	Yes	No
1	**DEFINITION:** Engine power variation under steady throttle or cruise. Feels like the vehicle speeds up and slows down with no change in the accelerator pedal. Was the “On-Board Diagnostic (OBD) System Check” performed?	—	Go to *Step 2*	Go to *OBD System Check*
2	1. Perform a bulletin search. 2. If a bulletin that addresses the symptom is found, correct the condition as instructed in the bulletin. Was a bulletin found that addresses the symptom?	—	Verify repair	Go to *Step 3*
3	Was a visual/physical check performed?	—	Go to *Step 4*	Go to *Visual/ Physical Check*
4	Be sure that the driver understands transmission torque converter clutch and A/C compressor operation as explained in the owner’s manual. Inform the customer how the TCC and the A/C clutch operate. Is the customer experiencing a normal condition?	—	System OK	Go to *Step 5*
5	1. Check the priming pump. Refer to *Fuel System*. 2. If a problem is found, operate the priming pump. Was a problem found?	—	Verify repair	Go to *Step 6*
6	1. Injector Test Operate the each injector by Tech 2 with the ignition “ON” and check if the working noise confirm. 2. If a problem is found, check the harness and repair as necessary. Is the action complete?	—	Verify repair	Go to *Step 7*
7	1. Check ECM grounds for the cleanliness, tightness and proper locations. Refer to the ECM wiring diagrams in *Electrical Diagnosis*. 2. If a problem is found, repair as necessary. Was a problem found?	—	Verify repair	Go to *Step 8*
8	1. Check AP sensor connections. 2. If a problem is found, replace the faulty terminals as necessary. Refer to *Electrical Diagnosis* for wiring repair procedures. Was a problem found?	—	Verify repair	Go to *Step 9*
9	1. Visually/physically check vacuum hoses for splits, kinks, and proper connections and routing as shown on the “Vehicle Emission Control Information” label. 2. If a problem is found, repair as necessary. Was a problem found?	—	Verify repair	Go to *Step 10*

Surges and/or Chuggles Symptom (Cont'd)

Step	Action	Value(s)	Yes	No
10	1. Check the exhaust system for possible restriction: ● Inspect the exhaust system for damaged or collapsed pipes. ● Inspect the muffler for heat distress or possible internal failure. ● Check for a possible plugged catalytic converter by checking the exhaust system back pressure. Refer to *Restricted Exhaust System Check*. 2. If a problem is found, repair as necessary. Was a problem found?	—	Verify repair	Go to *Step 11*
11	1. Review all diagnostic procedures within this table. 2. If all procedures have been completed and no malfunctions have been found, review/inspect the following: ● Visual/physical inspection ● Tech 2 data ● Freeze Frame data/Failure Records buffer ● All electrical connections within a suspected circuit and/or system. 3. If a problem is found, repair as necessary. Was a problem found?	—	Verify repair	Contact Technical Assistance

Lack of Power, Sluggish or Spongy Symptom

Step	Action	Value(s)	Yes	No
1	**DEFINITION:** Engine delivers less than expected power. Little or no increase in speed when accelerator pedal is pushed down part-way. Was the "On-Board Diagnostic (OBD) System Check" performed?	—	Go to *Step 2*	Go to *OBD System Check*
2	1. Perform a bulletin search. 2. If a bulletin that addresses the symptom is found, correct the condition as instructed in the bulletin. Was a bulletin found that addresses the symptom?	—	Verify repair	Go to *Step 3*
3	Was a visual/physical check performed?	—	Go to *Step 4*	Go to *Visual/ Physical Check*
4	1. Remove and check the air filter element for dirt or restrictions. Refer to *Air Intake System* in *On-Vehicle Service*. 2. Replace the air filter element if necessary. Was a repair required?	—	Verify repair	Go to *Step 5*
5	1. Check AP sensor system. Refer to *AP sensor diagnostic*. 2. If a problem is found, repair as necessary. Was a problem found?	—	Verify repair	Go to *Step 6*
6	1. Check for water-or alcohol-contaminated fuel. 2. If a problem is found, repair as necessary. Was a problem found?	—	Verify repair	Go to *Step 7*
7	1. Using a Tech 2, Injector test. 2. If a problem is found, repair as necessary. Was a problem found?	—	Verify repair	Go to *Step 8*
8	1. Check the ECM grounds for the cleanliness, tightness and proper locations. Refer to the ECM wiring diagrams in *Electrical Diagnosis*. 2. If a problem is found, repair as necessary. Was a problem found?	—	Verify repair	Go to *Step 9*
9	1. Check the exhaust system for possible restriction: • Inspect the exhaust system for damaged or collapsed pipes. • Inspect the muffler for heat distress or possible internal failure. • Check for a possible plugged catalytic converter by checking the exhaust system back pressure. Refer to *Restricted Exhaust System Check*. 2. If a problem is found, repair as necessary. Was a problem found?	—	Verify repair	Go to *Step 10*
10	1. Check the torque converter clutch (TCC) for proper operation. Refer to *Transmission Diagnosis*. 2. If a problem is found, repair as necessary. Was a problem found?	—	Verify repair	Go to *Step 11*

Lack of Power, Sluggish or Spongy Symptom (Cont'd)

Step	Action	Value(s)	Yes	No
11	1. Check for an engine mechanical problem. Check for low compression, incorrect or worn camshaft, loose timing belt, etc. Refer to *Engine Mechanical*. 2. If a problem is found, repair as necessary. Was a problem found?	—	Verify repair	Go to *Step 12*
12	1. Review all diagnostic procedures within this table. 2. If all procedures have been completed and no malfunctions have been found, review/inspect the following: ● Visual/physical inspection ● Tech 2 data ● Freeze Frame data/Failure Records buffer ● All electrical connections within a suspected circuit and/or system. 3. If a problem is found, repair as necessary. Was a problem found?	—	Verify repair	Contact Technical Assistance

Rough, Unstable, or Incorrect Idle, Stalling Symptom

Step	Action	Value(s)	Yes	No
1	**DEFINITION:** Engine runs unevenly at idle. If severe, the engine or vehicle may shake. Engine idle speed may vary in RPM. Either condition may be severe enough to stall the engine. Was the "On-Board Diagnostic (OBD) System Check" performed?	—	Go to *Step 2*	Go to *OBD System Check*
2	1. Perform a bulletin search. 2. If a bulletin that addresses the symptom is found, correct the condition as instructed in the bulletin. Was a bulletin found that addresses the symptom?	—	Go to *Step 6*	Go to *Step 3*
3	Was a visual/physical check performed?	—	Go to *Step 4*	Go to *Visual/ Physical Check*
4	1. Check the ECM grounds for cleanliness, tightness and proper routing. Refer to the ECM wiring diagrams in *Electrical Diagnosis*. 2. If a problem is found, repair as necessary. Was a problem found?	—	Verify repair	Go to *Step 5*
5	1. Check for incorrect idle speed. Ensure that the following conditions are present: ● The engine is fully warm. ● The accessories are "OFF." 2. Using a Tech 2, monitor the AP position. Is the AP position within the specified values?	0%	Go to *Step 10*	Go to *Step 9*
6	1. Visually/physically inspect for the following conditions: ● Restricted air intake system. Check for a possible collapsed air intake duct, restricted air filter element, or foreign objects blocking the air intake system. 2. If a problem is found, repair as necessary. Was a problem found?	—	Verify repair	Go to *Step 7*
7	1. Injector Test Operate the each injector by Tech 2 with the ignition "ON" and check if the working noise confirm. 2. If a problem is found, check the harness or replace the injector. Is the action complete?	—	Verify repair	Go to *Step 8*
8	1. Check the transmission range switch circuit. Use a Tech 2 and be sure the Tech 2 indicates that the vehicle is in drive with the gear selector in drive or overdrive. 2. If a problem is found, diagnose and repair the transmission range switch as necessary (Refer to *Automatic Transmission Diagnosis*). Was a problem found?	—	Verify repair	Go to *Step 9*

Rough, Unstable, or Incorrect Idle, Stalling Symptom (Cont'd)

Step	Action	Value(s)	Yes	No
9	1. Check for the following engine mechanical items. Refer to *Engine Mechanical* for diagnosis procedures: ● Low compression ● Sticking or leaking valves ● Worn camshaft lobe(s) ● Camshaft drive belt slipped or stripped ● Incorrect valve timing ● Valves clearance ● Broken valve springs 2. If a problem is found, repair as necessary. Was a problem found?	—	Verify repair	Go to *Step 10*
10	1. Check for faulty engine mounts. Refer to *Engine Mechanical* for inspection of mounts. 2. If a problem is found, repair as necessary. Was a problem found?	—	Verify repair	Go to *Step 11*
11	1. Review all diagnostic procedures within this table. 2. If all procedures have been completed and no malfunctions have been found, review/inspect the following: ● Visual/physical inspection ● Tech 2 data ● Freeze Frame data/Failure Records buffer ● All electrical connections within a suspected circuit and/or system. 3. If a problem is found, repair as necessary. Was a problem found?	—	Verify repair	Contact Technical Assistance

Poor Fuel Economy Symptom

Step	Action	Value(s)	Yes	No
1	**DEFINITION:** Fuel economy, as measured by an actual road test, is noticeably lower than expected. Also, economy is noticeably lower than it was on this vehicle at one time, as previously shown by an actual road test. (Larger than standard tires will cause odometer readings to be incorrect, and that may cause fuel economy to appear poor when it is actually normal.) Was the “On-Board Diagnostic (OBD) System Check” performed?	—	Go to *Step 2*	Go to *OBD System Check*
2	1. Perform a bulletin search. 2. If a bulletin that addresses the symptom is found, correct the condition as instructed in the bulletin. Was a bulletin found that addresses the symptom?	—	Verify repair	Go to *Step 3*
3	Was a visual/physical check performed?	—	Go to *Step 4*	Go to *Visual/ Physical Check*
4	Check owner’s driving habits. ● Is the A/C “ON” full time (defroster mode “ON”)? ● Are tires at the correct pressure? ● Are excessively heavy loads being carried? ● Is acceleration too much, too often? ● Is engine oil correct? Was a problem found?	—	Go to *Step 5*	Go to *Step 6*
5	Review the items in Step 4 with the customer and advise as necessary. Is the action complete?	—	System OK	—
6	1. Visually/physically check: Vacuum hoses for splits, kinks, and improper connections and routing as shown on the “Vehicle Emission Control Information” label. 2. If a problem is found, repair as necessary. Was a repair required?	—	Verify repair	Go to *Step 7*
7	1. Remove and check the air filter element for dirt or for restrictions. Refer to *Air Intake System*. 2. Replace the air filter element if necessary. Was a repair required?	—	Verify repair	Go to *Step 8*
8	1. Check for low engine coolant level. Refer to *Engine Cooling*. 2. If a problem is found, repair as necessary. Was a problem found?	—	Verify repair	Go to *Step 9*
9	1. Check for an incorrect or faulty engine thermostat. Refer to *Engine Cooling*. 2. If a problem is found, repair as necessary. Was a problem found?	—	Verify repair	Go to *Step 10*
10	1. Check for low engine compression. Refer to *Engine Mechanical*. 2. If a problem is found, repair as necessary. Was a problem found?	—	Verify repair	Go to *Step 11*

Poor Fuel Economy Symptom (Cont'd)

Step	Action	Value(s)	Yes	No
11	1. Check the TCC operation. Refer to *Transmission Diagnosis*. 2. If a problem is found, repair as necessary. Was a problem found?	—	Verify repair	Go to *Step 12*
12	1. Check the exhaust system for possible restriction: ● Inspect the exhaust system for damaged or collapsed pipes. ● Inspect the muffler for heat distress or possible internal failure. 2. If a problem is found, repair as necessary. Was a problem found?	—	Verify repair	Go to *Step 13*
13	Check for proper calibration of the speedometer. Does the speed indicated on the speedometer closely match the vehicle speed displayed on the Tech 2?	—	Go to *Step 15*	Go to *Step 14*
14	Diagnose and repair an inaccurate speedometer condition as necessary. Refer to *Vehicle Speed Sensor* in *Electrical Diagnosis*. Was a problem found?	—	Verify repair	—
15	1. Check the air intake system and the crankcase for air leaks. Refer to *Air Intake System* and *Crankcase Ventilation System*. 2. If a problem is found, repair as necessary. Was a problem found?	—	Verify repair	Go to *Step 16*
16	1. Review all diagnostic procedures within this table. 2. When all procedures have been completed and no malfunctions have been found, review/inspect the following: ● Visual/physical inspection ● Tech 2 data ● Freeze Frame data/Failure Records buffer ● All connections within a suspected circuit and/or system. 3. If a problem is found, repair as necessary. Was a problem found?	—	Verify repair	Go to *Step 17*
17	Perform the procedure in *Injector Test*. Was the fuel pressure normal?	—	Contact Technical Assistance	Verify repair

Excessive Exhaust Emissions or Odors Symptom

Step	Action	Value(s)	Yes	No
1	**DEFINITION:** Vehicle fails an emission test. Vehicle has excessive "rotten egg" smell. (Excessive odors do not necessarily indicate excessive emissions.) Was the "On-Board Diagnostic (OBD) System Check" performed?	—	Go to *Step 2*	Go to *OBD System Check*
2	1. Perform a bulletin search. 2. If a bulletin that addresses the symptom is found, correct the condition as instructed in the bulletin. Was a bulletin found that addresses the symptom?	—	Verify repair	Go to *Step 3*
3	Was a thorough visual/physical check performed?	—	Go to *Step 4*	Go to *Visual/ Physical Check*
4	1. Check for vacuum leaks. Check vacuum lines, intake manifold, throttle body, etc. 2. If a problem is found, repair as necessary. Were any vacuum leaks located?	—	Verify repair	Go to *Step 5*
5	1. Check the fuel cap for proper installation. 2. Secure the fuel cap if necessary. Was the fuel cap installed properly?	—	Go to *Step 6*	Verify repair
6	1. Injector Test Operate the each injector by Tech 2 with the ignition "ON" and check if the working noise confirm. 2. If a problem is found, check the harness or replace the injector. Is the action complete?	—	Verify repair	Go to *Step 7*
7	1. Refer to *Engine Cooling* for cooling system diagnosis. 2. If a problem is found, repair as necessary. Was a problem found?	—	Verify repair	Go to *Step 8*
8	1. Check for an engine mechanical problem. Perform a cylinder compression check (Refer to *Engine Mechanical*). 2. If a problem is found, repair as necessary. Was a problem found?	—	Verify repair	Go to *Step 9*
9	1. Review all diagnostic procedures within this table. 2. If all procedures have been completed and no malfunctions have been found, review/inspect the following: ● Visual/physical inspection ● Tech 2 data ● Freeze Frame data/Failure Records butter ● All electrical connections within a suspected circuit and/or system. 3. If a problem is found, repair as necessary. Was a problem found?	—	Verify repair	Contact Technical Assistance

Dieseling, Run-On Symptom

Step	Action	Value(s)	Yes	No
1	**DEFINITION:** Engine continues to run after key is turned “OFF,” but runs very rough. If engine runs smooth, check ignition switch and adjustment. Was the “On-Board Diagnostic (OBD) System Check” performed?	—	Go to *Step 2*	Go to *OBD System Check*
2	1. Perform a bulletin search. 2. If a bulletin that addresses the symptom is found, correct the condition as instructed in the bulletin. Was a bulletin found that addresses the symptom?	—	Verify repair	Go to *Step 3*
3	Was a visual/physical check performed?	—	Go to *Step 4*	Go to *Visual/ Physical Check*
4	1. Check for a short between B+ and any of the ignition feed circuits. 2. If a problem is found, repair as necessary. Was a problem found?	—	Verify repair	Go to *Step 5*
5	1. Review all diagnostic procedures within this table. 2. If all procedures have been completed and no malfunctions have been found, review/inspect the following: ● Visual/physical inspection ● Tech 2 data ● Freeze Frame data/Failure Records butter ● All electrical connections within a suspected circuit and/or system 3. If a problem is found, repair as necessary. Was a problem found?	—	Verify repair	Contact Technical Assistance

Cuts Out, Symptom

Step	Action	Value(s)	Yes	No
1	**DEFINITION:** Steady pulsation or jerking that follows engine speed; usually more pronounced as engine load increases. Was the “On-Board Diagnostic (OBD) System Check” performed?	—	Go to *Step 2*	Go to *OBD System Check*
2	1. Perform a bulletin search. 2. If a bulletin that addresses the symptom is found, correct the condition as instructed in the bulletin. Was a bulletin found that addresses the symptom?	—	Go to *Step 7*	Go to *Step 3*
3	Was a visual/physical check performed?	—	Go to *Step 4*	Go to *Visual/ Physical Check*
4	1. Check the ECM grounds for clearness, tightness and proper routing. Refer to the ECM wiring diagrams in *Electrical Diagnosis*. 2. If a problem is found, repair as necessary. Was a problem found?	—	Verify repair	Go to *Step 5*
5	1. Check for incorrect idle speed. Ensure that the following conditions are present: ● The engine is fully warm. ● The accessories are “off.” 2. Using a Tech 2, monitor the AP position. Is the AP position within the specified values?	0%	Go to *Step 6*	Go to *Step 7*
6	1. Visually/physically inspect for the following conditions: ● Restricted air intake system. Check for a possible collapsed air intake duct, restricted air filter element, or foreign objects blocking the air intake system. ● Check the Throttle body. ● Large vacuum leak. Check for a condition that causes a large vacuum leak, such as an incorrectly installed or faulty VSV or brake booster hose disconnected . 2. If a problem is found, repair as necessary. Was a problem found?	—	Verify repair	Go to *Step 7*
7	Using a Tech 2, monitor the AP angle with the engine idling. Is the AP angle at the specified value and steady?	0%	Go to *Step 8*	Refer to *DTC P0123* for further diagnosis
8	1. Check the transmission range switch circuit. Use a Tech 2 and be sure the Tech 2 indicates that the vehicle is in drive with the gear selector in drive or overdrive. 2. If a problem is found, diagnose and repair the transmission range switch as necessary. Was a problem found?	—	Verify repair	Go to *Step 9*

Cuts Out, Symptom (Cont'd)

Step	Action	Value(s)	Yes	No
9	1. Injector Test Operate the each injector by Tech 2 with the ignition "ON" and check if the working noise confirm. 2. If a problem is found, check the harness or replace the injector. Is the action complete?	—	Verify repair	Go to *Step 10*
10	1. Check the following engine mechanical items. Refer to *Engine Mechanical* for diagnosis procedures: ● Low compression ● Sticking or leaking valves ● Worn camshaft lobe(s) ● Camshaft drive belt slipped or stripped ● Incorrect valve timing ● Broken valve springs 2. If a problem is found, repair as necessary. Was a problem found?	—	Verify repair	Go to *Step 11*
11	1. Check for faulty motor mounts. Refer to *Engine Mechanical* for inspection of mounts. 2. If a problem is found, repair as necessary. Was a problem found?	—	Verify repair	Go to *Step 12*
12	1. Review all diagnostic procedures within this table. 2. If all procedures have been completed and no malfunctions have been found, review/inspect the following: ● Visual/physical inspection ● Tech 2 data ● Freeze Frame data/Failure Records butter ● All electrical connections within a suspected circuit and/or system 3. If a problem is found, repair as necessary. Was a problem found?	—	Verify repair	Contact Technical Assistance

Starter Motor Doesn't Rotate

Step	Action	Value(s)	Yes	No
1	**DEFINITION:** As starter motor doesn't rotate, engine is not cranked. 1. Perform a bulletin search. 2. If a bulletin that addresses the symptom is found, correct the condition as instructed in the bulletin. Was the bulletin found?	—	Verify repair	Go to *Step 2*
2	Was a visual/physical check performed?	—	Go to *Step 3*	Go to *Visual/ Physical Check*
3	1. Check battery cord terminal for looseness & poor contact due to corrosion. 2. Check battery voltage. 3. If a problem is found, repair as necessary. Was a problem found?	—	Verify repair	Go to *Step 4*
4	1. Check fan belt for looseness & damage. 2. If a problem is found, adjust or replace as necessary. Was a problem found?	—	Verify repair	Go to *Step 5*
5	1. Check fuse bull link for disconnection & short. 2. If a problem is found, repair as necessary. Was a problem found?	—	Verify repair	Go to *Step 6*
6	1. Check generator for mount & damage (Refer to Engine Mechanical). 2. If a problem is found, repair as necessary. Was a problem found?	—	Verify repair	Go to *Step 7*
7	1. Check starter SW and starter relay for looseness and damage. 2. If a problem is found, repair as necessary. Was a problem found?	—	Verify repair	Go to *Step 8*
8	1. Check starter motor for mount and damage. (Refer to *Engine Mechanical*) 2. If a problem is found, repair as necessary. Was a problem found?	—	Verify repair	Go to *Step 9*
9	1. Review all diagnostic procedures within this table. 2. If all procedures have been completed and no malfunctions have been found, review/inspect the following: • Visual/physical inspection • Tech 2 data • Freeze Frame data/Failure Records butter • All electrical connections within a suspected circuit and/or system 3. If a problem is found, repair as necessary. Was a problem found?	—	Verify repair	Contact Technical Assistance

Starting Difficulty In Case Fuel Doesn't Come to Injector

Step	Action	Value(s)	Yes	No
1	**DEFINITION:** Engine is cranked, but not started for a long time. Steps soon. Was OBD System check performed?	—	Go to *Step 2*	Go to *OBD System Check*
2	1. Perform a bulletin research. 2. If a bulletin that addresses the symptom is found, correct the condition as instructed in the bulletin. Was a bulletin found?	—	Verify repair	Go to *Step 3*
3	Was a visual/physical check performed?	—	Go to *Step 4*	Go to *Visual/ Physical Check*
4	Check fuel shortage. If short, replenish. Was fuel short?	—	Verify replenish	Go to *Step 5*
5	1. Check fuel pipeline for leak. 2. If a problem is found, repair as necessary. Was a problem found?	—	Verify repair	Go to *Step 6*
6	1. Check fuel pipeline & filter for deformation & clogging. 2. If a problem is found, repair as necessary. Was a problem found?	—	Verify repair	Go to *Step 7*
7	1. Check fuel pump for damage. 2. If a problem is found, repair as necessary. Was a problem found?	—	Verify repair	Go to *Step 8*
8	Check the Injector test by Tech 2. Does the working noise confirm?	—	Go to *Step 11*	Go to *Step 9*
9	1. Check the injector connector for damage. 2. Check the injector harness for damage. 3. If a problem is found, repair as necessary. Was a problem found?	—	Verify repair	Go to *Step 10*
10	Replace the injector. (Refer to the *injector group sign programming)* Is the action complete?	—	Verify repair	—
11	1. Indicate RPCV Data List by Tech 2 to check operation. Perform RPCV test. 2. If a problem is found, replace RP sensor or RPCV as necessary. Was a problem found?	—	Verify repair	Go to *Step 12*

Starting Difficulty In Case Fuel Doesn't Come to Injector (Cont'd)

Step	Action	Value(s)	Yes	No
12	1. Review all diagnostic procedures within this table. 2. If all procedures have been completed and no malfunctions have been found, review/inspect the following: ● Visual/physical inspection ● Tech 2 data ● Freeze Frame data/Failure Records butter ● All electrical connections within a suspected circuit and/or system 3. If a problem is found, repair as necessary. Was a problem found?	—	Verify repair	Contact Technical Assistance

Lubrication System Trouble

Step	Action	Value(s)	Yes	No
1	**DEFINITION:** In road tests oil pressure doesn't rise, or oil is foul to excess. Was OBD System check performed?	—	Go to *Step 2*	Go to *OBD System Check*
2	1. Perform a bulletin research. 2. If a bulletin that addresses the symptom is found, correct the condition as instructed in the bulletin. Was a bulletin found?	—	Verify repair	Go to *Step 3*
3	1. Check if a correct engine oil is used. 2. If a problem is found, change engine oil. Was a problem found?	—	Verify repair	Go to *Step 4*
4	1. Check the oil pressure meter for damage. 2. Check the oil unit harness and connector for damage. 3. If a problem is found, repair as necessary. Was a problem found?	—	Verify repair	Go to *Step 5*
5	1. Check oil pipe connections for leakage. 2. If a problem is found, repair as necessary. Was a problem found?	—	Verify repair	Go to *Step 6*
6	1. Check oil filter for clogging. 2. If a problem is found, repair as necessary. Was a problem found?	—	Verify repair	Go to *Step 7*
7	1. Check valve clearance. 2. If a problem is found, adjust as necessary. Was a problem found?	—	Verify repair	Go to *Step 8*
8	1. Check camshaft bearing for wear. 2. If a problem is found, repair as necessary. Was a problem found?	—	Verify repair	Go to *Step 9*
9	1. Check crankshaft & connecting rod bearings for wear. 2. If a problem is found, repair as necessary. Was a problem found?	—	Verify repair	Go to *Step 10*
10	1. Check oil pump for damage. 2. If a problem is found, repair as necessary. Was a problem found?	—	Verify repair	Go to *Step 11*

Lubrication System Trouble (Cont'd)

Step	Action	Value(s)	Yes	No
11	1. Check cylinder head & cam carrier gaskets for damage. 2. If a problem is found, repair or replace as necessary. Was a problem found?	—	Verify repair	Go to *Step 12*
12	1. Review all diagnostic procedures within this table. 2. If all procedures have been completed and no malfunctions have been found, review/inspect the following: ● Visual/physical inspection ● Tech 2 data ● Freeze Frame data/Failure Records butter ● All electrical connections within a suspected circuit and/or system 3. If a problem is found, repair as necessary. Was a problem found?	—	Verify repair	Contact Technical Assistance

QOS System Doesn't Work

Step	Action	Value(s)	Yes	No
1	Was OBD System check performed?	—	Go to *Step 2*	Go to *OBD System Check*
2	Check glawplug indicator light. If bulb is broken, replace. Was a problem found?	—	Verify repair	Go to *Step 3*
3	1. Connect a circuit tester between glawplug & engine ground. 2. With ignition on and engine off, check if the glaw indicator and circuit tester indicate power voltage for 9 to 13 sec. If not indicated, repair terminal & wire harness. Was repair needed?	—	Verify repair	Go to *Step 4*
4	1. Connect a circuit tester between glawplug and engine ground. 2. With engine on, check if voltage continues for 180 sec. If not, inspect and repair glaw relay. Was repair needed?	—	Verify repair	Go to *Step 5*
5	1. Remove the glawplug, and if damaged, replace. 2. Check glawplug resistance. Was resistance as specified?	0.8 – 1Ω	Go to *Step 7*	Go to *Step 6*
6	Replace glawplug. Was measure completed?	—	Verify repair	Go to *Step 7*
7	1. Review all diagnostic procedures within this table. 2. If all procedures have been completed and no malfunctions have been found, review/inspect the following: ● Visual/physical inspection ● Tech 2 data ● Freeze Frame data/Failure Records butter ● All electrical connections within a suspected circuit and/or system 3. If a problem is found, repair as necessary. Was a problem found?	—	Verify repair	Contact Technical Assistance

Much Black Smoke in Exhaust Gas

Step	Action	Value(s)	Yes	No
1	**DEFINITION:** In road tests, much black smoke is mixed. Was OBD System check performed?	—	Go to *Step 2*	Go to *OBD System Check*
2	1. Perform a bulletin research. 2. If a bulletin that addresses the symptom is found, correct the condition as instructed in the bulletin. Was a bulletin found?	—	Verify repair	Go to *Step 3*
3	1. Check if a correct fuel is used. 2. If a problem is found, change fuel. Was a problem found?	—	Verify repair	Go to *Step 4*
4	1. Check air cleaner element for clogging. 2. If a problem is found, repair or replace as necessary. Was a problem found?	—	Verify repair	Go to *Step 5*
5	1. Connect Tech 2 to the vehicle. 2. Monitor data list to check injector function. 3. If a problem is found, repair as necessary. Was a problem found?	—	Verify repair	Go to *Step 6*
6	1. Connect Tech 2 to the vehicle. 2. Monitor RPCV test to check rpcv function. 3. If a problem is found, repair as necessary. Was a problem found?	—	Verify repair	Go to *Step 7*
7	1. Check valve clearance. 2. If a problem is found, adjust as necessary. Was a problem found?	—	Verify repair	Go to *Step 8*
8	1. Review all diagnostic procedures in this table. 2. If all procedures have been completed and no malfunctions have been found, review/inspect the following: ● Visual/physical check ● Tech 2 data list ● Freeze Frame data ● All electrical connections in suspected circuits & systems 3. If a problem is found, repair as necessary. Was a problem found?	—	Verify repair	Contact Technical Assistance

Excess Engine Oil Consumption

Step	Action	Value(s)	Yes	No
1	**DEFINITION:** Oil consumption measured in road tests is higher than expected. Was OBD System check performed?	—	Go to *Step 2*	Go to *OBD System Check*
2	1. Perform a bulletin research. 2. If a bulletin that addresses the symptom is found, correct the condition as instructed in the bulletin. Was a bulletin found?	—	Verify repair	Go to *Step 3*
3	1. Check if a correct engine oil is used. 2. If a problem is found, change engine oil. Was a problem found?	—	Verify repair	Go to *Step 4*
4	1. Check oil pipe connections for leakage. 2. If a problem is found, repair as necessary. Was a problem found?	—	Verify repair	Go to *Step 5*
5	1. Check oil seals and gaskets for leakage. 2. If a problem is found, repair as necessary. Was a problem found?	—	Verify repair	Go to *Step 6*
6	1. Connect Tech 2 to the vehicle. 2. Perform RPCV test to check its function. 3. If a problem is found, repair as necessary. Was a problem found?	—	Verify repair	Go to *Step 7*
7	1. Check piston ring for damage & groove wear. 2. If a problem is found, repair as necessary. Was a problem found?	—	Verify repair	Go to *Step 8*
8	1. Check valve stem, valve guide and oil controller for wear. 2. If a problem is found, repair as necessary. Was a problem found?	—	Verify repair	Go to *Step 9*
9	1. Check camshaft carrier & cylinder head gaskets for blow-by. 2. If a problem is found, repair or replace as necessary. Was a problem found?	—	Verify repair	Go to *Step 10*
10	1. Review all the diagnostic procedures in this table. 2. If all procedures have been completed and no malfunctions have been found, review/inspect the following: ● Visual/physical check ● Tech 2 data list ● Freeze Frame data ● All electrical connections in suspected circuits & systems 3. If a problem is found, repair as necessary. Was a problem found?	—	Verify repair	Contact Technical Assistance

Default Matrix Table

Service Procedure Default Strategy

A referral strategy has been established to assist the technician with additional information when the cause of the failure cannot be determined. If no problem is found after performing diagnostics, then refer to the default matrix table for further diagnostic information.

Default Matrix Table

Strategy Based Diagnostic Charts	Initial Diagnosis	Default Section(s)
On-Board Diagnostic (OBD) System Check	Vehicle does not enter diagnostics.	Chassis Electrical
On-Board Diagnostic (OBD) System Check	Vehicle enters diagnostics and communicates with the Tech 2. MIL is “ON” in diagnostics. Engine does not start and run.	HEUI System Check
On-Board Diagnostic (OBD) System Check	Engine starts and runs, no ECM codes set. Customer complains of vibration.	—
On-Board Diagnostic (OBD) System Check	Engine starts and runs, no ECM codes set. Customer complains of harsh or soft shift, poor performance, delayed or no engagement into drive or reverse, transmission fluid leak, transmission noise or vibration, or improper TCC operation.	Automatic Transmission
ECM Power and Ground Check	On-Board Diagnostic (OBD) System Check.	Chassis Electrical
ECM Power and Ground Check	On-Board Diagnostic (OBD) System Check. ECM power and ground circuits OK. Data link voltage incorrect.	Chassis Electrical
On-Board Diagnostic (OBD) System Check	Engine starts and runs, no ECM codes set. Customer complains of harsh or soft shift, poor performance, delayed or no engagement into drive or reverse, transmission fluid leak, transmission noise or vibration, or improper TCC operation.	Automatic Transmission

Symptoms	Initial Diagnosis	Default Section(s)
Intermittents	1. On-board diagnostic (OBD) system check. 2. Careful visual/physical inspections.	Chassis Electrical
Hard Starts	1. OBD system check. 2. Sensors (ECT, MAP, EGR, AP) ; output chart. 3. Fuel system electrical test, fuel system diagnosis. 4. Injector system.	Engine Mechanical, Injector System Check, Exhaust System Diagnosis
Surges and/or Chuggles	1. OBD system check. 2. Fuel system diagnosis. 3. Injector system.	Calibration ID “Broadcast” /Service Bulletins, Ignition System Check, Generator Output, Exhaust System Diagnosis
Lack of Power, Sluggish or Spongy	1. OBD system check. 2. Fuel system diagnosis. 3. Injector system.	Refer to *Exhaust System* in *Engine Exhaust*, TCC Operation, Calibration ID/Service Bulletins

Symptoms	Initial Diagnosis	Default Section(s)
Hesitation, Sag, Stumble	1. OBD system check. 2. AP. 3. MAP output check. 4. Fuel system diagnosis. 5. Injector system.	Generator Output Voltage (refer to *Chassis Electrical*), Calibration ID/Service Bulletins, Ignition System Check
Rough, Unstable, or Incorrect Idle, Stalling	1. OBD system check. 2. Fuel injector test.	MAP Output Check, Throttle Linkage, A/C Clutch Control Circuit Diagnosis, Calibration ID/Service Bulletins, Generator Output Voltage (refer to *Chassis Electrical*), Exhaust Diagnosis
Poor Fuel Economy	1. OBD system check. 2. Careful visual/physical inspection. 3. Injector system. 4. Cooling system.	TCC Operation, Exhaust System (refer to *Engine Exhaust*)
Engine Cranks But Will Not Run	1. OBD system check.	Fuel System Electrical Diagnosis, Fuel System Diagnosis, Fuel Injector Test.
Excessive Exhaust Emissions or Odors	1. OBD system check. 2. Emission test. 3. Cooling system. 4. Fuel system diagnosis. 5. Fuel injector test. 6. Injector system. 7. MAP output check.	Exhaust Diagnosis, Calibration ID/Service Bulletins
Dieseling, Run-On	1. OBD system check. 2. Careful visual/physical inspection. 3. Fuel system diagnosis.	—

On–Vehicle Service Camshaft Position (CMP) Sensor

Removal Procedure

1. Disconnect the negative battery cable.
2. Disconnect the electrical connector to the CMP sensor.

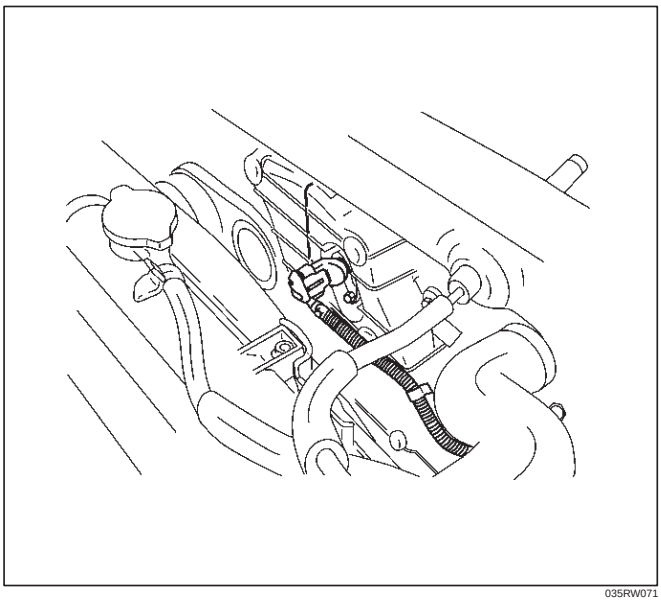

035RW071

3. Remove the CMP sensor retaining bolt from the cylinder head cover.

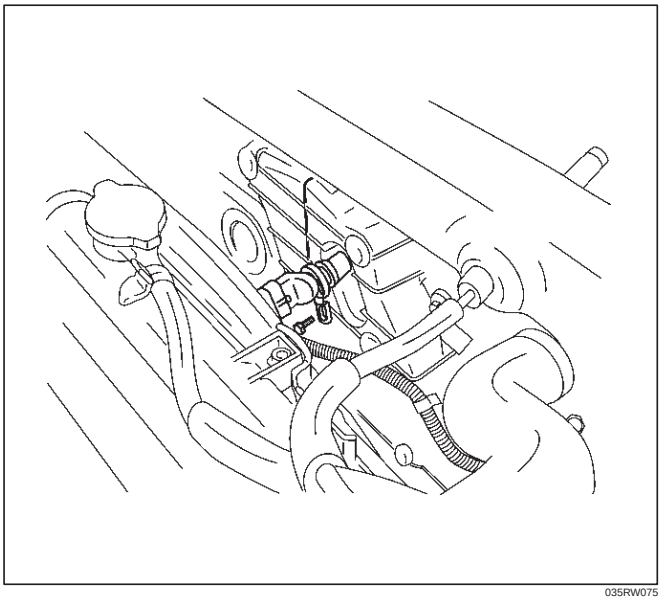

035RW075

Inspection Procedure

1. Inspect the sensor O-ring for cracks or leaks.
2. Replace the O-ring if it is worn or damaged.
3. Lubricate the new O-ring with engine oil.
4. Install the lubricated O-ring.

Installation Procedure

1. Install the CMP sensor in the cylinder head cover.
2. Install the CMP sensor retaining bolt.

Tighten

- **Tighten the retaining bolt to 9 N·m (78 lb in.).**

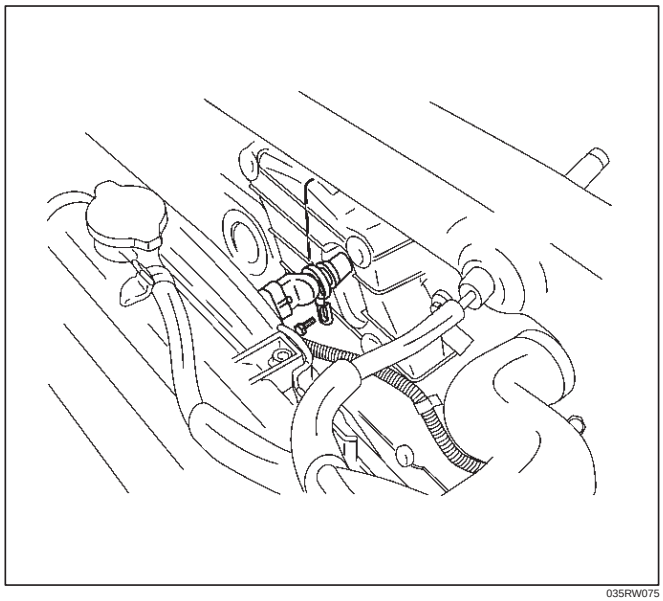

035RW075

3. Connect the electrical connector to the CMP sensor.

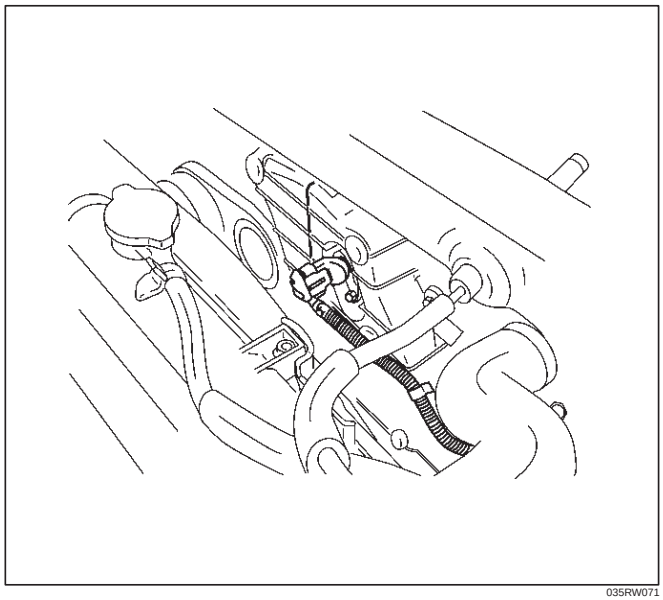

035RW071

4. Connect the negative battery cable.

Crankshaft Position (CKP) Sensor

Removal Procedure

1. Disconnect the negative battery cable.
2. Remove the under cover.

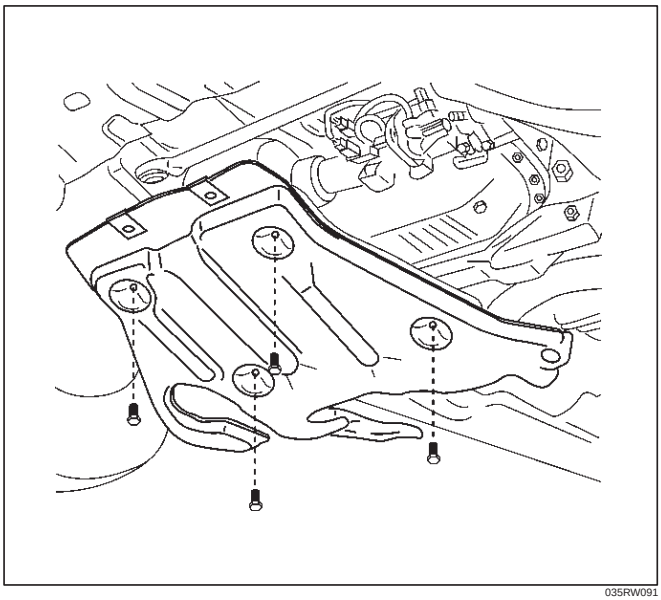

035RW091

3. Disconnect the electrical connector to the CKP sensor.
4. Remove one bolt and the CKP sensor from the left side of the engine block.

NOTE: Use caution to avoid any hot oil that might drip out.

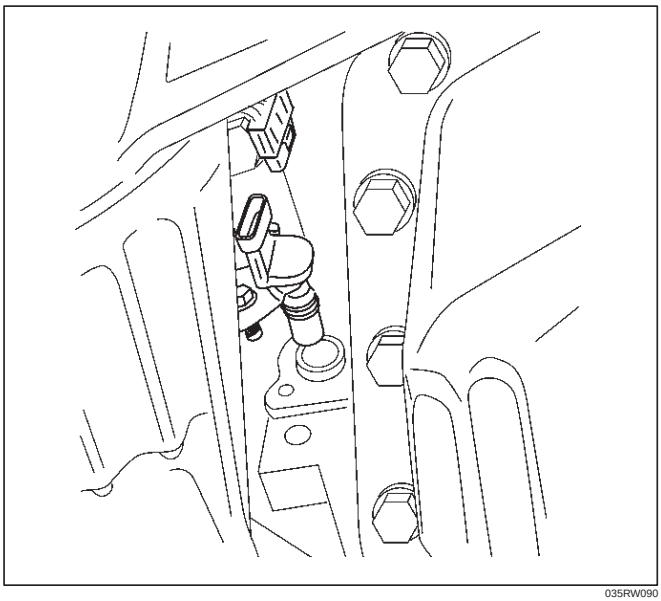

035RW090

Inspection Procedure

1. Inspect the sensor O-ring for cracks or leaks.
2. Replace the O-ring if it is worn or damaged.
3. Lubricate the new O-ring with engine oil.
4. Install the lubricated O-ring.

Installation Procedure

1. Install the CKP sensor in the engine block.
2. Install the CKP sensor mounting bolt.

Tighten

- **Tighten the mounting bolt to 9 N·m (78 lb in.).**

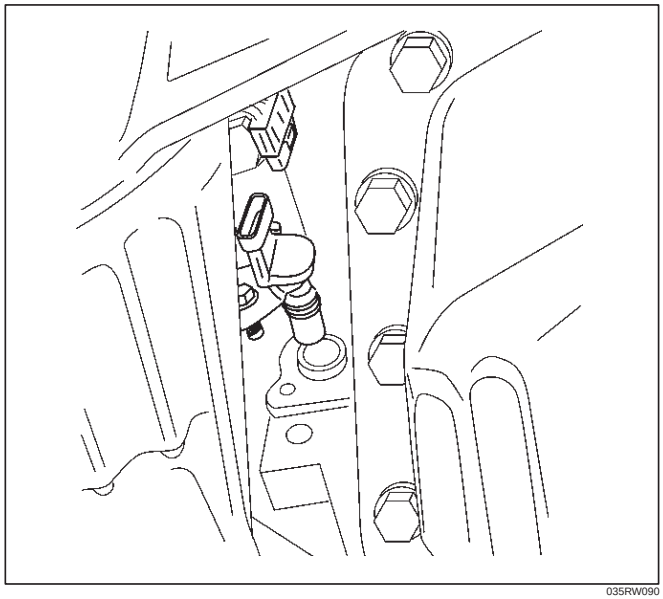

035RW090

3. Connect the electrical connector to the CKP sensor.
4. Install the under cover.

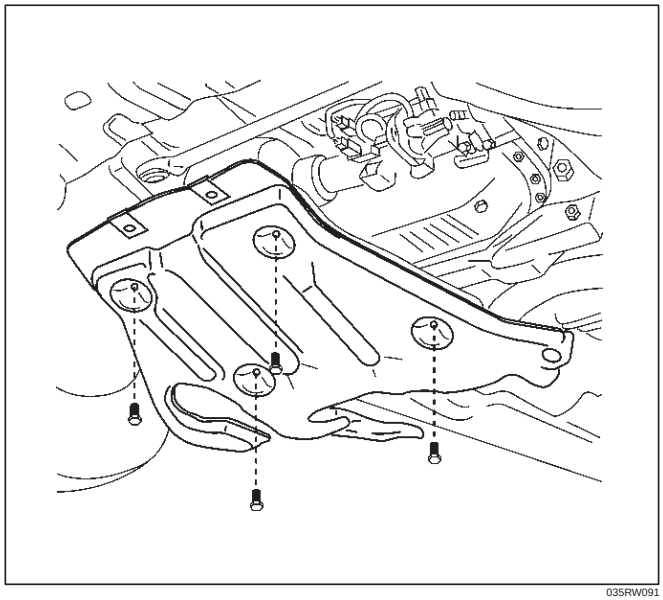

035RW091

5. Connect the negative battery cable.

Engine Coolant Temperature (ECT) Sensor

Removal Procedure

NOTE: Care must be taken when handling the engine coolant temperature (ECT) sensor. Damage to the ECT sensor will affect proper operation of the fuel injection system.

1. Disconnect the negative battery cable.
2. Drain the radiator coolant. Refer to *Draining and Refilling Cooling System* in *Engine Cooling*.
3. Disconnect the electrical connector.
4. Remove the ECT sensor from the front side of the intake manifold.

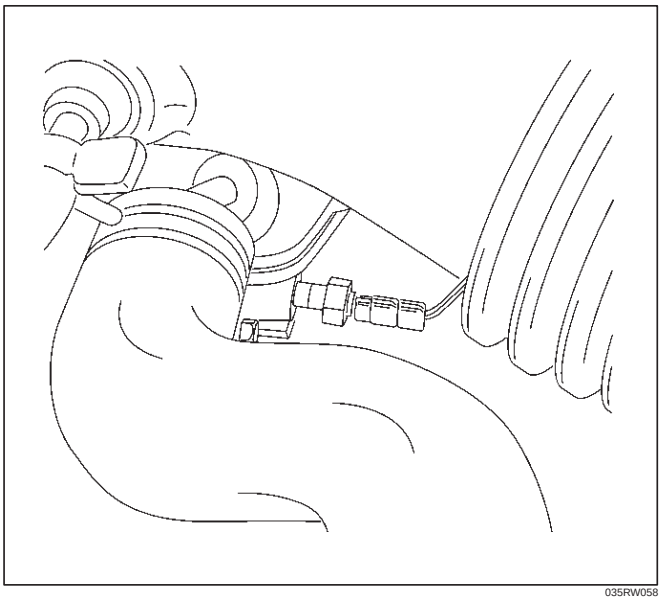

035RW058

Installation Procedure

1. Apply sealer (LOCTITE 262) or the equivalent to the threads of the ECT sensor.
2. Install the ECT sensor in the front side of the intake manifold.

Tighten

- **Tighten the ECT sensor to 19 N·m (14 lb ft.).**

3. Connect the electrical connector.

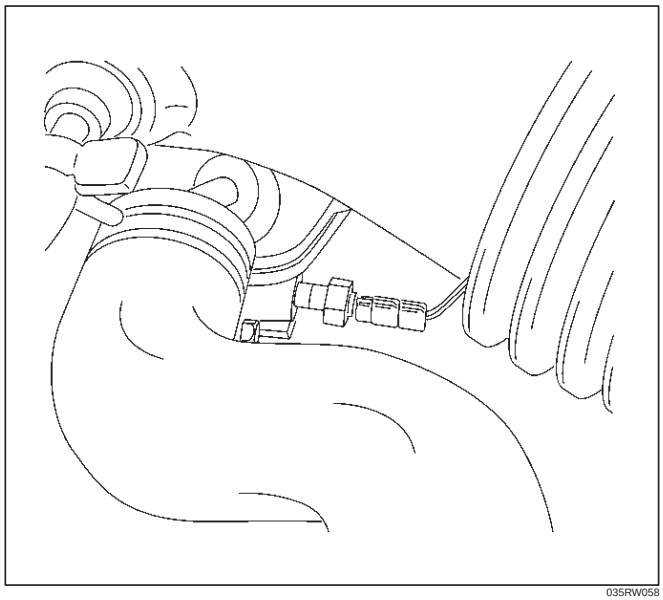

035RW058

4. Fill the radiator with coolant. Refer to *Draining and Refilling Cooling System* in *Engine Cooling*.
5. Connect the negative battery cable.

Intake Air Temperature (IAT) Sensor

Removal Procedure

1. Disconnect the negative battery cable.
2. Disconnect the electrical connector from the IAT sensor.
3. Remove the IAT sensor from the intake air duct by using a rocking motion while pulling the sensor.

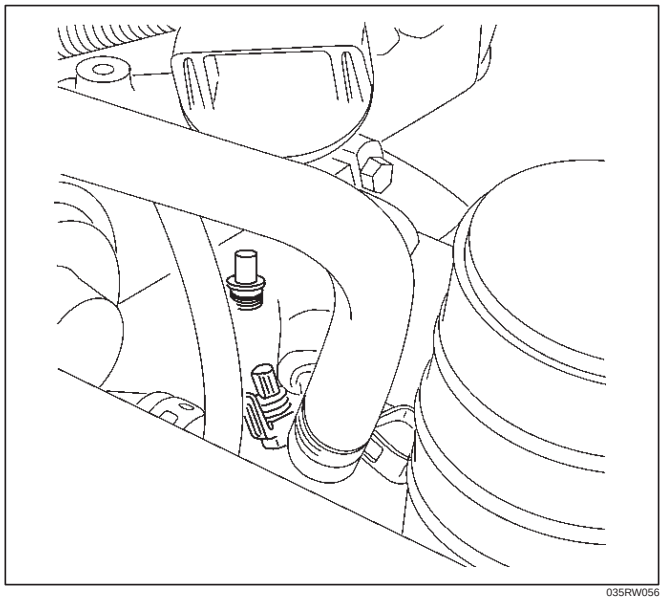

035RW056

Installation Procedure

1. Install the IAT sensor into the grommet in the intake air duct.

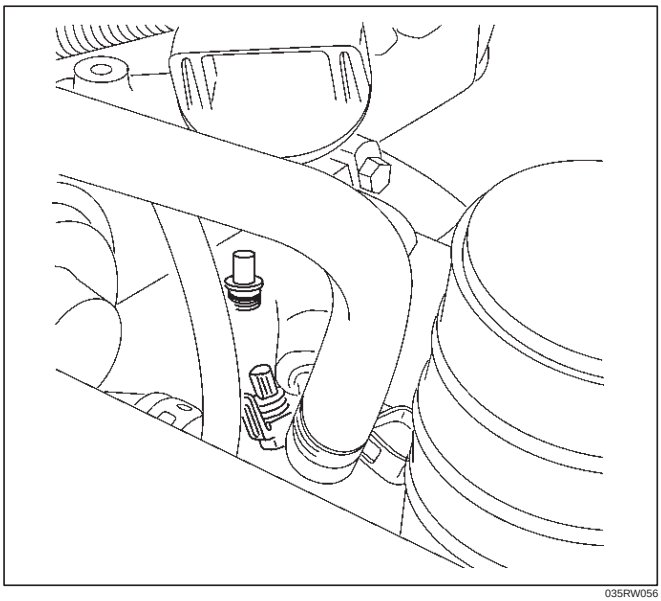

035RW056

2. Correct the IAT electrical connector.
3. Connect the negative battery cable.

Manifold Absolute Pressure (MAP) Sensor

Removal Procedure

1. Disconnect the negative battery cable.
2. Disconnect the EGR valve.

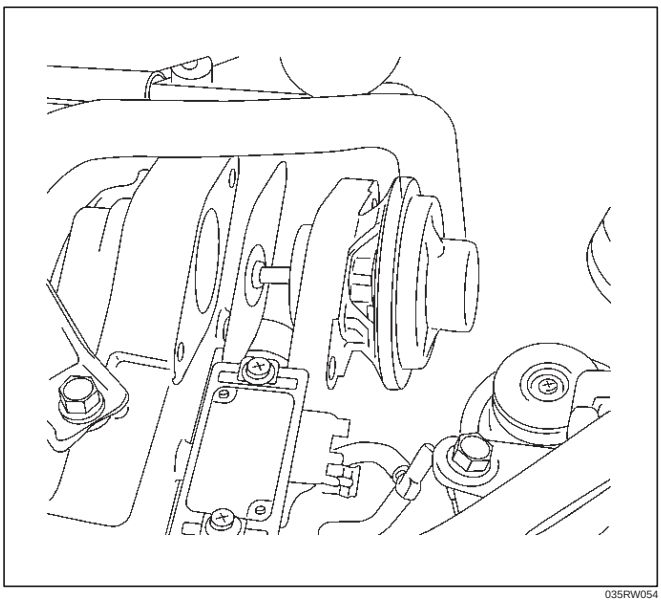

035RW054

3. Disconnect the MAP sensor connector from the MAP sensor.

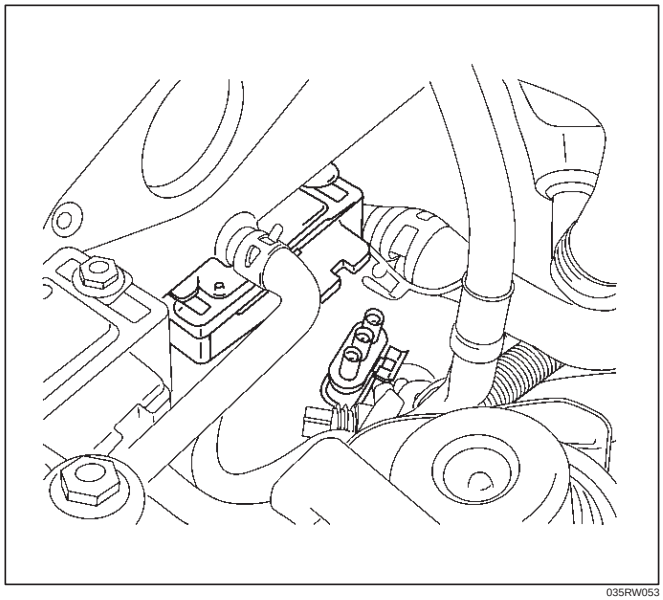

035RW053

4. Remove the bolts and the MAP sensor from the intake manifold.

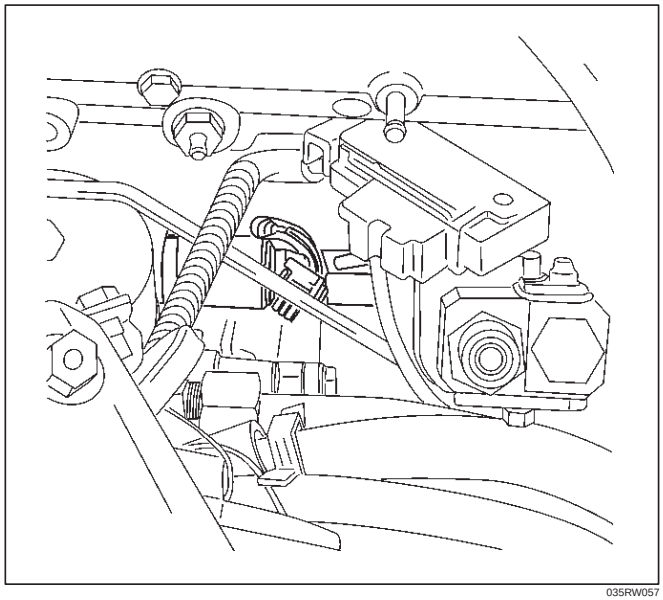

035RW057

Installation Procedure

1. Install the MAP sensor and bolts on the intake manifold.

Torque: 4 N·m (35 lb in)

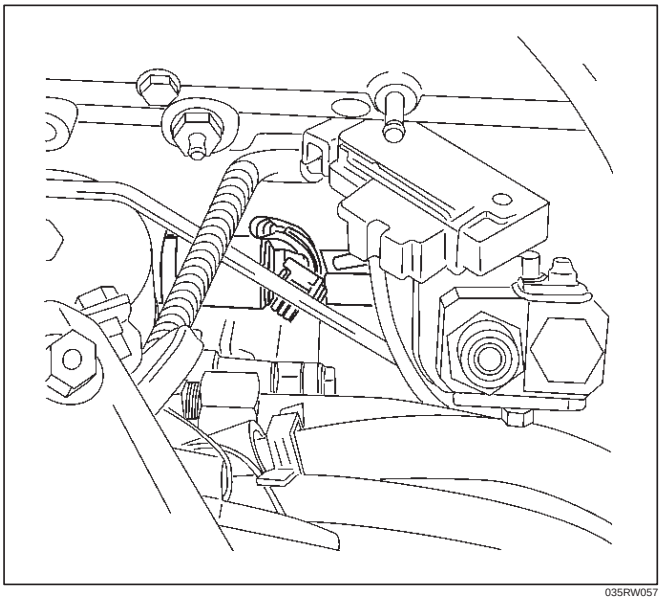

035RW057

2. Connect the MAP sensor connector.

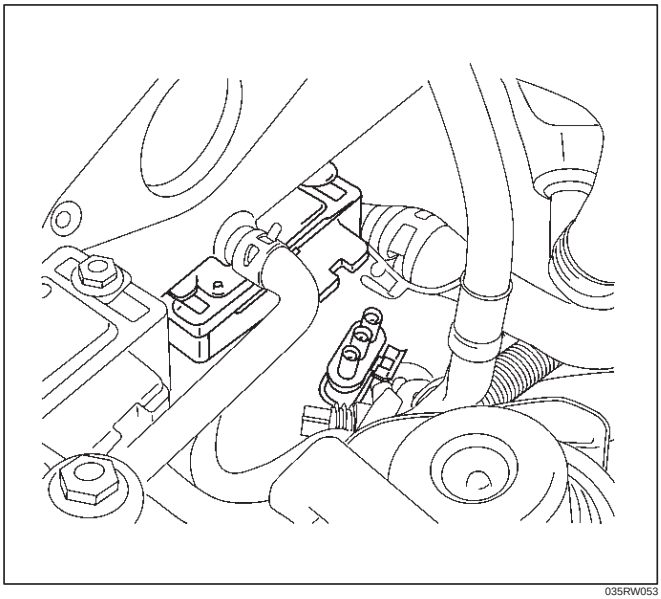

035RW053

3. Connect the EGR valve.

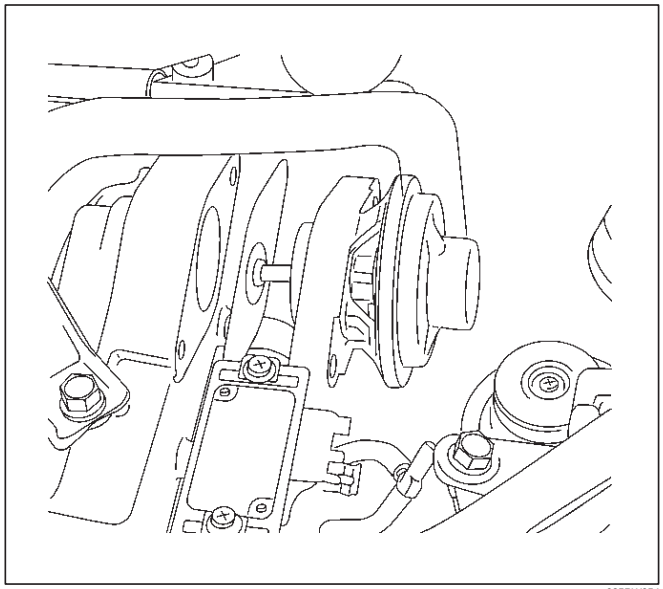

035RW054

4. Connect the negative battery cable.

Oil Temperature (OT) Sensor

Removal Procedure

1. Disconnect the negative battery cable.
2. Remove the battery.

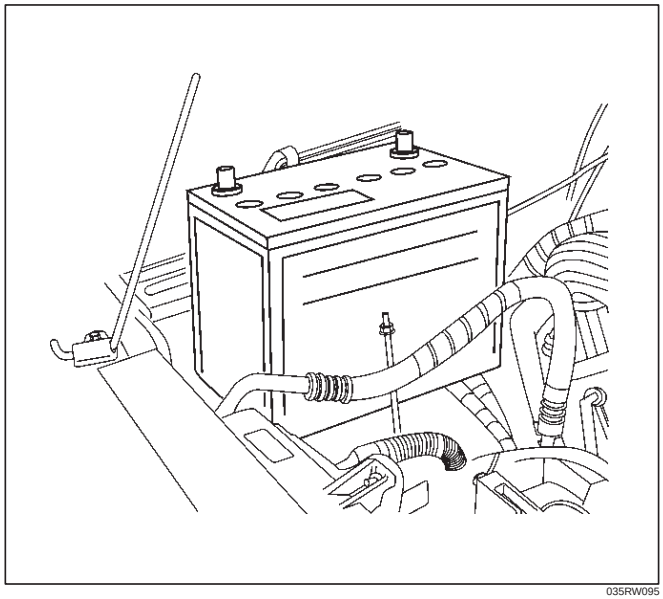

035RW095

3. Disconnect the electrical connector from the OT sensor.
4. Remove the OT sensor.

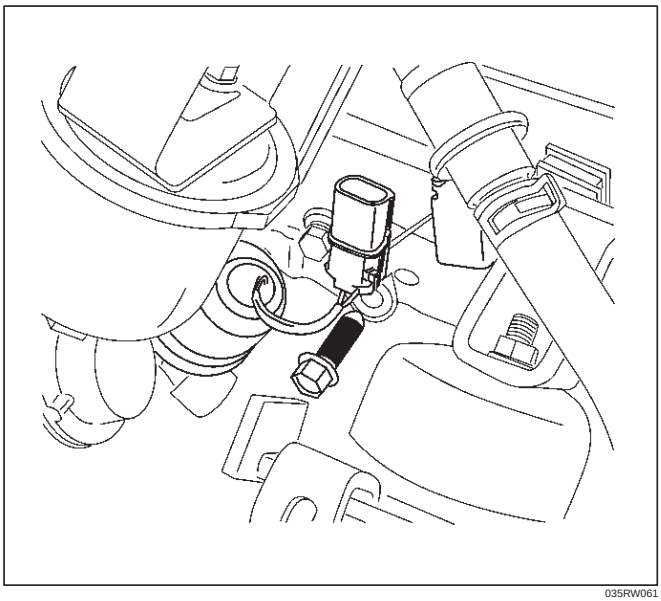

035RW061

Installation Procedure

1. Install the OT sensor.

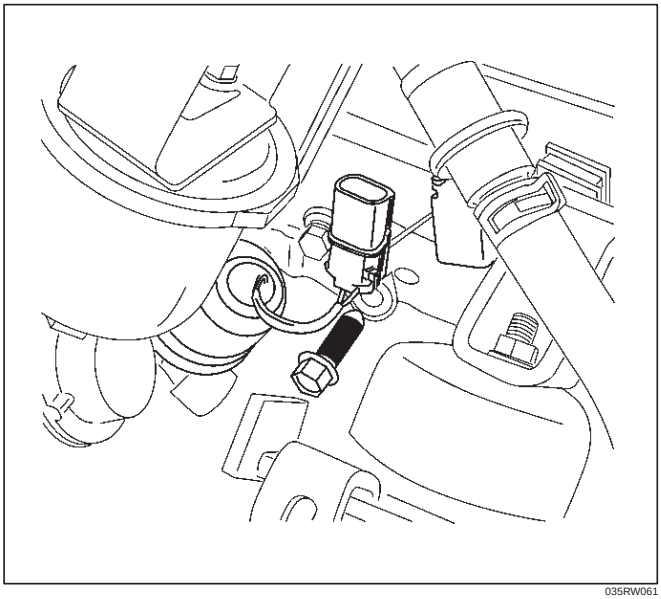

035RW061

2. Connect the OT sensor electrical connector.
3. Install the battery.

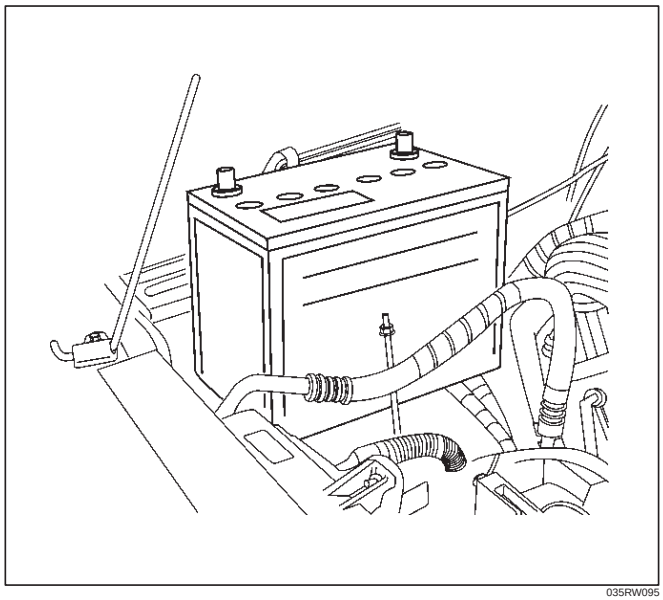

035RW095

4. Connect the negative battery cable.

Malfunction Indicator Lamp (MIL)

Removal and Installation Procedure

Refer to Meter in Electrical section.

Engine Control Module (ECM)

Service Precaution

NOTE: To prevent possible electrostatic discharge damage to the ECM, do not touch the connector pins or soldered components on the circuit board.

When replacing the ECM to prevent possible electro damage, follow these guidelines:
Before removing the ECM, disconnect the negative battery cable.
Before install the ECM, install the negative battery cable.

Electrostatic Discharge (ESD) Damage

Electronic components used in the control systems are often designed to carry very low voltage. Electronic components are susceptible to damage caused by electrostatic discharge. Less than 100 volts of static electricity can cause damage to some electronic components. By comparison, it takes as much as 4,000 volts for a person to even feel the zap of a static discharge.
There are several ways for a person to become statically charged. The most common methods of charging are by friction and by induction. An example of charging by friction is a person sliding across a car seat.
Charging by induction occurs when a person with well insulated shoes stands near a highly charged object and momentarily touches ground. Charges of the same polarity are drained off leaving the person highly charged with the opposite polarity. Static charges can cause

damage, therefore, it is important to use care when handling and testing electronic components.

NOTE: To prevent possible Electrostatic Discharge damage, follow these guidelines:

- Do not touch the control module connector pins or soldered components on the control module circuit board.
- Do not open the replacement part package until the part is ready to be installed.
- Before removing the part from the package, ground the package to a known good ground on the vehicle.
- If the part has been handled while sliding across the seat, or while sitting down from a standing position, or while walking a distance, touch a known good ground before installing the part.

NOTE: To prevent internal ECM damage, the ignition must be in the “OFF” position in order to disconnect or reconnect power to the ECM (for example: battery cable, ECM pigtail, ECM fuse, jumper cables, etc.).

IMPORTANT: When replacing the production ECM with a service ECM, it is important to transfer the broadcast code and production ECM number to the service ECM label. This will allow positive identification of ECM parts throughout the service life of the vehicle. Do not record this information on the metal ECM cover.

IMPORTANT: The ignition should always be in the “OFF” position in order to install or remove the ECM connectors.

Service of the ECM should normally consist of either replacement of the ECM. If the diagnostic procedures call for the ECM to be replaced, the ECM should be checked first to ensure it is the correct part. If it is, remove the faulty ECM and install the new service ECM.

DTC P0601 indicates the check sum error.

Removal Procedure

1. Disconnect the negative battery cable.
2. Disconnect the ECM connector.

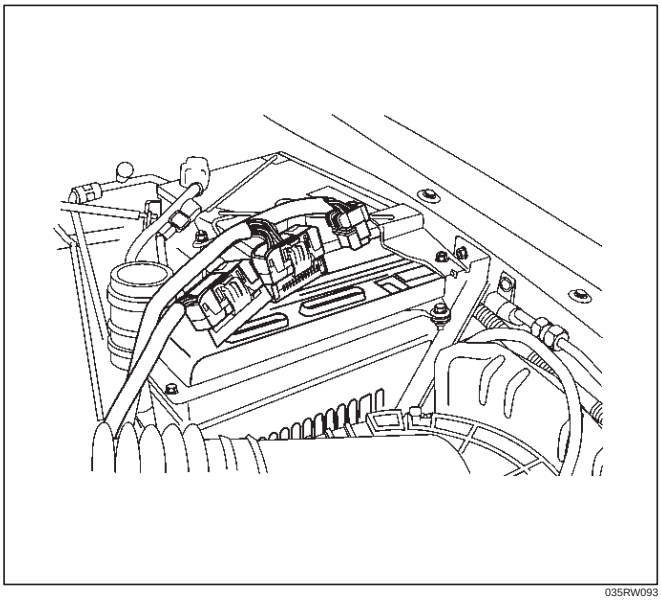

035RW093

3. Remove the bolts ECM bracket and battery bracket.

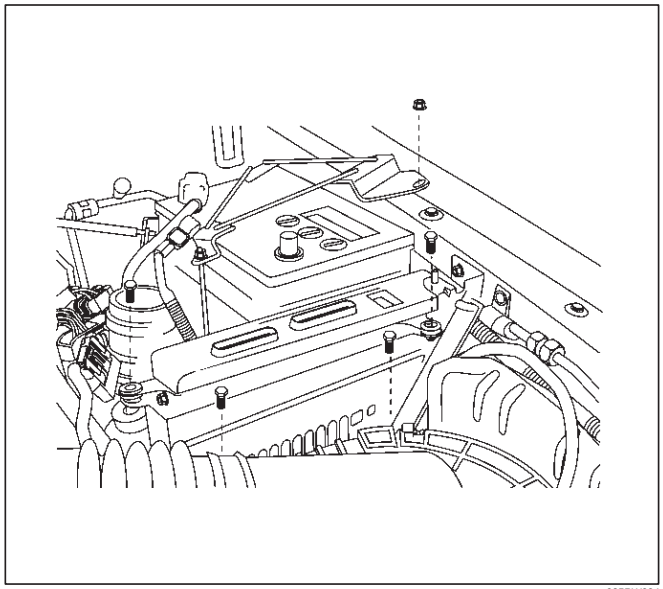

035RW094

4. Remove the ECM.

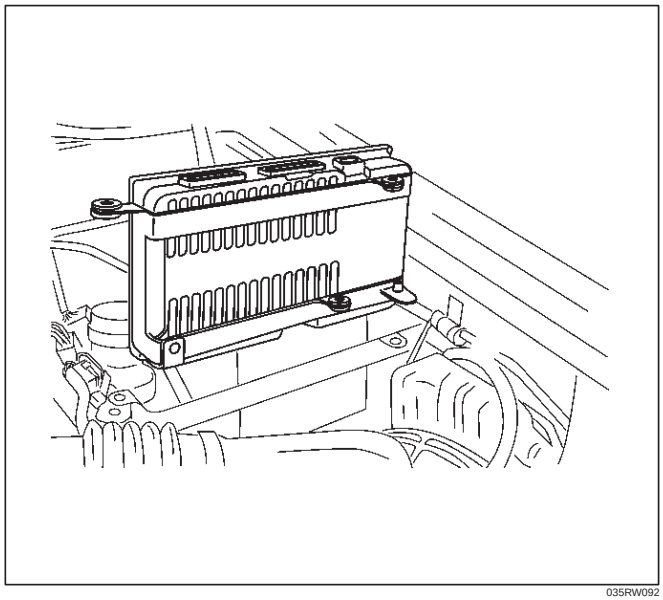

035RW092

Installation Procedure

1. Install the ECM.

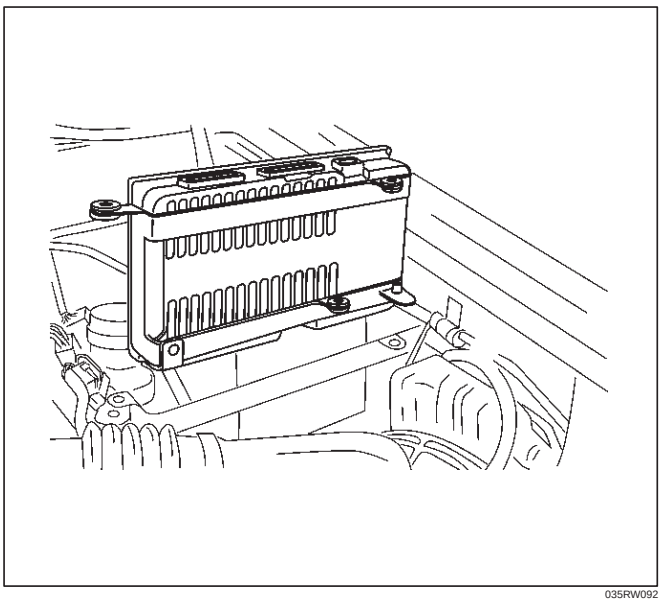

035RW092

2. Install the bolts, ECM bracket and battery bracket.

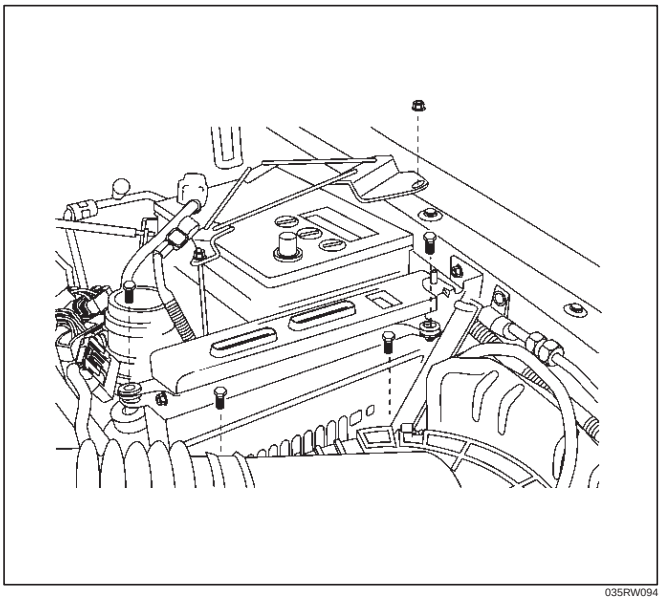

035RW094

3. Connect the ECM connector.

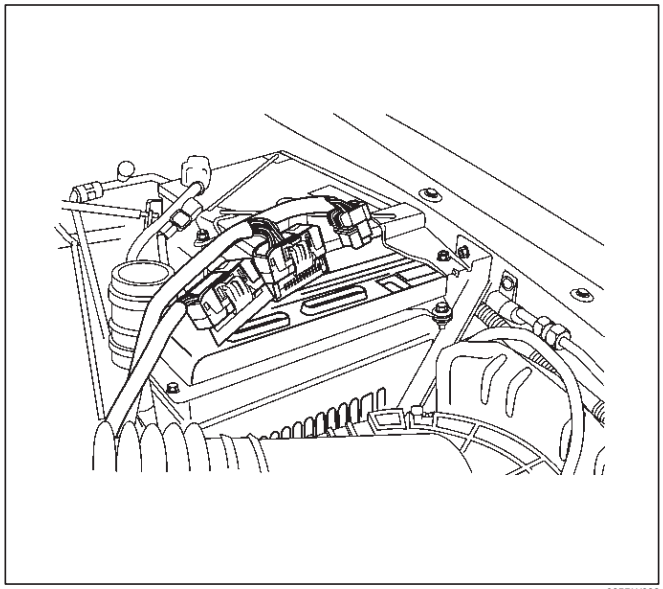

035RW093

4. Connect the negative battery cable.

If the ECM is replaced, the new ECM will need to be programmed.

EEPROM

General Description

The Electronically Erasable Programmable Read Only Memory (EEPROM) is a permanent memory that is physically soldered within the ECM. The EEPROM contains program and calibration information that the ECM needs to control powertrain operation.

Functional Check

1. Perform the On-Board Diagnostic System Check.
2. Start the engine and run for one minute.
3. Scan for DTCs using the Tech 2.

Intake Throttle Position (ITP) Sensor

Removal Procedure

1. Disconnect the negative battery cable.

2. Remove the cover of the intercooler.

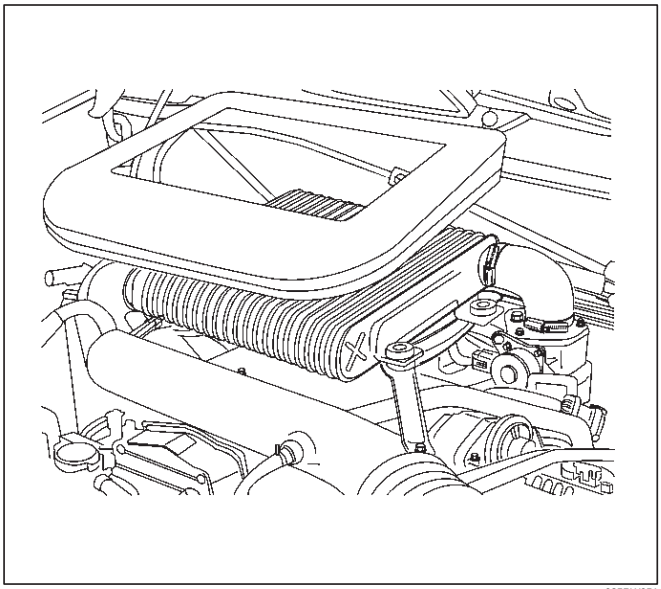

035RW051

3. Remove the bolts and the left side bracket to the intercooler.
4. Remove the air duct with bracket from the intercooler.
5. Remove the throttle body from the intake manifold.
6. Disconnect the ITP sensor electrical connector and throttle motor control connector.
7. Remove the bolts and the ITP sensor from the throttle body.

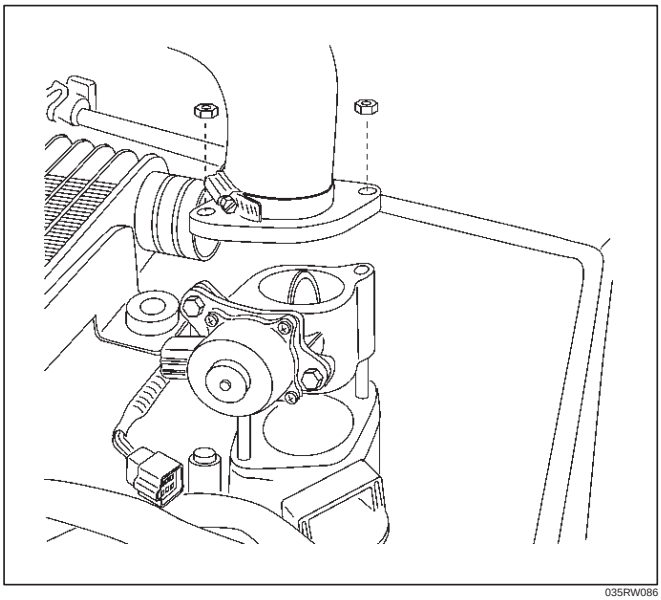

035RW086

NOTE: Do not clean the ITP sensor by soaking it in solvent. The sensor will be damaged as a result.

Function Check

Use a Tech 2 to check the ITP sensor output voltage at closed throttle.

- The voltage should be under 0.85 volt.
- If the reading is greater than 0.85 volt, check the throttle shaft to see if it is binding.
- If the throttle shaft is not binding and the throttle cable is properly adjusted, install a new ITP sensor.

Installation Procedure

1. Install the ITP sensor on the throttle body with the bolts.

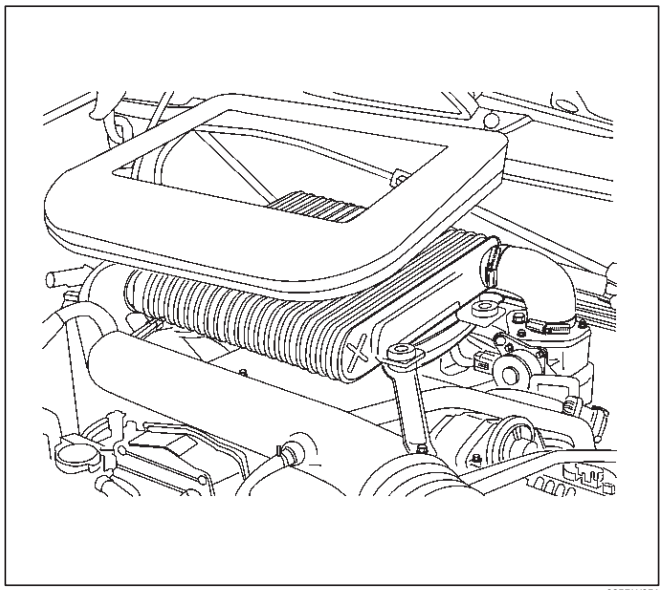

035RW051

2. Install the throttle body to the intake manifold and the air duct with bracket between throttle body and intercooler.

Torque: 20 N·m (14 lb ft)

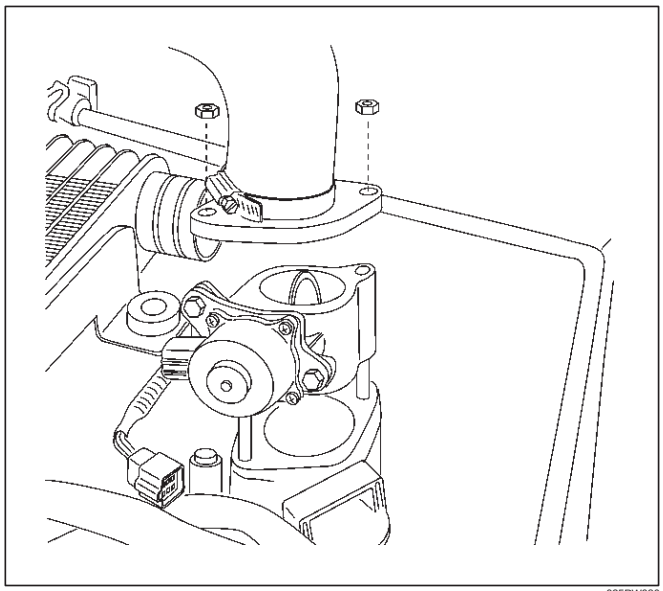

035RW086

3. Connect the ITP sensor electrical connector and throttle motor control connector.
4. Install the bracket to the intercooler.
5. Install the cover of intercooler.
6. Install the negative battery cable.

Vehicle Speed Sensor (VSS)

Removal Procedure

CAUTION: The VSS is located on the right side of the transfer case just ahead of the rear propeller shaft and very close to the exhaust pipes. Be sure that the exhaust pipes are cool enough to touch before trying to remove the VSS. If the pipes are hot, you could be burned.

1. Disconnect the negative battery cable.
2. Disconnect the VSS electrical connector.

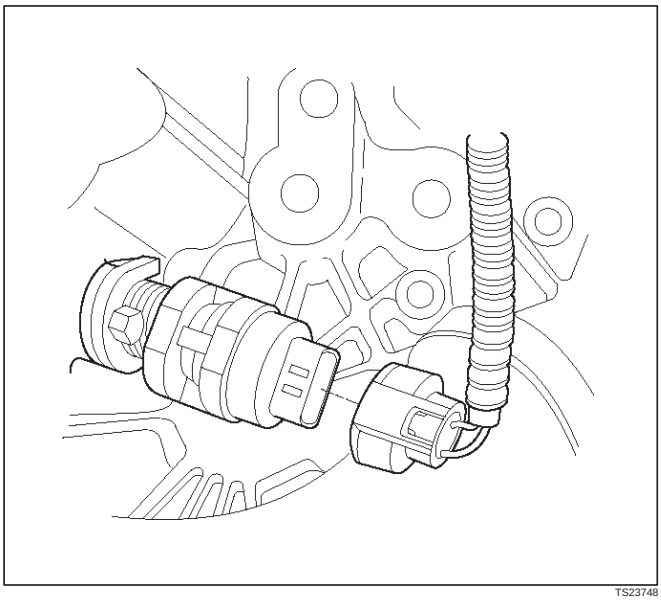

TS23748

3. Remove the bolt and the clamp securing the VSS in place.

IMPORTANT: Have a container ready to catch any fluid that leaks out when the VSS is removed from the transfer case.

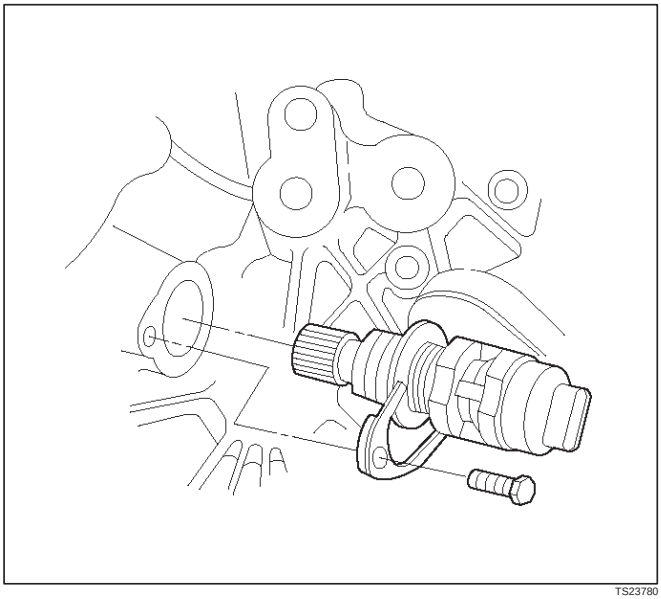

TS23780

4. Remove the VSS from the transfer case by wiggling it slightly and pulling it straight out.

Inspection Procedure

1. Inspect the electrical connector for signs of corrosion or warping. Replace the VSS if the electrical connector is corroded or warped.
2. Inspect the VSS driven gear for chips, breaks, or worn condition. Replace the VSS if the driven gear is chipped, broken or worn.
3. Inspect the O-ring for wear, nicks, tears, or looseness. Replace the O-ring if necessary.

Installation Procedure

1. Install the VSS in the transfer case with the notch for the connector facing the rear.
2. Secure the VSS in place with the clamp and the bolt.

Tighten

- **Tighten the bolt to 16 N·m (12 lb ft.).**

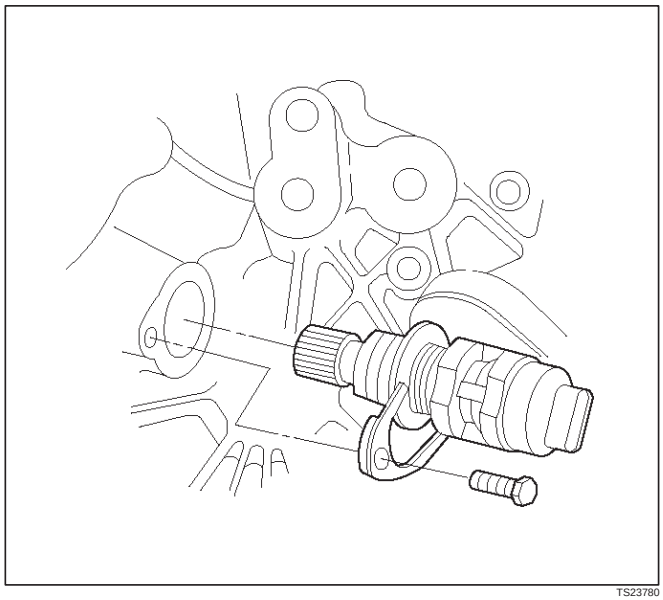

TS23780

3. Connect the VSS electrical connector.

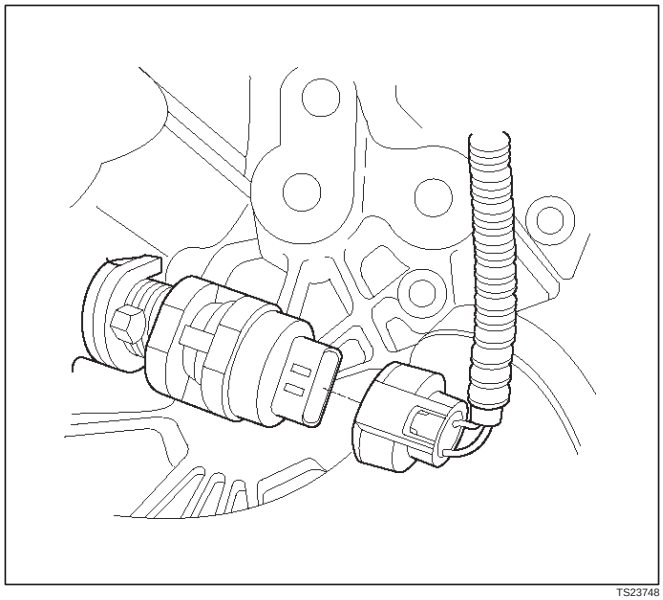

TS23748

4. Check the transfer case oil level. Add fluid if necessary.

5. Connect the negative battery cable.

Air Cleaner/Air Filter

Removal Procedure

1. Loosen the clamp between the air cleaner lid and the duct.
2. Release the four latches securing the lid to the air cleaner housing.
3. Remove the air cleaner lid.
4. Remove the air filter element.

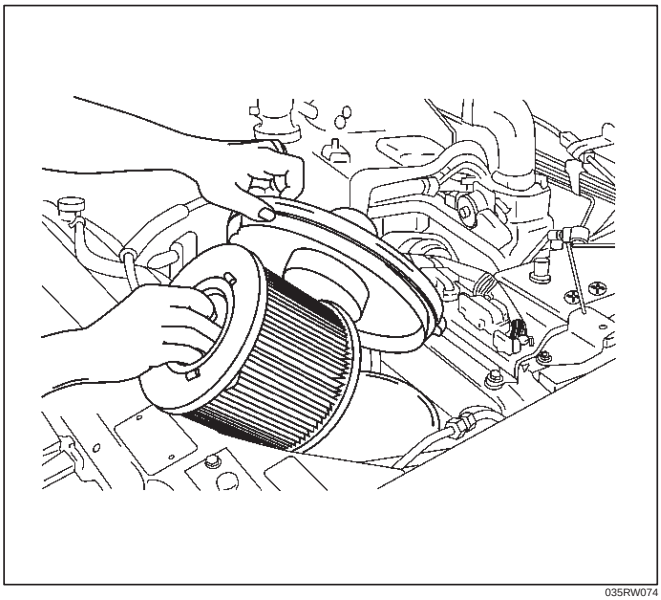

035RW074

5. Remove the retaining bolts and the air cleaner housing from the vehicle.

Installation Procedure

1. Install the air cleaner housing in the vehicle with the retaining bolts.
2. Install the air filter element in the air cleaner housing.

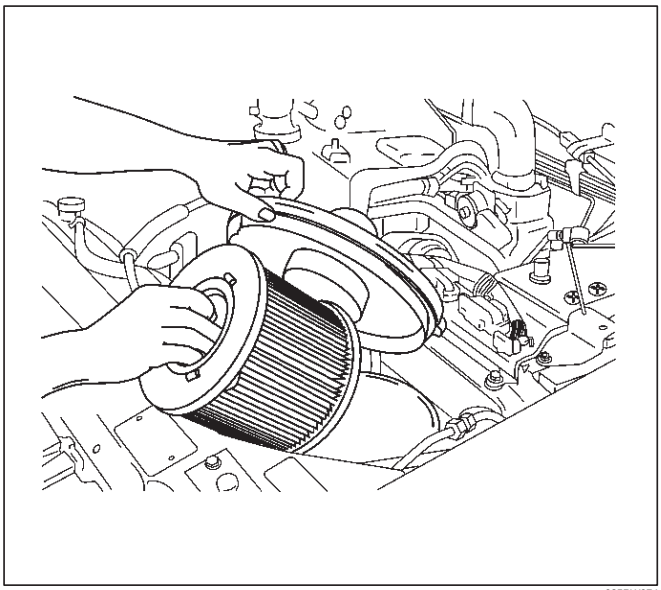

035RW074

3. Install the air cleaner lid on the air duct and the air cleaner housing.
4. Tighten the clamp and secure the four latches between the lid and the air cleaner housing.

Accel Position (AP) Sensor

Removal Procedure

1. Disconnect the negative battery cable.
2. Disconnect the electrical connector to the AP sensor.
3. Remove the bolts and the accelerator pedal assembly from the bulkhead.

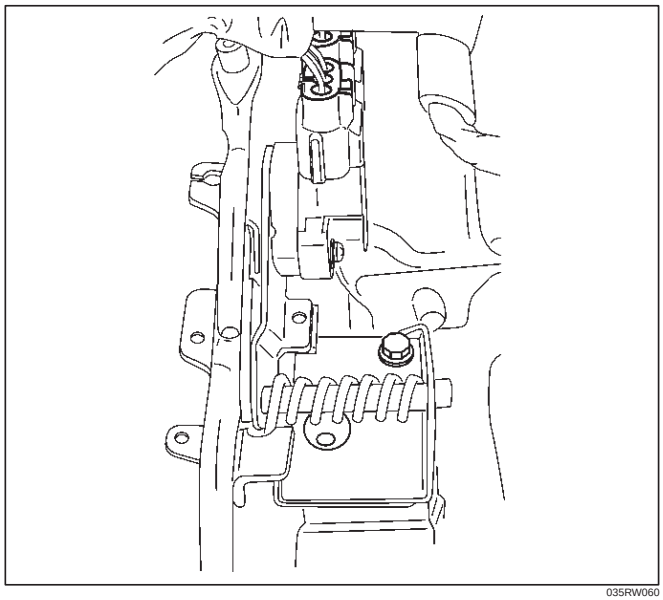

035RW060

4. Remove the bolts and AP sensor from the accelerator pedal assembly.

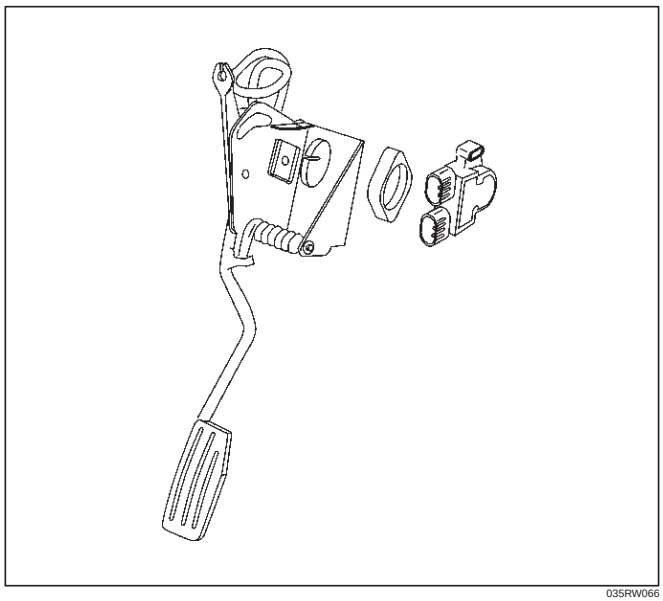

035RW066

Installation Procedure

1. Install the AP sensor to the accelerator pedal assembly.

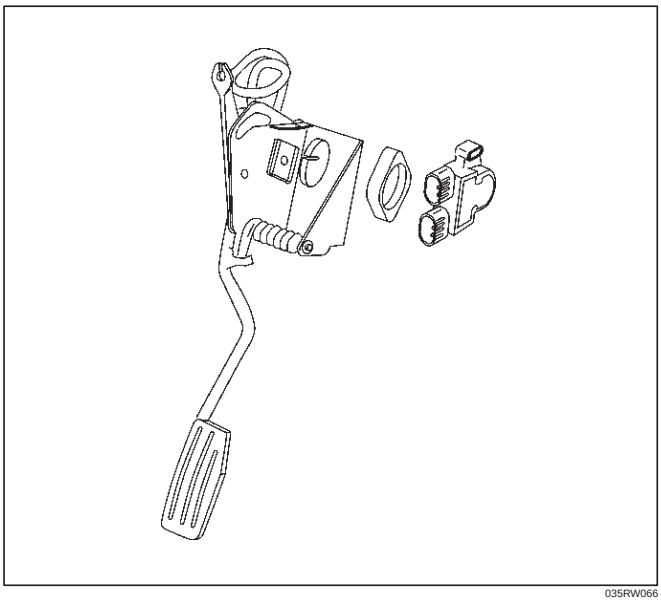

035RW066

2. Install the accelerator pedal assembly to the bulkhead.
3. Connect the electrical connector to the AP sensor.

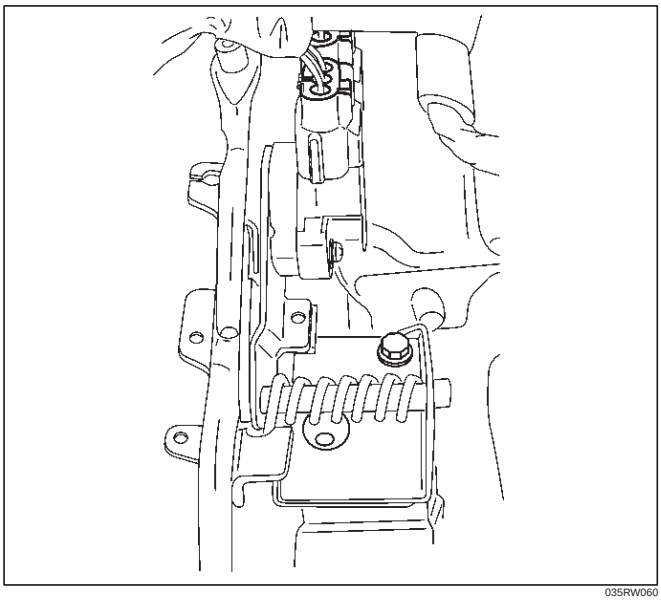

035RW060

4. Connect the negative battery cable.

Accelerator Pedal Replacement

Removal Procedure

1. Disconnect the negative battery cable.
2. Disconnect the electrical connector to the AP sensor.
3. Remove the bolts and the accelerator pedal assembly from the bulkhead.

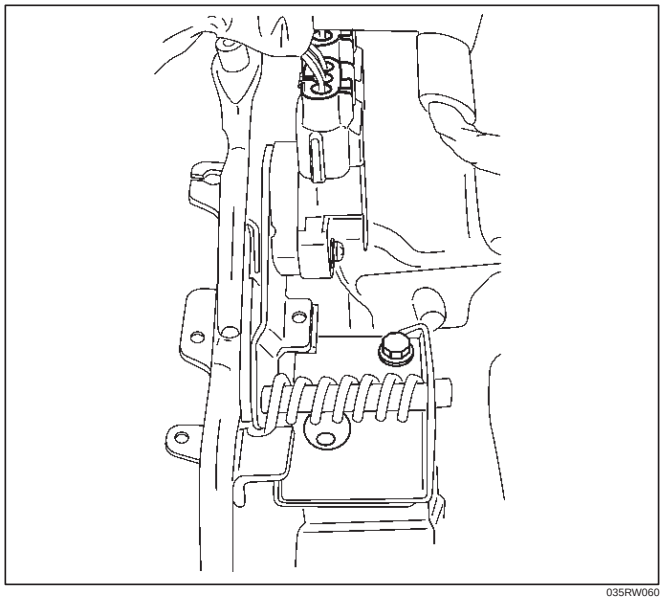

035RW060

4. Remove the bolts and AP sensor from the accelerator pedal assembly.

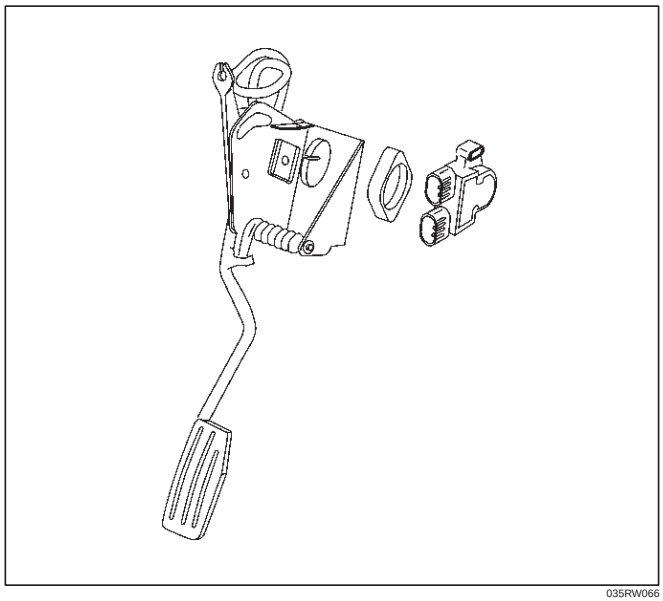

035RW066

Installation Procedure

1. Install the AP sensor to the accelerator pedal assembly.
2. Install the accelerator pedal assembly to the bulkhead.

3. Connect the electrical connector to the AP sensor.

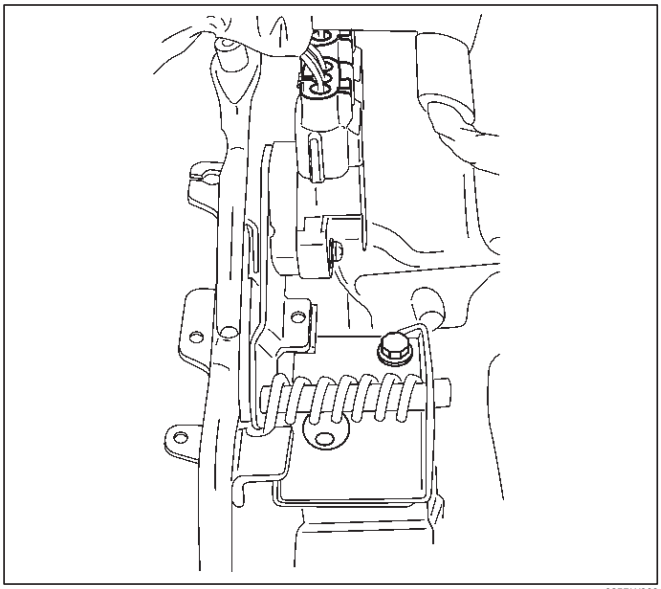

035RW060

4. Connect the negative battery cable.

Fuel Filter Cap

General Description

The fuel filler cap includes a vacuum valve and a pressure valve.
If high vacuum or high pressure occurs in the fuel tank, each valve works to adjust the pressure in order to prevent damage to the tank at the EGR valve.

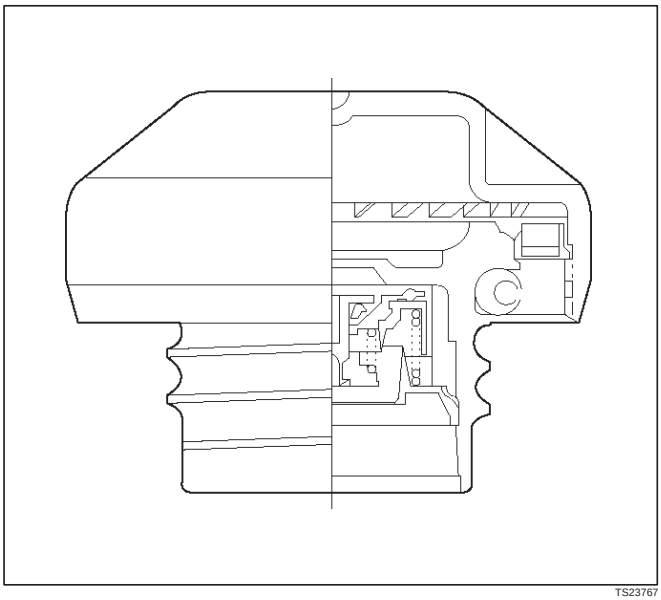

TS23767

Inspection Procedure

NOTE: Replace the fuel filler cap with the same type of filler cap that was originally installed on the vehicle.

- Check the seal ring in the filler cap for any abnormality and for seal condition.
- Replace the filler cap if any abnormality is found.

Fuel Filter

Removal and Installation Procedure

Refer to the Engine fuel in the 4JX1 Engine section.

Fuel Gauge Unit

Removal Procedure

1. Disconnect the negative battery cable.
2. Loosen the fuel filler cap.
3. Drain the fuel from the tank.

Tighten

- **Tighten the drain plug to 20 N·m (14 lb ft.).**

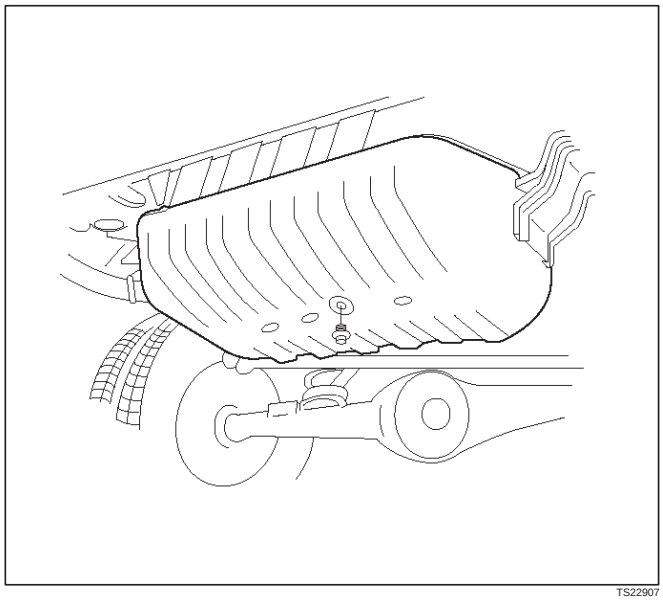

TS22907

4. Disconnect the wiring connector from the fuel gauge unit.

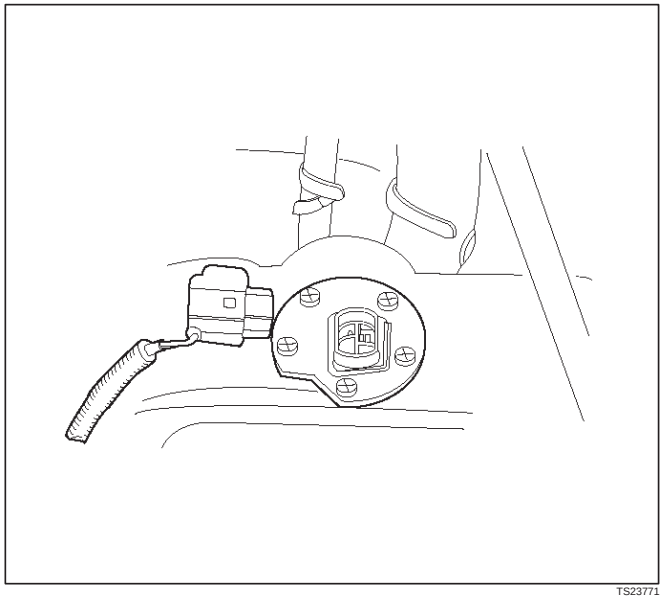

TS23771

5. Remove the fuel gauge unit retaining screws.

6. Remove the fuel gauge unit.
   - Cover or plug the fuel tank to prevent dust, dirt, or debris from entering the tank.

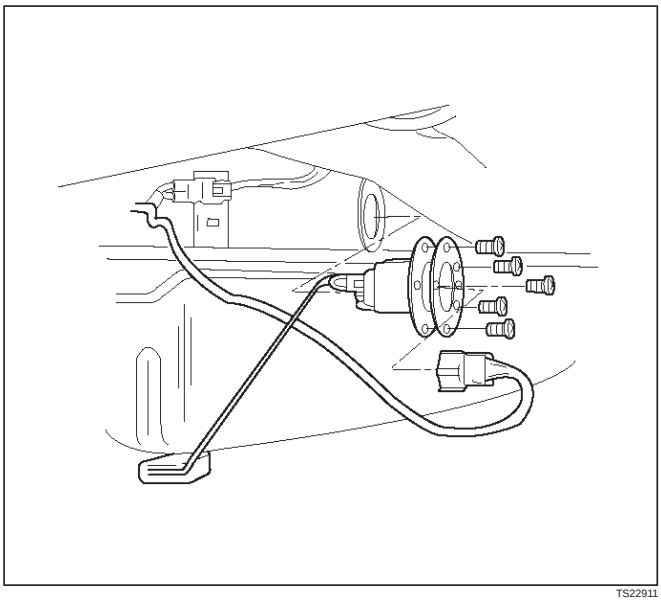

TS22911

Installation Procedure

1. Install the fuel gauge unit.
2. Install the fuel gauge unit retaining screws.

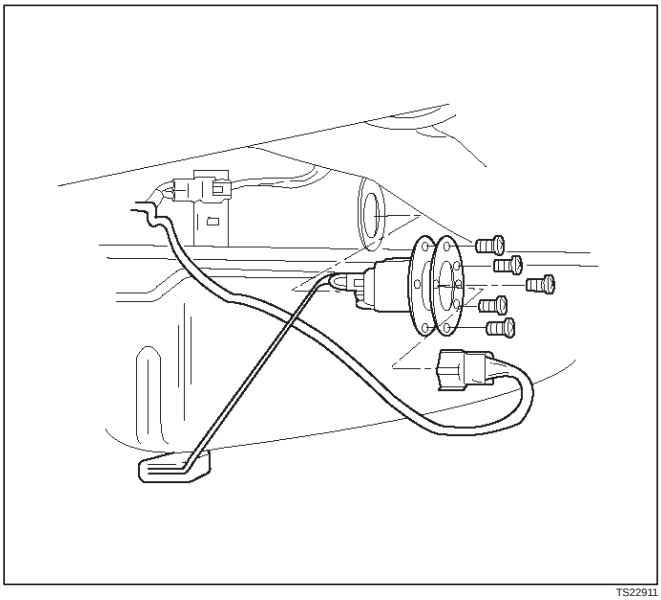

TS22911

3. Connect the wiring connector to the fuel gauge unit.

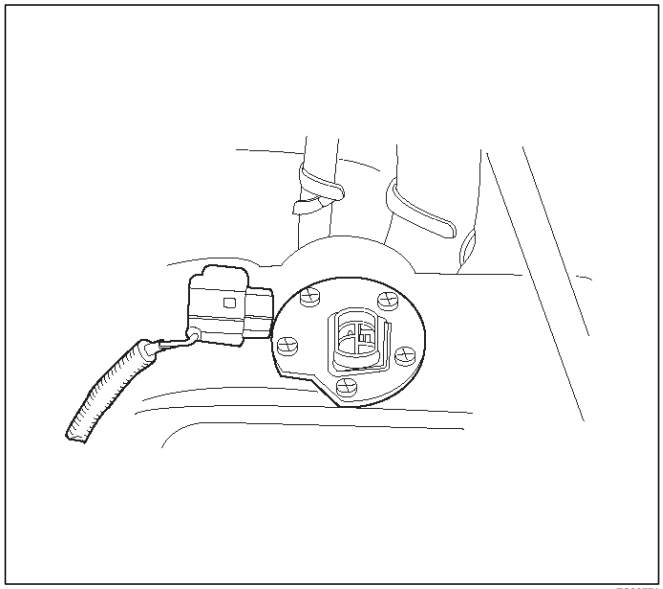

TS23771

4. Fill the fuel tank with fuel.
   - Tighten the fuel filler cap.
   - Check for leaks at the fuel gauge unit gasket.
5. Connect the negative battery cable.

Fuel Injectors

Removal and Installation Procedure

Refer to Engine Fuel in 4JX1 Engine Section.

Fuel Temperature Sensor

Removal Procedure

CAUTION: To reduce the risk of fire and personal injury, it is necessary to relieve the fuel system pressure before servicing the fuel system components.

CAUTION: After relieving the system pressure, a small amount of fuel may be released when servicing fuel lines or connections. Reduce the chance of personal injury by covering the fuel line fittings with a shop towel before disconnecting the fittings. The towels will absorb any fuel that may leak out. When the disconnect is completed, place the towel in an approved container.

1. Disconnect the negative battery cable.
2. Remove the intercooler assembly.
3. Remove the cylinder head. Refer to engine mechanical section.

4. Remove the rear side engine hanger.

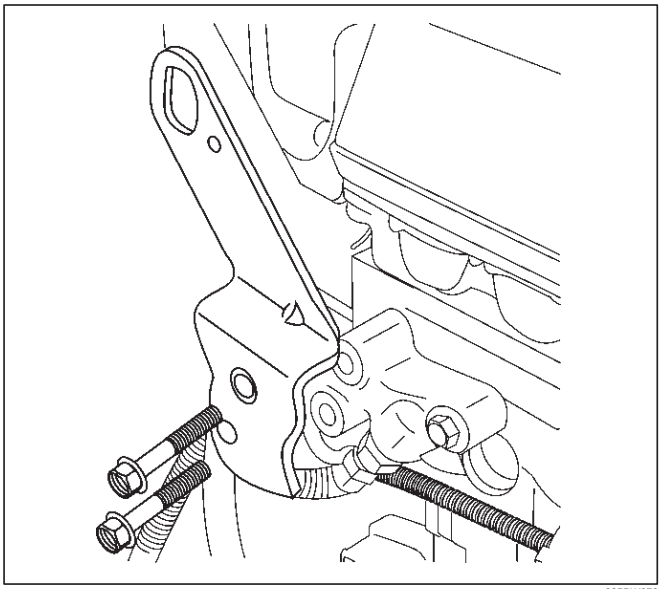

035RW070

5. Remove the fuel return adapter.

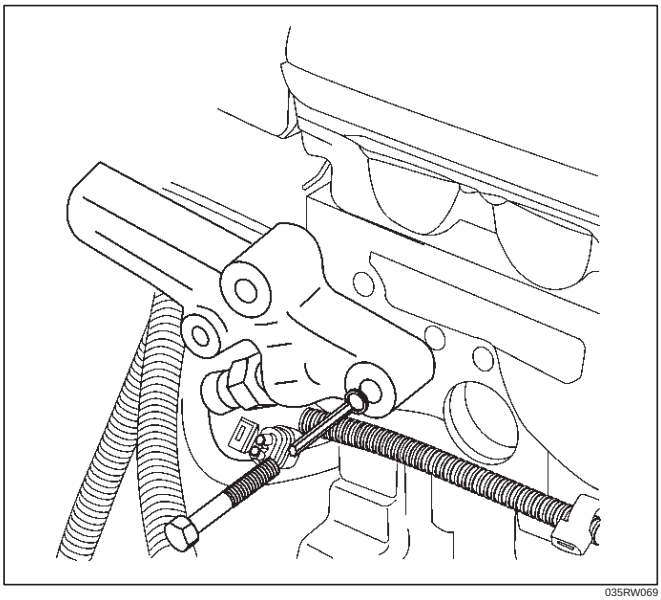

035RW069

6. Remove the fuel pressure sensor from the fuel return adapter.

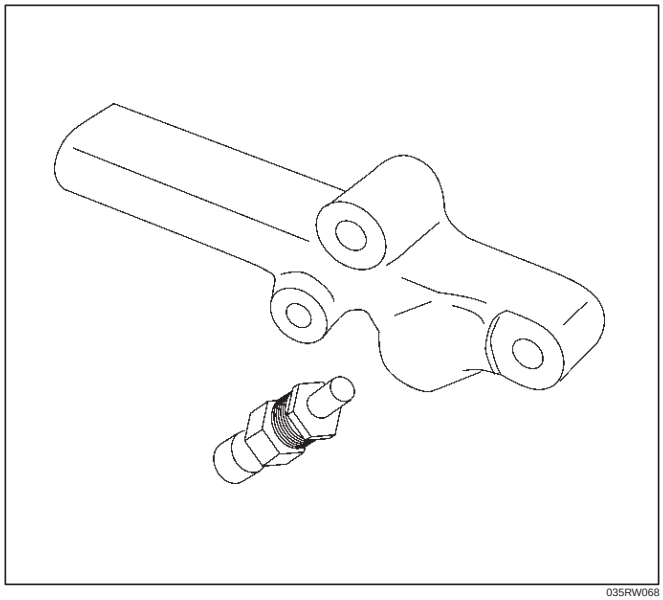

035RW068

Installation Procedure

1. Install the fuel pressure sensor in the fuel return adapter.

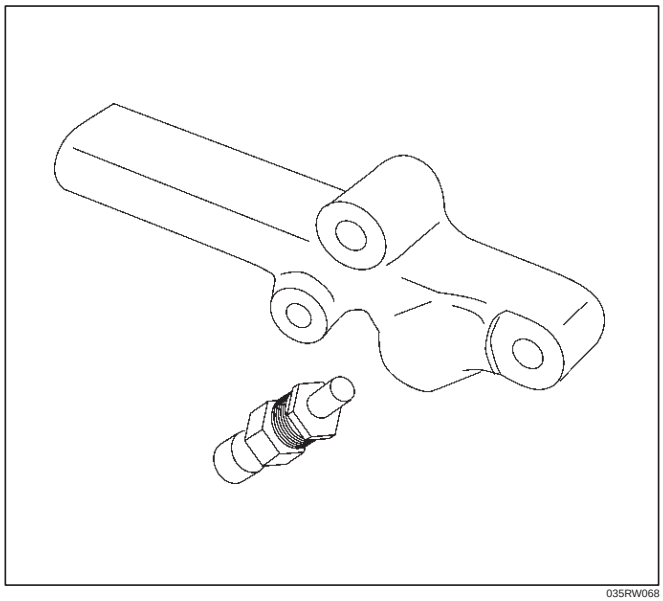

035RW068

2. Install the fuel return adapter.

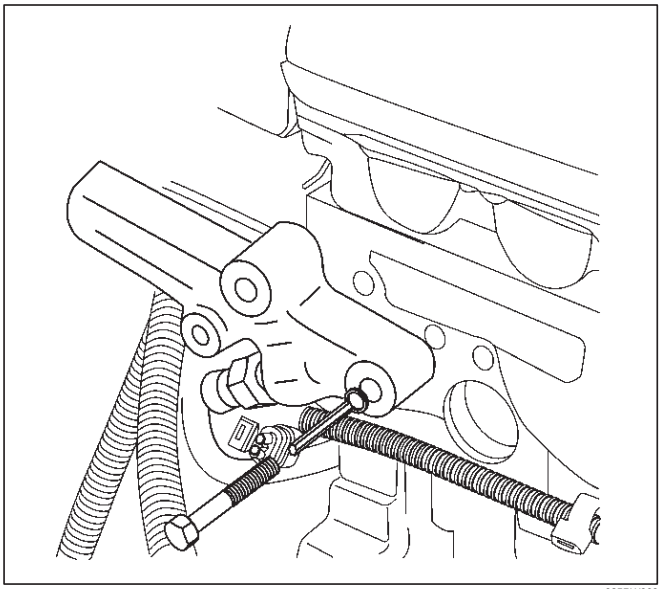

035RW069

3. Install the rear side engine hanger. Tighten the rear side engine hanger fixing bolts to specified torque.

Torque: 19 N·m (14 lb ft)

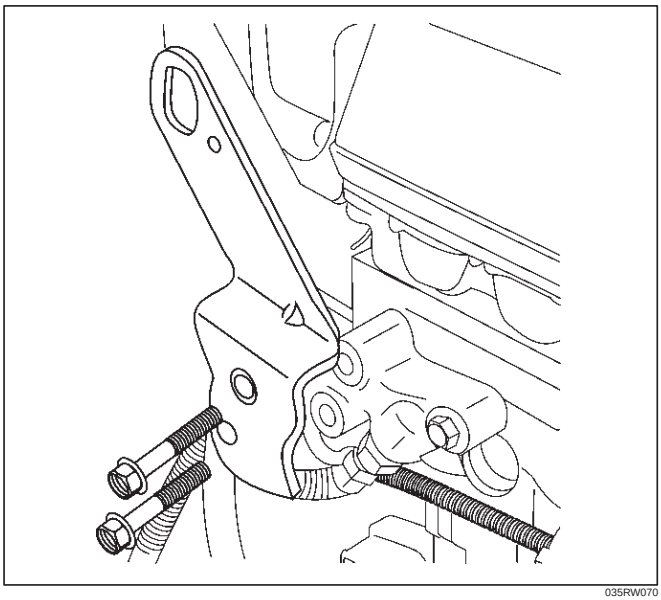

035RW070

4. Install the cylinder head. Refer to engine mechanical section.
5. Install the intercooler assembly.
6. Connect the negative battery cable.

Rail Pressure (RP) Sensor

Removal Procedure

1. Disconnect the negative battery cable.
2. Remove the air cleaner cover and air duct.
3. Remove the intercooler assembly.
4. Remove the injector oil pipe.
5. Remove the intake throttle valve.
6. Remove the cylinder head cover noise inselation.
7. Remove the cylinder head cover.
8. Remove the RP sensor.

Installation Procedure

- Refer to the *RP Sensor Programming*.

1. Install the RP sensor.
2. Install the cylinder head cover.
3. Install the cylinder head cover noise inselation.
4. Install the intake throttle valve.
5. Install the injector oil pipe.
6. Install the intercooler assembly and tighten intercooler assembly fixing bolts to specified torque.

Torque: 20 N·m (14 lb ft)

7. Install the air cleaner cover and air duct.
8. Connect the negative battery cable.

Fuel Tank

Removal Procedure

Refer to*Engine Fuel in 4JX1 Engine section.*

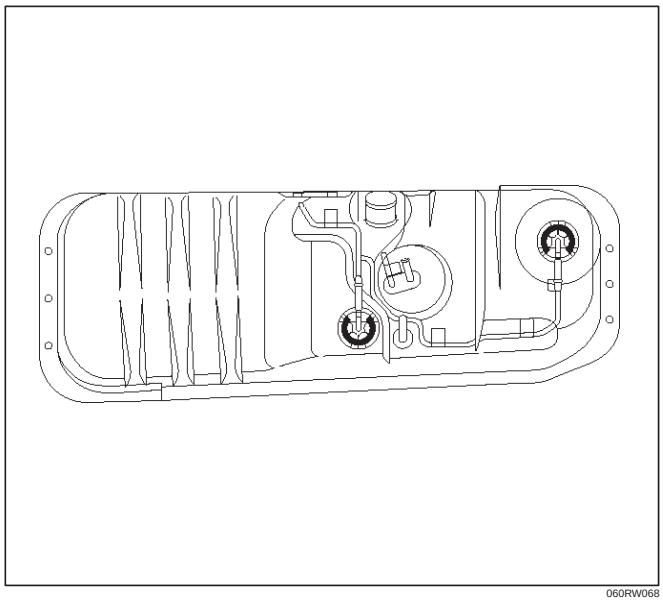

060RW068

Throttle Body (TB)

Removal Procedure

1. Disconnect the negative battery cable.
2. Remove the cover of the intercooler.

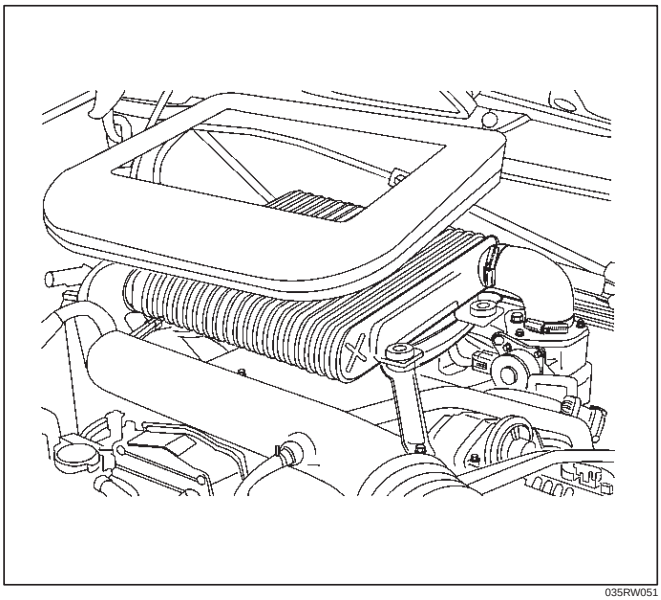

035RW051

3. Remove the bolts and the left side bracket to the intercooler.
4. Remove the air duct with bracket from the intercooler.

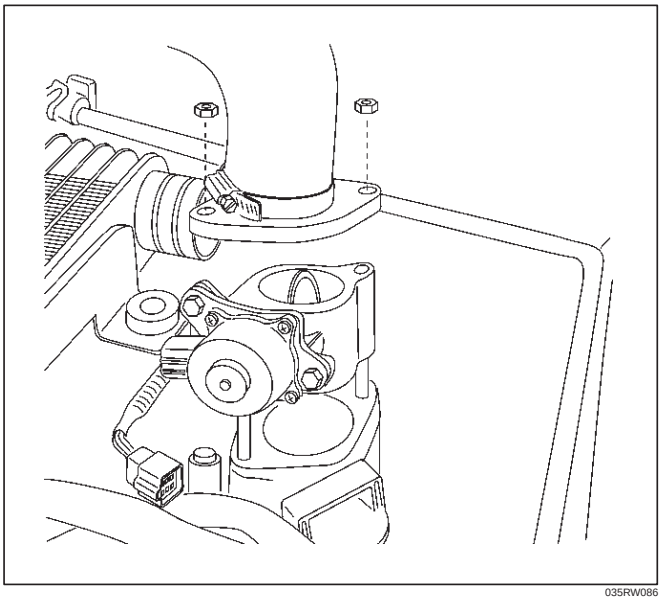

035RW086

5. Remove the throttle body assembly from the intake manifold.
6. Disconnect the ITP sensor electrical connector.

Installation Procedure

NOTE: Do not use solvent of any type when you clean the gasket surfaces on the intake manifold and the throttle body assembly. The gasket surfaces and the throttle body assembly may be damaged as a result.

- If the throttle body gasket needs to be replaced, remove any gasket material that may be stuck to the mating surfaces of the manifold.
- Do not leave any scratches in the aluminum casting.

1. Install the throttle body assembly to the intake manifold and the air duct with bracket between throttle body and intercooler.

Torque: 20 N·m (14 lb ft)

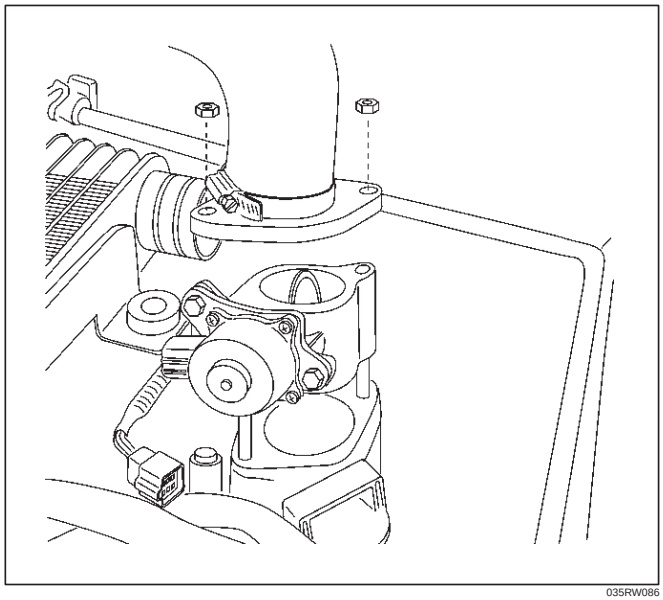

035RW086

2. Connect the ITP sensor electrical connector and throttle motor control connector.
3. Install the bracket to the intercooler.
4. Install the cover of intercooler.
5. Connect the negative battery cable.

Air Conditioning (A/C) Relay

Removal Procedure

1. Remove the fuse and relay box cover from under the hood.
2. Consult the diagram on the cover to determine which is the correct relay.
3. Pull the relay straight up and out of the fuse and relay box.

Installation Procedure

1. Insert the relay into the correct place in the fuse and relay box with the catch slot facing forward.
2. Press down until the catch engages.
   - An audible “click” will be heard.
3. Install the fuse and relay box cover.

Exhaust Gas Recirculation (EGR) Vacuum Switch Valve (VSV)

Removal Procedure

1. Disconnect the negative battery cable.

2. Disconnect the EGR VSV connector and vacuum hose from the EGR VSV.

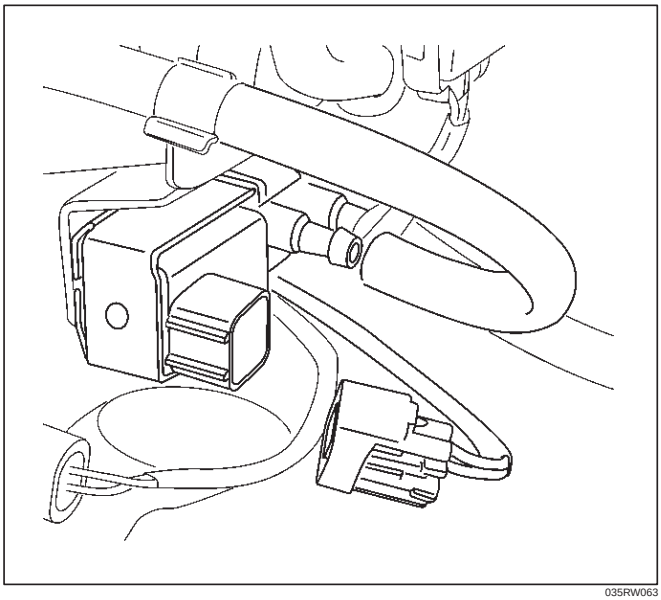

035RW063

3. Remove the MAP sensor assembly and EGR VSV.

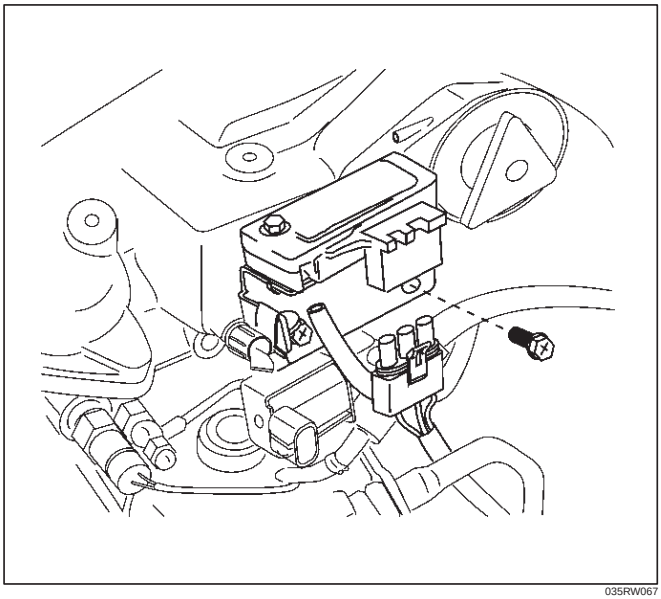

035RW067

4. Remove the EGR VSV from the MAP sensor bracket.

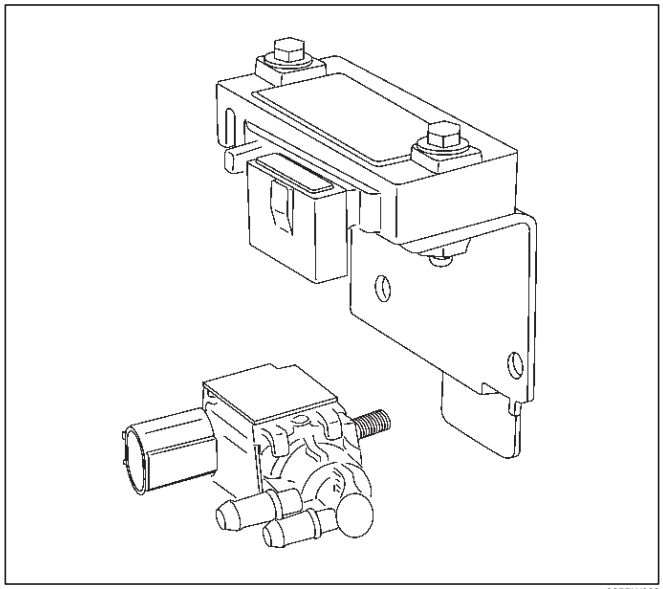

035RW062

Installation Procedure

1. Install the EGR VSV and tighten nut to specified torque.

Torque: 8 N·m (69 lb in)

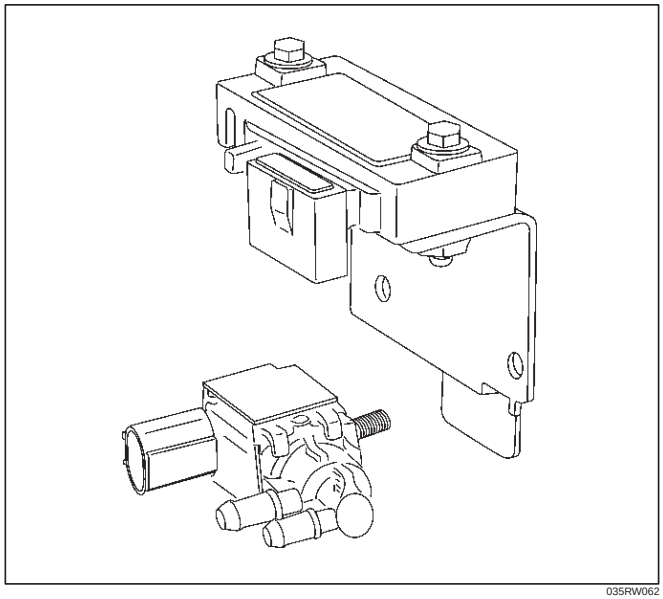

035RW062

2. Install the MAP sensor assembly and EGR VSV and tighten MAP sensor bracket fixing bolts specified torque.

Torque: 9 N·m (78 lb in)

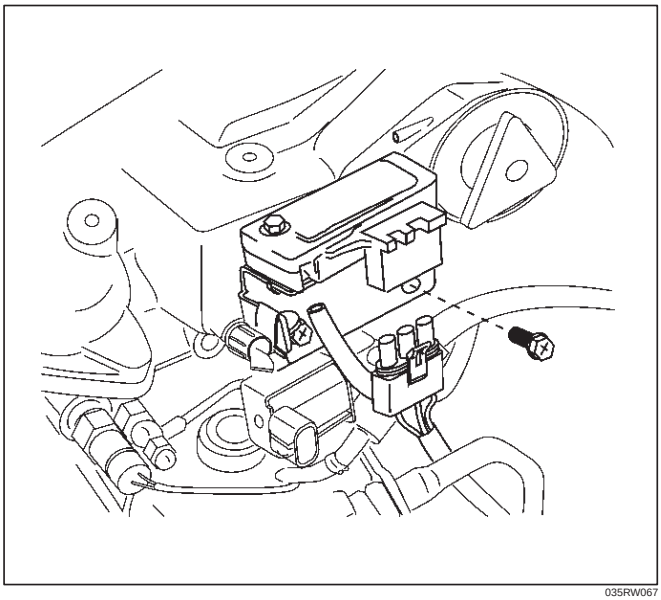

035RW067

3. Connect the EGR VSV connector and vacuum hose in the EGR VSV.

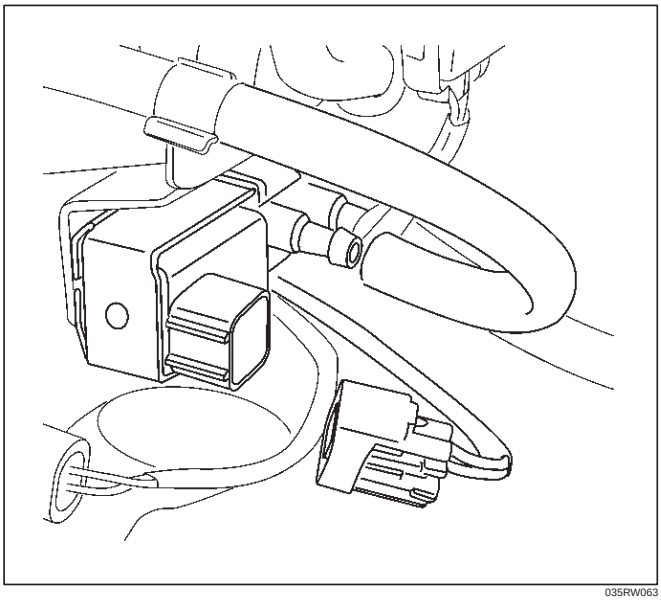

035RW063

4. Connect the negative battery cable.

Electronic Vacuum Regurating Valve (EVRV)

Removal Procedure

1. Disconnect the negative battery cable.
2. Disconnect the EVRV hose and the EVRV connector.

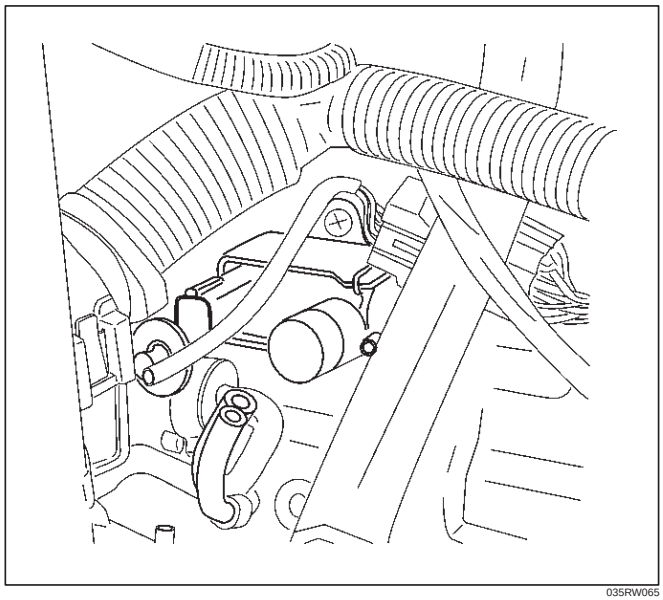

035RW065

3. Remove the EVRV.

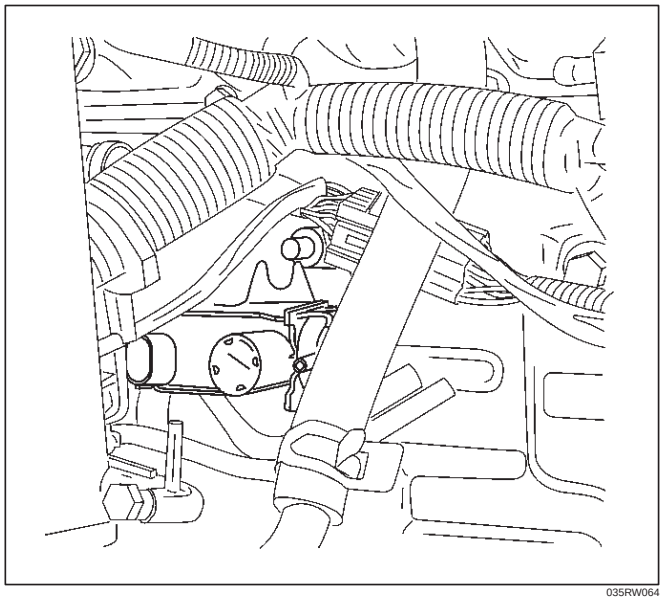

035RW064

Installation Procedure

1. Install the EVRV.

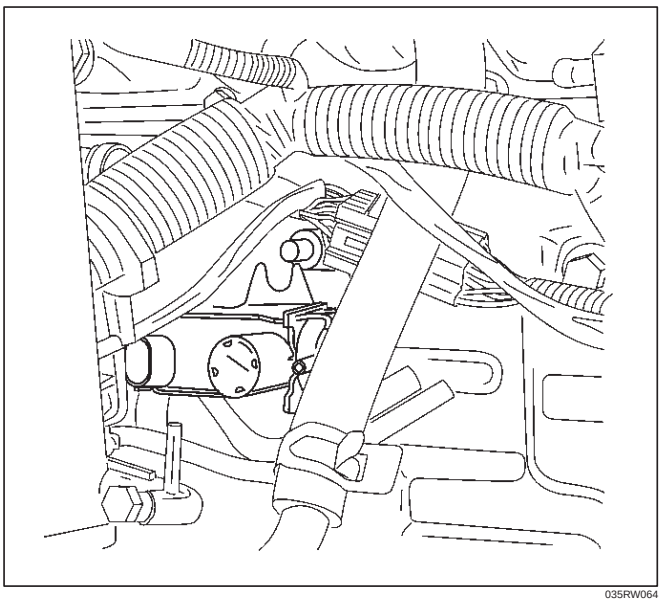

035RW064

2. Connect the EVRV hose and the EVRV connector.

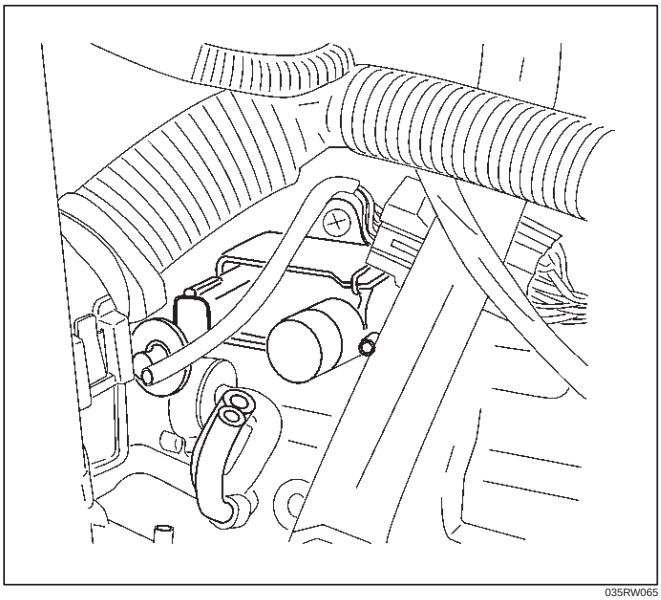

035RW065

3. Connect the negative battery cable.

Wiring and Connectors

Wiring Harness Service

The ECM harness electrically connects the ECM to the various solenoids, switches and sensors in the vehicle engine compartment and passenger compartment.
Replace wire harnesses with the proper part number replacement.
Because of the low amperage and voltage levels utilized in powertrain control systems, it is essential that all wiring in environmentally exposed areas be repaired with crimp and seal splice sleeves.

The following wire harness repair information is intended as a general guideline only. Refer to *Chassis Electrical* for all wire harness repair procedures.

Connectors and Terminals

Use care when probing a connector and when replacing terminals. It is possible to short between opposite terminals. Damage to components could result. Always use jumper wires between connectors for circuit checking. NEVER probe through Weather-Pack seals. Use an appropriate connector test adapter kit which contains an assortment of flexible connectors used to probe terminals during diagnosis. Use an appropriate fuse remover and test tool for removing a fuse and to adapt the fuse holder to a meter for diagnosis.
Open circuits are often difficult to locate by sight because oxidation or terminal misalignment are hidden by the connectors. Merely wiggling a connector on a sensor, or in the wiring harness, may temporarily correct the open circuit. Intermittent problems may also be caused by oxidized or loose connections.
Be certain of the type of connector/terminal before making any connector or terminal repair. Weather-Pack and Com-Pack III terminals look similar, but are serviced differently.

Wire Harness Repair: Twisted Shielded Cable

Removal Procedure

1. Remove the outer jacket.
2. Unwrap the aluminum/mylar tape. Do not remove the mylar.

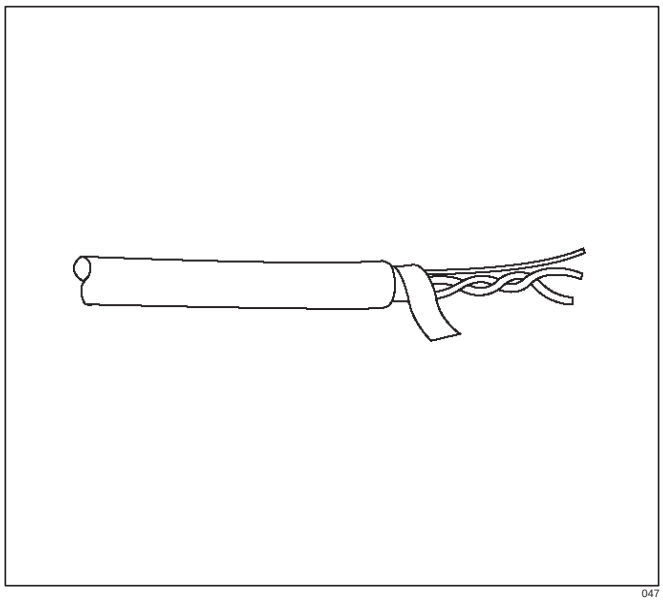

047

3. Untwist the conductors.
4. Strip the insulation as necessary.

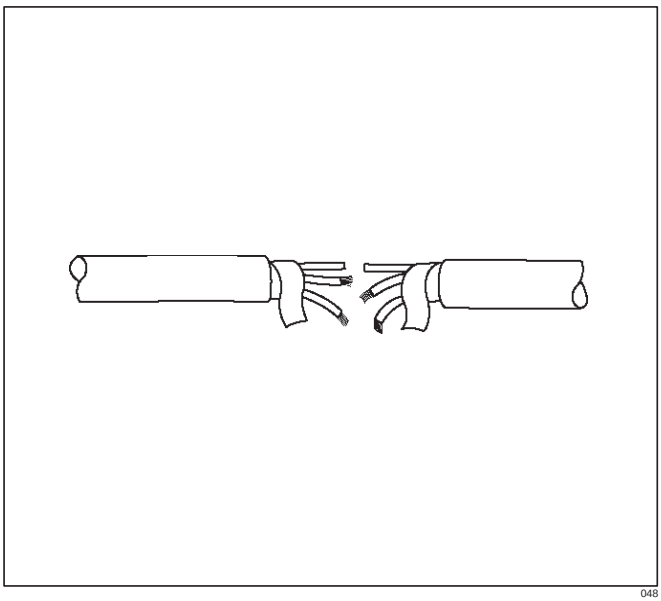

048

Installation Procedure

1. Splice the wires using splice clips and rosin core solder.
2. Wrap each splice to insulate.
3. Wrap the splice with mylar and with the drain (uninsulated) wire.

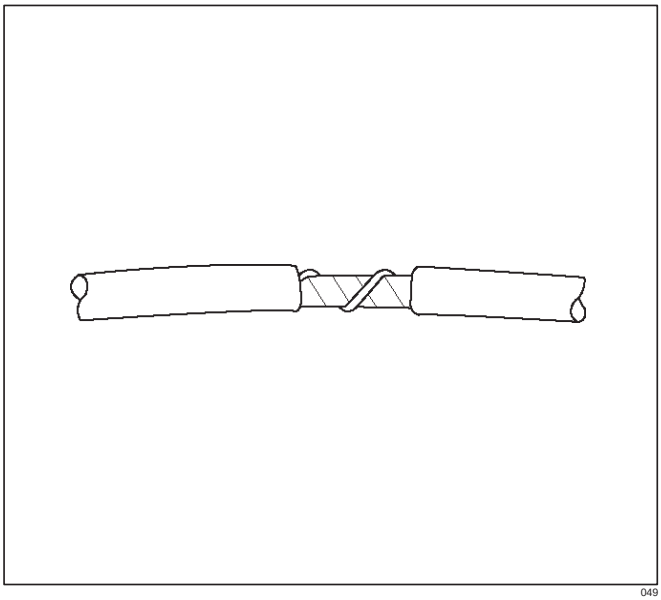

049

4. Tape over the whole bundle to secure.

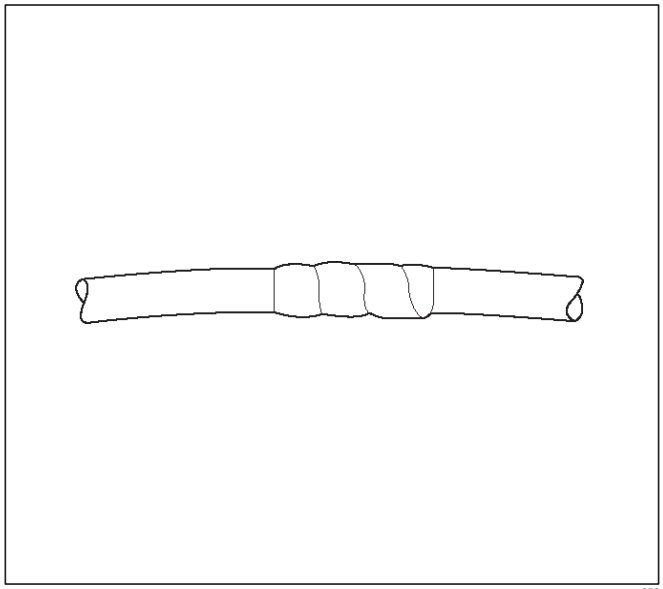

050

Twisted Leads

Removal Procedure

1. Locate the damaged wire.
2. Remove the insulation as required.

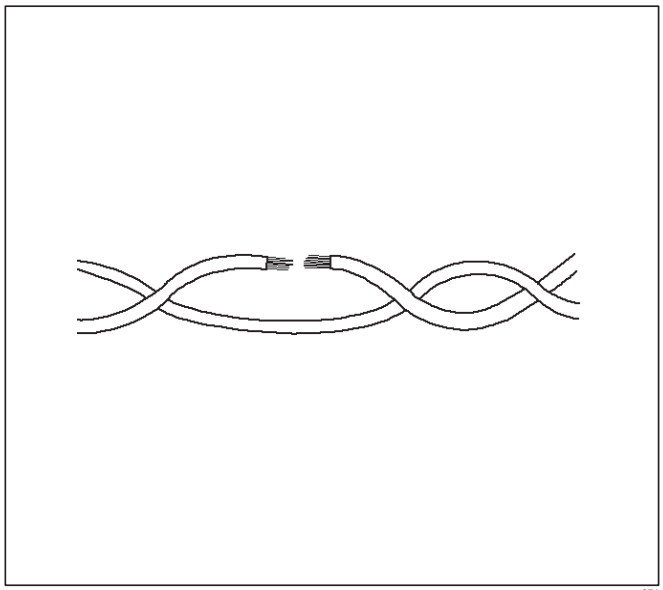

051

Installation Procedure

1. Use splice clips and rosin core solder in order to splice the two wires together.

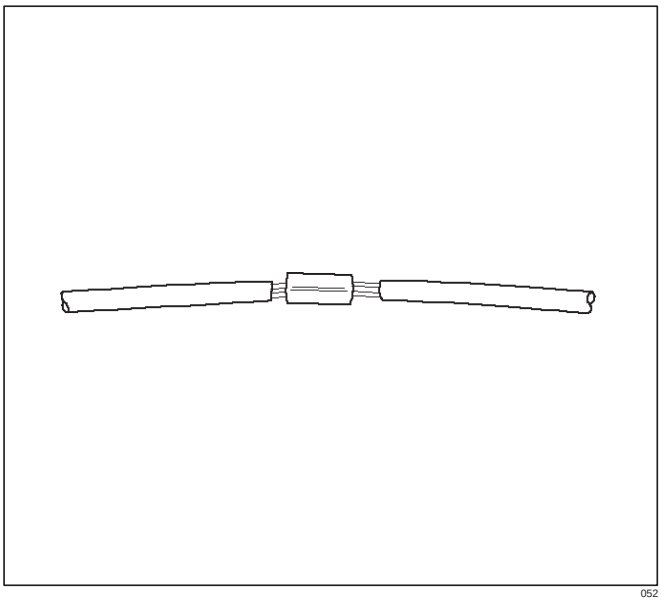

052

2. Cover the splice with tape in order to insulate it from the other wires.

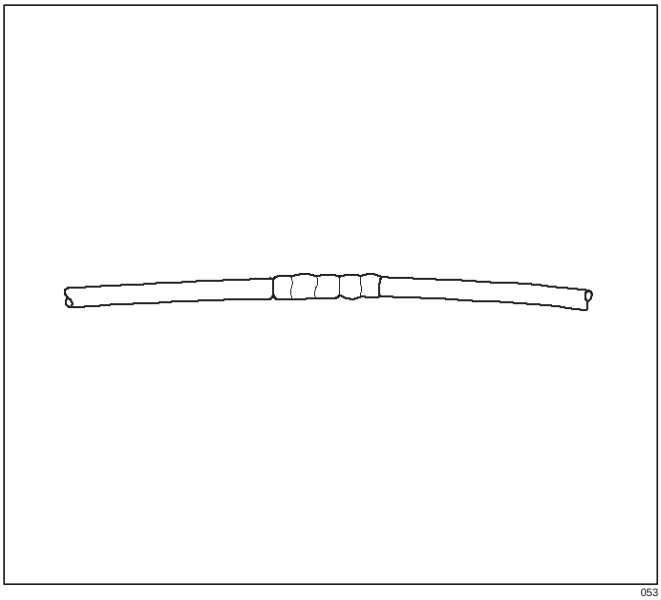

053

3. Twist the wires as they were before starting this procedure.

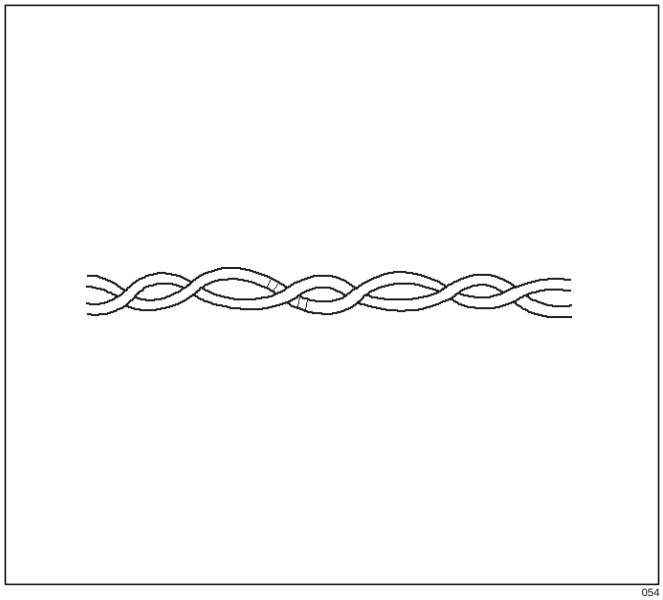

054

4. Tape the wires with electrical tape. Hold in place.

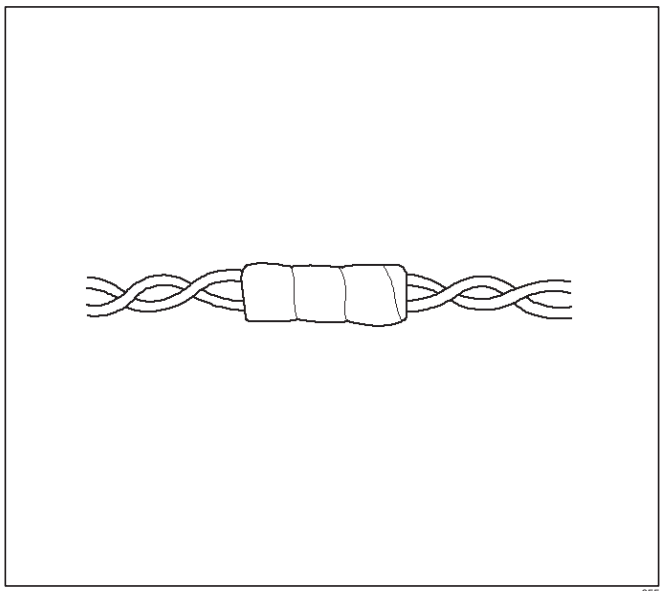

055

Weather-Pack Connector

Tools Required

5-8840-0388-0 Weather-Pack II Terminal Remover

Removal Procedure

A Weather-Pack connector can be identified by a rubber seal at the rear of the connector. This engine room connector protects against moisture and dirt, which could from oxidation and deposits on the terminals. This protection is important, because of the low voltage and the low amperage found in the electronic systems.

1. Open the secondary lock hinge on the connector.

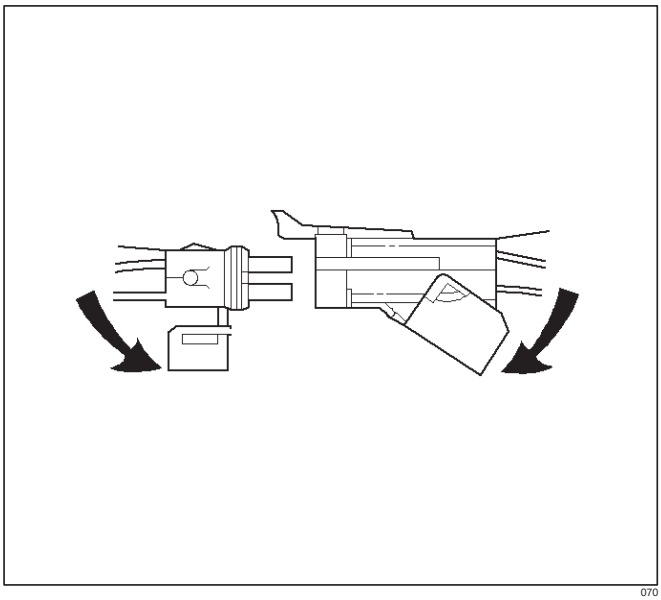

070

2. Use tool 5-8840-0388-0 or the equivalent to remove the pin and the sleeve terminals. Push on 5-8840-0388-0 to release.

NOTE: Do the use an ordinary pick or the terminal may be bent or deformed. Unlike standard blade terminals, these terminals cannot be straightened after they have been improperly bent.

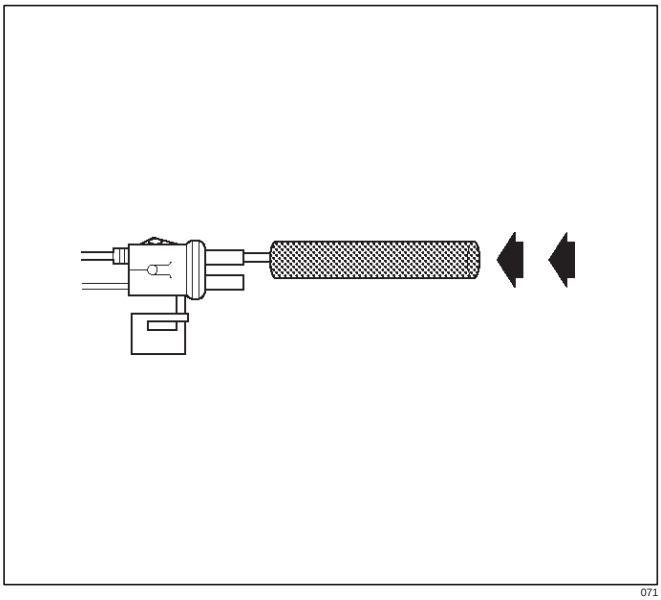

071

3. Cut the wire immediately behind the cable seal.

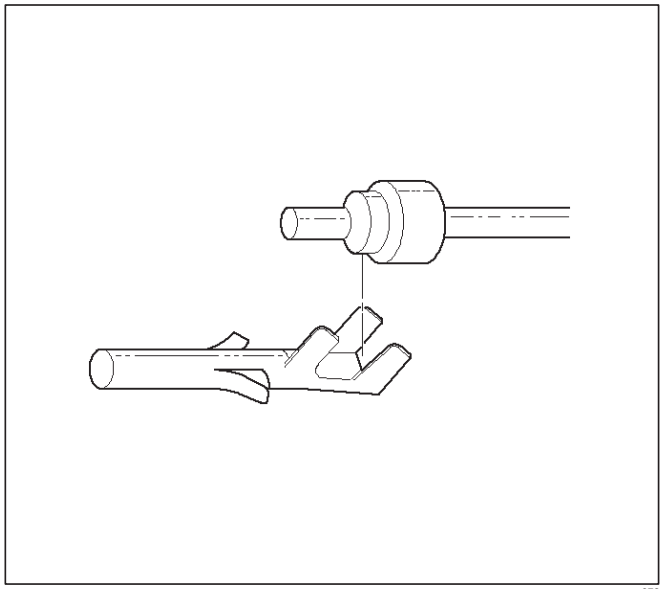

072

Installation Procedure

Make certain the connectors are properly seated and all of the sealing rings are in place when you reconnect the leads. The secondary lock hinge provides a backup locking feature for the connector. The secondary lock hinge is used for added reliability. This flap should retain the terminals even if the small terminal lock tangs are not positioned properly.

Do not replace the Weather-Pack connections with standard connections. Read the instructions provided with the Weather-Pack connector and terminal packages.

1. Replace the terminal.
2. Slip the new seal onto the wire.
3. Strip 5 mm (0.2”) of insulation from the wire.
4. Crimp the terminal over the wire and the seal.

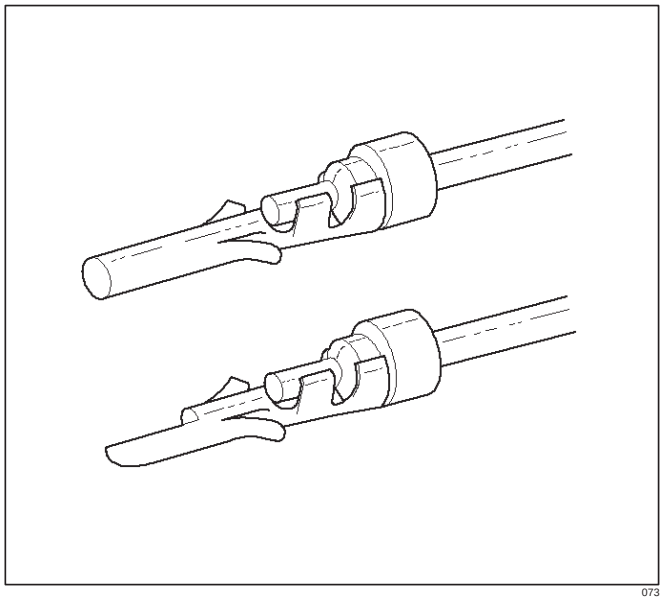

073

5. Push the terminal and the connector to engage the locking tangs.

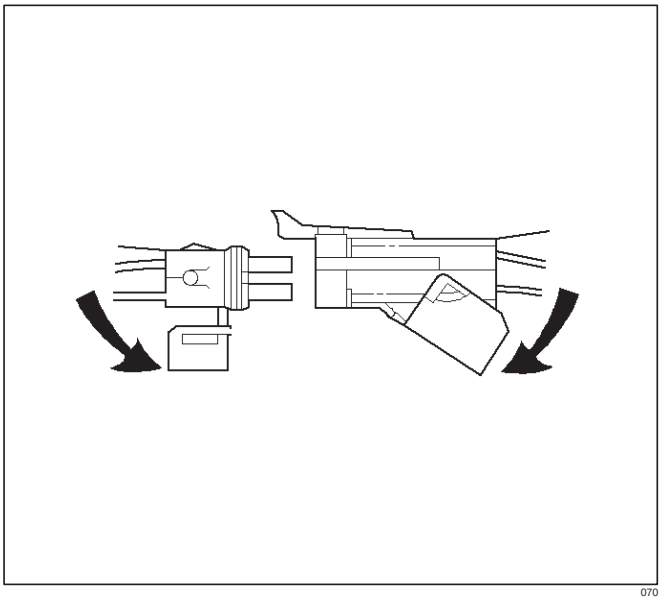

070

6. Close the secondary locking hinge.

Com-Pack III

General Information

The Com-Pack III terminal looks similar to some Weather-Pack terminals. This terminal is not sealed and is used where resistance to the environment is not required. Use the standard method when repairing a terminal. Do not use the Weather-Pack terminal tool 5-8840-0388-0 or equivalent. These will damage the terminals.

Metri-Pack

Tools Required

5-8840-0632-0 Terminal Remover

Removal Procedure

Some connectors use terminals called Metri-Pack Series 150. These may be used at the engine coolant temperature (ECT) sensor.

1. Slide the seal (1) back on the wire.
2. Insert the 5-8840-0632-0 tool or equivalent (3) in order to release the terminal locking tang (2).

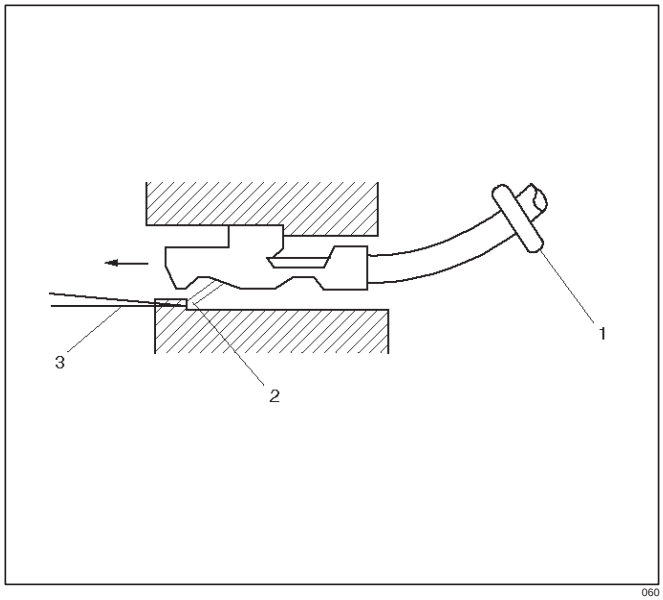

060

3. Push the wire and the terminal out through the connector. If you reuse the terminal, reshape the locking tang.

Installation Procedure

Metri-Pack terminals are also referred to as “pull-to-seat” terminals.

1. In order to install a terminal on a wire, the wire must be inserted through the seal (2) and through the connector (3).
2. The terminal (1) is then crimped onto the wire.

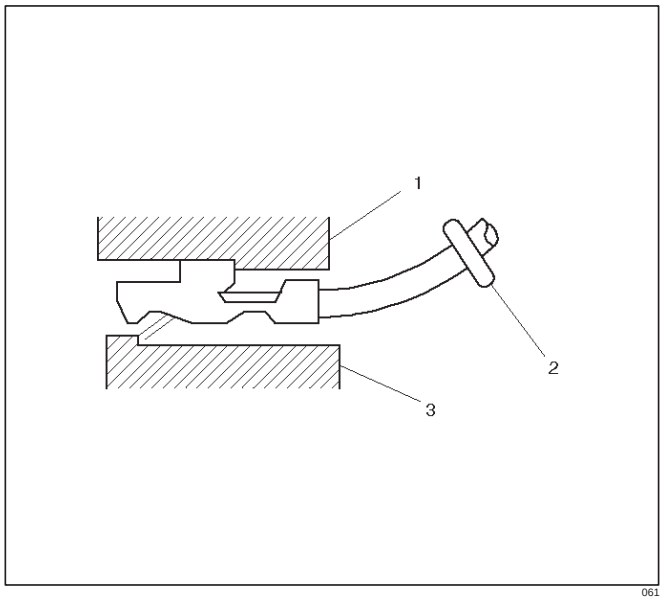

061

3. Then the terminal is pulled back into the connector to seat it in place.

General Description (ECM and Sensors)

57X Reference ECM Input

The engine control module (ECM) uses this signal from the crankshaft position (CKP) sensor to calculate engine RPM and crankshaft position at all engine speeds. The ECM also uses the pulses on this circuit to initiate injector pulses. If the ECM receives no pulses on this circuit, DTC P0337 will set. The engine will not start and run without using the 57X reference signal.

A/C Request Signal

This signal tells the ECM when the A/C mode is selected at the A/C control head.
Refer to *A/C Clutch Circuit Diagnosis* for A/C wiring diagrams and diagnosis for the A/C electrical system.

Crankshaft Position (CKP) Sensor

The crankshaft position (CKP) sensor provides a signal used by the engine control module (ECM) to calculate the ignition sequence. The CKP sensor initiates the 57X reference pulses which the ECM uses to calculate RPM and crankshaft position.
Refer to *Electronic Ignition System* for additional information.

Camshaft Position (CMP) Sensor and Signal

The camshaft position (CMP) sensor sends a CMP signal to the ECM. The ECM uses this signal as a “cylinder distinction” to trigger the injectors in the power order. If the ECM detects an incorrect CMP signal while the engine is running, DTC P0341 will set, and the ECM triggers the injectors in the power order.
Refer to *DTC P0341*.

Engine Coolant Temperature (ECT) Sensor

The engine coolant temperature (ECT) sensor is a thermistor (a resistor which changes value based on temperature) mounted in the engine coolant stream. Low coolant temperature produces a high resistance of 100,000 ohms at –40˚C (–40˚F). High temperature causes a low resistance of 70 ohms at 130˚C (266˚F). The ECM supplies a 5-volt signal to the ECT sensor through resistors in the ECM and measures the voltage. The signal voltage will be high when the engine is cold and low when the engine is hot. By measuring the voltage, the ECM calculates the engine coolant temperature. Engine coolant temperature affects most of the systems that the ECM controls.
The Tech 2 displays engine coolant temperature in degrees. After engine start-up, the temperature should rise steadily to about 85˚C (185˚F). It then stabilizes when the thermostat opens. If the engine has not been run for several hours (overnight), the engine coolant temperature and intake air temperature displays should be close to each other. A hard fault in the engine coolant sensor circuit will set DTC P0117 or DTC P0118.

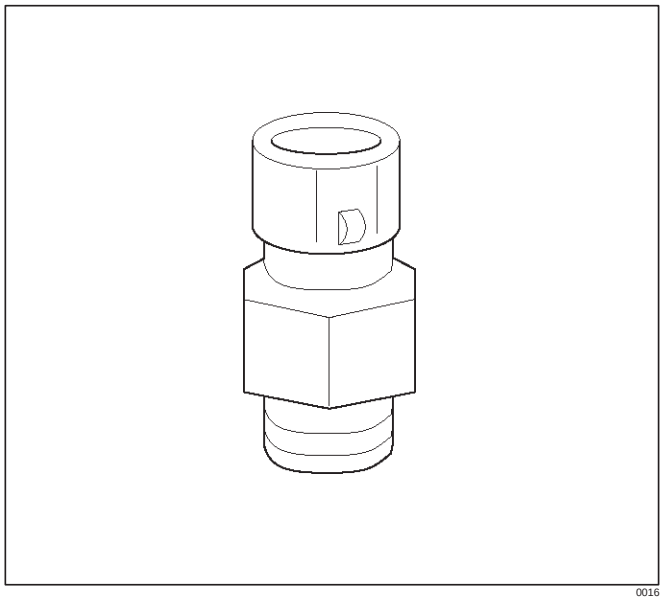

Electrically Erasable Programmable Read Only Memory (EEPROM)

The electrically erasable programmable read only memory (EEPROM) is a permanent memory chip that is physically soldered within the ECM. The EEPROM contains the program and the calibration information that the ECM needs to control powertrain operation.
Unlike the PROM used in past applications, the EEPROM is not replaceable. If the ECM is replaced, the new ECM will need to be programmed. Equipment containing the correct program and calibration for the vehicle is required to program the ECM.

Intake Air Temperature (IAT) Sensor

The intake air temperature (IAT) sensor is a thermistor which changes its resistance based on the temperature of air entering the engine. Low temperature produces a high resistance of 100,000 ohms at –40˚C (–40˚F). High temperature causes low resistance of 70 ohms at 130˚C (266˚F) . The ECM supplies a 5-volt signal to the sensor through a resistor in the ECM and monitors the signal voltage. The voltage will be high when the incoming air is cold. The voltage will be low when the incoming air is hot. By measuring the voltage, the ECM calculates the incoming air temperature.
The Tech 2 displays the temperature of the air entering the engine. The temperature should read close to the ambient air temperature when the engine is cold and rise as underhood temperature increases. If the engine has not been run for several hours (overnight), the IAT sensor temperature and engine coolant temperature should read close to each other. A fault in the IAT sensor circuit will set DTC P0112 or DTC P0113.

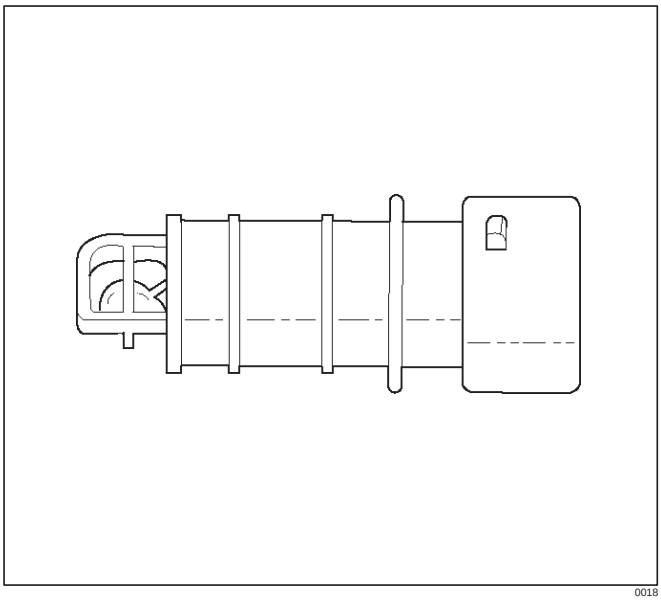

Manifold Absolute Pressure (MAP) Sensor

The manifold absolute pressure (MAP) sensor responds to changes in intake manifold pressure. The MAP sensor signal voltage to the ECM varies from below 2 volts at idle (high vacuum) to above 4 volts.

The MAP sensor is used to determine the following:

- Boost pressure for injector control.
- Barometric pressure (BARO).

If the ECM detects a voltage that is lower than the possible range of the MAP sensor, DTC P0107 will be set. A signal voltage higher than the possible range of the sensor will set DTC P0108. An intermittent low or high voltage will set DTC P1107 or DTC P1106, respectively. The ECM can detect a shifted MAP sensor. The ECM compares the MAP sensor signal to a calculated MAP based on throttle position and various engine load factors. If the ECM detects a MAP signal that varies excessively above or below the calculated value, DTC P0106 will set.

Engine Control Module (ECM)

The engine control module (ECM) is located in the engine room.

The ECM constantly observes the information from various sensors. The ECM controls the systems that affect vehicle performance. The ECM performs the diagnostic function of the system. It can recognize operational problems, alert the driver through the MIL (Service Engine Soon lamp), and store diagnostic trouble codes (DTCs). DTCs identify the problem areas to aid the technician in making repairs.

ECM Function

The ECM supplies 5, 12 and 110 volts to power various sensors or switches. The power is supplied through resistances in the ECM which are so high in value that a test light will not light when connected to the circuit. In some cases, even an ordinary shop voltmeter will not give an accurate reading because its resistance is too low. Therefore, a digital voltmeter with at least 10 megohms input impedance is required to ensure accurate voltage readings. The ECM controls output circuits such as the injectors, glow relays, etc., by controlling the ground or the power feed circuit through transistors or through either of the following two devices:

- Output Driver Module (ODM)
- Quad Driver Module (QDM)

ECM Components

The ECM is designed to maintain exhaust emission levels to government mandated standards while providing excellent driveability and fuel efficiency. The ECM monitors numerous engine and vehicle functions via electronic sensors such as the crankshaft position (CKP) sensor, and vehicle speed sensor (VSS). The ECM also controls certain engine operations through the following:

- Fuel injector control
- Rail pressure control

ECM Voltage Description

The ECM supplies a buffered voltage to various switches and sensors. It can do this because resistance in the ECM is so high in value that a test light may not illuminate when connected to the circuit. An ordinary shop voltmeter may not give an accurate reading because the voltmeter input impedance is too low. Use a 10-megohm input impedance digital voltmeter to assure accurate voltage readings.

The input/output devices in the ECM include analog-to-digital converters, signal buffers, counters, and special drivers. The ECM controls most components with electronic switches which complete a ground circuit when turned “ON.” These switches are arranged in groups of 4 and 7, called either a surface-mounted quad driver module (QDM), which can independently control up to 4 output terminals, or QDMs which can independently control up to 7 outputs. Not all outputs are always used.

ECM Input/Outputs

Inputs – Operating Conditions Read

- Air Conditioning “ON” or “OFF”
- Engine Coolant Temperature
- Crankshaft Position
- Electronic Ignition
- Manifold Absolute Pressure
- Battery Voltage
- Intake Throttle Position
- Vehicle Speed
- Fuel Temperature
- Oil Temperature
- Intake Air Temperature
- EGR boost pressure
- Oil rail pressure
- Camshaft Position
- Accelerator position

Outputs – Systems Controlled

- Exhaust Gas Recirculation (EGR)
- Injector Control
- QWS

- QOS
- Diagnostics
  - Malfunction Indicator Lamp (Service Engine Soon lamp)
  - Data Link Connector (DLC)
  - Data Output

ECM Service Precautions

The ECM is designed to withstand normal current draws associated with vehicle operation. Avoid overloading any circuit. When testing for opens and shorts, do not ground or apply voltage to any of the ECM's circuits unless instructed to do so. These circuits should only be tested using digital voltmeter. The ECM should remain connected to the ECM or to a recommended breakout box.

Intake Throttle Position (ITP) Sensor

ITP sensor is a potentiometer type and installed to the intake throttle valve body. A voltage of 5V is applied constantly from ECM to ITP sensor thereby to determine by change in voltage the opening of the intake throttle valve during warming up.

Transmission Range Switch

IMPORTANT: The vehicle should not be driven with the transmission range switch disconnected; idle quality will be affected.

The four inputs from the transmission range switch indicate to the ECM which position is selected by the transmission selector lever.
For more information on the transmission on the transmission range switch, refer to *Automatic Transmission*.

Accelerator Position Sensor (AP)

AP sensor is a potentiometer type and installed to accelerator pedal bracket. A voltage of 5V constantly applied from ECM to the sensor thereby to determine the accelerator pedaling angle by change in voltage. Further, this sensor is provided with an accelerator switch, which is set off only when the accelerator pedal is stepped on.

Aftermarket Electrical and Vacuum Equipment

Aftermarket (add-on) electrical and vacuum equipment is defined as any equipment which connects to the vehicle's electrical or vacuum systems that is installed on a vehicle after it leaves the factory. No allowances have been made in the vehicle design for this type of equipment.

NOTE: No add-on vacuum equipment should be added to this vehicle.

NOTE: Add-on electrical equipment must only be connected to the vehicle's electrical system at the battery (power and ground).

Add-on electrical equipment, even when installed to these guidelines, may still cause the powertrain system to malfunction. This may also include equipment not connected to the vehicle electrical system such as portable telephones and radios. Therefore, the first step in diagnosing any powertrain problem is to eliminate all aftermarket electrical equipment from the vehicle. After this is done, if the problem still exists, it may be diagnosed in the normal manner.

Electrostatic Discharge Damage

Electronic components used in the ECM are often designed to carry very low voltage. Electronic components are susceptible to damage caused by electrostatic discharge. Less than 100 volts of static electricity can cause damage to some electronic components. By comparison, it takes as much as 4000 volts for a person to feel even the zap of a static discharge.

TS23793

There are several ways for a person to become statically charged. The most common methods of charging are by friction and induction.

- An example of charging by friction is a person sliding across a vehicle seat.
- Charge by induction occurs when a person with well insulated shoes stands near a highly charged object and momentary touches ground. Charges of the same polarity are drained off leaving the person highly charged with the opposite polarity. Static charges can cause damage, therefore it is important to use care when handling and testing electronic components.

NOTE: To prevent possible electrostatic discharge damage, follow these guidelines:

- Do not touch the ECM connector pins or soldered components on the ECM circuit board.
- Do not open the replacement part package until the part is ready to be installed.
- Before removing the part from the package, ground the package to a known good ground on the vehicle.
- If the part has been handled while sliding across the seat, while sitting down from a standing position, or while walking a distance, touch a known good ground before installing the part.

General Description (Air Induction)

Air Induction System

The air induction system filters contaminants from the outside air, and directs the progress of the air as it is drawn into the engine. A remote-mounted air cleaner prevents dirt and debris in the air from entering the engine. The air duct assembly routes filtered air to the throttle body. Air enters the engine by to following steps:

1. Through the throttle body.
2. Into the intake manifold.
3. Through the cylinder head intake ports.
4. Into the cylinders.

General Description (Fuel Metering)

Deceleration Mode

The ECM reduces the amount of fuel injected when it detects a decrease in the Accelerator position.

Fuel Injector

Fuel injector comprises the solenoid, hydraulic line, and fuel line. Fuel injection is controlled by the continuity time signal and continuity start timing signal from ECM to the solenoid

ECM determines the running conditions of engine by input signals such as engine speed. Accelerator throttle valve opening, and engine coolant temperature, thereby to send the solenoid the best suited signal to the engine status. When current is carried to the solenoid, the armature opens the poppet valve to alow high pressure oil to run into the injector. Under the pressure of the oil, the piston and plunger are depressed to compress the fuel in the combustion chamber of the plunger. Specifically, the pressure of the fuel compressed is increased by a piston top/ plunger bottom area ratio over the pressure of high pressure oil, thereby lifting the fuel nozzle end needle for injecting fuel.

Fuel Metering System Components

The fuel metering system is made up of the following parts:

- The fuel injectors.
- The intake throttle body.
- The Accelerator position (AP) sensor
- The ECM.
- The crankshaft position (CKP) sensor.
- The camshaft position (CMP) sensor.

Basic System Operation

Fuel is supplied through fuel filter to the fuel pump.

The fuel pump is installed to the oil pump, and fuel is forced, through the fuel pump outlet, pipe and cylinder head inside, into the fuel injector.

An orifice is provided at the rear fuel outlet of cylinder head to control the pressure of oil.

The injector is controlled by ECM which gives opening/closing commands to the solenoid installed on the top of the injector. Opening/closing operation of the pressurized engine oil circuit of the injector controls fuel injection quantity, fuel injection timing, etc.

A/C Clutch Diagnosis

A/C Request Signal

This signal tells the ECM when the A/C mode is selected at the A/C control head. The ECM uses this to adjust the idle speed.

Refer to *A/C Clutch Circuit Diagnosis* for A/C wiring diagrams and diagnosis for A/C electrical system.

General Description Exhaust Gas Recirculation (EGR) System

EGR Purpose

The exhaust gas recirculation (EGR) system is use to reduce emission levels of oxides of nitrogen (NOx). NOx emission levels are caused by a high combustion temperature. The EGR system lowers the NOx emission levels by decreasing the combustion temperature.

The ECM uses information from the following sensors to control EGR valve boost pressure.

- ECT
- ITP
- Engine Speed
- AP sensor

Fuse and Relay Panel (Underhood Electrical Center) RHD

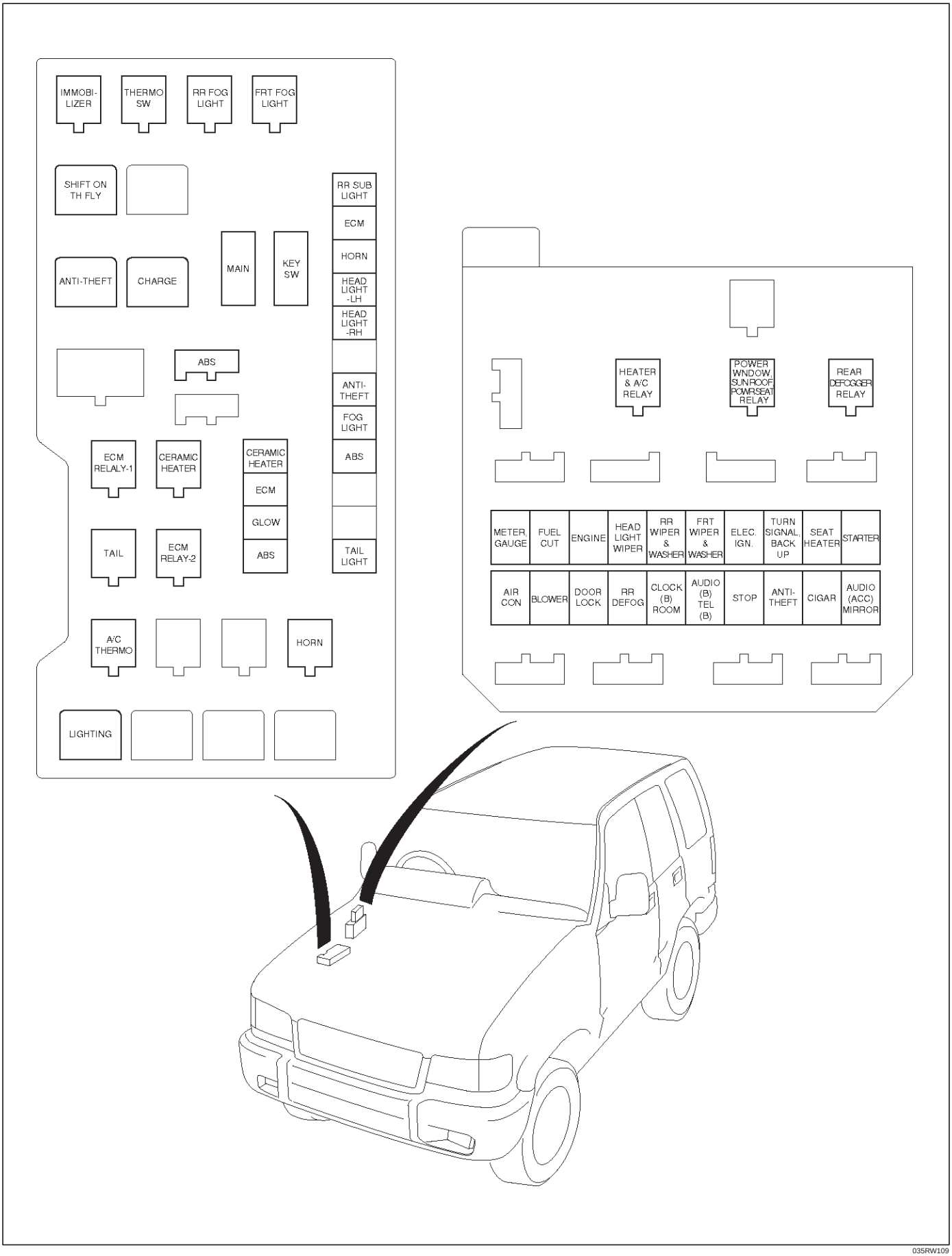

035RW109

Fuse and Relay Panel (Underhood Electrical Center) LHD

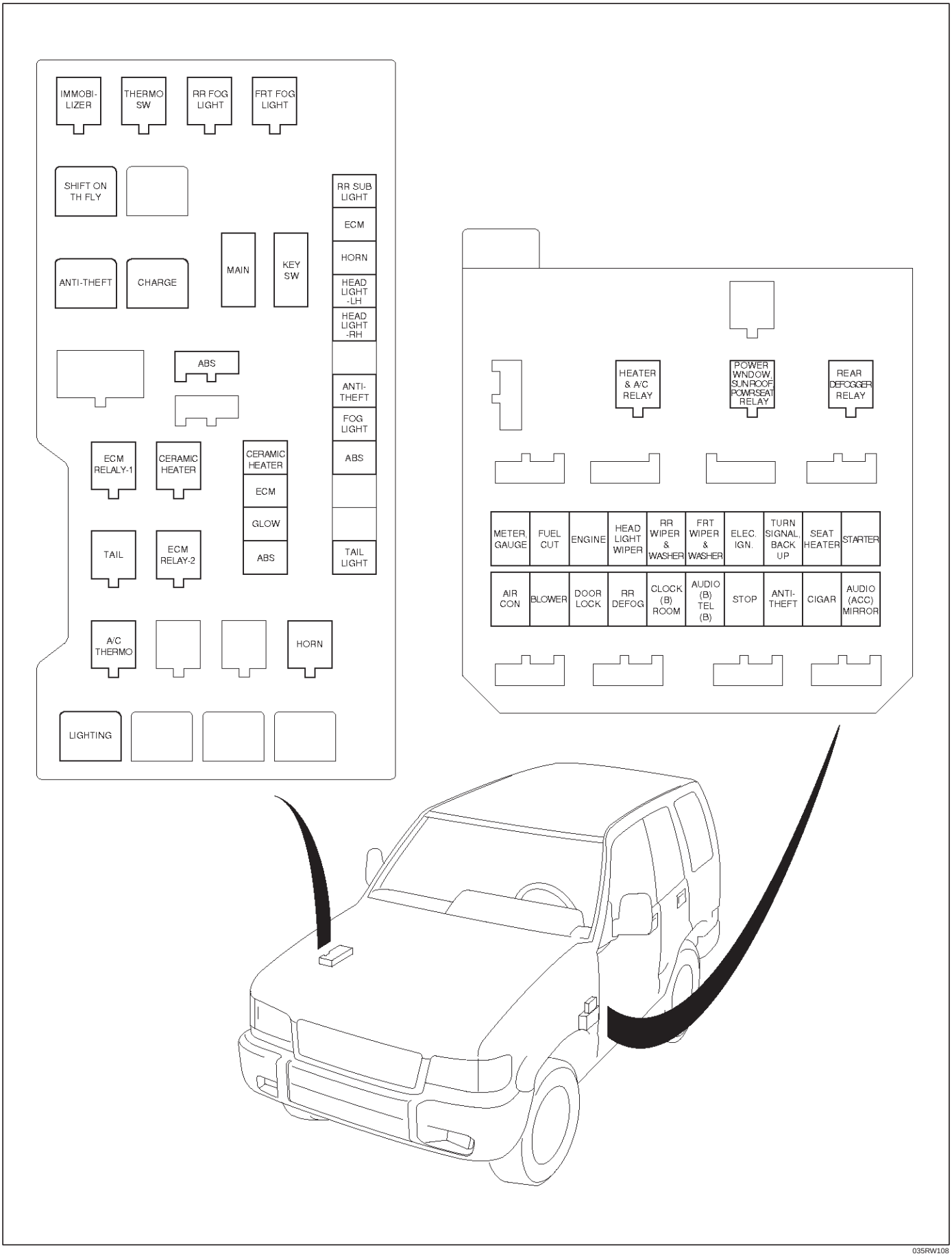

035RW108

ENGINE EXHAUST

CAUTION: Exhaust system components must have enough clearance from the underbody to prevent overheating of the floor pan and possible damage to the passenger compartment, insulation and trim materials.

CONTENTS

General Description 6F–2
Hangers 6F–2
Gasket 6F–2
On-Vehicle Service 6F–3
Front Exhaust Pipe 6F–3
Center Exhaust Pipe 6F–5
Exhaust Silencer 6F–6
Rear Exhaust Pipe 6F–7

GENERAL DESCRIPTION

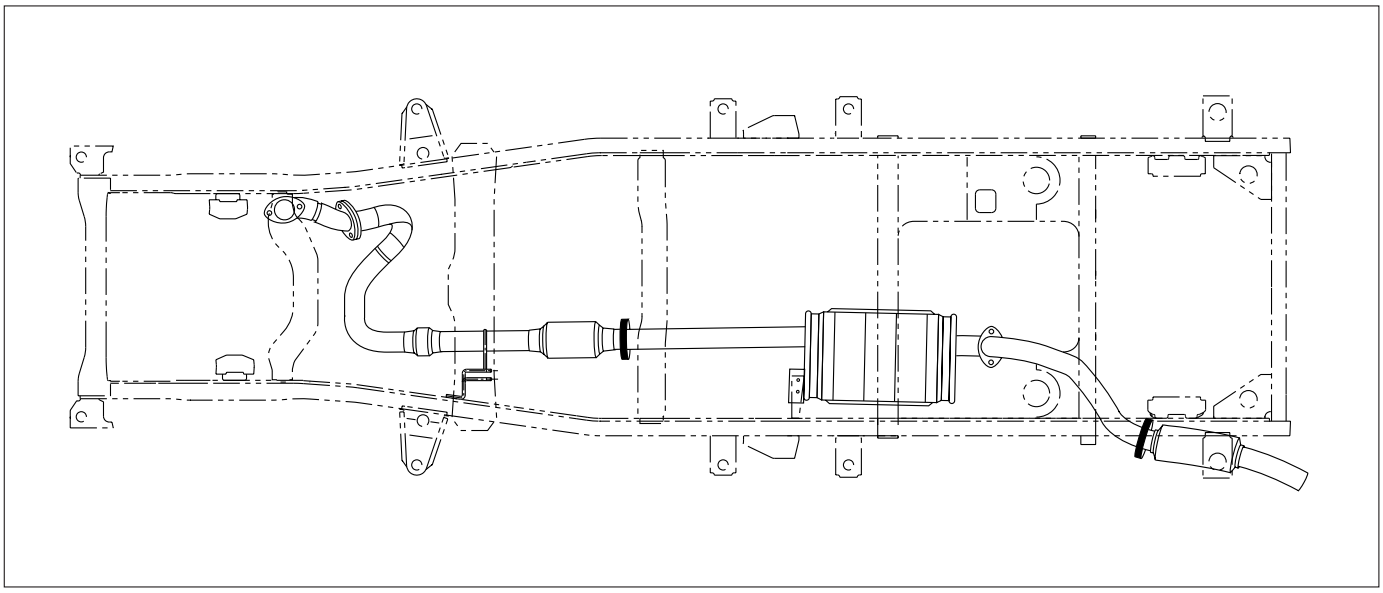

150RW070

When inspecting or replacing exhaust system components, make sure there is adequate clearance from all points on the underbody to prevent overheating of the floor pan and possible damage to the passenger compartment insulation and trim materials.

Check complete exhaust system and nearby body areas and rear compartment lid for broken, damaged, missing or mispositioned parts, open seams, holes loose connections or other deterioration which could permit exhaust fumes to seep into the rear compartment or passenger compartment. Dust or water in the rear compartment may be an indication of a problem in one of these areas. Any faulty areas should be corrected immediately.

HANGERS

Various types of hangers are used to support exhaust system(s). These include conventional rubber straps, rubber rings, and rubber blocks.

The installation of exhaust system supports is very important, as improperly installed supports can cause annoying vibrations which can be difficult to diagnose.

GASKET

The gasket must be replaced whenever a new exhaust pipe, muffler or exhaust throttle is installed.

ON-VEHICLE SERVICE

Rattles and noise vibrations in the exhaust system are usually caused by misalignment of parts. When aligning the system, leave all bolts or nuts loose until all parts are properly aligned; then tighten, working from front to rear.

1. Check connections for looseness or damage, especially for exhaust gas leakage.
2. Check clamps and rubbers for weakness, cracks or damage.
3. If any part of the converter heat shield is damaged or dented to the extent that it contacts the catalyst, repair or replace.
4. Check for dents or damage and for any holes or cracks caused by corrosion.

FRONT EXHAUST PIPE

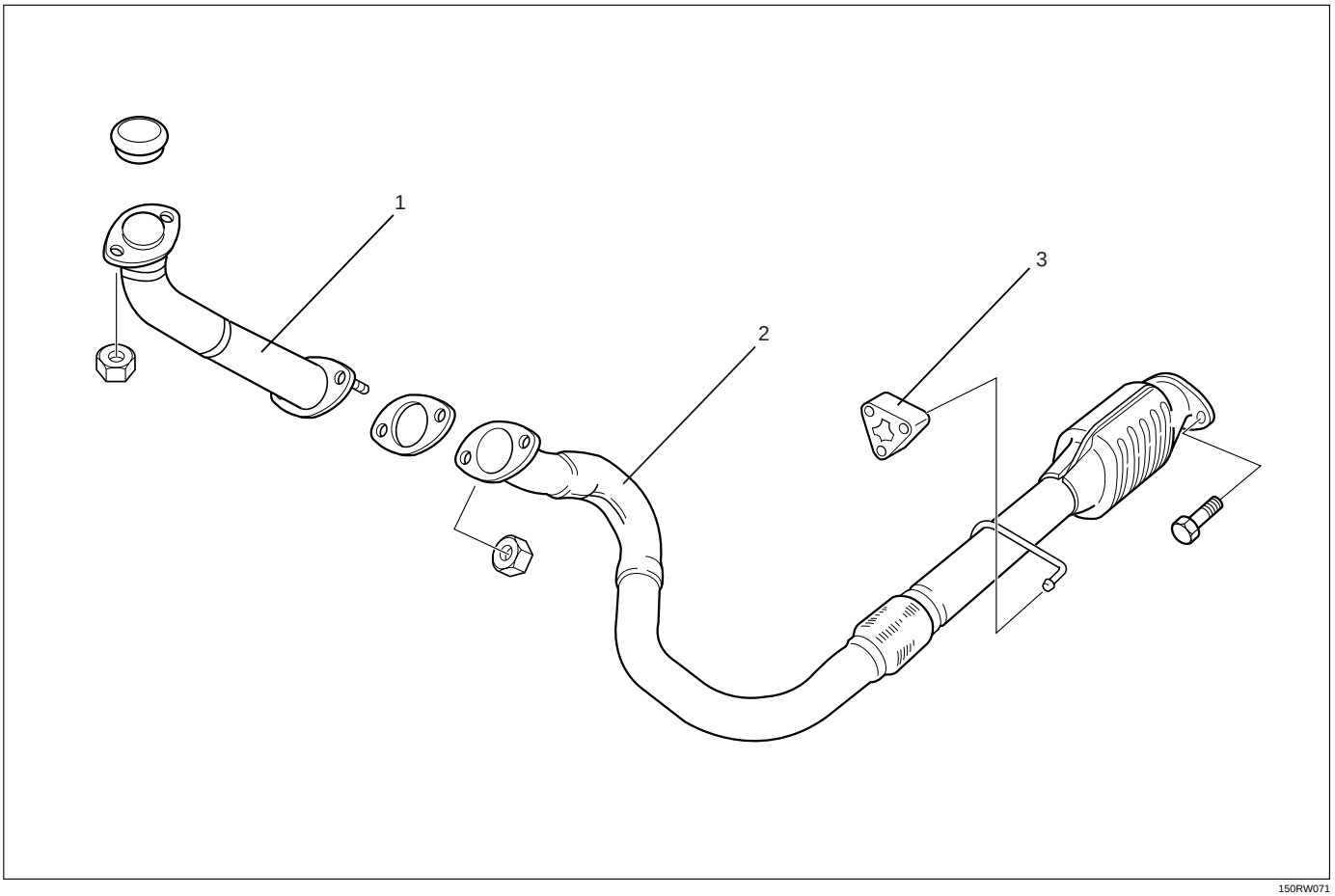

150RW071

Legend

(1) Front exhaust pipe
(2) Center exhaust pipe
(3) Mounting rubber

REMOVAL

1. Battery negative cable.
2. Raise the vehicle and support with suitable safety stands.
3. Remove front exhaust pipe fixing nuts from engine side.
4. Remove fixing nuts between front exhaust pipe and center exhaust pipe, remove front exhaust pipe.
5. Disconnect center exhaust pipe and silencer, remove center exhaust pipe.
6. Remove fixing nuts from connection part of tail pipe, remove mounting rubber and remove silencer bracket, silencer.
7. Remove mounting rubber for tail pipe, remove tail pipe.

INSTALLATION

1. Install front exhaust pipe and tighten it temporarily.
2. Tighten fixing nuts of front exhaust pipe to the specified torque. (for engine side)

Torque: 67 N·m (6.8 kg·m/49 lb ft)

3. Tighten fixing nuts of front exhaust pipe to the specified torque. (for center pipe side)

Torque: 43 N·m (4.4 kg·m/32 lb ft)

4. Install silencer and tighten silencer bracket nuts to the specified torque.

Torque: 16 N·m (1.6 kg·m/12 lb ft)

5. Install tail pipe and tighten it.

Torque: 43 N·m (4.4 kg·m/32 lb ft)

6. Install mounting rubbers.

CENTER EXHAUST PIPE

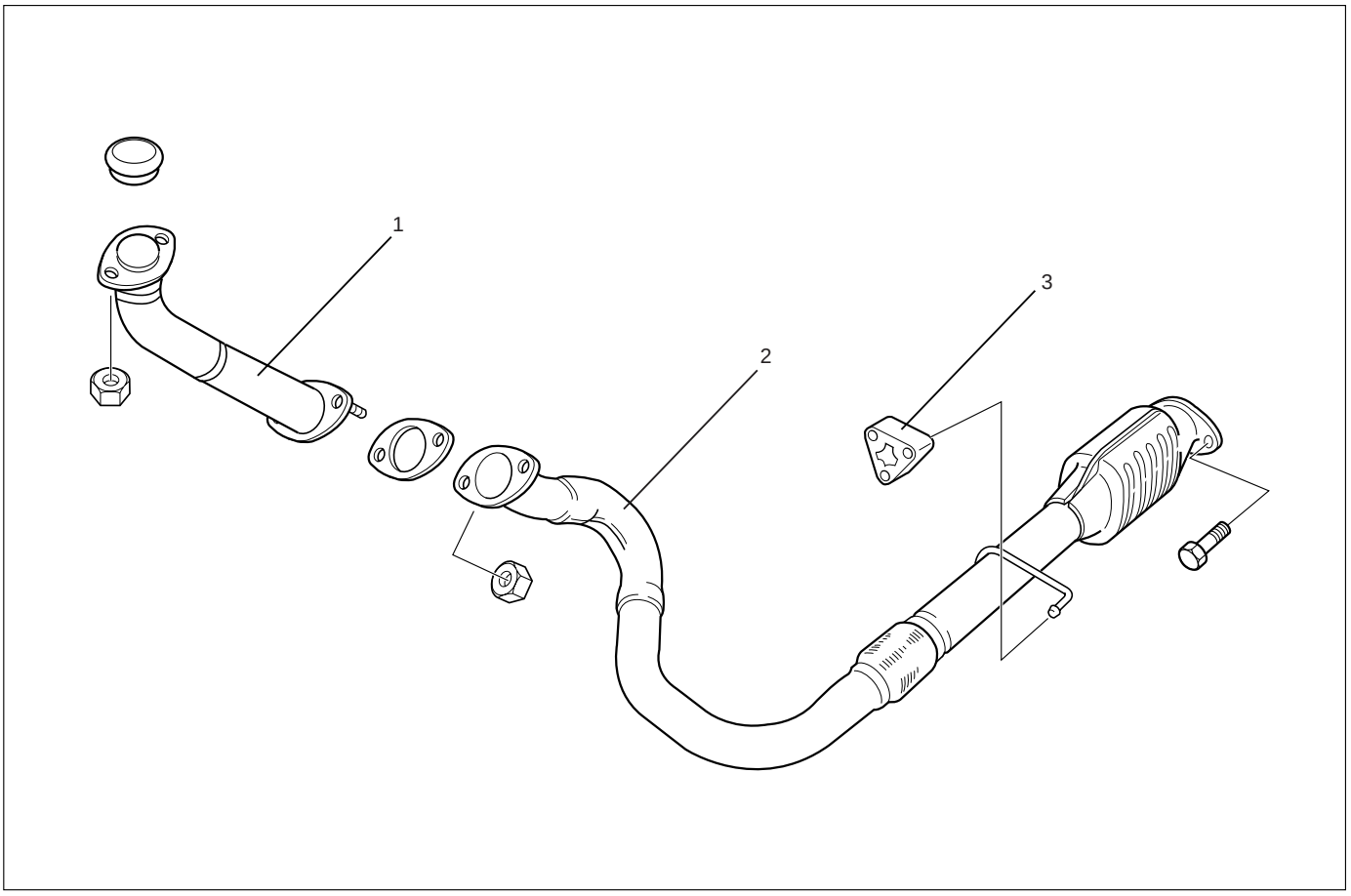

150RW071

Legend

(1) Front Exhaust Pipe
(2) Center Exhaust Pipe
(3) Mounting Rubber

REMOVAL

1. Battery negative cable.
2. Raise the vehicle and support with suitable safety stands.
3. Remove mounting rubber.
4. Remove fixing nuts from silencer side.
5. Remove fixing nuts from front exhaust pipe.
6. Remove center exhaust pipe assembly.

INSTALLATION

1. Place center exhaust pipe in the original position then tighten fixing nuts temporarily.
2. Install mounting rubber.
3. Tighten front exhaust pipe side nuts to the specified torque.

Torque : 43 N·m (4.4 kg·m/32 lb ft)

4. Tighten silencer side nuts to the specified torque.

Torque : 43 N·m (4.4 kg·m/32 lb ft)

EXHAUST SILENCER

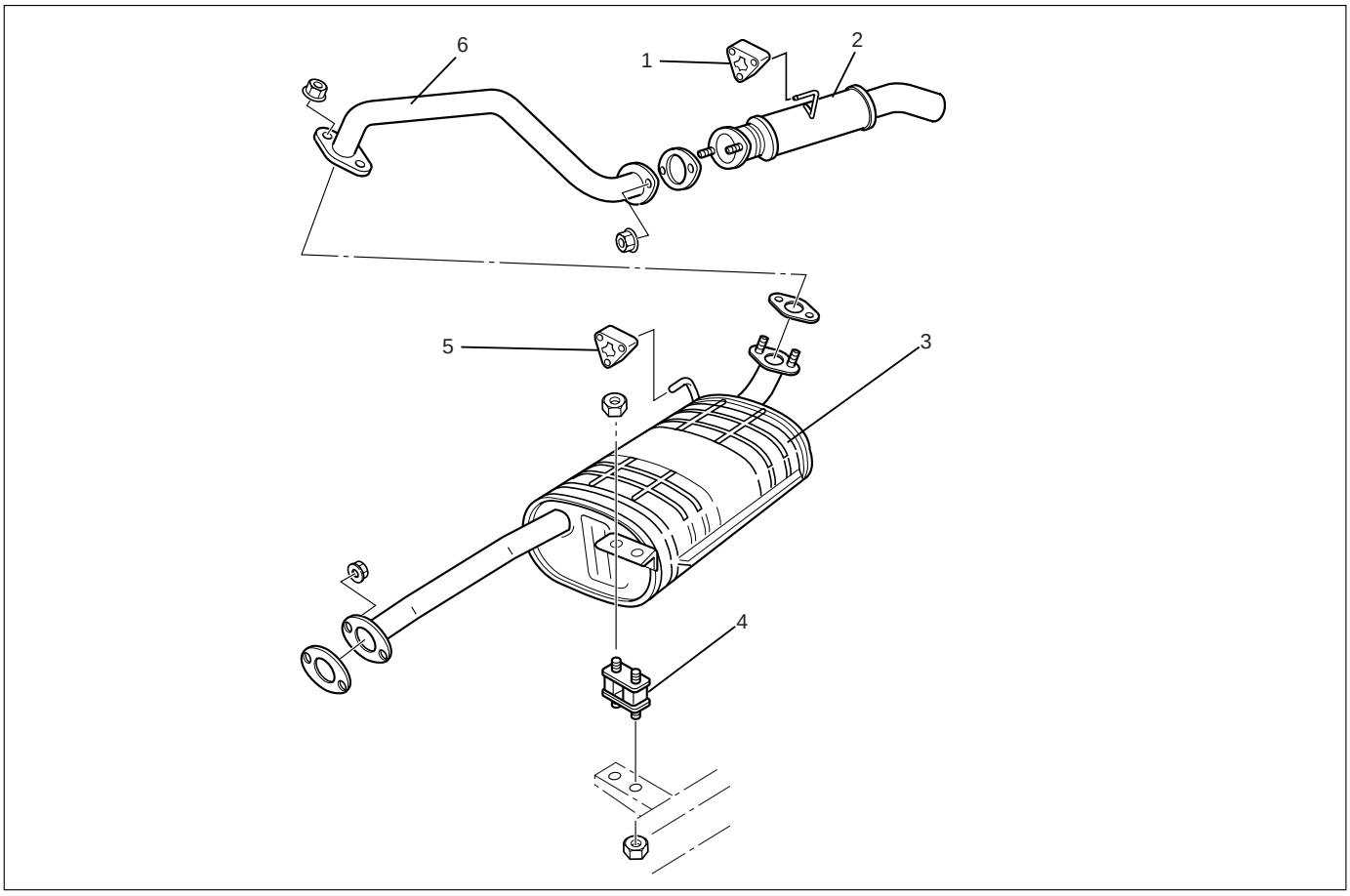

150RW072

Legend

(1) Mounting Rubber
(2) Post Silencer
(3) Silencer
(4) Mounting Bracket
(5) Mounting Rubber
(6) Tail Pipe

REMOVAL

1. Battery negative cable.
2. Raise the vehicle and support with suitable safety stands.
3. Remove mounting rubber from silencer.
4. Remove silencer mounting bracket.
5. Remove fixing nuts between center exhaust pipe and silencer.
6. Remove fixing nuts from tail pipe flange.
7. Remove silencer assembly.

INSTALLATION

1. Place silencer assembly in the original installation position, tighten both side (front and rear) nuts temporarily.
2. Tighten silencer mounting bracket to the specified torque.

Torque : 16 N·m (1.6 kg·m/12 lb ft)

3. Tighten center exhaust pipe side nuts to the specified torque.

Torque : 43 N·m (4.4 kg·m/32 lb ft)

4. Tighten tail pipe side nuts to the specified torque.

Torque : 43 N·m (4.4 kg·m/32 lb ft)

5. Install silencer mounting rubber.

REAR EXHAUST PIPE

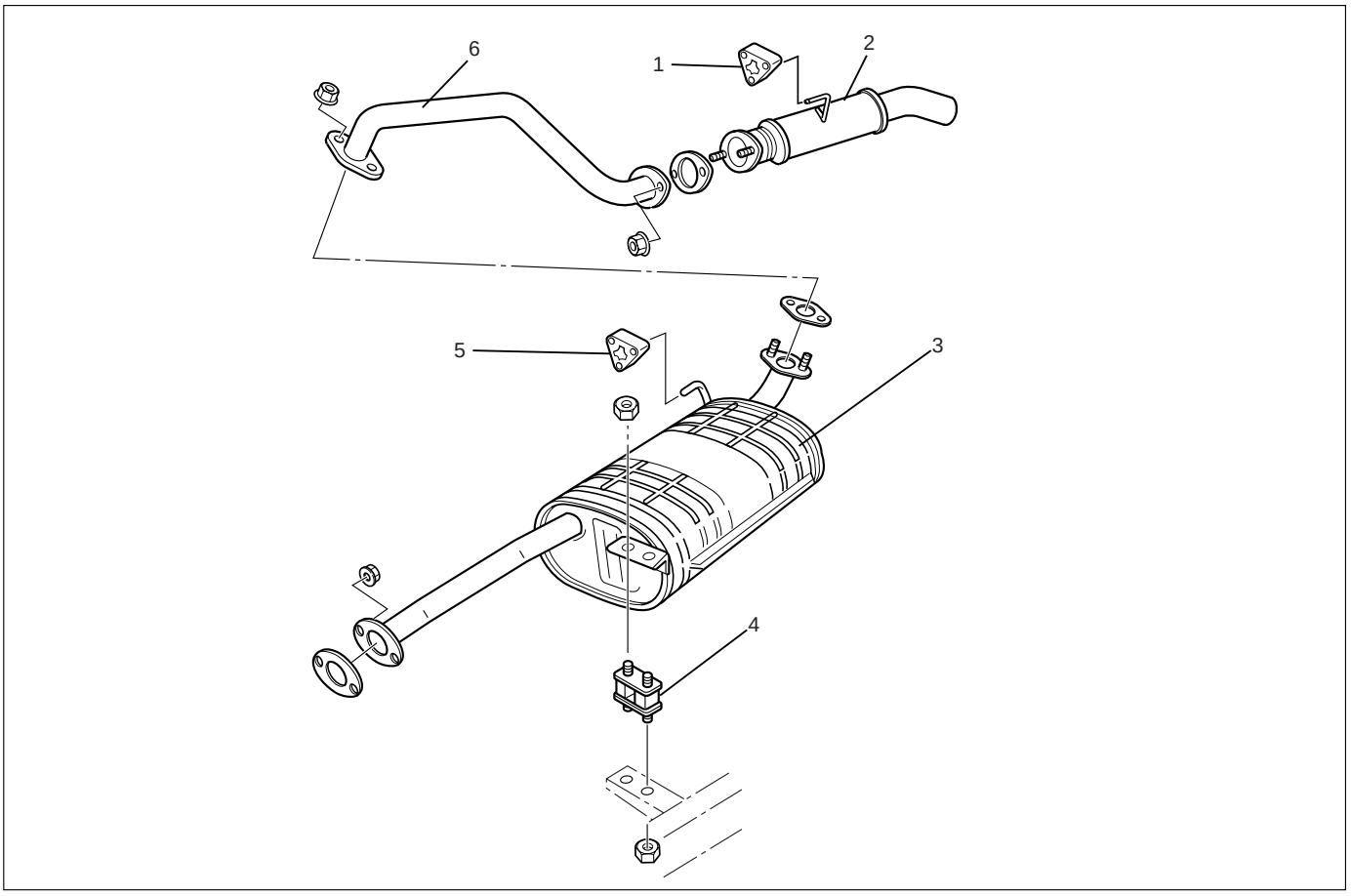

150RW072

Legend

(1) Mounting Rubber
(2) Post Silencer
(3) Silencer
(4) Mounting Bracket
(5) Mounting Rubber
(6) Tail Pipe

REMOVAL

1. Battery negative cable.
2. Raise the vehicle and support with suitable safety stands.
3. Remove mounting rubber from post silencer.
4. Remove fixing nuts at silencer side.
5. Remove tail pipe together with post silencer.
6. Remove fixing nuts between tail pipe and post silencer which separates them.

INSTALLATION

1. Install tail pipe and post silencer and tighten them to the specified torque.

Torque : 43 N·m (4.4 kg·m/32 lb ft)

2. Place tail pipe together with post silencer to original position and tighten fixing nuts at silencer side.

Torque : 43 N·m (4.4 kg·m/32 lb ft)

3. Install mounting rubber for post silencer.
4. Lower the vehicle.
5. Reconnect battery negative cable.

MEMO

ENGINE LUBRICATION

CONTENTS

General Description 6G–2
Lubrication Chart 6G–2
Oil Flow 6G–3
Oil Pump Specification 6G–3
Oil Filter Specification 6G–3
Sub Oil Filter Specification 6G–4
Oil Pump 6G–5
Oil Cooler Assembly 6G–6
Oil Cooler Specification. 6G–6
Oil Filter 6G–6
Sub Oil Filter 6G–6

GENERAL DESCRIPTION

LUBRICATION CHART

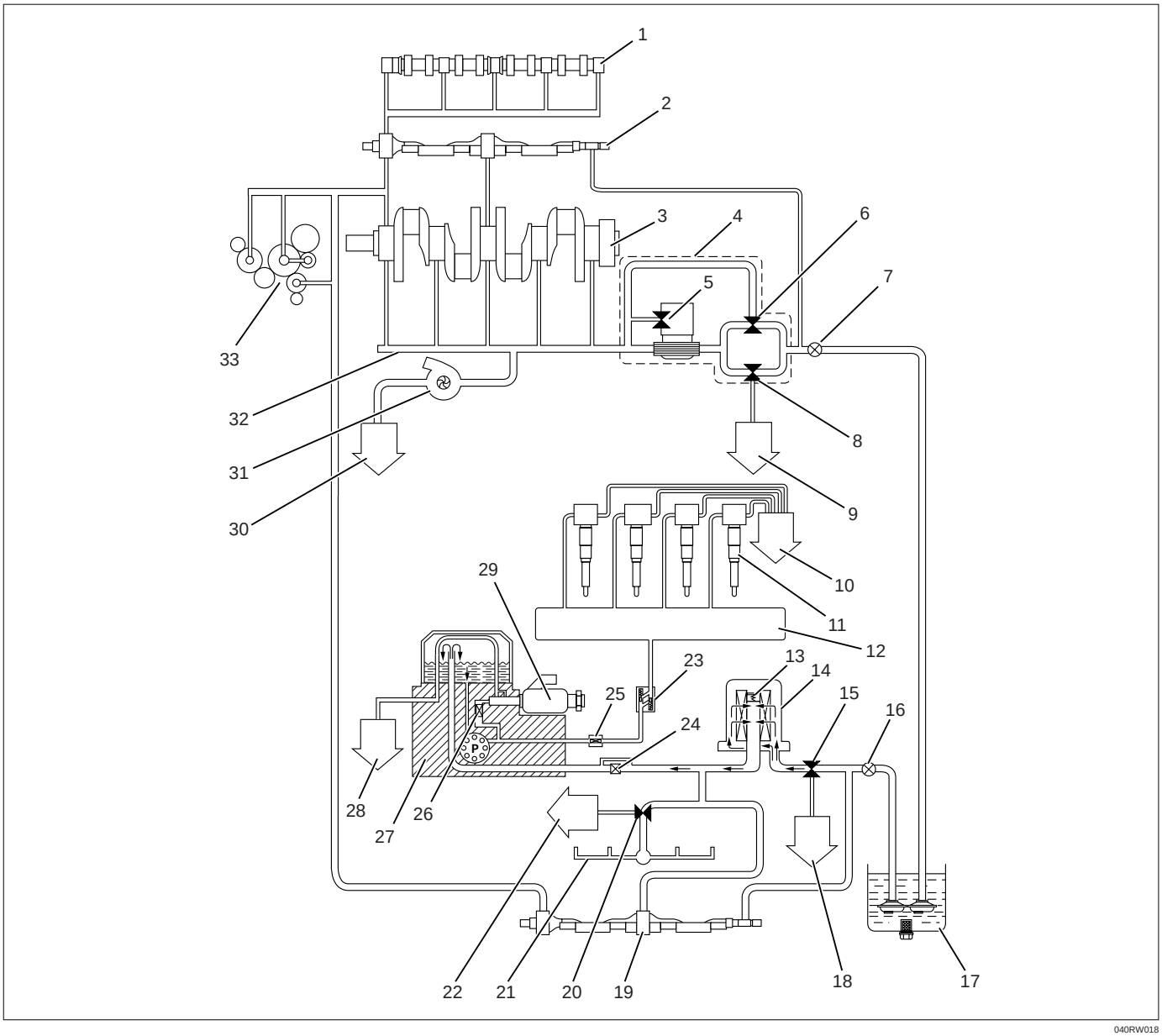

040RW018

Legend

(1) Camshaft
(2) Balance Shaft
(3) Crankshaft
(4) Oil Cooler and Oil Filter Assembly
(5) Oil Filter Relief Valve 98 Kpa (1 kg/cm^2/14.2 Psi)
(6) Oil Cooler Relief Valve 245 Kpa (2.5 kg/cm^2/ 36 Psi)
(7) First Oil Pump
(8) Main Oil Relief Valve 588 Kpa (6 kg/cm^2/ 85 Psi)
(9) To Oil Pan
(10) To Oil Pan
(11) Injector
(12) Oil Rail
(13) Sub Oil Filter Relief Valve 98 Kpa (1 kg/cm^2/ 14.2 Psi)
(14) Sub Oil Filter
(15) Relief Valve 588 Kpa (6 kg/cm^2/ 85 Psi)
(16) Second Oil Pump
(17) Oil Pan
(18) To Oil Pan
(19) Balance Shaft
(20) Cooling Jet Relief Valve 245 Kpa (2.5 kg/cm^2/ 36 Psi)
(21) Cooling Jet
(22) To Oil Pan
(23) Two Way Check Valve
(24) Nipple Filter

(25) Edge Filter
(26) Edge Filter
(27) High Pressure Oil Pump Assembly
(28) To Oil Pan
(29) Pressure Control Valve
(30) To Oil Pan
(31) Turbocharger
(32) Oil Gallery
(33) Timing Gear Train

To meet a newly adopted electronically controlled fuel injection system using engine oil two oil pumps have been provided to increase circulating oil capacity.
The first oil pump serves mainly to lubricate the engine parts, while the second mainly serves the fuel injectors and partially cools the pistons.
The oil cooler is provided on the first oil pump side and uses engine coolant.

OIL FLOW

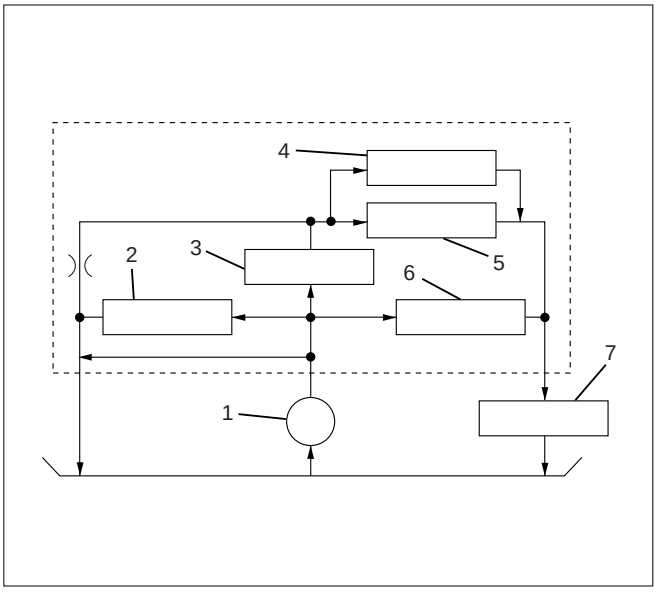

050RW010

Legend
(1) Oil Pump
(2) Regulator Valve
(3) Oil Cooler
(4) Oil Filter Relief Valve
(5) Full Flow Filter
(6) Oil Cooler Relief Valve
(7) Gallery

OIL PUMP SPECIFICATIONS

	First	Second
Pump Revolution	8800 rpm	
Delivery Pressure	392 Kpa (4.0 kg/cm^2/57 psi)	
Delivery Capacity	>48.8 ℓ/min	>37.1 ℓ/min

OIL FILTER SPECIFICATIONS

Filtration Method	Full flow Paper
Filtration Area	0.32 m^2
Relief Valve opening pressure	981 Kpa (10 kg/cm^2/142 psi)

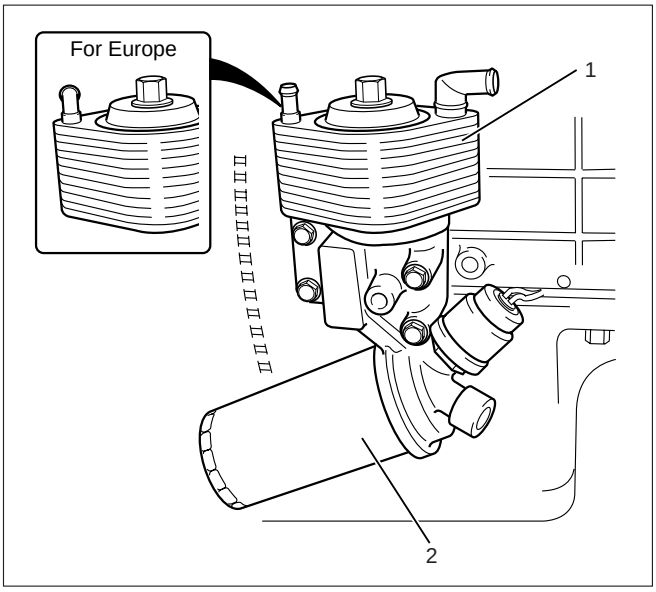

050R200001

Legend
(1) Oil cooler assembly
(2) Oil filter assembly

SUB OIL FILTER SPECIFICATIONS

Filtration Method	Full flow Paper
Filtration Area	0.12 m^2
Relief Valve opening pressure	981 Kpa (10 kg/cm^2/142 psi)

The sub oil filter requires no servicing until the replacement interval is reached.
The element is designed to provide special filtering efficiency until it becomes due for replacement.
It is recommended to check and replace the sub filter when the engine is being overhauled or if it is broken inside the engine.

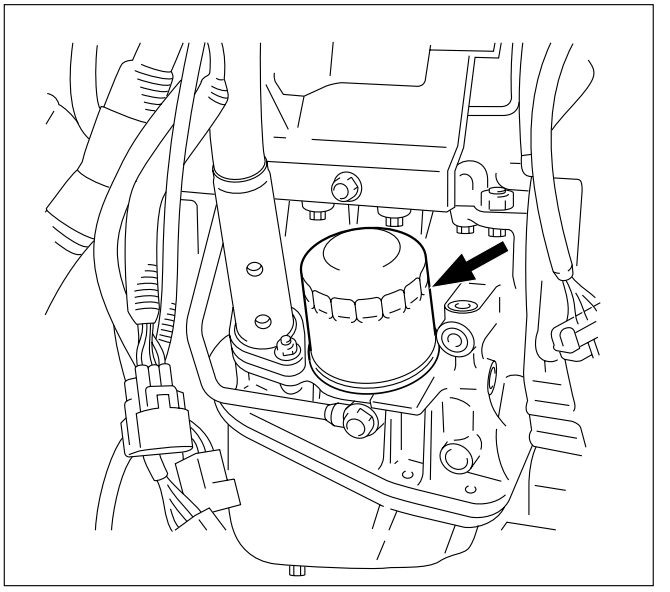

442RW004

OIL PUMP

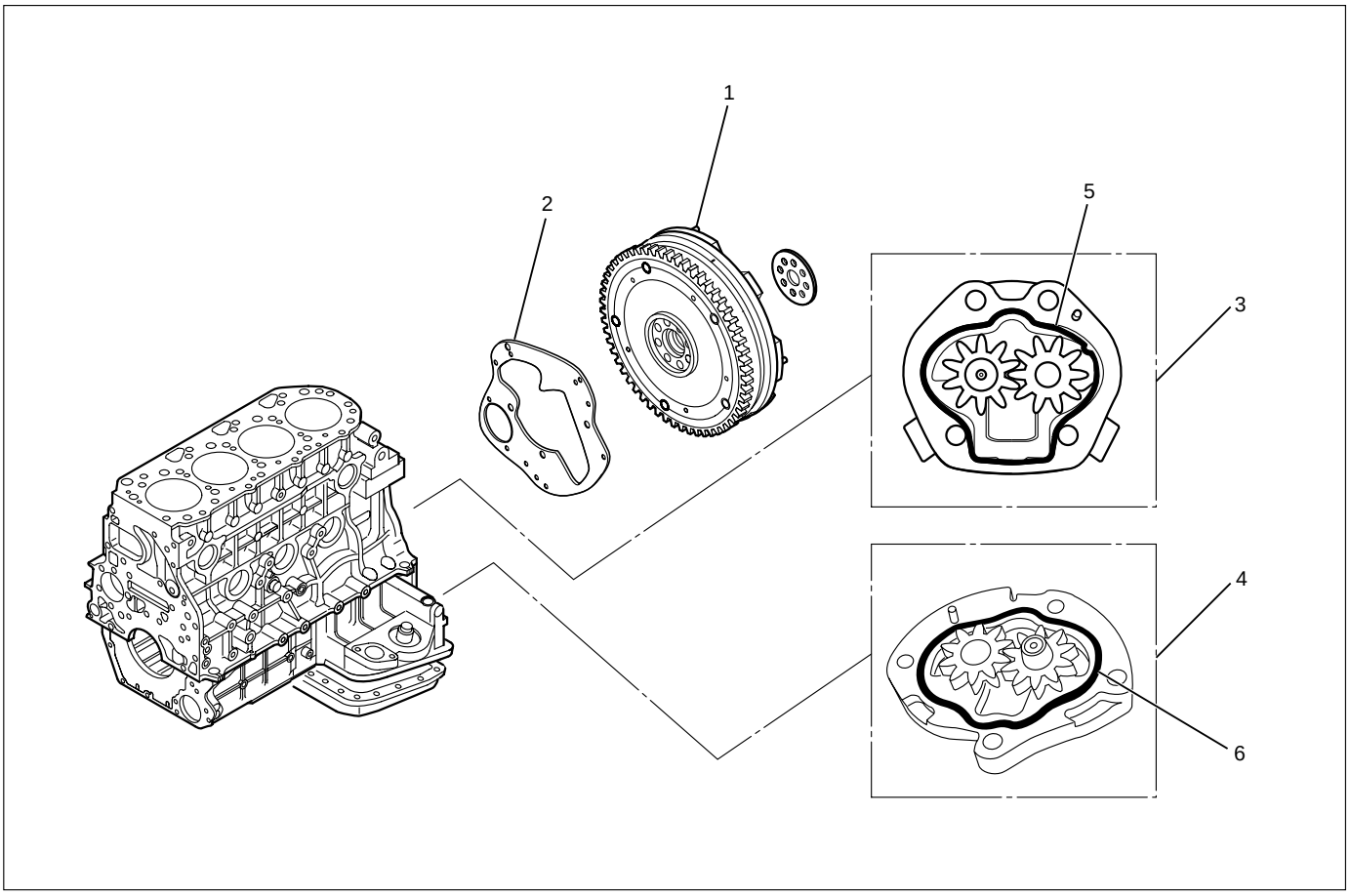

012RW097

Legend

(1) Flywheel
(2) Rear Plate
(3) First Oil Pump
(4) Second Oil Pump
(5) O-ring (For 1st oil pump)
(6) O-ring (For 2nd oil pump)

REMOVAL

1. Remove battery ground cable.
2 Raise the vehicle and support with suitable safety stand.
3. Drain engine oil.
4. Remove flywheel assembly.
5. Remove rear plate (For A/T) or flywheel housing (For MT).
6. Remove first oil pump assembly from cylinder block and second oil pump assembly from crank case.

INSPECTION AND REPAIR

1. Inspect flaws and/or wear on the teeth surface.
2. Inspect abnormal wear journal on the gear and in the drive spline.
3. If problem is found during inspection, the worn parts must be replaced.

INSTALLATION

1. Install first oil pump.
   1) Set O-ring to oil pump.
   2) Install oil pump drive gear to the end of balance shaft RH.
   3) Apply engine oil to oil pump gear and install gear to the end surface of cylinder block.

Torque: 20 N·m (2.0 kg·m / 14 lb ft)

2. Install second oil pump.
   1) Set O-ring to oil pump.
   2) Install oil pump drive gear to the end of balance shaft LH.
   3) Apply engine oil to oil pump gear and install gear to the end surface of crankcase.

Torque: 20 N·m (2·0 kg.m / 14 lb ft)

OIL COOLER ASSEMBLY

REMOVAL

1. Disconnect battery ground cable.
2. Drain engine coolant.
3. Remove front exhaust pipe.
4. Remove heat protector.
5. Remove exhaust valve assembly.
6. Oil cooler assembly.
   1) Remove water hose from water inlet and outlet side.
   2) Cloth should be put under the oil cooler to prevent oil from flowing out.
   3) Loosen fixing bolt then remove oil cooler assembly.

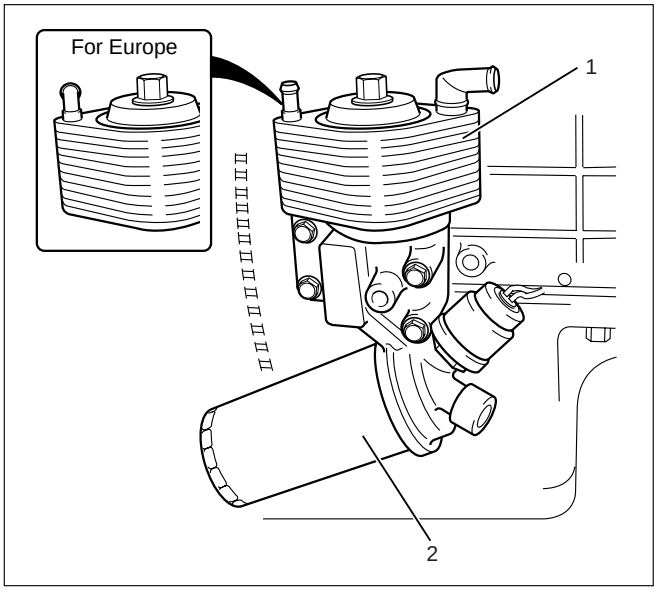

050R200001

Legend
(1) Oil cooler assembly
(2) Oil filter assembly

INSPECTION AND REPAIR

1. Inspect for corrosion, wear, and breaks on the oil cooler core.
2. If a problem is found on the oil cooler core, the oil cooler assembly must be replaced.

INSTALLATION

1. Oil cooler assembly
   1) Tighten oil cooler fixing bolt to the specified torque and install water hoses.

Torque: 29 N·m (3.0 kg·m / 22 lb ft)

2. Install exhaust valve assembly to turbocharger assembly and tighten to the specified torque.

Torque: 27 N·m (2.8 kg·m / 20 lb ft)

3. Install front exhaust pipe to the exhaust valve.

Torque:

67 N·m (6.8 kg·.m / 49 lb ft)
(At exhaust valve side)

43 N·m (4.4 kg·m / 32 lb ft)
(At center exhaust pipe side)

4. Install heater protector.
5. Fill engine coolant.
6. Connect battery ground cable.
7. Start engine and carefully check for leakage of oil and coolant.

OIL COOLER SPECIFICATIONS

Cooling method	Water cooled Multi plate type
Heat exchange Area	0.323 m^2
Heat exchange capacity	>11,300 kcl/h
Relief Valve opening pressure	245 Kpa (2.5 kg/cm^2/36 psi)

OIL FILTER

REMOVAL

1. Put container under the oil filter to prevent oil from the oil filter from flowing out.
2. Use filter wrench to remove oil filter.
   Filter wrench: 5-8840-0203-0

INSTALLATION

1. Apply engine oil thinly to oil filter O-ring.
2. Tighten oil filter by hand until O-ring comes in contact with the sealing surface.
3. Use filter wrench to tighten oil filter one turn and 1/8 turn.
4. Start engine and carefully check for oil leakage from oil filter.

SUB OIL FILTER

The sub oil filter requires no servicing until the replacement interval is reached.
The element is designed to provide special filtering efficiency until it becomes due for replacement.
It is recommended to check and replace the sub oil filter when the engine is being overhauled or if it is broken inside the engine.

ENGINE SPEED CONTROL

CONTENTS

General Description 6H–2
Accelerator Pedal 6H–3

GENERAL DESCRIPTION

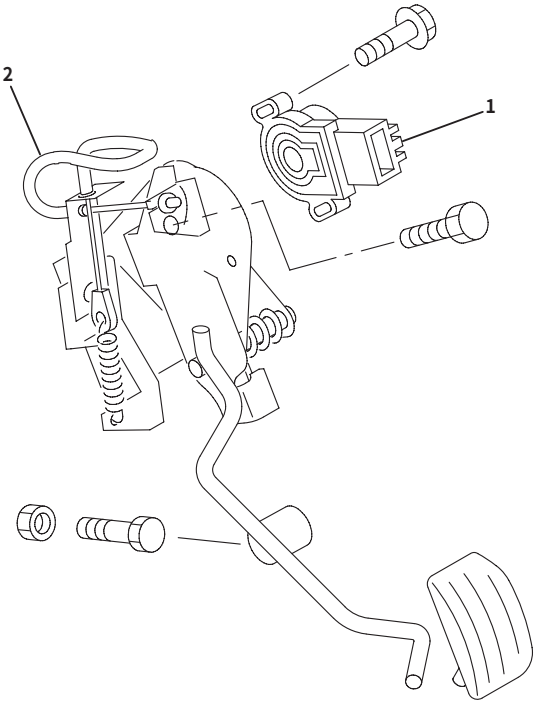

101R200006

Legend

(1) Accerator Position Sensor
(2) Return Cable

Engine control has been changed from the control cable system to an electronically controlled TP (Throttle Position) sensor.
The TP sensor is a potentiometer (Variable resistance) type and installed to the accelerator pedal bracket.
A voltage of 5 V is always applied from the ECM (Electronic Control Module) to the TP sensor so that the operating angle of the accelerator pedal can be detected from a change in voltage.
Further, this sensor is equipped with an accelerator switch which sends signals to the ECM when the accelerator pedal is stepped on.
This switch remains on and turns off only when the accelerator pedal is stepped on.

All vehicles have no throttle cable, and therefore, a return spring is provided on the accelerator pedal and a return cable assembly having the sliding resistance of a cable is used to give the pedal a feeling.
To meet the newly adopted electronic control system, the idling control button has been dropped.

ACCELERATOR PEDAL

REMOVAL

1. Remove harness connector from accel position (AP) sensor.
2. Remove accelerator pedal assembly from chassis.

INSPECTION AND REPAIR

1. Check moving condition of accelerator pedal, if not smooth working, apply oil to the pivot etc.
2. Check tightening condition of accel position (AP) sensor, if not completely tightened, it should be tightened additionally.

INSTALLATION

1. Install accelerator pedal assembly to chassis.
2. Connect harness connector to accel position (AP) sensor.

MEMO

INDUCTION

CONTENTS

General Description 6J–2
Air Cleaner 6J–3
Turbocharger 6J–4
Intercooler 6J–9
Intake Throttle Valve 6J–10
Intake Manifold 6J–11
Main Data and Specifications 6J–12

GENERAL DESCRIPTION

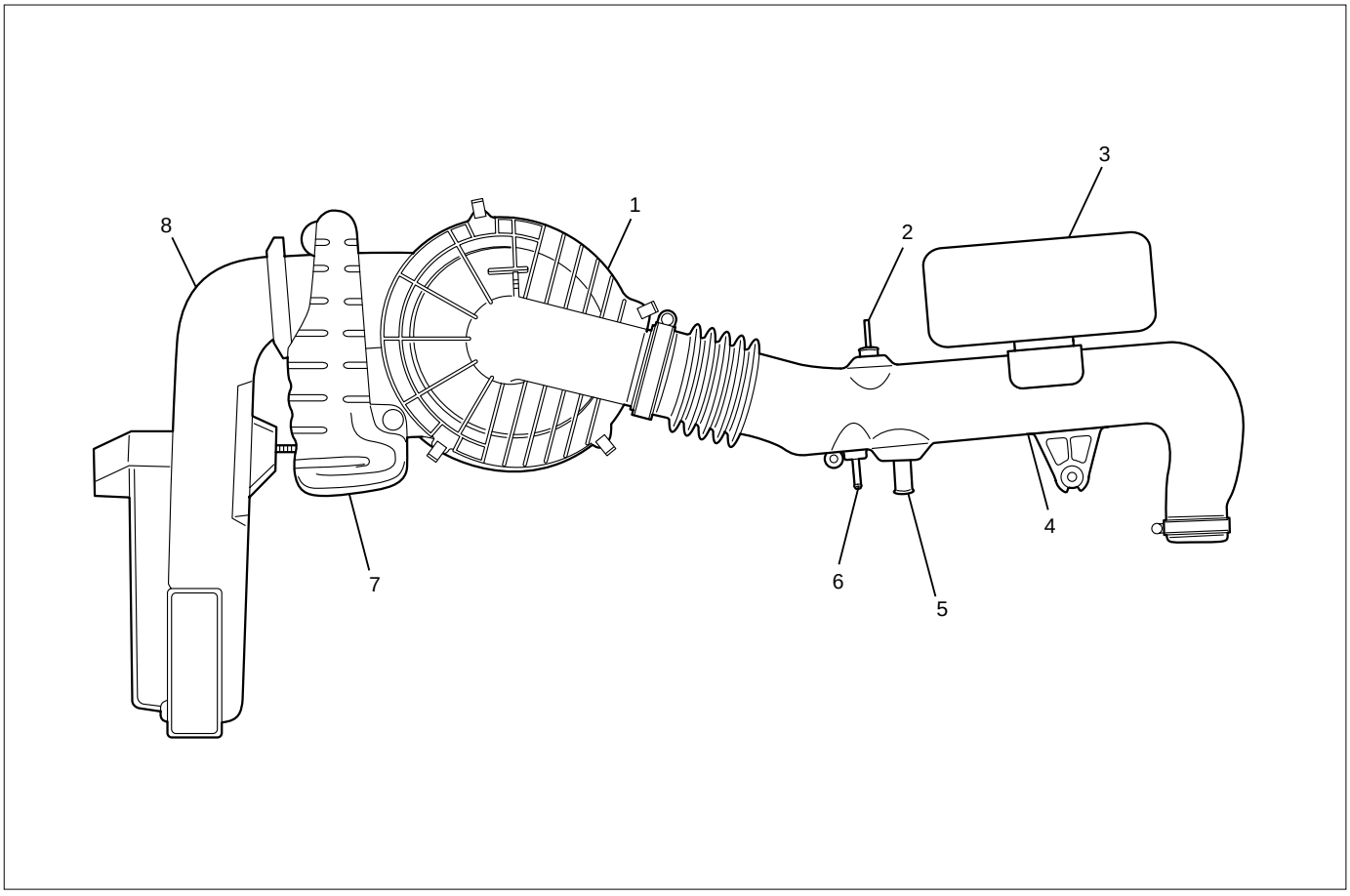

130R200003

Legend

(1) Air Cleaner
(2) Connector for Fuel Tank Breather Hose
(3) Resonator
(4) Air Duct
(5) Connector for PCV Hose
(6) Connector for EGR VSV Hose
(7) Air Duct
(8) Air Duct

There is a large intake silencer provided at the entrance of the air cleaner. Air cleaner element is a viscous type which features high filtration efficiency.
A resonator is used also in the air duct between the air cleaner and turbocharger to reduce air intake noise. The air taken in flows through the turbocharger to the intercooler where the air is cooled and then taken in the cylinder through the intake manifold.

AIR CLEANER

REMOVAL

1. Remove air cleaner cover with air duct.
2. Remove air cleaner element.

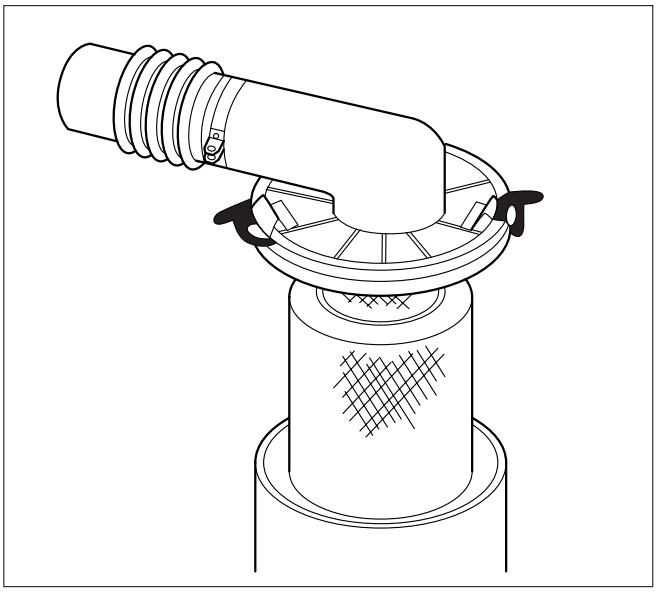

130RW010

INSPECTION

Check air cleaner element for clogs, chokes and breaks, and if any problem is found during inspection, the element must be replaced.

INSTALLATION

1. Air cleaner element
2. Air cleaner cover with air duct.
   1) Put air cleaner cover in original position and tighten it with the clip.

TURBOCHARGER

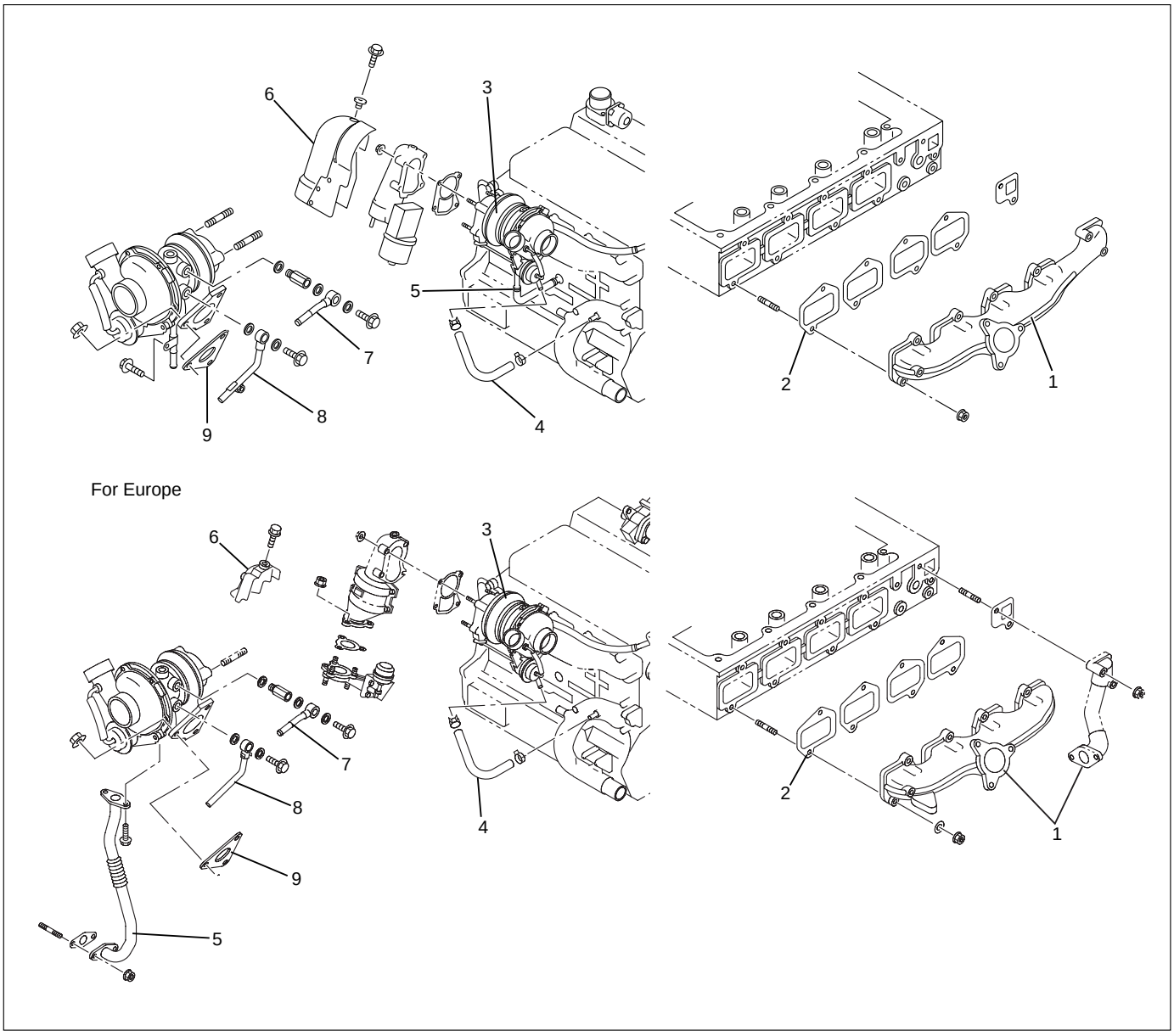

025R200004

Legend

(1) Exhaust Manifold
(2) Gasket
(3) Turbocharger Assembly
(4) Water Hose
(5) Water Hose
(6) Heat Protector
(7) Oil Pipe
(8) Oil Pipe
(9) Gasket

REMOVAL

1. Remove battery.
2. Drain engine coolant.
3. Remove air cleaner cover and air duct.
4. Remove intercooler assembly.
   Refer to “Intercooler” in this manual.
5. Remove water pipe from water inlet of turbocharger.
6. Remove oil pipe.
   1) Remove fixing bolts from oil inlet of turbocharger then remove oil pipe.
   2) Plug open port of turbocharger to prevent foreign materials from entering the turbocharger.
7. Remove oil drain pipe from turbocharger.
8. Remove water outlet pipe from turbocharger.
9. Remove heat protector.
10. Remove exhaust valve assembly.
11. Remove turbocharger fixing nuts from exhaust manifold then remove turbocharger assembly.

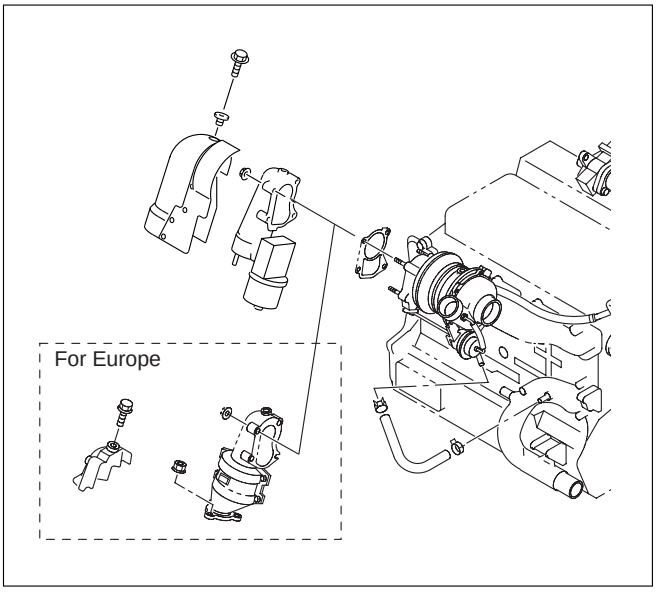

025R200006

INSPECTION AND REPAIR

Make the necessary adjustments, repairs and part replacements if excessive wear or damage is discovered during inspection.
Minor servicing operations are described in this section. Contact the nearest IHI SERVICE FACILITY for major repairs and maintenance.
Refer to IHI SERVICE NETWORK at the end of this section for the location of your area's IHI SERVICE FACILITY.
Turbine shaft end play.

1) Set a dial indicator to the turbine shaft end.
2) Apply a force of 11.8 N (1.2 kg / 2.6 lb) alternately to the compressor wheel and and the turbine wheel end.
3) Read the dial indicator.

Turbine End Play

Standard: 0.03 – 0.06 mm (0.0012 – 0.0024 in)
Limit: 0.09 mm (0.0035 in)

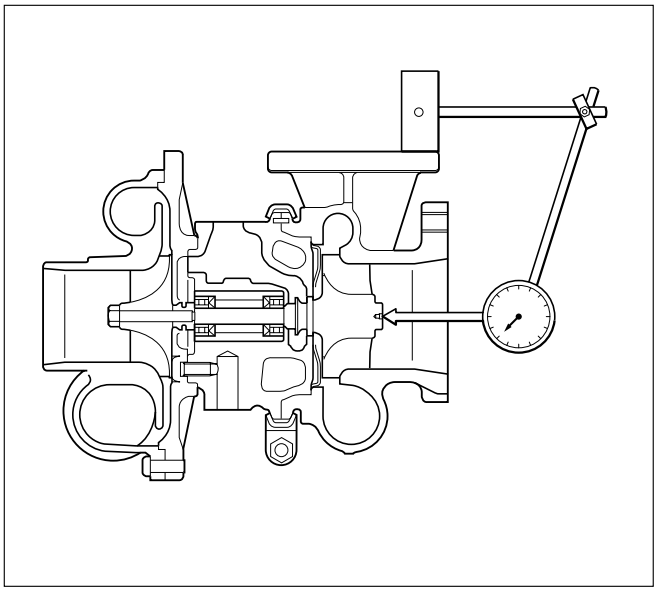

036RW008

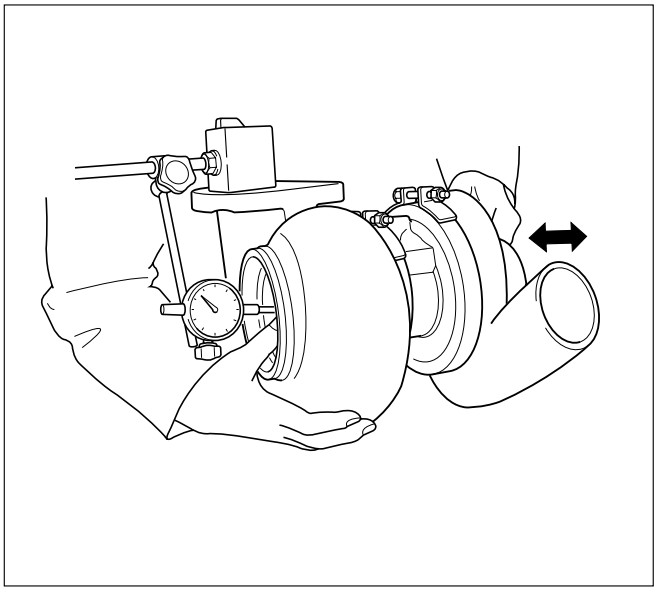

036RW010

Turbine shaft and bearing clearance

1) Set a dial indicator to the turbine shaft center through the center housing oil drain port.
2) Move the turbine shaft from side to side.
3 Read the dial indicator.

Turbine Shaft and Bearing Clearance

Standard: 0.056 - 0.127 mm (0.0022 - 0.0050 in)
Limit: 0.14 mm (0.0055 in)

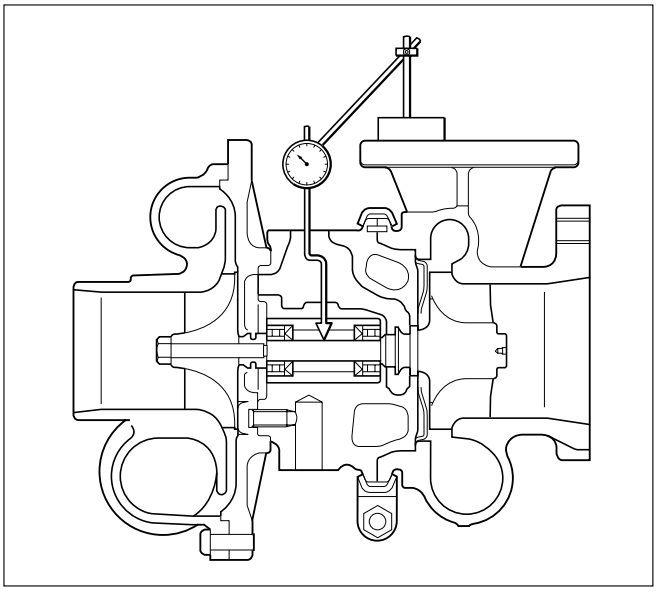

036RW009

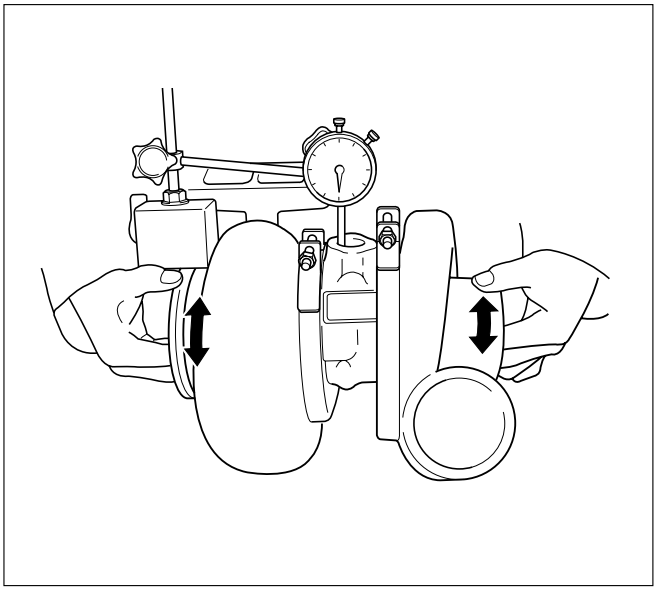

036RW007

Waste gate operation

1) Remove hose from waste gate actuator side and install pressure gauge (1) to the waste gate actuator.
2) Operate pump of pressure gauge while engine is stopped.
3) Read pressure at the control rod (2) move 2mm.

Pressure: 106 – 115 kPa
(796 – 862 mmHg/ 15.4 – 16.7 PSi)

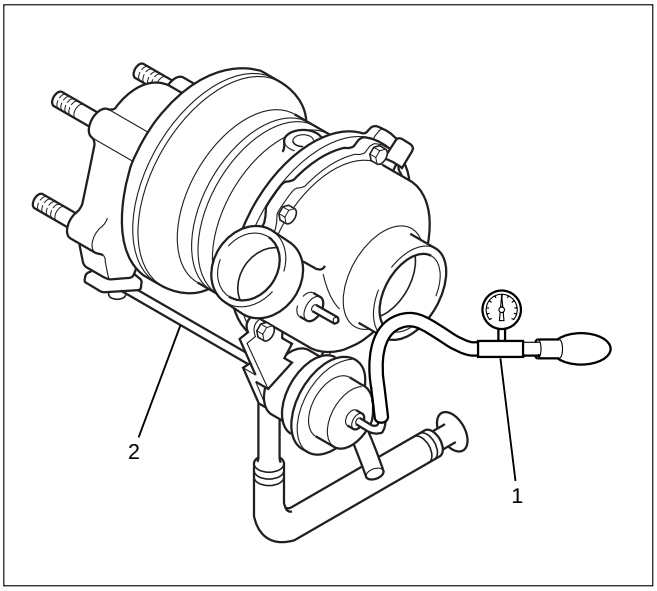

036RW011

Legend
(1) Pressure gauge
(2) Waste gate control rod

4) Check for cracks or breaks on the hose, if a problem is found, the hose must be replaced.

CAUTION: Do not apply more than 120 Kpa (900 mmHg / 18.7 PSi) to waste gate actuator.

INSTALLATION

1. Install turbocharger assembly to exhaust manifold, tighten to the specified torque.

Torque: 27 N·m (2.8 kg·m / 20 lb ft)

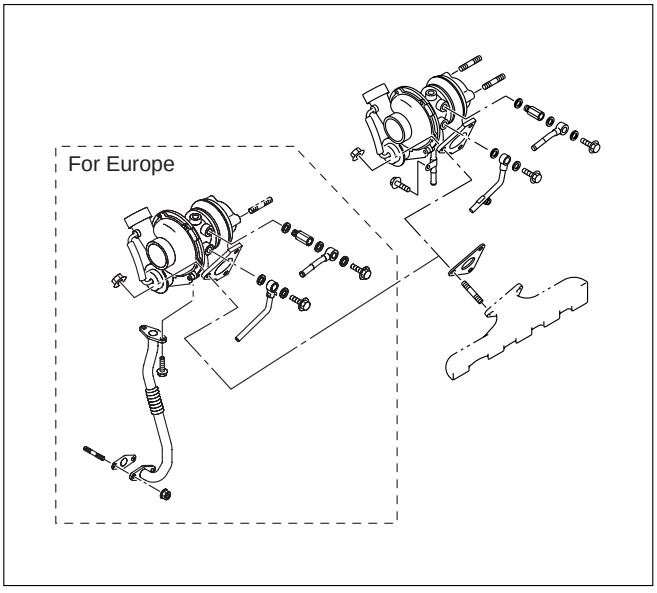

025R200007

2. Install exhaust valve assembly to outlet of turbocharger, tighten bolts to the specified torque.

Torque: 27 N·m (2.8 kg·m / 20 lb ft)

3. Install heat protector.
4. Water inlet pipe.
   1) Tighten water inlet pipe with new gasket.

Torque: 9 N·m (0.9 kg·m / 78 lb in)

5. Oil drain pipe.
   1) Tighten oil drain pipe with new gasket.

Torque: 9 N·m (0.9 kg·m / 78 ib in)

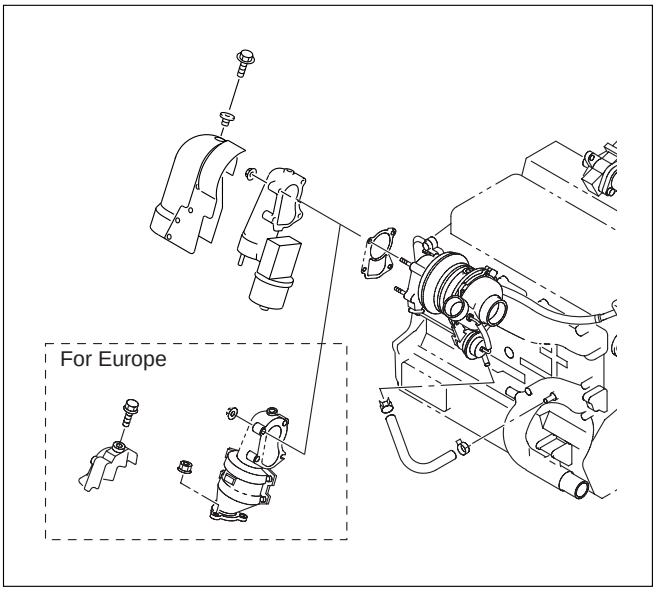

025R200006

6. Oil inlet pipe.
   1) Apply about 100 cc engine oil to turbocharger housing before installing the oil pipe.
   2) Turn the turbine shaft by hand to lubricate the bearing.
   3) Install the oil inlet pipe with a new gasket, tighten bolt to the specified torque.

Torque: 22 N·m (2.2 kg·m / 16 lb ft) For M10

Torque: 54 N·m (5.5 kg·m / 40 lb ft) For M14

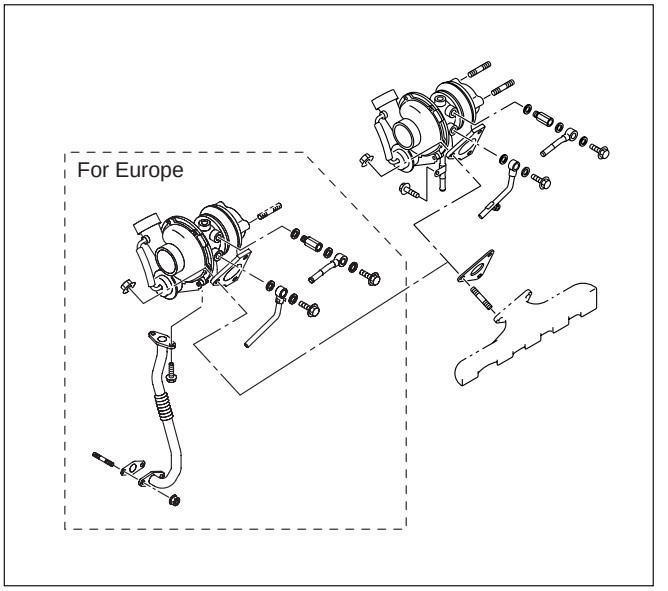

025R200007

7. Water inlet pipe.
   1) Install water inlet pipe with a new gasket, tighten bolts to the specified torque.

Torque: 9 N·m (0.9 kg·m / 78 lb in)

8. Install intercooler assembly.
   Refer to “Intercooler” in this manual.
9. Install air cleaner cover with air duct.
10. Fill engine coolant to full level.
11. Install battery and connect battery cable.

INTERCOOLER

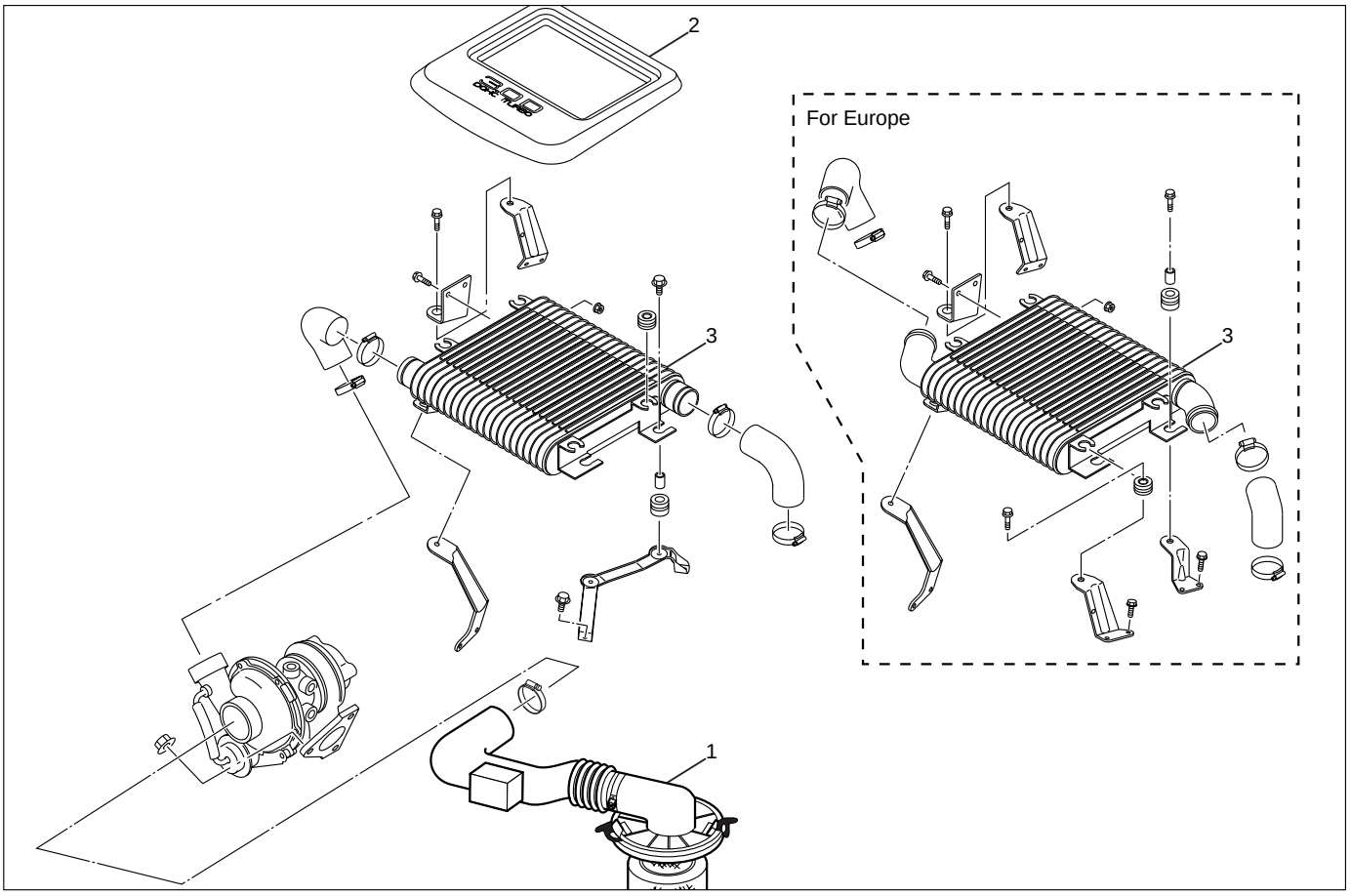

135R200003

Legend

(1) Air Cleaner Cover and Air Duct
(2) Intercooler Cover
(3) Intercooler Assembly

REMOVAL

1. Disconnect battery ground cable.
2. Remove air cleaner cover with air duct.
3. Remove intercooler cover.
4. Intercooler assembly.
   1) Remove rubber hose from intercooler outlet side.
   2) Remove rubber hose from intercooler inlet side.
   3) Remove four fixing bolts and remove intercooler assembly.

INSPECTION AND REPAIR

1. Visual check for clogs in the fins.
2. Check for brokens on the tube.
3. If any problem on the intercooler is observed during inspection, clean or replace the intercooler.

INSTALLATION

1. Intercooler assembly.
   1) Connect outlet hose to intake manifold.
      Tighten hose clamp to the specified torque.

Torque: 4 N·m (0.4 kg·m / 35 lb in)

   2) Connect inlet hose to the turbocharger outlet side.
      Tighten hose clamp to the specified torque.

Torque: 4 N·m (0.4 kg·m / 35 lb in)

   3) Install intercooler assembly, tighten fixing bolts to the specified torque.

Torque: 20 N·m (2.0 kg·m / 14 lb ft)

2. Install intercooler cover.
3. Install air cleaner cover and air duct.
4. Connect battery ground cable.

INTAKE THROTTLE VALVE

REMOVAL

1. Remove intercooler assembly.
   Refer to “Intercooler” in this manual.
2. Remove harness connector from motor and ITP sensor.
3. Loosen the two fixing nuts and remove the throttle valve assembly.

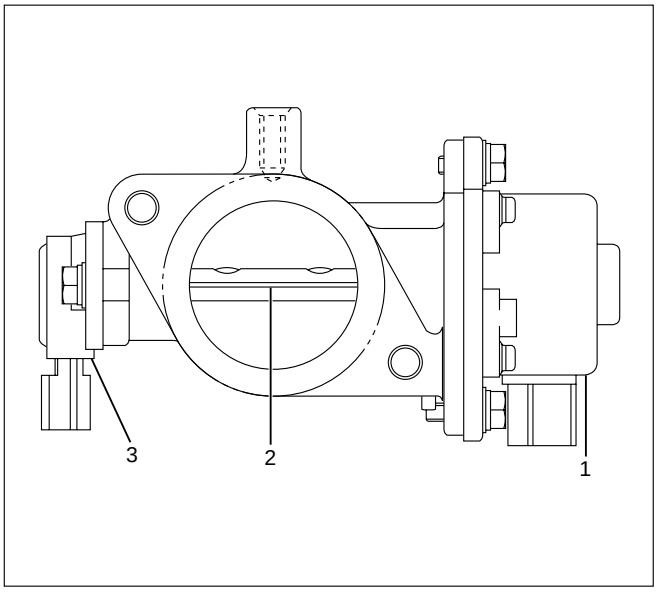

025RW032

Legend
(1) Motor
(2) Intake Throttle Valve
(3) ITP sensor

INSPECTION AND REPAIR

1. Check for catching somwhere on the throttle valve.
2. If some problem is discovered during inspection on the throttle valve, the throttle valve must replace.

INSTALLATION

1. Put gasket on the intake manifold and install throttle valve.
2. Tighten nuts to the specified torque.

Torque: 20 N·m (2.0 kg·m / 14 lb ft)

3. Reconnect harness connector to motor and ITPsensor.
4. Install intercooler assembly.

INTAKE MANIFOLD

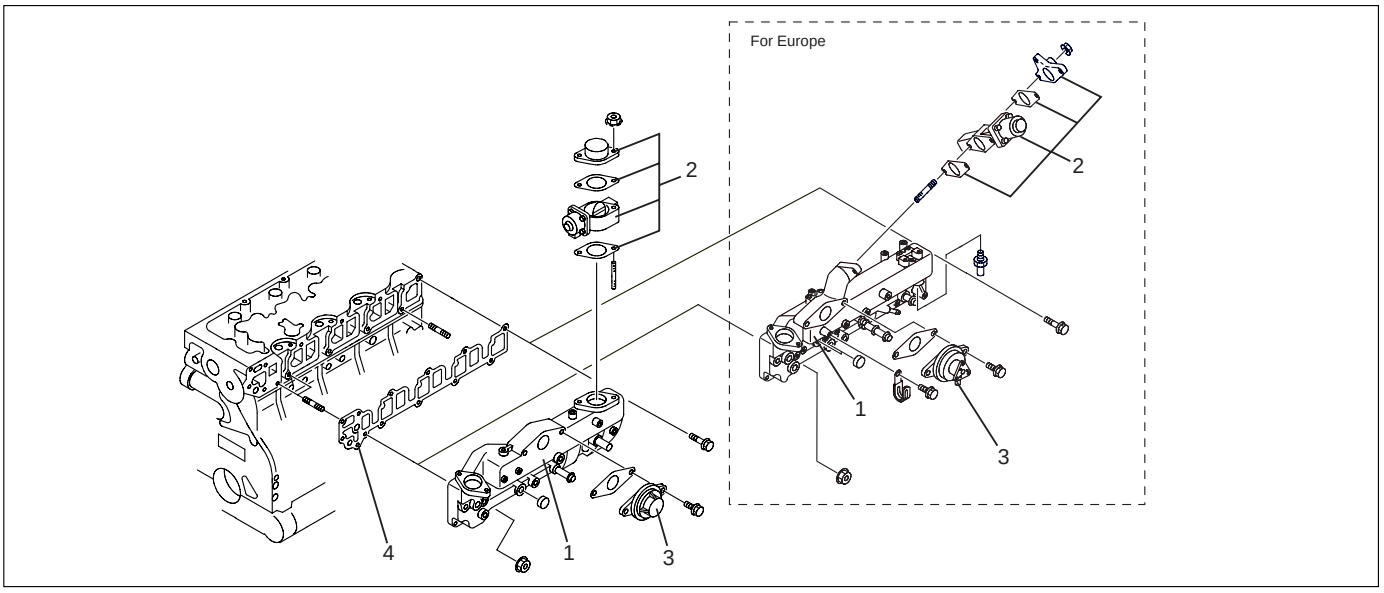

025R200005

Legend
(1) Intake Manifold
(2) Throttle Valve Assembly
(3) EGR Valve
(4) Gasket

REMOVAL

1. Drain engine coolant and remove water hose from thermostat housing
2. Remove intercooler assembly.
3. Remove bracket fixing bolt of oil level gauge guide tube.
4. Remove PCV hose.
5. Remove hoses from EGR valve, EGR vacuum sensor and outlet of heater unit.
6. Disconnect harness connector from MAP sensor, EGR vacuum sensor, ETC sensor, Water temperature unit, IAT sensor and EVRV.
7. Remove high pressure oil pipe.
8. Remove two way check valve.
9. Remove fuel pipe.
10. Remove fixing bolts and nuts of intake manifold, remove intake manifold assembly.

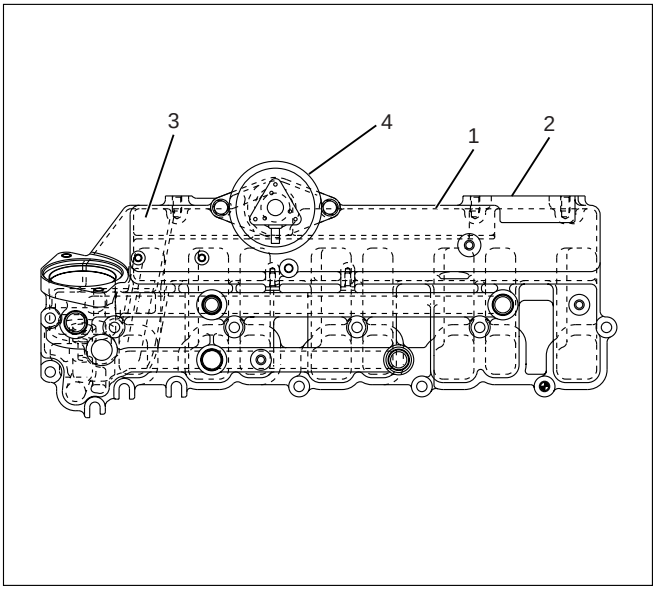

025RW031

Legend
(1) Intake manifold
(2) Fixing portion of throttle valve
(3) EGR passage
(4) EGR valve

INSPECTION AND RAPAIR

1. Visually check for cracks/clogs inside intake manifold.
2. If foreign material is observed, it should be taken out, and if there are some cracks on the intake manifold, it must be replaced.

INSTALLATION

1. Install the intake manifold assembly, tighten bolts and to the specified torque.

Torque: 20 N·m (2.0 kg·m / 14 lb ft) for bolt
Torque: 20 N·m (2.0 kg·m / 14 lb ft) for nut

2. Install fuel pipe.

Torque: 4 N·m (0.4 kg·m / 35 lb in) for M16 nut (Apply engine oil)

Torque: 13 N·m (1.3 kg·m / 113 lb in) for M10 cap nut

Torque: 14 N·m (1.4 kg·m / 122 lb in) for M10 (Apply engine oil)

3. Install two way check valve.

Torque: 20 N·m (2.0 kg·m / 14 lb ft)

4. Fill with about 300 cc of engine oil from the high pressure oil pipe installation port of the oil rail using an oil filler.

   If assembled without filling the oil rail with oil, the time for engine starting will be longer.
5. Install high pressure oil pipe, then tighten sleeve nut to the specified torque.

Torque: 29 N·m (3.0 kg·m / 22 lb ft)

6. Reconnect harness connector to MAP sensor, EGR vacuum sensor, ETC sensor, Water thermo unit, IAT sensor and EVRV sensor.
7. Install hoses to EGR valve, EGR vacuum sensor and Water outlet of heater.
8. Connect PCV hose.
9. Install oil level gauge guide and fix it.
10. Install intercooler assembly.

    Refer to “Intercooler” in this manual.
11. Install water hose to thermostat housing and fill with engine coolant.

MAIN DATA AND SPECIFICATIONS

Model of Turbocharger	IHI RHF5
Turbine Maximum Speed	180,000 rpm
Maximum Inlet Gas Temperature	800 °C (1472 °F)
Vibration Peak (G) criteria	Maximum 4 (G) at Turbine Rotor Speed 140,000 rpm
Tolerance Limit of Compressor Blade Height	Less then 0.5 mm (0.0197 in)

IHI SERVICE NETWORK

For inquiries relating to turbochargers, please contact your ISUZU distributor or the nearest IHI Turbocharger Service Facility.

HEADQUARTERS

ISHIKAWAJIMA HARIMA HEAVY INDUSTRIES CO., LTD. (IHI)
General Machinery Division
Tokyo Chuo Building 1-6-2 Marunouchi Chiyoda-ku
Tokyo 100-0005 JAPAN
TEL: 81-(3)-3286-2405 to 2407 (3 lines)
FAX: 81-(3)-3286-2430

CHINA

IHI BEIJING OFFICE
Room 705, China World Trade Center, No. 1 Jian Guo Men Wai Avenue
Beijing, People's R epublic of CHINA
TEL: 86-(1)-505-4997, 0408
FAX: 86-(1)-505-4350
TLX: 210343 IHIPK CN

TAIWAN

IHI TAIPEI OFFICE
Room 1202, Chia Hsin Building, No. 96 Chung Shan
North Road, Section 2, Taipei, TAIWAN
TEL: 886-(2)-542-5520, 5521, 5523
FAX: 886-(2)-542-4362
TLX: 11320 IHICO

THAILAND

IHI BANGKOK OFFICE
8th Floor, Thaniya Building, 62 Silom Road, Bangkok, THAILAND
TEL: 66-(2)-236-3490, 7356, 9099
FAX: 66-(2)-236-7340
TLX: 82375 IHICO TH

MALAYSIA

IHI KUALA LUMPUR OFFICE
Letter Box No. 52, 22nd Floor, UBN Tower,
10 Jin. P. Ramlee 50250 Kuala Lumpur, MALAYSIA
TEL: 60-(3)-232-1255, 1271
FAX: 60-(3)-232-1418
TLX: IHI KLMA 20257

INDONESIA

IHI JAKARTA OFFICE
9th Floor, Skyline Building JI. M.H. Thamrin, No. 9, Jakarta, INDONESIA
TEL: 62-(21)-32-2147, 390-2211
FAX: 62-(21)-32-3273
TLX: 44175 IHIJKT

MEMO

UB4JX-WE-9811

You are requested to order this manual using the manual number that is shown above.

This manual is applicable for vehicles in all countries except the USA and Canada.

All rights reserved. This manual may not be reproduced in whole or in part, without the permission in writing of ISUZU MOTORS LIMITED.

Issued by

ISUZU MOTORS LIMITED

INTERNATIONAL SERVICE DEPARTMENT

Tokyo, Japan

First edition July., 2001

No.UB4JX-WE-9811

TRANSMISSION

AUTOMATIC TRANSMISSION (4L30–E)

CONTENTS

Service Precaution 7A–3
Construction 7A–3
Range Reference Chart 7A–4
Normal Operation Of 2000 4L30–E Transmission 7A–5
Diagnosis 7A–5
Driver Information 7A–5
General Diagnosis Procedure 7A–8
Preliminary Inspection Chart 7A–9
Checking Transmission Fluid Level and Condition 7A–10
Test Driving 7A–11
Mechanical / Hydraulic Diagnosis Check Trans Indicator Chart 7A–12
Mechanical / Hydraulic Diagnosis Symptoms Index 7A–13
Stall Test 7A–23
Line Pressure Test 7A–23
Shift Speed Chart (V6 3.2L 6VD1 Model) . . . 7A–24
Shift Speed Chart (V6 3.5L 6VE1 Model) . . 7A–26
Lockup Speed Chart (V6 3.2L 6VD1 Model) 7A–28
Lockup Speed Chart (V6 3.5L 6VE1 Model) 7A–28
Changing Transmission Fluid 7A–29
Selector Lever 7A–29
Inspection 7A–29
Removal 7A–30
Installation 7A–30
Mode Switch 7A–31
Removal 7A–31
Installation 7A–31
Transmission (With Transfer Case) 7A–33
Transmission And Associated Parts 7A–33
Removal 7A–33
Installation 7A–35
Solenoid (Main Case Valve Body) 7A–39
Removal 7A–39
Installation 7A–39
Solenoid (Adapter Case Valve Body) 7A–40
Removal 7A–40
Installation 7A–40
Valve Body Assembly (Main Case) 7A–41
Removal 7A–41
Installation 7A–41
Valve Body Assembly (Adapter Case) 7A–43
Removal 7A–43
Installation 7A–43
Powertrain Control Module (PCM) 7A–43
Removal 7A–43
Installation 7A–43
Speed Sensor (Extension Housing) 7A–44
Removal 7A–44
Installation 7A–44
Transmission Oil Temperature Sensor (Adapter Case) 7A–44
Removal 7A–44
Installation 7A–45
Front Oil Seal (Converter Housing) 7A–45
Removal 7A–45
Installation 7A–45
Rear Oil Seal (Extension Housing) 7A–46
Removal 7A–46
Installation 7A–46
Transmission (4L30–E) 7A–46
Disassembly 7A–46
Reassembly 7A–50
Converter Housing And Oil Pump Assembly 7A–60
Disassembled View 7A–60
Disassembly 7A–60
Inspection And Repair 7A–60
Reassembly 7A–60
Oil Pump 7A–61
Disassembled View 7A–61
Disassembly 7A–61
Inspection And Repair 7A–61
Reassembly 7A–61
Main Case Valve Body 7A–62
Disassembled View 7A–62
Disassembly 7A–62
Inspection And Repair 7A–63
Reassembly 7A–63
Adapter Case Valve Body 7A–64
Disassembled View 7A–64
Disassembly 7A–64
Inspection And Repair 7A–64
Reassembly 7A–64
Third Clutch And Sprag Unit 7A–65
Disassembled View 7A–65
Disassembly 7A–65
Inspection And Repair 7A–66

Reassembly 7A–66
Third Clutch 7A–67
Disassembled View 7A–67
Disassemble 7A–67
Inspection And Repair 7A–67
Reassembly 7A–67
Sprag Unit 7A–69
Disassembled View 7A–69
Disassembly 7A–69
Inspection And Repair 7A–69
Reassembly 7A–69
Second Clutch 7A–70
Disassembled View 7A–70
Disassembly 7A–70
Inspection And Repair 7A–71
Reassembly 7A–71
3–4 Accumulator Piston 7A–72
Disassembled View 7A–72
Disassembly 7A–72
Inspection And Repair 7A–73
Reassembly 7A–73
Reverse Clutch Piston And Center Support . 7A–74
Disassembled View 7A–74
Disassembly 7A–75
Inspection And Repair 7A–75
Reassembly 7A–75
Overrun Clutch And Turbine Shaft 7A–76
Disassembled View 7A–76
Disassembly 7A–77
Inspection And Repair 7A–77
Reassembly 7A–77
Main Data And Specification 7A–79
Special Tools 7A–83
4L30–E Parts List 7A–86

Service Precaution

WARNING: IF SO EQUIPPED WITH A SUPPLEMENTAL RESTRAINT SYSTEM (SRS), REFER TO THE SRS COMPONENT AND WIRING LOCATION VIEW IN ORDER TO DETERMINE WHETHER YOU ARE PERFORMING SERVICE ON OR NEAR THE SRS COMPONENTS OR THE SRS WIRING. WHEN YOU ARE PERFORMING SERVICE ON OR NEAR THE SRS COMPONENTS OR THE SRS WIRING, REFER TO THE SRS SERVICE INFORMATION. FAILURE TO FOLLOW WARNINGS COULD RESULT IN POSSIBLE AIR BAG DEPLOYMENT, PERSONAL INJURY, OR OTHERWISE UNNEEDED SRS SYSTEM REPAIRS.

CAUTION: Always use the correct fastener in the proper location. When you replace a fastener, use ONLY the exact part number for that application. ISUZU will call out those fasteners that require a replacement after removal. ISUZU will also call out the fasteners that require thread lockers or thread sealant. UNLESS OTHERWISE SPECIFIED, do not use supplemental coatings (Paints, greases, or other corrosion inhibitors) on threaded fasteners or fastener joint interfaces. Generally, such coatings adversely affect the fastener torque and the joint clamping force, and may damage the fastener. When you install fasteners, use the correct tightening sequence and specifications. Following these instructions can help you avoid damage to parts and systems.

Construction

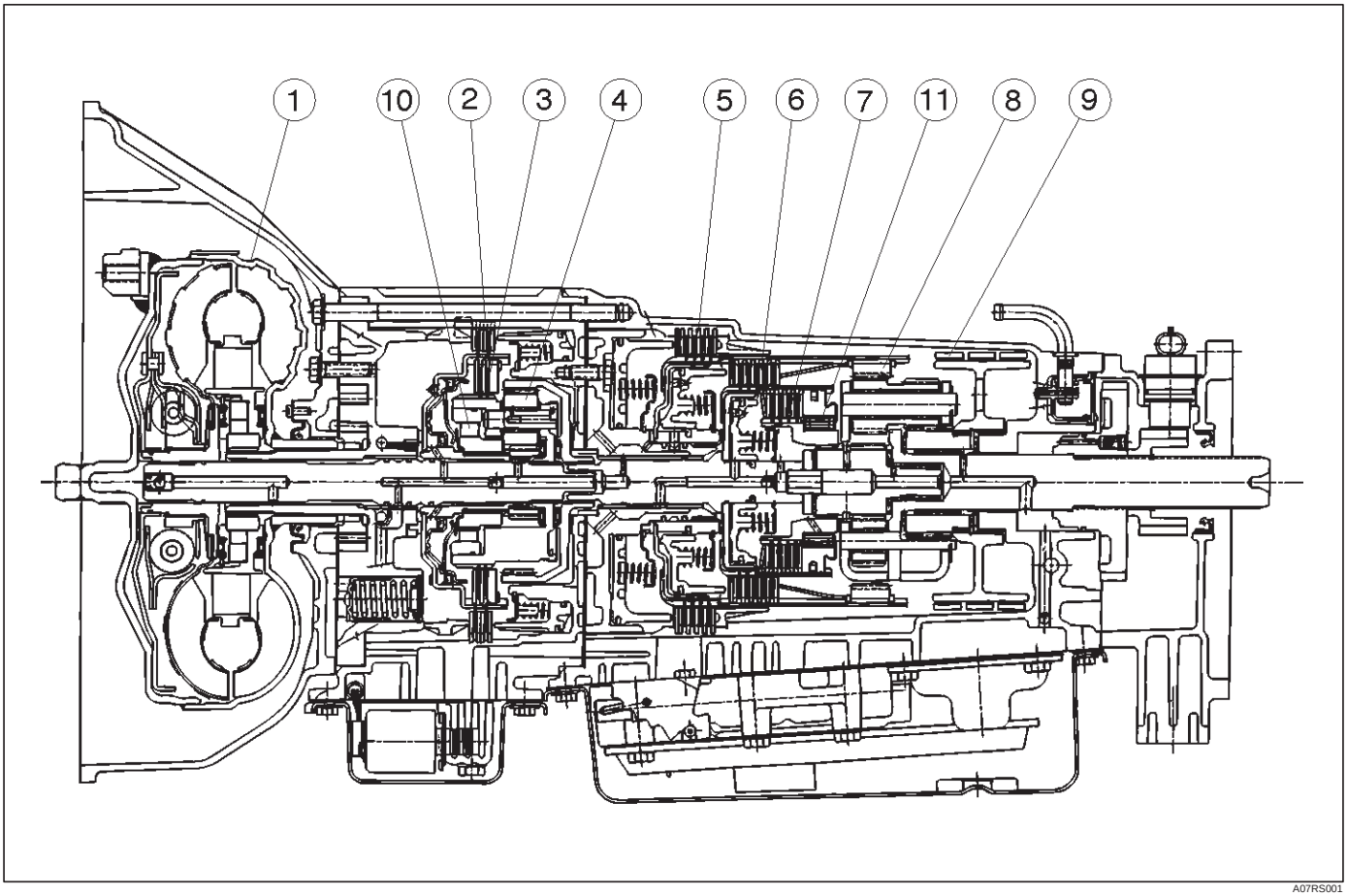

A07RS001

Legend

(1) Torque Converter Clutch (TCC)
(2) Fourth Clutch (C4)
(3) Overrun Clutch (OC)
(4) Overdrive Unit
(5) Reverse Clutch (RC)
(6) Second Clutch (C2)
(7) Third Clutch (C3)
(8) Ravigneaux Planetary Gear Set
(9) Brake Band (B)
(10) Overdrive Free Wheel (One Way Clutch) (OFW)
(11) Principle Sprag Assembly (One Way Clutch) (PFW)

Range Reference Chart

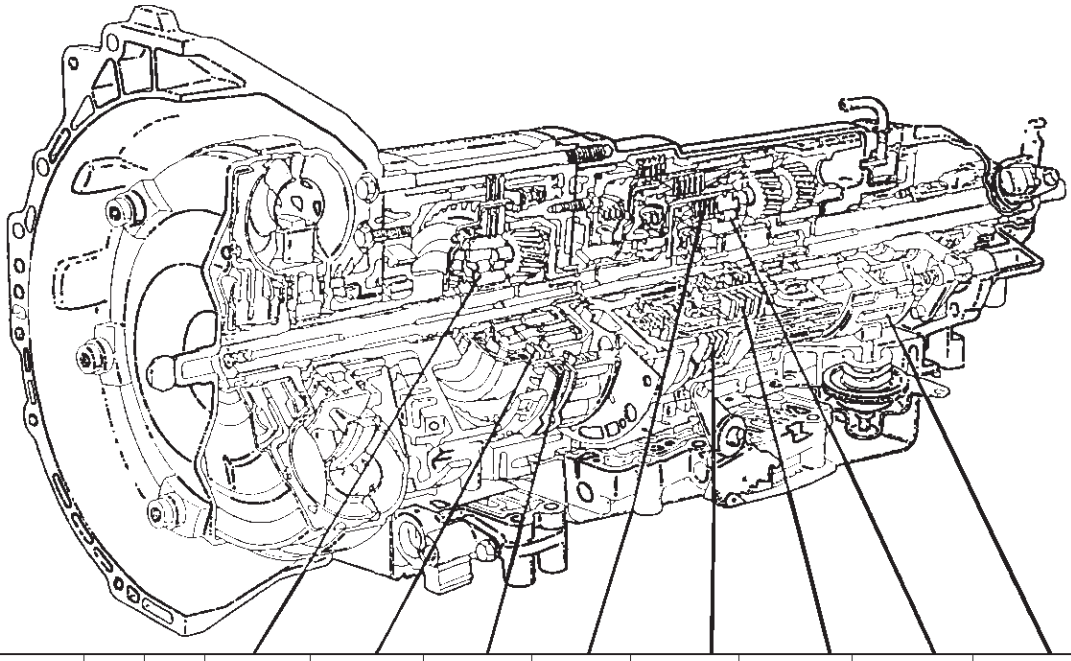

RANGE	GEAR	SOL A N.C.	SOL B N.O.	O/DRIVE ROLLER CLUTCH (OFW)	OVERRUN CLUTCH (OC)	FOURTH CLUTCH (C4)	THIRD CLUTCH (C3)	REVERSE CLUTCH (RC)	SECOND CLUTCH (C2)	PRINCIPLE SPRAG ASSEMBLY (PFW)	BAND ASSEMBLY (B)	ENGINE BRAKING
P-N		OFF	ON		APPLIED							NO
R	REVERSE	OFF	ON	LD	APPLIED			APPLIED		LD		NO
D	1ST	OFF	ON	LD	APPLIED					LD	APPLIED	NO
	2ND	ON	ON	LD	APPLIED				APPLIED	FW	APPLIED	YES
	3RD	ON	OFF	LD	APPLIED		APPLIED		APPLIED	NE		YES
	4TH	OFF	OFF	FW		APPLIED	APPLIED		APPLIED	NE		YES
3	1ST	OFF	ON	LD	APPLIED					LD	APPLIED	NO
	2ND	ON	ON	LD	APPLIED				APPLIED	FW	APPLIED	YES
	3RD	ON	OFF	LD	APPLIED		APPLIED		APPLIED	NE		YES
2	1ST	OFF	ON	LD	APPLIED		APPLIED			LD	APPLIED	YES
	2ND	ON	ON	LD	APPLIED				APPLIED	FW	APPLIED	YES
L	1ST	OFF	ON	LD	APPLIED		APPLIED			LD	APPLIED	YES

LD : LOCKED IN DRIVE FW : FREEWHEELING NE : NOT EFFECTIVE

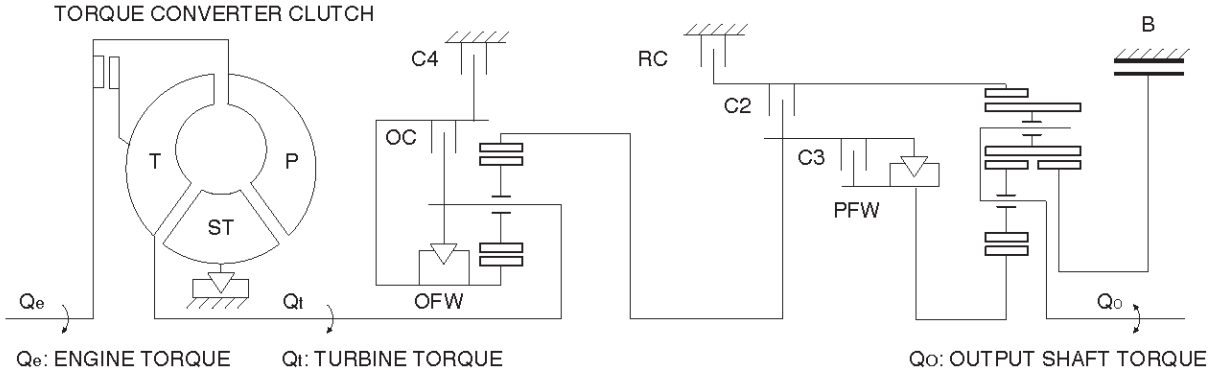

C07RT010

Normal Operation Of 2000 4L30–E Transmission

Torque Converter Clutch (TCC) Application Conditions:

The TCC is normally applied in 2nd, 3rd and 4th gears only when all of the following conditions exist:

— The engine coolant temperature is above 70˚C (158˚F).

— The brake pedal is released.

— The shift pattern requests TCC apply.

Moreover, TCC is always applied in 2nd, 3rd and 4th gears when the transmission oil temperature is above 135˚C (275˚F).

This mode should be canceled at 125˚C (257˚F).

ATF Warning Lamp

The ATF warning lamp will be constantly on (not flashing) if the transmission oil temperature is above 145˚C (293˚F).

The ATF warning lamp goes off again when the transmission oil temperature is below 125˚C (257˚F).

Special Shift Pattern When The Engine Is Cold:

A special shift pattern is activated when the engine coolant temperature is below 70˚C (158˚F). (3–4 shifts, for example, are delayed for small throttle openings and will occur a few MPH higher.)

Diagnosis

Introduction

The systematic troubleshooting information covered by this Section offers a practical and systematic approach to diagnosing 4L30–E transmission, using information that can be obtained from road tests, electrical diagnosis, oil pressure checks or noise evaluation.

The key to correcting a complaint is to make use of all of the available symptoms and logically letting them direct you to the cause.

When dealing with automatic transmission complaints, it is best to gather as many symptoms as possible before making the decision to remove the transmission from the vehicle.

Frequently, the correction of the complaint does not require removal of the transmission from the vehicle.

Driver Information

To analyze the problem fill out a complete description of the owner’s complaint.

Please draw a circle around the right information and complete the following form. (The next page is an example of a completed form). You can draw a circle around many numbers if you are not sure.

A - Today's date :	Month :	Day :	Year : .....
B - End User Name, Address :			
C - Date of Problem :	Month :	Day :	Year : .....
D - Mileage : ..... Miles / Km	**E - With Ignition ON is CHECK TRANS Indicator :** 1- Flashing 2- Not Flashing	**F - Car load when problem occured :** 1 - Towing a trailer 2- ..... people OR ..... Kg	
G - Weather conditions when problem : 1- Clear 2- Cloudy 3- Rain 4- Snow 5- Unstable 6-Any	**H - Weather Temperature when problem:** 1- Hot 2- Warm 3- Cool 4- Cold 5- Unstable 6- Any	**I - Road Conditions when problem :** 1- Any 2- Inter City 3- Outside City 4- Highway 5 - Uphill 6- Downhill 7- Unpaved 8- Snow 9 - Others :	**J - Frequency of the Problem :** 1- Always 2- Occasional : ..... times/day, ... times/month 3- Only Once 4- Others :
K - Engine Condition : 1- Always 2- At Cold 3- During Warming up 4- After Warming or Hot 5- Others	**L - Engine Speed when the problem occured :** 1- Idling 2- Starting 3- Stalling 4- High RPM 5- Low RPM	**M - Transmission Condition when it occured :** 1- Any 2- Idling 3- Starting 4- Driving 5- Accelerating 6-Coasting 7- In corner 8- Shifting	

N - If there is a Transmission driveability problem BEFORE THE CHECK TRANS INDICATOR WAS FLASHING :

1- No Power	in Range : All - P - R - N - D - 3 - 2 - L	during a : upshift : 1-2 / 2-3 / 3-4 or downshift : 4-3 / 3-2 / 2-1
2- No shift	in Range : All - P - R - N - D - 3 - 2 - L	during a : upshift : 1-2 / 2-3 / 3-4 or downshift : 4-3 / 3-2 / 2-1
3- Shift Shock	in Range : All - P - R - N - D - 3 - 2 - L	during a : upshift : 1-2 / 2-3 / 3-4 or downshift : 4-3 / 3-2 / 2-1
4- Shift Slip	in Range : All - P - R - N - D - 3 - 2 - L	during a : upshift : 1-2 / 2-3 / 3-4 or downshift : 4-3 / 3-2 / 2-1
5- Shift Delayed	in Range : All - P - R - N - D - 3 - 2 - L	during a : upshift : 1-2 / 2-3 / 3-4 or downshift : 4-3 / 3-2 / 2-1
6- Shift Point too high	in Range : All - P - R - N - D - 3 - 2 - L	during a : upshift : 1-2 / 2-3 / 3-4 or downshift : 4-3 / 3-2 / 2-1
7- Shift Point too low	in Range : All - P - R - N - D - 3 - 2 - L	during a : upshift : 1-2 / 2-3 / 3-4 or downshift : 4-3 / 3-2 / 2-1
8- TCC Shudder	in Range : All - P - R - N - D - 3 - 2 - L	during a : upshift : 1-2 / 2-3 / 3-4 or downshift : 4-3 / 3-2 / 2-1
9- Noise	in Range : All - P - R - N - D - 3 - 2 - L	during a : upshift : 1-2 / 2-3 / 3-4 or downshift : 4-3 / 3-2 / 2-1
Noise type : 1- Buzz 2- Whine 3- Clunk 4- Rattle 5- Whistle // 6- light 7-medium 8- heavy		
10- Other :	in Range : All - P - R - N - D - 3 - 2 - L	during a : upshift : 1-2 / 2-3 / 3-4 or downshift : 4-3 / 3-2 / 2-1

O - Other customer concern and comments

P - Isuzu Vehicle Code :	.....	**Q - VIN Number**	.....
R - Date of Vehicle Registration	Month :	Day :	Year : .....
S - Trans. model :	.....	**T - A/T Serial Number :**	.....
U - Your name :	.....		

V - Dealer Name, Address, Phone

F07RT036

Example of form completed.

A - Today's date :	Month : April.....	Day : .13.....	Year : .1994.....
B - End User Name, Address :	Dave Smith 6584, Arlington road Plymouth MI 48170 USA		
C - Date of Problem :	Month : April.....	Day : .8.....	Year : .1994.....
D - Mileage : 12230..Mile / Km	E - With Ignition ON is CHECK TRANS Indicator : (1-) Flashing 2- Not Flashing	F - Car load when problem occured : 1 - Towing a trailer 2- ..2..... people OR ..... Kg	
G - Weather conditions when problem : 1- Clear 2- Cloudy 3- Rain 4- Snow 5- Unstable (6-) Any	H - Weather Temperature when problem: 1- Hot 2- Warm 3- Cool 4- Cold 5- Unstable (6-) Any	I - Road Conditions when problem : 1- Any 2- Inter City 3- Outside City (4-) Highway 5 - Uphill 6- Downhill 7- Unpaved ~~8- Snow~~ 9 - Others	J - Frequency of the Problem : 1- Always (2-) Occasional : ..... times/day, ...3... times/month 3- Only Once 4- Others :
K - Engine Condition : 1- Always 2- At Cold 3- During Warming up (4-) After Warming or Hot 5- Others	L - Engine Speed when the problem occured : 1- Idling 2- Starting 3- Stalling (4-) High RPM 5- Low RPM	M - Transmission Condition when it occured : 1- Any 2- Idling 3- Starting 4- Driving (5-) Accelerating (6-) Coasting 7- In corner (8-) Shifting	this means do not take this into account

N - If there is a Transmission driveability problem BEFORE THE CHECK TRANS INDICATOR WAS FLASHING :

1- No Power	in Range : All - P - R - N - D - 3 - 2 - L	during a : upshift : 1-2 / 2-3 / 3-4 or downshift : 4-3 / 3-2 / 2-1
2- No shift	in Range : All - P - R - N - D - 3 - 2 - L	during a : upshift : 1-2 / 2-3 / 3-4 or downshift : 4-3 / 3-2 / 2-1
(3-) Shift Shock	in Range : All - P - R - N - (D-) 3 - 2 - L	during a (upshift :) 1-2 / 2-3 / (3-4) or (downshift :) (4-3) / 3-2 / 2-1
4- Shift Slip	in Range : All - P - R - N - D - 3 - 2 - L	during a : upshift : 1-2 / 2-3 / 3-4 or downshift : 4-3 / 3-2 / 2-1
5- Shift Delayed	in Range : All - P - R - N - D - 3 - 2 - L	during a : upshift : 1-2 / 2-3 / 3-4 or downshift : 4-3 / 3-2 / 2-1
6- Shift Point too high	in Range : All - P - R - N - D - 3 - 2 - L	during a : upshift : 1-2 / 2-3 / 3-4 or downshift : 4-3 / 3-2 / 2-1
7- Shift Point too low	in Range : All - P - R - N - D - 3 - 2 - L	during a : upshift : 1-2 / 2-3 / 3-4 or downshift : 4-3 / 3-2 / 2-1
8- TCC Shudder	in Range : All - P - R - N - D - 3 - 2 - L	during a : upshift : 1-2 / 2-3 / 3-4 or downshift : 4-3 / 3-2 / 2-1
9- Noise	in Range : All - P - R - N - D - 3 - 2 - L	during a : upshift : 1-2 / 2-3 / 3-4 or downshift : 4-3 / 3-2 / 2-1
Noise type : 1- Buzz 2- Whine 3- Clunk 4- Rattle 5- Whistle // 6- light 7-medium 8- heavy		
10- Other :	in Range : All - P - R - N - D - 3 - 2 - L	during a : upshift : 1-2 / 2-3 / 3-4 or downshift : 4-3 / 3-2 / 2-1

O - Other customer concern and comments :

(This is just an example). Shift shock very harsh overall during a downshift. Not sure if it's the 4-3 or 3-2.

P - Isuzu Vehicle Code :	94 UCR	Q - VIN Number	4S2CV58ZXM4324047
R - Date of Vehicle Registration	Month : November.	Day : ....18.....	Year : ..1993.....
S - Trans. model :	4L30-E	T - A/T Serial Number :	96 358 654
U - Your name :	Joe Spring		

V - Dealer Name, Address, Phone

Kent Helfrich

Home-town ISUZU

900 - 999 - 9999

F07RT037

General Diagnosis Procedure

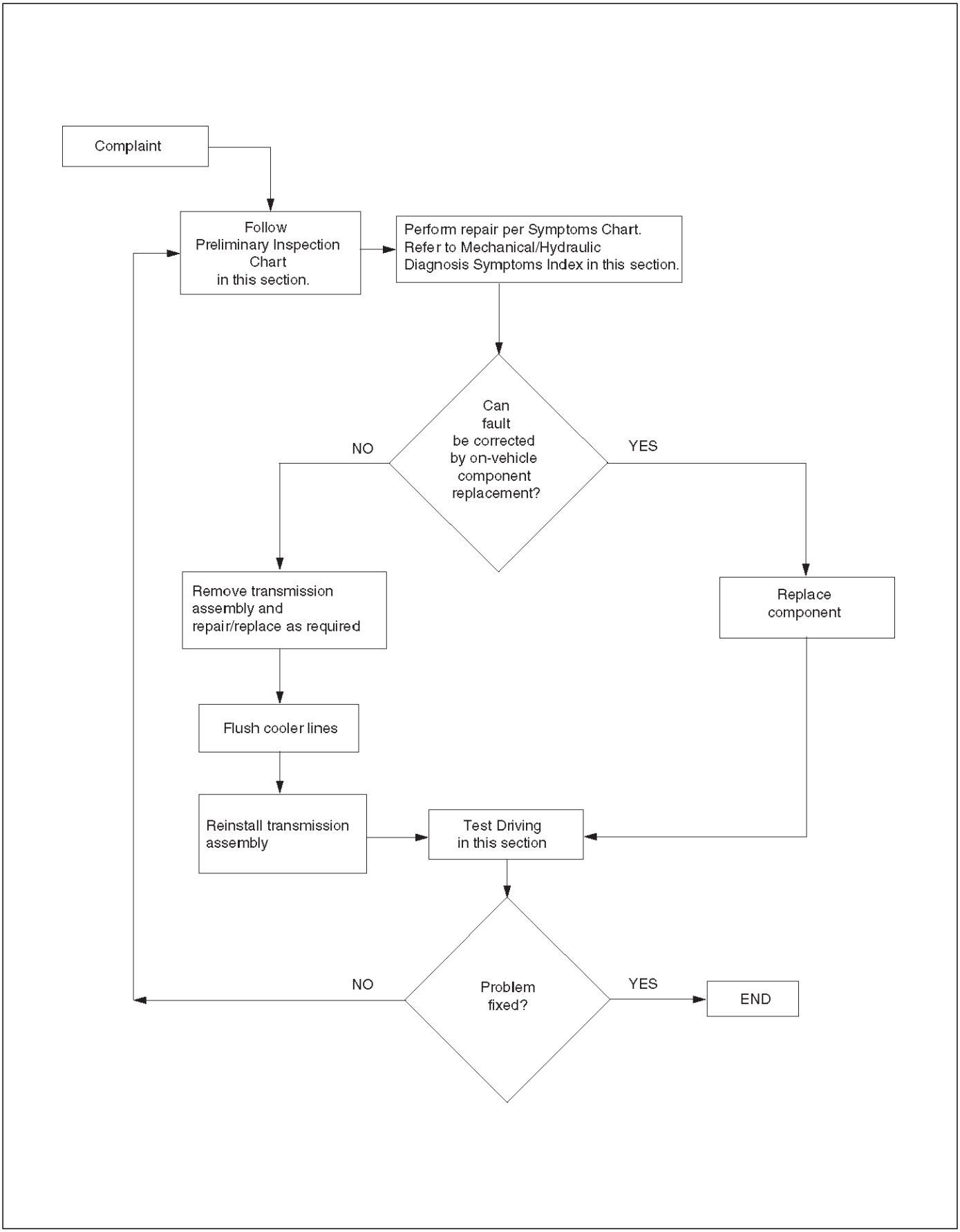

F07RT038

Preliminary Inspection Chart

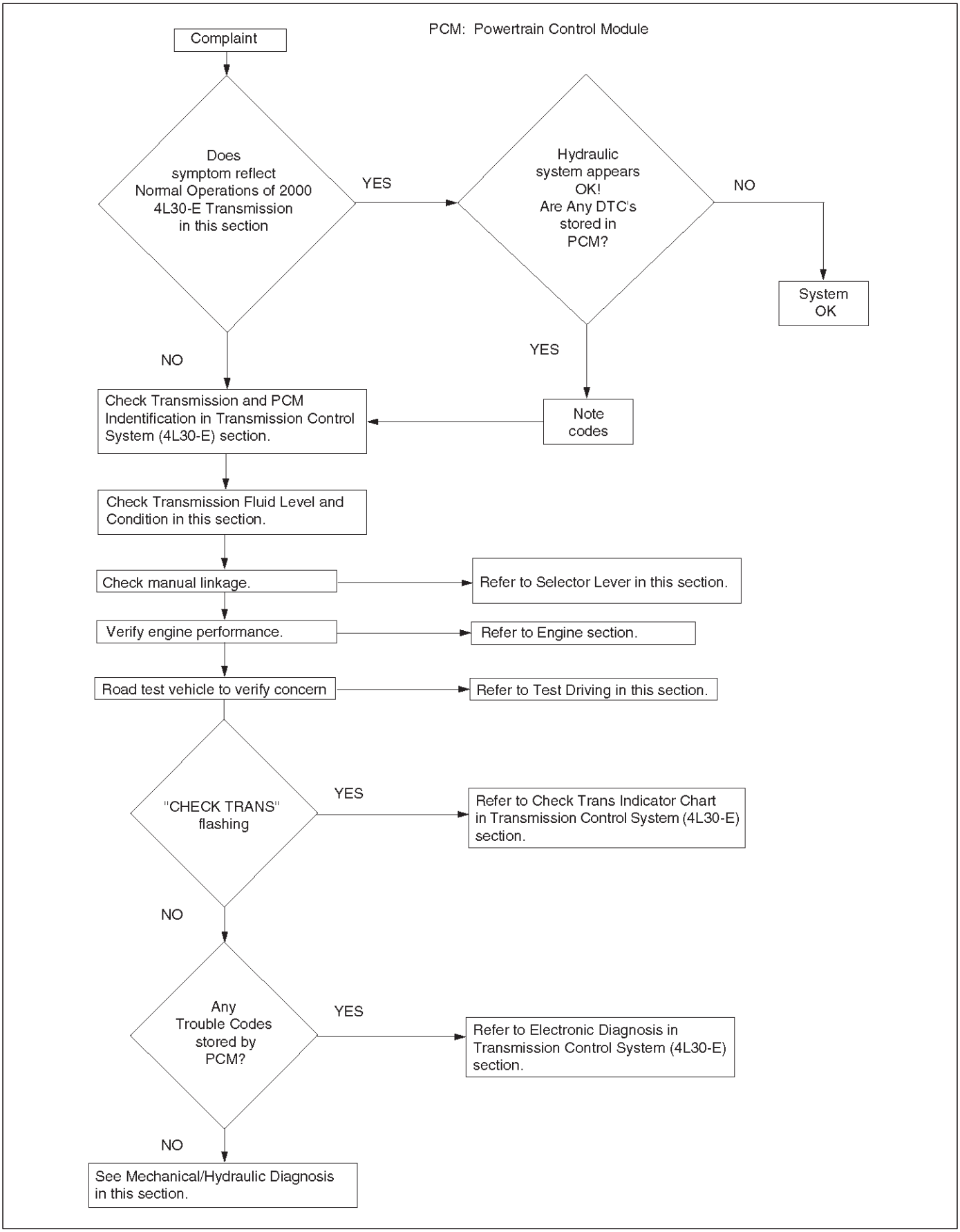

F07RY00023

Checking Transmission Fluid Level and Condition

Checking fluid level and condition (color and odor) at regular intervals will provide early diagnosis information about the transmission. This information may be used to correct a condition that, if not detected early, could result in major transmission repairs.

IMPORTANT: When new, automatic transmission fluid is red in color. As the vehicle is driven, the transmission fluid will begin to look darker in color. The color may eventually appear light brown.

A dark brown color with burnt odor may indicate excessive fluid deterioration and signal a need for fluid change.

Fluid Level

When adding or changing fluid, use only DEXRON ®–III. Refer to Maintenance and Lubrication in General Information section for maintenance information and servicing interval.

CAUTION: DO NOT OVERFILL.

Overfilling will cause foaming, loss of fluid, abnormal shifting and possible damage to the transmission.

1. Park the vehicle on level ground and apply the parking brake firmly.
2. Check fluid level with engine running at idle.

NOTE: Be sure that transmission fluid temperature is below 30˚C (86˚F).

3. Move the selector lever through all gear ranges.
4. Move the selector lever to “Park”.
5. Let engine idle for 3 minutes and open the overfill screw (1).
6. Add released transmission fluid until it flows out over the overfill screw opening.
7. Let engine idle until a fluid temperature between 32˚C (90˚F) and 57˚C (135˚F) is reached, then close the overfill screw (1).

Torque: 38 N•m (3.9 kg·m/28 lb ft)

NOTE: To prevent fluid leaks, the overfill screw and oil drain screws gasket must be replaced each time these screws are removed.

NOTE: Check transmission fluid temperature with scan tool.

Minimum fluid level → 57˚C (135˚F)

Maximum fluid level → 32˚C (90˚F)

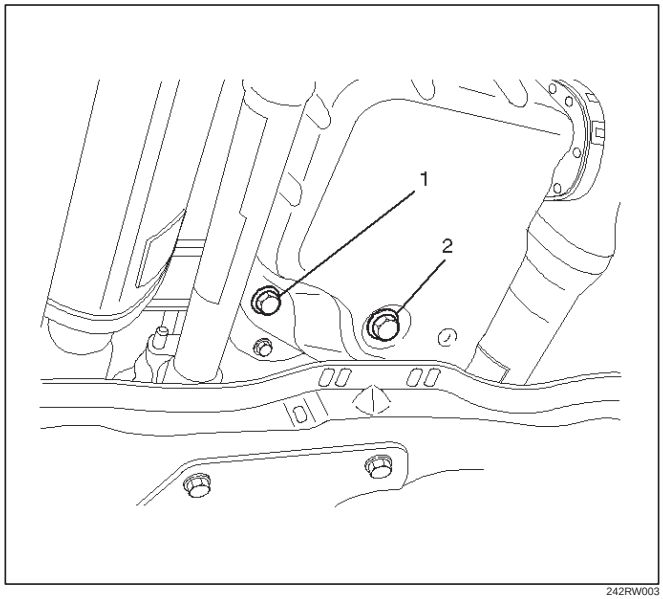

242RW003

CAUTION: Do not open overfill screw with engine stopped.

CAUTION: DO NOT CHECK FLUID LEVEL UNDER THESE CONDITIONS:

- Immediately after driving at sustained highway speeds.
- In heavy city traffic during hot weather.
- If vehicle is towing a trailer.

If the vehicle has been operated under these conditions, shut the engine off and allow the vehicle to “cool” for thirty (30) minutes. After the cool down period, restart the vehicle and continue from step 2 above.

Fluid Condition

	FLUID CONDITION			
	NORMAL*		CONTAMINATED	
COLOR	RED OR LIGHT BROWN	BROWN	NON–TRANSPARENT / PINK	BROWN
DRAIN REQUIRED?	NO	YES	YES	YES
CONTAMINA–TION	NONE	Very small amount of foreign material in bottom of pan	Contamination by coolant or other source	Large pieces of metal or other foreign material in bottom of pan
CORRECT LEVEL AND CONDITION	1. LOW LEVEL: A. Add fluid to obtain proper level & check for external leaks. B. Correct cause of leak. 2. HIGH LEVEL: – Remove excess fluid	– Remove both pans – Change filter – Flush cooler – Add new fluid – Check level	– Repair/replace radiator cooler – Transmission overhaul required – Check for: ● Damaged plates and seals ● Contaminated solenoids – Flush cooler – Add new fluid – Check level	– Transmission overhaul required – Flush cooler and cooler lines – Add new fluid – Check level

*Fluid should be changed according to maintenance schedule.

Test Driving

Some 4L30–E automatic transmission complaints will require a test drive as a part of the diagnostic procedure. Some codes will not set unless the vehicle is moving. The purpose of the test drive is to duplicate the customer's complaint condition and set a current Powertrain Control Module (PCM) trouble code. Perform this procedure before each 4L30–E automatic transmission repair, and again after repairs are made.

IMPORTANT:

- Duplicate the condition under which the customer's complaint was observed.
- Depending on the complaint, the line pressure gauge and the scan tool may be required during the test drive.
- During the test drive, it is important to record all necessary data from the areas being monitored, for use in diagnosis. Also listen for and note any unusual noises.

The following procedure should be used to test drive 4L30–E automatic transmission complaint vehicles:

1. Turn the ignition ON without starting the engine. Check that the "CHECK TRANS" lamp comes on for approximately 2 seconds and then goes out and remains out.
   - If the lamp is flashing, GOTO Check Trans Indicator in Transmission Control System (4L30–E) section.
   - If no serial data is present, GOTO OBD System Check. Refer to Driveability and Emissions in Engine section.
   - If the lamp stays ON or stays OFF, GOTO "Check Trans" Check in Transmission Control System (4L30–E) section.
2. Drive the vehicle. During the test drive, be sure that the transmission achieves normal operating temperature (approx. 20 minutes).
   Allow the transmission to go through all of its gear ranges, checking shift timing and firmness. Duplicate the owner's complaint condition as closely as possible during the test drive.
3. If, during the test drive, the "CHECK TRANS" lamp comes on, use the scan tool to check for trouble codes.
4. If, during the test drive, a problem is felt, but the "CHECK TRANS" lamp does not come on and no trouble codes are present, drive the vehicle with the PCM disconnected (manually shifting the vehicle).
   - In Manual L, the vehicle operates in first gear.
   - In Manual 2, the vehicle operates in third gear.
   - In Manual 3 or "D", the vehicle operates in fourth gear.

   If the problem still exists with the PCM disconnected, refer to Mechanical/Hydraulic Diagnosis in this section.
5. If no problem has been found at this point, check all underhood connections that supply power to the PCM and ignition fuses. Physically and visually inspect all the PCM harness connectors for loose or corroded terminals. Inspect the PCM ground points.

Mechanical / Hydraulic Diagnosis Check Trans Indicator Chart

Perform Preliminary Inspection First!

When the “CHECK TRANS” indicator is flashing, it indicates that a problem related to the transmission, the Powertrain Control Module (PCM), or the vehicle harness has occurred.

The system is now operating in a “BACKUP MODE” where the risk of further damaging the transmission has been reduced. The vehicle may be shifted manually.
If the initial problem is intermittent or seldom, switching the engine OFF/ON might allow normal operation again until the problem reoccurs.

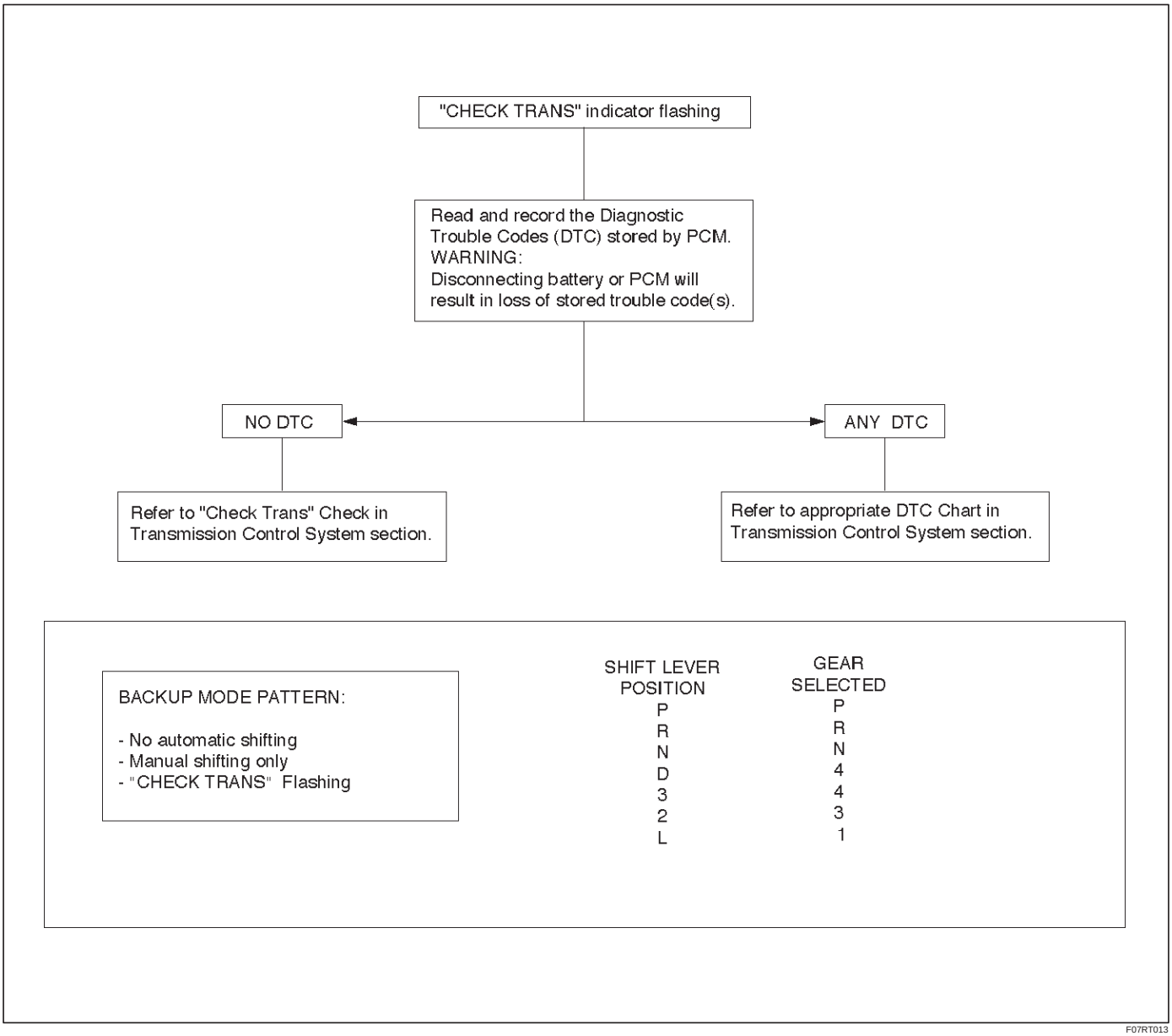

F07RT013

Mechanical / Hydraulic Diagnosis Symptoms Index

Perform Preliminary Inspection First!

CHART	SYMPTOMS
1	NO ENGINE START IN NEUTRAL OR PARK
2	NO FORWARD GEARS IN ANY RANGE/NO REVERSE
3	NO ENGINE BRAKE IN ANY RANGE
4	POOR SHIFTING IN ALL GEARS (ALL HARSH OR ALL SOFT)
5a	DELAYS IN DRIVE AND REVERSE
5b	DELAYS IN REVERSE ONLY
6	DIAGNOSTIC TROUBLE CODE (DTC) P0730
7	HARSH 1–2 SHIFT
8	HARSH 3–4 SHIFT
9a	3–2 DOWNSHIFT COMPLAINT
9b	HARSH SHIFT WHEN SHIFTING INTO “D” OR ACCELERATING FROM STOP
9c	COASTDOWN HARSH SHIFT OR CLUNK AT 3–2 DOWNSHIFT
10	INTERMITTENT 4TH TO 2ND GEAR DOWNSHIFT AT STEADY SPEED
11	ENGINE FLARE AT SHIFTING DURING TURNING ONLY (USUALLY WITH WARM ENGINE)
12	ENGINE FLARE DURING 1–2 OR 2–3 SHIFT
13	SHUDDER ONLY DURING TORQUE CONVERTER CLUTCH (TCC) APPLYING
14	POSSIBLE CAUSES OF TRANSMISSION NOISE
15a	POSSIBLE CAUSES OF LOW LINE PRESSURE
15b	POSSIBLE CAUSES OF HIGH LINE PRESSURE
16	POSSIBLE CAUSES OF TRANSMISSION FLUID LEAKS

NOTE: Numbers with parenthesis on the following charts refer to Parts List at end of this section.

Chart 1: No Engine Start In Neutral Or Park

Step	Action	Yes	No
1	Does engine start when shift lever moved from drive to neutral mostly in hot condition?	Go to Step 2	Go to Step 3
2	Does engine start in park at any condition?	Re–test vehicle	Go to Step 4
3	Does engine also not start in neutral when shift lever moved from park to neutral?	Go to Step 4	Go to Step 5
4	Check mode switch (63) setting. Readjust if necessary. Problems fixed?	Re–test vehicle	Go to Step 5
5	Check start circuit of mode switch (63) open in neutral. Was open found?	Locate and repair open(s)	Replace mode switch (63)

Chart 2: No Forward Gears In Any Range/No Reverse

Step	Action	Yes	No
1	Check line pressure. Refer to Line Pressure Test in this section. Was line pressure normal?	Go to Step 2	Use Chart 15a: Possible Causes of Low Line Pressure in this section
2	1. Check internal linkage: – Manual linkage (58) not moving manual valve (326). 2. Check for internal mechanical damage: – Turbine shaft (506) broken loose. – Overrun roller clutch (516) broken loose. Was the problem found?	Repair or replace	—

Chart 3: No Engine Brake In Any Range

Step	Action	Yes	No
1	Check line pressure. Refer to Line Pressure Test in this section. Was line pressure normal?	Go to Step 2	Use Chart 15a: Possible Causes of Low Line Pressure in this section
2	1. Check for overrun clutch leaks caused by: – Damaged piston lip (513) – Check ball defective (504) 2. Check for overrun lockout valve (705) stuck by foreign material. 3. Check for leaks at turbine shaft (506) caused by: – Teflon seal rings damaged (508) – Excessive wear of turbine shaft bearing surfaces. Was the problem found?	Repair or replace	—

Chart 4: Poor Shifting In All Gears (All Harsh Or All Soft)

Step	Action	Yes	No
1	Check line pressure. Refer to Line Pressure Test in this section. Was line pressure normal?	Go to Step 2	Go to Step 3
2	1. Check for these conditions which could affect clutch apply time: – Defective band apply solenoid (323). – Defective servo or/and accumulator piston. – Excessive clutch piston travel. 2. Check of possible causes of internal leaks: – Cut or damaged sealing ring(s) – Damaged sealing gasket(s) – Check ball missing or out of location in 2nd and 3rd clutch pistons. 3. Check for caused of burned clutch plates or band. Was the problem found?	Repair or replace	—
3	Was the line pressure high?	Go to Step 4	Use Chart 15a: Possible Causes of Low Line Pressure in this section
4	Were DTCs P0560 and P0705 set?	Diagnose those DTC(s) first	Use Chart 15b: Possible Causes of High Line Pressure in this section

Chart 5a: Delays In Drive And Reverse

NOTE: A short delay (less than 3 seconds) when first engaging drive or reverse after allowing vehicle to sit overnight is normal.

Step	Action	Yes	No
1	Check line pressure. Refer to Line Pressure Test in this section. Was line pressure normal?	More than 3 second delay in drive and reverse with engine off 1 hour or less. Teflon seals (508) on turbine shaft damaged. Repair	Use Chart 15a: Possible Causes of Low Line Pressure in this section.

Chart 5b: Delays In Reverse Only

Step	Action	Yes	No
1	Check line pressure. Refer to Line Pressure Test in this section. Was line pressure normal?	Go to Step 2	Use Chart 15a: Possible Causes of Low Line Pressure in this section.
2	Main case valve body gasket (88) damaged. – Reverse check ball (85) in valve body (84) missing or out of location. – Check for restrictions at valve body transfer plate orifice. Was the problem found?	Repair	—

Chart 6: Diagnostic Trouble Code (DTC) P0730

Step	Action	Yes	No
1	Check line pressure. Refer to Line Pressure Test in this section. Was line pressure normal?	Go to Step 2	Use Chart 15b: Possible Causes of High Line Pressure in this section
2	1. 1st and 2nd gear missing or 3rd and 4th gear missing. Check appropriate shift valve. If OK replace solenoid. 2. No engine brake in any range (All ranges in Drive and Reverse are OK). Check for suspected conditions modifying delays to clutch apply: – Overrun clutch seal damaged. – Excessive overrun clutch piston travel. – Defective 3–4 accumulator piston. – Causes of internal leaks. – Causes of burned clutch plates. 3. 1st and 4th gear missing or 2nd and 3rd gear missing. Shift solenoid A stuck. Replace shift solenoid A. 4. DTC P0730 is set in D range 1st gear above 3500 rpm. Go to Step 3. 5. DTC P0730 is set in D range 3rd gear between 55-80 mph. NOTE: Perform this test within safe and legal limits. Check for suspected conditions modifying delays to clutch apply: – 4th clutch seal damaged. – Excessive 4th clutch piston travel. – Defective 3–4 accumulator piston. – Causes of internal leaks. – Causes of burned clutch plates. Was the problem found?	Repair or replace	—
3	Check 3rd gear in “D” in winter mode. Does vehicle move?	Shift solenoid A stuck. Replace shift solenoid A.	Go to Step 4
4	Check for suspected conditions modifying delays to clutch apply: – 2nd clutch seal damaged. – Excessive 2nd clutch piston travel. – Defective accumulator piston. – Causes of internal leaks. – Check ball missing or out of location in 2nd clutch. – Seals cut, damaged or missing. – Gaskets defective. – Causes of burned clutch plates. Was the problem found?	Repair or replace	—

Chart 7: Harsh 1–2 Shift

Step	Action	Yes	No
1	Check line pressure. Refer to Line Pressure Test in this section. Was line pressure normal?	Check for 1–2 accumulator valve (320) stuck by foreign material in main case valve body.	Use Chart 15b: Possible Causes of High Line Pressure in this section.

Chart 8: Harsh 3–4 Shift

Step	Action	Yes	No
1	Check line pressure. Refer to Line Pressure Test in this section. Was line pressure normal?	Go to Step 2	Use Chart 15b: Possible Causes of High Line Pressure in this section
2	1. Check for 3–4 accumulator valve (407) stuck in adapter case valve body (401). 2. Check for 3–4 accumulator piston (18) stuck in adapter case (20). Was the problem found?	Repair or replace	—

Chart 9a: 3–2 Downshift Complaint

Step	Action	Yes	No
1	Check line pressure. Refer to Line Pressure Test in this section. Was line pressure normal?	Go to Step 2	Use Chart 15a: Possible Causes of Low Line Pressure in this section
2	Does DTC P1850 set?	Diagnose P1850 first	Replace band apply solenoid (PWM) (323)

Chart 9b: Harsh Shift When Shifting Into “D” Or Accelerating From Stop

Step	Action	Yes	No
1	Check line pressure. Refer to Line Pressure Test in this section. Was line pressure normal?	Go to Step 2	Use Chart 15b: Possible Causes of High Line Pressure in this section
2	Does DTC P1850 set?	Diagnose P1850 first	Replace band apply solenoid (PWM) (323)

Chart 9c: Coastdown Harsh Shift Or Clunk At 3–2 Downshift

Step	Action	Yes	No
1	Check line pressure. Refer to Line Pressure Test in this section. Was line pressure normal?	Go to Step 2	Use Chart 15b: Possible Causes of High Line Pressure in this section
2	Does DTC P1850 set?	Diagnose P1850 first	Replace band apply solenoid (PWM) (323)

Chart 10: Intermittent 4TH TO 2ND Gear Downshift At Steady Speed

Step	Action	Yes	No
1	Check for consistent speed sensor reading with scan tool. Was the reading correct?	Replace mode switch for intermittent contact.	Go to Step 2
2	1. Check for wiring harness damage or short to ground. If OK, go to (2). 2. Check transmission speed sensor connections. If OK, go to (3). 3. Replace transmission speed sensor. Was the replacement complete?	—	Replace speed sensor.

Chart 11: Engine Flare At Shifting During Turning Only (Usually With Warm Engine)

Step	Action	Yes	No
1	Check for oil leaks at transmission. Was the problem found?	Replace transmission oil filter and gasket	—

Chart 12: Engine Flare During 1–2 Or 2–3 Shift

Step	Action	Yes	No
1	Check line pressure. Refer to Line Pressure Test in this section. Was line pressure normal?	Go to Step 2	Use Chart 15a: Possible Causes of Low Line Pressure in this section
2	1. Check for a stuck 1–2 accumulator valve (320). 2. Check for servo piston (106) leaks. 3. Check for a stuck band apply solenoid (323). Was line pressure normal?	Repair or replace	—

Chart 13: Shudder Only During Torque Converter Clutch (TCC) Applying

Step	Action	Yes	No
1	1. TCC shudder is one of the most commonly misdiagnosed conditions in an automatic transmission. The key to diagnosing TCC shudder is to note when it happens and under what conditions. Once the TCC has been fully applied, it is nearly impossible to make it shudder. TCC shudder (short burst of noise normally less than 1 second) will only occur during clutch applying. It is not a steady state condition. 2. Drive until whole drivetrain is at normal operating temperature. – On 4WD vehicles, the test must be performed with transfer case selector lever in “2H” position. – Shudder is a short burst of noise normally less than 1 second in duration, and can be induced by the following maneuver: 3. From coast condition at 50 mph in “D” range (Normal mode), depress the throttle to 1/4-1/3 throttle. If present, shudder will occur within 5 seconds together with TCC application.(The scan tool may be used to determine the exact time of TCC applying) Was the problem found?	Replace transmission fluid and filter (remove both pans) and flush cooler lines. Replace converter assembly and O-ring on turbine shaft	Perform mechanical inspection of other drivetrain components.

Chart 14: Possible Causes Of Transmission Noise

CAUTION: Before checking transmission for what is believed to be transmission noise, ensure presence and positioning of insulating plugs, pads etc. Also make sure that noise does not come from other drivetrain components.

Condition	Possible cause	Correction
Whine or Buzz	Oil level low	Fill with ATF, check for external leaks.
	Plugged or restricted oil filter	Inspect oil filter. Replace oil filter or ATF as necessary.
	Damaged oil filter gasket	Replace oil filter gasket.
Knocking noise from front of transmission.	Loose bolts (Converter to flex plate)	Tighten to specifications.
	Cracked or broken flex plate	Replace flex plate.
	Converter damaged	Replace converter.
Knocking noise while driving, mostly on acceleration.	Transmission mount loose or broken	Tighten mount bolts or replace transmission mount.
	Cooler line mounts loose or broken	Tighten or replace cooler line mounts.
	Cooler lines touching body or frame	Repair or replace as necessary.
Knocking noise when vehicle is stationary.	Loose flex plate mounting bolts	Tighten to specifications.
	Cracked or broken flex plate	Replace flex plate.
	Damaged converter	Replace converter.

Chart 15a: Possible Causes of Low Line Pressure

Step	Action	Yes	No
1	Check oil level. Was the problem found?	Fill with ATF	Go to Step 2
2	Check for defective throttle position sensor. Was the problem found?	Replace throttle position sensor	Go to Step 3
3	Check for plugged, loose, or damaged oil filter (79). Was the problem found?	Inspect oil filter, tighten bolts or replace oil filter (79)	Go to Step 4
4	Check for a stuck force motor plunger (404). (Adapter case valve body) Was the problem found?	Replace force motor plunger (404)	Go to Step 5
5	Check for a stuck feed limit valve (412). (Adapter case valve body) Was the problem found?	Replace feed limit valve (412)	Go to Step 6
6	Check for loose converter bolts (4 & 5). Was the problem found?	Tighten converter bolts (4 & 5)	Go to Step 7
7	Check for a stuck pressure regulator valve (208). (Oil pump) Was the problem found?	Replace pressure regulator valve (208)	Go to Step 8
8	Check for a stuck boost valve (205).(Oil pump) Was the problem found?	Replace boost valve (205)	Go to Step 9
9	Check for blocked intermediate oil passages to pressure regulator valve. (Oil pump) Was the problem found?	Replace oil pump	Go to Step 10
10	Check for defective oil pump (9, 201, 202 & 209). Was the problem found?	Replace oil pump	Go to Step 11
11	Check for internal leaks. – Check balls missing or out of location in valve bodies – Seals cut or damaged – Gaskets defective, etc. Was the problem found?	Install balls, or correct ball location Replace seals Replace gaskets	—

Chart 15b: Possible Causes Of High Line Pressure

NOTE: If transmission is operating in backup mode, high line pressure will be present.

Step	Action	Yes	No
1	Check for defective throttle position sensor. Was the problem found?	Replace throttle position sensor.	Go to Step 2.
2	Check for a stuck force motor plunger (404). (Open circuit/intermittent) (Adapter case valve body) Was the problem found?	Replace force motor plunger (404)	Go to Step 3
3	Check for a stuck feed limit valve (412). (Adapter case valve body) Was the problem found?	Replace force motor plunger (412)	Go to Step 4
4	Check converter bolts (4 & 5). Was the problem found?	Tighten converter bolts (4 & 5)	Go to Step 5
5	Check for a stuck pressure regulator valve (208). (Oil pump) Was the problem found?	Replace pressure regulator valve (208)	Go to Step 6
6	Check for a stuck boost valve (205). (Oil pump) Was the problem found?	Replace boost valve (205)	Go to Step 7
7	Check for internal leaks. – Check balls missing or out of location in valve bodies – Seals cut or missing – Gaskets defective, etc. Was the problem found?	Install balls, or correct ball location Replace seals Replace gaskets	—

Chart 16: Possible Causes Of Transmission Fluid Leaks

Before attempting to correct an oil leak, the actual source of the leak must be determined. In many cases, the source of the leak may be difficult to determine due to “wind flow” around the engine and transmission.
The suspected area should be wiped clean before inspecting for the source of the leak.

Oil leaks around the engine and transmission are generally carried toward the rear of the vehicle by the air stream. In determining the source of an leak, the following two checks should be made:

1. With the engine running, check for external line pressure leaks.
2. With the engine off, check for oil leaks due to the raised oil level caused by drainback of converter oil into the transmission.

Possible Causes Of Fluid Leaks Due To Sealing Malfunction

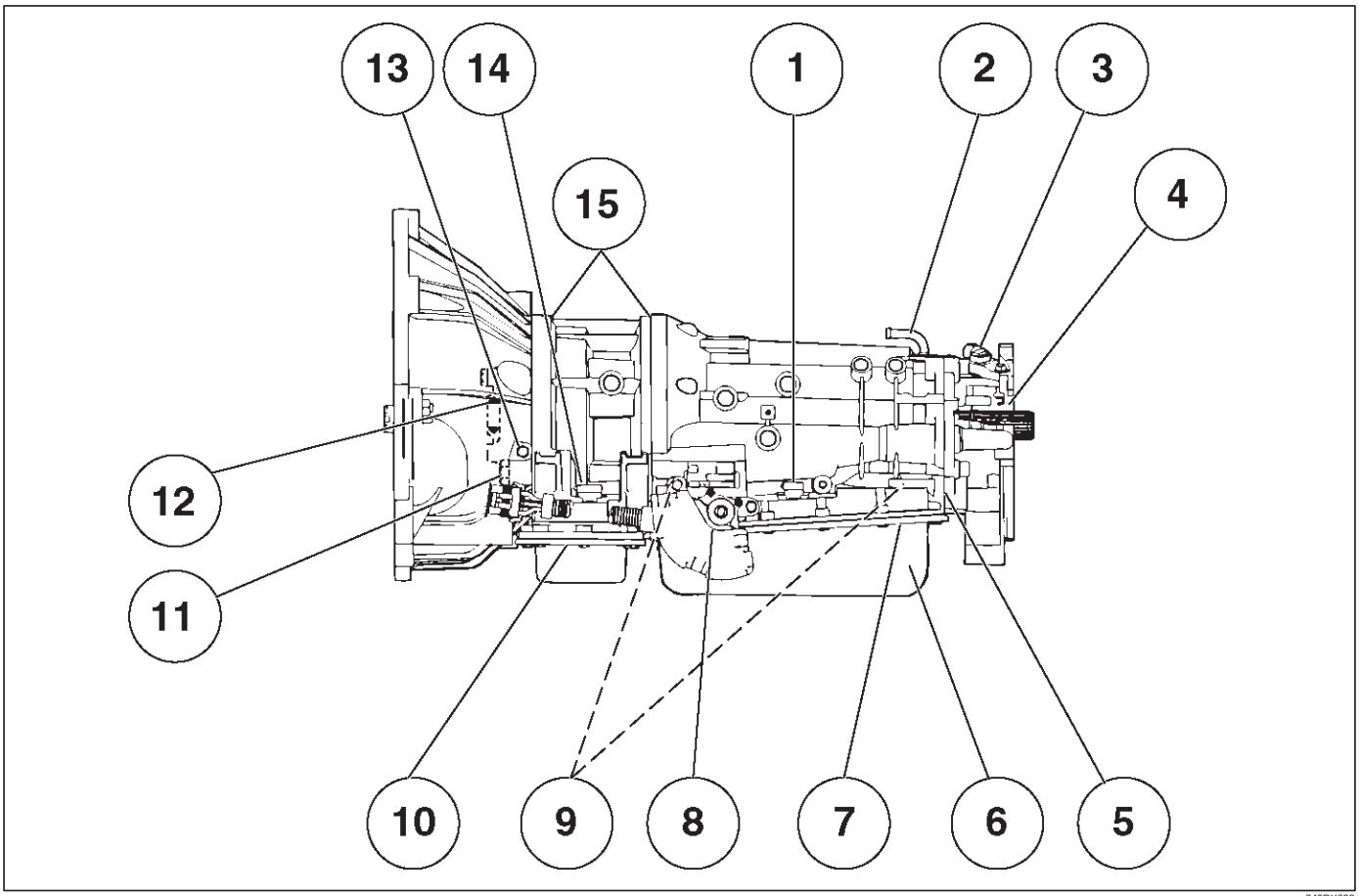

240RX008

Legend

(1) Electrical Connector (Main Case) Seal
(2) Transmission Vent (Breather)
(3) Speed Sensor O–Ring
(4) Extension (Adapter) Lip Seal
(5) Extension (Adapter) to Main Case Gasket
(6) Overfill and Oil Drain Screws Gasket
(7) Oil Pan Gasket (Main Case)
(8) Selector Shaft Seal
(9) Oil Cooler Connectors (2)
(10) Oil Pan Gasket (Adapter Case)
(11) Converter housing attaching bolts not correctly torqued
(12) Converter Housing Lip Seal
(13) Line Pressure Tap Plug
(14) Electrical Connector (Adapter Case) Seal
(15) Adapter Case Seal Rings (2)

Stall Test

The stall test allows you to check the transmission for internal abrasion and the one way clutch for slippage. Torque converter performance can also be evaluated.
The stall test results together with the road test results will identify transmission components requiring servicing or adjustment.

Stall Test Procedure:

1. Check the level of the engine coolant, the engine oil, and the automatic transmission fluid. Replenish if necessary.
2. Block the wheels and set the parking brake.
3. Connect a tachometer to the engine.
4. Start the engine and allow it to idle until the engine coolant temperature reaches 70 – 80˚C (158 – 176˚F).
5. Hold the brake pedal down as far as it will go.
6. Place the selector in the “D” range.
7. Gradually push the accelerator pedal to the floor.
   The throttle valve will be fully open.
   Note the engine speed at which the tachometer needle stabilizes.

Stall Speed : 2,100 ±150 rpm

NOTE: Do not continuously run this test longer than 5 seconds.

8. Release the accelerator pedal.
9. Place the selector in the “N” range.
10. Run the engine at 1,200 rpm for one minute.
    This will cool the transmission fluid.
11. Repeat Steps 7 – 10 for the “3”, “2”, “L” and “R” ranges.

Line Pressure Test

The line pressure test checks oil pump and control valve pressure regulator valve function. It will also detect oil leakage.

Line Pressure Test Procedure:

1. Check the level of the engine coolant, the engine oil, and the automatic transmission fluid.
   Replenish if required.
2. Block the wheels and set the parking brake.
3. Remove the pressure detection plug at the left side of the transmission case.
   Set 5–8840–0004–0 pressure gauge and adapter to the pressure detection plug hole.

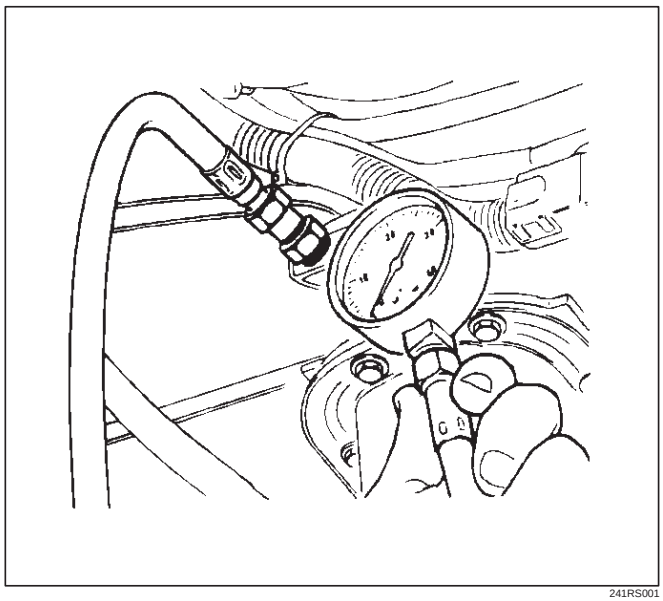

241RS001

4. Start the engine and allow it to idle until the engine coolant temperature reaches 70 – 80˚C (158 – 176˚F).
5. Hold the brake pedal down as far as it will go.
6. Place the selector in the “D” range.
7. Note the pressure gauge reading with the engine idling.
8. Gradually push the accelerator pedal to the floor. The throttle valve will be fully open.
   Note the pressure gauge reading with the accelerator pedal fully depressed.

NOTE: Do not continuously run this test longer than 5 seconds.

9. Release the accelerator pedal.
10. Place the selector in the “N” range.
11. Run the engine at 1,200 rpm for one minute.
    This will cool the transmission fluid.
12. Repeat Steps 7 – 11 for the “3”, “2”, “L”, and “R” ranges.
13. Install a pressure detection plug to the transmission case, applying recommended thread locking agent (LOCTITE 242) or its equivalent to thread of plug. Make sure that thread is cleaned before applying locking agents.
14. Tighten the pressure detection plug to the specified torque.

Torque: 9 – 14N·m (0.9 – 1.4 kg·m/7 – 10 lb ft)

MODE	LEVER POSITION	ENGINE SPEED	LINE PRESSURE		FORCE MOTOR CURRENT
			kPa	PSI	
NORMAL/POWER	D,3,2,L	IDLE	312–363	45.2–52.6	VARIABLE
WINTER	D	IDLE	312 – 363	45.2 – 52.6	0.9 – 1.0A
NORMAL/POWER WINTER	REVERSE	IDLE	419 – 486	60.7 – 70.5	0.9 – 1.0A
NORMAL/POWER	D, 3, 2, L	STALL SPEED	1,236 – 1,320	179.3 – 191.4	0.1 – 0.2A
WINTER	D	STALL SPEED	1,236 – 1,320	179.3 – 191.4	0.1 – 0.2A
NORMAL/POWER WINTER	REVERSE	STALL SPEED	1,634 – 1,743	236.9 – 252.8	0.1 – 0.2A

Shift Speed Chart (V6 3.2L 6VD1 Model)

Transfer gear ratio:	High: 1.000
Rear axle ratio:	4.555

“Normal mode”

Upshift

Range	Throttle opening	1 → 2 (First Gear) (Second Gear) Km/h (mph)	2 → 3 (Second Gear) (Third Gear) Km/h (mph)	3 → 4 (Third Gear) (Fourth Gear) Km/h (mph)
D (Drive)	Fully opened	37 ~ 43 (23 ~ 27)	76 ~ 82 (47 ~ 51)	125 ~ 131 (78 ~ 81)
	Half throttle	29 ~ 35 (18 ~ 22)	54 ~ 60 (34 ~ 37)	107 ~ 113 (66 ~ 70)
3 (Third)	Fully opened	37 ~ 43 (23 ~ 27)	76 ~ 82 (47 ~ 51)	—
	Half throttle	29 ~ 35 (18 ~ 22)	54 ~ 60 (34 ~ 37)	—
2 (Second)	Fully opened	37 ~ 43 (23 ~ 27)	—	—
	Half throttle	29 ~ 35 (18 ~ 22)	—	—

Downshift

Range	Throttle opening	1 ← 2 (First Gear) (Second Gear) Km/h (mph)	2 ← 3 (Second Gear) (Third Gear) Km/h (mph)	3 ← 4 (Third Gear) (Fourth Gear) Km/h (mph)
D (Drive)	Fully opened	14 ~ 20 (9 ~ 12)	69 ~ 75 (43 ~ 47)	107 ~ 113 (66 ~ 70)
	Half throttle	13 ~ 19 (8 ~ 12)	30 ~ 36 (19 ~ 22)	61 ~ 67 (38 ~ 42)
	Fully closed	12 ~ 18 (7 ~ 11)	20 ~ 26 (12 ~ 16)	27 ~ 33 (17 ~ 20)
3 (Third)	Fully opened	14 ~ 20 (9 ~ 12)	69 ~ 75 (43 ~ 47)	—
	Half throttle	13 ~ 19 (8 ~ 12)	30 ~ 36 (19 ~ 22)	—
	Fully closed	12 ~ 18 (7 ~ 11)	20 ~ 26 (12 ~ 16)	—
2 (Second)	Fully opened	14 ~ 20 (9 ~ 12)	82 ~ 88 (51 ~ 55)	—
	Half throttle	13 ~ 19 (8 ~ 12)	82 ~ 88 (51 ~ 55)	—
	Fully closed	12 ~ 18 (7 ~ 11)	82 ~ 88 (51 ~ 55)	—
L (First)	—	36 ~ 42 (22 ~ 26)	—	—

“Power mode”

Upshift

Range	Throttle opening	1 → 2 (First Gear) (Second Gear) Km/h (mph)	2 → 3 (Second Gear) (Third Gear) Km/h (mph)	3 → 4 (Third Gear) (Fourth Gear) Km/h (mph)
D (Drive)	Fully opened	41 ~ 47 (25 ~ 29)	79 ~ 85 (49 ~ 53)	125 ~ 131 (78 ~ 81)
	Half throttle	36 ~ 42 (22 ~ 26)	69 ~ 75 (43 ~ 47)	119 ~ 125 (74 ~ 78)
3 (Third)	Fully opened	41 ~ 47 (25 ~ 29)	79 ~ 85 (49 ~ 53)	—
	Half throttle	36 ~ 42 (22 ~ 26)	69 ~ 75 (43 ~ 47)	—
2 (Second)	Fully opened	41 ~ 47 (25 ~ 29)	—	—
	Half throttle	36 ~ 42 (22 ~ 26)	—	—

Downshift

Range	Throttle opening	1 ← 2 (First Gear) (Second Gear) Km/h (mph)	2 ← 3 (Second Gear) (Third Gear) Km/h (mph)	3 ← 4 (Third Gear) (Fourth Gear) Km/h (mph)
D (Drive)	Fully opened	28 ~ 34 (17 ~ 21)	70 ~ 76 (43 ~ 47)	115 ~ 121 (71 ~ 75)
	Half throttle	20 ~ 26 (12 ~ 16)	46 ~ 52 (29 ~ 32)	90 ~ 96 (56 ~ 60)
	Fully closed	12 ~ 18 (7 ~ 11)	22 ~ 28 (14 ~ 17)	43 ~ 50 (27 ~ 31)
3 (Third)	Fully opened	28 ~ 34 (17 ~ 21)	70 ~ 76 (43 ~ 47)	—
	Half throttle	20 ~ 26 (12 ~ 16)	46 ~ 52 (29 ~ 32)	—
	Fully closed	12 ~ 18 (7 ~ 11)	22 ~ 28 (14 ~ 17)	—
2 (Second)	Fully opened	28 ~ 34 (17 ~ 21)	82 ~ 88 (51 ~ 55)	—
	Half throttle	20 ~ 26 (12 ~ 16)	82 ~ 88 (51 ~ 55)	—
	Fully closed	12 ~ 18 (7 ~ 11)	82 ~ 88 (51 ~ 55)	—
L (First)	—	36 ~ 42 (22 ~ 26)	—	—

“Winter mode”

D range, winter mode ON → OFF	27 ~ 33 Km/h (17 ~ 20 mph)

Shift Speed Chart (V6 3.5L 6VE1 Model)

Transfer gear ratio:	High: 1.000
Rear axle ratio:	4.300

“Normal mode”

Upshift

Range	Throttle opening	1 → 2 (First Gear) (Second Gear) Km/h (mph)	2 → 3 (Second Gear) (Third Gear) Km/h (mph)	3 → 4 (Third Gear) (Fourth Gear) Km/h (mph)
D (Drive)	Fully opened	42 ~ 48 (26 ~ 30)	86 ~ 92 (54 ~ 58)	139 ~ 145 (87 ~ 91)
	Half throttle	29 ~ 35 (18 ~ 22)	58 ~ 64 (36 ~ 40)	113 ~ 118 (70 ~ 74)
3 (Third)	Fully opened	52 ~ 58 (33 ~ 36)	105 ~ 111 (66 ~ 69)	—
	Half throttle	32 ~ 38 (20 ~ 24)	58 ~ 64 (36 ~ 40)	—
2 (Second)	Fully opened	52 ~ 58 (33 ~ 36)	—	—
	Half throttle	32 ~ 38 (20 ~ 24)	—	—

Downshift

Range	Throttle opening	1 ← 2 (First Gear) (Second Gear) Km/h (mph)	2 ← 3 (Second Gear) (Third Gear) Km/h (mph)	3 ← 4 (Third Gear) (Fourth Gear) Km/h (mph)
D (Drive)	Fully opened	17 ~ 23 (11 ~ 14)	75 ~ 81 (47 ~ 51)	118 ~ 124 (74 ~ 78)
	Half throttle	23 ~ 29 (14 ~ 18)	32 ~ 38 (20 ~ 24)	65 ~ 71 (40 ~ 44)
	Fully closed	13 ~ 19 (8 ~ 12)	20 ~ 26 (12 ~ 16)	28 ~ 34 (17 ~ 21)
3 (Third)	Fully opened	42 ~ 48 (26 ~ 30)	92 ~ 98 (58 ~ 61)	—
	Half throttle	15 ~ 21 (9 ~ 13)	34 ~ 40 (21 ~ 25)	—
	Fully closed	13 ~ 19 (8 ~ 12)	15 ~ 21 (9 ~ 13)	—
2 (Second)	Fully opened	43 ~ 49 (27 ~ 31)	100 ~ 106 (63 ~ 66)	—
	Half throttle	15 ~ 21 (9 ~ 13)	94 ~ 100 (59 ~ 63)	—
	Fully closed	13 ~ 19 (8 ~ 12)	82 ~ 88 (51 ~ 55)	—
L (First)	—	50 ~ 56 (31 ~ 35)	—	—

“Power mode”

Upshift

Range	Throttle opening	1 → 2 (First Gear) (Second Gear) Km/h (mph)	2 → 3 (Second Gear) (Third Gear) Km/h (mph)	3 → 4 (Third Gear) (Fourth Gear) Km/h (mph)
D (Drive)	Fully opened	47 ~ 53 (29 ~ 33)	89 ~ 95 (56 ~ 59)	140 ~ 146 (88 ~ 91)
	Half throttle	37 ~ 43 (23 ~ 27)	73 ~ 79 (45 ~ 49)	126 ~ 132 (78 ~ 82)
3 (Third)	Fully opened	52 ~ 58 (33 ~ 36)	105 ~ 111 (66 ~ 69)	—
	Half throttle	37 ~ 43 (23 ~ 27)	74 ~ 80 (46 ~ 50)	—
2 (Second)	Fully opened	52 ~ 58 (33 ~ 36)	—	—
	Half throttle	37 ~ 43 (23 ~ 27)	—	—

Downshift

Range	Throttle opening	1 ← 2 (First Gear) (Second Gear) Km/h (mph)	2 ← 3 (Second Gear) (Third Gear) Km/h (mph)	3 ← 4 (Third Gear) (Fourth Gear) Km/h (mph)
D (Drive)	Fully opened	33 ~ 39 (21 ~ 24)	79 ~ 85 (49 ~ 52)	126 ~ 132 (79 ~ 82)
	Half throttle	21 ~ 27 (13 ~ 17)	50 ~ 56 (31 ~ 35)	94 ~ 100 (58 ~ 62)
	Fully closed	13 ~ 19 (8 ~ 12)	23 ~ 29 (14 ~ 18)	45 ~ 51 (28 ~ 32)
3 (Third)	Fully opened	43 ~ 49 (27 ~ 30)	96 ~ 102 (60 ~ 63)	—
	Half throttle	21 ~ 27 (13 ~ 17)	53 ~ 59 (33 ~ 37)	—
	Fully closed	13 ~ 19 (8 ~ 12)	24 ~ 30 (15 ~ 19)	—
2 (Second)	Fully opened	43 ~ 49 (27 ~ 30)	100 ~ 106 (63 ~ 66)	—
	Half throttle	21 ~ 27 (13 ~ 17)	94 ~ 100 (59 ~ 63)	—
	Fully closed	13 ~ 19 (8 ~ 12)	82 ~ 88 (51 ~ 55)	—
L (First)	—	53 ~ 59 (33 ~ 36)	—	—

“Winter mode”

D range, winter mode ON → OFF	31 ~ 37 Km/h (19 ~ 23 mph)

Lockup Speed Chart (V6 3.2L 6VD1 Model)

Transfer gear ratio:	High: 1.000
Rear axle ratio:	4.555

	Mode	Lockup ON			Lockup OFF		
		2nd Km/h (mph)	3rd Km/h (mph)	4th Km/h (mph)	2nd Km/h (mph)	3rd Km/h (mph)	4th Km/h (mph)
D range Throttle opening 6%	Normal	69 ~ 75 (43 ~ 47)	63 ~ 69 (39 ~ 43)	70 ~ 76 (43 ~ 47)	64 ~ 70 (40 ~ 43)	43 ~ 49 (27 ~ 30)	65 ~ 71 (40 ~ 44)
	Power	69 ~ 75 (43 ~ 47)	73 ~ 79 (45 ~ 49)	73 ~ 79 (45 ~ 49)	64 ~ 70 (40 ~ 43)	65 ~ 71 (40 ~ 44)	69 ~ 75 (43 ~ 47)

Lockup Speed Chart (V6 3.5L 6VE1 Model)

Transfer gear ratio:	High: 1.000
Rear axle ratio:	4.300

	Mode	Lockup ON			Lockup OFF		
		2nd Km/h (mph)	3rd Km/h (mph)	4th Km/h (mph)	2nd Km/h (mph)	3rd Km/h (mph)	4th Km/h (mph)
D range Throttle opening 6%	Normal	72 ~ 78 (45 ~ 48)	53 ~ 59 (33 ~ 37)	78 ~ 84 (48 ~ 52)	67 ~ 73 (42 ~ 45)	45 ~ 51 (28 ~ 32)	73 ~ 79 (45 ~ 49)
	Power	72 ~ 78 (45 ~ 48)	77 ~ 83 (48 ~ 52)	77 ~ 83 (48 ~ 52)	67 ~ 73 (42 ~ 45)	68 ~ 74 (42 ~ 46)	72 ~ 78 (45 ~ 48)

Changing Transmission Fluid

There is no need to change the transmission fluid unless the transmission is used under one or more of the following heavy duty conditions.

A. Repeated short trips

B. Driving on rough roads

C. Driving on dusty roads

D. Towing a trailer

If the vehicle is used under these conditions, change the fluid every 20,000 miles (32,000 km).
More over, the remaining life percentage of ATF can be estimated by using Tech 2 as an auxiliary tool to judge the right time for ATF replacement.
The remaining life percentage is calculated from ATF'S heat history. When it is close to 0%, ATF replacement is recommended.

1. Place a large drain pan under the oil pan.
2. Remove the transmission oil drain screw (2) and drain fluid.
3. Tighten drain screw (2).

   Torque: 38 N•m (3.9 kg·m/28 lb ft)

4. Remove the transmission overfill screw (1) and fill transmission through overfill screw opening, using DEXRON®–III ATF.

NOTE: Add transmission fluid until it flows out over the overfill screw opening.

5. Let engine idle until a fluid temperature between 32˚C (90˚F) and 57˚C (135˚F) is reached.
6. Add transmission fluid until it flows out over the overfill screw opening, then close the overfill screw (1).

   Torque: 38 N•m (3.9 kg·m/28 lb ft)

NOTE: To prevent fluid leaks, the overfill screw and oil drain screws gasket must be replaced each time these screws are removed.

NOTE: Check transmission fluid temperature with service scan tool.

7. Reset "Oil Life Monitor" data by using Tech 2.
   Refer to Tech 2 OBD II Connector in Transmission Control System (4L30-E) Section.

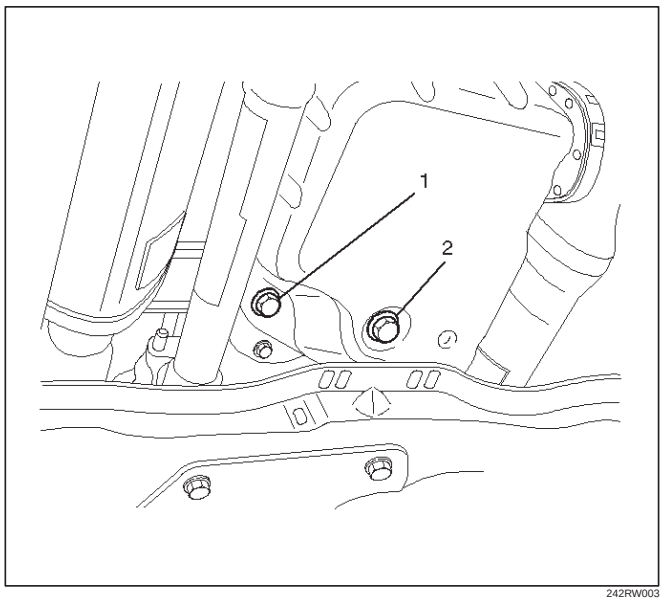

242RW003

Selector Lever

Inspection

1. Make sure that when the selector lever is shifted from "P" to "L", a "clicking" can be felt at each shift position. Make sure that the gear corresponds to that of the position plate indicator.
2. Check to see if the selector lever can be shifted as shown in illustration.

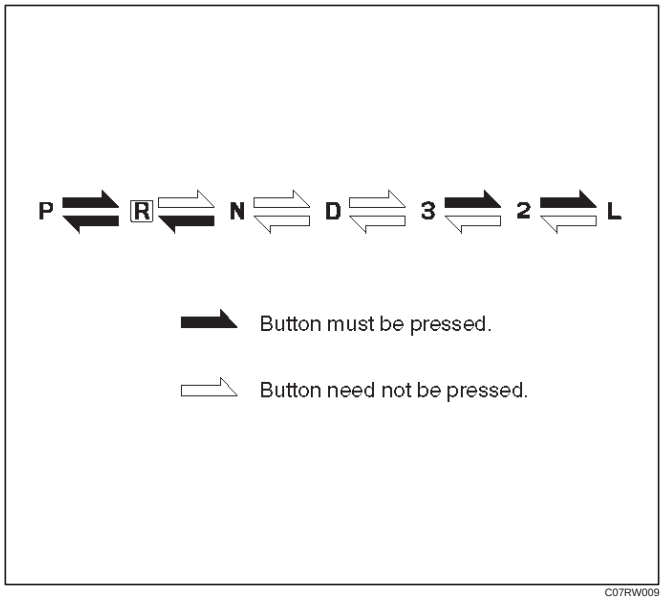

C07RW009

Removal

1. Disconnect battery ground cable.
2. Remove transfer control lever knob.
3. Remove front console.
   - Disconnect wiring harness connectors from front console.
4. Disconnect shift lock cable (1) from the selector lever assembly side.

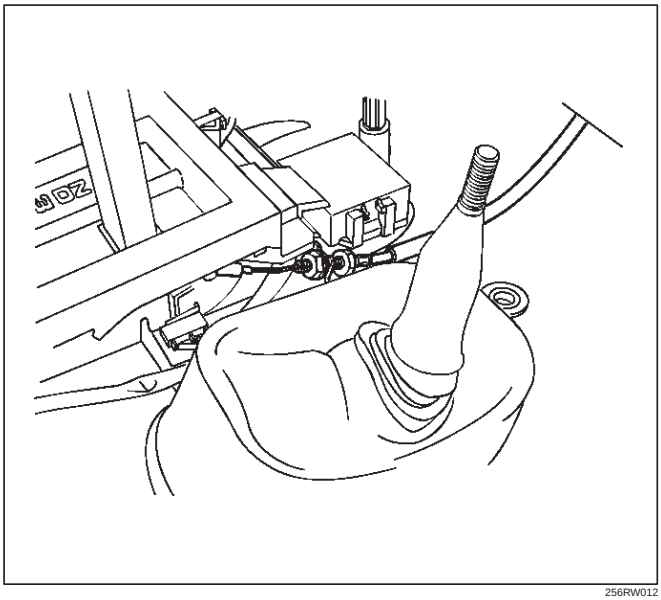

256RW012

5. Disconnect shift control rod (2) from the selector lever assembly side.

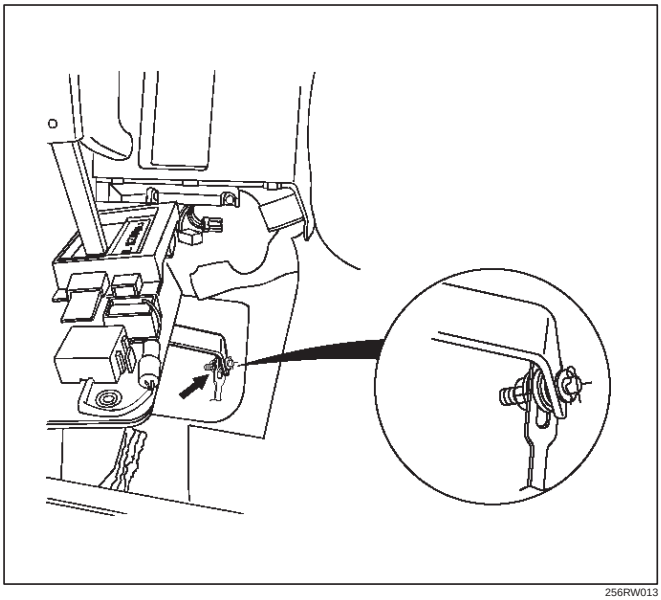

256RW013

6. Disconnect wiring harness connectors from the selector lever assembly.
7. Remove selector lever assembly.

Installation

To install, follow the removal steps in the reverse order, noting the following points:

Adjustment of select lever and control rod

1. Place the vehicle on a level surface.

NOTE: If the vehicle is not on level surface, the shift select cable set positions will vary with the movement of engine. To prevent possible misadjustment of the cable, the vehicle must be placed on a level surface.

2. Install the shift control rod (1) to the transmission select lever (2), and then place the lever in the “N” position.
3. Set select lever in the “N” position.
4. Push select lever forward (“R” position side) and secure it (using a rubber band (3), etc.) so that the pin comes into contact with the wall of the detent plate.
5. Install the shift control rod (1) to the selector lever arm (4).

   Torque: 32 N•m (3.3 kg·m/24 lb ft)

NOTE: Do not apply oil to the threaded portions.

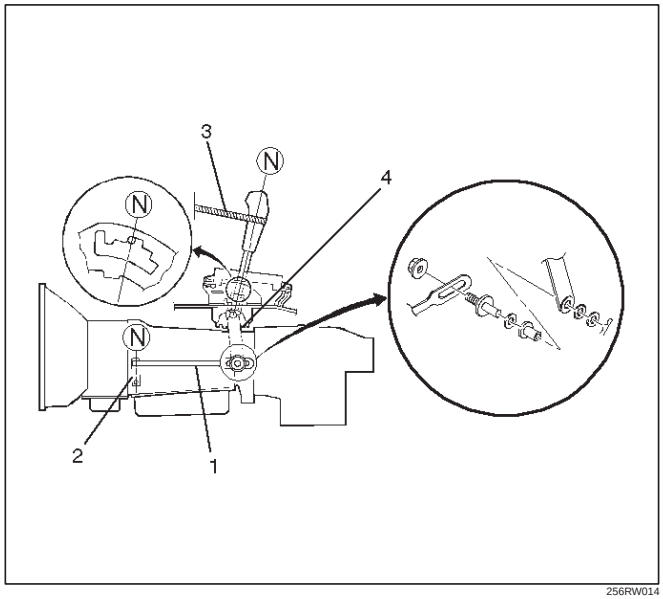

256RW014

6. After adjustment, make sure that the selector lever operates normally, and that each selector position is properly indicated. (The red mark shows through the window.)

Adjustment of shift lock cable

1. Set ignition key in “LOCK” position and selector lever in “P” position.
2. Adjust cable screw cap on selector lever side to provide a gap (slack for cable) of 1 – 2 mm between rod on steering lock side and stopper.

   Adjust cap as follows:

   a. Pull screw cap (1) in arrow direction to remove inner cable slack.
   b. With cable kept as (a), adjust gap between nut (2) and bracket to 5 mm (0.2 in).
   c. Lock inner cable by turning nut (3) while holding nut (2) in place.

   Torque : 3.7 N•m (38 kg·cm/33 lb in)

NOTE: Clean the cable threads, and do not apply oil to them.

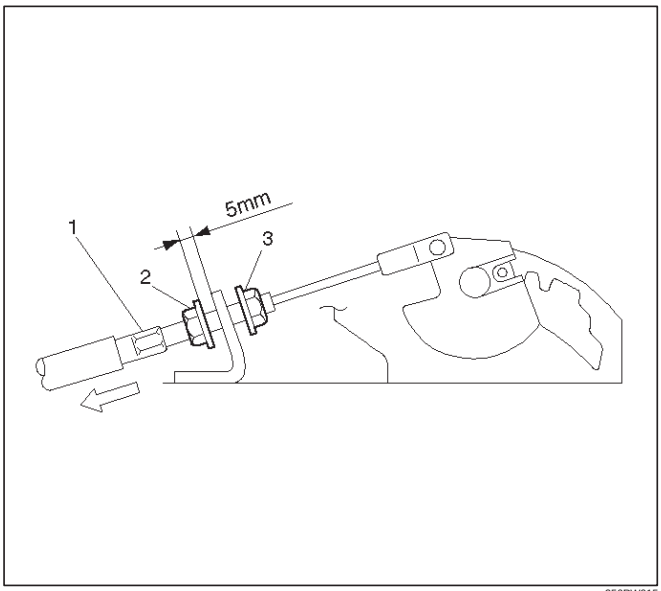

256RW015

3. Check the shift lock operation:
   a. Selector lever should not move out of “P” position with ignition key in “Lock” position.
   b. Selector lever can be moved out of “P” position with ignition key in “ON” position only when brake pedal is depressed.
   c. Ignition key can be turned to “LOCK” position only when selector lever is in “P” position (key can be pulled out).

   If (a) and (c) fail, readjust cable. If (b) fails, readjust connector wiring and brake pedal switch.

Mode Switch

Removal

1. Place selector lever in neutral.
2. Disconnect battery ground cable.
3. Remove mode switch cover (1).
4. Disconnect selector lever (2) from the mode switch.
5. Disconnect transmission harness from the mode switch connector (3).
6. Remove bracket with mode switch connector from the transmission case.
7. Remove mode switch connector (3) from the bracket (4).
8. Remove two mode switch bolts and nut then remove mode switch (5).

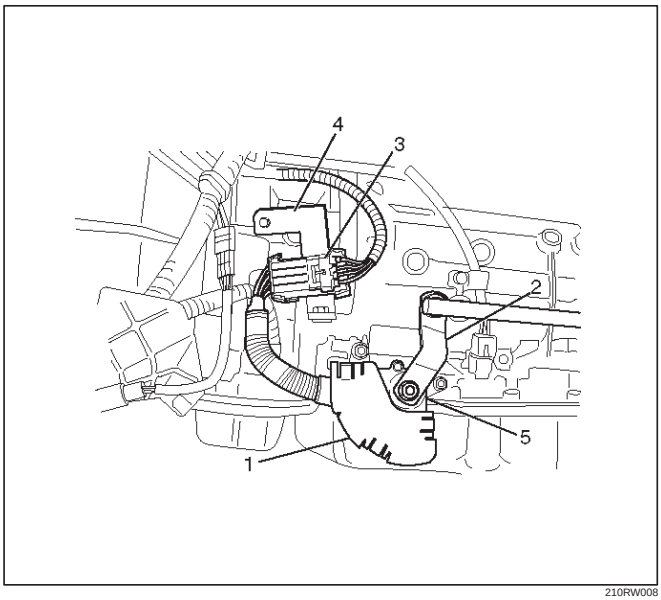

210RW008

Installation

To install, follow the removal steps in the reverse order, noting the following points;

1. Torque

   Mode switch bolt: 13 N•m (1.3 kg·m/113 lb in)

   Selector lever nut: 23 N•m (2.3 kg·m/17 lb ft)

2. Mode switch setting procedure

   Perform either of the following adjustment procedures:

   Procedure 1

   a. Place selector lever in neutral.
   b. Remove selector lever from the mode switch.
   c. Remove the mode switch cover.
   d. Loosen the two 10 mm screws.
   e. Rotate the mode switch until the slot in the mode switch housing aligns with the selector shaft bushing, and insert a 3/32 in. (2.4 mm) drill bit or punch (1) into the slot.
   f. Tighten the screws to 13 N·m (1.3 kg·m/113 lb in).
   g. After completing adjustment, snap the mode switch cover into place.

h. Reinstall the selector lever.

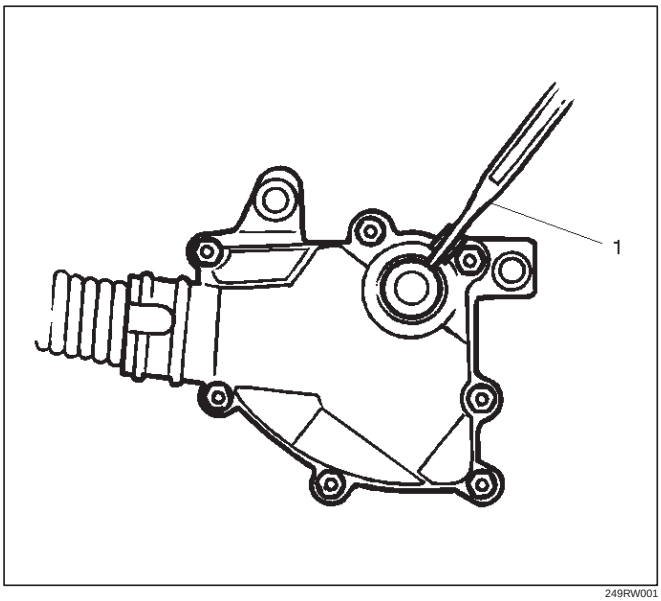

249RW001

Procedure 2

a. Place selector lever in neutral.
b. Disconnect transmission harness connector from mode switch connector.
c. Remove mode switch connector with bracket from the transmission case.
d. Connect multimeter (resistance mode) to terminals 1(E) and 4(H) on mode switch connector.
e. Loosen two mounting screws.
f. Rotate mode switch slightly in both directions to determine the range (approx. 5 degrees) of electrical contact.
g. Position mode switch in middle of contact range.
h. Tighten two mounting screws.
i. Remove multimeter and install mode switch harness connector with bracket to the transmission case.
j. Connect transmission harness connector to mode switch connector.

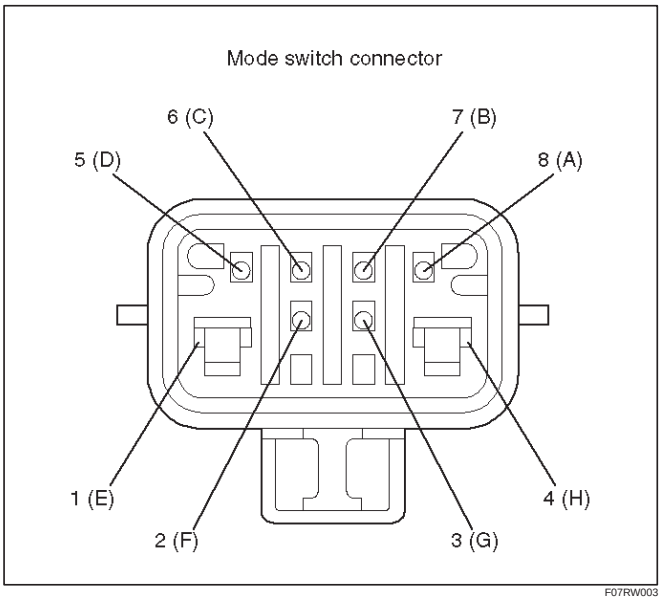

F07RW003

Transmission (With Transfer Case)

Transmission And Associated Parts

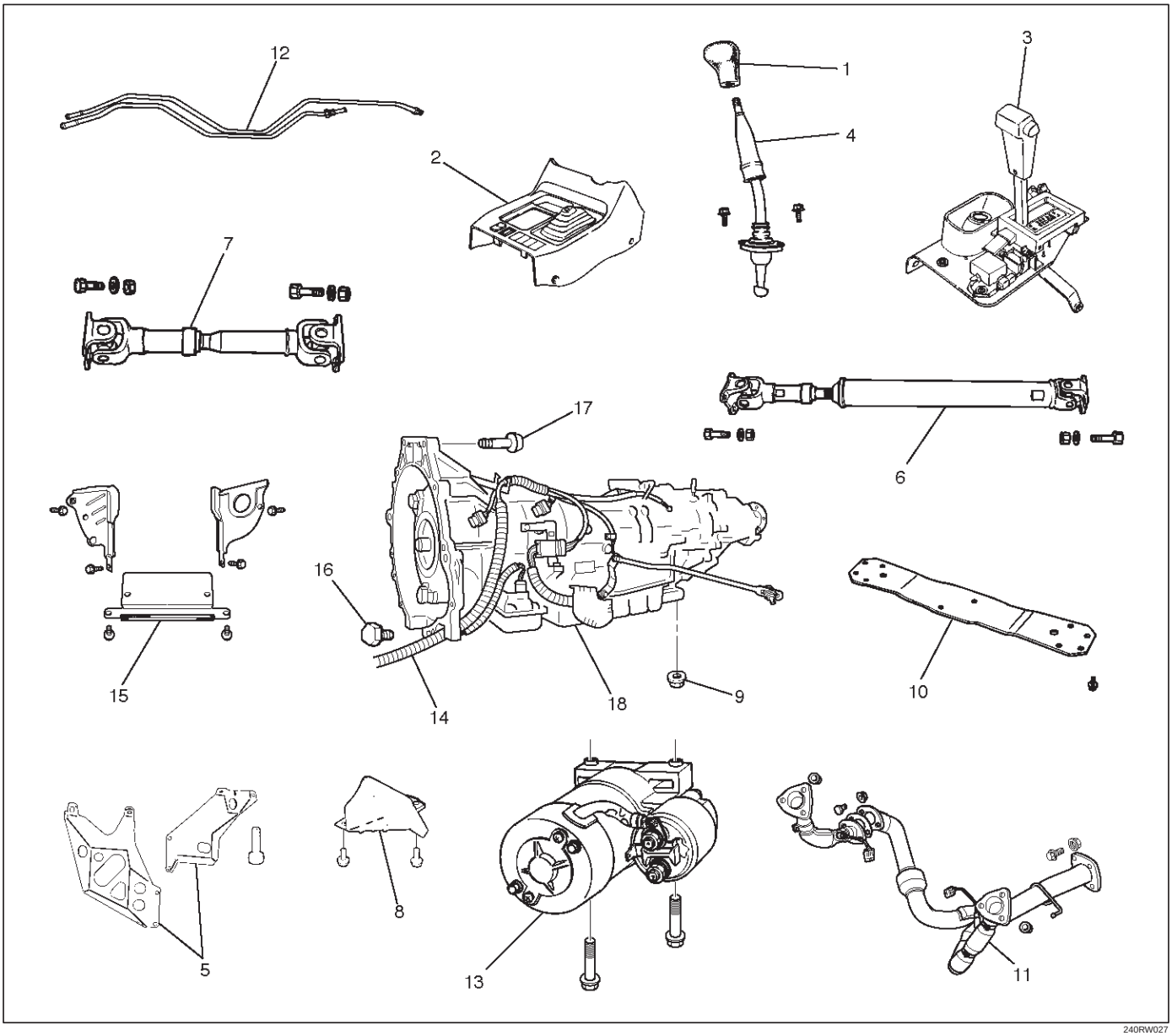

240RW027

Legend

(1) Transfer Control Lever Knob
(2) Front Console
(3) Selector Lever Assembly
(4) Transfer Control Lever
(5) Transfer and Exhaust Protector
(6) Rear Propeller Shaft
(7) Front Propeller Shaft
(8) Harness Protector
(9) Rear Mount Nut
(10) Third Crossmember
(11) Exhaust Pipe
(12) Transmission Oil Cooler Pipe
(13) Starter
(14) Transmission Harness Connector
(15) Under Cover
(16) Torque Converter Bolt
(17) Engine Transmission Bolt
(18) Transmission Assembly

Removal

NOTE: Before remove transmission and transfer assembly from vehicle, change the tansfer mode to 2WD using push button on dash panel.

1. Remove engine hood.
2. Disconnect battery ground cable.
3. Remove transfer control lever knob (1) and disconnect wiring harness connectors, then remove front console (2).

4. Disconnect shift lock cable from the selector lever assembly side.

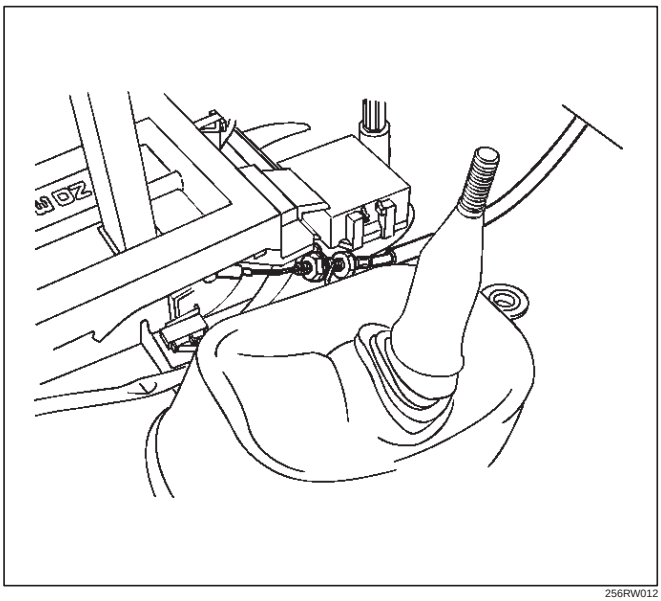

256RW012

5. Disconnect wiring harness connectors.
6. Disconnect shift control rod from the selector lever assembly side.

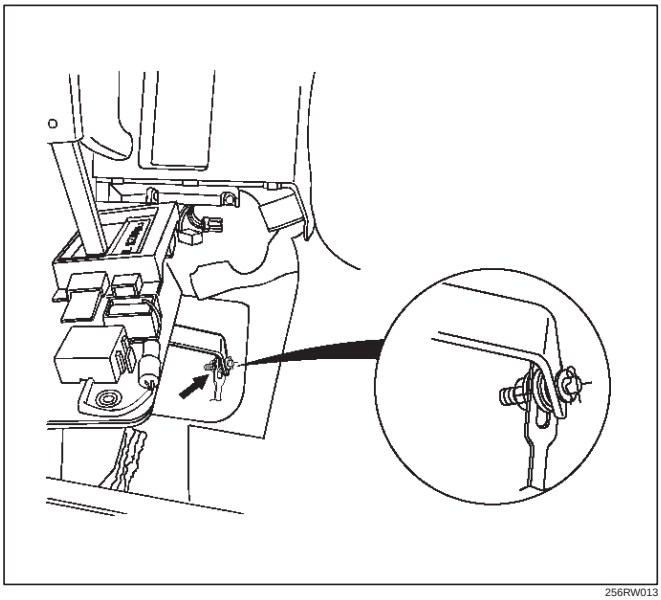

256RW013

7. Remove selector lever assembly (3).
8. Remove transfer control lever (4).
9. Remove transfer and exhaust protector (5).
10. Remove rear propeller shaft (6).
11. Remove front propeller shaft (7).
12. Remove harness protector (8).
13. Support transfer case with a jack and remove two rear mount nuts (9) from the 3rd crossmember side.
14. Remove eight third crossmember bolts and third crossmember (10).
15. Disconnect one oxygen sensor connector from the transmission harness.

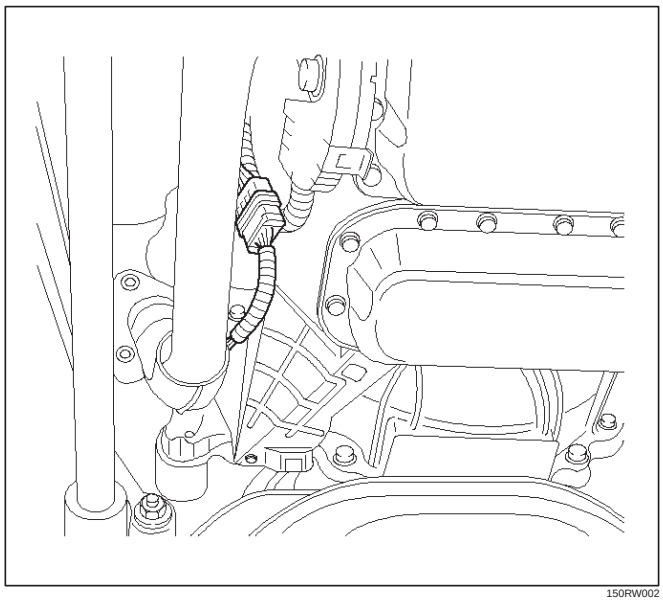

150RW002

16. Remove exhaust pipe (11).
17. Disconnect transmission oil cooler pipe (12) from A/T side.
18. Remove oil pipe clamp from torque converter housing bracket.

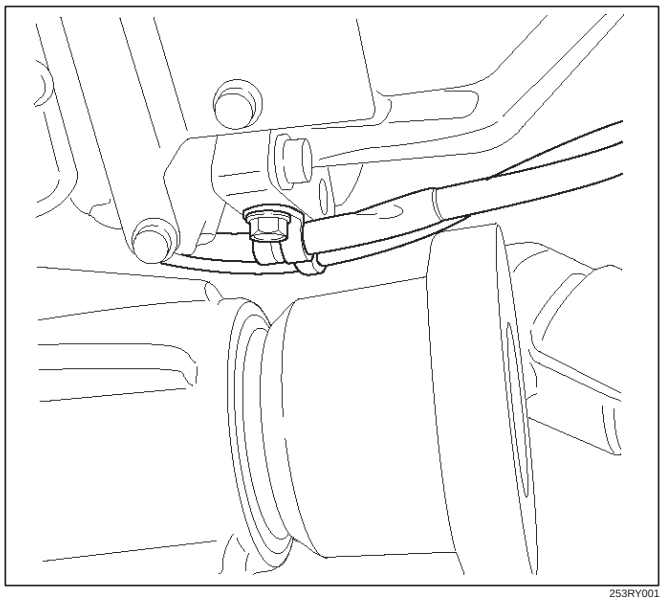

253RY001

19. Loosen oil pipe clamp bolt at the engine mount side.
20. Remove starter (13).
21. Disconnect fuel pipe clamp bracket from transmission side.
22. Disconnect transmission harness connectors (14) from transmission, and transfer.
23. Remove under covers (3 pieces) (15) from transmission case.
24. Lower the front of the transmission a little, then remove flex plate torque converter fixing bolts (6 pieces) (16) by turning crankshaft.
25. Support the transmission with a transmission jack, and hoist engine with a chain block.
26. Remove engine transmission fixing bolts (17).

27. Remove transmission assembly (18).

Installation

1. Slowly raise transmission jack until front of the transmission is aligned with rear of the engine, then install transmission assembly.
2. Tighten engine transmission bolts to the specified torque.

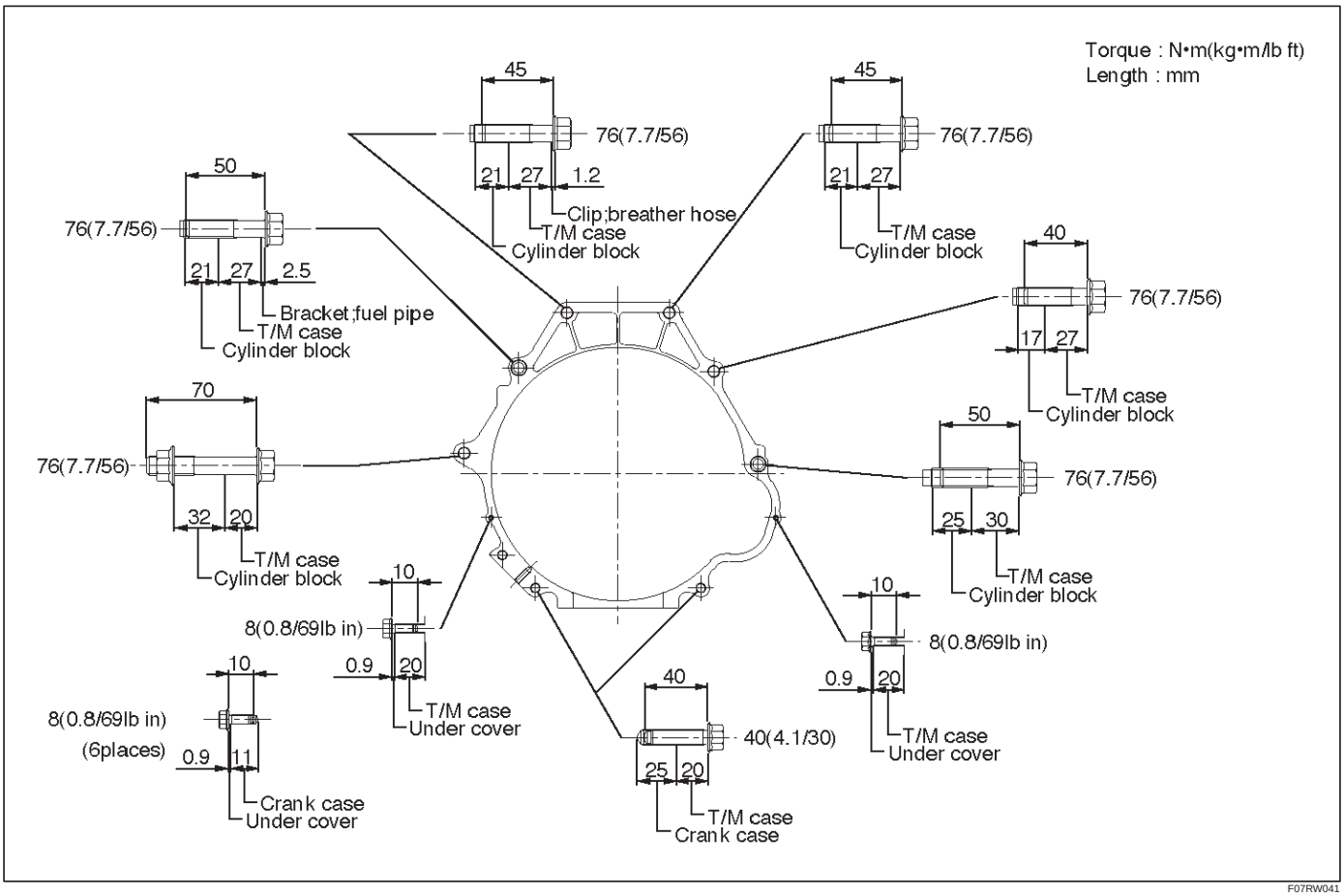

F07RW041

3. Support transfer case with a jack, and remove the transmission jack.
4. Install flex plate torque converter bolts (6 pieces) by turning crankshaft.

Torque: 54 N•m (5.5 kg·m/40 lb ft)

NOTE: Do not reuse the flex plate torque converter bolt.

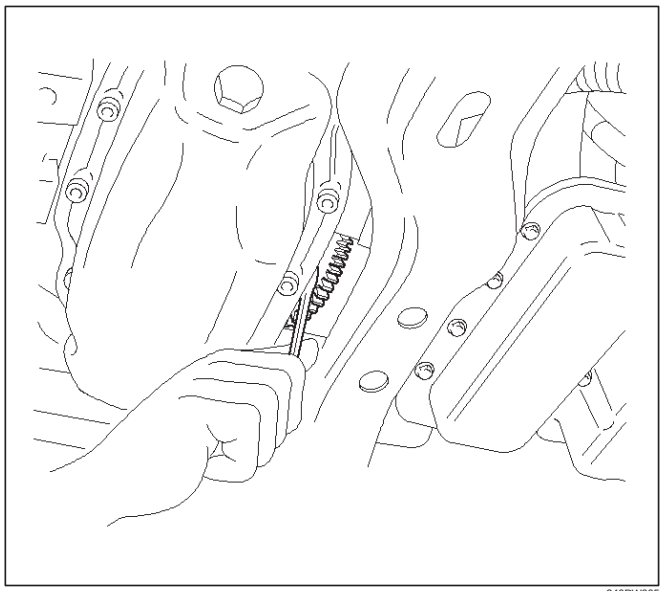

240RW005

5. Install the under cover (3 pieces), and tighten the bolts to the specified torque.

   Torque: 8 N•m (0.8 kg·m/69 lb in)

6. Install the starter, and tighten the bolts to the specified torque.

   Torque: 40 N•m (4.1 kg·m/30 lb ft)

7. Connect transmission harness connectors to transmission, and transfer.
8. Connect fuel pipe bracket to transmission side.

For 4×4

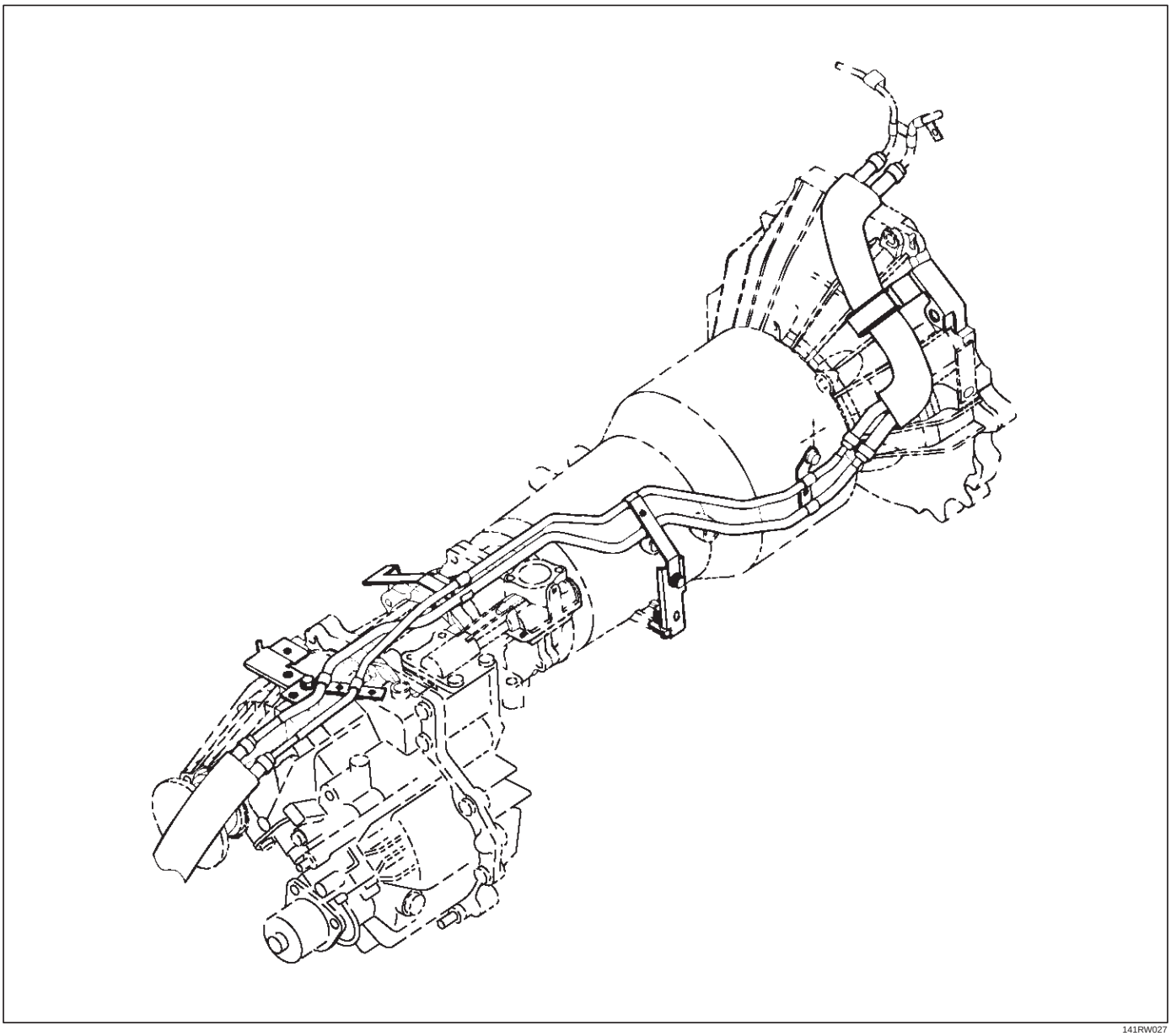

141RW027

For 4×4 (TOD)

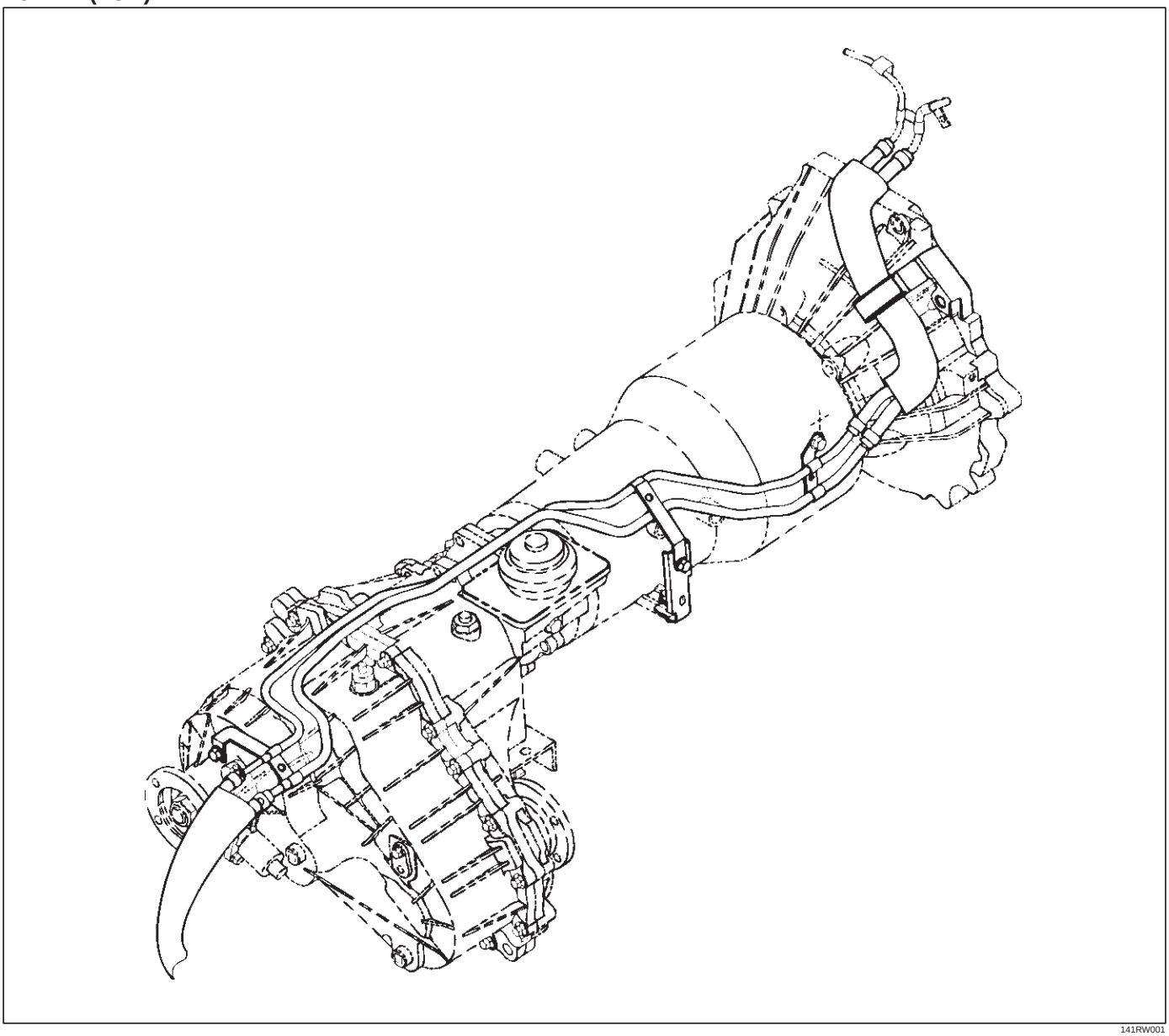

141RW001

9. Install transmission oil cooler pipe to transmission.

   Torque: 44 N•m (4.5 kg·m/33 lb ft)

10. Install oil pipe clamp to torque converter housing bracket.
11. Tighten oil pipe clamp bolt at engine mount side.
12. Install exhaust pipe, and tighten the bolts to the specified torque.

    Exh. pipe to exh. manifold 67 N•m (6.8 kg·m/49 lb ft)

    Exh. pipe flange bolt 43 N•m (4.4 kg·m/32 lb ft)

13. Connect one oxygen sensor connector to the transmission harness.
14. Install third crossmember, and tighten the bolts to the specified torque.

    Torque: 76 N•m (7.8 kg·m/56 lb ft)

15. Install rear mount nuts, and tighten the nuts to the specified torque.

    Torque: 50 N•m (5.1 kg·m/37 lb ft)

16. Remove the jack from the transfer case.

17. Install harness protector.

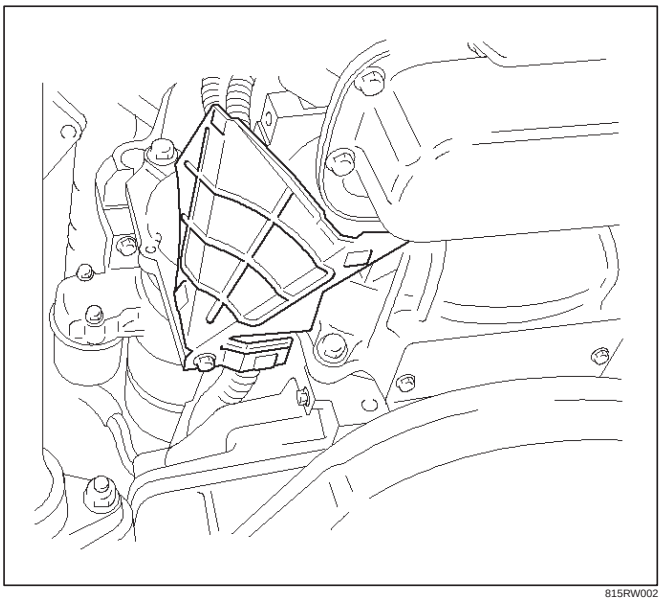

815RW002

18. Install the front propeller shaft, and tighten the bolts to the specified torque.

    Torque: 63 N•m (6.4 kg·m/46 lb ft)

19. Install the rear propeller shaft, and tighten the bolts to the specified torque.

    Torque: 63 N•m (6.4 kg·m/46 lb ft)

20. Install the transfer and exhaust protectors, and tighten the bolts to the specified torque.

    Torque: 37 N•m (3.8 kg·m/27 lb ft)

21. Install the transfer control lever.
22. Install the selector lever assembly.
23. Connect the shift control rod to selector lever assembly.
24. Connect the wiring harness connectors.
25. Connect the shift lock cable to selector lever assembly. Refer to Selector Lever in this section.
26. Connect the wiring harness connectors to front console.
27. Install the front console.
28. Install the transfer control lever knob.
29. Connect the battery ground cable.
30. Install the engine hood.

Solenoid (Main Case Valve Body)

Removal

1. Raise the vehicle and support it on jack stands.
2. Disconnect battery ground cable.
3. Remove transfer and exhaust protectors.
4. Drain fluid.
5. Remove exhaust pipe and disconnect oxygen sensor connector.
6. Support transfer case with a jack and remove third crossmember.
7. Remove sixteen 10 mm screws, main case oil pan, magnet, and gasket.
8. Remove three 13 mm screws, oil filter.
9. Disconnect wiring harness from band control solenoid and shift solenoids. Pull only on connectors, not on wiring harness.
10. Remove spring pin for shift solenoid A, shift solenoid B, and band control solenoid respectively, using suitable pliers taking care not to damage solenoids.

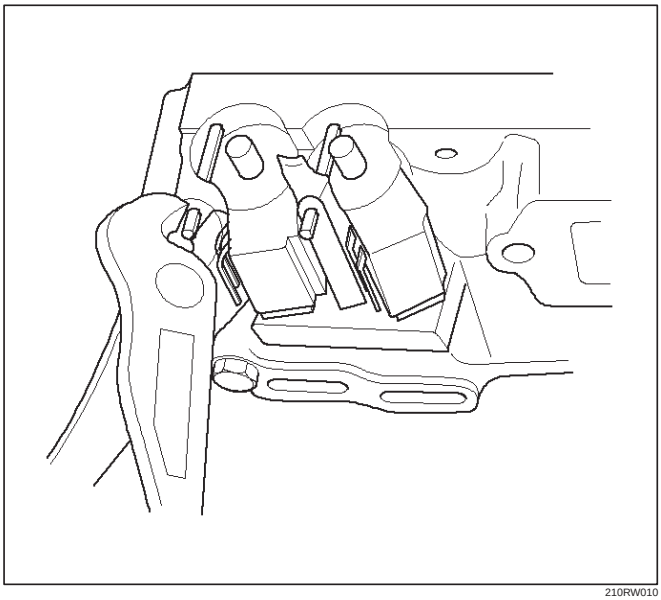

210RW010

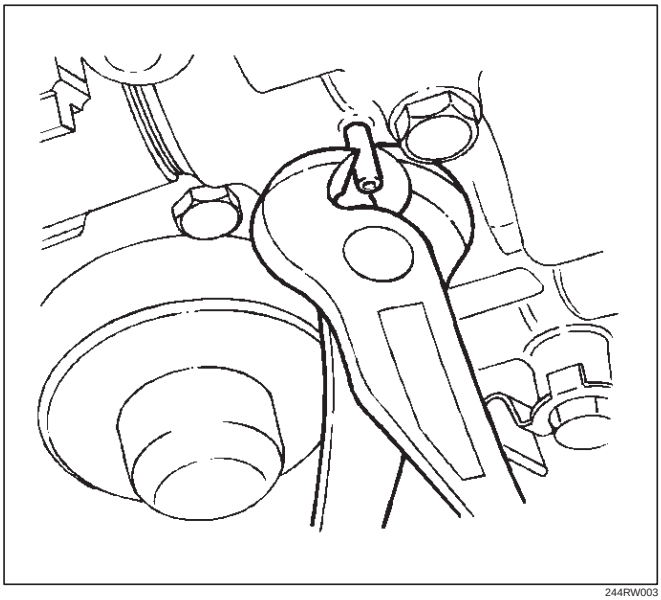

244RW003

11. Remove shift solenoid A, shift solenoid B, band control solenoid, and gaskets from main case valve body. Do not pull on wiring harness. Remove solenoids by grasping the metal tip.

Installation

1. Install shift solenoid A, shift solenoid B, band control solenoid with new gaskets to main case valve body respectively.
2. Carefully install spring pin with hammer to avoid damage to valve body, etc.

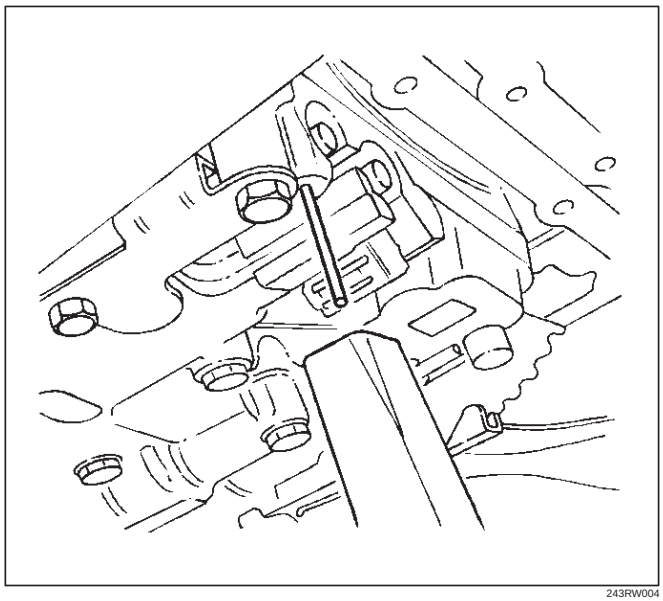

243RW004

3. Connect wiring harness to solenoids.
4. Install oil filter with a new gasket and the three 13 mm screws. Tighten the screws to the specified torque.

   Torque: 20 N•m (2.0 kg·m/15 lb ft)

5. Install magnet, main case oil pan with new gasket, sixteen 10 mm screws. Tighten the screws to the specified torque.

   Torque: 11 N•m (1.1 kg·m/96 lb in)

6. Install third crossmember and rear mount nuts. Tighten the nuts and bolts to the specified torque.

   Third crossmember bolt: 76 N•m (7.8 kg·m/56 lb ft)

   Rear mount nut: 50 N•m (5.1 kg·m/37 lb ft)

7. Install exhaust pipe and connect oxygen sensor connector. Tighten the bolts to the specified torque.

   Exhaust pipe flange bolt torque: 43 N•m (4.4 kg·m/32 lb ft)

8. Install the transfer and exhaust protectors. Tighten the bolts to the specified torque.

   Torque: 37 N•m (3.8 kg·m/27 lb ft)

9. Fill transmission through the overfill screw hole of oil pan, using ATF DEXRON®–III. Refer to Changing Transmission Fluid in this section.
10. Connect the battery ground cable.

Solenoid (Adapter Case Valve Body)

Removal

1. Raise the vehicle and support it on jack stands.
2. Disconnect battery ground cable.
3. Drain fluid.
4. Remove transfer and exhaust protectors.
5. Remove exhaust pipe and disconnect oxygen sesnor connector.
6. Remove adapter case oil pan twelve fixing 10 mm screws, adapter case oil pan, and gasket.

NOTE: Oil pan still contains transmission fluid. Place a large drain container under the oil pan and drain the fluid carefully.

7. Disconnect wiring harness from force motor solenoid and converter clutch solenoid. Pull only on connectors, not on wiring harness.
8. Remove 11 mm bolt and converter clutch solenoid with two O–rings.

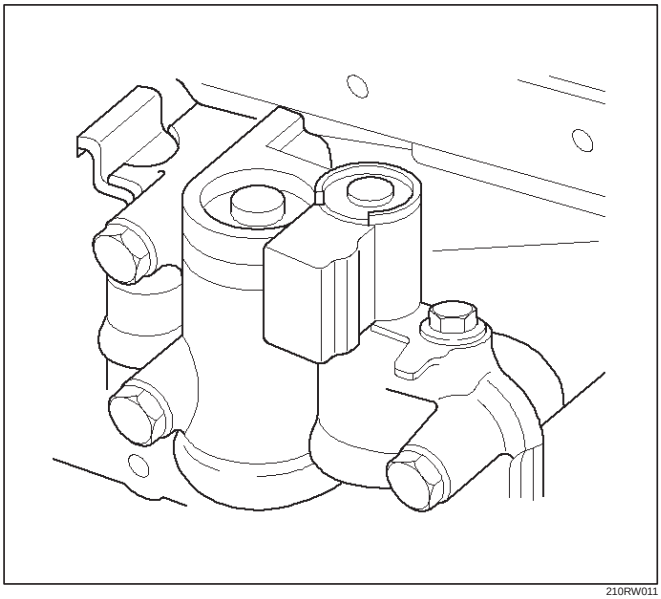

210RW011

9. Remove 11 mm bolt, retainer, and force motor solenoid.

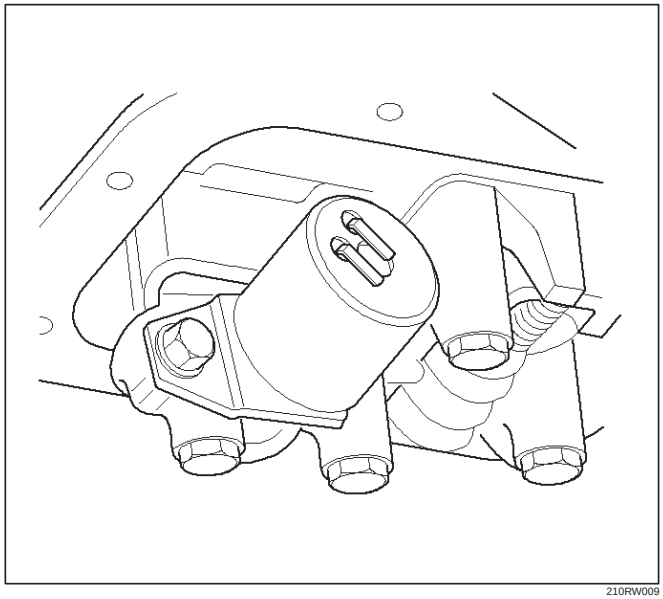

210RW009

Installation

1. Install force motor solenoid, retainer, and 11 mm bolt to adapter case valve body. Tighten the bolt to the specified torque.

   Torque: 10 N•m (1.0 kg·m/87 lb in)

2. Install converter clutch solenoid with two O– rings, and 11 mm bolt to adapter case valve body. Tighten the bolt to the specified torque.

   Torque : 10 N•m (1.0 kg·m/87 lb in)

3. Connect wiring harness assembly to solenoids.
4. Install adapter case oil pan, new gasket, and twelve 10 mm screws. Tighten the screws to the specified torque.

   Torque : 11 N•m (1.1 kg·m/96 lb in)

5. Install exhaust pipe and connect oxygen sensor connector. Tighten the bolt to the specified torque.

   Exhaust pipe flange bolt torque :
   43 N•m (4.4 kg·m/32 lb ft)

6. Install transfer and exhaust protectors. Tighten the bolt to the specified torque.

   Torque : 37 N•m (3.8 kg·m/27 lb ft)

7. Fill transmission through overfill screw hole oil pan, using ATF DEXRON®–III. Refer to Changing Transmission Fluid in this section.
8. Connect battery ground cable.

Valve Body Assembly (Main Case)

Removal

1. Raise the vehicle and support it on jack stands.
2. Disconnect battery ground cable.
3. Remove transfer and exhaust protectors.
4. Drain fluid.
5. Remove exhaust pipe and disconnect oxygen sensor connector.
6. Support transfer case with a jack and remove third crossmember.
7. Remove sixteen 10 mm screws, main case oil pan, magnet and gasket.
8. Remove three 13 mm oil filter fixing screws, then remove oil filter.
9. Remove two 13 mm manual detent fixing screws, then remove roller and spring assembly.
10. Disconnect wiring harness from band control solenoid and shift solenoids. Pull only on connectors, not on wiring harness.
11. Remove four 13 mm servo cover fixing screws, then remove servo cover and gasket.
12. Remove seven 13 mm valve body fixing screws.
    - Disconnect the ground wire from the main case valve body.
13. Remove main case valve body with manual valve link and transfer plate. Note the position of the link (long end into valve, short end into range selector lever).
14. Remove transfer plate gasket from main case.
15. Remove two check balls from main case.

Installation

1. Install two check balls to main case.

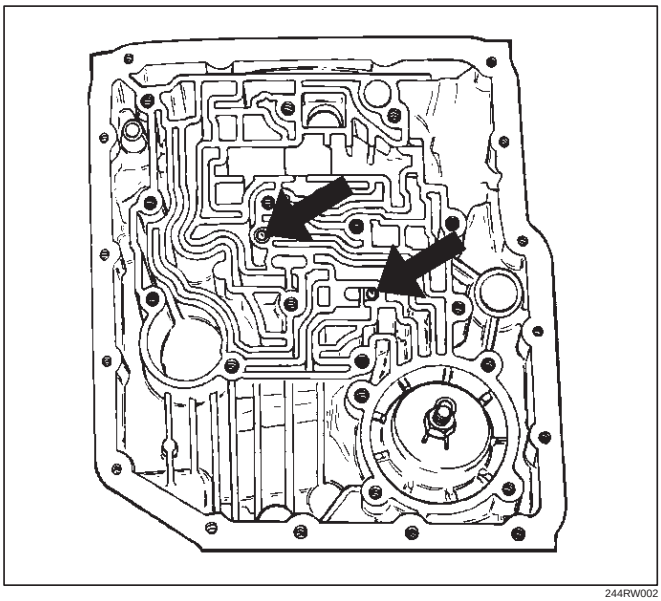

244RW002

2. Inspect electrical 4 pin connector and seal of main case. Replace if necessary.
3. Use two 5–8840–0022–0 (J–25025–B) guide pin to install main case.
   - Install valve body assembly and manual valve link.

NOTE: Valve must be extended as the short end of manual valve link is connected to the range selector lever. Long end of link goes into valve.

4. Install seven 13 mm screws, and tighten them to the specified torque.

   Torque: 20 N•m (2.0 kg·m/15 lb ft)

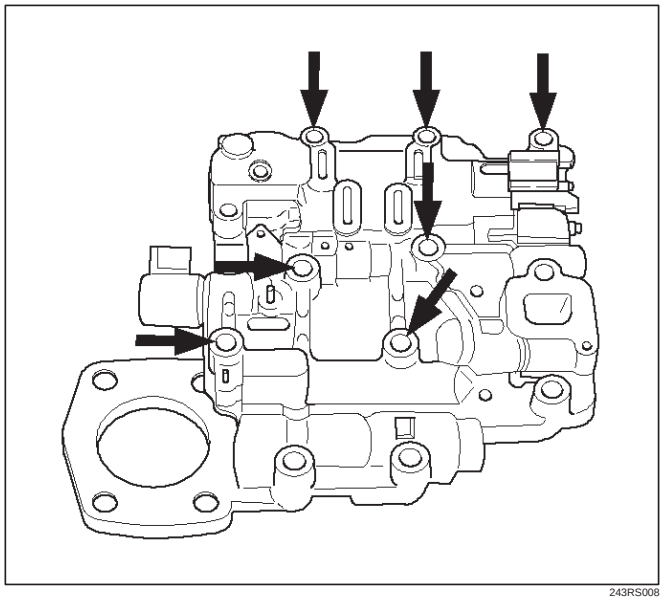

243RS008

5. Install 8.5 mm connector of ground wire the head of this valve body bolt and reinstall it. Tighten the bolt to the specified torque.

   Torque: 20 N•m (2.0 kg·m/15 lb ft)

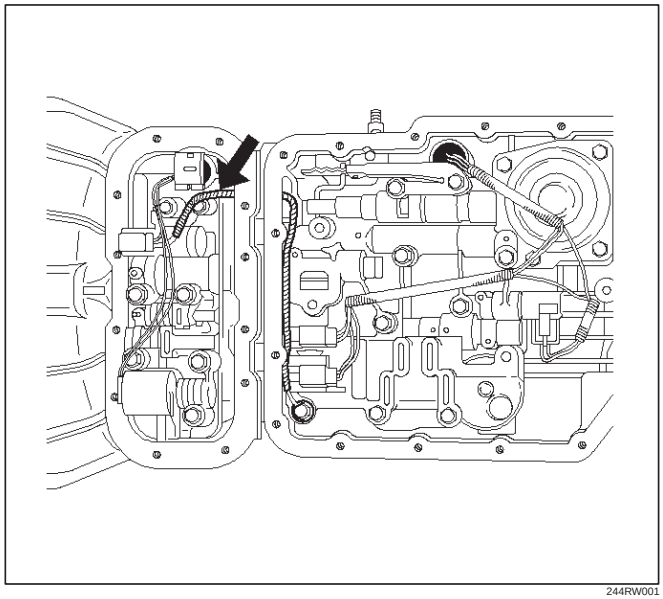

244RW001

6. Remove two guide pins from main case.
7. Install servo cover gasket, cover, and four 13 mm screws. Tighten the screws to the specified torque.

   Torque: 25 N•m (2.6 kg·m/18 lb ft)

8. Connect wiring harness to band control and shift solenoids.
9. Install roller and spring assembly to manual detent.
   - Install two 13 mm screws, and tighten them to the specified torque.

   Torque: 20 N•m (2.0 kg·m/15 lb ft)
10. Install oil filter and three 13 mm screws. Tighten the screws to the specified torque.

    Torque : 20 N•m (2.0 kg·m/15 lb ft)
11. Install oil pan gasket, magnet, oil pan and sixteen 10 mm screws. Tighten the screws to the specified torque.

    Torque: 11 N•m (1.1 kg·m/96 lb in)
12. Install third crossmember and rear mount. Tighten the bolts and nuts to the specified torque.

    Torque

    Third crossmember bolt:
    76 N•m (7.8 kg·m/56 lb ft)

    Rear mount nut: 50 N•m (5.1 kg·m/37 lb ft)
13. Install exhaust pipe and connect oxygen sensor connector. Tighten the bolts to the specified torque.

    Exhaust pipe flange bolt torque:
    43 N•m (4.4 kg·m/32 lb ft)
14. Install transfer and exhaust protectors. Tighten the bolts to the specified torque.

    Torque: 37 N•m (3.8 kg·m/27 lb ft)
15. Fill transmission through overfill screw hole of oil pan, using ATF DEXRON®–III, refer to Changing Transmission Fluid in this section.
16. Connect battery ground cable.

Valve Body Assembly (Adapter Case)

Removal

1. Raise the vehicle and support it on jack stands.
2. Disconnect battery ground cable.
3. Drain fluid.
4. Remove transfer and exhaust protectors.
5. Remove exhaust pipe and disconnect oxygen sensor connector.
6. Remove twelve 10 mm adapter case oil pan fixing screws, adapter case oil pan, and gasket.

NOTE: Oil pan still contains transmission fluid. Place a large drain container under the oil pan.

Drain the fluid carefully.

7. Disconnect wiring harness from force motor solenoid and converter clutch solenoid. Pull only on connectors, not on wiring harness.
8. Remove seven 13 mm screws from adapter case valve body assembly, then remove transfer plate, two gaskets, and adapter case valve body.

Installation

1. Inspect electrical 5 pin connector and seal of adapter case. Replace if necessary.
2. Install gasket, transfer plate, and gasket.
3. Install adapter case valve body and seven 13 mm screws. Tighten the screws to the specified torque.

   Torque: 20 N•m (2.0 kg·m/15 lb ft)
4. Connect wiring harness assembly to converter clutch solenoid and force motor.
5. Install oil pan gasket, oil pan, and twelve 10 mm screws. Tighten the screws to the specified torque.

   Torque: 11 N•m (1.1 kg·m/96 lb in)
6. Install exhaust pipe and connect oxygen sensor connector. Tighten the bolts to the specified torque.

   Exhaust pipe flange bolt torque:
   43 N•m (4.4 kg·m/32 lb ft)
7. Install transfer and exhaust protectors. Tighten the bolts to the specified torque.

   Torque: 37 N•m (3.8 kg·m/27 lb ft)
8. Fill transmission through the overfill screw hole of oil pan, using ATF DEXRON®–III. Refer to Changing Transmission Fluid in this section.
9. Connect battery ground cable.

Powertrain Control Module (PCM)

Removal

1. Disconnect battery ground cable.
2. Remove front console.
3. Disconnect PCM wiring harness connectors from PCM.
4. Remove three PCM retaining screws.
5. Remove two brackets from PCM.

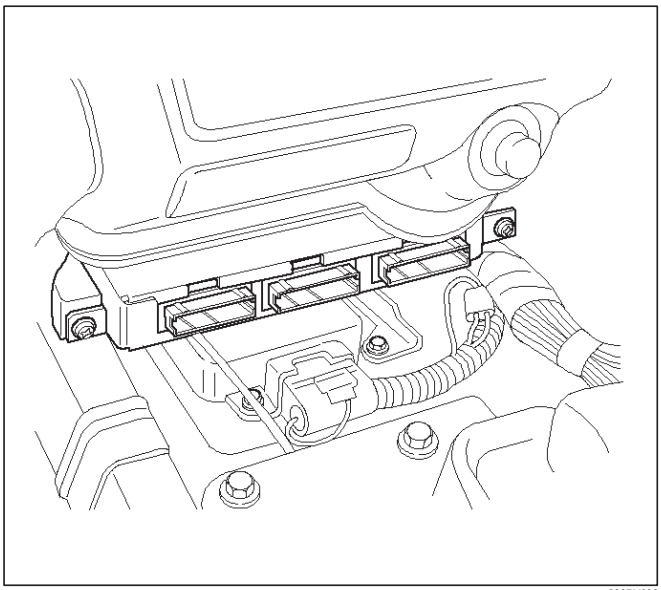

826RV006

Installation

1. Install two brackets to PCM.
2. Install three PCM retaining screws.
3. Connect PCM wiring harness connectors to PCM.
4. Install front console.
5. Connect battery ground cable.

Speed Sensor (Extension Housing)

Removal

1. Disconnect battery ground cable.
2. Remove front console.
3. Remove selector lever assembly.
4. Disconnect speed sensor harness connector from speed sensor.
5. Remove one 10 mm screw and speed sensor with O–ring.

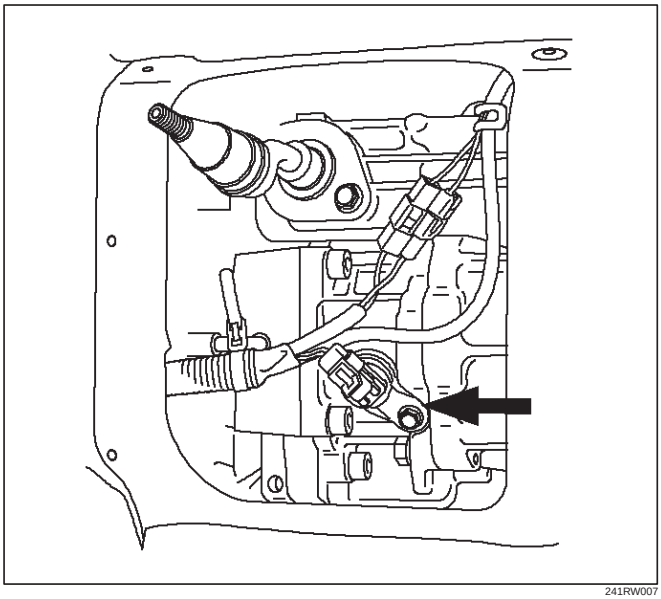

241RW007

Installation

1. Inspect the speed sensor O–ring, and replace it if necessary.
2. Install speed sensor assembly and 10 mm screw.

   Torque: 9 N•m (0.9 kg·m/78 lb in)
3. Connect speed sensor harness connector to speed sensor.
4. Install selector lever assembly.
   - Adjust shift lock cable. Refer to Selector Lever in this section.
5. Install front console.
6. Connect battery ground cable.

Transmission Oil Temperature Sensor (Adapter Case)

Removal

1. Raise the vehicle and support it on jack stands.
2. Disconnect battery ground cable.
3. Drain fluid.
4. Remove transfer and exhaust protectors.
5. Remove exhaust pipe and disconnect oxygen sensor connector.
6. Remove twelve 10 mm adapter case oil pan fixing screws, adapter case oil pan, and gasket.

NOTE: Oil pan still contains transmission fluid. Place a large drain container under the oil pan, and drain the fluid carefully.

7. Disconnect wiring harness from force motor solenoid, converter clutch solenoid, and 5 pin connector of adapter case. Pull only on connectors, not on wiring harness.
8. Disconnect ground wire from converter clutch solenoid wiring harness connector.
9. Remove wiring harness assembly (transmission oil temperature sensor).

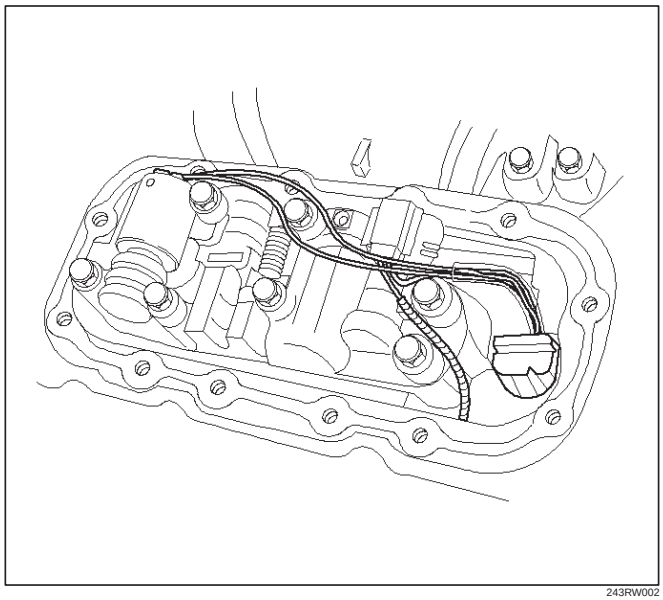

243RW002

Installation

1. Connect ground wire to converter clutch solenoid wiring harness connector of the wiring harness assembly.
2. Install wiring harness assembly to converter clutch solenoid, force motor, and 5 pin connector of adapter case.
3. Install oil pan gasket, oil pan, and twelve 10 mm fixing screws. Tighten the screws to the specified torque.

   Torque: 11 N•m (1.1 kg·m/96 lb in)
4. Install exhaust pipe and connect oxygen sensor connector. Tighten the bolts to the specified torque.

   Exhaust pipe flange bolt torque:
   43 N•m (4.4 kg·m/32 lb ft)
5. Install transfer and exhaust protectors. Tighten the bolts to the specified torque.

   Torque: 37 N•m (3.8 kg·m/27 lb ft)
6. Fill transmission through the overfill screw hole of oil pan, using ATF DEXRON®–III.
   Refer to Changing Transmission Fluid in this section.
7. Connect battery ground cable.

Front Oil Seal (Converter Housing)

Removal

1. Remove transmission assembly with transfer case from the vehicle. Refer to Transmission (with Transfer Case) in this section.
2. Remove torque converter from converter housing.
3. Remove three screws and oil seal ring from converter housing.

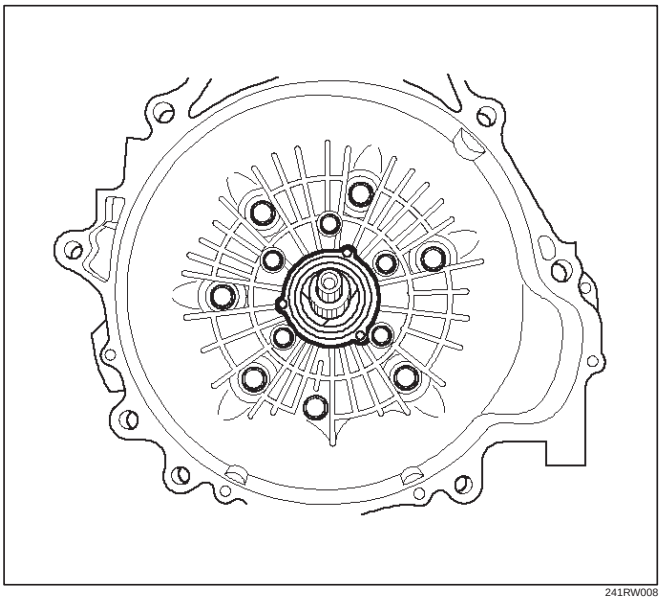

241RW008

Installation

1. Apply clean ATF to the new oil seal ring lip.
   - Install oil seal ring to converter housing. Tighten the screws to the specified torque.

   Torque: 3 N•m (0.3 kg·m/26 lb in)
2. Install torque converter to converter housing.
3. Install transmission assembly with transfer case to the vehicle. Refer to Transmission (with Transfer Case) in this section.

Rear Oil Seal (Extension Housing)

Removal

1. Remove transfer case assembly from the vehicle. Refer to Transfer Case in Drive Line/Axle section.
2. Remove rear oil seal from transmission extension housing.

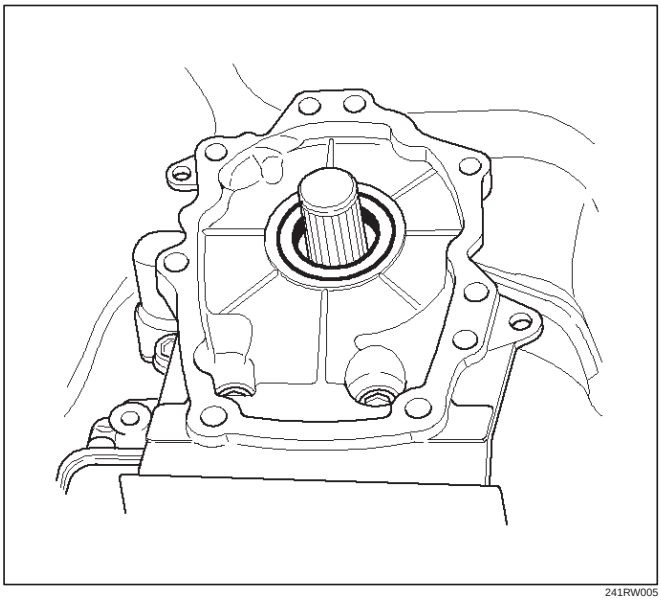

241RW005

Installation

1. Use 5–8840–2282–0 (J–36797) extension housing oil seal installer, and install the rear oil seal to the transmission extension housing.
2. Install the transfer case assembly to the vehicle. Refer to Transfer Case in Drive Line/Axle section.

Transmission (4L30–E)

Disassembly

NOTE: During the disassembly and reassembly, perform the following:

- Wash each part thoroughly, and blow air through each oil passage and groove to eliminate blockage.
- Seal rings, roll pins, and gaskets should be replaced.
- When assembling the components, apply DEXRON®–III Automatic Transmission Fluid (ATF) to each seal, rotating part, and sliding part.
- Do not dip part facings, such as clutch or brake drive plates, in cleaner when washing it.
  Also, always coat parts with new ATF two or three times after cleaning with solvent.

1. Remove torque converter (1).
   - Drain fluid from torque converter.
   - Attach 5–8840–2278–0 (J–8763–02) holding fixture to the transmission and set it on 5–8840–0003–0 (J–3289–20) holding fixture base.

NOTE: Do not overtighten the tool, as case damage may result.

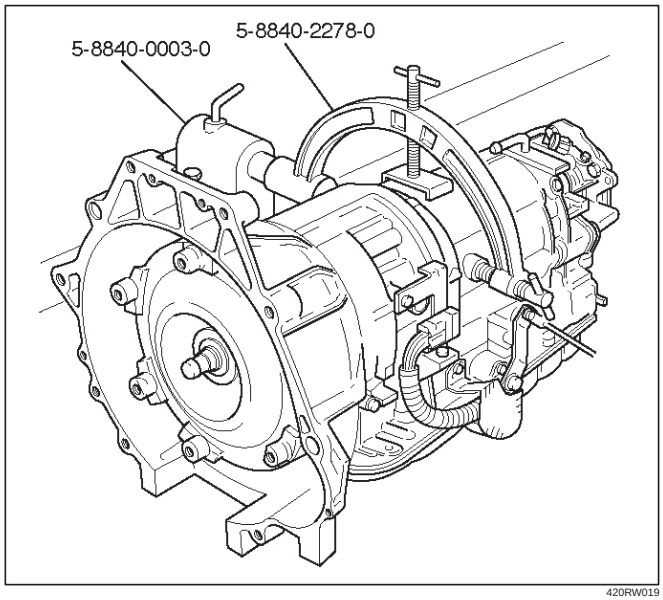

420RW019

2. Remove O–ring (2) from turbine shaft.
3. Remove two 10mm mode switch screws, selector lever nut, cover, and mode switch (3).
4. Remove twelve 10mm adapter case oil pan (4) fixing screws, adapter oil pan, and gasket.
5. Disconnect electrical wiring connections (5) from solenoids and 5 pin connector of adapter case. Pull on connectors only, not on wiring harness.

6. Remove seven 13mm adapter case valve body (6) fixing screws, adapter case valve body assembly, transfer plate, and two gaskets.
   - Remove wiring harness and 5 pin connector.
7. Remove sixteen 10mm main case oil pan (7) fixing screws, main oil pan, magnet, and gasket.
8. Remove three 13mm oil filter (8) fixing screws and oil filter.
9. Remove two 13mm manual detent (9) fixing screws, roller and spring, and manual detent.
10. Disconnect wiring harness assembly (10) from band apply solenoid, shift solenoids, and main case 4 pin connector.
    Pull on connectors only, not on wiring harness.
11. Remove four 13mm servo cover (11) fixing screws, servo cover, and gasket.
12. Remove seven 13mm valve body screws and ground wire from main case.
    - Remove wiring harness assembly (5) from the adapter case side.
    - Remove main valve body assembly (12) with manual valve link and transfer plate. Note the position of the link (long end into valve, short end into range selector lever).
    - Remove 4 pin connector.
    - Remove gasket transfer plate from main case.
13. Remove two check balls (13) from main case.

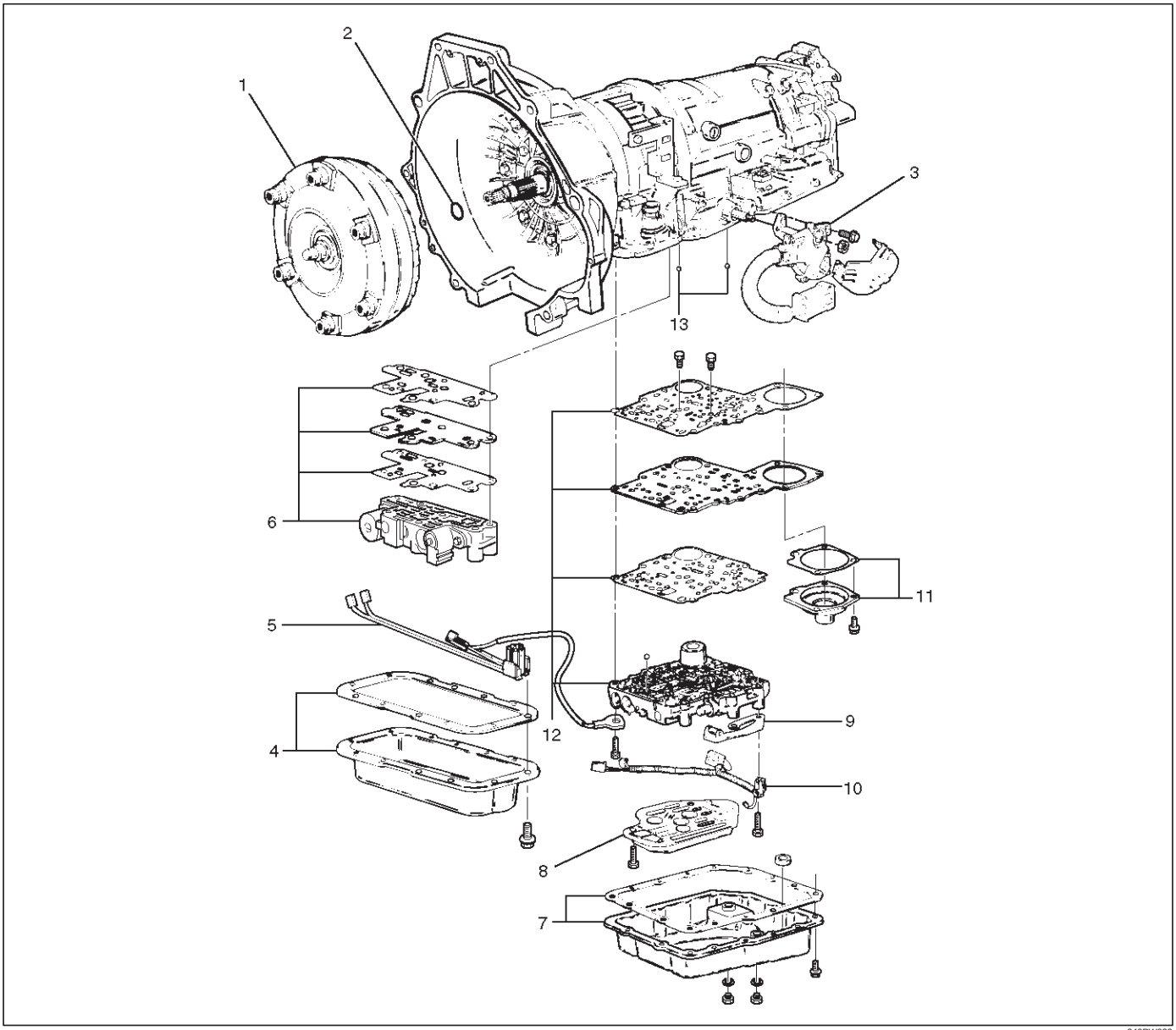

240RW022

14. Turn transmission to vertical position to drain fluid. Return back to horizontal position when drained.
    - Install 5–8840–0501–0 (J–23075) servo piston spring compressor with offset to the rear of case.
    - Compress servo piston assembly.
    - Remove servo piston retaining ring (14).
    - Slowly release servo piston assembly (15).
    - Remove tool.

15. Remove servo piston assembly (15), return spring (16), and servo apply rod (17).

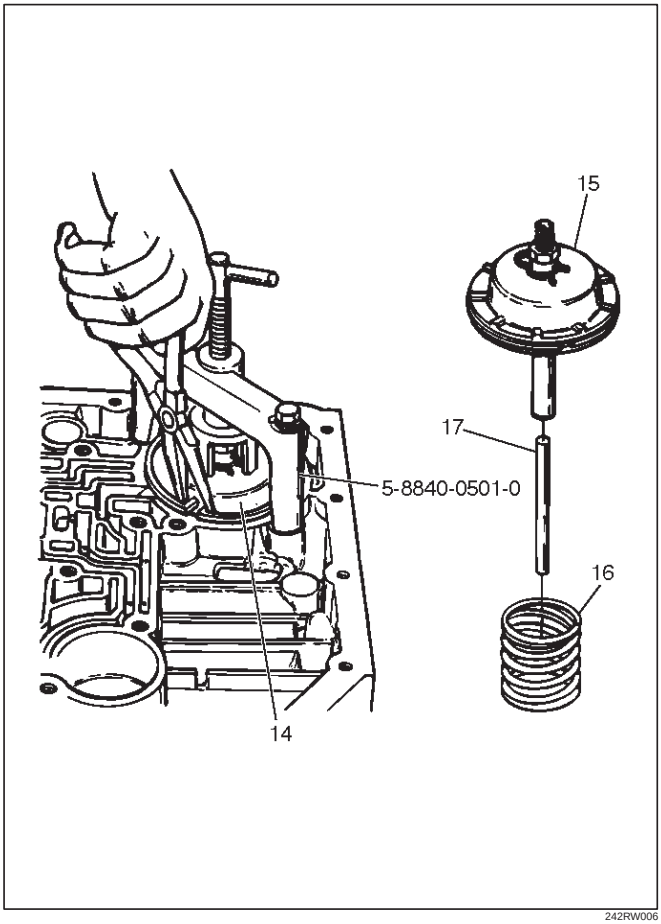

16. Rotate transmission to horizontal position, pan side down.
    - Remove one 10mm screw, and speed sensor (18) with “O” ring.
17. Remove seven 8mm extension housing hexagon socket head screws, extension housing assembly (19), and gasket.
18. Remove retaining ring (20).

NOTE: Use extra long, needle- nose pliers.

19. Remove speed wheel (21).
20. Remove wheel parking lock (with seal ring) (22).

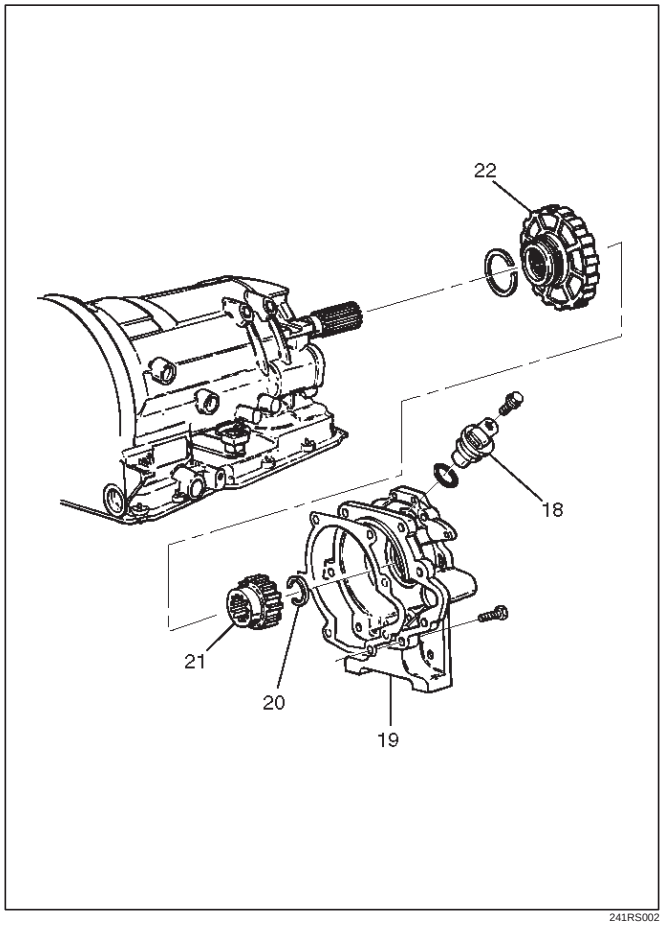

21. Rotate transmission to vertical position, converter housing up.
    - Loosen the converter housing and oil pump assembly fixing screws, but do not remove the five 13 mm inner screws if oil pump disassembly is required.
    - Remove seven outer screws.
    - Remove converter housing and oil pump assembly (23).
22. Remove gasket (24).

23. Remove selective thrust washer (25).

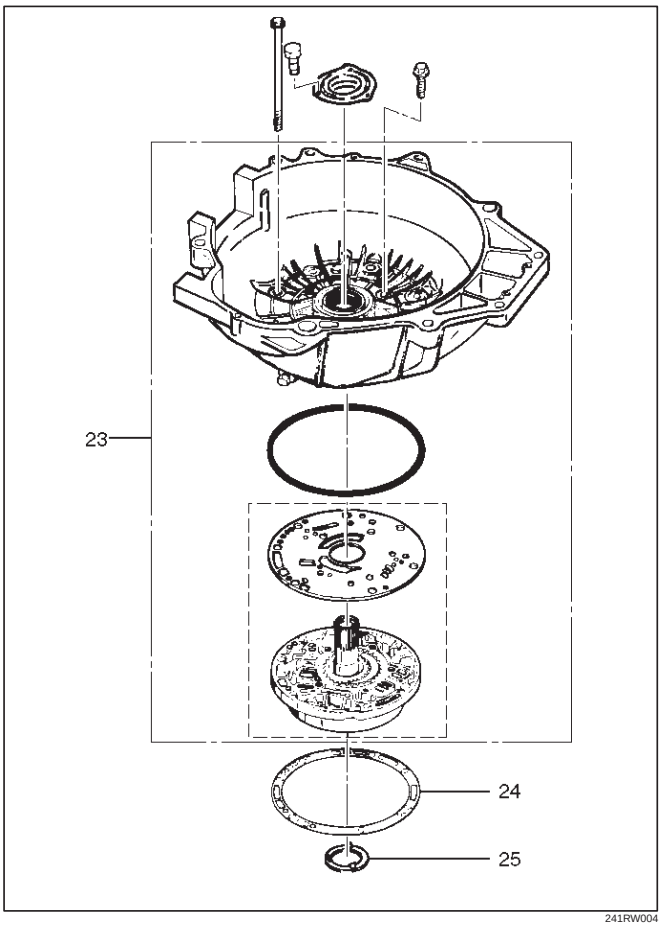

24. Remove fourth clutch retainer (26).
25. Grasp turbine shaft and lift out the overrun clutch housing assembly (27) and fourth clutch plates (28).
26. Remove thrust bearing assembly (29).
27. Remove overdrive internal gear (30).
28. Remove thrust washer (31).

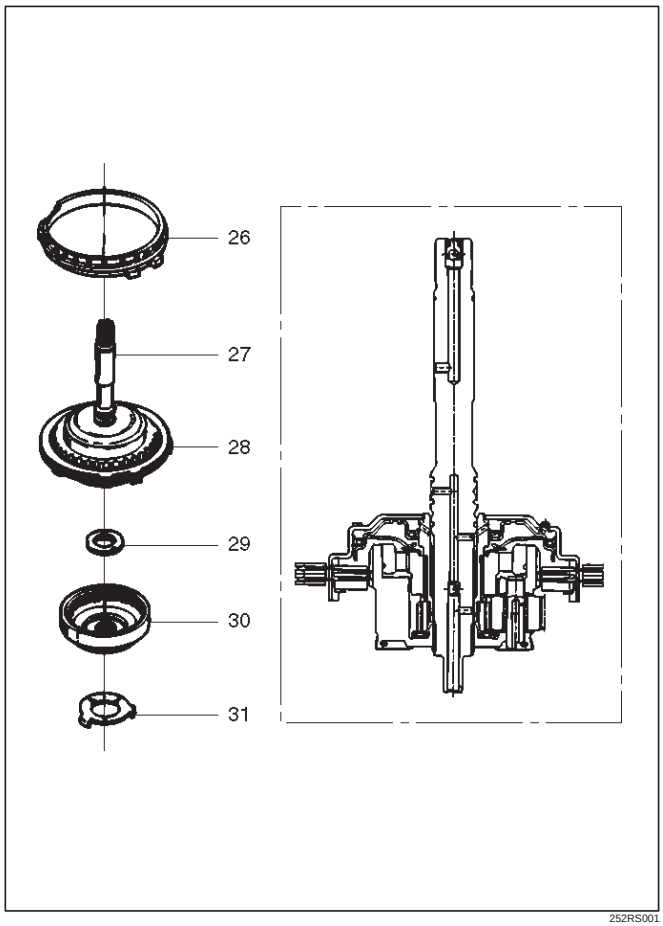

29. Remove adapter case and center support assembly (with fourth clutch piston) (32).
30. Remove seal ring (33).
31. Remove selective thrust washer (34) and two O–ring seals (35) from main case.
32. Use 5–8840–0195–0 (J–23327) and 5–8840–2263–0 (J–23327–90) compressor to compress the fourth clutch spring retainer and springs (37).
    - Release snap ring (36) from groove.
    - Remove clutch compressor and snap ring (36).
33. Remove retainer and spring assembly (37).
34. Insert two converter housing/main case screws to hold adapter case while pulling out fourth clutch piston (38).
    - Remove fourth clutch piston assembly (38) from the adapter case.
    - Remove converter housing/main case screws.
35. Grasp intermediate shaft, twist and pull out the second and third clutch drum assemblies with reverse clutch plates while holding onto output shaft (39).

36. Separate second (40) and third clutch (41) assemblies.
37. Remove thrust washer (42).
38. Remove reverse clutch plates (43 and 44) and reverse clutch pressure plate (45).
39. Remove bearing (46) and washer (47).
40. Remove planetary carrier assembly (48).
41. Remove thrust bearing (49).
42. Remove reaction sun gear (50)
43. Remove needle bearing (51).
44. Remove brake drum (52).
45. Remove brake band (53).
46. Remove thrust bearing (54).

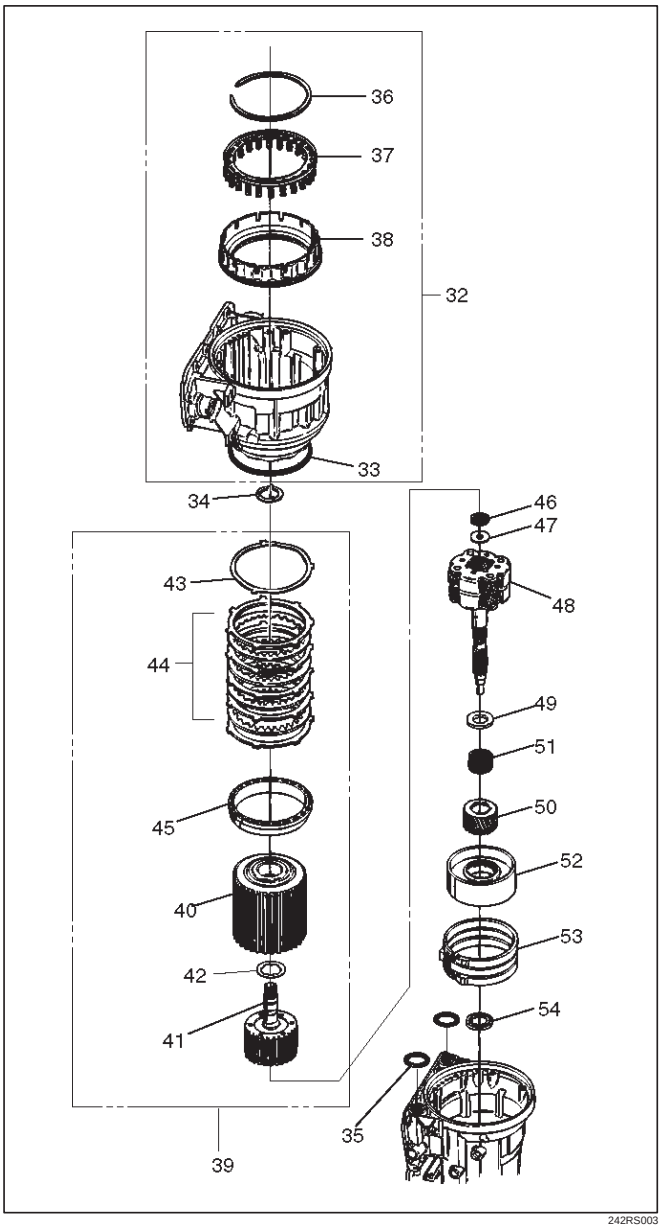

242RS003

47. Rotate case to horizontal position, valve body side facing up.
    - Remove spring pin (55), using cutting pliers, then remove parking lock and selector lever assembly (56).

NOTE: Insert wire in the center of the spring pin to prevent it from collapsing during removal. Be aware of pin height. Protect machined face of main case.

48. Remove parking lock and range selector lever 17 mm nut (57).
49. Remove parking lock and range selector lever (56), and actuator assembly.
50. Remove selector shaft (58).

NOTE: Inspect the shaft for burrs before removing to prevent damaging seal. If necessary, remove burrs by lightly sanding with an oilstone.

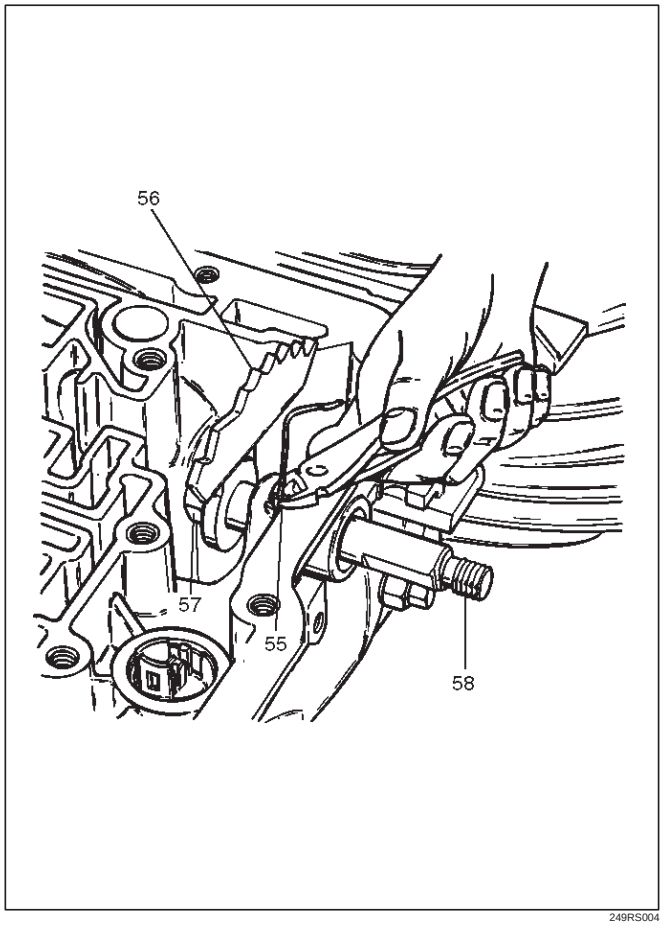

249RS004

Reassembly

1. Inspect selector shaft seal, and replace it if necessary.

NOTE: Use a seal installer when replacing the seal.

- Install selector shaft.

NOTE: Spring pin groove must be positioned inside the case.

2. Install spring pin. Be sure the selector shaft can move freely. Do not push the pin flush with the case surface. Leave enough height for removal.
3. Install actuator assembly (1).
4. Install parking lock and range selector lever (2) and new 17 mm nut. Tighten the nut to the specified torque.

Torque: 22 N•m (2.2 kg·m/16 lb ft)

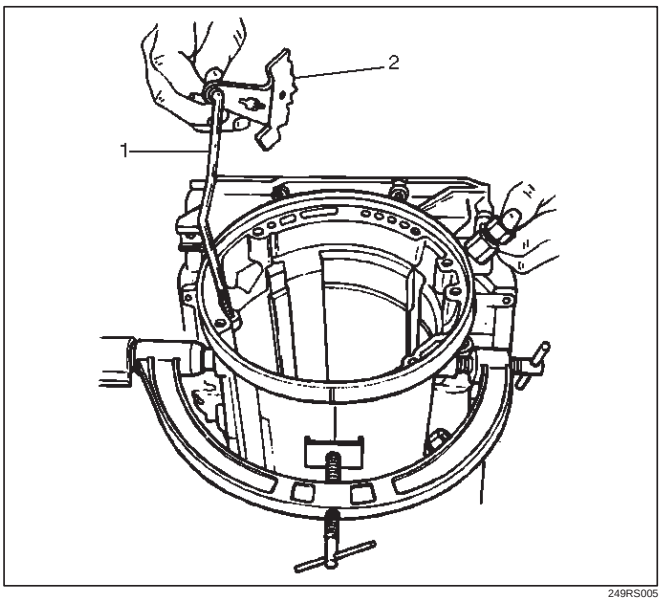

249RS005

5. Rotate main case to vertical position, extension end facing down.
   - Install brake band assembly (3).

NOTE: Be sure to align servo pin area with the servo hole.

6. Install thrust bearing (4).

NOTE: The case bushing acts as a guide for the thrust bearing.

7. Install brake drum (5).
8. Install reaction sun gear (6).
9. Install needle bearing (7).
10. Inspect planetary carrier assembly (8) for wear and damage. If necessary replace it.
    - Measure pinion end play clearance with a feeler gauge.

    Clearance: 0.13mm–0.89mm (0.005 in–0.035 in)

    If clearance is outside specified value, replace the planetary carrier assembly.

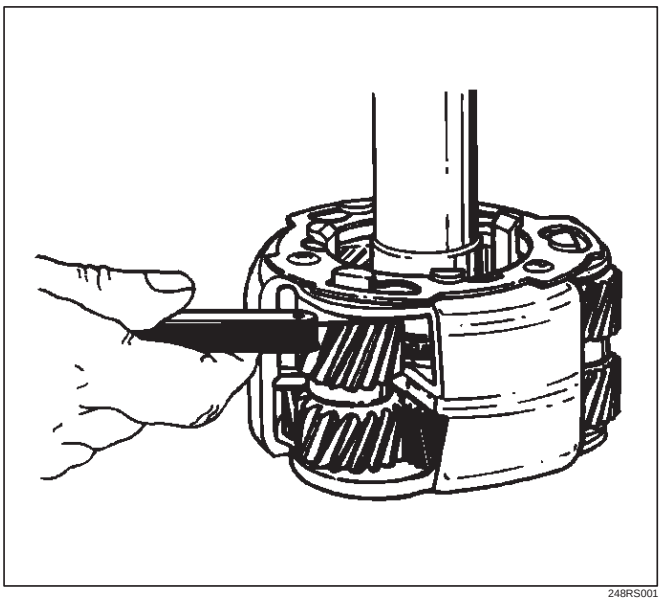

248RS001

11. Install the thrust bearing (9) on the output shaft.

NOTE: Use petroleum jelly to hold the thrust bearing in place.

12. Align planetary pinions. Each pinion is marked with double points to indicate the master tooth space and exactly opposite with a single point to indicate the master tooth. The markings on the planetary carrier consist of double lines which are to be lined up with the double points on two opposite pinions; the single lines are to be lined up with the single points on the other two pinions.
    - After all four pinions are lined up, slide on the third clutch assembly. Rotate third clutch and check mark alignment. Considering that the ring gear tooth between the double points of one planetary pinion is tooth number 1, count the teeth to check that the single points on the two adjacent pinions are between teeth 23 and 24 of the ring gear, and that the ring gear tooth between the double points of the opposite pinion is tooth number 46. If the ring gear and pinions are not lined up, remove, and realign them.
13. Install planetary carrier (8) with third clutch (12).

NOTE: Do not force. When properly aligned, the parts will fit together easily.

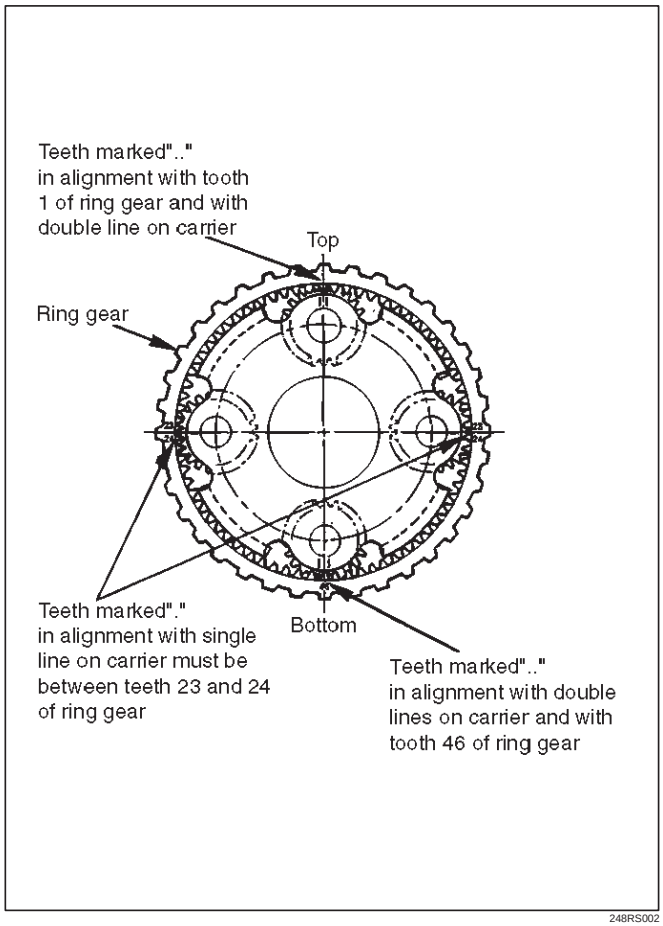

248RS002

14. Remove the third clutch (12).
15. Install bearing (11) and washer (10).

NOTE: Use petroleum jelly to hold the washer and bearing in place.

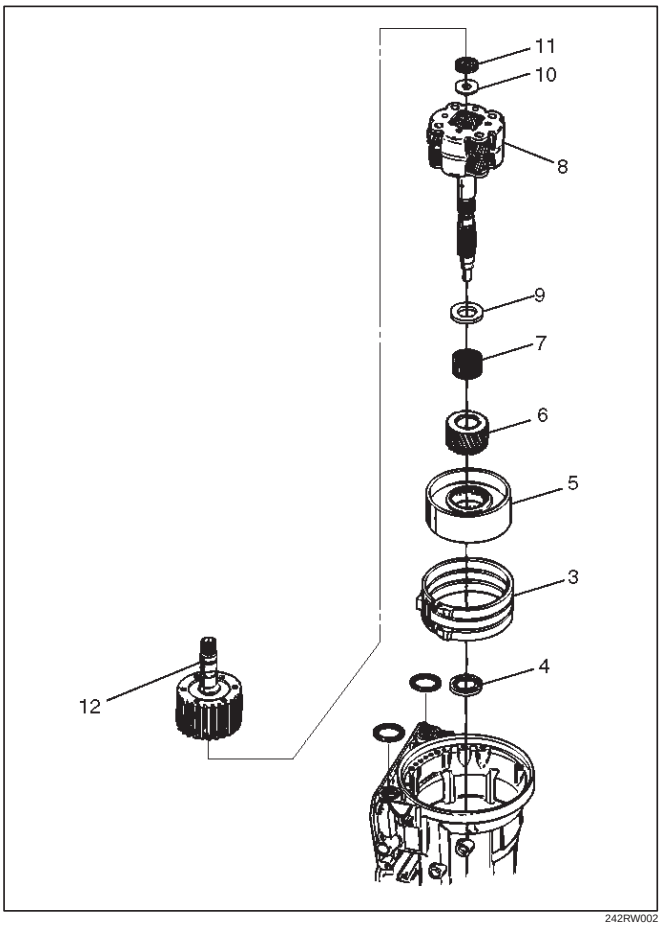

242RW002

16. Carefully align the second clutch plate inner tangs.
    - Install thrust washer, tangs pointing downward, and locating tang positioned in slot on second clutch hub.

NOTE: Use petroleum jelly to hold thrust washer in place.

17. Install third clutch and intermediate shaft assembly (13) into the second clutch drum (14).

18. Install second and third clutch assemblies into the main case. Twist output shaft and clutch assemblies to ensure proper fit.

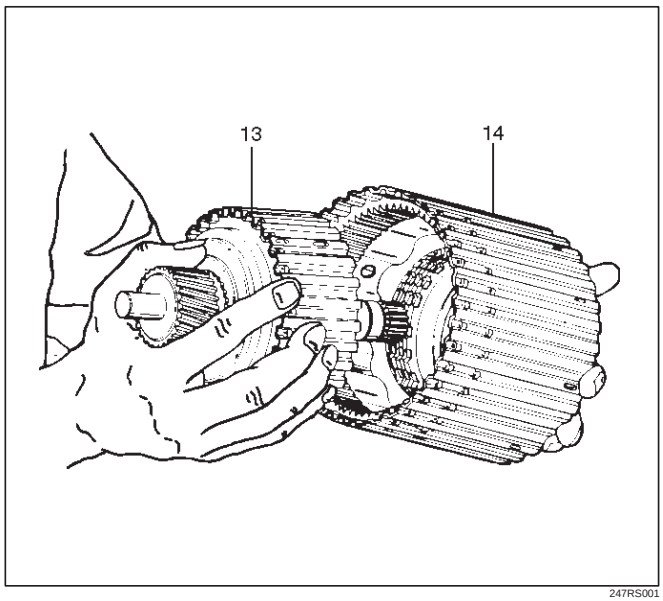

247RS001

19. Install pressure plate (15) with lip side up, tang facing valve body face.
20. Install reverse clutch plates. Start with a steel plate (17) and alternate with a lined plate (16).
21. Install waved clutch plate (18) with center tang facing valve body side.

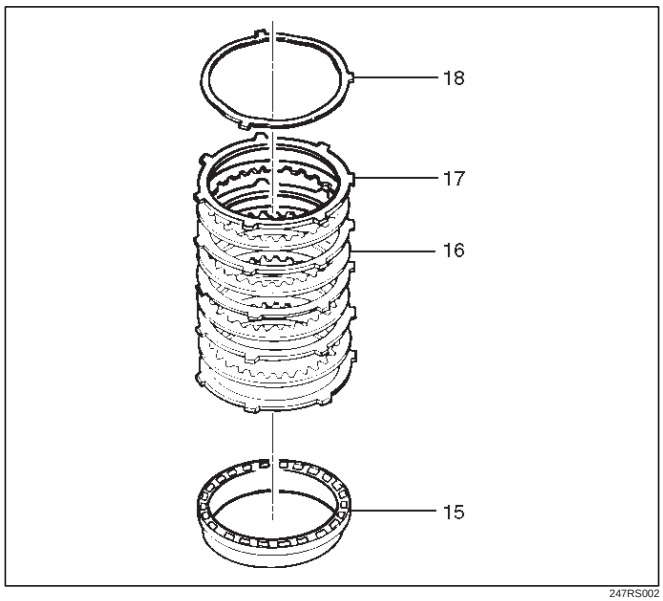

247RS002

22. Second clutch end play measurement
    1. Install the 5–8840–2262–0 (J–23085–A) Selective washer gauging tool (with spacer ring) on the case flange and against the intermediate shaft.
    2. Position the inner shaft of the gauging tool against the thrust surface of the second clutch hub.
    3. Tighten thumb screw. Remove the tool.
    4. Fit the spacer ring on the inner shaft of the tool.
    5. Measure the gap, and select the appropriate washer as shown in the chart.

Selective Thrust Washer	
Gap: mm(in)	**Color**
1.53 – 1.63 (0.060 – 0.064)	Yellow
1.72 – 1.82 (0.068 – 0.072)	Red
1.91 – 2.01 (0.075 – 0.079)	Black
2.10 – 2.20 (0.083 – 0.087)	Natural
2.29 – 2.39 (0.090 – 0.094)	Green
2.48 – 2.58 (0.098 – 0.102)	Blue
FOLLOWING THE PROCEDURE SHOULD RESULT IN FINAL END–PLAY FROM 0.36 mm TO 0.79 mm (0.014 in TO 0.031 in)	

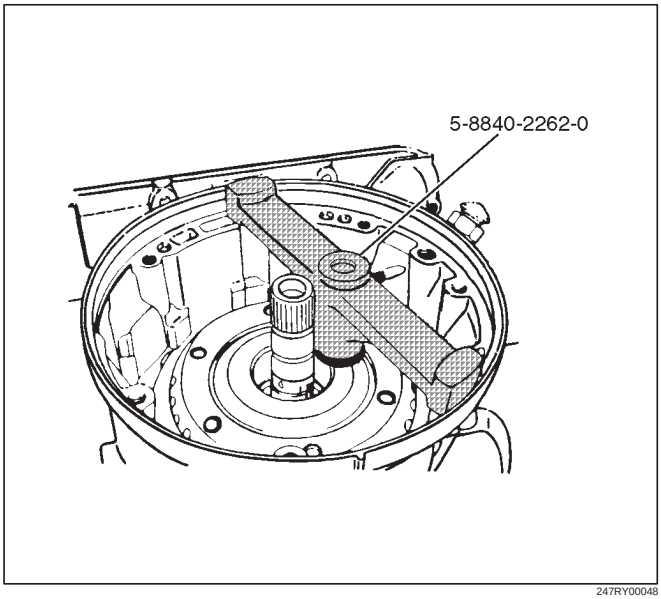

247RY00048

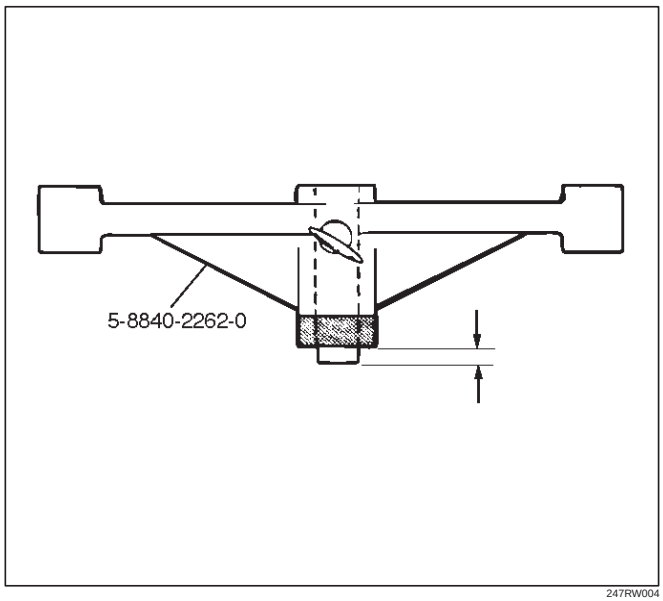

247RW004

23. Inspect fourth clutch piston seals and replace if necessary.
    - Lubricate 5–8840–2267–0 (J–38554) fourth clutch piston fitter and install it on fourth clutch piston (19).
    - Install fourth clutch piston (19) in adapter case (20).
    - Remove fitter.

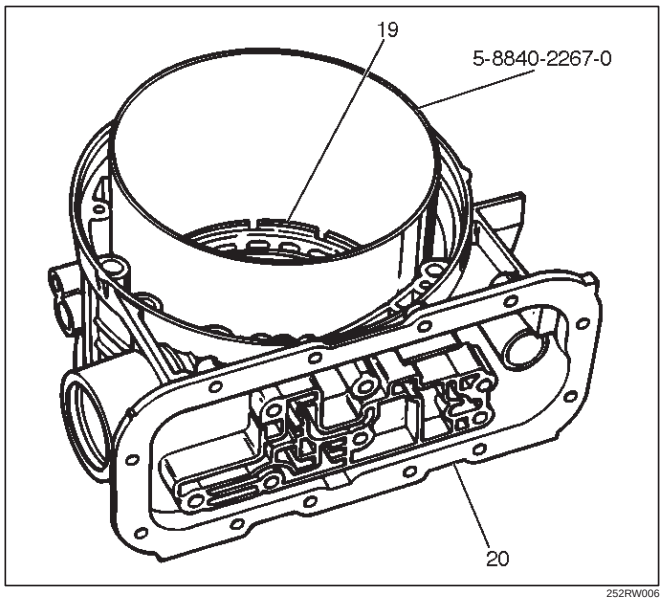

252RW006

24. Install retainer and spring assembly (22) into fourth clutch piston (21).
25. Install snap ring (23) in adapter case.
    - Install 5–8840–0195–0 (J–23327) and 5–8840–2263–0 (J–23327–90) fourth clutch spring compressor.
    - Seat snap ring in groove.
    - Remove compressor.

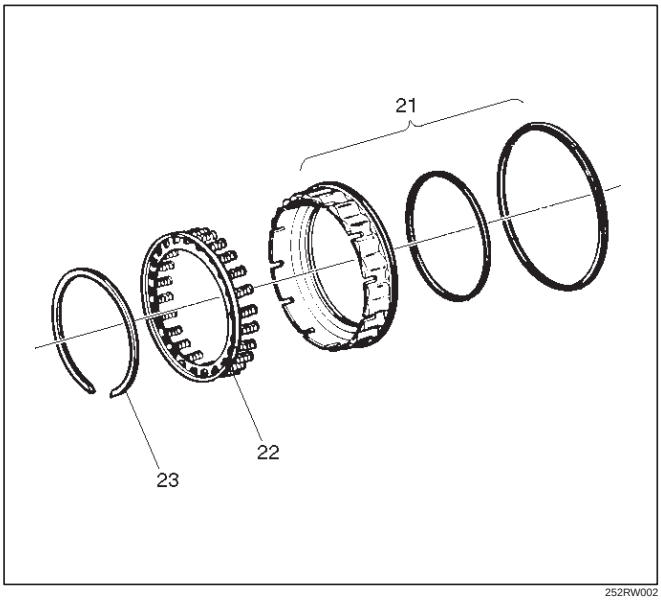

252RW002

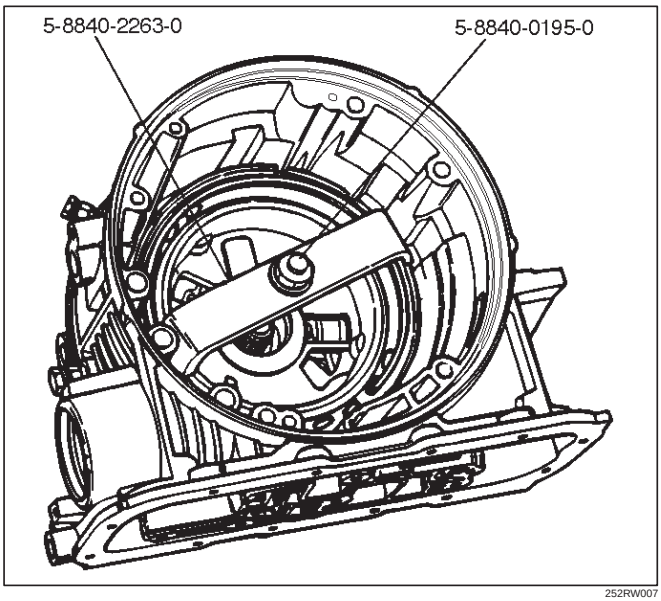

252RW007

26. Install selective washer using petroleum jelly.
27. Install two O–ring seals (24) in main case and adapter case/main case seal ring (25).
28. Install 5–8840–2268–0 (J–38588) guide pins.
    - Install adapter case and center support assembly to main case.

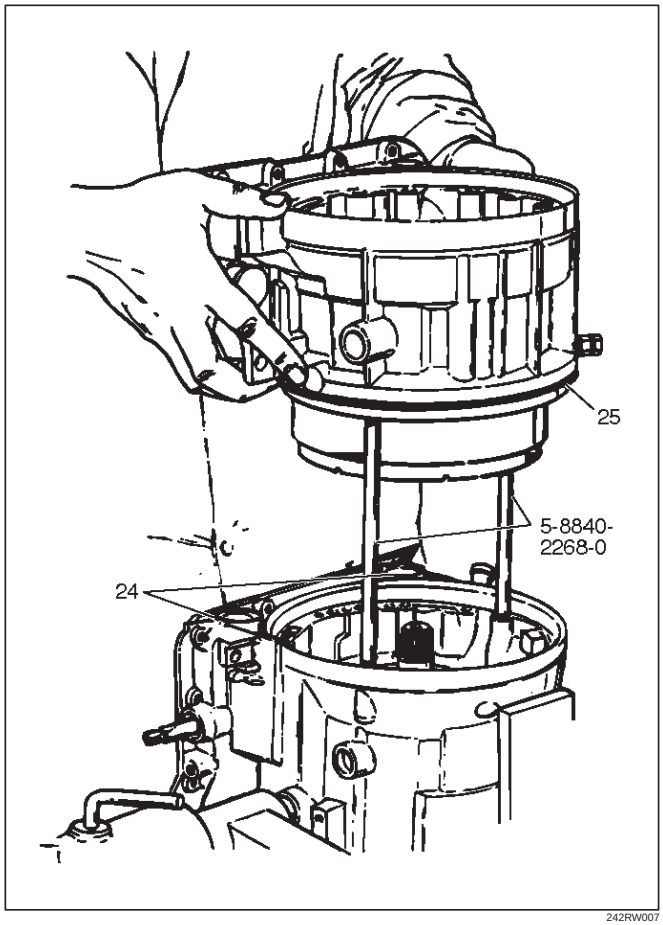

242RW007

29. Install thrust washer (26) into adapter case, with tangs pointing downwards.
30. Preassemble overdrive internal gear (27) and thrust bearing assembly (28) onto the turbine shaft and overrun clutch assembly.

NOTE: Install bearing assembly, black side up. Use petroleum jelly to keep assembly in place.

31. Install overdrive carrier (30) and internal gear assembly into adapter case.
32. Install fourth clutch plates (29) in the following order: Steel, Lined, Steel, Steel, Lined, Steel. Steel plates go in with short tang facing towards valve body surface.

33. Install fourth clutch retainer (31) with the notch facing up and positioned towards valve body surface.

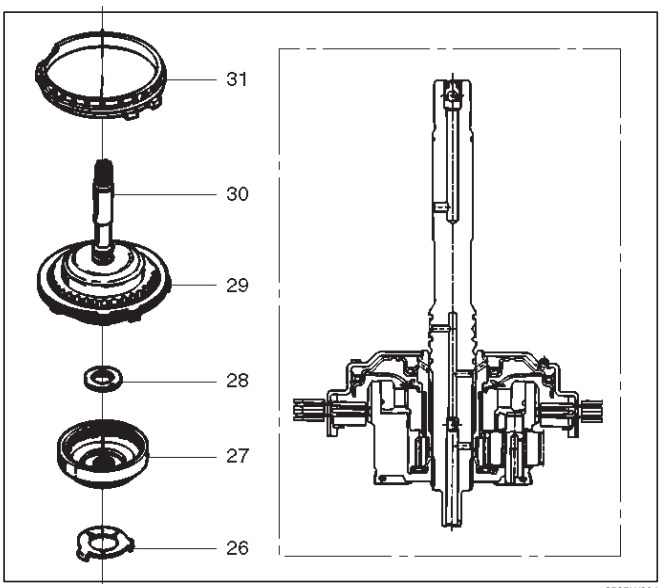

252RW004

34. Overdrive clutch end play measurement
    1. Install the 5–8840–2262–0 (J–23085–A) selective washer gauging tool on the adapter case flange and against the input shaft.
    2. Position the inner shaft of the tool against the thrust surface of the overrun clutch housing.
    3. Tighten thumb screw. Remove the tool.
    4. Measure gap. Select appropriate size washer as shown in the chart.
    5. Set selective thrust washer aside.

Selective Thrust Washer	
Gap: mm(in)	**Color**
1.53 – 1.63 (0.060 – 0.064)	Yellow
1.72 – 1.82 (0.068 – 0.072)	Red
1.91 – 2.01 (0.075 – 0.079)	Black
2.10 – 2.20 (0.083 – 0.087)	Natural
2.29 – 2.39 (0.090 – 0.094)	Green
2.48 – 2.58 (0.098 – 0.102)	Blue
FOLLOWING THE PROCEDURE SHOULD RESULT IN FINAL END–PLAY FROM 0.1 mm TO 0.8 mm (0.004 in TO 0.03 in)	

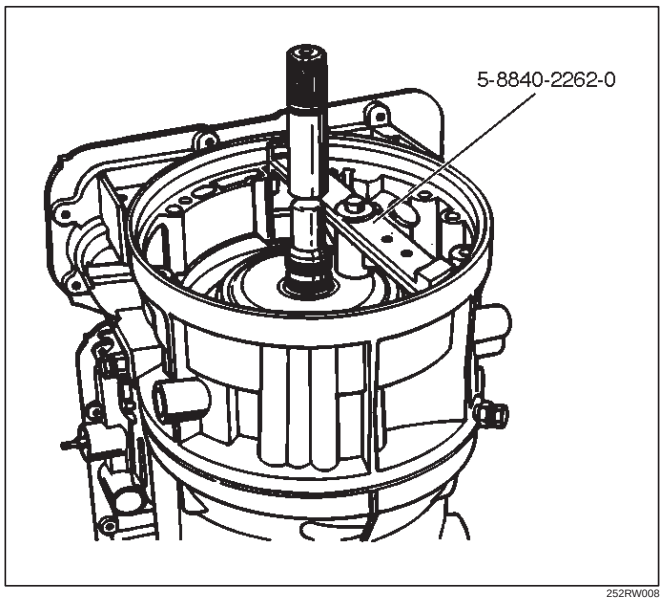

252RW008

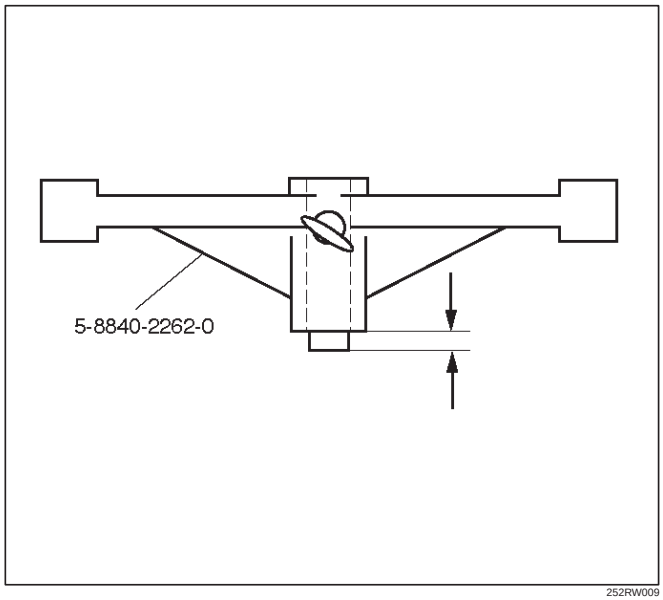

252RW009

35. Install selective washer (32).

NOTE: Use petroleum jelly to hold selective washer in place.

36. Install gasket (33).
37. Install converter housing and oil pump assembly (34) to adapter case.
    - Fit and tighten seven outer 13 mm screws.

    Torque: 39 N•m (4.0 kg·m/29 lb ft)

- Ensure free rotation of pump using 5–8840–2273–0 (J–23082–01) oil pump rotation tool.

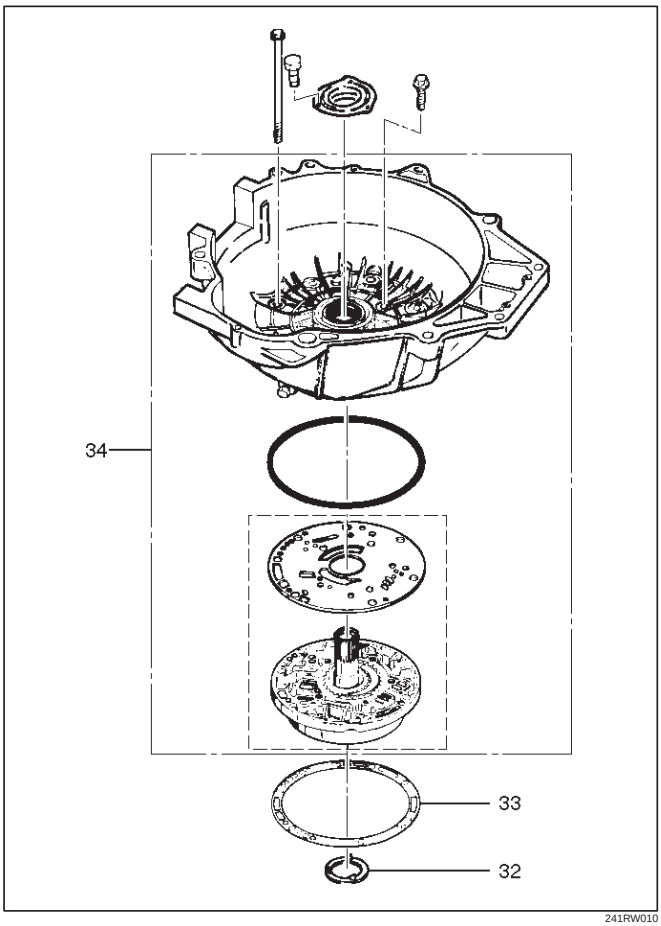

38. Overdrive clutch end play measurement.
    1. Fit 5–8840–2271–0 (J–25022) and 5–8840–0618–0 (J–24773–1) turbine shaft puller on turbine shaft.
    2. Position axial play checking tool on converter housing mating face.
    3. Pull turbine shaft upwards with puller until first resistance is met. (due to weight of overdrive assembly).
    4. Maintain shaft in this position and set indicator to zero.
    5. Pull turbine shaft further upwards with puller. Read end play shown on indicator.

End play: 0.1mm – 0.8mm (0.004 in – 0.031in)

6. Remove axial play checking tool and puller.

NOTE: If end play is not correct, repeat selective washer selection.

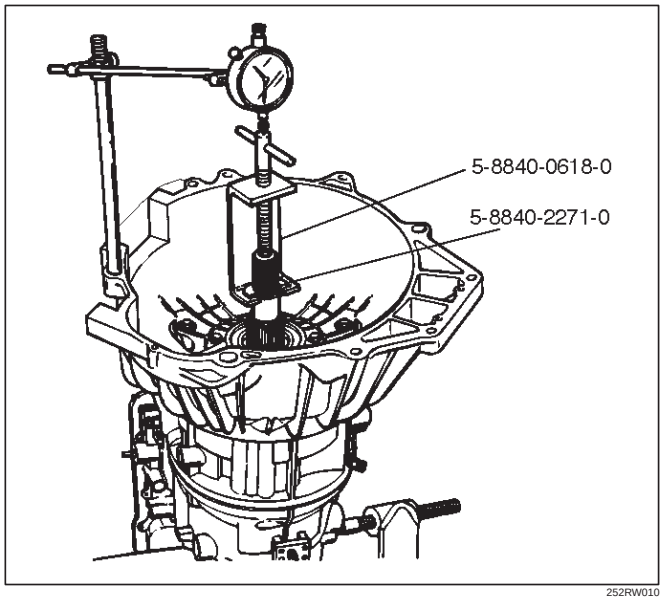

39. Inspect extension housing oil seal and replace if necessary, using 5–8840–2282–0 (J–36797) extension housing oil seal installer.
    - Rotate transmission to horizontal position, with valve body side down.
    - Inspect parking wheel seal ring. Replace if necessary.
    - Install wheel parking lock assembly (35).
40. Install speed wheel (36) and snap ring (37).

NOTE: Use extra long, needle-nose pliers.

41. Install gasket onto extension assembly with a thin coating of oil.
    - Install extension housing assembly (38), and align parking pawl shaft.
    - Install actuator assembly into extension assembly.
    - Install seven 8 mm hexagon socket head screws.

Torque: 32 N•m (3.3 kg·m/24 lb ft)

42. Inspect speed sensor O–ring. Replace if necessary.
    - Install speed sensor assembly (39) and 10 mm screw.

Torque: 9 N•m (0.9 kg·m/78 lb in)

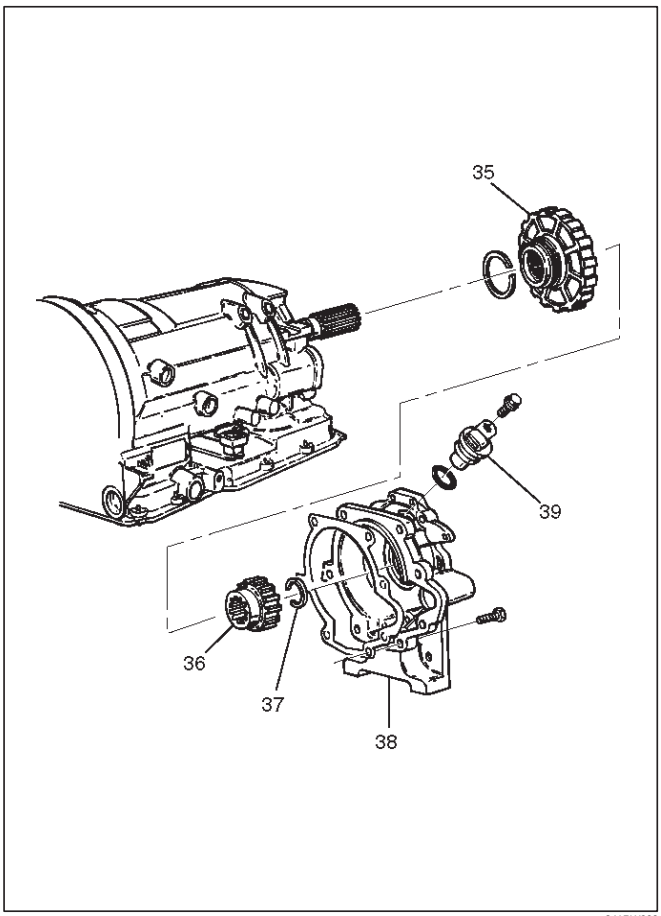

241RW009

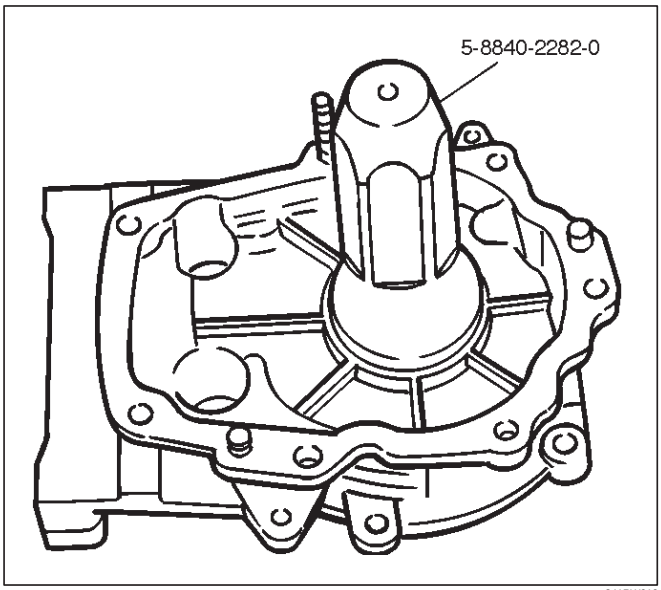

241RW019

43. Main case end play measurement.
    1. Attach axial play checking tool on the extension housing and set indicator to zero on output shaft.
    2. Manually push output shaft upwards.

    End play: 0.36mm – 0.80mm (0.014 in – 0.031in)

    3. Remove axial play checking tool.
    4. If end play is not correct, repeat selective washer selection.

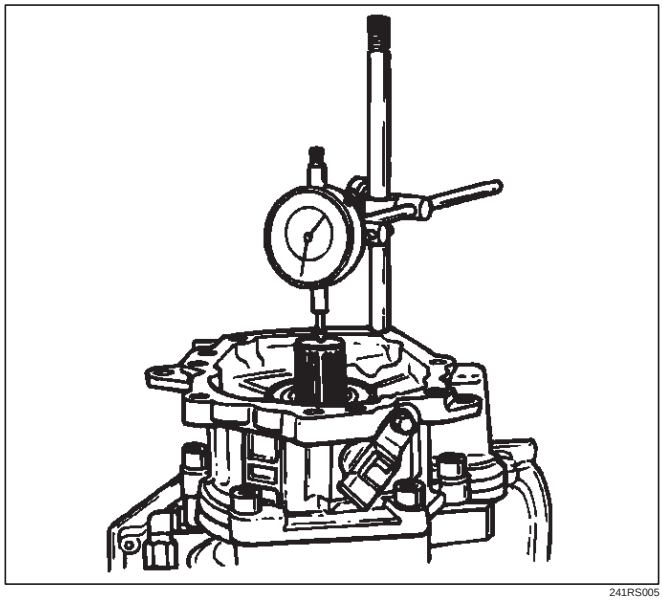

241RS005

44. Inspect servo piston seal ring. Replace if necessary.
    - Ensure brake band is correctly positioned. Rotate output shaft if necessary.
    - Install 5–8840–2274–0 (J–38428) servo piston fitter in servo bore.
    - Install apply rod (40), round end toward band, return spring (41) and piston assembly (42).
45. Install the 5–8840–0501–0 (J–23075) servo spring compressor with offset to rear of case.
    - Compress servo piston seal ring, using fitter while tightening the tool screw.
    - Install servo piston retaining ring (43).
    - Remove tool.
    - Adjust the brake band by tightening the servo adjusting screw to 4.5 N·m torque. Be certain the lock nut is loose, then back–off the screw five turns exactly. Hold piston sleeve with wrench and tighten lock nut to 18.5 N·m torque. Be certain the adjusting screw does not turn.

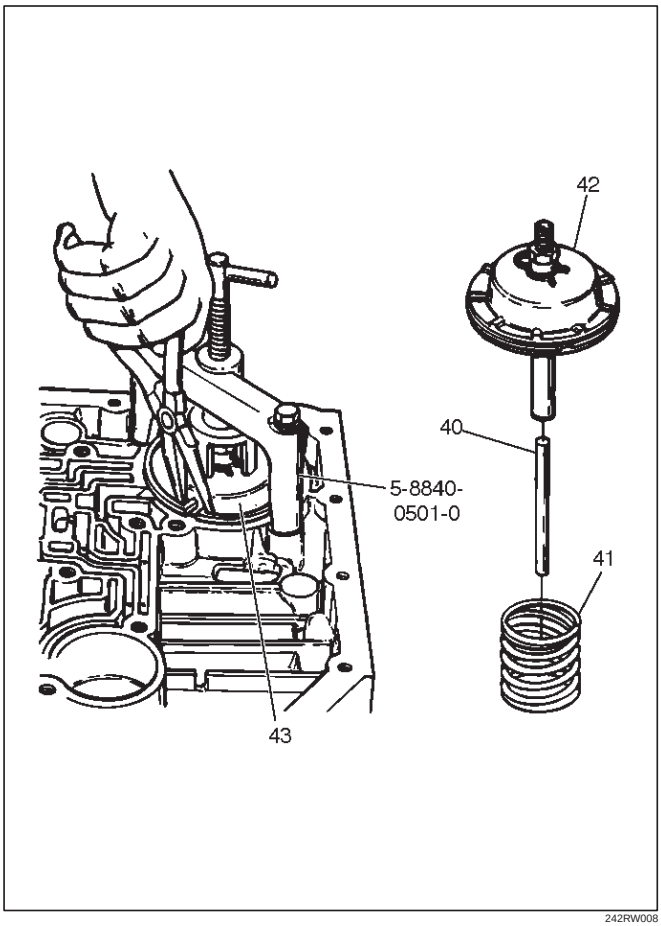

242RW008

46. Install two check balls (44).

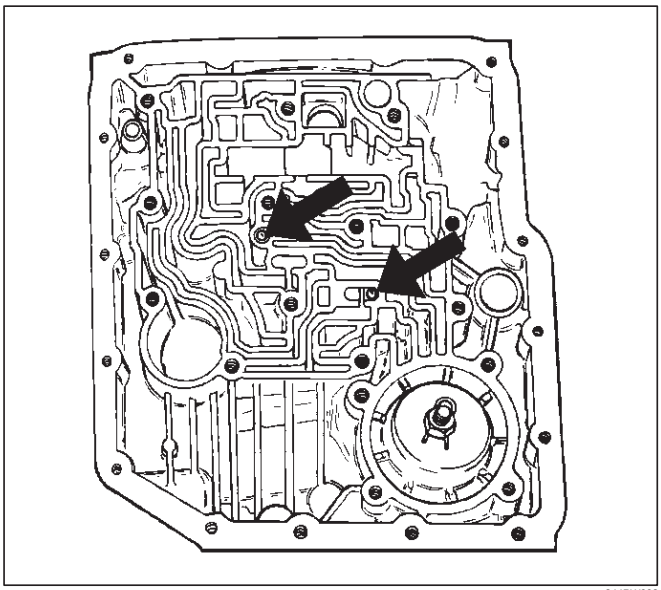

244RW002

47. Inspect main case electrical connector and seal, replace if necessary.
    - Install electrical 4 pin connector/main case and wiring harness.
48. Install two 5–8840–0022–0 (J–25025–B) guide pins into main case.
    - Install main case valve body complete assembly (45) and manual valve link.

NOTE: Valve must be extended as the short end of manual valve link is connected to the range selector lever. Long end of link goes into valve.

- Install seven 13 mm screws.

Torque: 20 N•m (2.0 kg·m/15 lb ft)

- Pass ground wire of adapter case wiring harness assembly through the hole joining adapter fluid area and main case fluid area.
- Assemble 8.5 mm connector of ground wire under the head of this valve body bolt and reinstall it.
- Remove two guide pins.

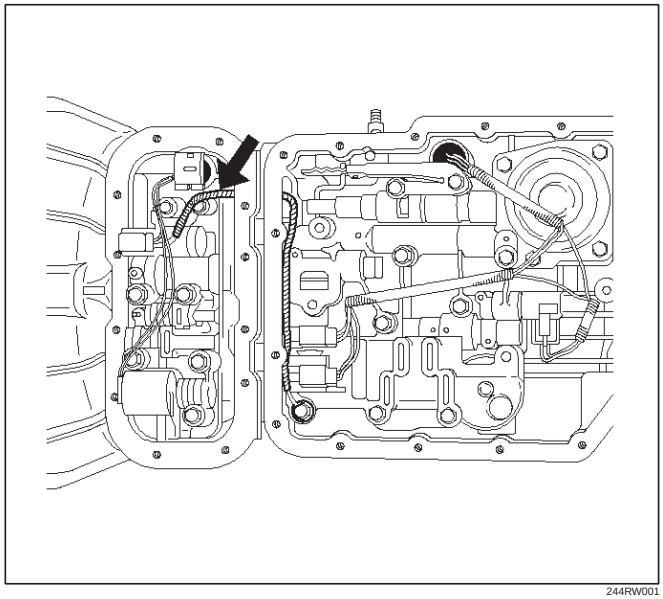

244RW001

49. Install servo cover gasket, cover (46) and four 13 mm screws.

    Torque: 25 N•m (2.6 kg·m/18 lb ft)
50. Connect wiring harness (47) to band control, shift solenoids, and main case 4 pin connector.
51. Install manual detent roller and spring assembly (48) with clip.
    - Install two 13 mm screws.

    Torque: 20 N•m (2.0 kg·m/15 lb ft)
52. Install oil filter (49), and three 13 mm screws.

    Torque: 20 N•m (2.0 kg·m/15 lb ft)
53. Install oil pan gasket, magnet, main oil pan (50), and sixteen 10 mm screws.

    Torque: 11 N•m (1.1 kg·m/96 lb in)
54. Inspect adapter case electrical connector and seal. Replace if necessary.
    - Install electrical five pin connector and harness assembly (52) in bottom of adapter case.
55. Install gasket, transfer plate, and gasket.
    - Install adapter case valve body (51) and seven 13 mm screws.

    Torque: 20 N•m (2.0 kg·m/15 lb ft)

56. Connect wiring harness harness assembly (52) to converter clutch solenoid, force motor, and 5 pin connector.
57. Install oil pan gasket, adapter case oil pan (53), and twelve 10 mm screws.

    Torque: 11 N•m (1.1 kg·m/96 lb in)

    - Rotate transmission, with bottom pan facing down.
58. Install mode switch (54), two 10 mm screws, selector lever nut, and cover.

    10 mm screw

    Torque: 13 N•m (1.3 kg·m/113 lb in)

    Nut

    Torque: 23 N•m (2.3 kg·m/17 lb ft)

    - Adjust using setting tool, refer to Mode Switch in this section.
59. Install O–ring (55) on turbine shaft.
60. Install torque converter (56)

    The converter assembly must be replaced under any of the following conditions:

    a. Evidence of damage to the pump assembly.
    b. Metal particles are found after flushing the cooler lines.
    c. External leaks in hub weld area.
    d. Converter pilot broken, damaged, or poor fit into crankshaft.
    e. Converter hub scored or damaged.
    f. Internal failure in stator.
    g. Contamination from engine coolant.
    h. Excess end play.

    - Rotate transmission, bell housing up. Spin converter to insure proper fit.
61. Fill transmission through the overfill screw hole of oil pan, using ATF DEXRON®–III. Refer to Changing Transmission Fluid in this section.

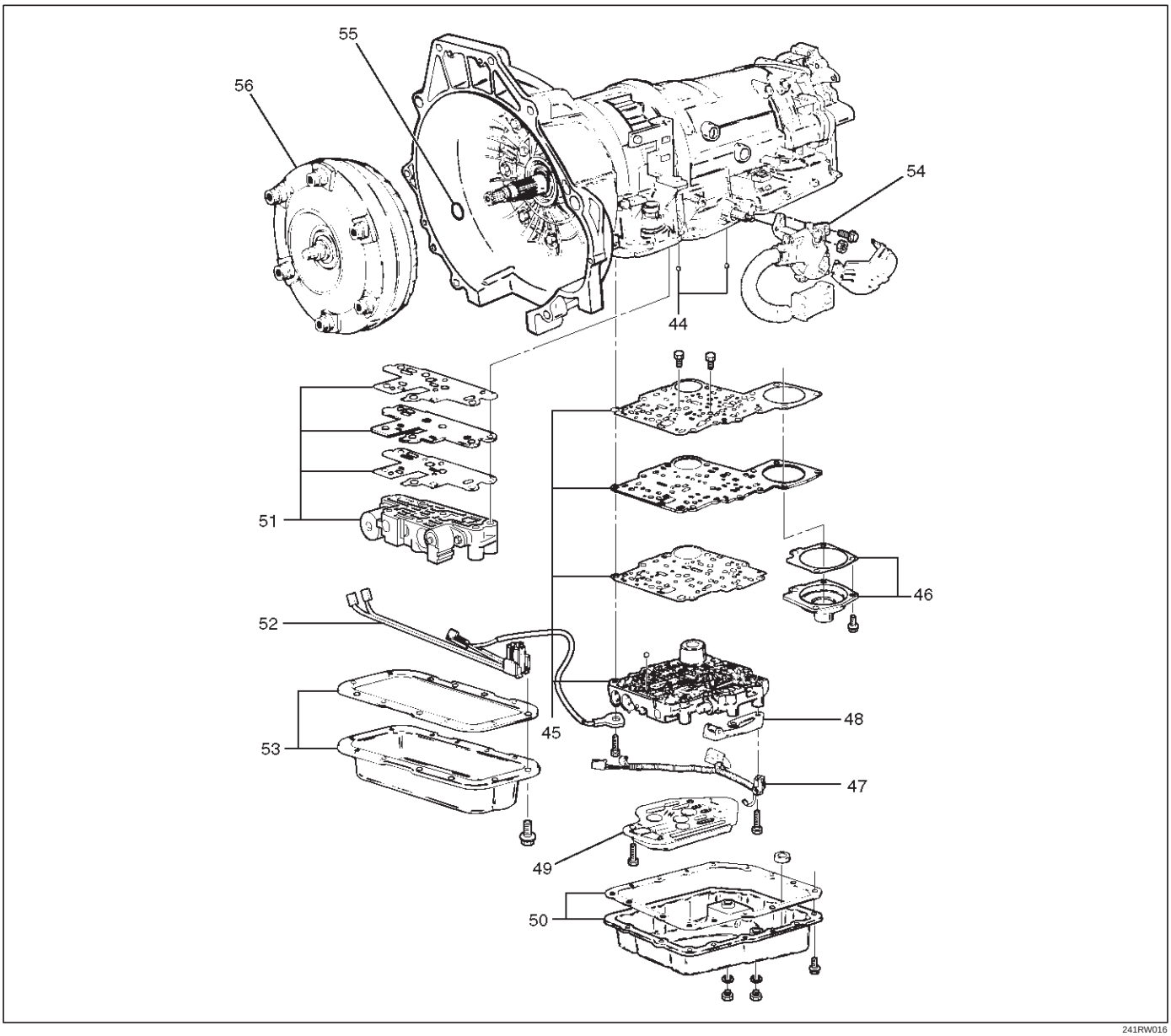

241RW016

Converter Housing And Oil Pump Assembly

Disassembled View

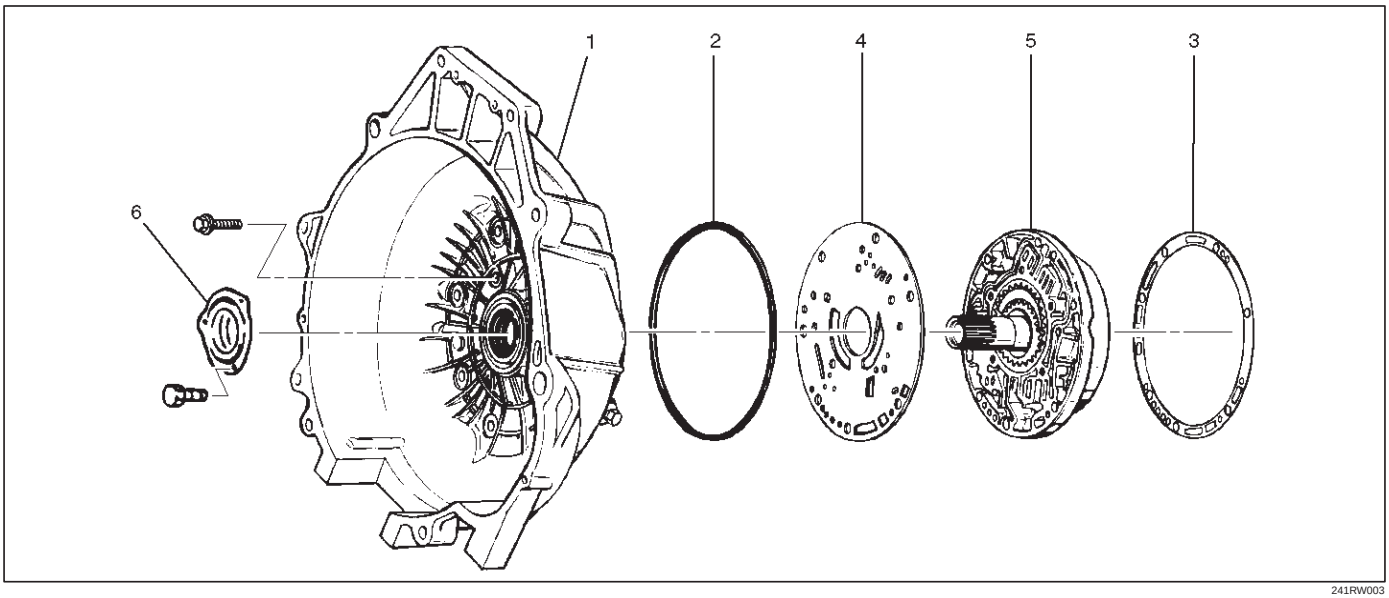

241RW003

Legend

(1) Converter Housing
(2) Outer Seal Ring
(3) Gasket
(4) Wear Plate
(5) Oil Pump Assembly
(6) Oil Seal Ring

Disassembly

1. Remove oil pump assembly from converter housing.
2. Remove outer seal ring.
3. Remove gasket.
4. Remove wear plate.
5. Remove oil seal ring.

Inspection And Repair

Visual Check:

If any damage, deformation, or local wear is found in a converter housing, outer seal ring, wear plate, or oil seal ring, replace it.

Reassembly

1. Install wear plate onto oil pump assembly.
2. Install converter housing onto complete oil pump assembly. Align with two short 5–8840–2268–0 (J–38588) guide pins on outer bolt holes.
   - Loosely install five 13mm bolts.
   - Center converter housing using 5–8840–2272–0 (J–38557) centering tool.
   - Tighten five inner 13mm bolts in an alternating pattern.

   Torque: 20 N•m (2.0 kg·m/15 lb ft)

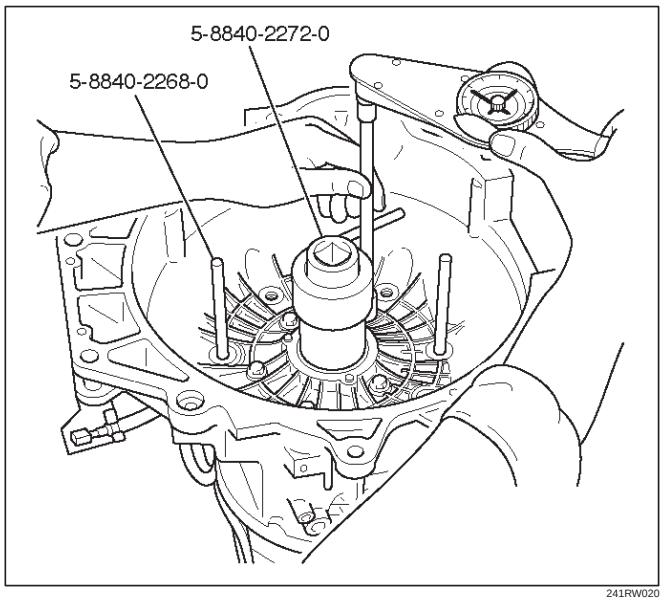

241RW020

3. Install oil seal ring (3 screws).

   Torque: 3 N•m (0.3 kg·m/26 lb in)
4. Install gasket.
5. Install outer seal ring.

Oil Pump

Disassembled View

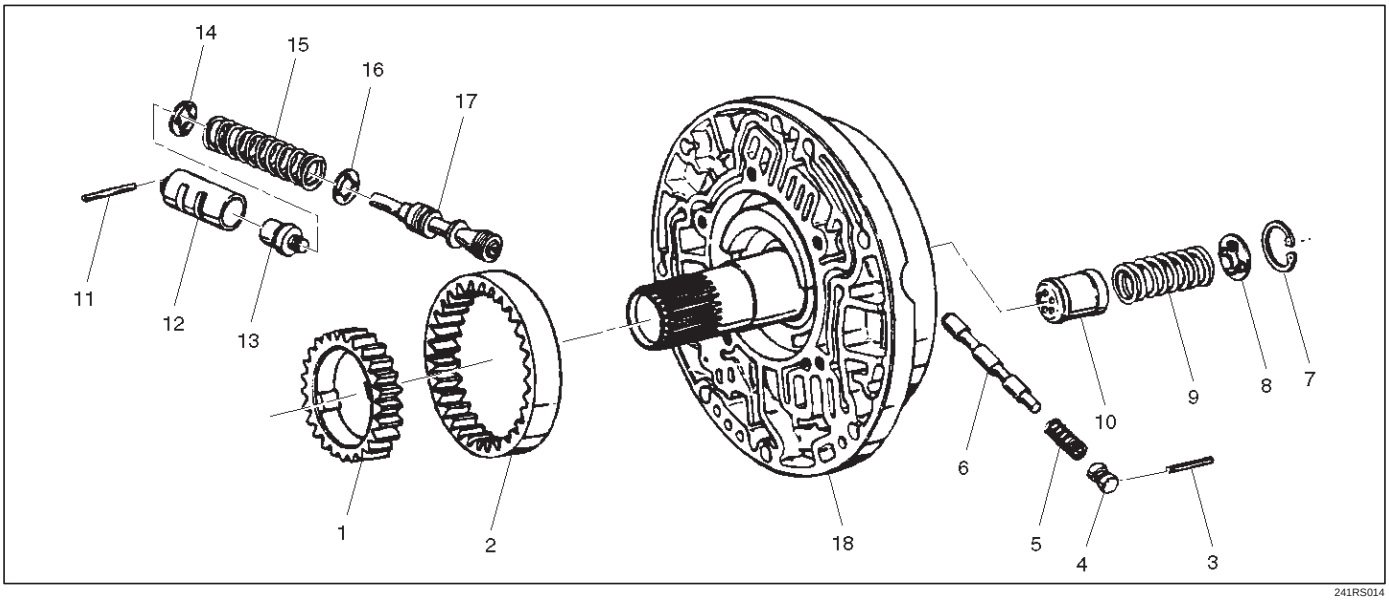

241RS014

Legend

(1) Oil Pump Drive Gear
(2) Oil Pump Driven Gear
(3) Pin
(4) Plug
(5) Spring
(6) Converter Clutch Control Valve
(7) Snap Ring
(8) Spring Seat
(9) Spring
(10) Throttle Signal Accumulator Piston
(11) Sleeve Pin
(12) Sleeve
(13) Boost Valve
(14) Spring Seat
(15) Valve Spring
(16) Spring Seat
(17) Pressure Regulator valve
(18) Oil Pump Assembly

Disassembly

1. Remove oil pump drive gear (1) and driven gear (2).
2. Remove pin (3) from oil pump assembly (18).
3. Remove plug (4), spring (5), and converter clutch control valve (6).
4. Remove snap ring (7) from oil pump assembly (18).
5. Remove spring seat (8), spring (9), and throttle signal accumulator piston (10).
6. Remove sleeve pin (11) from oil pump assembly (18).
7. Remove sleeve (12), boost valve (13), spring seat (14), valve spring (15), spring seat (16), and pressure regulator valve (17).

Inspection And Repair

Visual Check:

If any damage, deformation or wear is found, replace the damaged part.

Reassembly

1. Lubricate and preinstall pressure regulator spring seat (16) on valve (17), with the flat side against shoulder.
2. Install pressure regulator valve (17) and spring seat (16) assembly, valve spring (15), and spring seat (14) with the flat side away from spring to oil pump assembly (18).
3. Assemble boost valve (13) into sleeve (12).
4. Install boost valve and sleeve assembly, and sleeve pin (11) to oil pump assembly (18).
5. Install throttle signal accumulator piston (10), spring (9), and spring seat (8), with the flat side away from the spring, and snap ring (7) to oil pump assembly (18).
6. Install converter clutch control valve (6), spring (5), plug (4), and pin (3) to oil pump assembly (18).
7. Install oil pump driven gear (2) and drive gear (1).

Main Case Valve Body

Disassembled View

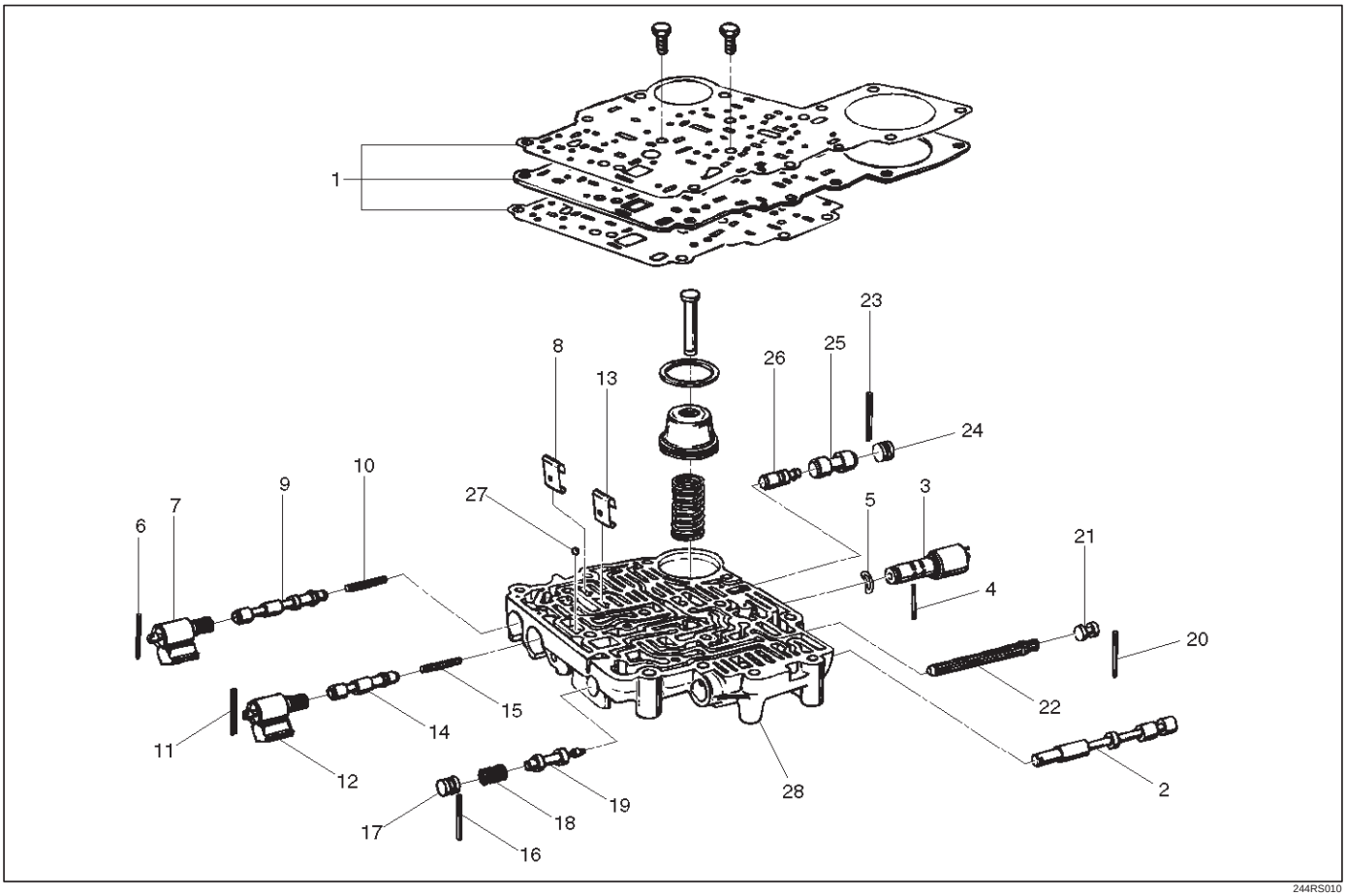

244RS010

Legend

(1) Gaskets and Transfer Plate
(2) Manual Valve
(3) Band Control Solenoid
(4) Pin
(5) Waved Washer
(6) Spring Pin
(7) Solenoid A
(8) Retainer
(9) 1–2/3–4 Shift Valve
(10) Spring
(11) Spring Pin
(12) Solenoid B
(13) Retainer
(14) 2–3 Shift Valve
(15) Spring
(16) Spring Pin
(17) Plug
(18) Spring
(19) Low Pressure Control Valve
(20) Spring Pin
(21) Plug
(22) Band Control Screen Assembly
(23) Spring Pin
(24) Plug
(25) 1–2 Accumulator Valve
(26) 1–2 Accumulator Control Valve
(27) Check Ball
(28) Main Case Valve Body

Disassembly

1. Remove two 11mm bolts from valve body (28), then remove gaskets and transfer plate (1).
2. Remove manual valve (2).
3. Push in band control solenoid (3) to compress waved washer (5), and remove pin (4).
4. Remove band control solenoid (3) and waved washer (5).
5. Remove spring pin (6) with a 3 mm dia punch.
6. Remove solenoid A (7) by grasping the metal tip. Do not grasp the connector housing.
7. Remove retainer (8), 1–2/3–4 shift valve (9), and spring (10).
8. Remove spring pin (11) with a 3 mm dia punch.
9. Remove solenoid B (12) by grasping the metal tip. Do not grasp the connector housing.

10. Remove retainer (13), 2–3 shift valve (14), and spring (15).
11. Remove spring pin (16), plug (17), spring (18), and low pressure control valve (19).
12. Remove spring pin (20), plug (21), and band control screen assembly (22).
13. Remove spring pin (23), plug (24), 1–2 accumulator valve (25), and 1–2 accumulator control valve (26).
14. Remove check ball (27) from valve body (28).

Inspection And Repair

Inspect for the following, and replace any damaged or worn parts:

1. Damage or wear to each valve.
2. Damage in oil passeges.
3. Cracks or damage to valve body.
4. Valve operations.
5. Spring fatigue.

Reassembly

1. Install 1–2 accumulator control valve (26), 1–2 accumulator valve (25), plug (24), and spring pin (23).
2. Install band control screen assembly (22), plug (21), and spring pin (20).
3. Install low pressure control valve (19), spring (18), plug (17), and spring pin (16).
4. Install spring (15), 2–3 shift valve (14), retainer (13), solenoid B (12), and spring pin (11).
5. Install spring (10), 1–2/3–4 shift valve (9), retainer (8), solenoid A (7), and spring pin (6).
6. Install waved washer (5), band control solenoid (3), and pin (4).
7. Install manual valve (2).
8. Install check ball (27) to valve body (28).
9. Install gasket (valve body/transfer plate) and transfer plate using two 5–8840–2270–0 (J–3387–2) guide pins.
   - Install two 11mm bolts.

   Torque: 13 N•m (1.3 kg·m/113 lb in)

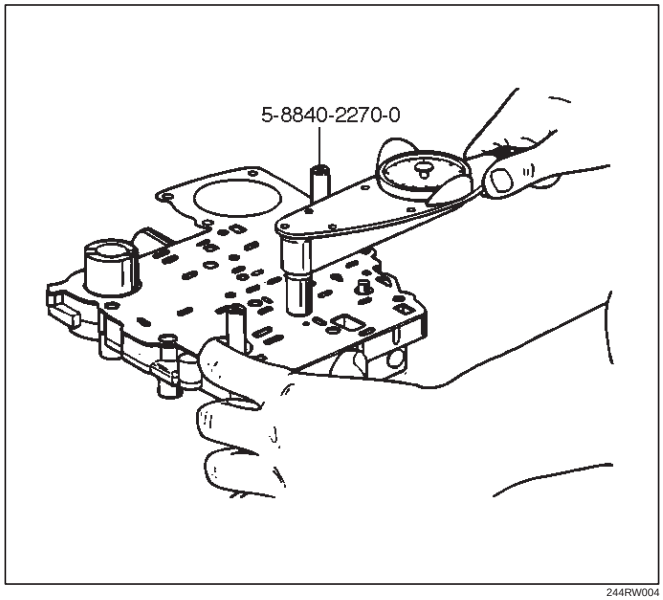

244RW004

   - Install gasket (transfer plate/main case).

Adapter Case Valve Body

Disassembled View

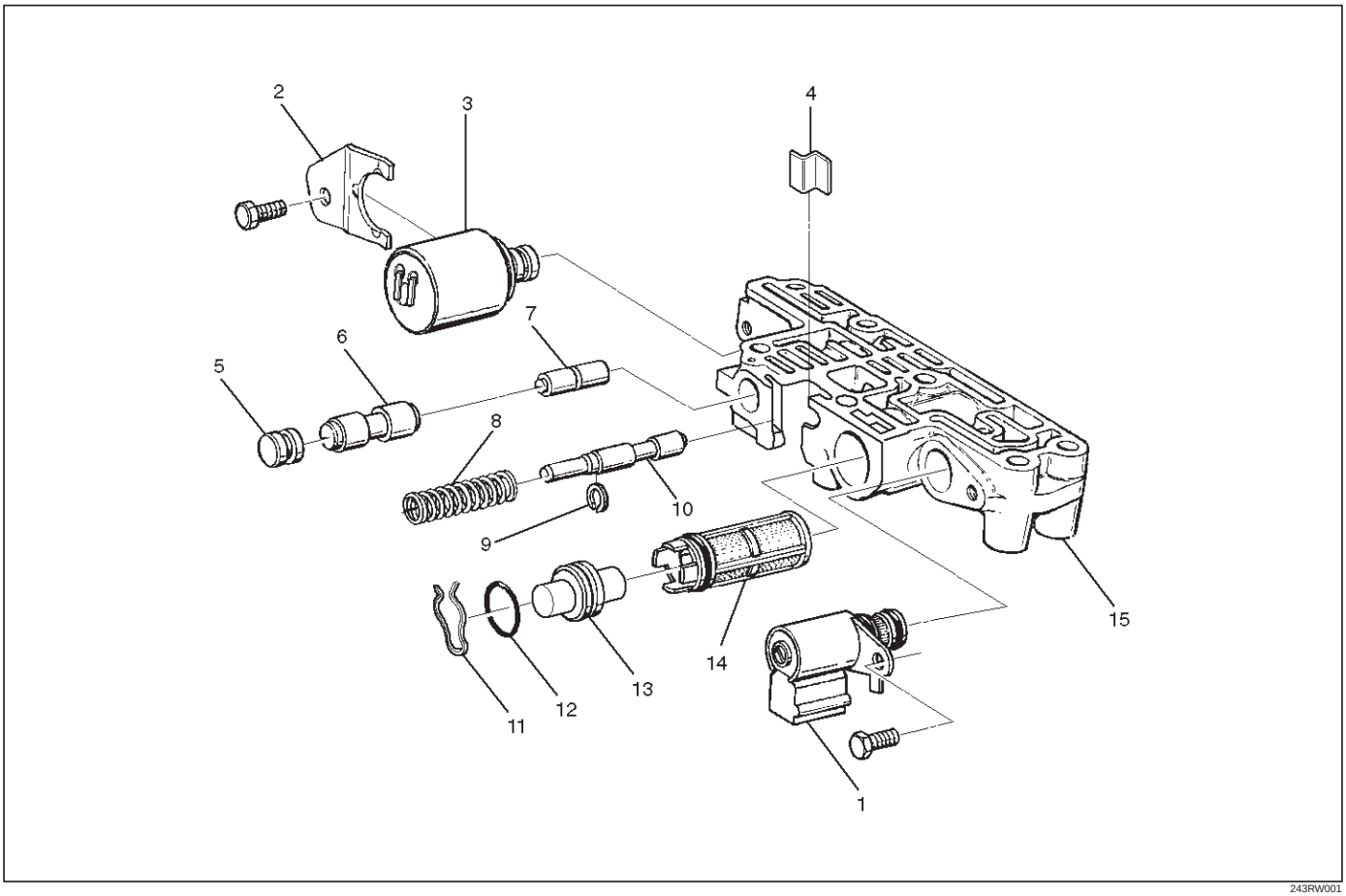

243RW001

Legend

(1) Converter Clutch Solenoid Assembly
(2) Retainer
(3) Force Motor Solenoid
(4) Retainer
(5) Plug
(6) 3/4 Accumulator Valve
(7) 3/4 Accumulator Control Valve
(8) Spring
(9) Retaining Ring
(10) Feed Limit Valve
(11) Plug Retainer
(12) O–Ring
(13) Plug
(14) Force Motor Screen Assembly
(15) Adapter Case Valve Body

Disassembly

1. Remove 11mm bolt from valve body.
   - Remove converter control solenoid assembly (1).
2. Remove 11mm bolt and retainer (2) from valve body.
   - Remove force motor solenoid (3).
3. Remove retainer (4), plug (5), 3/4 accumulator valve (6), and 3/4 accumulator control valve (7).
4. Remove spring (8), retaining ring (9), and feed limit valve (10).
5. Remove plug retainer (11), O–ring (12), plug (13), and force motor screen assembly (14).
   - Use 5 mm bolt to pull plug.

Inspection And Repair

Inspect for the following, and replace any damaged or worn parts:

1. Damage or wear to each valve.
2. Damage in oil passeges.
3. Cracks or damage to valve body.
4. Valve operations.
5. Spring fatigue.

Reassembly

1. Install force motor screen assembly (14), plug (13), O–ring (12), and plug retainer (11).
2. Install feed limit valve (10), retaining ring (9), and spring (8).

3. Install 3/4 accumulator control valve (7), 3/4 accumulator valve (6), plug (5), and retainer (4).
4. Install force motor solenoid (3).
   - Place solenoid terminals pointing towards mating face.
   - Install retainer (2) and bolt.

   Torque: 10 N•m (1.0 kg·m/87 lb in)
5. Install converter clutch solenoid assembly with two O–rings (1) to valve body.
   - Install bolt.

   Torque: 10 N•m (1.0 kg·m/87 lb in)

Third Clutch And Sprag Unit

Disassembled View

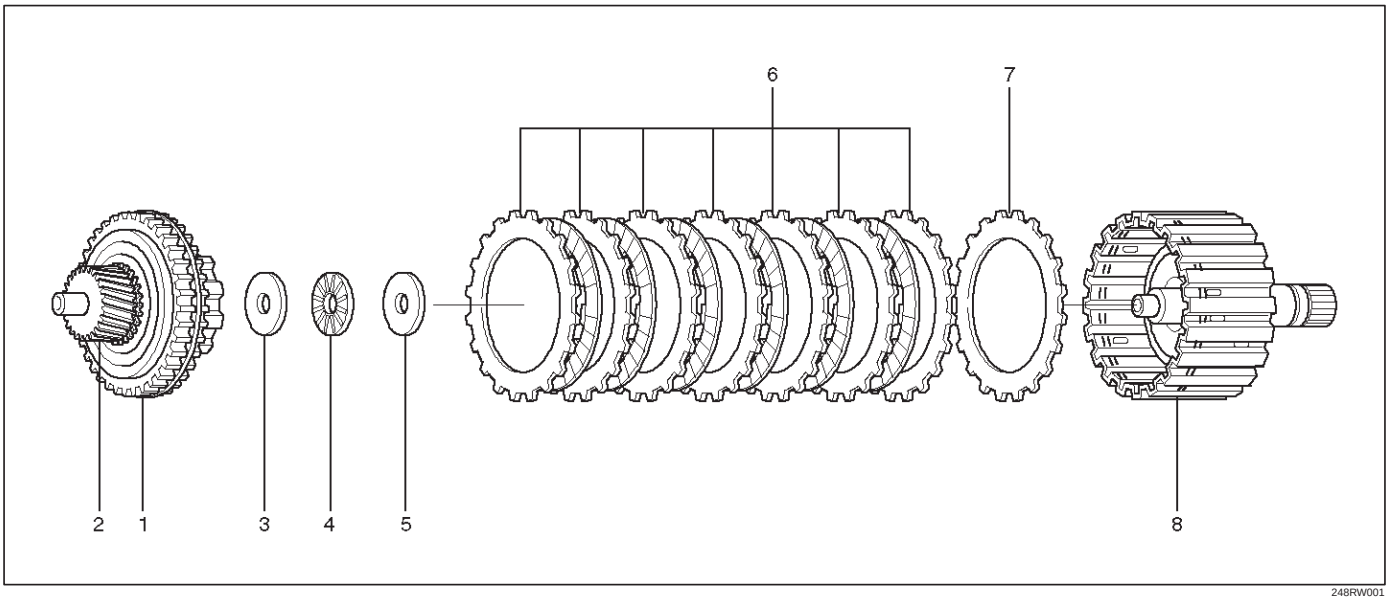

248RW001

Legend

(1) Retaining Ring
(2) Input Sun Gear and Sprag Unit Assembly
(3) Retaining Washer
(4) Bearing
(5) Thrust Washer
(6) Clutch Plates
(7) Third Clutch Spring Cushion Plate
(8) Third Clutch Drum Assembly

Disassembly

1. Place the third clutch drum and intermediate shaft assembly upright, using the overdrive internal gear as a support.
2. Locate the ends of the retaining ring. Depress one end of the ring using a small screwdriver instead of the depressor handle provided with the tool 5-8840-2258-0 (J-38450-A). Slide one blade down between the third clutch drum and the retaining ring.
3. Remove a screwdriver and repeat this step for the other end of retaining ring.
4. Install the remaining four blades approximately (five) notches apart using a screwdriver to depress the retaining ring.
5. Pull up on input sun gear and sprag unit assembly (1 and 2) to release the retaining ring from third clutch drum assembly (8).
6. Remove the tool blades.

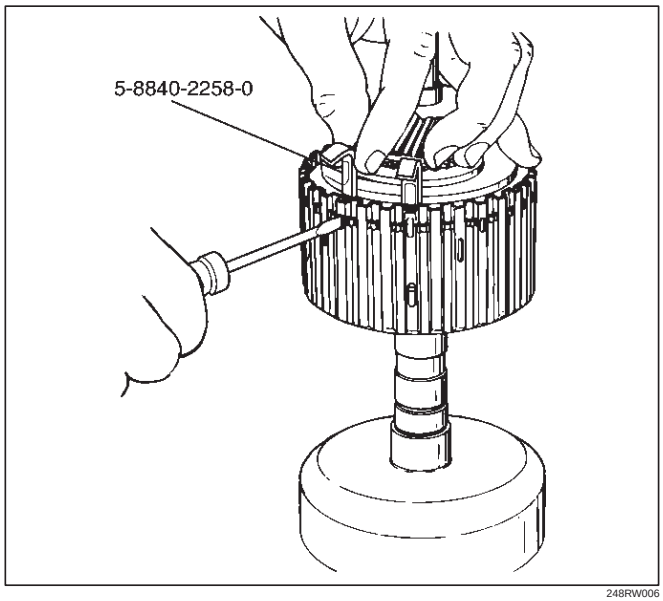

248RW006

7. Remove retaining washer (3), bearing (4), thrust washer (5), and clutch plates (6 and 7) form the third clutch drum assembly (8).

Inspection And Repair

Visual Check:

If any damage, deformation or wear is found, replace the damaged part.

Reassembly

1. Place third clutch drum and intermediate shaft assembly upright, using the overdrive internal gear as a support.
2. Install third clutch spring cushion plate (7), bevel face down.
3. Install third clutch plates (6) into third clutch drum assembly (8). Start with the steel clutch plate and alternate with lined plates.
4. Install thrust washer (5), bearing (4), and retaining washer (3).
5. Fully engage the hub splines of the input sun gear and sprag unit assembly (2) into the third clutch inner tangs.
   - Simultaneously rotate the outer sprag race to engage into the third clutch drum assembly (8).
6. Place 5-8840-2258-0 (J-38450-A) blades between the retaining ring and the third clutch drum approximately (five) notches apart, and one blade at each end of the retaining ring (1). Push down on sprag assembly until the assembly is seated into the third clutch drum assembly (8).
7. Remove the tool blades and engage retaining ring into groove of third clutch drum.

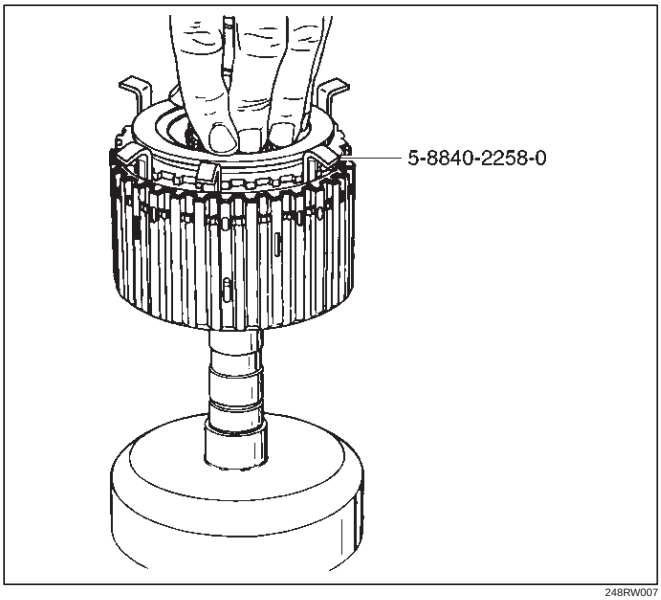

248RW007

Third Clutch

Disassembled View

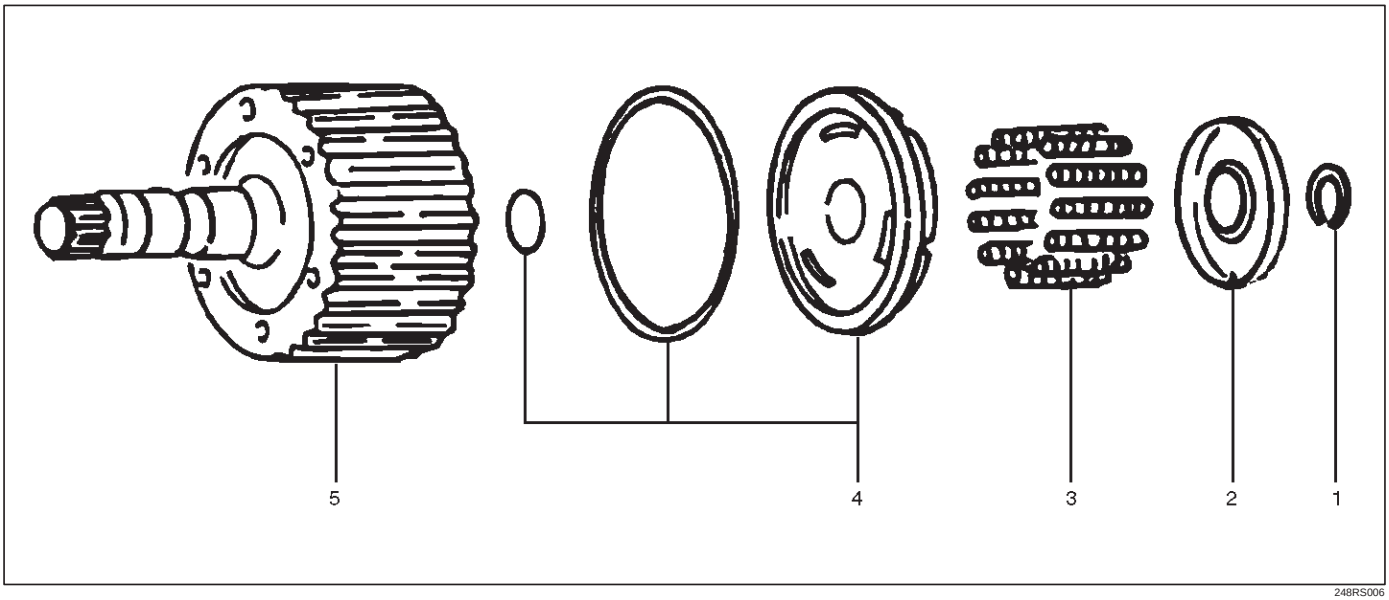

248RS006

Legend

(1) Retaining Ring
(2) Spring Seat
(3) Springs
(4) Piston Assembly
(5) Third Clutch Drum

Disassemble

1. Compress spring seat using the 5–8840–0501–0 (J–23075) spring compressor and 5–8840–2259–0 (J–23075–12) adapter tool.

NOTE: Do not over–stress the springs and seat. This will cause damage to the spring seat.

- Remove the tool.
- Remove retaining ring (1).

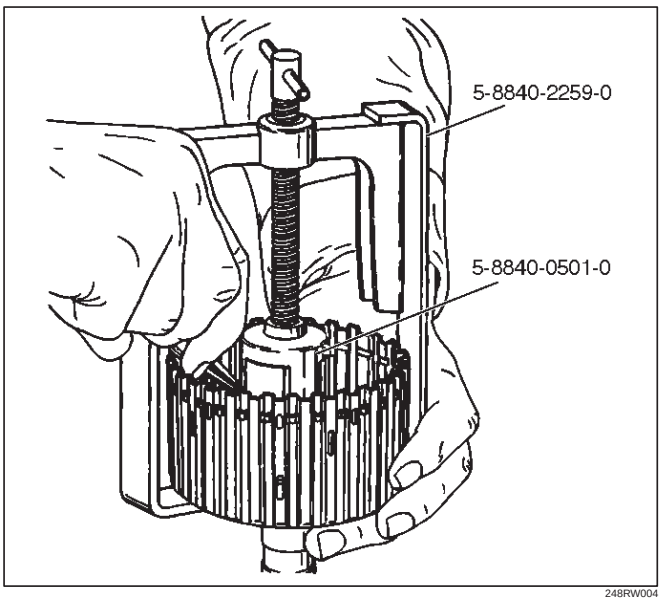

248RW004

2. Release the spring seat (2).

NOTE: Do not let the spring seat catch in the ring groove.

- Remove spring seat (2) and springs (3).

3. Remove piston assembly (4) from third clutch drum (5).

Inspection And Repair

Visual check:

If any damage, deformation or wear is found, replace the damaged part.

Operation check:

Shake the piston and listen for check ball movement indicates proper check ball operation. Replace the piston if the check ball is missing or falls out.

Reassembly

1. The lip of the piston seal must point toward the front of the transmission. Lubricate the seal lip with transmission fluid.
   - Install piston assembly (4) into the third clutch drum (5). Use the 5–8840–2260–0 (J–23084) third clutch piston installer to protect the outer seal during installation.

- Remove the seal installer.

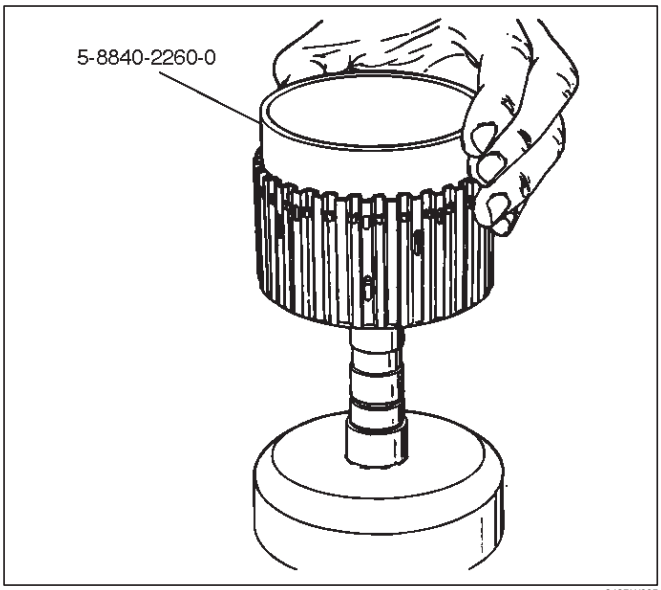

248RW005

2. Install twelve springs (3) and spring seat (2).
3. Place retaining ring (1) onto spring seat.
   - Compress the piston springs, using the 5–8840–0501–0 (J–23075) piston spring compressor and 5–8840–2259–0 (J–23075–12) adapter.

CAUTION: Do not over stress the springs and seat. Do not let the spring seat catch in the ring groove. This may cause damage to the spring seat.

- Install spring seat retaining ring (1).
- Remove the piston spring compressor and adapter.

Sprag Unit

Disassembled View

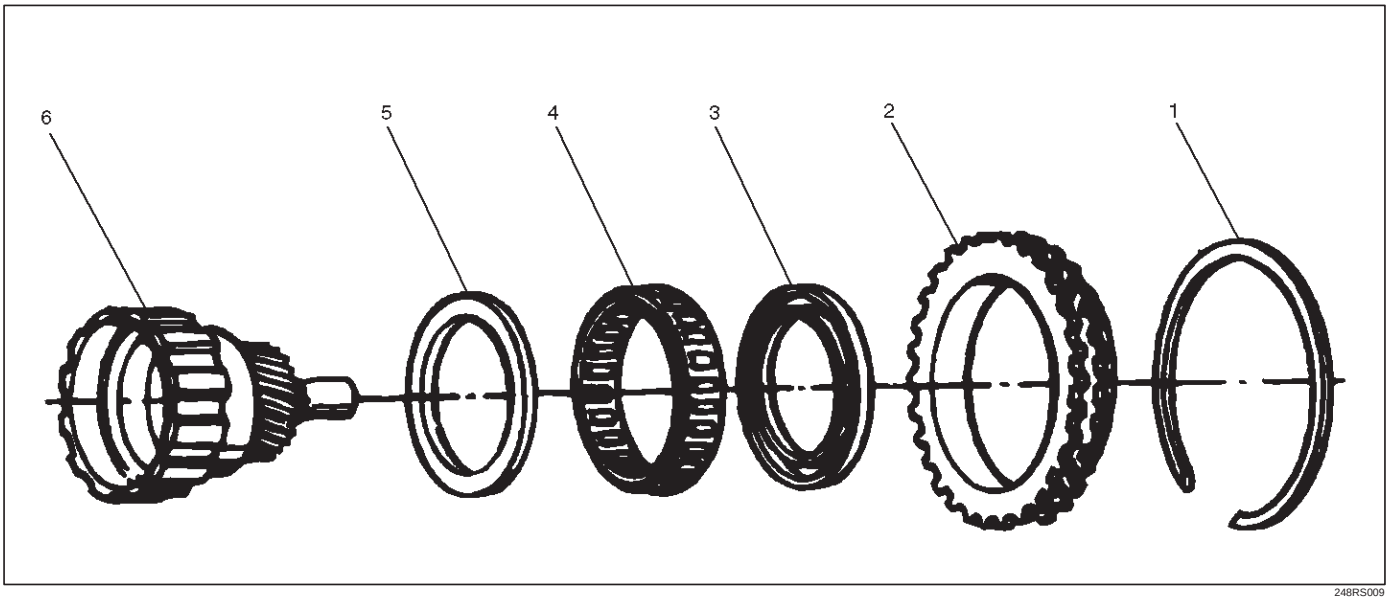

248RS009

Legend

(1) Retaining Ring
(2) Sprag Outer Race
(3) Ring
(4) Sprag Assembly
(5) Ring
(6) Third Clutch Hub and Sun Gear Assembly

Disassembly

1. Remove the sprag outer race, retaining ring, and sprag assembly from the third clutch hub and sun gear assembly.
2. Remove the rings and sprag assembly from the sprag outer race.

Inspection And Repair

Visual Check:

If any damage, deformation or wear is found, replace the damaged part.

Reassembly

NOTE: Flared shoulder of the sprag cage faces the sun gear. This procedure must be followed exactly to be sure that the sprag assembly is installed properly.

1. Install rings and sprag assembly onto the third clutch hub and sun gear.
2. Install sprag outer race and retaining ring assembly over the sprag cage assembly.
   - Place third clutch hub and sun gear assembly on a flat surface, sun gear facing up. Place sprag outer race and sprag assembly over the sun gear assembly, push down and turn the input sun counterclockwise at the same time.

NOTE: Check correct rotation by holding the sun gear in your left hand and turning the outer race. The outer sprag race should turn freely towards you and should lock turning away from you.

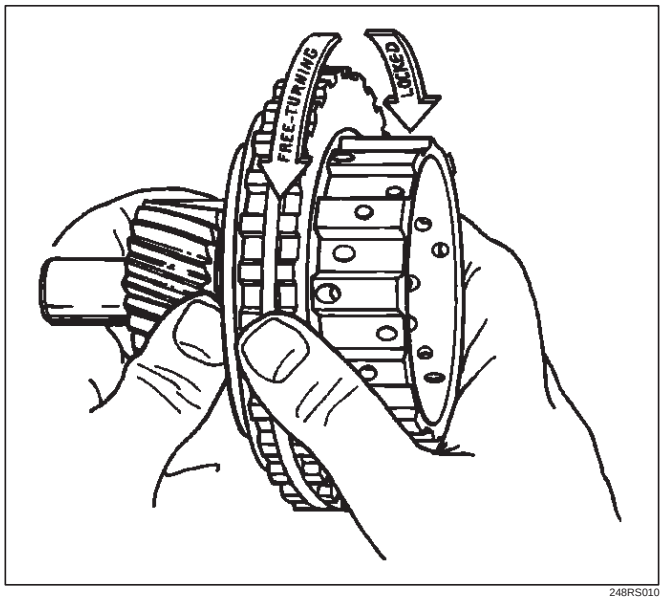

248RS010

Second Clutch

Disassembled View

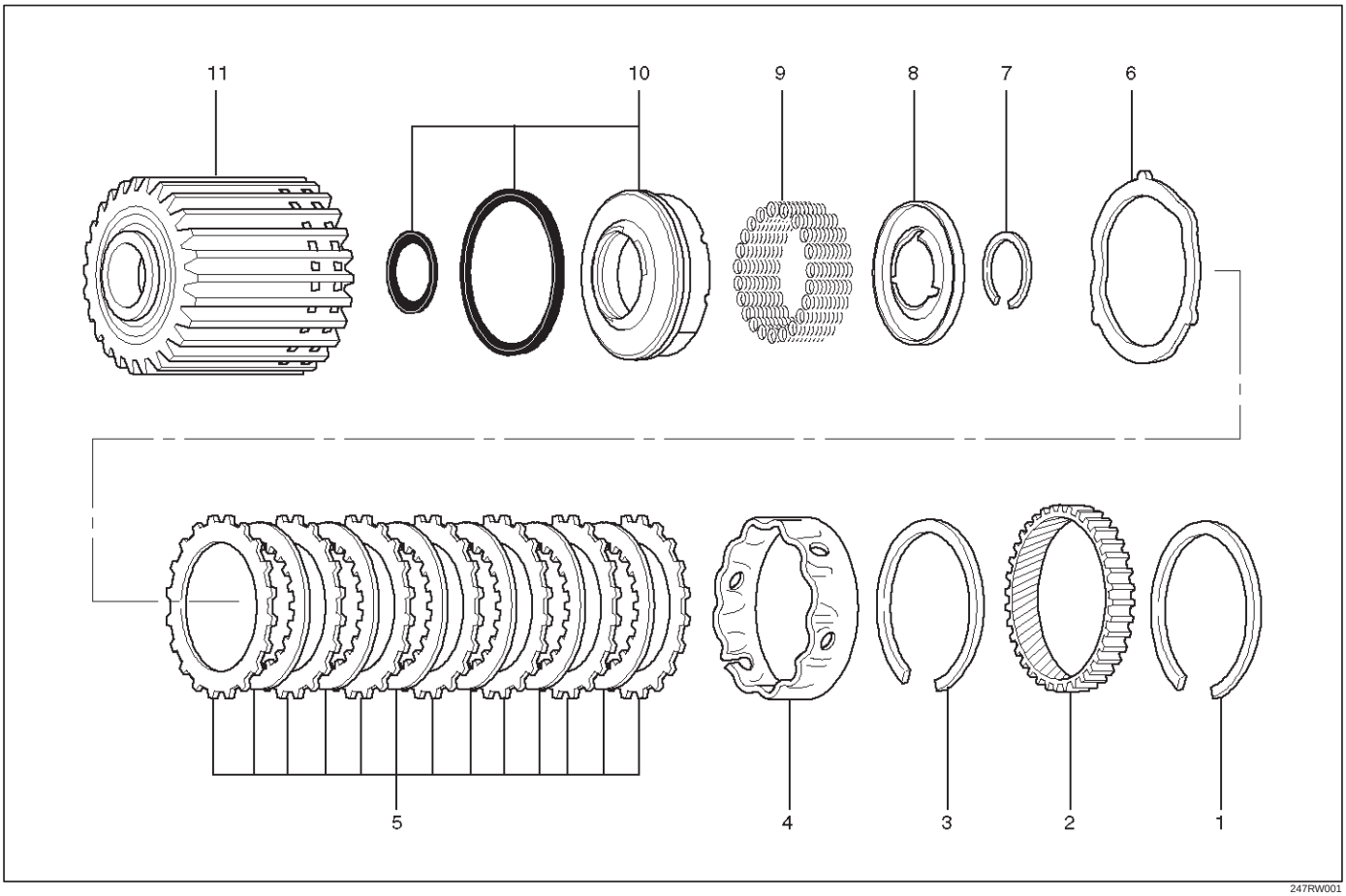

247RW001

Legend

(1) Retaining Ring
(2) Ring Gear
(3) Retaining Ring
(4) Spacer
(5) Clutch Plates
(6) Waved Washer
(7) Retaining Ring
(8) Spring Seat
(9) Springs
(10) Piston Assembly
(11) Second Clutch Drum

Disassembly

1. Remove retaining ring (1) from second clutch drum (11).
2. Remove ring gear (2), retaining ring (3), and spacer (4).
3. Remove clutch plates (5) and waved washer (6).
4. Remove retaining ring (7) using 5–8840–0195–0 (J–23327) compressor to compress the spring seat (8).
5. Remove spring seat (8), springs (9) and piston assembly (10) from second clutch drum (11).

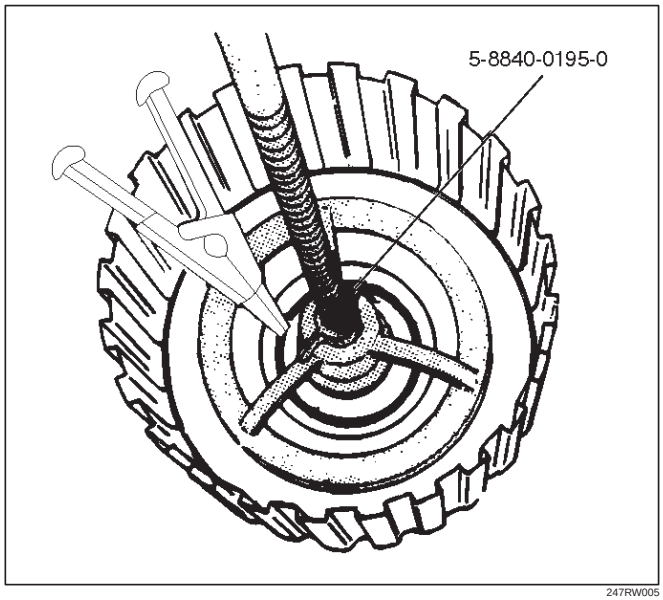

247RW005

Inspection And Repair

Visual Check:

If any damage, deformation or wear is found, replace the damaged part.

Operation Check:

Shake the piston and listen for check ball movement. Movement indicates proper check ball operation. Replace the piston if the check ball is missing or falls out.

Reassembly

1. Install piston assembly (10) into the second clutch drum (11).
   - Lubricate the lip seal with transmission fluid. Use the 5–8840–2261–0 (J–23080–A) second clutch piston installer to protect the outer piston lip seal.

NOTE: Lip of the seal should point toward front of transmission.

- Remove the installer.

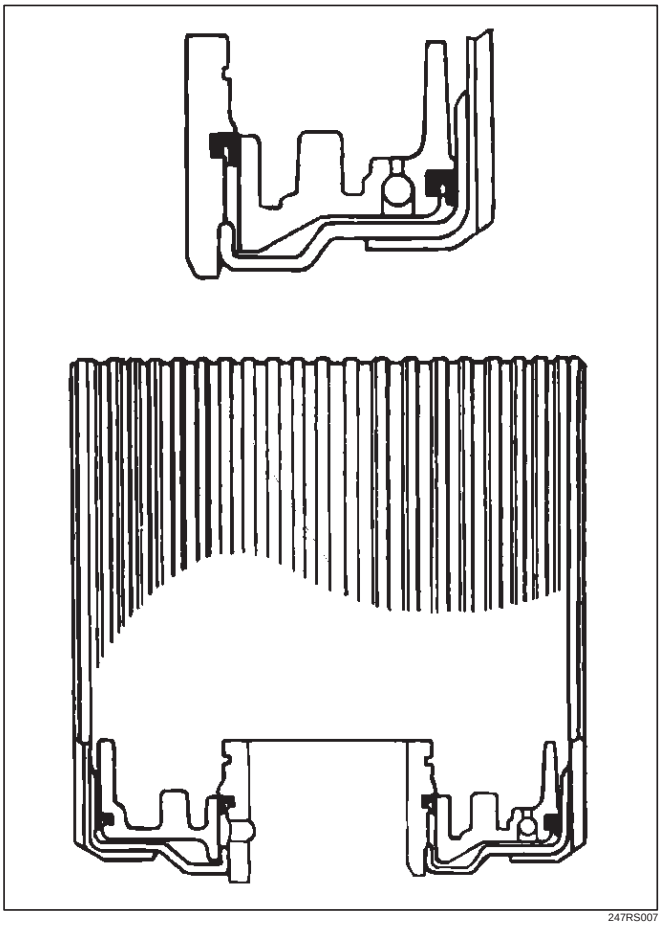

247RS007

2. Install twenty–two piston springs (9) and spring seat (8) on the second clutch piston (10). Place retaining ring (7) onto spring seat.
   - Use the 5–8840–0195–0 (J–23327) compressor to compress the piston springs.

NOTE: Do not let spring seat catch in ring groove.

- Remove the compressor.

3. Install waved plate (6) and clutch plates (5). Start with a steel plate and alternate with lined plates.
   - Align second clutch inner tangs.
4. Install spacer (4), with the fluted end toward clutch plates.
5. Install retaining ring (3), ring gear (2) and retaining ring (1).

3–4 Accumulator Piston

Disassembled View

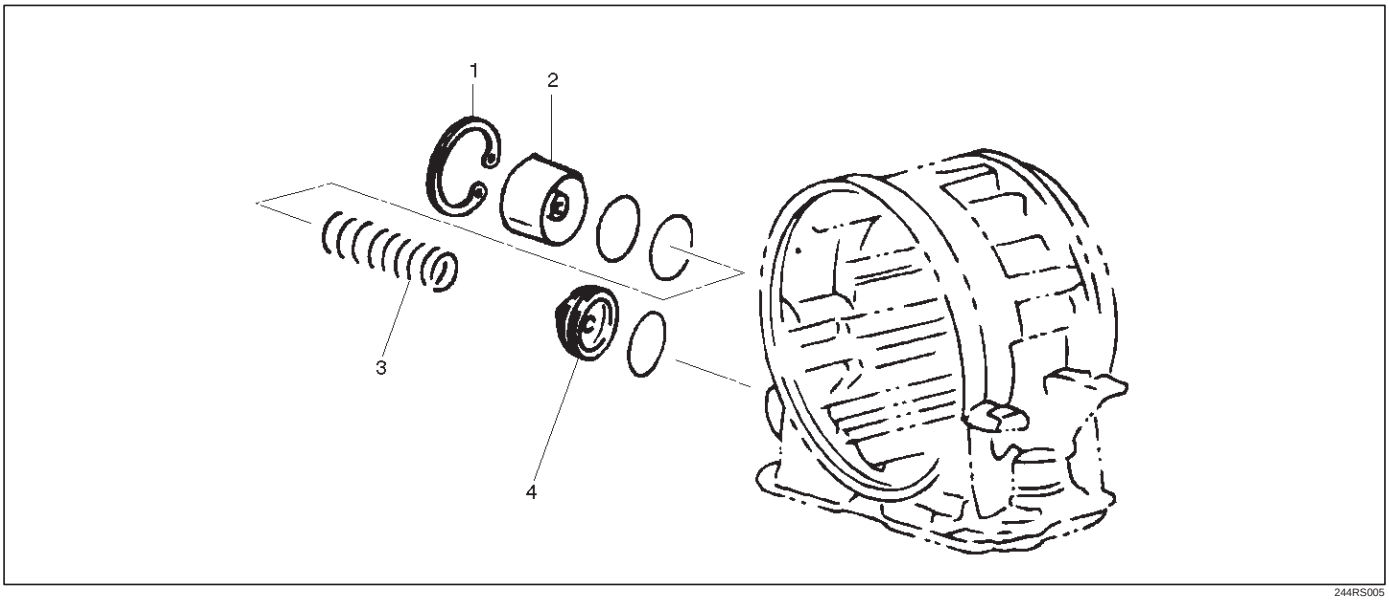

244RS005

Legend

(1) Snap Ring
(2) Cover
(3) Spring
(4) Piston Assembly

Disassembly

1. Install the 5–8840–2277–1 (J–38559–A) cover compressor on adapter case.
   - Compress piston cover then remove snap ring.

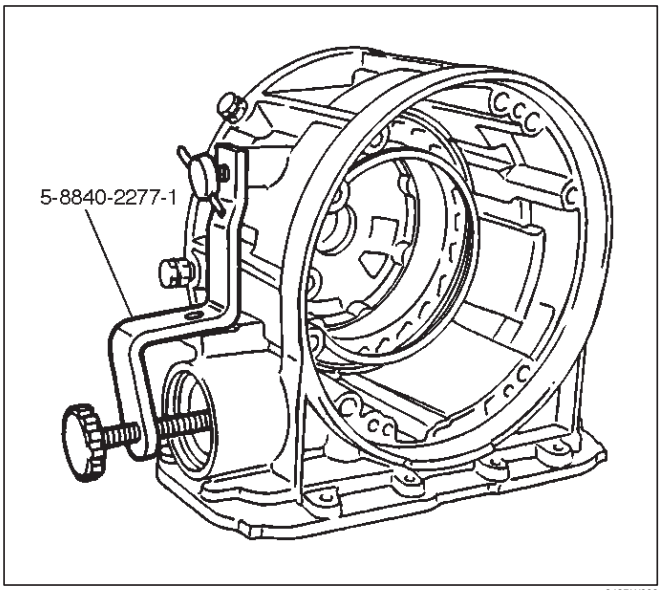

242RW009

2. Install the 5–8840–2403–0 (J–41096) cover remover and 5–8840–2266–0 (J–38584) adapter to center hole of cover.
   - Use the 5–8840–0019–0 and 5–8840–2000–0 (J–23907) slide hammer to remove cover.
3. Remove spring and piston assembly.

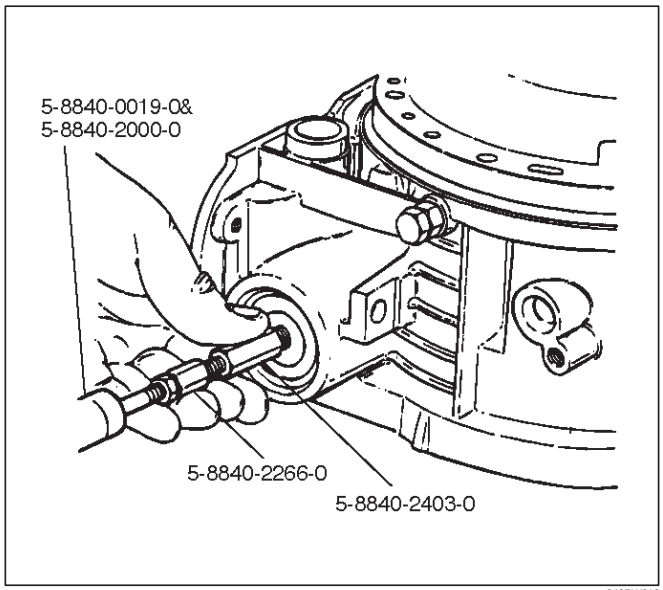

242RW010

Inspection And Repair

Visual Check:

If any damage, deformation or wear is found, replace the damaged part.

Reassembly

1. Place the 5–8840–2264–0 (J–38553) piston fitter into adaptor case and push the piston into position, using suitable diameter tube.
   - Remove the piston fitter.

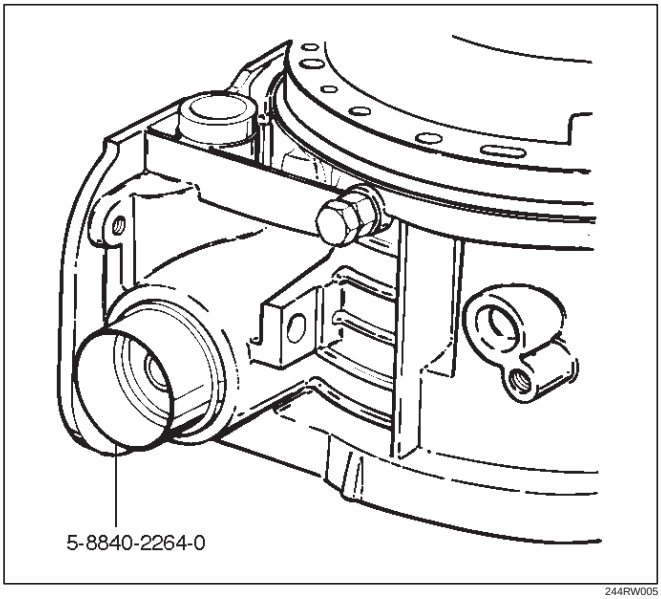

244RW005

2. Install spring and cover.
3. Install snap ring, using the 5–8840–2277–1 (J–38559–A) compressor tool.
   - Install snap ring in groove.
   - Remove the compressor tool.

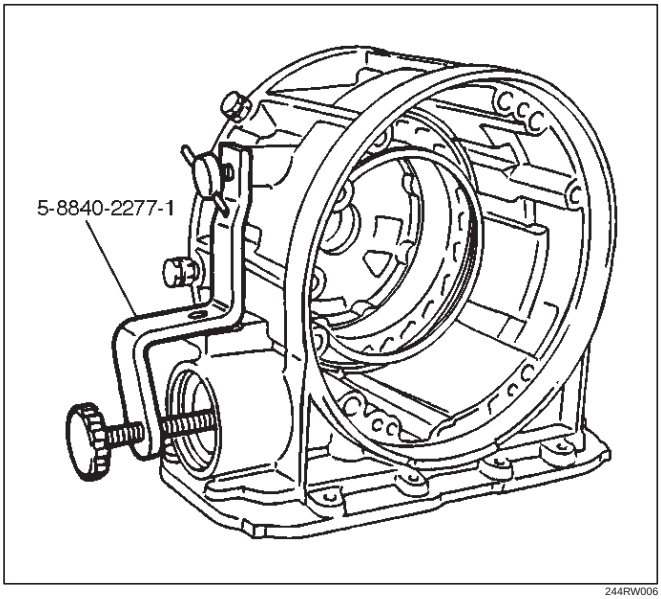

244RW006

Reverse Clutch Piston And Center Support

Disassembled View

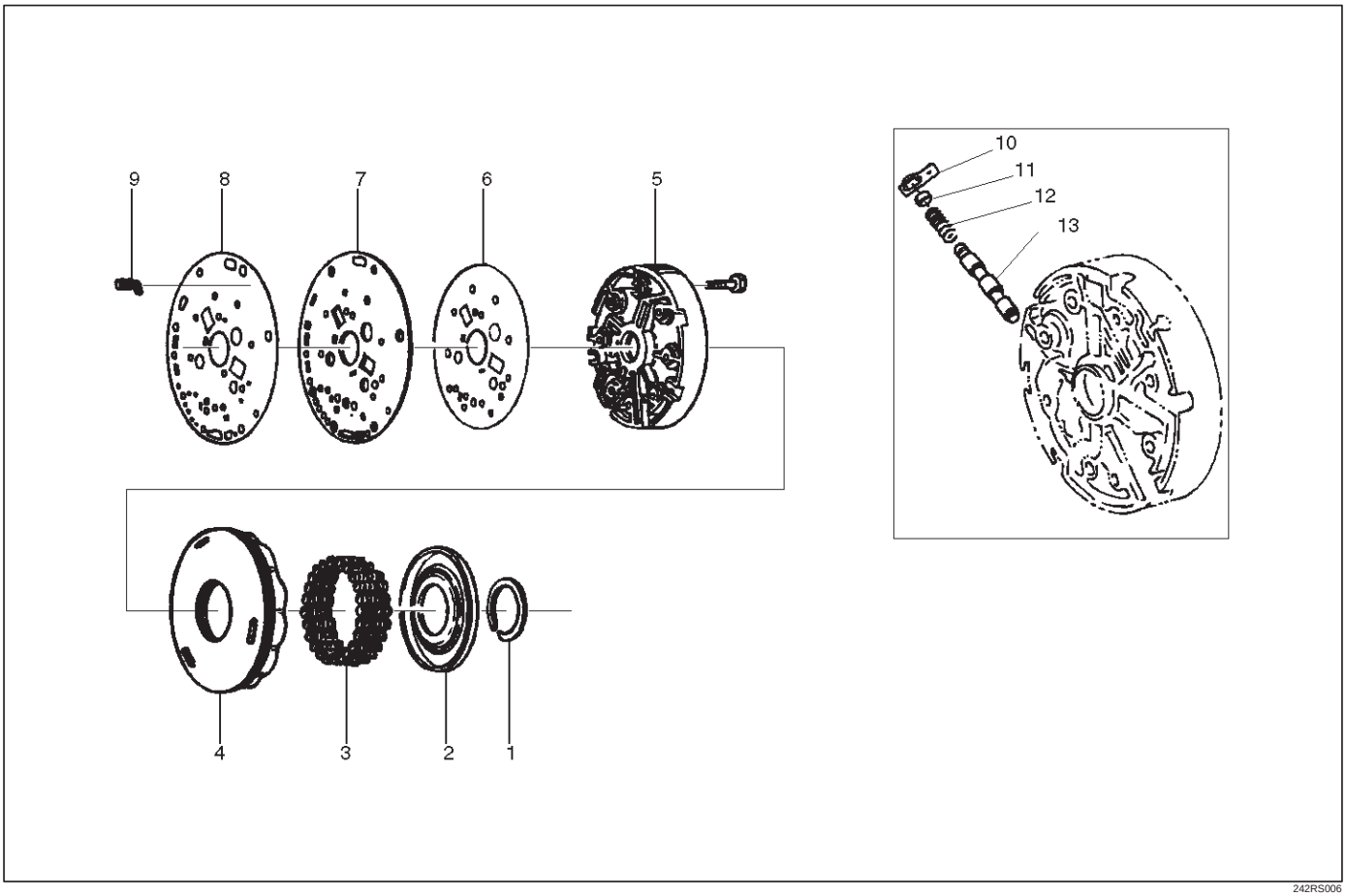

Legend

(1) Retaining Ring
(2) Spring Seat
(3) Springs
(4) Piston Assembly
(5) Center Support
(6) Gasket
(7) Transfer Plate
(8) Gasket
(9) Restrictor
(10) Retainer Plate
(11) Plug
(12) Spring
(13) Overrun Lock Out Valve

Disassembly

1. Install the 5–8840–0195–0 (J–23327) compressor tool on spring seat, then compress the spring seat.
   - Remove retaining ring (1).

NOTE: Do not over–stress the springs and seat, as this will cause damage to the spring seat.

   - Remove the compressor tool.

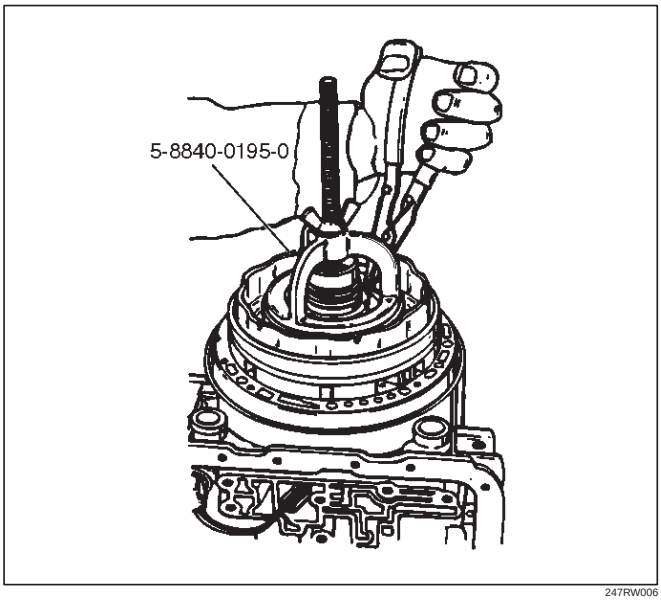

247RW006

2. Remove spring seat (2) and springs (3).
3. Remove piston assembly (4).
4. Remove 8 bolts from center support (5), then remove center support (5) from adapter case.
5. Remove gasket transfer plate/outer support (6), center support transfer plate (7), and gasket transfer plate/adapter case (8).
6. Remove restrictor (9) from adapter case housing.
7. Remove retainer plate (10), plug (11), spring (12), and overrun lock out valve (13) from center support (5).

Inspection And Repair

Visual Check:

If any damage, deformation or wear is found, replace the damaged part.

Reassembly

1. Install overrun lock out valve (13) and spring (12) to center support.

NOTE: Ensure correct assembly of valve. The spring should be located over the long small diameter end.

2. Install plug (11) and retainer plate (10).
3. Place restrictor (9) in the lube overdrive channel in the adapter case housing.

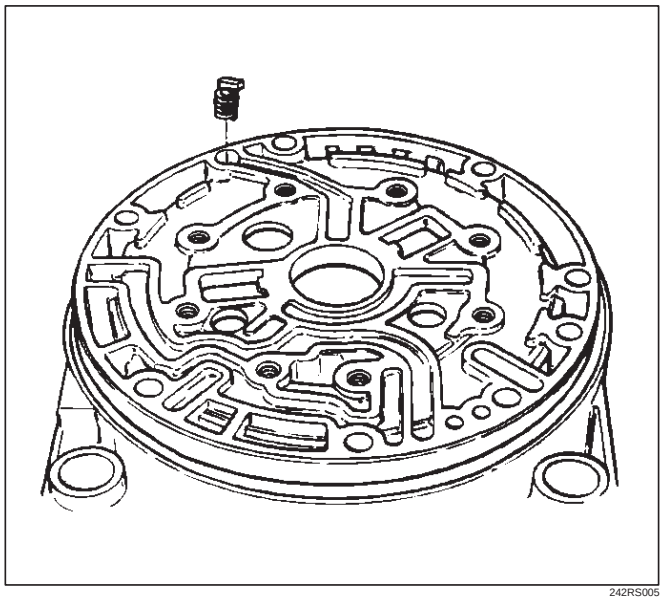

242RS005

4. Install gasket transfer plate/adapter case (8), center support transfer plate (7), and gasket transfer plate/center support (6).
5. Install center support (5) with 8 bolts.

   Torque : 25 N•m (2.5 kg·m/18 lb ft)

6. Install piston assembly (4) into center support (5).
7. Install twenty four springs (3), spring seat (2), and retaining ring (1).
   - Install the 5–8840–0195–0 (J–23327) compressor and compress spring seat (2) and springs (3), then seat snap ring (1) in groove.
   - Remove the tool.

Overrun Clutch And Turbine Shaft

Disassembled View

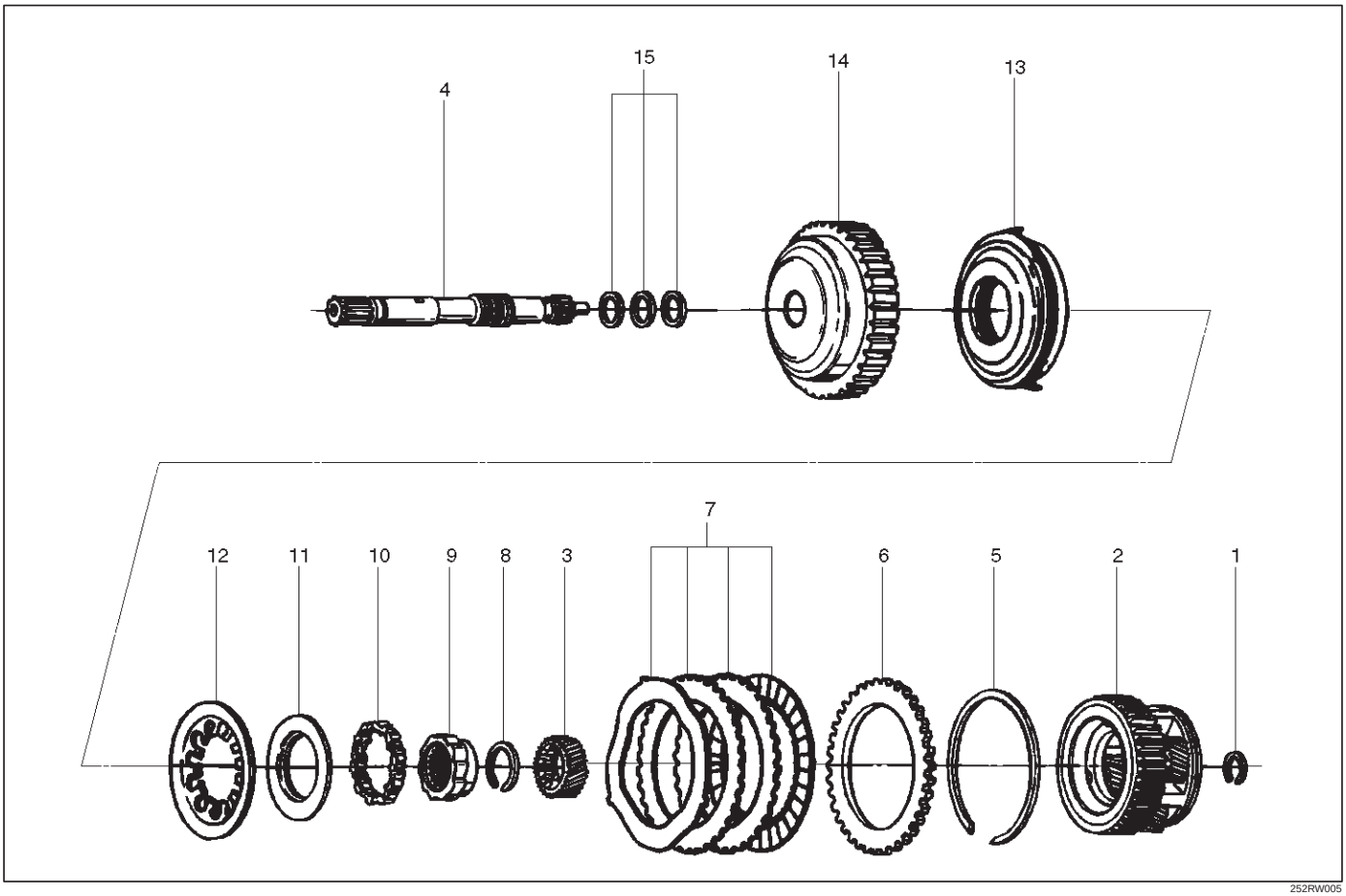

Legend

(1) Snap Ring
(2) Overdrive Carrier Assembly
(3) Sun Gear
(4) Turbine Shaft
(5) Snap Ring
(6) Backing Plate
(7) Clutch Plates
(8) Snap Ring
(9) Overrun Roller Clutch Cam
(10) Roller Clutch Assembly
(11) Overrun Clutch Release Spring Retainer
(12) Diaphragm Spring
(13) Piston Assembly
(14) Overrun Clutch Drum
(15) Turbine Shaft Seal Rings

Disassembly

1. Position overrun clutch assembly upright, using the overdrive internal gear as a support.
   - Remove snap ring (1).

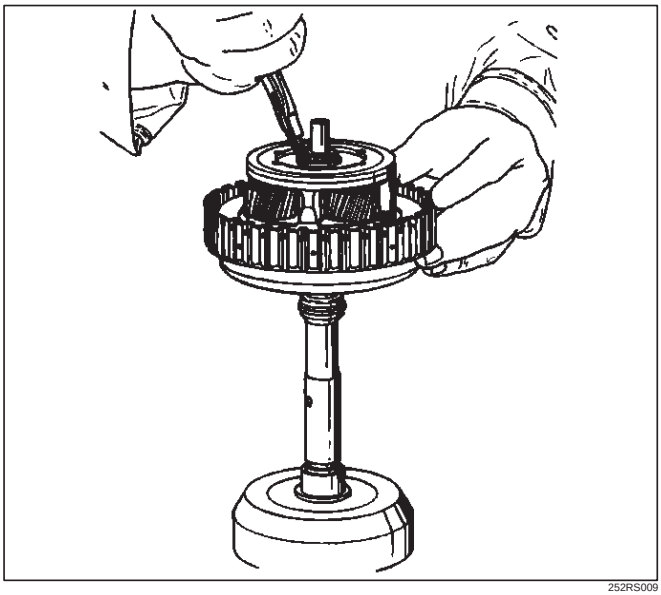

252RS009

2. Remove overdrive carrier assembly (2), sun gear (3) and turbine shaft (4).
3. Remove snap ring (5), backing plate (6), and clutch plates (7).
4. Compress diaphragm spring with the 5–8840–2275–0 (J–23327–91) compressor, then remove snap ring (8).

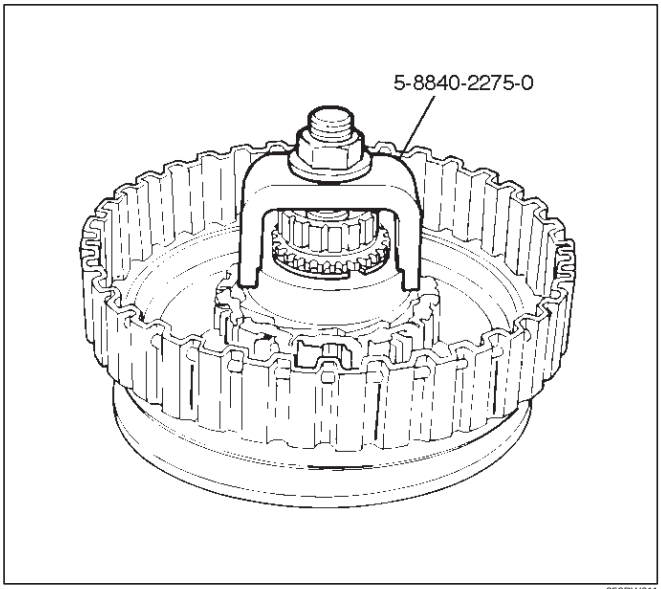

252RW011

5. Remove overrun roller clutch cam (9) and roller clutch assembly (10).
6. Remove overrun clutch release spring retainer (11) and diaphragm spring (12).
7. Remove piston assembly (13) from overrun clutch drum (14).
8. Remove turbine shaft seal rings (15).

Inspection And Repair

Overdrive Carrier Check

- Check pinion end play with a feeler gauge.

Clearance: 0.24mm–0.64mm (0.0094in–0.025in)

If clearance is outside specified value, replace overdrive carrier assembly.

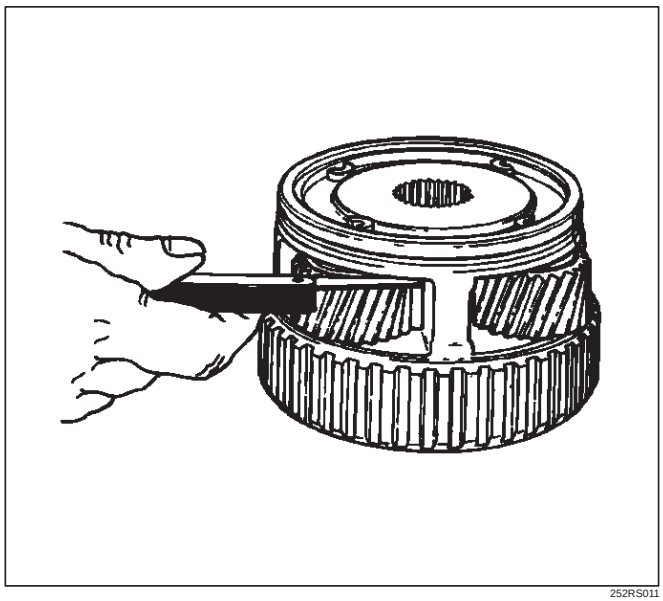

252RS011

Visual Check:

If any damage, deformation or local wear is found, replace the damaged part.

Reassembly

1. Install turbine shaft seal rings (15) with grease (petroleum jelly).

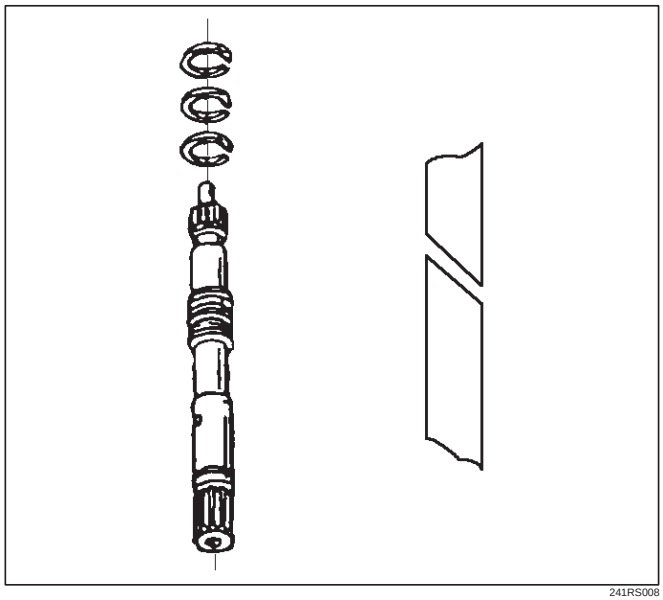

241RS008

2. Install the 5–8840–2269–0 (J–38555) inner installer on the drum (14).
   - Pre–install piston assembly into 5–8840–2269–0 (J–38555) outer installer.

- Install overrun clutch piston assembly (13). Use the outer installer while pushing piston into drum (14).
- Remove the installer.

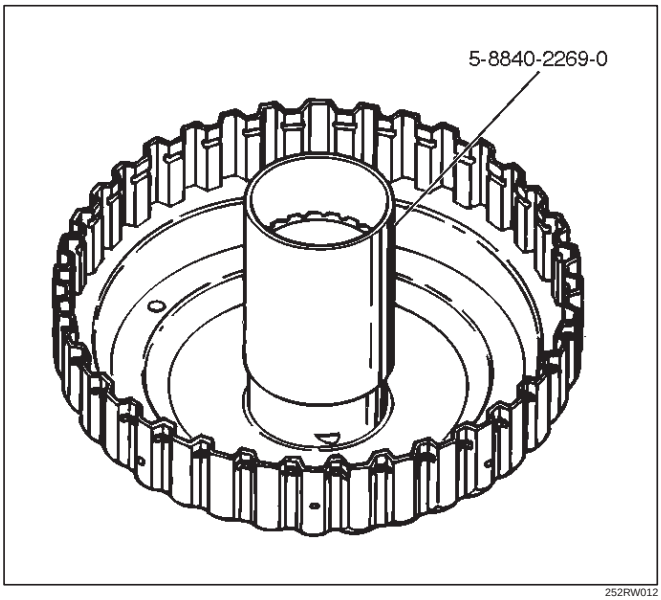

252RW012

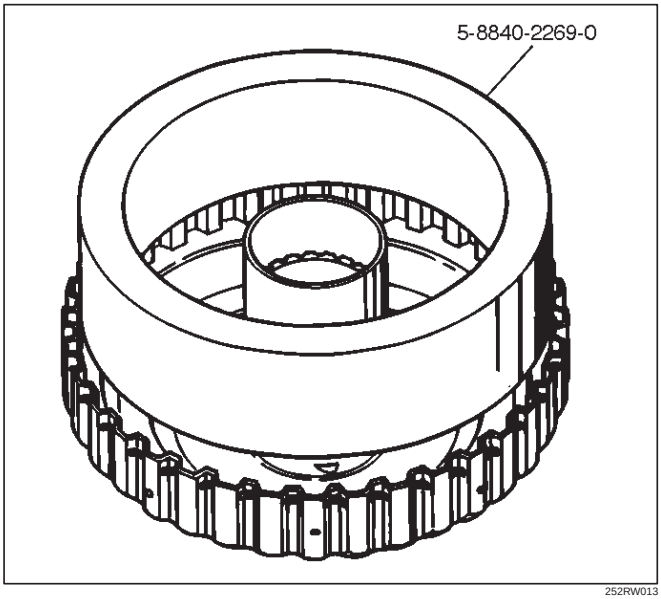

252RW013

3. Install diaphragm spring (12).
4. Install overrun clutch release spring retainer (11) (lip faces upwards), overrun roller clutch assembly (10), and cam (9).
5. Place snap ring loosely on spring retainer.
   - Hold the 5–8840–2275–0 (J–23327–91) compressor in a vise and compress piston return spring with compressor.
   - Set snap ring (8) in ring groove.
   - Remove the compressor.
6. Install clutch plates (7), start with steel plate and alternate with lined plates.
7. Install backing plate (6).
8. Install snap ring (5).
9. Install overdrive sun gear with countersink pointing downwards.
10. Install the overdrive carrier assembly (2).

NOTE: Turn the assembly in a counter–clockwise direction only until roller clutch enters the outer race. After installation, rotate the assembly and listen for loose rollers.

11. Install turbine shaft (4) and snap ring (1).

Main Data And Specification

General Specifications

				Remarks
Model			THM 4L30–E	
Engine			V6 3.2L 6VD1 or V6 3.5L 6VE1	DOHC
Type			Automatic four speed overdrive in 4th gear lock–up clutch torque converter	
Control systems	Shift control		Hydraulic	
	Shift pattern		Electronic	
	Shift quality		Electronic	
	Lock–up clutch		Electronic	
Gear ratio	1st		2.856	
	2nd		1.618	
	3rd		1.000	
	4th (O/D)		0.723	
	Reverse		2.000	
Gear set			Noiseless, high torque capability	
Oil used	Name		ATF DEXRON®–III	
	Q'ty liter (qt)		8.6 (9.1)	
Torque converter			2,100 ± 150	Stall speed (rpm)
	Reverse clutch	RC	4	Number of discs
	Second clutch	C2	6	
	Third clutch	C3	6	
	Brake band		Double wrap	
	Fourth clutch	C4	2	Number of discs
	Overrun clutch	OC	1	
	Overdrive	OFW	10	Number of rollers
	Principal	PFW	26	Number of sprags
	Ravigneaux planetary gear set	Input sun gear	30	Number of teeth
		Pinion gear	19	
		Long pinion	23	
		Ring gear	90	
		Long pinion	19	
		Output sun gear	46	
	Overdrive planetary gear set	Sun gear	31	
		Pinion gear	24	
		Ring gear	81	

Torque Specifications

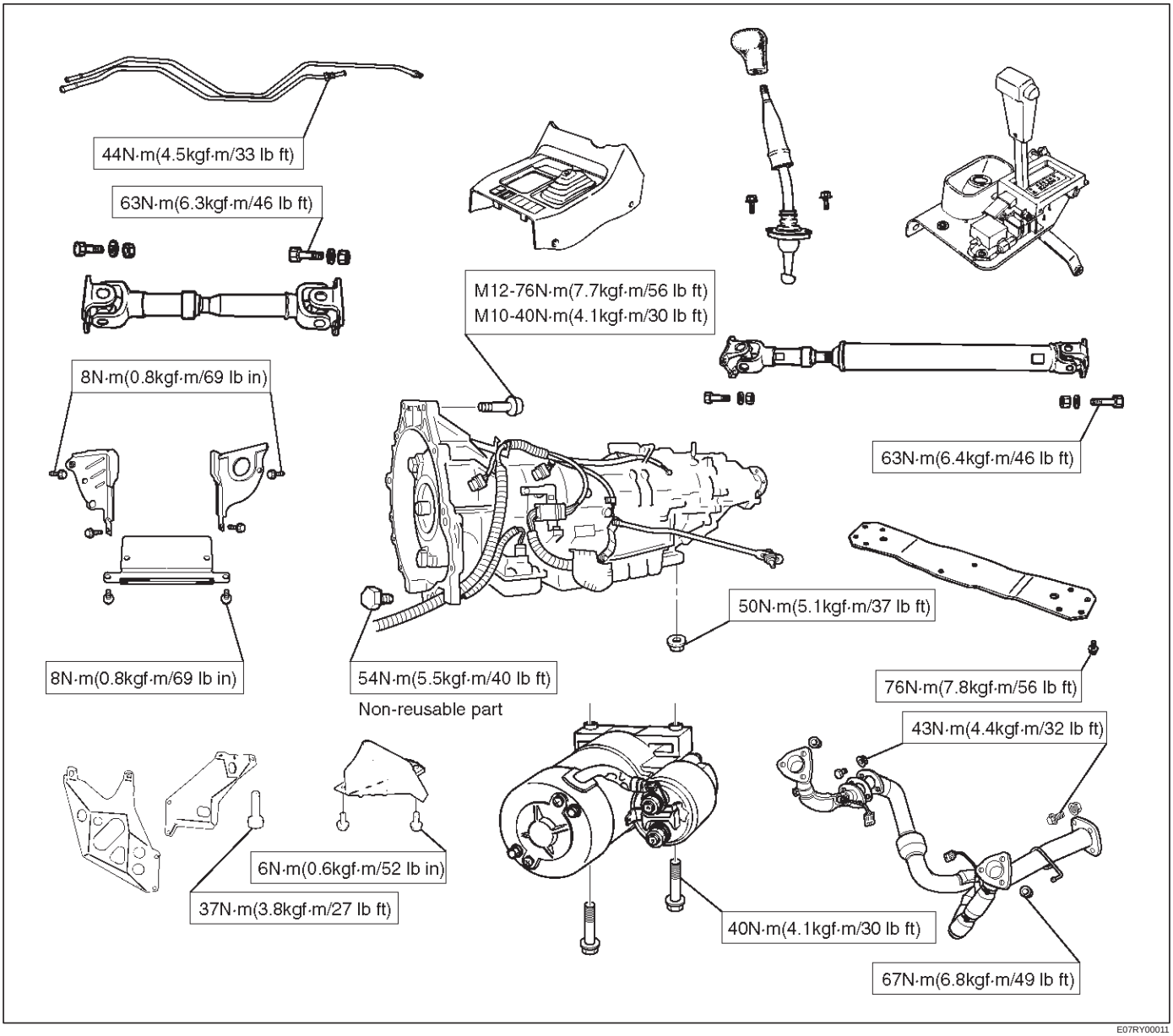

E07RY00011

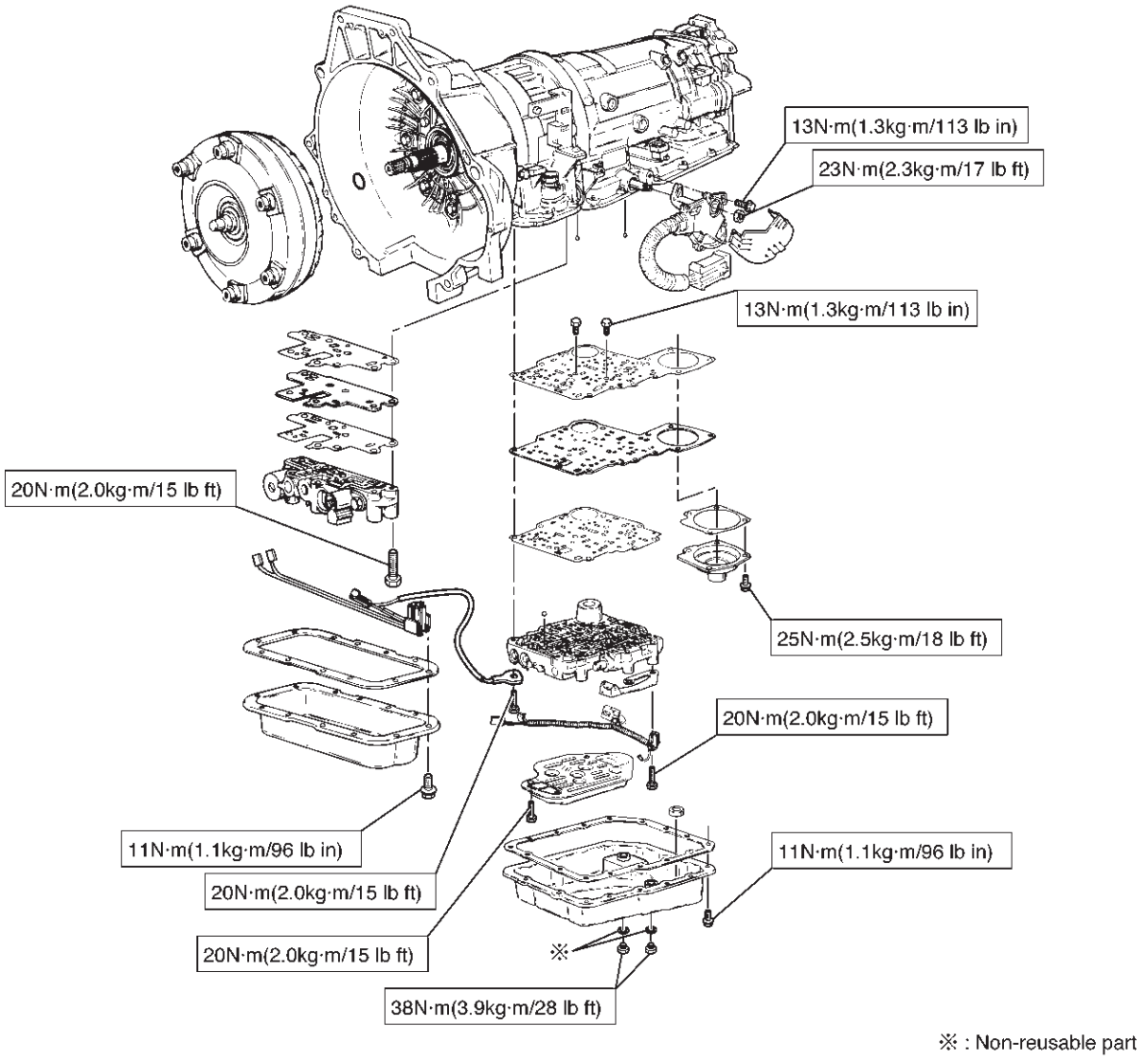
13N·m(1.3kg·m/113 lb in)
23N·m(2.3kg·m/17 lb ft)
13N·m(1.3kg·m/113 lb in)
20N·m(2.0kg·m/15 lb ft)
25N·m(2.5kg·m/18 lb ft)
20N·m(2.0kg·m/15 lb ft)
11N·m(1.1kg·m/96 lb in)
11N·m(1.1kg·m/96 lb in)
20N·m(2.0kg·m/15 lb ft)
20N·m(2.0kg·m/15 lb ft)
※
38N·m(3.9kg·m/28 lb ft)
※ : Non-reusable part

E07RW079

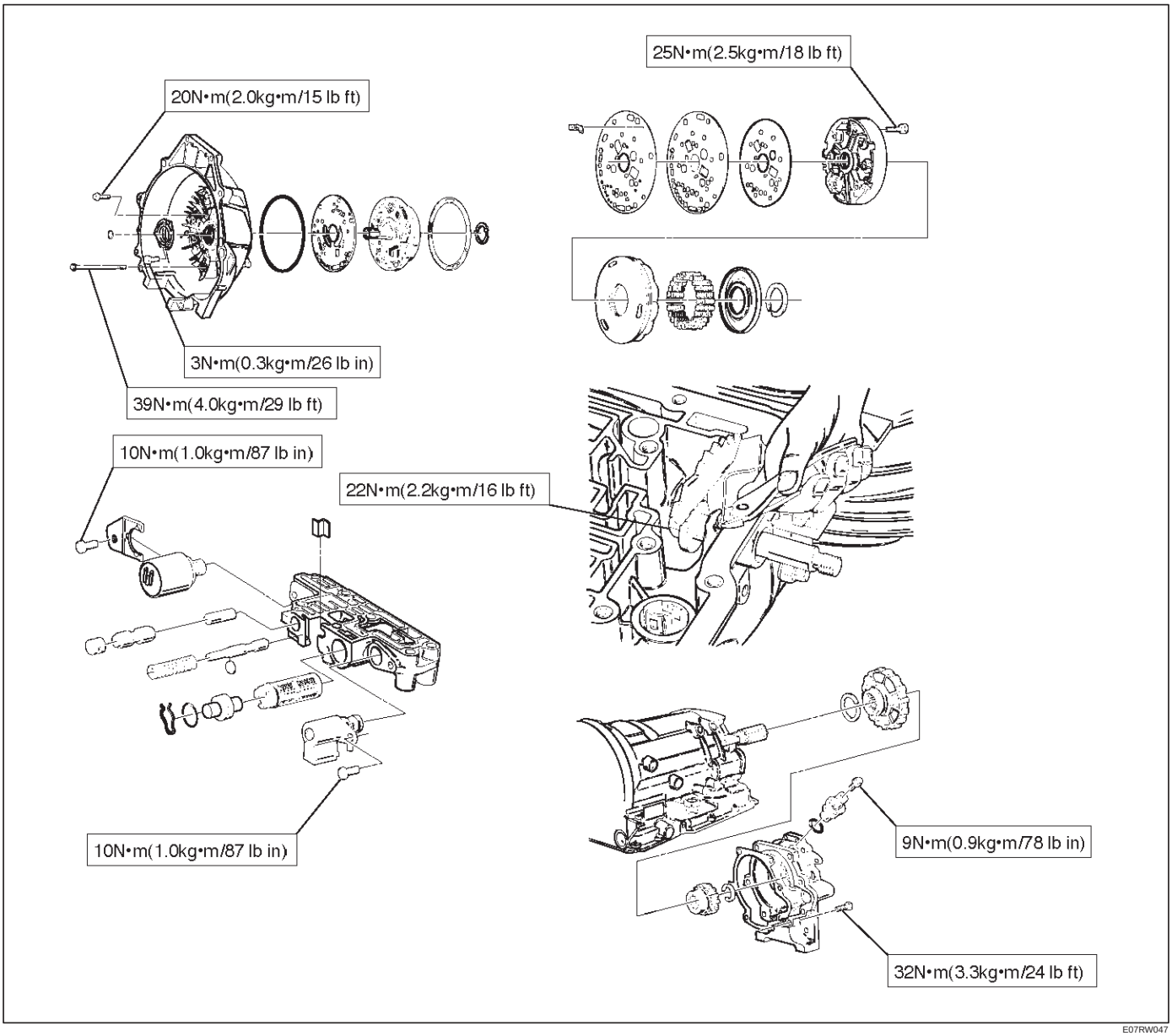
25N•m(2.5kg•m/18 lb ft)
20N•m(2.0kg•m/15 lb ft)
3N•m(0.3kg•m/26 lb in)
39N•m(4.0kg•m/29 lb ft)
10N•m(1.0kg•m/87 lb in)
22N•m(2.2kg•m/16 lb ft)
10N•m(1.0kg•m/87 lb in)
9N•m(0.9kg•m/78 lb in)
32N•m(3.3kg•m/24 lb ft)

E07RW047

Special Tools

ILLUSTRATION	TOOL NO. TOOL NAME
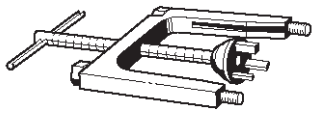 901RT071	5–8840–0501–0 **(J–23075)** Spring compressor (For servo piston)
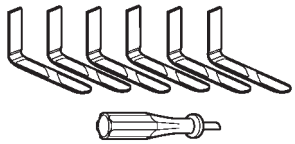 901RX007	5–8840–2258–0 **(J–38450–A)** Third clutch snap ring compressor
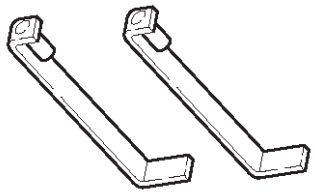 901RT073	5–8840–2259–0 **(J–23075–12)** Third clutch spring compressor adapter (Use with 5–8840–0501–0 (J–23075))
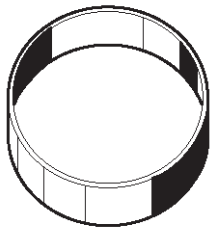 901RT074	5–8840–2260–0 **(J–23084)** Third clutch piston installer
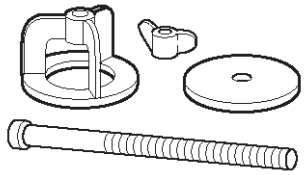 901RT075	5–8840–0195–0 **(J–23327)** Third clutch spring compressor
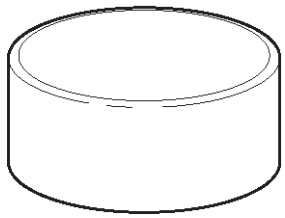 901RT076	5–8840–2261–0 **(J–23080–A)** Second clutch piston installer

ILLUSTRATION	TOOL NO. TOOL NAME
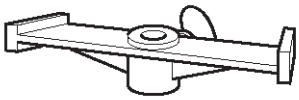 901RT077	5–8840–2262–0 **(J–23085–A)** Selective washer gauging tool
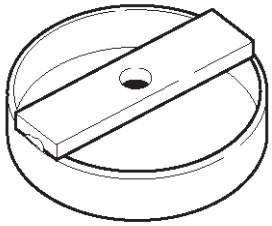 901RT078	5–8840–2263–0 **(J–23327–90)** Fourth clutch spring compressor (Use with 5–8840–0195–0 (J–23327))
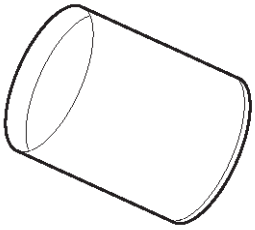 901RT079	5–8840–2264–0 **(J–38553)** 3/4 Accumulator piston fitter
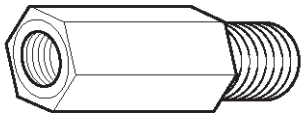 901RT080	5–8840–2403–0 **(J–41096)** Cover remover (Use with 5–8840–2266–0 (J–38584))
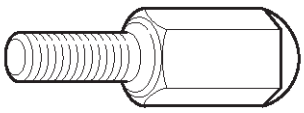 901RT081	5–8840–2266–0 **(J–38584)** Slide hammer adapter (Use with 5–8840–0019–0 (J–23907))
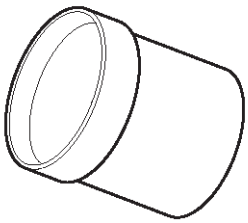 901RT082	5–8840–2267–0 **(J–38554)** Fourth clutch piston fitter

ILLUSTRATION	**TOOL NO.** TOOL NAME
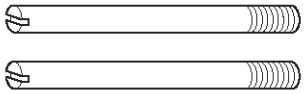 901RT083	5–8840–2268–0 **(J–38588)** Guide pins; adapter case to main case
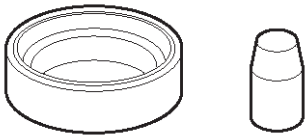 901RT084	5–8840–2269–0 **(J–38555)** Overrun clutch piston seal installer set
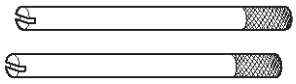 901RT085	5–8840–2270–0 **(J–3387–2)** Guide pins; gasket and transfer plate to valve body
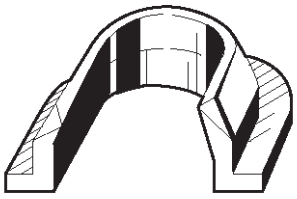 901RT086	5–8840–2271–0 **(J–25022)** Turbine shaft puller (Use with 5–8840–0618–0 (J–24773–1))
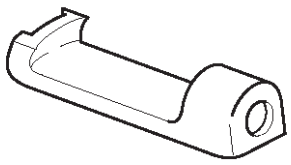 901RT087	5–8840–0196–0 **(J–23129)** Oil seal remover (Use with 5–8840–2266–0 (J–23907) and 5–8840–0019–0 (J–38584))
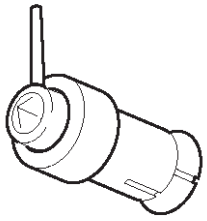 901RT088	5–8840–2272–0 **(J–38557)** Oil pump centering tool

ILLUSTRATION	**TOOL NO.** TOOL NAME
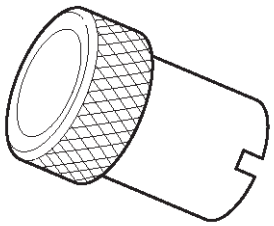 901RT089	5–8840–2273–0 **(J–23082–01)** Oil pump rotation tool
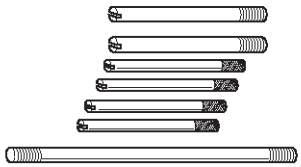 901RT090	5–8840–0022–0 **(J–25025–B)** Guide pins; valve body to main case
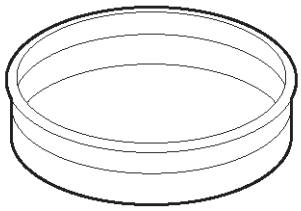 901RT091	5–8840–2274–0 **(J–38428)** Servo piston fitter
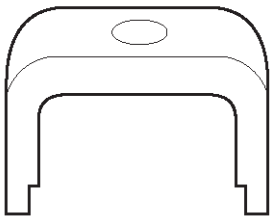 901RT092	5–8840–2275–0 **(J–23327–91)** Overrun clutch spring compressor
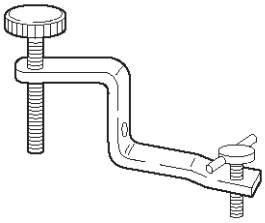 901RT093	5–8840–2277–1 **(J–38559–A)** 3/4 Accumulator piston cover compressor
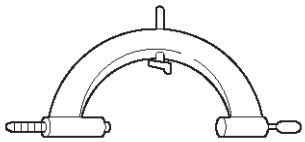 901RT094	5–8840–2278–0 **(J–8763–02)** Holding fixture

ILLUSTRATION	**TOOL NO.** TOOL NAME
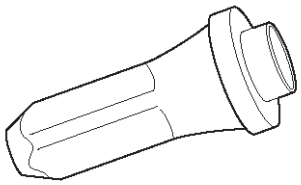 901RT095	5–8840–2282–0 **(J–36797)** A/T extension housing oil seal installer (Inside)
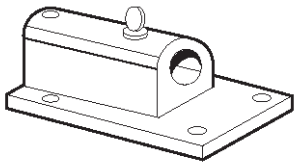 901RT096	5–8840–0003–0 **(J–3289–20)** Holding fixture base
 901RT097	5–8840–0004–0 Pressure gauge
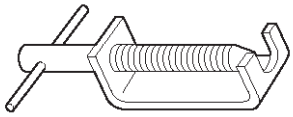 901RT098	5–8840–0618–0 **(J–24773–1)** End play fixture (Use with 5–8840–2271–0 (J–25022))
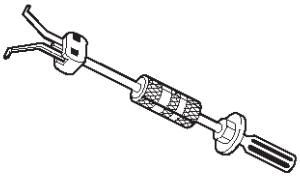 901RT099	5–8840–0019–0 & 5–8840–2000–0 **(J–23907)** Slide hammer

4L30–E Parts List

Case And Associated Parts

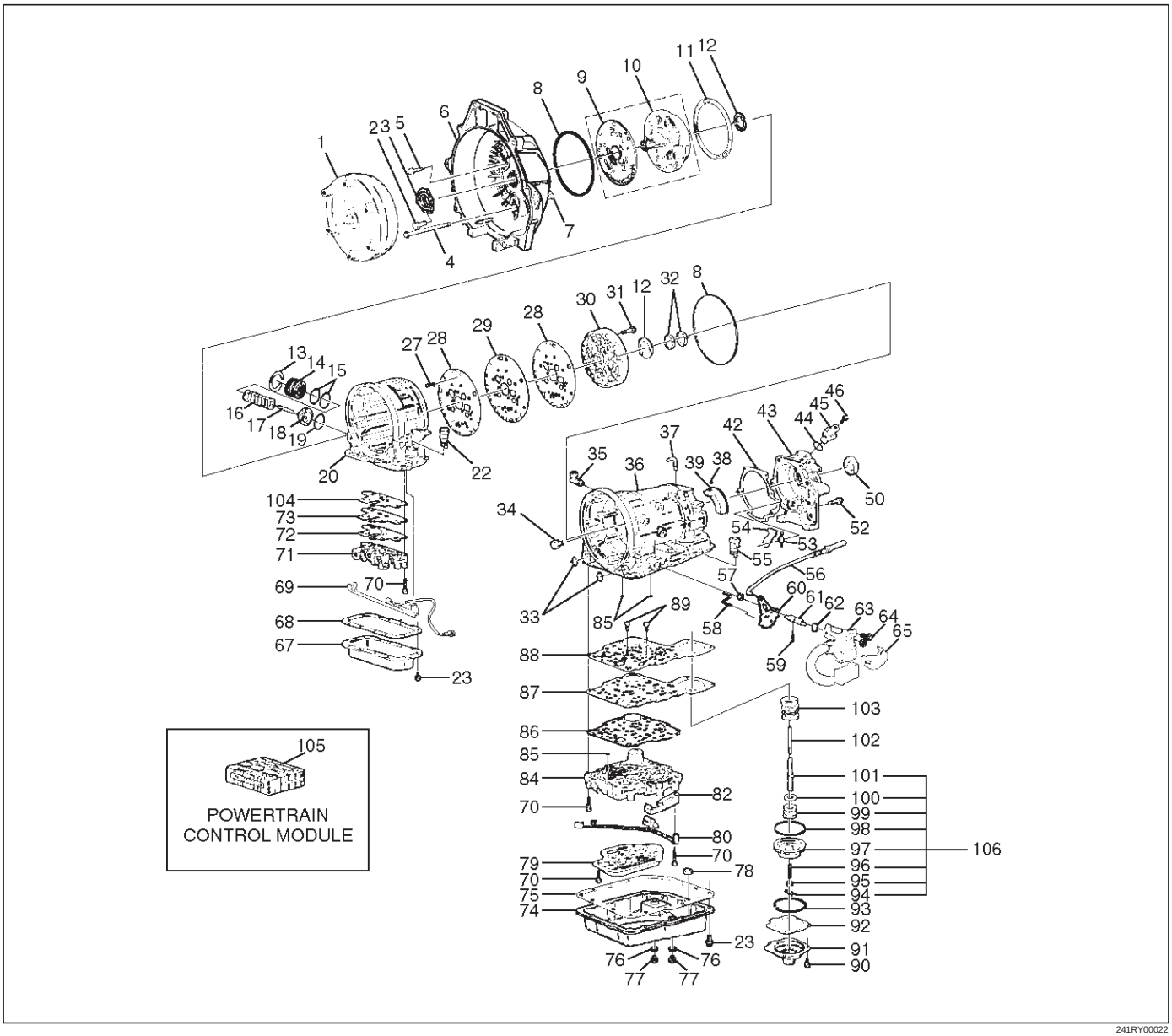

241RY00022

Legend

(1) Torque Converter
(2) Screw, Seal Ring Assembly
(3) Seal Ring Assembly, Converter Housing
(4) Screw, Converter Housing/Main Case
(5) Screw, Converter Housing/Oil Pump
(6) Housing, Converter
(7) Plug, Converter Housing
(8) Seal, O–Ring
(9) Wear Plate, Oil Pump Body
(10) Pump Assembly, Oil
(11) Gasket
(12) Washer, Thrust Selective
(13) Ring, Snap
(14) Cover, 3–4 Accumulator Piston
(15) Seal, O–Ring, 3–4 Accumulator
(16) Spring, 3–4 Accumulator Piston
(17) Pin, 3–4 Accumulator Piston
(18) Piston, 3–4 Accumulator
(19) Ring, 3–4, Accumulator Piston
(20) Case, Adapter
(22) Connector, Electrical/Adapter Case
(23) Screw, Pan
(27) Restrictor, Oil
(28) Gasket, Transfer Plate/Adapter
(29) Plate, Transfer Adapter/Center Support
(30) Support Assembly, Center
(31) Screw, Center Support
(32) Ring, Oil Seal
(33) Seal, O–Ring Main Case
(34) Fitting, Cooler
(35) Fitting Assembly, Cooler
(36) Case, Main
(37) Breather, Pipe

(38) Seal, O–Ring
(39) Reservoir
(42) Gasket, Extension Case
(43) Extension Assembly
(44) Seal, O–Ring/Speed Sensor
(45) Sensor Assembly, Speed
(46) Screw, Speed Sensor
(50) Seal, Extension Assembly
(52) Screw, Extension/Main Case
(53) Spring, Parking Pawl Lock
(54) Pawl, Parking Lock
(55) Connector, Electrical/Main Case
(56) Actuator Assembly, Parking Lock
(57) Nut, Parking Lock Lever
(58) Link, Manual Valve
(59) Pin, Spring
(60) Lever, Parking Lock and Range Selector
(61) Shaft, Selector
(62) Seal, Selector Shaft
(63) Mode Switch Assembly
(64) Screw and Conical Washer Assembly
(65) Shield, Mode Switch
(67) Pan, Bottom/Adapter Case
(68) Gasket, Bottom Pan/Adapter Case
(69) Harness Assembly, Adapter Case
(70) Screw, Valve Body
(71) Valve Body Assembly, Adapter Case
(72) Gasket, Adapter Valve Body
(73) Plate, Adapter Valve Body/Transfer
(74) Pan, Bottom/Main Case
(75) Gasket, Bottom Pan/Main Case
(76) Gasket, Oil Drain or Overfill Screw
(77) Screw, Oil Drain or Overfill
(78) Magnet, Chip Collector
(79) Filter Oil
(80) Harness Assembly, Main Case
(82) Roller and Spring Assembly, Manual Detent
(84) Valve Body Assembly, Main Case
(85) Ball, Check
(86) Gasket, Main V.B./Transfer Plate
(87) Plate, Main V.B./Transfer
(88) Gasket, Transfer/Main Case
(89) Screw, Transfer Plate on V.B.
(90) Screw, Servo Cover
(91) Cover, Servo Piston
(92) Gasket, Cover/Servo Piston
(93) Ring, Retaining Servo Piston
(94) Clip, Servo Piston
(95) Nut, Servo Screw
(96) Screw, Servo Piston
(97) Piston, Servo
(98) Seal, Ring/Servo Piston
(99) Spring, Cushion/Servo Piston
(100) Seat, Cushion Spring
(101) Sleeve, Servo Piston Adjust
(102) Rod, Apply/Servo Piston
(103) Spring, Return/Servo Piston
(104) Gasket, Adapter Case/Transfer Plate
(105) Powertrain Control Module
(106) Servo Piston Assembly

Pump Assembly

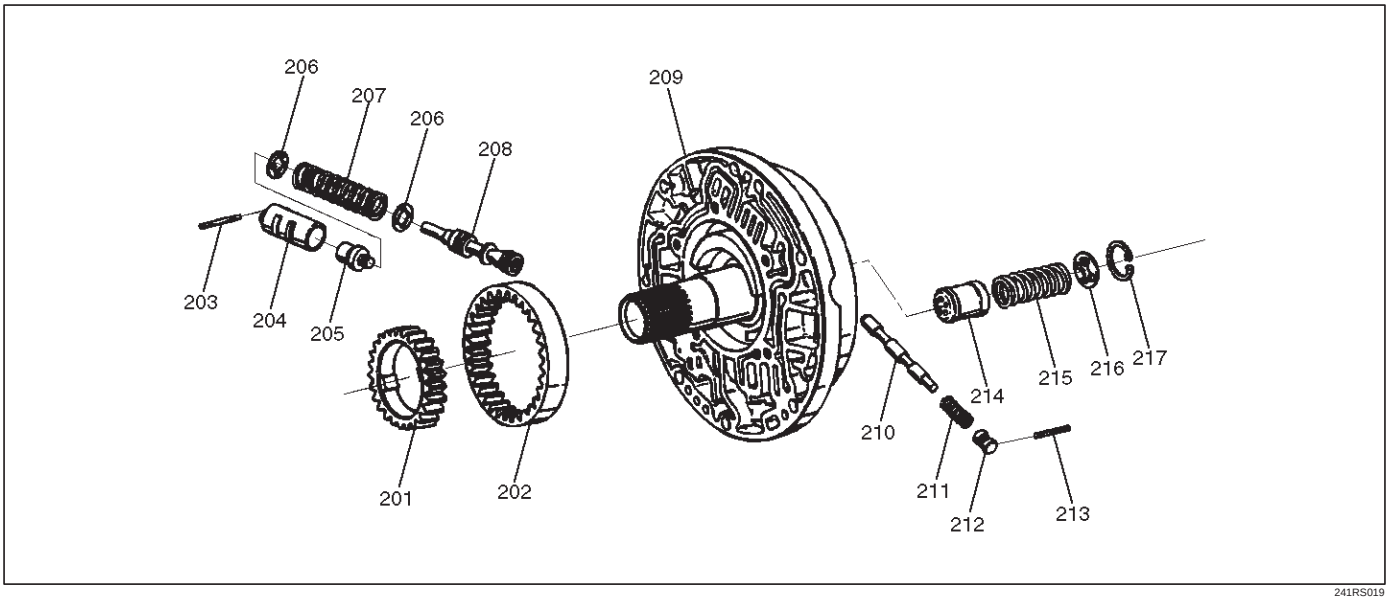

241RS019

Legend

(201) Gear, Oil Pump Drive
(202) Gear, Oil Pump Driven
(203) Pin, Boost Valve Sleeve
(204) Sleeve, Boost Valve
(205) Valve, Boost
(206) Seat, Spring/Pressure Regulator Valve
(207) Spring, Pressure Regulator Valve
(208) Valve, Pressure Regulator
(209) Pump Assembly, Oil

(210) Valve, Converter Clutch Control
(211) Spring, Converter Clutch Control Valve
(212) Plug, Converter Clutch Control Valve
(213) Pin, Spring
(214) Piston, Throttle Signal Accumulator
(215) Spring, Throttle Signal Accumulator
(216) Seat, Spring/Throttle Signal Accumulator
(217) Ring, Snap/Throttle Signal Accumulator

Valve Body Assemblies

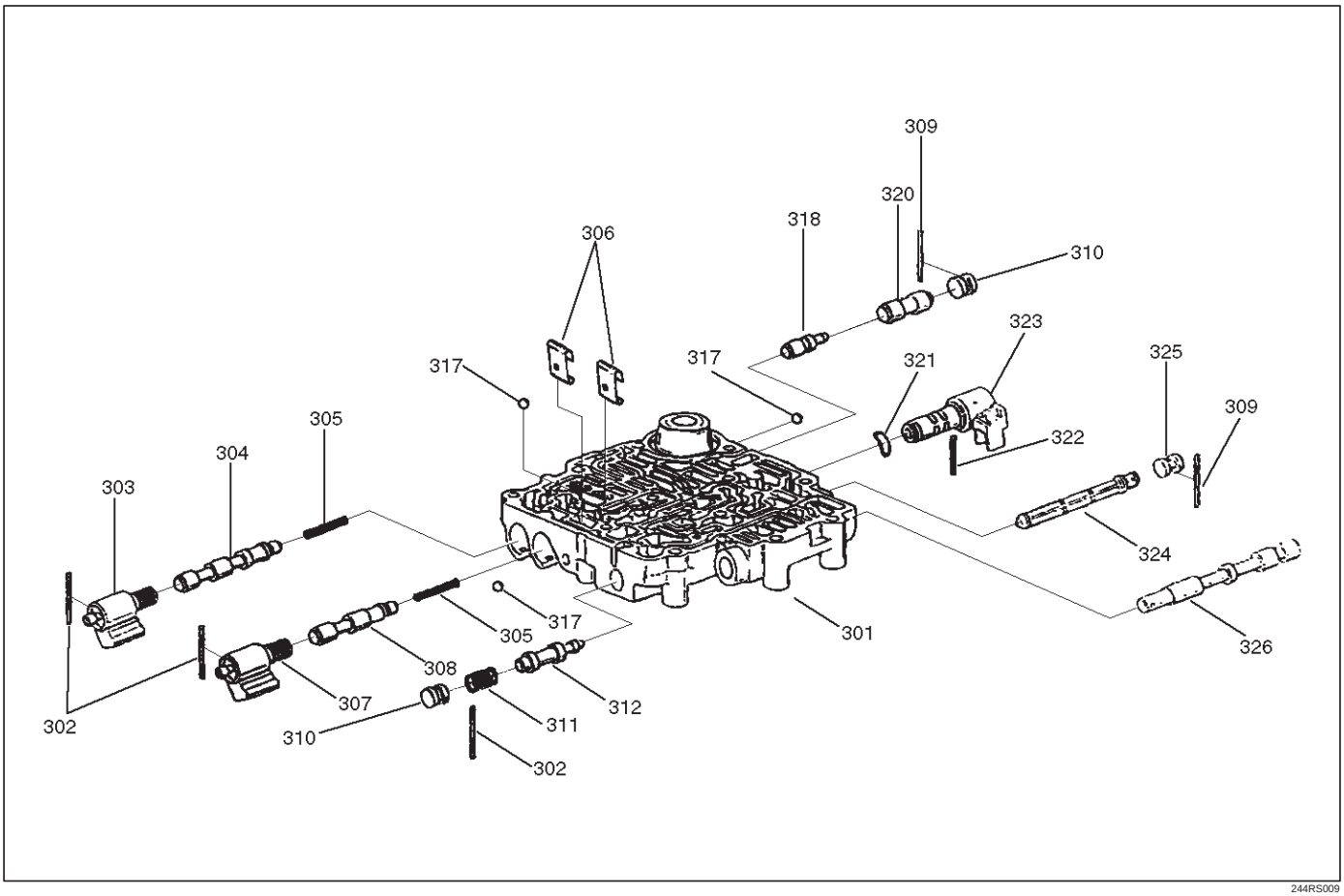

244RS009

Legend

(301) Body, Valve Main Case
(302) Pin, Spring
(303) Solenoid Assembly, ON/OFF N.C.
(304) Valve, 1–2 and 3–4 Shift
(305) Spring, 1–2 and 3–4 (2–3) Shift
(306) Retainer, Valve
(307) Solenoid Assembly, ON/OFF N.O.
(308) Valve, 2–3 Shift
(309) Pin, Spring
(310) Plug, Valve Bore
(311) Spring, Valve Low Pressure Control
(312) Valve, Low Pressure Control
(317) Ball, Check
(318) Valve, 1–2 Accumulator Control
(320) Valve, 1–2 Accumulator
(321) Washer, Waved PWM Solenoid
(322) Pin, Solenoid PWM
(323) Solenoid Assembly, Band Control PWM
(324) Screen Assembly, PWM Solenoid
(325) Plug, Screen
(326) Valve, Manual

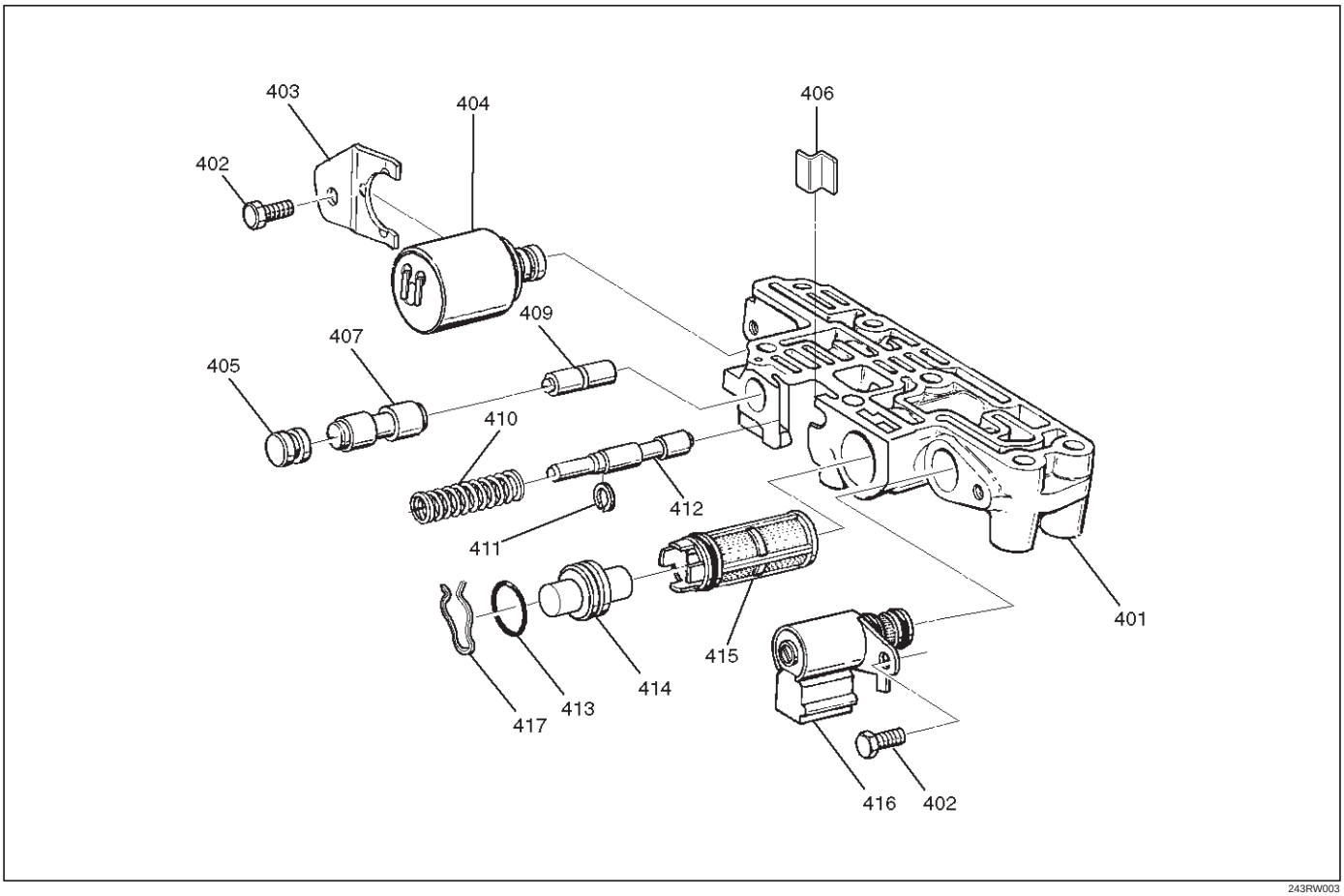

243RW003

Legend

(401) Body, Valve/Adapter Case
(402) Screw, Solenoid Force Motor
(403) Retainer, Force Motor
(404) Solenoid, Force Motor
(405) Plug, 3–4 Accumulator
(406) Plug and Spring Retainer
(407) Valve, 3–4 Accumulator
(409) Valve, 3–4 Accumulator Control
(410) Spring, Feed Limit Valve
(411) Ring, Retainer
(412) Valve, Feed Limit
(413) Seal, O–Ring Plug Filter
(414) Plug, Screen
(415) Screen Assembly, Force Motor
(416) Solenoid, Torque Conv. Clutch ON/OFF N.C.
(417) Plug Retainer

Overdrive Internal Components

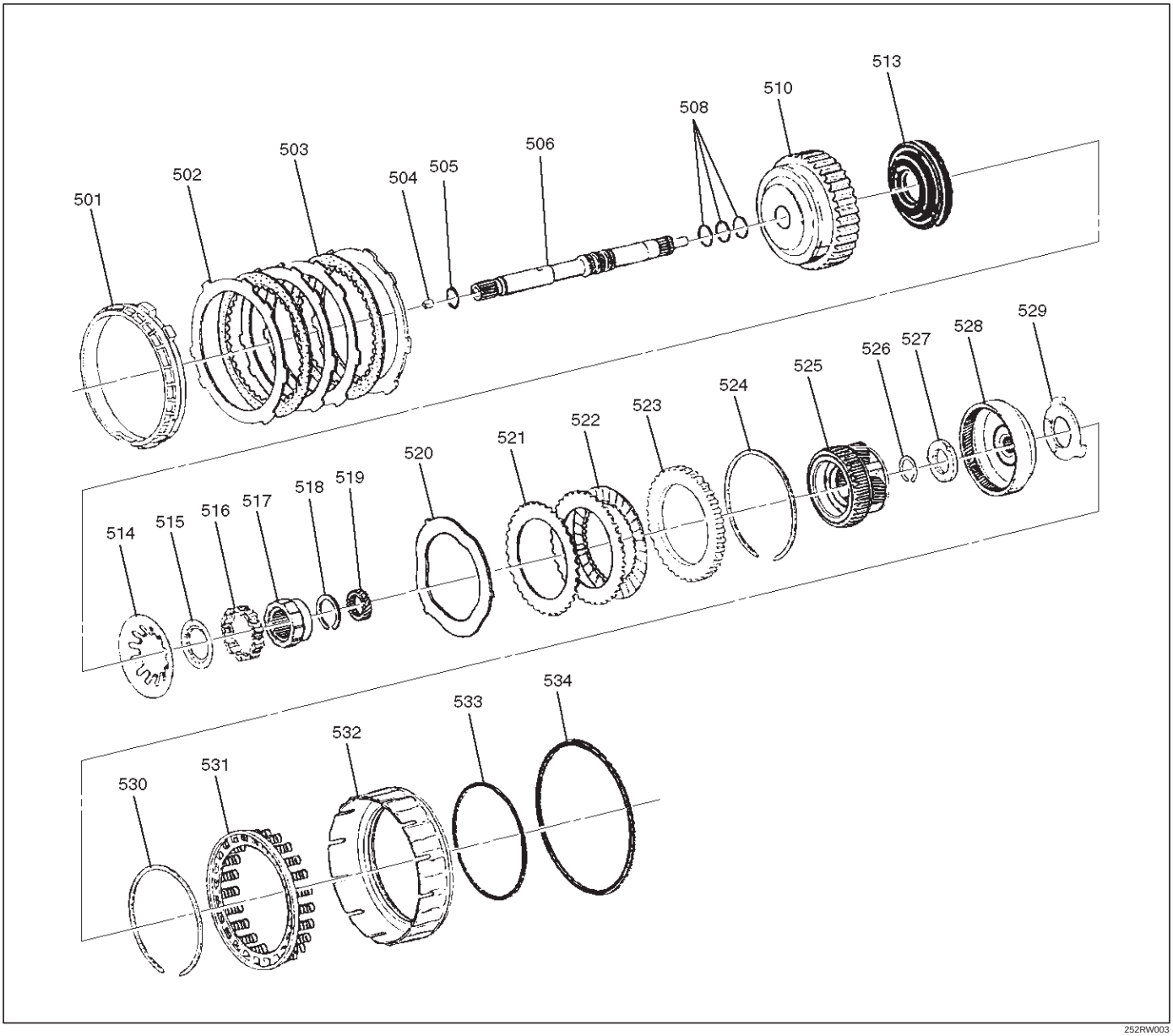

252RW003

Legend

(501) Retainer, 4th Clutch
(502) Plate, 4th Clutch (Steel)
(503) Plate Assembly, 4th Clutch (Lined)
(504) Retainer And Ball Assembly, Check Valve
(505) Seal, O–Ring/Turbine Shaft
(506) Shaft, Turbine
(508) Ring, Oil Seal/Turbine Shaft
(510) Housing, Overrun Clutch
(513) Piston, Overrun Clutch
(514) Spring, Overrun Clutch Release
(515) Retainer, Release Spring/Overrun Clutch
(516) Roller Assembly, Overdrive Clutch
(517) Cam, Overdrive Roller Clutch
(518) Ring, Snap/Overrun Clutch Hub
(519) Gear, Overdrive Sun
(520) Plate, Waved/Overrun Clutch
(521) Plate, Overrun Clutch (Steel)
(522) Plate Assembly, Overrun Clutch (Lined)
(523) Plate, Backing/Overrun Clutch
(524) Ring, Snap/Overrun Clutch Housing
(525) Carrier Assembly, Overdrive Complete
(526) Ring, Snap/Turbine Shaft/Carrier
(527) Bearing Assembly, Thrust
(528) Gear, Overdrive Internal
(529) Washer, Thrust/Internal Gear/Support
(530) Ring, Snap/Adapter/4th Clutch Spring
(531) Retainer and spring assembly, 4th clutch
(532) Piston, 4th Clutch
(533) Seal, 4th Clutch Piston (Inner)
(534) Seal, 4th Clutch Piston (outer)

Internal Components

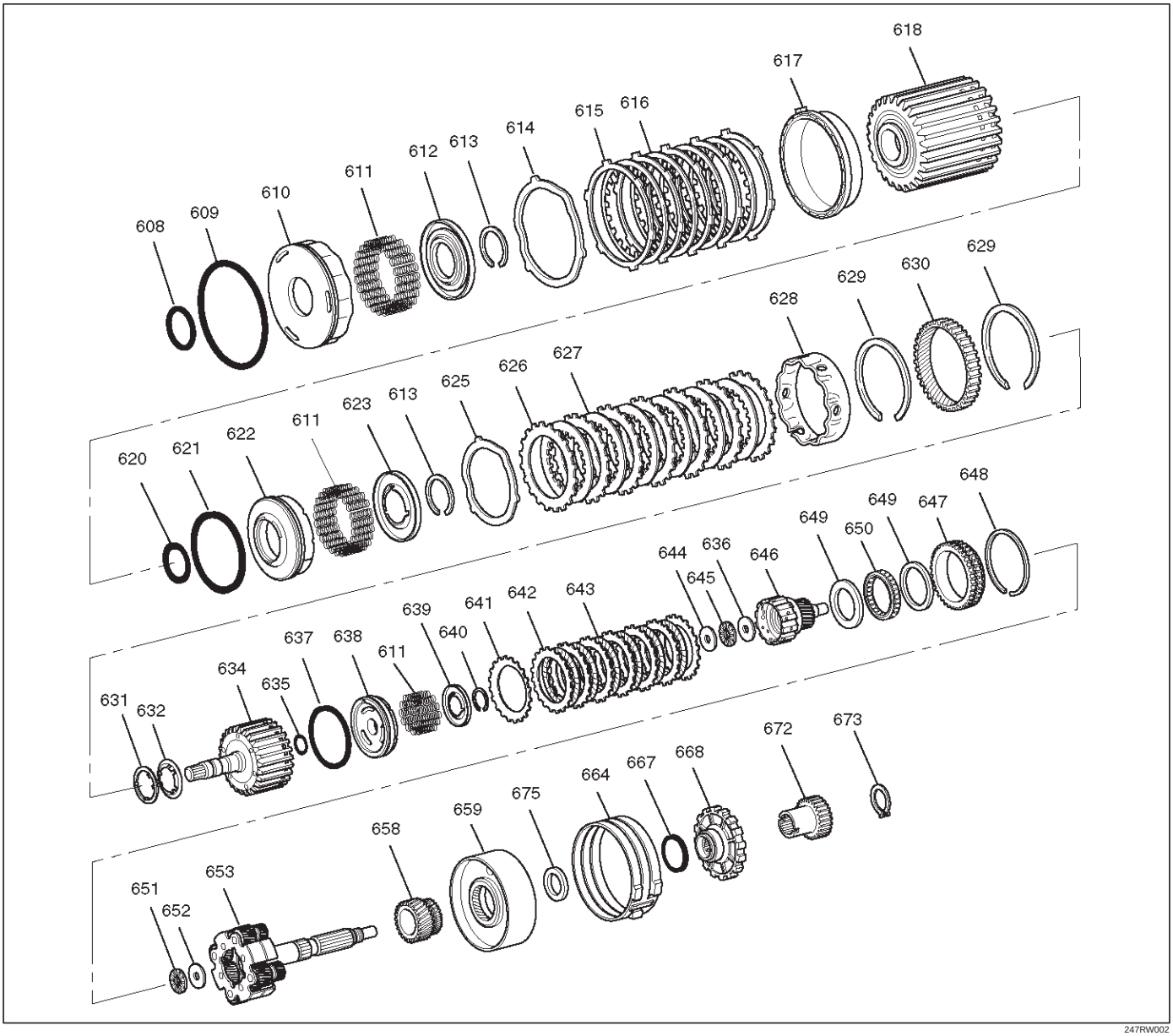

247RW002

Legend

(608) Seal, Reverse Clutch Piston (Inner)
(609) Seal, Reverse Clutch Piston (Outer)
(610) Piston, Reverse Clutch
(611) Spring, Piston Clutch
(612) Seat, Spring/Reverse Clutch
(613) Ring, Retaining
(614) Plate, Waved/Reverse Clutch
(615) Plate, Reverse Clutch (Steel)
(616) Plate Assembly, Reverse Clutch (Lined)
(617) Plate, Reverse Clutch Pressure/Selective
(618) Drum Assembly, 2nd Clutch
(620) Seal, 2nd Clutch Piston (Inner)
(621) Seal, 2nd Clutch Piston (Outer)
(622) Piston, 2nd Clutch
(623) Seat, Spring/2nd Clutch
(625) Plate, Waved/2nd Clutch
(626) Plate, 2nd Clutch (Steel)
(627) Plate Assembly, 2nd Clutch (Lined)
(628) Spacer, 2nd Clutch
(629) Ring, Retaining
(630) Gear, Ring
(631) Washer, Thrust/2nd Clutch/3rd Clutch
(632) Thrust Washer, Clutch Hub
(634) Drum Assembly, 3rd Clutch
(635) Seal, 3rd clutch piston (Inner)
(636) Washer, Retaining
(637) Seal, 3rd Clutch Piston (Outer)
(638) Piston 3rd Clutch
(639) Seat, Spring/3rd Clutch
(640) Ring, Retaining
(641) Plate, Spring Cushion/3rd Clutch
(642) Plate, 3rd Clutch (Steel)
(643) Plate Assembly, 3rd Clutch (Lined)
(644) Washer, Thrust/Input Sun
(645) Bearing, Input Shaft/Gear Assembly

(646) Gear Assembly, Input Sun
(647) Race Assembly, Sprag
(648) Ring, Retaining/Sprag
(649) Ring, Retaining
(650) Cage Assembly, Sprag
(651) Bearing, Output Shaft/Input Sun
(652) Washer, Output Shaft/Input Sun
(653) Carrier Assembly, Planetary
(658) Gear, Reaction Sun
(659) Drum, Reaction Sun
(664) Band Assembly, Brake
(667) Seal, Ring/Wheel Parking Lock
(668) Wheel, Parking Lock
(672) Wheel, Speed
(673) Ring, Retaining
(675) Bearing, Thrust Assembly

Center Support Assembly

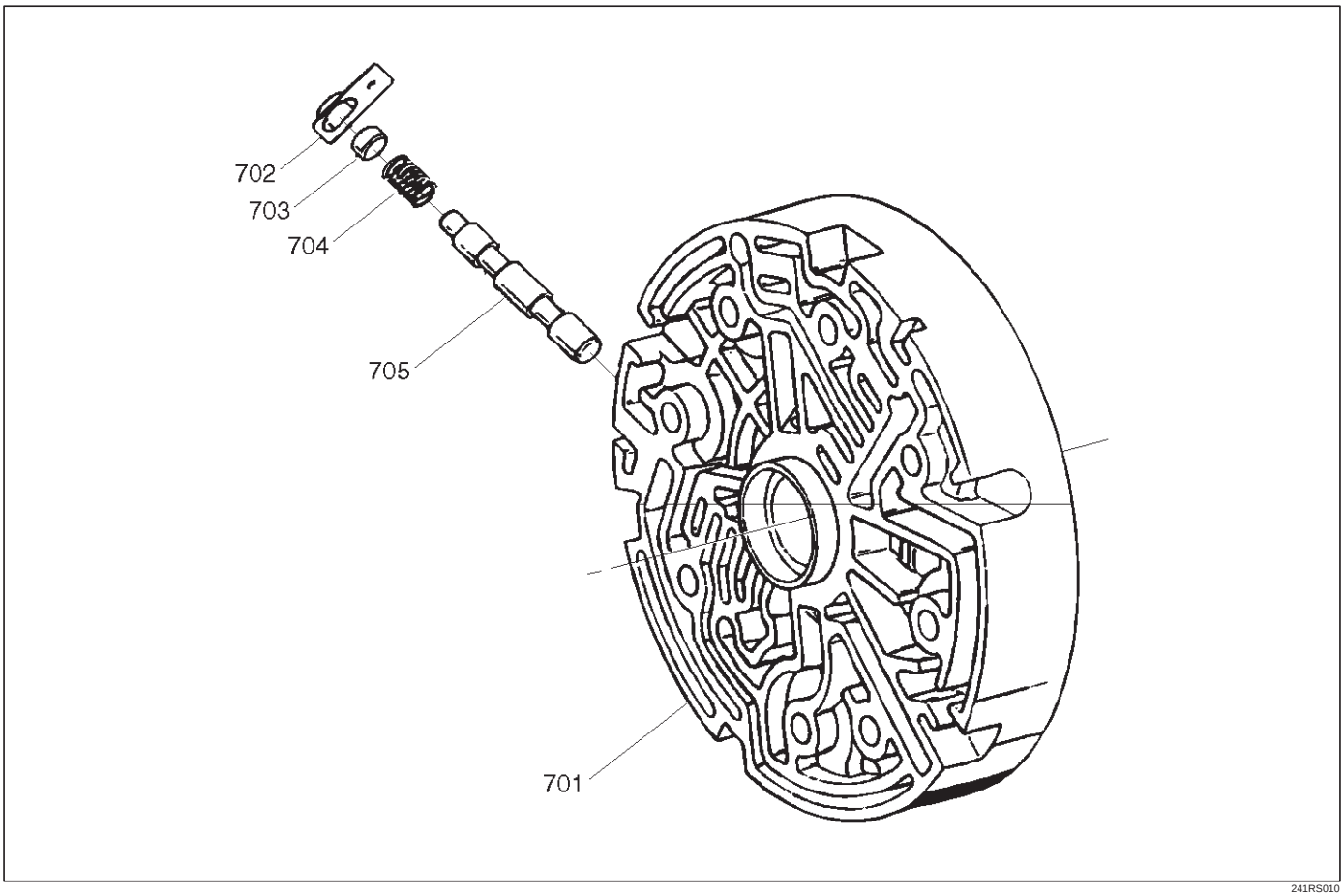

241RS010

Legend
(701) Center Support
(702) Retainer Plate
(703) Plug, Lockout
(704) Spring, Overrun Lockout
(705) Valve, Overrun Lockout

TRANSMISSION

CONTENTS

Automatic Transmission (4L30–E) 7A
Transmission Control System (4L30–E) 7A1
Manual Transmission 7B
Clutch 7C

AUTOMATIC TRANSMISSION (4L30–E)

CONTENTS

Service Precaution 7A–3
Construction 7A–3
Range Reference Chart 7A–4
Normal Operation Of 2002 4L30–E Transmission 7A–5
Diagnosis 7A–5
Driver Information 7A–5
General Diagnosis Procedure 7A–8
Preliminary Inspection Chart 7A–9
Checking Transmission Fluid Level and Condition 7A–10
Test Driving 7A–11
Mechanical / Hydraulic Diagnosis Check Trans Indicator Chart 7A–12
Mechanical / Hydraulic Diagnosis Symptoms Index 7A–13
Stall Test 7A–23
Line Pressure Test 7A–23
Shift Speed Chart 7A–24
Lockup Speed Chart 7A–26
Changing Transmission Fluid 7A–27
Selector Lever 7A–27
Inspection 7A–27
Removal 7A–27
Installation 7A–28
Mode Switch 7A–29
Removal 7A–29
Installation 7A–29
Transmission (With Transfer Case) 7A–31
Transmission And Associated Parts 7A–31
Removal 7A–32
Installation 7A–34
Solenoid (Main Case Valve Body) 7A–39
Removal 7A–39
Installation 7A–39
Solenoid (Adapter Case Valve Body) 7A–40
Removal 7A–40
Installation 7A–40
Valve Body Assembly (Main Case) 7A–41
Removal 7A–41
Installation 7A–41
Valve Body Assembly (Adapter Case) 7A–42
Removal 7A–42
Installation 7A–42
Powertrain Control Module (PCM) 7A–42
Removal 7A–42
Installation 7A–42
Speed Sensor (Extension Housing) 7A–43
Removal 7A–43
Installation 7A–43
Transmission Oil Temperature Sensor (Main Case) 7A–44
Removal 7A–44
Installation 7A–44
Front Oil Seal (Converter Housing) 7A–45
Removal 7A–45
Installation 7A–45
Rear Oil Seal (Extension Housing) 7A–45
Removal 7A–45
Installation 7A–45
Transmission (4L30–E) 7A–46
Disassembly 7A–46
Reassembly 7A–50
Converter Housing And Oil Pump Assembly 7A–60
Disassembled View 7A–60
Disassembly 7A–60
Inspection And Repair 7A–60
Reassembly 7A–60
Oil Pump 7A–61
Disassembled View 7A–61
Disassembly 7A–61
Inspection And Repair 7A–62
Reassembly 7A–62
Main Case Valve Body 7A–63
Disassembled View 7A–63

Disassembly 7A–63
Inspection And Repair 7A–64
Reassembly 7A–64
Adapter Case Valve Body 7A–65
Disassembled View 7A–65
Disassembly 7A–65
Inspection And Repair 7A–65
Reassembly 7A–65
Third Clutch And Sprag Unit 7A–67
Disassembled View 7A–67
Disassembly 7A–67
Inspection And Repair 7A–67
Reassembly 7A–68
Third Clutch 7A–69
Disassembled View 7A–69
Disassemble 7A–69
Inspection And Repair 7A–69
Reassembly 7A–69
Sprag Unit 7A–71
Disassembled View 7A–71
Disassembly 7A–71
Inspection And Repair 7A–71
Reassembly 7A–71
Second Clutch 7A–72
Disassembled View 7A–72
Disassembly 7A–72
Inspection And Repair 7A–73
Reassembly 7A–73
3–4 Accumulator Piston 7A–74
Disassembled View 7A–74
Disassembly 7A–74
Inspection And Repair 7A–75
Reassembly 7A–75
Reverse Clutch Piston And Center Support . 7A–76
Disassembled View 7A–76
Disassembly 7A–77
Inspection And Repair 7A–77
Reassembly 7A–77
Overrun Clutch And Turbine Shaft 7A–78
Disassembled View 7A–78
Disassembly 7A–79
Inspection And Repair 7A–79
Reassembly 7A–79
Main Data And Specification 7A–81
General Specifications 7A–81
Torque Specifications 7A–82
Special Tools 7A–85
4L30–E Parts List 7A–88

Service Precaution

WARNING: THIS VEHICLE HAS A SUPPLEMENTAL RESTRAINT SYSTEM (SRS). REFER TO THE SRS COMPONENT AND WIRING LOCATION VIEW IN ORDER TO DETERMINE WHETHER YOU ARE PERFORMING SERVICE ON OR NEAR THE SRS COMPONENTS OR THE SRS WIRING. WHEN YOU ARE PERFORMING SERVICE ON OR NEAR THE SRS COMPONENTS OR THE SRS WIRING, REFER TO THE SRS SERVICE INFORMATION. FAILURE TO FOLLOW WARNINGS COULD RESULT IN POSSIBLE AIR BAG DEPLOYMENT, PERSONAL INJURY, OR OTHERWISE UNNEEDED SRS SYSTEM REPAIRS.

CAUTION: Always use the correct fastener in the proper location. When you replace a fastener, use ONLY the exact part number for that application. ISUZU will call out those fasteners that require a replacement after removal. ISUZU will also call out the fasteners that require thread lockers or thread sealant. UNLESS OTHERWISE SPECIFIED, do not use supplemental coatings (Paints, greases, or other corrosion inhibitors) on threaded fasteners or fastener joint interfaces. Generally, such coatings adversely affect the fastener torque and the joint clamping force, and may damage the fastener. When you install fasteners, use the correct tightening sequence and specifications. Following these instructions can help you avoid damage to parts and systems.

Construction

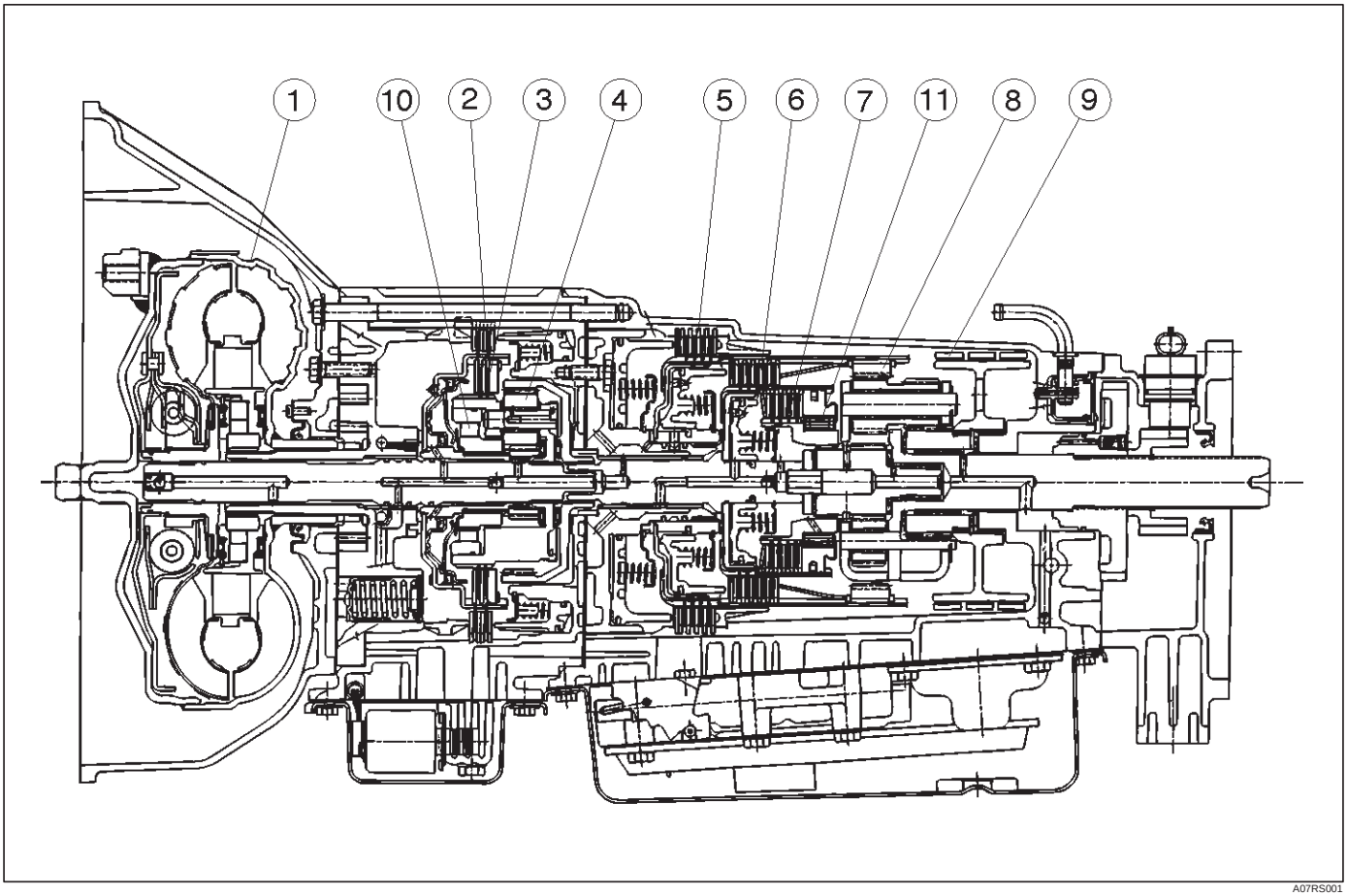

A07RS001

Legend

(1) Torque Converter Clutch (TCC)
(2) Fourth Clutch (C4)
(3) Overrun Clutch (OC)
(4) Overdrive Unit
(5) Reverse Clutch (RC)
(6) Second Clutch (C2)
(7) Third Clutch (C3)
(8) Ravigneaux Planetary Gear Set
(9) Brake Band (B)
(10) Overdrive Free Wheel (One Way Clutch) (OFW)
(11) Principle Sprag Assembly (One Way Clutch) (PFW)

Range Reference Chart

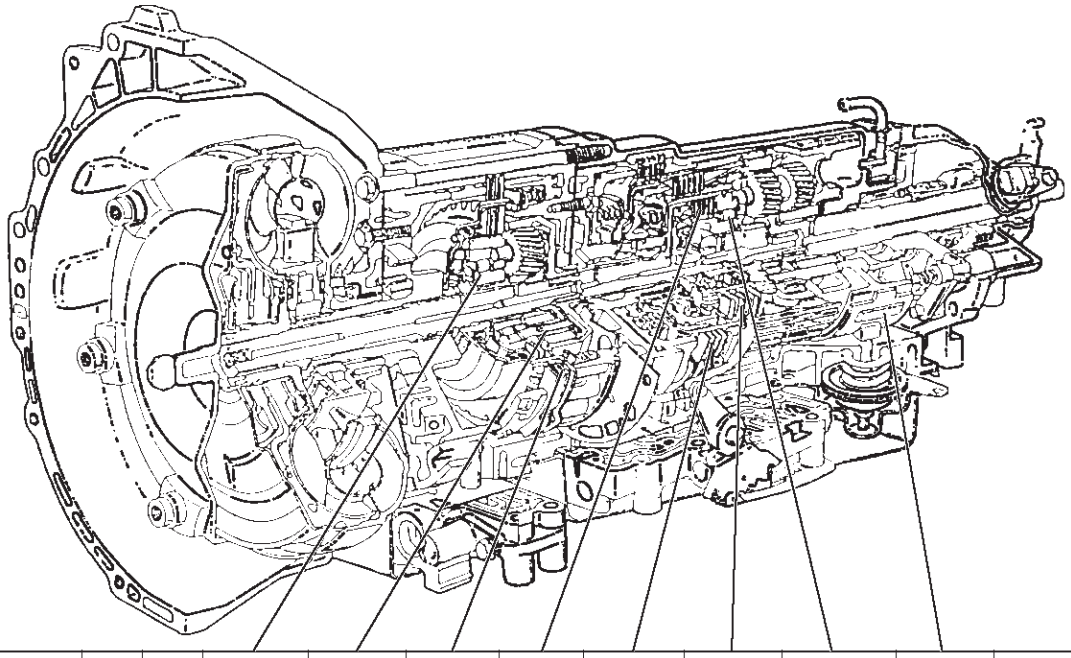

RANGE	GEAR	SOL A N.C.	SOL B N.O.	O/DRIVE FREE WHEEL (OFW)	O/RUN CLUTCH (OC)	FOURTH CLUTCH (C4)	THIRD CLUTCH (C3)	REVERSE CLUTCH (RC)	SECOND CLUTCH (C2)	PRINCIPLE SPRAG ASM (PFW)	BAND ASM (B)	ENGINE BRAKING	TORQUE CONV. CLUTCH
P-N		OFF	ON		APP							NO	NO
R	REVERSE	OFF	ON	LD	APP			APP		LD		NO	NO
D	1ST	OFF	ON	LD	APP					LD	APP	NO	NO
	2ND	ON	ON	LD	APP				APP	FW	APP	YES	ECCC
	3RD	ON	OFF	LD	APP		APP		APP	NE		YES	ECCC
	4TH	OFF	OFF	FW		APP	APP		APP	NE		YES	ECCC
3	1ST	OFF	ON	LD	APP					LD	APP	NO	NO
	2ND	ON	ON	LD	APP				APP	FW	APP	YES	ECCC
	3RD	ON	OFF	LD	APP		APP		APP	NE		YES	ECCC
2	1ST	OFF	ON	LD	APP		APP			LD	APP	YES	NO
	2ND	ON	ON	LD	APP				APP	FW	APP	YES	ECCC
L	1ST	OFF	ON	LD	APP		APP			LD	APP	YES	NO

LD : LOCKED IN DRIVE FW : FREEWHEELING NE : NOT EFFECTIVE APP : APPLIED

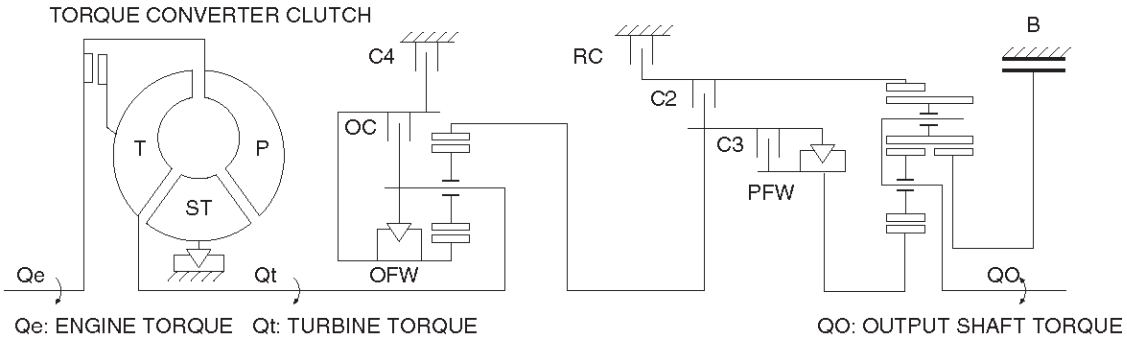

C07RY00032

Normal Operation Of 2002 4L30–E Transmission

Torque Converter Clutch (Electronically Controlled Capacity Clutch : ECCC) Application Conditions:

The clutch apply is controlled by moving the converter clutch control valve by commanding Torque Converter Clutch (TCC) solenoid using the PWM signal.
The TCC is normally applied in 2nd, 3rd and 4th gears only when all of the following conditions exist:

— The engine coolant temperature is above 70˚C (158˚F) and ATF temperature is above 18˚C (64.5˚F).
— The brake pedal is released.
— The shift pattern requests TCC apply.

Moreover, TCC is always applied in 2nd, 3rd and 4th gears when the transmission oil temperature is above 135˚C (275˚F).
This mode should be canceled at 125˚C (257˚F).

ATF Warning Lamp

The ATF warning lamp will be constantly on (not flashing) if the transmission oil temperature is above 145˚C (293˚F).
The ATF warning lamp goes off again when the transmission oil temperature is below 125˚C (257˚F).

Reverse Lock Out

With the selector lever in reverse position, the PCM will not close the PWM solenoid until the vehicle is below 11 km/h (6.8 mph), thus preventing reverse engagement above this speed.

Diagnosis

Introduction

The systematic troubleshooting information covered by this Section offers a practical and systematic approach to diagnosing 4L30–E transmission, using information that can be obtained from road tests, electrical diagnosis, oil pressure checks or noise evaluation.
The key to correcting a complaint is to make use of all of the available symptoms and logically letting them direct you to the cause.
When dealing with automatic transmission complaints, it is best to gather as many symptoms as possible before making the decision to remove the transmission from the vehicle.
Frequently, the correction of the complaint does not require removal of the transmission from the vehicle.

Driver Information

To analyze the problem fill out a complete description of the owner’s complaint.
Please draw a circle around the right information and complete the following form. (The next page is an example of a completed form). You can draw a circle around many numbers if you are not sure.

A - Today's date :	Month :	Day :	Year : .....
B - End User Name, Address :			
C - Date of Problem :	Month :	Day :	Year : .....
D - Mileage : ..... Miles / Km	**E - With Ignition ON is CHECK TRANS Indicator :** 1- Flashing 2- Not Flashing	**F - Car load when problem occured :** 1 - Towing a trailer 2- ..... people OR ..... Kg	
G - Weather conditions when problem : 1- Clear 2- Cloudy 3- Rain 4- Snow 5- Unstable 6-Any	**H - Weather Temperature when problem:** 1- Hot 2- Warm 3- Cool 4- Cold 5- Unstable 6- Any	**I - Road Conditions when problem :** 1- Any 2- Inter City 3- Outside City 4- Highway 5 - Uphill 6- Downhill 7- Unpaved 8- Snow 9 - Others :	**J - Frequency of the Problem :** 1- Always 2- Occasional : ..... times/day, ... times/month 3- Only Once 4- Others :
K - Engine Condition : 1- Always 2- At Cold 3- During Warming up 4- After Warming or Hot 5- Others	**L - Engine Speed when the problem occured :** 1- Idling 2- Starting 3- Stalling 4- High RPM 5- Low RPM	**M - Transmission Condition when it occured :** 1- Any 2- Idling 3- Starting 4- Driving 5- Accelerating 6-Coasting 7- In corner 8- Shifting	

N - If there is a Transmission driveability problem BEFORE THE CHECK TRANS INDICATOR WAS FLASHING :

1- No Power	in Range : All - P - R - N - D - 3 - 2 - L	during a : upshift : 1-2 / 2-3 / 3-4 or downshift : 4-3 / 3-2 / 2-1
2- No shift	in Range : All - P - R - N - D - 3 - 2 - L	during a : upshift : 1-2 / 2-3 / 3-4 or downshift : 4-3 / 3-2 / 2-1
3- Shift Shock	in Range : All - P - R - N - D - 3 - 2 - L	during a : upshift : 1-2 / 2-3 / 3-4 or downshift : 4-3 / 3-2 / 2-1
4- Shift Slip	in Range : All - P - R - N - D - 3 - 2 - L	during a : upshift : 1-2 / 2-3 / 3-4 or downshift : 4-3 / 3-2 / 2-1
5- Shift Delayed	in Range : All - P - R - N - D - 3 - 2 - L	during a : upshift : 1-2 / 2-3 / 3-4 or downshift : 4-3 / 3-2 / 2-1
6- Shift Point too high	in Range : All - P - R - N - D - 3 - 2 - L	during a : upshift : 1-2 / 2-3 / 3-4 or downshift : 4-3 / 3-2 / 2-1
7- Shift Point too low	in Range : All - P - R - N - D - 3 - 2 - L	during a : upshift : 1-2 / 2-3 / 3-4 or downshift : 4-3 / 3-2 / 2-1
8- TCC Shudder	in Range : All - P - R - N - D - 3 - 2 - L	during a : upshift : 1-2 / 2-3 / 3-4 or downshift : 4-3 / 3-2 / 2-1
9- Noise	in Range : All - P - R - N - D - 3 - 2 - L	during a : upshift : 1-2 / 2-3 / 3-4 or downshift : 4-3 / 3-2 / 2-1
Noise type : 1- Buzz 2- Whine 3- Clunk 4- Rattle 5- Whistle // 6- light 7-medium 8- heavy		
10- Other :	in Range : All - P - R - N - D - 3 - 2 - L	during a : upshift : 1-2 / 2-3 / 3-4 or downshift : 4-3 / 3-2 / 2-1

O - Other customer concern and comments

P - Isuzu Vehicle Code :	.....	**Q - VIN Number**	.....
R - Date of Vehicle Registration	Month :	Day :	Year : .....
S - Trans. model :	.....	**T - A/T Serial Number :**	.....
U - Your name :	.....		

V - Dealer Name, Address, Phone

F07RT036

Example of form completed.

A - Today's date :	Month : April.....	Day : .13.....	Year : .1994.....
B - End User Name, Address :	Dave Smith 6584, Arlington road Plymouth MI 48170 USA		
C - Date of Problem :	Month : April.....	Day : .8.....	Year : .1994.....
D - Mileage : 12230..Mile / Km	E - With Ignition ON is CHECK TRANS Indicator : (1-) Flashing 2- Not Flashing	F - Car load when problem occured : 1 - Towing a trailer 2- ..2..... people OR ..... Kg	
G - Weather conditions when problem : 1- Clear 2- Cloudy 3- Rain 4- Snow 5- Unstable (6-) Any	H - Weather Temperature when problem: 1- Hot 2- Warm 3- Cool 4- Cold 5- Unstable (6-) Any	I - Road Conditions when problem : 1- Any 2- Inter City 3- Outside City (4-) Highway 5 - Uphill 6- Downhill 7- Unpaved ~~8- Snow~~ 9 - Others	J - Frequency of the Problem : 1- Always (2-) Occasional : ..... times/day, ...3... times/month 3- Only Once 4- Others :
K - Engine Condition : 1- Always 2- At Cold 3- During Warming up (4-) After Warming or Hot 5- Others	L - Engine Speed when the problem occured : 1- Idling 2- Starting 3- Stalling (4-) High RPM 5- Low RPM	M - Transmission Condition when it occured : 1- Any 2- Idling 3- Starting 4- Driving (5-) Accelerating (6-) Coasting 7- In corner (8-) Shifting	this means do not take this into account

N - If there is a Transmission driveability problem BEFORE THE CHECK TRANS INDICATOR WAS FLASHING :

1- No Power	in Range : All - P - R - N - D - 3 - 2 - L	during a : upshift : 1-2 / 2-3 / 3-4 or downshift : 4-3 / 3-2 / 2-1
2- No shift	in Range : All - P - R - N - D - 3 - 2 - L	during a : upshift : 1-2 / 2-3 / 3-4 or downshift : 4-3 / 3-2 / 2-1
(3-) Shift Shock	in Range : All - P - R - N - (D-) 3 - 2 - L	during a (upshift :) 1-2 / 2-3 / (3-4) or (downshift :) (4-3) / 3-2 / 2-1
4- Shift Slip	in Range : All - P - R - N - D - 3 - 2 - L	during a : upshift : 1-2 / 2-3 / 3-4 or downshift : 4-3 / 3-2 / 2-1
5- Shift Delayed	in Range : All - P - R - N - D - 3 - 2 - L	during a : upshift : 1-2 / 2-3 / 3-4 or downshift : 4-3 / 3-2 / 2-1
6- Shift Point too high	in Range : All - P - R - N - D - 3 - 2 - L	during a : upshift : 1-2 / 2-3 / 3-4 or downshift : 4-3 / 3-2 / 2-1
7- Shift Point too low	in Range : All - P - R - N - D - 3 - 2 - L	during a : upshift : 1-2 / 2-3 / 3-4 or downshift : 4-3 / 3-2 / 2-1
8- TCC Shudder	in Range : All - P - R - N - D - 3 - 2 - L	during a : upshift : 1-2 / 2-3 / 3-4 or downshift : 4-3 / 3-2 / 2-1
9- Noise	in Range : All - P - R - N - D - 3 - 2 - L	during a : upshift : 1-2 / 2-3 / 3-4 or downshift : 4-3 / 3-2 / 2-1
Noise type : 1- Buzz 2- Whine 3- Clunk 4- Rattle 5- Whistle // 6- light 7-medium 8- heavy		
10- Other :	in Range : All - P - R - N - D - 3 - 2 - L	during a : upshift : 1-2 / 2-3 / 3-4 or downshift : 4-3 / 3-2 / 2-1

O - Other customer concern and comments :

(This is just an example). Shift shock very harsh overall during a downshift. Not sure if it's the 4-3 or 3-2.

P - Isuzu Vehicle Code :	94 UCR	Q - VIN Number	4S2CV58ZXM4324047
R - Date of Vehicle Registration	Month : November.	Day : ....18.....	Year : ..1993.....
S - Trans. model :	4L30-E	T - A/T Serial Number :	96 358 654
U - Your name :	Joe Spring		

V - Dealer Name, Address, Phone

Kent Helfrich

Home-town ISUZU

900 - 999 - 9999

F07RT037

General Diagnosis Procedure

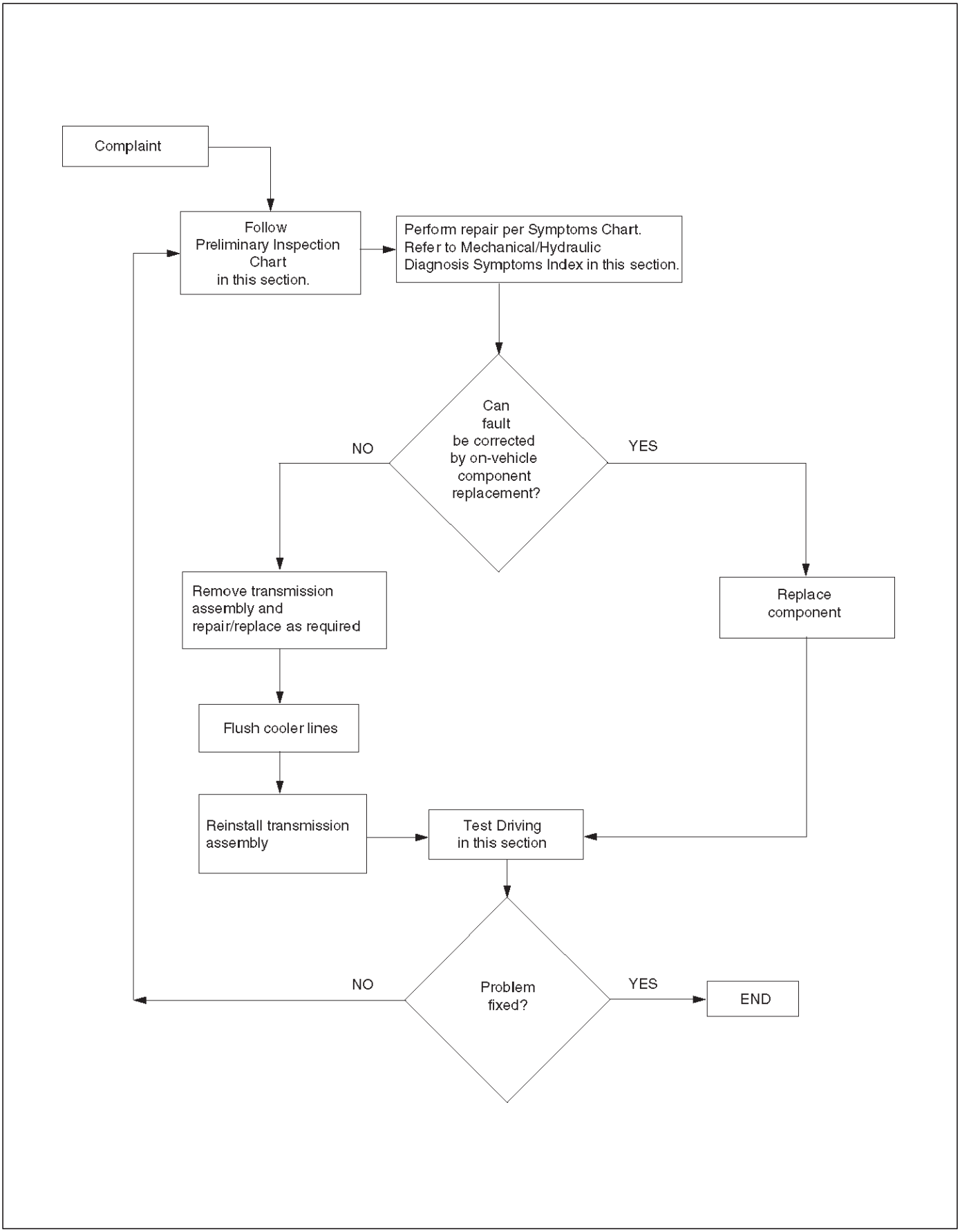

F07RT038

Preliminary Inspection Chart

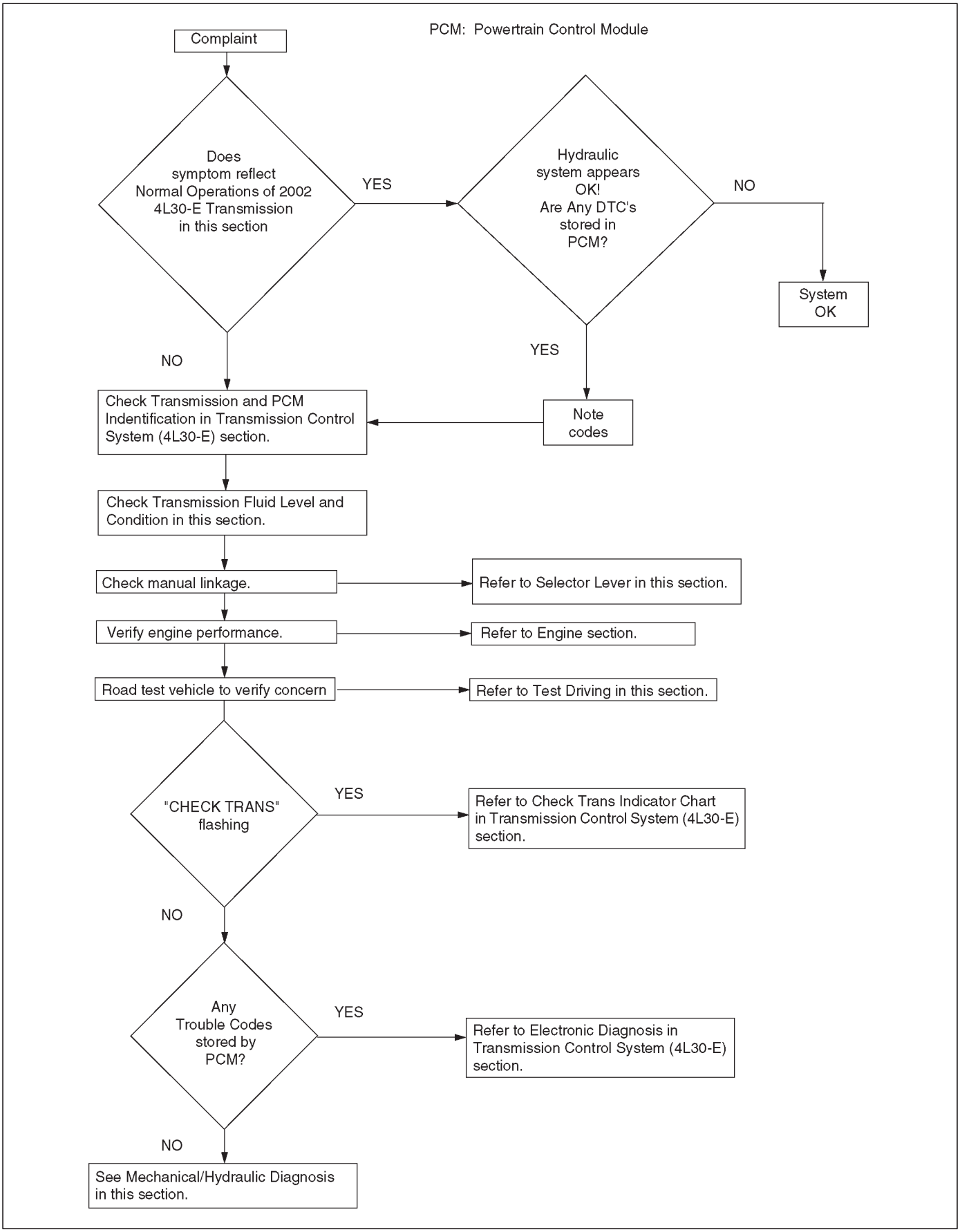

F07R200013

Checking Transmission Fluid Level and Condition

Checking fluid level and condition (color and odor) at regular intervals will provide early diagnosis information about the transmission. This information may be used to correct a condition that, if not detected early, could result in major transmission repairs.

IMPORTANT: When new, automatic transmission fluid is red in color. As the vehicle is driven, the transmission fluid will begin to look darker in color. The color may eventually appear light brown.

A dark brown color with burnt odor may indicate excessive fluid deterioration and signal a need for fluid change.

Fluid Level

When adding or changing fluid, use only DEXRON ®–III. Refer to Maintenance and Lubrication in General Information section for maintenance information and servicing interval.

CAUTION: DO NOT OVERFILL.

Overfilling will cause foaming, loss of fluid, abnormal shifting and possible damage to the transmission.

1. Park the vehicle on level ground and apply the parking brake firmly.
2. Check fluid level with engine running at idle.

NOTE: Be sure that transmission fluid temperature is below 30˚C (86˚F).

3. Move the selector lever through all gear ranges.
4. Move the selector lever to “Park”.
5. Let engine idle for 3 minutes and open the overfill screw (1).
6. Add released transmission fluid until it flows out over the overfill screw opening.
7. Let engine idle until a fluid temperature between 32˚C (90˚F) and 57˚C (135˚F) is reached, then close the overfill screw (1).

Torque: 38 N•m (3.9 kg·m/28 lb ft)

NOTE: To prevent fluid leaks, the overfill screw and oil drain screws gasket must be replaced each time these screws are removed.

NOTE: Check transmission fluid temperature with scan tool.

Minimum fluid level → 57˚C (135˚F)

Maximum fluid level → 32˚C (90˚F)

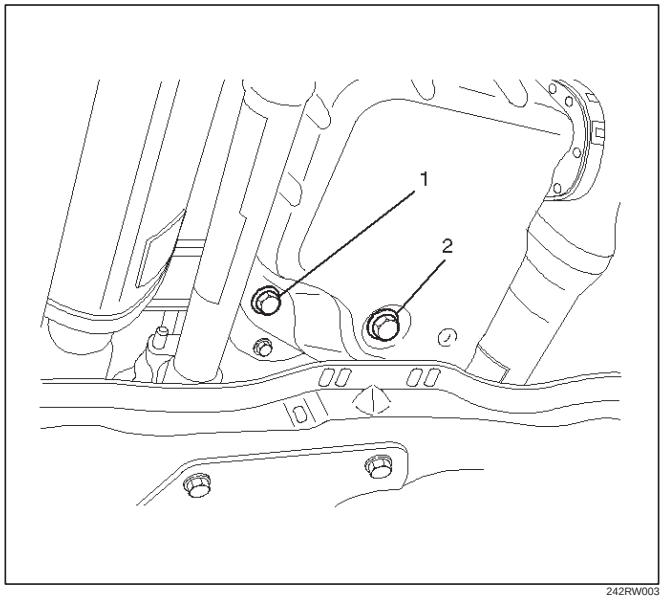

242RW003

CAUTION: Do not open overfill screw with engine stopped.

CAUTION: DO NOT CHECK FLUID LEVEL UNDER THESE CONDITIONS:

- Immediately after driving at sustained highway speeds.
- In heavy city traffic during hot weather.
- If vehicle is towing a trailer.

If the vehicle has been operated under these conditions, shut the engine off and allow the vehicle to “cool” for thirty (30) minutes. After the cool down period, restart the vehicle and continue from step 2 above.

Fluid Condition

	FLUID CONDITION			
	NORMAL*		CONTAMINATED	
COLOR	RED OR LIGHT BROWN	BROWN	NON–TRANSPARENT / PINK	BROWN
DRAIN REQUIRED?	NO	YES	YES	YES
CONTAMINA–TION	NONE	Very small amount of foreign material in bottom of pan	Contamination by coolant or other source	Large pieces of metal or other foreign material in bottom of pan
CORRECT LEVEL AND CONDITION	1. LOW LEVEL: A. Add fluid to obtain proper level & check for external leaks. B. Correct cause of leak. 2. HIGH LEVEL: – Remove excess fluid	– Remove both pans – Change filter – Flush cooler – Add new fluid – Check level	– Repair/replace radiator cooler – Transmission overhaul required – Check for: ● Damaged plates and seals ● Contaminated solenoids – Flush cooler – Add new fluid – Check level	– Transmission overhaul required – Flush cooler and cooler lines – Add new fluid – Check level

*Fluid should be changed according to maintenance schedule.

Test Driving

Some 4L30–E automatic transmission complaints will require a test drive as a part of the diagnostic procedure. Some codes will not set unless the vehicle is moving. The purpose of the test drive is to duplicate the customer's complaint condition and set a current Powertrain Control Module (PCM) trouble code. Perform this procedure before each 4L30–E automatic transmission repair, and again after repairs are made.

IMPORTANT:

- Duplicate the condition under which the customer's complaint was observed.
- Depending on the complaint, the line pressure gauge and the scan tool may be required during the test drive.
- During the test drive, it is important to record all necessary data from the areas being monitored, for use in diagnosis. Also listen for and note any unusual noises.

The following procedure should be used to test drive 4L30–E automatic transmission complaint vehicles:

1. Turn the ignition ON without starting the engine. Check that the "CHECK TRANS" lamp comes on for approximately 2 seconds and then goes out and remains out.
   - If the lamp is flashing, GOTO Check Trans Indicator in Transmission Control System (4L30–E) section.
   - If no serial data is present, GOTO OBD System Check. Refer to Driveability and Emissions in Engine section.
   - If the lamp stays ON or stays OFF, GOTO "Check Trans" Check in Transmission Control System (4L30–E) section.
2. Drive the vehicle. During the test drive, be sure that the transmission achieves normal operating temperature (approx. 20 minutes).
   Allow the transmission to go through all of its gear ranges, checking shift timing and firmness. Duplicate the owner's complaint condition as closely as possible during the test drive.
3. If, during the test drive, the "CHECK TRANS" lamp comes on, use the scan tool to check for trouble codes.
4. If, during the test drive, a problem is felt, but the "CHECK TRANS" lamp does not come on and no trouble codes are present, drive the vehicle with the transmission 4–pin connector (M–6) and 7–pin connector (M–7) disconnected (manually shifting the vehicle).
   - In Manual L, the vehicle operates in first gear.
   - In Manual 2, the vehicle operates in third gear.
   - In Manual 3 or "D", the vehicle operates in fourth gear.

   If the problem still exists with the PCM disconnected, refer to Mechanical/Hydraulic Diagnosis in this section.
5. If no problem has been found at this point, check all underhood connections that supply power to the PCM and ignition fuses. Physically and visually inspect all the PCM harness connectors for loose or corroded terminals. Inspect the PCM ground points.

Mechanical / Hydraulic Diagnosis Check Trans Indicator Chart

Perform Preliminary Inspection First!

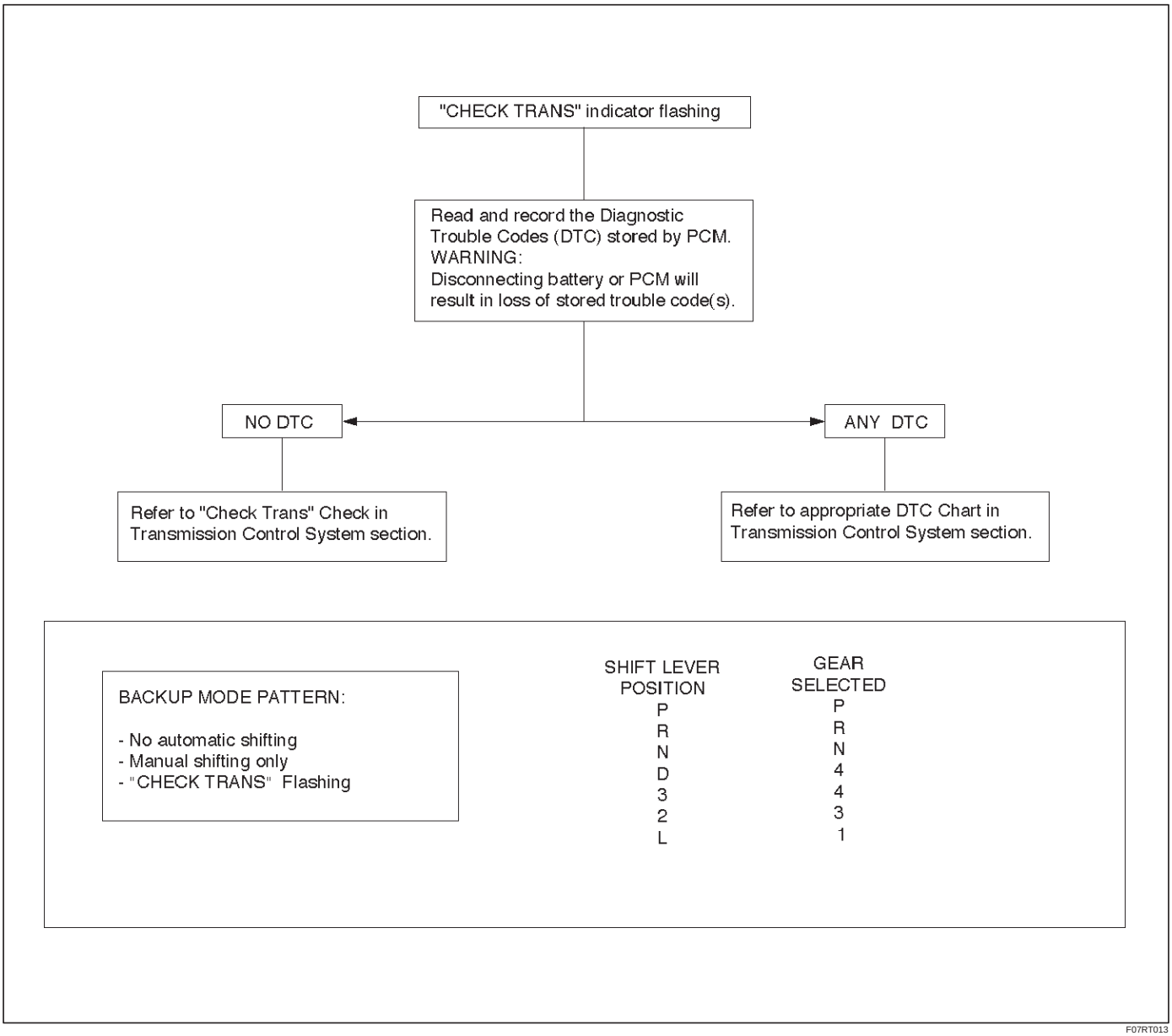

F07RT013

When the “CHECK TRANS” indicator is flashing, it indicates that a problem related to the transmission, the Powertrain Control Module (PCM), or the vehicle harness has occurred.

The system is now operating in a “BACKUP MODE” where the risk of further damaging the transmission has been reduced. The vehicle may be shifted manually.

If the initial problem is intermittent or seldom, switching the engine OFF/ON might allow normal operation again until the problem reoccurs.

Mechanical / Hydraulic Diagnosis Symptoms Index

Perform Preliminary Inspection First!

CHART	SYMPTOMS
1	NO ENGINE START IN NEUTRAL OR PARK
2	NO FORWARD GEARS IN ANY RANGE/NO REVERSE
3	NO ENGINE BRAKE IN ANY RANGE
4	POOR SHIFTING IN ALL GEARS (ALL HARSH OR ALL SOFT)
5a	DELAYS IN DRIVE AND REVERSE
5b	DELAYS IN REVERSE ONLY
6	DIAGNOSTIC TROUBLE CODE (DTC) P0730
7	HARSH 1–2 SHIFT
8	HARSH 3–4 SHIFT
9a	3–2 DOWNSHIFT COMPLAINT
9b	HARSH SHIFT WHEN SHIFTING INTO “D” OR ACCELERATING FROM STOP
9c	COASTDOWN HARSH SHIFT OR CLUNK AT 3–2 DOWNSHIFT
10	INTERMITTENT 4TH TO 2ND GEAR DOWNSHIFT AT STEADY SPEED
11	ENGINE FLARE AT SHIFTING DURING TURNING ONLY (USUALLY WITH WARM ENGINE)
12	ENGINE FLARE DURING 1–2 OR 2–3 SHIFT
13	SHUDDER ONLY DURING TORQUE CONVERTER CLUTCH (TCC) APPLYING
14	POSSIBLE CAUSES OF TRANSMISSION NOISE
15a	POSSIBLE CAUSES OF LOW LINE PRESSURE
15b	POSSIBLE CAUSES OF HIGH LINE PRESSURE
16	POSSIBLE CAUSES OF TRANSMISSION FLUID LEAKS

NOTE: Numbers with parenthesis on the following charts refer to Parts List at end of this section.

Chart 1: No Engine Start In Neutral Or Park

Step	Action	Yes	No
1	Does engine start when shift lever moved from drive to neutral mostly in hot condition?	Go to Step 2	Go to Step 3
2	Does engine start in park at any condition?	Re–test vehicle	Go to Step 4
3	Does engine also not start in neutral when shift lever moved from park to neutral?	Go to Step 4	Go to Step 5
4	Check mode switch (63) setting. Readjust if necessary. Problems fixed?	Re–test vehicle	Go to Step 5
5	Check start circuit of mode switch (63) open in neutral. Was open found?	Locate and repair open(s)	Replace mode switch (63)

Chart 2: No Forward Gears In Any Range/No Reverse

Step	Action	Yes	No
1	Check line pressure. Refer to Line Pressure Test in this section. Was line pressure normal?	Go to Step 2	Use Chart 15a: Possible Causes of Low Line Pressure in this section
2	1. Check internal linkage: – Manual linkage (58) not moving manual valve (326). 2. Check for internal mechanical damage: – Turbine shaft (506) broken loose. – Overrun roller clutch (516) broken loose. Was the problem found?	Repair or replace	—

Chart 3: No Engine Brake In Any Range

Step	Action	Yes	No
1	Check line pressure. Refer to Line Pressure Test in this section. Was line pressure normal?	Go to Step 2	Use Chart 15a: Possible Causes of Low Line Pressure in this section
2	1. Check for overrun clutch leaks caused by: – Damaged piston lip (513) – Check ball defective (504) 2. Check for overrun lockout valve (705) stuck by foreign material. 3. Check for leaks at turbine shaft (506) caused by: – Teflon seal rings damaged (508) – Excessive wear of turbine shaft bearing surfaces. Was the problem found?	Repair or replace	—

Chart 4: Poor Shifting In All Gears (All Harsh Or All Soft)

Step	Action	Yes	No
1	Check line pressure. Refer to Line Pressure Test in this section. Was line pressure normal?	Go to Step 2	Go to Step 3
2	1. Check for these conditions which could affect clutch apply time: – Defective band apply solenoid (323). – Defective servo or/and accumulator piston. – Excessive clutch piston travel. 2. Check of possible causes of internal leaks: – Cut or damaged sealing ring(s) – Damaged sealing gasket(s) – Check ball missing or out of location in 2nd and 3rd clutch pistons. 3. Check for causes of burned clutch plates or band. Was the problem found?	Repair or replace	—
3	Was the line pressure high?	Go to Step 4	Use Chart 15a: Possible Causes of Low Line Pressure in this section
4	Does DTC P0705 set?	Diagnose those DTC(s) first	Use Chart 15b: Possible Causes of High Line Pressure in this section

Chart 5a: Delays In Drive And Reverse

NOTE: A short delay (less than 3 seconds) when first engaging drive or reverse after allowing vehicle to sit overnight is normal.

Step	Action	Yes	No
1	Check line pressure. Refer to Line Pressure Test in this section. Was line pressure normal?	More than 3 second delay in drive and reverse with engine off 1 hour or less. Teflon seals (508) on turbine shaft damaged. Repair	Use Chart 15a: Possible Causes of Low Line Pressure in this section.

Chart 5b: Delays In Reverse Only

Step	Action	Yes	No
1	Check line pressure. Refer to Line Pressure Test in this section. Was line pressure normal?	Go to Step 2	Use Chart 15a: Possible Causes of Low Line Pressure in this section.
2	Main case valve body gasket (88) damaged. – Reverse check ball (85) in valve body (84) missing or out of location. – Check for restrictions at valve body transfer plate orifice. Was the problem found?	Repair	—

Chart 6: Diagnostic Trouble Code (DTC) P0730

Step	Action	Yes	No
1	Check line pressure. Refer to Line Pressure Test in this section. Was line pressure normal?	Go to Step 2	Use Chart 15b: Possible Causes of High Line Pressure in this section
2	1. 1st and 2nd gear missing or 3rd and 4th gear missing. Check appropriate shift valve. If OK replace solenoid. 2. No engine brake in any range (All ranges in Drive and Reverse are OK). Check for suspected conditions modifying delays to clutch apply: – Overrun clutch seal damaged. – Excessive overrun clutch piston travel. – Defective 3–4 accumulator piston. – Causes of internal leaks. – Causes of burned clutch plates. 3. 1st and 4th gear missing or 2nd and 3rd gear missing. Shift solenoid A stuck. Replace shift solenoid A. 4. DTC P0730 is set in D range 1st gear above 3500 rpm. Go to Step 3. 5. DTC P0730 is set in D range 3rd gear between 55-80 mph. NOTE: Perform this test within safe and legal limits. Check for suspected conditions modifying delays to clutch apply: – 4th clutch seal damaged. – Excessive 4th clutch piston travel. – Defective 3–4 accumulator piston. – Causes of internal leaks. – Causes of burned clutch plates. Was the problem found?	Repair or replace	—
3	Check 3rd gear in “D” in winter mode. Does vehicle move?	Shift solenoid A stuck. Replace shift solenoid A.	Go to Step 4
4	Check for suspected conditions modifying delays to clutch apply: – 2nd clutch seal damaged. – Excessive 2nd clutch piston travel. – Defective accumulator piston. – Causes of internal leaks. – Check ball missing or out of location in 2nd clutch. – Seals cut, damaged or missing. – Gaskets defective. – Causes of burned clutch plates. Was the problem found?	Repair or replace	—

Chart 7: Harsh 1–2 Shift

Step	Action	Yes	No
1	Check line pressure. Refer to Line Pressure Test in this section. Was line pressure normal?	Check for 1–2 accumulator valve (320) stuck by foreign material in main case valve body.	Use Chart 15b: Possible Causes of High Line Pressure in this section.

Chart 8: Harsh 3–4 Shift

Step	Action	Yes	No
1	Check line pressure. Refer to Line Pressure Test in this section. Was line pressure normal?	Go to Step 2	Use Chart 15b: Possible Causes of High Line Pressure in this section
2	1. Check for 3–4 accumulator valve (407) stuck in adapter case valve body (401). 2. Check for 3–4 accumulator piston (18) stuck in adapter case (20). Was the problem found?	Repair or replace	—

Chart 9a: 3–2 Downshift Complaint

Step	Action	Yes	No
1	Check line pressure. Refer to Line Pressure Test in this section. Was line pressure normal?	Go to Step 2	Use Chart 15a: Possible Causes of Low Line Pressure in this section
2	Does DTC P1850 set?	Diagnose P1850 first	Replace band apply solenoid (PWM) (323)

Chart 9b: Harsh Shift When Shifting Into “D” Or Accelerating From Stop

Step	Action	Yes	No
1	Check line pressure. Refer to Line Pressure Test in this section. Was line pressure normal?	Go to Step 2	Use Chart 15b: Possible Causes of High Line Pressure in this section
2	Does DTC P1850 set?	Diagnose P1850 first	Replace band apply solenoid (PWM) (323)

Chart 9c: Coastdown Harsh Shift Or Clunk At 3–2 Downshift

Step	Action	Yes	No
1	Check line pressure. Refer to Line Pressure Test in this section. Was line pressure normal?	Go to Step 2	Use Chart 15b: Possible Causes of High Line Pressure in this section
2	Does DTC P1850 set?	Diagnose P1850 first	Replace band apply solenoid (PWM) (323)

Chart 10: Intermittent 4TH TO 2ND Gear Downshift At Steady Speed

Step	Action	Yes	No
1	Check for consistent speed sensor reading with scan tool. Was the reading correct?	Replace mode switch for intermittent contact.	Go to Step 2
2	1. Check for wiring harness damage or short to ground. If OK, go to (2). 2. Check transmission speed sensor connections. If OK, go to (3). 3. Replace transmission speed sensor. Was the replacement complete?	—	Replace speed sensor.

Chart 11: Engine Flare At Shifting During Turning Only (Usually With Warm Engine)

Step	Action	Yes	No
1	Check for oil leaks at transmission. Was the problem found?	Replace transmission oil filter and gasket	—

Chart 12: Engine Flare During 1–2 Or 2–3 Shift

Step	Action	Yes	No
1	Check line pressure. Refer to Line Pressure Test in this section. Was line pressure normal?	Go to Step 2	Use Chart 15a: Possible Causes of Low Line Pressure in this section
2	1. Check for a stuck 1–2 accumulator valve (320). 2. Check for servo piston (106) leaks. 3. Check for a stuck band apply solenoid (323). Was line pressure normal?	Repair or replace	—

Chart 13: Shudder Only During Torque Converter Clutch (TCC) Applying

Step	Action	Yes	No
1	1. TCC shudder is one of the most commonly misdiagnosed conditions in an automatic transmission. The key to diagnosing TCC shudder is to note when it happens and under what conditions. Once the TCC has been fully applied, it is nearly impossible to make it shudder. TCC shudder (short burst of noise normally less than 1 second) will only occur during clutch applying. It is not a steady state condition. 2. Drive until whole drivetrain is at normal operating temperature. – On 4WD vehicles, the test must be performed with transfer case selector lever in “2H” position. – Shudder is a short burst of noise normally less than 1 second in duration, and can be induced by the following maneuver: 3. From coast condition at 50 mph in “D” range (Normal mode), depress the throttle to 1/4-1/3 throttle. If present, shudder will occur within 5 seconds together with TCC application.(The scan tool may be used to determine the exact time of TCC applying) Was the problem found?	Replace transmission fluid and filter (remove both pans) and flush cooler lines. Replace converter assembly and O-ring on turbine shaft	Perform mechanical inspection of other drivetrain components.

Chart 14: Possible Causes Of Transmission Noise

CAUTION: Before checking transmission for what is believed to be transmission noise, ensure presence and positioning of insulating plugs, pads etc. Also make sure that noise does not come from other drivetrain components.

Condition	Possible cause	Correction
Whine or Buzz	Oil level low	Fill with ATF, check for external leaks.
	Plugged or restricted oil filter	Inspect oil filter. Replace oil filter or ATF as necessary.
	Damaged oil filter gasket	Replace oil filter gasket.
Knocking noise from front of transmission.	Loose bolts (Converter to flex plate)	Tighten to specifications.
	Cracked or broken flex plate	Replace flex plate.
	Converter damaged	Replace converter.
Knocking noise while driving, mostly on acceleration.	Transmission mount loose or broken	Tighten mount bolts or replace transmission mount.
	Cooler line mounts loose or broken	Tighten or replace cooler line mounts.
	Cooler lines touching body or frame	Repair or replace as necessary.
Knocking noise when vehicle is stationary.	Loose flex plate mounting bolts	Tighten to specifications.
	Cracked or broken flex plate	Replace flex plate.
	Damaged converter	Replace converter.

Chart 15a: Possible Causes of Low Line Pressure

Step	Action	Yes	No
1	Check oil level. Was the problem found?	Fill with ATF	Go to Step 2
2	Check for defective throttle position sensor. Was the problem found?	Replace throttle position sensor	Go to Step 3
3	Check for plugged, loose, or damaged oil filter (79). Was the problem found?	Inspect oil filter, tighten bolts or replace oil filter (79)	Go to Step 4
4	Check for a stuck force motor plunger (404). (Adapter case valve body) Was the problem found?	Replace force motor plunger (404)	Go to Step 5
5	Check for a stuck feed limit valve (412). (Adapter case valve body) Was the problem found?	Replace feed limit valve (412)	Go to Step 6
6	Check for loose converter bolts (4 & 5). Was the problem found?	Tighten converter bolts (4 & 5)	Go to Step 7
7	Check for a stuck pressure regulator valve (217). (Oil pump) Was the problem found?	Replace pressure regulator valve (217)	Go to Step 8
8	Check for a stuck boost valve (213).(Oil pump) Was the problem found?	Replace boost valve (213)	Go to Step 9
9	Check for blocked intermediate oil passages to pressure regulator valve. (Oil pump) Was the problem found?	Replace oil pump	Go to Step 10
10	Check for defective oil pump (9, 201, 202 & 228). Was the problem found?	Replace oil pump	Go to Step 11
11	Check for internal leaks. – Check balls missing or out of location in valve bodies – Seals cut or damaged – Gaskets defective, etc. Was the problem found?	Install balls, or correct ball location Replace seals Replace gaskets	—

Chart 15b: Possible Causes Of High Line Pressure

NOTE: If transmission is operating in backup mode, high line pressure will be present.

Step	Action	Yes	No
1	Check for defective throttle position sensor. Was the problem found?	Replace throttle position sensor.	Go to Step 2.
2	Check for a stuck force motor plunger (404). (Open circuit/intermittent) (Adapter case valve body) Was the problem found?	Replace force motor plunger (404)	Go to Step 3
3	Check for a stuck feed limit valve (412). (Adapter case valve body) Was the problem found?	Replace force motor plunger (412)	Go to Step 4
4	Check converter bolts (4 & 5). Was the problem found?	Tighten converter bolts (4 & 5)	Go to Step 5
5	Check for a stuck pressure regulator valve (217). (Oil pump) Was the problem found?	Replace pressure regulator valve (217)	Go to Step 6
6	Check for a stuck boost valve (213). (Oil pump) Was the problem found?	Replace boost valve (213)	Go to Step 7
7	Check for internal leaks. – Check balls missing or out of location in valve bodies – Seals cut or missing – Gaskets defective, etc. Was the problem found?	Install balls, or correct ball location Replace seals Replace gaskets	—

Chart 16: Possible Causes Of Transmission Fluid Leaks

Before attempting to correct an oil leak, the actual source of the leak must be determined. In many cases, the source of the leak may be difficult to determine due to “wind flow” around the engine and transmission.
The suspected area should be wiped clean before inspecting for the source of the leak.

Oil leaks around the engine and transmission are generally carried toward the rear of the vehicle by the air stream. In determining the source of an oil leak, the following two checks should be made:

1. With the engine running, check for external line pressure leaks.
2. With the engine off, check for oil leaks due to the raised oil level caused by drainback of converter oil into the transmission.

Possible Causes Of Fluid Leaks Due To Sealing Malfunction

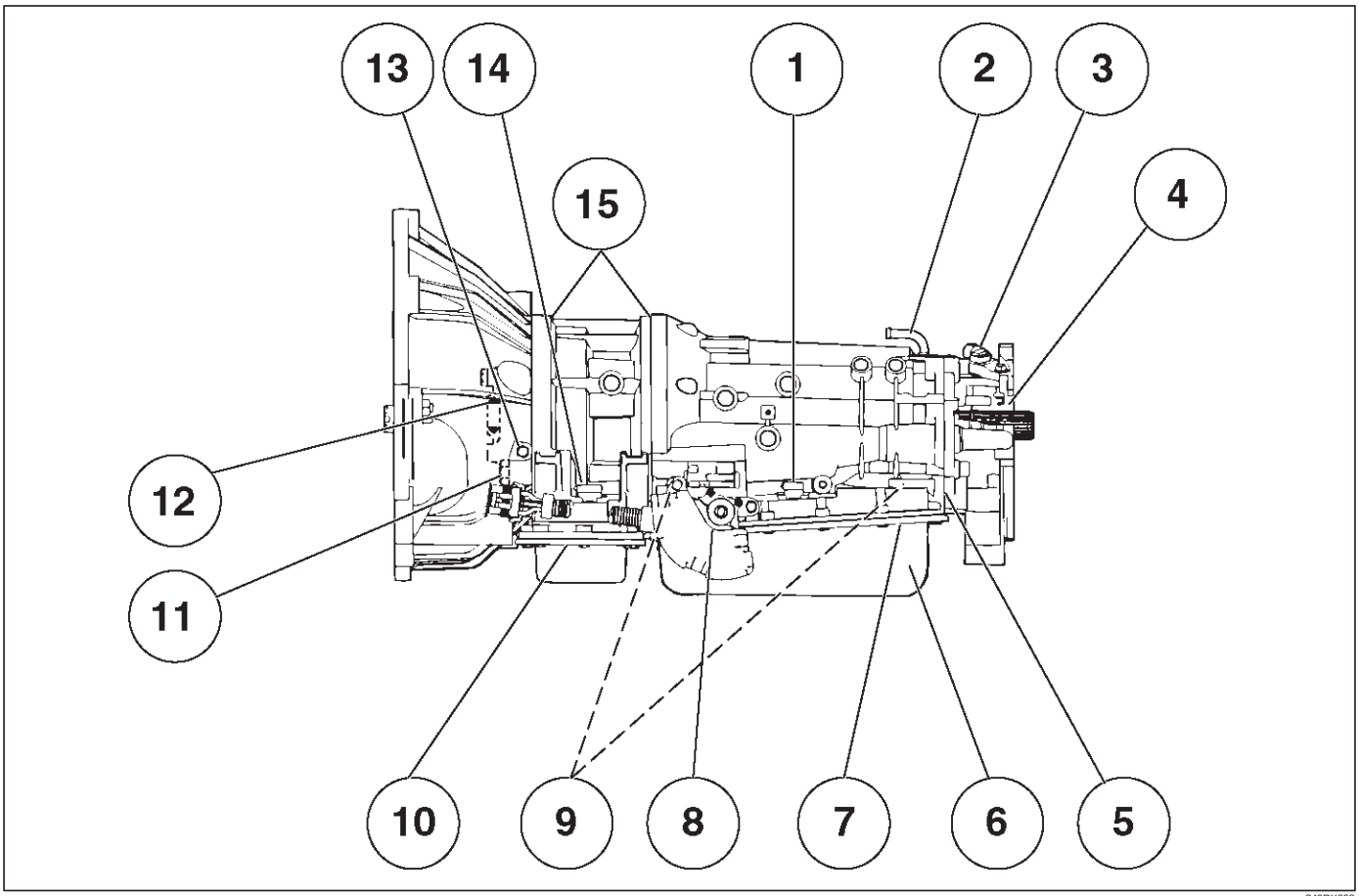

240RX008

Legend

(1) Electrical Connector (Main Case) Seal
(2) Transmission Vent (Breather)
(3) Speed Sensor O–Ring
(4) Extension (Adapter) Lip Seal
(5) Extension (Adapter) to Main Case Gasket
(6) Overfill and Oil Drain Screws Gasket
(7) Oil Pan Gasket (Main Case)
(8) Selector Shaft Seal
(9) Oil Cooler Connectors (2)
(10) Oil Pan Gasket (Adapter Case)
(11) Converter housing attaching bolts not correctly torqued
(12) Converter Housing Lip Seal
(13) Line Pressure Tap Plug
(14) Electrical Connector (Adapter Case) Seal
(15) Adapter Case Seal Rings (2)

Stall Test

The stall test allows you to check the transmission for internal abrasion and the one way clutch for slippage. Torque converter performance can also be evaluated.
The stall test results together with the road test results will identify transmission components requiring servicing or adjustment.

Stall Test Procedure:

1. Check the level of the engine coolant, the engine oil, and the automatic transmission fluid. Replenish if necessary.
2. Block the wheels and set the parking brake.
3. Connect a tachometer to the engine.
4. Start the engine and allow it to idle until the engine coolant temperature reaches 70 – 80˚C (158 – 176˚F).
5. Hold the brake pedal down as far as it will go.
6. Place the selector in the “D” range.
7. Gradually push the accelerator pedal to the floor.
   The throttle valve will be fully open.
   Note the engine speed at which the tachometer needle stabilizes.

Stall Speed : 2,100 ±150 rpm

NOTE: Do not continuously run this test longer than 5 seconds.

8. Release the accelerator pedal.
9. Place the selector in the “N” range.
10. Run the engine at 1,200 rpm for one minute.
    This will cool the transmission fluid.
11. Repeat Steps 7 – 10 for the “3”, “2”, “L” and “R” ranges.

Line Pressure Test

The line pressure test checks oil pump and control valve pressure regulator valve function. It will also detect oil leakage.

Line Pressure Test Procedure:

1. Check the level of the engine coolant, the engine oil, and the automatic transmission fluid.
   Replenish if required.
2. Block the wheels and set the parking brake.
3. Remove the pressure detection plug at the left side of the transmission case.
   Set 5–8840–0004–0 pressure gauge and adapter to the pressure detection plug hole.

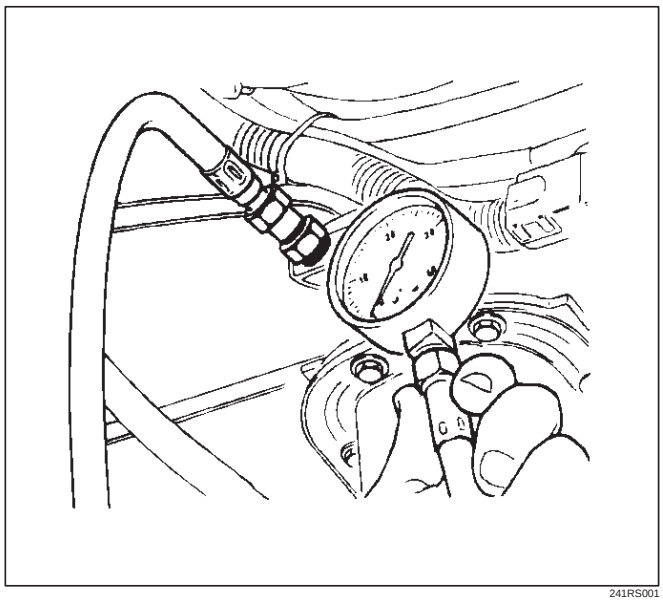

241RS001

4. Start the engine and allow it to idle until the engine coolant temperature reaches 70 – 80˚C (158 – 176˚F).
5. Hold the brake pedal down as far as it will go.
6. Place the selector in the “D” range.
7. Note the pressure gauge reading with the engine idling.
8. Gradually push the accelerator pedal to the floor. The throttle valve will be fully open.
   Note the pressure gauge reading with the accelerator pedal fully depressed.

NOTE: Do not continuously run this test longer than 5 seconds.

9. Release the accelerator pedal.
10. Place the selector in the “N” range.
11. Run the engine at 1,200 rpm for one minute.
    This will cool the transmission fluid.
12. Repeat Steps 7 – 11 for the “3”, “2”, “L”, and “R” ranges.
13. Install a pressure detection plug to the transmission case, applying recommended thread locking agent (LOCTITE 242) or its equivalent to thread of plug. Make sure that thread is cleaned before applying locking agents.
14. Tighten the pressure detection plug to the specified torque.

Torque: 9 – 14N·m (0.9 – 1.4 kg·m/7 – 10 lb ft)

MODE	LEVER POSITION	ENGINE SPEED	LINE PRESSURE		FORCE MOTOR CURRENT (mA)
			kPa	PSI	
NORMAL/POWER	D,3,2,L	IDLE	590 – 730	86 – 106	680 – 720
WINTER	D	IDLE	300 – 390	44 – 57	1,020 – 1,060
NORMAL/POWER WINTER	REVERSE	IDLE	460 – 630	67 – 91	880 – 920
NORMAL/POWER	D, 3, 2, L	STALL SPEED	1,250 – 1,380	181 – 200	70 – 110
WINTER	D	STALL SPEED	1,250 – 1,380	181 – 200	70 – 110
NORMAL/POWER WINTER	REVERSE	STALL SPEED	1,400 – 1,580	203 – 229	340 – 380

Shift Speed Chart

Transfer gear ratio:	High: 1.000
Rear axle ratio:	4.100

“Normal mode”

Upshift

Range	Throttle opening	1 → 2 (First Gear) (Second Gear) km/h (mph)	2 → 3 (Second Gear) (Third Gear) km/h (mph)	3 → 4 (Third Gear) (Fourth Gear) km/h (mph)
D (Drive)	Fully opened	54 ~ 60 (34 ~ 37)	114 ~ 120 (71 ~ 75)	166 ~ 172 (103 ~ 107)
	Half throttle	32 ~ 38 (20 ~ 24)	57 ~ 63 (35 ~ 39)	99 ~ 105 (61 ~ 65)
3 (Third)	Fully opened	54 ~ 60 (34 ~ 37)	114 ~ 120 (71 ~ 75)	—
	Half throttle	32 ~ 38 (20 ~ 24)	57 ~ 63 (35 ~ 39)	—
2 (Second)	Fully opened	54 ~ 60 (34 ~ 37)	—	—
	Half throttle	32 ~ 38 (20 ~ 24)	—	—

Downshift

Range	Throttle opening	1 ← 2 (First Gear) (Second Gear) km/h (mph)	2 ← 3 (Second Gear) (Third Gear) km/h (mph)	3 ← 4 (Third Gear) (Fourth Gear) km/h (mph)
D (Drive)	Fully opened	45 ~ 51 (28 ~ 32)	107 ~ 113 (66 ~ 70)	155 ~ 161 (96 ~ 100)
	Half throttle	14 ~ 20 (9 ~ 12)	33 ~ 39 (20 ~ 24)	64 ~ 70 (40 ~ 43)
	Fully closed	13 ~ 19 (8 ~ 12)	19 ~ 25 (12 ~ 16)	27 ~ 33 (17 ~ 21)
3 (Third)	Fully opened	45 ~ 51 (28 ~ 32)	107 ~ 113 (66 ~ 70)	—
	Half throttle	14 ~ 20 (9 ~ 12)	33 ~ 39 (20 ~ 24)	—
	Fully closed	13 ~ 19 (8 ~ 12)	19 ~ 25 (12 ~ 16)	—
2 (Second)	Fully opened	45 ~ 51 (28 ~ 32)	97 ~ 103 (60 ~ 64)	—
	Half throttle	14 ~ 20 (9 ~ 12)	97 ~ 103 (60 ~ 64)	—
	Fully closed	13 ~ 19 (8 ~ 12)	97 ~ 103 (60 ~ 64)	—
L (First)	—	50 ~ 56 (31 ~ 35)	—	—

“Power mode”

Upshift

Range	Throttle opening	1 → 2 (First Gear) (Second Gear) km/h (mph)	2 → 3 (Second Gear) (Third Gear) km/h (mph)	3 → 4 (Third Gear) (Fourth Gear) km/h (mph)
D (Drive)	Fully opened	54 ~ 60 (34 ~ 37)	114 ~ 120 (71 ~ 75)	174 ~ 180 (108 ~ 112)
	Half throttle	41 ~ 47 (25 ~ 29)	84 ~ 90 (52 ~ 56)	136 ~ 142 (84 ~ 88)
3 (Third)	Fully opened	54 ~ 60 (34 ~ 37)	114 ~ 120 (71 ~ 75)	—
	Half throttle	41 ~ 47 (25 ~ 29)	84 ~ 90 (52 ~ 56)	—
2 (Second)	Fully opened	54 ~ 60 (34 ~ 37)	—	—
	Half throttle	41 ~ 47 (25 ~ 29)	—	—

Downshift

Range	Throttle opening	1 ← 2 (First Gear) (Second Gear) km/h (mph)	2 ← 3 (Second Gear) (Third Gear) km/h (mph)	3 ← 4 (Third Gear) (Fourth Gear) km/h (mph)
D (Drive)	Fully opened	45 ~ 51 (28 ~ 32)	107 ~ 113 (66 ~ 70)	163 ~ 169 (101 ~ 105)
	Half throttle	22 ~ 28 (14 ~ 17)	57 ~ 63 (35 ~ 39)	108 ~ 114 (67 ~ 71)
	Fully closed	13 ~ 19 (8 ~ 12)	23 ~ 29 (14 ~ 18)	46 ~ 52 (29 ~ 32)
3 (Third)	Fully opened	45 ~ 51 (28 ~ 32)	107 ~ 113 (66 ~ 70)	—
	Half throttle	22 ~ 28 (14 ~ 17)	57 ~ 63 (35 ~ 39)	—
	Fully closed	13 ~ 19 (8 ~ 12)	23 ~ 29 (14 ~ 18)	—
2 (Second)	Fully opened	45 ~ 51 (28 ~ 32)	97 ~ 103 (60 ~ 64)	—
	Half throttle	22 ~ 28 (14 ~ 17)	97 ~ 103 (60 ~ 64)	—
	Fully closed	13 ~ 19 (8 ~ 12)	97 ~ 103 (60 ~ 64)	—
L (First)	—	50 ~ 56 (31 ~ 35)	—	—

“Winter mode”

D range, winter mode ON → OFF	31 ~ 37 km/h (19 ~ 23 mph)

Lockup Speed Chart

Transfer gear ratio	High: 1.000
Rear axle ratio	4.100

	Mode	ECCC Apply			ECCC Release		
		2nd Km/h (mph)	3rd Km/h (mph)	4th Km/h (mph)	2nd Km/h (mph)	3rd Km/h (mph)	4th Km/h (mph)
D range Throttle opening 6%	Normal	57 ~ 63 (35 ~ 39)	42 ~ 48 (26 ~ 30)	43 ~ 49 (27 ~ 31)	52 ~ 58 (32 ~ 36)	32 ~ 38 (20 ~ 24)	41 ~ 47 (25 ~ 29)
	Power	57 ~ 63 (35 ~ 39)	67 ~ 73 (42 ~ 45)	57 ~ 63 (35 ~ 39)	52 ~ 58 (32 ~ 36)	32 ~ 38 (20 ~ 24)	49 ~ 55 (30 ~ 34)

Changing Transmission Fluid

There is no need to change the transmission fluid unless the transmission is used under one or more of the following heavy duty conditions.

A. Repeated short trips

B. Driving on rough roads

C. Driving on dusty roads

D. Towing a trailer

If the vehicle is used under these conditions, change the fluid every 20,000 miles (32,000 km).

1. Place a large drain pan under the oil pan.
2. Remove the transmission oil drain screw (2) and drain fluid.
3. Tighten drain screw (2).

   Torque: 38 N•m (3.9 kg·m/28 lb ft)

4. Remove the transmission overfill screw (1) and fill transmission through overfill screw opening, using DEXRON®–III ATF.

NOTE: Add transmission fluid until it flows out over the overfill screw opening.

5. Let engine idle until a fluid temperature between 32˚C (90˚F) and 57˚C (135˚F) is reached.
6. Add transmission fluid until it flows out over the overfill screw opening, then close the overfill screw (1).

   Torque: 38 N•m (3.9 kg·m/28 lb ft)

NOTE: To prevent fluid leaks, the overfill screw and oil drain screws gasket must be replaced each time these screws are removed.

NOTE: Check transmission fluid temperature with service scan tool.

7. Reset “Oil Life Monitor” data by using Tech 2.
   Refer to Tech 2 OBD II Connection in Transmission Control System (4L30-E) section.

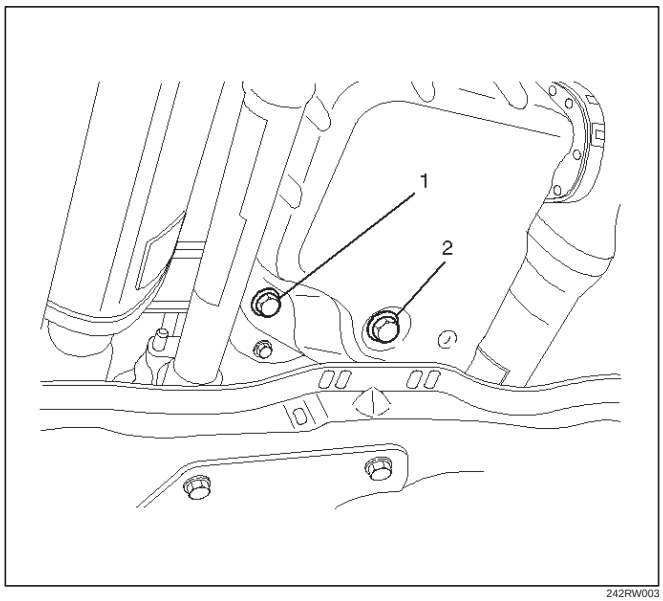

242RW003

Selector Lever

Inspection

1. Make sure that when the selector lever is shifted from “P” to “L”, a “clicking” can be felt at each shift position. Make sure that the gear corresponds to that of the position plate indicator.
2. Check to see if the selector lever can be shifted as shown in illustration.

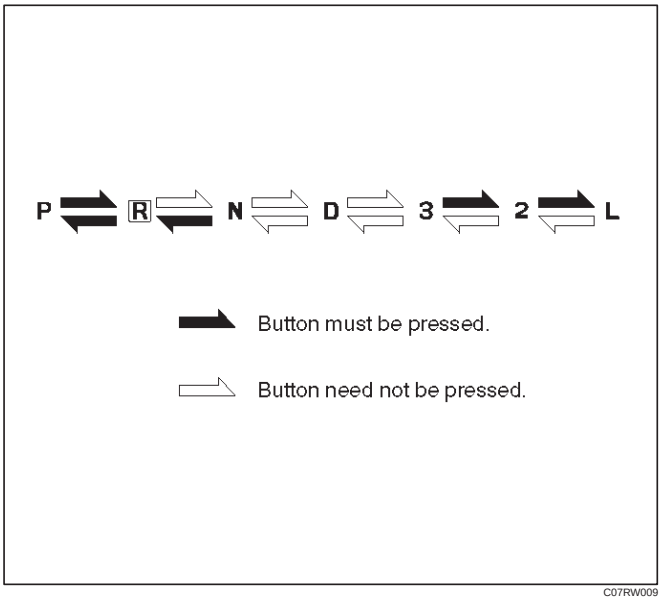

C07RW009

Removal

1. Disconnect battery ground cable.
2. Remove transfer control lever knob (4×4).
3. Remove front console.
   - Disconnect wiring harness connectors from front console.
4. Disconnect shift lock cable (1) from the selector lever assembly side.

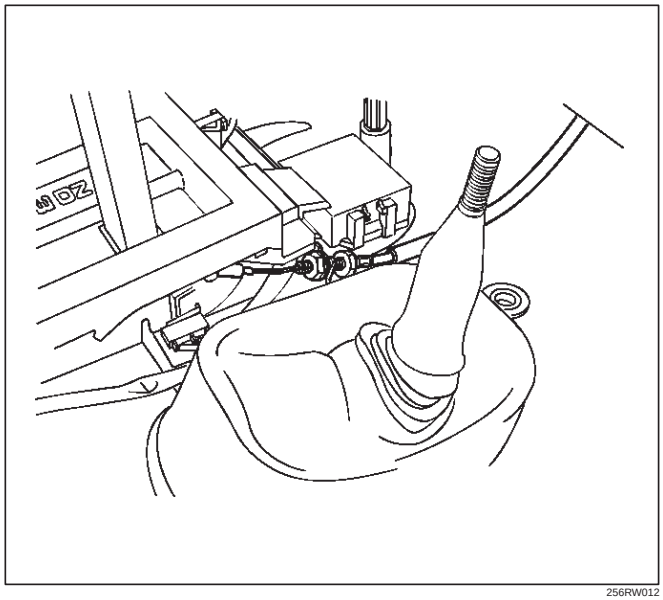

256RW012

5. Disconnect shift control rod (2) from the selector lever assembly side.

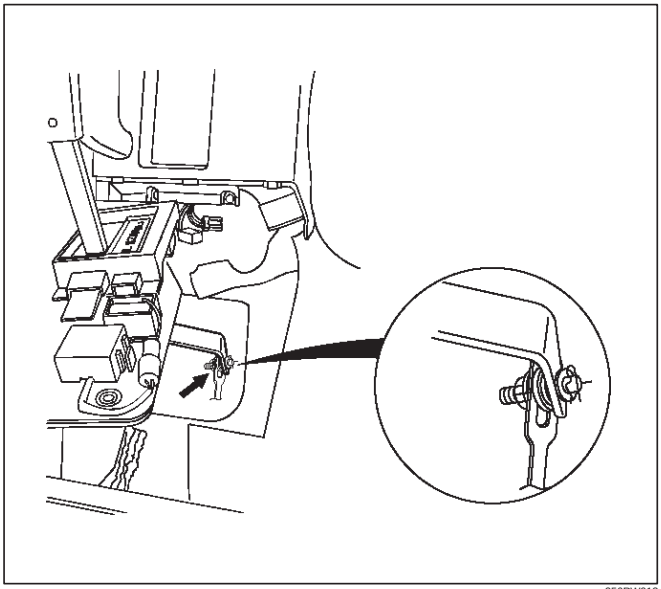

6. Disconnect wiring harness connectors from the selector lever assembly.
7. Remove selector lever assembly.

Installation

To install, follow the removal steps in the reverse order, noting the following points:

Adjustment of select lever and control rod

1. Place the vehicle on a level surface.

NOTE: If the vehicle is not on level surface, the shift select cable set positions will vary with the movement of engine. To prevent possible misadjustment of the cable, the vehicle must be placed on a level surface.

2. Install the shift control rod (1) to the transmission select lever (2), and then place the lever in the “N” position.
3. Set select lever in the “N” position.
4. Push select lever forward (“R” position side) and secure it (using a rubber band (3), etc.) so that the pin comes into contact with the wall of the detent plate.
5. Install the shift control rod (1) to the selector lever arm (4).

Torque: 32 N•m (3.3 kg·m/24 lb ft)

NOTE: Do not apply oil to the threaded portions.

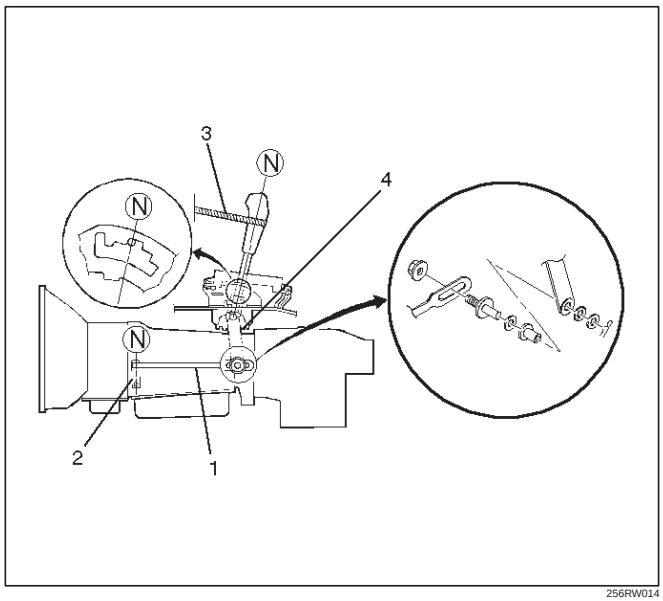

6. After adjustment, make sure that the selector lever operates normally, and that each selector position is properly indicated. (The red mark shows through the window.)

Adjustment of shift lock cable

1. Set ignition key in “LOCK” position and selector lever in “P” position.
2. Adjust cable screw cap on selector lever side to provide a gap (slack for cable) of 1 – 2 mm between rod on steering lock side and stopper.

   Adjust cap as follows:

   a. Pull screw cap (1) in arrow direction to remove inner cable slack.
   b. With cable kept as (a), adjust gap between nut (2) and bracket to 5 mm (0.2 in).
   c. Lock inner cable by turning nut (3) while holding nut (2) in place.

Torque : 3.7 N•m (3.8 kg·cm/33 lb in)

NOTE: Clean the cable threads, and do not apply oil to them.

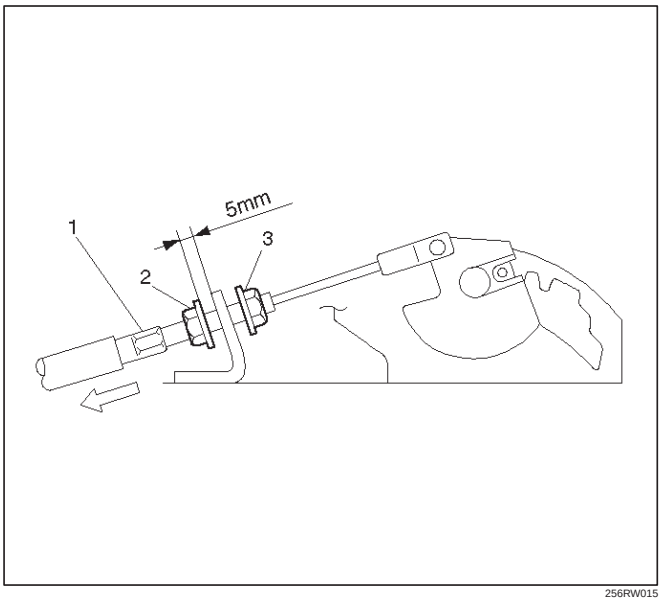

256RW015

3. Check the shift lock operation:
   a. Selector lever should not move out of “P” position with ignition key in “Lock” position.
   b. Selector lever can be moved out of “P” position with ignition key in “ON” position only when brake pedal is depressed.
   c. Ignition key can be turned to “LOCK” position only when selector lever is in “P” position (key can be pulled out).

   If (a) and (c) fail, readjust cable. If (b) fails, readjust connector wiring and brake pedal switch.

Mode Switch

Removal

1. Place selector lever in neutral.
2. Disconnect battery ground cable.
3. Remove mode switch cover (1).
4. Disconnect selector lever (2) from the mode switch.
5. Disconnect transmission harness from the mode switch connector (3).
6. Remove bracket with mode switch connector from the transmission case.
7. Remove mode switch connector (3) from the bracket (4).
8. Remove two mode switch bolts and nut then remove mode switch (5).

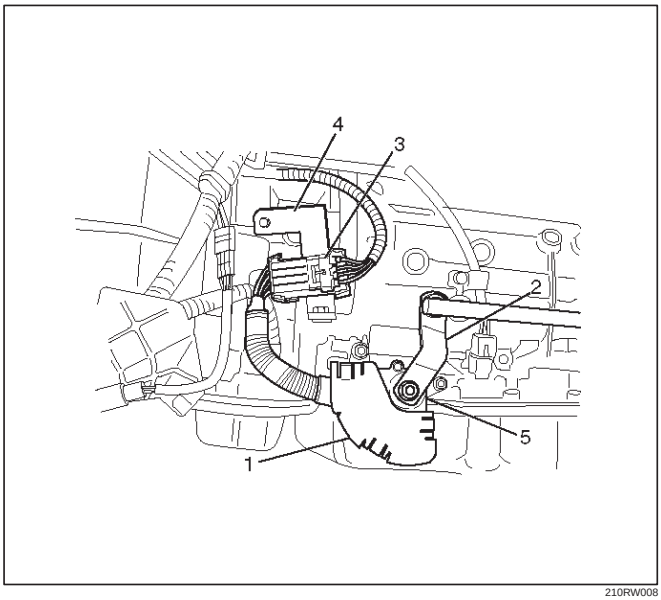

210RW008

Installation

To install, follow the removal steps in the reverse order, noting the following points;

1. Torque

   Mode switch bolt: 13 N•m (1.3 kg·m/113 lb in)

   Selector lever nut: 23 N•m (2.3 kg·m/17 lb ft)

2. Mode switch setting procedure

   Perform either of the following adjustment procedures:

   Procedure 1

   a. Place selector lever in neutral.
   b. Remove selector lever from the mode switch.
   c. Remove the mode switch cover.
   d. Loosen the two 10 mm screws.
   e. Rotate the mode switch until the slot in the mode switch housing aligns with the selector shaft bushing, and insert a 3/32 in. (2.4 mm) drill bit or punch (1) into the slot.
   f. Tighten the screws to 13 N·m (1.3 kg·m/113 lb in).
   g. After completing adjustment, snap the mode switch cover into place.
   h. Reinstall the selector lever.

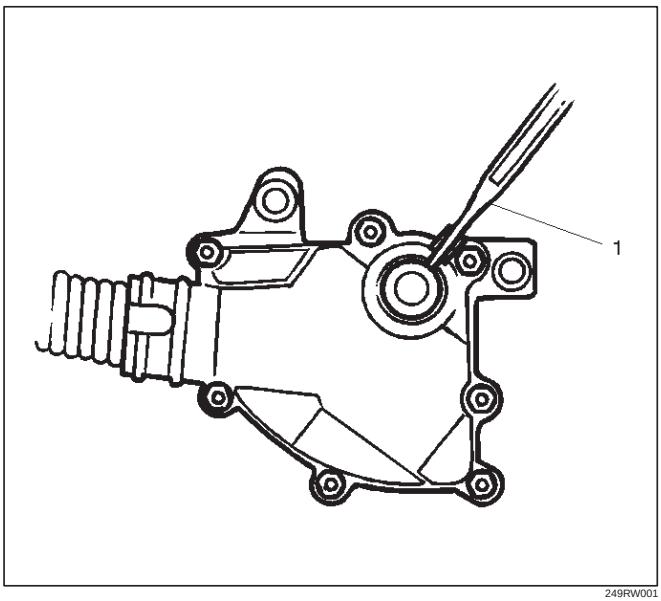

249RW001

Procedure 2

a. Place selector lever in neutral.
b. Disconnect transmission harness connector from mode switch connector.
c. Remove mode switch connector with bracket from the transmission case.
d. Connect multimeter (resistance mode) to terminals 1(E) and 4(H) on mode switch connector.
e. Loosen two mounting screws.
f. Rotate mode switch slightly in both directions to determine the range (approx. 5 degrees) of electrical contact.
g. Position mode switch in middle of contact range.
h. Tighten two mounting screws.
i. Remove multimeter and install mode switch harness connector with bracket to the transmission case.
j. Connect transmission harness connector to mode switch connector.

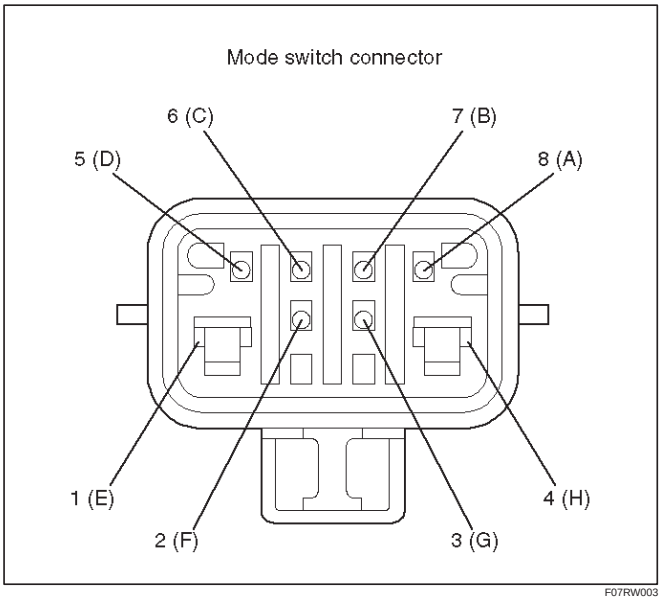

F07RW003

Transmission (With Transfer Case)

Transmission And Associated Parts

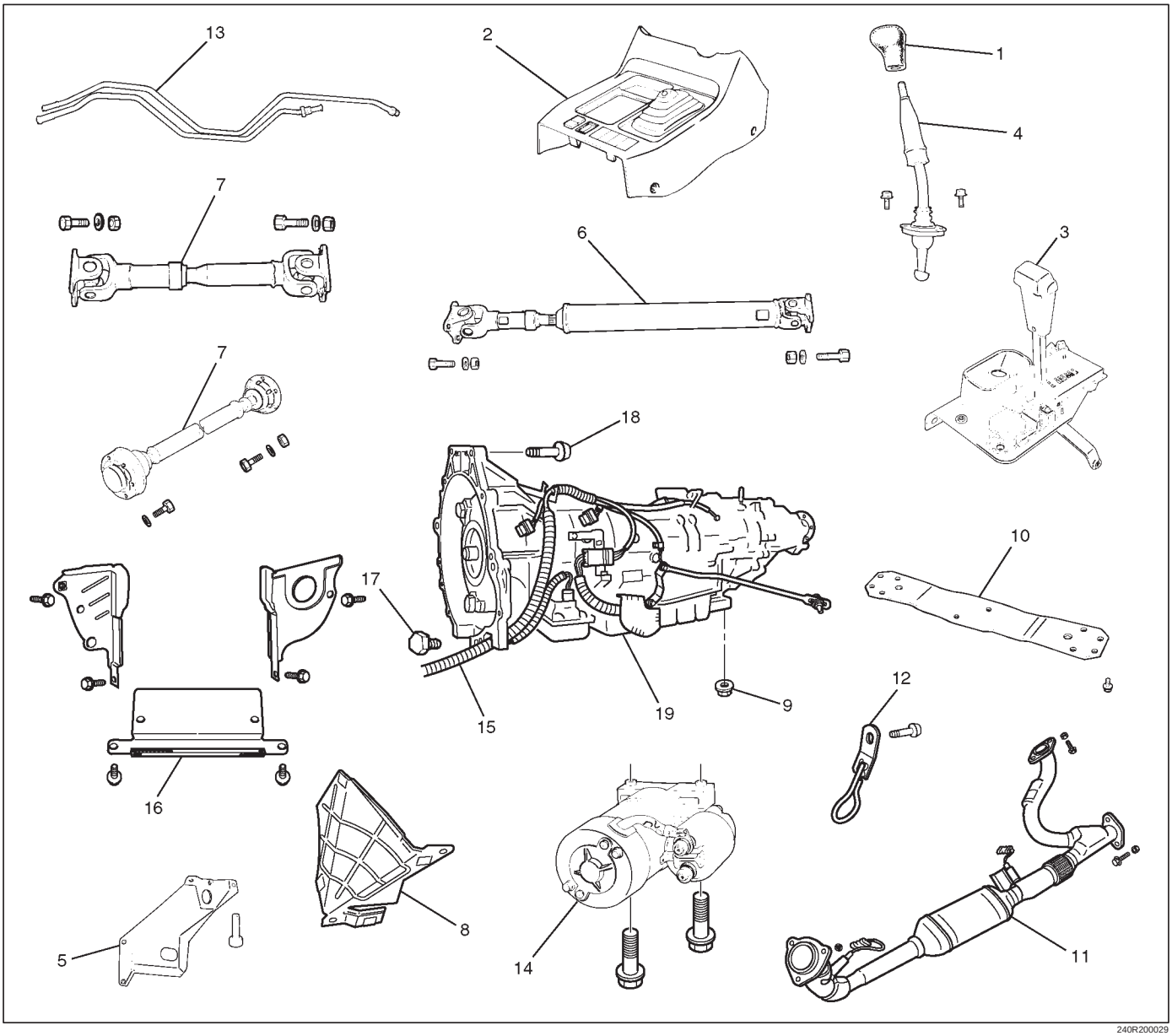

240R200029

Legend

(1) Transfer Control Lever Knob
(2) Front Console
(3) Selector Lever Assembly
(4) Transfer Control Lever
(5) Transfer Protector
(6) Rear Propeller Shaft
(7) Front Propeller Shaft
(8) Harness Protector
(9) Rear Mount Nut
(10) Third Crossmember
(11) Left Catalytic Converter Assembly
(12) Seat Belt Tension Rod
(13) Transmission Oil Cooler Pipe
(14) Starter
(15) Transmission Harness Connector
(16) Under Cover
(17) Torque Converter Bolt
(18) Engine Transmission Bolt
(19) Transmission Assembly (With Transfer Case)

Removal

NOTE: Before remove transmission and transfer assembly from vehicle, change the tansfer mode to 2WD using push button on dash panel.

1. Remove engine hood.
2. Disconnect battery ground cable.
3. Remove transfer control lever knob (1) and disconnect wiring harness connectors, then remove front console (2).
4. Remove selector lever assembly (3).
5. Remove transfer control lever (4).
6. Remove transfer protector (5).
7. Disconnect shift control rod from the selector lever assembly side.

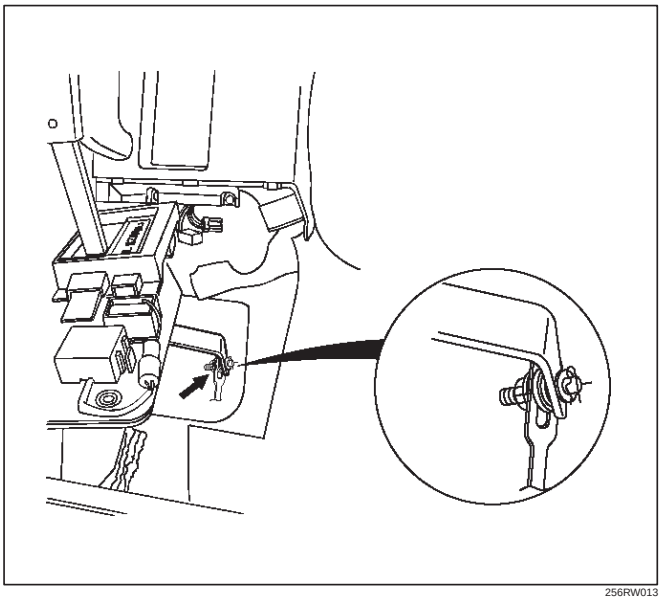

256RW013

8. Remove rear propeller shaft (6).
9. Remove front propeller shaft (7).
10. Remove harness protector (8).
11. Support transfer case with a jack and remove two rear mount nuts (9) from the 3rd crossmember side.
12. Remove eight third crossmember bolts and third crossmember (10).
13. Remove front exhaust silencer mounting nuts.
14. Remove left seat belt tension rod.
15. Disconnect two left side oxygen sensor connectors from the transmission harness.

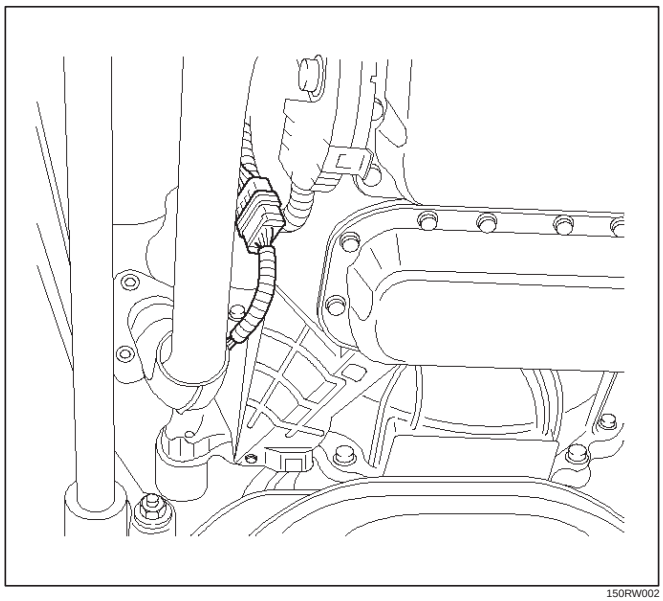

150RW002

16. Remove left catalytic converter assembly (11).
17. Loosen right catalytic converter nuts to exhaust manifold.

NOTE: This will make the next steps easier.

18. Disconnect transmission oil cooler pipe (13) from A/T side.
19. Remove oil pipe clamp from torque converter housing bracket.

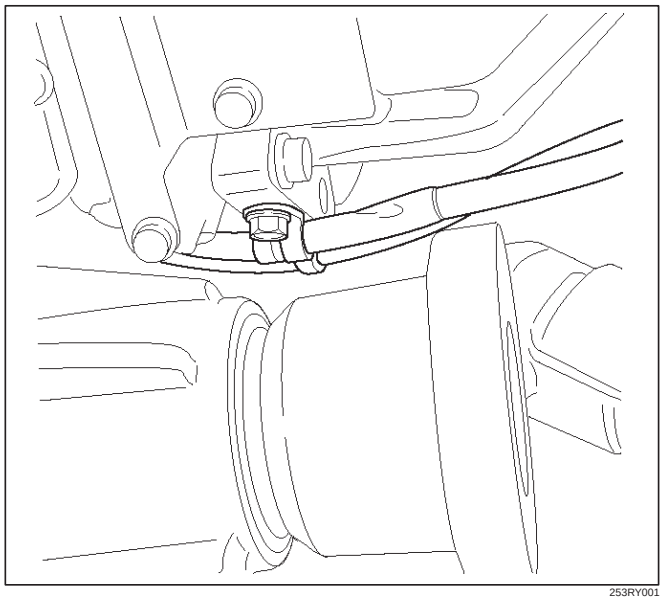

253RY001

20. Loosen oil pipe clamp bolt at the engine mount side.
21. Remove starter (14).

22. Disconnect fuel pipe clamp brackets from transmission side.

Fuel hose connector removal procedure

If removal of the fuel hose connector is required for transmission servicing and/or replacement, follow the steps below.

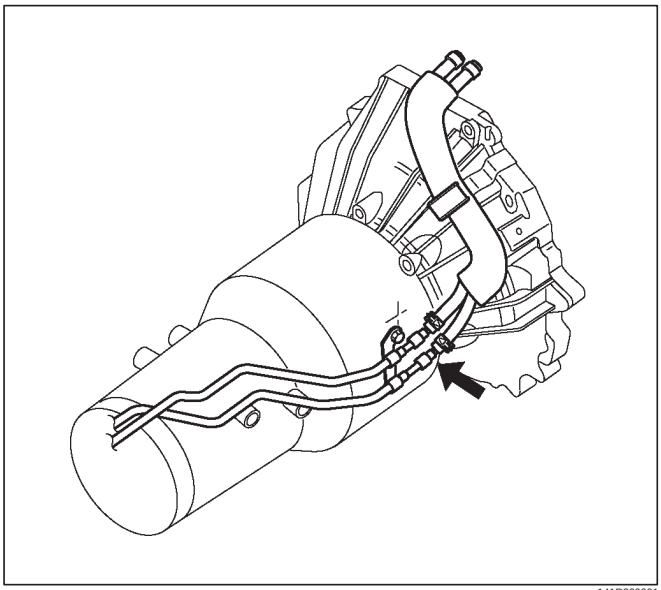

141R200001

NOTE:

- An O-ring is used as a seal between the fuel pipe and the connector. Take care not to damage the contact surfaces during the removal procedure. Do not allow the surface to become contaminated with dirt or other foreign material.
- Perform the entire removal procedure with your hands. Do not use tools.

1. **Separating the connector and fuel pipe**
   1. Clean the fuel pipe and connector to remove mud and other dirt.
   2. Pull the black plastic piece toward the connector. Hold the piece near the connector. Pull the connector from the fuel pipe.

   If the connector and fuel pipe are stuck together, jiggle the connector back and forth to loosen the connector. Do not yank the connector from the fuel pipe.

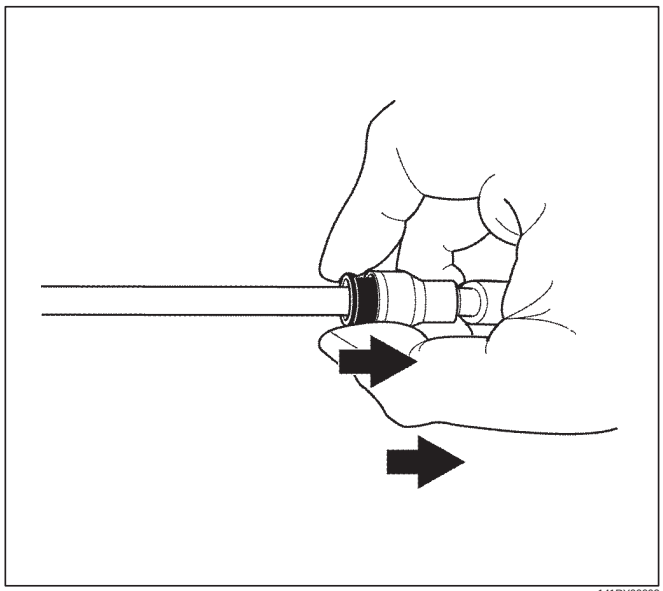

141RY00002

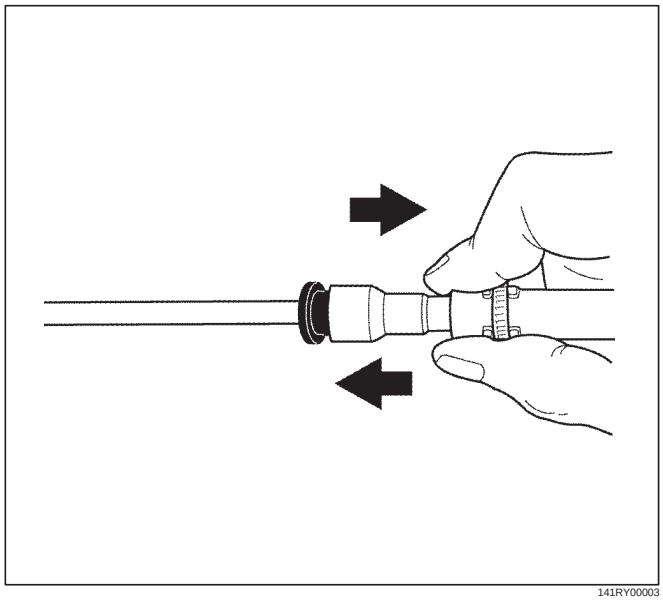

141RY00003

3. Tie a vinyl bag around the connector and fuel pipe to protect them from dirt.

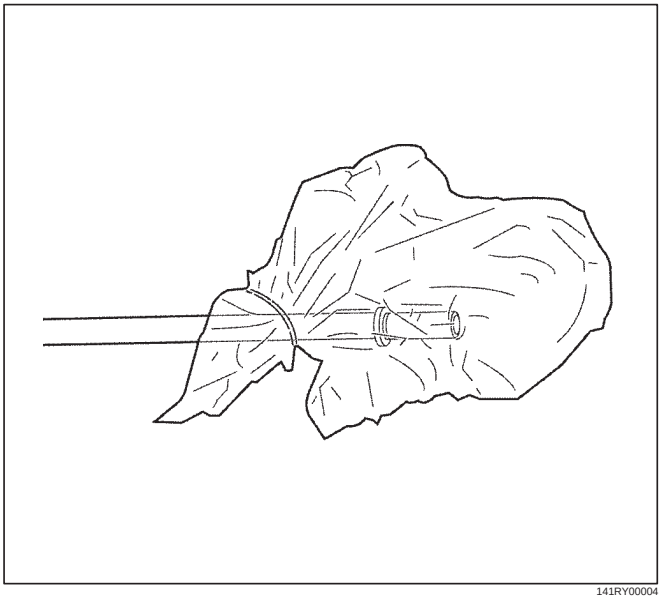

141RY00004

2. **Joining the connector and fuel hose**
   1. Remove the vinyl bag from the connector and fuel hose. Check that the contact surfaces are undamaged and free of dirt and other foreign material. Clean if necessary.
   2. Align the axis of the fuel pipe and connector. Push the connector into the fuel pipe until a distinct click is heard.

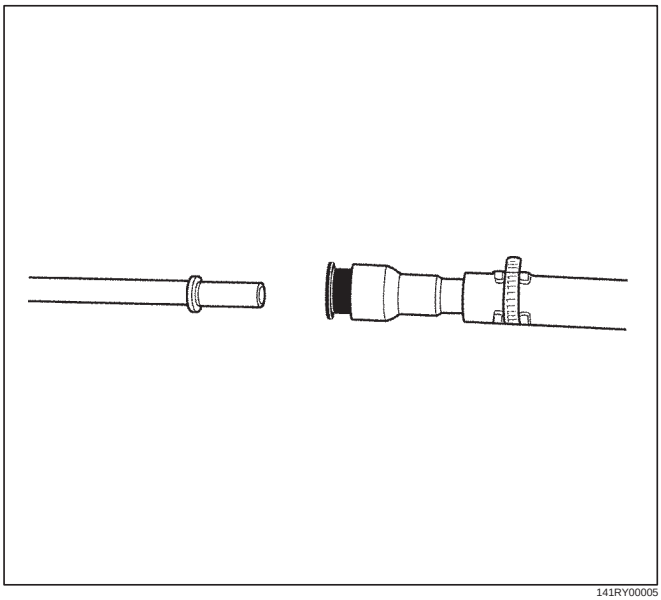

141RY00005

3. Gently pull on the connector to check that it is securely latched.

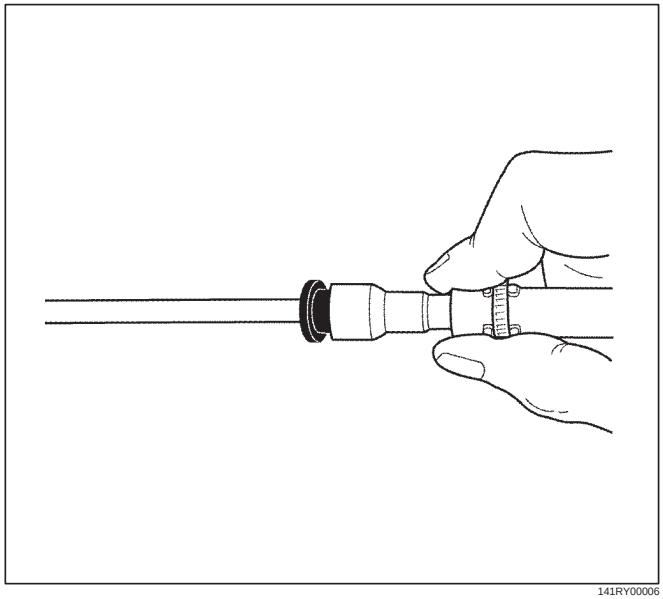

141RY00006

23. Disconnect transmission harness connectors (15) from transmission, transfer, and right catalytic converter.
24. Remove under covers (3 pieces) (16) from transmission case.
25. Remove flex plate torque converter fixing bolts (6 pieces) (17) by turning crankshaft.
26. Support the transmission with a transmission jack, and hoist engine with a chain block.
27. Remove engine transmission fixing bolts (18).
28. Remove transmission assembly with transfer case (19).
29. Remove transfer case from the transmission assembly if necessary.

Installation

1. Slowly raise transmission jack until front of the transmission is aligned with rear of the engine, then install transmission assembly.

2. Tighten engine transmission bolts, to the specified torque.

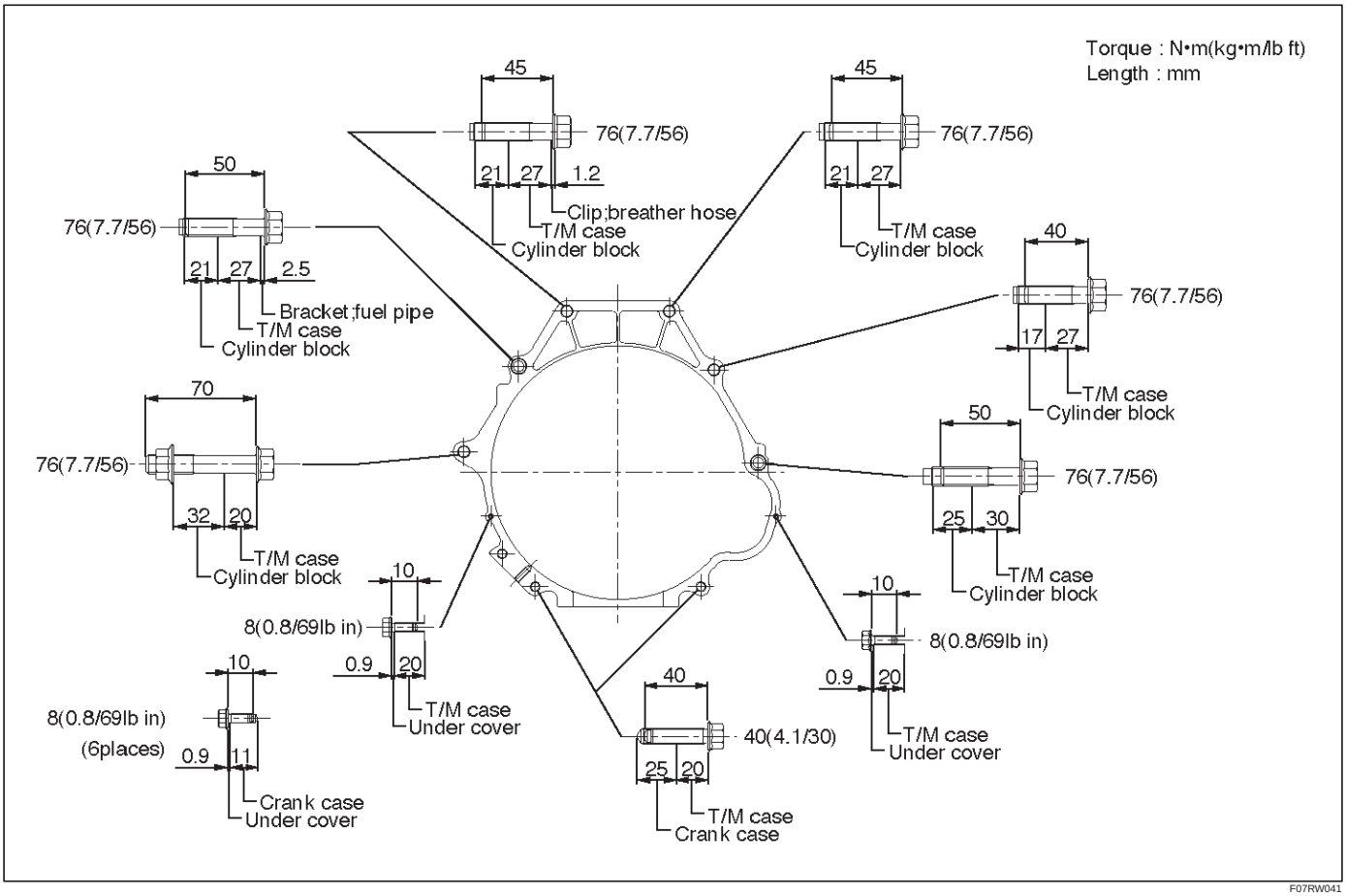

F07RW041

3. Support transfer case with a jack, and remove the transmission jack.
4. Install flex plate torque converter bolts (6 pieces) by turning crankshaft.

Torque: 54 N•m (5.5 kg·m/40 lb ft)

NOTE: Do not reuse the flex plate torque converter bolt.

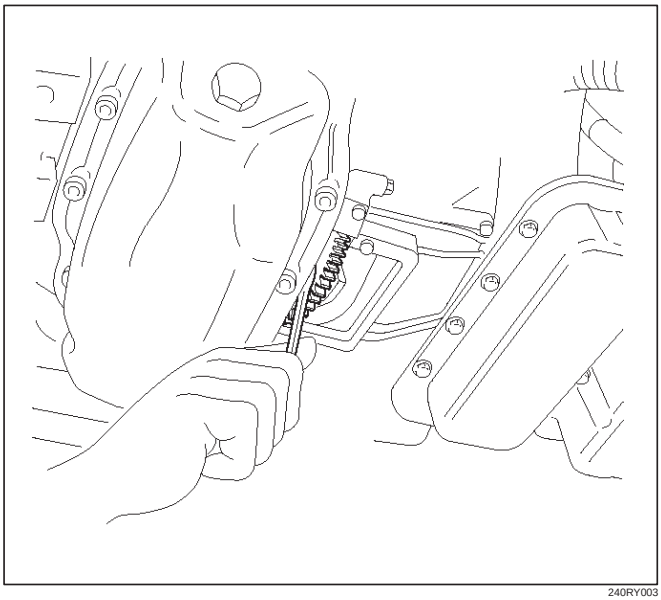

240RY003

5. Install the under cover (3 pieces), and tighten the bolts to the specified torque.

Torque: 8 N•m (0.8 kg·m/69 lb in)

6. Install the starter, and tighten the bolts to the specified torque.

Torque: 40 N•m (4.1 kg·m/30 lb ft)

7. Connect transmission harness connectors to transmission, transfer, and right catalytic converter.
8. Connect fuel pipe brackets to transmission side.

NOTE: See “NOTE” of removal steps.

For TOD

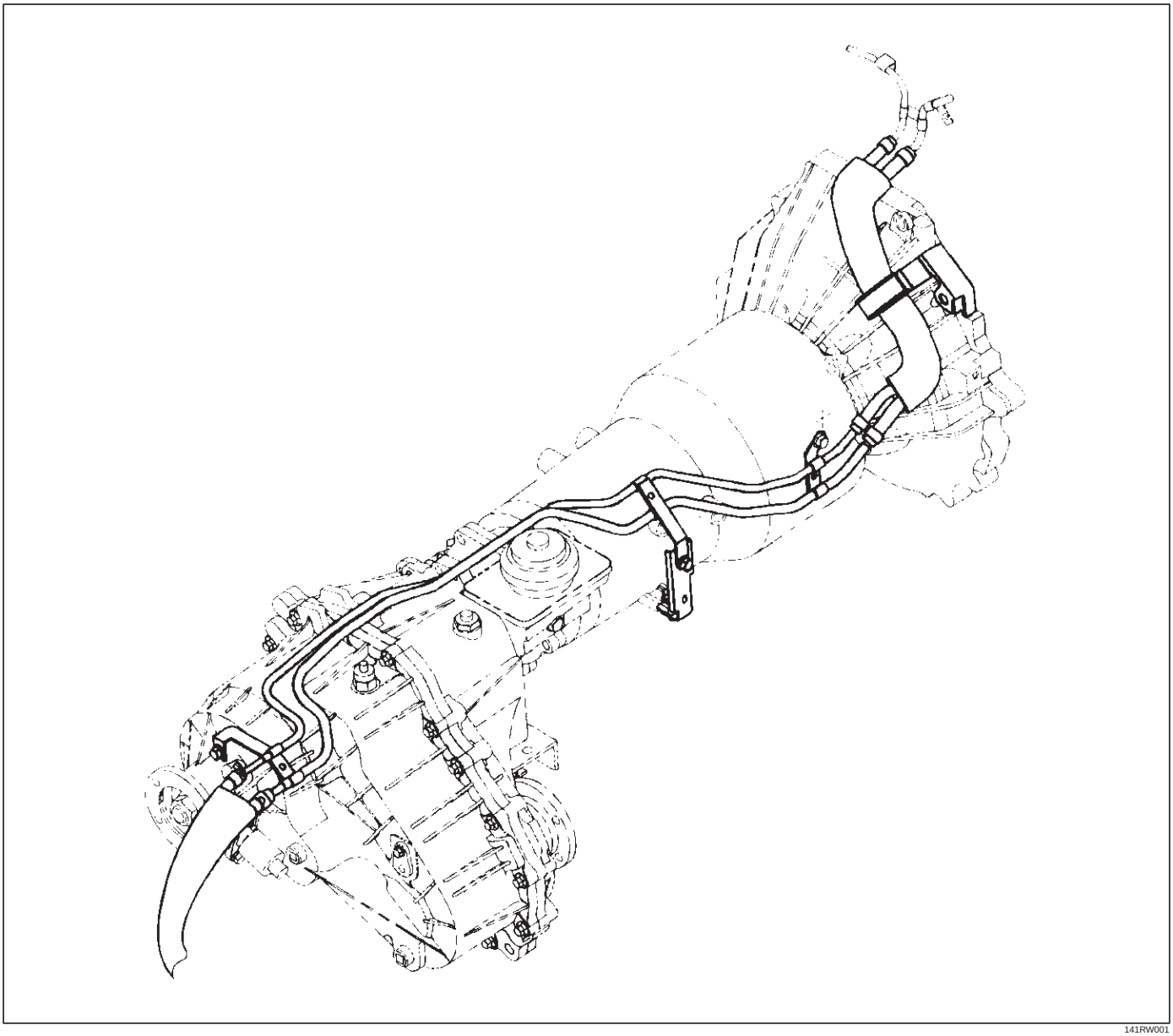

141RW001

For except TOD

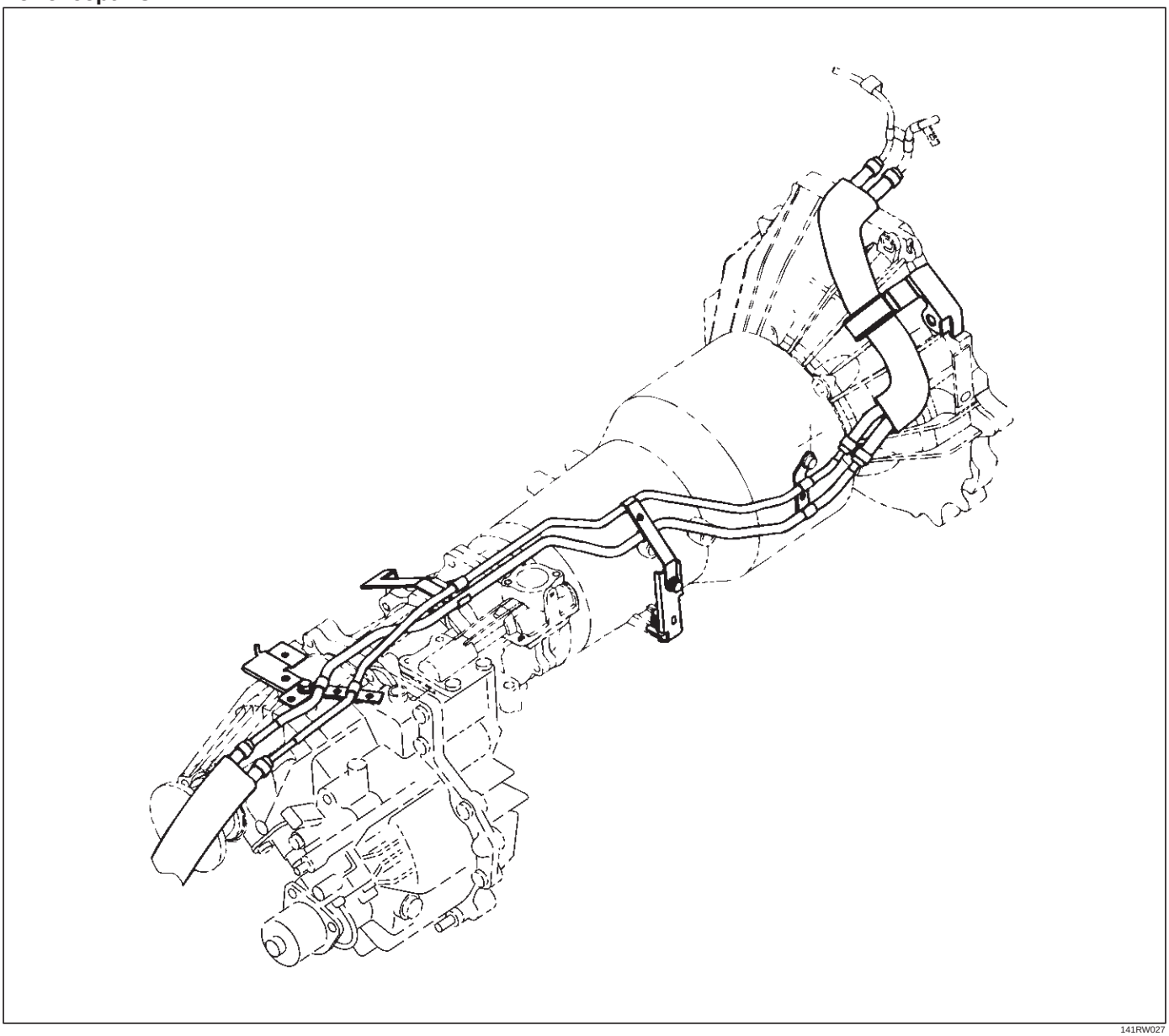

141RW027

9. Install transmission oil cooler pipe to transmission.

   Torque: 44 N•m (4.5 kg·m/33 lb ft)

10. Install oil pipe clamp to torque converter housing bracket.
11. Tighten oil pipe clamp bolt at engine mount side.
12. Install right catalytic converter, tighten to the specified torque.

    Torque: 67 N•m (6.8 kg·m/49 lb ft)

13. Install left catalytic converter assembly, and tighten the bolts to the specified torque.

    Exh. pipe to exh. manifold 67 N•m (6.8 kg·m/49 lb ft)

    Exh. pipe flange bolt 43 N•m (4.4 kg·m/32 lb ft)

14. Install left seat belt tension rod.

    Torque: 39 N•m (4.0 kg·m/29 lb ft)

15. Connect two left side oxygen sensor connectors to the transmission harness.
16. Install front exhaust silencer mounting nuts.
17. Install third crossmember, and tighten the bolts to the specified torque.

    Torque: 76 N•m (7.8 kg·m/56 lb ft)

18. Install rear mount nuts, and tighten the bolts to the specified torque.

    Torque: 50 N•m (5.1 kg·m/37 lb ft)

19. Remove the jack from the transfer case.

20. Install harness protector.

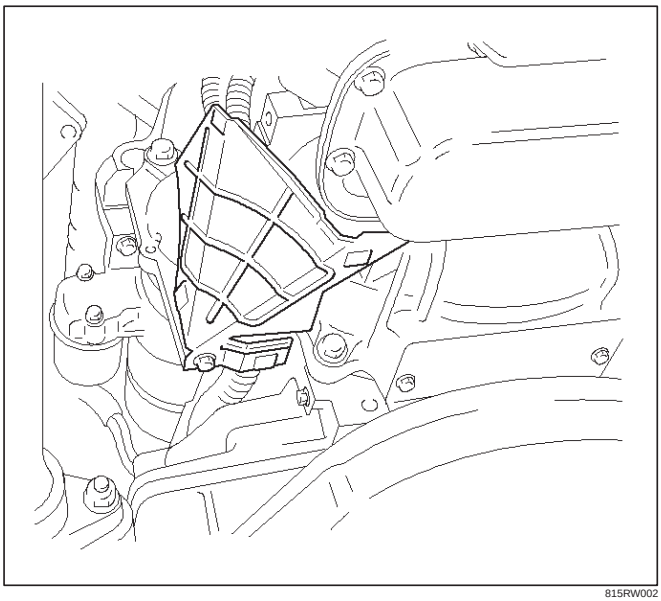

815RW002

21. Install the front propeller shaft, and tighten the bolts to the specified torque.

    Torque: 63 N•m (6.4 kg·m/46 lb ft)

    Front differential side bolt (W/TOD)

    Torque: 43 N•m (4.4 kg·m/32 lb ft)

22. Install the rear propeller shaft, and tighten the bolts to the specified torque.

    Torque: 63 N•m (6.4 kg·m/46 lb ft)

23. Connect the shift control rod to selector lever assembly.
24. Install the transfer protectors, and tighten the bolts to the specified torque.

    Torque: 37 N•m (3.8 kg·m/27 lb ft)

25. Install the transfer control lever.
26. Install the selector lever assembly.
27. Connect the wiring harness connectors to front console.
28. Install the front console.
29. Install the transfer control lever knob.
30. Connect the battery ground cable.
31. Install the engine hood.

Solenoid (Main Case Valve Body)

Removal

1. Raise the vehicle and support it on jack stands.
2. Disconnect battery ground cable.
3. Remove transfer protector.
4. Drain fluid.
5. Support transfer case with a jack and remove third crossmember.
6. Remove sixteen 10 mm screws, main case oil pan, magnet, and gasket.
7. Remove three 13 mm screws, oil filter.
8. Disconnect wiring harness from band control solenoid and shift solenoids. Pull only on connectors, not on wiring harness.
9. Remove spring pin for shift solenoid A, shift solenoid B, and band control solenoid respectively, using suitable pliers taking care not to damage solenoids.

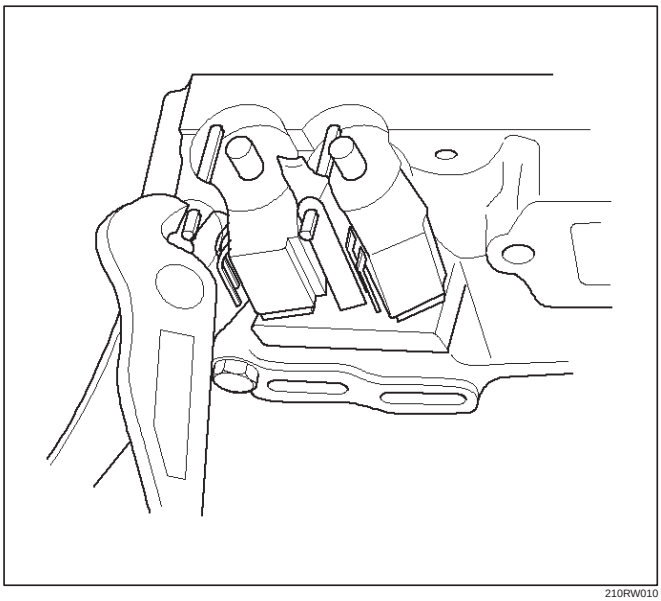

210RW010

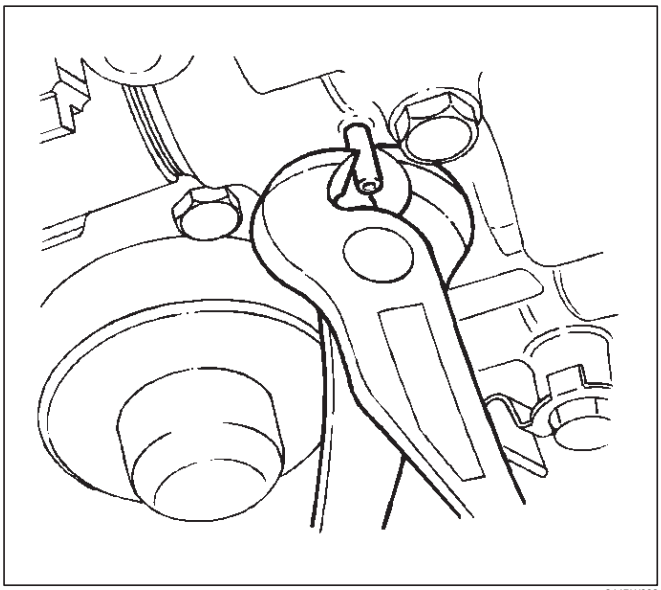

244RW003

10. Remove shift solenoid A, shift solenoid B, band control solenoid, and gaskets from main case valve body. Do not pull on wiring harness. Remove solenoids by grasping the metal tip.

Installation

1. Install shift solenoid A, shift solenoid B, band control solenoid with new gaskets to main case valve body respectively.
2. Carefully install spring pin with hammer to avoid damage to valve body, etc.

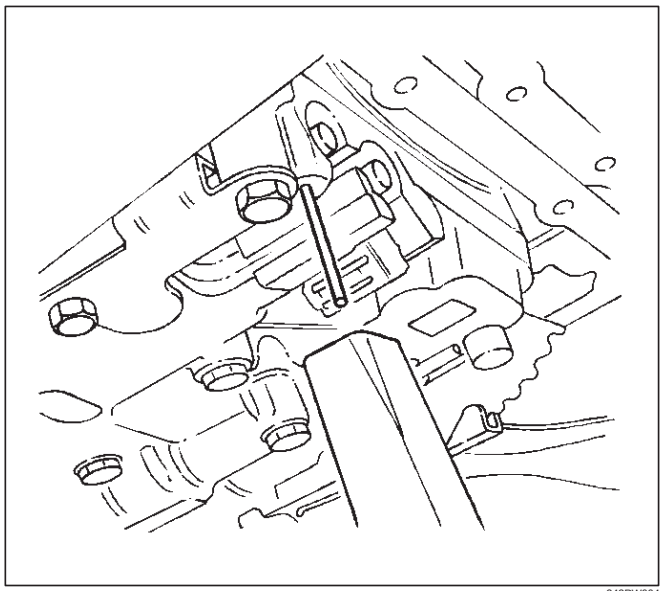

243RW004

3. Connect wiring harness to solenoids.
4. Install oil filter with a new gasket and the three 13 mm screws. Tighten the screws to the specified torque.

   Torque: 20 N•m (2.0 kg·m/15 lb ft)

5. Install magnet, main case oil pan with new gasket, sixteen 10 mm screws. Tighten the screws to the specified torque.

   Torque: 11 N•m (1.1 kg·m/96 lb in)

6. Install third crossmember and rear mount nuts. Tighten the nuts and bolts to the specified torque.

   Third crossmember bolt: 76 N•m (7.8 kg·m/56 lb ft)

   Rear mount nut: 50 N•m (5.1 kg·m/37 lb ft)

7. Install the transfer protector. Tighten the bolts to the specified torque.

   Torque: 37 N•m (3.8 kg·m/27 lb ft)

8. Fill transmission through the overfill screw hole of oil pan, using ATF DEXRON®–III. Refer to Changing Transmission Fluid in this section.
9. Connect the battery ground cable.

Solenoid (Adapter Case Valve Body)

Removal

1. Raise the vehicle and support it on jack stands.
2. Disconnect battery ground cable.
3. Drain fluid.
4. Remove adapter case oil pan twelve fixing 10 mm screws, adapter case oil pan, and gasket.

NOTE: Oil pan still contains transmission fluid. Place a large drain container under the oil pan and drain the fluid carefully.

5. Disconnect wiring harness from force motor solenoid and converter clutch PWM solenoid. Pull only on connectors, not on wiring harness.
6. Remove 11 mm bolt, bracket and converter clutch PWM solenoid with two O–rings.

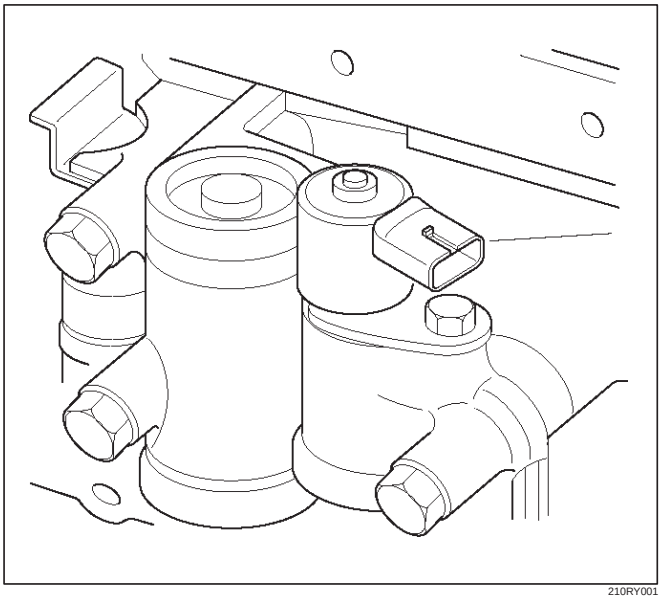

210RY001

7. Remove 11 mm bolt, retainer, and force motor solenoid.

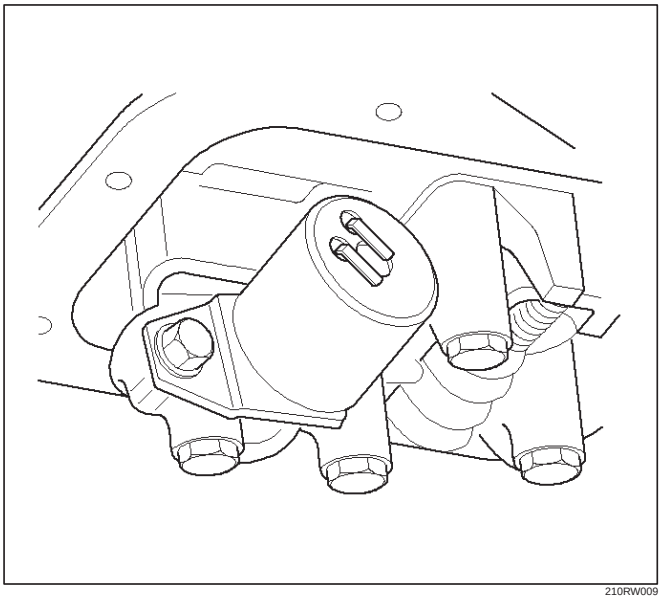

210RW009

Installation

1. Install force motor solenoid, retainer, and 11 mm bolt to adapter case valve body. Tighten the bolt to the specified torque.

   Torque: 10 N•m (1.0 kg·m/87 lb in)

2. Install converter clutch PWM solenoid with two O–rings, bracket, and 11 mm bolt to adapter case valve body. Tighten the bolt to the specified torque.

   Torque : 10 N•m (1.0 kg·m/87 lb in)

3. Connect wiring harness assembly to solenoids.
4. Install adapter case oil pan, new gasket, and twelve 10 mm screws. Tighten the screws to the specified torque.

   Torque : 11 N•m (1.1 kg·m/96 lb in)

5. Fill transmission through overfill screw hole oil pan, using ATF DEXRON®–III. Refer to Changing Transmission Fluid in this section.
6. Connect battery ground cable.

Valve Body Assembly (Main Case)

Removal

1. Raise the vehicle and support it on jack stands.
2. Disconnect battery ground cable.
3. Remove transfer protector (4×4).
4. Drain fluid.
5. Support transfer case with a jack and remove third crossmember.
6. Remove sixteen 10 mm screws, main case oil pan, magnet and gasket.
7. Remove three 13 mm oil filter fixing screws, then remove oil filter.
8. Remove two 13 mm manual detent fixing screws, then remove roller and spring assembly.
9. Disconnect wiring harness from band control solenoid and shift solenoids. Pull only on connectors, not on wiring harness.
10. Remove four 13 mm servo cover fixing screws, then remove servo cover and gasket.
11. Remove seven 13 mm valve body fixing screws.
12. Remove main case valve body with manual valve link and transfer plate. Note the position of the link (long end into valve, short end into range selector lever).
13. Remove transfer plate gasket from main case.
14. Remove two check balls from main case.

Installation

1. Install two check balls to main case.

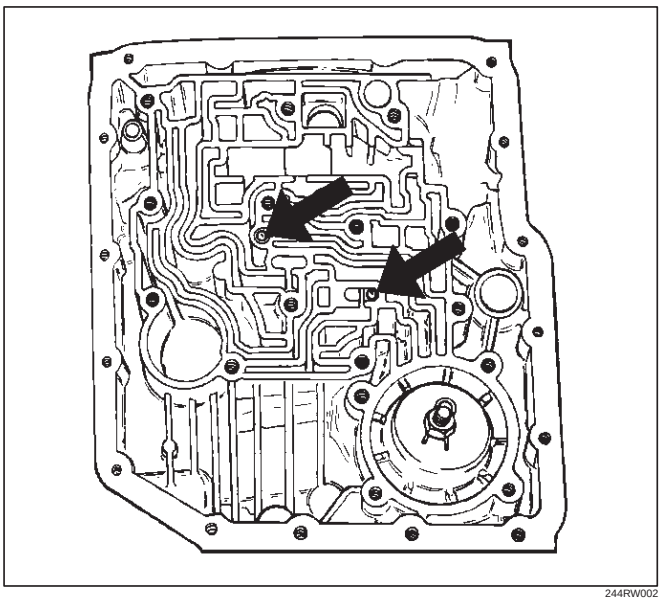

244RW002

2. Inspect electrical 7 way connector and seal of main case. Replace if necessary.
3. Use two 5–8840–0022–0 (J–25025–B) guide pin to install main case.
   - Install valve body assembly and manual valve link.

NOTE: Valve must be extended as the short end of manual valve link is connected to the range selector lever. Long end of link goes into valve.

4. Install seven 13 mm screws, and tighten them to the specified torque.

   Torque: 20 N•m (2.0 kg·m/15 lb ft)

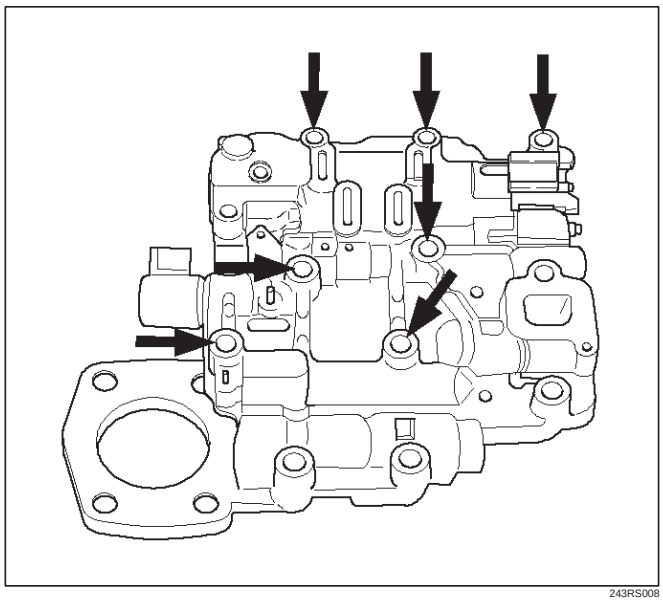

243RS008

5. Remove two guide pins from main case.
6. Install servo cover gasket, cover, and four 13 mm screws. Tighten the screws to the specified torque.

   Torque: 25 N•m (2.6 kg·m/18 lb ft)

7. Connect wiring harness to band control and shift solenoids.
8. Install roller and spring assembly to manual detent.
   - Install two 13 mm screws, and tighten them to the specified torque.

   Torque: 20 N•m (2.0 kg·m/15 lb ft)

9. Install oil filter and three 13 mm screws. Tighten the screws to the specified torque.

   Torque : 20 N•m (2.0 kg·m/15 lb ft)

10. Install oil pan gasket, magnet, oil pan and sixteen 10 mm screws. Tighten the screws to the specified torque.

    Torque: 11 N•m (1.1 kg·m/96 lb in)

11. Install third crossmember and rear mount. Tighten the bolts and nuts to the specified torque.

    Torque

    Third crossmember bolt: 76 N•m (7.8 kg·m/56 lb ft)

    Rear mount nut: 50 N•m (5.1 kg·m/37 lb ft)

12. Install transfer protector. Tighten the bolts to the specified torque.

    Torque: 37 N•m (3.8 kg·m/27 lb ft)

13. Fill transmission through overfill screw hole of oil pan, using ATF DEXRON®–III. Refer to Changing Transmission Fluid in this section.
14. Connect battery ground cable.

Valve Body Assembly (Adapter Case)

Removal

1. Raise the vehicle and support it on jack stands.
2. Disconnect battery ground cable.
3. Drain fluid.
4. Remove twelve 10 mm adapter case oil pan fixing screws, adapter case oil pan, and gasket.

NOTE: Oil pan still contains transmission fluid. Place a large drain container under the oil pan.

Drain the fluid carefully.

5. Disconnect wiring harness from force motor solenoid and converter clutch solenoid. Pull only on connectors, not on wiring harness.
6. Remove seven 13 mm screws from adapter case valve body assembly, then remove transfer plate, two gaskets, and adapter case valve body.

Installation

1. Inspect electrical 4 way connector and seal of adapter case. Replace if necessary.
2. Install gasket, transfer plate, and gasket.
3. Install adapter case valve body and seven 13 mm screws. Tighten the screws to the specified torque.

   Torque: 20 N•m (2.0 kg·m/15 lb ft)
4. Connect wiring harness assembly to converter clutch solenoid and force motor.
5. Install oil pan gasket, oil pan, and twelve 10 mm screws. Tighten the screws to the specified torque.

   Torque: 11 N•m (1.1 kg·m/96 lb in)
6. Fill transmission through the overfill screw hole of oil pan, using ATF DEXRON®–III. Refer to Changing Transmission Fluid in this section.
7. Connect battery ground cable.

Powertrain Control Module (PCM)

Removal

1. Disconnect battery ground cable.
2. Disconnect PCM wiring harness connectors from PCM.
3. Remove PCM from bracket.

LHD

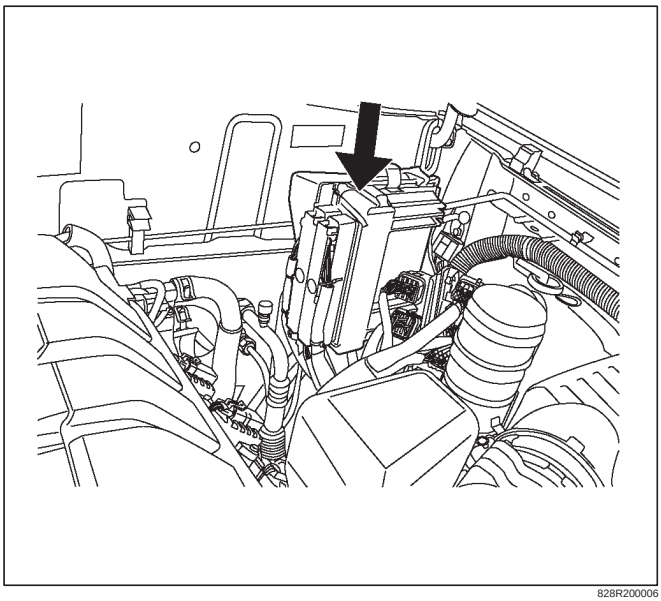

828R200006

RHD

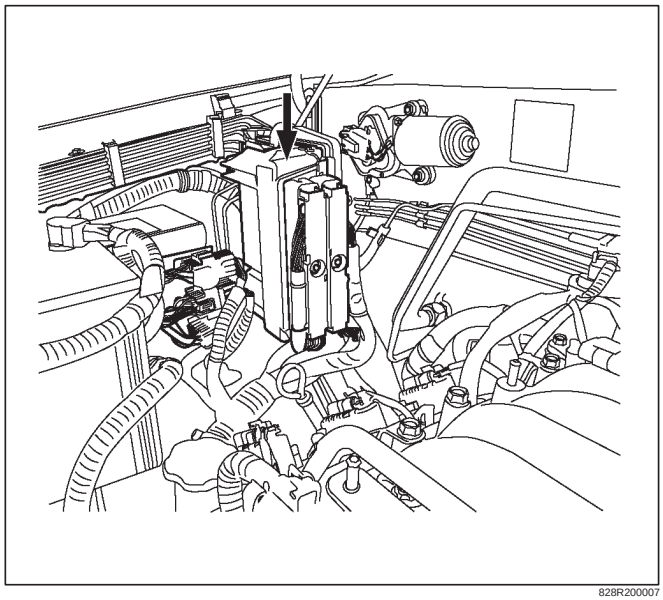

828R200007

Installation

1. Install PCM to bracket.
2. Connect PCM wiring harness connectors to PCM.
3. Connect battery ground cable.

Speed Sensor (Extension Housing)

Removal

1. Disconnect battery ground cable.
2. Remove front console.
3. Remove selector lever assembly.
4. Disconnect speed sensor harness connector from speed sensor.
5. Remove one 10 mm screw and speed sensor with O–ring.

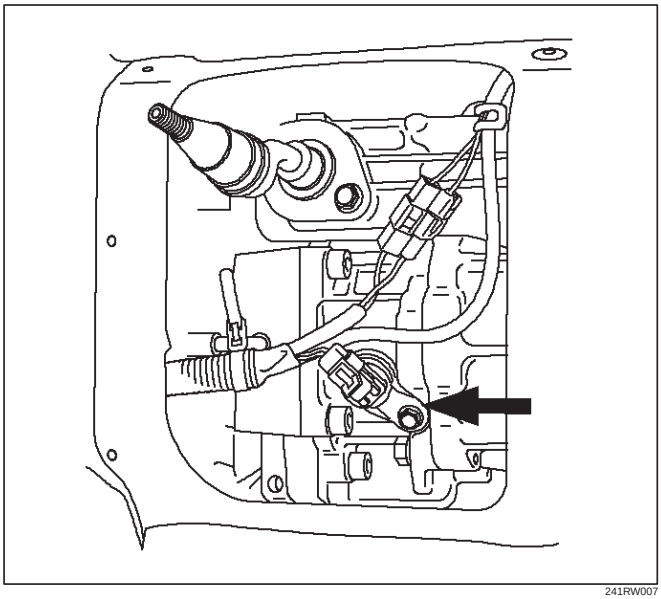

241RW007

Installation

1. Inspect the speed sensor O–ring, and replace it if necessary.
2. Install speed sensor assembly and 10 mm screw.

   Torque: 9 N•m (0.9 kg·m/78 lb in)
3. Connect speed sensor harness connector to speed sensor.
4. Install selector lever assembly.
   - Adjust shift lock cable. Refer to Selector Lever in this section.
5. Install front console.
6. Connect battery ground cable.

Transmission Oil Temperature Sensor (Main Case)

Removal

1. Raise the vehicle and support it on jack stands.
2. Disconnect battery ground cable.
3. Drain fluid.
4. Remove sixteen 10 mm main case oil pan fixing screws, main case oil pan, and gasket.
5. Disconnect wiring harness from shift solenoids, band apply solenoid, and 7 way connector of main case. Pull only on connectors, not on wiring harness.
6. Remove wiring harness assembly with transmission oil temperature sensor.

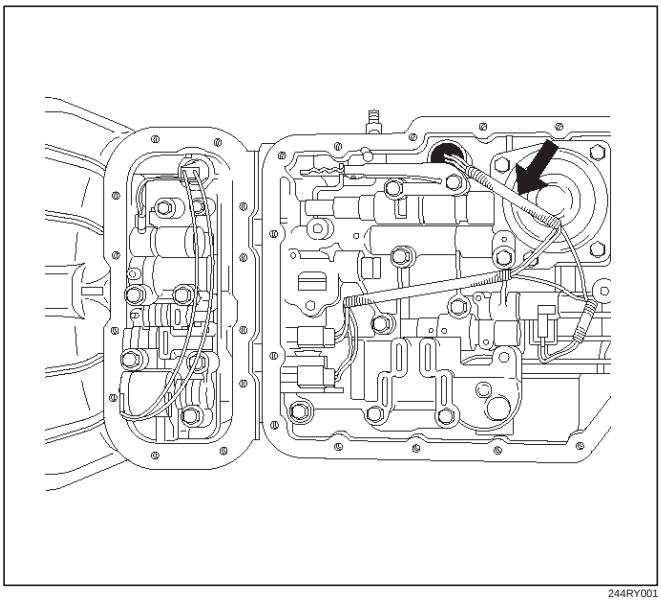

244RY001

Installation

1. Install wiring harness assembly with transmission oil temperature sensor to band apply solenoid, shift solenoids, and 7 way connector of main case.
2. Install oil pan gasket, oil pan, and sixteen 10 mm fixing screws. Tighten the screws to the specified torque.

   Torque: 11 N•m (1.1 kg·m/96 lb in)
3. Fill transmission through the overfill screw hole of oil pan, using ATF DEXRON®–III.

   Refer to Changing Transmission Fluid in this section.
4. Connect battery ground cable.

Front Oil Seal (Converter Housing)

Removal

1. Remove transmission assembly with transfer case from the vehicle. Refer to Transmission (With Transfer Case / Extension Assembly) in this section.
2. Remove torque converter from converter housing.
3. Remove three screws and oil seal ring from converter housing.

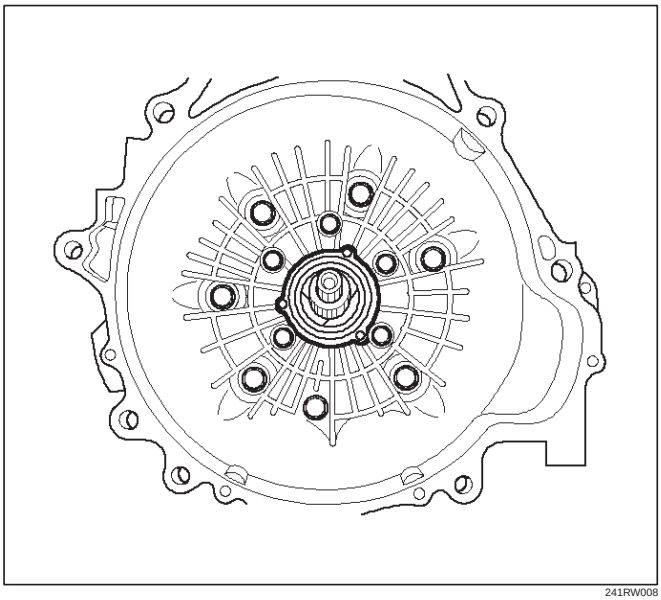

241RW008

Installation

1. Apply clean ATF to the new oil seal ring lip.
   - Install oil seal ring to converter housing. Tighten the screws to the specified torque.

   Torque: 3 N•m (0.3 kg·m/26 lb in)
2. Install torque converter to converter housing.
3. Install transmission assembly with transfer case to the vehicle. Refer to Transmission (With Transfer Case) in this section.

Rear Oil Seal (Extension Housing)

Removal

1. Remove transfer case assembly from the vehicle. Refer to Transfer Case in Drive Line/Axle section.
2. Remove rear oil seal from transmission extension housing.

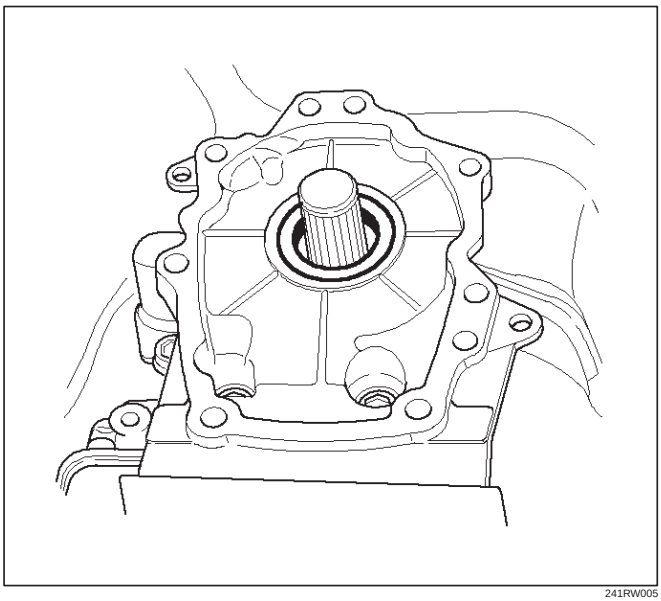

241RW005

Installation

1. Use 5–8840–2282–0 (J–36797) extension housing oil seal installer, and install the rear oil seal to the transmission extension housing.
2. Install the transfer case assembly to the vehicle. Refer to Transfer Case in Drive Line/Axle section.

Transmission (4L30–E)

Disassembly

NOTE: During the disassembly and reassembly, perform the following:

- Wash each part thoroughly, and blow air through each oil passage and groove to eliminate blockage.
- Seal rings, roll pins, and gaskets should be replaced.
- When assembling the components, apply DEXRON®–III Automatic Transmission Fluid (ATF) to each seal, rotating part, and sliding part.
- Do not dip part facings, such as clutch or brake drive plates, in cleaner when washing it.
  Also, always coat parts with new ATF two or three times after cleaning with solvent.

1. Remove torque converter (1).
   - Drain fluid from torque converter.
   - Attach 5–8840–2278–0 (J–8763–02) holding fixture to the transmission and set it on 5–8840–0003–0 (J–3289–20) holding fixture base.

NOTE: Do not overtighten the tool, as case damage may result.

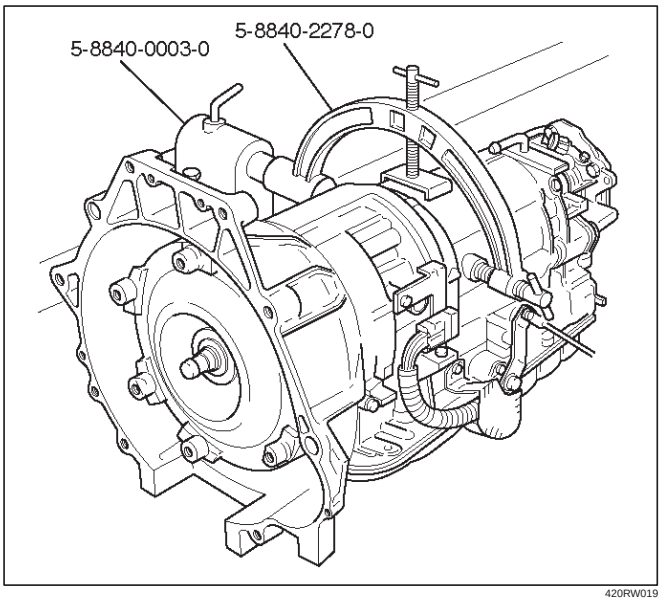

420RW019

2. Remove O–ring (2) from turbine shaft.
3. Remove two 10mm mode switch screws, selector lever nut, cover, and mode switch (3).
4. Remove twelve 10mm adapter case oil pan (4) fixing screws, adapter oil pan, and gasket.
5. Disconnect electrical wiring connections (5) from solenoids and 4 way connector of adapter case. Pull on connectors only, not on wiring harness.
6. Remove seven 13mm adapter case valve body (6) fixing screws, adapter case valve body assembly, transfer plate, and two gaskets.
   - Remove wiring harness and 4 way connector.
7. Remove sixteen 10mm main case oil pan (7) fixing screws, main oil pan, magnet, and gasket.
8. Remove three 13mm oil filter (8) fixing screws and oil filter.
9. Remove two 13mm manual detent (9) fixing screws, roller and spring, and manual detent.
10. Disconnect wiring harness assembly (10) from band apply solenoid, shift solenoids, and main case 7 way connector.
    Pull on connectors only, not on wiring harness.
11. Remove four 13mm servo cover (11) fixing screws, servo cover, and gasket.
12. Remove seven 13mm valve body screws and ground wire from main case.
    - Remove wiring harness assembly (5) from the adapter case side.
    - Remove main valve body assembly (12) with manual valve link and transfer plate. Note the position of the link (long end into valve, short end into range selector lever).
    - Remove 7 way connector.
    - Remove gasket transfer plate from main case.

13. Remove two check balls (13) from main case.

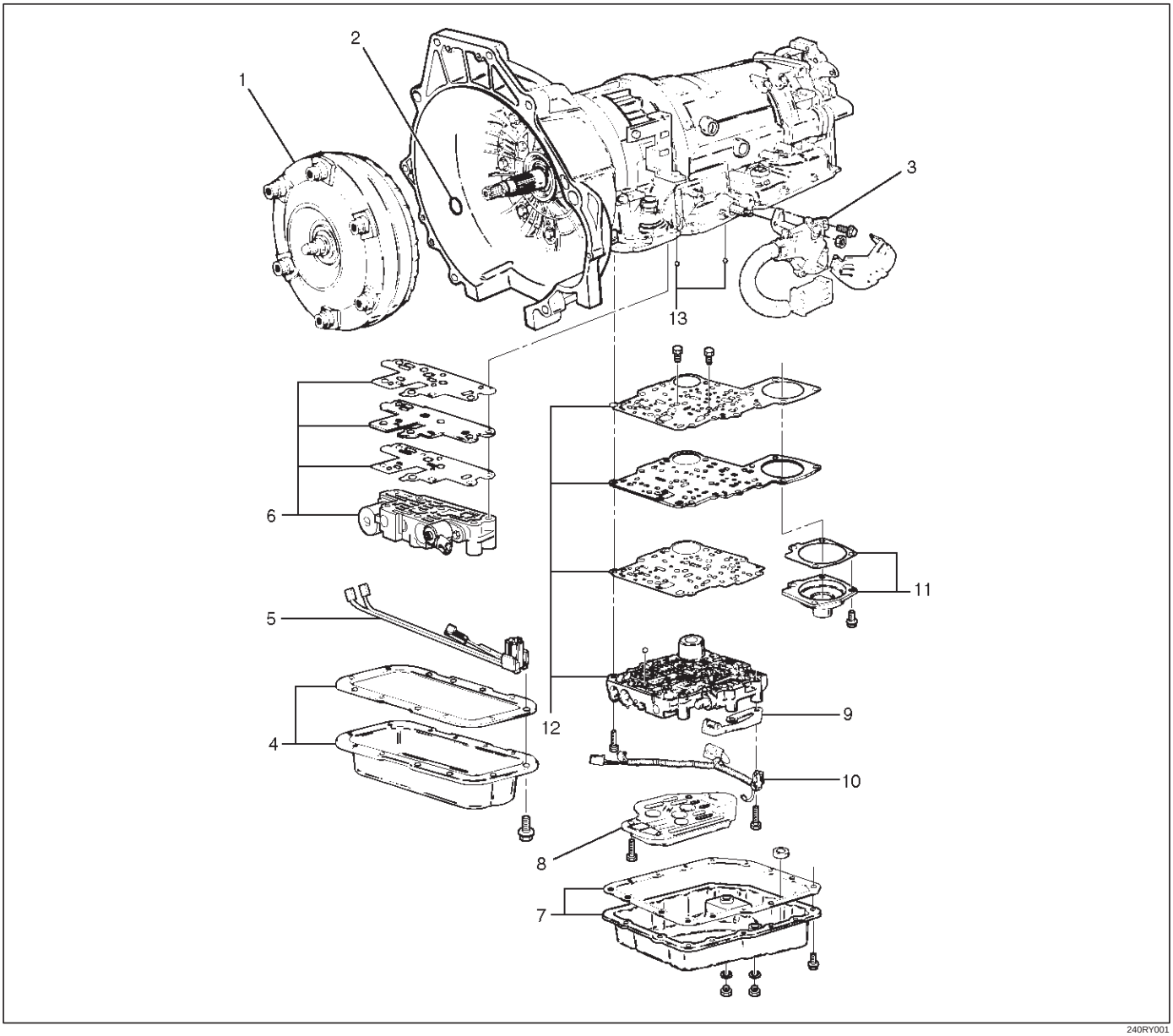

240RY001

14. Turn transmission to vertical position to drain fluid. Return back to horizontal position when drained.
    - Install 5–8840–0501–0 (J–23075) servo piston spring compressor with offset to the rear of case.
    - Compress servo piston assembly.
    - Remove servo piston retaining ring (14).
    - Slowly release servo piston assembly (15).
    - Remove tool.

15. Remove servo piston assembly (15), return spring (16), and servo apply rod (17).

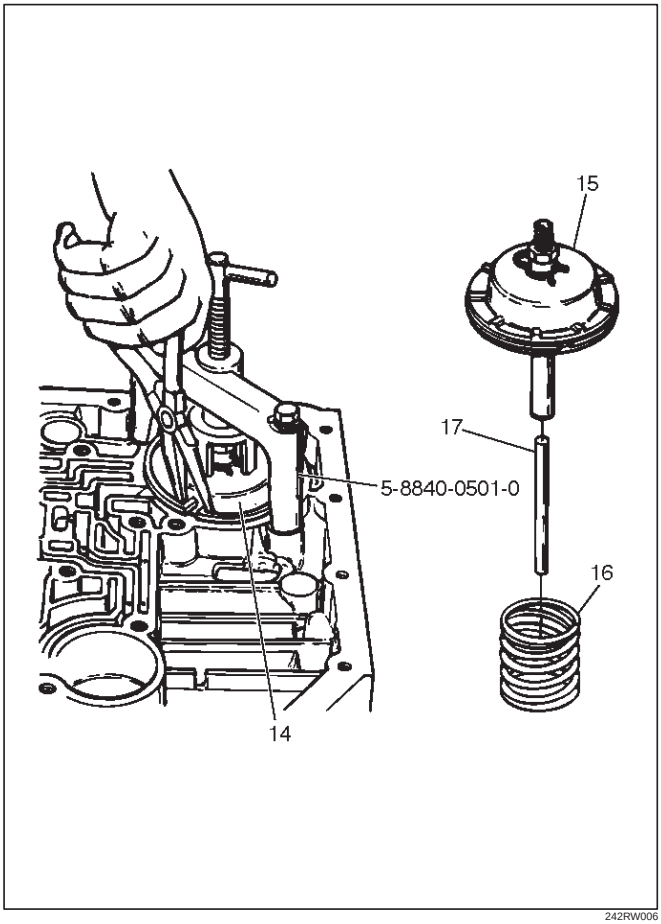

16. Rotate transmission to horizontal position, pan side down.
    - Remove one 10mm screw, and speed sensor (18) with “O” ring.
17. Remove seven 8mm extension housing hexagon socket head screws, extension housing assembly (19), and gasket.
18. Remove retaining ring (20).

NOTE: Use extra long, needle- nose pliers.

19. Remove speed wheel (21).
20. Remove wheel parking lock (with seal ring) (22).

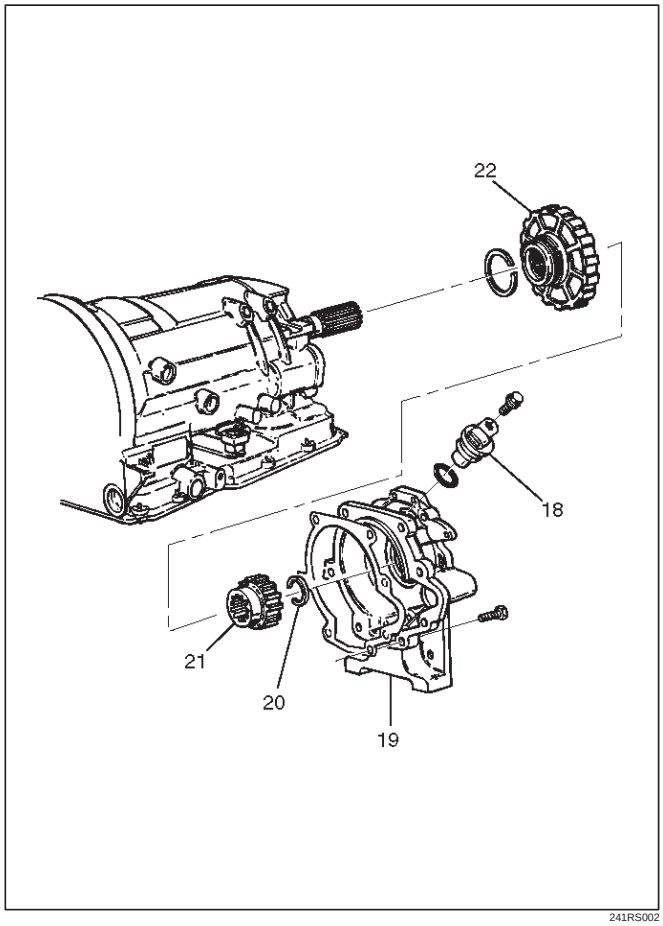

21. Rotate transmission to vertical position, converter housing up.
    - Loosen the converter housing and oil pump assembly fixing screws, but do not remove the five 13 mm inner screws if oil pump disassembly is required.
    - Remove seven outer screws.
    - Remove converter housing and oil pump assembly (23).
22. Remove gasket (24).

23. Remove selective thrust washer (25).

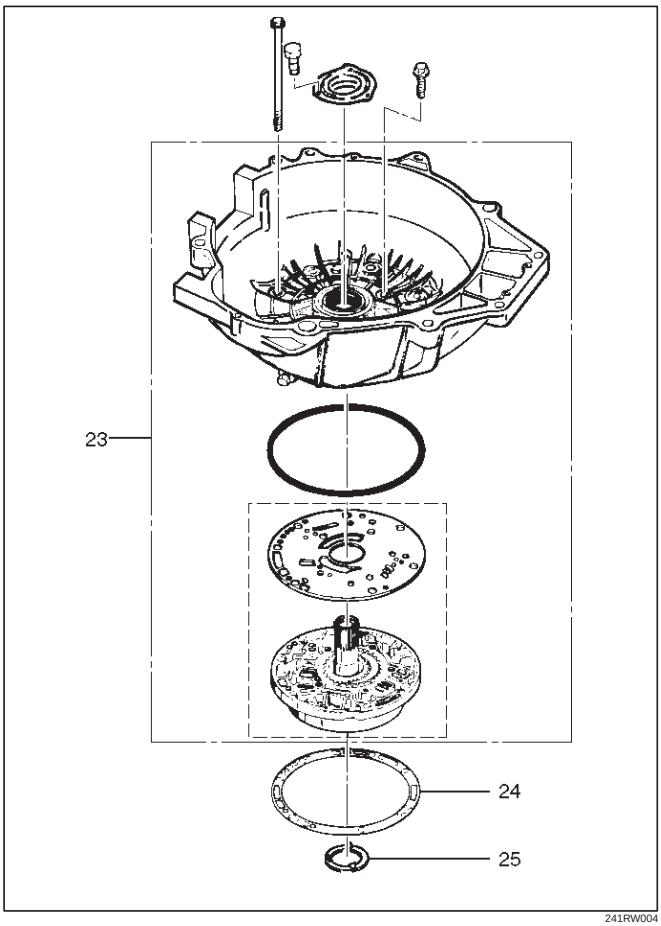

24. Remove fourth clutch retainer (26).
25. Grasp turbine shaft and lift out the overrun clutch housing assembly (27) and fourth clutch plates (28).
26. Remove thrust bearing assembly (29).
27. Remove overdrive internal gear (30).
28. Remove thrust washer (31).

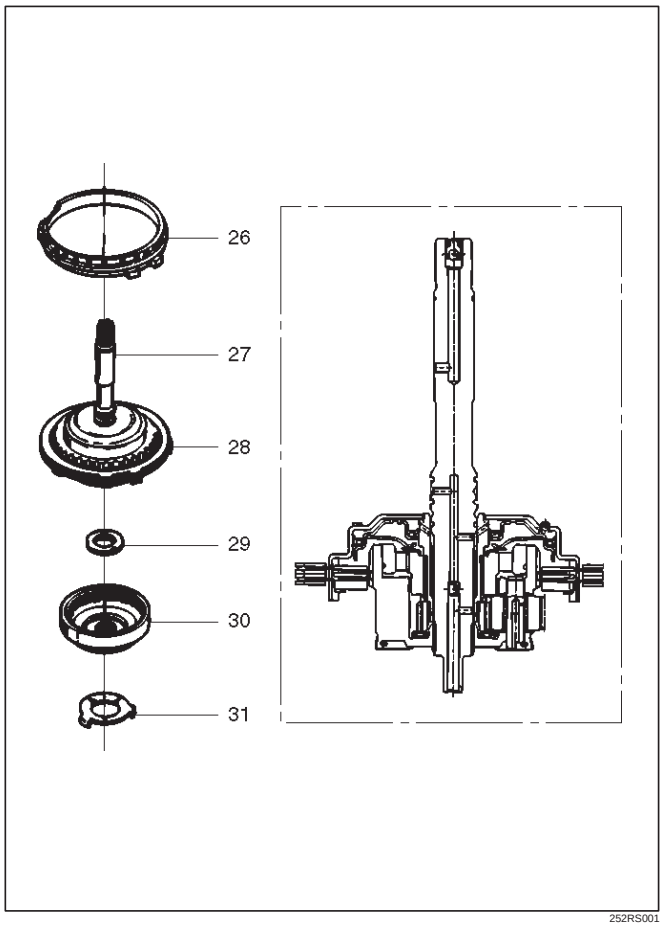

29. Remove adapter case and center support assembly (with fourth clutch piston) (32).
30. Remove seal ring (33).
31. Remove selective thrust washer (34) and two O–ring seals (35) from main case.
32. Use 5–8840–0195–0 (J–23327) and 5–8840–2263–0 (J–23327–90) compressor to compress the fourth clutch spring retainer and springs (37).
    - Release snap ring (36) from groove.
    - Remove clutch compressor and snap ring (36).
33. Remove retainer and spring assembly (37).
34. Insert two converter housing/main case screws to hold adapter case while pulling out fourth clutch piston (38).
    - Remove fourth clutch piston assembly (38) from the adapter case.
    - Remove converter housing/main case screws.
35. Grasp intermediate shaft, twist and pull out the second and third clutch drum assemblies with reverse clutch plates while holding onto output shaft (39).

36. Separate second (40) and third clutch (41) assemblies.
37. Remove thrust washer (42).
38. Remove reverse clutch plates (43 and 44) and reverse clutch pressure plate (45).
39. Remove bearing (46) and washer (47).
40. Remove planetary carrier assembly (48).
41. Remove thrust bearing (49).
42. Remove reaction sun gear (50)
43. Remove needle bearing (51).
44. Remove brake drum (52).
45. Remove brake band (53).
46. Remove thrust bearing (54).

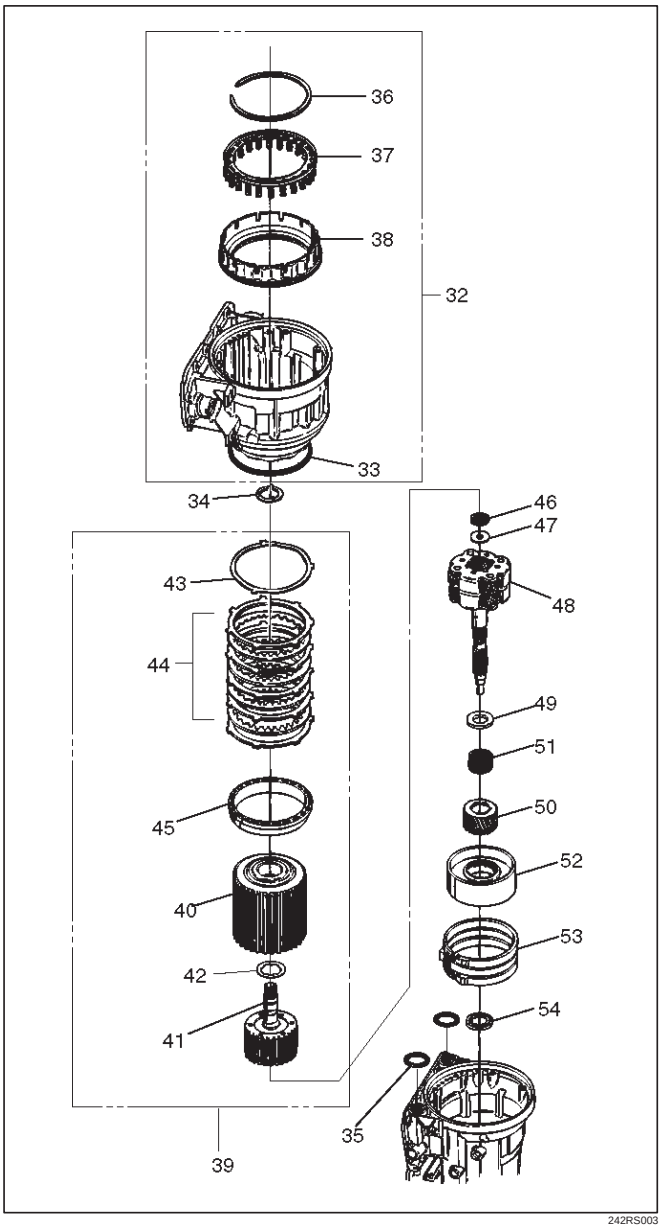

242RS003

47. Rotate case to horizontal position, valve body side facing up.
    - Remove spring pin (55), using cutting pliers, then remove parking lock and selector lever assembly (56).

NOTE: Insert wire in the center of the spring pin to prevent it from collapsing during removal. Be aware of pin height. Protect machined face of main case.

48. Remove parking lock and range selector lever 17 mm nut (57).
49. Remove parking lock and range selector lever (56), and actuator assembly.
50. Remove selector shaft (58).

NOTE: Inspect the shaft for burrs before removing to prevent damaging seal. If necessary, remove burrs by lightly sanding with an oilstone.

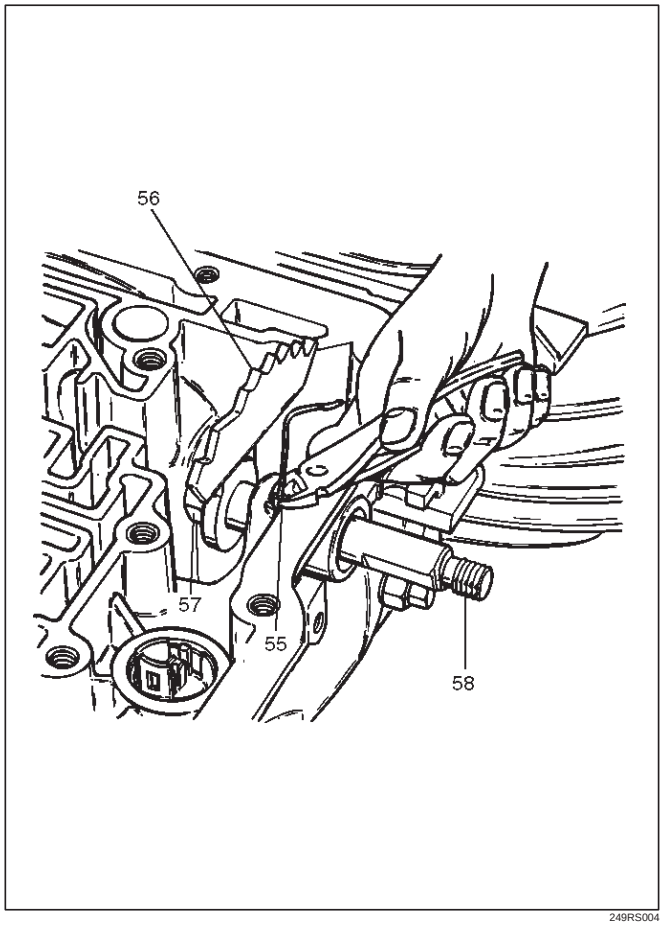

249RS004

Reassembly

1. Inspect selector shaft seal, and replace it if necessary.

NOTE: Use a seal installer when replacing the seal.

- Install selector shaft.

NOTE: Spring pin groove must be positioned inside the case.

2. Install spring pin. Be sure the selector shaft can move freely. Do not push the pin flush with the case surface. Leave enough height for removal.
3. Install actuator assembly (1).
4. Install parking lock and range selector lever (2) and new 17 mm nut. Tighten the nut to the specified torque.

Torque: 22 N•m (2.2 kg·m/16 lb ft)

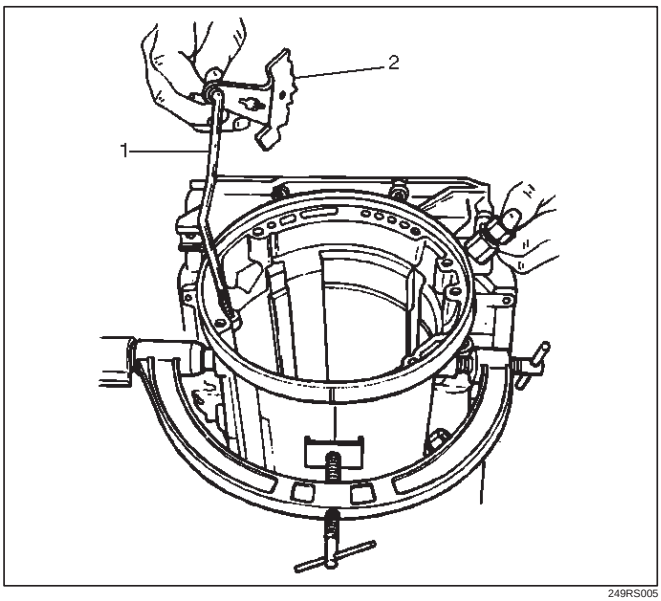

249RS005

5. Rotate main case to vertical position, extension end facing down.
   - Install brake band assembly (3).

NOTE: Be sure to align servo pin area with the servo hole.

6. Install thrust bearing (4).

NOTE: The case bushing acts as a guide for the thrust bearing.

7. Install brake drum (5).
8. Install reaction sun gear (6).
9. Install needle bearing (7).
10. Inspect planetary carrier assembly (8) for wear and damage. If necessary replace it.
    - Measure pinion end play clearance with a feeler gauge.

    Clearance: 0.13mm–0.89mm (0.005 in–0.035 in)

    If clearance is outside specified value, replace the planetary carrier assembly.

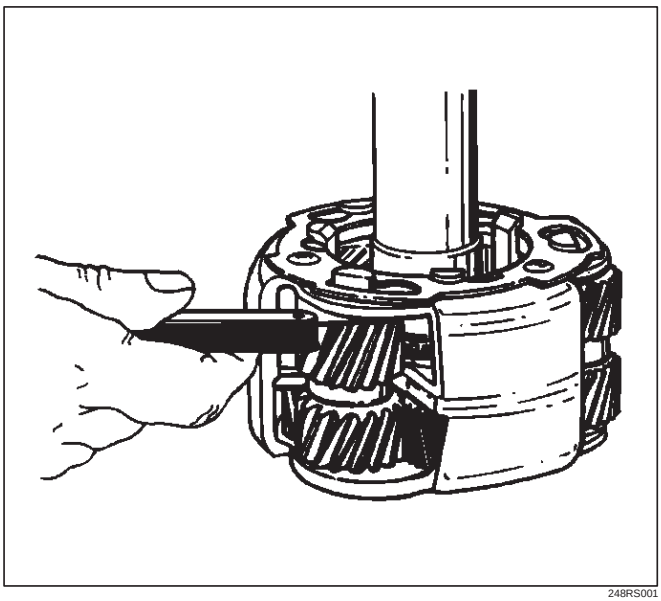

248RS001

11. Install the thrust bearing (9) on the output shaft.

NOTE: Use petroleum jelly to hold the thrust bearing in place.

12. Align planetary pinions. Each pinion is marked with double points to indicate the master tooth space and exactly opposite with a single point to indicate the master tooth. The markings on the planetary carrier consist of double lines which are to be lined up with the double points on two opposite pinions; the single lines are to be lined up with the single points on the other two pinions.
    - After all four pinions are lined up, slide on the third clutch assembly. Rotate third clutch and check mark alignment. Considering that the ring gear tooth between the double points of one planetary pinion is tooth number 1, count the teeth to check that the single points on the two adjacent pinions are between teeth 23 and 24 of the ring gear, and that the ring gear tooth between the double points of the opposite pinion is tooth number 46. If the ring gear and pinions are not lined up, remove, and realign them.
13. Install planetary carrier (8) with third clutch (12).

NOTE: Do not force. When properly aligned, the parts will fit together easily.

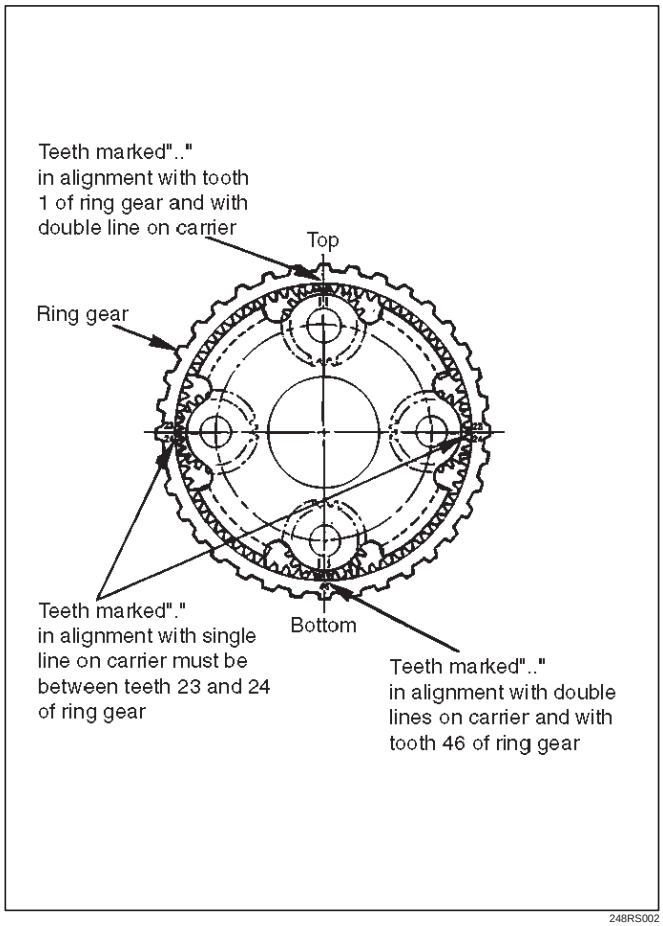

248RS002

14. Remove the third clutch (12).
15. Install bearing (11) and washer (10).

NOTE: Use petroleum jelly to hold the washer and bearing in place.

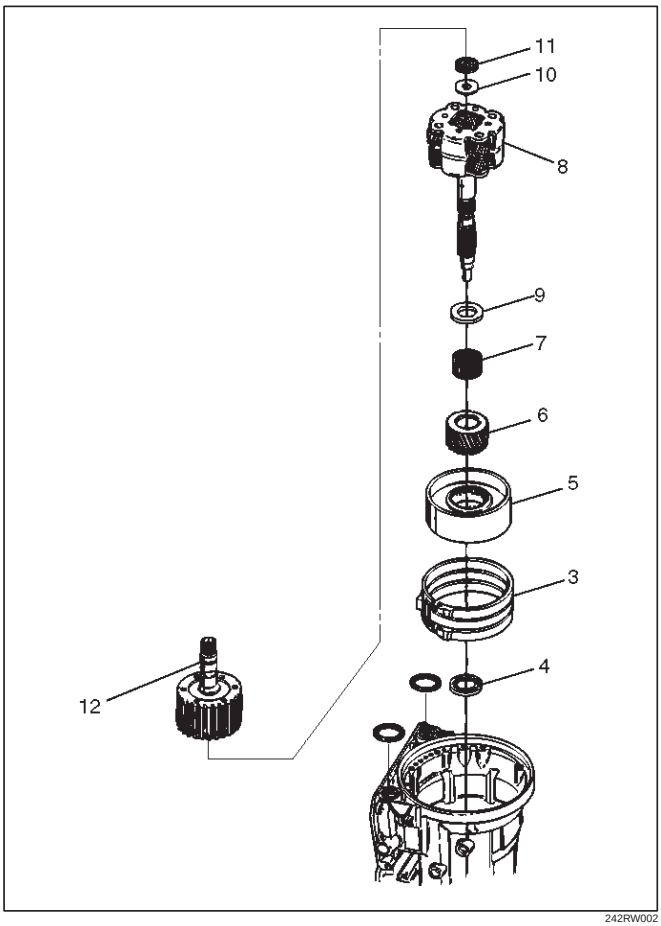

242RW002

16. Carefully align the second clutch plate inner tangs.
    - Install thrust washer, tangs pointing downward, and locating tang positioned in slot on second clutch hub.

NOTE: Use petroleum jelly to hold thrust washer in place.

17. Install third clutch and intermediate shaft assembly (13) into the second clutch drum (14).

18. Install second and third clutch assemblies into the main case. Twist output shaft and clutch assemblies to ensure proper fit.

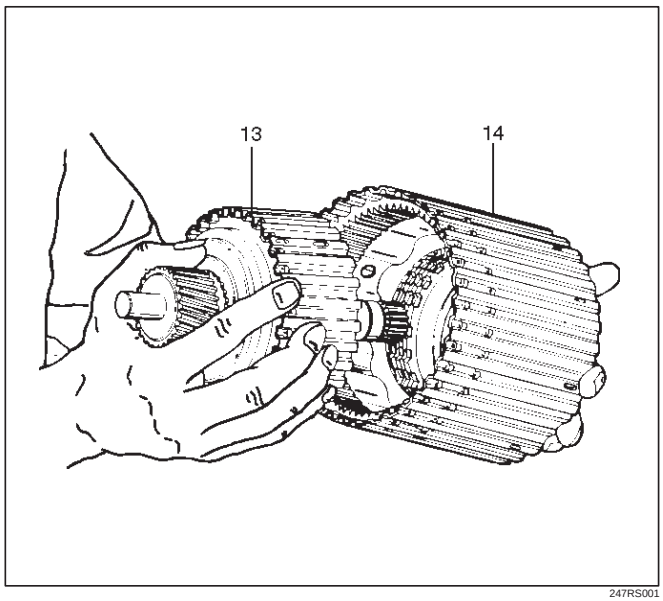

247RS001

19. Install pressure plate (15) with lip side up, tang facing valve body face.
20. Install reverse clutch plates. Start with a steel plate (17) and alternate with a lined plate (16).
21. Install waved clutch plate (18) with center tang facing valve body side.

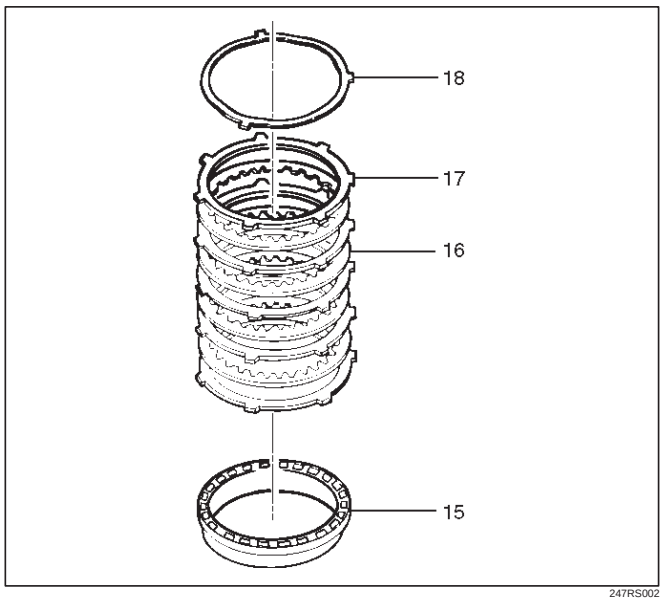

247RS002

22. Second clutch end play measurement
    1. Install the 5–8840–2262–0 (J–23085–A) Selective washer gauging tool (with spacer ring) on the case flange and against the intermediate shaft.
    2. Position the inner shaft of the gauging tool against the thrust surface of the second clutch hub.
    3. Tighten thumb screw. Remove the tool.
    4. Fit the spacer ring on the inner shaft of the tool.
    5. Measure the gap, and select the appropriate washer as shown in the chart.

Selective Thrust Washer	
Gap: mm(in)	**Color**
1.53 – 1.63 (0.060 – 0.064)	Yellow
1.72 – 1.82 (0.068 – 0.072)	Red
1.91 – 2.01 (0.075 – 0.079)	Black
2.10 – 2.20 (0.083 – 0.087)	Natural
2.29 – 2.39 (0.090 – 0.094)	Green
2.48 – 2.58 (0.098 – 0.102)	Blue
FOLLOWING THE PROCEDURE SHOULD RESULT IN FINAL END–PLAY FROM 0.36 mm TO 0.79 mm (0.014 in TO 0.031 in)	

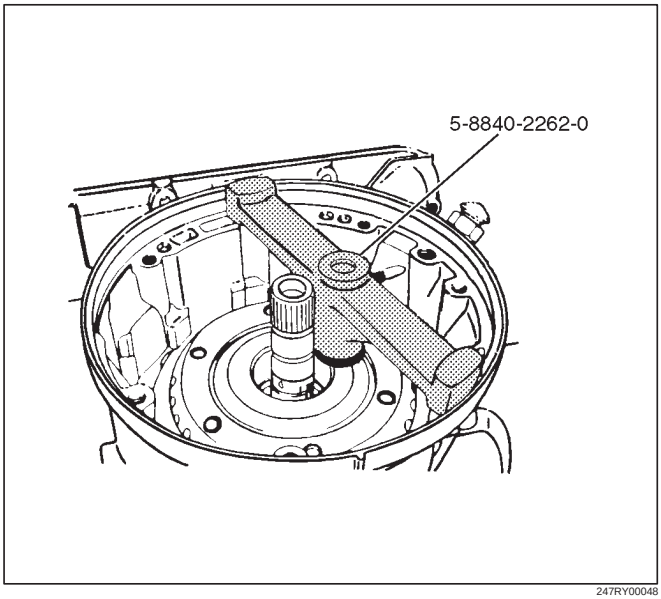

247RY00048

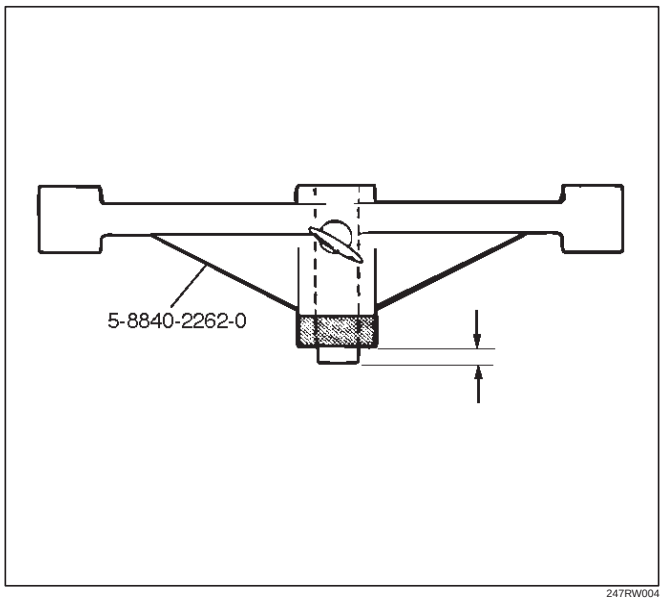

247RW004

23. Inspect fourth clutch piston seals and replace if necessary.
    - Lubricate 5–8840–2267–0 (J–38554) fourth clutch piston fitter and install it on fourth clutch piston (19).
    - Install fourth clutch piston (19) in adapter case (20).
    - Remove fitter.

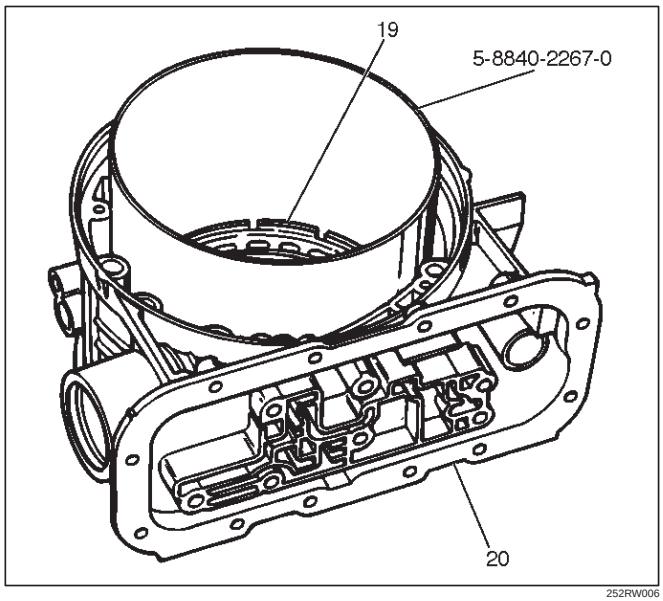

252RW006

24. Install retainer and spring assembly (22) into fourth clutch piston (21).
25. Install snap ring (23) in adapter case.
    - Install 5–8840–0195–0 (J–23327) and 5–8840–2263–0 (J–23327–90) fourth clutch spring compressor.
    - Seat snap ring in groove.
    - Remove compressor.

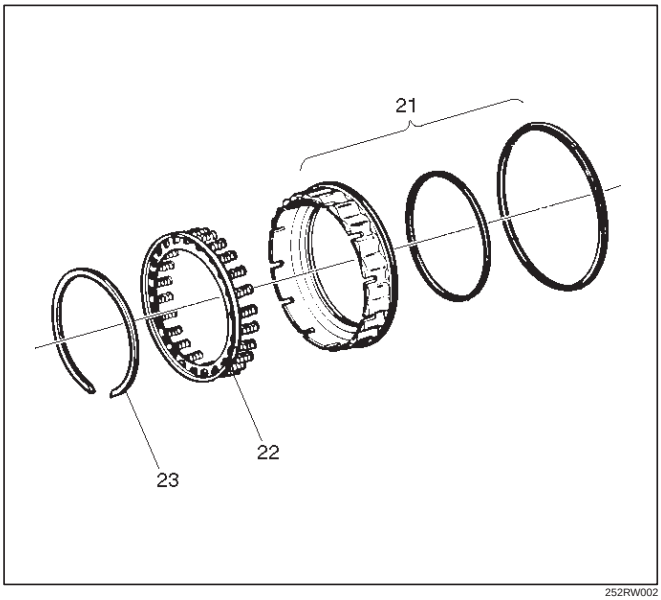

252RW002

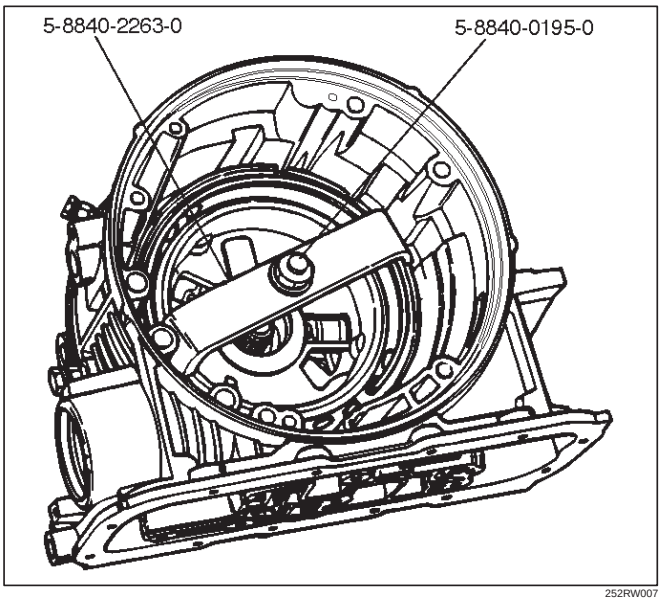

252RW007

26. Install selective washer using petroleum jelly.
27. Install two O–ring seals (24) in main case and adapter case/main case seal ring (25).
28. Install 5–8840–2268–0 (J–38588) guide pins.
    - Install adapter case and center support assembly to main case.

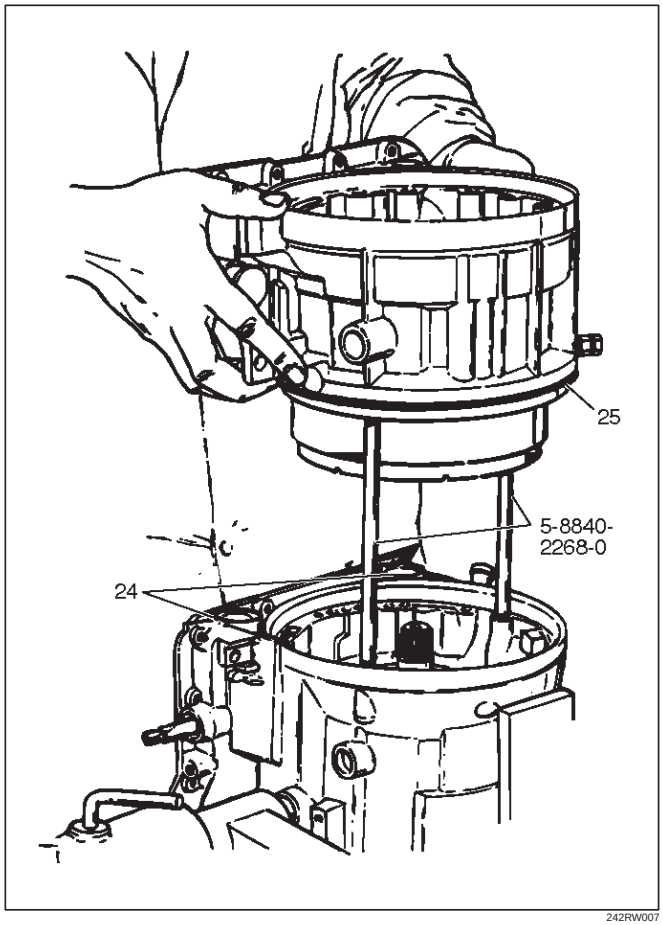

242RW007

29. Install thrust washer (26) into adapter case, with tangs pointing downwards.
30. Preassemble overdrive internal gear (27) and thrust bearing assembly (28) onto the turbine shaft and overrun clutch assembly.

NOTE: Install bearing assembly, black side up. Use petroleum jelly to keep assembly in place.

31. Install overdrive carrier (30) and internal gear assembly into adapter case.
32. Install fourth clutch plates (29) in the following order: Steel, Lined, Steel, Steel, Lined, Steel. Steel plates go in with short tang facing towards valve body surface.

33. Install fourth clutch retainer (31) with the notch facing up and positioned towards valve body surface.

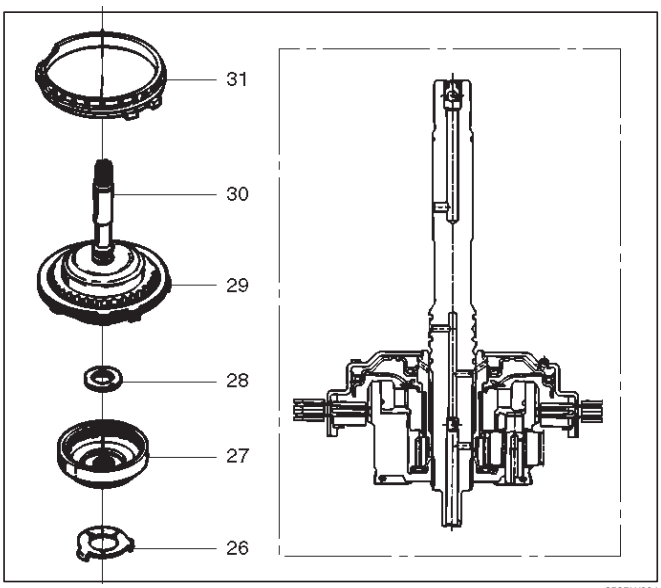

252RW004

34. Overdrive clutch end play measurement
    1. Install the 5–8840–2262–0 (J–23085–A) selective washer gauging tool on the adapter case flange and against the input shaft.
    2. Position the inner shaft of the tool against the thrust surface of the overrun clutch housing.
    3. Tighten thumb screw. Remove the tool.
    4. Measure gap. Select appropriate size washer as shown in the chart.
    5. Set selective thrust washer aside.

Selective Thrust Washer	
Gap: mm(in)	**Color**
1.53 – 1.63 (0.060 – 0.064)	Yellow
1.72 – 1.82 (0.068 – 0.072)	Red
1.91 – 2.01 (0.075 – 0.079)	Black
2.10 – 2.20 (0.083 – 0.087)	Natural
2.29 – 2.39 (0.090 – 0.094)	Green
2.48 – 2.58 (0.098 – 0.102)	Blue
FOLLOWING THE PROCEDURE SHOULD RESULT IN FINAL END–PLAY FROM 0.1 mm TO 0.8 mm (0.004 in TO 0.03 in)	

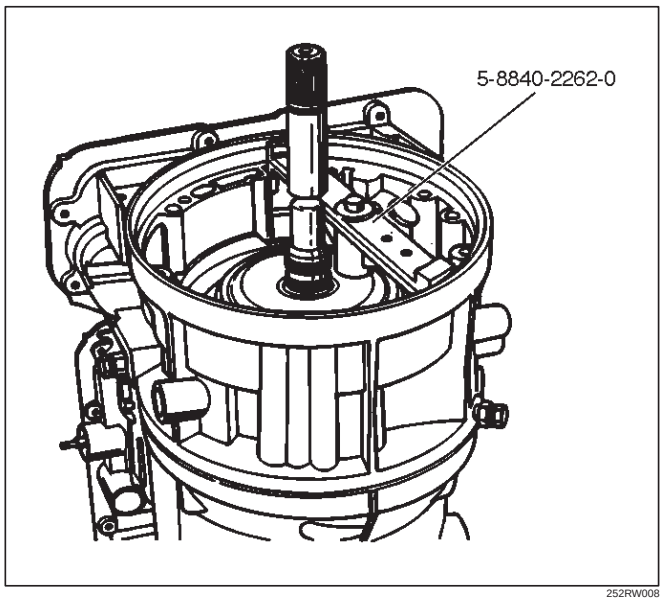

252RW008

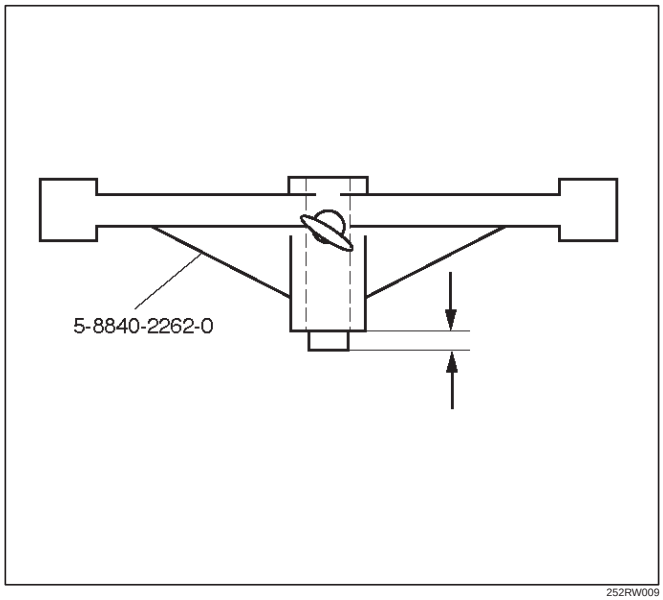

252RW009

35. Install selective washer (32).

NOTE: Use petroleum jelly to hold selective washer in place.

36. Install gasket (33).
37. Install converter housing and oil pump assembly (34) to adapter case.
    - Fit and tighten seven outer 13 mm screws.

    Torque: 39 N•m (4.0 kg·m/29 lb ft)

- Ensure free rotation of pump using 5–8840–2273–0 (J–23082–01) oil pump rotation tool.

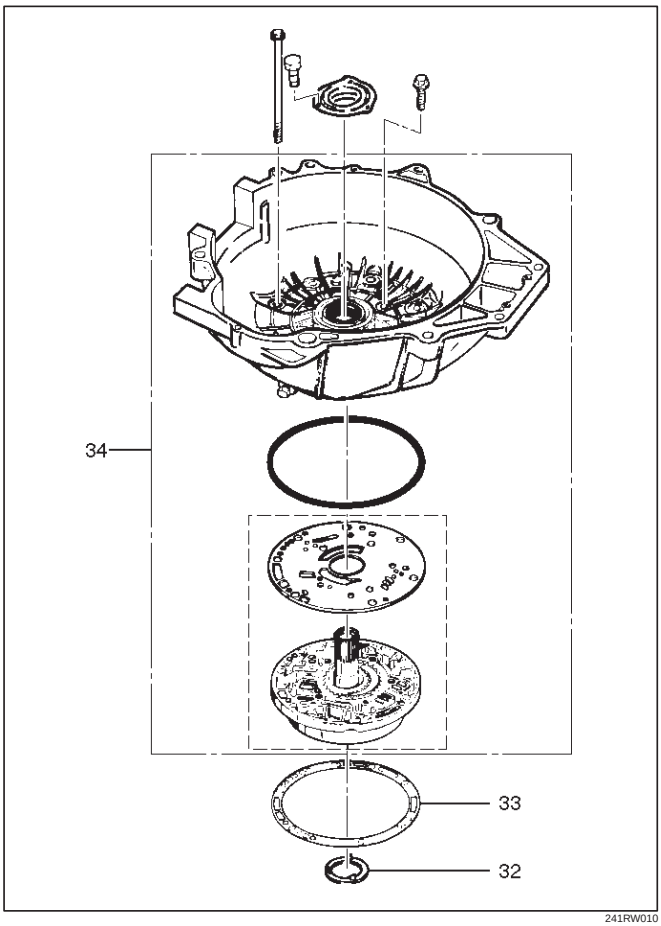

38. Overdrive clutch end play measurement
    1. Fit 5–8840–2271–0 (J–25022) and 5–8840–0618–0 (J–24773–1) turbine shaft puller on turbine shaft.
    2. Position axial play checking tool on converter housing mating face.
    3. Pull turbine shaft upwards with puller until first resistance is met. (due to weight of overdrive assembly).
    4. Maintain shaft in this position and set indicator to zero.
    5. Pull turbine shaft further upwards with puller. Read end play shown on indicator.

End play: 0.1mm – 0.8mm (0.004 in – 0.031in)

6. Remove axial play checking tool and puller.

NOTE: If end play is not correct, repeat selective washer selection.

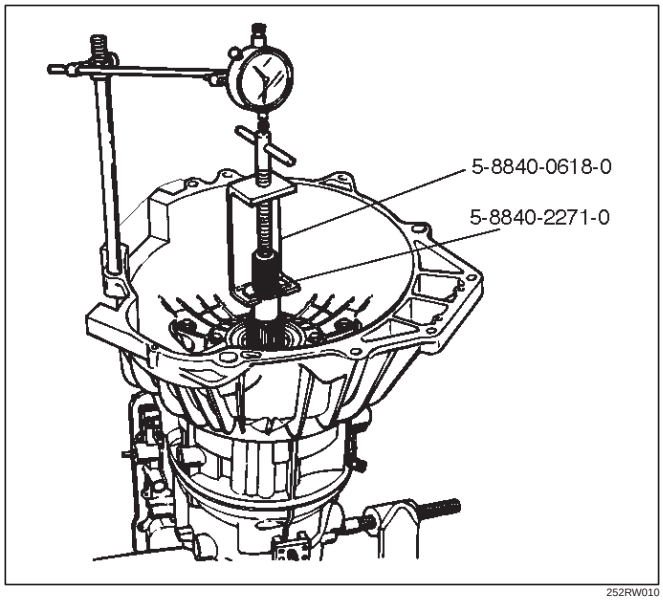

39. Inspect extension housing oil seal and replace if necessary, using 5–8840–2282–0 (J–36797) extension housing oil seal installer.
    - Rotate transmission to horizontal position, with valve body side down.
    - Inspect parking wheel seal ring. Replace if necessary.
    - Install wheel parking lock assembly (35).
40. Install speed wheel (36) and snap ring (37).

NOTE: Use extra long, needle-nose pliers.

41. Install gasket onto extension assembly with a thin coating of oil.
    - Install extension housing assembly (38), and align parking pawl shaft.
    - Install actuator assembly into extension assembly.
    - Install seven 8 mm hexagon socket head screws.

Torque: 32 N•m (3.3 kg·m/24 lb ft)

42. Inspect speed sensor O–ring. Replace if necessary.
    - Install speed sensor assembly (39) and 10 mm screw.

Torque: 9 N•m (0.9 kg·m/78 lb in)

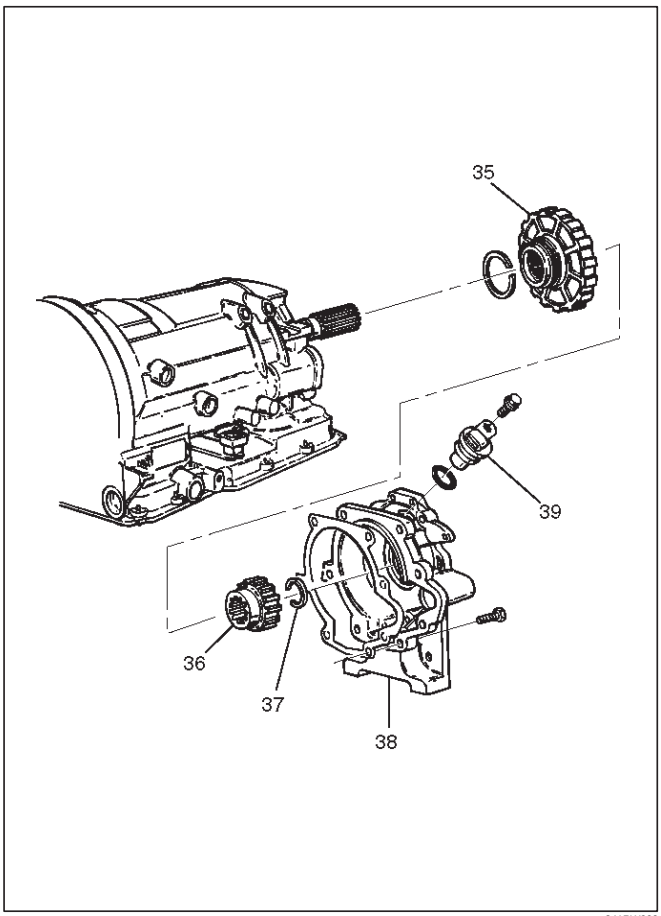

241RW009

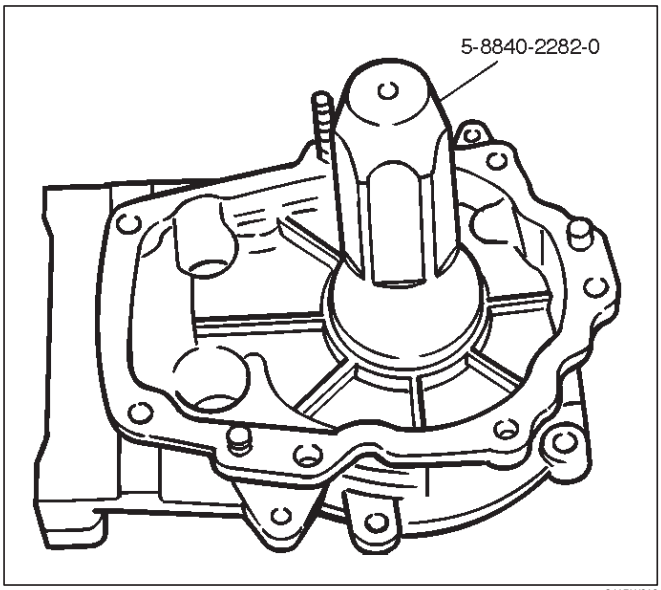

241RW019

43. Main case end play measurement
    1. Attach axial play checking tool on the extension housing and set indicator to zero on output shaft.
    2. Manually push output shaft upwards.

    End play: 0.36mm – 0.80mm (0.014 in – 0.031in)

    3. Remove axial play checking tool.
    4. If end play is not correct, repeat selective washer selection.

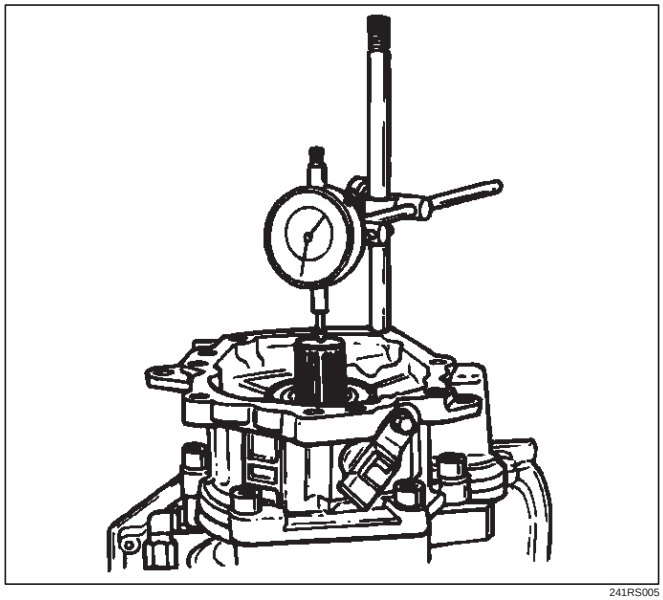
241RS005

44. Inspect servo piston seal ring. Replace if necessary.
    - Ensure brake band is correctly positioned. Rotate output shaft if necessary.
    - Install 5–8840–2274–0 (J–38428) servo piston fitter in servo bore.
    - Install apply rod (40), round end toward band, return spring (41) and piston assembly (42).
45. Install the 5–8840–0501–0 (J–23075) servo spring compressor with offset to rear of case.
    - Compress servo piston seal ring, using fitter while tightening the tool screw.
    - Install servo piston retaining ring (43).
    - Remove tool.

- Adjust the brake band by tightening the servo adjusting screw to 4.5 N·m torque. Be certain the lock nut is loose, then back–off the screw five turns exactly. Hold piston sleeve with wrench and tighten lock nut to 18.5 N·m torque. Be certain the adjusting screw does not turn.

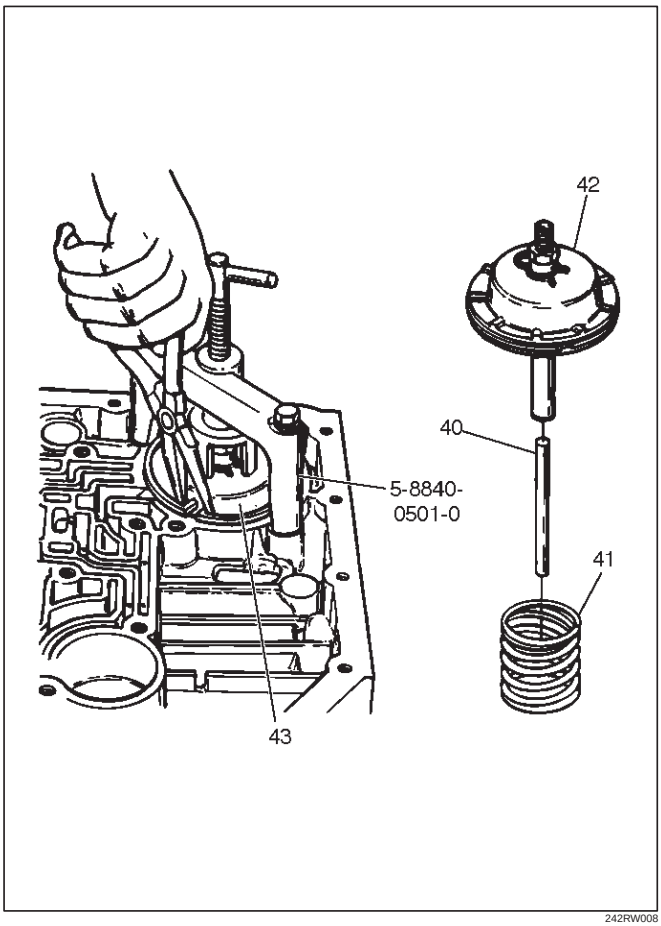

242RW008

46. Install two check balls (44).

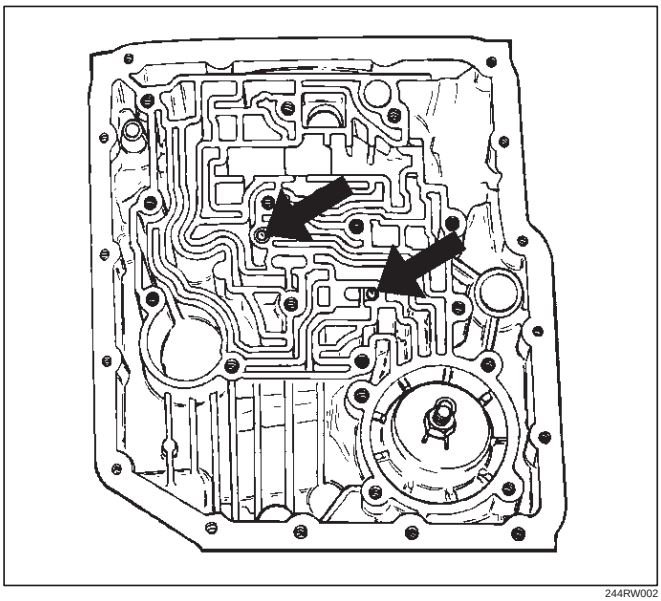

244RW002

47. Inspect main case electrical connector and seal, replace if necessary.
    - Install electrical 7 way connector/main case and wiring harness.
48. Install two 5–8840–0022–0 (J–25025–B) guide pins into main case.
    - Install main case valve body complete assembly (45) and manual valve link.

NOTE: Valve must be extended as the short end of manual valve link is connected to the range selector lever. Long end of link goes into valve.

- Install seven 13 mm screws.

Torque: 20 N•m (2.0 kg·m/15 lb ft)

- Remove two guide pins.

49. Install servo cover gasket, cover (46) and four 13 mm screws.

Torque: 25 N•m (2.6 kg·m/18 lb ft)

50. Connect wiring harness (47) to band control, shift solenoids, and main case 7 way connector.
51. Install manual detent roller and spring assembly (48) with clip.
    - Install two 13 mm screws.

Torque: 20 N•m (2.0 kg·m/15 lb ft)

52. Install oil filter (49), and three 13 mm screws.

Torque: 20 N•m (2.0 kg·m/15 lb ft)

53. Install oil pan gasket, magnet, main oil pan (50), and sixteen 10 mm screws.

Torque: 11 N•m (1.1 kg·m/96 lb in)

54. Inspect adapter case electrical connector and seal. Replace if necessary.
    - Install electrical five pin connector and harness assembly (52) in bottom of adapter case.
55. Install gasket, transfer plate, and gasket.
    - Install adapter case valve body (51) and seven 13 mm screws.

Torque: 20 N•m (2.0 kg·m/15 lb ft)

56. Connect wiring harness harness assembly (52) to converter clutch PWM solenoid, force motor, and 4 way connector.
57. Install oil pan gasket, adapter case oil pan (53), and twelve 10 mm screws.

Torque: 11 N•m (1.1 kg·m/96 lb in)

- Rotate transmission, with bottom pan facing down.

58. Install mode switch (54), two 10 mm screws, selector lever nut, and cover.

10 mm screw

Torque: 13 N•m (1.3 kg·m/113 lb in)

Nut

Torque: 23 N•m (2.3 kg·m/17 lb ft)

- Adjust using setting tool, refer to Mode Switch in this section.

59. Install O–ring (55) on turbine shaft.
60. Install torque converter (56).
    The converter assembly must be replaced under any of the following conditions:
    a. Evidence of damage to the pump assembly.
    b. Metal particles are found after flushing the cooler lines.
    c. External leaks in hub weld area.
    d. Converter pilot broken, damaged, or poor fit into crankshaft.
    e. Converter hub scored or damaged.
    f. Internal failure in stator.
    g. Contamination from engine coolant.
    h. Excess end play.
    - Rotate transmission, bell housing up. Spin converter to insure proper fit.
61. Fill transmission through the overfill screw hole of oil pan, using ATF DEXRON®–III. Refer to Changing Transmission Fluid in this section.

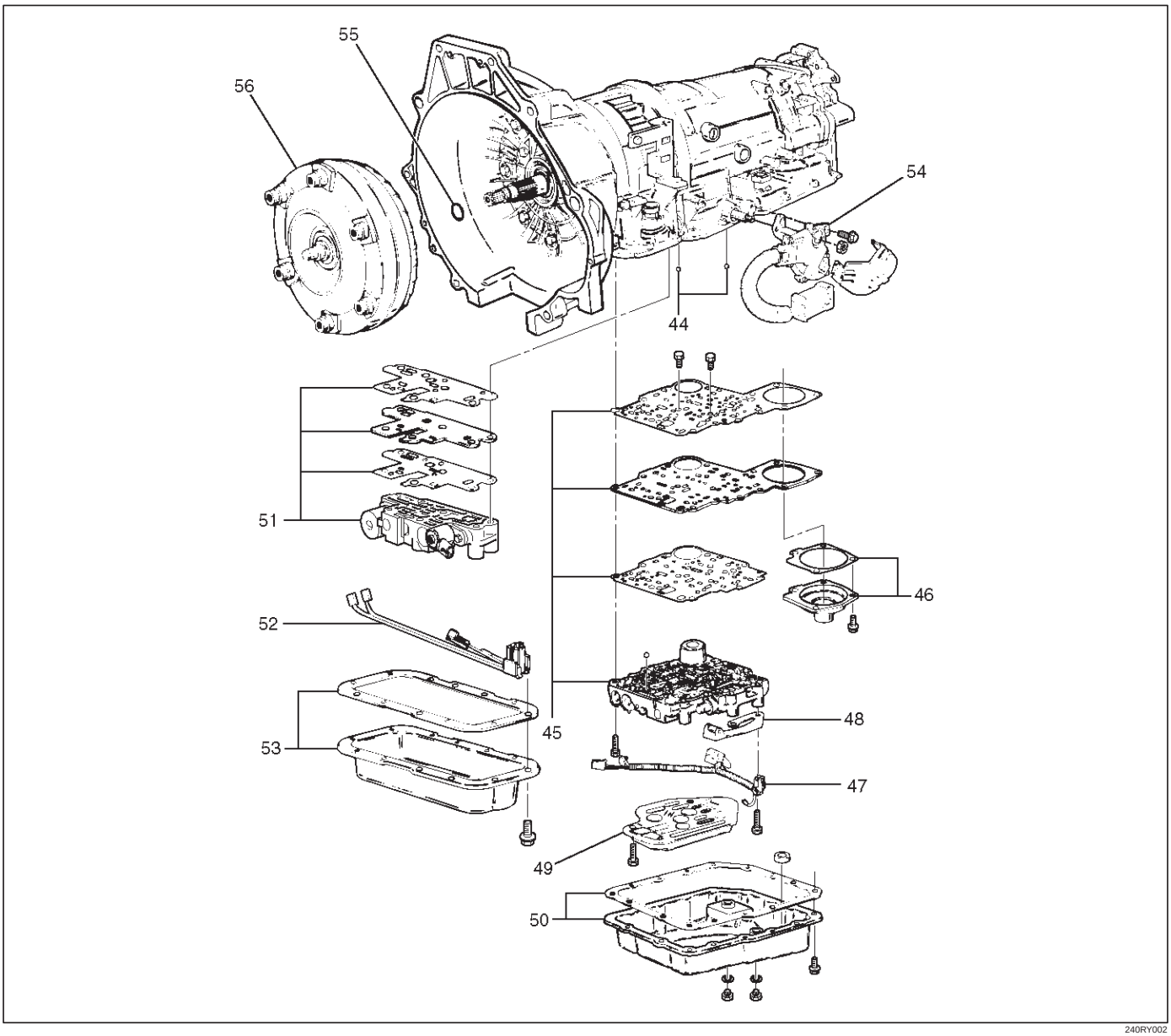

240RY002

Converter Housing And Oil Pump Assembly

Disassembled View

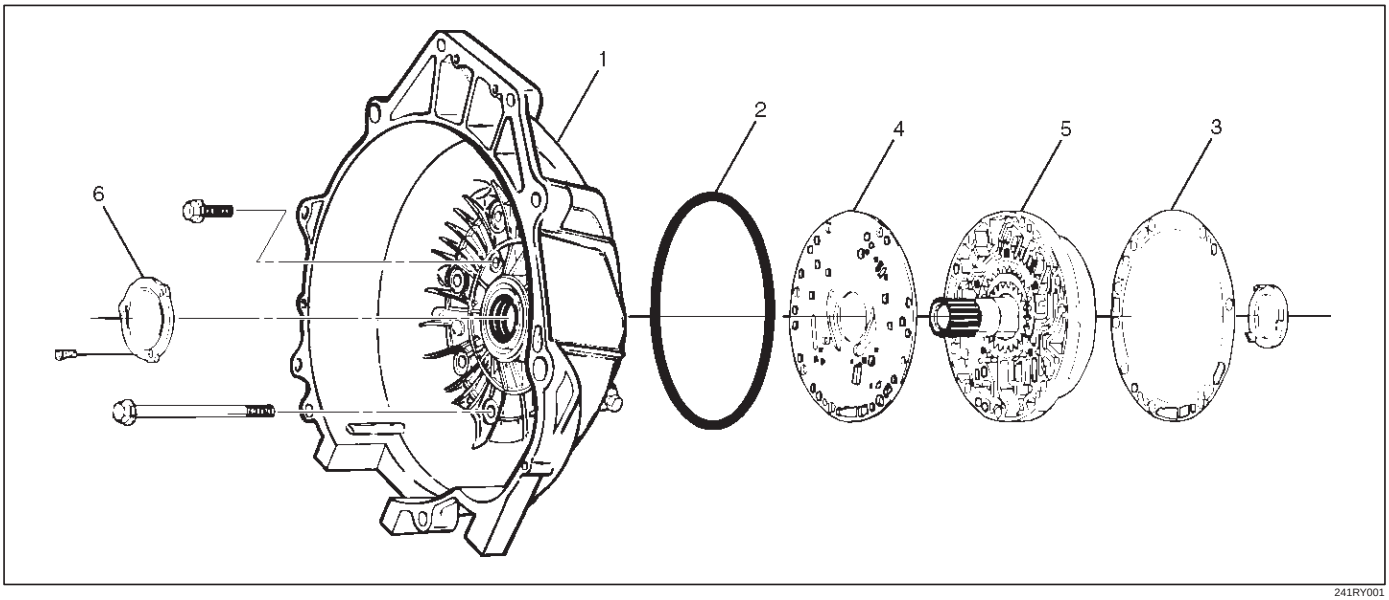

241RY001

Legend

(1) Converter Housing
(2) Outer Seal Ring
(3) Gasket
(4) Wear Plate
(5) Oil Pump Assembly
(6) Oil Seal Ring

Disassembly

1. Remove oil pump assembly from converter housing.
2. Remove outer seal ring.
3. Remove gasket.
4. Remove wear plate.
5. Remove oil seal ring.

Inspection And Repair

Visual Check:

If any damage, deformation, or local wear is found in a converter housing, outer seal ring, wear plate, or oil seal ring, replace it.

Reassembly

1. Install wear plate onto oil pump assembly.
2. Install converter housing onto complete oil pump assembly. Align with two short 5–8840–2268–0 (J–38588) guide pins on outer bolt holes.
   - Loosely install five 13mm bolts.
   - Center converter housing using 5–8840–2272–0 (J–38557) centering tool.
   - Tighten five inner 13mm bolts in an alternating pattern.

   Torque: 20 N•m (2.0 kg·m/15 lb ft)

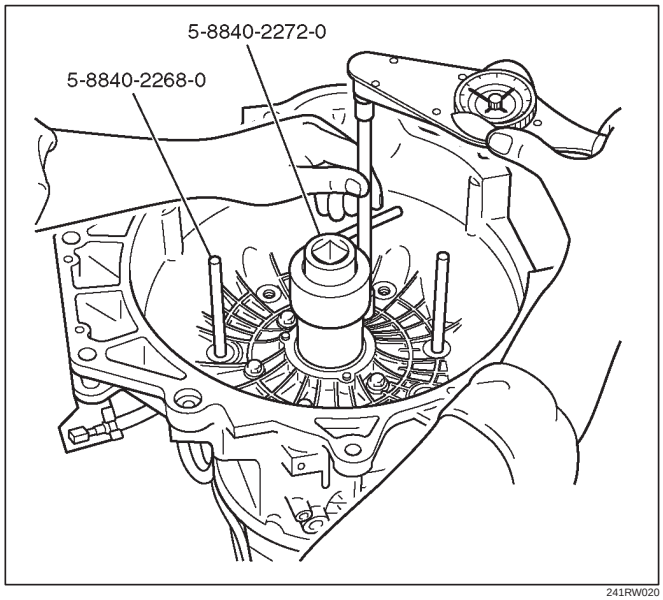

241RW020

3. Install oil seal ring (3 screws).

   Torque: 3 N•m (0.3 kg·m/26 lb in)
4. Install gasket.
5. Install outer seal ring.

Oil Pump

Disassembled View

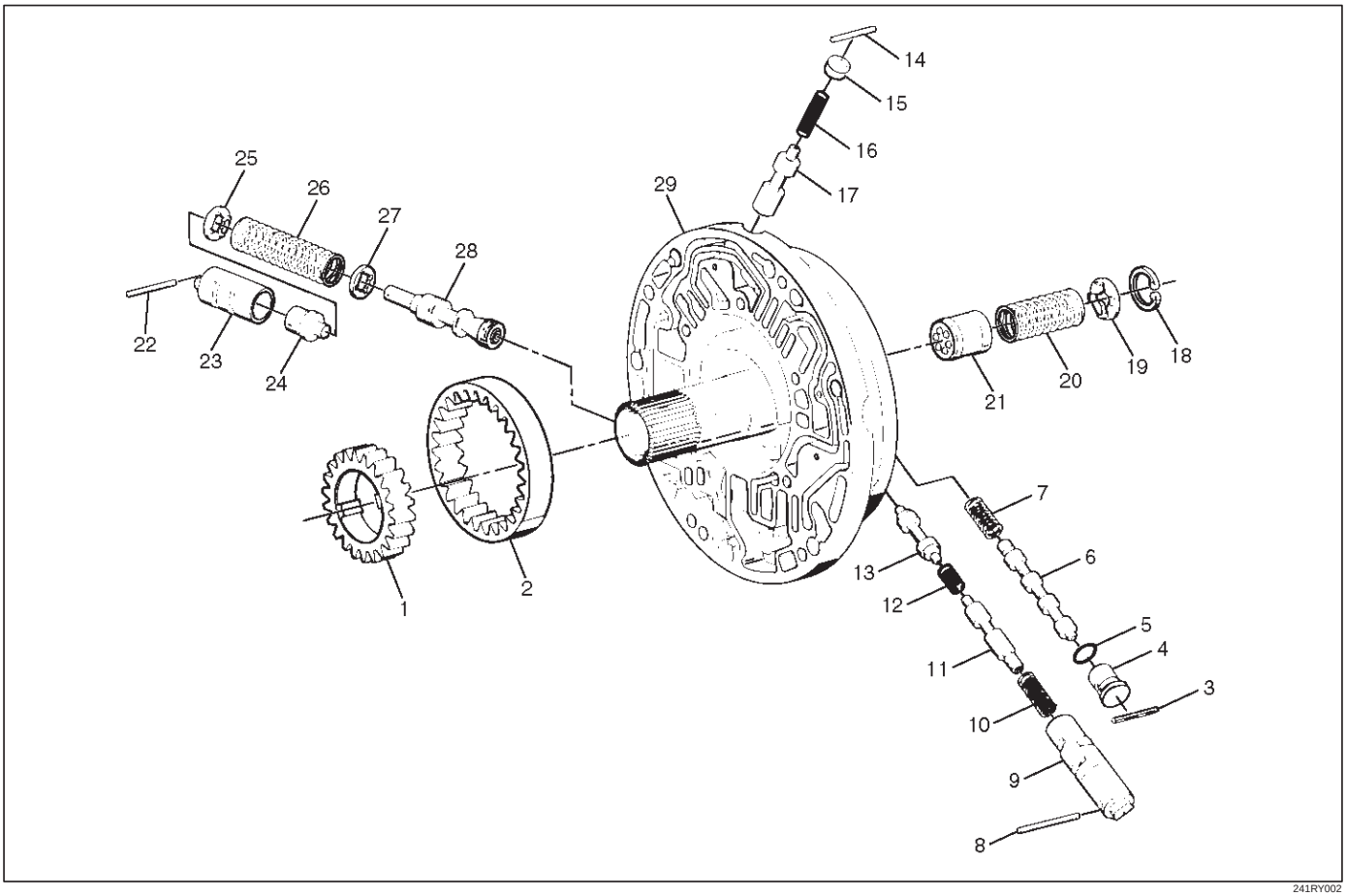

241RY002

Legend

(1) Oil Pump Drive Gear
(2) Oil Pump Driven Gear
(3) Pin
(4) Plug
(5) Seal Ring
(6) Torque Converter Clutch Control Valve
(7) Converter Clutch Control Valve Spring
(8) Pin
(9) Converter Clutch Regulator Sleeve
(10) Converter Clutch Regulator Spring
(11) Converter Clutch Regulator Valve
(12) Isolator Spring
(13) Isolator Valve
(14) Pin
(15) Enable Valve Spring Guide
(16) Enable Valve Spring
(17) Enable Valve
(18) Snap Ring
(19) Spring Seat
(20) Throttle Signal Accumulator Spring
(21) Throttle Signal Accumulator Piston
(22) Sleeve Pin
(23) Boost Valve Sleeve
(24) Boost Valve
(25) Spring Seat
(26) Pressure Regulator Valve Spring
(27) Spring Seat
(28) Pressure Regulator Valve
(29) Oil Pump Assembly

Disassembly

1. Remove oil pump drive gear (1) and driven gear (2).
2. Remove pin (3) from oil pump assembly (29).
3. Remove plug (4) and seal ring (5), torque converter clutch control valve (6) and spring (7).
4. Remove pin (8) from oil pump assembly (29).
5. Remove torque converter regulator sleeve (9), converter clutch regulator spring (10), converter clutch regulator valve (11), isolator spring (12) and isolator valve (13).
6. Remove pin (14) from oil pump assembly (29).
7. Remove enable valve spring (16), spring guide (15) and enable valve (17).
8. Remove snap ring (18) from oil pump assembly (29).

9. Remove spring seat (19), spring (20) and throttle signal accumulator piston (21).
10. Remove sleeve pin (22) from oil pump assembly (29).
11. Remove boost valve sleeve (23), boost valve (24), spring seat (25), valve spring (26), spring seat (27), and pressure regulator valve (28).

Inspection And Repair

Visual Check:

If any damage, deformation or wear is found, replace the damaged part.

Reassembly

1. Lubricate and preinstall pressure regulator spring seat (27) on valve (28), with the flat side against shoulder.
2. Install pressure regulator valve (28) and spring seat (27) assembly, valve spring (26), and spring seat (25) with the flat side away from spring to oil pump assembly (29).
3. Assemble boost valve (24) into sleeve (23).
4. Install boost valve and sleeve assembly, and sleeve pin (22) to oil pump assembly (29).
5. Install throttle signal accumulator piston (21), spring (20), and spring seat (19), with the flat side away from the spring, and snap ring (18) to oil pump assembly (29).
6. Install enable valve (17), spring guide (15), enable valve spring (16) and retainer pin (14) to oil pump assembly (29).
7. Assemble torque converter regulator spring (10) and torque converter regulator valve (11) into sleeve (9).
8. Install isolator valve (13), isolator valve spring (12) and the torque converter regulator sleeve and valve assembly into the oil pump assembly (29).
9. Install torque converter clutch control valve spring (7), torque converter clutch control valve (6), plug (4) and seal ring (5), and retainer pin (3) to oil pump assembly (29).
10. Install oil pump driven gear (2) and drive gear (1).

Main Case Valve Body

Disassembled View

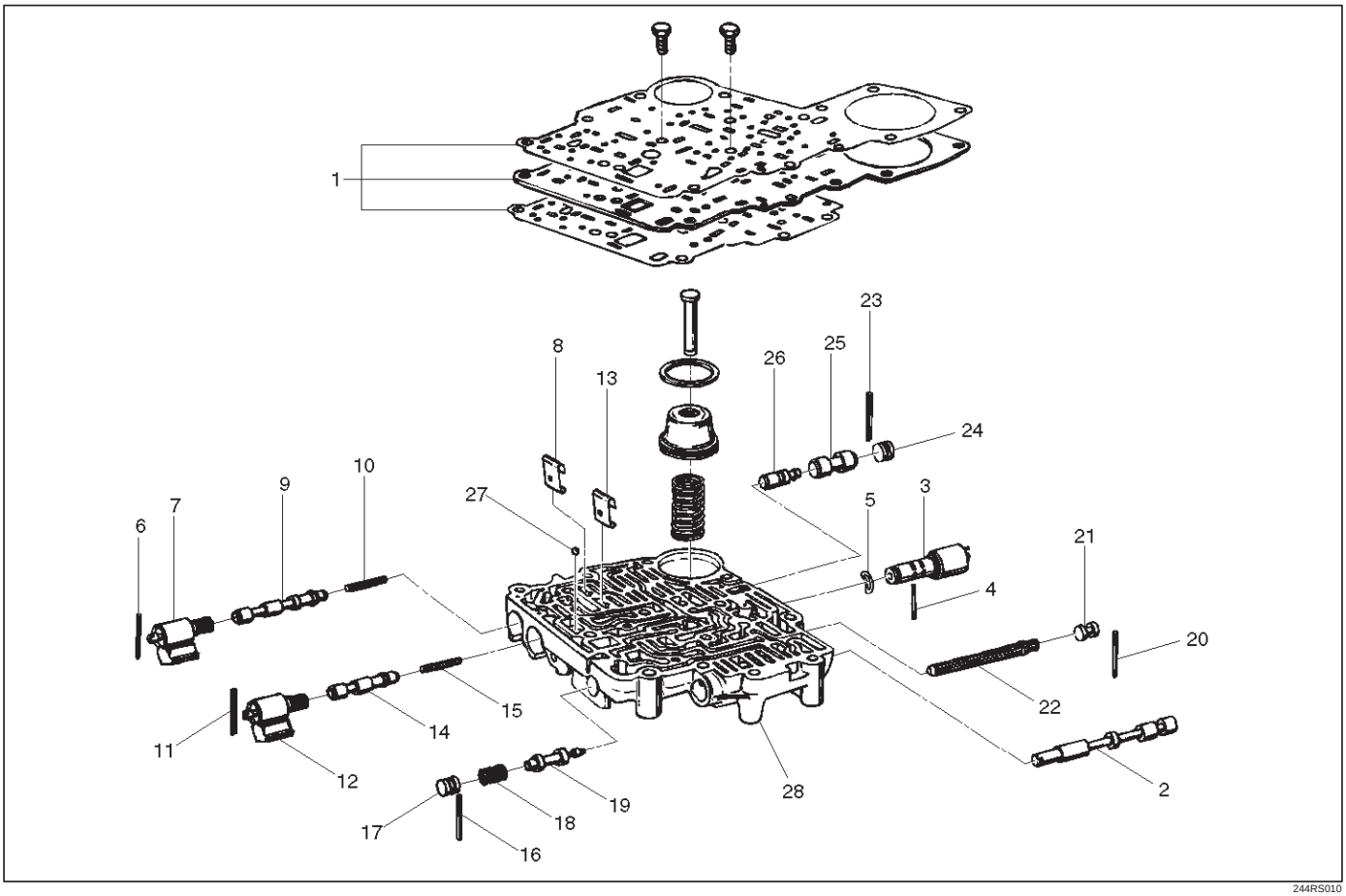

244RS010

Legend

(1) Gaskets and Transfer Plate
(2) Manual Valve
(3) Band Control Solenoid
(4) Pin
(5) Waved Washer
(6) Spring Pin
(7) Solenoid A
(8) Retainer
(9) 1–2/3–4 Shift Valve
(10) Spring
(11) Spring Pin
(12) Solenoid B
(13) Retainer
(14) 2–3 Shift Valve
(15) Spring
(16) Spring Pin
(17) Plug
(18) Spring
(19) Low Pressure Control Valve
(20) Spring Pin
(21) Plug
(22) Band Control Screen Assembly
(23) Spring Pin
(24) Plug
(25) 1–2 Accumulator Valve
(26) 1–2 Accumulator Control Valve
(27) Check Ball
(28) Main Case Valve Body

Disassembly

1. Remove two 11mm bolts from valve body (28), then remove gaskets and transfer plate (1).
2. Remove manual valve (2).
3. Push in band control solenoid (3) to compress waved washer (5), and remove pin (4).
4. Remove band control solenoid (3) and waved washer (5).
5. Remove spring pin (6) with a 3 mm dia punch.
6. Remove solenoid A (7) by grasping the metal tip. Do not grasp the connector housing.
7. Remove retainer (8), 1–2/3–4 shift valve (9), and spring (10).
8. Remove spring pin (11) with a 3 mm dia punch.
9. Remove solenoid B (12) by grasping the metal tip. Do not grasp the connector housing.

10. Remove retainer (13), 2–3 shift valve (14), and spring (15).
11. Remove spring pin (16), plug (17), spring (18), and low pressure control valve (19).
12. Remove spring pin (20), plug (21), and band control screen assembly (22).
13. Remove spring pin (23), plug (24), 1–2 accumulator valve (25), and 1–2 accumulator control valve (26).
14. Remove check ball (27) from valve body (28).

Inspection And Repair

Inspect for the following, and replace any damaged or worn parts:

1. Damage or wear to each valve.
2. Damage in oil passeges.
3. Cracks or damage to valve body.
4. Valve operations.
5. Spring fatigue.

Reassembly

1. Install 1–2 accumulator control valve (26), 1–2 accumulator valve (25), plug (24), and spring pin (23).
2. Install band control screen assembly (22), plug (21), and spring pin (20).
3. Install low pressure control valve (19), spring (18), plug (17), and spring pin (16).
4. Install spring (15), 2–3 shift valve (14), retainer (13), solenoid B (12), and spring pin (11).
5. Install spring (10), 1–2/3–4 shift valve (9), retainer (8), solenoid A (7), and spring pin (6).
6. Install waved washer (5), band control solenoid (3), and pin (4).
7. Install manual valve (2).
8. Install check ball (27) to valve body (28).
9. Install gasket (valve body/transfer plate) and transfer plate using two 5–8840–2270–0 (J–3387–2) guide pins.
   - Install two 11mm bolts.

   Torque: 13 N•m (1.3 kg·m/113 lb in)

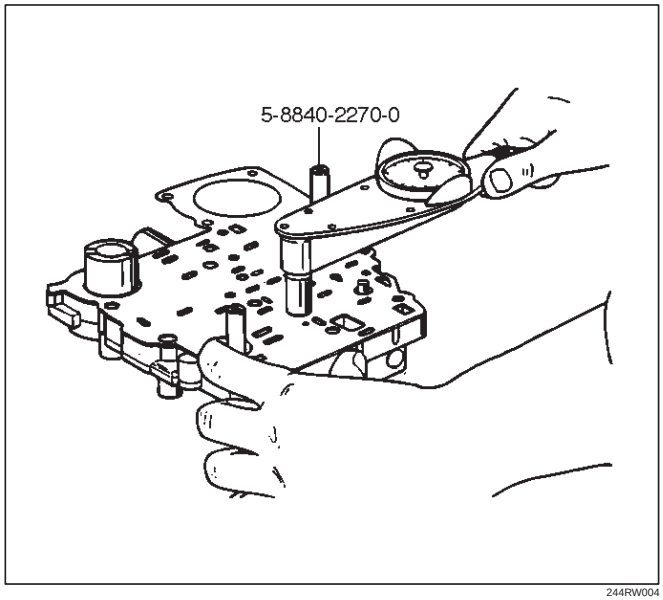

244RW004

   - Install gasket (transfer plate/main case).

Adapter Case Valve Body

Disassembled View

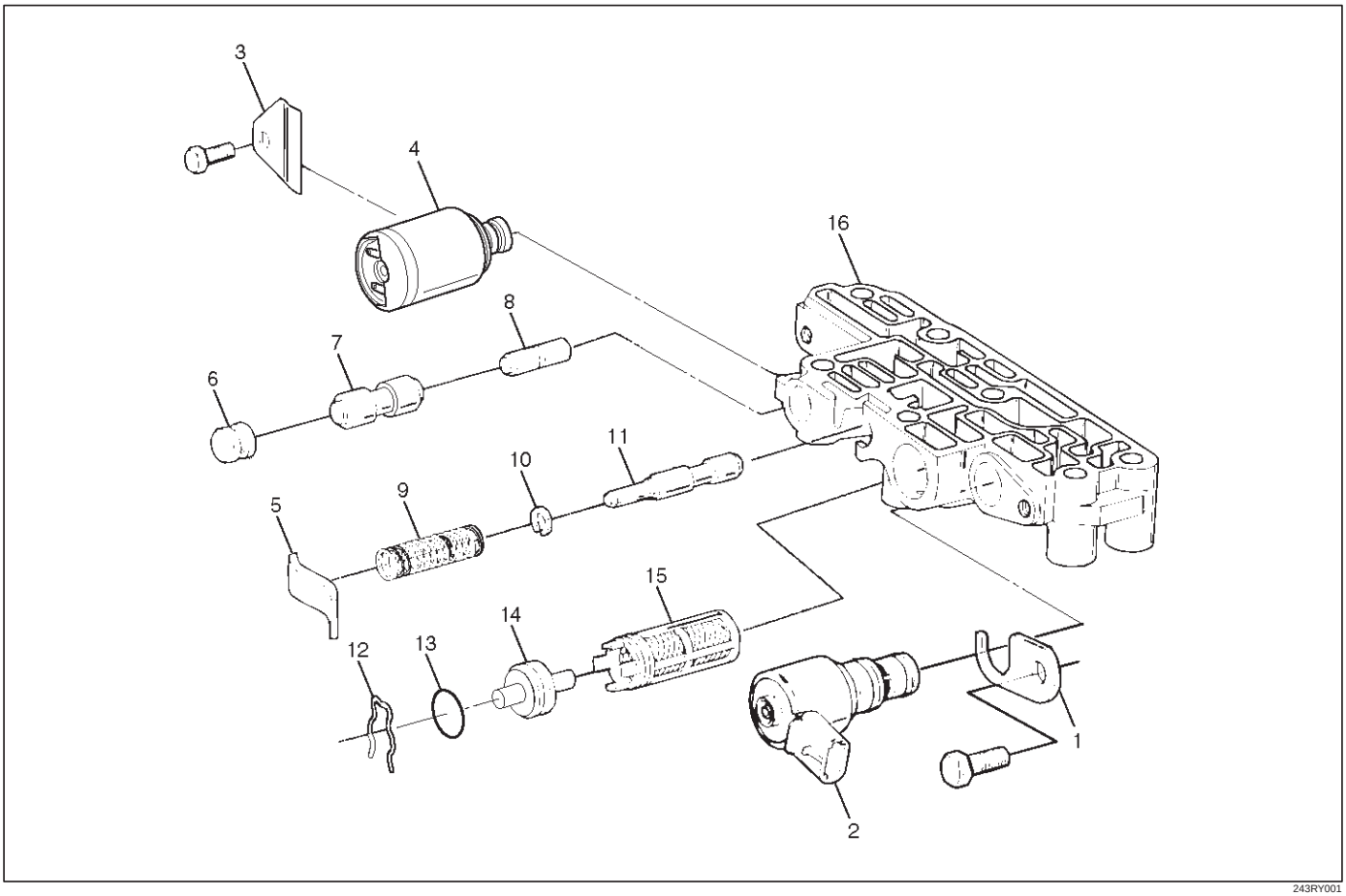

243RY001

Legend

(1) Bracket
(2) Converter Clutch PWM Solenoid
(3) Retainer
(4) Force Motor Solenoid
(5) Retainer
(6) Plug
(7) 3/4 Accumulator Valve
(8) 3/4 Accumulator Control Valve
(9) Spring
(10) Retaining Ring
(11) Feed Limit Valve
(12) Plug Retainer
(13) O–Ring
(14) Plug
(15) Force Motor Screen Assembly
(16) Adapter Case Valve Body

Disassembly

1. Remove 11mm bolt from valve body.
   - Remove bracket (1) and converter clutch PWM solenoid (2).
2. Remove 11mm bolt and retainer (3) from valve body.
   - Remove force motor solenoid (4).
3. Remove retainer (5), plug (6), 3/4 accumulator valve (7), and 3/4 accumulator control valve (8).
4. Remove spring (9), retaining ring (10), and feed limit valve (11).
5. Remove plug retainer (12), O–ring (13), plug (14), and force motor screen assembly (15).
   - Use 5 mm bolt to pull plug.

Inspection And Repair

Inspect for the following, and replace any damaged or worn parts:

1. Damage or wear to each valve.
2. Damage in oil passeges.
3. Cracks or damage to valve body.
4. Valve operations.
5. Spring fatigue.

Reassembly

1. Install force motor screen assembly (15), plug (14), O–ring (13), and plug retainer (12).

2. Install feed limit valve (11), retaining ring (10), and spring (9).
3. Install 3/4 accumulator control valve (8), 3/4 accumulator valve (7), plug (6), and retainer (5).
4. Install force motor solenoid (4).
   - Place solenoid terminals pointing towards mating face.
   - Install retainer (3) and bolt.

   Torque: 10 N•m (1.0 kg·m/87 Ib in)
5. Install converter clutch PWM solenoid (2) with two O–rings (2) and bracket (1) to valve body.
   - Install bolt.

   Torque: 10 N•m (1.0 kg·m/87 Ib in)

Third Clutch And Sprag Unit

Disassembled View

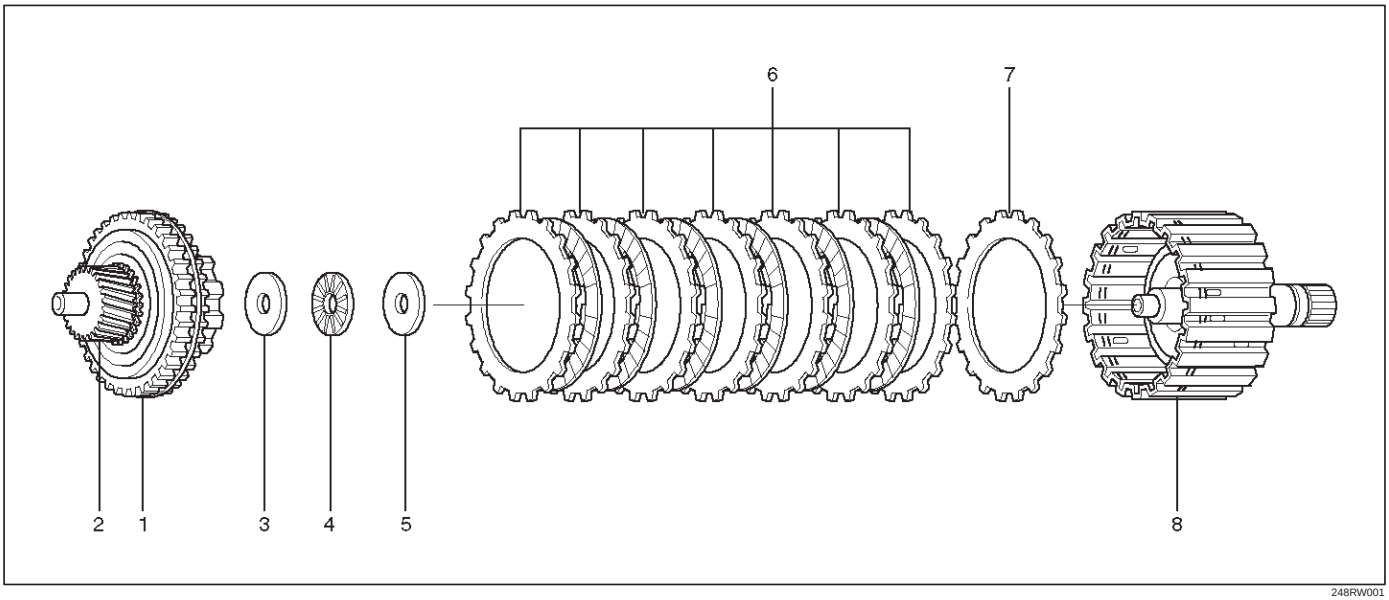

248RW001

Legend

(1) Retaining Ring
(2) Input Sun Gear and Sprag Unit Assembly
(3) Retaining Washer
(4) Bearing
(5) Thrust Washer
(6) Clutch Plates
(7) Third Clutch Spring Cushion Plate
(8) Third Clutch Drum Assembly

Disassembly

1. Place the third clutch drum and intermediate shaft assembly upright, using the overdrive internal gear as a support.
2. Locate the ends of the retaining ring. Depress one end of the ring using a small screwdriver instead of the depressor handle provided with the tool 5–8840–2258–0 (J-38450-A). Slide one blade down between the third clutch drum and the retaining ring.
3. Remove a screwdriver and repeat this step for the other end of retaining ring.
4. Install the remaining four blades approximately (five) notches apart using a screwdriver to depress the retaining ring.
5. Pull up on input sun gear and sprag unit assembly (1 and 2) to release the retaining ring from third clutch drum assembly (8).
6. Remove the tool blades.

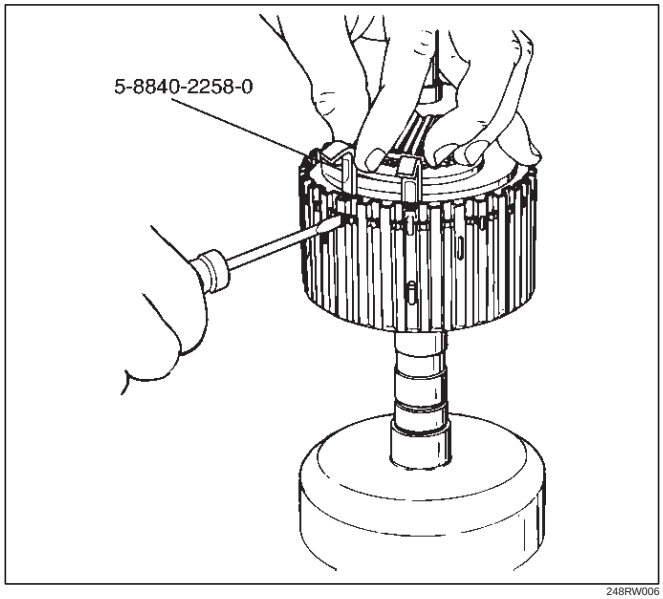

248RW006

7. Remove retaining washer (3), bearing (4), thrust washer (5), and clutch plates (6 and 7) from the third clutch drum assembly (8).

Inspection And Repair

Visual Check:

If any damage, deformation or wear is found, replace the damaged part.

Reassembly

1. Place third clutch drum and intermediate shaft assembly upright, using the overdrive internal gear as a support.
2. Install third clutch spring cushion plate (7), bevel face down.
3. Install third clutch plates (6) into third clutch drum assembly (8). Start with the steel clutch plate and alternate with lined plates.
4. Install thrust washer (5), bearing (4), and retaining washer (3).
5. Fully engage the hub splines of the input sun gear and sprag unit assembly (2) into the third clutch inner tangs.
   - Simultaneously rotate the outer sprag race to engage into the third clutch drum assembly (8).
6. Place 5–8840–2258–0 (J-38450-A) blades between the retaining ring and the third clutch drum apporximately (five) notches apart, and one blade at each end of the retaining ring (1). Push down on sprag assembly until the assembly is seated into the third clutch drum assembly (8).
7. Remove the tool blades and engage retaining ring into groove of third clutch drum.

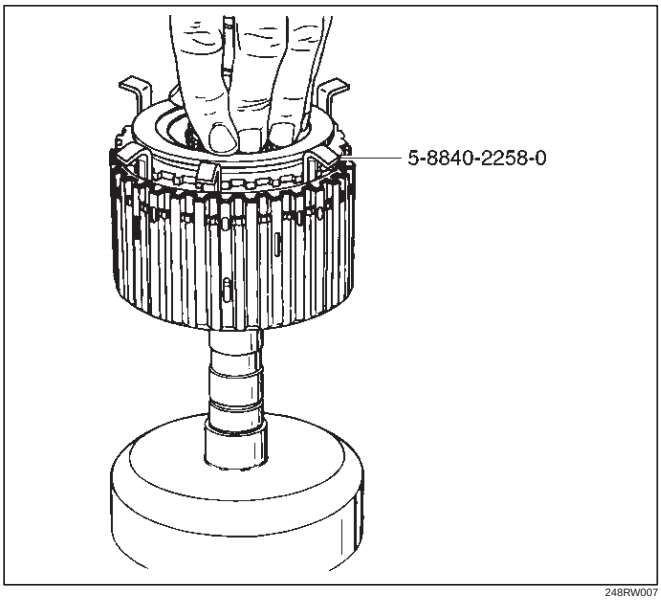

248RW007

Third Clutch

Disassembled View

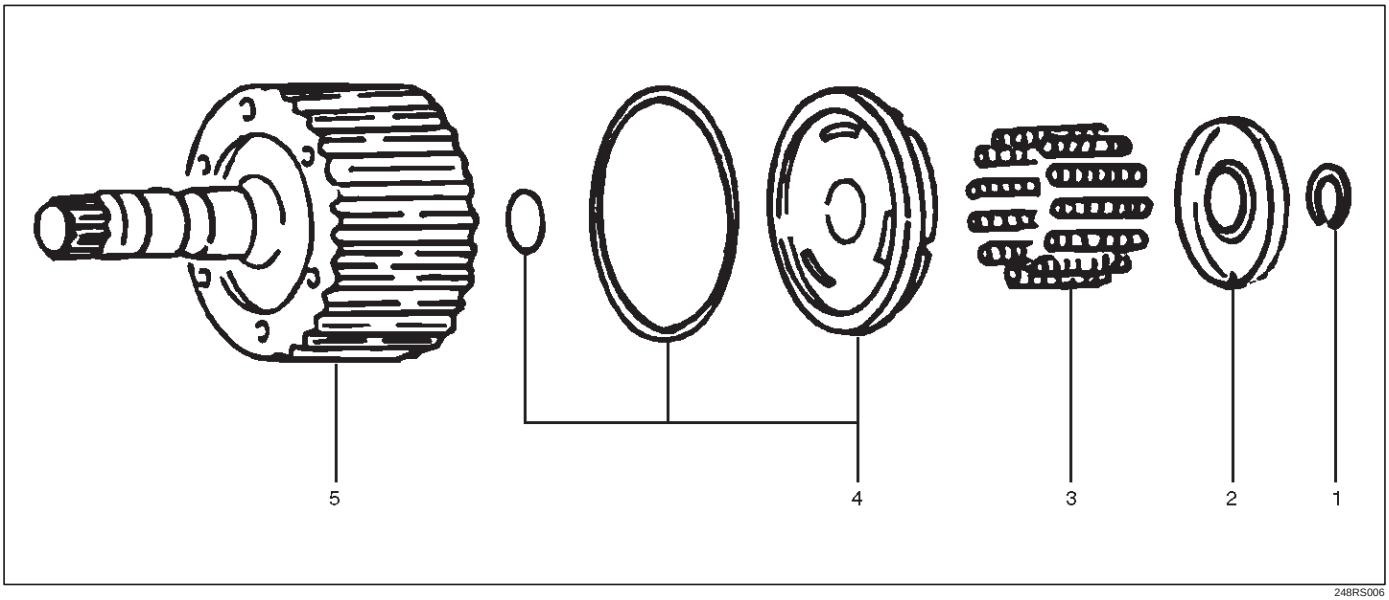

248RS006

Legend

(1) Retaining Ring
(2) Spring Seat
(3) Springs
(4) Piston Assembly
(5) Third Clutch Drum

Disassemble

1. Compress spring seat using the 5–8840–0501–0 (J–23075) spring compressor and 5–8840–2259–0 (J–23075–12) adapter tool.

NOTE: Do not over–stress the springs and seat. This will cause damage to the spring seat.

- Remove the tool.
- Remove retaining ring (1).

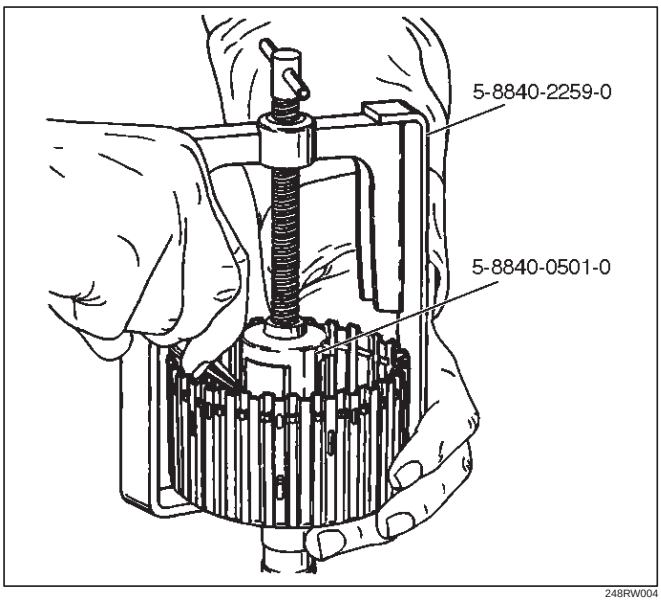

248RW004

2. Release the spring seat (2).

NOTE: Do not let the spring seat catch in the ring groove.

- Remove spring seat (2) and springs (3).

3. Remove piston assembly (4) from third clutch drum (5).

Inspection And Repair

Visual check:

If any damage, deformation or wear is found, replace the damaged part.

Operation check:

Shake the piston and listen for check ball movement indicates proper check ball operation. Replace the piston if the check ball is missing or falls out.

Reassembly

1. The lip of the piston seal must point toward the front of the transmission. Lubricate the seal lip with transmission fluid.
   - Install piston assembly (4) into the third clutch drum (5). Use the 5–8840–2260–0 (J–23084) third clutch piston installer to protect the outer seal during installation.
   - Remove the seal installer.

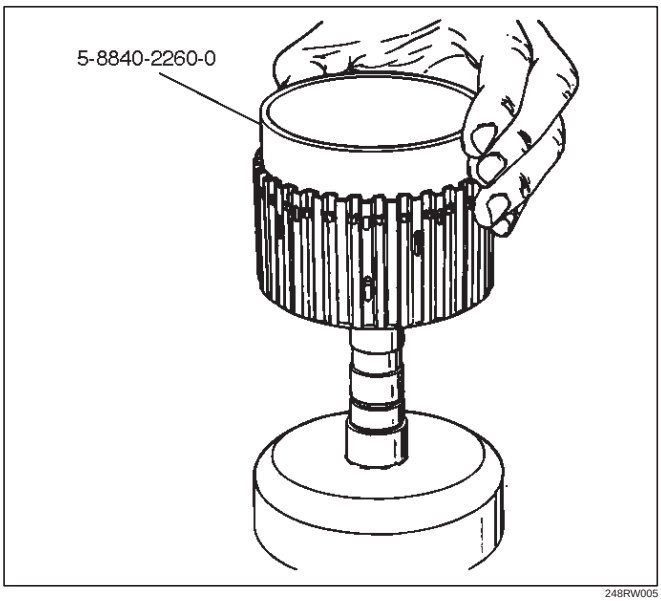

248RW005

2. Install twelve springs (3) and spring seat (2).
3. Place retaining ring (1) onto spring seat.
   - Compress the piston springs, using the 5–8840–0501–0 (J–23075) piston spring compressor and 5–8840–2259–0 (J–23075–12) adapter.

CAUTION: Do not over stress the springs and seat. Do not let the spring seat catch in the ring groove. This may cause damage to the spring seat.

- Install spring seat retaining ring (1).
- Remove the piston spring compressor and adapter.

Sprag Unit

Disassembled View

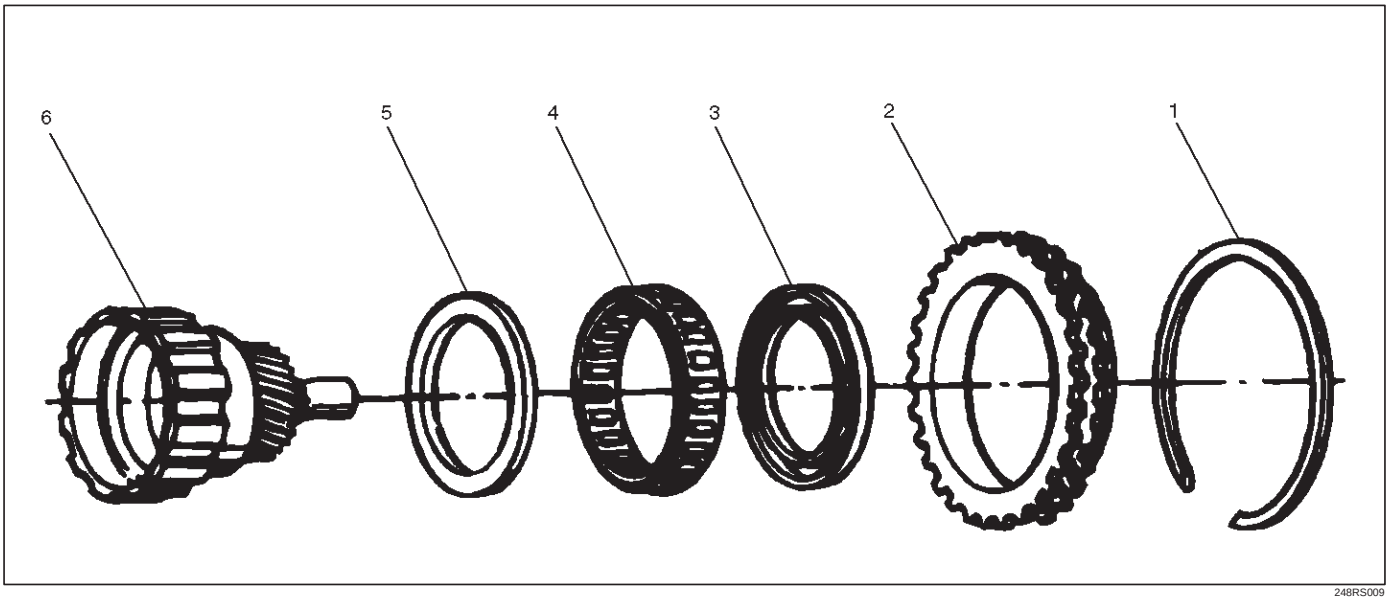

248RS009

Legend

(1) Retaining Ring
(2) Sprag Outer Race
(3) Ring
(4) Sprag Assembly
(5) Ring
(6) Third Clutch Hub and Sun Gear Assembly

Disassembly

1. Remove the sprag outer race, retaining ring, and sprag assembly from the third clutch hub and sun gear assembly.
2. Remove the rings and sprag assembly from the sprag outer race.

Inspection And Repair

Visual Check:

If any damage, deformation or wear is found, replace the damaged part.

Reassembly

NOTE: Flared shoulder of the sprag cage faces the sun gear. This procedure must be followed exactly to be sure that the sprag assembly is installed properly.

1. Install rings and sprag assembly onto the third clutch hub and sun gear.
2. Install sprag outer race and retaining ring assembly over the sprag cage assembly.
   - Place third clutch hub and sun gear assembly on a flat surface, sun gear facing up. Place sprag outer race and sprag assembly over the sun gear assembly, push down and turn the input sun counterclockwise at the same time.

NOTE: Check correct rotation by holding the sun gear in your left hand and turning the outer race. The outer sprag race should turn freely towards you and should lock turning away from you.

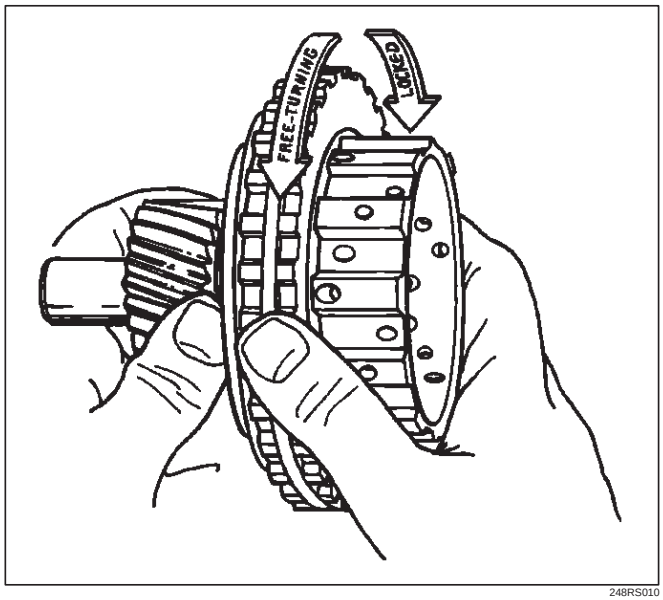

248RS010

Second Clutch

Disassembled View

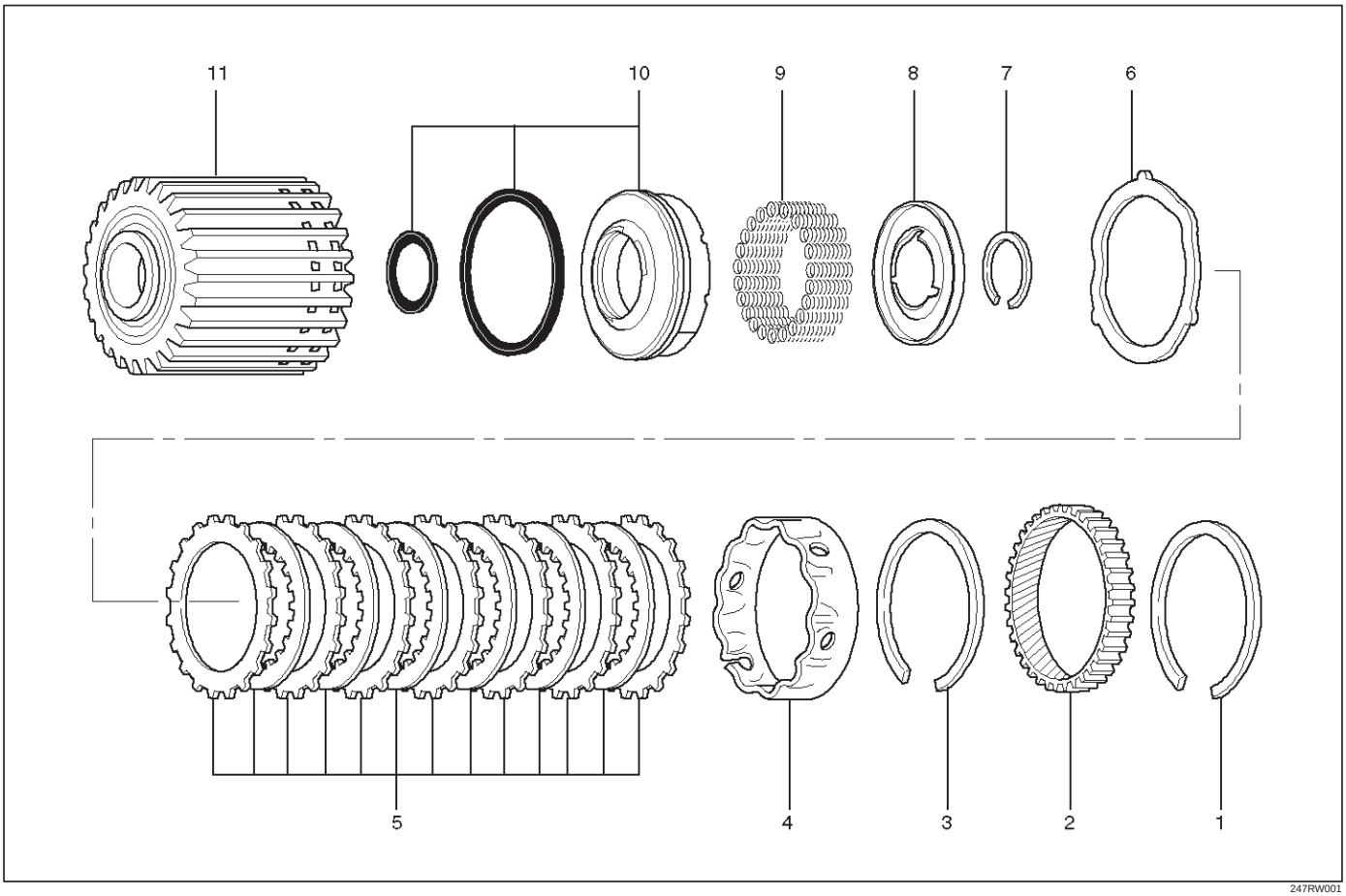

247RW001

Legend

(1) Retaining Ring
(2) Ring Gear
(3) Retaining Ring
(4) Spacer
(5) Clutch Plates
(6) Waved Washer
(7) Retaining Ring
(8) Spring Seat
(9) Springs
(10) Piston Assembly
(11) Second Clutch Drum

Disassembly

1. Remove retaining ring (1) from second clutch drum (11).
2. Remove ring gear (2), retaining ring (3), and spacer (4).
3. Remove clutch plates (5) and waved washer (6).
4. Remove retaining ring (7) using 5–8840–0195–0 (J–23327) compressor to compress the spring seat (8).
5. Remove spring seat (8), springs (9) and piston assembly (10) from second clutch drum (11).

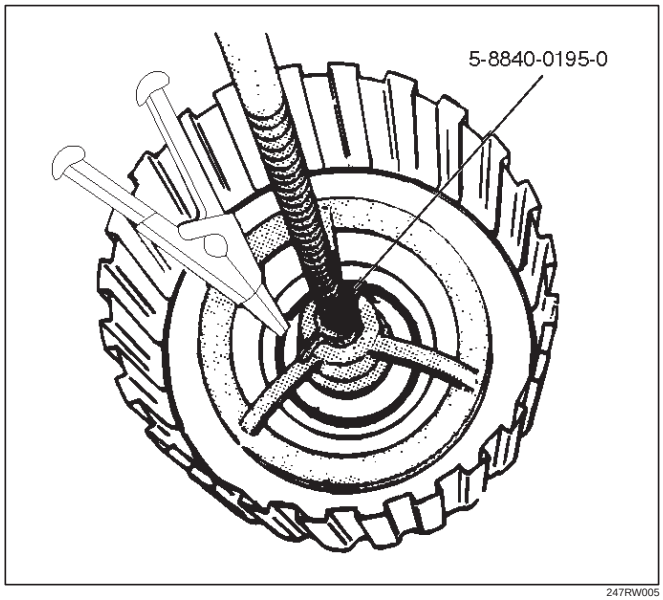

247RW005

Inspection And Repair

Visual Check:

If any damage, deformation or wear is found, replace the damaged part.

Operation Check:

Shake the piston and listen for check ball movement. Movement indicates proper check ball operation. Replace the piston if the check ball is missing or falls out.

Reassembly

1. Install piston assembly (10) into the second clutch drum (11).
   - Lubricate the lip seal with transmission fluid. Use the 5–8840–2261–0 (J–23080–A) second clutch piston installer to protect the outer piston lip seal.

NOTE: Lip of the seal should point toward front of transmission.

- Remove the installer.

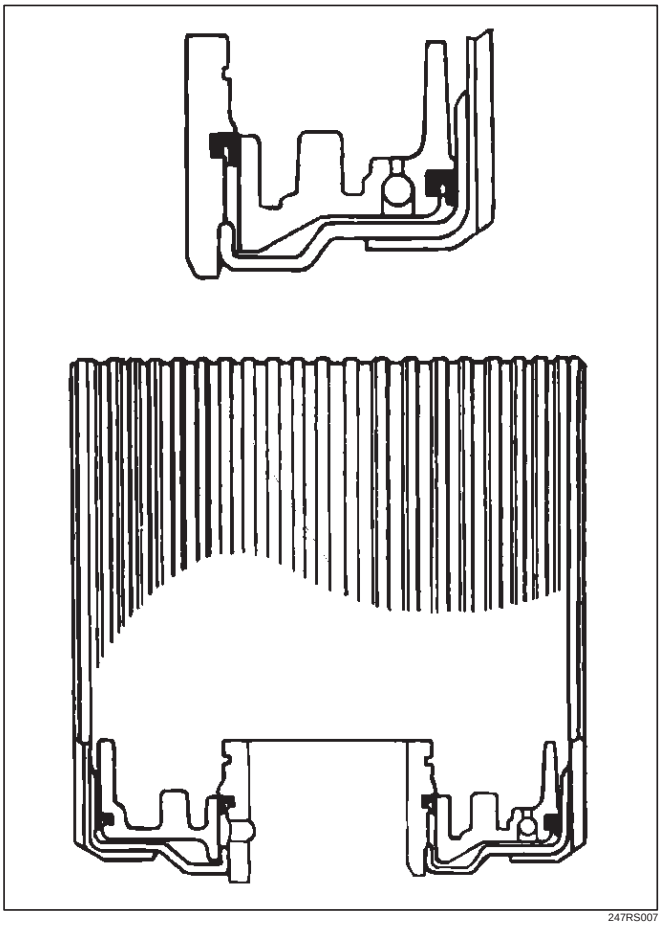

247RS007

2. Install twenty–two piston springs (9) and spring seat (8) on the second clutch piston (10). Place retaining ring (7) onto spring seat.
   - Use the 5–8840–0195–0 (J–23327) compressor to compress the piston springs.

NOTE: Do not let spring seat catch in ring groove.

- Remove the compressor.

3. Install waved plate (6) and clutch plates (5). Start with a steel plate and alternate with lined plates.
   - Align second clutch inner tangs.
4. Install spacer (4), with the fluted end toward clutch plates.
5. Install retaining ring (3), ring gear (2) and retaining ring (1).

3–4 Accumulator Piston

Disassembled View

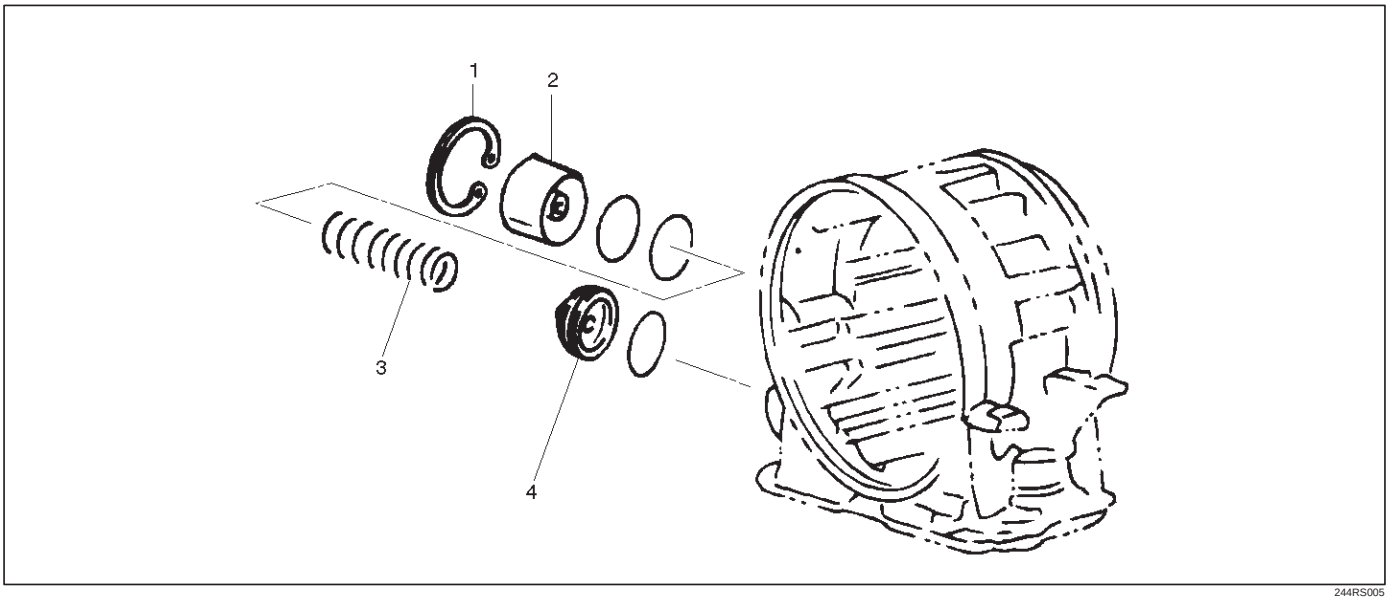

244RS005

Legend

(1) Snap Ring
(2) Cover
(3) Spring
(4) Piston Assembly

Disassembly

1. Install the 5–8840–2277–1 (J–38559–A) cover compressor on adapter case.
   - Compress piston cover then remove snap ring.

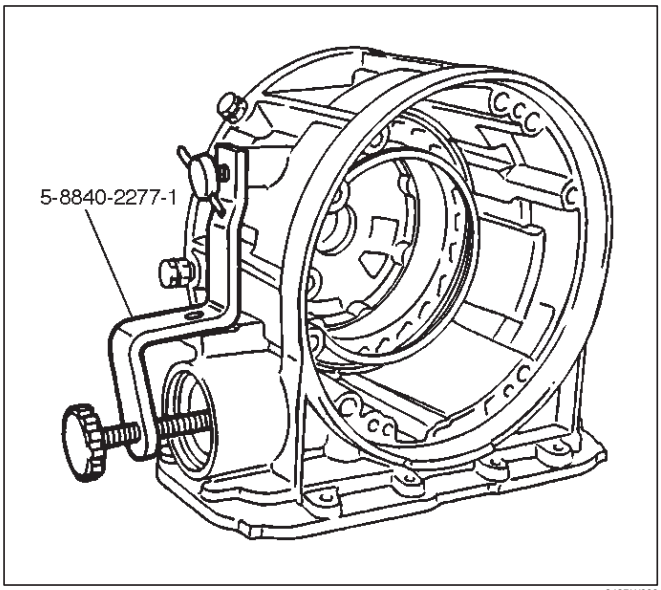

242RW009

2. Install the 5–8840–2403–0 (J–41096) cover remover and 5–8840–2266–0 (J–38584) adapter to center hole of cover.
   - Use the 5–8840–0019–0 and 5–8840–2000–0 (J–23907) slide hammer to remove cover.
3. Remove spring and piston assembly.

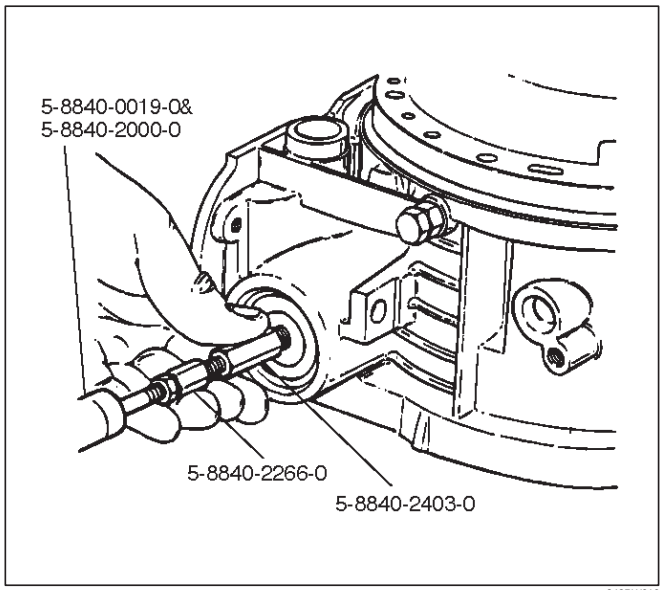

242RW010

Inspection And Repair

Visual Check:

If any damage, deformation or wear is found, replace the damaged part.

Reassembly

1. Place the 5–8840–2264–0 (J–38553) piston fitter into adaptor case and push the piston into position, using suitable diameter tube.
   - Remove the piston fitter.

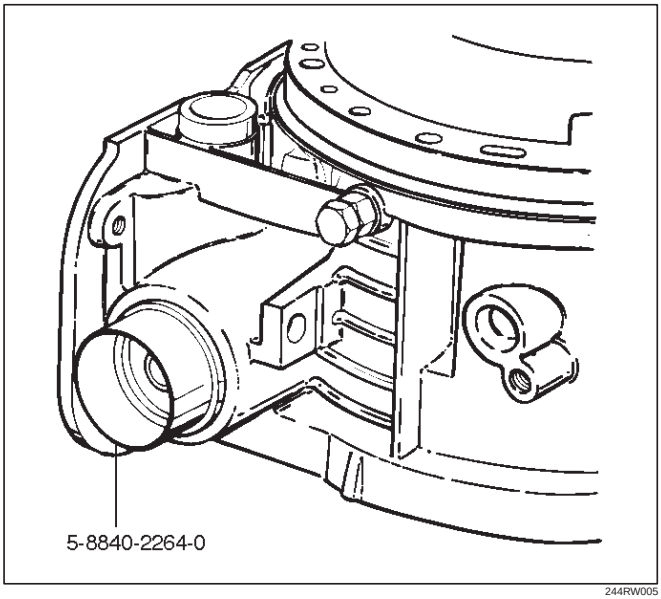

244RW005

2. Install spring and cover.
3. Install snap ring, using the 5–8840–2277–1 (J–38559–A) compressor tool.
   - Install snap ring in groove.
   - Remove the compressor tool.

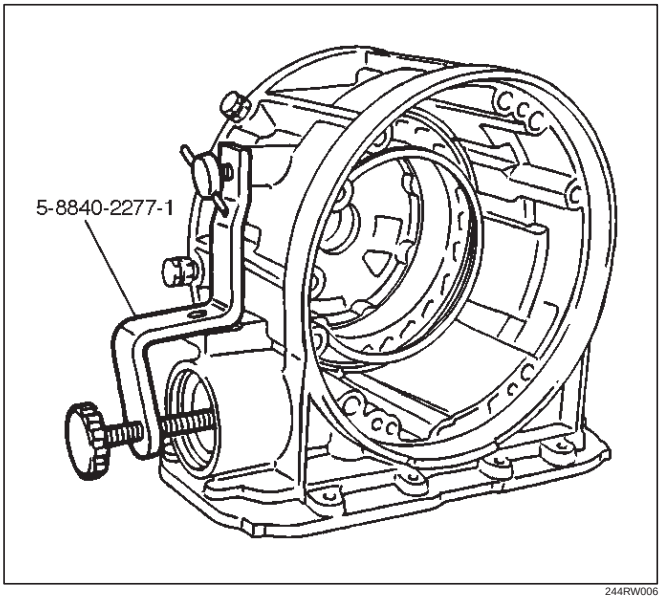

244RW006

Reverse Clutch Piston And Center Support

Disassembled View

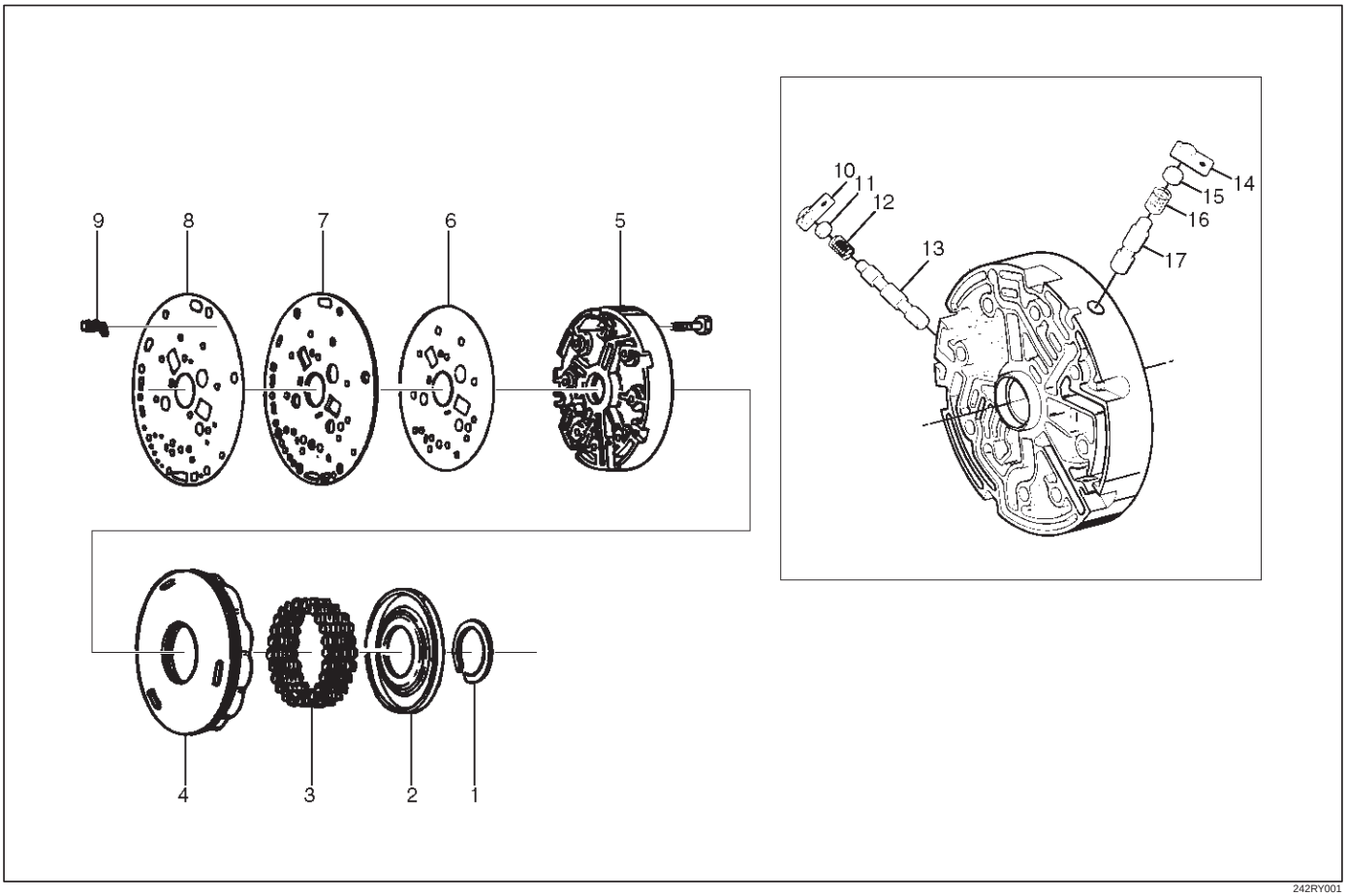

Legend

(1) Retaining Ring
(2) Spring Seat
(3) Springs
(4) Piston Assembly
(5) Center Support
(6) Gasket
(7) Transfer Plate
(8) Gasket
(9) Restrictor
(10) Retainer Plate
(11) Plug
(12) Spring
(13) Overrun Lock Out Valve
(14) Retainer Plate
(15) Plug
(16) Spring
(17) Reverse Lock Out Control Valve

Disassembly

1. Install the 5–8840–0195–0 (J–23327) compressor tool on spring seat, then compress the spring seat.
   - Remove retaining ring (1).

NOTE: Do not over–stress the springs and seat, as this will cause damage to the spring seat.

- Remove the compressor tool.

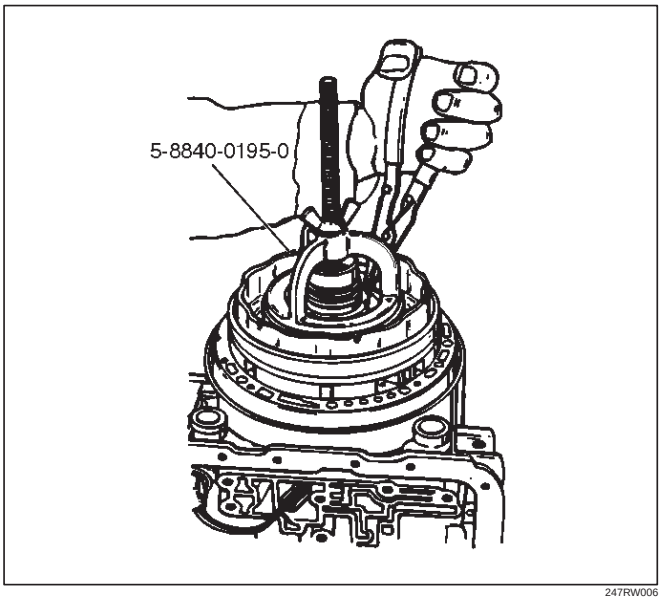

247RW006

2. Remove spring seat (2) and springs (3).
3. Remove piston assembly (4).
4. Remove 8 bolts from center support (5), then remove center support (5) from adapter case.
5. Remove gasket transfer plate/outer support (6), center support transfer plate (7), and gasket transfer plate/adapter case (8).
6. Remove restrictor (9) from adapter case housing.
7. Remove retainer plate (10), plug (11), spring (12), and overrun lock out valve (13) from center support (5).
8. Remove retainer plate (14), plug (15), spring (16) and reverse lock out valve (17) from center support (5).

Inspection And Repair

Visual Check:

If any damage, deformation or wear is found, replace the damaged part.

Reassembly

1. Install reverse lock out valve (17) and spring (16) to center support.

NOTE: Ensure correct assembly of valve. The spring should be located over the long small diameter end.

2. Install plug (15) and retainer plate (14).
3. Install overrun lock out valve (13) and spring (12) to center support.

NOTE: Ensure correct assembly of valve. The spring should be located over the long small diameter end.

4. Install plug (11) and retainer plate (10).
5. Place restrictor (9) in the lube overdrive channel in the adapter case housing.

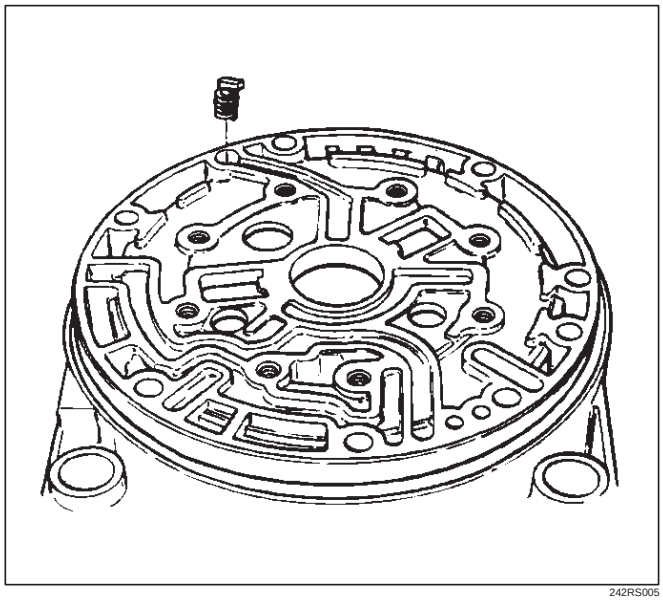

242RS005

6. Install gasket transfer plate/adapter case (8), center support transfer plate (7), and gasket transfer plate/center support (6).
7. Install center support (5) with 8 bolts.

   Torque : 25 N•m (2.5 kg·m/18 lb ft)

8. Install piston assembly (4) into center support (5).
9. Install twenty four springs (3), spring seat (2), and retaining ring (1).
   - Install the 5–8840–0195–0 (J–23327) compressor and compress spring seat (2) and springs (3), then seat snap ring (1) in groove.
   - Remove the tool.

Overrun Clutch And Turbine Shaft

Disassembled View

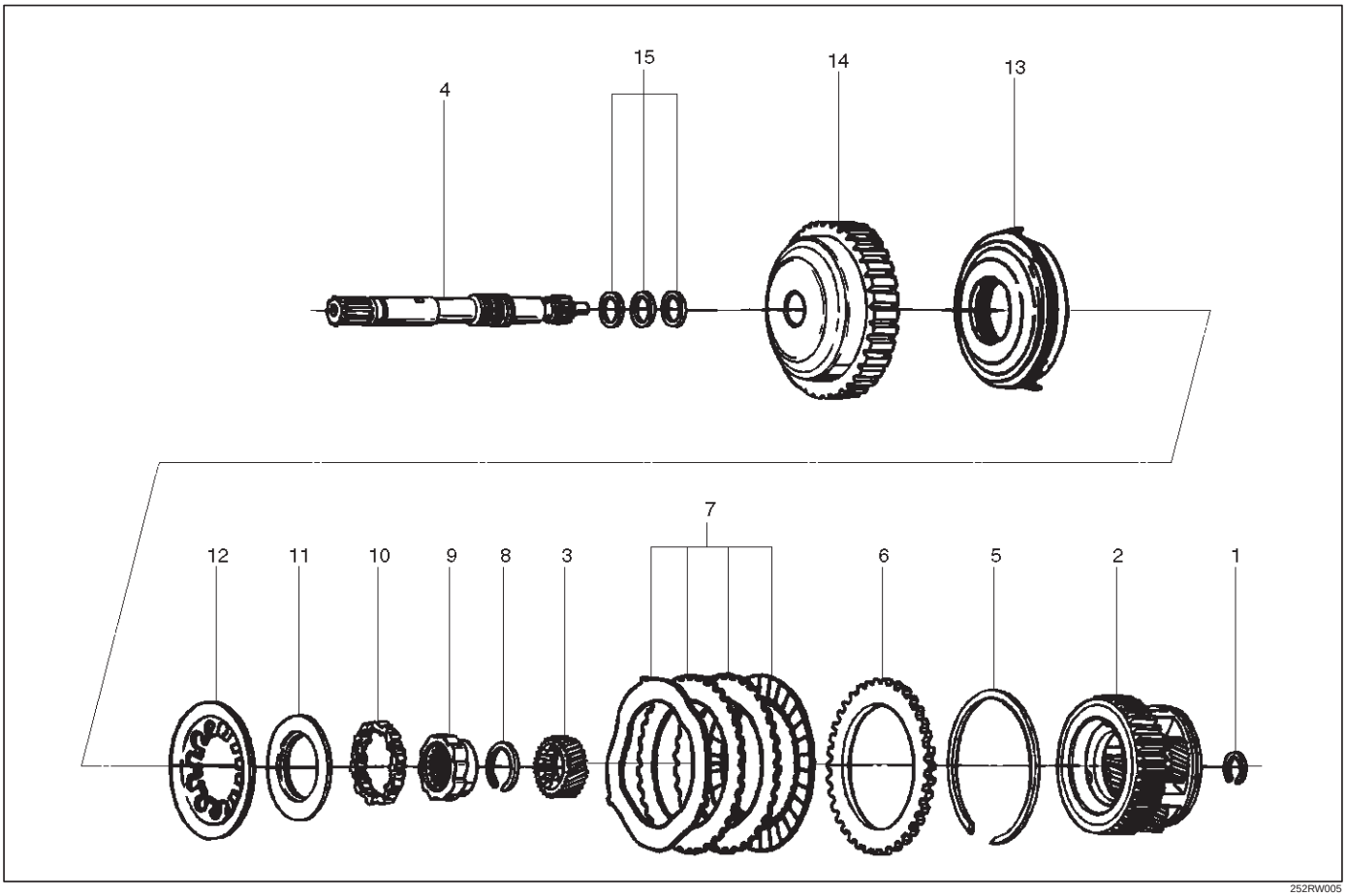

Legend

(1) Snap Ring
(2) Overdrive Carrier Assembly
(3) Sun Gear
(4) Turbine Shaft
(5) Snap Ring
(6) Backing Plate
(7) Clutch Plates
(8) Snap Ring
(9) Overrun Roller Clutch Cam
(10) Roller Clutch Assembly
(11) Overrun Clutch Release Spring Retainer
(12) Diaphragm Spring
(13) Piston Assembly
(14) Overrun Clutch Drum
(15) Turbine Shaft Seal Rings

Disassembly

1. Position overrun clutch assembly upright, using the overdrive internal gear as a support.
   - Remove snap ring (1).

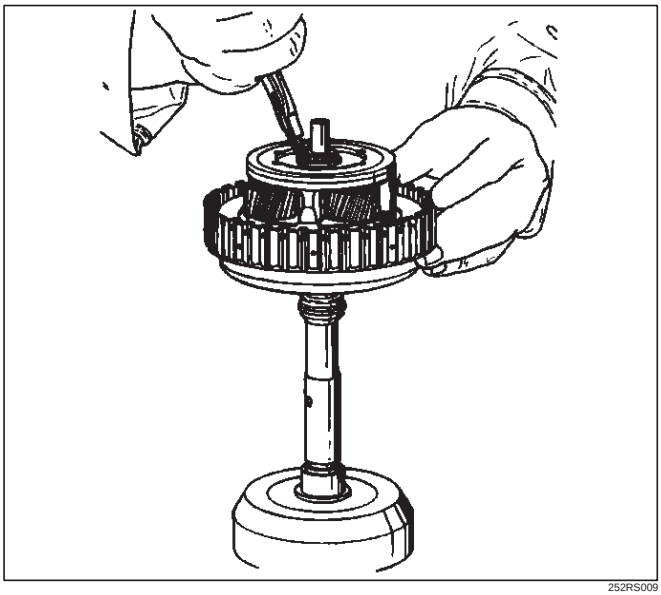

252RS009

2. Remove overdrive carrier assembly (2), sun gear (3) and turbine shaft (4).
3. Remove snap ring (5), backing plate (6), and clutch plates (7).
4. Compress diaphragm spring with the 5–8840–2275–0 (J–23327–91) compressor, then remove snap ring (8).

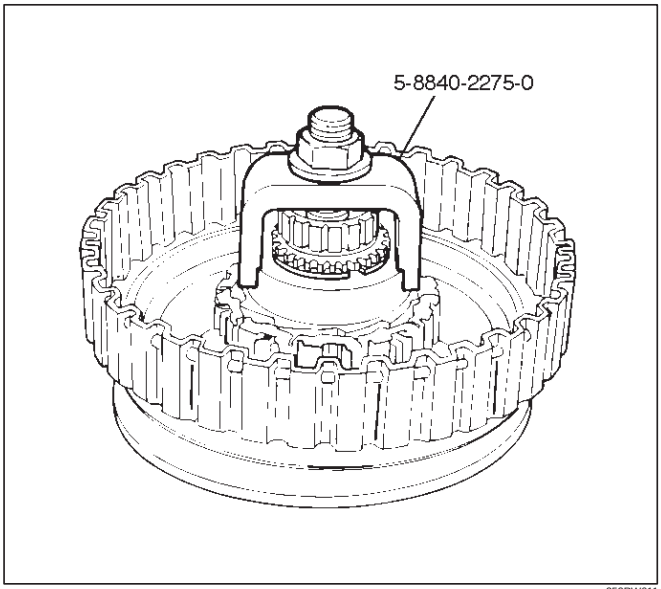

252RW011

5. Remove overrun roller clutch cam (9) and roller clutch assembly (10).
6. Remove overrun clutch release spring retainer (11) and diaphragm spring (12).
7. Remove piston assembly (13) from overrun clutch drum (14).
8. Remove turbine shaft seal rings (15).

Inspection And Repair

Overdrive Carrier Check

- Check pinion end play with a feeler gauge.

Clearance: 0.24mm–0.64mm (0.0094in–0.025in)

If clearance is outside specified value, replace overdrive carrier assembly.

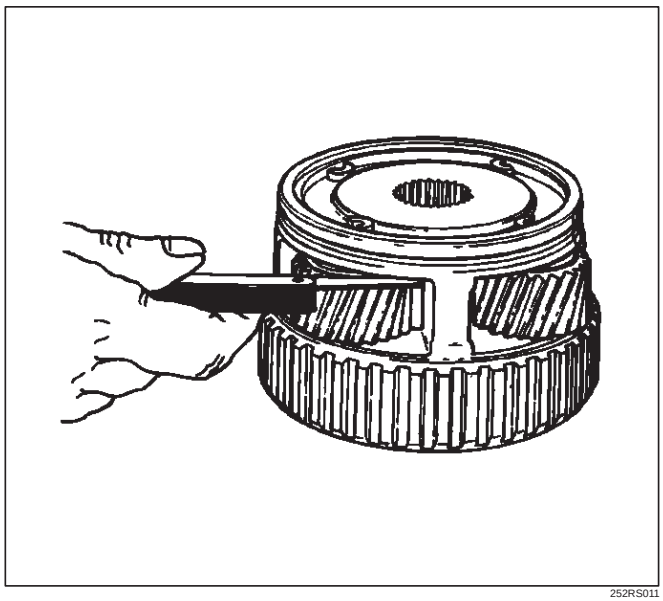

252RS011

Visual Check:

If any damage, deformation or local wear is found, replace the damaged part.

Reassembly

1. Install turbine shaft seal rings (15) with grease (petroleum jelly).

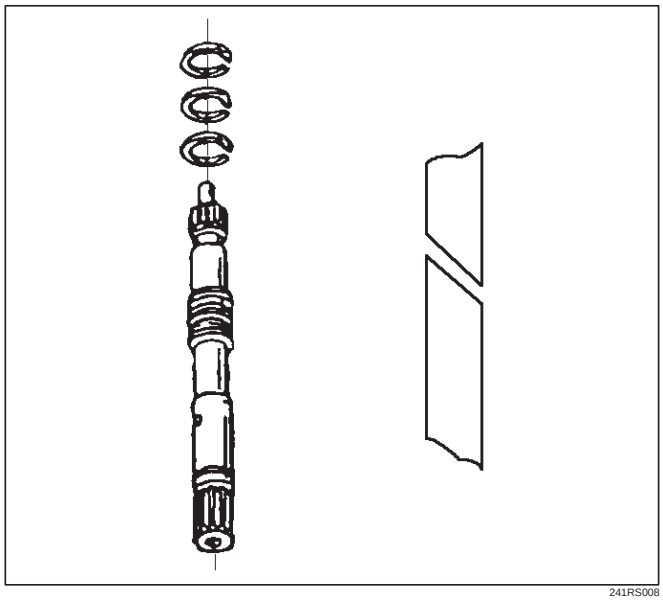

241RS008

2. Install the 5–8840–2269–0 (J–38555) inner installer on the drum (14).
   - Pre–install piston assembly into 5–8840–2269–0 (J–38555) outer installer.
   - Install overrun clutch piston assembly (13). Use the outer installer while pushing piston into drum (14).
   - Remove the installer.

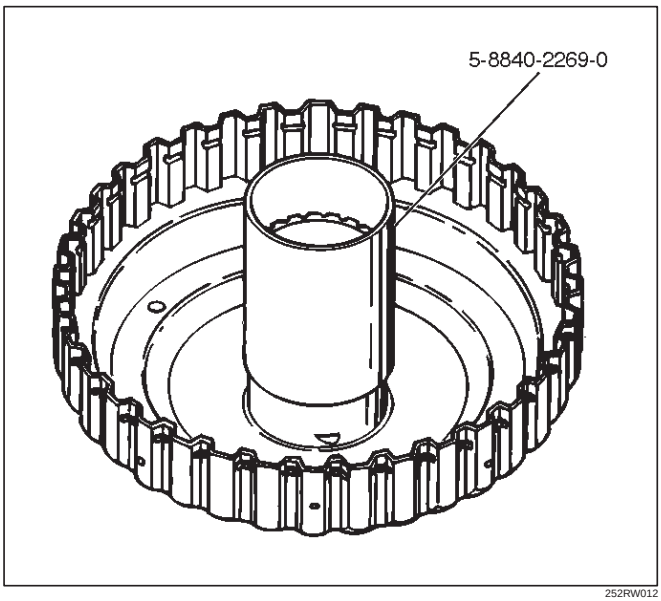

252RW012

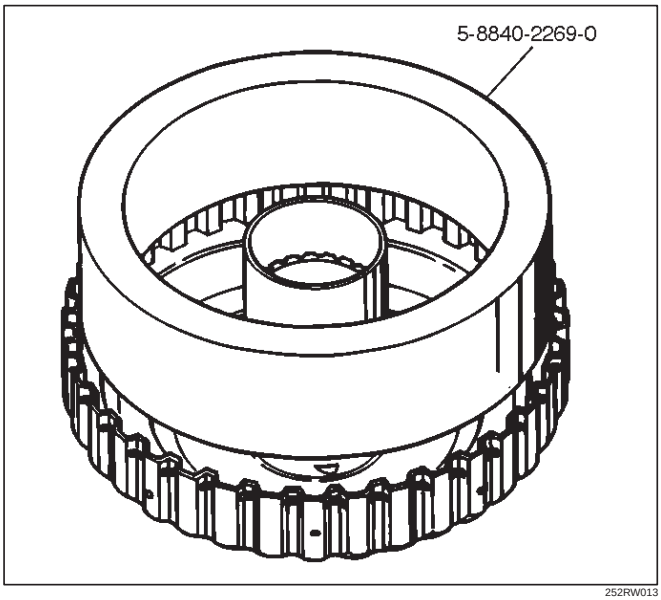

252RW013

3. Install diaphragm spring (12).
4. Install overrun clutch release spring retainer (11) (lip faces upwards), overrun roller clutch assembly (10), and cam (9).
5. Place snap ring loosely on spring retainer.
   - Hold the 5–8840–2275–0 (J–23327–91) compressor in a vise and compress piston return spring with compressor.
   - Set snap ring (8) in ring groove.
   - Remove the compressor.
6. Install clutch plates (7), start with steel plate and alternate with lined plates.
7. Install backing plate (6).
8. Install snap ring (5).
9. Install overdrive sun gear with countersink pointing downwards.
10. Install the overdrive carrier assembly (2).

NOTE: Turn the assembly in a counter–clockwise direction only until roller clutch enters the outer race. After installation, rotate the assembly and listen for loose rollers.

11. Install turbine shaft (4) and snap ring (1).

Main Data And Specification

General Specifications

				Remarks
Model			THM 4L30–E	
Engine			V6 3.5L 6VE1	DOHC
Type			Automatic four speed overdrive in 4th gear lock–up clutch torque converter	
Control systems	Shift control		Hydraulic	
	Shift pattern		Electronic	
	Shift quality		Electronic	
	Lock–up clutch		Electronic	
Gear ratio	1st		2.856	
	2nd		1.618	
	3rd		1.000	
	4th (O/D)		0.723	
	Reverse		2.000	
Gear set			Noiseless, high torque capability	
Oil used	Name		ATF DEXRON®–III	
	Q'ty liter (qt)		8.6 (9.1)	
Torque converter			2,100 ± 150	Stall speed (rpm)
	Reverse clutch	RC	4	Number of discs
	Second clutch	C2	6	
	Third clutch	C3	6	
	Brake band		Double wrap	
	Fourth clutch	C4	2	Number of discs
	Overrun clutch	OC	1	
	Overdrive	OFW	10	Number of rollers
	Principal	PFW	26	Number of sprags
	Ravigneaux planetary gear set	Input sun gear	30	Number of teeth
		Pinion gear	19	
		Long pinion	23	
		Ring gear	90	
		Long pinion	19	
		Output sun gear	46	
	Overdrive planetary gear set	Sun gear	31	
		Pinion gear	24	
		Ring gear	81	

Torque Specifications

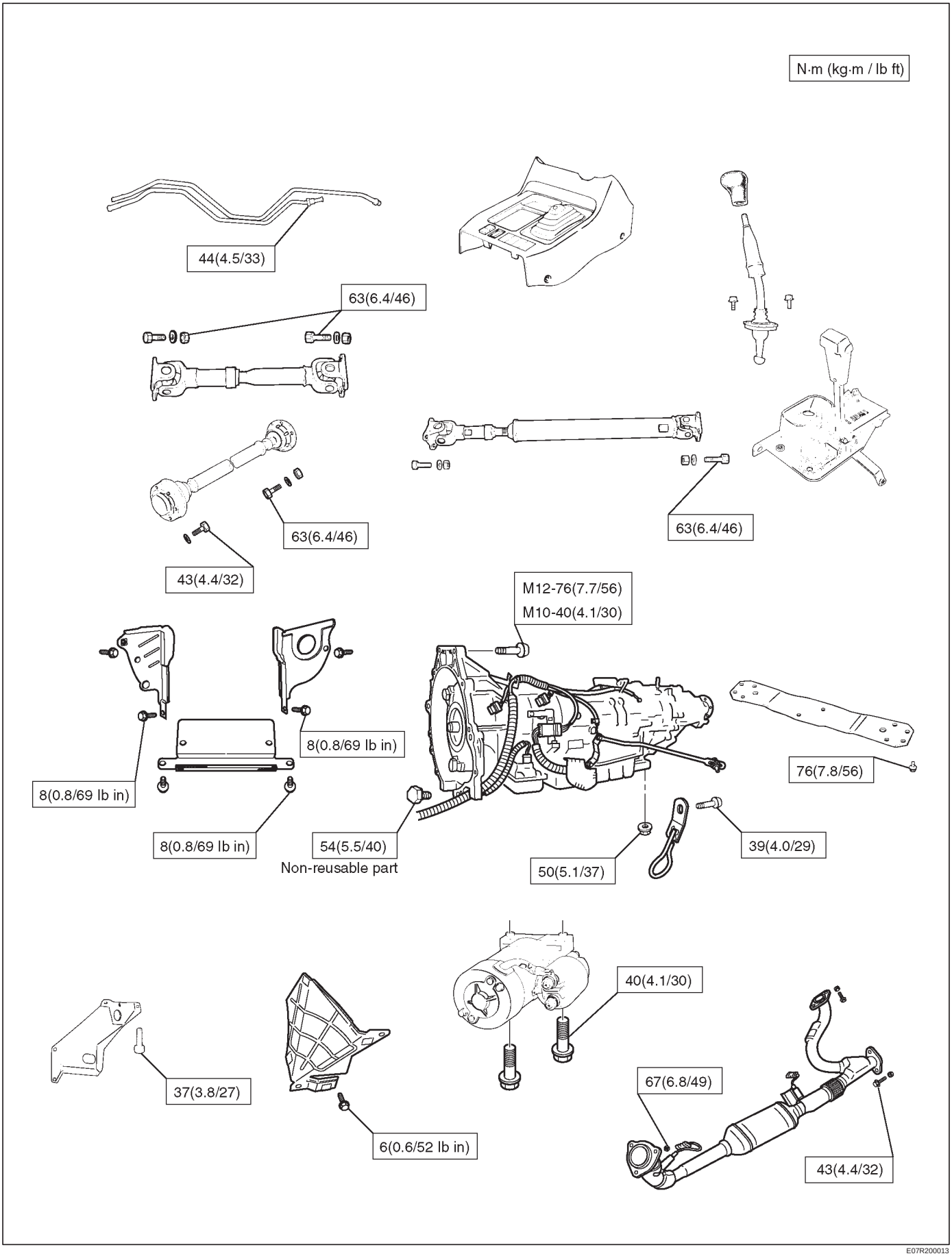

E07R200013

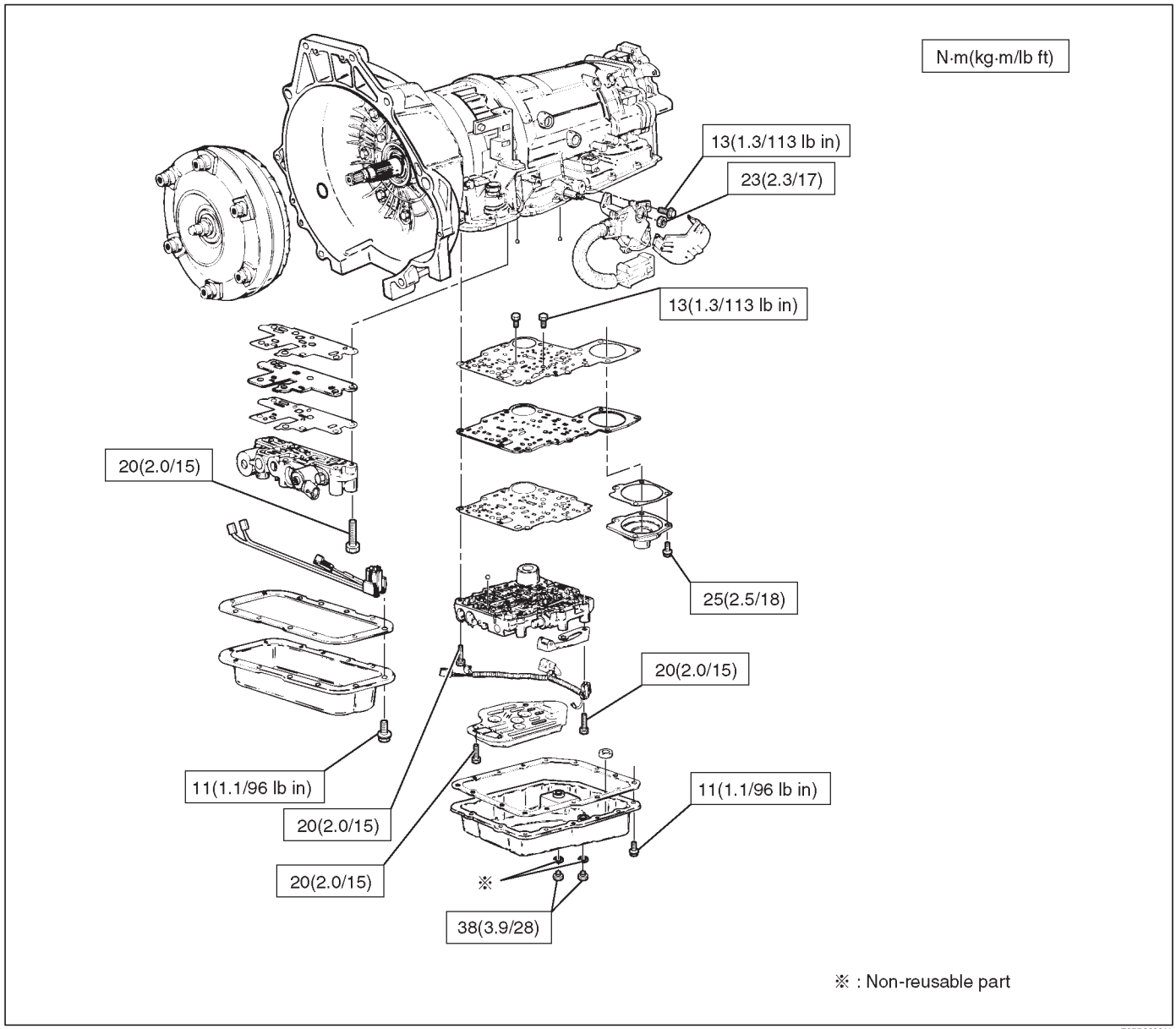
N·m(kg·m/lb ft)
13(1.3/113 lb in)
23(2.3/17)
13(1.3/113 lb in)
20(2.0/15)
25(2.5/18)
20(2.0/15)
11(1.1/96 lb in)
20(2.0/15)
11(1.1/96 lb in)
20(2.0/15)
※
38(3.9/28)
※ : Non-reusable part

E07R200011

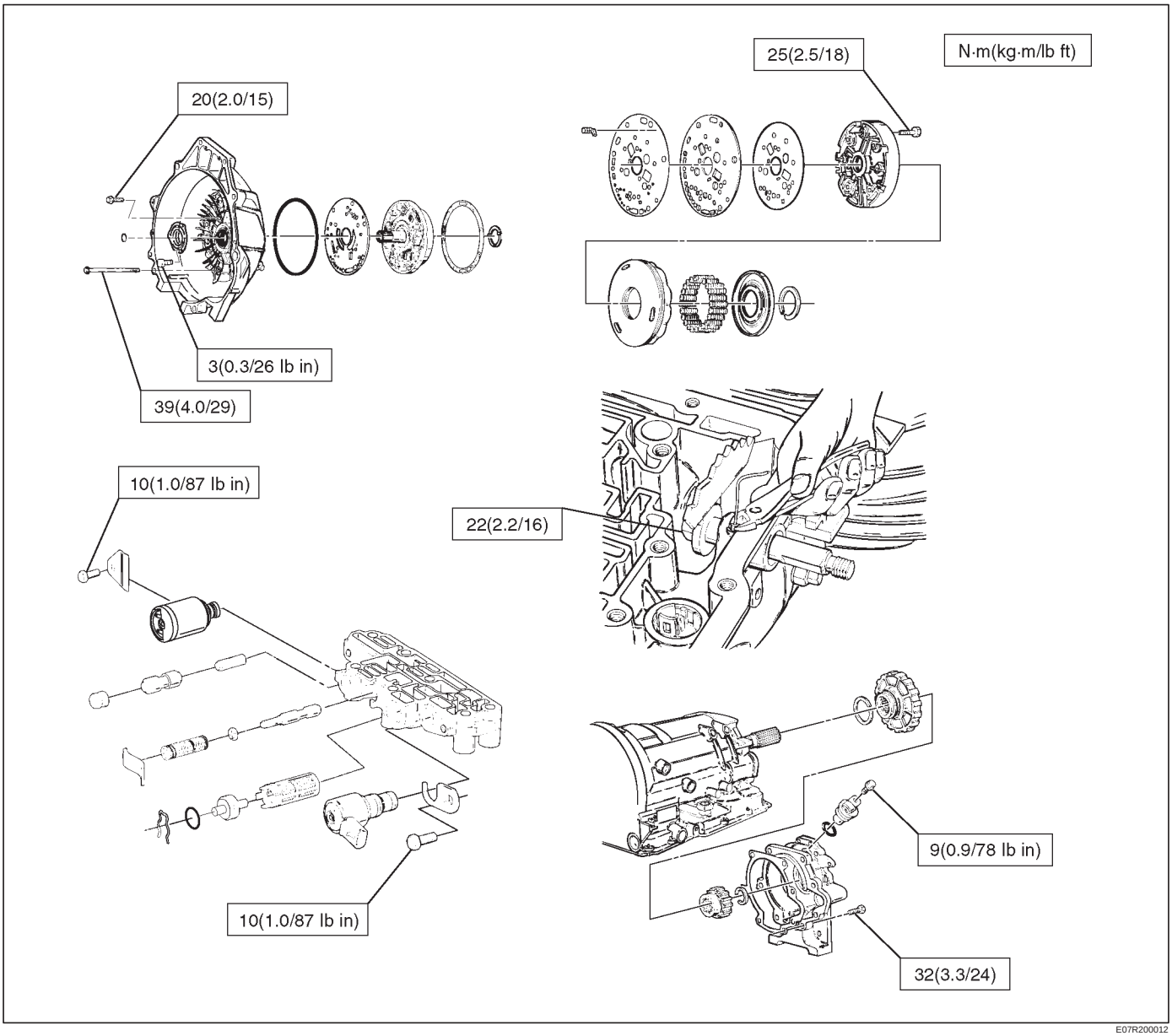
N·m(kg·m/lb ft)
25(2.5/18)
20(2.0/15)
3(0.3/26 lb in)
39(4.0/29)
10(1.0/87 lb in)
22(2.2/16)
10(1.0/87 lb in)
9(0.9/78 lb in)
32(3.3/24)

E07R200012

Special Tools

ILLUSTRATION	TOOL NO. TOOL NAME
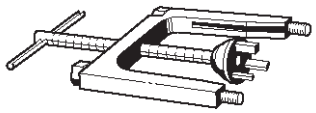 901RT071	5–8840–0501–0 (J–23075) Spring compressor (For servo piston)
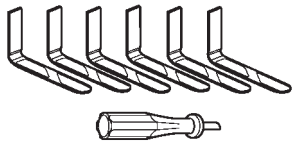 901RX007	5–8840–2258–0 (J–38450–A) Third clutch snap ring compressor
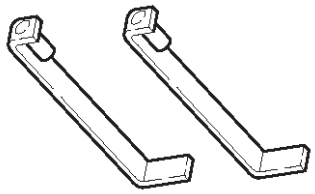 901RT073	5–8840–2259–0 (J–23075–12) Third clutch spring compressor adapter (Use with 5–8840–0501–0 (J–23075))
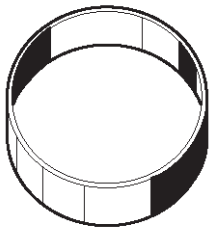 901RT074	5–8840–2260–0 (J–23084) Third clutch piston installer
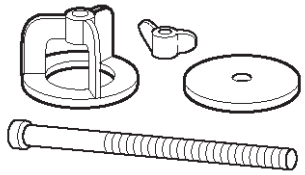 901RT075	5–8840–0195–0 (J–23327) Third clutch spring compressor
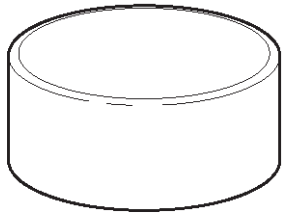 901RT076	5–8840–2261–0 (J–23080–A) Second clutch piston installer

ILLUSTRATION	TOOL NO. TOOL NAME
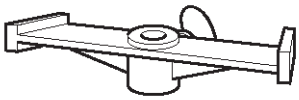 901RT077	5–8840–2262–0 (J–23085–A) Selective washer gauging tool
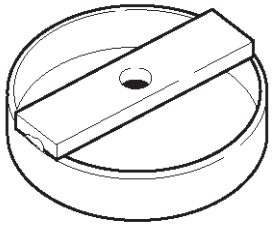 901RT078	5–8840–2263–0 (J–23327–90) Fourth clutch spring compressor (Use with 5–8840–0195–0 (J–23327))
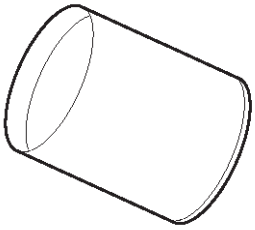 901RT079	5–8840–2264–0 (J–38553) 3/4 Accumulator piston fitter
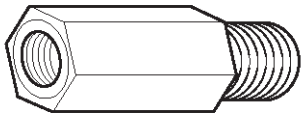 901RT080	5–8840–2403–0 (J–41096) Cover remover (Use with 5–8840–2266–0 (J–38584))
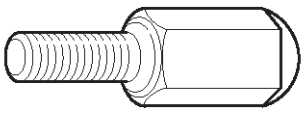 901RT081	5–8840–2266–0 (J–38584) Slide hammer adapter (Use with 5–8840–0019–0 (J–23907))
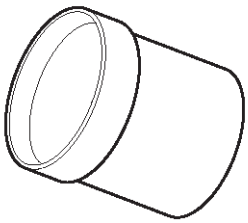 901RT082	5–8840–2267–0 (J–38554) Fourth clutch piston fitter

ILLUSTRATION	TOOL NO. TOOL NAME
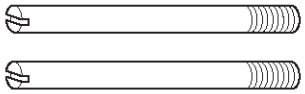 901RT083	5–8840–2268–0 (J–38588) Guide pins; adapter case to main case
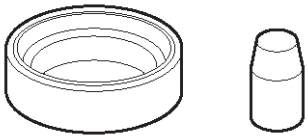 901RT084	5–8840–2269–0 (J–38555) Overrun clutch piston seal installer set
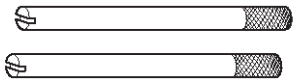 901RT085	5–8840–2270–0 (J–3387–2) Guide pins; gasket and transfer plate to valve body
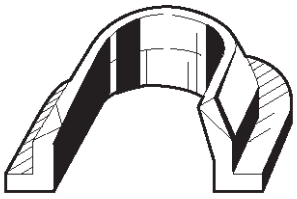 901RT086	5–8840–2271–0 (J–25022) Turbine shaft puller (Use with 5–8840–0618–0 (J–24773–1))
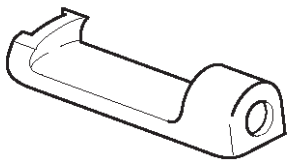 901RT087	5–8840–0196–0 (J–23129) Oil seal remover (Use with 5–8840–2266–0 (J–38584) and 5–8840–0019–0 (J–23907))
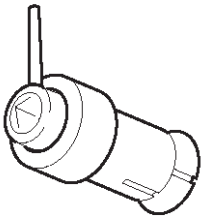 901RT088	5–8840–2272–0 (J–38557) Oil pump centering tool

ILLUSTRATION	TOOL NO. TOOL NAME
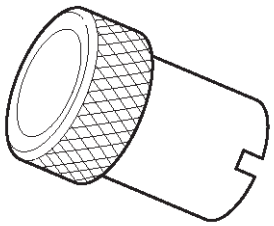 901RT089	5–8840–2273–0 (J–23082–01) Oil pump rotation tool
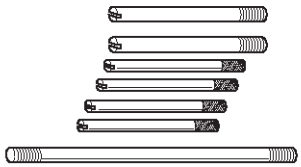 901RT090	5–8840–0022–0 (J–25025–B) Guide pins; valve body to main case
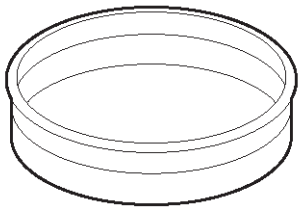 901RT091	5–8840–2274–0 (J–38428) Servo piston fitter
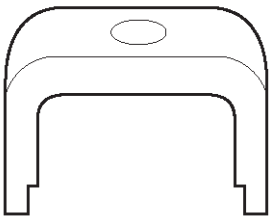 901RT092	5–8840–2275–0 (J–23327–91) Overrun clutch spring compressor
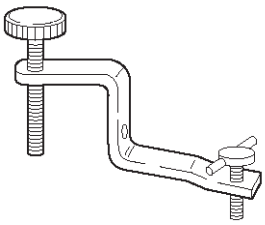 901RT093	5–8840–2277–1 (J–38559–A) 3/4 Accumulator piston cover compressor
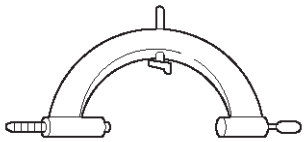 901RT094	5–8840–2278–0 (J–8763–02) Holding fixture

ILLUSTRATION	TOOL NO. TOOL NAME
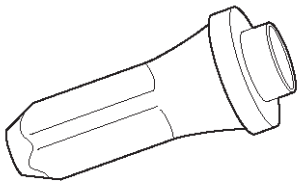 901RT095	5–8840–2282–0 (J–36797) A/T extension housing oil seal installer (Inside)
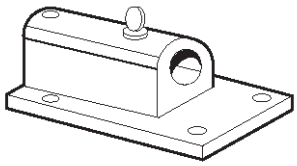 901RT096	5–8840–0003–0 (J–3289–20) Holding fixture base
 901RT097	5–8840–0004–0 Pressure gauge
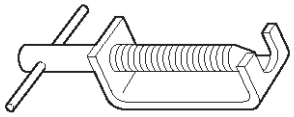 901RT098	5–8840–0618–0 (J–24773–1) End play fixture (Use with 5–8840–2271–0 (J–25022))
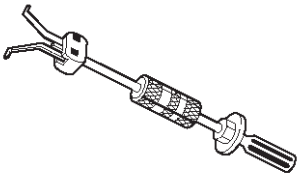 901RT099	5–8840–0019–0 & 5–8840–2000–0 (J–23907) Slide hammer

4L30–E Parts List

Case And Associated Parts

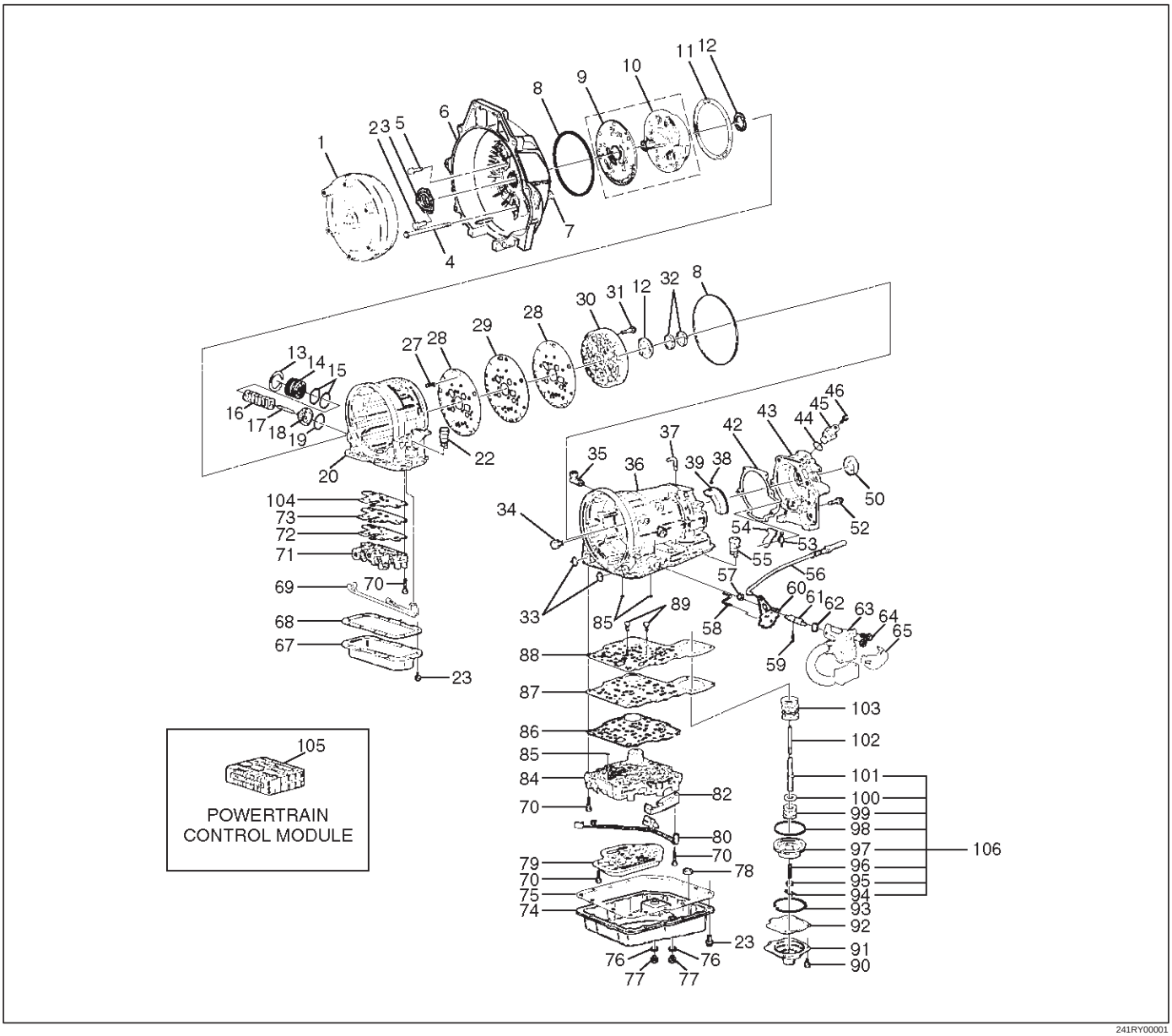

241RY00001

Legend

(1) Torque Converter
(2) Screw, Seal Ring Assembly
(3) Seal Ring Assembly, Converter Housing
(4) Screw, Converter Housing/Main Case
(5) Screw, Converter Housing/Oil Pump
(6) Housing, Converter
(7) Plug, Converter Housing
(8) Seal, O–Ring
(9) Wear Plate, Oil Pump Body
(10) Pump Assembly, Oil
(11) Gasket
(12) Washer, Thrust Selective
(13) Ring, Snap
(14) Cover, 3–4 Accumulator Piston
(15) Seal, O–Ring, 3–4 Accumulator
(16) Spring, 3–4 Accumulator Piston
(17) Pin, 3–4 Accumulator Piston
(18) Piston, 3–4 Accumulator
(19) Ring, 3–4, Accumulator Piston
(20) Case, Adapter
(22) Connector, Electrical/Adapter Case
(23) Screw, Pan
(27) Restrictor, Oil
(28) Gasket, Transfer Plate/Adapter
(29) Plate, Transfer Adapter/Center Support
(30) Support Assembly, Center
(31) Screw, Center Support
(32) Ring, Oil Seal
(33) Seal, O–Ring Main Case
(34) Fitting, Cooler
(35) Fitting Assembly, Cooler
(36) Case, Main
(37) Breather, Pipe

(38) Seal, O–Ring
(39) Reservoir
(42) Gasket, Extension Case
(43) Extension Assembly
(44) Seal, O–Ring/Speed Sensor
(45) Sensor Assembly, Speed
(46) Screw, Speed Sensor
(50) Seal, Extension Assembly
(52) Screw, Extension/Main Case
(53) Spring, Parking Pawl Lock
(54) Pawl, Parking Lock
(55) Connector, Electrical/Main Case
(56) Actuator Assembly, Parking Lock
(57) Nut, Parking Lock Lever
(58) Link, Manual Valve
(59) Pin, Spring
(60) Lever, Parking Lock and Range Selector
(61) Shaft, Selector
(62) Seal, Selector Shaft
(63) Mode Switch Assembly
(64) Screw, Mode Switch
(65) Shield, Mode Switch
(67) Pan, Bottom/Adapter Case
(68) Gasket, Bottom Pan/Adapter Case
(69) Harness Assembly, Adapter Case
(70) Screw, Valve Body
(71) Valve Body Assembly, Adapter Case
(72) Gasket, Adapter Valve Body
(73) Plate, Adapter Valve Body/Transfer
(74) Pan, Bottom/Main Case
(75) Gasket, Bottom Pan/Main Case
(76) Gasket, Oil Drain or Overfill Screw
(77) Screw, Oil Drain or Overfill
(78) Magnet, Chip Collector
(79) Filter Oil
(80) Harness Assembly, Main Case
(82) Roller and Spring Assembly, Manual Detent
(84) Valve Body Assembly, Main Case
(85) Ball, Check
(86) Gasket, Main V.B./Transfer Plate
(87) Plate, Main V.B./Transfer
(88) Gasket, Transfer/Main Case
(89) Screw, Transfer Plate on V.B.
(90) Screw, Servo Cover
(91) Cover, Servo Piston
(92) Gasket, Cover/Servo Piston
(93) Ring, Retaining Servo Piston
(94) Clip, Servo Piston
(95) Nut, Servo Screw
(96) Screw, Servo Piston
(97) Piston, Servo
(98) Seal, Ring/Servo Piston
(99) Spring, Cushion/Servo Piston
(100) Seat, Cushion Spring
(101) Sleeve, Servo Piston Adjust
(102) Rod, Apply/Servo Piston
(103) Spring, Return/Servo Piston
(104) Gasket, Adapter Case/Transfer Plate
(105) Powertrain Control Module
(106) Servo Piston Assembly

Pump Assembly

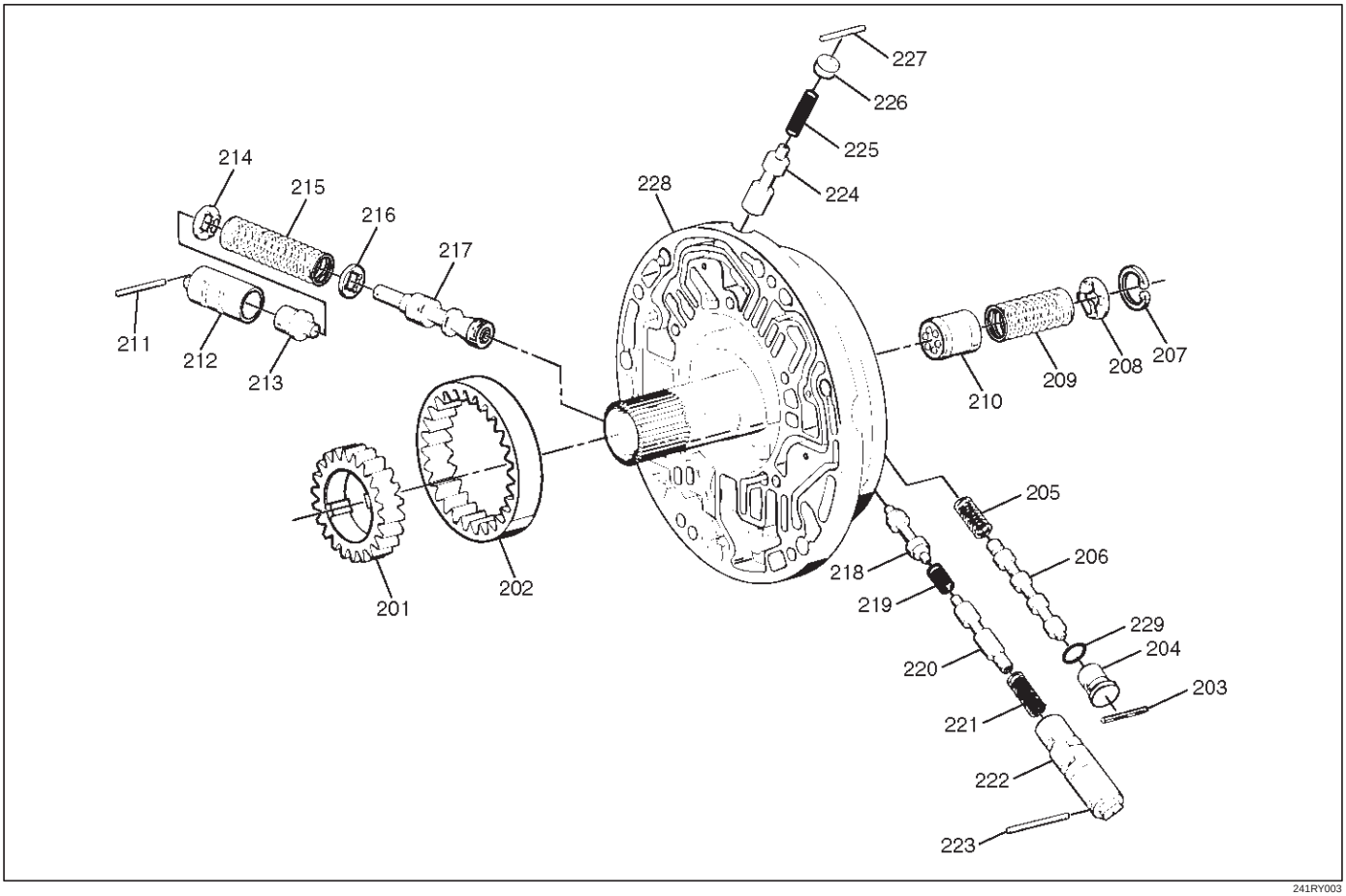

241RY003

Legend

(201) Gear, Oil Pump Drive
(202) Gear, Oil Pump Driven
(203) Pin, Plug Converter Clutch Control
(204) Plug, Converter Clutch Control Valve
(205) Spring, Converter Clutch Control Valve
(206) Valve, Converter Clutch Control
(207) Ring, Snap/Throttle Signal Accumulator
(208) Seat, Spring/Throttle Signal Accumulator
(209) Spring, Throttle Signal Accumulator
(210) Piston, Throttle Signal Accumulator
(211) Pin, Boost Valve Sleeve
(212) Sleeve, Boost Valve
(213) Valve, Boost
(214) Seat, Spring/Pressure Regulator Valve
(215) Spring, Pressure Regulator Valve
(216) Seat, Spring/Pressure Regulator Valve
(217) Valve, Pressure Regulator
(218) Isolator Valve
(219) Spring, Isolator
(220) Valve, Converter Clutch Regulator
(221) Spring, Converter Clutch Regulator
(222) Sleeve, Converter Clutch Regulator
(223) Pin, Retainer Sleeve
(224) Valve, Enable
(225) Spring, Enable Valve
(226) Spring Guide, Enable Valve
(227) Pin, Enable Valve
(228) Pump Assembly
(229) Seal Ring, Plug

Valve Body Assemblies

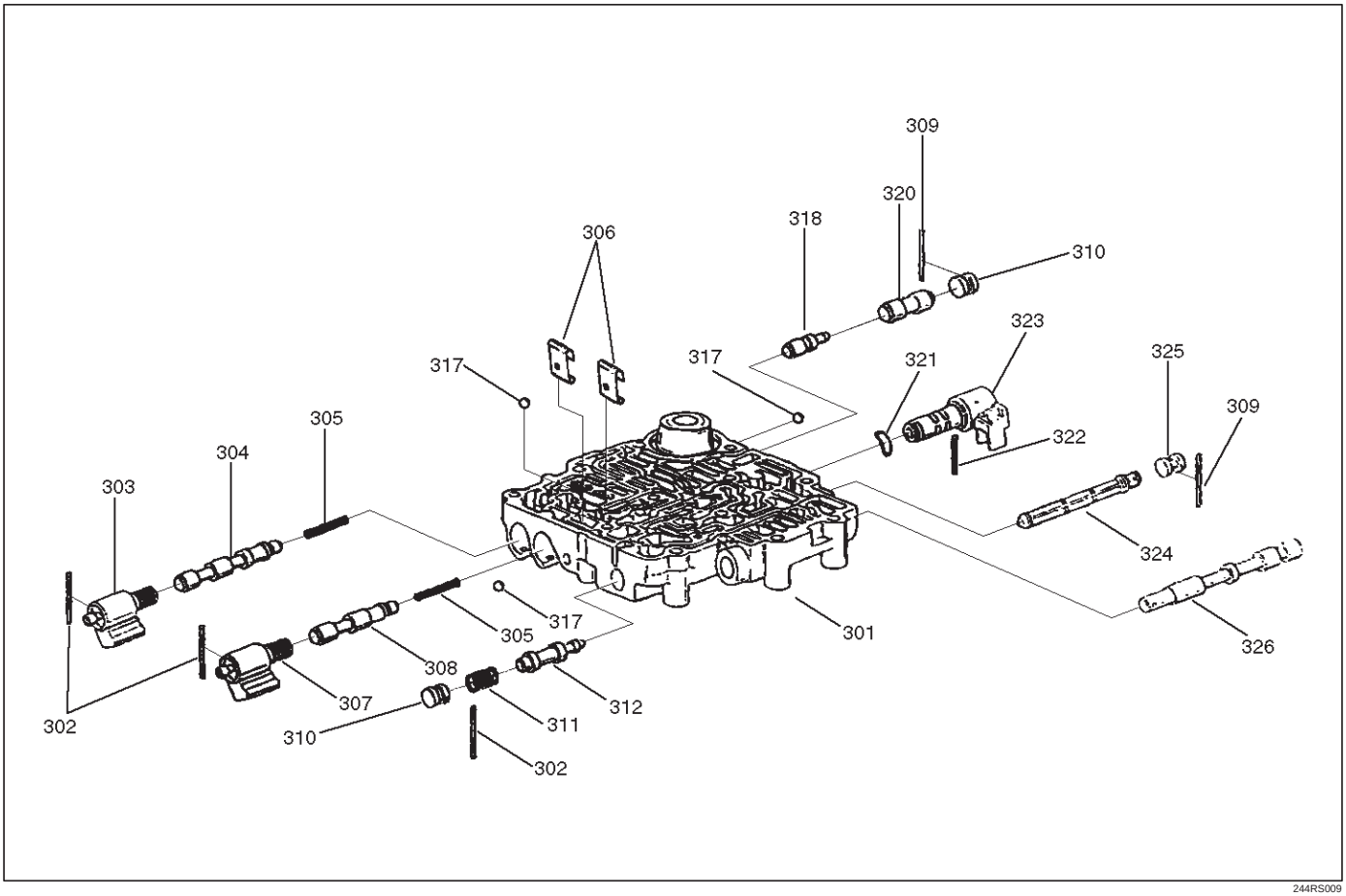

244RS009

Legend

(301) Body, Valve Main Case
(302) Pin, Spring
(303) Solenoid Assembly, ON/OFF N.C.
(304) Valve, 1–2 and 3–4 Shift
(305) Spring, 1–2 and 3–4 (2–3) Shift
(306) Retainer, Valve
(307) Solenoid Assembly, ON/OFF N.O.
(308) Valve, 2–3 Shift
(309) Pin, Spring
(310) Plug, Valve Bore
(311) Spring, Valve Low Pressure Control
(312) Valve, Low Pressure Control
(317) Ball, Check
(318) Valve, 1–2 Accumulator Control
(320) Valve, 1–2 Accumulator
(321) Washer, Waved PWM Solenoid
(322) Pin, Solenoid PWM
(323) Solenoid Assembly, Band Control PWM
(324) Screen Assembly, PWM Solenoid
(325) Plug, Screen
(326) Valve, Manual

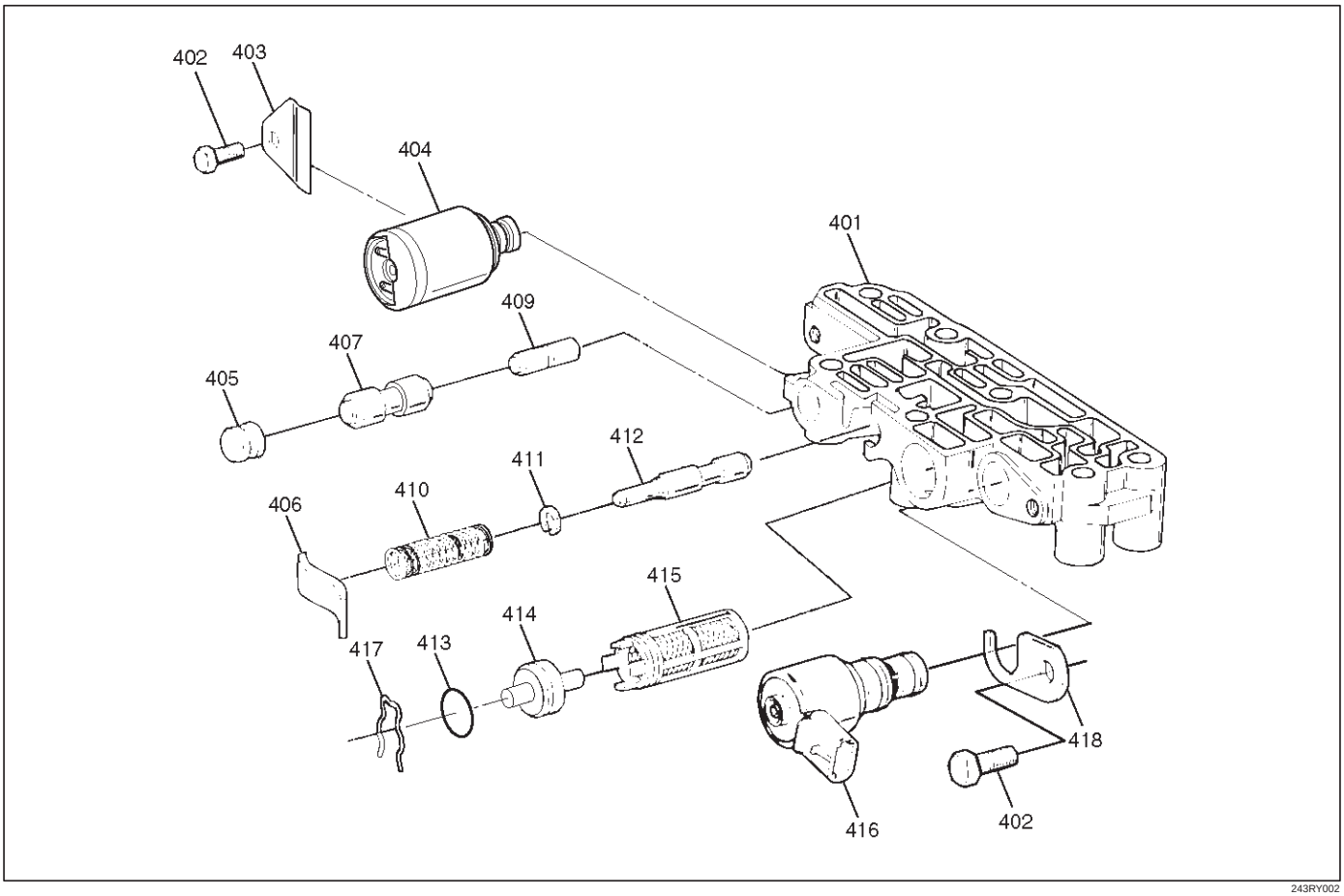

243RY002

Legend

(401) Body, Valve/Adapter Case
(402) Screw, Solenoid Force Motor
(403) Retainer, Force Motor
(404) Solenoid, Force Motor
(405) Plug, 3–4 Accumulator
(406) Plug and Spring Retainer
(407) Valve, 3–4 Accumulator
(409) Valve, 3–4 Accumulator Control
(410) Spring, Feed Limit Valve
(411) Ring, Retainer
(412) Valve, Feed Limit
(413) Seal, O–Ring Plug Filter
(414) Plug, Screen
(415) Screen Assembly, Force Motor
(416) Solenoid, Torque Converter Clutch, PWM
(417) Retainer, Screen Plug
(418) Bracket, PWM Solenoid

Overdrive Internal Components

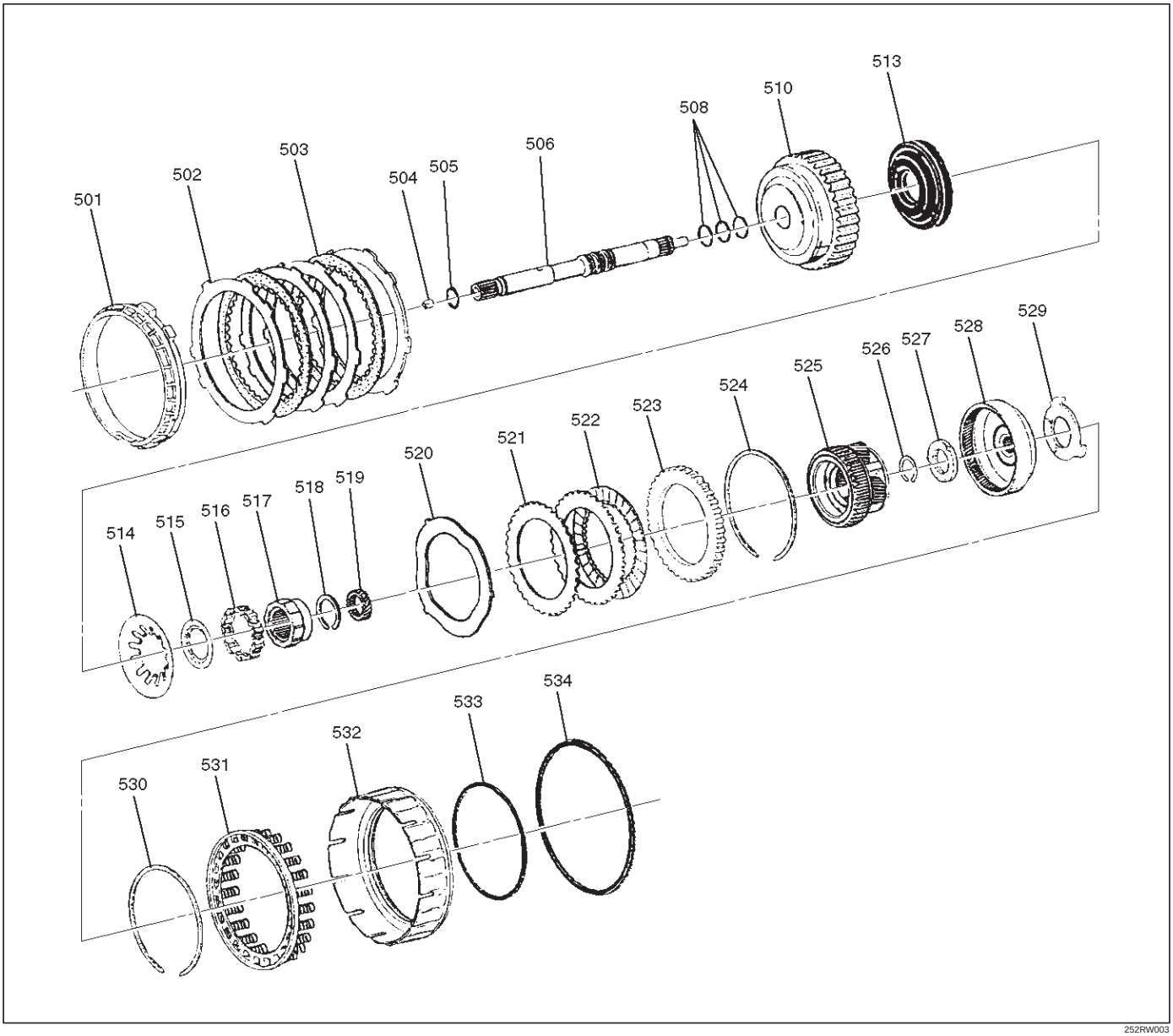

252RW003

Legend

(501) Retainer, 4th Clutch
(502) Plate, 4th Clutch (Steel)
(503) Plate Assembly, 4th Clutch (Lined)
(504) Retainer And Ball Assembly, Check Valve
(505) Seal, O–Ring/Turbine Shaft
(506) Shaft, Turbine
(508) Ring, Oil Seal/Turbine Shaft
(510) Housing, Overrun Clutch
(513) Piston, Overrun Clutch
(514) Spring, Overrun Clutch Release
(515) Retainer, Release Spring/Overrun Clutch
(516) Roller Assembly, Overdrive Clutch
(517) Cam, Overdrive Roller Clutch
(518) Ring, Snap/Overrun Clutch Hub
(519) Gear, Overdrive Sun
(520) Plate, Waved/Overrun Clutch
(521) Plate, Overrun Clutch (Steel)
(522) Plate Assembly, Overrun Clutch (Lined)
(523) Plate, Backing/Overrun Clutch
(524) Ring, Snap/Overrun Clutch Housing
(525) Carrier Assembly, Overdrive Complete
(526) Ring, Snap/Turbine Shaft/Carrier
(527) Bearing Assembly, Thrust
(528) Gear, Overdrive Internal
(529) Washer, Thrust/Internal Gear/Support
(530) Ring, Snap/Adapter/4th Clutch Spring
(531) Retainer and spring assembly, 4th clutch
(532) Piston, 4th Clutch
(533) Seal, 4th Clutch Piston (Inner)
(534) Seal, 4th Clutch Piston (outer)

Internal Components

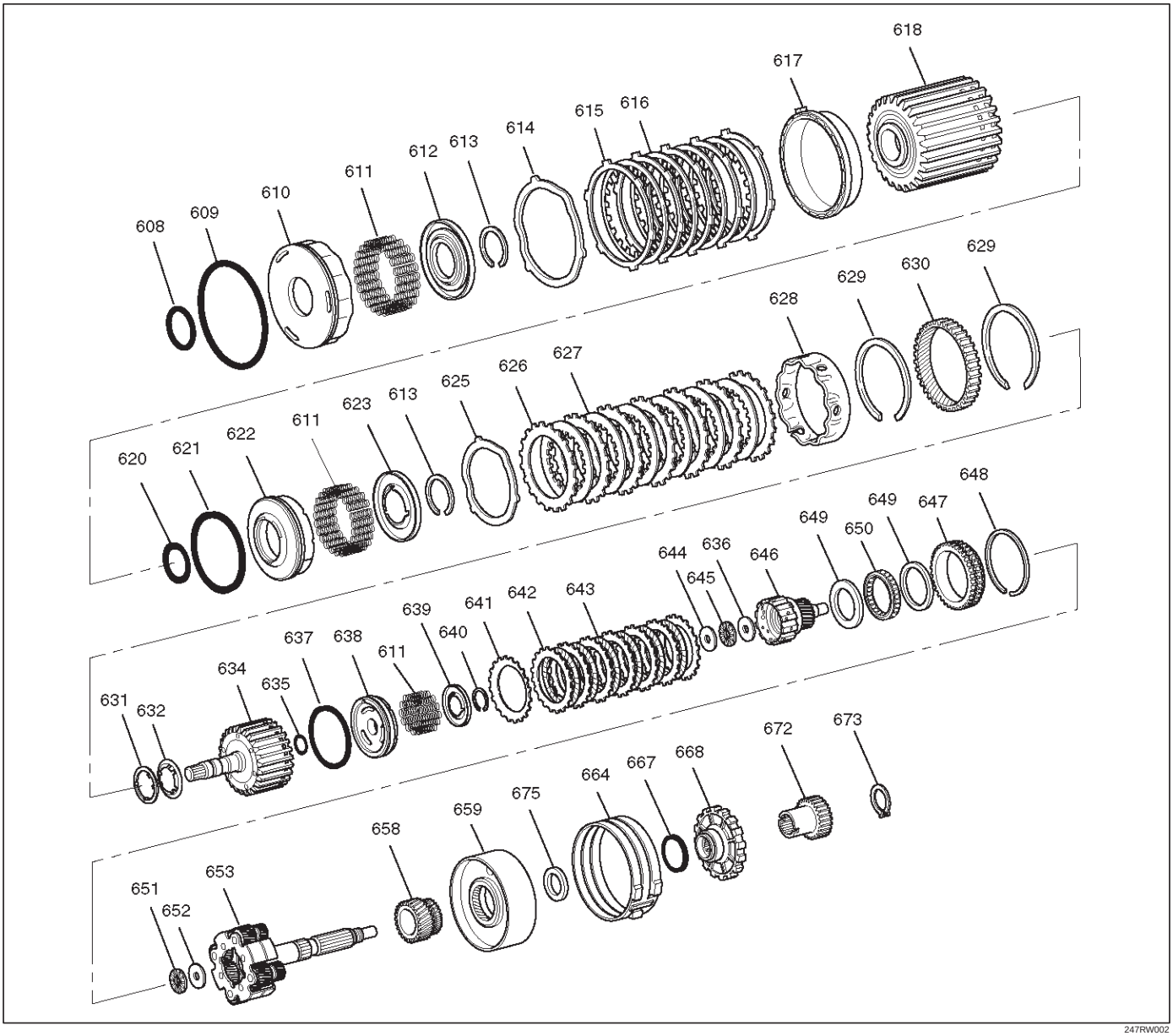

247RW002

Legend

(608) Seal, Reverse Clutch Piston (Inner)
(609) Seal, Reverse Clutch Piston (Outer)
(610) Piston, Reverse Clutch
(611) Spring, Piston Clutch
(612) Seat, Spring/Reverse Clutch
(613) Ring, Retaining
(614) Plate, Waved/Reverse Clutch
(615) Plate, Reverse Clutch (Steel)
(616) Plate Assembly, Reverse Clutch (Lined)
(617) Plate, Reverse Clutch Pressure/Selective
(618) Drum Assembly, 2nd Clutch
(620) Seal, 2nd Clutch Piston (Inner)
(621) Seal, 2nd Clutch Piston (Outer)
(622) Piston, 2nd Clutch
(623) Seat, Spring/2nd Clutch
(625) Plate, Waved/2nd Clutch
(626) Plate, 2nd Clutch (Steel)
(627) Plate Assembly, 2nd Clutch (Lined)
(628) Spacer, 2nd Clutch
(629) Ring, Retaining
(630) Gear, Ring
(631) Washer, Thrust/2nd Clutch/3rd Clutch
(632) Thrust Washer, Clutch Hub
(634) Drum Assembly, 3rd Clutch
(635) Seal, 3rd clutch piston (Inner)
(636) Washer, Retaining
(637) Seal, 3rd Clutch Piston (Outer)
(638) Piston 3rd Clutch
(639) Seat, Spring/3rd Clutch
(640) Ring, Retaining
(641) Plate, Spring Cushion/3rd Clutch
(642) Plate, 3rd Clutch (Steel)
(643) Plate Assembly, 3rd Clutch (Lined)
(644) Washer, Thrust/Input Sun
(645) Bearing, Input Shaft/Gear Assembly

(646) Gear Assembly, Input Sun
(647) Race Assembly, Sprag
(648) Ring, Retaining/Sprag
(649) Ring, Retaining
(650) Cage Assembly, Sprag
(651) Bearing, Output Shaft/Input Sun
(652) Washer, Output Shaft/Input Sun
(653) Carrier Assembly, Planetary
(658) Gear, Reaction Sun
(659) Drum, Reaction Sun
(664) Band Assembly, Brake
(667) Seal, Ring/Wheel Parking Lock
(668) Wheel, Parking Lock
(672) Wheel, Speed
(673) Ring, Retaining
(675) Bearing, Thrust Assembly

Center Support Assembly

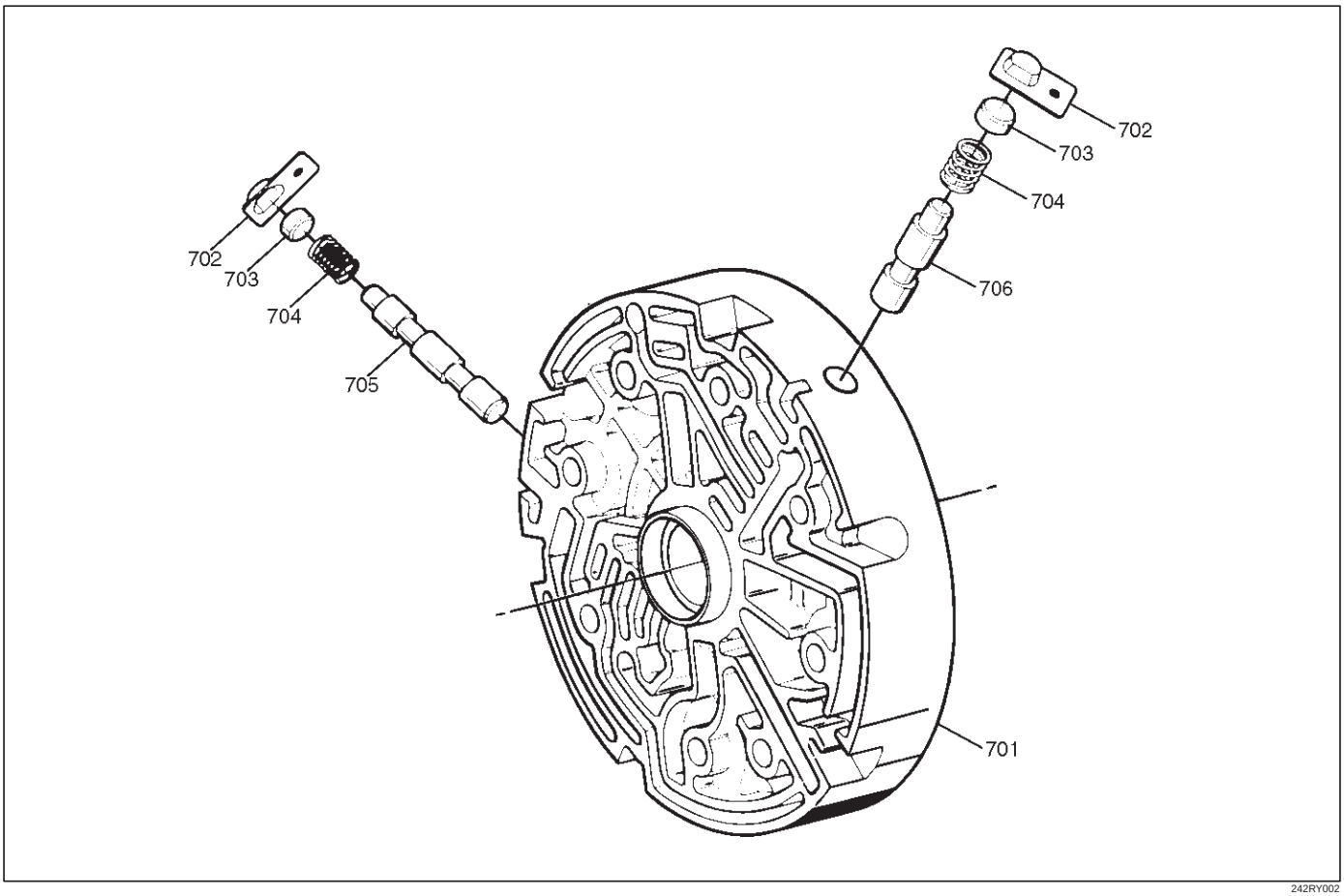

242RY002

Legend

(701) Center Support
(702) Retainer Plate
(703) Plug, Lockout
(704) Spring, Lockout
(705) Valve, Overrun Lockout
(706) Valve, Reverse Lockout Control

SECTION 7A

AUTOMATIC TRANSMISSION (AW30-40LE)

CONTENTS

GENERAL DESCRIPTION . . . 7A–3
CONSTRUCTION . . . 7A–3
ELECTRONIC CONTROL COMPONENTS . . . 7A–4
TRANSMISSION CONTROL MODULE (TCM) . . . 7A–5
CONTROL SYSTEM DIAGRAM . . . 7A–6
CONTROL AND FUNCTIONS . . . 7A–7
MAJOR INPUT/OUTPUT COMPONENTS . . . 7A–9
LOCATION OF CLUTCH, BRAKE ONE-WAY CLUTCH AND SOLENOID . . . 7A–10
OPERATION OF CLUTCH, BRAKE AND ONE-WAY CLUTCH . . . 7A–11
SPEED CHANGE AND LOCK-UP PATTERN . . . 7A–11
OVERDRIVE AND LOCK-UP OPERATING CONDITIONS . . . 7A–12
DIAGNOSIS . . . 7A–13
BASIC TROUBLESHOOTING . . . 7A–13
SELF-DIAGNOSIS . . . 7A–14
DIAGNOSIS WITH TECH2 . . . 7A–17
TECH2 CONNECTION . . . 7A–18
TECH2 OPERATING FLOW CHART (START UP) . . . 7A–19
TRANSMISSION DATA . . . 7A–21
TCC DATA . . . 7A–22
INTERMITTENT CONDITIONS . . . 7A–23
IDENTIFICATION OF TRANSMISSION CONTROL MODULE (TCM) . . . 7A–24
DIAGNOSTIC TROUBLE CODES (DTC) CHECK . . . 7A–25
WIRING DIAGRAM . . . 7A–52
CONNECTOR LIST . . . 7A–54
TROUBLESHOOTING CHART . . . 7A–56
MANUAL SHIFTING TEST . . . 7A–62
STALL TEST . . . 7A–63
TIME LAG TEST . . . 7A–64
HYDRAULIC TEST . . . 7A–65
ROAD TEST . . . 7A–66
SHIFT POINT CHART AND LOCK-UP POINT CHART . . . 7A–69
TCM VOLTAGE CHECK . . . 7A–71
TCM STANDARD VOLTAGE . . . 7A–72
ON-VEHICLE SERVICE . . . 7A–75
TRANSIMISSION FLUID LEVEL AND CONDITION . . . 7A–75
ATF REPLACEMENT . . . 7A–75
NEUTRAL START SWITCH INSPECTION . . . 7A–76
BRAKE SIGNAL INSPECTION . . . 7A–77
VEHICLE SPEED SENSOR INSPECTION . . . 7A–77
INPUT AND OUTPUT REVOLUTION SENSOR INSPECTION . . . 7A–77
PATTERN SELECT SWITCH INSPECTION . . . 7A–78
OVERDRIVE OFF SWITCH INSPECTION . . . 7A–78
SOLENOID INSPECTION . . . 7A–78
THROTTLE POSITION SENSOR INSPECTION . . . 7A–79
ATF TEMPERATURE SENSOR INSPECTION . . . 7A–79
SELECTOR LEVER . . . 7A–80
TRANSMISSION CONTROL MODULE (TCM) . . . 7A–81
SHIFT SOLENOID AND LOCK-UP SOLENOID . . . 7A–83

VALVE BODY ASSEMBLY AND PRESSERE CONTOROL SOLENOID 7A–84
TRANSMISSION REMOVAL AND INSTALLATION. 7A–86
UNIT REPAIR 7A–91
DISASSEMBLY OF MAJOR COMPONENTS 7A–91
DISASSEMBLY, INSPECTION AND REASSEMBLY OF MINOR COMPONENTS. 7A–107
OIL PUMP 7A–108
OD PLANETARY GEAR AND OD DIRECT CLUTCH ASSEMBLY (C-0) 7A–114
OD SUPPORT ASSEMBLY 7A–126
DIRECT CLUTCH ASSEMBLY (C-2) 7A–133
FORWARD CLUTCH ASSEMBLY (C-1) 7A–141
FRONT PLANETARY GEAR 7A–150
PLANETARY SUN GEAR AND NO.1 ONE–WAY CLUTCH 7A–153
SECOND BRAKE ASSEMBLY (B–2). 7A–158
REAR PLANETARY GEAR ASSEMBLY AND OUTPUT SHAFT. 7A–163
FIRST AND REVERSE BRAKE (B–3) 7A–171
TRANSMISSION CASE 7A–177
TORQUE CONVERTER. 7A–181
REASSEMBLY OF MAJOR COMPONENTS 7A–182
MAIN DATA AND SPECIFICATIONS 7A–207
GENERAL SPECIFICATIONS 7A–207
TORQUE SPECIFICATIONS 7A–208
SPECIAL TOOLS 7A–211

CAUTION: When fasteners are removed, always reinstall them at a the same location from which they were removed. If a fastener needs to be replaced, use the correct part number fastener for that application. If the correct part number fastener is not available, a fastener of equal size and strength (or stronger) may be used. Fasteners that are not reused, and those requiring thread locking compound, will be called out. The correct torque values must be used when installing fasteners that require torque. If the above conditions are not followed, parts or system damage could result.

GENERAL DESCRIPTION

CONSTRUCTION

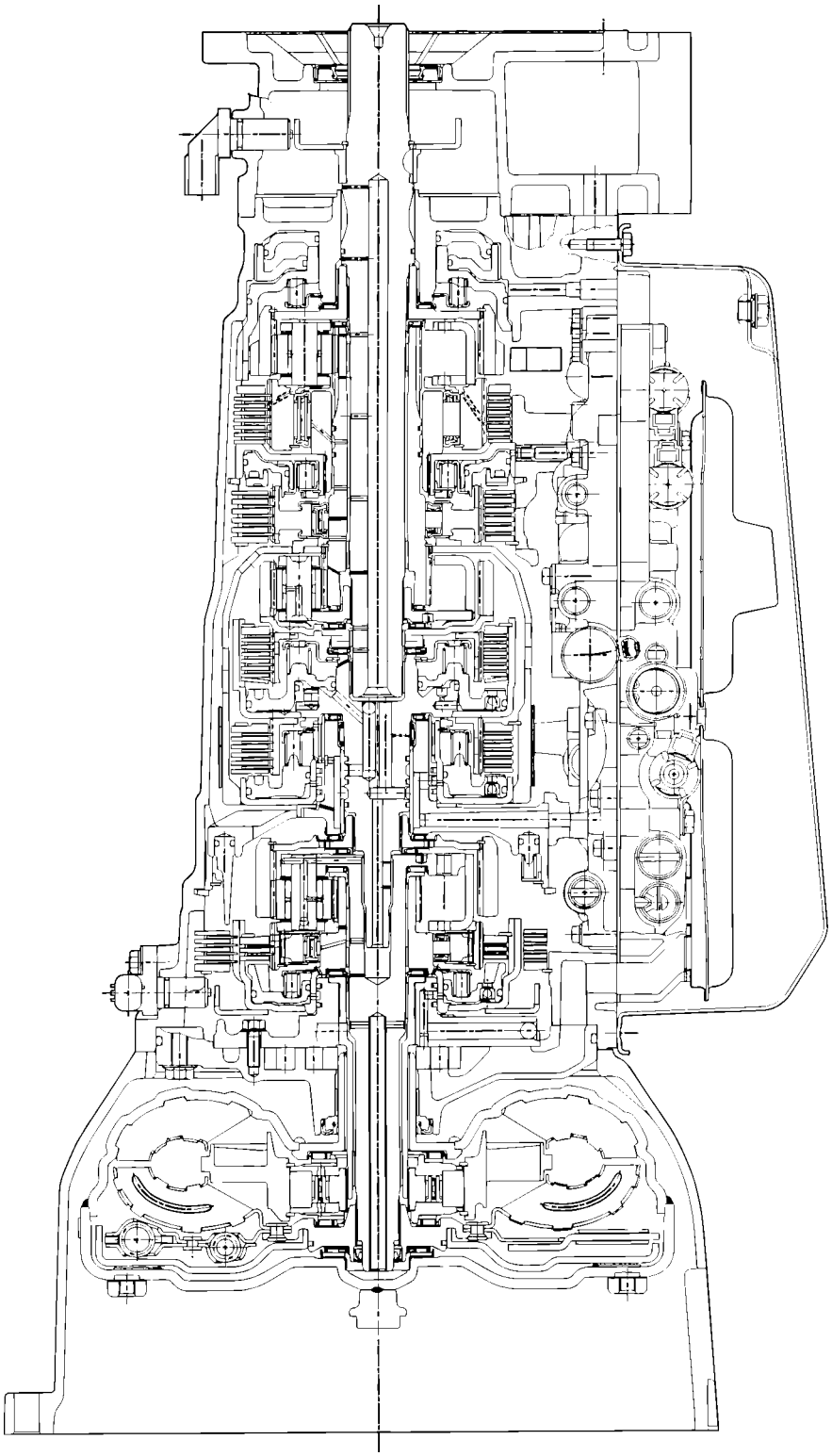

A07RY00001

ELECTRONIC CONTROL COMPONENTS

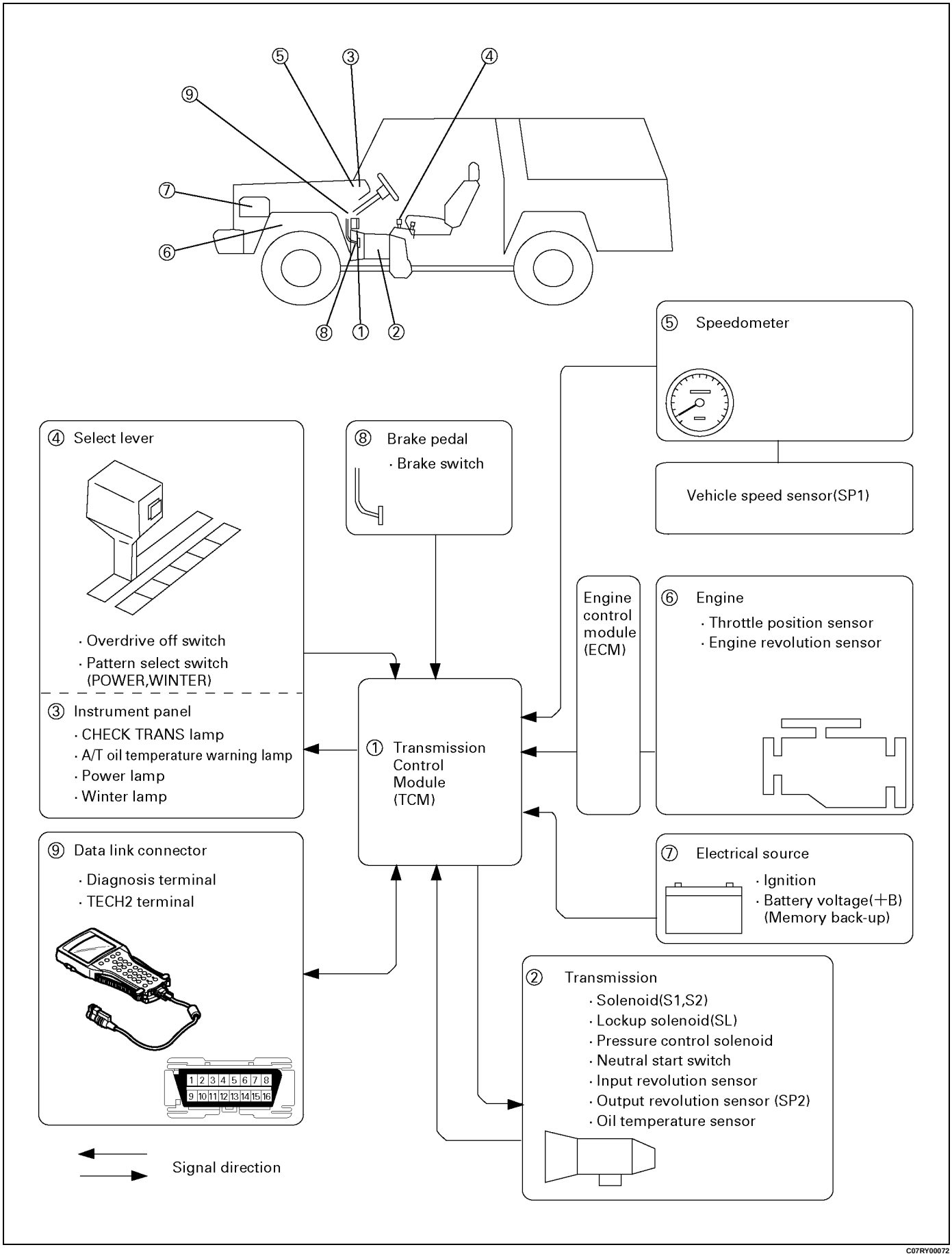

C07RY00072

TRANSMISSION CONTROL MODULE (TCM)

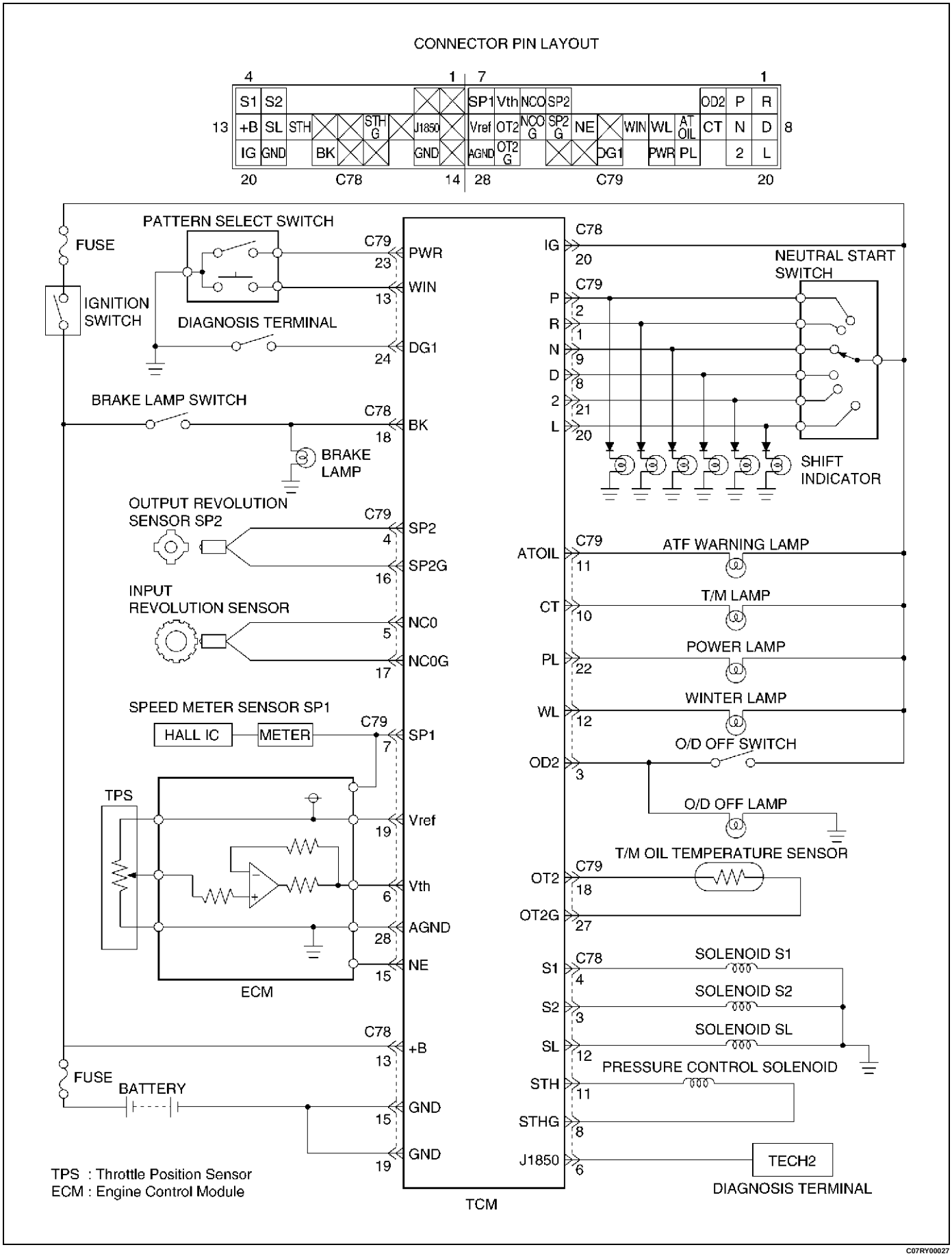

CONTROL SYSTEM DIAGRAM

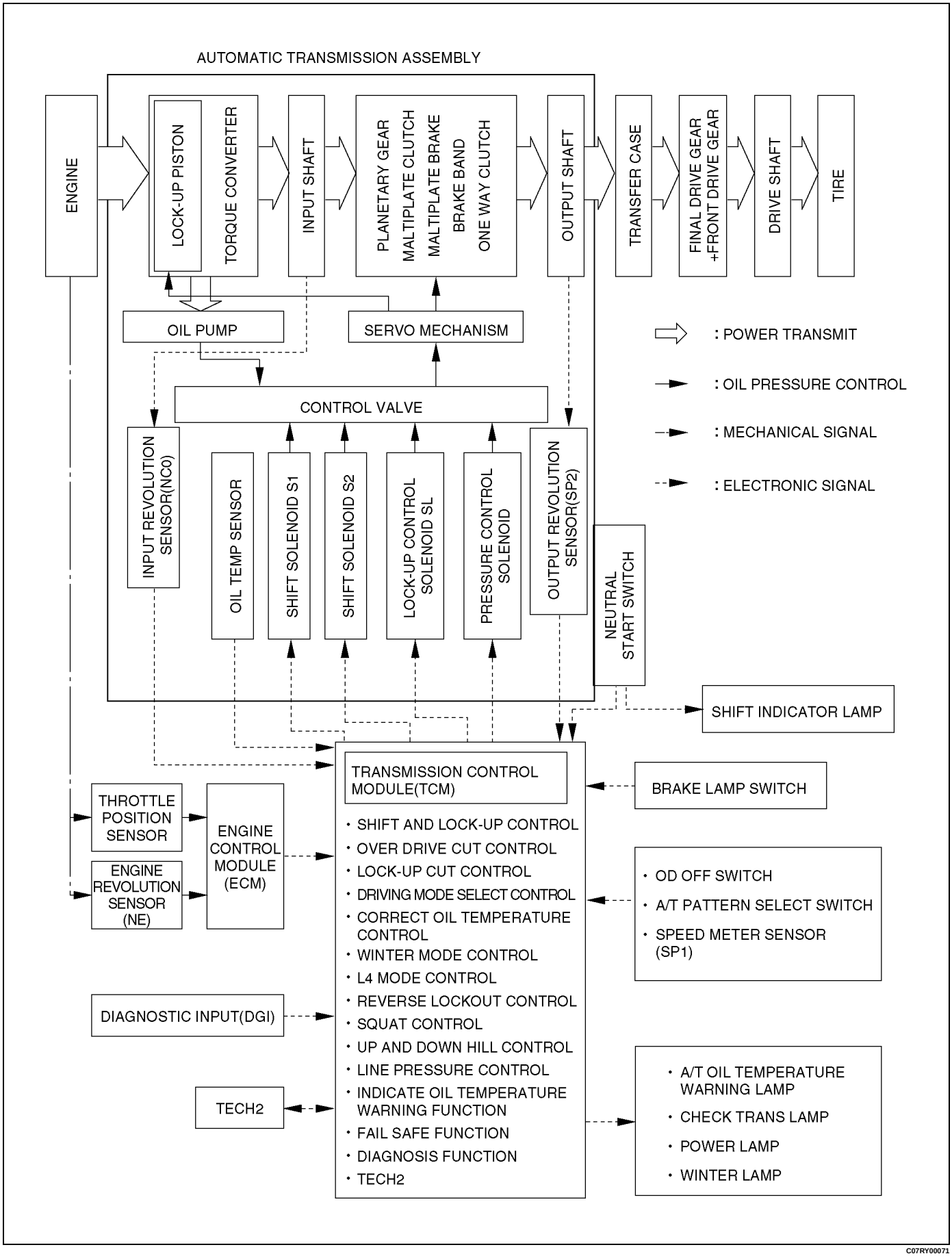

C07RY00071

CONTROL AND FUNCTIONS

Item	Description
Shift and lock-up control	• In D range, speed change point and Lock-up point can be changed by setting pattern selection switch to "POWER", "NORMAL" or "WINTER" mode. • Gear shift position in the conditions made up of transmission shift positions (D.2.L) combined with pattern selection switch (POWER, NORMAL, and WINTER) can be controlled in accordance with vehicle speed and the opening of throttle valve.

Overdrive cut control	• If O/D OFF switch is set on in D range (O/D OFF lamp ON), gear shift to O/D is not effected.
	• Overdrive is released at O/D OFF switch on and high transmission oil temperature (More than 130°C).
	However, to prevent engine over revolution
	  • 4→3 shifting at vehicle speed is less than 118 km/h.
	  • 3→4 shifting at vehicle speed is more than 131 km/h.

Lock-up cut control	• In D range, 3rd or O/D lock-up is conducted in "POWER" or "NORMAL" mode. • In 2, L range, lock-up is off in the whole area. • Lock-up timing is controlled to reduce gear shift shock using kind of gear shift (shift up, etc.) lock-up status at the time of gear shift judgement, gear step and throttle opening after gear shift. • Lock-up is released at brake on or high transmission oil temperature (More than 130°C). • Lock-up is prohibited when idling is defected by throttle position sensor.
Driving mode select control	• The TCM selects a suitable driving mode from the nine kinds for the variety driving condition. i) Economy mode ii) Power mode iii) Winter mode iv) HOT1 mode v) HOT2 mode vi) L4 mode vii) Slope mode (Up slope 1, Up slope 2 and Down slope mode) • The priority of driving mode: Economy < Power < Slope < L4 < Winter < HOT1 < HOT2
Squat control	• When the TCM detects D signal on, the TCM controls 1–3–1 shift by setting a timer, in order to improve the shift feel at N→D.
Line pressure control	• The TCM output current which corresponds to throttle oil pressure to pressure control solenoid based on throttle opening.
Indicate oil temperature warning function	• If the transmission oil temperature sensor senses that transmission oil temperature is greater than 146°C, the TCM turn on A/T OIL TEMP warning lamp. (The warning lamp is turned off, if oil temperature is less than 126°C.)
L4 mode control	• The TCM judges whether the transfer is engaged in high or low based on the ratio rpm data from output speed sensor in the transmission and the rpm data from speed meter sensor to select the shift map.
Up and down hill control	• The TCM judges up and down hill, and change shift pattern based on throttle opening and acceleration.
Correct oil temperature control	• If the temperature exceeds a predetermined value, the TCM selects the high oil temperature shift point for downshifting, thus preventing the oil temperature from rising. (More than 130°C, D range)

Winter mode control	• The TCM controls the vehicle start smoothly on low frictional road like snow road by executing this control. Activate condition: 1. Excluding "2", "L" range 2. Vehicle speed is less than 11 km/h 3. Transmission oil temperature is less than 115°C 4. Throttle opening is less than 8% 5. Excluding winter mode Cancel condition: 1. When winter mode switch is pushed again 2. When either "2" or "L" is detected 3. Ignition switch "OFF" 4. Vehicle speed is more than 34 km/h for 1 second or mode continuously 5. Transmission oil temperature is more than 130°C
Fail-safe function	• When trouble occurs to vehicle sensor and each solenoid, TCM automatically exerts fail-safe control not to spoil driveability. • This control is exerted when sensor or actuator is in trouble, while TCM works normally.
Diagnosis function	• If there is an abnormality in vehicle sensors, each solenoid (S1-S3, STH), or throttle position sensor, "CHECK TRANS" lamp is actuated to warn the drive. But when the abnormality items have been restored to normal, the light does not blink. • Faulty parts are memorized in TCM. If self-diagnosis start signal is inputted, "CHECK TRANS" lamp is blinked and results of diagnosis are indicated. A history of faults remains recorded even when IGN switch is off.
TECH 2	• Output of control data in the TCM • Actuator (Solenoid) operation check • Erasure of trouble code

MAJOR INPUT/OUTPUT COMPONENTS

	Component	Function
Input	Vehicle speed sensor (Speedometer)	Detects the vehicle speed (Back-up sensor of output revolution sensor).
	Output revolution sensor (Transmission)	Detects the vehicle speed.
	Input revolution sensor (Transmission)	Detects the input revolution (O/D direct clutch drum revolution).
	Engine revolution sensor	Detects the engine revolution.
	Throttle position sensor	Detects the throttle opening rate.
	Neutral start switch	Detects the select lever position.
	Pattern select switch	Detects whether the driver has selected "NORMAL", "POWER", or "WINTER" mode.
	Overdrive off switch	Detects whether the driver has selected O/D.
	Brake lamp switch	Detects whether the driver has pressed the brake pedal or not.
	Oil temperature sensor	Detects the oil temperature.
	Diagnostic start switch	Starts self-diagnosis and displays a code for faulty part if any.
Input/Output	Data link connector	When connected with Tech2 or tester, can communicate the data for function check, etc.
Output	Shift solenoid S1, S2	Selects shift point and gear position suited to the vehicle running condition on the basis of TCM output.
	Lock-up control solenoid SL	Control the lock-up clutch suited to the vehicle running condition on the basis of TCM output.
	Pressure control solenoid STH	Adjusts throttle pressure by energizing current of linear pressure control solenoid to prevent the shift shock and to obtain shift smoothly.
	"CHECK TRANS" lamp	When trouble has occurred to throttle position sensor, vehicle speed sensor, or solenoid, "CHECK TRANS" lamp is blinked to warn the driver. If also displays the trouble code.
	A/T OIL TEMP warning lamp	Lights when ATF oil temperature rises. (Turned on at greater than 146°C. Turned off at less than 126°C.
	Power mode lamp	Informs the driver whether the vehicle is in power mode or not.
	Winter mode lamp	Informs the driver whether the vehicle is in winter mode or not.
Computer	Transmission Control Module (TCM)	Based on the signal from each switch and sensors, judges necessary shift point and lock-up operation, and send signal to each solenoid.

LOCATION OF CLUTCH, BRAKE, ONE-WAY CLUTCH AND SOLENOID

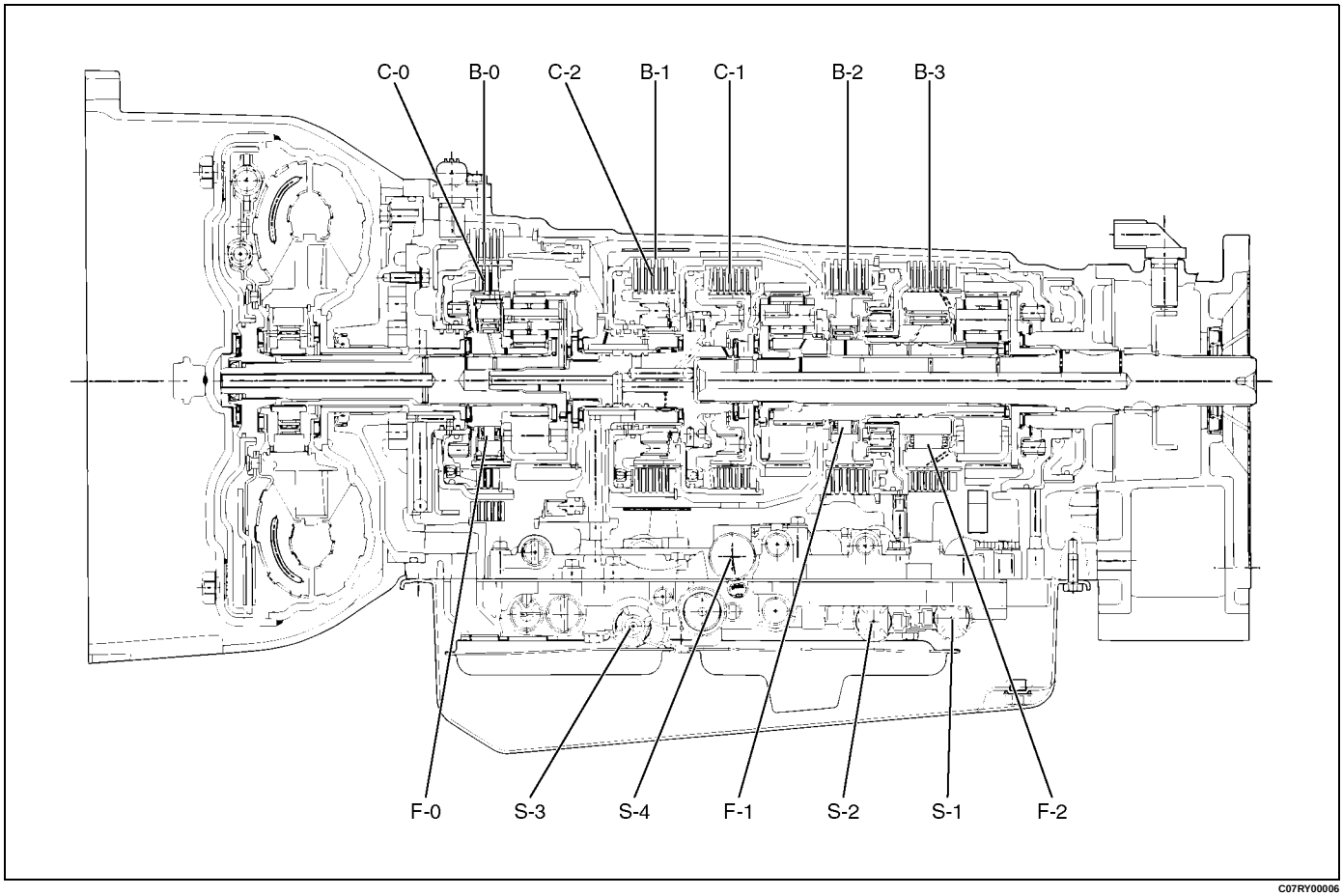

C07RY00006

Legend

C-0: Overdrive direct clutch
C-1: Forward clutch
C-2: Direct clutch
B-0: Overdrive brake
B-1: Second coast brake
B-2: Second brake
B-3: First and reverse brake
F-0: Overdrive one-way clutch
F-1: One-way clutch (No.1)
F-2: One-way clutch (No.2)
S-1: Shift solenoid S1
S-2: Shift solenoid S2
S-3: Lock-up solenoid SL
S-4: Pressure control solenoid STH

OPERATION OF CLUTCH, BRAKE AND ONE-WAY CLUTCH

❍ :Operating ⊗ :Free at coast down ◎ :Operating at Lock-up

Shift lever position	Gear position	C-0	C-1	C-2	B-0	B-1	B-2	B-3	F-0	F-1	F-2	S-1	S-2	S-3
P	Parking	❍										❍		
R	Reverse	❍		❍				❍	❍			❍		
N	Neutral	❍										❍		
D	1st	❍	❍						❍		⊗	❍		
	2nd	❍	❍				❍		❍	⊗		❍	❍	
	3rd	❍	❍	❍			❍		❍				❍	◎
	O/D		❍	❍	❍		❍							◎
2	1st	❍	❍						❍		⊗	❍		
	2nd	❍	❍			❍	❍		❍	❍		❍	❍	
	3rd	❍	❍	❍			❍		❍				❍	
L	1st	❍	❍					❍	❍		❍	❍		
	(1*) 2nd	❍	❍			❍	❍		❍	❍		❍	❍	
	(2*) 3rd	❍	❍	❍			❍		❍				❍	

(1*): Down-shift only in the L range and 2nd gear - no up-shift.
(2*): Down-shift only in the L range and 3rd gear - no up-shift.

SPEED CHANGE AND LOCK-UP PATTERN

If you select a speed range and a lock-up pattern as shown below by specifying respective positions of transmission shift lever, transfer shift lever and pattern select switch, the transmission control computer controls speed change and lock-up operations based on the specified pattern in accordance with the degree of throttle opening and vehicle speed.

Pattern select sw. position	Transmission shift position			
	D		2	L
	Overdrive OFF switch OFF (⊔)	Overdrive OFF switch ON (⊔)		
NORMAL POWER	1st ⇔ 2nd ⇔ [3rd] ⇔ [O/D]	1st ⇔ 2nd ⇔ [3rd] ⇐ [O/D]	1st⇔2nd⇔(3rd)	1st⇐(2nd)⇐(3rd)
WINTER	3rd fixed		—	—

☐: The lock-up operation is available.
( ): Transmission is shifted at high speed to prevent overrun.

OVERDRIVE AND LOCK-UP OPERATING CONDITIONS

The overdrive and lock-up clutch operate if the following conditions are satisfied.

	Overdrive	Lock-up clutch
Transmission shift position	D range	⇐ (1*)
O/D OFF switch	OFF (O/D OFF lamp OFF)	—
Stop lamp switch	—	OFF
Throttle opening	—	Except fully closed
Vehicle speed	About 49 km/h or more	3rd: About 50 km/h or more O/D: About 65 km/h or more

(1*): If transmission oil temperature is more than 130°C, lock-up is inhibit.

DIAGNOSIS

BASIC TROUBLESHOOTING

AW30-40LE transmission, called Electronic Controlled Transmission (ECT), differs from oil pressure control type transmissions in that it is controlled by a microcomputer. Accordingly, its troubleshooting procedure differs also.
Before troubleshooting an ECT, first determine whether the problem is electrical or mechanical. To do this, just refer to the basic troubleshooting flowchart provided below. If the cause is already known, using the basic troubleshooting chart below along with the general troubleshooting chart on the following page should speed the procedure.

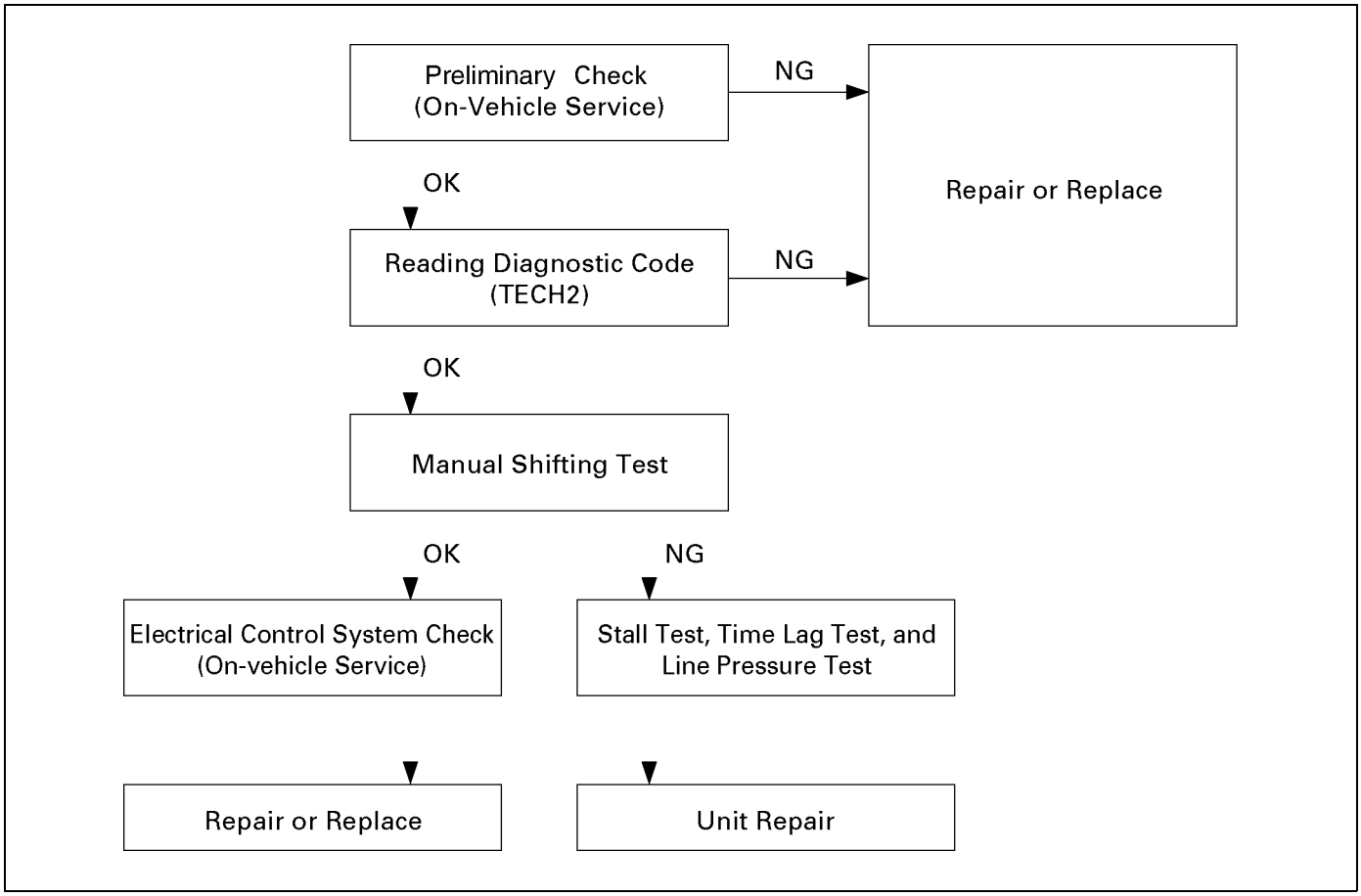

SELF-DIAGNOSIS

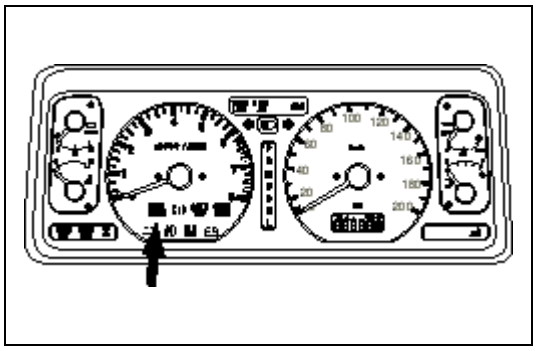

821RY00012

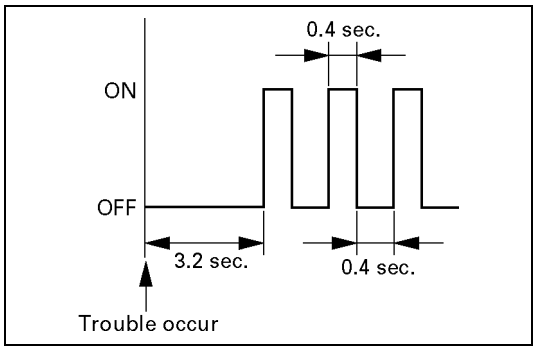

F07LV002

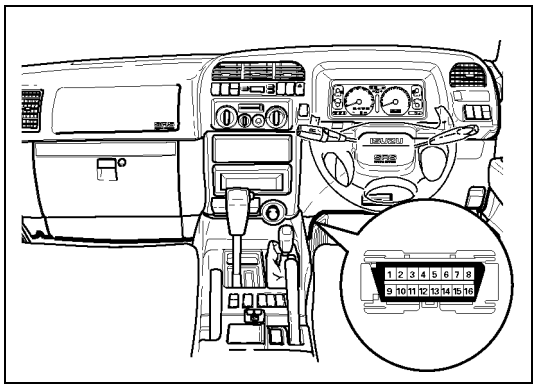

740RY00013

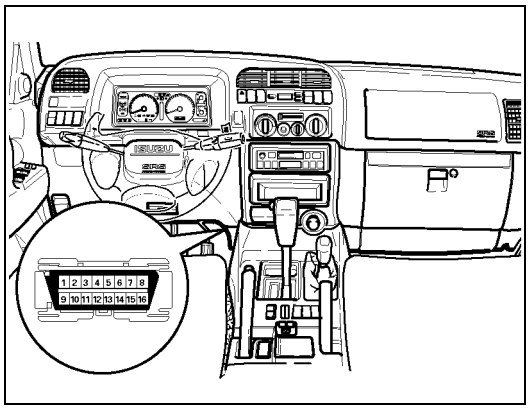

740RY00014

Warning to the driver

- When trouble has occurred to throttle position sensor, output revolution sensor, input revolution sensor, neutral start switch, engine revolution signal, speed meter signal, or solenoids, "CHECK TRANS" lamp is blinked (1.25 Hz) even during driving to warn the driver.
- The trouble is recorded by trouble code in TCM.
- When temporary trouble has been shooted, the "CHECK TRANS" lamp stops blinking. This blinking can be stopped by setting the ignition key off. But the trouble code remains memorized in TCM.

Self-diagnosis code (Flashing code) display

- For quick search for faulty parts, 12 different items of trouble code are indicated by "CHECK TRANS" lamp blinking.
- The storaged trouble codes can be identified by shorting the terminals No. 11 and No. 4 or 5 (ground) of data link connector with a lead wire.

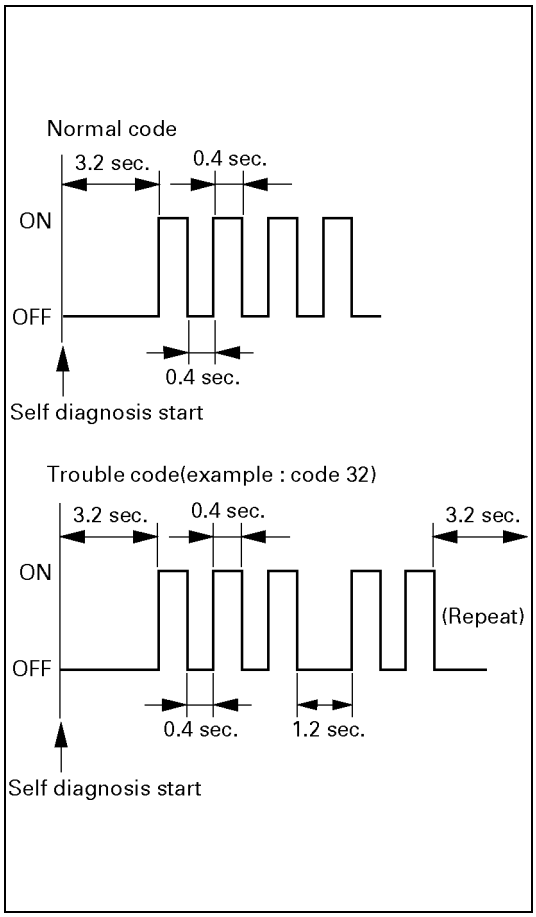

F07LV001

Indication Method:

1. Terminals No. 11 are No. 4 or 5 (ground) of data link connector are short circuited.
2. Turn the ignition key to the ON position.
3. In case there no trouble, normal code is indicated.
4. In case a plurality of trouble codes have occurred at a time, each code is indicated three times in numerical order.

NOTE:
Power line runs through data link connector.
Be careful shorting with a lead wire, etc.
(The vehicle side of control module may be damaged.) For identification of trouble code, connect Tech2 to data link connector.

Clear of trouble code memory

1. Clear the trouble code memory using F1: Clear DTC Information for Tech2.
2. After more than 1 second has elapsed after the ignition key has been turned ON, short between No. 11 and No. 4 or 5 (ground) of data link connector. Then, after 1 second, but within 6 seconds, discontinue shorting.

Flashing code

Flashing Code (P-Code)	Mode	Description
11 (P0722)	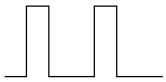	Output revolution sensor failure (SP2)
13 (P0727)	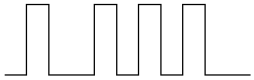	Engine revolution signal failure (NE)
14 (P0717)	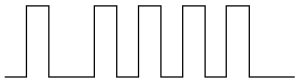	Input revolution sensor failure (NC0)
16 (P0710)	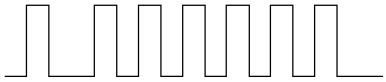	Oil temperature sensor failure (OT2)
17 (P0705)	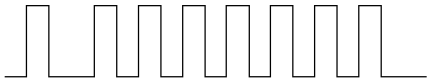	Gear selector failure (PRND2L)
21 (P0120)	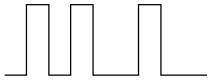	Analog throttle signal failure (VTH)
23 (P1121)	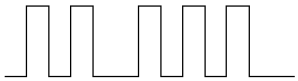	Analog throttle signal failure (VREF, VGND)
24 (P0502)	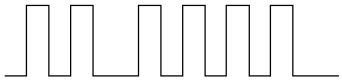	Speed meter sensor failure (SP1)
31 (P0753)		Solenoid 1 failure (S1)
32 (P0758)	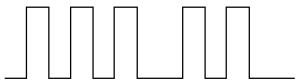	Solenoid 2 failure (S2)
33 (P0743)	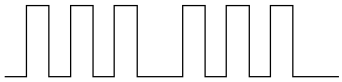	Torque converter clutch control lock-up (ON/OFF) solenoid failure (SL)
35 (P0748)	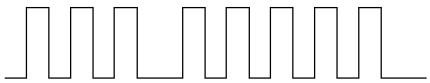	Pressure control solenoid failure (STH)

F07RY00016

DIAGNOSIS WITH TECH2

In this AW30-40LE transmission, troubleshooting can be performed for electrical faults using the Tech2 scan tool.
If the CHECK TRANS lamp blinks, or if an electrical fault in the transmission may probably exist, check trouble codes using the Tech2 scan tool.
In the diagnostic procedures described in this manual, first repair the faulty positions indicated by trouble code in the order of numbers and then perform troubleshooting for the faulty positions that are not indicated by trouble code. For correct troubleshooting, it is necessary to first repair the trouble codes of lower-order numbers, then to repair the trouble codes of higher-order numbers in sequence.

How to Use This Manual:
Check trouble codes using the Tech2 scan tool.

If no codes are set:

- Refer to *F1: Data Display* and identify the electrical faults that are not indicated by trouble code.

If codes are set:

- Record all the codes displayed by the Tech2 and check if the codes are intermittent (intermittent faults).
- Clear the codes.
- Drive the vehicle for a test to reproduce the faulty status.
- Check trouble codes again using the Tech2.
- If no code is displayed by test driving, the fault is intermittent. In this case, refer to the cautions on intermittent conditions.
- If a code is present, refer to "DIAGNOSTIC TROUBLE CODES (DTC) CHECK" for diagnosis.
- Because a code of high-order number may be set for the reason that a code of low-order number has been set after occurrence of a fault, perform repair work starting with a lower-order number is ascending order.

TECH2 CONNECTION

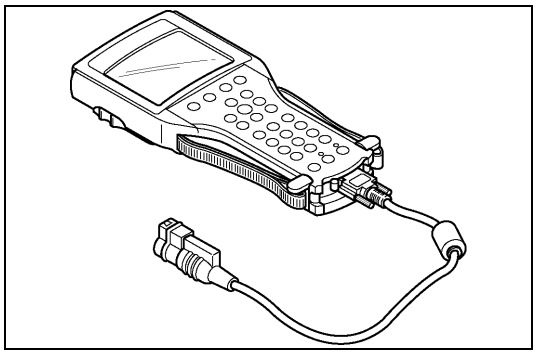

901RW176

The Tech2 scan tool is used to electrically diagnose the automatic transmission system and to check the system. The Tech2 enhances the diagnosis efficiency though all the troubleshooting can be done without the Tech2.
The Tech2 is a portable, compact, and light tester. When it is connected to the diagnosis connector of the vehicle, you can perform a variety of diagnoses and tests by communicating with the Transmission Control Module (TCM) of the vehicle.

1. Configuration of Tech2
   1. Tech2 scan tool kit (No. 7000086), Tech2 scan tool (No. 7000057) and DLC cable (No. 3000095)
   2. SAE16/19 adapter (No. 3000098) (1), RS232 loop back connector (No. 3000112) (2), and PCMCIA card (No. 3000117) (3)

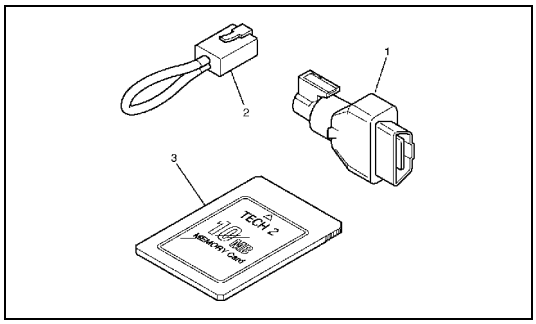

F07RW033

2. Tech2 Connection

•Observe the Tech2 User Guide.

1. Check the ignition is OFF.
2. Insert the ISUZU 2000 system PCMCIA card (1) into the Tech2 (4).
3. Connect the SAE16/19 adapter (2) to the DLC cable (3).
4. Connect the DLC cable (3) to the Tech2 (4).
5. Connect the SAE16/19 adapter (2) to the diagnosis connector of the vehicle.
6. Turn the ignition of the vehicle ON and press the "PWR" key of the Tech2.

•Check the display of the Tech2.

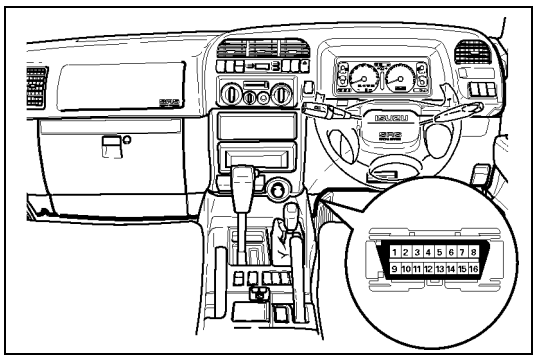

740RY00013

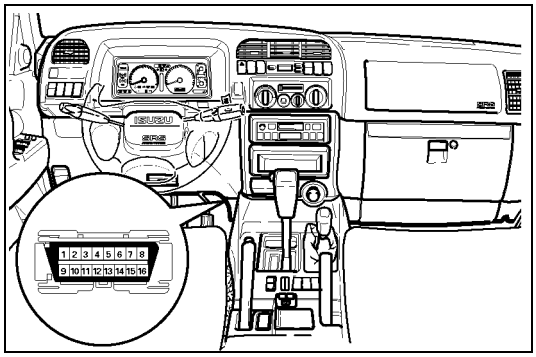

740RY00014

NOTE:
Be sure to check that the power is not supplied to the Tech2 when attaching or removing the PCMCIA card.

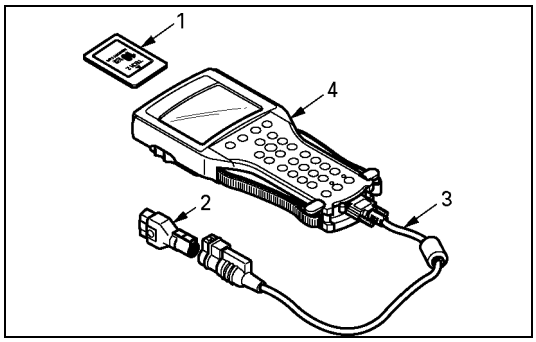

901RY00014

TECH2 OPERATING FLOW CHART (START UP)

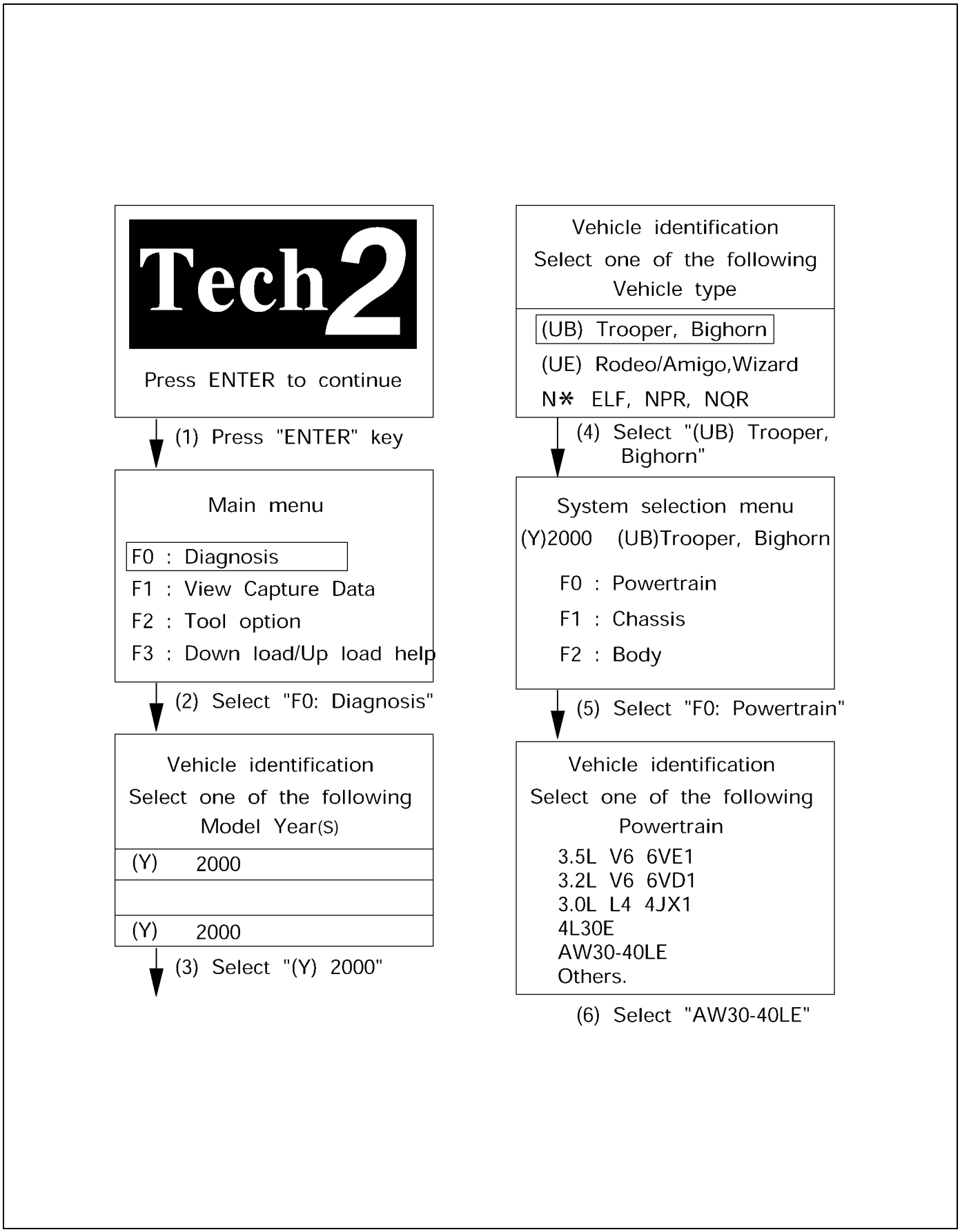

060RY00110

Once the test vehicle has been identified an “Application (Powertrain) Menu" screen appears. Please select the appropriate application.
The following table shows, which functions are used for the available equipment versions.

- F0: Diagnostic Trouble Codes
  - F0: Read DTC Info Ordered By Priority
  - F1: Clear DTC Information
  - F2: DTC Information
    - F0: History
    - F1: MIL SVS or Message Requested
    - F2: Last Test Failed
    - F3: Test Failed Since Code Cleared
    - F4: Not Ran Since Code Cleared
    - F5: Failed This Ignition
- F1: Data Display
  - F0: Transmission Data
  - F1: TCC Data
- F2: Snapshot
- F3: Actuator Tests
  - F0: Lamps
    - F0: Check Light Test
    - F1: Power Lamp Test
    - F2: Winter Lamp Test
    - F3: AT Oil Temperature Lamp Test
  - F1: Solenoids
    - F0: Solenoid 2-3 Test
    - F1: Solenoid 1-2/3-4 Test
    - F2: TCC Solenoid Test
    - F3: Pressure Control Solenoid (PCS)

Diagnostic Trouble Codes
The purpose of the “Diagnostic Trouble Codes" mode is to display stored TCM trouble codes.
When “Diagnostic Trouble Codes" is selected an “Application Menu" screen appears.

Clear DTC Information
The purpose of the “Clear DTC Information" mode is to command the clearing of stored TCM trouble codes.
When “Clear DTC Information" is selected, a “Clear DTC Information", warning screen appears. This screen informs you that by cleaning DTC's, “all stored DTC information in controller will be erased".
Do you want to clear DTC's (Yes/No).
Press either the Yes or No key when answering.
After clearing codes, confirm system operation by test driving the vehicle.
Allow the vehicle to shift through all four forward gears in a manner which attempts to repeat the failure condition.

NOTE: When the trouble has not been repaired and the trouble code cannot be erased, check the vehicle again.

DTC Information
When “DTC Information" is selected, an “Application Menu" appears with a list of DTC information function keys addressing DTC specifics and their origins.
Function key selections may vary for particular vehicle and/or system.

Data Display
The purpose of the “Data Display" mode is to continuously monitor data parameters.
The current actual values of all important sensors and signals in the system are display through F1 mode.
When “Data Display" is selected an “Application Menu" appears.
See “TRANSMISSION DATA" and “TCC DATA” on next page.

Snapshot
When “Snapshot" is selected an “Application Menu" appears.
When “Transmission Snapshot" application is selected from the “Application Menu", a “Snapshot Menu" appears, displaying several options. “Snapshot" options may vary from one system to another.
“Snapshot" allows a recording of all vehicle parameters. There parameters may then be replayed at a future point in time.
This action allows you to focus on making the condition occur, rather than trying to view all of the data in anticipation of the fault. The snapshot will collect parameter information around a trigger point that you select.
When a snapshot is taken. It is recorded onto the PCMCIA memory card. When the Tech2 is powered down. Snapshots are not lost.

Actuator Tests
The purpose of “Actuator Tests" mode is to check for correct operation of electronic system actuators.

Lamps
You can operate the lamps by pressing the ON and OFF buttons.
Preconditions: P or N position

Solenoid
Solenoid S1(1-2/3-4), S2(2-3) and TCC Solenoid (Torque Converter Clutch)
You can operate the solenoids by pressing the ON and OFF buttons.
Preconditions: P or N position, no vehicle speed, no engine speed
Pressure Control Solenoid (PCS)
You can operate the PC Solenoid by pressing the ON and OFF buttons. ON will command a maximum current of 1000 mA and OFF a minimum of 200 mA.
Preconditions: P or N position, no vehicle speed, engine running

TRANSMISSION DATA

Item	Unit	Enigne running at idle
Current Gear		1
Lock Up	Inactive, Active	Inactive
Selector Position		Park
AT Output Speed (Automatic Transmission)	RPM	0 RPM
Output Speed (Meter Signal Side)	RPM	0 RPM
AT Input Speed (Automatic Transmission)	RPM	0 RPM
Engine Speed	RPM	695 ~ 745 RPM
Vehicle Speed (Output Side)	km/h	0 km/h
Throttle Position	%	0 %
Throttle Position Sensor	V	0.25 ~ 0.45V
AT Oil Temperature (Automatic Transmission)	°C, °F	70 ~ 80°C (158 ~ 176°F)
Shift Pattern		
Desired PCS Pressure (Pressure Control Solenoid)	kPa	
PCS Desired Current (Pressure Control Solenoid)	mA	
PCS Actual Current (Pressure Control Solenoid)	mA	
Overdrive Off Switch	Off, On	
Brake Switch	Open 0V, Closed 12V	Closed 12V
Winter Switch	Open, Closed 0V	Open
Power Switch	Open, Closed 0V	Open
Diagnostic Request	Open, Closed	Open
Winter Lamp	Inactive 12V, Active 0V	Inactive 12V
Power Lamp	Inactive 12V, Active 0V	Inactive 12V
Check Light	Inactive 12V, Active 0V	Inactive 12V
AT Oil Temperature Lamp (Automatic Transmission)	Inactive 12V, Active 0V	Inactive 12V
Solenoid 2-3	Inactive 0V, Active 12V	Inactive 0V
Solenoid 1-2/3-4	Inactive 0V, Active 12V	Active 12V
TCC Solenoid (Torque Converter Clutch)	Inactive 0V, Active 12V	Inactive 0V

TCC DATA

Item	Unit	Enigne running at idle
Current Gear		1
Lock Up	Inactive, Active	Inactive
AT Output Speed (Automatic Transmission)	RPM	0 RPM
Output Speed (Meter Signal Side)	RPM	0 RPM
AT Input Speed (Automatic Transmission)	RPM	0 RPM
Engine Speed	RPM	695 ~ 745 RPM
Vehicle Speed (Output Side)	km/h	0 km/h
Throttle Position	%	0 %
Gear Ratio	:1	2.804
AT Oil Temperature (Automatic Transmission)	°C, °F	70 ~ 80°C (158 ~ 176°F)
TCC Slip Speed	RPM	695 ~ 745 RPM
TCC Solenoid Pressure Desired	kPa	0 kPa
Desired TCC Solenoid Current	mA	0 mA
Actual TCC Solenoid Current	mA	0 mA

INTERMITTENT CONDITIONS

If the Tech2 displays a code as intermittent, or if after a test drive a code does not reappear, the problem is most likely a faulty electrical connection or loose wiring.
Terminals should always be the prime suspect.
Intermittent rarely occur in sophisticated electronic components such as the Transmission Control Module (TCM).
When an intermittent problem is encountered, check suspect circuits for:

- Poor terminal to wire connection.
- Terminals not fully seated in the connector body (backed out).
- Improperly formed or damaged terminals.
- Loose, dirty, or corroded ground connections.
  HINT: Any time you have an intermittent in more than one circuit, check whether the circuits share a common ground connection.
- Pinched or damaged wires.
- Electro-Magnetic Interference (EMI)
  HINT: Check that all wires are properly routed away from spark plug wires, distributor wires, coil, and generator. Also check for improperly installed electrical options, such as lights, 2-way radios, etc.

Use the F2: SNAPSHOT mode of the Tech2 to help isolate the cause of an intermittent fault. The snapshot mode will record information before and after the problem occurs. Set the snapshot to "trigger" on the suspect code (or codes) or, if you notice the reported symptom during test drive, trigger the snapshot manually.
After the snapshot has been triggered, command the Tech2 to play back the flow of data recorded from each of the various sensors. Signs of an intermittent fault in a sensor circuit are a sudden unexplainable jump in data values out of the normal range.

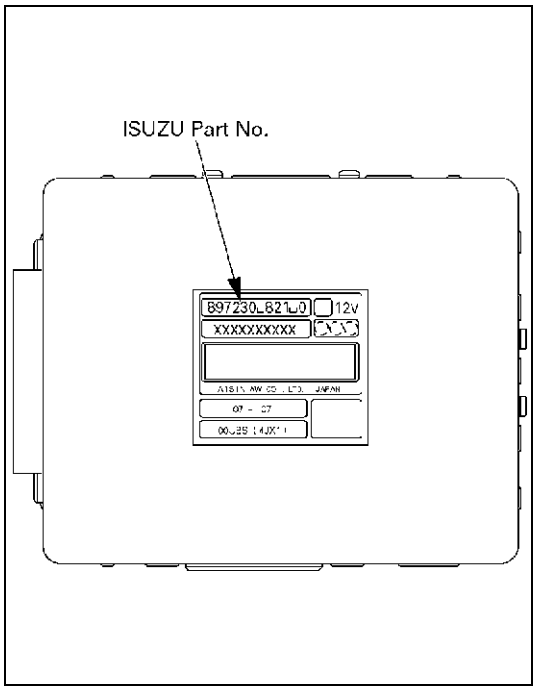

826RY00004

IDENTIFICATION OF TRANSMISSION CONTROL MODULE (TCM)

ISUZU Part No: 8-97230-821-0

DIAGNOSTIC TROUBLE CODES (DTC) CHECK

DTC NUMBER	FLASHING CODE	**DESCRIPTION**
P0120	21	ANALOG THROTTLE SIGNAL FAILURE (VTH)
P0502	24	SPEED METER SENSOR FAILURE (SP1)
P0705	17	GEAR SELECTOR FAILURE (PRND2L)
P0710	16	OIL TEMPERATURE SENSOR FAILURE (OT2)
P0717	14	INPUT REVOLUTION SENSOR FAILURE (NC0)
P0722	11	OUTPUT REVOLUTION SENSOR FAILURE (SP2)
P0727	13	ENGINE REVOLUTION SIGNAL FAILURE (NE)
P0743	33	TORQUE CONVERTER CLUTCH CONTROL LOCK-UP (ON/OFF) SOLENOID FAILURE (SL)
P0748	35	PRESSURE CONTROL SOLENOID FAILURE (STH)
P0753	31	SOLENOID 1 FAILURE (S1)
P0758	32	SOLENOID 2 FAILURE (S2)
P1121	23	ANALOG THROTTLE SIGNAL FAILURE (VREF, VGND)

DTC P0120 (FLASHING CODE 21) ANALOG THROTTLE SIGNAL FAILURE (VTH)

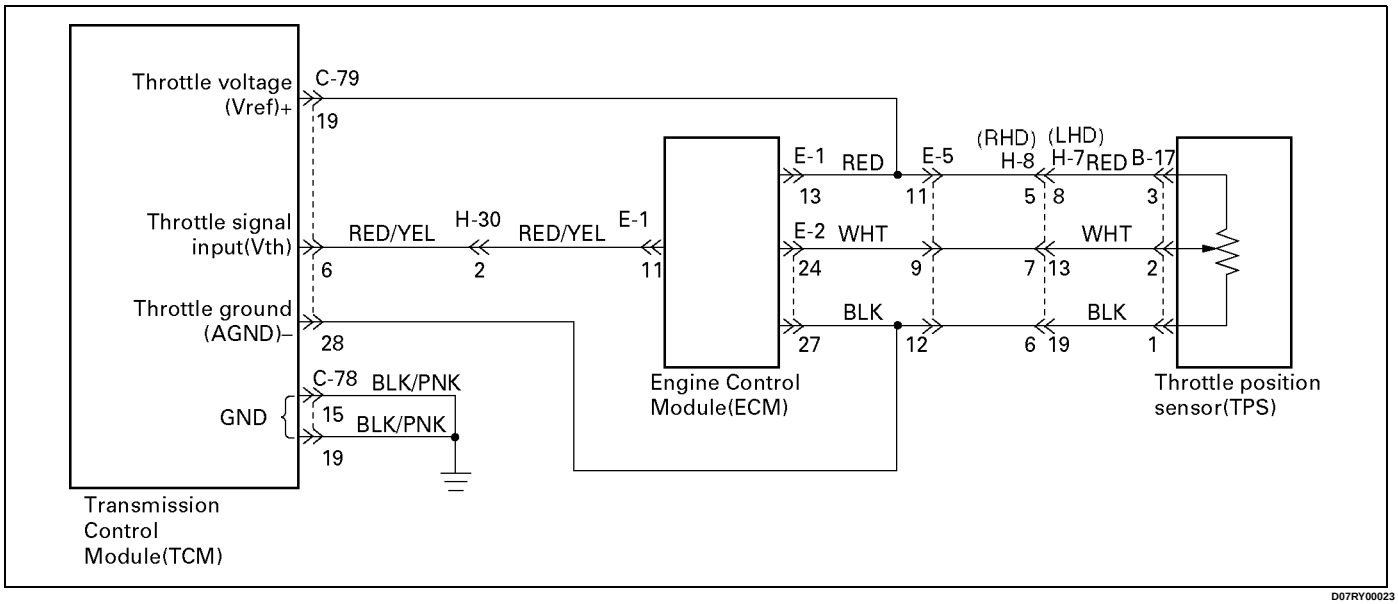

Circuit description:
When the signal of the engine throttle position sensor located on the accelerator pedal is supplied to the TCM, the TCM judges the opening condition of the throttle.
The shift point of the transmission is determined by this opening condition of the throttle.

Fail-safe control:
The TCM controls fail-safe by detecting analog throttle signal (VTH) failure.

Failure detection:

- When the throttle input voltage is detected less than 0.112V or more than 4.417V for 2.0 seconds.

Contents of control:
At failure detection

- Throttle opening for line pressure control ... Throttle opening 100%
- Throttle opening for shift control ... Throttle opening 0%
- Lock-up control inhibit
- Up hill and down hill control inhibit
- Squat control inhibit

At failure decision
Executes following items in addition to above control items at failure detection.

- Blinks "CHECK TRANS" lamp
- Stores the failure information in failure-memory

Conditions of turning "CHECK TRANS" lamp off:
Turns “CHECK TRANS” lamp off when judged 0km/h by output revolution sensor after throttle signal input voltage is detected more than 0.112V and less than 4.717V.
(however, uses 0 km/h judgment by back-up vehicle speed at output revolution failure)

Reversion conditions from fail-safe:
At failure detection
Immediately recovers when the throttle input voltage is detected more than 0.112V and less than 4.717V.
At failure decision
Recovers at the same time as the conditions of turning “CHECK TRANS” lamp off are satisfied.

Test description:
The following numbers correspond to circled numbers on the diagnostic chart.

(1) Check that the throttle input voltage is 0.25 to 0.45V.
(2) At this test, check that as the throttle opens, the voltage goes up and that the voltage reaches 3.74 to 4.56V at the full open status.
(3) Check the power supply voltage (4.75 – 5.25V) of the throttle position sensor.

Diagnostic aids:
An intermittent may be caused by a poor connection, rubbed through wire insulation or a wire broken inside the insulation. Inspect related harness connector for backed out terminals, improper mating, broken locks, improperly formed or damaged terminals, poor terminal to wire connection and damaged harness.

DTC P0120 (FLASHING CODE 21) ANALOG THROTTLE SIGNAL FAILURE (VTH)

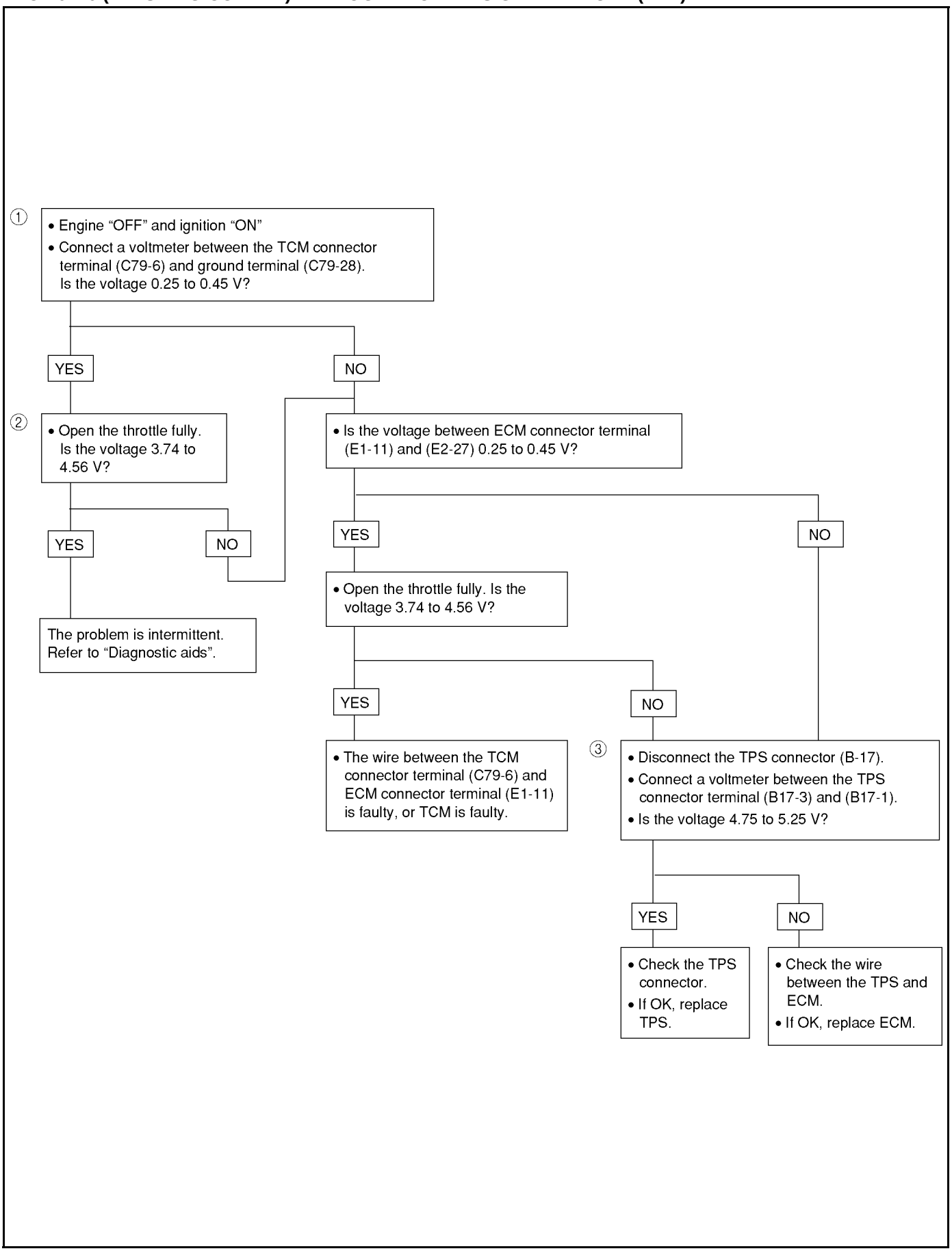

DTCP0120

DTC P0502 (FLASHING CODE 24) SPEED METER SENSOR FAILURE (SP1)

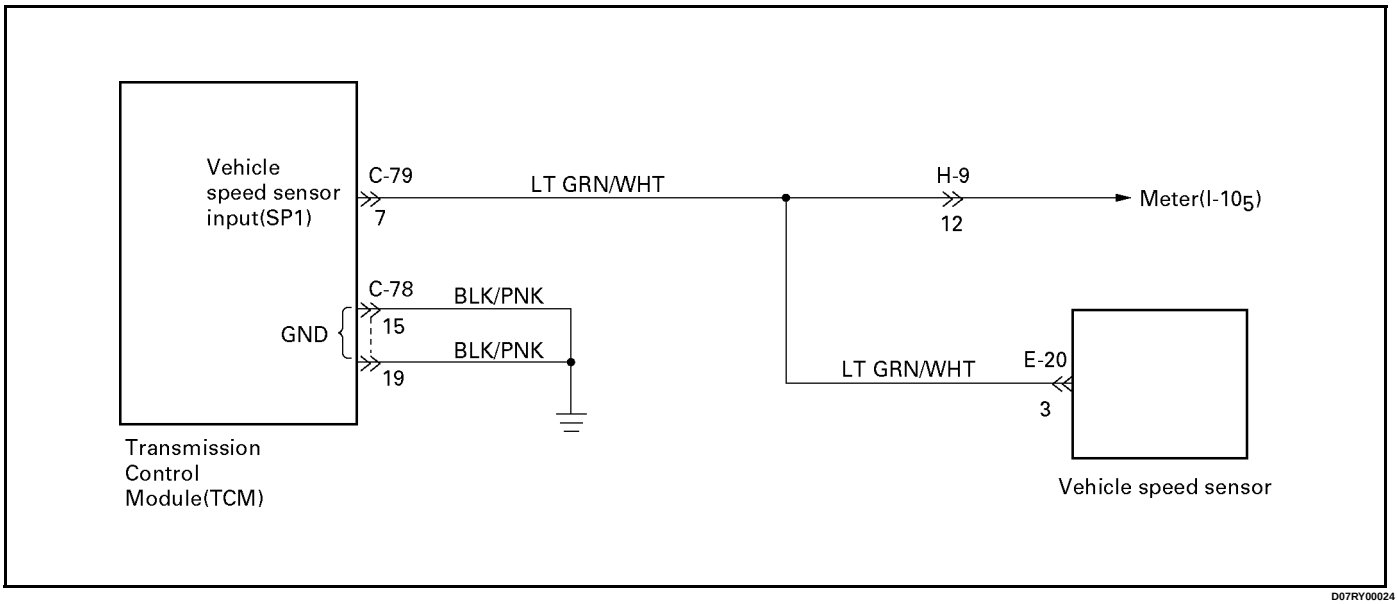

D07RY00024

Circuit description:
Speed information is provided by the speed meter sensor to the meter.
In the meter, the pulses of the speed meter sensor are converted to speed signals (pulses), and these signals are output to the TCM. The TCM converts these pulse voltages to km/h signals.

Fail-safe control:
The TCM controls fail-safe by detecting speed meter signal failure.

Failure detection:

- When not even 1 pulse is input in the speed meter signal during the time 100 pulses are input in the output revolution sensor signal.
- When not even 1 pulse is input in the speed meter signal during the time 27 pulses are input in the output revolution sensor signal.

Contents of control:
At failure detection

- Keeps the condition of transfer (High/Low judgment) just before detection until vehicle speed is 0km/h, and changes shift map to L4 map (3→4 UP None) at vehicle speed is 0km/h.
- Uses high oil temperature map according to shift map priority at correct oil temperature control.
- Up hill and down hill control inhibit.
- Stores the failure information in failure -memory.
- The failure detection of oil temperature sensor inhibit

At failure decision
Executes following items in adition to above control items at failure detection.

- Blinks "CHECK TRANS" lamp

Conditions of turning "CHECK TRANS" lamp off:
Turns "CHECK TRANS" lamp off when judged 0km/h by speed meter sensor after more than 1 pulse are input in the speed meter signal during the time 27 pulses are input in the output revolution sensor.

Reversion conditions from fail-safe:
At failure detection and decision
Recovers at the same time as the conditions of turning “CHECK TRANS” lamp off are satisfied.

Test description:
The following numbers correspond to circled numbers on the diagnostic chart.

(1) The cause of DTC P0502 setting is due to the operation fault of the speed meter.
(2) Speed signals are output from the meter. The sensor power supply is given from the TCM.

Diagnostic aids:
An intermittent may be caused by a poor connection, rubbed through wire insulation or a wire broken inside the insulation. Inspect related harness connector for backed out terminals, improper mating, broken locks, improperly formed or damaged terminals, poor terminal to wire connection and damaged harness.

DTC P0502 (FLASHING CODE 24) SPEED METER SENSOR FAILURE (SP1)

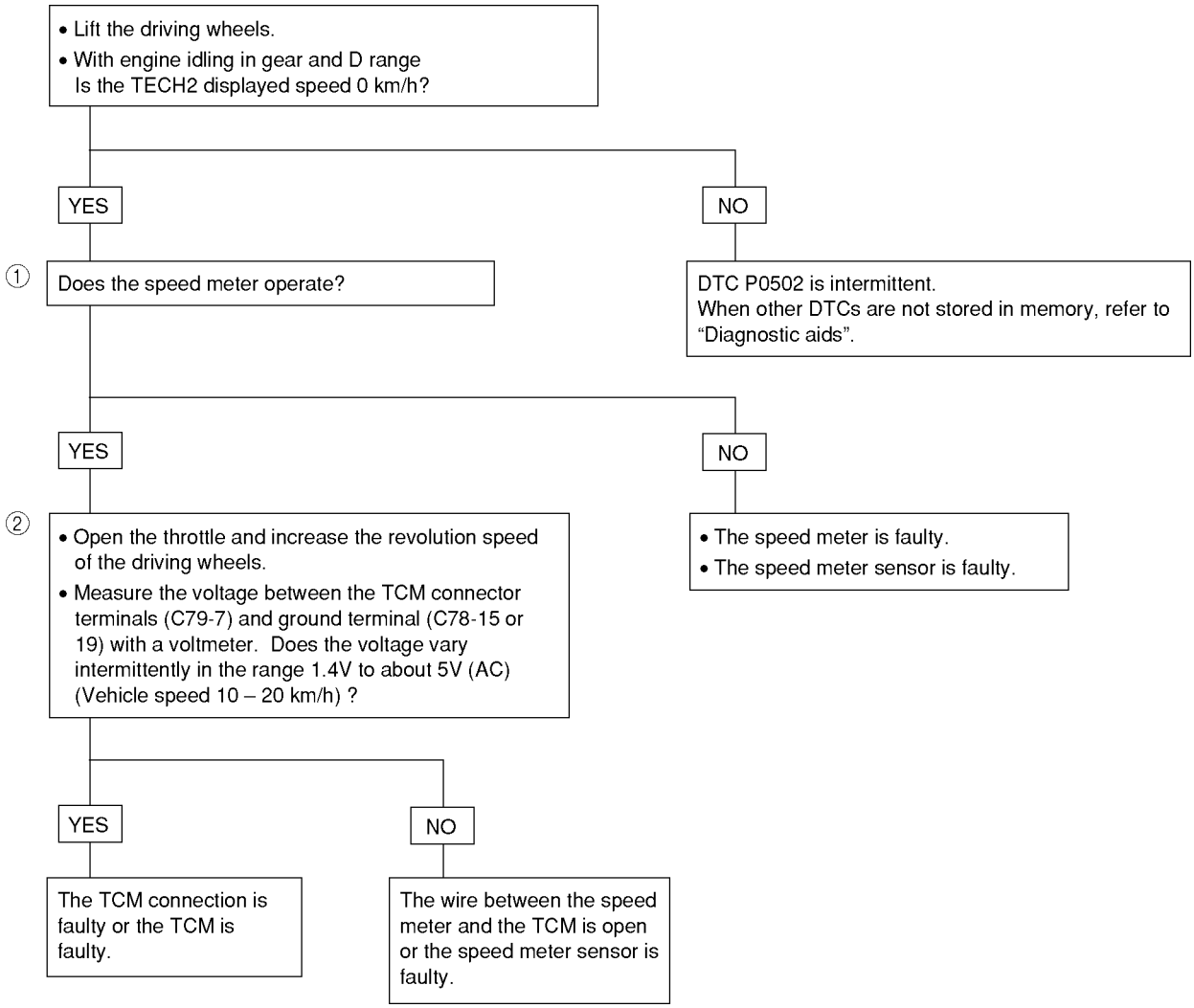

DTCP0502

DTC P0705 (FLASHING CODE 17) GEAR SELECTOR FAILURE (PRND2L)

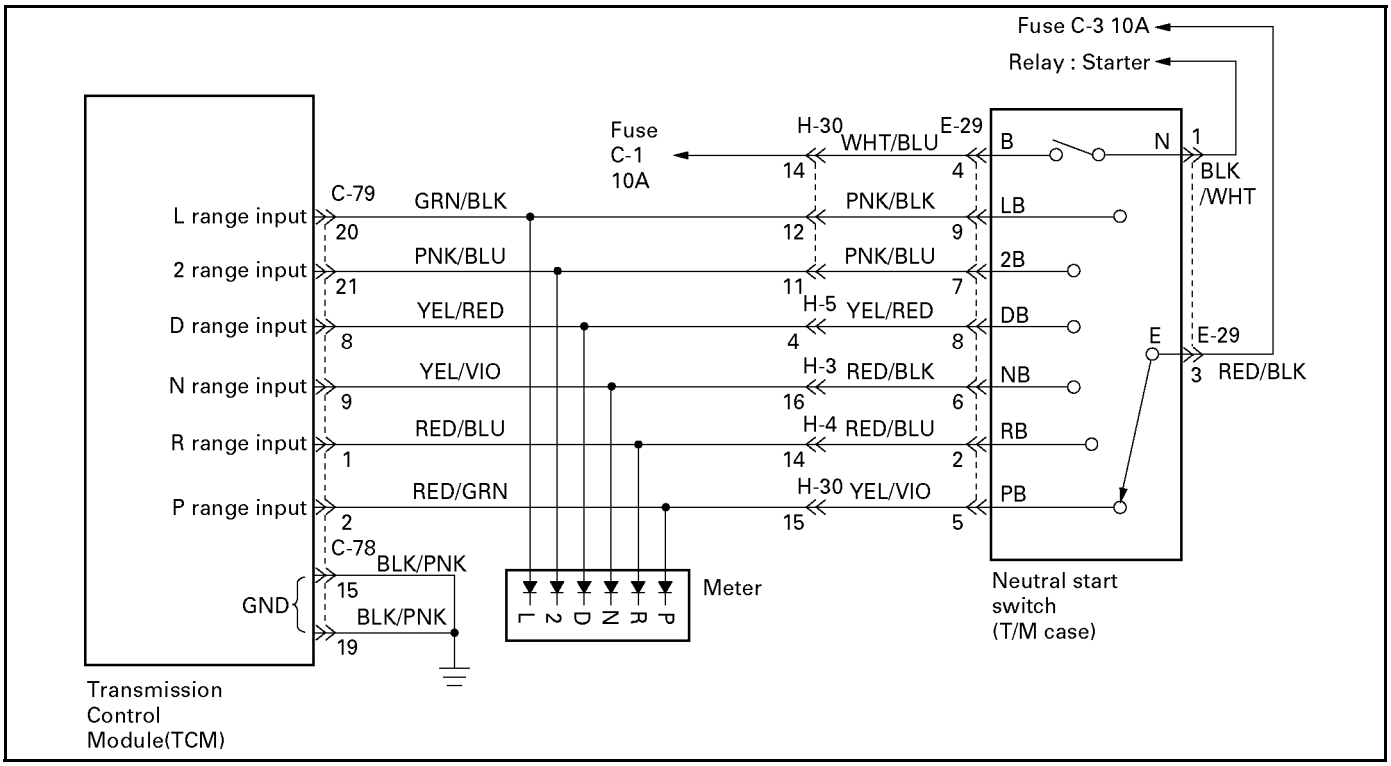

Circuit description:
The neutral start switch gives the signals related to the selector lever position (PRND2L) to the Transmission Control Module (TCM). The neutral start switch turns on when the select lever is shifted to the P, R, N, D, 2 or L range. The neutral start switch, which is connected to the starter switch circuit, is available only when the select lever is in the P or N range
The neutral start switch is connected to the transmission manual shaft and installed in the transmission case.

Fail-safe condition:
The TCM controls fail-safe by detecting selector position switch failure.

Failure detection:

(1) OPEN:
- When all switches are OFF
- When the failure criteria continues for 30 seconds if the vehicle speed which is calculated by output revolution sensor is more than 30 km/h and the engine revolution is more than 1500 rpm.

(2) SHORT:
- When more than two switches are ON at the same time.
- When the failure criteria condition for 10 seconds.

Contents of control:
At failure detection

(1) OPEN: D range judgment

(2) SHORT: Judged by priority D>2>L>R>N>P

•Up hill and down hill control inhibit

•Winter mode inhibit

At failure decision

Excutes following items in addition to above control items at failure detection.

•Blinks "CHECK TRANS" lamp

•Stores the failure information in failure-memory

•Reverse lockout control inhibit

Conditions of turning “CHECK TRANS” off:
Turns “CHECK TRANS” lamp off when only one of all switches is ON.

Reversion conditions from fail-safe:
Turns “CHECK TRANS” lamp off when only one of all switches is ON.

Test description:
The following numbers correspond to circled numbers on the diagnostic chart.

(1) It is judged whether the input signal received from the neutral start switch by the TCM is proper or not.

(2) The power status of the neutral start switch is checked.

(3) The continuity between neutral start switch terminals and the continuity of the wire connected to the neutral start switch are checked.

Diagnostic aids:
An intermittent may be caused by a poor connection, rubbed through wire insulation or a wire broken inside the insulation. Inspect related harness connector for backed out terminals, improper mating, broken locks, improperly formed or damaged terminals, poor terminal to wire connection and damaged harness.

DTC P0705 (FLASHING CODE 17) GEAR SELECTOR FAILURE (PRND2L)

①
- Engine “OFF” and key switch “ON”
- Connect a voltmeter to the each terminal of the TCM connectors (C-79) and grounding terminal (C78-15 or 19).
- Measure the voltage shifting the select lever to every position. (Comparison with Table 1)
- Is the displayed voltage at every position normal?

(Table 1)

⊖ Terminal	⊕ Terminal	Voltage (V)
C78-15 or C78-19	C79-2	8 - 16: P range 1 or less: Other than P range
	C79-1	8 - 16: R range 1 or less: Other than R range
	C79-9	8 - 16: N range 1 or less: Other than N range
	C79-8	8 - 16: D range 1 or less: Other than D range
	C79-21	8 - 16: 2 range 1 or less: Other than 2 range
	C79-20	8 - 16: L range 1 or less: Other than L range

YES

- Clear the TCM memory. Refer to “Clear of trouble code memory” of SELF-DIAGNOSIS.
- Make a running test. (greater than 30 sec.)

Is DTC P0705 displayed by self-diagnosis?

YES

The TCM is faulty or the continuity of wiring is temporarily faulty. Refer to “Diagnostic aids”.

NO

The continuity of wiring is temporarily faulty. Refer to “Diagnostic aids”.

NO

Is the displayed voltage at every position abnormal?

YES

②
- Check if there is any wire breaking in the fuse and wire connected to the connector terminal (E29-3) of the neutral start switch.
- Check the adjusted condition of the neutral start switch.
- If no fault is found, replace the neutral start switch.

NO

③
- Disconnect the connectors (E-29) of the neutral start switch.
- Make a continuity check between neutral start switch termnals with an ohmmeter. (Table 2) Is the result OK ?

(Table 2)

Range \ Terminal	E-29								
	1	4	3	5	2	6	8	7	9
P	○	○	○	○					
R			○		○				
N	○	○	○			○			
D			○				○		
2			○					○	
1			○						○

○—○ Continuity

YES

Wire breaking or a short circuit between the TCM connector and the neutral start switch connector.

NO

Replace the neutral start switch.

DTCP0705

DTC P0710 (FLASHING CODE 16) OIL TEMPERATURE SENSOR FAILURE (OT2)

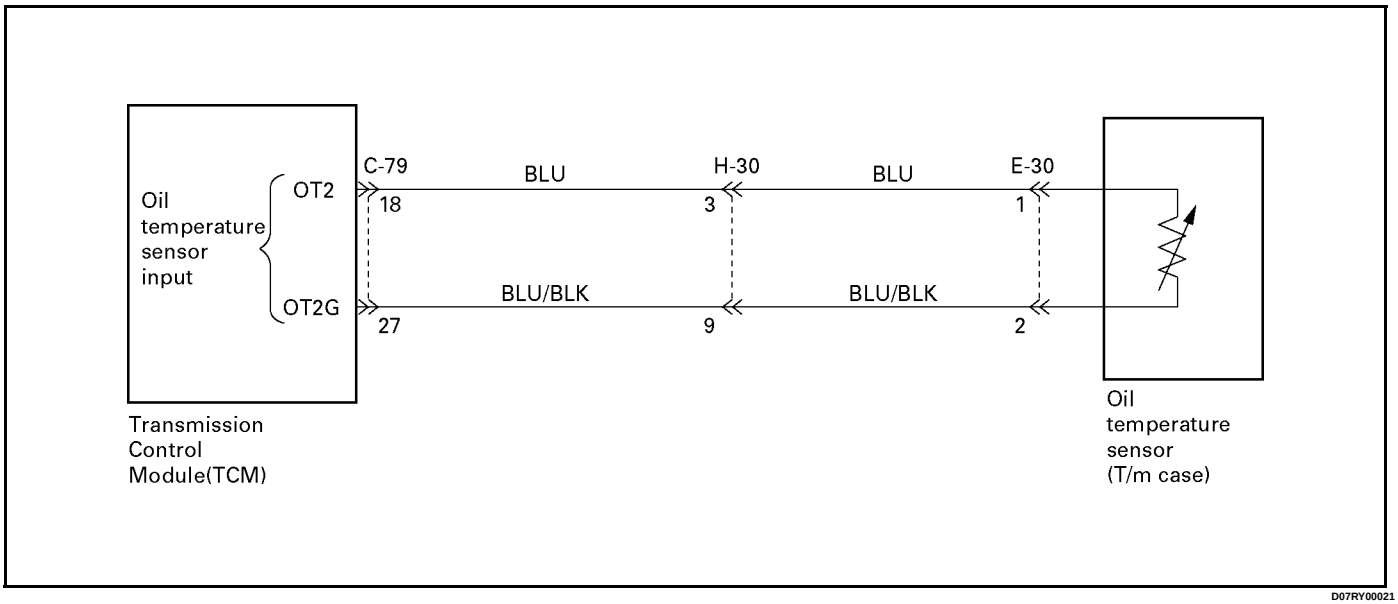

D07RY00021

Circuit description:
The oil temperature sensor is a thermistor sensor that is installed in the transmission case and converts temperature changes into continuous electric signals, then outputs them to the Transmission Control Module (TCM). When the ATF temperature is low, the resistance of the sensor (thermistor) goes up, so that the voltage of the TCM signal becomes high.
As the ATF is gradually warmed, the resistance of the sensor goes down and the voltage becomes low. At the normal operating ATF temperature (80°C/176°F) of the transmission, the voltage of the TCM is about 3.7V.

Fail-safe condition:
The TCM controls fail-safe by detecting oil temperature sensor failure.

Failure detection:
Short detection

- When the A/D value is detected less than 10 (220°C) for 5 minutes continuously while normal judgment is not satisfied from ignition on.

Open detection

- After 15 minites passed when the engine revolution is more than 400 rpm and the selector position switch is selected on R, D, 2, L range.
- When the change of the A/D value from engine start is less than 15 and the minnum A/D value is more than 1000 (-10°C) from engine start.

Contents of control:
At failure detection

- Changes shift map to HOT2 map
- Controls as A/T oil temperature 200°C
- Lock-up control inhibit
- Up hill and down hill control inhibit
- Blinks "CHECK TRANS" lamp
- Stores the failure information in failure-memory

At failure decision
Same as failure detection.

Conditions of turning "CHECK TRANS" off:
Turns "CHECK TRANS" lamp off when judged 0km/h by output revolution sensor after the normal area of oil temperature 40°C – 150°C is detected for 10 sec continuously.

Reversion conditions from fail-safe:
Recovers at the same time as the conditions of turning “CHECK TRANS” lamp off are satisfied.

Test description:
The following numbers correspond to circled numbers on the diagnostic chart.

(1) Check that the voltage of the oil temperature sensor varies with ATF temperatures.
(2) Check that the resistance of the oil temperature sensor varies with ATF temperatures.

Diagnostic aids:
An intermittent may be caused by a poor connection, rubbed through wire insulation or a wire broken inside the insulation. Inspect related harness connector for backed out terminals, improper mating, broken locks, improperly formed or damaged terminals, poor terminal to wire connection and damaged harness.

DTC P0710 (FLASHING CODE 16) OIL TEMPERATURE SENSOR FAILURE (OT2)

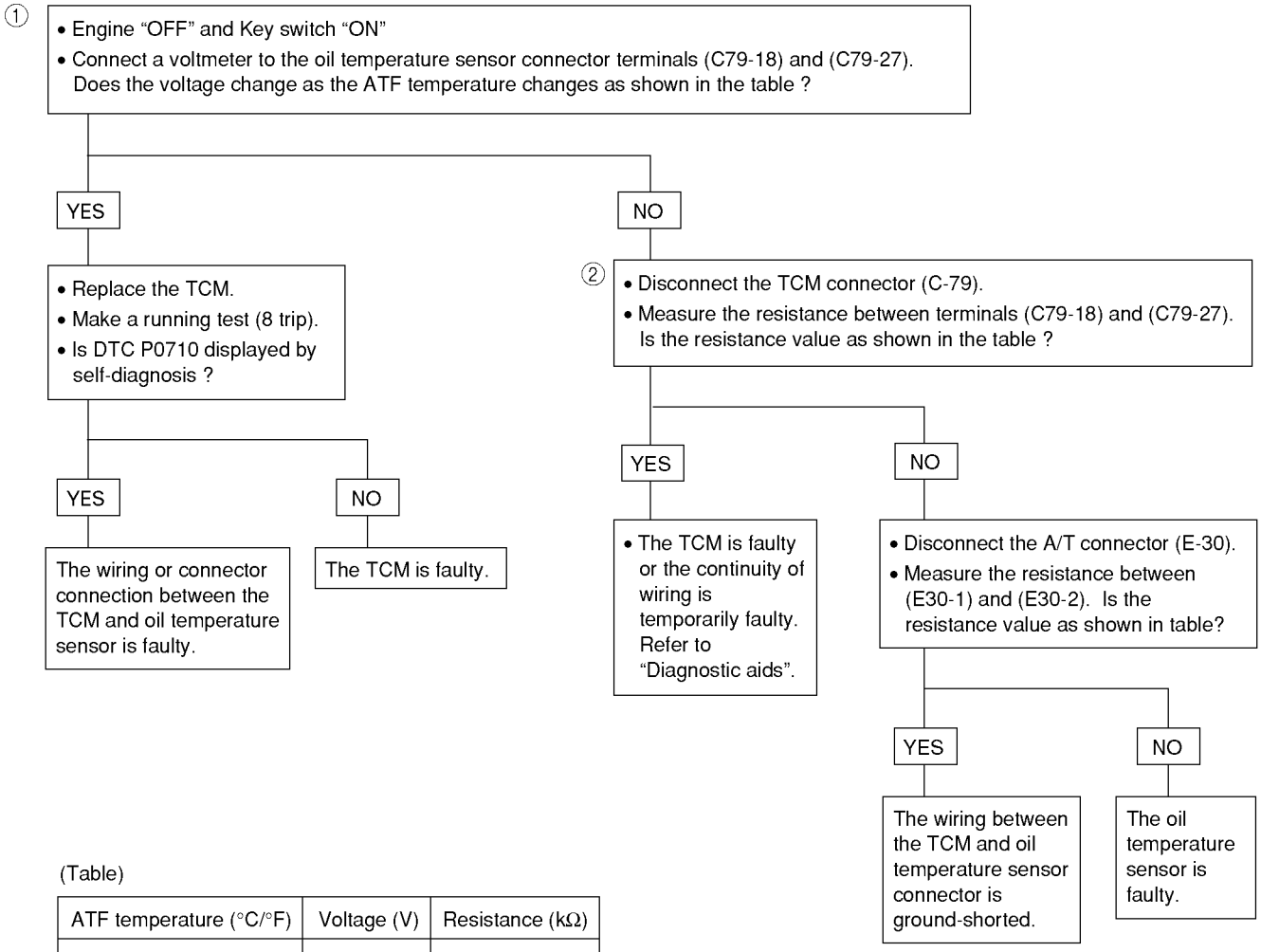

(Table)

ATF temperature (°C/°F)	Voltage (V)	Resistance (kΩ)
20/68	Approx. 4.7	0.5 – 30
80/176	Approx. 3.7	

DTC P0717 (FLASHING CODE 14) INPUT REVOLUTION SENSOR FAILURE (NC0)

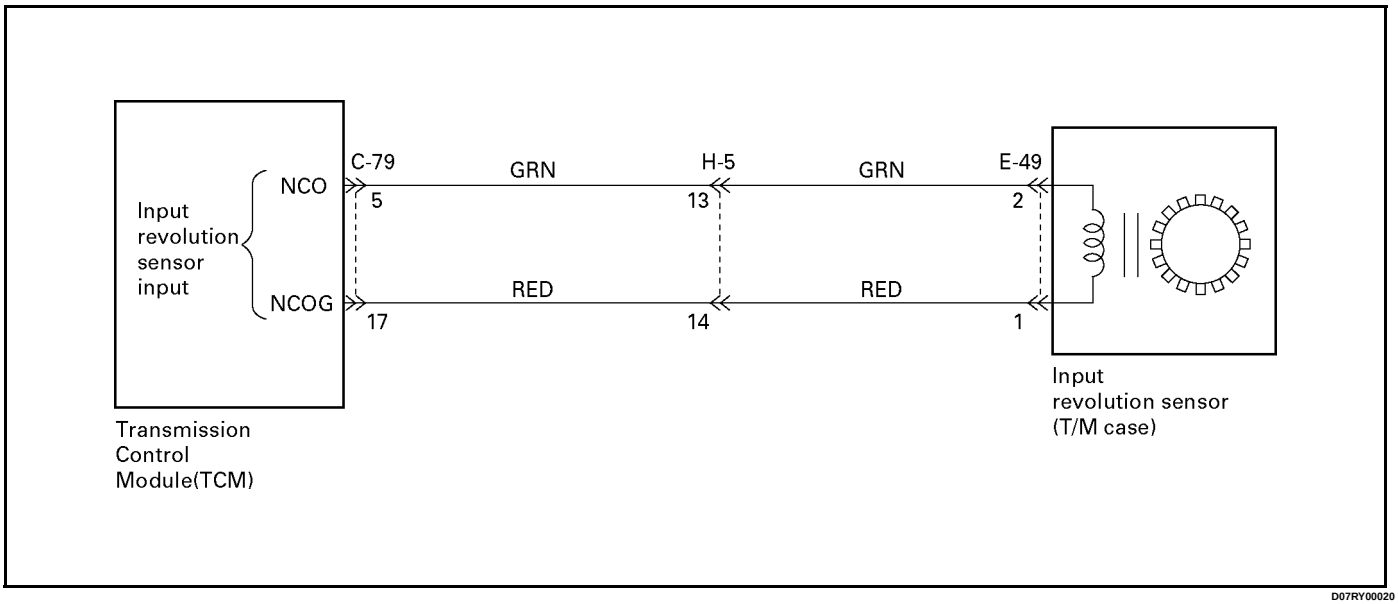

D07RY00020

Circuit description:
Input revolution information is provided to TCM by the input revolution sensor. This sensor is located in the transmission case.
The input revolution sensor is an electromagnetic pulse pickup type that generates a speed signal according to the revolution of the transmission OD direct clutch drum.
As a result, the sensor sends a sine wave signal (AC) to the TCM, which converts this sine wave signal (pulse voltage) to a RPM signal.

Fail-safe control:
The TCM controls fail-safe by detecting input revolution sensor failure.

Failure detection:

- When not even 1 pulse is input in the input revolution sensor during the time 4 pulses are input in the output revolution sensor.
- When the failure criteria is continuously 1000 times from the time ignition is turned ON until it is turned OFF.

Prohibits failure detection when at least one among the following conditions is satisfied.

- When D, 2 and L range signal is not fixed.
- When output revolution is less than 775 rpm.
- When the failure detection timer T1 (*1) is less than 25 seconds.
- Solenoid S1, S2, and selector position switch is on failure detection or decision.
- At 4th gear.
- When passed less than 10 seconds after shift command output.

*1: Failure detection inhibit timer T1
Timer starts when D, 2 or L range are detected (fixation signal).

Contents of control:
At failure detection

- Lock-up control inhibit
- Up hill and down hill control inhibit

At failure decision
Executes following items in addition to above control items at failure detection.

- Blinks "CHECK TRANS" lamp
- Stores the failure information in failure-memory

Conditions of turning "CHECK TRANS" off:
At D, 2 or L range and not shifting, turns "CHECK TRANS" lamp off when judged 0km/h by output revolution sensor after more than 1 pulse input in the input revolution sensor and finished vehicle speed calculation during the time 4 pulse are input in the output revolution sensor.

Reversion conditions from fail-safe:
Recovers at the same time as the conditions of turning “CHECK TRANS” lamp off are satisfied.

Test description:
The following numbers correspond to circled numbers on the diagnostic chart.

(1) When the engine is running, a revolution signal is input from the input revolution sensor to the TCM.
(2) At this test, the continuity of circuit wiring and the input revolution sensor is checked.
(3) At this test, the continuity of the input revolution sensor is checked.

Diagnostic aids:
An intermittent may be caused by a poor connection, rubbed through wire insulation or a wire broken inside the insulation. Inspect related harness connector for backed out terminals, improper mating, broken locks, improperly formed or damaged terminals, poor terminal to wire connection and damaged harness.

DTC P0717 (FLASHING CODE 14) INPUT REVOLUTION SENSOR FAILURE (NC0)

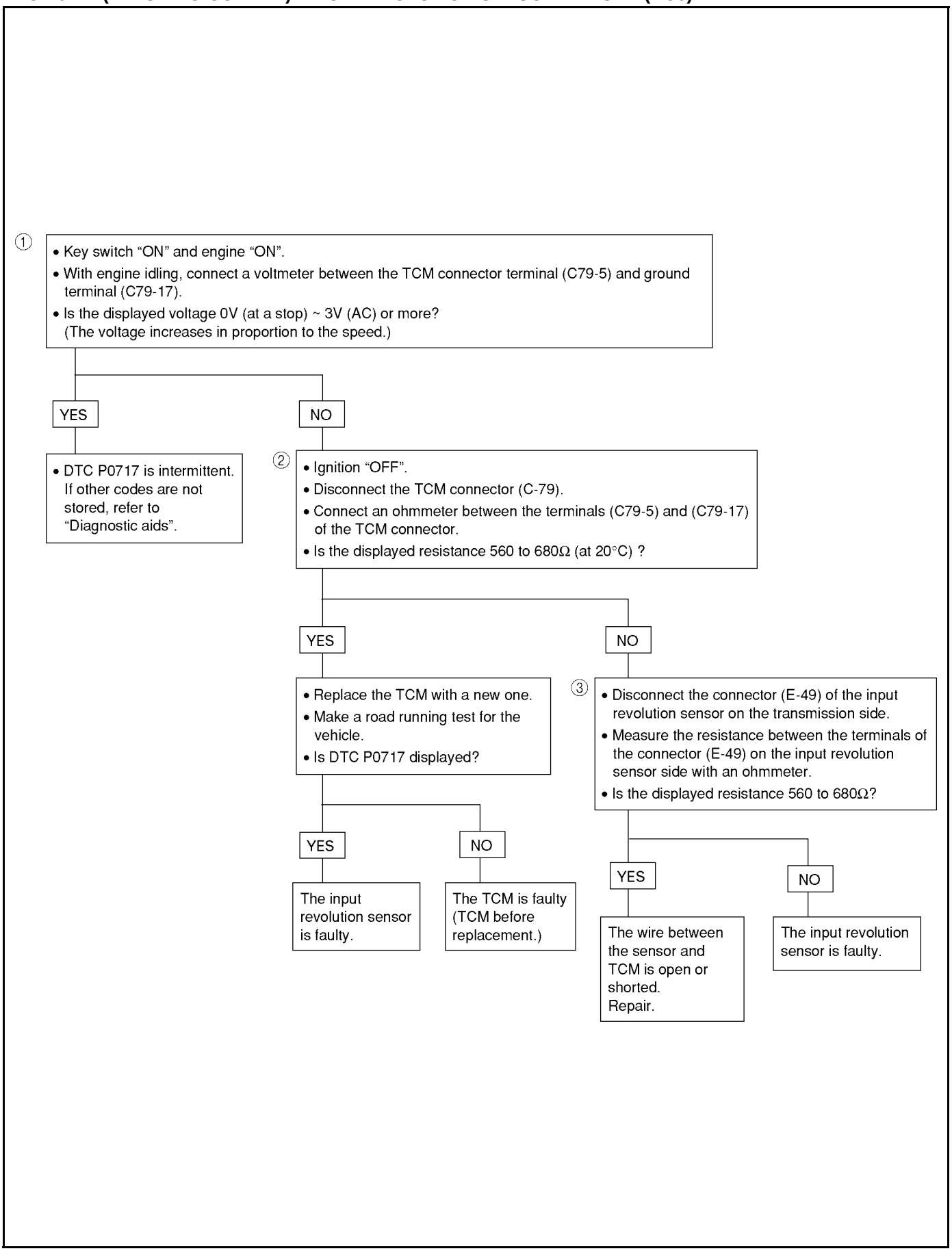

DTCP0717

DTC P0722 (FLASHING CODE 11) OUTPUT REVOLUTION SENSOR FAILURE (SP2)

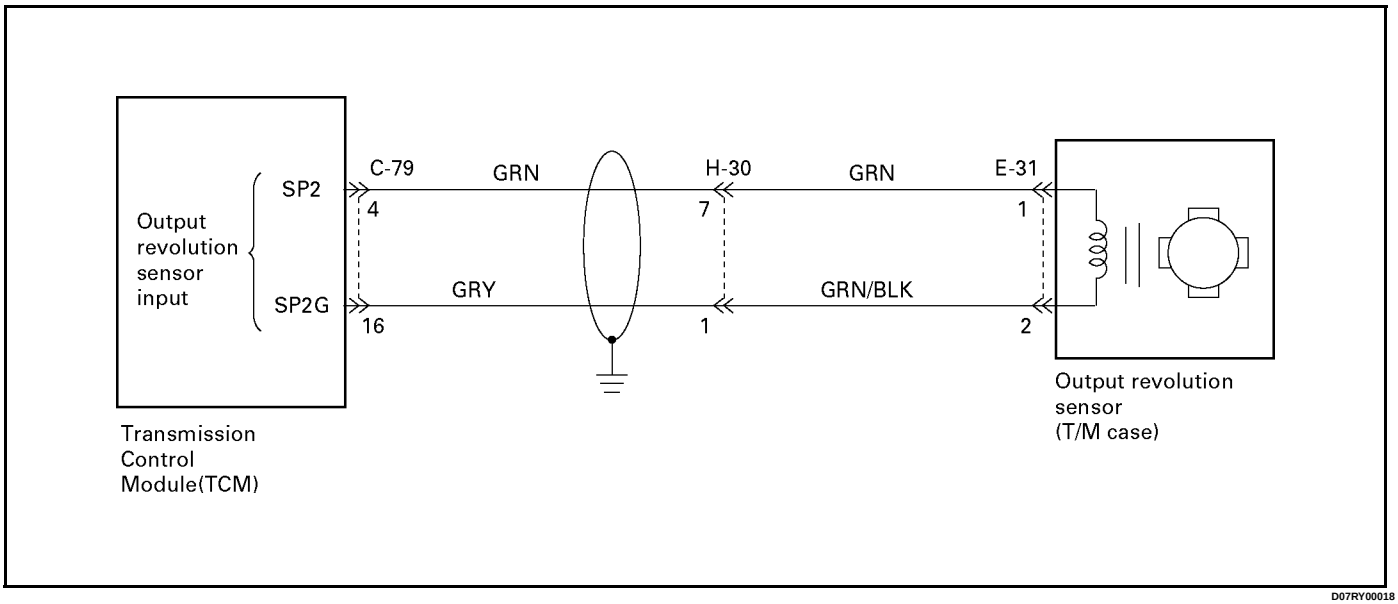

Circuit description:
Vehicle speed information is provided to the TCM by the output revolution sensor. This sensor is located in the transmission adapter housing. The output revolution sensor is an electromagnetic pulse pickup type that generates a speed signal according to the revolution of the transmission output shaft. As a result, the sensor sends a sine wave signal (AC) to the TCM, which converts this sine wave signal (pulse voltage) to a km/h signal.

Fail-safe control:
The TCM controls fail-safe by detecting output revolution sensor failure.

Failure detection:

- When not even 1 pulse is input in the output revolution sensor during the time 4 pulses are input in the speed meter sensor.
- When the failure criteria is continuously 500 times from the time ignition is turned ON until it is turned OFF.
- Detection inhibit condition:
  When speed meter sensor revolution is less than 80 rpm.

Contents of control:
At failure detection

- Uses the vehicle speed calculated by speed meter sensor for shift control
- Keeps the condition of transfer (High/Low judgment) just before detection until vehicle speed is 0km/h, and changes shift map to L4 map (3→4UP None) at vehicle speed 0km/h.
- Use high oil temperature map according to shift map priority at correct oil temperature control.
- Squat control inhibit
- Up hill and down hill control inhibit
- Reverse lockout control inhibit
- Stores the failure information in failure-memory

At failure decision
Executes following items in addition to above control items at failure detection.

- Blinks "CHECK TRANS" lamp

Conditions of turning "CHECK TRANS" off:

Turns "CHECK TRANS" lamp off when judged 0km/h by speed meter sensor after more than 1 pulse input in the output revolution sensor and finished vehicle speed calculation during the time 4 pulse are input in the speed meter sensor.

Reversion conditions from fail-safe:

Recovers at the same time as the conditions of turning “CHECK TRANS” lamp off are satisfied.

Test description:

The following numbers correspond to circled numbers on the diagnostic chart.

(1) When the vehicle is running, a speed signal is input from the output revolution sensor to the TCM.
(2) At this test, the continuity of circuit wiring and the output revolution sensor is checked.
(3) At this test, the continuity of the output revolution sensor is checked.

Diagnostic aids:
An intermittent may be caused by a poor connection, rubbed through wire insulation or a wire broken inside the insulation. Inspect related harness connector for backed out terminals, improper mating, broken locks, improperly formed or damaged terminals, poor terminal to wire connection and damaged harness.

DTC P0722 (FLASHING CODE 11) OUTPUT REVOLUTION SENSOR FAILURE (SP2)

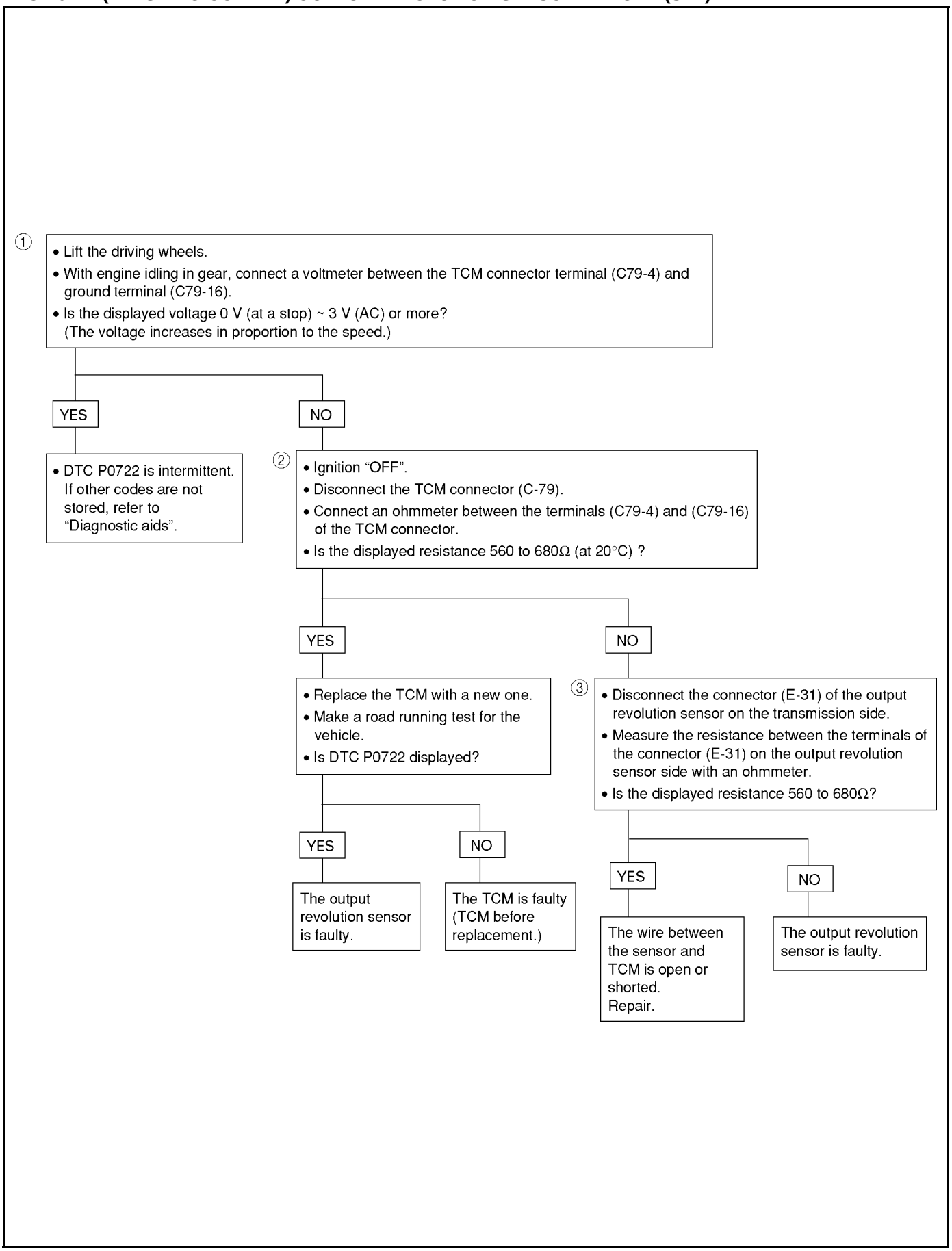

DTCP0722

DTC P0727 (FLASHING CODE 13) ENGINE REVOLUTION SIGNAL FAILURE (NE)

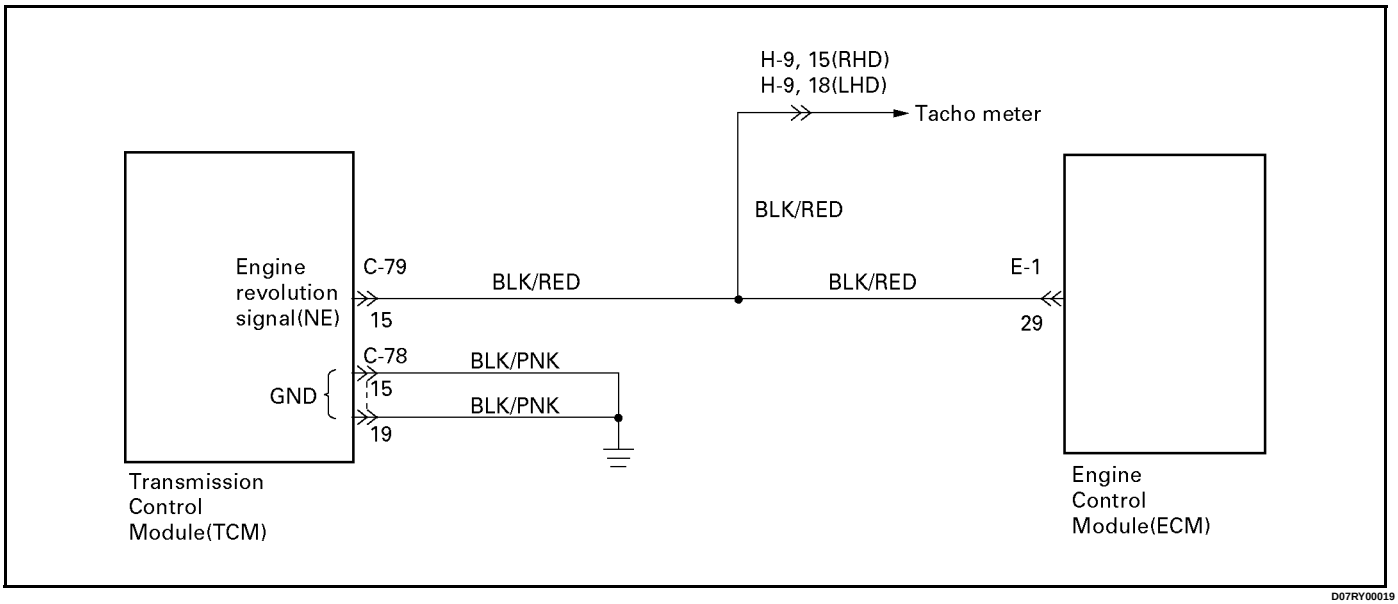

Circuit description:
Engine revolution (rpm) signals are sent from Engine Control Module (ECM) to the Transmission Control Module (TCM).
The engine speed sensor is an electromagnetic pulse pickup type that generates signals when the flywheel gear revolves (2 pulses at a single revolution of the flywheel gear).
The TCM converts these sine wave signals into engine revolution (RPM) signals.

Fail-safe control:
The TCM controls fail-safe by detecting engine revolution sensor failure.

Failure detection:

- When input revolution is more than 2000 rpm
- When not even 1 pulse is input in the engine revolution signal during 5 seconds
- Detection inhibit condition: At 4th gear

Contents of control:
At failure detection

- Up hill and down hill control inhibit
- Oil temperature sensor failure detection inhibit
- Blinks "CHECK TRANS" lamp
- Stores the failure information in failure memory.

At failure decision
Same as failure detection

Conditions of turning "CHECK TRANS" lamp off:
Turns "CHECK TRANS" lamp off when judged 0km/h by speed meter sensor after the engine revolution signal pulses are input 250 pulses normally.
(however, uses 0 km/h judgment by back-up vehicle speed at output revolution failure)

Reversion conditions from fail-safe:
Recovers at the same time as the conditions of turning “CHECK TRANS” lamp off are satisfied.

Test description:
The following numbers correspond to circled numbers on the diagnostic chart.

(1) Engine revolution signals are input from the ECM into the TCM.
(2) When the engine idling, voltage fluctuates with (AC intermittent) range of less than 1.4V ⇔ 9 ~ 16V.

Diagnostic aids:
An intermittent may be caused by a poor connection, rubbed through wire insulation or a wire broken inside the insulation. Inspect related harness connector for backed out terminals, improper mating, broken locks, improperly formed or damaged terminals, poor terminal to wire connection and damaged harness.

DTC P0727 (FLASHING CODE 13) ENGINE REVOLUTION SIGNAL FAILURE (NE)

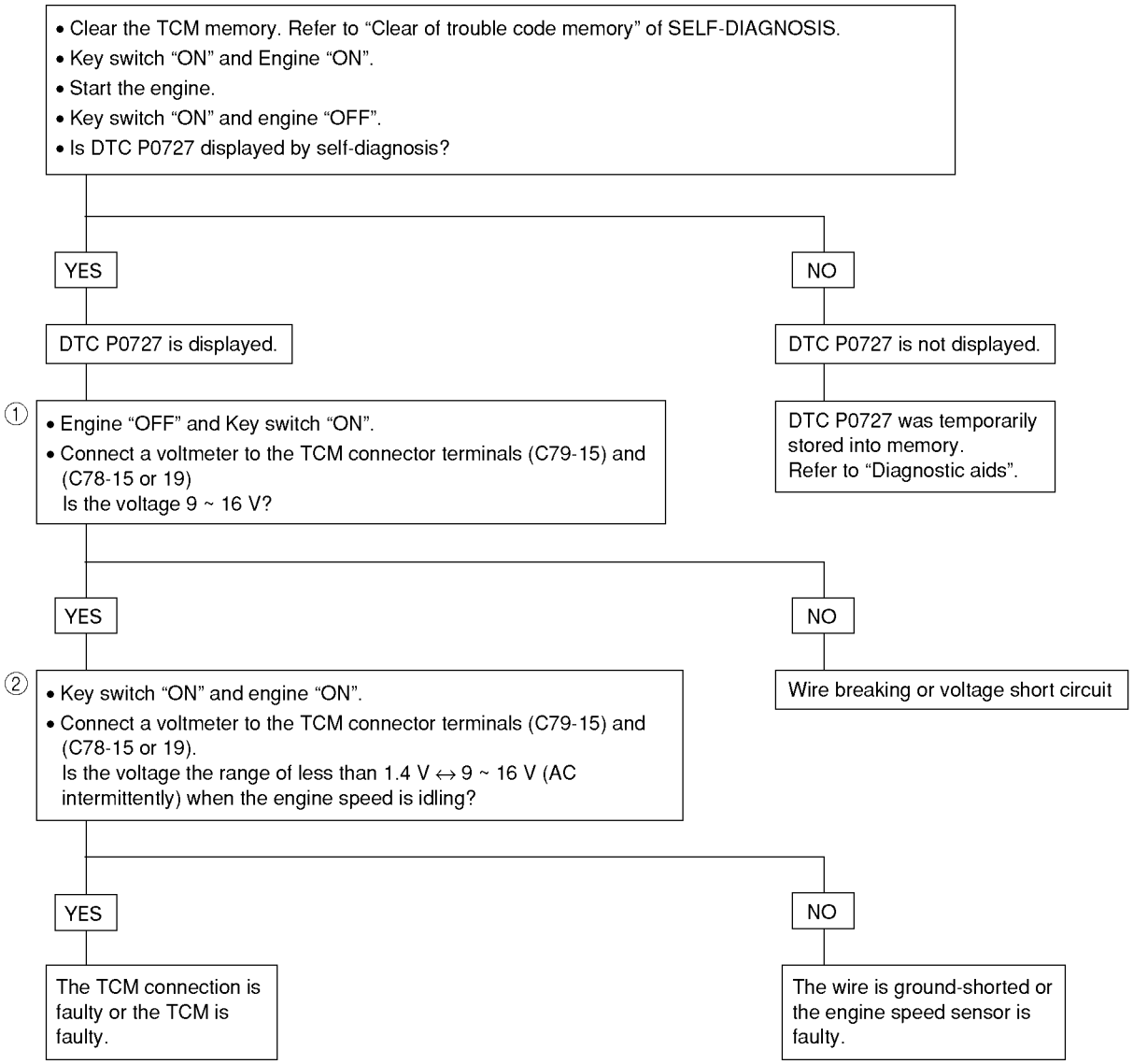

DTCP0727

DTC P0743 (FLASHING CODE 33) TORQUE CONVERTER CLUTCH CONTROL LOCK-UP (ON/OFF) SOLENOID FAILURE (SL)

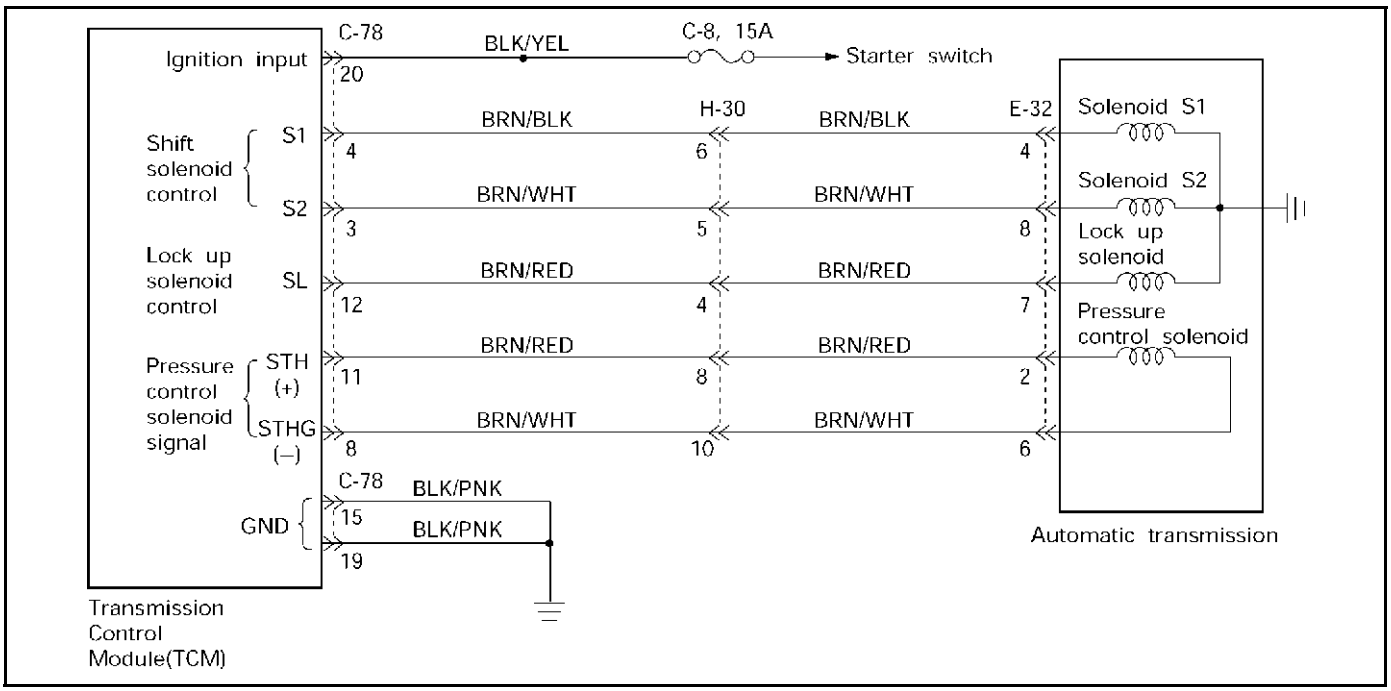

D07RY00047

Circuit description:
The lock-up solenoid SL of the torque converter clutch (TCC) controls the lock-up clutch by a signal according to the lock-up range judgement of the TCM when the vehicle runs.
This function can improve the fuel consumption to almost the same extent as the manual transmission. The lock-up solenoid SL is put into B+ by the TCM, so that the solenoid is actuated with the result of lock-up.

Fail-safe control:
The TCM controls fail-safe by detecting SL solenoid failure.

Failure detection:
GND SHORT detection
- •When SHORT detection continues for 0.3 sec.
- •When SHORT failure detection continues 8 times.

Open detection
- •When OPEN detection continues for 0.5 sec.
- •When OPEN failure detection continues 8 times.

Contents of control:
At failure detection
- Lock-up control inhibit
- If + B short failure is detected, keeps 1st gear when the vehicle speed calculated by output revolution sensor is less than 10km/h to prevent stall. (Canceled at more than 15km/h)

At failure decision
Executes following items in addition to above control items at failure detection.
- •Stores the failure information in failure-memory.

Conditions of turning “CHECK TRANS” lamp off:
None

Reversion conditions from fail-safe:
When a normal condition is judged by rechecking on the state of lock-up ON/OFF

Test description:
The following numbers correspond to circled numbers on the diagnostic chart.
(1) When the key is ON, the voltage between the TCM connector terminals (C78-12) and (C78-15 or 19) is 1.0 V or less.
(2) When the gear is of the 2nd speed in the D range and the throttle opening is about 50% at a higher speed than about 40km/h, the TCM supplies 8 to 16 V, so that the solenoid is actuated with the result of lock-up.
(3) The resistance range of the solenoid is 11 to 15Ω.

Diagnostic aids:
In case of faulty connection, open or shorted circuit. to the TCM terminal (C78-12), DTC P0743 is displayed. A intermittent failure may be caused by a poor connection, rubbed through wire insulation or a wire broke inside the insulation.

DTC P0743 (FLASHING CODE 33) TORQUE CONVERTER CLUTCH CONTROL LOCK-UP (ON/OFF) SOLENOID FAILURE (SL)

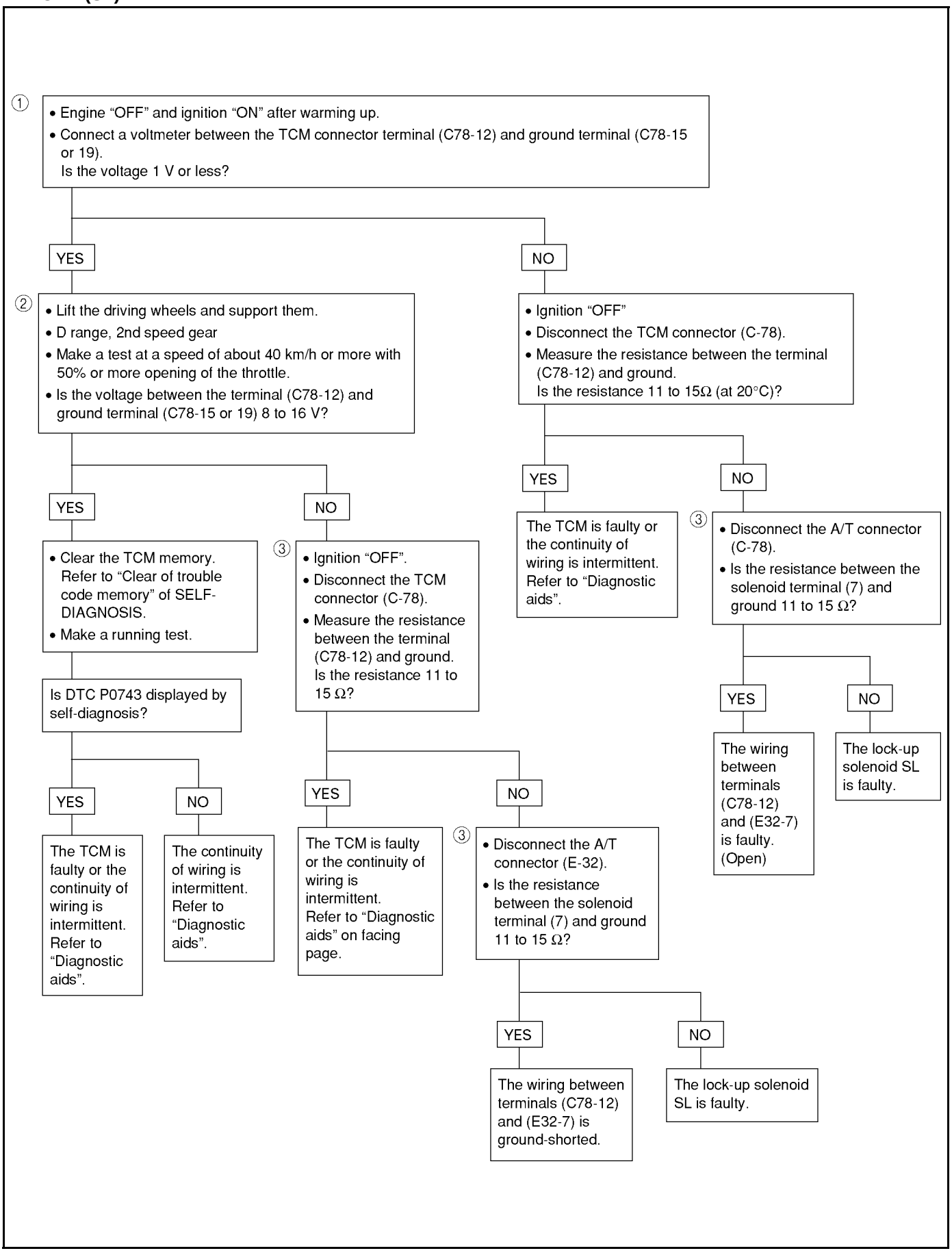

DTCP0743

DTC P0748 (FLASHING CODE 35) PRESSURE CONTROL SOLENOID FAILURE (STH)

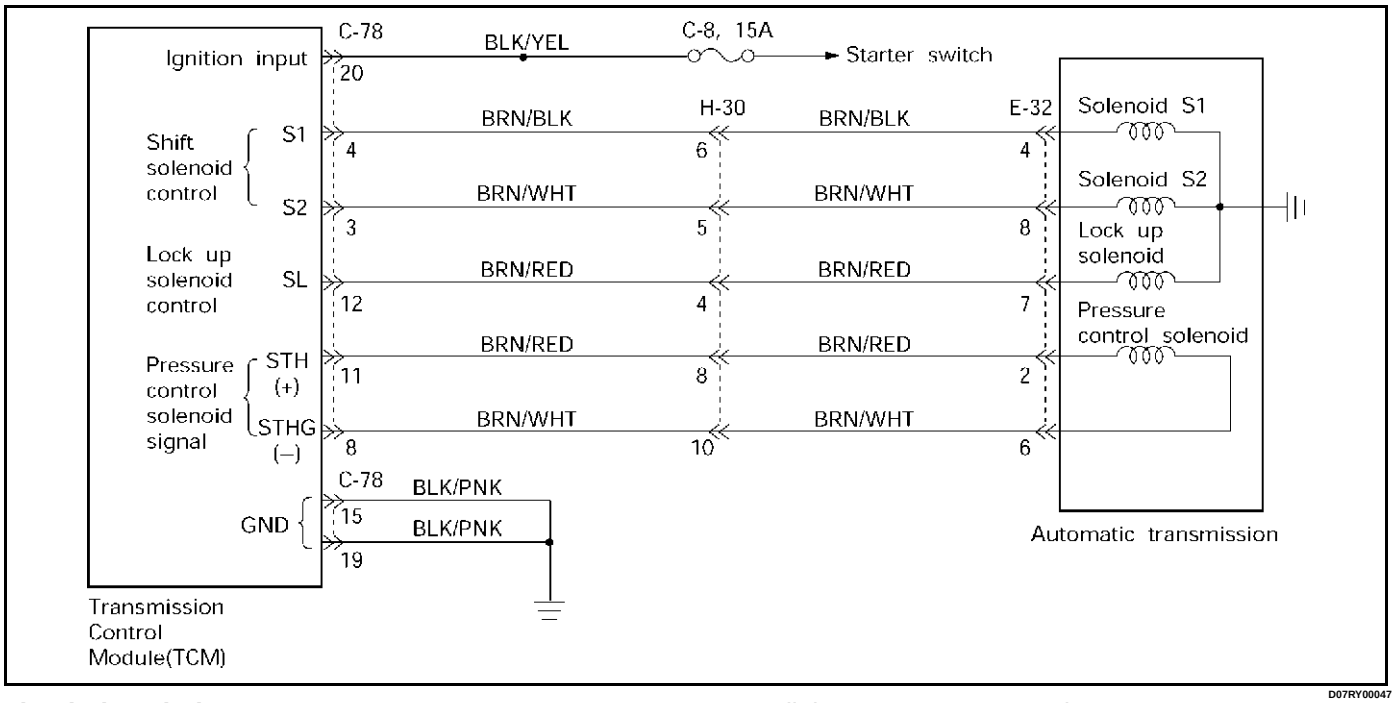

Circuit description:
The pressure control solenoid is a PWM duty control solenoid located in the valve body.
The pressure control solenoid is a TCM-controled device used to regulate transmission throttle pressure by energizing current from the TCM.

Fail-safe control:
The TCM controls fail-safe by detecting pressure control solenoid failure.

Failure detection:
IG short failure

- When the feedback A/D value is more than 1020 for 500 milli-second continuously.
- Detection inhibit condition: Prohibition during 1 second after reversion from open failure, because the possibility of the mis-detection is high.

Open failure (Including GND Short)

- When the feedback A/D value is less than 15 for more than 70 milli-second continuously, judges as faliure, and turns the current of target output off, after 1.5 second passed turns the current of target value to normal. The A/D value is checked, and this operation is repeated during 70 milli-second again.
- When it continues for 12.5 second in total.

Contents of control:
At failure detection

- Lock-up control inhibit
- Up hill and down hill control inhibit
- Squat control inhibit

At failure decision
Executes following items in addition to above control items at failure detection.

- Turns Solenoid power supply OFF
- Blinks "CHECK TRANS" lamp
- Stores the failure information in failure memory

* Prohibits failure detection of S1, S2, SL, STH, selector position switch, and oil temperature sensor.

Conditions of turning "CHECK TRANS" off:
Turns "CHECK TRANS" lamp off after ignition is turned ON→ OFF→ ON.

Reversion conditions from fail-safe:
At failure detection
When IG short failure…The feedback A/D value is less than 1020 for 1 second continuously.
When open failure…Detection criteria is not satisfied or the feedback A/D value is more than 15 for 1 second continuously.
At failure decision
Recovers at the same time as the conditions of turning “CHECK TRANS” lamp off are satisfied.

Test description:
The following numbers correspond to circled numbers on the diagnostic chart.

(1) The solenoid resistance is within the range of 5 to 5.6Ω.

(2) This test checks for shorted circuit at the TCM.

Diagnostic aids:
An intermittent may be caused by a poor connection, rubbed through wire insulation or a wire broken inside the insulation. Inspect related harness connector for backed out terminals, improper mating, broken locks, improperly formed or damaged terminals, poor terminal to wire connection and damaged harness.

DTC P0748 (FLASHING CODE 35) PRESSURE CONTROL SOLENOID FAILURE (STH)

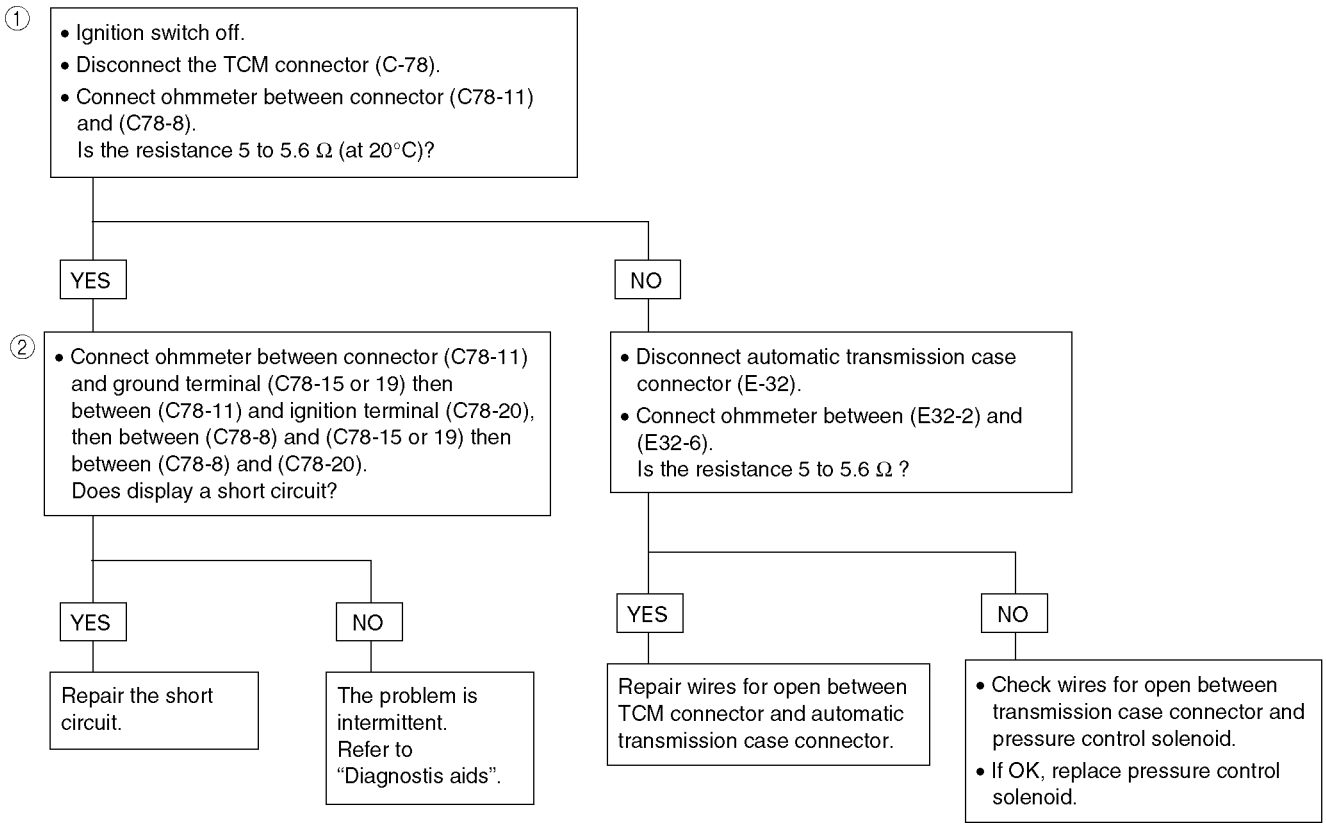

DTCP0748

DTC P0753 (FLASHING CODE 31) SOLENOID 1 FAILURE (S1)

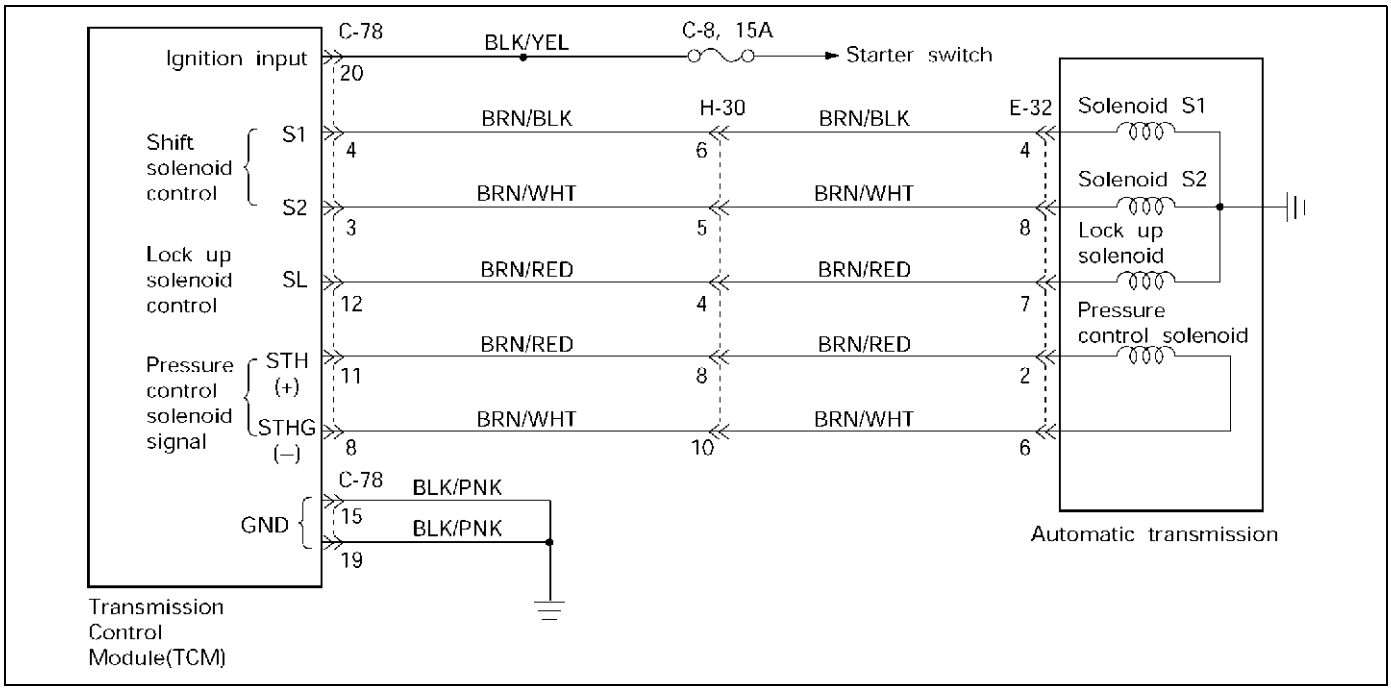

Circuit description:

The shift solenoid S1 changes the hydraulic route with the signals from the TCM according to the vehicle speed and the throttle opening to control shifting. When the solenoid S1 or S2 fails, the hydraulic circuit is mechanically operated as a backup.

Fail-safe control:

The TCM controls fail-safe by detecting S1, S2 shift solenoid failure.

Failure detection:

GND SHORT detection

- When SHORT detection continues for 0.3 sec.
- When SHORT failure detection continues 8 times.

Open detection

- When OPEN detection continues for 0.5 sec.
- When OPEN failure detection continues 8 times.

Contents of control:

At failure detection

- Lock-up control inhibit
- Up hill and down hill control inhibit
- Squat control inhibit

• Changes solenoid output pattern as following figure
The shift theory at shift solenoid failure

Shift lever Position	Normal			S1 failure			S2 filure			S1 and S2 failure		
	Gear	S1	S2	Gear	S1	S2	Gear	S1	S2	Gear	S1	S2
D	1	❍	×	3		×→❍	1	❍		O/D		
	2	❍	❍			❍	O/D	❍→×				
	3	×	❍			❍		×				
	O/D	×	×	O/D		×		×				
2	1	❍	×	3		×→❍	1	❍		3		
	2	❍	❍			❍	O/D	❍→×				
	3	×	❍			❍		×				
L	1	❍	×	3		×→❍	1	❍		3		
	2	❍	❍			❍	O/D	❍→×				

At failure decision
Executes following items in addition to above control items at failure detection.

•Turns Solenoid power supply OFF

•Blinks "CHECK TRANS" lamp

•Stores the failure information in failure-memory
*Prohibits failure detection of S1, S2, SL, STH, Selector position switch, and Oil temp. sensor.

Conditions of turning "CHECK TRANS" off:
Turns "CHECK TRANS" lamp off after ignition is turned ON→ OFF→ ON.

Reversion conditions from fail-safe:
At failure detection
When a normal judgment is obtained by rechecking during shifting.
At failure decision
Recovers at the same time as the conditions of turning “CHECK TRANS” lamp off are satisfied.

Test description:

The following numbers correspond to circled numbers on the diagnostic chart.

(1) With the key "ON", the voltage between the TCM terminals (C78-4) and (C78-15 or 19) is 8 to 16V.

(2) When the driving wheels revolve with the 3rd speed gear, the voltage is 1 V or less.

(3) The solenoid resistance is within the range of 11 to 15Ω.

Diagnostic aids:
In case of faulty connection, open or shorted circuit to the TCM terminal (C78-4), DTC P0753 is displayed. A intermittent failure may be caused by a poor connection, rubbed through wire insulation or a wire broke inside the insulation.

DTC P0753 (FLASHING CODE 31) SOLENOID 1 FAILURE (S1)

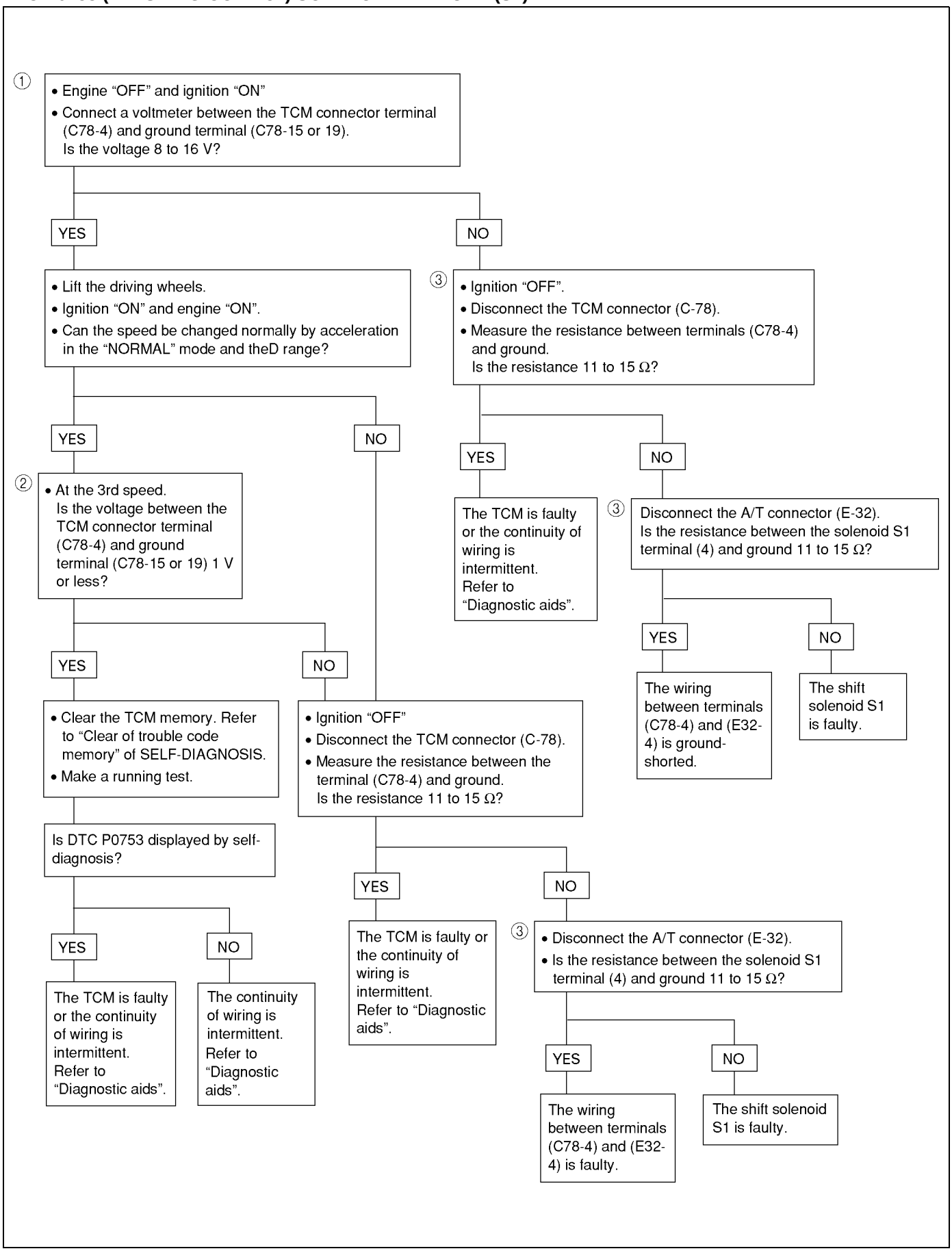

DTCP0753

MEMO

DTC P0758 (FLASHING CODE 32) SOLENOID 2 FAILURE (S2)

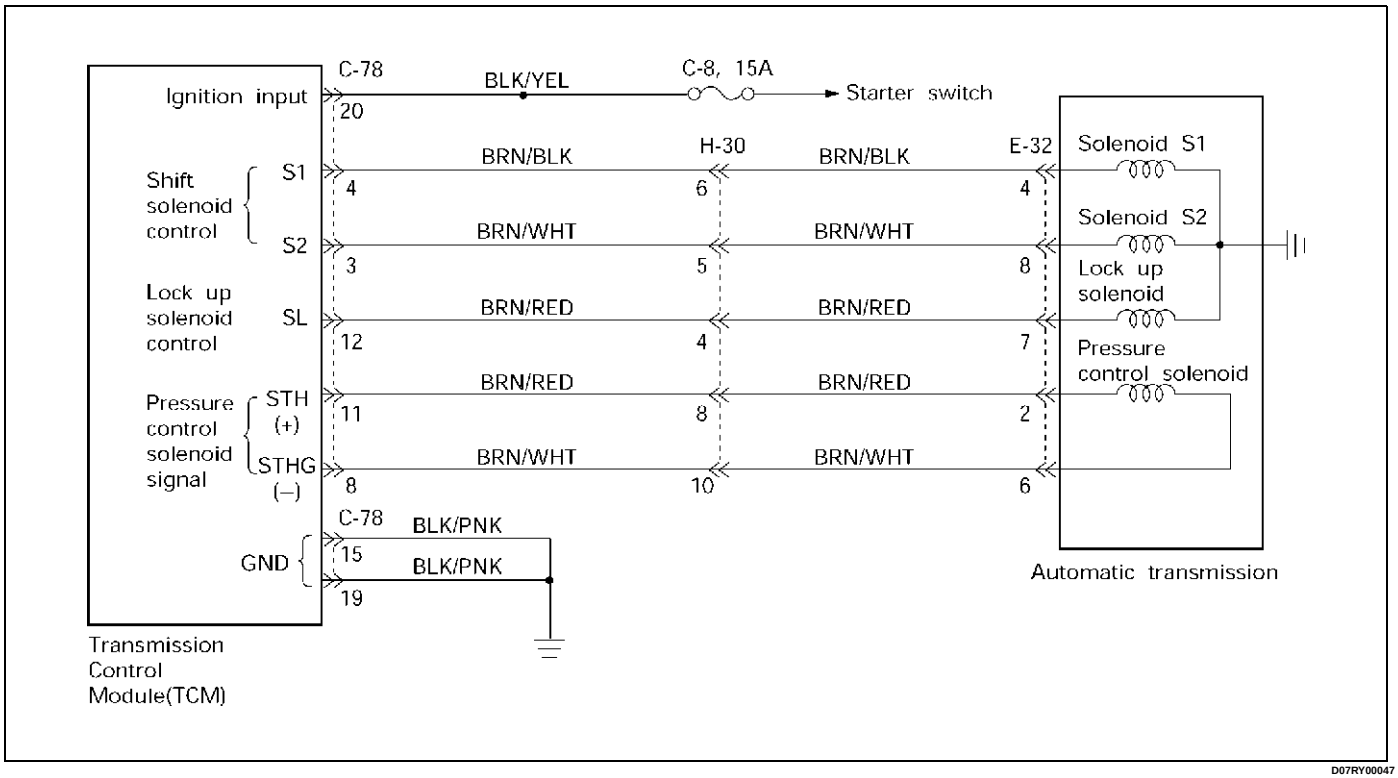

Circuit description:
The solenoid S2 changes the hydraulic route with the signals from the TCM according to the vehicle speed and the throttle opening to control shifting. When the solenoid S1 or S2 fails, the hydraulic circuit is mechanically operated as a backup.

Fail-safe control:
The TCM controls fail-safe by detecting S1, S2 shift solenoid failure.

Failure detection:
GND SHORT detection

- When SHORT detection continues for 0.3 sec.
- When SHORT failure detection continues 8 times.

Open detection

- When OPEN detection continues for 0.5 sec.
- When OPEN failure detection continues 8 times.

Contents of control:
At failure detection

- Lock-up control inhibit
- Up hill and down hill control inhibit
- Squat control inhibit
- Changes solenoid output pattern as "The shift theory at shift solenoid failure". (See DTC P0753)

At failure decision
Executes following items in addition to above control items at failure detection.

- Turns Solenoid power supply OFF
- Blinks "CHECK TRANS" lamp
- Stores the failure information in failure-memory
  *Prohibits failure detection of S1, S2, SL, STH, Selector position switch, and Oil temperature sensor.

Conditions of turning "CHECK TRANS" off:
Turns "CHECK TRANS" lamp off after ignition is turned ON→ OFF→ ON.

Reversion conditions from fail-safe:
At failure detection
When a normal judgment is obtained by rechecking during shifting.
At failure decision
Recovers at the same time as the conditions of turning “CHECK TRANS” lamp off are satisfied.

Test description:
The following numbers correspond to circled numbers on the diagnostic chart.

1 With the key "ON", the voltage between the TCM terminals (C78-3) or (C78-15 or 19) is 1V or less.

2 When the driving wheels revolve with the 2nd speed gear, the voltage is 8 to 16V.

3 The resistance of the solenoid is in the range of 11 to 15Ω.

Diagnostic aids:
In case of faulty connection, open or shorted circuit to the TCM terminal (C78-3), DTC P0758 is displayed. A intermittent failure may be caused by a poor connection, rubbed through wire insulation or a wire broken inside the insulation.

DTC P0758 (FLASHING CODE 32) SOLENOID 2 FAILURE (S2)

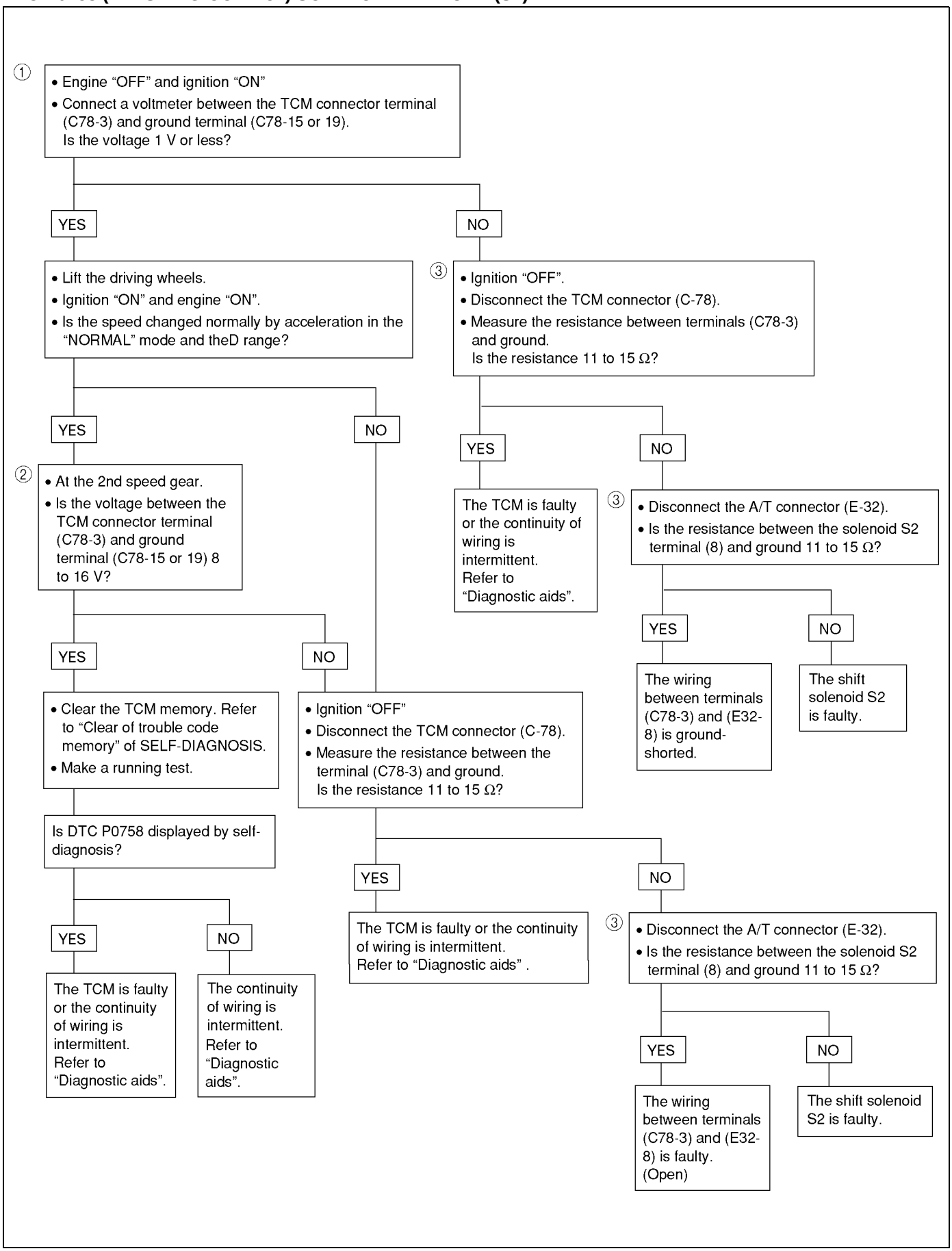

DTCP0758

DTC P1121 (FLASHING CODE 23) ANALOG THROTTLE SIGNAL FAILURE (VREF, VGND)

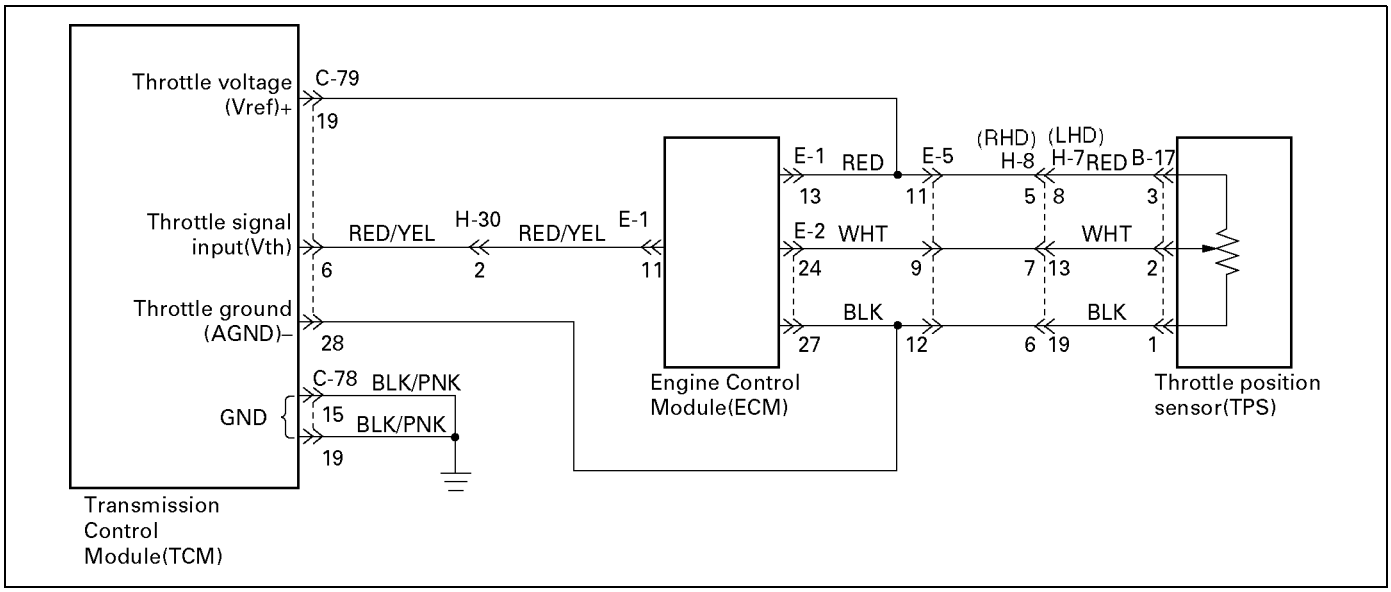

Circuit description:
When the signal of the engine throttle position sensor located on the accelerator pedal is supplied to the transmission TCM, the TCM judges the opening condition of the throttle.
The shift point of the transmission is determined by this opening condition of the throttle.

Fail-safe control:
The TCM controls fail-safe by detecting analog throttle signal (VREF, VGND) failure.

Failure detection:

- When the Vref input voltage is detected more than 5.55V or less than 4.45V.
- When the Vgnd input voltage is detected more than 0.40V or less than -0.40V.
- When the failure criteria is continuously for 1.0 sec.

Contents of control:
At failure detection

- Judges throttle opening of linear sensor (Vth) as Vref:5V, Vgnd:0V
- Throttle learning control inhibit
- Up hill and down hill control inhibit

At failure decision
Executes following items in addition to above control items at failure detection.

- Stores the failure information in failure-memory

Conditions of turning “CHECK TRANS” lamp off:
None

Reversion conditions from fail-safe:
At failure detection
When the Vref input voltage is detected less than 5.55 V and more than 4.45 V.
When the Vgnd input voltage is detected less than 0.40 V and more than -0.40 V.
At failure decision

- Recovers when judged 0km/h by output revolution sensor after the Vref input voltage is detected less than 5.55V and more than 4.45V.
  (however, uses 0 km/h judgment by back-up vehicle speed at output revolution failure)
- Recovers when judged 0km/h by output revolution sensor after the Vgnd input voltage is detected less than 0.40V and more than -0.40V.
  (however, uses 0 km/h judgment by back-up vehicle speed at output revolution failure)

Test description:
The following numbers correspond to circled numbers on the diagnostic chart.
(1) Check the power supply voltage (4.75-5.25V) of throttle position sensor.

Diagnostic aids:
An intermittent may be caused by a poor connection, rubbed through wire insulation or a wire broken inside the insulation. Inspect related harness connector for backed out terminals, improper mating, broken locks, improperly formed or damaged terminals, poor terminal to wire connection and damaged harness.

DTC P1121 (FLASHING CODE 23) ANALOG THROTTLE SIGNAL FAILURE (VREF, VGND)

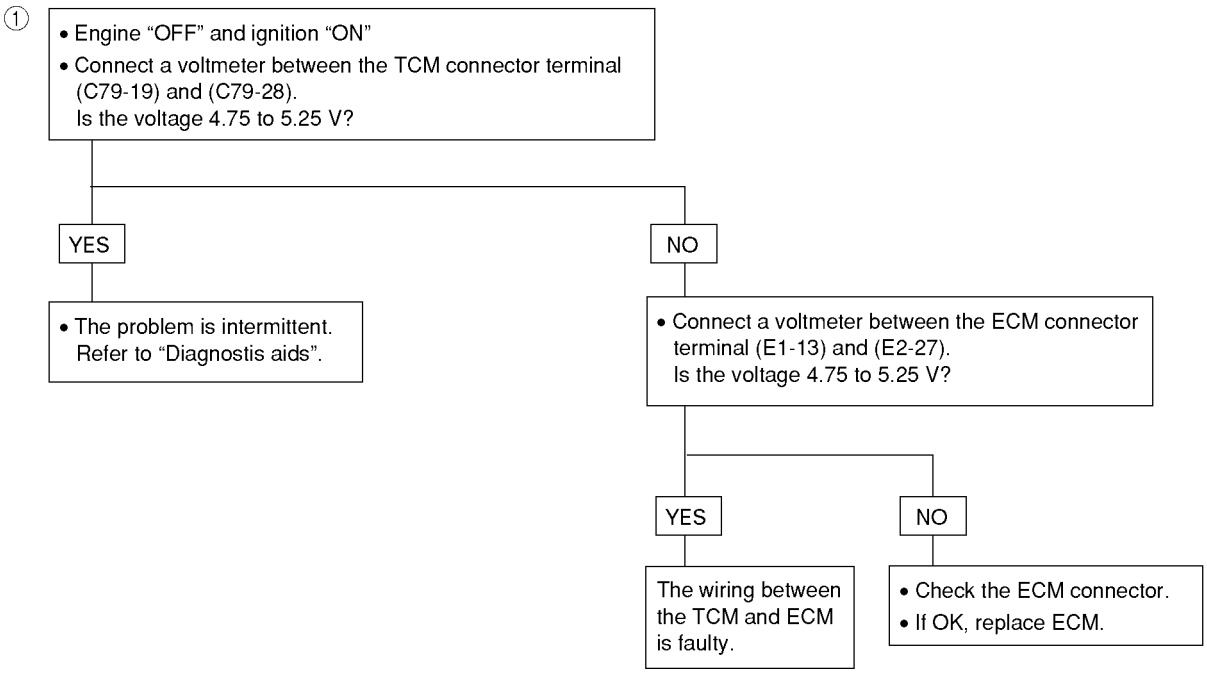

DTCP1121

WIRING DIAGRAM

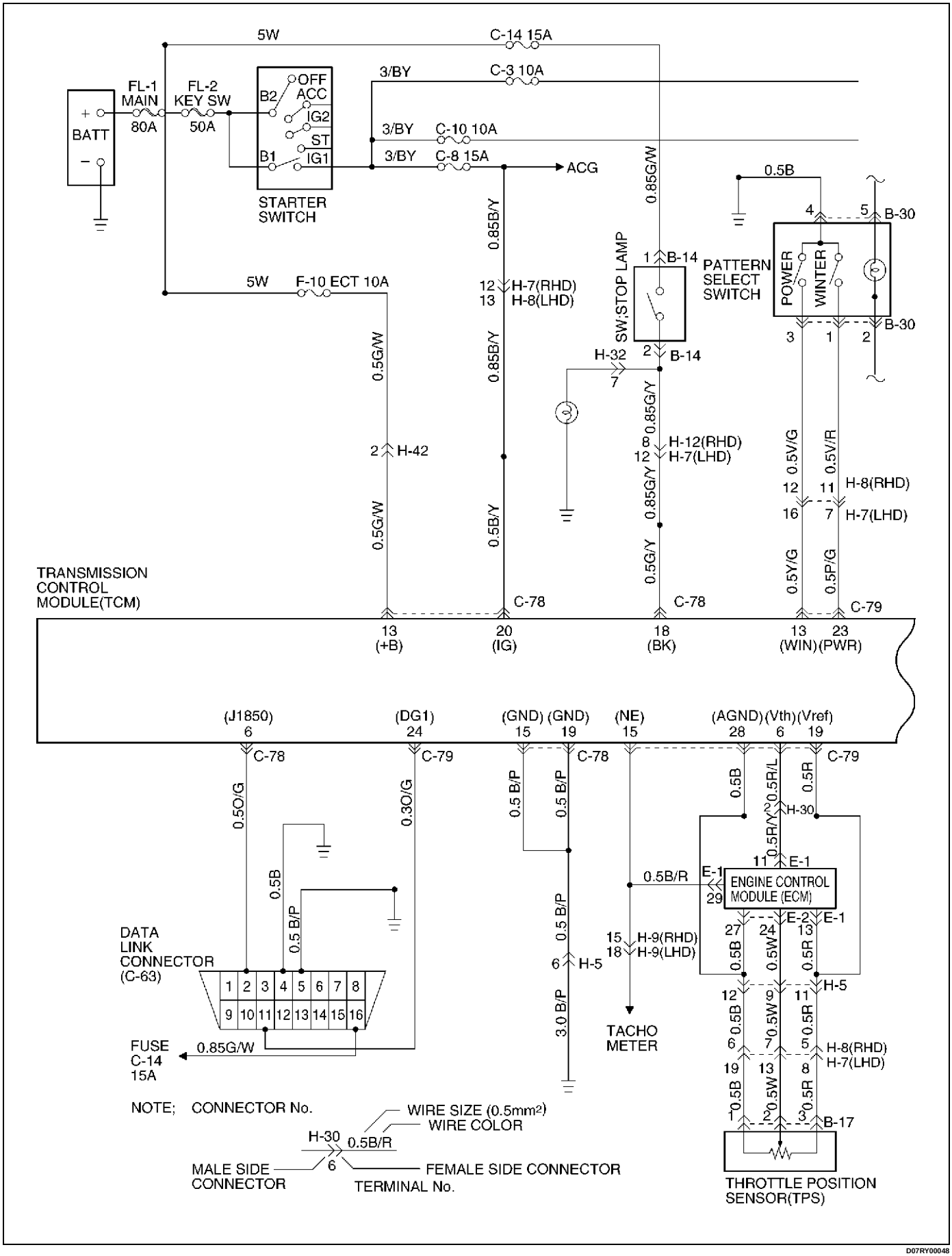

WIRING DIAGRAM

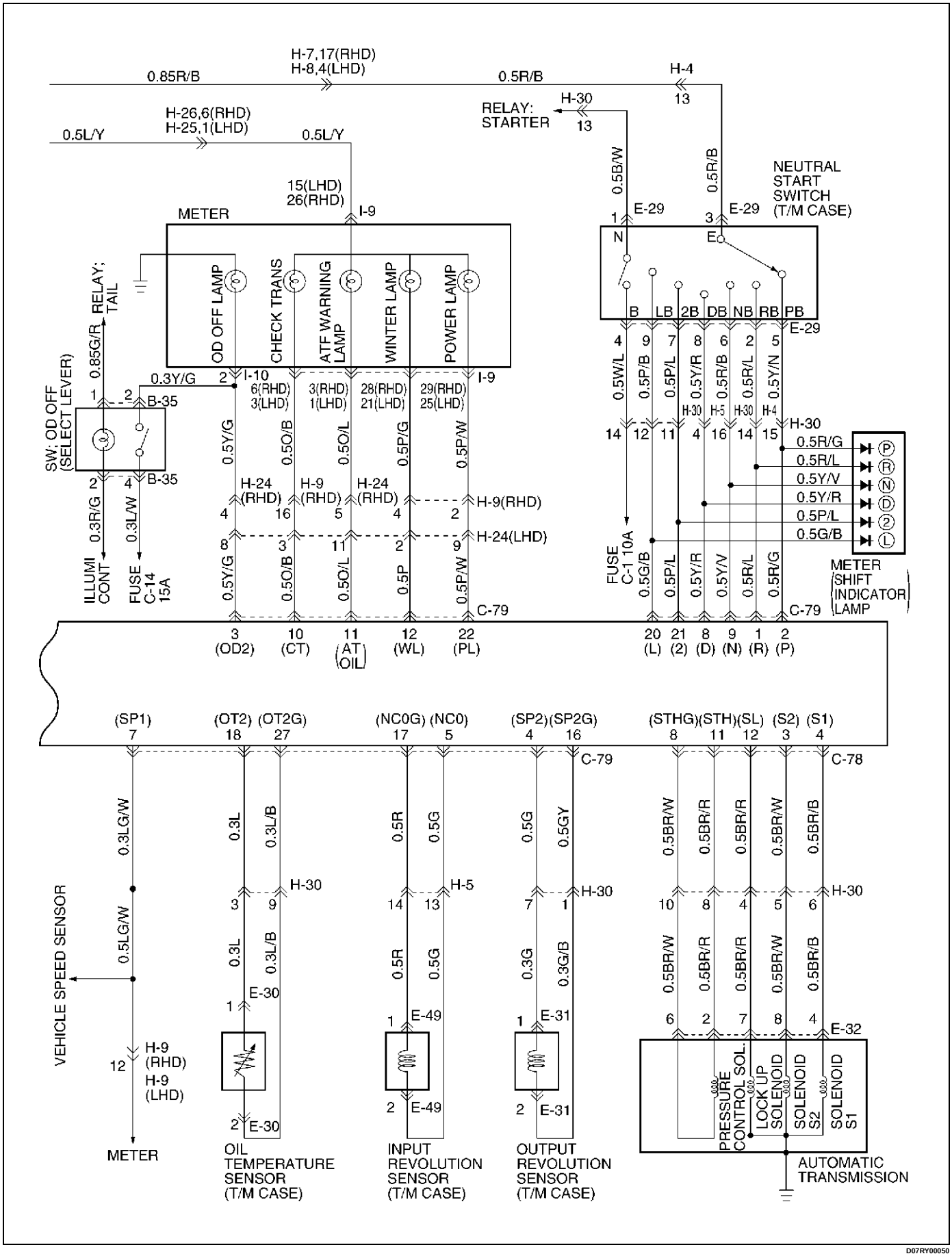

CONNECTOR LIST

No.	Connector face		No.	Connector face
B-14			E-30	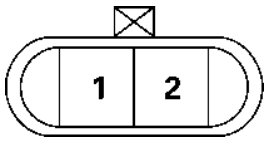
B-17	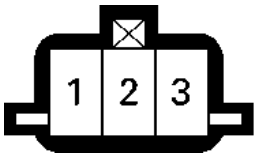		E-31	
B-30			E-32	
B-35	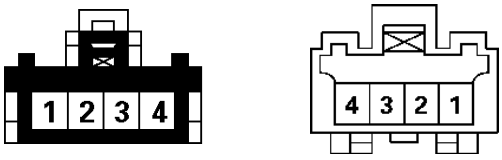		E-49	
C-63	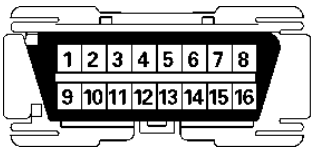		H-4	(BLACK)
C-78	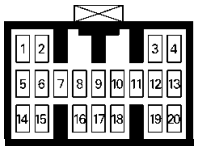		H-5	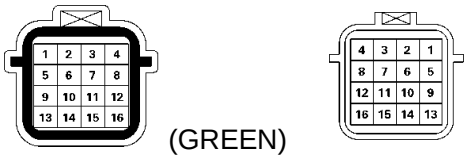 (GREEN)
C-79	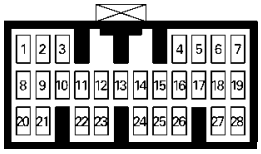		H-7 (RHD)	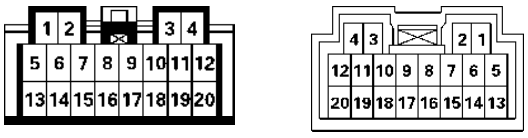
E-1	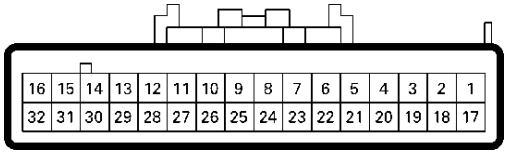		H-7 (LHD)	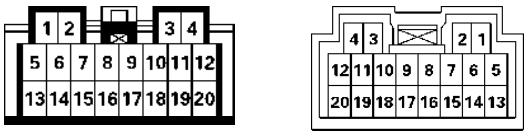
E-2	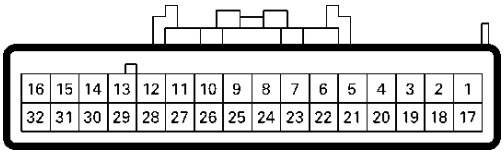		H-8 (RHD)	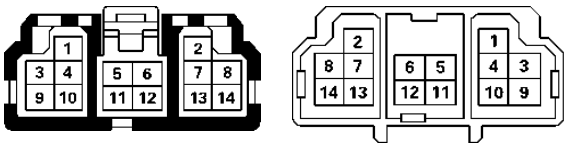
E-29	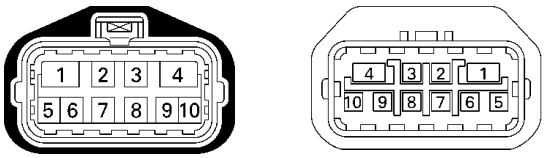		H-8 (LHD)	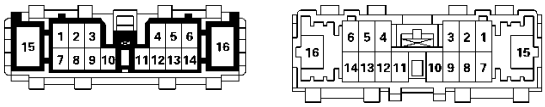

CONNECTOR LIST

No.	Connector face		No.	Connector face
H-9 (RHD)	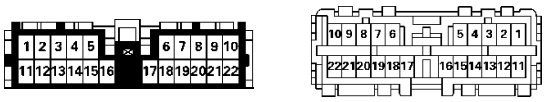		H-42	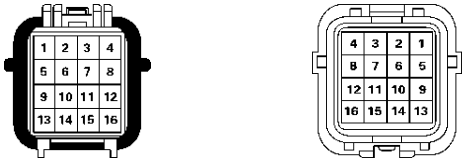
H-9 (LHD)	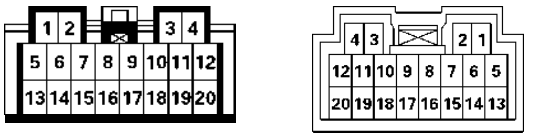		I-9	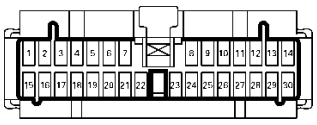
H-12 (RHD)	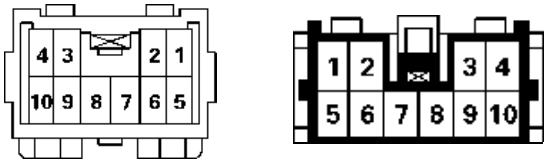		I-10	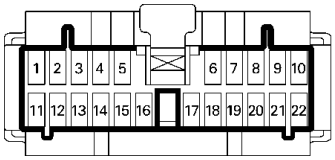
H-24 (RHD)	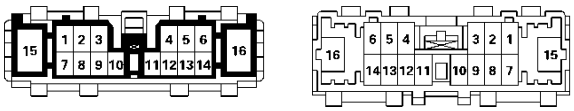			
H-24 (LHD)	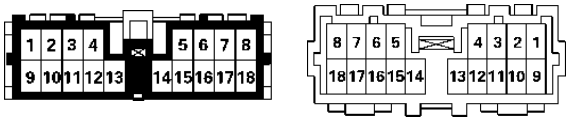			
H-25 (LHD)	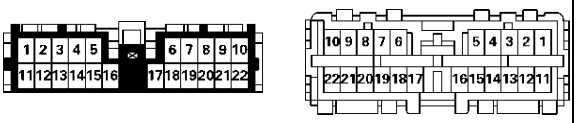			
H-26 (RHD)	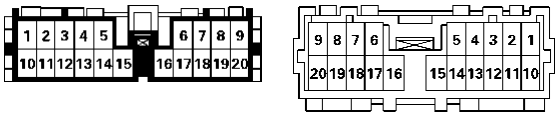			
H-30	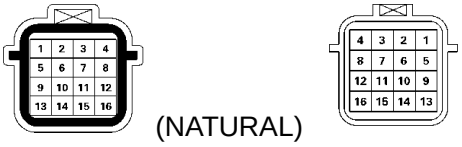 (NATURAL)			
H-32	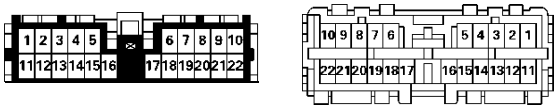			

TROUBLESHOOTING CHART

Number are arranged in order of probability.
Parform inspections starting with number one and working up.

ON-VEHICLE TROUBLESHOOTING

No	Symptom	Inspection item	No vehicle movement		Slippage		Long garage shift time lag		No engine start	Engine stop		No shift						
			No forward movement	No reverse movement	Slip to front	Slip to rear	N→D	N→R		N→D or N→R	Speed reduction	1→2, 2→1	2→3, 3→2	3→4, 4→3	Lock-up does not operate	Poor engine braking in 2nd gear	Poor engine braking in 1st gear	No kick-down
A/T		A/T interior * Refer to A/T internal troubleshooting	6	8	5	5	5	4		2	2	6	6	8	7	3	3	
		O-rings																
		Gaskets																
		Oil seals																
ATF		Water in fluid/Wrong fluid	2	2	2	2	2	2										
		Automatic transmission fluid level (Too much or too little)	1	1	1	1	1	1										
A/T (External)		Cooler pipe resonance																
		Cooler pipe installation																
		Cooler pipes (Bending and/or clogging)	4	6														
		Breather (Bending)																
		Select lever linkage (Operation and adjustment)	3	3												1	1	
Electrical system		TCM internal circuits										5	5	7	6			5
		ECM																
		Tachometer																
		Wire harness connectors																
		Brake switch circuit													5			
		Overdrive switch circuit												1				
		Pattern select switch circuit																
		Oil temperature sensor circuit					4											
		Neutral start switch circuit (Operation and adjustment)							2			2	2	5	2	2	2	
		SP1 sensor circuit (Speedometer sensor)												2				
		SP2 sensor circuit (Output revolution sensor)		5								3	3	4	3			2
		Input revolution sensor circuit																
		Pressure control solenoid circuit			4	4	3	3										
		Lock-up solenoid circuit													4			
		Shift solenoid S2 circuit		4								4		6				3
		Shift solenoid S1 circuit											4					4
		Throttle position sensor circuit			3	3						1	1	3	1			1
Chassis		Suspension looseness																
		Drive train and body interference																
ENG		Exhaust system resonance																
		Engine and automatic transmission mounting																
		Drive plate	5	7														
		Engine tuning								1	1							

ON-VEHICLE TROUBLESHOOTING

No	Symptom	Inspection item	ENG				Chassis		Electrical system																	A/T (External)					ATF		A/T			
			Engine tuning	Drive plate	Engine and automatic transmission mounting	Exhaust system resonance	Drive train and body interference	Suspension looseness	Throttle position sensor circuit	Shift solenoid S1 circuit	Shift solenoid S2 circuit	Lock-up solenoid circuit	Pressure control solenoid circuit	Input revolution sensor circuit	SP2 sensor circuit (Output revolution sensor)	SP1 sensor circuit (Speedometer sensor)	Neutral start switch circuit (Operation and adjustment)	Oil temperature sensor circuit	Pattern select switch circuit	Overdrive switch circuit	Brake switch circuit	Wire harness connectors	Tachometer	ECM	TCM internal circuits	Select lever linkage (Operation and adjustment)	Breather (Bending)	Cooler pipes (Bending and/or clogging)	Cooler pipe installation	Cooler pipe resonance	Automatic transmission fluid level (Too much or too little)	Water in fluid/Wrong fluid	Oil seals	Gaskets	O-rings	A/T interior * Refer to A/T internal troubleshooting
7	Shift point failure	Shift point too high							1						5	4	3	6	2						7											
		Shift point too low							1						5	4	3		2						6											
8	Shift lever too stiff or too loose																									1										2
9	Poor fuel economy											3						5	4	2												1				6
10	Pattern select switch not working																	2	1						3											
11	Oil leakage	Breather																									3	4			1	2				5
		Engine and transmission housing mating surfaces		1																													2		3	4
		Transmission case and engine housing mating																																1		
		Oil pan																																1		2
		Manual shift oil seal																															1			
		O-rings (Union elbow and transmission wires																																	1	
		Cooler pipe installation																										3	1	2						

ON-VEHICLE TROUBLESHOOTING

No	Symptom	Inspection item	ENG				Chassis		Electrical system																	A/T (External)					ATF		A/T			
			Engine tuning	Drive plate	Engine and automatic transmission mounting	Exhaust system resonance	Drive train and body interference	Suspension looseness	Throttle position sensor circuit	Shift solenoid S1 circuit	Shift solenoid S2 circuit	Lock-up solenoid circuit	Pressure control solenoid circuit	Input revolution sensor circuit	SP2 sensor circuit (Output revolution sensor)	SP1 sensor circuit (Speedometer sensor)	Neutral start switch circuit (Operation and adjustment)	Oil temperature sensor circuit	Pattern select switch circuit	Overdrive switch circuit	Brake switch circuit	Wire harness connectors	Tachometer	ECM	TCM internal circuits	Select lever linkage (Operation and adjustment)	Breather (Bending)	Cooler pipes (Bending and/or clogging)	Cooler pipe installation	Cooler pipe resonance	Automatic transmission fluid level (Too much or too little)	Water in fluid/Wrong fluid	Oil seals	Gaskets	O-rings	A/T interior * Refer to A/T internal troubleshooting
12	Jolt when gears are changed	N→D			3				5				6					7							8	4					1	2				9
		N→R			3				5				6												7	4					1	2				8
		1→2	9		3				4				5	6	7										8						1	2				10
		2→3	9		3				4				5	6	7										8						1	2				10
		3→4	9		3				4				5	6	7										8						1	2				10
		Coast-down (Including vehicle stop)			2		3	4	5				6	7	8										9							1				10
		Kick-down			2			3	4				5	6	7										8							1				9
		Lock-up (ON/OFF)			2				3				4												5							1				6
		Accelerator ON/OFF (No gear change)	5		1				2			3													4											
13	Excessive vibration	Running	3	7	6	4	5																								1	2				8
14	Abnormal noise	Idling	3																											2	1					4
		Garage shift			1																															
		Running	2		1	1	1																							1						3
		Gear change	2		1	1	1																													3
		Accelerator ON/OFF (No gear change)	2		1	1	1																													

ON–VEHICLE TROUBLESHOOTING

No	Symptom	Inspection item	P0753(31)	P0758(32)	P0748(35)	P0743(33)	P0502(24)	P0722(11)	P0717(14)	P0727(13)	P0120(21)	P1121(23)	P0705(17)
			DTC (FLASHING CODE)										
15	A/T	A/T interior * Refer to A/T internal troubleshooting											
		O-rings											
		Gaskets											
		Oil seals											
	ATF	Water in fluid/Wrong fluid											
		Automatic transmission fluid level (Too much or too little)											
	A/T (External)	Cooler pipe resonance											
		Cooler pipe installation											
		Cooler pipes (Bending and/or clogging)											
		Breather (Bending)											
		Select lever linkage (Operation and adjustment)											
	Electrical system	TCM internal circuits	2	2	2	2	2	2	2	2	3	3	2
		ECM								1	1		
		Tachometer								1			
		Wire harness connectors	1	1	1	1	1	1	1	1	2	2	1
		Brake switch circuit											
		Overdrive switch circuit											
		Pattern select switch circuit											
		Oil temperature sensor circuit											
		Neutral start switch circuit (Operation and adjustment)											1
		SP1 sensor circuit (Speedometer sensor)					1					1	
		SP2 sensor circuit (Output revolution sensor)						1					
		Input revolution sensor circuit							1				
		Pressure control solenoid circuit			1								
		Lock-up solenoid circuit				1							
		Shift solenoid S2 circuit		1									
		Shift solenoid S1 circuit	1										
		Throttle position sensor circuit									2	2	
	Chassis	Suspension looseness											
		Drive train and body interference											
	ENG	Exhaust system resonance											
		Engine and automatic transmission mounting											
		Drive plate											
		Engine tuning											

UNIT TROUBLESHOOTING

Symptom		Inspection item	T/C		Oil pump	Oil strainer	Transmission case	Shift solenoid S1 (Stick)	Shift solenoid S2 (Stick)	Lock-up solenoid (Stick)	Pressure controller solenoid (Stick)	Valve body (Internal)	Accumulator (C0, C2, B0, and B2)	Clutch			Brake				One-way clutch			Overdrive front and rear planetary gears	Bearing races	Detent spring
			Internal problem	External problem										Overdrive direct clutch (C0)	Forward clutch (C1)	Direct clutch (C2)	Overdrive brake (B0)	2nd coast brake (B1)	2nd brake (B2)	1st and reverse brake (B3)	Overdrive one-way clutch (F0)	One-way clutch No. 1 (F1)	One-way clutch No. 2			
1	No vehicle movement	No forward movement	7		3	1					2	8			4								5	6		
		No reverse movement	6		3	1					2	7				4				5						
2	Slippage	Slip to front	7		3	1					2	8			4								5	6		
		Slip to rear	6		3	1					2	7				4				5						
3	Long garage shift time lag	N→D			2						1	5			3								4			
		N→R			2						1	5				3				4						
4	Engine stop	N→D or N→R	2							1		3														
		Speed reduction								1		2														
5	No shift	1→2							1			4							2			3				
		2→3						1				3				2										
		3→4							1			3					2									
		4→3							1			4		2			3				2					
		3→2						1				4				2						3				
		2→1							1			5							2			3	4			
		Lock-up does not operate	2							1		3														
		Poor engine braking in 2nd gear										2						1								
		Poor engine braking in 1st gear										2							1							
6	Shift lever too stiff or too loose																									1

UNIT TROUBLESHOOTING

	Symptom	Inspection item	T/C											Clutch			Brake				One-way clutch					
			Internal problem	External problem	Oil pump	Oil strainer	Transmission case	Shift solenoid S1 (Stick)	Shift solenoid S2 (Stick)	Lock-up solenoid (Stick)	Pressure controller solenoid (Stick)	Valve body (Internal)	Accumulator (C0, C2, B0, and B2)	Overdrive direct clutch (C0)	Forward clutch (C1)	Direct clutch (C2)	Overdrive brake (B0)	2nd coast brake (B1)	2nd brake (B2)	1st and reverse brake (B3)	Overdrive one-way clutch (F0)	One-way clutch No. 1 (F1)	One-way clutch No. 2	Overdrive front and rear planetary gears	Bearing races	Detent spring
7	Poor fuel economy		2							1		3														
8	Oil leakage	Breather										1														
		Engine and transmission housing mating surfaces		1	2																					
		Oil pan					1																			
9	Jolt when gears are changed	N→D									1	3			2											
		N→R									1	4	2			3										
		1→2									1	4	2						3							
		2→3									1	4	2			3										
		3→4									1	4	2				3									
		Coast-down									1	3	2													
		Kick-down									1	3	2													
		Lock-up								1	1	2														
10	Excessive vibration	Running	2			1						3														
11	Abnormal noise	Idling	4		2	1																			3	
		Garage shift													2	1										
		Running	5		2	1						6												3	4	
		Gear change												1	5	3	2	4	6	7						

MANUAL SHIFTING TEST

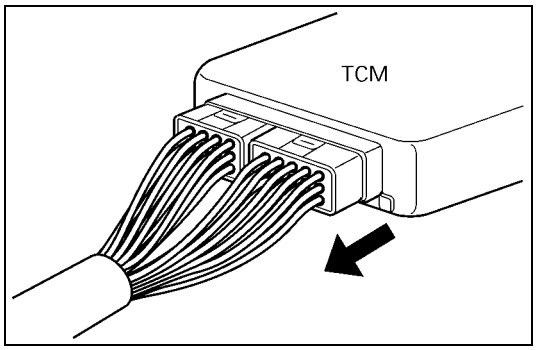

826RY00018

NOTE:
With this test, it can be determined whether the trouble lies within the electrical circuit or is a mechanical problem in the transmission.

1. Disconnect TCM connector

With the engine OFF, disconnect the TCM connector.

Position	Transmission		
Shift	"D" range	"2" range	"L" range
Gear	OD	3rd	3rd

Transmission	
"R" range	"P" range
Reverse	Pawl Lock

F07RY00024

2. Inspect manual driving operation

Check that the shift and gear positions correspond with the table below.
If the "L", "2" and "D" range gear positions are difficult to distinguish, do perform the following road test.
While driving, shift through the "L", "2" and "D" ranges. Check that the gear change corresponds to the gear position.
If any abnormality is found in the above test, do perform the stall, time lag or gear change tests.

3. Connect TCM connector

With the engine off, connect the TCM connector.

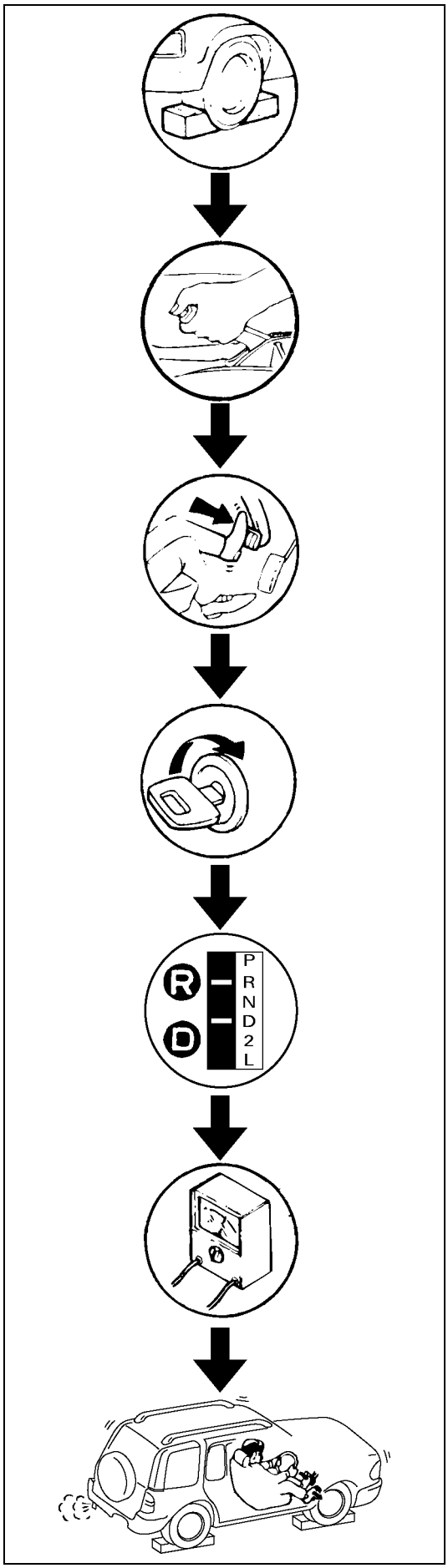

F07RY00002

STALL TEST

The object of this test is to check the overall performance of the transmission and engine by measuring the maximum engine speeds at the "D" and "R" ranges.

NOTE:

(1) Perform the test at normal operation fluid temperature (50 – 80°C or 122 – 176°F).

(2) Do not continuously run this test longer than 5 seconds.

MEASURE STALL SPEED

1) Chock the four wheels.
2) Mount an engine tachometer.
3) Fully apply the parking brake.
4) Step down strongly on the brake pedal with your left foot.
5) Start the engine.
6) Shift into the "D" range. Step all the way down on the accelerator pedal with your right foot. Quickly read the highest engine rpm.

Stall speed	2450 ± 150rpm

7) Perform the same test in the "R" range.

EVALUATION

1) If the engine speed is the same for both ranges but lower than the specified value:
   - Engine output is insufficient.
   - Stator one-way clutch is not operating properly.

NOTE:
If more than 600 rpm below the specified value, the torque converter could be faulty.

2) If the stall speed in only "D" range is higher than specified:
   - Line pressure too low
   - Forward clutch slipping
   - No. 2 one-way clutch not operating properly
3) If the stall speed in only "R" range is higher than specified:
   - Line pressure too low
   - Direct clutch slipping
   - No. 3 brake slipping
4) If the stall speed in the "R" and "D" ranges are higher than specified:
   - Line pressure too low
   - Improper fluid level

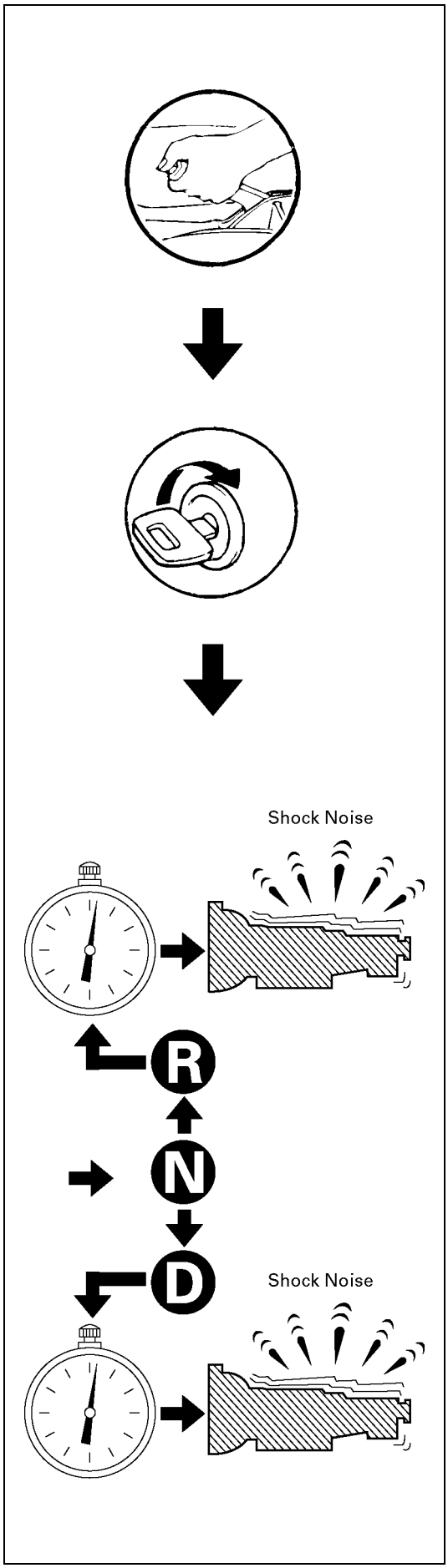

F07RY00003

TIME LAG TEST

If the shift lever is shifted while the engine is idling, there will be a certain time elapse or lag before the shock can be felt. This is used for checking the condition of the forward clutch, direct clutch, No. 3 brake, and No. 2 one-way clutch.

NOTE:

(1) Perform the test at normal operation fluid temperature (50 – 80°C or 122 – 176°F).

(2) Be sure to allow one minute interval between tests.

(3) Make three measurements and take the average value.

MEASURE TIME LAG

1) Fully apply the parking brake.
2) Start the engine.
   Check idling speed (A/C OFF)

"N" range	695 – 745 rpm

3) Shift the shift lever from "N" to "D" range. Using a stop watch, measure the time it takes from shifting the lever until the shock is felt.

Time lag	Less than 0.7 seconds

4) In same manner, measure the time lag for "N" → "R".

Time lag	Less than 1.2 seconds

EVALUATION

1) If "N" → "D" time lag is longer than specified:
   - Line pressure too low
   - Forward clutch malfunction
   - No. 2 one-way clutch not operating properly
2) If "N" → "R" time lag is longer than specified:
   - Line pressure too low
   - Direct clutch malfunction
   - No. 3 brake malfunction
3) If both time lag is longer than specified:
   - Line pressure too low

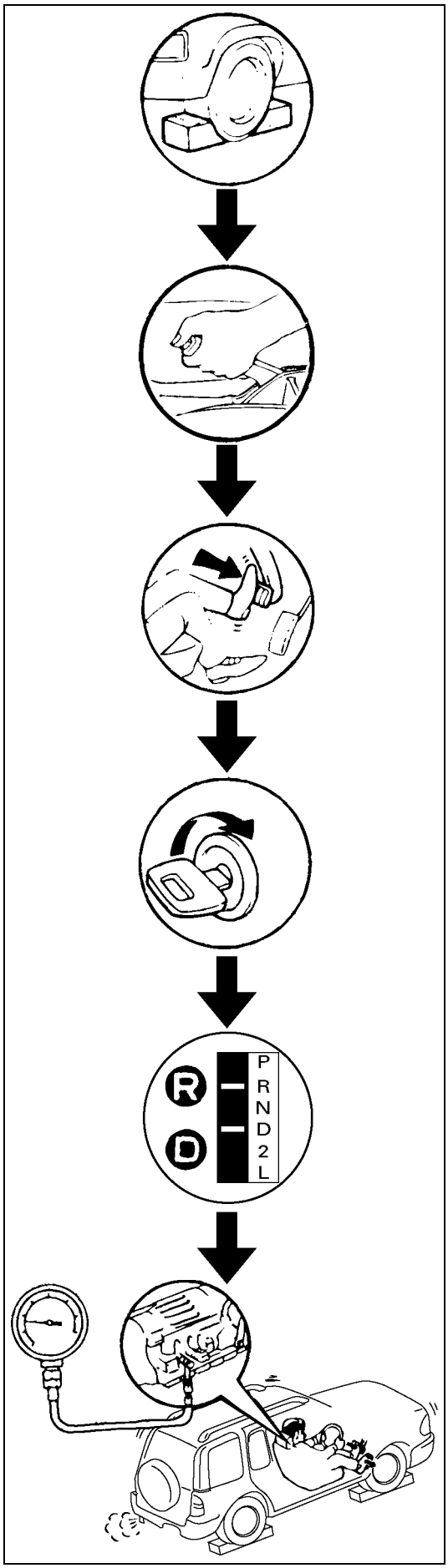

F07RY00004

HYDRAULIC TEST

PREPARATION

1) Warm up the transmission fluid.
2) Remove the transmission case test plug and mount the hydraulic pressure gauge.
   Oil pressure gauge: 5-8840-0093-0

NOTE:
Perform the test at normal operating fluid temperature (50 – 80°C or 122 – 176°F).

MEASURE LINE PRESSURE

1) Fully apply the parking brake and chock the four wheels.
2) Start the engine and check idling rpm.
3) Shift into "D" range, step down strongly on the brake pedal with your left foot and, while manipulating the accelerator pedal with the right foot, measure the line pressures at the engine speeds specified in the table.
4) In the same manner, perform the test in "R" range.

Engine speed	Line pressure kPa (kg/cm^2/psi)	
	"D" range	"R" range
Idling	358 – 417 (3.6–4.3 / 51–61)	588 – 686 (6.0–7.0 / 85–100)
Stall	1,176 – 1,323 (12.0–13.5 / 171–192)	1,607 – 1,940 (16.4–19.8 / 233–282)

EVALUATION

1) If the measured values at all ranges are higher than specified.
   - Pressure control solenoid defective.
   - Primary regulator valve defective.
2) If the measured values at all ranges are lower than specified.
   - Primary regulator valve defective.
   - Oil pump defective.
   - Pressure control solenoid defective.
3) If pressure is low in "D" range only:
   - "D" range circuit fluid leakage.
4) If pressure is low in "R" range only:
   - "R" range circuit fluid leakage.

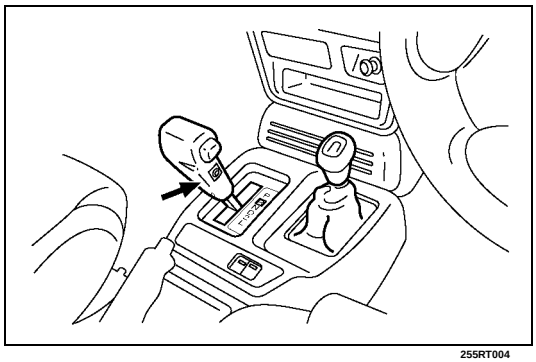

ROAD TEST

NOTE:

Perform the test at normal operation fluid temperature (50 – 80°C or 122 – 176°F).

"D" RANGE TEST IN "NORMAL", AND "POWER" PATTERN RANGES

Shift into the "D" range and hold the accelerator pedal constant at the 50% and 100% throttle valve opening positions.
Push in one of the pattern selector buttons and check the following:

1) 1-2, 2-3, 3-OD and lock-up, up-shifts should take place, and shift points should conform to those shown in the automatic shift diagram.

NOTE:

Drive the vehicle on level ground so as not to change to up and down hill control.

EVALUATION

(1) If there is no 1 → 2 up-shift:
- No. 2 solenoid is stuck
- 1-2 shift valve is stuck

(2) If there is no 2 → 3 up-shift:
- No. 1 solenoid is stuck
- 2-3 shift valve is stuck

(3) If there is no 3 → OD up-shift (throttle valve opening 1/2):
- No. 2 solenoid is stuck
- 3-4 shift valve is stuck

(4) If the shift point is defective:
Refer to *"TROUBLESHOOTING CHART" in this section.*

(5) If the lock-up is defective:
Refer to *"TROUBLESHOOTING CHART" in this section.*

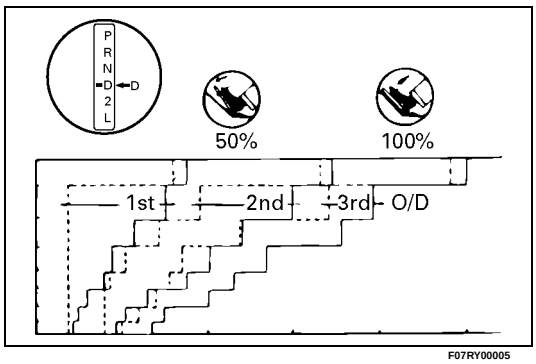

2) In the same manner, check the shock and slip at the 1 → 2, 2 → 3 and 3 → OD up-shifts.

EVALUATION

If the shock is excessive:
Refer to *"TROUBLESHOOTING CHART" in this section.*

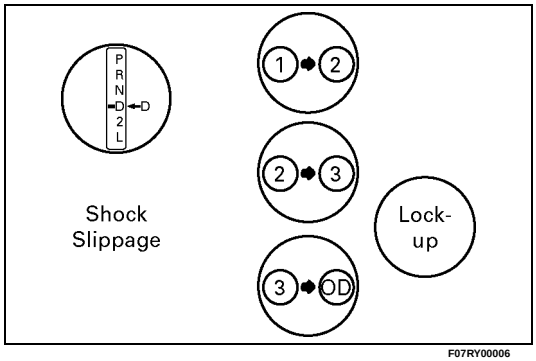

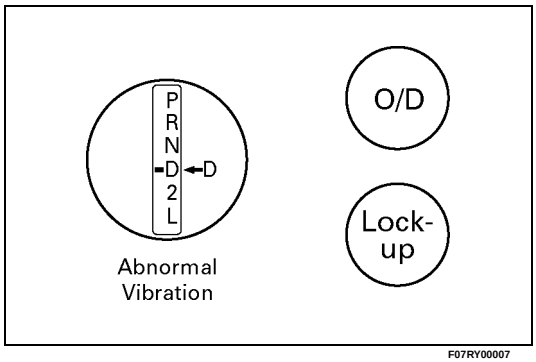

F07RY00007

3) Run at "D" range lock-up or OD gear and check for abnormal noise and vibration.

NOTE:
The check for the cause of abnormal noise and vibration must be made with extreme care as it could also be due to loss of balance in the propeller shaft, differential, the torque converter, etc. or insufficient bending, rigidity, etc. in the power train.

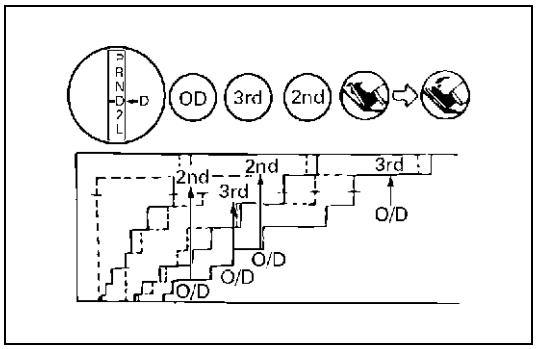

F07RY00008

4) While running in "D" range, 2nd, 3rd gears and OD, check to see that the possible kick-down vehicle speed limits for 2 → 1, 3 → 1, 3 → 2, OD → 3 and OD → 2 kick-downs conform to those indicated on the automatic shift diagram.

5) Check for abnormal shock and slip at kick-down.

6) While running in "D" range, OD gear or "lock-up", shift to "2" and "L" ranges and check the engine braking effect at each of these ranges.

7) Also check to see that downshift is made from 3 → 2 or from OD to 3 and then to 2 immediately and that 2 → 1 downshift point is within the limits shown in the diagram when tested by releasing the accelerator pedal and shifting into position of "L" while driving in the third gear or in overdrive.

EVALUATION

(1) If there is no engine braking effect in the "2" range:
- Second coast (No. 1) brake is defective.

(2) If there is no engine braking effect in the "L" range:
- First and reverse (No. 3) brake is defective

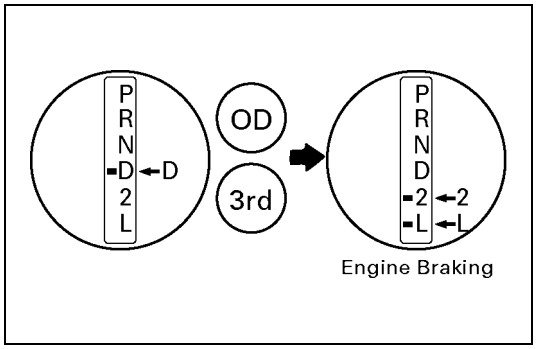

F07RY00009

(3) Also check to see that downshift is made from 3 → 2 or from OD to 3 and then to 2 immediately and that 2 → 1 downshift point is within the limits shown in the diagram when tested by releasing the accelerator pedal and shifting into "L" position while driving in the third gear or in overdrive.

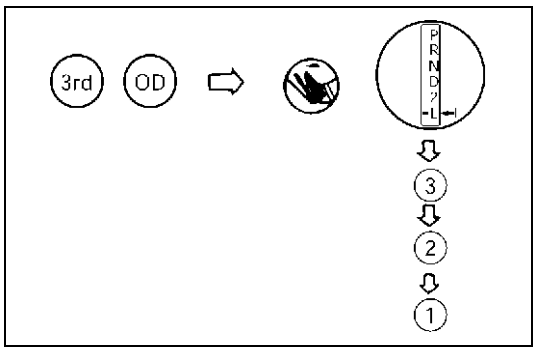

F07RY00010

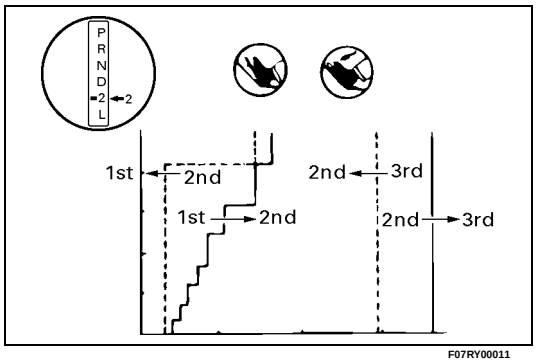

F07RY00011

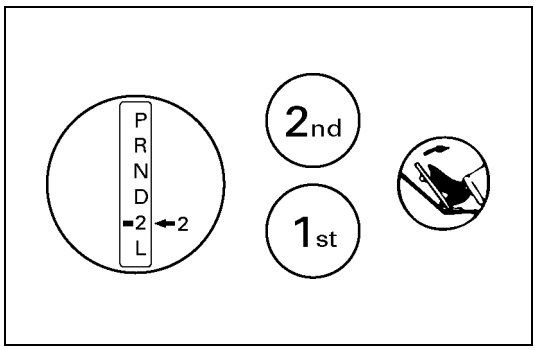

F07RY00012

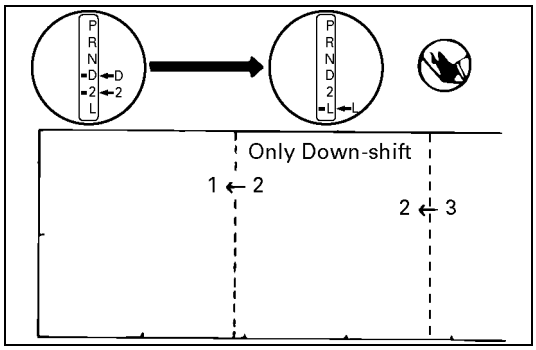

F07RY00020

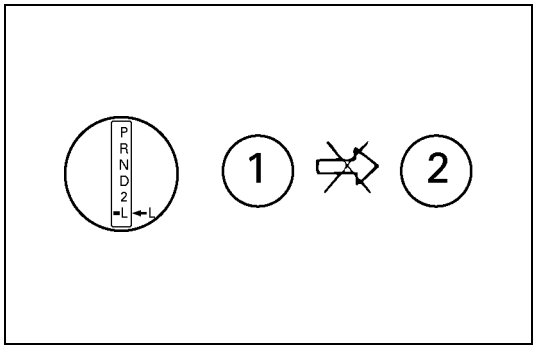

F07RY00014

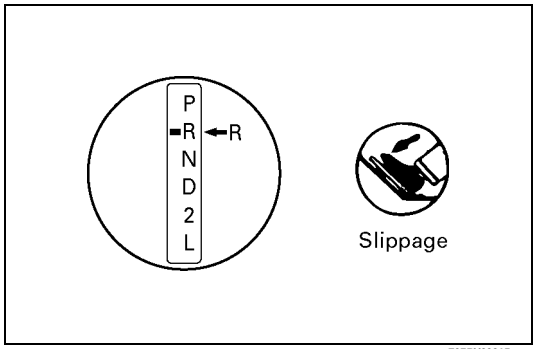

F07RY00015

"2" RANGE TEST

Shift into "2" range and, while driving with the accelerator pedal held constantly at the specified point (throttle valve opening 50% and 100%), push in one of the pattern selectors (only for 4x4) and check on the following points.

1) At each of the above throttle openings, check to see that the 1 → 2 up-shift takes place and that the shift points conform to those shown on the automatic shift diagram.

NOTE:
There is no OD and no lock-up in the "2" range.

2) While running in the "2" range and 2nd gear, release the accelerator pedal and check the engine's braking effect.
3) Check for 2 → 1 down-shift and abnormal noise at acceleration and deceleration, and for shock at upshift and down-shift.

"L" RANGE TEST

1) While running above 90 km/h (56 mph) in the "D" range, release your foot from the accelerator pedal and shift into the "L" range.
   Then check to see that the 2 → 1 and 3 → 2 down-shift occurs at the specified point shown on the automatic shift diagram.
2) While running in the "L" range, check to see that there is no up-shift to 2nd gear.
3) While running in the "L" range, release the accelerator pedal and check the engine braking effect.
4) Check for abnormal noise during acceleration and deceleration.

"R" RANGE TEST

Shift into the "R" range and, while starting at full throttle, check for slipping.

"P" RANGE TEST

Stop the vehicle on a grade (more than 9%) and after shifting into the "P" range, release the parking brake. Then check to see that the parking lock pawl holds the vehicle in place.

SHIFT POINT CHART AND LOCK-UP POINT CHART

SHIFT POINT CHART

(H2, H4)
(REAR AXLE RATIO: 4.300)
(RADIUS OF TIRE: 0.363m)

“NORMAL” mode

Up shift **km/h**

Range	Throttle Opening	1 ⇒ 2	2 ⇒ 3	3 ⇒ 4
D	Fully opened	39 - 45	78 - 84	128 - 134
	Half throttle	22 - 28	48 - 54	89 - 95
2	Fully opened	39 - 45	89 - 95	—
	Half throttle	22 - 28	89 - 95	—

Down shift **km/h**

Range	Throttle Opening	1 ⇐ 2	2 ⇐ 3	3 ⇐ 4
D	Fully opened	30 - 36	65 - 71	115 - 121
	Half throttle	9 - 15	27 - 33	64 - 70
	Fully closed	9 - 15	22 - 28	37 - 43
2	Fully opened	30 - 36	85 - 91	—
	Half throttle	9 - 15	85 - 91	—
	Fully closed	9 - 15	85 - 91	—
L	Fully opened	43 - 49	85 - 91	—
	Half throttle	43 - 49	85 - 91	—
	Fully closed	43 - 49	85 - 91	—

“POWER” mode

Up shift **km/h**

Range	Throttle Opening	1 ⇒ 2	2 ⇒ 3	3 ⇒ 4
D	Fully opened	39 - 45	78 - 84	128 - 134
	Half throttle	29 - 35	58 - 64	89 - 95
2	Fully opened	39 - 45	89 - 95	—
	Half throttle	22 - 28	89 - 95	—

Down shift **km/h**

Range	Throttle Opening	1 ⇐ 2	2 ⇐ 3	3 ⇐ 4
D	Fully opened	30 - 36	65 - 71	115 - 121
	Half throttle	11 - 17	45 - 51	74 - 80
	Fully closed	9 - 15	22 - 28	37 - 43
2	Fully opened	30 - 36	85 - 91	—
	Half throttle	9 - 15	85 - 91	—
	Fully closed	9 - 15	85 - 91	—
L	Fully opened	43 - 49	85 - 91	—
	Half throttle	43 - 49	85 - 91	—
	Fully closed	43 - 49	85 - 91	—

LOCK-UP POINT CHART

(H2, H4)
(REAR AXLE RATIO: 4.300)
(RADIUS OF TIRE: 0.363m)

km/h

Range	A/T Mode	Throttle Opening : 20%			
		Lock-up ON		Lock-up OFF	
		3rd	4th	3rd	4th
D	NORMAL	47 - 53	62 - 68	45 - 51	55 - 61
	POWER	47 - 53	66 - 72	45 - 51	55 - 61

TCM VOLTAGE CHECK

TCM voltage check is done to check for transmission and transmission control module (TCM) problems which cannot be detected by self-diagnosis.
Additionally, it serves as a back-up check for self-diagnosis.
Measure the voltage drop and make a continuity test for each of the sensors, solenoids, and switches.
If the voltage is within the specified range and continuity exists, that particular area of the TCM and automatic transmission assembly is normal.
If voltage deviation or lack of continuity is discovered, disconnect the applicable parts and check each of them individually.
This will allow you to determine the trouble location (TCM, automatic transmission unit, or another area of the vehicle).

Inspection Tool
Use a circuit tester to measure voltage and circuit continuity.
Insert the test probes from the connector wiring side. TCM terminals are extremely small.
Wrap a piece of thin wire around the probe of tester.
This will make measurement easier.

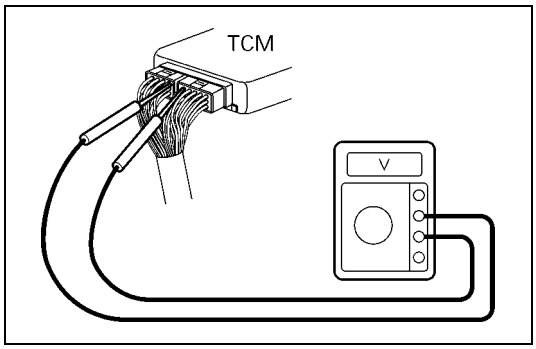

826RY00017

TCM Voltage Check Procedure

1. Remove the TCM.
2. Turn the ignition switch on. Do not start the engine.
3. Measure the voltage at the terminal. Refer to *the following table for the specified voltage ranges.*

TCM STANDARD VOLTAGE

Check circuit	Terminal		Measuring condition	Voltage (V)
	+	-		
Throttle position sensor	C79-6	C79-28	Throttle fully opened (WOT)	3.47 ~ 4.56
			Throttle fully closed (idling)	0.25 ~ 0.45
	C79-19	C79-18	Key switch ON	4.75 ~ 5.25
Output revolution sensor	C79-4	C79-16	Engine idling in gear	0 ~ 3
Input revolution sensor	C79-5	C79-17	Engine idling	0 ~ 3
Speed meter sensor	C79-7	C78-15 or -19	Vehicle speed 10 ~ 20 km/h	Less than 1.4 ⇔ about 5
Brake switch	C78-18	C78-15 or -19	Depress brake	7 ~ 16
			Release brake	Less than 1
O/D OFF switch	C79-3	C78-15 or -19	O/D OFF switch ON (O/D OFF)	7 ~ 16
			O/D OFF switch OFF (O/D ON)	Less than 1
Neutral start switch (P)	C79-2	C78-15 or -19	Selector “P” range	7 ~ 16
			Selector all ranges except “P”	Less than 1
Neutral start switch (R)	C79-1	C78-15 or -19	Selector “R” range	7 ~ 16
			Selector all ranges except “R”	Less than 1
Neutral start switch (N)	C79-9	C78-15 or -19	Selector “N” range	7 ~ 16
			Selector all ranges except “N”	Less than 1
Neutral start switch (D)	C79-8	C78-15 or -19	Selector “D” range	7 ~ 16
			Selector all ranges except “D”	Less than 1
Neutral start switch (2)	C79-21	C78-15 or -19	Selector “2” range	7 ~ 16
			Selector all ranges except “2”	Less than 1
Neutral start switch (L)	C79-20	C78-15 or -19	Selector “L” range	7 ~ 16
			Selector all ranges except “L”	Less than 1
Engine revolution signal	C79-15	C78-15 or -19	Engine idling	Less than 1.4 ⇔ 9 ~ 16
Diagnosis terminal	C79-24	C78-15 or -19	Self-diagnosis ON	0 ~ 1.5
Power pattern switch	C79-23	C78-15 or -19	Power pattern switch OFF (NORMAL)	8 ~ 16
			Power pattern switch ON (POWER)	Less than 1.4
Winter select switch	C79-13	C78-15 or -19	Switch OFF	8 ~ 16
			Switch ON	Less than 1.4
Electrical source (Battery)	C78-13	C78-15 or -19	—	9 ~ 16
Electrical source (Ignition)	C78-20	C78-15 or -19	Key switch ON	9 ~ 16
Oil temperature warning lamp	C79-11	C78-15 or -19	Oil temperature warning lamp ON	Less than 1
			Oil temperature warning lamp OFF	8 ~ 16
“CHECK TRANS lamp”	C79-10	C78-15 or -19	“CHECK TRANS” lamp ON	Less than 1
			“CHECK TRANS” lamp OFF	8 ~ 16
Power lamp	C79-22	C78-15 or -19	Power lamp ON	Less than 1
			Power lamp OFF	8 ~ 16

Check circuit	Terminal		Measuring condition	Voltage (V)
	+	-		
Winter lamp	C79-12	C78-15 or -19	Winter lamp ON	Less than 1
			Winter lamp OFF	8 ~ 16
Solenoid S1	C78-4	C78-15 or -19	OFF (3rd or O/D)	Less than 1
			ON (1st or 2nd)	8 ~ 16
Solenoid S2	C78-3	C78-15 or -19	OFF (1st or O/D)	Less than 1
			ON (2nd or 3rd)	8 ~ 16
Lock up solenoid SL	C78-12	C78-15 or -19	OFF (Lock up OFF)	Less than 1
			ON (Lock up ON)	8 ~ 16
Pressure control solenoid	C78-11	C78-8	At throttle pressure changing	Less than 1 ⇔ 8-16
Oil temperature sensor	C79-18	C79-27	ATF temperature 20°C	4.70
			ATF temperature 80°C	3.65
Tech 2 diagnosis terminal (J1850)	C78-6	C78-15 or -19	On diagnosis communication	0-1.5 ⇔ 6.25-8.0
Throttle position sensor (ground)	C79-19	C78-15 or -19	Key switch ON	-0.1 ~ 0.1

MEMO

ON-VEHICLE SERVICE

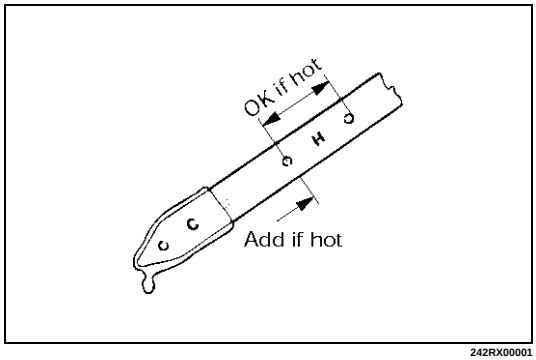

242RX00001

TRANSIMISSION FLUID LEVEL AND CONDITION

Park vehicle on level ground and set parking brake.
With the engine idling, move the shift lever through all positions from "P" to "L", then return to position "P".
Check to see If the level of fluid comes to "HOT" range of about 80°C (176°F) on the dipstick gauge.
If the level of fluid is too low, replenish to bring it to maximum level in "HOT" range.

Inspection of fluid condition
If the ATF is black or smells burnt, replace it.

ATF REPLACEMENT

NOTE:
Do not overfill.

1) Remove the drain plug from oil pan and drain the fluid.
2) Reinstall the drain plug securely.
3) With the engine OFF, add new fluid through the filler tube.

	Transmission
Drain and refill	5.2 L
Dry fill	8.7 L
Fluid	BESCO ATF III

4) Start the engine and shift the selector into all position from "P" through "L", and then shift into "P".
5) With the engine idling, check the fluid level. Add fluid up to the "COLD" level on the dipstick.
6) The ATF level must be checked again for correct level with the "HOT" level.

NOTE:
To prevent fluid leaks, the drain plug gasket must be replaced each time this plug is removed.

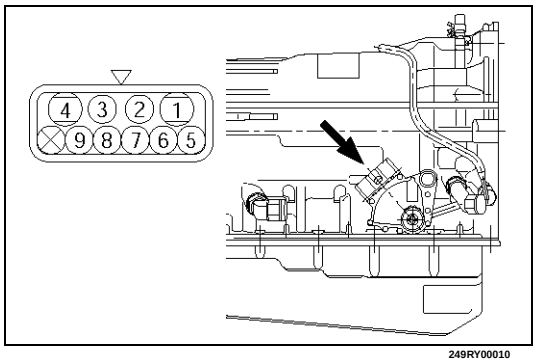

249RY00010

NEUTRAL START SWITCH INSPECTION

Inspection

With a circuit tester, make a continuity test on the neutral start switch with the moving piece set in each position.

Terminal Position	1	4	3	5	2	6	8	7	9
P	❍	❍	❍	❍					
R			❍		❍				
N	❍	❍	❍			❍			
D			❍				❍		
2			❍					❍	
L			❍						❍

❍—❍ Continuity

Removal

Preparation:

Disconnect negative (–) battery cable.

1. Remove rear sound cover.
2. Remove the rear side ATF cooler pipe from the transmission elbow.
3. Disconnect neutral start switch connector.
4. Unstake the lock washer, and then remove the shaft nut.
5. Remove the neutral start switch.

Installation

To install, follow the removal steps in the reverse order, noting the following points;

Adjustment

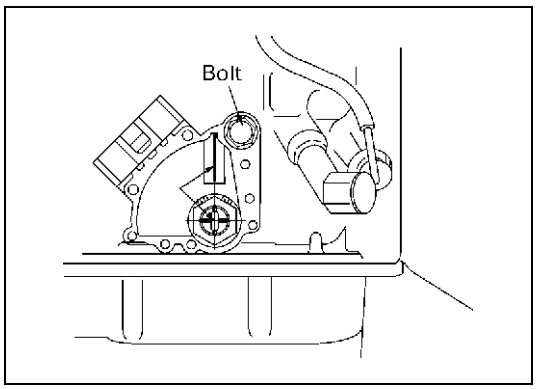

249RY00008

1) Loosen the neutral start switch bolt and set the shift selector to the "N" range.
2) Align the groove and neutral basic line.
3) Hold in position and tighten the bolt.

Torque	N·m (kg·cm/lb·in)
Nut	7 (70/61)
Bolt	13 (130/113)

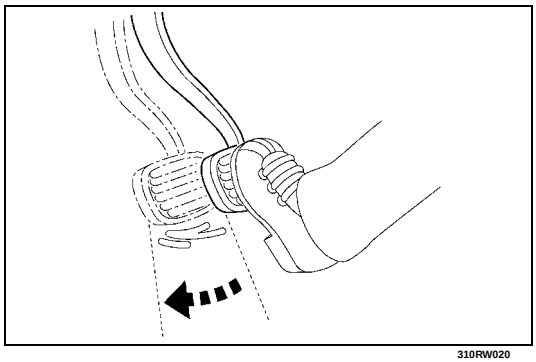

310RW020

BRAKE SIGNAL INSPECTION

Check that the brake light comes on when the brake pedal is depressed.

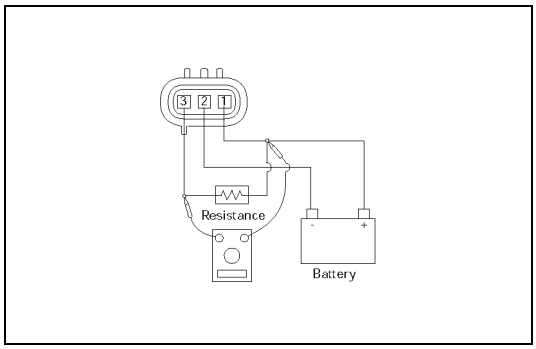

F07RY00017

VEHICLE SPEED SENSOR INSPECTION

1. Connect the Vehicle speed sensor connector terminal (1) to the battery (+) terminal and terminal (2) to the battery (-) terminal.
2. Connect a resistance of 1.3k ohm to 5k ohm (1.4W or more) between terminals (1) and (3).

NOTE:
Be extremely careful not to connect the battery (+) terminal to the terminal (3)
This may damage the vehicle speed sensor.

3. Rotate the shaft of the vehicle speed sensor slowly and measure the voltage at both ends with a digital tester.

   The voltage, with one rotation of shaft, fluctuates four times in the following range: 10 to 14V ⇔ 2V or less.

   Replace the sensor when the result of inspection is found abnormal.

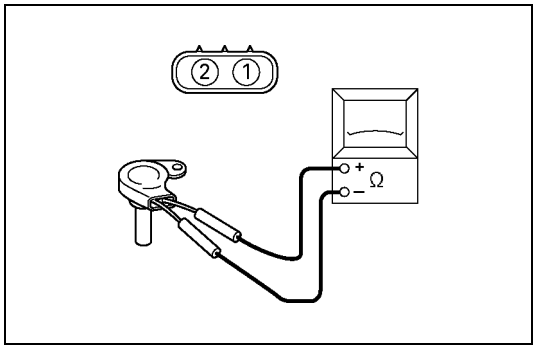

F07RY00018

INPUT AND OUTPUT REVOLUTION SENSOR INSPECTION

Use an ohmmeter to measure the resistance between terminals 1 and 2.

Standard resistance	560 – 680Ω (20°C) 610 – 740Ω (40°C)

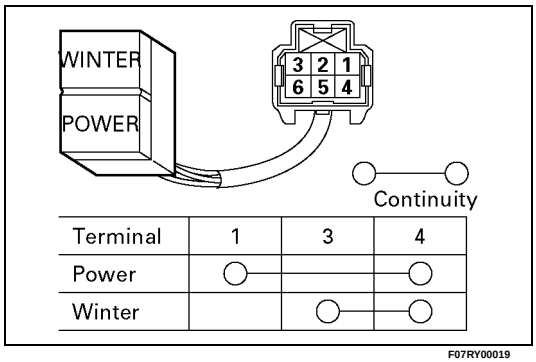

PATTERN SELECT SWITCH INSPECTION

Inspect that there is continuity between each terminals.

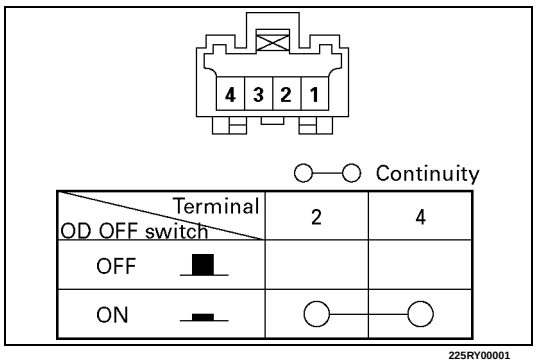

OVERDRIVE OFF SWITCH INSPECTION

Inspect that there is continuity between terminals 2 and 4.

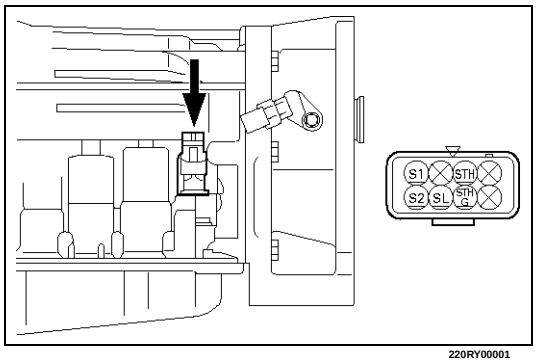

SOLENOID INSPECTION

1. Resistance check
   - Using an ohmmeter, check the resistance between each terminals (S1/S2/SL) and body.

Solenoid S1, S2 and Lock-up solenoid resistance	11 - 15 Ω (20°C) 12 - 16 Ω (40°C)

   - Using an ohmmeter, check the resistance between terminals (STH) and (STHG).

Pressure control solenoid resistance	5 - 5.6 Ω (20°C) 5.4 - 6.1 Ω (40°C)

NOTE:
If the pressure contorl solenoid resistance is not within specification, replace the valve body assembly.

2. Operation Check

   Check the solenoid operation by blowing into an oil hole as shown in the figure.

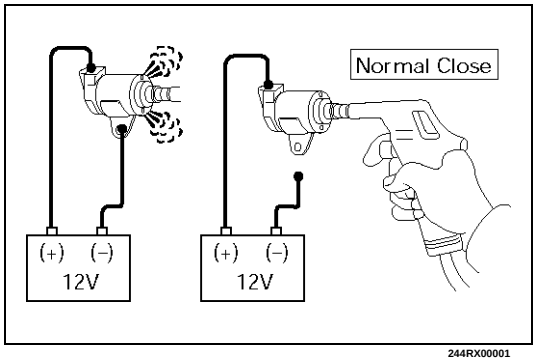

Solenoid S1 and S2 (Normal close type)

When battery terminal is disconnected	No air leaks
When battery terminal is connected	Air passes through

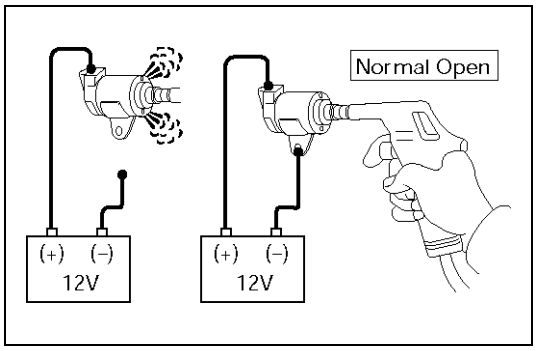

244RY00005

Look-up solenoid (Normal open type)

When battery terminal is disconnected	Air passes through
When battery terminal is connected	No air leaks

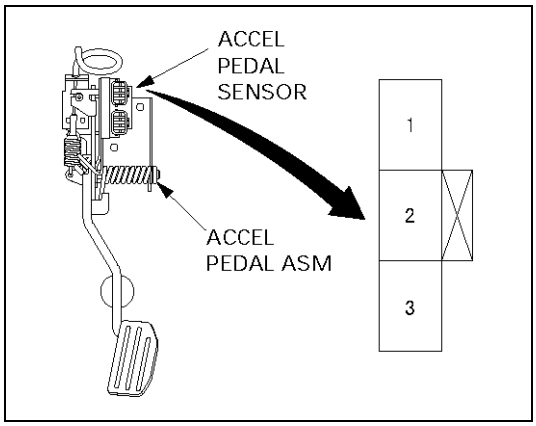

101RY00004

THROTTLE POSITION SENSOR INSPECTION

1. Turn the starter switch to the "ON" position.
2. Measure the voltage between throttle position sensor connector terminals 2 (output) and 3 (ground).

NOTE:

- **Do not remove the sensor connector.**
- **Make sure that power source (4.75-5.25V) is measured between terminals 1 and 3 before measurement at step 2).**

Throttle position	Voltage (V)
Idle	0.25-0.45
WOT	3.74-4.56

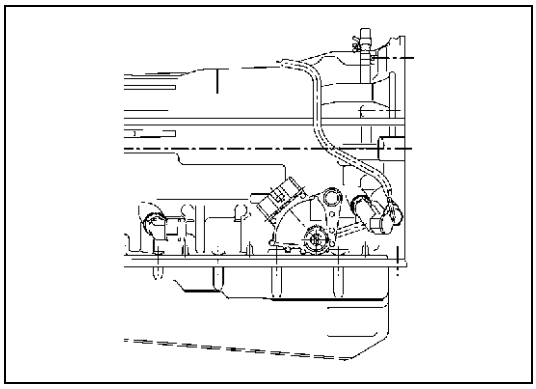

249RW003

ATF TEMPERATURE SENSOR INSPECTION

1. Disconnect the front side ATF cooler pipe from the elbow and remove the elbow.
2. Remove the ATF temperature sensor from the transmission case.
3. Place the ATF temperature sensor in a container of ATF.

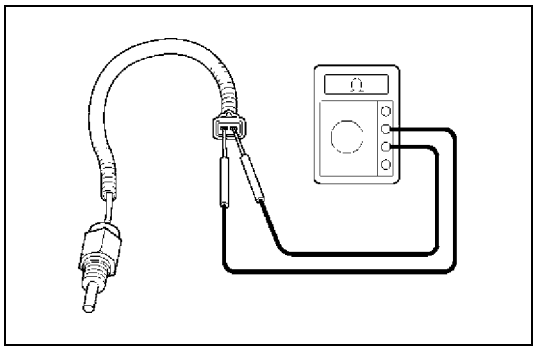

242RW013

4. Measure the resistance between each terminals.

Resistance	0.5 - 30 kΩ (0°C - 120°C)

5. If either of the measured values exceeds the specified, replace the ATF temperature sensor.

	N·m (kg·m/ lb·ft)
Torque	15 (1.5/11)

SELECTOR LEVER

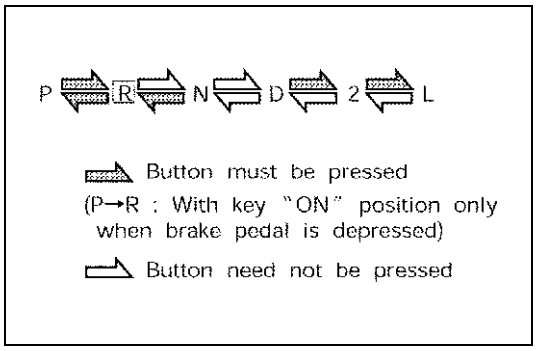

256RY00001

INSPECTION

1. Make sure that when the selector lever is shifted from "P" to "L", a "clicking" can be felt at each shift position. Make sure that the gear corresponds to that of the position plate indicator.
2. Check to see if the shifter lever can be shifted as shown.

REMOVAL

Preparation:

Diconnect negative (–) battery cable.

1. Transfer Control Lever Knob

2. Front Console

Disconnect wiring harness connectors.

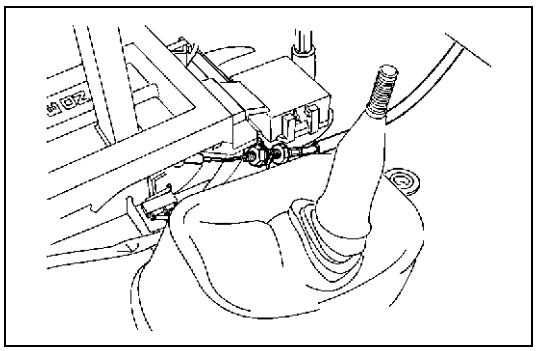

256RW012

3. Selector Lever Assembly

1) Disconnect shift lock cable from the selector lever assembly side.
2) Disconnect wiring harness connectors.

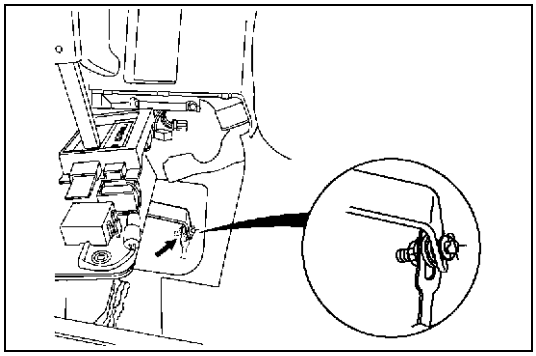

256RW013

3) Disconnect shift control rod from the selector lever assembly side.

INSTALLATION

To install, follow the removal steps in the reverse order, noting the following points;

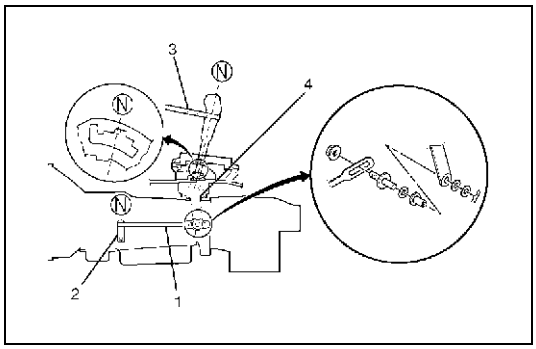

256RW014

Adjustment of select lever and control rod

1) Place the vehicle on a level surface.

NOTE:
If the vehicle is not on a level surface, the shift select cable set position will vary with the movement of the engine. To prevent possible misadjustment of the cable, the vehicle must be placed on a level surface.

2) Install the shift control rod (1) to the transfmission select lever (2), and then place the lever in the "N" position.
3) Set select lever in the "N" position.
4) Push select lever forward and secure it (using a rubber band (3), etc.) so that pin comes into contact with the wall of detent plate.
5) Install the shift control rod (1) to the selector lever arm (4).

	N·m(kg·m / lb·ft)
Nut torque	32 (3.3/24)

NOTE:
Do not apply to threaded portions.

6) After adjustment, operate select lever on a trial basis to makes sure of its smooth operation and no abnormal indication in each position.

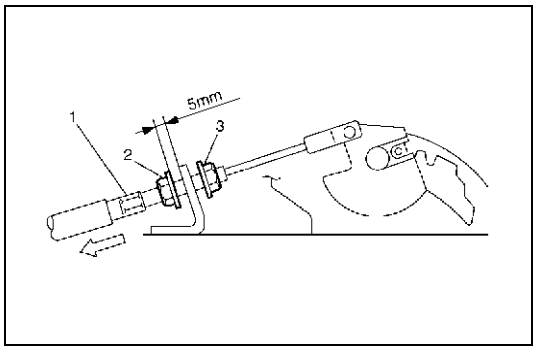

256RW015

Adjustment of shift lock cable

1) Set ignition key in "LOCK" position and selector lever in "P" position.
2) Adjust cable screw cap on selector lever side to provide a gap (slack for cable) of 1–2mm between rod on steering lock side and stopper.
   Adjust cap as follows:
   a. Pull screw cap (1) in arrow direction to put off slack of inner cable.
   b. With cable kept as (a), adjust gap between nut (2) and bracket to 5mm (0.2in).
   c. Lock inner cable by turning nut (3) while holding nut (2) in place.

	N·m(kg·cm / lb·in)
Lock nut torque	3.7 (38/33)

NOTE:
Clean the rod threads and do not apply oil to the threaded portions.

3) Make sure of proper operation of shift lock through checks as follows:
   a. Selector lever shall not be moved out of "P" position with ingition key in "Lock" position.
   b. Selector lever can be moved out of "P" position with ignition key in "ON" position only when brake pedal is depressed.
   c. Ignition key can be turned to "LOCK" position only when selector lever is in "P" position (key can be pulled out).
   If (a) and (c) fail, readjust cable. If (b) fails, readjust connector wiring and brake pedal switch.

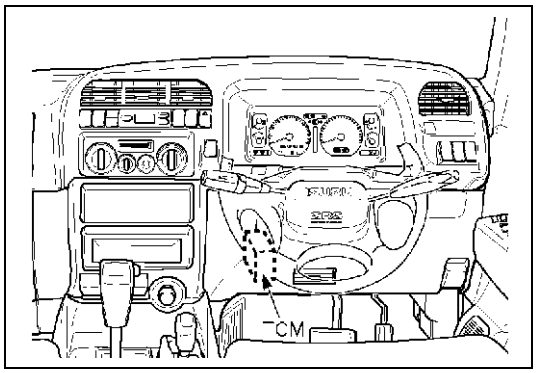

826RY00005

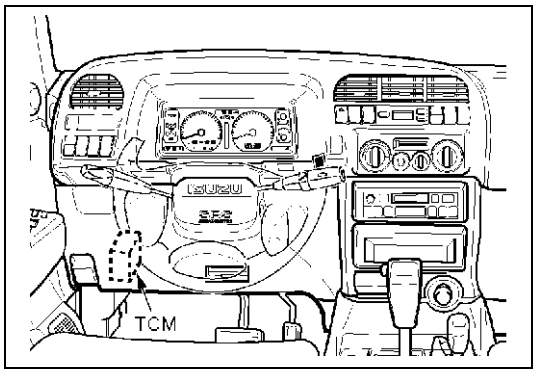

826RY00006

TRANSMISSION CONTROL MODULE (TCM)

REMOVAL

Preparation:

Disconnect negative (–) battery cable.

1. Disconnect the TCM harness connectors.
2. Remove fixing nuts (3 pieces) and TCM from the bracket.

INSTALLATION

To install, follow the removal steps in reverse order.

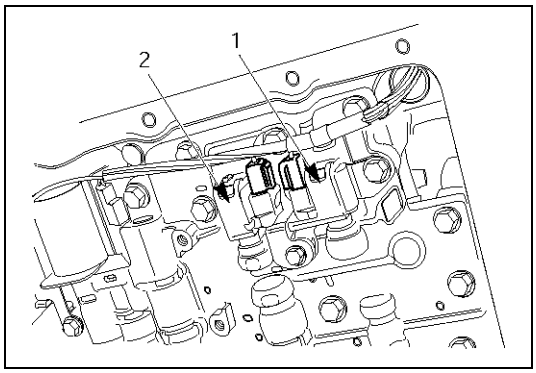

249RY00011

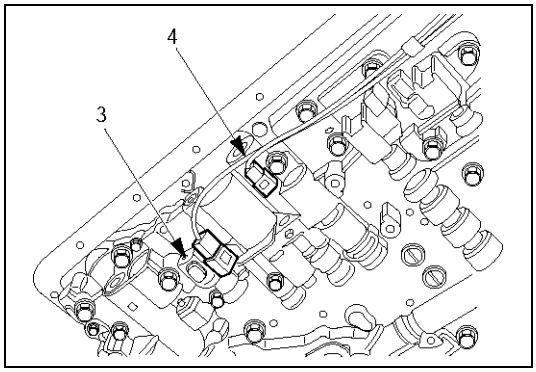

249RY00012

SHIFT SOLENOID AND LOCK-UP SOLENOID

REMOVAL

Preparation:

- Disconnect negative (–) battery cable.
- Remove the rear sound cover.
- Drain the fluid.
  Refer to *"ATF REPLACEMENT" in this section.*

1. Remove the nineteen bolts and oil pan.
2. Remove the oil strainer assembly.
3. Disconnect the solenoid wiring connectors from the shift solenoid S1(1), S2(2) and lock-up solenoid (3).
4. Remove each retaining bolts and solenoids.

INSTALLATION

To install, follow the removal steps in reverse order noting the following point;

Tprque	N·m (kg·cm/lb·in)
Solenoid S1, S2 bolt	7 (70/61)
Lock-up solenoid bolt	10 (100/87)

VALVE BODY ASSEMBLY AND PRESSERE CONTOROL SOLENOID

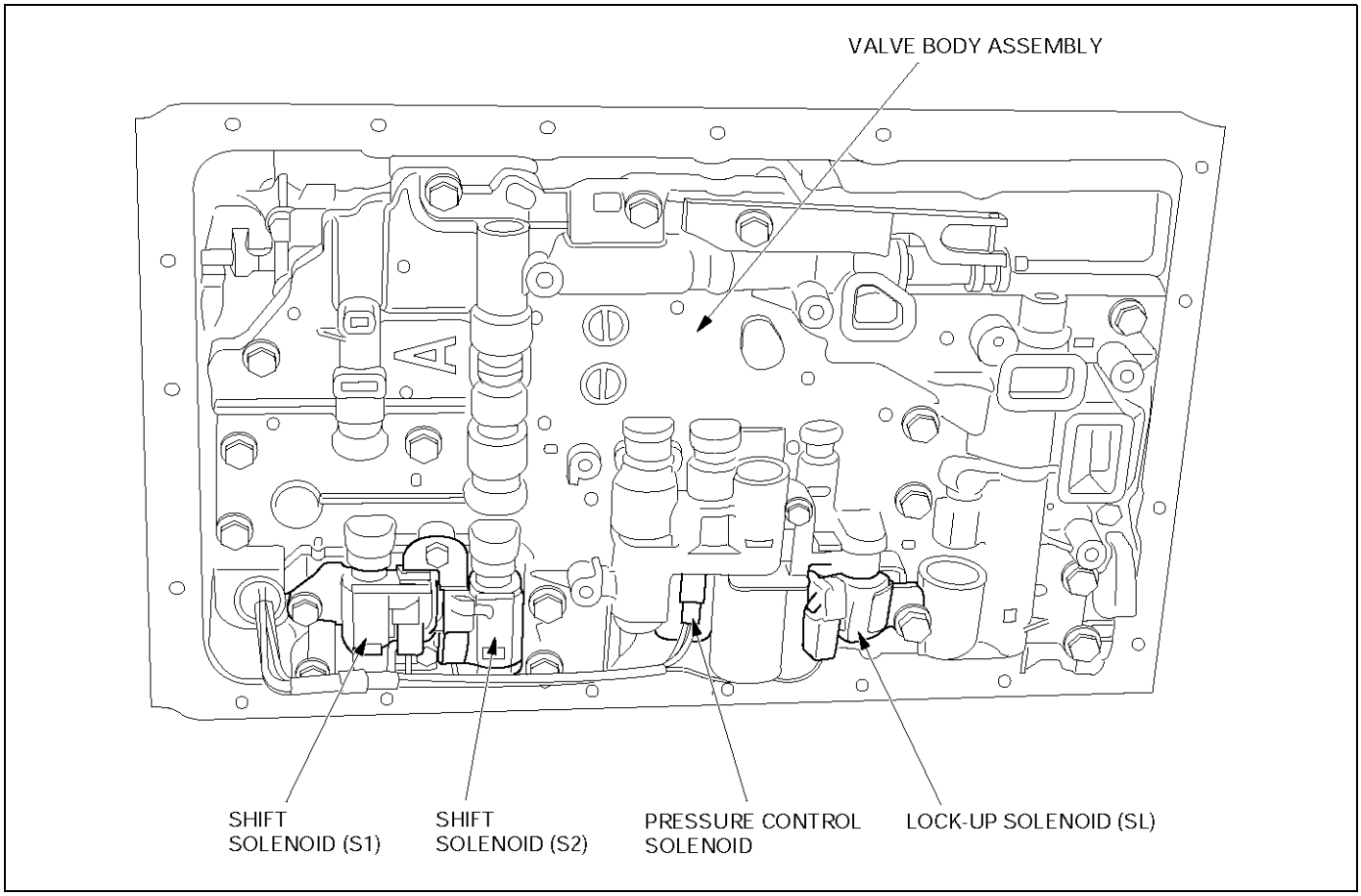

244RY00009

REMOVAL

Preparation:

- Disconnect negative (–) battery cable.
- Remove the rear sound cover.
- Drain the fluid.

Refer to *"ATF REPLACEMENT" in this section.*

1. Remove the nineteen bolts and oil pan.
2. Remove the oil strainer assembly.
3. Disconnect the soleniod wiring connectors from the solenoids.
4. Remove the twenty botls from the valve body.
5. Remove the valve body assembly and pressure control solenoid.
   - When removing valve body assembly from the transmission case, loosen the solenoid clamp bolt and remove the pressure control solenoid from the upper valve body assembly.
     Also disconnect the harness connector from the pressure control solenoid.

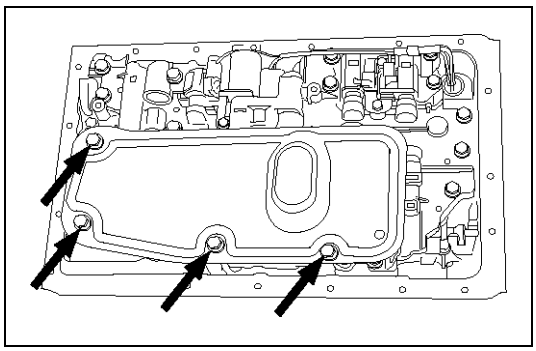

244RY00003

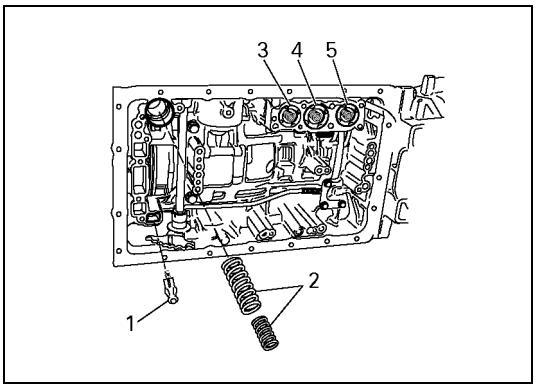

244RY00018

NOTE:

1. 2 or 3 people are reguired removal and installation of the valve body assembly and pressure control solenoid.
2. The check valve assembly (1) and the C0 accumulator piston springs (2) will fall from the transmission case during removal of valve body assembly.
   Protect these parts from damage.
   The B0 (3), C2 (4), and B2 (5) accumulator piston and springs may also fall free and must be protected.

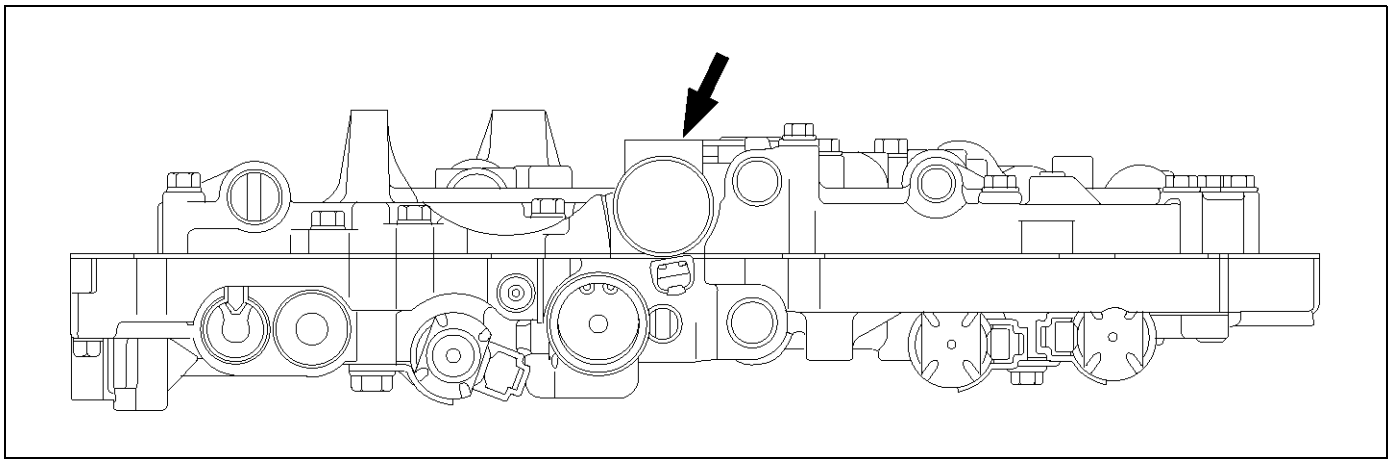
244RY00006

INSTALLATION

To install, follow the removal steps in reverse order, noting the following points;

1. Reinstall the parts removed with the valve body assembly to their assigned positions in the transmission case (check valve assembly, C0 accumulator pistons, etc). Install the valve body assembly to the transmission case.
   Refer to *“REASSEMBLY OF MAJOR COMPONENTS (2).”*
2. Solenoid clamp bolt

	N·m(kg·cm / lb·in)
Torque	7 (70/61)

3. Valve body fixing bots
   Each bolt location and length(mm) is indicated in the figure.

	N·m(kg·cm / lb·in)
Torque	10 (100/87)

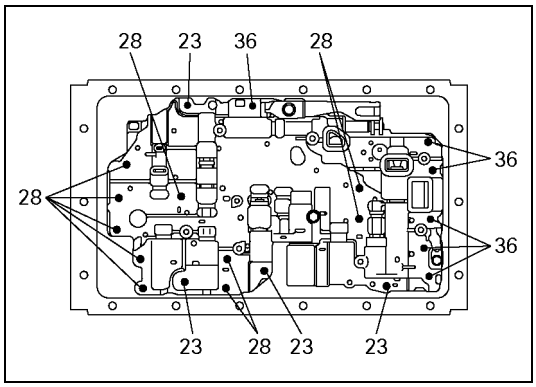

244RY00017

TRANSMISSION REMOVAL AND INSTALLATION

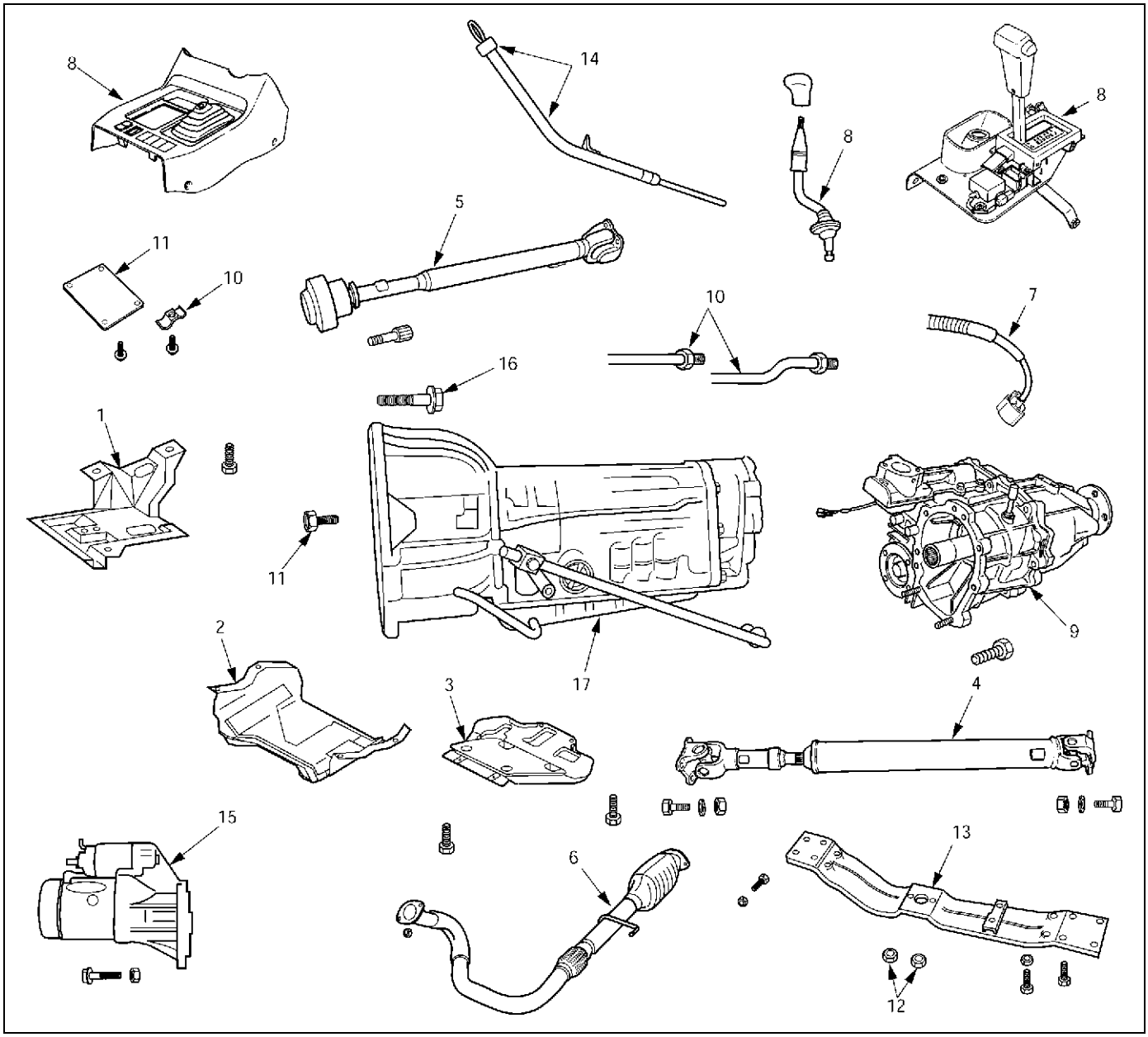

240RY00038

Removal Steps

1. Transfer protector
2. Rear sound cover
3. Front sound cover
4. Rear propeller shaft
5. Front propeller shaft
6. Exhaust pipe
7. Harness connector
8. Front console, selector lever assembly, and transfer control lever
9. Transfer case assembly
10. ATF cooler pipe and clamp
11. Under cover and flex plate-torque converter bolt
12. Rear mounting nut
13. 3rd crossmember
14. Oil level gauge and tube
15. Starter
16. Engine-transmission bolt
17. Transmission assembly

Installation steps

To install, follow the removal steps in reverse order.

REMOVAL

Preparation:

- Remove engine hood.
- Disconnect negative (–) battery cable.

1. Transfer protector

2. Rear sound cover

3. Front sound cover

4. Rear propeller shaft

5. Front propeller shaft

NOTE:
Apply alignment marks on the flange at both front and rear sides.

6. Exhaust pipe

- Remove the 2nd front exhaust pipe from the 1st front exhaust pipe and exhaust silencer.

7. Transmission harness connector

- Disconnect the harness connectors from the transmission.

8. Front console, selector lever assembly, and transfer control lever

- Disconnect the transfer control lever knob.
- Remove the front console.
- Disconnect the harness connector.
- Remove the selector lever assembly.
- Disconnect the shift control rod from the transmission.

9. Transfer case assembly

- Disconnect the breather hose from the transfer case.
- Remove the transfer case assembly from the transmission.

10. ATF cooler pipe and clamp

- Disconnect two ATF cooler pipes from A/T side.
- Remove oil pipe clamp from torque converter housing side.
- Loosen oil pipe clamp bolt at engine mount side.

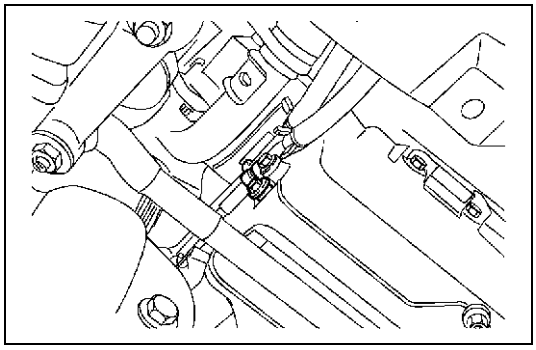

253RY00001

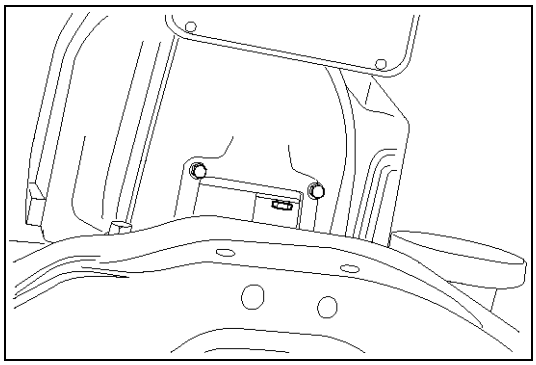

240RY00026

11. Under cover and flex plate-torque converter bolt

- Remove the under cover.
- Turn the crankshaft to gain access to each bolt.
  Remove the six torque coverter fixing bolts.

NOTE:
New fixing bolts should be replaced for reassembly.

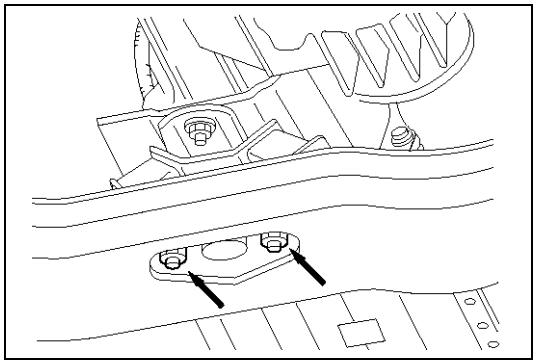

022RY00001

12. Rear mounting nut

- Support transmission with a jack.
- Remove two rear mounting nuts from the 3rd crossmember.

13. 3rd crossmember

14. Oil level gauge and tube

15. Starter

- Remove the mounting bolts, and pull the starter toward the front of the vehicle.
  Lay the starter alongside the engine.

16. Engine-transmission bolt

- Remove engine-transmission fixing bolts.
- Disconnect the breather hose from the breather hose 3 way (W/TOD) or 2 way (WO/TOD).

17. Transmission assembly

NOTE:
Keep the oil pan positioned down.
Be careful not to let the torque converter slide out.

INSTALLATION

To install, follow the removal steps in the reverse order, noting the following points;

1. Torque

N·m(kg·m / lb·ft)

Rear mounting to crossmember	50 (5.1/37)
Torque converter bolt	29 (3.0/22)
ATF cooler pipe to transmission	44 (4.5/33)
Exhaust pipe flange to flange	43 (4.4/32)
3rd crossmember to flame	76 (7.8/56)
Front propeller shaft bolt	63 (6.4/46)
Rear propeller shaft bolt	63 (6.4/46)

Engine-Transmission Bolt Torque

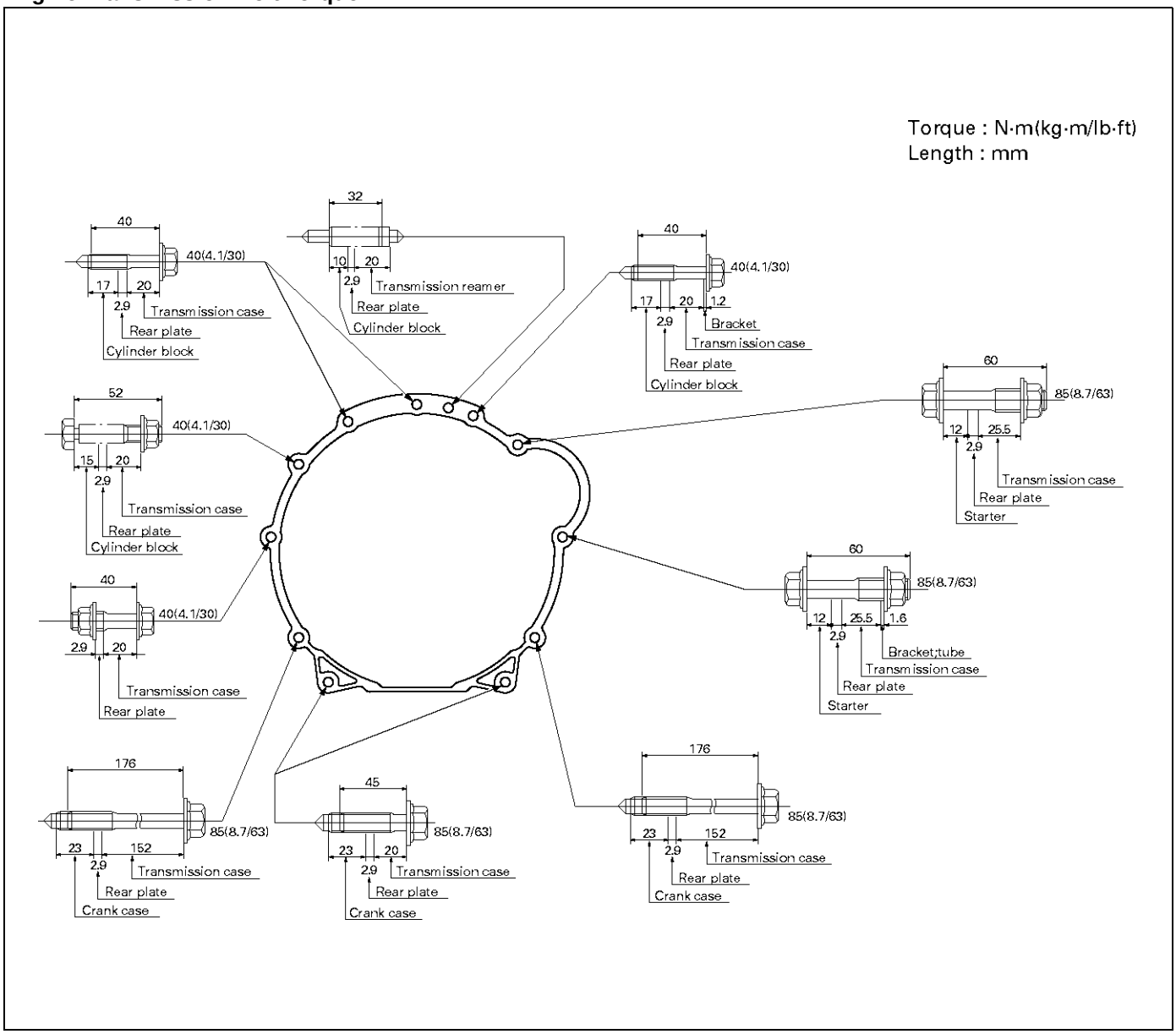

225RY00001

Transmission-Transfer Case Bolt Torque

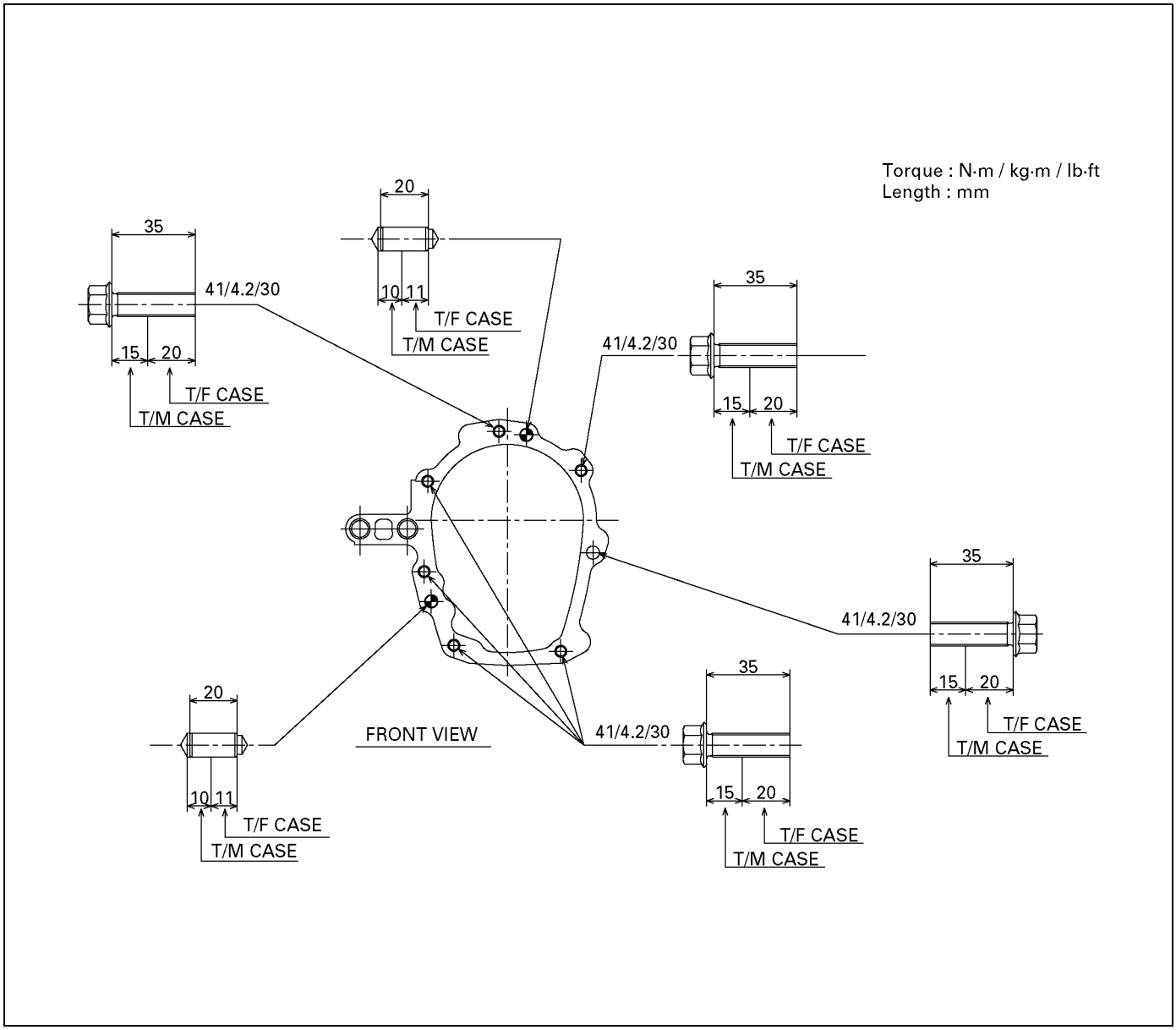

260RY00001

UNIT REPAIR

DISASSEMBLY OF MAJOR COMPONENTS (1)

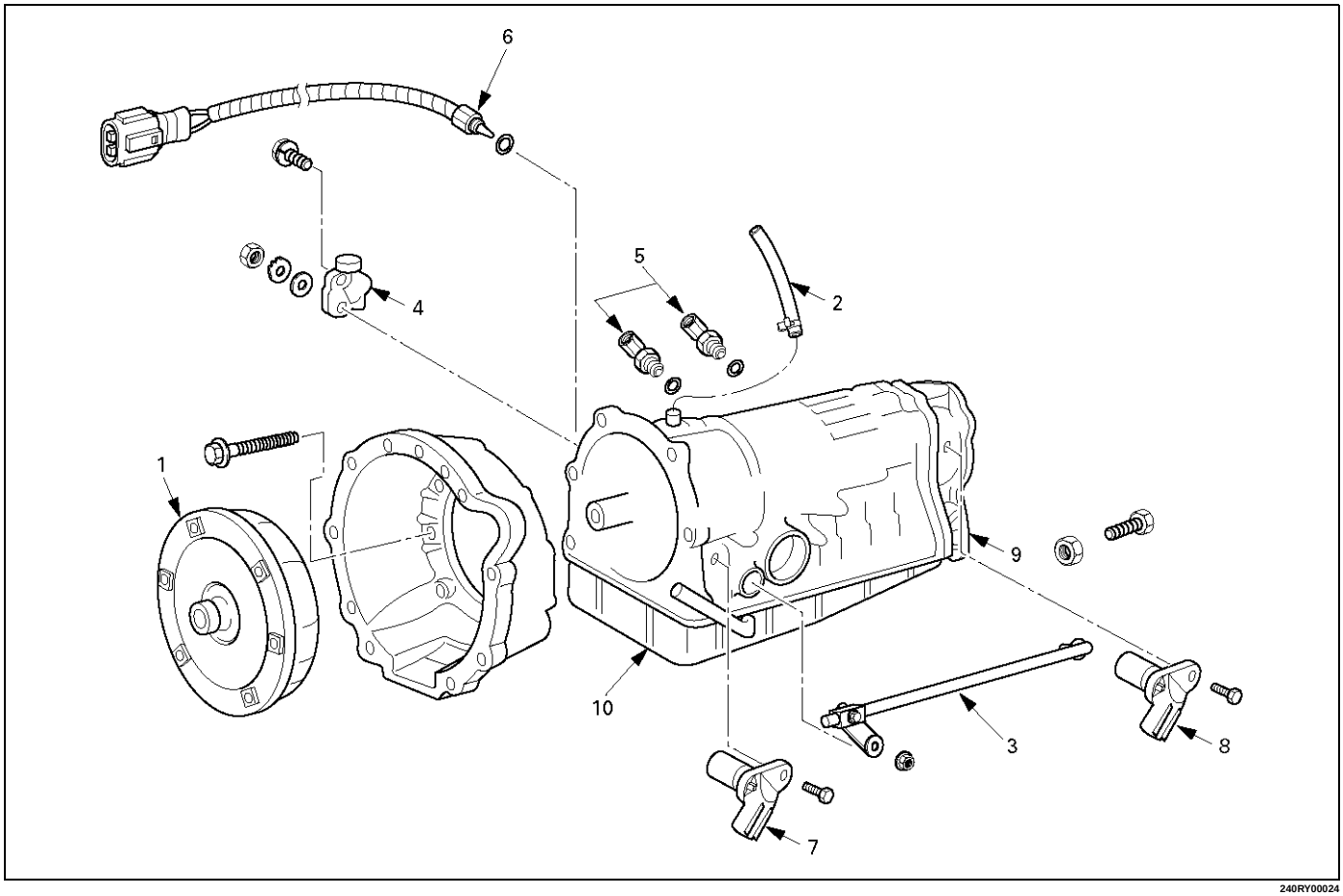

240RY00024

Disassembly steps

1. Torque converter
2. Breather hose
3. ▲ Transmission ocntrol rod and shift lever
4. ▲ Neutral start switch
5. ▲ Elbow
6. Oil temperature sensor
7. Input revolution sensor
8. Output revolution sensor
9. Adapter housing
10. Transmission assembly

NOTE:
Steps marked with a triangle (▲) are important operations. Detailed information appears in the text.

Important operations

3. Transmission control rod and shift lever

Remove the transmission control rod and shift lever.

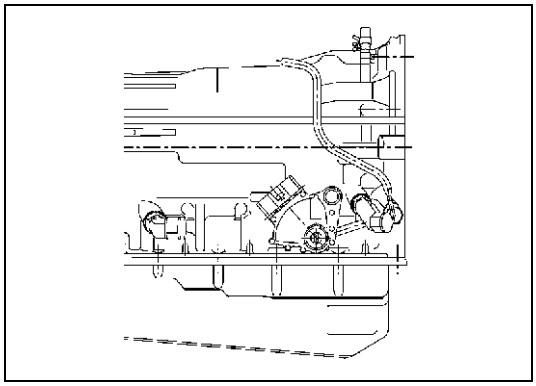

249RW003

4. Neutral start switch

Unstake the lock washer.

Remove the nut and bolts, and then remove the neutral start switch.

Remove the lock washer and grommet.

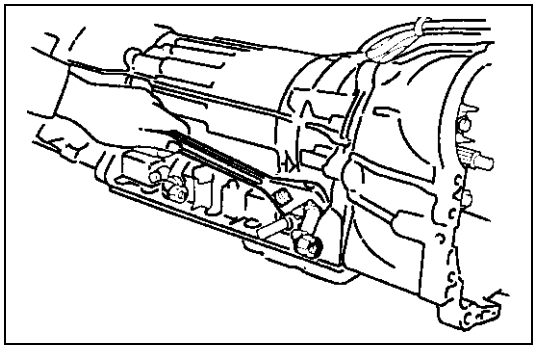

240RY00001

5. Elbow

Remove two elbows from transmission case.

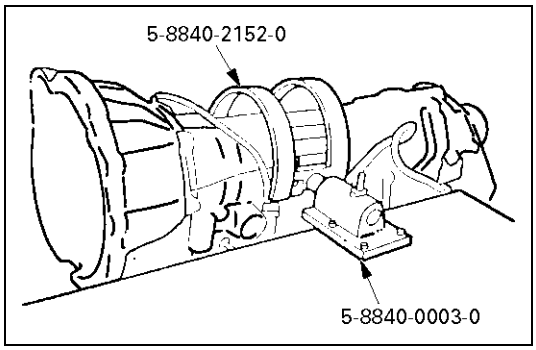

240RY00002

Install special tool to the transmission unit.

Holding fixture: 5-8840-2152-0 (J-37227)

Fixture base: 5-8840-0003-0 (J-3289-20)

DISASSEMBLY OF MAJOR COMPONENTS (2)

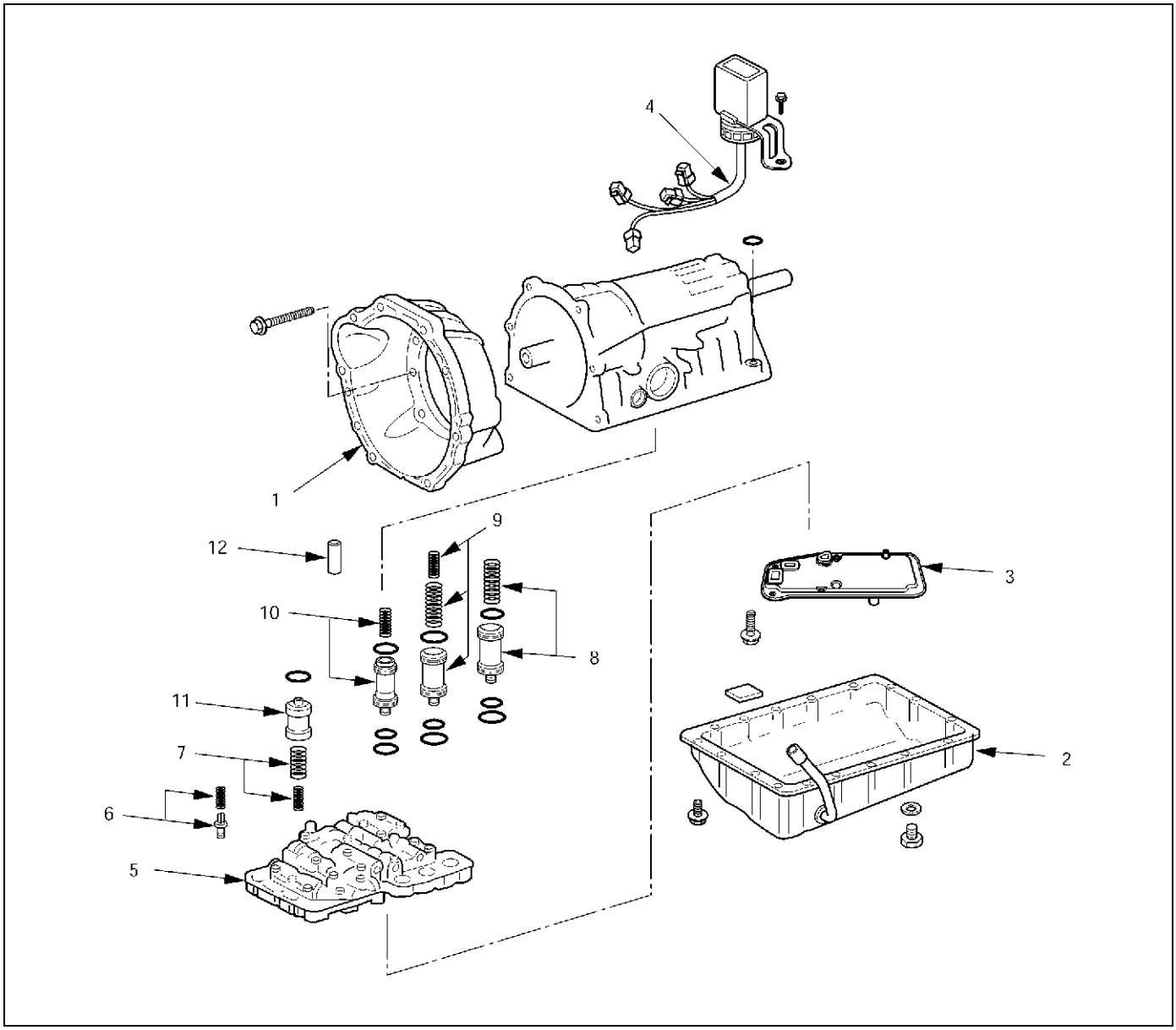

242RY00005

Disassembly steps

- ▲ 1. Converter housing
- ▲ 2. Oil pan
- ▲ 3. Oil strainer assembly
- ▲ 4. Solenoid wiring
- ▲ 5. Valve body
- ▲ 6. Check valve, spring
- ▲ 7. Spring
- ▲ 8. Accumulator piston (B-2)
- ▲ 9. Accumulator piston (C-2)
- ▲ 10. Accumulator piston (B-0)
- ▲ 11. Accumulator piston (C-0)
- 12. Second brake drum gasket

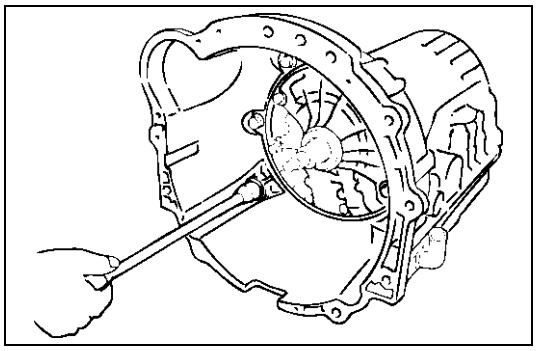

240RY00006

Important operations

1. Converter housing

Remove the six bolts.
Remove the transmission housing.

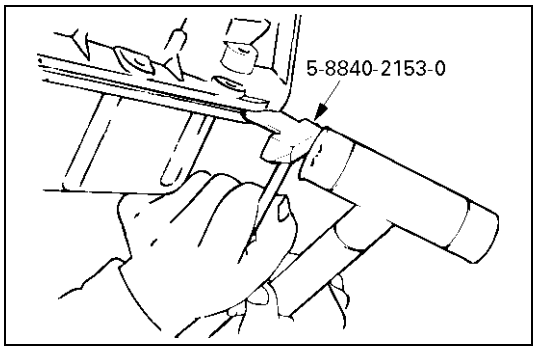

240RY00007

2. Oil pan

NOTE:
Do not turn over the transmission as this will contaminate the valve body with foreign materials in the bottom of the pan.

Remove the nineteen bolts.
Remove pan by lifting the transmission case.
Seal cutter: 5-8840-2153-0 (J-37228)

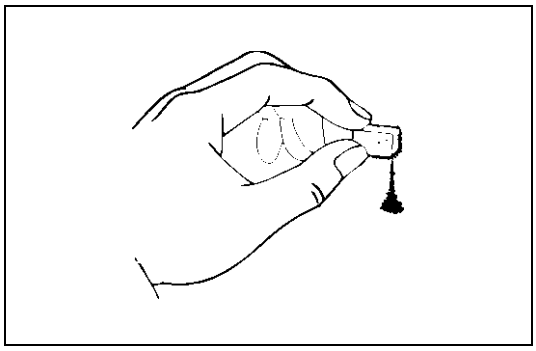

240RY00008

Examine particles in pan

Remove the magnet and use it to collect any steel chips. Look carefully at the chips and particles in the pan and on the magnet to anticipate what type of wear you will find in the transmission:
Steel (magnetic).....bearing, gear and clutch plate wear
Brass (non-magnetic)...bushing wear

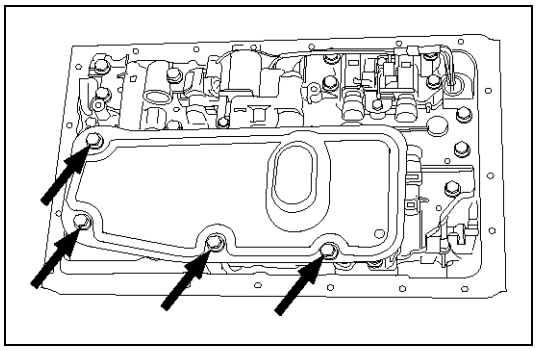

244RY00003

3. Oil strainer assembly

Remove four bolts holding the oil strainer.

NOTE:
When reassembling components, install a new oil strainer assembly.

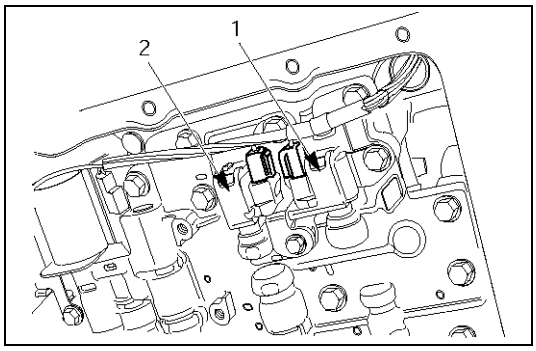

249RY00011

4. Solenoid wiring

Disconnect the connectors from the solenoid S1(1), S2(2), lock-up solenoid (3) and pressure control solenoid (4).
Turn over transmission, remove the solenoid wiring stopper plate from the case.
Pull the wiring out of the transmission case.

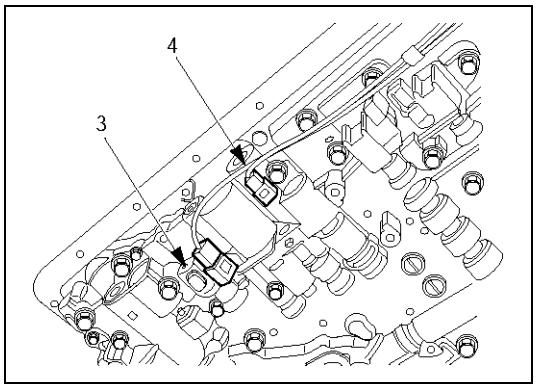

249RY00012

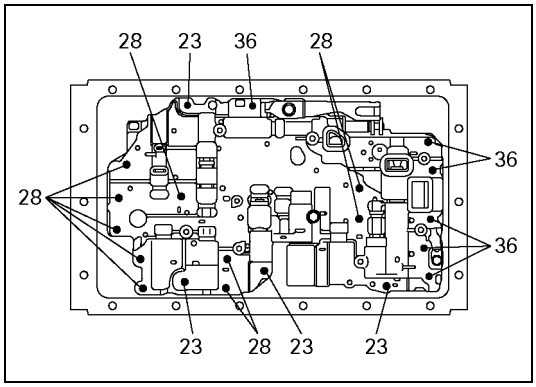

244RY00017

5. Valve body

Remove the twenty bolts from valve body.

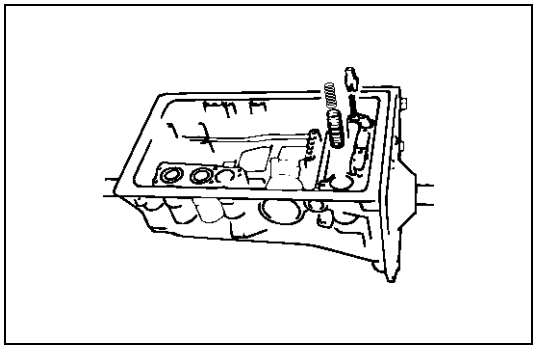

240RY00028

6. Check valve, spring
7. Spring

Remove the check valve and spring.
Remove two springs from C-0 accumulator piston.

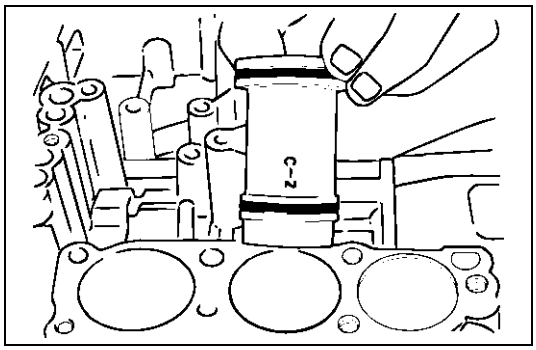

240RY00010

8. Accumulator piston (B-2)
9. Accumulator piston (C-2)
Remove accumulator pistons and springs from transmission case.

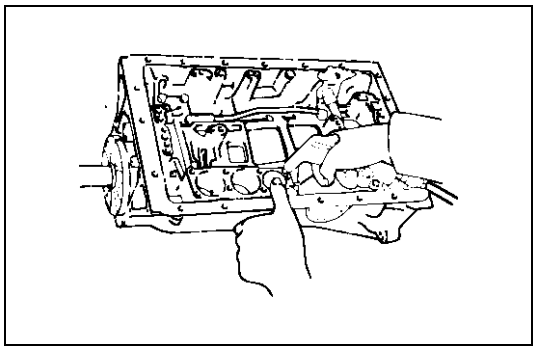

240RY00011

10. Accumulator piston (B-0)
Applying compressed air to the oil hole, remove the B-0 accumulator piston and spring.

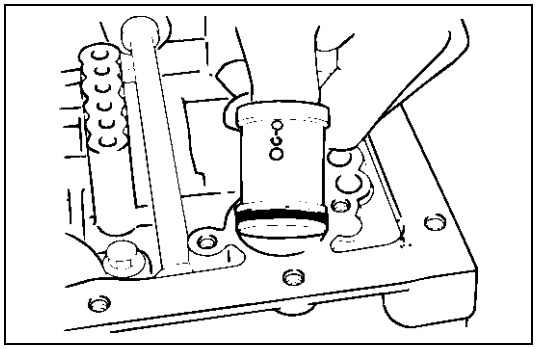

240RY00012

11. Accumulator piston (C-0)
Remove the C-0 accumulator piston.

DISASSEMBLY OF MAJOR COMPONENTS (3)

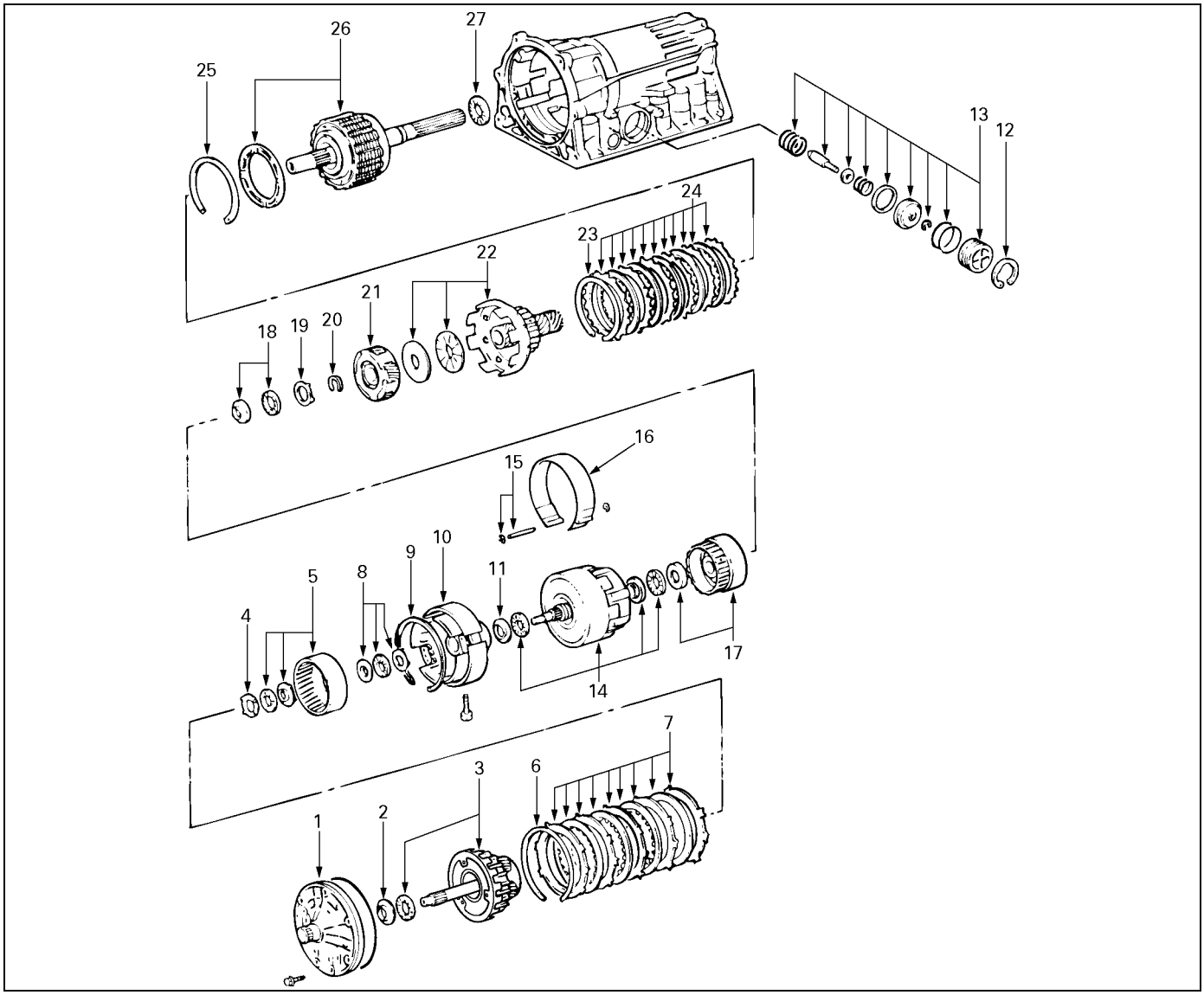

248L100001

Disassembly steps

- ▲ 1. Oil pump
- ▲ 2. Race
- ▲ 3. OD planetary gear and OD direct clutch
- ▲ 4. Race
- ▲ 5. OD planetary ring gear
- ▲ 6. Snap ring
- ▲ 7. Flange, plate and disc
- ▲ 8. Bearing and race
- ▲ 9. Snap ring
- ▲ 10. OD support
- ▲ 11. Race
- ▲ 12. Snap ring
- ▲ 13. Second coast brake piston assembly
- ▲ 14. Direct clutch and forward clutch
- ▲ 15. E-ring and pin
- ▲ 16. Second coast brake band
- ▲ 17. Front planetary ring gear
- ▲ 18. Bearing and race
- ▲ 19. Race
- ▲ 20. Snap ring
- ▲ 21. Front planetary gear
- ▲ 22. Drum and one-way clutch
- ▲ 23 Snap ring
- ▲ 24. Flange, plate and disc
- ▲ 25. Snap ring
- ▲ 26. Rear planetary gear, second brake drum and output shaft
- ▲ 27. Bearing

Important operations

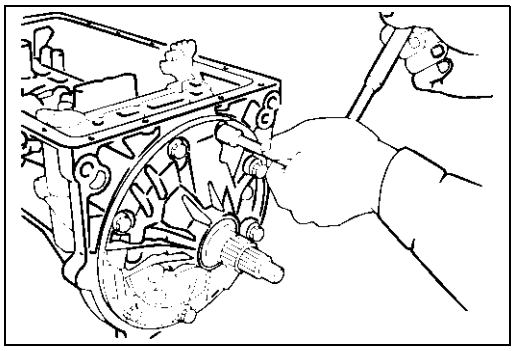

241RY00003

1. Oil pump

Remove seven bolts fixing the oil pump to the transmission case.

Remove the oil pump.

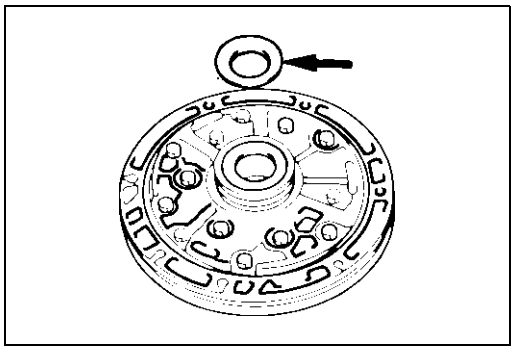

241RY00002

2. Race

Remove race from oil pump.

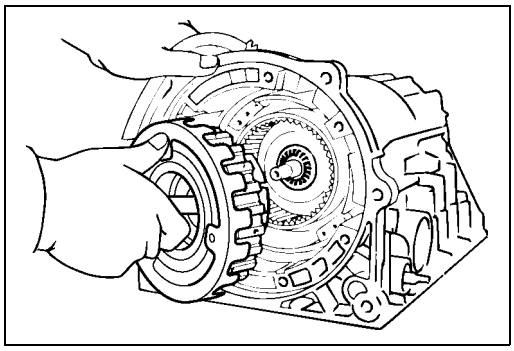

252L100001

3. OD planetary gear and OD direct clutch

Remove the overdrive planetary gear and overdrive direct clutch with thrust needle bearing from the transmission case.

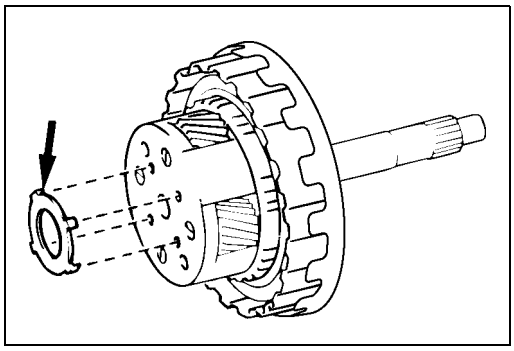

252L100017

4. Race

Remove the race from OD planetary gear.

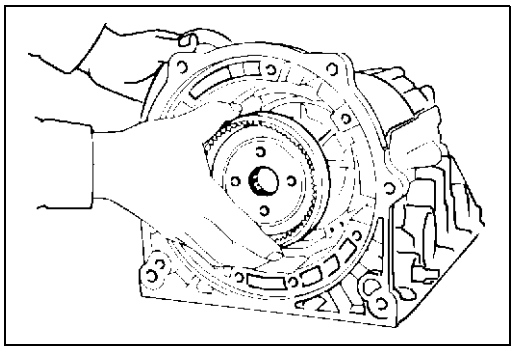

252RY00002

5. OD planetary ring gear

Remove the overdrive planetary ring gear from the transmission case.

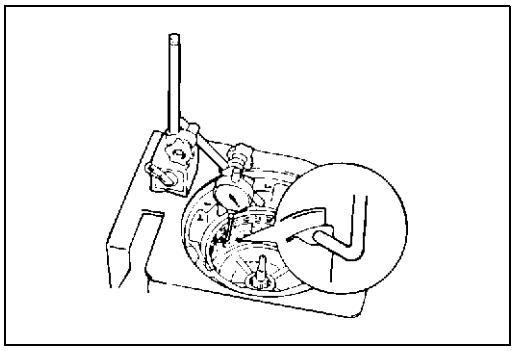

252RY00003

Check piston stroke of overdrive brake

Place a dial indicator onto the overdrive brake piston as shown in the figure.

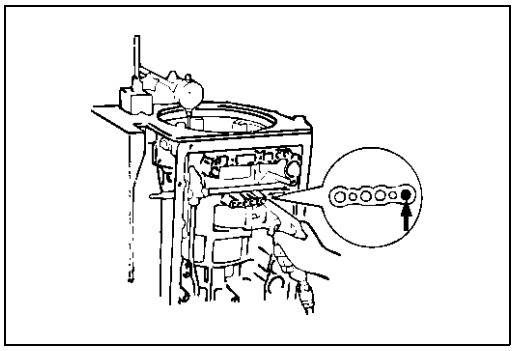

244RY00001

Measure the stroke applying and releasing the compressed air (4– 8kg/cm^2, 57– 114 psi or 392– 785kPa) as shown in the figure.

mm (in.)

Piston stroke	1.40–1.70 (0.0551–0.0669)

If the values are nonstandard, select another flange.

Available flange sizes	mm (in.)
3.3 (0.130)	3.8 (0.150)
3.5 (0.138)	3.9 (0.154)
3.6 (0.142)	4.0 (0.158)
3.7 (0.146)	

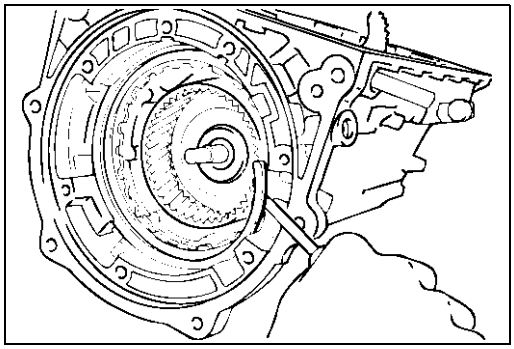

246RY00001

6. Snap ring

Remove the snap ring.

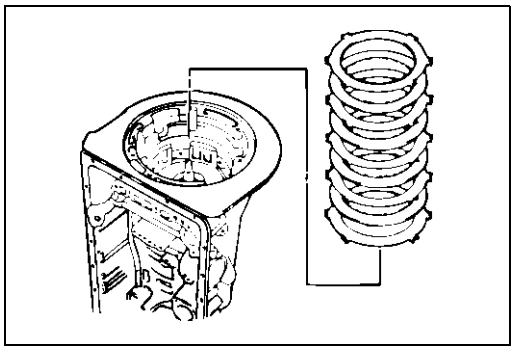

246RY00026

7. Flange, plate and disc
Remove two flanges, three plates and four discs.

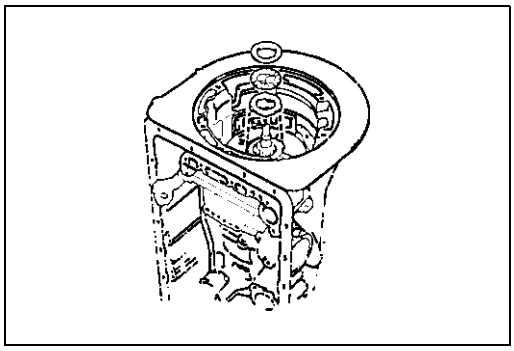

247RY00003

8. Bearing and race
Remove the thrust bearing and two races.

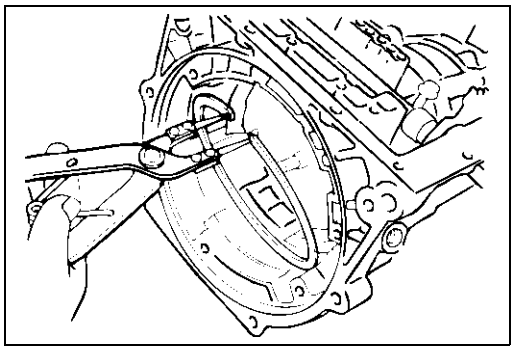

246RY00002

9. Snap ring
Using snap ring pliers, remove the snap ring.

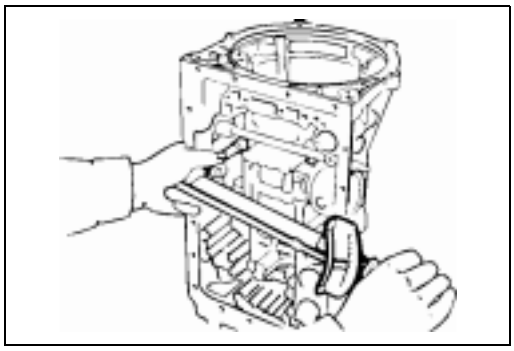

252RY00004

10. OD support
Remove two bolts fixing the overdrive support assembly to the case.

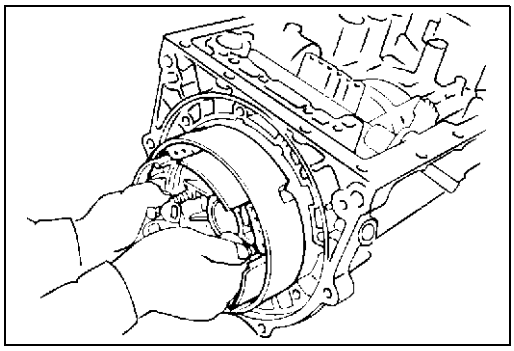

252RY00005

Install two removed bolts to the OD support, and pull out the OD support assembly.

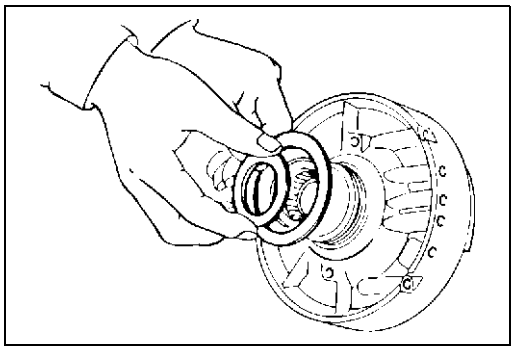

252RY00006

11. Race

Remove two races from OD support.

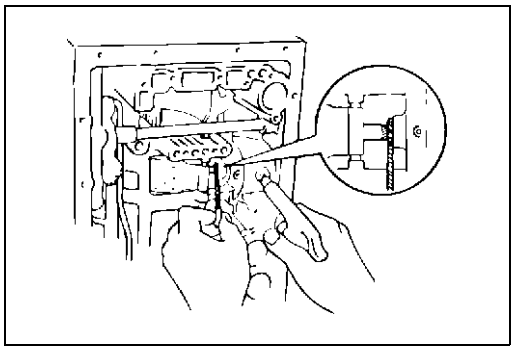

248RY00004

Check piston stroke of second coast brake

Place a mark on the second coast brake piston rod as shown in the figure.

Using feeler gauge, measure the stroke applying the compressed air (4 – 8kg/cm^2, 57 – 114psi or 392 – 785 kPa) as shown in the figure.

mm (in.)

Piston stroke	1.5–3.0 (0.059-0.118)

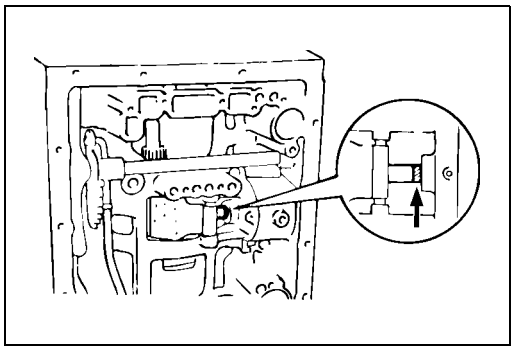

248RY00005

If the values are nonstandard, replace piston rod and recheck piston stroke. If piston stroke is nonstandard, replace brake band.

There are two piston rods.

Rod length	71.4mm (2.811 in.)
	72.9mm (2.870 in.)

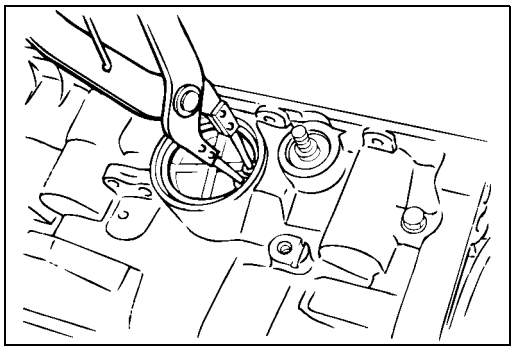

248RY00006

12. Snap ring

Using snap ring pliers, remove the snap ring.

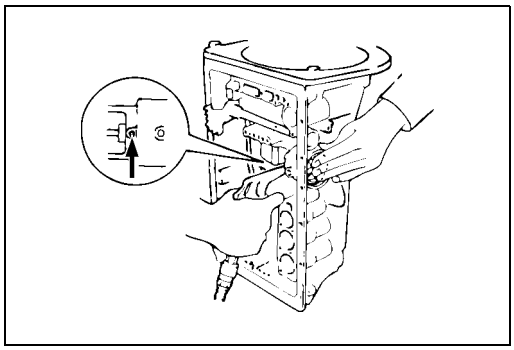

248RY00007

13. Second coast brake piston assembly

Applying compressed air to the oil hole, remove the second coast brake piston assembly.

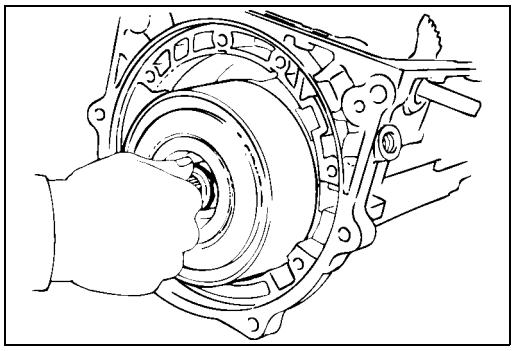

248RY00008

14. Direct clutch and forward clutch

Remove the direct clutch and forward clutch from the case.

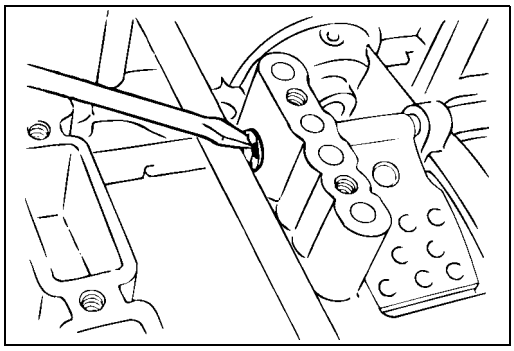

248RY00009

15. E-ring and pin

Remove the E-ring from the pin.

Remove the pin from the brake band.

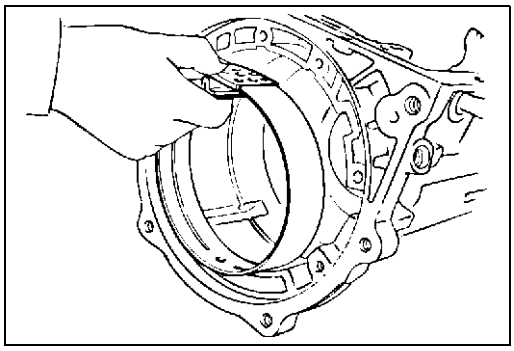

248RY00010

16. Second coast brake band

Remove the second coast brake band from the case.

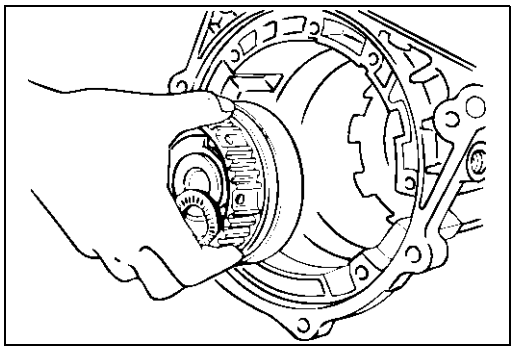

247RY00004

17. Front planetary ring gear

Remove the front planetary ring gear from the case.

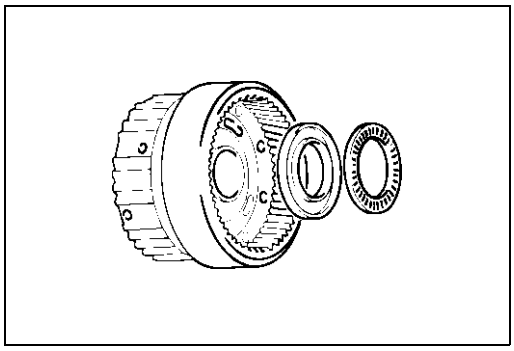

247RY00005

18. Bearing and race

Remove the bearing and race.

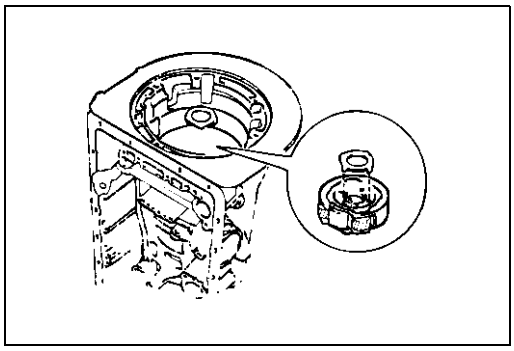

247RY00006

19. Race

Remove the race.

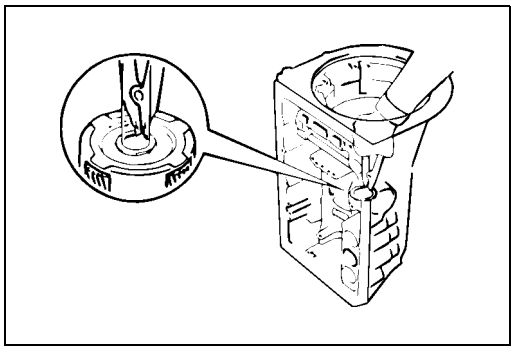

248RY00011

20. Snap ring

Using snap ring pliers, remove the snap ring.

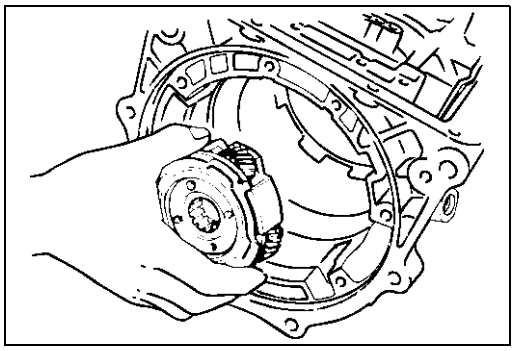

247RY00007

21. Front planetary gear

Remove the front planetary gear from the case.

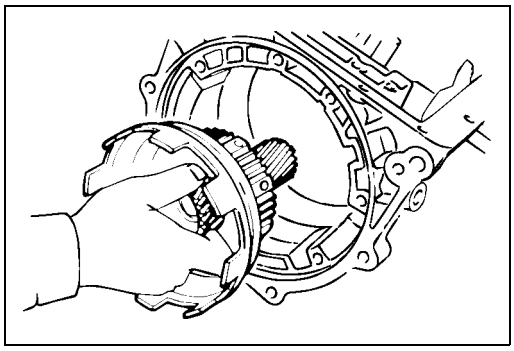

248RY00012

22. Drum and one-way clutch

Remove sun gear input drum and one-way clutch.

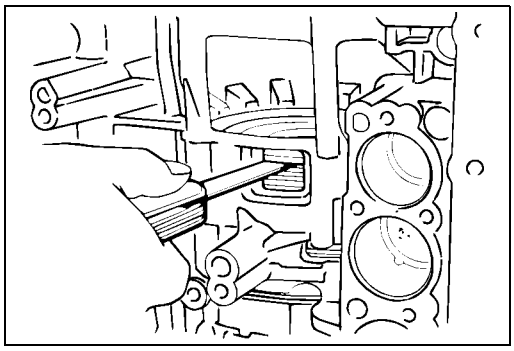

248RY00013

Check pack clearance of second brake

Using a feeler gauge, measure the clearance between the snap ring and flange as shown in the figure.

mm (in.)

Clearance	0.62–1.98 (0.0244–0.0780)

If the values are nonstandard, replace the discs.

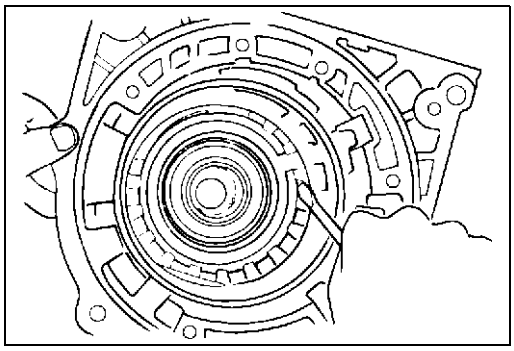

248RY00014

23. Snap ring

Using two screwdrivers, remove the snap ring.

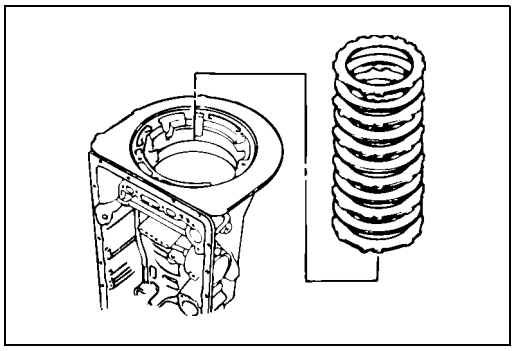

248RY00015

24. Flange, plate and disc

Remove the flange, five discs and five plates.

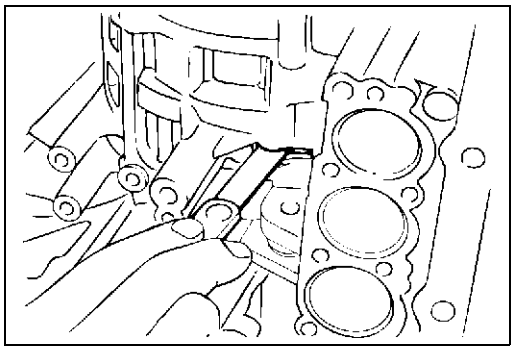

248RY00016

Check pack clearance of first and reverse brake

Using a feeler gauge, measure the clearance between the plate and second brake drum as shown in the figure.

	mm (in.)
Clearance	0.7–1.0 (0.0276–0.0394)

If the values are nonstandard, select another flange.

Available flange sizes	mm (in.)
4.0 (0.158)	4.8 (0.189)
4.2 (0.165)	5.0 (0.197)
4.4 (0.173)	5.2 (0.205)
4.6 (0.181)	5.4 (0.213)

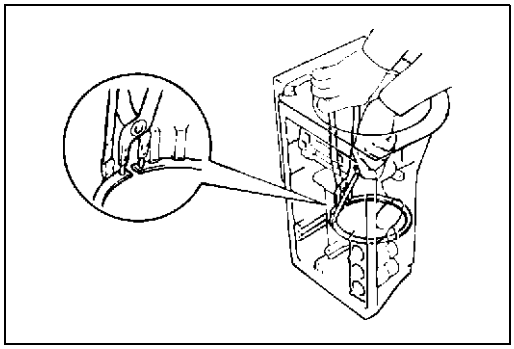

248RY00017

25. Snap ring

Using snap ring pliers, remove the snap ring.

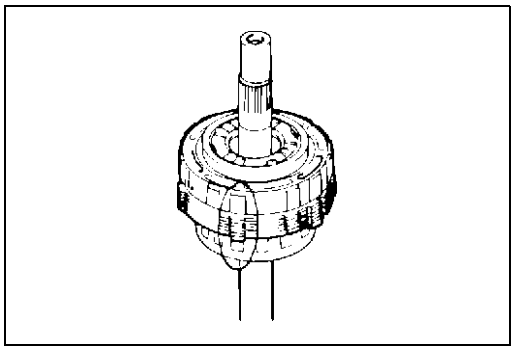

247RY00009

26. Rear planetary gear, second brake drum and output shaft

Remove the rear planetary gear, second brake drum and output shaft as an assembly.

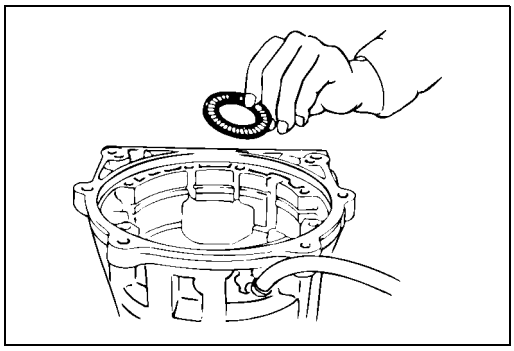

248RY00018

27. Bearing

Remove the assembled thrust bearing and race from the case.

DISASSEMBLY, INSPECTION AND REASSEMBLY OF MINOR COMPONENTS

The instructions here are organized so that you work on only one component group at a time.
This will help avoid confusion from similar-looking parts of different subassemblies being on your workbench at the same time.
The component groups are inspected and repaired from the converter housing side.
As much as possible, complete the inspection, repair and reassembly before proceeding to the next component group. If a component group cannot be reassembled because parts are being ordered, be sure to keep all parts of that group in a separate container while proceeding with disassembly, inspection, repair and reassembly of other component groups.
Recommended ATF type BESCO ATF II or III.

GENERAL CLEANING NOTES:

1. All disassembled parts should be washed clean and any fluid passages and holes blown through with compressed air.
2. When using compressed air to dry parts, always aim away from yourself to prevent accidentally spraying automatic transmission fluid in your face.
3. The recommended automatic transmission fluid should be used for cleaning.

PARTS ARRANGEMENT:

1. After cleaning, the parts should be arranged in proper order to allow performing inspection, repairs, and reassembly with efficiency.
2. When disassembling a valve body, be sure to keep each valve together with the corresponding spring.
3. New brakes and clutches that are to be used for replacement must be soaked in transmission fluid for at least thirty before assembly.

GENERAL ASSEMBLY:

1. All oil seal rings, clutch discs, clutch plates, rotating parts, and sliding surfaces should be coated with transmission fluid prior to reassembly.
2. All gaskets and rubber O-rings should be replaced.
3. Make sure that ends of a snap ring are not aligned with one of the cutouts and are installed in the groove correctly.
4. If a worn bushing is to be replaced, the subassembly containing that bushing must be replaced.
5. Check thrust bearings and races for wear or damage. Replace if necessary.
6. Use petroleum jelly or vaseline to keep parts in place.

OIL PUMP

DISASSEMBLY

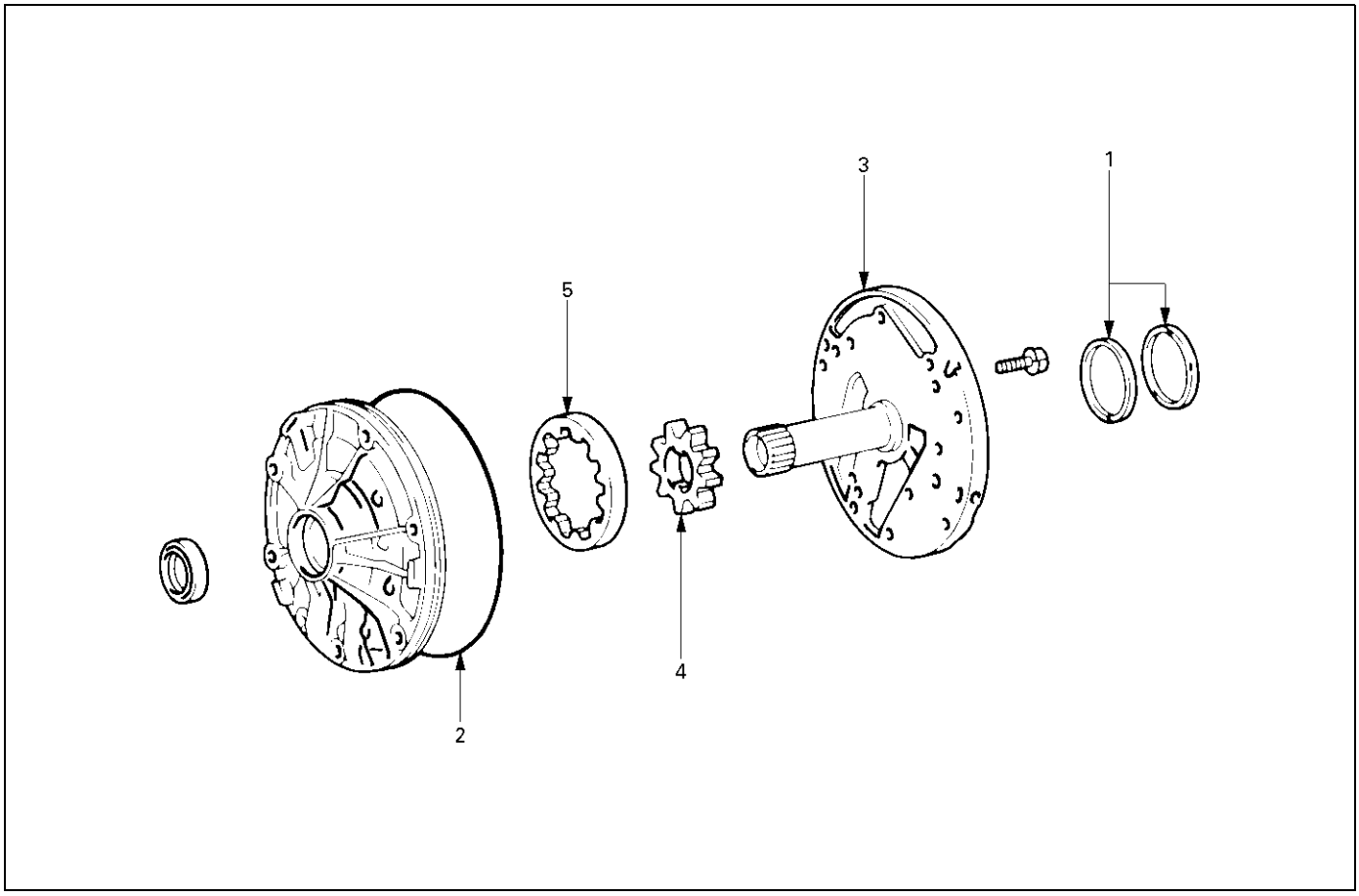

241RY00004

Disassembly steps

▲ 1. Oil seal ring
▲ 2. O-ring
▲ 3. Stator shaft
4. Oil pump drive gear
5. Oil pump driven gear

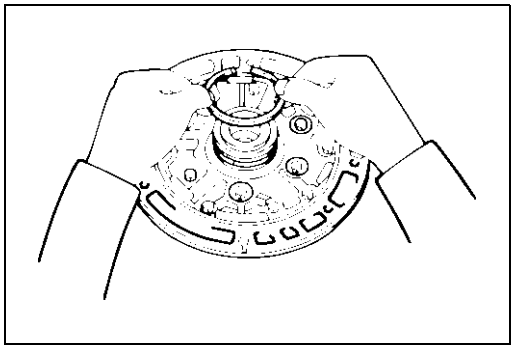

241RY00005

Important operations

1. Oil seal ring
Use torque converter as work stand.
Remove 2 oil seal rings from stator shaft.

2. O-ring
Remove O-ring.

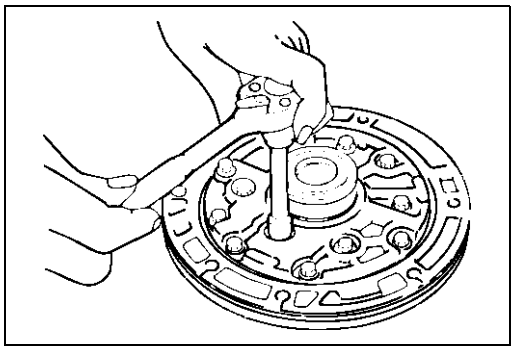

241RY00006

3. Stator shaft

Remove 13 bolts, and then remove the stator shaft from oil pump body.
Then remove drive and driven gear.

INSPECTION AND REPAIR

Make necessary correction or parts replacement if wear, damage or any abnormal conditions are found through inspection.

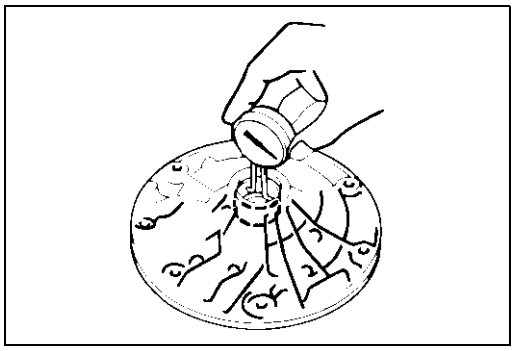

241RY00007

Check oil pump body bushing

Using a dial indicator, measure the inside diameter of the oil pump body bushing.

mm (in.)

Maximum inside diameter	38.19 (1.5035)

If the inside diameter is greater than the maximum, replace the oil pump body.

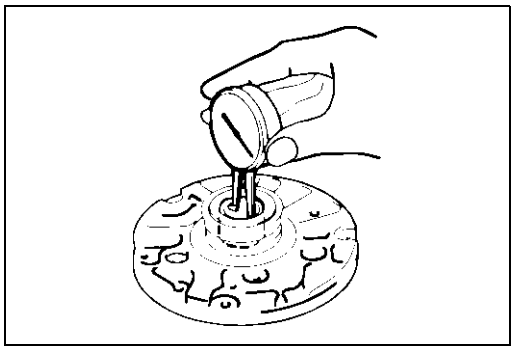

241RY00008

Check stator shaft bushing

Using a dial indicator, measure the inside diameter of the stator shaft bushing.

mm (in.)

Maximum inside diameter	Front side	21.58 (0.8496)
	Rear side	27.08 (1.0661)

If the inside diameter is greater than maximum, replace the stator shaft.

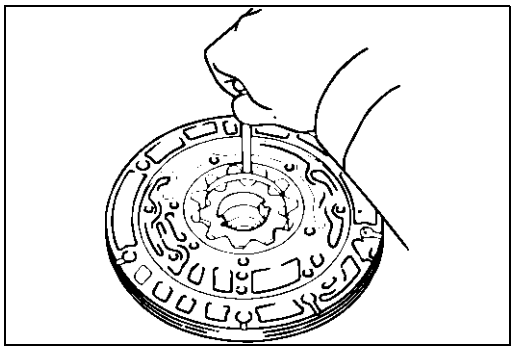

241RY00009

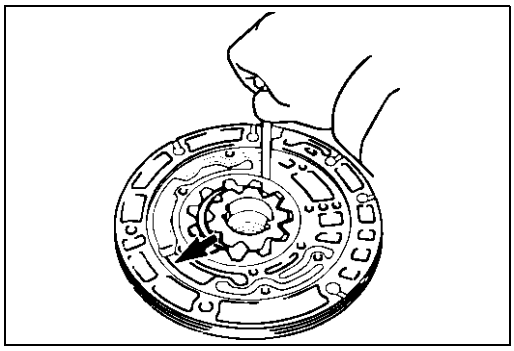

241RY00010

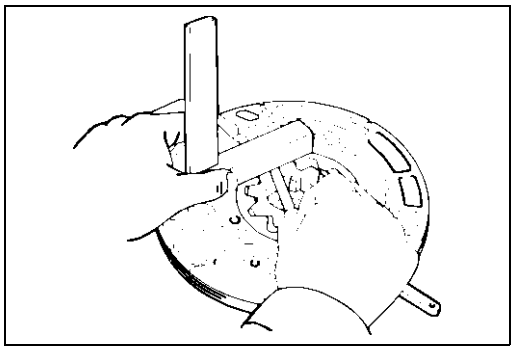

241RY00011

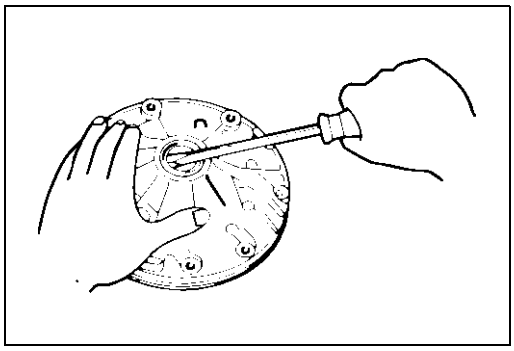

241RY00012

Check tip clearance of both gears

Measure between the gear teeth and the cresent-shaped part of the pump body.

mm (in.)

Standard tip clearance	0.11–0.14 (0.0043–0.0055)
Maximum tip clearance	0.3 (0.012)

If the tip clearance is greater than the maximum, replace the drive gear, driven gear or pump body.

Check body clearance of driven gear

Push the driven gear to one side of the body.
Use a feeler gauge, measure the clearance.

mm (in.)

Standard body clearance	0.07–0.15 (0.0028–0.0059)
Maximum body clearance	0.3 (0.012)

If the body clearance is greater than the maximum, replace the drive gear, driven gear or pump body.

Check side clearance of both gears

Using a steel straightedge and a feeler gauge, measure the side clearance of both gears.

mm (in.)

Standard side clearance	0.02–0.05 (0.0008–0.0020)
Maximum side clearance	0.1 (0.004)

If the side clearance is greater than the maximum, replace the drive gear, driven gear or pump body.

Check oil seal

Check for wear, damage or cracks.
If necessary, replace oil seal.
Pry off the oil seal with a screwdriver.

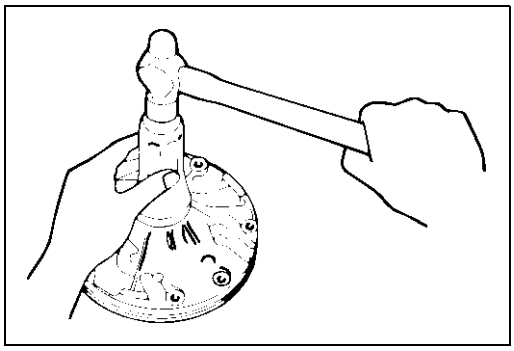

241RY00013

Using special tool, install a new oil seal.
The oil seal end should be flush with the outer edge of the pump body.
Oil seal installer: 5-8840-2256-0 (J-9617)
Coat the oil seal lip with multi purpose grease.

REASSEMBLY

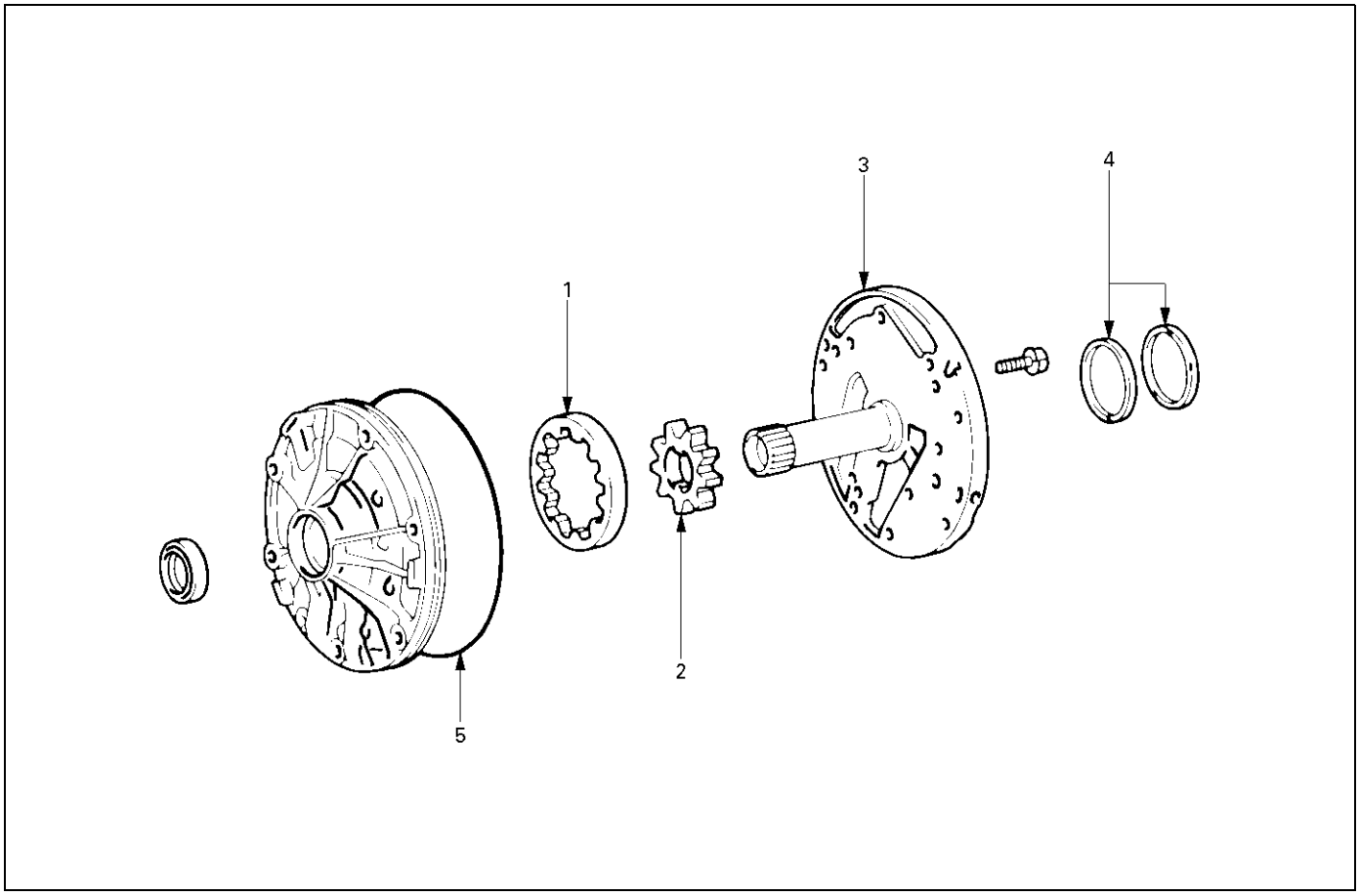

241RY00019

Reassembly steps

- ▲ 1. Oil pump driven gear
- 2. Oil pump drive gear
- ▲ 3. Stator shaft
- ▲ 4. Oil seal ring
- ▲ 5. O-ring

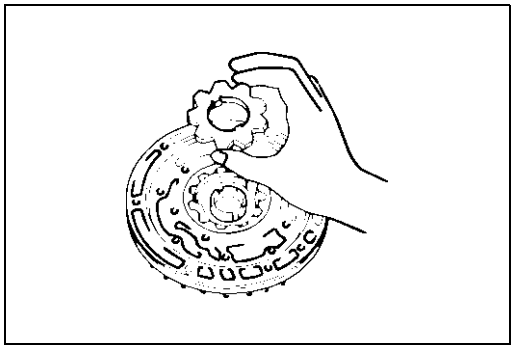

241RY00014

Important operations

1. Oil pump driven gear

Place the oil pump body on the torque converter.
Coat the driven gear and drive gear with ATF.
Install the driven gear and drive gear.

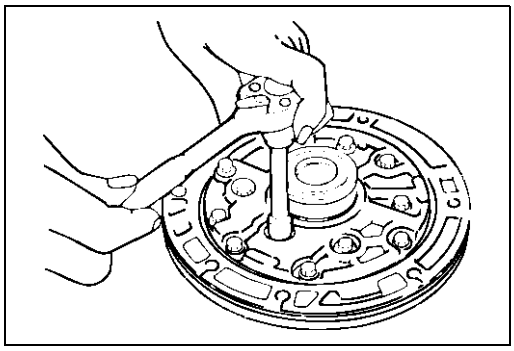

241RY00006

3. Stator shaft

Align the stator shaft with the bolt holes.
Tighten the thirteen bolts.

	N·m (kg·m/Ib in)
Torque	11 (1.1/95)

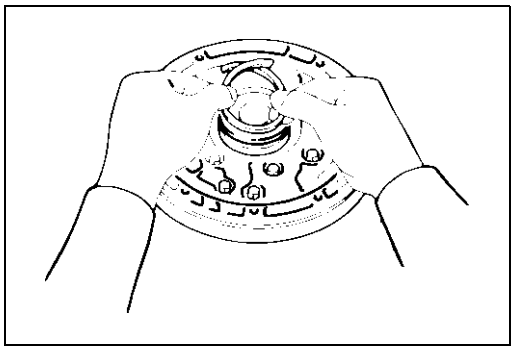

241RY00015

4. Oil seal ring

Coat the oil seal rings with ATF.
Contract the oil seal rings as shown, and install them onto the stator shaft.

NOTE:
Do not spread the ring ends too much.

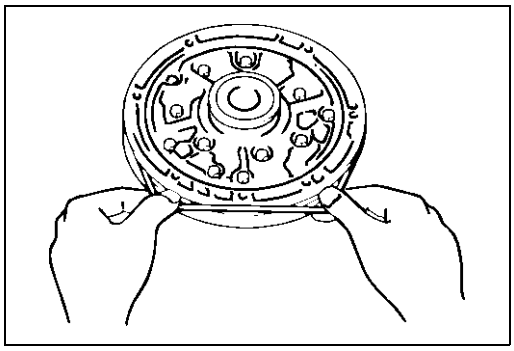

241RY00016

5. O-ring

Coat a new O-ring with ATF and install it to the oil pump body.

O-ring size (Reference)	mm (in.)
Inside diameter	204.9 (8.067)
Thickness	3.5 (0.138)

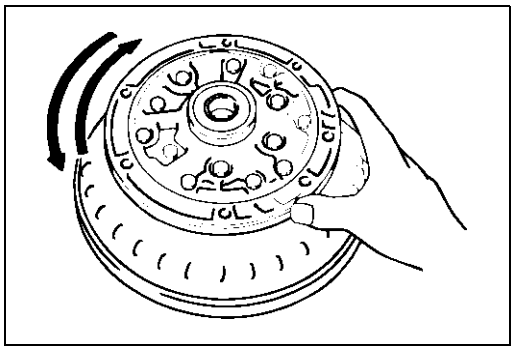

241RY00017

Check oil pump drive gear rotation

Make sure the drive gear rotates smoothly when installed to the torque converter.

OD PLANETARY GEAR AND OD DIRECT CLUTCH ASSEMBLY (C-0)

DISASSEMBLY

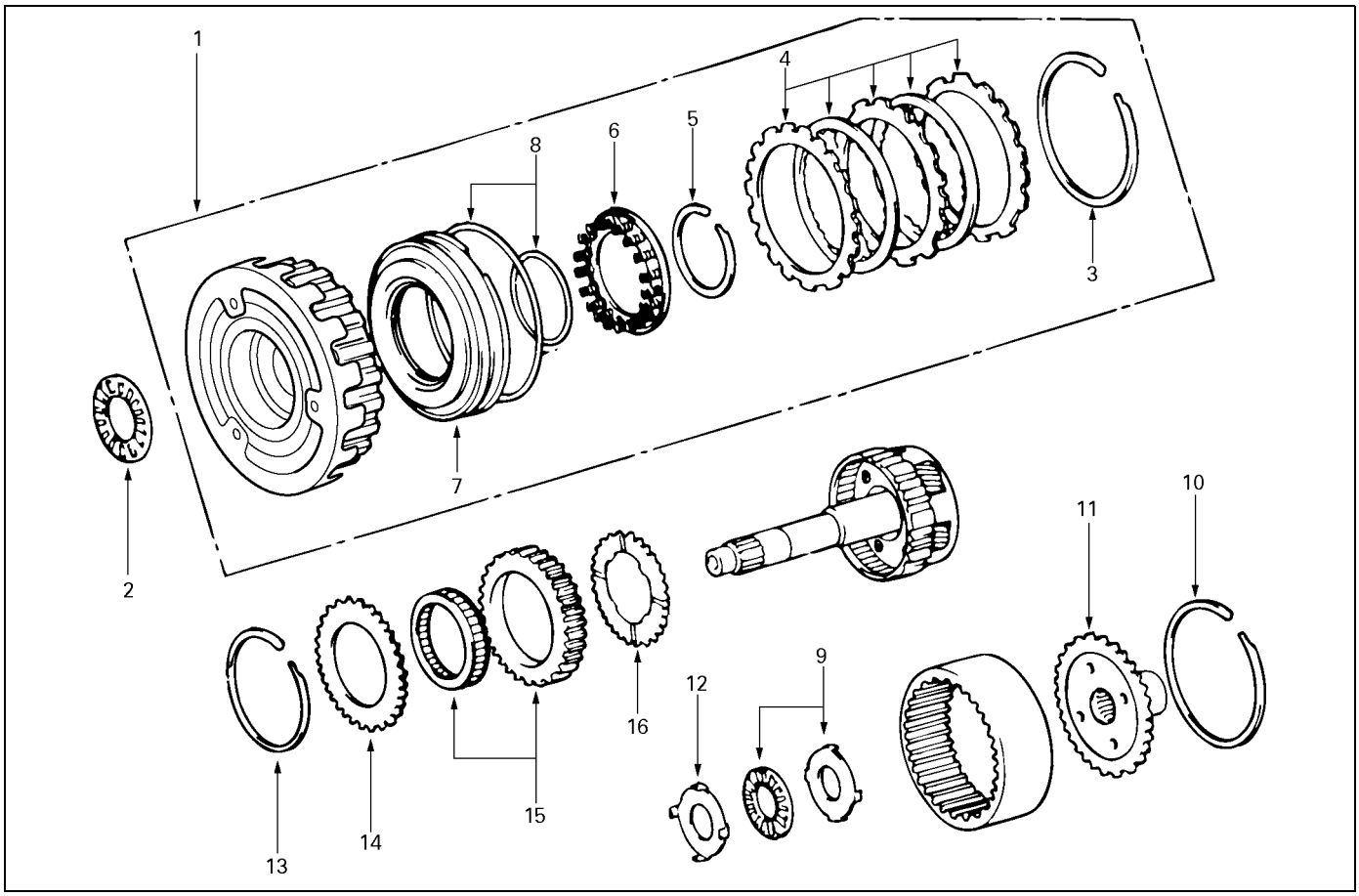

252L100002

Disassembly steps

- ▲ 1. OD direct clutch assembly
- ▲ 2. Thrust bearing
- ▲ 3. Snap ring
- ▲ 4. Flange, disc and plate
- ▲ 5. Snap ring
- ▲ 6. Piston return spring
- ▲ 7. OD direct clutch piston with O-ring
- ▲ 8. O-ring
- ▲ 9. Thrust bearing
- ▲ 10. Snap ring
- ▲ 11. Ring gear flange
- 12. Race
- ▲ 13. Snap ring
- ▲ 14. Retaining plate
- ▲ 15. OD one-way clutch
- 16. Thrust washer

Important operations

Check operation of one-way clutch

Hold the OD direct clutch drum and turn the input shaft.
The input shaft should turn freely clockwise and should lock counterclockwise.
(1): Free
(2): Lock

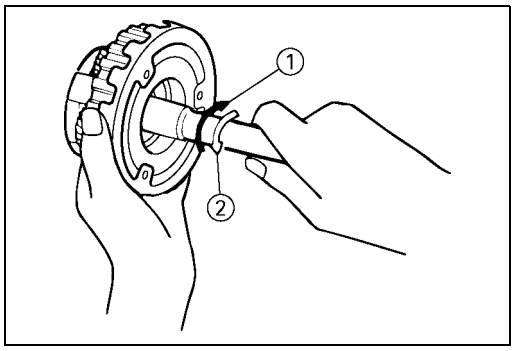

252L100003

1. **OD direct clutch assembly**
   Remove OD direct clutch assembly from OD planetary gear.
2. **Thrust bearing**
   Then remove thrust bearing with the race from OD direct clutch drum.

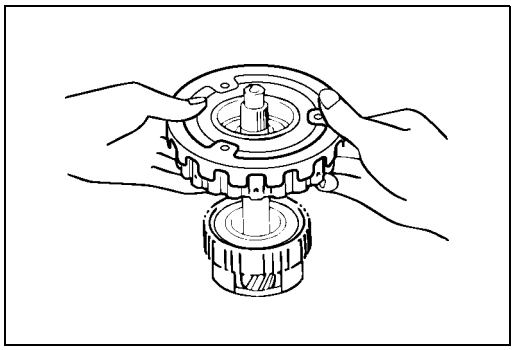

252L100004

Check piston stroke of OD direct clutch (C-O)

Place the oil pump onto the torque converter, and then place the OD direct clutch assembly onto the oil pump.

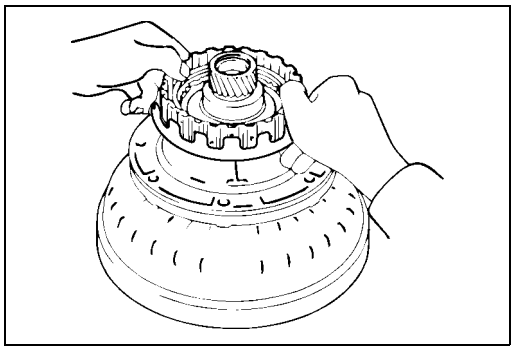

252L100005

Use a dial indicator, measure the OD direct clutch piston stroke applying and releasing the compressed air (4– 8 kg/cm^2, 57– 114 psi, 392– 785 kPa) as shown.

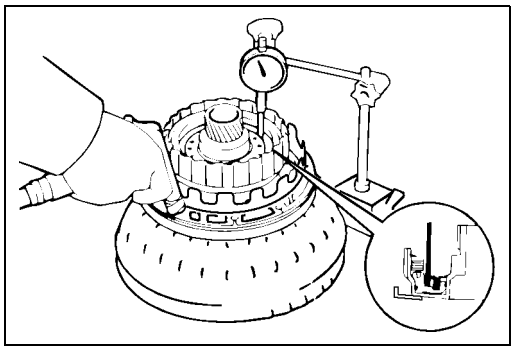

252L100016

mm (in.)

Piston stroke	1.85– 2.15 (0.0728– 0.0847)

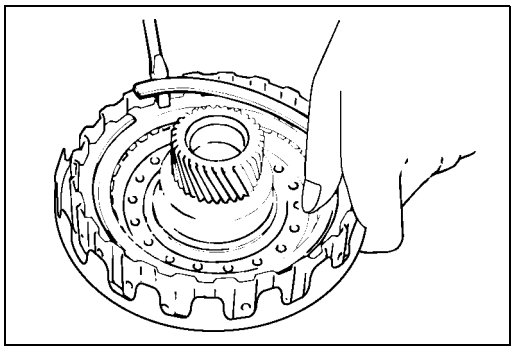

252L100006

3. Snap ring
Remove snap ring from clutch drum.

4. Flange, disc and plate
Remove flange, two discs and two plates.

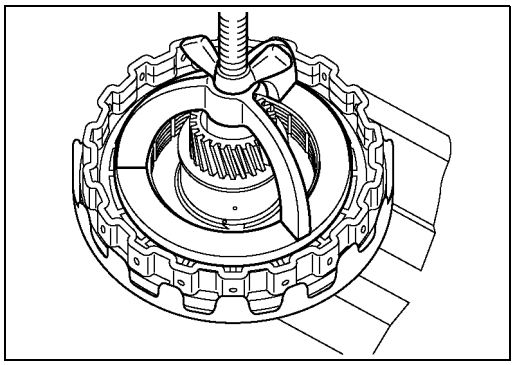

252L100007

5. Snap ring
Place special tool and a suitable ring on the spring retainer and compress the return spring. Using snap ring pliers, remove the snap ring.
Spring compressor: 5-8840-0195-0 (J-23327-1)

6. Piston return spring
Remove piston return spring.

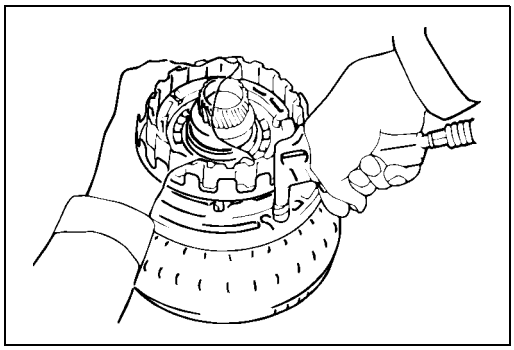

252L100008

7. OD direct clutch piston with O-ring
Place the oil pump onto the torque converter and then place the OD direct clutch onto the oil pump.
Holding the OD direct clutch piston by hand, apply compressed air to the oil pump to remove the OD direct clutch piston.
Remove the OD direct clutch piston.

8. O-ring
Remove two O-rings from piston.

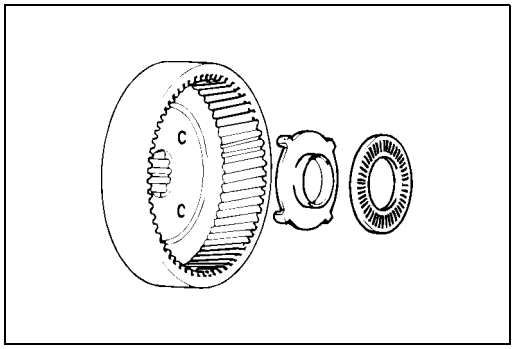

252ry00021

9. Thrust bearing
Remove bearing and race from OD planetary ring gear.

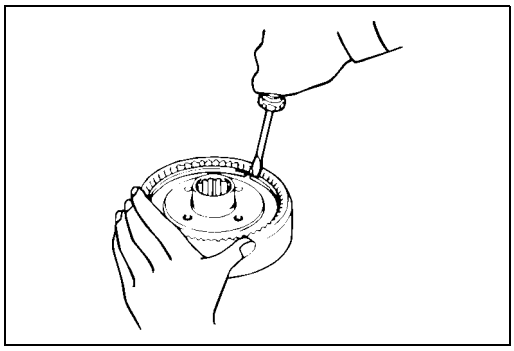

252RY00022

10. Snap ring
Remove snap ring.

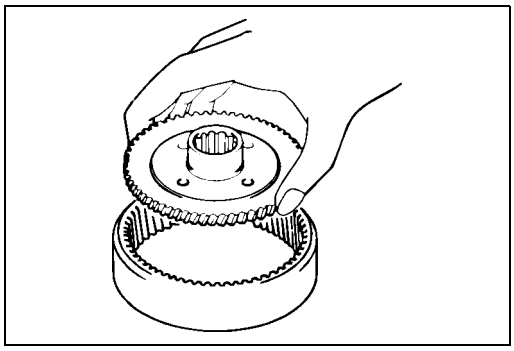

252RY00023

11. Ring gear flange
Remove ring flange from OD planetary ring gear.

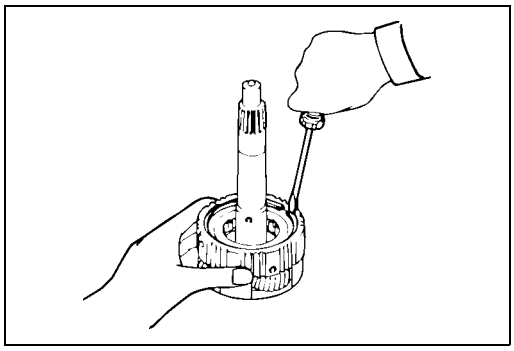

252RY00024

13. Snap ring
Remove snap ring, using screwdriver.

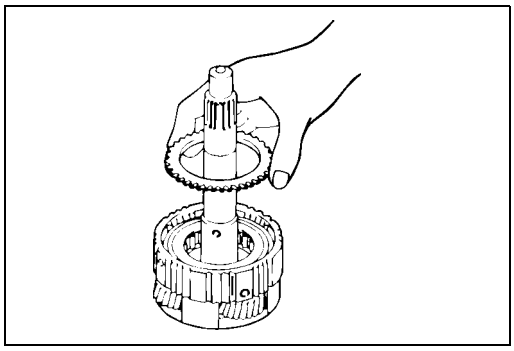

252RY00025

14. Retaining plate
Remove retaining plate from OD planetary gear.

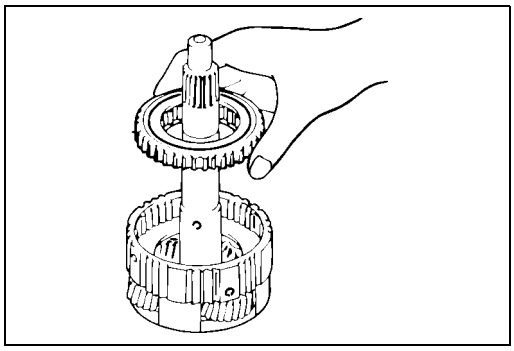

252RY00026

15. OD one-way clutch

Remove OD one-way clutch with outer race.

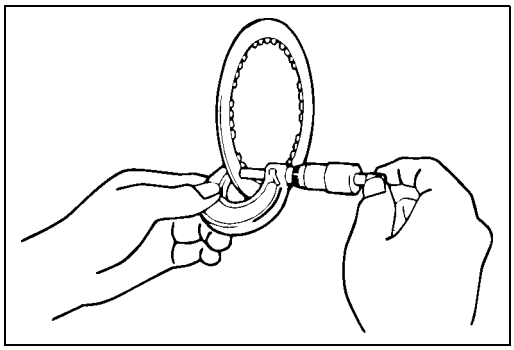

252RY00027

INSPECTION AND REPAIR

Check discs

Using a micrometer, measure the thickness of the discs.

	mm (in.)
Minimum thickness	1.84 (0.0724)

If the thickness is less than the minimum, replace the disc.

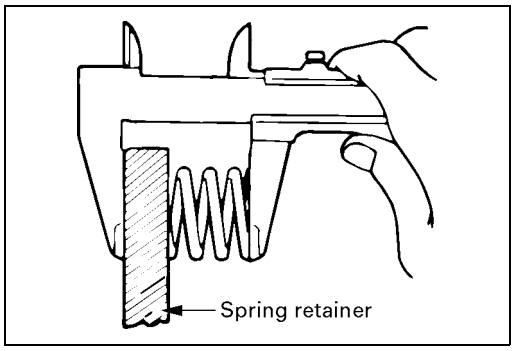

252RY00028

Check piston return spring

Using calipers, measure the free length of the return spring.

	mm (in.)
Standard length	15.8 (0.622)

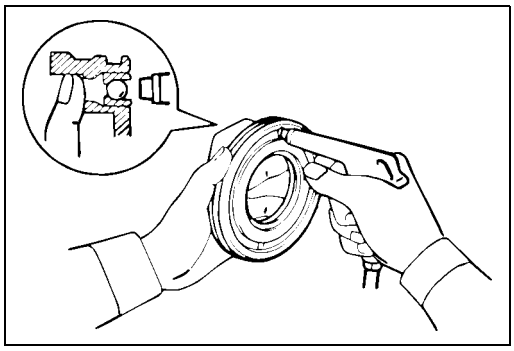

252RY00029

Check OD direct clutch piston

Check that check ball is free by shaking the piston.

Check that the valve does not leak by applying low-pressure compressed air.

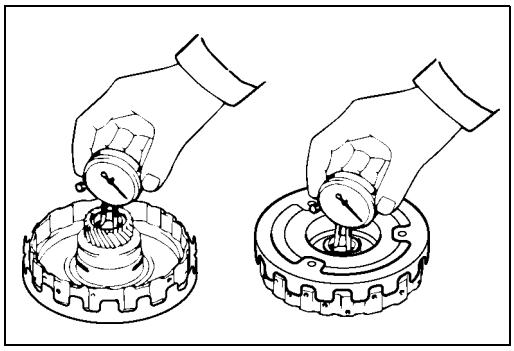

252L100009

Check OD direct clutch drum bushings

Using a dial indicator, measure the inside diameter of the clutch drum bushings.

	mm (in.)
Maximum inside diameter	27.11 (1.0673)

If the inside diameter is greater than the maximum, replace the clutch drum.

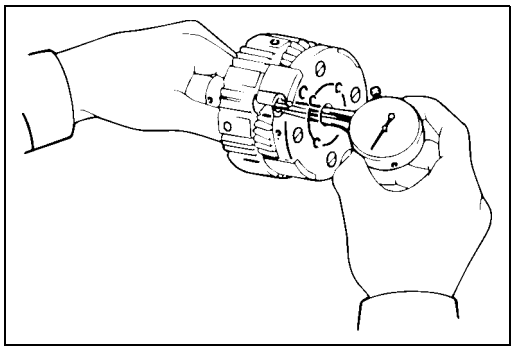

252RY00031

Check OD planetary gear bushing

Using a dial indicator, measure the inside diameter of the planetary gear bushing.

	mm (in.)
Maximum inside diameter	11.27 (0.4437)

If the inside diameter is greater than the maximum, replace the planetary gear.

REASSEMBLY

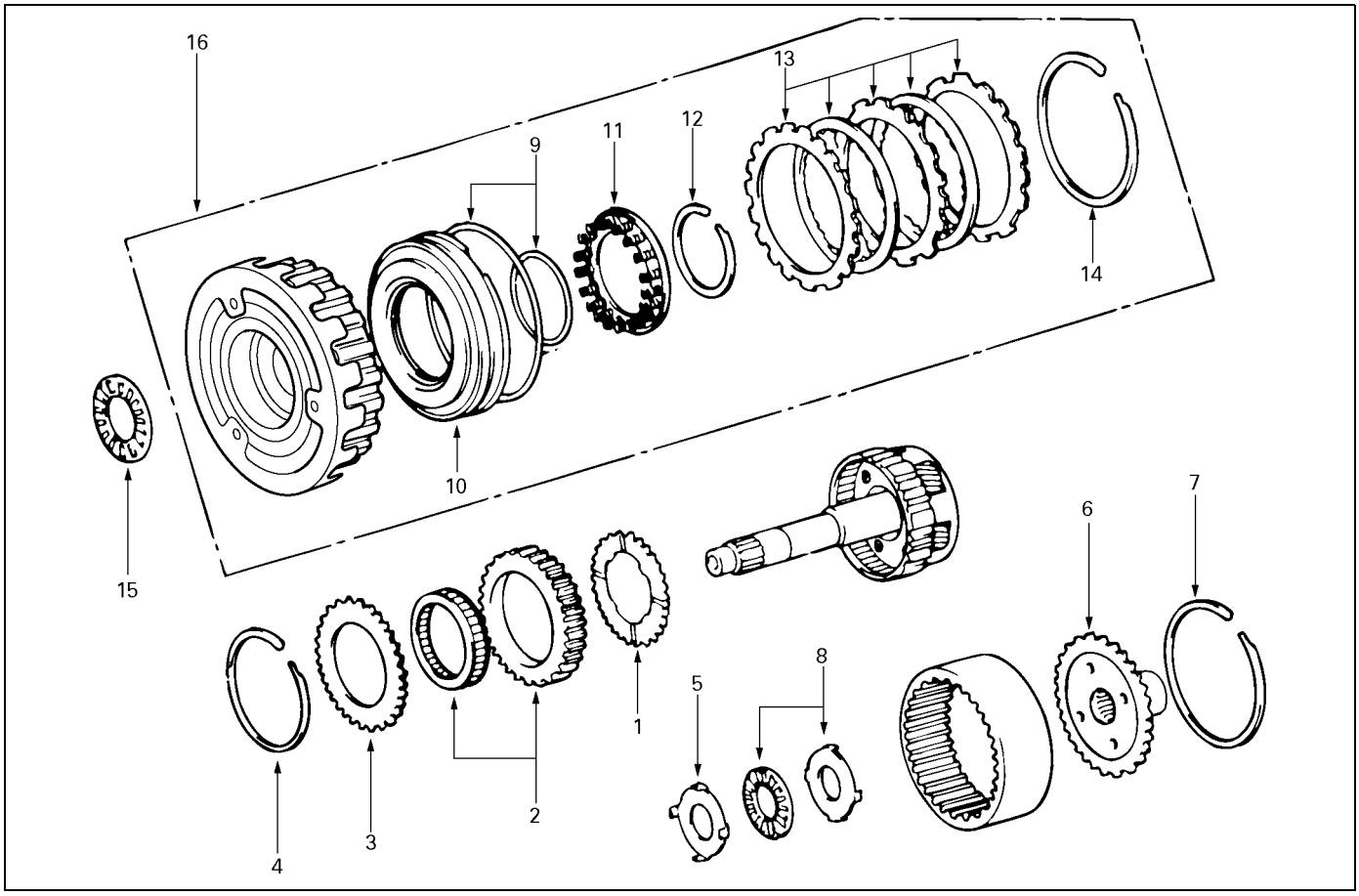

252L100010

Reassembly steps

- ▲ 1. Thrust washer
- ▲ 2. OD one-way clutch
- ▲ 3. Retaining plate
- ▲ 4. Snap ring
- ▲ 5. Race
- ▲ 6. Ring gear flange
- ▲ 7. Snap ring
- ▲ 8. Thrust bearing
- ▲ 9. O-ring
- ▲ 10. OD direct clutch piston with O-ring
- ▲ 11. Piston return spring
- ▲ 12. Snap ring
- ▲ 13. Flange, disc and plate
- ▲ 14. Snap ring
- ▲ 15. Thrust bearing
- ▲ 16. OD direct clutch assembly

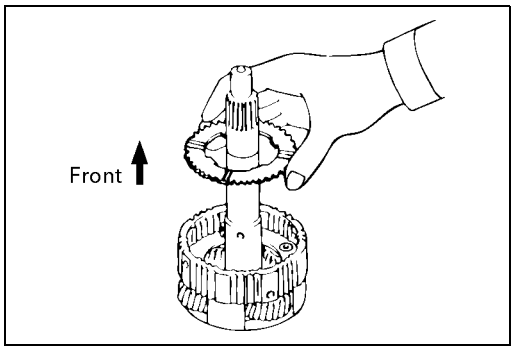

252RY00032

Important operations

1. Thrust washer

Install the thrust washer to the OD planetary gear, facing the grooved side upward.

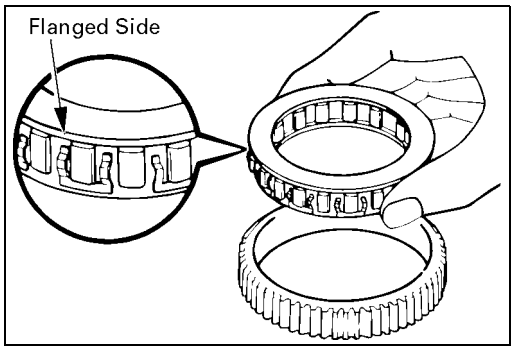

252RY00033

2. OD one-way clutch

Install the one-way clutch into the outer race, with the flanged side of the one-way clutch facing upward.

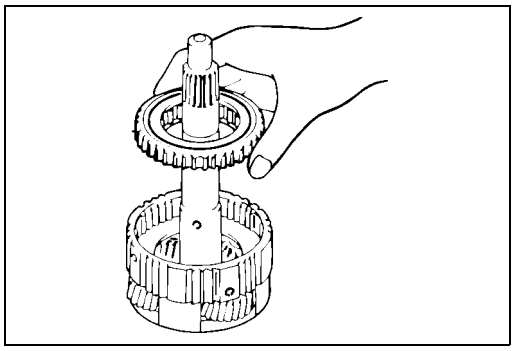

252RY00026

Install OD one-way clutch with outer race to overdrive planetary gear.

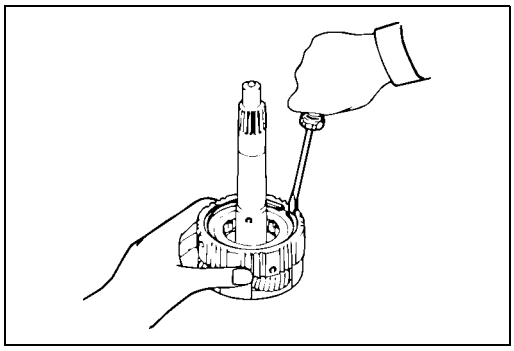

252RY00024

3. Retaining plate

4. Snap ring

Install retaining plate, then install snap ring, using a screwdriver.

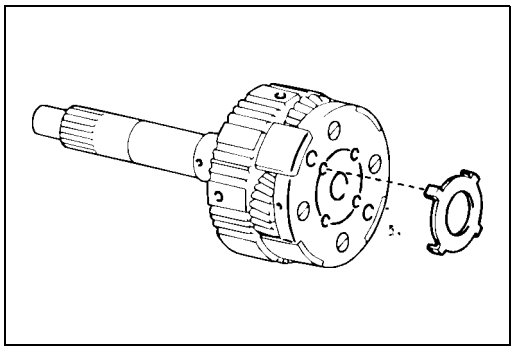

252RY00034

5. Race

Coat the race with petroleum jelly and install it to the planetary gear.

Race diameter (Reference)	mm (in.)
Inside diameter	27.3 (1.075)
Outside diameter	41.8 (1.646)

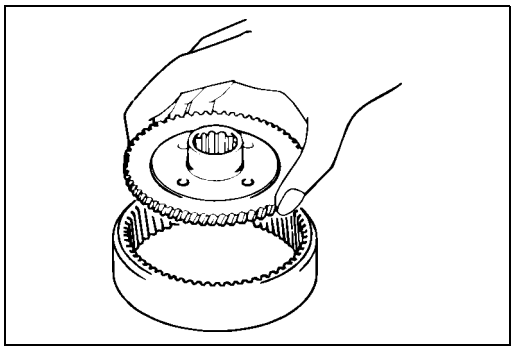

252RY00023

6. Ring gear flange

Install ring gear flange to OD planetary ring gear.

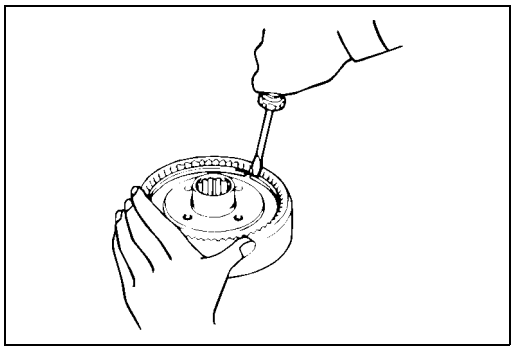

252RY00022

7. Snap ring

Install snap ring, using a screwdriver.

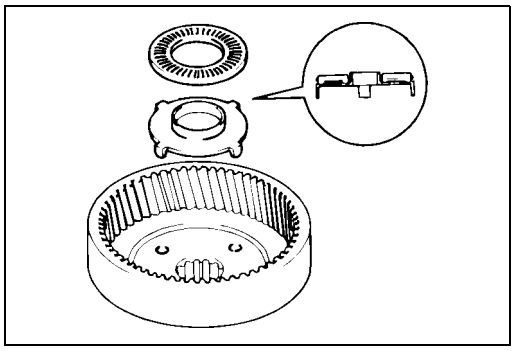

252RY00035

8. Thrust bearing

Coat the race and bearing with petroleum jelly and install them onto the OD planetary ring gear.

Race and bearing diameter (Reference)		mm (in.)
	Inside	Outside
Race	24.2 (0.953)	47.8 (1.882)
Bearing	26.0 (1.024)	46.8 (1.843)

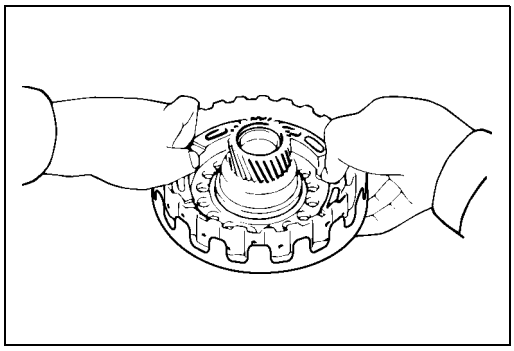

252L100011

9. O-ring

Coat new O-rings with ATF and install them on the OD direct clutch piston.

10. OD direct clutch piston with O-ring

Being careful not to damage the O-rings, press in the OD direct clutch piston into the clutch drum, using both hands.

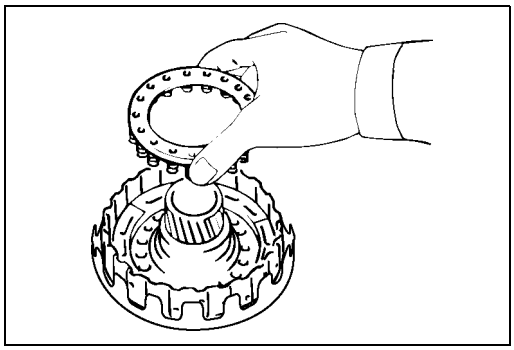

252L100012

11. Piston return spring

Install piston return spring.

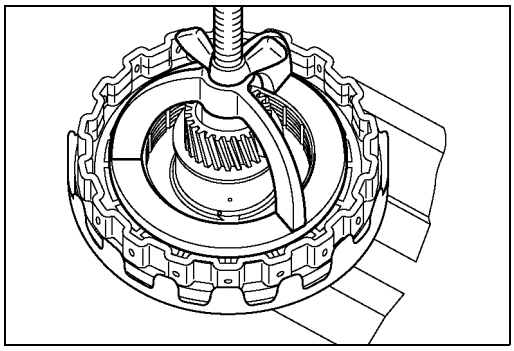

252L100007

12. Snap ring

Place special tool and a suitable ring on the spring retainer, and compress the return spring.

Spring compressor: 5-8840-0195-0 (J-23327-1)

Install the snap ring with snap ring pliers. Be sure the end gap of the snap ring is not aligned with the spring retainer claw.

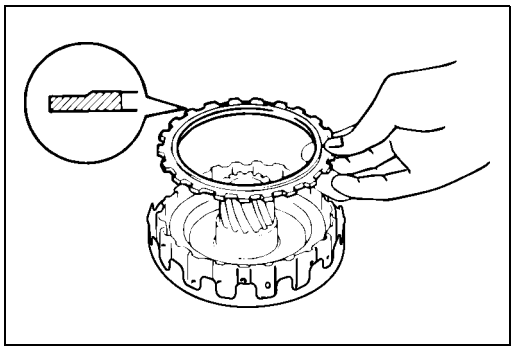

252L100013

13. Flange, disc and plate

Install two plates and two discs then install the flange, with the flat side facing downward.

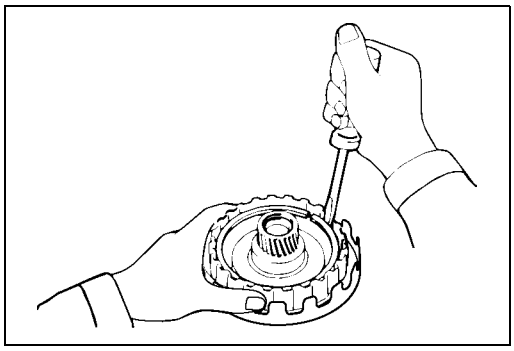

252L100014

14. Snap ring

Install snap ring.

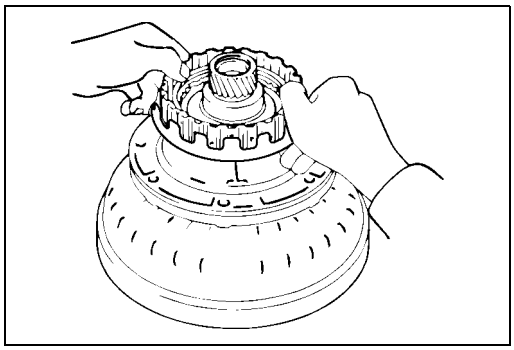

252L100005

Check piston stroke of OD direct clutch (C-0).
Place the oil pump onto the torque converter, and then place the OD direct clutch assembly onto the oil pump.

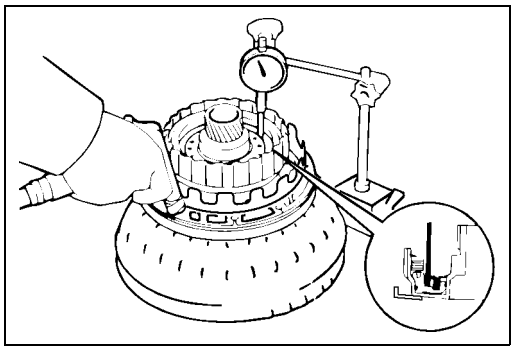

252L100016

Using a dial indicator, measure the OD direct clutch piston stroke by applying and releasing the compressed air (4– 8 kg/cm^2, 57– 114 psi or 392– 785 kPa) as shown.

mm (in.)

Piston stroke mm (in.)	1.85– 2.15 (0.0728– 0.0847)

If the piston stroke is not within specification, replace the disc and recheck the piston stroke.
If the piston stroke is non standard, select another flange.
There are six flange sizes.

mm (in.)

No.	Flange thickness	No.	Flange thickness
16	3.6 (0.142)	19	3.3 (0.130)
17	3.5 (0.138)	20	3.2 (0.126)
18	3.4 (0.134)	21	3.1 (0.122)

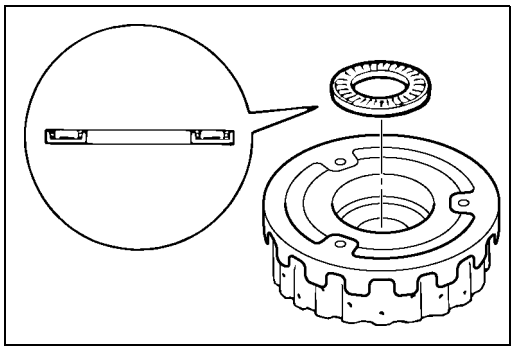

252L100015

15. Thrust bearing

Coat the assembled bearing and race with petroleum jelly and install it with the race side facing downward.

Assembled bearing and race (Reference)	mm (in.)
Inside diameter	28.9 (1.138)
Outside diameter	50.2 (1.976)

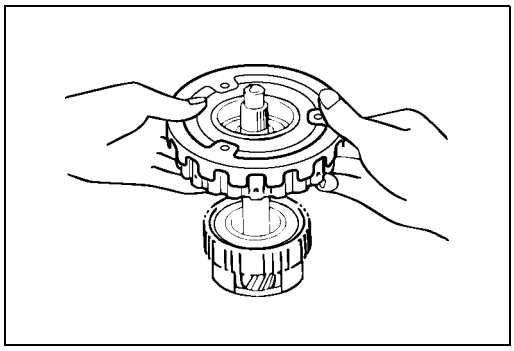

252L100004

16. OD direct clutch assembly

Align the flukes of discs in the direct clutch .
Install the OD direct clutch assembly onto the OD planetary gear.

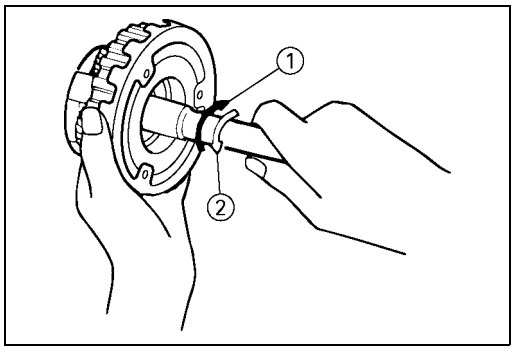

252L100003

Check operation of one-way clutch.

Hold the OD direct clutch drum and turn the input shaft.
The input shaft should turn freely clockwise and should lock counterclockwise.
(1): Free
(2): Lock

OD SUPPORT ASSEMBLY

DISASSEMBLY

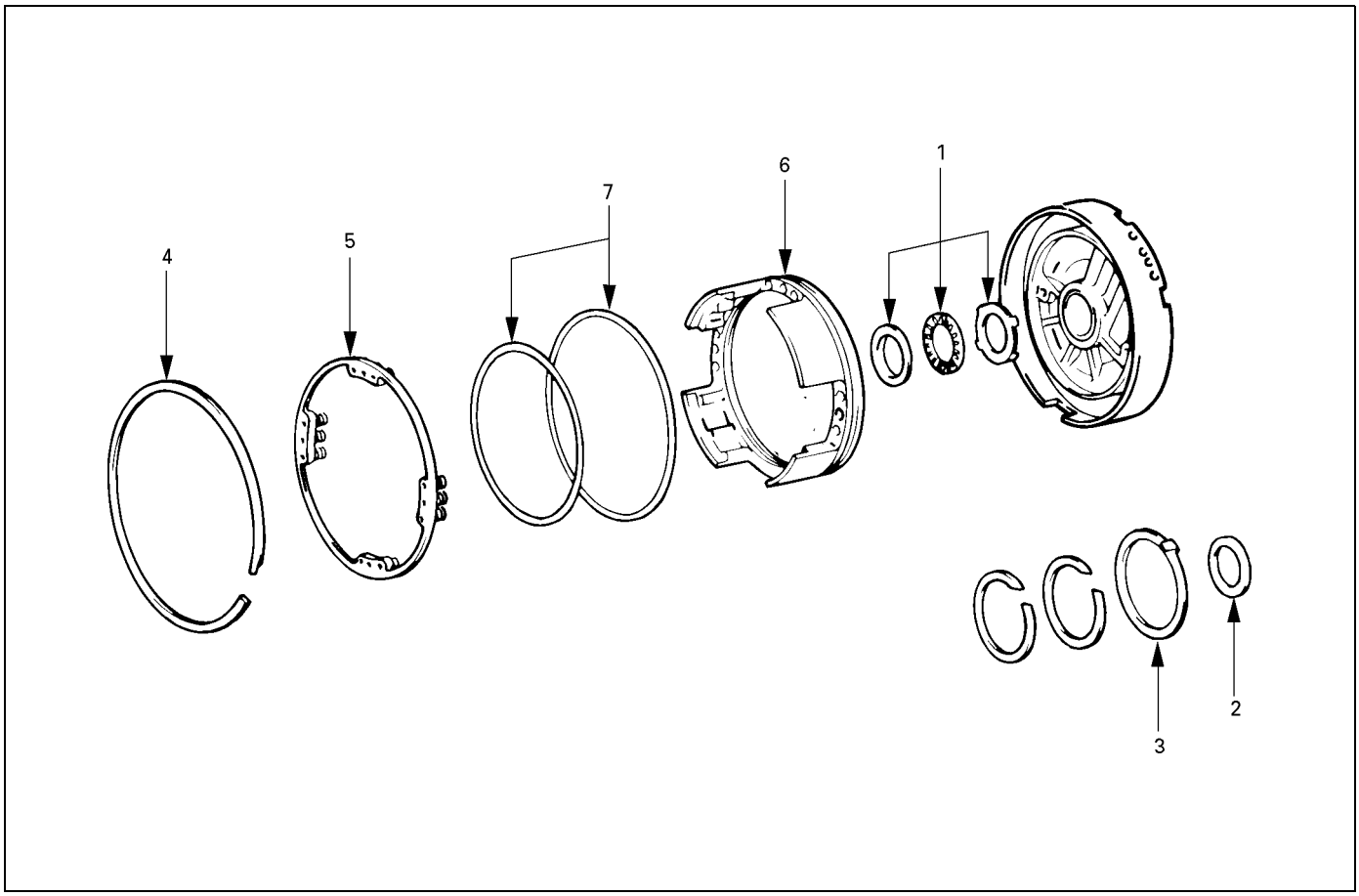

252RY00041

Disassembly steps

1. Thrust bearing
2. Race
3. Thrust washer (plastic)
▲ 4. Snap ring
5. Piston return spring
▲ 6. OD brake piston
7. O-ring

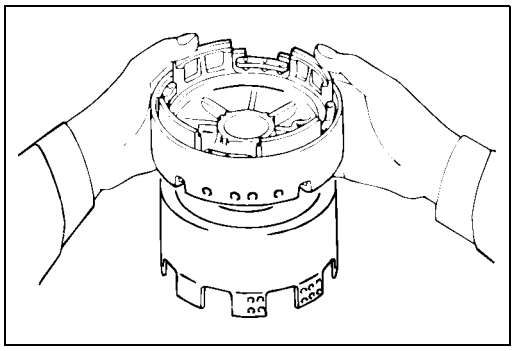

252RY00042

Important operations

Check OD brake piston

Place the OD support assembly onto the direct clutch assembly.

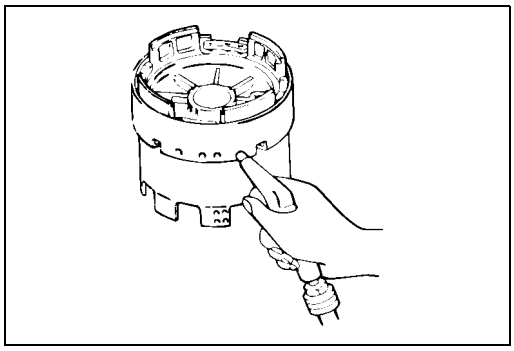

252RY00043

Apply compressed air into the oil passage as shown, and be sure that the OD brake piston moves smoothly.

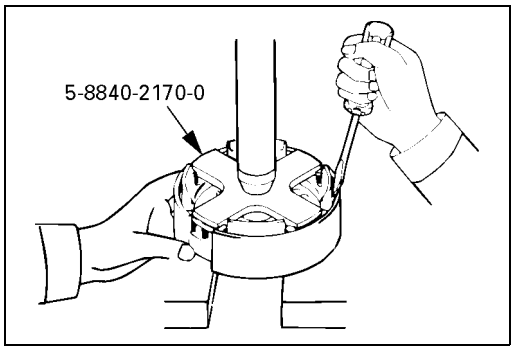

252RY00044

4. Snap ring

Place special tool on the spring retainer, and compress the return spring with a shop press.

Spring compressor: 5-8840-2170-0 (J-37233)

Remove the snap ring with a screwdriver.

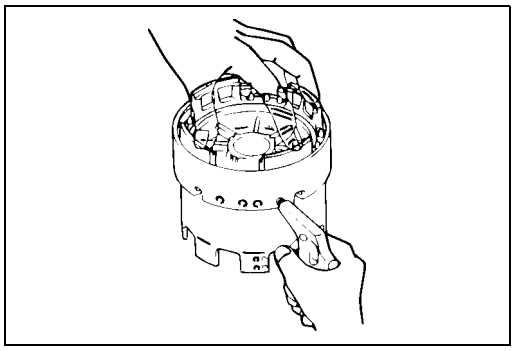

252RY00045

6. OD brake piston

Place the OD support onto the direct clutch assembly.

Hold the OD brake piston so it is not slanted and apply compressed air into the passage to remove the OD brake piston.

Remove the OD brake piston.

INSPECTION AND REPAIR

Make necessary correction or parts replacement if wear, damage or any abnormal conditions are found through inspection.

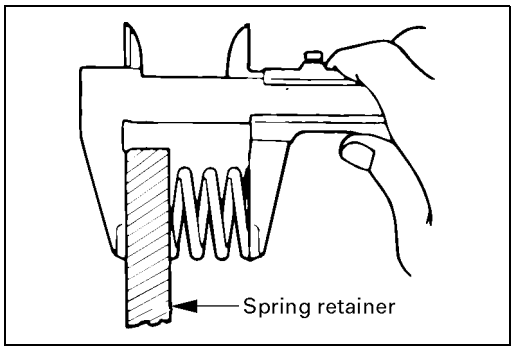

252RY00046

Check piston return spring

Using calipers, measure the free length of the return spring.

	mm (in.)
Standard	17.2 (0.677)

REASSEMBLY

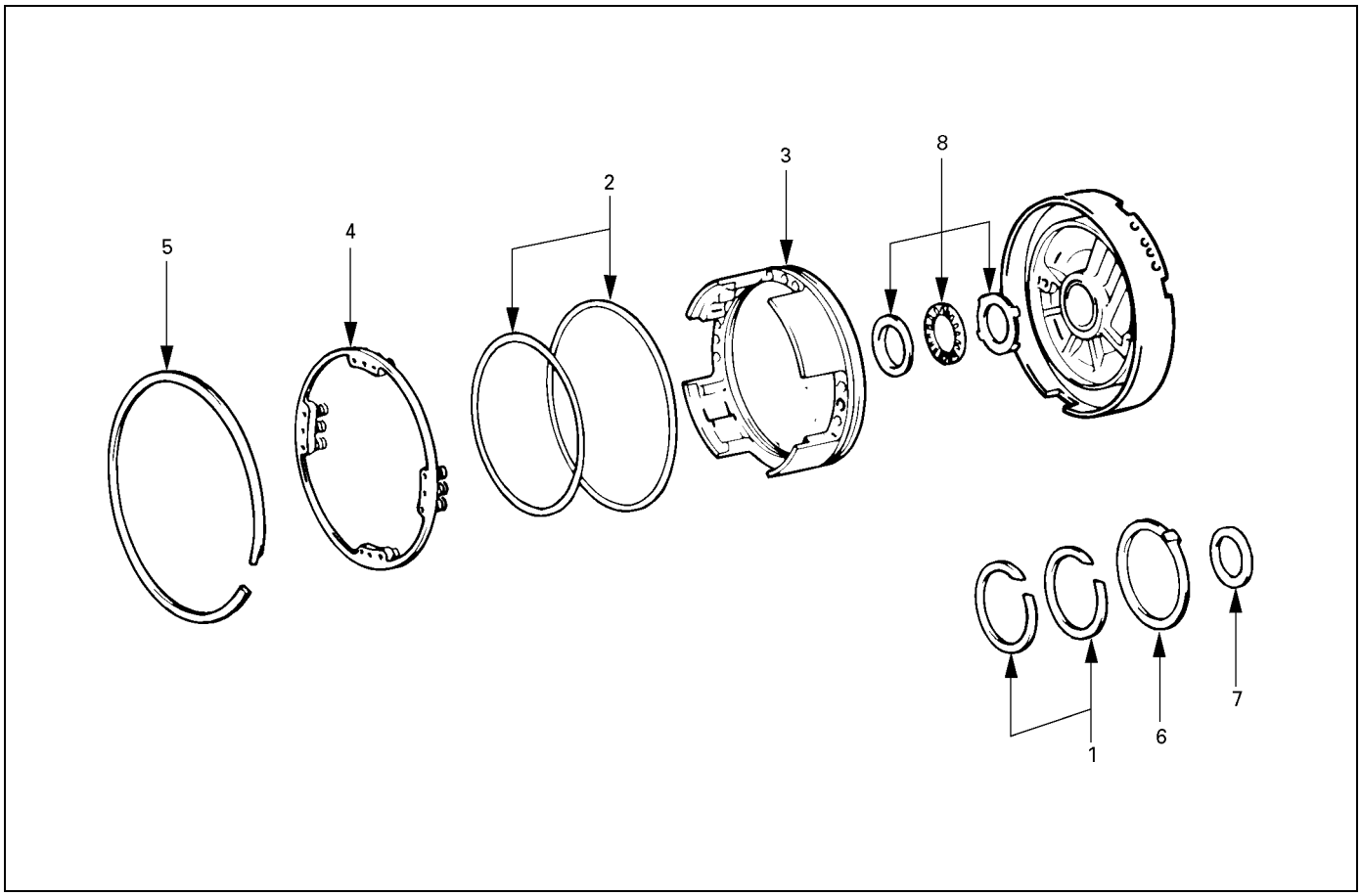

252RY00068

Reassembly steps

- ▲ 1. Oil seal ring
- ▲ 2. O-ring
- ▲ 3. OD brake piston
- ▲ 4. Piston return spring
- ▲ 5. Snap ring
- ▲ 6. Thrust washer (Plastic)
- ▲ 7. Race
- ▲ 8. Thrust bearing

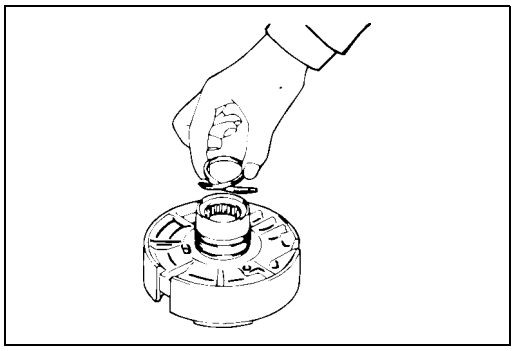

252RY00047

Important operations

1. Oil seal ring
Coat the two oil seal rings with ATF.
Contract the oil seals as shown, and install them onto the OD support.

NOTE:
Do not spread the ring ends more than necessary.

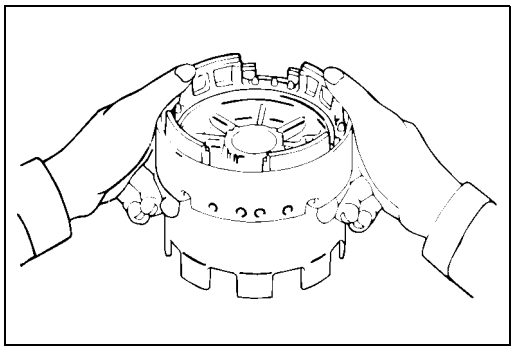

252RY00048

2. O-ring
Coat two new O-rings with ATF and install them on the OD brake piston.

3. OD brake piston
Being careful not to damage the O-rings, press in the brake piston into the OD support, using both hands.

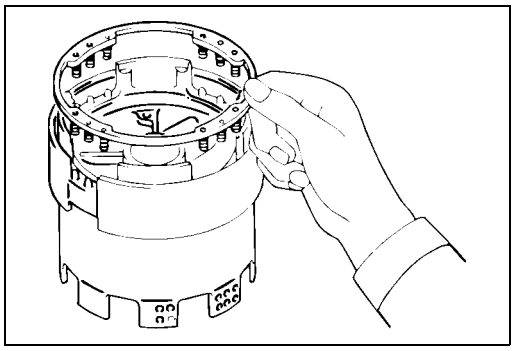

252RY00049

4. Piston return spring
Install piston return spring.

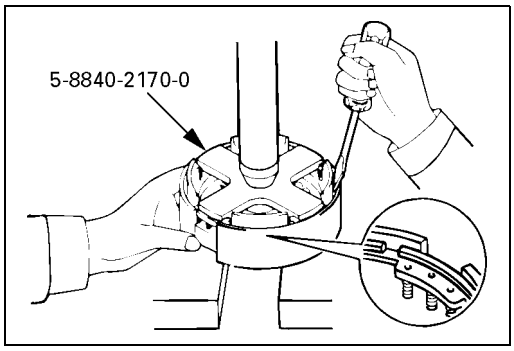

252RY00050

5. Snap ring
Place special tool on the spring retainer, and compress the return spring with a shop press.
Spring compressor: 5-8840-2170-0 (J-37233)
Install the snap ring with a screwdriver. Be sure the end gap of the snap ring is not aligned with cutout portion of the OD support.

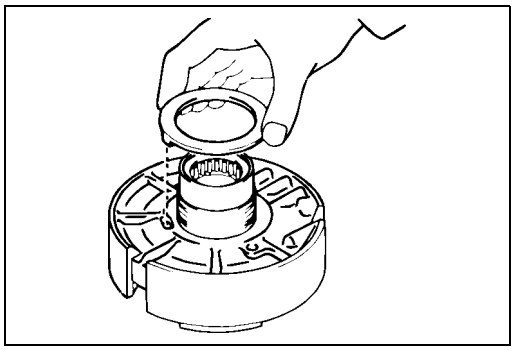

252RY00051

6. Thrust washer (plastic)

Coat the thrust washer with petroleum jelly and install it onto the OD support.

NOTE:
Make sure that the lug fits into the hole on the OD support.

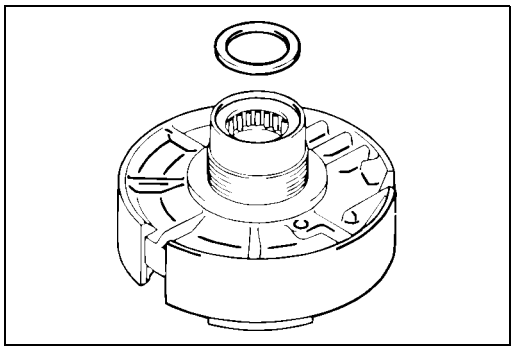

252RY00052

7. Race

Coat the race with petroleum jelly, and install it onto the OD support.

Race diameter (Reference)	mm (in.)
Inside diameter	36.8 (1.449)
Outside diameter	50.9 (2.004)

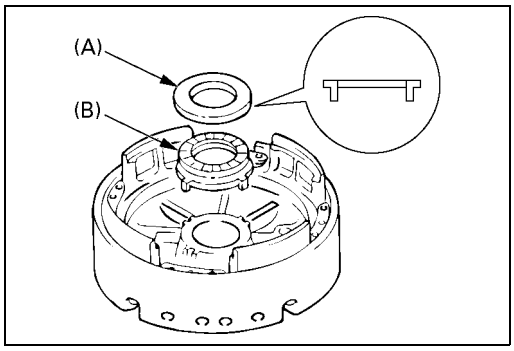

252RY00069

8. Thrust bearing

Turn over OD support.

Coat the two races with petroleum jelly, and install them onto the OD support.

Race and bearing diameter (Reference) mm (in.)

	Inside	Outside
Race (A)	37.2 (1.465)	58.8 (2.315)
Bearing	36.5 (1.437)	48.5 (1.910)
Race (B)	33.7 (1.327)	50.1 (1.973)

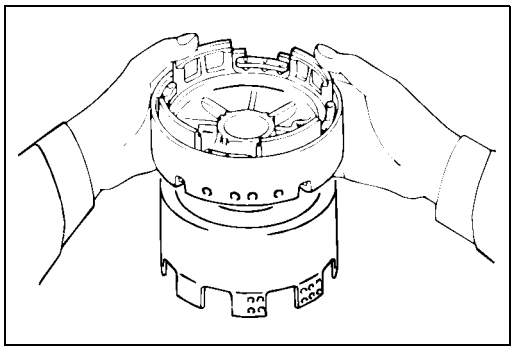

252RY00042

Check OD brake piston

Place the OD support assembly onto the direct clutch assembly.

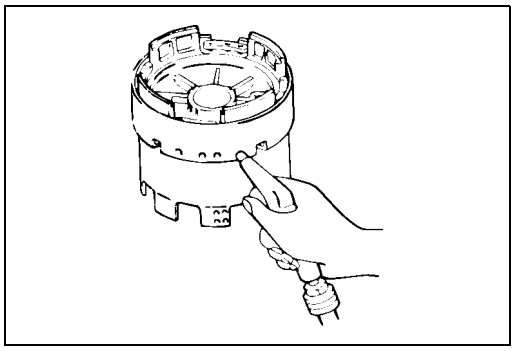

252RY00043

Apply compressed air into the oil passage as shown, and be sure that the OD brake piston moves smoothly.

DIRECT CLUTCH ASSEMBLY (C-2)

DISASSEMBLY

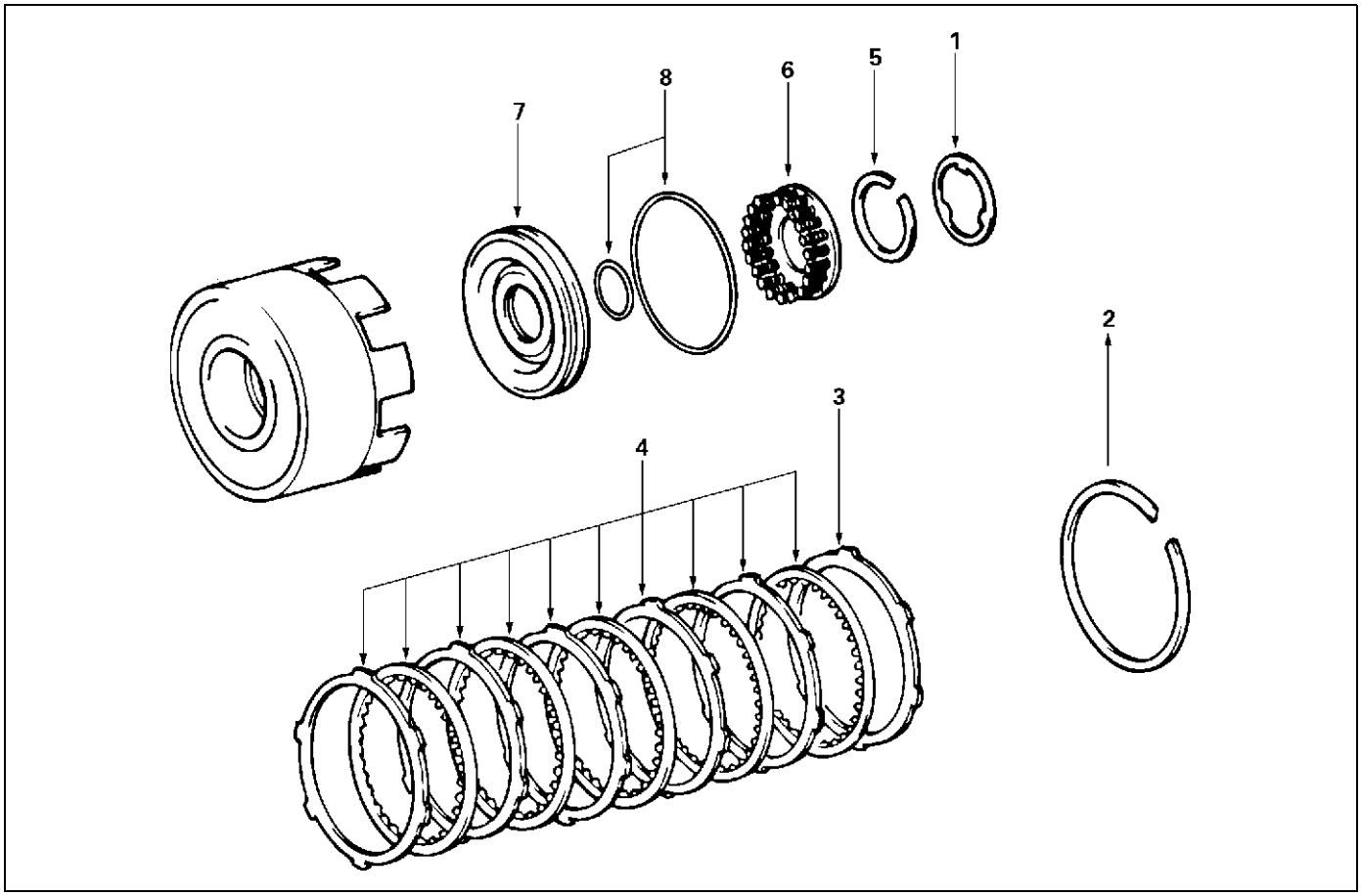

248RY00059

Disassembly steps

1. Clutch drum thrust washer
2. Snap ring
3. Flange
4. Plate and disc
▲ 5. Snap ring
6. Piston return spring
▲ 7. Direct clutch piston
8. O-ring

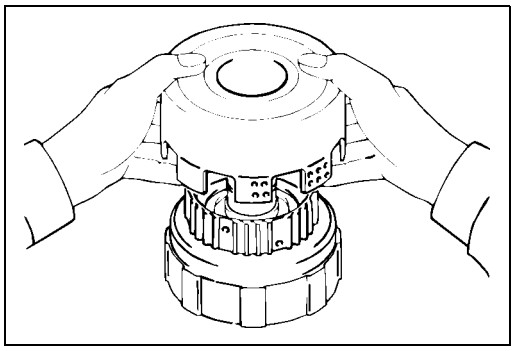

248RY00028

Important operations

Remove direct clutch drum assembly from forward clutch assembly.

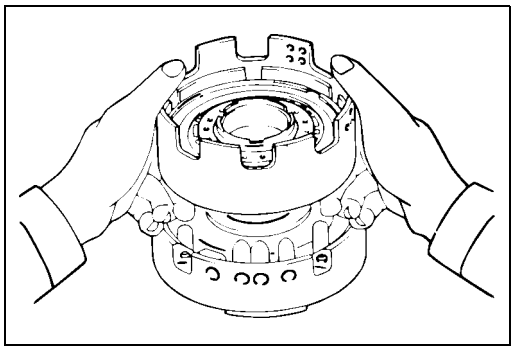

248RY00029

Check piston stroke of direct clutch (C-2)

Place the direct clutch assembly onto the OD support assembly.

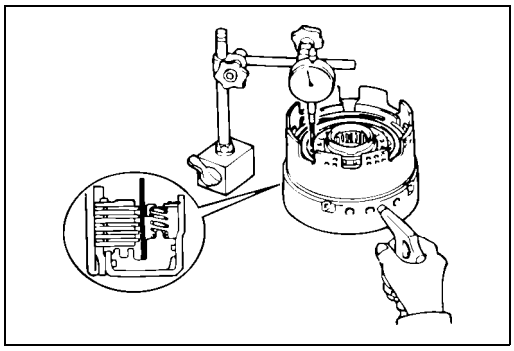

248RY00061

Using a dial indicator, measure the direct clutch piston stroke by applying and releasing compressed air (4– 8 kg/ cm^2, 57– 114 psi or 392– 785 kPa) as shown.

	mm (in.)
Piston stroke	1.6– 1.9 (0.0630– 0.0748)

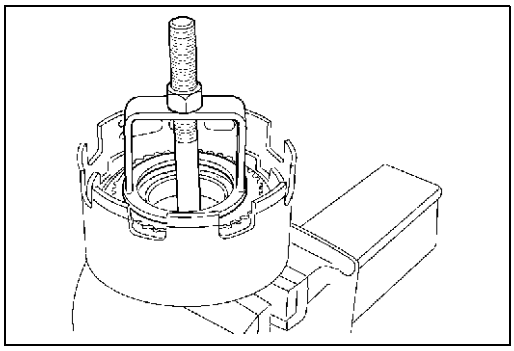

248RY00002

5. Snap ring

Place special tool and a suitable ring on the spring retainer and compress the return spring. Using snap ring pliers, remove the snap ring.

Spring compressor: 5-8840-0254-0 (J-25048)

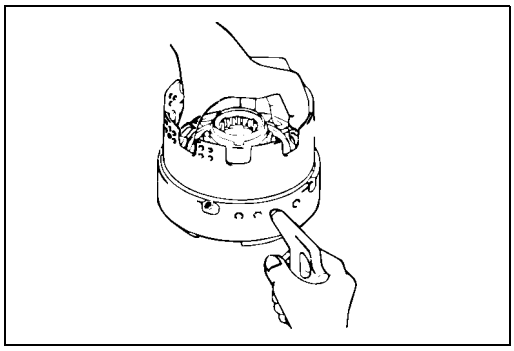

248RY00030

7. Direct clutch piston

Place the direct clutch drum onto the OD support.
Holding the direct clutch piston by hand, apply compressed air to the OD support to remove the direct clutch piston.
Remove the direct clutch piston.
Remove two O-ring from piston.

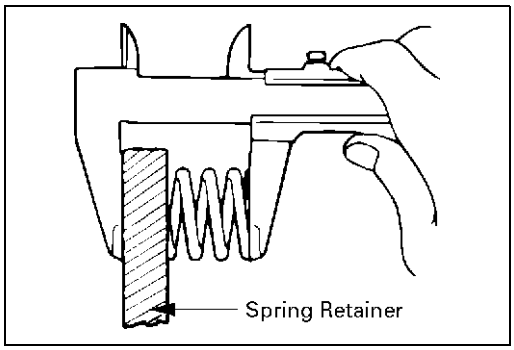

247RY00034

INSPECTION AND REPAIR

Check piston return spring

Using calipers, measure the free length of the return spring.

	mm (in.)
Standard	21.3 (0.839)

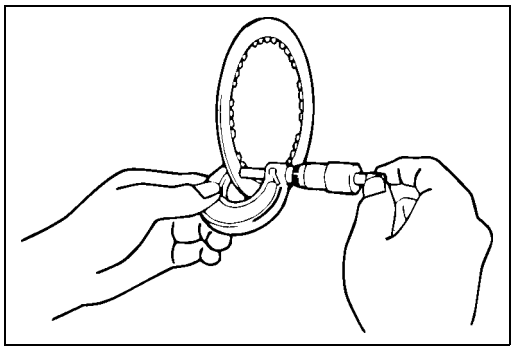

252RY00027

Check discs

Using a micrometer, measure the thickness of the discs.

	mm (in.)
Minimum thickness	1.84 (0.0724)

If the thickness is less than the minimum, replace the disc.

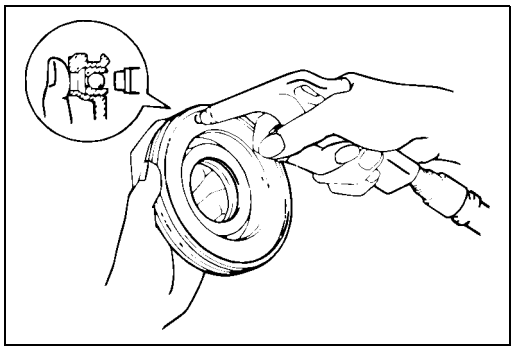

248RY00031

Check direct clutch piston

Check that check ball is free by shaking the piston.
Check that the valve does not leak by applying low-pressure compressed air.

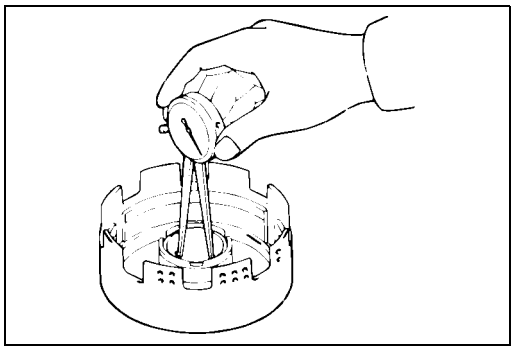

248RY00032

Check direct clutch drum bushing

Using a dial indicator, measure the inside diameter of the clutch drum bushing.

	mm (in.)
Maximum inside diameter	53.99 (2.1256)

If the inside diameter is grater than maximum, replace the clutch drum.

REASSEMBLY

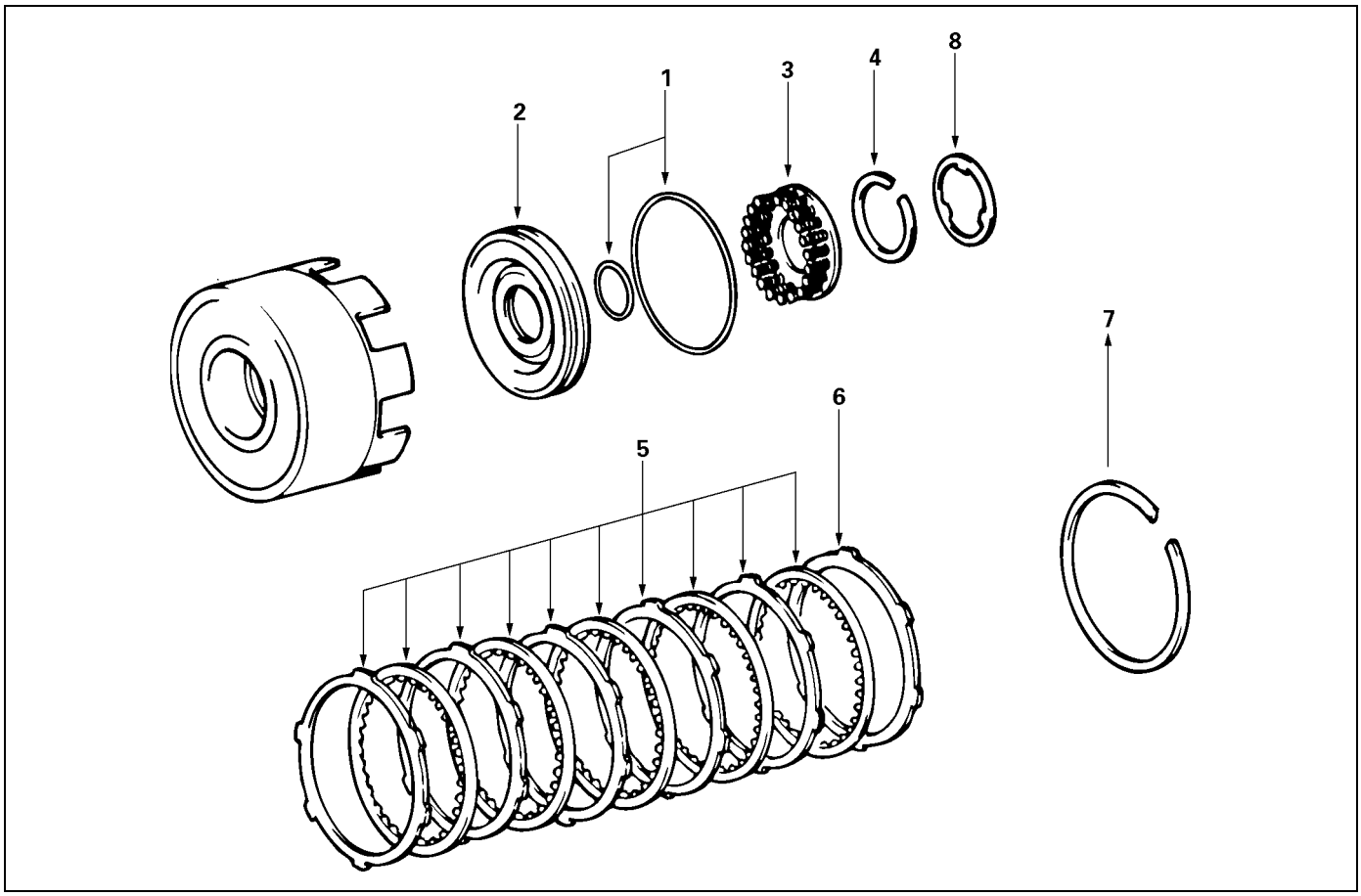

248RY00060

Reassembly steps

- ▲ 1. O-ring
- ▲ 2. Direct clutch piston
- ▲ 3. Piston return spring
- ▲ 4. Snap ring
- ▲ 5. Disc and plate
- ▲ 6. Flange
- ▲ 7. Snap ring.
- ▲ 8. Clutch drum thrust washer (plastic)

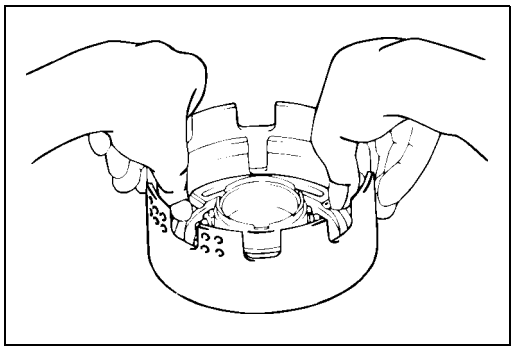

248RY00033

Important operations

1. **O-ring**
   Coat new O-rings with ATF and install them on the direct clutch piston.
2. **Direct clutch piston**
   Install direct clutch piston to direct clutch drum.
   Being careful not to damage the O-rings, press in the direct clutch piston into the clutch drum, using both hands.

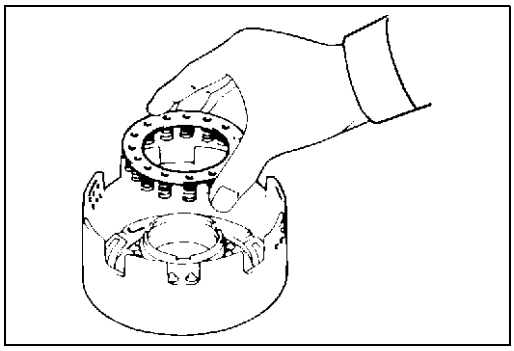

248RY00034

3. **Piston return spring**
   Install piston return spring.

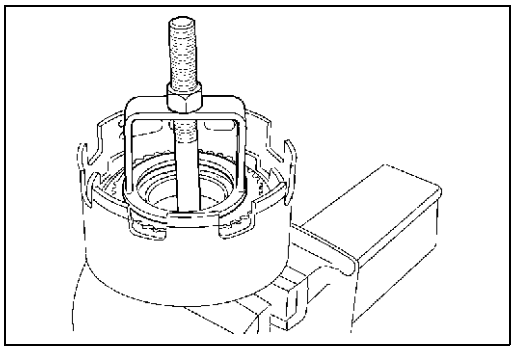

248RY00002

4. **Snap ring**
   Compress piston return spring and install snap ring in groove.
   Place special tool and a suitable ring on the spring retainer, and compress the return spring.
   Install the snap ring with snap ring pliers. Be sure the end gap of the snap ring is not aligned with the spring retainer claw.
   Spring compressor: 5-8840-0254-0 (J-25048)

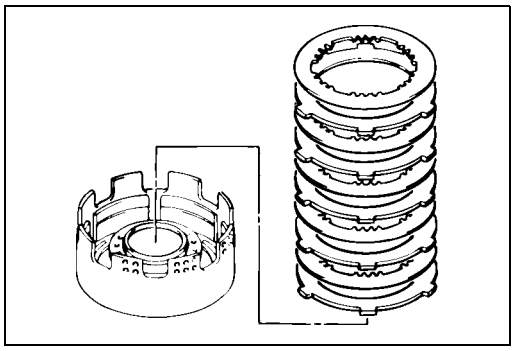

248RY00062

5. **Disc and plate**
   Install plates and discs.
   Install in order: P– D– P– D– P– D– P– D– P– D
   P: Plate, D: Disc

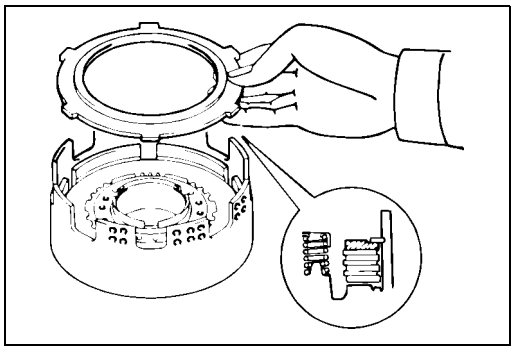

248RY00035

6. Flange

Install the flange, with the flat side facing downward.

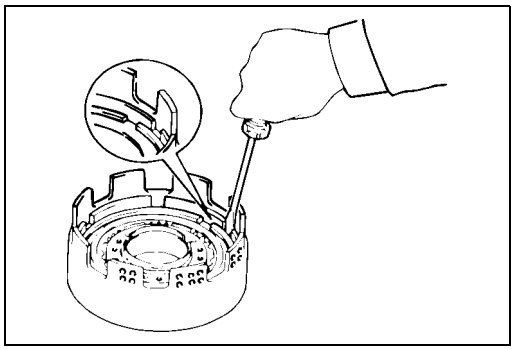

248RY00036

7. Snap ring

Install the snap ring with a screwdriver. Be sure the end gap of the snap ring is not aligned with the cutout portion of the direct clutch drum.

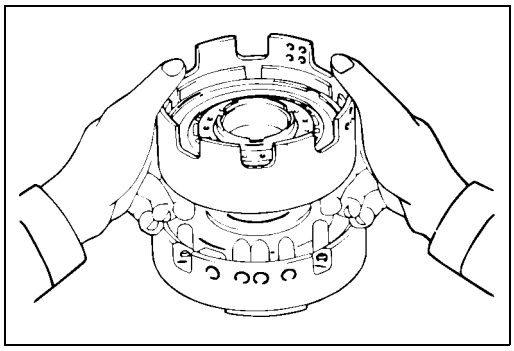

248RY00029

Check piston stroke of direct clutch (C-2)

Place the direct clutch assembly onto the OD support assembly.

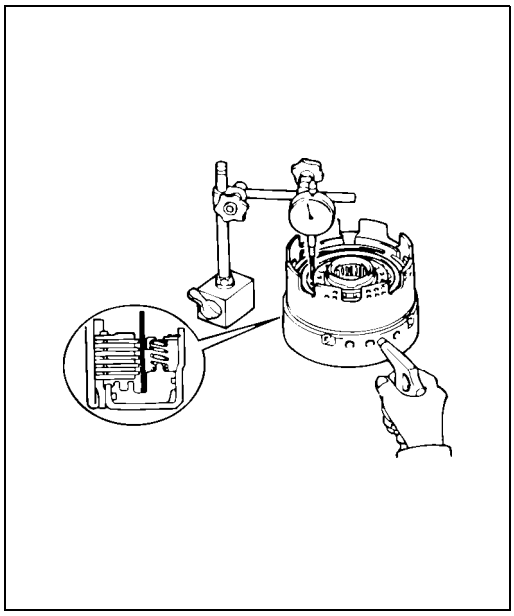

248RY00061

Using a dial indicator, measure the direct clutch piston stroke by applying and releasing compressed air (4– 8 kg/ cm^2, 57– 114 psi or 392– 785 kPa) as shown.

mm (in.)

Piston stroke	1.6– 1.9 (0.0630– 0.0748)

If the piston stroke is not within specification, replace the discs and recheck the piston stroke.
If the piston stroke is non standard, select another flange.
There are eight flanges.

mm (in.)

No.	Flange thickness	No.	Flange thickness
33	3.3 (0.130)	37	3.7 (0.146)
34	3.4 (0.134)	38	3.8 (0.150)
35	3.5 (0.138)	39	3.9 (0.154)
36	3.6 (0.142)	40	4.0 (0.158)

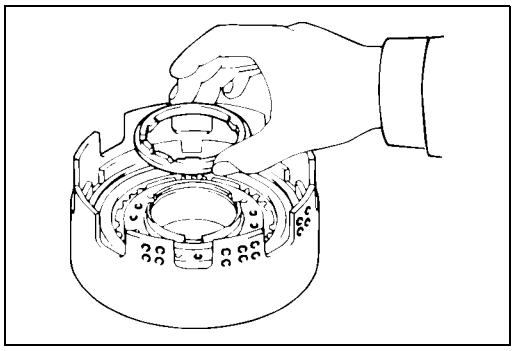

248RY00037

8. Clutch drum thrust washer (plastic)

Coat the thrust washer with petroleum jelly and install it onto the direct clutch.

NOTE:

Make sure that the lugs fit into the cutout portions on the direct clutch.

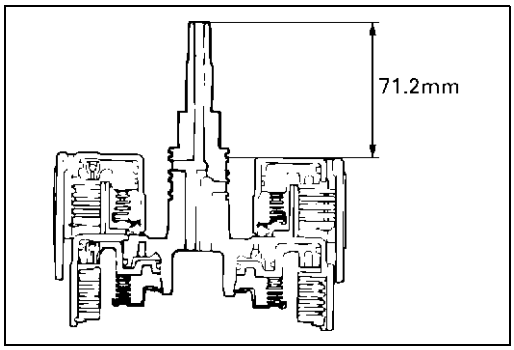

248RY00038

Install direct clutch assembly

Align the flukes of discs in the direct clutch.

Install the direct clutch assembly onto the forward clutch assembly.

Check that the distance from the direct clutch end to the forward clutch end is 71.2 mm (2.803 in.).

FORWARD CLUTCH ASSEMBLY (C-1)

DISASSEMBLY

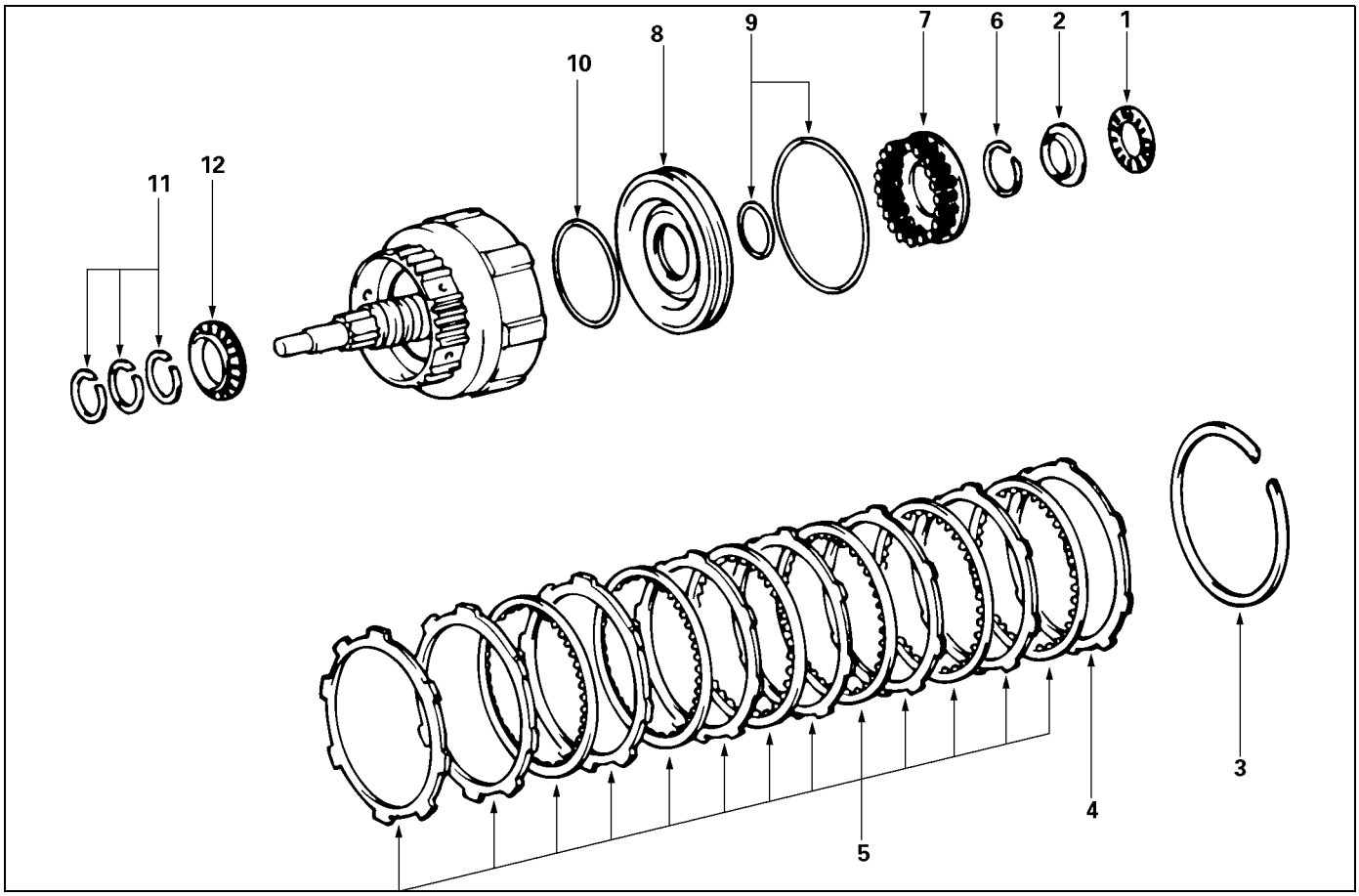

248RY00063

Disassembly steps

- ▲ 1. Thrust bearing
- 2. Race
- ▲ 3. Snap ring
- 4. Flange
- 5. Disc and plate
- ▲ 6. Snap ring
- 7. Piston return spring
- ▲ 8. Piston
- 9. O-ring
- 10. O-ring
- 11. Oil seal ring
- 12. Thrust bearing

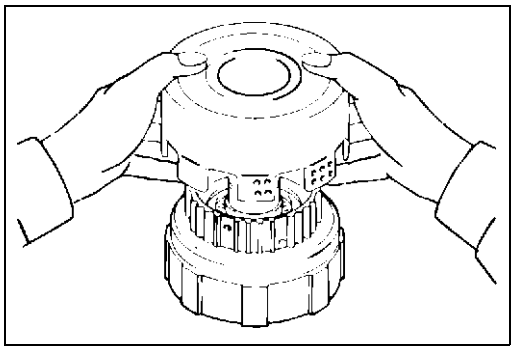

248RY00039

Important operations

Remove forward clutch assembly from direct clutch assembly.

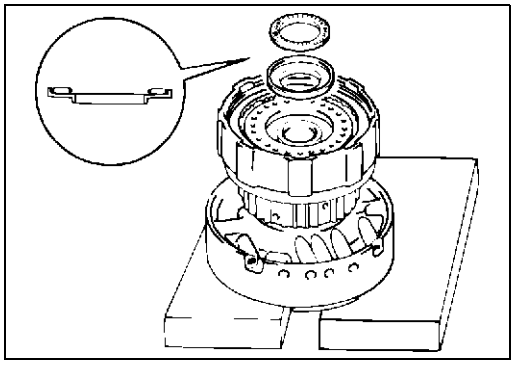

248RY00048

1. Thrust bearing

Place wooden blocks, etc, to prevent forward clutch shaft from touching the work stand, and place the OD support on them.

Place the forward clutch onto the OD support and remove the bearing and race.

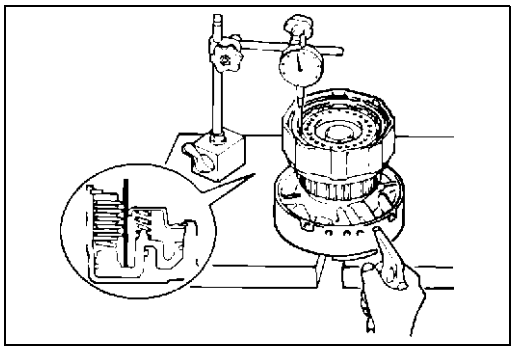

248RY00040

Check piston stroke of forward clutch (C–1)

Using a dial indicator, measure the forward clutch piston stroke by applying and releasing compressed air (4–8kg/cm^2, 57–114psi or 392–785kPa)as shown.

mm (in.)

Pack clearance	0.6–1.0 (0.0236–0.0394)

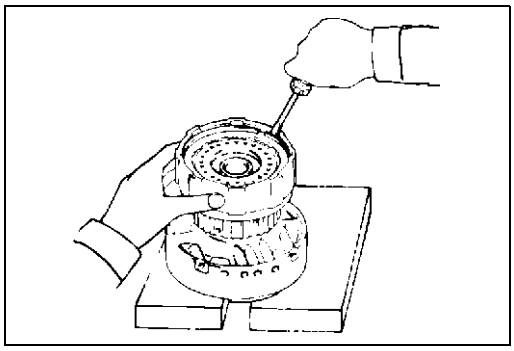

248RY00041

3. Snap ring

Remove snap ring from clutch drum.

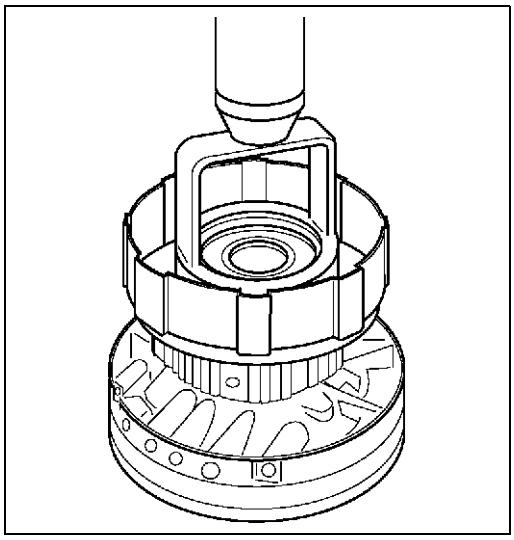

248RY00003

6. Snap ring

Place special tool on the spring retainer and compress the return spring. Using snap ring pliers, remove the snap ring.
Spring compressor : 5–8840–0254–0 (J–25048)

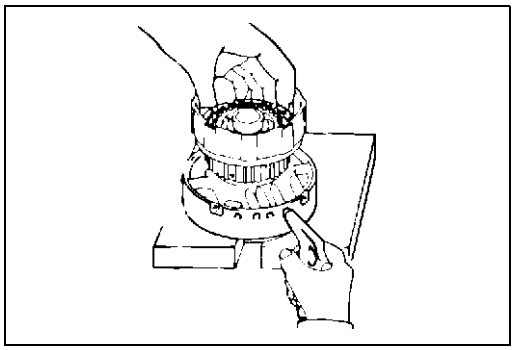

248RY00042

8. Piston

PLace the forward clutch drum onto the OD support. Holding the forward clutch piston by hand, apply compressed air to the OD support to remove the forward clutch piton.

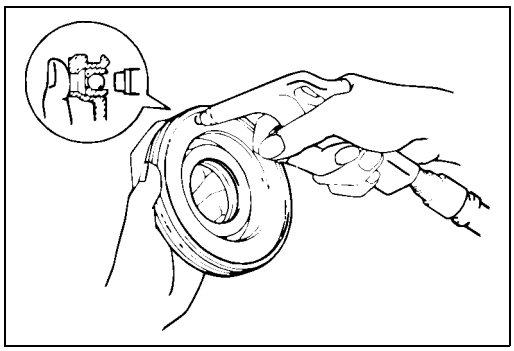

248RY00031

INSPECTION AND REPAIR

Check forward clutch piston

Check that check ball is free by shaking the piston.
Check that the valve does not leak by applying low-pressure compressed air.

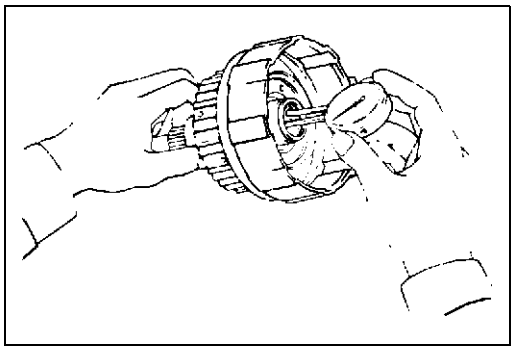

248RY00043

Check forward clutch drum bushing

Using a dial indicator, measure the inside diameter of the forward clutch drum bushing.

	mm (in.)
Maximum inside diameter	24.08 (0.948)

If the inside diameter is greater than the maximum, replace the forward clutch drum.

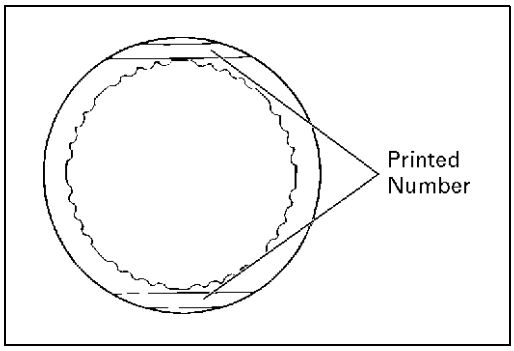

248RY00045

Check disc, plate and flange

Check to see if the sliding surface of the disc, plate and flange are worn or burnt. If necessary, replace them.

- If the lining of the disc is peeling off or discolored, or even if parts of the printed numbers are defaced, replace all discs.
- Before assembling new discs, soak them in ATF for at least fifteen minutes.

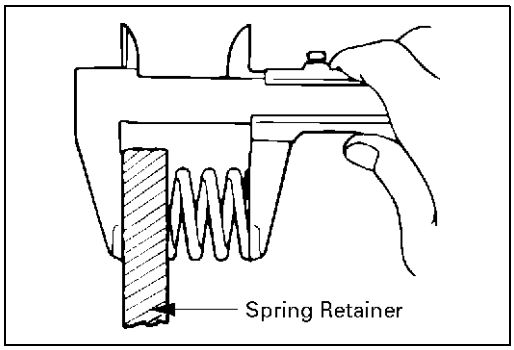

247RY00034

Check piston return spring

Using calipers, measure the free length of the return spring.

	mm (in.)
Standard length	19.47 (0.7665)

REASSEMBLY

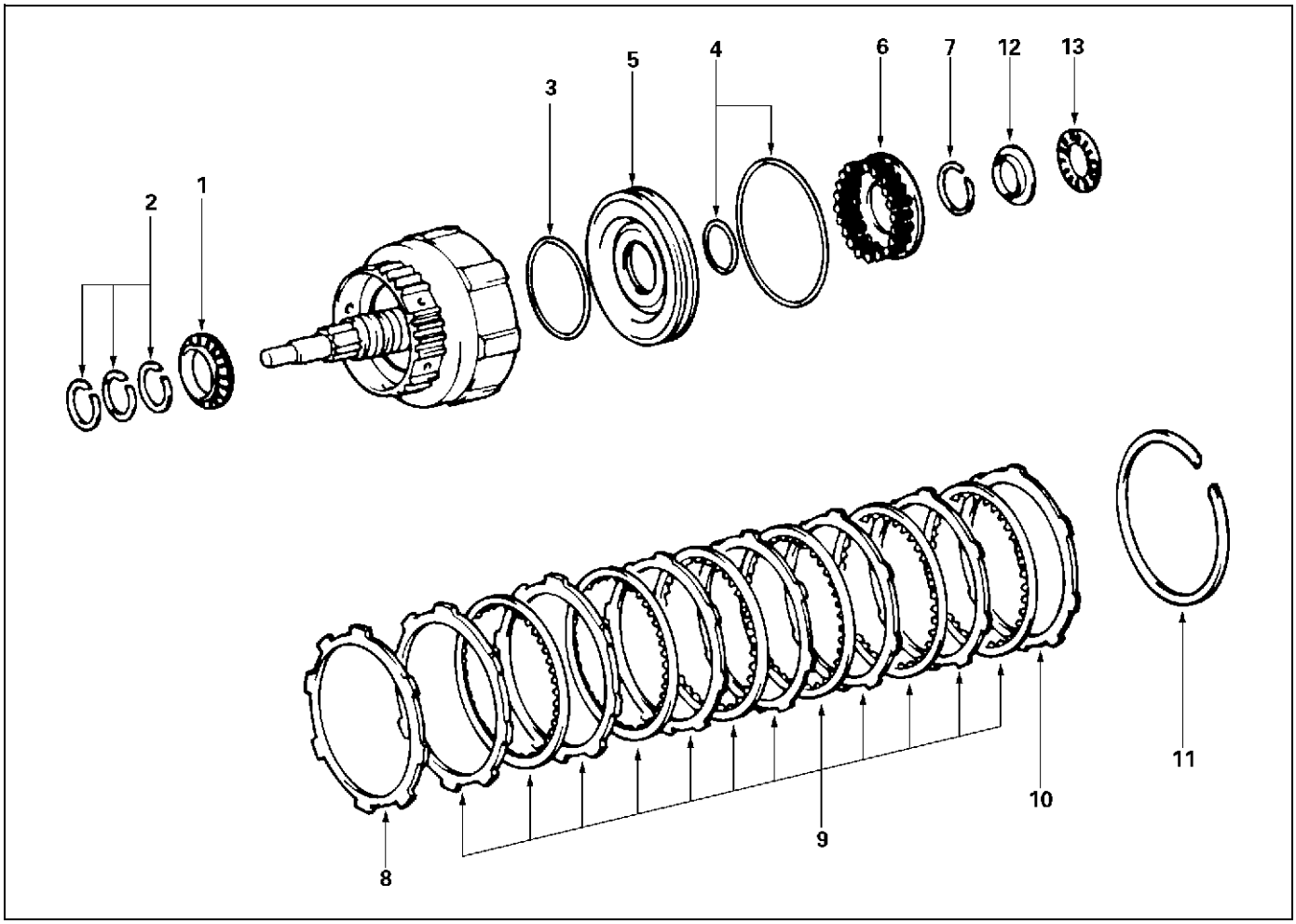

248RY00064

Reassembly steps

- ▲ 1. Thrust bearing
- ▲ 2. Oil seal ring
- ▲ 3. O-ring
- ▲ 4. O-ring
- ▲ 5. Forward clutch piston
- ▲ 6. Piston return spring
- ▲ 7. Snap ring
- ▲ 8. Cushion plate
- ▲ 9. Disc and plate
- ▲ 10. Flange
- ▲ 11. Snap ring
- ▲ 12. Race
- ▲ 13. Thrust bearing

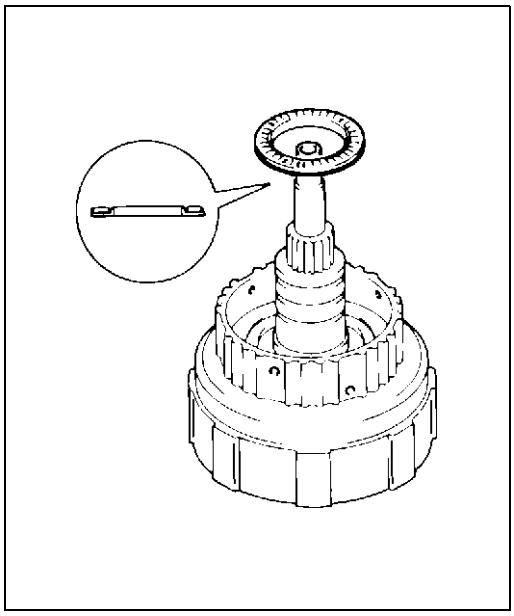

248RY00044

Important operations

1. **Thrust bearing**
   Coat the assembled bearing and race with petroleum jelly and install it onto the forward clutch drum, with the race side facing downward.

Assembled bearing and race (Reference) mm (in.)

Inside diameter	33.7 (1.327)
Outside diameter	47.8 (1.882)

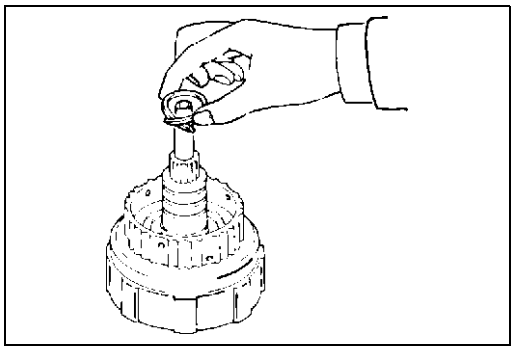

248RY00046

2. **Oil seal ring**
   Coat the three oil rings with ATF.
   Contract the oil seal rings as shown, and install three oil seal rings onto the forward clutch drum.

NOTE:
Do not spread the ring ends more than necessary.

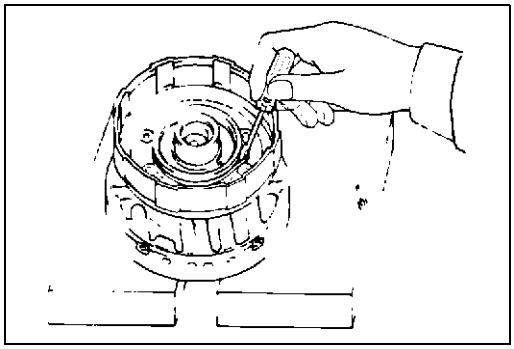

248RY00047

3. **O-ring**
   Coat a new O-ring with ATF and install O-ring on the forward clutch drum.
4. **O-ring**
   Coat new O-rings with ATF and install two O-rings on the forward clutch piston.

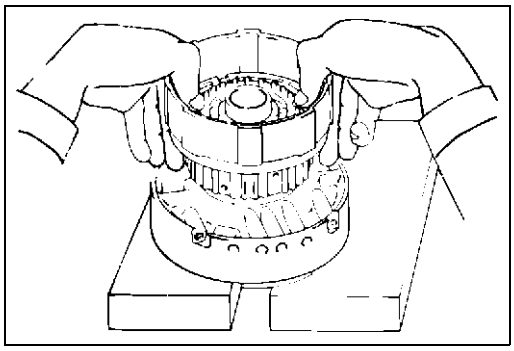

248RY00049

5. **Forward clutch piston**
   Being careful not to damage the O-rings, press the forward clutch piston into the forward clutch drum.

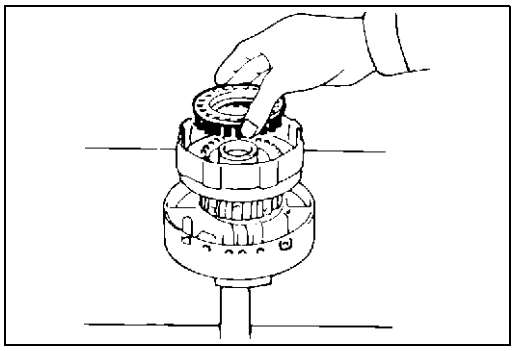

248RY00065

6. Piston return spring

Install piston return spring.

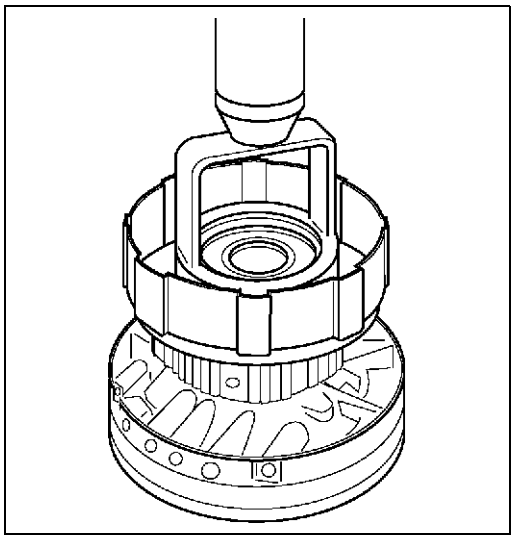

248RY00003

7. Snap ring

Place special tool on the spring retainer, and compress the return spring.

Spring compressor: 5–8840–0254–0 (J–25048)

Install the snap ring with snap ring pliers. Be sure the end gap of the snap ring is not aligned with the spring retainer claw.

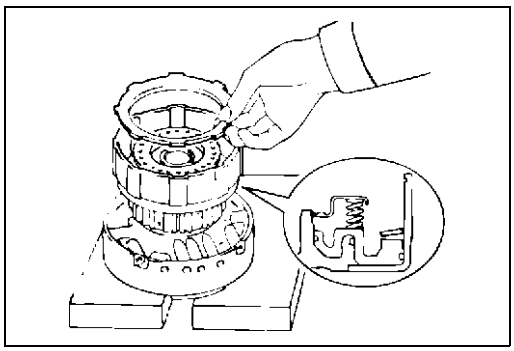

248RY00069

8. Cushion plate

Install cushion plate rounded side down as shown.

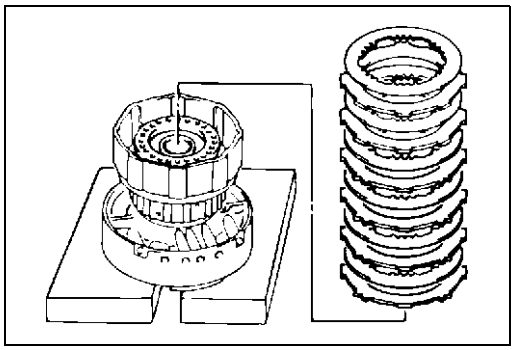

248RY00070

9. Disc and plate

Install discs. plates and flange.

Install in order:P–D–P–D–P–D–P–D–P–D–P–D

10. Flange

And then install the flange, with the rounded edge facing downward.

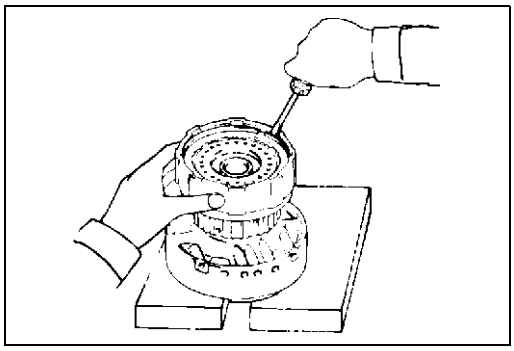

248RY00041

11. Snap ring

Install the snap ring with a screw driver. Be sure the end gap of the snap ring is not aligned with the cutout portion of the forward clutch drum.

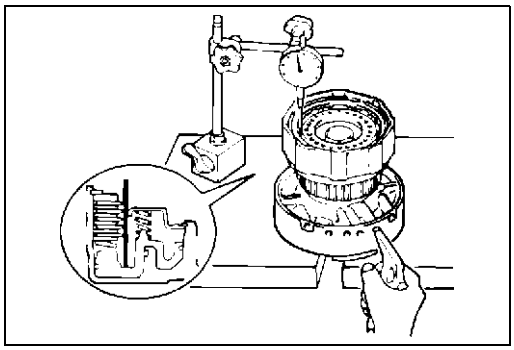

248RY00040

Check piston stroke of forward clutch (C–1)

Using a dial indicator, measure the forward clutch piston stroke by applying and releasing the compressed air (4–8kg/cm^2, 57–114psi or 392–785kPa) as shown.

mm(in.)

Pack clearance	0.6–1.0 (0.0236–0.0394)

If the Pack clearance is not within specification, select another flange, and recheck the piston stroke.
There are eight flanges.

mm (in.)

No.	Flange thickness	No.	Flange thickness
61	3.0 (0.118)	92	3.4 (0.134)
63	4.2 (0.165)	93	3.6 (0.142)
64	4.4 (0.173)	94	3.8 (0.150)
91	3.2 (0.126)	95	4.0 (0.158)

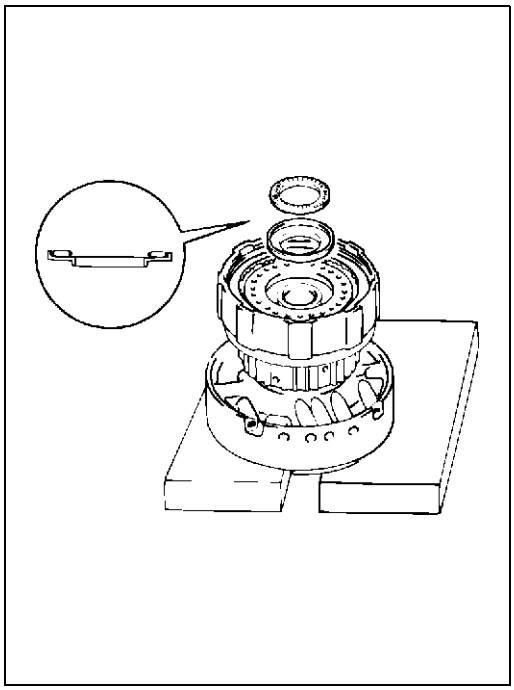

248RY00048

12. Race

13. Thrust bearing

Coat the race and bearing with petroleum jelly, and install them onto the forward clutch drum.

Race and bearing diameter (Reference) mm(in.)

	Inside	Outside
Race	26.0 (1.024)	48.9 (1.925)
Bearing	26.0 (1.024)	46.7 (1.839)

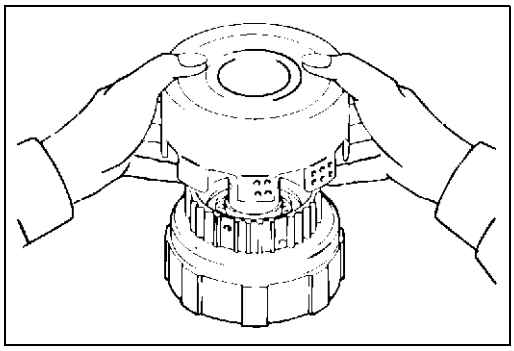

248RY00039

Install direct clutch assembly to forward clutch assembly

Align the flukes of discs in the direct clutch.

Install the direct clutch assembly onto the forward clutch assembly.

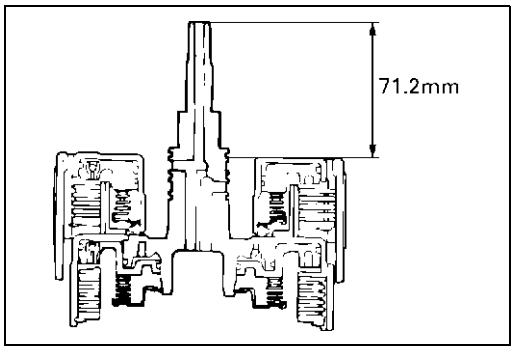

248RY00038

Check that distance from the direct clutch end to the forward clutch end is 71.2 mm (2.803 in.).

mm (in.)
71.2 (2.803)

FRONT PLANETARY GEAR

DISASSEMBLY

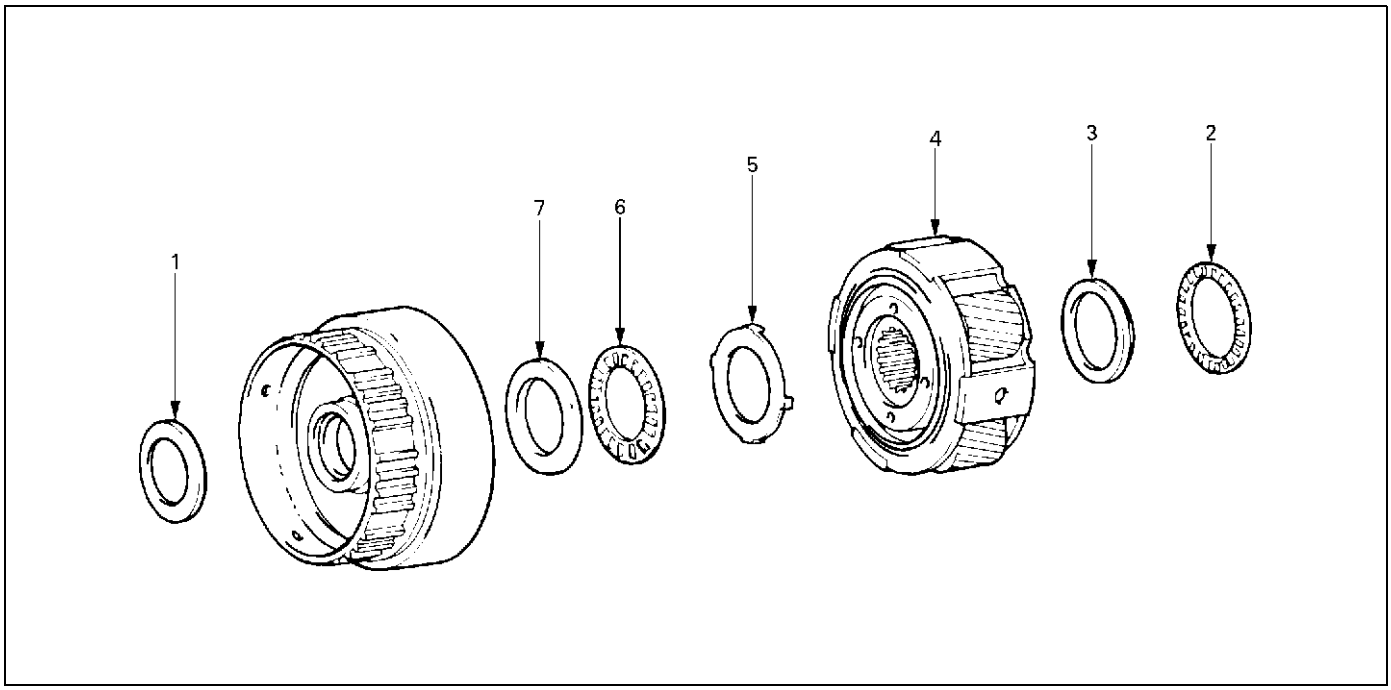

247RY00022

Disassembly steps

1. Race
2. Thrust bearing
3. Race
4. Front planetary gear
5. Race (Metal)
6. Thrust bearing
7. Race

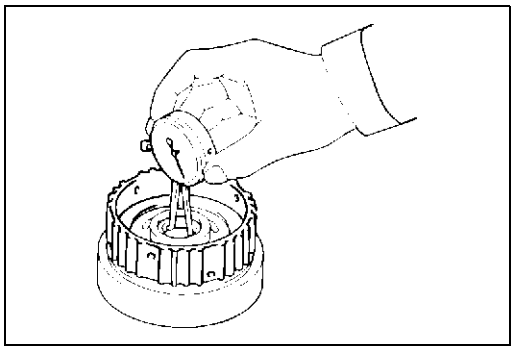

247RY00021

INSPECTION AND REPAIR

Check front planetary ring gear bushing

Using a dial indicator, measure the inside diameter of the planetary ring gear bushing.

mm (in.)

Maximum inside diameter	24.08 (0.9480)

If the inside diameter is greater than the maximum, replace the planetary ring gear.

REASSEMBLY

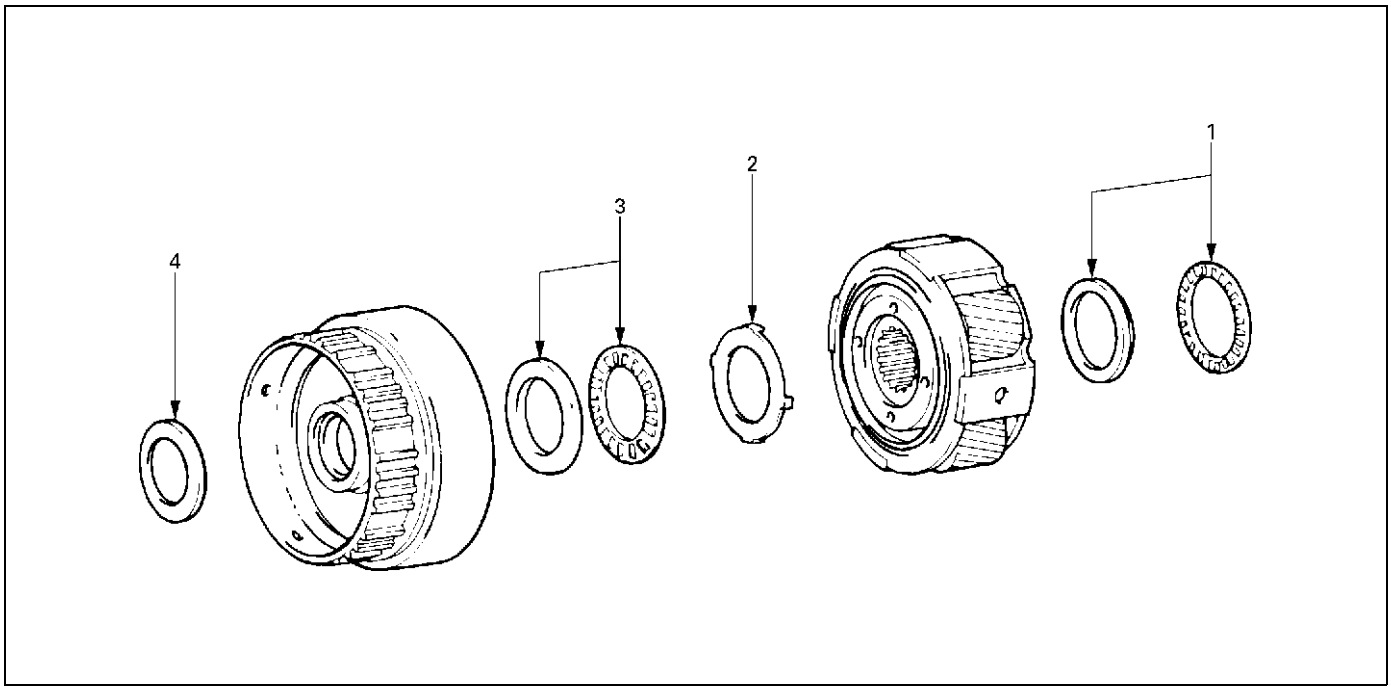

247RY00045

Reassembly steps

▲ 1. Thrust bearing and race

▲ 2. Race (Metal)

▲ 3. Thrust bearing and race

▲ 4. Race

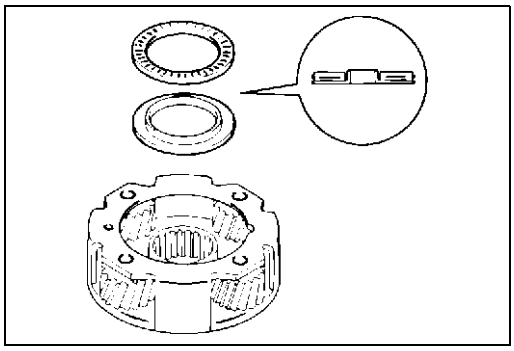

247RY00023

Important operations

1. Thrust bearing and race

Coat the races and bearing with petroleum jelly.
Install the race and bearing to the rear side of the planetary gear.

mm (in.)

	Inside	Outside
Bearing	35.6 (1.402)	47.7 (1.878)
Race	33.7 (1.327)	47.6 (1.874)

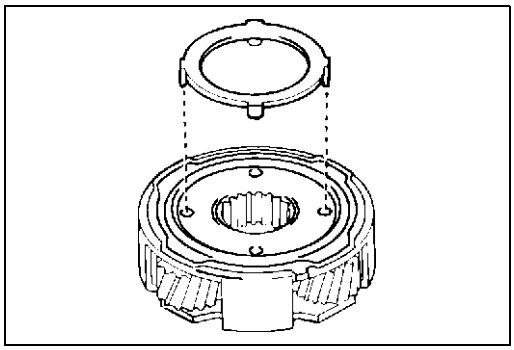

247RY00024

2. Race (Metal)

Turn over the planetary gear and install the race.
Make sure that the lugs fit into the holes on the planetary gear.

Bearing and races diameter (Reference) mm (in.)

	Inside	Outside
Race	34.3 (1.350)	47.8 (1.882)

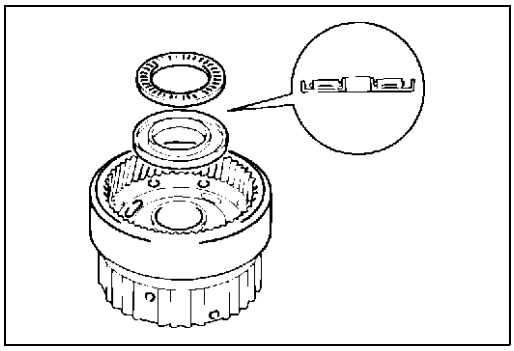

247RY00025

3. Thrust bearing and race

Coat the races and bearing with petroleum jelly.
Install the race and bearing onto the rear side of the planetary ring gear.

mm (in.)

	Inside	Outside
Race	30.6 (1.205)	53.6 (2.110)
Bearing	32.7 (1.287)	47.7 (1.878)

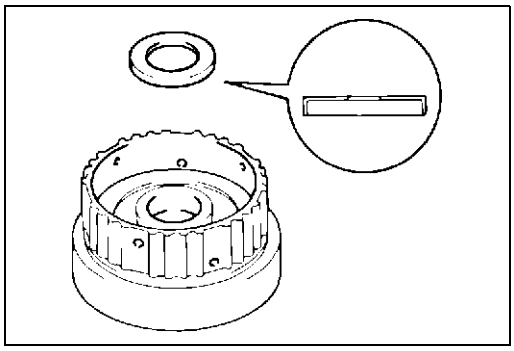

247RY00026

4. Race

Turn over the planetary ring gear and install the race onto the front side of the planetary ring gear.

Races and bearing diameter (Reference) mm (in.)

	Inside	Outside
Race	26.8 (1.055)	47.0 (1.850)

PLANETARY SUN GEAR AND NO.1 ONE–WAY CLUTCH

DISASSEMBLY

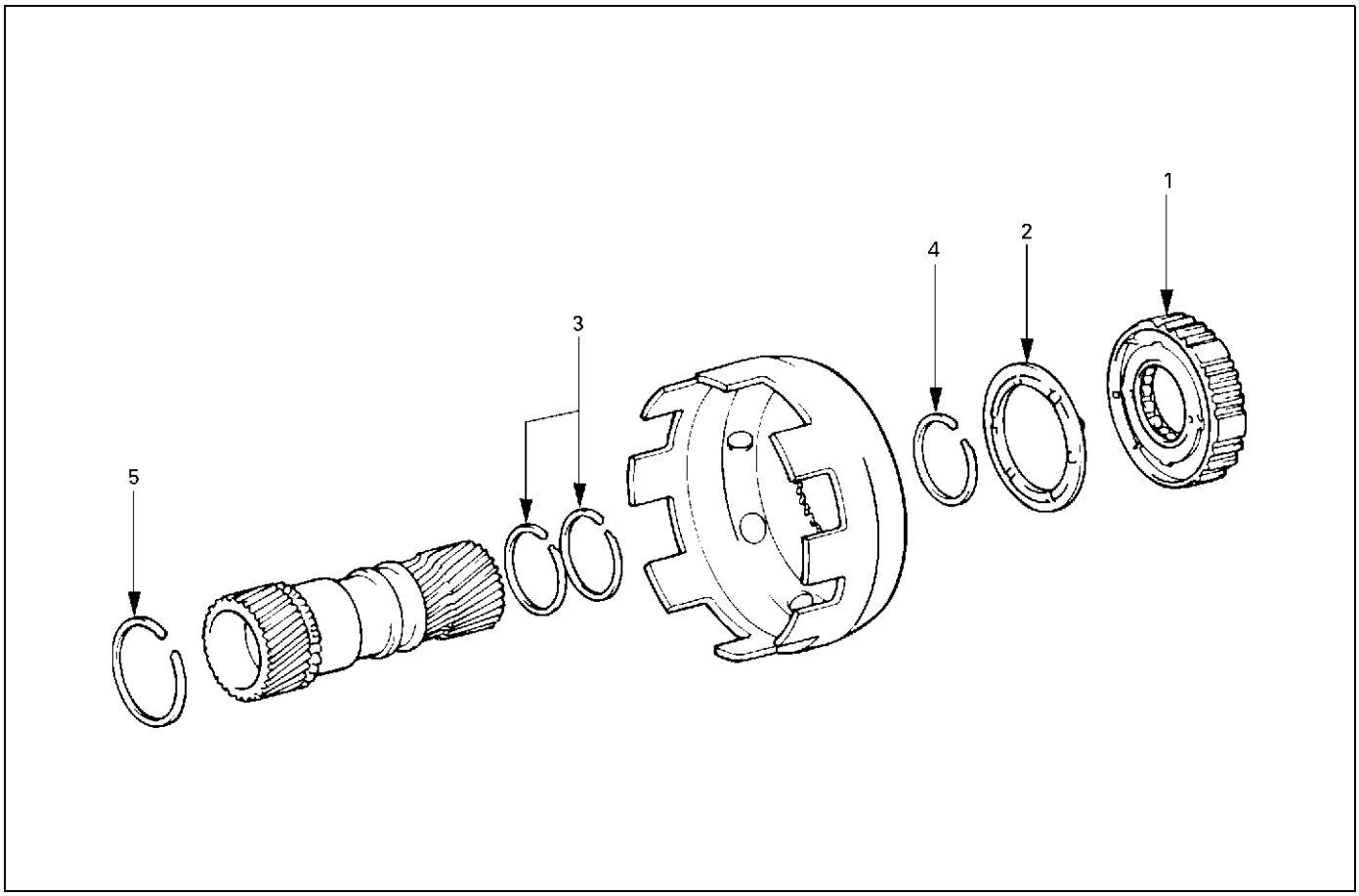

248RY00050

Disassembly steps

1. One–way clutch and second brake hub
2. Thrust washer (Plastic)
3. ▲ Oil seal ring (Metal)
4. ▲ Snap ring
5. Snap ring

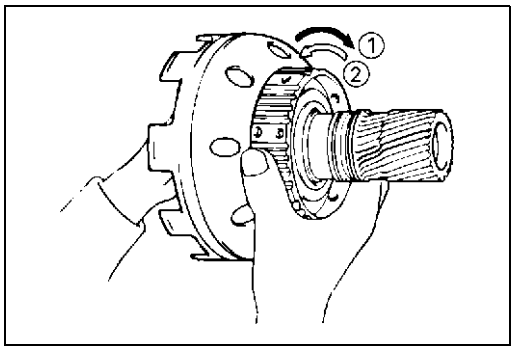

248RY00051

Important operations

Check operation of No.1 one–way clutch

Hold the planetary sun gear and turn the second brake hub. The second brake hub should turn freely clockwise and should lock counterclockwise.
(1) : Free
(2) : Lock

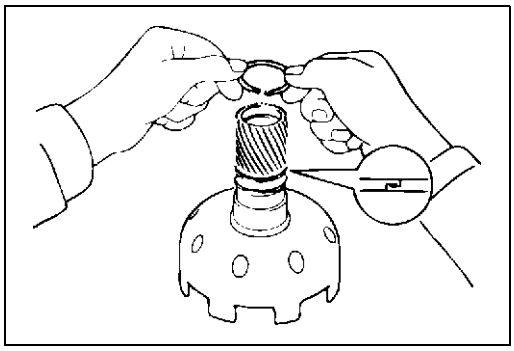

248RY00052

3. Oil seal ring (Metal)

Remove two oil seal rings.

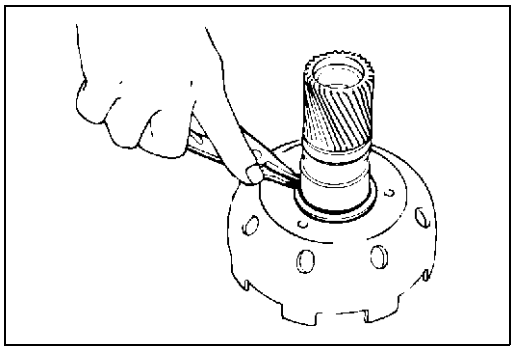

248RY00053

4. Snap ring

Remove the snap ring with snap ring pliers.

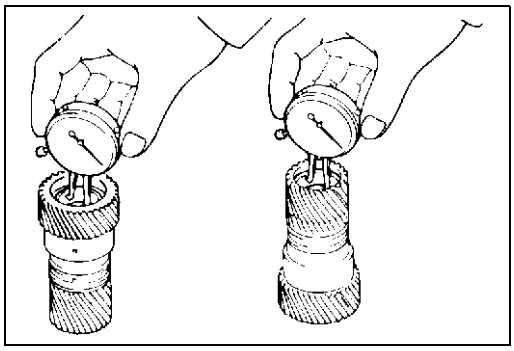

248RY00054

INSPECTION AND REPAIR

Check planetary sun gear bushing

Using a dial indicator, measure the inside diameter of the planetary sun gear bushing.

	mm (in.)
Maximum inside diameter	27.08 (1.0661)

If the inside diameter is greater than the maximum, replace the planetary sun gear.

REASSEMBLY

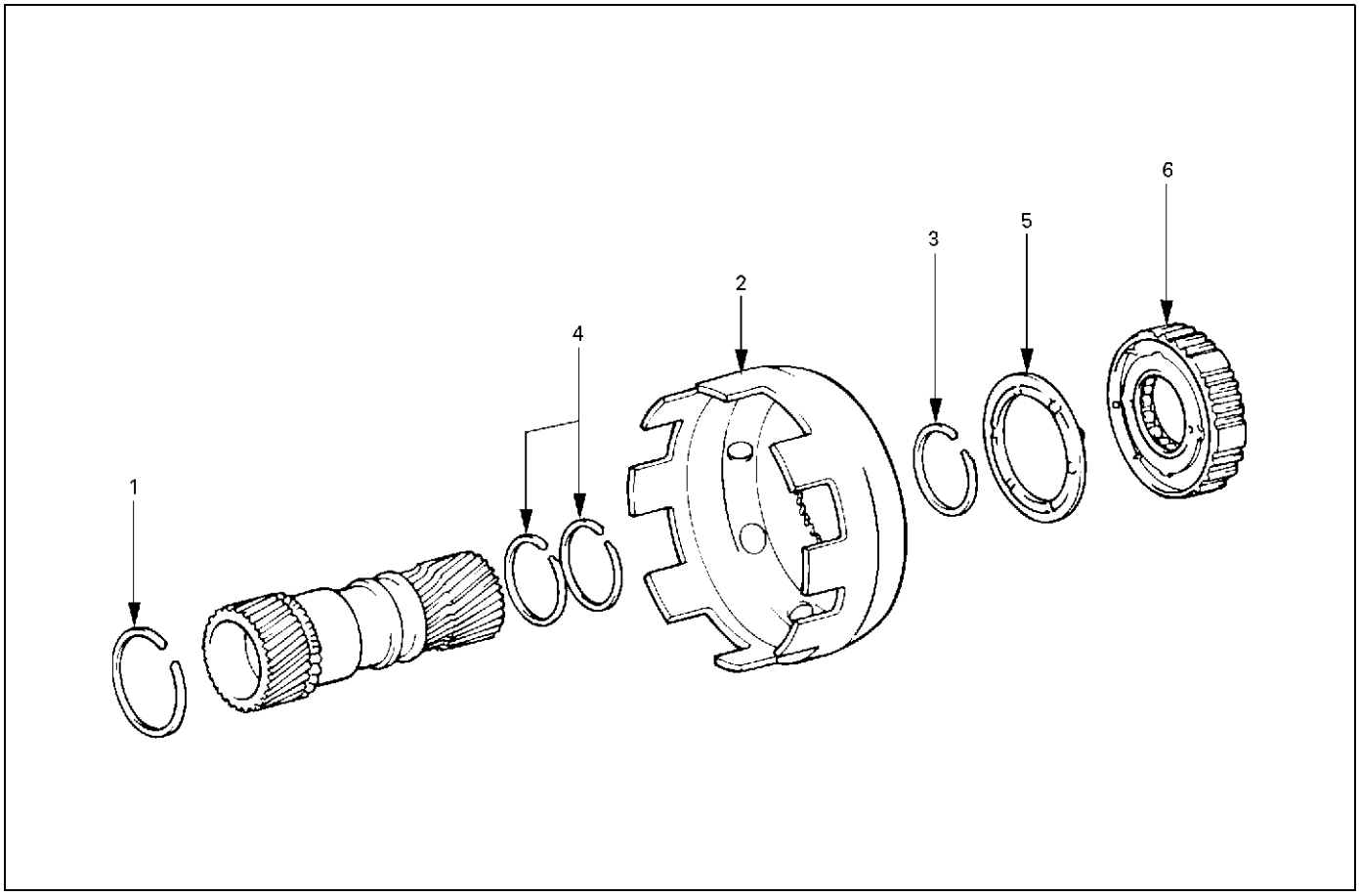

248RY00066

Reassembly steps

- ▲ 1. Snap ring
- ▲ 2. Sun gear input drum
- ▲ 3. Snap ring
- ▲ 4. Oil seal ring (Metal)
- ▲ 5. Thrust washer (Plastic)
- ▲ 6. One–way clutch and second brake hub

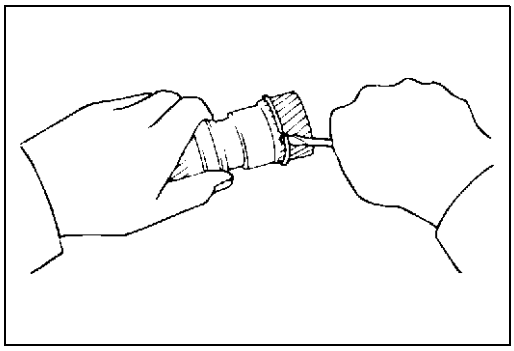

248RY00055

Important operations

1. Snap ring

Install snap ring to planetary sun gear.

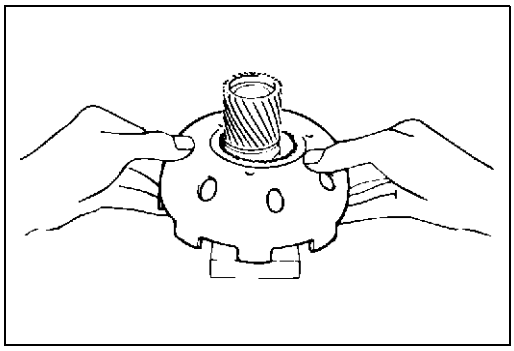

248RY00056

2. Sun gear input drum

Place a wooden block, etc. as a work stand and place the planetary sun gear onto it.

Install the sun gear input drum onto the planetary sun gear.

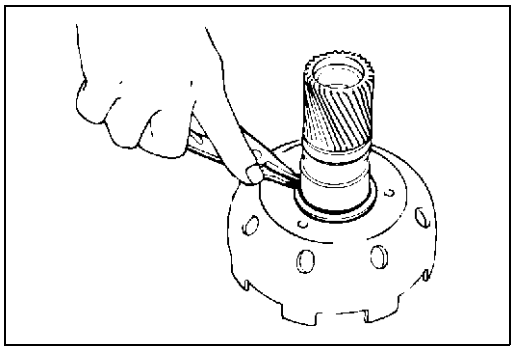

248RY00053

3. Snap ring

Install snap ring with snap ring pliers.

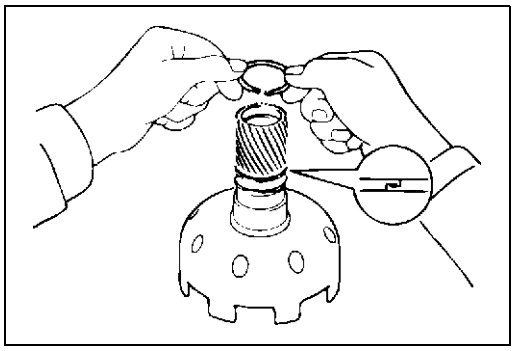

248RY00052

4. Oil seal ring (Metal)

Coat the two oil seal rings with ATF.

Install the two oil seal rings onto the planetary sun gear.

NOTE:

Do not spread the ring ends too much.

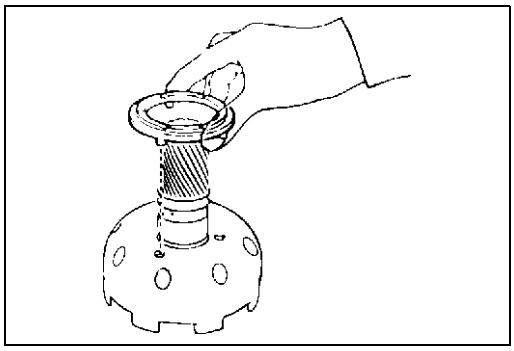

248RY00057

5. Thrust washer (plastic)

Install thrust washer.

NOTE:

Make sure that the lugs fit into the holes on the sun gear input drum.

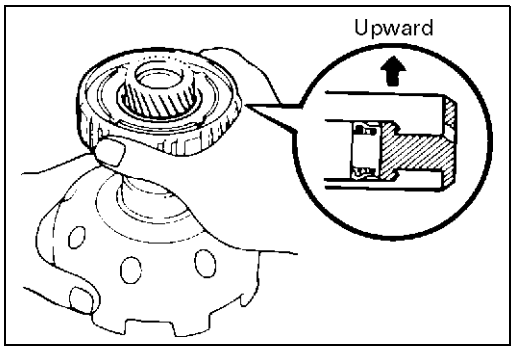

248RY00058

6. One–way clutch and second brake hub

Install assembled No.1 one–way clutch and second brake hub onto planetary sun gear as shown.

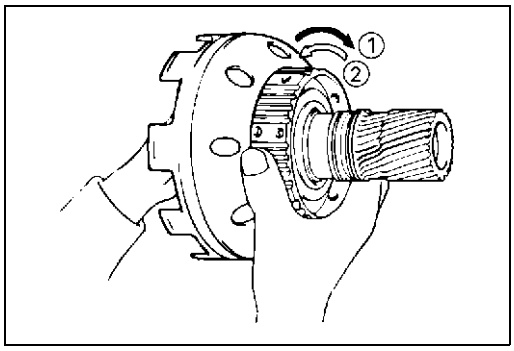

248RY00051

Check operation of No.1 one–way clutch

Hold the planetary sun gear and turn the second brake hub. The second brake hub should turn freely clockwise and should lock counterclockwise.

(1) : Free

(2) : Lock

SECOND BRAKE ASSEMBLY (B–2)

DISASSEMBLY

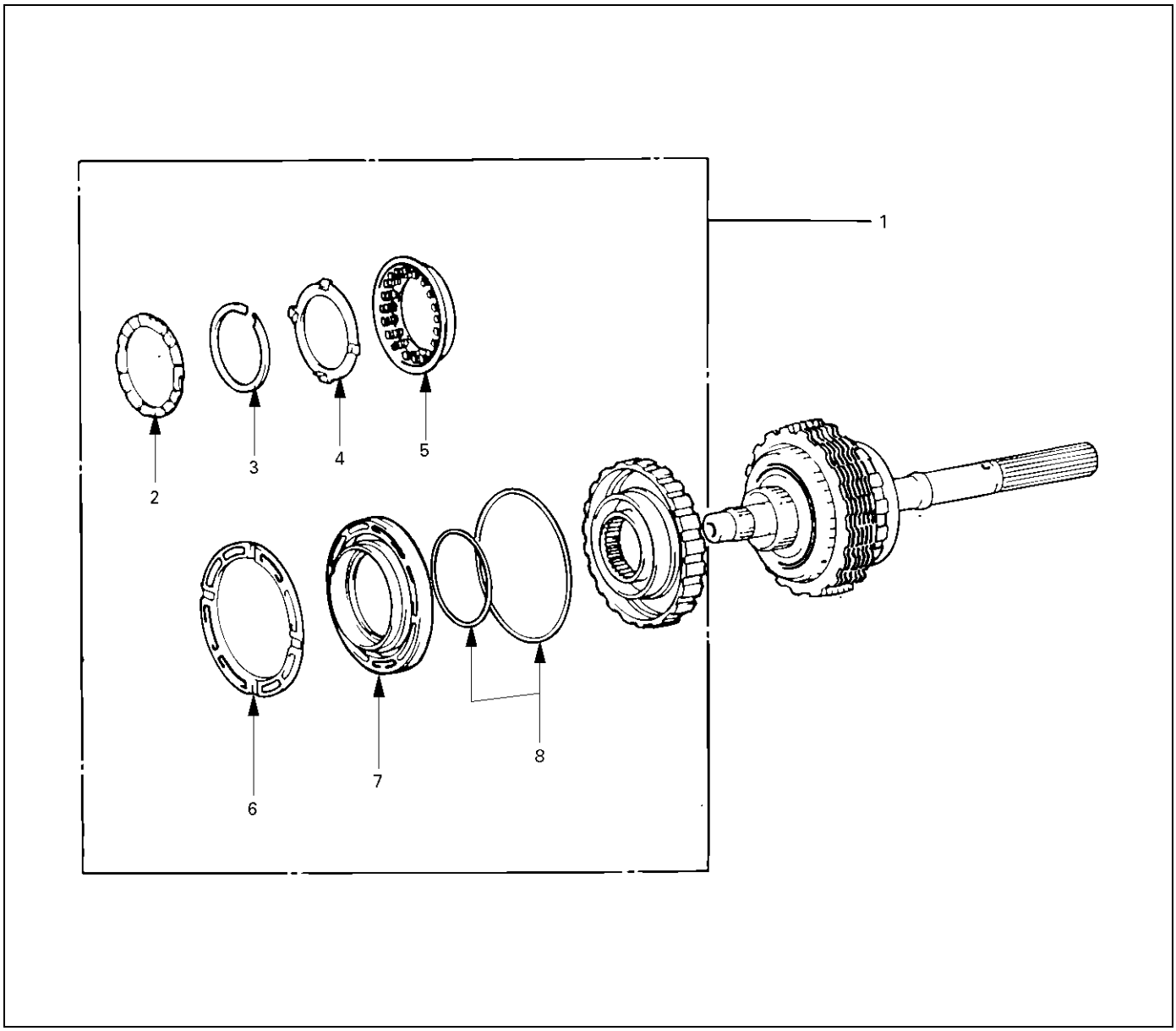

246RY00006

Disassembly steps

▲ 1. Second brake assembly
2. Thrust washer (Plastic)
▲ 3. Snap ring
4. Spring retainer
5. Piston return spring
6. Piston sleeve
▲ 7. Second brake piston
8. O–ring

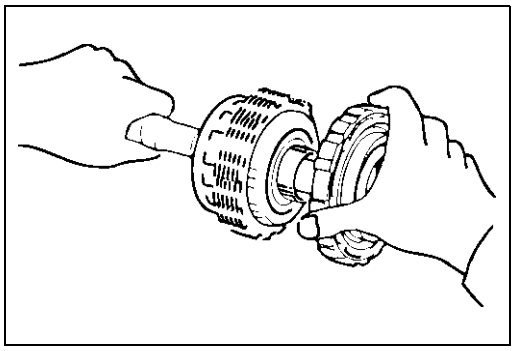

246RY00007

Important operations

1. Second brake assembly

Remove second brake assembly from output shaft.

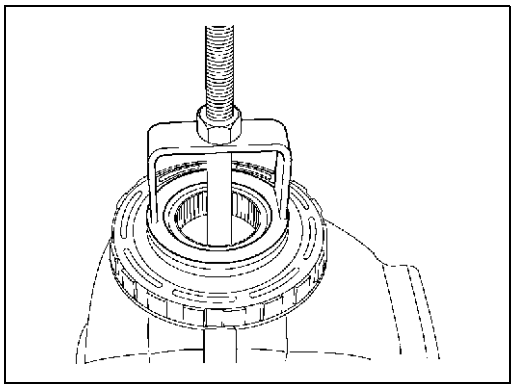

247RY00001

2. Snap ring

Place special tool on the spring retainer, and compress the return spring.
Spring compressor : 5–8840–0254–0 (J–25048)
Remove the snap ring with snap ring pliers.

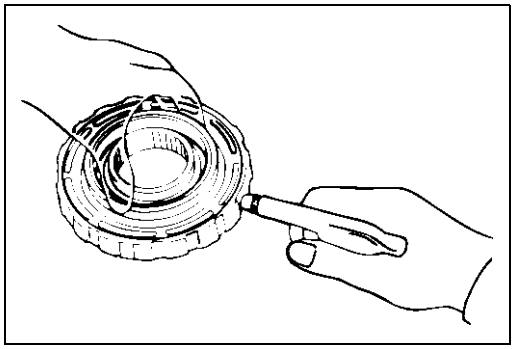

246RY00008

7. Second brake piston

Holding the second brake piston by hand, apply compressed air to the second brake drum to remove the second brake piston.
Remove the second brake piston.

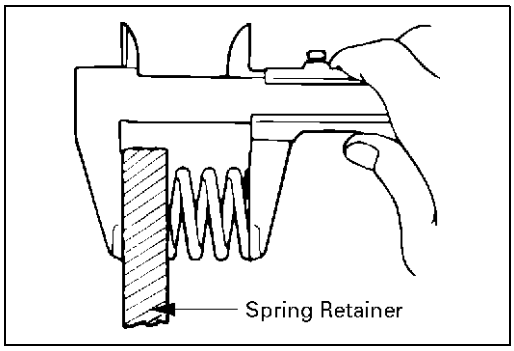

247RY00034

INSPECTION AND REPAIR

Check piston return spring

Using calipers, measure the free length of the return spring.

mm (in.)

Standard length	16.05 (0.6319)

REASSEMBLY

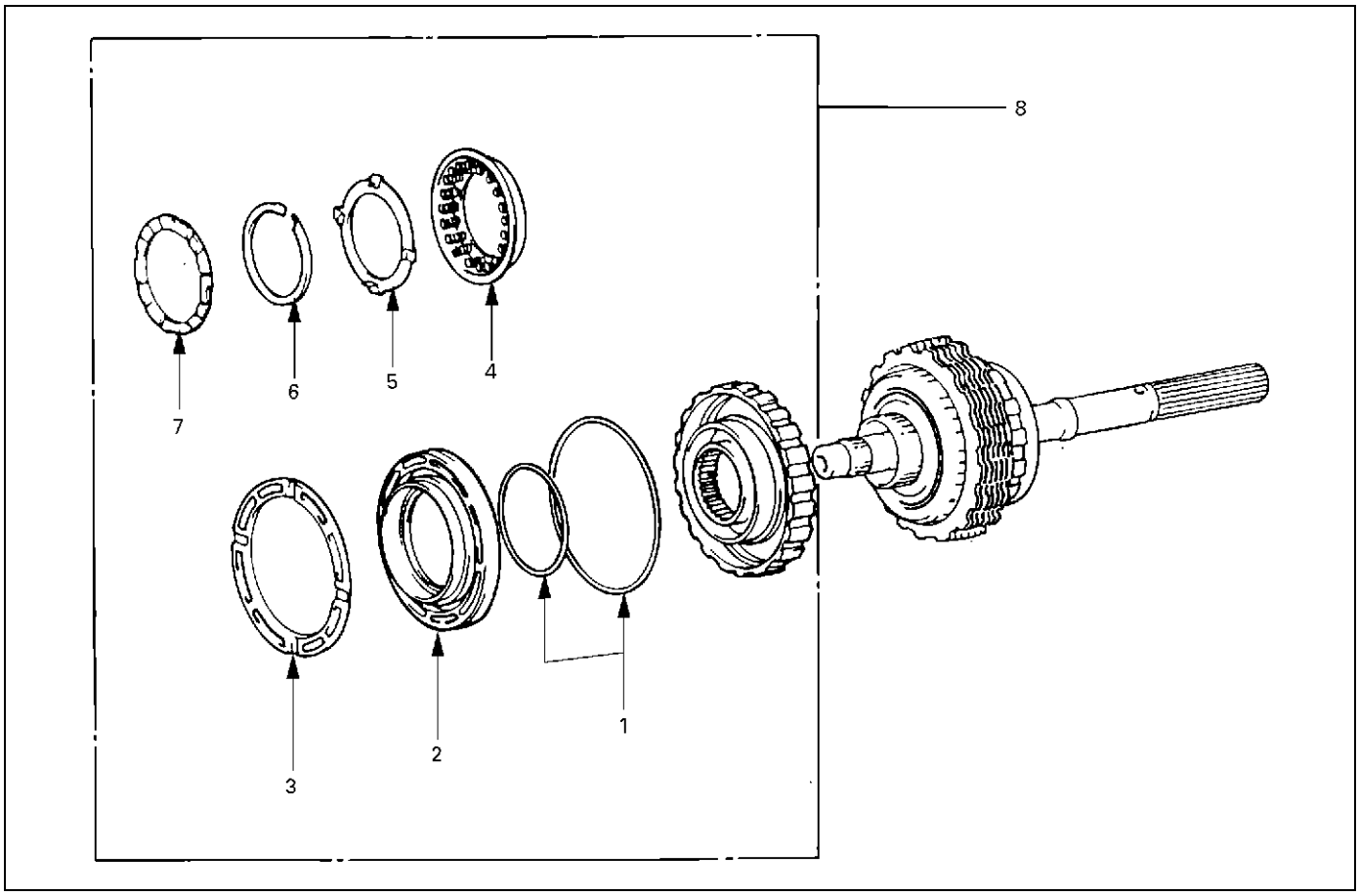

246RY00023

Reassembly steps

- ▲ 1. O–ring
- ▲ 2. Second brake piston
- ▲ 3. Piston sleeve
- ▲ 4. Piston return spring
- ▲ 5. Spring retainer
- ▲ 6. Snap ring
- ▲ 7. Thrust washer (Plastic)
- ▲ 8. Second brake assembly

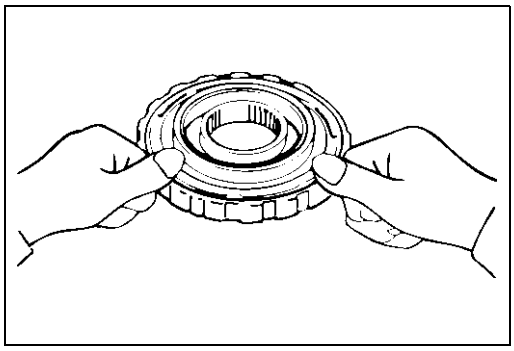

246RY00009

Important operations

1. **O–ring**
   Coat new O–ring with ATF and install them on the second brake piston.
2. **Second brake piston**
   Being careful not to damage the O–rings, press in the second brake piston into the second brake drum.
3. **Piston sleeve**
   Install piston sleeve.

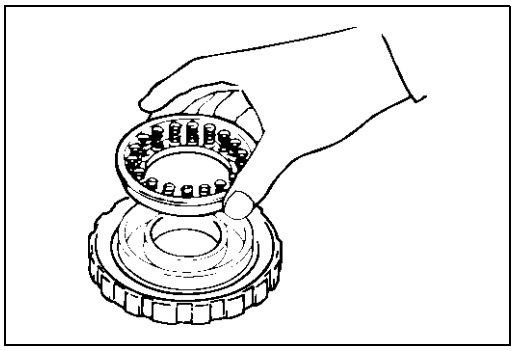

246RY00010

4. **Piston return spring**
   Install piston return spring.
5. **Spring retainer**
   Install spring retainer.

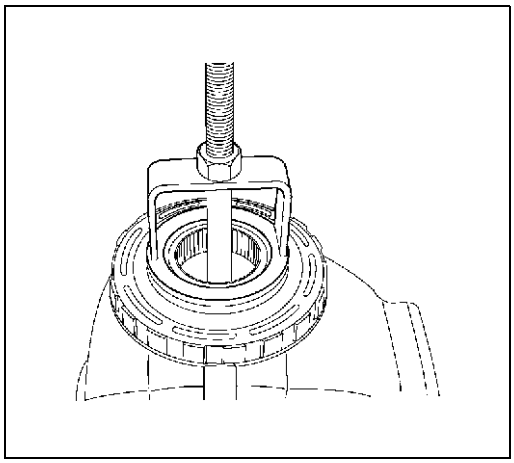

247RY00001

6. **Snap ring**
   Place special tool on the spring retainer, and compress the return spring.
   Spring compressor : 5–8840–0254–0(J–25048)
   Install the snap ring with snap ring pliers. Be sure the end gap of the snap ring is not aligned with the spring retainer claw.

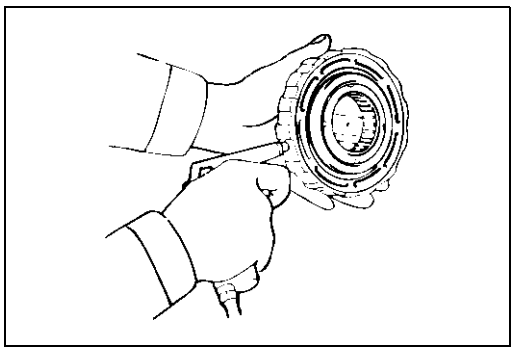

246RY00011

Check second brake piston movement

Make sure the second brake piston moves smoothly when applying and releasing the low compressed air to the second brake drum.

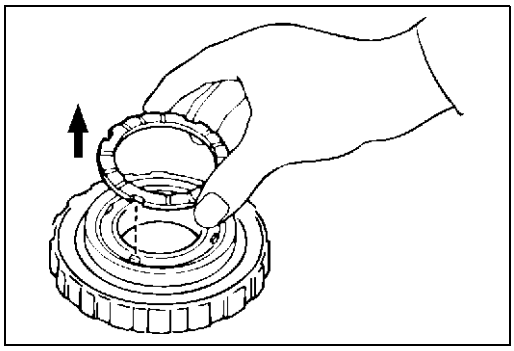

246RY00012

7. Thrust washer (Plastic)

Coat the thrust washer with petroleum jelly and install it to the second brake piston, with the grooved side facing upward.

NOTE:

Make sure that the cutout portions of the thrust washer match the teeth of the spring retainer.

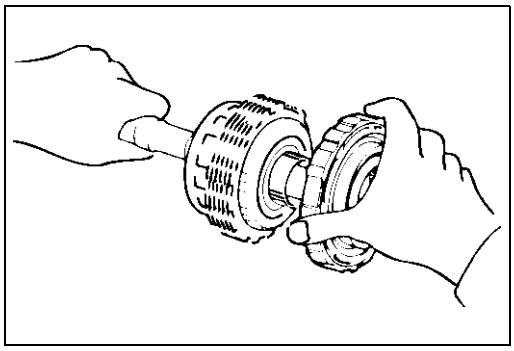

246RY00014

8. Second brake assembly

Install second brake assembly to output shaft.

REAR PLANETARY GEAR ASSEMBLY AND OUTPUT SHAFT

DISASSEMBLY

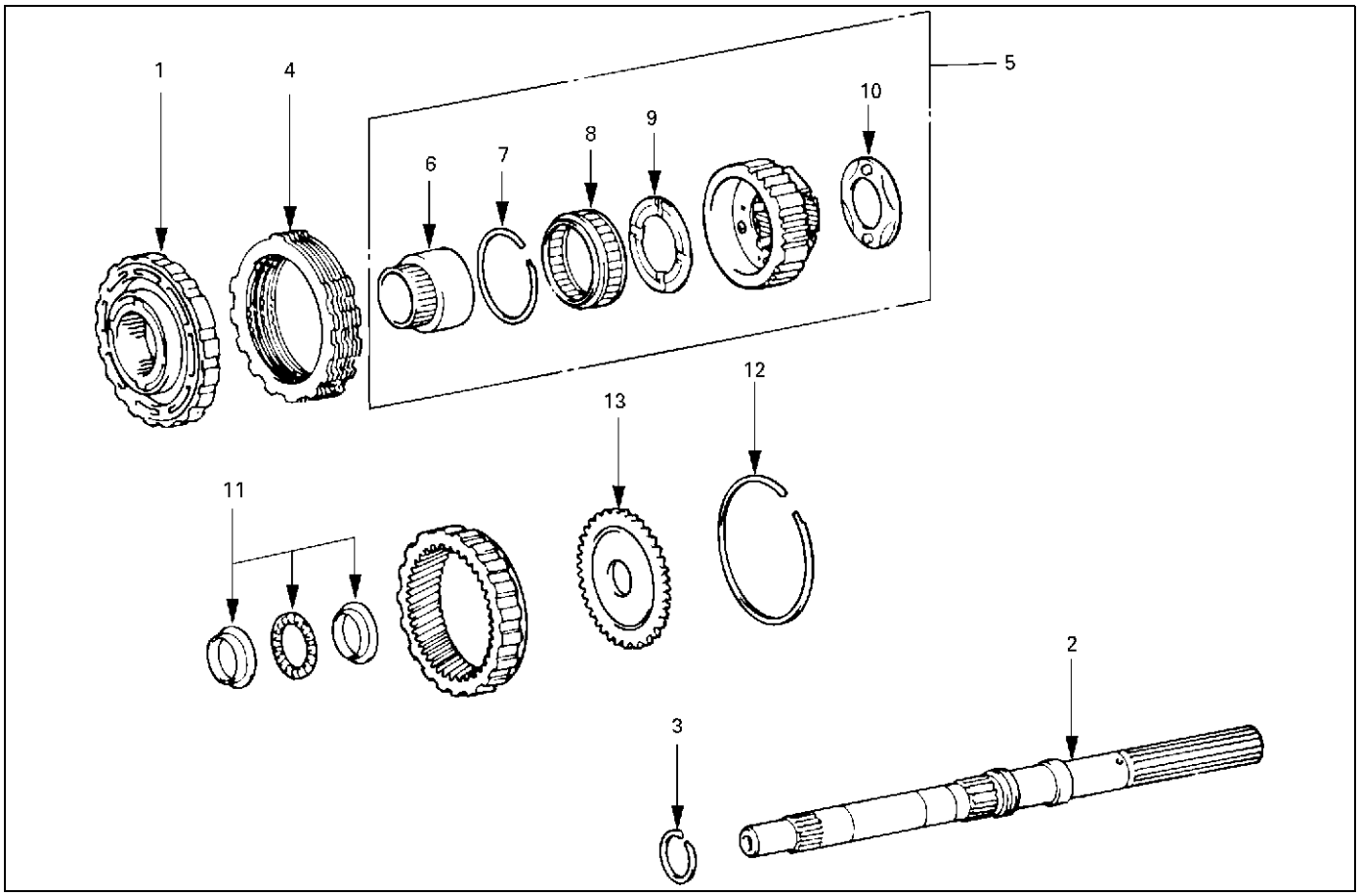

247RY00027

Disassembly steps

1. Second brake assembly
2. Output shaft
3. ▲ Oil seal ring
4. Disc, plate and flange
5. ▲ Rear planetary gear assembly
6. ▲ One–way clutch inner race
7. ▲ Snap ring
8. ▲ One–way clutch
9. Thrust washer (Plastic)
10. Thrust washer (Plastic)
11. Thrust bearing and race
12. Snap ring
13. Ring gear flange

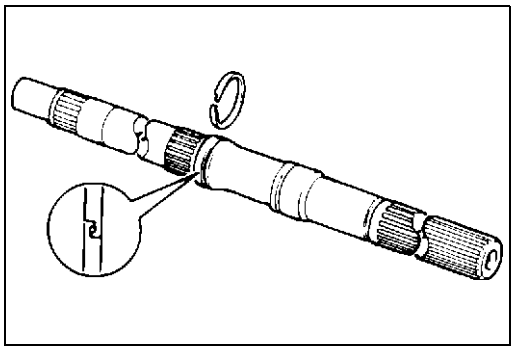

247RY00028

Important operations

3. Oil seal ring

Remove oil seal ring from output shaft.

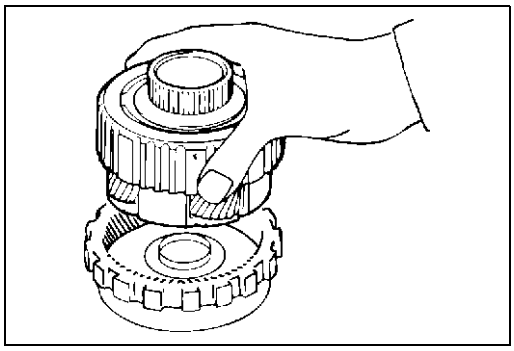

247RY00029

5. Rear planetary gear assembly

Remove rear planetary gear from rear planetary ring gear.

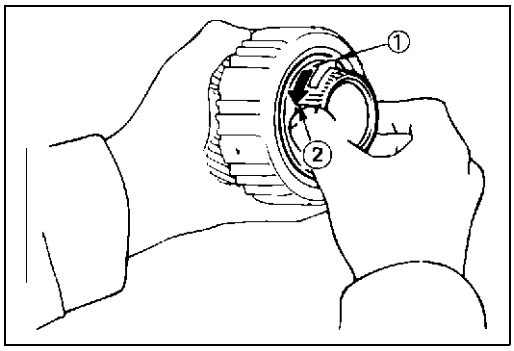

247RY00030

Check operation of No.2 one–way clutch

Hold the planetary gear and turn the one–way clutch inner race. The one–way clutch inner race should turn freely counterclockwise and should lock clockwise.

(1) : Lock

(2) : Free

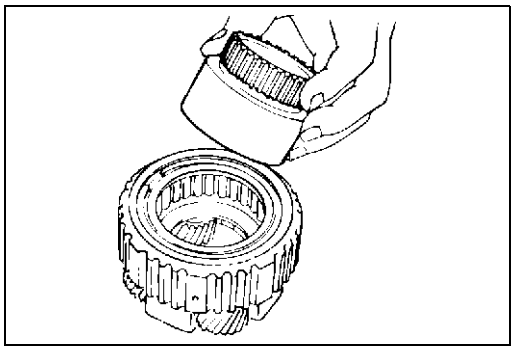

247RY00031

6. One–way clutch inner race

Remove the one–way clutch inner race from the rear planetary gear.

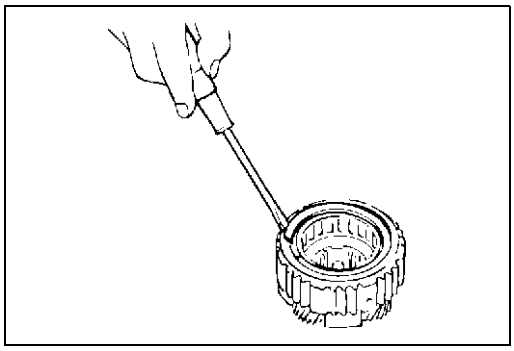

247RY00032

7. Snap ring

Remove the snap ring with a screwdriver.

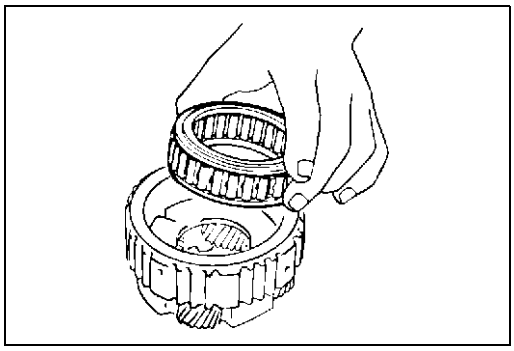

247RY00033

8. One–way clutch

Remove the one–way clutch with retainers from the planetary gear.

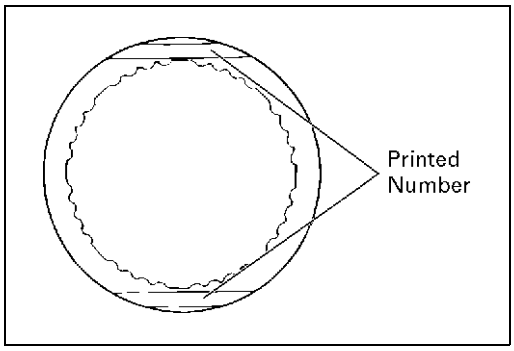

248RY00045

Check disc, plate and flange

Check to see if the sliding surface of the disc, plate and flange are worn or burnt. If necessary, replace them.

- If the lining of the disc is peeling off or discolored, or even if parts of the printed numbers are defaced, replace all discs.
- Before assembling new discs, soak them in ATF for at least fifteen minutes.

REASSEMBLY

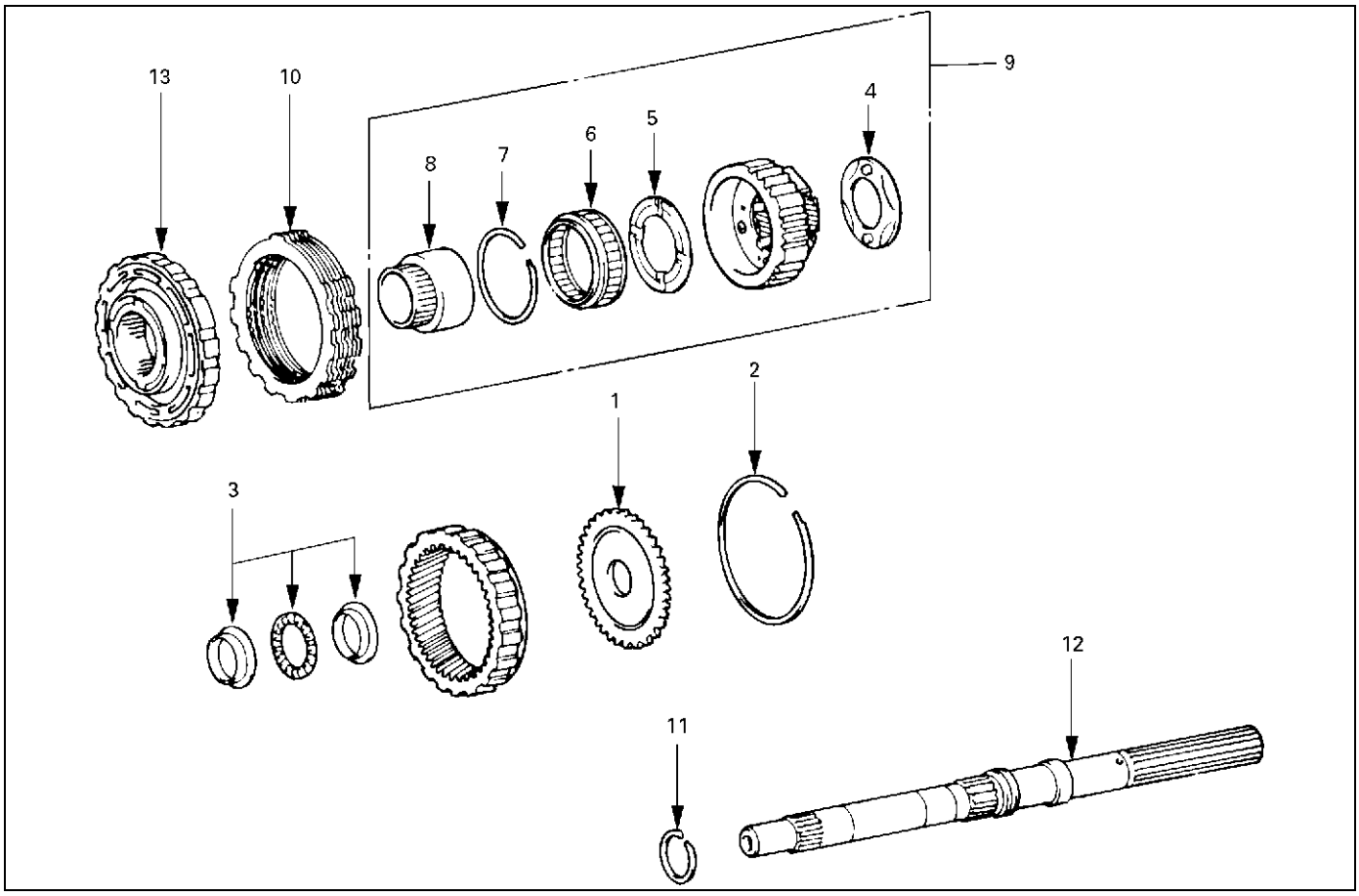

247RY00046

Reassembly steps

- ▲ 1. Ring gear flange
- ▲ 2. Snap ring
- ▲ 3. Thrust bearing and race
- ▲ 4. Thrust washer (Plastic)
- ▲ 5. Thrust washer (Plastic)
- ▲ 6. One–way clutch
- ▲ 7. Snap ring
- ▲ 8. One–way clutch inner race
- ▲ 9. Rear planetary gear assembly
- ▲ 10. Disc, plate, and flange
- ▲ 11. Oil seal ring
- ▲ 12. Output shaft
- ▲ 13. Second brake assembly

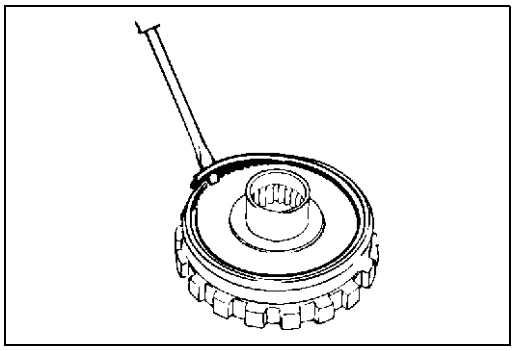

247RY00035

Important operations

1. **Ring gear flange**
   Install ring gear flange to the ring gear.
2. **Snap ring**
   Install snap ring to the ring gear.

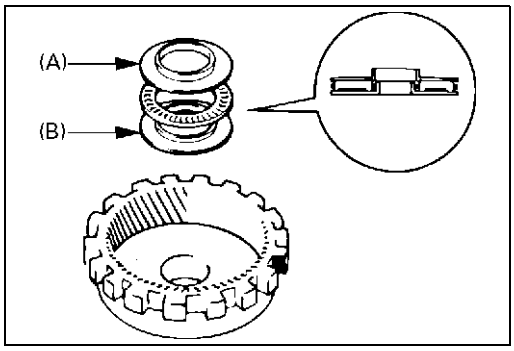

247RY00036

3. **Thrust bearing and race**
   Coat the races and bearing with petroleum jelly, and install them onto the rear planetary ring gear.

Races and bearing diameter (Reference) mm (in.)

	Inside	Outside
Race (A)	28.8 (1.134)	44.8 (1.764)
Bearing	30.1 (1.185)	44.7 (1.760)
Race (B)	27.8 (1.095)	44.8 (1.764)

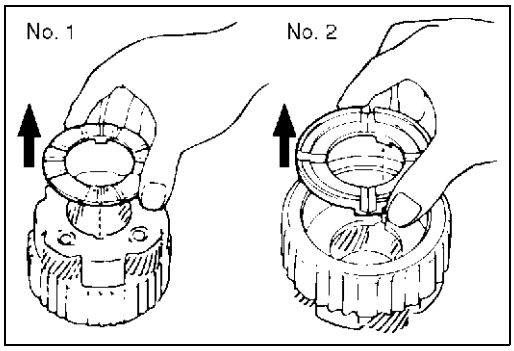

247RY00037

4. **Thrust washer (Plastic)**
5. **Thrust washer (Plastic)**
   Coat the thrust washer with petroleum jelly.
   Install the thrust washer onto both sides of the rear planetary gear, facing the grooved side upward.

NOTE:
Make sure that the lugs fit into the cutout portions on the rear planetary gear.

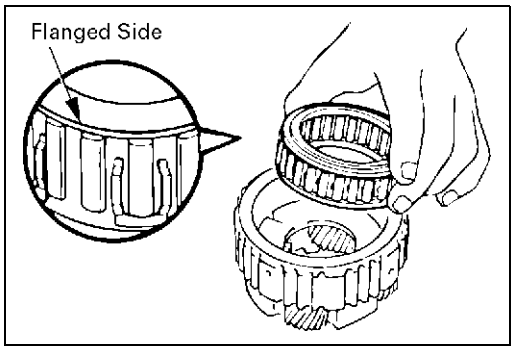

247RY00038

6. **One–way clutch**
   Install the one–way clutch with the flanged side facing upward onto the rear planetary gear.

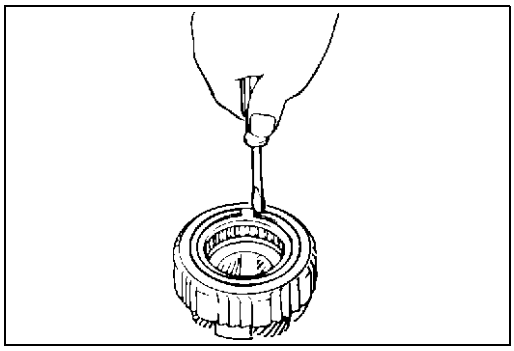

247RY00039

7. Snap ring

Install snap ring.

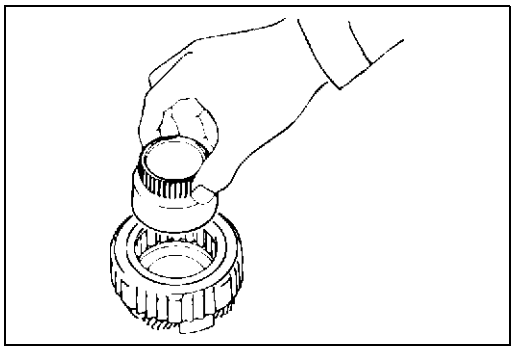

247RY00040

8. One–way clutch inner race

While turning counterclockwise, install one–way clutch inner race to rear planetary gear.

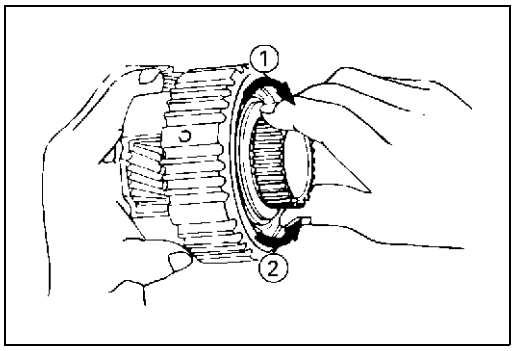

247RY00041

Check operation of one–way clutch

Hold the planetary gear and turn the one–way clutch inner race. The one–way clutch inner race should turn freely counterclockwise and should lock clockwise.

(1) : Lock

(2) : Free

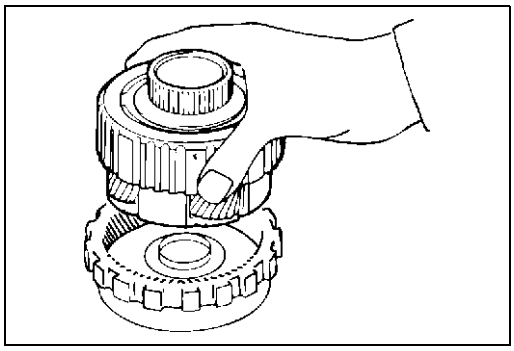

247RY00029

9. Rear planetary gear assembly

Install rear planetary gear onto rear planetary ring gear.

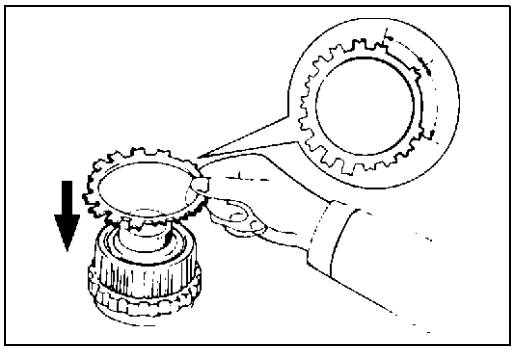

246RY00013

10. Disc, plate, and flange

Install a clutch plate onto the rear planetary gear assembly.

NOTE:
The claw interval of the plate should be as shown in the figure when viewing the clutch plate from the arrow direction.

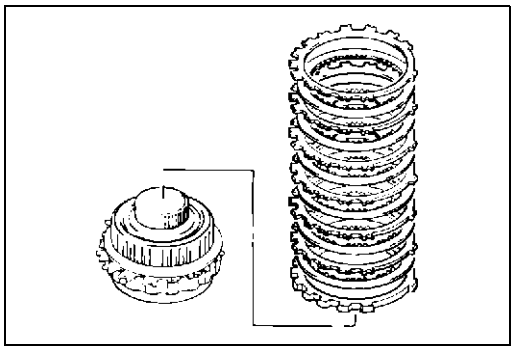

247RY00047

Install a brake flange onto the rear planetary gear assembly.
Install seven clutch discs and seven brake plates alternately, starting with clutch disc, onto the rear planetary gear assembly.

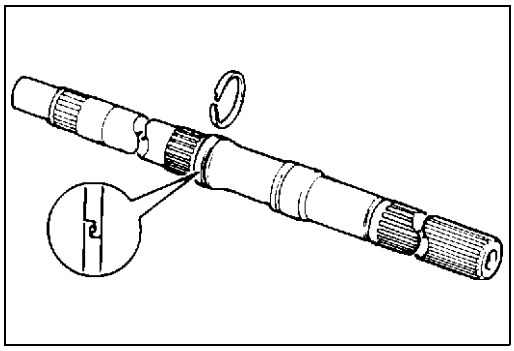

247RY00028

11. Oil seal ring

Coat the oil seal ring with ATF and install it to the output shaft.

NOTE:
Do not spread the ring ends too much.

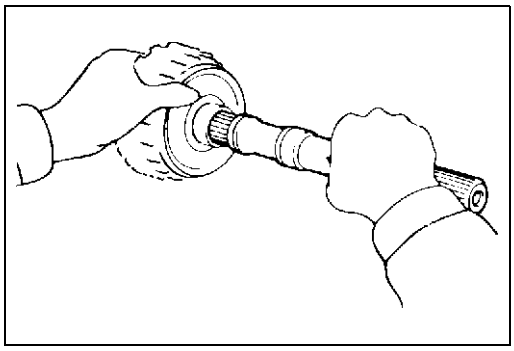

247RY00042

12. Output shaft

Install output shaft into rear planetary assembly.

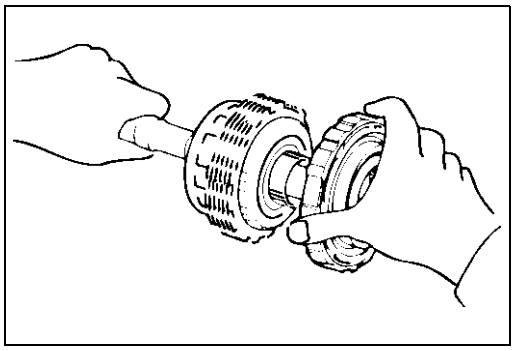

246RY00014

13. Second brake assembly

Install second brake assembly to output shaft.

FIRST AND REVERSE BRAKE (B–3)

DISASSEMBLY

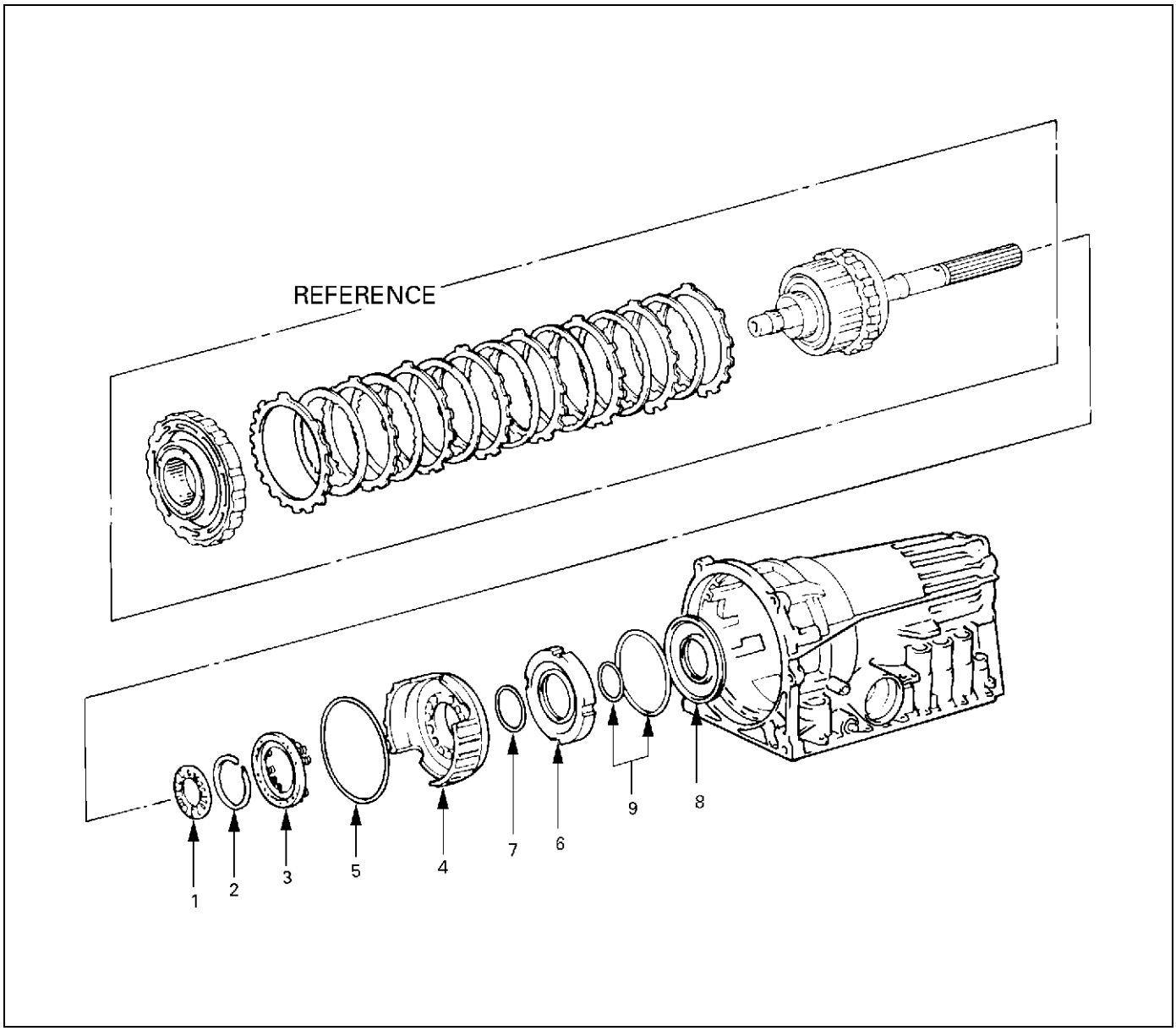

246RY00024

Disassembly steps

- ▲ 1. Thrust bearing and race
- ▲ 2. Snap ring
- 3. Piston return spring
- ▲ 4. 1st and reverse brake piston No.2
- 5. O–ring
- ▲ 6. Reaction sleeve
- 7. O–ring
- ▲ 8. 1st and reverse brake piston No.1
- 9. O–ring

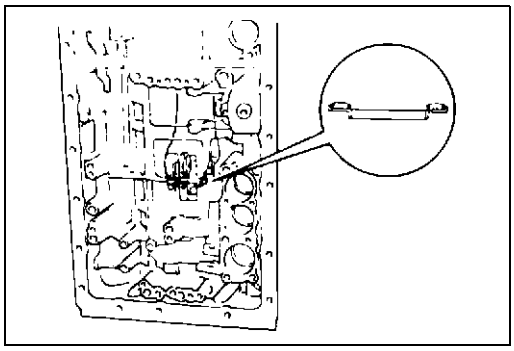

247RY00043

Important operations

1. Thrust bearing and race

Remove assembled bearing and race from transmission case.

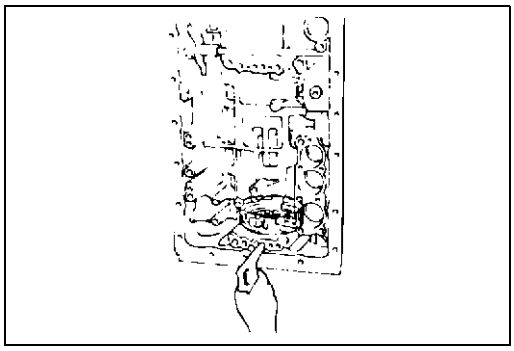

246RY00016

Check first and reverse brake piston movement

Make sure that first and reverse brake piston moves smoothly when applying and releasing the compressed air into the transmission case.

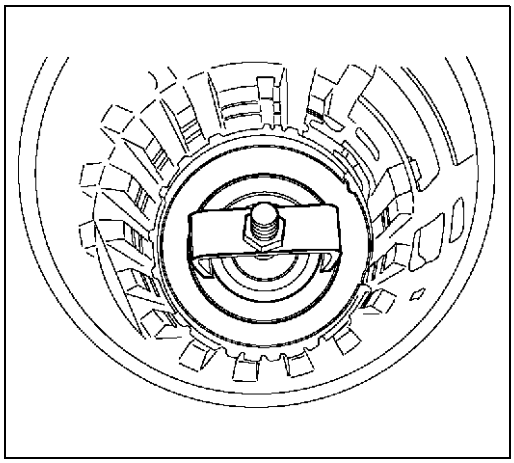

247RY00002

2. Snap ring

Set special tool on the spring retainer, and compress the return spring.

Spring compressor:5–8840–0254–0 (J–25048)

Remove the snap ring with snap ring pliers.

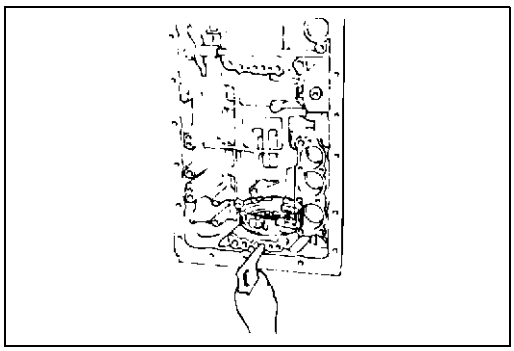

246RY00016

4. 1st and reverse brake piston No.2

Holding the No.2 first and reverse brake piston by hand, apply compressed air to the transmission case to remove the No.2 first and reverse brake piston.

Remove the No.2 first and reverse brake piston.

If the piston does not pop out with compressed air, lift the piston out with needle–nose pliers.

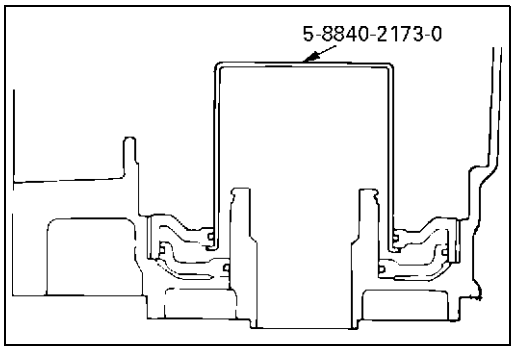

246RY00017

6. Reaction sleeve

Insert special tool behind the reaction sleeve and gradually lift it out of the transmission case.
Reaction sleeve puller : 5–8840–2173–0 (J–37236)

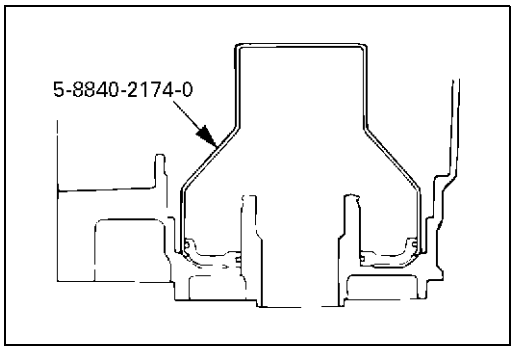

247RY00044

8. 1st and reverse brake piston No.1

Insert special tool behind the No.1 brake piston and gradually lift it out of the transmission case.
Piston puller : 5–8840–2174–0 (J–37237)

REASSEMBLY

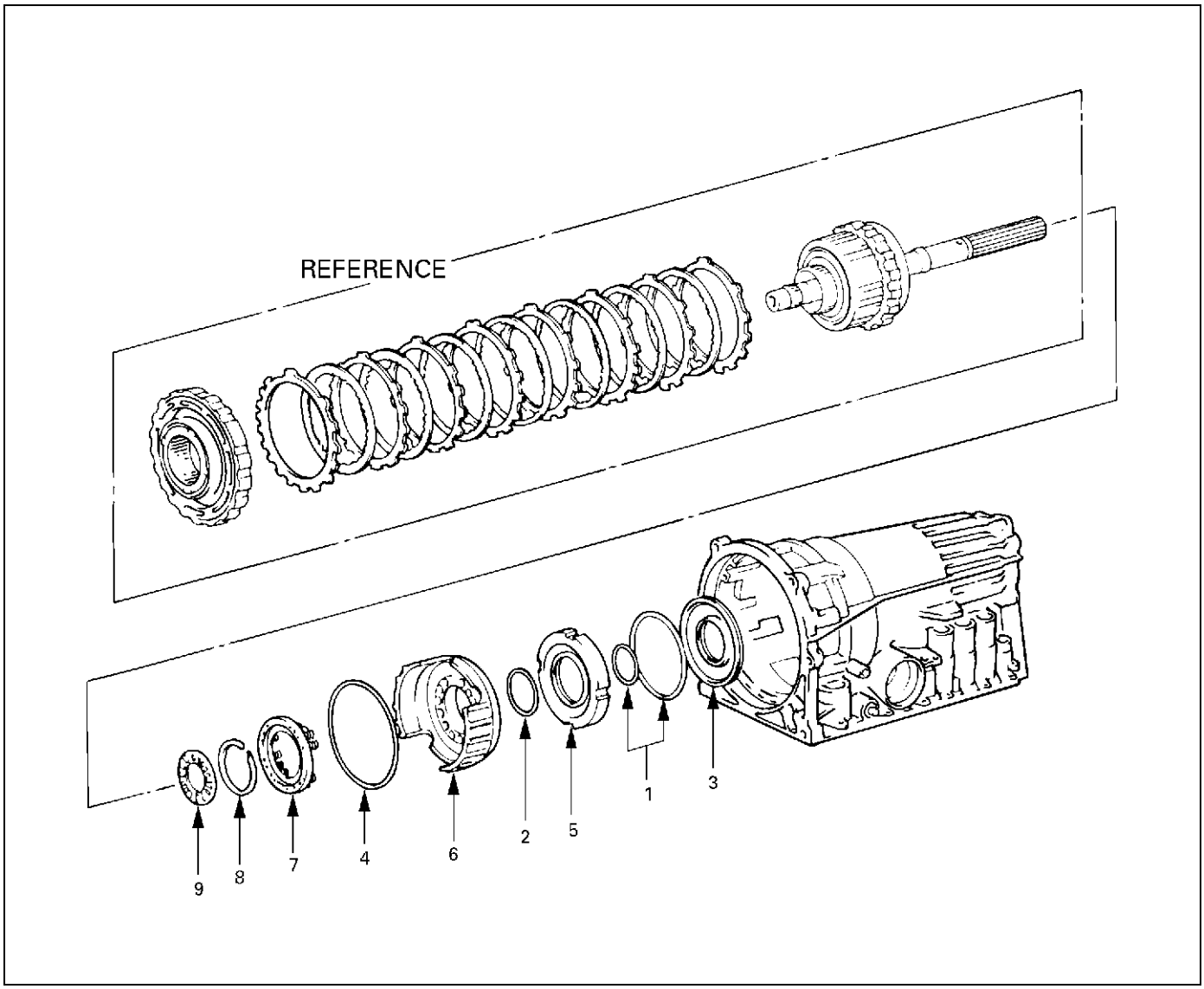

246RY00025

Reassembly steps

- ▲ 1. O–ring
- ▲ 2. O–ring
- ▲ 3. 1st and reverse brake piston No.1
- ▲ 4. O–ring
- ▲ 5. Reaction sleeve
- ▲ 6. 1st and reverse brake piston No.2
- ▲ 7. Return spring
- ▲ 8. Snap ring
- ▲ 9. Thrust bearing and race

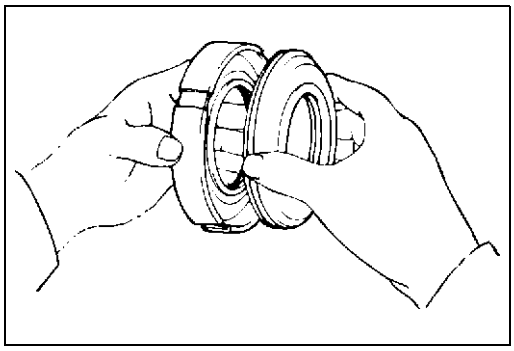

246RY00018

Important operations

1. **O–ring**
   Coat three new O–rings with ATF.
   Install the two O–ring on the No.1 piston.
2. **O–ring**
   Install the O–ring on the reaction sleeve.
3. **1st and reverse brake piston No.1**
   Install the No.1 piston to the reaction sleeve.

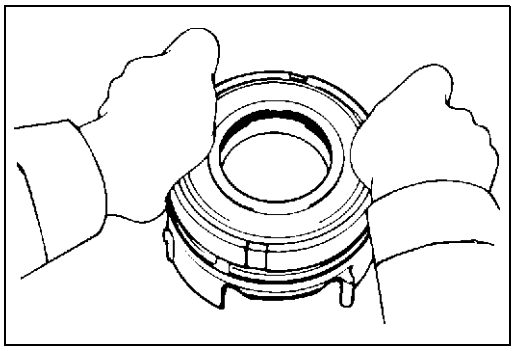

246RY00019

4. **O–ring**
   Coat a new O–ring with ATF and install it on the No.2 piston.
5. **Reaction sleeve**
   Install the No.1 piston with reaction sleeve onto the No.2 piston.

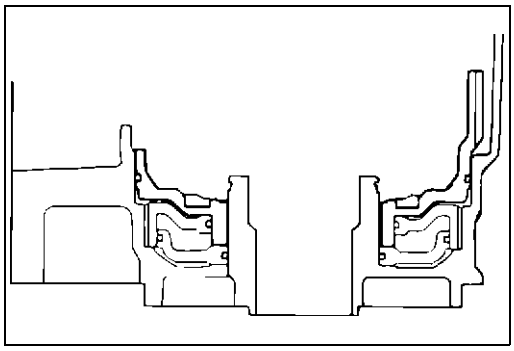

246RY00020

6. **1st reverse brake piston No.2**
   Align the teeth of the No.2 piston into the proper grooves.
   Being careful not to damage the O–rings, press in the No.2 with No.1 first and reverse brake pistons into the transmission case.

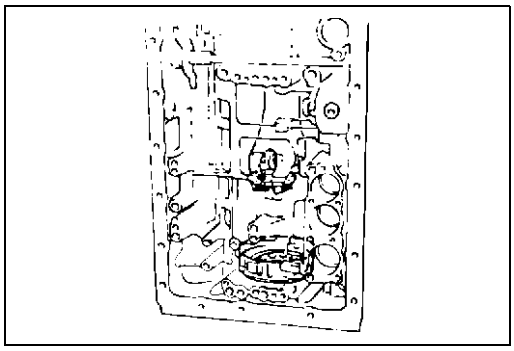

246RY00021

7. **Return spring**
   Place piston return spring onto No.2 piston.

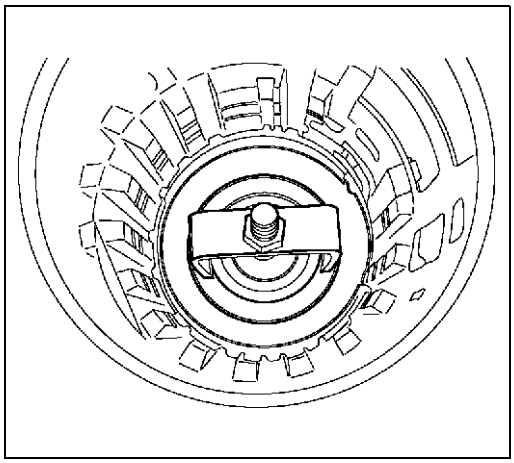

247RY00002

8. Snap ring

Set special tool as shown, and compress the return spring with special tool.

Spring compressor : 5–8840–0254–0 (J–25048)

Install the snap ring with snap ring pliers. Be sure the end gap of the snap ring is not aligned with the spring retainer claw.

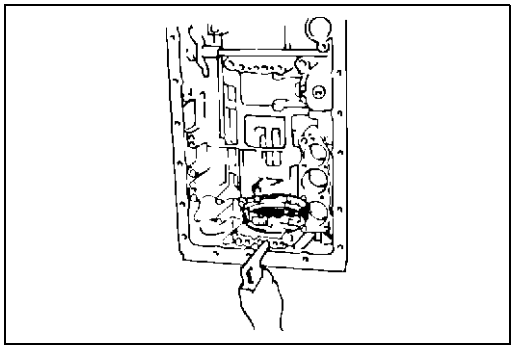

246RY00022

Check first and reverse brake piston

Make sure the first and reverse brake piston moves smoothly when applying and releasing the compressed air into the transmission case.

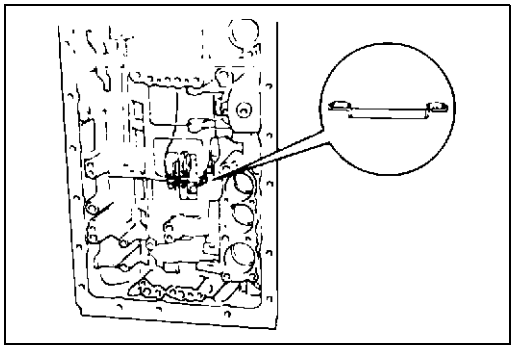

247RY00043

9. Thrust bearing and race

Coat the assembled bearing and race with petroleum jelly.

Install the assembled bearing and race facing the bearing side upward.

Assembled bearing and race diameter. (Reference) mm (in.)

Inside diameter	39.2 (1.543)
Outside diameter	57.7 (2.272)

TRANSMISSION CASE

DISASSEMBLY

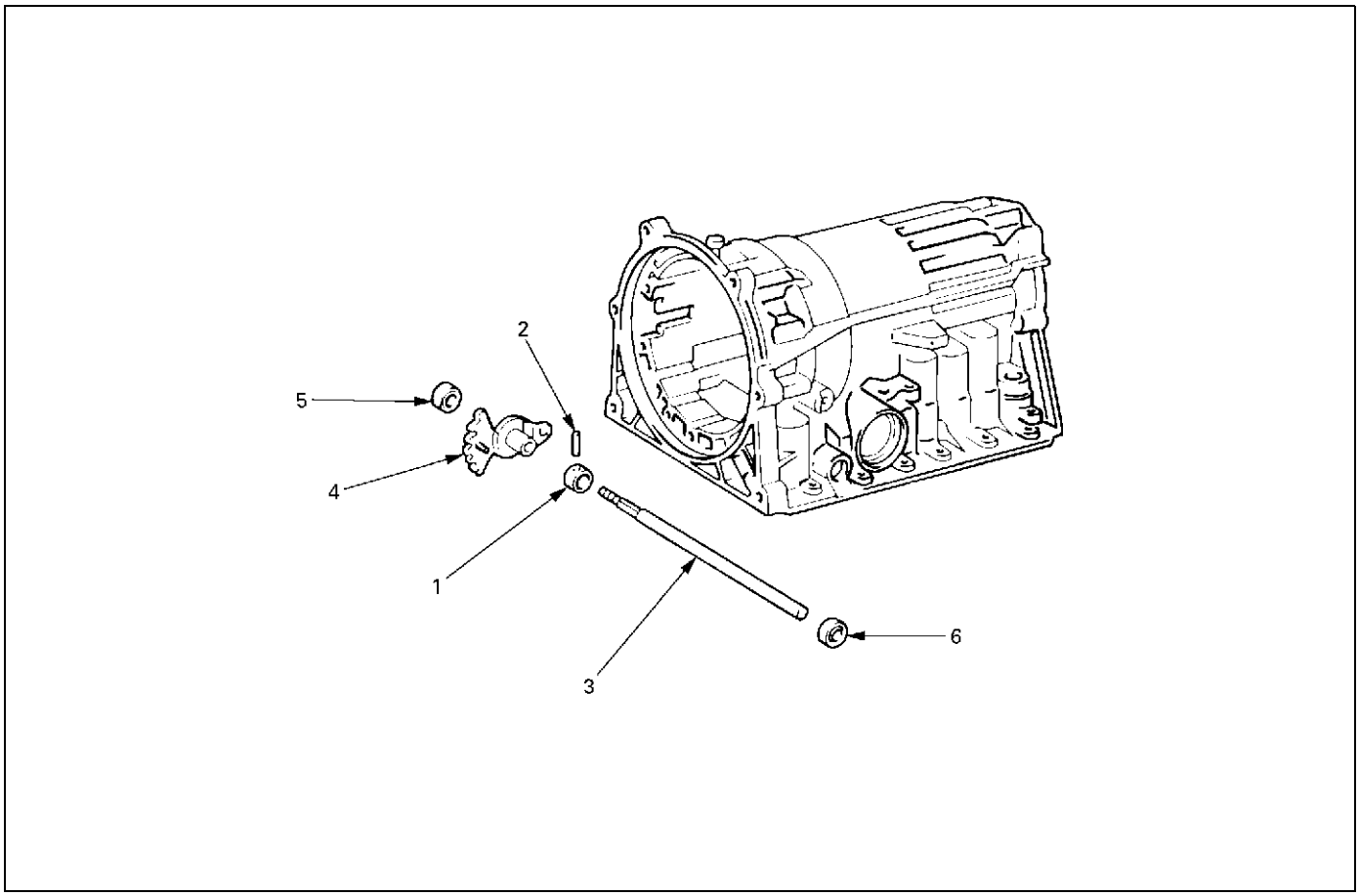

249RY00001

Disassembly steps

- ▲ 1. Spacer
- ▲ 2. Pin
- ▲ 3. Manual valve lever shaft
- ▲ 4. Manual valve lever
- ▲ 5. Oil seal
- ▲ 6. Oil seal

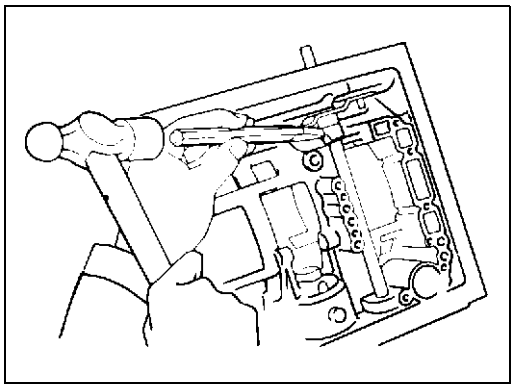

249RY00002

Important operations

1. **Spacer**
   Using a chisel, cut off the spacer and remover it from the shaft.

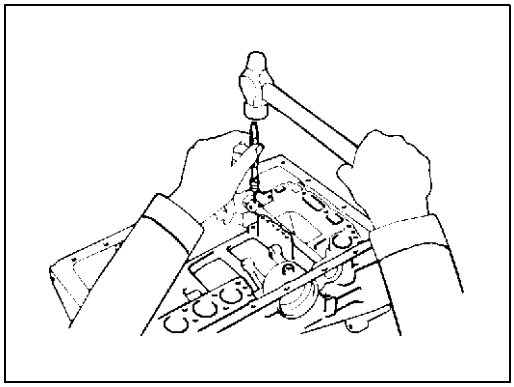

249RY00003

2. **Pin**
   Using a punch, drive out the pin.
3. **Manual valve lever shaft**
4. **Manual valve lever**
   Pull the manual valve lever shaft out through the case by the threads.

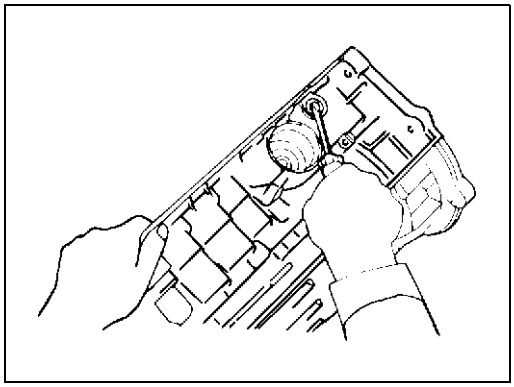

249RY00004

5. **Oil seal**
6. **Oil seal**
   Using a screwdriver, remove the oil seal.

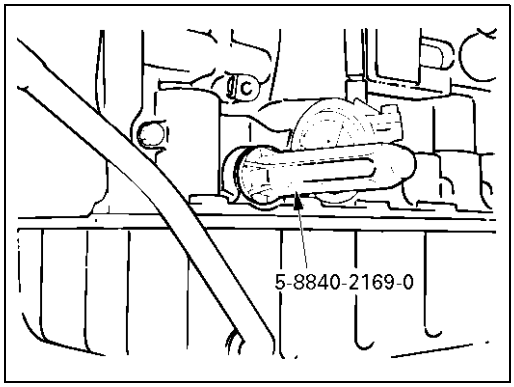

240RY00021

On–vehicle replacement of oil seal

Using special tool, install the oil seal.
Installer : 5–8840–2169–0 (J–37232–2)

REASSEMBLY

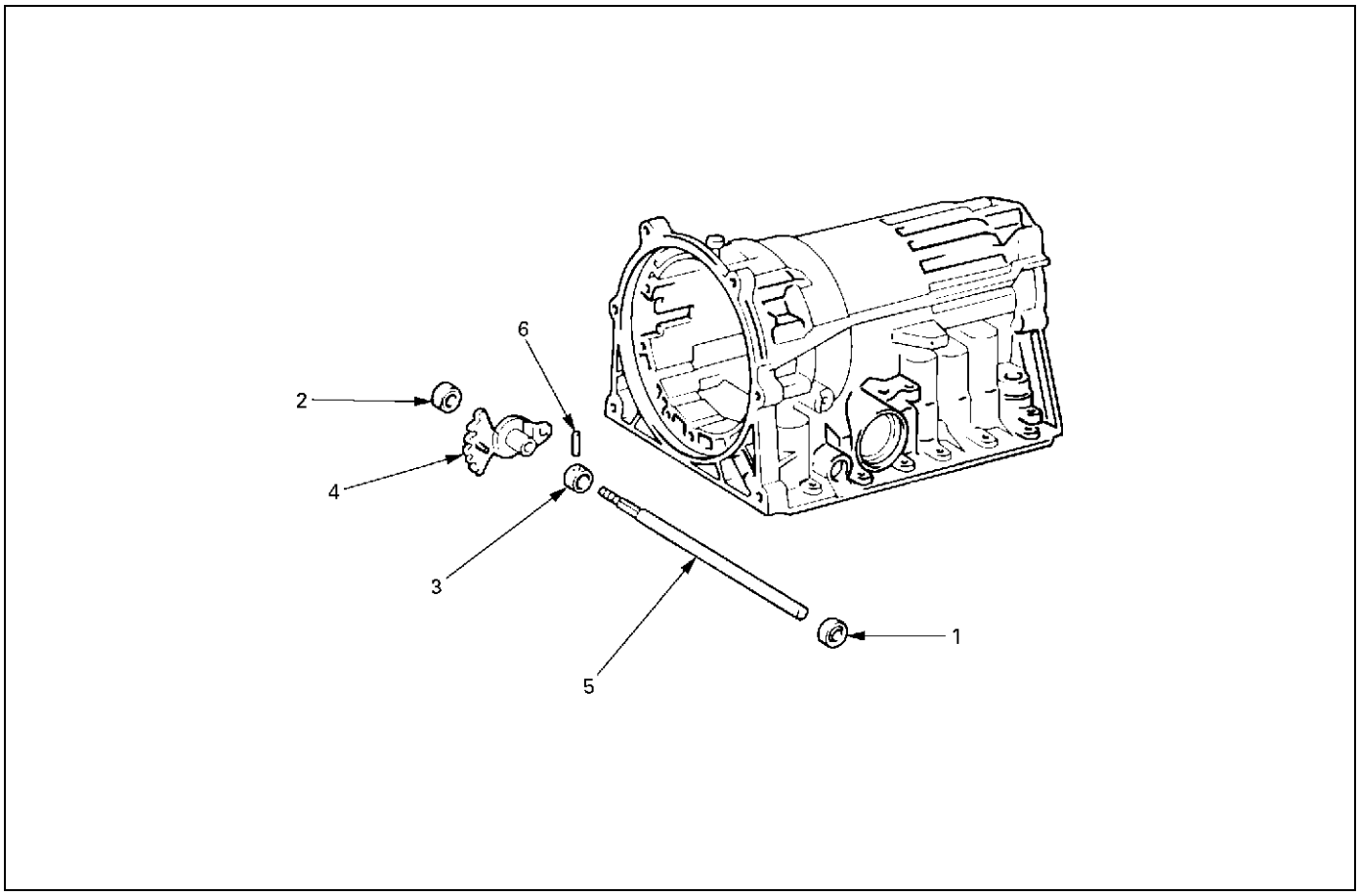

249RX00001

Reassembly steps

- ▲ 1. Oil seal
- ▲ 2. Oil seal
- ▲ 3. Spacer
- ▲ 4. Manual valve lever
- ▲ 5. Manual valve lever shaft
- ▲ 6. Pin

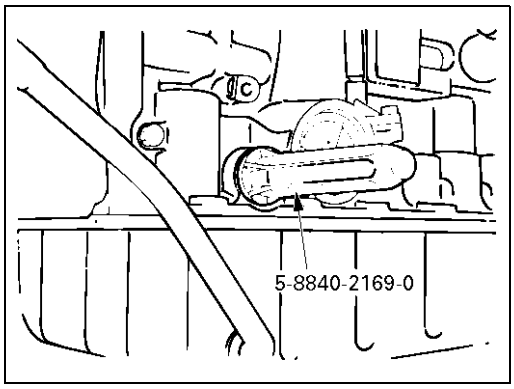

240RY00021

Important operations

1. **Oil seal**
2. **Oil seal**
   Coat a new oil seal lip with multi purpose grease.
   Using special tool, drive in the oil seal.
   Oil seal installer : 5–8840–2169–0 (J–37232–2)

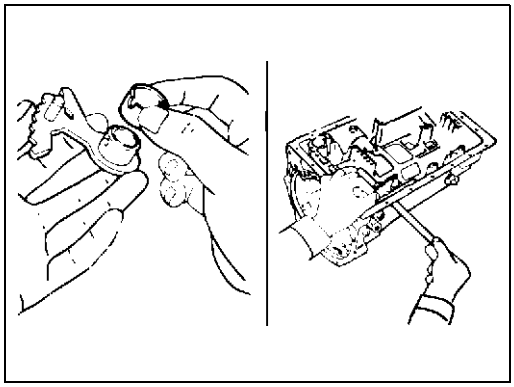

249RY00005

3. **Spacer**
4. **Manual valve lever**
   Assemble a new spacer to the manual valve lever.
5. **Manual valve lever shaft**
   Install the manual valve lever shaft to the transmission case through the manual valve lever by the threads.

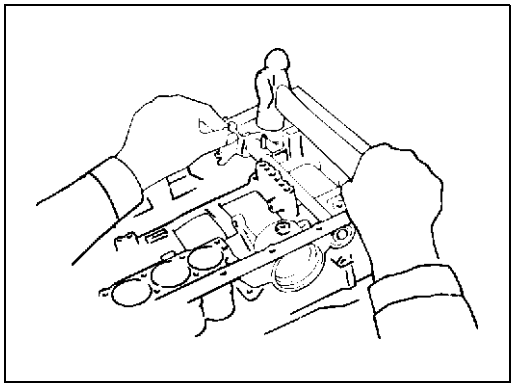

249RY00006

6. **Pin**
   Drive in the pin with the slot at a right angle to the shaft.

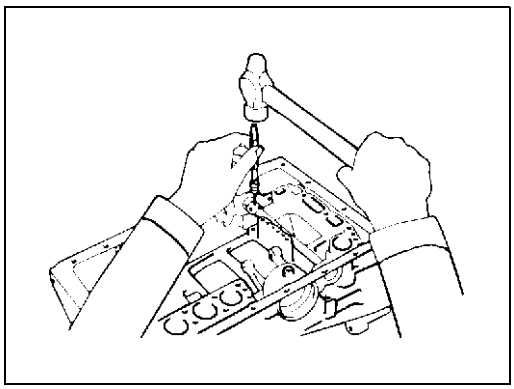

249RY00003

Match the spacer hole to the lever staking hollow and stake the spacer to the lever.
Make sure the manual valve lever shaft turns smoothly.

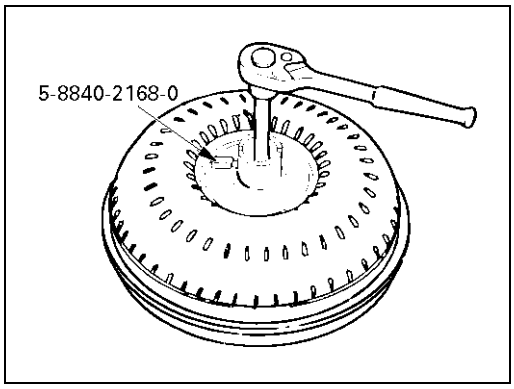

241RY00018

TORQUE CONVERTER

INSPECTION AND REPAIR

Insert special tool in end of torque converter

Insert a turning tool into the inner race of the one–way clutch.

One–way clutch testing tool : 5–8840–2168–0 (J–35467)

Insert the stopper so that it fits in the notch of the converter hub and outer race of the one–way clutch.

Test one–way clutch

The clutch should lock when turned counterclockwise, and rotate freely and smoothly clockwise. Less than 25kg·cm (22 Ib·in) of torque should be required to rotate the clutch clockwise. If necessary, clean the converter and retest the clutch. Replace the converter if the clutch still fails the test.

REASSEMBLY OF MAJOR COMPONENTS

Disassembly, inspection and reassembly of each component group have been indicated in the preceding chapter. Before reassembly, make sure, again, that all component groups are assembled correctly.
If something wrong is found in a certain component group during assembly, inspect and repair this group immediately.

GENERAL ASSEMBLY NOTES:

1. The automatic transmission is composed of highly precision–finished parts, necessitating careful inspection before assembly because even a small nick could cause fluid leakage or affect performance.
2. Before assembling new clutch discs and brake bands, soak them in automatic transmission fluid for at least thirty minutes.
3. Apply automatic transmission fluid on the sliding or rotating surfaces of parts before assembly.
4. Use petroleum jelly to keep small parts in their places.
5. Do not use adhesive cements on gaskets and similar parts.
6. When assembling the transmission, be sure to use new gaskets and O–rings.
7. Dry all parts with compressed air - never use shop rags.
8. Be sure to install the thrust bearings and races in the correct direction and position.

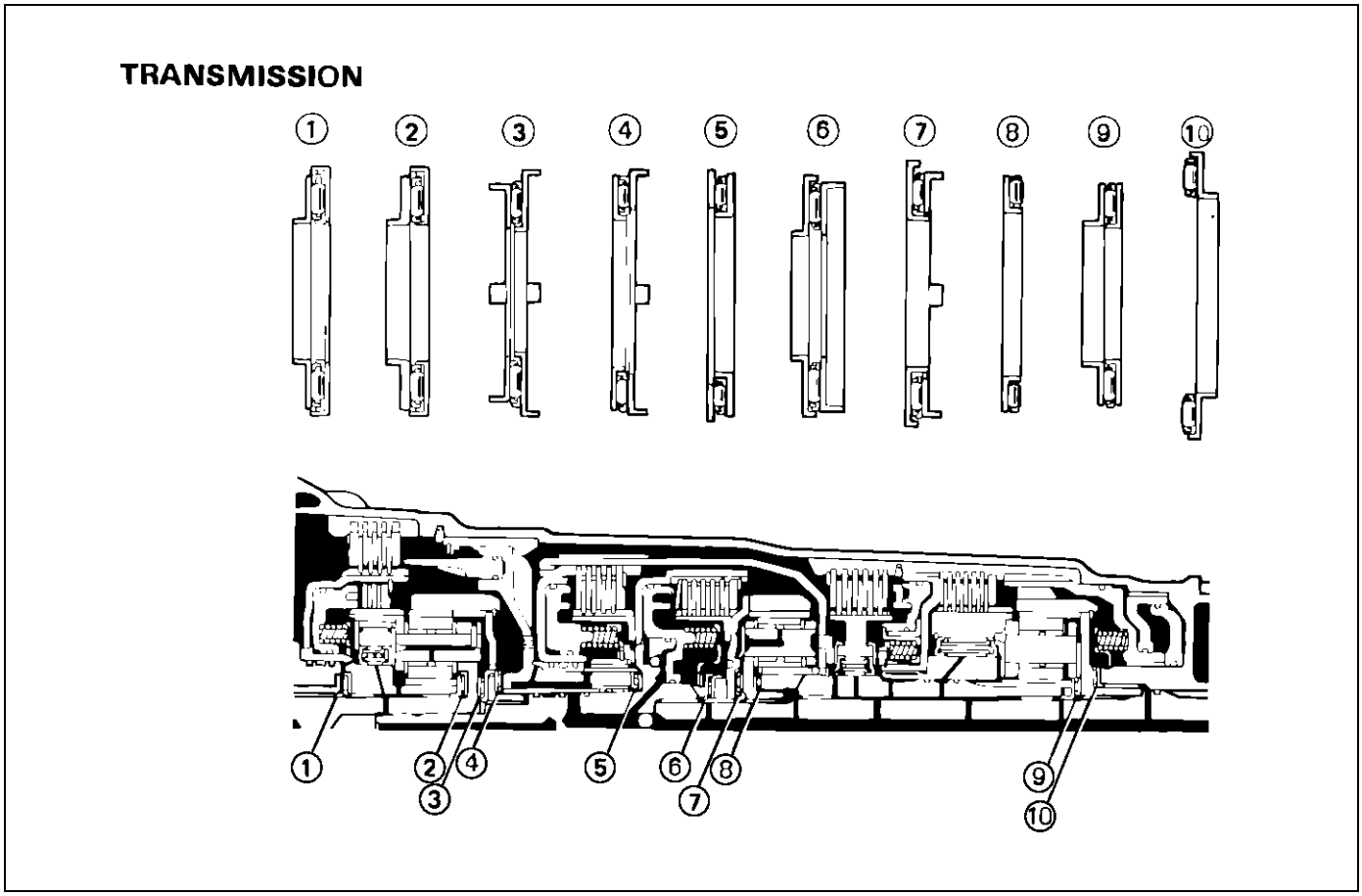

240RY00022

REASSEMBLY OF MAJOR COMPONENTS (1)

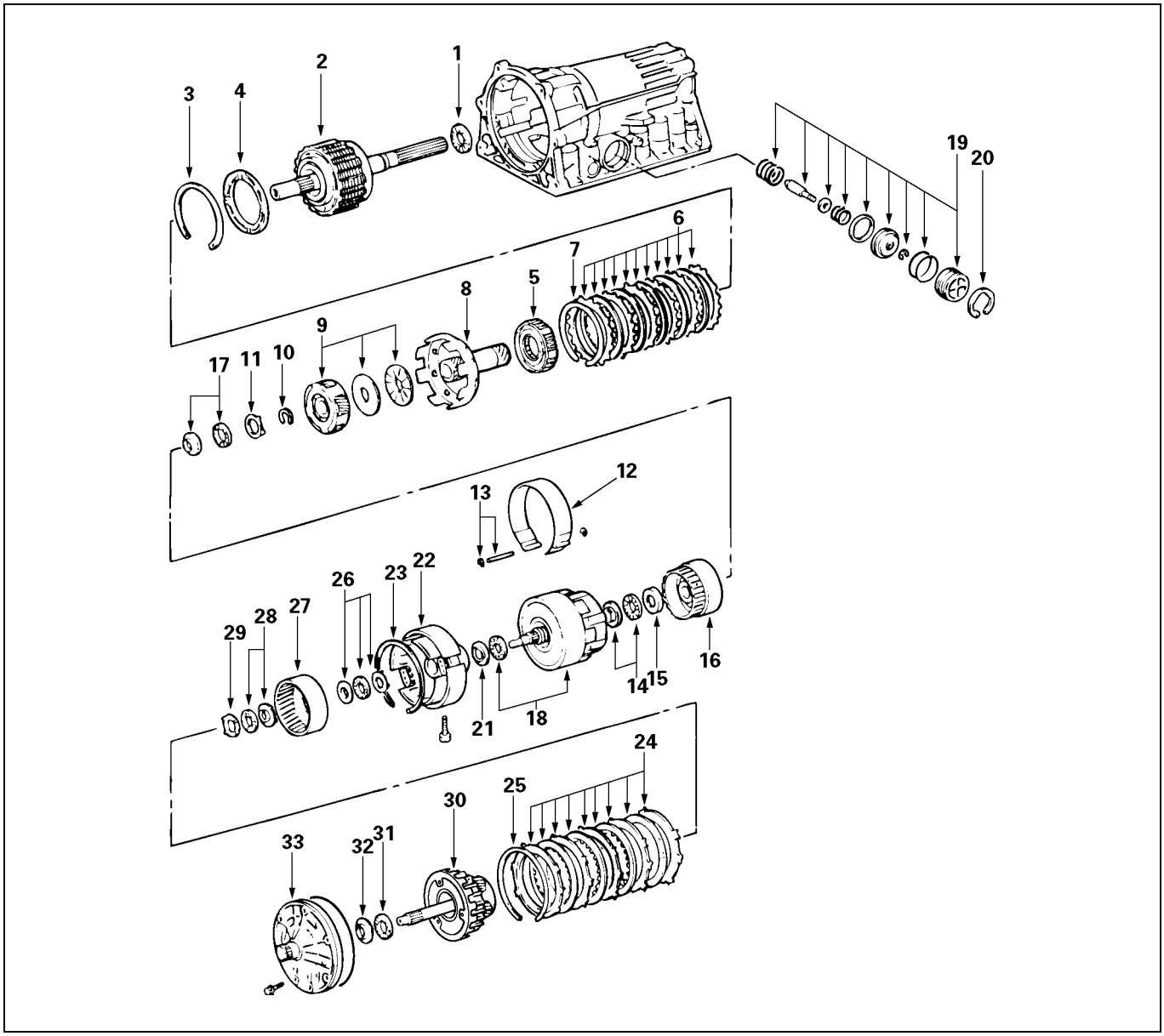

248L100002

Reassembly steps

- ▲ 1. Bearing
- ▲ 2. Rear planetary gear, second brake drum and output shaft
- ▲ 3. Snap ring
- ▲ 4. Second brake piston sleeve
- ▲ 5. One–way clutch
- ▲ 6. Flange plate and disc
- ▲ 7. Snap ring
- ▲ 8. Drum
- ▲ 9. Front planetary gear and bearing
- ▲ 10. Snap ring
- ▲ 11. Race
- ▲ 12. Second coast brake band
- ▲ 13. E–ring and pin
- ▲ 14. Bearing and race
- ▲ 15. Race
- ▲ 16. Front planetary ring gear
- ▲ 17. Bearing and race
- ▲ 18. Direct clutch and forward clutch
- ▲ 19. Second coast brake piston assembly
- ▲ 20. Snap ring
- ▲ 21. Race

▲ 22. OD support
▲ 23. Snap ring
▲ 24. Flange, plate and disc
▲ 25. Snap ring
▲ 26. Bearing and race
▲ 27. OD planetary ring gear
▲ 28. Bearing and race
▲ 29. Race
▲ 30. OD planetary gear and OD direct clutch
▲ 31. Bearing
▲ 32. Race
▲ 33. Oil pump

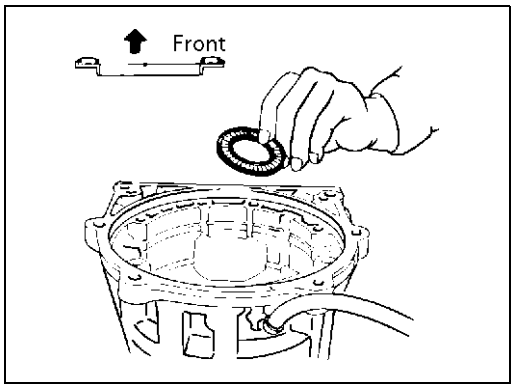

247RY00008

Important operations

1. Bearing

Coat the assembled bearing and race with petroleum jelly and install it onto the case.

Assemble bearing and race (reference) mm (in.)

Bearing and race	Diameter
Inside	39.2 (1.543)
Outside	57.7 (2.272)

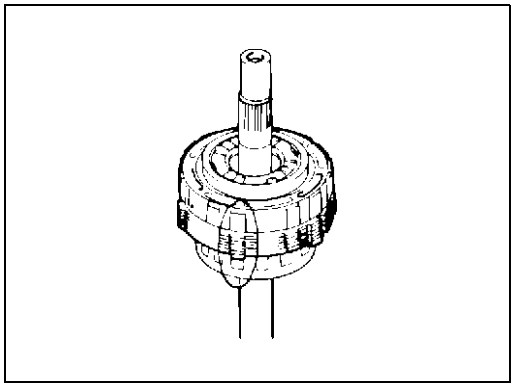

247RY00009

2. Rear planetary gear, second brake drum and output shaft

Align the teeth of the second brake drum, flanges, discs and plates as shown in the figure.

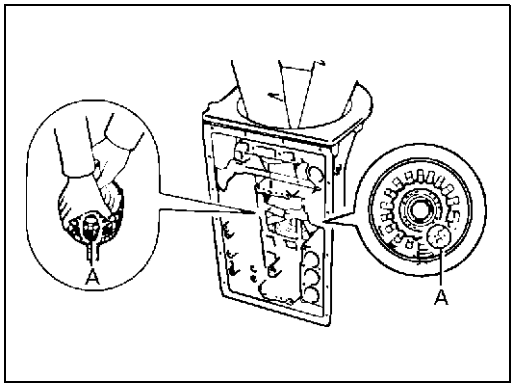

247RY00010

Align the splines of the transmission case and the assembled rear planetary gear, second brake drum and output shaft, indicated by A in the figure at left.

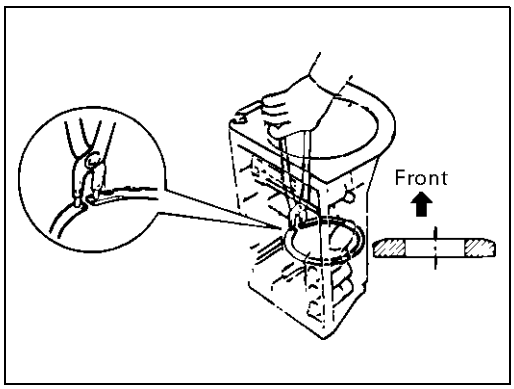

246RY00003

3. Snap ring

Using snap ring pliers, install the snap ring.

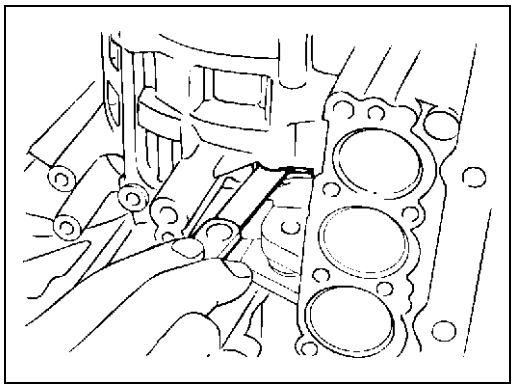

248RY00016

Check pack clearance of first and reverse brake

Using a thickness gauge, measure the clearance between the plate and second brake drum as shown in the figure.

mm (in.)

Clearance	0.7–1.0 (0.0276–0.0394)

If the values are nonstandard, check for an improper installation.

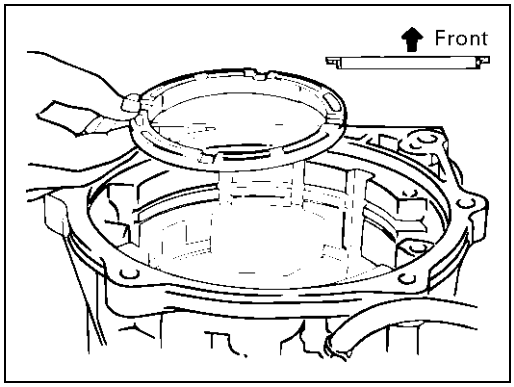

246RY00004

4. Second brake piston sleeve

Install second brake piston sleeve.

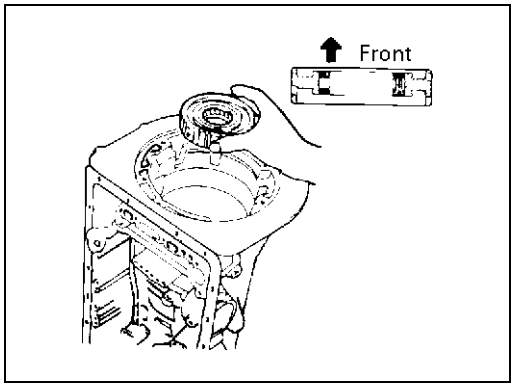

247RY00011

5. One–way clutch

Install one–way clutch.

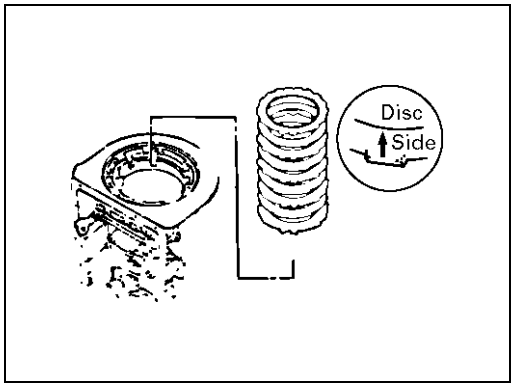

246RY00005

6. Flange plate and disc

Install flange, discs and plates.

Install the 2.5mm (0.098in.) thick plate with the rounded edge side of the plate facing the disc.

Alternately install four discs and three plates (Disc first)

Install the flange with the rounded edge of the flange facing the disc.

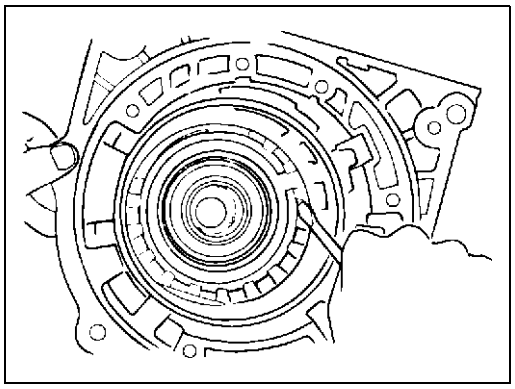

248RY00014

7. Snap ring

Install the snap ring.

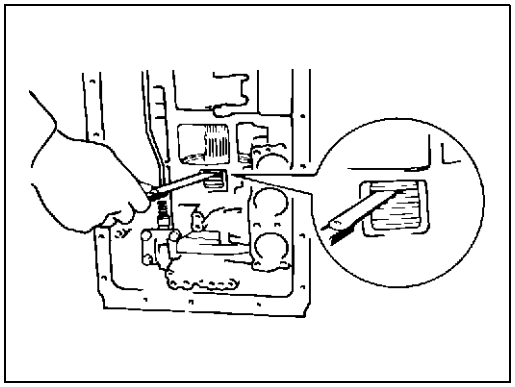

248RY00019

Check pack clearance of second brake

Using a thickness gauge, measure the clearance between the snap ring and flange as shown in the figure.

mm (in.)

Clearance	0.62–1.98 (0.0244–0.0780)

If the values are nonstandard, check for an improper installation.

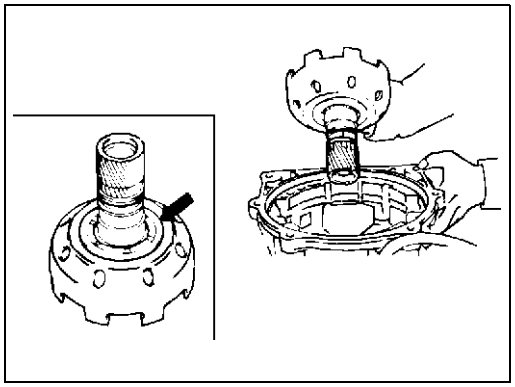

248RY00020

8. Drum

While turning the sun gear input drum clockwise, install it into the one-way clutch.

NOTE:
Confirm the thrust washers are installed correctly.

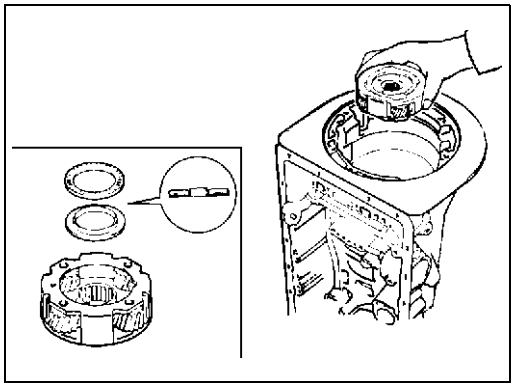

247RY00012

9. Front planetary gear and bearing

Install the front planetary gear to the sun gear.

NOTE:
Confirm the bearing and race is installed correctly.

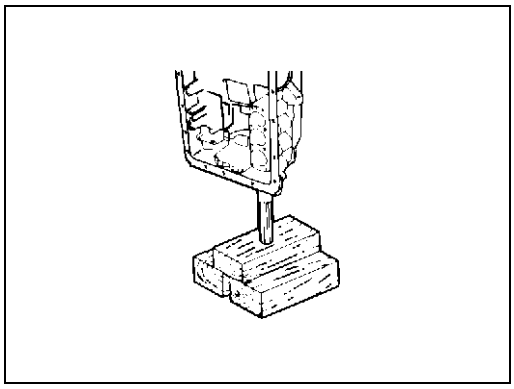

247RY00013

With wooden blocks under the output shaft, stand the transmission on the output shaft.

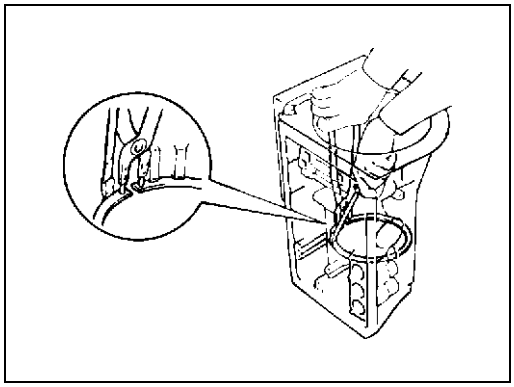

248RY00017

10. Snap ring

Using snap ring pliers, install the snap ring.

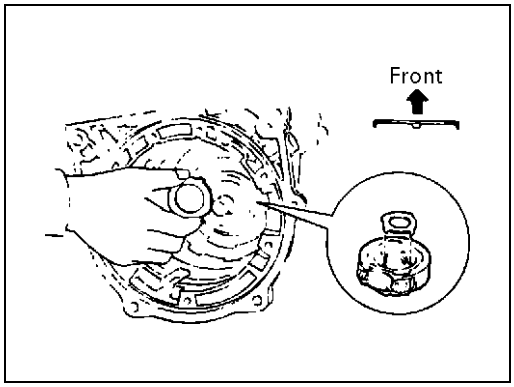

247RY00014

11. Race

Coat the bearing race with petroleum jelly and install it onto the front planetary gear.

Bearing race diameter (Reference) mm (in.)

Bearing race	Diameter
Inside	34.3 (1.350)
Outside	47.8 (1.882)

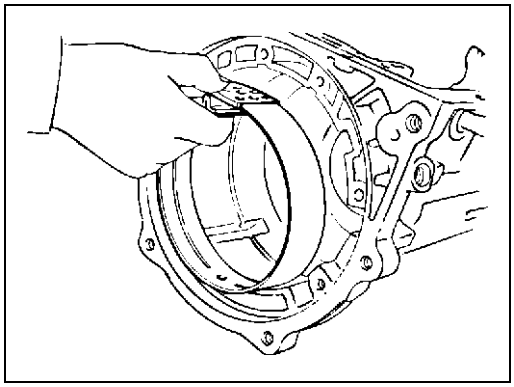

248RY00010

12. Second coast brake band

Insert the second coast brake band to the case.

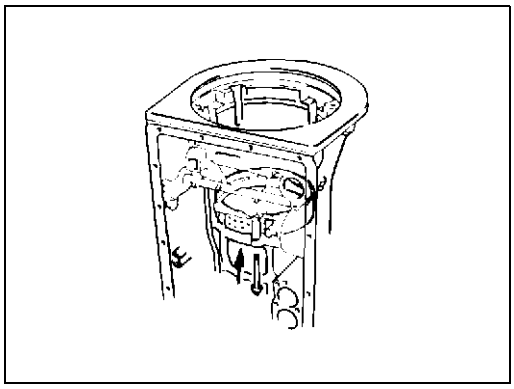

248RY00021

13. E–ring and pin

Install the pin through the brake band.

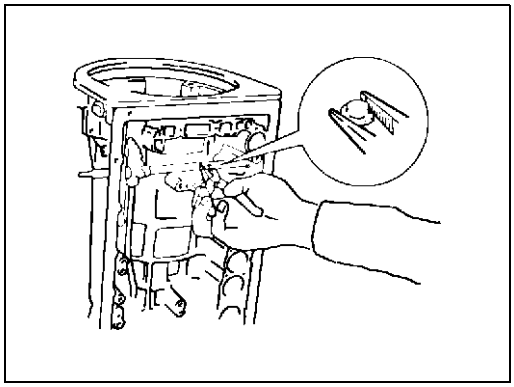

248RY00022

Install the E–ring to the pin.

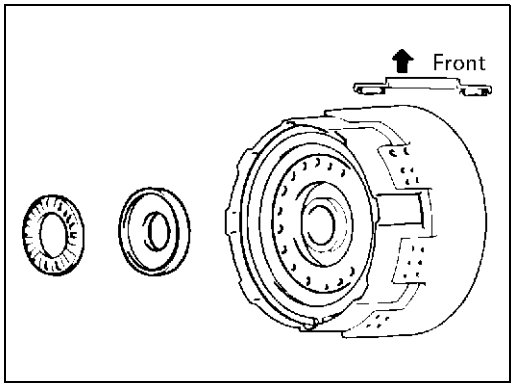

248RY00023

14. Bearing and race

Coat the bearing and race with petroleum jelly and install them onto the forward clutch.

Bearing and race diameter (Reference) mm (in.)

	Inside	Outside
Bearing	26.0 (1.024)	46.7 (1.839)
Race	26.0 (1.024)	48.9 (1.925)

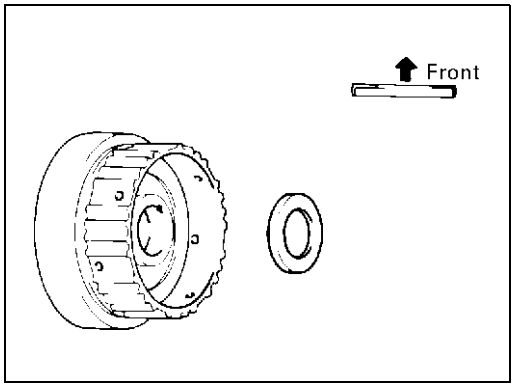

247RY00015

15. Race

Coat the race with petroleum jelly and install it onto the front planetary ring gear.

Race diameter (Reference) mm (in.)

	Inside	Outside
Race	26.8 (1.055)	47.0 (1.850)

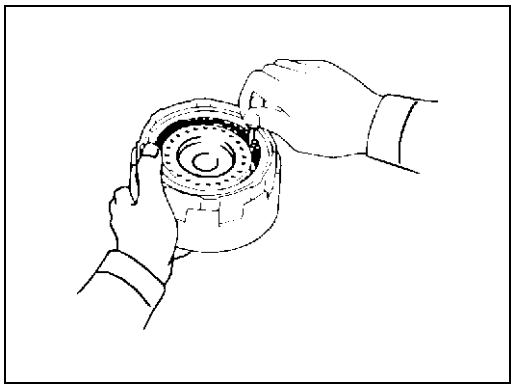

247RY00016

Align the flukes of the discs in the forward clutch.

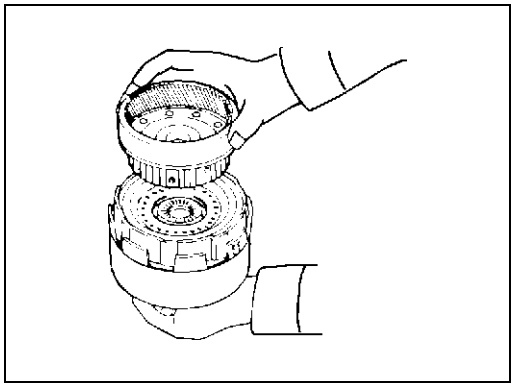

247RY00017

16. Front planetary ring gear

Align the spline of th front planetary gear with the flukes of the discs and install the front planetary gear to the forward clutch.

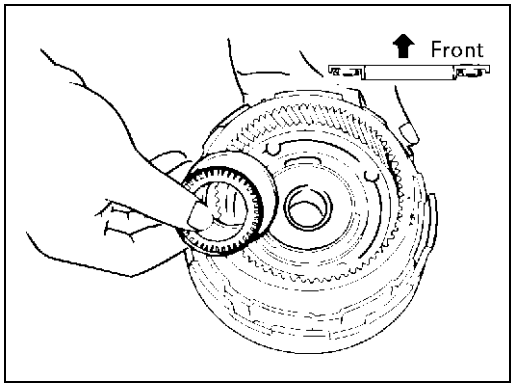

247RY00019

17. Bearing and race

Coat the bearing and race with petroleum jelly and install them onto the ring gear.

Bearing and race diameter (Reference) mm (in.)

	Inside	Outside
Bearing	32.6 (1.283)	47.7 (1.878)
Race	30.6 (1.205)	53.6 (2.110)

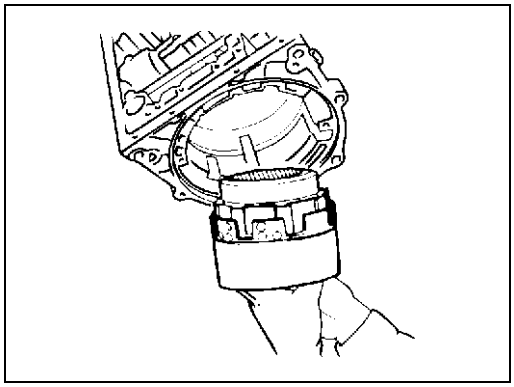

247RY00018

18. Direct clutch and forward clutch

Install the assembled direct clutch, forward clutch and front planetary ring gear into the transmission case.

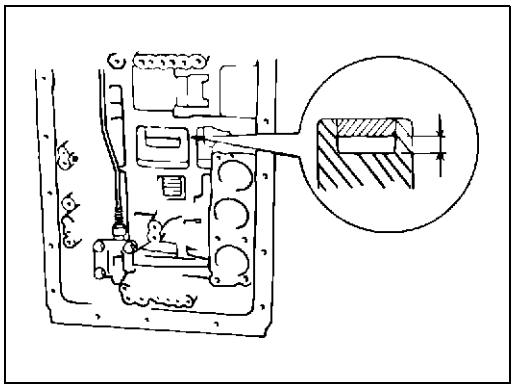

248RY00024

Using vernier calipers, measure the distance between the sun gear input drum and direct clutch drum as shown in the figure.

mm (in.)

Height	9.8 – 11.8 (0.386 – 0.465)

If the values are nonstandard, check for an improper installation.

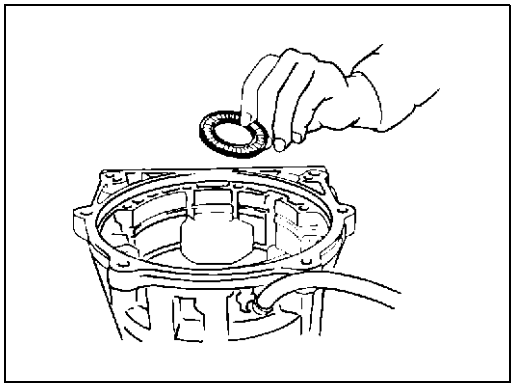

248RY00025

Coat the assembled bearing and race with petroleum jelly and install it onto the forward clutch.

Assembled bearing and race diameter (Reference)

mm (in.)

	Inside	Outside
Bearing and race	33.7 (1.327)	47.8 (1.882)

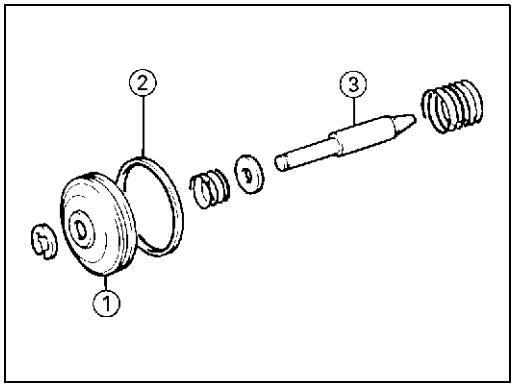

248RY00026

19. Second coast brake piston assembly

Coat the oil seal ring with ATF and install it to the second coast brake piston.

Install the washer, spring and piston to the piston rod. Install the E–ring.

(1): Second coast brake piston

(2): Oil seal

(3): Piston rod

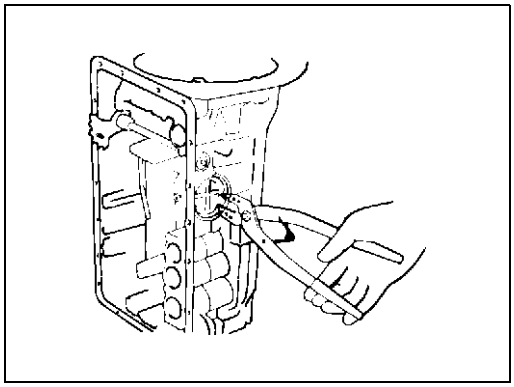

248RY00027

20. Snap ring

Coat two new oil seals with ATF and install them to the piston cover.

Install the spring, second coast brake piston assembly and piston cover to the case.

Using snap ring pliers, install the snap ring.

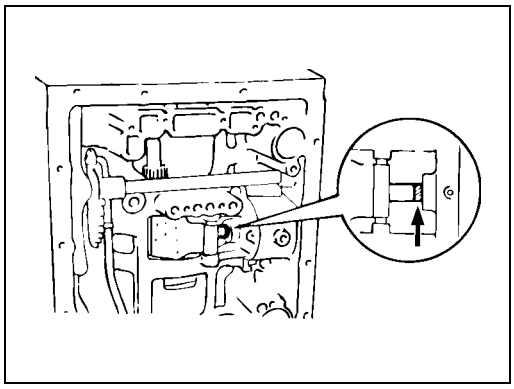

248RY00005

Check piston stroke of second coast brake

Place a mark on the second coast brake piston rod as shown in the figure.

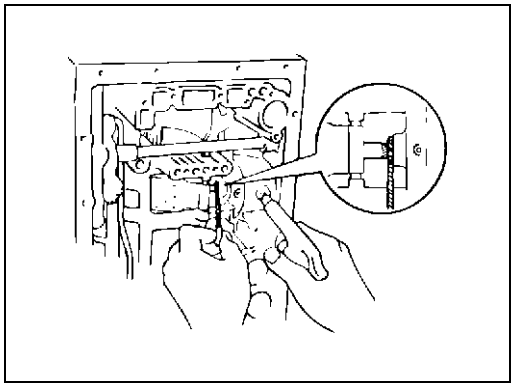

248RY00004

Using wire gage, measure the stroke by applying the compressed air (4–8kg/cm^2, 57–114 psi or 392–785kPa) as shown in the figure.

mm (in.)

Piston stroke	1.5–3.0 (0.059–0.118)

If the values are nonstandard, check for an improper installation.

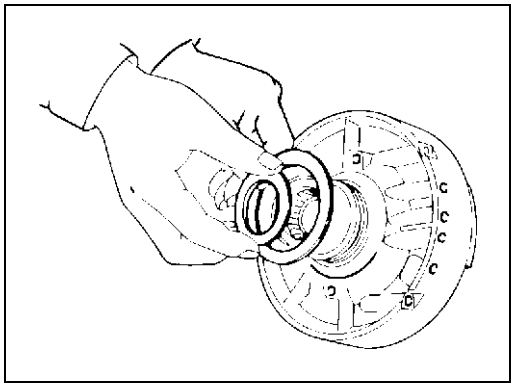

252RY00007

21. Race

Coat the race with petroleum jelly and install it onto the overdrive support assembly.

Race diameter (Reference) mm (in.)

	Inside	Outside
Race	36.8 (1.450)	50.9 (2.004)

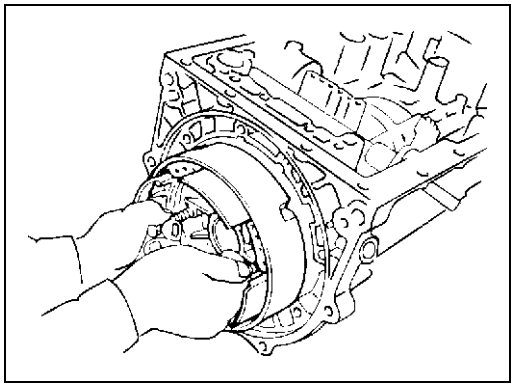

252RY00005

22. OD support

Aim the bolt and oil holes of the overdrive support toward the valve hole side, and align them with the bolt hole of the transmission case and insert.

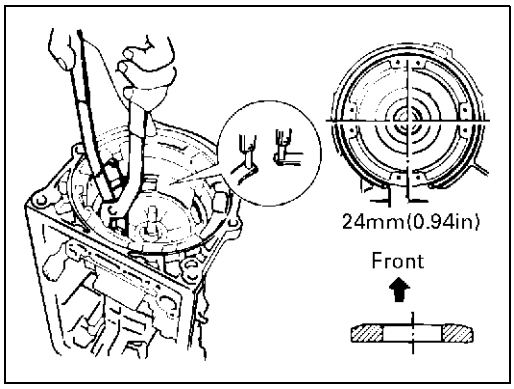

252RY00008

23. Snap ring

Using snap ring pliers, install the snap ring as shown in the figure.

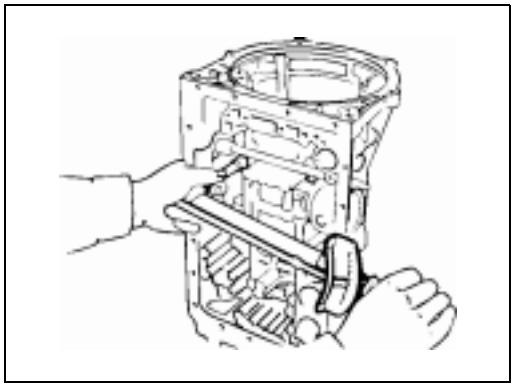

252RY00004

Install and tighten the two bolts.

	N·m(kg·m / lb·ft)
Torque	25 (2.6/19)

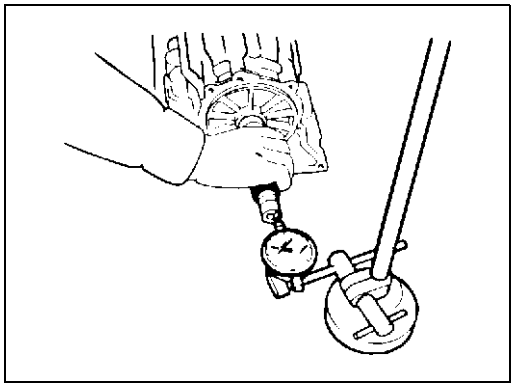

247RY00020

Check end of output shaft

Using a dial indicator, measure the end play of the output shaft by hand.

	mm (in.)
End play	0.27–0.86 (0.0106–0.0339)

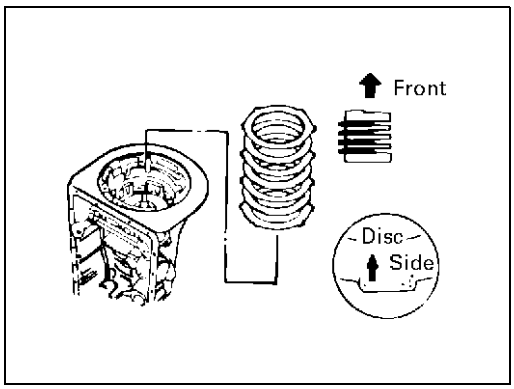

252RY00009

24. Flange, plate and disc

Install the (flat ring) 4.0 mm (0.157 in.) thick flange with the rounded edge side of the flange facing the disc.
Alternately install four discs and three plates. (Disc first)

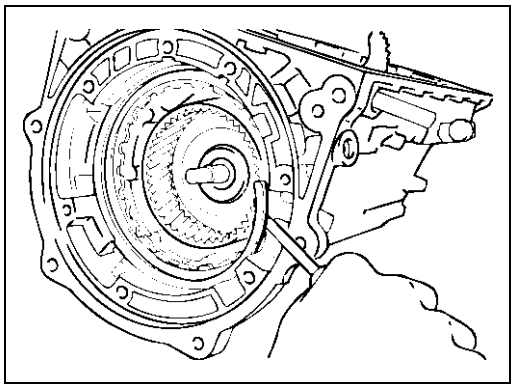

246RY00001

25. Snap ring

Install the (stepped ring) flange with the flat side of the flange facing the disc.
Install the snap ring.

Snap ring (Reference)	mm (in.)
Inside diameter	167.9 (6.61)

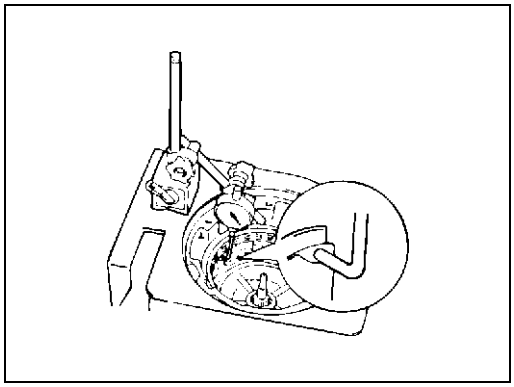

252RY00003

Check piston stroke of overdrive brake

Place a dial indicator onto the overdrive brake piston as shown in the figure.

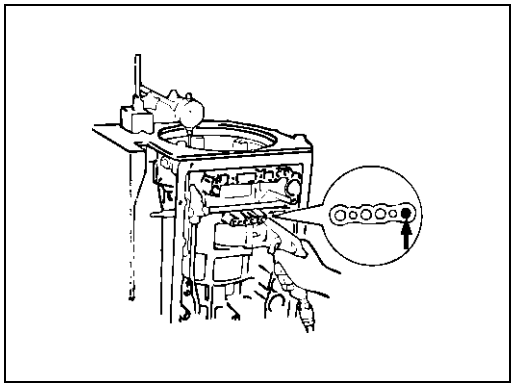

244RY00001

Measure the stroke by applying and releasing the compressed air (4–8kg/cm^2, 57–114–psi or 392–785 kPa) as shown in the figure.

	mm (in.)
Piston stroke	1.40–1.70 (0.0551–0.0670)

If the values are nonstandard, select another flange.

Available Flange size	mm(in.)
3.3 (0.130)	3.8 (0.150)
3.5 (0.138)	3.9 (0.154)
3.6 (0.142)	4.0 (0.158)
3.7 (0.146)	

Remove the snap ring.

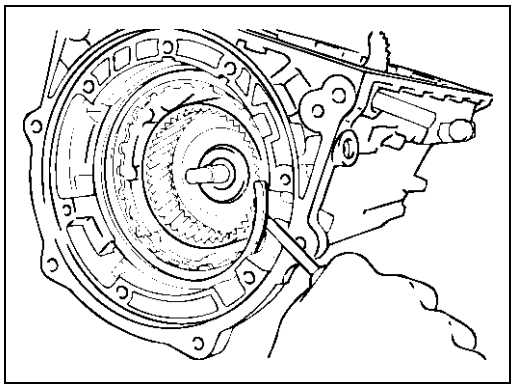

246RY00001

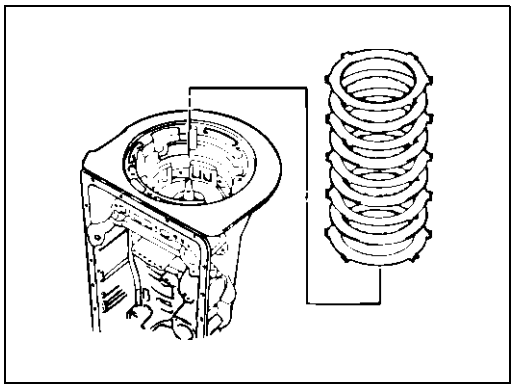

246RY00026

Remove two flanges, three plates and four discs.

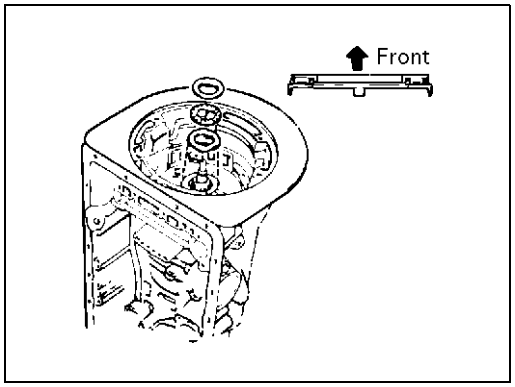

252RY00010

26. Bearing and race

Coat the bearing and races with petroleum jelly and install them onto the overdrive support.

Bearing and races diameter (Reference) mm (in.)

	Inside	Outside
Bearing	36.5 (1.437)	48.5 (1.910)
Race (Front)	37.2 (1.465)	58.8 (2.315)
Race (Rear)	33.7 (1.327)	50.1 (1.973)

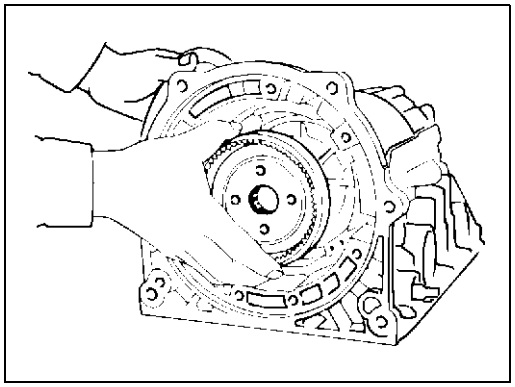

252RY00002

27. OD planetary ring gear

Install the overdrive planetary ring gear.

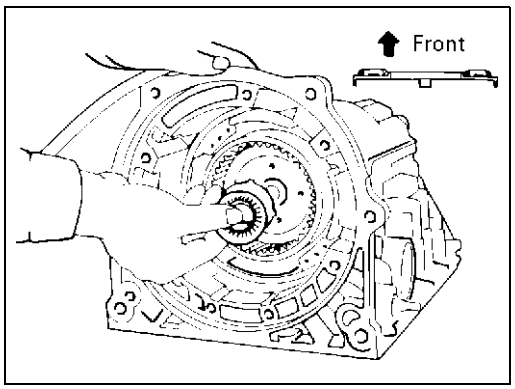

252RY00011

28. Bearing and race

Coat the bearing and race with petroleum jelly and install them onto the planetary ring gear.

Bearing and race diameter (Reference) mm (in.)

	Inside	Outside
Bearing	26.0 (1.024)	46.8 (1.843)
Race	24.2 (0.953)	47.8 (1.882)

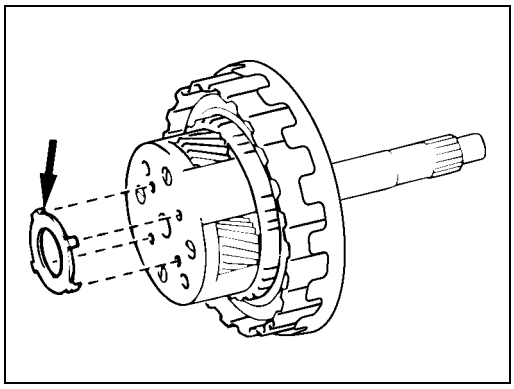

252L100017

29. Race

Coat the race with petroleum jelly and install it onto the planetary gear.

Race diameter (Reference) mm (in.)

	Inside	Outside
Race	27.3 (1.075)	41.8 (1.646)

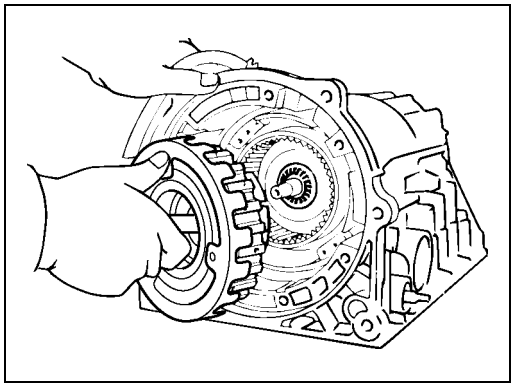

252L100001

30.OD planetary gear and OD direct clutch

Install the overdrive planetary gear and direct clutch.

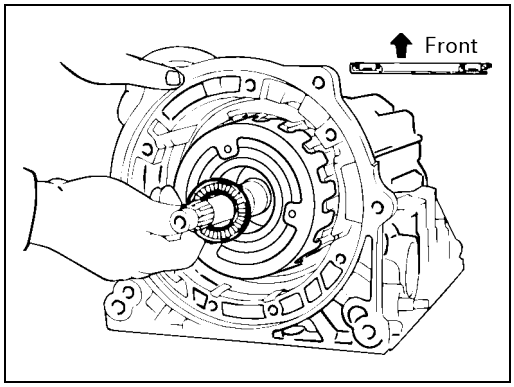

252L100018

31.Bearing

Coat the assembled bearing and race with petroleum jelly and install it onto the direct clutch.

Bearing and race diameter (Reference) mm (in.)

	Inside	Outside
Bearing and race	28.9 (1.138)	50.2 (1.976)

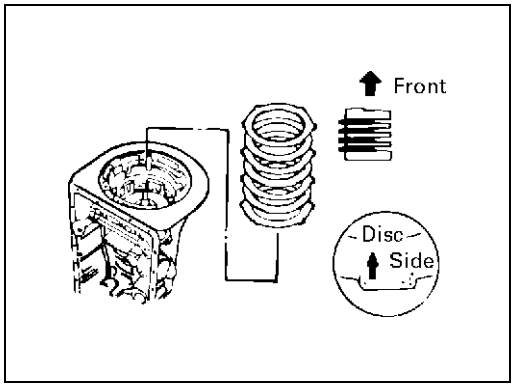

252RY00009

Install the (flat ring) 4.0mm (0.157 in.) thick flange with the rounded edge side of the flange facing the disc.
Alternately install three discs and two plates. (Disc first)

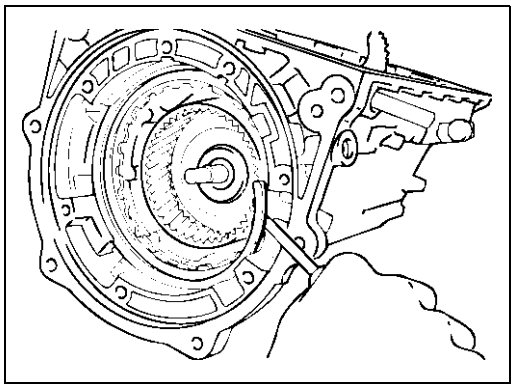

246RY00001

Install the (stepped ring) flange with the flat side of the flange facing the disc.
Install the snap ring.

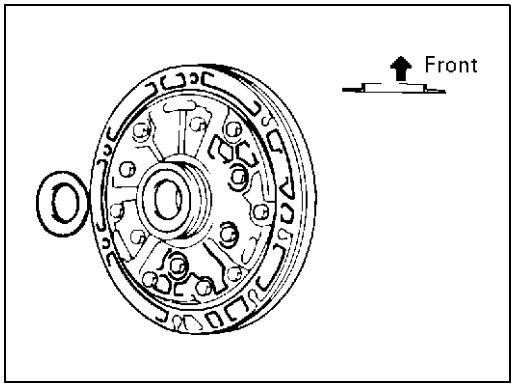

252RY00014

32.Race

Coat the race with petroleum jelly and install it onto the oil pump.

Race diameter (Reference) mm (in.)

	Inside	Outside
Race	28.1 (1.106)	47.3 (1.862)

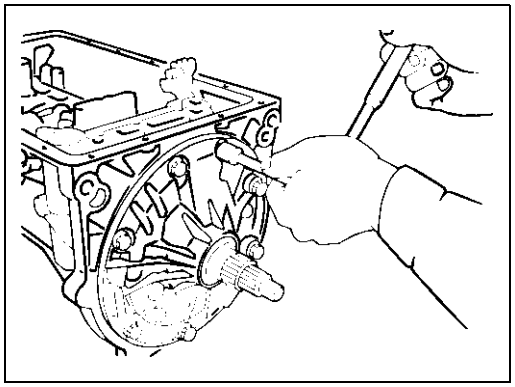

241RY00003

33.Oil pump

Coat the O–ring with ATF and install it around the pump body.
Place the oil pump through the input shaft, and align the bolt holes of the pump body with the transmission case.
Hold the input shaft, and lightly press the oil pump body to slide the oil seal rings on the stator shaft through the direct clutch drum.

NOTE:
Do not push on the oil pump strongly or the oil seal ring will stick to the direct clutch drum.

Install the seven bolts.

N·m(kg·m / lb·ft)

Torque	22 (2.2/16)

Check input shaft rotation

Make sure the input shaft rotates smoothly.

REASSEMBLY OF MAJOR COMPONENTS (2)

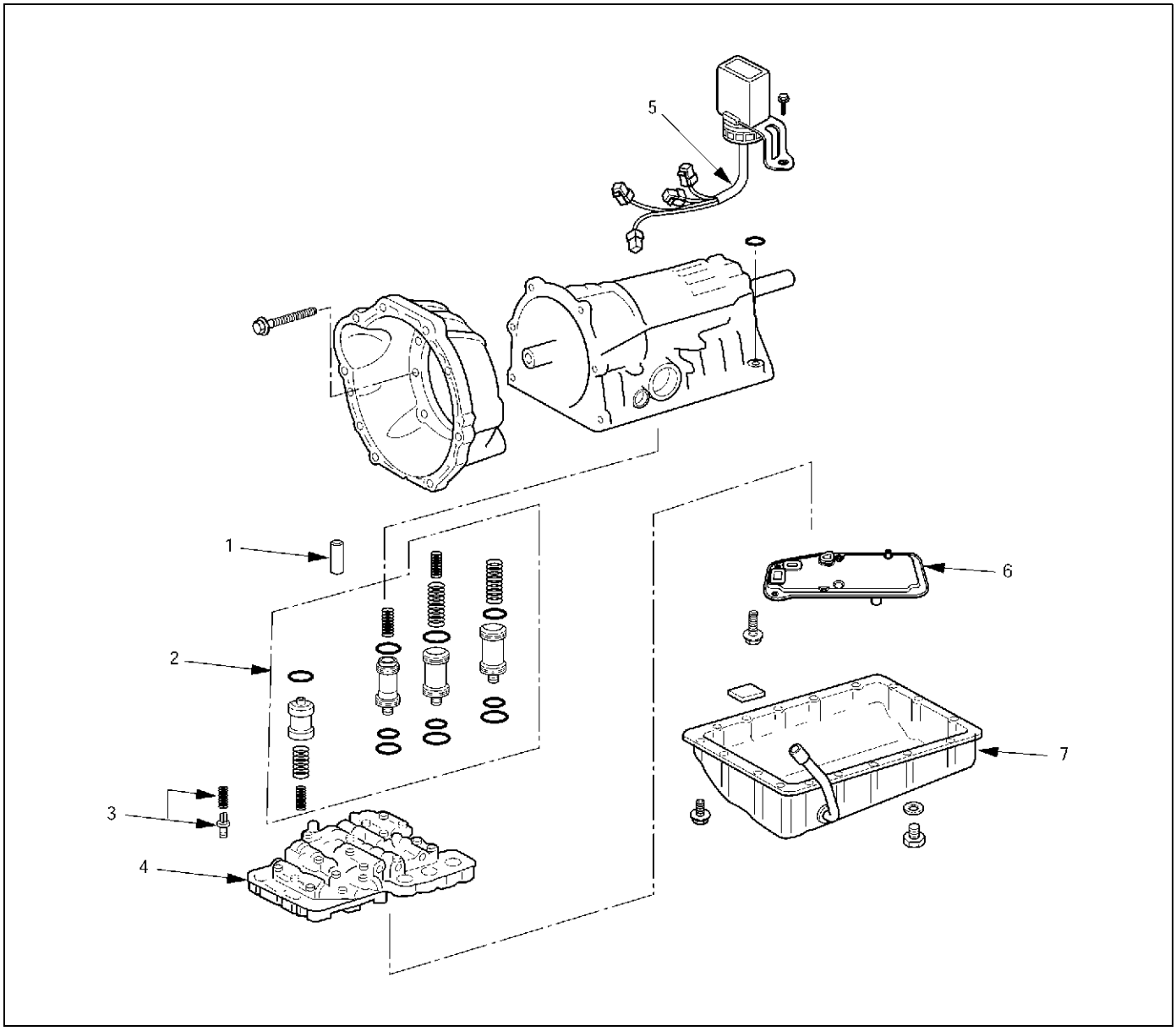

242RY00006

Reassembly steps

- ▲ 1. Second brake drum gasket
- ▲ 2. Accumulator piston
- ▲ 3. Check valve, spring
- ▲ 4. Valve body
- ▲ 5. Solenoid wiring
- ▲ 6. Oil strainer assembly
- ▲ 7. Oil pan

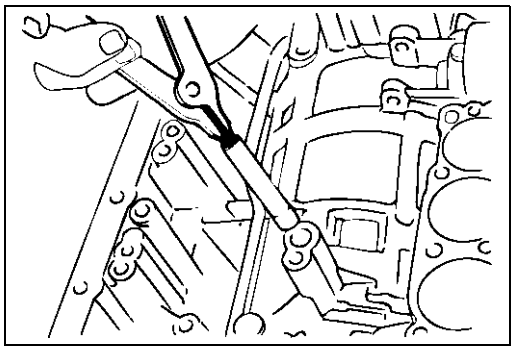

240RY00013

Important operations

1. Second brake drum gasket

Install a new brake drum gasket to the transmission case.

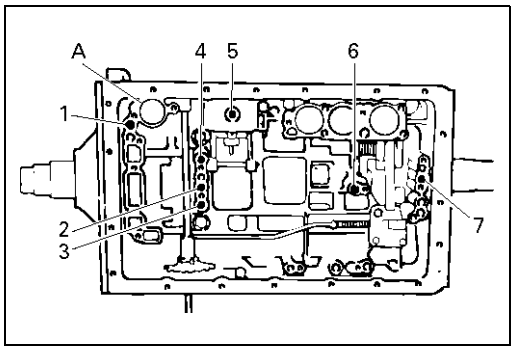

240RY00014

Individual piston operation inspection

Check for the sound of operation while injecting compressed air into the oil hole indicated in the figure.

1: OD direct clutch	5: Second coast brake
2: Direct clutch	6. Second brake
3: Forward clutch	7. First and reverse brake
4: OD brake	

NOTE:

When inspecting the direct clutch, check with the C–0 accumulator piston hole closed. If there is no noise, disassemble and check the condition of the parts.

A : C–0 Accumulator piston hole

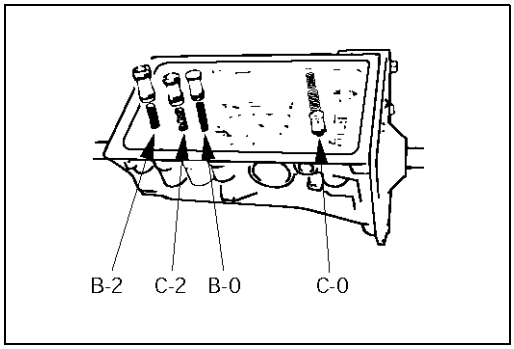

240RY00027

2. Accumulator piston

Coat the O–ring with ATF and install it to the piston.

Install the five springs and four accumulator pistons to the bore as shown in the figure.

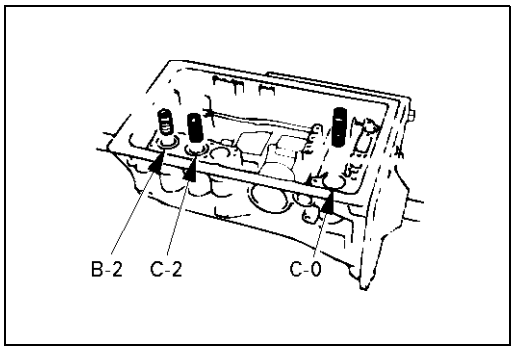

240RY00015

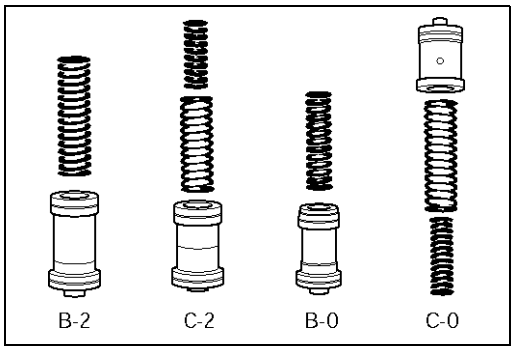

240RY00029

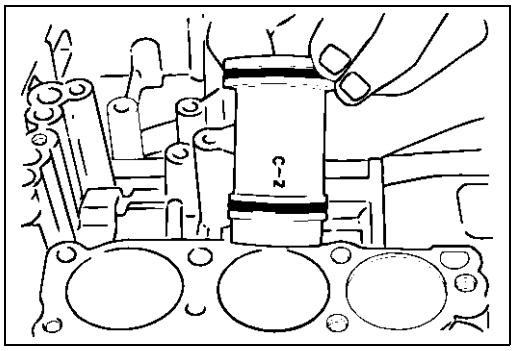

240RY00010

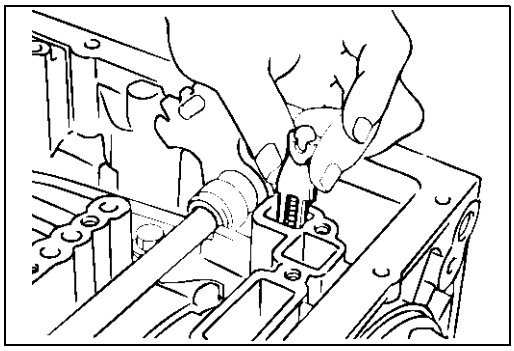

240RY00016

mm (in.)

Piston	Outer diameter	Height
B–2	36.8 (1.449)	62.5 (2.461)
C–2	36.8 (1.449)	56.6 (2.228)
B–0	31.8 (1.252)	52.0 (2.047)
C–0	29.8 (1.173)	44.0 (1.732)

Spring	Free length	Outer diameter
(1) B–2	75.8 (2.984)	20.1 (0.791)
(2) C–2 (Inner)	42.1 (1.658)	14.7 (0.579)
(3) C–2 (Outer)	64.0 (2.520)	20.2 (0.795)
(4) B–0	63.6 (2.504)	16.0 (0.630)
(5) C–0(Outer)	74.6 (2.937)	20.9 (0.823)
(6) C–0(Inner)	46.0 (1.811)	14.0 (0.551)

3. Check valve, spring

Install new check valve and spring.

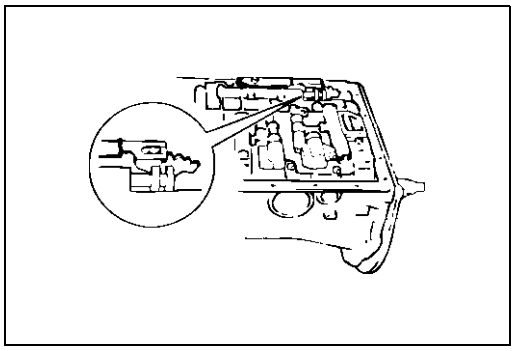

240RY00017

4. Valve body

Align the groove of the manual valve to the pin of the lever.

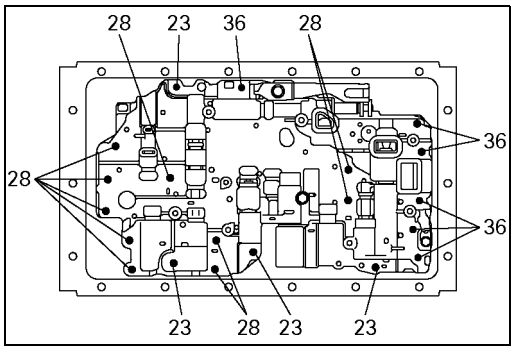

244RY00017

Install the twenty bolts.

Each bolt length (mm) is indicated in the figure.

	N·m (kg·m/lb·in)
Torque	10 (1.0/87)

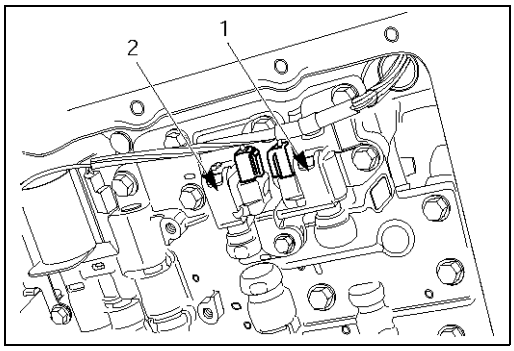

249RY00011

5. Solenoid wiring

Coat a new O–ring with ATF, and install it to the solenoid wiring.

Insert the solenoid wiring to the case and install the stopper plate.

Connect the connectors to the solenoid S1(1), S2(2), lock-up solenoid (3), and pressure control solenoid (4).

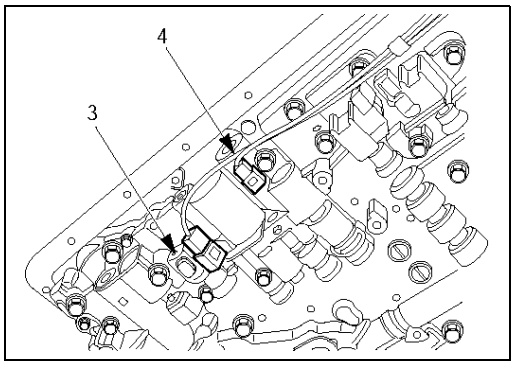

249RY00012

6. Oil strainer assembly

Install a new oil strainer assembly with gaskets.

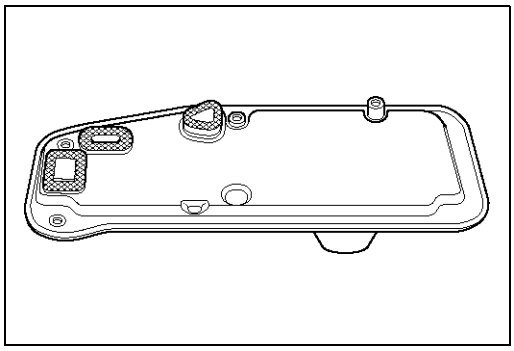

244RY00002

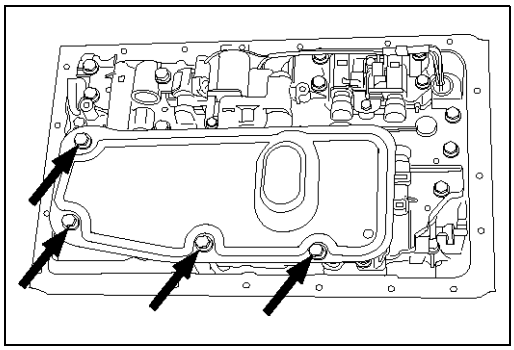

244RY00003

Install the oil strainer with the gaskets to the valve body. Tighten the four bolts.

	N·m (kg·m/lb·in)
Torque	10 (1.0/87)

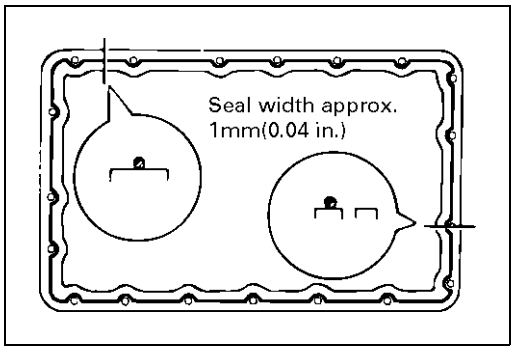

240RY00019

7. Oil pan

Install magnet in pan.

Remove any packing material and be careful not to drop oil on the contacting surfaces of the transmission case and oil pan.

Apply liquid gasket (TB1281 or its equivalent) to the oil pan as shown in the figure.

NOTE:

Install the oil pan as soon as the seal packing is applied.

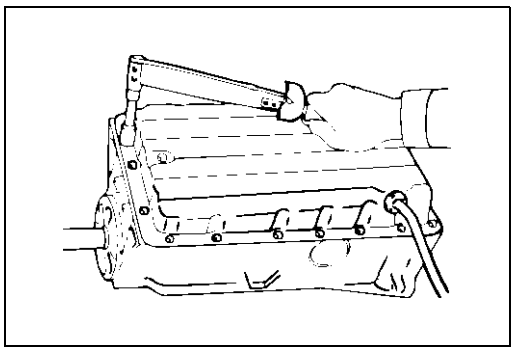

240RY00020

Install and tighten the nineteen bolts.

	N·m (kg·m/lb·in)
Torque	8 (0.8/69)

REASSEMBLY OF MAJOR COMPONENTS (3)

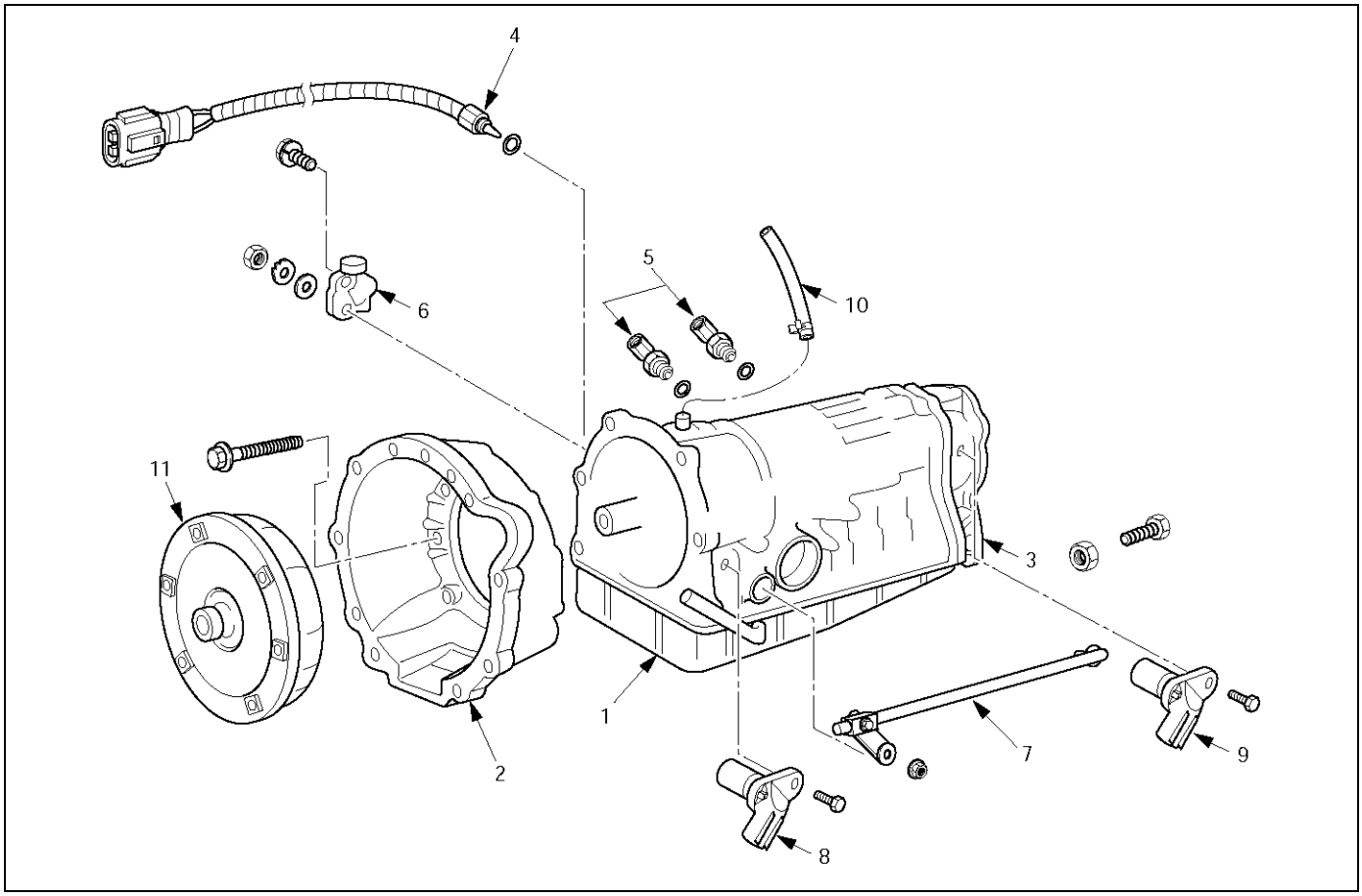

240RY00030

Reassembly steps

1. Transmission assembly
▲ 2. Converter housing
▲ 3. Adapter housing
▲ 4. Oil temperature sensor
▲ 5. Elbow
▲ 6. Neutral start switch
▲ 7. Transmission control rod and shift lever
8. Input revolution sensor
9. Output revolution sensor
10. Breather hose
▲ 11. Torque converter

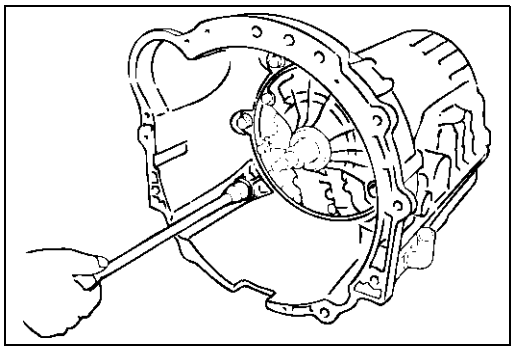

240RY00006

Important operations

2. Converter housing

N·m (kg·m/lb·ft)

Torque	M10	34 (3.5/25)
	M12	57 (5.8/42)

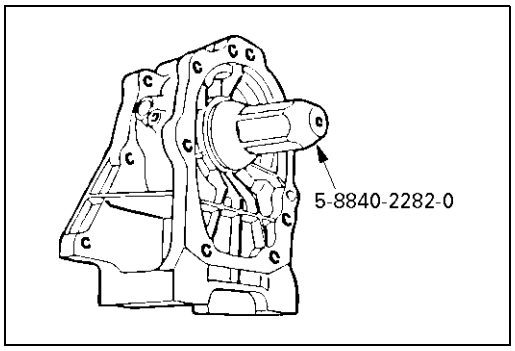

240RY00003

3. Adapter housing

Oil seal replacement

(1)Using a screwdriver, remove the oil seal.

(2)Apply ATF to a new oil seal lip.

(3)Using special tool, install the oil seal.
Installer:5–8840–2282–0

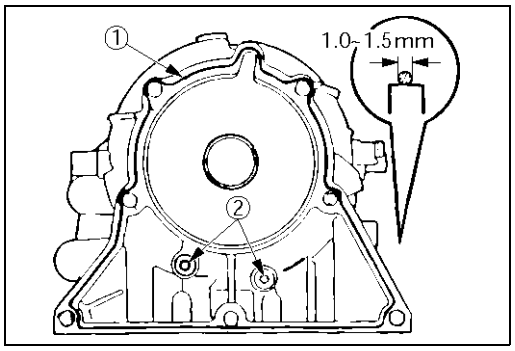

241RY00020

Remove any gasket material on the contacting surfaces of the adapter case and transmission case.
Apply liquid gasket (TB1281–B or its equivalent) (1) and install the apply gaskets (2) to the adapter case as shown in the figure.
Install the adapter housing to the transmission case.

N·m (kg·m/lb·ft)

Torque	34 (3.5/25)

4. Oil temperature sensor

Install the oil temperature sensor to the transmission case.

N·m (kg·m/lb·ft)

Torque	15 (1.5/11)

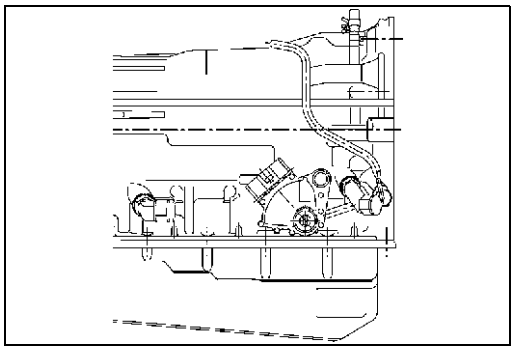

249RW003

5. Elbow

Coat new O–rings with ATF, install them to the two elbows. Install the elbows as shown in the figure.

	N·m (kg·m/lb·ft)
Torque	29 (3.0/22)

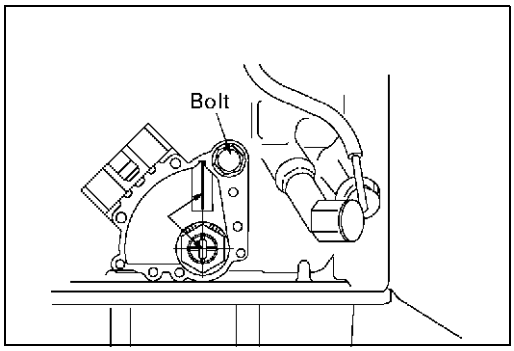

249RY00008

6. Neutral start switch

Using the control shift lever, fully turn the manual lever shaft back and return two notches. It is now in neutral.
Insert the neutral start switch onto the manual valve shaft and temporarily tighten the adjusting bolt.
Install the lock washer and install and torque the nut.

	N·m (kg·m/lb·in)
Torque	7 (0.7/61)

Align the neutral standard line and the switch groove and tighten the adjusting bolt.

	N·m (kg·m/lb·in)
Torque	13 (1.3/113)

Bend the tabs of the lock washer.

NOTE:
Bend at least two of the lock washer tabs.

7. Control rod and shift lever

Install control shift lever.

	N·m (kg·m/lb·ft)
Torque	29 (3.0/22)

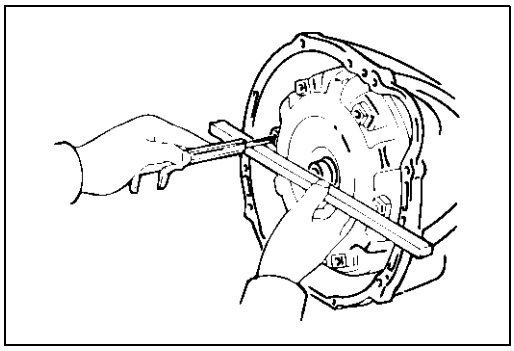

240RY00005

11. Torque converter

Using calipers and a straight edge, measure from the installed surface of the transmission housing.

	mm (in.)
Correct distance	67(2.64) or more

MAIN DATA AND SPECIFICATIONS

GENERAL SPECIFICATIONS

				Remarks
Model			AW30-40LE	
Engine			4JX1-TC	
Type			Electronic control planetary gear type	
			3-element 1-stage 2-phase type (with lock-up mechanism)	
Gear ratio	1st		2.804	
	2nd		1.532	
	3rd		1.000	
	4th (O/D)		0.705	
	Reverse		2.394	
Oil used	Name		BESCO ATF III	
	Q'ty (ℓ)		8.7	
Torque converter			2450 ± 150	Stall speed (rpm)
Friction element	Forward clutch	C-1	6	Number of discs
	Direct clutch	C-2	5	
	O/D direct clutch	C-0	2	
	2nd coast brake	B-1	40mm	Band width or No. of discs
	2nd brake	B-2	5	No. of discs
	1st & reverse brake	B-3	7	
	Overdrive brake	B-0	4	
Clutch	One-way clutch No.1	F-1	22	Number of sprags
	One-way clutch No.2	F-2	28	
	O/D one-way clutch	F-0	24	
Planetary gear	Front planetary	Sun gear	42	Number of teeth
		Pinion gear	19	
		Ring gear	79	
	Rear planetary	Sun gear	33	
		Pinion gear	23	
		Ring gear	79	
	O/D planetary	Sun gear	33	
		Pinion gear	23	
		Ring gear	79	

TORQUE SPECIFICATIONS

N·m (kg·m/lb·ft)

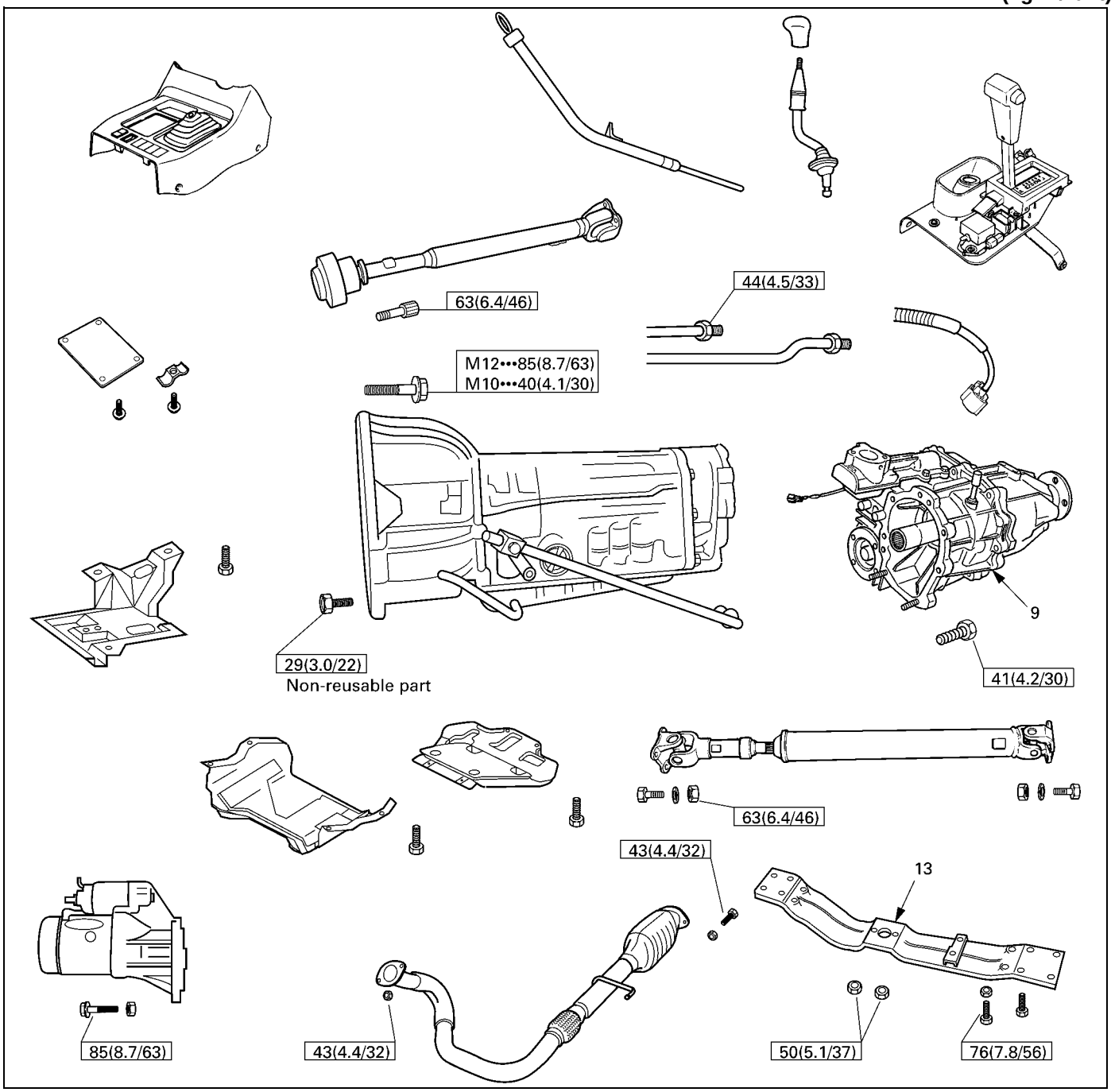

E07RY00009

TORQUE SPECIFICATIONS

N·m (kg·m/lb·ft)

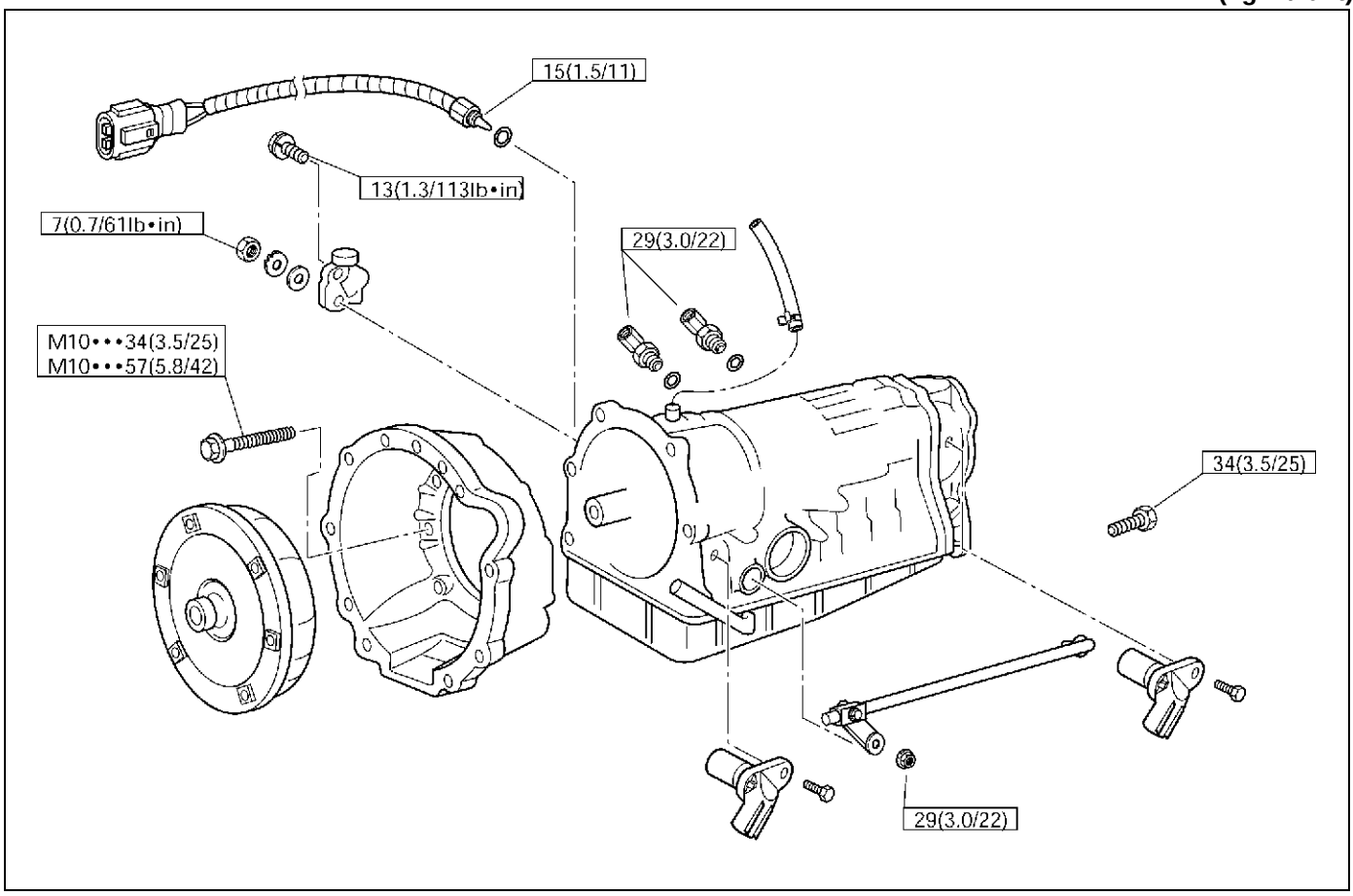

E07RY00006

TORQUE SPECIFICATIONS

N·m (kg·m/lb·ft)

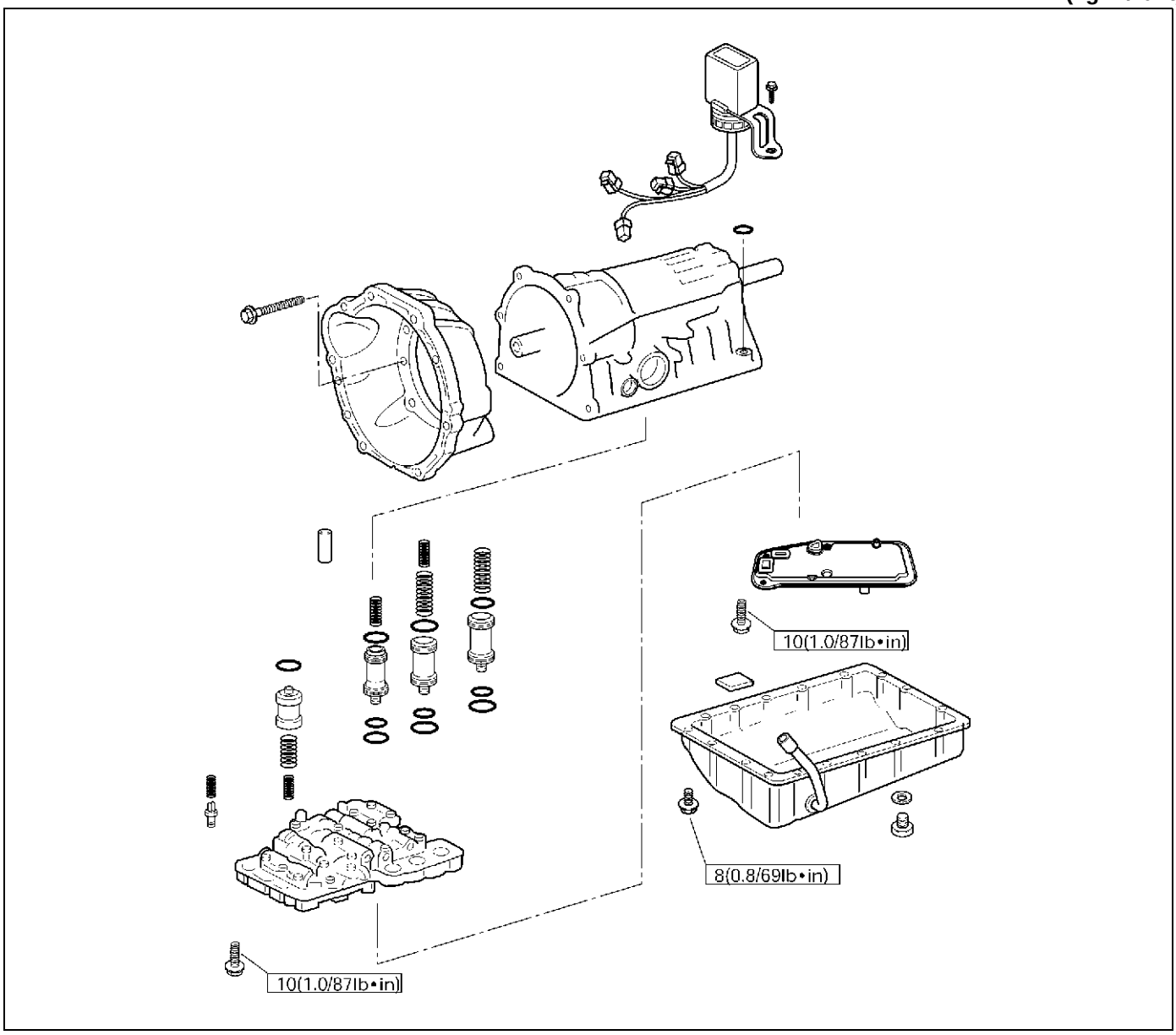

E07RY00007

SPECIAL TOOLS

ILLUSTRATION	PART NO.	PART NAME
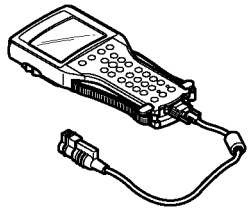 901RW176	7000057 & 3000095	TECH2 unit and DLC cable
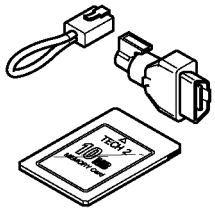 901RY00016	3000098, 9000112 & 3000117	SAE 16/19 adapter RS232 loop back connector PCMCIA card
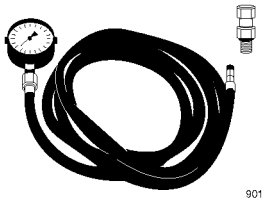 901RY00017	5-8840-0093-0	Oil pressure gauge
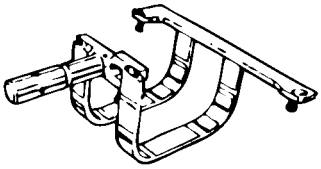 901RY00018	5-8840-2152-0 (J-37227)	Holding fixture
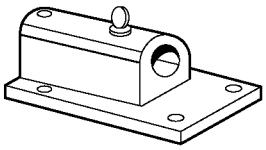 901RT096	5-8840-0003-0 (J-3289-20)	Holding fixture base
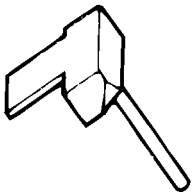 901RY00019	5-8840-2153-0 (J-37228)	Oil pan seal cutter
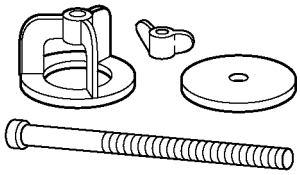 901RY00028	5-8840-0195-0 (J-23327-1)	Spring compressor

ILLUSTRATION	PART NO.	PART NAME
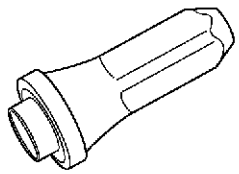	5-8840-2256-0 (J-9617)	Oil seal installer
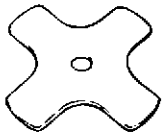	5-8840-2170-0 (J-37233)	OD brake piston spring compressor
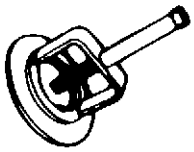	5-8840-0254-0 (J-25048)	Spring compressor (snap ring)
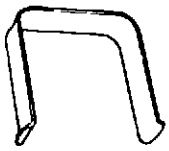	5-8840-2173-0 (J-37236)	1st/reverse brake puller
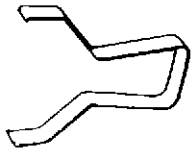	5-8840-2174-0 (J-37237)	1st/reverse brake puller
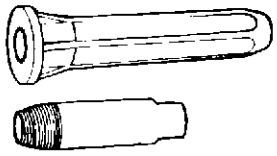	5-8840-2169-0 (J-37232-2)	Manual valve shaft seal installer & remover
	5-8840-2168-0 (J-35467)	One-way clutch testing tool; torque converter
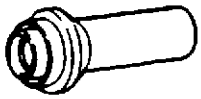	5-8840-2282-0	Oil seal installer

TRANSMISSION

TRANSMISSION CONTROL SYSTEM (4L30–E)

CONTENTS

Service Precaution 7A1–2
General Description 7A1–2
Electronic Control Diagram 7A1–3
Powertrain Control Module (PCM) 7A1–4
Control System Diagram 7A1–5
Shift Control 7A1–6
Band Apply Control 7A1–6
Torque Converter Clutch Control 7A1–6
Line Pressure Control 7A1–6
On–Board Diagnostic System 7A1–6
Fail Safe Mechanism 7A1–6
Torque Management Control 7A1–6
ATF Warning Control 7A1–6
ABS Control (If equipped) 7A1–6
Shift Mode Control 7A1–7
Gear Shift Control 7A1–8
Winter Drive Mode 7A1–9
Backup Mode 7A1–9
Functions of Input / Output Components . . 7A1–10
Diagnosis 7A1–11
Electronic Diagnosis 7A1–11
Check Trans Indicator 7A1–11
Diagnostic Check 7A1–11
“Check Trans” Check 7A1–12
Tech2 OBD II Connection 7A1–13
F0: Transmission Data 7A1–18
F1: PC Solenoid Data 7A1–19
OBD II Diagnostic Management System . . 7A1–20
16 – Terminal Data Link Connector (DLC) . 7A1–21
Malfunction Indicator Lamp (MIL) 7A1–22
Types Of Diagnostic Trouble Codes (DTCs) 7A1–22
Clear DTC 7A1–22
DTC Check 7A1–23
PCM Precaution 7A1–23
Information On PCM 7A1–23
Intermittent Conditions 7A1–23
Transmission And PCM Identification 7A1–24
Isuzu Trooper 7A1–25
Diagnostic Trouble Code (DTC) Identification 7A1–26
DTC P0218 Transmission Fluid Over Temperature 7A1–27
DTC P0560 System Voltage Malfunction . . . 7A1–29
DTC P0705 Transmission Range Switch (Mode Switch) Illegal Position 7A1–32
DTC P0706 Transmission Range Switch (Mode Switch) Performance 7A1–35
DTC P0712 Transmission Fluid Temperature (TFT) Sensor Circuit Low Input 7A1–38
DTC P0713 Transmission Fluid Temperature (TFT) Sensor Circuit High Input 7A1–41
DTC P0719 TCC Brake Switch Circuit High (Stuck On) 7A1–44
DTC P0722 Transmission Output Speed Sensor (OSS) Low Input 7A1–47
DTC P0723 Transmission Output Speed Sensor (OSS) Intermittent 7A1–50
DTC P0730 Transmission Incorrect Gear Ratio 7A1–53
DTC P0748 Pressure Control Solenoid (PCS) (Force Motor) Circuit Electrical 7A1–56
DTC P0753 Shift Solenoid A Electrical 7A1–58
DTC P0758 Shift Solenoid B Electrical 7A1–61
DTC P1790 ROM Transmission Side Bad Check Sum 7A1–65
DTC P1792 EEPROM Transmission Side Bad Check Sum 7A1–66
DTC P1835 Kickdown Switch Always On . . . 7A1–67
DTC P1850 Brake Band Apply Solenoid Malfunction 7A1–69
DTC P1860 TCC Solenoid Electrical 7A1–73
Transmission Fluid Temperature (TFT) Sensor Specifications 7A1–76

Service Precaution

WARNING: IF SO EQUIPPED WITH A SUPPLEMENTAL RESTRAINT SYSTEM (SRS), REFER TO THE SRS COMPONENT AND WIRING LOCATION VIEW IN ORDER TO DETERMINE WHETHER YOU ARE PERFORMING SERVICE ON OR NEAR THE SRS COMPONENTS OR THE SRS WIRING. WHEN YOU ARE PERFORMING SERVICE ON OR NEAR THE SRS COMPONENTS OR THE SRS WIRING, REFER TO THE SRS SERVICE INFORMATION. FAILURE TO FOLLOW WARNINGS COULD RESULT IN POSSIBLE AIR BAG DEPLOYMENT, PERSONAL INJURY, OR OTHERWISE UNNEEDED SRS SYSTEM REPAIRS.

CAUTION: Always use the correct fastener in the proper location. When you replace a fastener, use ONLY the exact part number for that application. ISUZU will call out those fasteners that require a replacement after removal. ISUZU will also call out the fasteners that require thread lockers or thread sealant. UNLESS OTHERWISE SPECIFIED, do not use supplemental coatings (Paints, greases, or other corrosion inhibitors) on threaded fasteners or fastener joint interfaces. Generally, such coatings adversely affect the fastener torque and the joint clamping force, and may damage the fastener. When you install fasteners, use the correct tightening sequence and specifications. Following these instructions can help you avoid damage to parts and systems.

General Description

The 4L30–E is a 4–speed fully automatic transmission. It uses a microcomputer as a control unit to judge running conditions including throttle opening rate and vehicle speed, then it sets the shifting point in the optimum timing so that best driving performance can be achieved.
In addition, the built–in shift mode select function can select three shift modes according to the driver's preference:

- Normal mode –Normal shift pattern.
- Winter mode –Starts in 3rd gear to reduce slippage on ice or snow.
- Power mode has a delayed upshift for when more powerful acceleration is required.

Also, the built–in fail safe function ("backup mode") assures driving performance even if the vehicle speed sensor, throttle signal or any solenoid fails.
Further, the self–diagnostic function conducts diagnosis in a short time when the control system fails, thus improving serviceability.
The major features of 4L30–E are as follows:

- A compact structure consisting of 2 sets of planetary gears and flat torque converter.
- Electronic control selects the optimum shift mode according to the driving conditions.
- Electronic control maintains the optimum hydraulic pressure for clutch, band brake as well as transmission so that shift feeling is improved.
- Two sets of planetary gears reduce friction of power train.

  Also, a lockup mechanism in the torque converter reduces fuel consumption.
- Wide gear ratio and high torque rate of torque converter provide excellent starting performance.

Electronic Control Diagram

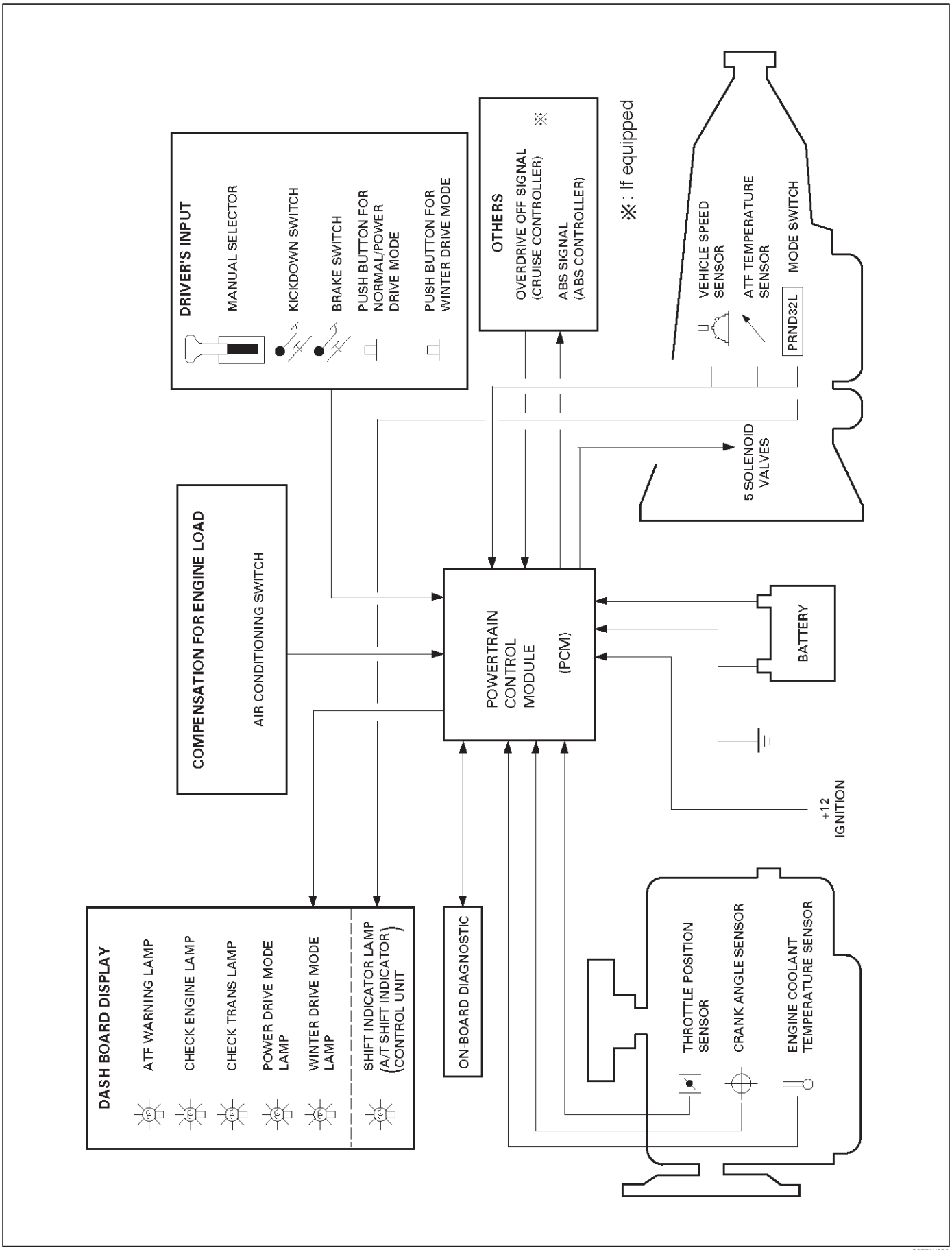

C07RW052

Powertrain Control Module (PCM)

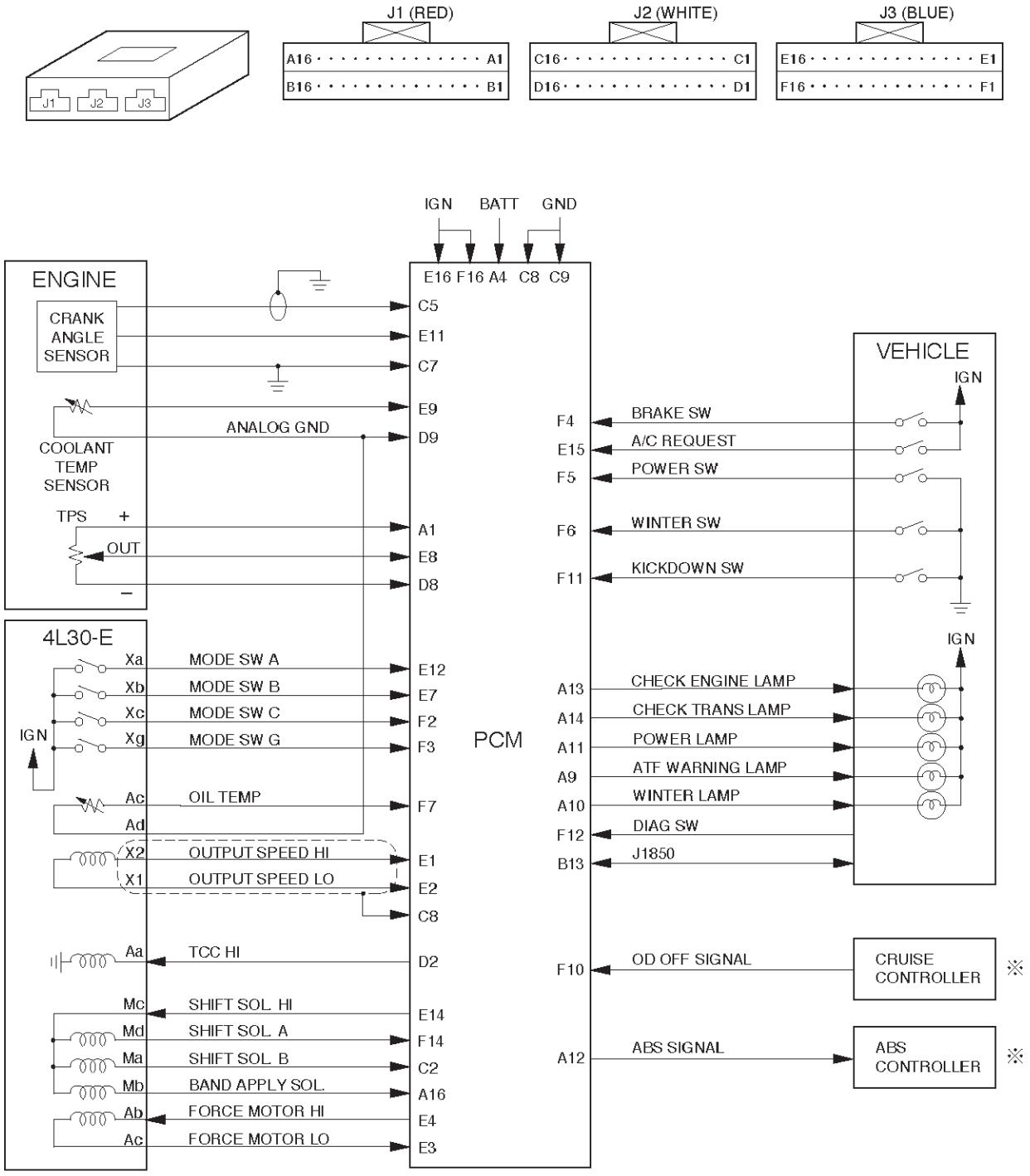

TPS: Throttle Position Sensor
TCC: Torque Converter Clutch
ABS: Anti-Lock Brake System
※: If equipped

C07RW051

Control System Diagram

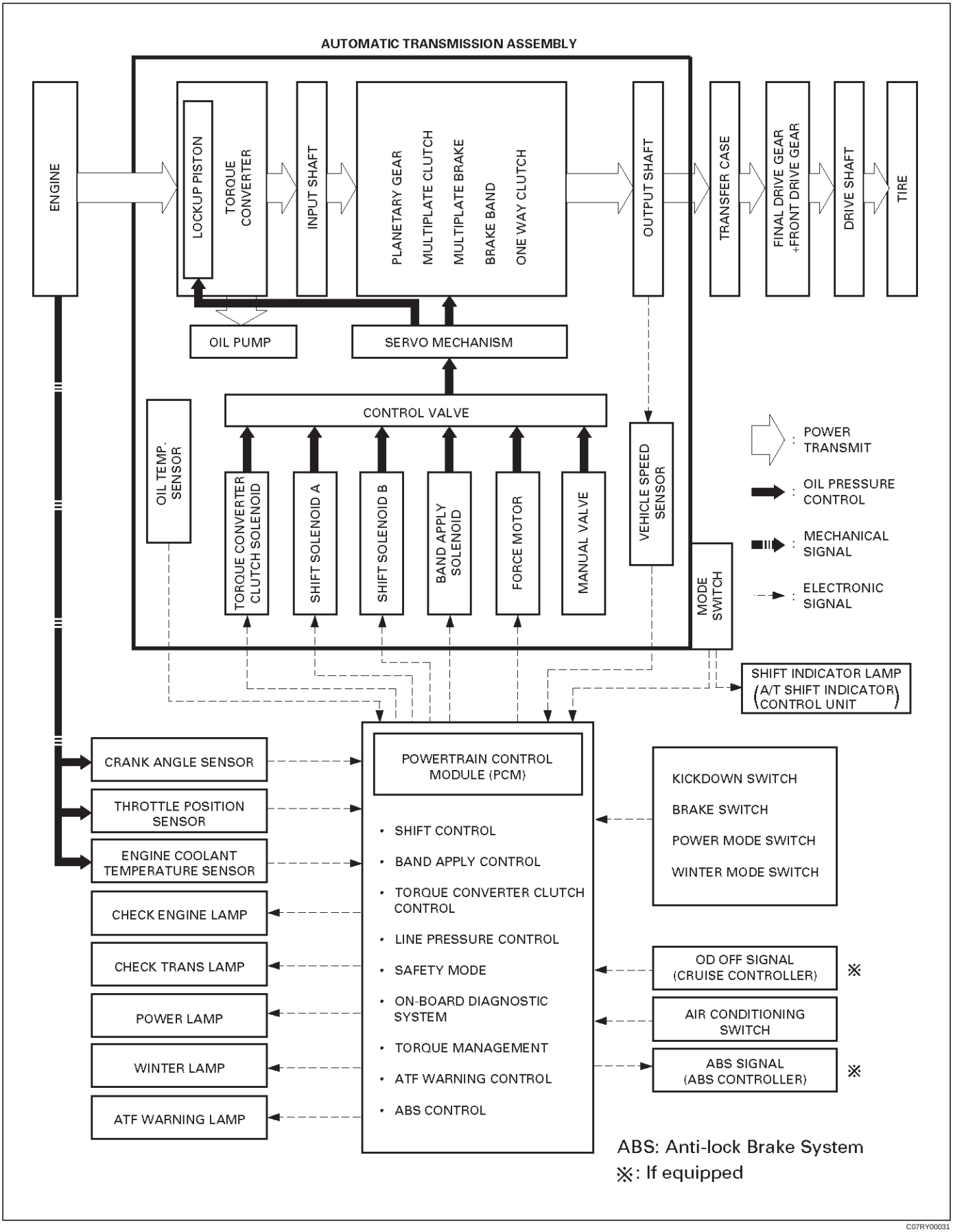

C07RY00031

Shift Control

The transmission gear is shifted according to the shift pattern selected by the driver. In shifting gears, the gear ratio is controlled by the ON/ OFF signal using the shift solenoid A and the shift solenoid B.

Band Apply Control

The band apply is controlled when in the 3–2 downshift (engine overrun prevention) and the garage shift (shock control).
The band apply solenoid is controlled by the signal from the Pulse Width Modulation (PWM) to regulate the flow of the oil.

Torque Converter Clutch Control

The clutch ON/OFF is controlled by moving the converter clutch valve through shifting Torque Converter Clutch (TCC) solenoid using the ON/OFF signal.

Line Pressure Control

The throttle signal allows the current signal to be sent to the force motor. After receiving the current signal, the force motor activates the pressure regulator valve to regulate the line pressure.

On–Board Diagnostic System

Several malfunction displays can be stored in the Powertrain Control Module (PCM) memory, and read out of it afterward.
The serial data lines, which are required for the testing of the final assembly and the coupling to other electronic modules, can be regulated by this function.

Fail Safe Mechanism

If there is a problem in the transmission system, the PCM will go into a “backup” mode.
The vehicle can still be driven, but the driver must use the select lever to shift gears.

Torque Management Control

The transmission control side sends the absolute spark advance signal to the engine control side while the transmission is being shifted. This controls the engine spark timing in compliance with the vehicle running condition to reduce the shocks caused by the change of speed.

ATF Warning Control

The oil temperature sensor detects the ATF oil temperature to control the oil temperature warning, TCC, and the winter mode.

ABS Control (If equipped)

When the select lever is at “L” or “R” range, a signal is sent to the ABS controller as one of the ABS control conditions.

Shift Mode Control

① Mode Type

Mode Type	Select lever position
Normal drive mode (NOR)	Entire range (excluding "R")
Power drive mode (PWR)	Entire range (excluding "R")
Winter drive mode	"D", "N", "R" and "P" range

② Mode selection

	SWITCH (SW)		LAMP	
Mode Type	POW/NOR. SW	WINTER SW	POWER DRIVE LAMP	WINTER DRIVE LAMP
Normal drive mode (NOR)	OFF	OFF	OFF	OFF
Power drive mode (PWR)	ON	OFF	ON	OFF
Winter drive mode	ON/OFF	ON	OFF	ON

However, the winter switch prevails over the PWR/NOR switch.
The mode becomes normal drive mode when the winter switch is operated from ON to OFF.

③ Comparison of mode

(1) The normal drive mode is set at the normal shift points.

(2) The shift points of the power drive mode are shifted to the higher speed side, compared to the normal drive mode.

(3) The winter drive mode is a special mode used exclusively for starting in third gear.

Shift diagram

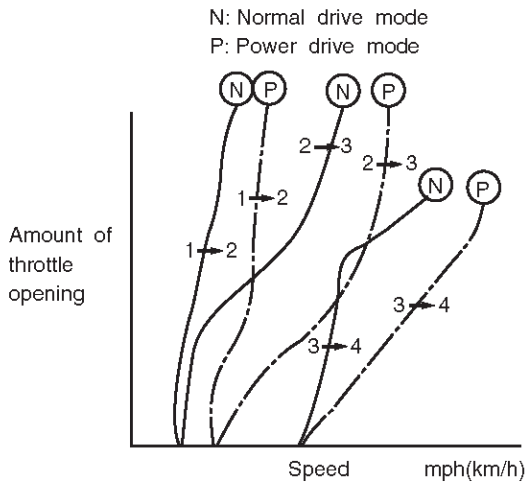

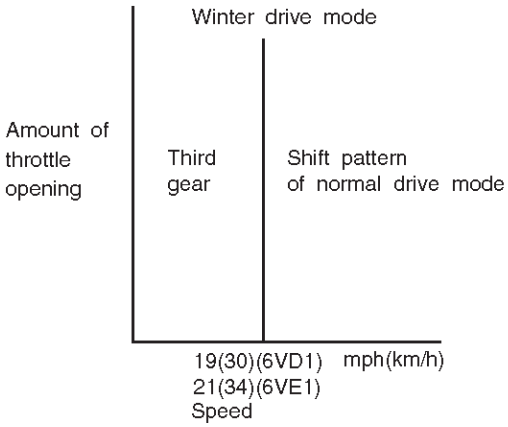

C07RY00012

Gear Shift Control

① Shift pattern

SELECT LEVER RANGE	SHIFT PATTERN
D (Drive)	1⇄2TCC ⇄3TCC ⇄4TCC
3 (Third)	1⇄2TCC ⇄3TCC ←4TCC
2 (Second)	1⇄2TCC ←3TCC
L (First)	1←2

TCC = Torque Converter Clutch

② Gear position

The gear is selected by ON/OFF of two solenoids.

Gear \ SOL	A	B
4 (Fourth)	×	×
3 (Third)	○	×
2 (Second)	○	○
1 (First)	×	○
P (park) R (Reverse) N (Neutral)	×	○

○ = ON

× = OFF

Shift solenoid A (Normally closed) ON → PRESSURE TO SHIFT VALVE

Shift solenoid B (Normally open) OFF → PRESSURE TO SHIFT VALVE

③ Selecting gear pisition

Seven types of positions can be selected according to 5 signals from the mode switch as below.

SELECT LEVER RANGE	MODE SW TERMINALS				
	5(D)	8(A)	7(B)	6(C)	3(G)
P (park)	•	•			•
R (Reverse)	•	•	•		
N (Neutral)	•		•		•
D (Drive)	•		•	•	
3 (Third)	•	•	•	•	•
2 (Second)	•	•		•	
L (First)	•			•	•

• = Continuity

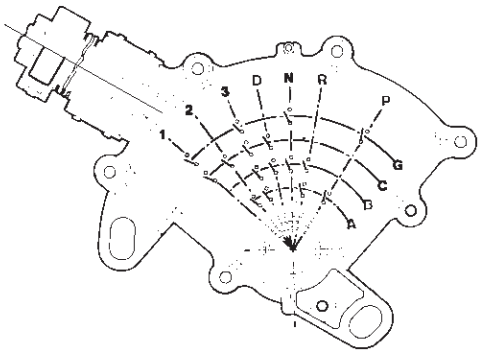

F07RT034

Winter Drive Mode

1. **Operation**
   The winter switch will operate when switched on after all of the following conditions are present:
   a. The gear select position is “D”, “N”, “R” and “P” range.
   b. Vehicle speed is 7 mph (11 km/h) or less.
   c. Transmission oil temperature is 130˚C (266˚F) or less.
   d. Kickdown switch is off.
   e. Accelerator opening is at 8% or less.
2. **Cancel Release**
   1. Cancellation by driver
      a. Turning off the winter drive mode switch
      b. Shifting select position to “3”, “2”, or “L” (Winter drive mode is not canceled by selecting “N”, “R”, or “P” from “D”)
      c. Ignition key is turned off.
   2. Automatic cancellation
      a. When vehicle runs at 19mph (30 km/h) (6VD1) or 21 mph (34 km/h) (6VE1) or more for 1 second or more
      b. When transmission oil temperature reaches 130˚C (266˚F) or above

NOTE: The mode returns to normal drive mode or power drive mode after the winter drive mode is canceled.

Backup Mode

If a major system failure occurs which could affect safety or damage the transmission under normal vehicle operation, the diagnostic system detects the fault and overrides the Powertrain Control Module (PCM).
The “CHECK TRANS” light flashes to alert the driver, and the transmission must be manually shifted as follows:

Select lever position	Gear Ratio Selected
D	4 (Fourth)
Manual 3	4 (Fourth)
Manual 2	3 (Third)
Manual L	1 (First)
R	Reverse

Shifts are firmer to prevent clutch slip and consequent wear. The fault should be corrected as soon as possible.

Functions of Input / Output Components

Components			Function
INPUT SIGNAL	Speed sensor (fixed to transmission (T/M))		Senses rotation of output shaft and feeds the data to Powertrain Control Module (PCM).
	Throttle position sensor (TPS) (fixed to engine)		Senses the extent of throttle valve opening and the speed of the throttle valve lever motion to open the valve. Feeds the data to PCM.
	Brake Switch (SW) (fixed to brake pedal)		Senses whether the driver has pressed the brake pedal or not and feeds the information to PCM.
	Kickdown SW (fixed to accelerator pedal)		Senses whether the driver has pushed the accelerator pedal fully or not, and feeds the information to PCM.
	Mode SW (fixed to T/M)		Senses the select lever position, and feeds the information to PCM.
	Power drive SW (fixed to front console)		Senses whether the driver has selected the power mode, and feeds the information to PCM.
	T/M oil temp. sensor		Senses the T/M oil temperature and feeds the data to PCM
	Engine coolant temperature sensor		Senses the engine coolant temperature, and feeds the data to PCM.
	Engine speed signal		Feeds the signals monitoring engine speed to PCM from crank angle sensor.
	Air conditioning information		Senses whether the air conditioner has been switched on or not, and feeds the information to PCM.
	Winter switch (fixed to front console)		Senses whether the driver has selected the winter mode, and feeds the information to PCM.
	Cruise controller * (Overdrive OFF signal)		Downshift takes place when Overdrive OFF signal is received from auto cruise control unit.
OUTPUT SIGNAL	SOLENOID	Shift solenoid A, B	Selects shift point and gear position suited to the vehicle running condition on the basis of PCM output.
		Band apply solenoid	Controls oil flow suited to the vehicle running condition on the basis of PCM output.
		Torque Converter Clutch solenoid	Controls clutch engagement/disengagement suited to the vehicle running condition on the basis of PCM output.
		Force motor (Pressure regulator valve)	Adjusts the oil pump delivery pressure to line pressure suited to the vehicle running condition on the basis of PCM output.
	Power drive mode lamp		Informs the driver whether the vehicle is in power mode or not.
	Winter drive mode lamp		Informs the driver whether the vehicle is in winter mode or not.
	T/M monitor lamp (“CHECK TRANS”)		Informs the driver of failure in the system.
	ATF warning lamp		Lights when ATF oil temperature rises.
	ABS signal *		When the select lever is at “Reverse” or “L” range, sends a signal to the ABS controller as one of the ABS control conditions.

* If equipped

Diagnosis

Electronic Diagnosis

How To Diagnose The Problem

1. To avoid incorrect diagnostics, this book needs to be followed accurately. Unless stated, do not jump directly to a section that could contain the solution. Some important information may be missed.
2. The sections in CAPITALS and bold are the main sections that can be found in the contents.
3. The GOTO **“SECTION”** means to continue to check going to the “section”.
4. The GOTHROUGH **“SECTION”** means to go through the “section” and then to go back to the place the GOTHROUGH was written.
5. BASIC ELECTRIC CIRCUITS:
   You should understand the basic theory of electricity. This includes the meaning of voltage, amps, ohms, and what happens in a circuit with an open or shorted wire. You should also be able to read and understand wiring diagrams.

Check Trans Indicator

Find CHECK TRANS indicator and verify if it is

A. Flashing: GOTO **DIAGNOSTIC CHECK.**

B. Staying on: GOTHROUGH **CHECK TRANS CHECK**.

C. Is never ON when the ignition key is turned on: GOTHROUGH **CHECK TRANS CHECK**

D. Is ON during 2 seconds at ignition but OFF after: Normal operation. No DTC or malfunction.

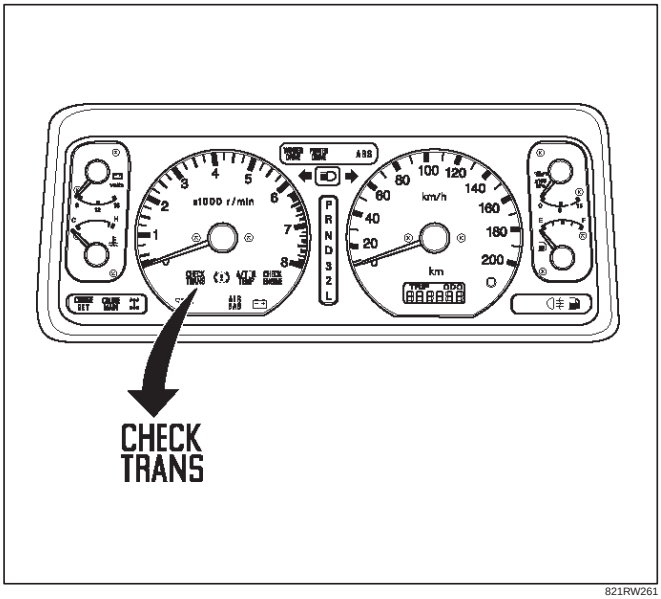

821RW261

Diagnostic Check

This test determines if the transmission or its inputs, outputs, connections, or sensors are failing.

1. Connect the Tech2: GOTHROUGH **Tech2 OBD II CONNECTION**.
2. Turn on the ignition but not the engine.
3. Push “F2” on Tech2 to see the Diagnostic Trouble Code (DTC):
4. Do you have a DTC?
   YES: write down all code numbers and do the **DTC CHECK**
   NO: the DTC can not help you finding the problem.
   1. GOTHROUGH **“CHECK TRANS” CHECK**
   2. IF it is flashing and the flash is 0.2 seconds ON and 0.2 seconds OFF, this means that you should have a DTC stored. Please recheck GOTO **DIAGNOSTIC CHECK** and if you find the same problem, replace the Powertrain Control Module (PCM).

Normal

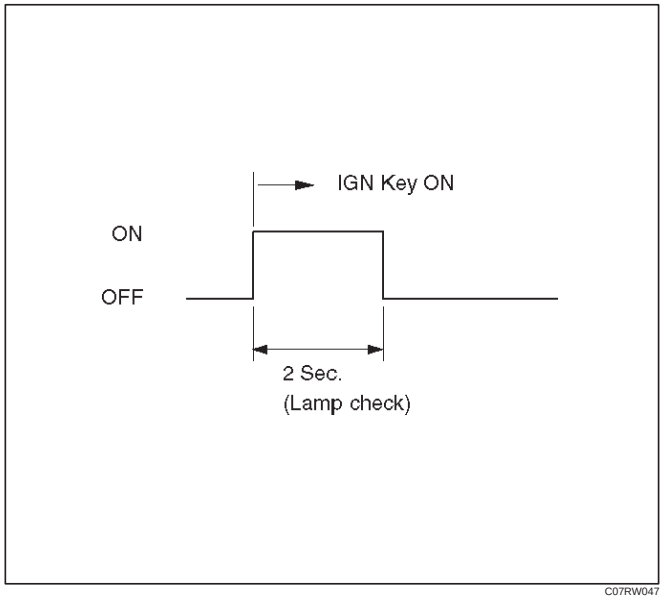

C07RW047

Abnormal

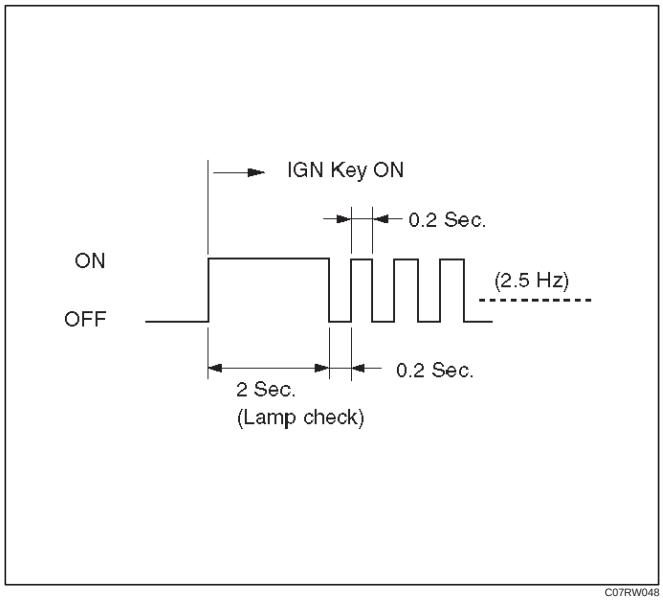

C07RW048

“Check Trans” Check

1. Indicator it is ON during 2 seconds at ignition (or when the engine is cranked) but it is OFF after the engine starts. The indicator is working normally GOTO **DIAGNOSTIC CHECK**.

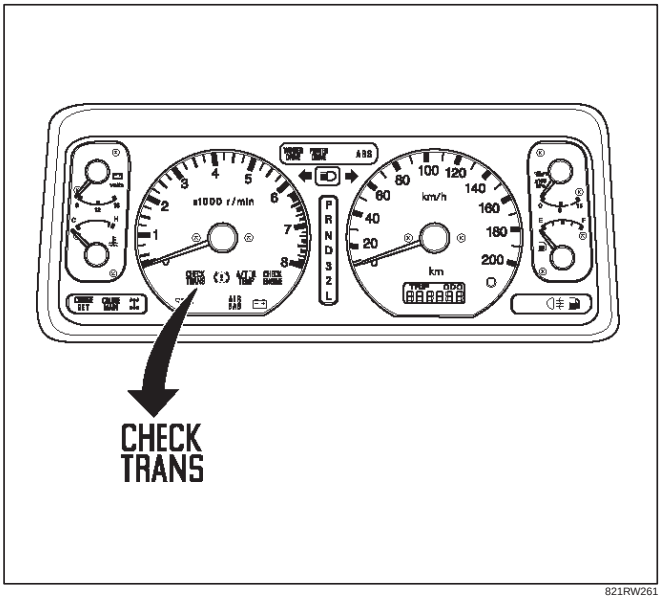

821RW261

Normal

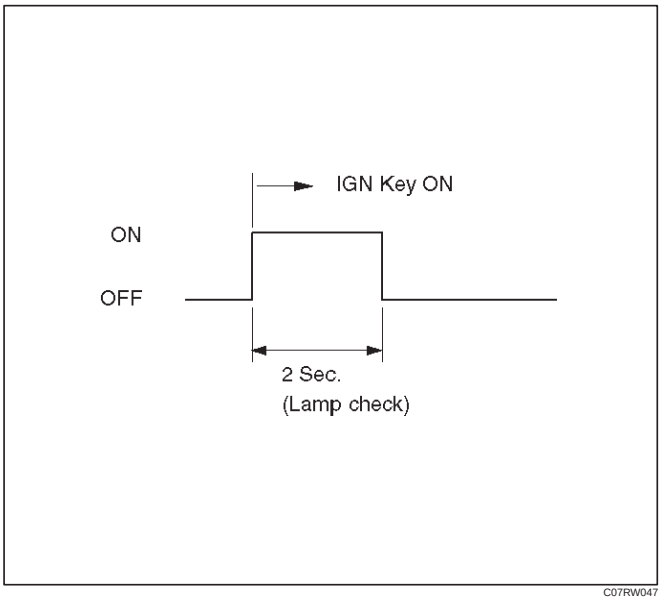

C07RW047

2. Indicator it is flashing and the flash is 0.2 seconds ON and 0.2 seconds OFF always when ignition is on (engine cranked or not). This means that there is a malfunction. GOTO **DIAGNOSTIC CHECK**.

Abnormal

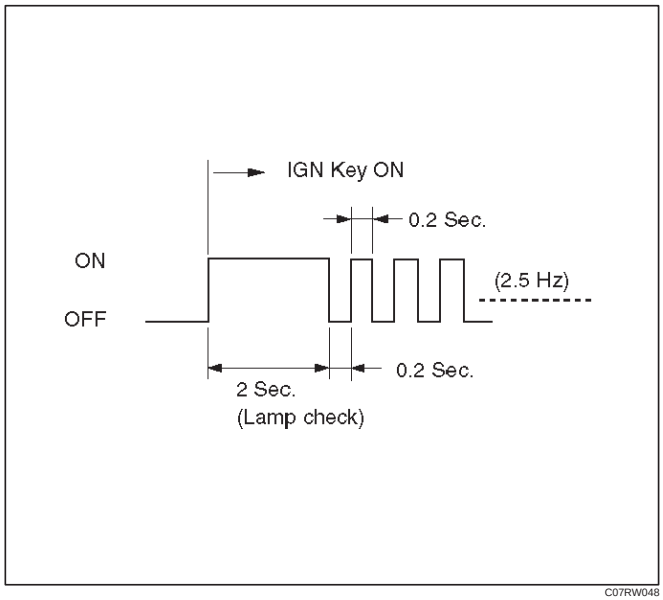

C07RW048

3. Indicator it is staying ON always when Ignition is ON.
   1. This means that connection between the lamp and the PCM is shorted to ground.
   2. Verify if instrument panel terminal 3 of connector I–9 is shorted to ground.
   3. Verify if the PCM connector J1 (RED) terminal A14 is shorted to ground.
   4. Verify that the instrument panel terminal 15 of connector I–9 is connected to battery.
   5. IF problem solved: GOTO **CHECK TRANS INDICATOR**.

   NO:Replace Powertrain Control Module (PCM).
4. Indicator it is staying OFF with the ignition ON (engine OFF).
   1. This means that connection between the lamp and the PCM is shorted to battery or opened.
   2. Verify if instrument panel terminal 3 of connector I–9 is shorted to battery or open.
   3. Verify if the PCM connector J1 (RED) terminal A14 is shorted to battery or open.
   4. Verify that the instrument panel terminal 15 of connector I–9 is connected to battery. If not, check the fuses and the connections voltage.
   5. IF problem solved: GOTO **CHECK TRANS INDICATOR**.

   NO: Replace Powertrain Control Module (PCM).

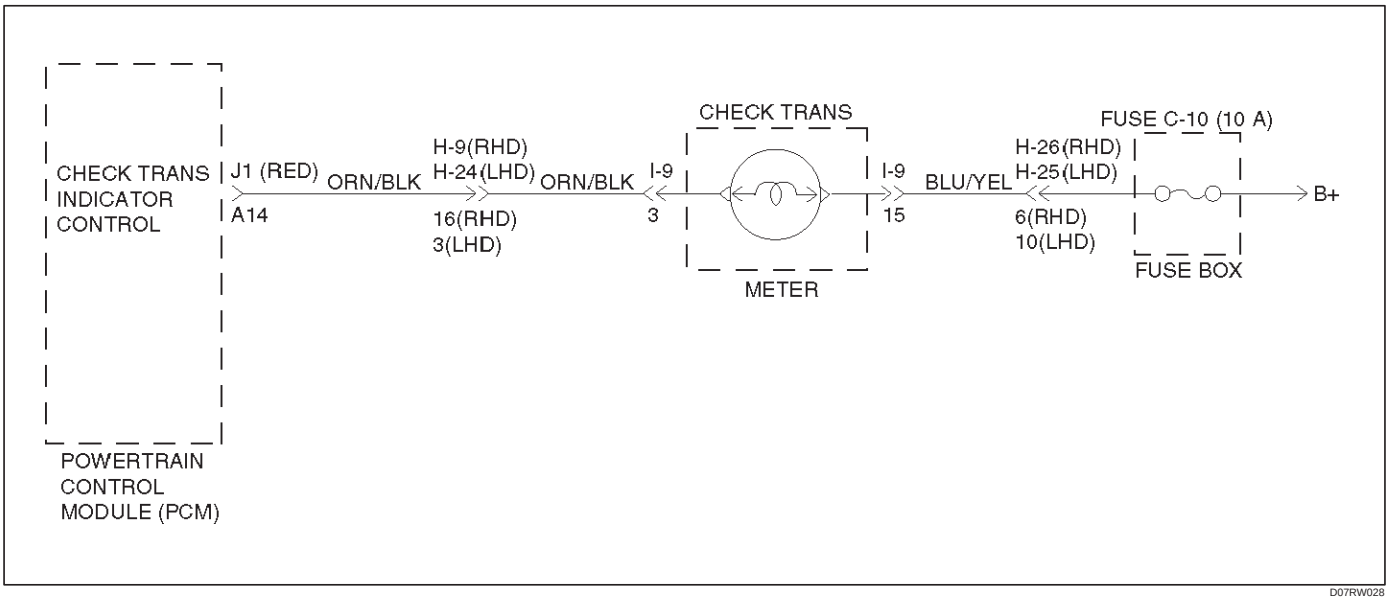

D07RW028

Tech2 OBD II Connection

In order to access OBD II Powertrain Control Module (PCM) data, use of the Tech2 scan tool kit (7000086) is required.

1. The electronic diagnosis equipment is composed of:
   1. Tech2 (7000057) hand–held scan tool unit and DLC cable (3000095).

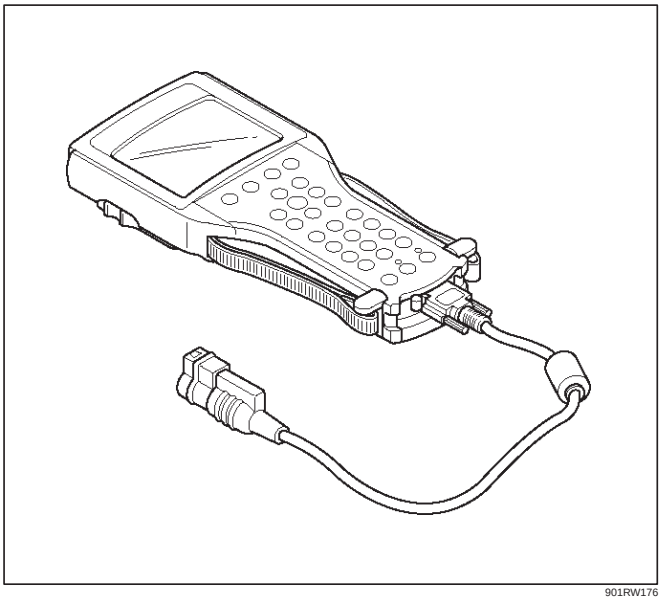

901RW176

   2. SAE 16/19 adapter (3000098) (1), RS 232 loop back connector (3000112) (2), and PCMCIA card (3000117) (3).

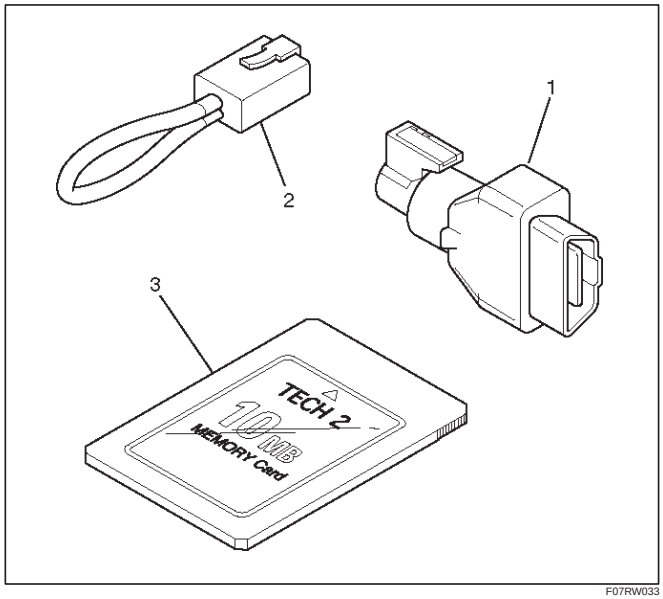

F07RW033

2. Connecting the TECH2

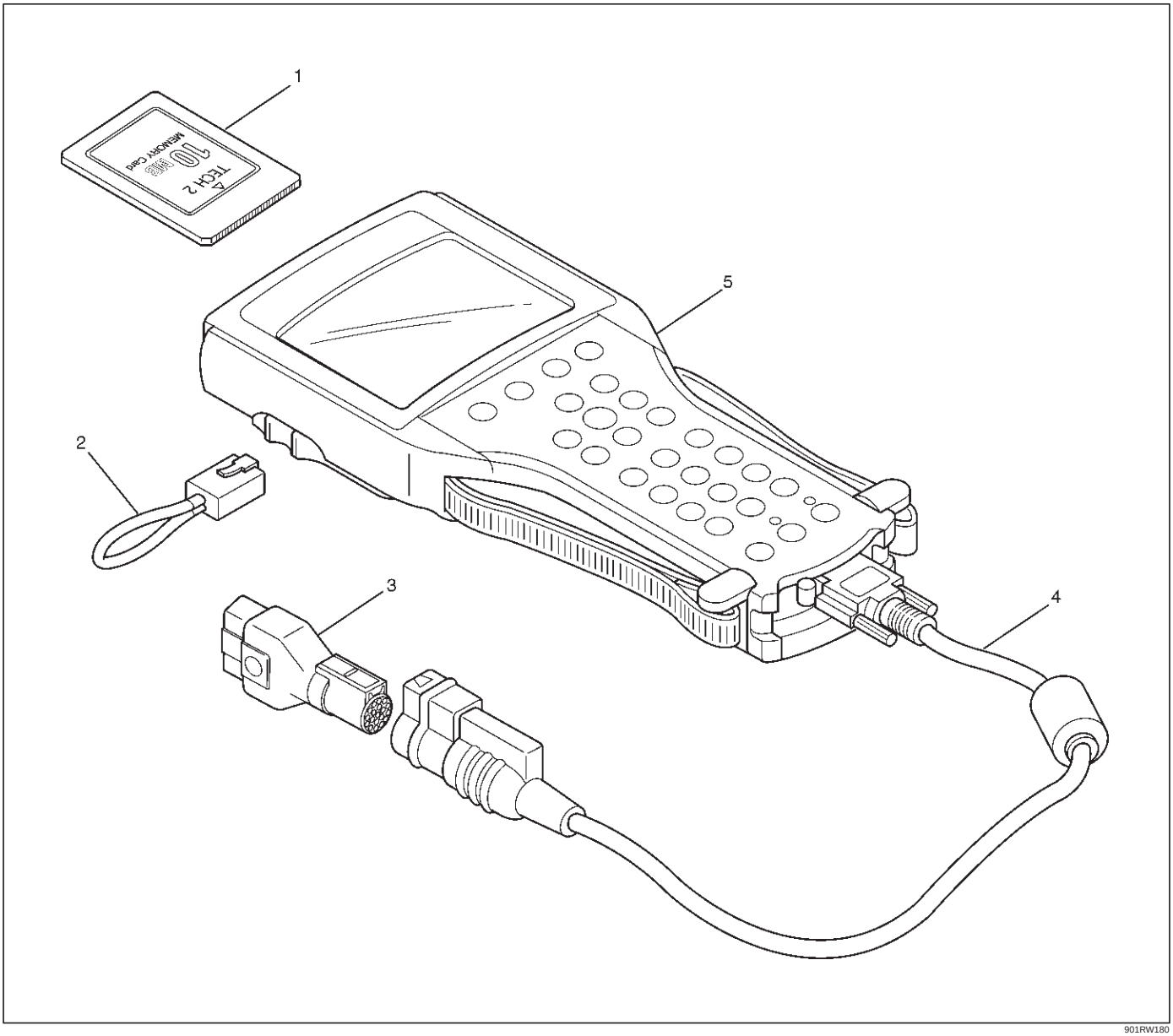

Legend

(1) PCMCIA Card
(2) RS 232 Loop Back Connector
(3) SAE 16/19 Adapter
(4) DLC Cable
(5) Tech2

- Before operating the Isuzu PCMCIA card with the Tech 2, the following steps must be performed:

1. The Isuzu 2000 System PCMCIA card (1) inserts into the Tech 2 (5).
2. Connect the SAE 16/19 adapter (3) to the DLC cable (4).
3. Connect the DLC cable to the Tech 2 (5)
4. Make sure the vehicle ignition is off.

5. Connect the Tech 2 SAE 16/19 adaptor to the vehicle DLC.

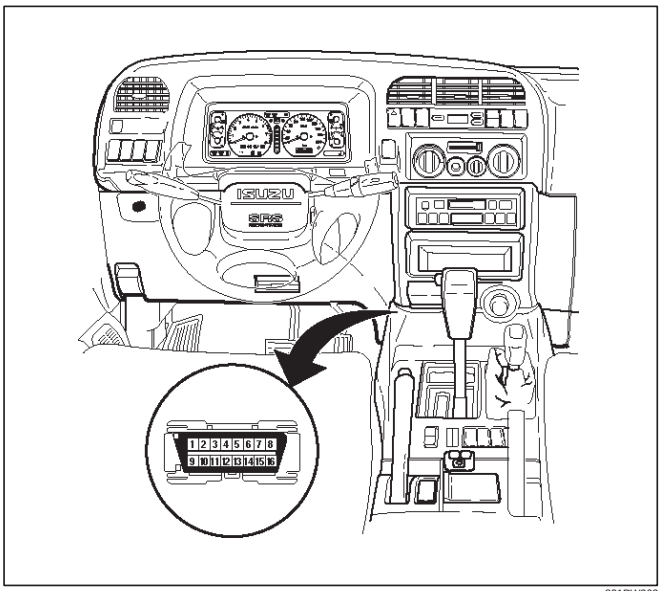

821RW262

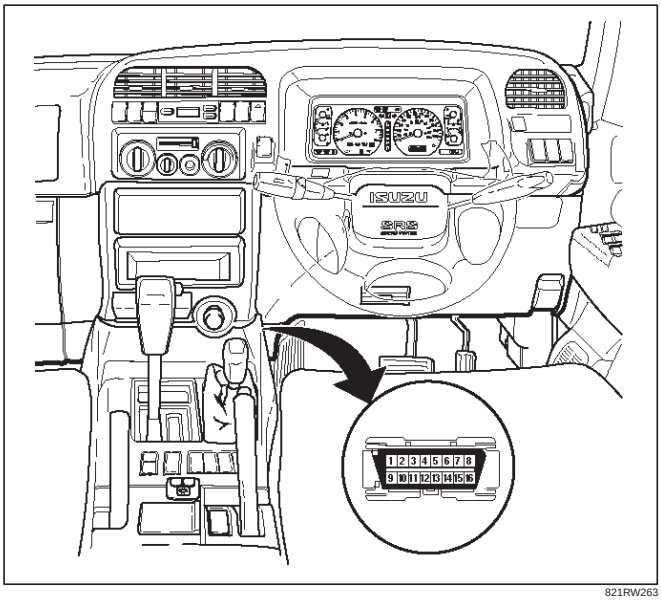

821RW263

6. The vehicle ignition turns on.
7. Verify the Tech 2 power up display.

060RW009

NOTE: The RS232 Loop back connector is only to use for diagnosis of Tech 2 and refer to user guide of the Tech 2.

8. The power up screen is displayed when you power up the tester with the Isuzu systems PCMCIA card. Follow the operating procedure below.

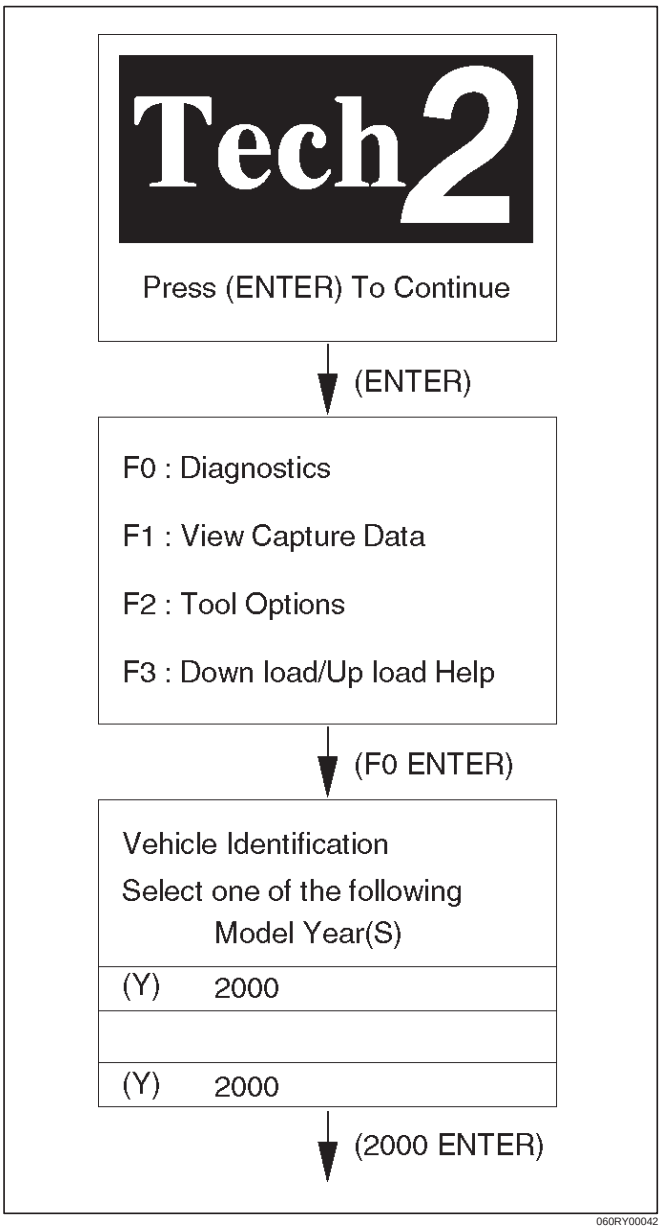
Tech2
Press (ENTER) To Continue
(ENTER)
F0 : Diagnostics
F1 : View Capture Data
F2 : Tool Options
F3 : Down load/Up load Help
(F0 ENTER)
Vehicle Identification
Select one of the following
Model Year(S)
(Y) 2000
(Y) 2000
(2000 ENTER)
060RY00042

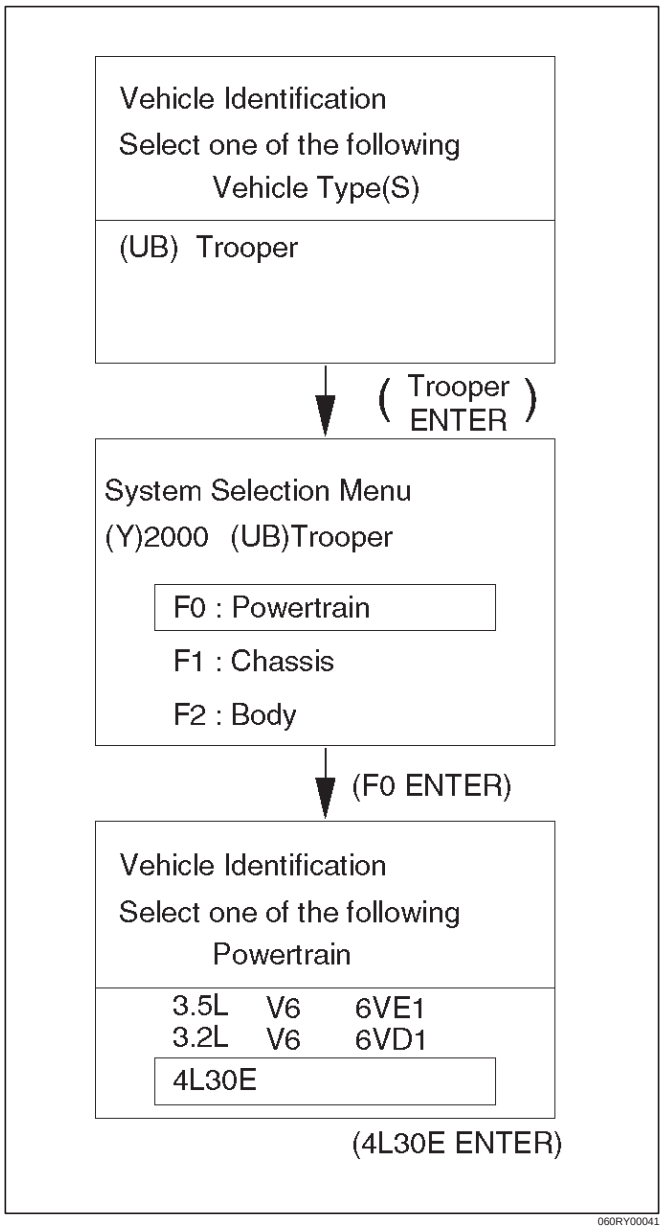
Vehicle Identification
Select one of the following
Vehicle Type(S)
(UB) Trooper
(Trooper ENTER)
System Selection Menu
(Y)2000 (UB)Trooper
F0 : Powertrain
F1 : Chassis
F2 : Body
(F0 ENTER)
Vehicle Identification
Select one of the following
Powertrain
3.5L V6 6VE1
3.2L V6 6VD1
4L30E
(4L30E ENTER)
060RY00041

Once the test vehicle has been identified an “Application (Powertrain) Menu” screen appears. Please select the appropriate application.

Data Display

When F1: Data Display is selected, a “Data Display Menu” screen appears.
Please select either “Transmission Data” or “PC Solenoid Data”.

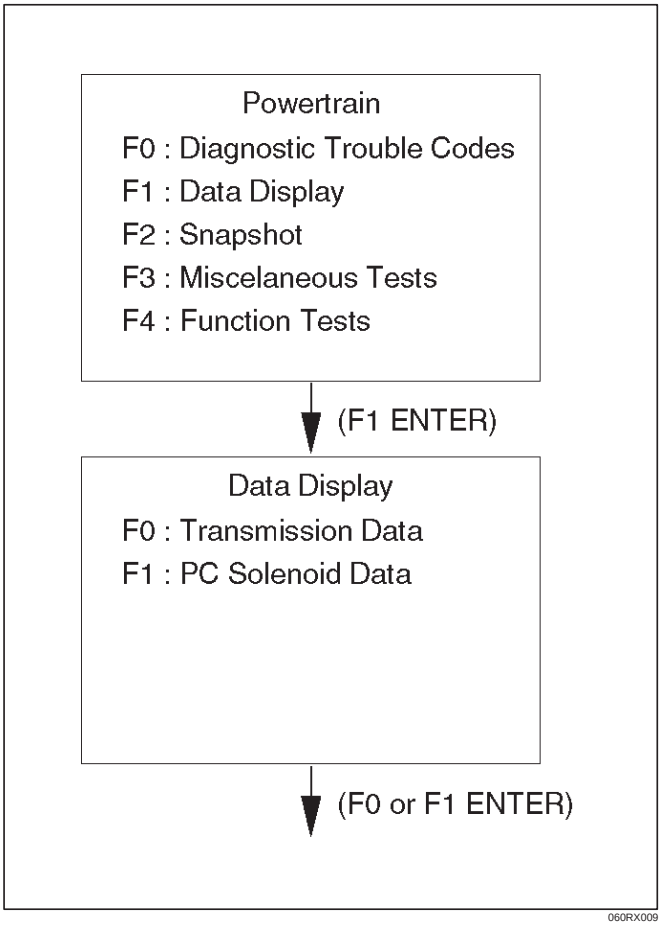

Function Tests (Reset Oil Life Monitor)

When F4: Function Tests is selected from the “Powertrain Menu”, a “Reset Oil Life Monitor Menu” screen appears. When the ATF has been replaced, select “F0” and reset “Oil Life Monitor” data.

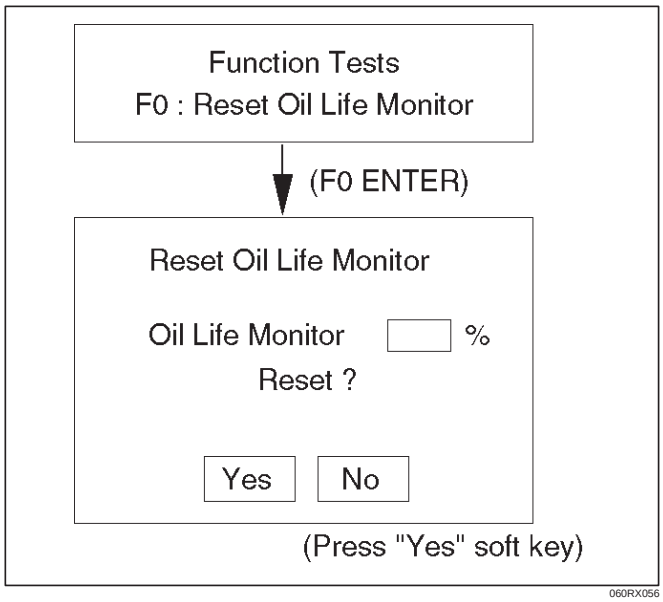

F0: Transmission Data

Item	Unit	Engine running at idle
Engine Speed	RPM	750 ~ 900 RPM
Vehicle Speed	km/h, MPH	0 MPH
Throttle Position	%	0 %
Throttle Position Sensor	V	0.5 ~ 1.0 V
Manifold Absolute Pressure	kPa	approx. 40 kPa
Barometric Pressure	kPa	approx. 102 kPa
AT Output Speed (Automatic Transmission)	RPM	0 RPM
AT Input Speed Ratio (Automatic Transmission)		0.0
Ignition Voltage	V	12.8 ~ 14.1 V
AT Oil Temperature (Automatic Transmission)	˚C, ˚F	70 ~ 80˚C (158 ~ 176˚F)
AT Oil Life Monitor (Automatic Transmission)	%	100 %
Commanded Gear		1
Current Gear		1
Mode Switch C	Inactive, Active	Inactive
Mode Switch B	Inactive, Active	Inactive
Mode Switch A	Inactive, Active	Active
Mode Switch G	Inactive, Active	Active
Actual Gear		Park
1–2 Shift Solenoid A	Off, On	Off
2–3 Shift Solenoid B	Off, On	On
Brake Switch	Off, On	Off
Solenoid Brake Band	Off, On	Off
TCC Slip Speed	RPM	750 ~ 900 RPM
TCC Status	Disabled, Enabled	Enabled
TCC Solenoid	Off, On	Off
TCC Duty Cycle	%	0 %
TCC Apply Mode	No Apply, In Apply	No Apply
TCC Release Mode	No, Yes	No
TCC On Mode	No, Yes	No
TCC Off Mode	No, Yes	Yes
Default Gear	No, Yes	No
Engine Warm	No, Yes	Yes
A/C Request	Yes, No	Yes
A/C Clutch Relay	Off, On	On
Winter Switch	Off, On	Off
Winter Drive Lamp	Off, On	Off
Kickdown Switch	Off, On	Off
ATF Lamp (Automatic Transmission)	Off, On	Off
Power Switch	Normal, Power	Normal
Power Drive Lamp	Off, On	Off
ABS Status	On, Off	Off

F1: PC Solenoid Data

Item	Unit	Engine running at idle
Engine Speed	RPM	750 ~ 900 RPM
Vehicle Speed	km/h, MPH	0 MPH
Throttle Position	%	0 %
Throttle Position Sensor	V	0.5 ~ 1.0 V
Manifold Absolute Pressure	kPa	approx. 40 kPa
Barometric Pressure	kPa	approx. 102 kPa
PCS Current (Pressure Control Solenoid)	A	approx. 1.0 A
PCS Actual Current (Pressure Control Solenoid)	A	approx. 1.0 A
PCS Duty Cycle (Pressure Control Solenoid)	%	approx. 45 %
Desired PCS Pressure (Pressure Control Solenoid)	kPa	43 ~ 52 kPa
Shift Pressure (Line Pressure)	kPa	43 ~ 52 kPa
Transmission Temperature	˚C, ˚F	75 ~ 110˚C (167 ~ 230˚F)

OBD II Diagnostic Management System

Powertrain Control Module (PCM) Location

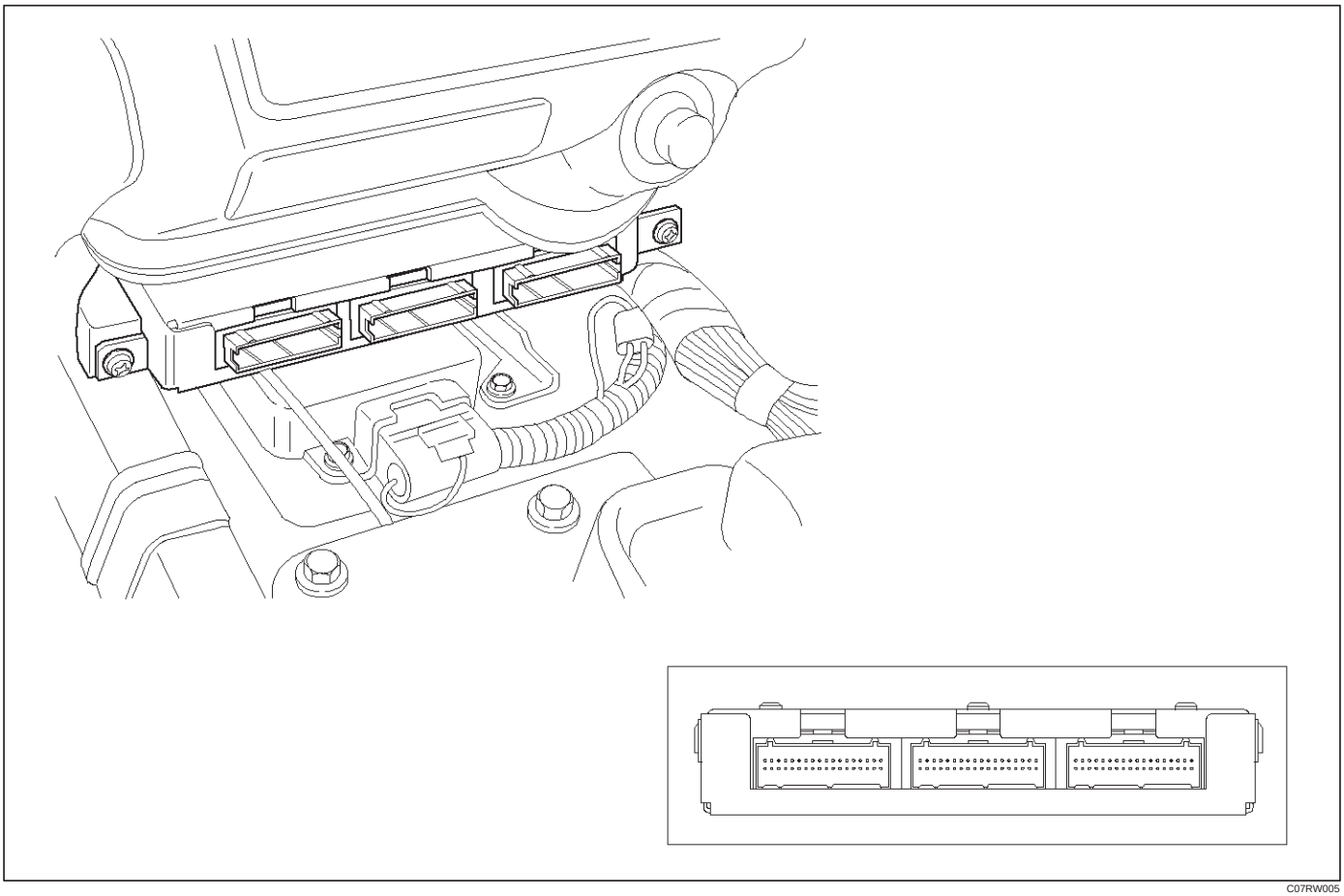

C07RW005

Class 2 Serial Data Bus

OBD II technology requires a much more sophisticated PCM than does OBD I technology. The OBD II PCM diagnostic management system not only monitors systems and components that can impact emissions, but they also run active tests on these systems and components. The decision making functions of OBD II PCMs have also greatly increased. To accommodate this expansion in diagnostic complexity, Isuzu engineers have designed the Class 2 serial data bus, which meets SAE J1850 recommended practice for serial data.

"Serial Data" refers to information which is transferred in a linear fashion – over a single line, one bit at a time. A "Data Bus" is an electronic pathway through which serial data travels.

TROOPER previously used a 5 volt data bus called UART, which is an acronym for "Universal Asynchronous Receive and Transmit". When neither the vehicle's control module nor the diagnostic tool, such as a Tech2, are "talking," the voltage level of the bus at rest is 5 volts. The two computers talk to each other at a rate of 8,192 bits per second, by toggling or switching the voltage on the data bus from 5 volts to ground.

Class 2 data, which is used on OBD II vehicles, is quite different. Data is transferred at a rate of 10.4 kilobits per second, and the voltage is toggled between zero and 7 volts.

C07RT006

Class 2 data is also pulse width modulated. Each bit of information can have one of two lengths: long or short. On the other hand, UART data bits come in only one length (short). The pulse width modulation of Class 2 data allows better utilization of the data line.

The message carried on Class 2 data streams are also prioritized. This means that if two devices try to communication on the data line at the same time, only the higher priority message will continue. The device with the lower priority message must wait.

NOTE: The Class 2 data wire is always terminal 2 of the new 16–terminal Data Link Connector (DLC).

16 – Terminal Data Link Connector (DLC)

OBD II standardizes Data Link Connector (DLC) configurations. The DLC, formerly referred to as the ALDL, will be a 16–terminal connector found on the lower left side of the driver's side instrument panel. All manufacturers must conform to this 16–terminal standard.

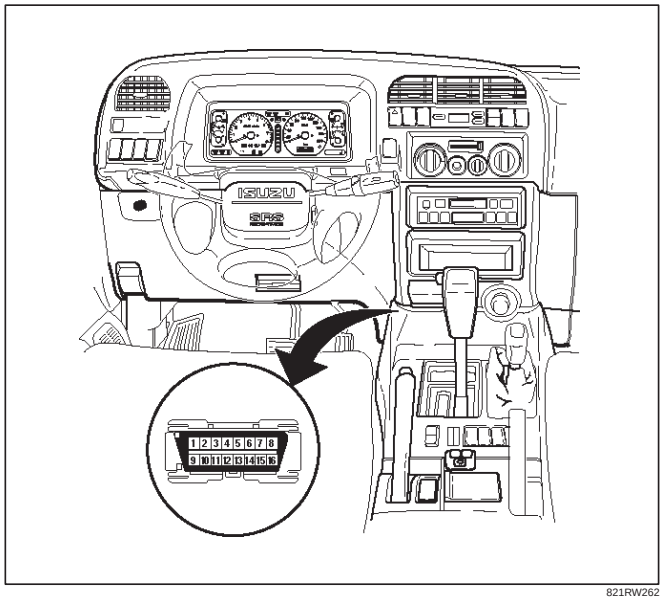

821RW262

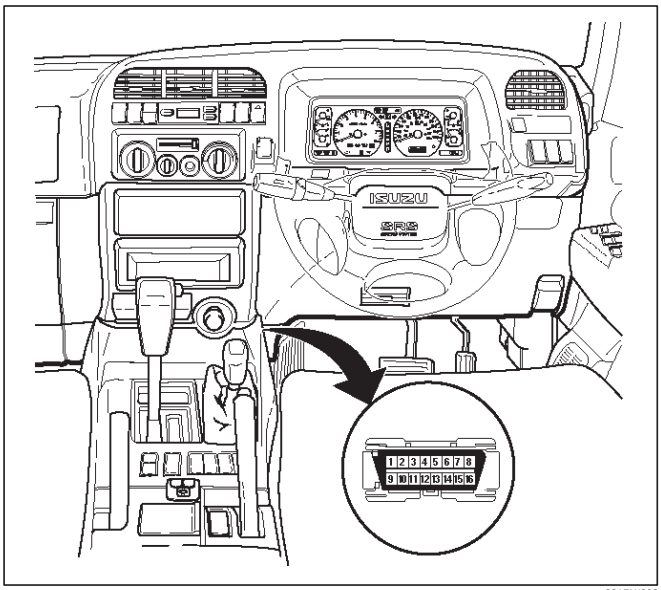

821RW263

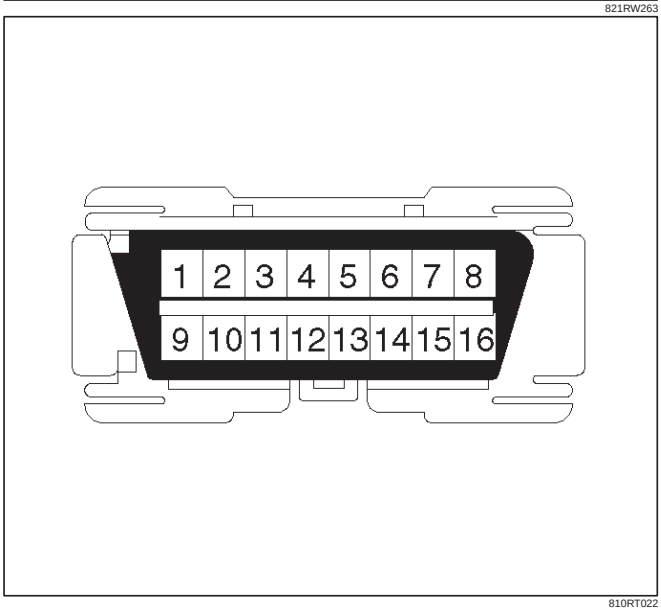

810RT022

PIN 1 – (Not used)
PIN 2 – J1850 Bus + L line on 2–wire systems, or single wire (Class 2)
PIN 3 – (Not used)
PIN 4 – Chassis ground pin
PIN 5 – Signal ground pin
PIN 6 – PCM diagnostic enable
PIN 7 – (Not used)
PIN 8 – (Not used)
PIN 9 – Primary UART
PIN 10 – (Not used)
PIN 11 – (Not used)
PIN 12 – ABS diagnostic or CCM diagnostic enable
PIN 13 – SIR diagnostic enable
PIN 14 – (Not used)
PIN 15 – (Not used)
PIN 16 – Battery power from vehicle unswitched (4 AMP MAX.)

Malfunction Indicator Lamp (MIL)

The Malfunction Indicator Lamp (MIL) looks the same as the MIL you are already familiar with (“CHECK ENGINE” lamp). However, OBD II requires that it illuminate under a strict set of guidelines. Basically, the MIL is turned on when the PCM detects a DTC that will impact the vehicle’s emissions.

The MIL is under the control of the Diagnostic Executive. The MIL will be turned on if a component or system which has an impact on vehicle emissions indicates a malfunction or fails to pass an emissions–related diagnostic test. It will stay on until the system or component passes the same test, for three consecutive trips, with no emissions–related faults.

Types Of Diagnostic Trouble Codes (DTCs)

The Diagnostic Executive classifies Diagnostic Trouble Codes (DTCs) into certain categories. Each type has different requirements to set the code, and the Diagnostic Executive will only illuminate the Malfunction Indicator Lamp (MIL) for emissions–related DTCs. DTCs fall into four categories: A, B, C, and D; only types A and B are emission–related The following descriptions define these categories:

TYPE A

Will store the DTC and turn on the MIL (“Check Engine” lamp) on the first trip in which an emission–related diagnostic test has run and reported a “test failed” to the Diagnostic Executive.

TYPE B

Will store the DTC and turn on the MIL on the second consecutive trip in which an emission–related diagnostic test has run and reported a “test failed” to the Diagnostic Executive. After one failure, the type B DTC is “armed,” or prepared to store a history code and turn on the MIL if a second failure occurs. One passed test will disarm a type B DTC. Some special conditions apply to misfire and fuel trim DTCs. For a type B DTC to store and turn on the MIL, two ignition cycles are required.

TYPE C

Will store the DTC and turn on a “SERVICE” lamp (“Check Trans” lamp) on the first trip that a non–emission–related diagnostic test has run and reported a “test failed” to the Diagnostic Executive. This type of DTC will be used in future applications.

TYPE D

Will store a DTC but will not turn on the MIL on the first trip that a non–emission–related diagnostic test has run and reported a “test failed” to the Diagnostic Executive. These codes can be very helpful for vehicle service when the driver may comment about a condition, but the MIL did not turn on.

Clear DTC

NOTE: If you clear the DTC (Diagnostic Trouble Codes) you will not be able to read any codes recorded during the last occurrence.

NOTE: To use the DTC again to identify a problem, you will need to reproduce the fault or the problem. This may require a new test drive or just turning the ignition on (this depends on the nature of the fault).

1. IF you have a Tech2:
   1. Connect the Tech2 if it is still not connected GOTHROUGH **Tech2 OBD II CONNECTION.**
   2. Push “F1= Clear DTC Info” in the Application Menu and answer “Yes” to the question “Do you want to clear DTC’s?”
      a. When a malfunction remains as it is the Tech2 displays “4L30E CODES NOT CLEARED”. This means that the problem is still there or that the recovery was not done. Please **GOTO DTC CHECK.**
      b. When a malfunction has been repaired and the recovery is done. The Tech2 displays “4L30E CODES CLEARED”.
2. IF you have no Tech2:
   To clear the DTC, remove Fuse “Stop, A/T CONT” (C–14, 15A) for at least 10 seconds.

DTC Check

1. Diagnostic Trouble Codes (DTC) have been identified by Tech2.
2. You have written the list of the DTCs. The order of the malfunctions has no meanings for this PCM. Usually only one or two malfunctions should be set for a given problem.
3. Check directly the DTCs you identified. The DTCs are sorted by number. Refer to Diagnostic Trouble Code (DTC) Identification in this section.

PCM Precaution

The PCM can be damaged by:

1. Electrostatic discharge
2. The short circuit of some terminals to voltage or to ground.

Electrostatic Discharge Damage Description:

1. Electronic components used to control systems are often designed to carry very low voltage, and are very susceptible to damage caused by electrostatic discharge. It is possible for less than 100 volts of static electricity to cause damage to some electronic components. By comparison, it takes as much as 4,000 volts for a person to even feel the zap of a static discharge.
2. There are several ways for a person to become statically charged. The most common methods of charging are by friction and induction. An example of charging by friction is a person sliding across a car seat, in which a charge of as much as 25,000 volts can build up. Charging by induction occurs when a person with well insulated shoes stands near a highly charged object and momentarily touches ground. Charges for the same polarity are drained off, leaving the person highly charged with the opposite polarity. Static charges of either type can cause damage, therefore, it is important to use care when handling and testing electronic components.

NOTICE: **To prevent possible electrostatic discharge damage:**

1. Do not touch the PCM connector pins or soldered components on the PCM circuit board.
2. Be sure to follow the guidelines listed below if servicing any of these electronic components:
3. Do not open the replacement part package until it is time to install the part.
4. Avoid touching electrical terminals of the part.
5. Before removing the part from its package, ground the package to a known good ground on the vehicle.
6. Always touch a known good ground before handling the part. This step should be repeated before installing the part if the part has been handled while sliding across the seat, while sitting down from a standing position or while walking some distance.

Information On PCM

1. The Powertrain Control Module (PCM) is located in the center console and is the control center of the electronic transmission control system.
2. The PCM must be maintained at a temperature below 85˚C (185˚F) at all times. This is most essential if the vehicle is put through a paint baking process. The PCM will become inoperative if its temperature exceeds 85˚C (185˚F). Therefore, it is recommended that the PCM be removed or that temporary insulation be placed around the PCM during the time the vehicle is in a paint oven or other high temperature process.
3. The PCM is designed to process the various inputs and then respond by sending the appropriate electrical signals to control transmission upshift, downshift, shift feel and torque converter clutch engagement.
4. The PCM constantly interprets information from the various sensors, and controls the systems that affect transmission and vehicle performance. By analyzing operational problems, the PCM is able to perform a diagnostic function by displaying DTC(s) and aid the technician in making repairs.

Intermittent Conditions

If the Tech2 displays a diagnostic trouble code as intermittent, or if after a test drive a DTC does not reappear though the detection conditions for this DTC are present, the problem is most likely a faulty electrical connection or loose wiring. Terminals and grounds should

always be the prime suspect. Intermittents rarely occur inside sophisticated electronic components such as the PCM.
Use the DTC information to understand which wires and sensors are involved.
When an intermittent problem is encountered, check suspect circuits for:

1. Poor terminal to wire connection.
2. Terminals not fully seated in the connector body (backed out).
3. Improperly formed or damaged terminals.
4. Loose, dirty, or corroded ground connections:
   HINT: Any time you have an intermittent in more than one circuit, check whether the circuits share a common ground connection.
5. Pinched or damaged wires.
6. Electro–Magnetic Interference (EMI):
   HINT: Check that all wires are properly routed away from spark plug wires, distributor wires, coil, and generator. Also check for improperly installed electrical options, such as lights, 2–way radios, etc.

Use the F3 SNAPSHOT mode of the Tech2 to help isolate the cause of an intermittent fault. The snapshot mode will record information before and after the problem occurs. Set the snapshot to “trigger” on the suspect DTC. If you notice the reported symptom during the test drive, trigger the snapshot manually.
After the snapshot has been triggered, command the Tech2 to play back the flow of data recorded from each of the various sensors. Signs of an intermittent fault in a sensor circuit are sudden unexplainable jump in data values out of the normal range.

Transmission And PCM Identification

The chart below contains a list of all important information concerning rear axle ratio, Powertrain Control Module (PCM), and transmission identification.

VEHICLE		Rr axle Ratio	PCM	TRANSMISSION		
Type	Engine		ISUZU Parts No.	Calibration Code	Isuzu Part No.	Model Code
Isuzu / Trooper	3.2L V6	4.555	8–16254–949–0 8–16254–749–0 8–16253–989–0	G20	8–96018–272–3	FP (4X4)
	3.5L V6	4.300	8–16254–019–1 8–16254–959–1 8–09376–619–1	G21	8–96018–270–4	FK (4X4)

Isuzu Trooper

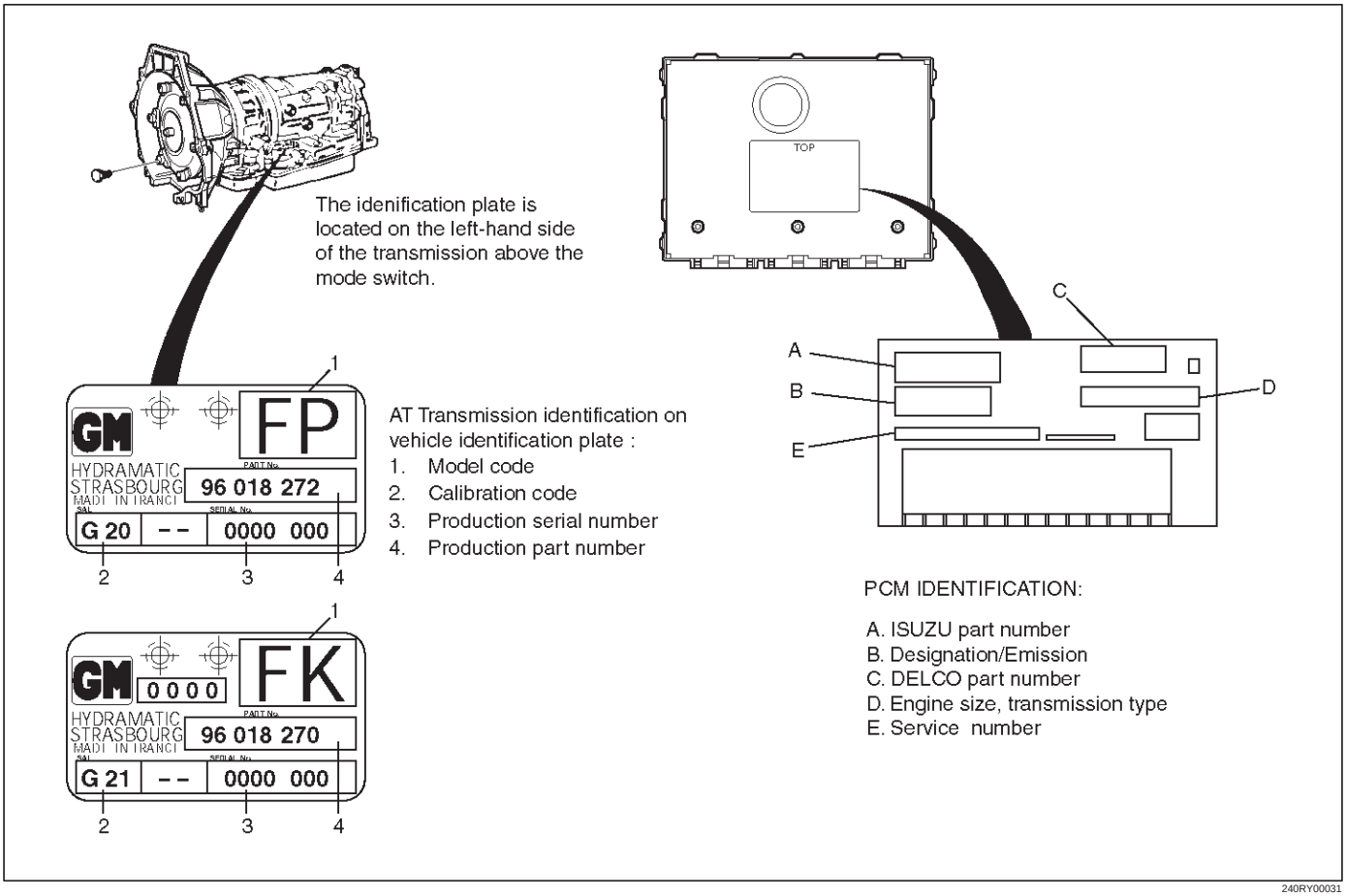

240RY00031

Diagnostic Trouble Code (DTC) Identification

DTC NUMBER	DTC NAME	DTC TYPE	“CHECK TRANS”
P0218	Transmission Fluid Over Temperature	D	
P0560	System Voltage Malfunction	C	Flash
P0705	Transmission Range Switch (Mode Switch) Illegal Position	D	
P0706	Transmission Range Switch (Mode Switch) Performance	D	
P0712	Transmission Fluid Temperature Sensor Circuit Low Input (TFT)	D	
P0713	Transmission Fluid Temperature (TFT) Sensor Circuit High Input	D	
P0719	TCC Brake Switch Circuit High (Stuck ON)	D	
P0722	Transmission Output Speed Sensor (OSS) Low Input	C	Flash
P0723	Transmission Output Speed Sensor (OSS) Intermittent	C	Flash
P0730	Transmission Incorrect Gear Ratio	C	Flash
P0748	Pressure Control Solenoid (PCS) (Force Motor) Circuit Electrical	C	Flash
P0753	Shift Solenoid A Electrical	C	Flash
P0758	Shift Solenoid B Electrical	C	Flash
P1790	ROM Transmission Side Bad Check Sum	C	Flash
P1792	EEPROM Transmission Side Bad Check Sum	C	Flash
P1835	Kickdown Switch Always ON	D	
P1850	Brake Band Apply Solenoid Malfunction	D	
P1860	TCC Solenoid Electrical	D	

DTC TYPE	DEFINITION
C	Flashing Check Trans on 1st failure
D	No lamps

NOTE: On the following charts, refer to the Powertrain Control Module (PCM) section for the Wiring System, and the Body and Accessories section for circuit diagram details, parts location, and connector configuration.

DTC P0218 Transmission Fluid Over Temperature

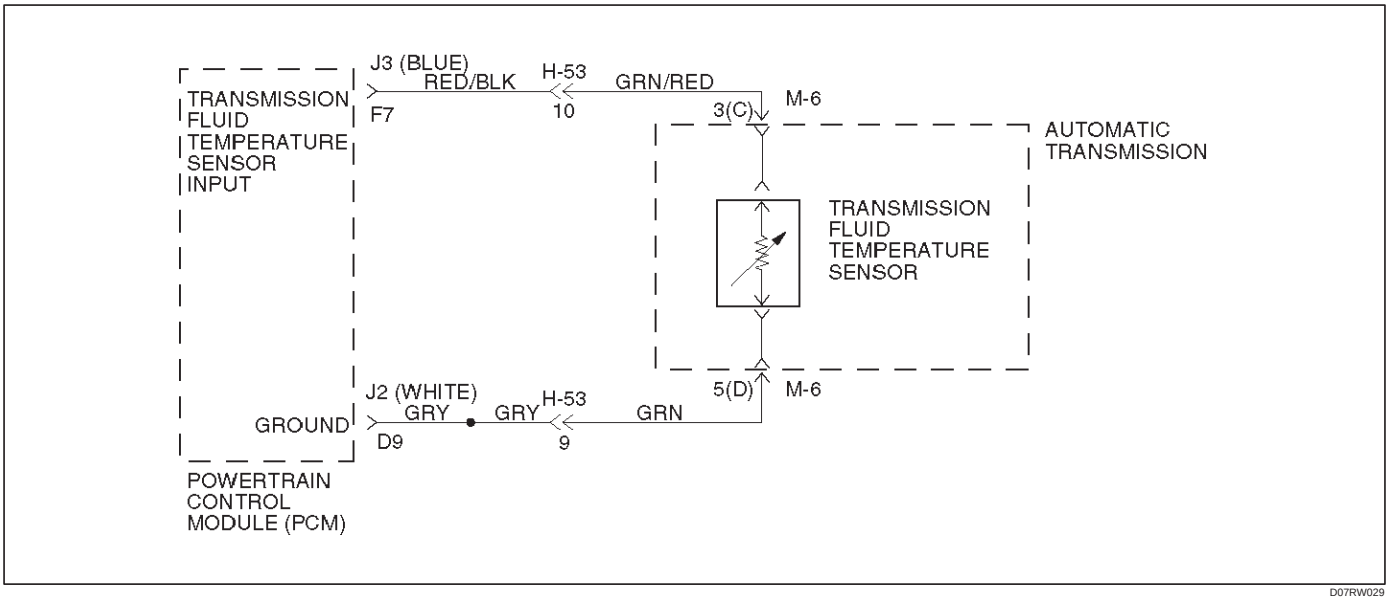

Circuit Description

The Transmission Fluid Temperature (TFT) sensor is a thermister that controls the signal voltage to the PCM. The PCM supplies a 5–volt reference to the sensor on circuit RED/BLK–GRN/RED. When the transmission fluid is cold, the sensor resistance is high and the PCM will sense high signal voltage. As the fluid temperature warms to a normal transmission operating temperature of 100˚C (212˚F), the sensor resistance becomes less and the voltage decreases to 1.5 to 2.0 volts.
This DTC detects a high transmission temperature for a long period of time. This is a type “D” DTC.

Conditions For Setting The DTC

- No TFT DTCs P0712 or P0713.
- TFT is greater than 135˚C (275˚F).
- All conditions met for 21 seconds.

Action Taken When The DTC Sets

- Hot mode TCC Shift Pattern.
- The PCM will not illuminate the CHECK TRANS Lamp.
- ATF Lamp ON. (TFT is greater than 145˚C (293˚F).)
- Disable E–side TCC OFF request.

Conditions For Clearing The DTC

- The DTC can be cleared from the PCM history by using a scan tool.
- The DTC will be cleared from history when the vehicle has achieved 40 warm–up cycles without a failure reported.
- The PCM will cancel the DTC default actions when the fault no longer exists and the ignition is cycled “off” long enough to power down the PCM.

Diagnostic Aids

- Inspect the wiring for poor electrical connections at the PCM and at the transmission 16–way connector. Look for possible bent, backed out, deformed, or damaged terminals. Check for weak terminal tension as well.

  Also check for a chafed wire that could short to bare metal or other wiring. Inspect for a broken wire inside the insulation.
- When diagnosing for a possible intermittent short or open condition, move the wiring harness while observing test equipment for a change.
- Check harness routing for a potential short to ground in circuit RED/BLK–GRN/RED.
- Scan tool TFT sensor temperature should rise steadily to about 100˚C (212˚F), then stabilize.
- Check for a “skewed” (mis–scaled) sensor by comparing the TFT sensor temperature to the ambient temperature after a vehicle cold soak. A “skewed” sensor can cause delayed garage shifts or TCC complaints.
- Check for a possible torque converter stator problem.
- Verify customer driving habits, trailer towing, etc.

Test Description

The numbers below refer to the step numbers on the diagnostic chart.

2. This test checks for a “skewed” sensor or shorted circuit.
3. This test simulates a TFT DTC P0713.

DTC P0218 Transmission Fluid Over Temperature

Step	Action	Yes	No
1	Perform the following checks: ● Check for possible engine system problems. ● Transmission fluid checking procedure. Refer to Checking Transmission Fluid Level and Condition in Automatic Transmission (4L30–E) Section. Were the checks performed?	Go to Step 2	—
2	1. Install the scan tool. 2. With the engine “off”, turn the ignition switch “on”. NOTE: Before clearing DTC(s), use the scan tool to record “Failure Records” for reference, as data will be lost when “Clear Info” function is used. 3. Record the DTC “Failure Records”. Is the TFT sensor signal voltage less than 1.54 volts?	Go to Step 3	Go to Diagnostic Aids
3	1. Turn the ignition “off”. 2. Disconnect the transmission 16–way connector H–53 (additional DTCs may set). Is the TFT sensor signal voltage greater than 4.92 volts?	Go to Internal Wiring Harness Check.	Go to Step 4
4	Inspect/repair circuit RED/BLK–GRN/RED for a short to ground. Was a problem found?	Go to Step 6	Go to Step 5
5	1. Inspect the PCM for poor connections. 2. Replace the PCM if no poor connections were found. Is the replacement complete?	Go to Step 6	—
6	1. After the repair is complete, use the scan tool to select “DTC”, then “Clear Info” function and ensure the following conditions are met: TFT is less than 125˚C (257˚F) for at least 10 seconds. 2. Review the scan tool “DTC Info”. Has the last test failed or is the current DTC displayed?	Begin diagnosis again Go to Step 1	Repair verified Exit DTC table

DTC P0560 System Voltage Malfunction

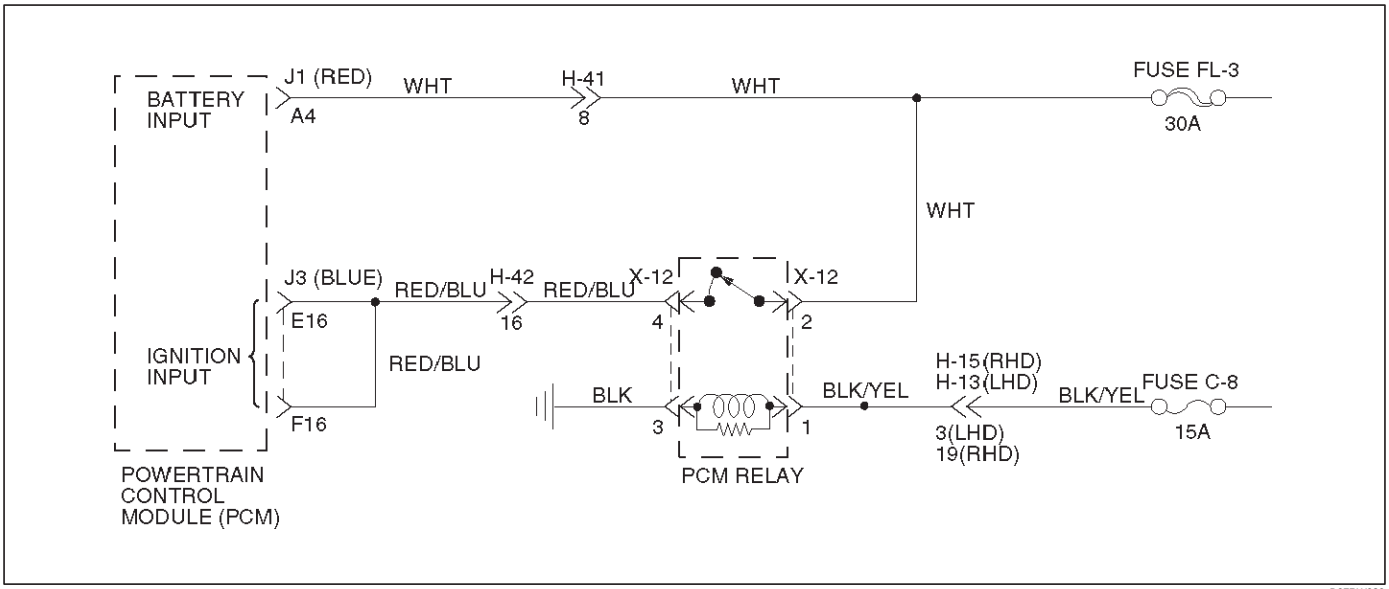

Circuit Description

Circuit WHT is the battery voltage feed for the PCM. Circuit RED/BLU is the ignition voltage feed for the PCM. This DTC detects a low voltage or a high voltage. This is a type “C” DTC.

Conditions For Clearing The DTC

System Voltage Low:

- Engine speed is greater than 1,000 rpm.
- System voltage is less than 10 volts at a maximum transmission temperature of 150˚C (302˚F).
- System voltage is less than 7.3 volts at a minimum transmission temperature of –40˚C (–40˚F).
- All conditions met for 4 seconds.

System Voltage High:

- System voltage is greater than 16 volts for 2 seconds.

Action Taken When The DTC Sets

- Fixed to 4th gear.
- Maximum line pressure.
- Inhibit TCC engagement.
- The PCM will illuminate the CHECK TRANS Lamp.

Conditions For Clearing The DTC/CHECK TRANS Lamp

- The DTC can be cleared from the PCM history by using a scan tool.
- The PCM will turn off the CHECK TRANS Lamp after three consecutive ignition cycles without a failure reported.
- The DTC will be cleared from history when the vehicle has achieved 40 warmup cycles without a failure reported.
- The PCM will cancel the DTC default actions when the fault no longer exists and the ignition is cycled “off” long enough to power down the PCM.

Diagnostic Aids

- Charging the battery with a battery charger and jump starting an engine may set DTC(s). If DTC(s) set when an accessory is operated, check for faulty connections or excessive current draw.
- Check for faulty connections at the starter solenoid or fusible link.
- Check for loose/damaged terminals at generator.
- Check belt wear/tension.

Test Description

The numbers below refer to the step numbers on the diagnostic chart.

3. This test checks charging system voltage.
4. This test checks battery voltage input at the PCM.
6. This test checks ignition voltage input at the PCM.

DTC P0560 System Voltage Malfunction

Step	Action	Yes	No
1	1. Install the scan tool. 2. With the engine “off”, turn the ignition switch “on”. NOTE: Before clearing DTC(s), use the scan tool to record “Failure Records” for reference, as data will be lost when the “Clear Info” function is used. 3. Record the DTC “Failure Records”. Note: If any other DTCs are present, refer to their applicable diagnostic charts before continuing. 4. Using the J–39200 DVOM, measure the battery voltage across the battery terminals. Record the measurement for future reference. Is the voltage higher than 10.5 volts?	Go to Step 2	Go to Engine Electrical in Engine section
2	Start the engine and warm to normal operating temperature. Is the generator/check engine light “on”?	Go to Starting and Charging System in Engine section	Go to Step 3
3	1. Increase the engine speed to 1,000–1,500 rpm. 2. Observe scan tool system voltage. Is the system voltage within 13–15 volts.	Go to Step 4	Go to Starting and Charging System in Engine section
4	1. Turn the ignition switch “off”. 2. Disconnect the J1(RED) and J3 (BLUE) PCM connector (additional DTCs will set). 3. With the engine “off”, turn the ignition switch “on”. 4. Using the J39200 DVOM, measure the battery voltage input at PCM connector terminals J1–A4 and J3–E16. Is there a voltage variance between the voltage measured at the battery (taken in Step 1) and at terminals J1–A4 and J3–E16 that is greater than 0.5 volts?	Go to Step 5	Go to Step 6
5	Repair the high resistance condition in circuit WHT. Was the circuit repaired?	Go to Step 10	—
6	1. Disconnect the J3 (BLUE) PCM connector. 2. Measure the ignition voltage input at PCM connector terminals J3–E16 and J3–F16. Is there a voltage variance between the voltage measured at the battery (taken in Step 1) and at terminals J3–E16 and J3–F16 that is greater than 0.5 volts?	Go to Step 7	Go to Step 8
7	Repair the high resistance condition is circuit RED/BLU. Was the circuit repaired?	Go to Step 10	—
8	Check PCM connector terminals J1–A4, J3–E16 and J3–F16 for bent, damaged, or backed out connector pins. Also check for weak terminal tension. Was a problem found?	Go to Step 10	Go to Step 9

DTC P0560 System Voltage Malfunction (Cont'd)

Step	Action	Yes	No
9	Replace the PCM. Is the replacement complete?	Go to Step 10	—
10	1. After the repair is complete, use the scan tool to select "DTC", then "Clear Info" function and operate the vehicle under the following conditions: Start the vehicle and warm to normal operating temperature. The PCM must see a system voltage between 10 and 16 volts. 2. Review the scan tool "DTC Info". Has the last test failed or is the current DTC displayed?	Begin diagnosis again Go to Step 1	Repair verified Exit DTC table

DTC P0705 Transmission Range Switch (Mode Switch) Illegal Position

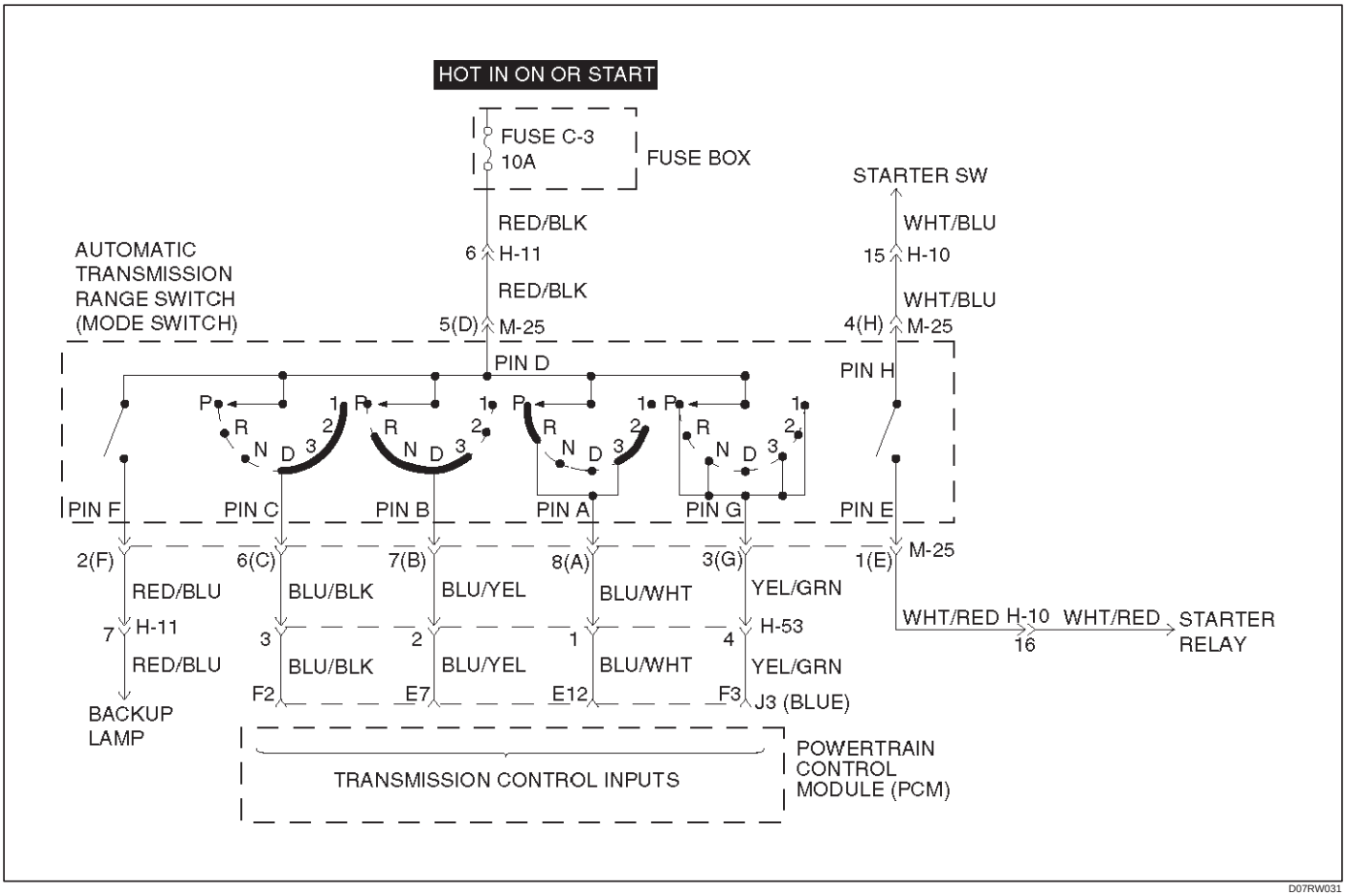

Circuit Description

- The range switch supplies the Powertrain Control Module (PCM) with information regarding the selector lever position: P, R, N, D 3, 2 or L. The selector lever position is indicated by the state of four ON/OFF contracts. The range switch is located on one side of the transmission. It is on the transmission manual shaft and is fixed to the main case.
- The range switch is also used to provide the information P or N to the engine crank wiring. The engine can be cranked only if connector M–25 terminal 4(H) is connected to terminal 1(E) which is connected to ground.
- The range switch is also used to provide the backup lamp power in reverse. This is why the range switch is supplied through a 10A fuse (C–3). This fuse can burn due to a short circuit in the backup lamp.

This DTC detects when a fuse is open or the range switch circuit does not work. This is a type “D” DTC.

Conditions For Setting The DTC

- Range switch illegal positions met for 5 seconds.

Action Taken When The DTC Sets

- Default to D position.
- Inhibit torque management.
- Maximum line pressure.
- The PCM will not illuminate the CHECK TRANS Lamp.

Conditions For Clearing The DTC

- The DTC can be cleared from the PCM history by using a scan tool.
- The DTC will be cleared from history when the vehicle has achieved 40 warmup cycles without a failure reported.
- The PCM will cancel the DTC default actions when the fault no longer exists and the ignition is cycled “off” long enough to power down the PCM.

Diagnostic Aids

- Refer to accompanying chart for the normal range signals and the illegal combinations.
- Inspect the wiring for poor electrical connections at the PCM and at the transmission 8–way connector. Look for possible bent, backed out, deformed or damaged terminals. Check for weak terminal tension as well. Also check for a chafed wire that could short to bare metal or other wiring. Inspect for a broken wire inside the insulation.
- When diagnosing for a possible intermittent short or open condition, move the wiring harness while observing test equipment for a change.

- Refer to the “Range Switch Logic Table” or “Functional Test Procedure” for further information.

Test Description

The numbers below refer to the step numbers on the diagnostic chart:

2. This test checks the indicated range signal to the manual valve actually selected.
5. This test checks for continuity between each selected range switch connector terminals.

Range Switch Logic Table

Range Position	Range Switch Pin			
	A	B	C	P(G)
Park	ON	OFF	OFF	ON
Reverse	ON	ON	OFF	OFF
Neutral	OFF	ON	OFF	ON
D4	OFF	ON	ON	OFF
D3	ON	ON	ON	ON
2	ON	OFF	ON	OFF
L	OFF	OFF	ON	ON
Illegal	OFF	OFF	OFF	OFF
Illegal	OFF	OFF	OFF	ON

DTC P0705 Transmission Range Switch (Mode Switch) Illegal Position

Step	Action	Yes	No
1	Perform the following checks: ● The transmission linkage from the select lever to the manual valve is adjusted properly. ● Diagnostic circuit check. Were the checks performed?	Go to Step 2	—
2	1. Install the scan tool. 2. With the engine “off”, turn the ignition switch “on”. NOTE: Before clearing DTC(s), use the scan tool to record “Failure Records” for reference, as data will be lost when the “Clear Info” function is used. 3. Record the DTC “Failure Records”. 4. Select each transmission range: DL, D2, D3, D4, N, R, and P. Does each selected transmission range match the scan tool “Range Switch” display?	Go to Diagnostic Aids	Go to Step 3
3	Are all range switch pin displays incorrect?	Go to Step 4	Go to Step 5
4	Check fuse and wiring to the 8–way connector terminal 5(D) for opens. Refer to Mode Switch in Automatic Transmission (4L30–E) section. If no problem was found, replace the range switch. Is the replacement complete?	Go to Step 8	—
5	1. Disconnect the 8–way range switch connector. 2. Using ohmmeter, check continuity between terminal 5(D) and respectively terminals 3(G), 6(C), 7(B) and 8(A) of the 8–way range switch connector. 3. Move shift selector lever through all positions and compare results with “Range Switch Logic Table”. Is one range switch pin display incorrect?	Go to Step 6	Go to Step 7
6	Check the affected wiring and connector, and repair. Is the repair complete?	Go to Step 8	—

DTC P0705 Transmission Range Switch (Mode Switch) Illegal Position (Cont'd)

Step	Action	Yes	No
7	Check the Powertrain Control Module (PCM) connectors for poor connection. If no problem was found, replace the PCM. Is the replacement complete?	Go to Step 8	—
8	1. After the repair is complete, use the scan tool to select "DTC", then "Clear Info" function and road test the vehicle. 2. Review the scan tool "DTC Info". Has the last test failed or is the current DTC displayed?	Begin diagnosis again Go to Step 1	Repair verified Exit DTC table

DTC P0706 Transmission Range Switch (Mode Switch) Performance

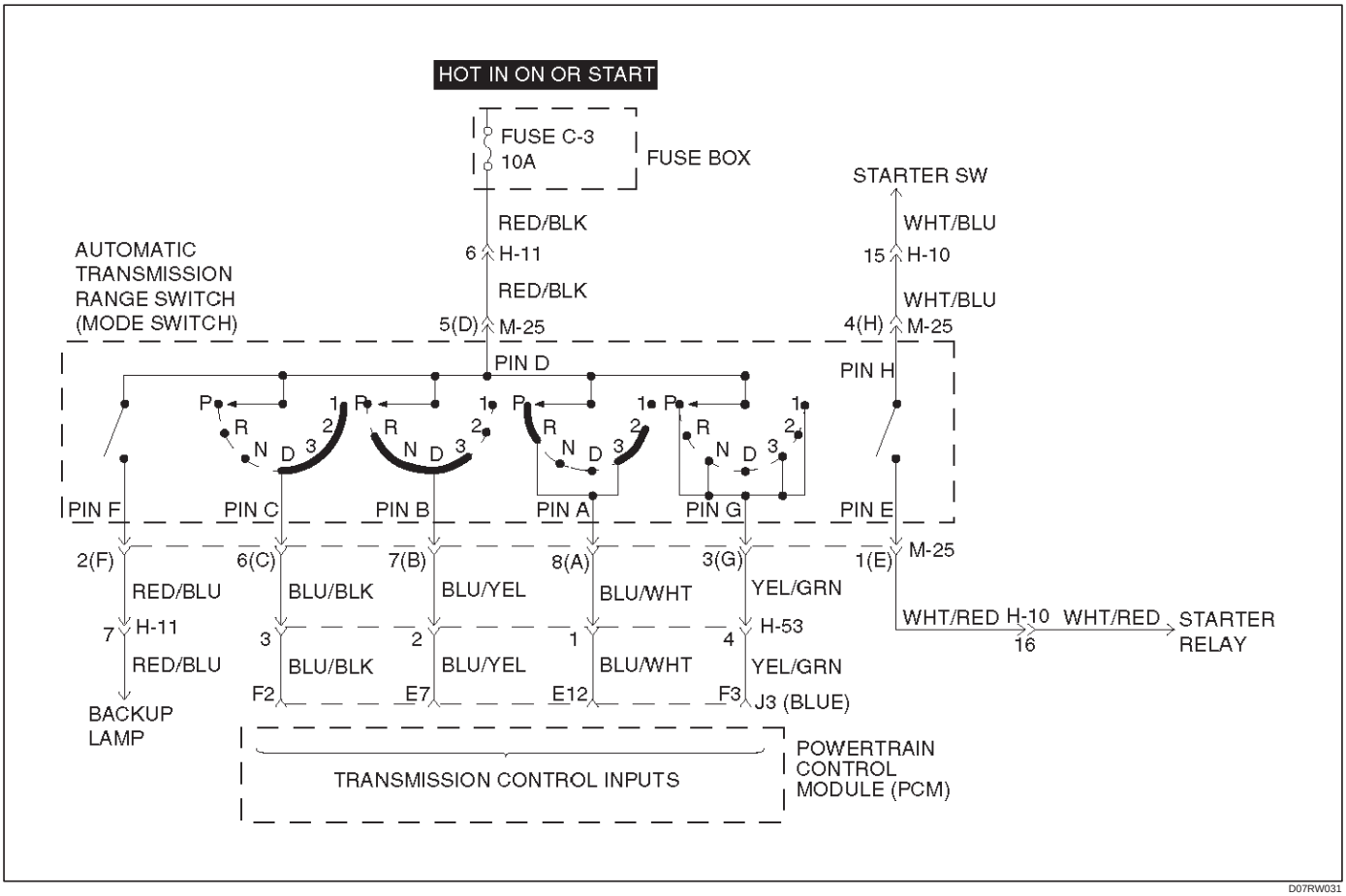

Circuit Description

- The range switch supplies the Powertrain Control Module (PCM) with information regarding the selector lever position: P, R, N, D, 3, 2 or L. The selector lever position is indicated by the state of four ON/OFF contracts. The range switch is located on one side of the transmission. It is on the transmission manual shaft and is fixed to the main case.
- The range switch is also used to provide the information P or N to the engine crank wiring. The engine can be cranked only if connector M–25 terminal 4(H) is connected to terminal 1(E) which is connected to ground.
- The range switch is also used to provide the backup lamp power in reverse. This is why the mode switch is supplied through a 10A fuse (C–3). This fuse can burn due to a shot circuit in the backup lamp.
- This DTC detects an invalid state of the range switch or the range switch circuit by deciphering the range switch inputs. This is a type “D” DTC.

Conditions For Setting The DTC

This DTC will set if any of the following conditions occurs:

Condition 1 (“R” bad position):

- Engine is running.
- No output speed DTCP0722, P0723.
- Output speed greater than 3,200 RPM.
- Range switch indicates “R”.
- All conditions met for 4 seconds.

Condition 2 (“P” or “N” bad position):

- Engine is running.
- No TPS codes.
- Engine speed is less than 3,000 RPM.
- TP angle is greater than 20%.
- Range switch indicates “P” or “N”.
- All conditions met for 4 seconds.

Action Taken When The DTC Sets

- Default to “D” position.
- The PCM will not illuminate the CHECK TRANS Lamp.

Conditions For Clearing The DTC

- The DTC can be cleared from the PCM history by using a scan tool.
- The DTC will be cleared from history when the vehicle has achieved 40 warmup cycles without a failure reported.
- The PCM will cancel the DTC default actions when the fault no longer exists and the ignition is cycled “off” long enough to power down the PCM.

Diagnostic Aids

- Refer to the accompanying chart for the normal range signals and the illegal combinations.
- Inspect the wiring for poor electrical connections at the PCM and at the transmission 8–way connector. Look for possible bent, backed out, deformed or damaged terminals. Check for weak terminal tension as well. Also check for a chafed wire that could short to bare metal or other wiring. Inspect for a broken wire inside the insulation.
- When diagnosing for a possible intermittent short or open condition, move the wiring harness while observing test equipment for a change.
- Refer to the “Range Switch Logic Table” for further information.

Test Description

The numbers below refer to the step numbers on the diagnostic chart:

2. This test checks the indicated range signal to the manual valve actually selected.
5. This test checks for continuity between each selected range switch connector terminals.

Range Switch Logic Table

Range Position	Range Switch Pin			
	A	B	C	P(G)
Park	ON	OFF	OFF	ON
Reverse	ON	ON	OFF	OFF
Neutral	OFF	ON	OFF	ON
D4	OFF	ON	ON	OFF
D3	ON	ON	ON	ON
2	ON	OFF	ON	OFF
L	OFF	OFF	ON	ON
Illegal	OFF	OFF	OFF	OFF
Illegal	OFF	OFF	OFF	ON

DTC P0706 Transmission Range Switch (Mode Switch) Performance

Step	Action	Yes	No
1	Perform the following checks: ● The transmission linkage from the select lever to the manual valve is adjusted properly. ● Diagnostic circuit check. Were the checks performed?	Go to Step 2	—
2	1. Install the scan tool. 2. With the engine “off”, turn the ignition switch “on”. NOTE: Before clearing DTC(s), use the scan tool to record “Failure Records” for reference, as data will be lost when the “Clear Info” function is used. 3. Record the DTC “Failure Records”. 4. Select each transmission range: DL, D2, D3, D4, N, R, and P. Does each selected transmission range match the scan tool “Range Switch” display?	Go to Diagnostic Aids	Go to Step 3
3	Are all range switch pin displays incorrect?	Go to Step 4	Go to Step 5
4	Check fuse and wiring to the 8–way connector terminal 5(D) for opens. Refer to Mode Switch in Automatic Transmission (4L30–E) section. If no problem was found, replace the range switch. Is the replacement complete?	Go to Step 8	—
5	1. Disconnect the 8–way range switch connector. 2. Using ohmmeter, check continuity between terminal 5(D) and respectively terminals 3(G), 6(C), 7(B) and 8(A) of the 8–way range switch connector. 3. Move shift selector lever through all positions and compare results with “Range Switch Logic Table”. Is one range switch pin display incorrect?	Go to Step 6	Go to Step 7
6	Check the affected wiring and connector, and repair. Is the repair complete?	Go to Step 8	—

DTC P0706 Transmission Range Switch (Mode Switch) Performance (Cont'd)

Step	Action	Yes	No
7	Check the Powertrain Control Module (PCM) connectors for poor connection. If no problem was found, replace the PCM. Is the replacement complete?	Go to Step 8	—
8	1. After the repair is complete, use the scan tool to select "DTC", then "Clear Info" function and road test the vehicle. 2. Review the scan tool "DTC Info". Has the last test failed or is the current DTC displayed?	Begin diagnosis again Go to Step 1	Repair verified Exit DTC table

DTC P0712 Transmission Fluid Temperature (TFT) Sensor Circuit Low Input

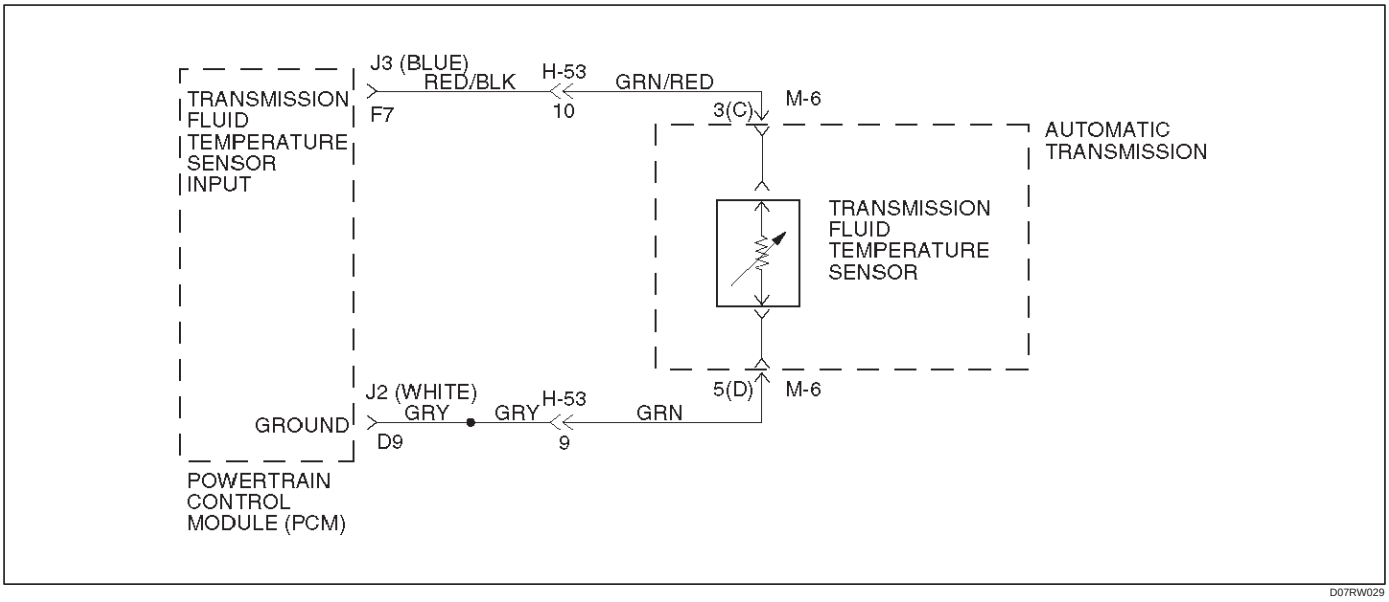

Circuit Description

The TFT sensor is a thermister that controls the signal voltage to the PCM. The PCM supplies a 5–volt reference signal to the sensor on circuit RED/BLK–GRN/RED. When the transmission fluid is cold, the sensor resistance is high. The PCM detects high signal voltage. As the transmission fluid temperature increases to the normal operating temperature of 100˚C (212˚F), the sensor resistance becomes less and the voltage decreases to 1.5 to 2 volts. With transmission fluid over temperature and DTC P0218 also set, check the transmission cooling system.

This DTC detects a continuous short to ground in the TFT signal circuit or the TFT sensor. This is a type “D” DTC.

Conditions For Setting The DTC

- Battery voltage is between 10 and 16 volts.
- Ignition is “on”.
- TFT sensor indicating a voltage less than 0.4 volts.
- All conditions met for 20 seconds.

Action Taken When The DTC Sets

- Transmission default temperature will be:

  80˚C (176˚F) if engine temperature code is set.

  100˚C (212˚F) if engine temperature is warm.

  80˚C (176˚F) if engine run time is greater than 5 minutes.

  21˚C (69.8˚F) if engine run time is less than 5 minutes.
- The PCM will not illuminate the CHECK TRANS Lamp.

Conditions For Clearing The DTC

- The DTC can be cleared from the PCM history by using a scan tool.
- The DTC will be cleared from history when the vehicle has achieved 40 warmup cycles without a failure reported.
- The PCM will cancel the DTC default actions when the fault no longer exists and the ignition is cycled “off” long enough to power down the PCM.

Diagnostic Aids

- Check harness routing for a potential short to ground in circuit RED/BLK–GRN/RED. Scan tool TFT display should rise steadily to about 100˚C (212˚F), then stabilize.
- Inspect the wiring for poor electrical connection at the PCM and at the transmission 16–way connector. Look for possible bent, backed out, deformed or damaged terminals. Check for weak terminal tension as well. Also check for a chafed wire that could short to bare metal or other wiring. Inspect for a broken wire inside the insulation.
- When diagnosing for a possible intermittent short or open condition, move the wiring harness while observing test equipment for a change.
- The temperature to resistance value scale may be used to test the TFT sensor at the various temperature levels to evaluate the possibility of a “skewed” (mis–scaled) sensor.

  A “skewed” sensor could result in delayed garage shifts or TCC complaints.
- Verify customer driving habits, trailer towing, etc.

Test Description

The numbers below refer to the step numbers on the diagnostic chart:

2. This test checks for a short to ground or a “skewed” sensor.
3. This test checks for an internal fault within the transmission by creating an open.

Resistance Chart

˚C	˚F	Resistance (kΩ)
–40	–40	672
0	32	65
20	68	25
80	176	2.5
120	248	0.78
150	304	0.37

DTC P0712 Transmission Fluid Temperature (TFT) Sensor Circuit Low Input

Step	Action	Yes	No
1	Perform the transmission fluid checking procedure. Refer to Checking Transmission Fluid Level and Condition in Automatic Transmission (4L30–E) section. Was the fluid checking procedure performed?	Go to Step 2	Refer to Checking Transmission Fluid Level and Condition in Automatic Transmission (4L30–E) section
2	1. Install the scan tool. 2. With the engine “off”, turn the ignition switch “on”. NOTE: Before clearing DTC(s), use the scan tool to record “Failure Records” for reference, as data will be lost when the “Clear Info” function is used. 3. Record the DTC “Failure Records”. Does the scan tool display a TFT sensor signal voltage less than 0.4 volts?	Go to Step 3	Go to Diagnostic Aids
3	1. Turn the ignition “off”. 2. Disconnect the transmission 16–way connector H–53. 3. Turn the ignition “on”. Does the TFT signal voltage change to match the voltage 4.92 volts?	Go to Step 4	Go to Step 9
4	Using the J39200 DVOM, measure the resistance between terminals 3(C) and 5 (D). Is the resistance within specifications? (See Resistance Chart.)	Go to Diagnostic Aids	Go to Step 5
5	1. Disconnect the transmission 5–way connector M–6. 2. Using the J39200 DVOM, measure the resistance between terminals 3(C) and 5(D). Is the resistance within specifications? (See Resistance Chart.)	Go to Diagnostic Aids	Go to Step 6
6	1. Remove the transmission oil pan. Refer to Transmission Oil Temperature Sensor (Adapter Case) in Automatic Transmission (4L30–E) section. 2. Check the internal wiring harness for a short to ground. Was a problem found?	Go to Step 8	Go to Step 7
7	1. Disconnect the internal wiring harness at the TFT sensor. 2. Measure the resistance of the TFT sensor. Is the resistance within specifications? (See Resistance Chart.)	Go to Diagnostic Aids	Go to Step 8
8	Replace the TFT Sensor. Is the replacement complete?	Go to Step 12	—

DTC P0712 Transmission Fluid Temperature (TFT) Sensor Circuit Low Input (Cont'd)

Step	Action	Yes	No
9	Check circuit RED/BLK–GRN/RED for a short to ground. Was a problem found?	Go to Step 12	Go to Step 10
10	Check the PCM for faulty connections. Was a problem found?	Go to Step 12	Go to Step 11
11	Replace the PCM. Refer to Powertrain Control Module (PCM) in Automatic Transmission (4L30–E) section. Is the replacement complete?	Go to Step 12	—
12	1. After the repair is complete, use the scan tool to select "DTC", then "Clear Info" function and ensure the following conditions are met: TFT sensor indicates a voltage greater than 0.33 volts for 2 seconds. 2. Review the scan tool "DTC info". Has the last test failed or is the current DTC displayed?	Begin diagnosis again Go to Step 1	Repair verified Exit DTC table

DTC P0713 Transmission Fluid Temperature (TFT) Sensor Circuit High Input

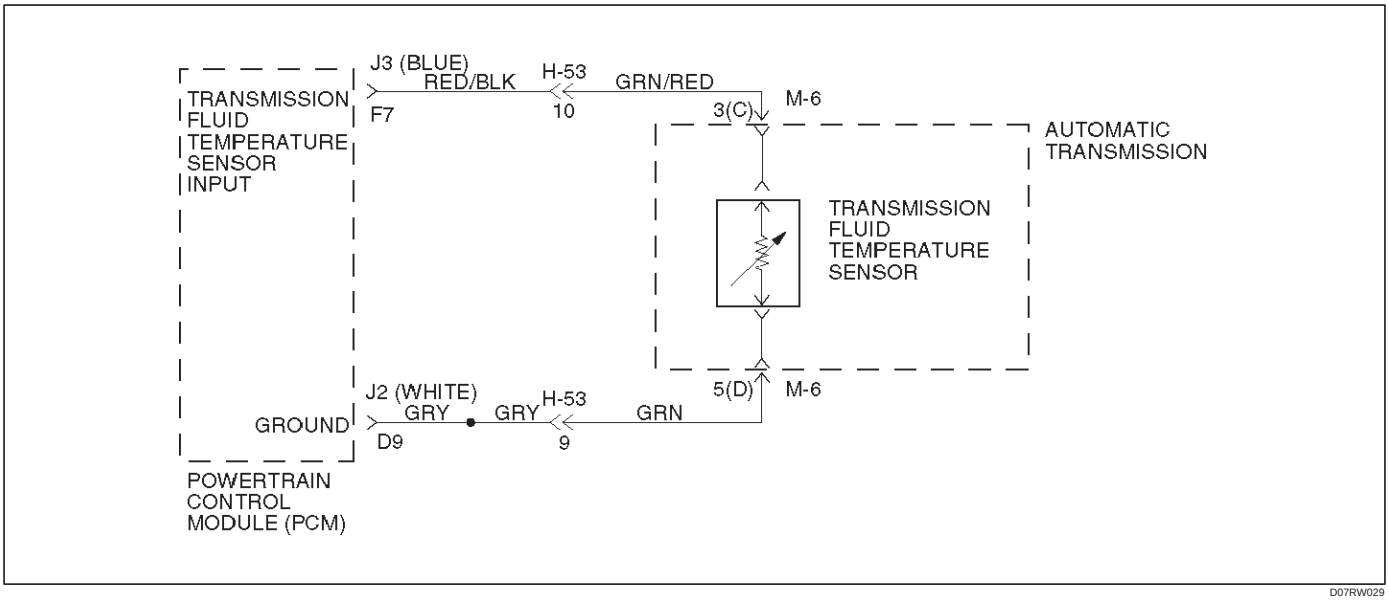

Circuit Description

The TFT sensor is a thermistor that controls the signal voltage to the PCM. The PCM supplies a 5–volt reference signal to the sensor on circuit RED/BLK–GRN/RED. When the transmission fluid is cold, the sensor resistance is high and the PCM will sense high signal voltage. As the transmission fluid temperature warms to the normal operating temperature of 100˚C (212˚F), the sensor resistance becomes less and the voltage decreases to about 1.5 to 2 volts.

This DTC detects a continuous open or short to power in the TFT signal circuit or the TFT sensor. This is a type “D” DTC.

Conditions For Setting The DTC

- Battery voltage is between 10 and 16 volts.
- Ignition is “on”.
- TFT sensor indicating a voltage greater than 4.86 volts.
- All conditions met for 20 seconds.

Action Taken When The DTC Sets

- Transmission default temperature will be:

  80˚C (176˚F) if engine temperature code is set.

  100˚C (212˚F) if engine temperature is warm.

  80˚C (176˚F) if engine run time is greater than 5 minutes.

  21˚C (69.8˚F) if engine run time is less than 5 minutes.
- The PCM will not illuminate the CHECK TRANS Lamp.

Conditions For Clearing The DTC

- The DTC can be cleared from the PCM history by using a scan tool.
- The DTC will be cleared from history when the vehicle has achieved 40 warmup cycles without a failure reported.
- The PCM will cancel the DTC default actions when the fault no longer exists and the ignition is cycled “off” long enough to power down the PCM.

Diagnostic Aids

- Inspect the wiring for poor electrical connection at the PCM and at the transmission 16–way connector. Look for possible bent, backed out, deformed or damaged terminals. Check for weak terminal tension as well. Also check for a chafed wire that could short to bare metal or other wiring. Inspect for a broken wire inside the insulation.
- When diagnosing for a possible intermittent short or open condition, move the wiring harness while observing test equipment for a change.
- Scan tool displays transmission fluid temperature in degrees. After transmission is operating, the temperature should rise steadily to about 100˚C (212˚F), then stabilize.
- The temperature to resistance value scale may be used to check the TFT sensor at the various temperature levels to evaluate the possibility of a “skewed” (mis–scaled) sensor.

  A “skewed” sensor could result in hard shifts or TCC complaints.

Test Description

The numbers below refer to the step numbers on the diagnostic chart:

2. This check verifies problem in the TFT sensor circuit.
3. This test simulates a TFT sensor DTC P0712. If the PCM recognizes the low signal voltage (high temperature), and the scan tool displays 146˚C (295˚F) or greater, the PCM and wiring are OK.

5. This test checks the TFT sensor and internal wiring harness.

Resistance Chart

˚C	˚F	Resistance (kΩ)
–40	–40	672
0	32	65
20	68	25
80	176	2.5
120	248	0.78
150	304	0.37

DTC P0713 Transmission Fluid Temperature (TFT) Sensor Circuit High Input

Step	Action	Yes	No
1	Perform the transmission fluid checking procedure. Refer to Checking Transmission Fluid Level and Condition in Automatic Transmission (4L30–E) section. Was the fluid checking procedure performed?	Go to Step 2	Refer to Checking Transmission Fluid Level and Condition in Automatic Transmission (4L30–E) section
2	1. Install the scan tool. 2. With the engine “off”, turn the ignition switch “on”. NOTE: Before clearing DTC(s), use the scan tool to record “Failure Records” for reference, as data will be lost when the “Clear Info” function is used. 3. Record the DTC “Failure Records”. Does the scan tool display a TFT sensor signal voltage greater than 4.86 volts?	Go to Step 3	Go to Diagnostic Aids
3	1. Turn the ignition “off”. 2. Disconnect the transmission 16–way connector H–53. 3. Install a fused jumper wire from terminal 3(C) to 5(D) on the engine harness. 4. Turn the ignition “on”. Does the TFT signal voltage drop to less than 0.4 volts?	Go to Step 4	Go to Step 9
4	1. Turn the ignition “off”. 2. Using the J39200 DVOM, measure the resistance between terminals 3(C) and 5(D). Is the resistance within specifications? (See Resistance Chart.)	Go to Diagnostic Aids	Go to Step 5
5	1. Disconnect the transmission 5–way connector M–6. 2. Using the J39200 DVOM, measure the resistance between terminals 3(C) and 5(D). Is the resistance within specifications? (See Resistance Chart.)	Go to Diagnostic Aids	Go to Step 6
6	1. Remove the transmission oil pan. 2. Check the internal wiring harness for an open. Refer to Transmission Oil Temperature Sensor (Adapter Case) in Automatic Transmission (4L30–E) section. Was a problem found and corrected?	Go to Step 13	Go to Step 7
7	1. Disconnect the internal wiring harness at the TFT sensor. 2. Measure the resistance of the TFT sensor. Is the resistance within specifications? (See Resistance Chart.)	Go to Diagnostic Aids	Go to Step 8

DTC P0713 Transmission Fluid Temperature (TFT) Sensor Circuit High Input (Cont'd)

Step	Action	Yes	No
8	Replace TFT sensor. Refer to Transmission Oil Temperature Sensor (Adapter Case) in Automatic Transmission (4L30–E) section. Is the replacement complete?	Go to Step 13	—
9	Check circuit RED/BLK–GRN/RED for an open or short to B+. Was a problem found?	Go to Step 13	Go to Step 10
10	Check circuit GRY–GRN for an open. Was a problem found?	Go to Step 13	Go to Step 11
11	Check the PCM for faulty or intermittent connections. Was a problem found?	Go to Step 13	Go to Step 12
12	Replace the PCM. Refer to Powertrain Control Module (PCM) in Automatic Transmission (4L30–E) section. Is the replacement complete?	Go to Step 13	—
13	1. After the repair is complete, use the scan tool to select "DTC", then "Clear Info" function and ensure the following conditions are met: 2. TFT sensor indicates a voltage less than 4.92 volts for 2 seconds. 3. Review the scan tool "DTC Info". Has the last test failed or is the current DTC displayed?	Begin diagnosis again Go to Step 1	Repair verified Exit DTC table

DTC P0719 TCC Brake Switch Circuit High (Stuck On)

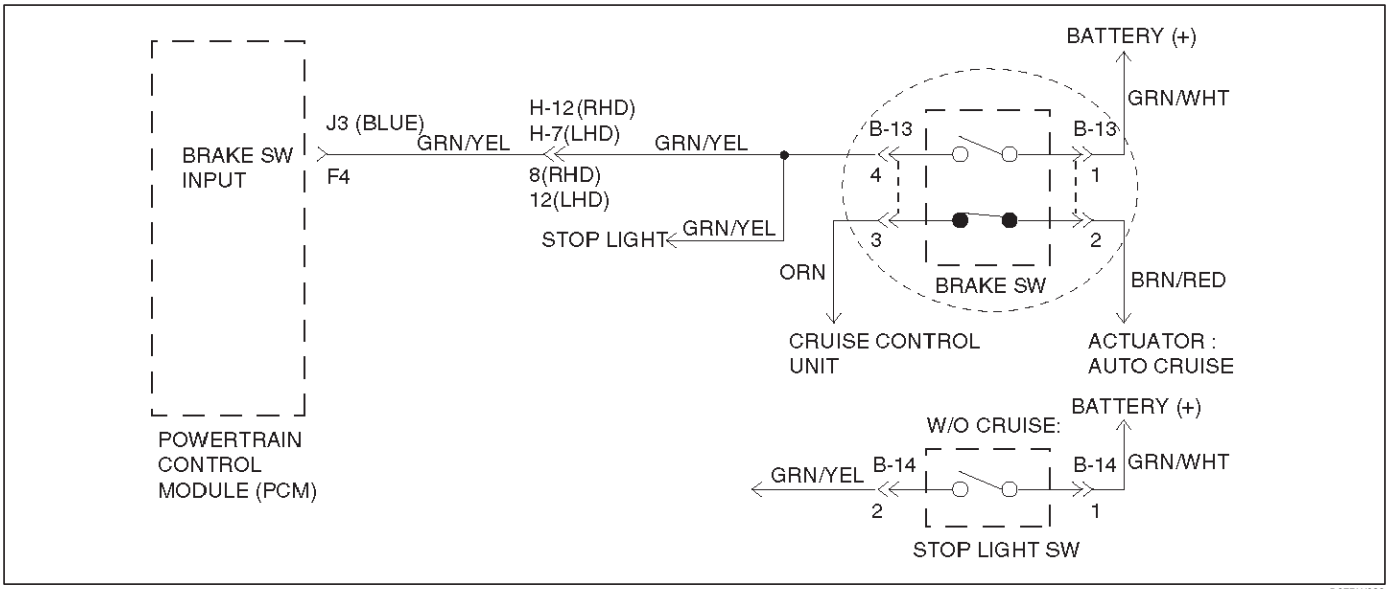

Circuit Description

The TCC brake switch is used to indicate brake pedal status. The normally opened brake switch signal voltage circuit is opened.

Brake switch supplies a B+ signal on circuit GRN/YEL to the PCM when the brakes are applied. The PCM uses this signal to deenergize the TCC solenoid when the brakes are applied.

This DTC detects a closed brake switch during accelerations. This is a type “D” DTC.

Conditions For Setting The DTC

- No OSS DTCs P0722 or P0723.
- The PCM detects a closed brake switch/circuit (12 volts) for 2 seconds, and the following events occur seven consecutive times: vehicle speed is less than 8 km/h (5 mph); then vehicle speed is between 8 and 32 km/h (5 and 20 mph) for 4 seconds; then vehicle speed is greater than 32 km/h (20 mph) for 4 seconds.

Action Taken When The DTC Sets

- If throttle opening is greater than 10% and vehicle speed is greater than 45 km/h (28 mph), then disregard brake switch contingency for TCC off mode.
- The PCM will not illuminate the CHECK TRANS Lamp.

Conditions For Clearing The DTC

- The DTC can be cleared from the PCM history by using a scan tool.
- The DTC will be cleared from history when the vehicle has achieved 40 warmup cycles without a failure reported.
- The PCM will cancel the DTC default actions when the fault no longer exists and the ignition is cycled “off” long enough to power down the PCM.

Diagnostic Aids

- Inspect the wiring for poor electrical connections at the PCM and TCC brake switch. Look for possible bent, backed out, deformed or damaged terminals. Check for weak terminal tension as well. Also check for a chafed wire that could short to bare metal or other wiring. Inspect for a broken wire inside the insulation.
- When diagnosing for a possible intermittent short or open condition, move the wiring harness while observing test equipment for a change.
- Check customer driving habits and/or unusual driving conditions (i.e. stop and go, highway).
- Check brake switch for proper mounting and adjustment.

Test Description

The numbers below refer to the step numbers on the diagnostic chart:

2. This test checks for voltage at the brake switch.
5. This test checks the brake switch.
8. This test checks circuit GRN/YEL at the PCM.

DTC P0719 TCC Brake Switch Circuit High (Stuck On)

Step	Action	Yes	No
1	1. Install the scan tool. 2. With the engine “off”, turn the ignition switch “on”. If ABS code is set, check applicable fuse. NOTE: Before clearing DTC(s), use the scan tool to record “Failure Records” for reference, as data will be lost when the “Clear Info” function is used. 3. Record the DTC “Failure Records”. 4. Apply then release the brake pedal. Does the scan tool display “TCC Brake Switch” as “closed” with the brake pedal applied, and then display “open” when the brake pedal is released?	Go to Diagnostic Aids	Go to Step 2
2	1. Connect the test light to ground. 2. Back probe ignition feed circuit terminal B13–1 at the brake switch. Is the test light “on”?	Go to Step 3	Go to Step 4
3	1. Connect the test light to ground. 2. Back probe circuit terminal B13–4 at the brake switch. Is the test light “off”?	Go to Step 7	Go to Step 5
4	Repair the open in battery feed circuit terminal B13–1 to the brake switch. If fuse is open, check circuit terminal B13–4 for a short to ground. Is the repair complete?	Go to Step 13	—
5	Disconnect brake switch connector B–13 and ignition switch “on”. Is the test light “on”?	Go to Step 8	Go to Step 6
6	Check the brake switch short (B13–1 and B13–4). Was a problem found?	Go to Step 9	Go to Step 10
7	Check circuit terminal B13–4 for a short to voltage. Ignition switch “on”. Is the test light “on”?	Go to Step 8	Go to Step 10
8	1. Disconnect the J3 (BLUE) PCM connector. 2. Check circuit terminal B13–4 for a short to voltage. Was a problem found?	Go to Step 13	Go to Step 10
9	Replace the brake switch. Is the replacement complete?	Go to Step 13	—
10	1. Turn the ignition “off”. 2. Reconnect the J3 (BLUE) PCM connector. 3. Turn the ignition “on”. Does the scan tool display “TCC Brake Switch” as “open” with the brake applied, then display “closed” with the brake pedal released?	Go to Diagnostic Aids	Go to Step 11
11	Check the PCM for faulty or intermittent connections. Was a problem found and corrected?	Go to Step 13	Go to Step 12

DTC P0719 TCC Brake Switch Circuit High (Stuck On) (Cont'd)

Step	Action	Yes	No
12	Replace the PCM. Refer to Powertrain Control Module (PCM) in Automatic Transmission (4L30–E) section. Is the replacement complete?	Go to Step 13	—
13	1. After the repair is complete, use the scan tool to select "DTC", then "Clear Info" function and ensure the following conditions are met: The PCM brake switch signal must indicate 0 volts for 1 seconds with the brake pedal applied. 2. Review the scan tool "DTC Info". Has the last test failed or is the current DTC displayed?	Begin diagnosis again Go to Step 1	Repair verified Exit DTC table

DTC P0722 Transmission Output Speed Sensor (OSS) Low Input

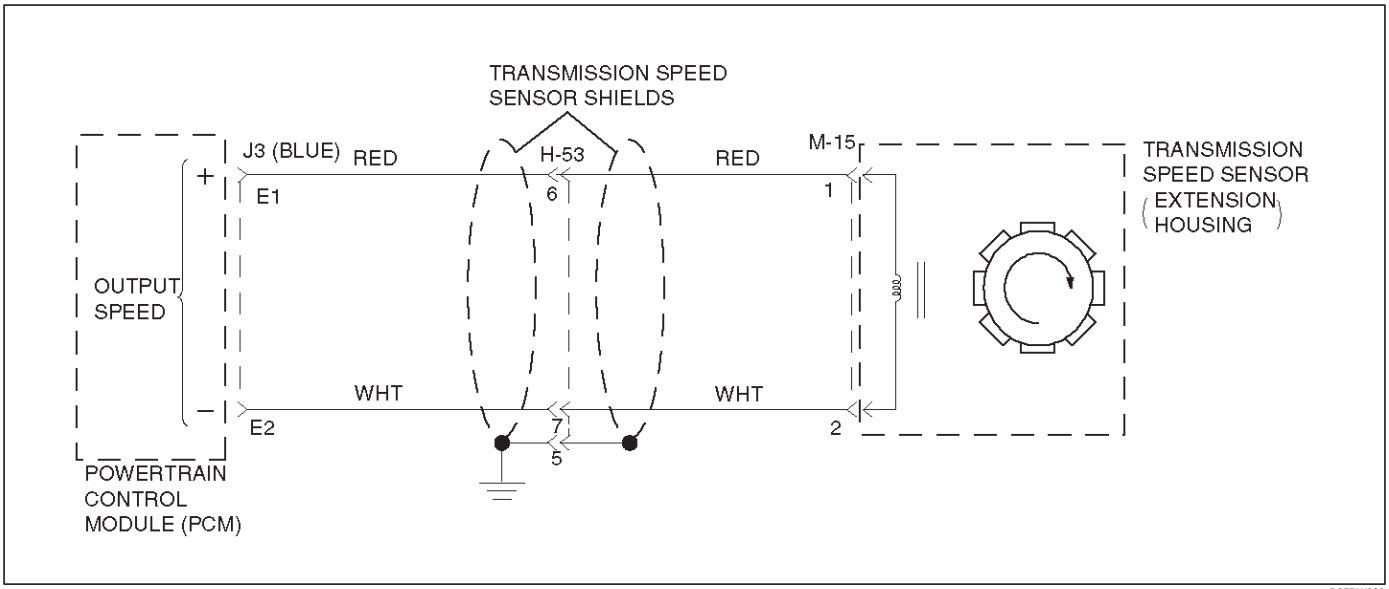

Circuit Description

Output speed information is provided to the PCM by the OSS, which is a permanent magnet (PM) generator. The PM generator produces a pulsing AC voltage. The AC voltage level and number of pulses increases as the speed of the vehicle increases. The PCM then converts the pulsing voltage to output speed, which is used for calculations. The vehicle speed can be displayed with a scan tool.

This DTC detects a low output speed when there is a high engine speed in a drive gear range. This is a type “C” DTC.

Conditions For Setting The DTC

- No MAP DTCs P0107 or P0108, P0106, P1106, P1107.
- No TPS DTCs P0122 or P0123.
- Not in Park or Neutral.
- TP angle is greater than 10%.
- Engine vacuum is between 0 and 70kPa.
- Engine speed is between 3,000 and 7,000 rpm.
- Transmission output speed is less than 0 rpm.
- All conditions met for 5 seconds.

Action Taken When The DTC Sets

- Fixed to 4th gear.
- Maximum line pressure.
- Inhibit TCC engagement.
- The PCM will illuminate the CHECK TRANS Lamp.

Conditions For Clearing The DTC/CHECK TRANS Lamp

- The PCM will turn off the CHECK TRANS Lamp after three consecutive ignition cycles without a failure reported.
- The DTC can be cleared from the PCM history by using a scan tool. The DTC will be cleared from history when the vehicle has achieved 40 warmup cycles without a failure reported.
- The PCM will cancel the DTC default actions when the fault no longer exists and the ignition is cycled “off” long enough to power down the PCM.

Diagnostic Aids

- An OSS DTC P0722 will set when no output speed is at detected at start off.
- Inspect the wiring for poor electrical connection at the PCM. Look for possible bent, backed out, deformed or damaged terminals. Check for weak terminal tension as well. Also check for a chafed wire that could short to bare metal or other wiring. Inspect for a broken wire inside the insulation.
- When diagnosing for a possible intermittent short or open condition, move the wiring harness while observing test equipment for a change.

Test Description

The numbers below refer to the step numbers on the diagnostic chart:

4. This test checks the OSS circuit.
5. This test checks the integrity of the OSS.
7. This test checks the 5–volt and ground circuit of the PCM.

DTC P0722 Transmission Output Speed Sensor (OSS) Low Input

Step	Action	Yes	No
1	1. Install the scan tool. 2. With the engine “off”, turn the ignition switch “on”. NOTE: Before clearing DTC(s), use the scan tool to record “Failure Records” for reference, as data will be lost when the “Clear Info” function is used. 3. Record the DTC “Failure Records”. 4. Raise the drive wheels. 5. Start the engine. 6. Place the transmission in any drive range. With the drive wheels rotating, does the “Trans Output Speed” increase with the drive wheel speed?	Go to Diagnostic Aids	Go to Step 2
2	Does the speedometer work?	Go to Step 3	Go to Step 4
3	Check for the most current and/or incorrect calibration. Is the calibration current?	Go to Step 16	Go to Step 4
4	1. Turn the ignition “off”. 2. Disconnect the J3 (BLUE) PCM connector. 3. Using the J39200 DVOM, measure the resistance between harness connector terminals J3–E1 and J3–E2. Is the reading 3,000 ohms?	Go to Step 5	Go to Step 6
5	1. Select AC volts. 2. Rotate the rear wheels, ensuring the driveshaft is turning. Is the voltage greater than 0.5 volts?	Go to Step 7	Go to Step 8
6	Inspect circuits RED and WHT for a poor connection or an open circuit. Was a problem found?	Go to Step 17	Go to Step 8
7	1. Reconnect the J3 (BLUE) PCM connector. 2. Disconnect the OSS harness from the OSS. 3. With the engine “off”, turn the ignition “on”. 4. Using the J 39200 DVOM, measure the voltage at the OSS harness connector terminals M15–1 and M15–2. Is the reading between 4.0 to 5.1 volts?	Go to Step 16	Go to Step 10
8	1. Remove the OSS. 2. Check the output shaft speed sensor rotor for damage or misalignment. Refer to Speed Sensor (Extension Housing) in Automatic Transmission (4L30–E) section. Was a problem found?	Go to Step 17	Go to Step 9
9	Replace the OSS. Is the replacement complete?	Go to Step 17	—
10	Was the reading in step 7 less than 4.0 volts?	Go to Step 12	Go to Step 11
11	Was the reading in step 7 greater than 5.1 volts?	Go to Step 15	—
12	Using the J 39200 DVOM to chassis ground, measure the voltage on circuit RED. Is the reading between 4.0 to 5.1 volts?	Go to Step 13	Go to Step 14
13	Repair the open in circuit WHT. Is the repair complete?	Go to Step 17	—
14	Check circuit RED for a short to ground or open. Was a problem found and corrected?	Go to Step 17	Go to Step 16

DTC P0722 Transmission Output Speed Sensor (OSS) Low Input (Cont'd)

Step	Action	Yes	No
15	Repair the short to B+ in circuit RED. Is the repair complete?	Go to Step 17	—
16	Replace the PCM. Refer to Powertrain Control Module (PCM) in automatic Transmission (4L30–E) section. Is the replacement complete?	Go to Step 17	—
17	1. After the repair is complete, use the scan tool to select "DTC", then "Clear Info" function and operate the vehicle under the following conditions: Transmission output speed is greater than 101 rpm for 3 seconds. 2. Review the scan tool "DTC Info". Has the last test failed or is the current DTC displayed?	Begin diagnosis again Go to Step 1	Repair verified Exit DTC table

DTC P0723 Transmission Output Speed Sensor (OSS) Intermittent

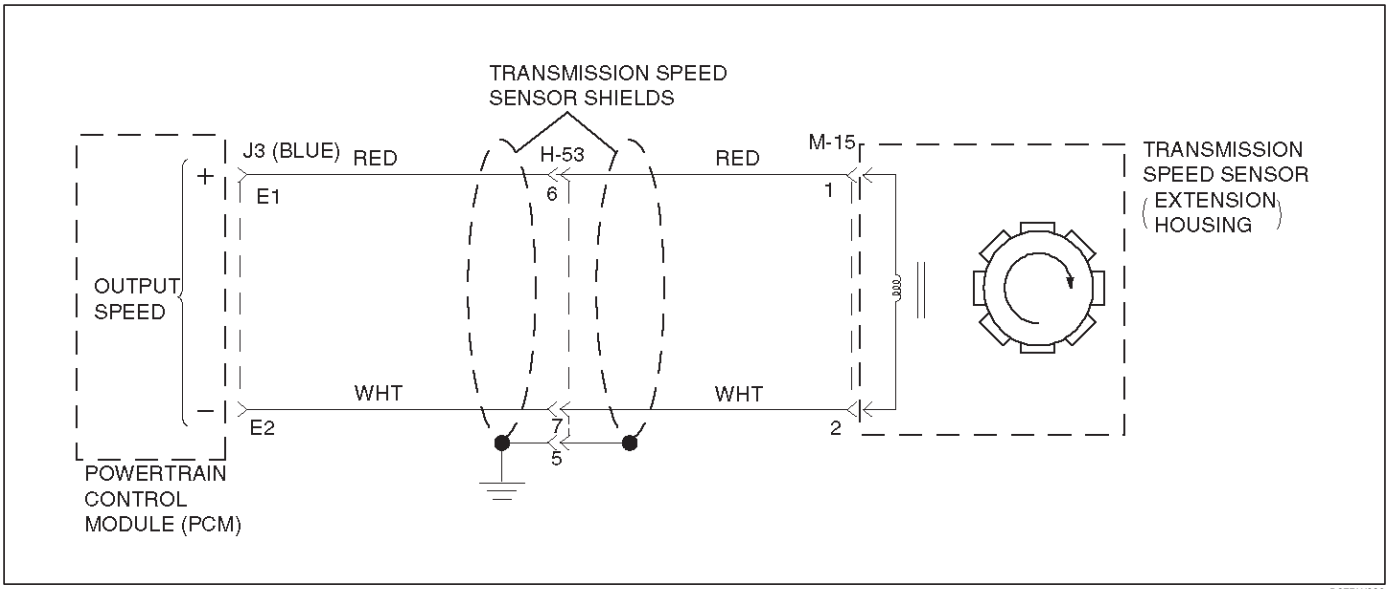

Circuit Description

Output speed information is provided to the PCM by the OSS, which is a permanent magnet (PM) generator. The PM generator produces a pulsing AC voltage. The AC voltage level and number of pulses increases as the speed of the vehicle increases. The PCM then converts the pulsing voltage to output speed, which is used for calculations. The vehicle speed can be displayed with a scan tool.

This DTC detects a low output speed when there is a high engine speed in a drive gear range. This is a type “C” DTC.

Conditions For Setting The DTC

In Park or Neutral:

- Transmission output speed change is greater than 10,000 rpm.
- Conditions met for 6 seconds.
- Engine running time is greater than 2 seconds.

Not in Park or Neutral:

- Transmission output speed change is greater than 512 rpm.
- Conditions met for 0.075 seconds
- Engine running time is greater than 2 seconds.
- Engine vacuum is less than 70 kPa.
- Output speed is greater than 1,380 rpm for 1 second.
- NORAW–NOLAST < 60 rpm for 6 seconds.

  NORAW: Latest raw data of output shaft speed.

  NOLAST: Filtered pervious data of output speed.

Action Taken When The DTC Sets

- Fixed to 4th gear.
- Maximum line pressure.
- Inhibit TCC engagement.
- The PCM will illuminate the CHECK TRANS Lamp.

Conditions For Clearing The DTC/CHECK TRANS Lamp

- The PCM will turn off the CHECK TRANS Lamp after three consecutive ignition cycles without a failure reported.
- The DTC can be cleared from the PCM history by using a scan tool.
- The DTC will be cleared from history when the vehicle has achieved 40 warmup cycles without a failure reported.
- The PCM will cancel the DTC default actions when the fault no longer exists and the ignition is cycled “off” long enough to power down the PCM.

Diagnostic Aids

- A OSS DTC P0723 will set when output speed has been detected and is lost.
- Inspect the wiring for poor electrical connection at the PCM. Look for possible bent, backed out, deformed or damaged terminals. Check for weak terminal tension as well. Also check for a chafed wire that could short to bare metal or other wiring. Inspect for a broken wire inside the insulation.
- When diagnosing for a possible intermittent short or open condition, move the wiring harness while observing test equipment for a change.

Test Description

The numbers below refer to the step numbers on the diagnostic chart:

4. This test checks the OSS circuit.
5. This test checks the integrity of the OSS.
7. This test checks the 5–volt and ground circuit of the PCM.

DTC P0723 Transmission Output Speed Sensor (OSS) Intermittent

Step	Action	Yes	No
1	1. Install the scan tool. 2. With the engine “off”, turn the ignition switch “on”. NOTE: Before clearing DTC(s), use the scan tool to record “Failure Records” for reference, as data will be lost when the “Clear Info” function is used. 3. Record the DTC “Failure Records”. 4. Raise the drive wheels. 5. Start the engine. 6. Place the transmission in any drive range. With the drive wheels rotating, does the “Trans Output Speed” increase with the drive wheel speed?	Go to Diagnostic Aids	Go to Step 2
2	Does the speedometer work?	Go to Step 3	Go to Step 4
3	Check for the most current and/or incorrect calibration. Is the calibration current?	Go to Step 16	Go to Step 4
4	1. Turn the ignition “off”. 2. Disconnect the J3 (BLUE) PCM connector. 3. Using the J39200 DVOM, measure the resistance between harness connector terminals J3–E1 and J3–E2. Is the reading 3,000 ohms?	Go to Step 5	Go to Step 6
5	1. Select AC volts. 2. Rotate the rear wheels, ensuring the driveshaft is turning. Is the voltage greater than 0.5 volts?	Go to Step 7	Go to Step 8
6	Inspect circuits RED and WHT for a poor connection or an open circuit. Was a problem found?	Go to Step 17	Go to Step 8
7	1. Reconnect the J3 (BLUE) PCM connector. 2. Disconnect the OSS harness from the OSS. 3. With the engine “off”, turn the ignition “on”. 4. Using the J 39200 DVOM, measure the voltage at the OSS harness connector terminals M15–1 and M15–2. Is the reading between 4.0 to 5.1 volts?	Go to Step 16	Go to Step 10
8	1. Remove the OSS. 2. Check the output shaft speed sensor rotor for damage or misalignment. Refer to Speed Sensor (Extension Housing) in Automatic Transmission (4L30–E) section. Was a problem found?	Go to Step 17	Go to Step 9
9	Replace the OSS. Is the replacement complete?	Go to Step 17	—
10	Was the reading in step 7 less than 4.0 volts?	Go to Step 12	Go to Step 11
11	Was the reading in step 7 greater than 5.1 volts?	Go to Step 15	—
12	Using the J 39200 DVOM to chassis ground, measure the voltage on circuit RED. Is the reading between 4.0 to 5.1 volts?	Go to Step 13	Go to Step 14
13	Repair the open in circuit WHT. Is the repair complete?	Go to Step 17	—
14	Check circuit RED for a short to ground or open. Was a problem found and corrected?	Go to Step 17	Go to Step 16

DTC P0723 Transmission Output Speed Sensor (OSS) Intermittent (Cont'd)

Step	Action	Yes	No
15	Repair the short to B+ in circuit RED. Is the repair complete?	Go to Step 17	—
16	Replace the PCM. Refer to Powertrain Control Module (PCM) in Automatic Transmission (4L30–E) section. Is the replacement complete?	Go to Step 17	—
17	1. After the repair is complete, use the scan tool to select "DTC", then "Clear Info" function and operate the vehicle under the following conditions: Transmission output speed is greater than 101 rpm for 3 seconds. 2. Review the scan tool "DTC Info". Has the last test failed or is the current DTC displayed?	Begin diagnosis again Go to Step 1	Repair verified Exit DTC table

DTC P0730 Transmission Incorrect Gear Ratio

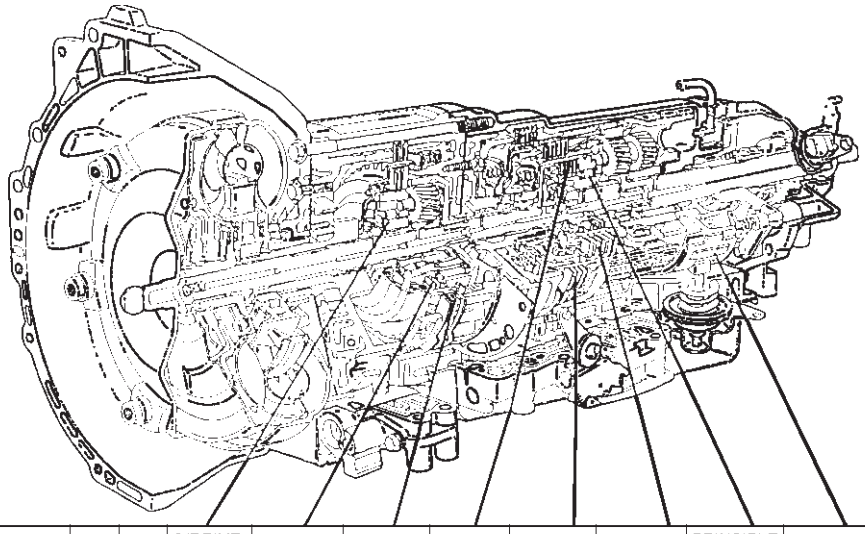

RANGE	GEAR	SOL A N.C.	SOL B N.O.	O/DRIVE ROLLER CLUTCH (OFW)	OVERRUN CLUTCH (OC)	FOURTH CLUTCH (C4)	THIRD CLUTCH (C3)	REVERSE CLUTCH (RC)	SECOND CLUTCH (C2)	PRINCIPLE SPRAG ASSEMBLY (PFW)	BAND ASSEMBLY (B)	ENGINE BRAKING
P-N		OFF	ON		APPLIED							NO
R	REVERSE	OFF	ON	LD	APPLIED			APPLIED		LD		NO
D	1ST	OFF	ON	LD	APPLIED					LD	APPLIED	NO
	2ND	ON	ON	LD	APPLIED				APPLIED	FW	APPLIED	YES
	3RD	ON	OFF	LD	APPLIED		APPLIED		APPLIED	NE		YES
	4TH	OFF	OFF	FW		APPLIED	APPLIED		APPLIED	NE		YES
3	1ST	OFF	ON	LD	APPLIED					LD	APPLIED	NO
	2ND	ON	ON	LD	APPLIED				APPLIED	FW	APPLIED	YES
	3RD	ON	OFF	LD	APPLIED		APPLIED		APPLIED	NE		YES
2	1ST	OFF	ON	LD	APPLIED		APPLIED			LD	APPLIED	YES
	2ND	ON	ON	LD	APPLIED				APPLIED	FW	APPLIED	YES
L	1ST	OFF	ON	LD	APPLIED		APPLIED			LD	APPLIED	YES

LD : LOCKED IN DRIVE FW : FREEWHEELING NE : NOT EFFECTIVE

D07RT015

Circuit Description

- The Powertrain Control Module (PCM) calculates the slippage of the converter and transmission based upon the engine speed, the output speed, and the current gear ratio.
- The slippage of the converter at a high enough engine speed is low. The transmission should not slip more than a given value when there is no shift.
- This DTC detects a slip at each gear. This is a type “C” DTC.

Conditions For Setting The DTC

- No Output Speed Sensor DTC(s) P0722, P0723.
- Not in Park, Neutral, or Reverse.
- Engine speed is greater than 3,500 rpm.
- 3 seconds since upshift.
- 3 seconds since downshift.
- 3 seconds since garage shift (N→D).
- And one of the following conditions occur:
  - Slip is greater than 508 rpm in 1st gear.
  - Slip is greater than 468 rpm in 2nd gear.
  - Slip is greater than 449 rpm on 3rd gear.
  - Slip is greater than 440 rpm on 4th gear.
- All conditions met for 5.5 seconds.

Action Taken When The DTC Sets

- Maximum line pressure.
- The PCM will illuminate the CHECK TRANS Lamp.

Conditions For Clearing The DTC/CHECK TRANS Lamp

- The PCM will turn “off” the CHECK TRANS Lamp after three consecutive ignition cycles without a failure reported.
- The DTC can be cleared from PCM memory by using a scan tool.
- The DTC can also be cleared from memory when the vehicle has made 40 warmup cycles without a failure reported.
- The PCM will cancel the DTC Actions Taken items when the fault conditions no longer exist and the ignition is cycles “off” long enough to power down the PCM.

Diagnostic Aids

- Check for intermittent output speed sensor circuit problems.
- Check for possible incorrect calibration. (PCM part No., tire specification, and rear axle ratio)

Test Description

The numbers below refer to the step numbers on the diagnostic chart:

2. This step checks for possible low fluid level causing slipping resulting in an undefined gear ratio.
3. This step checks for correct gear ratios for commanded gears.
4. This step checks for low line pressure.

DTC P0730 Transmission Incorrect Gear Ratio

Step	Action	Yes	No
1	Visually inspect the transmission cooling system for fluid leaks. ● Refer to Chart 16: Possible Causes of Transmission Fluid Leaks of Mechanical/Hydraulic Diagnosis Symptoms Index in Automatic Transmission (4L30–E) section Was condition found and corrected?	Go to Step 6	Go to Step 2
2	Refer to Checking Transmission Fluid Level and Condition in Automatic Transmission (4L30–E) section. Has transmission fluid checking procedure been performed?	Go to Step 3	Go to Checking Transmission Fluid Level and Condition in Automatic Transmission (4L30–E) section
3	1. Install the scan tool. 2. Turn the ignition switch to the “on” position. 3. Engine not running. NOTE: Before clearing DTC(s) use the scan tool to record the “Failure Records” for reference, as data will be lost when the “Clear Info” function is used. 4. Record the Failure Record data. 5. Use the scan tool snapshot mode to record transmission gear ratios. 6. Drive vehicle in transmission gear ranges L, 2, 3, and D with the engine speed is greater than 3,500 rpm for 5.5 seconds. 7. Record each transmission gear. 1st:2.73 – 2.99 2nd:1.54 – 1.71 3rd:0.93 – 1.05 4th:0.66 – 0.78 Does commanded gear ratio match ranges as shown?	Refer to Diagnostic Aids	Go to Step 4
4	Perform line pressure check. ● Refer to Line Pressure Test in Automatic Transmission (4L30–E) section. Was condition found and corrected?	Go to Step 6	Go to Step 5

DTC P0730 Transmission Incorrect Gear Ratio (Cont'd)

Step	Action	Yes	No
5	Check for possible clutch slippage. ● Refer to Chart 6: Diagnostic Trouble Code (DTC) P0730 of Mechanical/Hydraulic Diagnosis Symptoms Index in Automatic Transmission (4L30–E) section. Was condition found and corrected?	Go to Step 6	—
6	1. After the repair is complete, use the scan tool to select "DTC", then "Clear info" function. 2. Operate the vehicle under the following conditions: ● Drive the vehicle in D4 with the engine speed greater than 3,500 rpm to obtain anyone of the following gear ratios for seven seconds. 1st 1:2.73 – 1:2.99 2nd 1:1.54 – 1:1.71 3rd 1:0.93 – 1:1.05 4th 1:0.66 – 1:0.78 Has the last test failed?	Begin diagnosis again Go to Step 1	Repair verified Exit DTC table

DTC P0748 Pressure Control Solenoid (PCS) (Force Motor) Circuit Electrical

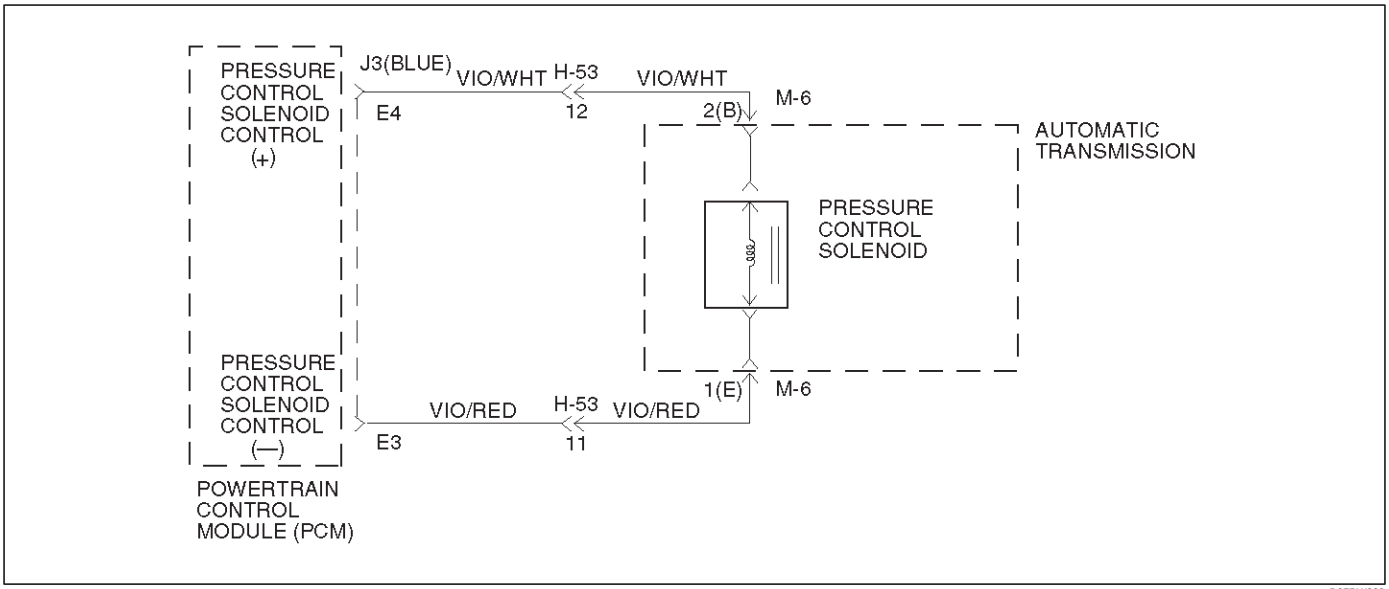

D07RW008

Circuit Description

The PCS is a PCM–controlled device used to regulate transmission line pressure. The PCM compares TPS voltage, engine rpm, and other inputs to determine the line pressure appropriate for a given load. The PCM will regulate the pressure by applying a varying amperage to the PCS. The applied amperage can vary from 0.1 to 1 amp, and is monitored by the PCM.

This DTC detects a continuous open or short to ground in the PCS circuit or the PCS. This is a type “C” DTC.

Conditions For Setting The DTC

- Battery voltage is between 10 and 16 volts.
- The PCM detects that the different between commanded and actual current is 200 milliampere (mA) for over 1 second.

Action Taken When the DTC Sets

- Maximum line pressure.
- The PCM will illuminate the CHECK TRANS Lamp.

Conditions For Clearing The DTC/CHECK TRANS Lamp

- The PCM will turn “off” the CHECK TRANS Lamp after three consecutive ignition cycles without a failure reported.
- The DTC can be cleared from PCM history by using a scan tool.
- The DTC will be cleared from memory when the vehicle has achieved 40 warmup cycles without a failure reported.
- The PCM will cancel the DTC default actions when the fault no longer exists and the ignition is cycled “off” long enough to power down the PCM.

Diagnostic Aids

- Inspect the wiring for poor electrical connection at the PCM and at the transmission 5–way connector. Look for possible bent, backed out, deformed or damaged terminals. Check for weak terminal tension as well. Also check for a chafed wire that could short to bare metal or other wiring. Inspect for a broken wire inside the insulation.
- When diagnosing for a possible intermittent short or open condition, move the wiring harness while observing test equipment for a change.

Test Description

The numbers below refer to the step numbers on the diagnostic chart:

1. This test checks the ability of the PCM to command the PCS.
2. This test checks the PCS and internal wiring harness for incorrect resistance.

DTC P0748 Pressure Control Solenoid (PCS) (Force Motor) Circuit Electrical

Step	Action	Yes	No
1	1. Install the scan tool. 2. With the engine “off”, turn the ignition switch “on”. NOTE: Before clearing DTC(s), use the scan tool to record “Failure Records” for reference, as data will be lost when the “Clear Info” function is used. 3. Record the DTC “Failure Records”. 4. While the engine is operating, put the transmission in Park. 5. Using the scan tool, apply 0.1 amp through 1.0 amp while observing “PC Ref. Current” and “PC Act. Current”. Is the “PC Act. Current” reading always within 0.16 amp?	Go to Diagnostic Aids	Go to Step 2
2	1. Turn the ignition “off”. 2. Disconnect the transmission 5–way connector M–6. 3. Using the J39200 DVOM, measure the resistance between terminals M6–2(B) and M6–1(E). Is the resistance within 3–7 ohms?	Go to Step 6	Go to Step 3
3	1. Remove the transmission oil pan. Refer to Solenoid (Adapter Case Valve Body) in Automatic Transmission (4L30–E) section. 2. Disconnect the internal wiring harness at the PCS. 3. Measure the resistance of the PCS. Is the resistance within 3–7 ohms?	Go to Step 5	Go to Step 4
4	Replace the PCS. Is the replacement complete?	Go to Step 9	—
5	Repair the internal wiring harness for an open. Is the repair complete?	Go to Step 9	—
6	Inspect/repair circuits J3–E4, M6–2(B), J3–E3, and M6–1(E). Was a problem found?	Go to Step 9	Go to Step 7
7	Inspect/repair circuits J3–E4, M6–2(B), J3–E3, and M6–1(E) for a short to ground or poor connections. Was a problem found?	Go to Step 9	Go to Step 8
8	Replace the PCM. Refer to Powertrain Control Module (PCM) in Automatic Transmission (4L30–E) section. Is the replacement complete?	Go to Step 9	—
9	1. After the repair is complete, use the scan tool to select “DTC”, then “Clear Info” function and ensure the following conditions are met: The PCS duty cycle is not at its electrical high or low limit. 2. Review the scan tool “DTC Info”. Has the last test failed or is the current DTC displayed?	Begin diagnosis again Go to Step 1	Repair verified Exit DTC table

DTC P0753 Shift Solenoid A Electrical

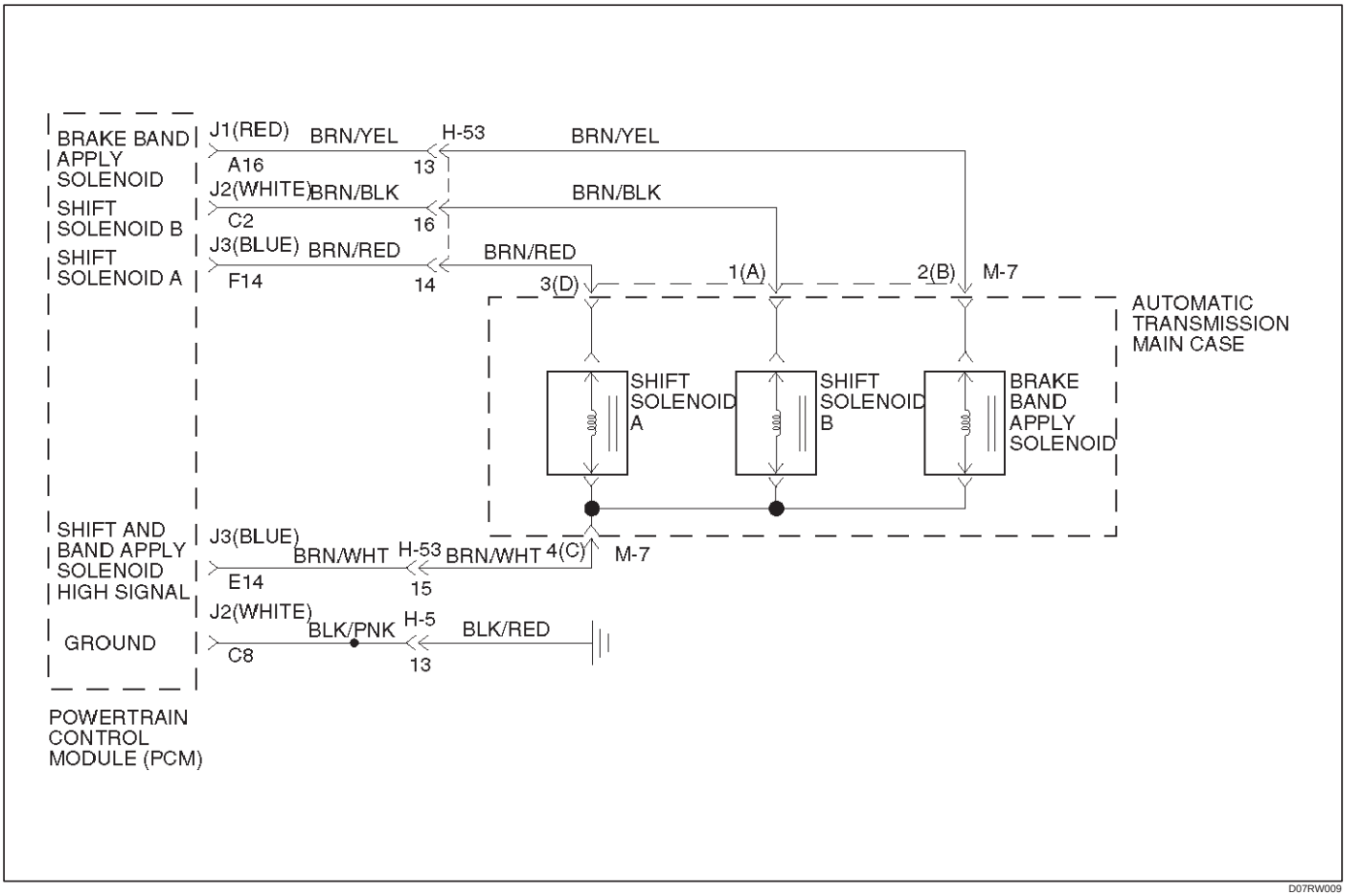

Circuit Description

- The shift solenoid A is a simple on/off solenoid located in the main case valve body. The solenoid is the normally closed type. In second or third gear, the Powertrain Control Module (PCM) energizes the solenoid to open a fluid inlet port. When the port is open, fluid pressure actuates the shift valve.
- The solenoid is activated by current. This current is produced by applying a voltage to one side (the High side) and a ground to the other side (Low side).
- The High Side Driver (HSD) is a circuit of the PCM that acts as a switch between the solenoids and the supply voltage. The High side of the solenoid is permanently supplied with voltage, except in BACKUP MODE or when ignition is off the HSD is turned off.

This DTC detects a continuous open or short to ground in the shift solenoid A circuit or the shift solenoid A. This is a type “C” DTC.

Conditions For Setting The DTC

- Ignition is “on”, Engine “run”.
- Battery voltage is between 10 and 16 volts.
- The PCM commands the solenoid “on” and the voltage remains high (B+) or the PCM commands the solenoid “off” and the voltage remains low (zero volts).
- All conditions met for 0.33 seconds.

Action Taken When The DTC Sets

- Maximum line pressure.
- Immediate landing to 4th gear.
- Inhibit TCC engagement.
- The PCM will illuminate the CHECK TRANS Lamp.

Conditions For Clearing The DTC/CHECK TRANS Lamp

- The PCM will turn off the CHECK TRANS Lamp after three consecutive ignition cycles without a failure reported.
- The DTC can be cleared from the PCM history by using a scan tool.
- The DTC will be cleared from history when the vehicle has achieved 40 warmup cycles without a failure reported.
- The PCM will cancel the DTC default actions when the fault no longer exists and the ignition is cycled “off” long enough to power down the PCM.

Diagnostic Aids

- Inspect the wiring for poor electrical connection at the PCM and at the transmission 16–way connector. Look for possible bent, backed out, deformed or damaged terminals. Check for weak terminal tension as well. Also check for a chafed wire that could short to bare metal or other wiring. Inspect for a broken wire inside the insulation.

- When diagnosing for a possible intermittent short or open condition, move the wiring harness while observing test equipment for a change.
- An open ignition feed circuit can cause multiple DTCs to set.

Test Description

The numbers below refer to the step numbers on the diagnostic chart:

2. This test checks for power to the shift solenoid A from the ignition through the PCM.
4. This test measures the resistance of the component.
8. This test checks the function of the shift solenoid A and the transmission internal wiring harness.

Shift Solenoid Status Chart

Gear	Shift solenoid A	Shift solenoid B
1st	OFF	ON
2nd	ON	ON
3rd	ON	OFF
4th	OFF	OFF

DTC P0753 Shift Solenoid A Electrical

Step	Action	Yes	No
1	1. Install the scan tool. 2. With the engine “on”, turn the ignition switch “on”. NOTE: Before clearing DTC(s), use the scan tool to record “Failure Records” for reference, as data will be lost when the “Clear Info” function is used. 3. Record the DTC “Failure Records”. Were DTCs P0753, P0758, P1860 set?	Go to Step 2	Go to Diagnostic Aids
2	1. Turn the ignition “on”. 2. Using the J39200 DVOM, measure the voltage between PCM connector terminals J3–E14 and J2–C8 (GND). Is the voltage within 10–12 volts?	Go to Step 3	Go to Step 4
3	1. Turn the ignition “off”. 2. Disconnect the J3 (BLUE) PCM connector. 3. Turn the ignition “on”. 4. Using the J39200 DVOM, measure the voltage between PCM connector terminals J3–F14 and ground. Is the voltage within 10 – 12 volts?	Go to Step 10	Go to Step 4
4	1. Turn the ignition “off”. 2. Disconnect the J3 (BLUE) PCM connector. 3. Using the J39200 DVOM, measure the resistance between PCM connector terminals J3–E14 and J3–F14. Is the resistance within 18 – 20 ohms?	Go to Step 5	Go to Step 6
5	1. Disconnect the J1 (RED) and J2 (WHITE) PCM connectors. 2. Using the J39200 DVOM, check a continuity between PCM terminals J3–F14 and ground. Is there a continuity?	Go to Step 11	Go to Step 7
6	1. Disconnect the 16–way harness connector H–53. 2. Using the J39200 DVOM, measure the resistance between terminals H53–14 and H53–15. Is the resistance within 18–20 ohms?	Go to Step 13	Go to Step 8
7	Using the J39200 DVOM, check a continuity between J3 (BLUE) PCM terminal E14 and ground. Is there a continuity?	Go to Step 12	Go to Step 9
8	1. Disconnect the transmission main case 4 pin connector M–7. 2. Using the J39200 DVOM, measure the resistance between terminals M7–3(D) and M7–4(C). Is the resistance within 18–20 ohms?	Go to Step 14	Go to Step 15

DTC P0753 Shift Solenoid A Electrical (Cont'd)

Step	Action	Yes	No
9	Check every connection at the PCM connector. Was a problem found?	Go to Step 17	Go to Step 16
10	The wiring harness between PCM connector terminals J3–F14 and transmission harness terminal M7–3(D) is shorted to voltage. Was a problem found and corrected?	Go to Step 18	—
11	The wiring harness between PCM connector terminal J3–F14 and transmission harness terminal M7–3(D) is shorted to ground. Was a problem found and corrected?	Go to Step 18	—
12	The wiring harness between PCM connector terminals J3–E14 and transmission harness terminal M7–4(C) is shorted to ground. Was a problem found and corrected?	Go to Step 18	—
13	The wiring harness between PCM connector J3 and transmission 16–way connector H–53 is open or poor connection. Was a problem found and corrected?	Go to Step 18	—
14	The wiring harness between transmission 16–way connector H–53 and transmission main case connector M–7 is open or has a poor connection. Was a problem found and corrected?	Go to Step 18	—
15	The shift solenoid A is faulty. Replace the shift solenoid A. Refer to Solenoid (Main Case Valve Body) in Automatic Transmission (4L30–E) section. Is the replacement complete?	Go to Step 18	—
16	The PCM may be faulty. Replace the PCM. Refer to Powertrain Control Module (PCM) in Automatic Transmission (4L30–E) section. Is the replacement complete?	Go to Step 18	—
17	Repair the PCM connector connection. Was a problem found and corrected?	Go to Step 18	—
18	1. After the repair is complete, use the scan tool to select "DTC", then "Clear Info" function and operate the vehicle under the following conditions: ● The shift solenoid A is commanded "on" and voltage drops to zero. ● The shift solenoid A is commanded "off" and voltage increases to B+. 2. Review the scan tool "DTC Info". Has the last test failed or is the current DTC displayed?	Begin diagnosis again Go to Step 1	Repair verified Exit DTC table

DTC P0758 Shift Solenoid B Electrical

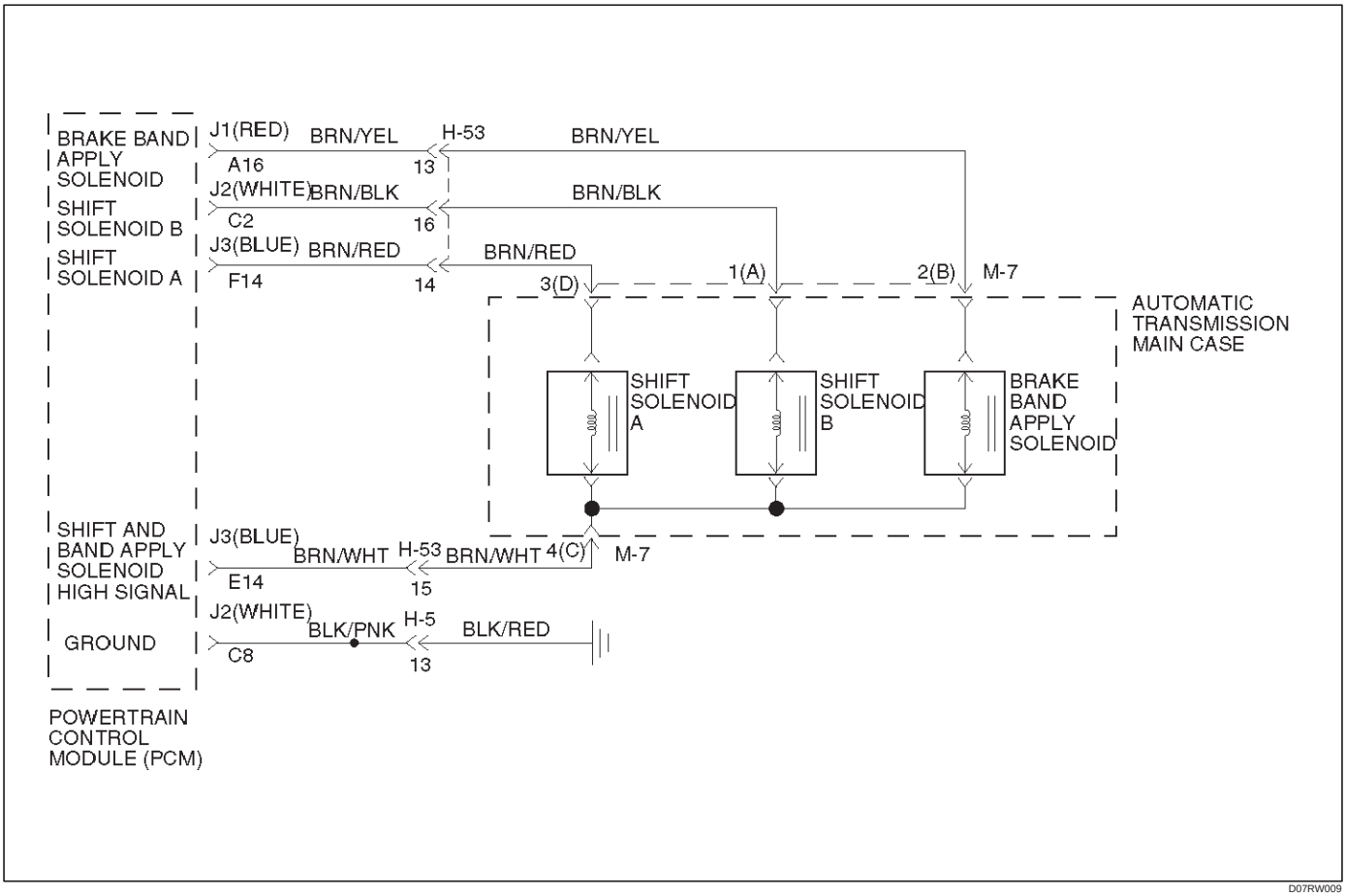

Circuit Description

- The shift solenoid B is a simple on/off solenoid located in the main case valve body. It is normally open. When the port is open, fluid pressure actuates the shift valve. In first or second gear, the Powertrain Control Module (PCM) energizes the solenoid to close a fluid inlet port.
- The solenoid is activated by current. This current is procuded by applying a voltage to one side (the High side) and a ground to the other side (Low side).
- The High Side Driver (HSD) is a circuit of the PCM that acts as a switch between the solenoids and the supply voltage. The High side of the solenoid is permanently supplied with voltage. In BACKUP MODE or when the ignition is off, the HSD is turned off.

This DTC detects a continuous open or short to ground in the shift solenoid B circuit or shift solenoid B. This is a type “C” DTC.

Conditions For Setting The DTC

- Ignition is “on”, Engine “run”.
- Battery voltage is between 10 and 16 volts.
- The PCM commands the solenoid “on” and the voltage remains high (B+)or the PCM commands the solenoid “off” and the voltage remains low (zero volts).
- All conditions met for 0.33 seconds.

Action Taken When The DTC Sets

- Fixed to 4th gear.
- Maximum line pressure.
- Inhibit TCC engagement.
- The PCM will illuminate the CHECK TRANS Lamp.

Conditions For Clearing The DTC/CHECK TRANS Lamp

- The PCM will turn off the CHECK TRANS Lamp after three consecutive ignition cycles without a failure reported.
- The DTC can be cleared from the PCM history by using a scan tool.
- The DTC will be cleared from history when the vehicle has achieved 40 warmup cycles without a failure reported.
- The PCM will cancel the DTC default actions when the fault no longer exists and the ignition is cycled “off” long enough to power down the PCM.

Diagnostic Aids

- Inspect the wiring for poor electrical connections at the PCM and at the transmission 16–way connector. Look for possible bent, backed out, deformed or damaged terminals. Check for weak terminal tension as well. Also check for a chafed wire that could short to bare metal or other wiring. Inspect for a broken wire inside the insulation.

- When diagnosing for a possible intermittent short or open condition, move the wiring harness while observing test equipment for a change.

Test Description

The numbers below refer to the step numbers on the diagnostic chart:

4. This test measures the resistance of the component.
6. This test checks the function of the shift solenoid B and the transmission internal wiring harness.
10. This test checks for power to the shift solenoid B from the ignition through the PCM.

Shift Solenoid Status Chart

Gear	Shift solenoid A	Shift solenoid B
1st	OFF	ON
2nd	ON	ON
3rd	ON	OFF
4th	OFF	OFF

DTC P0758 Shift Solenoid B Electrical

Step	Action	Yes	No
1	1. Install the scan tool. 2. With the engine “on”, turn the ignition switch “on”. NOTE: Before clearing DTC(s), use the scan tool to record “Failure Records” for reference, as data will be lost when the “Clear Info” function is used. 3. Record the DTC “Failure Records”. Were DTCs P0753, P0758, P1860 set?	Go to Step 3	Go to Step 2
2	1. The engine “on”. 2. Apply brake pedal and select transmission range “D”. 3. Press and hold down the winter switch and select transmission mode “winter”. Does the scan tool display DTC P0758 at 3rd gear?	Go to Step 7	Go to Diagnostic Aids
3	1. Turn the ignition “off”. 2. Disconnect the J2 (WHITE) and J3 (BLUE) PCM connectors. 3. Turn the ignition “on”. 4. Using the J39200 DVOM, measure the voltage between PCM connector terminals J2–C2 and J2–C8. Is the voltage within 10 – 12 volts?	Go to Step 14	Go to Step 4
4	1. Turn the ignition “off”. 2. Using the J39200 DVOM, measure the resistance between PCM connector terminals J2–C2 and J3–E14. Is the resistance within 18 – 20 ohms?	Go to Step 15	Go to Step 5
5	1. Disconnect the transmission 16–way connector H–53. 2. Using the J39200 DVOM, measure the resistance between terminals H53–16 and H53–15. Is the resistance within 18 – 20 ohms?	Go to Step 16	Go to Step 6
6	1. Disconnect the transmission main case connector M–7. 2. Using the J39200 DVOM, measure the resistance between terminals M7–1(A) and M7–4(C). Is the resistance within 18 – 20 ohms?	Go to Step 17	Go to Step 18
7	1. Turn the ignition “off”. 2. Disconnect the J2 (WHITE) and J3 (BLUE) PCM connectors. 3. Using the J39200 DVOM, measure the resistance between PCM connector terminals J2–C2 and J3–E14. Is the resistance within 18 – 20 ohms?	Go to Step 8	Go to Step 9
8	Using the J39200 DVOM, check a continuity between PCM connector terminal J2–C2 and ground. Is there a continuity?	Go to Step 19	Go to Step 10

DTC P0758 Shift Solenoid B Electrical (Cont'd)

Step	Action	Yes	No
9	1. Disconnect the transmission 16–way connector H–53. 2. Using the J39200 DVOM, measure the resistance between terminals H53–16 and H53–15. Is the resistance within 18–20 ohms?	Go to Step 20	Go to Step 11
10	Using the J39200 DVOM, check a continuity between PCM connector terminal J3–E14 and ground. Is there a continuity?	Go to Step 21	Go to Step 12
11	1. Disconnect the transmission main case connector M–7. 2. Using the J39200 DVOM, measure the resistance between terminals M7–1(A) and M7–4(C). Is the resistance within 18 – 20 ohms?	Go to Step 22	Go to Step 23
12	Check every connection of the PCM and transmission 16–way connector H–53. Was a problem found and corrected?	Go to Step 25	Go to Step 13
13	1. Connect the J2 (WHITE) and J3 (BLUE) PCM connectors to the PCM. 2. Turn the ignition "on", the engine "on". 3. Repeat Step 2. Does the scan tool display DTC P0758 at 3rd gear?	Go to Step 24	Go to Diagnostic Aids
14	The wiring harness between PCM connector terminal J2–C2 and transmission main case terminal M7–1(A) is shorted to voltage. Was a problem found and corrected?	Go to Step 25	—
15	The PCM internal terminal J2–C2 is shorted to voltage. Replace the PCM. Refer to Powertrain Control Module (PCM) in Automatic Transmission (4L30–E) section. Is the replacement complete?	Go to Step 25	—
16	The wiring harness between PCM connector and transmission 16–way connector is shorted. Was a problem found and corrected?	Go to Step 25	—
17	The wiring harness between transmission 16–way connector and transmission main case connector is shorted. Was a problem found and corrected?	Go to Step 25	—
18	The shift solenoid B is faulty, or the internal wiring harness from the shift solenoid B is shorted. Was a problem found and corrected?	Go to Step 25	—
19	The wiring harness between PCM connector terminal J2–C2 and transmission main case connector terminal M7–1(A) is shorted to ground. Was a problem found and corrected?	Go to Step 25	—
20	The wiring harness between PCM connector terminal J2–C2 and transmission 16–way connector terminal H53–16, or between PCM connector terminal J3–E14 and 16–way connector terminal H53–15 is open. Was a problem found and corrected?	Go to Step 25	—

DTC P0758 Shift Solenoid B Electrical (Cont'd)

Step	Action	Yes	No
21	The wiring harness between PCM connector terminal J3–E14 and transmission main case connector terminal M7–4(C) is shorted to ground. Was a problem found and corrected?	Go to Step 25	—
22	The wiring harness between transmission 16–way connector terminal H53–16 and transmission main case connector terminal M7–1(A), or between H53–15 and M7–4(C) is open. Was a problem found and corrected?	Go to Step 25	—
23	The internal wiring harness from the shift solenoid B is open, or the shift solenoid B is faulty. Was a problem found and corrected?	Go to Step 25	—
24	Replace the PCM. Is the replacement complete?	Go to Step 25	—
25	1. After the repair is complete, use the scan tool to select "DTC", then "Clear Info" function and operate the vehicle under the following conditions: ● The shift solenoid B is commanded "on" and voltage drop to zero. ● The shift solenoid B is commanded "off" and voltage increases to B+. 2. Review the scan tool "DTC Info". Has the last test failed or is the current DTC displayed?	Begin diagnosis again Go to Step 1	Repair verified Exit DTC table

DTC P1790 ROM Transmission Side Bad Check Sum

Circuit Description

Transmission Side Read Only Memory (ROM) and Electronically Erasable Programmable Read Only Memory (EEPROM) is an electronic circuit that controls the transmission control in the Powertrain Control Module (PCM).
This DTC detects a check sum error. This is a type “C” DTC.

Conditions For Setting The DTC

- Detects check sum error for 1 second.

Action Taken When The DTC Sets

- Maximum line pressure.
- Immediate landing to 4th gear.
- Inhibit TCC engagement.
- The PCM will illuminate the CHECK TRANS Lamp.

Conditions For Clearing The DTC/CHECK TRANS Lamp

- The PCM will turn off the CHECK TRANS Lamp after three consecutive ignition cycles without a failure reported.
- The DTC can be cleared from the PCM history by using a scan tool.
- The DTC will be cleared from history when the vehicle has achieved 40 warmup cycles without a failure reported.
- The PCM will cancel the DTC default actions when the fault no longer exists and the ignition is cycled “off” long enough to power down the PCM.

DTC P1790 ROM Transmission Side Bad Check Sum

Step	Action	Yes	No
1	1. Install the scan tool. 2. With the engine “off”, turn the ignition switch “on”. NOTE: Before clearing DTC(s), use the scan tool to record “Failure Records” for reference, as data will be lost when the “Clear Info” function is used. 3. Record the DTC “Failure Records”. Was DTC P1790 set?	Go to Step 4	Go to Step 2
2	Was DTC P1792 set?	Go to Step 3	—
3	1. Remove the PCM. Refer to Powertrain Control Module (PCM) in Automatic Transmission (4L30–E) section. 2. Using the ITCS, make a reprogramming the transmission EEPROM. Was the reprogramming complete?	Go to Step 5	—
4	Replace the PCM. Is the replacement complete?	Go to Step 5	—
5	1. After the repair is complete, use the scan tool to select “DTC”, then “Clear Info” function and operate the vehicle. 2. Review the scan tool “DTC Info”. Has the last test failed or is the current DTC displayed?	Begin diagnosis again Go to Step 1	Repair verified Exit DTC table

DTC P1792 EEPROM Transmission Side Bad Check Sum

Circuit Description

Transmission Side Read Only Memory (ROM) and Electronically Erasable Programmable Read Only Memory (EEPROM) is an electronic circuit that controls the transmission control in the Powertrain Control Module (PCM).
This DTC detects a check sum error. This is a type “C” DTC.

Conditions For Setting The DTC

- Detects check sum error for 1 second.

Action Taken When The DTC Sets

- Maximum line pressure.
- Immediate landing to 4th gear.
- Inhibit TCC engagement.
- The PCM will illuminate the CHECK TRANS Lamp.

Conditions For Clearing The DTC/CHECK TRANS Lamp

- The PCM will turn off the CHECK TRANS Lamp after three consecutive ignition cycles without a failure reported.
- The DTC can be cleared from the PCM history by using a scan tool.
- The DTC will be cleared from history when the vehicle has achieved 40 warmup cycles without a failure reported.
- The PCM will cancel the DTC default actions when the fault no longer exists and the ignition is cycled “off” long enough to power down the PCM.

DTC P1792 EEPROM Transmission Side Check Bad Check Sum

Step	Action	Yes	No
1	1. Install the scan tool. 2. With the engine “off”, turn the ignition switch “on”. NOTE: Before clearing DTC(s), use the scan tool to record “Failure Records” for reference, as data will be lost when the “Clear Info” function is used. 3. Record the DTC “Failure Records”. Was DTC P1790 set?	Go to Step 4	Go to Step 2
2	Was DTC P1792 set?	Go to Step 3	—
3	1. Remove the PCM. Refer to Powertrain Control Module (PCM) in Automatic Transmission (4L30–E) section. 2. Using the ITCS, make a reprogramming the transmission EEPROM. Was the reprogramming complete?	Go to Step 5	—
4	Replace the PCM. Is the replacement complete?	Go to Step 5	—
5	1. After the repair is complete, use the scan tool to select “DTC”, then “Clear Info” function and operate the vehicle. 2. Review the scan tool “DTC Info”. Has the last test failed or is the current DTC displayed?	Begin diagnosis again Go to Step 1	Repair verified Exit DTC table

DTC P1835 Kickdown Switch Always On

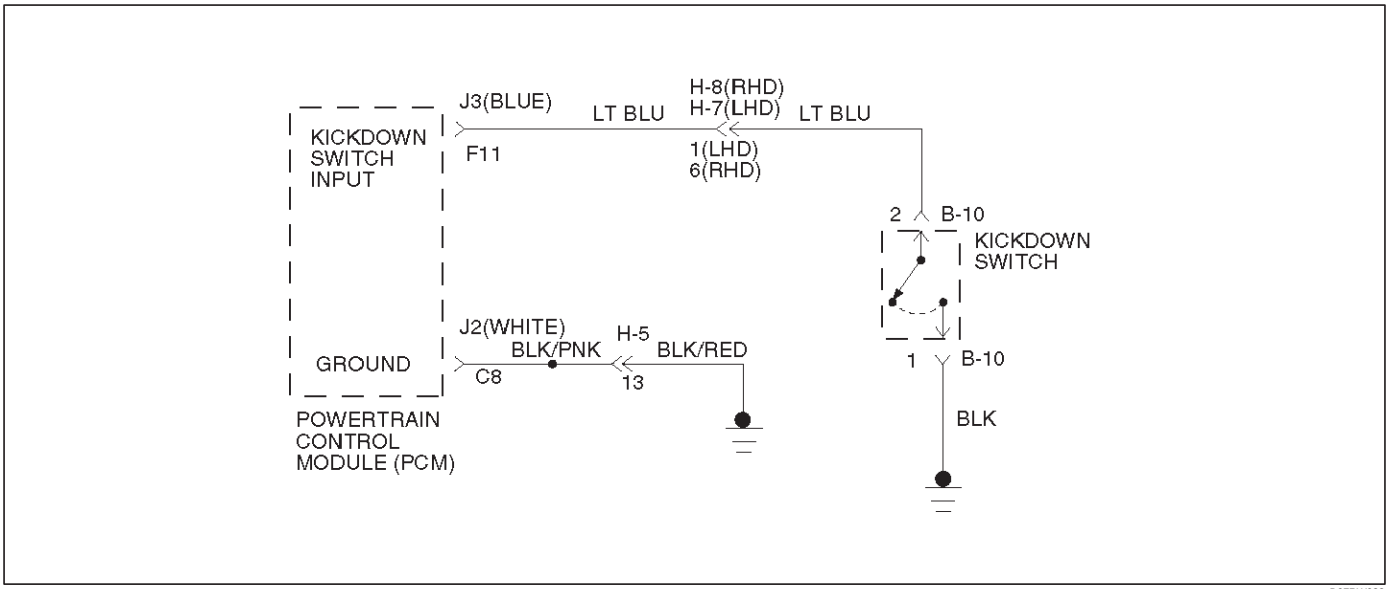

D07RW033

Circuit Description

- When the driver presses the accelerator pedal down fully, the kickdown switch closes, sending a ground signal to the Powertrain Control Module (PCM).
- This information is used to perform shifts at high engine speed.
- When the kickdown switch is closed, the Throttle Position Sensor (TPS) is already is at 100%.
- This DTC detects a closed kickdown switch when TP angle is less than 70%.
- This is a type “D” DTC.

Conditions For Setting The DTC

- No TPS DTCs P0122 or P0123.
- TP angle is less than 70%.
- Kickdown switch is “on”.
- All conditions met for 1 second.

Action Taken When The DTC Sets.

- Kickdown mode control is off.
- The PCM will not illuminate the CHECK TRANS Lamp.

Conditions For Clearing The DTC

- The DTC can be cleared from the PCM history by using a scan tool.
- The DTC will be cleared from history when the vehicle has achieved 40 warmup cycles without a failure reported.
- The PCM will cancel the DTC default actions when the fault no longer exists and the ignition is cycled “off” long enough to power down the PCM.

Diagnostic Aids

- Check the wiring harness for a short to ground between the PCM and kickdown switch.
- Check the kickdown switch for failure.
- Check kickdown adjustment.

Test Description

The numbers below refer to the step numbers on the diagnostic chart:

1. This test checks for short to ground or kickdown switch failure.
3. This test checks for regulation kickdown switch.

DTC P1835 Kickdown Switch Always On

Step	Action	Yes	No
1	1. Install the scan tool. 2. With the engine “on”, turn the ignition switch “on”. NOTE: Before clearing DTC(s), use the scan tool to record “Failure Records” for reference, as data will be lost when the “Clear Info” function is used. 3. Record the DTC “Failure Records”. Does the scan tool display “Kickdown switch” “low” (closed switch)?	Go to Step 2	Go to Step 3
2	1. Turn the ignition “off”. 2. Disconnect the J3 (BLUE) PCM connector. 3. Using the J39200 DVOM, check a continuity between PCM connector terminal J3–F11 and ground. Is there a continuity?	Go to Step 4	Go to Step 7
3	The TP angle goes from 0% to 100% with the accelerator pedal depressed. Is the kickdown switch “on” when TP angle is below 70%?	Go to Step 5	Go to Diagnostic Aids
4	1. Disconnect the kickdown switch connector B–10. 2. Using the J39200 DVOM, check a continuity between terminals B10–1 and B10–2. Is there a continuity?	Go to Step 6	Go to Step 8
5	Adjust the kickdown switch. Is the kickdown switch “on” when TP angle is above 95%?	Go to Step 9	—
6	Replace the kickdown switch. Is the replacement complete?	Go to Step 9	—
7	Replace the PCM. Refer to Powertrain Control Module (PCM) in Automatic Transmission (4L30–E) section. Is the replacement complete?	Go to Step 9	—
8	Repair the short to ground in circuit LT BLUE. Is the repair complete?	Go to Step 9	—
9	1. After the repair is complete, use the scan tool to select “DTC”, then “Clear Info” function and ensure the following condition is met: The torque converter stator temperature switch circuit does not indicate a hot mode when the transmission fluid temperature is less than 60˚C (140˚F) for at least 5 seconds. 2. Review the scan tool “DTC Info”. Has the last test failed or is the current DTC displayed?	Begin diagnosis again Go to Step 1	Repair verified Exit DTC table

DTC P1850 Brake Band Apply Solenoid Malfunction

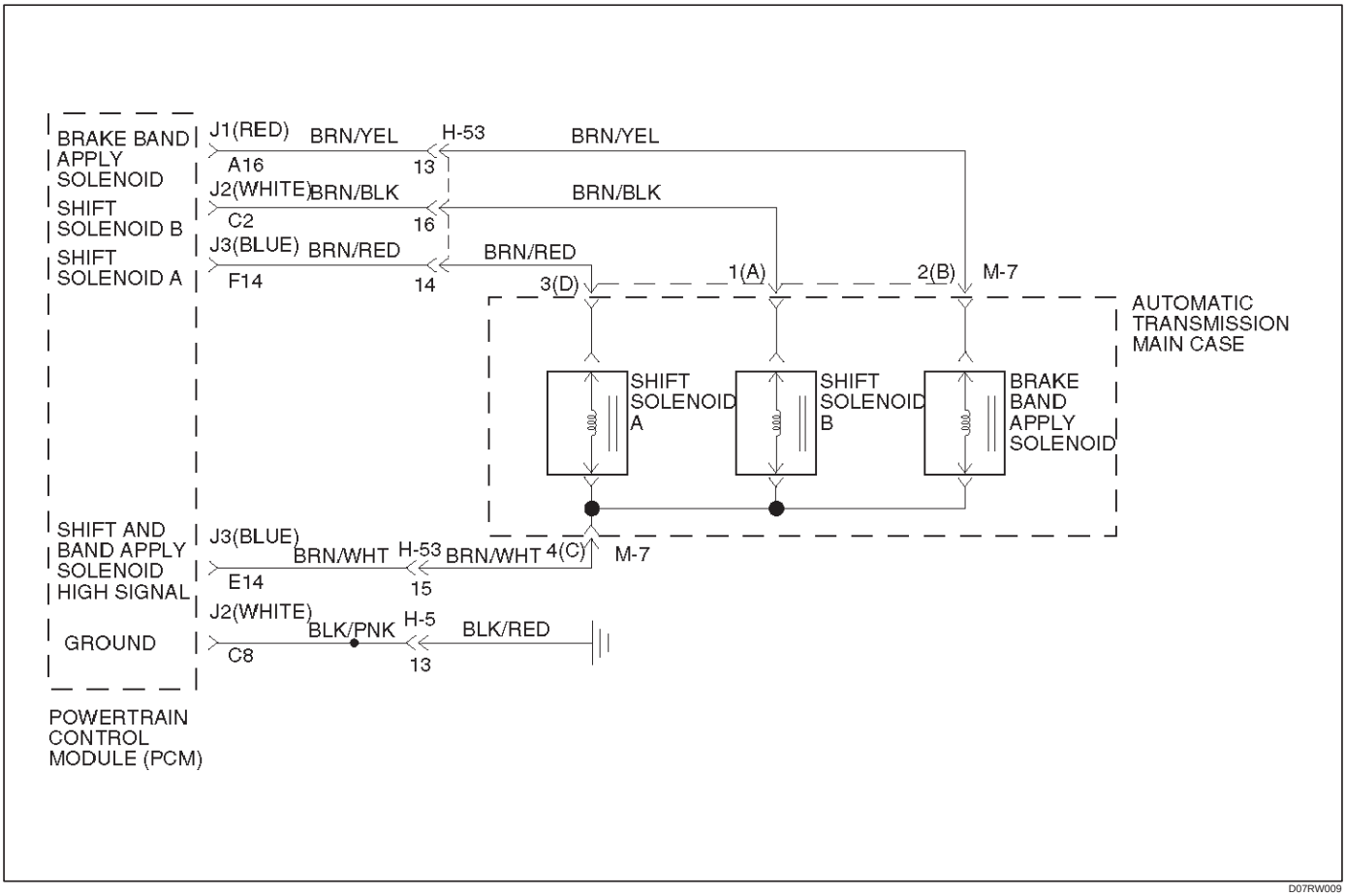

Circuit Description

- The brake band apply solenoid is a normally open solenoid which controls the flow of fluid for brake band application. The Powertrain Control Module (PCM) uses Pulse Width Modulation (PWM) and changes the duty cycle to control the solenoid. The PCM turns the solenoid on (energized) and off (deenergized) at a constant frequency. The length of time the solenoid is energized during each on/off cycle is called the pulse width. By varying or “modulating” the pulse width, the solenoid output pressure is changed. Since the solenoid is normally open, increasing the pulse width increases the duty cycle and decreases the output pressure. PWM control provides smooth band application without an accumulator. The band is only applied in first and second gears.
- In the event of an electrical failure (open), the solenoid regulates at the maximum oil flow (0% duty cycle).
- The solenoid is activated by current. This current is produced by applying a voltage to one side (the High side) and a ground to the other side (Low side).
- The High Side Driver (HSD) is a circuit of the PCM that acts as a switch between the solenoids and the supply voltage. The High side of the solenoid is permanently supplied with voltage. When the ignition is off, the HSD is turned off.

This DTC detects a continuous open or short to ground in the brake band apply solenoid circuit or the brake band apply solenoid. This is a type “D” DTC.

Conditions For Setting The DTC

- Battery voltage is between 10 and 16 volts.
- Ignition is “on”, Engine “run”.
- The PCM commands the solenoid “on” and the voltage remains high (B+) or the PCM commands the solenoid “off” and the voltage remains low (zero volts).
- All conditions met in 1.3 seconds.

Action Taken When The DTC Sets

- Inhibit brake band apply solenoid.
- The PCM will not illuminate the CHECK TRANS Lamp.

Conditions For Clearing The DTC

- The DTC can be cleared from the PCM history by using a scan tool.
- The DTC will be cleared from history when the vehicle has achieved 40 warmup cycles without a failure reported.
- The PCM will cancel the DTC default actions when the fault no longer exists and the ignition is cycled “off” long enough to power down the PCM.

Diagnostic Aids

- Inspect the wiring for poor electrical connection at the PCM and at the transmission 16–way connector. Look for possible bent, backed out, deformed or damaged terminals. Check for weak terminal tension as well. Also check for a chafed wire that could short to bare metal or other wiring. Inspect for a broken wire inside the insulation.
- When diagnosing for a possible intermittent short or open condition, move the wiring harness while observing test equipment for a change.

Test Description

The numbers below refer to the step numbers on the diagnostic chart:

2. This test checks for power to the brake band apply solenoid from the ignition through the PCM.
3. This test checks the resistance of the transmission internal wiring harness and brake band apply solenoid.
4. This test checks the ability of the PCM and wiring to control the ground circuit.

DTC P1850 Brake Band Apply Solenoid Malfunction

Step	Action	Yes	No
1	1. Install the scan tool. 2. With the engine “on”, turn the ignition switch “on”. NOTE: Before clearing DTC(s), use the scan tool to record “Failure Records” for reference, as data will be lost when the “Clear Info” function is used. 3. Record the DTC “Failure Records”. Were DTCs P0753, P0758 set?	Go to Step 2	Go to Step 3
2	Using the J39200 DVOM, back probe between PCM connector terminals J3–E14 and J2–C8. Is the voltage between 10 to 12 volts?	Go to Step 4	Go to Step 5
3	1. Turn the ignition “off”. 2. Disconnect the J1 (RED) and J3 (BLUE) PCM connectors. 3. Using the J39200 DVOM, measure the resistance between PCM connector terminals J1–A16 and J3–E14. Is the resistance within 10–12 ohms?	Go to Step 11	Go to Step 12
4	Using the J39200 DVOM, back probe between PCM connector terminals J1–A16 and J2–C8. Is the voltage between 10 to 12 volts?	Go to Step 25	Go to Step 3
5	1. Turn the ignition “off”. 2. Disconnect the J1 (RED) and J3 (BLUE) PCM connectors. 3. Using the J39200 DVOM, check continuity between PCM terminal J3–E14 and ground. Is there a continuity?	Go to Step 6	Go to Step 8
6	1. Disconnect the transmission 16–way connector H–53. 2. Using the J39200 DVOM, check continuity between connector H53–13 and ground. Is there a continuity?	Go to Step 7	Go to Step 16
7	1. Disconnect the transmission main case connector M–7. 2. Using the J39200 DVOM, check continuity between the terminal M7–2(B) and ground. Is there a continuity?	Go to Step 17	Go to Step 18
8	1. Disconnect the J1 (RED) PCM Connector. 2. Using the J39200 DVOM, measure the resistance between PCM connector terminals J1–A16 and J3–E14. Is the resistance within 10–12 ohms?	Go to Step 25	Go to Step 9
9	1. Disconnect the transmission 16–way connector H–53. 2. Using the J39200 DVOM, measure the resistance between terminal H53–13 and H53–15. Is the resistance within 10–12 ohms?	Go to Step 16	Go to Step 10

DTC P1850 Brake Band Apply Solenoid Malfunction (Cont'd)

Step	Action	Yes	No
10	1. Disconnect the transmission main case connector M–7. 2. Using the J39200 DVOM, measure the resistance between terminals M7–2(B) and M7–4(C). Is the resistance within 10–12 ohms?	Go to Step 19	Go to Step 20
11	Using the J39200 DVOM, check continuity between PCM terminal J1–A16 and ground. Is there a continuity?	Go to Step 13	Go to Step 25
12	1. Disconnect the transmission 16–way connector H–53. 2. Using the J39200 DVOM, measure the resistance between terminal H53–13 and H53–15. Is the resistance within 10–12 ohms?	Go to Step 23	Go to Step 14
13	1. Disconnect the transmission 16–way connector H–53. 2. Using the J39200 DVOM, check continuity between terminal H53–13 and ground. Is there a continuity?	Go to Step 15	Go to Step 21
14	1. Disconnect the transmission main case connector M–7. 2. Using the J39200 DVOM, measure the resistance between terminals M7–2(B) and M7–4(C). Is the resistance within 10–12 ohms?	Go to Step 24	Go to Step 20
15	1. Disconnect the transmission main case connector M–7. 2. Using the J39200 DVOM, check continuity between the terminal M7–2(B) and ground. Is there a continuity?	Go to Step 17	Go to Step 22
16	The wiring harness between PCM terminal J3–E14 and transmission 16–way connector terminal H53–15 is open. Was a problem found and corrected?	Go to Step 26	—
17	The brake band apply solenoid is faulty, or the internal wiring harness from the brake band apply solenoid is shorted to ground. Was a problem found and corrected?	Go to Step 26	—
18	The wiring harness between the transmission 16–way connector terminal H53–15 and the transmission main case connector terminal M7–4(C) is shorted to ground. Was a problem found and corrected?	Go to Step 26	—
19	The wiring harness between the transmission 16–way connector terminal H53–15 and the transmission main case connector terminal M7–4(C) is open. Was a problem found and corrected?	Go to Step 26	—
20	The brake band apply solenoid is faulty, or the internal wiring harness from the brake band apply solenoid is open. Was a problem found and corrected?	Go to Step 26	—
21	The wiring harness between the PCM connector terminal J1–A16 and transmission 16–way connector terminal H53–13 is shorted to ground. Was a problem found and corrected?	Go to Step 26	—
22	The wiring harness between the transmission 16–way connector terminal H53–13 and the transmission main case connector terminal M7–2(B) is shorted to ground. Was a problem found and corrected?	Go to Step 26	—

DTC P1850 Brake Band Apply Solenoid Malfunction (Cont'd)

Step	Action	Yes	No
23	The wiring harness between the PCM connector terminal J1–A16 and the 16–way connector terminal H53–13 is open. Was a problem found and corrected?	Go to Step 26	—
24	The wiring harness between the transmission 16–way connector terminal H53–13 and the transmission main case connector terminal M7–2(B) is open. Was a problem found and corrected?	Go to Step 26	—
25	Check every connection at the PCM. If OK, replace the PCM. Refer to Powertrain Control Module (PCM) in Automatic Transmission (4L30–E) section. Is the replacement complete?	Go to Step 26	—
26	1. After the repair is complete, use the scan tool to select "DTC", then "Clear Info" function and ensure the following conditions are met: ● The brake band apply solenoid is commanded "on" and the volts drop to zero. ● The brake band apply solenoid is commanded "off" and the volts increase to B+. 2. Review the scan tool "DTC Info". Has the last test failed or is the current DTC displayed?	Begin diagnosis again Go to Step 1	Repair verified Exit DTC table

DTC P1860 TCC Solenoid Electrical

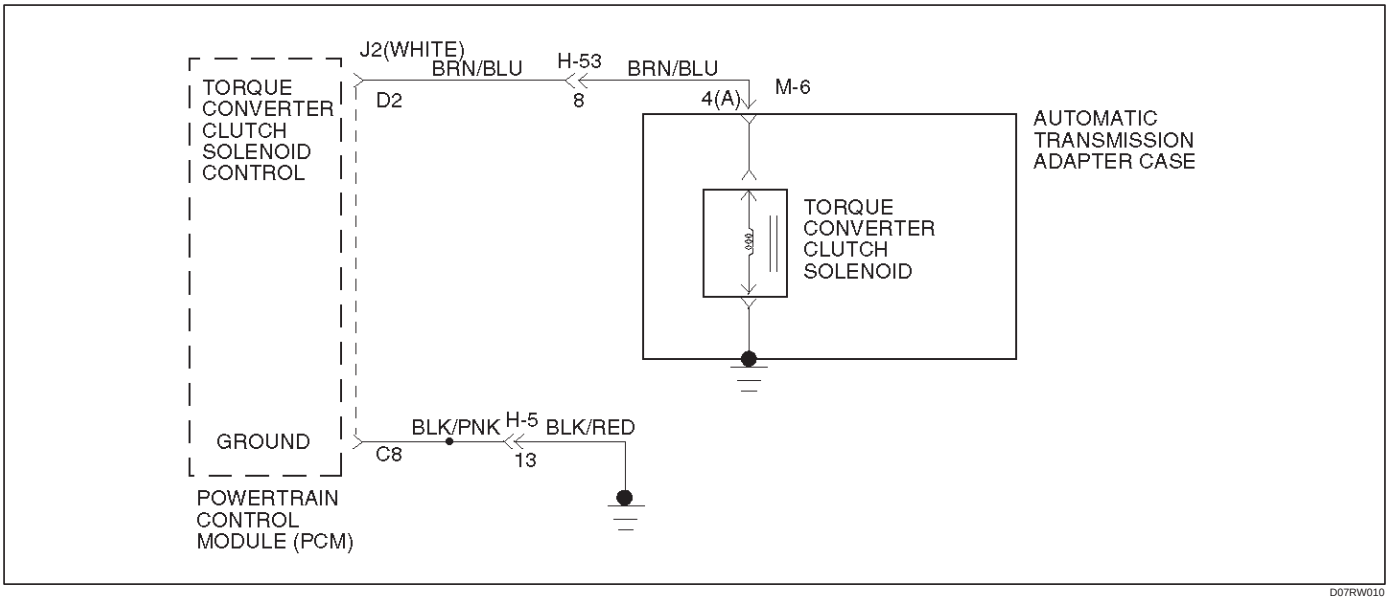

Circuit Description

The PCM allows current to flow through the solenoid coil according to the duty cycle (percentage of “on” and “off” time). This current flow through the solenoid coil creates a magnetic field that magnetizes the solid core. The magnetized core attracts the check ball to seat against spring pressure. This blocks the exhaust for the TCC signal fluid and allows 2–3 drive fluid to feed to TCC signal circuit. The TCC signal fluid pressure acts on the TCC regulator valve to regulate line pressure and to apply fluid pressure to the torque converter clutch shift valve. When the TCC shift valve is in the apply position, regulated apply fluid pressure is directed through the TCC valve to apply the torque converter clutch. The TCC solenoid is used in conjunction with the TCC solenoid to regulate fluid to the torque converter. The TCC solenoid is attached to the valve body within the transmission.

This DTC detects a continuous open or short to ground or ignition in the TCC circuit or the TCC solenoid. This is a type “D” DTC.

Conditions For Setting The DTC

- Battery voltage is between 10 and 16 volts.
- No shift solenoid A DTC P0753.
- No shift solenoid B DTC P0758.
- Ignition is “on”, Engine “run”.
- The PCM commands the solenoid “on” and the voltage remains low (zero volts).
- The PCM commands the solenoid “off” and the voltage remains high (B+).
- All conditions met for 0.25 seconds.

Action Taken When The DTC Sets

- Inhibit TCC engagement.
- The PCM will not illuminate the CHECK TRANS Lamp.

Conditions For Clearing The DTC

- The DTC can be cleared from the PCM history by using a scan tool.
- The DTC will be cleared from history when the vehicle has achieved 40 warmup cycles without a failure reported.
- The PCM will cancel the DTC default actions when the fault no longer exists and the ignition is cycled “off” long enough to power down the PCM.

Diagnostic Aids

- Inspect the wiring for poor electrical connections at the PCM and at the transmission 16–way connector. Look for possible bent, backed out, deformed or damaged terminals. Check for weak terminal tension as well. Also check for a chafed wire that could short to bare metal or other wiring. Inspect for a broken wire inside the insulation.
- When diagnosing for a possible intermittent short or open condition, move the wiring harness while observing test equipment for a change.

Test Description

The numbers below refer to the step numbers on the diagnostic chart:

2. This test checks for voltage to the solenoid.
3. This test checks the ability of the PCM and wiring to control the ignition circuit.
8. This test checks the resistance of the TCC solenoid and the internal wiring harness.

DTC P1860 TCC Solenoid Electrical

Step	Action	Yes	No
1	1. Install the scan tool. 2. With the engine “on”, turn the ignition switch “on”. NOTE: Before clearing DTC(s), use the scan tool to record “Failure Records” for reference, as data will be lost when the“Clear Info” function is used. 3. Record the DTC “Failure Records”.	Go to Step 2	Go to Step 3
2	Using the J39200 DVOM, back probe between PCM connector terminals J2–D2 and J2–C8. Is the voltage 0 ?	Go to Step 4	Go to Step 5
3	1. Apply brake pedal and select transmission range “D”. 2. Do a test drive, and increase the vehicle speed to TCC “on” at 4th. Does the scan tool display DTC P1860 at TCC “ON”?	Go to Step 9	Go to Diagnostic Aids
4	1. Turn the ignition “off”. 2. Disconnect the J2 (WHITE) PCM connector. 3. Using the J39200 DVOM, measure the resistance between PCM connector terminals J2–D2 and J2–C8. Is the resistance within 18 – 20 ohms?	Go to Step 6	Go to Step 7
5	The wiring harness between PCM connector terminal J2–D2 and transmission adapter case connector terminal M6–4(A) is shorted to voltage. Was a problem found and corrected?	Go to Step 18	Go to Step 19
6	Intermittent condition. Check the wiring harness and terminals between PCM connector J2 and transmission adapter case connector M–6. Was a problem found and corrected?	Go to Step 18	Go to Step 19
7	1. Disconnect the transmission 16–way connector H–53. 2. Using the J39200 DVOM, measure the resistance between terminal H53–8 and ground. Is the resistance within 18 – 20 ohms?	Go to Step 15	Go to Step 8
8	1. Disconnect the transmission adapter case connector M–6. 2. Using the J39200 DVOM, measure the resistance between terminal M6–4(A) and ground. Is the resistance within 18 – 20 ohms?	Go to Step 16	Go to Step 17
9	1. Turn the ignition “off”. 2. Disconnect the J2 (WHITE) PCM connector. 3. Using the J39200 DVOM, measure the resistance between terminals J2–D2 and J2–C8. Is the resistance within 18 – 20 ohms?	Go to Step 18	Go to Step 10
10	1. Disconnect the transmission 16–way connector H–53. 2. Using the J39200 DVOM, measure the resistance between terminal H53–8 and ground. Is the resistance within 18–20 ohms?	Go to Step 12	Go to Step 11
11	1. Disconnect the transmission adapter case connector M–6. 2. Using the J39200 DVOM, measure the resistance between terminal M6–4(A) and ground. Is the resistance within 18–20 ohms?	Go to Step 13	Go to Step 14

DTC P1860 TCC Solenoid Electrical (Cont'd)

Step	Action	Yes	No
12	The wiring harness between PCM connector terminal J2–D2 and transmission 16–way connector terminal H53–8 is shorted to ground. Was a problem found and corrected?	Go to Step 20	—
13	The wiring harness between transmission 16–way connector H–53 and adapter case connector M–6 is shorted to ground. Was a problem found and corrected?	Go to Step 20	—
14	The TCC solenoid is faulty, or the internal wiring harness from the TCC solenoid is shorted to ground. Was a problem found and corrected?	Go to Step 20	—
15	The wiring harness between PCM connector terminal J2–D2 and transmission 16–way connector terminal H53–8 is open. Was a problem found and corrected?	Go to Step 20	—
16	The wiring harness between transmission 16–way connector terminal H53–8 and adapter case terminal M6–4(A) is open. Was a problem found and corrected?	Go to Step 20	—
17	The TCC solenoid is faulty, or the internal wiring harness from the TCC solenoid is open. Was a problem found and corrected?	Go to Step 20	—
18	Check every connection at the PCM. If OK, replace the PCM. Refer to Powertrain Control Module (PCM) in Automatic Transmission (4L30–E) section. Is the replacement complete?	Go to Step 20	—
19	Check the PCM connector terminal J2–D2, transmission 16–way connector terminal H53–8 and transmission adapter case connector terminal M6–4(A). Was a problem found and corrected?	Go to Step 20	—
20	1. After the repair is complete, use the scan tool to select "DTC", then "Clear Info" function and ensure the following conditions are met: ● The TCC solenoid is commanded "on" and the volts increase to B+. ● The TCC solenoid is commanded "off" and the volts drop to zero. 2. Review the scan tool "DTC Info". Has the last test failed or is the current DTC displayed?	Begin diagnosis again Go to Step 1	Repair verified Exit DTC table

Transmission Fluid Temperature (TFT) Sensor Specifications

Temperature	Temperature	Minimum Resistance	Nominal Resistance	Maximum Resistance	Signal
˚C	˚F	Ω	Ω	Ω	Volts
-40	-40	600500	664200	731100	5.00
-30	-22	319800	350400	382400	4.65
-20	-4	177400	192700	208600	4.41
-10	14	102200	110100	118300	4.00
0	32	60870	65110	69450	3.52
10	50	37410	39750	42120	2.98
20	68	23660	24980	26300	2.40
30	86	15270	16120	16970	1.85
40	104	10040	10660	11290	1.43
50	122	6758	7211	7673	4.29
60	140	4645	4980	5324	4.04
70	158	3255	3506	3765	3.69
80	176	2323	2513	2710	3.34
90	194	1685	1831	1982	3.04
100	212	1242	1355	1472	2.58
110	230	929	1017	1109	2.24
120	248	704	773	846	1.97
130	266	540	595	653	1.67
140	284	419	464	511	1.42
150	302	329	365	403	1.16

TRANSMISSION

TRANSMISSION CONTROL SYSTEM (4L30–E)

CONTENTS

Service Precaution 7A1–2
General Description 7A1–2
Electronic Control Diagram 7A1–3
Powertrain Control Module (PCM) 7A1–4
Control System Diagram 7A1–5
Shift Control 7A1–6
Band Apply Control 7A1–6
Torque Converter Clutch Control (Electronically Controlled Capacity Clutch = ECCC) 7A1–6
Line Pressure Control 7A1–6
On–Board Diagnostic System 7A1–6
Fail Safe Mechanism 7A1–6
Torque Management Control 7A1–6
ATF Warning Control 7A1–6
ABS Control 7A1–6
Reverse Lock Out Control 7A1–6
Downhill Control 7A1–6
Uphill Control 7A1–6
Shift Mode Control 7A1–7
Gear Shift Control 7A1–8
Winter Drive Mode 7A1–9
Backup Mode 7A1–9
Functions of Input / Output Components . . 7A1–10
Diagnosis 7A1–11
Electronic Diagnosis 7A1–11
Check Trans Indicator 7A1–11
Diagnostic Check 7A1–11
“Check Trans” Check 7A1–12
Tech 2 OBD II Connection 7A1–14
Transmission Data 7A1–19
OBD II Diagnostic Management System . . 7A1–20
16 – Terminal Data Link Connector (DLC) . 7A1–21
Malfunction Indicator Lamp (MIL) 7A1–22
DTC Types 7A1–22
Clear DTC 7A1–23
DTC Check 7A1–23
PCM Precaution 7A1–23
Information On PCM 7A1–24
Intermittent Conditions 7A1–24
Transmission And PCM Identification 7A1–25
Isuzu UBS 7A1–25
Diagnostic Trouble Code (DTC) Identification 7A1–26
DTC P0218 Transmission Fluid Over Temperature 7A1–27
DTC P0705 Transmission Range Switch (Mode Switch) Illegal Position 7A1–29
DTC P0706 Transmission Range Switch (Mode Switch) Performance 7A1–33
DTC P0711 Transmission Fluid Temperature (TFT) Sensor Performance 7A1–37
DTC P0712 Transmission Fluid Temperature (TFT) Sensor Circuit Low Input 7A1–40
DTC P0713 Transmission Fluid Temperature (TFT) Sensor Circuit High Input 7A1–43
DTC P0719 Brake Switch Circuit Low (Stuck On) 7A1–46
DTC P0722 Automatic Transmission Output Speed Sensor (OSS) Low Input 7A1–49
DTC P0723 Automatic Transmission Output Speed Sensor (OSS) Intermittent 7A1–52
DTC P0724 Brake Switch Circuit High (Stuck Off) 7A1–55
DTC P0730 Gear Error Without Input Speed 7A1–57
DTC P0742 Torque Converter Clutch (TCC) System Stuck On 7A1–60
DTC P0748 Pressure Control Solenoid (PCS) (Force Motor) Circuit Electrical 7A1–62
DTC P0751 Shift Solenoid A Performance (Stuck OFF) 7A1–64
DTC P0752 Shift Solenoid A Performance (Stuck ON) 7A1–66
DTC P0753 Shift Solenoid A Electrical 7A1–68
DTC P0756 Shift Solenoid B Performance (Stuck OFF) 7A1–72
DTC P0757 Shift Solenoid B Performance (Stuck ON) 7A1–74
DTC P0758 Shift Solenoid B Electrical 7A1–76
DTC P1850 Brake Band Apply Solenoid Malfunction 7A1–81
DTC P1860 TCC PWM Solenoid Electrical . 7A1–86
Test Description 7A1–86
DTC P1870 Transmission Component Slipping (TCC Stuck OFF) 7A1–89
Circuit Diagram (LHD) 7A1–91
Circuit Diagram (RHD) 7A1–93
Harness Connector Faces (LHD) 7A1–95
Harness Connector Faces (RHD) 7A1–97
Transmission Fluid Temperature (TFT) Sensor Specifications 7A1–99

Service Precaution

WARNING: THIS VEHICLE HAS A SUPPLEMENTAL RESTRAINT SYSTEM (SRS). REFER TO THE SRS COMPONENT AND WIRING LOCATION VIEW IN ORDER TO DETERMINE WHETHER YOU ARE PERFORMING SERVICE ON OR NEAR THE SRS COMPONENTS OR THE SRS WIRING. WHEN YOU ARE PERFORMING SERVICE ON OR NEAR THE SRS COMPONENTS OR THE SRS WIRING, REFER TO THE SRS SERVICE INFORMATION. FAILURE TO FOLLOW WARNINGS COULD RESULT IN POSSIBLE AIR BAG DEPLOYMENT, PERSONAL INJURY, OR OTHERWISE UNNEEDED SRS SYSTEM REPAIRS.

CAUTION: Always use the correct fastener in the proper location. When you replace a fastener, use ONLY the exact part number for that application. ISUZU will call out those fasteners that require a replacement after removal. ISUZU will also call out the fasteners that require thread lockers or thread sealant. UNLESS OTHERWISE SPECIFIED, do not use supplemental coatings (Paints, greases, or other corrosion inhibitors) on threaded fasteners or fastener joint interfaces. Generally, such coatings adversely affect the fastener torque and the joint clamping force, and may damage the fastener. When you install fasteners, use the correct tightening sequence and specifications. Following these instructions can help you avoid damage to parts and systems.

General Description

The 4L30–E is a 4–speed fully automatic transmission. It uses a microcomputer as a control unit to judge running conditions including throttle opening rate and vehicle speed, then it sets the shifting point in the optimum timing so that best driving performance can be achieved.
In addition, the built–in shift mode select function can select three shift modes according to the driver's preference:

- Normal mode –Normal shift pattern.
- Winter mode –Starts in 3rd gear to reduce slippage on ice or snow.
- Power mode has a delayed upshift for when more powerful acceleration is required.

Also, the built–in fail safe function ("backup mode") assures driving performance even if the vehicle speed sensor, throttle signal or any solenoid fails.
Further, the self–diagnostic function conducts diagnosis in a short time when the control system fails, thus improving serviceability.
The major features of 4L30–E are as follows:

- A compact structure consisting of 2 sets of planetary gears and flat torque converter.
- Electronic control selects the optimum shift mode according to the driving conditions.
- Electronic control maintains the optimum hydraulic pressure for clutch, band brake as well as transmission so that shift feeling is improved.
- Two sets of planetary gears reduce friction of power train.

  Also, a lockup mechanism in the torque converter reduces fuel consumption.
- Wide gear ratio and high torque rate of torque converter provide excellent starting performance.

Electronic Control Diagram

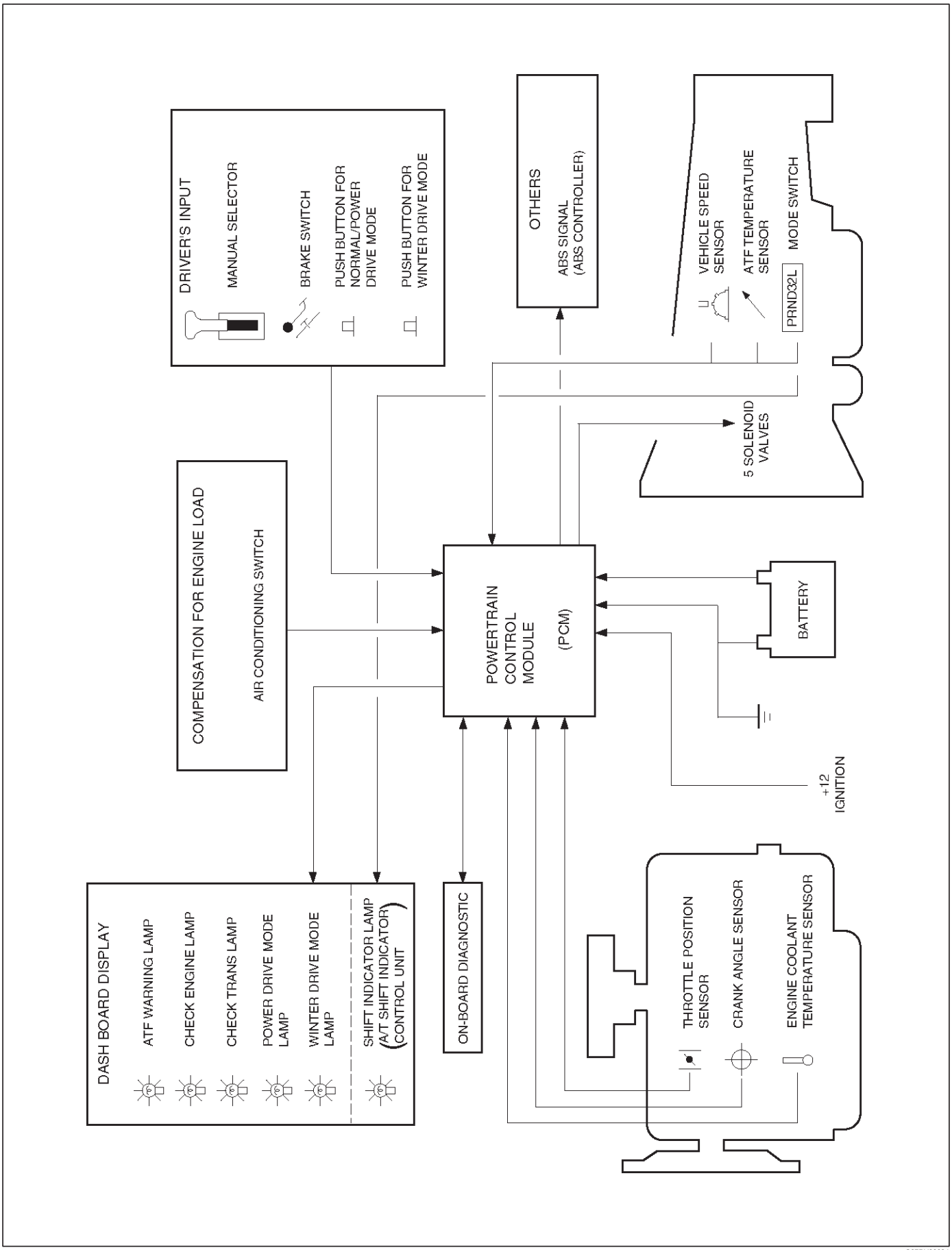

C07RY00034

Powertrain Control Module (PCM)

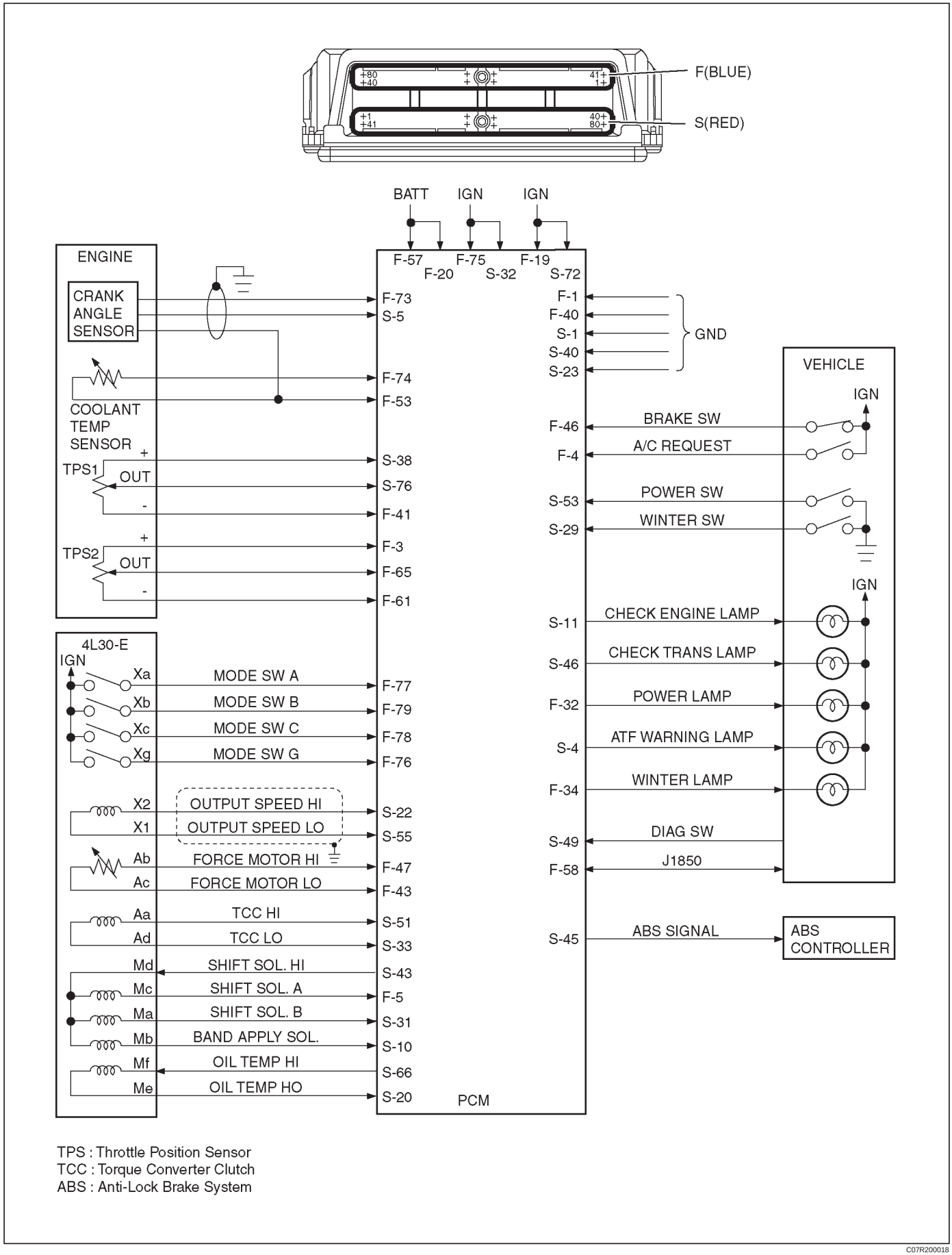

TPS : Throttle Position Sensor
TCC : Torque Converter Clutch
ABS : Anti-Lock Brake System

C07R200018

Control System Diagram

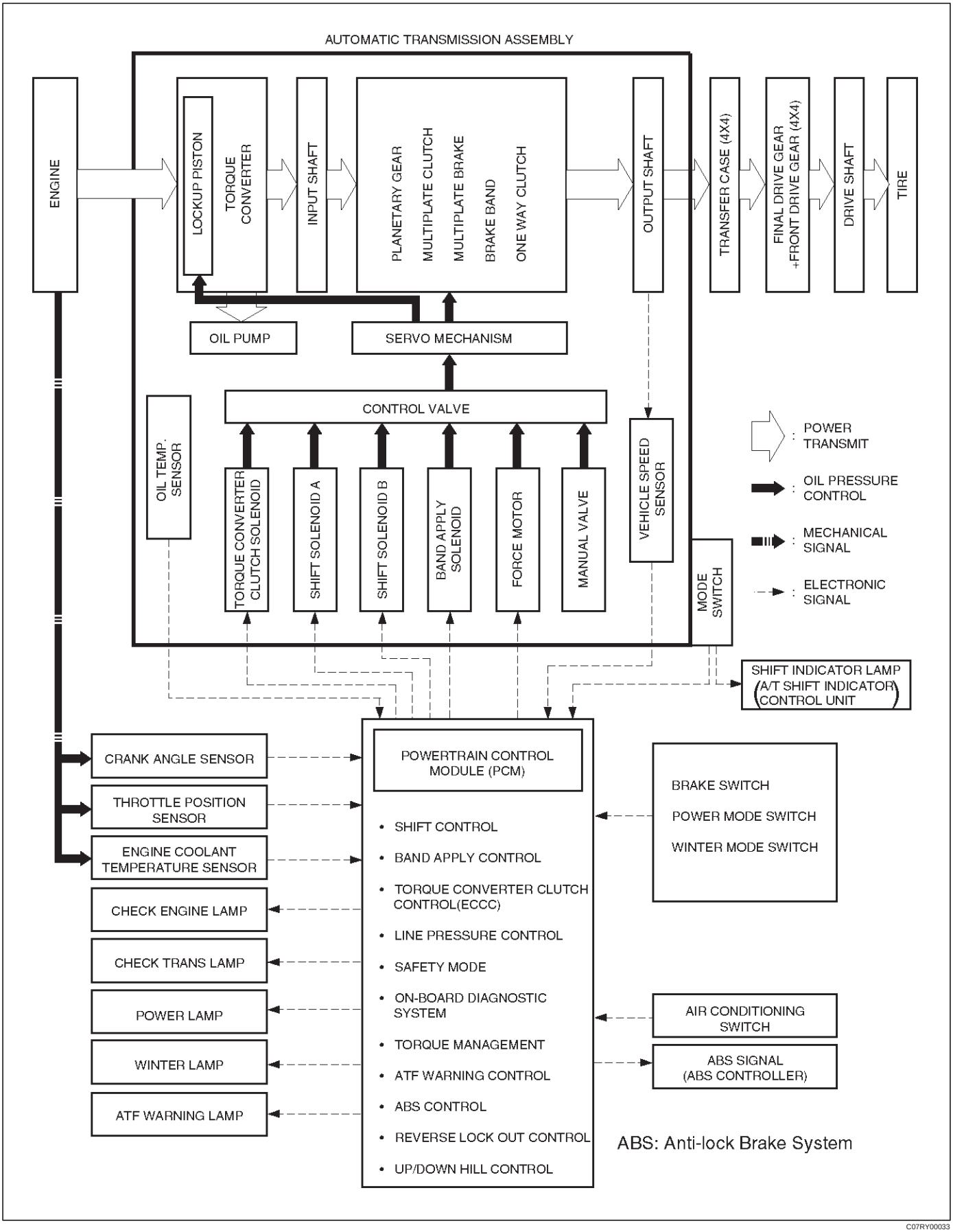

C07RY00033

Shift Control

The transmission gear is shifted according to the shift pattern selected by the driver. In shifting gears, the gear ratio is controlled by the ON/ OFF signal using the shift solenoid A and the shift solenoid B.

Band Apply Control

The band apply is controlled when in the 3–2 downshift (engine overrun prevention) and the garage shift (shock control).
The band apply solenoid is controlled by the signal from the Pulse Width Modulation (PWM) to regulate the flow of the oil.

Torque Converter Clutch Control (Electronically Controlled Capacity Clutch = ECCC)

The clutch apply is controlled by moving the converter clutch valve by commanding Torque Converter Clutch (TCC) solenoid using the PWM signal.

Line Pressure Control

The throttle signal allows the current signal to be sent to the force motor. After receiving the current signal, the force motor activates the pressure regulator valve to regulate the line pressure.

On–Board Diagnostic System

Several malfunction displays can be stored in the Powertrain Control Module (PCM) memory, and read out of it afterward.
The serial data lines, which are required for the testing of the final assembly and the coupling to other electronic modules, can be regulated by this function.

Fail Safe Mechanism

If there is a problem in the transmission system, the PCM will go into a “backup” mode.
The vehicle can still be driven, but the driver must use the select lever to shift gears.

Torque Management Control

The transmission control side sends the absolute spark advance signal to the engine control side while the transmission is being shifted. This controls the engine spark timing in compliance with the vehicle running condition to reduce the shocks caused by the change of speed.

ATF Warning Control

The oil temperature sensor detects the ATF oil temperature to control the oil temperature warning, TCC, and the winter mode.

ABS Control

When the select lever is at “L” or “R” range, a signal is sent to the ABS controller as one of the ABS control conditions.

Reverse Lock Out Control

With the selector lever in reverse position, the PCM will not close the PWM solenoid until the vehicle is below 11 km/h (6.8 mph), thus preventing reverse engagement above this speed.

Downhill Control

This mode is automatically activated from “NORMAL” mode only when downhill conditions are recognized.
The shift pattern is identical to “NORMAL” mode except 3-4 and 4-3 shift lines at low throttle modified to get engine braking on a larger speed range.
ECCC lines unchanged compared to “NORMAL” mode.

Uphill Control

When Uphill condition are recognized the 2-3 and 3-4 shift and TCC apply take place only when the engine torque is sufficient in order to avoid shift hunting.

Shift Mode Control

① Mode Type

Mode Type	Select lever position
Normal drive mode (NOR)	Entire range (excluding "R")
Power drive mode (PWR)	Entire range (excluding "R")
Winter drive mode	"D" range only

② Mode selection

	SWITCH (SW)		LAMP	
Mode Type	POW/NOR. SW	WINTER SW	POWER DRIVE LAMP	WINTER DRIVE LAMP
Normal drive mode (NOR)	OFF	OFF	OFF	OFF
Power drive mode (PWR)	ON	OFF	ON	OFF
Winter drive mode	ON/OFF	ON	OFF	ON

However, the winter switch prevails over the PWR/NOR switch.
The mode becomes normal drive mode when the winter switch is operated from ON to OFF.

③ Comparison of mode

(1) The normal drive mode is set at the normal shift points.

(2) The shift points of the power drive mode are shifted to the higher speed side, compared to the normal drive mode.

(3) The winter drive mode is a special mode used exclusively for starting in third gear.

Shift diagram

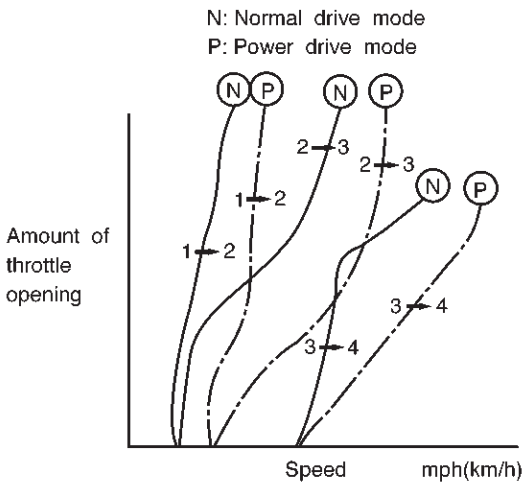

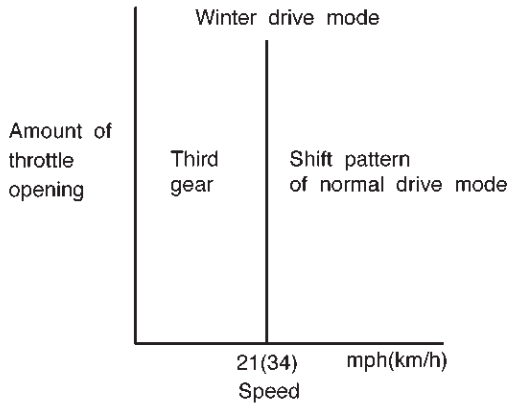

F07RX001

Gear Shift Control

① Shift pattern

SELECT LEVER RANGE	SHIFT PATTERN
D (Drive)	1⇄2TCC ⇄3TCC ⇄4TCC
3 (Third)	1⇄2TCC ⇄3TCC ←4TCC
2 (Second)	1⇄2TCC ←3TCC
L (First)	1←2

TCC = Torque Converter Clutch

② Gear position

The gear is selected by ON/OFF of two solenoids.

Gear \ SOL	A	B
4 (Fourth)	×	×
3 (Third)	○	×
2 (Second)	○	○
1 (First)	×	○
P (park) R (Reverse) N (Neutral)	×	○

○ = ON

× = OFF

Shift solenoid A (Normally closed) ON → PRESSURE TO SHIFT VALVE

Shift solenoid B (Normally open) OFF → PRESSURE TO SHIFT VALVE

③ Selecting gear pisition

Seven types of positions can be selected according to 5 signals from the mode switch as below.

SELECT LEVER RANGE	MODE SW TERMINALS				
	5(D)	8(A)	7(B)	6(C)	3(G)
P (park)	•	•			•
R (Reverse)	•	•	•		
N (Neutral)	•		•		•
D (Drive)	•		•	•	
3 (Third)	•	•	•	•	•
2 (Second)	•	•		•	
L (First)	•			•	•

• = Continuity

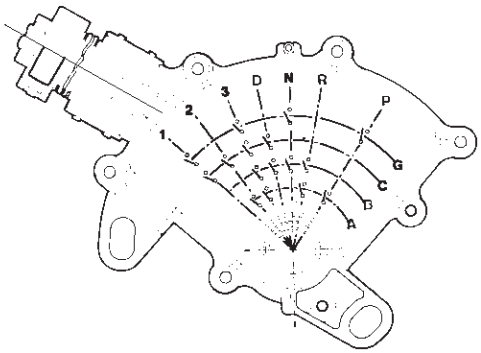

F07RT034

Winter Drive Mode

1. **Operation**
   The winter switch will operate when switched on after all of the following conditions are present:

   Conditions:

   a. The select lever position is “D” range only.
   b. Vehicle speed is 7 mph (11 km/h) or less.
   c. Transmission oil temperature is 130˚C (266˚F) or less.
   d. Accelerator opening is at 8% or less.

2. **Cancel Release**
   1. Cancellation by driver
      a. Turning off the winter drive mode switch
      b. Shifting select position to “3”, “2”, or “L” (winter drive mode is not canceled by selecting “D”, “N”, “R”, or “P”).
      c. Ignition key is turned off.
   2. Automatic cancellation
      a. When vehicle runs at 21mph (34 km/h) or more for 1 second or more
      b. When transmission oil temperature reaches 130˚C (266˚F) or above

NOTE: The mode returns to normal drive mode or power drive mode after the winter drive mode is canceled.

Backup Mode

If a major system failure occurs which could affect safety or damage the transmission under normal vehicle operation, the diagnostic system detects the fault and overrides the Powertrain Control Module (PCM).
The “CHECK TRANS” light flashes to alert the driver, and the transmission must be manually shifted as follows:

Select lever position	Gear Ratio Selected
D	4 (Fourth)
Manual 3	4 (Fourth)
Manual 2	3 (Third)
Manual L	1 (First)
R	Reverse

Shifts are firmer to prevent clutch slip and consequent wear. The fault should be corrected as soon as possible.

Functions of Input / Output Components

Components			Function
INPUT SIGNAL	Speed sensor (fixed to transmission)		Senses rotation of output shaft and feeds the data to Powertrain Control Module (PCM).
	Throttle position sensor (TPS) (fixed to engine)		Senses the extent of throttle valve opening and the speed of the throttle valve lever motion to open the valve. Feeds the data to PCM.
	Brake switch (fixed to brake pedal)		Senses whether the driver has pressed the brake pedal or not and feeds the information to PCM.
	Mode switch (fixed to transmission)		Senses the select lever position, and feeds the information to PCM.
	Power drive switch (fixed to front console)		Senses whether the driver has selected the power mode, and feeds the information to PCM.
	T/M oil temperature sensor		Senses the T/M oil temperature and feeds the data to PCM
	Engine coolant temperature sensor		Senses the engine coolant temperature, and feeds the data to PCM.
	Engine speed signal		Feeds the signals monitoring engine speed to PCM from crank angle sensor.
	Air conditioning information		Senses whether the air conditioner has been switched on or not, and feeds the information to PCM.
	Winter switch (fixed to front console)		Senses whether the driver has selected the winter mode, and feeds the information to PCM.
	Cruise controller (Overdrive OFF signal)		Downshift takes place when overdrive OFF signal is received from auto cruise controller integrated in PCM.
OUTPUT SIGNAL	SOLENOID	Shift solenoid A, B	Selects shift point and gear position suited to the vehicle running condition on the basis of PCM output.
		Band apply solenoid	Controls oil flow suited to the vehicle running condition on the basis of PCM output.
		Torque Converter Clutch PWM solenoid	Controls clutch apply suited to the vehicle running condition on the basis of PCM output.
		Force motor (Pressure regulator valve)	Adjusts the oil pump delivery pressure to line pressure suited to the vehicle running condition on the basis of PCM output.
	Power drive mode lamp		Informs the driver whether the vehicle is in power mode or not.
	Winter drive mode lamp		Informs the driver whether the vehicle is in winter mode or not.
	CHECK TRANS lamp		Informs the driver of failure in the system.
	ATF warning lamp		Lights when ATF oil temperature rises.
	ABS signal		When the select lever is at “Reverse” or “L” range, sends a signal to the ABS controller as one of the ABS control conditions.

Diagnosis

Electronic Diagnosis

How To Diagnose The Problem

1. To avoid incorrect diagnostics, this book needs to be followed accurately. Unless stated, do not jump directly to a section that could contain the solution. Some important information may be missed.
2. The sections in CAPITALS and bold are the main sections that can be found in the contents.
3. The GOTO **“SECTION”** means to continue to check going to the “section”.
4. The GOTHROUGH **“SECTION”** means to go through the “section” and then to go back to the place the GOTHROUGH was written.
5. BASIC ELECTRIC CIRCUITS:
   You should understand the basic theory of electricity. This includes the meaning of voltage, amps, ohms, and what happens in a circuit with an open or shorted wire. You should also be able to read and understand wiring diagrams.

Check Trans Indicator

Find CHECK TRANS indicator and verify if it is

A. Flashing: GOTO **DIAGNOSTIC CHECK.**

B. Staying on: GOTHROUGH **CHECK TRANS CHECK**.

C. Is never ON when the ignition key is turned on: GOTHROUGH **CHECK TRANS CHECK**

D. Is ON during 2 ~ 3 seconds at ignition but OFF after: Normal operation. No DTC or malfunction.

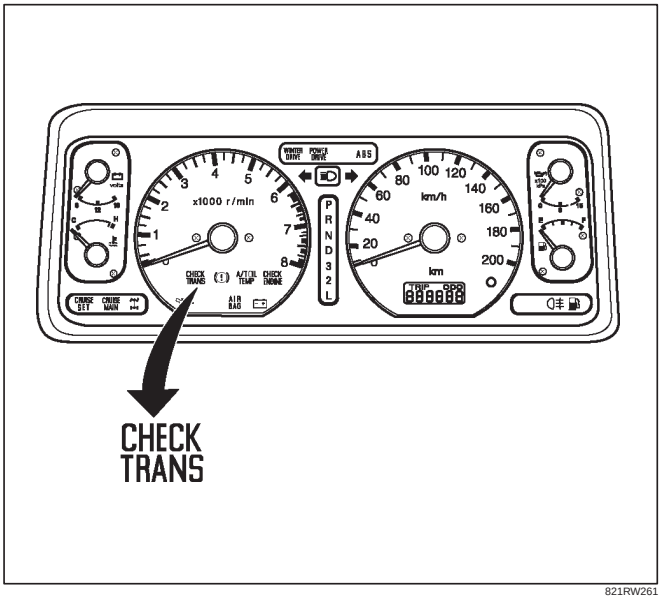

821RW261

Diagnostic Check

This test determines if the transmission or its input or output connections or sensors are failing.

1. Connect the Tech 2: GOTHROUGH **Tech 2 OBD II CONNECTION**.
2. Turn on the ignition but not the engine.
3. Push “F0” on Tech 2 to see the Diagnostic Trouble Code (DTC):
4. Do you have a DTC?
   YES: write down all code numbers and do the **DTC CHECK**
   NO: the DTC can not help you finding the problem.
   1. GOTHROUGH **“CHECK TRANS” CHECK**
   2. IF it is flashing and the flash is 0.2 seconds ON and 0.2 seconds OFF, this means that you should have a DTC stored. Please recheck GOTO **DIAGNOSTIC CHECK** and if you find the same problem, replace the Powertrain Control Module (PCM).

Normal

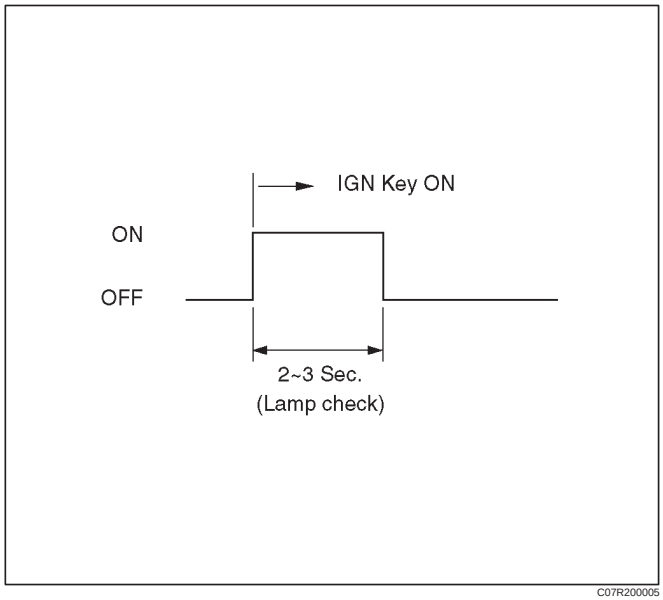

C07R200005

Abnormal

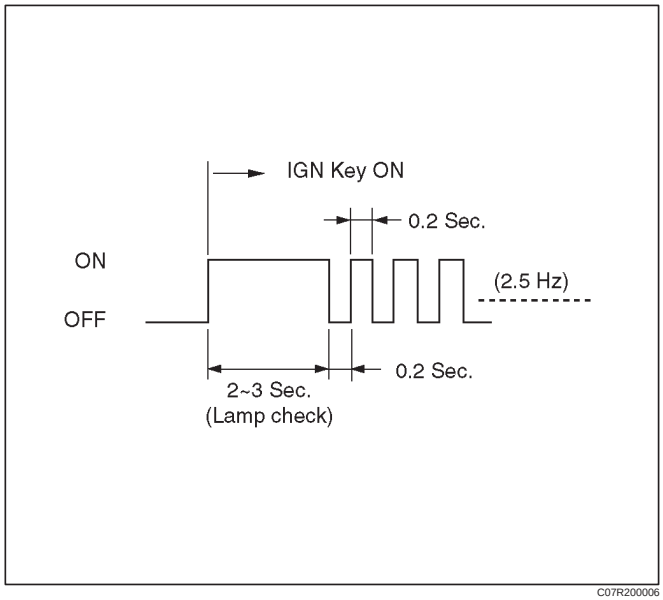

C07R200006

“Check Trans” Check

1. Indicator it is ON during 2 ~ 3 seconds at ignition (or when the engine is cranked) but it is OFF after the engine starts. The indicator is working normally GOTO **DIAGNOSTIC CHECK**.

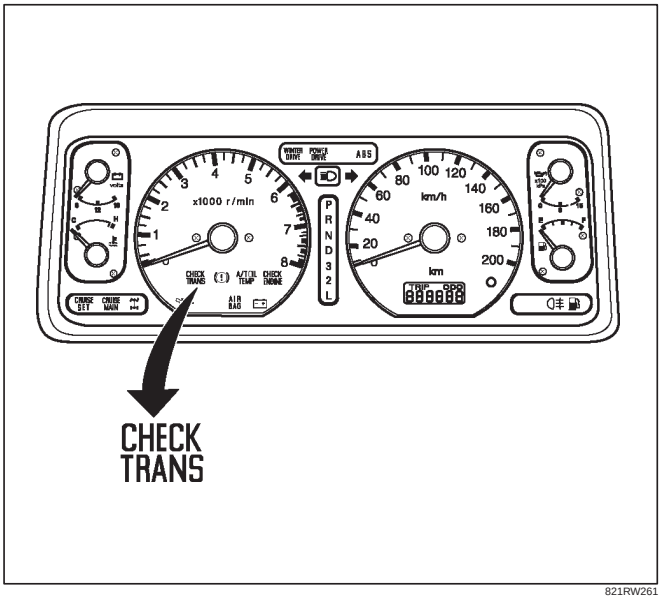

821RW261

Normal

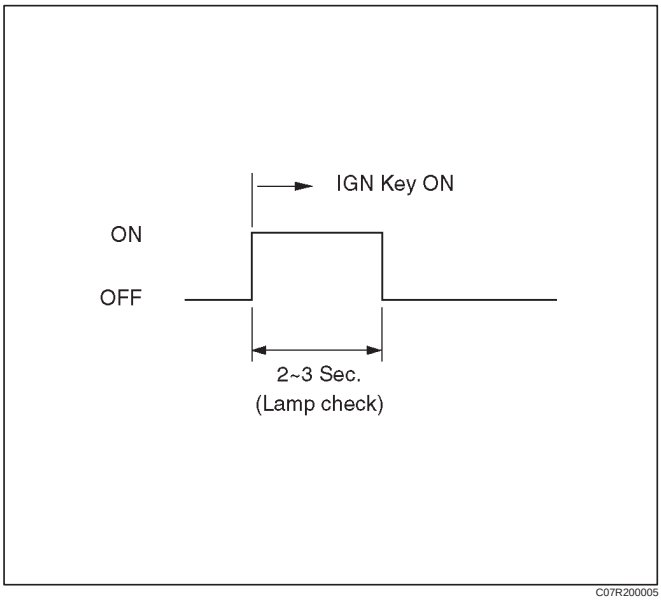

C07R200005

2. Indicator it is flashing and the flash is 0.2 seconds ON and 0.2 seconds OFF always when ignition is on (engine cranked or not). This means that there is a malfunction. GOTO **DIAGNOSTIC CHECK**.

Abnormal

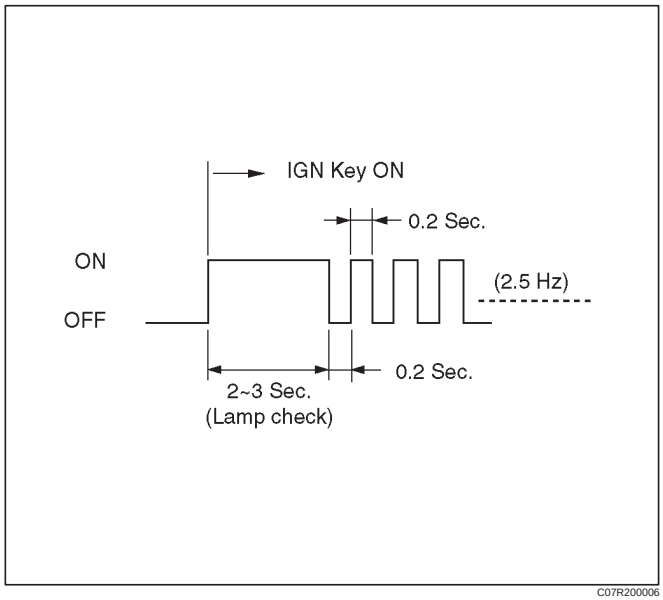

C07R200006

3. Indicator it is staying ON always when Ignition is ON.
   1. This means that connection between the lamp and the PCM is shorted to ground.
   2. Verify if instrument panel terminal 3 (WO/TOD) or 6 (WO/TOD) of connector I–9 is shorted to ground.
   3. Verify if the PCM connector S (RED) terminal 46 is shorted to ground.
   4. Verify that the instrument panel terminal 15 (WO/TOD) or 26 (W/TOD) of connector I–9 is connected to battery.
   5. IF problem solved: GOTO **CHECK TRANS INDICATOR**.

   NO:Replace Powertrain Control Module (PCM).
4. Indicator it is staying OFF with the ignition ON (engine OFF).
   1. This means that connection between the lamp and the PCM is shorted to battery or opened.
   2. Verify if instrument panel terminal 3 (WO/TOD) or 6 (WO/TOD) of connector I–9 is shorted to battery or open.
   3. Verify if the PCM connector S (RED) terminal 46 is shorted to battery or open.
   4. Verify that the instrument panel terminal 15 (WO/TOD) or 26 (W/TOD) of connector I–9 is connected to battery. If not, check the fuses and the connections voltage.

5. IF problem solved: GOTO **CHECK TRANS INDICATOR**.

NO: Replace Powertrain Control Module (PCM).

LHD

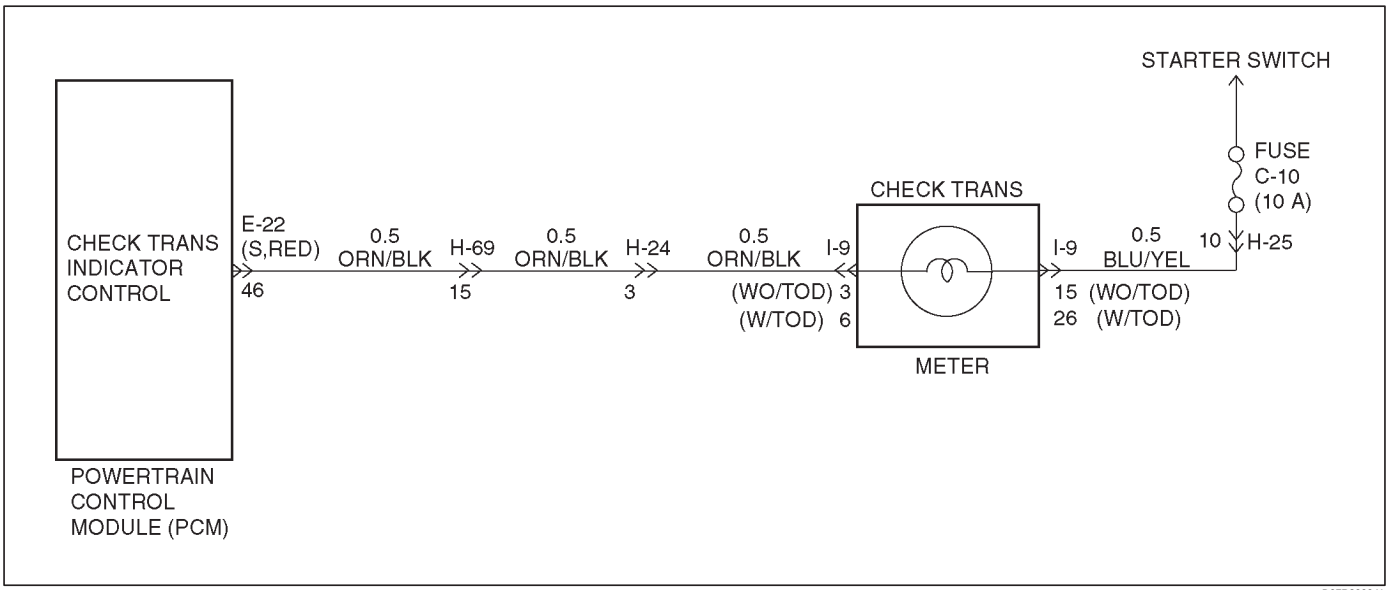

D07R200041

RHD

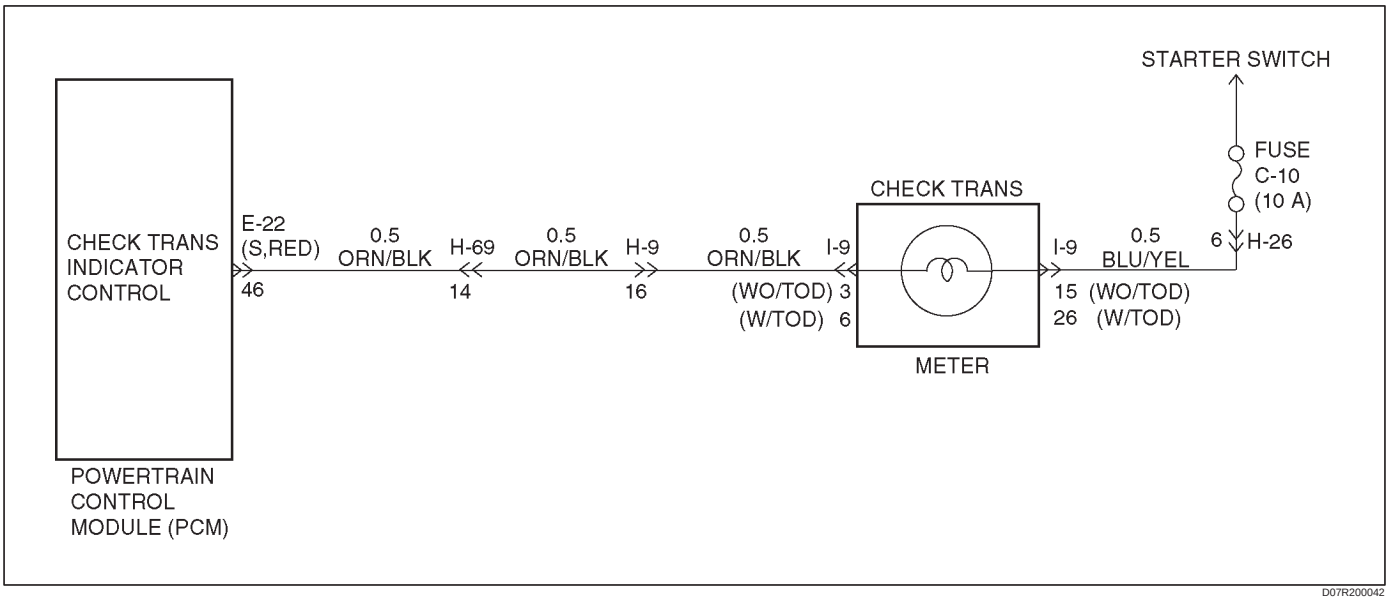

D07R200042

Tech 2 OBD II Connection

In order to access OBD II Powertrain Control Module (PCM) data, use of the Tech 2 scan tool kit (7000086) is required.

1. The electronic diagnosis equipment is composed of:
   1. Tech 2 hand held scan tool unit (7000057) and DLC cable (3000095).

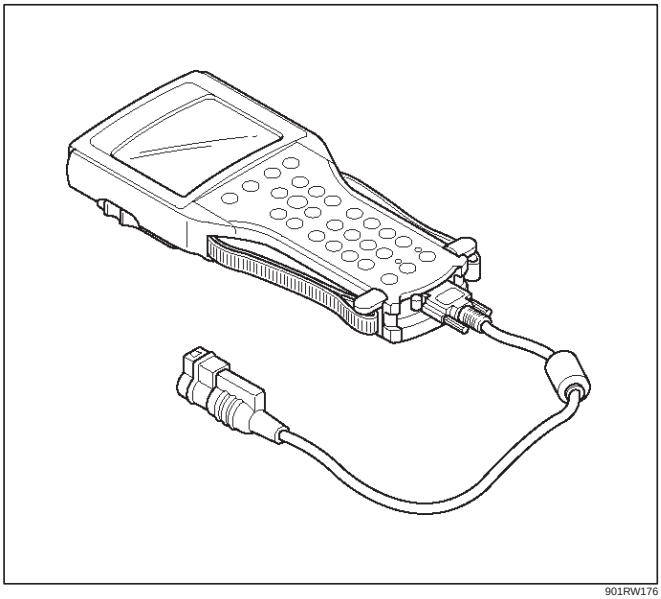

901RW176

   2. SAE 16/19 adaptor (3000098) (1), RS 232 loop back connector (3000112) (2), and PCMCIA card (3000117) (3).

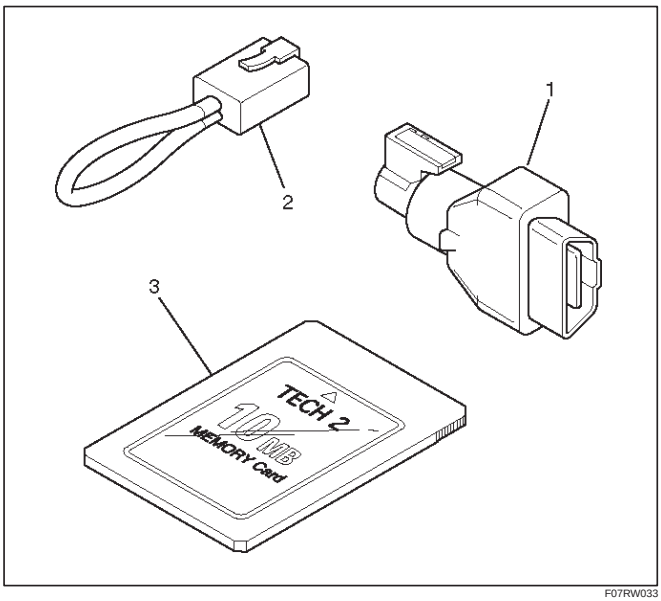

F07RW033

2. Connecting the TECH2

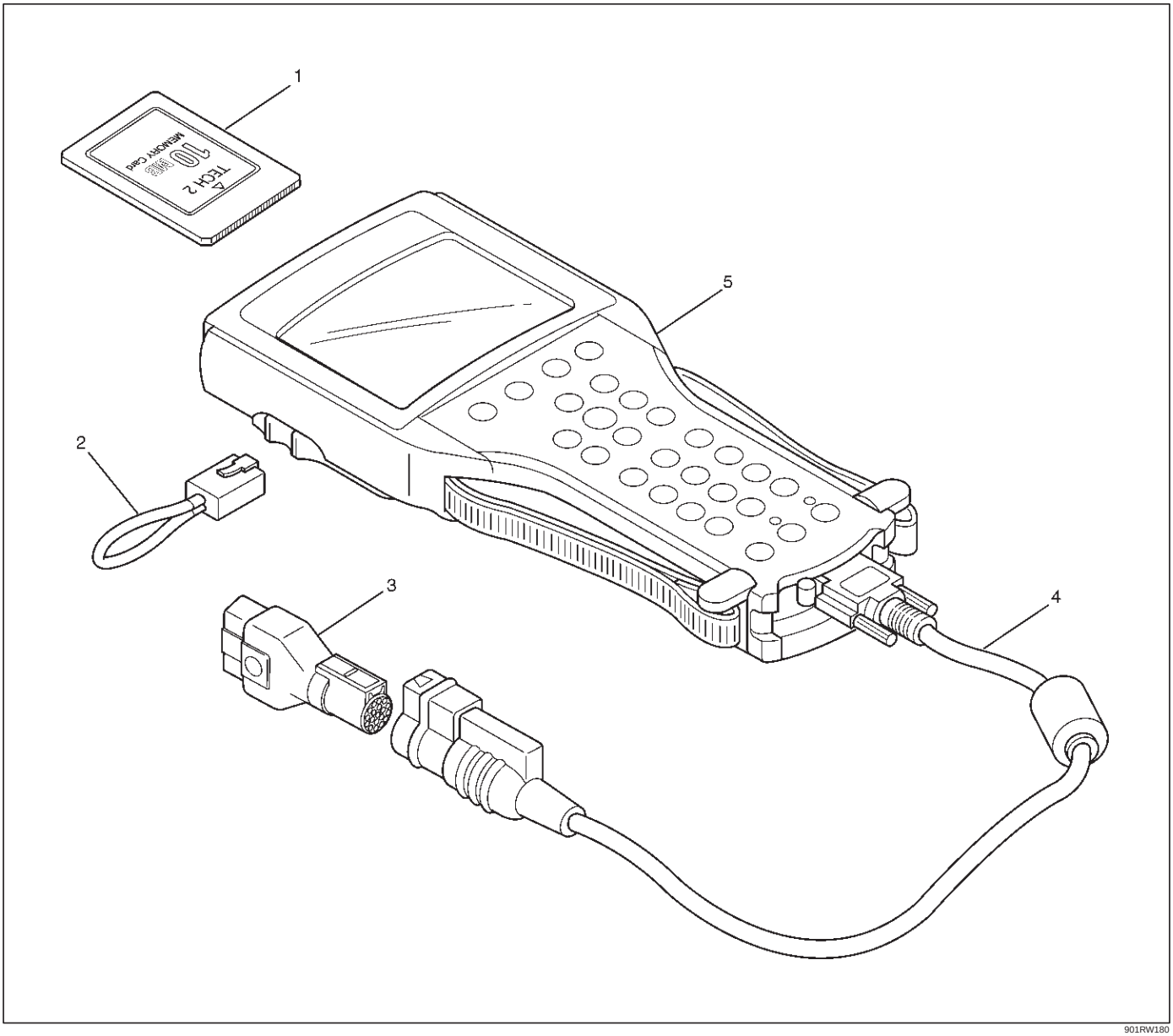

Legend

(1) PCMCIA Card
(2) RS 232 Loop Back Connector
(3) SAE 16/19 Adapter
(4) DLC Cable
(5) Tech 2

- Before operating the Isuzu PCMCIA card with the Tech 2, the following steps must be performed:

1. The Isuzu (model year) System PCMCIA card (1) inserts into the Tech 2 (5).
2. Connect the SAE 16/19 adapter (3) to the DLC cable (4).
3. Connect the DLC cable to the Tech 2 (5)
4. Make sure the vehicle ignition is off.
5. Connect the Tech 2 SAE 16/19 adaptor to the vehicle DLC.

LHD

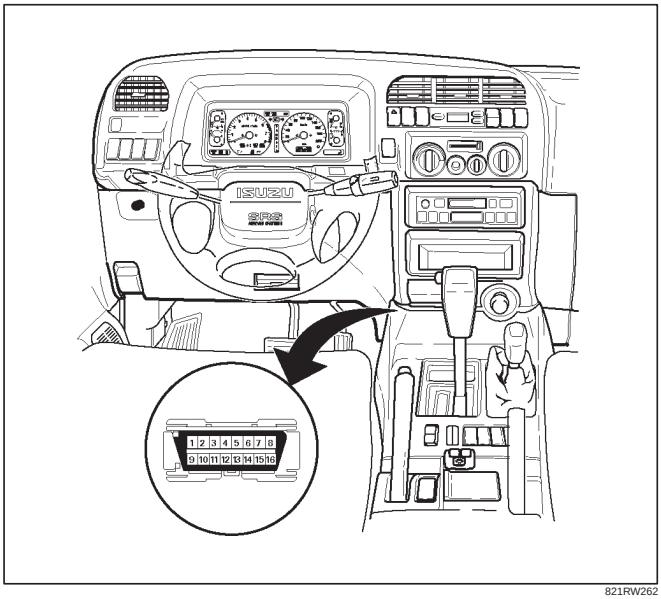

821RW262

RHD

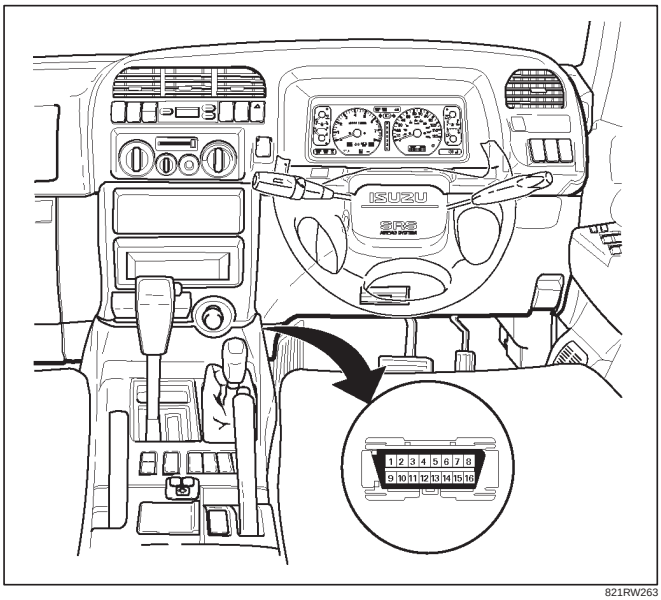

821RW263

6. The vehicle ignition turns on.
7. Verify the Tech 2 power up display.

060RW009

NOTE: The RS232 Loop back connector is only to use for diagnosis of Tech 2 and refer to user guide of the Tech 2.

8. The power up screen is displayed when you power up the tester with the Isuzu systems PCMCIA card. Follow the operating procedure below.

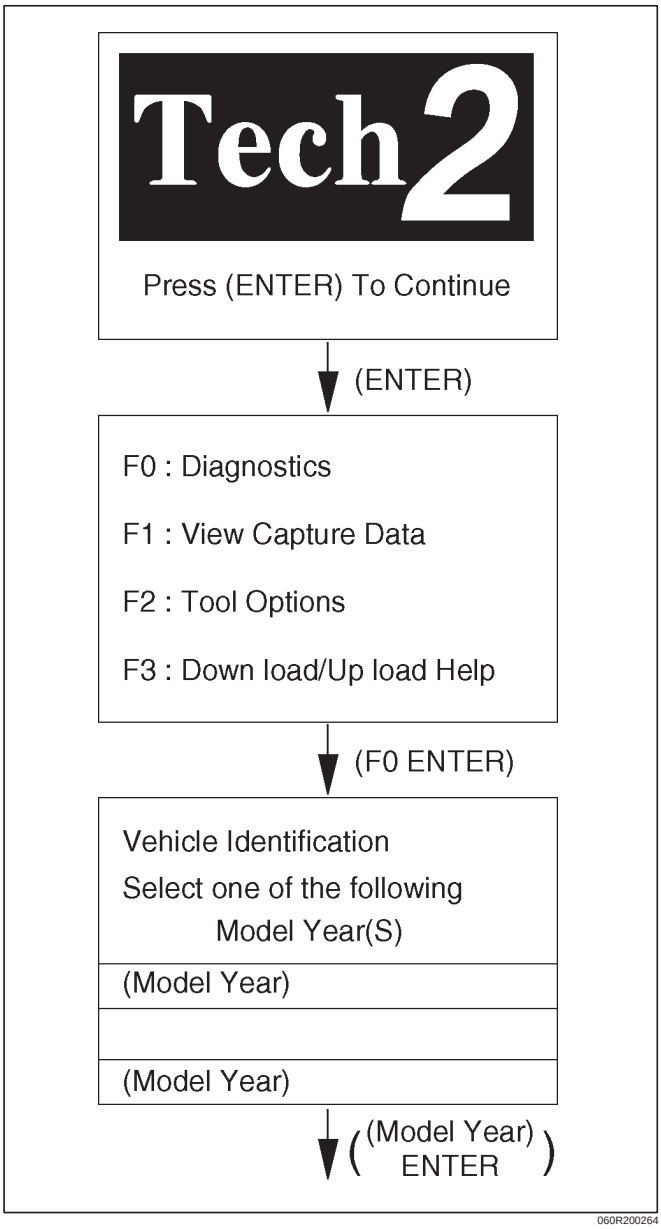

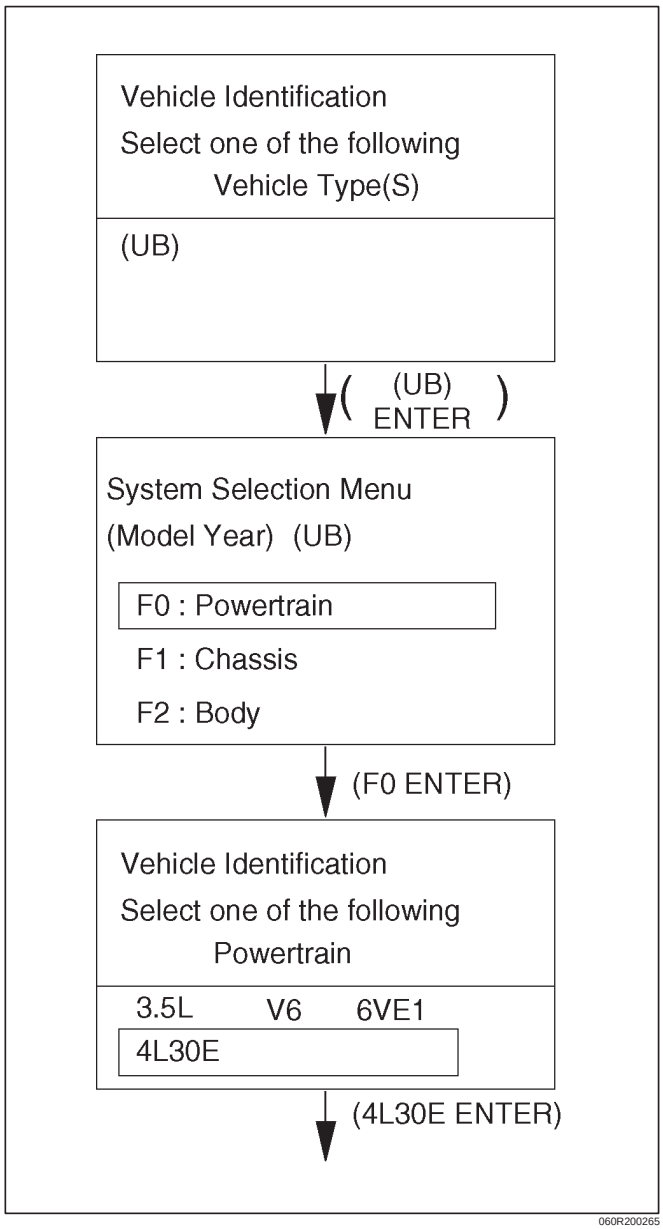

Once the test vehicle has been identified an “Application (Powertrain) Menu” screen appears. Please select the appropriate application.
The following table shows, which functions are used for the available equipment versions.

- F0: Diagnostic Trouble Codes
  - F0: Read DTC Info Ordered By Priority
  - F1: Clear DTC Information
  - F2: DTC Information
- F1: Data Display
  - F0: Transmission Data
- F2: Snap Shot
- F3: Actuator Tests
  - F0: Lamps
    - F0: Check Light
    - F1: Winter Drive Lamp
    - F2: Power Drive Lamp
    - F3: AT Oil Temperature Lamp
  - F1: Solenoids
    - F0: Solenoid 1-2/3-4 Test
    - F1: Solenoid 2-3 Test
    - F2: TCC Solenoid
    - F3: Band Apply Solenoid
    - F4: Pressure Control Solenoid (PCS)
- F4: Function Tests
  - F0: Reset Oil Life Monitor

Diagnostic Trouble Codes

The purpose of the “Diagnostic Trouble Codes” mode is to display stored PCM trouble codes.
When “Diagnostic Trouble Codes” is selected an “Application Menu” screen appears.

Clear DTC Information

The purpose of the “Clear DTC Information” mode is to command the clearing of stored PCM trouble codes.
When “Clear DTC Information” is selected, a “Clear DTC Information”, warning screen appears. This screen informs you that by cleaning DTC’s, “all stored DTC information in controller will be erased”.
Do you want to clear DTC’s (Yes/No).
Press either the Yes or No key when answering.
After clearing codes, confirm system operation by test driving the vehicle.
Allow the vehicle to shift through all four forward gears in a manner which attempts to repeat the failure condition.

NOTE: When the trouble has not been repaired and the trouble code cannot be erased, check the vehicle again.

DTC Information

When “DTC Information” is selected, an “Application Menu” appears with a list of DTC information function keys addressing DTC specifics and their origins.

Function key selections may vary for particular vehicle and/or system.

Data Display

The purpose of the “Data Display” mode is to continuously monitor data parameters.
The current actual values of all important sensors and signals in the system are display through F1 mode.
When “Data Display” is selected an “Application Menu” appears. Please select either “Engine” or “Transmission Data Display”.
See “Transmission Data” on next page.

Snapshot

When “Snapshot” is selected an “Application Menu” appears.
When “Transmission Snapshot” application is selected from the “Application Menu”, a “Snapshot Menu” appears, displaying several options. “Snapshot” options may vary from one system to another.
“Snapshot” allows a recording of all vehicle parameters. There parameters may then be replayed at a future point in time.
This action allows you to focus on making the condition occur, rather than trying to view all of the data in anticipation of the fault. The snapshot will collect parameter information around a trigger point that you select.
When a snapshot is taken. It is recorded onto the PCMCIA memory card. When the Tech 2 is powered down. Snapshots are not lost.

Actuator Tests

The purpose of “Actuator Tests” mode is to check for correct operation of electronic system actuators.

Lamps

You can operate the lamps by pressing the ON and OFF buttons.
Preconditions: none

Solenoid

Solenoid 1-2/3-4, Solenoid 2-3, TCC Solenoid
You can operate the solenoids by pressing the ON and OFF buttons.
Preconditions: P–N position, no vehicle speed, no engine speed

Band Apply Solenoid
You can operate the solenoid by pressing the ON and OFF buttons.
Preconditions: P-N position, idle engine speed, no vehicle speed.

Pressure Control Solenoid (PCS)
You can set desired PCS Current using the UP (+25) and DOWN (–25) button. The PC Solenoid Data informs about PCS Current, Pressure and Duty Cycle.
Preconditions: P–N position, no engine speed, no vehicle speed

Reset Oil Life Monitor

Displays parameter “Oil Life Monitor” and resets to 100% if Yes-button is pressed on Reset-question. “No” leaves test.
Preconditions: no vehicle speed, no engine speed

Transmission Data

Item	Unit	Engine running at idle
Ignition Voltage	V	12.8 ~ 14.1 V
Engine Speed	RPM	750 ~ 900 RPM
Vehicle Speed	km/h, MPH	0 MPH
AT Output Speed (Automatic Transmission)	RPM	0 RPM
AT Input Speed Ratio (Automatic Transmission)		0.0
Throttle Position	%	0 %
AT Oil Temperature (Automatic Transmission)	˚C, ˚F	70 ~ 80˚C (158 ~ 176˚F)
AT Oil Temperature Lamp (Automatic Transmission)	Off, On	Off
AT Oil Life Monitor (Automatic Transmission)	%	100 %
AT Oil Life Lamp (Automatic Transmission)	Off, On	Not used
Commanded Gear		1
Current Gear		1
Mode Switch A	Inactive, Active	Active
Mode Switch B	Inactive, Active	Inactive
Mode Switch C	Inactive, Active	Inactive
Mode Switch G	Inactive, Active	Active
Selector Position		Park
1–2 Shift Solenoid A	Off, On	Off
2–3 Shift Solenoid B	Off, On	On
Solenoid Brake Band	Off, On	Off
TCC Slip Speed	RPM	750 ~ 900 RPM
TCC Solenoid	Off, On	Off
TCC Duty Cycle	%	0 %
PCS Current (Pressure Control Solenoid)	A	approx. 1.0 A
PCS Duty Cycle (Pressure Control Solenoid)	%	approx. 45 %
Desired PCS Pressure (Pressure Control Solenoid)	kPa	43 ~ 52 kPa
Shift Pressure	kPa	43 ~ 52 kPa
Brake Switch	Off, On	On
Kickdown Switch	On, Off	Not used
Winter Switch	On, Off	Off
Winter Drive Lamp	Off, On	Off
Power Switch	Power Drive Normal	Normal
Power Drive Lamp	Off, On	Off
Emergency Mode	Off, On	Off
ABS Status	On, Off	Off

OBD II Diagnostic Management System

Powertrain Control Module (PCM) Location

LHD

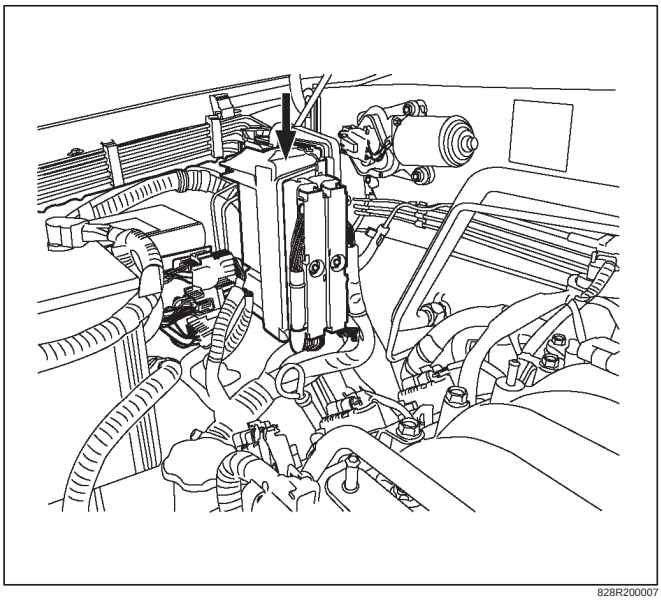

828R200007

RHD

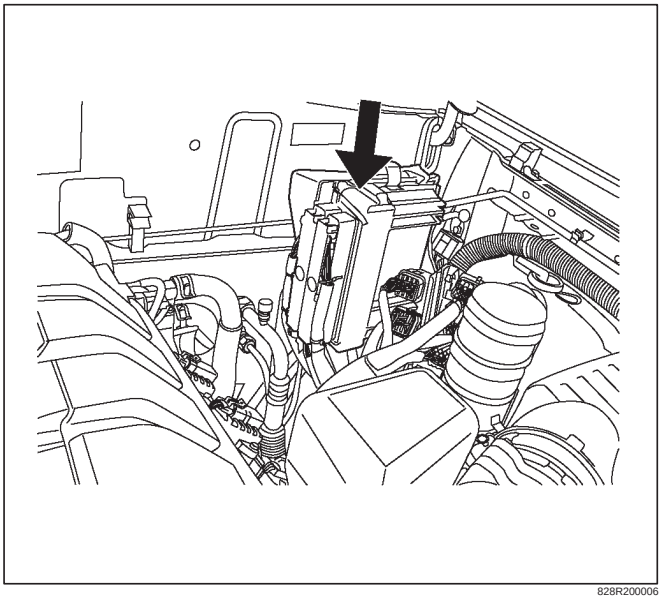

828R200006

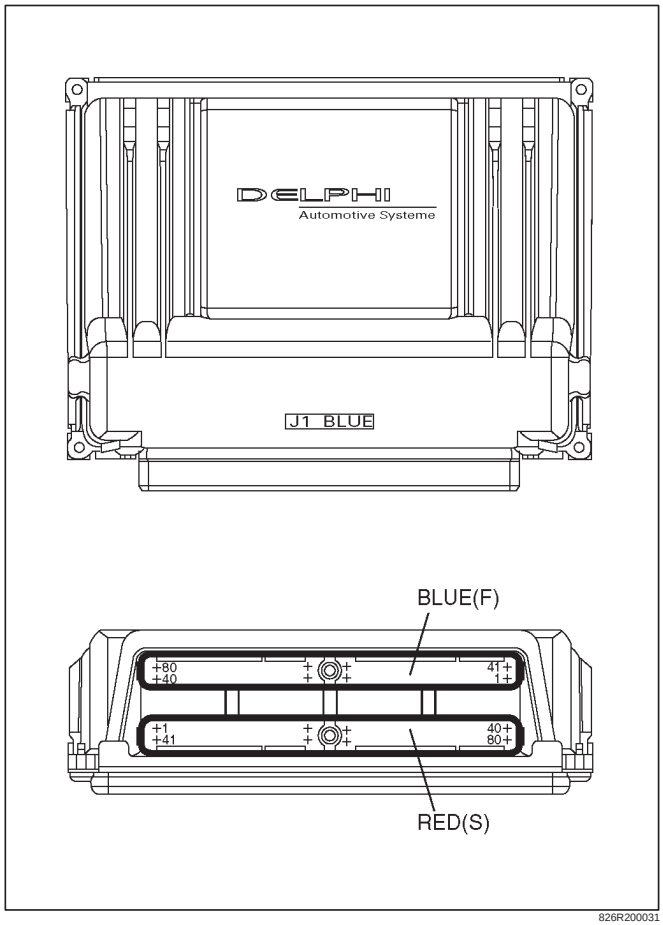

826R200031

Class 2 Serial Data Bus

OBD II technology requires a much more sophisticated PCM than does OBD I technology. The OBD II PCM diagnostic management system not only monitors systems and components that can impact emissions, but they also run active tests on these systems and components. The decision making functions of OBD II PCMs have also greatly increased. To accommodate this expansion in diagnostic complexity, Isuzu engineers have designed the Class 2 serial data bus, which meets SAE J1850 recommended practice for serial data.

“Serial Data” refers to information which is transferred in a linear fashion – over a single line, one bit at a time. A “Data Bus” is an electronic pathway through which serial data travels.

UBS previously used a 5 volt data bus called UART, which is an acronym for “Universal Asynchronous Receive and Transmit”. When neither the vehicle’s control module nor the diagnostic tool, such as a Tech 2, are “talking,” the voltage level of the bus at rest is 5 volts. The two computers talk to each other at a rate of 8,192 bits per second, by toggling or switching the voltage on the data bus from 5 volts to ground.

Class 2 data, which is used on OBD II vehicles, is quite different. Data is transferred at a rate of 10.4 kilobits per second, and the voltage is toggled between zero and 7 volts.

C07RT006

Class 2 data is also pulse width modulated. Each bit of information can have one of two lengths: long or short. On the other hand, UART data bits come in only one length (short). The pulse width modulation of Class 2 data allows better utilization of the data line.
The message carried on Class 2 data streams are also prioritized. This means that if two devices try to communication on the data line at the same time, only the higher priority message will continue. The device with the lower priority message must wait.

NOTE: The Class 2 data wire is always terminal 2 of the new 16–terminal Data Link Connector (DLC).

16 – Terminal Data Link Connector (DLC)

OBD II standardizes Data Link Connector (DLC) configurations. The DLC, formerly referred to as the ALDL, will be a 16–terminal connector found on the lower left side of the driver's side instrument panel. All manufacturers must conform to this 16–terminal standard.

LHD

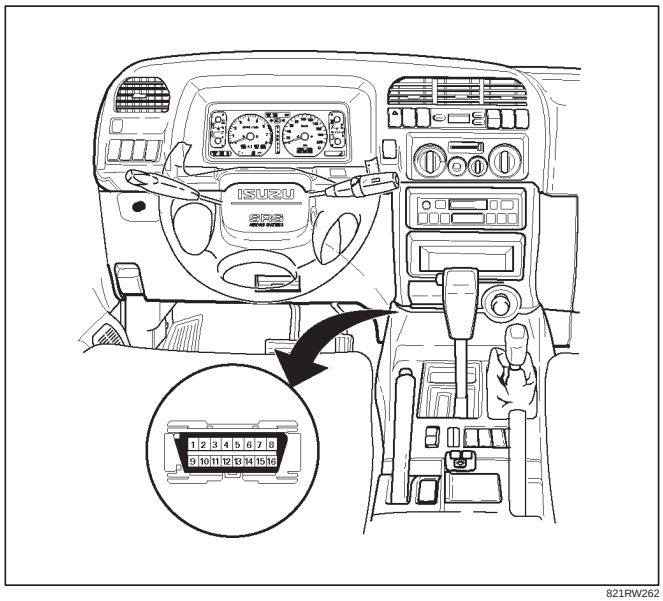

821RW262

RHD

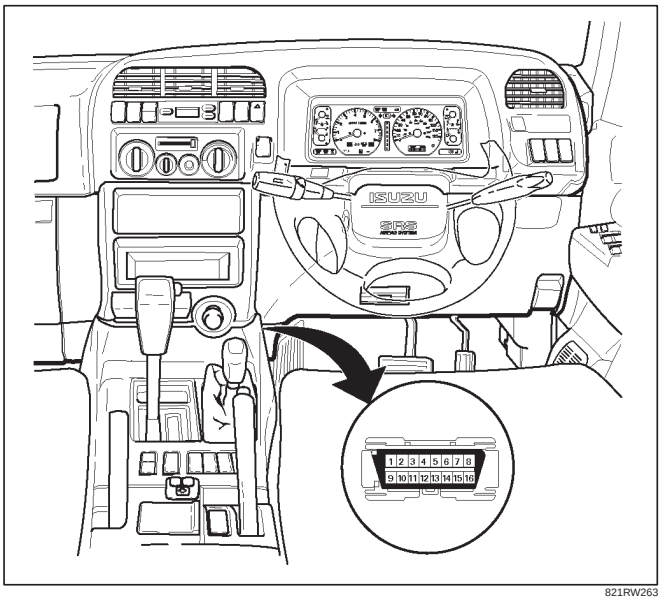

821RW263

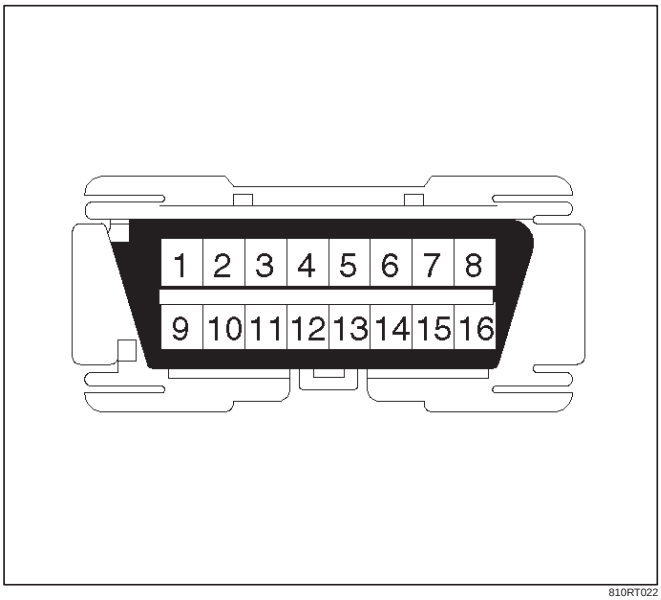

810RT022

PIN 1 –	DIAG. SW
PIN 2 –	J1850 Bus + L line on 2–wire systems, or single wire (Class 2)
PIN 3 –	(Not used)
PIN 4 –	Chassis ground pin
PIN 5 –	Signal ground pin
PIN 6 –	(Not used)
PIN 7 –	ABS diagnostic enable
PIN 8 –	TOD diagnostic enable
PIN 9 –	Primary UART
PIN 10 –	(Not used)
PIN 11 –	(Not used)
PIN 12 –	ABS diagnostic or CCM diagnostic enable
PIN 13 –	SIR diagnostic enable
PIN 14 –	(Not used)
PIN 15 –	(Not used)
PIN 16 –	Battery power from vehicle unswitched (4 AMP MAX.)

Malfunction Indicator Lamp (MIL)

The Malfunction Indicator Lamp (MIL) looks the same as the MIL you are already familiar with (“CHECK ENGINE” lamp). However, OBD II requires that it illuminate under a strict set of guidelines. Basically, the MIL is turned on when the PCM detects a DTC that will impact the vehicle’s emissions.

The MIL is under the control of the Diagnostic Executive. The MIL will be turned on if a component or system which has an impact on vehicle emissions indicates a malfunction or fails to pass an emissions–related diagnostic test. It will stay on until the system or component passes the same test, for three consecutive trips, with no emissions–related faults.

DTC Types

Each DTC is directly related to a diagnostic test. The Diagnostic Management System sets DTC based on the failure of the tests during a trip or trips. Certain tests must fail two (2) consecutive trips before the DTC is set. The following are the four (4) types of DTCs and the characteristics of those codes:

- Type A
  - Emissions related
  - Requests illumination of the MIL of the first trip with a fail
  - Stores a History DTC on the first trip with a fail
  - Stores a Freeze Frame (if empty) (DTC Information for 6VE1 engine)
  - Stores a Fail Record
  - Updates the Fail Record each time the diagnostic test fails
- Type B
  - Emissions related
  - “Armed” after one (1) trip with a fail
  - “Disarmed” after one (1) trip with a pass
  - Requests illumination of the MIL on the *second consecutive trip* with a fail
  - Stores a History DTC on the second consecutive trip with a fail (The DTC will be armed after the first fail)
  - Stores a Freeze Frame on the second consecutive trip with a fail (if empty) (DTC Information for 6VE1 engine)
  - Stores a Fail Record when the first test fails (not dependent on *consecutive trip* fails)
  - Updates the Fail Record each time the diagnostic test fails

(Some special conditions apply to misfire and fuel trim DTCs)

- Type C (if the vehicle is so equipped)
  - Non-Emissions related
  - Requests illumination of the Service Lamp or the service message on the Drive Information Center (DIC) on the *first trip* with a fail
  - Stores a History DTC on the *first trip* with a fail
  - *Does not* store a Freeze Frame
  - Stores Fail Record when test fails
  - Updates the Fail Record each time the diagnostic test fails
- Type D
  - Non-Emissions related
  - Not request illumination of any lamp
  - Stores a History DTC on the *first trip* with a fail
  - *Does not* store a Freeze Frame
  - Stores Fail Record when test fails
  - Updates the Fail Record each time the diagnostic test fails

IMPORTANT: Only four Fail Records can be stored. Each Fail Record is for a different DTC. It is possible that there will not be Fail Records for every DTC if multiple DTCs are set.

Clear DTC

NOTE: If you clear the DTC (Diagnostic Trouble Codes) you will not be able to read any codes recorded during the last occurrence.

NOTE: To use the DTC again to identify a problem, you will need to reproduce the fault or the problem. This may require a new test drive or just turning the ignition on (this depends on the nature of the fault).

1. IF you have a Tech 2:
   1. Connect the Tech 2 if it is still not connected GOTHROUGH **Tech 2 OBD II CONNECTION.**
   2. Push “F1: Clear DTC Information” in the Application Menu and answer “Yes” to the question “Do you want to clear DTC’s?”
      a. When a malfunction remains as it is the Tech 2 displays “4L30E CODES NOT CLEARED”. This means that the problem is still there or that the recovery was not done. Please **GOTO DTC CHECK.**
      b. When a malfunction has been repaired and the recovery is done. The Tech 2 displays “4L30E CODES CLEARED”.
2. IF you have no Tech 2:
   Disconnect the PCM battery feed as necessary.

DTC Check

1. Diagnostic Trouble Codes (DTC) have been identified by Tech 2.
2. You have written the list of the DTCs. The order of the malfunctions has no meanings for this PCM. Usually only one or two malfunctions should be set for a given problem.
3. Check directly the DTCs you identified. The DTCs are sorted by number. Refer to Diagnostic Trouble Code (DTC) Identification in this section.

PCM Precaution

The PCM can be damaged by:

1. Electrostatic discharge
2. The short circuit of some terminals to voltage or to ground.

Electrostatic Discharge Damage Description:

1. Electronic components used to control systems are often designed to carry very low voltage, and are very susceptible to damage caused by electrostatic discharge. It is possible for less than 100 volts of static electricity to cause damage to some electronic components. By comparison, it takes as much as 4,000 volts for a person to even feel the zap of a static discharge.
2. There are several ways for a person to become statically charged. The most common methods of charging are by friction and induction. An example of charging by friction is a person sliding across a car seat, in which a charge of as much as 25,000 volts can build up. Charging by induction occurs when a person with well insulated shoes stands near a highly charged object and momentarily touches ground. Charges for the same polarity are drained off, leaving the person highly charged with the opposite polarity. Static charges of either type can cause damage, therefore, it is important to use care when handling and testing electronic components.

NOTICE: **To prevent possible electrostatic discharge damage:**

1. Do not touch the PCM connector pins or soldered components on the PCM circuit board.
2. Be sure to follow the guidelines listed below if servicing any of these electronic components:
3. Do not open the replacement part package until it is time to install the part.
4. Avoid touching electrical terminals of the part.
5. Before removing the part from its package, ground the package to a known good ground on the vehicle.
6. Always touch a known good ground before handling the part. This step should be repeated before installing the part if the part has been handled while sliding across the seat, while sitting down from a standing position or while walking some distance.

Information On PCM

1. The Powertrain Control Module (PCM) is located in the center console and is the control center of the electronic transmission control system.
2. The PCM must be maintained at a temperature below 85˚ (185˚F) at all times. This is most essential if the vehicle is put through a paint baking process. The PCM will become inoperative if its temperature exceeds 85˚C (185˚F). Therefore, it is recommended that the PCM be removed or that temporary insulation be placed around the PCM during the time the vehicle is in a paint oven or other high temperature process.
3. The PCM is designed to process the various inputs and then respond by sending the appropriate electrical signals to control transmission upshift, downshift, shift feel and torque converter clutch engagement.
4. The PCM constantly interprets information from the various sensors, and controls the systems that affect transmission and vehicle performance. By analyzing operational problems, the PCM is able to perform a diagnostic function by displaying DTC(s) and aid the technician in making repairs.

Intermittent Conditions

If the Tech 2 displays a diagnostic trouble code as intermittent, or if after a test drive a DTC does not reappear though the detection conditions for this DTC are present, the problem is most likely a faulty electrical connection or loose wiring. Terminals and grounds should always be the prime suspect. Intermittents rarely occur inside sophisticated electronic components such as the PCM.

Use the DTC information to understand which wires and sensors are involved.

When an intermittent problem is encountered, check suspect circuits for:

1. Poor terminal to wire connection.
2. Terminals not fully seated in the connector body (backed out).
3. Improperly formed or damaged terminals.
4. Loose, dirty, or corroded ground connections:
   HINT: Any time you have an intermittent in more than one circuit, check whether the circuits share a common ground connection.
5. Pinched or damaged wires.
6. Electro–Magnetic Interference (EMI):
   HINT: Check that all wires are properly routed away from coil, and generator. Also check for improperly installed electrical options, such as lights, 2–way radios, etc.

Use the F2 SNAPSHOT mode of the Tech 2 to help isolate the cause of an intermittent fault. The snapshot mode will record information before and after the problem occurs. Set the snapshot to “trigger” on the suspect DTC. If you notice the reported symptom during the test drive, trigger the snapshot manually.

After the snapshot has been triggered, command the Tech 2 to play back the flow of data recorded from each of the various sensors. Signs of an intermittent fault in a sensor circuit are sudden unexplainable jump in data values out of the normal range.

Transmission And PCM Identification

The chart below contains a list of all important information concerning rear axle ratio, Powertrain Control Module (PCM), and transmission identification.

VEHICLE		Rr axle Ratio	PCM	TRANSMISSION		
Type	Engine		ISUZU Parts No.	Calibration Code	Isuzu Part No.	Model Code
Isuzu / UBS	3.5L V6	4.100	8–97264–698–0 8–97264–700–2	G26	8–96018–507–0	YA

Isuzu UBS

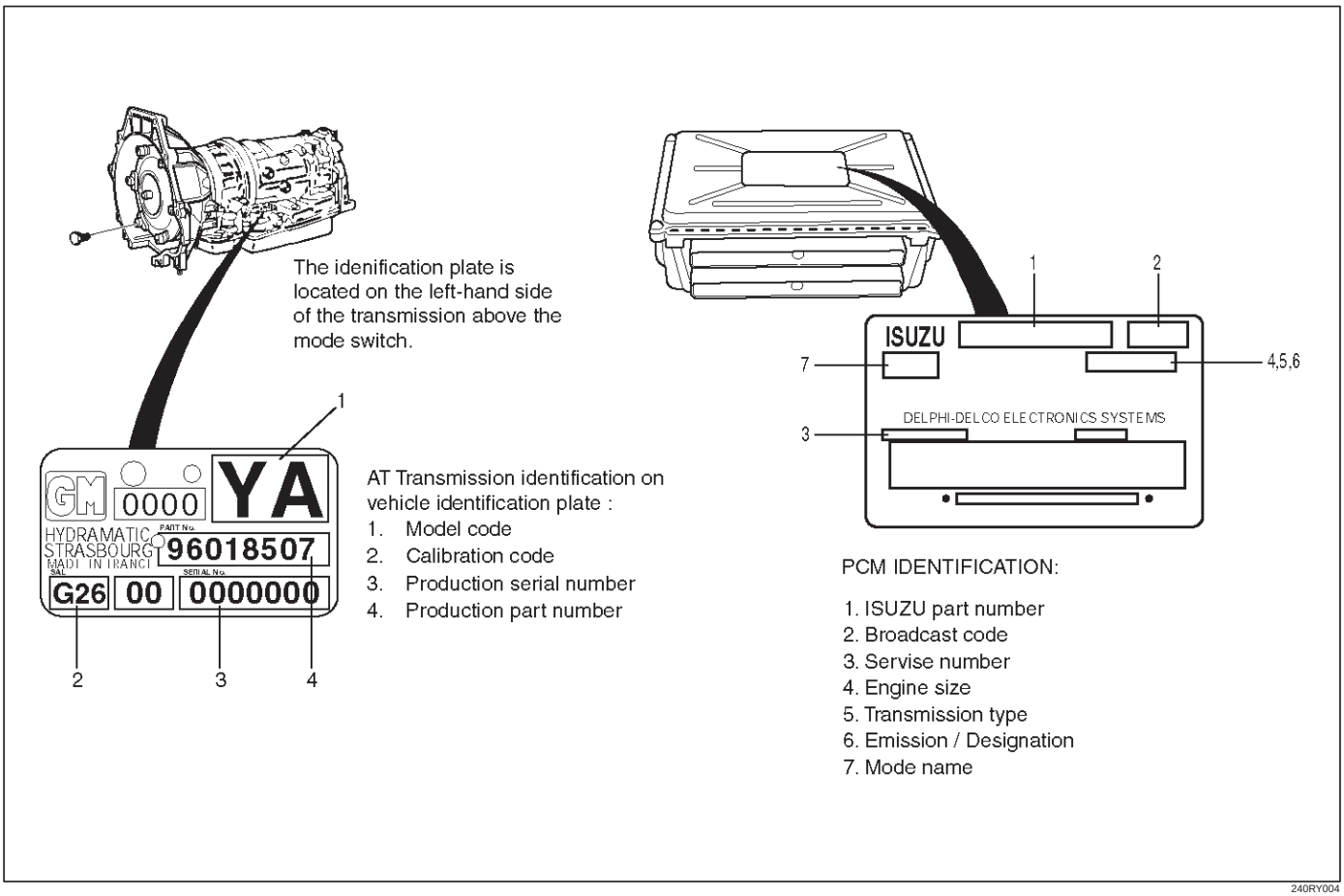

240RY004

Diagnostic Trouble Code (DTC) Identification

DTC NUMBER	DTC NAME	DTC TYPE	MIL “CHECK ENGINE”	“CHECK TRANS”
P0218	Transmission Fluid Over Temperature	D		
P0705	Transmission Range Switch (Mode Switch) Illegal Position	D		
P0706	Transmission Range Switch (Mode Switch) Performance	D		
P0711	Transmission Fluid Temperature (TFT) Sensor Performance	D		
P0712	Transmission Fluid Temperature (TFT) Sensor Circuit Low Input	D		
P0713	Transmission Fluid Temperature (TFT) Sensor Circuit High Input	D		
P0719	Brake Switch Circuit Low (Stuck ON)	D		
P0722	Automatic Transmission Output Speed Sensor (OSS) Low Input	B	ON	Flash
P0723	Automatic Transmission Output Speed Sensor (OSS) Intermittent	B	ON	Flash
P0724	Brake Switch Circuit High (Stuck OFF)	D		
P0730	Gear Error Without Input Speed	C		Flash
P0742	Torque Converter Clutch (TCC) System Stuck ON	B	ON	Flash
P0748	Pressure Control Solenoid (PCS) (Force Motor) Circuit Electrical	C		Flash
P0751	Shift Solenoid A Performance (Stuck OFF)	B	ON	Flash
P0752	Shift Solenoid A Performance (Stuck ON)	B	ON	Flash
P0753	Shift Solenoid A Electrical	B	ON	Flash
P0756	Shift Solenoid B Performance (Stuck OFF)	B	ON	Flash
P0757	Shift Solenoid B Performance (Stuck ON)	B	ON	Flash
P0758	Shift Solenoid B Electrical	B	ON	Flash
P1850	Brake Band Apply Solenoid Malfunction	D		
P1860	TCC Solenoid Electrical	B	ON	Flash
P1870	Transmission Component Slipping (TCC Stuck OFF)	B	ON	Flash

DTC TYPE	DEFINITION
B	Emission related, turn on MIL (Check Engine) and flashing Check Trans after 2 consecutive trips (Removal to confirmed)
C	Non–emission related, flashing Check Trans on 1st failure
D	Non–emission related, no lamps

DTC P0218 Transmission Fluid Over Temperature

LHD

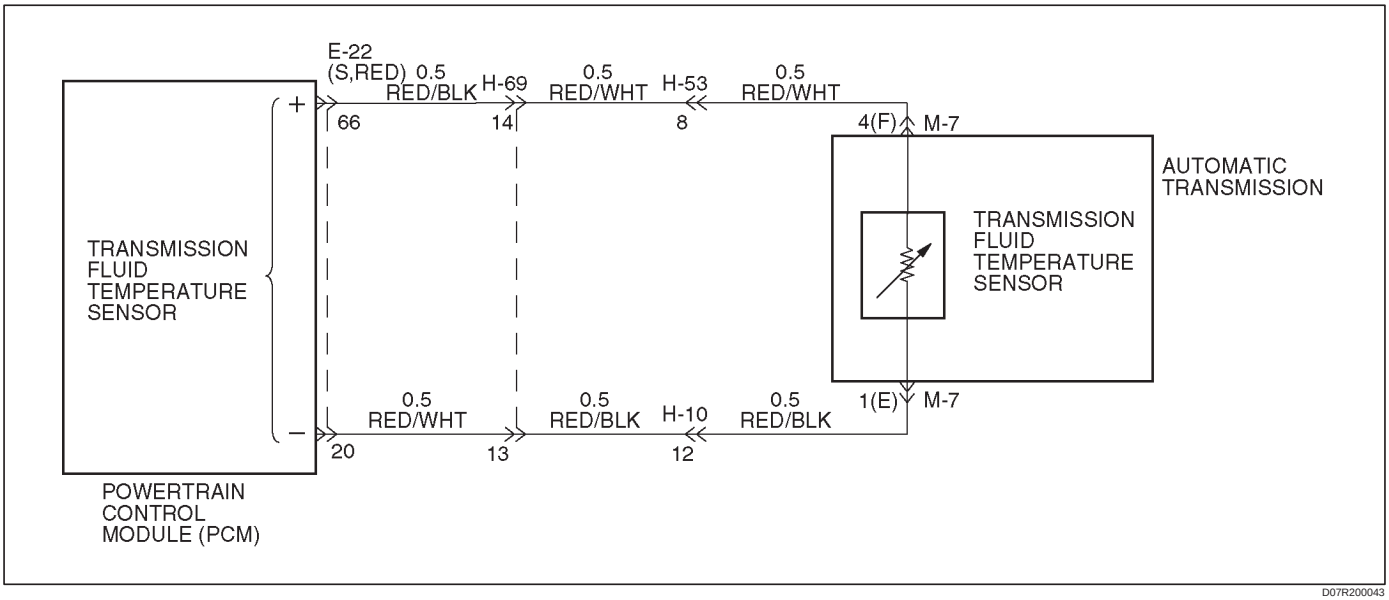

D07R200043

RHD

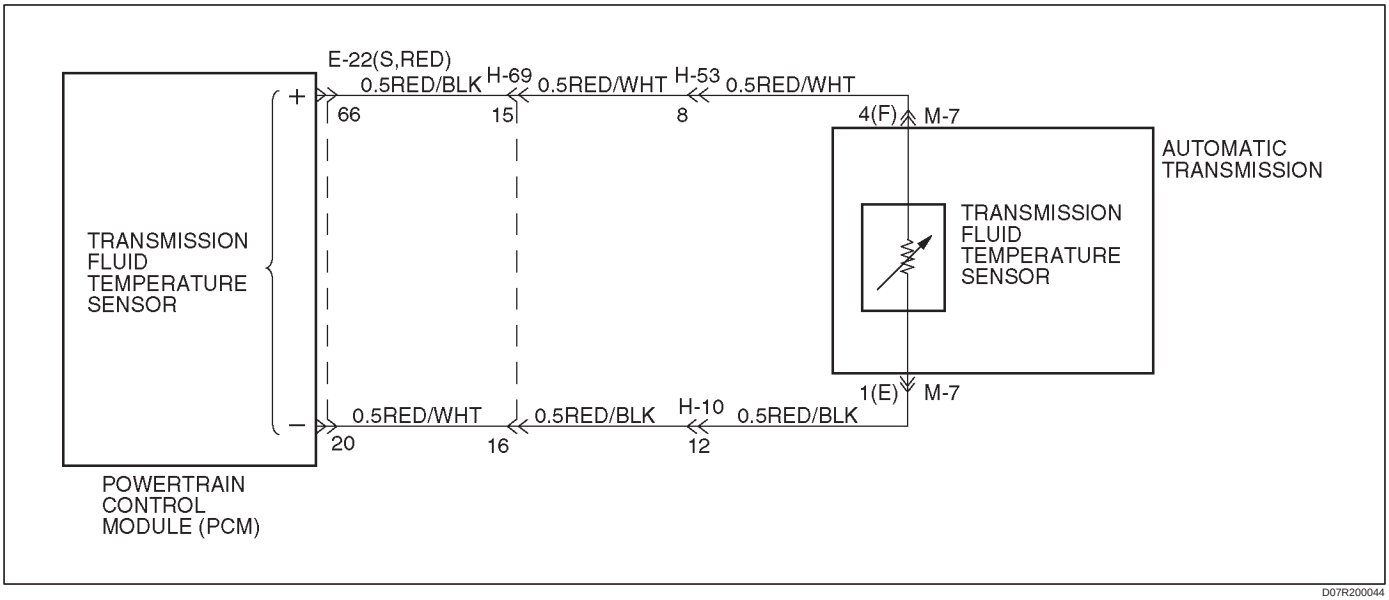

D07R200044

Circuit Description

The Transmission Fluid Temperature (TFT) sensor is a thermister that controls the signal voltage to the PCM. The PCM supplies a 5–volt reference to the sensor on circuit RED/WHT. When the transmission fluid is cold, the sensor resistance is high and the PCM will sense high signal voltage. As the fluid temperature warms to a normal transmission operating temperature of 100˚C (212˚F), the sensor resistance becomes less and the voltage decreases to 1.5 to 2.0 volts.
This DTC detects a high transmission temperature for a long period of time. This is a type “D” DTC.

Conditions For Setting The DTC

- No TFT DTCs P0712 or P0713.
- TFT is greater than 135˚C (275˚F).
- All conditions met for 21 seconds.

Action Taken When The DTC Sets

- Hot mode TCC Shift Pattern.
- The PCM will not illuminate the Malfunction Indicator Lamp (MIL).
- ATF Lamp ON. (TFT is greater than 145˚C (293˚F).)
- Disable E–side TCC OFF request.

Conditions For Clearing The DTC

- The DTC can be cleared from the PCM history by using a scan tool.
- The DTC will be cleared from history when the vehicle has achieved 40 warm–up cycles without a failure reported.
- The PCM will cancel the DTC default actions when the fault no longer exists and the ignition is cycled “off” long enough to power down the PCM.

Diagnostic Aids

- Inspect the wiring for poor electrical connections at the PCM and at the transmission 16–way connectors. Look for possible bent, backed out, deformed, or damaged terminals. Check for weak terminal tension as well.

  Also check for a chafed wire that could short to bare metal or other wiring. Inspect for a broken wire inside the insulation.
- When diagnosing for a possible intermittent short or open condition, move the wiring harness while observing test equipment for a change.
- Check harness routing for a potential short to ground in circuit RED/WHT.
- Scan tool TFT sensor temperature should rise steadily to about 100˚C (212˚F), then stabilize.
- Check for a “skewed” (mis–scaled) sensor by comparing the TFT sensor temperature to the ambient temperature after a vehicle cold soak. A “skewed” sensor can cause delayed garage shifts or TCC complaints.
- Check for a possible torque converter stator problem.
- Verify customer driving habits, trailer towing, etc.

Test Description

The numbers below refer to the step numbers on the diagnostic chart.

3. This test checks for a “skewed” sensor or shorted circuit.
4. This test simulates a TFT DTC P0713.

DTC P0218 Transmission Fluid Over Temperature

Step	Action	Yes	No
1	Were you sent here from the “Powertrain On–Board Diagnostic (OBD) System Check”?	Go to Step 2	Go to OBD System Check Refer to Driveability and Emissions in Engine section
2	Perform the following checks: ● Check for possible engine system problems. ● Transmission fluid checking procedure. Refer to Checking Transmission Fluid Level and Condition in Automatic Transmission (4L30–E) Section. Were the checks performed?	Go to Step 3	—
3	1. Install the scan tool. 2. With the engine “off”, turn the ignition switch “on”. NOTE: Before clearing DTC(s), use the scan tool to record “Failure Records” for reference, as data will be lost when “Clear Info” function is used. 3. Record the DTC “Failure Records”. Is the TFT sensor signal voltage less than 1.54 volts?	Go to Step 4	Go to Diagnostic Aids
4	1. Turn the ignition “off”. 2. Disconnect the transmission 16–way connector H–69 (additional DTCs may set). Is the TFT sensor signal voltage greater than 4.92 volts?	Go to Internal Wiring Harness Check.	Go to Step 5
5	Inspect/repair circuit RED/WHT for a short to ground. Was a problem found?	Go to Step 7	Go to Step 6
6	1. Inspect the PCM for poor connections. 2. Replace the PCM if no poor connections were found. Is the replacement complete?	Go to Step 7	—
7	1. After the repair is complete, use the scan tool to select “DTC”, then “Clear Info” function and ensure the following conditions are met: TFT is less than 125˚C (257˚F) for at least 10 seconds. 2. Review the scan tool “DTC Info”. Has the last test failed or is the current DTC displayed?	Begin diagnosis again Go to Step 1	Repair verified Exit DTC table

DTC P0705 Transmission Range Switch (Mode Switch) Illegal Position

LHD

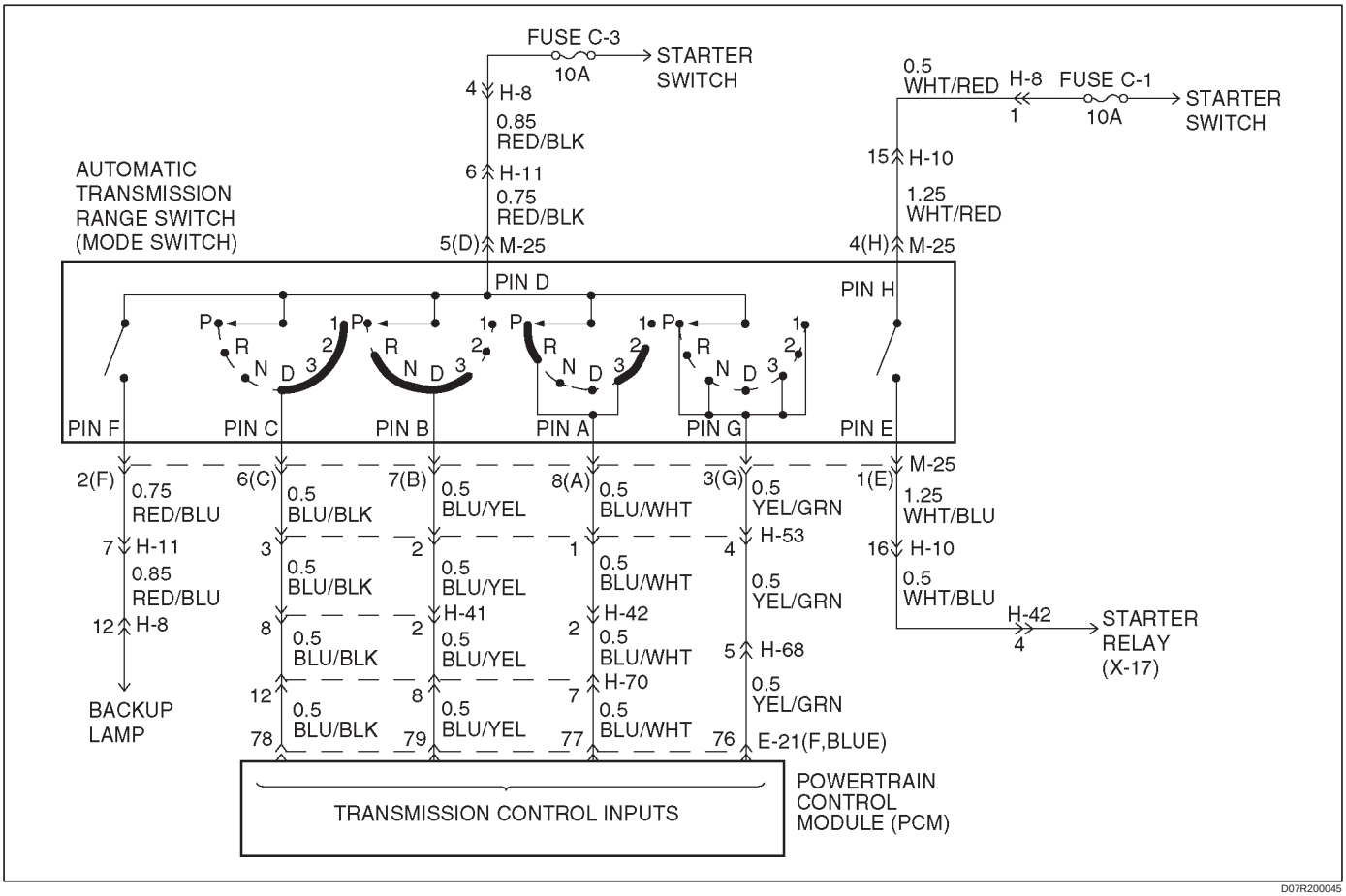

D07R200045

RHD

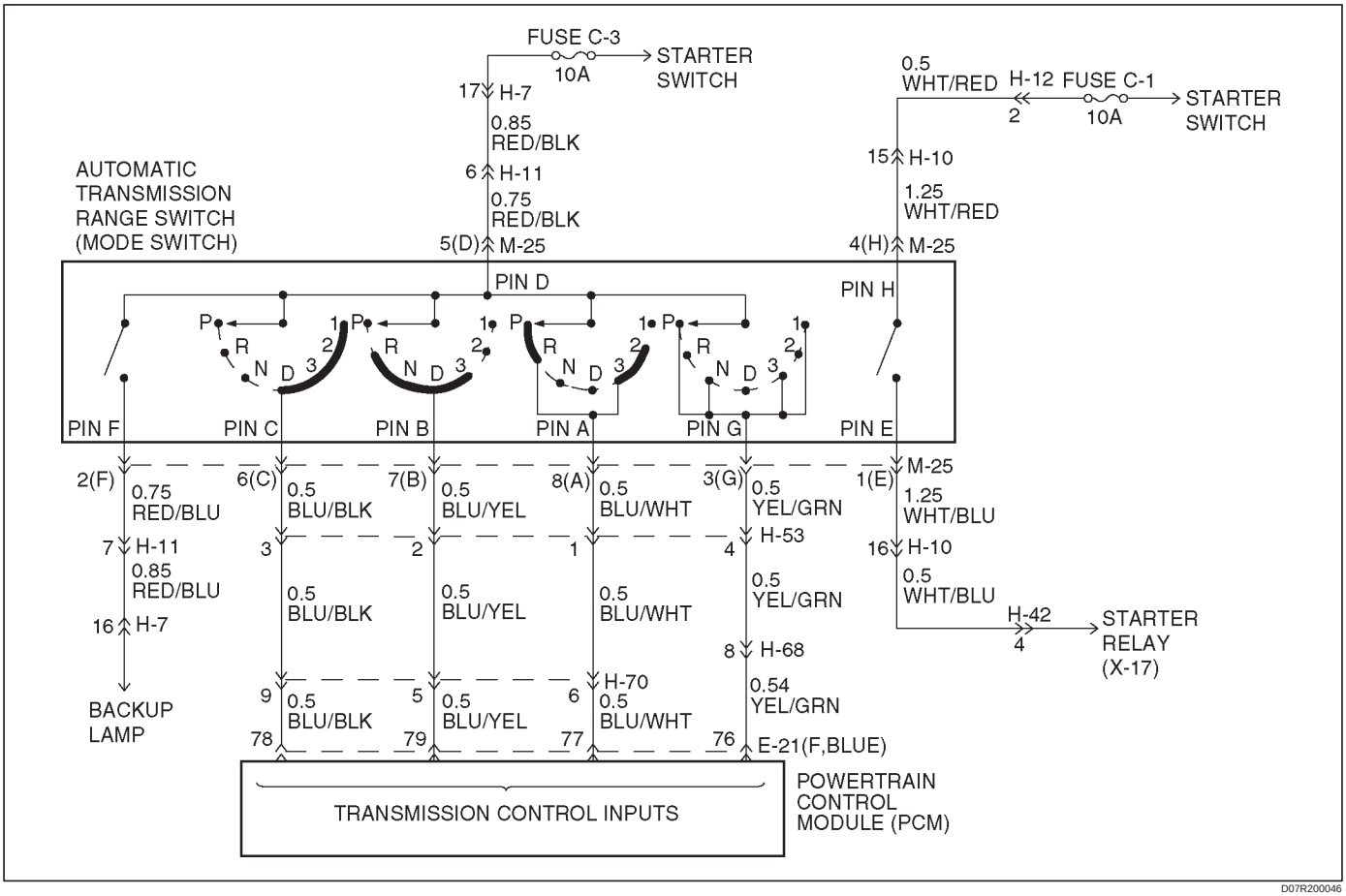

Circuit Description

- The range switch supplies the Powertrain Control Module (PCM) with information regarding the selector lever position: P, R, N, D 3, 2 or L. The selector lever position is indicated by the state of four ON/OFF contacts. The range switch is located on one side of the transmission. It is on the transmission manual shaft and is fixed to the main case.
- The range switch is also used to provide the information P or N to the engine crank wiring. The engine can be cranked only if connector M–25 terminal 4(H) is connected to terminal 1(E) which is connected to ground.
- The range switch is also used to provide the backup lamp power in reverse. This is why the range switch is supplied through a 10A fuse (C–3). This fuse can burn due to a short circuit in the backup lamp.

This DTC detects when a fuse is open or the range switch circuit does not work. This is a type “D” DTC.

Conditions For Setting The DTC

- Range switch illegal positions met for 5 seconds.

Action Taken When The DTC Sets

- Default to D position.
- Inhibit torque management.
- Maximum line pressure.
- Turn force motor OFF.
- The PCM will not illuminate the Malfunction Indicator Lamp (MIL).

Conditions For Clearing The DTC

- The DTC can be cleared from the PCM history by using a scan tool.
- The DTC will be cleared from history when the vehicle has achieved 40 warmup cycles without a failure reported.
- The PCM will cancel the DTC default actions when the fault no longer exists and the ignition is cycled “off” long enough to power down the PCM.

Diagnostic Aids

- Refer to accompanying chart for the normal range signals and the illegal combinations.
- Inspect the wiring for poor electrical connections at the PCM and at the transmission 8–way connector. Look for possible bent, backed out, deformed or damaged terminals. Check for weak terminal tension as well. Also check for a chafed wire that could short to bare metal or other wiring. Inspect for a broken wire inside the insulation.
- When diagnosing for a possible intermittent short or open condition, move the wiring harness while observing test equipment for a change.
- Refer to the “Range Switch Logic Table” or “Functional Test Procedure” for further information.

Test Description

The numbers below refer to the step numbers on the diagnostic chart:

3. This test checks the indicated range signal to the manual valve actually selected.
6. This test checks for continuity between each selected range switch connector terminals.

Range Switch Logic Table

Range Position	Range Switch Pin			
	A	B	C	P(G)
Park	ON	OFF	OFF	ON
Reverse	ON	ON	OFF	OFF
Neutral	OFF	ON	OFF	ON
D4	OFF	ON	ON	OFF
D3	ON	ON	ON	ON
2	ON	OFF	ON	OFF
L	OFF	OFF	ON	ON
Illegal	OFF	OFF	OFF	OFF
Illegal	OFF	OFF	OFF	ON

DTC P0705 Transmission Range Switch (Mode Switch) Illegal Position

Step	Action	Yes	No
1	Were you sent here from the “Powertrain On–Board Diagnostic (OBD) System Check”?	Go to Step 2	Go to OBD System Check Refer to Driveability and Emissions in Engine section
2	Perform the following checks: ● The transmission linkage from the select lever to the manual valve is adjusted properly. ● Diagnostic circuit check. Were the checks performed?	Go to Step 3	—
3	1. Install the scan tool. 2. With the engine “off”, turn the ignition switch “on”. NOTE: Before clearing DTC(s), use the scan tool to record “Freeze Frame” and “Failure Records” for reference, as data will be lost when the “Clear Info” function is used. 3. Record the DTC “Freeze Frame” and “Failure Records”. 4. Select each transmission range: DL, D2, D3, D4, N, R, and P. Does each selected transmission range match the scan tool “Range Switch” display?	Go to Diagnostic Aids	Go to Step 4
4	Are all range switch pin displays incorrect?	Go to Step 5	Go to Step 6
5	Check fuse and wiring to the 8–way connector terminal 5(D) for opens. Refer to Mode Switch in Automatic Transmission (4L30–E) section. If no problem was found, replace the range switch. Is the replacement complete?	Go to Step 9	—
6	1. Disconnect the 8–way range switch connector. 2. Using ohmmeter, check continuity between terminal 5(D) and respectively terminals 3(G), 6(C), 7(B) and 8(A) of the 8–way range switch connector. 3. Move shift selector lever through all positions and compare results with “Range Switch Logic Table”. Is one range switch pin display incorrect?	Go to Step 7	Go to Step 8
7	Check the affected wiring and connector, and repair. Is the repair complete?	Go to Step 9	—
8	Check the Powertrain Control Module (PCM) connectors for poor connection. If no problem was found, replace the PCM. Is the replacement complete?	Go to Step 9	—
9	1. After the repair is complete, use the scan tool to select “DTC”, then “Clear Info” function and road test the vehicle. 2. Review the scan tool “DTC Info”. Has the last test failed or is the current DTC displayed?	Begin diagnosis again Go to Step 1	Repair verified Exit DTC table

DTC P0706 Transmission Range Switch (Mode Switch) Performance

LHD

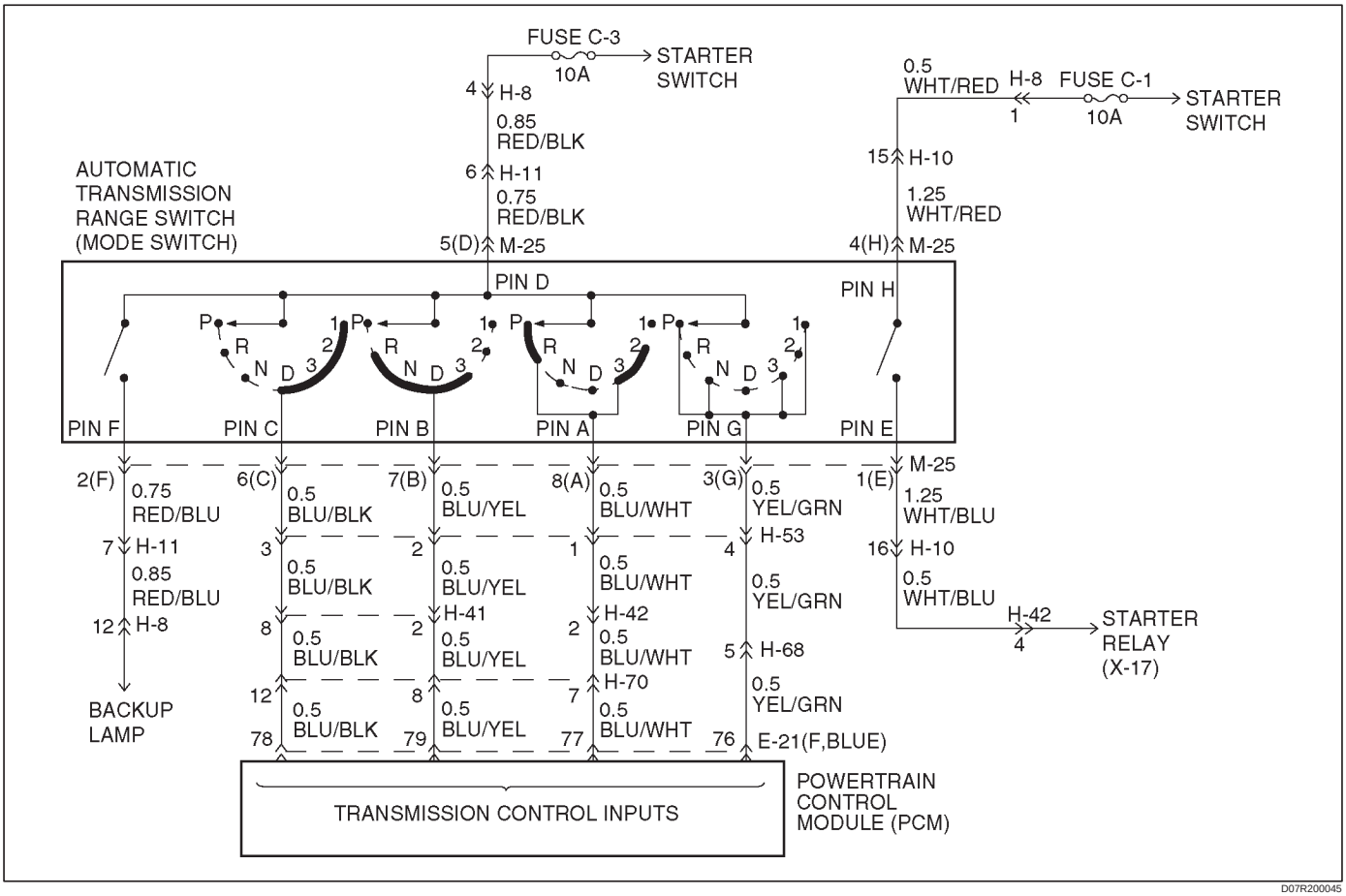

RHD

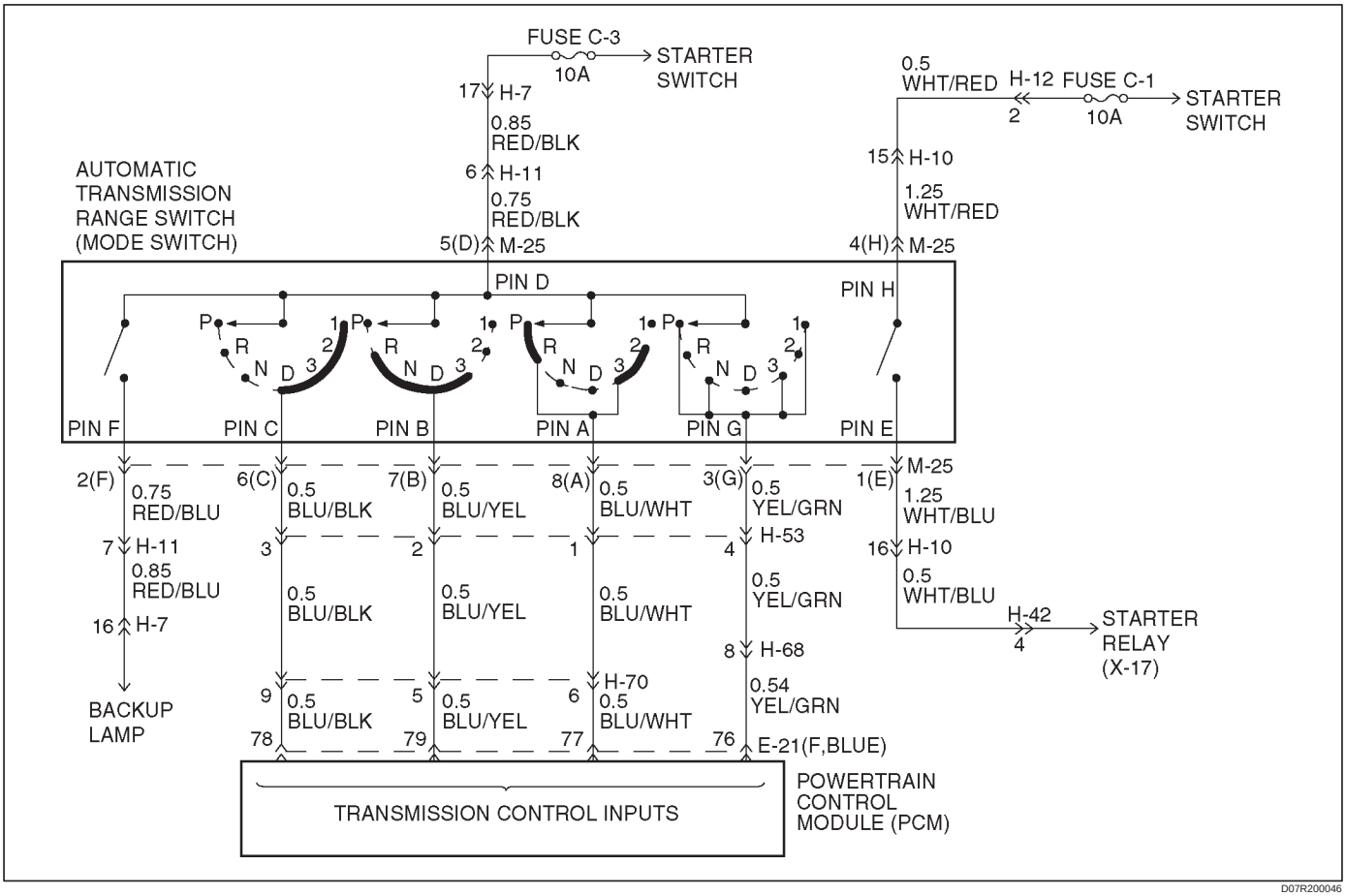

Circuit Description

- The range switch supplies the Powertrain Control Module (PCM) with information regarding the selector lever position: P, R, N, D, 3, 2 or L. The selector lever position is indicated by the state of four ON/OFF contacts. The range switch is located on one side of the transmission. It is on the transmission manual shaft and is fixed to the main case.
- The range switch is also used to provide the information P or N to the engine crank wiring. The engine can be cranked only if connector M–25 terminal 4(H) is connected to terminal 1(E) which is connected to ground.
- The range switch is also used to provide the backup lamp power in reverse. This is why the mode switch is supplied through a 10A fuse (C–3). This fuse can burn due to a shot circuit in the backup lamp.
- This DTC detects an invalid state of the range switch or the range switch circuit by deciphering the range switch inputs. This is a type “D” DTC.

Conditions For Setting The DTC

This DTC will set if any of the following conditions occurs:

Condition 1 (“R” bad position):

- Engine is running.
- No output speed DTCP0722, P0723.
- Output speed greater than 3,200 RPM.
- Range switch indicates “R”.
- All conditions met for 4 seconds.

Condition 2 (“P” or “N” bad position):

- Engine is running.
- No TPS codes.
- Engine speed is less than 3,000 RPM.
- TP angle is greater than 20%.
- Range switch indicates “P” or “N”.
- All conditions met for 4 seconds.

Action Taken When The DTC Sets

- Default to “D” position.
- The PCM will not illuminate the Malfunction Indicator Lamp (MIL).

Conditions For Clearing The DTC

- The DTC can be cleared from the PCM history by using a scan tool.
- The DTC will be cleared from history when the vehicle has achieved 40 warmup cycles without a failure reported.
- The PCM will cancel the DTC default actions when the fault no longer exists and the ignition is cycled “off” long enough to power down the PCM.

Diagnostic Aids

- Refer to the accompanying chart for the normal range signals and the illegal combinations.

- Inspect the wiring for poor electrical connections at the PCM and at the transmission 8–way connector. Look for possible bent, backed out, deformed or damaged terminals. Check for weak terminal tension as well. Also check for a chafed wire that could short to bare metal or other wiring. Inspect for a broken wire inside the insulation.
- When diagnosing for a possible intermittent short or open condition, move the wiring harness while observing test equipment for a change.
- Refer to the “Range Switch Logic Table” or “Functional Test Procedure” for further information.

Test Description

The numbers below refer to the step numbers on the diagnostic chart:

3. This test checks the indicated range signal to the manual valve actually selected.
6. This test checks for continuity between each selected range switch connector terminals.

Range Switch Logic Table

Range Position	Range Switch Pin			
	A	B	C	P(G)
Park	ON	OFF	OFF	ON
Reverse	ON	ON	OFF	OFF
Neutral	OFF	ON	OFF	ON
D4	OFF	ON	ON	OFF
D3	ON	ON	ON	ON
2	ON	OFF	ON	OFF
L	OFF	OFF	ON	ON
Illegal	OFF	OFF	OFF	OFF
Illegal	OFF	OFF	OFF	ON

DTC P0706 Transmission Range Switch (Mode Switch) Performance

Step	Action	Yes	No
1	Were you sent here from the “Powertrain On–Board Diagnostic (OBD) System Check”?	Go to Step 2	Go to OBD System Check Refer to Driveability and Emissions in Engine section
2	Perform the following checks: ● The transmission linkage from the select lever to the manual valve is adjusted properly. ● Diagnostic circuit check. Were the checks performed?	Go to Step 3	—
3	1. Install the scan tool. 2. With the engine “off”, turn the ignition switch “on”. NOTE: Before clearing DTC(s), use the scan tool to record “Freeze Frame” and “Failure Records” for reference, as data will be lost when the “Clear Info” function is used. 3. Record the DTC “Freeze Frame” and “Failure Records”. 4. Select each transmission range: DL, D2, D3, D4, N, R, and P. Does each selected transmission range match the scan tool “Range Switch” display?	Go to Diagnostic Aids	Go to Step 4
4	Are all range switch pin displays incorrect?	Go to Step 5	Go to Step 6
5	Check fuse and wiring to the 8–way connector terminal 5(D) for opens. Refer to Mode Switch in Automatic Transmission (4L30–E) section. If no problem was found, replace the range switch. Is the replacement complete?	Go to Step 9	—
6	1. Disconnect the 8–way range switch connector. 2. Using ohmmeter, check continuity between terminal 5(D) and respectively terminals 3(G), 6(C), 7(B) and 8(A) of the 8–way range switch connector. 3. Move shift selector lever through all positions and compare results with “Range Switch Logic Table”. Is one range switch pin display incorrect?	Go to Step 7	Go to Step 8
7	Check the affected wiring and connector, and repair. Is the repair complete?	Go to Step 9	—
8	Check the Powertrain Control Module (PCM) connectors for poor connection. If no problem was found, replace the PCM. Is the replacement complete?	Go to Step 9	—
9	1. After the repair is complete, use the scan tool to select “DTC”, then “Clear Info” function and road test the vehicle. 2. Review the scan tool “DTC Info”. Has the last test failed or is the current DTC displayed?	Begin diagnosis again Go to Step 1	Repair verified Exit DTC table

DTC P0711 Transmission Fluid Temperature (TFT) Sensor Performance

LHD

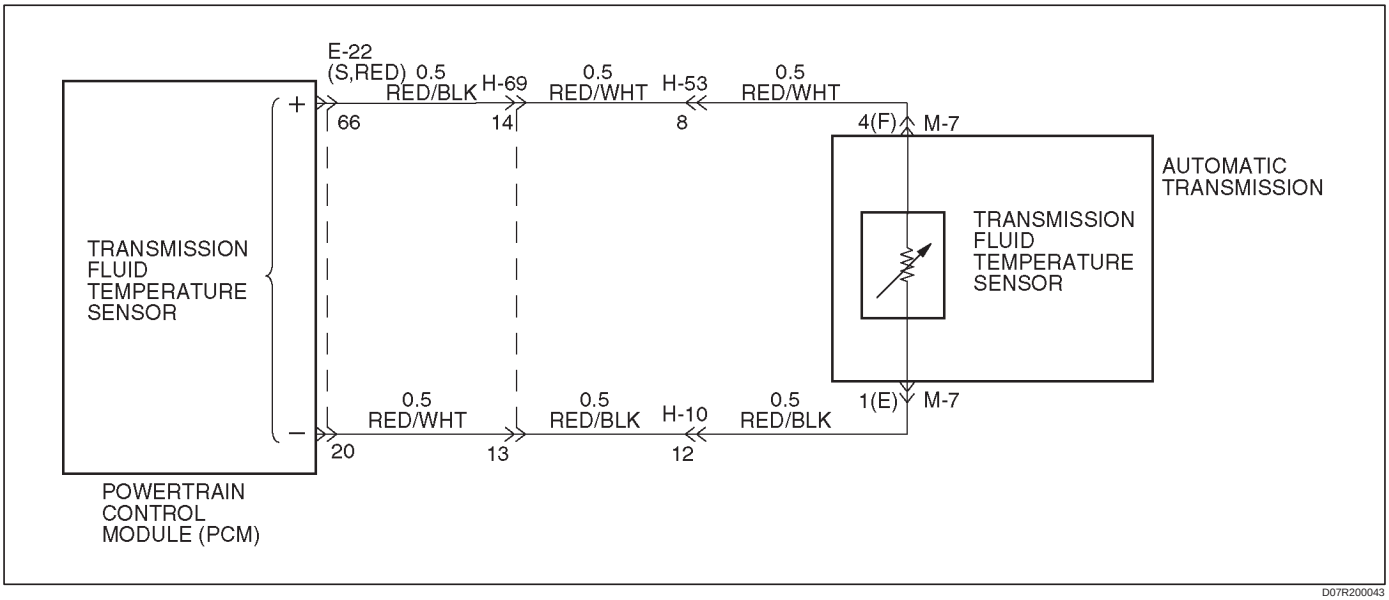

RHD

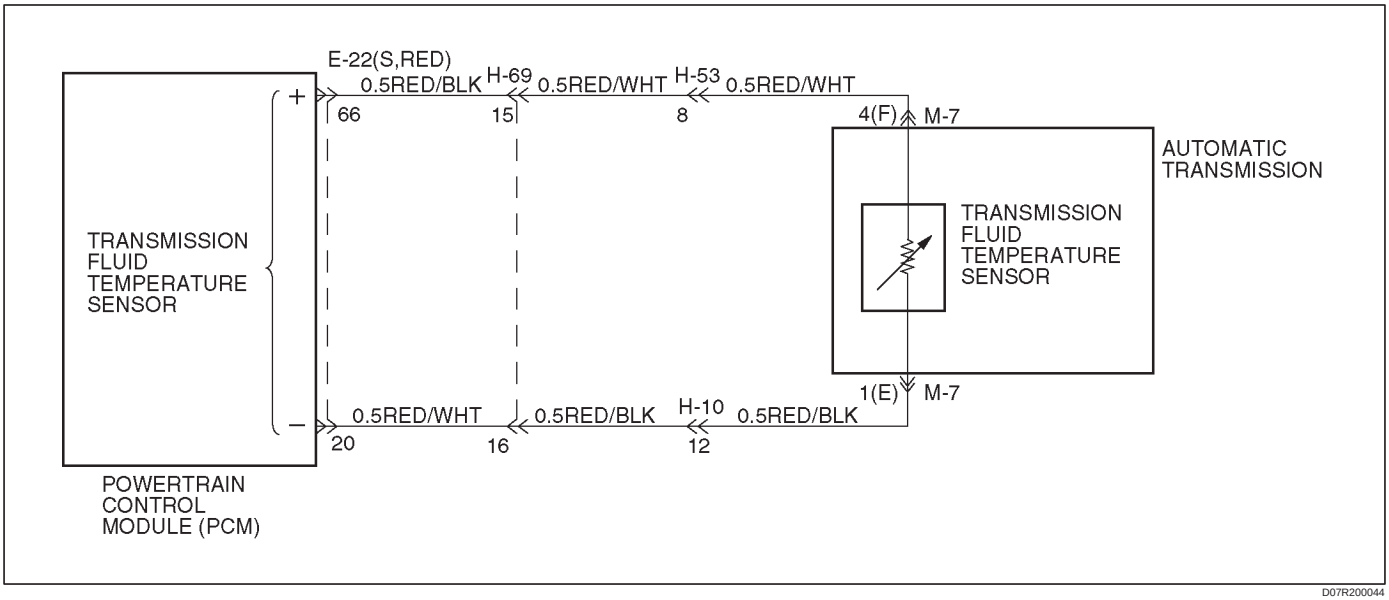

Circuit Description

The TFT sensor is a thermister that controls the signal voltage to the PCM. The PCM supplies a 5–volt reference signal to the sensor on circuit RED/WHT. When the transmission fluid is cold, the sensor resistance is high and the PCM detects high signal voltage. As the transmission fluid temperature increases to normal operating temperature of 100˚C (212˚F), the sensor resistance becomes less and the voltage decreases to 1.5 to 2 volts.

When the PCM detects a TFT sensor that remains at the startup value, or a sensor that has a change delta of greater than 20˚C (36˚F) less than 1 second, DTC P0711 sets. DTC P0711 is a type D.

Conditions For Setting The DTC

- No VSS DTCs P0722 or P0723.
- No Transmission Component Slipping DTC P1870.
- Engine is running.
- TFT is between 20 A/D (Analog/Digital) counts and 248 A/D counts.
- TFT is between –40˚C (–40˚F) and +21˚C (69.8˚F) at engine startup.
- Engine coolant temperature is greater than 70˚C (150˚F).
- Engine coolant temperature has changed by greater than 50˚C (90˚F) since engine startup.
- Vehicle speed has been greater than 5 mph for greater than 410 seconds since engine startup (cumulative timer).
- TCC slip speed has been greater than 120 rpm for greater than 410 seconds since engine startup (cumulative timer).
- Battery voltage is between 10 and 16 volts.

All of the above is true and either of the following occurs:

- If the sensor is stuck, the TFT has not changed for greater than 2 counts (from startup temperature) for greater than 410 seconds.
- If the sensor shows an unrealistic change, the TFT exhibits a change delta of greater than 20˚C (36˚F), greater than 14 times in 7 seconds.

Action Taken When The DTC Sets

- Transmission default temperature will be:

  80˚C (176˚F) if engine temperature code is set.

  100˚C (212˚F) if engine temperature is warm.

  80˚C (176˚F) if engine run time is greater than 5 minutes.

  21˚C (69.8˚F) if engine run time is less than 5 minutes.
- The PCM will not illuminate the Malfunction Indicator Lamp (MIL).

Conditions For Clearing The DTC

- The DTC can be cleared from the PCM history by using a scan tool.
- The DTC will be cleared from history when the vehicle has achieved 40 warmup cycles without a failure reported.
- The PCM will cancel the DTC default actions when the fault no longer exists and the ignition is cycled “off” long enough to power down the PCM.

Diagnostic Aids

- Inspect the wiring for poor electrical connection at the PCM. Inspect the wiring for poor electrical connections at the transmission 16–way connectors. Look for the following conditions:
  a. A bent terminal
  b. A backed out terminal
  c. A damaged terminal
  d. Poor terminal tension
  e. A chafed wire
  f. A broken wire inside the insulation
- When diagnosing for an intermittent short or open connection, move the wiring harness while watching the test equipment for a change.
- First diagnose and clear any engine DTCs or TP Sensor codes. Then inspect for any transmission DTCs that may have reset.

Test Description

The number below refers to the step number on the diagnostic chart:

3. This test checks PCM and associated wiring up to the 16–way connectors. If the voltage increases to match chart the problem is isolated to the transmission wiring.

DTC P0711 Transmission Fluid Temperature (TFT) Sensor Performance

Step	Action	Yes	No
1	Was the Powertrain On–Board Diagnostic (OBD) System Check performed?	Go to Step 2	Go to OBD System Check Refer to Driveability and Emissions in Engine section
2	Perform the transmission fluid checking procedure. Refer to Checking Transmission Fluid Level and Condition in Automatic Transmission (4L30–E) section. Did you perform the fluid checking procedure?	Go to Step 3	Go to Checking Transmission Fluid Level and Condition in Automatic Transmission (4L30–E) section
3	1. Install the scan tool. 2. With the engine “off”, turn the ignition switch to the “on” position. NOTE: Before clearing DTCs, use the scan tool in order to record the Freeze Frame and Failure Records for reference. The Clear Info function will erase the data. 3. Record the DTC Freeze Frame and Failure Records. 4. Select TFT on the scan tool. 5. While observing the scan tool display, move or massage the engine wiring harness from PCM connectors S–66 and S–20 to the transmission 16–way connectors. Does the TFT change by more than ±20˚C (36˚F)?	Go to Step 6	Go to Step 4

DTC P0711 Transmission Fluid Temperature (TFT) Sensor Performance (Cont'd)

Step	Action	Yes	No
4	1. Turn the ignition "off". 2. Disconnect the transmission 16–way connector H–69. 3. Install Jumper Harness on the transmission side of the 16–way connector H–69. 4. Using the J39200 DVOM and J35616 Connector Test Adapter Kit, connect the DVOM leads from terminal M7–4(F) to terminal M7–1(E). 5. Set the DVOM on MIN/MAX to measure resistance. 6. Record the TFT sensor resistance. 7. Move or massage the automatic transmission wiring harness assembly from the 16–way connector H–56 to the TFT sensor connector. (See Transmission Fluid Temperature (TFT) Sensor Specifications.) Does the DVOM MAX display a resistance greater than the value recorded in Action item 6 of this step?	Go to Step 7	Go to Step 5
5	Does the DVOM MIN display a resistance less than the value recorded in Action item 6 of step 4?	Go to Step 8	—
6	Inspect circuit RED/WHT and RED/BLK of the engine wiring harness for an intermittent open or short condition. Repair the circuits if necessary. Did you find a problem?	Go to Step 12	Go to Step 11
7	Inspect the automatic transmission wiring harness assembly for an intermittent open in circuits RED/WHT and RED/BLK. Did you find a problem?	Go to Step 9	Go to Step 10
8	Inspect the automatic transmission wiring harness assembly for an intermittent shorted condition in circuits RED/WHT and RED/BLK. Did you find a problem?	Go to Step 9	Go to Step 10
9	Replace the automatic transmission wiring harness assembly. Is the replacement complete?	Go to Step 12	—
10	Replace TFT Sensor. Refer to Transmission Oil Temperature Sensor (Main Case) in Automatic Transmission (4L30–E) section. Is the replacement complete?	Go to Step 12	—
11	Replace the PCM. Refer to Powertrain Control Module (PCM) in Automatic Transmission (4L30–E) section. Is the replacement complete?	Go to Step 12	—
12	In order to verify your repair, perform the following procedure. 1. Select DTC. 2. Select Clear Info. 3. Drive the vehicle and ensure the following conditions are met: ● The TFT changes by more than 2.25˚C (4.05˚F) for 11 seconds since startup. ● The TFT does not change by more than 20˚C (36˚F) within 0.200 second for a period of at least 11 seconds. 4. Select Specific DTC. 5. Enter DTC P0711. Has the test run and passed?	System OK	Begin the diagnosis again Go to Step 1

DTC P0712 Transmission Fluid Temperature (TFT) Sensor Circuit Low Input

LHD

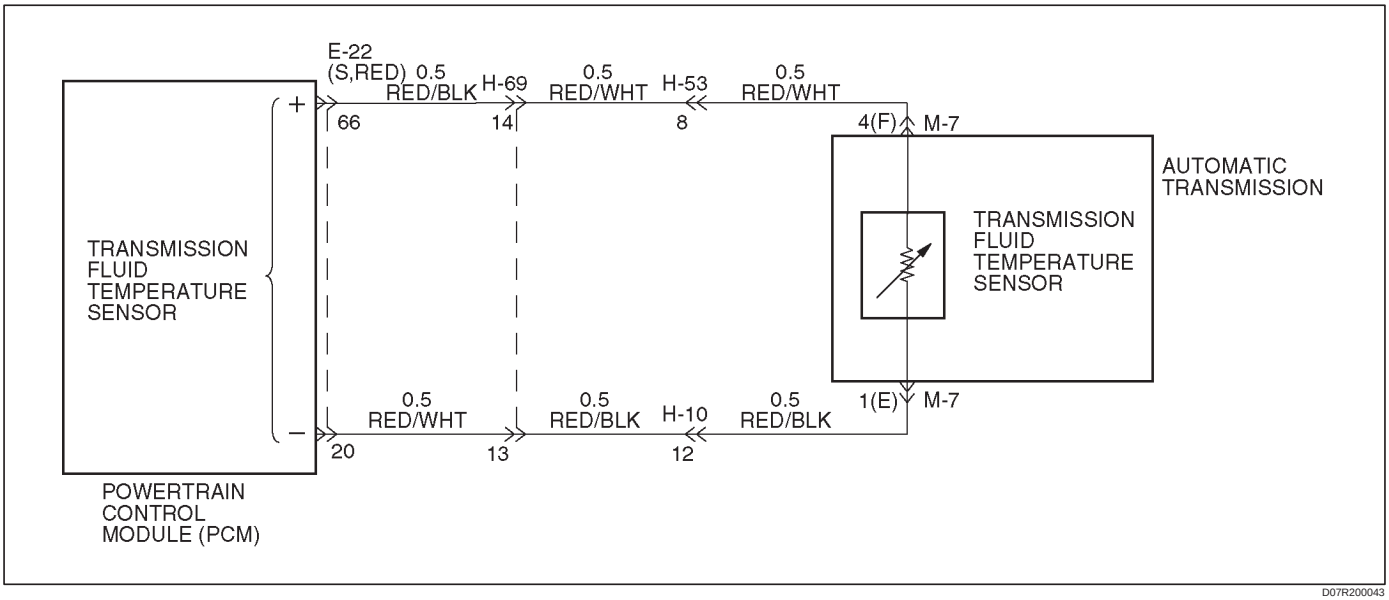

D07R200043

RHD

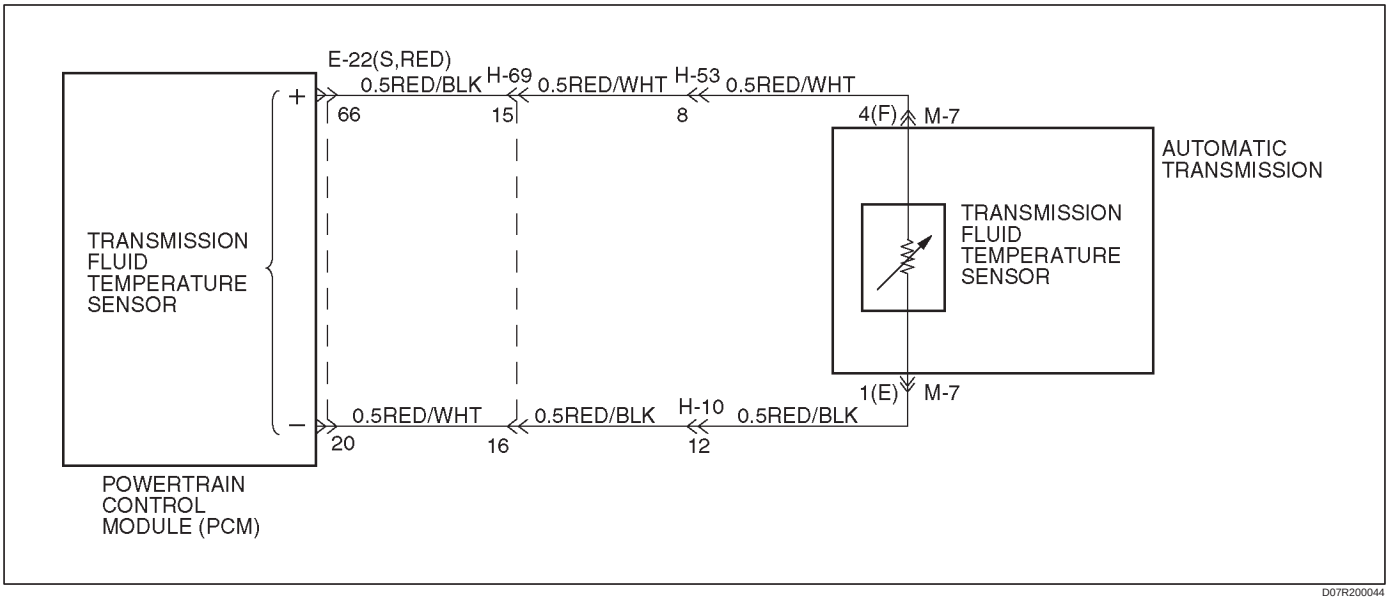

D07R200044

Circuit Description

The TFT sensor is a thermister that controls the signal voltage to the PCM. The PCM supplies a 5–volt reference signal to the sensor on circuit RED/WHT. When the transmission fluid is cold, the sensor resistance is high. The PCM detects high signal voltage. As the transmission fluid temperature increases to the normal operating temperature of 100˚C (212˚F), the sensor resistance becomes less and the voltage decreases to 1.5 to 2 volts. With transmission fluid over temperature and DTC P0218 also set, check the transmission cooling system.

This DTC detects a continuous short to ground in the TFT signal circuit or the TFT sensor. This is a type “D” DTC.

Conditions For Setting The DTC

- Battery voltage is between 10 and 16 volts.
- Ignition is “on”.
- TFT sensor indicating a voltage less than 0.4 volts.
- All conditions met for 20 seconds.

Action Taken When The DTC Sets

- Transmission default temperature will be:

  80˚C (176˚F) if engine temperature code is set.

  100˚C (212˚F) if engine temperature is warm.

  80˚C (176˚F) if engine run time is greater than 5 minutes.

  21˚C (69.8˚F) if engine run time is less than 5 minutes.
- The PCM will not illuminate the Malfunction Indicator Lamp (MIL).

Conditions For Clearing The DTC

- The DTC can be cleared from the PCM history by using a scan tool.
- The DTC will be cleared from history when the vehicle has achieved 40 warmup cycles without a failure reported.
- The PCM will cancel the DTC default actions when the fault no longer exists and the ignition is cycled “off” long enough to power down the PCM.

Diagnostic Aids

- Check harness routing for a potential short to ground in circuit RED/WHT. Scan tool TFT display should rise steadily to about 100˚C (212˚F), then stabilize.
- Inspect the wiring for poor electrical connection at the PCM and at the transmission 16–way connectors. Look for possible bent, backed out, deformed or damaged terminals. Check for weak terminal tension as well. Also check for a chafed wire that could short to bare metal or other wiring. Inspect for a broken wire inside the insulation.
- When diagnosing for a possible intermittent short or open condition, move the wiring harness while observing test equipment for a change.
- The temperature to resistance value scale may be used to test the TFT sensor at the various temperature levels to evaluate the possibility of a “skewed” (mis–scaled) sensor.

  A “skewed” sensor could result in delayed garage shifts or TCC complaints.
- Verify customer driving habits, trailer towing, etc.

Test Description

The numbers below refer to the step numbers on the diagnostic chart:

3. This test checks for a short to ground or a “skewed” sensor.
4. This test checks for an internal fault within the transmission by creating an open.

DTC P0712 Transmission Fluid Temperature (TFT) Sensor Circuit Low Input

Step	Action	Yes	No
1	Were you sent here from the “Powertrain On–Board Diagnostic (OBD) System Check”?	Go to Step 2	Go to OBD System Check Refer to Driveability and Emissions in Engine section
2	Perform the transmission fluid checking procedure. Refer to Checking Transmission Fluid Level and Condition in Automatic Transmission (4L30–E) section. Was the fluid checking procedure performed?	Go to Step 3	Refer to Checking Transmission Fluid Level and Condition in Automatic Transmission (4L30–E) section
3	1. Install the scan tool. 2. With the engine “off”, turn the ignition switch “on”. NOTE: Before clearing DTC(s), use the scan tool to record “Freeze Frame” and “Failure Records” for reference, as data will be lost when the “Clear Info” function is used. 3. Record the DTC “Freeze Frame” and “Failure Records”. Does the scan tool display a TFT sensor signal voltage less than 0.4 volts?	Go to Step 4	Go to Diagnostic Aids
4	1. Turn the ignition “off”. 2. Disconnect the transmission 16–way connector H–69. 3. Turn the ignition “on”. Does the TFT signal voltage change to match the voltage 4.92 volts?	Go to Step 5	Go to Step 10
5	Using the J39200 DVOM, measure the resistance between terminals M7–4(F) and M7–1(E). Is the resistance within specifications? (See Transmission Fluid Temperature (TFT) Sensor Specifications.)	Go to Diagnostic Aids	Go to Step 6

DTC P0712 Transmission Fluid Temperature (TFT) Sensor Circuit Low Input (Cont'd)

Step	Action	Yes	No
6	1. Disconnect the transmission 7–way connector M–7. 2. Using the J39200 DVOM, measure the resistance between terminals M7–4(F) and M7–1(E). Is the resistance within specifications? (See Transmission Fluid Temperature (TFT) Sensor Specifications.)	Go to Diagnostic Aids	Go to Step 7
7	1. Remove the transmission oil pan. Refer to Transmission Oil Temperature Sensor (Main Case) in Automatic Transmission (4L30–E) section. 2. Check the internal wiring harness for a short to ground. Was a problem found?	Go to Step 9	Go to Step 8
8	1. Disconnect the internal wiring harness at the TFT sensor. 2. Measure the resistance of the TFT sensor. Is the resistance within specifications? (See Transmission Fluid Temperature (TFT) Sensor Specifications.)	Go to Diagnostic Aids	Go to Step 9
9	Replace the TFT Sensor. Is the replacement complete?	Go to Step 13	—
10	Check circuit RED/WHT for a short to ground. Was a problem found?	Go to Step 13	Go to Step 11
11	Check the PCM for faulty connections. Was a problem found?	Go to Step 13	Go to Step 12
12	Replace the PCM. Refer to Powertrain Control Module (PCM) in Automatic Transmission (4L30–E) section. Is the replacement complete?	Go to Step 13	—
13	1. After the repair is complete, use the scan tool to select "DTC", then "Clear Info" function and ensure the following conditions are met: TFT sensor indicates a voltage greater than 0.33 volts for 2 seconds. 2. Review the scan tool "DTC info". Has the last test failed or is the current DTC displayed?	Begin diagnosis again Go to Step 1	Repair verified Exit DTC table

DTC P0713 Transmission Fluid Temperature (TFT) Sensor Circuit High Input

LHD

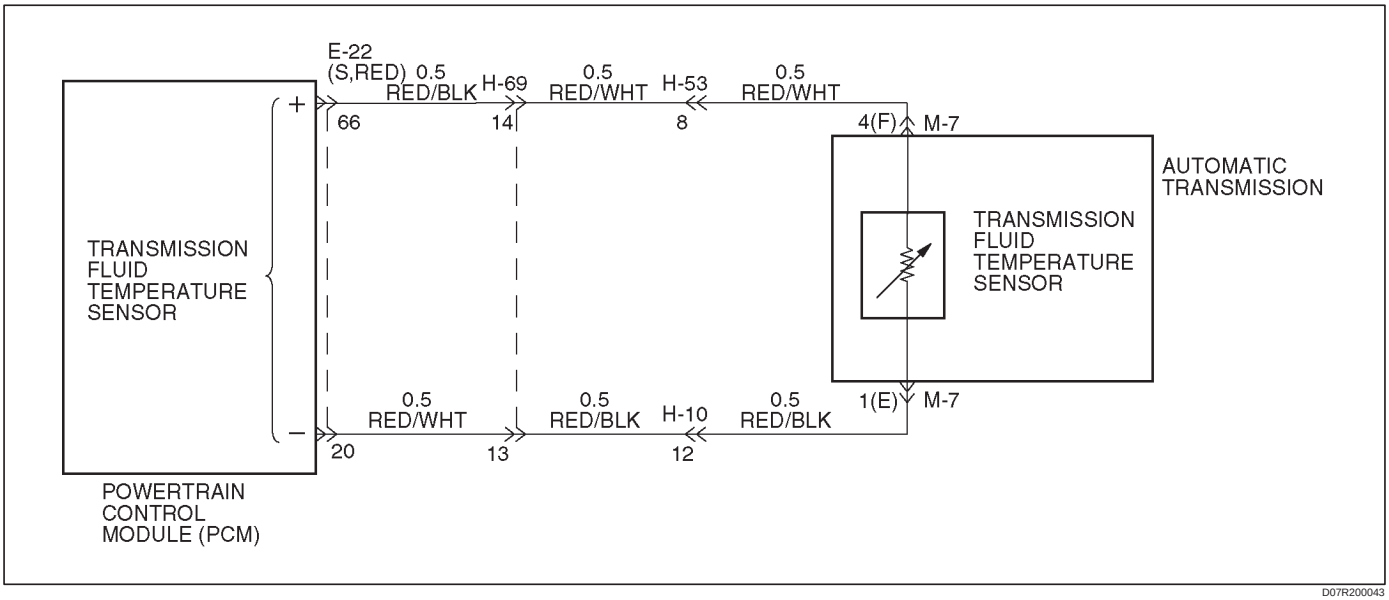

D07R200043

RHD

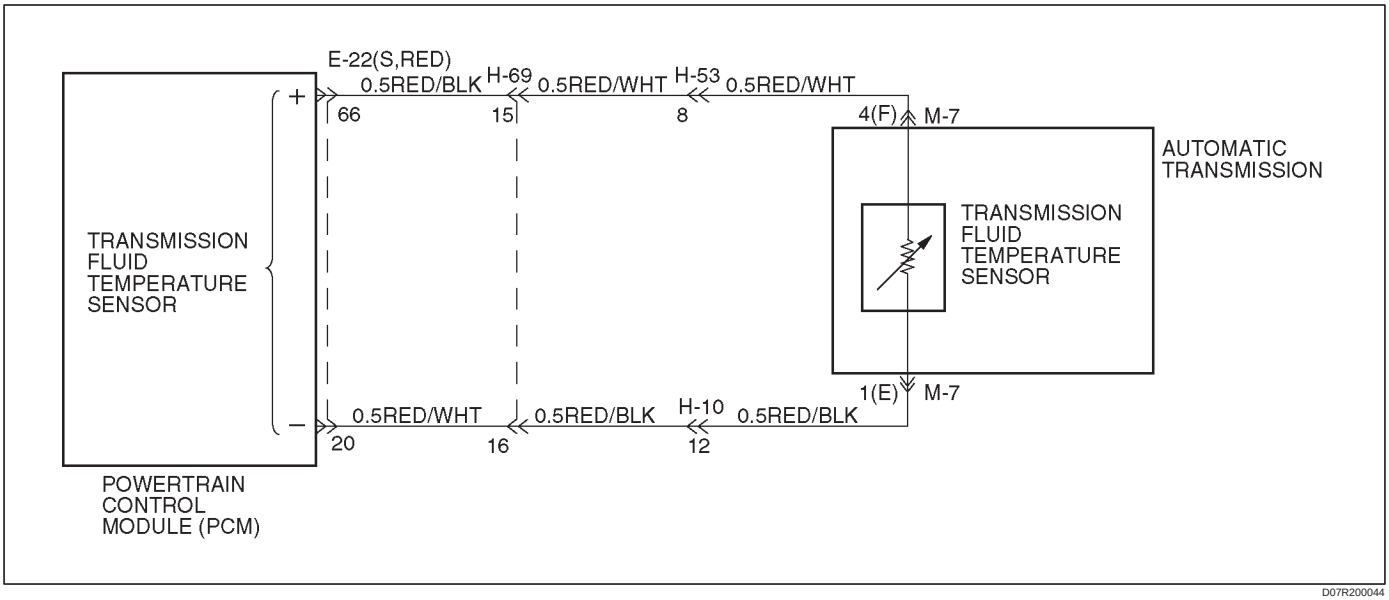

D07R200044

Circuit Description

The TFT sensor is a thermistor that controls the signal voltage to the PCM. The PCM supplies a 5–volt reference signal to the sensor on circuit RED/WHT. When the transmission fluid is cold, the sensor resistance is high and the PCM will sense high signal voltage. As the transmission fluid temperature warms to the normal operating temperature of 100˚C (212˚F), the sensor resistance becomes less and the voltage decreases to about 1.5 to 2 volts.

This DTC detects a continuous open or short to power in the TFT signal circuit or the TFT sensor. This is a type “D” DTC.

Conditions For Setting The DTC

- Battery voltage is between 10 and 16 volts.
- Ignition is “on”.
- TFT sensor indicating a voltage greater than 4.86 volts.
- All conditions met for 20 seconds.

Action Taken When The DTC Sets

- Transmission default temperature will be:

  80˚C (176˚F) if engine temperature code is set.

  100˚C (212˚F) if engine temperature is warm.

  80˚C (176˚F) if engine run time is greater than 5 minutes.

  21˚C (69.8˚F) if engine run time is less than 5 minutes.

- The PCM will not illuminate the Malfunction Indicator Lamp (MIL).

Conditions For Clearing The DTC

- The DTC can be cleared from the PCM history by using a scan tool.
- The DTC will be cleared from history when the vehicle has achieved 40 warmup cycles without a failure reported.
- The PCM will cancel the DTC default actions when the fault no longer exists and the ignition is cycled “off” long enough to power down the PCM.

Diagnostic Aids

- Inspect the wiring for poor electrical connection at the PCM and at the transmission 16–way connectors. Look for possible bent, backed out, deformed or damaged terminals. Check for weak terminal tension as well. Also check for a chafed wire that could short to bare metal or other wiring. Inspect for a broken wire inside the insulation.
- When diagnosing for a possible intermittent short or open condition, move the wiring harness while observing test equipment for a change.
- Scan tool displays transmission fluid temperature in degrees. After transmission is operating, the temperature should rise steadily to about 100˚C (212˚F), then stabilize.
- The temperature to resistance value scale may be used to check the TFT sensor at the various temperature levels to evaluate the possibility of a “skewed” (mis–scaled) sensor.

  A “skewed” sensor could result in hard shifts or TCC complaints.

Test Description

The numbers below refer to the step numbers on the diagnostic chart:

3. This check verifies problem in the TFT sensor circuit.
4. This test simulates a TFT sensor DTC P0712. If the PCM recognizes the low signal voltage (high temperature), and the scan tool displays 146˚C (295˚F) or greater, the PCM and wiring are OK.
5. This test checks the TFT sensor and internal wiring harness.

DTC P0713 Transmission Fluid Temperature (TFT) Sensor Circuit High Input

Step	Action	Yes	No
1	Were you sent here from the “Powertrain On–Board Diagnostic (OBD) System Check”?	Go to Step 2	Go to OBD System Check Refer to Driveability and Emission in Engine section
2	Perform the transmission fluid checking procedure. Refer to Checking Transmission Fluid Level and Condition in Automatic Transmission (4L30–E) section. Was the fluid checking procedure performed?	Go to Step 3	Refer to Checking Transmission Fluid Level and Condition in Automatic Transmission (4L30–E) section
3	1. Install the scan tool. 2. With the engine “off”, turn the ignition switch “on”. NOTE: Before clearing DTC(s), use the scan tool to record “Freeze Frame” and “Failure Records” for reference, as data will be lost when the “Clear Info” function is used. 3. Record the DTC “Freeze Frame” and “Failure Records”. Does the scan tool display a TFT sensor signal voltage greater than 4.86 volts?	Go to Step 4	Go to Diagnostic Aids
4	1. Turn the ignition “off”. 2. Disconnect the transmission 16–way connector H–69. 3. Install a fused jumper wire from terminal M7–4(F) and M7–1(E) on the engine harness. 4. Turn the ignition “on”. Does the TFT signal voltage drop to less than 0.4 volts?	Go to Step 5	Go to Step 10

DTC P0713 Transmission Fluid Temperature (TFT) Sensor Circuit High Input (Cont'd)

Step	Action	Yes	No
5	1. Turn the ignition "off". 2. Using the J39200 DVOM, measure the resistance between terminals M7–4(F) and M7–1(E). Is the resistance within specifications? (See Transmission Fluid Temperature (TFT) Sensor Specifications.)	Go to Diagnostic Aids	Go to Step 6
6	1. Disconnect the transmission 7–way connector M–7. 2. Using the J39200 DVOM, measure the resistance between terminals M7–4(F) and M7–1(E). Is the resistance within specifications? (See Transmission Fluid Temperature (TFT) Sensor Specifications.)	Go to Diagnostic Aids	Go to Step 7
7	1. Remove the transmission oil pan. 2. Check the internal wiring harness for an open. Refer to Transmission Oil Temperature Sensor (Main Case) in Automatic Transmission (4L30–E) section. Was a problem found and corrected?	Go to Step 14	Go to Step 8
8	1. Disconnect the internal wiring harness at the TFT sensor. 2. Measure the resistance of the TFT sensor. Is the resistance within specifications? (See Transmission Fluid Temperature (TFT) Sensor Specifications.)	Go to Diagnostic Aids	Go to Step 9
9	Replace TFT sensor. Refer to Transmission Oil Temperature Sensor (Main Case) in Automatic Transmission (4L30–E) section. Is the replacement complete?	Go to Step 14	—
10	Check circuit RED/WHT for an open or short to B+. Was a problem found?	Go to Step 14	Go to Step 11
11	Check circuit RED/BLK for an open. Was a problem found?	Go to Step 14	Go to Step 12
12	Check the PCM for faulty or intermittent connections. Was a problem found?	Go to Step 14	Go to Step 13
13	Replace the PCM. Refer to Powertrain Control Module (PCM) in Automatic Transmission (4L30–E) section. Is the replacement complete?	Go to Step 14	—
14	1. After the repair is complete, use the scan tool to select "DTC", then "Clear Info" function and ensure the following conditions are met: 2. TFT sensor indicates a voltage less than 4.92 volts for 2 seconds. 3. Review the scan tool "DTC Info". Has the last test failed or is the current DTC displayed?	Begin diagnosis again Go to Step 1	Repair verified Exit DTC table

DTC P0719 Brake Switch Circuit Low (Stuck On)

LHD

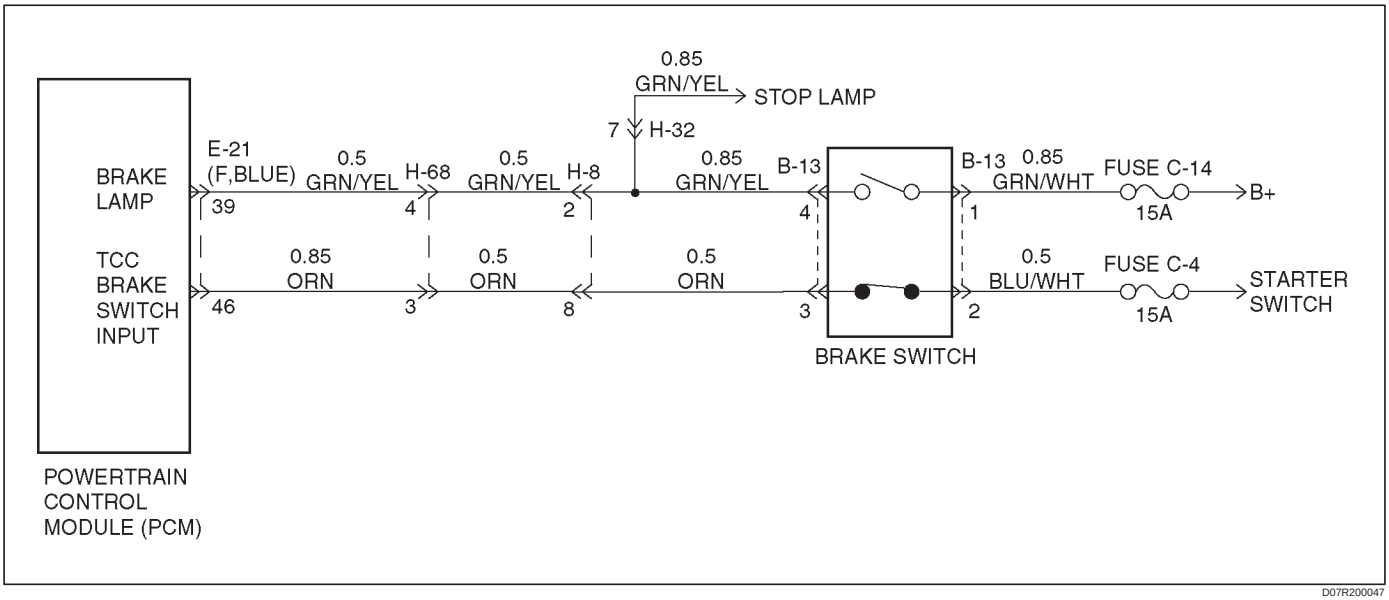

D07R200047

RHD

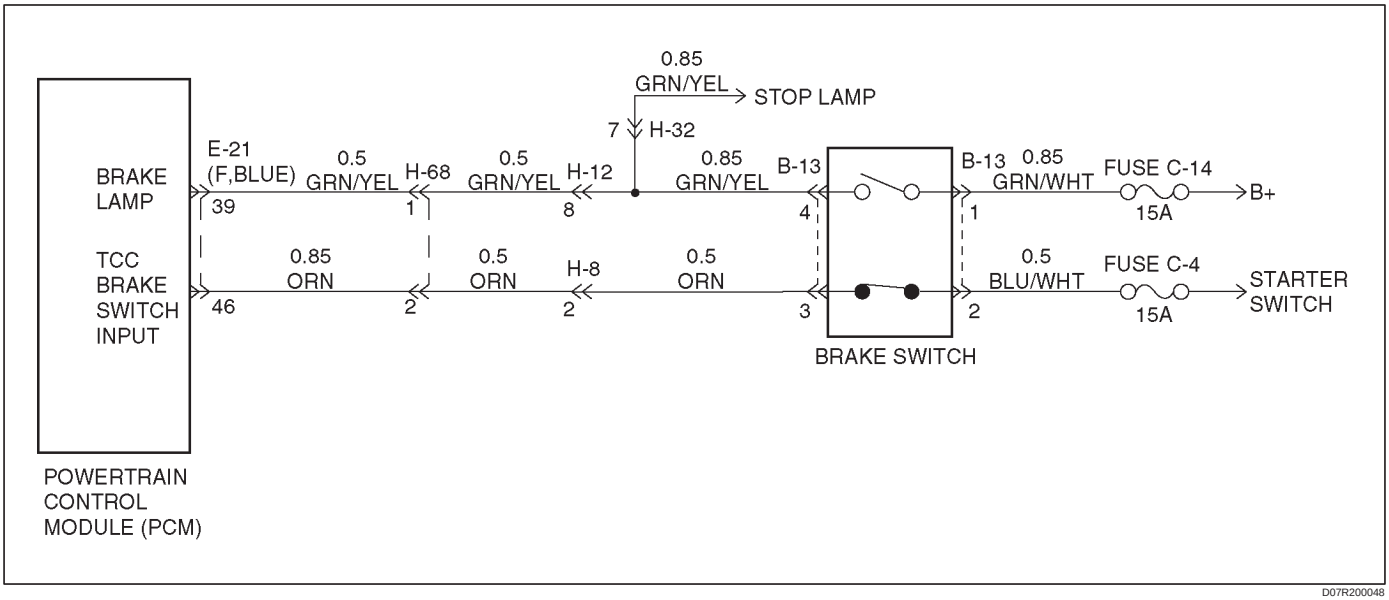

D07R200048

Circuit Description:

The brake switch indicates brake pedal status to the Powertrain Control Module (PCM). The brake switch is a normally–closed switch that supplies battery voltage on circuit ORN to the PCM. Applying the brake pedal opens the switch, interrupting voltage to the PCM. When the brake pedal is released, the PCM receives a constant voltage signal. If the PCM receives a zero voltage signal at the brake switch input, and the Torque Converter Clutch (TCC) is engaged, the PCM de–energizes the Torque Converter Clutch Solenoid Valve (TCC Sol. Valve). The PCM disregards the brake switch input for TCC scheduling if there is a brake switch circuit fault (Refer to Diagnostic Aids).

When the PCM detects an open brake switch circuit (0 volts, low input) during accelerations, then DTC P0719 sets. DTC P0719 is a type D DTC.

Conditions For Setting The DTC

- No OSS Assy. DTCs P0722 or P0723.
- The PCM detects an open brake switch or circuit (0 volts) for 15 minutes without changing for 2 seconds, and the following events occur seven consecutive times:
  - The vehicle speed is less than 8 km/h (5 mph);
  - then the vehicle speed is 8–32 km/h (5–20 mph) for 4 seconds;
  - then the vehicle speed is greater than 32 km/h (20 mph) for 4 seconds.

Action Taken When The DTC Sets

- The PCM does not illuminate the Malfunction Indicator Lamp (MIL).
- DTC P0719 stores in PCM history.

Conditions For Clearing The DTC

- A scan tool can clear the DTC from the PCM history. The PCM clears the DTC from the PCM history if the vehicle completes 40 warm–up cycles without a failure reported.
- The PCM cancels the DTC default actions when the fault no longer exists and the ignition is OFF long enough in order to power down the PCM.

Diagnostic Aids

- Inspect the wiring for poor electrical connections at the PCM and brake switch. Look for possible bent, backed out, deformed or damaged terminals. Check for weak terminal tension as well. Also check for a chafed wire that could short to bare metal or other wiring. Inspect for a broken wire inside the insulation.
- When diagnosing for a possible intermittent short or open condition, move the wiring harness while observing test equipment for a change.
- Check customer driving habits and/or unusual driving conditions (i.e. stop and go, highway).
- Check brake switch for proper mounting and adjustment.

Test Description

The numbers below refer to the step numbers on the diagnostic chart.

3. This step isolates the brake switch as a source for setting the DTC.

DTC P0719 Brake Switch Circuit Low (Stuck On)

Step	Action	Yes	No
1	Was the Powertrain On–Board Diagnostic (OBD) System Check performed?	Go to Step 2	Go to Powertrain OBD System Check
2	1. Install the scan tool. 2. With the engine “off,” turn the ignition switch to the “on” position. NOTE: Before clearing the DTC(s), use the scan tool in order to record the “Failure Records” for reference. Using the “Clear Info” function will erase the stored “Failure Records” from the PCM. 3. Record the “DTC Failure Records”, then clear the DTC(s). 4. Select “TCC Brake Switch” on the scan tool. 5. Disconnect the brake switch connector from the brake switch. 6. Connect a test lamp from cavity B13–2 of the brake switch connector to a known good ground. Is the test lamp ON?	Go to Step 3	Go to Step 4
3	Install a J 36169–A Fused Jumper Wire from terminal B13–3 to terminal B13–2 of the brake switch connector. Did the TCC Brake Switch status change from Open to Closed?	Go to Step 7	Go to Step 9
4	1. Remove the fuse C–4 (15A). 2. Inspect the fuse for an open. Is the fuse open?	Go to Step 5	Go to Step 8
5	Inspect circuit BLU/WHT for a short to ground condition. Repair the circuit if necessary. Did you find a short to ground condition?	Go to Step 11	Go to Step 6
6	Inspect circuit ORN for a short to ground condition. Repair the circuit if necessary. Did you find a short to ground condition?	Go to Step 11	Go to Step 10
7	Replace the brake switch. Is the replacement complete?	Go to Step 11	—
8	Inspect circuit BLU/WHT for an open condition. Repair the circuit if necessary. Did you find and correct an open condition?	Go to Step 11	—
9	Inspect circuit ORN for an open. Did you find an open condition?	Go to Step 11	Go to Step 10
10	Replace the PCM. Is the replacement complete?	Go to Step 11	—
11	In order to verify your repair, perform the following procedure: 1. Select DTC. 2. Select Clear Info. 3. With the engine “off,” turn the ignition switch to the “on” position. 4. Do not depress the brake pedal. 5. Verify that the TCC Brake Switch status indicates “Closed” (12 volts) for 2 seconds. 6. Select Specific DTC. Enter DTC P0719. Has the test run and passed?	System OK	Begin the diagnosis again. Go to Step 1

DTC P0722 Automatic Transmission Output Speed Sensor (OSS) Low Input

LHD

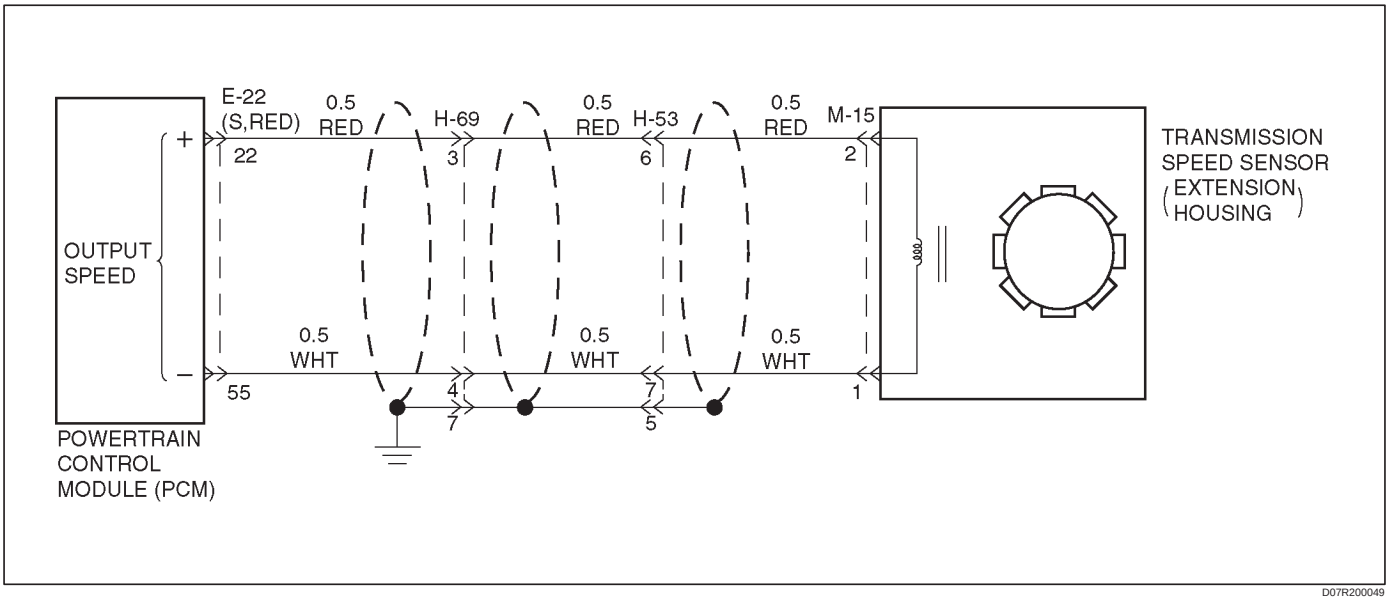

D07R200049

RHD

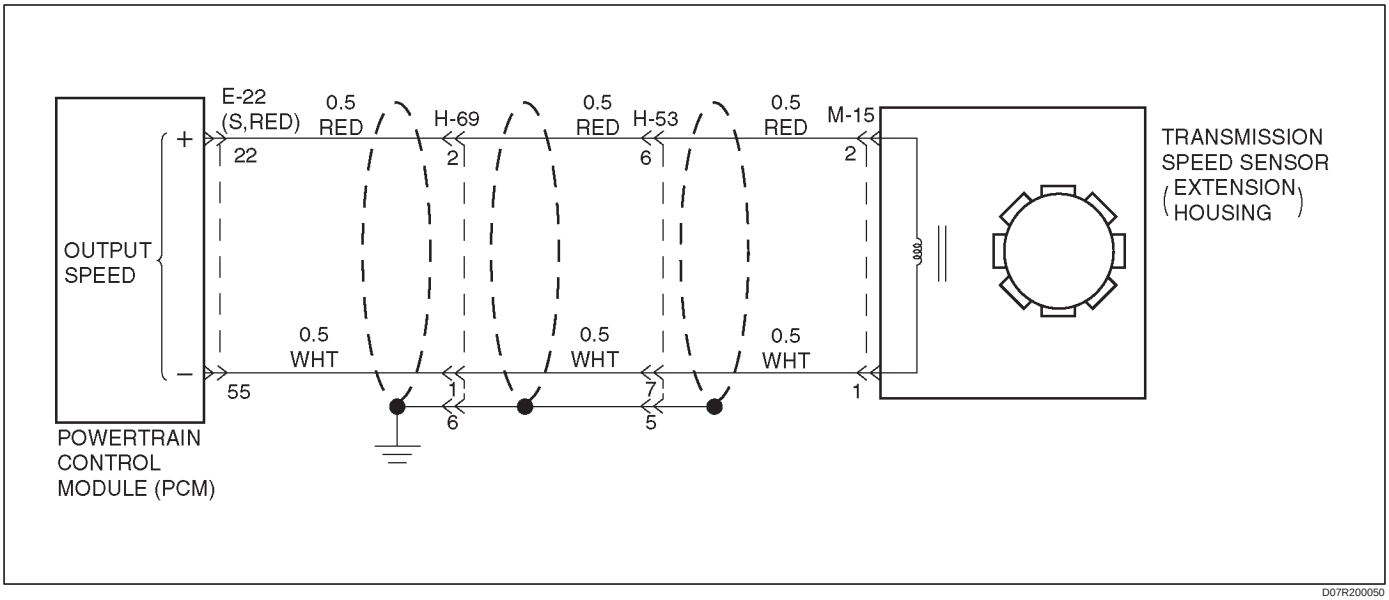

D07R200050

Circuit Description

Output speed information is provided to the PCM by the OSS, which is a permanent magnet (PM) generator. The PM generator produces a pulsing AC voltage. The AC voltage level and number of pulses increases as the speed of the vehicle increases. The PCM then converts the pulsing voltage to output speed, which is used for calculations. The vehicle speed can be displayed with a scan tool.

This DTC detects a low output speed when there is a high engine speed in a drive gear range. This is a type “B” DTC.

Conditions For Setting The DTC

- No MAP DTCs P0107 or P0108, P0106, P1106, P1107.
- No TPS DTCs P0122 or P0123.
- Not in Park or Neutral.
- TP angle is greater than 10%.
- Engine vacuum is between 0 and 70kPa.
- Engine speed is between 3,000 and 7,000 rpm.
- Transmission output speed is less than 0 rpm.
- All conditions met for 5 seconds.

Action Taken When The DTC Sets

- Fixed to 4th gear.
- Maximum line pressure.
- Inhibit TCC engagement.
- For lamp illuminate refer to DTC type definition (type B).

Conditions For Clearing The MIL/DTC

- The PCM will turn off the MIL and CHECK TRANS Lamp after three consecutive ignition cycles without a failure reported.
- The DTC can be cleared from the PCM history by using a scan tool. The DTC will be cleared from history when the vehicle has achieved 40 warmup cycles without a failure reported.
- The PCM will cancel the DTC default actions when the fault no longer exists and the ignition is cycled “off” long enough to power down the PCM.

Diagnostic Aids

- An OSS DTC P0722 will set when no output speed is at detected at start off.
- Inspect the wiring for poor electrical connection at the PCM. Look for possible bent, backed out, deformed or damaged terminals. Check for weak terminal tension as well. Also check for a chafed wire that could short to bare metal or other wiring. Inspect for a broken wire inside the insulation.
- When diagnosing for a possible intermittent short or open condition, move the wiring harness while observing test equipment for a change.

Test Description

The numbers below refer to the step numbers on the diagnostic chart:

4. This test checks the OSS circuit.
5. This test checks the integrity of the OSS.
7. This test checks the 5–volt and ground circuit of the PCM.

DTC P0722 Automatic Transmission Output Speed Sensor (OSS) Low Input

Step	Action	Yes	No
1	Were you sent here from the “Powertrain On–Board Diagnostic (OBD) System Check”?	Go to Step 2	Go to OBD System Check Refer to Driveability and Emissions in Engine section
2	1. Install the scan tool. 2. With the engine “off”, turn the ignition switch “on”. NOTE: Before clearing DTC(s), use the scan tool to record “Freeze Frame” and “Failure Records” for reference, as data will be lost when the “Clear Info” function is used. 3. Record the DTC “Freeze Frame” and “Failure Records”. 4. Raise the drive wheels. 5. Start the engine. 6. Place the transmission in any drive range. With the drive wheels rotating, does the “Trans Output Speed” increase with the drive wheel speed?	Go to Diagnostic Aids	Go to Step 3
3	Check for the most current and/or incorrect calibration. Is the calibration current?	Go to Step 16	Go to Step 4
4	1. Turn the ignition “off”. 2. Disconnect the S (RED) PCM connector. 3. Using the J39200 DVOM, measure the resistance between harness connector terminals S–22 and S–55. Is the reading 3,000 ohms?	Go to Step 5	Go to Step 6
5	1. Select AC volts. 2. Rotate the rear wheels, ensuring the driveshaft is turning. Is the voltage greater than 0.5 volts?	Go to Step 7	Go to Step 8
6	Inspect circuits RED and WHT for a poor connection or an open circuit. Was a problem found?	Go to Step 17	Go to Step 8

DTC P0722 Automatic Transmission Output Speed Sensor (OSS) Low Input (Cont'd)

Step	Action	Yes	No
7	1. Reconnect the S (RED) PCM connector. 2. Disconnect the OSS harness from the OSS. 3. With the engine "off", turn the ignition "on". 4. Using the J 39200 DVOM, measure the voltage at the OSS harness connector terminals M15–2 and M15–1. Is the reading between 4.0 to 5.1 volts?	Go to Step 16	Go to Step 10
8	1. Remove the OSS. 2. Check the output shaft speed sensor rotor for damage or misalignment. Refer to Speed Sensor (Extension Housing) in Automatic Transmission (4L30–E) section. Was a problem found?	Go to Step 17	Go to Step 9
9	Replace the OSS. Is the replacement complete?	Go to Step 17	—
10	Was the reading in step 7 less than 4.0 volts?	Go to Step 12	Go to Step 11
11	Was the reading in Step 7 greater than 5.1 volts?	Go to Step 15	—
12	Using the J 39200 DVOM to chassis ground, measure the voltage on circuit RED. Is the reading between 4.0 to 5.1 volts?	Go to Step 13	Go to Step 14
13	Repair the open in circuit WHT. Is the repair complete?	Go to Step 17	—
14	Check circuit RED for a short to ground or open. Was a problem found and corrected?	Go to Step 17	Go to Step 16
15	Repair the short to B+ in circuit RED. Is the repair complete?	Go to Step 17	—
16	Replace the PCM. Refer to Powertrain Control Module (PCM) in automatic Transmission (4L30–E) section. Is the replacement complete?	Go to Step 17	—
17	1. After the repair is complete, use the scan tool to select "DTC", then "Clear Info" function and operate the vehicle under the following conditions: Transmission output speed is greater than 101 rpm for 3 seconds. 2. Review the scan tool "DTC Info". Has the last test failed or is the current DTC displayed?	Begin diagnosis again Go to Step 1	Repair verified Exit DTC table

DTC P0723 Automatic Transmission Output Speed Sensor (OSS) Intermittent

LHD

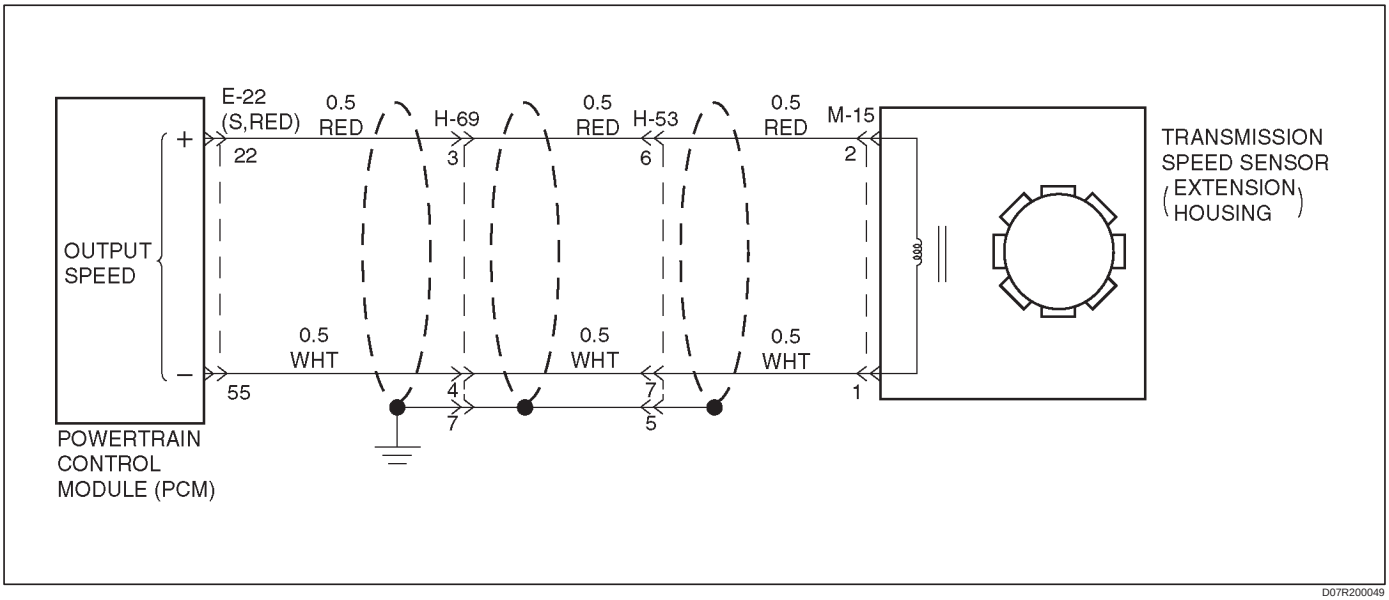

D07R200049

RHD

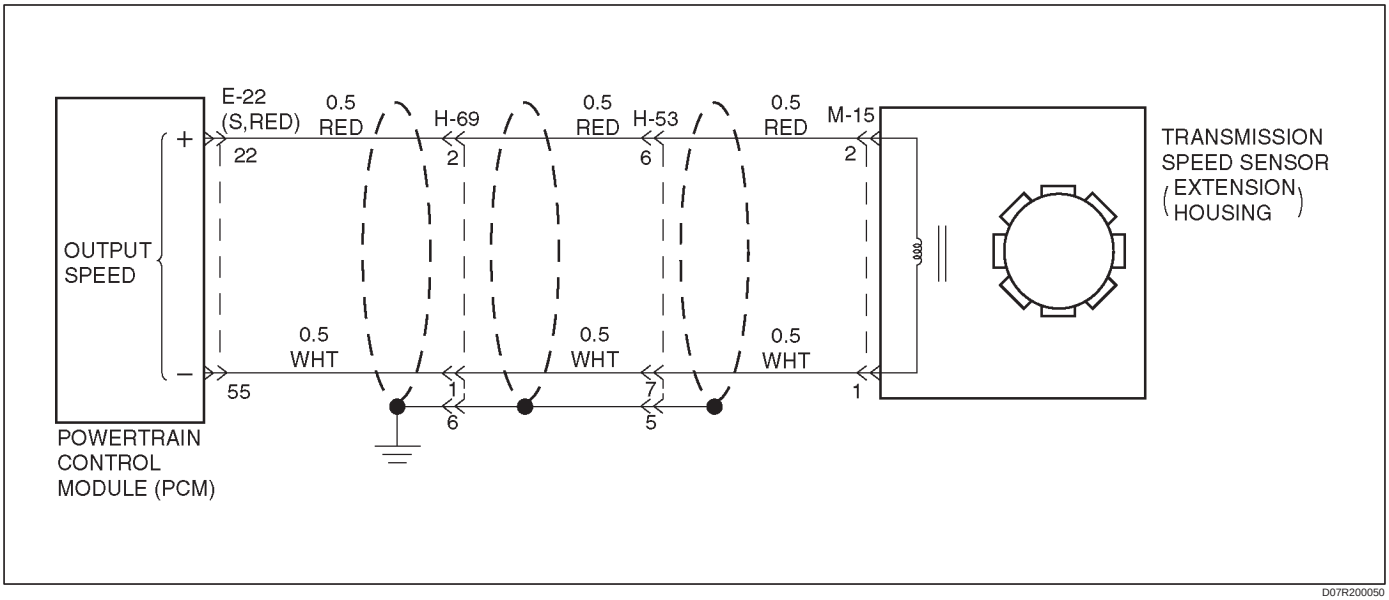

D07R200050

Circuit Description

Output speed information is provided to the PCM by the OSS, which is a permanent magnet (PM) generator. The PM generator produces a pulsing AC voltage. The AC voltage level and number of pulses increases as the speed of the vehicle increases. The PCM then converts the pulsing voltage to output speed, which is used for calculations. The vehicle speed can be displayed with a scan tool.

This DTC detects a low output speed when there is a high engine speed in a drive gear range. This is a type “B” DTC.

Conditions For Setting The DTC

Drive range

- Engine running time is greater than 5 seconds.
- Output speed is greater than 1300 rpm for 2 seconds.
- NORAW-NORAWLAST < 200 rpm for 2 seconds.

  NORAW Latest raw data of output shaft speed.

  NORAWLAST Filtered pervious data of output speed.
- Transmission negative output speed change is greater than 1300 rpm.
- Conditions met for 3 seconds.

Action During Detection Time

Output speed value is frozen.

Action Taken When The DTC Sets

- Fixed to 4th gear.
- Maximum line pressure.
- Inhibit TCC engagement.

- For lamp illumination refer to DTC type definition (type B).

Conditions For Clearing The MIL/DTC

- The PCM will turn off the MIL and CHECK TRANS Lamp after three consecutive trips without a failure reported.
- The DTC can be cleared from the PCM history by using a scan tool.
- The DTC will be cleared from history when the vehicle has achieved 40 warmup cycles without failure reported.
- The PCM will cancel the DTC default actions when the fault no longer exists and the ignition is cycled “off” long enough to power down the PCM.

Diagnostic Aids

- A OSS DTC P0723 will set when output speed has been detected and is lost.
- Inspect the wiring for poor electrical connection at the PCM. Look for possible bent, backed out, deformed or damaged terminals. Check for weak terminal tension as well. Also check for a chafed wire that could short to bare metal or other wiring. Inspect for a broken wire inside the insulation.
- When diagnosing for a possible intermittent short or open condition, move the wiring harness while observing test equipment for a change.

Test Description

The numbers below refer to the step numbers on the diagnostic chart:

4. This test checks the OSS circuit.
5. This test checks the integrity of the OSS.
7. This test checks the 5–volt and ground circuit of the PCM.

DTC P0723 Automatic Transmission Output Speed Sensor (OSS) Intermittent

Step	Action	Yes	No
1	Were you sent here from the “Powertrain On–Board Diagnostic (OBD) System Check”?	Go to Step 2	Go to OBD System Check Refer to Driveability and Emissions in Engine section
2	1. Install the scan tool. 2. With the engine “off”, turn the ignition switch “on”. NOTE: Before clearing DTC(s), use the scan tool to record “Freeze Frame” and “Failure Records” for reference, as data will be lost when the “Clear Info” function is used. 3. Record the DTC “Freeze Frame” and “Failure Records”. 4. Raise the drive wheels. 5. Start the engine. 6. Place the transmission in any drive range. With the drive wheels rotating, does the “Trans Output Speed” increase with the drive wheel speed?	Go to Diagnostic Aids	Go to Step 3
3	Check for the most current and/or incorrect calibration. Is the calibration current?	Go to Step 16	Go to Step 4
4	1. Turn the ignition “off”. 2. Disconnect the S (RED) PCM connector. 3. Using the J39200 DVOM, measure the resistance between harness connector terminals S–22 and S–55. Is the reading 3,000 ohms?	Go to Step 5	Go to Step 6
5	1. Select AC volts. 2. Rotate the rear wheels, ensuring the driveshaft is turning. Is the voltage greater than 0.5 volts?	Go to Step 7	Go to Step 8
6	Inspect circuits RED and WHT for a poor connection or an open circuit. Was a problem found?	Go to Step 17	Go to Step 8

DTC P0723 Automatic Transmission Output Speed Sensor (OSS) Intermittent (Cont'd)

Step	Action	Yes	No
7	1. Reconnect the S (RED) PCM connector. 2. Disconnect the OSS harness from the OSS. 3. With the engine "off", turn the ignition "on". 4. Using the J 39200 DVOM, measure the voltage at the OSS harness connector terminals M15–2 and M15–1. Is the reading between 4.0 to 5.1 volts?	Go to Step 16	Go to Step 10
8	1. Remove the OSS. 2. Check the output shaft speed sensor rotor for damage or misalignment. Refer to Speed Sensor (Extension Housing) in Automatic Transmission (4L30–E) section. Was a problem found?	Go to Step 17	Go to Step 9
9	Replace the OSS. Is the replacement complete?	Go to Step 17	—
10	Was the reading in step 7 less than 4.0 volts?	Go to Step 12	Go to Step 11
11	Was the reading in Step 7 greater than 5.1 volts?	Go to Step 15	—
12	Using the J 39200 DVOM to chassis ground, measure the voltage on circuit RED. Is the reading between 4.0 to 5.1 volts?	Go to Step 13	Go to Step 14
13	Repair the open in circuit WHT. Is the repair complete?	Go to Step 17	—
14	Check circuit RED for a short to ground or open. Was a problem found and corrected?	Go to Step 17	Go to Step 16
15	Repair the short to B+ in circuit RED. Is the repair complete?	Go to Step 17	—
16	Replace the PCM. Refer to Powertrain Control Module (PCM) in Automatic Transmission (4L30–E) section. Is the replacement complete?	Go to Step 17	—
17	1. After the repair is complete, use the scan tool to select "DTC", then "Clear Info" function and operate the vehicle under the following conditions: Transmission output speed is greater than 101 rpm for 3 seconds. 2. Review the scan tool "DTC Info". Has the last test failed or is the current DTC displayed?	Begin diagnosis again Go to Step 1	Repair verified Exit DTC table

DTC P0724 Brake Switch Circuit High (Stuck Off)

LHD

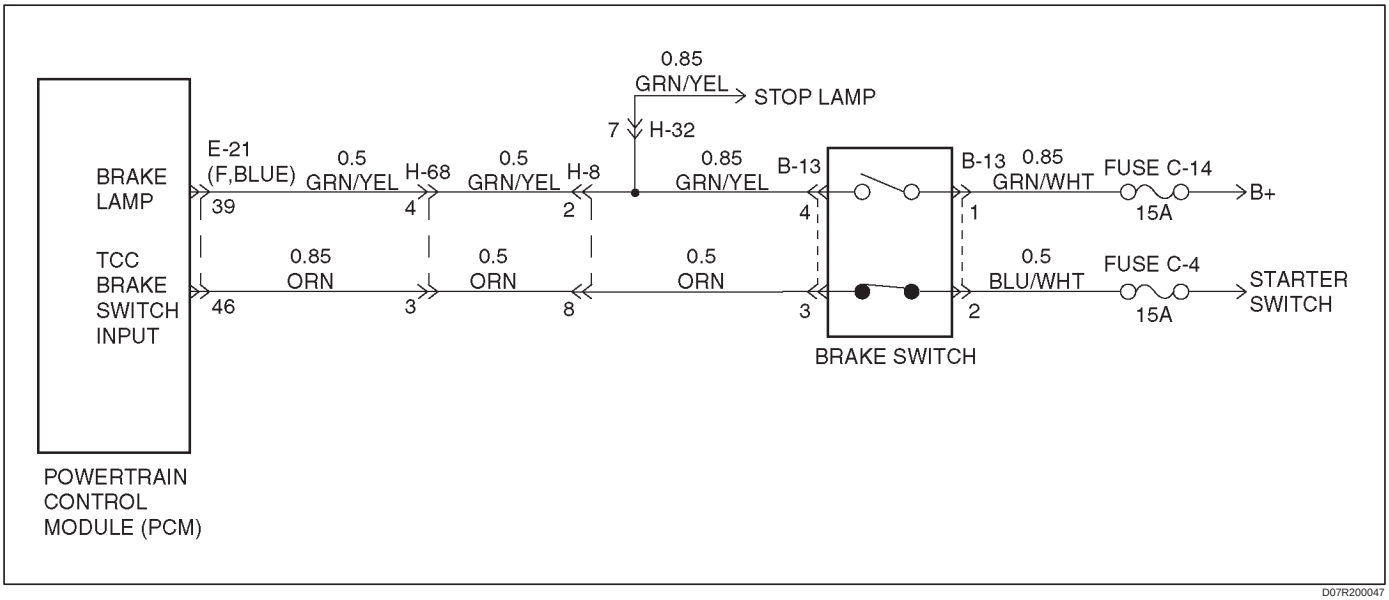

D07R200047

RHD

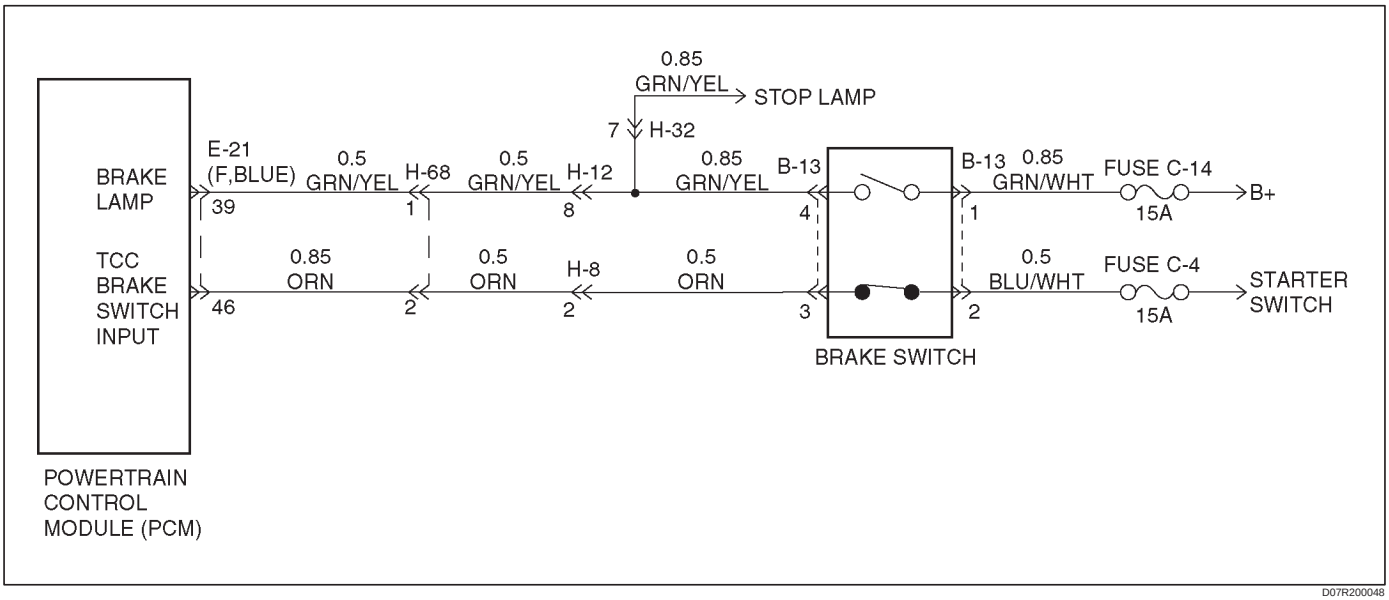

D07R200048

Circuit Description:

The brake switch indicates brake pedal status to the Powertrain Control Module (PCM). The brake switch is a normally–closed switch that supplies battery voltage on circuit ORN to the PCM. Applying the brake pedal opens the switch, interrupting voltage to the PCM. When the brake pedal is released, the PCM receives a constant voltage signal. If the PCM receives a zero voltage signal at the brake switch input, and the Torque Converter Clutch (TCC) is engaged, the PCM de–energizes the Torque Converter Clutch Solenoid Valve (TCC Sol. Valve). The PCM disregards the brake switch input for TCC scheduling if there is a brake switch circuit fault (Refer to Diagnostic Aids).

When the PCM detects a closed brake switch circuit (12 volts, high input) during decelerations, then DTC P0724 sets. DTC P0724 is a type D DTC.

Conditions For Setting The DTC

- No OSS Assy. DTCs P0722 or P0723.
- The PCM detects a closed brake switch circuit (12 volts) without changing and the following events occur seven consecutive times:
  - The vehicle speed is greater than 32 km/h (20 mph) for 4 seconds;
  - then the vehicle speed is between 8–32 km/h (5–20 mph) for 4 seconds;
  - then the vehicle speed is less than 8 km/h (5 mph).

Action Taken When The DTC Sets

- The PCM does not illuminate the Malfunction Indicator Lamp (MIL).
- DTC P0724 stores in PCM history.

Conditions For Clearing The DTC

- A scan tool can clear the DTC from the PCM history. The PCM clears the DTC from the PCM history if the vehicle completes 40 warm–up cycles without a failure reported.
- The PCM cancels the DTC default actions when the fault no longer exists and the ignition is OFF long enough in order to power down the PCM.

Diagnostic Aids

- Inspect the wiring for poor electrical connection at the PCM. Look for possible bent, backed out, deformed or damaged terminals. Check for weak terminal tension as well. Also check for a chafed wire that could short to bare metal or other wiring. Inspect for a broken wire inside the insulation.
- When diagnosing for a possible intermittent short or open condition, move the wiring harness while observing test equipment for a change.
- Check customer driving habits and/or unusual traffic conditions (i.e. stop and go, expressway).
- Check brake switch for proper mounting and adjustment.

Test Description

The numbers below refer to the step numbers on the diagnostic chart.

2. This step isolates the brake switch as a source for setting the DTC.

DTC P0724 Brake Switch Circuit High (Stuck Off)

Step	Action	Yes	No
1	Was the Powertrain On–Board Diagnostic (OBD) System Check performed?	Go to Step 2	Go to Powertrain OBD System Check
2	1. Install the scan tool. 2. With the engine “off,” turn the ignition switch to the “on” position. NOTE: Before clearing the DTC(s), use the scan tool in order to record the “Failure Records” for reference. Using the “Clear Info” function will erase the stored “Failure Records” from the PCM. 3. Record the DTC Failure Records, then clear the DTC(s). 4. Select “TCC Brake Switch” on the scan tool. 5. Disconnect the brake switch connector from the brake switch. Did the TCC brake switch status change from “Closed” to “Open”?	Go to Step 3	Go to Step 4
3	Replace the brake switch. Is the replacement complete?	Go to Step 6	—
4	Inspect circuit ORN for a short to B+ condition. Repair the circuit if necessary. Did you find a short to B+ condition?	Go to Step 6	Go to Step 5
5	Replace the PCM. Is the replacement complete?	Go to Step 6	—
6	In order to verify your repair, perform the following procedure: 1. Select DTC. 2. Select “Clear Info”. 3. With the engine “off” turn the ignition switch to the “on” position. 4. Apply the brake pedal. 5. Verify that the TCC brake switch status indicates “Open” (0 volts) for 2 seconds. 6. Select Specific DTC. Enter DTC P0724. Has the test run and passed?	System OK	Begin the diagnosis again. Go to Step 1

DTC P0730 Gear Error Without Input Speed

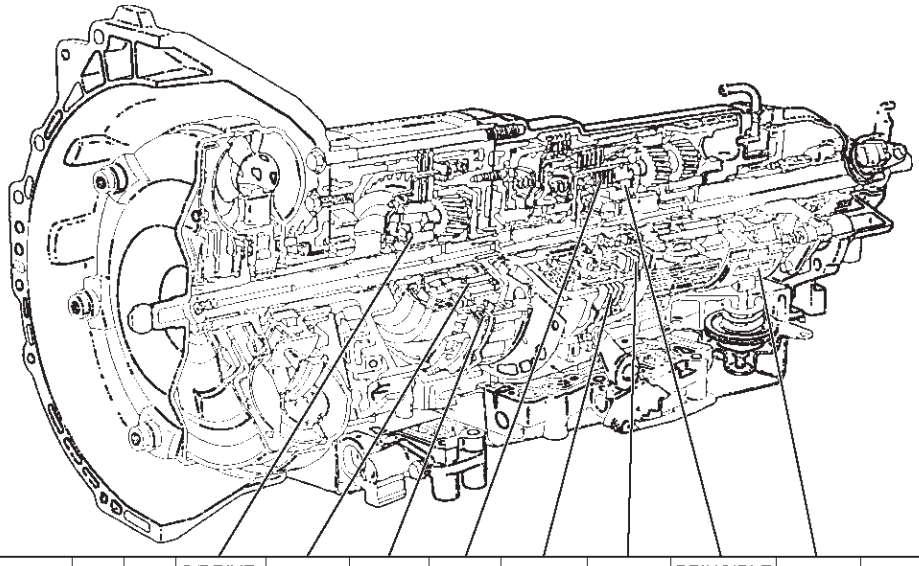

RANGE	GEAR	SOL A N.C.	SOL B N.O.	O/DRIVE FREE WHEEL (OFW)	O/RUN CLUTCH (OC)	FOURTH CLUTCH (C4)	THIRD CLUTCH (C3)	REVERSE CLUTCH (RC)	SECOND CLUTCH (C2)	PRINCIPLE SPRAG ASM (PFW)	BAND ASM (B)	ENGINE BRAKING	TORQUE CONV. CLUTCH
P-N		OFF	ON		APP							NO	NO
R	REVERSE	OFF	ON	LD	APP			APP		LD		NO	NO
D	1ST	OFF	ON	LD	APP					LD	APP	NO	NO
	2ND	ON	ON	LD	APP				APP	FW	APP	YES	ECCC
	3RD	ON	OFF	LD	APP		APP		APP	NE		YES	ECCC
	4TH	OFF	OFF	FW		APP	APP		APP	NE		YES	ECCC
3	1ST	OFF	ON	LD	APP					LD	APP	NO	NO
	2ND	ON	ON	LD	APP				APP	FW	APP	YES	ECCC
	3RD	ON	OFF	LD	APP		APP		APP	NE		YES	ECCC
2	1ST	OFF	ON	LD	APP		APP			LD	APP	YES	NO
	2ND	ON	ON	LD	APP				APP	FW	APP	YES	ECCC
L	1ST	OFF	ON	LD	APP		APP			LD	APP	YES	NO

LD : LOCKED IN DRIVE FW : FREEWHEELING NE : NOT EFFECTIVE APP : APPLIED

D07RY00055

Circuit Description

- The Powertrain Control Module (PCM) calculates the slippage of the converter and transmission based upon the engine speed, the output speed, and the current gear ratio.
- The slippage of the converter at a high enough engine speed is low. The transmission should not slip more than a given value when there is no shift.
- This DTC detects a slip at each gear. This is a type “C” DTC.

Conditions For Setting The DTC

- No Output Speed Sensor DTC(s) P0722, P0723.
- Not in Park, Neutral, or Reverse.
- Engine speed is greater than 3,500 rpm.
- 3 seconds since upshift.
- No Transmission Range Switch DTC(s) P0705, P0706.
- 3 seconds since downshift.
- 3 seconds since garage shift (N→D).
- And one of the following conditions occur:
  - Slip is greater than 508 rpm in 1st gear.
  - Slip is greater than 468 rpm in 2nd gear.
  - Slip is greater than 449 rpm on 3rd gear.
  - Slip is greater than 440 rpm on 4th gear.
- All conditions met for 5.5 seconds.

Action Taken When The DTC Sets

- Maximum line pressure.
- The PCM will not illuminate the Malfunction Indicator Lamp (MIL).

- The PCM will illuminate the CHECK TRANS Lamp.
- Turn force motor OFF.

Conditions For Clearing The DTC/CHECK TRANS Lamp

- The PCM will turn “off” the CHECK TRANS Lamp after three consecutive ignition cycles without a failure reported.
- The DTC can be cleared from PCM memory by using a scan tool.
- The DTC can also be cleared from memory when the vehicle has made 40 warmup cycles without a failure reported.
- The PCM will cancel the DTC Actions Taken items when the fault conditions no longer exist and the ignition is cycles “off” long enough to power down the PCM.

Diagnostic Aids

- Check for intermittent output speed sensor circuit problems.
- Check for possible incorrect calibration. (PCM part No., tire specification, and rear axle ratio)

Test Description

The numbers below refer to the step numbers on the diagnostic chart:

3. This step checks for possible low fluid level causing slipping resulting in an undefined gear ratio.
4. This step checks for correct gear ratios for commanded gears.
5. This step checks for low line pressure.

DTC P0730 Gear Error Without Input Speed

Step	Action	Yes	No
1	Were you sent here from the “On–Board Diagnostic (OBD) System Check”?	Go to Step 2	Go to OBD System Check Refer to Driveability and Emission in Engine section
2	Visually inspect the transmission cooling system for fluid leaks. ● Refer to Chart 16: Possible Causes of Transmission Fluid Leaks of Mechanical/Hydraulic Diagnosis Symptoms Index in Automatic Transmission (4L30–E) section Was condition found and corrected?	Go to Step 7	Go to Step 3
3	Refer to Checking Transmission Fluid Level and Condition in Automatic Transmission (4L30–E) section. Has transmission fluid checking procedure been performed?	Go to Step 4	Go to Checking Transmission Fluid Level and Condition in Automatic Transmission (4L30–E) section
4	1. Install the scan tool. 2. Turn the ignition switch to the “on” position. 3. Engine not running. NOTE: Before clearing DTC(s) use the scan tool to record the “Failure Records” for reference, as data will be lost when the “Clear Info” function is used. 4. Record the Failure Record data. 5. Use the scan tool snapshot mode to record transmission gear ratios. 6. Drive vehicle in transmission gear ranges 1, 2, 3, and D with the engine speed is greater than 3,500 rpm for 5.5 seconds. 7. Record each transmission gear. 1st:2.73 – 2.99 2nd:1.54 – 1.71 3rd:0.93 – 1.05 4th:0.66 – 0.78 Does commanded gear ratio match ranges as shown?	Refer to Diagnostic Aids	Go to Step 5

DTC P0730 Gear Error Without Input Speed (Cont'd)

Step	Action	Yes	No
5	Perform line pressure check. ● Refer to Line Pressure Test in Automatic Transmission (4L30–E) section. Was condition found and corrected?	Go to Step 7	Go to Step 6
6	Check for possible clutch slippage. ● Refer to Chart 6: Diagnostic Trouble Code (DTC) P0730 of Mechanical/Hydraulic Diagnosis Symptoms Index in Automatic Transmission (4L30–E) section. Was condition found and corrected?	Go to Step 7	—
7	1. After the repair is complete, use the scan tool to select "DTC", then "Clear info" function. 2. Operate the vehicle under the following conditions: ● Drive the vehicle in D4 with the engine speed greater than 3,500 rpm to obtain anyone of the following gear ratios for seven seconds. 1st 1:2.73 – 1:2.99 2nd 1:1.54 – 1:1.71 3rd 1:0.93 – 1:1.05 4th 1:0.66 – 1:0.78 Has the last test failed?	Begin diagnosis again Go to Step 1	Repair verified Exit DTC table

DTC P0742 Torque Converter Clutch (TCC) System Stuck On

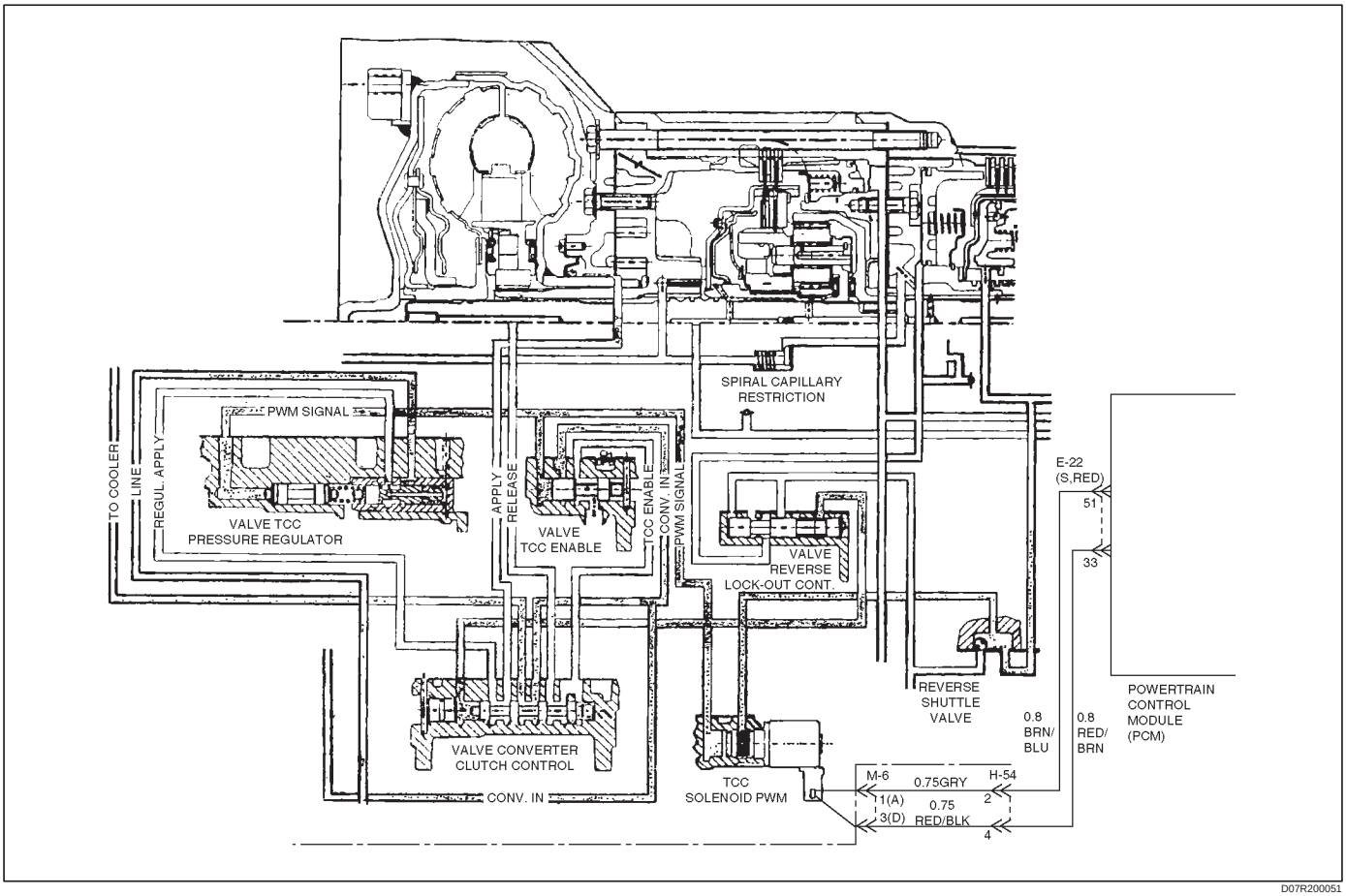

D07R200051

Circuit Description

The PCM energizes the TCC solenoid by creating an ignition voltage on circuit BRN/BLU. When ignition voltage is energized by the PCM, the TCC solenoid stops converter signal oil from exhausting. This causes converter signal oil pressure to increase and move the TCC valve. The TCC solenoid will deenergize when the PCM no longer provides ignition voltage. When the TCC solenoid is deenergized, it will exhaust fluid and release the TCC.

This DTC detects low torque converter slip when the TCC is commanded “off”. This is a type “B” DTC.

Conditions For Setting The DTC

The following conditions occur once per TCC cycle, three consecutive times:

- No TPS DTCs P0122 or P0123.
- No OSS DTCs P0722 or P0723.
- No TCC solenoid DTC P1860.
- TP angle is greater than 20%.
- Engine speed is greater than 500 rpm and less than 3,000 rpm.
- Engine vacuum is between 0 and 70 kPa.
- Commanded gear is not 1st.
- Gear range is D4.
- TCC is commanded “off”.
- No TCC Stuck off DTC P1870.
- TCC slip speed is between –20 and 40 rpm for 2 seconds.
- Vehicle speed is greater than 25 km/h (15 mph) and less than 120 km/h (75 mph).
- Speed ratio is greater than 0.9 and less than 2.0.

Action Taken When The DTC Sets

- For lamp illuminate refer to DTC type definition (type B).
- Inhibit TCC engagement.

Conditions For Clearing The MIL/DTC

- The PCM will turn off the MIL and CHECK TRANS Lamp after three consecutive ignition cycles without a failure reported.
- The DTC can be cleared from the PCM history by using a scan tool.
- The DTC will be cleared from history when the vehicle has achieved 40 warmup cycles without a failure reported.
- The PCM will cancel the DTC default actions when the fault no longer exists and the ignition is cycled “off” long enough to power down the PCM.

Diagnostic Aids

- If the TCC is mechanically stuck “on” with the parking brake applied and any gear range selected, the TCC fluid will mechanically apply the TCC, possibly causing an engine stall.

Test Description

The number below refers to the step number on the diagnostic chart:

3. This test checks the mechanical state of the TCC. (When the PCM commands the TCC solenoid “off”, the slip speed should increase).

DTC P0742 Torque Converter Clutch (TCC) System Stuck On

Step	Action	Yes	No
1	Were you sent here from the “Powertrain On–Board Diagnostic (OBD) System Check”?	Go to Step 2	Go to OBD System Check Refer to Driveability and Emissions in Engine section
2	1. Install the scan tool. 2. With the engine “off”, turn the ignition switch “on”. NOTE: Before clearing DTC(s), use the scan tool to record “Freeze Frame” and “Failure Records” for reference, as data will be lost when the “Clear Info” function is used. 3. Record the DTC “Freeze Frame” and “Failure Records”. 4. Using the scan tool, verify the “TP Sensor” operation. Are the “TP Sensor” values within 0.6 – 5.0 volts?	Go to Step 3	Go to Diagnostic Aids
3	Drive the vehicle in the D4 drive range in fourth gear under steady acceleration, with a TP angle greater than 20%. Does the scan tool display “TCC Slip Speed” between –30 and +30 rpm, while the displayed TCC solenoid state is “off”?	Go to Step 4	Go to Diagnostic Aids
4	The TCC is mechanically stuck “on”. Check the following items: ● Clogged exhaust orifice in the TCC solenoid. ● Converter clutch apply valve stuck in the apply position. ● Misaligned or damaged valve body gasket. ● Restricted release passage. Was a problem found and corrected?	Go to Step 5	—
5	1. After the repair is complete, use the scan tool to select “DTC”, then “Clear Info” function and ensure the following conditions are met: TCC slip speed must be between 200 and 2,500 rpm for 4 seconds. 2. Review the scan tool “DTC Info”. Has the last test failed or is the current DTC displayed?	Begin diagnosis again Go to Step 1	Repair verified Exit DTC table

DTC P0748 Pressure Control Solenoid (PCS) (Force Motor) Circuit Electrical

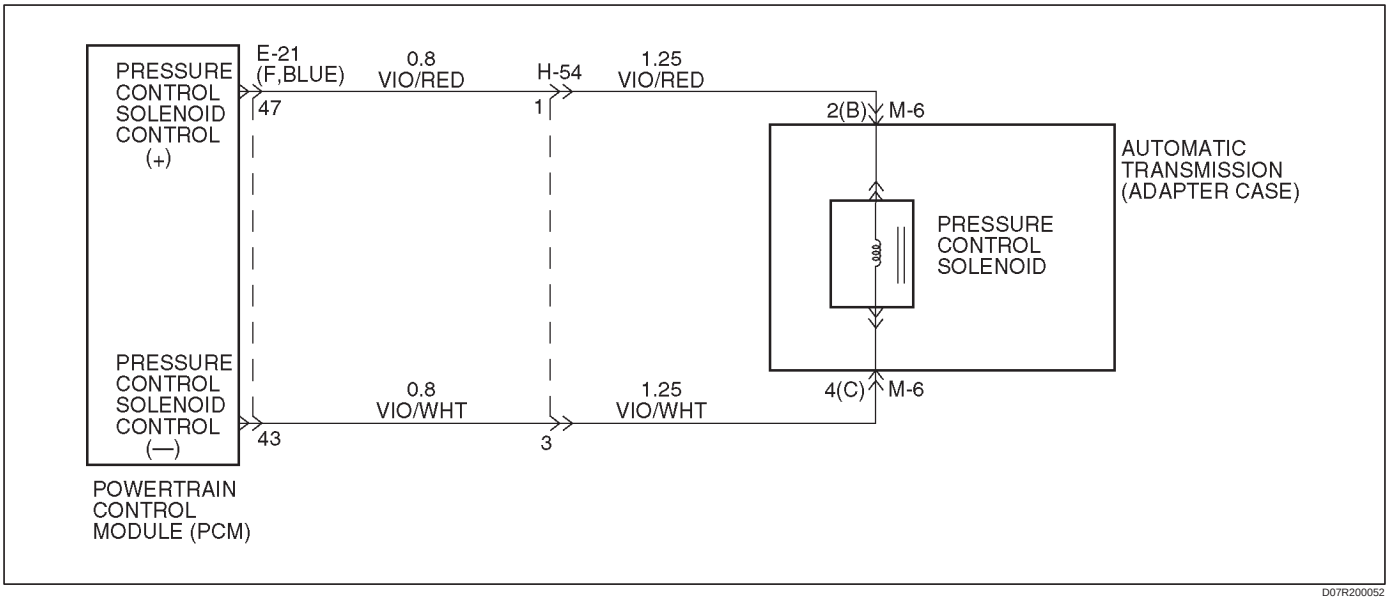

Circuit Description

The PCS is a PCM–controlled device used to regulate transmission line pressure. The PCM compares TPS voltage, engine rpm, and other inputs to determine the line pressure appropriate for a given load. The PCM will regulate the pressure by applying a varying amperage to the PCS. The applied amperage can vary from 70 to 1060 milliampere (mA), and is monitored by the PCM.
This DTC detects a continuous open or short to ground in the PCS circuit or the PCS. This is a type “C” DTC.

Conditions For Setting The DTC

- Battery voltage is between 10 and 16 volts.
- The PCM detects that the different between commanded and actual current is 200 milliampere (mA) for over 1 second.
- Engine speed is greater than 300 rpm.

Action Taken When the DTC Sets

- The PCM will not illuminate the Malfunction Indicator Lamp (MIL).
- Maximum line pressure.
- The PCM will illuminate the CHECK TRANS Lamp.
- Turn force motor OFF (Durability).

Conditions For Clearing The DTC/CHECK TRANS Lamp

- The PCM will turn “off” the CHECK TRANS Lamp after three consecutive ignition cycles without a failure reported.
- The DTC can be cleared from PCM history by using a scan tool.
- The DTC will be cleared from memory when the vehicle has achieved 40 warmup cycles without a failure reported.
- The PCM will cancel the DTC default actions when the fault no longer exists and the ignition is cycled “off” long enough to power down the PCM.

Diagnostic Aids

- Inspect the wiring for poor electrical connection at the PCM and at the transmission 4–way connector. Look for possible bent, backed out, deformed or damaged terminals. Check for weak terminal tension as well. Also check for a chafed wire that could short to bare metal or other wiring. Inspect for a broken wire inside the insulation.
- When diagnosing for a possible intermittent short or open condition, move the wiring harness while observing test equipment for a change.

Test Description

The numbers below refer to the step numbers on the diagnostic chart:

2. This test checks the ability of the PCM to command the PCS.
3. This test checks the PCS and internal wiring harness for incorrect resistance.

DTC P0748 Pressure Control Solenoid (PCS) (Force Motor) Circuit Electrical

Step	Action	Yes	No
1	Were you sent here from the “Powertrain On–Board Diagnostic (OBD) System Check”?	Go to Step 2	Go to OBD System Check Refer to Driveability and Emission in Engine section
2	1. Install the scan tool. 2. With the engine “off”, turn the ignition switch “on”. NOTE: Before clearing DTC(s), use the scan tool to record “Failure Records” for reference, as data will be lost when the “Clear Info” function is used. 3. Record the DTC “Failure Records”. 4. While the engine is operating, put the transmission in Park. 5. Using the scan tool, apply 70 through 1060 milliampere (mA) while observing “PC Ref. Current” and “PC Act. Current”. Is the “PC Act. Current” reading always within 160 mA?	Go to Diagnostic Aids	Go to Step 3
3	1. Turn the ignition “off”. 2. Disconnect the transmission 4–way connector M–6. 3. Using the J39200 DVOM, measure the resistance between terminals M6–2(B) and M6–4(C). Is the resistance within 3–7 ohms?	Go to Step 7	Go to Step 4
4	1. Remove the transmission oil pan. Refer to Solenoid (Adapter Case Valve Body) in Automatic Transmission (4L30–E) section. 2. Disconnect the internal wiring harness at the PCS. 3. Measure the resistance of the PCS. Is the resistance within 3–7 ohms?	Go to Step 6	Go to Step 5
5	Replace the PCS. Is the replacement complete?	Go to Step 10	—
6	Repair the internal wiring harness for an open. Is the repair complete?	Go to Step 10	—
7	Inspect/repair circuits F–47, M6–2(B), F–43, and M6–4(C). Was a problem found?	Go to Step 10	Go to Step 8
8	Inspect/repair circuits F–47, M6–2(B), F–43, and M6–4(C) for a short to ground or poor connections. Was a problem found?	Go to Step 10	Go to Step 9
9	Replace the PCM. Refer to Powertrain Control Module (PCM) in Automatic Transmission (4L30–E) section. Is the replacement complete?	Go to Step 10	—
10	1. After the repair is complete, use the scan tool to select “DTC”, then “Clear Info” function and ensure the following conditions are met: The PCS duty cycle is not at its electrical high or low limit. 2. Review the scan tool “DTC Info”. Has the last test failed or is the current DTC displayed?	Begin diagnosis again Go to Step 1	Repair verified Exit DTC table

DTC P0751 Shift Solenoid A Performance (Stuck OFF)

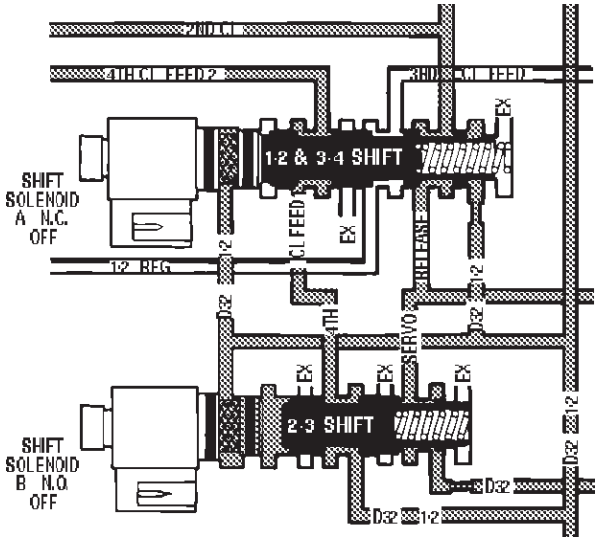

D07RT011

Circuit Description

The shift solenoid A is used to control fluid flow acting on the 1–2 and 3–4 shift valves. The solenoid is a normally close exhaust valve that is used with the shift solenoid B to allow four different shifting combinations.
The DTC detects when there is only a 1–1–4–4 shift pattern depending on the state of the mechanical failure instead of a 1–2–3–4 shift pattern. This is a type “B” DTC.

Conditions For Setting The DTC

- No ETC DTCs.
- No OSS DTCs P0722 or P0723.
- No TCC solenoid DTC P0742, P1860, P1870.
- No shift solenoid A DTC P0753.
- No shift solenoid B DTC P0758.
- Gear range is D4.
- Output speed is greater than 375 rpm.
- Transmission temperature is between 20˚ and 130˚C (68˚ and 266˚F).
- No range code P0705, P0706.
- No torque code (to be confirmed).
- Engine run for more 0 seconds and not influed cut-off (to be confirmed).

All the above conditions have been met and the combination of conditions 1, 2 occur two consecutive times.

Condition 1:

- 2nd gear is commanded for ≥ 1 sec
- 40 ≤ Engine Torque ≤ 400 N·m
- Throttle positon ≥ 10%
- 800 ≤ TCC slip ≤ 4000 rpm
- Speed ratio ≥ 0.6
- 2.75 ≤ Modeled Ratio ≤ 3.2 for 1 seconds.

Condition 2:

- 3rd Gear is commanded for ≥ 1 sec.
- 40 ≤ Engine Torque ≤ 400 N·m
- Trottle position ≥ 10%
- –8000 ≤ TCC slip ≤ 8000 rpm
- Speed ratio ≥ 0.45
- 0.62 ≤ Modeled Ratio ≤ 0.92 for 3 seconds

Action Taken When the DTC Sets

- Maximum line pressure.
- For lamp illuminate refer to DTC type definition (type B).
- Turn force motor OFF.

Conditions For Clearing The The MIL/DTC

- The PCM will turn off the MIL and CHECK TRANS Lamp after three consecutive ignition cycles without a failure reported.
- The DTC can be cleared from the PCM history by using a scan tool.
- The DTC will be cleared from history when the vehicle has achieved 40 warmup cycles without a failure reported.
- The PCM will cancel the DTC default actions when the fault no longer exists and the ignition is cycled “off” long enough to power down the PCM.

Diagnostic Aids

- Verify that the transmission meets the specifications in the 4L30–E shift speed chart.
- Other internal transmission failures may allow more than one shift to occur.

Test Description

The numbers below refer to the step numbers on the diagnostic chart:

2. This test checks the function of the range switch (mode switch).
3. This test checks that the scan tool commanded all shifts, all shifts solenoids responded correctly, but all the shifts did not occur.

DTC P0751 Shift Solenoid A Performance (Stuck OFF)

Step	Action	Yes	No
1	Were you sent here from the “Powertrain On–Board Diagnostic (OBD) System Check”?	Go to Step 2	Go to OBD System Check Refer to Driveability and Emissions in Engine section
2	1. Install the scan tool. 2. With the engine “off”, turn the ignition switch “on”. NOTE: Before clearing DTC(s), use the scan tool to record “Freeze Frame” and “Failure Records” for reference, as data will be lost when the “Clear Info” function is used. 3. Record the DTC “Freeze Frame” and “Failure Records”. 4. With the engine operating, apply the brake pedal and select each transmission range DL, D2, D3, D4, N, R, and P. Does each selected transmission range match the “TR Switch” on the scan tool?	Go to Step 3	Go to“Range Switch Logic Table”
3	1. While the engine is operating, raise the drive wheels. 2. With the transmission in D4 range, use the scan tool to command 1st, 2nd and 3rd, and 4th gears while accelerating the vehicle. Was a 1–1–4–4 only shift pattern detected? (Road testing the vehicle may be necessary).	Go to Step 4	Go to Diagnostic Aids
4	Check the shift solenoid/hydraulic circuit for: ● One or both of the shift solenoids for an internal malfunction. ● Contamination or sediment in one or both of the shift solenoids. ● Damaged seals on one or both of the shift solenoids. Refer to Solenoid (Main Case Valve Body) in Automatic Transmission (4L30–E) section. Was a problem found and corrected?	Go to Step 5	Go to Diagnostic Aids
5	1. After the repair is complete, use the scan tool to select “DTC”, then “Clear Info” function and road test the vehicle. 2. Review the scan tool “DTC Info”. Has the last test failed or is the current DTC displayed?	Begin diagnosis again Go to Step 1	Repair verified Exit DTC table

DTC P0752 Shift Solenoid A Performance (Stuck ON)

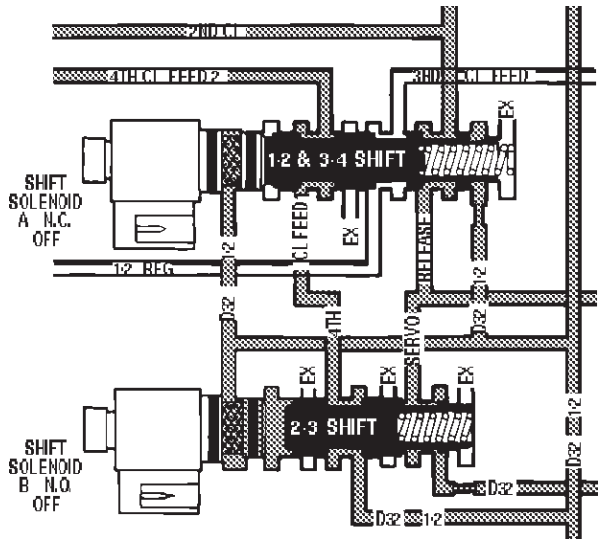

D07RT011

Circuit Description

The shift solenoid A is used to control fluid flow acting on the 1–2 and 3–4 shift valves. The solenoid is a normally close exhaust valve that is used with the shift solenoid B to allow four different shifting combinations.
The DTC detects when there is only a 2–2–3–3 shift pattern depending on the state of the mechanical failure instead of a 1–2–3–4 shift pattern. This is a type “B” DTC.

Conditions For Setting The DTC

- No ETC DTCs.
- No OSS DTCs P0722 or P0723.
- No TCC solenoid DTC P0742, P1860, P1870.
- No shift solenoid A DTC P0753.
- No shift solenoid B DTC P0758.
- Gear range is D4.
- Output speed is greater than 375 rpm.
- Transmission temperature is between 20˚ and 130˚C (68˚ and 266˚F).
- No range code P0705, P0706.
- No torque code (to be confirmed).
- Engine run for more 0 seconds and not influed cut-off (to be confirmed).

All the above conditions have been met and the combination of condition 1, 2 occur two consecutive times.

Condition 1:

- 1st gear is commanded for ≥ 1 sec
- 40 ≤ Engine Torque ≤ 400 N·m
- Throttle positon ≥ 10%
- –8000 ≤ TCC slip ≤ 8000 rpm
- Transmission out speed ≥ 375 rpm
- Speed ratio ≥ 0.3
- 1.5 ≤ Modeled Ratio ≤ 2.4 for 0.687 seconds

Condition 2:

- 4th Gear is commanded for ≥ 1 sec.
- 40 ≤ Engine Torque ≤ 400 N·m
- Trottle position ≥ 10%
- –8000 ≤ TCC slip ≤ 8000 rpm
- Speed ratio ≥ 0.6
- 0.92 ≤ Modeled Ratio ≤ 1.5 for 7 seconds

Action Taken When the DTC Sets

- Maximum line pressure.
- For lamp illuminate refer to DTC type definition (type B).
- Turn force motor OFF.

Conditions For Clearing The The MIL/DTC

- The PCM will turn off the MIL and CHECK TRANS Lamp after three consecutive ignition cycles without a failure reported.
- The DTC can be cleared from the PCM history by using a scan tool.
- The DTC will be cleared from history when the vehicle has achieved 40 warmup cycles without a failure reported.
- The PCM will cancel the DTC default actions when the fault no longer exists and the ignition is cycled “off” long enough to power down the PCM.

Diagnostic Aids

- Verify that the transmission meets the specifications in the 4L30–E shift speed chart.
- Other internal transmission failures may cause more than one shift to occur.

Test Description

The numbers below refer to the step numbers on the diagnostic chart:

2. This test checks the function of the range switch (mode switch).
3. This test checks that the scan tool commanded all shifts, all shifts solenoids responded correctly, but all the shifts did not occur.

DTC P0752 Shift Solenoid A Performance (Stuck ON)

Step	Action	Yes	No
1	Were you sent here from the “Powertrain On–Board Diagnostic (OBD) System Check”?	Go to Step 2	Go to OBD System Check Refer to Driveability and Emissions in Engine section
2	1. Install the scan tool. 2. With the engine “off”, turn the ignition switch “on”. NOTE: Before clearing DTC(s), use the scan tool to record “Freeze Frame” and “Failure Records” for reference, as data will be lost when the “Clear Info” function is used. 3. Record the DTC “Freeze Frame” and “Failure Records”. 4. With the engine operating, apply the brake pedal and select each transmission range DL, D2, D3, D4, N, R, and P. Does each selected transmission range match the “TR Switch” on the scan tool?	Go to Step 3	Go to“Range Switch Logic Table”
3	1. While the engine is operating, raise the drive wheels. 2. With the transmission in D4 range, use the scan tool to command 1st, 2nd and 3rd, and 4th gears while accelerating the vehicle. Was a 2–2–3–3 only shift pattern detected? (Road testing the vehicle may be necessary).	Go to Step 4	Go to Diagnostic Aids
4	Check the shift solenoid/hydraulic circuit for: ● One or both of the shift solenoids for an internal malfunction. ● Contamination or sediment in one or both of the shift solenoids. ● Damaged seals on one or both of the shift solenoids. Refer to Solenoid (Main Case Valve Body) in Automatic Transmission (4L30–E) section. Was a problem found and corrected?	Go to Step 5	Go to Diagnostic Aids
5	1. After the repair is complete, use the scan tool to select “DTC”, then “Clear Info” function and road test the vehicle. 2. Review the scan tool “DTC Info”. Has the last test failed or is the current DTC displayed?	Begin diagnosis again Go to Step 1	Repair verified Exit DTC table

DTC P0753 Shift Solenoid A Electrical

LHD

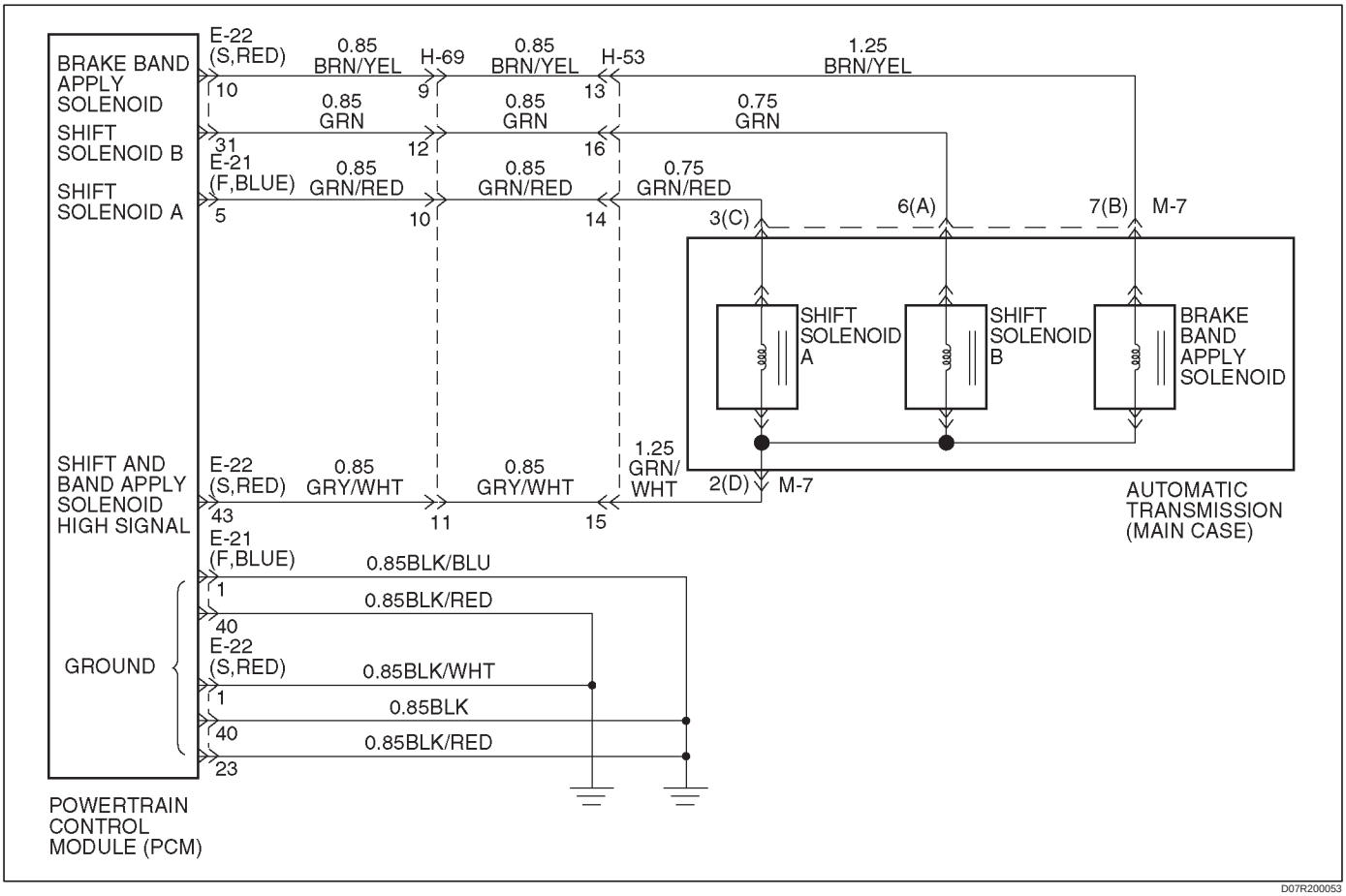

RHD

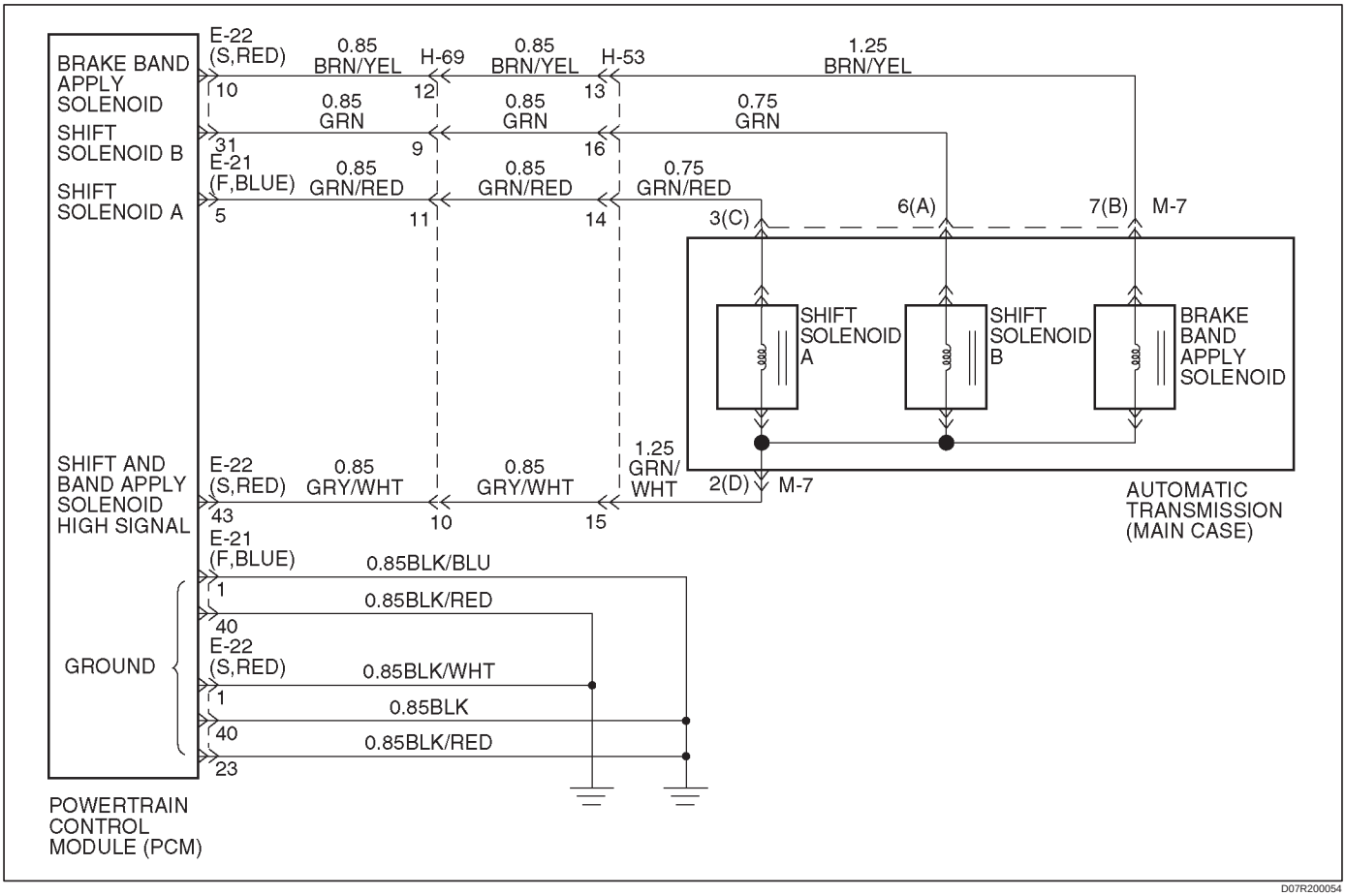

Circuit Description

- The shift solenoid A is a simple on/off solenoid located in the main case valve body. The solenoid is the normally closed type. In second or third gear, the Powertrain Control Module (PCM) energizes the solenoid to open a fluid inlet port. When the port is open, fluid pressure actuates the shift valve.
- The solenoid is activated by current. This current is produced by applying a voltage to one side (the High side) and a ground to the other side (Low side).
- The High Side Driver (HSD) is a circuit of the PCM that acts as a switch between the solenoids and the supply voltage. The High side of the solenoid is permanently supplied with voltage, except in BACKUP MODE or when ignition is off the HSD is turned off.

This DTC detects a continuous open or short to ground in the shift solenoid A circuit or the shift solenoid A. This is a type “B” DTC.

Conditions For Setting The DTC

- Ignition is “on”, Engine “run”.
- Battery voltage is between 10 and 16 volts.
- The PCM commands the solenoid “on” and the voltage remains high (B+) or the PCM commands the solenoid “off” and the voltage remains low (zero volts).
- All conditions met for 0.84 ~ 1.0 seconds.

Action Taken When The DTC Sets

- Maximum line pressure.
- Immediate landing to 4th gear.
- Inhibit TCC engagement.
- For lamp illuminate refer to DTC type definition (type B).

Conditions For Clearing The MIL/DTC

- The PCM will turn off the MIL and CHECK TRANS Lamp after three consecutive ignition cycles without a failure reported.
- The DTC can be cleared from the PCM history by using a scan tool.
- The DTC will be cleared from history when the vehicle has achieved 40 warmup cycles without a failure reported.
- The PCM will cancel the DTC default actions when the fault no longer exists and the ignition is cycled “off” long enough to power down the PCM.

Diagnostic Aids

- Inspect the wiring for poor electrical connection at the PCM and at the transmission 16–way connectors. Look for possible bent, backed out, deformed or damaged terminals. Check for weak terminal tension as well. Also check for a chafed wire that could short to bare metal or other wiring. Inspect for a broken wire inside the insulation.

- When diagnosing for a possible intermittent short or open condition, move the wiring harness while observing test equipment for a change.
- An open ignition feed circuit can cause multiple DTCs to set.
- A shift solenoid B DTC P0758 could also set with a shift solenoid A electrical failure.

Test Description

The numbers below refer to the step numbers on the diagnostic chart:

3. This test checks for power to the shift solenoid A from the ignition through the PCM.
5. This test measures the resistance of the component.
9. This test checks the function of the shift solenoid A and the transmission internal wiring harness.

Shift Solenoid Status Chart

Gear	Shift solenoid A	Shift solenoid B
1st	OFF	ON
2nd	ON	ON
3rd	ON	OFF
4th	OFF	OFF

DTC P0753 Shift Solenoid A Electrical

Step	Action	Yes	No
1	Were you sent here from the “Powertrain On–Board Diagnostic (OBD) System Check”?	Go to Step 2	Go to OBD System Check Refer to Driveability and Emissions in Engine section
2	1. Install the scan tool. 2. With the engine “on”, turn the ignition switch “on”. NOTE: Before clearing DTC(s), use the scan tool to record “Freeze Frame” and “Failure Records” for reference, as data will be lost when the “Clear Info” function is used. 3. Record the DTC “Freeze Frame” and “Failure Records”. Were DTCs P0753, P0758, P1860 set?	Go to Step 3	Go to Diagnostic Aids
3	1. Turn the ignition “on”. 2. Using the J39200 DVOM, measure the voltage between PCM connector terminals S–43 and F–1 (GND). Is the voltage within 10–12 volts?	Go to Step 4	Go to Step 5
4	1. Turn the ignition “off”. 2. Disconnect the F (BLUE) and S (RED) PCM connector. 3. Turn the ignition “on”. 4. Using the J39200 DVOM, measure the voltage between PCM connector terminals F–5 and ground. Is the voltage within 10 – 12 volts?	Go to Step 11	Go to Step 5
5	1. Turn the ignition “off”. 2. Disconnect the F (BLUE) and S (RED) PCM connector. 3. Using the J39200 DVOM, measure the resistance between PCM connector terminals S–43 and F–5. Is the resistance within 18 – 20 ohms?	Go to Step 6	Go to Step 7
6	1. Disconnect the F (BLUE) and S (RED) PCM connectors. 2. Using the J39200 DVOM, check a continuity between PCM terminals S–43 and ground. Is there a continuity?	Go to Step 12	Go to Step 8
7	1. Disconnect the 16–way harness connector H–69. 2. Using the J39200 DVOM, measure the resistance between terminals H69–11 and H69–10 (LHD), or H69–10 and H69–11 (RHD). Is the resistance within 18–20 ohms?	Go to Step 14	Go to Step 9

DTC P0753 Shift Solenoid A Electrical (Cont'd)

Step	Action	Yes	No
8	Using the J39200 DVOM, check a continuity between S (RED) PCM terminal 43 and ground. Is there a continuity?	Go to Step 13	Go to Step 10
9	1. Disconnect the transmission main case 7 pin connector M–7. 2. Using the J39200 DVOM, measure the resistance between terminals M7–2(D) and M7–3(C). Is the resistance within 18–20 ohms?	Go to Step 15	Go to Step 16
10	Check every connection at the PCM connector. Was a problem found?	Go to Step 18	Go to Step 17
11	The wiring harness between PCM connector terminals F–5 and transmission harness terminal M7–3(C) is shorted to voltage. Was a problem found and corrected?	Go to Step 19	—
12	The wiring harness between PCM connector terminal F–5 and transmission harness terminal M7–3(C) is shorted to ground. Was a problem found and corrected?	Go to Step 19	—
13	The wiring harness between PCM connector terminals S–43 and transmission harness terminal M7–2(D) is shorted to ground. Was a problem found and corrected?	Go to Step 19	—
14	The wiring harness between PCM connector F or S and transmission 16–way connector H–69 is open or poor connection. Was a problem found and corrected?	Go to Step 19	—
15	The wiring harness between transmission 16–way connector H–69 and transmission main case connector M–7 is open or has a poor connection. Was a problem found and corrected?	Go to Step 19	—
16	The shift solenoid A is faulty. Replace the shift solenoid A. Refer to Solenoid (Main Case Valve Body) in Automatic Transmission (4L30–E) section. Is the replacement complete?	Go to Step 19	—
17	The PCM may be faulty. Replace the PCM. Refer to Powertrain Control Module (PCM) in Automatic Transmission (4L30–E) section. Is the replacement complete?	Go to Step 19	—
18	Repair the PCM connector connection. Was a problem found and corrected?	Go to Step 19	—
19	1. After the repair is complete, use the scan tool to select "DTC", then "Clear Info" function and operate the vehicle under the following conditions: ● The shift solenoid A is commanded "on" and voltage drops to zero. ● The shift solenoid A is commanded "off" and voltage increases to B+. 2. Review the scan tool "DTC Info". Has the last test failed or is the current DTC displayed?	Begin diagnosis again Go to Step 1	Repair verified Exit DTC table

DTC P0756 Shift Solenoid B Performance (Stuck OFF)

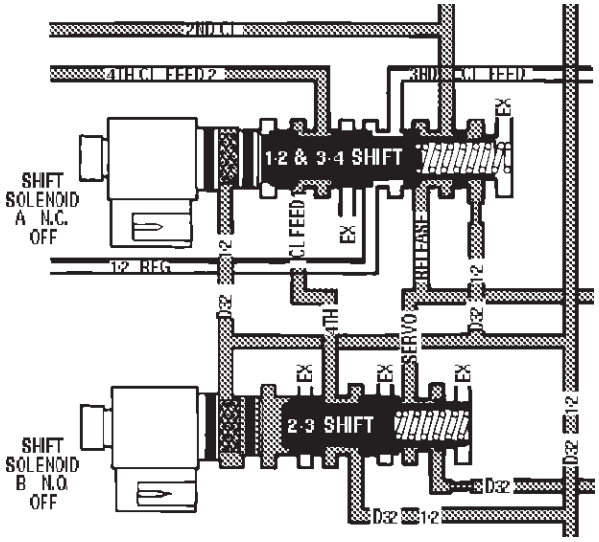

D07RT011

Circuit Description

The shift solenoid B is used to control fluid flow acting on the 2–3 shift valves. The solenoid is a normally open exhaust valve that is used with the shift solenoid A to allow four different shift combinations.

This DTC detects when there is only a 4–3–3–4 shift pattern depending on the state of the mechanical failure instead of a 1–2–3–4 shift pattren. This is a type “B” DTC.

Conditions For Setting The DTC

- No ETC DTCs.
- No OSS DTCs P0722 or P0723.
- No TCC solenoid DTC P0742, P1860., P1870.
- No shift solenoid A DTC P0753.
- No shift solenoid B DTC P0758.
- Gear range is D4.
- Output speed is greater than 375 rpm.
- Transmission fluid temperature is between 20˚ and 130˚C (68˚ and 266˚F).
- No range code P0705, P0706.
- No torque code (to be confirmed).
- Engine run for more 0 seconds and influed cut-off (to be confirmed).

All the above conditions have been met and the combination of condition 1, 2 occur two consecutive times.

Condition 1:

- 1st gear is commanded for ≥ 1 sec
- 40 ≤ Engine Torque ≤ 400 N·m
- Throttle position ≥ 10%
- –2300 ≤ TCC slip ≤ 200 rpm
- Transmission out speed ≥ 400 rpm
- Speed ratio ≥ 0.3
- 0.60 ≤ Modeled Ratio ≤ 1.49 for 1 seconds

Condition 2:

- 2nd Gear is commanded for ≥ 1 sec.
- 40 ≤ Engine Torque ≤ 400 N·m
- Trottle position ≥ 10%
- –8000 ≤ TCC slip ≤ 8000 rpm
- Speed ratio ≥ 0.6
- 0.92 ≤ Modeled Ratio ≤ 1.5 for 0.687 seconds

Action Taken When the DTC Sets

- Maximum line pressure.
- For lamp illuminate refer to DTC type definition (type B).
- Turn force motor OFF.

Conditions For Clearing The MIL/DTC

- The PCM will turn off the MIL and CHECK TRANS Lamp after three consecutive ignition cycles without a failure reported.
- The DTC can be cleared from the PCM history by using a scan tool.
- The DTC will be cleared from history when the vehicle has achieved 40 warmup cycles without a failure reported.
- The PCM will cancel the DTC default actions when the fault no longer exist and the ignition is cycled “off” long enough to power down the PCM.

Diagnostic Aids

- Verify that the transmission meets the specifications in the 4L30-E shift speed chart.
- Other internal transmission failures may allow more than one shift to occur.

Test Description

The numbers below refer to the step numbers on the diagnostic chart:

2. This test checks the function of the range switch (mode switch).
3. This test checks for selected gear ratio vs. a ratio not obtainable under normal driving conditions.

DTC P0756 Shift Solenoid B Performance (Stuck OFF)

Step	Action	Yes	No
1	Were you sent here from the “Powertrain On–Board Diagnostic (OBD) System Check”?	Go to Step 2	Go to OBD System Check Refer to Driveability and Emissions in Engine section
2	1. Install the scan tool. 2. With the engine “off”, turn the ignition switch “on”. NOTE: Before clearing DTC(s), use the scan tool to record “Freeze Frame” and “Failure Records” for reference, as data will be lost when the “Clear Info” function is used. 3. Record the DTC “Freeze Frame” and “Failure Records”. 4. With the engine operating, apply the brake pedal and select each transmission range DL, D2, D3, D4, N, R, and P. Does each selected transmission range match the “TR Switch” on the scan tool?	Go to Step 3	Go to “Range Switch Logic Table”
3	1. While the engine is operating, raise the drive wheels. 2. With the transmission in D4 range, use the scan tool to command 1st, 2nd, and 3rd, and 4th gears while accelerating the vehicle. Was a 4–3–3–4 shift pattern detected? (Road testing the vehicle may be necessary.)	Go to Step 4	Go to Diagnostic Aids
4	Check the shift solenoid/hydraulic circuit for: ● One or both of the shift solenoids for an internal malfunction. ● Contamination or sediment in one or both of the shift solenoids. ● Damaged seals on the one or both of the shift solenoids. Refer to Solenoid (Main Case Valve Body) in Automatic Transmission (4L30–E) section. Was a problem found and corrected?	Go to Step 5	Go to Diagnostic Aids
5	1. After the repair is complete, use the scan tool to select “DTC”, then “Clear Info” function and road test the vehicle. 2. Review the scan tool “DTC Info”. Has the last test failed or is the current DTC displayed?	Begin diagnosis again Go to Step 1	Repair verified Exit DTC table

DTC P0757 Shift Solenoid B Performance (Stuck ON)

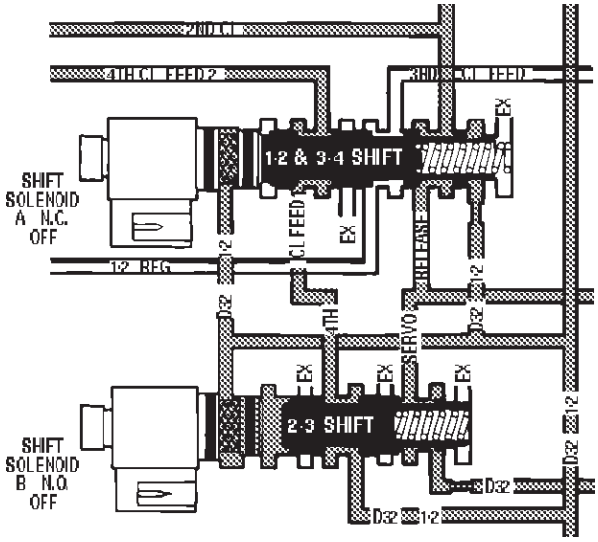

D07RT011

Circuit Description

The shift solenoid B is used to control fluid flow acting on the 2–3 shift valves. The solenoid is a normally open exhaust valve that is used with the shift solenoid A to allow four different shift combinations.

This DTC detects when there is only a 1–2–2–1 shift pattern depending on the state of the mechanical failure instead of a 1–2–3–4 shift pattern. This is a type “B” DTC.

Conditions For Setting The DTC

- No ETC DTCs.
- No OSS DTCs P0722 or P0723.
- No TCC solenoid DTC P0742, P1860, P1870.
- No shift solenoid A DTC P0753.
- No shift solenoid B DTC P0758.
- Gear range is D4.
- Output speed is greater than 375 rpm.
- Transmission fluid temperature is between 20˚ and 130˚C (68˚ and 266˚F).
- No range code P0705, P0706.
- No torque code (to be confirmed).
- Engine run for more 0 seconds and not influed cut-off (to be confirmed).

All the above conditions have been met and the combination of condition 1,2 occur two consecutive times.

Condition 1:

- 3rd gear is commanded for ≥ 1 sec
- 40 ≤ Engine Torque ≤ 400 N·m
- Throttle positon ≥ 10%
- –8000 ≤ TCC slip ≤ 8000 rpm
- Transmission out speed ≥ 375 rpm
- Speed ratio ≥ 0.6
- 1.44 ≤ Modeled Ratio ≤ 2.4 for 4 seconds

Condition 2:

- 4th Gear is commanded for ≥ 1 sec.
- 15 ≤ Engine Torque ≤ 400 N·m
- Trottle position ≥ 10%
- –8000 ≤ TCC slip ≤ 8000 rpm
- Speed ratio ≥ 0.6
- 2.75 ≤ Modeled Ratio ≤ 3.2 for 2 seconds

Action Taken When the DTC Sets

- Maximum line pressure.
- For lamp illuminate refer to DTC type definition (type B).
- Turn force motor OFF.

Conditions For Clearing The MIL/DTC

- The PCM will turn off the MIL and CHECK TRANS Lamp after three consecutive ignition cycles without a failure reported.
- The DTC can be cleared from the PCM history by using a scan tool.
- The DTC will be cleared from history when the vehicle has achieved 40 warmup cycles without a failure reported.
- The PCM will cancel the DTC default actions when the fault no longer exists and the ignition is cycled “off” long enough to power down the PCM.

Diagnostic Aids

- Verify that the transmission meets the specifications in the 4L30-E shift speed chart.
- Other internal transmission failures may cause more than one shift to occur.

Test Description

The numbers below refer to the step numbers on the diagnostic chart:

2. This test checks the function of the range switch (mode switch).
3. This test checks for selected gear ratio vs. a ratio not obtainable under normal driving conditions.

DTC P0757 Shift Solenoid B Performance (Stuck ON)

Step	Action	Yes	No
1	Were you sent here from the “Powertrain On–Board Diagnostic (OBD) System Check”?	Go to Step 2	Go to OBD System Check Refer to Driveability and Emissions in Engine section
2	1. Install the scan tool. 2. With the engine “off”, turn the ignition switch “on”. NOTE: Before clearing DTC(s), use the scan tool to record “Freeze Frame” and “Failure Records” for reference, as data will be lost when the “Clear Info” function is used. 3. Record the DTC “Freeze Frame” and “Failure Records”. 4. With the engine operating, apply the brake pedal and select each transmission range DL, D2, D3, D4, N, R, and P. Does each selected transmission range match the “TR Switch” on the scan tool?	Go to Step 3	Go to “Range Switch Logic Table”
3	1. While the engine is operating, raise the drive wheels. 2. With the transmission in D4 range, use the scan tool to command 1st, 2nd, and 3rd, and 4th gears while accelerating the vehicle. Was a 4–3–3–4 shift pattern detected? (Road testing the vehicle may be necessary.)	Go to Step 4	Go to Diagnostic Aids
4	Check the shift solenoid/hydraulic circuit for: ● One or both of the shift solenoids for an internal malfunction. ● Contamination or sediment in one or both of the shift solenoids. ● Damaged seals on the one or both of the shift solenoids. Refer to Solenoid (Main Case Valve Body) in Automatic Transmission (4L30–E) section. Was a problem found and corrected?	Go to Step 5	Go to Diagnostic Aids
5	1. After the repair is complete, use the scan tool to select “DTC”, then “Clear Info” function and road test the vehicle. 2. Review the scan tool “DTC Info”. Has the last test failed or is the current DTC displayed?	Begin diagnosis again Go to Step 1	Repair verified Exit DTC table

DTC P0758 Shift Solenoid B Electrical

LHD

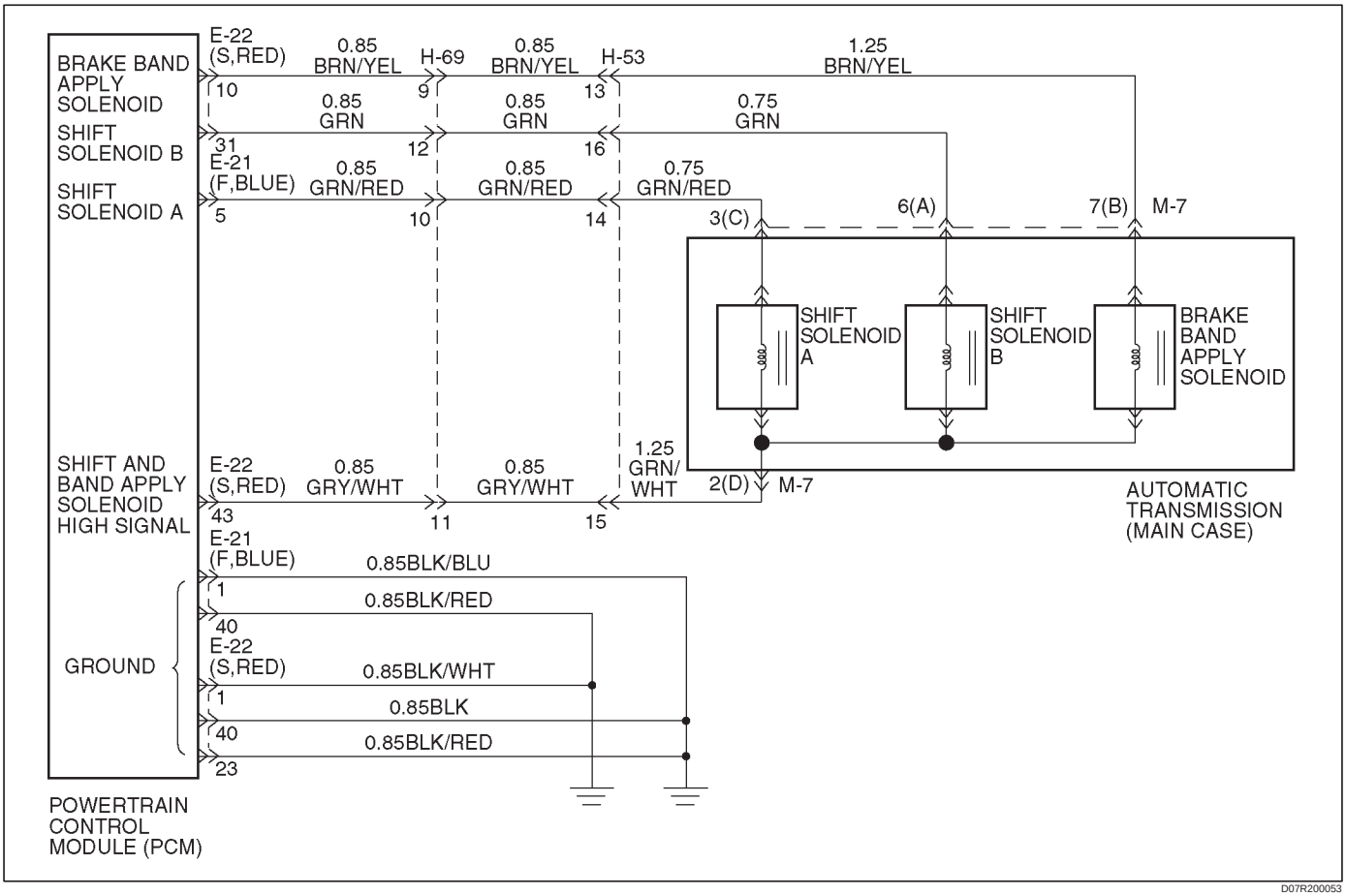

RHD

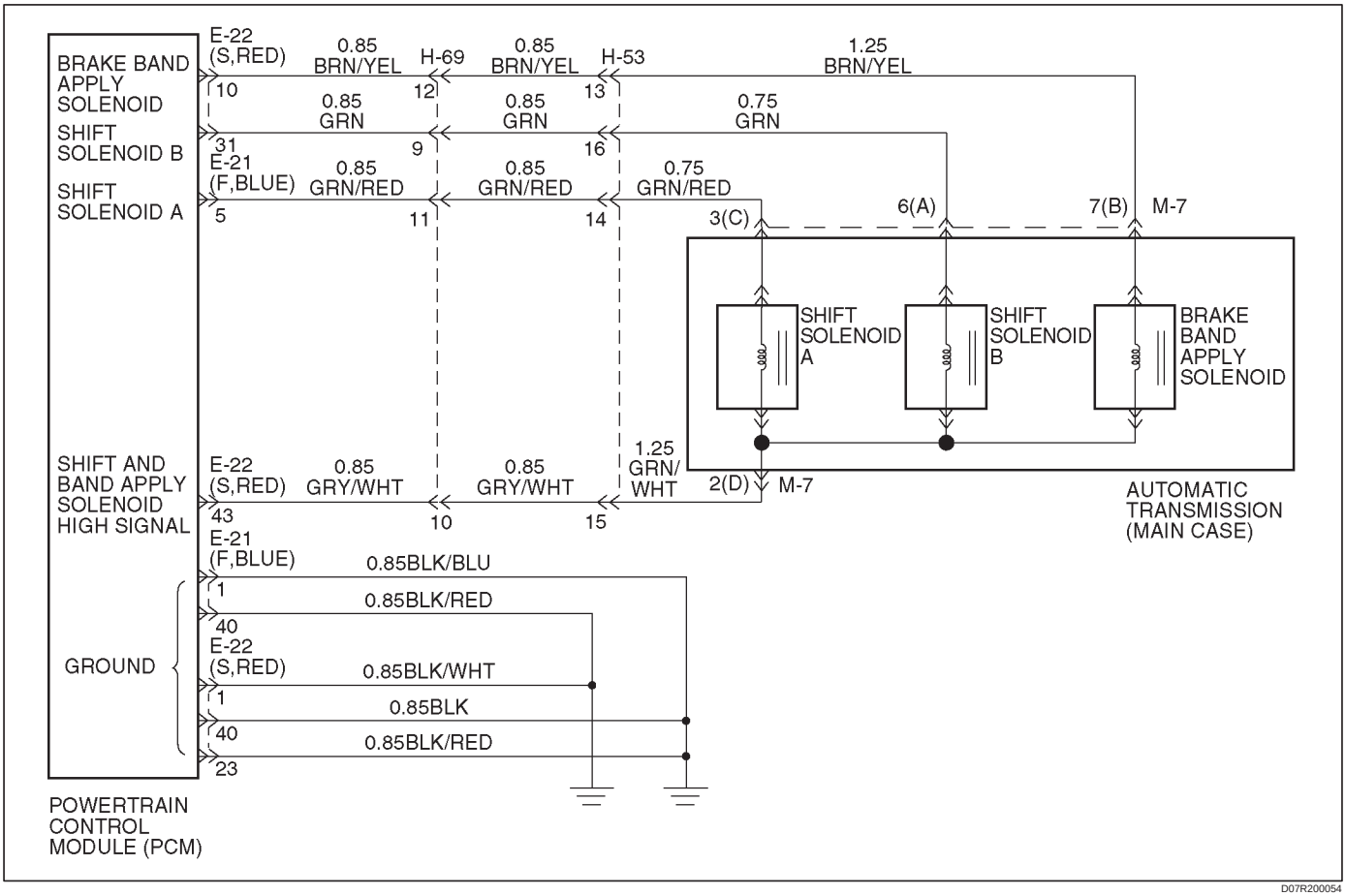

Circuit Description

- The shift solenoid B is a simple on/off solenoid located in the main case valve body. It is normally open. When the port is open, fluid pressure actuates the shift valve. In first or second gear, the Powertrain Control Module (PCM) energizes the solenoid to close a fluid inlet port.
- The solenoid is activated by current. This current is produced by applying a voltage to one side (the High side) and a ground to the other side (Low side).
- The High Side Driver (HSD) is a circuit of the PCM that acts as a switch between the solenoids and the supply voltage. The High side of the solenoid is permanently supplied with voltage. In BACKUP MODE or when the ignition is off, the HSD is turned off.

This DTC detects a continuous open or short to ground in the shift solenoid B circuit or shift solenoid B. This is a type “B” DTC.

Conditions For Setting The DTC

- Ignition is “on”, Engine “run”.
- Battery voltage is between 10 and 16 volts.
- The PCM commands the solenoid “on” and the voltage remains high (B+)or the PCM commands the solenoid “off” and the voltage remains low (zero volts).
- All conditions met for 0.84 ~ 1.0 seconds.

Action Taken When The DTC Sets

- Fixed to 4th gear.
- Maximum line pressure.
- Inhibit TCC engagement.
- The PCM will illuminate the Malfunction Indicator Lamp (MIL) and CHECK TRANS Lamp.

Conditions For Clearing The MIL/DTC

- The PCM will turn off the MIL and CHECK TRANS Lamp after three consecutive ignition cycles without a failure reported.
- The DTC can be cleared from the PCM history by using a scan tool.
- The DTC will be cleared from history when the vehicle has achieved 40 warmup cycles without a failure reported.
- The PCM will cancel the DTC default actions when the fault no longer exists and the ignition is cycled “off” long enough to power down the PCM.

Diagnostic Aids

- Inspect the wiring for poor electrical connections at the PCM and at the transmission 16–way connector. Look for possible bent, backed out, deformed or damaged terminals. Check for weak terminal tension as well. Also check for a chafed wire that could short to bare metal or other wiring. Inspect for a broken wire inside the insulation.

- When diagnosing for a possible intermittent short or open condition, move the wiring harness while observing test equipment for a change.

Test Description

The numbers below refer to the step numbers on the diagnostic chart:

5. This test measures the resistance of the component.
7. This test checks the function of the shift solenoid B and the transmission internal wiring harness.
11. This test checks for power to the shift solenoid B from the ignition through the PCM.

Shift Solenoid Status Chart

Gear	Shift solenoid A	Shift solenoid B
1st	OFF	ON
2nd	ON	ON
3rd	ON	OFF
4th	OFF	OFF

DTC P0758 Shift Solenoid B Electrical

Step	Action	Yes	No
1	Were you sent here from the “Powertrain On–Board Diagnostic (OBD) System Check”?	Go to Step 2	Go to OBD System Check Refer to Driveability and Emissions in Engine section
2	1. Install the scan tool. 2. With the engine “on”, turn the ignition switch “on”. NOTE: Before clearing DTC(s), use the scan tool to record “Freeze Frame” and “Failure Records” for reference, as data will be lost when the “Clear Info” function is used. 3. Record the DTC “Freeze Frame” and “Failure Records”. Were DTCs P0753, P0758, P1860 set?	Go to Step 4	Go to Step 3
3	1. The engine “on”. 2. Apply brake pedal and select transmission range “D”. 3. Press and hold down the winter switch and select transmission mode “winter”. Does the scan tool display DTC P0758 at 3rd gear?	Go to Step 8	Go to Diagnostic Aids
4	1. Turn the ignition “off”. 2. Disconnect the F (BLUE) and S (RED) PCM connectors. 3. Turn the ignition “on”. 4. Using the J39200 DVOM, measure the voltage between PCM connector terminals S–31 and F–1. Is the voltage within 10 – 12 volts?	Go to Step 15	Go to Step 5
5	1. Turn the ignition “off”. 2. Using the J39200 DVOM, measure the resistance between PCM connector terminals S–43 and S–31. Is the resistance within 18 – 20 ohms?	Go to Step 16	Go to Step 6
6	1. Disconnect the transmission 16–way connector H–69. 2. Using the J39200 DVOM, measure the resistance between terminals H69–11 and H69–12 (LHD), or H69–10 and H69–9 (RHD). Is the resistance within 18 – 20 ohms?	Go to Step 17	Go to Step 7
7	1. Disconnect the transmission main case connector M–7. 2. Using the J39200 DVOM, measure the resistance between terminals M7–2(D) and M7–6(A). Is the resistance within 18 – 20 ohms?	Go to Step 18	Go to Step 19

DTC P0758 Shift Solenoid B Electrical (Cont'd)

Step	Action	Yes	No
8	1. Turn the ignition "off". 2. Disconnect the F (BLUE) and S (RED) PCM connectors. 3. Using the J39200 DVOM, measure the resistance between PCM connector terminals S–43 and S–31. Is the resistance within 18 – 20 ohms?	Go to Step 9	Go to Step 10
9	Using the J39200 DVOM, check a continuity between PCM connector terminal S–31 and ground. Is there a continuity?	Go to Step 20	Go to Step 11
10	1. Disconnect the transmission 16–way connector H–69. 2. Using the J39200 DVOM, measure the resistance between terminals H69–11 and H69–12 (LHD), or H69–10 and H69–9 (RHD). Is the resistance within 18–20 ohms?	Go to Step 21	Go to Step 12
11	Using the J39200 DVOM, check a continuity between PCM connector terminal S–43 and ground. Is there a continuity?	Go to Step 22	Go to Step 13
12	1. Disconnect the transmission main case connector M–7. 2. Using the J39200 DVOM, measure the resistance between terminals M7–2(D) and M7–6(A). Is the resistance within 18 – 20 ohms?	Go to Step 23	Go to Step 24
13	Check every connection of the PCM and transmission 16–way connector H–69. Was a problem found and corrected?	Go to Step 26	Go to Step 14
14	1. Connect the F (BLUE) and S (RED) PCM connectors to the PCM. 2. Turn the ignition "on", the engine "on". 3. Repeat Step 3. Does the scan tool display DTC P0758 at 3rd gear?	Go to Step 25	Go to Diagnostic Aids
15	The wiring harness between PCM connector terminal S–31 and transmission main case terminal M7–6(A) is shorted to voltage. Was a problem found and corrected?	Go to Step 26	—
16	The PCM internal terminal S–31 is shorted to voltage. Replace the PCM. Refer to Powertrain Control Module (PCM) in Automatic Transmission (4L30–E) section. Is the replacement complete?	Go to Step 26	—
17	The wiring harness between PCM connector and transmission 16–way connector is shorted. Was a problem found and corrected?	Go to Step 26	—
18	The wiring harness between transmission 16–way connector and transmission main case connector is shorted. Was a problem found and corrected?	Go to Step 26	—
19	The shift solenoid B is faulty, or the internal wiring harness from the shift solenoid B is shorted. Was a problem found and corrected?	Go to Step 26	—

DTC P0758 Shift Solenoid B Electrical (Cont'd)

Step	Action	Yes	No
20	The wiring harness between PCM connector terminal S–31 and transmission main case connector terminal M7–6(A) is shorted to ground. Was a problem found and corrected?	Go to Step 26	—
21	The wiring harness between PCM connector terminal S–31 and transmission 16–way connector terminal H69–12 (LHD) or H69–9 (RHD), or between PCM connector terminal S–43 and 16–way connector terminal H69–11 (LHD) or H69–10 (RHD) is open. Was a problem found and corrected?	Go to Step 26	—
22	The wiring harness between PCM connector terminal S–43 and transmission main case connector terminal M7–2(D) is shorted to ground. Was a problem found and corrected?	Go to Step 26	—
23	The wiring harness between transmission 16–way connector terminal H69–12 (LHD) or H69–9 (RHD), and transmission main case connector terminal M7–6(A), or between H69–11 (LHD) or H69–10 (RHD) and M7–2(D) is open. Was a problem found and corrected?	Go to Step 26	—
24	The internal wiring harness from the shift solenoid B is open, or the shift solenoid B is faulty. Was a problem found and corrected?	Go to Step 26	—
25	Replace the PCM. Is the replacement complete?	Go to Step 26	—
26	1. After the repair is complete, use the scan tool to select "DTC", then "Clear Info" function and operate the vehicle under the following conditions: ● The shift solenoid B is commanded "on" and voltage drop to zero. ● The shift solenoid B is commanded "off" and voltage increases to B+. 2. Review the scan tool "DTC Info". Has the last test failed or is the current DTC displayed?	Begin diagnosis again Go to Step 1	Repair verified Exit DTC table

DTC P1850 Brake Band Apply Solenoid Malfunction

LHD

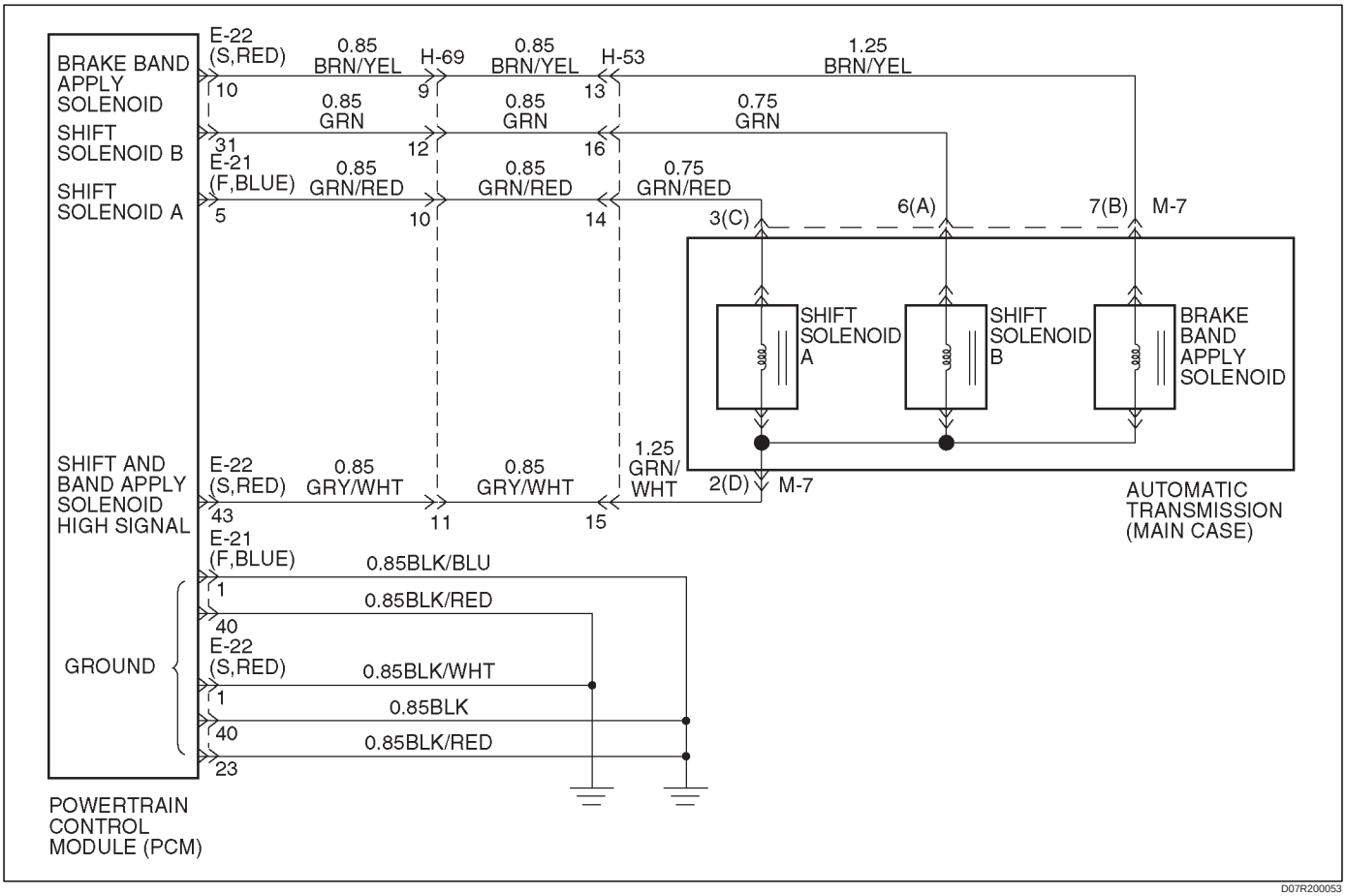

RHD

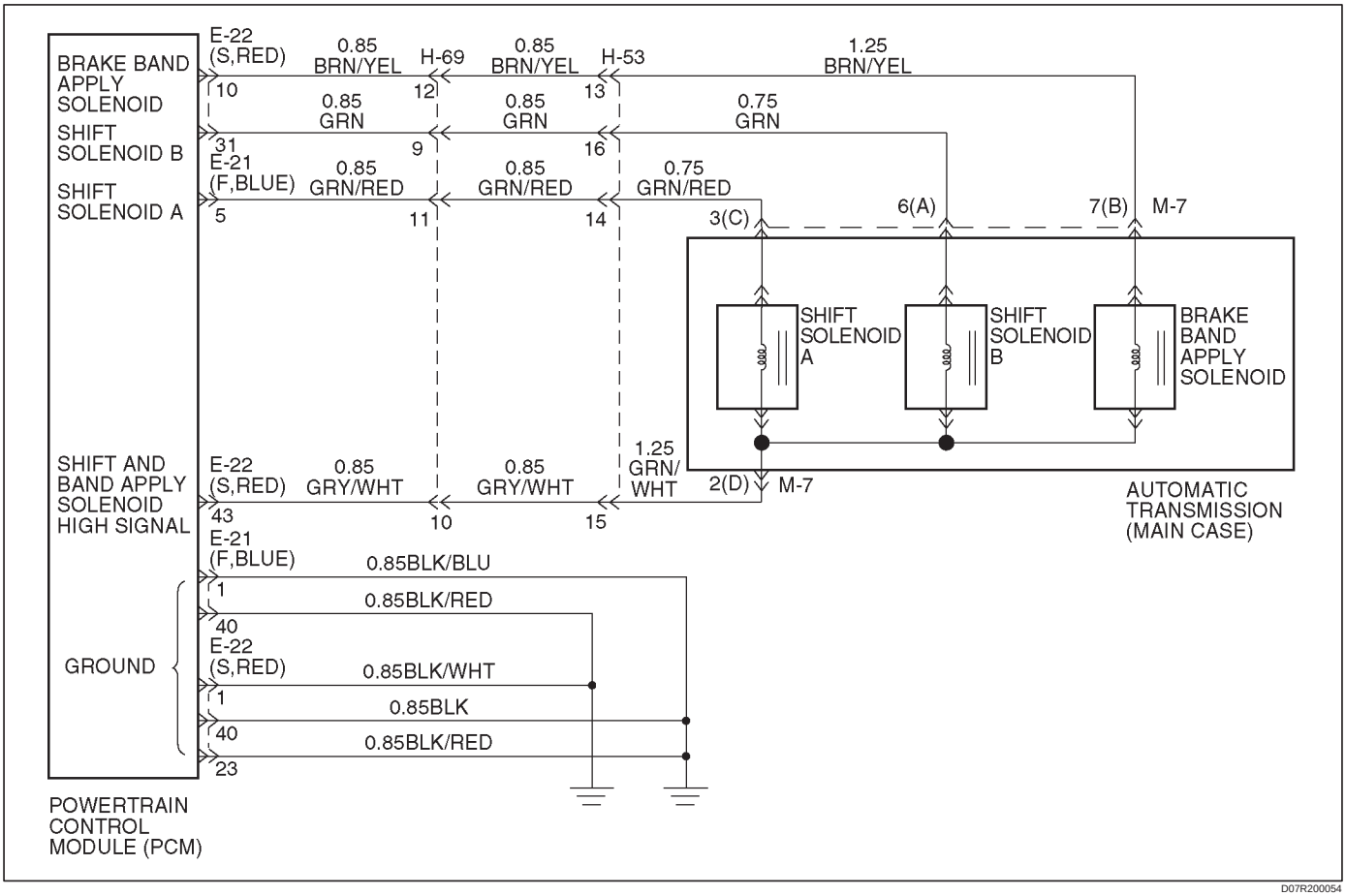

Circuit Description

- The brake band apply solenoid is a normally open solenoid which controls the flow of fluid for brake band application. The Powertrain Control Module (PCM) uses Pulse Width Modulation (PWM) and changes the duty cycle to control the solenoid. The PCM turns the solenoid on (energized) and off (deenergized) at a constant frequency. The length of time the solenoid is energized during each on/off cycle is called the pulse width. By varying or “modulating” the pulse width, the solenoid output pressure is changed. Since the solenoid is normally open, increasing the pulse width increases the duty cycle and decreases the output pressure. PWM control provides smooth band application without an accumulator. The band is only applied in first and second gears.
- In the event of an electrical failure (open), the solenoid regulates at the maximum oil flow (0% duty cycle).
- The solenoid is activated by current. This current is produced by applying a voltage to one side (the High side) and a ground to the other side (Low side).
- The High Side Driver (HSD) is a circuit of the PCM that acts as a switch between the solenoids and the supply voltage. The High side of the solenoid is permanently supplied with voltage. When the ignition is off, the HSD is turned off.

This DTC detects a continuous open or short to ground in the brake band apply solenoid circuit or the brake band apply solenoid. This is a type “D” DTC.

Conditions For Setting The DTC

- Battery voltage is between 10 and 16 volts.
- Ignition is “on”, Engine “run”.
- The PCM commands the solenoid “on” and the voltage remains high (B+) or the PCM commands the solenoid “off” and the voltage remains low (zero volts).
- All conditions met in 1.34 ~ 1.56 seconds.

Action Taken When The DTC Sets

- Inhibit brake band apply solenoid.
- The PCM will not illuminate the Malfunction Indicator Lamp (MIL).

Conditions For Clearing The DTC

- The DTC can be cleared from the PCM history by using a scan tool.
- The DTC will be cleared from history when the vehicle has achieved 40 warmup cycles without a failure reported.
- The PCM will cancel the DTC default actions when the fault no longer exists and the ignition is cycled “off” long enough to power down the PCM.

Diagnostic Aids

- Inspect the wiring for poor electrical connection at the PCM and at the transmission 16–way connectors. Look for possible bent, backed out, deformed or damaged terminals. Check for weak terminal tension as well. Also check for a chafed wire that could short to bare metal or other wiring. Inspect for a broken wire inside the insulation.
- When diagnosing for a possible intermittent short or open condition, move the wiring harness while observing test equipment for a change.

Test Description

The numbers below refer to the step numbers on the diagnostic chart:

3. This test checks for power to the brake band apply solenoid from the ignition through the PCM.
4. This test checks the resistance of the transmission internal wiring harness and brake band apply solenoid.
5. This test checks the ability of the PCM and wiring to control the ground circuit.

DTC P1850 Brake Band Apply Solenoid Malfunction

Step	Action	Yes	No
1	Were you sent here from the “Powertrain On–Board Diagnostic (OBD) System Check”?	Go to Step 2	Go to OBD System Check Refer to Driveability and Emissions in Engine section
2	1. Install the scan tool. 2. With the engine “on”, turn the ignition switch “on”. NOTE: Before clearing DTC(s), use the scan tool to record “Freeze Frame” and “Failure Records” for reference, as data will be lost when the “Clear Info” function is used. 3. Record the DTC “Freeze Frame” and “Failure Records”. Were DTCs P0753, P0758 set?	Go to Step 3	Go to Step 4
3	Using the J39200 DVOM, back probe between PCM connector terminals S–43 and F–1. Is the voltage between 10 to 12 volts?	Go to Step 5	Go to Step 6
4	1. Turn the ignition “off”. 2. Disconnect the F (BLUE) and S (RED) PCM connectors. 3. Using the J39200 DVOM, measure the resistance between PCM connector terminals S–43 and S–10. Is the resistance within 10–12 ohms?	Go to Step 12	Go to Step 13
5	Using the J39200 DVOM, back probe between PCM connector terminals S–10 and F–1. Is the voltage between 10 to 12 volts?	Go to Step 26	Go to Step 4
6	1. Turn the ignition “off”. 2. Disconnect the F (BLUE) and S (RED) PCM connectors. 3. Using the J39200 DVOM, check continuity between PCM terminal S–43 and ground. Is there a continuity?	Go to Step 7	Go to Step 9
7	1. Disconnect the transmission 16–way connector H–69. 2. Using the J39200 DVOM, check continuity between connector H69–9 (LHD) or H69–12 (RHD) and ground. Is there a continuity?	Go to Step 8	Go to Step 17
8	1. Disconnect the transmission main case connector M–7. 2. Using the J39200 DVOM, check continuity between the terminal M7–7(B) and ground. Is there a continuity?	Go to Step 18	Go to Step 19

DTC P1850 Brake Band Apply Solenoid Malfunction (Cont'd)

Step	Action	Yes	No
9	1. Disconnect the F (BLUE) and S (RED) PCM Connector. 2. Using the J39200 DVOM, measure the resistance between PCM connector terminals S–43 and S–10. Is the resistance within 10–12 ohms?	Go to Step 26	Go to Step 10
10	1. Disconnect the transmission 16–way connector H–69. 2. Using the J39200 DVOM, measure the resistance between terminal H69–11 and H69–9 (LHD), or H69–10 and H69–12 (RHD). Is the resistance within 10–12 ohms?	Go to Step 17	Go to Step 11
11	1. Disconnect the transmission main case connector M–7. 2. Using the J39200 DVOM, measure the resistance between terminals M7–2(D) and M7–7(B). Is the resistance within 10–12 ohms?	Go to Step 20	Go to Step 21
12	Using the J39200 DVOM, check continuity between PCM terminal S–10 and ground. Is there a continuity?	Go to Step 14	Go to Step 26
13	1. Disconnect the transmission 16–way connector H–69. 2. Using the J39200 DVOM, measure the resistance between terminal H69–11 and H69–9 (LHD), or H69–10 and H69–12 (RHD). Is the resistance within 10–12 ohms?	Go to Step 24	Go to Step 15
14	1. Disconnect the transmission 16–way connector H–69. 2. Using the J39200 DVOM, check continuity between terminal H69–9 (LHD) or H69–12 (RHD) and ground. Is there a continuity?	Go to Step 16	Go to Step 22
15	1. Disconnect the transmission main case connector M–7. 2. Using the J39200 DVOM, measure the resistance between terminals M7–2(D) and M7–7(B). Is the resistance within 10–12 ohms?	Go to Step 25	Go to Step 21
16	1. Disconnect the transmission main case connector M–7. 2. Using the J39200 DVOM, check continuity between the terminal M7–7(B) and ground. Is there a continuity?	Go to Step 18	Go to Step 23
17	The wiring harness between PCM terminal S–43 and transmission 16–way connector terminal H69–11 (LHD), or H69–10 (RHD) is open. Was a problem found and corrected?	Go to Step 27	—
18	The brake band apply solenoid is faulty, or the internal wiring harness from the brake band apply solenoid is shorted to ground. Was a problem found and corrected?	Go to Step 27	—
19	The wiring harness between the transmission 16–way connector terminal H69–11 (LHD) or H69–10 (RHD) and the transmission main case connector terminal M7–2(D) is shorted to ground. Was a problem found and corrected?	Go to Step 27	—
20	The wiring harness between the transmission 16–way connector terminal H69–11 (LHD) or H69–10 (RHD) and the transmission main case connector terminal M7–2(D) is open. Was a problem found and corrected?	Go to Step 27	—

DTC P1850 Brake Band Apply Solenoid Malfunction (Cont'd)

Step	Action	Yes	No
21	The brake band apply solenoid is faulty, or the internal wiring harness from the brake band apply solenoid is open. Was a problem found and corrected?	Go to Step 27	—
22	The wiring harness between the PCM connector terminal S–10 and transmission 16–way connector terminal H69–9 (LHD) or H69–12 (RHD) is shorted to ground. Was a problem found and corrected?	Go to Step 27	—
23	The wiring harness between the transmission 16–way connector terminal H69–9 (LHD) or H69–12 (RHD) and the transmission main case connector terminal M7–7(B) is shorted to ground. Was a problem found and corrected?	Go to Step 27	—
24	The wiring harness between the PCM connector terminal S–10 and the 16–way connector terminal H69–9 (LHD) or H69–12 (RHD) is open. Was a problem found and corrected?	Go to Step 27	—
25	The wiring harness between the transmission 16–way connector terminal H69–9 (LHD) or H69–12 (RHD) and the transmission main case connector terminal M7–7(B) is open. Was a problem found and corrected?	Go to Step 27	—
26	Check every connection at the PCM. If OK, replace the PCM. Refer to Powertrain Control Module (PCM) in Automatic Transmission (4L30–E) section. Is the replacement complete?	Go to Step 27	—
27	1. After the repair is complete, use the scan tool to select "DTC", then "Clear Info" function and ensure the following conditions are met: ● The brake band apply solenoid is commanded "on" and the volts drop to zero. ● The brake band apply solenoid is commanded "off" and the volts increase to B+. 2. Review the scan tool "DTC Info". Has the last test failed or is the current DTC displayed?	Begin diagnosis again Go to Step 1	Repair verified Exit DTC table

DTC P1860 TCC PWM Solenoid Electrical

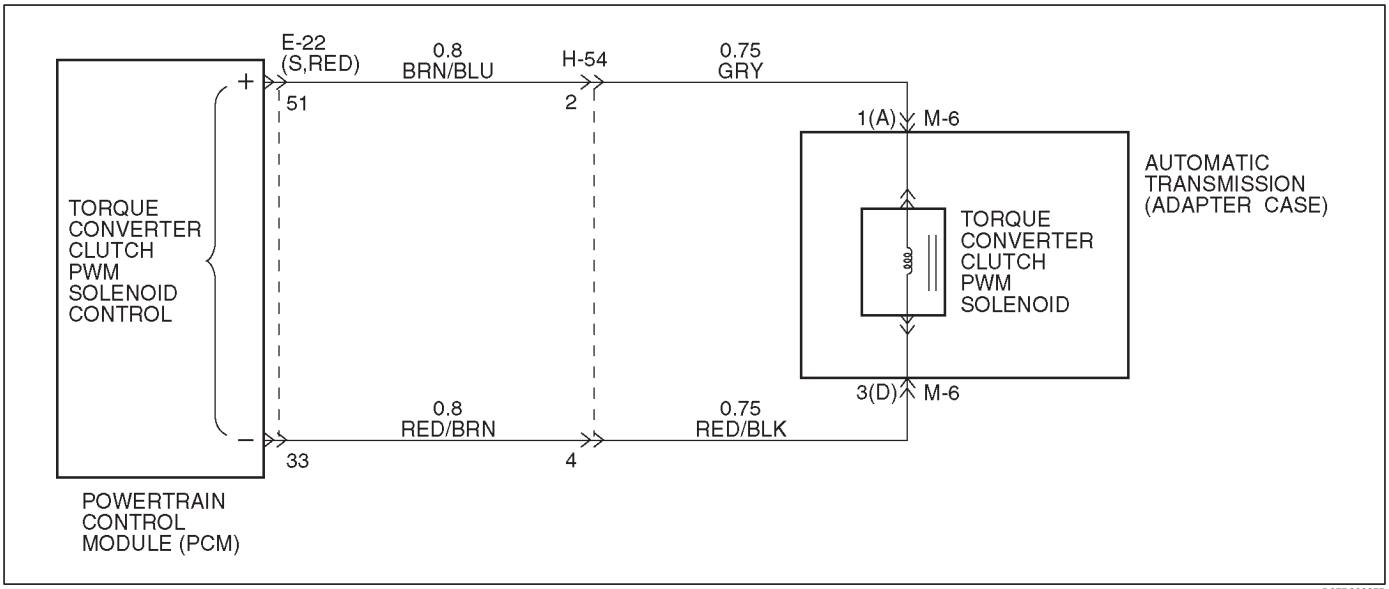

Circuit Description

The PCM allows current to flow through the solenoid coil according to the duty cycle (percentage of “on” and “off” time). This current flow through the solenoid coil creates a magnetic field that magnetizes the solid core. The magnetized core attracts the check ball to seat against spring pressure. This blocks the exhaust for the TCC signal fluid and allows solenoid feed drive fluid to feed to TCC signal circuit. The TCC signal fluid pressure acts on the TCC regulator valve to regulate line pressure and to apply fluid pressure to the torque converter clutch shift control valve. When the TCC control valve is in the apply position, regulated apply fluid pressure is directed through the TCC valve to apply the torque converter clutch. The TCC PWM solenoid is used in conjunction with the TCC reglator valve to regulate fluid to the torque converter. The TCC PWM solenoid is attached to the valve body within the transmission.
This DTC detects a continuous open or short to ground or ignition in the TCC circuit or the TCC PWM solenoid. This is a type “B” DTC.

Conditions For Setting The DTC

- Battery voltage is between 10 and 16 volts.
- No shift solenoid A DTCs P0751 or P0752 or P0753.
- No shift solenoid B DTCs P0756 or P0757 or P0758.
- Ignition is “on”, Engine “run”.
- The PCM commands the solenoid “on” and the voltage remains low (zero volts).
- The PCM commands the solenoid “off” and the voltage remains high (B+).
- All conditions met for 0.875 ~ 1.25 seconds.

Action Taken When The DTC Sets

- Inhibit TCC engagement.
- For lamp illuminate refer to DTC type definition (type B).

Conditions For Clearing The MIL/DTC

- The PCM will turn off the MIL and CHECK TRANS Lamp after three consecutive ignition cycles without a failure reported.
- The DTC can be cleared from the PCM history by using a scan tool.
- The DTC will be cleared from history when the vehicle has achieved 40 warmup cycles without a failure reported.
- The PCM will cancel the DTC default actions when the fault no longer exists and the ignition is cycled “off” long enough to power down the PCM.

Diagnostic Aids

- Inspect the wiring for poor electrical connections at the PCM and at the transmission connector. Look for possible bent, backed out, deformed or damaged terminals. Check for weak terminal tension as well. Also check for a chafed wire that could short to bare metal or other wiring. Inspect for a broken wire inside the insulation.
- When diagnosing for a possible intermittent short or open condition, move the wiring harness while observing test equipment for a change.

Test Description

The numbers below refer to the step numbers on the diagnostic chart:

3. This test checks for voltage to the solenoid.
4. This test checks the ability of the PCM and wiring to control the ignition circuit.
9. This test checks the resistance of the TCC solenoid and the internal wiring harness.

DTC P1860 TCC PWM Solenoid Electrical

Step	Action	Yes	No
1	Were you sent here from the “Powertrain On–Board Diagnostic (OBD) System Check”?	Go to Step 2	Go to OBD System Check Refer to Driveability and Emissions in Engine section
2	1. Install the scan tool. 2. With the engine “on”, turn the ignition switch “on”. NOTE: Before clearing DTC(s), use the scan tool to record “Freeze Frame” and “Failure Records” for reference, as data will be lost when the“Clear Info” function is used. 3. Record the DTC “Freeze Frame” and “Failure Records”.	Go to Step 3	Go to Step 4
3	Using the J39200 DVOM, back probe between PCM connector terminals S–51 and S–33. Is the voltage 0 ?	Go to Step 5	Go to Step 6
4	1. Apply brake pedal and select transmission range “D”. 2. Do a test drive, and increase the vehicle speed to TCC “on” at 4th. Does the scan tool display DTC P1860 at TCC “ON”?	Go to Step 10	Go to Diagnostic Aids
5	1. Turn the ignition “off”. 2. Disconnect the S (RED) PCM connector. 3. Using the J39200 DVOM, measure the resistance between PCM connector terminals S–51 and S–33. Is the resistance 10±0.5 ohms at 20˚C (68˚F) ?	Go to Step 7	Go to Step 8
6	The wiring harness between PCM connector terminal S–51 and transmission adapter case connector terminal M6–1(A) is shorted to voltage. Was a problem found and corrected?	Go to Step 19	Go to Step 20
7	Intermittent condition. Check the wiring harness and terminals between PCM connector S and transmission adapter case connector M–6. Was a problem found and corrected?	Go to Step 19	Go to Step 20
8	1. Disconnect the transmission 4–way connector H–54. 2. Using the J39200 DVOM, measure the resistance between terminal H54–2 and ground. Is the resistance 10±0.5 ohms at 20˚C (68˚F) ?	Go to Step 16	Go to Step 9
9	1. Disconnect the transmission adapter case connector M–6. 2. Using the J39200 DVOM, measure the resistance between terminal M6–1(A) and ground. Is the resistance 10±0.5 ohms at 20˚C (68˚F) ?	Go to Step 17	Go to Step 18
10	1. Turn the ignition “off”. 2. Disconnect the S (RED) PCM connector. 3. Using the J39200 DVOM, measure the resistance between terminals S–51 and S–33. Is the resistance 10±0.5 ohms at 20˚C (68˚F) ?	Go to Step 19	Go to Step 11
11	1. Disconnect the transmission 4–way connector H–54. 2. Using the J39200 DVOM, measure the resistance between terminal H54–2 and ground. Is the resistance 10±0.5 ohms at 20˚C (68˚F) ?	Go to Step 13	Go to Step 12

DTC P1860 TCC PWM Solenoid Electrical (Cont'd)

Step	Action	Yes	No
12	1. Disconnect the transmission adapter case connector M–6. 2. Using the J39200 DVOM, measure the resistance between terminal M6–1(A) and ground. Is the resistance 10±0.5 ohms at 20˚C (68˚F) ?	Go to Step 14	Go to Step 15
13	The wiring harness between PCM connector terminal S–51 and transmission 4–way connector terminal H54–2 is shorted to ground. Was a problem found and corrected?	Go to Step 21	—
14	The wiring harness between transmission 4–way connector H–54 and adapter case connector M–6 is shorted to ground. Was a problem found and corrected?	Go to Step 21	—
15	The TCC solenoid is faulty, or the internal wiring harness from the TCC solenoid is shorted to ground. Was a problem found and corrected?	Go to Step 21	—
16	The wiring harness between PCM connector terminal S–51 and transmission 4–way connector terminal H54–2 is open. Was a problem found and corrected?	Go to Step 21	—
17	The wiring harness between transmission 4–way connector terminal H54–2 and adapter case terminal M6–1(A) is open. Was a problem found and corrected?	Go to Step 21	—
18	The TCC solenoid is faulty, or the internal wiring harness from the TCC solenoid is open. Was a problem found and corrected?	Go to Step 21	—
19	Check every connection at the PCM. If OK, replace the PCM. Refer to Powertrain Control Module (PCM) in Automatic Transmission (4L30–E) section. Is the replacement complete?	Go to Step 21	—
20	Check the PCM connector terminal S–51, transmission 4–way connector terminal H54–2 and transmission adapter case connector terminal M6–1(A). Was a problem found and corrected?	Go to Step 21	—
21	1. After the repair is complete, use the scan tool to select "DTC", then "Clear Info" function and ensure the following conditions are met: ● The TCC solenoid is commanded "on" and the volts increase to B+. ● The TCC solenoid is commanded "off" and the volts drop to zero. 2. Review the scan tool "DTC Info". Has the last test failed or is the current DTC displayed?	Begin diagnosis again Go to Step 1	Repair verified Exit DTC table

DTC P1870 Transmission Component Slipping (TCC Stuck OFF)

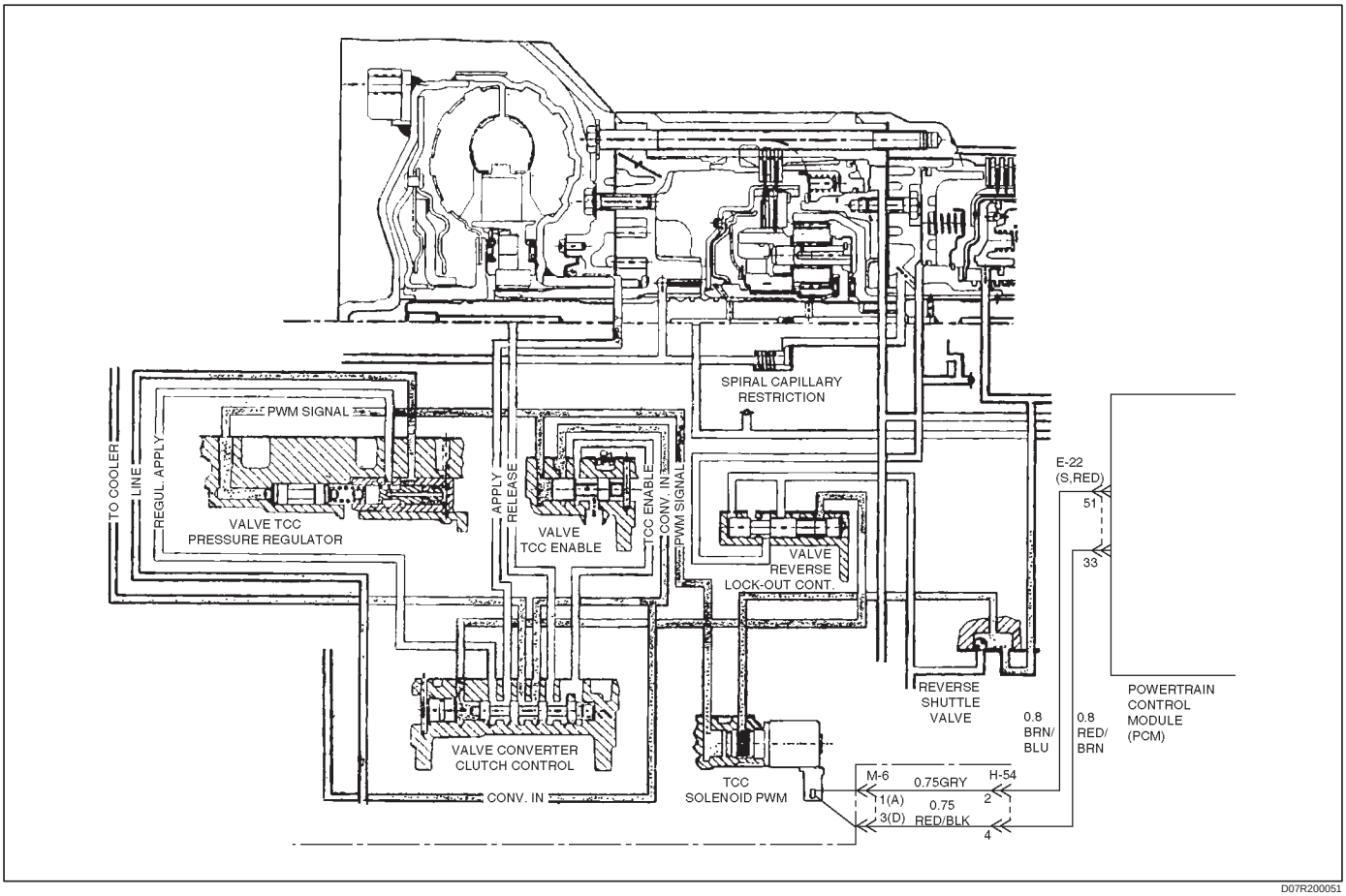

D07R200051

Circuit Description

The PCM monitors the difference in engine speed and transmission output speed. For example in D3 drive range with the ECCC commanded, the engine speed should closely match transmission output speed.
This DTC detects excessive TCC slip when the ECCC is engaged. This is a type “B” DTC.

Conditions For Setting The DTC

The following conditions are met for three TCC cycles with reported excessive TCC slip conditions.

- No OSS DTCs P0722 or P0723.
- No shift solenoid A DTCs P0751 or P0752 or P0753.
- No shift solenoid B DTCs P0756 or P0757 or P0758.
- No TCC solenoid DTCs P0742 or P1860 or P1870.
- Engine speed is between 1,000 and 3,500 rpm for 0.5 seconds.
- Gear range is D4.
- 13% < TPS < 99%
- 50 < Engine Torque < 300 N·m
- TFT is between 20˚ and 150˚C (68˚ and 302˚F).
- TCC slip speed is between 250 rpm and 800 rpm for 3 times 7 seconds.
- Vehicle speed is between 25 km/h (15 mph) and 225 km/h (158 mph).
- Speed ratio is between 0.6 and 0.95.
- ECCC is “ON”.
- Low (0.8) < TCC Capacity < hi (0.99) for 5 seconds

Action Taken When The DTC Sets

- Only stored in memory.
- For lamp illuminate refer to DTC type definition (type B).

Conditions For Clearing The MIL/DTC

- The PCM will turn off the MIL and CHECK TRANS Lamp after three consecutive ignition cycles without a failure reported.
- The DTC can be cleared from the PCM history by using a scan tool.
- The DTC will be cleared from history when the vehicle has achieved 40 warmup cycles without a failure reported.
- The PCM will cancel the DTC default actions when the fault no longer exist and the ignition is cycled “off” long enough to power down the PCM.

Diagnostic Aids

- Range switch malfunction could set a DTC P1870.
- A mechanical failure of the shift solenoids, TCC solenoid, or TCC PWM solenoid could set a DTC P1870.
- Internal transmission failures may set a DTC P1870.
- An intermittent or incorrect engine speed signal may set a DTC P1870.

Test Description

The numbers below refer to the step numbers on the diagnostic chart:

2. This test checks the indicated range signal to the actual selected range. A faulty switch could set a DTC P1870.
3. This test checks the torque converter for slippage while in a commanded lockup state.

Range Switch Logic Table

Range Position	Range Switch Pin			
	A	B	C	P(G)
Park	ON	OFF	OFF	ON
Reverse	ON	ON	OFF	OFF
Neutral	OFF	ON	OFF	ON
D4	OFF	ON	ON	OFF
D3	ON	ON	ON	ON
2	ON	OFF	ON	OFF
L	OFF	OFF	ON	ON
Illegal	OFF	OFF	OFF	OFF
Illegal	OFF	OFF	OFF	ON

DTC P1870 Transmission Component Slipping (TCC Stuck OFF)

Step	Action	Yes	No
1	Were you sent here from the “Powertrain On–Board Diagnostic (OBD) System Check”?	Go to Step 2	Go to OBD System Check Refer to Driveability and Emissions in Engine section
2	1. Install the scan tool. 2. With the engine “off”, turn the ignition switch “on”. NOTE: Before clearing DTC(s), use the scan tool to record “Freeze Frame” and “Failure Records” for reference, as data will be lost when the “Clear Info” function is used. 3. Record the DTC “Freeze Frame” and “Failure Records”. 4. Apply the brake pedal. 5. Select each transmission range: DL, D2, D3, D4, N, R, and P. Does each selected transmission range match the scan tool “TR Switch” display?	Go to Step 3	Go to “Range Switch Logic Table”
3	Drive the vehicle in 4th gear while the TCC is engaged. At any time is the “TCC Slip Speed” greater than 130 rpm for 8 seconds while the TCC is engaged?	Go to System Diagnosis Charts	Go to Diagnostic Aids

Circuit Diagram (LHD)

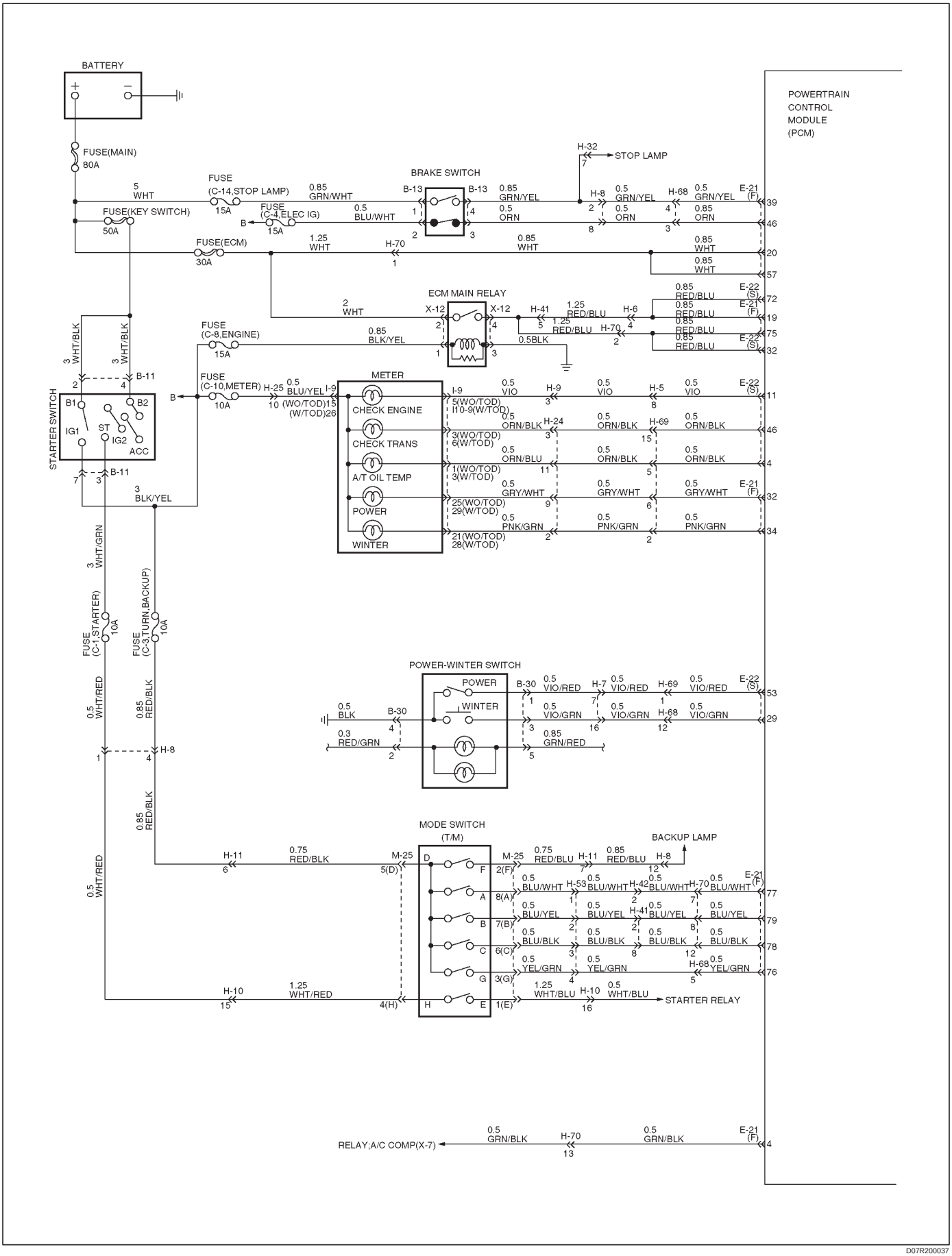

D07R200037

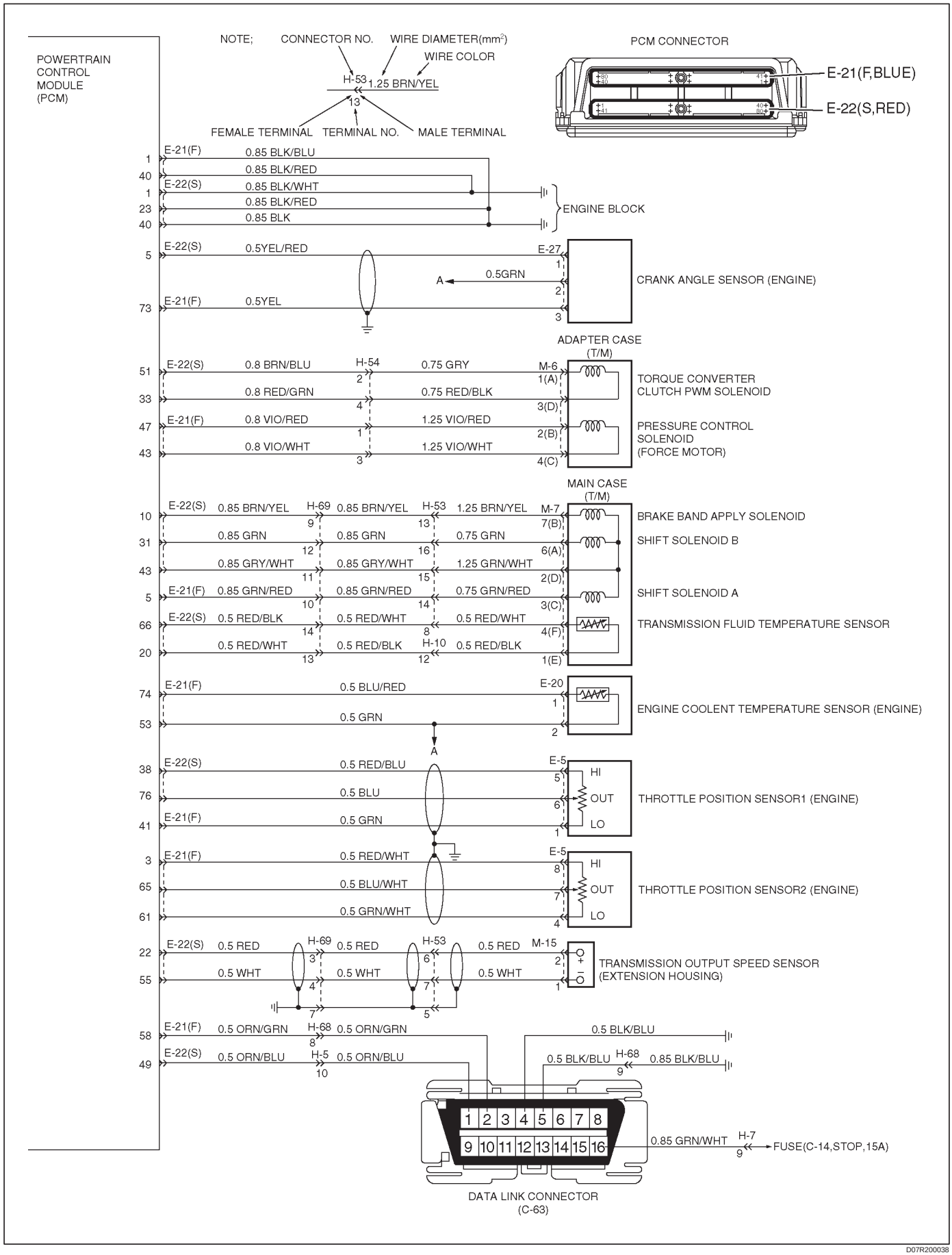
POWERTRAIN CONTROL MODULE (PCM)
NOTE;
CONNECTOR NO.
WIRE DIAMETER(mm²)
WIRE COLOR
H-53 1.25 BRN/YEL
13
FEMALE TERMINAL
TERMINAL NO.
MALE TERMINAL
PCM CONNECTOR
E-21(F,BLUE)
E-22(S,RED)
E-21(F) 1 0.85 BLK/BLU
40 0.85 BLK/RED
E-22(S) 1 0.85 BLK/WHT
23 0.85 BLK/RED
40 0.85 BLK
ENGINE BLOCK
E-22(S) 5 0.5YEL/RED
E-27
A
0.5GRN
CRANK ANGLE SENSOR (ENGINE)
E-21(F) 73 0.5YEL
ADAPTER CASE (T/M)
E-22(S) 51 0.8 BRN/BLU
H-54
0.75 GRY
M-6
1(A)
TORQUE CONVERTER CLUTCH PWM SOLENOID
33 0.8 RED/GRN
0.75 RED/BLK
3(D)
E-21(F) 47 0.8 VIO/RED
1.25 VIO/RED
2(B)
PRESSURE CONTROL SOLENOID (FORCE MOTOR)
43 0.8 VIO/WHT
1.25 VIO/WHT
4(C)
MAIN CASE (T/M)
E-22(S) 10 0.85 BRN/YEL
H-69
0.85 BRN/YEL
H-53
1.25 BRN/YEL
M-7
7(B)
BRAKE BAND APPLY SOLENOID
31 0.85 GRN
0.85 GRN
0.75 GRN
6(A)
SHIFT SOLENOID B
43 0.85 GRY/WHT
0.85 GRY/WHT
1.25 GRN/WHT
2(D)
E-21(F) 5 0.85 GRN/RED
0.85 GRN/RED
0.75 GRN/RED
3(C)
SHIFT SOLENOID A
E-22(S) 66 0.5 RED/BLK
0.5 RED/WHT
0.5 RED/WHT
4(F)
TRANSMISSION FLUID TEMPERATURE SENSOR
20 0.5 RED/WHT
0.5 RED/BLK
H-10
0.5 RED/BLK
1(E)
E-21(F) 74 0.5 BLU/RED
E-20
ENGINE COOLENT TEMPERATURE SENSOR (ENGINE)
53 0.5 GRN
A
E-22(S) 38 0.5 RED/BLU
E-5
HI
76 0.5 BLU
OUT
THROTTLE POSITION SENSOR1 (ENGINE)
E-21(F) 41 0.5 GRN
LO
E-21(F) 3 0.5 RED/WHT
E-5
HI
65 0.5 BLU/WHT
OUT
THROTTLE POSITION SENSOR2 (ENGINE)
61 0.5 GRN/WHT
LO
E-22(S) 22 0.5 RED
H-69
0.5 RED
H-53
0.5 RED
M-15
TRANSMISSION OUTPUT SPEED SENSOR (EXTENSION HOUSING)
55 0.5 WHT
0.5 WHT
0.5 WHT
E-21(F) 58 0.5 ORN/GRN
H-68
0.5 ORN/GRN
0.5 BLK/BLU
E-22(S) 49 0.5 ORN/BLU
H-5
0.5 ORN/BLU
0.5 BLK/BLU
H-68
0.85 BLK/BLU
1 2 3 4 5 6 7 8
9 10 11 12 13 14 15 16
0.85 GRN/WHT
H-7
FUSE(C-14,STOP,15A)
DATA LINK CONNECTOR (C-63)

D07R200038

Circuit Diagram (RHD)

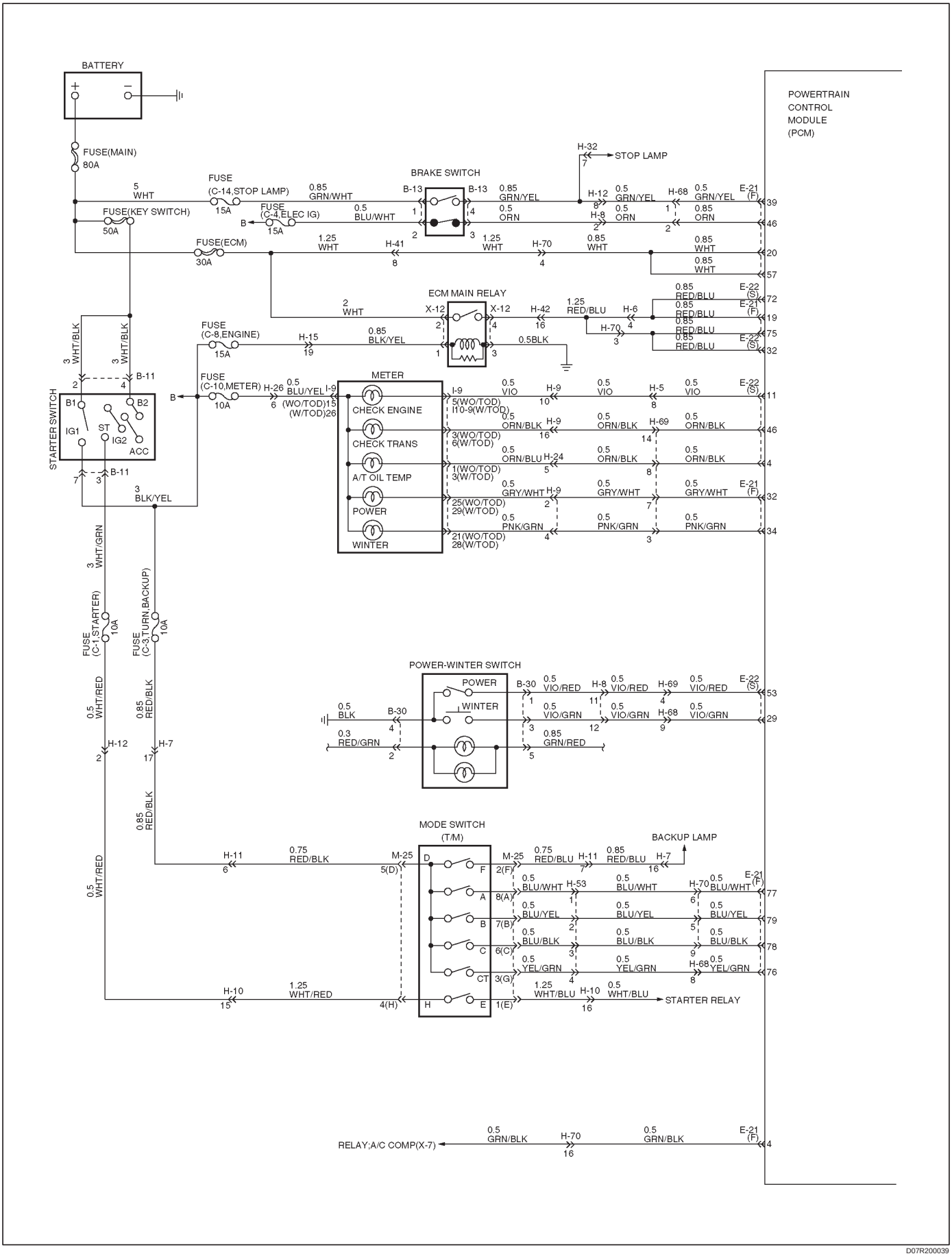

D07R200039

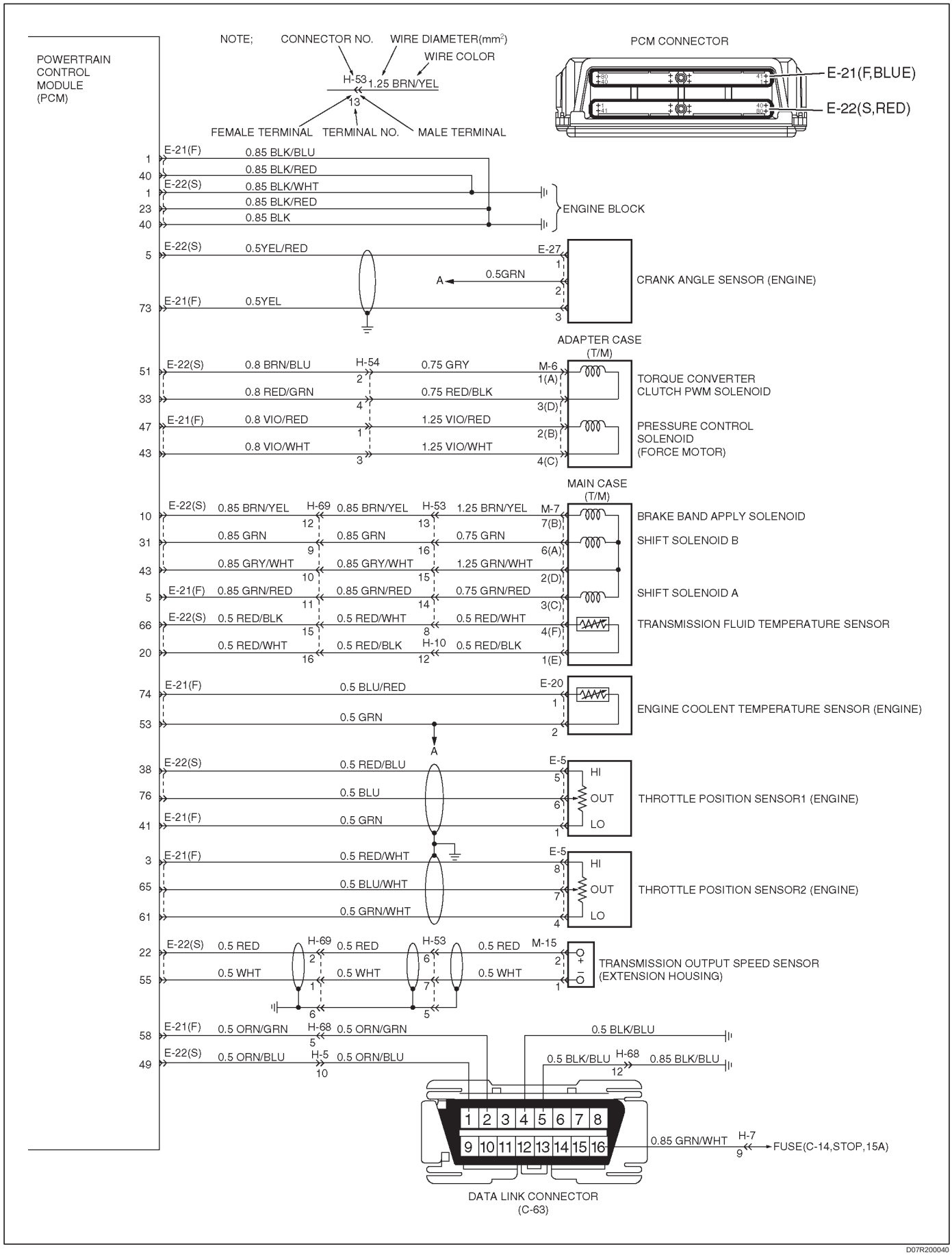
NOTE;
CONNECTOR NO.
WIRE DIAMETER(mm²)
WIRE COLOR
H-53 1.25 BRN/YEL
13
FEMALE TERMINAL
TERMINAL NO.
MALE TERMINAL
PCM CONNECTOR
E-21(F,BLUE)
E-22(S,RED)
POWERTRAIN CONTROL MODULE (PCM)
E-21(F) 0.85 BLK/BLU
0.85 BLK/RED
E-22(S) 0.85 BLK/WHT
0.85 BLK/RED
0.85 BLK
ENGINE BLOCK
E-22(S) 0.5YEL/RED
E-27
0.5GRN
A
CRANK ANGLE SENSOR (ENGINE)
E-21(F) 0.5YEL
ADAPTER CASE (T/M)
E-22(S) 0.8 BRN/BLU
H-54
0.75 GRY
M-6
0.8 RED/GRN
0.75 RED/BLK
TORQUE CONVERTER CLUTCH PWM SOLENOID
E-21(F) 0.8 VIO/RED
1.25 VIO/RED
0.8 VIO/WHT
1.25 VIO/WHT
PRESSURE CONTROL SOLENOID (FORCE MOTOR)
MAIN CASE (T/M)
E-22(S) 0.85 BRN/YEL
H-69
0.85 BRN/YEL
H-53
1.25 BRN/YEL
M-7
BRAKE BAND APPLY SOLENOID
0.85 GRN
0.85 GRN
0.75 GRN
SHIFT SOLENOID B
0.85 GRY/WHT
0.85 GRY/WHT
1.25 GRN/WHT
E-21(F) 0.85 GRN/RED
0.85 GRN/RED
0.75 GRN/RED
SHIFT SOLENOID A
E-22(S) 0.5 RED/BLK
0.5 RED/WHT
0.5 RED/WHT
TRANSMISSION FLUID TEMPERATURE SENSOR
0.5 RED/WHT
0.5 RED/BLK
H-10
0.5 RED/BLK
E-21(F) 0.5 BLU/RED
E-20
ENGINE COOLENT TEMPERATURE SENSOR (ENGINE)
0.5 GRN
E-22(S) 0.5 RED/BLU
E-5
HI
0.5 BLU
OUT
THROTTLE POSITION SENSOR1 (ENGINE)
E-21(F) 0.5 GRN
LO
E-21(F) 0.5 RED/WHT
0.5 BLU/WHT
THROTTLE POSITION SENSOR2 (ENGINE)
0.5 GRN/WHT
E-22(S) 0.5 RED
0.5 RED
0.5 RED
M-15
TRANSMISSION OUTPUT SPEED SENSOR (EXTENSION HOUSING)
0.5 WHT
0.5 WHT
0.5 WHT
E-21(F) 0.5 ORN/GRN
H-68
0.5 ORN/GRN
0.5 BLK/BLU
E-22(S) 0.5 ORN/BLU
H-5
0.5 ORN/BLU
0.5 BLK/BLU
H-68
0.85 BLK/BLU
1 2 3 4 5 6 7 8
9 10 11 12 13 14 15 16
0.85 GRN/WHT
H-7
FUSE(C-14,STOP,15A)
DATA LINK CONNECTOR (C-63)

D07R200040

Harness Connector Faces (LHD)

No.	Connector face
B-11	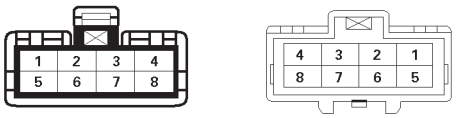 (WHITE)
B-13	(WHITE)
B-30	(WHITE)
C-63	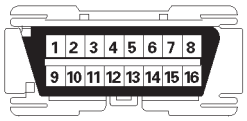 (BLACK)
E-5	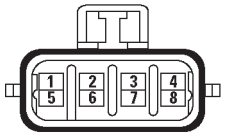 (BLACK)
E-20	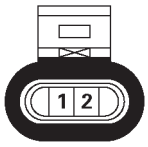 (BLACK)
E-21 (F)	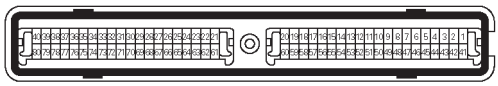 (BLUE)
E-22 (S)	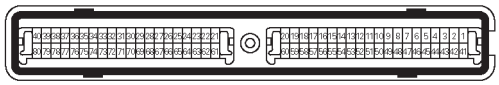 (RED)
E-27	(GRAY)

No.	Connector face
H-5	(GREEN)
H-6	(BLACK)
H-7	(WHITE)
H-8	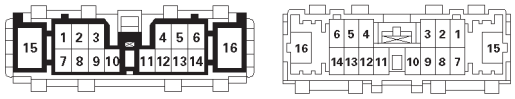 (BLACK)
H-9	(BLACK)
H-10	(BLUE)
H-11	(BLACK)
H-13	(GRAY)
H-24	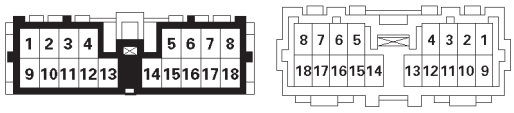 (YELLOW)

No.	Connector face
H-25	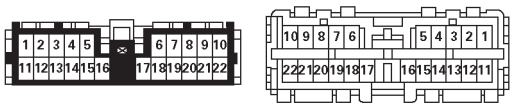 (BLUE)
H-32	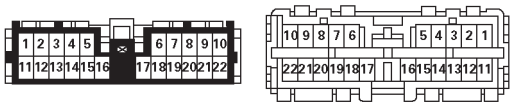 (BLACK)
H-41	(GRAY)
H-42	(BLACK)
H-53	(GREEN)
H-54	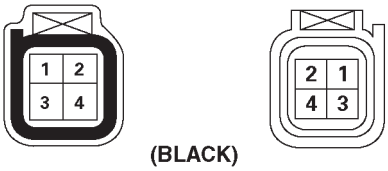 (BLACK)
H-68	(BLUE)
H-69	(GREEN)
H-70	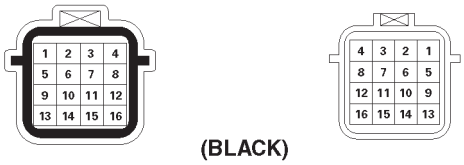 (BLACK)

No.	Connector face
I-9	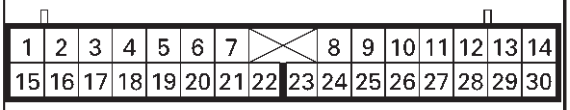
I-10	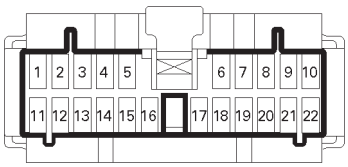
M-6	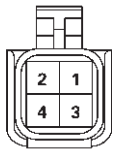
M-7	
M-15	
M-25	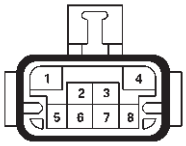
X-12	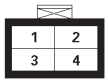

Harness Connector Faces (RHD)

No.	Connector face
B-11	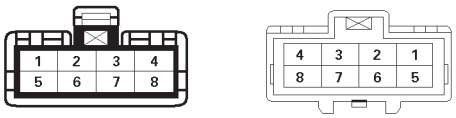 (WHITE)
B-13	(WHITE)
B-30	(WHITE)
C-63	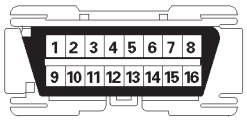 (BLACK)
E-5	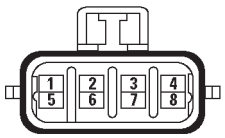 (BLACK)
E-20	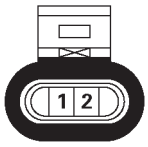 (BLACK)
E-21 (F)	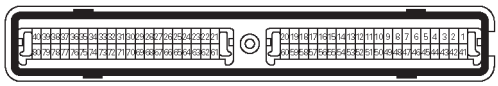 (BLUE)
E-22 (S)	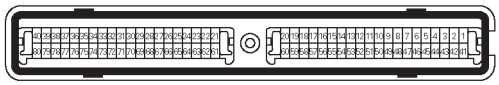 (RED)
E-27	(GRAY)

No.	Connector face
H-5	(GREEN)
H-6	(BLACK)
H-7	(WHITE)
H-8	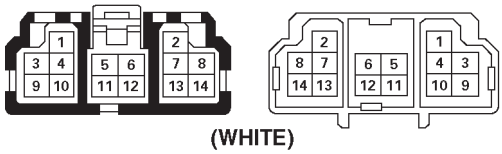 (WHITE)
H-9	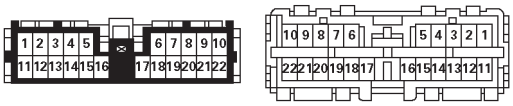 (WHITE)
H-10	(BLUE)
H-11	(BLACK)
H-12	(BLACK)
H-15	(WHITE)

No.	Connector face
H-24	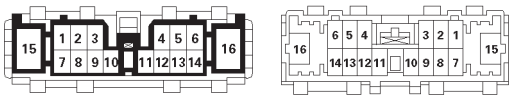 (BLACK)
H-26	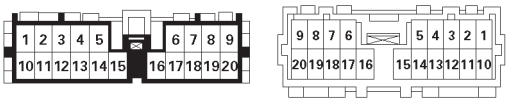 (WHITE)
H-32	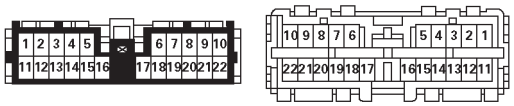 (BLACK)
H-41	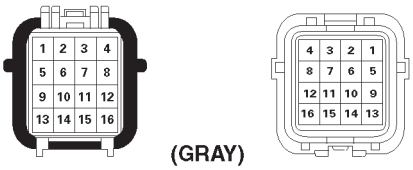 (GRAY)
H-42	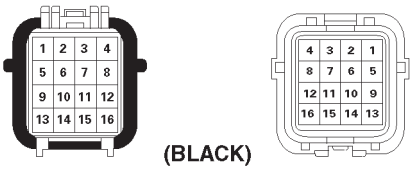 (BLACK)
H-53	(GREEN)
H-54	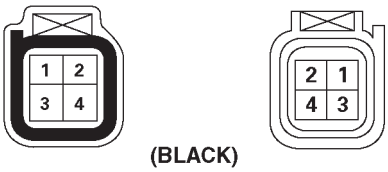 (BLACK)
H-68	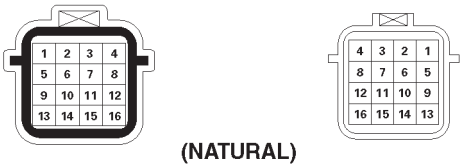 (NATURAL)
H-69	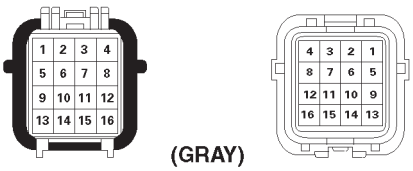 (GRAY)

No.	Connector face
H-70	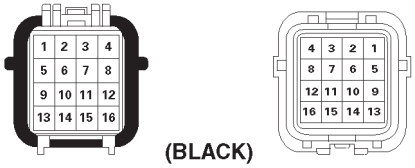 (BLACK)
I-9	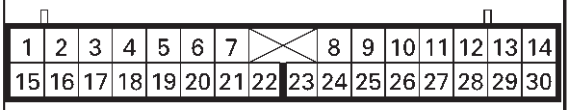
I-10	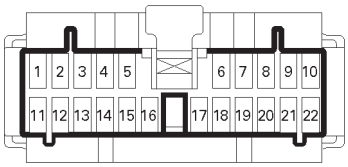
M-6	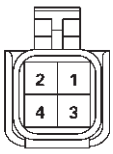
M-7	
M-15	
M-25	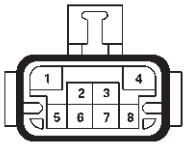
X-12	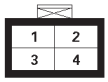

Transmission Fluid Temperature (TFT) Sensor Specifications

Temperature	Temperature	Minimum Resistance	Nominal Resistance	Maximum Resistance	Signal
˚F	˚C	Ω	Ω	Ω	Volts
-40	-40	600500	664200	731100	5.00
-22	-30	319800	350400	382400	4.65
-4	-20	177400	192700	208600	4.41
14	-10	102200	110100	118300	4.00
32	0	60870	65110	69450	3.52
50	10	37410	39750	42120	2.98
68	20	23660	24980	26300	2.40
86	30	15270	16120	16970	1.85
104	40	10040	10660	11290	1.43
122	50	6758	7211	7673	4.29
140	60	4645	4980	5324	4.04
158	70	3255	3506	3765	3.69
176	80	2323	2513	2710	3.34
194	90	1685	1831	1982	3.04
212	100	1242	1355	1472	2.58
230	110	929	1017	1109	2.24
248	120	704	773	846	1.97
266	130	540	595	653	1.67
248	140	419	464	511	1.42
302	150	329	365	403	1.16

TRANSMISSION

MANUAL TRANSMISSION

CONTENTS

Service Precaution 7B–1
General Description 7B–2
Diagnosis 7B–4
Manual Transmission Assembly 7B–5
Transmission and Associated Parts 7B–5
Removal 7B–6
Installation 7B–11
Rear Oil Seal (Transfer Adapter) 7B–17
Removal 7B–17
Installation 7B–17
Transmission (AR-5) 7B–18
Disassembled View 7B–18
Disassembly 7B–21
Inspection 7B–39
Reassembly 7B–41
Main Data and Specifications 7B–68
General Specifications 7B–68
Torque Specifications 7B–69
Special Tools 7B–72

Service Precaution

WARNING: IF SO EQUIPPED WITH A SUPPLEMENTAL RESTRAINT SYSTEM (SRS), REFER TO THE SRS COMPONENT AND WIRING LOCATION VIEW IN ORDER TO DETERMINE WHETHER YOU ARE PERFORMING SERVICE ON OR NEAR THE SRS COMPONENTS OR THE SRS WIRING. WHEN YOU ARE PERFORMING SERVICE ON OR NEAR THE SRS COMPONENTS OR THE SRS WIRING, REFER TO THE SRS SERVICE INFORMATION. FAILURE TO FOLLOW WARNINGS COULD RESULT IN POSSIBLE AIR BAG DEPLOYMENT, PERSONAL INJURY, OR OTHERWISE UNNEEDED SRS SYSTEM REPAIRS.

CAUTION: Always use the correct fastener in the proper location. When you replace a fastener, use ONLY the exact part number for that application. ISUZU will call out those fasteners that require a replacement after removal. ISUZU will also call out the fasteners that require thread lockers or thread sealant. UNLESS OTHERWISE SPECIFIED, do not use supplemental coatings (Paints, greases, or other corrosion inhibitors) on threaded fasteners or fastener joint interfaces. Generally, such coatings adversely affect the fastener torque and the joint clamping force, and may damage the fastener. When you install fasteners, use the correct tightening sequence and specifications. Following these instructions can help you avoid damage to parts and systems.

General Description

(6VE1)

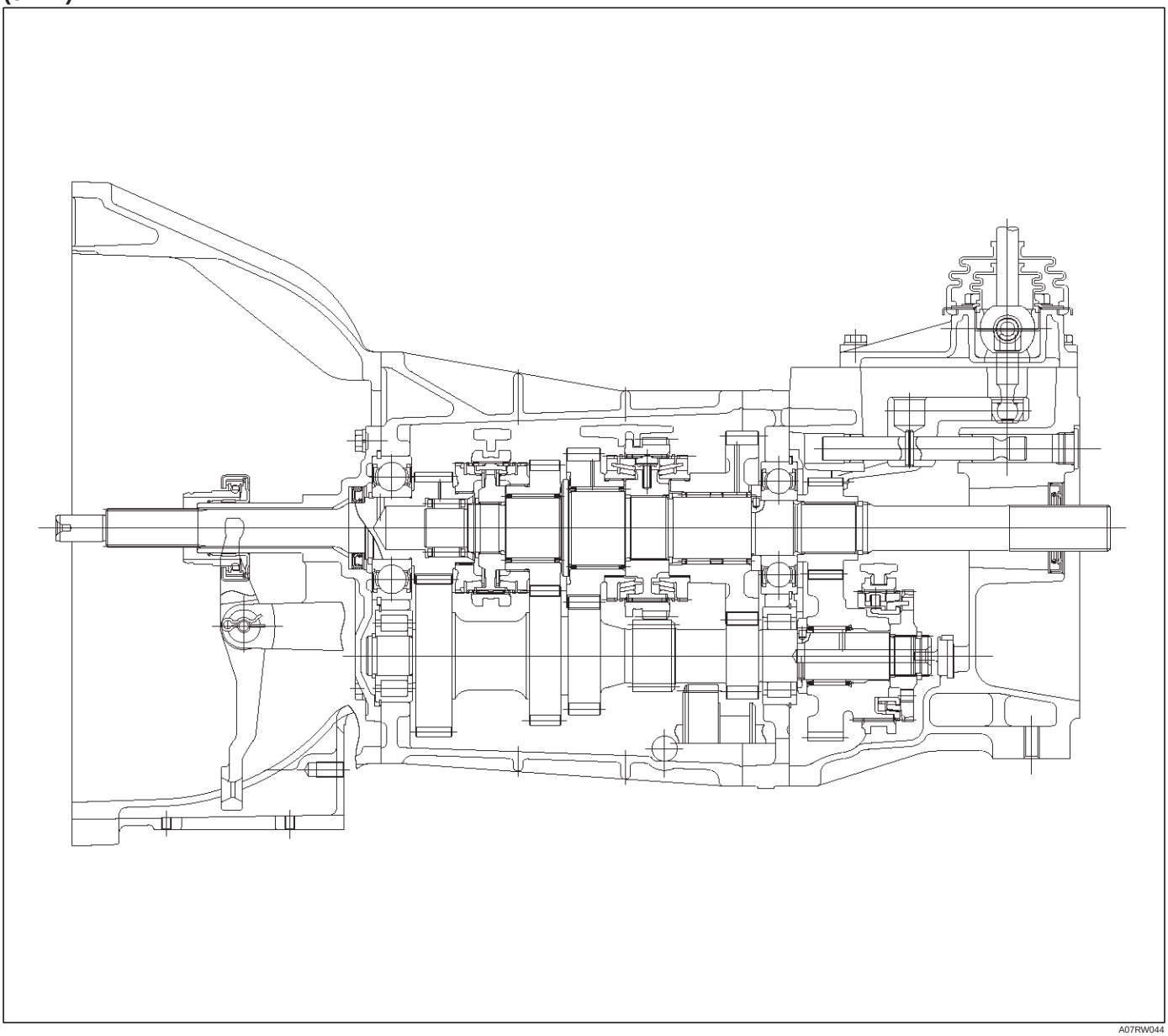

A07RW044

(4JX1)

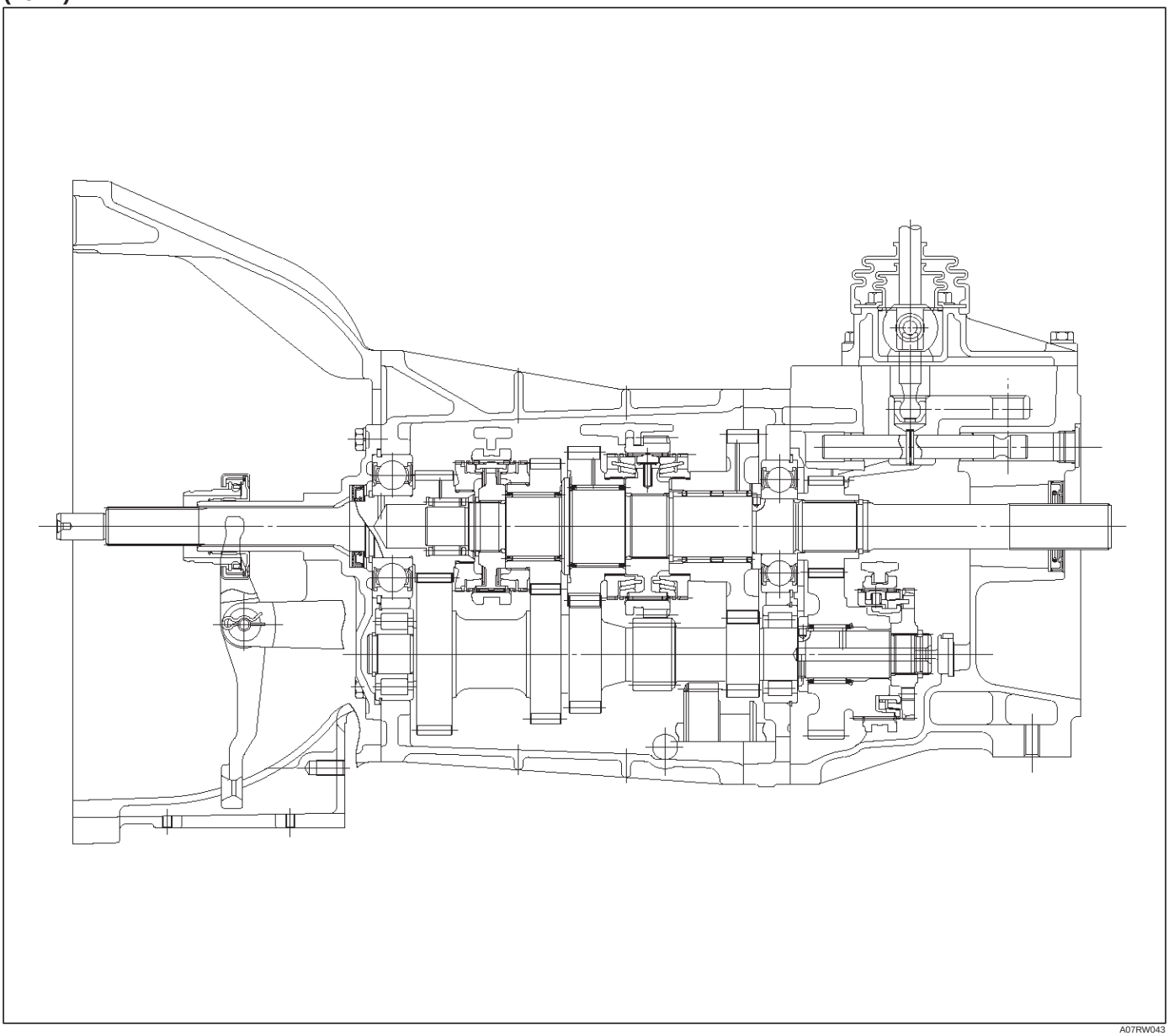

A07RW043

Diagnosis

Condition	Possible cause	Correction
Abnormal noise	Flywheel pilot bearing worn	Replace
	Bearings worn or broken (Mainshaft, counter shaft, and transfer shaft)	Replace
	Gear tooth contact surfaces worn or scuffed (Mainshaft, counter shaft, reverse idler gear and transfer gears)	Replace
	Splines worn (Mainshaft, synchronizer clutch hub)	Replace
	Gear or bearing thrust face seized	Replace
	Lack of backlash between meshing gears	Replace
Hard Shifting	Improper clutch pedal free play	Readjust
	Change lever sliding portions worn	Repair or replace Regrease
	Shift block, shift rod and/or control box sliding faces worn	Replace
	Shift arm and synchronizer sleeve groove worn	Replace worn parts
	Thrust washer, collar, and/or gear thrust faces worn (Mainshaft and counter shaft thrust play)	Replace worn parts
	Synchronizer parts worn	Replace
Walking or Jumping out of gear	Detent ball worn	Replace
	Detent spring weakened or broken	Replace
	Shift rod and/or control box sliding faces worn	Replace
	Shift arm and synchronizer sleeve groove worn	Replace worn parts
	Thrust washer, collar, and/or gear thrust faces worn (Mainshaft and counter shaft thrust play)	Replace worn parts
	Bearings worn or broken	Replace
	Splines worn (Mainshaft, synchronizer hub)	Replace
	Synchronizer spring weakened or broken	Replace
Oil leakage	Loose drain plug(s) and/or filler plug(s)	Tighten Replenish oil
	Defective or improperly installed gasket(s)	Replace
	Oil seal worn or scratched	Replace

Manual Transmission Assembly

Transmission and Associated Parts

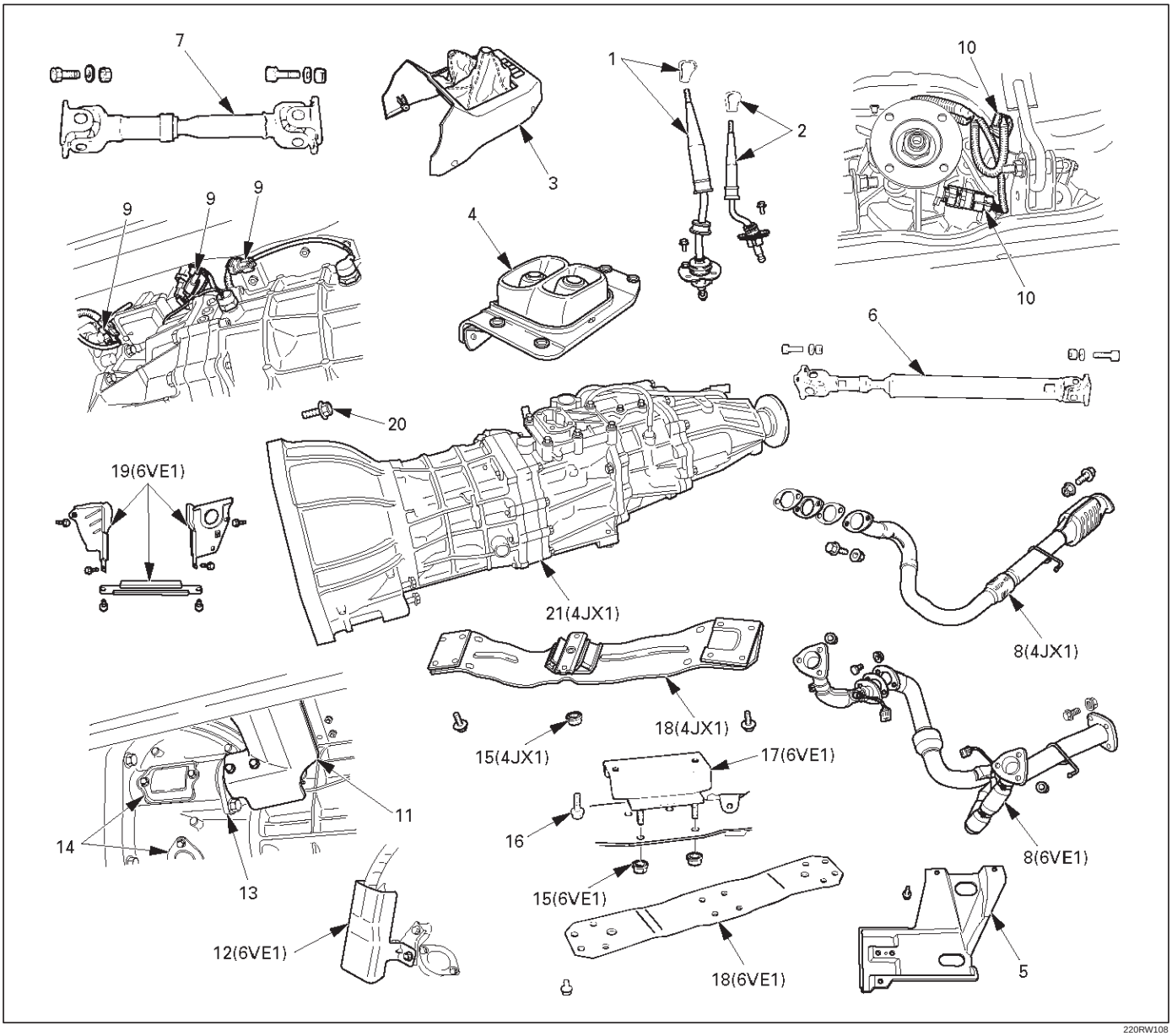

Legend

(1) Gear Control Lever and Knob
(2) Transfer Control Lever and Knob
(3) Front Console Assembly
(4) Grommet Assembly
(5) Transfer Protector
(6) Rear Propeller Shaft
(7) Front Propeller Shaft
(8) Exhaust Pipe
(9) Backup Lamp, 4WD Indicator, and 1–2 Indicator Switch Harness Connector
(10) Speedometer Sensor and 2WD–4WD Actuator Harness Connector
(11) Slave Cylinder Heat Protector
(12) Harness Heat Protector
(13) Slave Cylinder
(14) Dust Cover
(15) Engine Rear Mount Nut
(16) Engine Rear Mount Bolt
(17) Engine Rear Mount
(18) Third Crossmember
(19) Flywheel Under Cover
(20) Transmission Retaining Bolt
(21) Transmission Assembly with Transfer Case

Removal

NOTE: Before remove the transmission and transfer assembly from the vehicle, change the transfer mode to 2WD using push button on dash panel.

1. Remove engine hood.
2. Disconnect battery ground cable.
3. Remove the gear control lever knob.
4. Remove the front console assembly.
5. Remove the grommet assembly.
6. Remove the transmission control lever and transfer control lever.

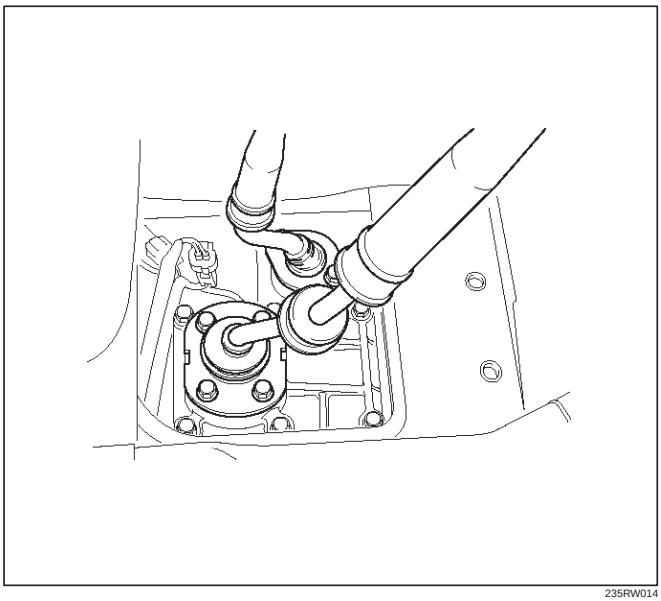

235RW014

7. Raise and support the vehicle with suitable jack stand.
8. Remove transfer protector.
9. Remove the rear propeller shaft.

NOTE: Apply alignment marks on the flange at the both front and rear side.

(4JX1)

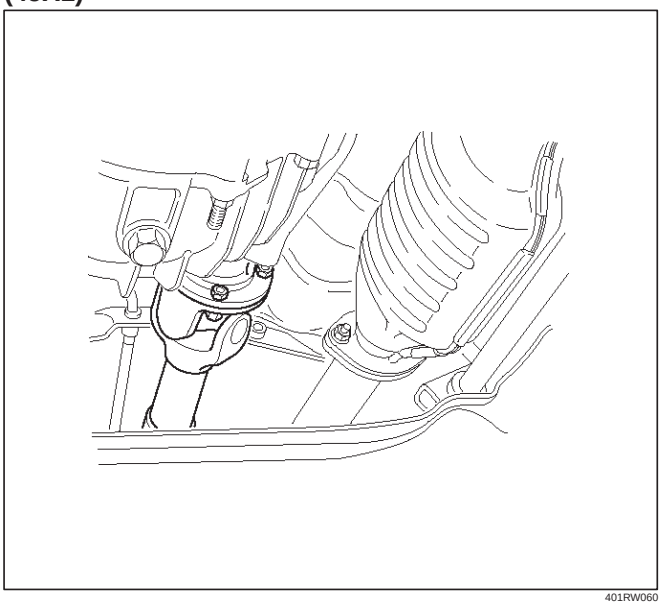

401RW060

10. Remove the front propeller shaft.

NOTE: Apply alignment marks on the flange at both the front and rear sides.

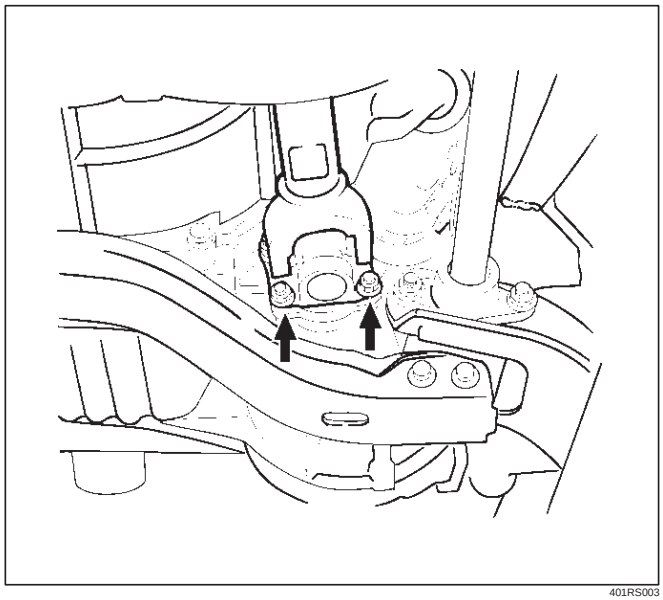

401RS003

11. Disconnect two oxygen sensor connectors from the transmission harness (6VE1).
12. Remove the front and 3 way exhaust pipe (6VE1). Remove the exhaust pipe with catalytic converter (4JX1).

(4JX1)

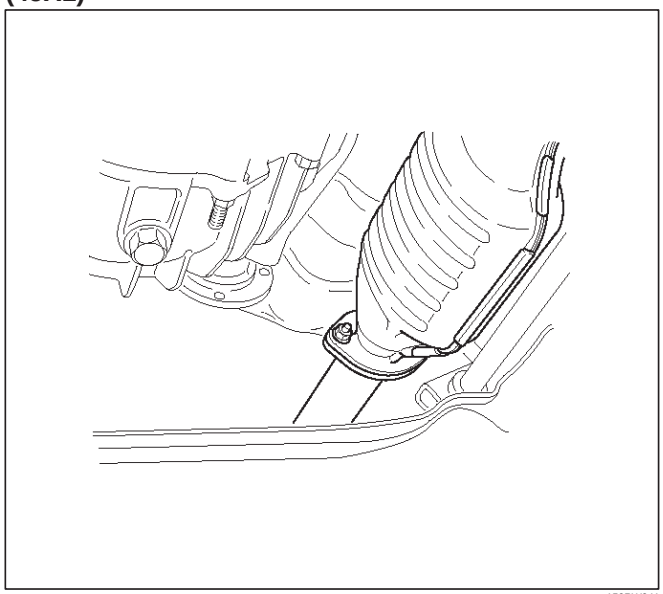

150RW041

13. Disconnect the backup lamp switch, 4WD indicator switch and 1–2 indicator switch harness connectors.

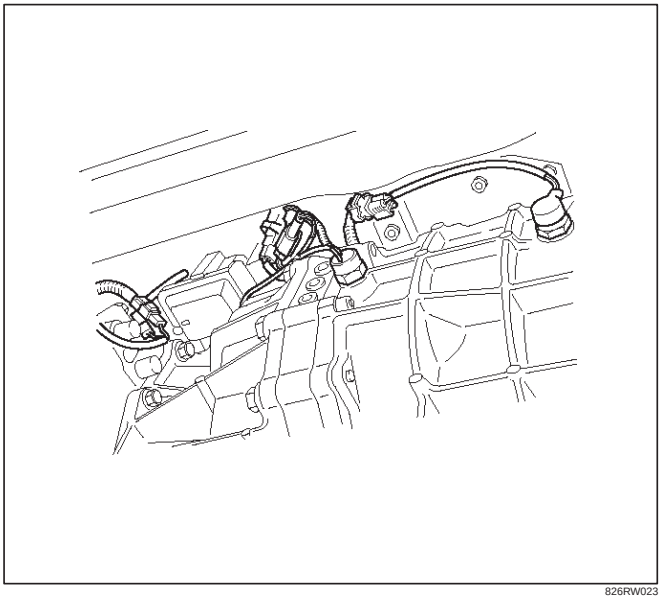

826RW023

14. Disconnect the speedometer sensor and 2WD-4WD actuator harness connectors.

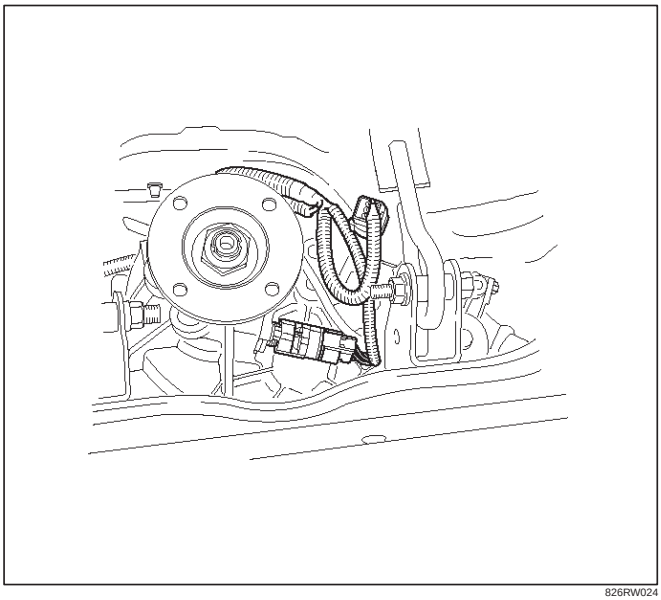

826RW024

15. Remove four fuel pipe bracket from the transmission case (6VE1).

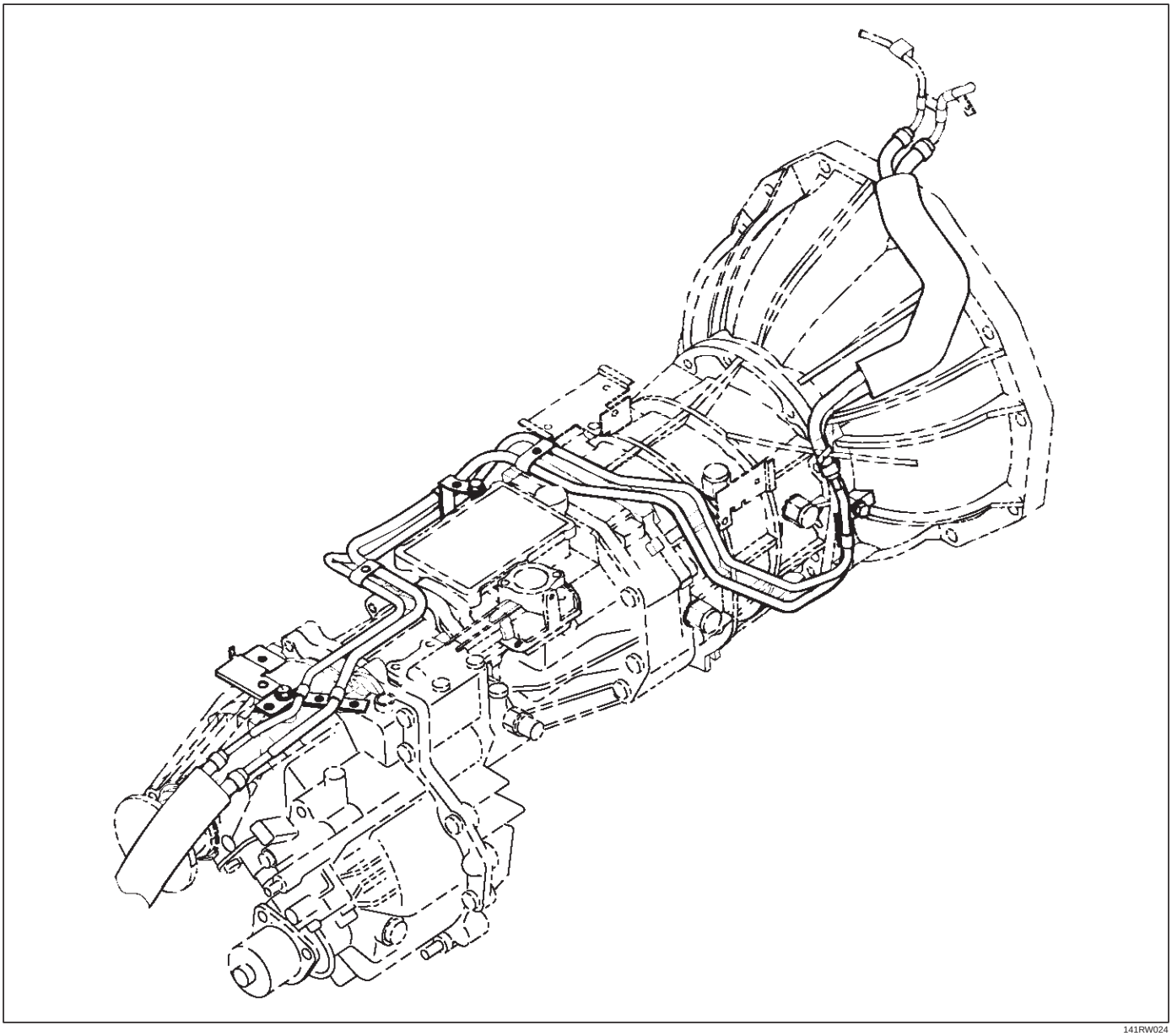

141RW024

16. Remove the slave cylinder heat protector.
17. Remove the harness heat protector (6VE1).

(6VE1)

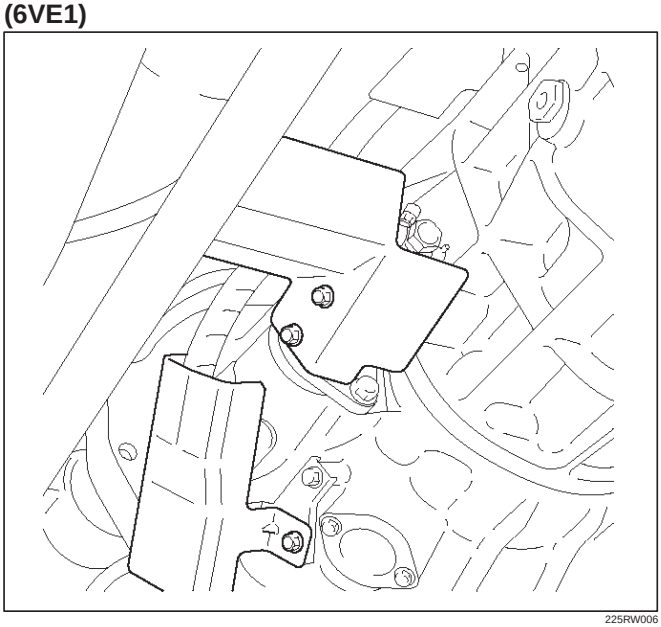

225RW006

18. Remove two transmission harness clamps and bracket (6VE1).
19. Remove the slave cylinder.

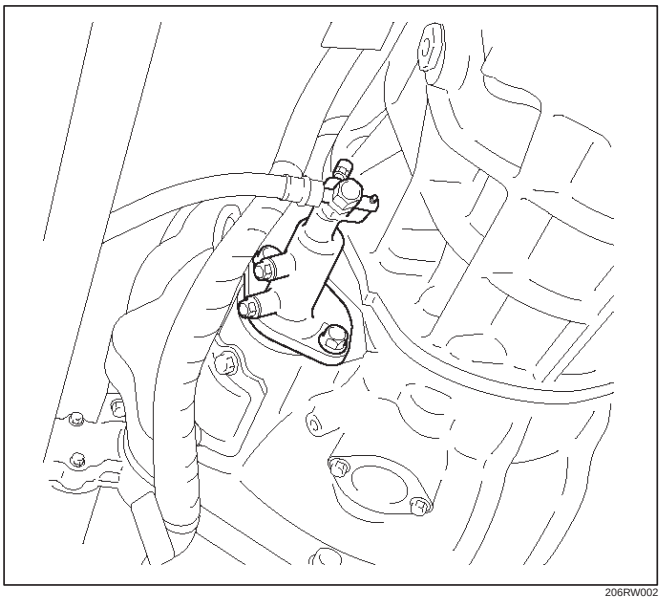

206RW002

20. Remove the two dust cover from transmission case.
21. Support the transfer case with a jack.
22. Remove two engine rear mount nuts.

(6VE1)

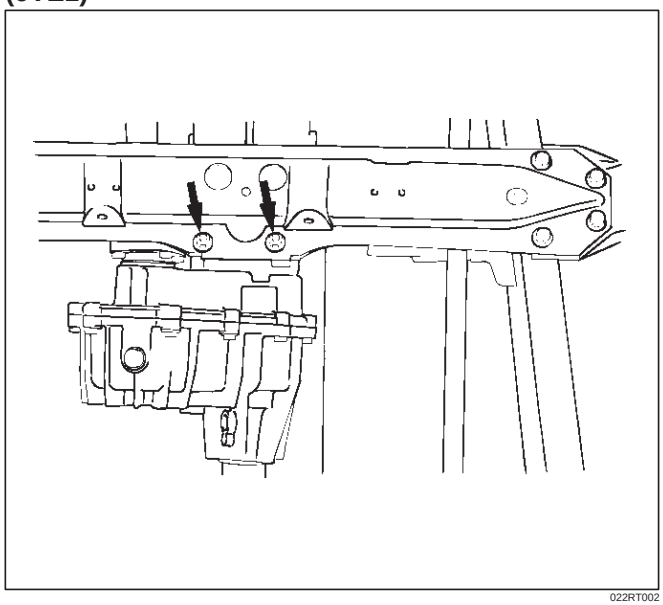

022RT002

23. Remove third crossmember (6VE1).
24. Remove third crossmember with rear mount rubber (4JX1).

(4JX1)

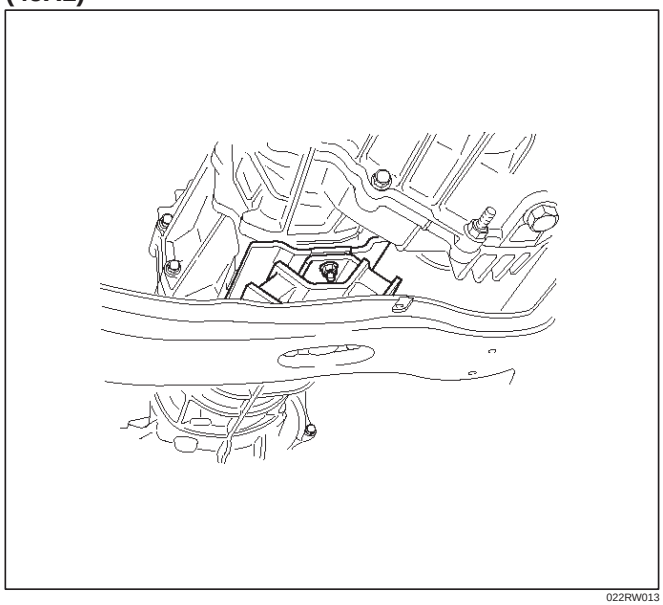

022RW013

25. Remove two engine rear mount bolts (6VE1).
26. Remove the rear mount from the transmission (6VE1).
27. Remove three flywheel under cover (6VE1).

28. Support the transmission with a transmission jack and then remove jack from the transfer case side.

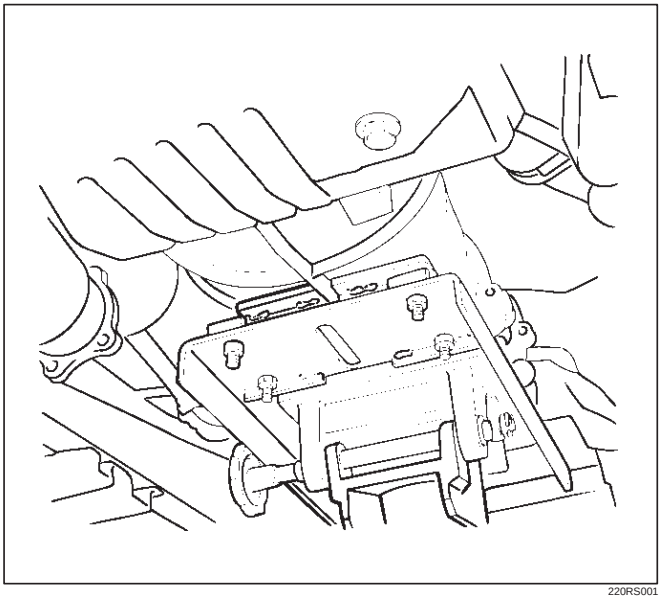

220RS001

29. Use the clutch release bearing remover 5–8840–2291–0 (J–39207) to disconnect the clutch release bearing from the clutch pressure plate.

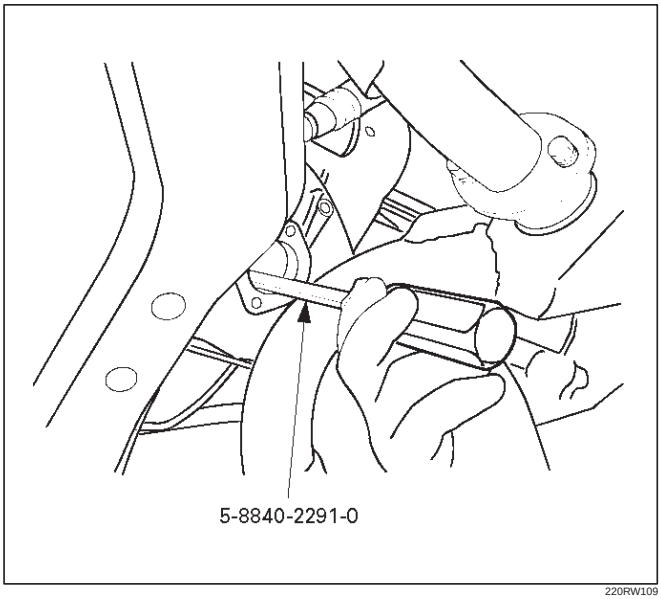

220RW109

Release bearing disconnection

1. Pull the shift fork toward the transmission to press the clutch release bearing against the clutch.
2. Insert the clutch release bearing remover between the wedge collar and the release bearing.
3. Turn the remover to separate the release bearing.

NOTE: Be sure not to insert the remover between the wedge collar and the clutch.

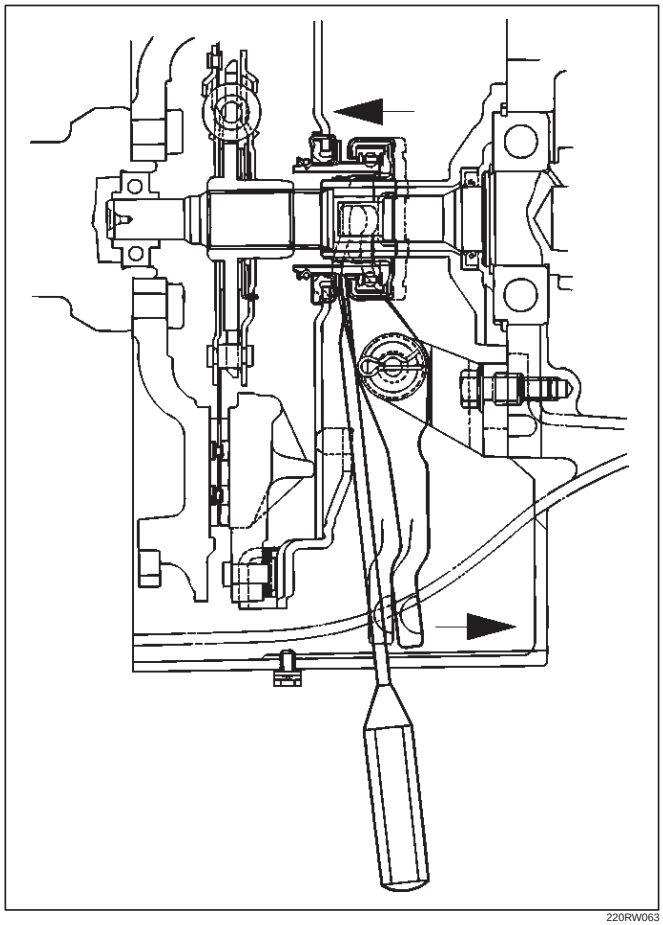

220RW063

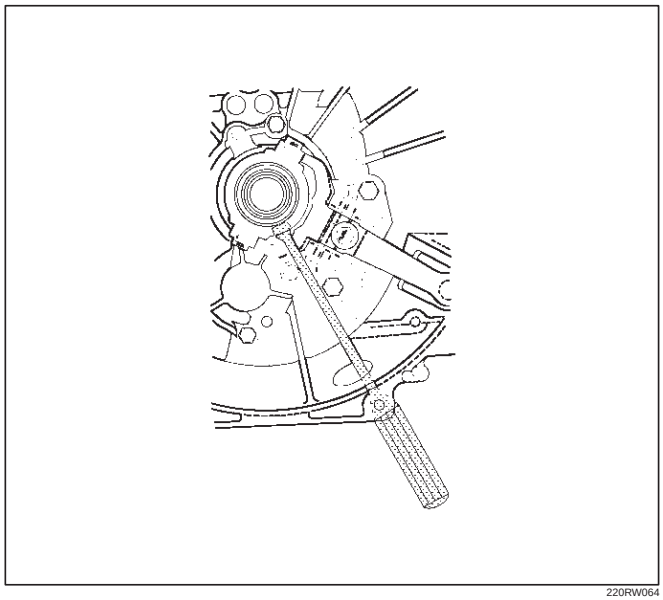

220RW064

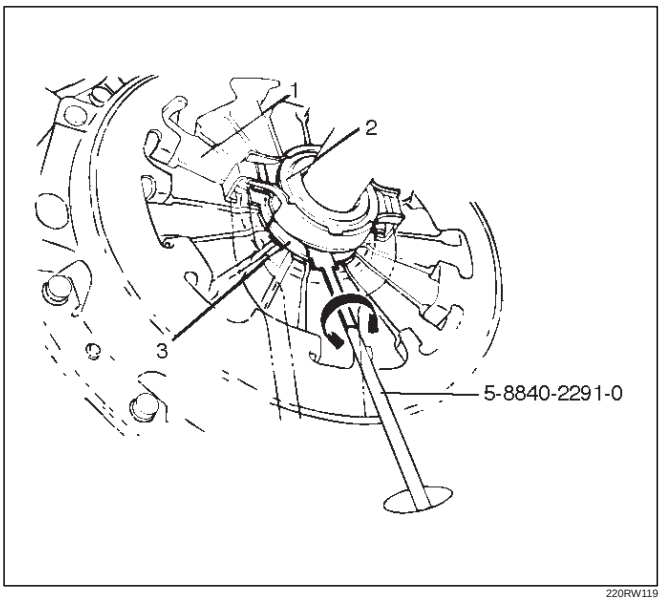

220RW119

Legend

(1) Pressure Plate Assembly
(2) Release Bearing
(3) Wedge Collar

30. Remove the transmission retaining nuts and bolts.
31. Remove the transmission assembly with transfer case from the vehicle.

NOTE: Remove the transfer case from the transmission assembly if the transmission disassembly required.

Refer to Transfer Case in Drive Line/Axle section.

Installation

1. Apply a thin coat of molybdenum disulfide grease to the top gear shaft spline.
2. Slowly operate the transmission jack until the front of transmission is aligned with the rear of the engine.
   The slope of the engine and the transmission must be the same.
3. Align the top gear shaft spline with the clutch driven plate spline.

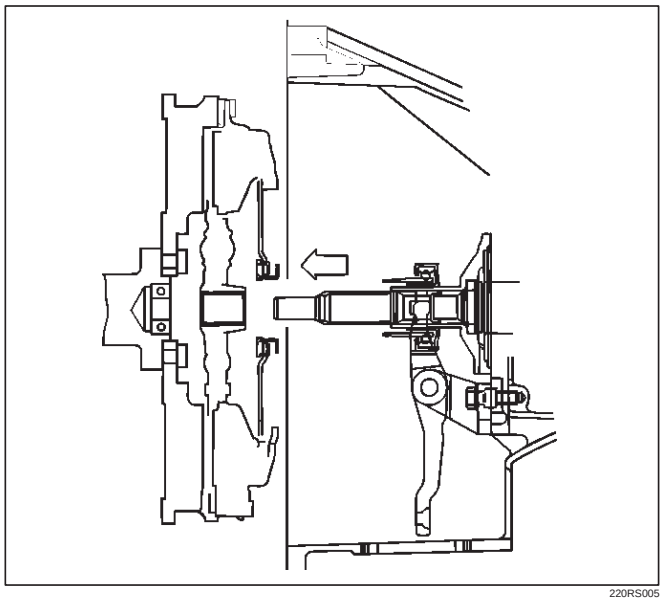

220RS005

4. Install the transmission to the engine.
   Tighten the transmission retaining nuts and bolts.

(6VE1)

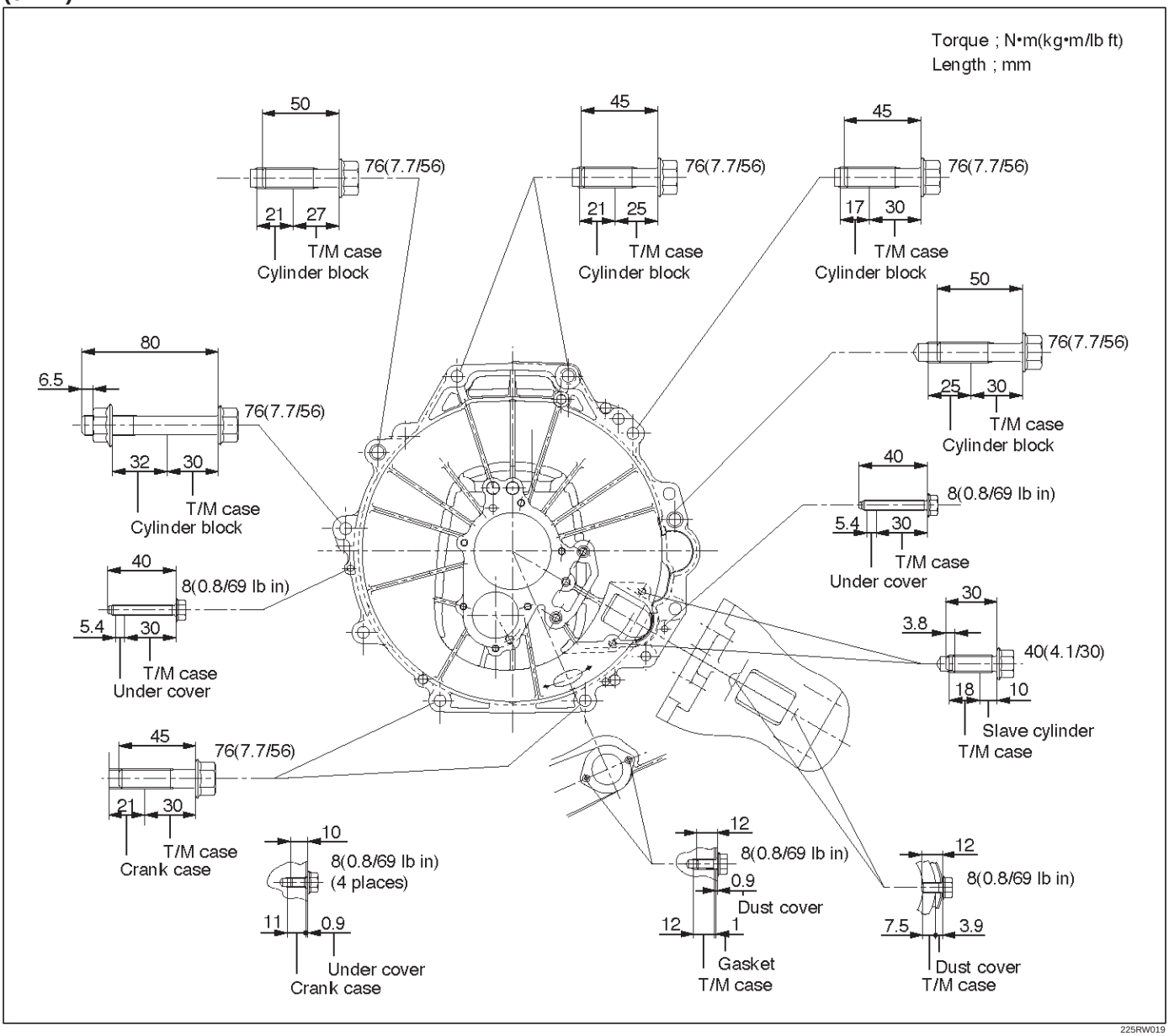

225RW019

(4JX1)

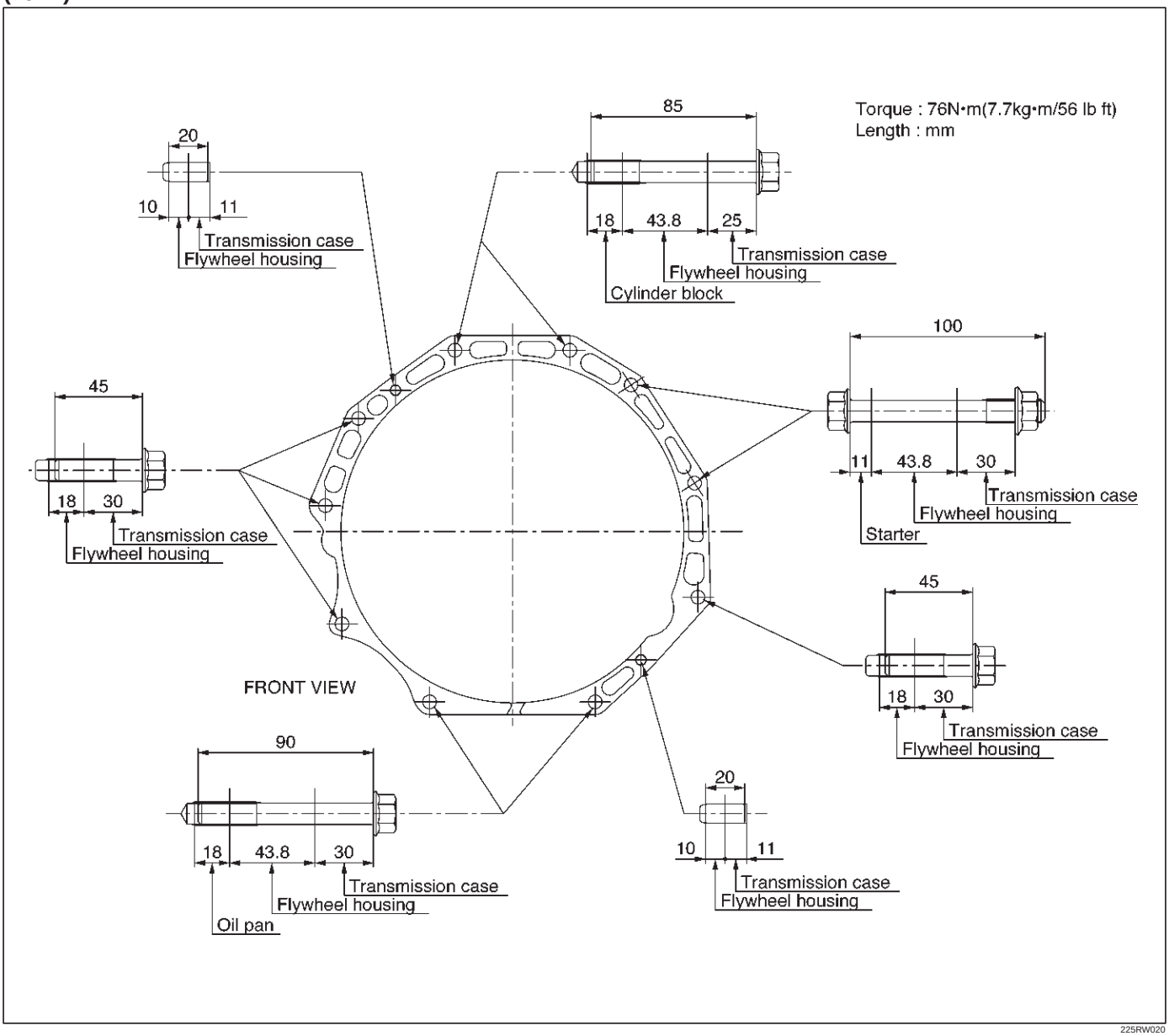

225RW020

5. Apply a force of about 113N (26 lb) to the tip of the shift fork in the direction of the transmission to engage the clutch pressure plate and release bearing.

NOTE: A clicking sound is heard when the release bearing and the tip of the diaphragm spring engage each other.

Check to see if they are securely engaged by pushing the tip of the shift fork toward the engine while applying a force of about 25 N (5.5 lb). If the shift fork will not move, then they are securely engaged.

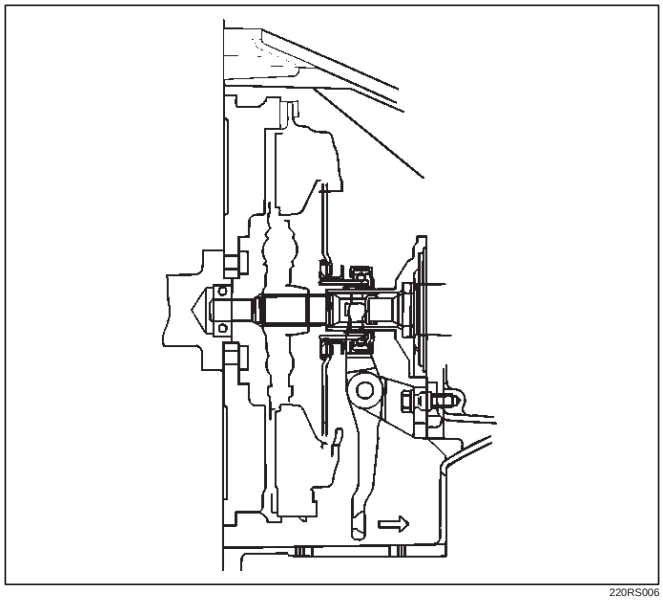

220RS006

6. Install three flywheel under cover (6VE1).

7. Install the engine rear mount to the transmission case and tighten the fixing bolts specified torque (6VE1).

   Torque: 41 N·m (4.2kg·m/30 lb ft)

8. Install the third crossmember to the frame and tighten the fixing bolts specified torque.

   Torque: 50 N·m (5.1kg·m/37 lb ft)

9. Tighten the engine rear mount nuts specified torque.

   Torque: 50 N·m (5.1kg·m/37 lb ft)

10. Remove the transmission jack.
11. Apply the grease to top hole portion of the shift fork.
12. Install the slave cylinder and tighten the fixing bolts specified torque.

    Torque: 43 N·m (4.4kg·m/32 lb ft)

13. Install the clutch dust cover to the clutch housing and tighten the fixing bolts specified torque.

    Torque: 8 N·m (0.8kg·m/69 lb in)

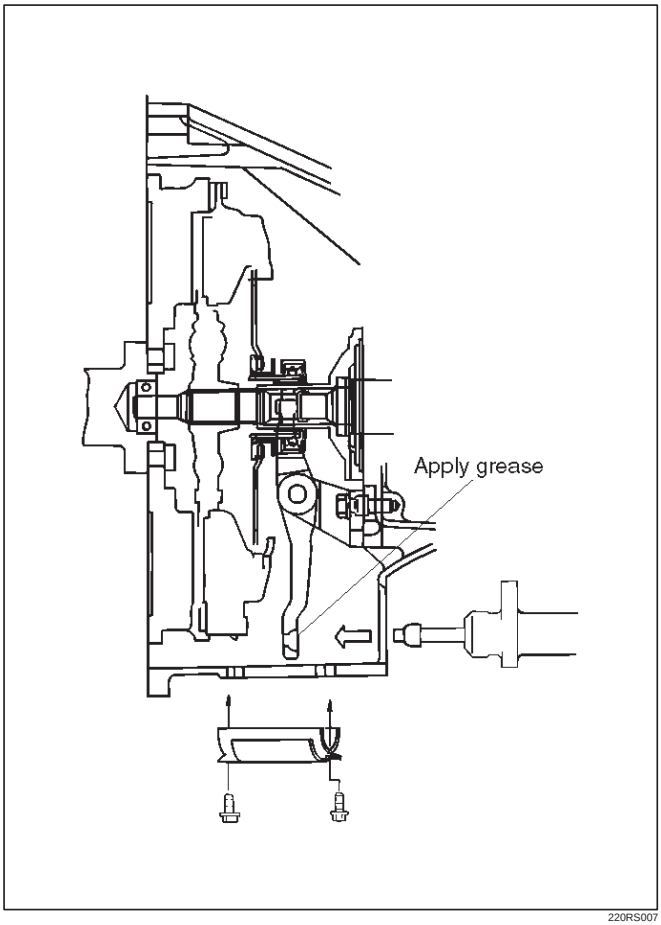

220RS007

14. Install the slave cylinder heat protector to the slave cylinder.
15. Install bracket and two transmission harness clamps to the transmission case (6VE1).
16. Install harness heat protector (6VE1).

(6VE1)

225RW006

17. Install four fuel pipe bracket (6VE1).

141RW024

18. Connect the speedometer sensor and 2WD–4WD actuator harness connector.

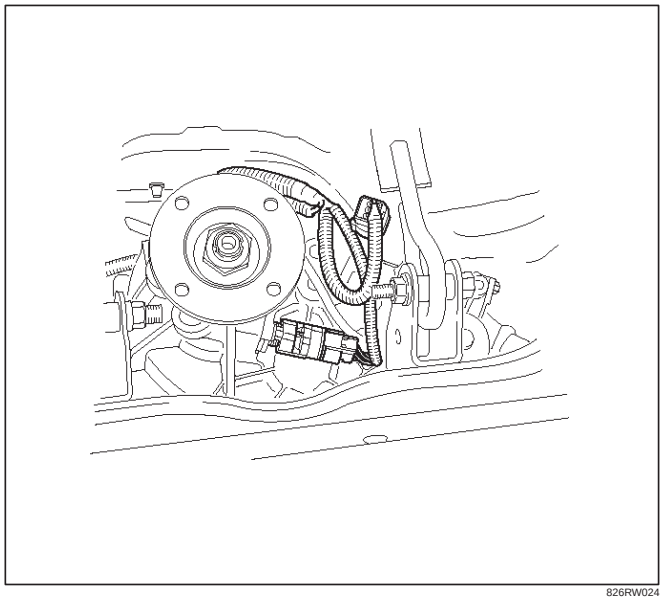

826RW024

19. Connect the backup lamp switch, 4WD indicator switch, and 1-2 indicator switch harness connectors.

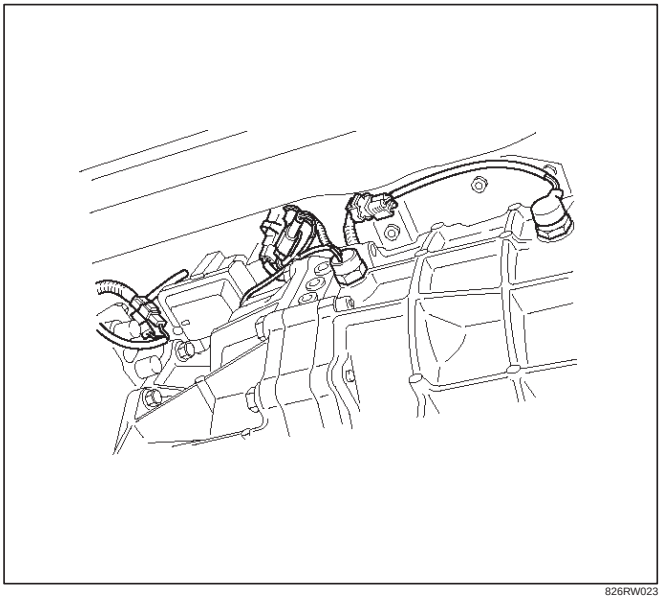

826RW023

20. Install the front and 3 way exhaust pipe (6VE1).
    Install the exhaust pipe with catalytic converter (4JX1).

    Torque:

    Exhaust pipe to exhaust manifold:
    67 N·m (6.8 kg·m/49 lb ft)

    Exhaust pipe flange bolt:
    43 N·m (4.4 kg·m/32 lb ft)

(4JX1)

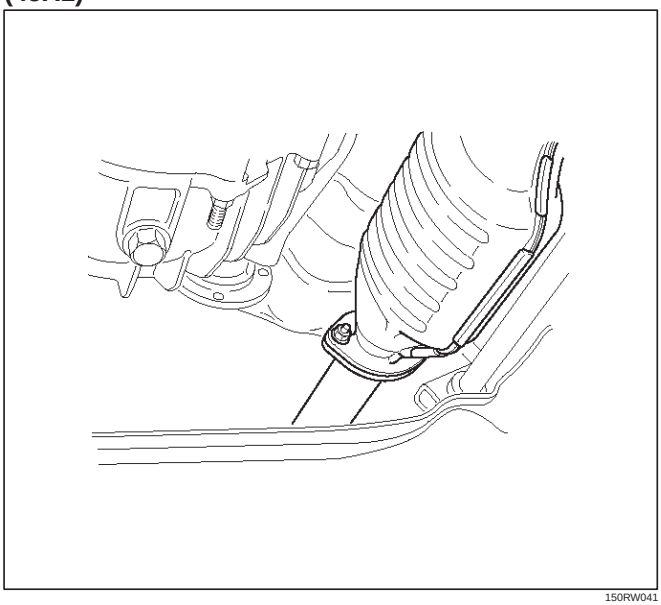

150RW041

21. Connect two oxygen sensor connectors to the transmission harness (6VE1).
22. Install the front propeller shaft and tighten the fixing bolts and nuts specified torque.

    Torque: 63 N·m (6.4 kg·m/46 lb ft)

23. Install the rear propeller shaft and tighten the fixing bolts and nuts specified torque.

    Torque: 63 N·m (6.4 kg·m/46 lb ft)

24. Install transfer protector and tighten the fixing bolts specified torque.

    Torque: 37 N·m (3.8 kg·m/27 lb ft)

25. Install the transmission control lever and transfer control lever.

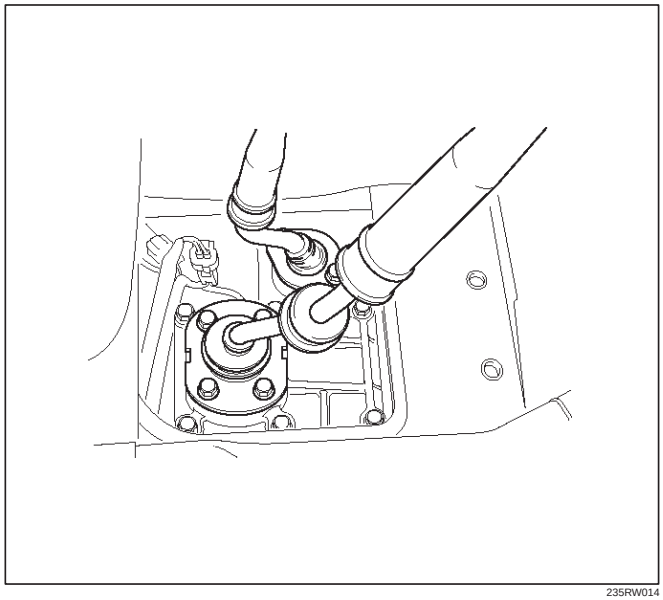

235RW014

26. Install the grommet assembly.
27. Install the front console assembly.
28. Install the gear control lever knob.
29. Connect battery ground cable.
30. Install engine hood.

Rear Oil Seal (Transfer Adapter)

Removal

1. Remove the transfer case assembly from the vehicle. Refer to Transfer Case in Drive Line/Axle section.
2. Remove the rear oil seal from the transfer adapter.

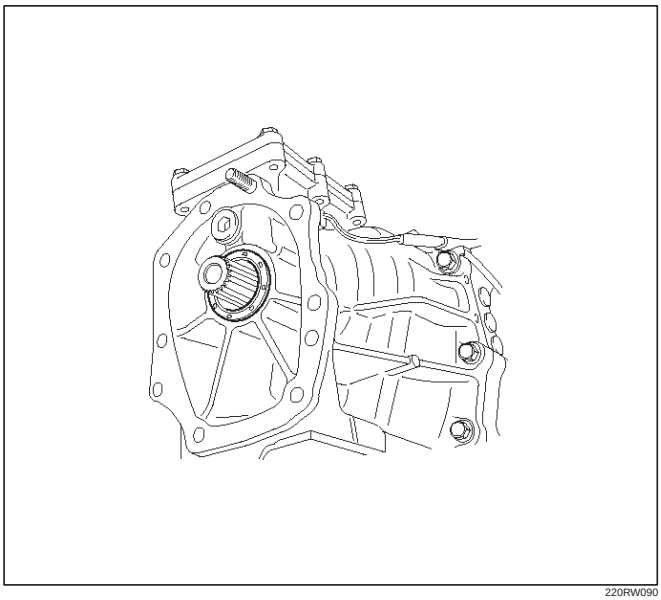

220RW090

Installation

1. Use 5–8840–2558–0 (J–42802) transfer adapter oil seal installer, and install the rear oil seal to the transfer adapter.
2. Apply grease to the oil seal lip.
3. Install the transfer case assembly to the vehicle. Refer to Transfer Case in Drive Line/Axle section.

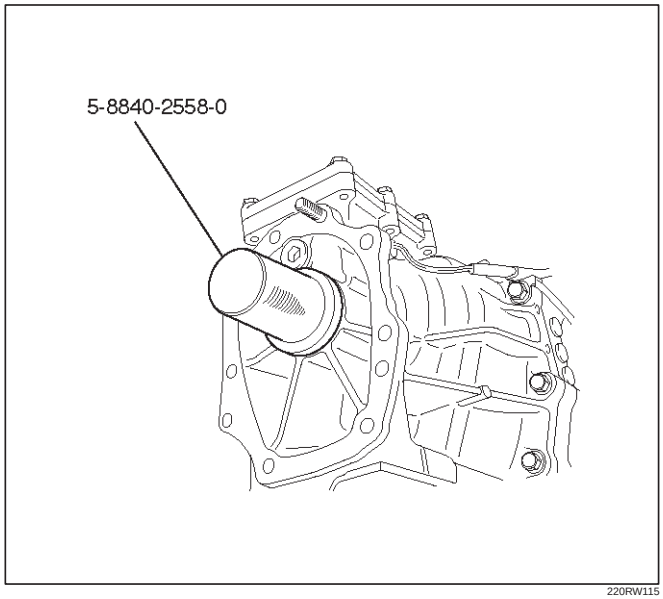

220RW115

Transmission (AR-5)

Disassembled View

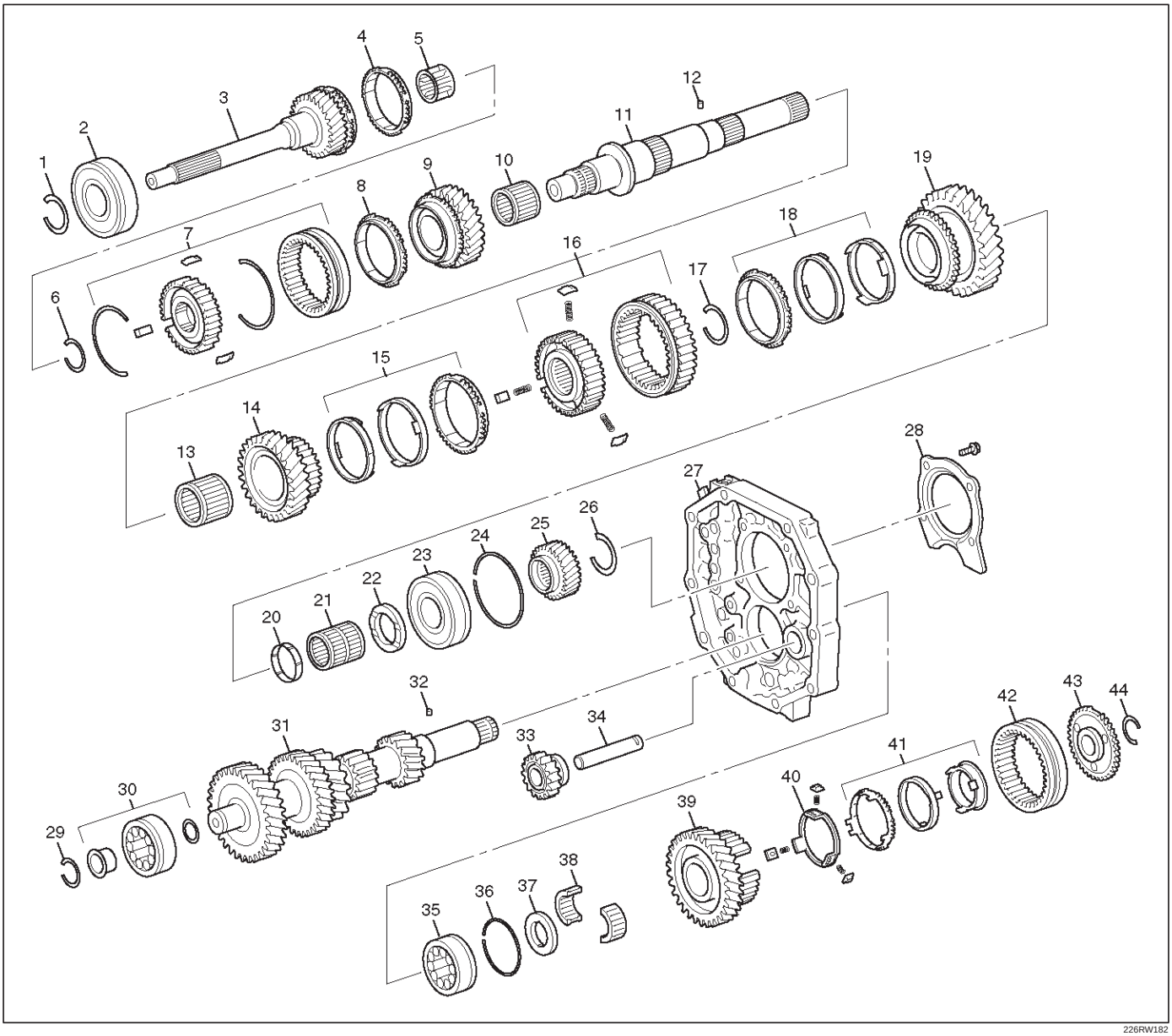

226RW182

Legend

(1) Snap Ring
(2) Bearing
(3) Top Gear Shaft
(4) Block Ring
(5) Roller Bearing
(6) Snap Ring
(7) Clutch Hub No.2 Assembly
(8) 3rd Block Ring
(9) 3rd Gear
(10) 3rd Gear Needle Roller Bearing
(11) Mainshaft
(12) Thrust Washer Pin
(13) 2nd Gear Needle Roller Bearing
(14) 2nd Gear
(15) Synchronizer Assembly
(16) Clutch Hub No.1 Assembly
(17) Snap Ring
(18) Synchronizer Assembly
(19) 1st Gear
(20) 1st Gear Bearing Spacer
(21) 1st Gear Needle Roller Bearing
(22) 1st Gear Thrust Washer
(23) Mainshaft Bearing
(24) Snap Ring
(25) 5th Gear
(26) Snap Ring
(27) Intermediate Plate
(28) Bearing Retainer
(29) Snap Ring
(30) Front Bearing Assembly
(31) Counter Gear Shaft

(32) Thrust Washer Pin
(33) Reverse Idle Gear
(34) Reverse Idle Gear Shaft
(35) Counter Gear Shaft Center Bearing
(36) Snap Ring
(37) Thrust Washer
(38) Roller Bearing
(39) Counter 5th Gear
(40) Reverse Block Ring
(41) Synchronizer Assembly
(42) Hub Sleeve No.3
(43) 5th Gear Spline Piece
(44) Snap Ring

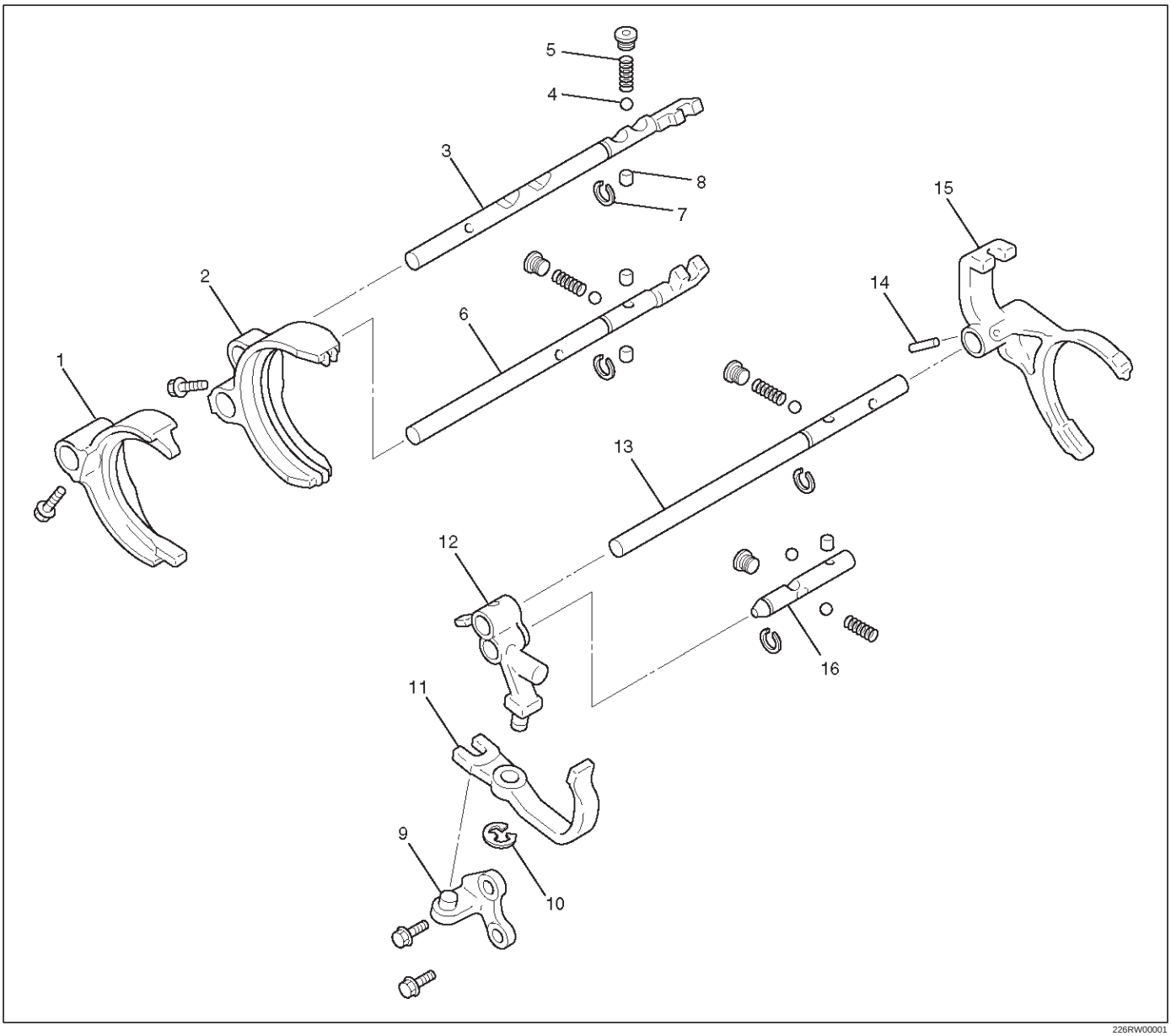

226RW00001

Legend

(1) 3rd-4th Shift Arm
(2) 1st-2nd Shift Arm
(3) 3rd-4th Shift Rod
(4) Ball
(5) Spring
(6) 1st-2nd Shift Rod
(7) Snap Ring
(8) Interlock Pin
(9) Reverse Shift Arm Bracket
(10) E–Ring
(11) Reverse Shift Arm No.2
(12) Reverse Shift Arm No.1
(13) 5th Reverse Shift Rod
(14) Spring Pin
(15) 5th Shift Arm
(16) Reverse Shift Rod

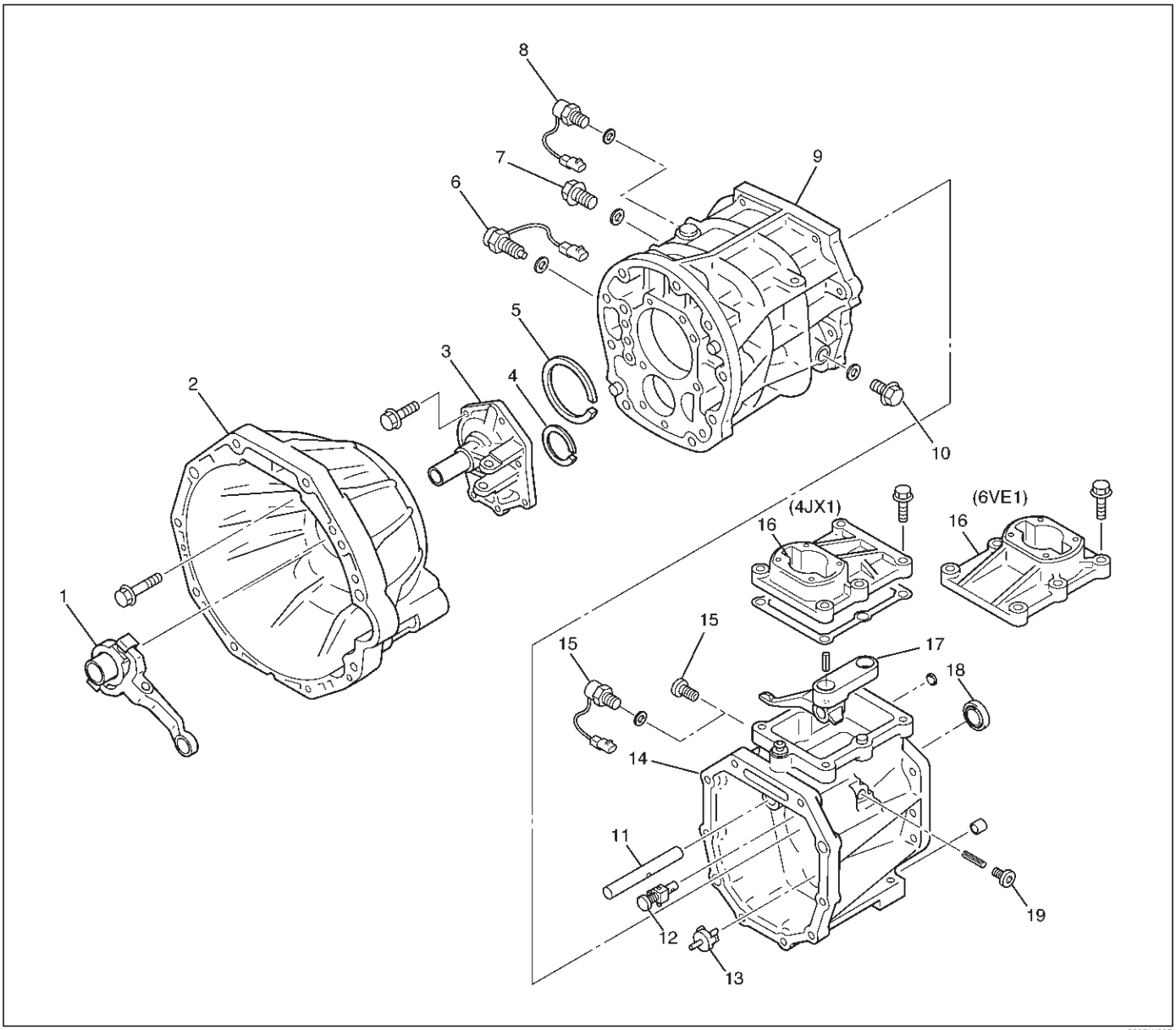

220RW095

Legend

(1) Release Bearing and Shift Fork
(2) Clutch Housing
(3) Front Cover
(4) Snap Ring
(5) Snap Ring
(6) 1st and 2nd Switch
(7) Drain Plug
(8) Backup Light Switch
(9) Transmission Case
(10) Filler Plug
(11) Gear Control Rod
(12) Reverse Restrict Pin
(13) Oil Receiver Pipe
(14) Transfer Adapter
(15) Plug (6VE1) or Neutral Switch (4JX1)
(16) Gear Control Box
(17) Shift Lever Housing
(18) Oil Seal
(19) Plug

Disassembly

1. Remove the drain plug and filler plug.
   1. Remove the drain plug (1) and gasket.
   2. Remove the filler plug (2) and gasket.

(6VE1)

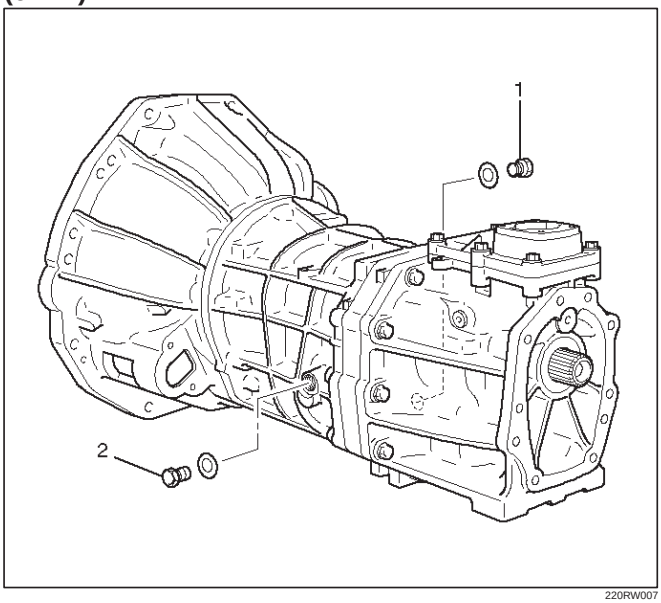

220RW007

2. Remove the clutch release bearing and shift fork.
   1. Remove the clutch release bearing (3) from the front cover.
   2. Remove the split pin (4). Remove the shaft from the under. Remove the shift fork (5).

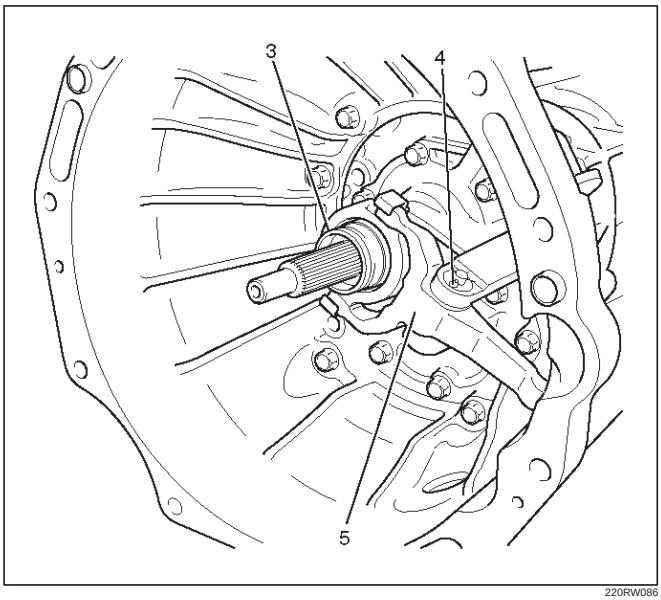

220RW086

3. Remove the switch.
   1. Remove backup light switch (6) and gasket.
   2. Remove neutral switch (7) and gasket (4JX1).
   3. Remove 1st and 2nd switch (8) and gasket.

(4JX1)

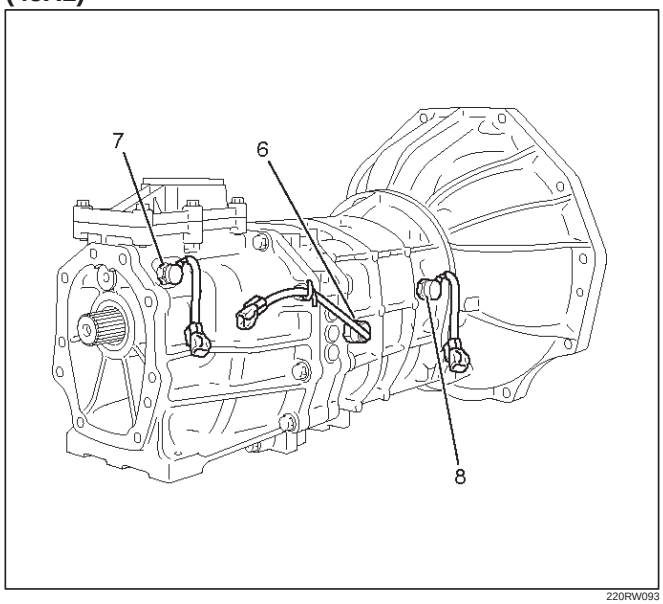

220RW093

4. Remove the clutch housing.
   1. Remove the 9 bolts.

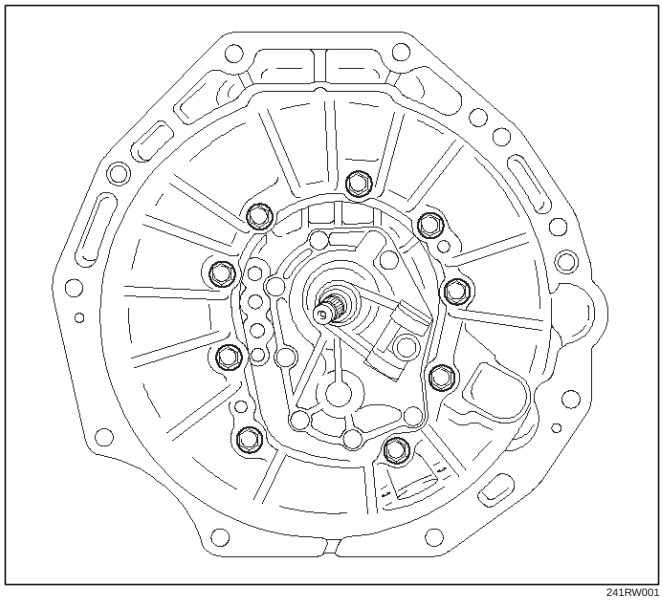

241RW001

2. Using a plastic hammer, carefully tap the clutch housing.

(6VE1)

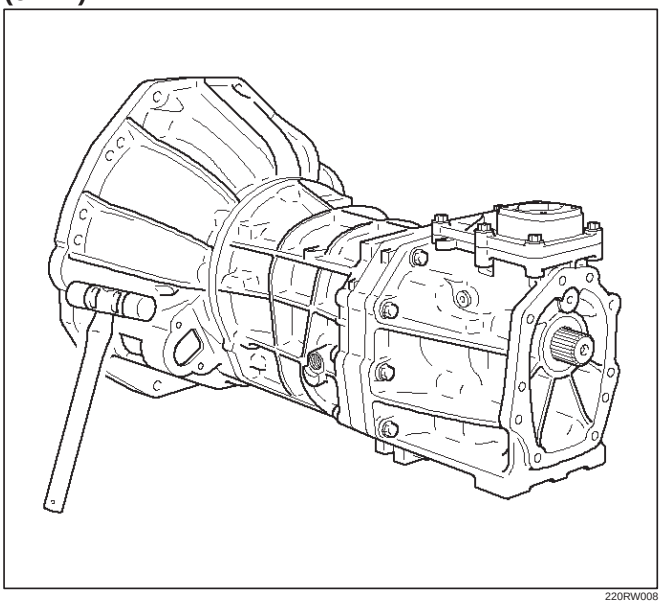

220RW008

5. Remove gear control box and gasket.
   1. Remove the 6 bolts, gear control box and gasket.

(6VE1)

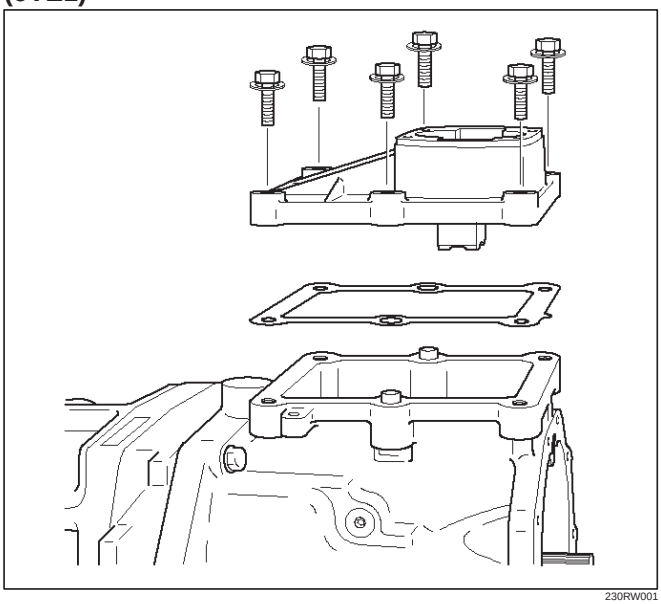

230RW001

6. Remove transfer adapter.
   1. Using a hexagon wrench, remove the plug (1).

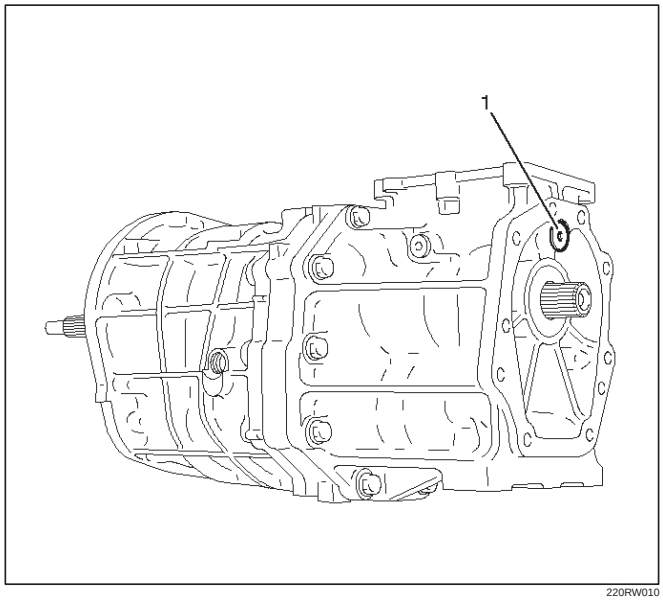

220RW010

   2. Using a pin punch and hammer, drive out the slotted spring pin (2).

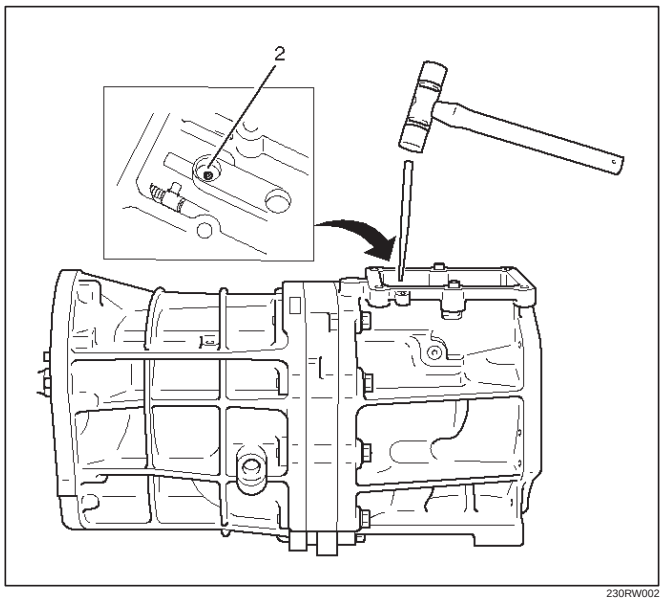

230RW002

3. Using the M8 × 1.25 bolt, remove the gear control rod and the shift lever hausing.

NOTE: Turn the M8 bolt a few times, before remove the gear control rod.

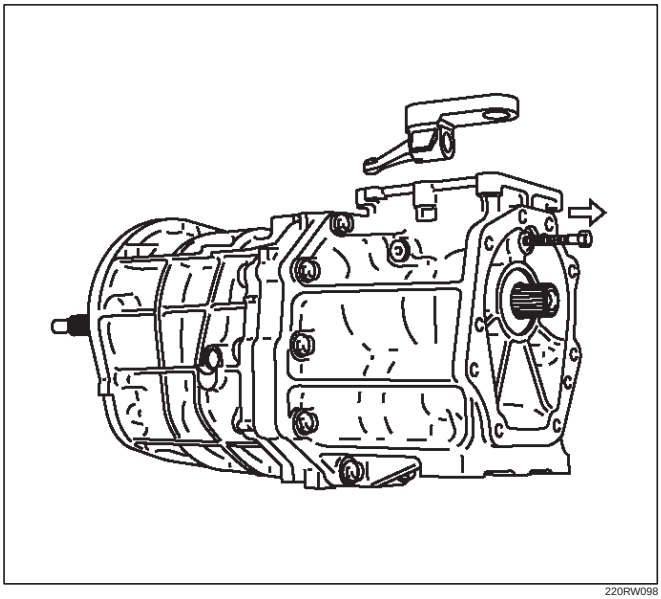

220RW098

4. Remove the 10 bolts and clamp.

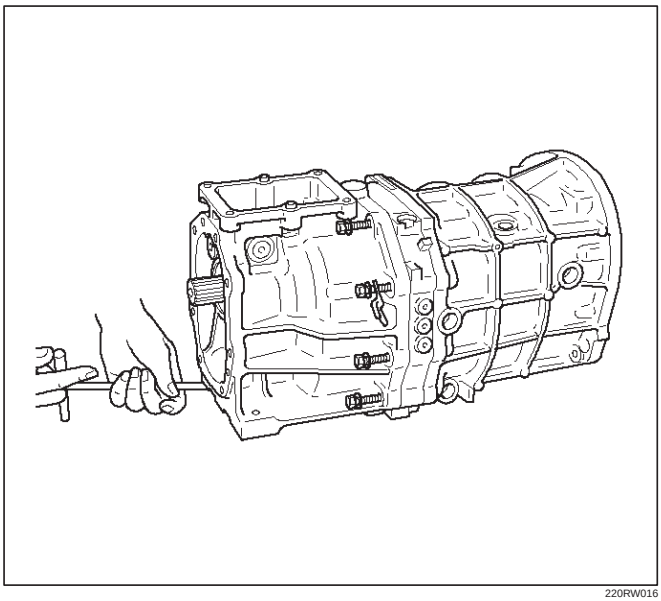

220RW016

5. Using a plastic hammer, tap the transfer adapter.

NOTE:

- Be careful not to lose the pin.
- Cover the mainshaft splines with adhesive tape. This will prevent damage to the oil seal lip.

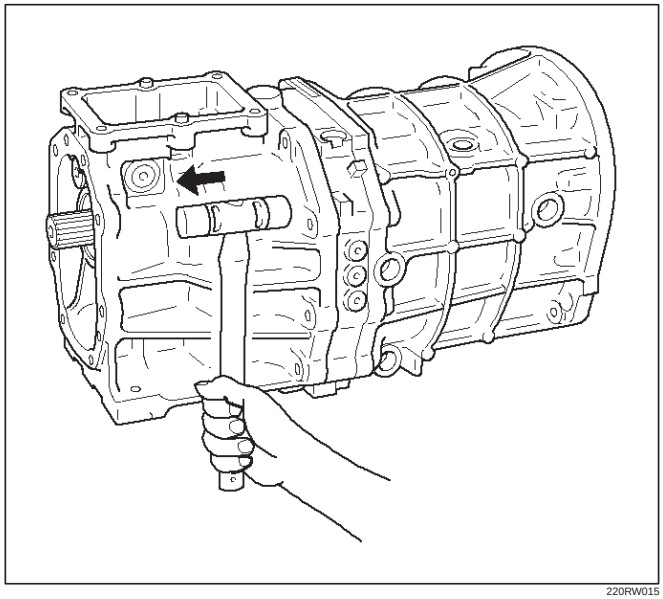

220RW015

7. Disassemble the transfer adapter assembly.
   1. Using a torx socket wrench(T40), remove the plug.

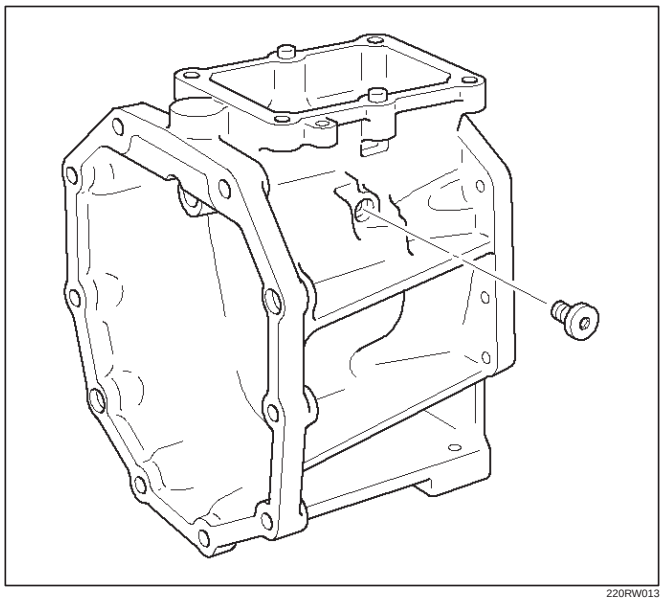

220RW013

2. Using a pin punch and hammer, drive out the slotted spring pin. Remove the reverse restrict pin.

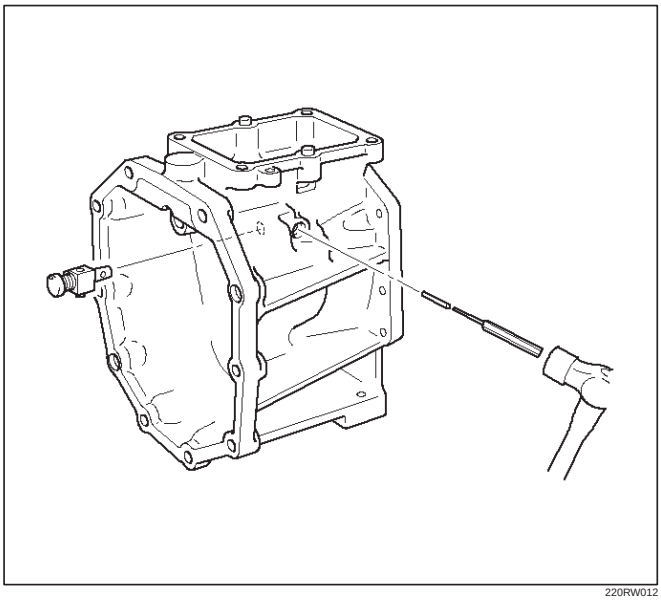

220RW012

3. Remove the oil receiver pipe.

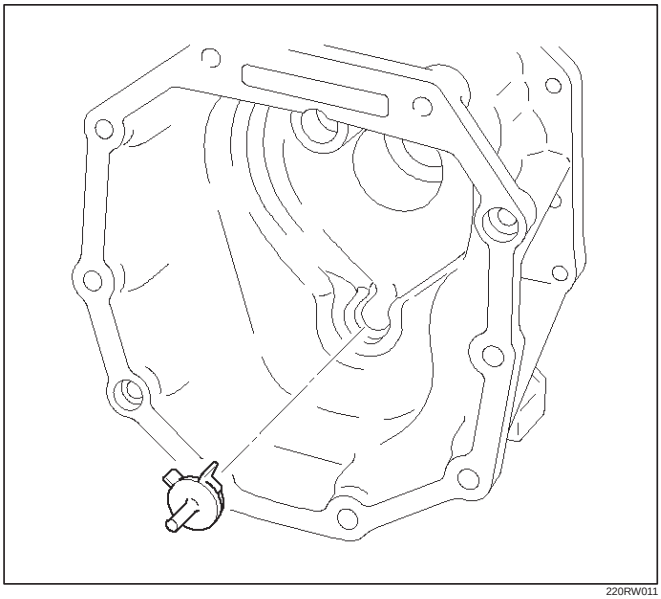

220RW011

4. Remove the oil seal.
5. Using socket hexagon wrench, remove the plug.

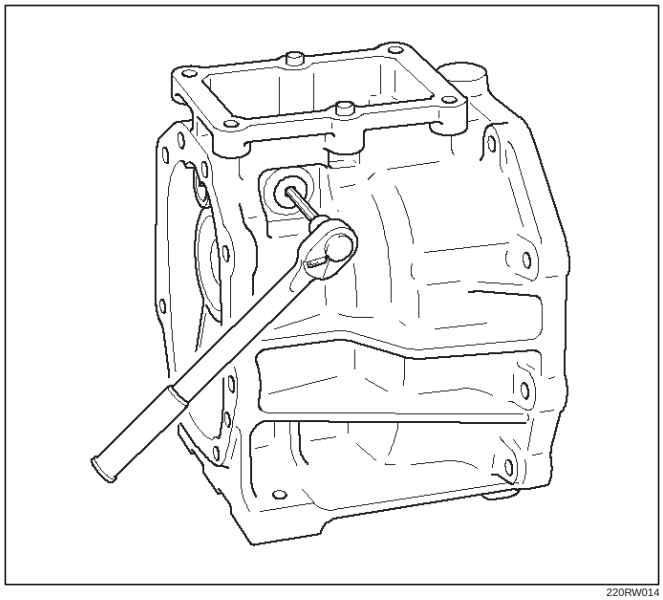

220RW014

8. Remove the front cover.
   1. Remove the 8 bolts.

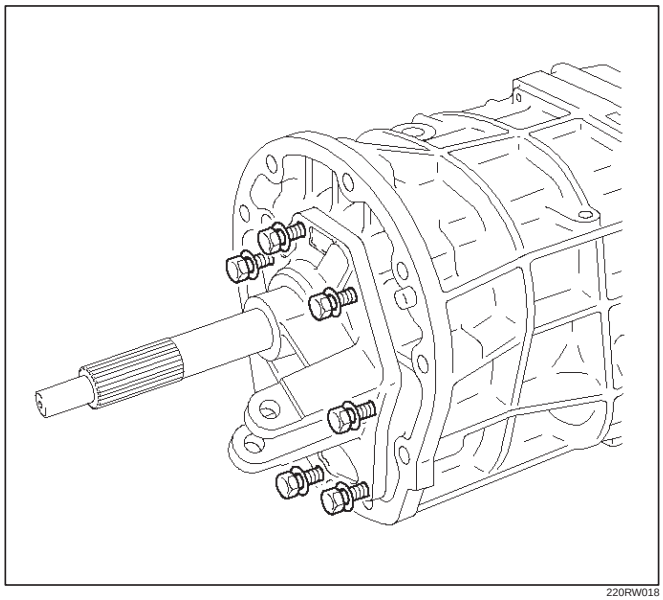

220RW018

2. Using a plastic hammer, carefully tap the front cover.

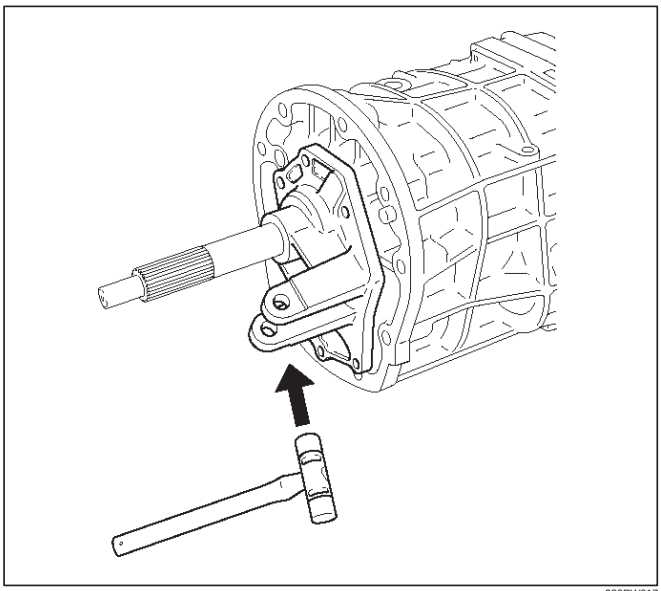

220RW017

9. Remove the front cover oil seal.
   1. Mount the front cover through the aluminum plate in a vise.
   2. Using screwdriver, remove oil seal (1).

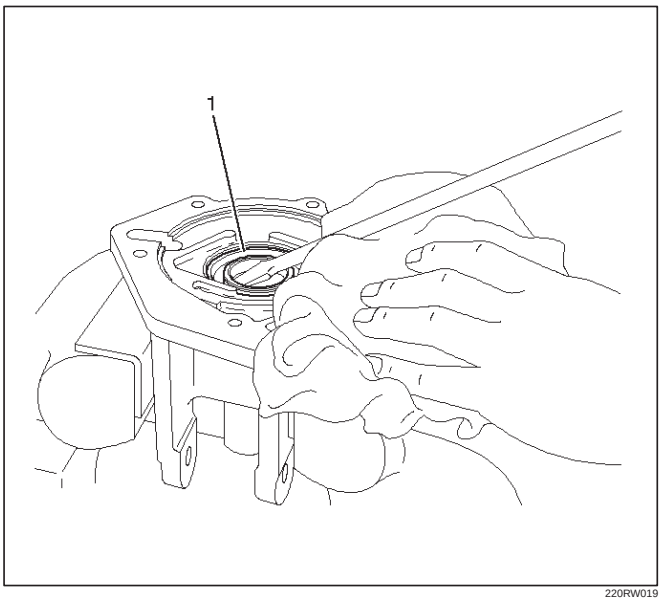

220RW019

10. Remove the transmission case.
    1. Using a snap ring expander, remove the 2 snap rings (1)(2).

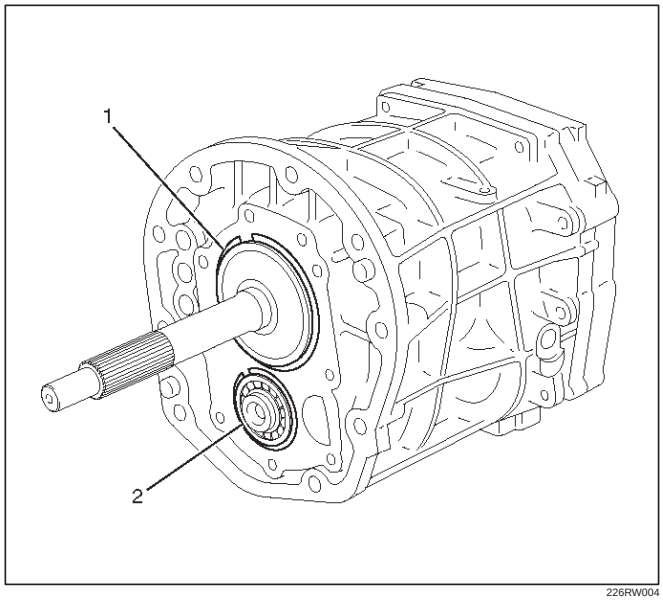

226RW004

    2. Using a plastic hammer, carefully tap the transmission case.

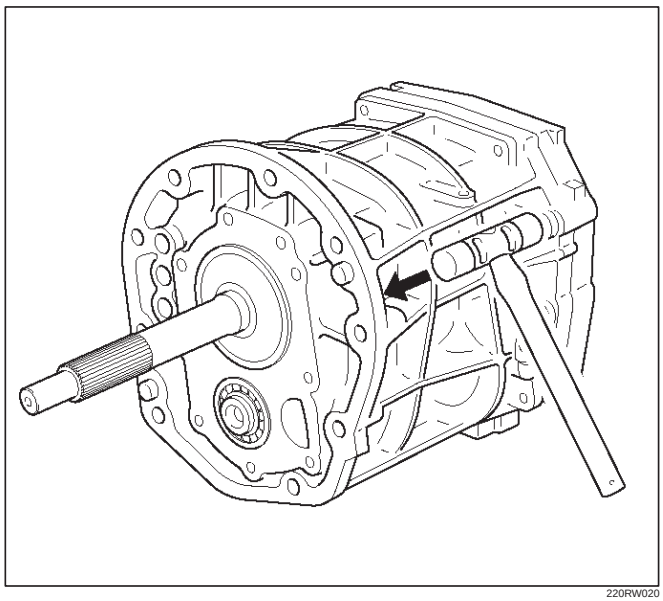

220RW020

11. Mount the intermediate plate.
    1. Mount the intermediate plate through the aluminum plate in a vise.

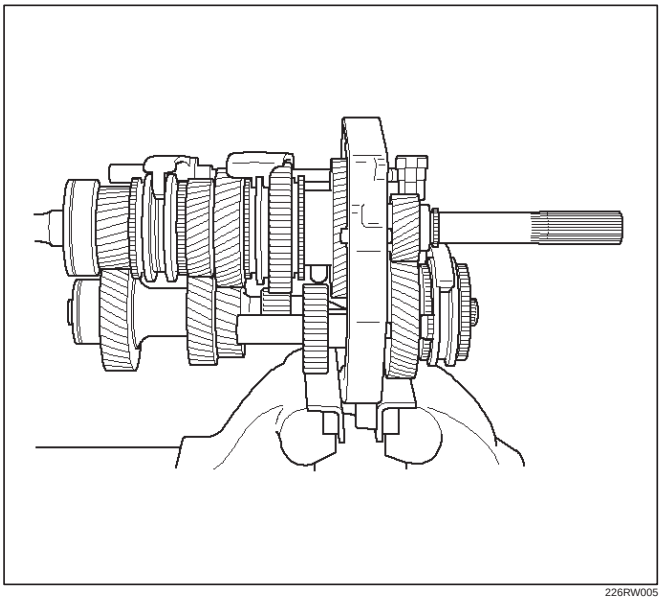

226RW005

12. Remove the slotted spring pin.
    1. Using a pin punch and hammer, drive out the pin from the arm.

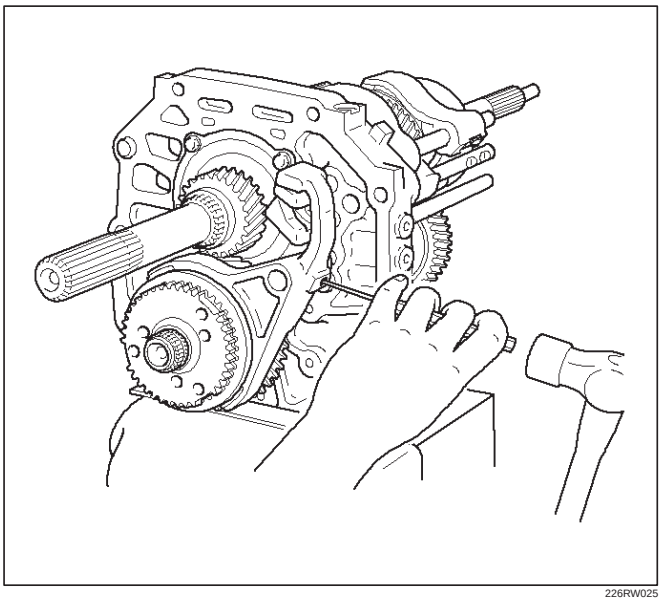

226RW025

13. Remove the shift arm set bolt.
    1. Remove the 2 bolts from the shift arm.

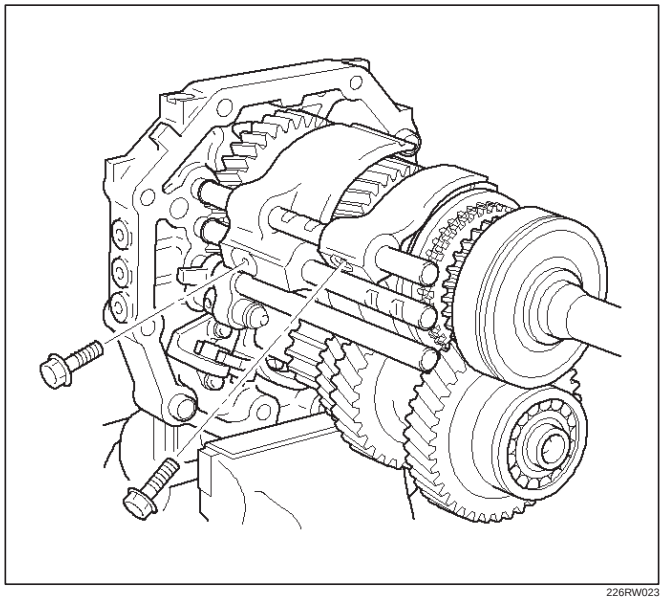

226RW023

14. Remove the counter 5th gear.
    1. Using 2 screwdrivers and hammer, tap out the snap ring.

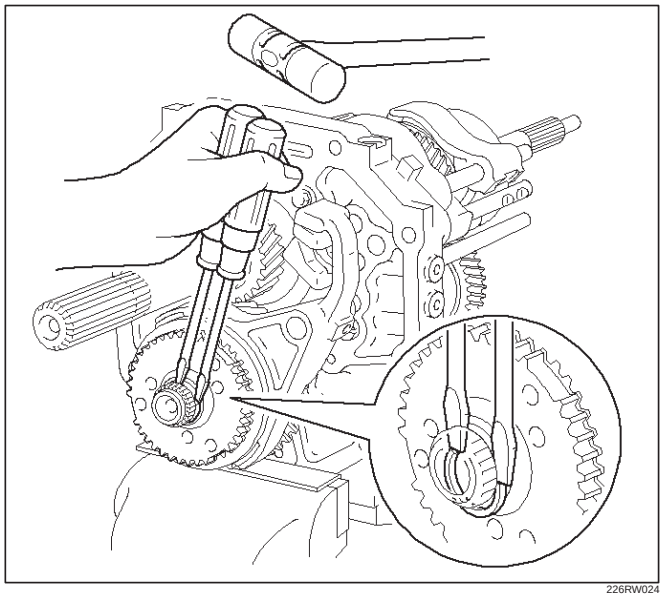

226RW024

2. Using remover 5–8840–2550–0 (J–42794) and attachment 5–8840–2560–0 (J–42988), remove the 5th gear spline piece.

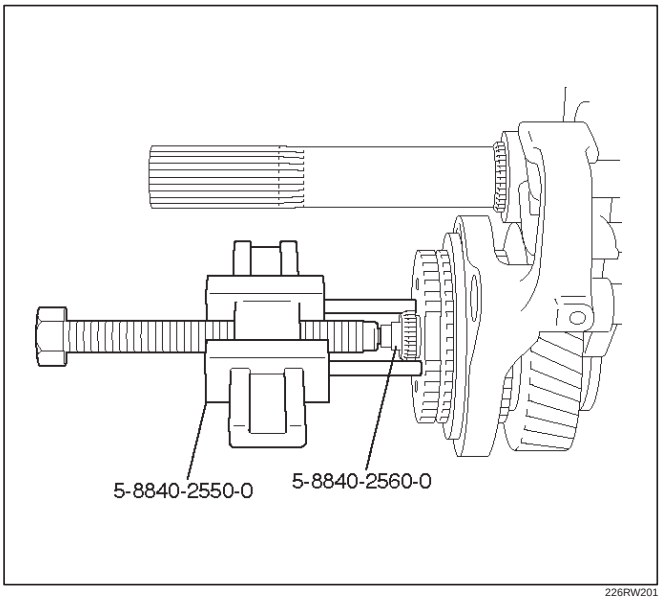

226RW201

3. Remove the hub sleeve No.3, block ring set, counter 5th gear, bearing and 5th shift arm.

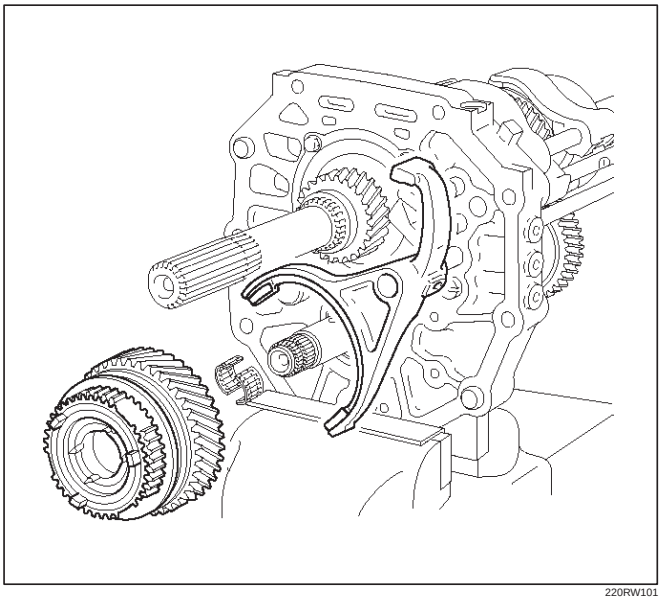

220RW101

4. Remove the synchronizer pull ring, synchronizer cone ring, and synchronizer outer ring from hub sleeve No.3.

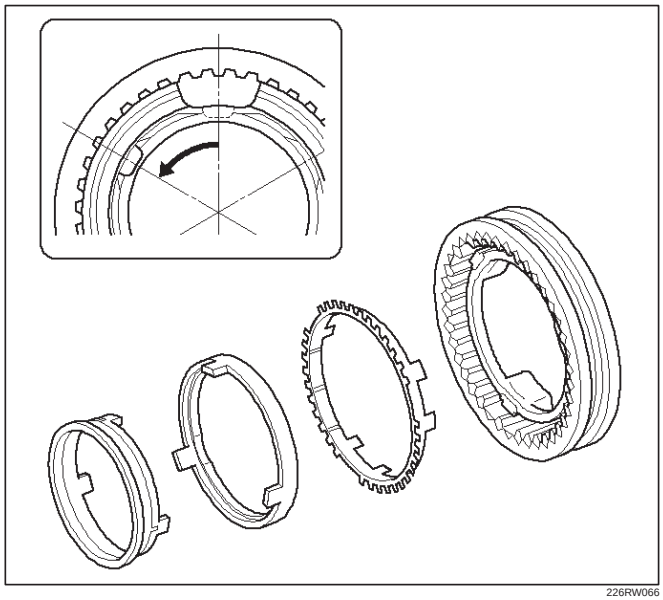

226RW066

5. Remove the reverse block ring from the hub sleeve No.3. Remove the 3 inserts and 3 compression springs.

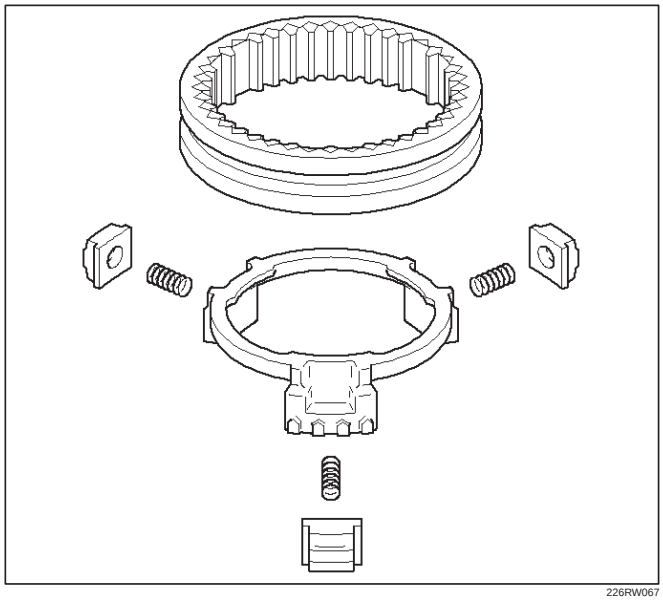

226RW067

15. Remove the thrust washer.
    1. Remove the thrust washer from counter gear shaft.
    2. Remove the thrust washer pin from counter gear shaft.

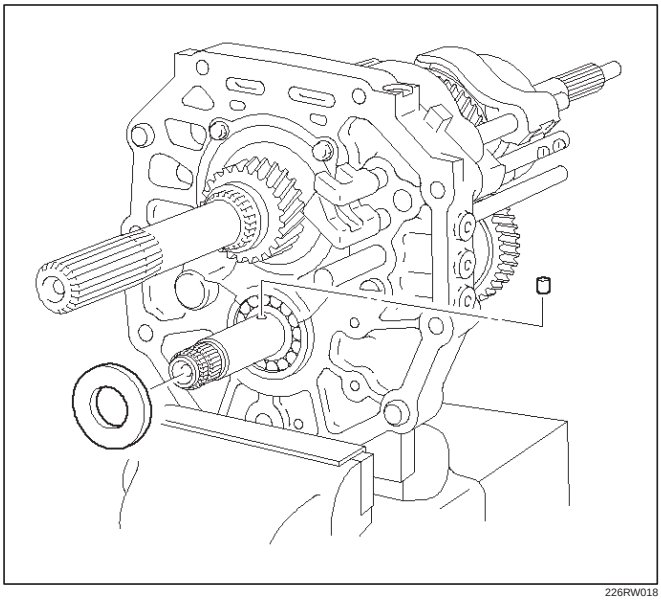

226RW018

16. Remove the bearing plate.
    1. Remove the 4 bolts and bearing retainer.

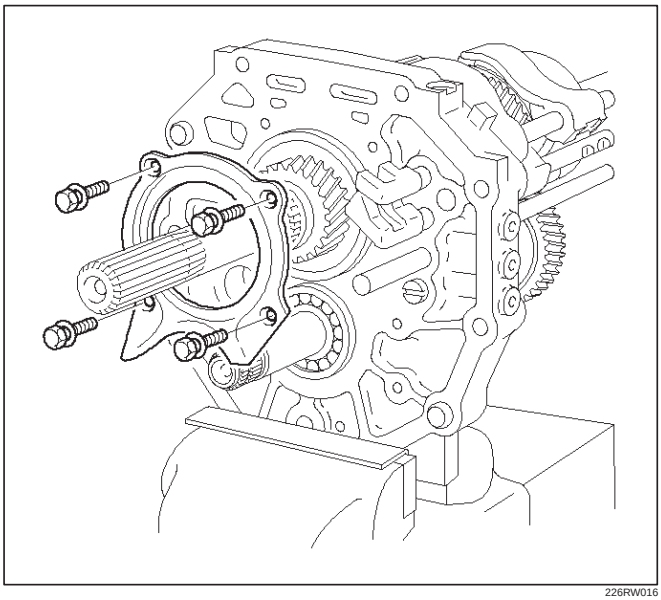

226RW016

17. Remove the reverse idle gear.
    1. Pull out the shaft foward the rear and remove the reverse idle gear.

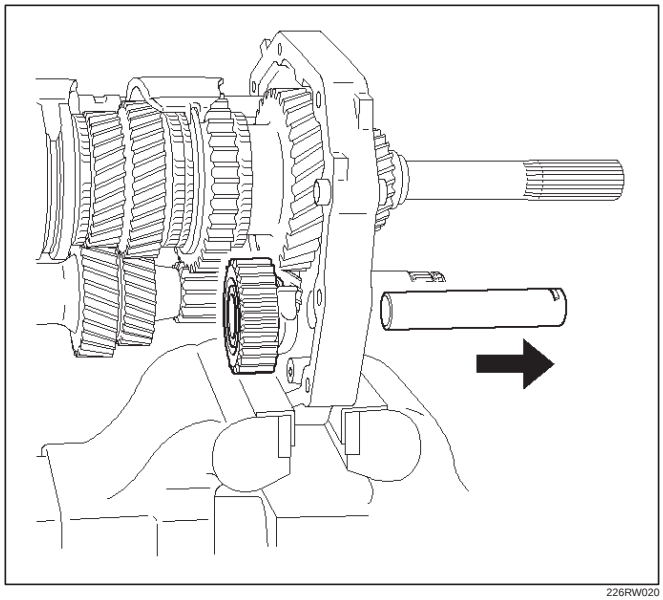

226RW020

18. Remove the counter gear shaft.
    1. Using snap ring plier, remove counter gear shaft center bearing snap ring.

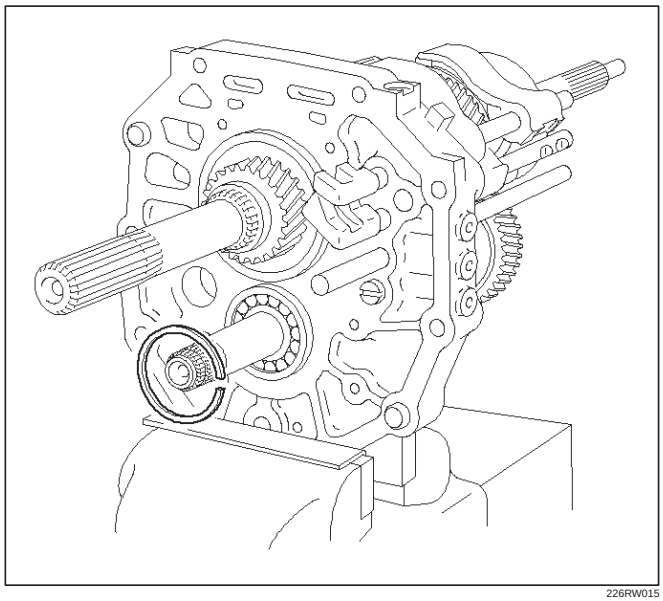

226RW015

2. Using remover 5–8840–2551–0 (J–42795) and attachment 5–8840–2560–0 (J–42988), remove counter gear shaft center bearing.

NOTE: Be careful not to drop the counter gear, when removing the bearing.

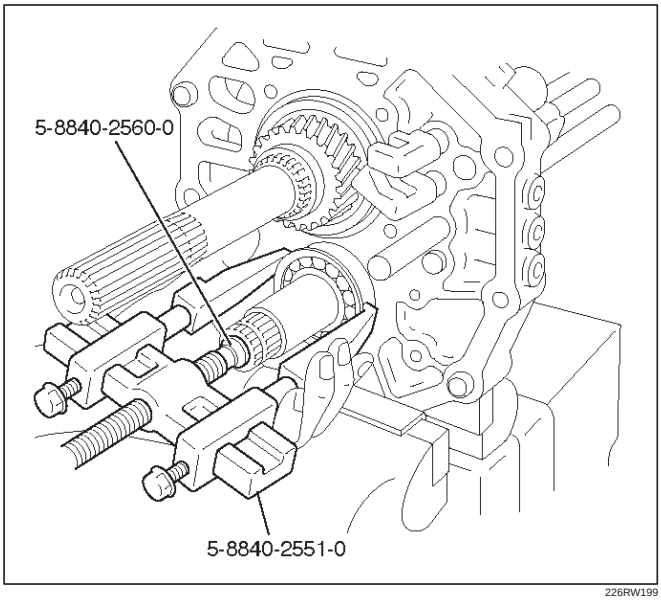

226RW199

3. Remove the counter gear from intermediate plate.

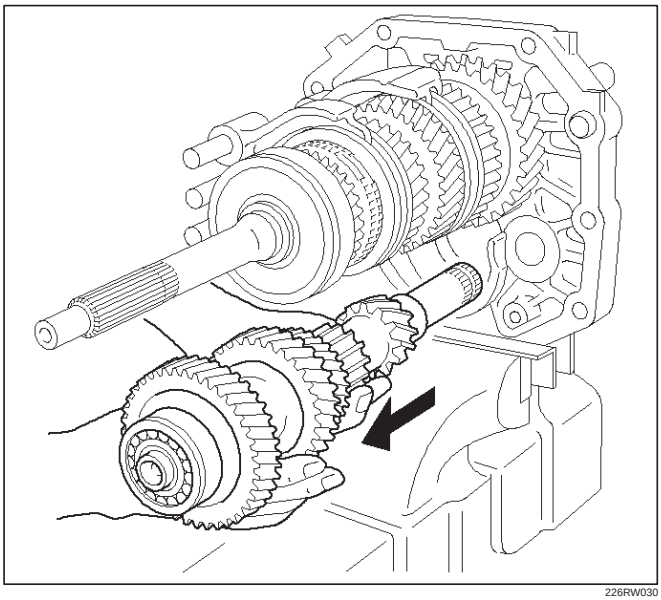

226RW030

19. Disassemble the counter gear shaft assembly.
    1. Using snap ring pliers, remove the counter gear shaft front bearing snap ring.

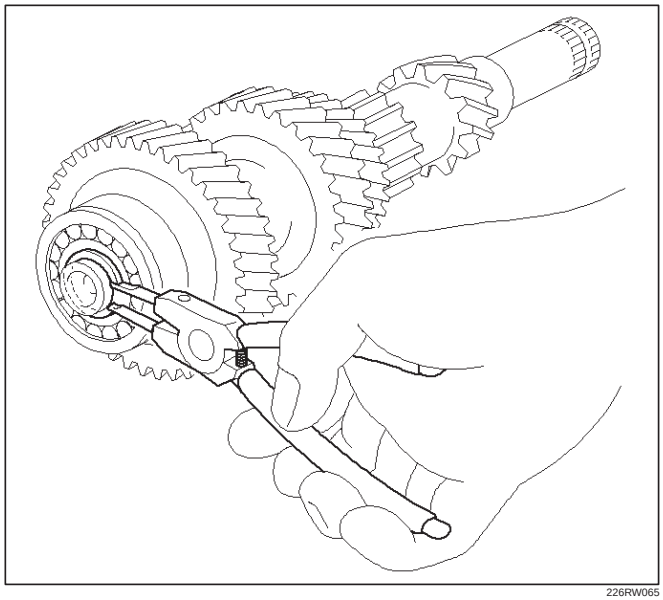

226RW065

2. Using bearing separator 5–8840–0015–0 (J–22912–01) and a press, remove the bearing.

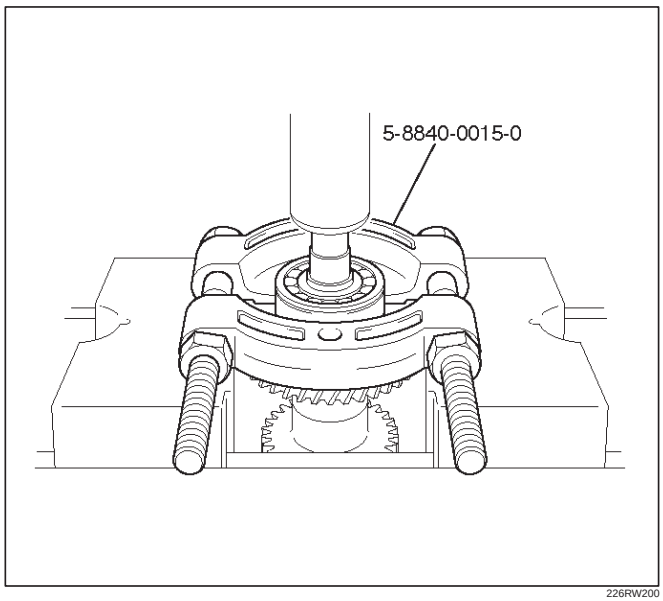

226RW200

20. Remove the top gear shaft.
    1. Remove the top gear shaft from mainshaft.

NOTE: Don’t fall needle roller bearing.

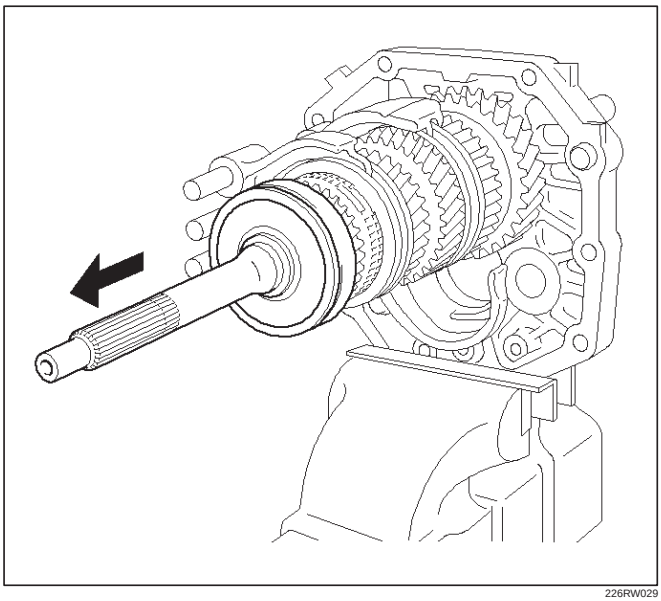

226RW029

2. Remove the 4th block ring and roller bearing.

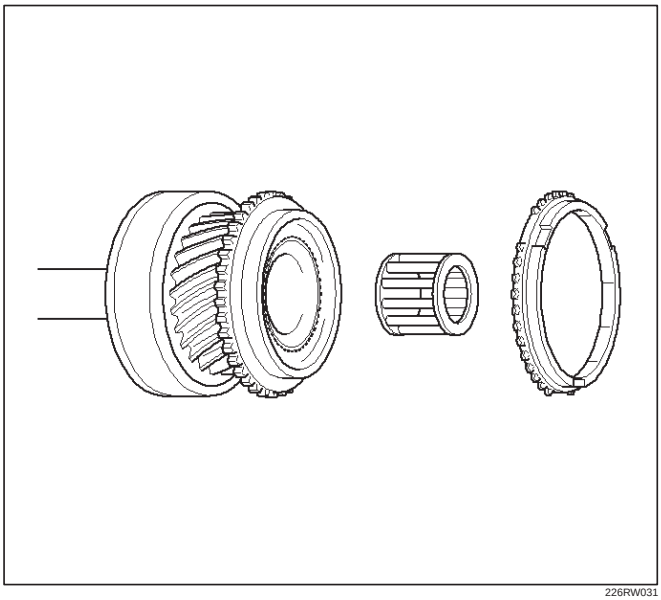

226RW031

21. Disassemble the top gear shaft assembly.
    1. Check for wear or damage.

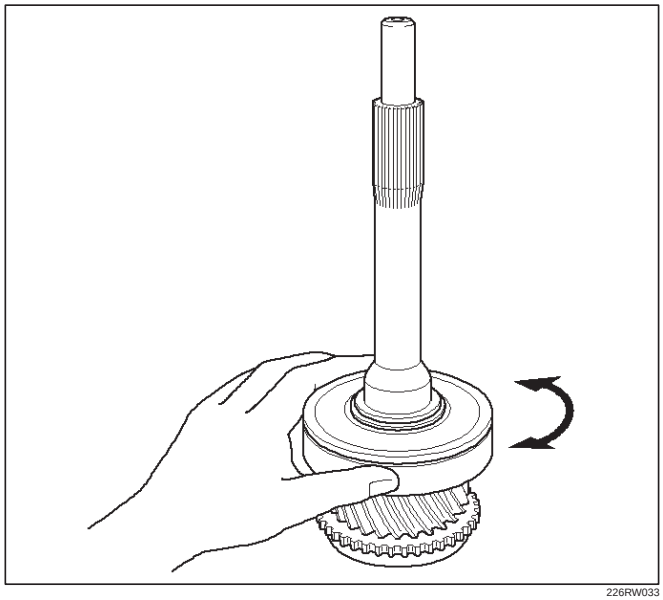

226RW033

2. Remove the front bearing shaft snap ring.

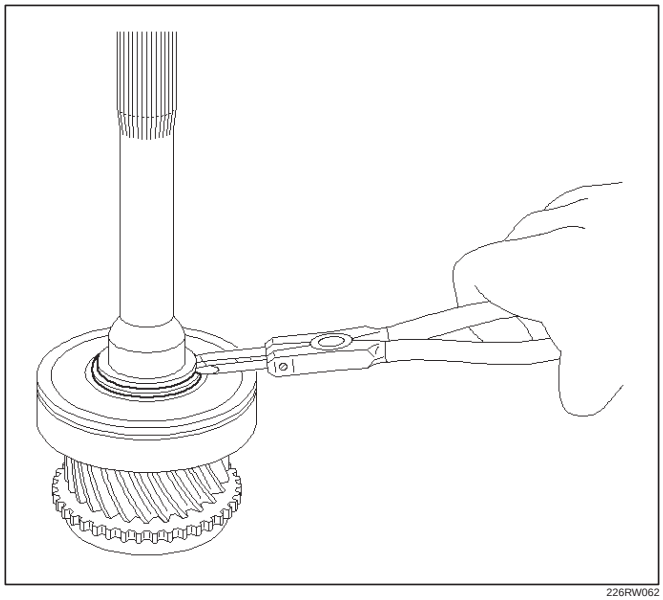

226RW062

3. Using bearing separator 5–8840–0015–0 (J–22912–01) and a press, remove the bearing.

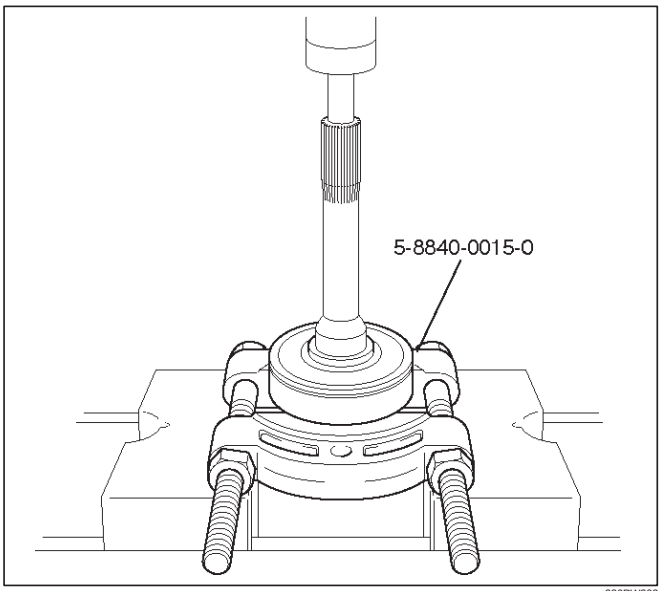

226RW202

22. Remove the mainshaft.
    1. Remove mainshaft bearing snap ring.

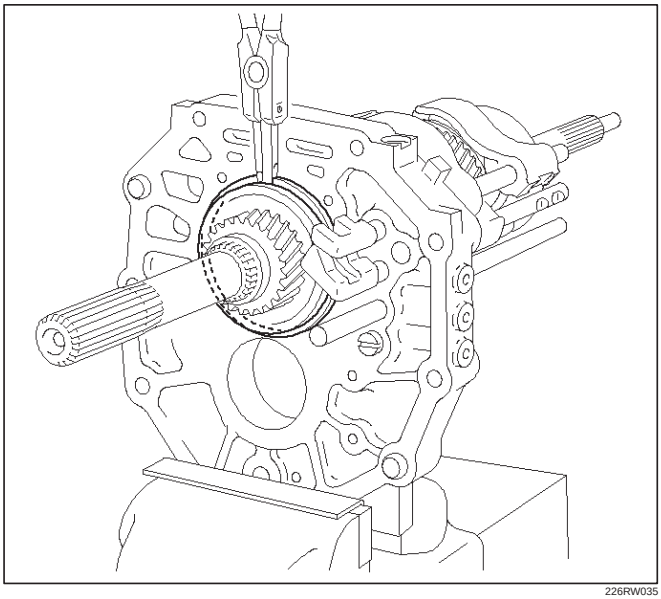

226RW035

2. Using a plastic hammer, tap the 5th-reverse shift rod at the reverse shift side.

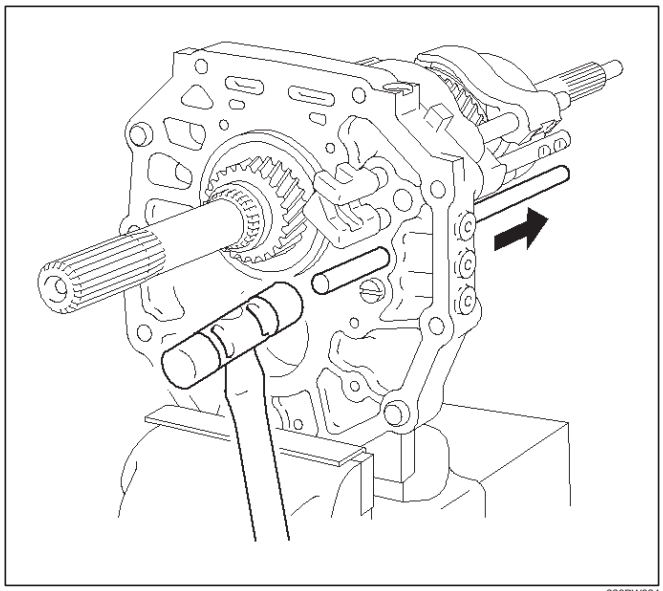

226RW034

3. Remove the intermediate plate from a vise.
4. Remove the mainshaft, 1st-2nd shift arm and 3rd-4th shift arm.

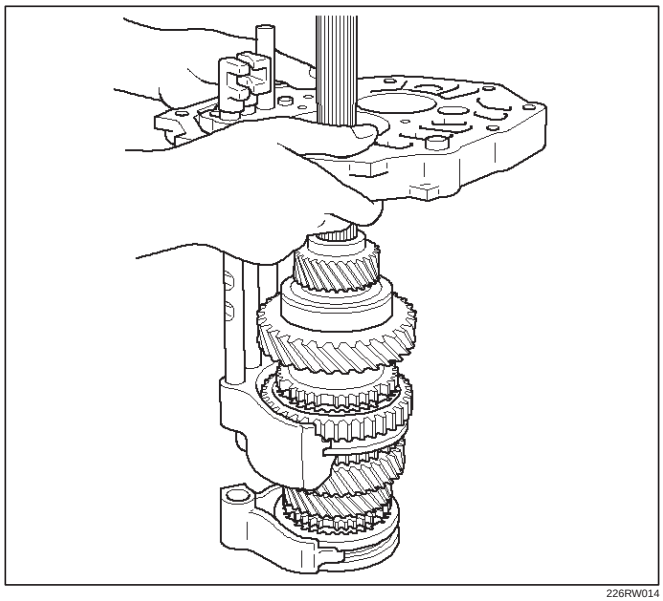

226RW014

23. Disassemble the mainshaft assembly.
    1. Inspect each gear thrust clearance.
        1. Using thickness gauge, inspect thrust clearance (1st gear, 3rd gear).

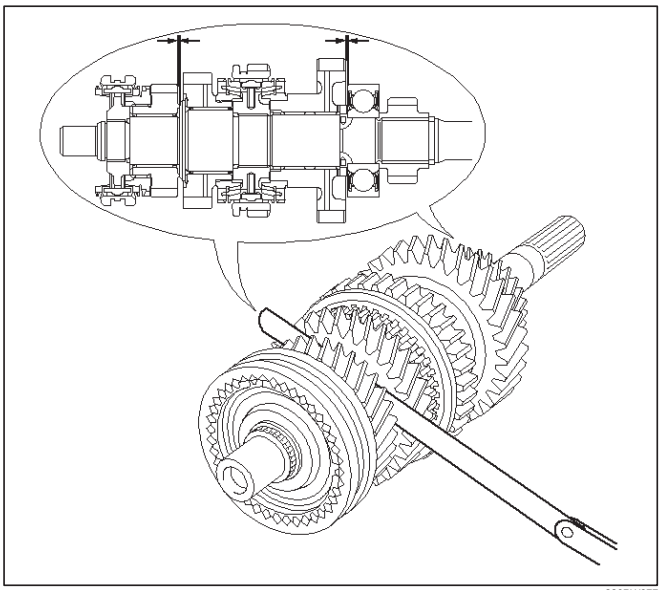

226RW077

        2. Mount the mainshaft through the aluminum plate in a vise.
        3. Using a dial indicator, measure each gear thrust clearance.

Gear	Standard Clearanse
1st	0.15 – 0.45 mm (0.0059 – 0.0177 in)
2nd	0.10 – 0.25 mm (0.0039 – 0.0098 in)
3rd	0.10 – 0.25 mm (0.0039 – 0.0098 in)

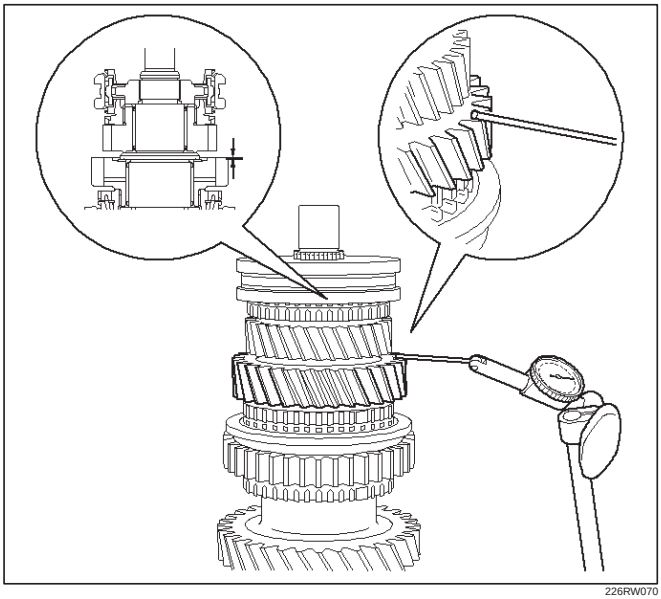

226RW070

    2. Inspect each gear radial clearance
        1. Using a dial indicator, measure the radial clearance of each gear.

Gear	Standard Clearanse
1st	0.020 – 0.074 mm (0.00078 – 0.00291 in)
2nd	0.015 – 0.068 mm (0.00059 – 0.00268 in)
3rd	0.015 – 0.068 mm (0.00059 – 0.00268 in)

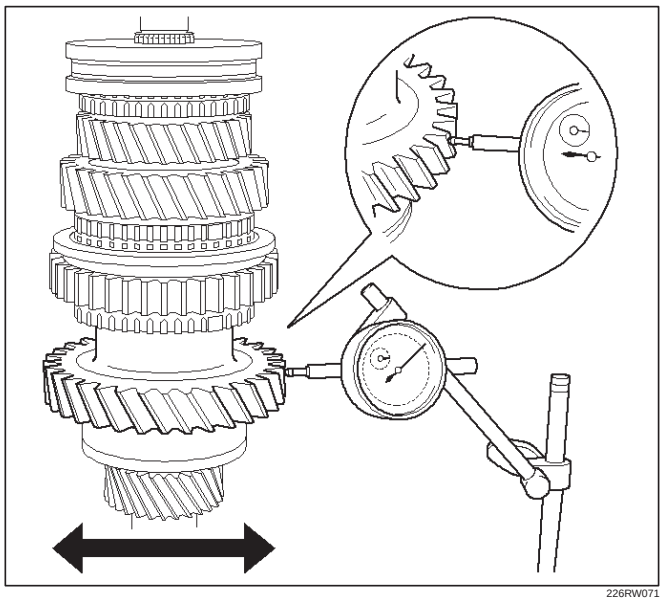

226RW071

    3. Using 2 screwdrivers and hammer, tap out the snap ring.

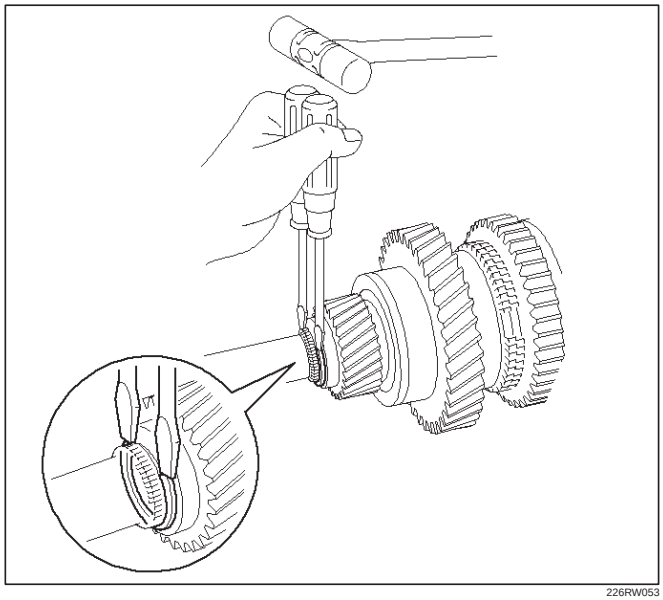

226RW053

4. Using bearing separator 5–8840–0015–0 (J–22912–01) and a press, remove the following parts.
   1. 5th gear (1).
   2. Mainshaft bearing (2).
   3. 1st gear thrust washer (3).
   4. 1st gear (4).

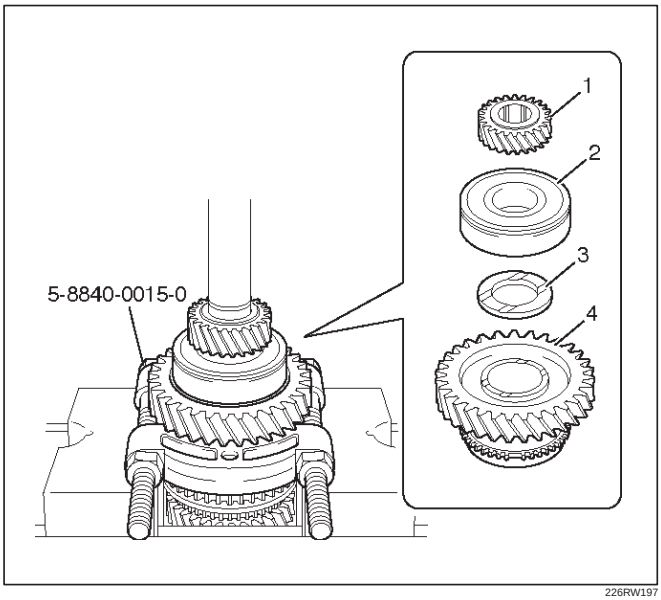

226RW197

5. Remove following parts from mainshaft.
   1. Synchronizer assembly (1).
   2. 1st gear thrust washer pin (3).
   3. 1st gear needle roller bearing (4).
   4. 1st gear bearing spacer (2).

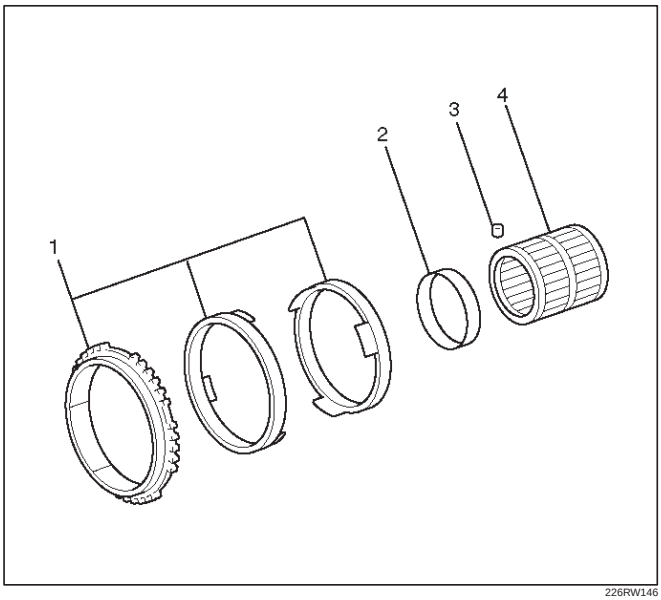

226RW146

6. Using 2 screwdrivers and hammer, tap out snap ring.

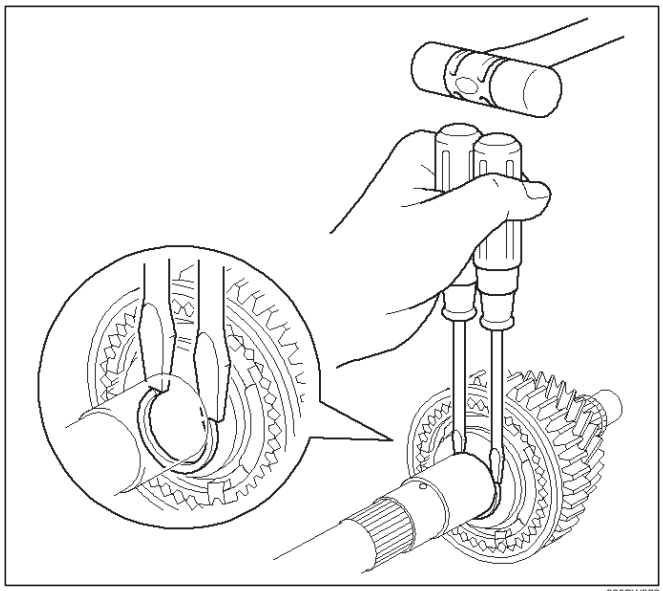

226RW073

7. Using bearing separator 5–8840–0015–0 (J–22912–01) and a press, remove the following parts.
   1. Clutch hub No.1 assembly (1).
   2. Synchronizer assembly (2).
   3. 2nd gear (3).
   4. 2nd gear needle roller bearing (4).

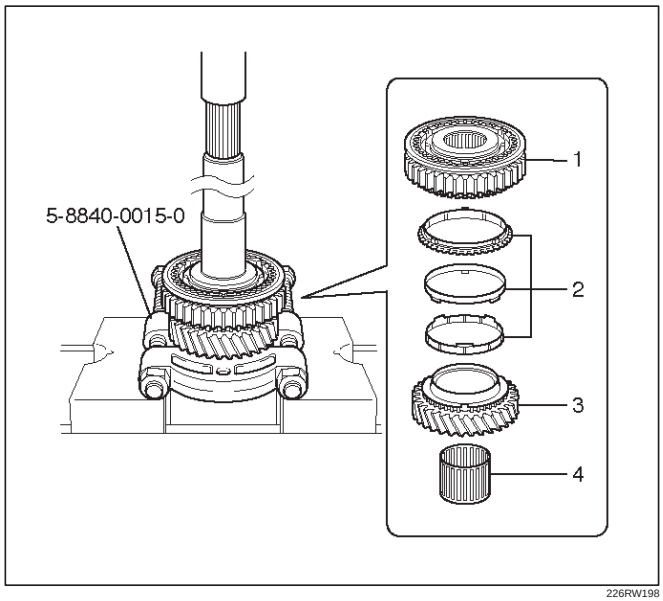

226RW198

8. Remove the reverse gear from clutch hub No.1.
9. Remove the 3 inserts and 3 compression springs.
   - When removing the inserts, push the insert spring with a screwdriver.

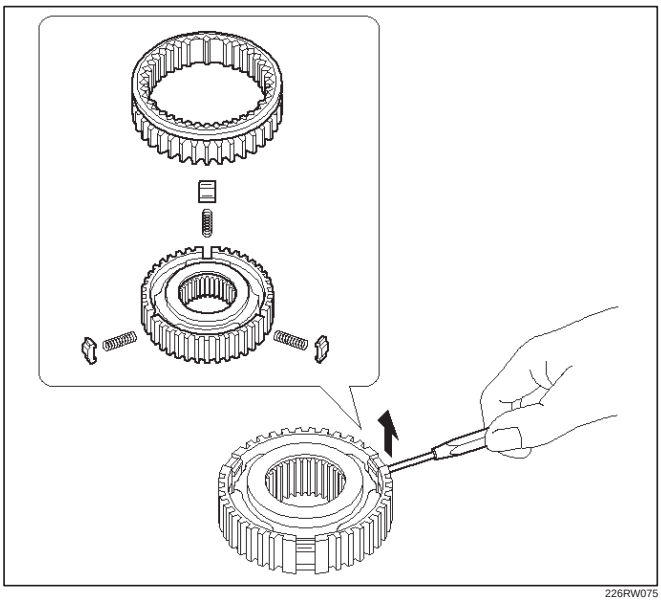

226RW075

10. Remove the snap ring.

NOTE: Don't damage the bearing surface.

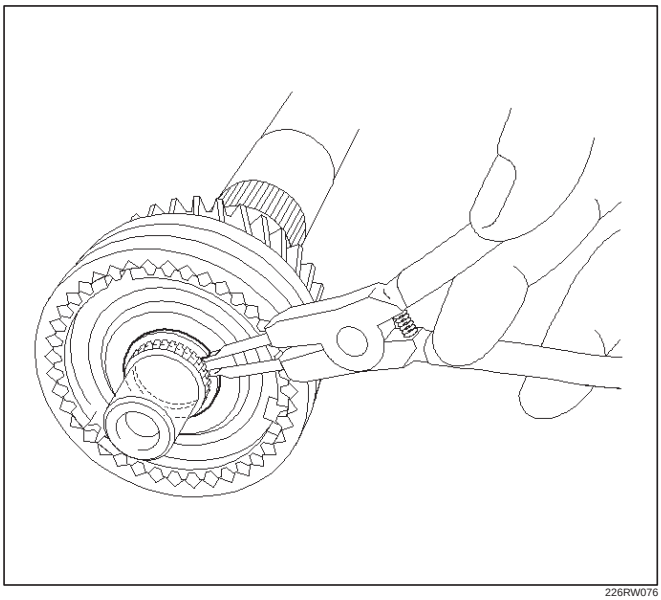

226RW076

11. Using a press, remove following parts.
    1. Clutch hub No.2 assembly (1).
    2. 3rd block ring (2).
    3. 3rd gear (3).
    4. 3rd gear needle roller bearing (4).

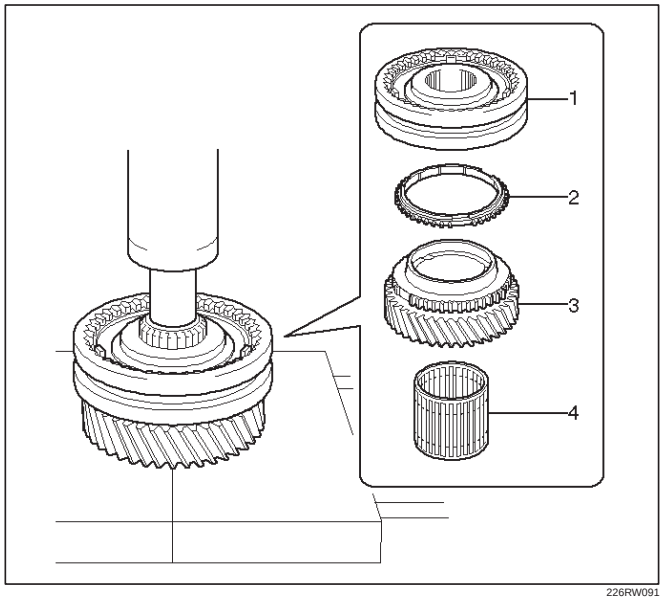

226RW091

12. Using screwdriver, remove the 2 insert springs, hub sleeve No.2, clutch hub No.2 and 3 inserts.

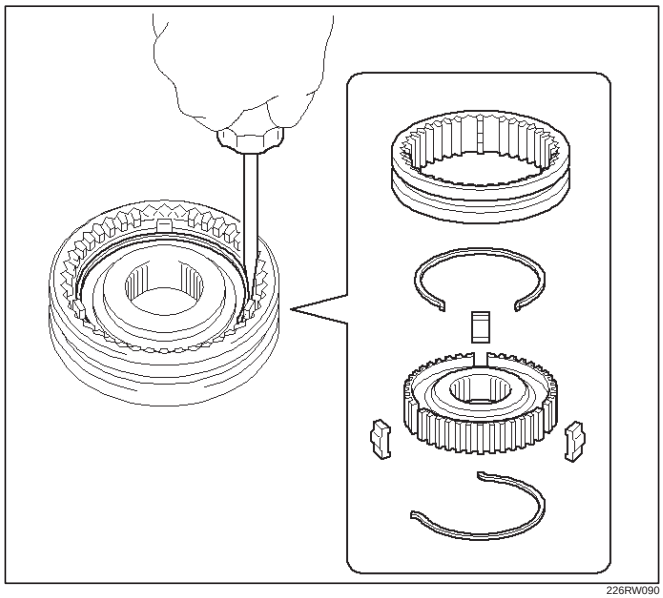

226RW090

24. Remove the shift parts and interlock parts.
    1. Mount the intermediate plate through the aluminum plate in a vise.
    2. Using a plastic hammer, tap the 5th shift rod on the neutral.

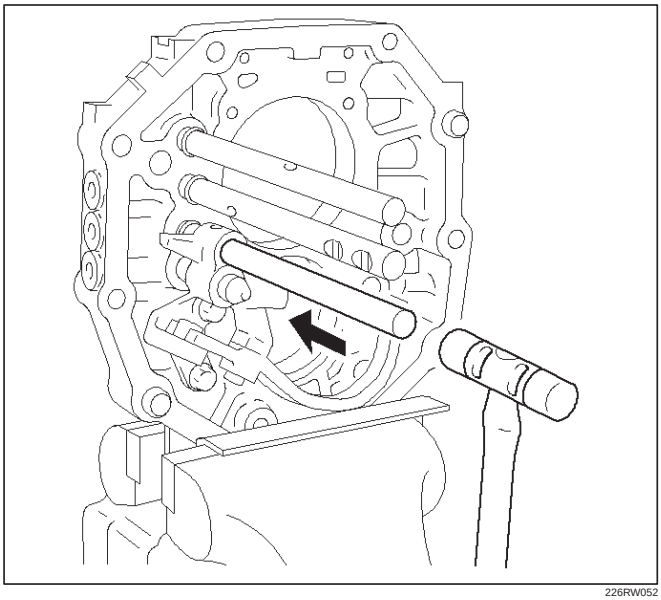

226RW052

    3. Using a torx socket wrench(T40), remove the 4 plugs.

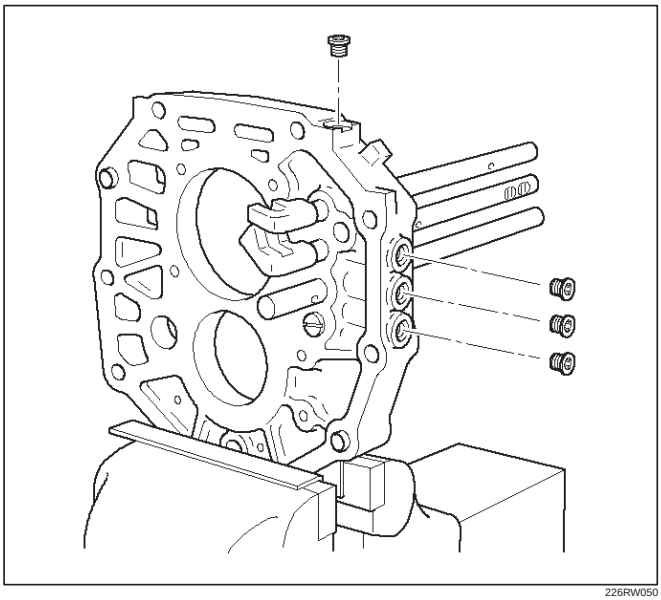

226RW050

    4. Using a magnetic finger, remove 3 springs and balls.

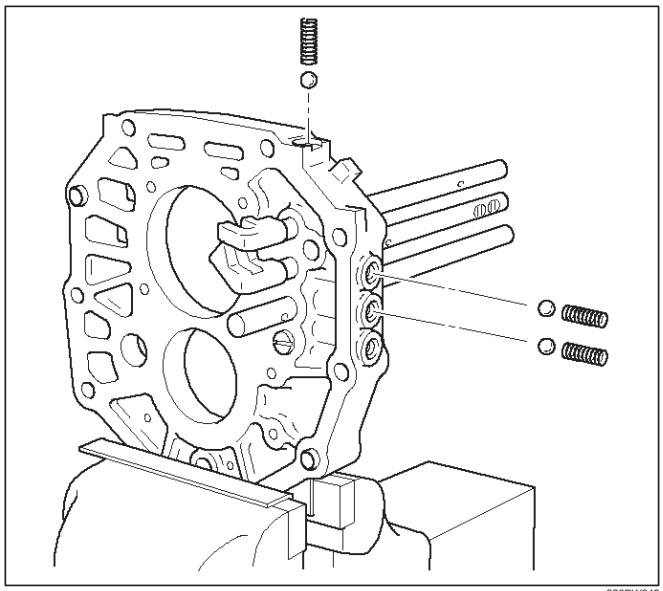

226RW049

    5. Using 2 screwdrivers and a hammer, remove 2 snap rings from each shift fork rod.

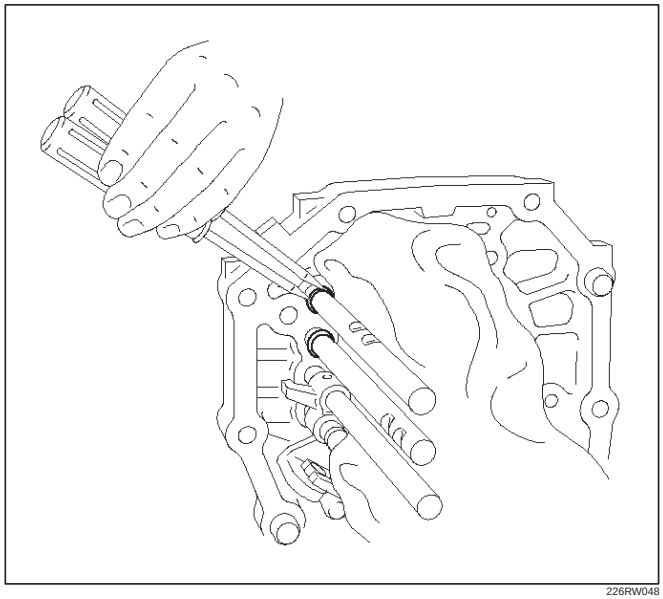

226RW048

6. Pull out the 3rd–4th shift rod at the rear.

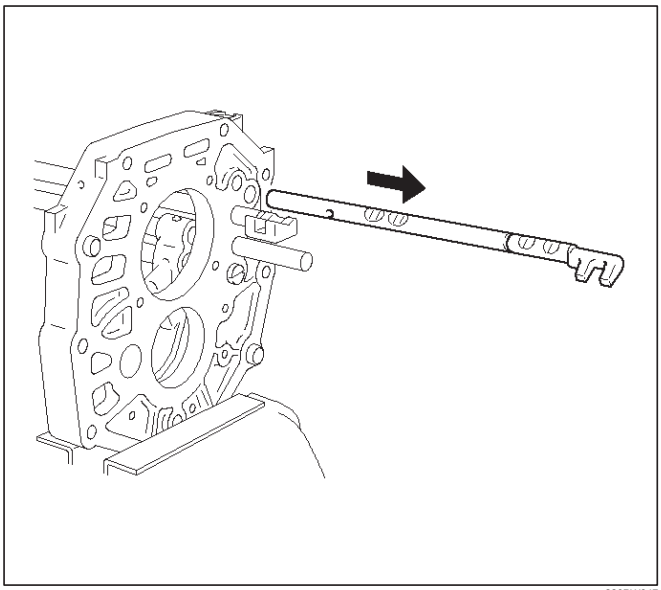

226RW047

7. Using a magnetic finger, remove the interlock pin and straight pin.

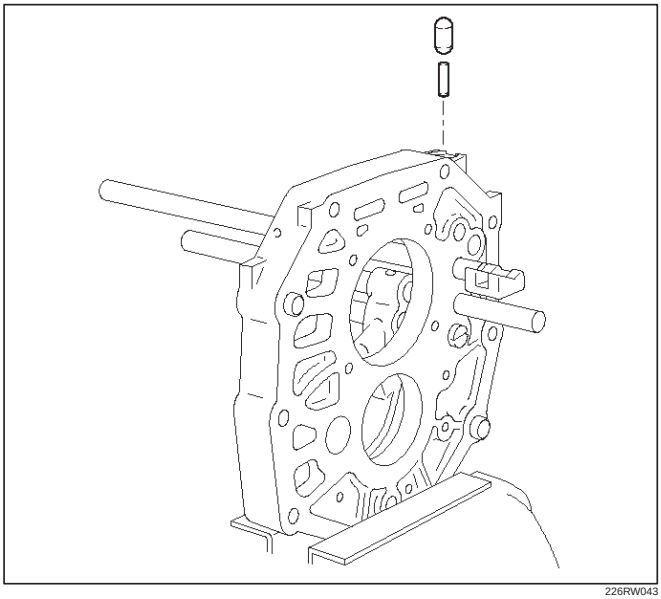

226RW043

8. Pull out the 1st–2nd shift rod at the rear.

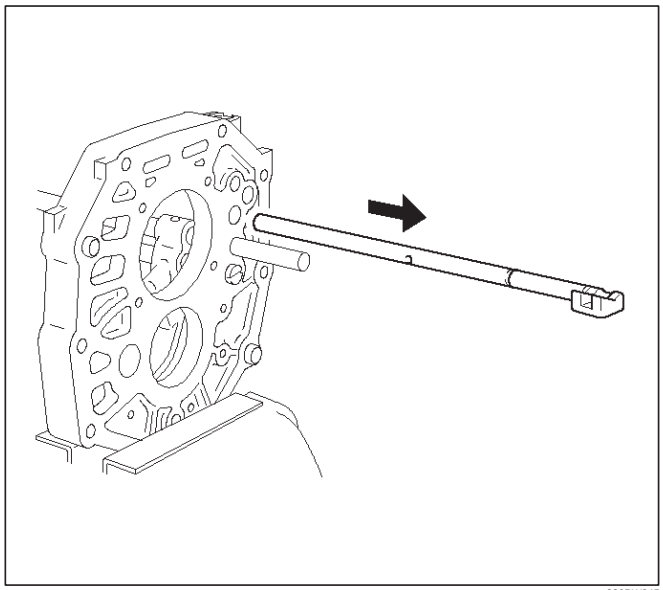

226RW045

9. Using a magnetic finger, remove the interlock pin.

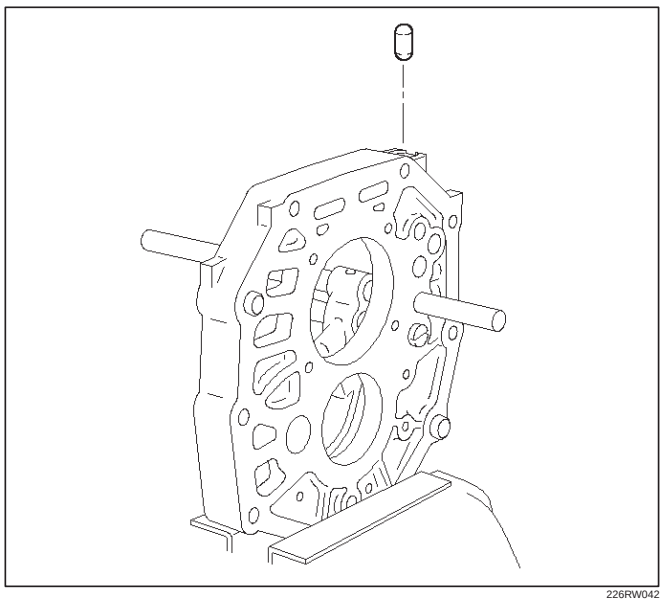

226RW042

10. Using 2 screwdrivers and a hammer, remove 2 snap rings.

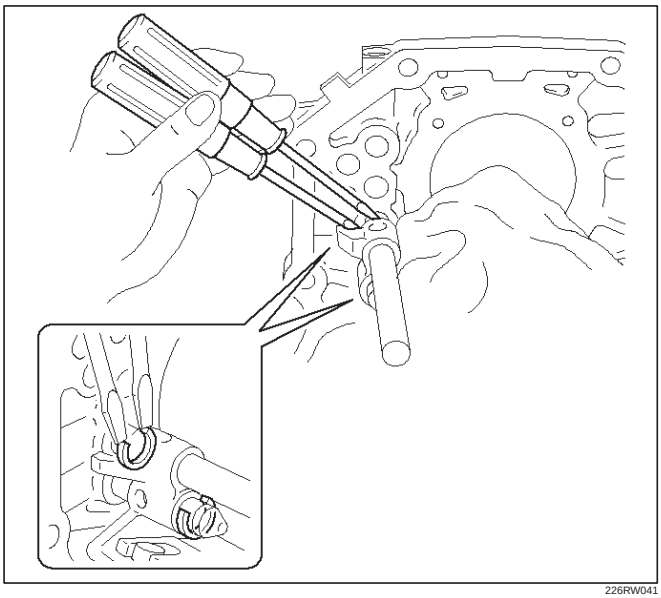

226RW041

11. Pull out the 5th-reverse shift rod at the front.

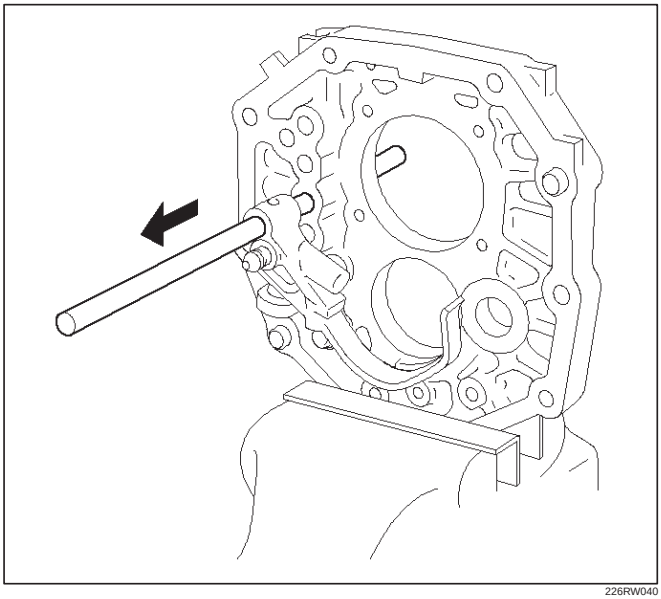

226RW040

12. Using a magnetic finger, remove the interlock pin from the intermediate plate. Remove the ball from the reverse shift arm No.1.

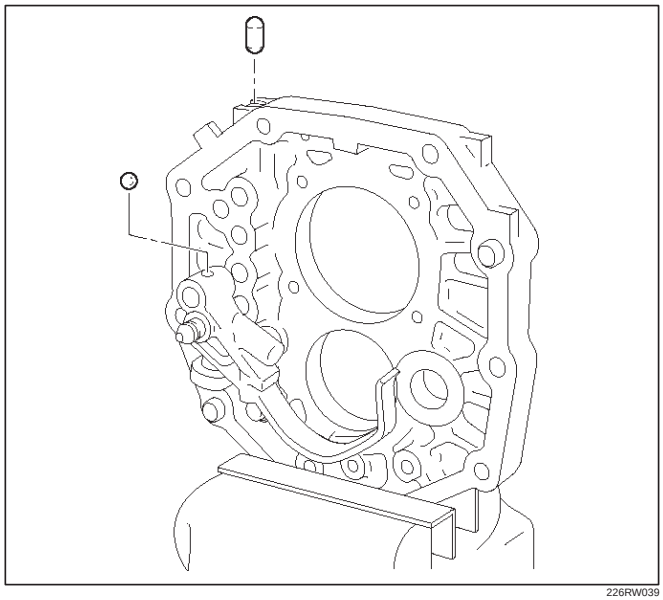

226RW039

13. Pull out at the rear reverse shift rod, reverse shift arm No.1 and reverse shift arm No.2 at the same time.

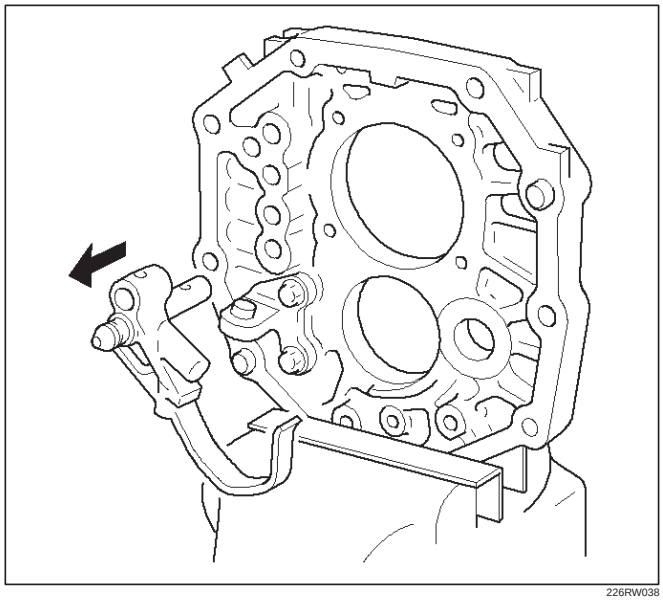

226RW038

14. Pull out reverse shift rod from reverse shift arm No.1.

NOTE: Be sure remove at the rear.

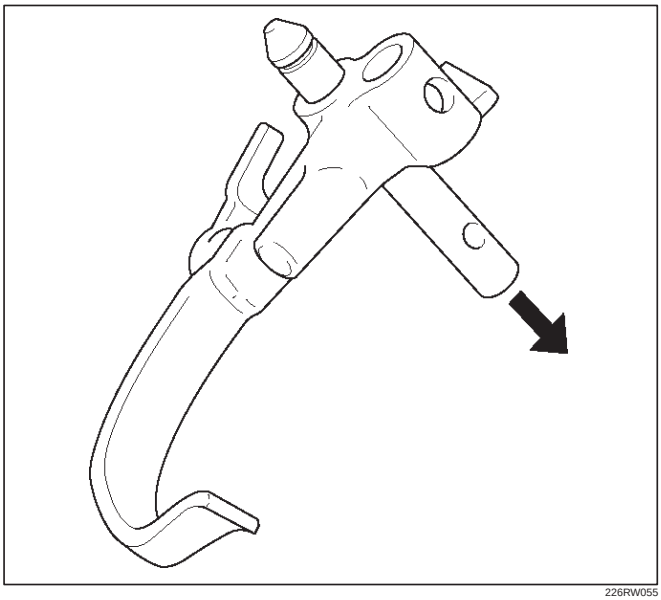

226RW055

15. Using a magnetic finger, remove the ball and spring from reverse shift arm No.1.

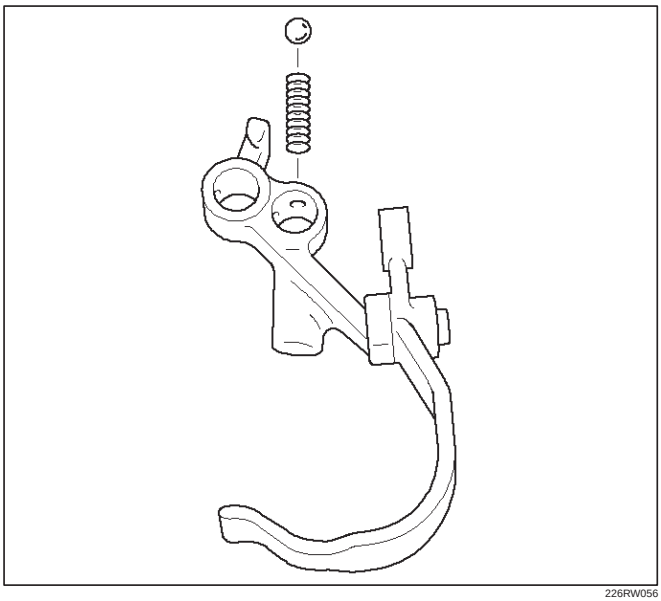

226RW056

16. Remove the reverse shift arm No.2 E–ring. Remove the reverse shift arm No.2 from reverse shift arm No.1.

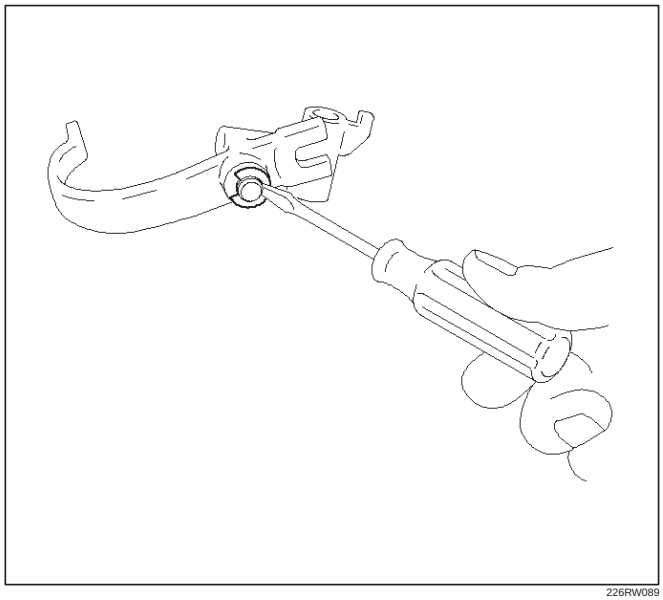

226RW089

17. Remove the 2 bolts and reverse shift arm bracket.

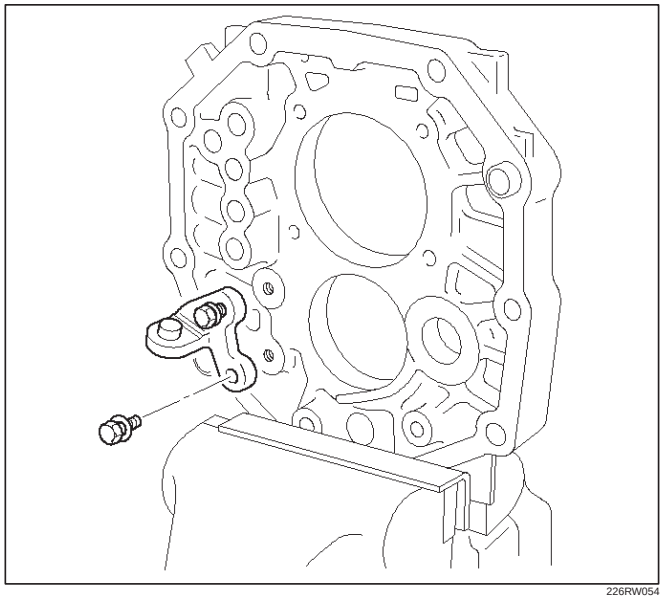

226RW054

Inspection

1. Counter 5th gear radial clearance.
   1. Install the following parts to the counter gear shaft.
      1. Counter 5th gear thrust washer pin (1).
      2. Counter 5th gear thrust washer (2).
      3. Counter 5th gear needle bearing(3).
      4. Counter 5th gear (4).

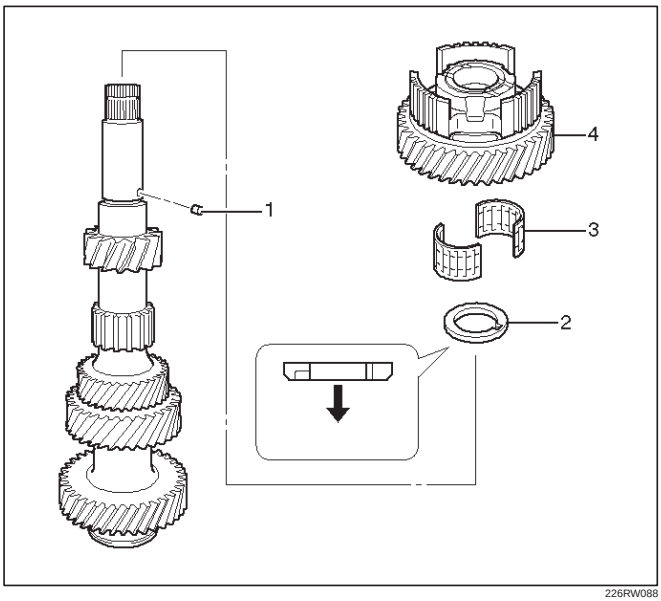

226RW088

   2. Mount the counter gear shaft through the aluminum plate in vise.
   3. Using a dial indicator, measure the counter 5th gear radial clearance.

Standard: 0.015 – 0.068 mm (0.00059 – 0.00268 in)

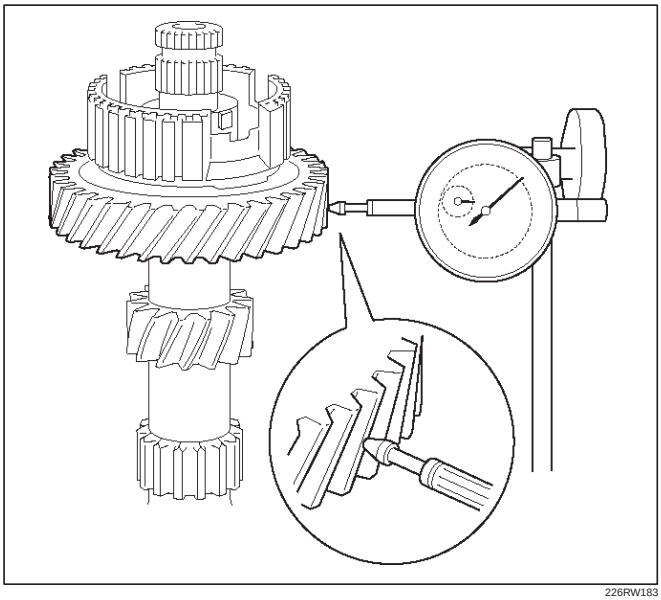

226RW183

   4. Using a inside dial indicator, measure the gear inside diameter.

Standard: 38.015 – 38.040 mm (1.49665 – 1.49763 in)

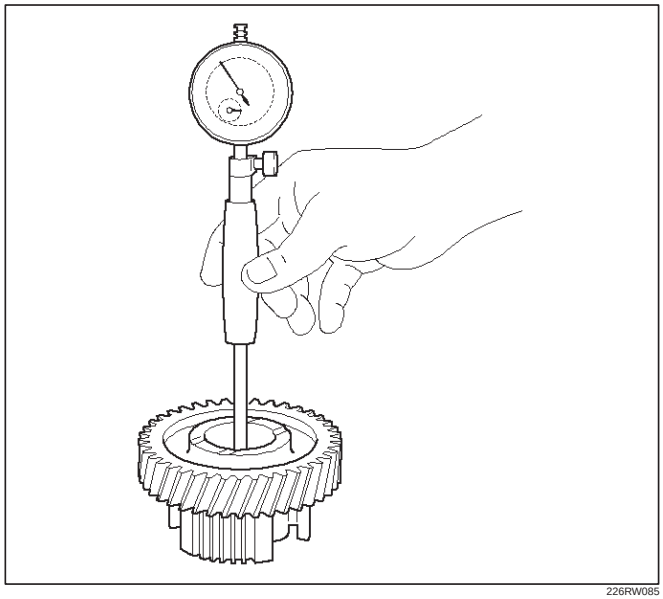

226RW085

2. 5th-reverse shift arm and hub sleeve No.3 clearance.
   1. Using a vernier caliper, measure the 5th-reverse shift arm thickness.

Reference: 10.2 mm (0.402 in)

   2. Using a vernier caliper, measure the center groove of hub sleeve No.3. Calculate the clearance between the hub sleeve No.3 and shift arm.

Standard: 0.26 – 0.84 mm (0.0102 – 0.0331 in)

Reference: Center groove dimension 10.5mm (0.413 in)

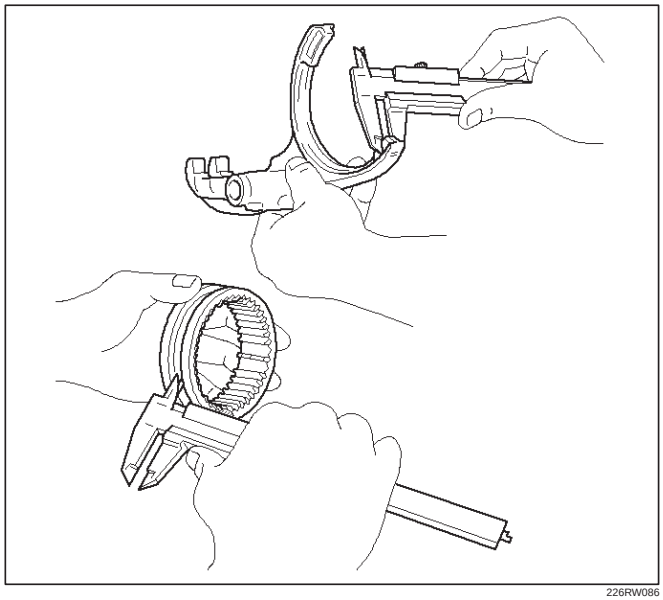

226RW086

3. Reverse block ring set.
   1. Using a thickness gauge, measure the clearance between the counter 5th gear spline piece and reverse block ring.

Standard: 0.7 – 1.7 mm (0.028 – 0.067 in)

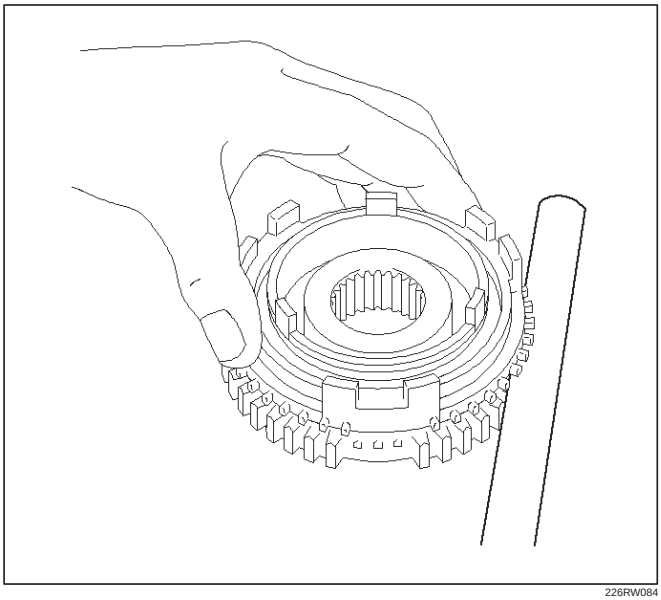

226RW084

4. Reverse idle gear and reverse idle gear shaft.
   1. Mount the reverse idle gear and reverse idle gear shaft in a vise.
   2. Using a dial indicator, measure the reverse idle gear radial clearance.

Standard: 0.040 – 0.082 mm (0.0016 – 0.0032 in)

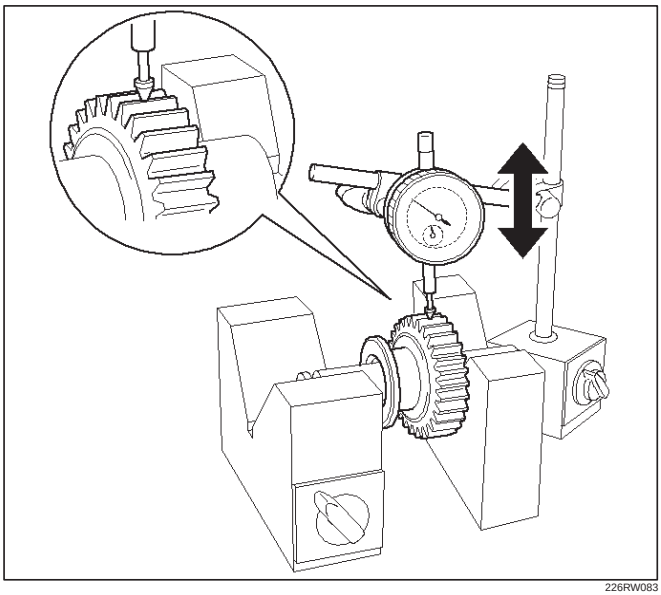

226RW083

   3. If the clearance exceeds the maximum, measure the gear inside diameter and shaft diameter.

Standard

Shaft Diameter: 23.979 – 24.000 mm (0.94405 – 0.94488 in)

Gear Diameter: 24.040 – 24.061 mm (0.94645 – 0.94728 in)

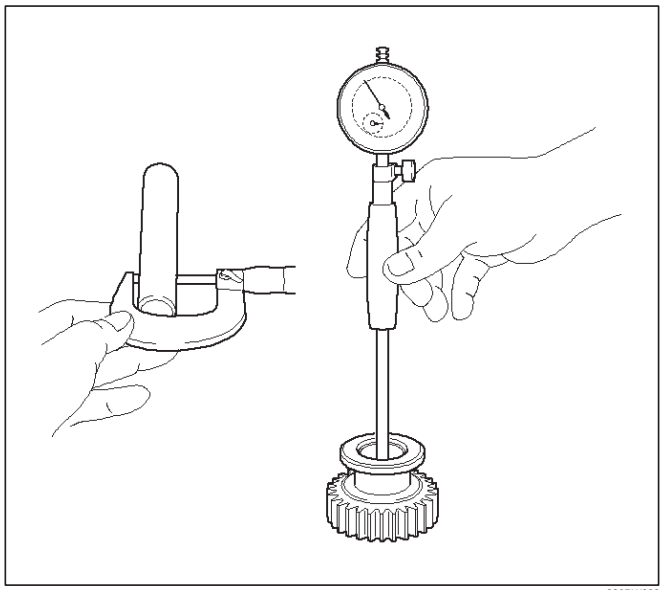

226RW082

5. Reverse shift arm No.2 thrust clearance.
   1. Using a thickness gauge, measure the clearance between the reverse idle gear and shift arm No.2.

Standard: 0.05 – 0.35 mm (0.002 – 0.014 in)

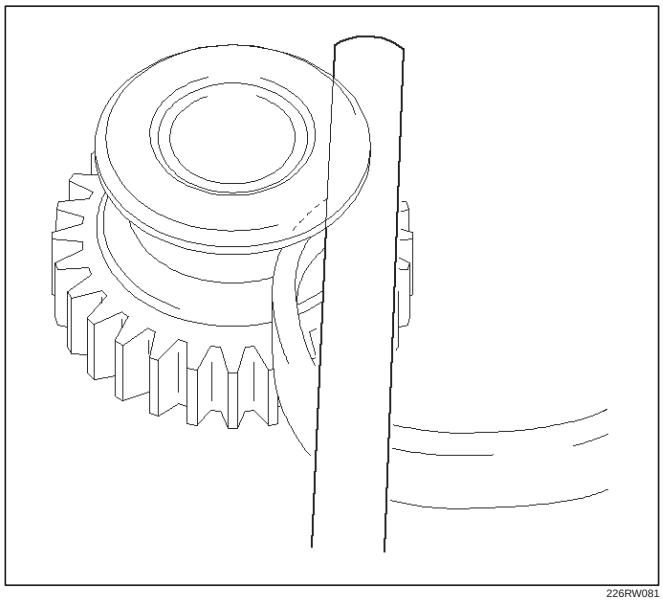

226RW081

Reassembly

1. Install the top gear shaft assembly.
   1. Using installer 5–8840–2559–0 (J–42904) and a press, install a new bearing.

NOTE: Outer race snap ring groove (1) toward front.

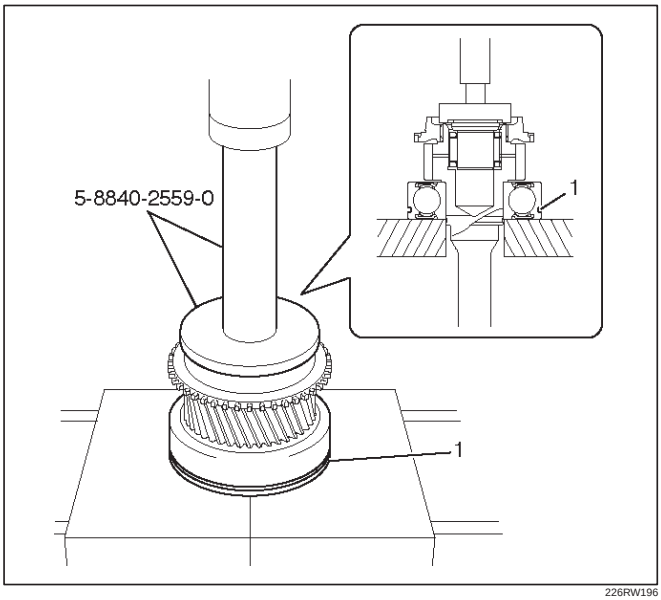

226RW196

   2. Select a snap ring that will allow minimum axial play.

Mark	Thickness
A	2.10 – 2.15 mm (0.083 – 0.085 in)
B	2.15 – 2.20 mm (0.085 – 0.087 in)
C	2.20 – 2.25 mm (0.087 – 0.089 in)
D	2.25 – 2.30 mm (0.089 – 0.091 in)
E	2.30 – 2.35 mm (0.091 – 0.093 in)
F	2.35 – 2.40 mm (0.093 – 0.095 in)
G	2.40 – 2.45 mm (0.095 – 0.097 in)

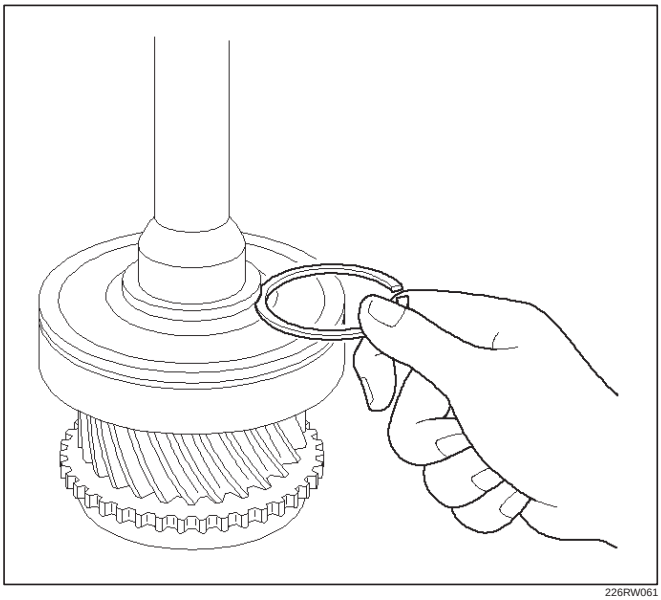

226RW061

   3. Using a snap ring expander, install the new snap ring.

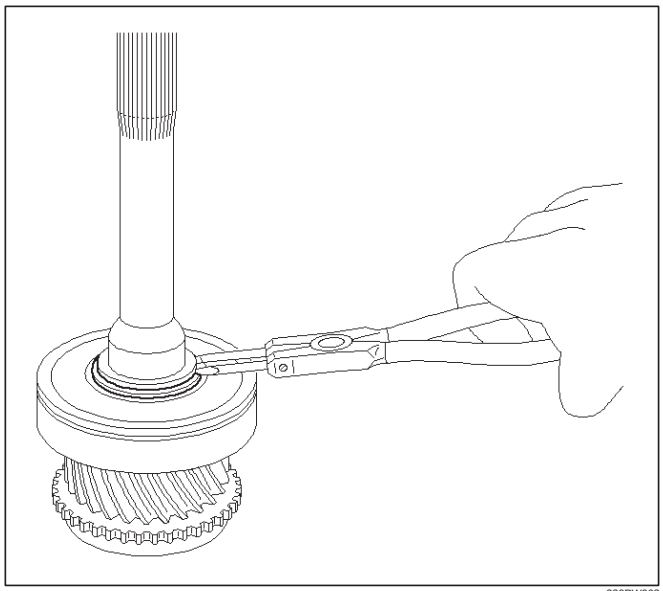

226RW062

   4. Install the 4th block ring.

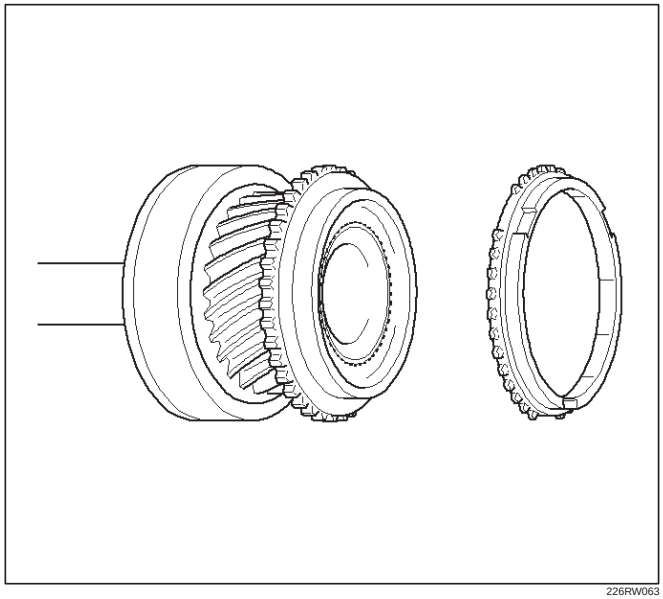

226RW063

5. Using a thickness gauge, measure the clearance between the 4th block ring back and gear spline end.

Standard: 0.75 – 1.65 mm (0.030 – 0.065 in)

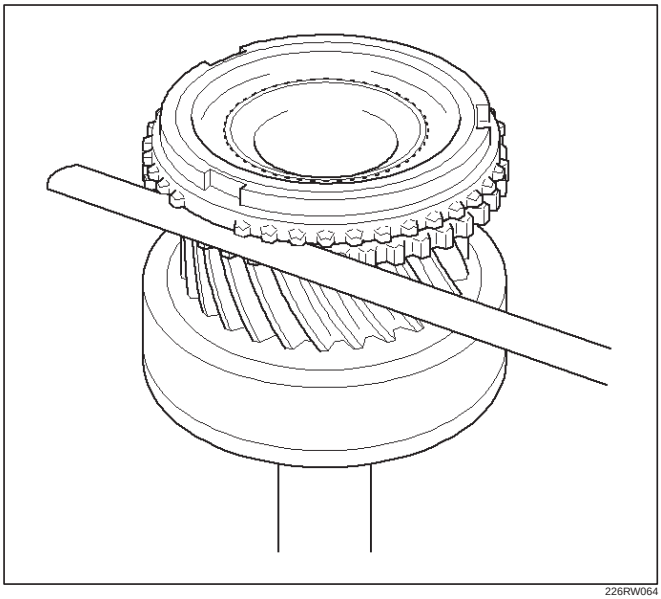

226RW064

6. Check the braking effect of the block ring. Turn the block ring in one direction while pushing it to the gear cone. Check that the ring locks. If it does not lock, replace the block ring.

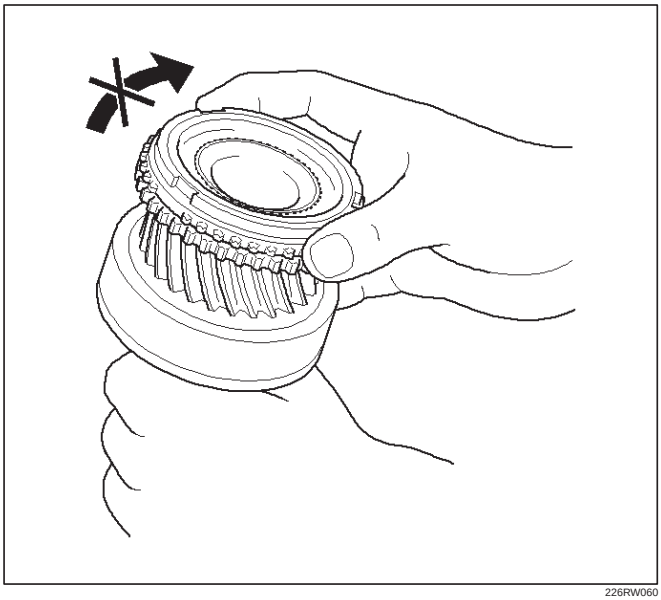

226RW060

7. Install the needle roller bearing.

2. Reassemble the mainshaft assembly.

NOTE: Apply all parts with engine oil before installing them.

3. Inspect block ring

1. Using a thickness gauge, measure the clearance between the synchronizer ring back and gear spline end.

Gear	Standard Clearanse
1st	0.80 – 1.60 mm (0.032 – 0.063 in)
2nd	0.65 – 1.75 mm (0.026 – 0.069 in)
3rd	0.75 – 1.65 mm (0.030 – 0.065 in)

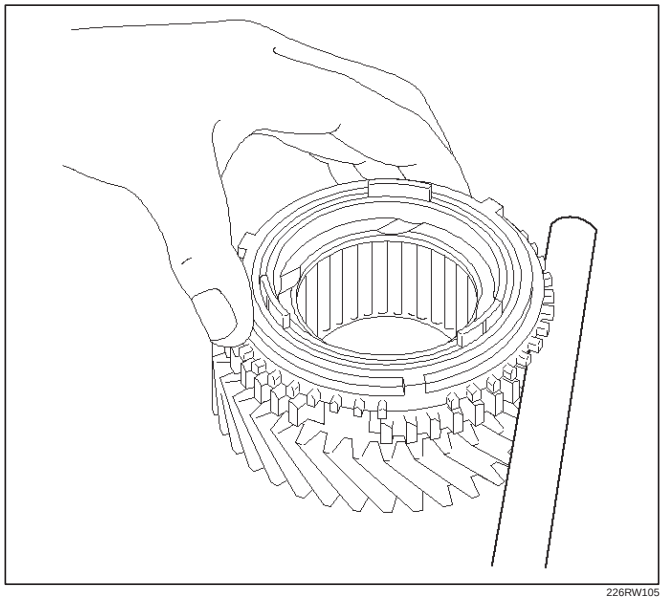

226RW105

2. Turn the synchronizer ring in one direction while pushing it to the gear cone. Check that the ring locks.

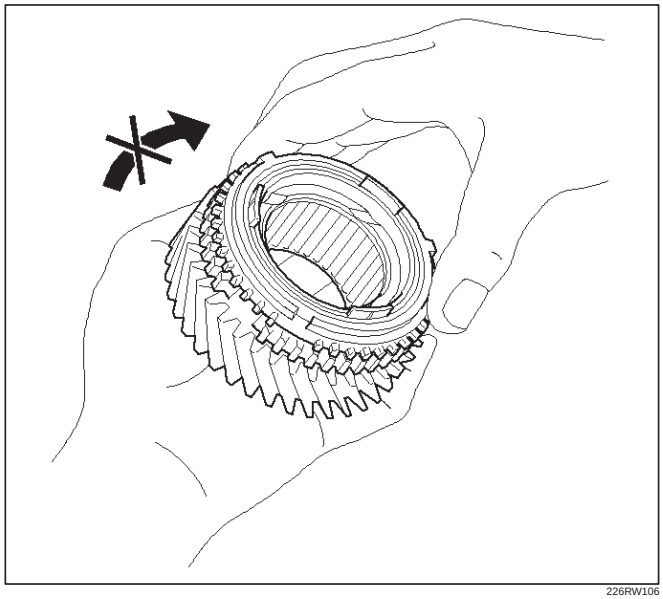

226RW106

4. Inspect hub sleeve and shift arm.

1st–2nd shift arm

1. Using a vernier caliper, measure center groove of the 1st–2nd shift arm.

Reference: 5.28 mm (0.208 in)

2. Using a vernier caliper, measure flange of the reverse gear. Calculate the clearance between the reverse gear and shift arm.

Reference: Reverse gear flange thickness 5.0 mm. (0.197 in)

Standard: 0.15 – 0.41 mm (0.006 – 0.016 in)

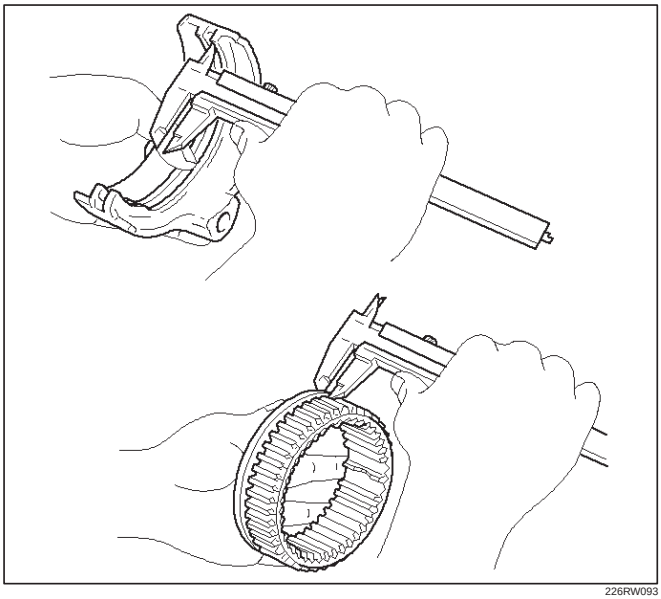

226RW093

3rd–4th shift arm

1. Using a vernier caliper, measure tip of the shift arm thickness.

Reference: 10.0mm (0.39 in)

2. Using a vernier caliper, measure center groove of the hub sleeve No.2. Calculate the clearance between the hub sleeve No.2 and shift arm.

Reference: Center groove dimension 10.2 mm (0.402 in)

Standard: 0.15 – 0.35 mm (0.006 – 0.014 in)

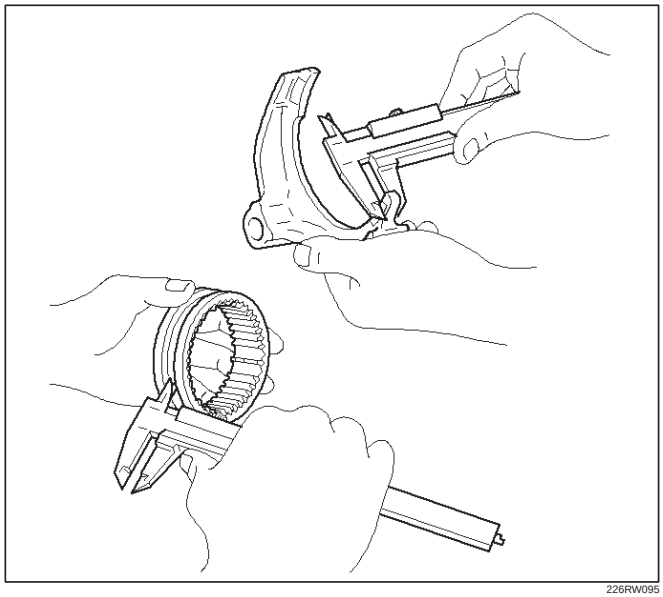

226RW095

5. Inspect clutch hub and hub sleeve.
   1. Check for wear or damage.
   2. Install the hub sleeve to the clutch hub, and check sliding smoothly.

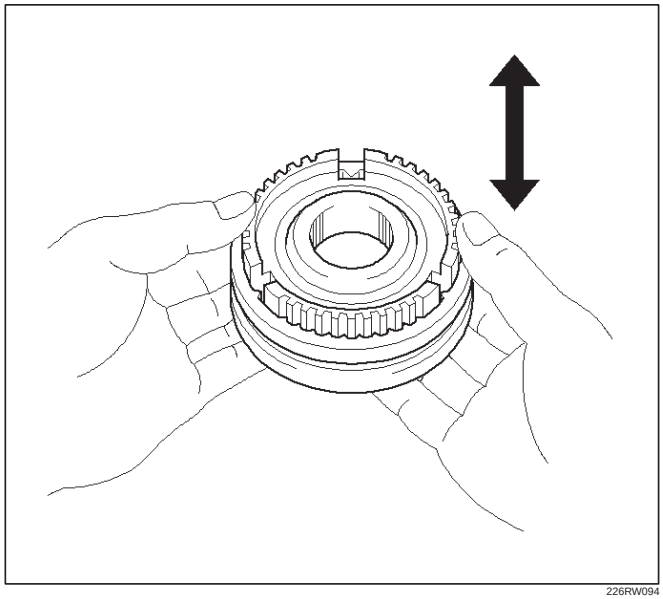

226RW094

6. Inspect gear inside diameter.
   1. Using a inside dial indicator, measure the gear inside diameter.

Gear	Standard Diameter
1st	46.015 – 46.040 mm (1.8116 – 1.8126 in)
2nd	53.015 – 53.040 mm (2.0872 – 2.0882 in)
3rd	44.015 – 44.040 mm (1.7329 – 1.7339 in)

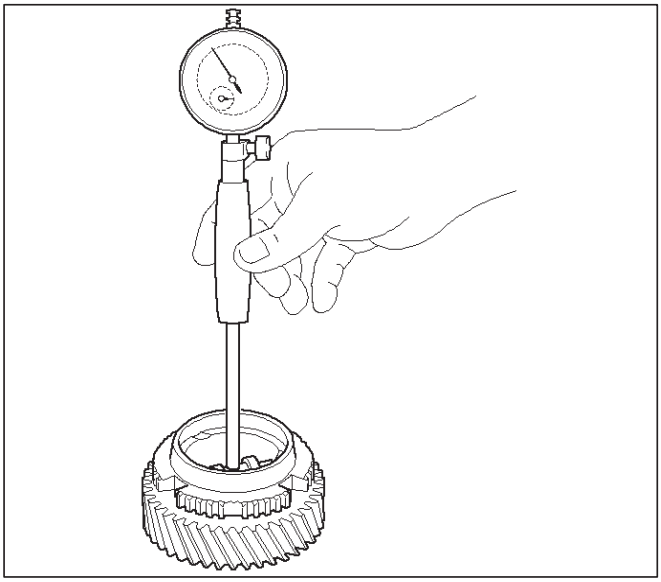

226RW096

7. Inspect mainshaft.
   1. Using a micrometer, measure the outer diameter of the mainshaft journal.

Measure Position	Standard
A	37.984 – 38.000 mm (1.4954 – 1.4961 in)
B	46.984 – 47.000 mm (1.8498 – 1.8504 in)
C	38.979 – 38.995 mm (1.5346 – 1.5352 in)

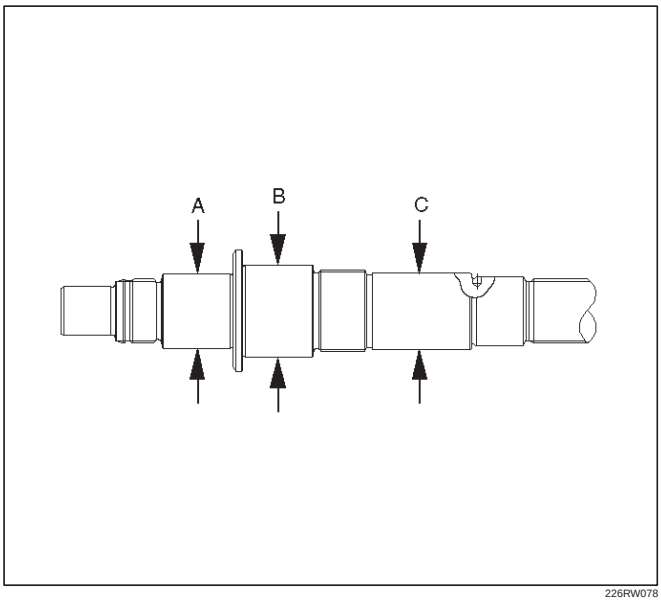

226RW078

   2. Using a micrometer, measure the mainshaft flange thickness.

Standard: 5.0 mm (0.197 in)

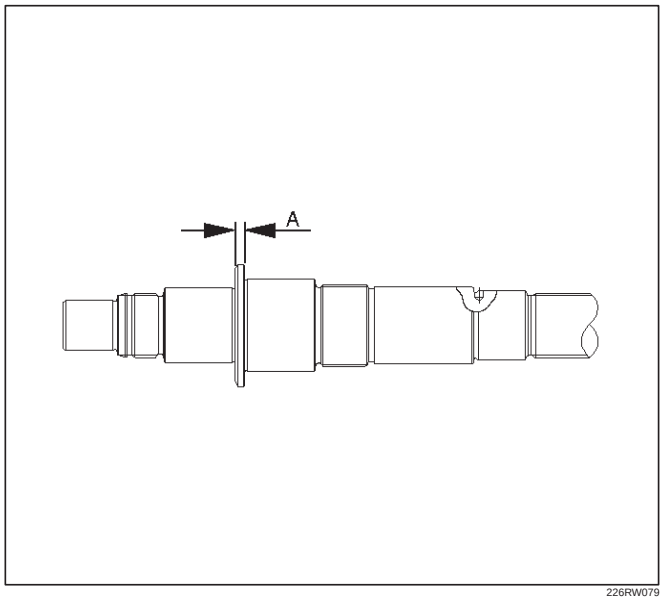

226RW079

   3. Install the mainshaft to V-blocks.
   4. Use a dial indicator to measure the mainshaft central portion run-out.

Standard: less than 0.015 mm (0.0006 in)

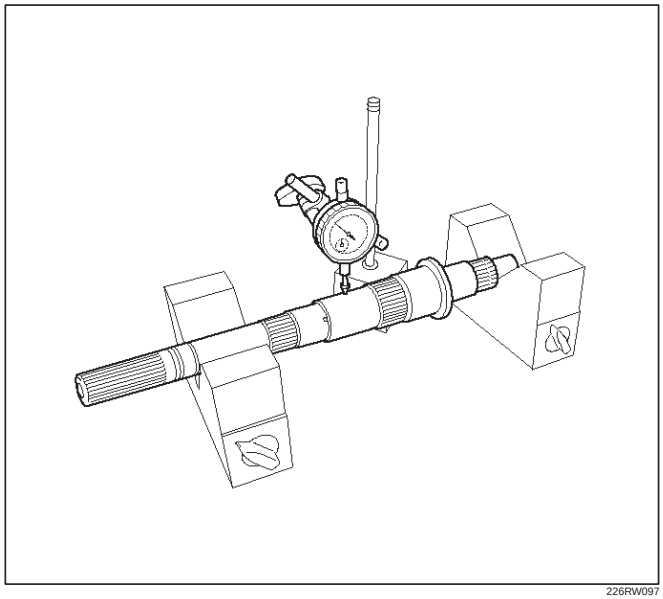

226RW097

8. Install 3rd gear.
   1. Install the 3rd gear needle bearing, 3rd gear and 3rd block ring to the mainshaft.

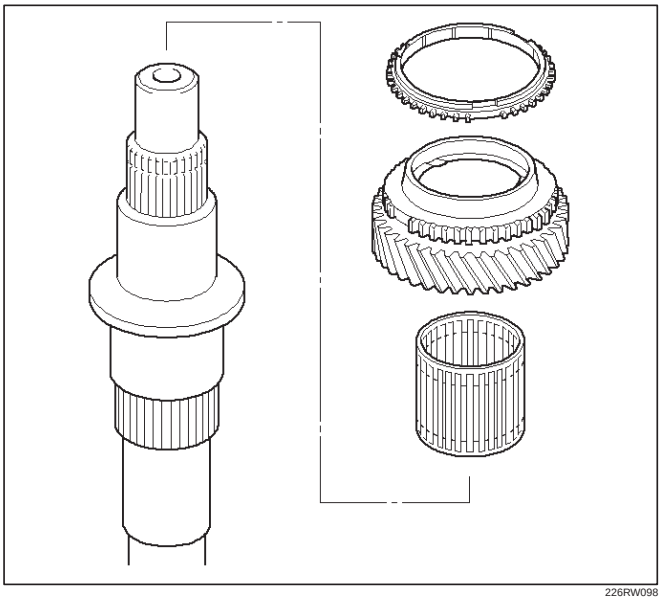

226RW098

9. Install the clutch hub No.2.
   1. Install the clutch hub No.2 and hub sleeve No.2.

NOTE: Be careful the direction of the clutch hub No.2, as shown.

   2. Using a screwdriver, install 3 inserts and 2 springs.

NOTE: Position the insert springs so that their end gaps are not in line.

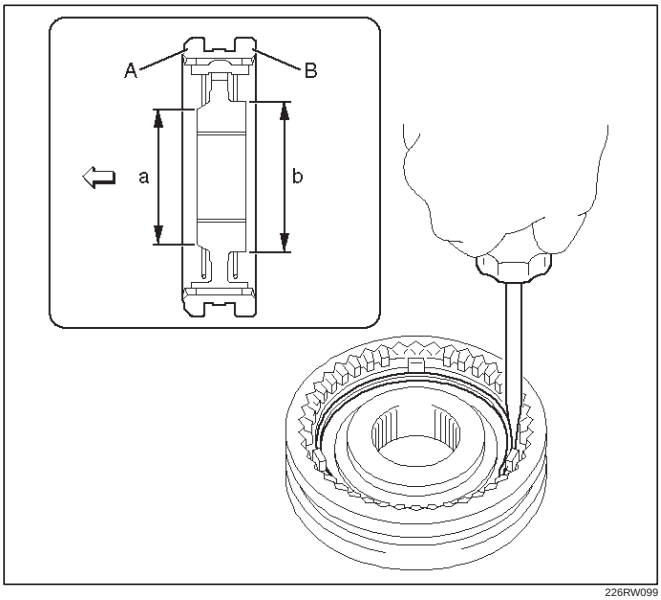

226RW099

   3. Using installer 5–8840–2553–0 (J–42797) and a press, install the clutch nob No.2 and hub sleeve No.2 to the mainshaft.

NOTE:

- Align the brock ring slots with the inserts.
- Check that the gear rotates smoothly.

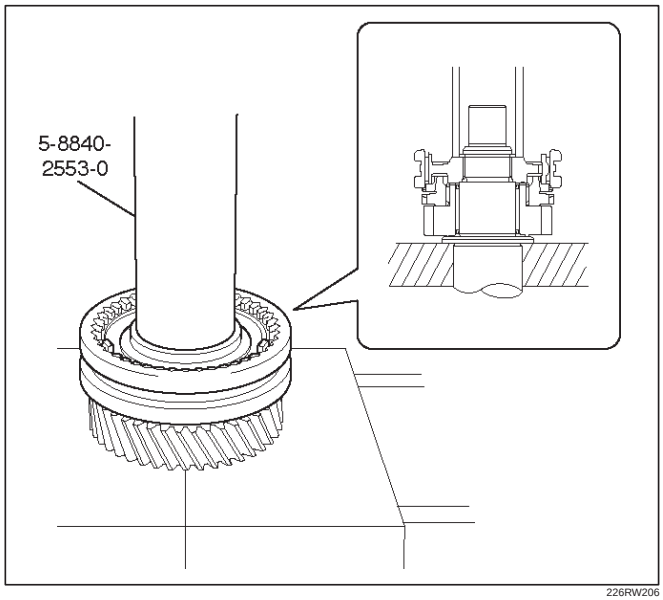

226RW206

   4. Select a snap ring that will allow minimum axial play.

Mark	Thickness
A	1.80 – 1.85 mm (0.071 – 0.073 in)
B	1.85 – 1.90 mm (0.073 – 0.075 in)
C	1.90 – 1.95 mm (0.075 – 0.077 in)
D	1.95 – 2.00 mm (0.077 – 0.079 in)
E	2.00 – 2.05 mm (0.079 – 0.081 in)
F	2.05 – 2.10 mm (0.081 – 0.083 in)
G	2.10 – 2.15 mm (0.083 – 0.085 in)

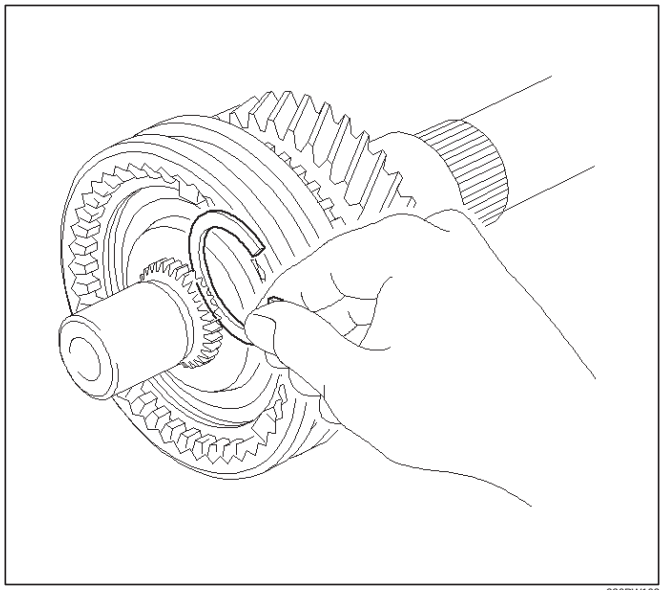

226RW102

5. Using a snap ring expander, install the new snap ring.

NOTE: Be careful not to damage the bearing surface.

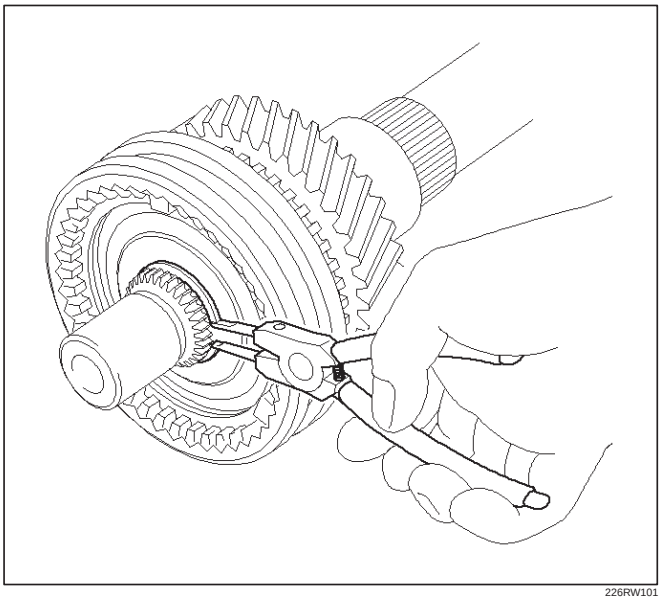

226RW101

6. Using a thickness gauge, inspect the 3rd gear thrust clearance.

Standard: 0.10 – 0.25mm (0.004 – 0.010 in)

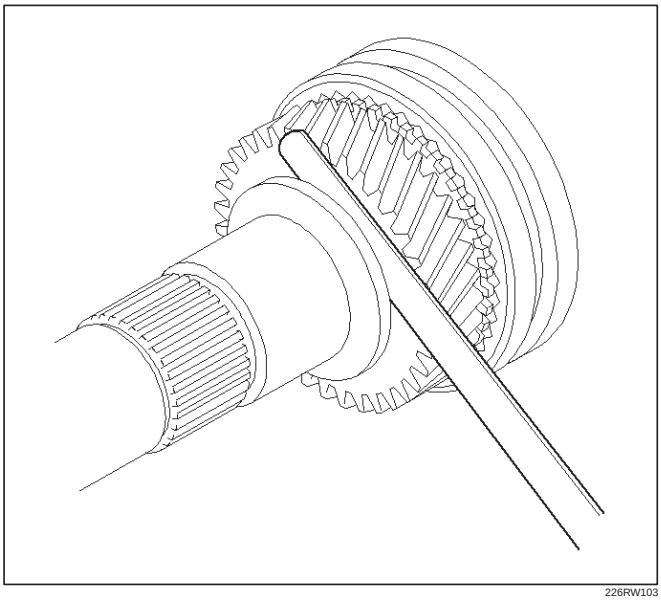

226RW103

10. Install the 2nd gear.
    1. Install the synchronizer ring set No.1 to the 2nd gear.

NOTE: Align the nail of middle ring with gear spline slots.

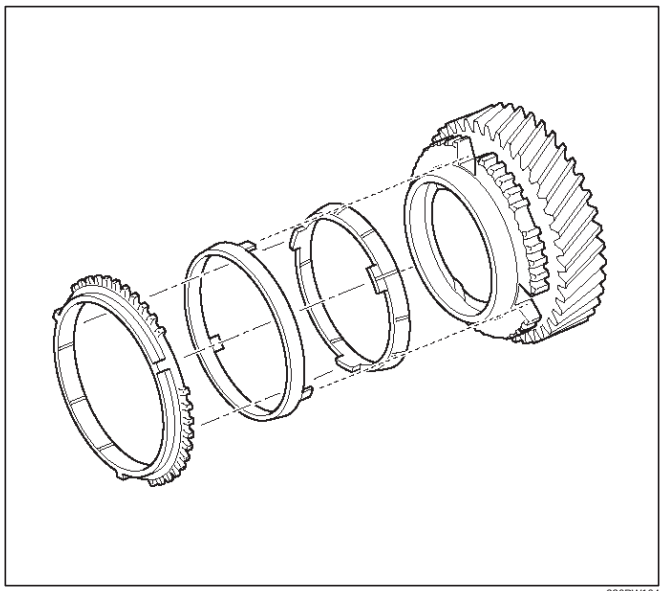

226RW104

2. Install the needle roller bearing, 2nd gear and 2nd gear block ring set to the mainshaft.

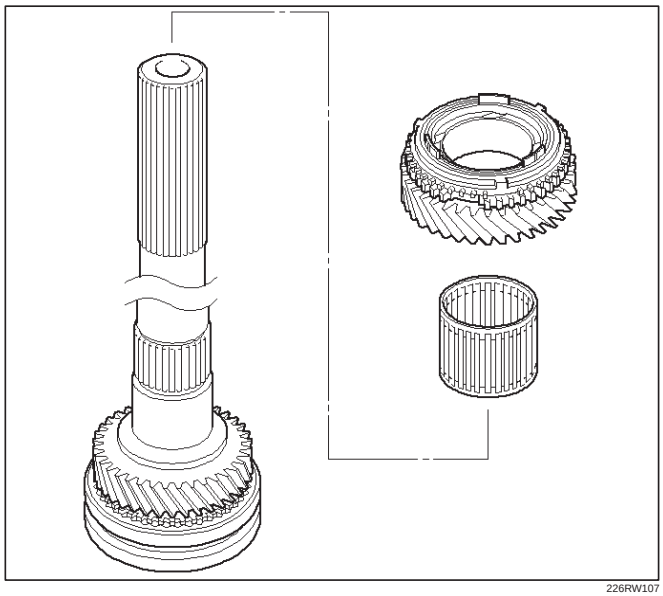

226RW107

11. Install the clutch hub No.1.
    1. Install the 3 inserts and 3 insert springs to the clutch hub No.1.
       Reference: While pushing the insert spring with a screwdriver, install the inserts.

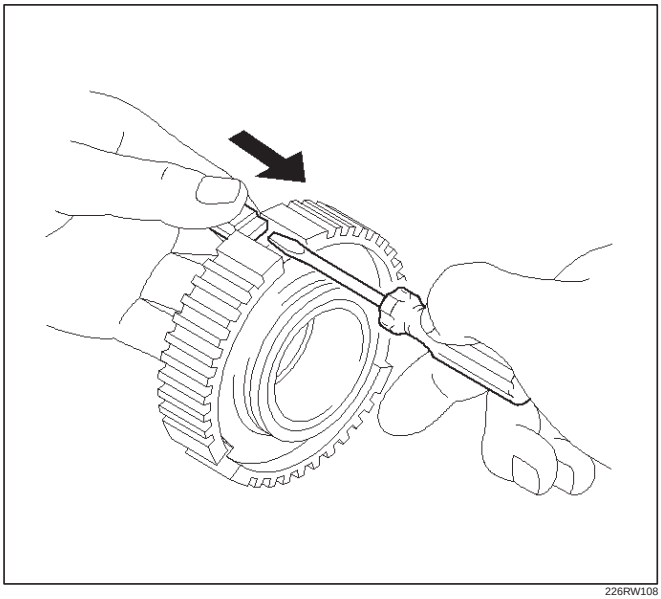

226RW108

    2. Install the clutch hub No.1 to the reverse gear.

NOTE: Check the clutch hub No.1 installing direction, as shown.

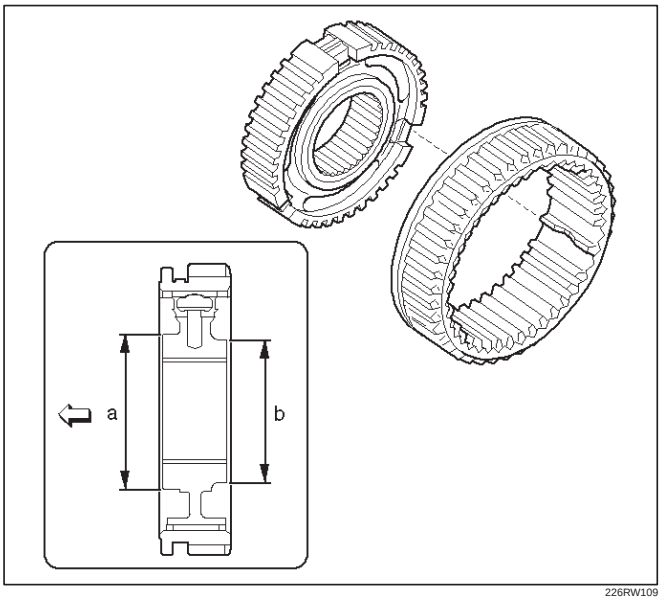

226RW109

    3. Using installer 5–8840–2554–0 (J–42798) and a press, install the hub No.1 by retaining the reverse gear.

NOTE:

- Align the projection of inner ring with hub No.1 slots.
- Check that the gear rotates smoothly.

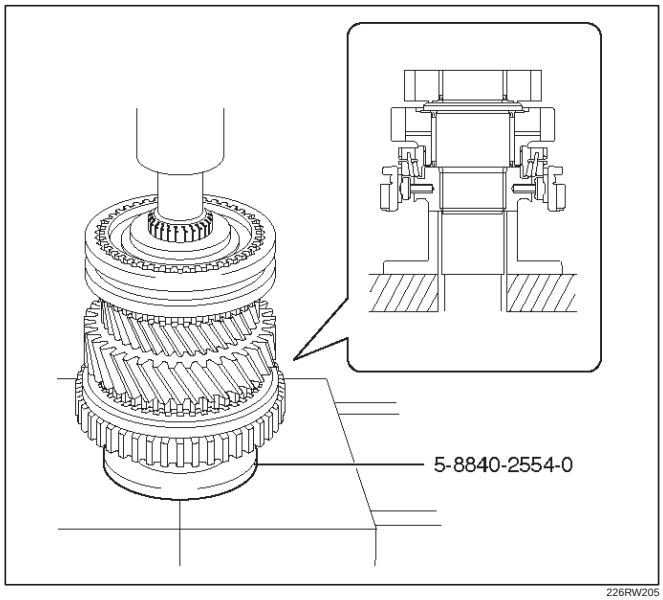

226RW205

    4. Select a snap ring that will allow minimum axial play.

Mark	Thickness
A	2.30 – 2.35 mm (0.091 – 0.093 in)
B	2.35 – 2.40 mm (0.093 – 0.095 in)
C	2.40 – 2.45 mm (0.095 – 0.097 in)
D	2.45 – 2.50 mm (0.097 – 0.098 in)
E	2.50 – 2.55 mm (0.098 – 0.100 in)
F	2.55 – 2.60 mm (0.100 – 0.102 in)
G	2.60 – 2.65 mm (0.102 – 0.104 in)

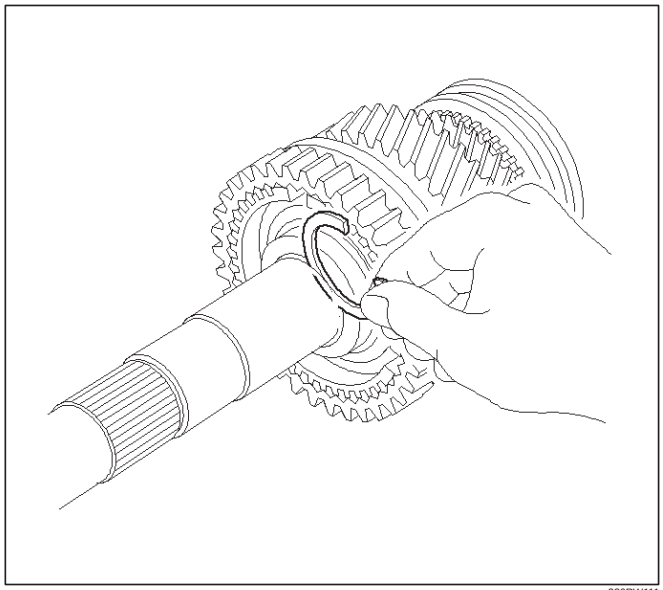

226RW111

5. Using a screwdriver and hammer, install the snap ring.

NOTE: Be careful not to damage the bearing surface.

6. Check that the gear rotates smoothly.

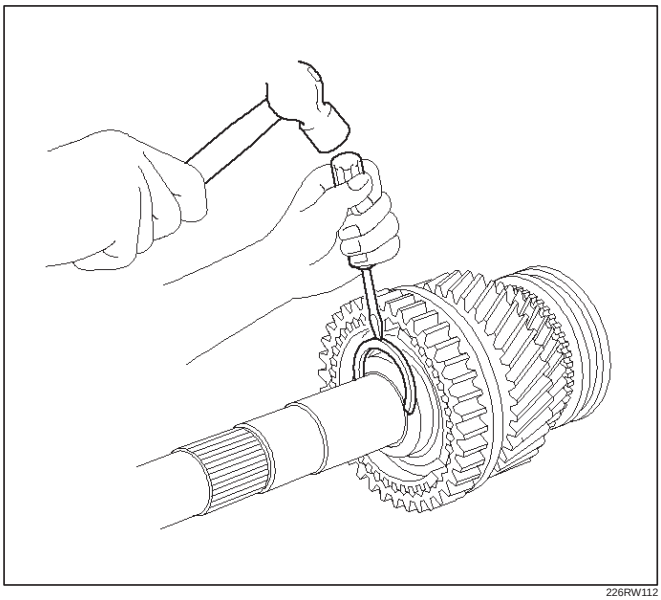

226RW112

7. Using a dial indicator, measure the 2nd gear thrust clearance.

Standard: 0.10 – 0.25mm (0.004 – 0.010 in)

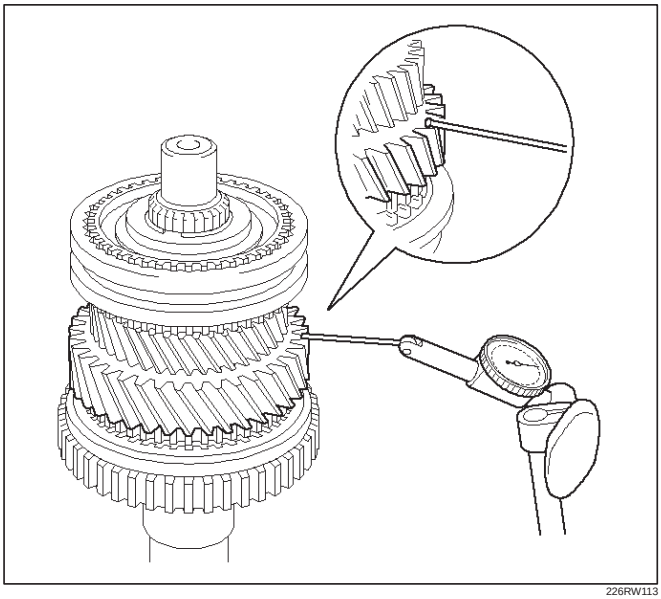

226RW113

12. Install the 1st gear.

1. Install the following parts:
   1. 1st gear bearing spacer (4).
   2. 1st gear needle roller bearing (3).
   3. Synchronizer assembly (2).
   4. 1st gear (1).

NOTE:

- Align the projection of inner ring with hub No.1 slots.
- Check that the gear rotates smoothly.

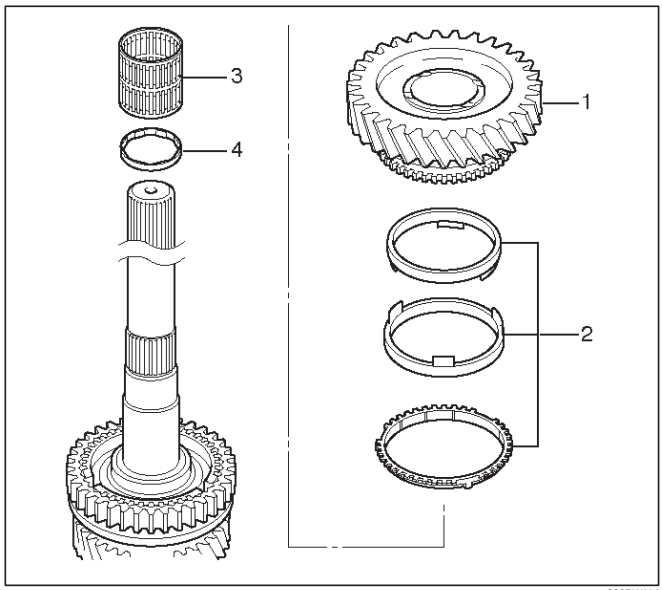

226RW114

2. Install the 1st gear thrust washer pin and 1st gear thrust washer to the mainshaft.

NOTE: Align the straight pin with the thrust washer slot.

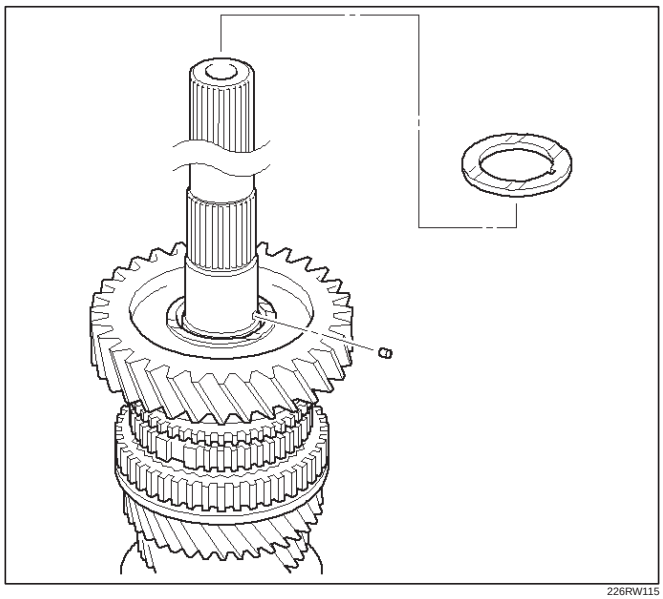

226RW115

13. Install the mainshaft center bearing.
    1. Using installer 5–8840–2555–0 (J–42799) and a press, install the mainshaft center bearing.

NOTE: Center bearing snap ring groove toward rear.

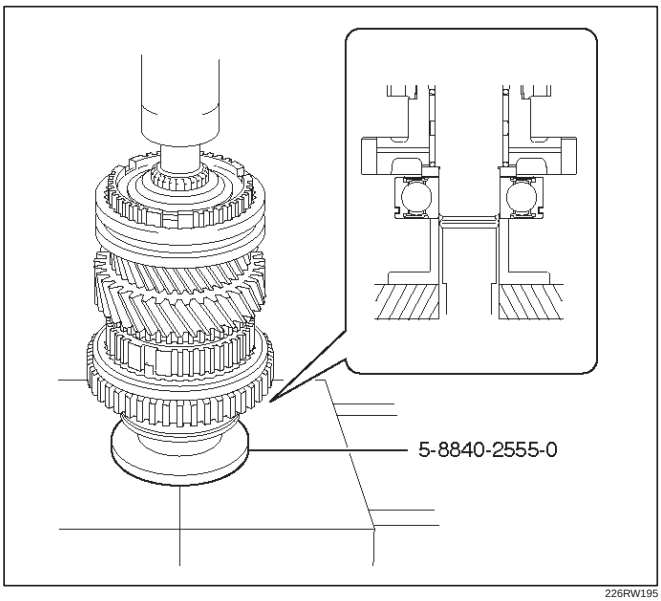

226RW195

    2. Using a thickness gauge, measure 1st gear thrust clearance.

Standard: 0.10 – 0.45mm (0.004 – 0.018 in)

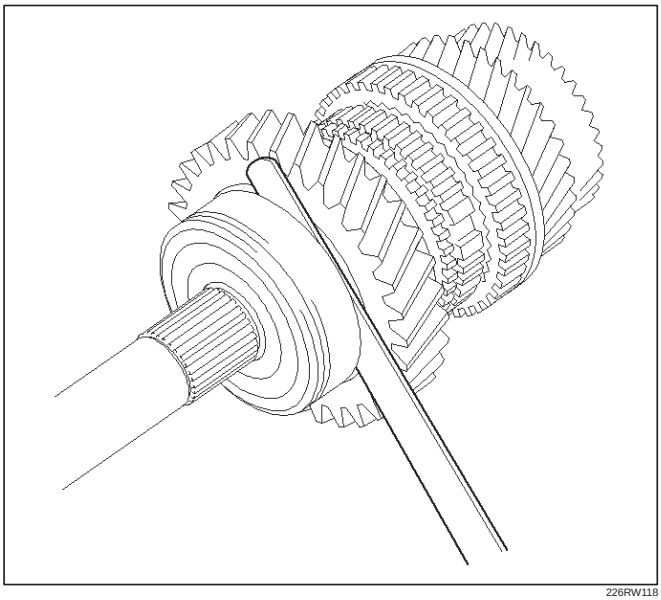

226RW118

14. Install the 5th gear.
    1. Using installer 5–8840–2555–0 (J–42799) and a press, install the 5th gear.
    2. Select a snap ring that will allow minimum axial play.

Mark	Thickness
C	2.75 – 2.80 mm (0.108 – 0.110 in)
D	2.80 – 2.85 mm (0.110 – 0.112 in)
E	2.85 – 2.90 mm (0.112 – 0.114 in)
F	2.90 – 2.95 mm (0.114 – 0.116 in)
G	2.95 – 3.00 mm (0.116 – 0.118 in)
H	3.00 – 3.05 mm (0.118 – 0.120 in)
J	3.05 – 3.10 mm (0.120 – 0.122 in)
K	3.10 – 3.15 mm (0.122 – 0.124 in)
L	3.15 – 3.20 mm (0.124 – 0.126 in)
M	3.20 – 3.25 mm (0.126 – 0.128 in)
N	3.25 – 3.30 mm (0.128 – 0.130 in)
P	3.30 – 3.35 mm (0.130 – 0.132 in)

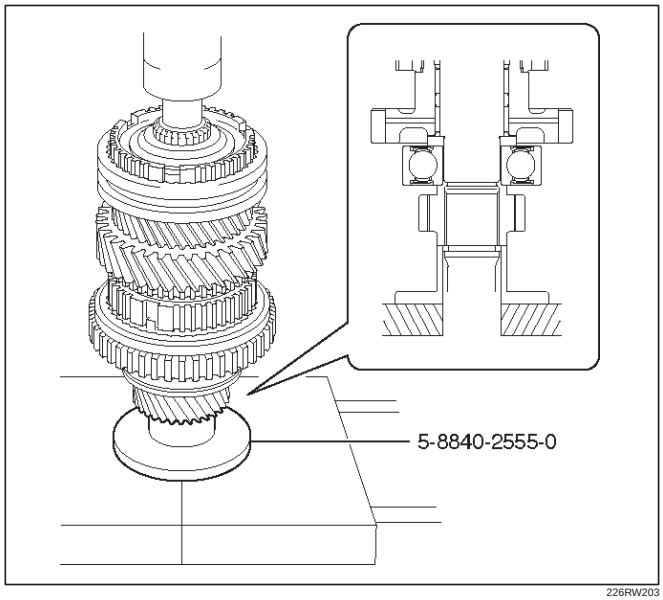

226RW203

    3. Using a screwdriver and hammer, install the new snap ring.

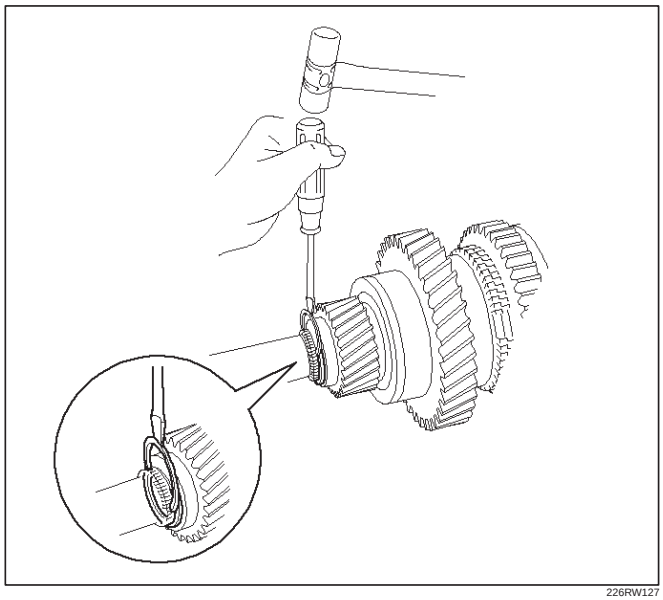

226RW127

15. Inspect each gear radial clearance.
    1. Mount the mainshaft through the aluminum plate in a vise.
    2. Using a dial indicator, measure the radial clearance of each gear.

Gear	Standard Clearanse
1st	0.020 – 0.073 mm (0.0008 – 0.0029 in)
2nd	0.015 – 0.068 mm (0.0006 – 0.0027 in)
3rd	0.015 – 0.068 mm (0.0006 – 0.0027 in)

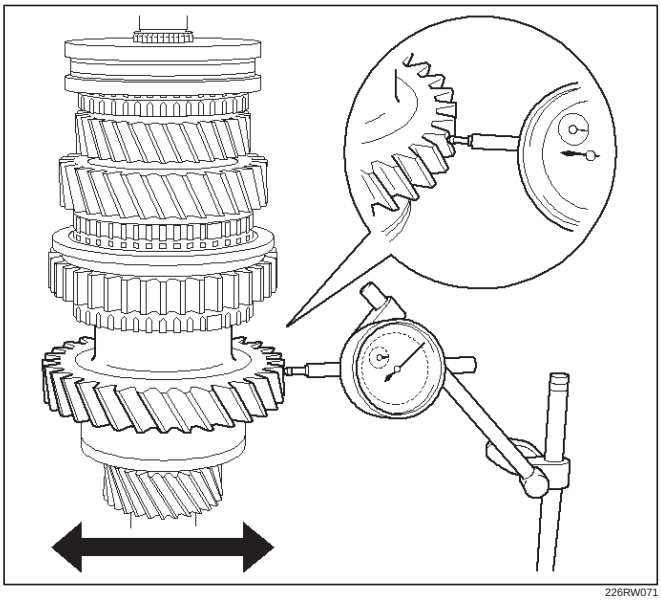

226RW071

16. Install the counter gear shaft.
    1. Check the new counter front bearing inner race and the side race, as shown.
    2. Using installer 5–8840–2556–0 (J–42800) and a press, install the counter gear shaft front bearing.

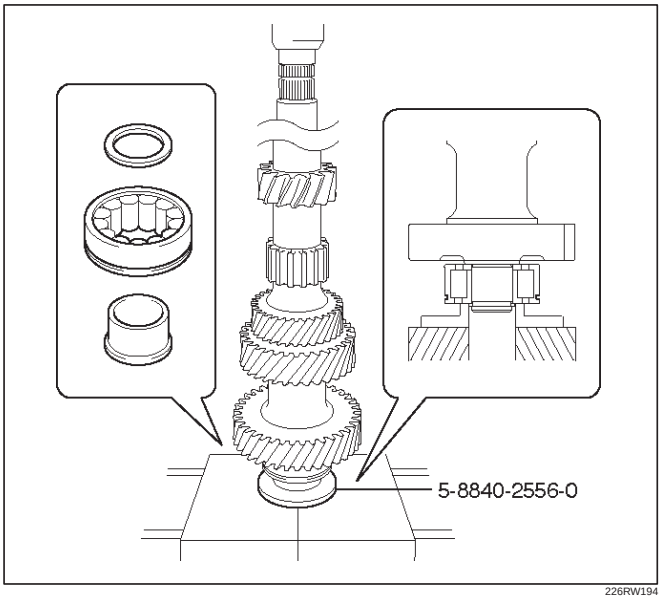

226RW194

    3. Select a snap ring that will allow minimum axial play.

Mark	Thickness
A	2.00 – 2.05 mm (0.079 – 0.081 in)
B	2.05 – 2.10 mm (0.081 – 0.083 in)
C	2.10 – 2.15 mm (0.083 – 0.085 in)
D	2.15 – 2.20 mm (0.085 – 0.087 in)
E	2.20 – 2.25 mm (0.087 – 0.089 in)
F	2.25 – 2.30 mm (0.089 – 0.091 in)

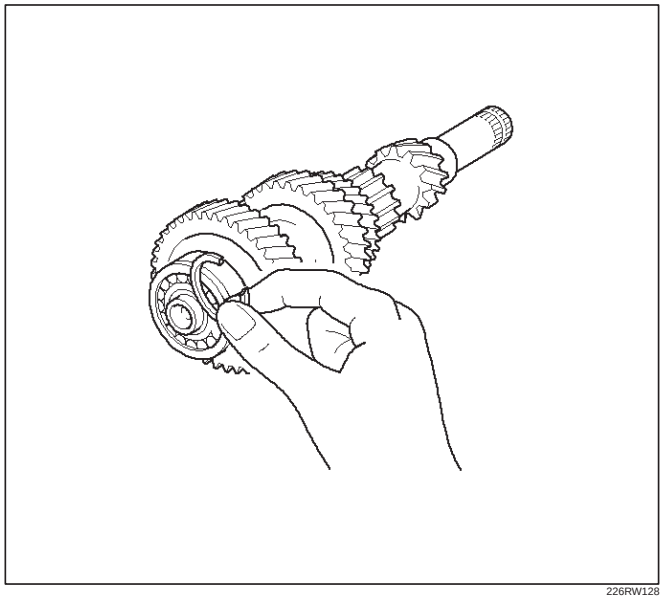

226RW128

    4. Using a snap ring expander, install the new snap ring.

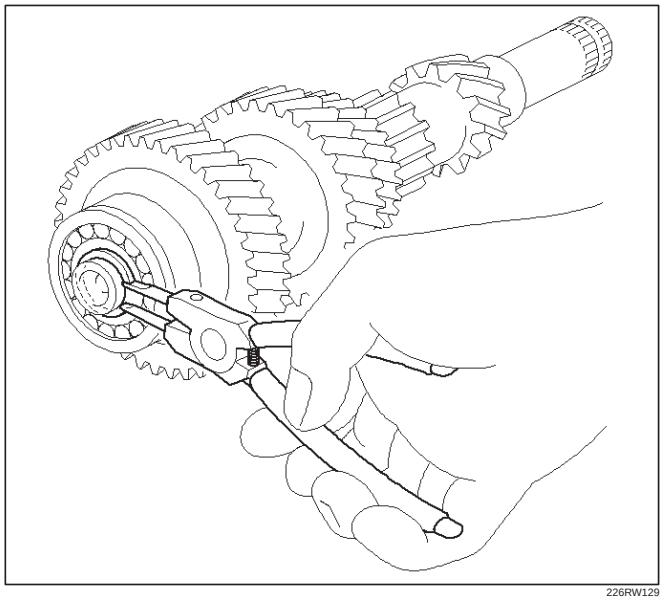

226RW129

17. Install the front cover.
    1. Using installer 5–8840–2557–0 (J–42801), grip 5–8840–0007–0 (J–8092) and a hammer, drive in a new oil seal.

    Drive in depth (from cover end): 11.7 ± 0.5 mm (0.46 ± 0.02 in)

    2. Apply grease to the seal lip.

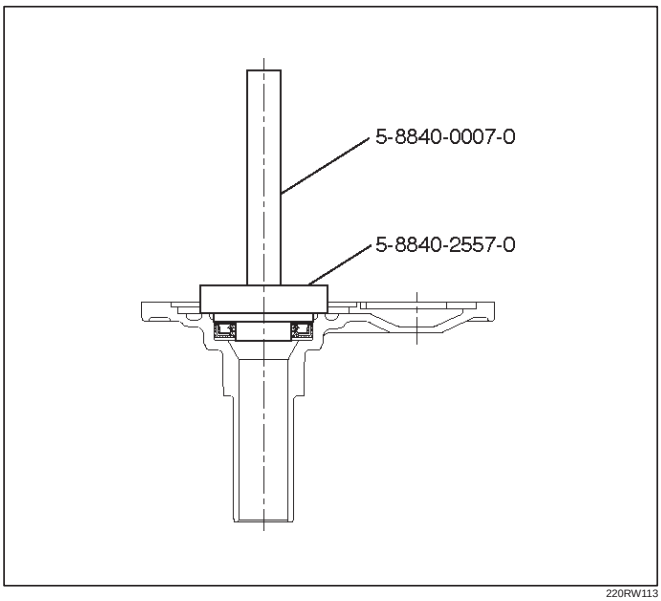

220RW113

18. Install the transfer adapter.
    1. Using installer 5–8840–2558–0 (J –42802), and a hammer drive in a new oil seal.

    Drive in depth (from transfer adapter): 10.95 ± 0.5 mm (0.431 ± 0.02 in)

    2. Apply grease to the oil seal lip.

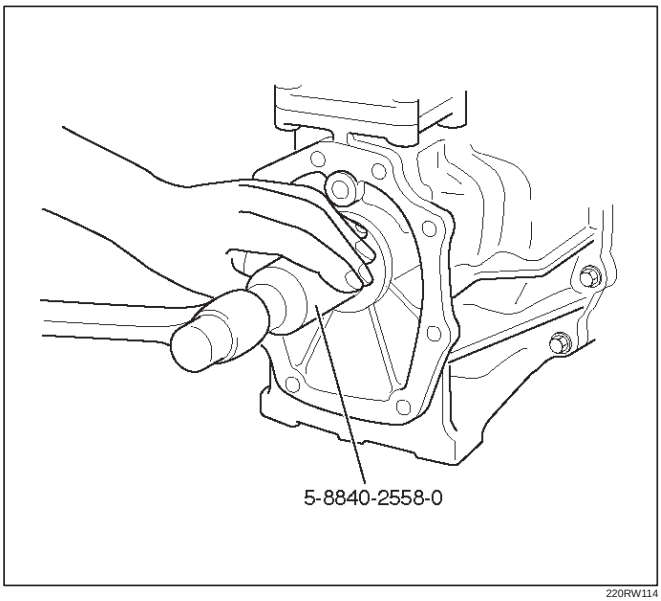

220RW114

3. Install the oil receiver pipe.

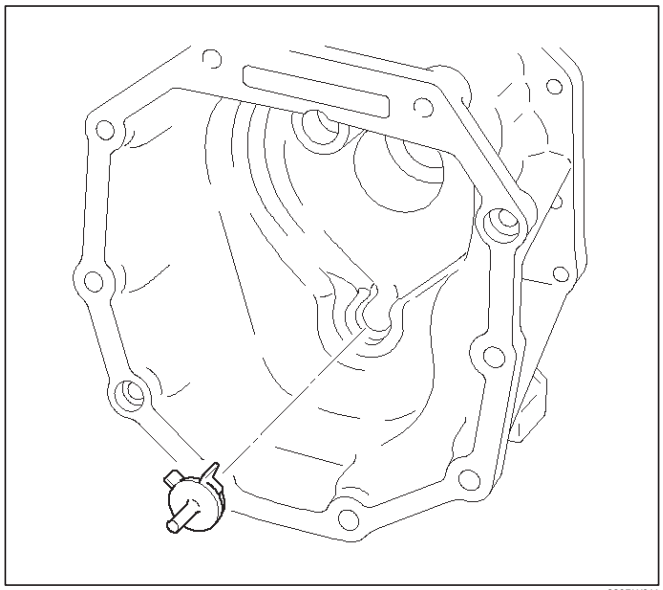

220RW011

4. Install the reverse restrict to the transfer adapter.

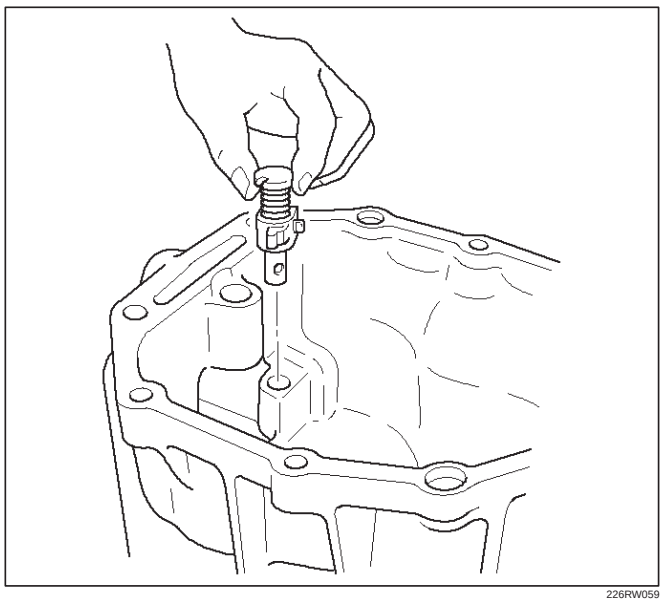

226RW059

5. Using a pin punch and hammer, drive in the slotted spring pin.

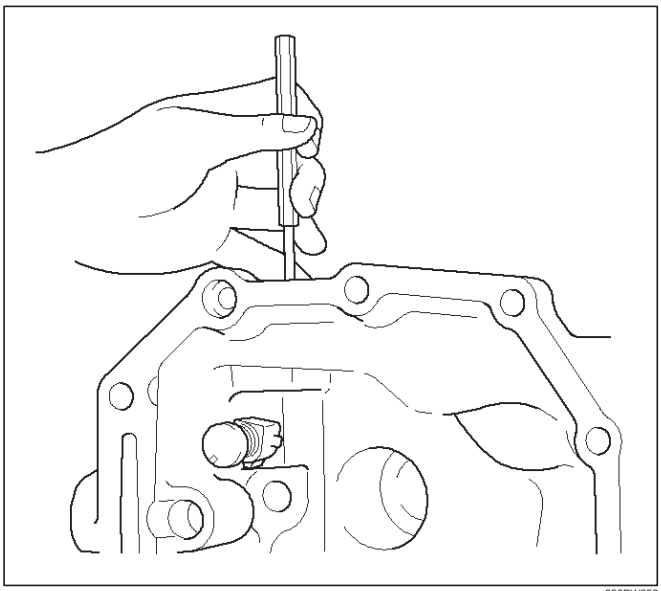

226RW058

6. Clean up the plug and plug hole.
7. Apply sealant to the plug threads. (THREE BOND 1344 or equivalent)
8. Using a torx socket wrench(T40), install and torque the plug.

Torque: 19 N·m (1.9 kg·m/14 lb ft)

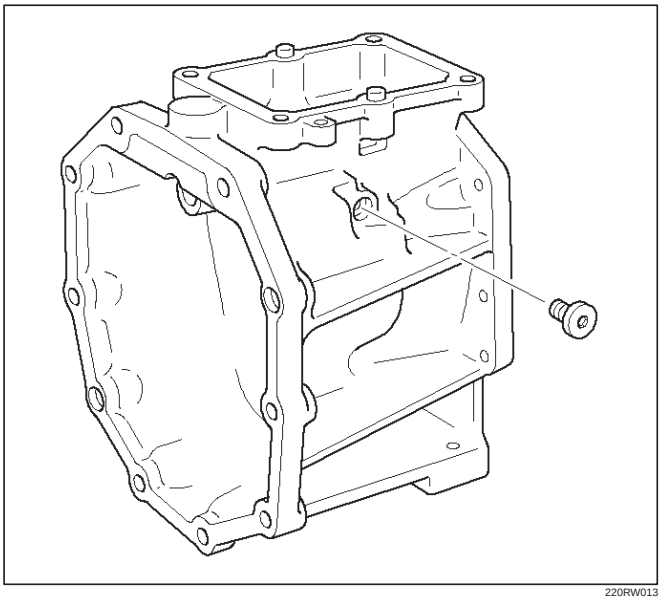

220RW013

9. Using hexagon wrench, install and torque the plug.

Torque: 37 N·m (3.8 kg·m/27 lb ft)

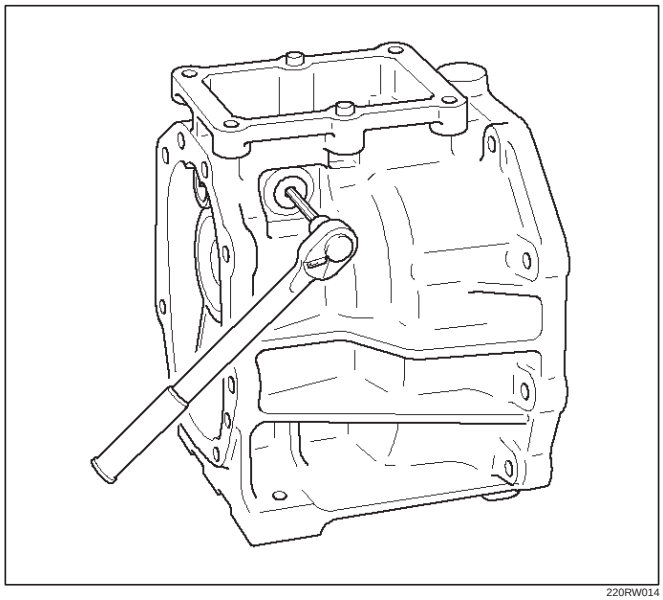

220RW014

19. Install the reverse shift arm No.1 and reverse shift arm No.2.
    1. Mount the intermediate plate through the aluminum plate in a vise.

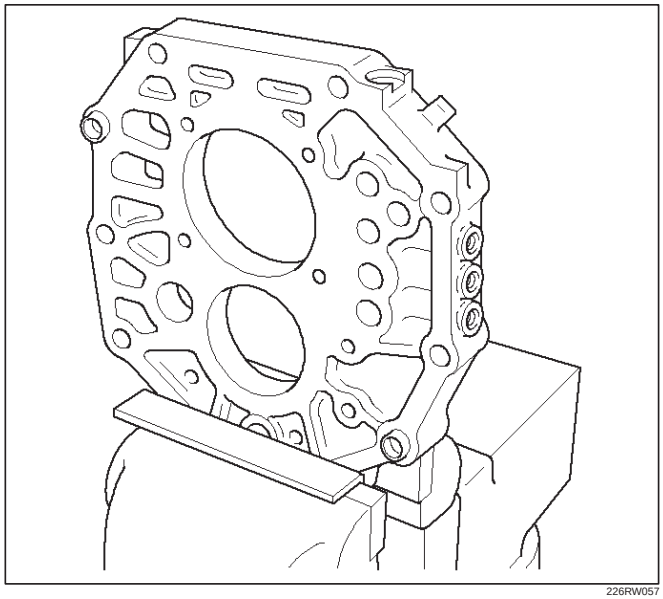

226RW057

2. Using 2 bolts, install reverse shift arm bracket.

Torque: 18 N·m (1.8 kg·m/13 lb ft)

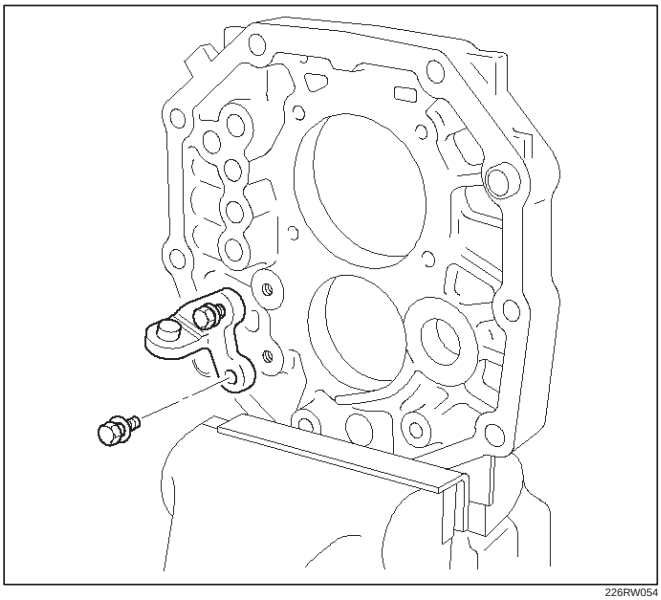

226RW054

3. Install reverse shift arm No.2 to the reverse shift arm No.1. Using screwdriver and a hammer, install the new E-ring.

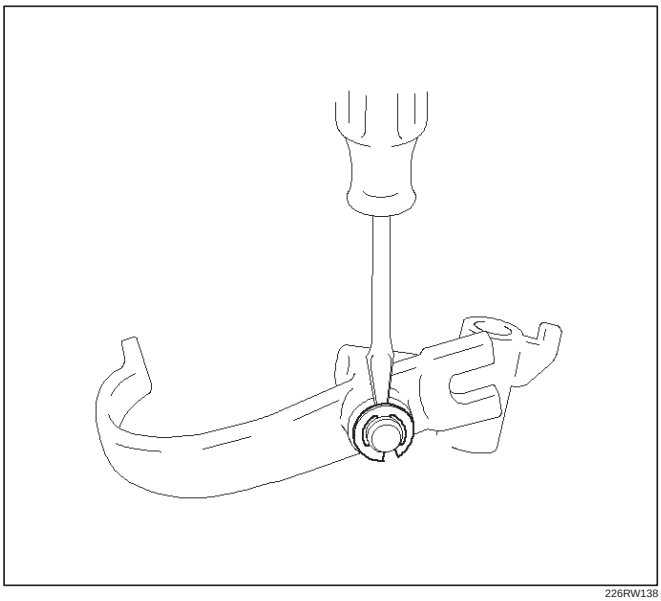

226RW138

4. Install reverse shift arm No.2 to the reverse shift arm bracket.

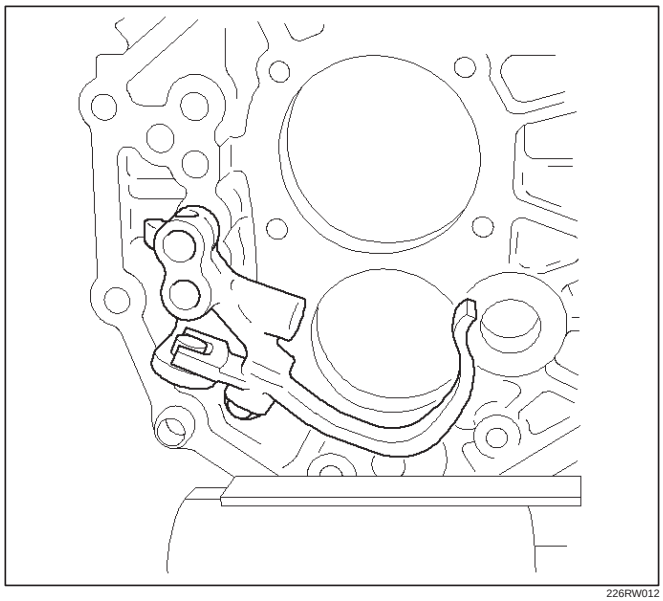

226RW012

20. Install the reverse shift rod.
    1. Install the reverse shift arm No.1 compression spring and ball to the reverse shift arm No.1.

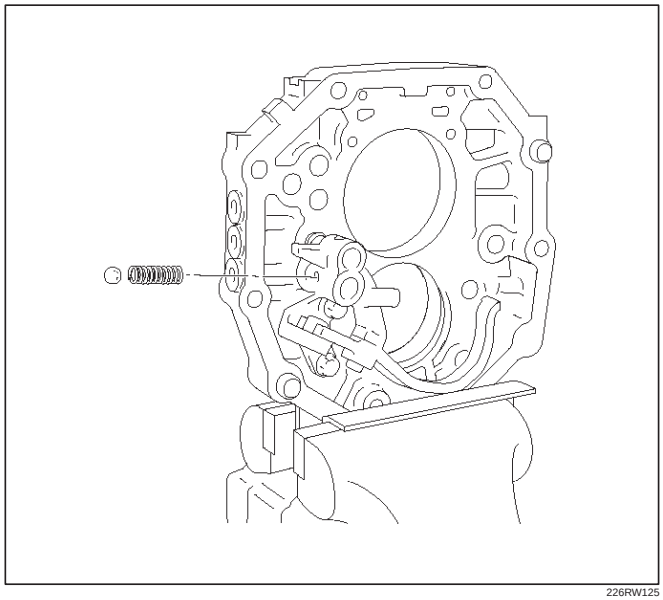

226RW125

2. Install the reverse shift rod from the rear side by pushing the ball on using a screwdriver.

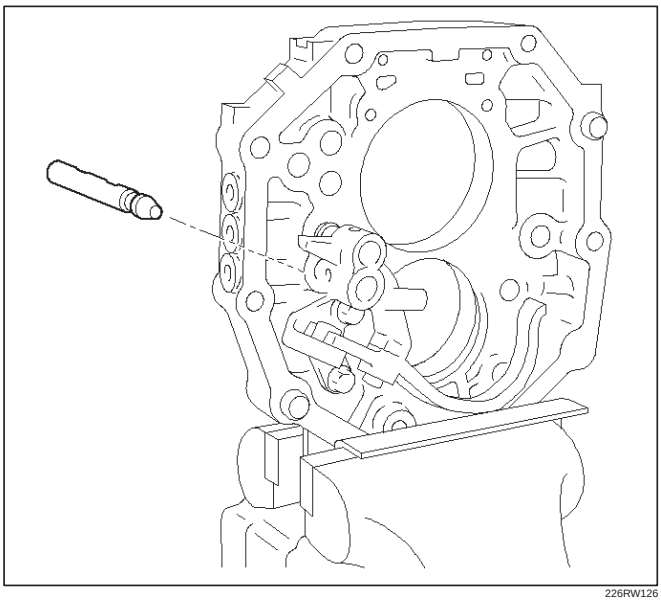

226RW126

21. Install the reverse-5th shift rod.
    1. Install the reverse shift arm No.1 lock ball to the reverse shift arm No.1.
    2. Install the interlock pin to the intermediate plate.

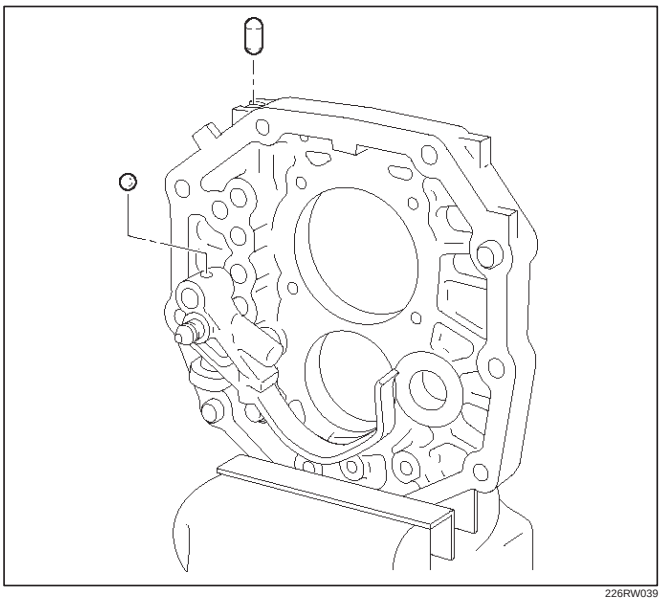

226RW039

3. Put in the reverse-5th shift rod from the front.

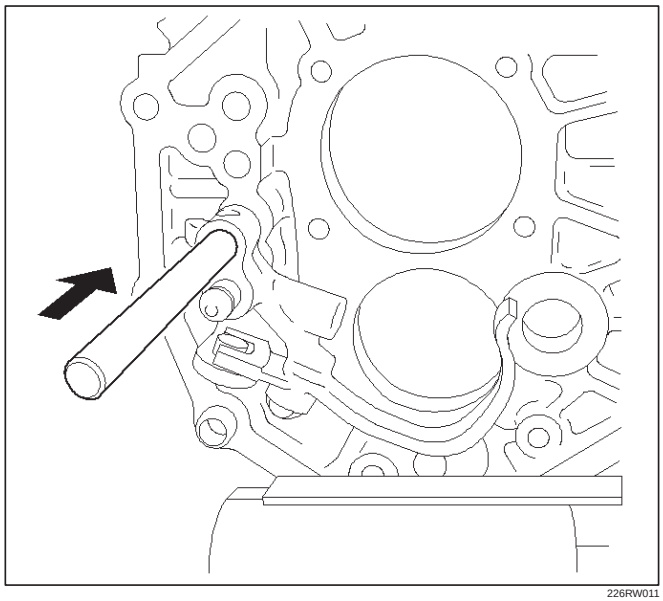

226RW011

4. Using a screwdriver and a hammer, install the 2 new shift rod snap rings to the 5th-reverse shift rod and reverse shift rod.

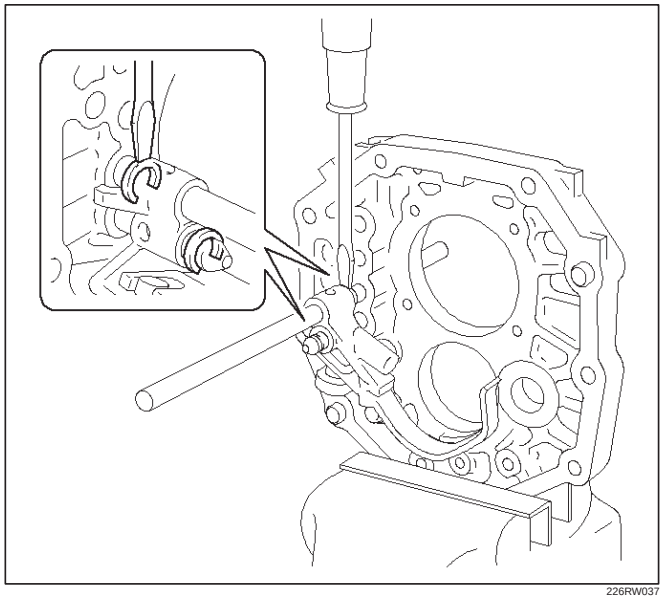

226RW037

22. Install 1st–2nd shift rod.
    1. Install the interlock pin to the intermediate plate.

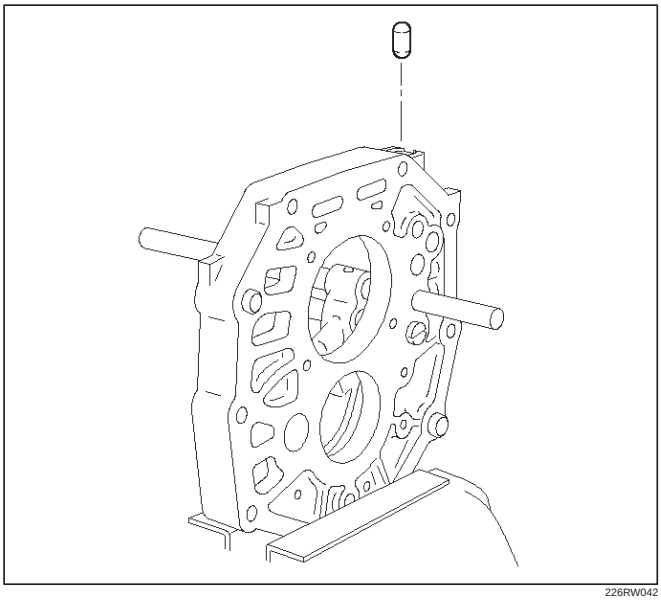

226RW042

    2. Put in the 1st–2nd shift rod from the rear.

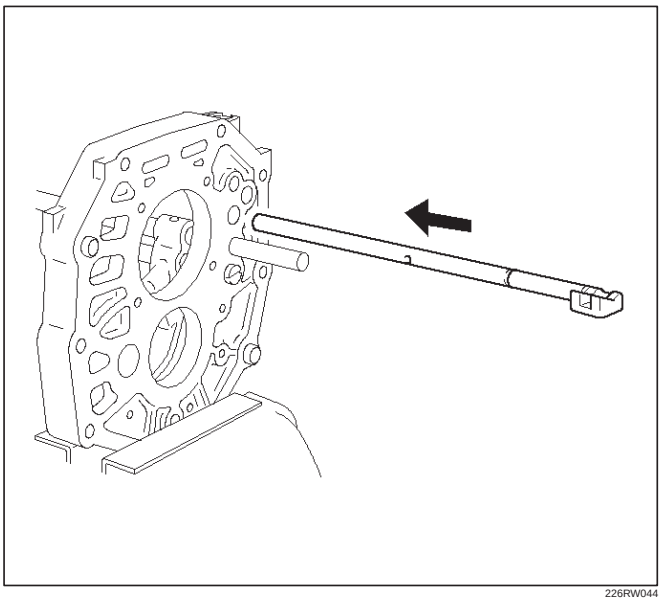

226RW044

23. Install 3rd–4th shift rod.
    1. Install the straight pin and interlock pin to the intermediate plate.

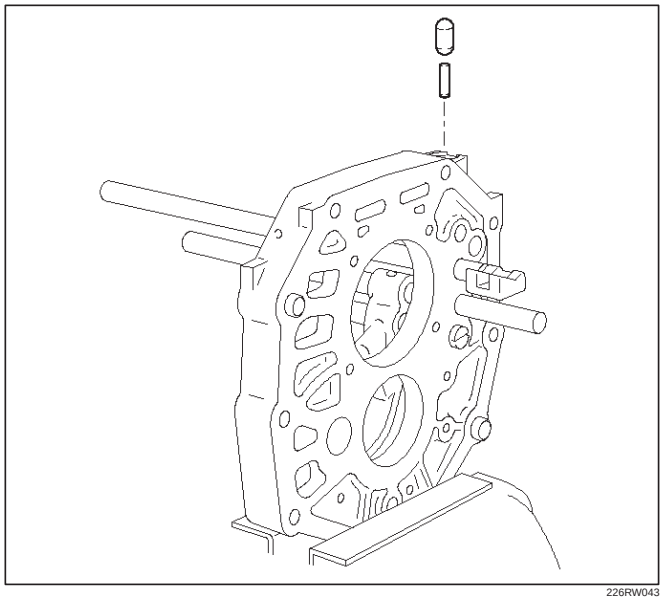

226RW043

    2. Put in the 3rd–4th shift rod from the rear.

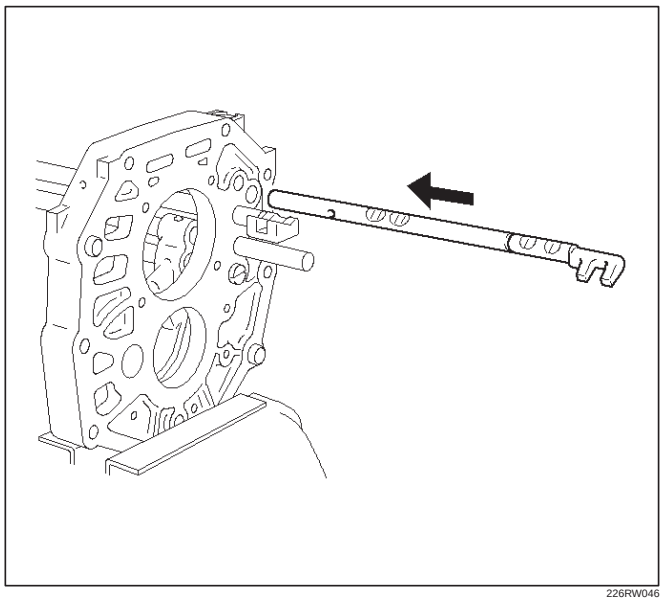

226RW046

24. Install the interlock parts.
    1. Using a screwdriver and hammer, 2 new shift rod snap rings to the 1st–2nd and 3rd–4th shift rod.

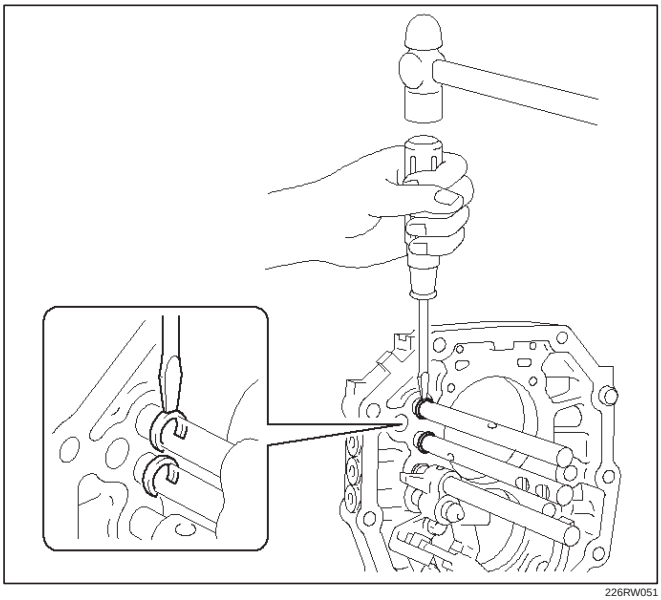

226RW051

    2. Install the 3 shift detent ball and springs to the intermediate plate.

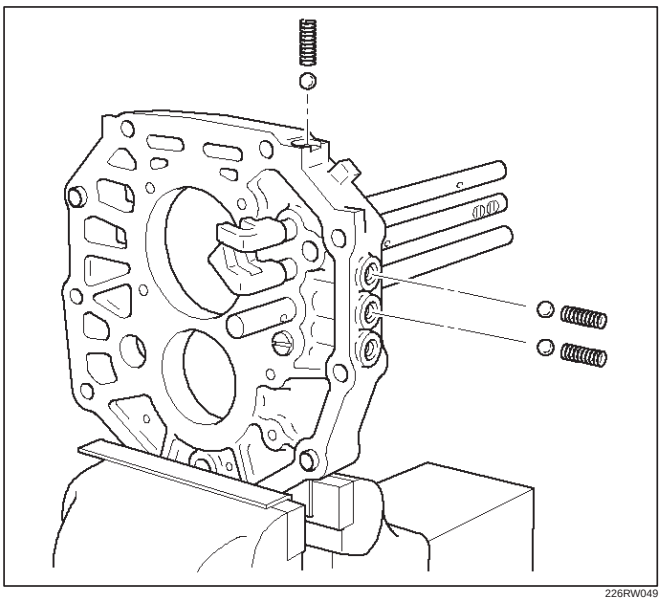

226RW049

    3. Clean up the plug hole.
    4. Apply sealant to the plug threads.
       sealant: THREE BOND 1344 or equivalent
    5. Using a torx socket wrench(T40), install and torque the 4 plugs.

Torque: 19 N·m (1.9 kg·m/14 lb ft)

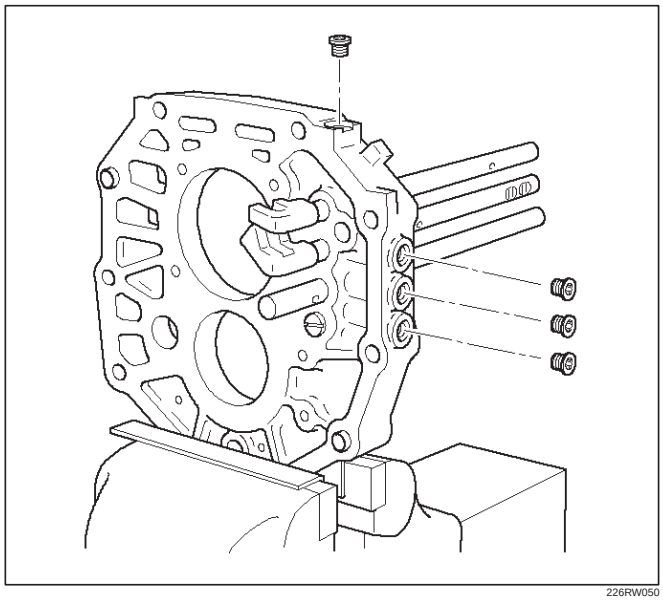

226RW050

25. Install mainshaft assembly.

NOTE: Coat all parts with gear oil before installing them.

    1. Using a plastic hammer, tap the 5th-reverse shift rod at the reverse shift.

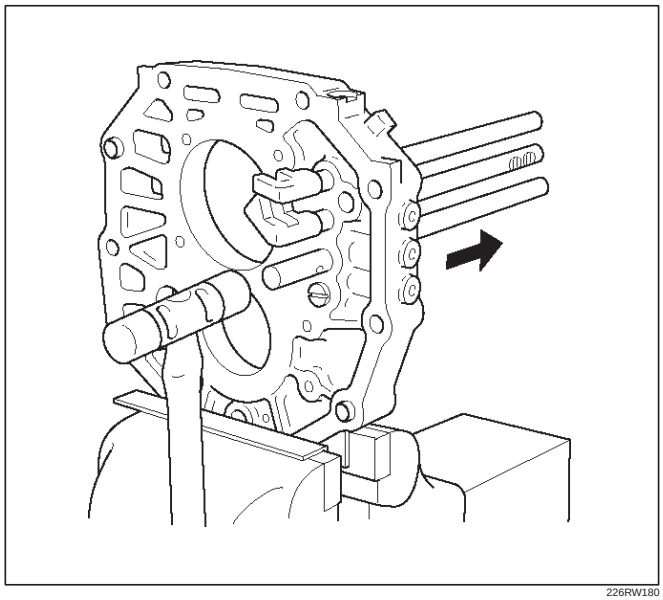

226RW180

2. Install the shift arm No.1 and No.2 to the mainshaft.

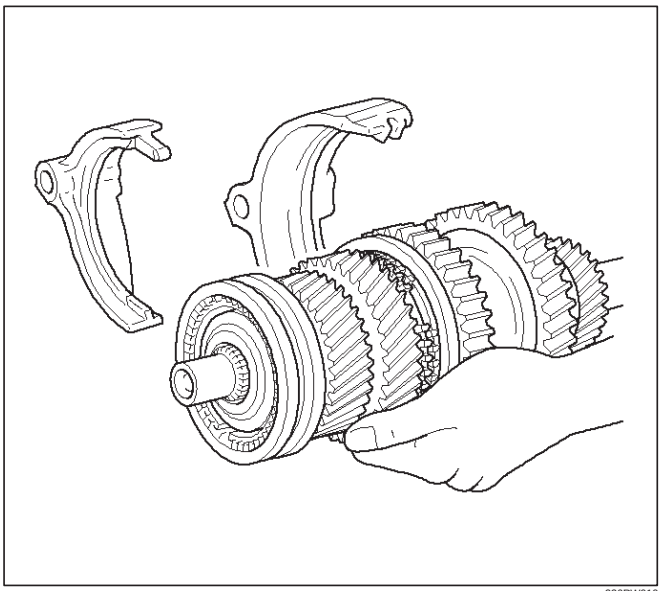

226RW010

3. Using a plastic hammer, tap the intermediate plate and install the mainshaft. Through the shift arm No.1 and No.2 to the shift rod.

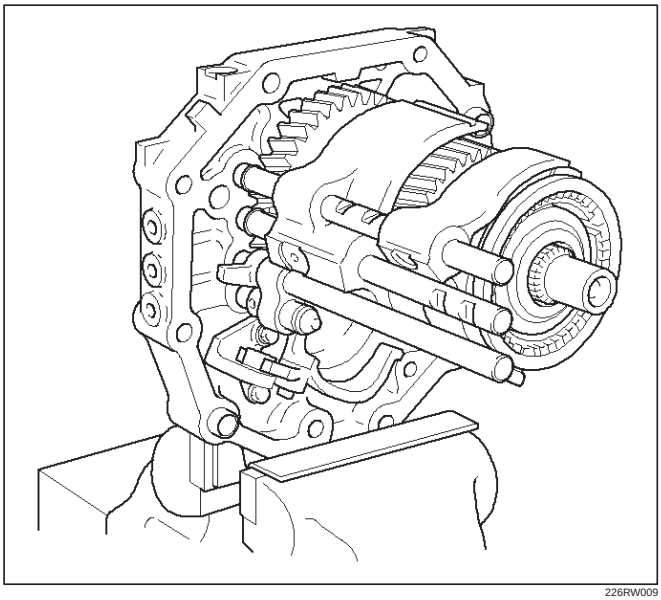

226RW009

4. Using a snap ring expander, install the snap ring.

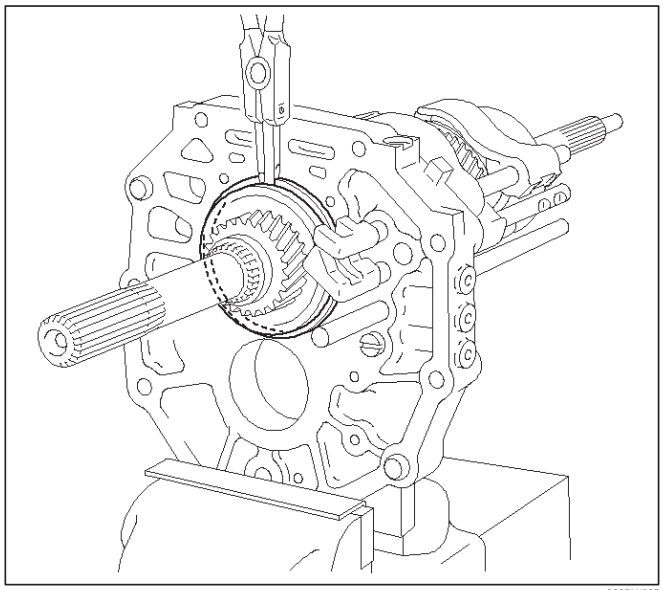

226RW035

5. Using a plastic hammer, tap the 5th-reverse shift rod at the neutral shift.

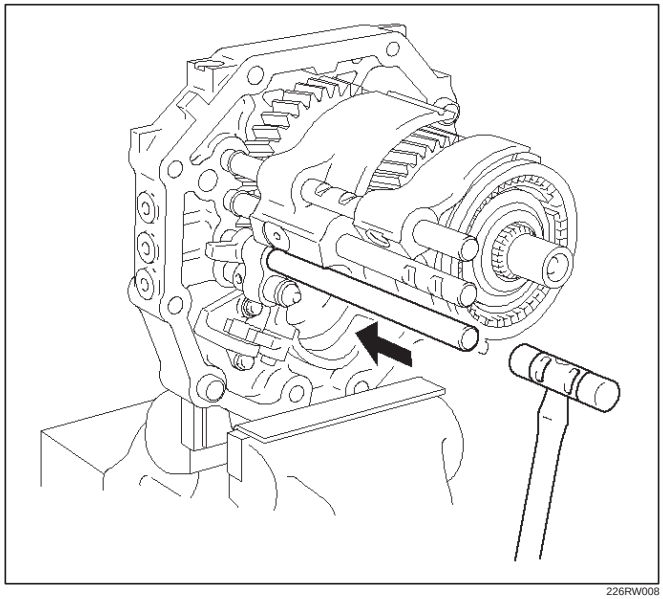

226RW008

26. Install the top gear shaft.
    1. Align the projection of the hub No.2 with the synchronizer ring slots, and install the top gear shaft assembly to the mainshaft.
    2. Check that the gear rotates smoothly.

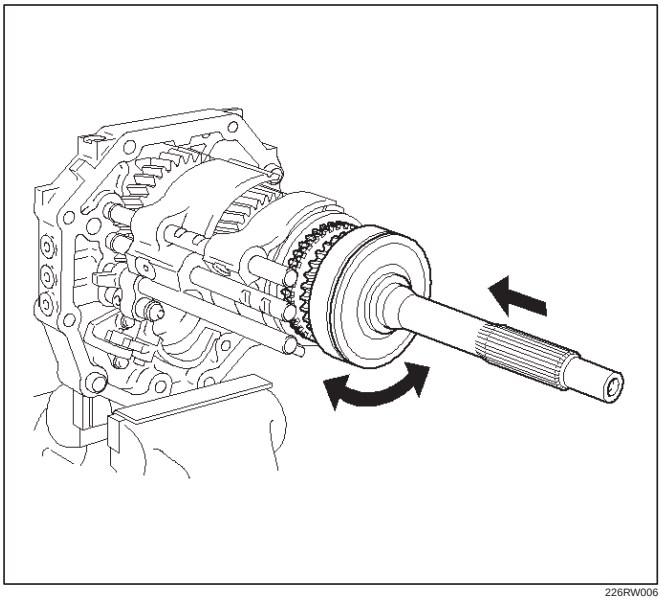

226RW006

27. Install the counter gear shaft.
    1. Temporarily install the counter gear shaft to the intermediate plate.

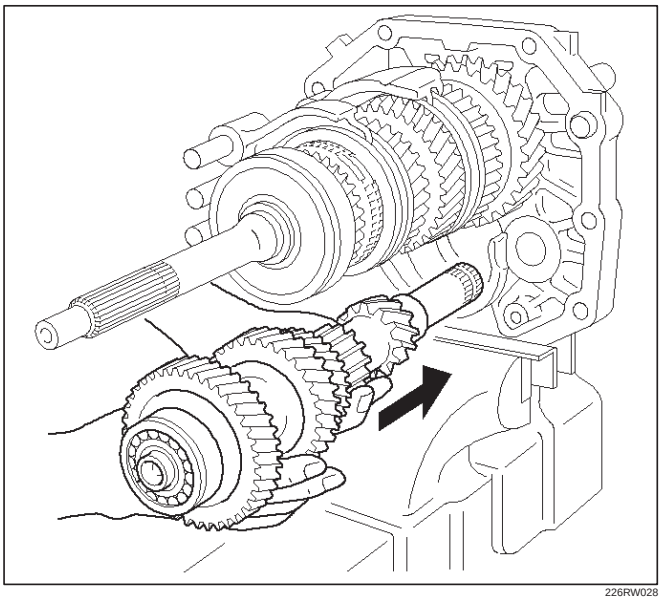

226RW028

    2. Using installer 5–8840–2552–0 (J–42796) and a hammer, drive in the center bearing as shown.

NOTE: Outer race snap ring groove toward rear.

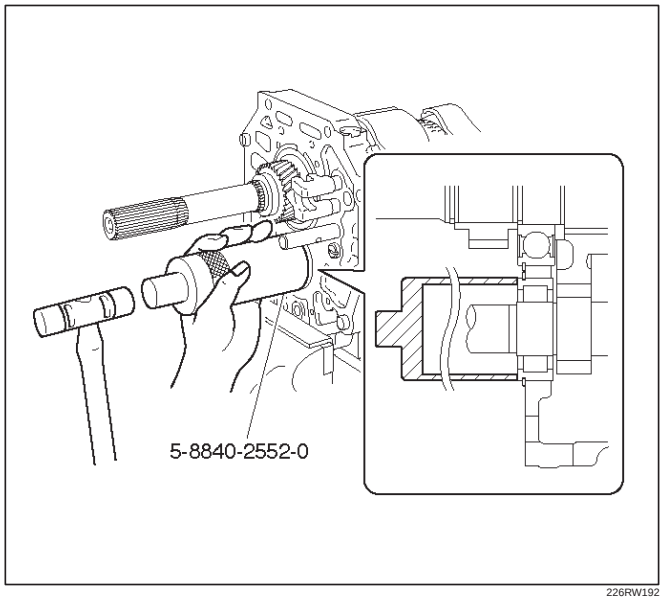

226RW192

Reference: Drive in the counter rear bearing by tapping on the front end of the counter shaft.

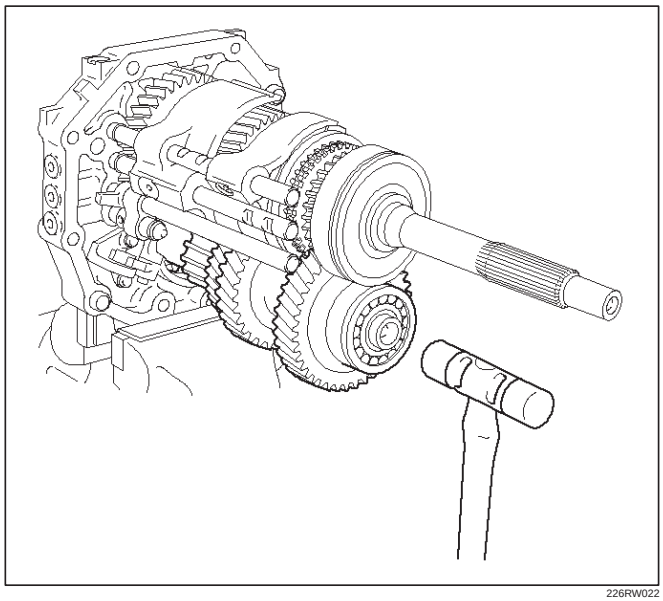

226RW022

28. Install the reverse idle gear.
    1. Install the reverse idle gear and reverse idle gear shaft.

NOTE:

- Insert the reverse idle gear shaft with the slot toward rear.
- Install the reverse idle gear with the reverse shift arm No.2.

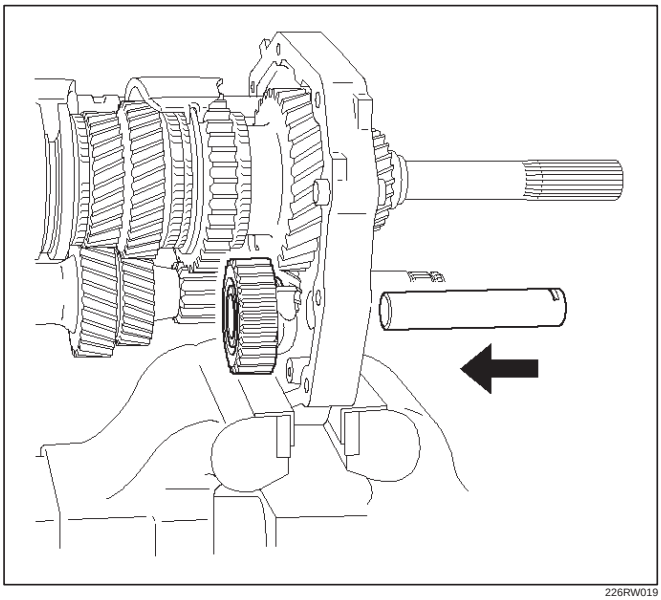

226RW019

29. Install the bearing plate.
    1. Align the bearing plate to groove of the reverse idle gear shaft.

Torque: 13 N·m (1.3 kg·m/113 lb in)

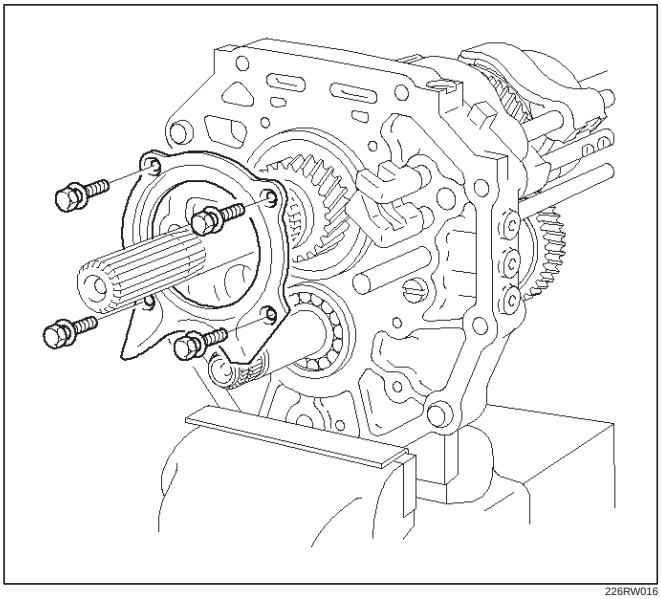

226RW016

30. Install the 5th gear thrust washer.
    1. Install the 5th gear thrust washer pin to the counter gear shaft.
    2. Install the 5th gear thrust washer to the counter gear shaft.

NOTE: Thrust washer must be assembled with the chamfered face of the washer toward the front.

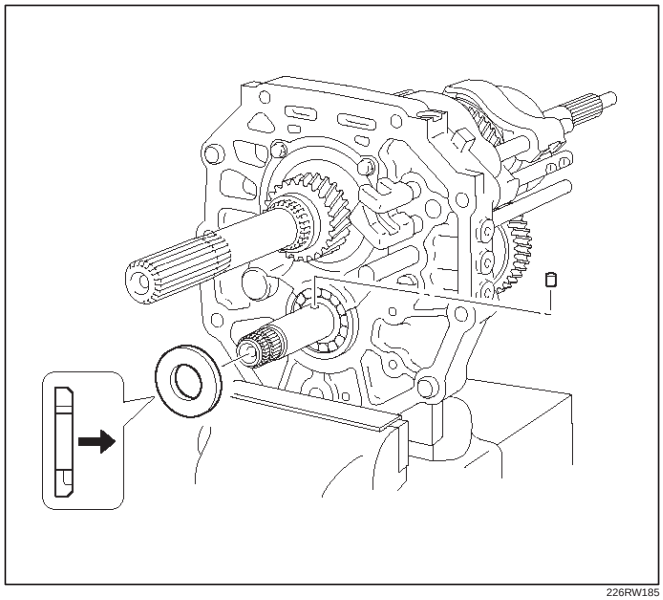

226RW185

31. Install the counter 5th gear.
    1. Install the 3 inserts and 3 compression springs to the reverse block ring.
       Reference: Push the 3 inserts with the 3 compression springs to the reverse synchronizer ring.

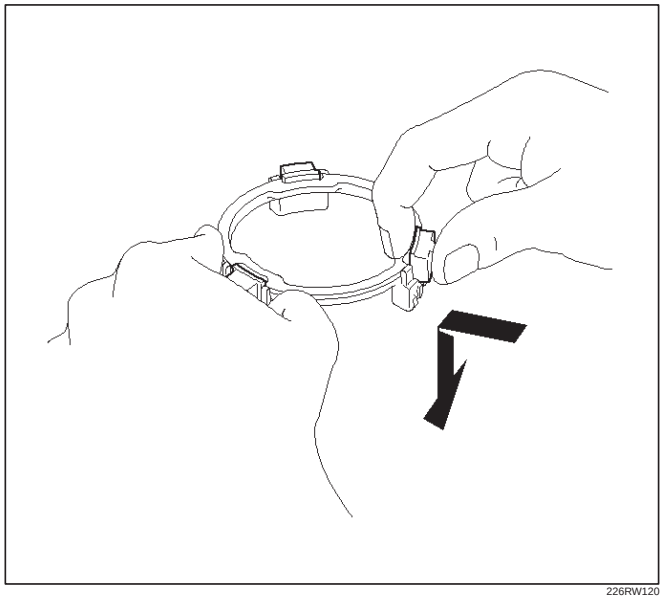

226RW120

2. Install the synchronizer outer ring, synchronizer cone ring, and synchronizer pull ring to the reverse block ring.

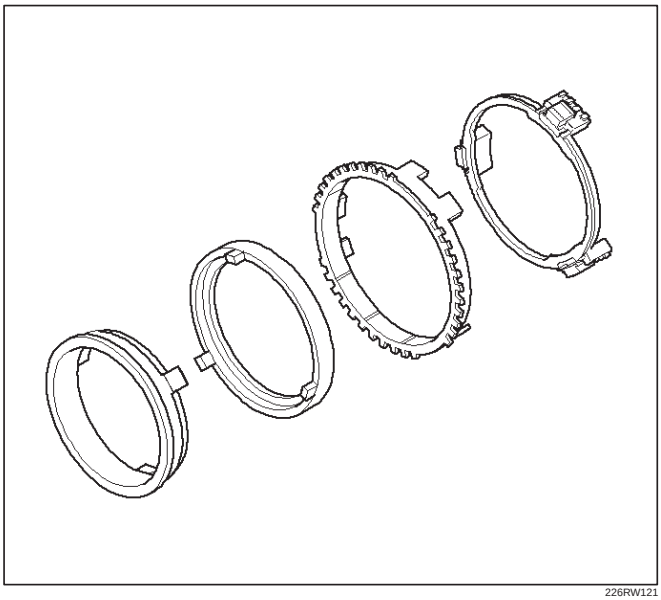

226RW121

3. Turn to 30 degree the reverse synchronizer pull ring.

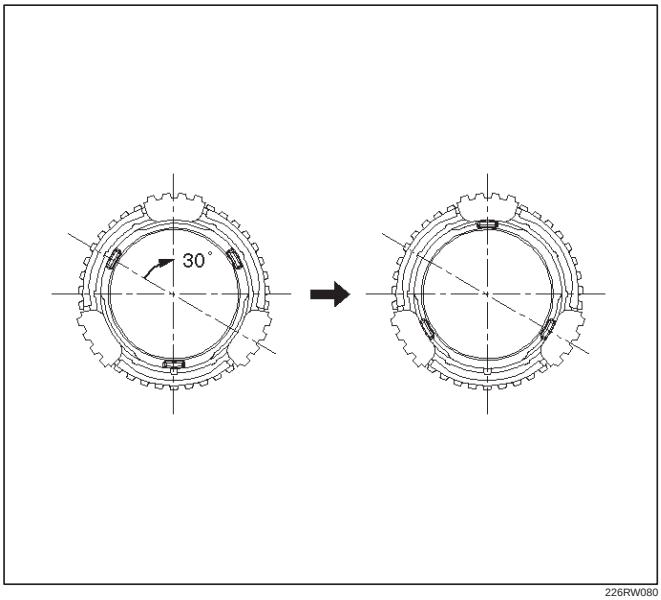

226RW080

4. Install the hub sleeve No.3 and reverse block ring set to the counter 5th gear.

NOTE: Check the hub sleeve No.3 direction, as shown.

Reference: While pushing the 3 inserts, install the synchronizer ring assembly to the hub sleeve No.3.

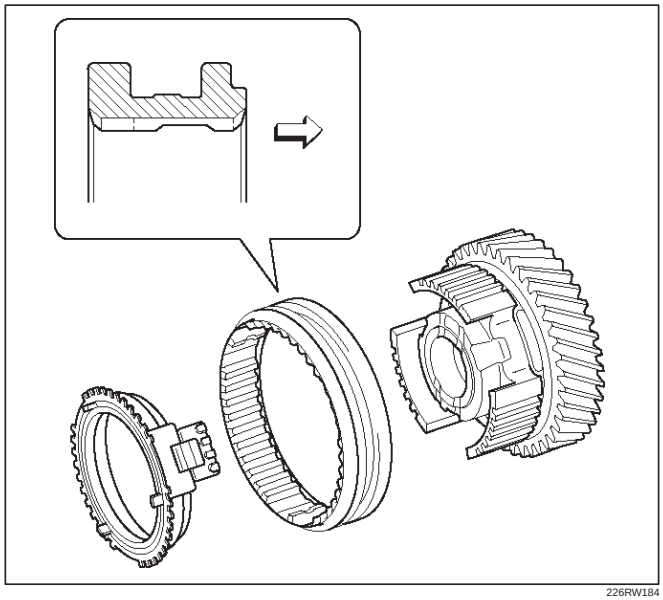

226RW184

5. Slide the hub sleeve No.3.

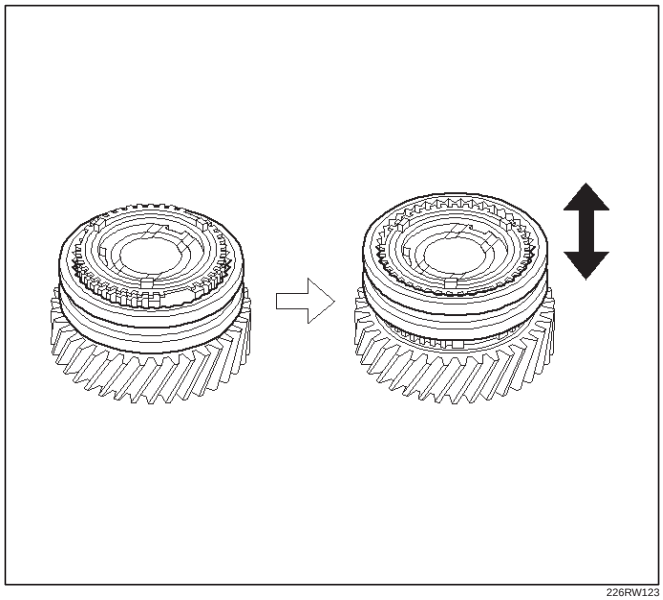

226RW123

6. Install the counter 5th gear bearing, counter 5th gear and reverse block ring set to the counter gear shaft, through the 5th reverse shift arm to the 5th reverse shift rod.

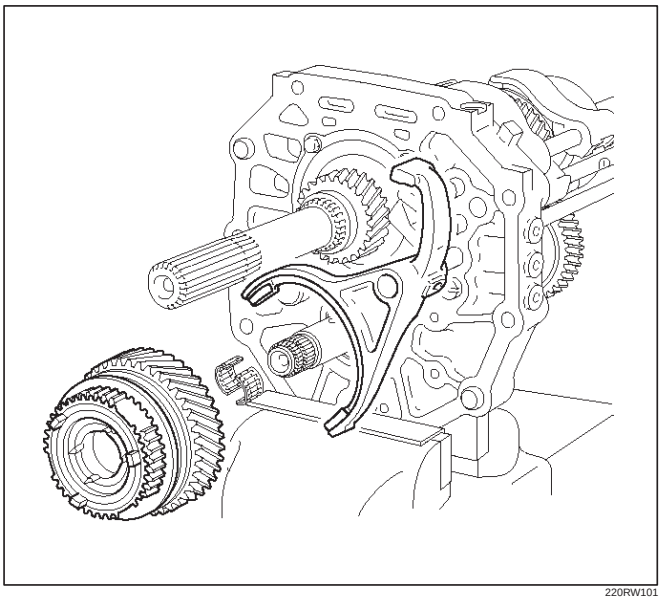

220RW101

7. Using installer 5–8840–2552–0 (J–42796) and a press, install counter 5th gear spline piece.

NOTE:

- Align the projection of the cone ring to the holes of the 5th gear spline piece.
- Check that the gear rotates smoothly.

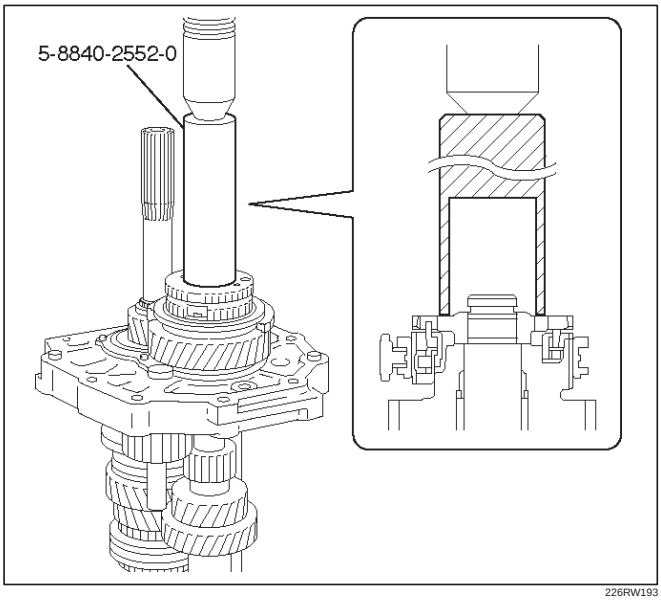

226RW193

8. Using thickness gauge, measure the counter 5th gear thrust clearance.

Standard: 0.10 – 0.35mm (0.004 – 0.014 in)

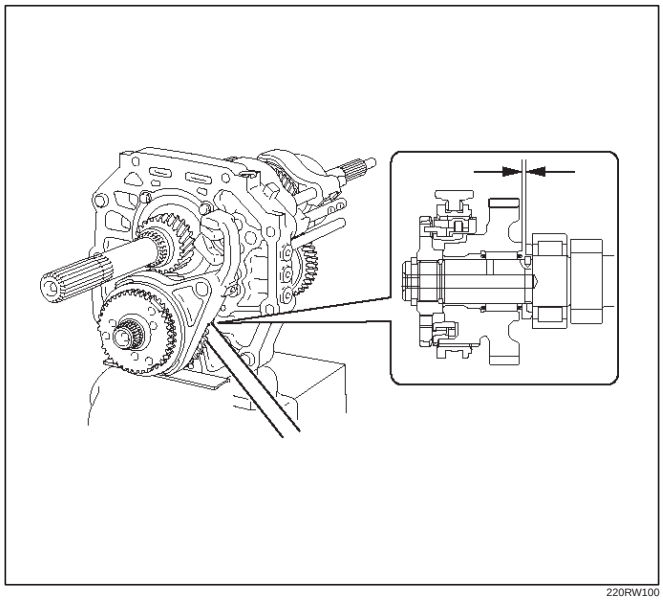

220RW100

9. Select a snap ring that will allow minimum axial play.

Mark	Thickness
A	2.80 – 2.85 (0.110 – 0.112 in)
B	2.85 – 2.90 (0.112 – 0.114 in)
C	2.90 – 2.95 (0.114 – 0.116 in)
D	2.95 – 3.00 (0.116 – 0.118 in)
E	3.00 – 3.05 (0.118 – 0.120 in)
F	3.05 – 3.10 (0.120 – 0.122 in)
G	3.10 – 3.15 (0.122 – 0.124 in)

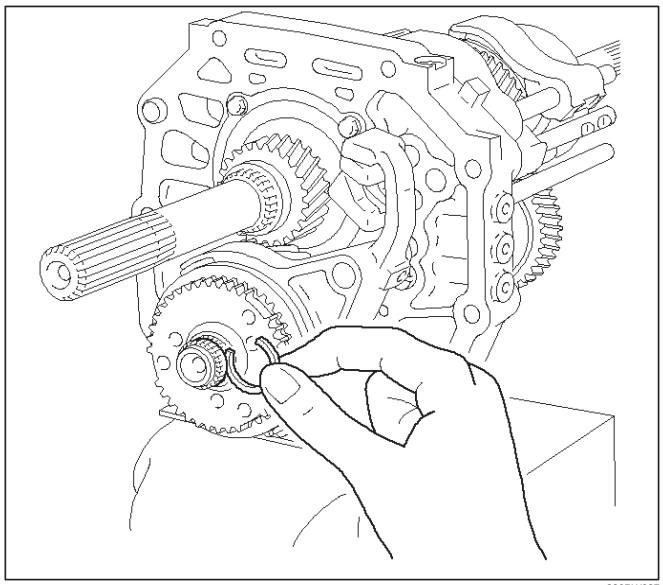

226RW027

10. Install the new snap ring.

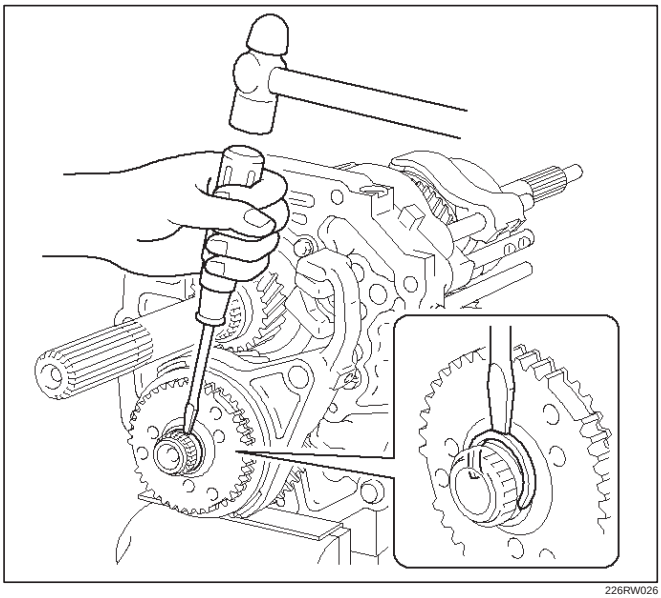

226RW026

32. Install the shift arm bolts.
    1. Install and torque the 2 shift arm bolts.

Torque: 20 N·m (2.0 kg·m/14 lb ft)

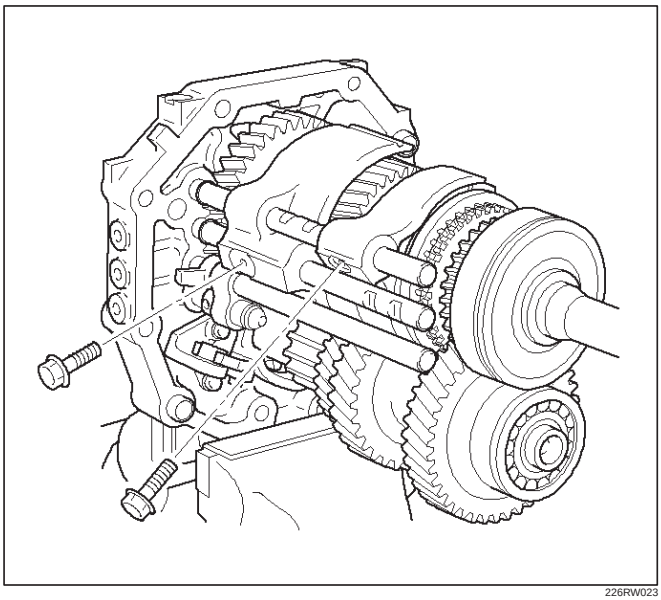

226RW023

33. Install the shift arm slotted pin.
    1. Using a pin punch and a hammer, drive in the slotted pin to the shift arm.

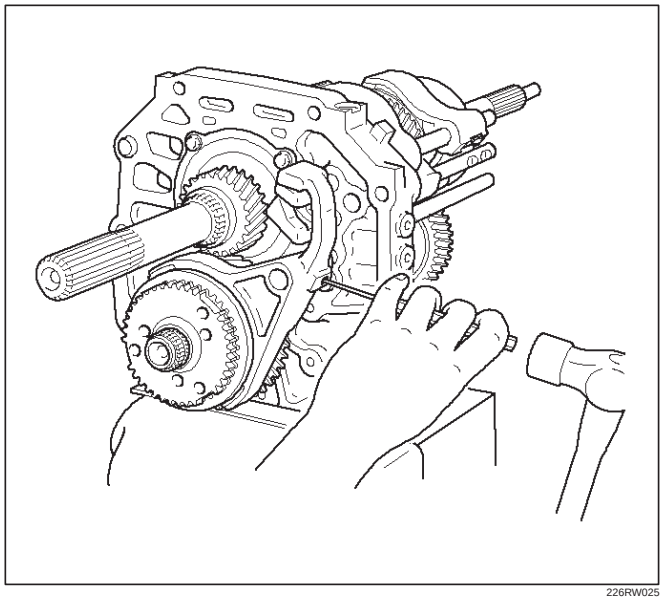

226RW025

34. Install the transmission case.
    1. Clean up the fitting surface.
    2. Apply recommended liquid gasket (THREE BOND 1281 or equivalent), as shown.

NOTE:

- Don’t dry the liquid gasket.

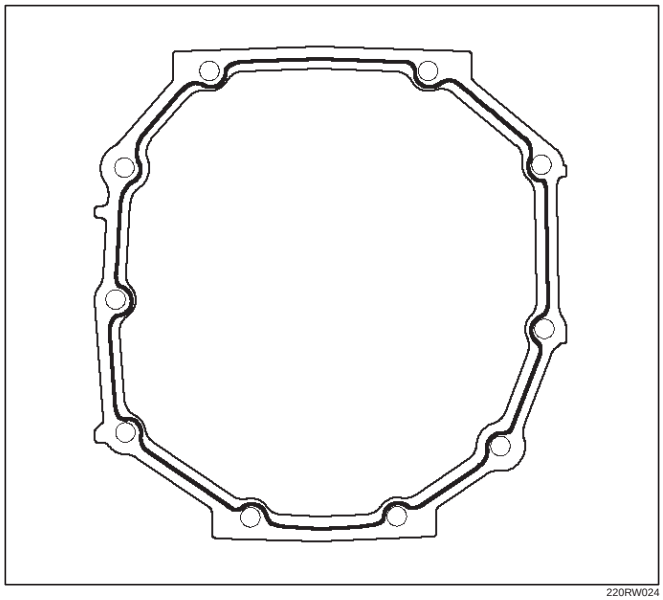

220RW024

3. Stand the transmission by the wood blocks.
4. Using a plastic hammer, tap the transmission case and attach it to the intermediate plate.

NOTE: Be careful not to add over force to bearing.

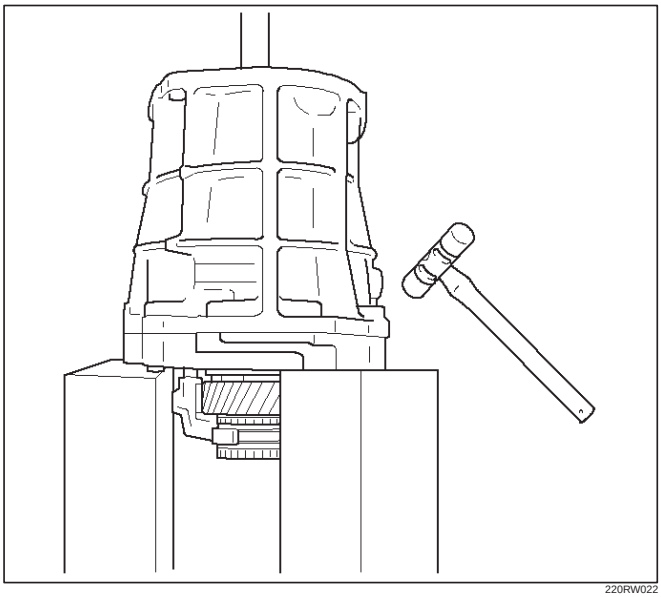

220RW022

5. Using a snap ring expander, install the front bearing shaft snap ring (1) and counter gear shaft bearing snap ring (2).

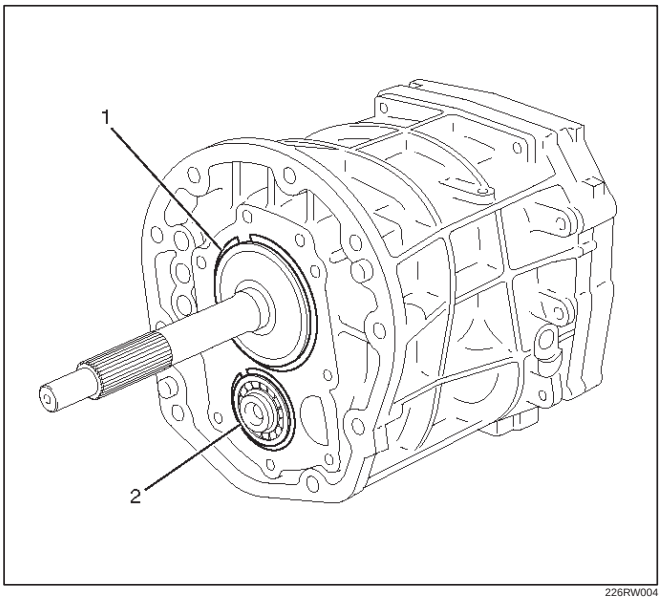

226RW004

6. Turn over the transmission.

35. Install the front cover.
1. Clean up the fitting surface.
2. Apply recommended liquid gasket (THREE BOND 1281 or equivalent), as shown.

NOTE:

- Don't dry the liquid gasket.

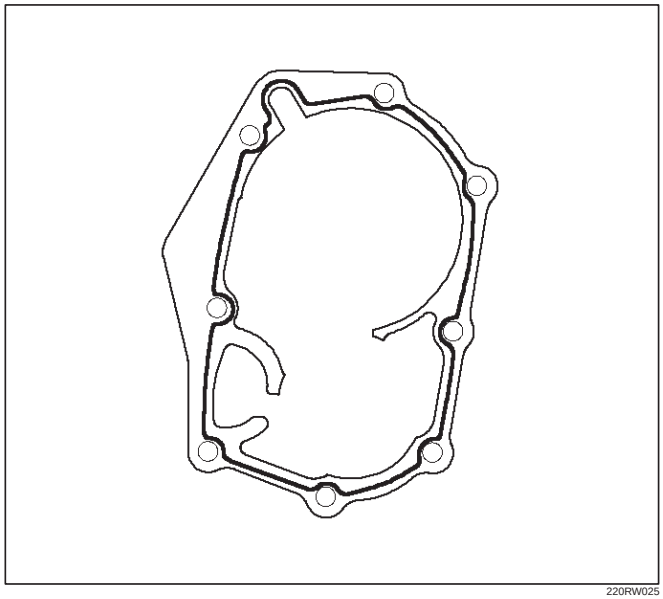

220RW025

3. Clean up and dry the bolts.
4. Apply thread sealant (THREE BOND 1344 or equivalent) to the 8 bolts.
5. Using 8 bolts, install the front cover to the transmission case.

Torque: 17 N·m (1.7 kg·m/12 lb ft)

NOTE:

- Tighten the all bolts evenly.
- Be careful not to damage the oil seal.

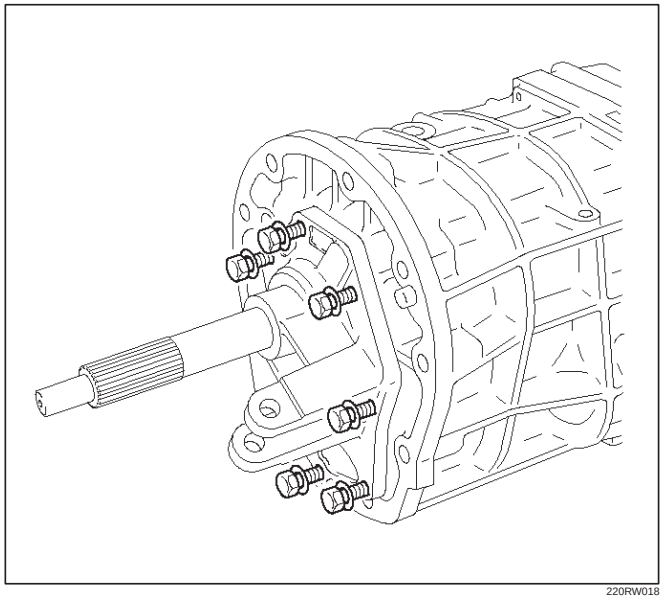

220RW018

6. Check that the top gear shaft and mainshaft rotate.

36. Install the transfer adapter.
    1. Clean up the fitting surface.
    2. Apply recommended liquid gasket (THREE BOND 1281 or equivalent), as shown.

NOTE:

- Don’t dry the liquid gasket.

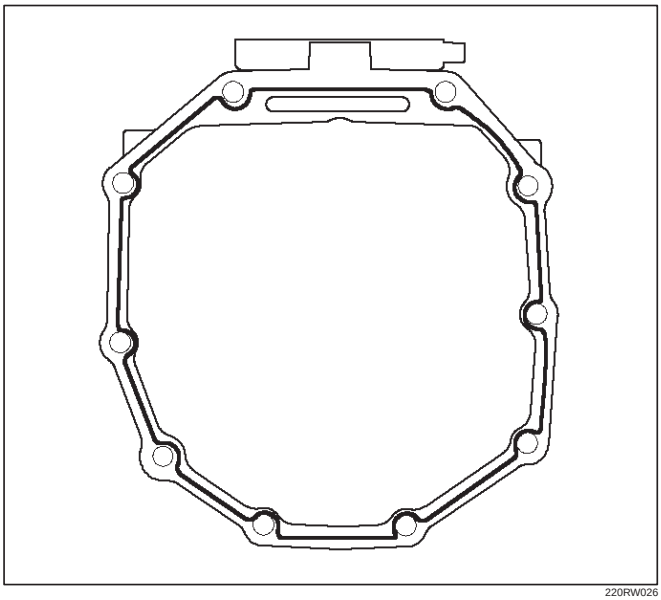

220RW026

3. Using a plastic hammer, tap the transfer adapter and attach it to the intermediate plate.

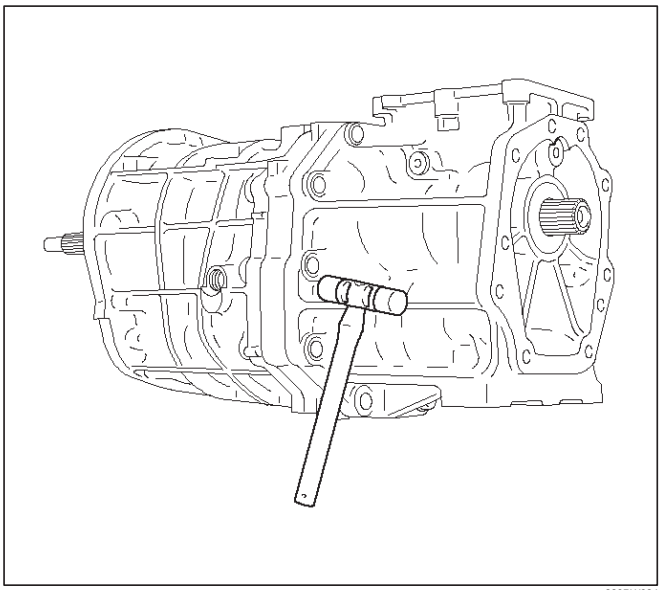

220RW034

4. Using 10 bolts, install the transfer adapter.

Torque: 37 N·m (3.8 kg·m/27 lb ft)

NOTE:

- Tighten the all bolts evenly.
- Don’t damage the lip of the oil seal.
- Install the wire clamp (9) to the transfer adapter.

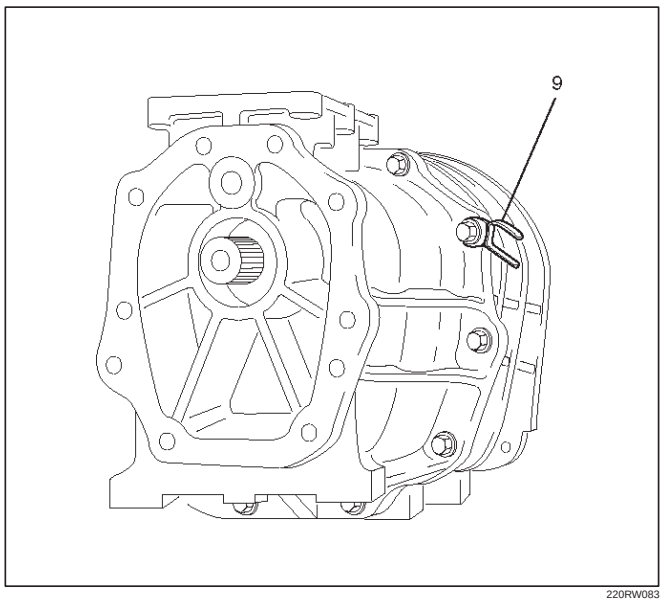

220RW083

37. Install the gear control box.
    1. Align the projection of the shift lever housing to the shaft rod groove, and install the gear control rod.

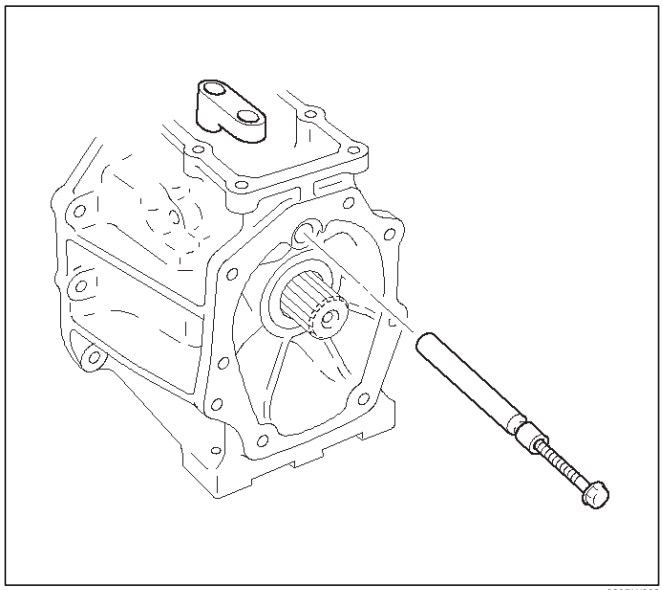

230RW003

2. Using a pin punch and hammer, drive in the slotted spring pin (2) to the shift lever housing.

NOTE: Be carefull not to drop the slotted spring pin.

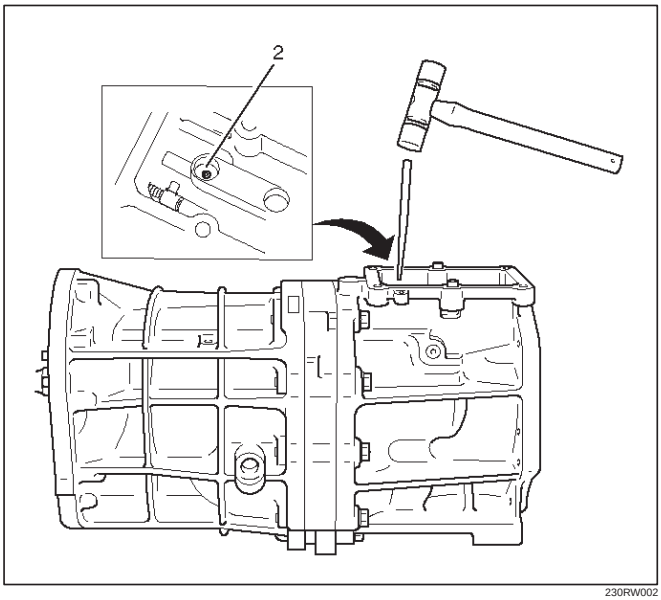

230RW002

3. Apply sealant (THREE BOND 1344 or equivalent) to the plug (1) thread.
4. Using hexagon wrench, install and torque the plug (1).

Torque: 18 N·m (1.8 kg·m/13 lb ft)

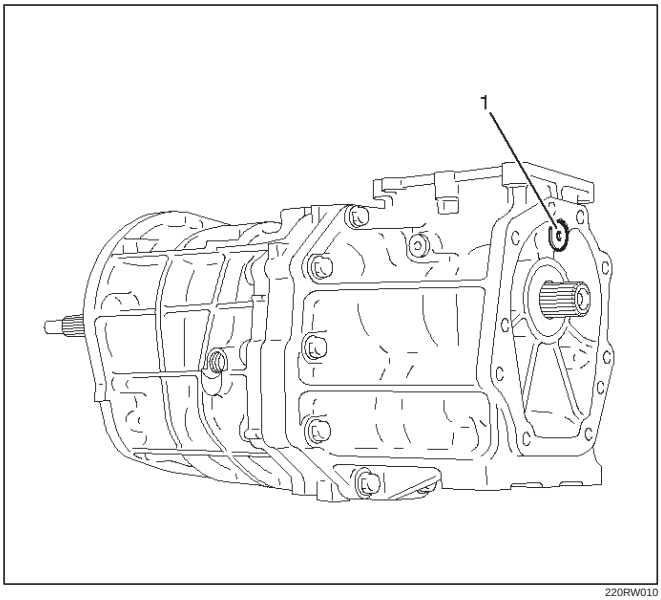

220RW010

5. Clean up the bolts and bolt hole.
6. Using 6 bolts, install the gear control box through the gasket.

Torque 18 N·m (1.8 kg·m/13 lb ft)

(6VE1)

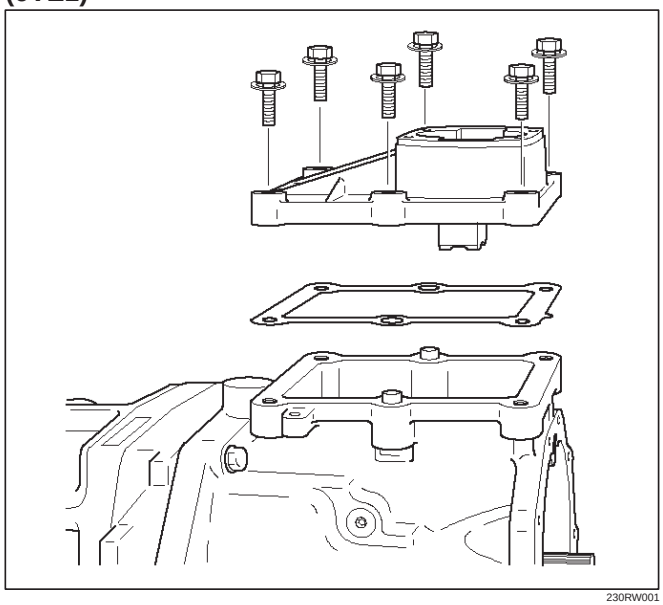

230RW001

(4JX1)

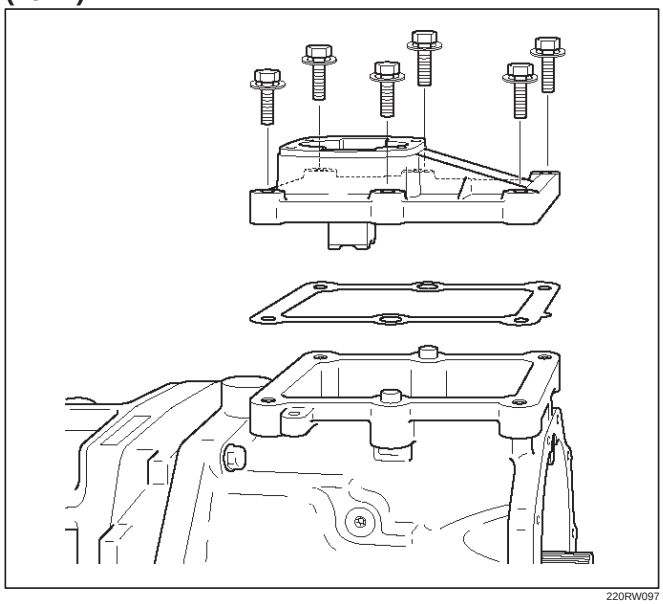

220RW097

38. Install clutch housing.
    1. Install the clutch housing to the transmission case.

    Torque: 36 N·m (3.7 kg·m/27 lb ft)

NOTE: Tighten the all bolts evenly.

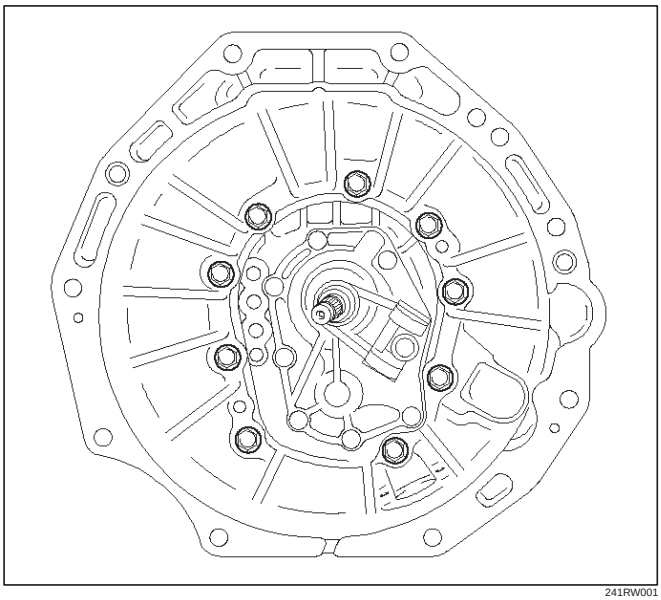

241RW001

39. Install the switches.
    1. Install the new gasket to the 1st and 2nd switch.
    2. Install the 1st and 2nd switch assembly (8).

    Torque: 39 N·m (4.0 kg·m/29 lb ft)

    3. Install the new gasket to the backup light switch.
    4. Install the backup light switch assembly (6).

    Torque: 44 N·m (4.5 kg·m/33 lb ft)

    5. Install the new gasket to the neutral switch.
    6. Install the neutral switch (7) to the transfer adapter (4JX1).

    Torque: 37 N·m (3.8 kg·m/27 lb ft)

(4JX1)

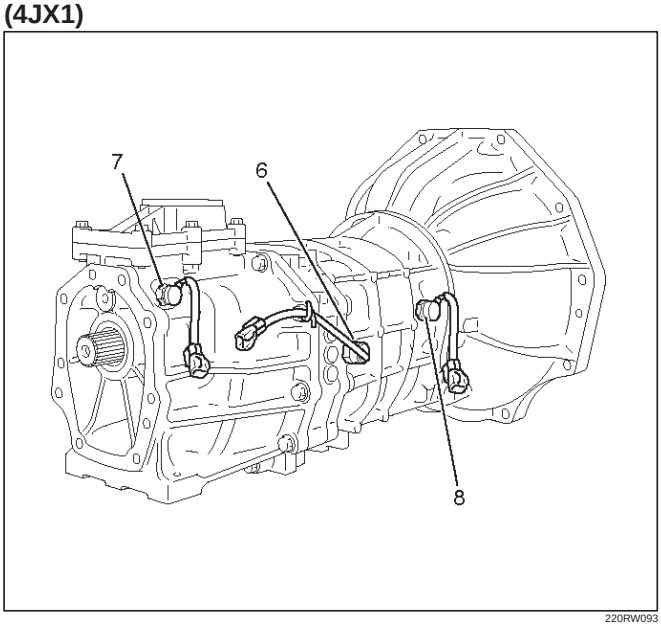

220RW093

40. Install the clutch release bearing (3) and clutch shift fork (5).
    1. Apply the clutch release grease.
        1. Fitting surface of the cylinder push rod.
        2. Fitting surface of the release bearing hub.
        3. The hole of the fork split pin (4).
    2. Apply the clutch release grease.
        1. The spline surface of the top gear shaft.
    3. Install the clutch shift fork (5).
    4. Install the snap pin.
    5. Install the clutch release bearing (3) to the clutch shift fork (5).

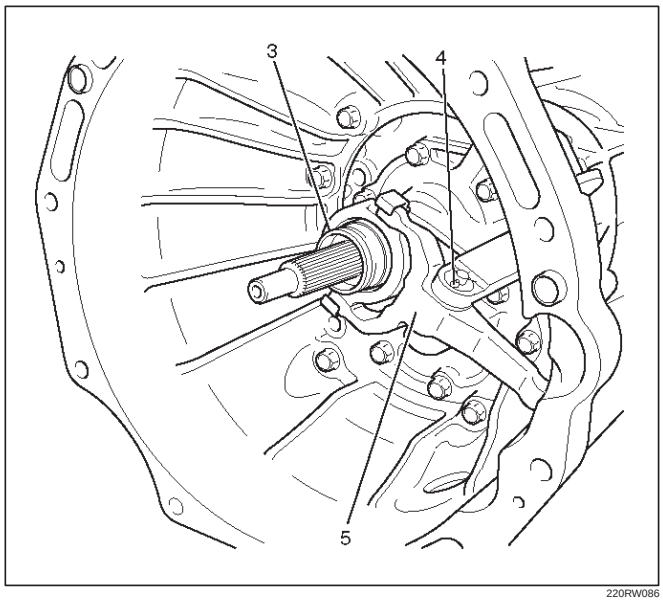

220RW086

41. Install the drain plug and filler plug.
    1. Install the drain plug (1) through the new gasket.

    Torque: 37 N·m (3.8 kg·m/27 lb ft)

    2. Install the filler plug (2) through the new gasket.

    Reference: Plug after the gear oil fill in.
    Torque: 37 N·m (3.8 kg·m/27 lb ft)

(6VE1)

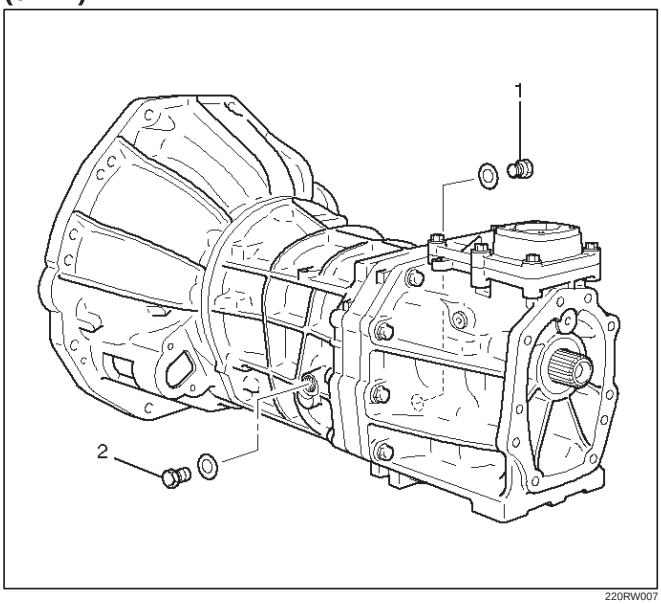

220RW007

Main Data and Specifications

General Specifications

Transmission type		Fully synchronized forward and reverse gears
Control method		Direct control with the gear shift lever on the floor
Gear ratio	1st	3.954
	2nd	2.330
	3rd	1.436
	4th	1.000
	5th	0.788
	Rev	3.918
Oil capacity lit (US qt)		2.7 (2.86)
Type of lubricant		Engine oil : Refer to the chart in “SECTION 0”

Torque Specifications

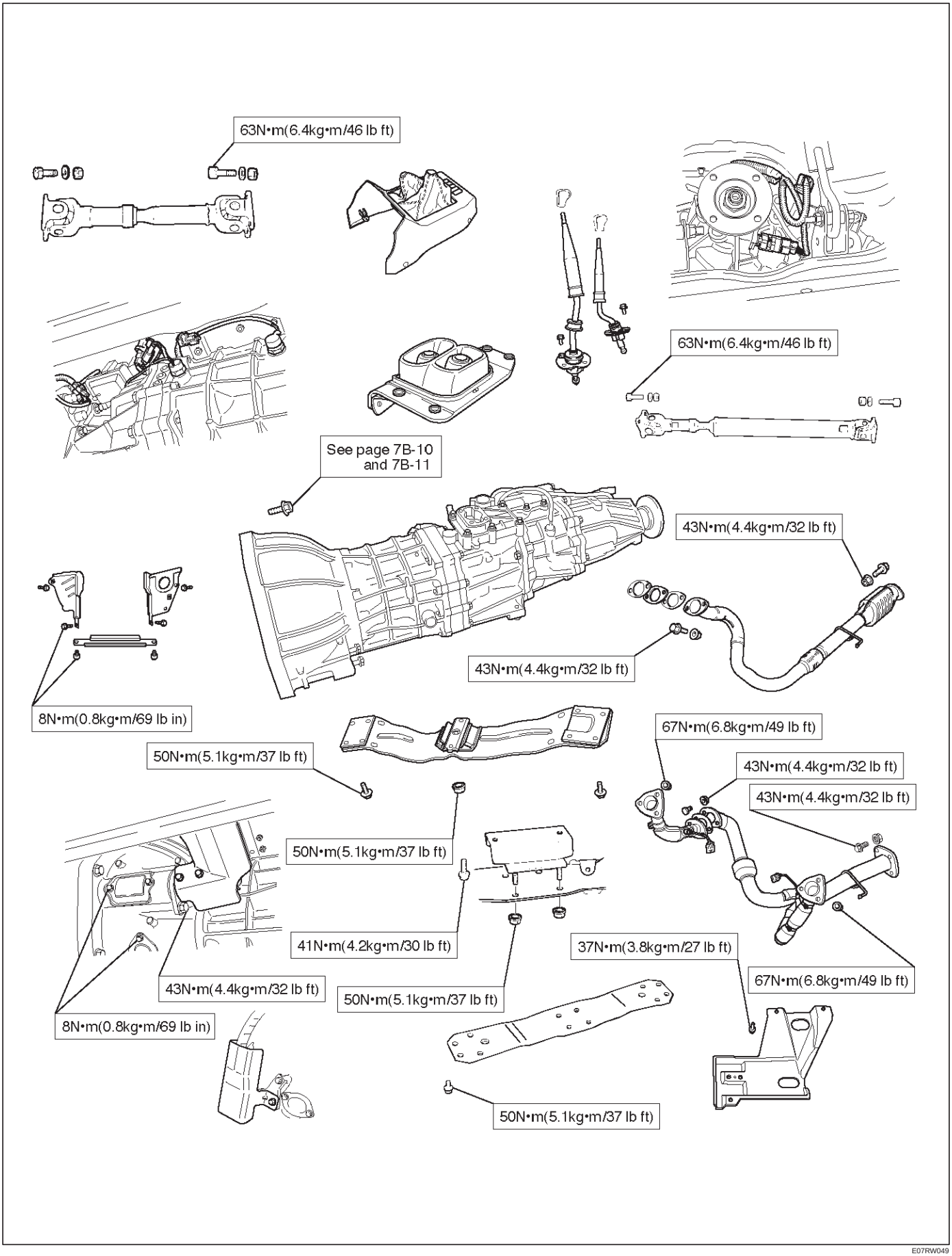

E07RW049

Torque Specifications (Cont'd)

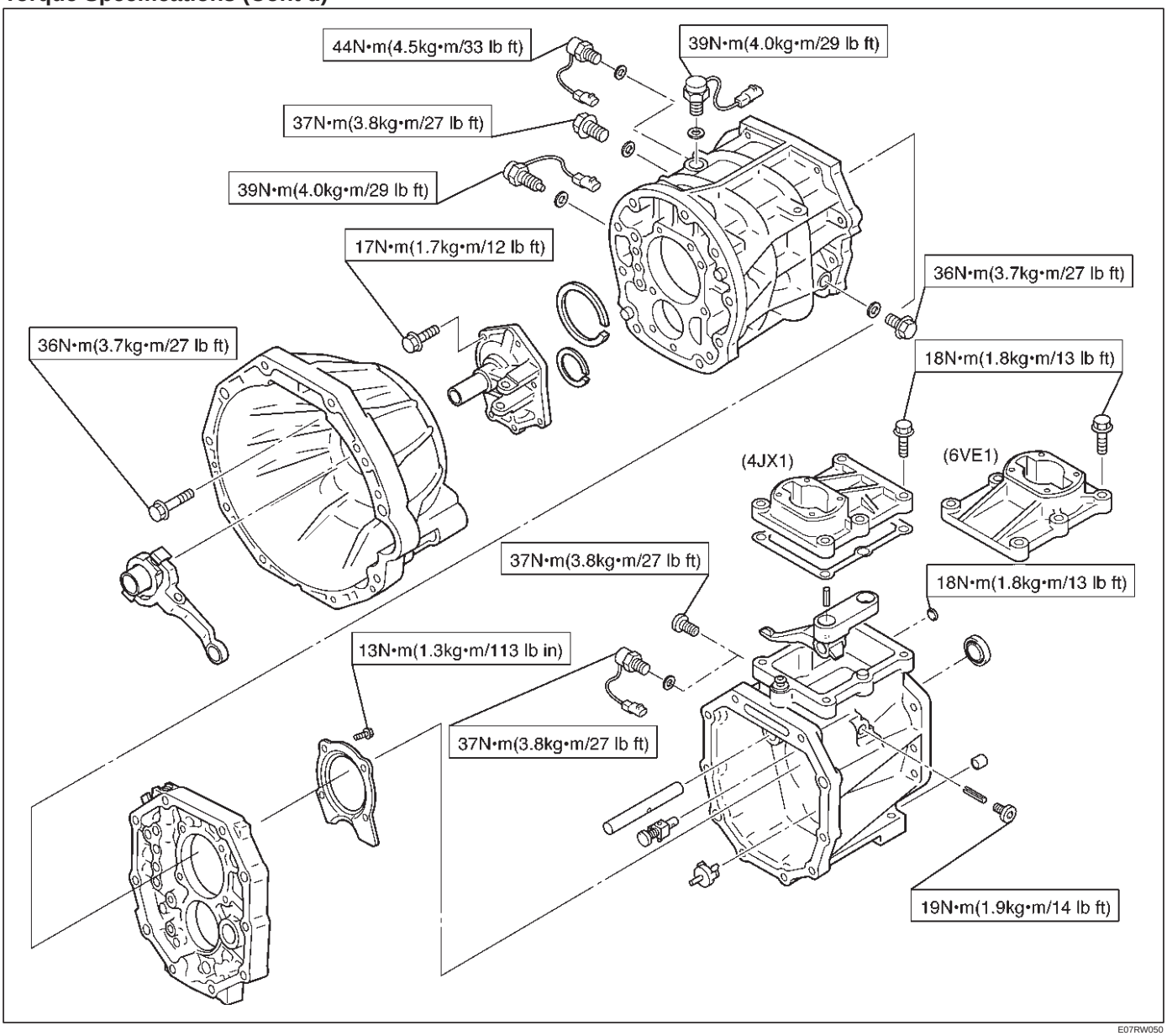

E07RW050

Torque Specifications (Cont'd)

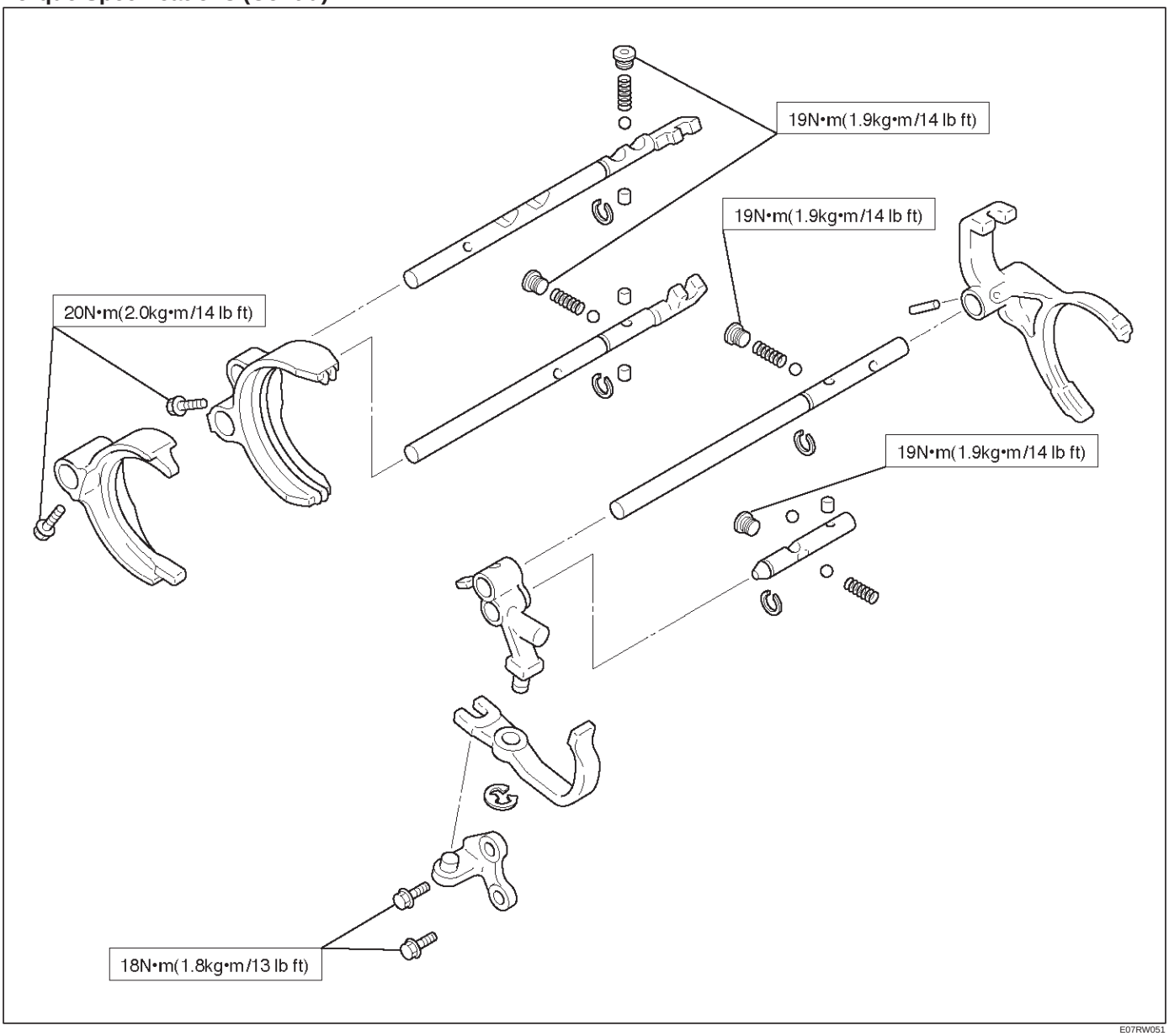

E07RW051

Special Tools

ILLUSTRATION	TOOL NO. TOOL NAME
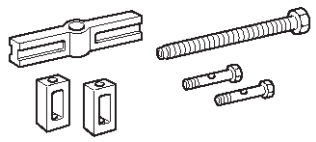 901RW201	**5–8840–2550–0** **(J–42794)** Gear spline pieace remover
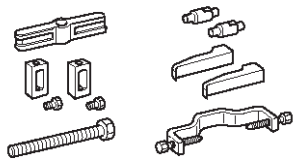 901RW202	**5–8840–2551–0** **(J–42795)** Center bearing remover
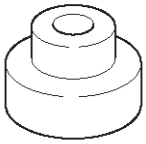 901RW203	**5–8840–2560–0** **(J–42988)** Attachment
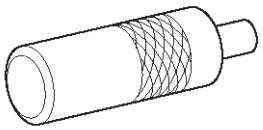 901RW204	**5–8840–2552–0** **(J–42796)** Counter gear shaft center bearing installer
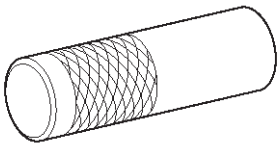 901RW205	**5–8840–2553–0** **(J–42797)** Clutch hub (No.2) installer
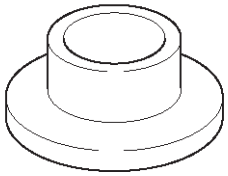 901RW206	**5–8840–2554–0** **(J–42798)** Clutch hub (No.1) installer

ILLUSTRATION	TOOL NO. TOOL NAME
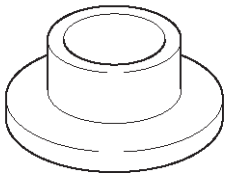 901RW206	**5–8840–2555–0** **(J–42799)** Installer
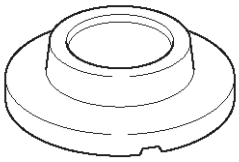 901RW207	**5–8840–2556–0** **(J–42800)** Counter gear shaft front bearing installer
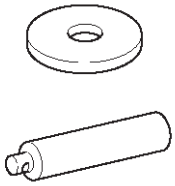 901RW208	**5–8840–2559–0** **(J–42904)** Top gear shaft front bearing installer
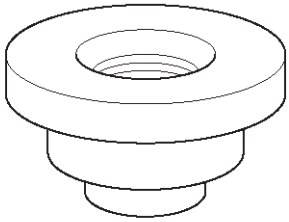 901RS296	**5–8840–2557–0** **(J–42801)** Front rerainer oil seal installer
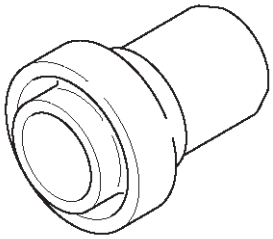 901RW095	**5–8840–2558–0** **(J–42802)** Transfer adapter oil seal installer
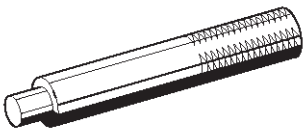 901RS218	**5–8840–0007–0** **(J–8092)** Driver handle

Special Tools (Cont'd)

ILLUSTRATION	**TOOL NO.** TOOL NAME
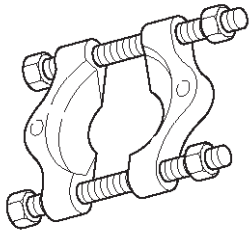	**5–8840–0015–0** **(J–22912–01)** Bearing separator

SECTION 7B1
MANUAL TRANSMISSION

TABLE OF CONTENTS

PAGE

4 x 2 Model Transmission ..... 7B1— 2
Main Data and Specifications ..... 7B1— 2
General Description ..... 7B1— 3
Torque Specifications ..... 7B1— 4
Recommended Liquid Gasket ..... 7B1— 6
Removal and Installation ..... 7B1— 7
Disassembly ..... 7B1— 16
Inspection and Repair ..... 7B1— 26
Reassembly ..... 7B1— 31
4 x 4 Model Transmission ..... 7B1— 46
Main Data and Specifications ..... 7B1— 46
General Description ..... 7B1— 47
Torque Specifications ..... 7B1— 48
Recommended Liquid Gasket ..... 7B1— 50
Removal and Installation ..... 7B1— 51
Disassembly ..... 7B1— 61
Inspection and Repair ..... 7B1— 81
Reassembly ..... 7B1— 87
Troubleshooting ..... 7B1—112

4 x 2 MODEL TRANSMISSION

MAIN DATA AND SPECIFICATIONS

Models		MUA 5C	MUA 5S
Transmission type		Fully synchronized 5-forward and revers gears.	
Gear ratio	1st	3.767	4.357
	2nd	2.248	2.502
	3rd	1.404	1.501
	4th	1.000	1.000
	5th	0.809	0.809
	Rev.	3.873	3.970
Oil capacity	lit (US gal.)	2.95 (0.78)	

GENERAL DESCRIPTION

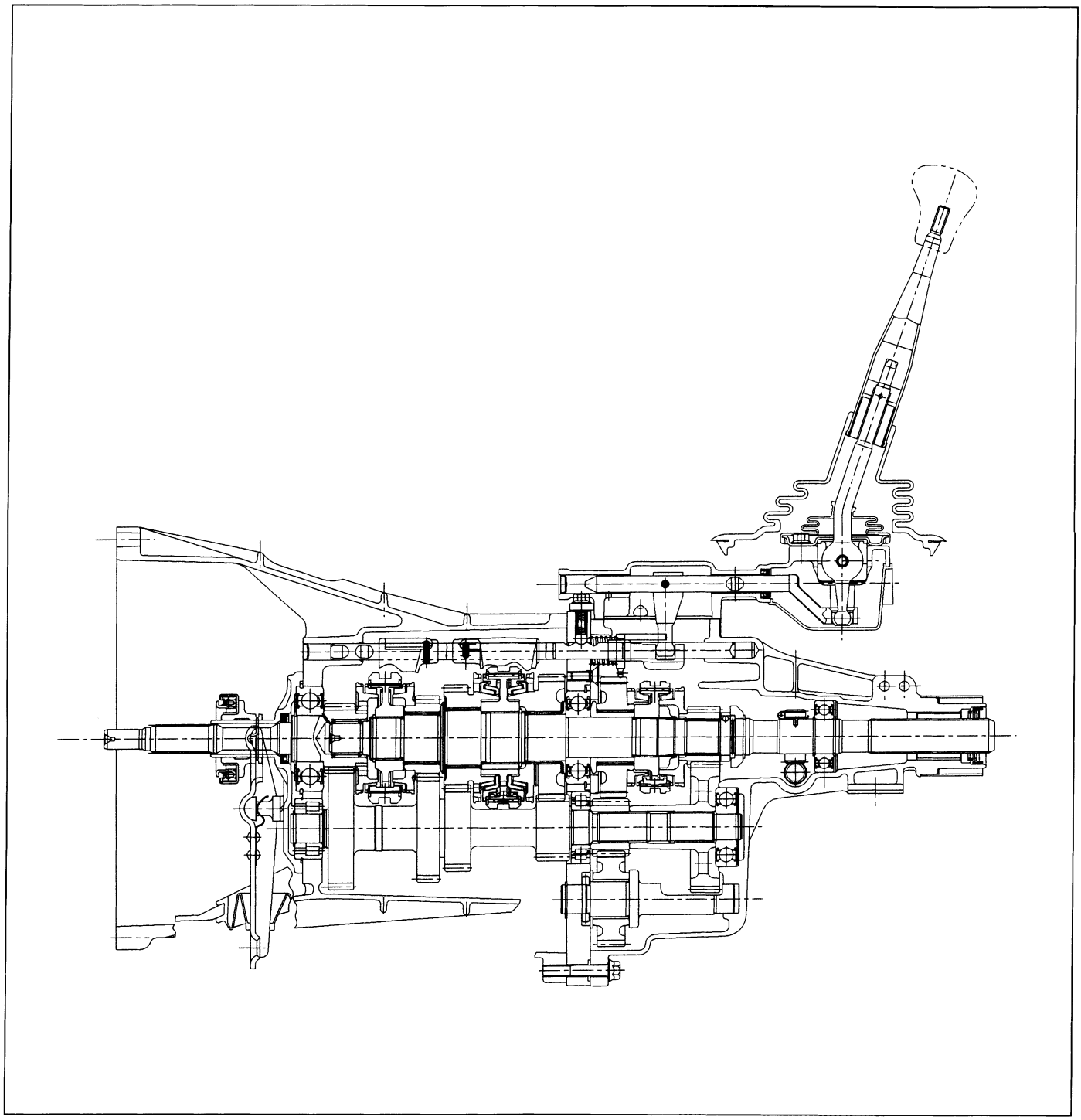

A07LV003

The transmission is designed for the quietest possible operation.

A longer center distance (77.5 mm (3.05 in)) provides increased durability.

Principle parts of the transmission are the integral clutch housing, the intermediate plate, the rear cover, and the gears.

The gear control box is built-in to the rear cover.

TORQUE SPECIFICATIONS

STANDARD BOLTS

The torque values given in the following table should be applied where a particular torque is not specified.

N·m (kg·m / lb·ft)

	Strength Class	4.8/4T	7T	8.8		9.8/9T
				Refined	Non-Refined	
	Bolt Identification	4	7	8	8	9
	Bolt Diameter× Pitch (mm)	No mark	—			
Standard Hex. Head Bolt	M6 × 1.0	6 (0.6 / 52 lb·in)	7 (0.7 / 61 lb·in)	8 (0.8 / 69 lb·in)		–
	M8 × 1.25	13 (1.3 / 113 lb·in)	17 (1.7 / 12)	20 (2.0 / 14)		24 (2.4 / 17)
	M10 × 1.25	27 (2.8 / 20)	37 (3.8 / 27)	42 (4.3 / 31)		50 (5.1 / 37)
	M12 × 1.25	61 (6.3 / 45)	76 (7.8 / 56)	87 (8.9 / 64)		95 (9.7 / 70)
	M14 × 1.5	96 (9.8 / 71)	116 (11.8 / 85)	133 (13.6 / 98)		142 (14.5 / 105)
	M16 × 1.5	130 (13.3 / 96)	170 (17.3 / 125)	193 (19.7 / 143)		200 (20.4 / 148)
	M18 × 1.5	188 (19.2 / 139)	244 (24.9 / 180)	278 (28.3 / 205)		287 (29.3 / 212)
	M20 × 1.5	258 (26.3 / 190)	337 (34.4 / 249)	385 (39.3 / 284)		396 (40.4 / 292)
	M22 × 1.5	332 (33.9 / 245)	453 (46.3 / 335)	517 (52.7 / 381)		530 (54.1 / 391)
	M24 × 2.0	449 (45.8 / 331)	570 (58.2 / 421)	651 (66.3 / 480)		692 (70.6 / 511)
	* M10 × 1.5	26 (2.7 / 20)	36 (3.7 / 27)	41 (4.2 / 30)		48 (4.9 / 35)
	* M12 × 1.75	57 (5.8 / 42)	71 (7.2 / 52)	80 (8.2 / 59)		89 (9.1 / 66)
	* M14 × 2.0	89 (9.1 / 66)	110 (11.2 / 81)	125 (12.7 / 92)		133 (13.6 / 98)
	* M16 × 2.0	124 (12.7 / 92)	162 (16.5 / 119)	185 (18.9 / 137)		191 (19.5 / 141)
Flange Bolt	M6 × 1.0	7 (0.7 / 61 lb·in)	8 (0.8 / 69 lb·in)	9 (0.9 / 78 lb·in)		–
	M8 × 1.25	15 (1.5 / 11)	19 (1.9 / 14)	22 (2.2 / 16)		26 (2.7 / 20)
	M10 × 1.25	31 (3.2 / 23)	41 (4.2 / 30)	47 (4.8 / 35)		56 (5.7 / 41)
	M12 × 1.25	69 (7.0 / 51)	85 (8.7 / 63)	97 (9.9 / 72)		106 (10.8 / 78)
	M14 × 1.5	104 (10.6 / 77)	126 (12.8 / 93)	144 (14.6 / 106)		154 (15.7 / 114)
	M16 × 1.5	145 (14.8 / 127)	188 (19.2 / 139)	214 (21.8 / 158)		221 (22.5 / 163)
	M18 × 1.5	–	–	–		–
	M20 × 1.5	–	–	–		–
	M22 × 1.5	–	–	–		–
	M24 × 2.0	–	–	–		–
	* M10 × 1.5	30 (3.1 / 22)	40 (4.1 / 30)	46 (4.7 / 34)		54 (5.5 / 40)
	* M12 × 1.75	64 (6.5 / 47)	78 (8.0 / 58)	89 (9.1 / 66)		99 (10.1 / 73)
	* M14 × 2.0	97 (9.9 / 72)	119 (12.1 / 88)	135 (13.8 / 99.7)		144 (14.7 / 107)
	* M16 × 2.0	137 (14.0 / 101)	178 (18.2 / 132)	203 (20.7 / 150)		210 (21.5 / 155)

The asterisk * indicates that the bolts are used for female-threaded parts that are made of soft materials such as casting, etc.

FLARE NUTS

N·m (kg·m / lb·ft)

Pipe diameter mm (in)	Torque	Pipe diameter mm (in)	Torque
4.76 (0.187)	16 (1.6 / 12)	10.00 (0.394)	54 (5.5 / 40)
6.35 (0.250)	26 (2.7 / 20)	12.00 (0.472)	88 (9.0 / 65)
8.00 (0.315)	44 (4.5 / 33)	15.00 (0.591)	106 (10.8 / 78)

SPECIAL PARTS FIXING NUTS AND BOLTS

kg·m(lb.ft/N·m)

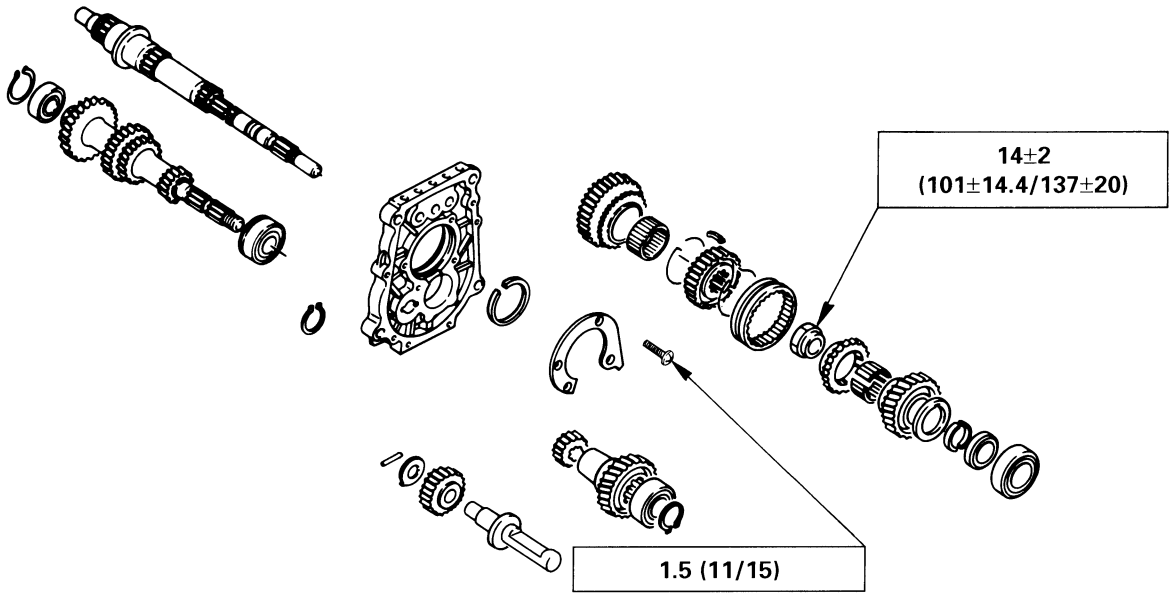

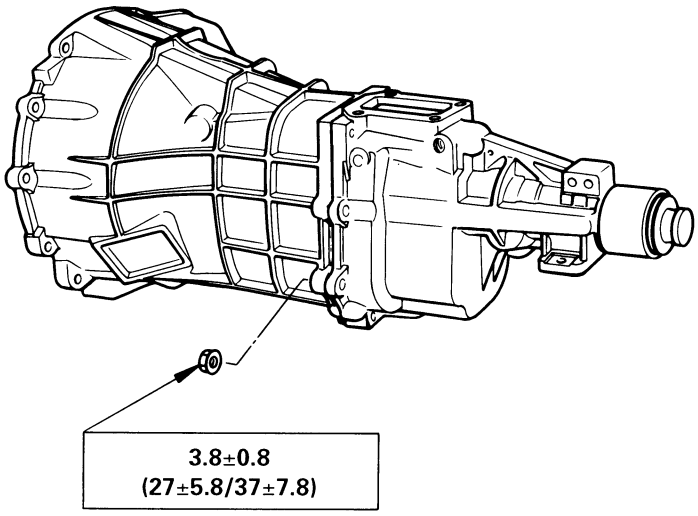

RECOMMENDED LIQUID GASKET

Type	Brand Name	Manufacturer	Remarks
RTV* Silicon Base	ThreeBond 1207B ThreeBond 1207C	Three Bond Three Bond	For Engine Repairs
	ThreeBond 1215 ThreeBond 1281	Three Bond Three Bond	For Axle Case and Transmission Repairs
Water Base	ThreeBond 1141E	Three Bond	For Engine Repairs
Solvent	ThreeBond 1104 BelcoBond 4 BelcoBond 401 BelcoBond 402	Three Bond Isuzu Isuzu Isuzu	For Engine Repairs
Anerobic	LOCTITE 515 LOCTITE 518	Loctite Loctite	All

* RTV : Room Temperature Vulcanizer

Note:

1. **It is very important that the liquid gaskets listed above or their exact equivalent be used on the vehicle.**
2. **Be careful to use the specified amount of liquid gasket.**
   Follow the manufacturer's instructions at all times.
3. **Be absolutely sure to remove all lubricants and moisture from the connecting surfaces before applying the liquid gasket.**
   The connecting surfaces must be perfectly dry.
4. **LOCTITE 515 and LOCTITE 518 harden upon contact with a metal surface.**
   Do not apply LOCTITE 515 or LOCTITE 518 between two metal surfaces having a clearance of greater than 0.25 mm (0.01 in). Poor adhesion will result.

REMOVAL AND INSTALLATION

Read this Section carefully before performing any removal and installation procedure. This Section gives you important points as well as the order of operation. Be sure that you understand everything in this Section before you begin.

Important Operations — Removal

Battery Cable

Disconnect the negative (–) cable from the battery terminal.

Engine Hood

Apply setting marks to the engine hood and the engine hood hinges before removing the engine hood.

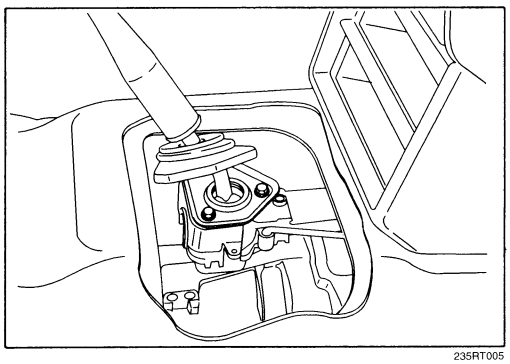

Gear Shift Lever

1. Place the gear shift lever in the neutral position.
2. Remove the gear shift lever knob.
3. Remove the front console assembly.
4. Remove the gear shift lever grommet and dust cover.
5. Remove the gear shift lever cover bolts.
6. Remove the gear shift lever.

Note:
Cover the shift lever hole to prevent the entry of foreign material into the transmission.

Lifting the Vehicle

1. Jack up the vehicle.
2. Place chassis stands at the front and the rear of the vehicle.

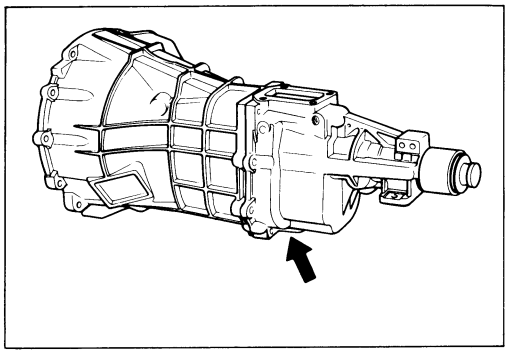

Transmission Oil Draining

1. Remove the transmission oil drain plug.
2. Replace the drain plug after draining the oil.

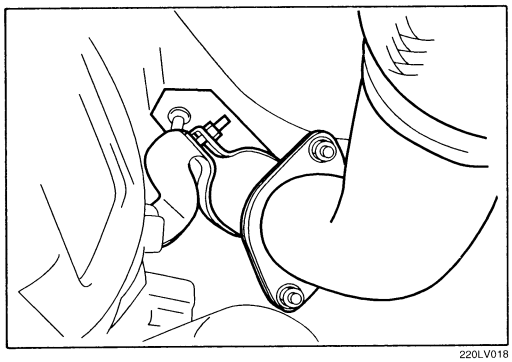

Exhaust Pipe

1. Remove the exhaust pipe bracket from the transmission case.
2. Remove the front exhaust pipe and 2nd-3rd exhaust pipe.

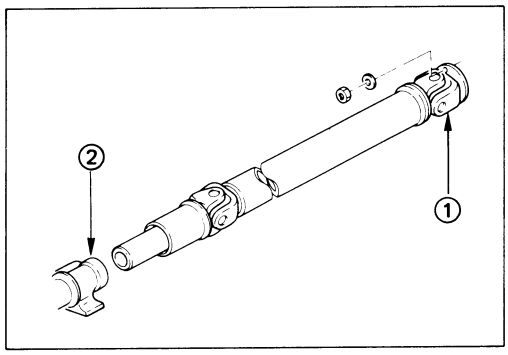

Rear Propeller Shaft (Single Shaft Type)

1. Remove the propeller shaft flange yoke at the drive pinion side ①.
2. Remove the propeller shaft from the transmission main shaft spline ②.

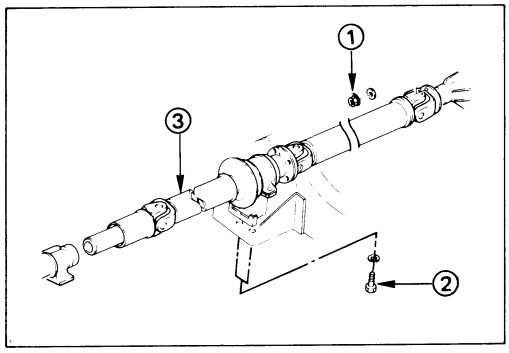

Rear Prppeller Shaft (Dual Shaft Type)

1. Apply setting marks to the 2nd propeller shaft flange yoke.
   This will prevent mispositioning during the installation procedure.
2. Remove the 2nd propeller shaft flange yoke bolts at the drive pinion side ①.
3. Remove the center bearing retainer bolts ②.
4. Remove the 1st propeller shaft ③ with the center bearing and the 2nd propeller shaft.
   Pull the 1st propeller shaft toward the rear of the vehicle unit the spline yoke is free of the transmission main shaft.

Harness Connector

Disconnect the back up light switch connector and the speedometer sensor connector.

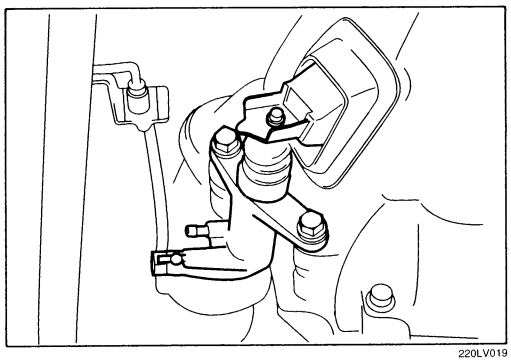

Slave Cylinder

Remove the slave cylinder from the transmission case.

Engine Lifting Hanger

1. Attach the engine lifting hanger to the front portion of the engine.
2. Attach the lifting wire to both ends of the engine lifting hanger.

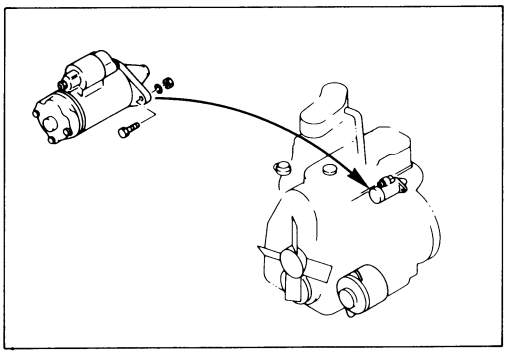

Starter Motor

Remove the starter motor from the engine rear plate.

Flywheel Under Cover (6VD1)

Remove flywheel under cover bolts.

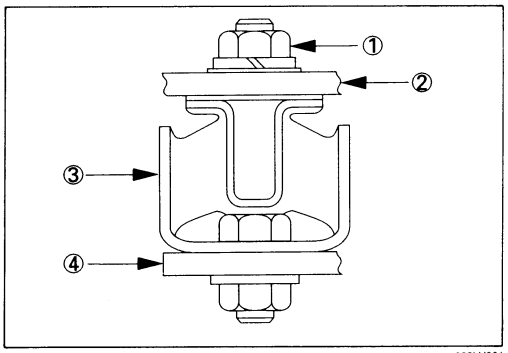

022LV001

Transmission

1. Support the transmission with a transmission jack.
2. Remove the engine rear mounting rubber nuts ① from the transmission ②.
3. Remove the rear mounting rubber ③ from the No.3 crossmember ④.
4. Remove the gear control box from the transmission.

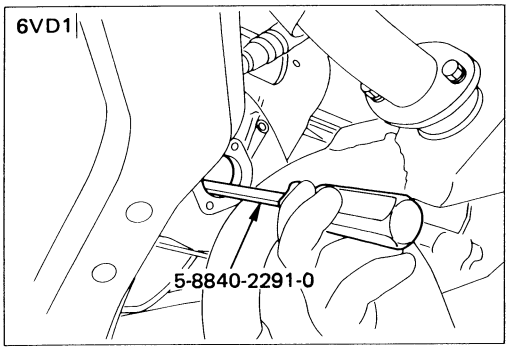

5. Use the remover for disconnect the clutch release bearing from the clutch pressure plate (6VD1).

   Clutch release bearing remover : 5-8840-2291-0 (J-39207)

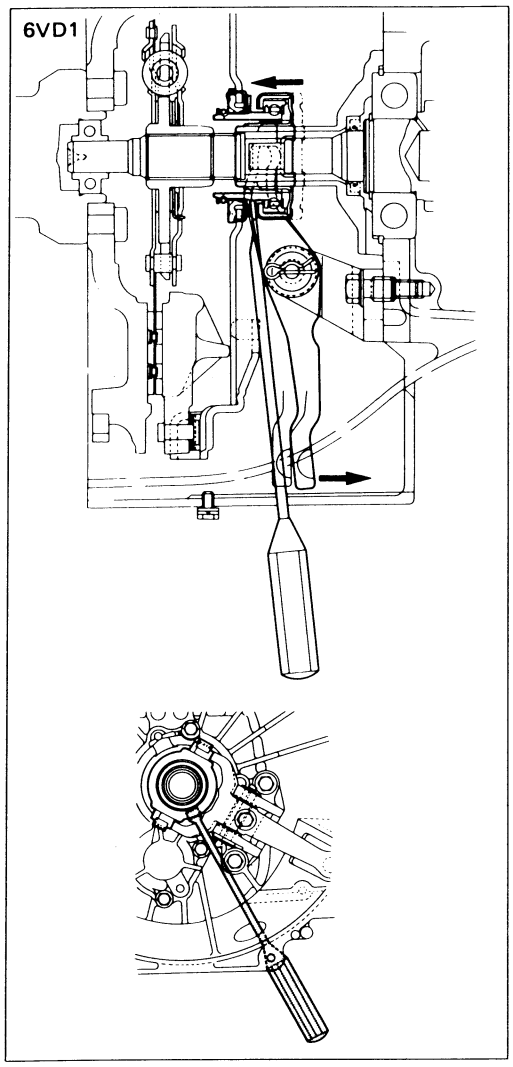

Release Bearing Disconnection (6VD1)

① Pull the shift fork toward the transmission to press the clutch release bearing against the clutch.
② Insert the clutch release bearing remover between the wedge collar and the release bearing.
③ Turn the remover to separate the release bearing.

NOTE:
Be sure not to insert the remover between the wedge collar and the clutch.

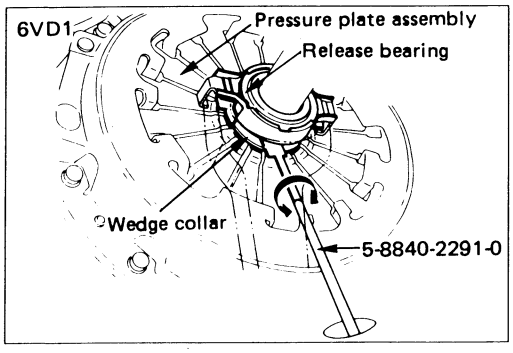

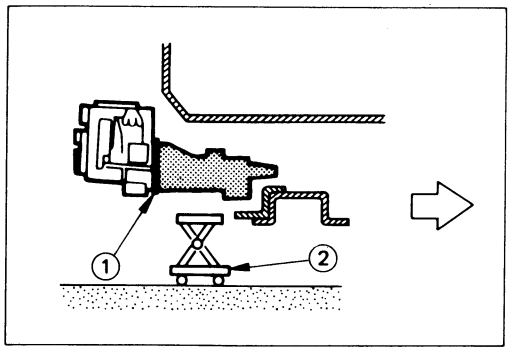

6. Remove the transmission from the engine.

   The removal of the transmission will require the cooperative efforts of two mechanics.

   1) Remove the transmission nuts and bolts ① from the engine rear plate.
   2) Place a transmission jack ② beneath the transmission.

      Do not raise the transmission jack.

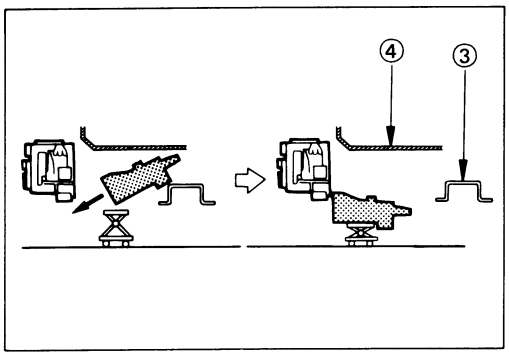

3) Manually move the transmission as far as possible toward the rear of the vehicle (into the space between the No.3 crossmember ③ and the floor panel ④.

4) Lower the clutch housing end of the transmission toward the transmission jack.

   The rear of the transmission is supported by the No. 3 crossmember at this time.

5) Firmly grasp the transmission rear cover (1st mechanic).

   Raise the transmission jack toward the transmission (2nd mechanic).

   Carefully lower the transmission onto the transmission jack.

   The transmission must be centered on the transmission jack.

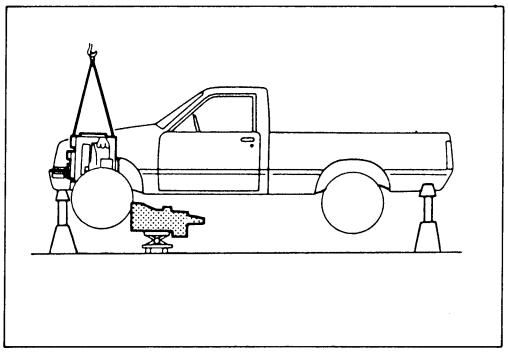

7. Carefully pull the transmission jack with the transmission from beneath the vehicle.

Important Operations — Installation

Follow the removal procedure in the reverse order to perform the installation procedure. Pay careful attention to the important points during the installation procedure.

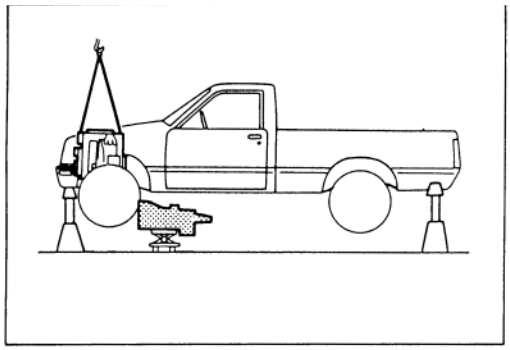

Transmission

1. Apply a thin coat of molybdenum disulfide grease to the top gear shaft spline.
2. Place the transmission on a transmission jack.
3. Carefully move the transmission jack and transmission into position behind the engine.

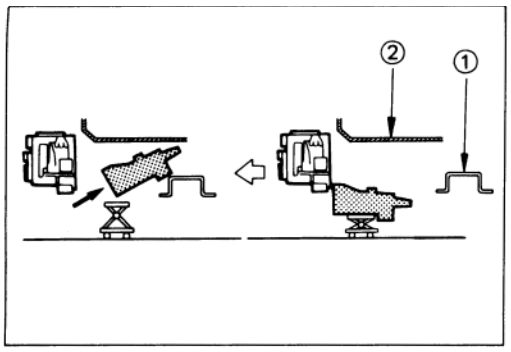

4. Slowly operate the transmission jack to raise the transmission until the rear of the transmission is at the same level as the No.3 crossmember ①.
5. Manually support the transmission rear cover.

   Move the transmission into position between the No.3 crossmember and the floor panel ②.

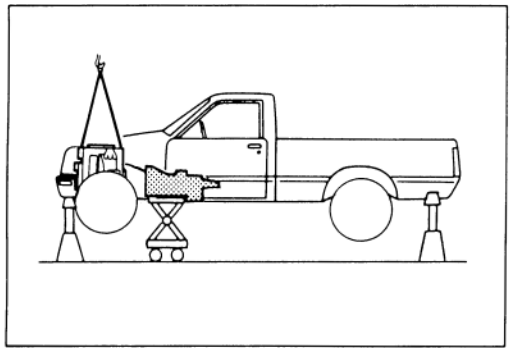

6. Slowly raise the transmission jack until the front of the transmission is aligned with the rear of the engine.

   The slope of the engine and the transmission must be the same.
7. Install the gear control box to the transmission.

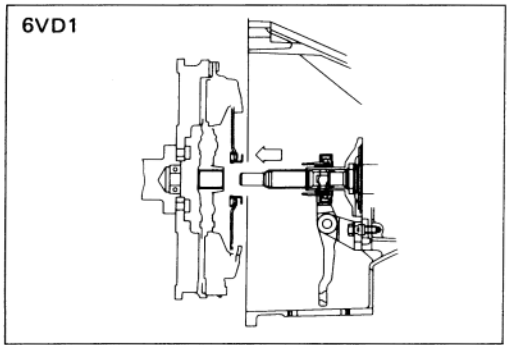

8. Align the top gear shaft spline with the clutch drive plate spline.
9. Install the transmission to the engine.

   Tighten the transmission nuts and bolts to the specified torque.

Transmission Nut and Bolt Torque	kg·m(lb·ft/N·m)
M10: 4.1 ± 1.0 (30 ± 7.2/40 ± 10)	
M12: 8.0 ± 1.6 (58 ± 12/78 ± 16)	

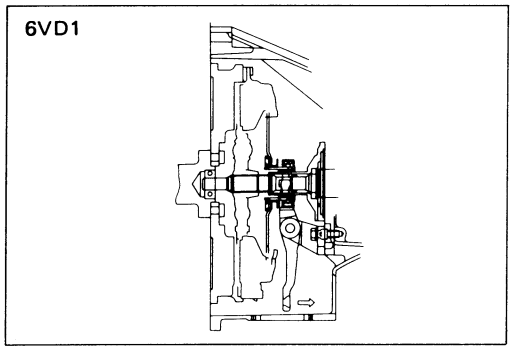

10. Apply a force of 59–78N (6–8 kg / 13.2–17.6 lb) to the tip of the shift fork in the direction of the transmission to engage the clutch pressure plate and release bearing (6VD1).

NOTE (6VD1):
A click sound is heard when the release bearing and the tip of the diaphragm spring engage each other.
Check to see if they are securely engaged by pushing the tip of the shift fork toward the engine while applying a force of about 25N (2.5 kg / 5.5 lb). If the shift fork will not move, then they are securely engaged.

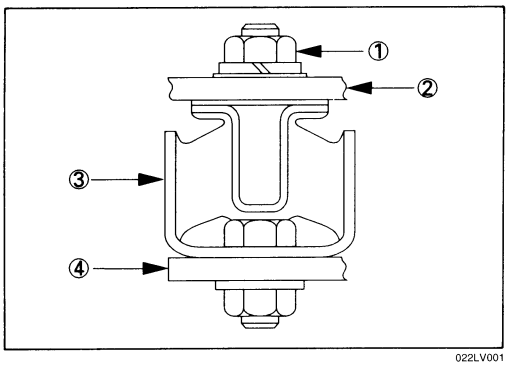

11. Install the rear mounting rubber ③ to the transmission ②.
    Install the rear mounting rubber ③ to the No.3 cross-member ④.
12. Tighten the rear mounting rubber nuts ① to the specified torque.

Rear Mounting Rubber Nut Torque	kg·m(lb·ft/N·m)
4.2 ± 0.5 (30 ± 3.6/41 ± 4.9)	

Mounting Bolt Torque	kg·m(lb·ft/N·m)
5.1 ± 0.6 (37 ± 4.3/50 ± 6)	

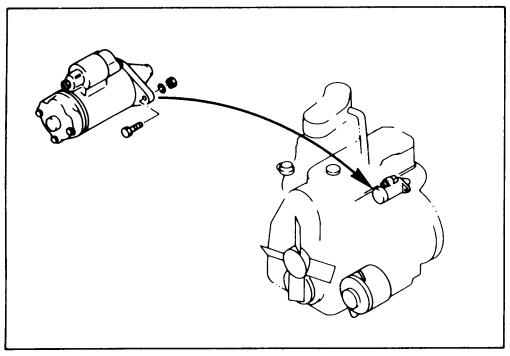

Starter Motor

1. Install the starter motor to the engine rear plate.
2. Tighten the starter motor bolts to the specified torque.

Starter Motor Bolt Torque	kg·m(lb·ft/N·m)
8.0 ± 1.6 (58 ± 12/78 ± 16)	

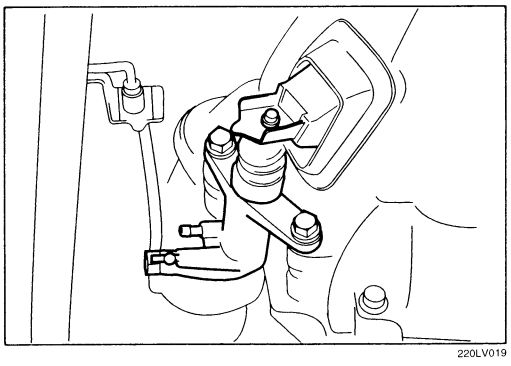

Slave Cylinder

Install the slave cylinder to the transmission case.

Slave Cylinder Bolt Torque	kg·m(lb·ft/N·m)
4.1 ± 1.0 (30 ± 7.2/40 ± 10)	

Harness Connector

Connect the back up light switch connector and speedometer sensor connector.

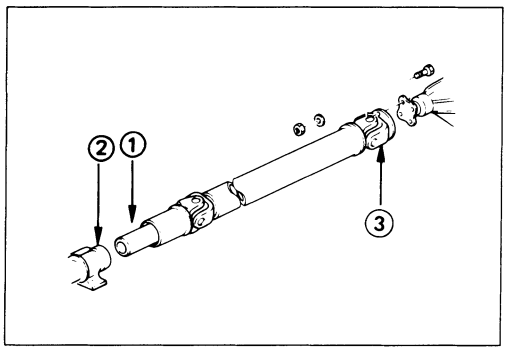

Rear Propeller Shaft (Single Shaft Type)

1. Insert the splined yoke ① with the propeller shaft into the transmission main shaft spline ②.
2. Install the propeller shaft flange yoke ③ to the drive pinion side.
3. Tighten the propeller shaft flange yoke bolt to the specified torque.

Propeller Shaft Flange Yoke Bolt Torque kg·m(lb·ft/N·m)
6.4 ± 0.4 (46.3 ± 2.9/62.7 ± 3.9)

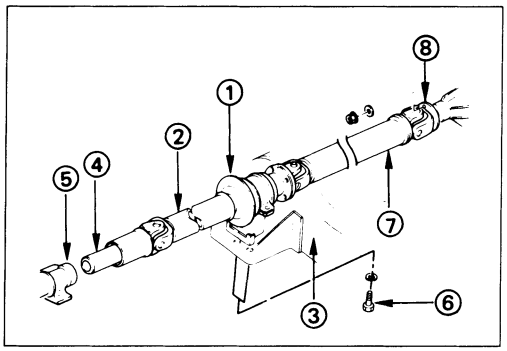

Rear Propeller Shaft (Dual Shaft Type)

1. Place the center bearing and retainer ① together with the 1st propeller shaft ② and 2nd propeller shaft ⑦ on the No.4 crossmember ③.
2. Insert the splined yoke ④ into the transmission main shaft spline ⑤.
3. Tighten the center bearing retainer bolts ⑥ to the specified torque.

Center Bearing Retainer Bolt Torque kg·m(lb·ft/N·m)
6.2 ± 1.2 (44.8 ± 8.7/60.8 ± 11.8)

4. Connect the 2nd propeller shaft ⑦ and drive pinion side ⑧.

   Be sure to align the setting marks applied at disassembly.
5. Tighten the coupling bolts to the specified torque.

Propeller Shaft Flange Yoke Bolt Torque kg·m(lb·ft/N·m)
6.4 ± 0.4 (46.3 ± 2.9/62.7 ± 3.9)

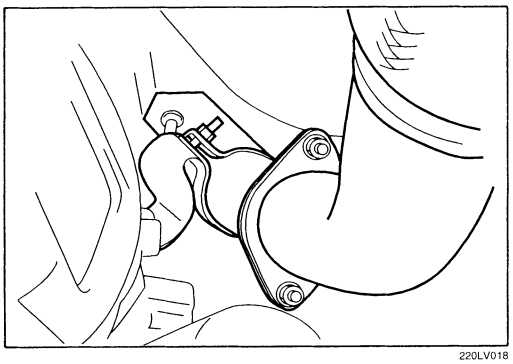

Exhaust Pipe

1. Install the front exhaust pipe and 2nd-3rd exhaust pipe.
2. Install the exhaust pipe bracket to the transmission case.

Gear Shift Lever

1. Replenish the transmission case with the specified engine oil.

Transmission Case Oil	lit(US/UK gt.)
2.95 (3.12/2.6)	

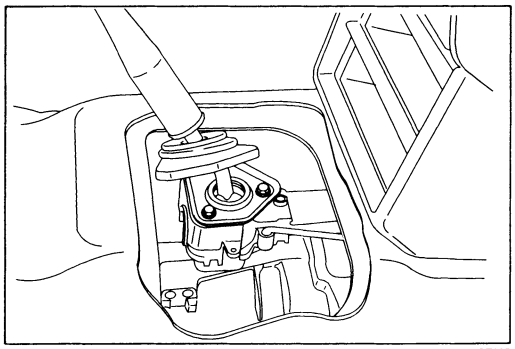

2. Install the gear shift lever to the gear control box.
3. Tighten the gear shift lever cover bolts to the specified torque.

Shift Lever Cover Bolt Torque	kg·m(lb·ft/N·m)
2.0 ± 0.2 (14.5 ± 1.5/19.6 ± 1.96)	

4. Install the dust cover and the grommet.
5 Install the front console assembly.
6. Install the gear shift lever knob.

Lowering the Vehicle

1. Place a jack beneath the vehicle.
2. Raise the jack to remove the chassis stands.
3. Lower the vehicle to the ground.

Engine Hood

Align the setting marks (applied at removal) on the engine hood and the engine hood hinges to install the engine hood.

Battery Cable

Connect the negative (–) cable to the battery terminal.

DISASSEMBLY

MAJOR COMPONENTS

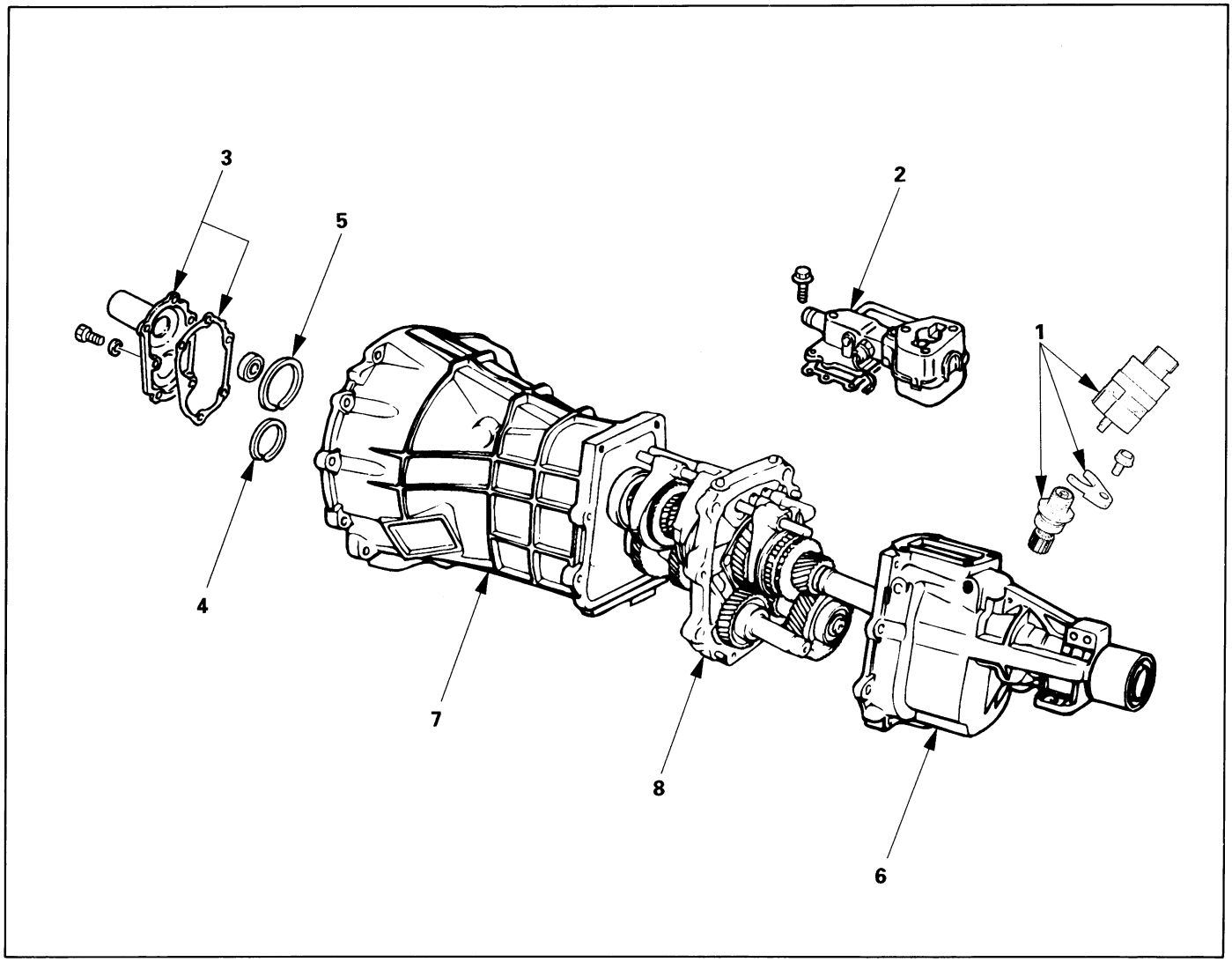

220LV004

Disassembly Steps

- ▲ 1. Speedometer sensor and speedometer driven gear
- 2. Gear control box assembly
- ▲ 3. Front cover with oil seal
- ▲ 4. Counter front bearing snap ring
- ▲ 5. Front bearing snap ring
- 6. Rear cover with oil seal
- 7. Transmission case
- 8. Intermediate plate with gear assembly

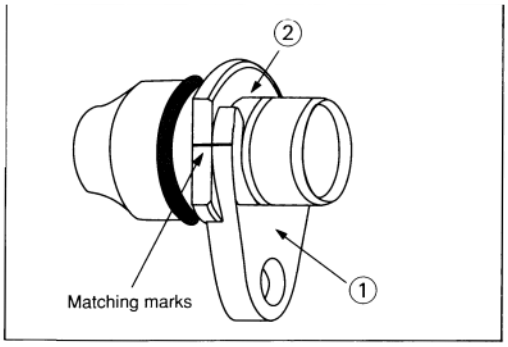

Important Operations

1. Speedometer Sensor and Speedometer Driven Gear

Mark the plate ① and bush ② alignment for reassembly.

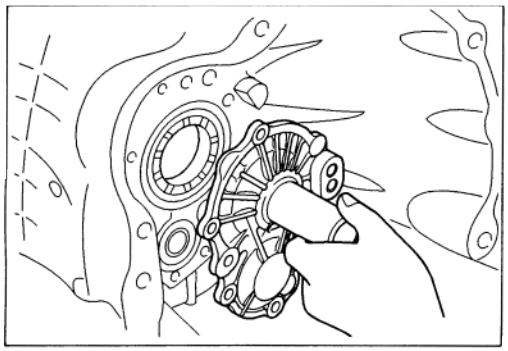

3. Front Cover with Oil Seal

Remove the front cover with oil seal from the transmission case

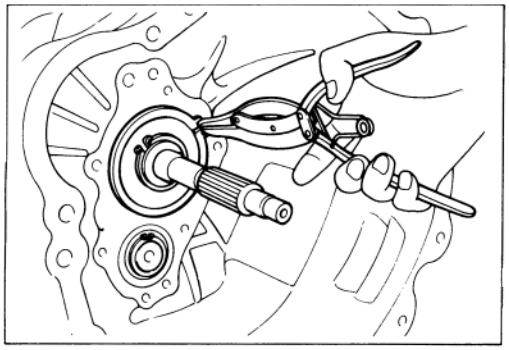

4. Counter Front Bearing Snap Ring

5. Front Bearing Snap Ring

Use a pair of snap ring pliers to remove the snap ring.

MINOR COMPONENTS

INTERMEDIATE PLATE AND GEAR ASSEMBLY, DETENT, SHIFT ARM ASSEMBLY, AND INTERLOCK PIN

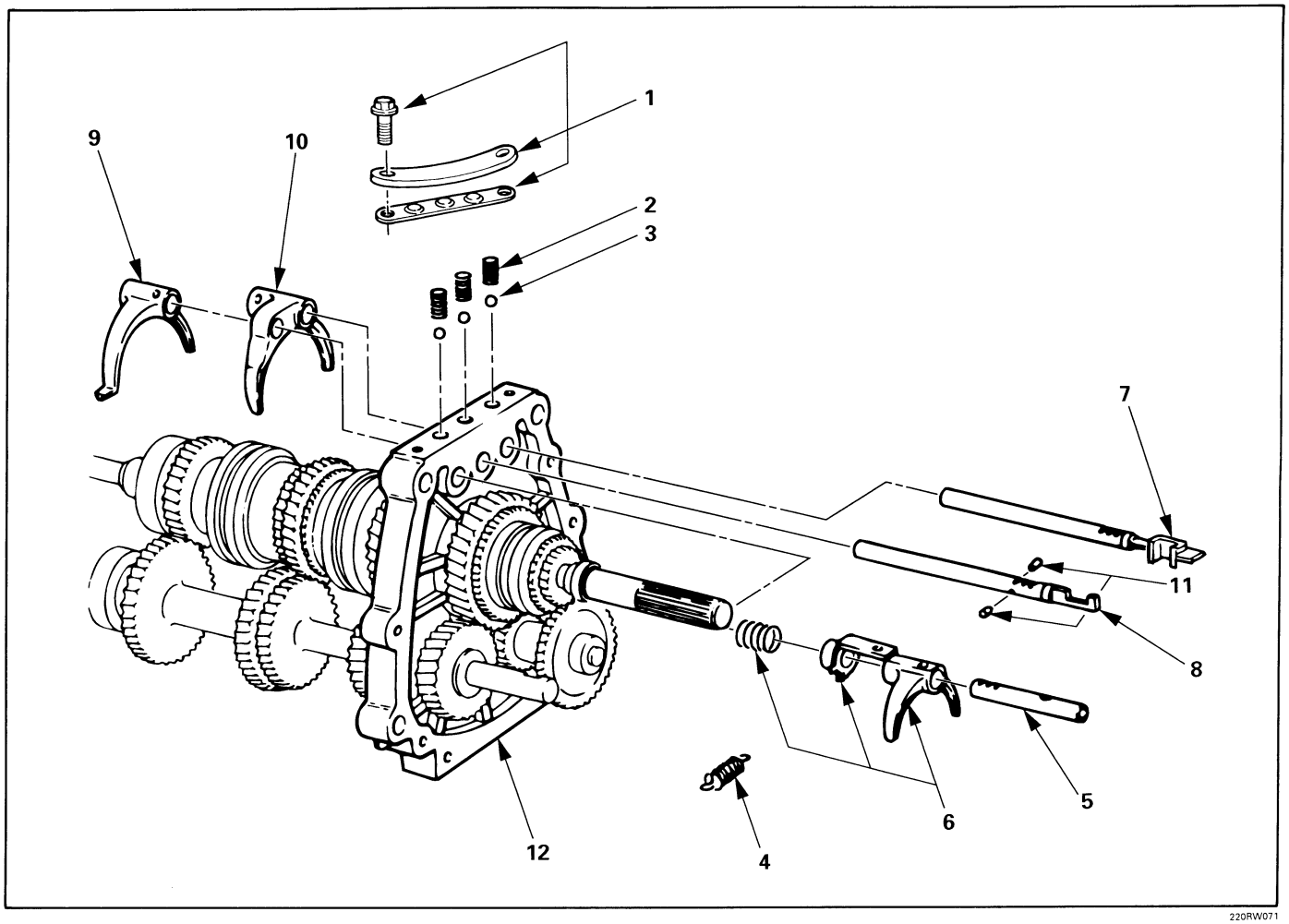

Disassembly Steps

1. Detent spring plate and gasket
2. Detent spring
▲ 3. Detent ball
4. Spring
5. Rev-5th shift rod
6. Rev-5th shift arm and reverse inhibitor
7. 1st-2nd shift rod
▲ 8. 3rd-4th shift rod
▲ 9. 3rd-4th shift arm
▲ 10. 1st-2nd shift arm
11. Interlock pin
12. Intermediate plate and gear assembly

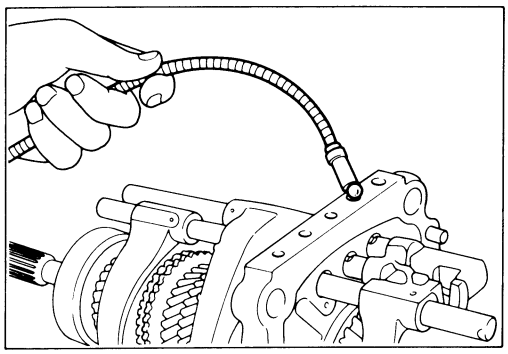

Important Operations

3. Detent Ball

Use a magnetic hand to remove the detent balls from the intermediate plate.

Take care not to lose the detent balls.

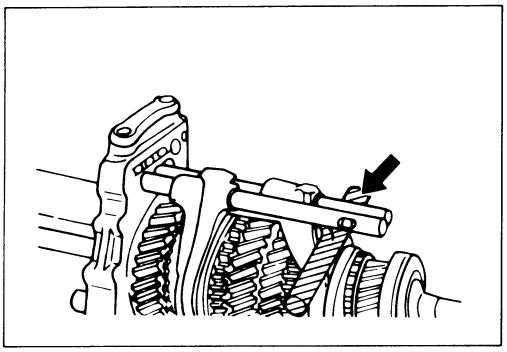

8. 3rd-4th Shift Rod

9. 3rd-4th Shift Arm

10. 1st-2nd Shift Arm

1) Hold a round bar against the shift arm end.

   This will prevent damage to other components.

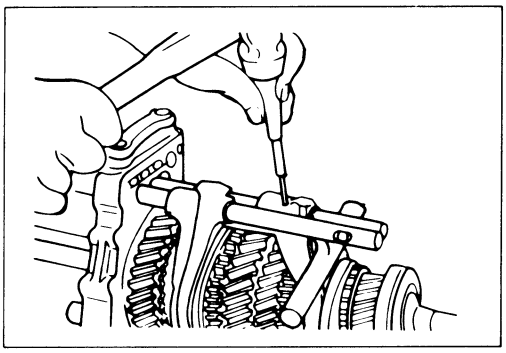

2) Use a spring pin remover to remove the shift arm spring pin from the shift arm and the shift rod.
3) Move the 3rd-4th shift rod forward.

   Take care not to lose the interlock pins.

REVERSE GEAR AND 5TH GEAR

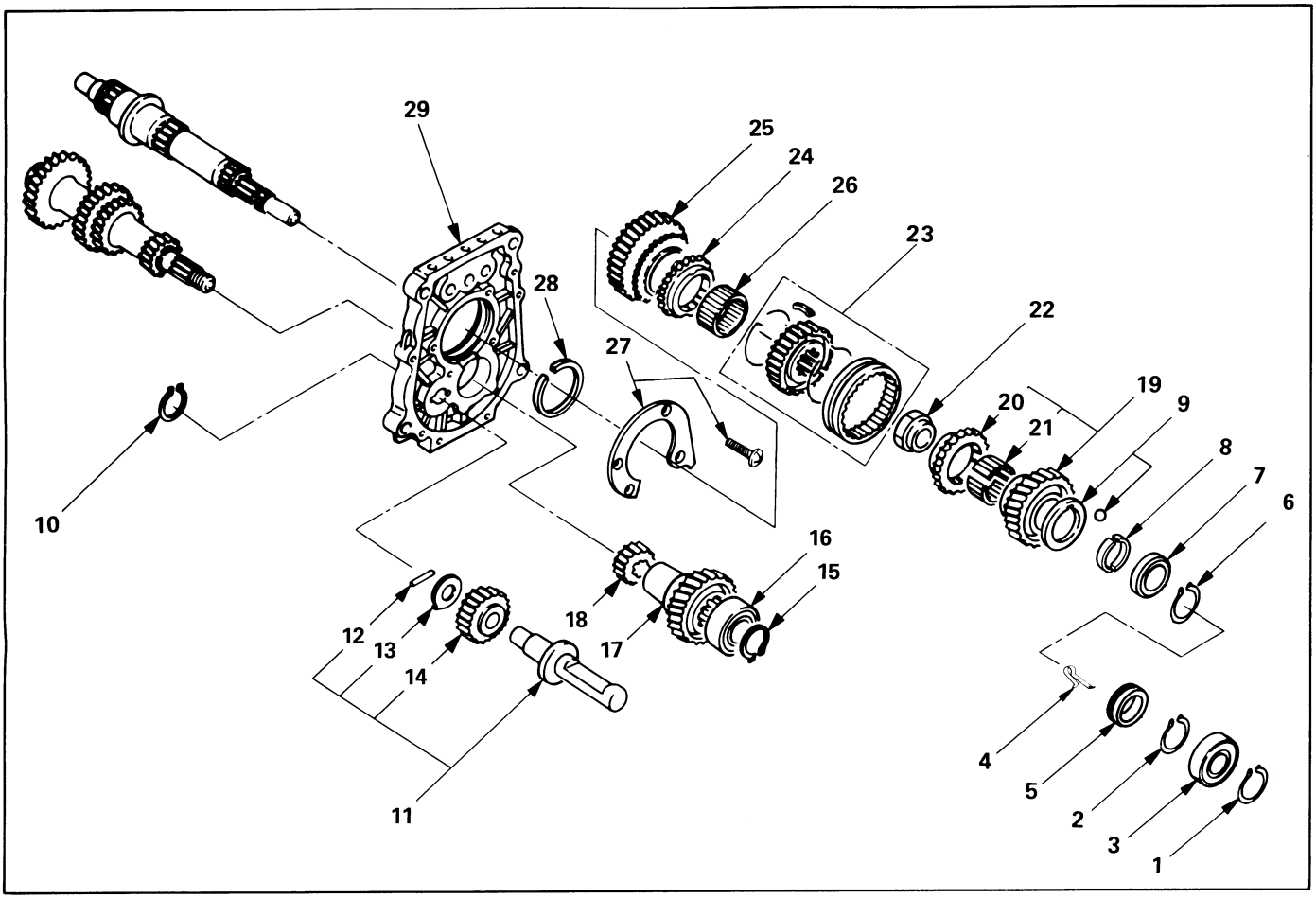

Disassembly Steps

1. Bearing snap ring
2. Bearing snap ring
▲ 3. Ball bearing
4. Clip
5. Speedometer drive gear
6. Retainer snap ring
7. Retaining ring
8. Thrust plate
9. Thrust washer and lock ball
▲ 10. Reverse gear snap ring
11. Reverse shaft
12. Idler shaft pin
13. Thrust washer
14. Reverse idler gear
15. Bearing snap ring
▲ 16. Ball bearing
▲ 17. Counter 5th gear
18. Counter reverse gear
19. 5th gear
20. 5th block ring
▲ 21. Needle bearing
▲ 22. Mainshaft nut
▲ 23. Rev-5th synchronizer assembly
▲ 24. Reverse block ring
▲ 25. Reverse gear
26. Needle bearing
▲ 27. Bearing plate and screw
▲ 28. Bearing snap ring
▲ 29. Intermediate plate

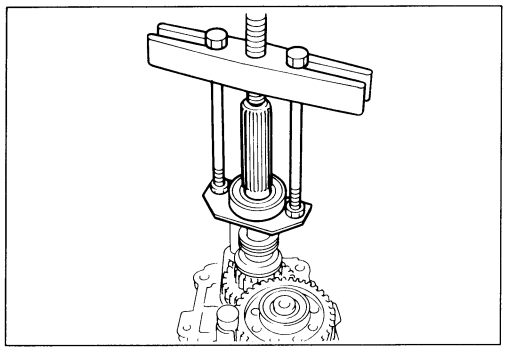

Important Operations

3. Ball Bearing

Set the bearing remover to the bearing and the mainshaft end to remove the bearing.

Bearing Remover : 5-8840-2155-0 (J-32717)
Puller : 5-8840-2027-0

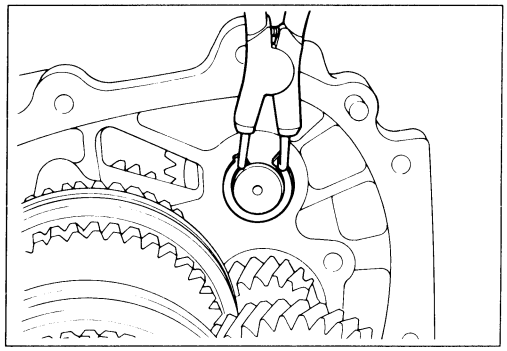

10. Reverse Gear Snap Ring

Use a pair of snap ring pliers to remove the snap ring.

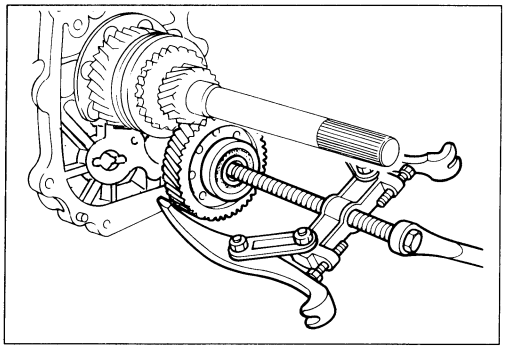

16. Ball Bearing
17. Counter 5th Gear

Use the bearing remover to remove the bearing.

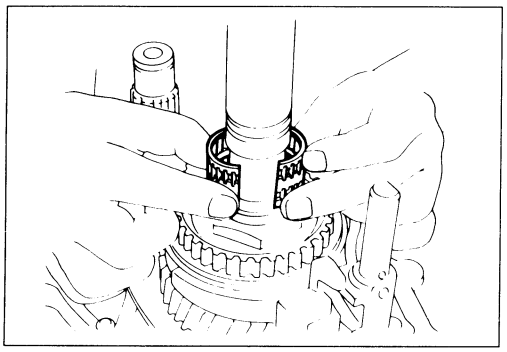

21. Needle Bearing

Remove the needle bearing (2 piece type).

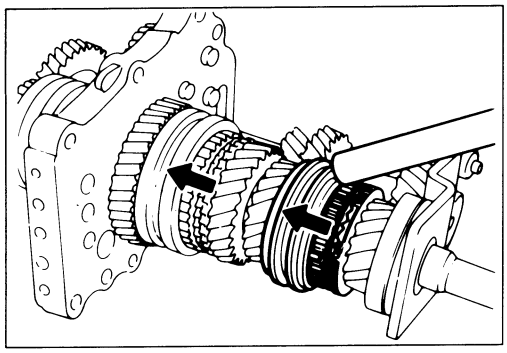

22. Mainshaft Nut

1) Engage the 3rd - 4th synchronizer with the 3rd gear.
2) Engage the 1st-2nd synchronizer with the 1st gear.
3) Attach the holding fixture to the mainshaft and the counter gear.

   Holding Fixture: 5-8840-2160-0 (J-37224)

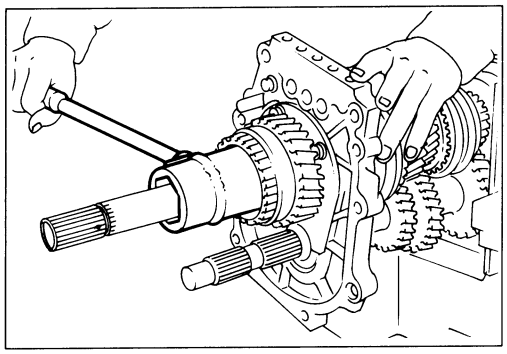

4) Use the mainshaft nut wrench to remove the mainshaft nut.

   Wrench: 5-8840-2156-0 (J-37219)

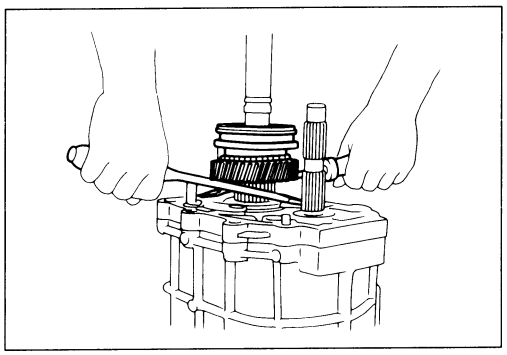

23. Rev.-5th Synchronizer Assembly

24. Reverse Ring

25. Reverse Gear

Use screw drivers between the reverse gear and bearing plate to remove the Rev.-5th synchronizer assembly together with reverse ring and gear.

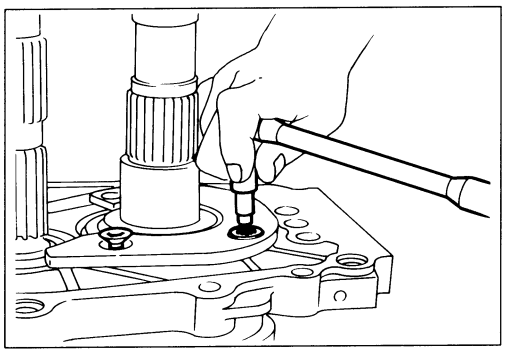

27. Bearing Plate and Screw

Use the torx bit wrench to remove the bearing plate screw from the intermediate plate.

Torx Bit Wrench: 5-8840-0047-0 (J-37225 : T45)

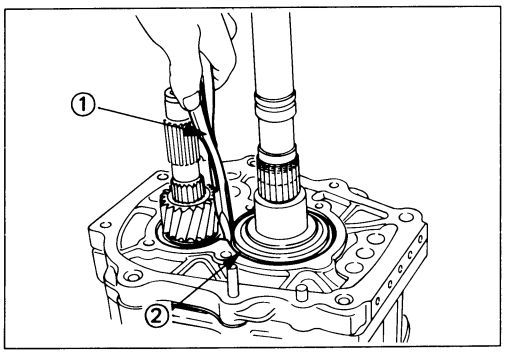

28. Bearing Snap Ring

29. Intermediate Plate

1) Insert the snap ring pliers into the mainshaft bearing snap ring hole.
2) Use the snap ring pliers ① to force open the mainshaft bearing snap ring ②.

   Hold the snap ring open with the pliers.
3) Push the intermediate plate toward the rear of the transmission to remove it.

   The ball bearing snap ring will come free.

TOP GEAR SHAFT, MAIN GEAR SHAFT, AND COUNTER GEAR

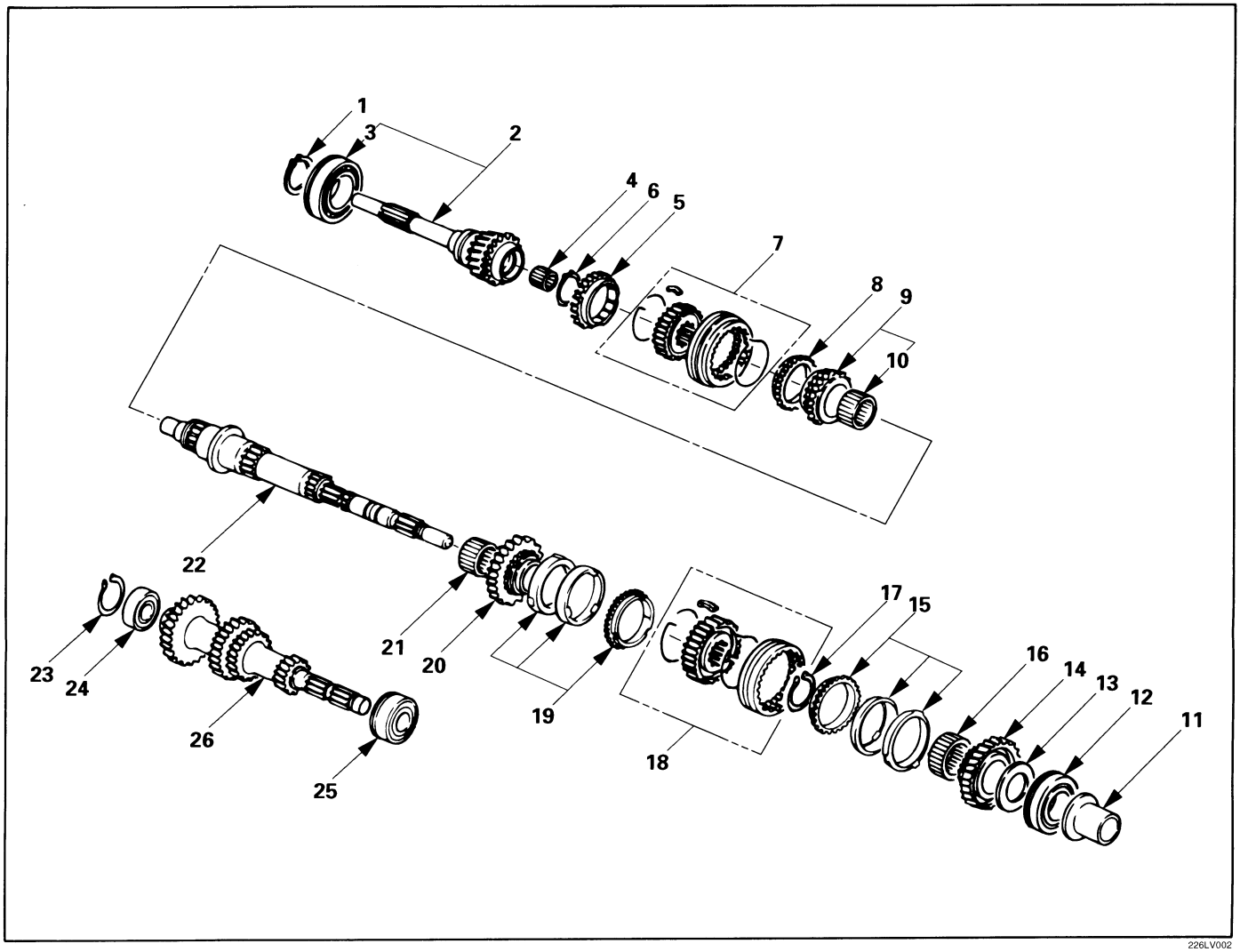

Disassembly Steps

1. Top gear shaft snap ring
2. Top gear shaft
3. ▲ Top gear ball bearing
4. Needle bearing
5. Top block ring
6. ▲ Mainshaft snap ring
7. ▲ 3rd-4th synchronizer assembly
8. 3rd block ring
9. 3rd gear
10. Needle bearing
11. ▲ Needle bearing collar
12. ▲ Mainshaft ball bearing
13. ▲ 1st gear thrust bearing and plate
14. ▲ 1st gear
15. 1st block ring (set)
16. Needle bearing
17. ▲ Clutch hub snap ring
18. ▲ 1st-2nd synchronizer assembly
19. ▲ 2nd block ring (set)
20. ▲ 2nd gear
21. Needle bearing
22. Mainshaft
23. Bearing snap ring
24. ▲ Counter gear front bearing
25. Counter gear center bearing
26. Counter gear

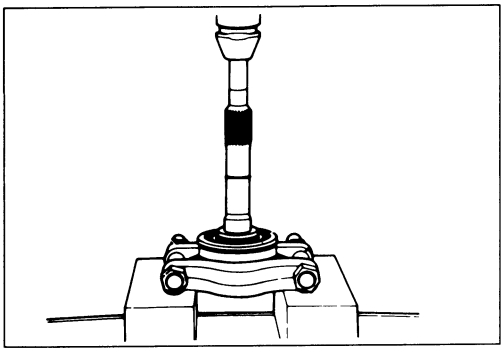

Important Operations

3. Top Gear Ball Bearing

Use a bench press and the bearing replacer to remove the ball bearing.

Bearing Replacer : 5-8840-0015-0 (J-22912-01)

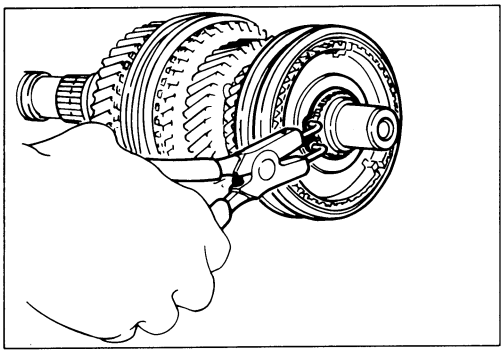

6. Mainshaft Snap Ring

Use a pair of snap ring pliers to remove the snap ring.

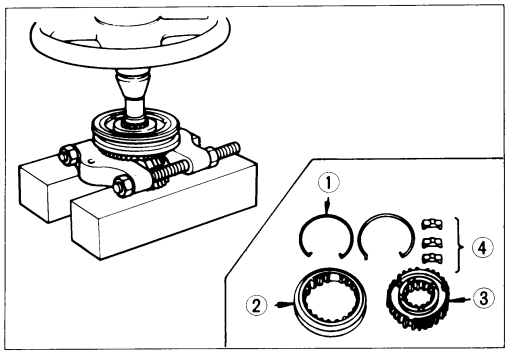

7. 3rd-4th Synchronizer Assembly

1) Use a bench press and the bearing replacer to remove the synchronizer assembly as a set.
2) Disassemble the synchronizer assembly.
   ① Springs
   ② Sleeve
   ③ Clutch Hub
   ④ Inserts

Note:

Mark the hub and sleeve alignment for reassembly.

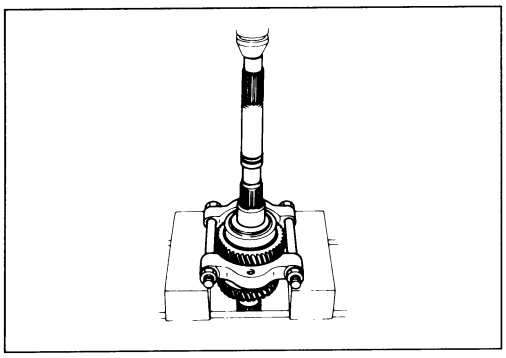

11. Needle Bearing Collar

12. Mainshaft Ball Bearing

13. 1st Gear Thrust Bearing and Plate

14. 1st Gear

Use a bench press and the bearing replacer to remove the ball bearing.

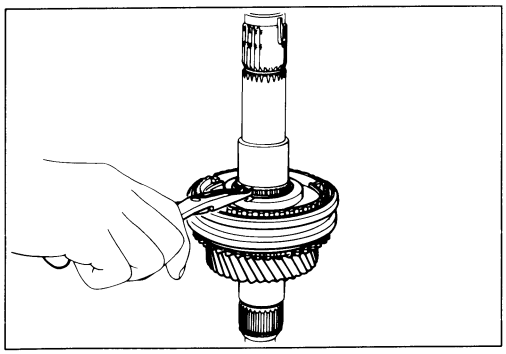

17. Clutch Hub Snap Ring

Use a pair of snap ring pliers to remove the snap ring.

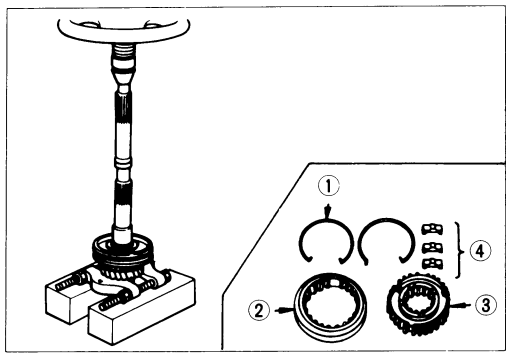

18. 1st-2nd Synchronizer Assembly

19. 2nd Block Ring (Set)

20. 2nd Gear

1) Use a bench press and the bearing remover to remove the 2nd gear together with synchronizer assembly.

   Remover: 5-8840-0015-0 (J-22912-01)

2) Disassemble the synchronizer assembly.

   ① Springs
   ② Sleeve
   ③ Clutch Hub
   ④ Inserts

Note:

Mark the hub and sleeve alignment for reassembly.

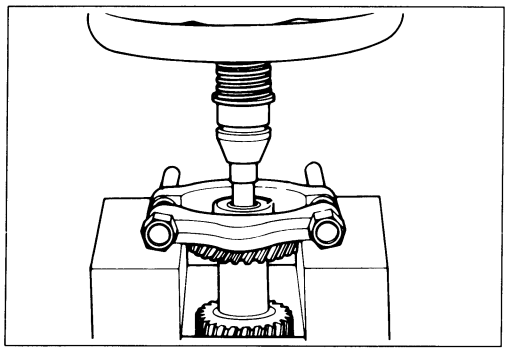

24. Counter Gear Front Bearing

Use a bench press and the bearing remover to remove the bearing.

Bearing Remover : 5-8840-0015-0 (J-22912-01)

INSPECTION AND REPAIR

Make the necessary adjustments, repairs, and part replacements if excessive wear or damage is discovered during inspection.

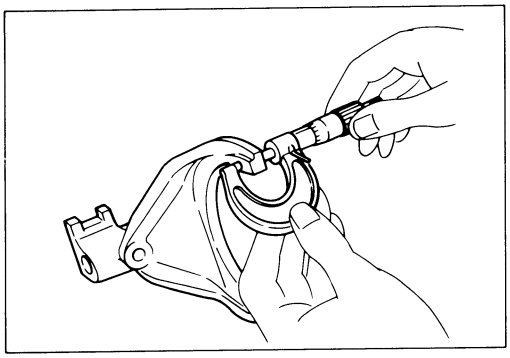

SHIFT ARM THICKNESS

Use a micrometer to measure the shift arm thickness.
If the measured value is less than the specified limit, the shift arm must be replaced.

Shift Arm Thickness — mm(in)

	Standard	Limit
1st–2nd	9.60–9.85 (0.378–0.388)	9.0 (0.354)
3rd–4th Rev.–5th	9.60–9.80 (0.378–0.386)	

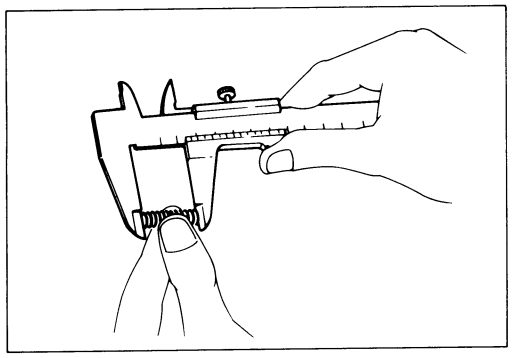

DETENT SPRING FREE LENGTH

Use a venier caliper to measure the detent spring free length.

If the measured value is less than the specified limit, the detent spring must be replaced.

Detent Spring Free Length — mm(in)

Standard	Limit
26.8 (1.06)	26.2 (1.03)

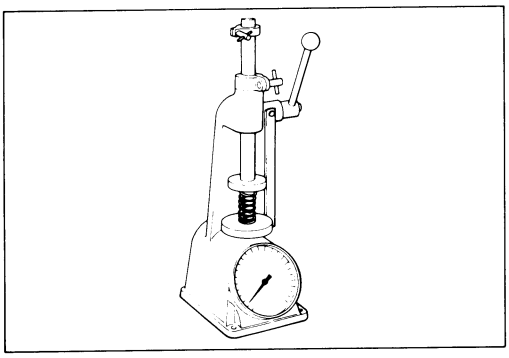

DETENT SPRING TENSION

Use a spring tester to measure the detent spring tension.

If the measured value is less than the specified standard, the detent spring must be replaced.

Detent Spring Tension — kg(lb/N)

Compressed Height	Standard
20 mm (0.787 in)	8.9–9.9 (19.6–21.8/87.2–97)

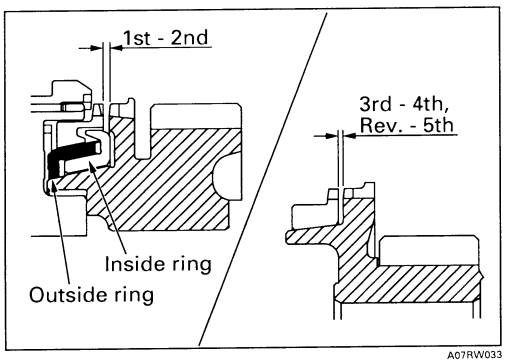

BLOCK RING AND DOG TEETH CLEARANCE

Use a thickness gauge to measure the clearance between the block ring and the dog teeth.

If the measured value exceeds the specified limit, the block ring must be replaced.

Block Ring and Dog Teeth Clearance — mm(in)

Standard	Limit
1.5 (0.059)	0.8 (0.032)

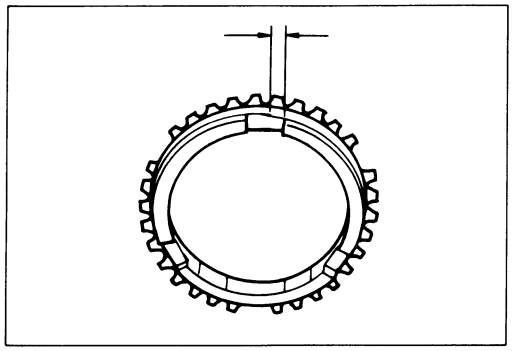

BLOCK RING AND INSERT CLEARANCE

Use a vernier caliper or thickness gauge to measure the clearance between the block ring and the insert.

If the measured value exceeds the specified limit, the block ring and the insert must be replaced.

Block Ring and Insert Clearance mm(in)

	Standard	Limit
3rd-4th	3.46–3.74 (0.136–0.147)	4.0 (0.158)
1st-2nd	4.34–4.66 (0.171–0.183)	4.9 (0.193)
Rev.-5th	3.59–3.91 (0.141–0.154)	4.1 (0.161)

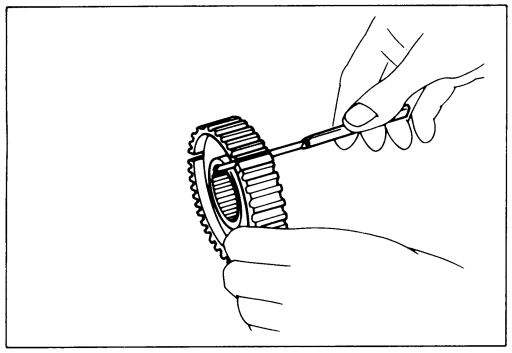

CLUTCH HUB AND INSERT CLEARANCE

Use a thickness gauge to measure the clearance between the clutch hub and the insert.

If the measured value exceeds the specified limit, the clutch hub and the insert must be replaced.

Clutch Hub and Insert Clearance mm(in)

	Standard	Limit
3rd-4th	0.01-0.19 (0.0004-0.0075)	0.4 (0.016)
1st-2nd Rev.-5th	0.09-0.31 (0.0035-0.0122)	

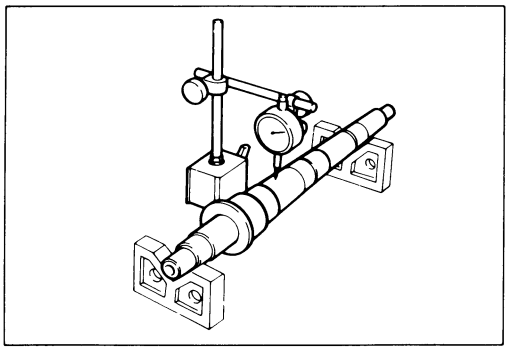

MAINSHAFT RUN-OUT

1. Install the mainshaft to a grinding machine.
2. Use a dial indicator to measure the mainshaft central portion run-out.

   If the measured mainshaft run-out exceeds the specified limit, the mainshaft must be replaced.

Mainshaft Run Out mm(in)

Limit
0.05 (0.0020)

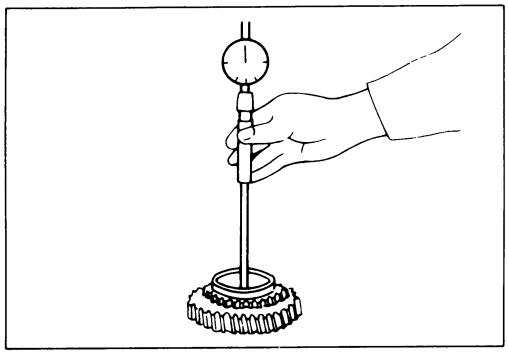

GEAR INSIDE DIAMETER

Use an inside dial indicator to measure the gear inside diameter.

If the measured value is less than the specified limit, the gear must be replaced.

Gear Inside Diameter mm(in)

	Standard	Limit
1st 3rd	45.000-45.013 (1.771-1.772)	45.100 (1.776)
2nd	52.000-52.013 (2.047-2.048)	52.100 (2.051)
Rev.	48.000-48.013 (1.889-1.890)	48.100 (1.894)
5th	32.000-32.013 (1.259-1.260)	32.100 (1.264)

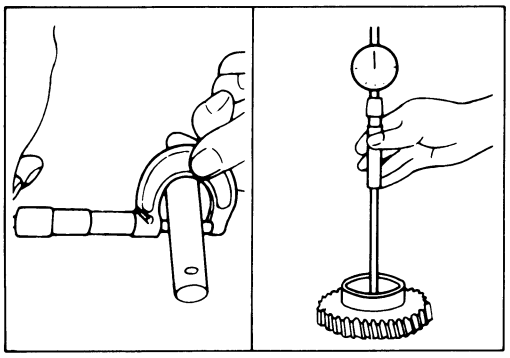

REVERSE IDLER GEAR AND IDLER GEAR SHAFT CLEARANCE

1. Use a micrometer to measure the idler gear shaft diameter.
2. Use an inside dial indicator to measure the idler gear inside diameter.
3. Calculate the idler gear and idler gear shaft clearance.

   Idler gear inside diameter – idler gear shaft diameter = idler gear and idler gear shaft clearance.

   If the measured value exceeds the specified limit, the idler gear and/or the idler gear shaft must be replaced.

Idler Gear and Idler Gear Shaft Clearance mm(in)

Standard	Limit
0.041 – 0.074 (0.0016 – 0.0029)	0.150 (0.0059)

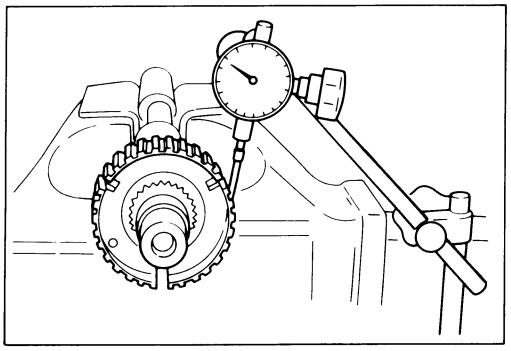

CLUTCH HUB SPLINE PLAY

1. Set a dial indicator to the clutch hub to be measured.
2. Move the clutch hub as far as possible to both the right and the left.

   Note the dial indicator reading.

   If the measured value exceeds the specified limit, the clutch hub must be replaced.

Clutch Hub Spline Play — mm(in)

	Standard	Limit
1st-2nd 3rd-4th	0-0.1 (0-0.0039)	0.2 (0.0079)
Rev.-5th	0-0.2 (0-0.0079)	0.3 (0.0118)

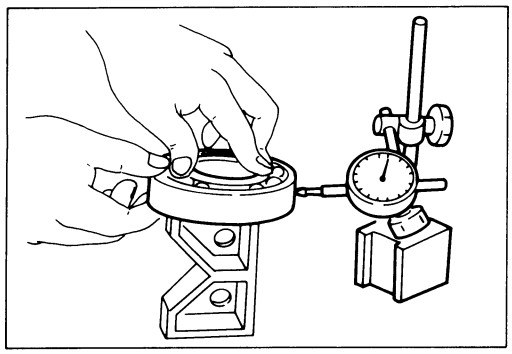

BALL BEARING PLAY

Use a dial indicator to measure the ball bearing play.

Ball Bearing Play — mm(in)

Limit
0.2 (0.0079)

FRONT COVER OIL SEAL

Oil Seal Replacement

Oil Seal Removal

Use a screwdriver to pry the oil seal from the front cover.

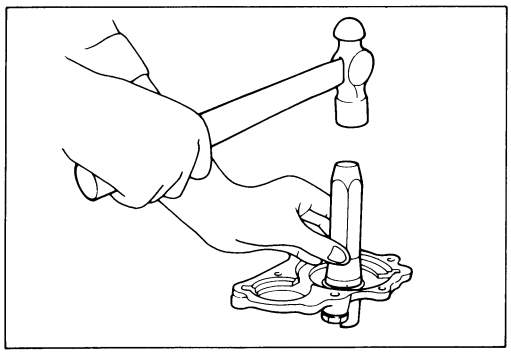

Oil Seal Installation

1. Use the oil seal installer to install the oil seal to the front cover.

   Oil Seal Installer : 5-8840-0026-0 (J-26540)
2. Apply gear oil to the oil seal lip.

REAR COVER OIL SEAL

Oil Seal Replacement

Oil Seal Removal

Use a screwdriver to pry the oil seal from the rear cover.

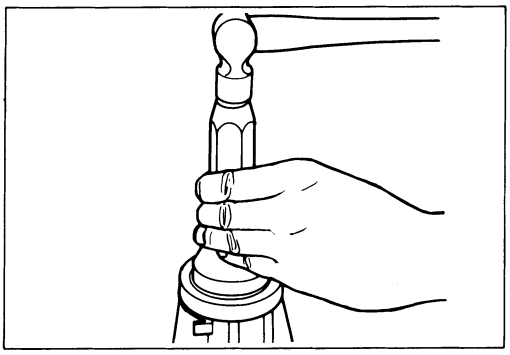

Oil Seal Installation

1. Use the oil seal installer to install the oil seal to the rear cover.

   Oil Seal Installer : 5-8522-0050 (J-29769)

2. Apply engine oil to the oil seal lip.

REASSEMBLY

MINOR COMPONENTS

TOP GEAR SHAFT, MAIN GEAR SHAFT, AND COUNTER GEAR

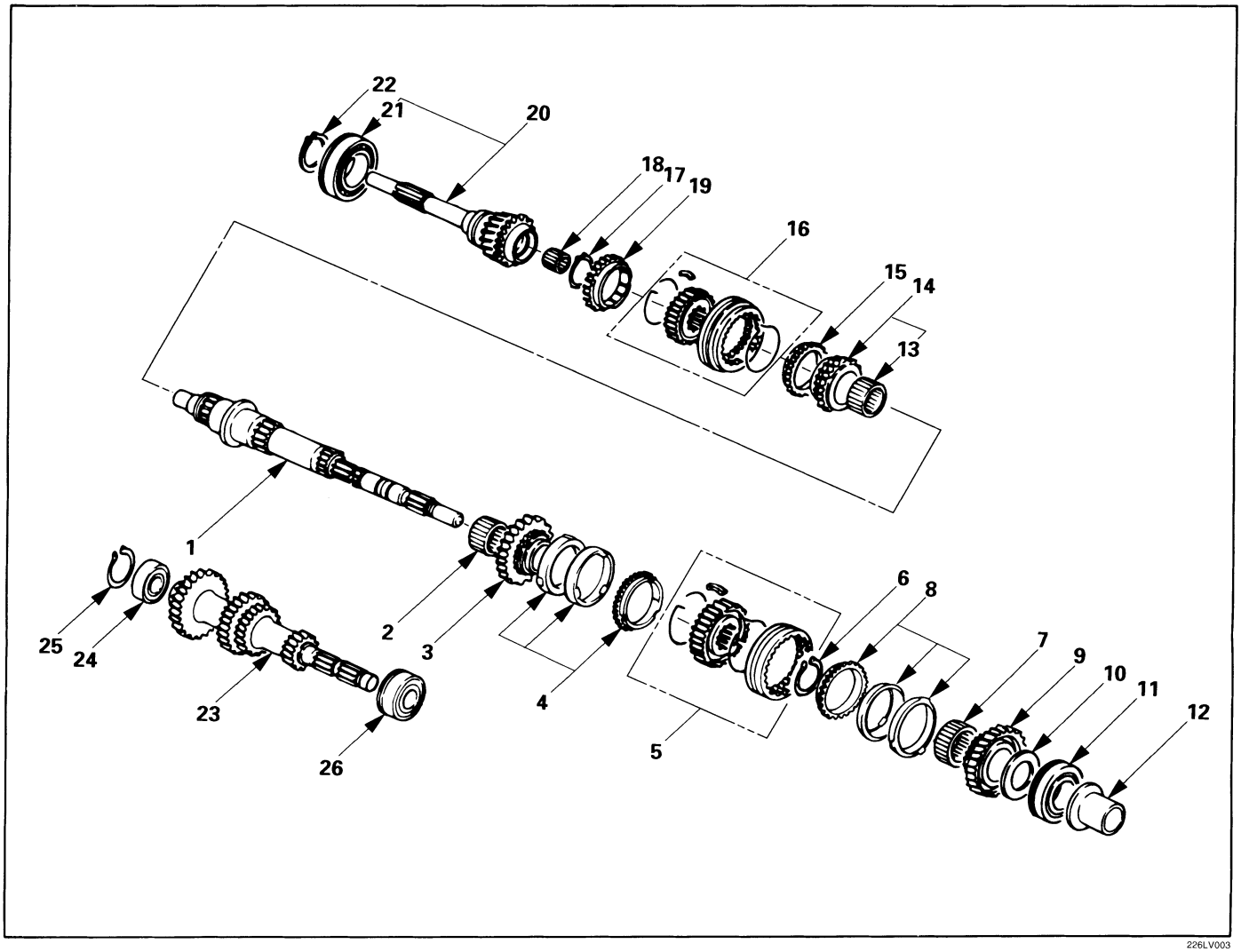

Reassembly Steps

1. Mainshaft
▲ 2. Needle bearing
▲ 3. 2nd gear
4. 2nd block ring (set)
▲ 5. 1st-2nd synchronizer assembly
▲ 6. Clutch hub snap ring
▲ 7. Needle bearing
8. 1st block ring (set)
▲ 9. 1st gear
▲ 10. 1st gear thrust bearing and plate
▲ 11. Mainshaft ball bearing
▲ 12. Needle bearing collar
▲ 13. Needle bearing
▲ 14. 3rd gear
15. 3rd block ring
▲ 16. 3rd-4th synchronizer assembly
▲ 17. Mainshaft snap ring
18. Needle bearing
19. Top block ring
20. Top gear shaft
▲ 21. Top gear ball bearing
▲ 22. Top gear shaft snap ring
23. Counter gear
▲ 24. Counter gear front bearing
25. Snap ring
26. Counter gear center bearing

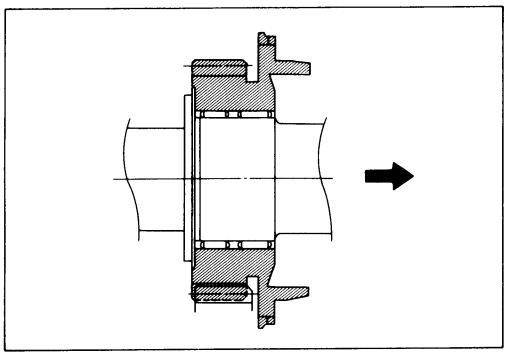

Important Operations

2. Needle Bearing

3. 2nd Gear

1) Apply engine oil to the needle bearing and the 2nd gear thrust surfaces.
2) Install the needle bearing and the 2nd gear to the mainshaft.

   The 2nd gear dog teeth must be facing the transmission rear side.

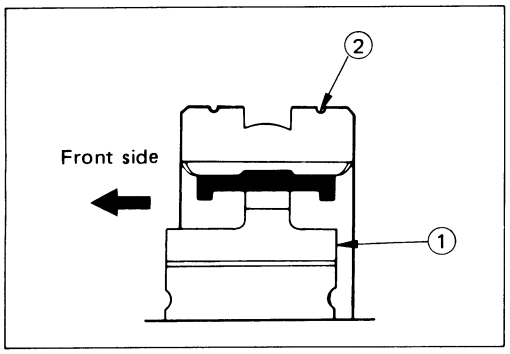

5. 1st-2nd Synchronizer Assembly

1) Turn the clutch hub face ① shallow toward the sleeve small groove ② on the outer circumference.

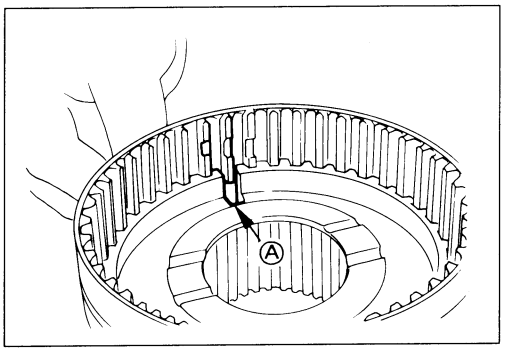

Note:
The clutch hub groove Ⓐ must be aligned with the key groove of sleeve.

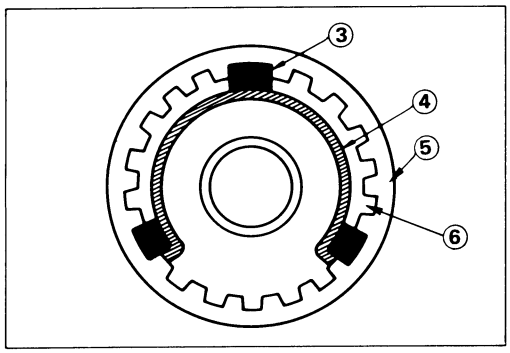

2) Check that the inserts ③ fit snugly into the block ring insert grooves.
3) Check that the insert springs ④ are fitted to the inserts as shown in the illustration.
4) Check that the clutch hub ⑤ and the sleeve ⑥ slide smoothly.
5) Install the synchronizer assembly to the mainshaft.

   The clutch hub face (with the heavy boss) must be facing the 2nd gear side.

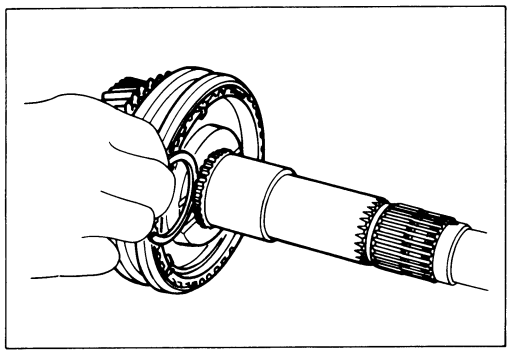

6. Clutch Hub Snap Ring

1) Select the snap ring which will provide the minimum clearance between the 1st-2nd clutch hub and the snap ring.

   There are three snap ring sizes available.

   The snap rings are color-coded to indicate their thickness.

Clutch Hub and Snap Ring Clearance	mm(in)
Standard	
0 — 0.1 (0 — 0.0039)	

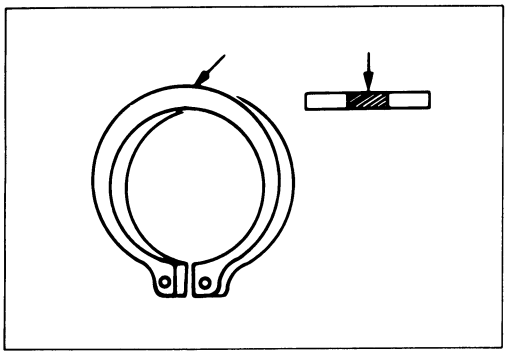

Snap Ring Availability mm(in)

Thickness	Color-Coding
1.80 (0.071)	White
1.85 (0.073)	Yellow
1.90 (0.075)	Blue

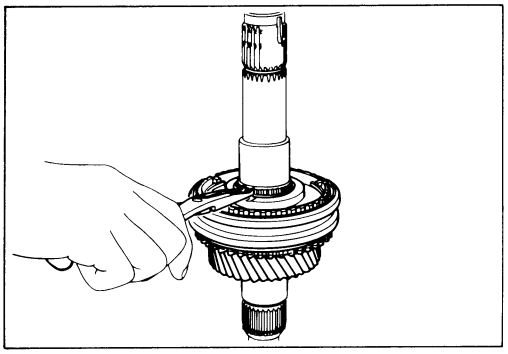

2) Use a pair of snap ring pliers to install the snap ring to the mainshaft.

   Snap Ring Pliers

   The snap ring must be fully inserted into the mainshaft snap ring groove.

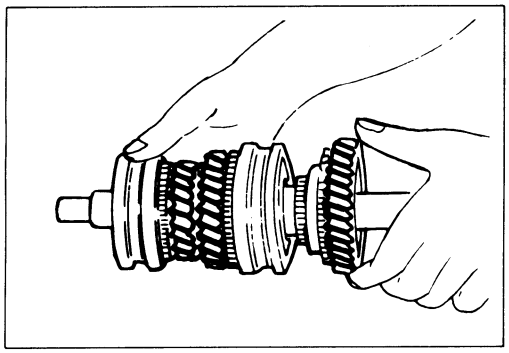

7. Needle Bearing

9. 1st Gear

1) Apply engine oil to the needle bearing and the 1st gear thrust surfaces.
2) Install the needle bearing and the 1st gear to the mainshaft.

   The 1st gear dog teeth must be facing the transmission front side.

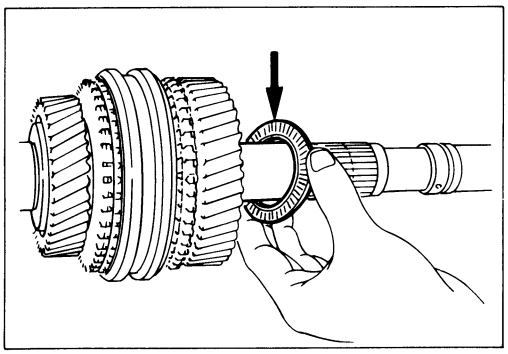

10. 1st Gear Thrust Bearing and Plate

Install the thrust bearing and the race to the main shaft.

The thrust bearing side must be facing the transmission front side.

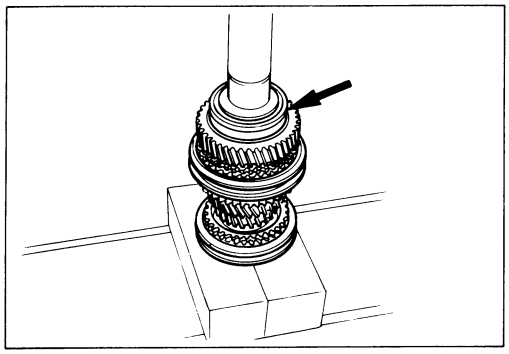

11. Mainshaft Ball Bearing

12. Needle Bearing Collar

1) Apply engine oil to the ball bearing and the mainshaft.
2) Install the ball bearing and collar to the mainshaft. The ball bearing snap ring groove must be facing the transmission rear side.
3) Use a bench press to slowly force the collar into place.

   Installer : 5-8840-2195-0 (J-6133-01)

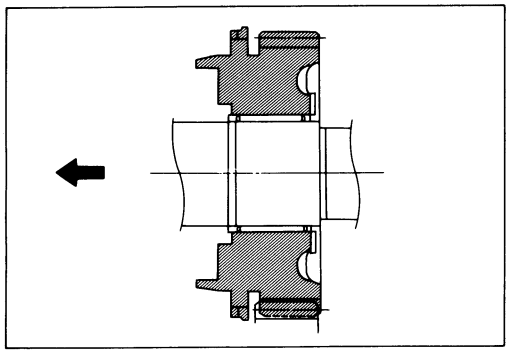

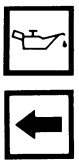

13. Needle Bearing

14. 3rd Gear

1) Apply engine oil to the needle bearing and the 3rd gear thrust surfaces.
2) Install the needle bearing and the 3rd gear to the mainshaft.

   The 3rd gear dog teeth must be facing the transmission front side.

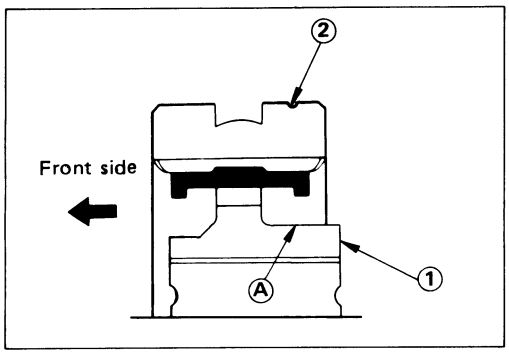

16. 3rd-4th Synchronizer Assembly

1) Turn the clutch hub face ① with the heavy boss Ⓐ toward the sleeve small groove ② on the outer circumference.

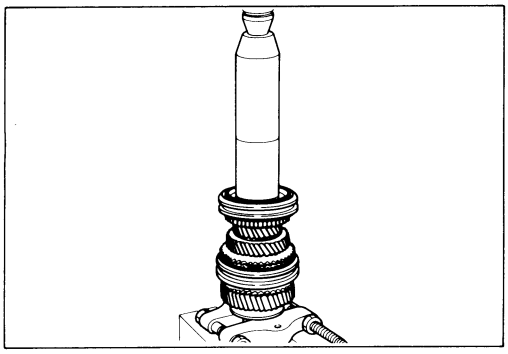

2) Check that the inserts fit snugly into the block ring insert grooves.
3) Check that the insert springs are fitted to the inserts as shown in the illustration.
4) Check that the clutch hub and the sleeve slide smoothly.
5) Install the synchronizer assembly to the main shaft.

   The clutch hub face (with the heavy boss) must be facing the 3rd gear side.

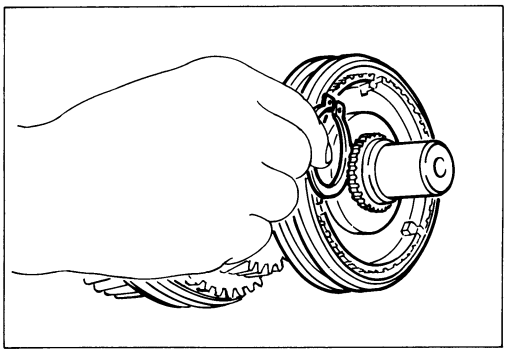

17. Mainshaft Snap Ring

1) Select the snap ring which will provide the minimum clearance between the 3rd-4th clutch hub and the snap ring.

   There are three snap ring sizes available.

   The snap rings are color-coded to indicate their thickness.

Clutch Hub and Snap Ring Clearance — mm(in)

Standard
0 — 0.1 (0 — 0.0039)

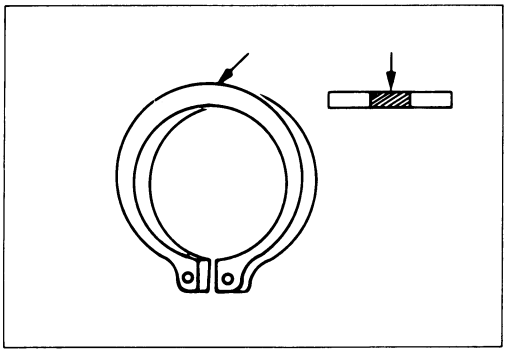

Snap Ring Availability — mm(in)

Thickness mm(in)	Color-Coding
1.80 (0.071)	White
1.85 (0.073)	Yellow
1.90 (0.075)	Blue

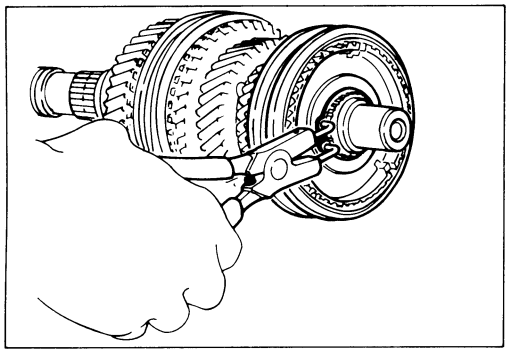

2) Use a pair of snap ring pliers to install the snap ring to the mainshaft.

   The snap ring must be fully inserted into the mainshaft snap ring groove.

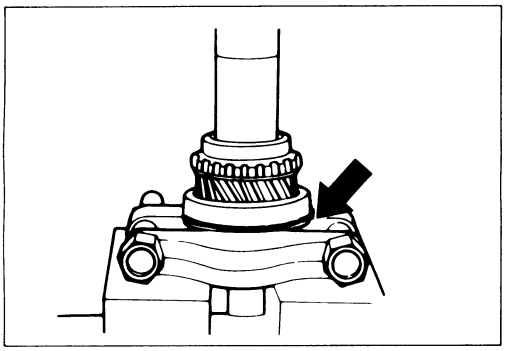

21. Top Gear Ball Bearing

22. 4th Gear Shaft Snap Ring

1) Use a bench press to install the top gear shaft ball bearing to the mainshaft.

   The snap ring groove must be facing the transmission front side.

2) Use a pair of snap ring pliers to install the snap ring to the bearing.

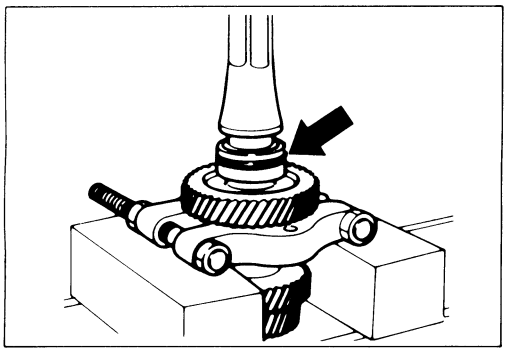

24. Counter Gear Front Bearing

Use a bench press to install the counter gear front bearing to the mainshaft.

The snap ring groove must be facing the transmission front side.

Bearing Installer: 5-8840-2194-0 (J-35283)

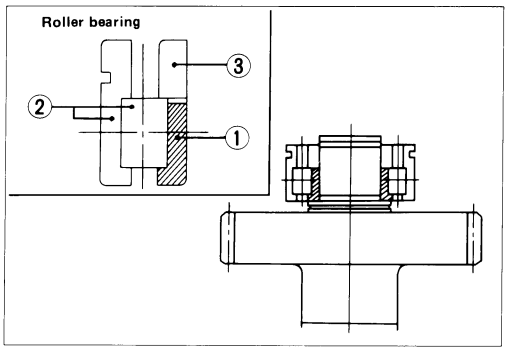

1) Apply engine oil to the bearing and install the inner race ① and outer race with roller ② in the proper direction to the mainshaft.
2) Then install the inner race ③ with taper side turned to outer race ②.

Note:
The inner race ③ should be installed with stamp on die face side turned to the front side of transmission.

REVERSE GEAR AND 5TH GEAR

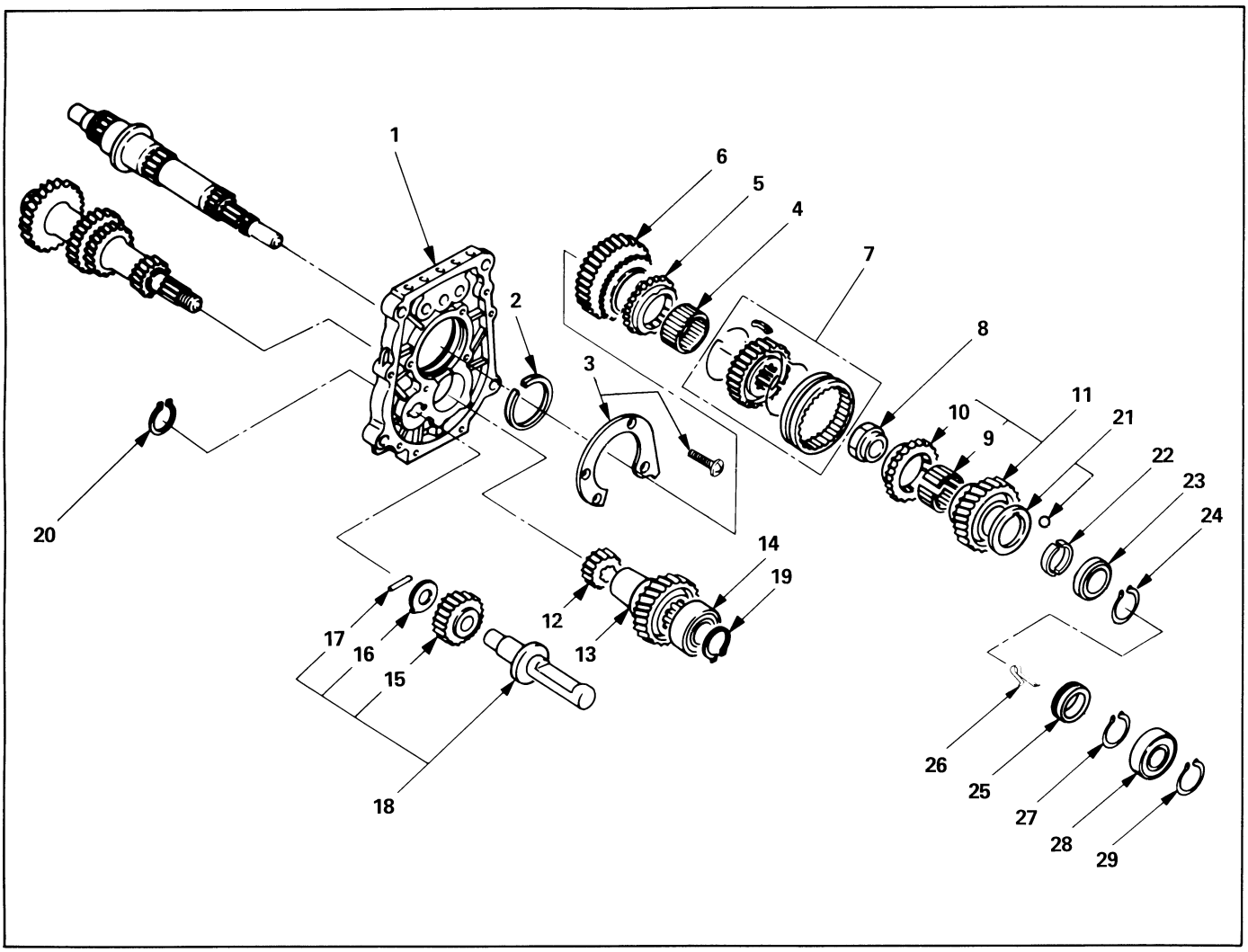

Reassembly Steps

- ▲ 1. Intermediate plate
- 2. Bearing snap ring
- ▲ 3. Bearing plate and screw
- 4. Needle bearing
- 5. Reverse block ring
- 6. Reverse gear
- ▲ 7. Rev.-5th synchronizer assembly
- ▲ 8. Mainshaft nut
- 9. Needle bearing
- 10. 5th block ring
- 11. 5th gear
- ▲ 12. Counter reverse gear
- 13. Counter 5th gear
- 14. Ball bearing
- 15. Reverse idler gear
- 16. Thrust washer
- 17. Idler shaft pin
- 18. Reverse idler shaft
- ▲ 19. Bearing snap ring
- ▲ 20. Reverse gear snap ring
- ▲ 21. Thrust washer and lock ball
- 22. Thrust plate
- 23. Retaining ring
- 24. Retainer snap ring
- 25. Speedometer drive gear
- 26. Clip
- 27. Bearing snap ring
- ▲ 28. Ball bearing
- 29. Bearing snap ring

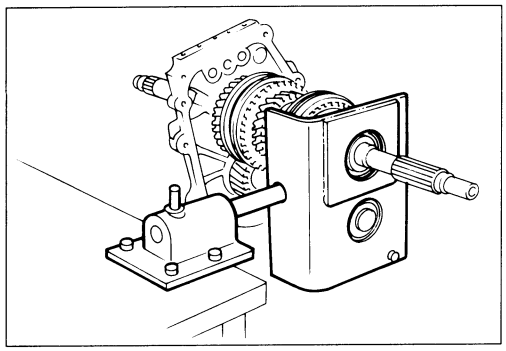

Important Operations

1. Intermediate Plate

1) Mesh the counter gear with the mainshaft assembly.
2) Install the holding fixture to the mainshaft and the counter gear.

   Holding Fixture: 5-8840-2160-0 (J-37224)
   Holding Base: 5-8840-0003-0 (J-3289-20)
3) Place the holding fixture (with the mainshaft and the countershaft) in a vise.
4) Install the intermediate plate.

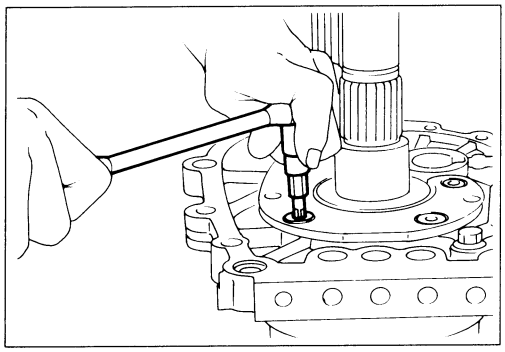

3. Bearing Plate and Screw

1) Apply recommended thread locking agents or its equivalent to each of the bearing plate screw threads.
2) Tighten the screws to the specified torque.

   Torx Bit Wrench: 5-8840-0047-0 (J-37225 : T45)

Bearing Plate Screw Torque	kg·m (lb·ft/N·m)
1.5 (11/15)	

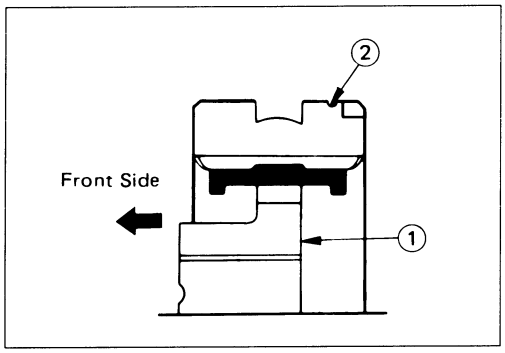

7. Rev-5th Synchronizer Assembly

1) Turn the clutch hub face ① toward the sleeve small groove ② on the outer circumference.
2) Install the synchronizer assembly to the mainshaft.

   The clutch hub face (with the heavy boss) must be facing the reverse gear side.

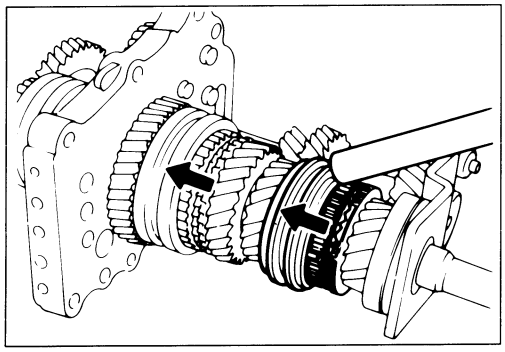

8. Mainshaft Nut

1) Mesh the 1st-2nd synchronizer with both the 1st and 3rd gears (double engagement).

   This will prevent the mainshaft from turning.

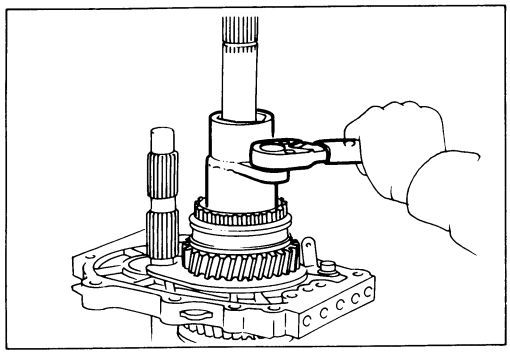

2) Install the mainshaft hub nut.
3) Use the mainshaft nut wrench to tighten the mainshaft nut to the specified torque.

   Wrench: 5-8840-2156-0 (J-37219)

Mainshaft Nut Torque	kg·m(lb·ft/N·m)
14 ± 2 (101 ± 14.2/137 ± 20)	

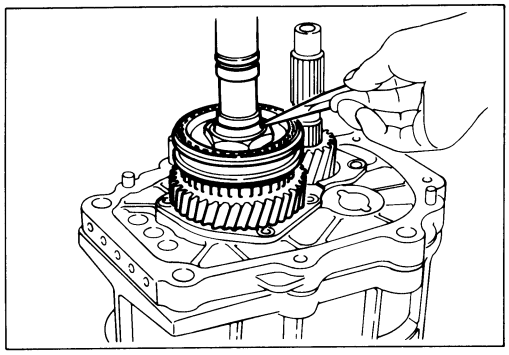

4) Use a punch to caulk the mainshaft nut.

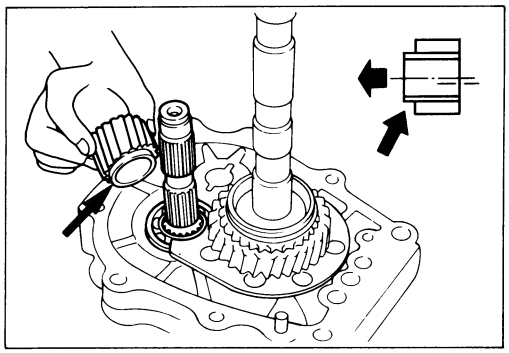

12. Counter Reverse Gear

1) Apply engine oil to the counter reverse gear and the reverse gear.
2) Install the counter reverse gear to the counter gear.

   Note the projection at either side of the counter reverse gear.

   The larger projection must be facing the intermediate plate.

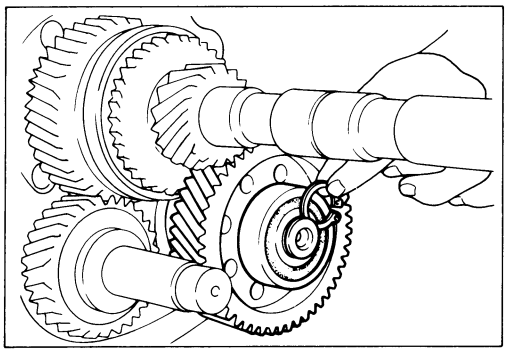

19. Bearing Snap Ring

1) Select the snap ring which will provide the minimum clearance between the ball bearing and the snap ring.

   There are six snap ring sizes available.

   The snap rings are color-coded to indicate their thickness.

Ball Bearing and Snap Ring Clearance	mm(in)
Standard	
0 — 0.15 (0 — 0.0059)	

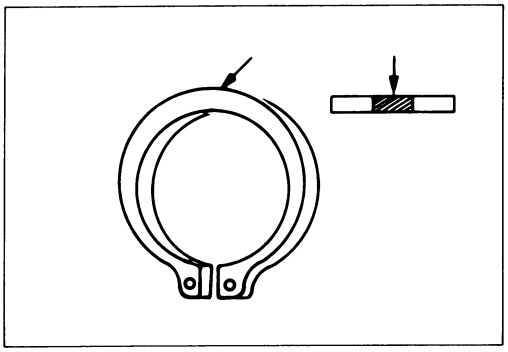

Snap Ring Availability mm(in)

Thickness mm(in)	Color-Coding
1.1 (0.043)	White
1.2 (0.047)	Yellow
1.3 (0.051)	Blue
1.4 (0.055)	Pink
1.5 (0.059)	Green
1.6 (0.063)	Brown

2) Use a pair of snap ring pliers to install the snap ring to the counter 5th gear.
Snap Ring Pliers
The snap ring must be fully inserted into the reverse idler shaft snap ring groove.

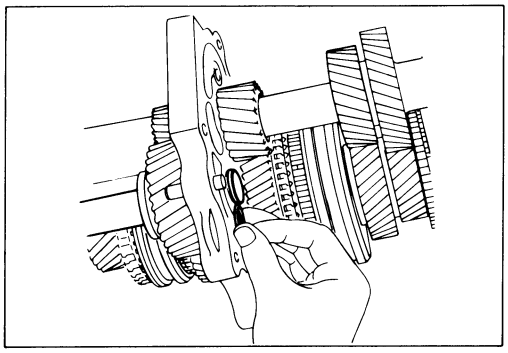

20. Reverse Gear Snap Ring

1) Select the snap ring which will provide the minimum clearance between the intermediate plate and the snap ring.
There are three snap ring sizes available.
The snap rings are color-coded to indicate their thickness.

Intermediate Plate and Snap Ring Clearance mm(in)

Standard
0 — 0.15 (0 — 0.0059)

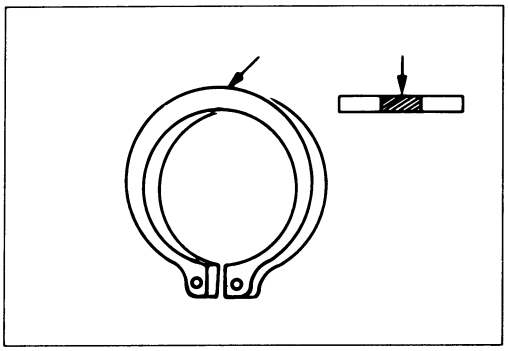

Snap Ring Availability mm(in)

Thickness mm(in)	Color-Coding
1.2 (0.047)	White
1.3 (0.051)	Yellow
1.4 (0.055)	Blue

2) Use a pair of snap ring pliers to install the snap ring to the reverse idler shaft.
Snap Ring Pliers
The snap ring must be fully inserted into the reverse idler shaft snap ring groove.

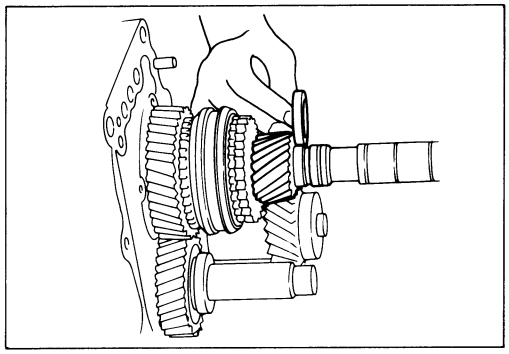

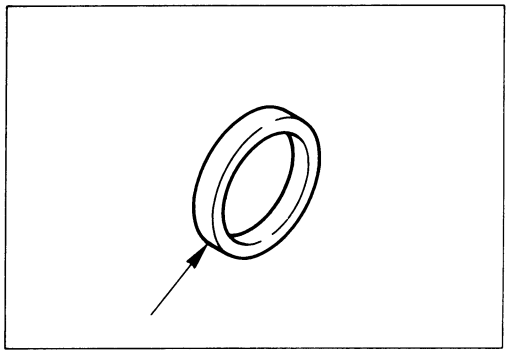

21. Thrust Washer and Lock Ball

1) Use a thickness gauge to measure the clearance between the 5th gear and the thrust washer.

5th Gear and Thrust Washer Clearance mm(in)
Standard
0.10 – 0.25 (0.0039 – 0.0098)

If required, replace the existing thrust washer with a new thrust washer to bring the clearance to specification.

There are four thrust washer sizes available.
The snap rings are color-coded to indicate their thickness.

Thrust Washer Availability mm(in)

Thickness	Color-Coding
7.9 (0.311)	White
8.0 (0.315)	Yellow
8.1 (0.319)	Green
8.2 (0.323)	Blue

2) Apply grease to the thrust washer and the lock ball.
3) Install the thrust washer and the lock ball.

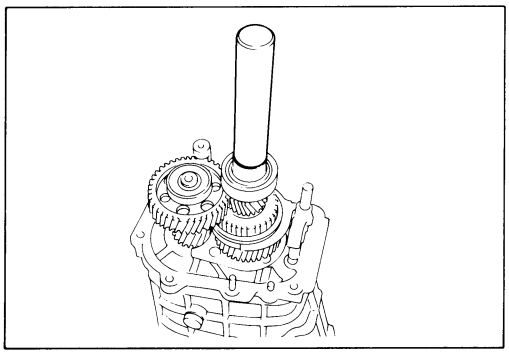

28. Ball Bearing

Use the installer to install the ball bearing to the mainshaft.

Installer: 5-8840-2159-0 (J-37223)

INTERMEDIATE PLATE AND GEAR ASSEMBLY, DETENT, SHIFT ARM ASSEMBLY, AND INTERLOCK PIN

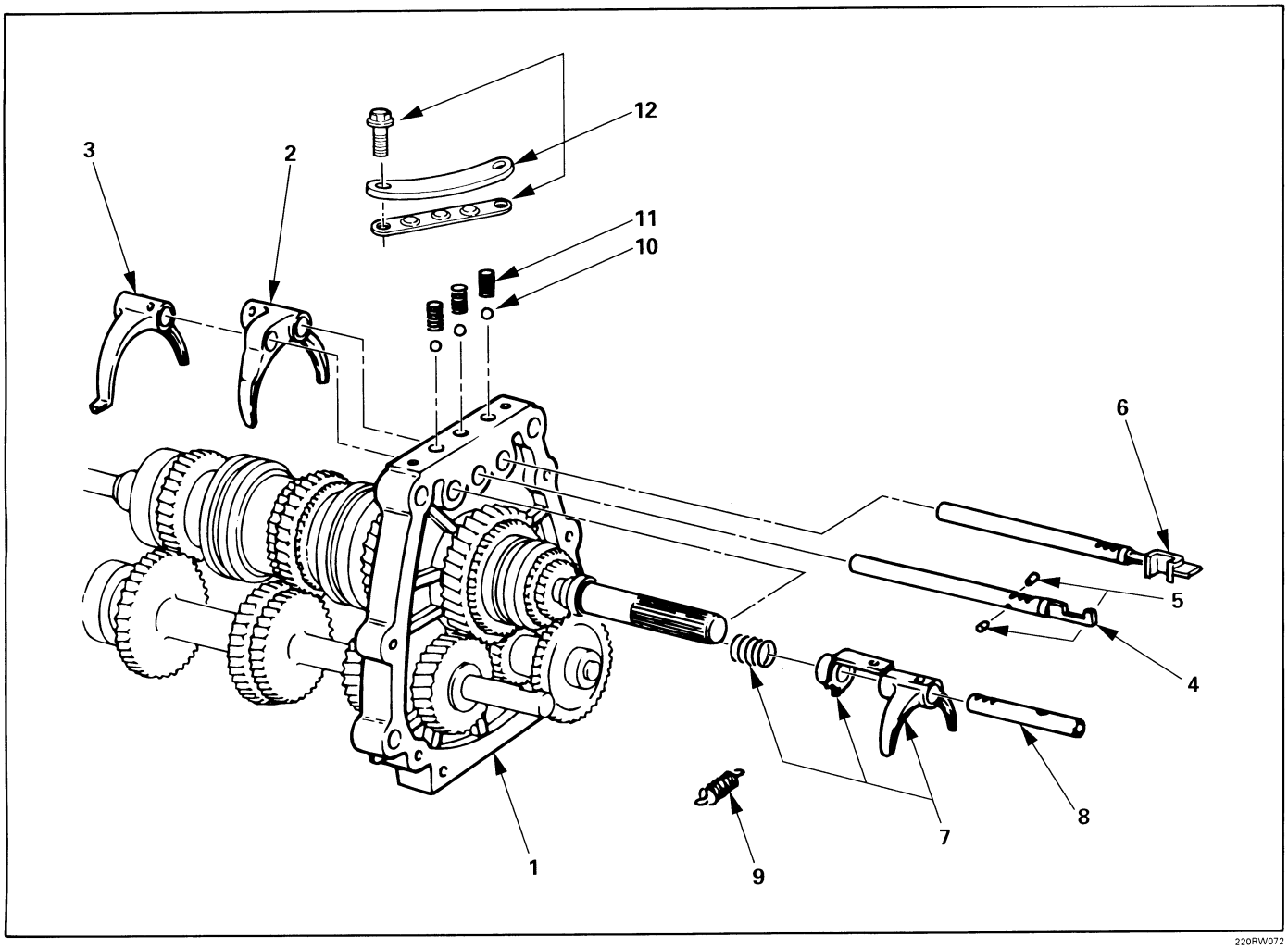

Reassembly Steps

1. Intermediate plate and gear assembly
2. 1st-2nd shift arm
3. 3rd-4th shift arm
4. ▲ 3rd-4th shift rod
5. ▲ Interlock pin
6. 1st-2nd shift rod
7. Rev-5th shift arm and reverse inhibitor
8. Rev-5th shift rod
9. Spring
10. Detent ball
11. Detent spring
12. ▲ Detent spring plate and gasket

Important Operations

4. 3rd-4th Shift Rod

5. Interlock Pin

1) Install the interlock pin to the shift rod.
2) Install the shift rod together with the interlock pin to the intermediate plate.

   Do not allow the interlock pin to fall from the shift rod.

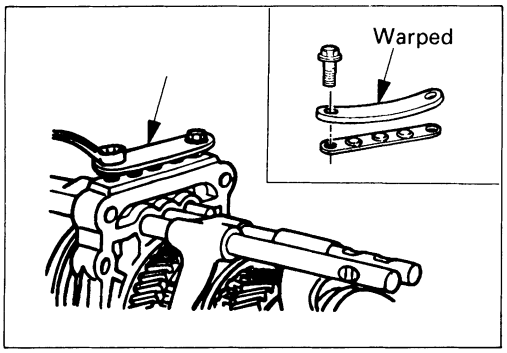

12. Detent Spring Plate and Gasket

1) Install the new-detent plate and new gasket onto the transmission case into the correct direction.
2) Tighten the detent spring plate bolts to the specified torque.

Detent Spring Plate Bolt Torque	kg·m(lb·ft/N·m)
2.0 ± 0.4 (14 ± 3/20 ± 4)	

MAJOR COMPONENTS

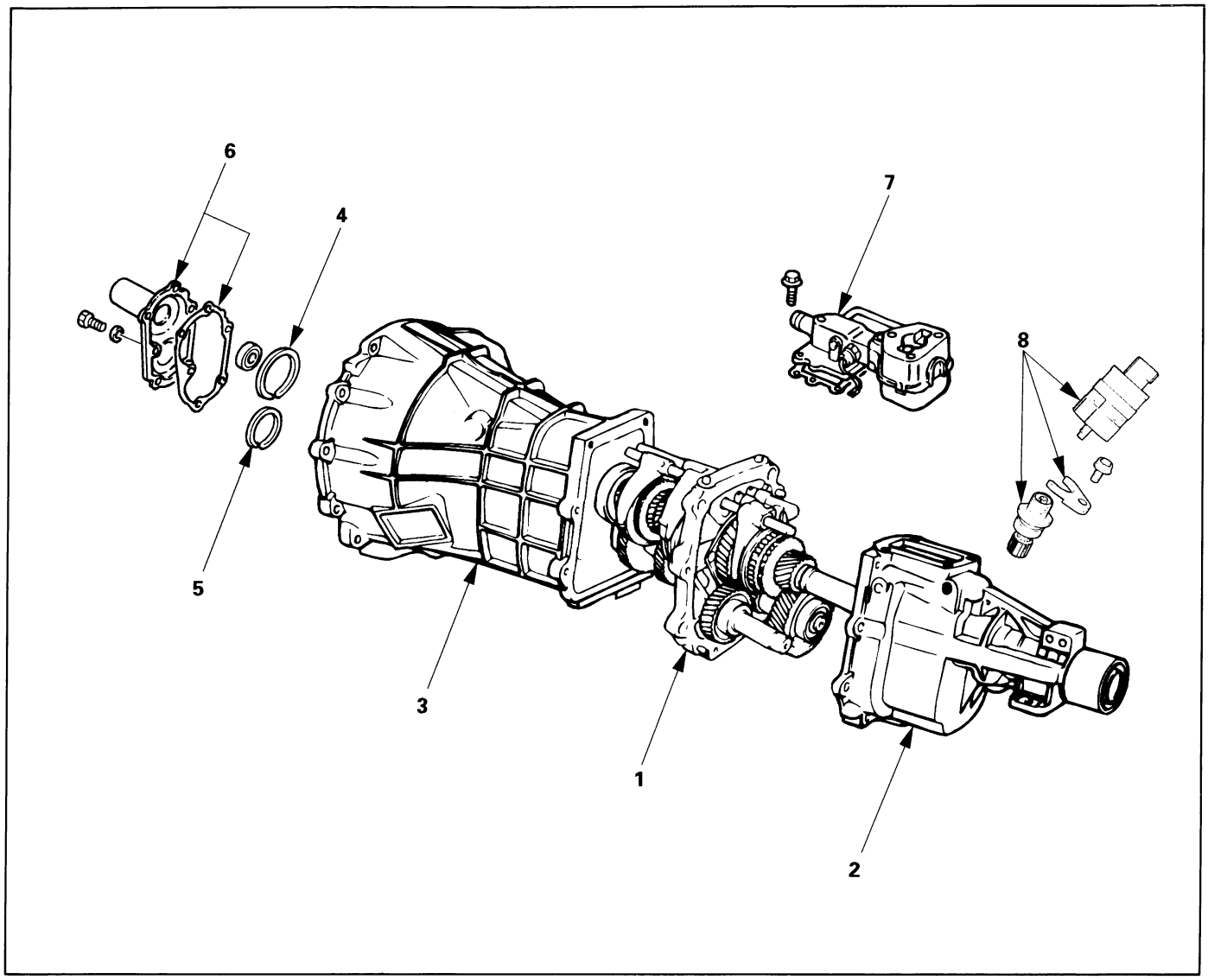

Reassembly Steps

- ▲ 1. Intermediate plate with gear assembly
- ▲ 2. Rear cover with oil seal
- ▲ 3. Transmission case
- ▲ 4. Front bearing snap ring
- ▲ 5. Counter front bearing snap ring
- ▲ 6. Front cover with oil seal
- ▲ 7. Gear control box assembly
- 8. Speedometer driven gear and speedometer sensor

Important Operations

1. Intermediate Plate with Gear Assembly

1) Apply a light coat of oil to the transmission case top gear shaft ball bearing fitting faces and the shift rods.

   This will facilitate smooth installation.

2) Install the intermediate plate assembly.

3) Pull out the top gear shaft until the ball bearing snap ring groove protrudes from the transmission case front cover fitting face.

   Avoid subjecting the mainshaft to sudden shock or stress.

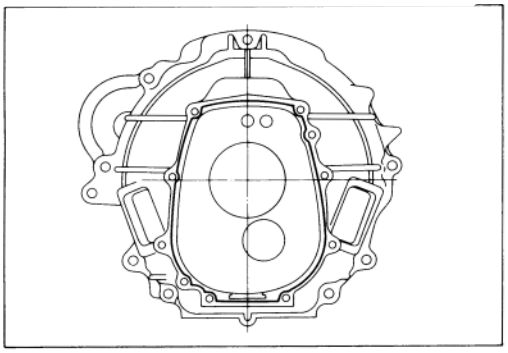

2. Rear Cover with Oil Seal

3. Transmission Case

1) Apply recommended liquid gasket or its equivalent to the transmission case and rear cover fitting surfaces.

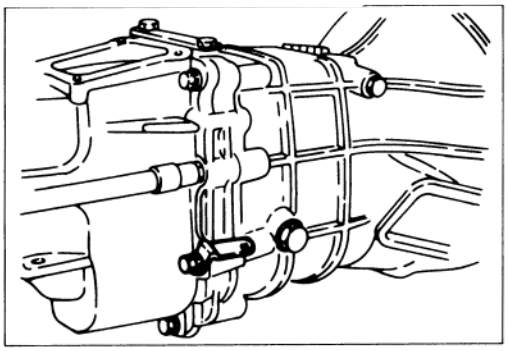

2) Install the rear cover and the transmission case to the intermediate plate.

3) Tighten the rear cover bolts to the specified torque.

Rear Cover Bolt Torque	kg·m (lb·ft/N·m)
	3.8 ± 0.8 (27 ± 5.8 / 37 ± 7.8)

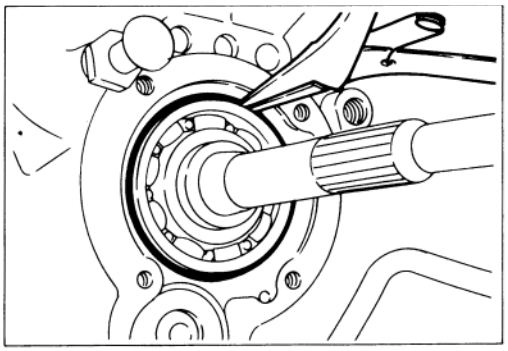

4. Front Bearing Snap Ring

5. Counter Front Bearing Snap Ring

Use a pair of snap ring pliers to install the snap rings to the mainshaft.

The snap rings must be fully inserted into the ball bearing snap ring groove.

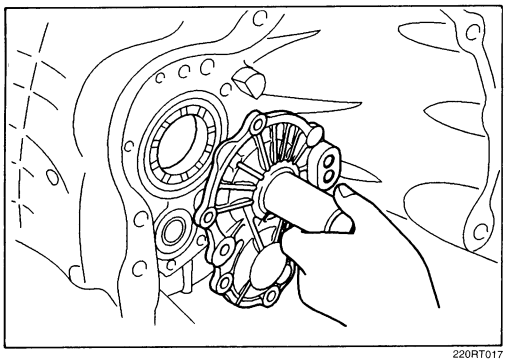

220RT017

6. Front Cover with Oil Seal

1) **Apply recommended liquid gasket or its equivalent to the through bolt threads.**
2) Install the new gasket and the front cover to the transmission case

   Take care not to damage the oil seal.
3) **Tighten the front cover bolts to the specified torque.**

Front Cover Bolt Torque	kg·m (lb·ft/N·m)
1.9 ± 0.4 (13.7 ± 2.9/18.6 ± 3.9)	

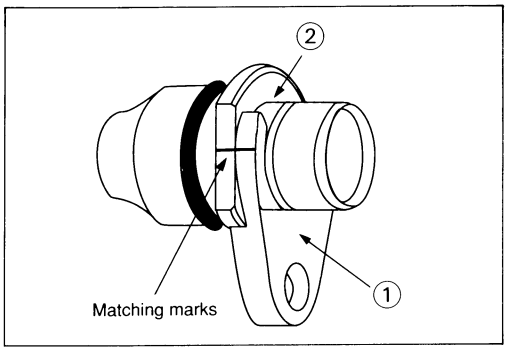

7. Speedometer Driven Gear and Speedometer Sensor

1) Install the O-ring to the speedometer driven gear bushing.
2) Install the driven gear to the speedometer driven gear bushing.
3) Align the matching marks on plate ① and bush ②, then tighten the bolt.

Bolt Torque	kg·m (lb·ft/N·m)
1.5 (10.8/14.7)	

4) Install the speedometer sensor.

Speedometer Sensor Torque	kg·m (lb·ft/N·m)
2.8 (20/27)	

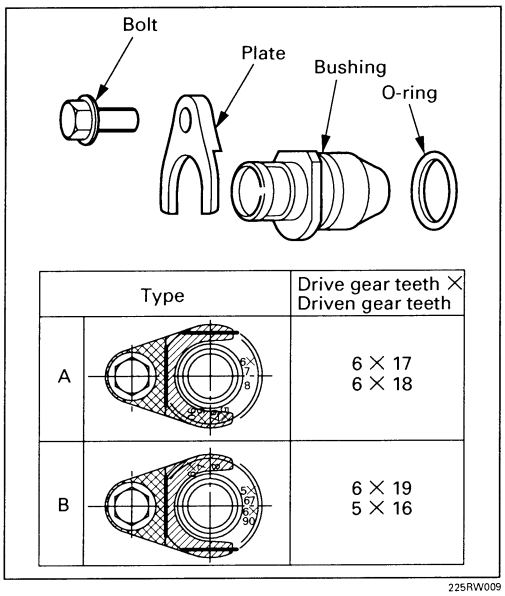

225RW009

4 x 4 MODEL TRANSMISSION

MAIN DATA AND SPECIFICATIONS

			MUA 5C	MUA 5S
Transmission type			Fully synchronized 5-forward and reverse gears.	
Transfer case type			Constant mesh type Low-High and 2H-4H gears.	
Gear ratio :	Transmissior	1st	3.767	4.357
		2nd	2.248	2.502
		3rd	1.404	1.501
		4th	1.000	1.000
		5th	0.809	0.809
		Rev.	3.873	3.970
	Transfer	High	1.000	
		Low	2.050	
Oil capacity :	Transmission	lit (US gal.)	2.95 (0.78)	
:	Transfer	lit (US gal.)	1.45 (0.38)	

GENERAL DESCRIPTION

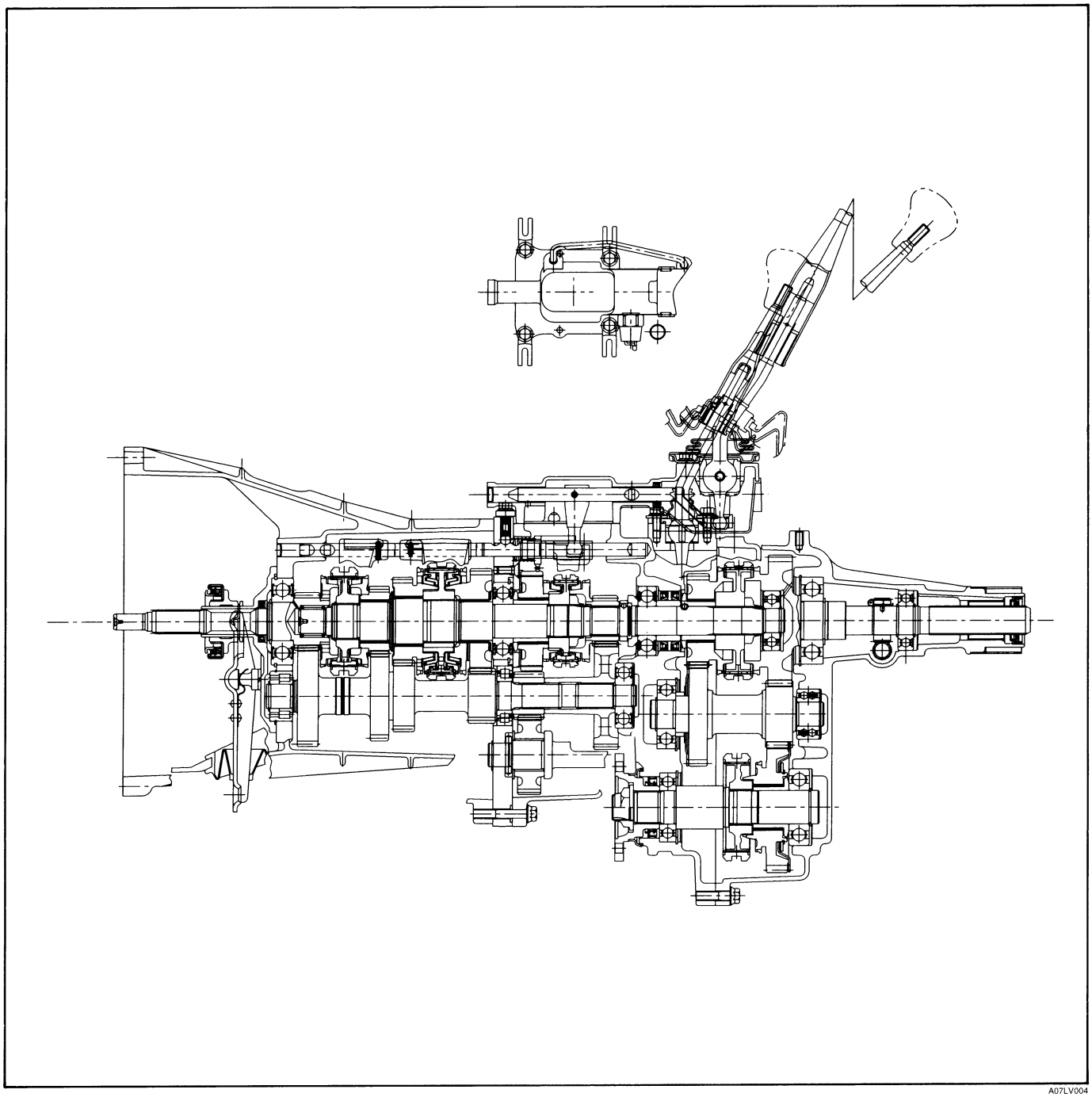

A07LV004

The transmission is designed for the quietest possible operation.

A longer center distance (77.5 mm (3.05 in)) provides increased durability.

Principle parts of the transmission are the integral clutch housing, the intermediate plate, the rear cover, and the gears.

The gear control box is built-in to the transfer case.

Transfer gear ratio is 1 : 2.050.

TORQUE SPECIFICATIONS

STANDARD BOLTS

The torque values given in the following table should be applied where a particular torque is not specified.

N·m (kg·m / lb·ft)

	Strength Class	4.8/4T	7T	8.8		9.8/9T
				Refined	Non-Refined	
	Bolt Identification	4	7	8	8	9
	Bolt Diameter× Pitch (mm)	No mark	—			
Standard Hex. Head Bolt	M6 × 1.0	6 (0.6 / 52 lb·in)	7 (0.7 / 61 lb·in)	8 (0.8 / 69 lb·in)		–
	M8 × 1.25	13 (1.3 / 113 lb·in)	17 (1.7 / 12)	20 (2.0 / 14)		24 (2.4 / 17)
	M10 × 1.25	27 (2.8 / 20)	37 (3.8 / 27)	42 (4.3 / 31)		50 (5.1 / 37)
	M12 × 1.25	61 (6.3 / 45)	76 (7.8 / 56)	87 (8.9 / 64)		95 (9.7 / 70)
	M14 × 1.5	96 (9.8 / 71)	116 (11.8 / 85)	133 (13.6 / 98)		142 (14.5 / 105)
	M16 × 1.5	130 (13.3 / 96)	170 (17.3 / 125)	193 (19.7 / 143)		200 (20.4 / 148)
	M18 × 1.5	188 (19.2 / 139)	244 (24.9 / 180)	278 (28.3 / 205)		287 (29.3 / 212)
	M20 × 1.5	258 (26.3 / 190)	337 (34.4 / 249)	385 (39.3 / 284)		396 (40.4 / 292)
	M22 × 1.5	332 (33.9 / 245)	453 (46.3 / 335)	517 (52.7 / 381)		530 (54.1 / 391)
	M24 × 2.0	449 (45.8 / 331)	570 (58.2 / 421)	651 (66.3 / 480)		692 (70.6 / 511)
	* M10 × 1.5	26 (2.7 / 20)	36 (3.7 / 27)	41 (4.2 / 30)		48 (4.9 / 35)
	* M12 × 1.75	57 (5.8 / 42)	71 (7.2 / 52)	80 (8.2 / 59)		89 (9.1 / 66)
	* M14 × 2.0	89 (9.1 / 66)	110 (11.2 / 81)	125 (12.7 / 92)		133 (13.6 / 98)
	* M16 × 2.0	124 (12.7 / 92)	162 (16.5 / 119)	185 (18.9 / 137)		191 (19.5 / 141)
Flange Bolt	M6 × 1.0	7 (0.7 / 61 lb·in)	8 (0.8 / 69 lb·in)	9 (0.9 / 78 lb·in)		–
	M8 × 1.25	15 (1.5 / 11)	19 (1.9 / 14)	22 (2.2 / 16)		26 (2.7 / 20)
	M10 × 1.25	31 (3.2 / 23)	41 (4.2 / 30)	47 (4.8 / 35)		56 (5.7 / 41)
	M12 × 1.25	69 (7.0 / 51)	85 (8.7 / 63)	97 (9.9 / 72)		106 (10.8 / 78)
	M14 × 1.5	104 (10.6 / 77)	126 (12.8 / 93)	144 (14.6 / 106)		154 (15.7 / 114)
	M16 × 1.5	145 (14.8 / 127)	188 (19.2 / 139)	214 (21.8 / 158)		221 (22.5 / 163)
	M18 × 1.5	–	–	–		–
	M20 × 1.5	–	–	–		–
	M22 × 1.5	–	–	–		–
	M24 × 2.0	–	–	–		–
	* M10 × 1.5	30 (3.1 / 22)	40 (4.1 / 30)	46 (4.7 / 34)		54 (5.5 / 40)
	* M12 × 1.75	64 (6.5 / 47)	78 (8.0 / 58)	89 (9.1 / 66)		99 (10.1 / 73)
	* M14 × 2.0	97 (9.9 / 72)	119 (12.1 / 88)	135 (13.8 / 99.7)		144 (14.7 / 107)
	* M16 × 2.0	137 (14.0 / 101)	178 (18.2 / 132)	203 (20.7 / 150)		210 (21.5 / 155)

The asterisk * indicates that the bolts are used for female-threaded parts that are made of soft materials such as casting, etc.

FLARE NUTS

N·m (kg·m / lb·ft)

Pipe diameter mm (in)	Torque	Pipe diameter mm (in)	Torque
4.76 (0.187)	16 (1.6 / 12)	10.00 (0.394)	54 (5.5 / 40)
6.35 (0.250)	26 (2.7 / 20)	12.00 (0.472)	88 (9.0 / 65)
8.00 (0.315)	44 (4.5 / 33)	15.00 (0.591)	106 (10.8 / 78)

SPECIAL PARTS FIXING NUTS AND BOLTS

kg·m(lb.ft/N·m)

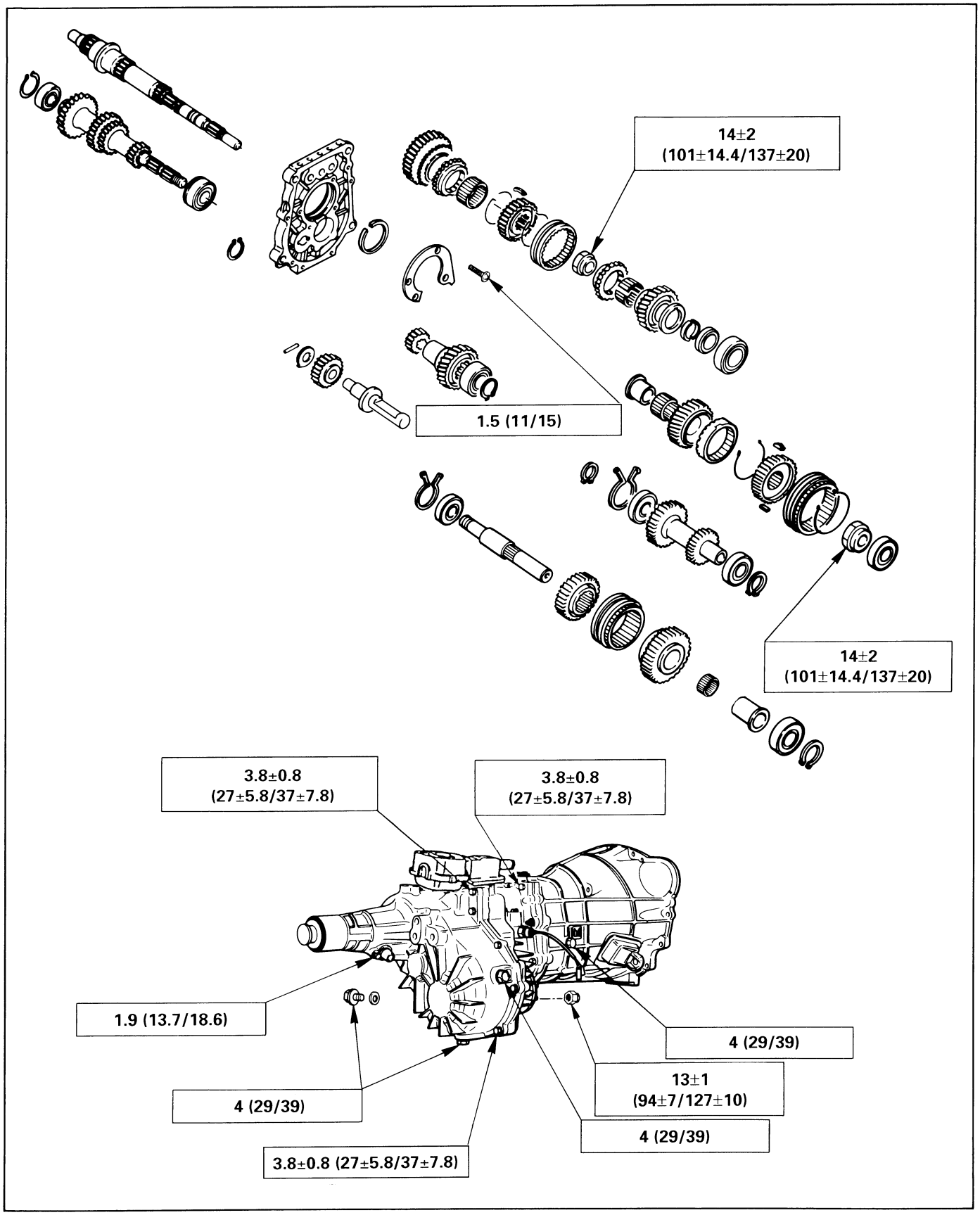

RECOMMENDED LIQUID GASKET

Type	Brand Name	Manufacturer	Remarks
RTV* Silicon Base	ThreeBond 1207B ThreeBond 1207C	Three Bond Three Bond	For Engine Repairs
	ThreeBond 1215 ThreeBond 1281	Three Bond Three Bond	For Axle Case and Transmission Repairs
Water Base	ThreeBond 1141E	Three Bond	For Engine Repairs
Solvent	ThreeBond 1104 BelcoBond 4 BelcoBond 401 BelcoBond 402	Three Bond Isuzu Isuzu Isuzu	For Engine Repairs
Anerobic	LOCTITE 515 LOCTITE 518	Loctite Loctite	All

* RTV : Room Temperature Vulcanizer

Note:

1. **It is very important that the liquid gaskets listed above or their exact equivalent be used on the vehicle.**
2. **Be careful to use the specified amount of liquid gasket.**
   Follow the manufacturer's instructions at all times.
3. **Be absolutely sure to remove all lubricants and moisture from the connecting surfaces before applying the liquid gasket.**
   The connecting surfaces must be perfectly dry.
4. **LOCTITE 515 and LOCTITE 518 harden upon contact with a metal surface.**
   Do not apply LOCTITE 515 or LOCTITE 518 between two metal surfaces having a clearance of greater than 0.25 mm (0.01 in). Poor adhesion will result.

REMOVAL AND INSTALLATION

Read this Section carefully before performing any removal and installation procedure. This Section gives you important points as well as the order of operation. Be sure that you understand everything in this Section before you begin.

Important Operations – Removal

Battery Cable

Disconnect the negative (–) cable from the battery terminal.

Engine Hood

Apply setting marks to the engine hood and the engine hood hinges before removing the engine hood.

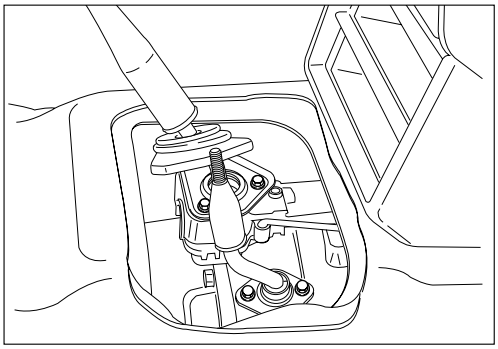

235RT004

Gear Shift Lever and Transfer Change Lever

1. Place the gear shift lever in the neutral position.
2. Place the transfer change lever in the “H” position.
3. Remove the gear shift lever knob and transfer change lever konb.
4. Remove the center console assembly and front console assembly.
5. Remove the grommet and dust cover.
6. Remove the gear shift lever cover bolt.
7. Remove the gear shift lever.
8. Remove the transfer change lever retainer bolts.
9. Remove the transfer change lever and O-ring.

Note:

Cover the shift lever and change lever holes to prevent the entry of foreign material into the transmission.

Lifting the Vehicle

1. Jack up the vehicle.
2. Place chassis stands at the front and the rear of the vehicle.

Transfer Case Protector (Except 00 Year or Subsequent ones)

Remove the transfer case protector from the transmission mounting member and the side member.

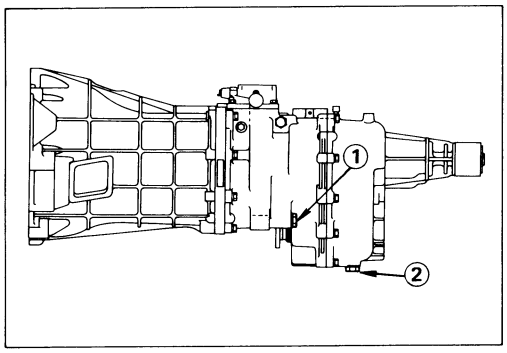

Transmission and Transfer Case Oil Draining

1. Remove the transmission oil drain plug ①.
2. Remove the transfer case oil drain plug ②.
3. Replace the drain plug(s) after draining the oil.

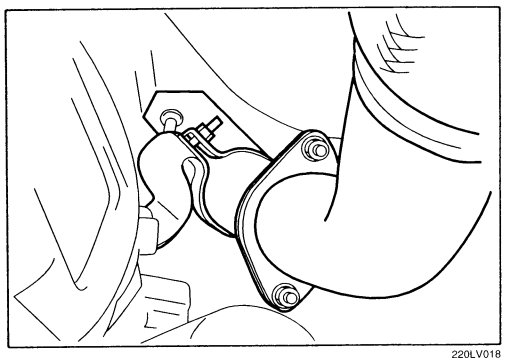

Exhaust Pipe

1. Remove the exhaust pipe bracket from the transmission case.
2. Remove the front exhaust pipe and 2nd-3rd exhaust pipe.

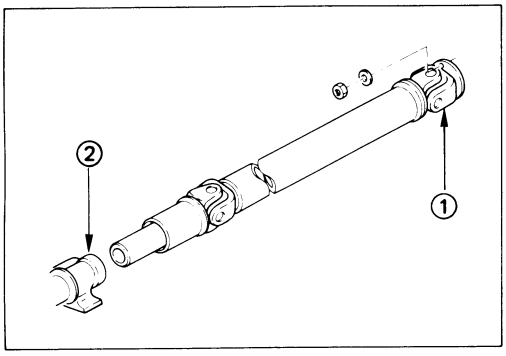

Rear Propeller Shaft (Single Shaft Type)

1. Remove the propeller shaft flange yoke at the drive pinion side ①.
2. Remove the propeller shaft from the transmission main shaft spline ②.

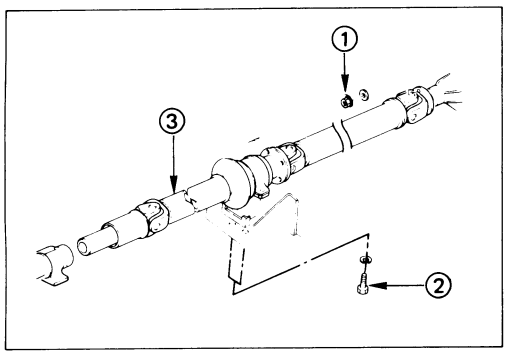

Rear Propeller Shaft (Dual Shaft Type)

1. Apply setting marks to the 2nd propeller shaft flange yoke.
   This will prevent mispositioning during the installation procedure.
2. Remove the 2nd propeller shaft flange yoke bolts at the drive pinion side ①.
3. Remove the center bearing retainer bolts ②.
4. Remove the 1st propeller shaft ③ with the center bearing and the 2nd propeller shaft.
   Pull the 1st propeller shaft toward the rear of the vehicle until the spline yoke is free of the transmission main shaft.

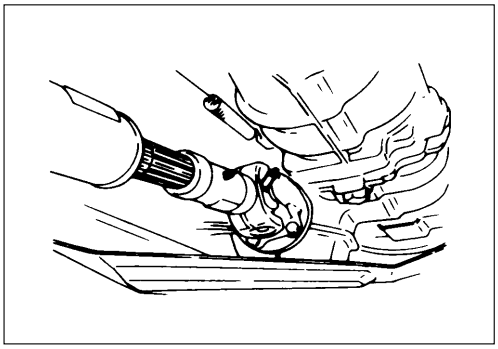

Front Propeller Shaft

Remove the splined yoke flange bolt at the transfer case side.

Do not allow the splined yoke to fall away from the front propeller shaft.

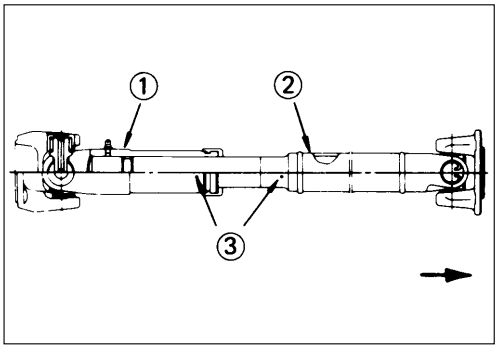

If the splined yoke should fall away from the front propeller shaft, align the setting marks ③ on the splined yoke ① and the propeller shaft ② to reassemble the two parts.

The setting marks ③ are punched circles approximately 3 mm (0.12 in) in diameter.

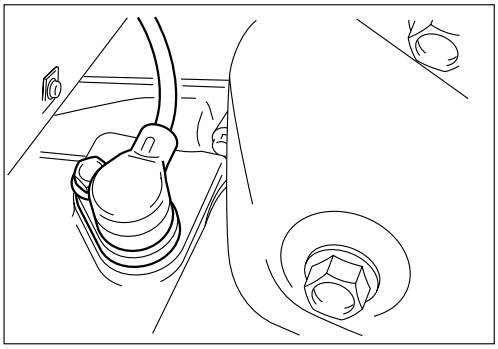

220R200001

TDC Sensor (4JA1TC Model)

Disconnect the TDC sensor from the transmission housing.

Harness Connector

Disconnect the 4WD switch connectors, back up light switch connector and the speedometer sensor connector.

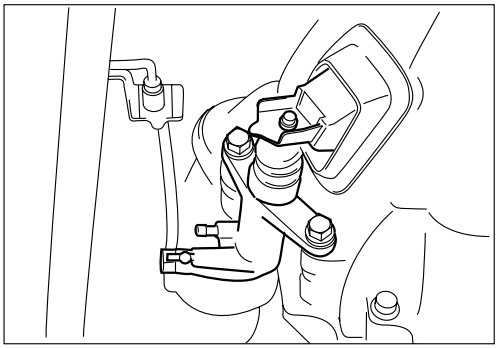

220LV019

Slave Cylinder

Remove the slave cylinder from the transmission case.

Engine LIfting Hanger

1. Attach the engine lifting hanger to the front portion of the engine.
2. Attach the lifting wire to both ends of the engine lifting hange.

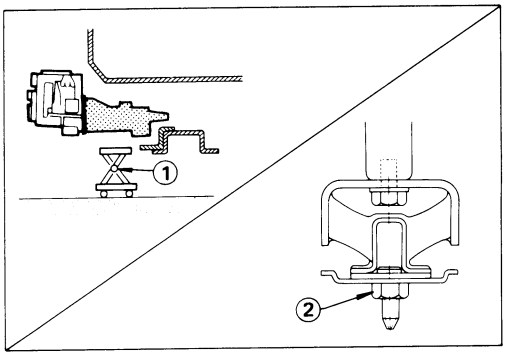

Engine Rear Mounting and Mounting Member

1. Support the transmission with a transmission jack ①.
2. Remove the engine rear mounting nuts ②.
3. Remove the engine rear mounting bolts.
4. Loosen the mounting member bolts.
5. Remove the mounting member from the sidemembers.
6. Remove the engine rear mounting.

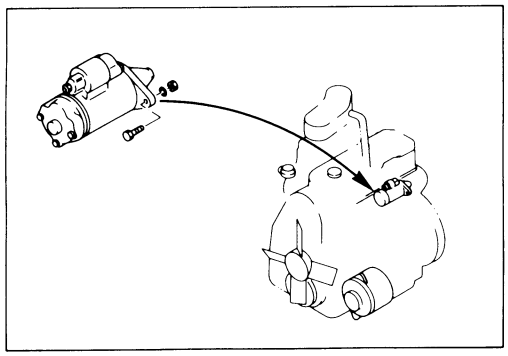

Starter Motor

Remove the starter motor from the engine rear plate.

Flywheel Under Cover (6VD1)

Remove flywheel under cover bolts.

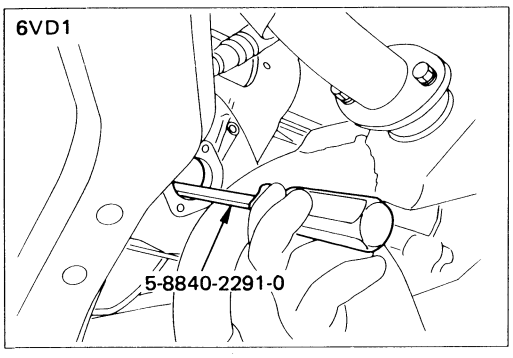

Transmission with Transfer

1. Use the remover for disconnect the clutch release bearing from the clutch pressure plate (6VD1).

   Clutch release bearing remover: 5-8840-2291-0 (J-39207)

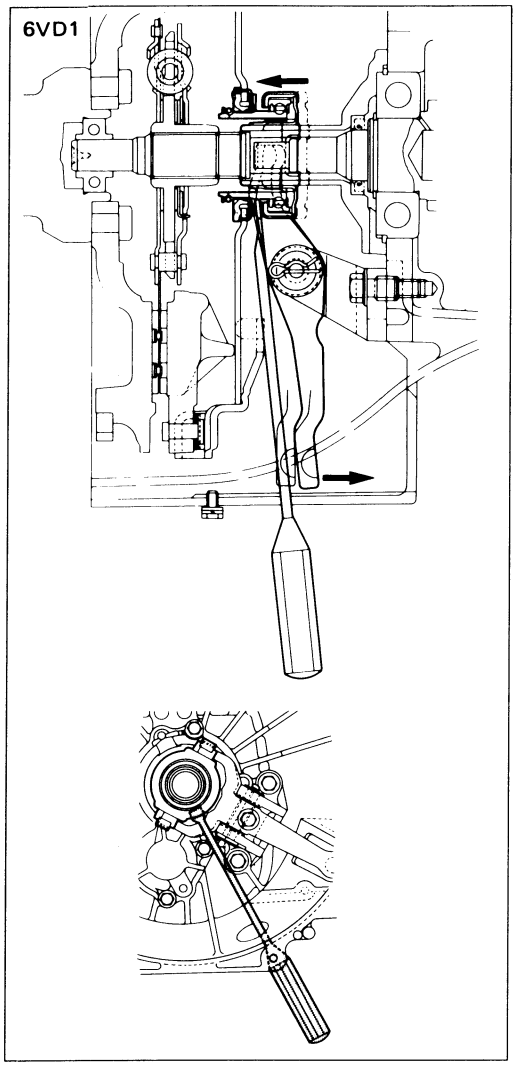

Release Bearing Disconnection (6VD1)

① Pull the shift fork toward the transmission to press the clutch release bearing against the clutch.
② Insert the clutch release bearing remover between the wedge collar and the release bearing.
③ Turn the remover to separate the release bearing.

NOTE:
Be sure not to insert the remover between the wedge collar and the clutch.

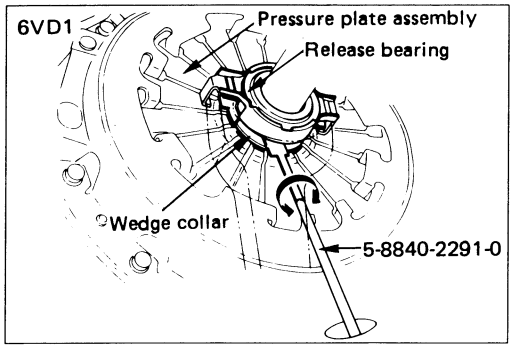

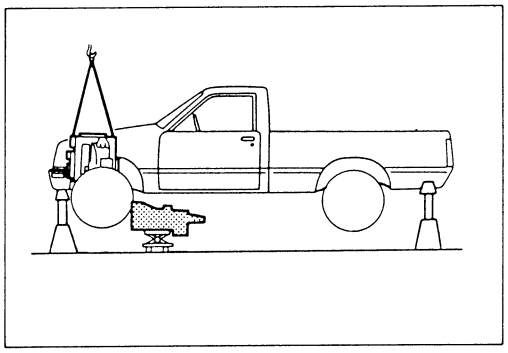

2. Remove the transmission nuts and bolts from the engine rear plate.
3. Carefully pull the transmission with the transmission jack toward the rear of the vehicle.
4. Operate the transmission jack to slowly lower the transmission.

Important Operations — Installation

Follow the removal procedure in the reverse order to perform the installation procedure. Pay careful attention to the important points during the installation procedure.

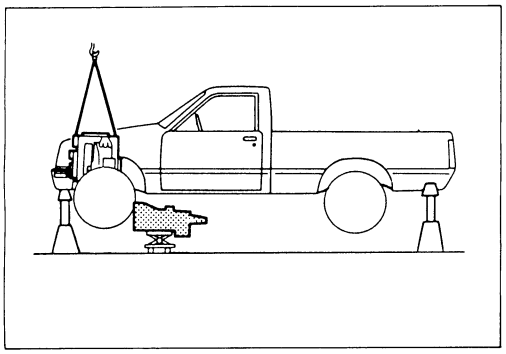

Transmission with Transfer

1. Apply a thin coat of molybdenum disulfide grease to the top gear shaft spline.
2. Place the transmission on a transmission jack.
3. Carefully move the transmission jack and transmission into position behind the engine.

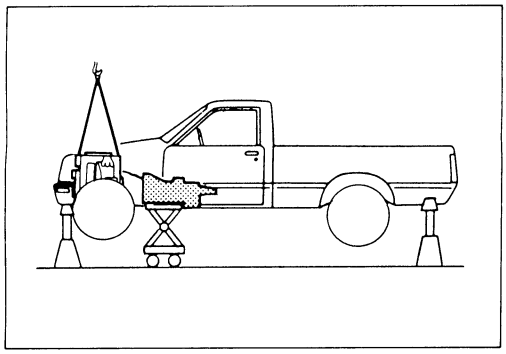

4. Slowly raise the transmission jack until the front of the transmission is aligned with the rear of the engine.

   The slope of the engine and the transmission must be the same.

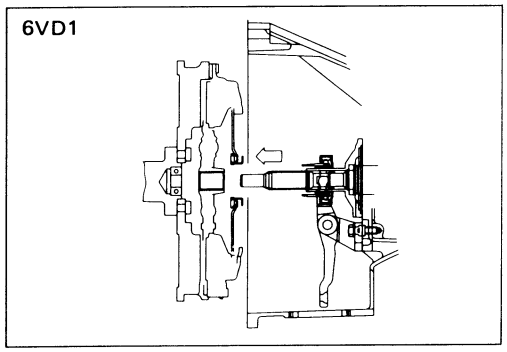

5. Align the top gear shaft spline with the clutch driven plate spline.
6. Install the transmission to the engine.

   Tighten the transmission nuts and bolts to the specified torque.

Transmission Nut and Bolt Torque	kg·m(lb·ft/N·m)
M10: 4.1 ± 1.0 (30 ± 7.2/40 ± 10)	
M12: 8.0 ± 1.6 (58 ± 12/78 ± 16)	

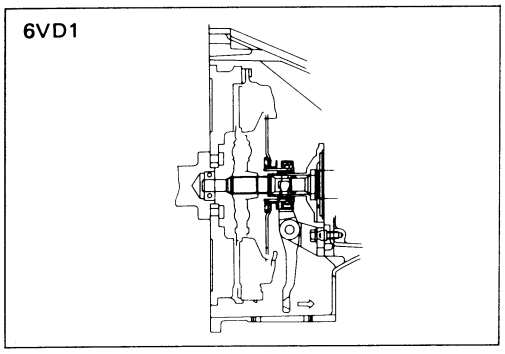

7. Apply a force of 59–78N (6–8 kg / 13.2–17.6 lb) to the tip of the shift fork in the direction of the transmission to engage the clutch pressure plate and release bearing (6VD1).

NOTE (6VD1):
A click sound is heard when the release bearing and the tip of the diaphragm spring engage each other.
Check to see if they are securely engaged by pushing the tip of the shift fork toward the engine while applying a force of about 25N (2.5 kg / 5.5 lb). If the shift fork will not move, then they are securely engaged.

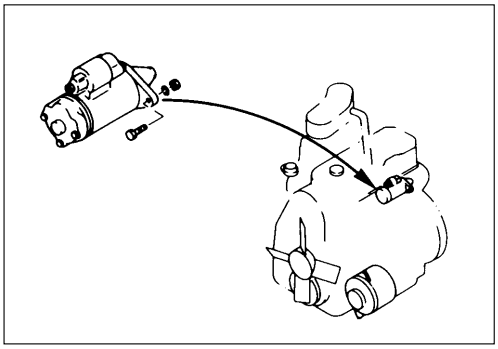

Starter Motor

1. Install the starter motor to the engine rear plate.

Starter Motor Bolt Torque	kg·m (lb·ft/N·m)
8.0 ± 1.6 (58 ± 12/78 ± 16)	

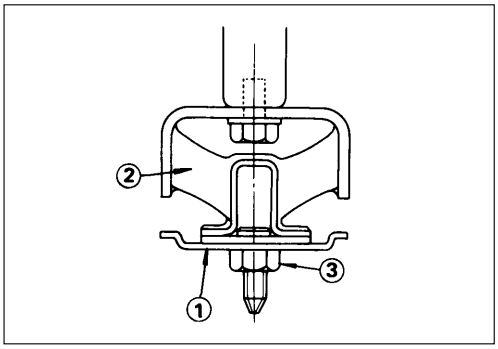

Engine Rear Mounting and Mounting Member

1. Install the engine rear mounting to the transmission.

Rear Mounting Bolt Torque	kg·m (lb·ft/N·m)
4.2 ± 0.5 (30 ± 3.6/41 ± 4.9)	

2. Install the mounting member ① to the mounting rubber ②.

Mounting Rubber Nut Torque	kg·m (lb·ft/N·m)
5.1 ± 0.6 (37 ± 4.3/50 ± 6)	

3. Install the mounting member to the sidemembers.

Mounting Member Bolt Torque	kg·m (lb·ft/N·m)
5.1 ± 0.6 (37 ± 4.3/50 ± 6)	

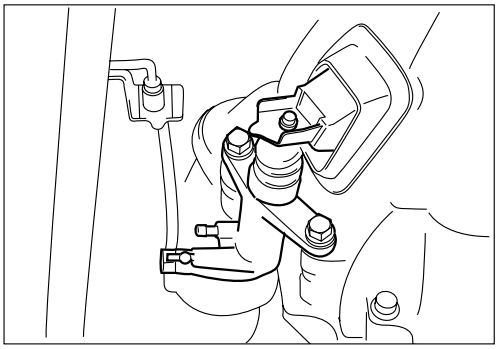

220LV019

Slave Cylinder

Install the slave cylinder to the transmission case.

Slave Cylinder Bolt Torque	kg·m (lb·ft/N·m)
4.1 ± 1.0 (30 ± 7.2/40 ± 10)	

Harness Connector

Disconnect the 4WD switch connectors back up light switch connector and speedometer sensor connector.

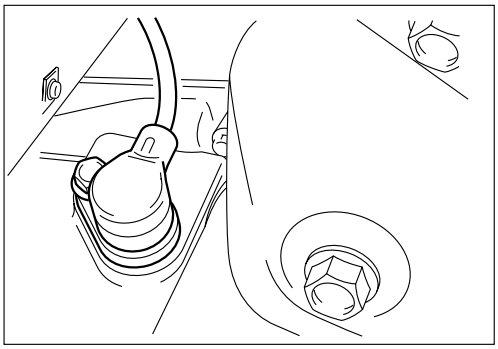

220R200001

TDC Sensor (4JA1TC Model)

Connect the TDC sensor from the transmission housing.

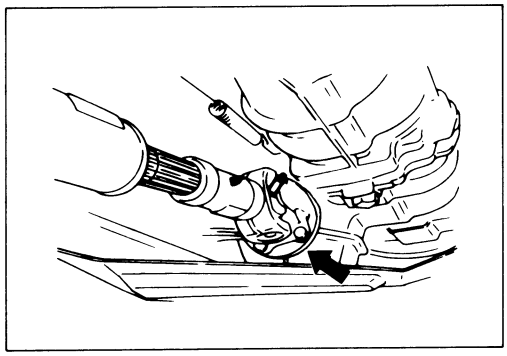

Front Propeller Shaft

1. Connect the propeller shaft flange yoke to the matching flange.
2. Tighten the propeller shaft flange yoke bolt to the specified torque.

Propeller Shaft Flange Yoke Bolt Torque kg·m (lb·ft/N·m)
6.4 ± 0.4 (46.3 ± 2.9/62.7 ± 3.9)

Note:

If the splined yoke and the front propeller shaft have accidentally separated, align their setting marks and recouple them.
Refer to "FRONT PROPELLER SHAFT REMOVAL".

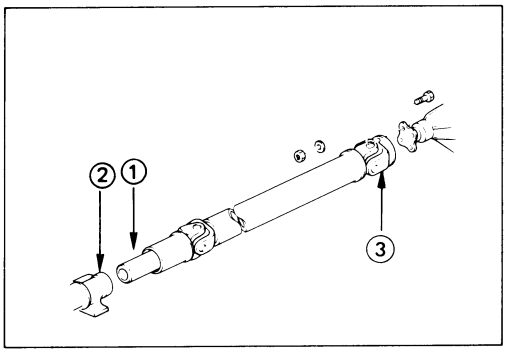

Rear Propeller Shaft (Single Shaft Type)

1. Insert the splined yoke ① with the propeller shaft into the transmission main shaft spline ②.
2. Install the propeller shaft flange yoke ③ to the drive pinion side.
3. Tighten the propeller shaft flange yoke bolt to the specified torque.

Propeller Shaft Flange Yoke Bolt Torque kg·m (lb·ft/N·m)
6.4 ± 0.4 (46.3 ± 2.9/62.7 ± 3.9)

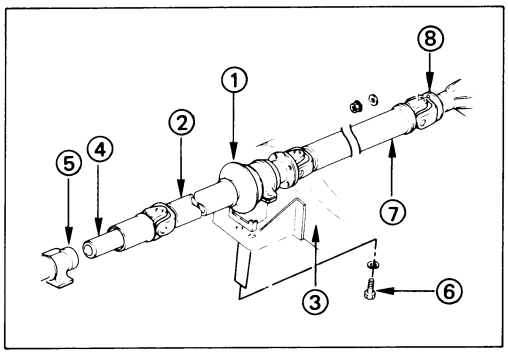

Rear Propeller Shaft (Dual Shaft Type)

1. Place the center bearing ① together with the 1st propeller shaft ② and 2nd propeller shaft ⑦ on the No.4 crossmember ③.
2. Insert the splined yoke ④ into the transmission main shaft spline ⑤.
3. Tighten the center bearing retainer bolts ⑥ to the specified torque.

Center Bearing Retainer Bolt Torque kg·m(lb·ft/N·m)
6.2 ± 1.2 (44.8 ± 8.7/60.8 ± 11.8)

4. Connect the 2nd propeller shaft ⑦ and drive pinion side ⑧.

   Be sure to align the setting marks applied at disassembly.

5. Tighten the coupling bolts to the specified torque.

Propeller Shaft Flange Yoke Bolt Torque kg·m(lb·ft/N·m)
6.4 ± 0.4 (46.3 ± 2.9/62.7 ± 3.9)

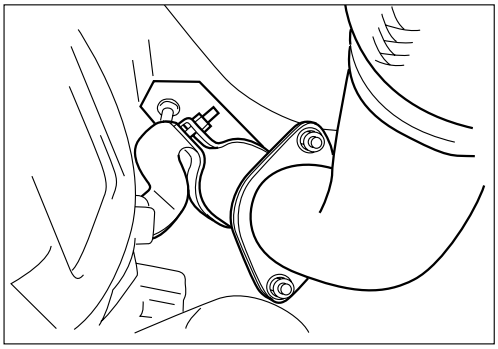

220LV018

Exhaust Pipe

1. Connect the front exhaust pipe and 2nd-3rd exhaust pipe.
2. Install the exhaust pipe bracket to the transmission case.

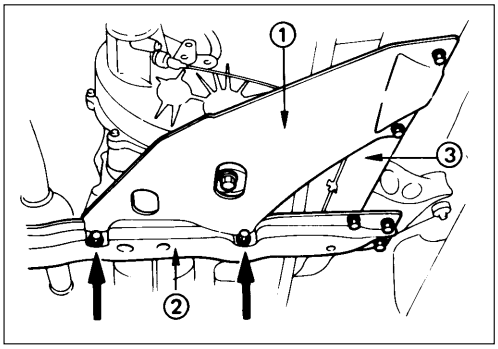

Transfer Case Protector (Except 00 Year or Subsequent ones)

1. Install the transfer case protector ① to the mounting member ② and the sidemebers ③.
2. Tighten the transfer case protector bolts to the specified torque.

Transfer Case Protector Bolt Torque	kg·m (lb·ft/N·m)
3.7 ± 1.0 (26.8 ± 7.2/36.3 ± 9.8)	

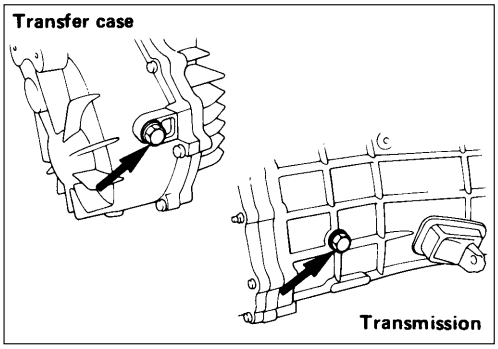

Gear Shift Lever and Transfer Change Lever

1. Replenish the transmission case and the transfer case with the specified engine oil.

Transmission and Transfer Case Oil	lit (US/UK qt.)
Transmission Case	2.95 (3.12/2.6)
Transfer Case	1.45 (1.53/1.28)

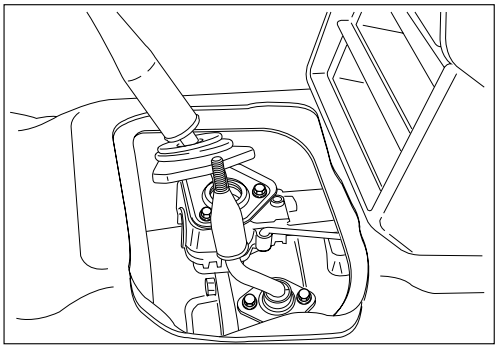

235RT004

2. Install the gear shift lever to the gear control box.

Shift Lever Cover Bolt Torque	kg·m (lb·ft/N·m)
2.0 ± 0.2 (14.5 ± 1.5/19.6 ± 1.96)	

3. Install the dust cover.
4. Insert the transfer change lever to the transfer case.

Change Lever Retainer Bolt Torque	kg·m (lb·ft/N·m)
2.0 ± 0.2 (14.5 ± 1.5/19.6 ± 1.96)	

5. Install the grommet.
6. Install the front console assembly and center console assembly.
7. Install the gear shift lever and the transfer change lever knobs.

Lowering the Vehicle

1. Place a jack beneath the vehicle.
2. Raise the jack to remove the chassis stands.
3. Lower the vehicle to the ground.

Engine Hood

Align the setting marks (applied at removal) on the engine hood and the engine hood hinges to install the engine hood.

Battery Cable

Connect the negative (–) cable to the battery terminal.

DISASSEMBLY

EXTERAL COMPONENTS

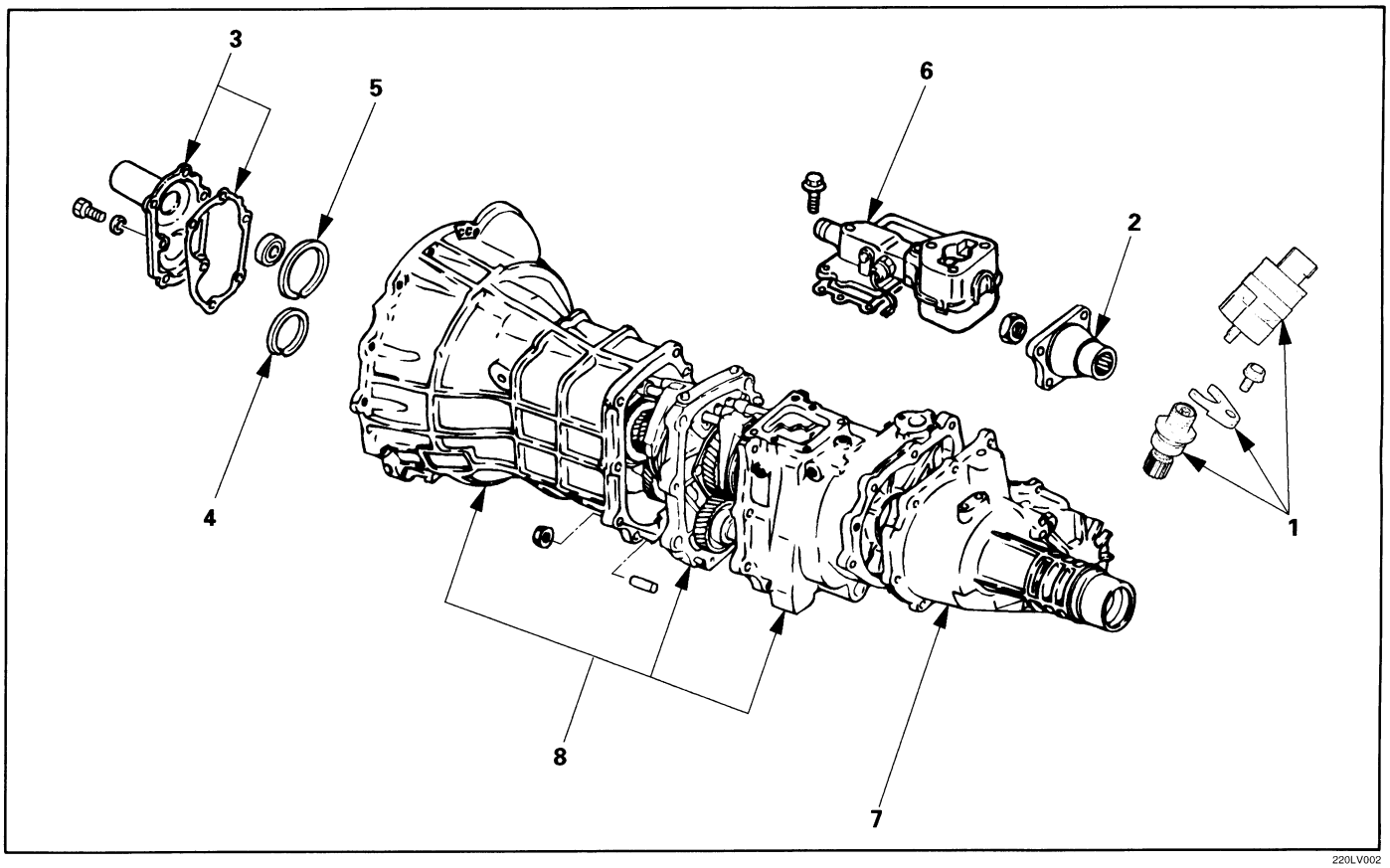

Disassembly Steps

- ▲ 1. Speedometer sensor and speedometer driven gear
- ▲ 2. Transfer flange
- ▲ 3. Front cover with oil seal
- ▲ 4. Counter gear snap ring
- ▲ 5. Bearing snap ring
- 6. Gear control box assembly
- 7. Transfer rear case assmbly
- 8. Transmission and transfer case assembly

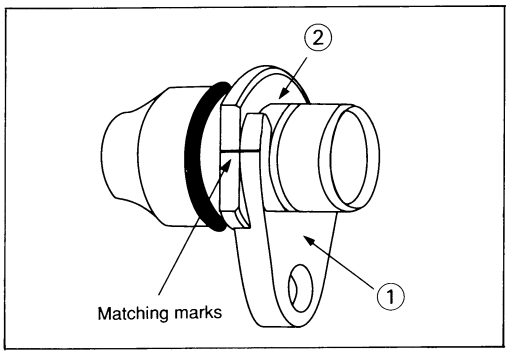

Important Operations

1. Speedometer Sensor and Speedometer Driven Gear

Mark the plate ① and bush ② alignment for reassembly.

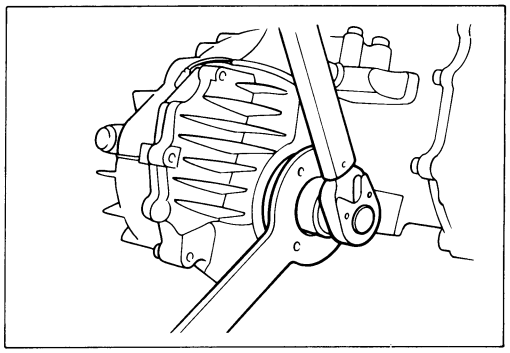

2. Transfer Flange

Use the transfer flange holder to remove the transfer flange.

Transfer Flange Holder: 5-8840-2157-0 (J-37221)

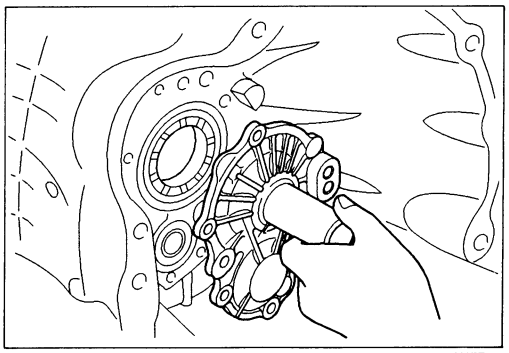

220RT017

3. Front Cover with Oil Seal

Remove the front cover with oil seal from the transmission case.

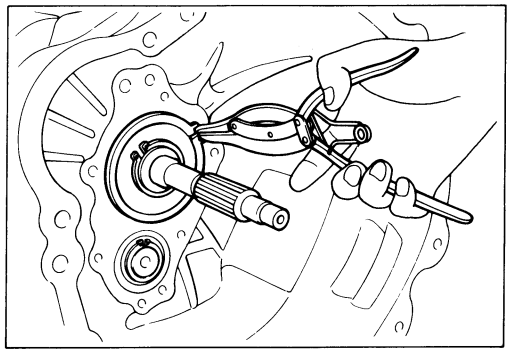

4. Counter Gear Snap Ring

5. Bearing Snap Ring

Use a pair of snap ring pliers to remove the snap ring.

MAJOR COMPONENT (TRANSFER CASE)

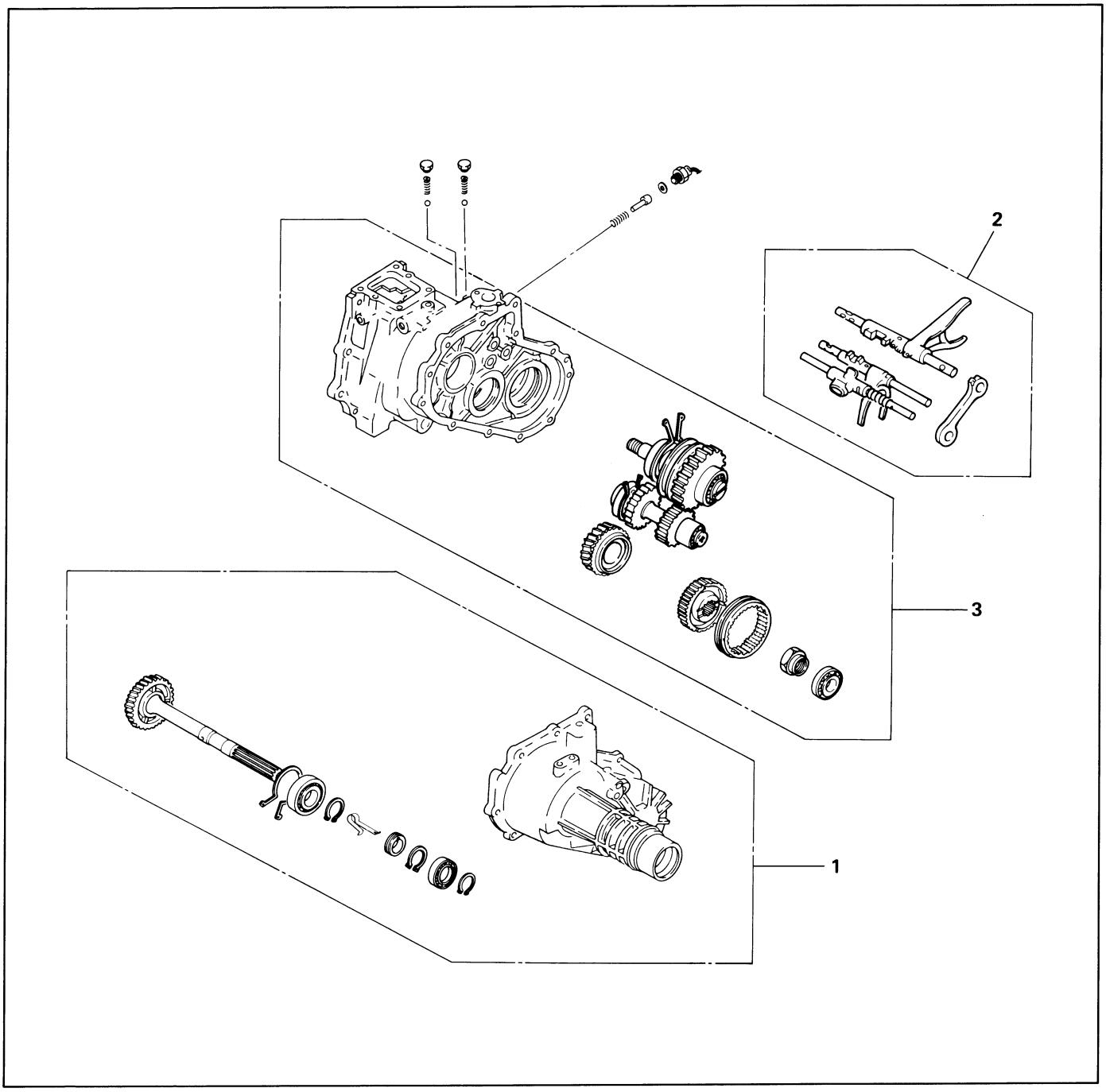

Disassembly Steps

1 Transfer rear case assembly
2. Shift fork assembly & interlock pin & detent assembly
3. Transfer case assembly

MAJOR COMPONENT (TRANSMISSION)

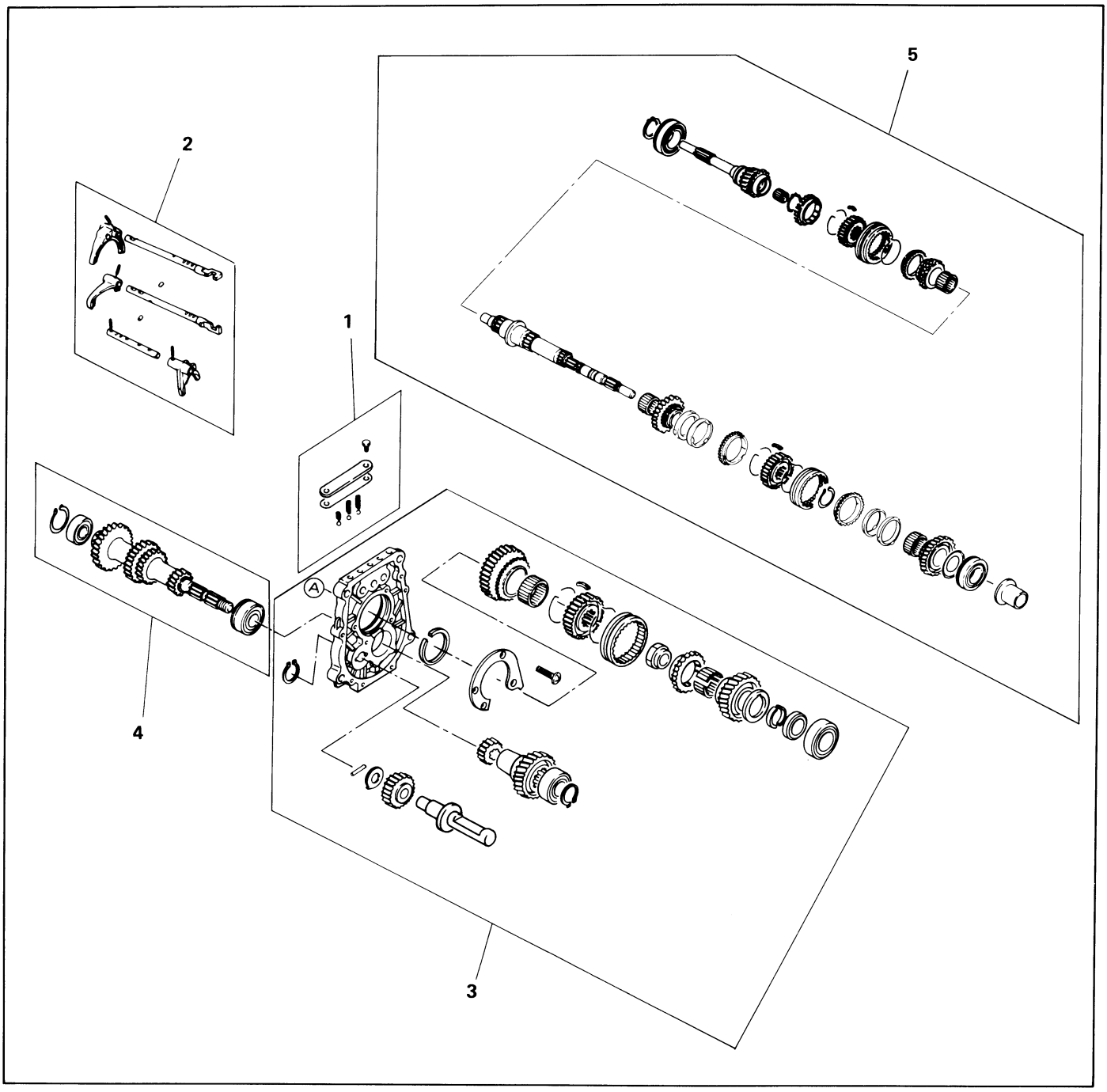

Disassembly Steps

1 Detent assembly
2. Shift fork assembly & interlock pin
3. Rev. and 5th gear assembly
4. Counter gear shaft assembly
5. Top & main gear shaft assembly

MINOR COMPONENT

TRANSFER REAR CASE ASSEMBLY

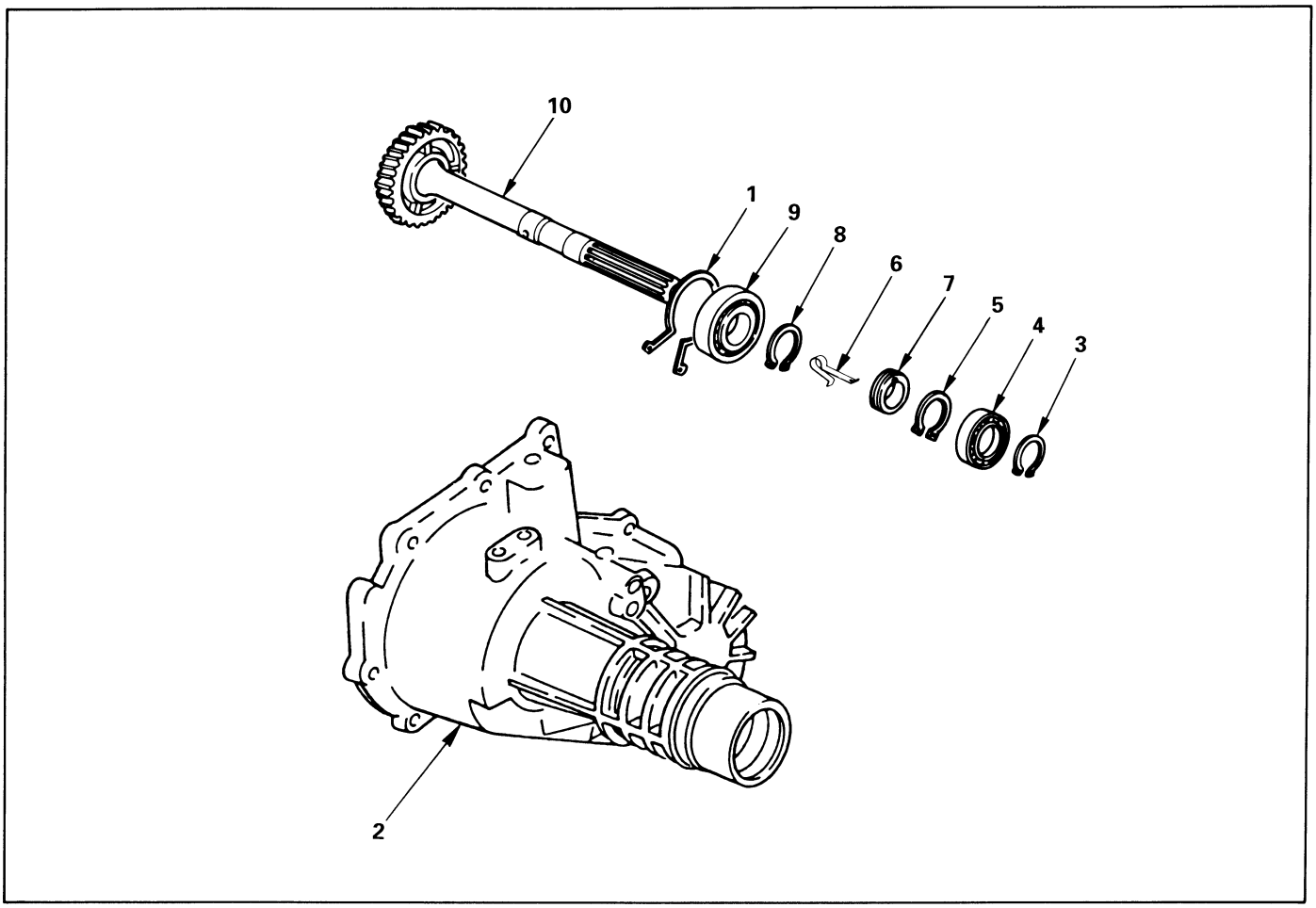

Disassembly Steps

▲ 1. Bearing snap ring
2. Transfer rear case
3. Bearing snap ring
▲ 4. Ball bearing
5. Bearing snap ring
6. Clip
7. Speedometer drive gear
8. Bearing snap ring
▲ 9. Ball bearing
10. Rear output shaft

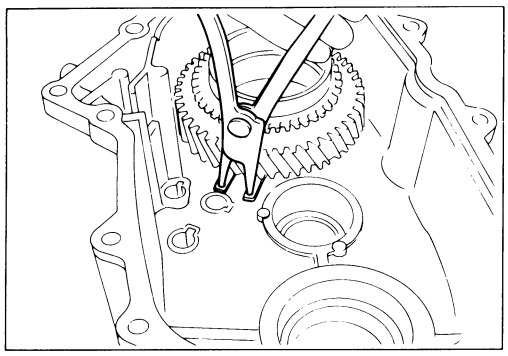

Important Operations

1. Bearing Snap Ring

Use a pair of snap ring pliers to remove the snap ring.

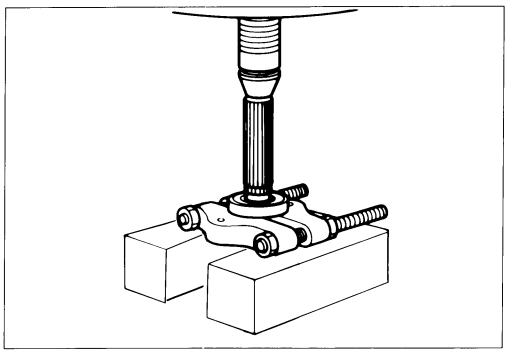

4. Ball Bearing

Use a bench press and the bearing remover to remove the ball bearing.

Bearing Remover: 5-8840-0015-0 (J-22912-01)

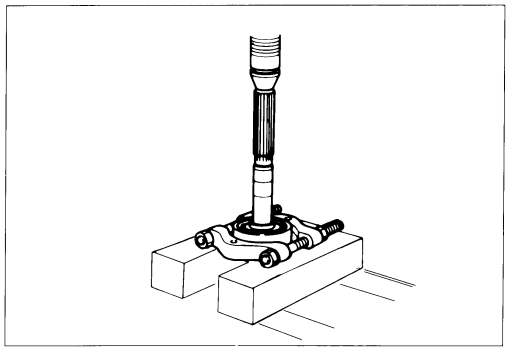

9. Ball Bearing

Use a bench press and the bearing remover to remove the ball bearing.

DETENT, SHIFT ARM ASSEMBLY AND INTERLOCK PIN

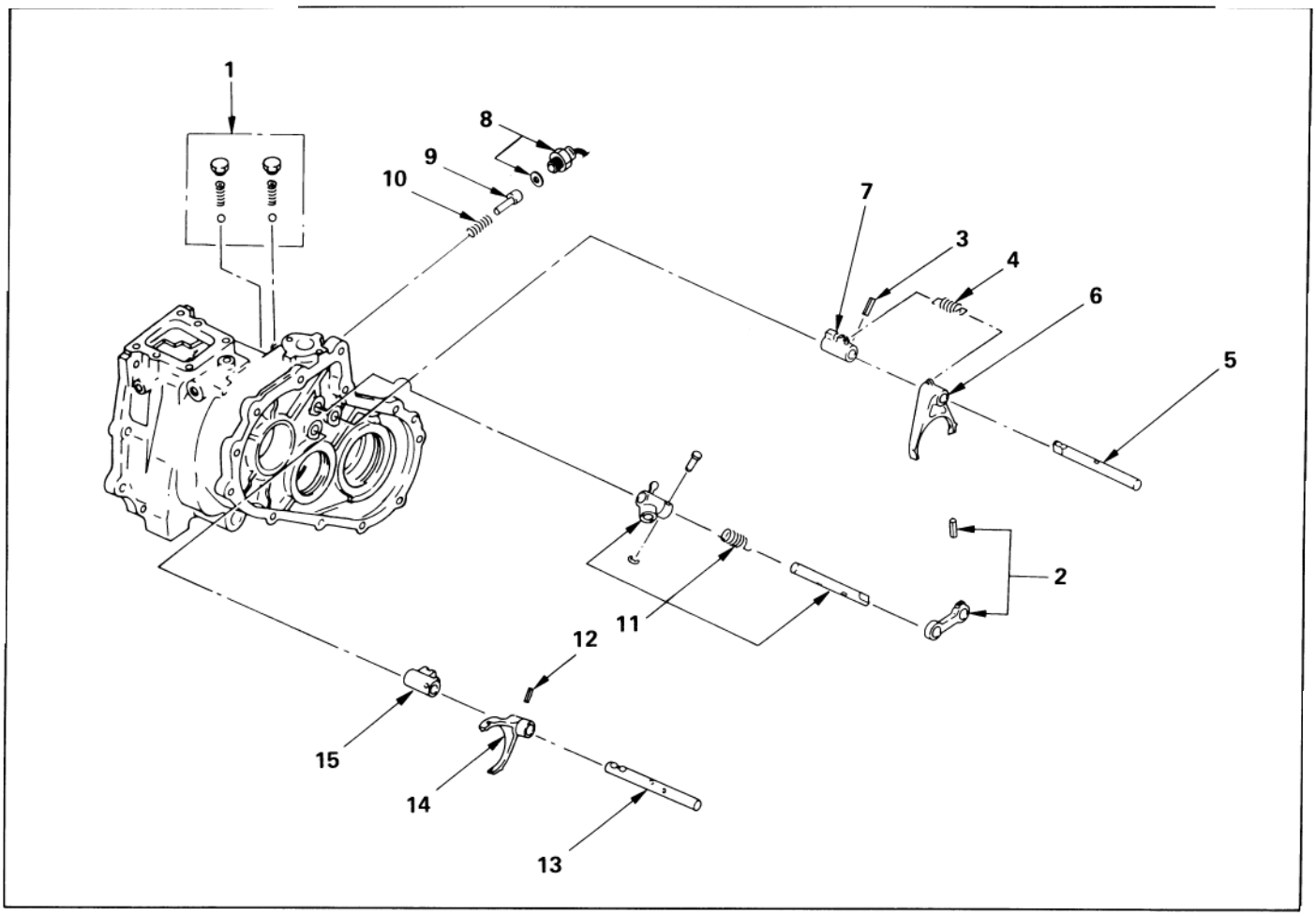

Disassembly Steps

1. Detent ball, spring and plug
▲ 2. Pin and bridge
3. Pin
4. Spring
▲ 5. 2WD-4WD shift rod
6. Shift arm
7. Shift block
8. 4WD indicator switch
▲ 9. Interlock pin
10. Spring
11. Select rod assembly
12. Pin
▲ 13. High-low shift rod
14. Shift arm
15. Shift block

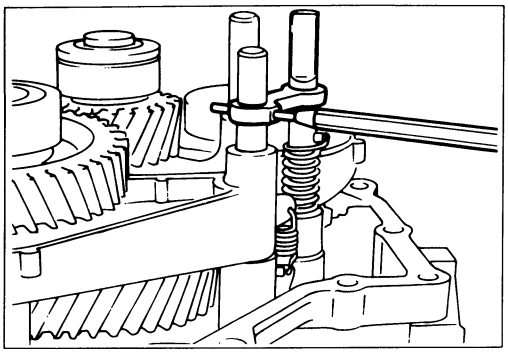

Important Operations

2. Bridge

Use a spring pin remover to remove the spring from the bridge.

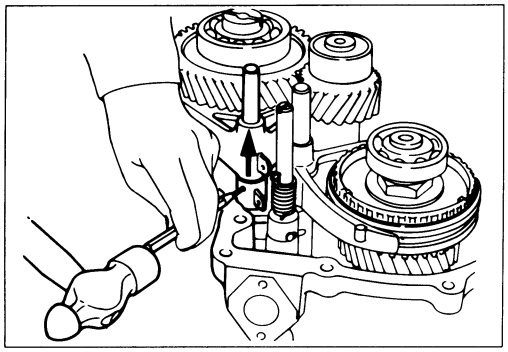

5. 2WD-4WD Shift Rod

1) Engage the 2nd-4th sleeve with the front output gear.
2) Remove the spring pin from the block.
3) Remove the shift rod.

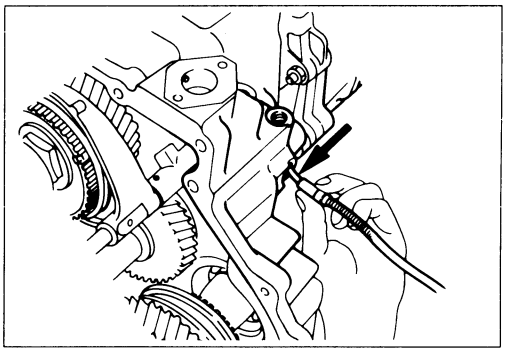

9. Interlock Pin

Use a magnetic tool to remove the interlock pin from the transfer case.

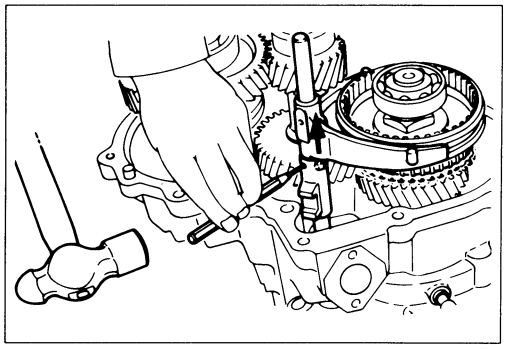

13. High-Low Shift Rod

Use a spring pin remover to remove the shift arm spring from the shift arm and the shift rod.

TRANSFER CASE ASSEMBLY AND MAINSHAFT GEAR

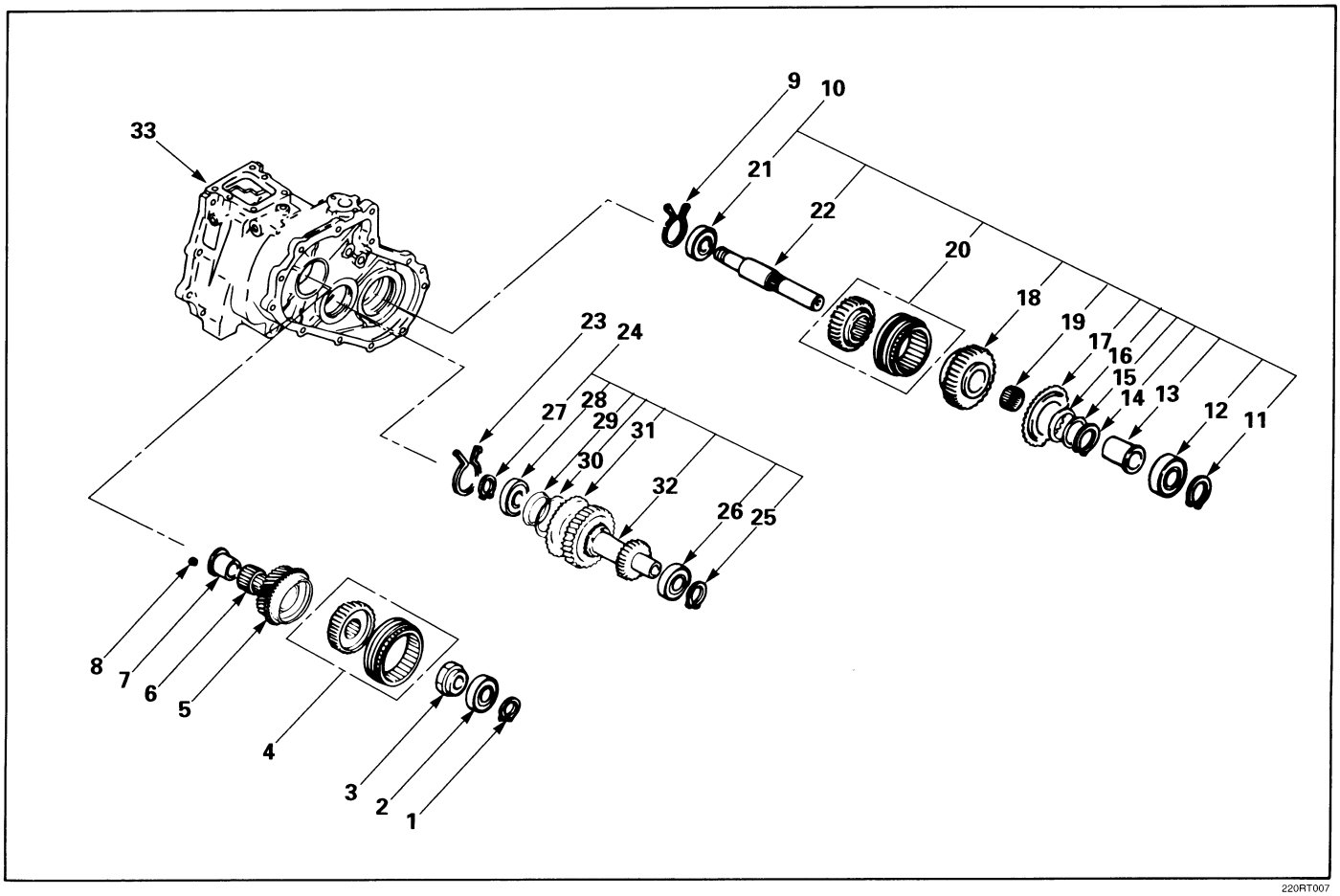

Disassembly Steps

1. Bearing snap ring
▲ 2. Mainshaft end ball bearing
▲ 3. Mainshaft end lock nut
▲ 4. High-low clutch hub and sleeve
▲ 5. Transfer input gear
6. Needle bearing
▲ 7. Bearing collar
8. Ball
▲ 9. Bearing snap ring
10. Front output gear assembly
11. Bearing snap ring
▲ 12. Ball bearing
13. Bearing collar
▲ 14. Anti-lash plate snap ring
15. Spacer
16. Belleville spring
17. Sub gear (Anti-lash plate)
18. Front output gear
19. Needle bearing
20. Clutch hub and sleeve
▲ 21. Ball bearing
22. Front output shaft
23. Bearing snap ring
24. Counter gear assembly
25. Bearing snap ring
▲ 26. Ball bearing
27. Bearing snap ring
▲ 28. Ball bearing
29. Spacer
30. Belleville spring
31. Sub gear (Anti-lash plate)
32. Counter gear
33. Transfer case

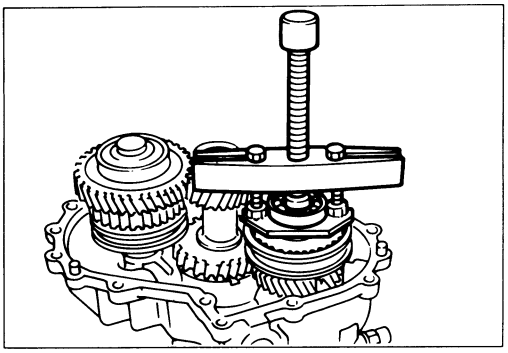

Important Operations

2. Mainshaft End Ball Bearing

Use a bearing remover to remove the ball bearing.

Remover : 5-8840-2155-0 (J-37217)
Puller : 5-8840-2027-0

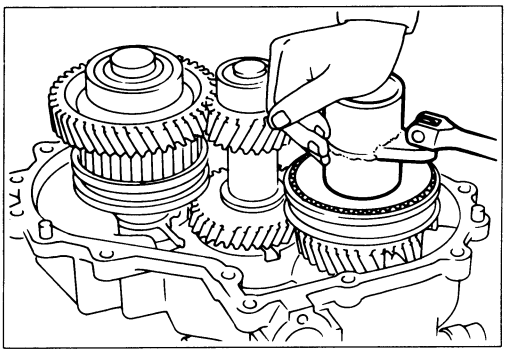

3. Mainshaft End Lock Nut

1) Engage the 3rd-top synchronizer with the 3rd gear.
2) Engage the low-2nd synchronizer with the low gear.
3) Use the lock nut wrench to remove the lock nut.
   Lock Nut Wrench: 5-8840-2156-0 (J-37219)

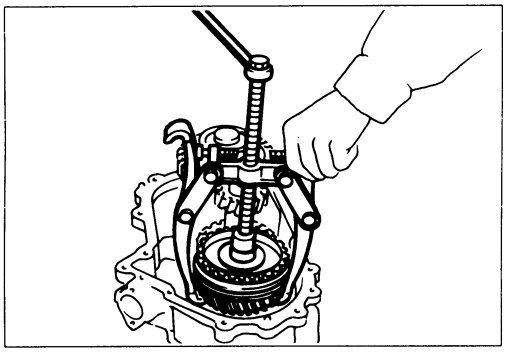

4. High-Low Clutch Hub and Sleeve

5. Transfer Input Gear

Use the universal puller to remove the high-low synchronizer assembly, the high-low block ring, and the transfer input gear.

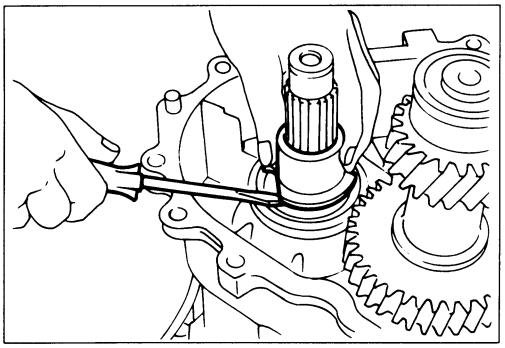

7. 8.Bearing Collar and Ball

Using screw driver to remove the bearing collar.

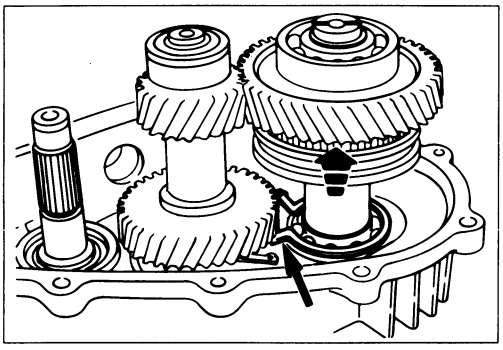

9. Bearing Snap Ring

Use a pair of snap ring pliers to expand the bearing snap ring.

Use a plastic hammer to tap the front output gear assembly free.

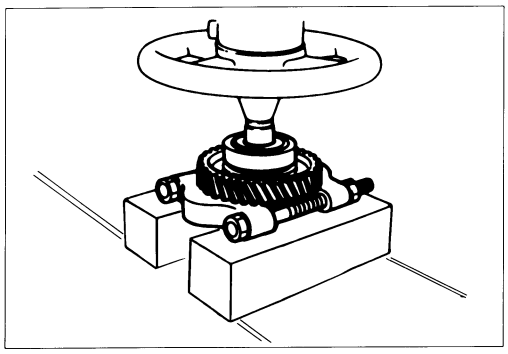

12. Ball Bearing

Use a bench press and the ball bearing remover to remove the ball bearing.

Bearing Remover: 5-8840-0015-0 (J-22912-01)

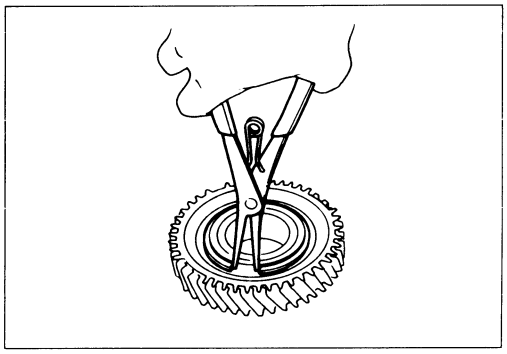

14. Anti-lash Plate Snap Ring

Use a pair of pliers to remove the snap ring.

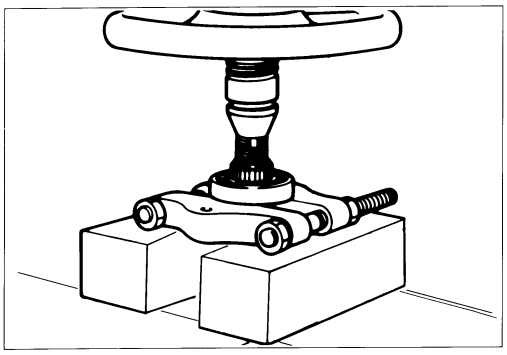

21. Ball Bearing

Use a bench press and the bearing remover to remove the ball bearing.

Bearing Remover: 5-8840-0015-0 (J-22912-01)

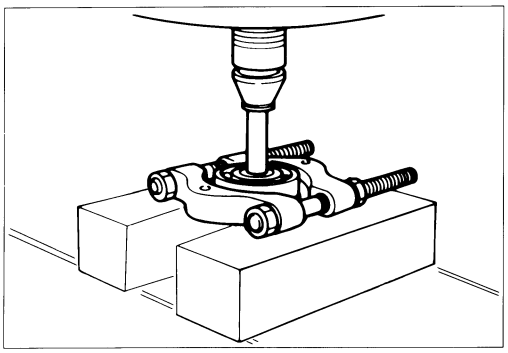

26. Ball Bearing
28. Ball Bearing

Use a bench press and the bearing remover to remove the ball bearings.

MINOR COMPONENT

INTERMEDIATE PLATE AND GEAR ASSEMBLY, DETENT, SHIFT ARM ASSEMBLY, AND INTERLOCK PIN

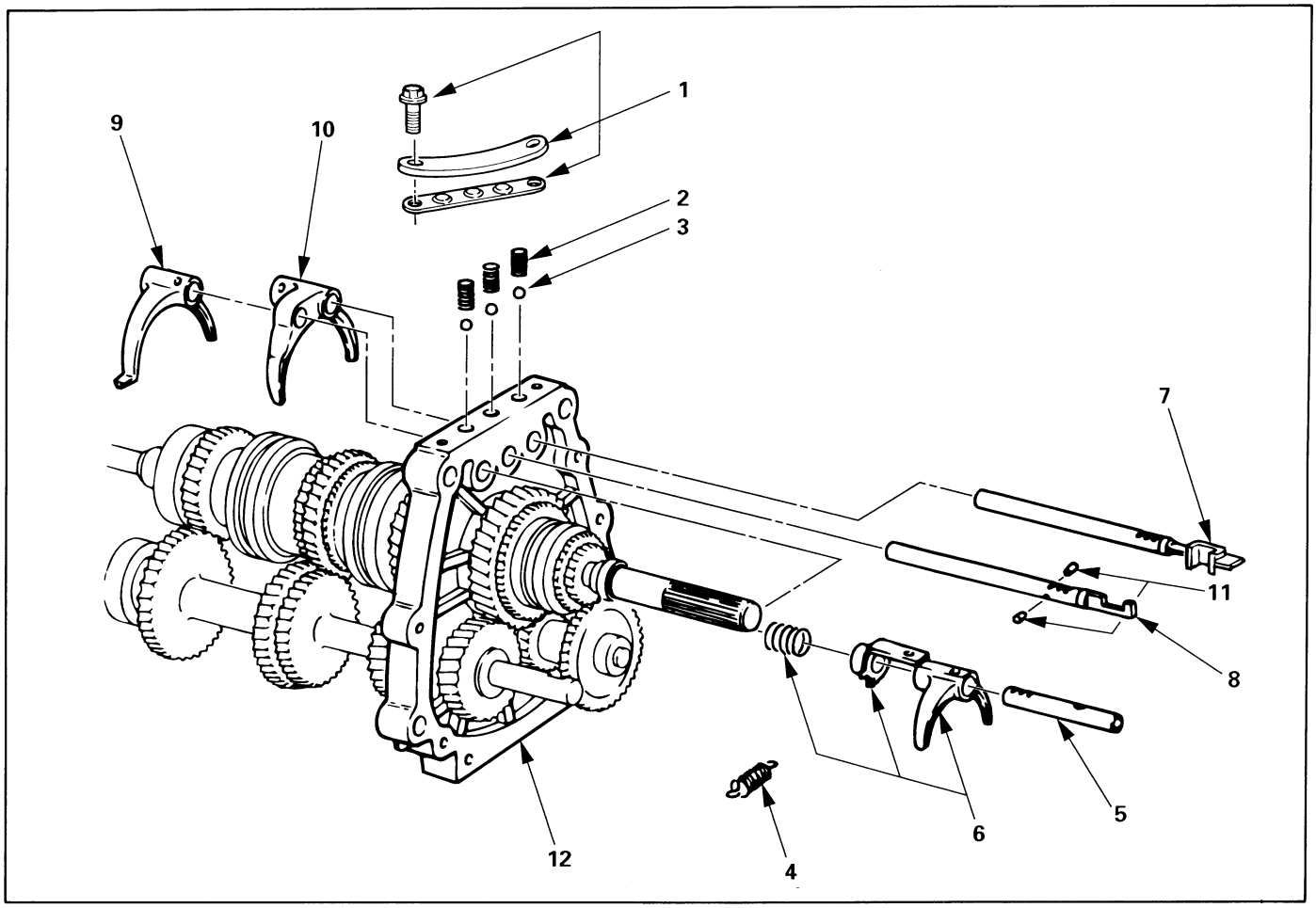

220RW071

Disassembly Steps

1. Detent spring plate and gasket
2. Detent spring
3. ▲ Detent ball
4. Spring
5. Rev-5th shift rod
6. Rev-5th shift arm and reverse inhibitor
7. 1st-2nd shift rod
8. ▲ 3rd-4th shift rod
9. ▲ 3rd-4th shift arm
10. ▲ 1st-2nd shift arm
11. ▲ Interlock pin
12. Intermediate plate and gear assembly

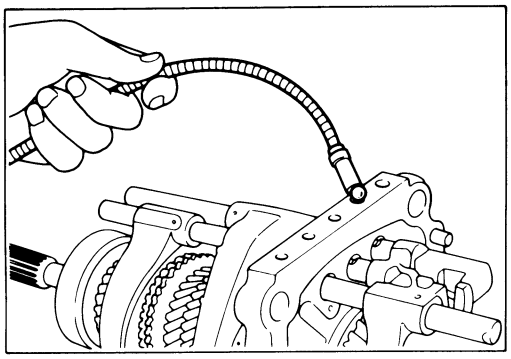

Important Operations

3. Detent Ball

Use a magnetic tool to remove the detent balls from the intermediate plate.

Take care not to lose the detent balls.

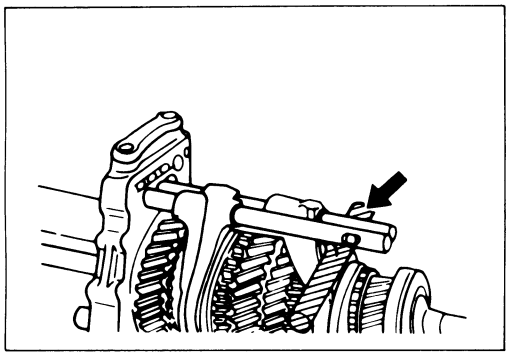

8. 3rd-4th Shift Rod

9. 3rd-4th Shift Arm

10. 1st-2nd Shift Arm

1) Hold a round bar against the shift arm end.

   This will prevent damage to other components.

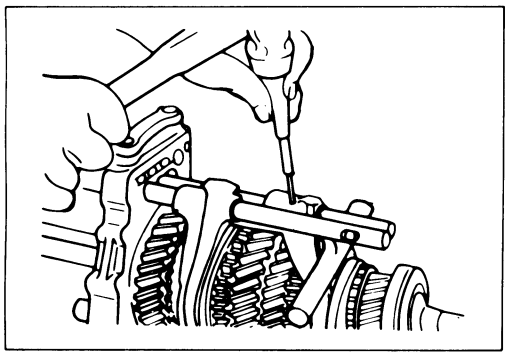

2) Use a spring pin remover to remove the shift arm spring pin from the shift arm and the shift rod.

   Discard the used spring pin.

3) Move the 3rd-4th shift rod forward.

   Take care not to lose the interlock pins.

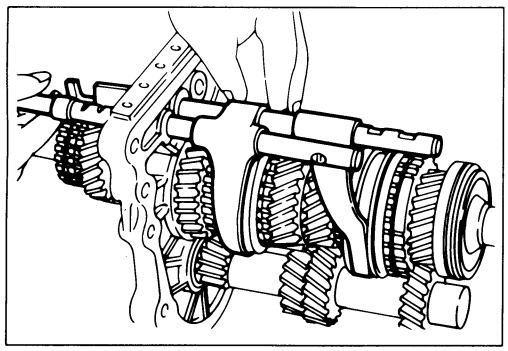

11. Interlock Pin

Carefully remove the reverse shifter rod forward to avoid losing the interlock pins.

Note:

Remove the shifter rods carefully. Interlock pins are located between the shifter rod in the intermediate plate.

REVERSE GEAR AND 5TH GEAR

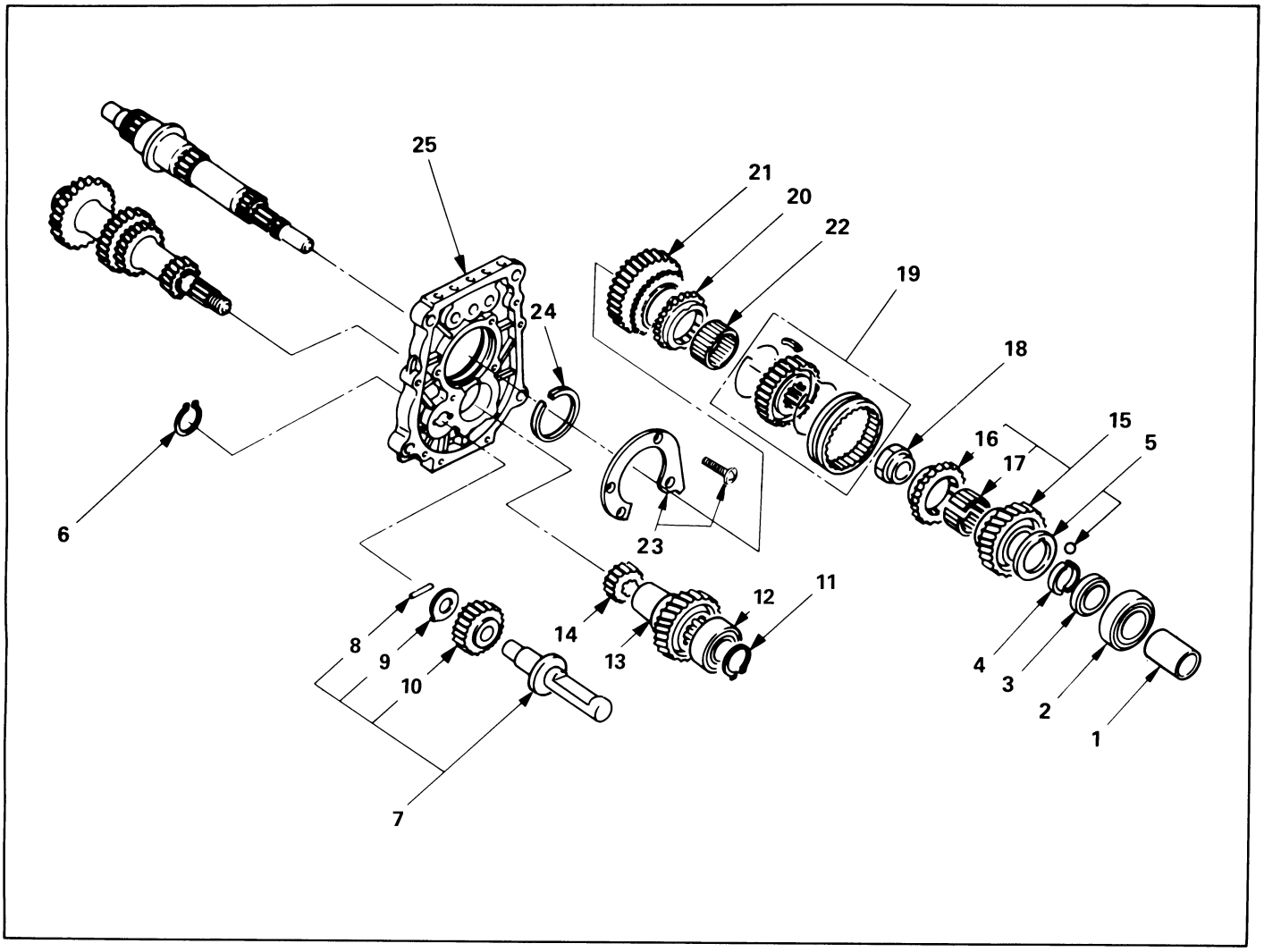

Disassembly Steps

- ▲ 1. Oil seal collar
- ▲ 2. Bearing
- ▲ 3. Retainer
- 4. Thrust plate
- 5. Thrust washer and lock ball
- ▲ 6. Reverse idler gear snap ring
- 7. Reverse idler shaft
- 8. Idle shaft pin
- 9. Thrust washer
- 10. Reverse idler gear
- 11. Bearing snap ring
- ▲ 12. Ball bearing
- ▲ 13. Counter 5th gear
- 14. Counter reverse gear
- 15. 5th gear
- 16. 5th block ring
- ▲ 17. Needle bearing
- ▲ 18. Clutch hub nut
- ▲ 19. Rev-5th synchronizer assembly
- ▲ 20. Reverse block ring
- ▲ 21. Reverse gear
- 22. Needle bearing
- ▲ 23. Bearing plate and screw
- ▲ 24. Bearing snap ring
- ▲ 25. Intermediate plate

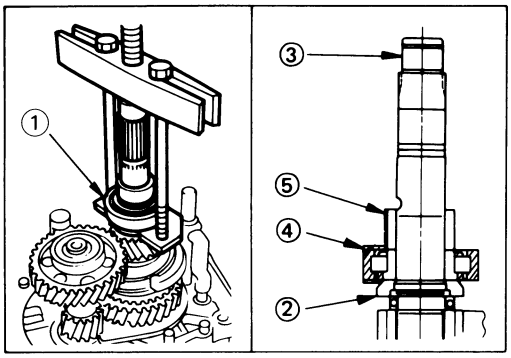

Important Operations

1. Oil Seal Collar

2. Bearing

3. Retainer

1) Set the retaining ring remover ① to the retainer ② and the mainshaft end ③.
2) Remove the retainer together with the bearing ④ and the oil seal collar ⑤.

The universal puller may be used in place of the retaining ring remover.

Retainer Remover: 5-8840-2158-0 (J-37222)

Universal Puller: 5-8840-2027-0

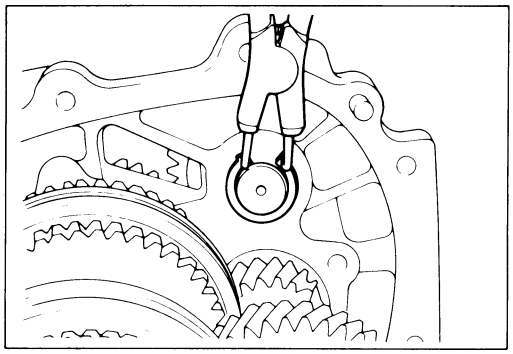

6. Reverse Idler Gear Snap Ring

Use a pair of snap ring pliers to remove the snap ring.

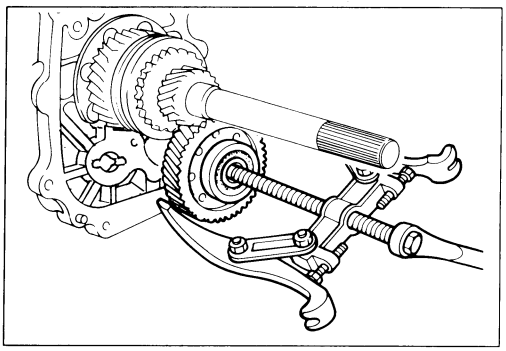

12. Ball Bearing

13. Counter 5th Gear

Use the bearing remover to remove the ball bearing.

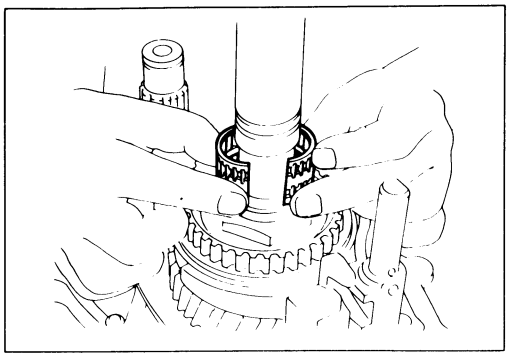

17. Needle Bearing

Remove the needle bearing (2 piece type).

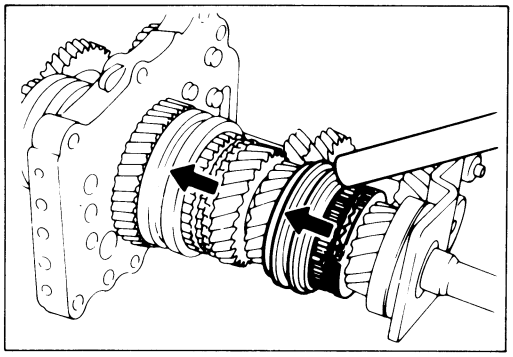

18. Clutch Hub Nut

1) Engage the 3rd-4th synchronizer with the 3rd gear.
2) Engage the 1st-2nd synchronizer with the 1st gear.
3) Attach the holding fixture together with the holding base to the mainshaft front bearing and the counter gear front bearing.

   Holding Fixture: 5-8840-2160-0 (J-37224)

   Holding Base: 5-8840-0003-0 (J-3289-20)

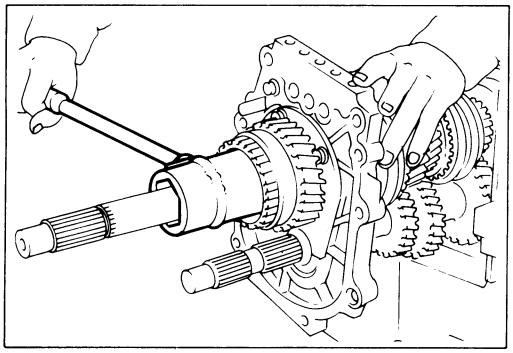

4) Use the hub nut wrench to remove the hub nut.

   Hub Nut Wrench: 5-8840-2156-0 (J-37219)

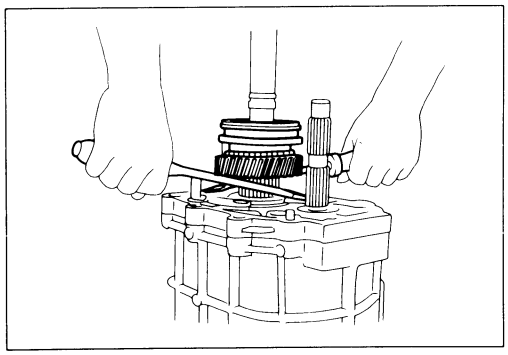

19. Rev.-5th Synchronizer Assembly

20. Reverse Ring

21. Reverse Gear

Use screw drivers between the reverse gear and bearing plate to remove the Rev.-5th synchronizer assembly together with reverse ring and gear.

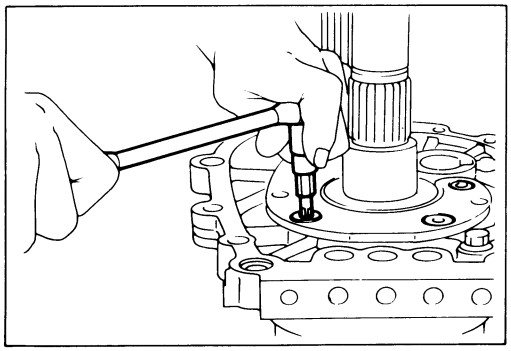

23. Bearing Plate and Screw

Use the Torx bit to remove the bearing plate screw from the intermediate plate.

Torx Bit Wrench: 5-8840-0047-0 (J-37225) (T45)

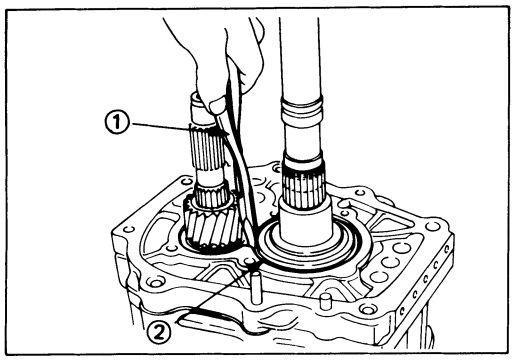

24. Ball Bearing Snap Ring

25. Intermediate Plate

1) Insert the snap ring pliers into the mainshaft bearing snap ring hole.
2) Use the snap ring pliers ① to force open the mainshaft bearing snap ring ②.

   Hold the snap ring open with the pliers.
3) Push the intermediate plate toward the rear of the transmission to remove it.

   The ball bearing snap ring will come free.

TOP GEAR SHAFT, MAIN GEAR SHAFT, AND COUNTER GEAR

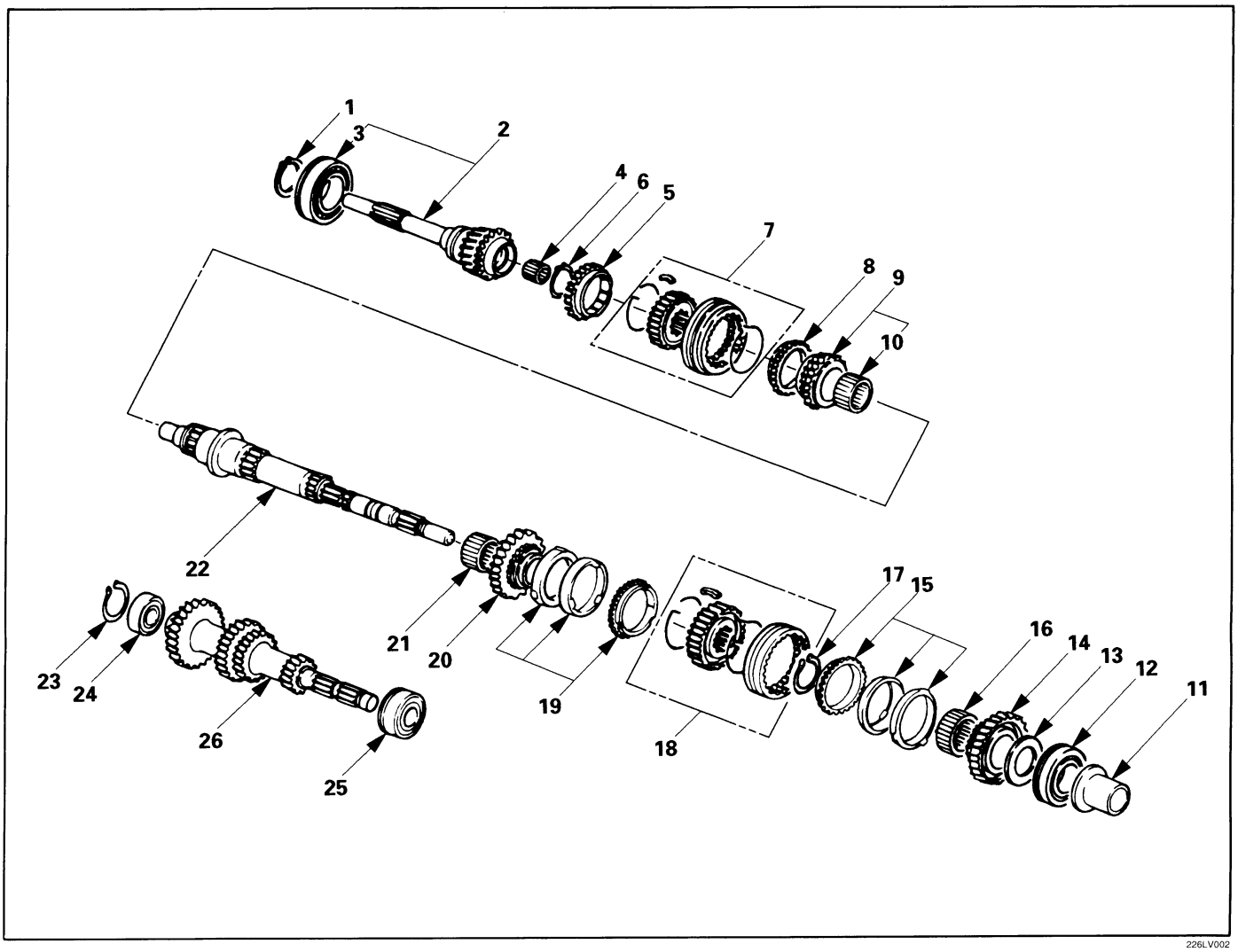

Disassembly Steps

1. Top gear shaft snap ring
2. Top gear shaft
▲ 3. Top gear ball bearing
4. Needle bearing
5. Top block ring
▲ 6. Mainshaft snap ring
▲ 7. 3rd-4th synchronizer assembly
8. 3rd block ring
9. 3rd gear
10. Needle bearing
▲ 11. Needle bearing collar
▲ 12. Mainshaft ball bearing
▲ 13. 1st gear thrust bearing
▲ 14. 1st gear
15. 1st block ring (set)
16. Needle bearing
▲ 17. Clutch hub snap ring
▲ 18. 1st-2nd synchronizer assembly
▲ 19. 2nd block ring (set)
▲ 20. 2nd gear
21. Needle bearing
22. Mainshaft
23. Bearing snap ring
▲ 24. Counter gear front bearing
25. Counter gear center bearing
26. Counter gear

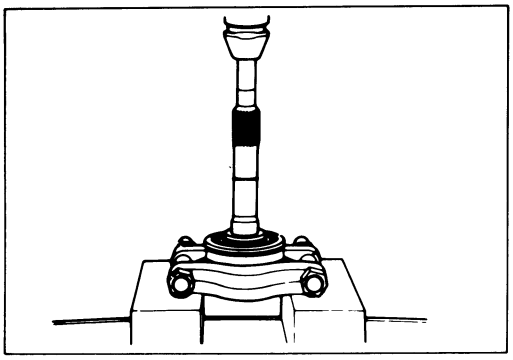

Important Operations

3. Top Gear Ball Bearing

Use a bench press and the bearing remover to remove the ball bearing.

Bearing Remover : 5-8840-0015-0 (J-22912-01)

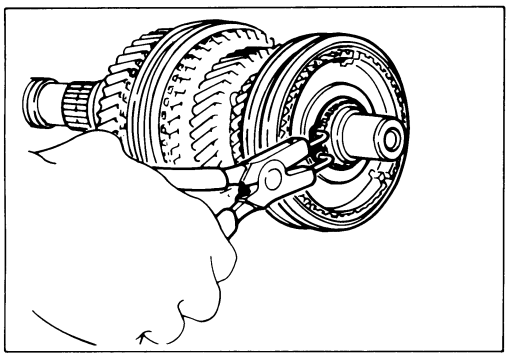

6. Mainshaft Snap Ring

Use a pair of snap ring pliers to remove the snap ring.

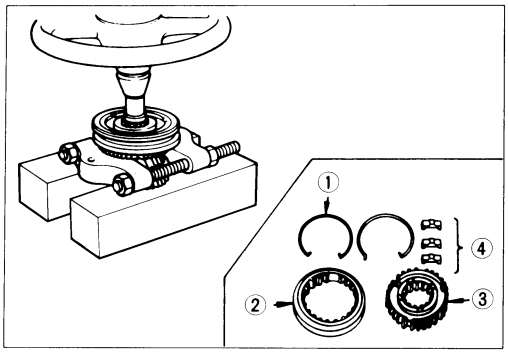

7. 3rd-4th Synchronizer Assembly

1) Use a bench press and the bearing replacer to remove the synchronizer assembly as a set.
2) Disassemble the synchronizer assembly.
   ① Springs
   ② Sleeve
   ③ Clutch Hub
   ④ Inserts

Note:

Mark the hub and sleeve alignment for reassembly.

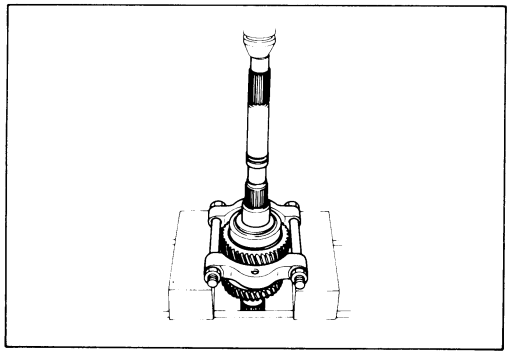

11. Needle Bearing Collar
12. Mainshaft Ball Bearing
13. 1st Gear Thrust Bearing
14. 1st Gear

Use a bench press and the bearing remover to remove the ball bearing.

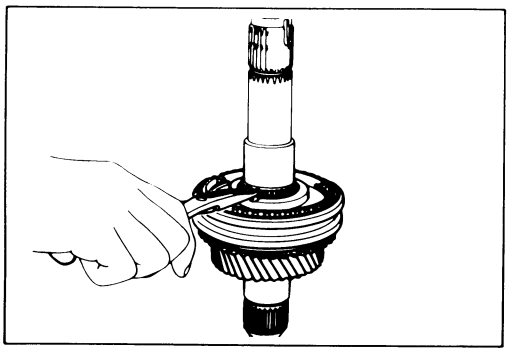

17. Clutch Hub Snap Ring

Use a pair of snap ring pliers to remove the snap ring.

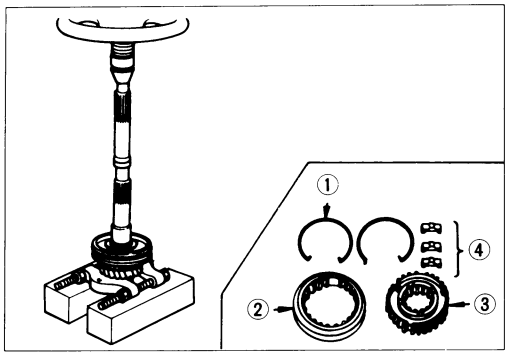

18. 1st-2nd Synchronizer Assembly

19. 2nd Block Ring (Set)

20. 2nd Gear

1) Use a bench press and the bearing remover to remove the ball bearing 2nd gear together with synchronizer assembly.

   Remover: 5-8840-0015-0 (J-22912-01)

2) Disassemble the synchronizer assembly.

   ① Springs
   ② Sleeve
   ③ Clutch Hub
   ④ Inserts

Note:

Mark the hub and sleeve alignment for reassembly.

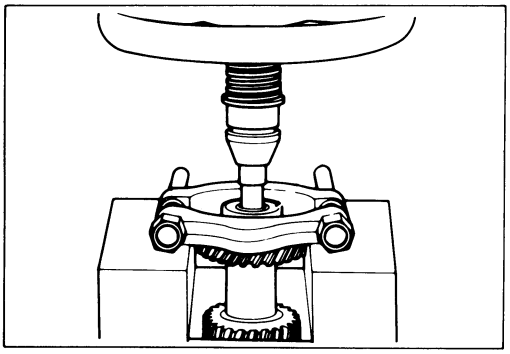

24. Counter Gear Front Bearing

Use a bench press and the bearing remover to remove the bearing.

Bearing Remover: 5-8840-0015-0 (J-22912-01)

INSPECTION AND REPAIR

Make the necessary adjustments, repairs, and part replacements if excessive wear or damage is discovered during inspection.

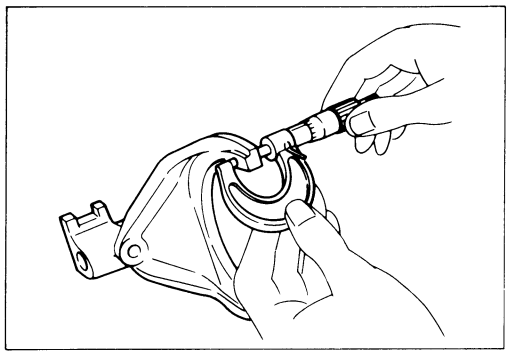

SHIFT ARM THICKNESS

Use a micrometer to measure the shift arm thickness.

If the measured value is less than the specified limit, the shift arm must be replaced.

Shift Arm Thickness — mm(in)

		Standard	Limit
1st–2nd Transfer	4x4/4x2 High/Low	9.60–9.85 (0.378–0.388)	9.0 (0.354)
3rd–4th Rev.–5th		9.60–9.80 (0.378–0.386)	

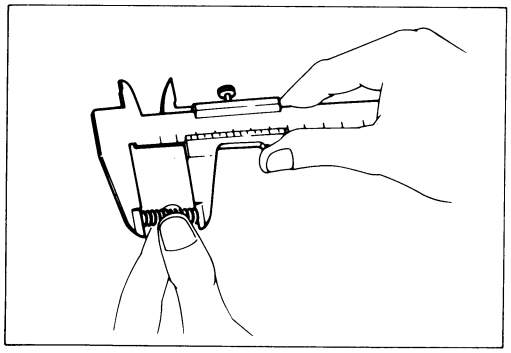

DETENT AND INTERLOCK SPRINGS FREE LENGTH

Use a venier caliper to measure the springs free length.

If the measured value is less than the specified limit, the springs must be replaced.

Springs Free Length — mm(in)

		Standard	Limit
(Detent Ball)	Transmission	26.8 (1.06)	26.2 (1.03)
	Transfer case	23.4 (0.92)	22.8 (0.90)
(Interlock Pin)	Transfer case	15.9 (0.626)	15.3 (0.602)

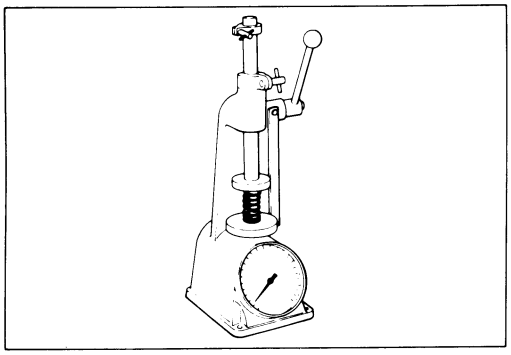

DETENT SPRING TENSION

Use a spring tester to measure the springs tension. If the measured value is less than the specified standard, the springs must be replaced.

Springs Tension — kg(lb/N)

		Compressed Height	Standard
(Detent Ball)	Transmission	20 mm (0.787 in)	8.9—9.9 (19.6—21.8/ 87.2—97)
	Transfer case	18.7 mm (0.736 in)	7.0–9.0 (15.4–19.8/ 68.6–88.2)
(Interlock Pin)	Transfer case	11.5 mm (0.453 in)	1.0 (2.2/9.8)

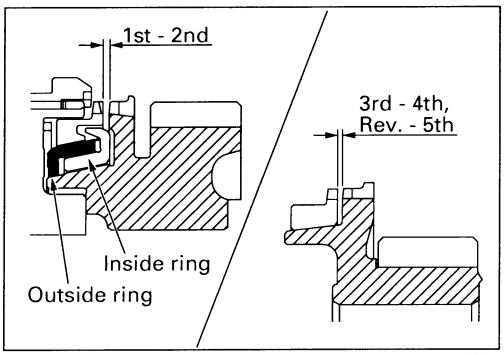

A07RW033

BLOCK RING AND DOG TEETH CLEARANCE

Use a thickness gauge to measure the clearance between the block ring and the dog teeth.

If the measured value exceeds the specified limit, the block ring must be replaced.

Block Ring and Dog Teeth Clearance — mm(in)

Standard	Limit
1.5 (0.059)	0.8 (0.032)

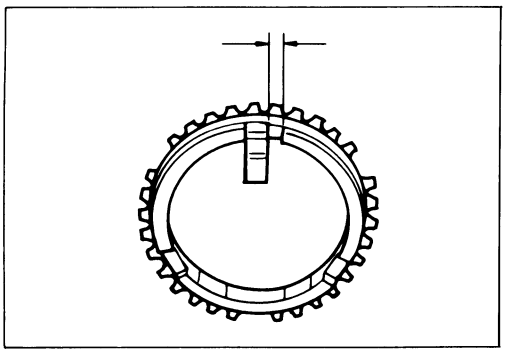

BLOCK RING AND INSERT CLEARANCE

Use a vernier caliper to measure the clearance between the block ring and the insert.

If the measured value exceeds the specified limit, the block ring and the insert must be replaced.

Block Ring and Insert Clearance — mm(in)

	Standard	Limit
3rd-4th	3.46–3.74 (0.136–0.147)	4.0 (0.158)
1st-2nd	4.34–4.66 (0.171–0.183)	4.9 (0.193)
Transfer	2.46–2.74 (0.097–0.108)	3.0 (0.118)
Rev.-5th	3.59–3.91 (0.141–0.154)	4.1 (0.161)

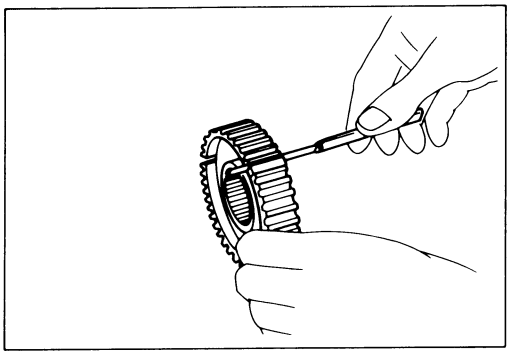

CLUTCH HUB AND INSERT CLEARANCE

Use a thickness gauge to measure the clearance between the clutch hub and the insert.

If the measured value exceeds the specified limit, the clutch hub and the insert must be replaced.

Clutch Hub and Insert Clearance — mm(in)

	Standard	Limit
3rd-4th	0.01-0.19 (0.0004-0.0075)	0.3 (0.012)
1st-2nd Rev.-5th	0.09-0.31 (0.0035-0.0122)	0.4 (0.016)

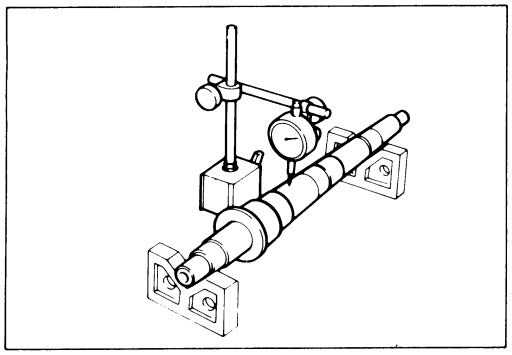

MAINSHAFT RUN-OUT

1. Install the mainshaft to a grinding machine.
2. Use a dial indicator to measure the mainshaft central portion run-out.
   If the measured mainshaft run-out exceeds the specified limit, the mainshaft must be replaced.

Mainshaft Run Out — mm(in)

Limit
0.05 (0.0020)

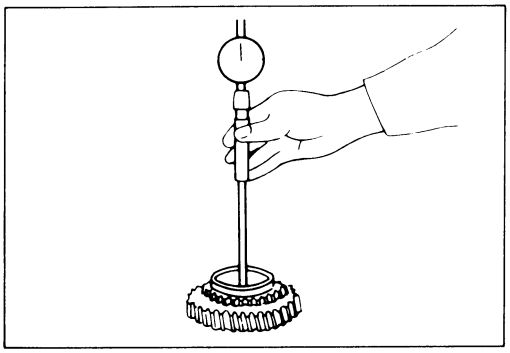

GEAR INSIDE DIAMETER

Use an inside dial indicator to measure the gear inside diameter.

If the measured value is less than the specified limit, the gear must be replaced.

Gear Inside Diameter — mm(in)

	Standard	Limit
1st 3rd	45.000-45.013 (1.771-1.772)	45.100 (1.776)
2nd	52.000-52.013 (2.047-2.048)	52.100 (2.051)
Rev. Transfer	48.000-48.013 (1.889-1.890)	48.100 (1.894)
5th	32.000-32.013 (1.259-1.260)	32.100 (1.264)

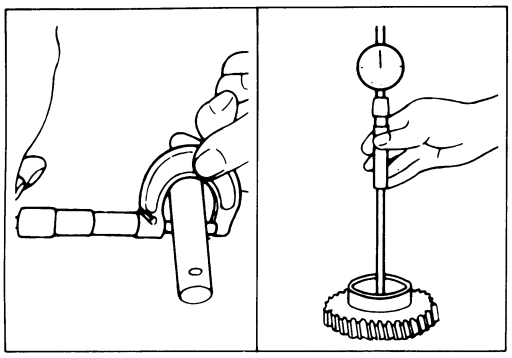

REVERSE IDLER GEAR AND IDLER GEAR SHAFT CLEARANCE

1. Use a micrometer to measure the idler gear shaft diameter.
2. Use an inside dial indicator to measure the idler gear inside diameter.
3. Calculate the idler gear and idler gear shaft clearance.

   Idler gear inside diameter – idler gear shaft diameter = idler gear and idler gear shaft clearance.

   If the measured value exceeds the specified limit, the idler gear and/or the idler gear shaft must be replaced.

Idler Gear and Idler Gear Shaft Clearance mm(in)

Standard	Limit
0.041 – 0.074 (0.0016 – 0.0029)	0.150 (0.0059)

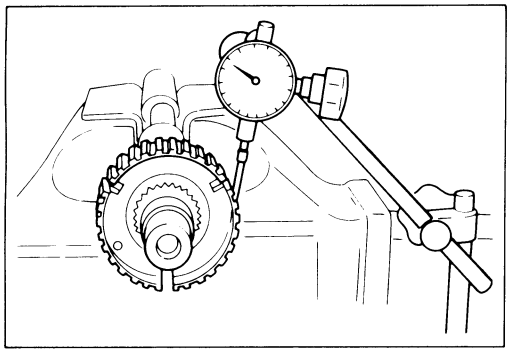

CLUTCH HUB SPLINE PLAY

1. Set a dial indicator to the clutch hub to be measured.
2. Move the clutch hub as far as possible to both the right and the left.

   Note the dial indicator reading.

   It the measured value exceeds the specified limit, the clutch hub must be replaced.

Clutch Hub Spline Play mm(in)

	Standard	Limit
1st—2nd 3rd—4th Transfer 4×2/4×4 High/Low	0 — 0.1 (0 — 0.0039)	0.2 (0.0079)
Rev.—5th	0 — 0.2 (0 — 0.0079)	0.3 (0.0118)

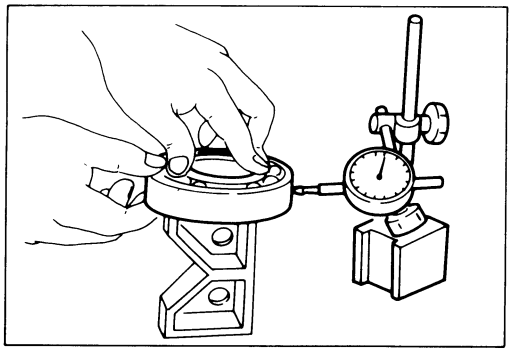

BALL BEARING PLAY

Use a dial indicator to measure the ball bearing play.

Ball Bearing Play mm(in)

Limit
0.2 (0.0079)

FRONT COVER OIL SEAL

Oil Seal Replacement

Oil Seal Removal

Use a screwdriver to pry the oil seal from the front cover.

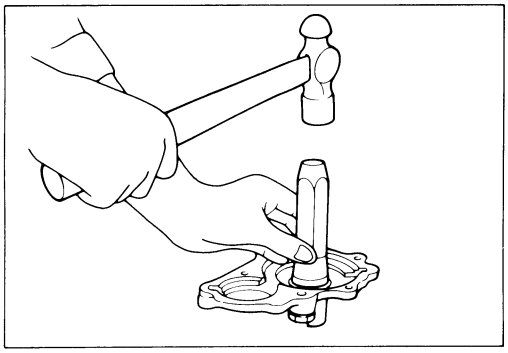

Oil Seal Installation

1. Use the oil seal installer to install the oil seal to the front cover.

   Oil Seal Installer : 5-8840-0026-0 (J-26540)
2. Apply gear oil to the oil seal lip.

REAR COVER OIL SEAL

Oil Seal Replacement

Oil Seal Removal

Use a screwdriver to pry the oil seal from the rear cover.

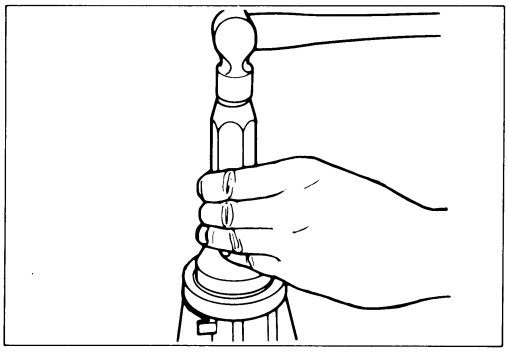

Oil Seal Installation

1. Use the oil seal installer to install the oil seal to the rear cover.

   Oil Seal Installer : 5-8522-0050 (J-29769)
2. Apply engine oil to the oil seal lip.

TRANSFER CASE MAINSHAFT OIL SEAL

Oil Seal Replacement

Oil Seal Removal

Use a screwdriver to pry the oil seal from the transfer case.

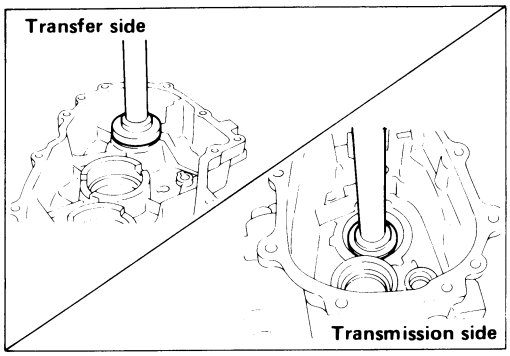

Oil Seal Installation

1. Use the oil seal installer to install the oil seal to the transfer case.

   Oil Seal Installer : 5-8840-2193-0 (J-37488)
   Drive Handle : 5-8840-0007-0 (J-8092)

2. Apply engine oil to the oil seal lip.

TRANSFER CASE FRONT OUTPUT SHAFT OIL SEAL

Oil Seal Replacement

Oil Seal Removal

Use a screwdriver to pry the oil seal from the transfer case.

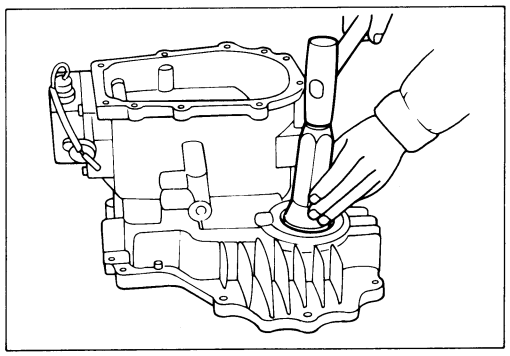

Oil Seal Installation

1. Use the oil seal installer to install the oil seal to the transfer case.

   Oil Seal Installer : 5-8840-2161-0 (J-37226)

2. Apply engine oil to the oil seal lip.

REASSEMBLY

MAJOR COMPONENT (TRANSMISSION)

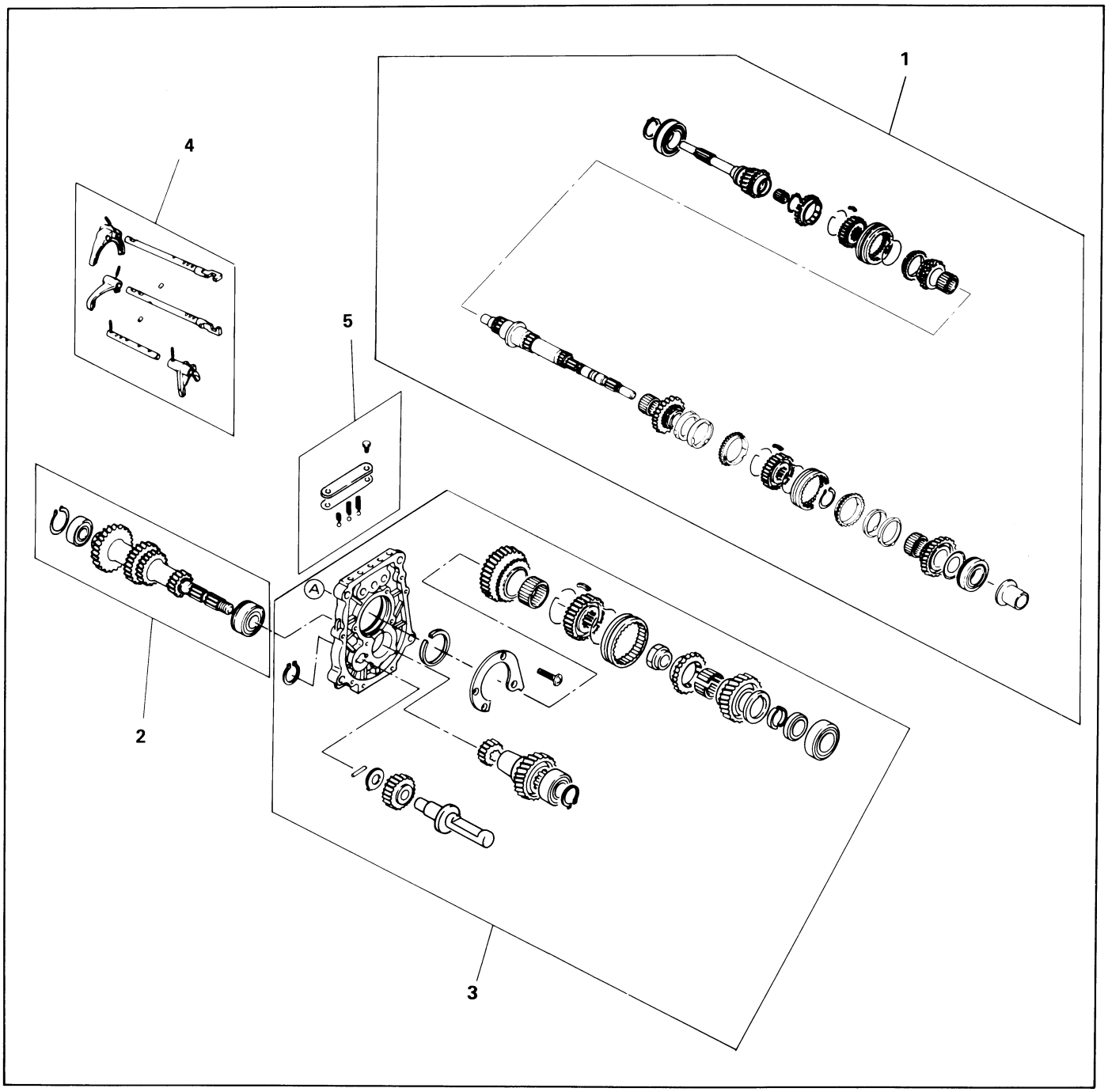

Reassembly Steps

1 Top & main gear shaft assembly
2. Counter gear shaft assembly
3. Rev. and 5th gear assembly
4. Shift arm assembly & interlock pin
5. Detent assembly

MAJOR COMPONENT (TRANSFER CASE)

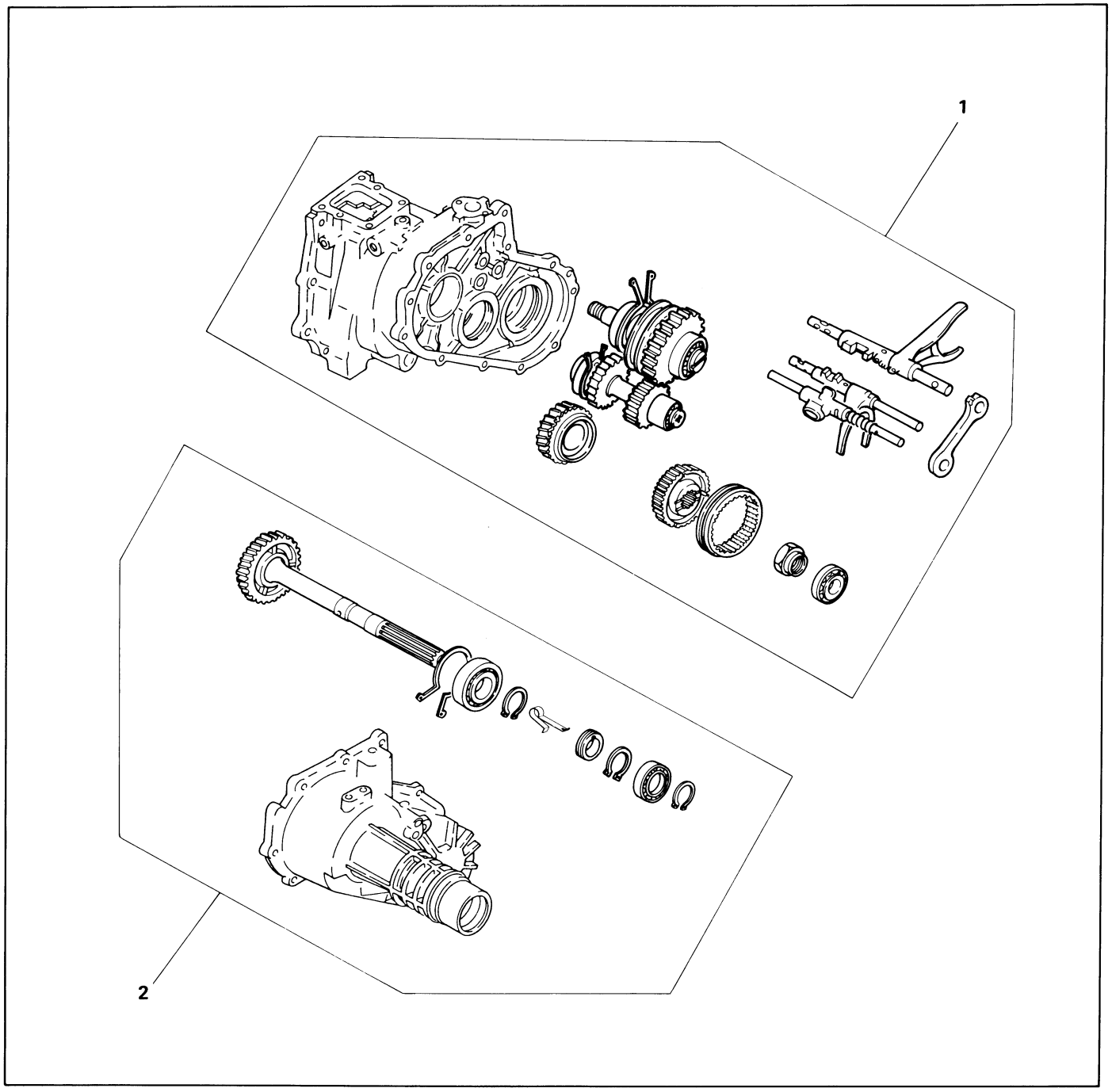

Reassembly Steps

1 Transfer case assembly
2. Transfer rear case assembly

MINOR COMPONENT (TRANSMISSION)

INTERMEDIATE PLATE AND GEAR ASSEMBLY TOP GEAR SHAFT, MAIN SHAFT GEAR AND COUNTER GEAR

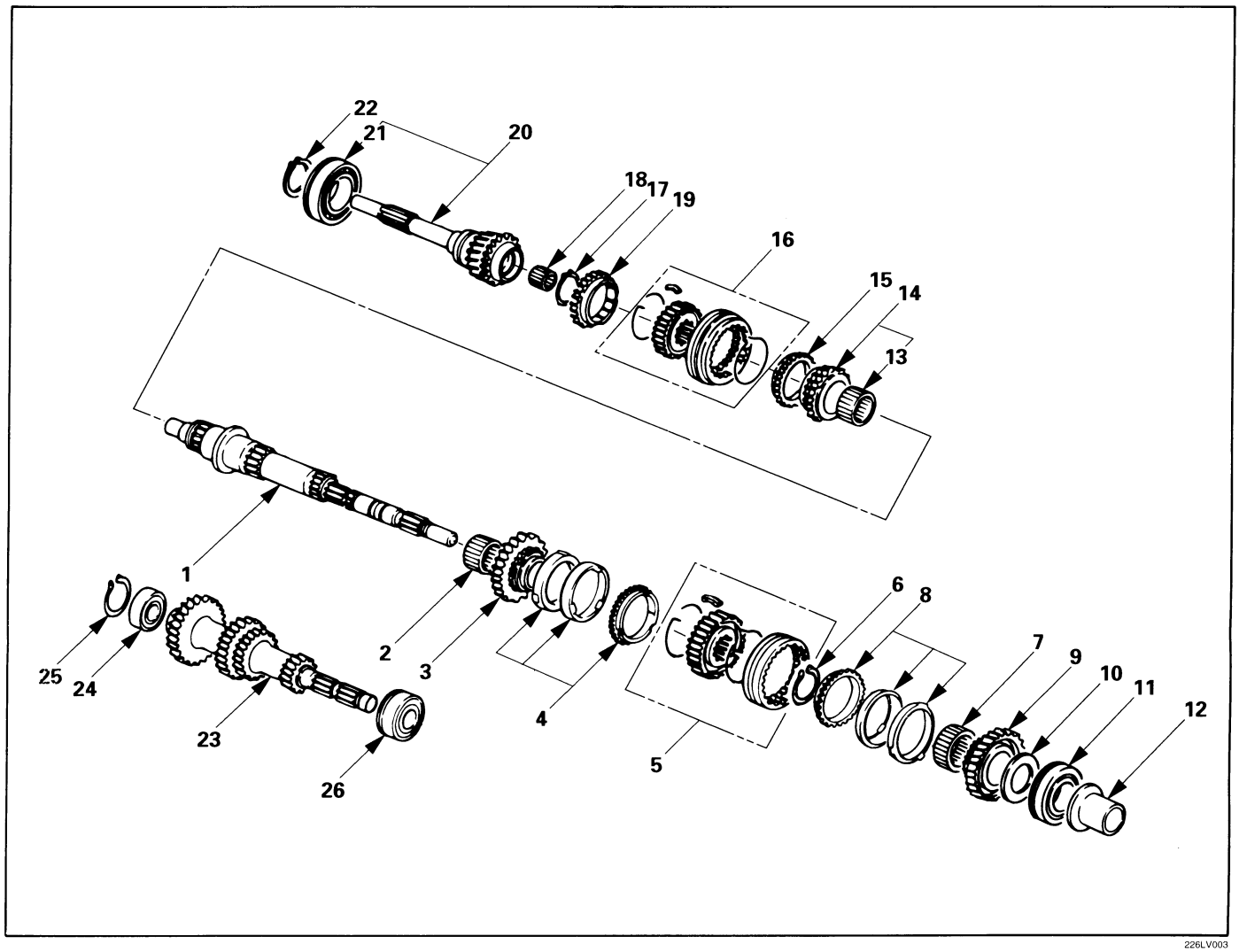

Reassembly Steps

1. Mainshaft
▲ 2. Needle bearing
▲ 3. 2nd gear
4. 2nd block ring (set)
▲ 5. 1st—2nd synchronizer assembly
▲ 6. Clutch hub snap ring
▲ 7. Needle bearing
8. 1st block ring (set)
▲ 9. 1st gear
▲ 10. 1st gear thrust bearing
▲ 11. Mainshaft ball bearing
▲ 12. Needle bearing collar
▲ 13. Needle bearing
▲ 14. 3rd gear
15. 3rd block ring
▲ 16. 3rd—4th synchronizer assembly
▲ 17. Mainshaft snap ring
18. Needle bearing
19. Top block ring
20. Top gear shaft
▲ 21. Ball bearing
▲ 22. Top gear shaft snap ring
23. Counter gear
▲ 24. Counter gear front bearing
25. Snap ring
26. Counter gear center bearing

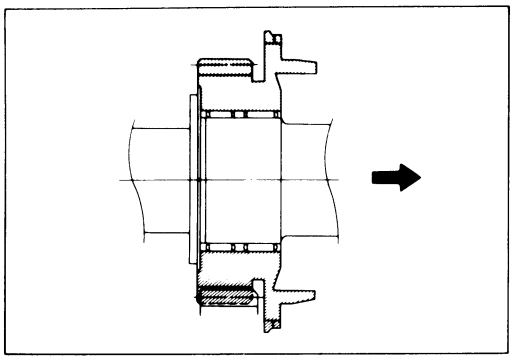

Important Operations

2. Needle Bearing

3. 2nd Gear

1) Apply engine oil to the needle bearing and the 2nd gear thrust surfaces.
2) Install the needle bearing and the 2nd gear to the mainshaft.
   The dog teeth of the 2nd gear must be facing the rear side of the transmission.

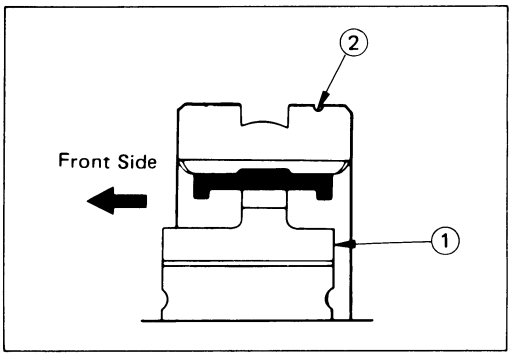

5. 1st—2nd Synchronizer Assembly

1) Turn the shallow clutch hub face ① toward the side of the sleeve with small groove ② on the outer circumference.

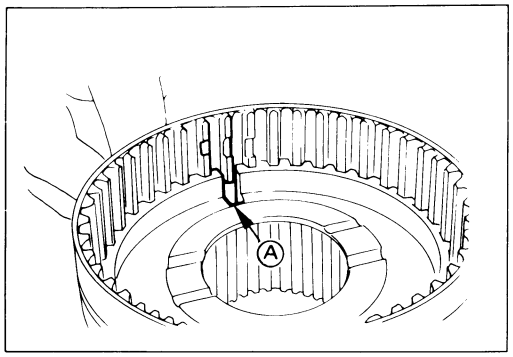

Note:
The clutch hub groove Ⓐ must be aligned with the key groove of sleeve.

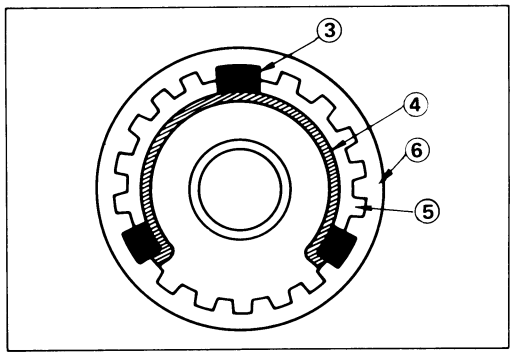

2) Check that the inserts ③ fit snugly into the block ring insert grooves.
3) Check that the insert springs ④ are fitted to the inserts as shown in the illustration.
4) Check that the clutch hub ⑤ and the sleeve ⑥ slide smoothly.
5) Install the synchronizer assembly to the mainshaft.
   The clutch hub face (with the heavy boss) must be facing the 2nd gear side.

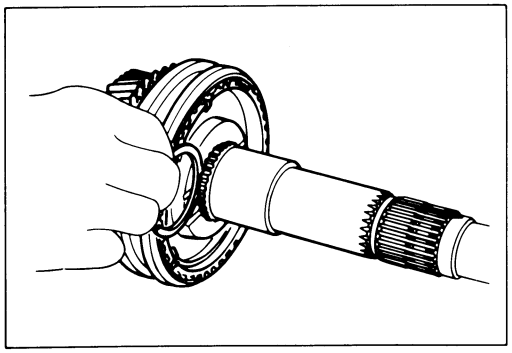

6. Clutch Hub Snap Ring

1) Select the snap ring which will provide the minimum clearance between the 1st/2nd clutch hub and the snap ring.
   There are three snap ring sizes available.
   The snap rings are color-coded to indicate their thickness.

Clutch Hub and Snap Ring Clearance	mm(in)
Standard	
0 – 0.1 (0.0039)	

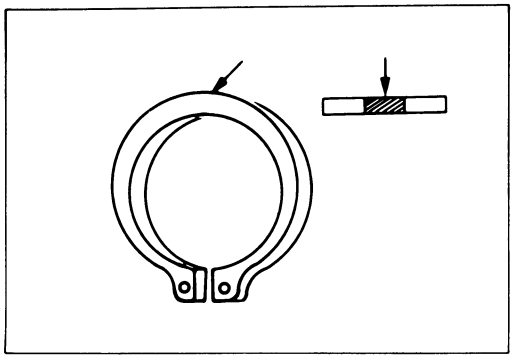

Snap Ring Avalilability

Thickness mm(in)	Color-Coding
1.80 (0.071)	White
1.85 (0.073)	Yellow
1.90 (0.075)	Blue

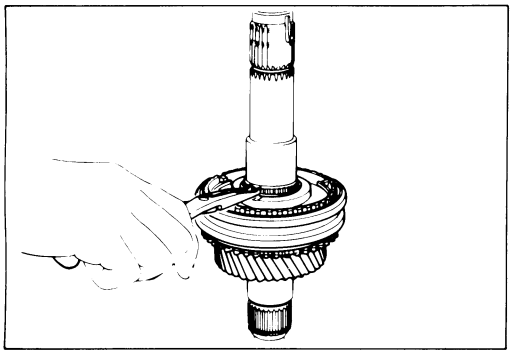

2) Use a pair of snap ring pliers to install the snap ring to the mainshaft.

The snap ring must be fully inserted into the mainshaft snap ring groove.

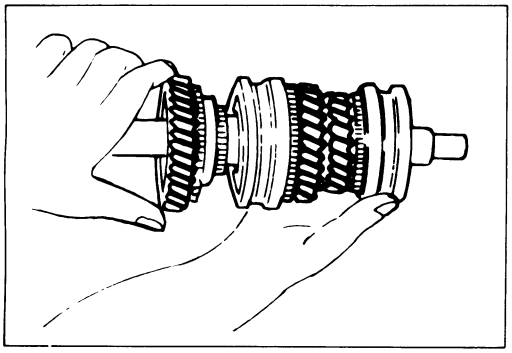

7. Needle Bearing

9. 1st Gear

1) Apply engine oil to the needle bearing and the 1st gear thrust surfaces.
2) Install the needle bearing and the 1st gear to the mainshaft.

The 1st gear dog teeth must be facing the transmission front side.

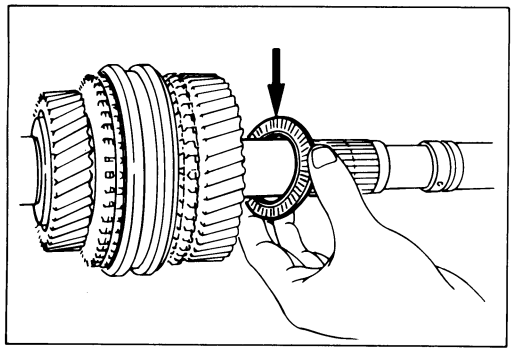

10. 1st Gear Thrust Bearing

Install the thrust bearing to the mainshaft.

The thrust bearing side must be facing the transmission front side.

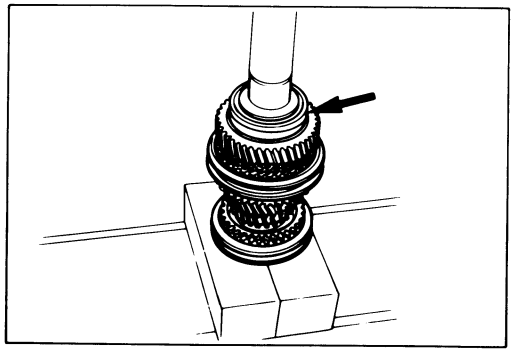

11. Mainshaft Ball Bearing

12. Needle Bearing Collar

1) Apply engine oil to the ball bearing and the mainshaft.
2) Install the ball bearing and collar to the mainshaft. The ball bearing snap ring groove must be facing the transmission rear side.
3) Use a bench press to slowly force the collar into place.

Installer: 5-8840-2195-0 (J-6133-01)

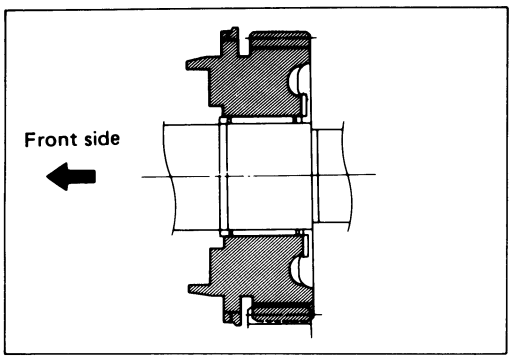

13. Needle Bearing

14. 3rd Gear

1) Apply engine oil to the needle bearing and the 3rd gear thrust surfaces.
2) Install the needle bearing and the 3rd gear to the mainshaft.

   The dog teeth of the 3rd gear must be facing the front side of the transmission.

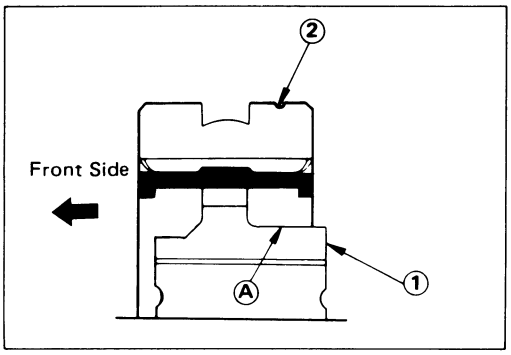

16. 3rd—4th Synchronizer Assembly

1) Turn the clutch hub face ① with the heavy boss Ⓐ toward the side of the sleeve with small groove ② on the outer circumference.

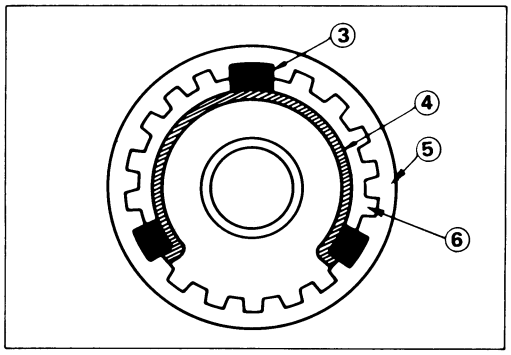

2) Check that the inserts ③ fit snugly into the block ring insert grooves.
3) Check that the insert springs ④ are fitted to the inserts as shown in the illustration.
4) Check that the clutch hub ⑤ and the sleeve ⑥ slide smoothly.
5) Install the synchronizer assembly to the mainshaft.

   The clutch hub face (with the heavy boss) must be facing the 3rd gear side.

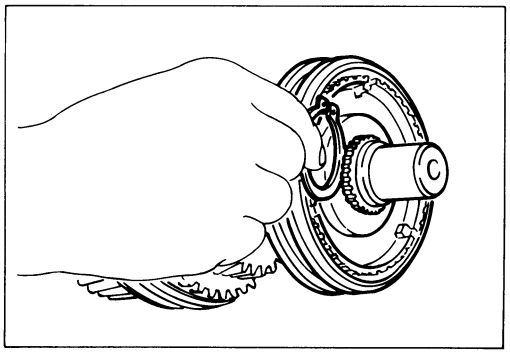

17. Mainshaft Snap Ring

1) Select the snap ring which will provide the minimum clearance between the 3rd—4th clutch hub and the snap ring.

   There are three snap ring sizes available.

   The snap rings are color-coded to indicate their thickness.

Clutch Hub and Snap Ring Clearance	mm(in)
Standard	
0 – 0.1 (0.0039)	

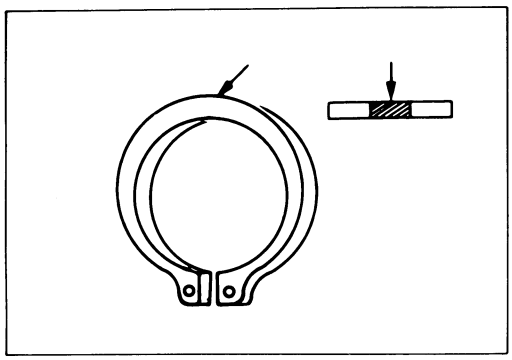

Snap Ring Availability mm(in)

Thickness	Color-Coding
1.80 (0.071)	White
1.85 (0.073)	Yellow
1.90 (0.075)	Blue

2) Use a pair of snap ring pliers to install the snap ring to the mainshaft.
3) The snap ring must be fully inserted into the mainshaft snap ring groove.

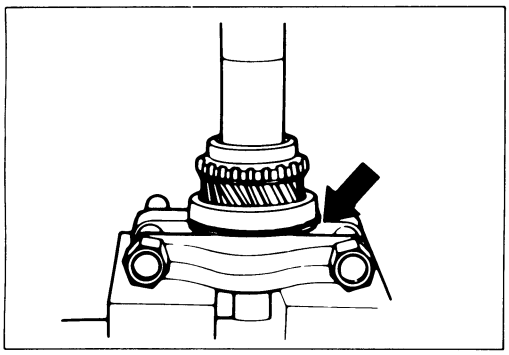

21. Ball Bearing

22. Top Gear Shaft Snap Ring

1) Use a bench press to install the top gear shaft ball bearing to the mainshaft.

   The snap ring groove must be facing the transmission front side.
2) Use a pair of snap ring pliers to install the snap ring to the bearing.

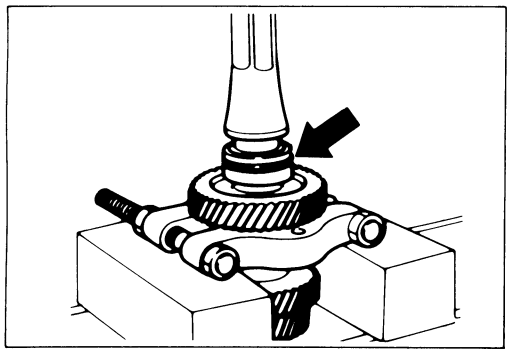

24. Counter Gear Front Bearing

Use a bench press to install the counter gear front ball bearing to the mainshaft.

The snap ring groove must be facing the transmission front side.

Bearing installer : 5-8840-2194-0 (J-35283)

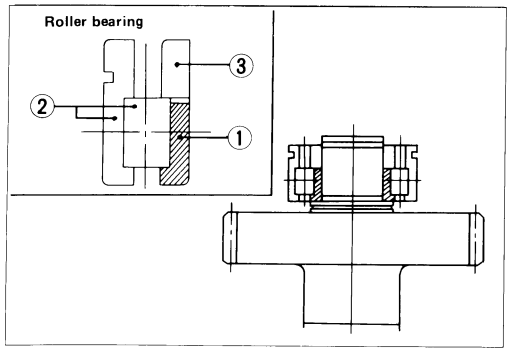

1) Apply engine oil to the bearing and install the inner race ① and outer race with roller ② in the proper direction to the mainshaft.
2) Then install the inner race ③ with taper side turned to outer race ②.

Note:
The inner race ③ should be installed with stamp on die face side turned to the front side of transmission.

REVERSE GEAR AND 5TH GEAR

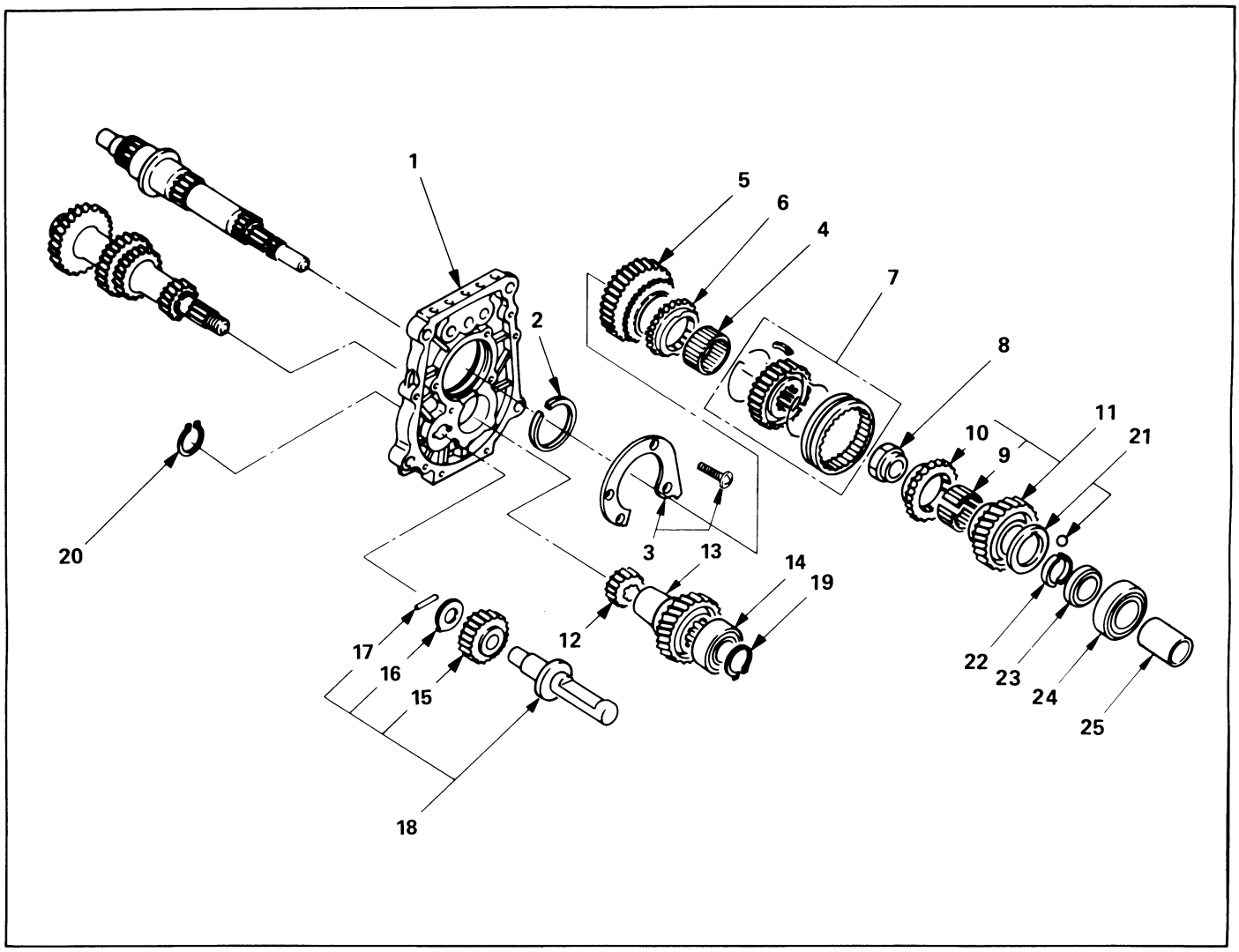

Reassembly Steps

- ▲ 1. Intermediate plate
- 2. Bearing snap ring
- ▲ 3. Bearing plate and screw
- 4. Needle bearing
- 5. Mainshaft reverse gear
- 6. Reverse block ring
- ▲ 7. Rev.-5th synchronizer assembly
- ▲ 8. Clutch hub nut
- 9. Needle bearing
- 10. 5th block ring
- 11. 5th gear
- ▲ 12. Counter reverse gear
- 13. Counter 5th gear
- 14. Ball bearing
- 15. Reverse idler gear
- 16. Thrust washer
- 17. Idler shaft pin
- 18. Reverse idler shaft
- ▲ 19. Bearing snap ring
- ▲ 20. Reverse gear snap ring
- ▲ 21. Thrust washer and lock ball
- 22. Thrust plate
- 23. Retainer
- ▲ 24. Roller bearing
- 25. Oil seal collar

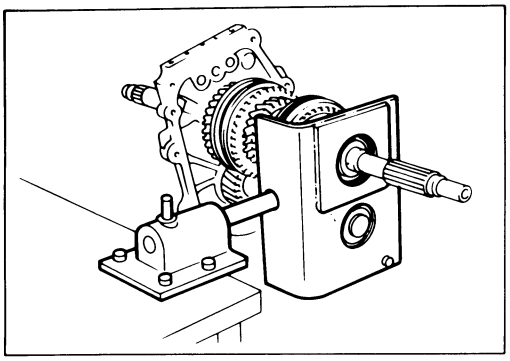

Important Operations

1. Intermediate Plate

1) Mesh the counter gear with the mainshaft assembly.
2) Install the holding fixture to the mainshaft and the counter gear.

   Holding Fixture : 5-8840-2160-0 (J-37224)

   Holding base : 5-8840-0003-0 (J-3289-20)
3) Place the holding fixture (with the mainshaft and the counter shaft) in a vise.
4) Install the intermediate plate.

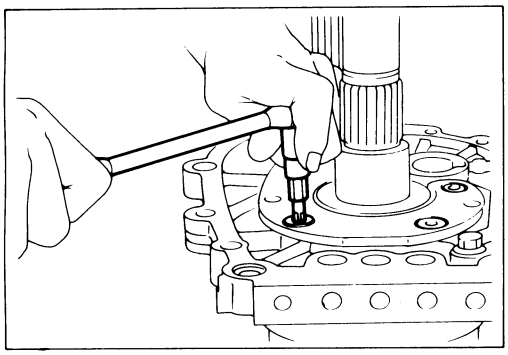

3. Bearing Plate and Screw

1) Apply recommended thread locking agents or its equivalent to each of the plate screw threads.
2) Use the wrench to tighten the screws to the specified torque.

   Torx Bit Wrench : 5-8840-0047-0 (J-37225) (T45)

Plate Screw Torque	kg·m (lb·ft/N·m)
	1.5 (11/15)

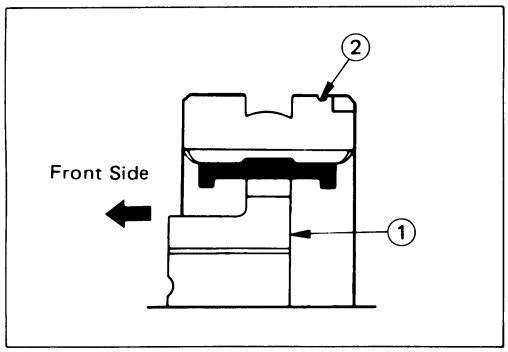

7. Rev.—5th Synchronizer Assembly

1) Turn the clutch hub face ① toward the side of the sleeve with small groove ② on the outer circumference.

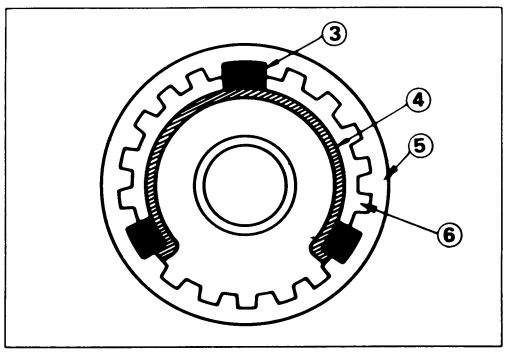

2) Check that the inserts ③ fit snugly into the block ring insert grooves.
3) Check that the insert springs ④ are fitted to the inserts as shown in the illustration.
4) Check that the clutch hub ⑤ and the sleeve ⑥ slide smoothly.
5) Install the synchronizer assembly to the mainshaft.

   The clutch hub face (with the heavy boss) must be facing the reverse gear side.

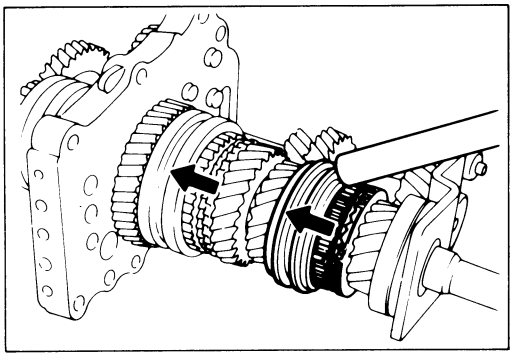

8. Clutch Hub Nut

1) Mesh the 1st—2nd synchronizer with both the 1st and 3rd gears (double engagement).

   This will prevent the mainshaft from turning.

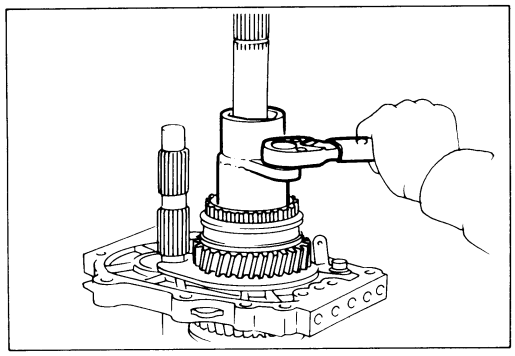

2) Install the mainshaft lock nut.
3) Use the lock nut wrench to tighten the lock nut to the specified torque.

   Wrench: 5-8840-2156-0 (J-37219)

Hub Nut Torque	kg·m(lb.ft/N·m)
14 ± 2 (101 ± 14.4/137 ± 20)	

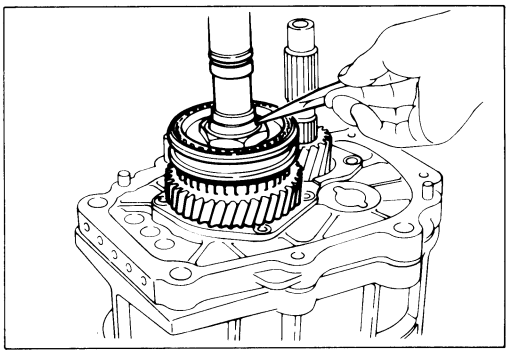

4) Use a punch to stake the lock nut.

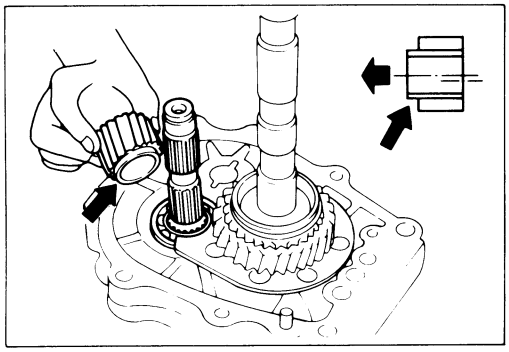

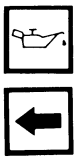

12. Counter Reverse Gear

1) Apply engine oil to the counter reverse gear and the reverse gear.
2) Install the counter reverse gear to the counter gear.

   The reverse gear projection must be facing the side of the intermediate plate.

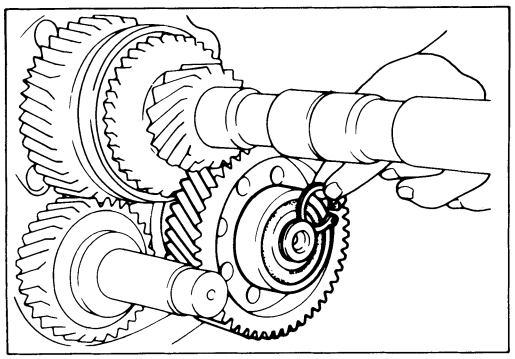

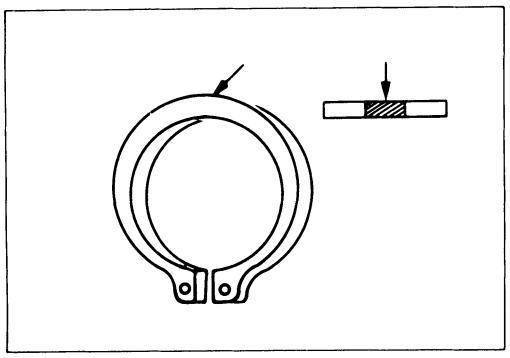

19. Bearing Snap Ring

1) Select the snap ring which will provide the minimum clearnance between the ball bearing and the snap ring.

   There are six snap ring sizes available.

   The snap rings are color-coded to to indicate their thickness.

Ball Bearing and Snap Ring Clearance mm(in)

Standard	0 – 0.15 (0 – 0.0059)

Snap Ring Availability mm(in)

Thickness mm(in)	Color-Coding
1.1 (0.043)	White
1.2 (0.047)	Yellow
1.3 (0.051)	Blue
1.4 (0.055)	Pink
1.5 (0.059)	Green
1.6 (0.063)	Brown

2) Use a pair of snap ring pliers to install the snap ring to the counter 5th gear.
   The snap ring must be fully inserted into the counter 5th gear snap ring groove.

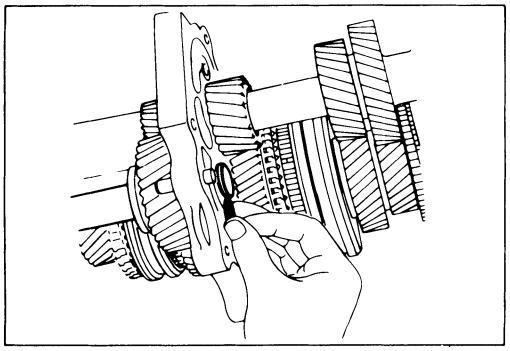

20. Reverse Gear Snap Ring

1) Select the snap ring which will provide the minimum clearance between the intermediate plate and the snap ring.
   There are three snap ring sizes available.
   The snap rings are color-coded to indicate their thickness.

Intermediate Plate and Snap Ring Clearance mm(in)

Standard	0 – 0.15 (0 – 0.0059)

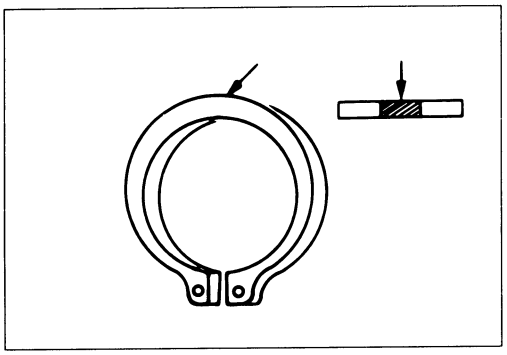

Snap Ring Availability mm(in)

Thickness mm(in)	Color-Coding
1.2 (0.047)	White
1.3 (0.051)	Yellow
1.4 (0.055)	Blue

2) Use a pair of snap ring pliers to install the snap ring to the reverse idler shaft.
The snap ring must be fully inserted into the reverse idler shaft snap ring groove.

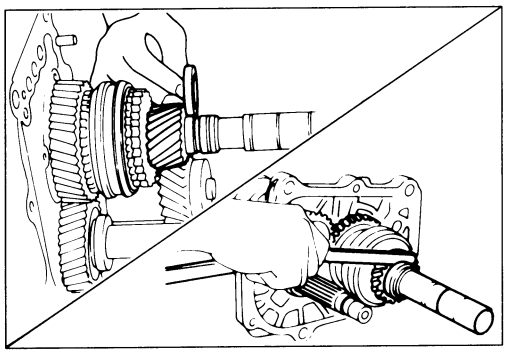

21. Thrust Washer and Lock Ball

1) Use a thickness gauge to measure the clearance between the 5th gear and the thrust washer.

5th Gear and Thrust Washer Clearance mm(in)

Standard
0.10 – 0.25 (0.0039 – 0.0098)

If required, replace the exsisting thrust washer with a new thrust washer to bring the clearance to specification.

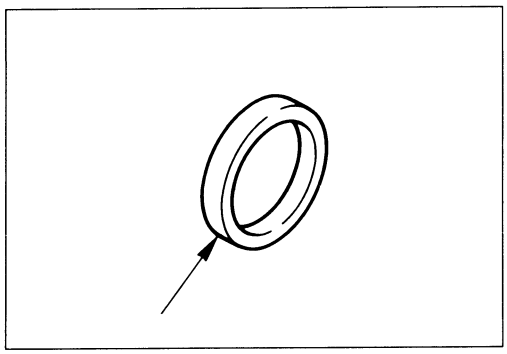

There are four thrust washer sizes available.

The snap rings are color-coded to indicate their thickness.

Thrust Washer Availability mm(in)

Thickness	Color-Coding
7.9 (0.311)	White
8.0 (0.315)	Yellow
8.1 (0.319)	Green
8.2 (0.323)	Blue

2) Apply grease to the thrust washer and the lock ball.
3) Install the thrust washer and the lock ball to the mainshaft.

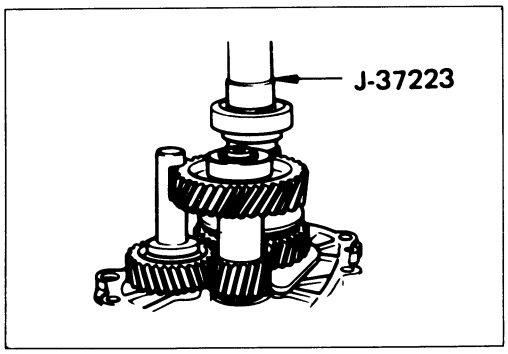

24. Roller Bearing

Apply engine oil to the bearing inner and outer circumference.

Use the installer to install the roller bearing to the mainshaft.

Installer : 5-8840-2159-0 (J-37223)

Note:

Be sure the bearing is installed in the direction it was removed from.

DETENT, SHIFT ARM ASSEMBLY AND INTERLOCK PIN

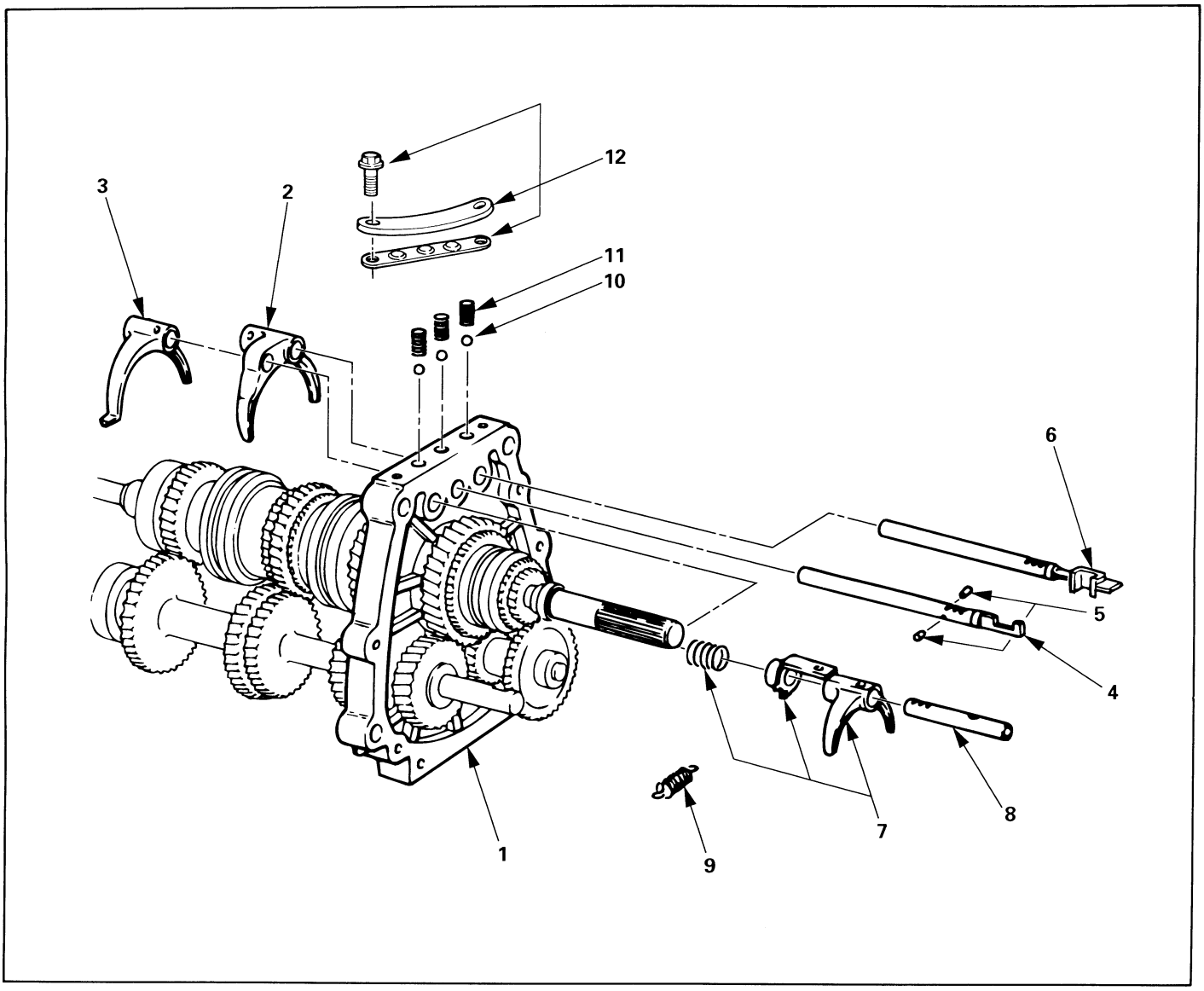

Reassembly Steps

1. Intermediate plate and gear assembly
▲ 2. 1st—2nd shift arm
▲ 3. 3rd—4th shift arm
▲ 4. 3rd—4th shift rod
▲ 5. Interlock pin
6. 1st—2nd shift rod
7. Rev.—5th shift arm and inhibiter
8. Rev.—5th shift rod
9. Spring
10. Detent ball
11. Detent spring
▲ 12. Detent spring plate and gasket

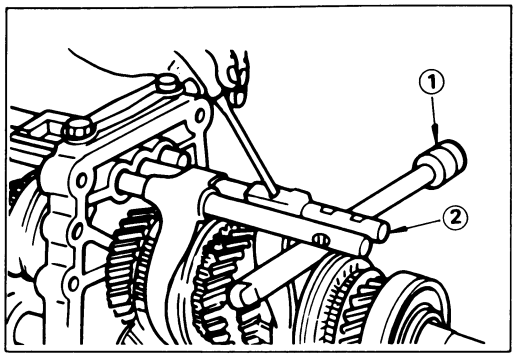

Important Operations

2. 1st—2nd Shift Arm

3. 3rd—4th Shift Arm

Hold a round bar ① against the shift rod end lower face ② to protect it against damage.

Install the new spring pin.

Never reinstall the used spring pin.

4. 3rd—4th Shift Rod

5. Interlock pin

1) Install the interlock pin to the shift rod.
2) Install the shift rod together with the interlock pin to the intermediate plate.

   Do not allow the interlock pin to fall from the shift rod.

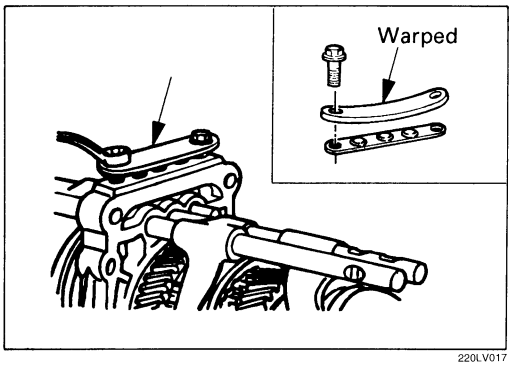

12. Detent Spring Plate and Gasket

1) Install the new-detent plate and new gasket onto the transmisson case into the correct direction.
2) Tighten the detent spring plate bolts to specified torque.

Detent Spring Plate Bolt Torque	kg·m(lb.ft/N·m)
2.0 ± 0.4 (14 ± 3/20 ± 4)	

MINOR COMPONENT

TRANSFER CASE ASSEMBLY

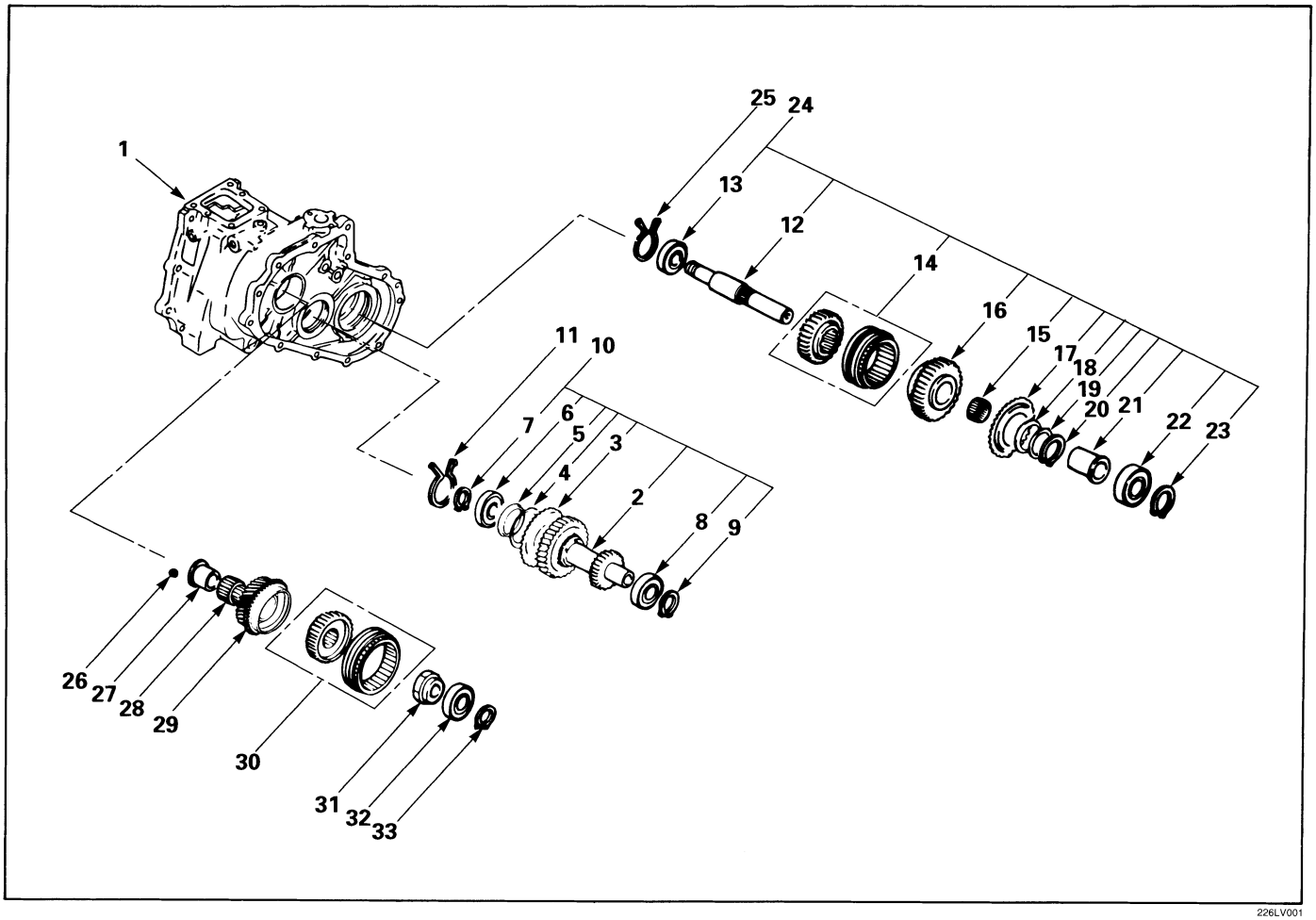

226LV001

Reassembly Steps

- ▲ 1. Transfer case
- ▲ 2. Counter gear
- ▲ 3. Sub gear (Anti-lash plate)
- 4. Belleville spring
- 5. Spacer
- 6. Ball bearing
- ▲ 7. Snap ring
- 8. Ball bearing
- 9. Snap ring
- 10. Counter gear assembly
- 11. Bearing snap ring
- 12. Front output shaft
- 13. Ball bearing
- 14. Clutch hub and sleeve
- 15. Needle bearing
- ▲ 16. Front output gear
- ▲ 17. Sub gear (Anti-lash plate)
- ▲ 18. Belleville spring
- ▲ 19. Spacer
- ▲ 20. Anti-lash plate snap ring
- ▲ 21. Bearing collar
- 22. Ball bearing
- ▲ 23. Snap ring
- 24. Front output gear assembly
- 25. Bearing snap ring
- 26. Ball
- 27. Bearing collar
- 28. Needle bearing
- 29. Transfer input gear
- ▲ 30. High-low clutch hub and sleeve
- ▲ 31. Mainshaft end lock nut
- ▲ 32. Ball bearing
- 33. Snap ring

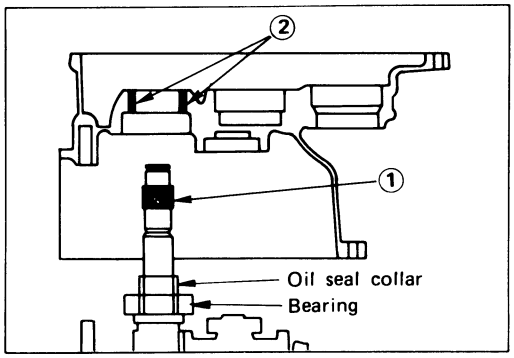

Important Operations

1. Transfer Case

1) Cover the shaft spline with adhesive tape ①.
   This will prevent damage to the oil seal lip ②.

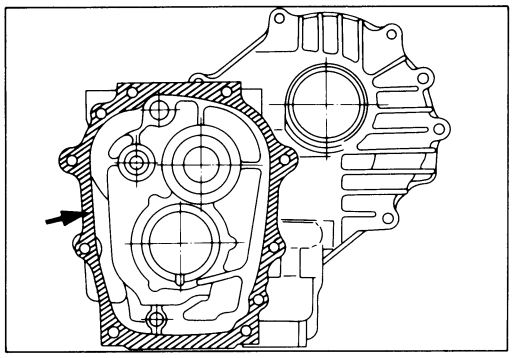

2) Apply recommend liquid gasket or its equivalent to the transfer case fitting surfaces.
3) Tighten the transfer case bolts to the specified torque a little at a time.

Transfer Case Bolt Torque	kg·m (lb·ft/N·m)
3.8 ± 0.8 (27 ± 5.8 / 37 ± 7.8)	

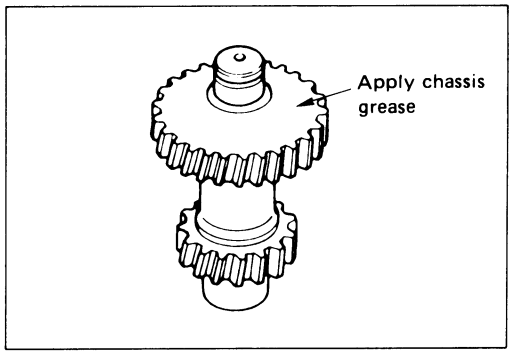

2. Counter Gear

3. Sub Gear (Anti-lash Plate)

Apply chassis grease to the sub-gear and the counter gear thrust surfaces.

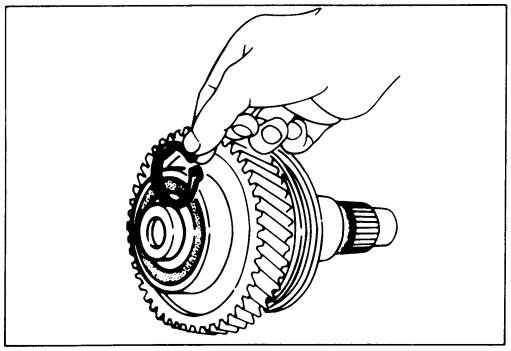

7. Snap Ring

1) Select a snap ring that will allow the minimum axial play.
2) Use a pair of snap ring pliers to install the snap ring to the counter gear.

Bearing and Snap Ring Clearance	mm(in)
Standard	
0 – 0.1 (0 – 0.0039)	

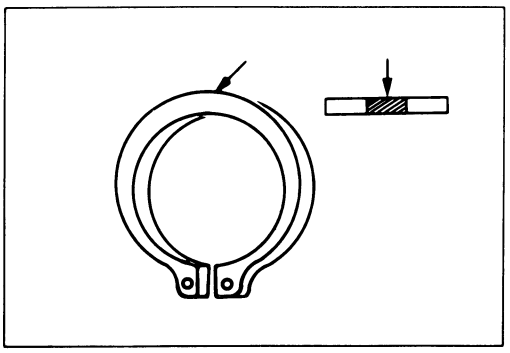

Snap Ring Availability	mm(in)
Thickness	Color-Coding
1.50 (0.059)	White
1.55 (0.061)	Yellow
1.60 (0.063)	Blue

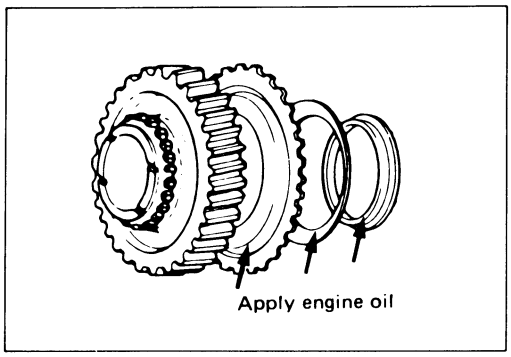

16. Front Output Gear

17. Sub Gear (Anti-lash Plate)

18. Belleville Spring

19. Spacer

Apply engine oil to the thrust surfaces of the sub-gear, the belleville spring, and the spacer.

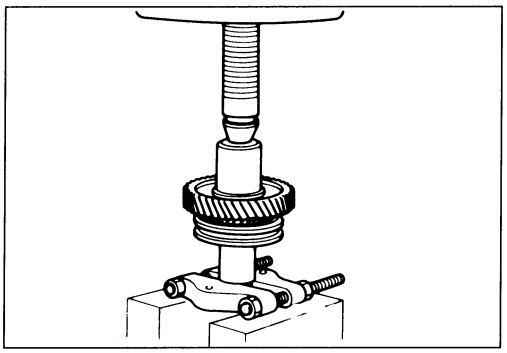

20. Anti-lash Plate Snap Ring

21. Bearing Collar

Use a bench press to install the needle bearing and collar together with the front output gear.

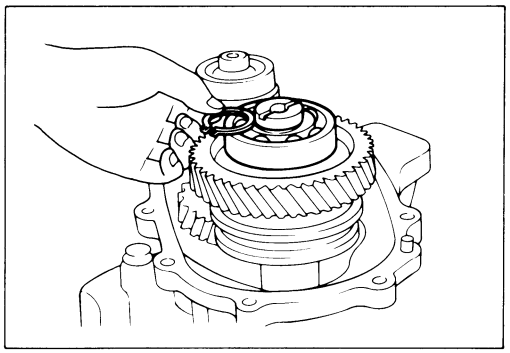

23. Snap Ring

1) Select a snap ring that will allow the minimum axial play.
2) Use a pair of snap ring pliers to install the snap ring to the output shaft.

Bearing and Snap Ring Clearance mm(in)
Standard
0 – 0.1 (0 – 0.0039)

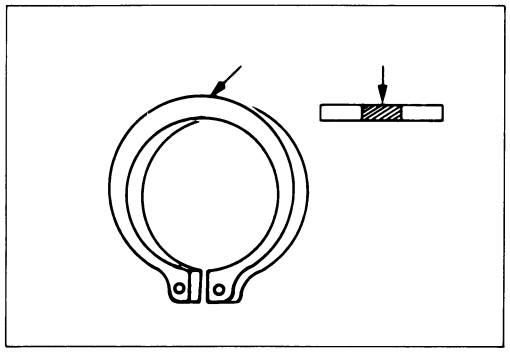

Snap Ring Availability mm(in)

Snap Ring Thickness	Color Coding
1.55 (0.061)	White
1.60 (0.063)	Yellow
1.65 (0.065)	Blue
1.70 (0.067)	Pink
1.75 (0.069)	Green
1.80 (0.071)	Brown
1.85 (0.073)	Red
1.90 (0.075)	Orange

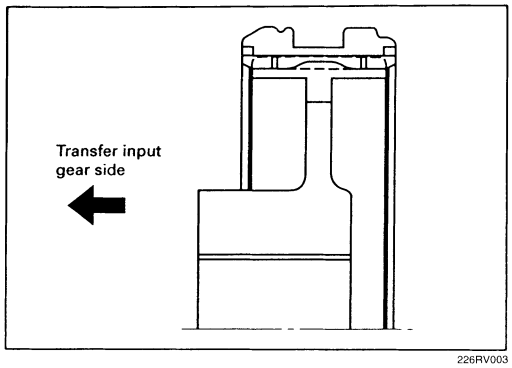

30. High-Low Clutch Hub and Sleeve

The clutch hub face with the heavy bass must be facing the transfer input gear side.

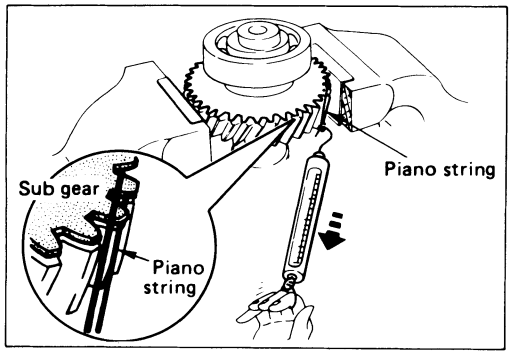

Sub Gear (Anti-lash Plate) Preload

1) Hook a length of piano wire over one of the sub-gear teeth.
2) Attach the other end of the piano wire to a spring balancer.
3) Measure the sub-gear preload.

Sub-Gear Preload	kg(lb/N)
Standard	
6 – 10 (13 – 22/59 – 98)	

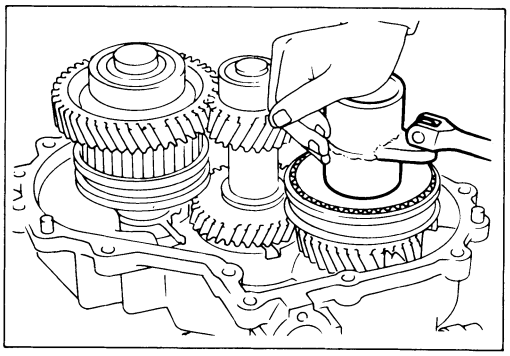

32. Mainshaft End Lock Nut

1) Use the lock nut wrench to tighten the mainshaft end lock nut to the specified torque.

   Lock Nut Wrench : J-37219

Mainshaft End Lock Nut Torque	kg·m (lb·ft/N·m)
14 ± 2 (101 ± 14.4/137 ± 20)	

2) Stake the lock nut.

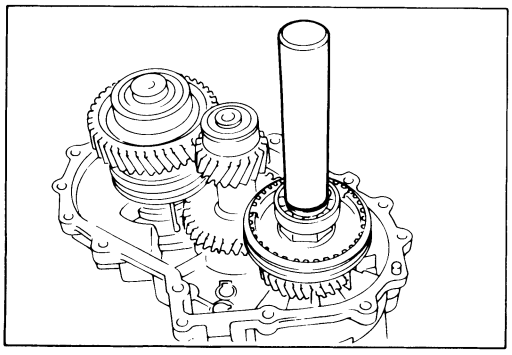

33. Ball Bearing

Use the ball bearing installer to install the ball bearing.

Installer: 5-8840-2159-0 (J-37223)

DETENT, SHIFT ARM ASSEMBLY AND INTERLOCK PIN

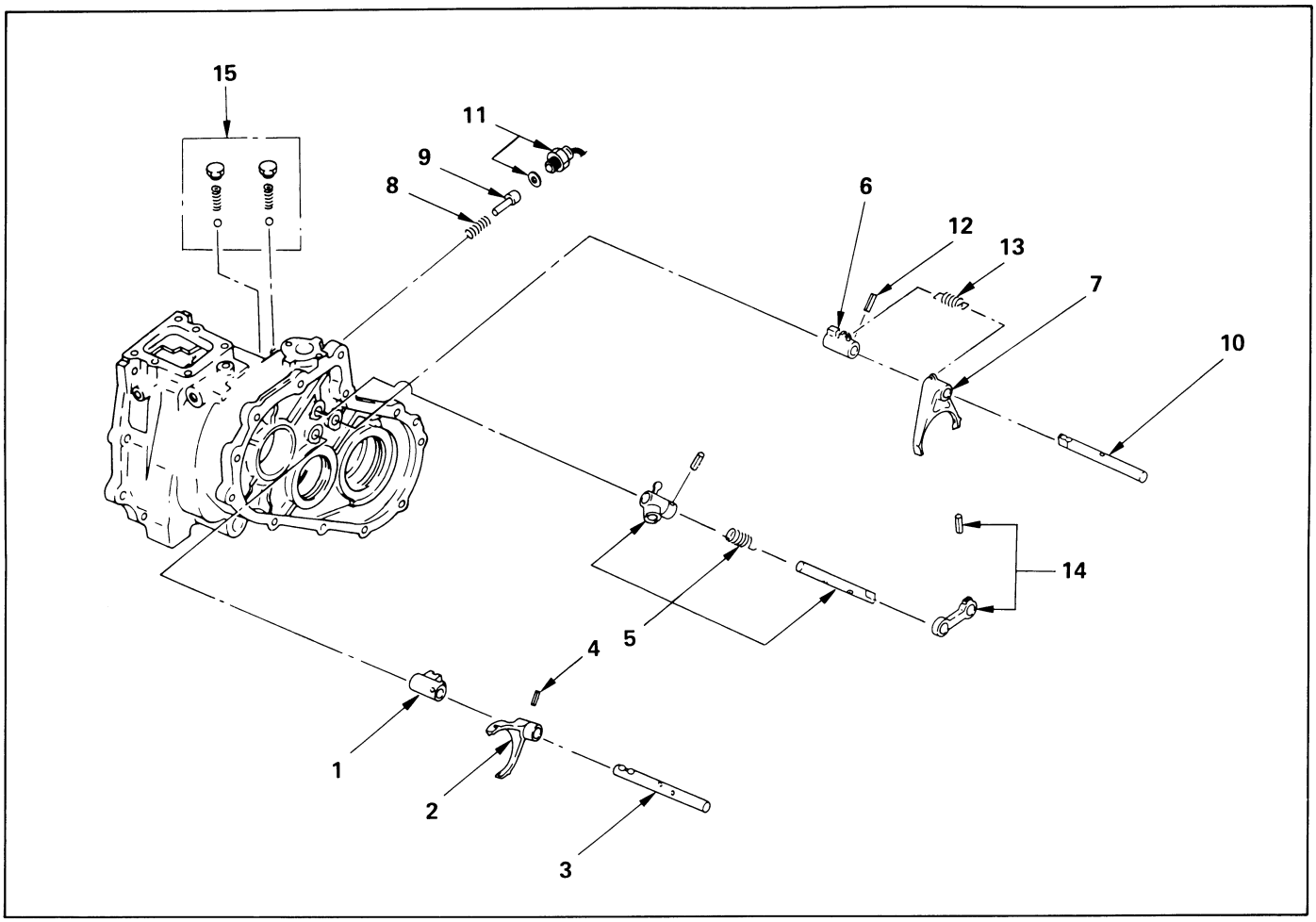

Reassembly Steps

1. Shift block
2. Shift arm
3. ▲ High-low shift rod
4. ▲ Spring pin
5. Select rod assembly
6. Shift block
7. Shift arm
8. Spring
9. ▲ Interlock pin
10. ▲ 2WD-4WD shift rod
11. ▲ 4WD indicator switch
12. ▲ Spring pin
13. Spring
14. Pin and bridge
15. ▲ Detent ball, spring and plug

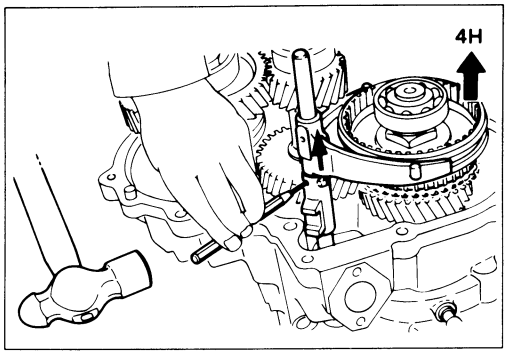

Important Operations

3. High-Low Shift Rod

4. Spring Pin

1) Engage the High-Low sleeve with 4H side.
2) Install the spring pin to the shift block.

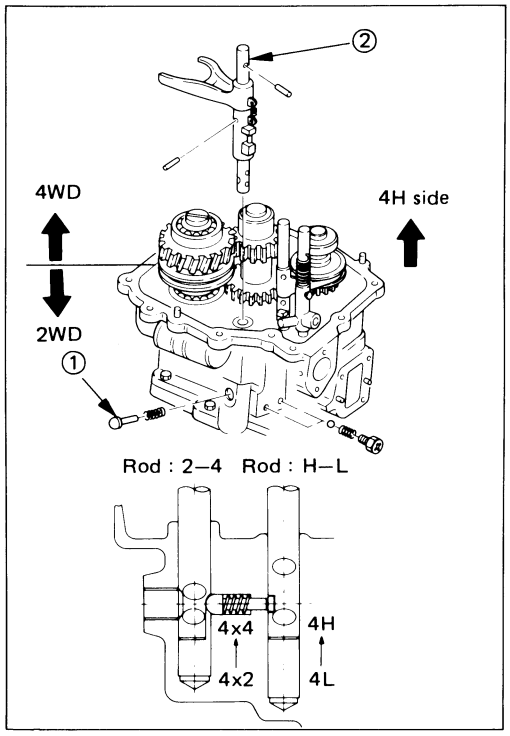

9. Interlock Pin

10. 2WD-4WD Shift Rod

1) Engage the High-Low synchronizers with 4H side and install the interlock pin 1 in proper direction.
2) Install the shift rod: 2WD-4WD 2 with the interlock pin pushed it in.

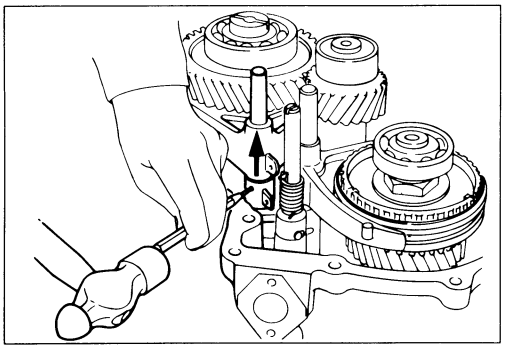

12. Spring Pin

1) Engage the 2WD-4WD sleeve with the 4WD side and install the spring pin.

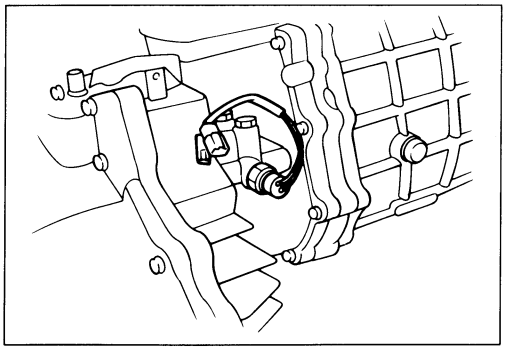

11. 4WD Indicator Switch

Tighten the switch to the specified torque.

Switch Torque	kg·m(lb.ft/N·m)
	4 (29.0/39.2)

15. Detent Ball, Spring and Plug

Tighten the plugs to the specified torque.

Plug Torque	kg·m(lb.ft/N·m)
	1.9 ± 0.4 (13.7 ± 2.9/18.6 ± 3.9)

TRANSFER REAR CASE ASSEMBLY

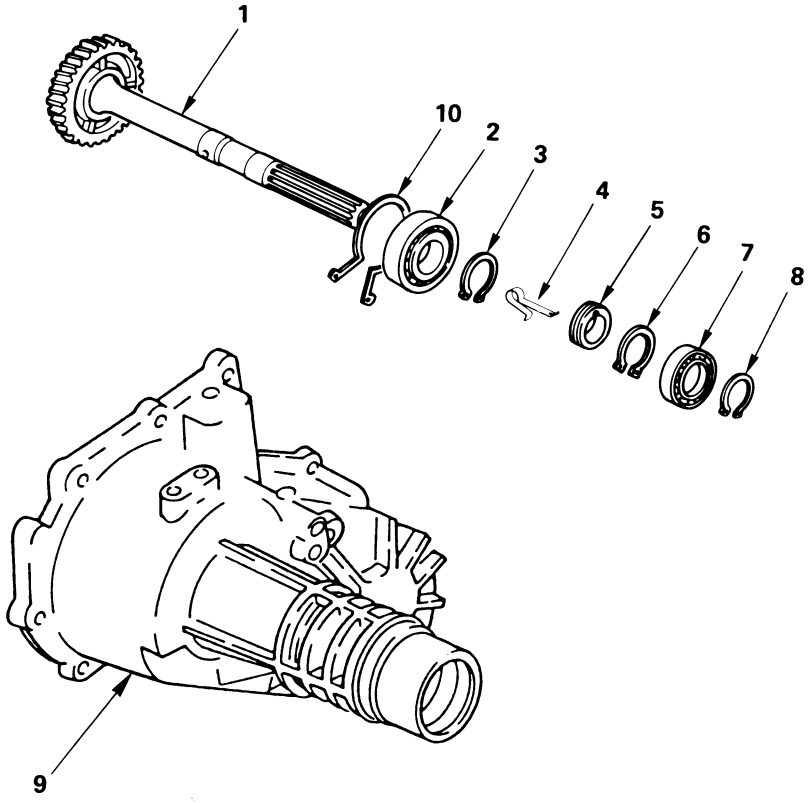

Reassembly Steps

1. Rear output shaft
▲ 2. Ball bearing
3. Bearing snap ring
▲ 4. Clip
5. Speedometer drive gear
6. Bearing snap ring
▲ 7. Ball bearing
8. Bearing snap ring
9. Rear case
10. Bearing snap ring

Important Operations

2. Ball Bearing

Use the ball bearing installer and the adapter to install the ball bearing.

Ball Bearing Installer : 5-8840-2159-0 (J-37223)

Adapter : 5-8840-2192-1 (J-37486-A)

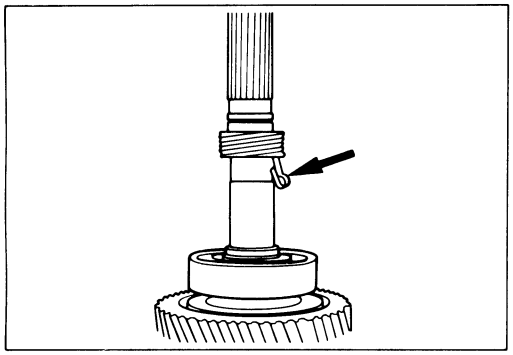

4. Clip

Install the clip to the drive gear groove.

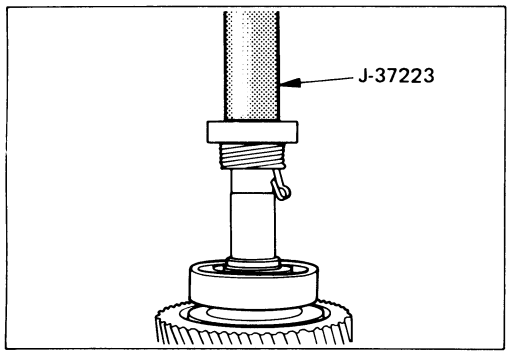

7. Ball Bearing

Use the ball bearing installer to install the ball bearing.

Ball Bearing Installer : 5-8840-2159-0 (J-37223)

REASSEMBLY

EXTERNAL COMPONENTS

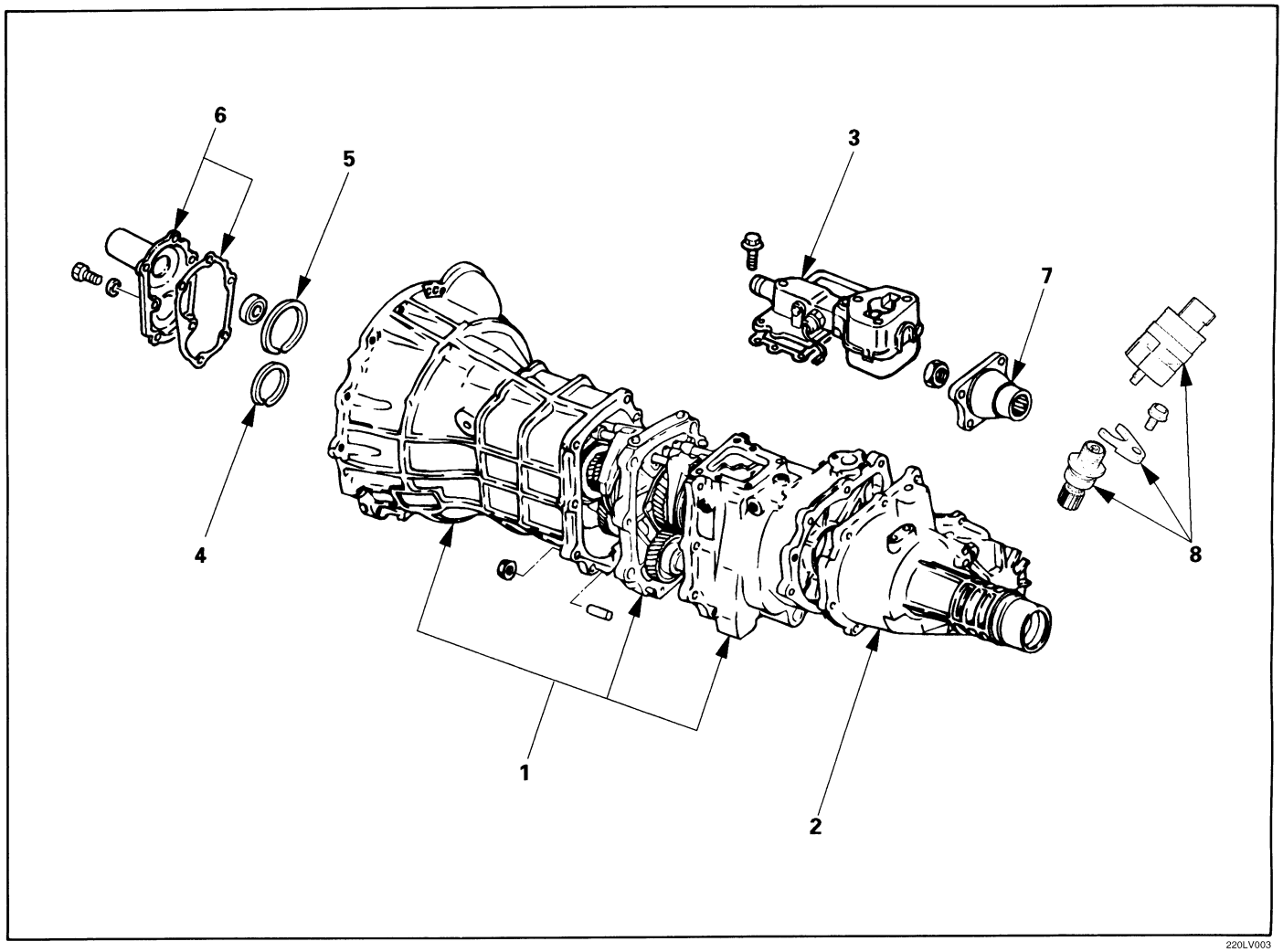

220LV003

Reassembly Steps

1. Transmission and transfer assembly
2. ▲ Transfer rear case assembly
3. Gear control box assembly
4. ▲ Counter gear snap ring
5. ▲ Bearing snap ring
6. ▲ Front cover with oil seal
7. ▲ Transfer flange
8. ▲ Speedometer driven gear and speedometer sensor

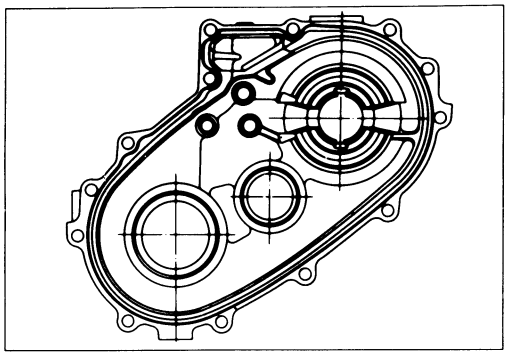

Important Operations

2. Transfer Rear Case Assembly

1) Apply recommended liquid gasket or its equivalent to the transfer rear case fitting faces.

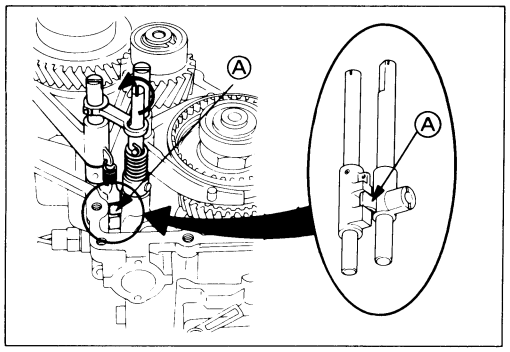

2) Apply the following steps before fitting the transfer rear case.
   ① Shift the High-Low synchronizer to the 4H side.
   ② Turn the select rod counterclockwise so that the select block projection Ⓐ may enter into the 2WD-4WD shift block.

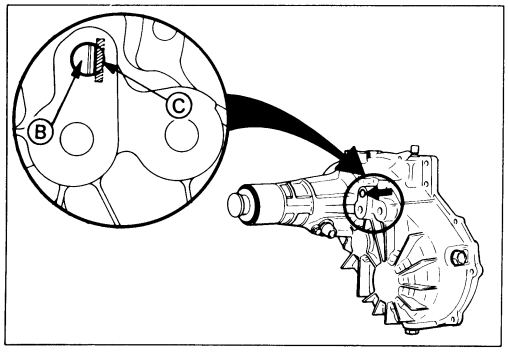

When the rear case is fitted under this condition ②, the direction of the cut-away portion of select rod head Ⓑ aligns with that of the rear case hole's stopper Ⓒ.

3) Tighten the rear transfer rear case bolts to the specified torque.

Transfer Case Bolt Torque	kg·m (lb·ft/N·m)
3.8 ± 0.8 (27 ± 5.8 / 37 ± 7.8)	

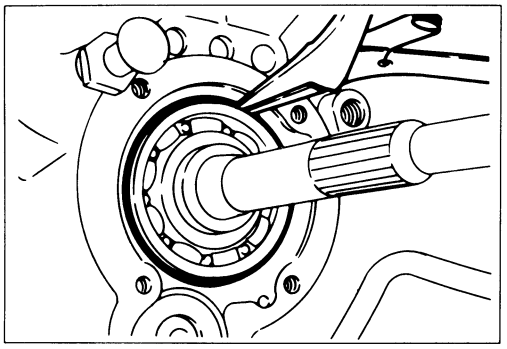

4. Counter Gear Snap Ring

5. Bearing Snap Ring

Use a pair of snap ring pliers to install the snap ring to the mainshaft.

The snap ring must be fully inserted into the ball bearing snap ring groove.

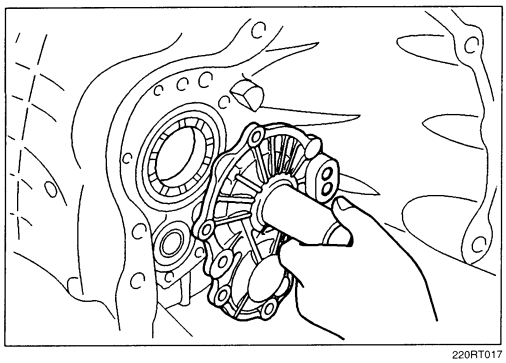
220RT017

6. Front Cover with Oil Seal

1) Apply recommended liquid gasket or its equivalent to the through bolt threads.
2) Install the new gasket and the front cover with oil seal to the transmission case.

   Take care not to damage the oil seal.
3) Tighten the front cover bolts to the specified torque.

Front Cover Bolt Torque	kg·m (lb·ft/N·m)
1.9 ± 0.4 (13.7 ± 2.9/18.6 ± 3.9)	

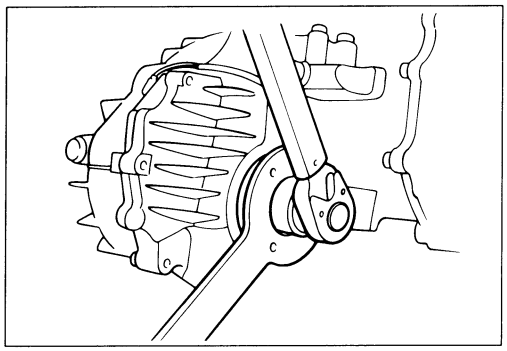

7. Transfer Flange

1) Use the flange holder to install the flange to the rear transfer case.

   Flange Holder : 5-8840-2157-0 (J-27221)
2) Tighten the transfer flange bolts to the specified torque.

Transfer Flange Bolt Torque	kg·m(lb.ft/N·m)
14 ± 2 (101 ± 14.4/ 137 ± 20)	

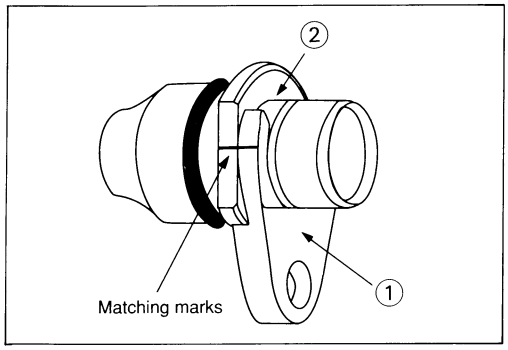

8. Speedometer Driven Gear and Speedometer Sensor

1) Install the O-ring to the speedometer driven gear bushing.
2) Install the driven gear to the speedometer driven gear bushing.
3) Align the matching marks on plate ① and bush ② then tighten the bolt.

Bolt Torque	kg·m (lb·ft/N·m)
1.5 (10.8/14.7)	

4) Install the speedmeter sensor.

	kg·m (lb·ft/N·m)
2.8 (20/27)	

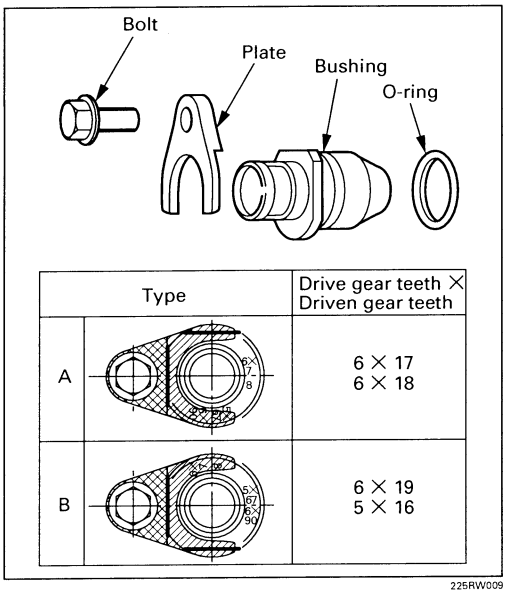

225RW009

TROUBLESHOOTING

Refer to this Section to quickly diagnose and repair engine problems. Each troubleshooting chart has three headings arranged from left to right.

(1) Checkpoint (2) Trouble Cause (3) Countermeasure

This Section is divided into four sub-sections:

1. Abnormal Noise
   1) Noise in Neutral
   2) Noisy Operation
2. Head Shifting
3. Walking or Jumping Out of Gear
4. Oil Leakage

1. ABNORMAL NOISE

1) NOISY IN NEUTRAL

Checkpoint		Trouble Cause	Countermeasure
Gear oil	NG	Insufficient or improper gear oil	Replenish or replace the gear oil
OK			
Flywheel pilot bearing	NG	Worn flywheel pilot bearing	Replace the flywheel pilot
OK			
Bearings (Mainshaft, counter-shaft, and transfer shaft)	NG	Worn or broken bearing(s)	Replace the bearing(s)
OK			
Gears (Mainshaft, counter-shaft, reverse idler gear and transfer gears	NG	Worn or scuffed gear tooth contact surfaces	Replace the gear(s)
OK			
Mainshaft splines Synchronizer clutch hub splines	NG	Worn splines	Replace the main shaft and the synchronizer clutch hub
OK			
Transmission	NG	Transmission misalignment	Realign the transmission

2) NOISY OPERATION

Checkpoint		Trouble Cause	Countermeasure
Gear oil (Metallic rattling)	NG	Insufficient or improper gear oil	Replenish or replace the gear oil
OK			
Bearings (Hissing, thumping or bumping)	NG	Worn or broken bearing(s)	Replace the bearing(s)
OK			
Gears (Growling, humming, or grinding)	NG	Worn, chipped, or cracked gear(s)	Replace the gear(s)
OK			
Gears (Squealing at high speeds)	NG	Free running gears seizing on the thrust face or the inner face	Replace the gear(s)
OK			
Gears (Gear whining)	NG	Lack of backlash between meshing gears	Replace the gear(s)

2. HARD SHIFTING

Checkpoint		Trouble Cause	Countermeasure
Gear oil	NG	Insufficient or improper gear oil	Replenish or replace the gear oil
OK			
Clutch pedal free play	NG	Improper clutch pedal free play	Readjust the clutch pedal free play
OK			
Change lever operation	NG	Hard operating change lever caused insufficient grease	Repair or regrease the change lever assembly
OK			
Change lever play	NG	Worn change lever sliding portions	Repair or replace the applicable parts and regrease
OK			
Shift block sleeve movement	NG	Sleeve movement failure	Repair or replace the sleeve
OK			
Shift rod and quadrant box sliding faces, and other parts	NG	Worn shift rod and/or sliding faces	Replace the shift rod and/ or the quadrant box

Continued on the next page

Continued from the previous page

Checkpoint		Trouble Cause	Countermeasure
Shift arm and synchronizer sleeve	NG	Worn shift arm and/or synchronizer sleeve groove	Replace the worn parts
Mainshaft and countershaft thrust play	NG	Worn thrust washer, collar, and/or gear thrust faces	Replace the worn parts
Synchronizer assembly	NG	Worn synchronizer parts	Replace the worn parts

OK

OK

OK

3. WALKING OR JUMPING OUT OR GEAR

Checkpoint		Trouble Cause	Countermeasure
Change lever play	NG	Insufficient stroke caused by sliding position wear and excessive play	Replace the worn parts
OK			
Detent ball	NG	Worn detent ball	Replace the detent ball
OK			
Detent spring	NG	Detent spring weak or broken	Repair or replace the detent spring
OK			
Shift rod and quadrant box sliding faces	NG	Worn shift rod and/or sliding faces	Replace the shift rod and/or the quadrant box
OK			
Shift arm and synchronizer sleeve	NG	Worn shift arm and/or synchronizer sleeve groove	Replace the worn parts
OK			
Mainshaft and countershaft thrust play	NG	Worn thrust washer, collar, and/or gear thrust faces	Replace the worn parts

Continued on the next page

Continued from the previous page

Checkpoint		Trouble Cause		Countermeasure
Bearings (Mainshaft, countershaft, and individual gears)	NG	Worn or broken bearing(s)		Replace the bearing(s)
Mainshaft splines Synchronizer clutch hub splines	NG	Worn splines		Replace the main shaft and the synchronizer clutch hub
Synchronizer assembly	NG	Weak or broken spring		Replace the spring

OK

OK

OK

4. OIL LEAKAGE

Checkpoint		Trouble Cause	Countermeasure
Oil level	NG	Oil level too high	Drain the oil to the correct level
OK			
Gear oil	NG	Improper gear oil	Replace the gear oil
OK			
Drain plug and/or filler plug	NG	Loose plug(s)	Tighten the plug(s) and replenish the oil
OK			
Gaskets	NG	Defective or improperly installed gasket(s)	Replace the gasket(s)
OK			
Air breather	NG	Air breather not installed Air breather clogged	Install the air breather Replace the air breather
OK			
Front cover oil seal	NG	Worn or scratched oil seal	Replace the oil seal
OK			
Rear cover oil seal	NG	Worn or scratched oil seal	Replace the oil seal

TRANSMISSION

CLUTCH

CONTENTS

Service Precaution 7C–1
General Description 7C–2
Diagnosis 7C–8
Clutch Assembly 7C–9
Clutch Assembly and Associated Parts . . . 7C–9
Removal 7C–9
Inspection and Repair 7C–10
Installation 7C–15
Clutch Control 7C–17
Clutch Control Parts 7C–17
Removal 7C–18
Inspection and Repair 7C–18
Installation 7C–19
Adjustment 7C–19
Master Cylinder 7C–22
Disassembled View 7C–22
Disassembly 7C–23
Inspection and Repair 7C–23
Reassembly 7C–23
Slave Cylinder 7C–24
Disassembled View 7C–24
Disassembly 7C–24
Inspection and Repair 7C–24
Reassembly 7C–25
Damper Cylinder 7C–26
Disassembled View 7C–26
Disassembly 7C–26
Inspection and Repair 7C–26
Reassembly 7C–26
Main Data and Specifications 7C–27
General Specifications 7C–27
Torque Specifications 7C–27
Special Tools 7C–30

Service Precaution

WARNING: IF SO EQUIPPED WITH A SUPPLEMENTAL RESTRAINT SYSTEM (SRS), REFER TO THE SRS COMPONENT AND WIRING LOCATION VIEW IN ORDER TO DETERMINE WHETHER YOU ARE PERFORMING SERVICE ON OR NEAR THE SRS COMPONENTS OR THE SRS WIRING. WHEN YOU ARE PERFOMING SERVICE ON OR NEAR THE SRS COMPONENTS OR THE SRS WIRING, REFER TO THE SRS SERVICE INFORMATION. FAILURE TO FOLLOW WARNINGS COULD RESULT IN POSSIBLE AIR BAG DEPLOYMENT, PERSONAL INJURY, OR OTHERWISE UNNEEDED SRS SYSTEM REPAIRS.

CAUTION: Always use the correct fastner in the proper location. When you reolace a fastener, use ONLY the exact part number for that application. ISUZU will call out those fasteners that requir a replacement after removal. ISUZU will also call out the fasteners that requir thread lockers or thread sealant. UNLESS OTHERWISE SPECIFIED , do not use supplemental coatings (Paints, greases, or other corrosion inhibitors) on threaded fastners or fastner joint interfaces. Generally,such coatings adversely affect the fastner torque and the joint clamping force, and may damage the fastner. When you install fasteners, use the correct tightening sequence and specifications. Following these instructions can help you avoid damage to parts and systems.

General Description

Clutch

(6VE1)

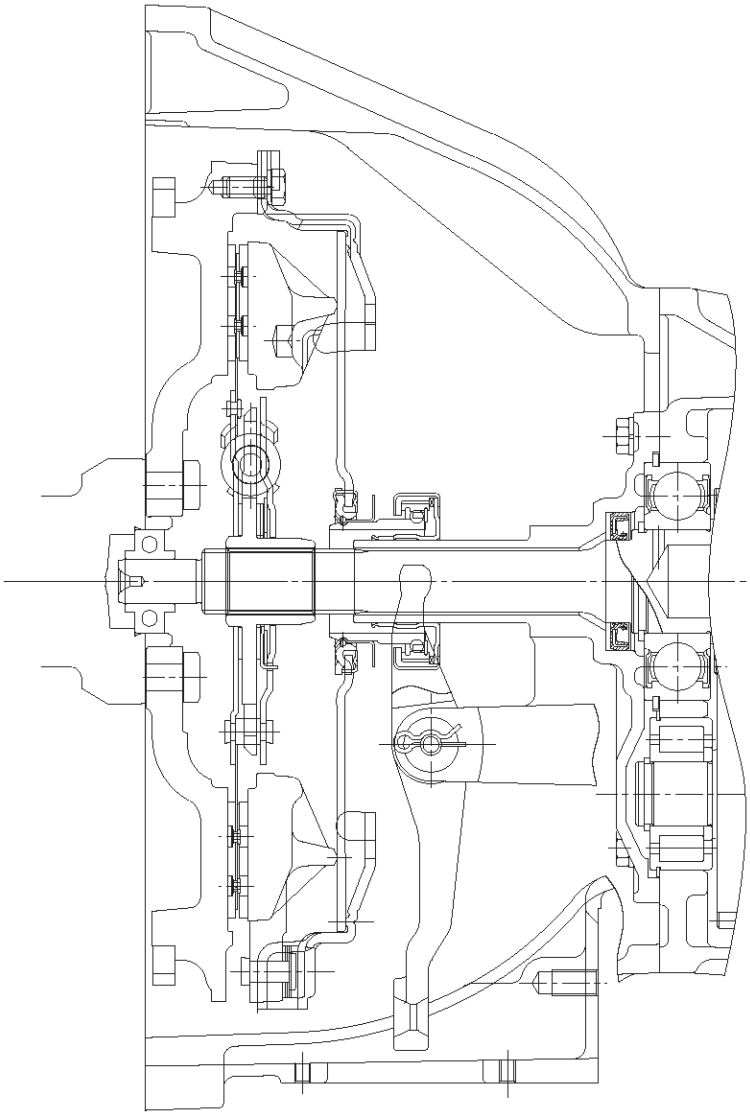

A07RW046

For 6VE1 (3.5L) and 4JX1 (3.0L) engine models, the pull-type clutch is employed. The pull-type clutch is disengaged by pulling the release lever (release bearing) to disengage the pressure plate.

Master Cylinder

(6VE1 LHD)

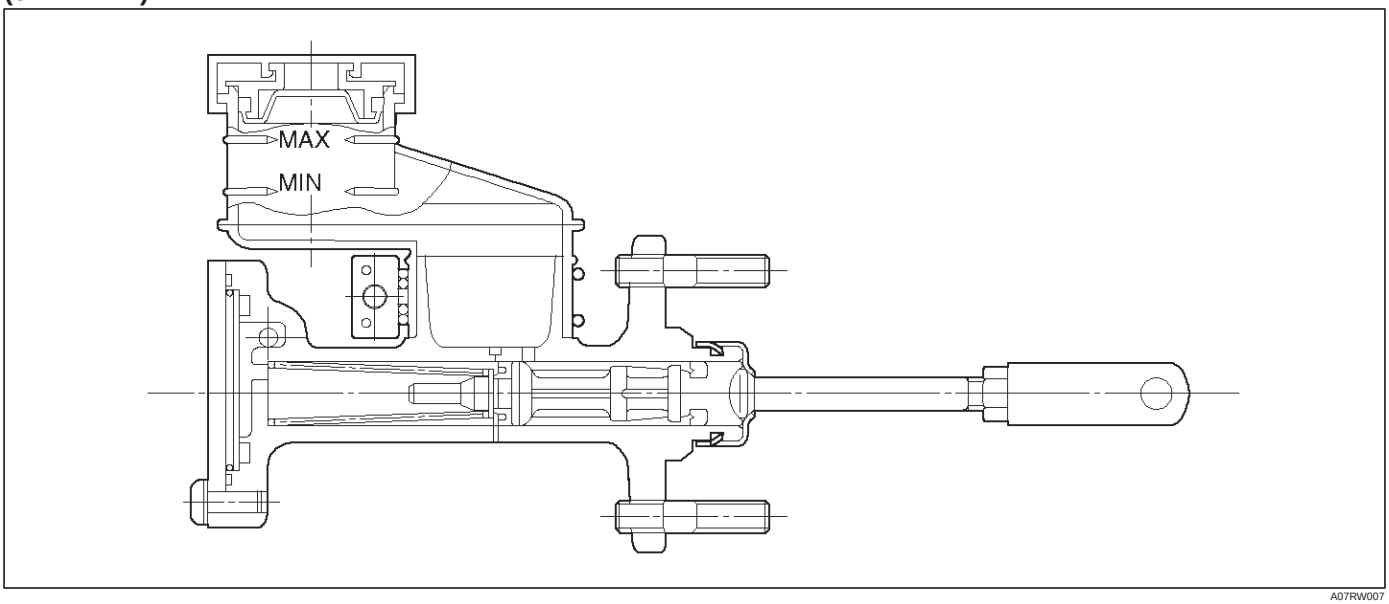

A07RW007

(6VE1 RHD)

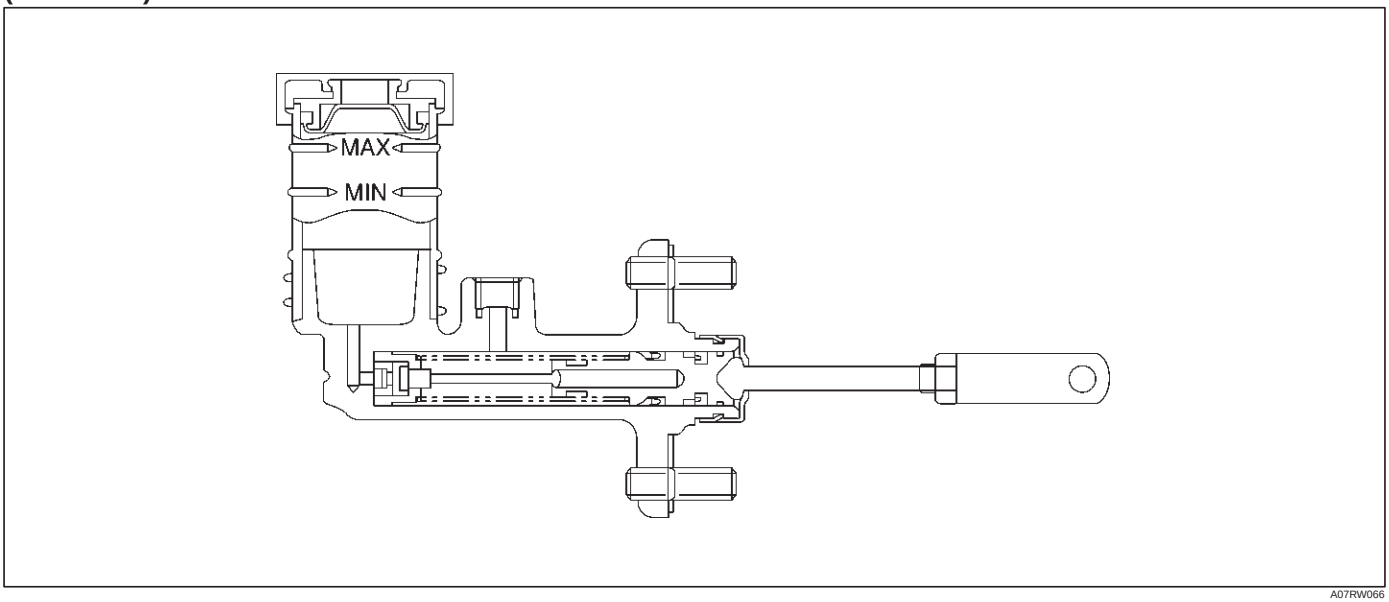

A07RW066

(4JX1)

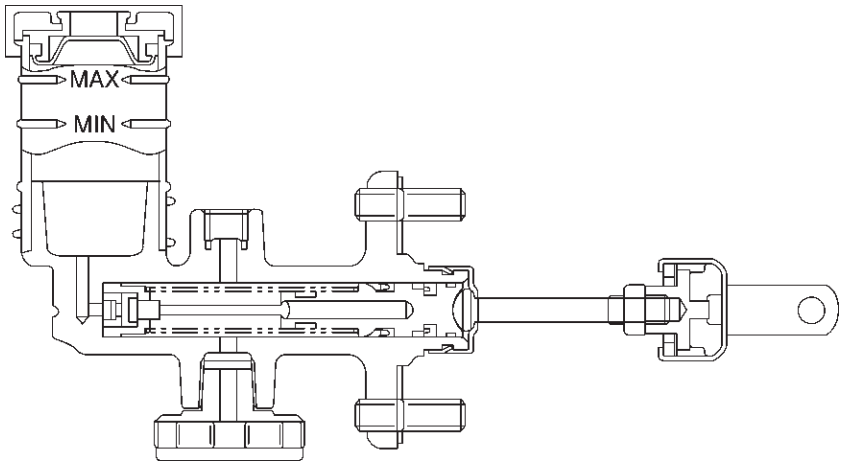

A07RW067

Damper Cylinder

(Except 6VE1 LHD)

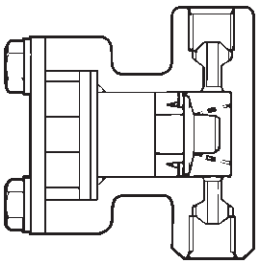

A07RS004

In order to reduce the occurrence of noises at the clutch hydraulic system, the damper cylinder is used in the clutch hydraulic line between the master cylinder and slave cylinder.

Slave Cylinder

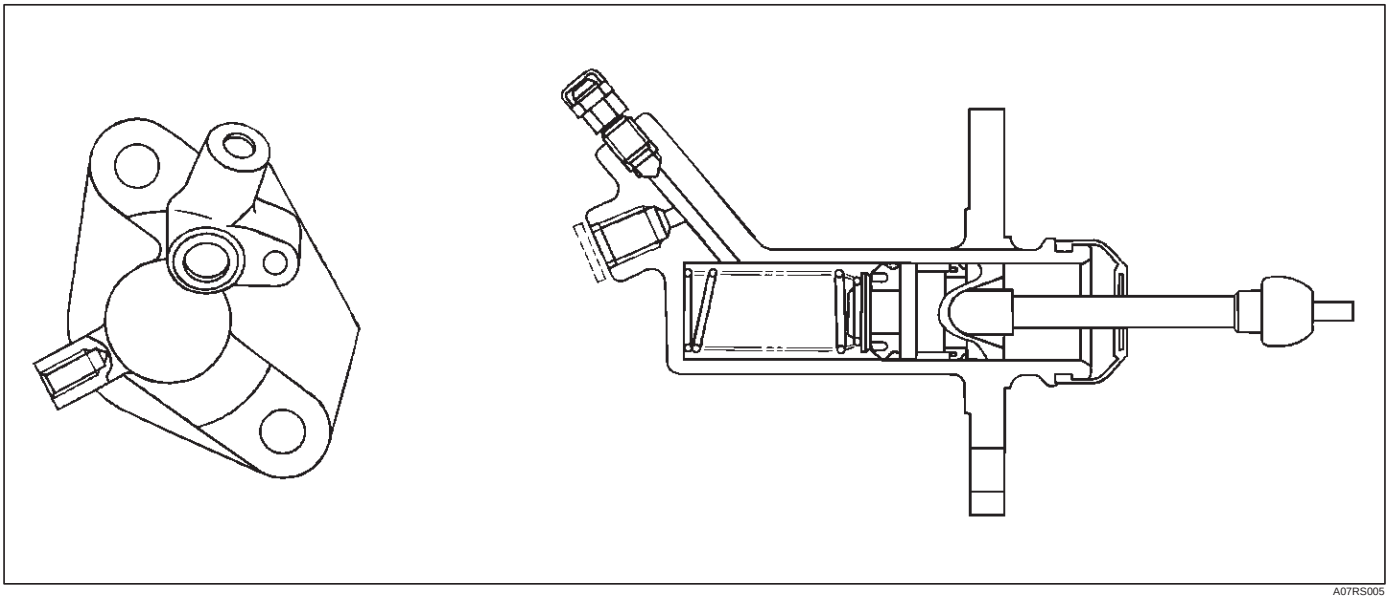

A07RS005

Pressure Plate Assembly

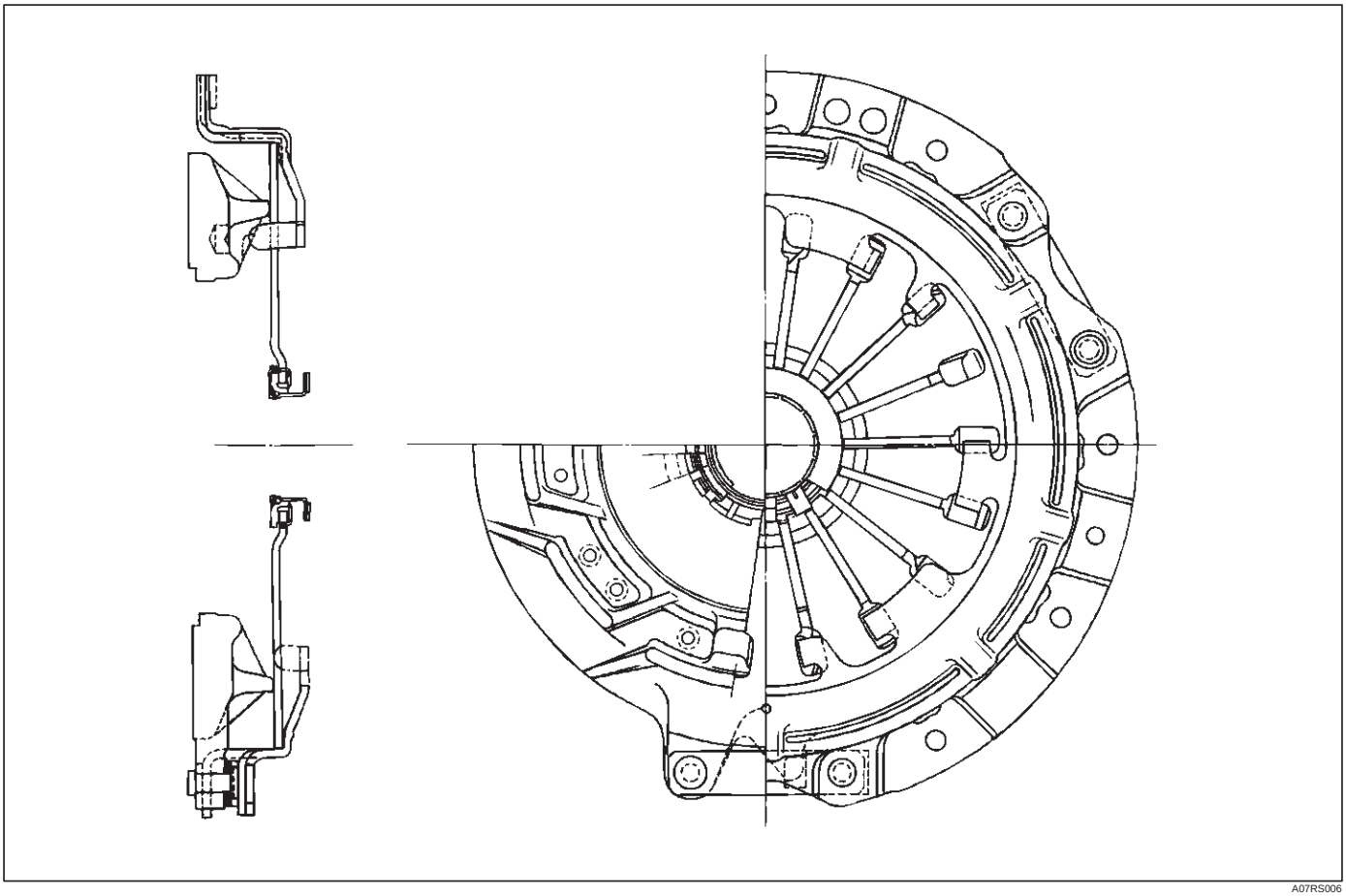

A07RS006

Driven Plate Assembly

(6VE1)

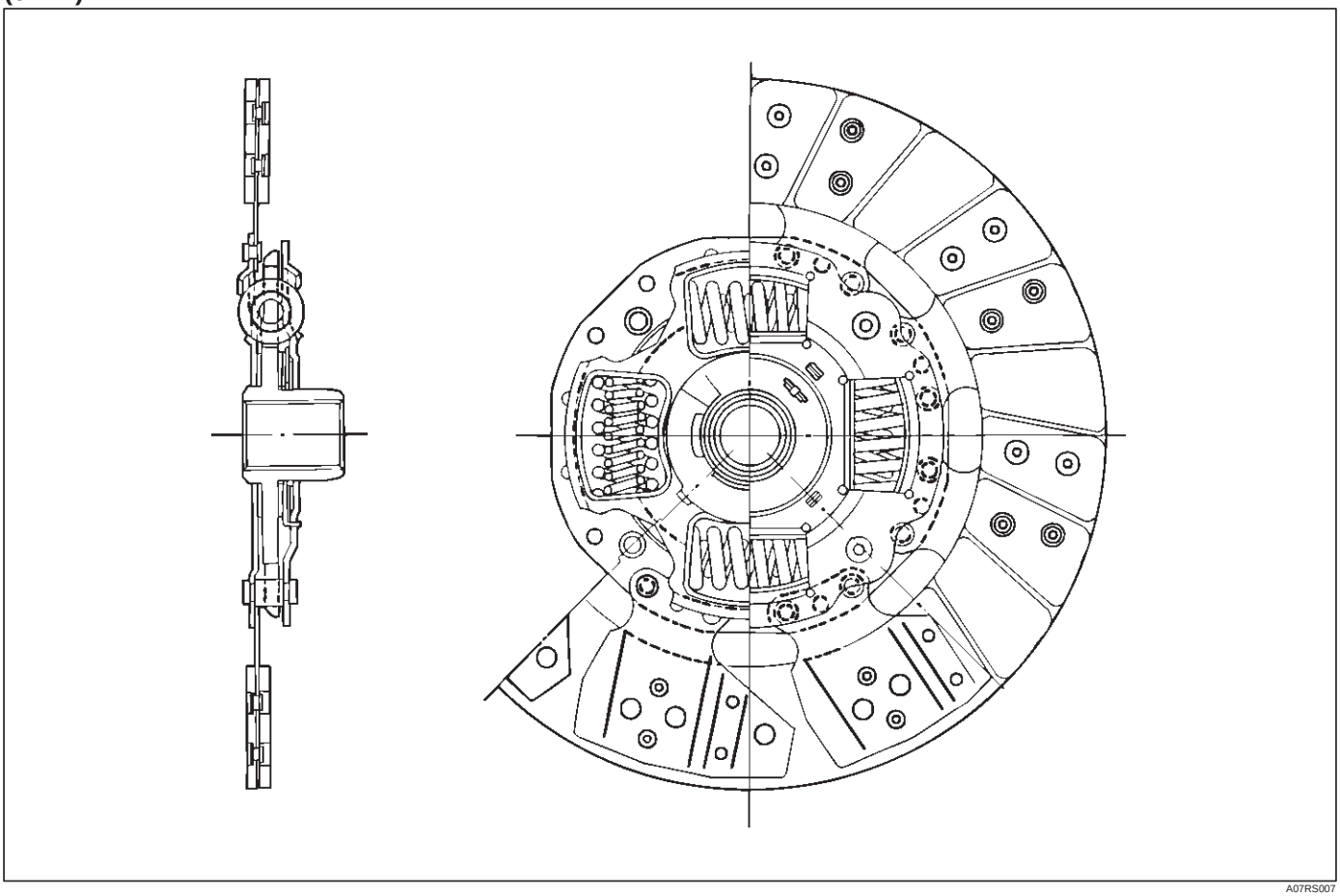

A07RS007

(4JX1)

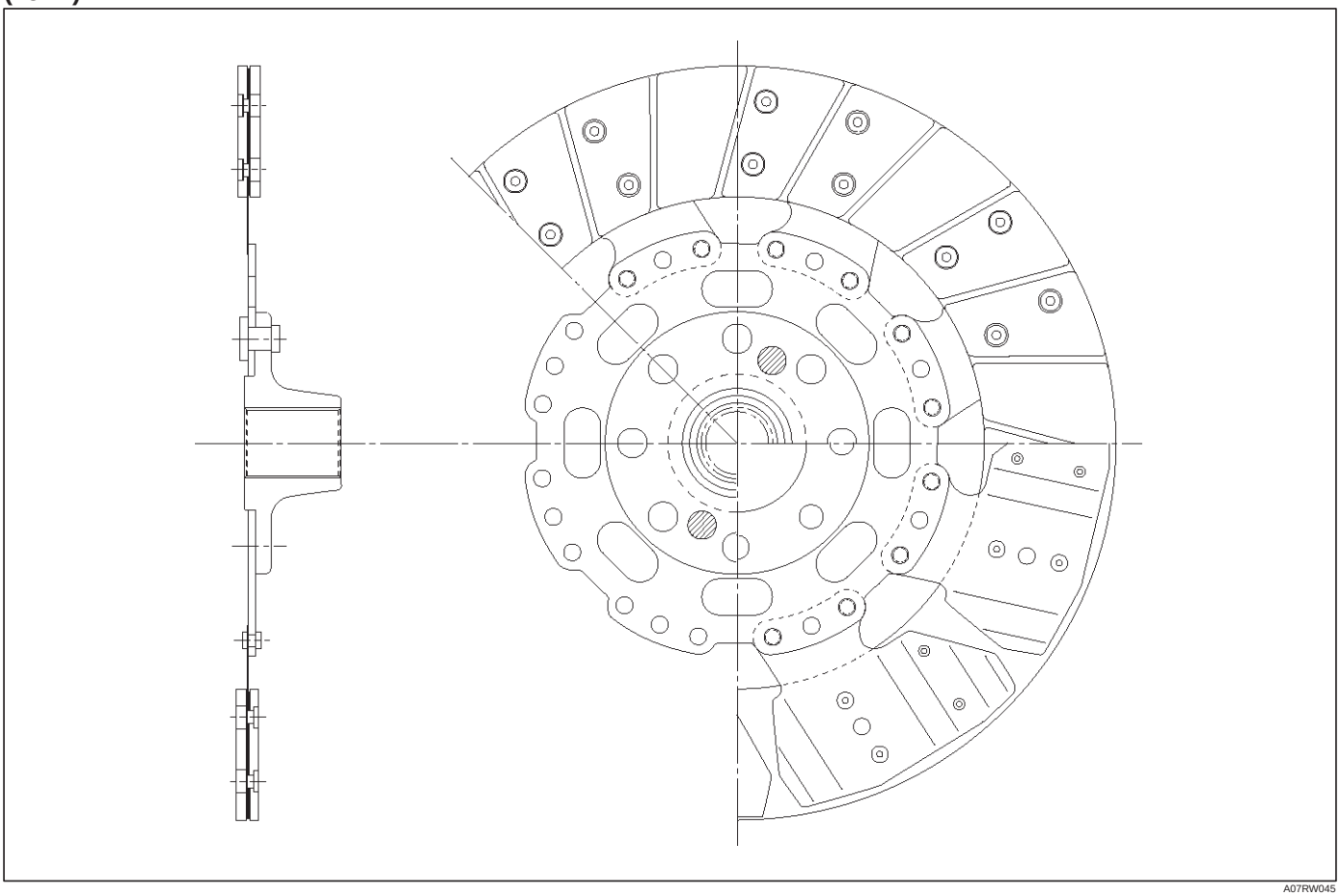

A07RW045

Diagnosis

Condition	Possible cause	Correction
Dragging	Fluid leakage.	Repair
	Air in hydraulic line.	Bleed
	Master cylinder and slave cylinder seals worn.	Replace master cylinder. Replace slave cylinder seals.
	Driven plate warped.	Replace driven plate.
	Diaphragm spring weakened or tip of fingers worn.	Replace pressure plate
	Driven plate sticking on splines.	Lubricate with grease or replace.
	Clutch spline worn.	Repair
	Release bearing worn or damaged.	Replace release bearing.
Slipping	Driven plate facing worn or oil–soaked.	Replace driven plate and check for leaks.
	Diaphragm spring weakened.	Replace pressure plate.
	Pressure plate or flywheel warped.	Correct or replace.
	Master cylinder and slave cylinder seals worn.	Replace master cylinder. Replace slave cylinder seals.
Chattering	Engine mounts loose or damaged.	Tighten or replace.
	Driven plate facing warped.	Replace driven plate.
	Surface of facing hardened.	Replace driven plate
	Driven plate facing oil soaked.	Replace driven plate and check for leaks.
	Damper springs weakened or broken.	Replace.
	Pressure plate or flywheel warped.	Correct or replace.
Noisy	Replace bearing binding.	Correct, or replace if damaged, and lubricate.
	Replace bearing worn or damaged.	Replace release bearing.
	Release bearing poorly lubricated.	Lubricate.
	Pilot bearing worn.	Replace pilot bearing.
	Damper springs weakened or broken.	Replace driven plate.
	Rivets of driven plate exposed.	Replace driven plate.
Replace driven plate.	Hydraulic line blocked.	Clean out or replace.
	Master or slave cylinders binding.	Repair or replace as needed.

Clutch Assembly

Clutch Assembly and Associated Parts

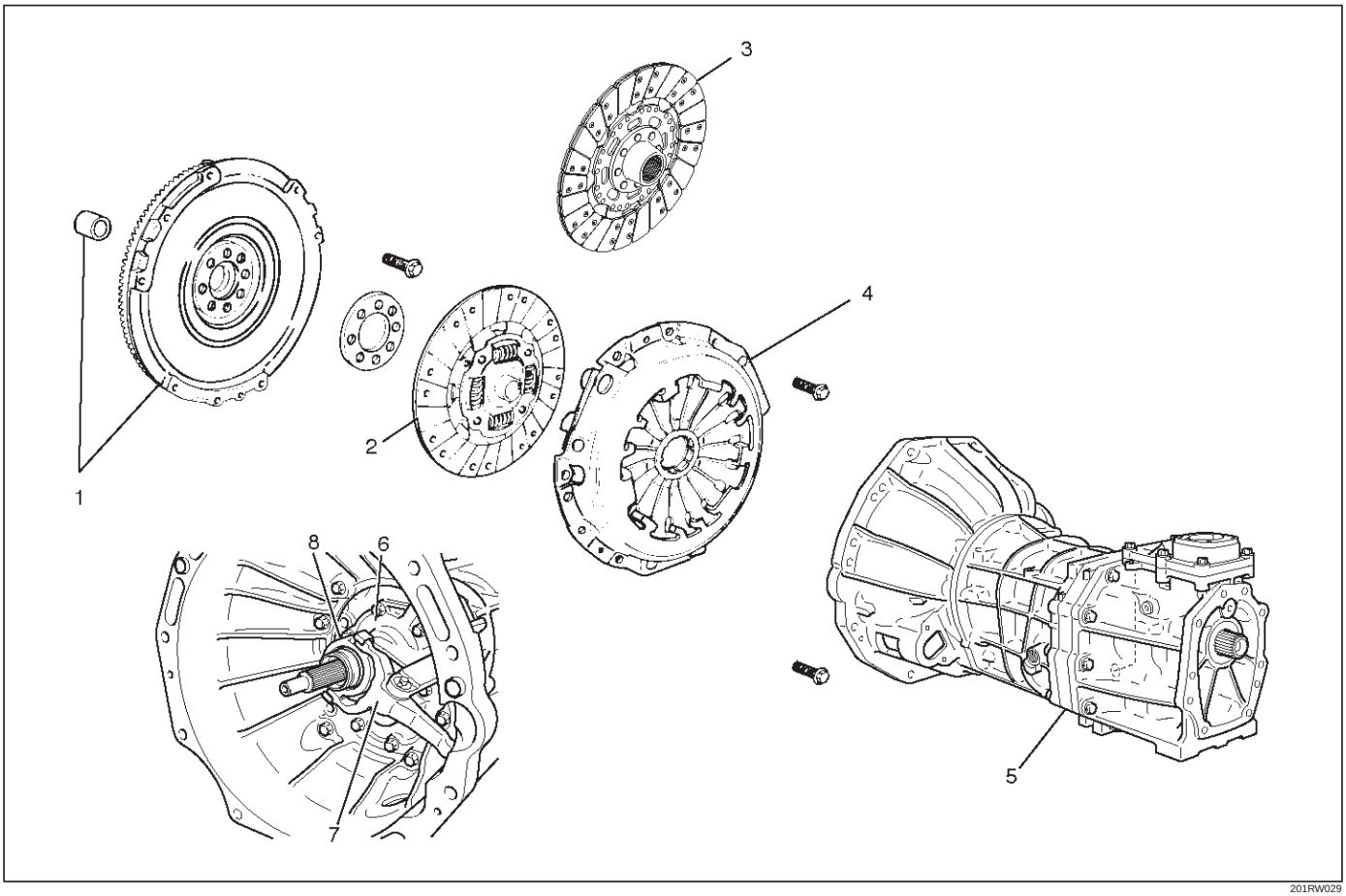

201RW029

Legend

(1) Flywheel Assembly and Crankshaft Bearing
(2) Driven Plate Assembly (6VE1)
(3) Driven Plate Assembly (4JX1)
(4) Pressure Plate Assembly
(5) Transmission Assembly
(6) Front Cover
(7) Shift Fork
(8) Release Bearing

Removal

1. Remove transmission assembly, refer to ”MANUAL TRANSMISSION” of Section 7B for ”Removal AND INSTALLATION” procedure.
2. Mark the flywheel, clutch cover and pressure plate lug for alignment when installing.
3. Remove pressure plate assembly (3).
4. Remove driven plate assembly (1) or (2). Use the pilot aligner 5-85253-001-0 (J-24547) to prevent the driven plate assembly from falling free.

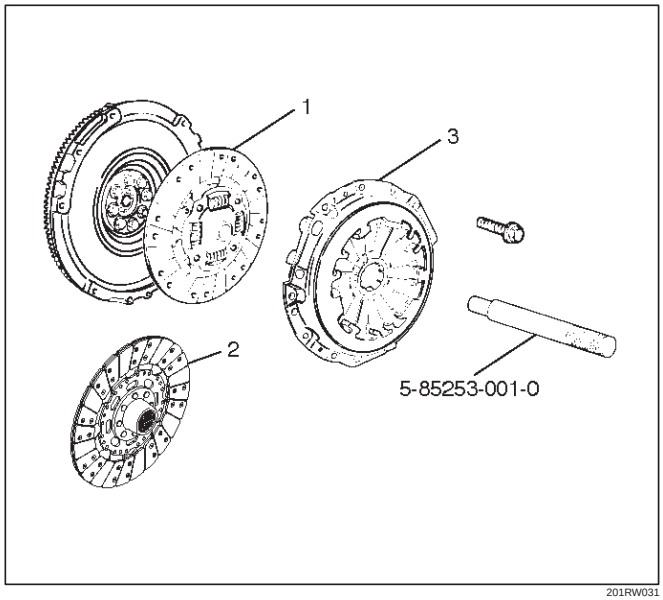

201RW031

5. Mark the flywheel, clutch cover and pressure plate lug for alignment when installing.
6. Remove the release bearing (3) from the transmission case .
7. Remove the shift fork snap pin.
8. Remove the shift fork pin and shift fork (4) from the front cover.
9. Remove the front cover bolts.
10. Remove the front cover (5) from the transmission case.

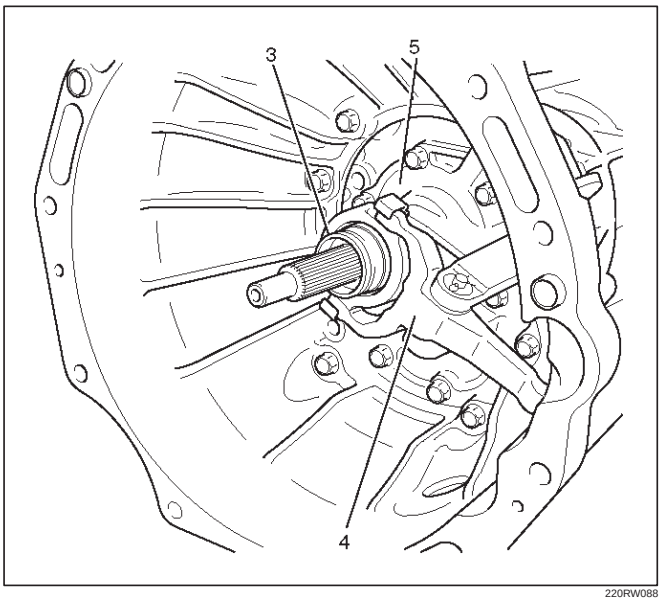

220RW088

11. Remove flywheel assembly and crankshaft bearing. Do not remove except for replacement.
12. Use the remover 5–8840–2000–0 (J–5822) and sliding hammer 5–8840–0019–0 (J–23907) to remove the crankshaft bearing

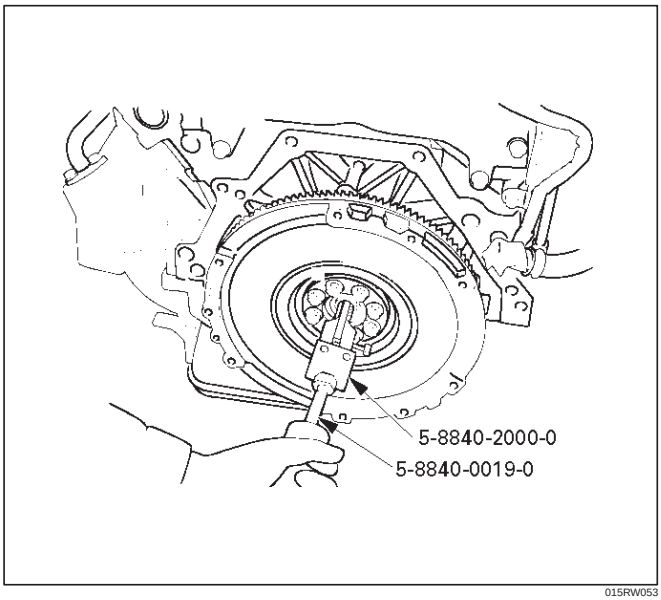

015RW053

Inspection and Repair

Make necessary correction or parts replacement if wear, damage, or any other abnormal condition are found through inspection.

Pressure Plate Assembly

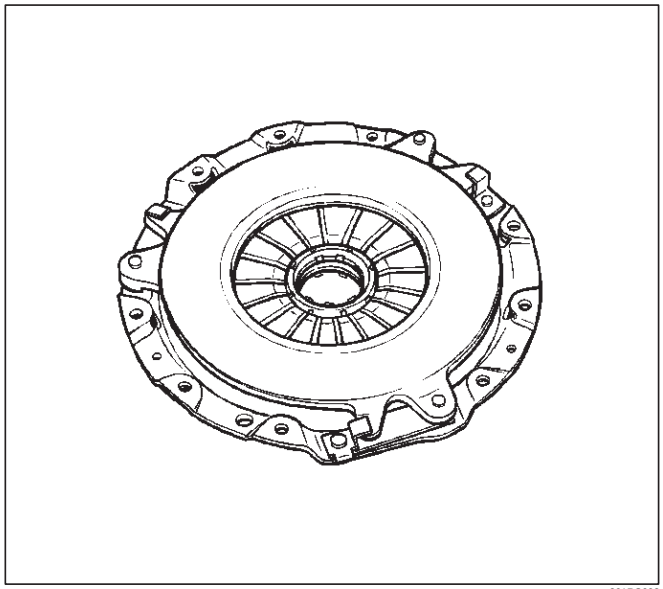

201RS002

1. Visually check the pressure plate friction surface for excessive wear and heat cracks.
2. If excessive wear or deep heat cracks are present, the pressure plate must be replaced.

Pressure Plate Warpage

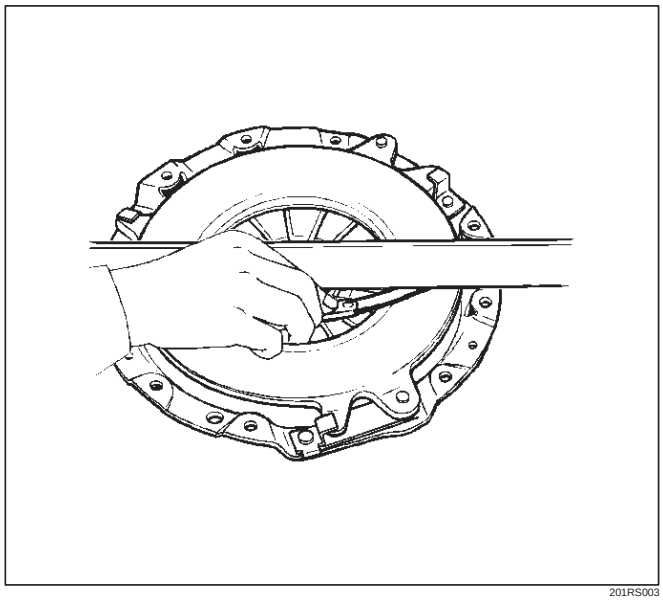

201RS003

1. Use a straight edge and a feeler gauge to measure the pressure plate friction surface flatness in four directions.
2. If any of the measured values exceeds the specified limit, the pressure plate must be replaced.

Pressure Plate Warpage

Limit: 0.3 mm (0.012 in)

Clutch Cover

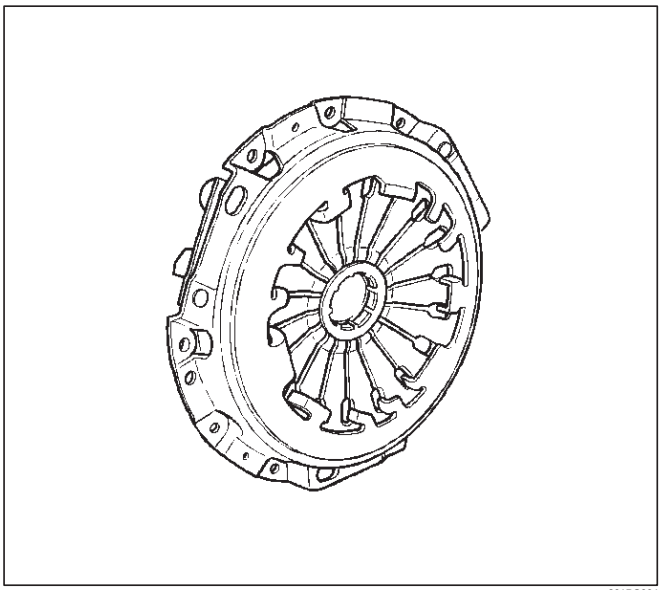

201RS004

1. Visually check the entire clutch cover for excessive wear, cracking, and other damage.
2. The clutch cover must be replaced if any of these conditions are present.

Clutch Set Force

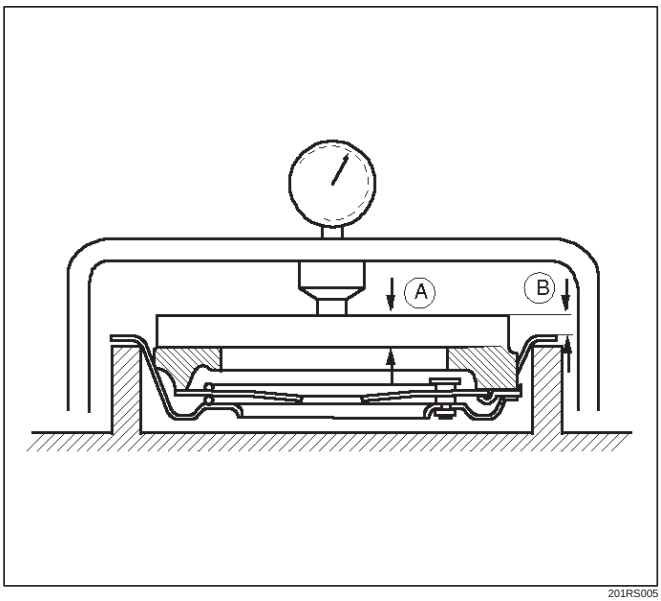

201RS005

1. Invert the pressure plate assembly.
2. Place a new driven plate over the pressure plate. A metal sheet with “A” thickness of 8.3 mm (0.327 in) may be used in place of the driven plate.
3. Compress the pressure plate assembly until the distance “B” becomes 12 mm (0.472 in).
4. Note the pressure gauge reading.
5. If the measured value is less than the specified limit, the pressure plate assembly must be replaced.

Clutch Set Force

Standard: 7208 N (1621 lb)

Limit: 6468 N (1454 lb)

Diaphragm Spring Finger Height

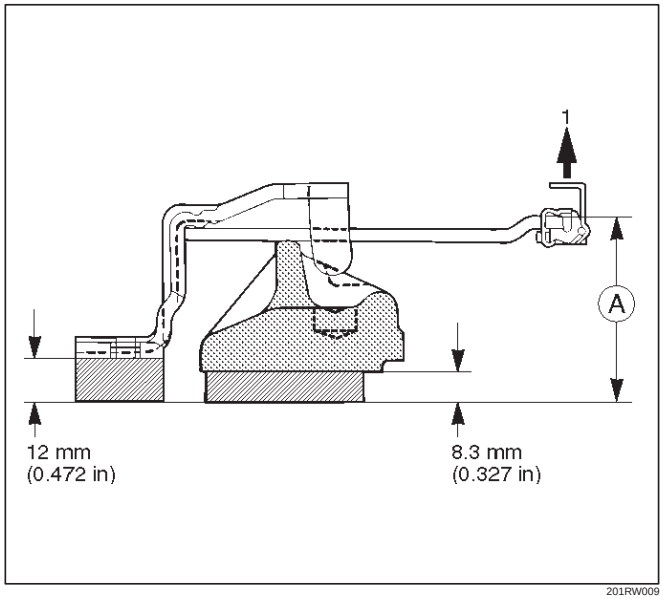

201RW009

Legend

(1) Release Side

1. Place a new driven plate or a 8.3 mm (0.327 in) spacer beneath the pressure plate.
2. Fully compress the pressure plate and diaphragm spring.
3. There are two ways to do this.
4. Use a bench press to press down on the assembly from the top.
5. Tighten the fixing bolts.

NOTE: Preload on diaphragm spring finger must be 49 – 98 N (11 – 22 lb) in direction of release, when clutch cover assembly is bolted to the flywheel.

6. Measure the spring height from base to spring tip “A”. If the measured value exceeds the specified limit, the pressure plate assembly must be replaced.

Diaphragm Spring Finger Height

Standard: 49.9 mm – 51.9 mm (1.965 in – 2.043 in)

Driven Plate Assembly

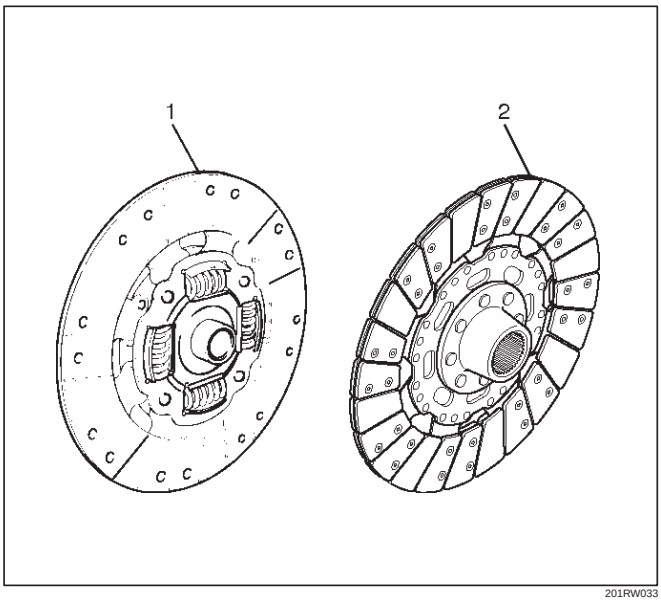

Legend

(1) Driven Plate Assembly (6VE1)
(2) Driven Plate Assembly (4JX1)

1. Visually check the torsion spring for looseness, breakage, and weakening.
2. If any of these conditions are discovered, the driven plate assembly must be replaced.
3. Visually check the facing surfaces for cracking and excessive scorching.
4. Visually inspect the facing surfaces for the presence of oil or grease.
5. If any of these conditions are discovered, the facing must be cleaned or replaced.
6. Check that the driven plate moves smoothly on the transmission top gear shaft spline.
7. Minor ridges on the top gear shaft spline may be removed with an oil stone.

Driven Plate Warpage

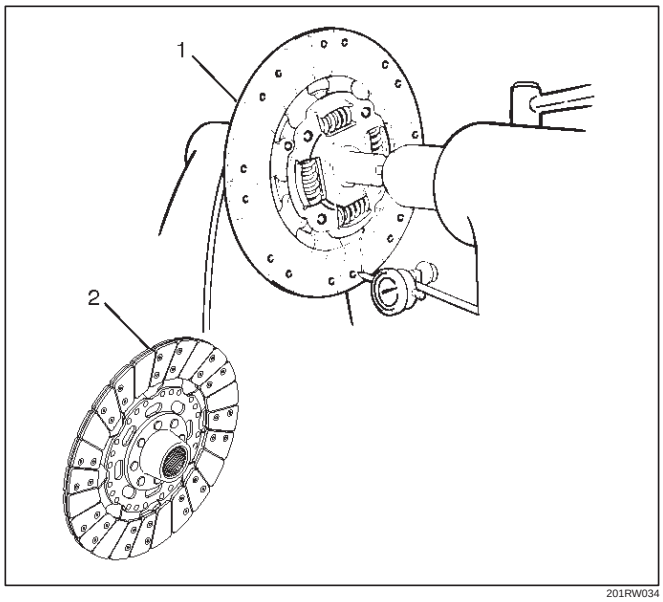

Legend

(1) Driven Plate Assembly (6VE1)
(2) Driven Plate Assembly (4JX1)

1. Insert the clutch pilot aligner into the driven plate splined hub.
2. The clutch pilot aligner J-24547 must be held perfectly horizontal.
3. Set a dial indicator to the driven plate outside circumference.
4. Slowly turn the driven plate.
5. Read the dial indicator as you turn the driven plate.
6. If the measured value exceeds the specified limit, the driven plate assembly must be replaced.

Driven Plate Warpage

Standard: 0.7 mm (0.028 in)

Limit: 1.0 mm (0.039 in)

Driven Plate Splined Hub Spline Wear

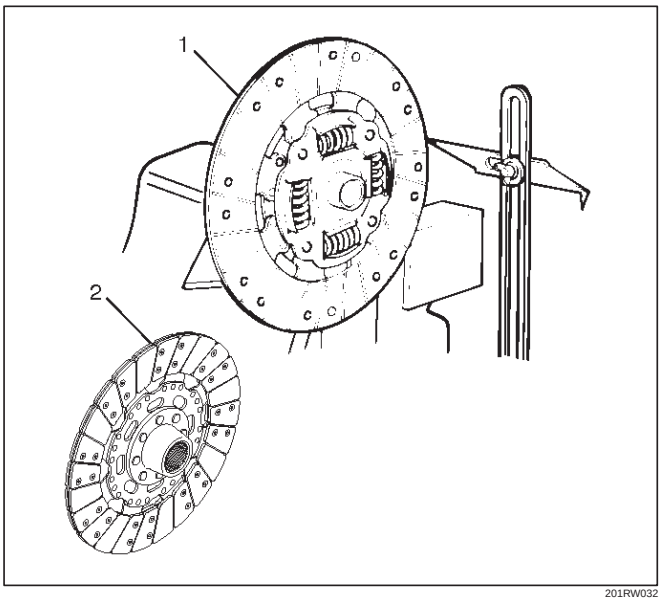

201RW032

Legend

(1) Driven Plate Assembly (6VE1)
(2) Driven Plate Assembly (4JX1)

1. Clean the driven plate splined hub.
2. Install the driven plate to the transmission top gear shaft spline.
3. Set a surface gauge to the driven plate outside circumference.
4. Slowly turn the driven plate counterclockwise.
5. Measure the spline rotation play as you turn the driven plate.
6. If the measured value exceeds the specified limit, the driven plate assembly must be replaced.

Driven Plate Splined Hub Spline Wear

Standard: 0.5 mm (0.020 in)

Limit: 1.0 mm (0.039 in)

Rivet Head Depression

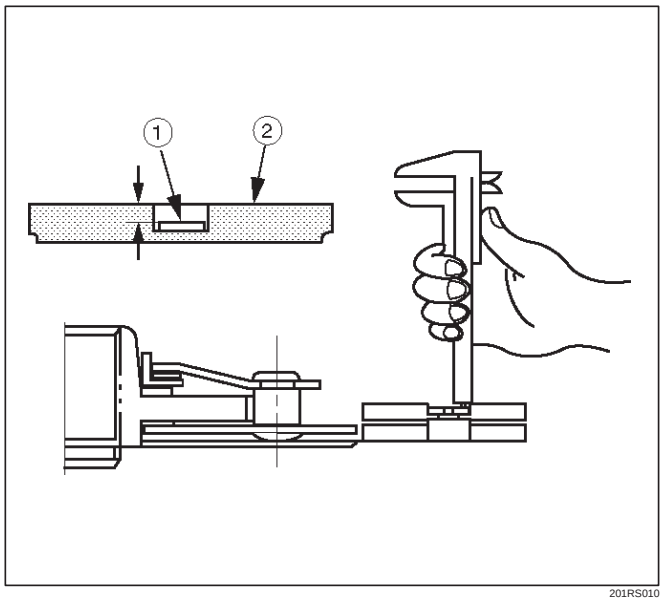

201RS010

1. Use a depth gauge or a straight edge with steel rule to measure the rivet head depression 1 from the facing surface 2.
2. Be sure to measure the rivet head depression on both sides of the driven plate.
3. If the measured value is less than the specified limit, the driven plate assembly must be replaced.

Rivet Head Depression

Standard:

	Flywheel side	Pressure plate side
6VE1	1.95mm (0.077 in)	1.95mm (0.077 in)
4JX1	1.60mm (0.063 in)	1.60mm (0.063 in)

Limit: 0.2 mm (0.008 in)

Release Bearing

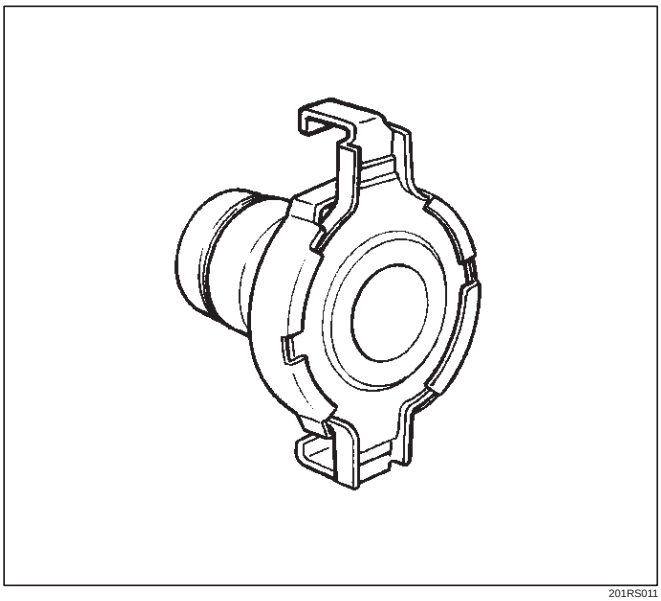

201RS011

1. Visually check the release bearing for excessive play, noise and breakage.
2. If any of these conditions are discovered, the release bearing must be replaced.
3. When replacing the release bearing, replace both the wedge collar and wire ring at the same time.

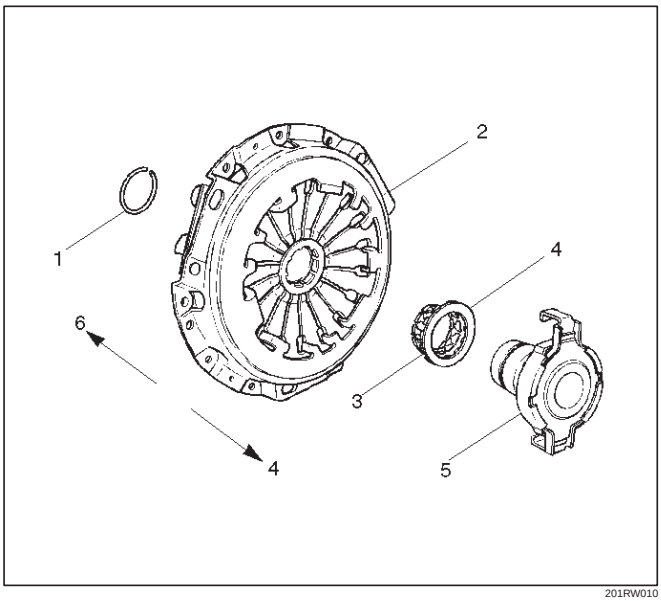

201RW010

Legend

(1) Wire Ring
(2) Pressure Plate Assembly
(3) Wedge Collar
(4) T/M Side
(5) Release Bearing
(6) Engine Side

Wedge Collar

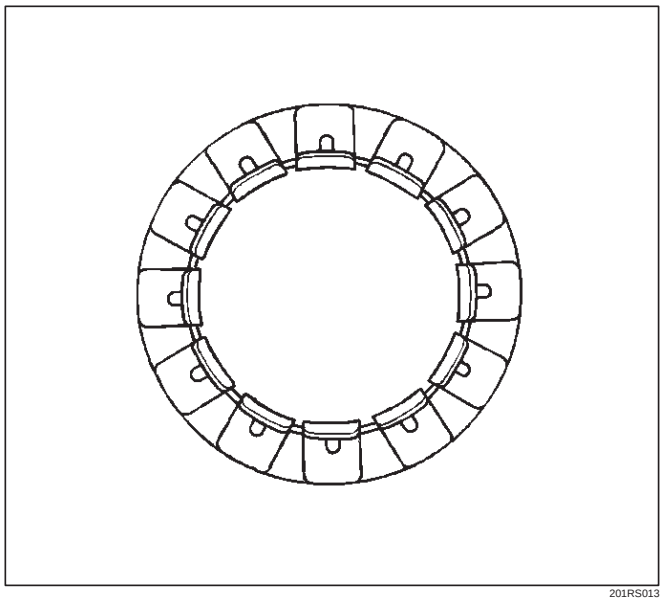

201RS013

1. Visually check the surfaces of the wedge collar making contact with the release bearing for excessive wear and damage.
2. Replace any exhibiting excessive wear or damage.

Shift Fork

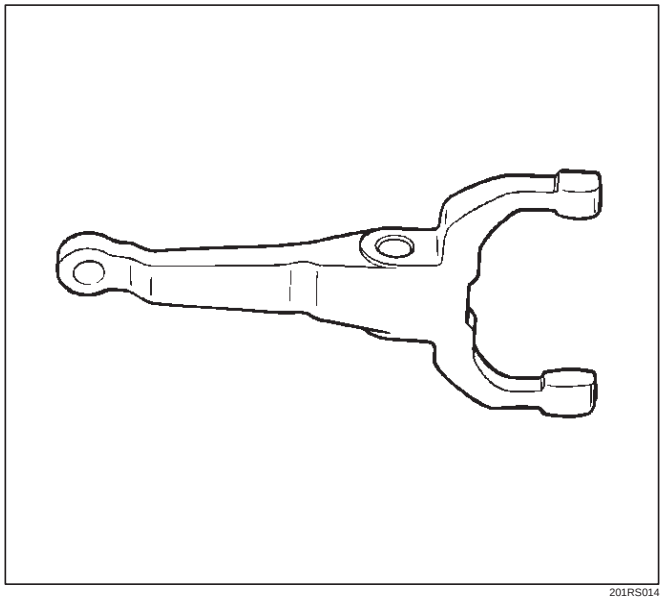

201RS014

1. Visually check the surfaces of the shift fork making contact with the release bearing for excessive wear and damage.
2. Remove any minor stepping or abrasion from shift fork with an oil stone.
3. Replace any exhibiting excessive wear or damage.

Installation

To install, follow the removal steps in the reverse order, noting the following points:

1. Install flywheel assembly and crankshaft bearing. Use the installer 5-8840-0125-0 (J-26516-A) and driver handle 5-8840-0007-0 (J-8092) to install the crankshaft bearing then clean and lubricate with grease.

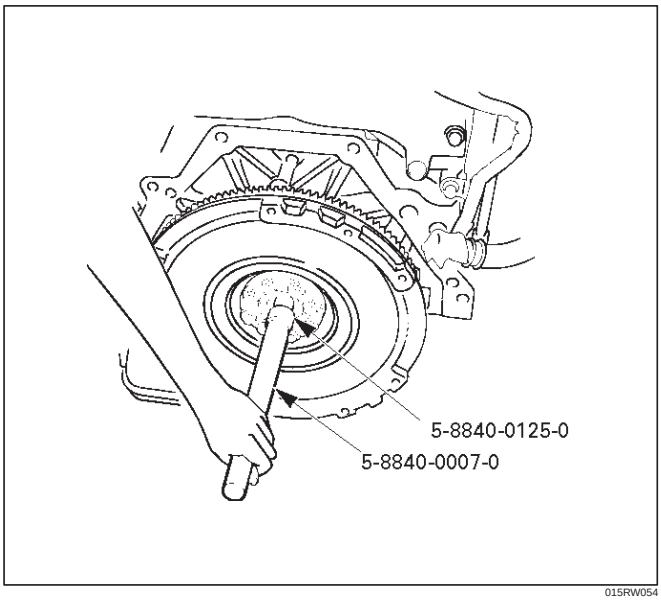

015RW054

2. Install new flywheel fixing bolts in the order illustrated and tighten them to the specified torque.

   Torque:

   6VE1: 54 N·m (5.5 kg·m/40 lb ft)

   4JX1: 60 N·m (6.1 kg·m/44 lb ft)+60°

NOTE: Do not reuse the bolt and do not apply oil or thread lock to the bolt.

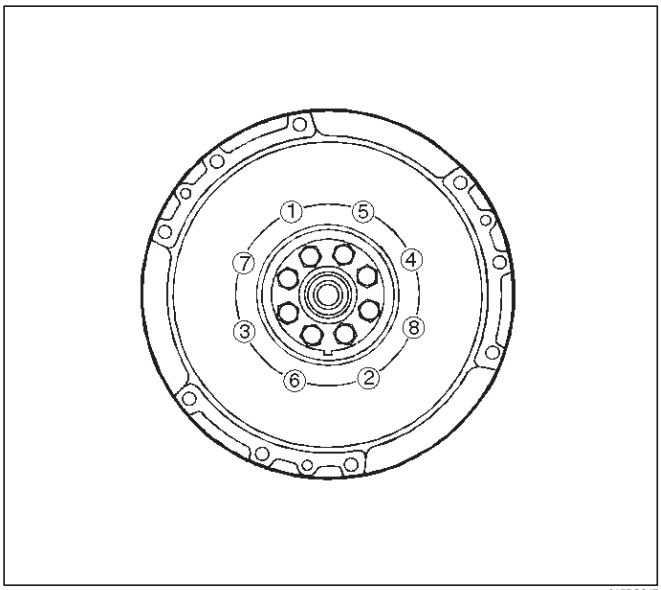

015RS047

3. Install the front cover (5) to the transmission case.
4. Tighten eight front cover bolts to the specified torque.

   Torque: 17 N·m (1.7 kg·m/12 lb ft)

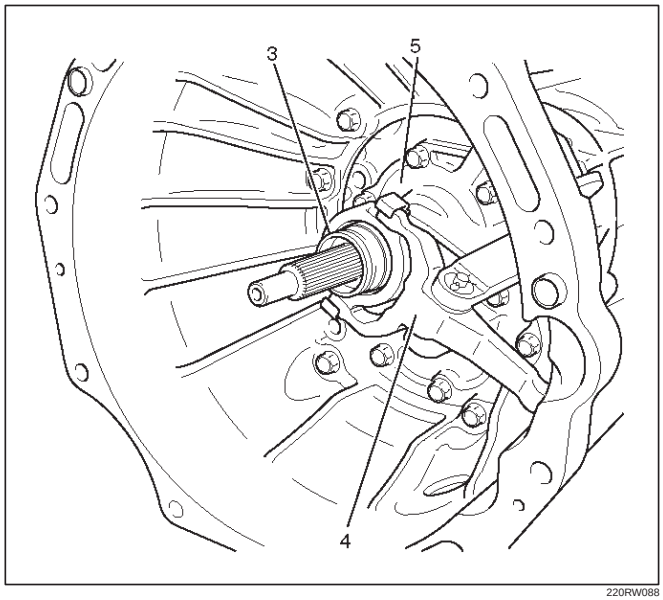

220RW088

5. Apply molybednum disulfide type grease to the pin hole inner circumferences and thrust surfaces.
6. Attach the shift fork to the front cover and insert the pin from below of the front cover.
7. Install the washer and snap pin.

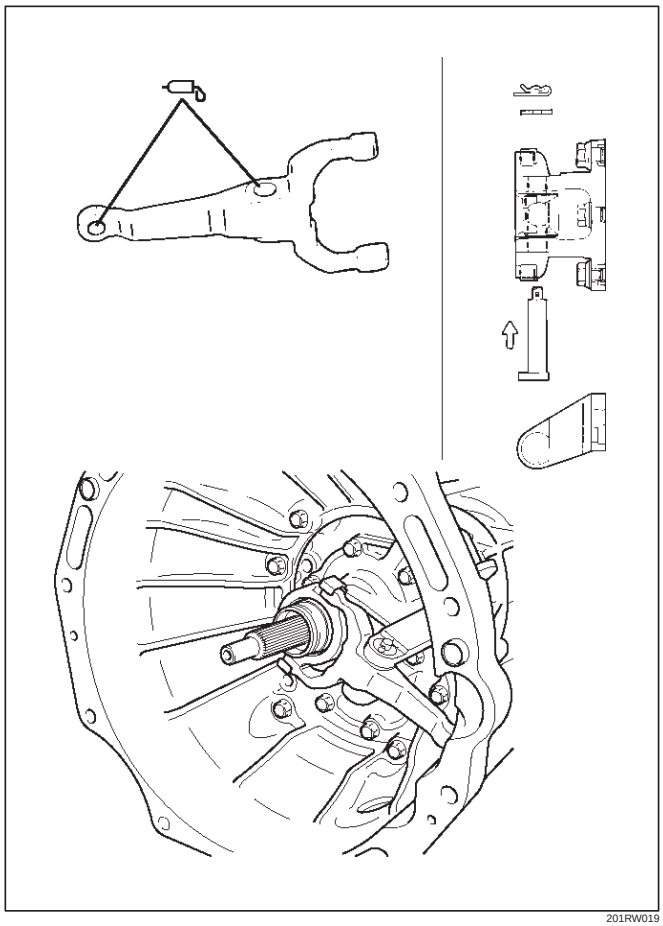

201RW019

8. Apply molybdenum disulfide type grease to the areas shown in illustration.

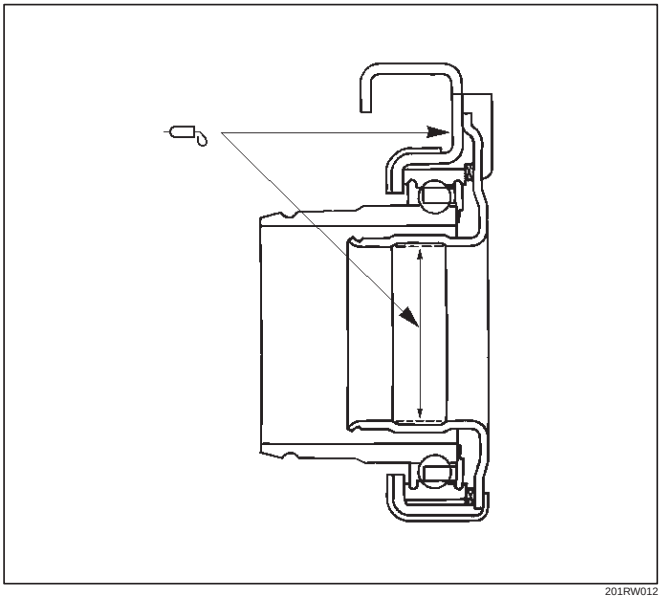

201RW012

9. Install the release bearing in the proper direction.

NOTE: Ensure release bearing is properly positioned during installation, as shown in illustration.

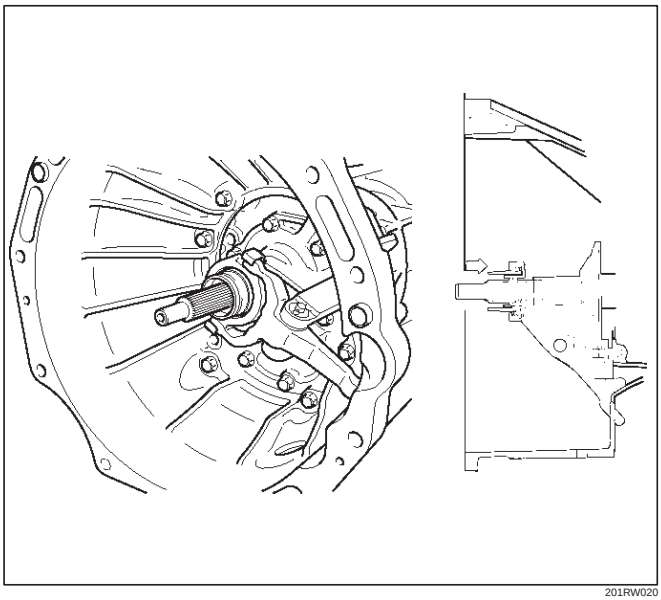

201RW020

10. Install driven plate assembly. Use the pilot aligner 5-85253-001-0 (J-24547) to install the driven plate assembly.

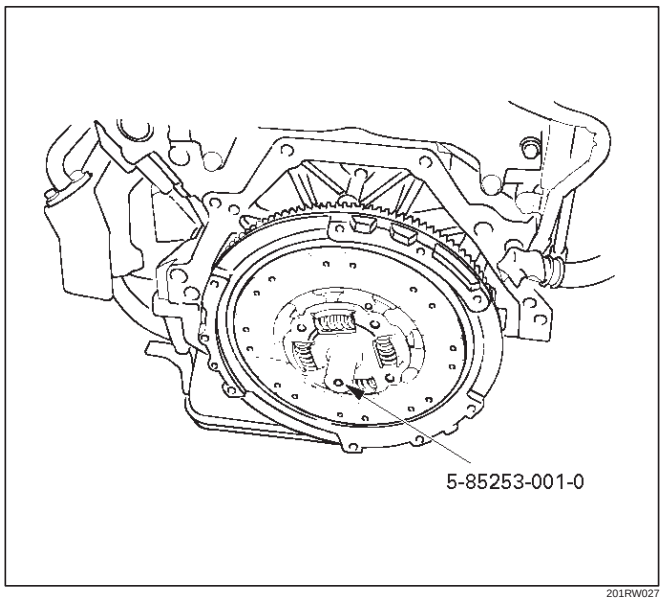

201RW027

11. Install pressure plate assembly and tighten the bolts holding the pressure plate assembly in the order shown in illustration.

Torque: 18 N·m (1.8 kg·m/13 lb ft)

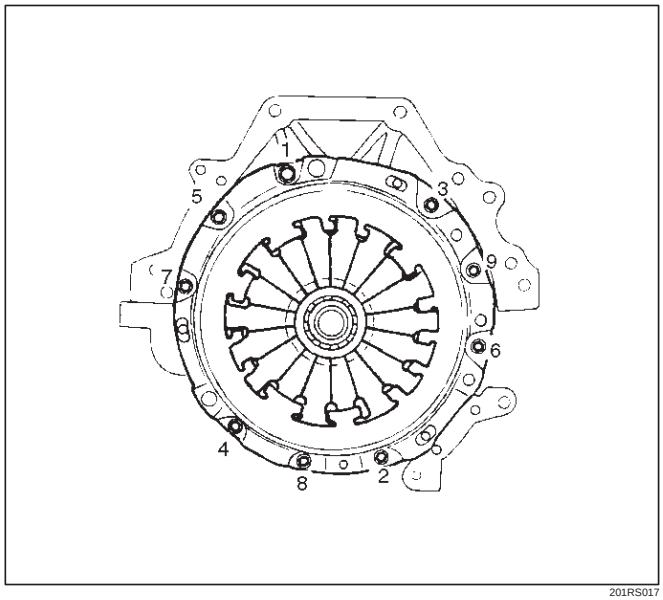

201RS017

12. Remove the aligner.

NOTE: Do not strike the aligner with a hammer to remove it.

13. Install transmission assembly.

Clutch Control

Clutch Control Parts

(6VE1 LHD)

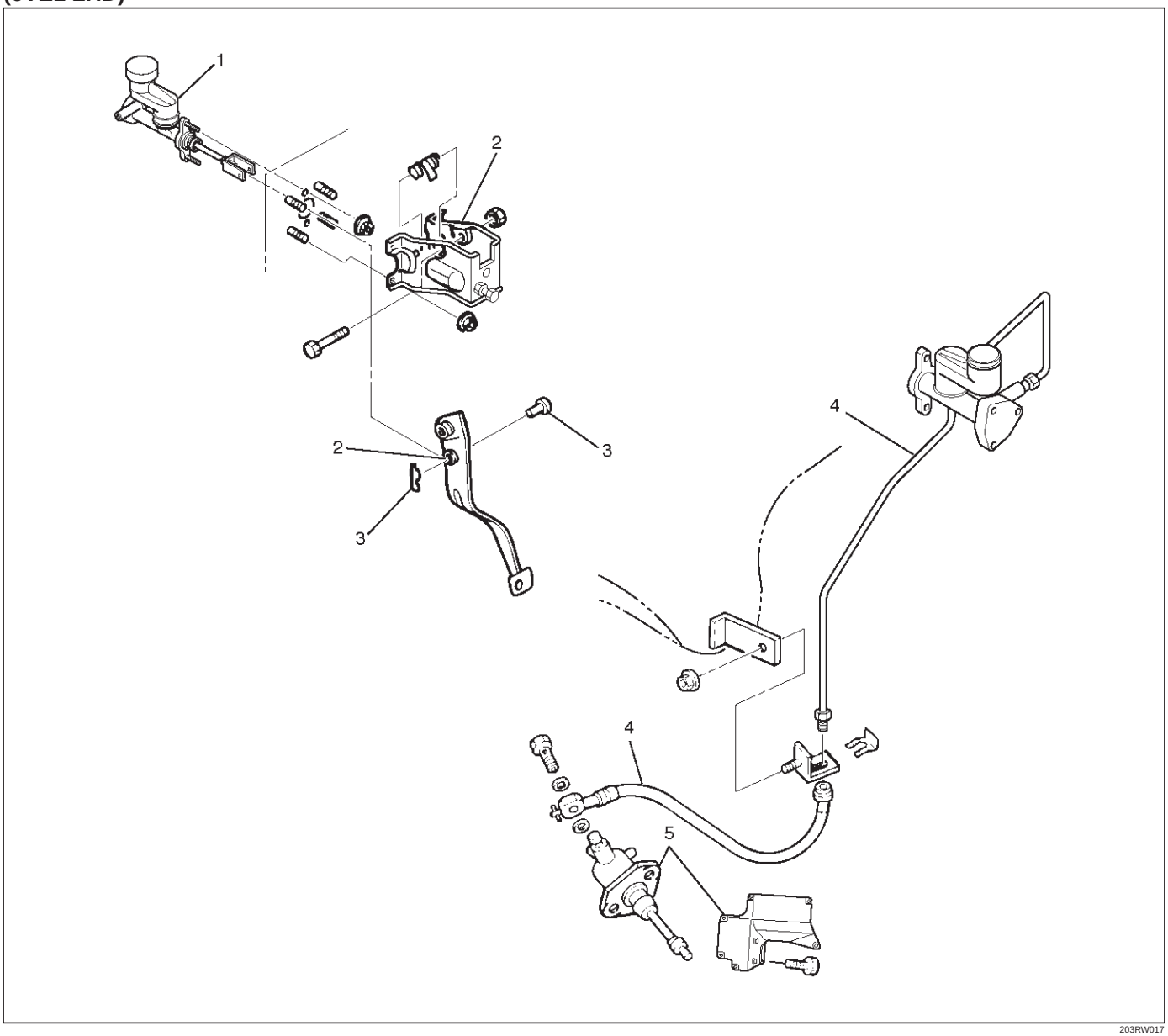

203RW017

Legend

(1) Master Cylinder Assembly
(2) Pedal Assembly
(3) Pin and Jaw Joint Pin
(4) Oil Line Pipe
(5) Slave Cylinder Assembly and Heat Protector

(Except 6VE1 LHD)

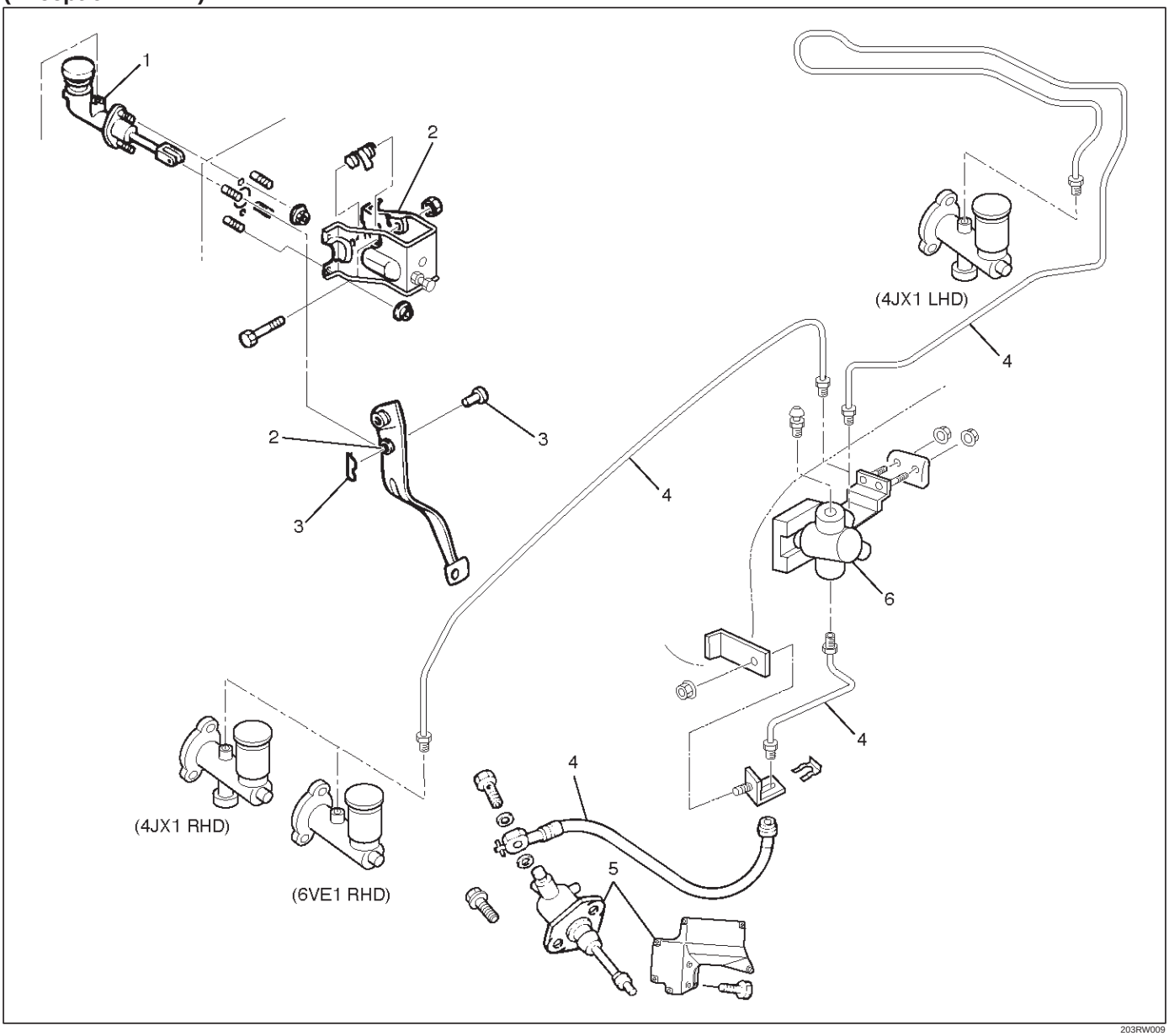

Legend

(1) Master Cylinder Assembly
(2) Pedal Assembly
(3) Pin and Joint Pin
(4) Oil Line Pipe
(5) Slave Cylinder Assembly and Heat Protector
(6) Damper Cylinder Assembly

Removal

1. Remove pin and jaw joint pin.
2. Remove pedal assembly.
3. Remove oil line pipe.
4. Remove slave cylinder assembly and heat protector.
5. Remove master cylinder assembly.
6. Remove damper cylinder assembly (except V6 LHD).

Inspection and Repair

Make necessary adjustments, repairs, and part replacement if wear, damage or other problems are discovered during inspection.

Installation

1. Install damper cylinder assembly (except V6 LHD).
2. Install master cylinder assembly.
3. Install slave cylinder assembly and heat protector.
4. Install oil line pipe.
5. Install pedal assembly.
6. Install pin and jaw joint pin.

Adjustment

Clutch Pedal Adjustment

1. Loosen the clutch pedal adjusting bolt so that there is enough gap between the clutch pedal and the adjusting bolt to allow push rod adjustment.

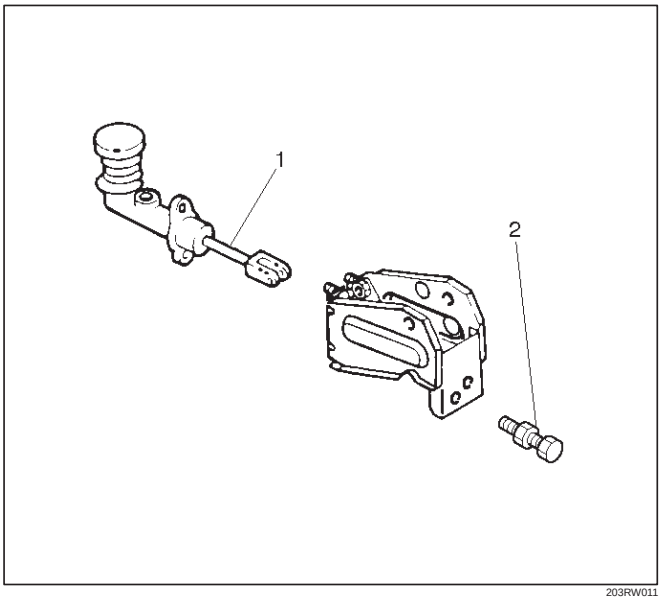

203RW011

Legend
(1) Push Rod
(2) Adjusting Bolt

2. Loosen clutch master cylinder push rod lock nut. Turn push rod by hand to set clutch pedal height (5) to within specification.

Clutch pedal height (5):

LHD: 217 mm – 227 mm (8.543 in – 8.937 in)

RHD:

(6VE1) 238.5 mm – 248.5 mm (9.390 in – 9.783 in)

(4JX1) 231 mm – 241 mm (9.094 in – 9.488 in)

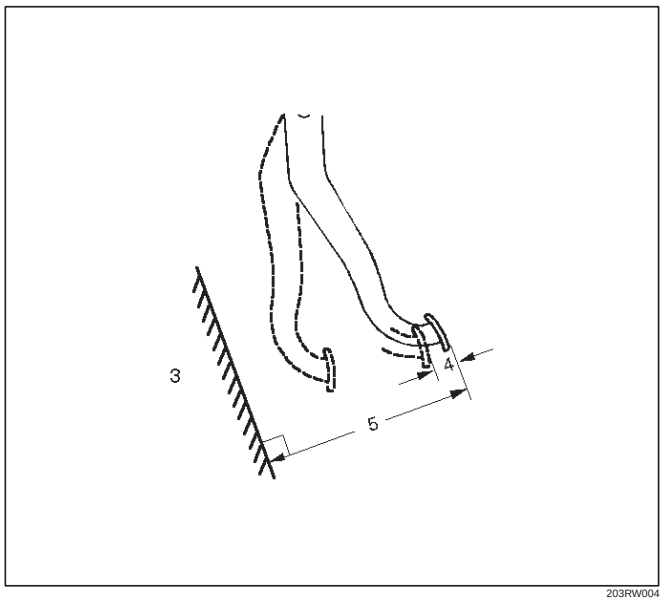

203RW004

Legend
(3) Floor Panel
(4) Pedal Free Play
(5) Clutch Pedal Height

3. Tighten push rod lock nut.
4. Adjusting bolt adjustment.
   1. Turn the adjusting bolt until it just touches the clutch pedal arm.

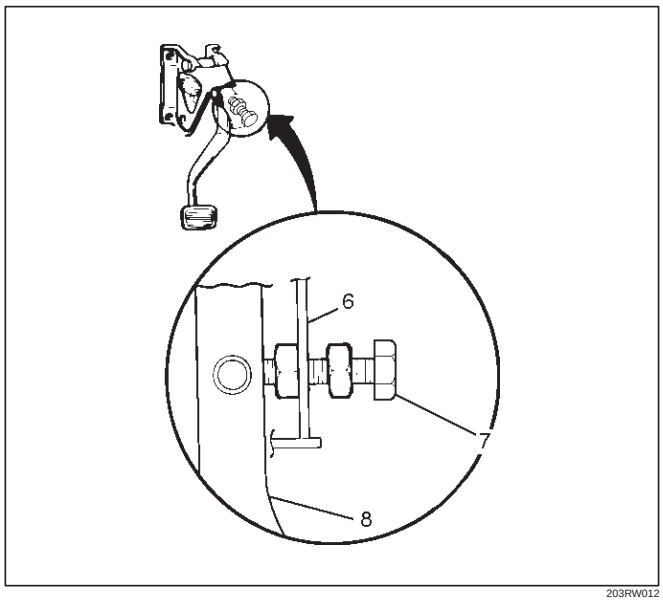

203RW012

Legend
(6) Blacket
(7) Adjusting Bolt
(8) Clutch Pedal Arm

2. Adjust clutch padel adjusting bolt by backing it out half a turn, and measure the clearance (δ) between the clutch pedal arm and the adjusting bolt.

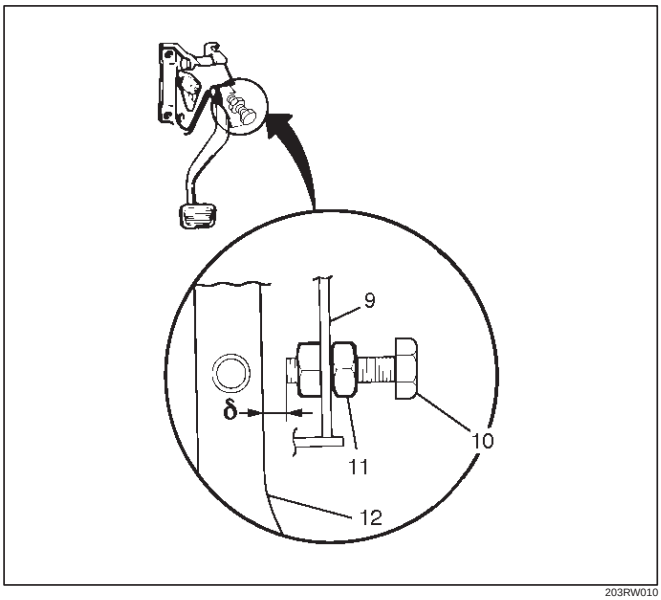

203RW010

Legend

(9) Bracket
(10) Clutch Pedal Adjusting Bolt
(11) Lock Nut
(12) Clutch Pedal Arm

3. Lock the lock nut.

Clutch Switch and Clutch Pedal Clearance (δ)

0.5 mm – 1.5 mm (0.020 in – 0.059 in)

5. After adjusting the clutch pedal height, push the clutch pedal by hand rightly to check the clutch pedal free play (4) to within specification.

Pedal Free Play (4)

5 mm – 15 mm (0.20 in – 0.59 in)

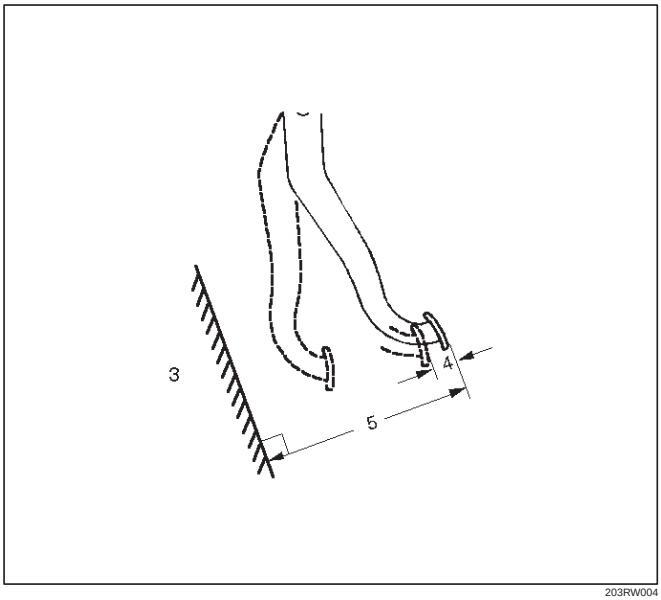

203RW004

6. Clutch pedal engagement height inspection:
   1. Operate the parking brake lever and block the wheels.
   2. Start the engine, fully step on the clutch pedal, and move the shift lever to 1st position.
   3. With the engine idling, release the clutch pedal slowly and measure its stroke just prior to its clutching position.

Clutch Pedal Engagement Height (14)

MIN. 30 mm (1.18 in)

7. If the measured value exceeds the specified limit, check the following points. Repair if necessary:
   - Hydraulic circuit for fluid leakage or air in circuit.
   - Clutch disc warped.
   - Diaphragm spring weakened or tip of fingers worn.
   - Driven plate sticking on sprines.
   - Release bearing worn or damaged.
   - Master cylinder and slave cylinder worn.

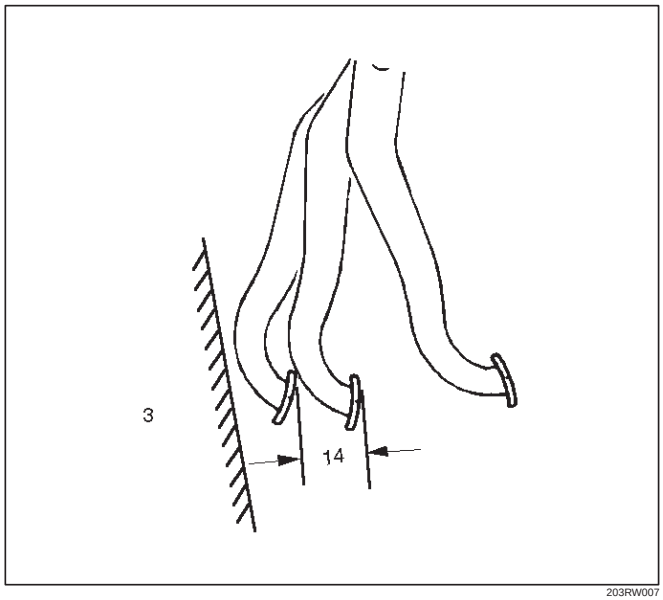

203RW007

Legend

(3) Floor Panel
(14) Clutch Pedal Engagement Height

Torque Specifications

- **Master cylinder to dash panel**
  Torque: 16 N·m (1.6 kg·m/12 lb ft)
- **Clutch pedal to dash panel**
  Torque: 21 N·m (2.1 kg·m/15 lb ft)
- **Master cylinder push rod to yoke**
  Torque: 17 N·m (1.7 kg·m/12 lb ft)
- **Clutch pipe to master cylinder**
  Torque: 20 N·m (2.0 kg·m/14 lb ft)
- **Clutch pipe to flex, hose**
  Torque:
  M 10: 16 N·m (1.6 kg·m/12 lb ft)
  M 12: 20 N·m (2.0 kg·m/14 lb ft)
- **Slave cylinder to case**
  Torque: 43 N·m (4.4 kg·m/32 lb ft)
- **Slave cylinder bleeder screw**
  Torque: 8 N·m (0.8 kg·m/69 lb in)
- **Flexible hose to slave cylinder**
  Torque: 20 N·m (2.0 kg·m/14 lb ft)
- **Clutch pipe to damper cylinder**
  Torque: 12 N·m (1.2 kg·m/104 lb in)
- **Damper cylinder bleeder screw**
  Torque: 8 N·m (0.8 kg·m/69 lb in)

Bleeding

1. Check the level of clutch fluid in the reservoir and replenish if necessary.
   Bleeding the damper cylinder (except V6 LHD model).
2. Remove the rubber cap from the bleeder screw and wipe clean the bleeder screw. Connect a vinyl tube to the bleeder screw and insert the other end of the vinyl tube into a transparent container.
3. Pump the clutch pedal repeatedly and hold it depressed.

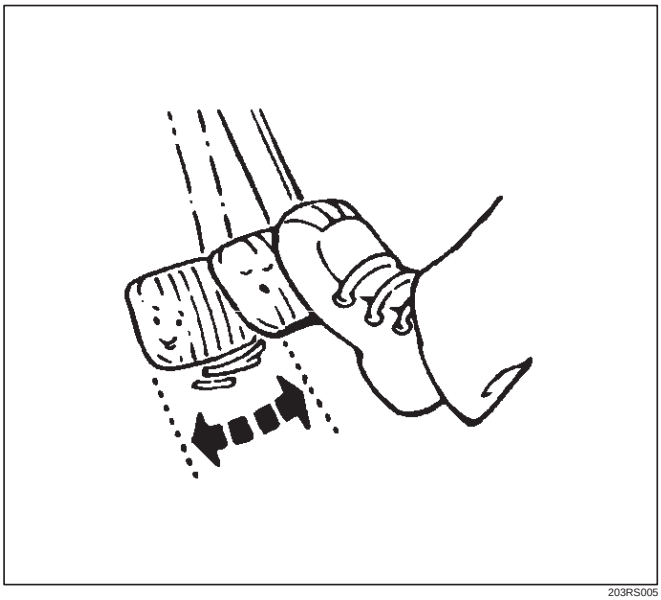

203RS005

4. Loosen the bleeder screw to release clutch fluid with air bubbles into the container, then tighten the bleeder screw immediately.
5. Release the clutch pedal carefully. Repeat the above operation until air bubbles disappear from the clutch fluid being pumped out into the container. During the bleeding operation, keep the clutch fluid reservoir filled to the specified level. Reinstall the rubber cap.
   Bleeding the slave cylinder
6. Repeat step 2 through 5 for bleeding the slave cylinder.

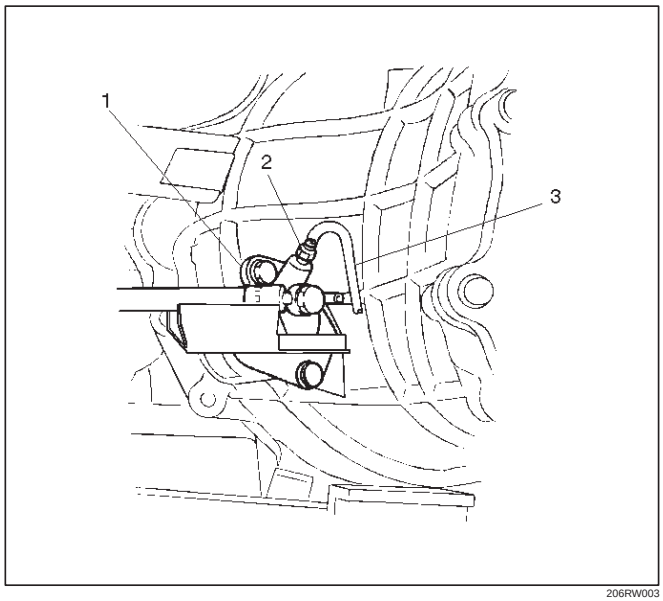

206RW003

Legend

(1) Slave Cylinder
(2) Bleeder Screw
(3) Vinyl Tube

Master Cylinder

Disassembled View

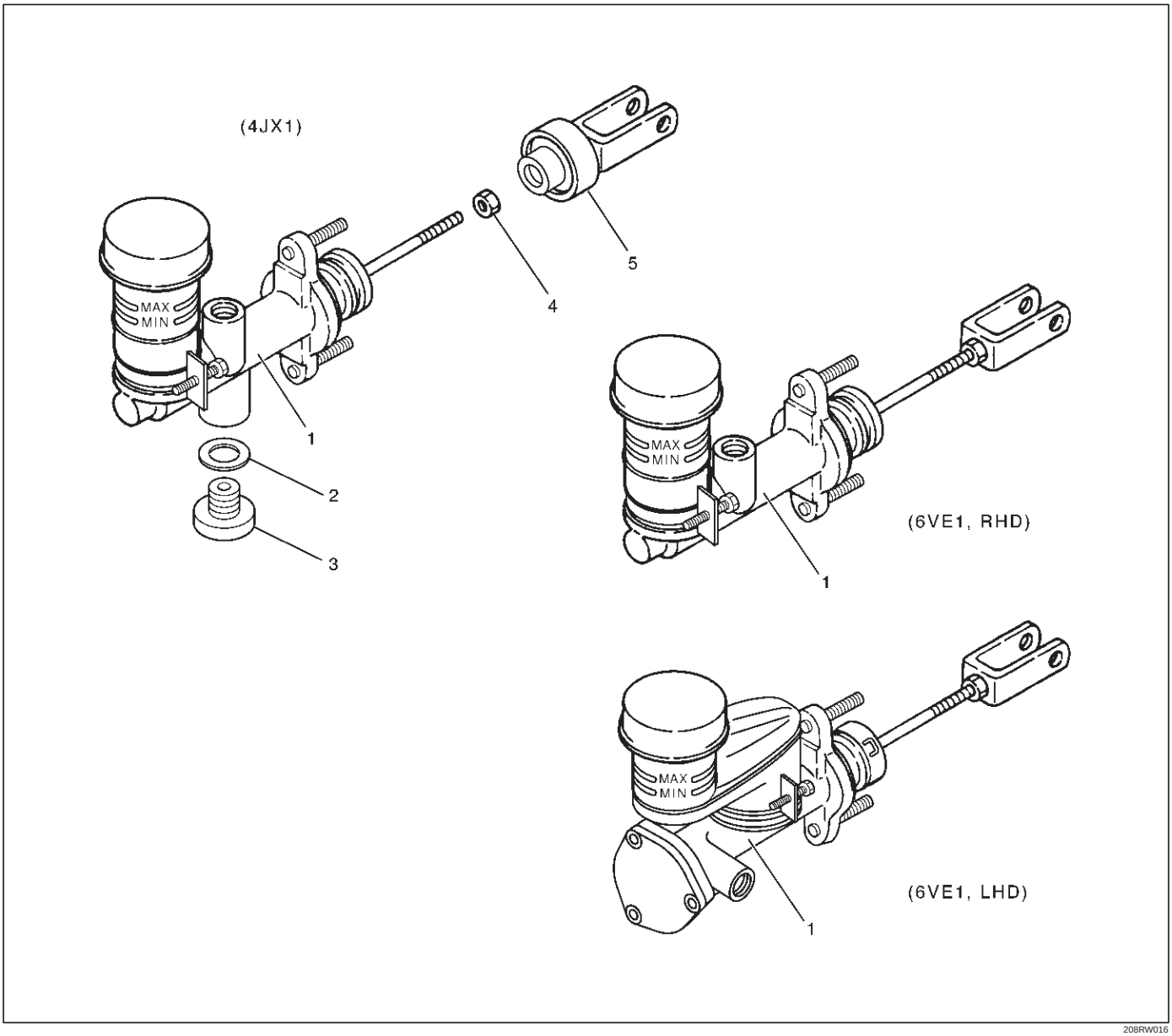

208RW016

Legend

(1) Master Cylinder Assembly
(2) Gasket
(3) Damper Cylinder Assembly
(4) Nut
(5) Push Rod Damper

Disassembly

(4JX1)

1. Remove damper cylinder assembly and gasket.
2. Remove push rod damper.

NOTE: The master cylinder assembly cannot be disassembled because of point–staked rod stopper.

Inspection and Repair

Clean and inspect the removed parts.
Make necessary parts replacement if any abnormalities such as wear, oil leaks or other damage are found through inspection.

Reassembly

To reassemble, follow the disassembly steps in the reverse order, noting the following points:

1. **Push rod set length**
   RHD: 117.5 mm (4.626 in)
   LHD: 119 mm (4.685 in)
2. **Push rod nut torque**
   17 N·m (1.7 kg·m/12 lb ft)
3. **Damper cylinder torque**
   47 N·m (4.8 kg·m/35 lb ft)

Slave Cylinder

Disassembled View

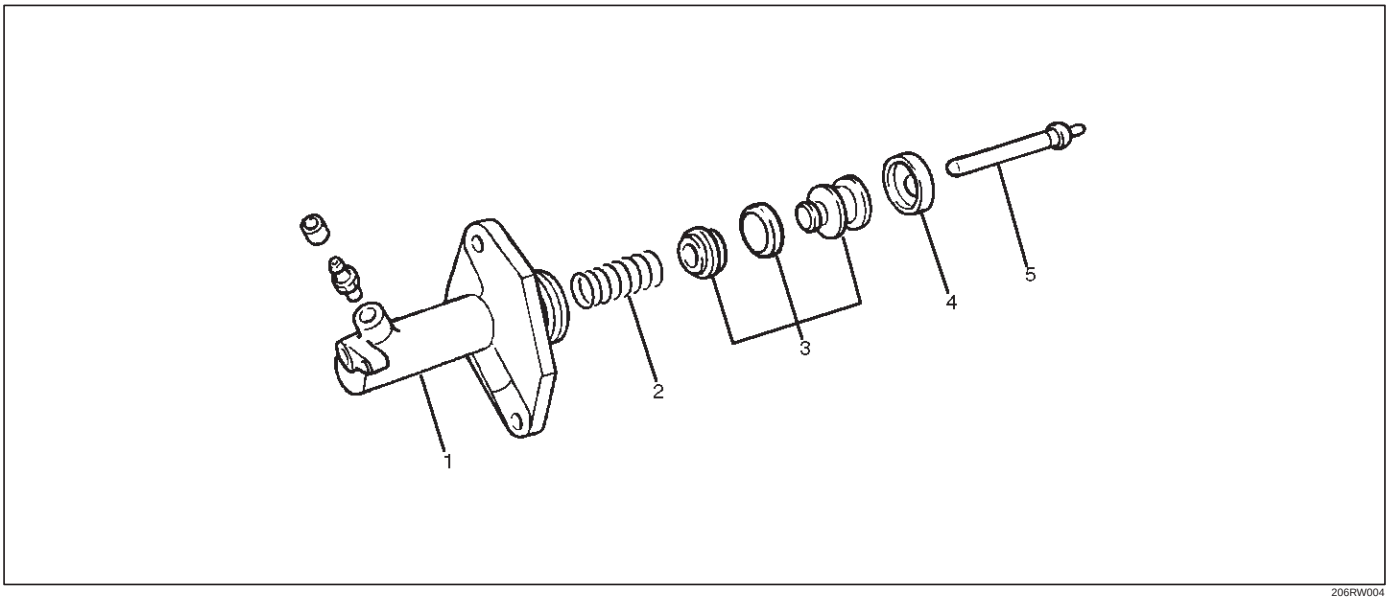

206RW004

Legend

(1) Cylinder Body
(2) Spring
(3) Piston and Piston Cup
(4) Boot
(5) Push Rod

Disassembly

1. Remove boot.
2. Remove push rod.
3. Remove piston and piston cup.
4. Remove spring.

Inspection and Repair

Make the necessary adjustments, repairs, and part replacements if excessive wear or damage is discovered during inspection.

Cylinder Body

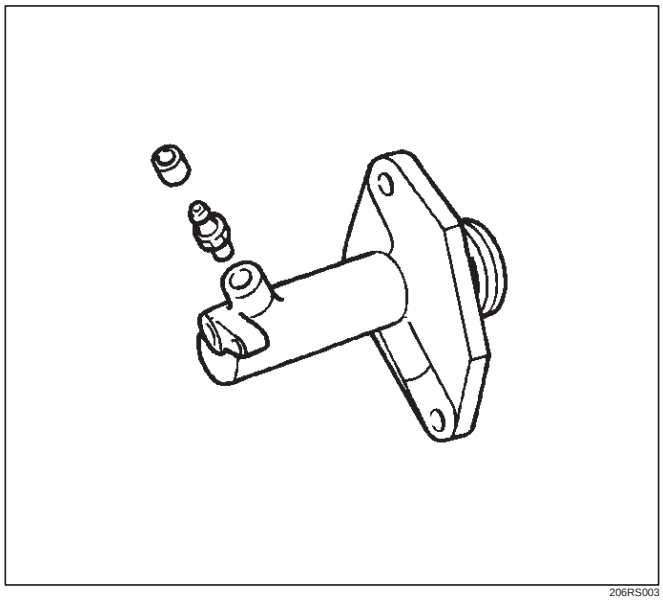

206RS003

1. Clean the cylinder body.
2. Check the fluid return port for restrictions and clean it if necessary.

Piston and Piston Cup

1. Visually inspect the disassembled piston and piston cup for excessive wear and damage.
2. Replace the inner parts with new parts shown in the illustration.

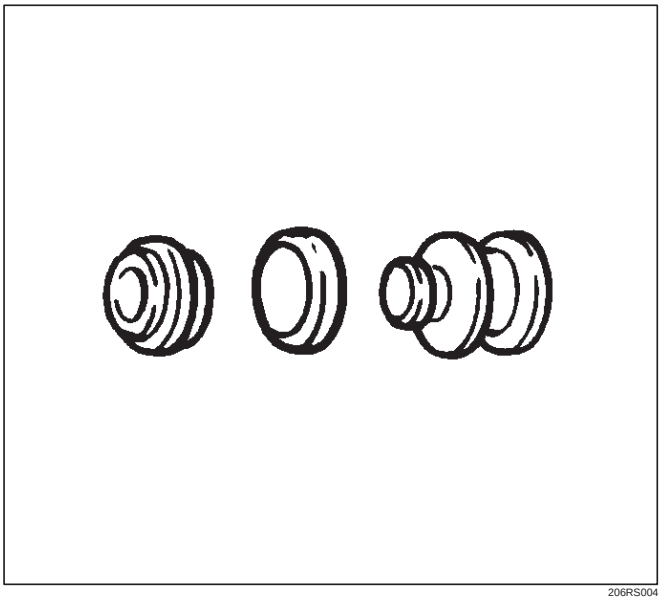

206RS004

3. Measure the clearance between slave cylinder wall and piston.
4. If the measured value exceeds the specified limit, the slave cylinder assembly must be replaced.

Standard: 0.07 mm (0.0028 in)

Limit: 0.15 mm (0.0059 in)

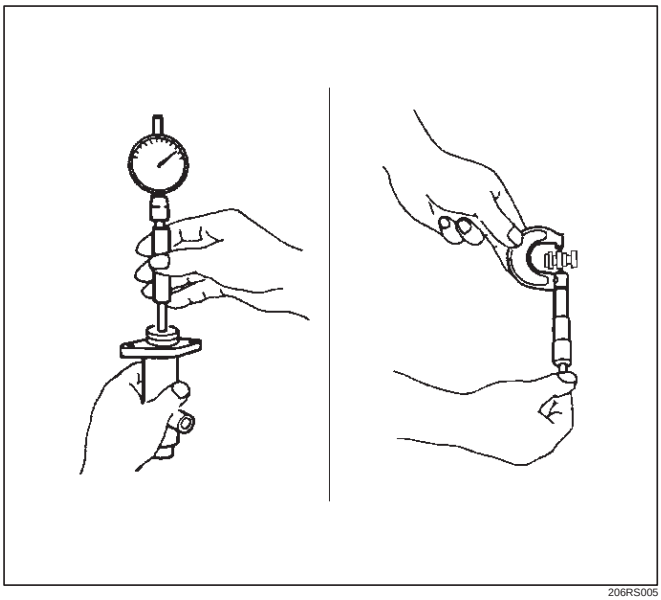

206RS005

Reassembly

To reassemble, follow the disassembly steps in the reverse order, noting the following points:

1. Before installing the parts, apply a thin coat of rubber grease.
2. Install cup in groove in piston with the lip turned to the front of cylinder. Use care so as not to scratch the cylinder.

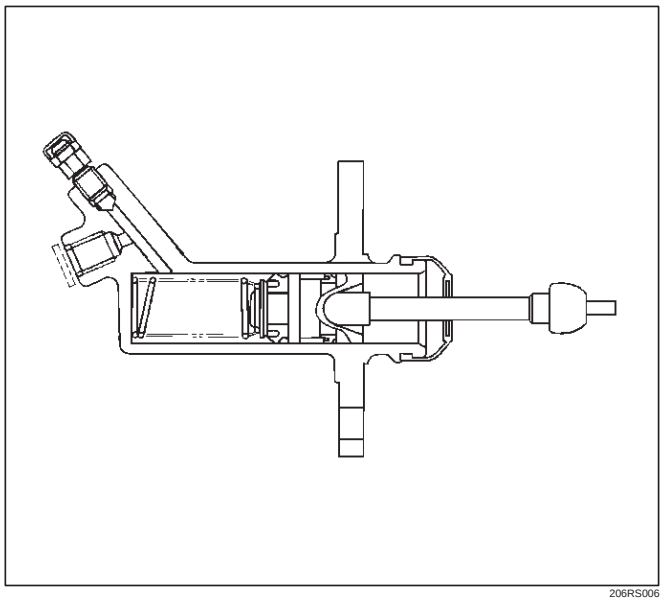

206RS006

Damper Cylinder

Disassembled View

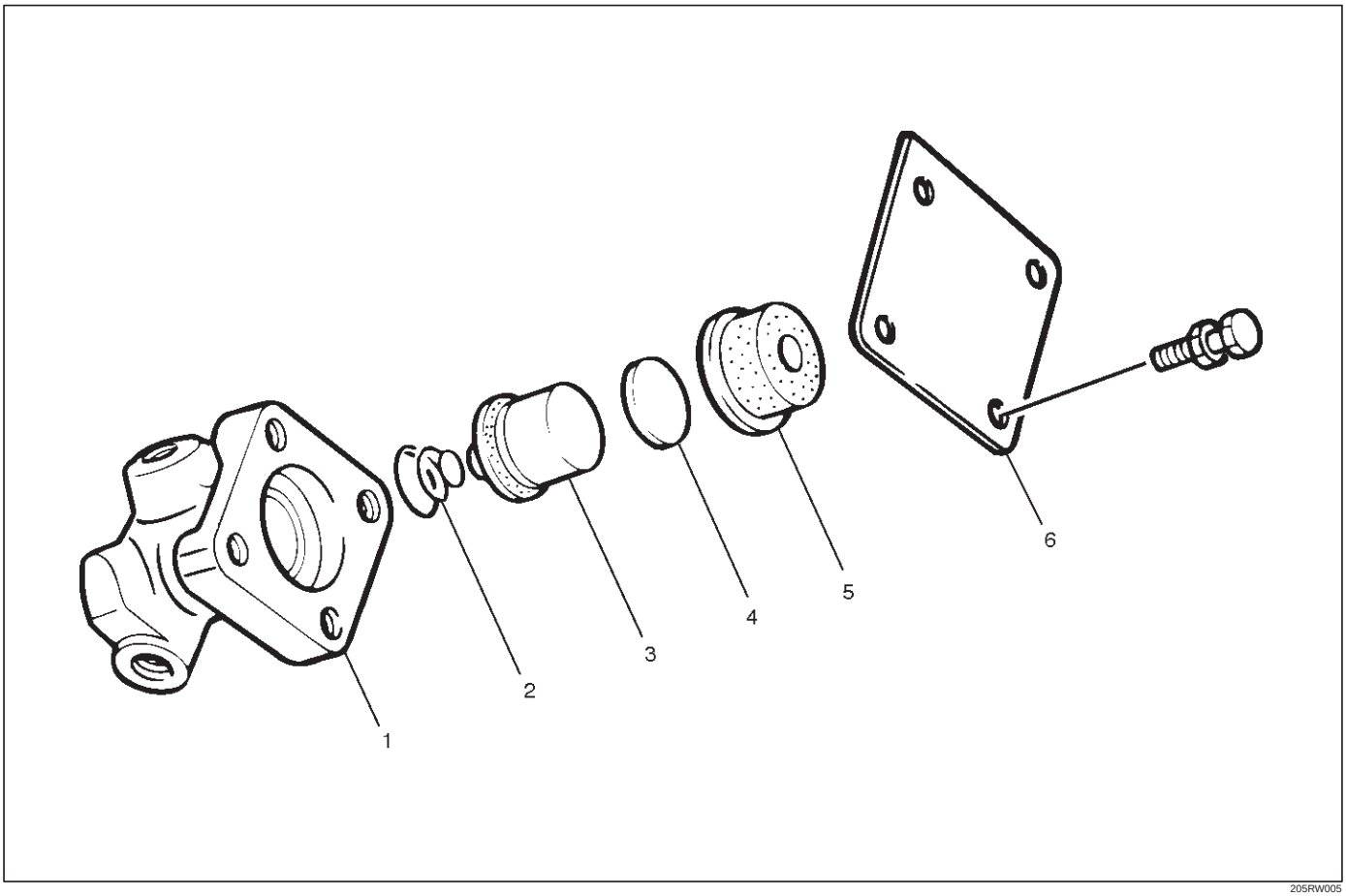

205RW005

Legend

(1) Cylinder Body
(2) Spring
(3) Piston Assembly
(4) Spacer
(5) Damper Rubber
(6) Cover and Gasket

Disassembly

1. Remove cover and gasket.
2. Remove damper rubber.
3. Remove spacer.
4. Remove piston assembly.
5. Remove spring.

Inspection and Repair

Check damper rubber and piston cup for cracks, deformation or damage.
Replace the damper cylinder assembly if necessary.

Reassembly

To assemble, follow the disassembly steps in the reverse order.

Main Data and Specifications

General Specifications

Type	Dry single plate type with diaphragm spring
Size	275 mm (10.83 in)
Pressure plate Outside diameter	332 mm (13.07 in)
Pressure plate Clamping force	7208 N (1621 lb)
Pressure plate Spring finger height	49.9 – 51.9 mm (1.965 – 2.043 in)
Driven plate Outside diameter x inside diameter	275 × 180 mm (10.83 × 6.69 in)
Thickness Clutch disengaged	8.8 mm (0.346 in)
Thickness Clutch engaged	8.3 mm (0.327 in)
Total friction area	339 ×2 cm^2 (52 ×2 in^2)
Clutch control type	Hydraulic
Clutch pedal free play	5 – 15 mm (0.20 – 0.59 in)
Clutch pedal height	LHD: 217 – 227 mm (8.543 – 8.937 in) RHD: (6VE1) 238.5 mm – 248.5 mm (9.390 in – 9.783 in) (4JX1) 231 mm – 241 mm (9.094 in – 9.488 in)
Clutch pedal stroke	152.5 – 162.5 mm (6.004 – 6.398 in) 4JX1, RHD: 145 – 155mm (5.709 – 6.102 in)

Torque Specifications

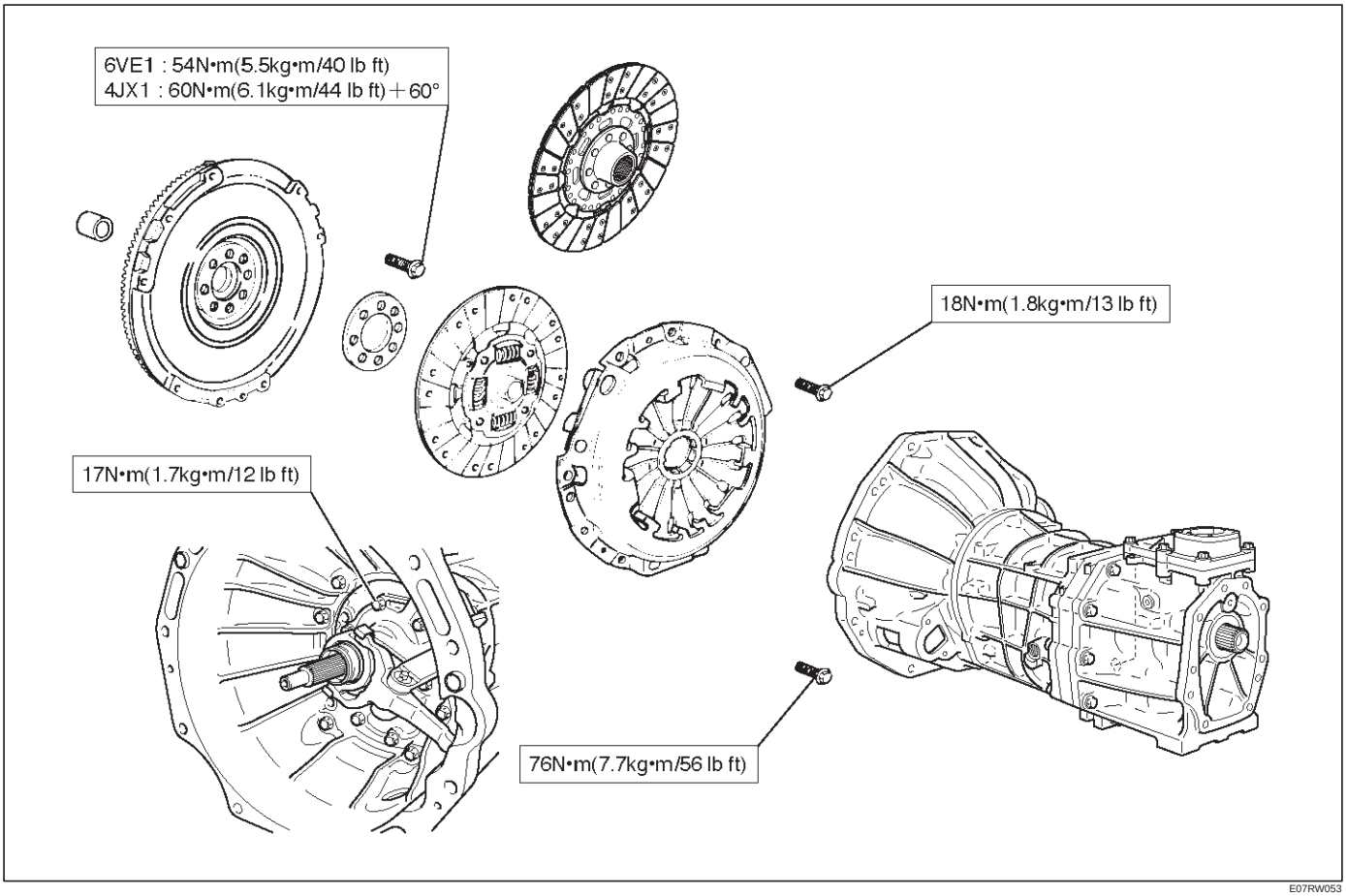

E07RW053

Torque Specifications (Cont'd)

(6VE1 LHD)

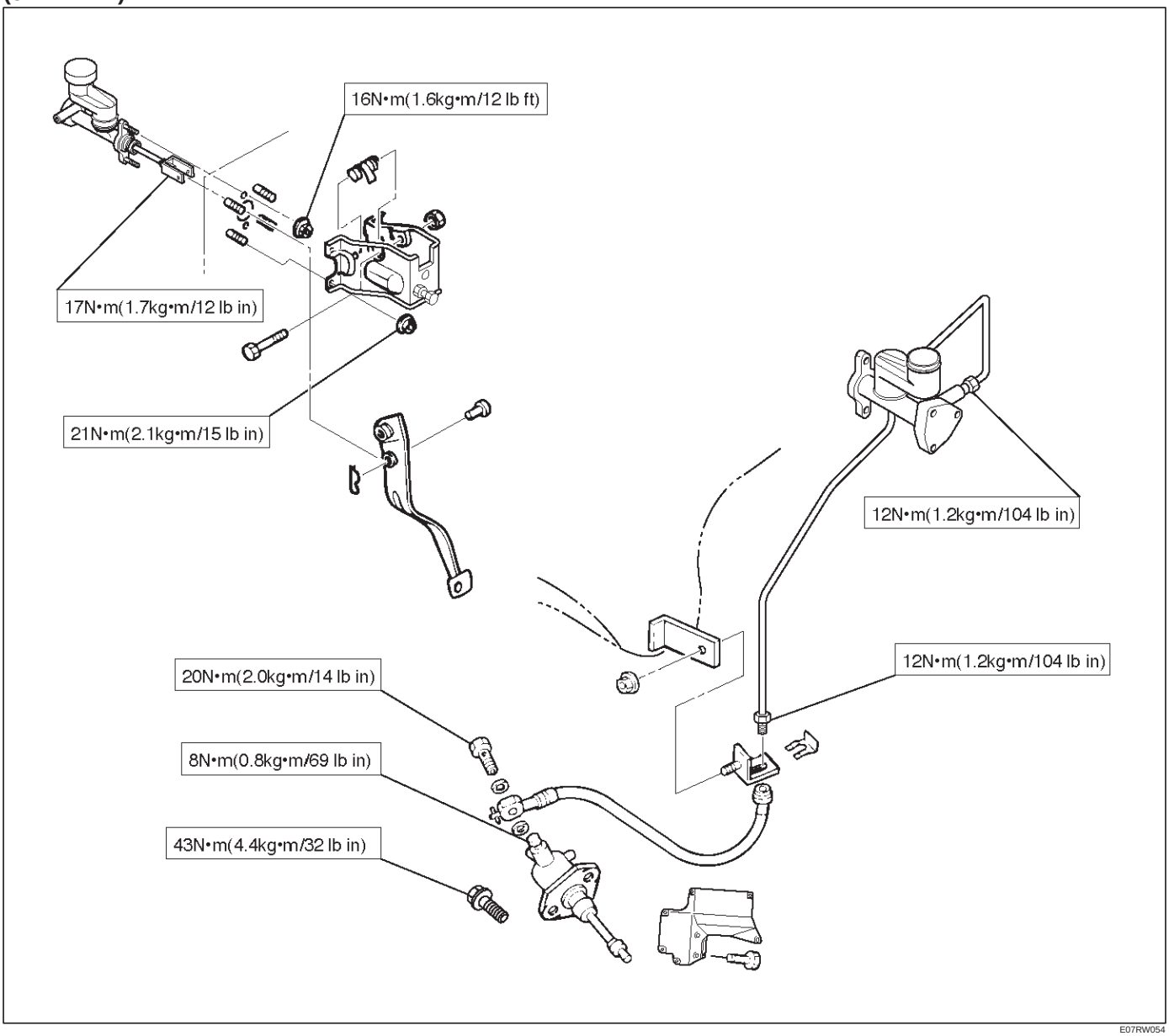

E07RW054

Torque Specifications (Cont'd)

(Except 6VE1 LHD)

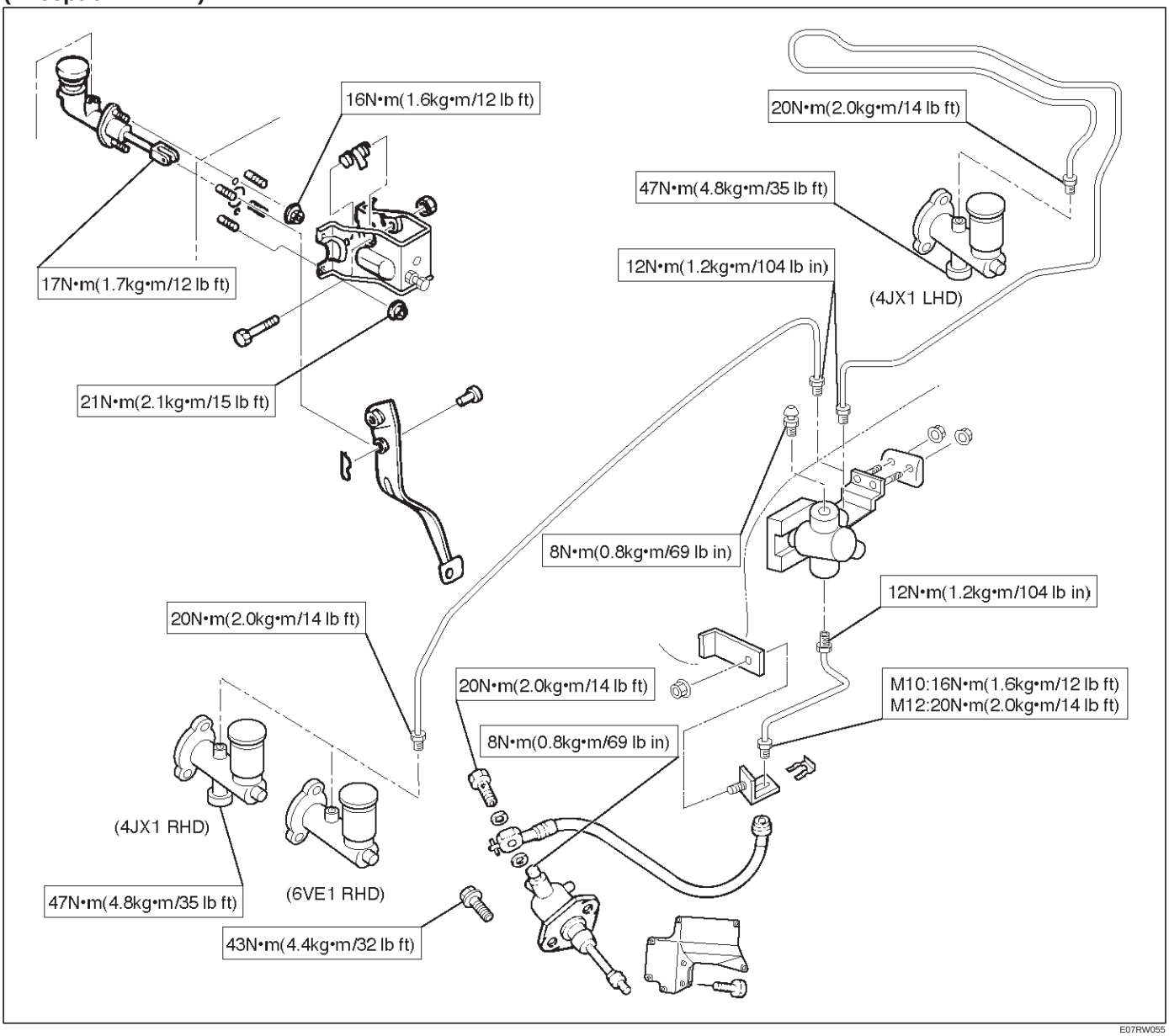

E07RW055

Special Tools

ILLUSTRATION	**TOOL NO.** TOOL NAME
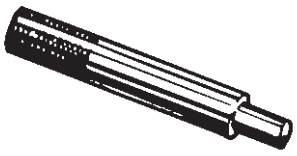 901RS265	**5-85253-001-0** **(J-24547)** Driven plate aligner
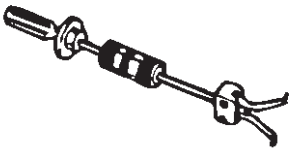 901RS266	**5-8840-2000-0 and** **5-8840-0019-0** **(J-5822 and J-23907)** Pilot bearing remover and Sliding hammer
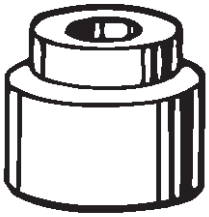 901RS267	**5-8840-0125-0** **(J-26516-A)** Crankshaft pilot bearing installer
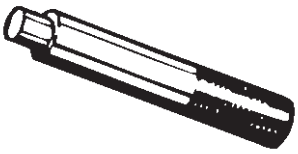 901RS268	**5-8840-0007-0** **(J-8092)** Driver handle

BODY AND ACCESSORIES

CONTENTS

Lighting System 8A
Wiper/Washer System 8B
Entertainment 8C
Wiring System 8D
Meter and Gauge 8E
Body Structure 8F
Seats 8G
Security and Locks 8H
Sun Roof/Convertible Top 8I
Exterior/Interior Trim 8J

LIGHTING SYSTEM

CONTENTS

Service Precaution 8A–2
Headlight Bulb 8A–3
Removal 8A–3
Installation 8A–3
Headlight 8A–4
Headlight and Associated Parts 8A–4
Removal 8A–4
Installation 8A–4
Headlight Adjustment 8A–4
Fog Light Bulb 8A–5
Removal 8A–5
Installation 8A–5
Fog Light Assembly 8A–6
Removal 8A–6
Installation 8A–6
Fog Light Adjustment 8A–6
Clarence Light Bulb 8A–6
Removal 8A–6
Installation 8A–6
Rear Fog Light Bulb (RHD) 8A–7
Removal 8A–7
Installation 8A–7
Taillight Bulb (Body) 8A–7
Removal 8A–7
Installation 8A–7
Taillight Bulb (Bumper) 8A–8
Removal 8A–8
Installation 8A–8
License Plate Light Bulb (Body) 8A–8
Removal 8A–8
Installation 8A–8
License Plate Light Bulb (Bumper) 8A–9
Removal 8A–9
Installation 8A–9
Stoplight Bulb 8A–9
Removal and Installation 8A–9
High Mount Stoplight 8A–10
Removal 8A–10
Installation 8A–10
Front Turn Signal Light Bulb 8A–10
Removal 8A–10
Installation 8A–10
Side Turn Signal Light Bulb 8A–11
Removal 8A–11
Installation 8A–11
Rear Turn Signal Light Bulb 8A–11
Removal 8A–11
Installation 8A–11
Backup Light Bulb 8A–12
Removal 8A–12
Installation 8A–12
Dome Light Bulb 8A–12
Removal 8A–12
Installation 8A–12
Luggage Room Light Bulb 8A–13
Removal 8A–13
Installation 8A–13
Courtesy Light Bulb 8A–13
Removal 8A–13
Installation 8A–13
Map Light Switch/Bulb 8A–14
Removal 8A–14
Installation 8A–14
Cigarette Lighter Illumination Bulb 8A–14
Removal 8A–14
Installation 8A–14
Ashtray Illumination Bulb 8A–15
Removal 8A–15
Installation 8A–15
Glove Box Illumination Bulb 8A–15
Removal 8A–15
Installation 8A–15

Vanity Mirror Illumination Bulb 8A–16
Removal 8A–16
Installation 8A–16
Starter Switch 8A–17
Removal 8A–17
Installation 8A–17
Lighting Switch (Combination Switch) 8A–18
Removal 8A–18
Installation 8A–18
Fog Light Switch 8A–19
Removal 8A–19
Installation 8A–19
Stoplight Switch (W/O Cruise Control) 8A–20
Removal 8A–20
Installation 8A–20
Brake Switch (W/Cruise Control) 8A–21
Removal 8A–21
Installation 8A–21
Turn Signal Switch (Combination Switch) . . . 8A–21
Removal and Installation 8A–21
Hazard Warning Switch 8A–22
Removal 8A–22
Installation 8A–22
Tailgate Switch 8A–23
Removal 8A–23
Installation 8A–23
Door Switch 8A–23
Removal 8A–23
Installation 8A–23
Rear Defogger Switch 8A–24
Removal 8A–24
Installation 8A–24
Seat Heater Switch 8A–25
Removal 8A–25
Installation 8A–25
Key Remind Switch (Starter Switch) 8A–25
Removal and Installation 8A–25
Illumination Controller 8A–26
Removal 8A–26
Installation 8A–26
Power/Winter Switch 8A–27
Removal 8A–27
Installation 8A–27
Main Data and Specifications 8A–28

Service Precaution

WARNING: IF SO EQUIPPED WITH A SUPPLEMENTAL RESTRAINT SYSTEM (SRS), REFER TO THE SRS COMPONENT AND WIRING LOCATION VIEW IN ORDER TO DETERMINE WHETHER YOU ARE PERFORMING SERVICE ON OR NEAR THE SRS COMPONENTS OR THE SRS WIRING. WHEN YOU ARE PERFORMING SERVICE ON OR NEAR THE SRS COMPONENTS OR THE SRS WIRING, REFER TO THE SRS SERVICE INFORMATION. FAILURE TO FOLLOW WARNINGS COULD RESULT IN POSSIBLE AIR BAG DEPLOYMENT, PERSONAL INJURY, OR OTHERWISE UNNEEDED SRS SYSTEM REPAIRS.

CAUTION: Always use the correct fastener in the proper location. When you replace a fastener, use ONLY the exact part number for that application. ISUZU will call out those fasteners that require a replacement after removal. ISUZU will also call out the fasteners that require thread lockers or thread sealant. UNLESS OTHERWISE SPECIFIED, do not use supplemental coatings (Paints, greases, or other corrosion inhibitors) on threaded fasteners or fastener joint interfaces. Generally, such coatings adversely affect the fastener torque and the joint clamping force, and may damage the fastener. When you install fasteners, use the correct tightening sequence and specifications. Following these instructions can help you avoid damage to parts and systems.

Headlight Bulb

Removal

1. Disconnect the battery ground cable.
2. Disconnect the connector.
3. Remove the cap(3) while turning it counter clockwise.
4. Remove the cover(2).
5. Pull the bulb(1) out from the headlight body.

CAUTION: The halogen bulb develops a very high temperature. Do not touch the glass portion. If any stain is on the glass surface, It will scorch and the glass will be damaged.

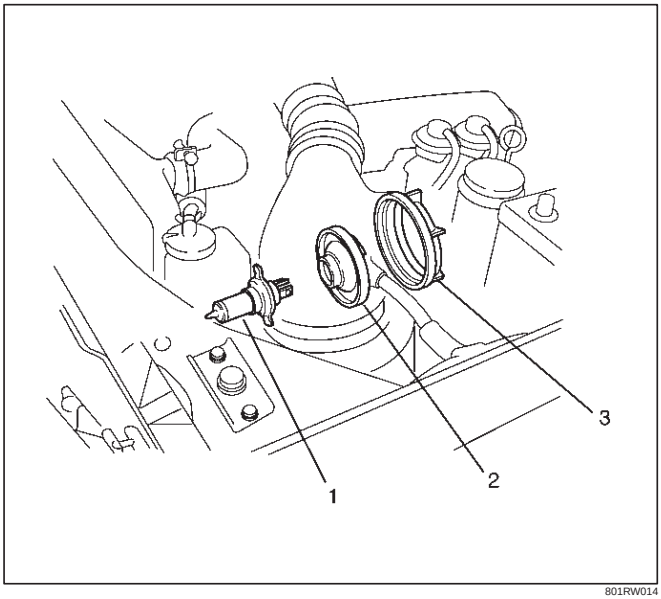

801RW014

Installation

To install, follow the removal steps in the reverse order.

Headlight

Headlight and Associated Parts

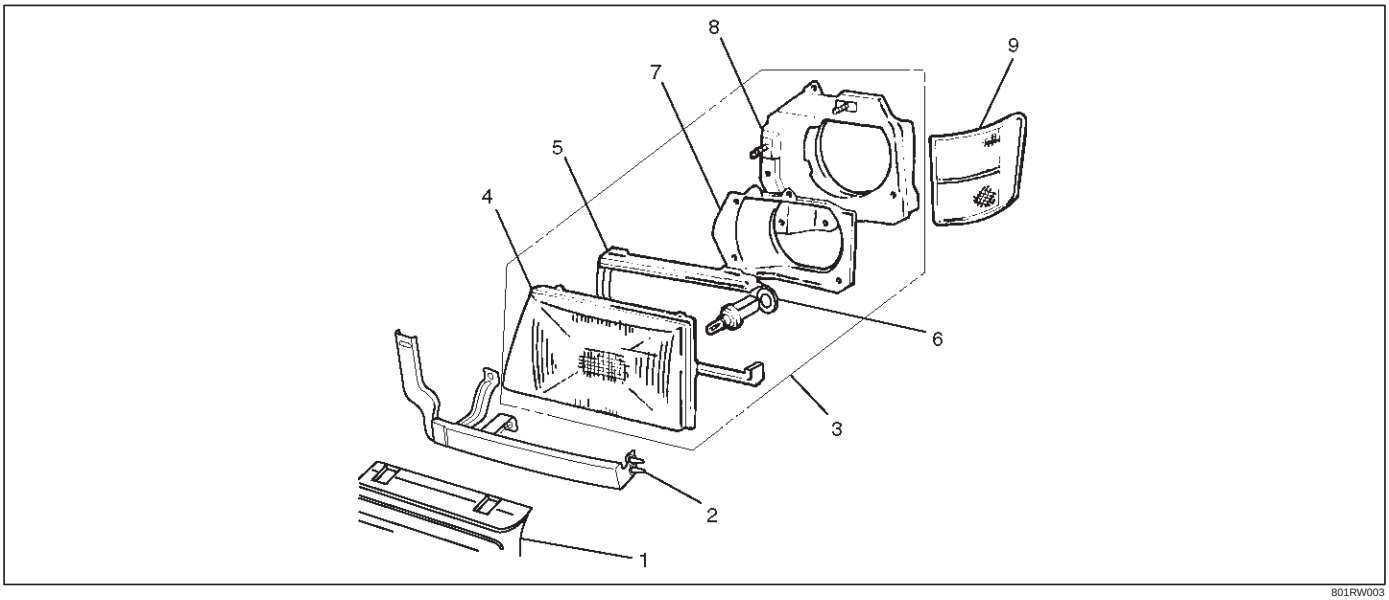

801RW003

Legend

(1) Radiator Grille
(2) Front End Lower Panel
(3) Headlight Assembly
(4) Headlight
(5) Headlight Rim
(6) Headlight Bulb
(7) Rear Cover
(8) Bracket
(9) Front Combination Light

Removal

1. Disconnect the battery ground cable.
2. Remove the screw and pull out the two projecting portions on the fender to remove the front combination light.
3. Remove five clips and two screws to remove the radiator grille.
4. Remove two screws to remove the front end lower panel(2).
5. Remove two bolts and two nuts to remove the headlight assembly (with bracket).
6. Remove the headlight bulb.
7. Remove two screws, two nuts and the spring for the headlight aim adjustment to remove the bracket.
8. Remove four screws to remove the rear cover.
9. Remove the headlight rim.
10. Remove the headlight.

Installation

To install, follow the removal steps in the reverse order.

CAUTION: After installing the headlight, be sure to adjust the headlight aim.

Headlight Adjustment

Preparation

Place the unloaded vehicle on a level surface and check to see if the inflation pressure of the tires is correct, the lenses are clean, and the battery is sufficiently charged. Adjust the aim with the headlight tester, if necessary. When adjusting, follow the procedure of the tester manufacturer's.

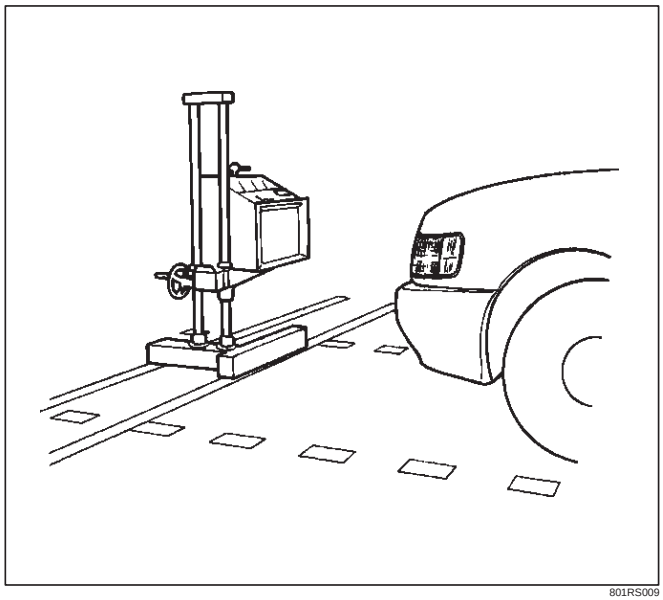

801RS009

Vertical adjustment

Use a screwdriver for vertical adjustment.

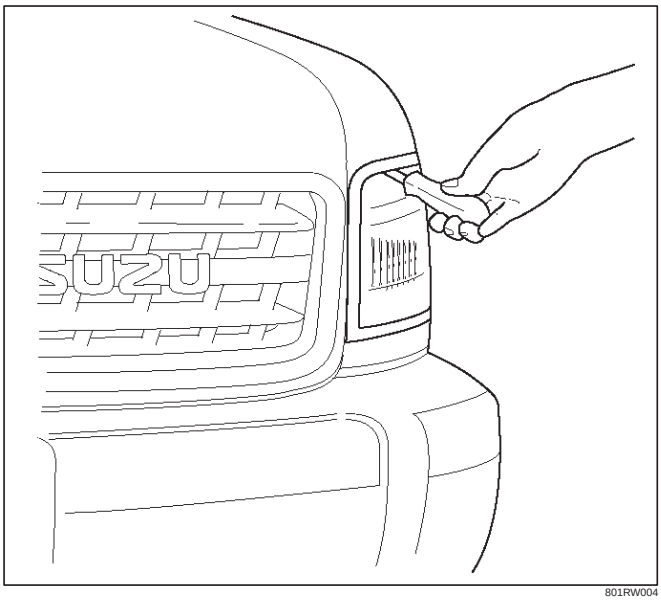

801RW004

Horizontal adjustment

Use a screwdriver for horizontal adjustment.

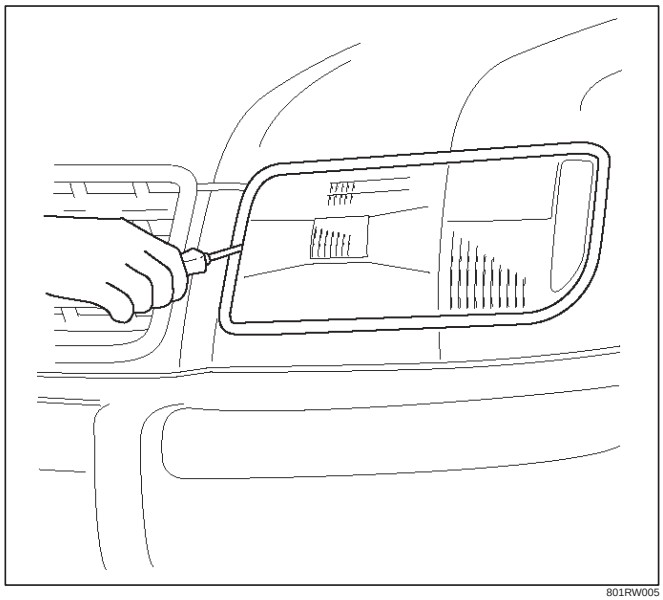

801RW005

Fog Light Bulb

Removal

1. Disconnect the battery ground cable.
2. Open the rear cover(1) of the case.
3. Remove the dust cover.
4. Disconnect the bulb connector.
5. Remove the clip(3).
6. Remove the fog light bulb(2).

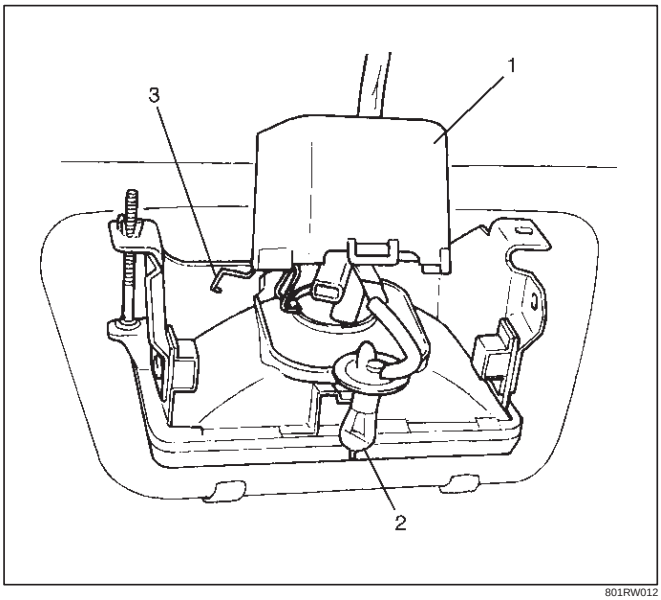

801RW012

Installation

1. Install the fog light bulb(1).
2. Install the clip(2).
3. Connect the bulb connector.
4. Install the dust cover.
5. Close the rear cover(3) of the case.

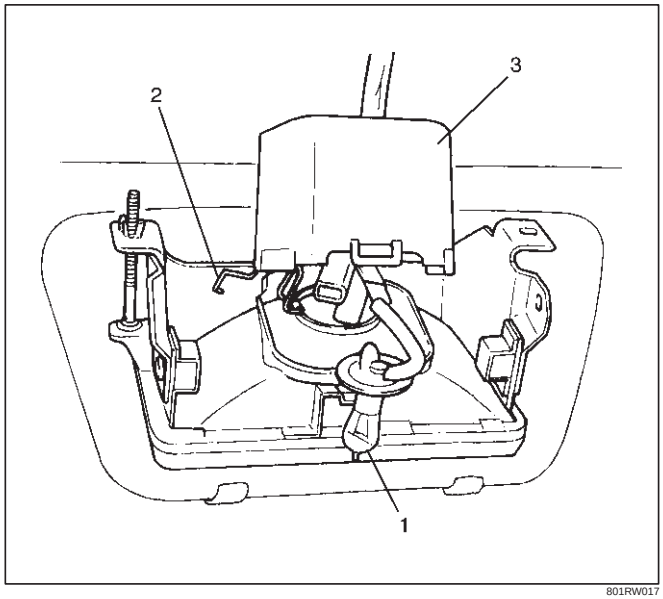

801RW017

6. Connect the battery ground cable.

Fog Light Assembly

Removal

1. Disconnect the battery ground cable.
2. Remove two nuts from the bracket.
3. Disconnect the connector.
4. Remove the fog light assembly (1).

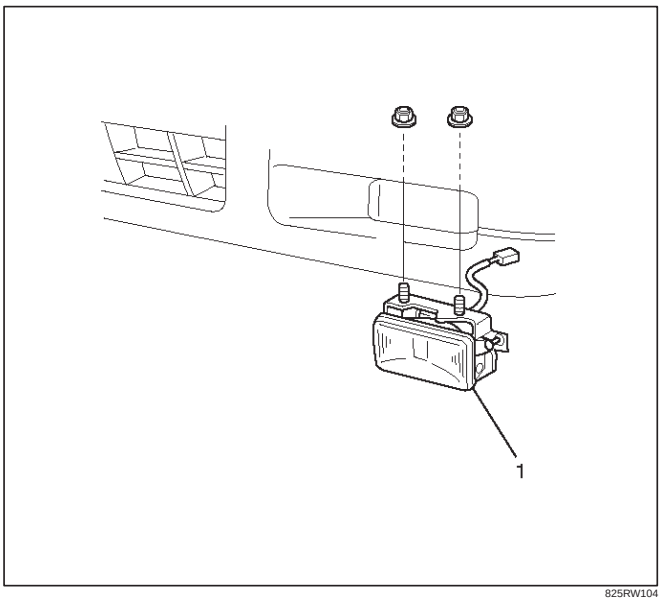

825RW104

CAUTION: After installing the fog light, be sure to adjust the fog light aim.

Fog Light Adjustment

Turn the adjusting screw with a screwdriver to adjust the aim of the fog light vertically.

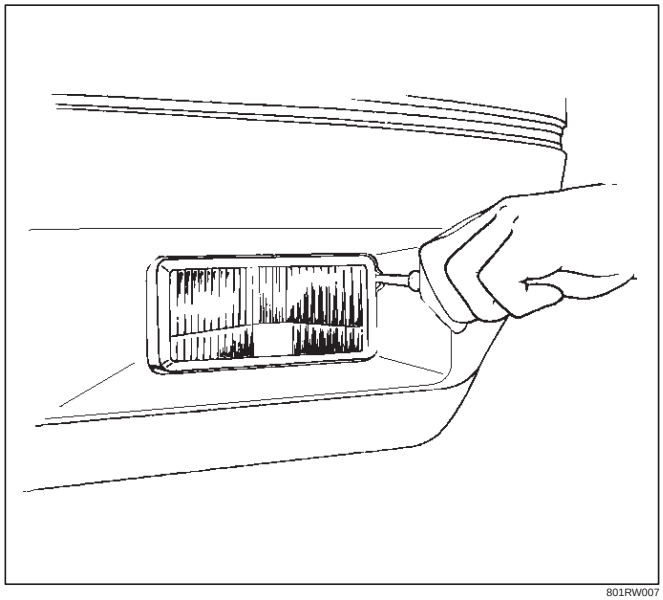

801RW007

Installation

To install, follow the removal steps in the reverse order.

Clarence Light Bulb

Removal

1. Disconnect the battery ground cable.
2. Remove the screw at the upper portion of the light bracket and then remove the bracket from the fender.
3. Remove the front combination light assembly(1).
4. Remove the front side marker light socket(2) by turning it counterclockwise.
5. Pull out the bulb(3) from the socket.

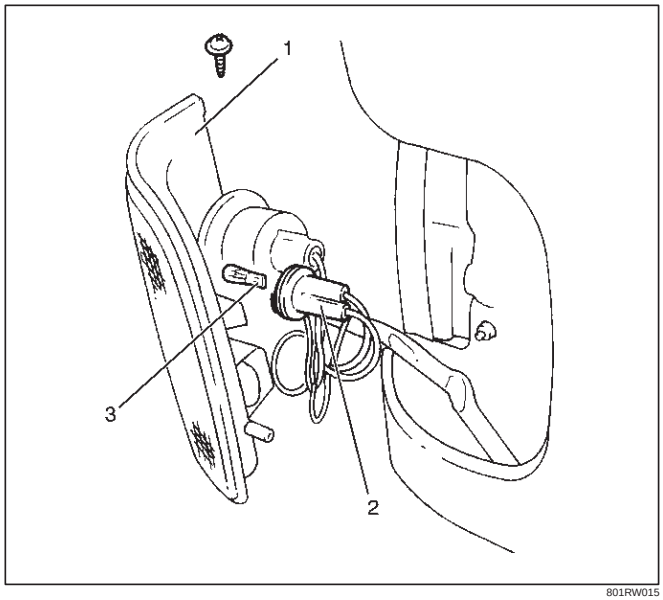

801RW015

Installation

To install, follow the removal steps in the reverse order.

Rear Fog Light Bulb (RHD)

Removal

1. Disconnect the battery ground cable.
2. Remove three screws and release locks at two locations to remove the rear combination light assembly(2).
3. Remove the socket(3) by turning it counterclockwise.
4. Turn the bulb(1) counterclockwise while pushing it to remove it from the socket.

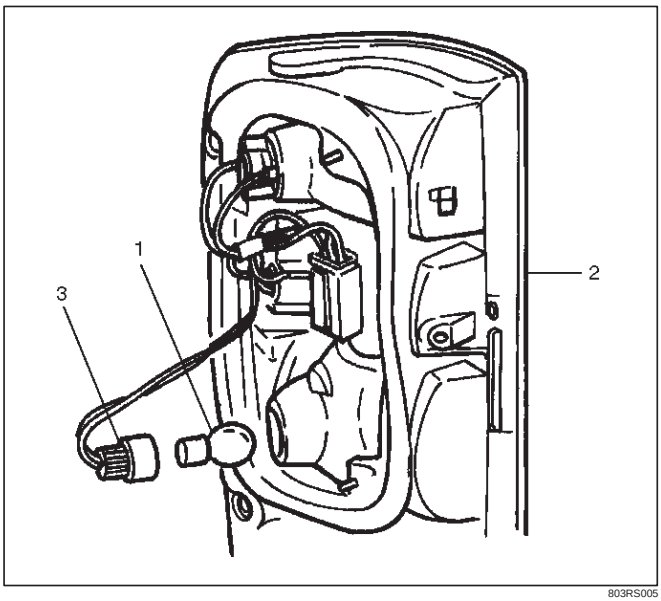

803RS005

Installation

To install, follow the removal steps in the reverse order.

Taillight Bulb (Body)

Removal

1. Disconnect the battery ground cable.
2. Remove three screws and release locks at two locations to remove the rear combination light assembly(2).
3. Remove the socket(3) by turning it counterclockwise.
4. Turn the bulb(1) counterclockwise while pushing it to remove it from the socket.

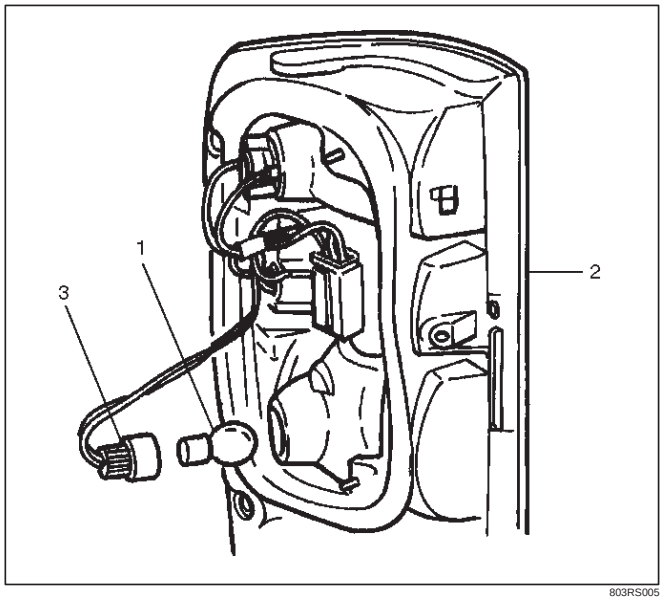

803RS005

Installation

To install, follow the removal steps in the reverse order.

Taillight Bulb (Bumper)

Removal

1. Disconnect the battery ground cable.
2. Remove two screws to remove the rear combination light assembly(2).
3. Remove the socket(1) by turning it counterclockwise.
4. Remove the bulb(3) by turning it counterclockwise while pushing.

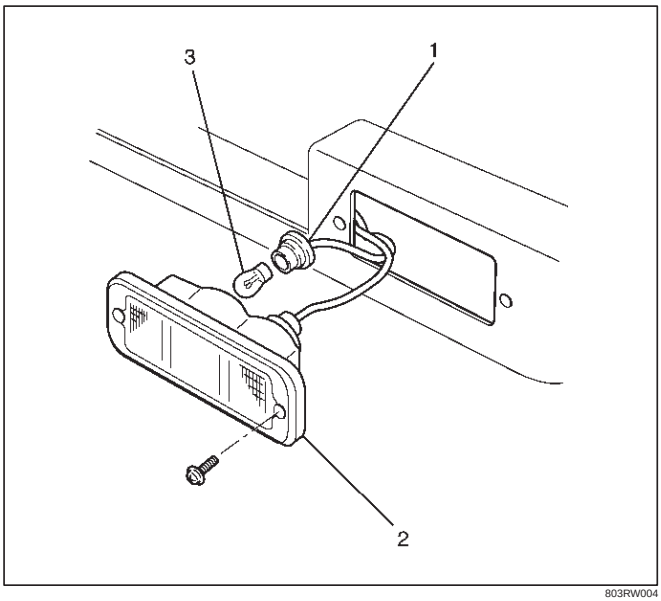

803RW004

Installation

To install, follow the removal steps in the reverse order.

License Plate Light Bulb (Body)

Removal

1. Disconnect the battery ground cable.
2. Remove two screws to remove the lens(2).
3. Pull out the bulb(1) from the socket.

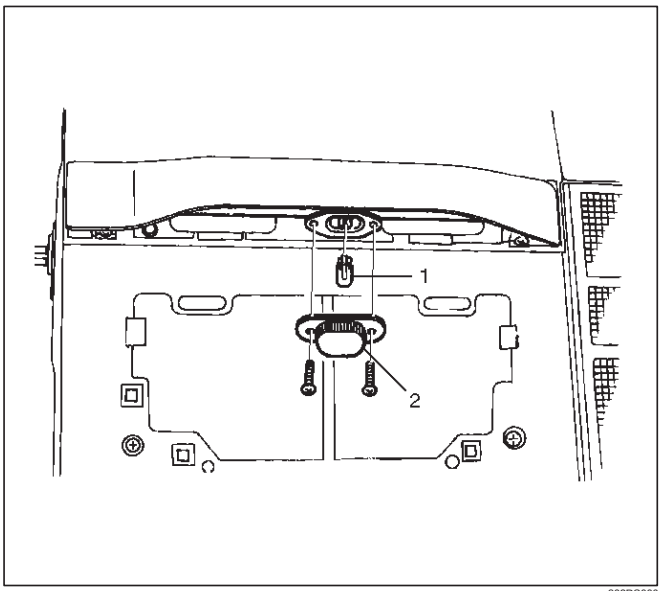

803RS006

Installation

To install, follow the removal steps in the reverse order.

License Plate Light Bulb (Bumper)

Removal

1. Disconnect the battery ground cable.
2. Remove two screws to remove the license plate light(1).
3. Pull out the bulb(3) from the socket(2).

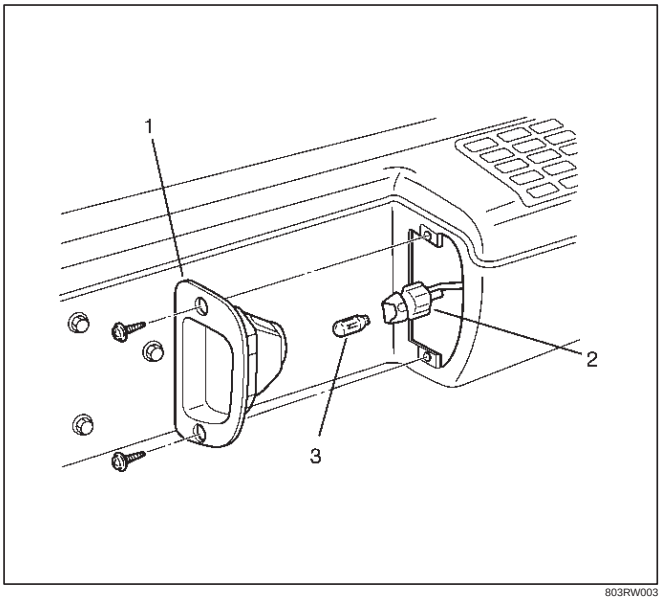

803RW003

Installation

To install, follow the removal steps in the reverse order.

Stoplight Bulb

Removal and Installation

Refer to the Taillight Bulb in this section.

High Mount Stoplight

Removal

1. Disconnect the battery ground cable.
2. Remove the clips(2).
3. Pull out the high mount stoplight(1).
4. Remove the connector.
5. Remove the high mount stoplight.

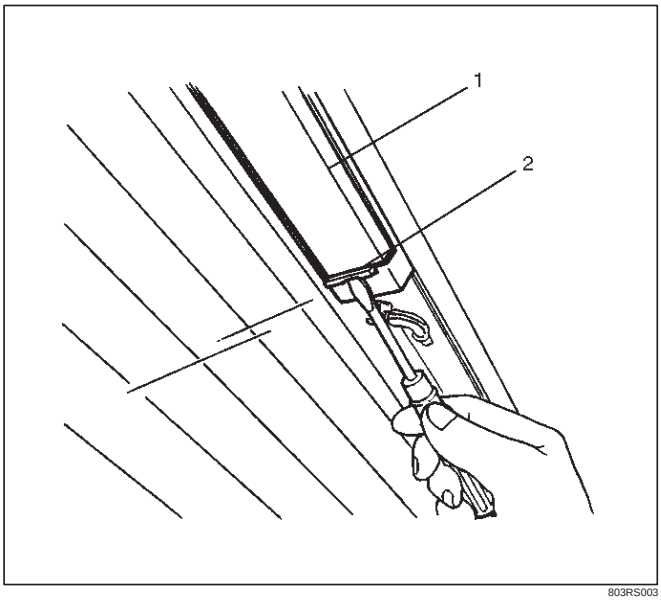

803RS003

Installation

1. Insert the clips(1)(3) into the high mount stoplight(2).
2. Reconnect the connector.
3. Install the high mount stoplight.

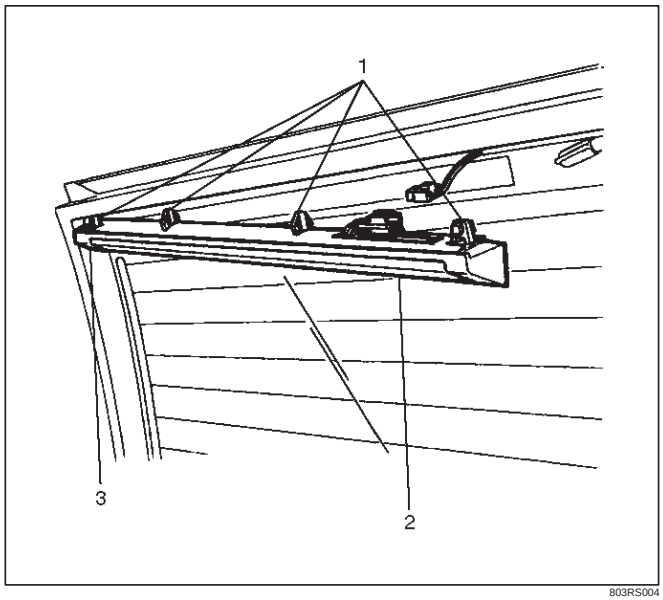

803RS004

Front Turn Signal Light Bulb

Removal

1. Disconnect the battery ground cable.
2. Remove the screw at the upper portion of the light bracket, and remove the bracket from the fender.
3. Remove the front combination light(1).
4. Remove the turn signal light socket(3) by turning it counterclockwise.
5. Remove the bulb(2) by turning it counterclockwise while pushing it at the same time.

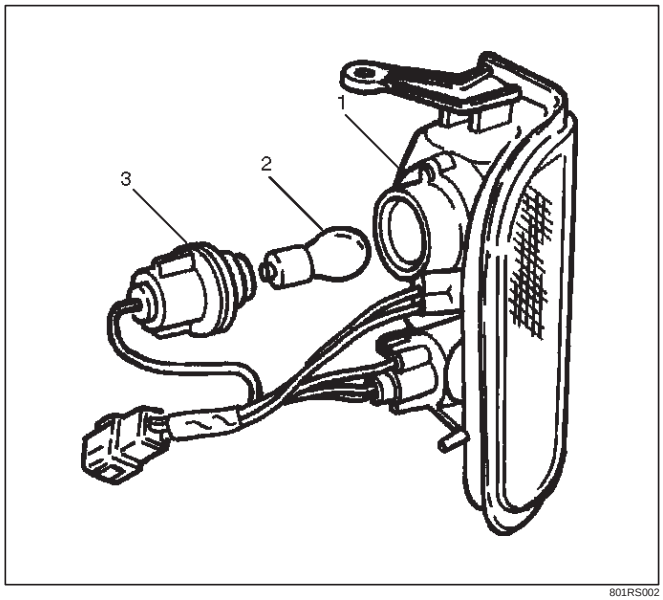

801RS002

Installation

To install, follow the removal steps in the reverse order.

Side Turn Signal Light Bulb

Removal

1. Disconnect the battery ground cable.
2. Pull the light/bulb(1) toward you while pushing the light housing in the rear direction of the vehicle to release its lock.
3. Remove the bulb by turning it counterclockwise while pushing it at the same time.

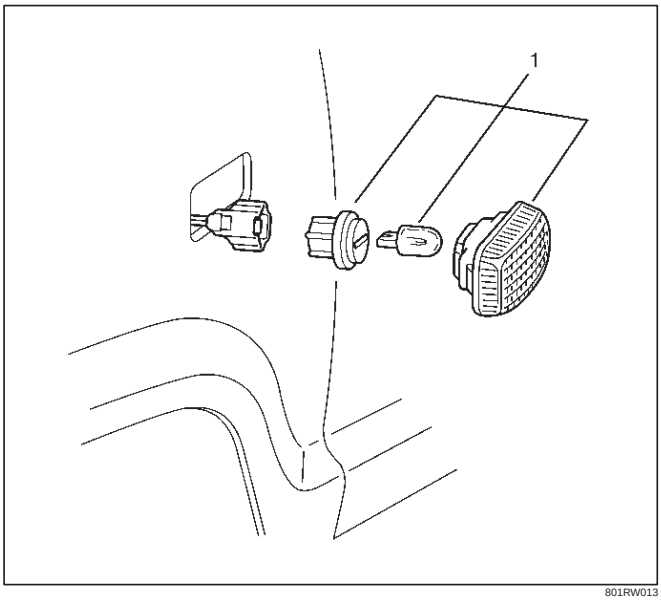

801RW013

Installation

To install, follow the removal steps in the reverse order.

Rear Turn Signal Light Bulb

Removal

1. Disconnect the battery ground cable.
2. Remove the three screws and release the lock at two positions.
3. Remove the rear combination light(3).
4. Remove the turn signal light socket/bulb(1) by turning it counterclockwise.
5. Remove the bulb(2) by turning it counterclockwise while pushing it at the same time.

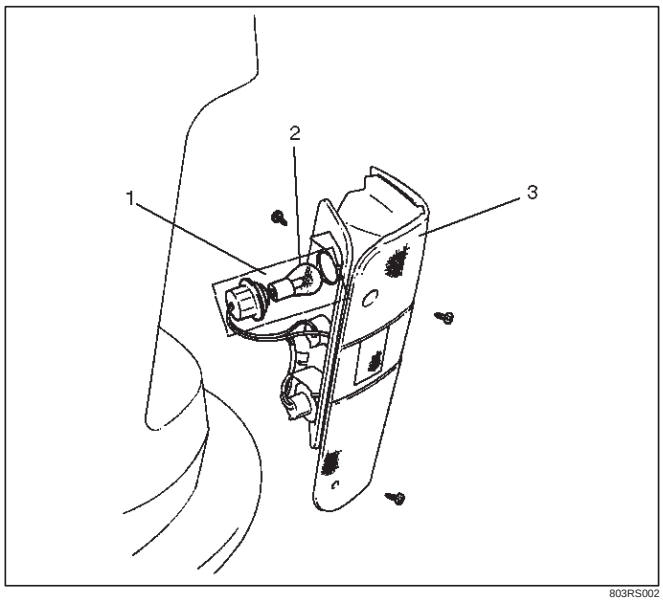

803RS002

Installation

To install, follow the removal steps in the reverse order.

Backup Light Bulb

Removal

1. Disconnect the battery ground cable.
2. Remove three screws and release the lock at two positions.
3. Remove the rear combination light(3).
4. Remove the backup light socket/bulb(1) by turning it counterclockwise.
5. Remove the bulb(2) by turning it counterclockwise while pushing it at the same time.

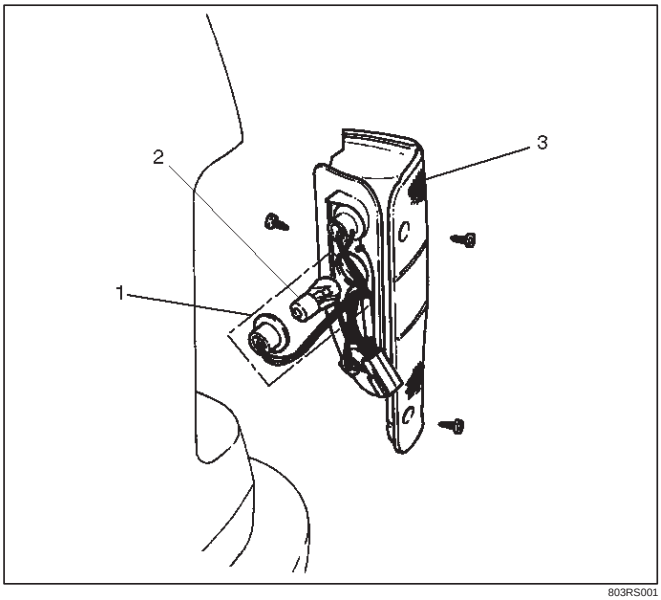

803RS001

Installation

To install, follow the removal steps in the reverse order.

Dome Light Bulb

Removal

1. Disconnect the battery ground cable.
2. Remove the lens(2) by releasing the locks at three locations.
3. Remove the bulb(1).

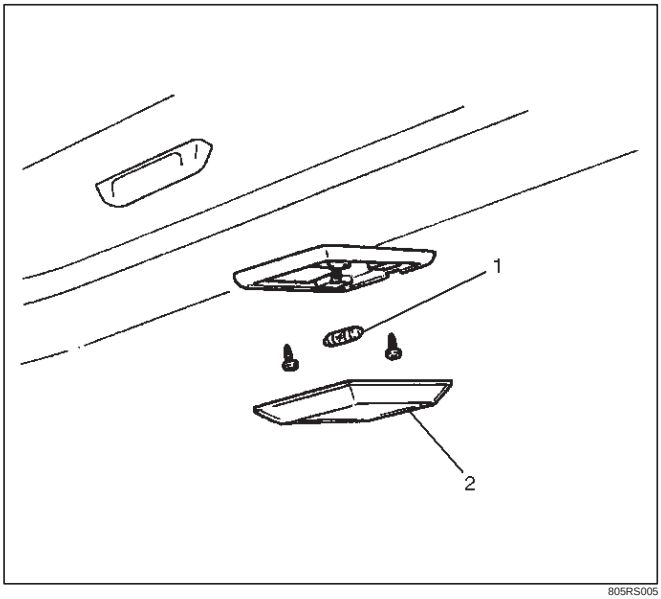

805RS005

Installation

To install, follow the removal steps in the reverse order.

Luggage Room Light Bulb

Removal

1. Disconnect the battery ground cable.
2. Remove the lens(2) by releasing the locks at four locations.
3. Remove the bulb(1).

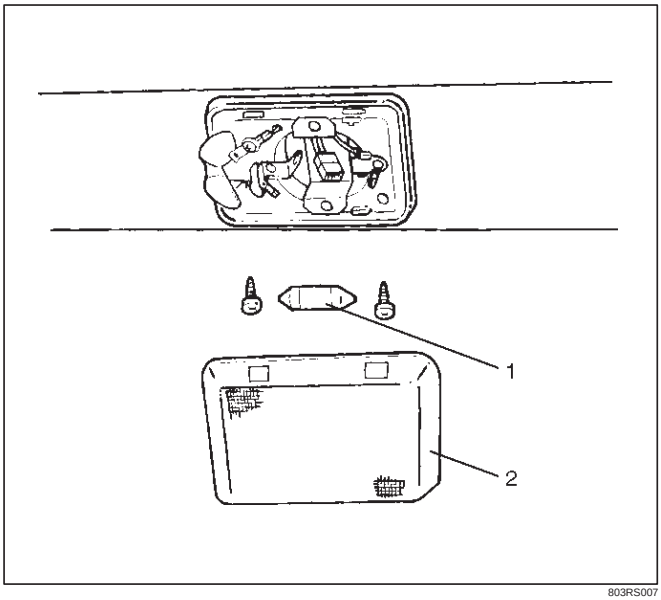

803RS007

Installation

To install, follow the removal steps in the reverse order.

Courtesy Light Bulb

Removal

1. Disconnect the battery ground cable.
2. Remove two screws to remove the lens(1).
3. Pull out the bulb(2) from the socket.

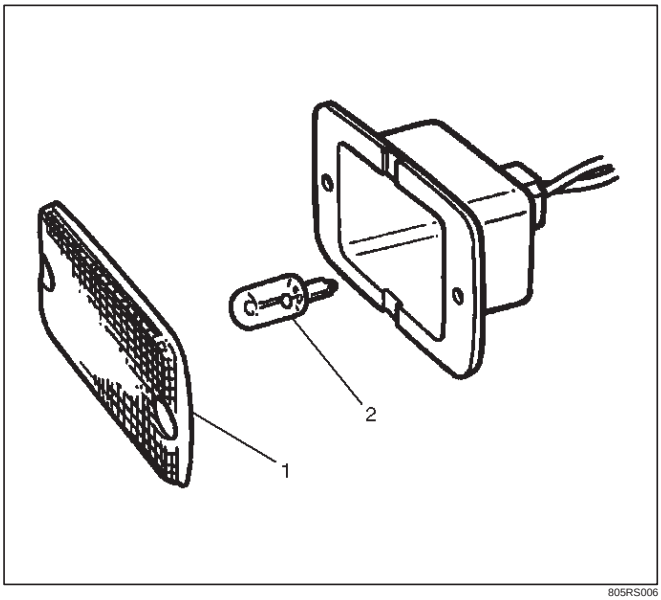

805RS006

Installation

To install, follow the removal steps in the reverse order.

Map Light Switch/Bulb

Removal

1. Disconnect the battery ground cable.
2. Pull the map light body downward to release the lock.
3. Disconnect the connectors of the map light and the sun roof switch.
4. Remove the map light switch.
5. Turn the socket counterclockwise to remove it.
6. Pull out the bulb from the socket.

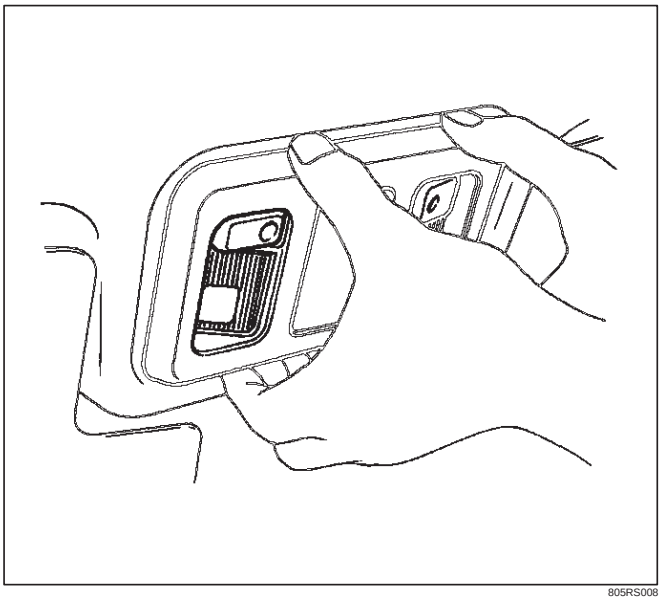

805RS008

Installation

To install, follow the removal steps in the reverse order.

Cigarette Lighter Illumination Bulb

Removal

1. Disconnect the battery ground cable.
2. Remove eight screws to remove the instrument cluster panel(2).
3. Turn the socket counterclockwise to remove it then pull out the bulb(1).

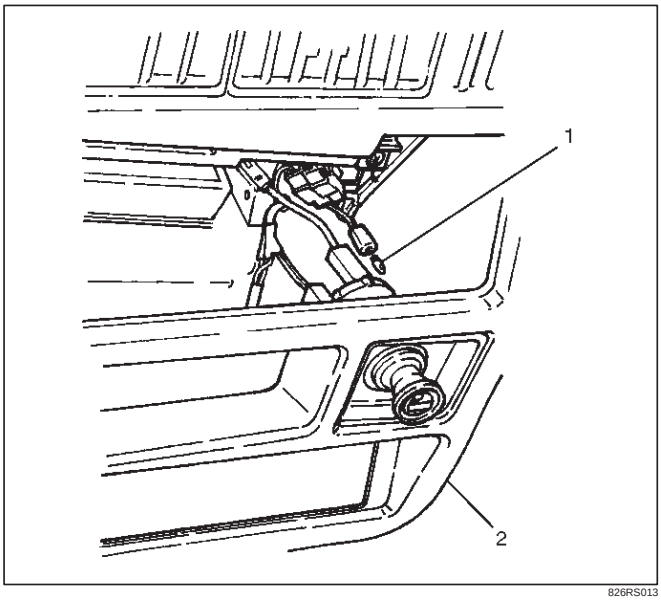

826RS013

Installation

To install, follow the removal steps in the reverse order.

Ashtray Illumination Bulb

Removal

1. Disconnect the battery ground cable.
2. Removal eight screws to remove the instrument cluster panel(1).
3. Remove the ashtray(5).
4. Remove four screws to remove the audio box(4).
5. Remove two screws to remove the ashtray guide(2).
6. Turn the socket counterclockwise to remove it then pull out the bulb(3).

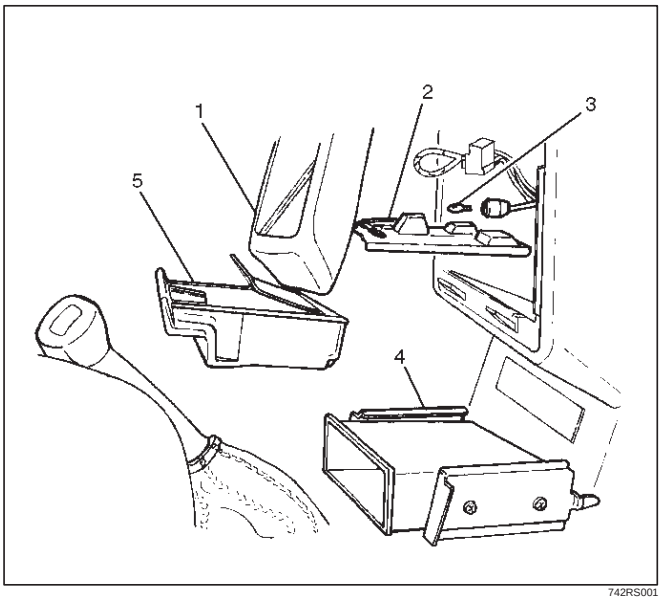

742RS001

Installation

To install, follow the removal steps in the reverse order.

Glove Box Illumination Bulb

Removal

1. Disconnect the battery ground cable.
2. Open the glove box lid, and then pull out the bulb(1).

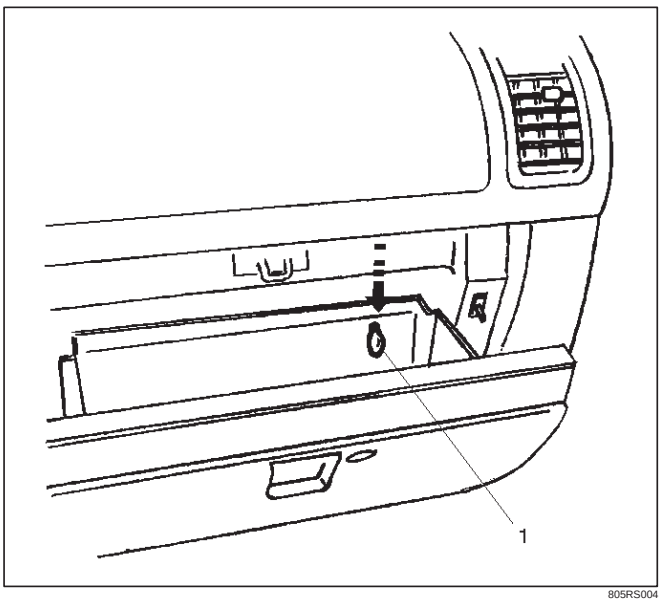

805RS004

Installation

To install, follow the removal steps in the reverse order.

Vanity Mirror Illumination Bulb

Removal

1. Disconnect the battery ground cable.
2. Remove the lens(2).
3. Remove the bulb(1).

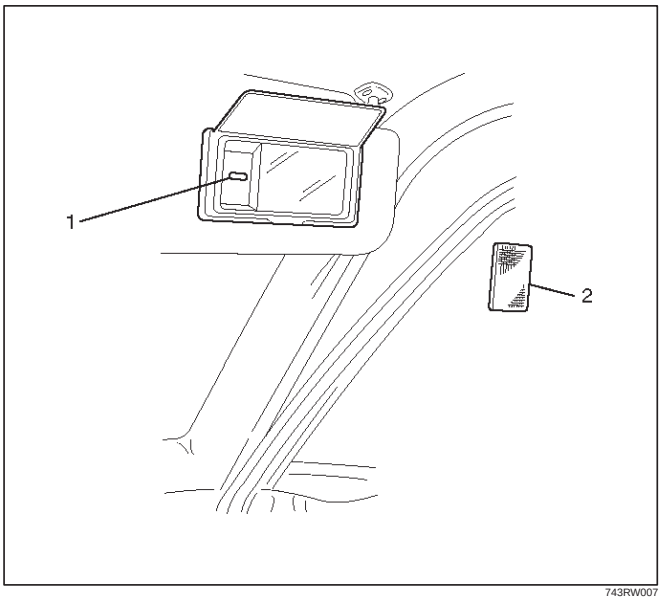

743RW007

Installation

To install, follow the removal steps in the reverse order.

Starter Switch

Removal

1. Disconnect the battery ground cable.
2. Remove the front console assembly(1).
   Refer to Instrument Panel Assembly in Body Structure section.
3. Remove the lower cluster assembly(2).
   Refer to the Instrument Panel Assembly in Body Structure section.
4. Remove the instrument panel driver lower cover assembly(3).
   Refer to the Instrument Panel Assembly in Body Structure section.

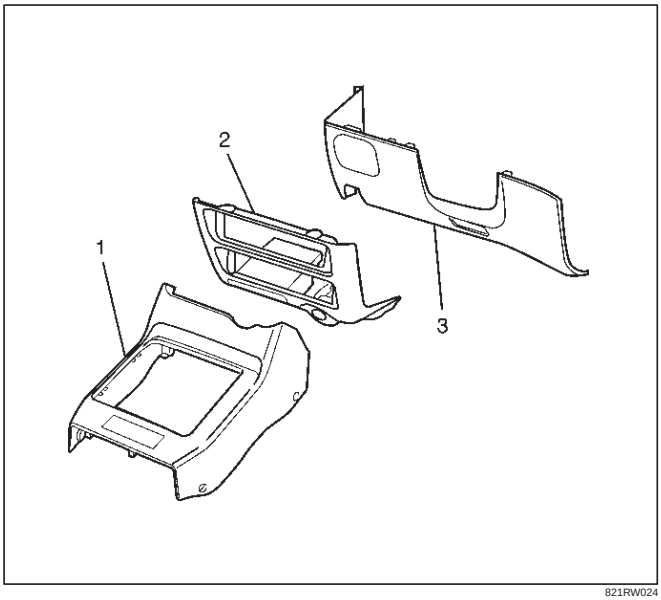

821RW024

5. Remove seven screws to remove the steering cowl(6).
6. Disconnect the connector, remove the screw(4) and then remove the starter switch(5).

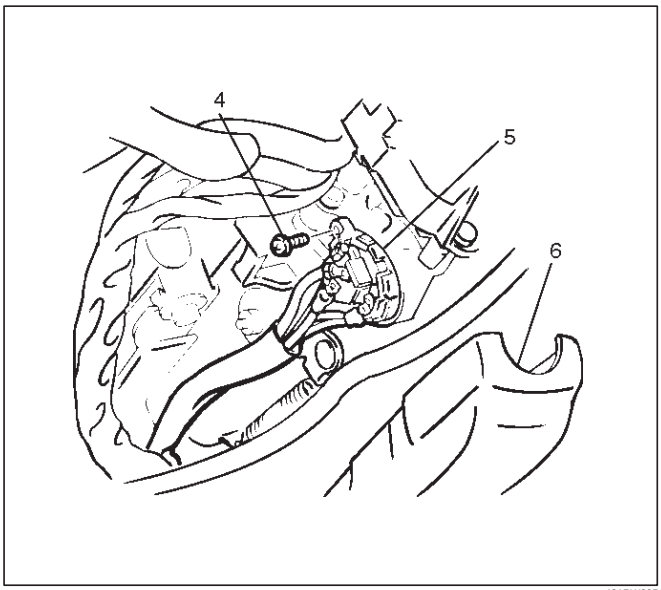

431RW005

Installation

To install, follow the removal steps in the reverse order noting the following point.

1. When installing the steering cowl(10), be sure to pass the harnesses through the route as shown in the figure so that the starter switch harness(7), the combination switch harness(8) and the inflator module harness(9) will not get caught.

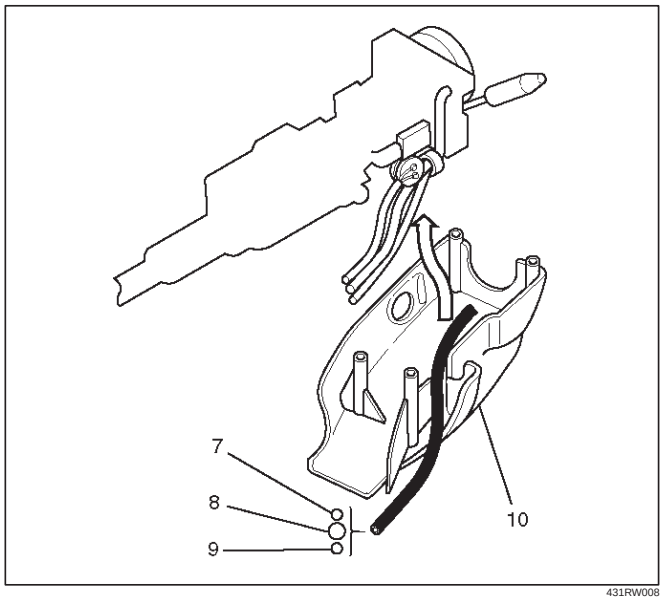

431RW008

Lighting Switch (Combination Switch)

Removal

1. Disconnect the battery ground cable.
2. Remove the instrument panel driver lower cover(5).
   Refer to the Instrument Panel Assembly in Body Structure section.
3. Remove seven screws to remove the steering cowl(4).
4. Disconnect the SDM (air bag controller) connector located at lower of the instrument panel driver lower cover.
5. Remove four fixing screws and disconnect the driver inflator module connector to remove the driver inflator module(3).

CAUTION: When carrying a live inflator module, make sure the bag opening is pointed away from you. In case of an accidental deployment, the bag will then deploy with minimal chance of injury. Never carry the inflator module by the wires or connector on the underside of the module.

When placing a live inflator module on a bench or other surface, always face the bag and trim cover up, away from the surface. This is necessary so that a free space is provided to allow the air bag to expand in the unlikely event of accidental deployment.

6. Remove the steering wheel(2).
   Refer to the Steering Wheel in Steering section.
7. Disconnect the SRS coil assembly connector, remove four fixing screws to remove the SRS coil assembly(1).
8. Disconnect the lighting switch connector, remove four fixing screws to remove the lighting switch(6).

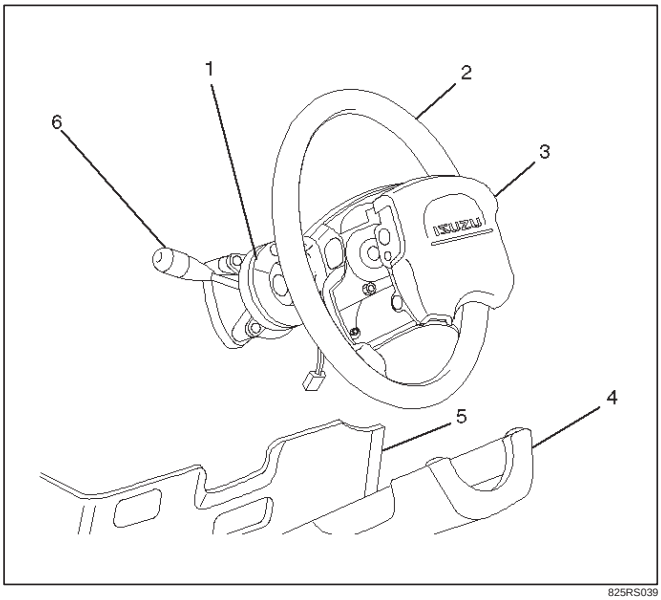

825RS039

Installation

To install, follow the removal steps in the reverse order, noting the following points.

1. Check to see if the vehicle is in the straight driving condition and turn the rotary section of the SRS coil assembly provided to the upper surface of the lighting switch (combination switch) counterclockwise fully until it stops.
   Then from where it stops, turn it back about 3 rotations to set the alignment marks(7) together before installing the steering wheel.

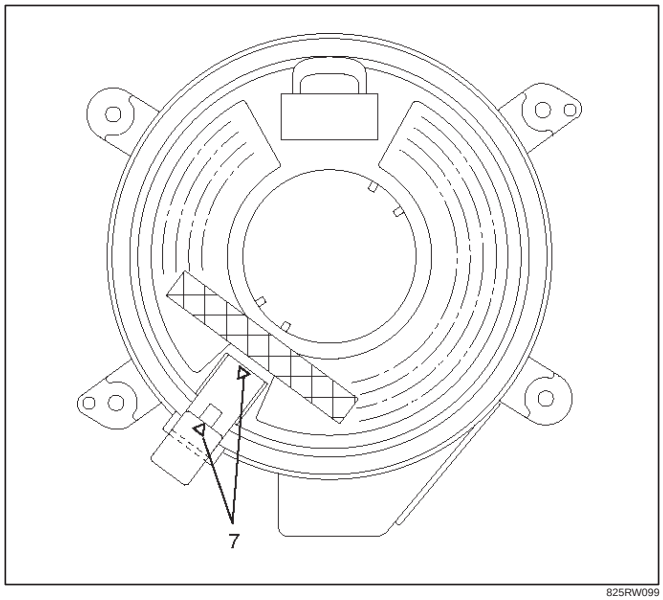

825RW099

2. Tighten the steering shaft nut to the specified torque.

   Torque: 34 N·m (3.5 kg·m/25 lb ft)

3. When connect the double lock type of inflator module connector, insert the connector completely and lock at outside.
   Imperfect locking may cause malfunction of SRS system circuit.
4. When installing the steering cowl(11), be sure to pass the harnesses through the route as shown in the figure so that the starter switch harness(8), the combination switch harness(9) and inflator module harness(10) will not get caught.

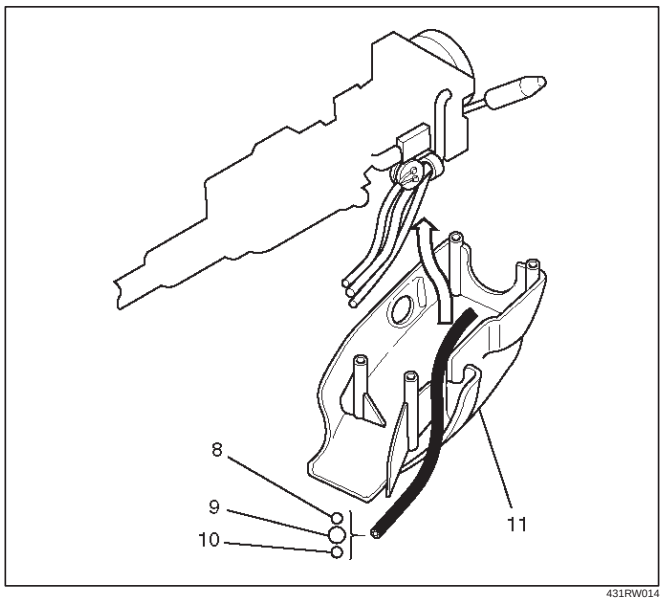

431RW014

Fog Light Switch

Removal

1. Disconnect the battery ground cable.
2. Remove the front console assembly(1).
   Refer to the Instrument Panel Assembly in Body Structure section.
3. Remove the lower cluster assembly(2).
   Refer to the Instrument Panel Assembly in Body Structure section.
4. Remove the instrument panel driver lower cover assembly(3).
   Refer to the Instrument Panel Assembly in Body Structure section.

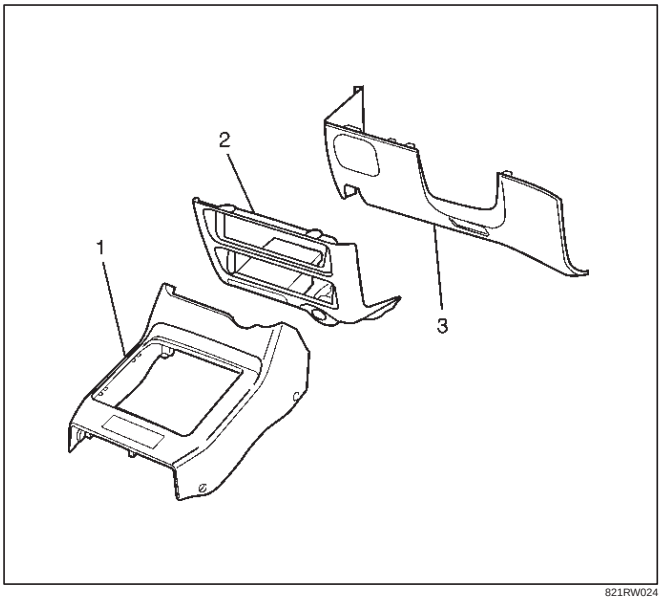

821RW024

5. Remove the instrument panel cluster assembly(4).
   Refer to the Instrument Panel Assembly in Body Structure section.
6. Disconnect the connector and push the lock from the back side of the instrument panel cluster assembly to remove the fog light switch(5).

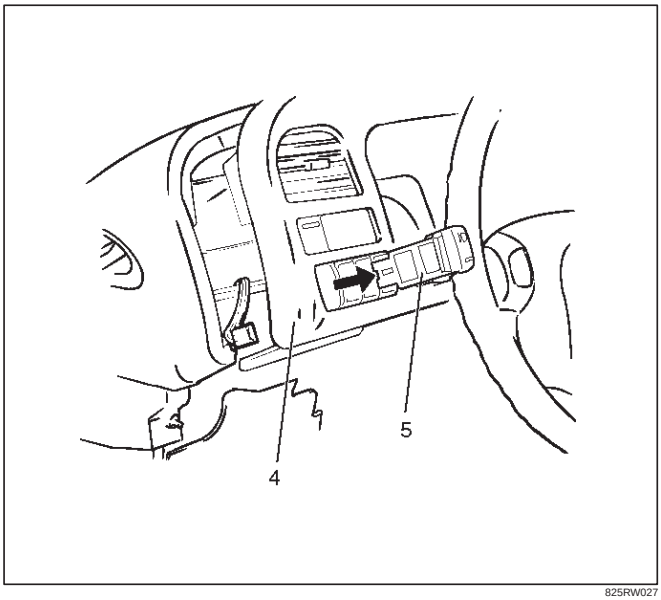

825RW027

Installation

To install, follow the removal steps in the reverse order, noting the following point:

1. Push in the switch with your fingers until the switch is locked securely.

Stoplight Switch (W/O Cruise Control)

Removal

1. Disconnect the battery ground cable.
2. Disconnect the connector(3), loosen the lock nut(1) and then remove the stoplight switch(2) by turning it.

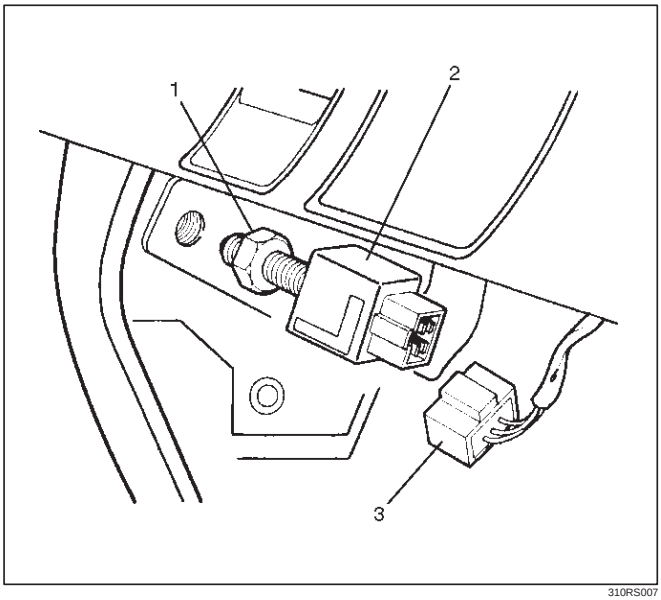

310RS007

Installation

To install, follow the removal steps in the reverse order, noting the following points.

1. Check to see if the brake pedal has been returned by the return spring to the specified position.
2. Turn the stoplight switch(1) clockwise until the tip of the threaded portion of the switch contacts the pedal arm(2).
3. Turn the switch counterclockwise until the space between the tip of the threaded portion and the pedal arm is 0.5 to 1.0 mm (0.02 – 0.04 in.).

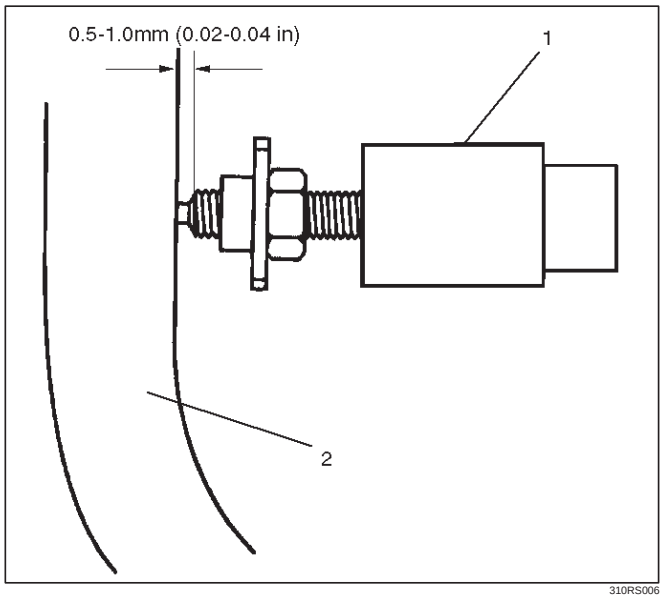

310RS006

Brake Switch (W/Cruise Control)

Removal

1. Disconnect the battery ground cable.
2. Disconnect the connector(1), loosen the lock nut(3) and then remove the brake switch(2) by turning it.

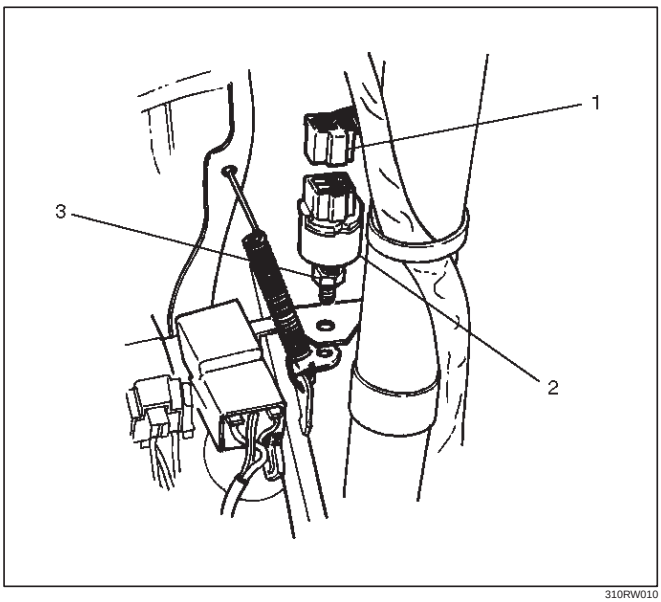

310RW010

Installation

To install, follow the removal steps in the reverse order, noting the following points.

1. Check to see if the brake pedal has been returned by the return spring to the specified position.
2. Turn the switch clockwise until the tip of the threaded portion of the brake switch contacts the pedal arm.
3. Turn the switch counterclockwise until the space between the tip of the threaded portion and the pedal arm is 0.5 to 1.0 mm (0.02 – 0.04 in.).

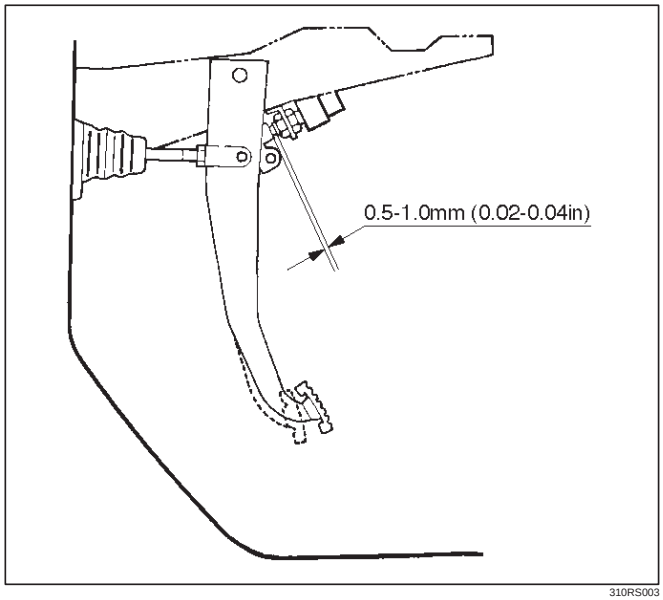

310RS003

Turn Signal Switch (Combination Switch)

Removal and Installation

Refer to the removal and installation steps of the Lighting Switch (Combination Switch) in this section.

Hazard Warning Switch

Removal

1. Disconnect the battery ground cable.
2. Remove the front console assembly(1).
   Refer to the Instrument Panel Assembly in Body Structure section.
3. Remove the lower cluster assembly(2).
   Refer to the Instrument Panel Assembly in Body Structure section.
4. Remove the instrument panel driver lower cover assembly(3).
   Refer to the Instrument Panel Assembly in Body Structure section.

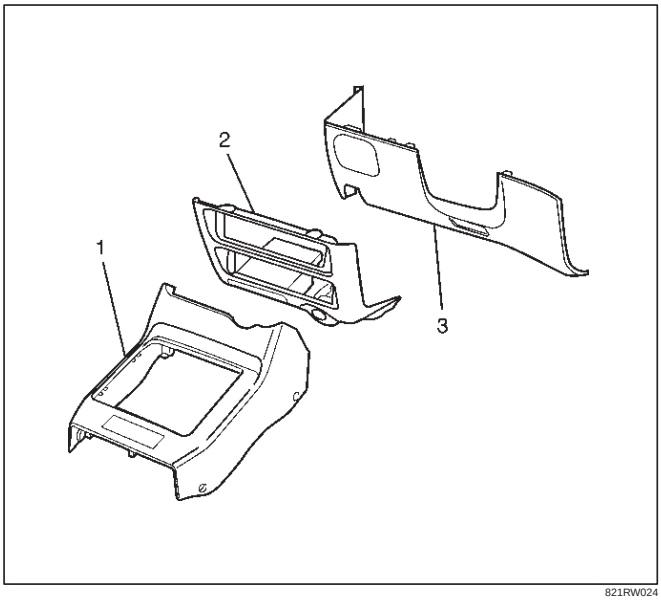

821RW024

5. Remove the instrument panel cluster assembly(4).
   Refer to the Instrument Panel Assembly in Body Structure section.
6. Disconnect the connector and push the lock from the back side of the instrument panel cluster assembly to remove the hazard warning switch(5).

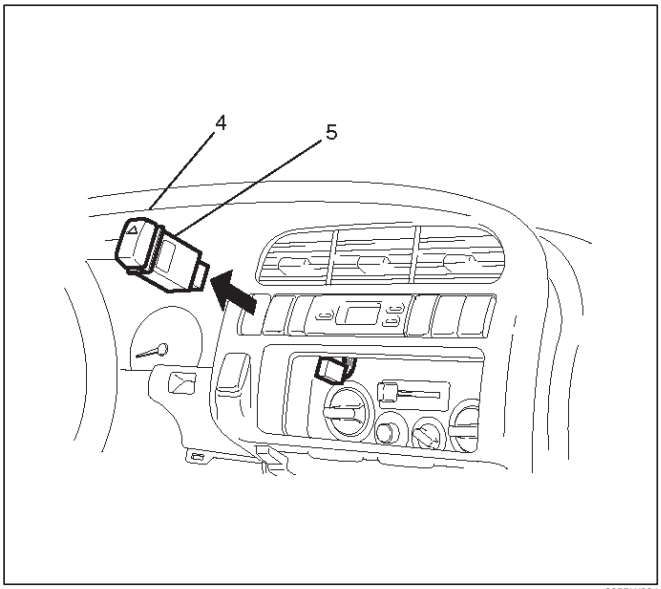

825RW024

Installation

To install, follow the removal steps in the reverse order, noting the following point.

1. Push in the switch with your fingers until it locks securely.

Tailgate Switch

Removal

1. Disconnect the battery ground cable.
2. Remove the screw and disconnect the connector(1) to remove the tailgate switch(2).

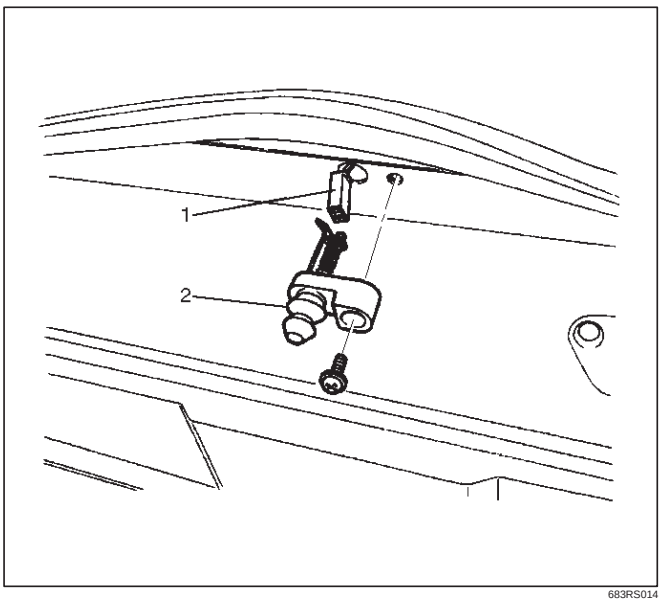

683RS014

Installation

To install, follow the removal steps in the reverse order.

Door Switch

Removal

1. Disconnect the battery ground cable.
2. Remove the screw and disconnect the connector to remove the door switch(1).

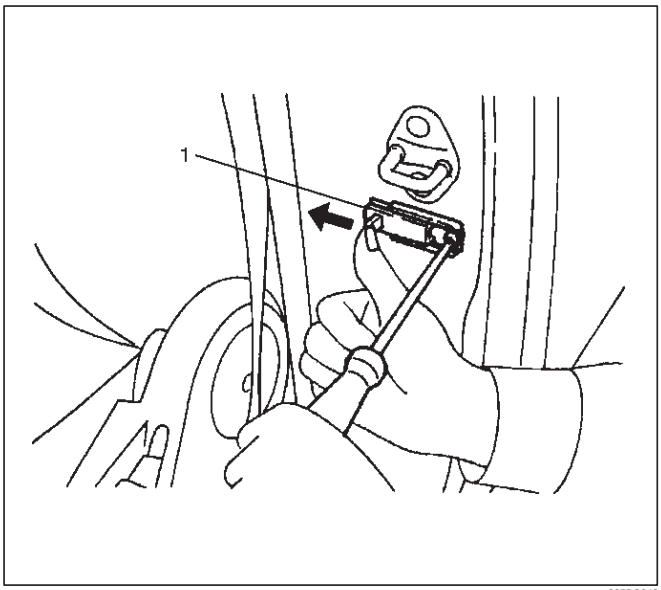

825RS043

Installation

To install, follow the removal steps in the reverse order.

Rear Defogger Switch

Removal

1. Disconnect the battery ground cable.
2. Remove the front console assembly(1).
   Refer to the Instrument Panel Assembly in Body Structure section.
3. Remove the lower cluster assembly(2).
   Refer to the Instrument Panel Assembly in Body Structure section.
4. Remove the instrument panel driver lower cover assembly(3).
   Refer to the Instrument Panel Assembly in Body Structure section.

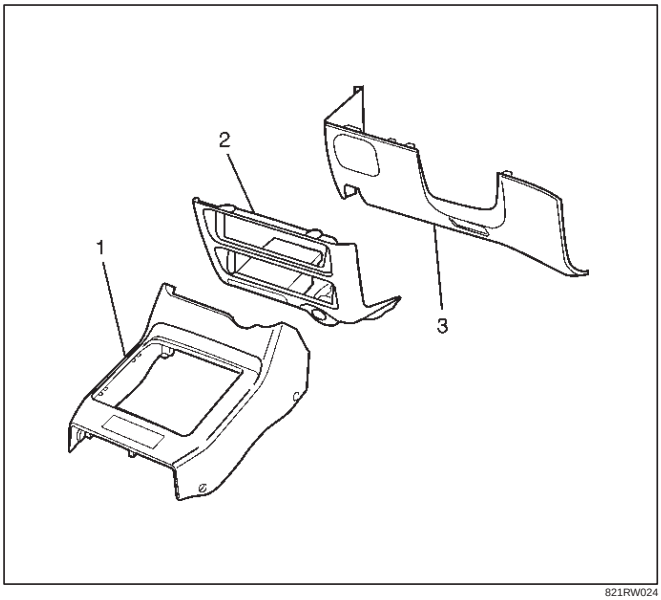

821RW024

5. Remove the instrument panel cluster assembly(4).
   Refer to the Instrument Panel Assembly in Body Structure section.
6. Disconnect the connector and push the lock from the back side of the instrument panel cluster assembly to remove the rear defogger switch(5).

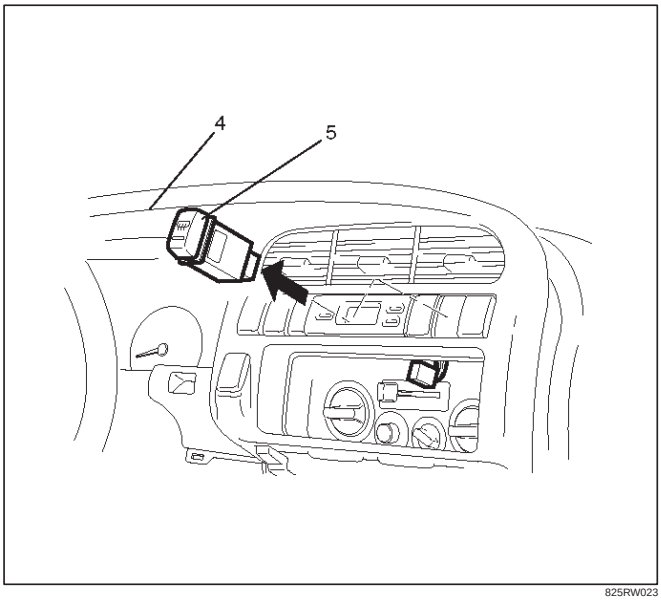

825RW023

Installation

To install, follow the removal steps in the reverse order, noting the following point.

1. Push in the switch with your fingers until it locks securely.

Seat Heater Switch

Removal

1. Disconnect the battery ground cable.
2. Remove four fixing screws and disconnect the switch connectors to remove the front console assembly(4).
3. Push the lock from the back side of the front console assembly to remove the seat heater switch(5).

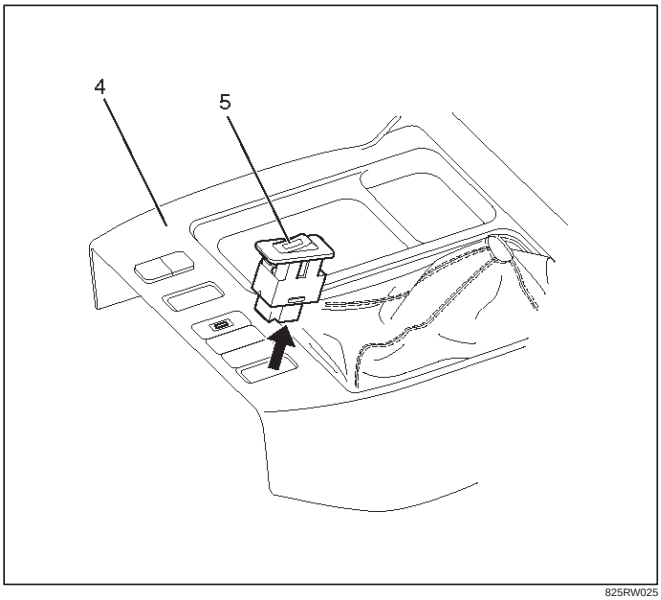

825RW025

Installation

To install, follow the removal steps in the reverse order, noting the following point.

1. Push the switch with your fingers until it locks securely.

Key Remind Switch (Starter Switch)

Removal and Installation

Refer to the removal and installation on steps of the Starter Switch in this section.

Illumination Controller

Removal

1. Disconnect the battery ground cable.
2. Remove the front console assembly(1).
   Refer to the Instrument Panel Assembly in Body Structure section.
3. Remove the lower cluster assembly(2).
   Refer to the Instrument Panel Assembly in Body Structure section.
4. Remove the instrument panel driver lower cover assembly(3).
   Refer to the Instrument Panel Assembly in Body Structure section.

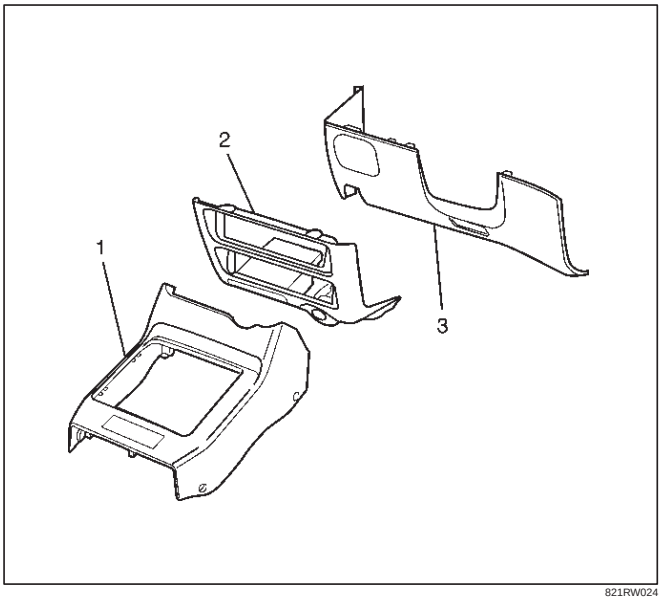

821RW024

5. Remove the instrument panel cluster assembly(4).
   Refer to the Instrument Panel Assembly in Body Structure section.
6. Disconnect the connector and push the lock from the back side of the instrument panel cluster assembly to remove the illumination controller(5).

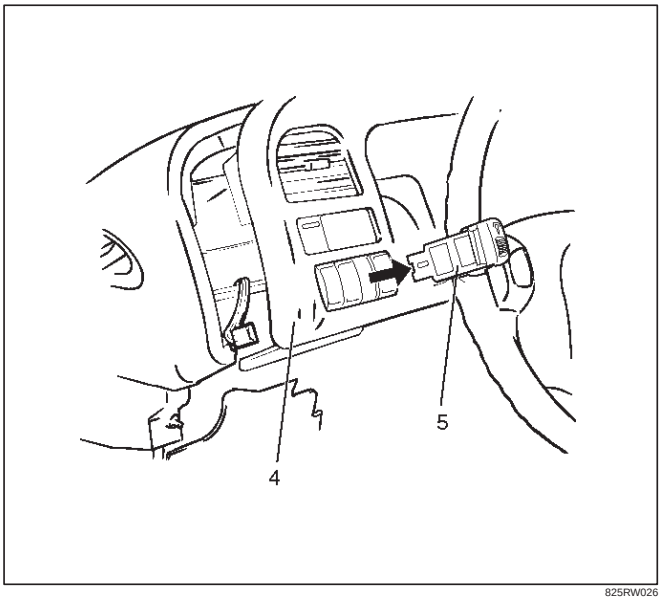

825RW026

Installation

To install, follow the removal steps in the reverse order, noting the following point.

1. Push in the switch with your fingers until the switch is locked securely.

Power/Winter Switch

Removal

1. Disconnect the battery ground cable.
2. Remove four fixing screws and disconnect the switch connectors to remove the front console assembly(4).
3. Push the lock from the back side of the front console assembly to remove the power/winter switch(5).

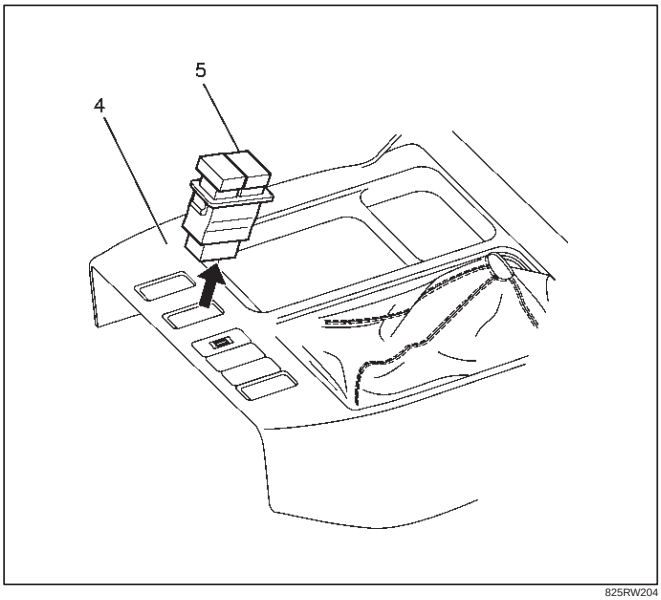

825RW204

Installation

To install, follow the removal steps in the reverse order, noting the following point.

1. Push the switch with your fingers until it locks securely.

Main Data and Specifications

Light and Bulb Specifications

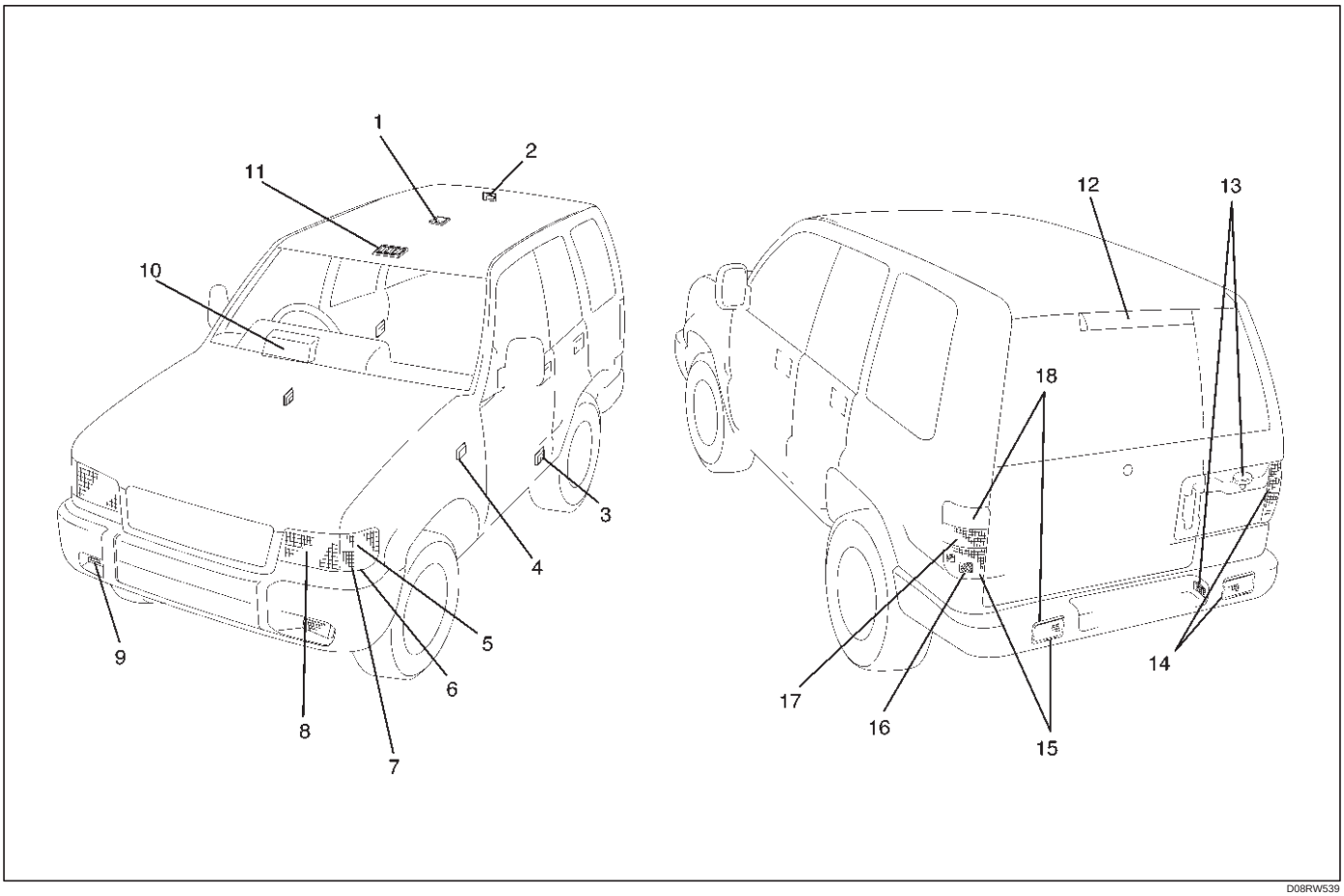

D08RW539

Legend

(1) Dome Light
(2) Luggage Room Light
(3) Courtesy Light
(4) Side Turn Signal Light
(5) Front Turn Signal Light
(6) Clearance Light
(7) Front Combination Light
(8) Headlight
(9) Fog Light
(10) Meter
(11) Map Light
(12) High Mount Step Light
(13) License Plate Light
(14) Rear combination Light
(15) Taillight/Stoplight
(16) Rear Fog Light
(17) Backup Light
(18) Rear Turn Signal Light.

Light Name			Rated Power	Number of Bulbs	Lens Color	Remarks
Headlight			60w/55w	2	White	Halogen
Front combination light	Turn signal light		21w	2	White	
	Clearance light		5w	2	Amber	
FRT fog light			55w	2	White	Halogen
Rear combination light	Bumper	Taillight/Stoplight	5w/21w	2	Red	
		Turn signal light	21w	2	Amber	
	Body	Taillight/Stoplight	5w/21w	2	Red	
		Turn signal light	21w	2	Amber	
Backup light			21w	2	White	
RR fog light			21w	2	Red	
Side turn signal light			5w	2	Amber	
License plate light	Bumper		5w	2	White	
	Body		5W	1	White	
High mount stoplight			—	—	Red	LED
Map light			5w	2	White	
Dome light			10w	1	White	
Luggage room light			8w	1	White	
Courtesy light			3.8w	2	White	
Indicator/ Warning light	A/C SW		60mA	1		
	RR defogger SW		0.84w	1		
	Mirror defogger SW		0.84w	1		
	FRT fog light SW		0.7w	1		
	RR fog light SW		0.7w	1		
	Cruise (Set)		1.4w	1		Meter
	Cruise (Main)		1.4w	1		Meter
	Check trans		3w	1		Meter
	Anti-theft		3w	1		Warning box
	Turn signal		1.4w	2		Meter
	Golw		1.4w	1		Meter
	Water sedimenter		1.4w	1		Meter
	High beam		1.4w	1		Meter
	ABS		1.4w	1		Meter
	Check engine		1.4w	1		Meter
	Low fuel		1.4w	1		Meter
	4WD		1.4w	1		Meter
	Oil Pressure		1.4w	1		Meter
	Brake system		1.4w	1		Meter
	Charge		1.4w	1		Meter
	Seat belt		2w	1		Meter
	A/T shift position		0.91w	7		Meter
	A/T oil temp		3w	1		Meter

	Power drive	1.4w	1		Meter
	Winter drive	1.4w	1		Meter
	Air bag	2w	1		Meter
Illumination Light	Engine warming SW	0.84w	1		
	FRT fog light SW	0.84w	1		
	RR fog light SW	0.84w	1		
	Glove box	1.2w	1		
	Ashtray	1.4w	1		
	Illumination controller	0.7w	1		
	Heater bezel	150mA	2		
	Hazard warning light SW	0.84w	1		
	Meter	3.4w	4		Meter ASM
	Cigar lighter	1.4w	1		
	Rear wiper & washer SW	0.84w	1		
	Rear defogger SW	0.84w	1		
	Mirror control SW	45mA	1		
	Mirror defogger SW	0.7w	1		
	Mirror folding SW	0.7w	1		
	A/T select lever	1.2w	1		
	Power & Winter SW	50mA	2		
	Cruise control main SW	0.84w	1		
	Headlight wiper SW	0.84w	1		

Torque Specifications

Application	N·m	kg·m	Lb Ft	Lb In
Steering Shaft Nut	34	3.5	25	—

WIPER / WASHER SYSTEM

CONTENTS

Service Precaution 8B–2
Windshield Wiper/Washer System 8B–2
General Description 8B–2
Windshield Wiper And Washer Switch 8B–2
Removal and Installation 8B–2
Windshield Wiper Motor 8B–2
Removal 8B–2
Installation 8B–2
Windshield Washer Motor 8B–3
Removal 8B–3
Installation 8B–3
Windshield Wiper Linkage 8B–4
Windshield Wiper Linkage and Associated Parts 8B–4
Removal 8B–4
Installation 8B–4
Windshield Wiper Arm/Blade 8B–5
Removal 8B–5
Installation 8B–5
Windshield Wiper Blade Rubber 8B–6
Removal 8B–6
Installation 8B–6
Rear Wiper/Washer System 8B–7
General Description 8B–7
Rear Wiper and Washer Switch 8B–7
Removal 8B–7
Installation 8B–7
Rear Wiper Motor 8B–8
Removal 8B–8
Installation 8B–8
Alarm & Relay Control Unit 8B–9
Removal 8B–9
Installation 8B–9
Rear Washer Motor 8B–9
Removal 8B–9
Installation 8B–9
Rear Wiper Arm/Blade 8B–10
Removal 8B–10
Installation 8B–10
Rear Washer Nozzle 8B–10
Removal 8B–10
Installation 8B–10
Rear Washer Nozzle Angle Adjustment . . . 8B–10
Rear Wiper Blade Rubber 8B–11
Removal and Installation 8B–11
Headlight Wiper/Washer 8B–11
General Description 8B–11
Headlight Wiper and Washer Switch 8B–12
Removal 8B–12
Installation 8B–12
Headlight Wiper Arm & Blade 8B–13
Removal 8B–13
Installation 8B–13
Headlight Wiper Motor 8B–13
Removal 8B–13
Installation 8B–13
Headlight Washer Motor 8B–14
Removal and Installation 8B–14
Main Data and Specifications 8B–14

Service Precaution

WARNING: IF SO EQUIPPED WITH A SUPPLEMENTAL RESTRAINT SYSTEM (SRS), REFER TO THE SRS COMPONENT AND WIRING LOCATION VIEW IN ORDER TO DETERMINE WHETHER YOU ARE PERFORMING SERVICE ON OR NEAR THE SRS COMPONENTS OR THE SRS WIRING. WHEN YOU ARE PERFORMING SERVICE ON OR NEAR THE SRS COMPONENTS OR THE SRS WIRING, REFER TO THE SRS SERVICE INFORMATION. FAILURE TO FOLLOW WARNINGS COULD RESULT IN POSSIBLE AIR BAG DEPLOYMENT, PERSONAL INJURY, OR OTHERWISE UNNEEDED SRS SYSTEM REPAIRS.

CAUTION: Always use the correct fastener in the proper location. When you replace a fastener, use ONLY the exact part number for that application. ISUZU will call out those fasteners that require a replacement after removal. ISUZU will also call out the fasteners that require thread lockers or thread sealant. UNLESS OTHERWISE SPECIFIED, do not use supplemental coatings (Paints, greases, or other corrosion inhibitors) on threaded fasteners or fastener joint interfaces. Generally, such coatings adversely affect the fastener torque and the joint clamping force, and may damage the fastener. When you install fasteners, use the correct tightening sequence and specifications. Following these instructions can help you avoid damage to parts and systems.

Windshield Wiper/Washer System

General Description

The circuit consists of the starter switch, windshield wiper & washer switch, windshield wiper motor, windshield washer motor and windshield intermittent relay.

When the wiper & washer switch is turned on with the starter switch on, the battery voltage is applied to the wiper motor to activate the wiper.
The washer motor squirts glass cleaning fluid while the washer switch is being pushed. The intermittent relay is used to control motion of the wiper.

Windshield Wiper And Washer Switch

Removal and Installation

Refer to the Lighting Switch (Combination Switch) in Lighting System section.

Windshield Wiper Motor

Removal

1. Disconnect the battery ground cable.
2. Disconnect the connector.
3. Remove 4 mounting bolts.
4. Remove the windshield wiper motor(1).

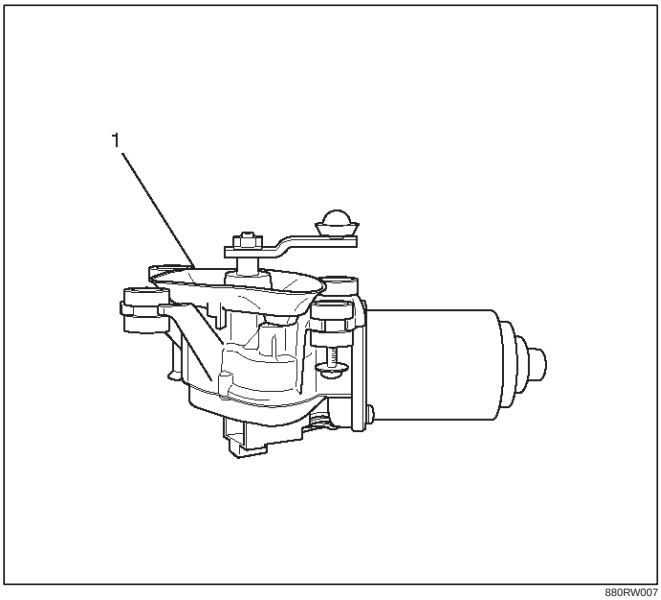

880RW007

Installation

To install, follow the removal steps in the reverse order.

Windshield Washer Motor

Removal

1. Disconnect the battery ground cable.
2. Remove the fender inner liner (right side) (1).
3. Remove the screws and then remove the front combination light(2).
4. Remove 2 screws, the filler neck and the hose.
5. Disconnect the windshield washer motor connector and remove the washer tank (4).
6. Pull the windshield washer motor(3) from the washer tank(4).

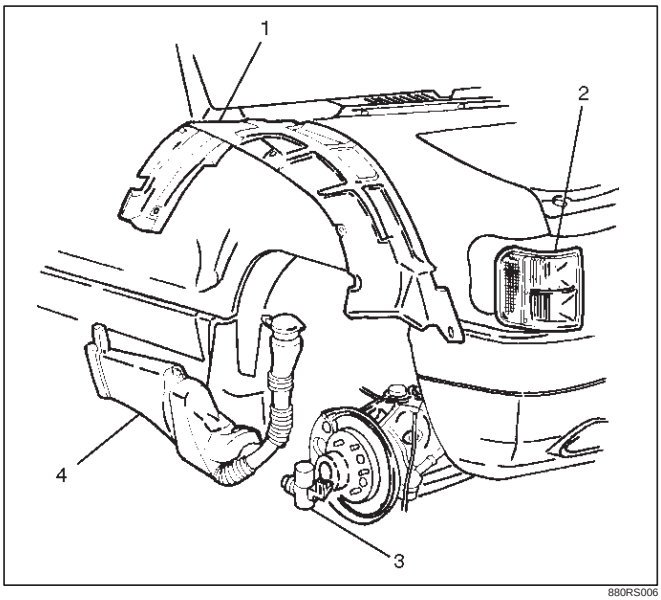

880RS006

Installation

To install, follow the removal steps in the reverse order.

Windshield Wiper Linkage

Windshield Wiper Linkage and Associated Parts

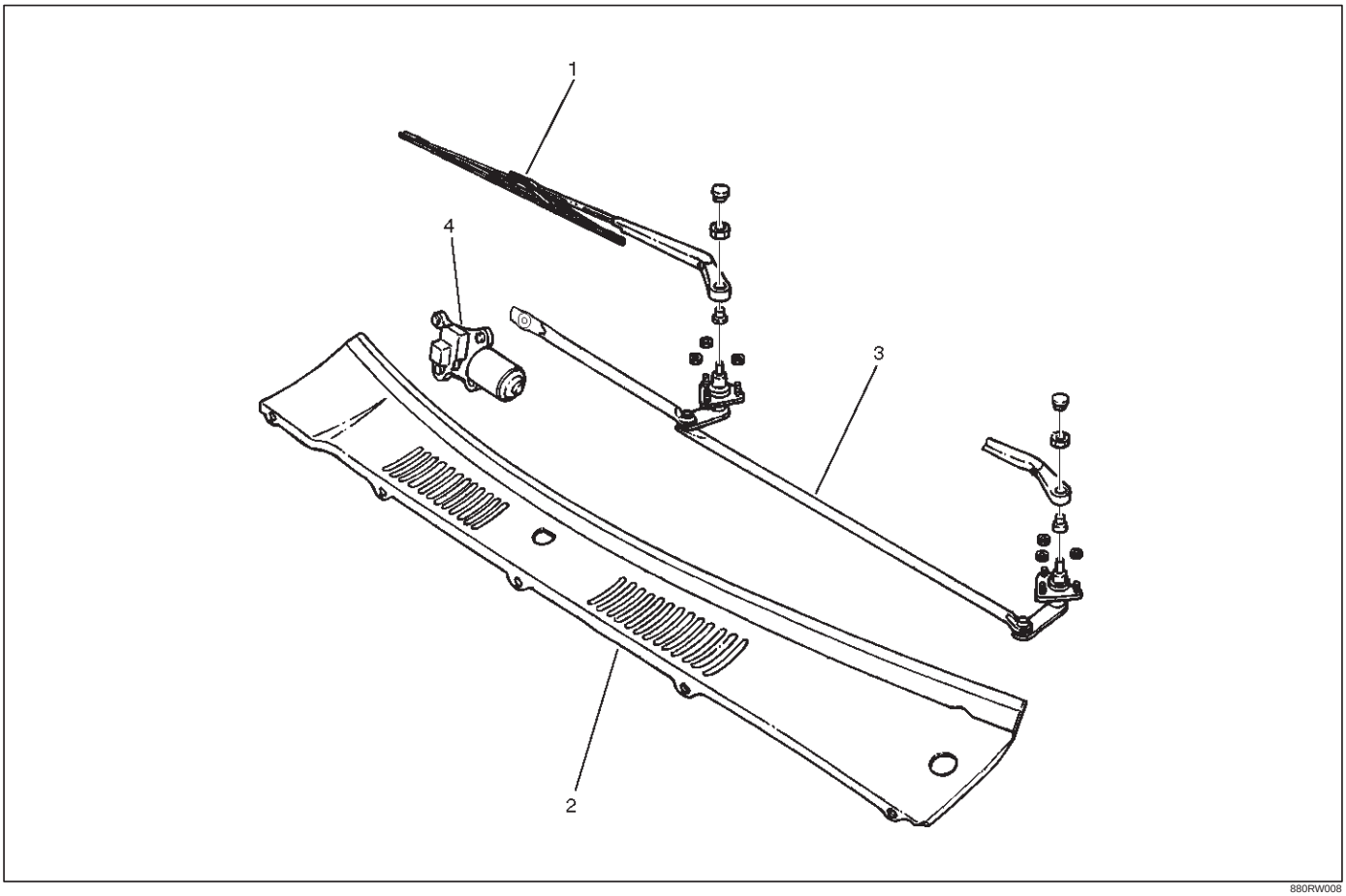

880RW008

Legend

(1) Windshield Wiper Arm/Blade
(2) Vent Cowl Cover
(3) Windshield Wiper Linkage Assembly
(4) Windshield Wiper Motor

Removal

1. Disconnect the battery ground cable.
2. Remove the windshield wiper arm/blade.
3. Remove the windshield wiper motor.
4. Remove the pivot assembly mounting nuts, fixing screws and then remove the vent cowl cover.
5. Take out the windshield wiper linkage assembly from the opening of the cowl.

Installation

To install, follow the removal steps in the reverse order.

Windshield Wiper Arm/Blade

Removal

1. Pry the cap(2) off with the tip of a screwdriver.
2. Remove the nut(3).
3. Remove the wiper/blade(1).

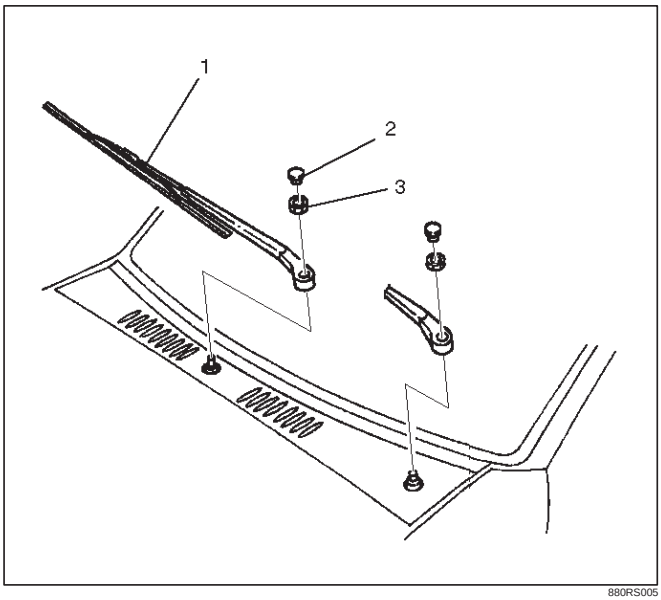

880RS005

Installation

To install, follow the removal steps in the reverse order, noting the following points.

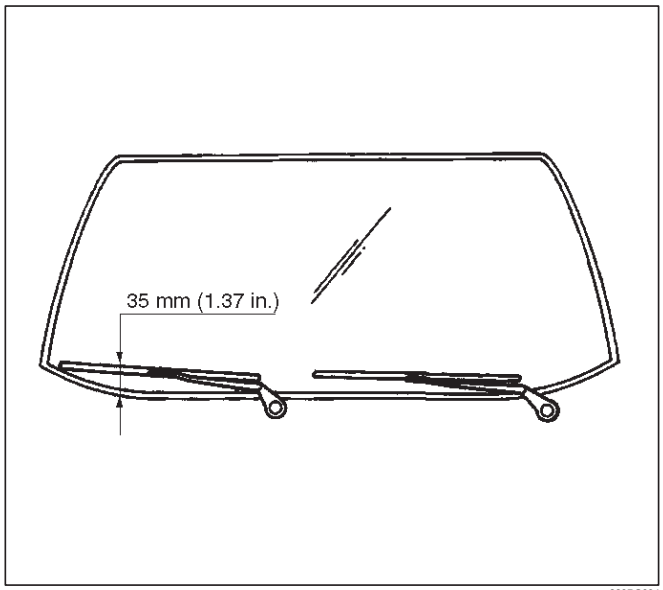

880RS004

1. Wiper arm/blade
   - Before installing the wiper arm/blade to the shaft, confirm that the motor stops at the auto-stop position.
   - Set the wiper arm/blade so that the tips of both blades are positioned about 35 mm (1.37 in) from the upper edge of the cowl cover as shown in the figure.
   - Tighten the nuts to the specified torque.

   Torque: 31 N·m (3.2 kg·m/23 lb ft)

Windshield Wiper Blade Rubber

Removal

1. Push the wiper blade lock(1) while pulling the wiper blade in the arrow direction as shown in the figure.

CAUTION: When the wiper blade has been removed, wrap the tip of the wiper arm with cloth, to avoid damaging the glass.

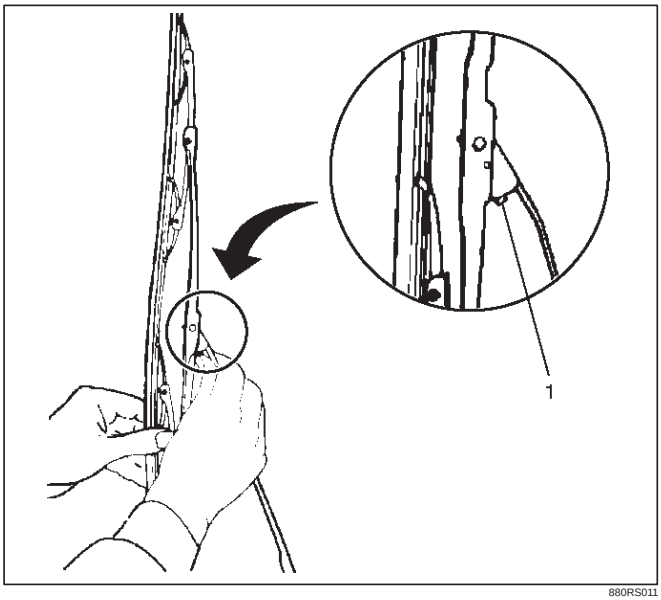

880RS011

2. Pull the end of rubber and remove the projection(3) from the click of the blade stay (2).

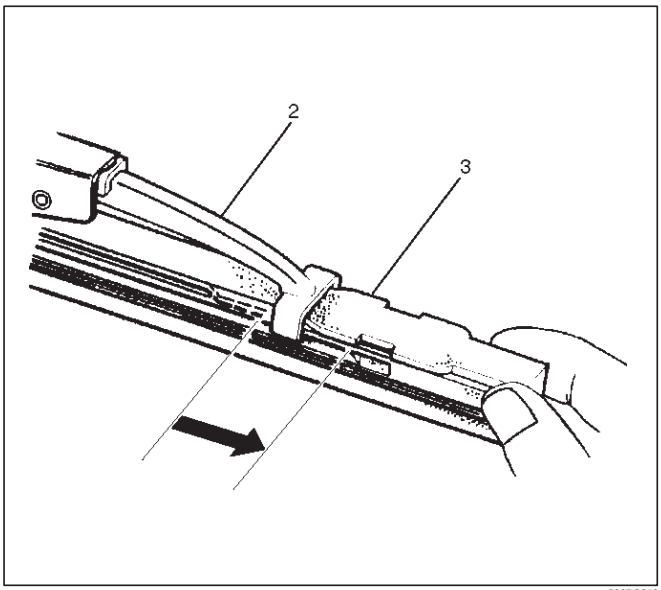

880RS010

3. Pull the rubber out in the same direction.

Installation

To install, follow the removal steps in the reverse order, noting the following points.

1. Install the click of the blade stay in the groove of the new rubber and slide it in. Complete wiper blade installation by pushing the click.

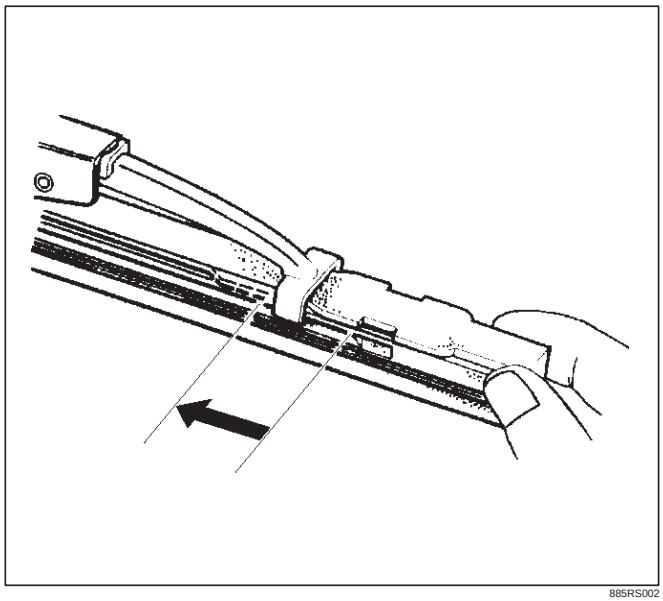

885RS002

2. Finally, check that the click of the stay has caught in the hole of the rubber.

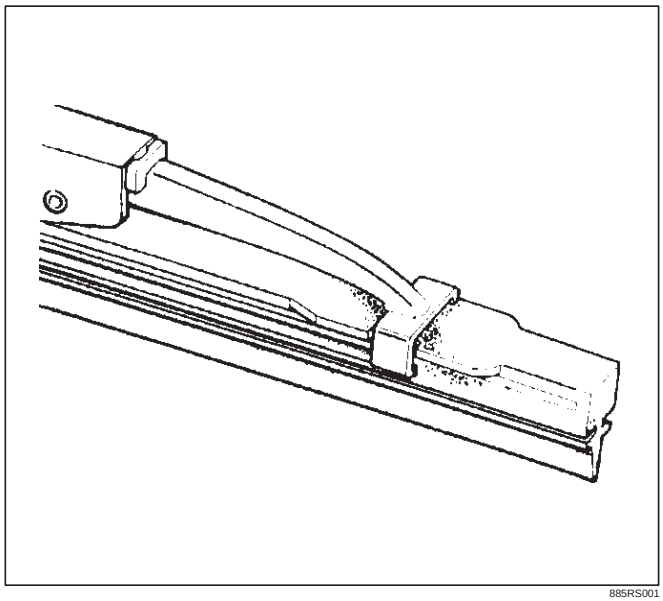

885RS001

Rear Wiper/Washer System

General Description

The circuit consists of the starter switch, rear wiper & washer switch, rear wiper motor, rear washer motor and rear intermittent relay.

When the wiper & washer switch is turned on with the starter switch on, the battery voltage is applied to the wiper motor to activate the wiper.
The washer motor squirts glass cleaning fluid while the washer switch is being pushed. The intermittent relay is used to control motion of the wiper.

Rear Wiper and Washer Switch

Removal

1. Disconnect the battery ground cable.
2. Remove the front console assembly(1).
   Refer to the Instrument Panel Assembly in Body Structure section.
3. Remove the lower cluster assembly(2).
   Refer to the Instrument Panel Assembly in Body Structure section.
4. Remove the instrument panel driver lower cover(3).
   Refer to the Instrument Panel Assembly in Body Structure section.

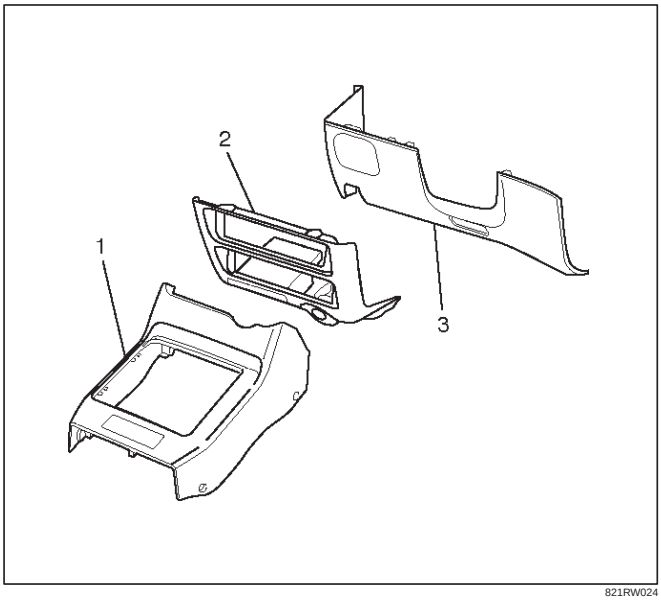

821RW024

5. Remove the instrument panel cluster assembly(4).
   Refer to the Instrument Panel Assembly in Body Structure section.
6. Disconnect the connector and push the lock from the back side of the instrument panel cluster assembly to remove the rear wiper & washer switch(5).

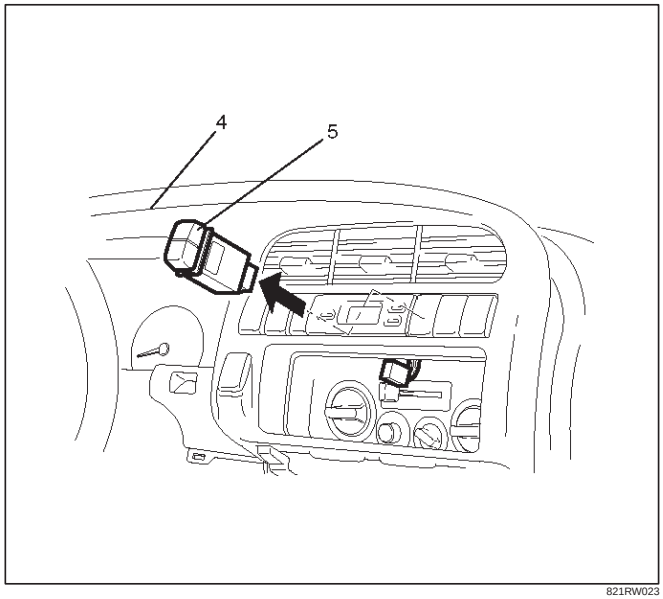

821RW023

Installation

To install, follow the removal steps in the reverse order, noting the following point:

1. Push the switch with your fingers until it locks securely.

Rear Wiper Motor

Removal

1. Disconnect the battery ground cable.
2. Remove the tailgate trim pad.
3. Remove the wiper arm/blade.
   Refer to the removal steps of the Rear Wiper Arm/Blade in this section.
4. Disconnect the connector remove the wiper shaft nut, remove the fixing screws and then remove the rear wiper motor(1).

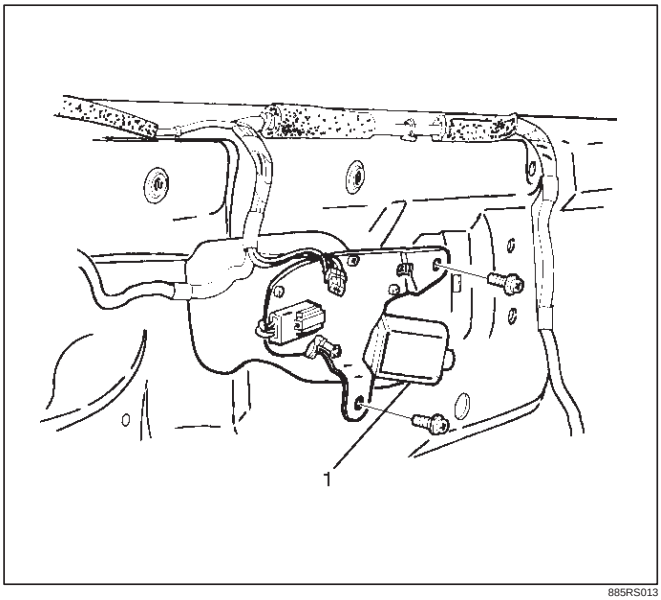

885RS013

Installation

To install, follow the removal steps in the reverse order, noting the following points.

1. Before installing the wiper arm/blade to the motor shaft, confirm that the motor stops at the auto-stop position.
2. Install the wiper arm so that the blade gets parallel to the lowermost heat wire(2) of the rear defogger (w/rear defogger), or position the blade 20 mm (0.79 in) from edge of tailgate glass (W/O rear defogger).

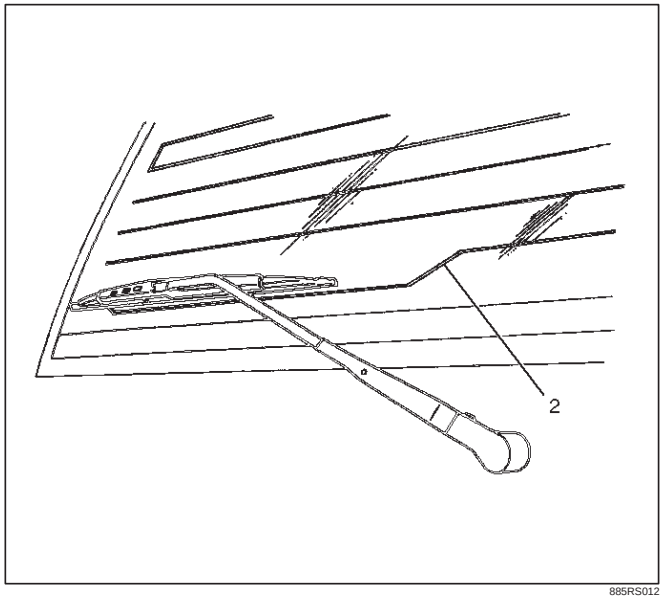

885RS012

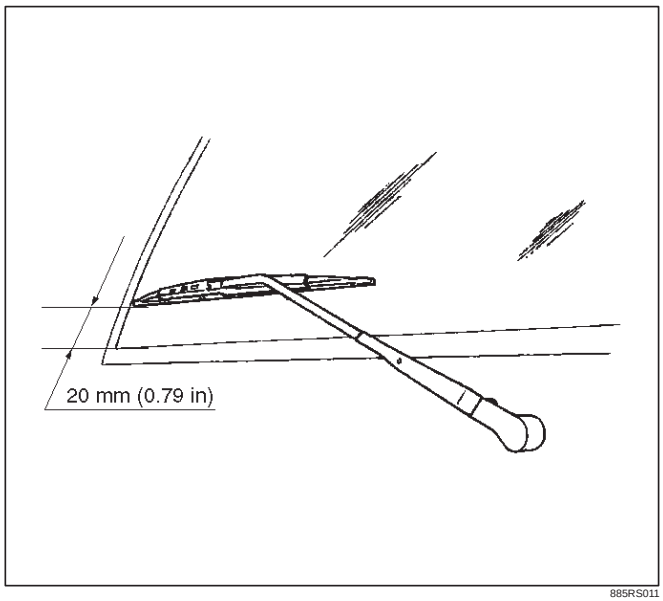

885RS011

3. Tighten the motor shaft nut to the specified torque.
   Torque: 6 N·m (0.6 kg·m/52 lb in)
4. Tighten the wiper arm nut to the specified torque.
   Torque: 9 N·m (0.9 kg·m/78 lb in)

Alarm & Relay Control Unit

Removal

1. Disconnect the battery ground cable.
2. Remove the glove box.
3. Remove the instrument panel passenger lower cover assembly.
4. Remove the passenger Knee bolster reinforcement assembly.
5. Remove the fixing bolts, disconnect the connectors and then remove the alarm & relay control unit (1).

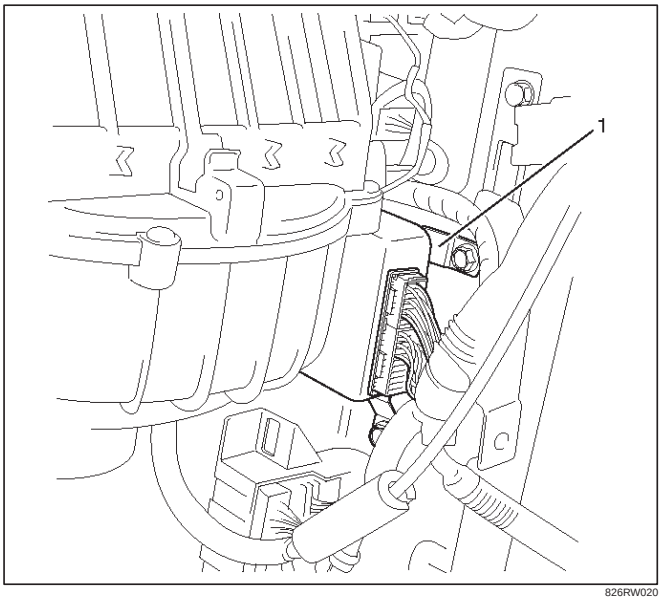

826RW020

Installation

To install, follow the removal steps in the reverse order.

Rear Washer Motor

Removal

1. Disconnect the battery ground cable.
2. Remove the tailgate trim pad(2).
3. Remove two screws, disconnect the connector, remove the washer hose and then remove the rear washer tank(3).
4. Pull out the rear washer motor(1) from the washer tank.

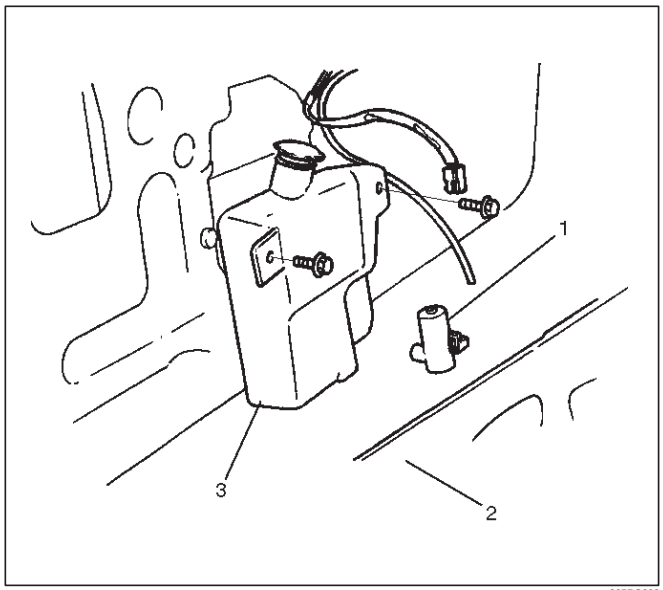

885RS009

Installation

To install, follow the removal steps in the reverse order.

Rear Wiper Arm/Blade

Removal

1. Remove the arm nut(2).
2. Remove the wiper arm/blade(1).

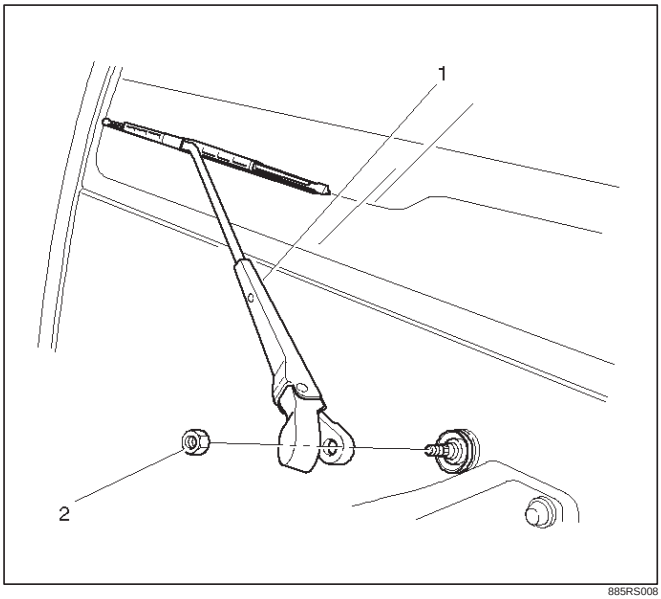

885RS008

Installation

Refer to the installation steps of the Rear Wiper Motor in Wiper/Washer System section.

Rear Washer Nozzle

Removal

1. Disconnect the hose(3).
2. Remove the lock nut(2), and then remove the washer nozzle(1).

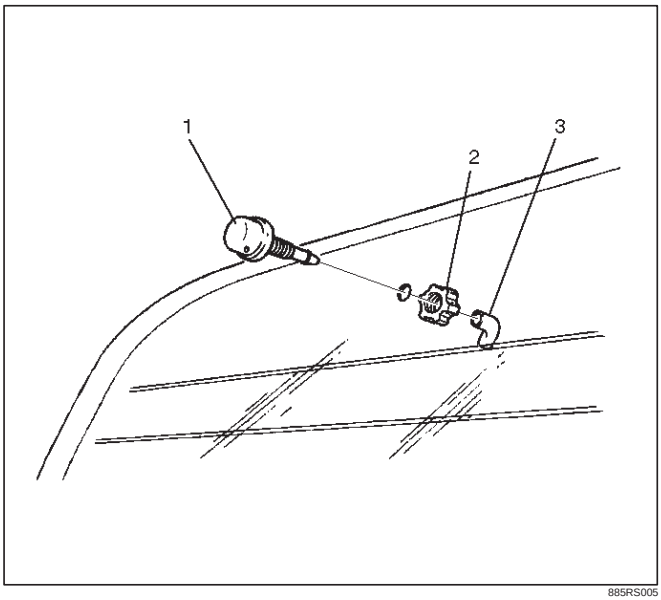

885RS005

Installation

To install, follow the removal steps in the reverse order.

Rear Washer Nozzle Angle Adjustment

Loosen the lock nut(2) of the washer nozzle(1) to adjust the injection angle of the cleaning fluid, and then retighten the lock nut(2).

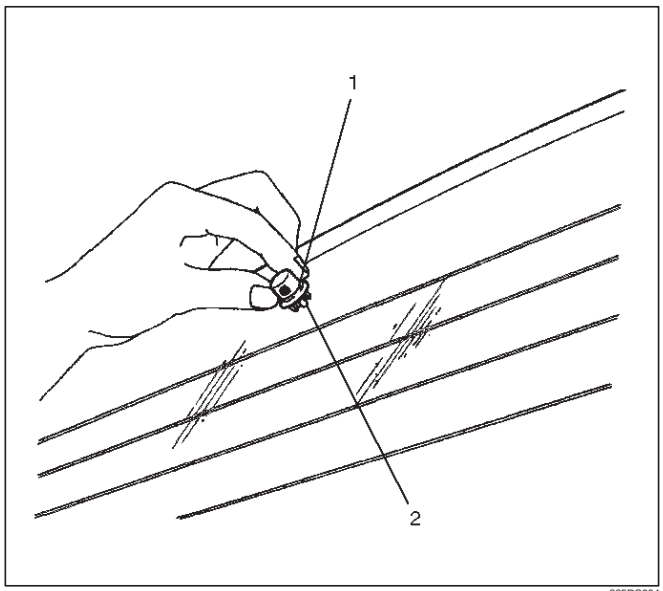

885RS004

Rear Washer Spray Pattern

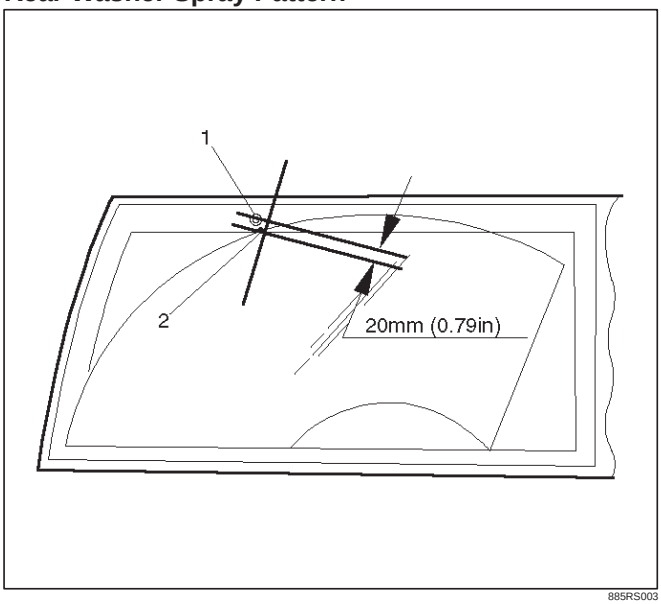

Legend
(1) Washer Nozzle
(2) Spray Target

Rear Wiper Blade Rubber

Removal and Installation

Refer to the Windshield Wiper Blade Rubber in this section.

Headlight Wiper/Washer

General Description

The circuit consists of the starter switch, headlight wiper/washer switch, headlight wiper motor and washer motor. By pushing the headlight wiper/washer switch with the starter switch on, the wiper will make 5 strokes with washer solution applied between each of the first 4 strokes, regardless of the length of time the switch is held down.
The washer nozzle is installed to the wiper blade, and the tank to which the washer motor is installed shared among the headlight washer and the windshield washer.

Headlight Wiper and Washer Switch

Removal

1. Disconnect the battery ground cable.
2. Remove the front console assembly(1).
   Refer to the Instrument Panel Assembly in Body Structure section.
3. Remove the lower cluster assembly(2).
   Refer to the Instrument Panel Assembly in Body Structure section.
4. Remove the instrument panel driver lower cover(3).
   Refer to the Instrument Panel Assembly in Body Structure section.

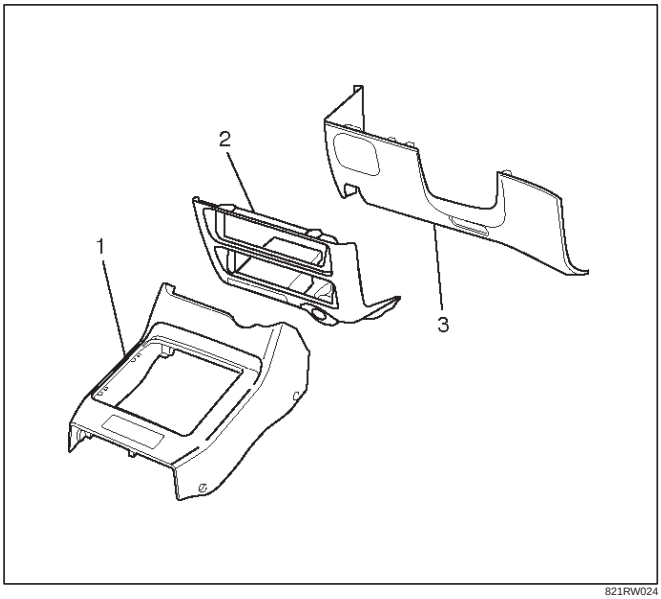

821RW024

5. Remove the instrument panel cluster assembly(4).
   Refer to the Instrument Panel Assembly in Body Structure section.
6. Disconnect the connector and push the lock from the back side of the instrument panel cluster assembly to remove the headlight wiper switch(5).

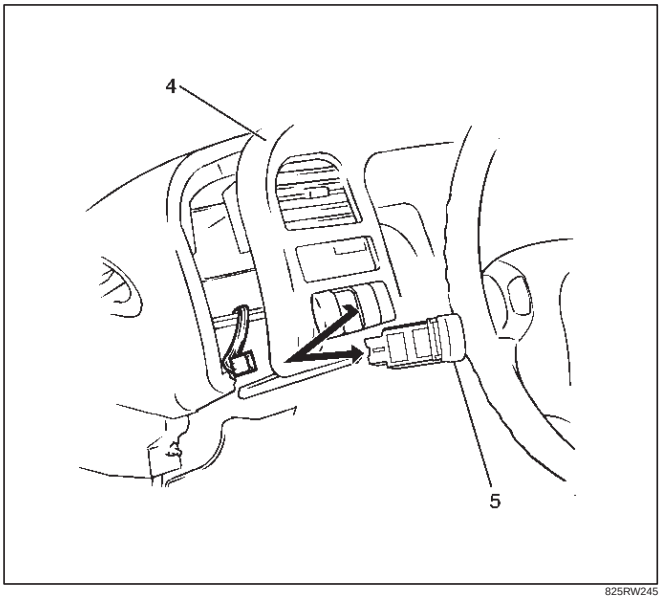

825RW245

Installation

To install, follow the removal steps in the reverse order, noting the following point:

1. Push the switch with your fingers until it locks securely.

Headlight Wiper Arm & Blade

Removal

1. Remove the wiper arm nut and the wiper arm & blade(1).
2. Disconnect the washer hose.

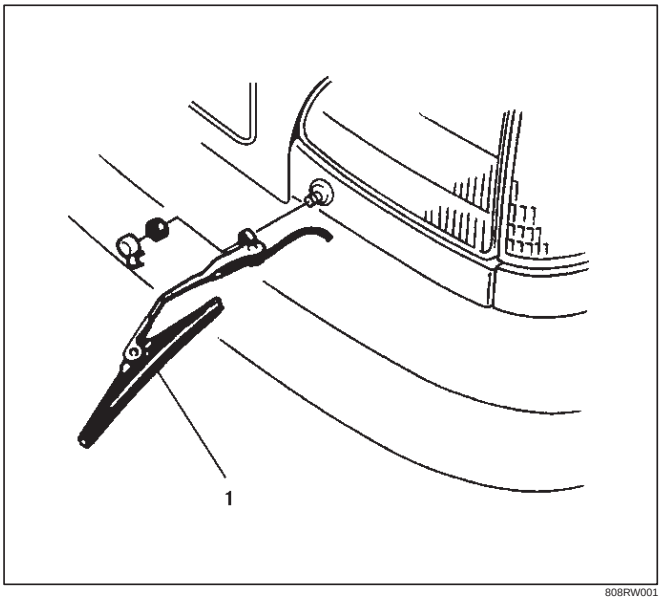

808RW001

Installation

To install, follow the removal steps in the reverse order, noting the following point:

1. Tighten the wiper arm nut to the specified torque.

   Torque: 5 N·m (0.5 kg·m/44 lb ft)

Headlight Wiper Motor

Removal

1. Disconnect the battery ground cable.
2. Remove the headlight wiper arm/blade(1).
3. Remove the headlight assembly(2).
   Refer to the Headlight removal steps in this section.
4. Remove 2 nuts and screws, the remove headlight wiper motor(3).

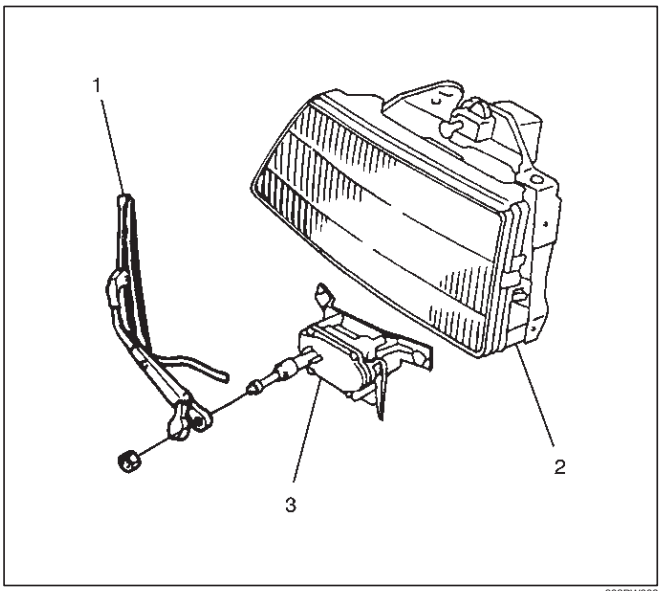

808RW002

Installation

To install, follow the removal steps in the reverse order, noting the following point:

1. Make sure that the motor stops at auto stop position prior to installing the wiper arm & blade to the motor shaft.

Headlight Washer Motor

Removal and Installation

Refer to the removal and installation steps of the windshield washer tank/motor under »Windshield Wiper/Washer And Rear Wiper/Washer” in this section.

Main Data and Specifications

Torque Specifications

Application	N·m	kg·m	Lb Ft	Lb In
Windshield Wiper Motor Shaft Nut	14	1.4	—	122
Windshield Wiper Arm Nuts	31	3.2	23	—
Rear Wiper Motor Shaft Nut	6	0.6	—	52
Rear Wiper Arm Nut	9	0.9	—	78
Headlight Wiper Arm Nuts	5	0.5	—	44

BODY AND ACCESSORIES

ENTERTAINMENT

CONTENTS

Service Precaution 8C–1
Cigarette Lighter 8C–2
General Description 8C–2
Removal 8C–2
Installation 8C–2
Digital Clock 8C–3
Removal 8C–3
Installation 8C–3
Rod Type Antenna 8C–4
Removal 8C–4
Installation 8C–4
Auto Antenna 8C–5
General Description 8C–5
Removal 8C–5
Installation 8C–5
Antenna Rod 8C–6
Removal 8C–6
Installation 8C–6
Radio 8C–7
Removal 8C–7
Installation 8C–7
Front Speaker 8C–8
Removal 8C–8
Installation 8C–8
Rear Speaker 8C–9
Removal 8C–9
Installation 8C–9

Service Precaution

WARNING: IF SO EQUIPPED WITH A SUPPLEMENTAL RESTRAINT SYSTEM (SRS), REFER TO THE SRS COMPONENT AND WIRING LOCATION VIEW IN ORDER TO DETERMINE WHETHER YOU ARE PERFORMING SERVICE ON OR NEAR THE SRS COMPONENTS OR THE SRS WIRING. WHEN YOU ARE PERFORMING SERVICE ON OR NEAR THE SRS COMPONENTS OR THE SRS WIRING, REFER TO THE SRS SERVICE INFORMATION. FAILURE TO FOLLOW WARNINGS COULD RESULT IN POSSIBLE AIR BAG DEPLOYMENT, PERSONAL INJURY, OR OTHERWISE UNNEEDED SRS SYSTEM REPAIRS.

CAUTION: Always use the correct fastener in the proper location. When you replace a fastener, use ONLY the exact part number for that application. ISUZU will call out those fasteners that require a replacement after removal. ISUZU will also call out the fasteners that require thread lockers or thread sealant. UNLESS OTHERWISE SPECIFIED, do not use supplemental coatings (Paints, greases, or other corrosion inhibitors) on threaded fasteners or fastener joint interfaces. Generally, such coatings adversely affect the fastener torque and the joint clamping force, and may damage the fastener. When you install fasteners, use the correct tightening sequence and specifications. Following these instructions can help you avoid damage to parts and systems.

Cigarette Lighter

General Description

When the cigarette lighter is pushed in with the starter switch at either “ACC” or “ON” position, a circuit is formed in the cigarette lighter case to heat the lighter coil.
The cigarette lighter is sprung back to its original position after the lighter coil is heated.

Removal

1. Disconnect the battery ground cable.
2. Remove the lower cluster assembly(1).
   Refer to the Instrument Panel Assembly removal steps in Body Structure section.
3. Disconnect the connectors, remove the socket of the illumination light, the retaining ring(7), the outer case(6), the cigarette lighter(3) and socket(4), the bezel(5) and then remove the cigarette lighter assembly(2).

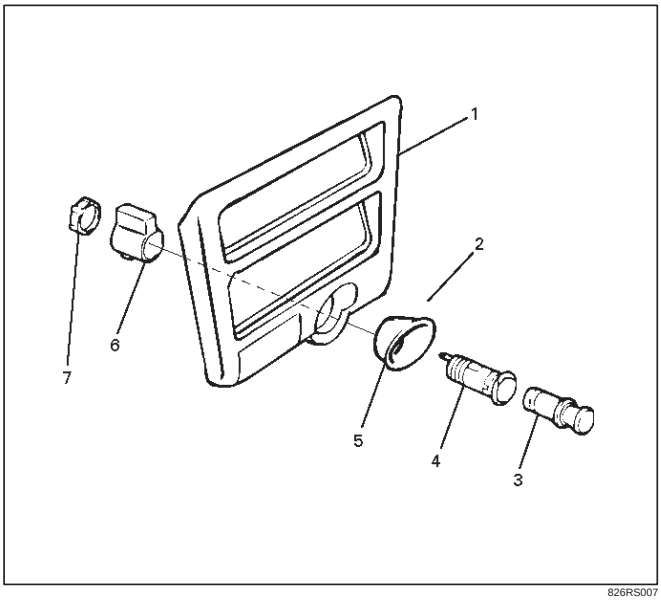

826RS007

Installation

To install, follow the removal steps in the reverse order, noting the following point.

1. When installing the bezel, align the projected portion of the socket with the notch of the bezel.

Digital Clock

Removal

1. Disconnect the battery ground cable.
2. Remove the front console assembly(1).
   Refer to the Instrument Panel Assembly in Body Structure section.
3. Remove the lower cluster assembly(2).
   Refer to the Instrument Panel Assembly in Body Structure section.
4. Remove the instrument panel driver lower cover assembly(3).
   Refer to the Instrument Panel Assembly in Body Structure section.

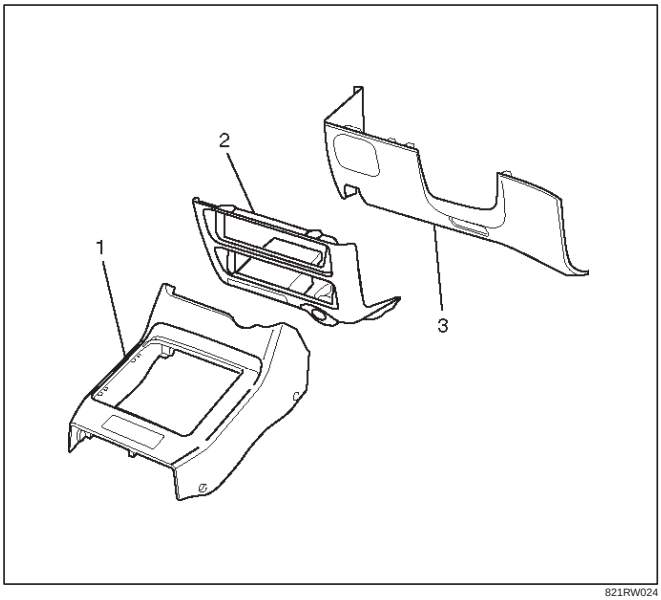

821RW024

5. Remove the instrument panel cluster assembly(4).
   Refer to the Instrument Panel Assembly in Body Structure section.
6. Disconnect the connector and push the lock from the back side of the instrument panel cluster assembly to remove the digital clock(5).

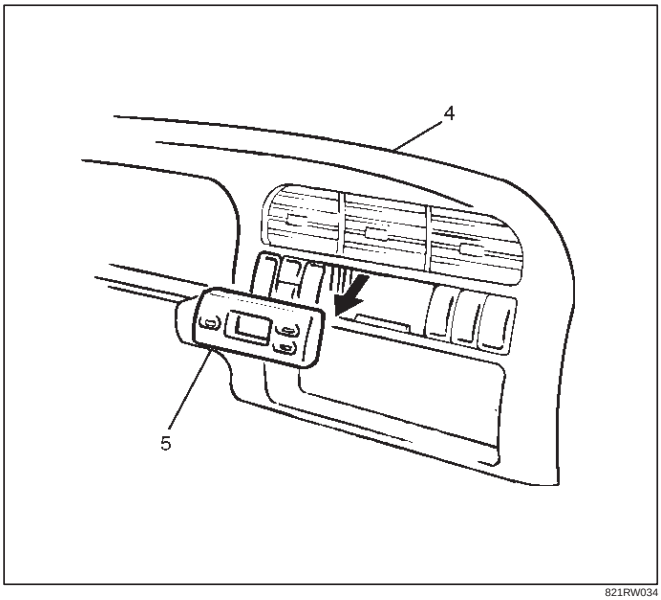

821RW034

Installation

To install, follow the removal steps in the reverse order, noting the following point.

1. Push in the switch with your fingers until it locks securely.

Rod Type Antenna

Removal

1. Disconnect the battery ground cable.
2. Turn the antenna rod(1) counterclockwise to remove it.
3. Remove three screws and nine clips to remove the fender inner liner(2).
4. Disconnect the feeder cable connector at the inside of the vehicle, remove the housing bracket screw, turn the lock nut counterclockwise to remove it together with the base mold and then remove the housing(3).

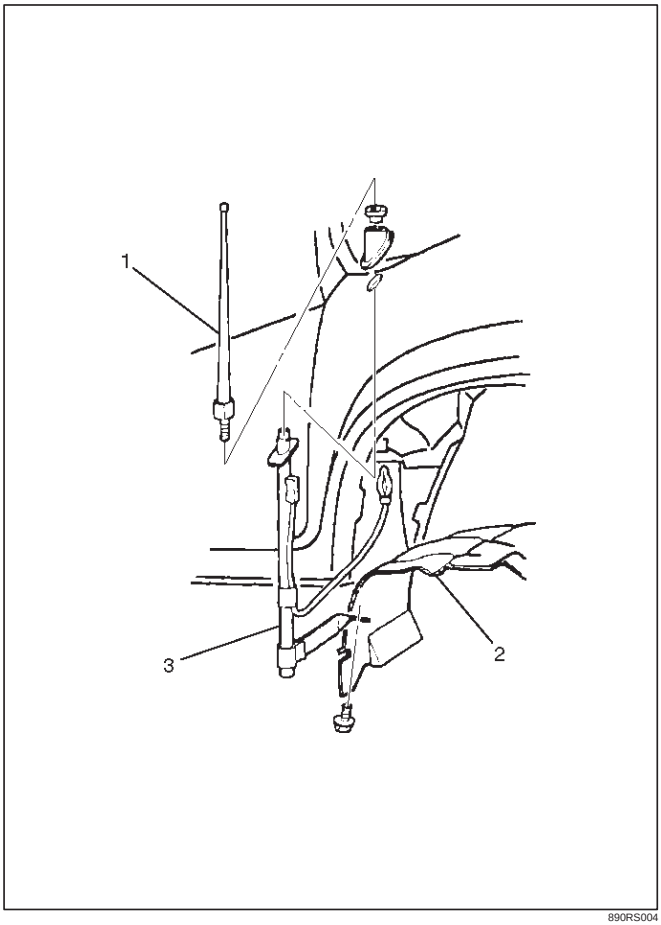

890RS004

Installation

To install, follow the removal steps in the reverse order.

Auto Antenna

General Description

The auto antenna is interlocked with the radio switch. The antenna rod goes up when the switch is on, and goes down when the switch is off. The antenna rod also goes down when the starter switch is turned off with the radio on.
The antenna rod goes up or down when the cable connected to the uppermost rod is let out or taken up by the rotation of motor.
The motor is provided with a built-in limit switch. When the up/down motion of the antenna is completed, the limit switch is activated to cut off the circuit.

Removal

1. Disconnect the battery ground cable.
2. Remove three screws and nine clips to remove the fender inner liner(4).
3. Disconnect the feeder cord and the antenna motor connector at the inside of the vehicle.
4. Remove the lock nut(1) and base mold(2).
5. After taking off the clips and screws, remove the motor bracket(5).

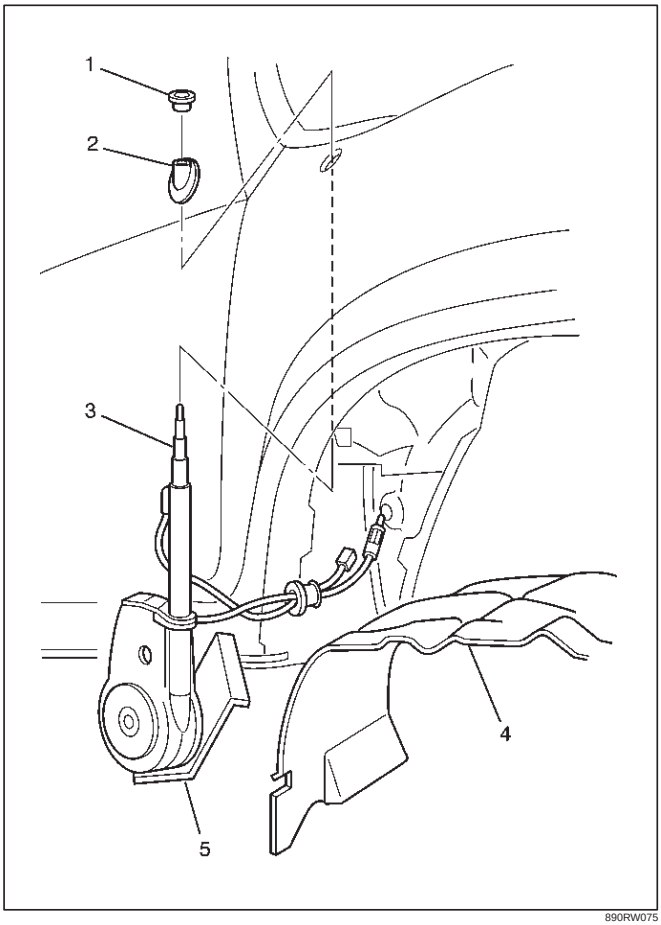

890RW075

Installation

To install, follow the removal steps in the reverse order.

Antenna Rod

Removal

1. Disconnect the battery ground cable.
2. Remove the antenna nut(1).
3. Until the lower part of the antenna rod(4) is removed from the bezel part, rotate the antenna motor in an ascending way, and expand the rod.
4. Turn the antenna top(2) counterclockwise.
5. Remove the contact sleeve(3).
6. Remove the antenna rod(4).

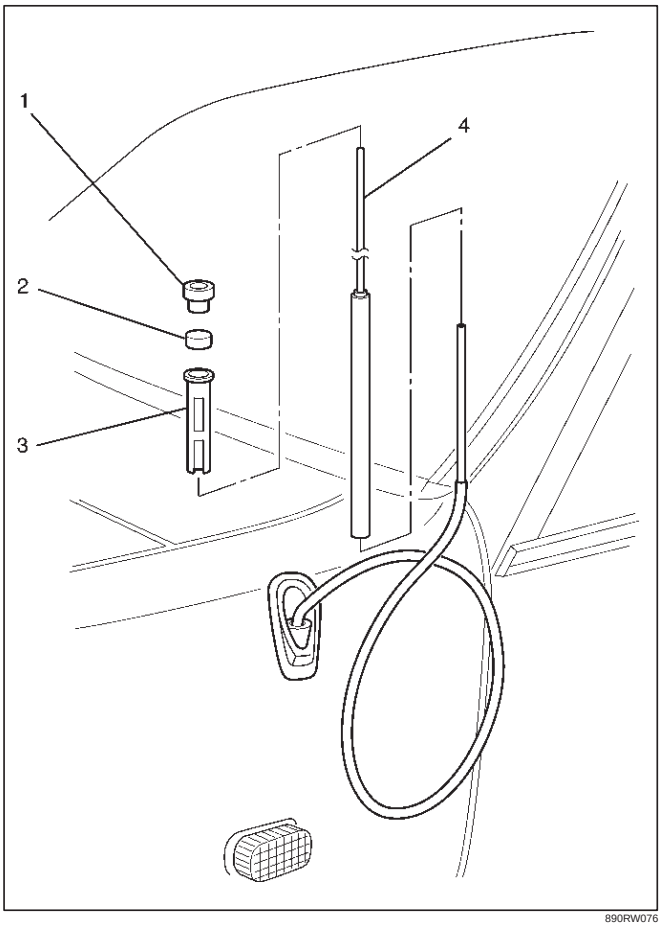

890RW076

Installation

To install, follow the removal steps in the reverse order, nothing the following points.

1. Rotate the antenna motor in a descend way, and push in vertically until the antenna rod is in the complete state of storage.
2. After ending the installation, confirm that the antenna rod works correctly.

Radio

Removal

1. Disconnect the battery ground cable.
2. Remove the front console assembly (1).
   Refer to the Instrument Panel Assembly in Body Structure section.
3. Remove the lower cluster assembly (2).
   Refer to the Instrument Panel Assembly in Body Structure section.
4. Remove the instrument panel driver lower cover assembly (3).
   Refer to the Instrument Panel Assembly in Body Structure section.

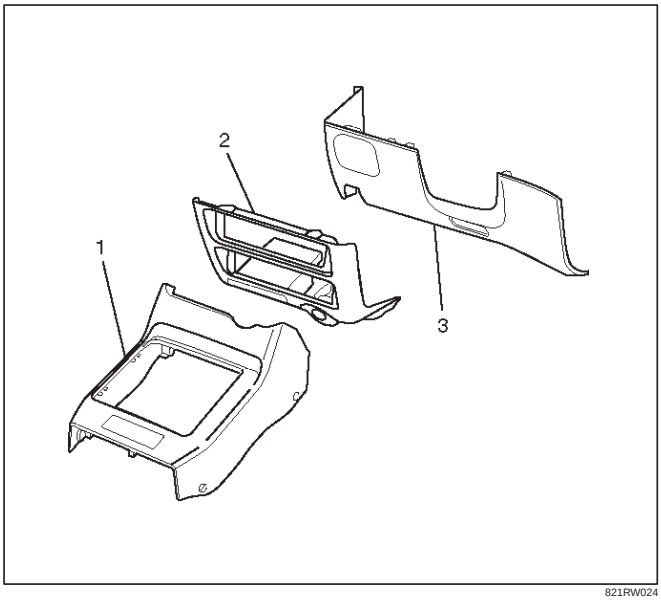

821RW024

5. Remove the instrument panel cluster assembly(4).
   Refer to the Instrument Panel Assembly in Body Structure section.
6. Remove two screws and disconnect the radio connector(5) and antenna feeder plug(6) to remove the radio(7).

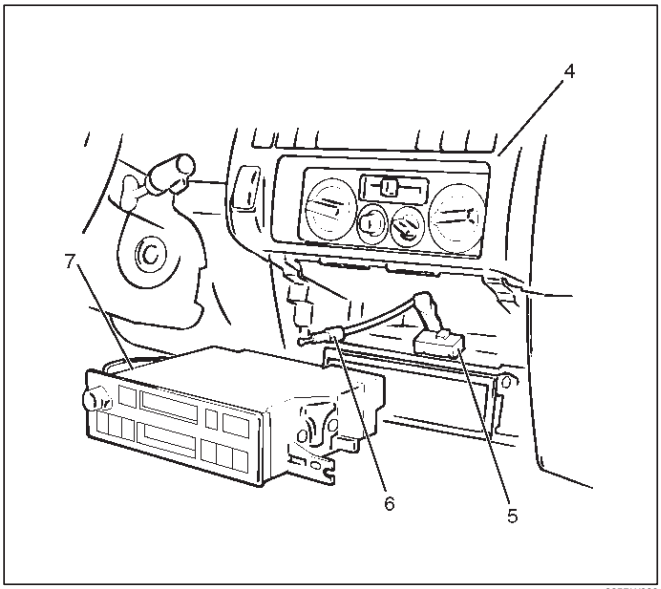

825RW039

Installation

To install, follow the removal steps in the reverse order.

Front Speaker

Removal

1. Disconnect the battery ground cable.
2. Pull the grille(1) to release the locks and then remove it.
3. Remove four screws and disconnect the connector(3) to remove the speaker(2).

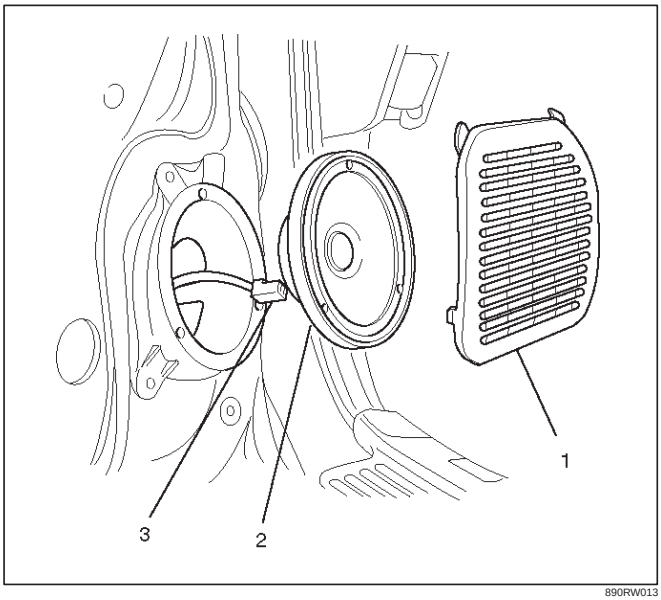

890RW013

Installation

To install, follow the removal steps in the reverse order.

Rear Speaker

Removal

1. Disconnect the battery ground cable.
2. Pull the grille(1) to release the locks and then remove it.
3. Remove four screws and disconnect the connector(3) to remove the speaker(2).

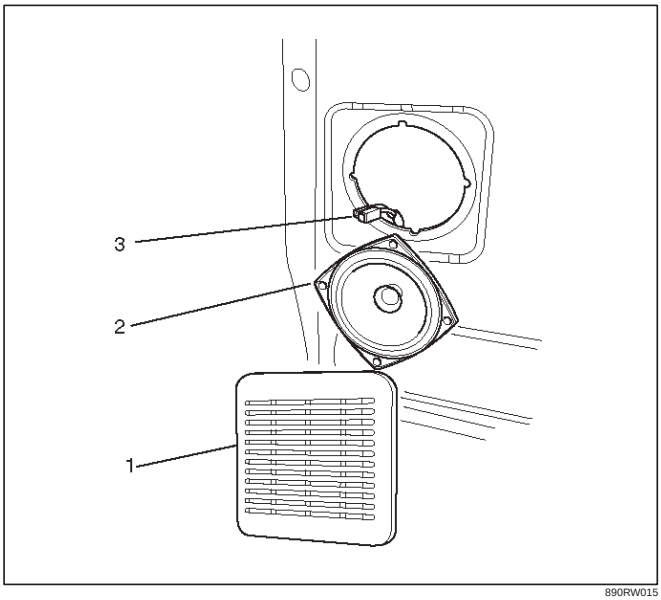

890RW015

Installation

To install, follow the removal steps in the reverse order.

MEMO

BODY AND ACCESSORIES

WIRING SYSTEM

CONTENTS

Service Precautions 8D–3
General Description 8D–4
Notes for Working on Electrical Items . . 8D–4
Symbols and Abbreviations 8D–10
Parts for Electrical Circuit 8D–12
Reading the Circuit Diagram 8D–21
Main Data and Specifications 8D–24
Fuse, Fusible Link and Circuit Breaker Location 8D–24
Relay Location 8D–27
Diode Location 8D–30
Grounding Point 8D–31
Cable Harness Routing 8D–43
Fuse Block Circuit 8D–51
Circuit Diagram 8D–52
Start and Charging 8D–65
General Description 8D–65
Circuit Diagram 8D–66
Parts Location 8D–68
Powertrain Control Module (PCM) 8D–78
General Description 8D–78
Circuit Diagram 8D–79
Parts Location 8D–91
QOSIII (4JG2) 8D–109
General Description 8D–109
Circuit Diagram 8D–110
Parts Location 8D–112
QOS and EGR System (4JG2) 8D–116
General Description 8D–116
Circuit Diagram 8D–117
Parts Location 8D–120
Headlight and Fog Light 8D–125
General Description 8D–125
Circuit Diagram 8D–126
Parts Location 8D–128
Diagnosis 8D–132
Rear Foglight 8D–148
General Description 8D–148
Circuit Diagram 8D–149
Parts Location 8D–152
Diagnosis 8D–153
Headlight Leveling 8D–155
General Description 8D–155
Circuit Diagram 8D–156
Parts Location 8D–157
Diagnosis 8D–158
Clearance Light, Taillight and License Plate Light 8D–161
General Description 8D–161
Circuit Diagram 8D–162
Parts Location 8D–165
Diagnosis 8D–170
Interior Illumination Light 8D–182
General Description 8D–182
Circuit Diagram 8D–183
Parts Location 8D–187
Diagnosis 8D–194
Turn Signal Light and Hazard Warning Light 8D–195
General Description 8D–195
Circuit Diagram 8D–196
Parts Location 8D–199
Diagnosis 8D–203
Stoplight 8D–210
General Description 8D–210
Circuit Diagram 8D–211
Parts Location 8D–214
Diagnosis 8D–218
Backup Light 8D–222
General Description 8D–222
Circuit Diagram 8D–223
Parts Location 8D–225
Diagnosis 8D–229
Horn 8D–232
General Description 8D–232
Circuit Diagram 8D–233
Parts Location 8D–234
Diagnosis 8D–237
Dome Light, Luggage Room Light, Courtesy Light and Map Light 8D–239
General Description 8D–239
Circuit Diagram 8D–240
Parts Location 8D–242
Power Door Lock 8D–246
General Description 8D–246
Circuit Diagram 8D–247
Parts Location 8D–252
Diagnosis 8D–258
Power Window 8D–263
General Description 8D–263
Circuit Diagram 8D–264
Parts Location 8D–265

Diagnosis 8D–268
Cruise Control 8D–274
General Description 8D–274
Circuit Diagram 8D–275
Parts Location 8D–277
Diagnosis 8D–281
Anti–Lock Brake System (ABS) 8D–286
General Description 8D–286
Circuit Diagram 8D–287
Parts Location 8D–293
A/T Shift Lock 8D–300
General Description 8D–300
Circuit Diagram 8D–301
Parts Location 8D–302
Windshield Wiper/Washer 8D–305
General Description 8D–305
Circuit Diagram 8D–306
Parts Location 8D–307
Diagnosis 8D–310
Rear Wiper/Washer 8D–318
General Description 8D–318
Circuit Diagram 8D–319
Parts Location 8D–321
Diagnosis 8D–325
Headlight Wiper/Washer 8D–331
General Description 8D–331
Circuit Diagram 8D–332
Parts Location 8D–334
Diagnosis 8D–338
Rear Defogger 8D–344
General Description 8D–344
Circuit Diagram 8D–345
Parts Location 8D–346
Diagnosis 8D–349
Audio 8D–352
General Description 8D–352
Circuit Diagram 8D–353
Parts Location 8D–357
Cigarette Lighter and Digital Clock 8D–361
General Description 8D–361
Circuit Diagram 8D–362
Parts Location 8D–363
Power Door Mirror 8D–366
General Description 8D–366
Circuit Diagram 8D–367
Parts Location 8D–370
Diagnosis 8D–375
Anti–Theft System with Keyless Entry 8D–382
Circuit Diagram 8D–383
Parts Location 8D–394
Diagnosis 8D–401
Meter and Warning/Indicator Light 8D–414
General Description 8D–414
Circuit Diagram 8D–415
Parts Location 8D–433
Diagnosis 8D–449
A/T Shift Indicator 8D–468
General Description 8D–468
Circuit Diagram 8D–469
Parts Location 8D–471
Heater and Air Conditioning 8D–475
General Description 8D–475
Circuit Diagram 8D–476
Parts Location 8D–478
Sun Roof 8D–488
General Description 8D–488
Circuit Diagram 8D–489
Parts Location 8D–490
Diagnosis 8D–493
Seat Heater 8D–497
General Description 8D–497
Circuit Diagram 8D–498
Parts Location 8D–499
Diagnosis 8D–502
Power Seat 8D–504
General Description 8D–504
Circuit Diagram 8D–505
Parts Location 8D–507
Diagnosis 8D–511
Shift on the Fly System 8D–517
Circuit Diagram 8D–518
Parts Location 8D–520
Torque on Demand (TOD) 8D–542
Circuit Diagram 8D–543
Parts Location 8D–546
Supplemental Restraint System (SRS)–
AIR BAG 8D–547
General Description 8D–547
Circuit Diagram 8D–548
Parts Location 8D–552
Connector List 8D–554

Service Precaution

WARNING: THIS VEHICLE HAS A SUPPLEMENTAL RESTRAINT SYSTEM (SRS). REFER TO THE SRS COMPONENT AND WIRING LOCATION VIEW IN ORDER TO DETERMINE WHETHER YOU ARE PERFORMING SERVICE ON OR NEAR THE SRS COMPONENTS OR THE SRS WIRING. WHEN YOU ARE PERFORMING SERVICE ON OR NEAR THE SRS COMPONENTS OR THE SRS WIRING, REFER TO THE SRS SERVICE INFORMATION. FAILURE TO FOLLOW WARNINGS COULD RESULT IN POSSIBLE AIR BAG DEPLOYMENT, PERSONAL INJURY, OR OTHERWISE UNNEEDED SRS SYSTEM REPAIRS.

CAUTION: Always use the correct fastener in the proper location. When you replace a fastener, use ONLY the exact part number for that application. ISUZU will call out those fasteners that require a replacement after removal. ISUZU will also call out the fasteners that require thread lockers or thread sealant. UNLESS OTHERWISE SPECIFIED, do not use supplemental coatings (Paints, greases, or other corrosion inhibitors) on threaded fasteners or fasteners joint interfaces. Generally, such coatings adversely affect the fastener torque and the joint clamping force, and may damage the fasteners. When you install fasteners, use the correct tightening sequence and specifications. Following these instructions can help you avoid damage to parts and systems.

General Description

The chassis electrical system is a 12–volt system with a negative ground polarity.
Wire size are appropriate to respective circuits, and classified by color. (The classification of harnesses by color is shown on the circuit diagram for ease of harness identification.)
The wire size is determined by load capacity and the length of wire required.
The vehicle harnesses are: body harness, chassis harness, engine room harness, instrument harness, transmission harness, engine ECGI harness, dome light harness, door harness, rear body harness, tailgate harness, SRS harness and battery cables.
The harnesses are protected either by tape or corrugated tube, depending on harness location.
The circuit for each system consists of the power source, wire, fuse, relay, switch, load parts and ground, all of which are shown on the circuit diagram.
In this section, each electrical device is classified by system.
For major parts shown on the circuit based on the circuit diagram for each system, a summary, diagnosis of troubles and inspection procedures are detailed.

Notes for Working on Electrical Items

Disconnecting the Battery Cable

1. All switches should be in the “OFF” position.
2. Disconnect the battery ground cable (2).
3. Disconnect the battery positive cable (1).

CAUTION: It is important that the battery ground cable be disconnected first. Disconnecting the battery positive cable first can result in a short circuit.

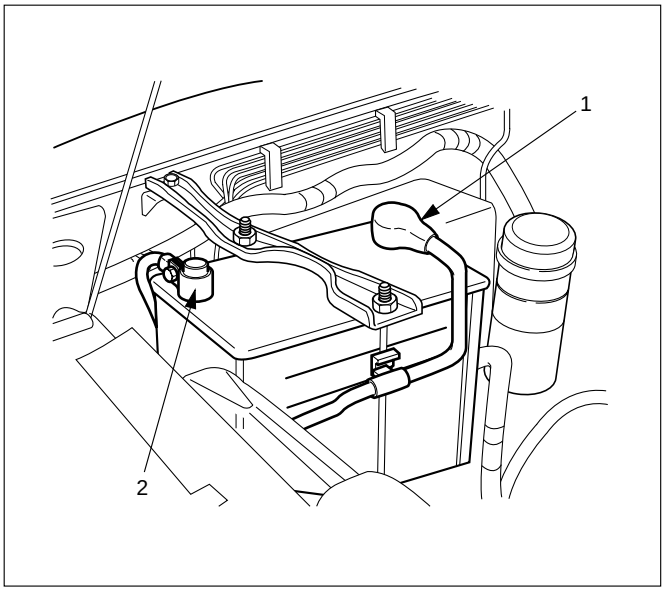

Connecting the Battery Cable

Follow the disconnecting procedure in the reverse order.

CAUTION: Clean the battery terminal and apply a light coat of grease to prevent terminal corrosion.

Disconnecting the Connector

Some connectors have a tang lock to hold the connectors together during vehicle operation.
Some tang locks are released by pulling them towards you (1).
Other tang locks are released by pressing them forward (2).
Determine which type of tang lock is on the connector being handled.

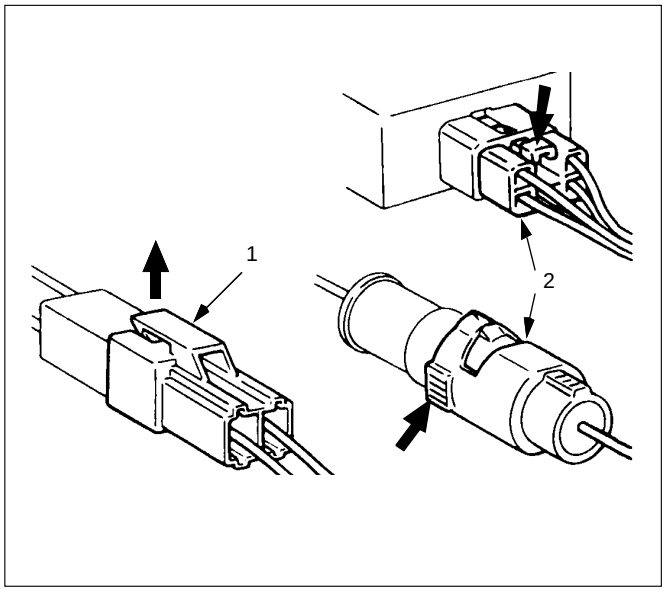

Firmly grasp both sides (male and female) of the connector (3).
Release the tang lock and carefully pull the two halves of the connector apart.
Never pull on the wires to separate the connectors (4).

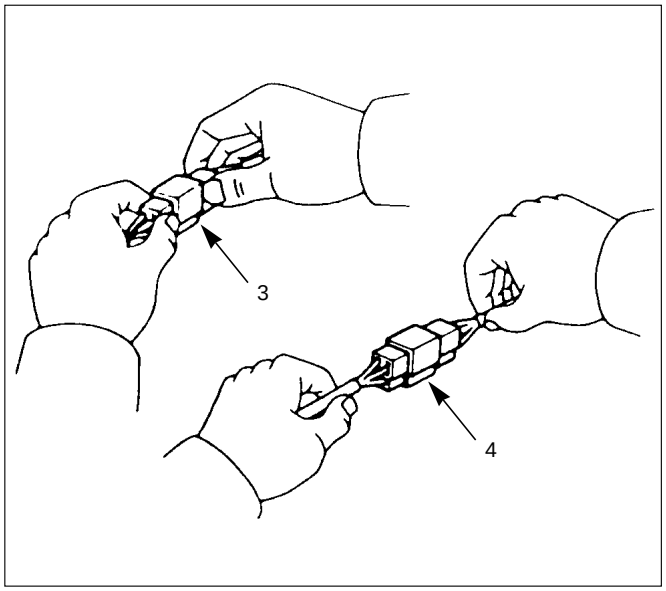

When removing the connector for relay (MR5B type) (5), unfasten the tang lock of the connector by using a screwdriver, then pull the relay out as shown in the figure.

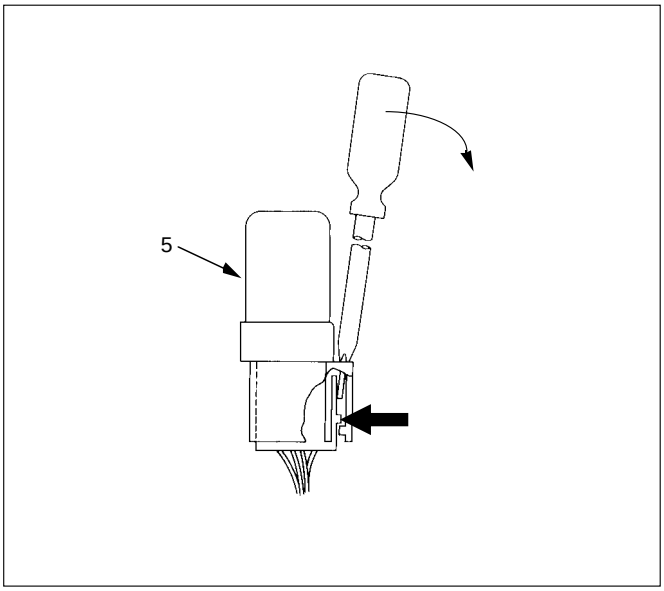

Connecting the Connector

Firmly grasp both sides (male and female) of the connectors. Be sure that both sides of the connectors are aligned with each other.
Firmly but carefully push the two sides of the connectors together until a distinct click is heard (2).
Do not connect them by force if they can not be connected smoothly (1).

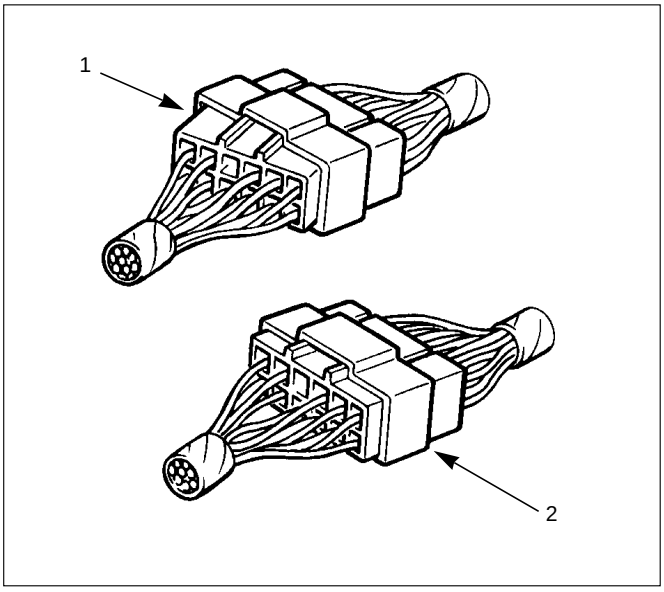

Connector Inspection

Use a circuit tester to check the connector for continuity. Insert the test probes (1) from the connector wire side.

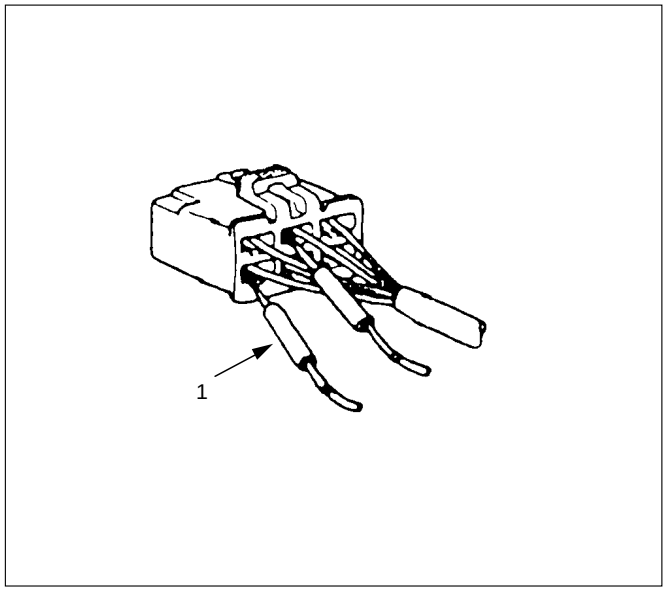

Never insert the circuit tester test probes (2) into the connector open end to test the continuity.
Broken or open connector terminals will result.

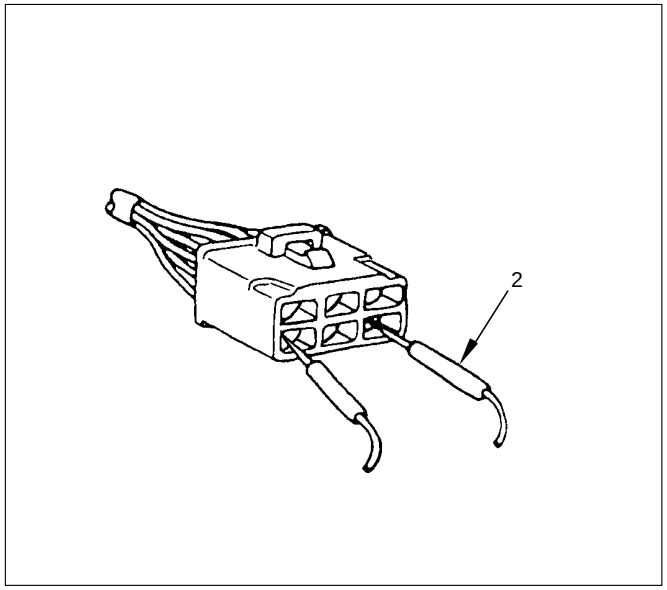

Waterproof Connector Inspection

It is not possible to insert the test probes (2) into the connector wire side of a waterproof connector.
Use one side of a connector (1) with its wires cut to make the test. Connect the test connector to the connector to be tested (3). Connect the test probes to the cut wires to check the connector continuity.

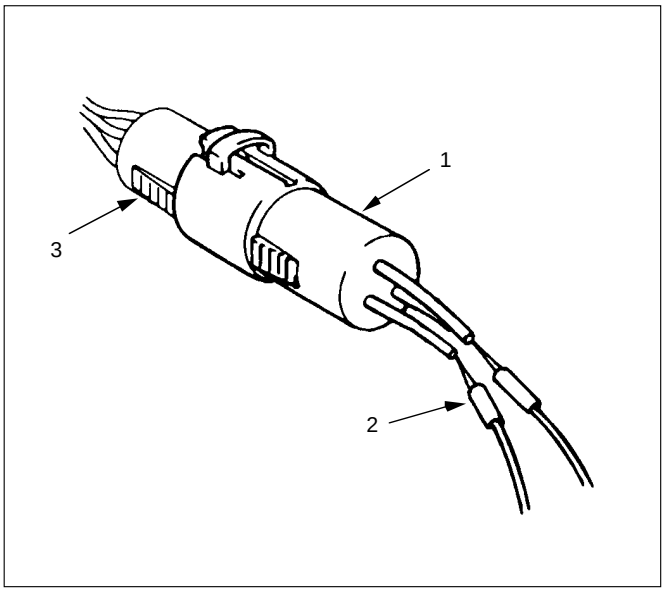

Connector Pin Removal – Connector Housing Tang Lock Type

1. Insert a slender shaft (1) into the connector housing open end (5).
2. Push the tang lock (2) up (in the direction of the arrow in the illustration).
   Pull the wire (3) with pin (4) free from the wire side of the connector.

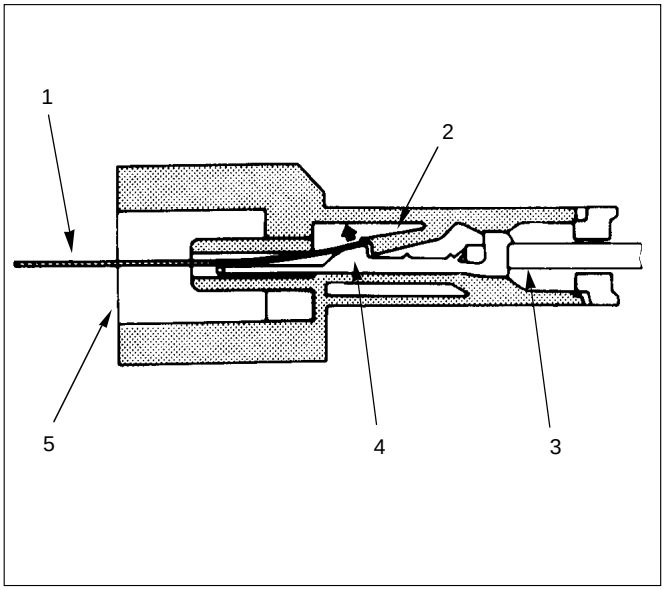

Connector Pin Removal – Pin Tang Lock Type

1. Insert a slender shaft (1) into the connector housing open end (5).
2. Push the tang lock (2) flat (toward the wire (3) side of the connector.
   Pull the wire with pin (4) free from the wire side of the connector.

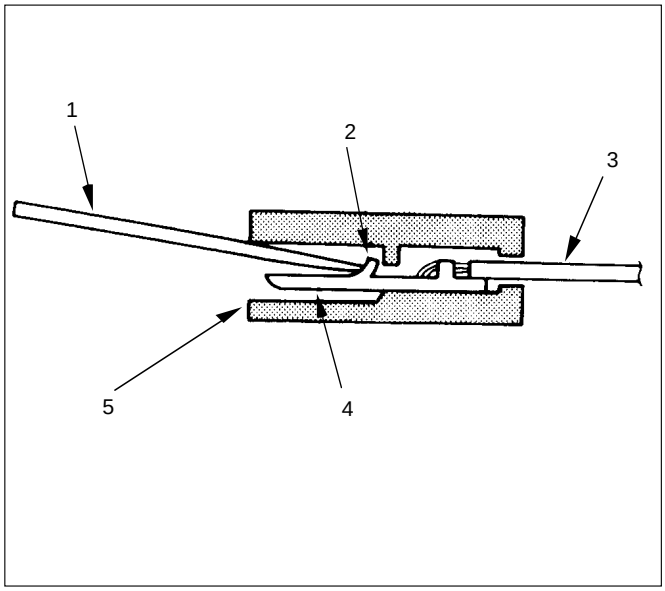

Connector Pin Insertion

1. Check that the tang lock (1) is fully up.
2. Insert the pin (3) from the connector wire (2) side.
   Push the pin in until the tang lock closes firmly.
3. Gently pull on the wires to make sure that the connector pin is firmly set in place.

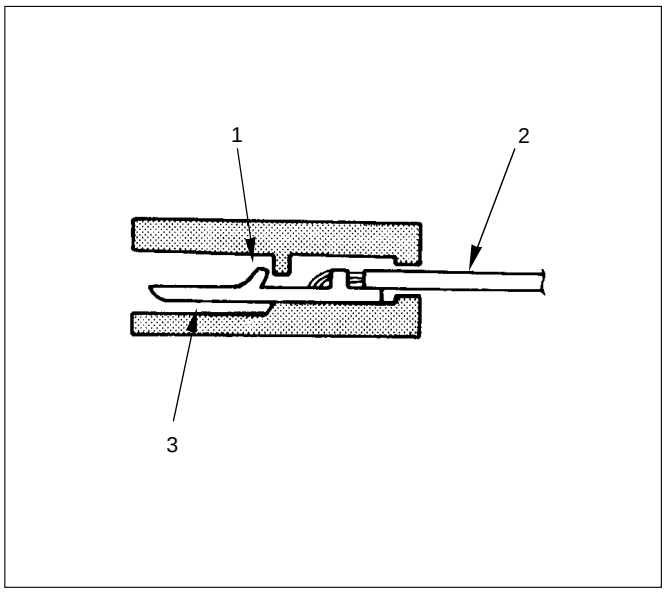

Parts Handling

Be careful when handling electrical parts. They should not be dropped or thrown, because short circuit or other damage may result.

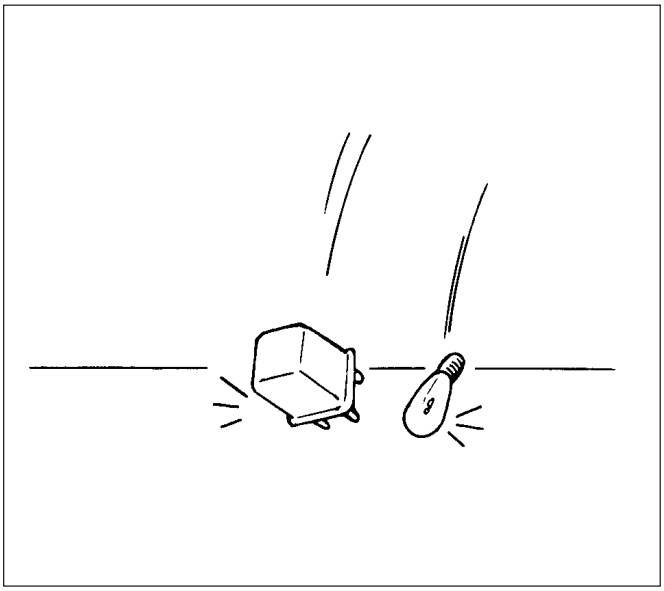

Cable Harness

1. When installing the parts, be careful not to pinch or wedge the wiring harness.
2. All electrical connections must be kept clean and tight.

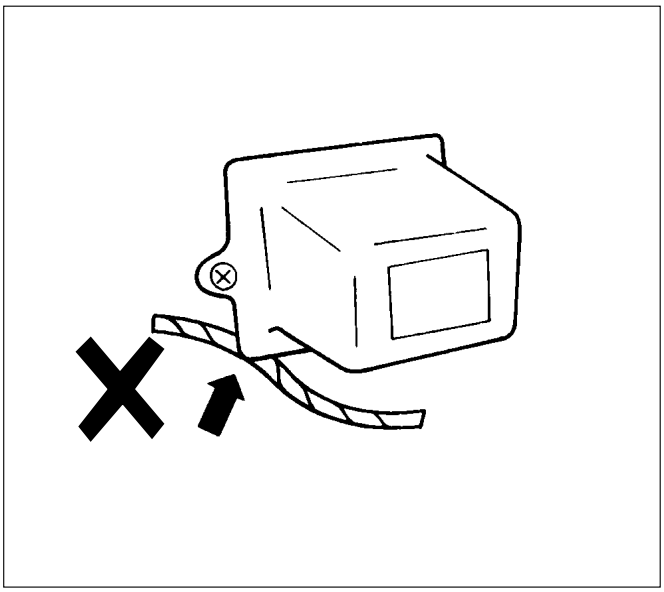

3. Use a grommet or guard tube (1) to protect the wiring harness from contacting a sharp edge or surface (2).

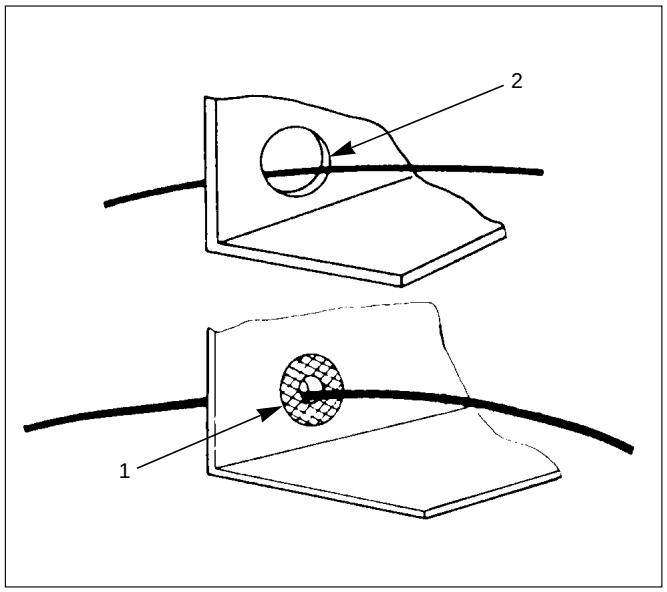

4. Position the wiring harness with enough clearance from the other parts and guard the wiring harness with a vinyl tube (2) and clips (1) to avoid direct contact.

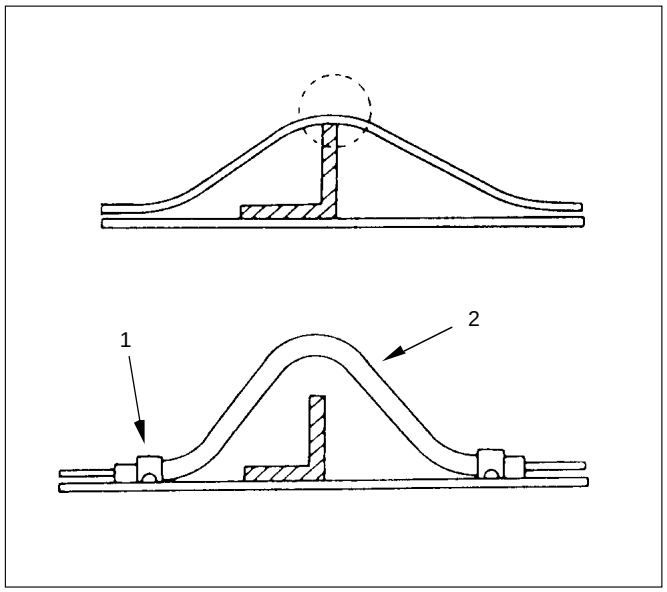

5. The wiring harness between engine and chassis should be long enough (2). Tension of the wire (1) may causes chafing or damage due to various vibrations.

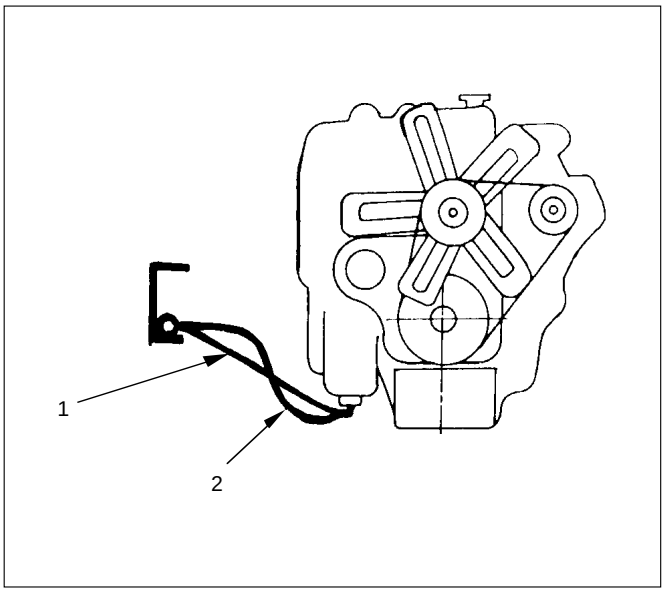

Splicing Wire

1. If the harness is taped, remove the tape. To avoid wire insulation damage, use a sewing “seam ripper” (available from sewing supply stores) to cut open the harness.

   If the harness has a black plastic conduit, simply pull out the desired wire.
2. Begin by cutting as little wire off the harness as possible. You may need the extra length of wire later if you decide to cut more wire off to change the location of a splice. You may have to adjust splice locations to make certain that each splice is at least 1–1/2” (40 mm) away from other splices, harness branches, or connectors.
3. When replacing a wire, use a wire of the same size as the original wire.

   Check the stripped wire for nicks or cut stands. If the wire is damaged, repeat the procedure on a new section of wire. The two stripped wire ends should be equal in length.
4. Select the proper clip to secure the splice.

   To determine the proper clip size for the wire being spliced, follow the directions included with your clips.

   Select the correct anvil on the crimper. (On most crimpers your choice is limited to either a small or large anvil.)

   Overlap the two stripped wire ends and hold them between your thumb and forefinger as shown in the figure.

   The center the spline clip (1) under the stripped wires and hold it in place.

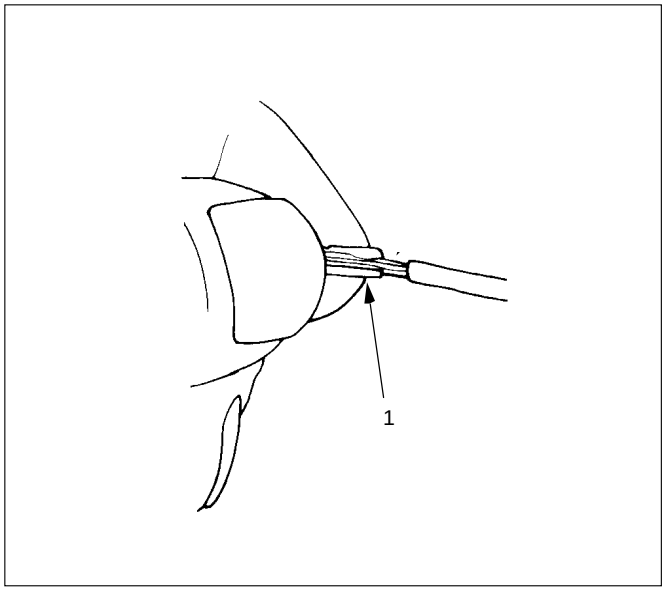

- Open the crimping tool to its full width and rest one handle on a firm flat surface.
- Center the back of the splice clip on the proper anvil and close the crimping tool to the point where the back of the splice clip touches the wings of the clip.
- Make sure that the clip and wires are still in the correct position. Then, apply steady pressure until the crimping tool closes as shown in the figure.

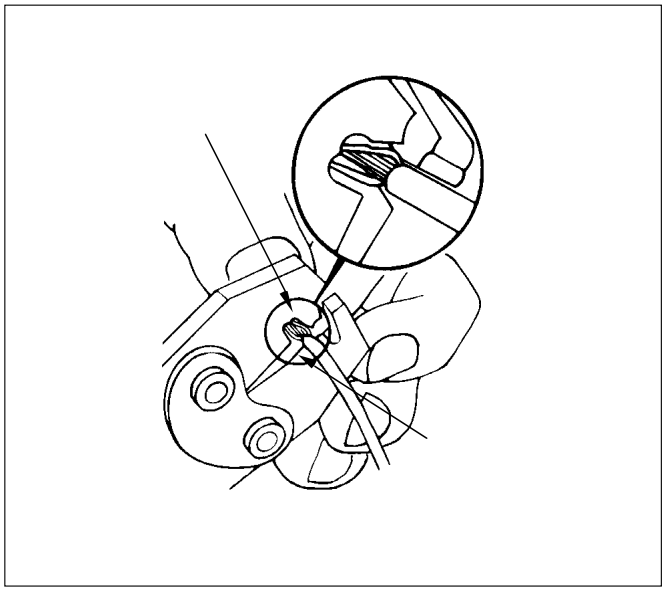

Before crimping the ends of the clip (1), be sure that:

- The wires extend beyond the clip in each direction.
- No strands of wire are cut loose, and
- No insulation is caught under the clip.

Crimp the splice again, once on each end.
Does not let the crimping tool (2) extend beyond the edge of the clip or you may damage or nick the wires as shown in the figure.

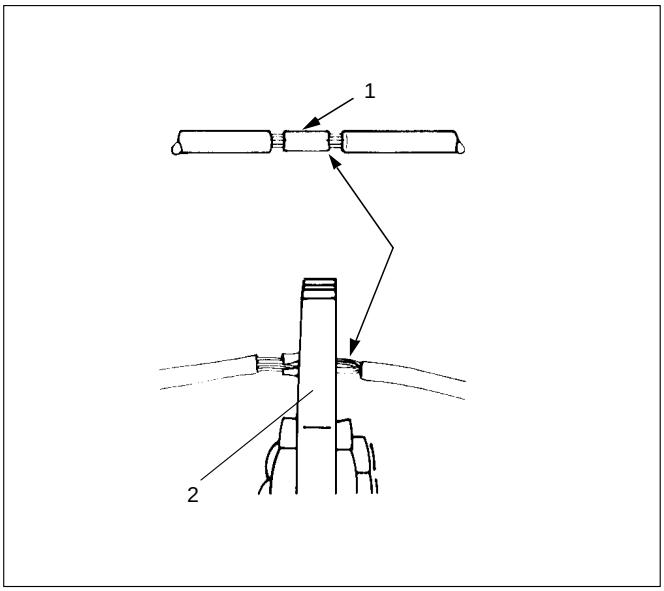

5. Apply 60/40 resin core solder to the opening in the back of the clip as shown in the figure.

   Follow the manufacturer's instructions for the solder equipment you are using.

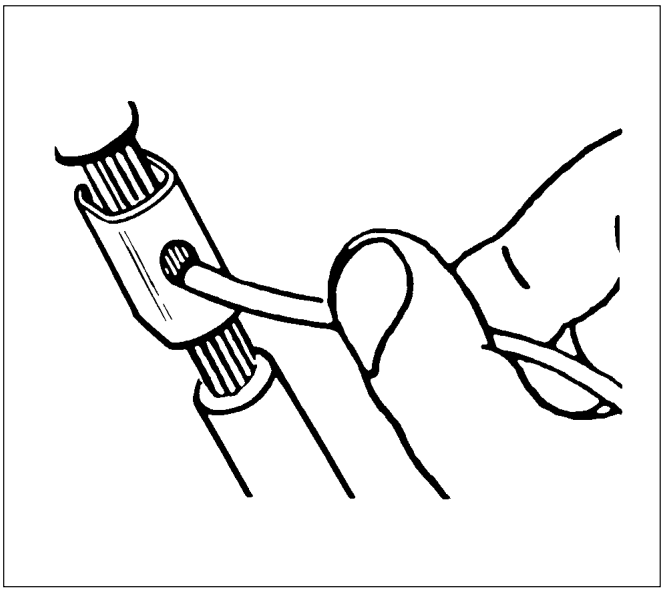

6. Center and roll the splicing tape.

   The tape should cover the entire splice.

   Roll on enough tape (1) to duplicate the thickness of the insulation on the existing wires.

   Does not flag the tape (2). Flagged tape may not provide enough insulation, and the flagged ends will tangle with the other wires in the harness as shown in the figure.

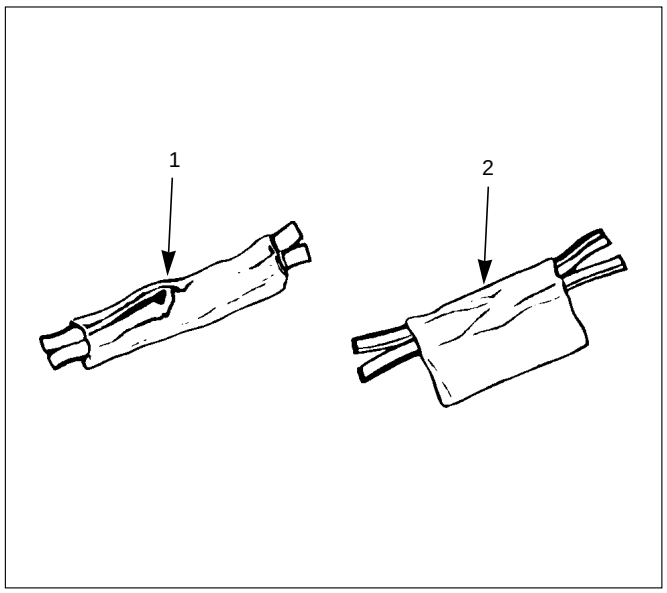

   If the wire does not belong in a conduit or other harness covering, tape the wire again. use a winding motion to cover the first piece of tape as shown in the figure.

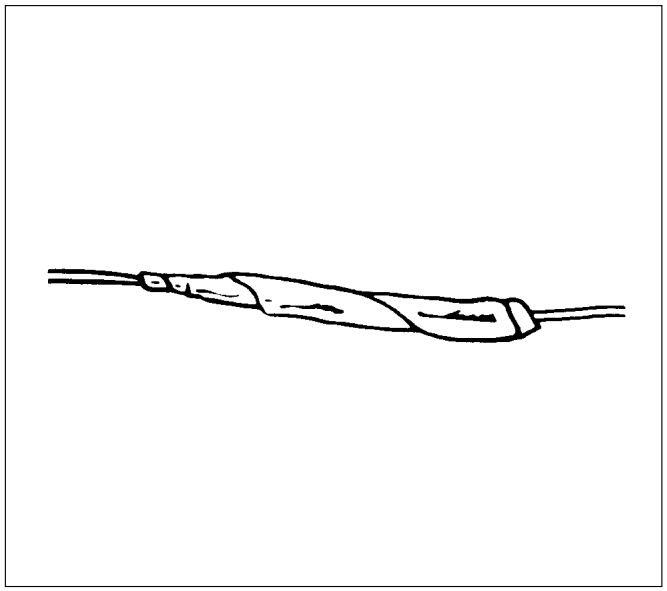

Symbols and Abbreviations

Symbols

Symbol	Meaning of Symbol	Symbol	Meaning of Symbol
	Fuse		Bulb
	Fusible link		Double filament bulb
	Fusible link wire	M	Motor
	Switch		Variable register Rheostat
	Switch		Coil (inductor), solenoid, magnetic valve
	Switch (Normal close type)		Relay
	Contact wiring		
+ –	Battery		
	Diode		Connector
	Electronic parts		Light emitting diode
	Resistor		Reed switch
	Speaker		Condenser
	Buzzer		Horn
	Circuit breaker		Vacuum switching valve

Abbreviations

Abbreviation	Meaning of Abbreviation	Abbreviation	Meaning of Abbreviation
A	Ampere (S)	kW	Kilowatt
ABS	Anti-lock brake system	LH	Left hand
ASM	Assembly	LWB	Long wheel base
AC	Alternating current	M/T	Manual transmission
A/C	Air conditioner	OD	Over drive
ACC	Accessories	OPT	Option
A/T	Automatic transmission	PCM	Powertrain control module
C/B	Circuit breaker	QOS	Quick on start
CSD	Cold start device	RH	Right hand
DIS	Direct ignition system	RR	Rear
EBCM	Electronic brake control module	SDM	Sensing and diagnostic module
ECGI	Electronic control gasoline injection	SRS	Supplemental restraint system
ECM	Engine control module	ST	Start
ECU	Electronic control unit	STD	Standard
EFE	Early fuel evaporation	SW	Switch
EGR	Exhaust gas recirculation	SWB	Short wheel base
4A/T	4-speed automatic transmission	3A/T	3-speed automatic transmission
4WD	Four-wheel drive	V	Volt
FL	Fusible link	VSV	Vacuum switching valve
FRT	Front	W	Watt (S)
H/L	Headlight	WOT	Wide open throttle
IC	Integrated circuit	W/	With
IG	Ignition	W/O	Without

Parts for Electrical Circuit

Wiring – Wire color

All wires have color–coded insulation.
Wires belonging to a system's main harness will have a single color (1). Wires belonging to a system's subcircuits will have a colored stripe (2). Striped wires use the following code to show wire size and colors.

Example: 0.5 G / R

- R — Red (Stripe color)
- G — Green (Base color)
- 0.5 — Wire size (0.5 mm^2)

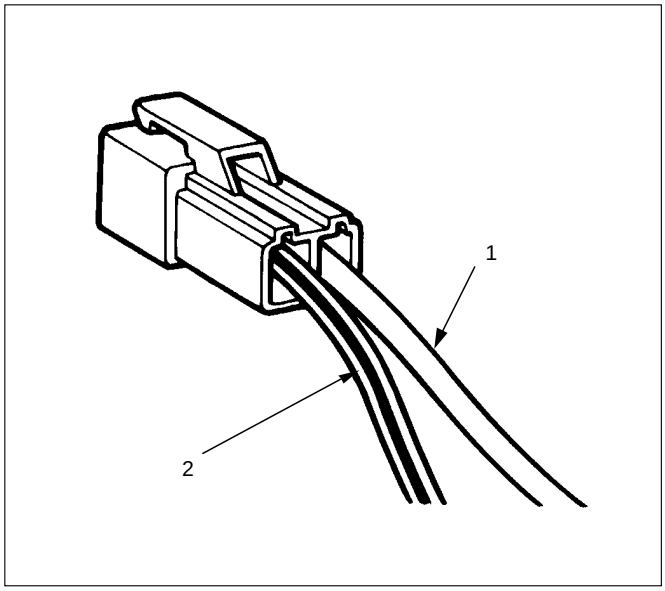

Wiring – Wire Color Coding

Abbreviations are used to indicate wire color within a circuit diagram.
Refer to the following table.

Color Coding	Meaning	Color Coding	Meaning
B	Black	BR	Brown
W	White	LG	Light green
R	Red	GR	Grey
G	Green	P	Pink
Y	Yellow	LB	Light blue
L	Blue	V	Violet
O	Orange		

Wiring – Wire Size

The size of wire used in a circuit is determined by the amount of current (amperage), the length of the circuit, and the voltage drop allowed. The following wire size and load capacity are specified. (Nominal size means approximate cross sectional area (1).)

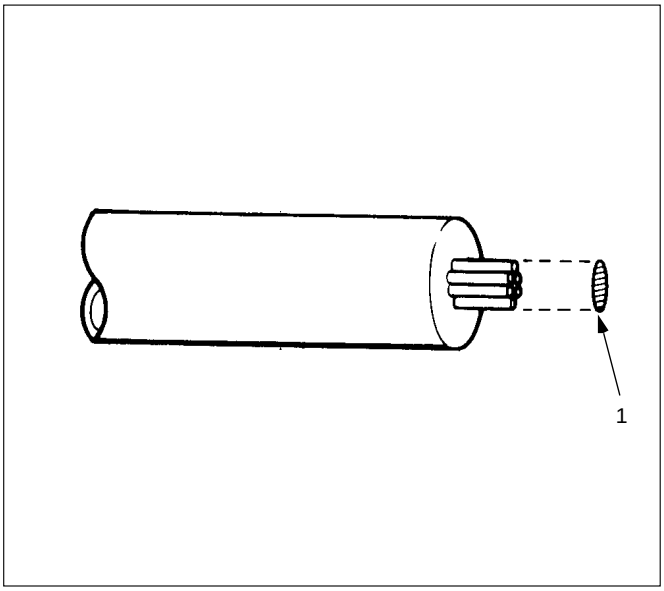

Wiring – Wire Size Table

Nominal size	Cross sectional area (mm^2)	Outside diameter (mm)	Allowable current (A)
0.3	0.372	1.5	9
0.5	0.563	1.7	12
0.85	0.885	1.9	16
1.25	1.287	2.2	21
2	2.091	2.7	28
3	3.296	3.6	37.5
5	5.227	4.4	53
8	7.952	5.5	67
15	13.36	7.0	75
20	20.61	8.2	97

Fuse

Fuses are the most common form of circuit protection used in vehicle wiring. A fuse is a thin piece of wire or strip of metal encased in a glass or plastic housing. It is wired in series with the circuit it protects. When there is an overload of current in a circuit, such as a short of a ground, the metal strip is designed to burn out and interrupt the flow of current. This prevents a surge of high current from reaching and damaging other components in the circuit.
Determine the cause of the overloaded before replacing the fuse.
The replacement fuse must have the same amperage specification as the original fuse.
Never replace a blown fuse with a fuse of a different amperage specification.
Doing so can result in an electrical fire or other serious circuit damage. A blown fuse is easily identified as shown in the figure.

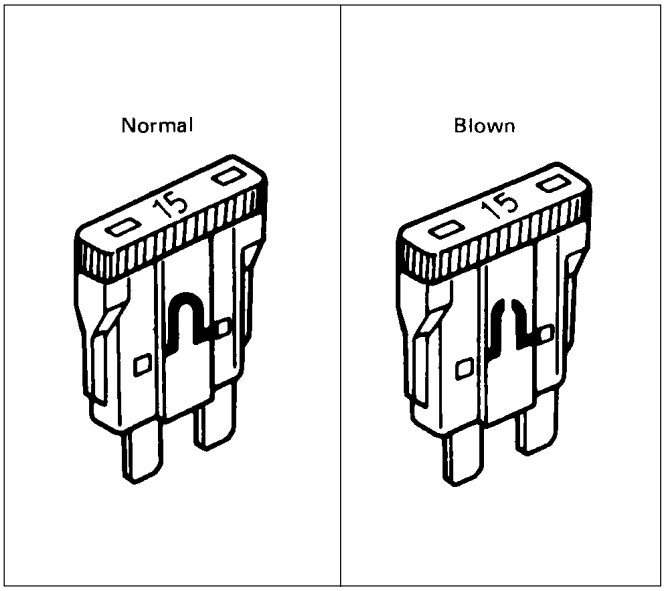

Fusible Link

The fusible link is primarily used to protect circuits where high amounts of current flow and where it would not be practical to use a fuse. For example, the starter circuit. When a current overload occurs, the fusible link melts open and interrupts the flow of current so as to prevent the rest of the wiring harness from burning.
Determine the cause of the overload before replacing the fusible link. the replacement fusible link must have the same amperage specification as the original fusible link.
Never replace a blown fusible link with fusible link of a different amperage specification. Doing so can result in an electrical fire or other serious circuit damage.
A blown fusible link is easily identified as shown in the figure.

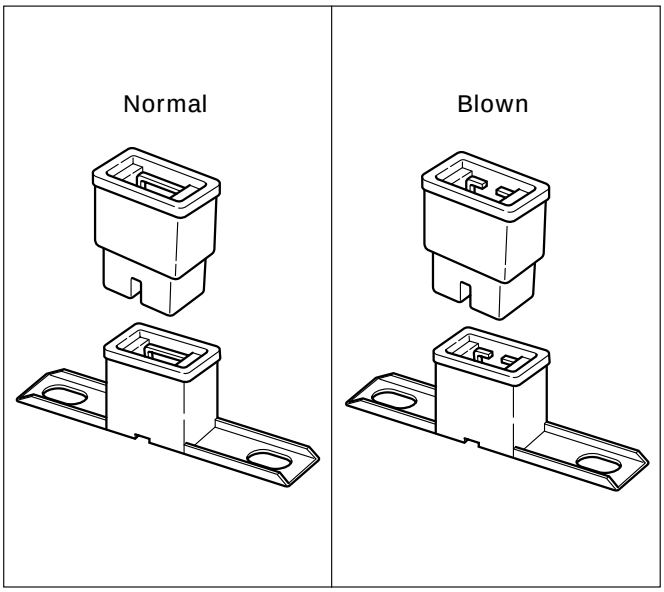

Fusible Link Specifications

Type	Rating	Case Color	Maximum Circuit Current (A)
Connector	30A	Pink	15
Connector	40A	Green	20
Bolted	50A	Red	25
Bolted	60A	Yellow	30
Bolted	80A	Black	40

Circuit Breaker

The circuit breaker is a protective device designed to open the circuit when a current load is in excess of rated breaker capacity. If there is a short or other type of overload condition in the circuit, the excessive current will open the circuit between the circuit breaker terminals. The reset knob (1) pops out when the circuit is open. Push the reset knob in place to restore the circuit after repairing it.

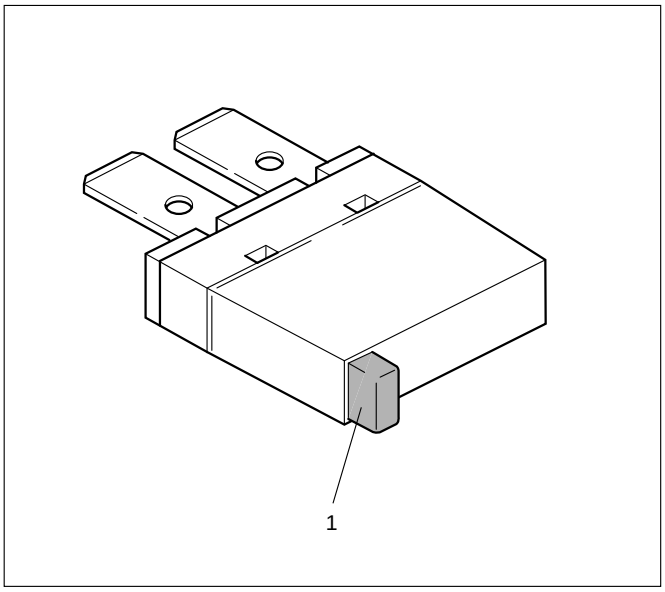

Relay

Battery and load location may require that a switch be placed some distance from either component. This means a longer wire and a higher voltage drop (1).
The installation of a relay between the battery and the load reduces the voltage drop (2).
Because the switch controls the relay, amperage through the switch can be reduced.

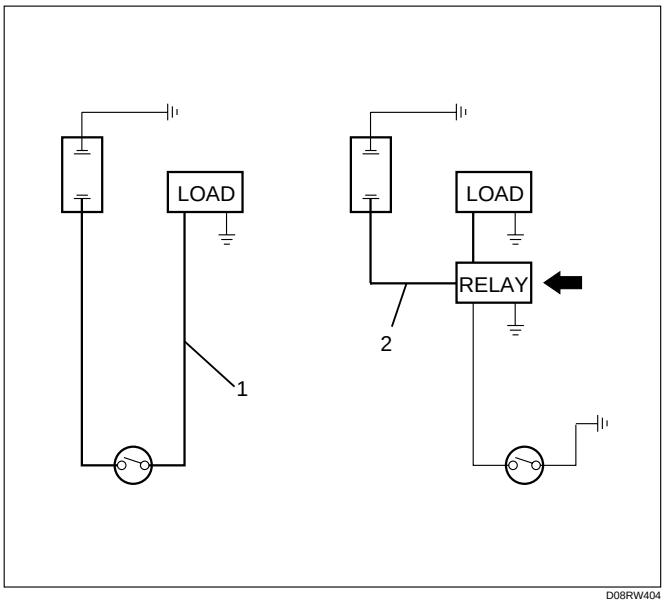

D08RW404

Relay Specifications and Configurations

Name/ Color	Rated voltage/Coil resistance	Internal circuit	Name/ Color	Rated voltage/Coil resistance	Internal circuit
1M (MR5L)/ Black	12V/ Approx. 80Ω Minimum operating voltage: 7V at 77˚F (25˚C)	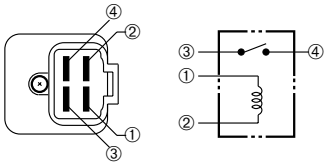	2M (MR5)/ Brown	12V/ Approx. 80Ω Minimum operating voltage: 7V at 77˚F (25˚C)	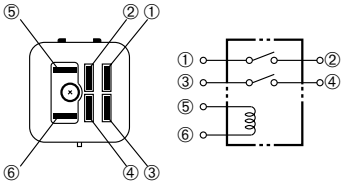
1B (MR5L)/ Grey	↑	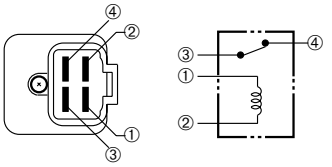	1B-1M (MR5)/ Grey	↑	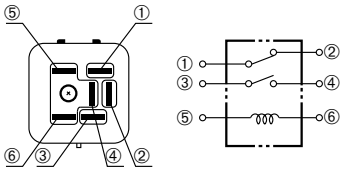
1M (MR5)/ Black (Case), Blue (Base)	↑	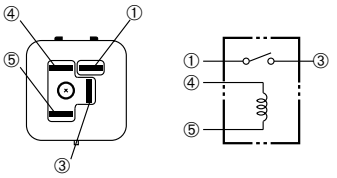	1M	↑ Minimum operating voltage: 9V at 68˚F (20˚C)	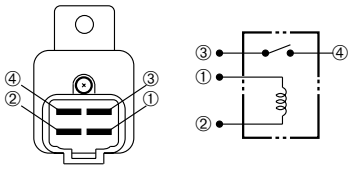
1T (MR5)/ Black/ Blue	↑	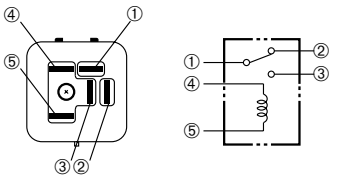	1M (MR5B)/ Black	12V Minimum operating voltage: 4.3V at 77˚F (25˚C)	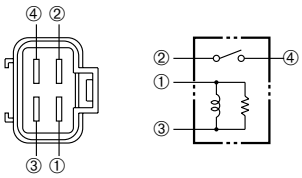
1M (Horn relay)	12V/ Minimum operating voltage: 8V at 68˚F (20˚C)	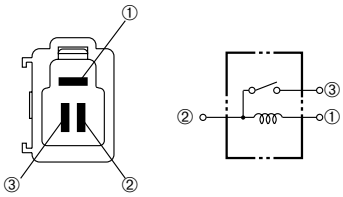			

* Relay contact shown in the wiring diagram indicates condition before actuation.

Diode – Diode Specifications and Configurations

SHAPE	MARK/ COLOR	CONSTRUCTION	CHECKING (THERE SHOULD BE CONTINUITY IN EITHER A OR B WHEN A CIRCUIT TESTER IS CONNECTED WITH DIODE TERMINAL)
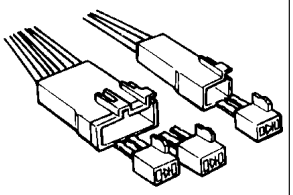	BLACK	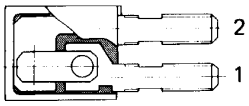	
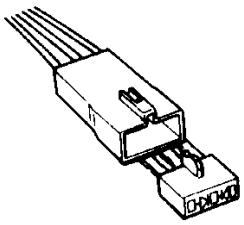	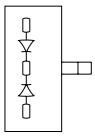 BLACK	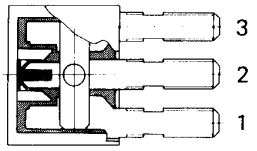	
	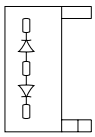 BLACK		
	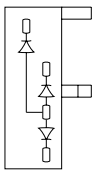 BLACK	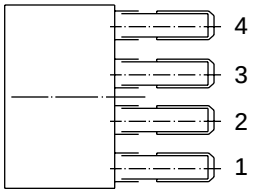	

CHECKING – CONNECTION PATTERN

TERMINAL NO.		2	1
CONNECTION PATTERN	A	⊕	⊖
	B	⊖	⊕

TERMINAL NO.		3	2	1
CONNECTION PATTERN	A	⊖	⊕	
			⊕	⊖
	B	⊕	⊖	
			⊖	⊕

TERMINAL NO.		3	2	1
CONNECTION PATTERN	A	⊖	⊕	
			⊕	⊖
	B	⊕	⊖	
			⊖	⊕

TERMINAL NO.		4	3	2	1
CONNECTION PATTERN	A			⊕	⊖
			⊖	⊕	
		⊖		⊕	
	B			⊖	⊕
			⊕	⊖	
		⊕		⊖	

Diode – Maximum Rating (Temp. = 77°F (25°C))

Items	Rating	Remarks
Peak reverse voltage	400V	
Transient peak reverse voltage	500V	
Average output current	1.5A	Temp. = 104°F (40°C)
Working ambient temperature	–22°F~176°F (–30°C~80°C)	
Storage temperature	–40°F~212°F (–40°C~100°C)	

Connector

The connector pin shape (2) determines whether the connector is male (3) or female (1).

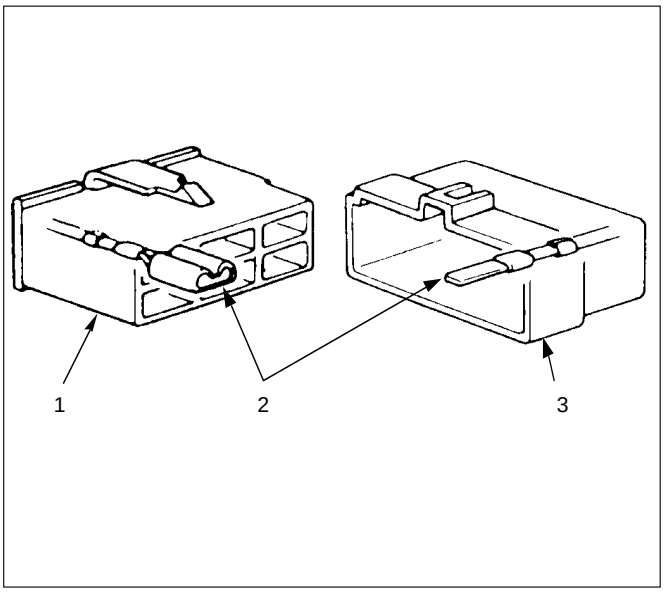

The symbol illustrated in the figure is used as connector, in the circuit of this section.

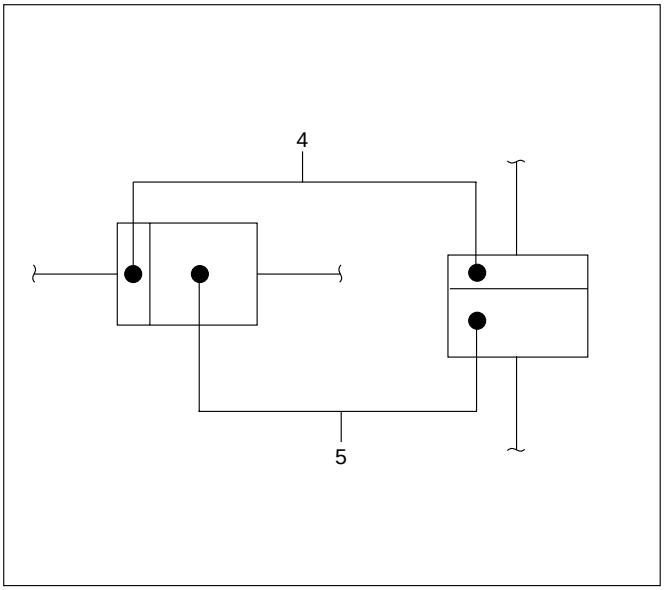

Legend
(4) Female Side Connector
(5) Male Side Connector

Connector is identified with a connector number (6)

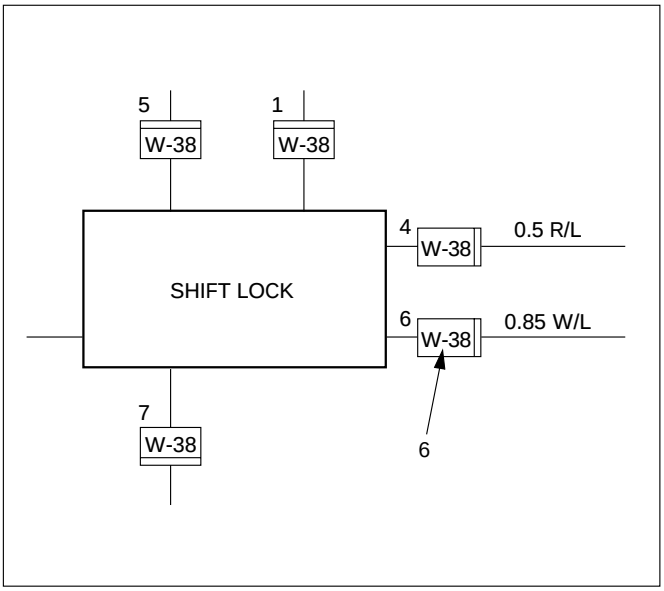

The applicable terminal number (7) is shown for each connector.

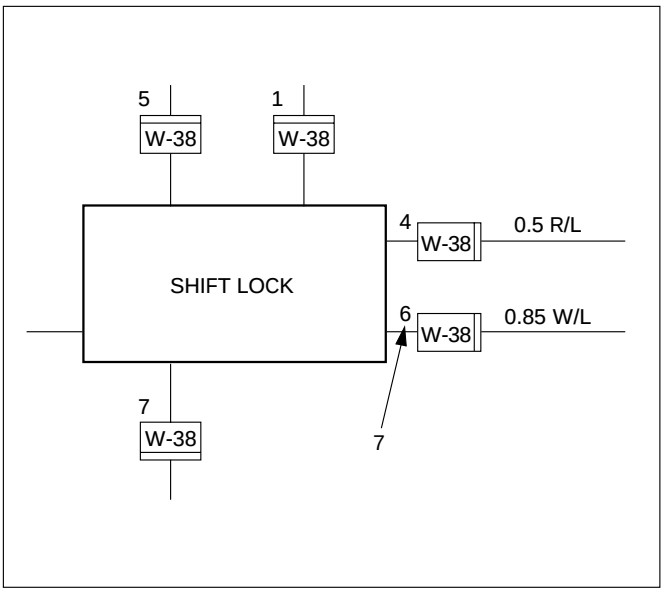

Connector terminal numbers (10) are clearly shown.
Male side connector (9) terminal numbers are in sequence from upper right to lower left.
Female side connector (8) terminal numbers are in sequence from upper left to lower right.

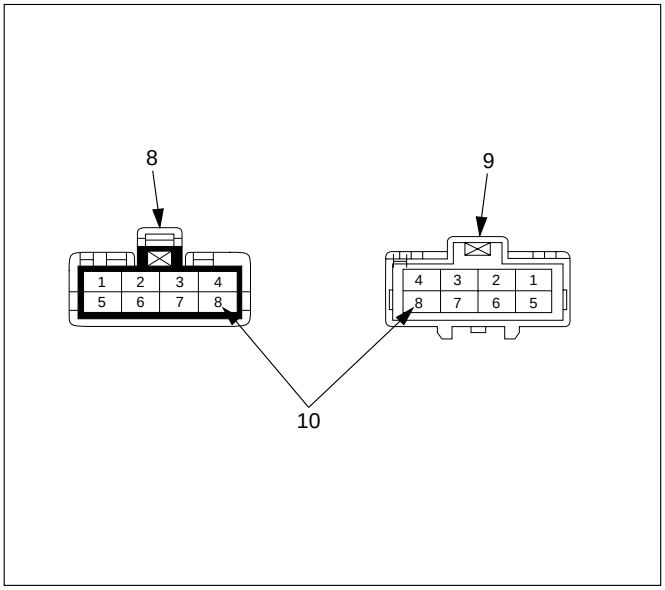

NOTE:
1. For those connectors on which specific terminal numbers or symbols are shown (such as PCM), the terminal numbers or symbols are used in the circuit diagram, irrespective of the above rule.
   Refer to the following figure.

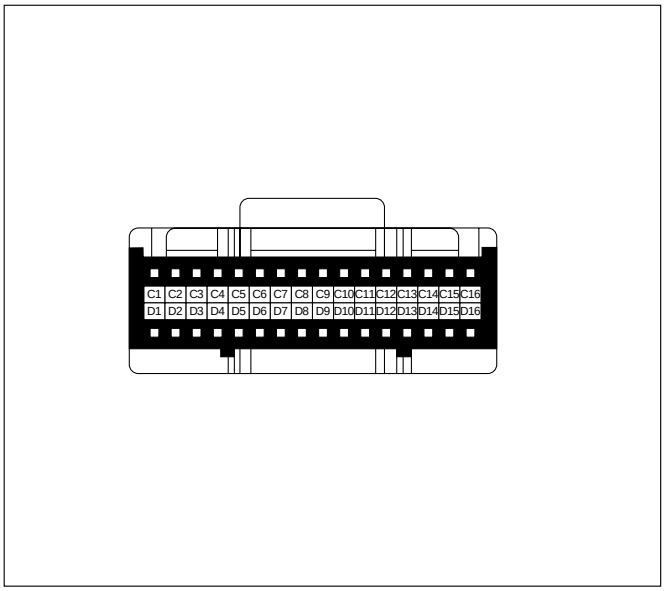

2. The connectors used for relays have their own terminal number assignment, irrespective of the above rule.
   Refer to the following figure.

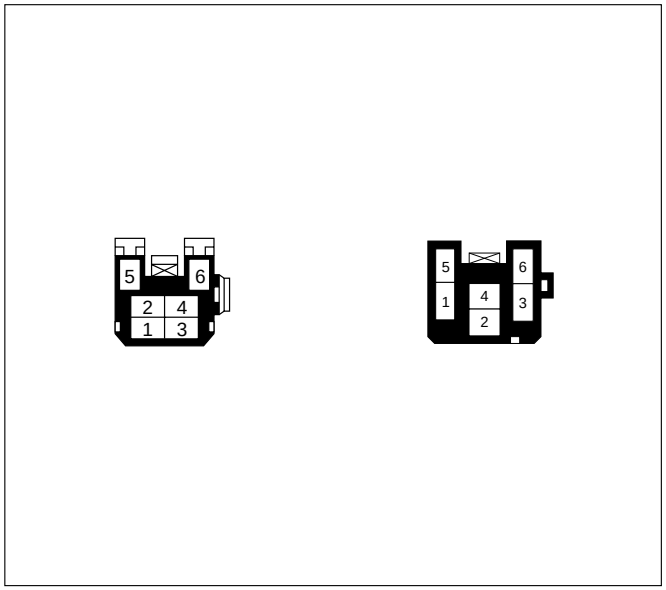

Double Lock Type Connector

Double lock type yellow color connectors are used for supplemental restraint system–air bag circuit. When removing the cable harness, disconnect the connector by unlocking at two places, outside (1) and inside (2). In such a case, do not pull the cables. Otherwise, cable disconnection may occur.
When connecting the connector, insert the connector completely and lock at outside. Imperfect locking may cause malfunction of SRS system circuit.

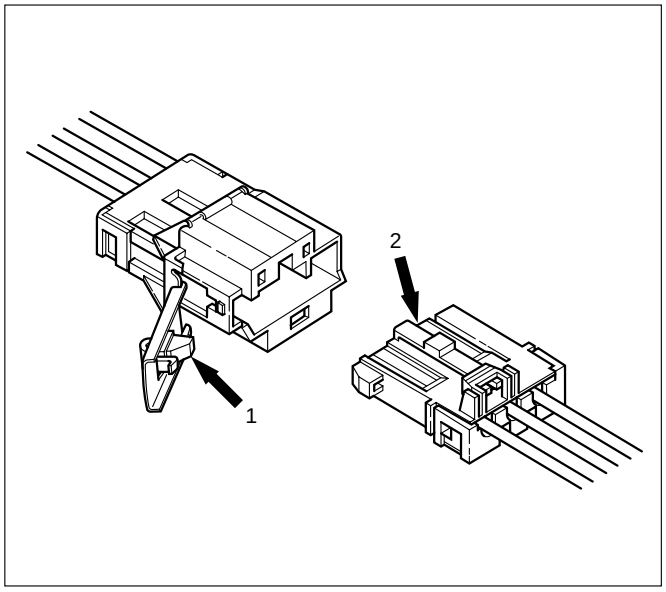

Reading the Circuit Diagram

In this section, each system has its own parts location illustration and circuit diagram.
And harness connector faces used in the circuit diagram are shown at the end of this section.

Parts Location

The parts location shows the location of the connectors (1) and the harness (2) used in each harness routing.

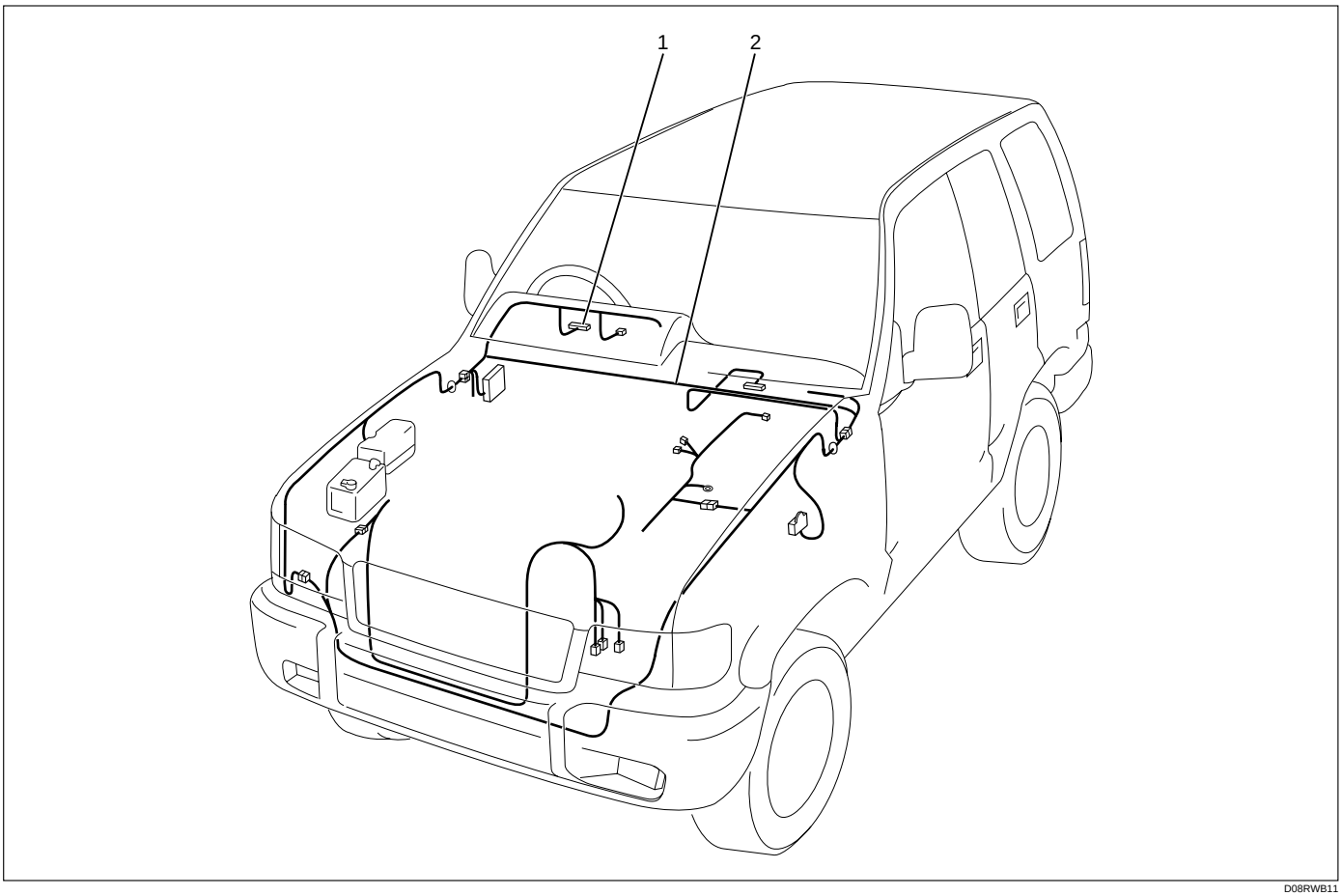

D08RWB11

Circuit Diagram

The circuit diagram shows the power supply (1), the load or loads (2) and the grounding point(s) (3).

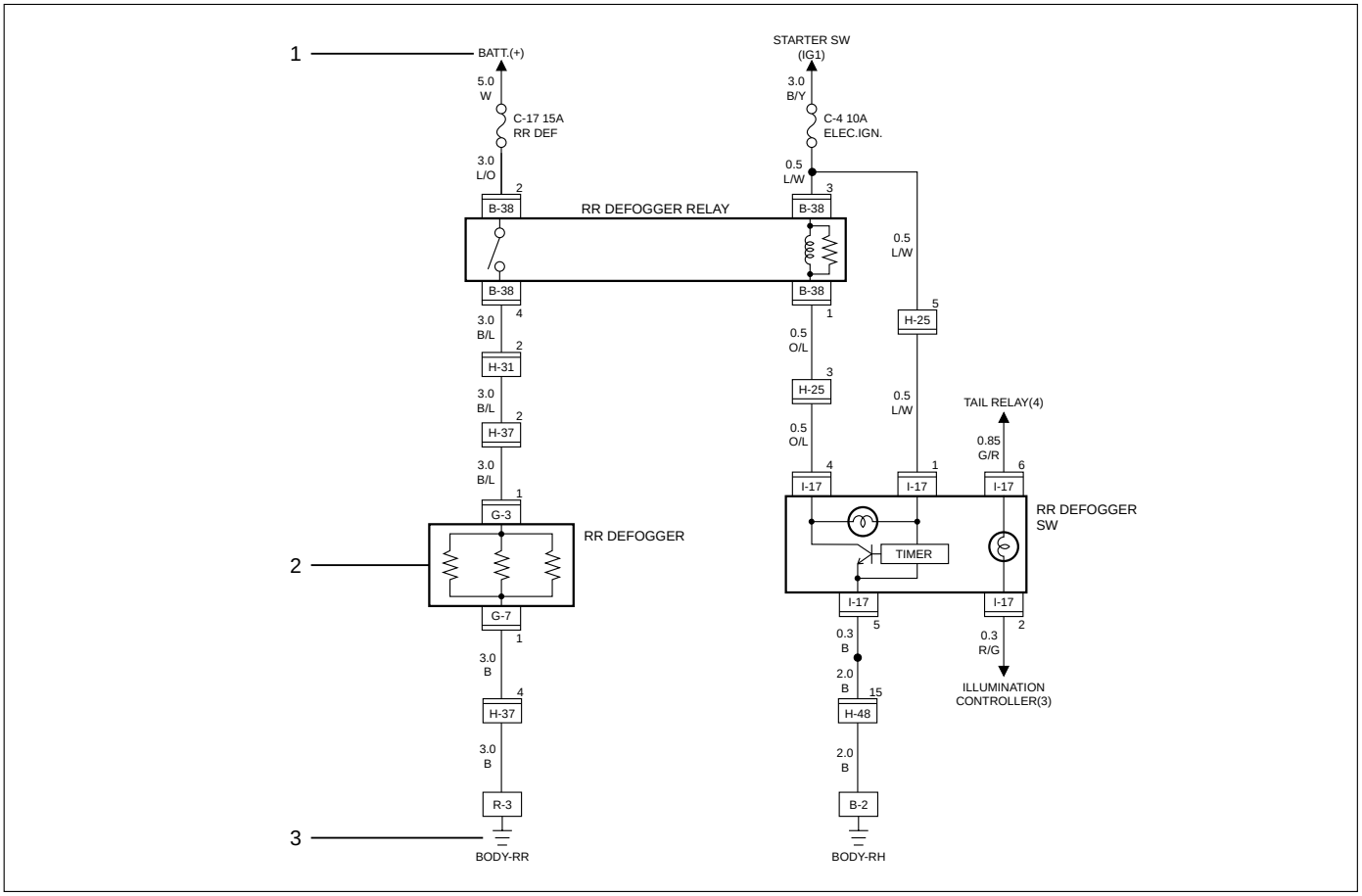

D08RW425

Harness Connector Faces

The harness connector faces show each connector's number (1), configuration (2) and the pin number (3).

No.	Connector face	No.	Connector face
B-21	NOT USED	B-31	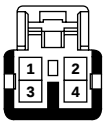
B-22	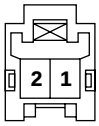	B-32	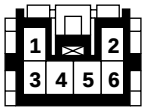 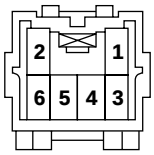
B-23	NOT USED	B-33	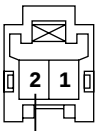

1 2 3

D08RW424

Main Data and Specifications

Fuse, Fusible Link and Circuit Breaker Location

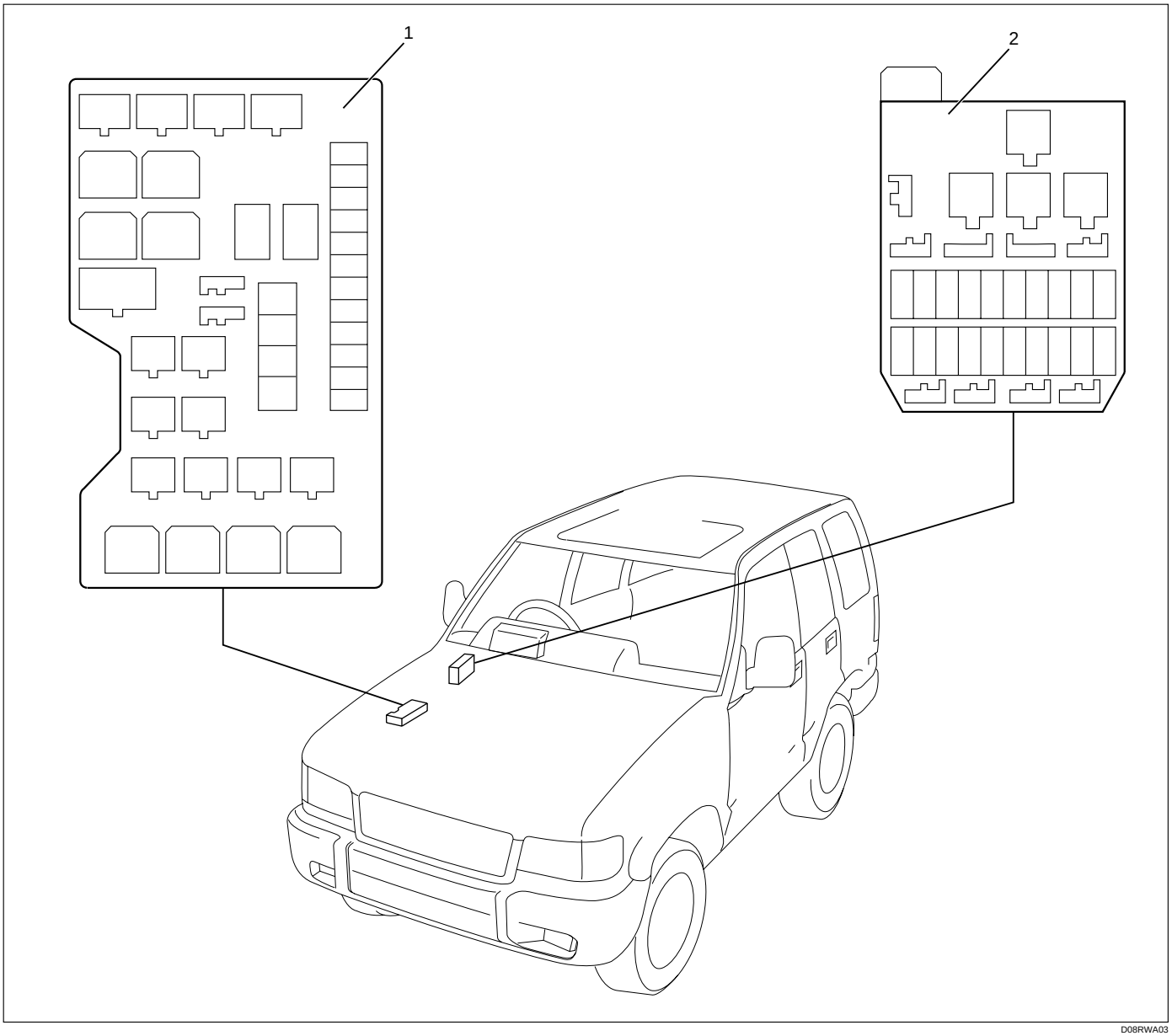

Legend

(1) Relay and Fuse Box
(2) Fuse Box

Relay & Fuse Box

RELAY AND FUSE BOX

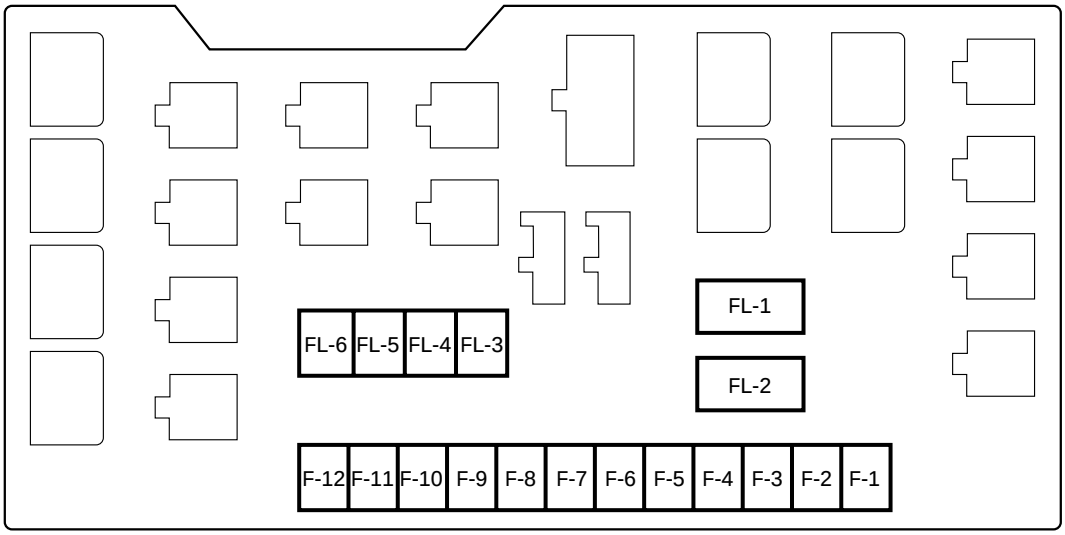

810RS027

	MODEL / No.	RHD	LHD
FUSIBLE LINK	FL-1	80A MAIN	80A MAIN
	FL-2	50A KEY SW	50A KEY SW
	FL-3	30A ECM (GASOLINE)	30A ECM (GASOLINE)
	FL-4	30A CONDENSER FAN	30A CONDENSER FAN
	FL-5	50A GLOW (4JG2)	50A GLOW (4JG2)
	FL-6	40A ABS	40A ABS
FUSE	F-1	10A RR SUB	15A RR COOLER/ANTI-THEFT
	F-2	10A O_2 SENSOR (GASOLINE)	10A O_2 SENSOR (GASOLINE)
	F-3	15A HORN HAZARD	15A HORN HAZARD
	F-4	15A H/LAMP-LH	10A H/LAMP-LH (HI)
	F-5	15A H/LAMP-RH	10A H/LAMP-RH (HI)
	F-6	10A RR COOLER	10A H/LAMP-LH (LOW)
	F-7	15A ANTI-THEFT (4JG2) 20A ACC SOCKET (6V*1)	10A H/LAMP-RH (LOW)
	F-8	20A FOG	20A FOG
	F-9	20A ABS	20A ABS
	F-10	15A FUEL PUMP (GASOLINE)	15A FUEL PUMP (GASOLINE)
	F-11	15A ANTI-THEFT	10A TAIL-LH
	F-12	15A TAIL	10A TAIL-RH

Fuse Box

This illustration is based on RHD

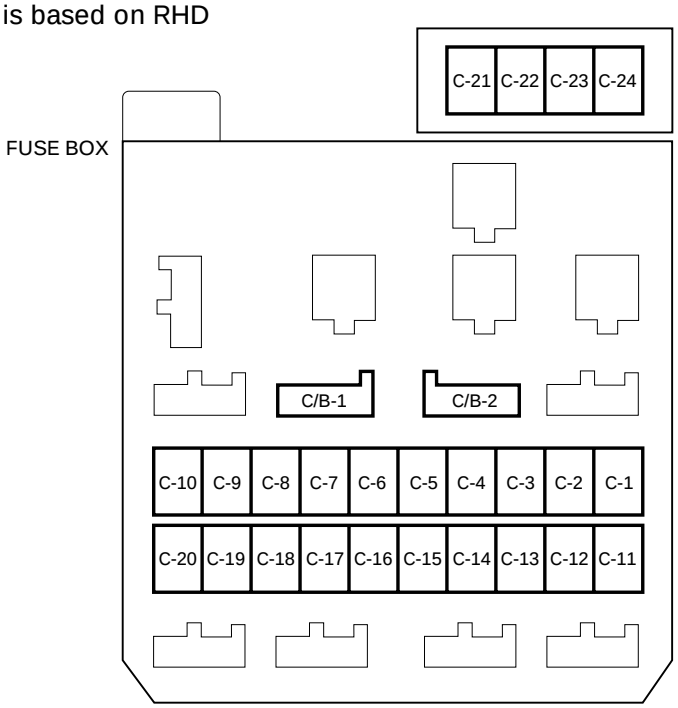

810RV026

FUSE

No.	RHD	LHD
C-1	10A STARTER RELAY	10A STARTER RELAY
C-2	15A SEAT HEATER	15A SEAT HEATER
C-3	10A TURN, BACK	10A TURN, BACK
C-4	15A ELEC. IGN.	15A ELEC. IGN.
C-5	15A FRT WIPER AND WASHER	15A FRT WIPER AND WASHER
C-6	10A RR WIPER AND WASHER	10A RR WIPER AND WASHER
C-7	10A H/LAMP WIPER	10A H/LAMP WIPER
C-8	15A ENGINE	15A ENGINE
C-9	15A IGN. COIL (GASOLINE) 15A FUEL CUT (4JG2)	15A IGN. COIL (GASOLINE) 15A FUEL CUT (4JG2)
C-10	10A METER, GAUGE	10A METER, GAUGE
C-11	10A AUDIO, MIRROR	10A AUDIO, MIRROR
C-12	20A CIGARETTE	20A CIGARETTE
C-13	10A ANTI-THEFT	10A ANTI-THEFT
C-14	15A STOP, A/T CONT.	15A STOP, A/T CONT.
C-15	20A TELEPHONE	20A TELEPHONE
C-16	10A CLOCK, ROOM	10A CLOCK, ROOM
C-17	25A RR DEFOG.	25A RR DEFOG.
C-18	20A DOOR LOCK	20A DOOR LOCK
C-19	25A BLOWER	25A BLOWER
C-20	10A AIR CON.	10A AIR CON.
C-21	10A SRS-1	10A SRS-1
C-22	—	—
C-23	—	—
C-24	—	—

CIRCUIT BREAKER

No.	RHD	LHD
C/B-1	—	—
C/B-2	30A P/W, P/S, S/R	30A P/W, P/S, S/R

Relay Location-1 (Relay and Fuse Box)

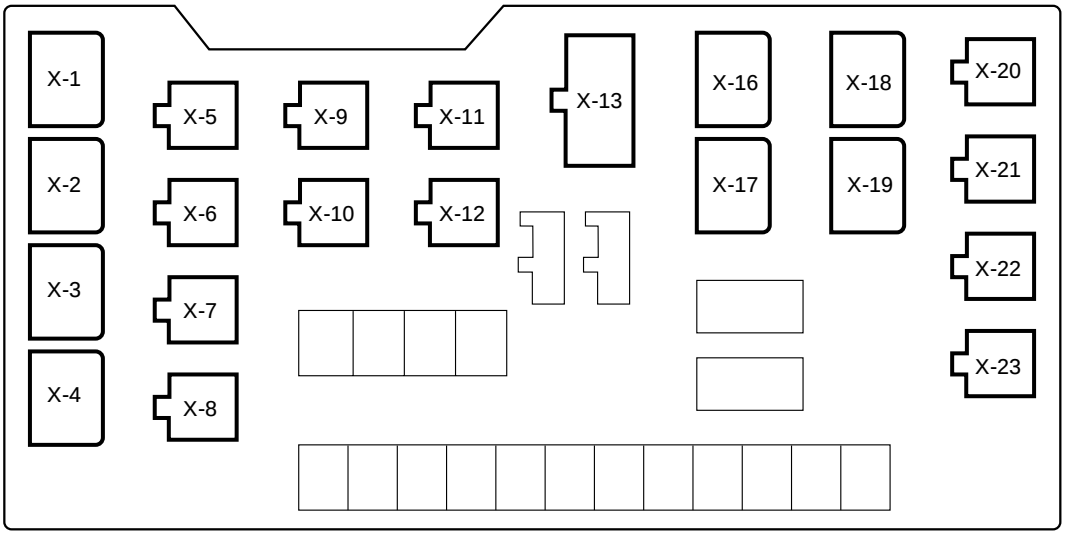

No.	RHD	LHD
X-1	RELAY ; LIGHTING	RELAY ; LIGHTING
X-2	—	—
X-3	—	RELAY ; DIMMER
X-4	RELAY ; ACC SOCKET	—
X-5	RELAY ; A/C THERMO	RELAY ; A/C THERMO
X-6	RELAY ; RR COOLER	RELAY ; RR COOLER
X-7	RELAY ; COMPRESSOR (GASOLINE)	RELAY ; COMPRESSOR (GASOLINE)
X-8	RELAY ; HORN	RELAY ; HORN
X-9	RELAY ; TAIL	RELAY ; TAIL
X-10	—	—
X-11	RELAY ; FUEL PUMP (GASOLINE)	RELAY ; FUEL PUMP (GASOLINE)
X-12	RELAY ; ECM MAIN (GASOLINE)	RELAY ; ECM MAIN (GASOLINE)
X-13	—	—
X-16	RELAY ; ANTI-THEFT	RELAY ; ANTI-THEFT
X-17	RELAY ; STARTER (GASOLINE) RELAY ; CHARGE (DIESEL)	RELAY ; STARTER (GASOLINE) RELAY ; CHARGE (DIESEL)
X-18	RELAY ; SHIFT ON THE FLY	RELAY ; SHIFT ON THE FLY
X-19	RELAY ; CONDENSER FAN (GASOLINE)	RELAY ; CONDENSER FAN
X-20	RELAY ; CORNERING LIGHT RELAY ; IMMOBILIZER	—
X-21	—	—
X-22	RELAY ; RR FOG LIGHT	—
X-23	RELAY ; FRT FOG LIGHT	RELAY ; FRT FOG LIGHT

Relay Location-2 (Fuse Box)

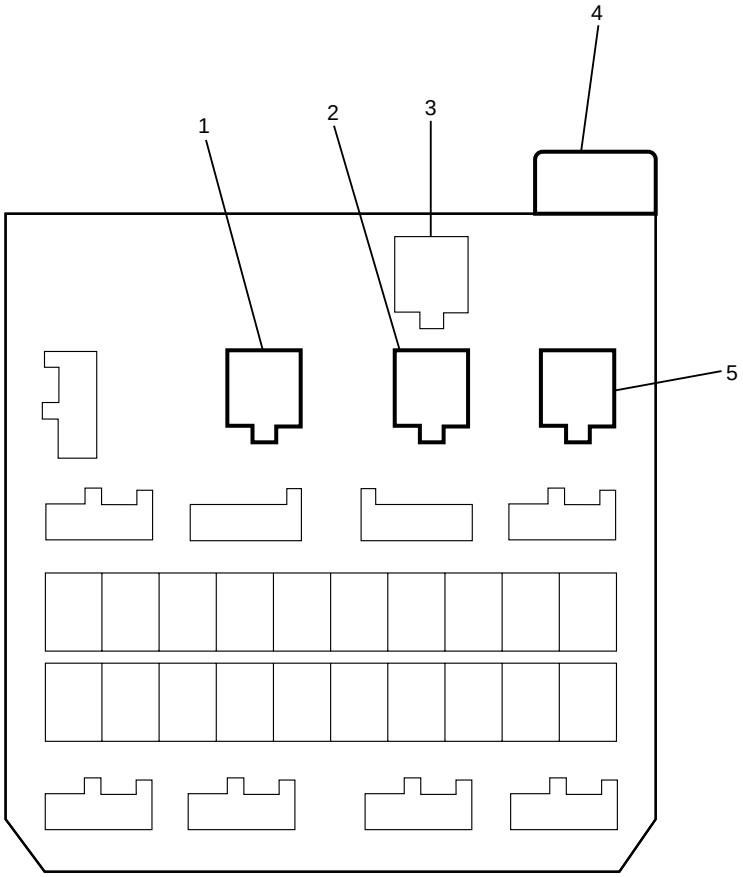

810RW330

Legend

(1) Heater & A/C Relay
(2) Power Window Relay
(3) H-63
(4) Flasher Unit
(5) Rear Defogger Relay

Relay Location-3

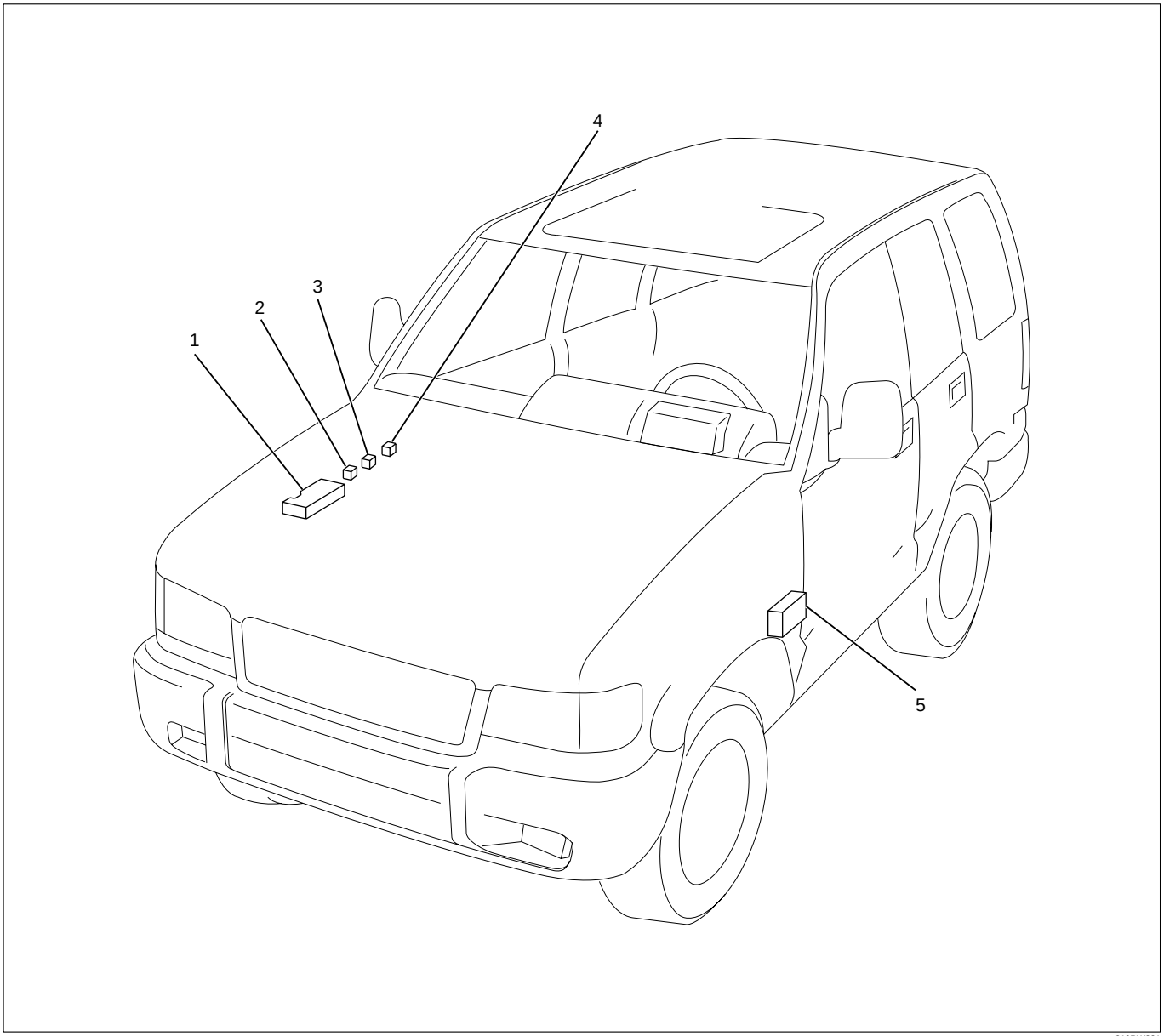

810RW331

Legend

(1) Relay and Fuse Box
(2) Glow Relay-1
(3) Glow Relay-2
(4) Starter Relay
(5) Fuse Box

Diode Location

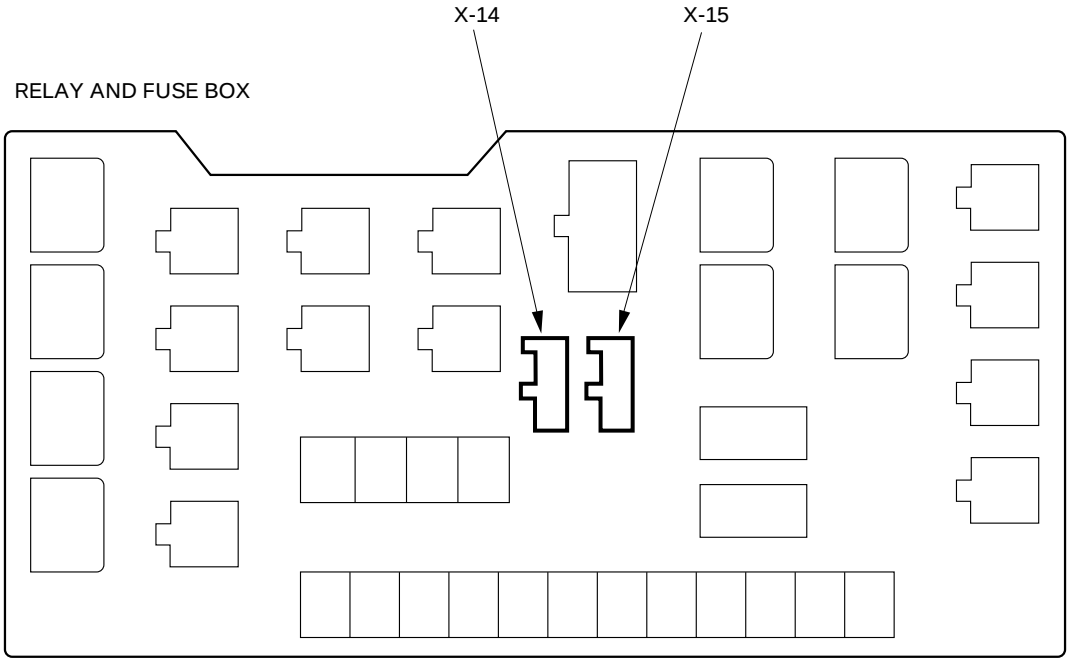

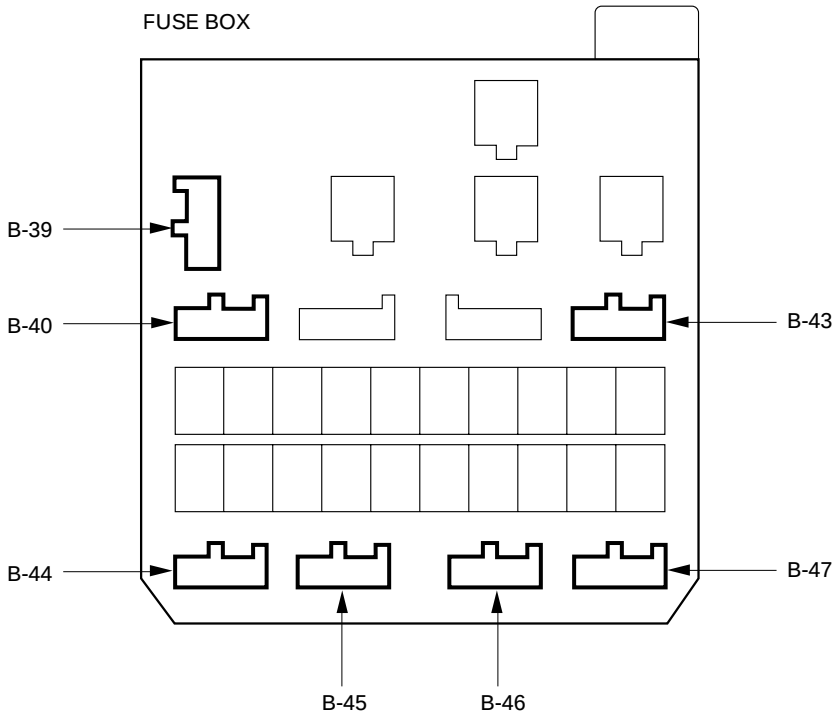

Grounding Point

Reference Table

(6VD1 RHD)

Connector No.	Cable harness	Location	Parts (Load)
B-1	Body harness	Body-LH	Door mirror defogger (LH), Fan SW, FRT power window & door lock SW-LH, Cruise control unit, FRT door key SW-LH, FRT door lock actuator-LH, FRT door lock SW-LH
B-2			Sun roof SW, Sun roof control unit, Safety SW, Limit SW
B-18		Body-RH	FRT door key SW-RH, FRT door lock & power window SW-RH, FRT door lock actuator & lock SW-RH, FRT door lock SW-RH, Door mirror defogger (RH), RR wiper intermittent relay, Mode SW (A/T), Starter relay
B-19			Cigar lighter, Dimmer·passing SW, Illumination controller, RR defogger SW, Flasher unit, Power window relay, Cruise main indicator light, Lighting SW, Glove box illumination light, Ashtray illumination light, Headlight wiper SW, Clock, FRT fog light SW, Variable intermittent (FRT wiper & washer SW), Kick down SW, Anti-theft controller, Turn signal indicator light, Heater & A/C relay
B-26		Body-center	RR Power window SW-RH, Mirror control SW, Mirror defogger SW, Mirror folding SW, Car telephone, Shift lock controller, POWER & WINTER SW, Seat heater, Seat heater SW, RR door lock actuator-LH, EBCM
B-28			RR power window SW-RH, Power & winter SW, Power seat SW, Tilt motor & SW, Recliner motor & SW, RR door lock actuator-RH, EBCM
1 C-16	Engine room harness	Fender-LH	Clearance light, FRT turn signal light
2 C-16			Pump & VSV, Headlight wiper timer
3 C-16			4WD SW, VSV;FRT axle, FRT axle SW
4 C-16			Headlight wiper motor
5 C-16			FRT fog light
6 C-16			O_2 Sensor, Headlight leveling actuator-RH
7 C-16			P/S pressure SW, Headlight leveling actuator-LH
8 C-16			Side turn signal light (LH)

Connector No.	Cable harness	Location	Parts (Load)
1 C-39	Engine room harness	Fender-RH	Windshield washer motor
2 C-39			Windshield wiper motor
3 C-39			Windshield intermittent relay
4 C-39			FRT fog light relay
5 C-39			Fuel pump relay, ECM main relay
6 C-39			Meter, Vehicle speed sensor (Meter), Fuel tank unit
7 C-39			Side turn signal light (RH)
8 C-39			Vehicle speed sensor, Brake fluid SW
E-28	Engine ECGI harness	Engine-common chamber	ECM, O_2 sensor
E-29			ECM, Data link connector
E-30			DIS
E-31			ECM, Data link connector, A/T Shift indicator control unit
R-3	Rear body harness	Body-RR	RR washer motor, Rear wiper motor, Luggage room light, RR defogger, High mount stoplight, Tailgate key SW, RR door lock actuator-LH, Tailgate lock actuator-LH, RR power window SW-LH
R-4			Taillight, Stoplight, RR turn signal light, Backup light, License plate light, Fuel tank unit, Fuel pump, Trailer harness connector, RR fog light
M-16	Mission harness	Engine	TCM
I-39	Instrument harness	Body-FRT	Audio
C-85	Engine room harness	Body-Center	EBCM
U-2	SRS harness	Body-FRT	SDM

(6VD1 LHD)

Connector No.	Cable harness	Location	Parts (Load)
B-1	Body harness	Body-RH	FRT power window & door lock SW-RH, FRT door key SW-RH, FRT door lock actuator-RH, Door lock SW-RH, Door mirror defogger (RH), Key & light remind buzzer (Saudi Arabia), Sun roof SW, Sun roof control unit, Safety SW, Limit SW
B-2			Seat belt warning light (Saudi Arabia), Cruise control unit, Fan SW, Turn signal indicator light, Clock, Glove box illumination light, Ashtray illumination light, RR defogger SW, Cigar lighter
B-18		Body-LH	FRT door key SW-LH, FRT door lock actuator & lock SW-LH, Door lock SW-LH, FRT door lock & power window SW-LH, Door mirror defogger (LH), RR wiper intermittent relay, Starter relay, Mode SW (A/T), Power window relay
B-19			Dimmer·passing SW, Illumination controller, RR defogger SW, Flasher unit, Cruise main indicator light, Lighting SW, Headlight wiper SW, Clock, FRT fog light SW, Variable intermittent (FRT wiper & washer SW), Anti-theft controller, Heater & A/C relay, Kick down SW
B-26		Body-center	Mirror control SW, Mirror folding SW, Mirror defogger SW, RR Door lock actuator-RH, Car telephone, Shift lock controller, POWER & WINTER SW, Seat heater, Seat heater SW, EBCM, RR power window SW-RH
B-28			EBCM, Seat belt SW (Saudi Arabia), Tilt motor & SW, Recliner motor & SW, Power seat SW
1 C-16	Engine room harness	Fender-LH	Clearance light, FRT turn signal light
3 C-16			4WD SW, VSV;FRT axle, FRT axle SW
4 C-16			Headlight wiper motor
5 C-16			FRT fog light
6 C-16			P/S pressure SW
7 C-16			O_2 Sensor
8 C-16			Side turn signal light (LH)

Connector No.	Cable harness	Location	Parts (Load)
1 C-39	Engine room harness	Fender-RH	Windshield washer motor, Side turn signal light (RH)
2 C-39			Windshield wiper motor
3 C-39			Windshield intermittent relay
4 C-39			Headlight-LH, FRT fog light relay
5 C-39			Condenser fan (Saudi Arabia)
6 C-39			Meter, Vehicle speed sensor (Meter), Fuel tank unit
7 C-39			Pump & VSV, Headlight-RH, Fuel pump relay, ECM main relay
8 C-39			High-beam indicator light, Vehicle speed sensor, Headlight wiper timer
C-85		Body-Center	EBCM
E-28	Engine ECGI harness	Engine-common chamber	ECM, O_2 sensor
E-29			ECM, Data link connector
E-30			DIS
E-31			ECM, Data link connector, A/T Shift indicator control unit
R-3	Rear body harness	Body-RR	RR washer motor, Rear wiper motor, Luggage room light, RR defogger, Tailgate key SW, Tailgate lock actuator-LH, RR Door lock actuator-LH, High mount stoplight, RR power window SW-LH
R-4			Taillight, Stoplight, RR turn signal light, License plate light, Fuel tank unit, Fuel pump, Backup light
M-16	Mission harness	Engine	TCM
I-39	Instrument harness	Body-FRT	Audio

(4JG2 RHD)

Connector No.	Cable harness	Location	Parts (Load)
B-1	Body harness	Body-LH	Door mirror defogger (LH), FRT power window & door lock SW-LH, Fan SW, FRT door key SW-LH, FRT door lock actuator-LH, FRT door lock SW-LH
B-2			Sun roof SW, Sun roof control unit, Safety SW, Limit SW
B-18		Body-RH	FRT door key SW-RH, FRT door lock & power window SW-RH, FRT door lock actuator & lock SW-RH, Door lock SW-RH, Door mirror defogger (RH), RR wiper intermittent relay, Starter relay
B-19			Headlight wiper SW, Dimmer·passing SW, Illumination controller, RR defogger SW, Flasher unit, Power window relay, Lighting SW, Glove box illumination light, Ashtray illumination light, Clock, FRT fog light SW, Variable intermittent (FRT wiper & washer SW), Cigar lighter, Vehicle speed sensor (Meter), Heater & A/C relay, Turn signal indicator light, Anti-theft controller, RR power window SW-RH
B-26		Body-center	Mirror control SW, Mirror folding SW, Mirror defogger SW, Car telephone, Seat heater, Seat heater SW, RR door lock actuator-LH, EBCM
B-28			RR power window SW-RH, EBCM, RR door lock actuator-RH, Tilt motor & SW, Power seat SW, Recliner motor & SW
1 C-16	Engine room harness	Fender-LH	Clearance light, FRT turn signal light
2 C-16			4WD SW, Fuel filter SW
3 C-16			VSV;FRT axle, FRT axle SW
4 C-16			Headlight wiper motor
5 C-16			FRT fog light
7 C-16			QOS-III control unit, Headlight wiper timer, VSV;FICD, QOS/EGR control unit, Data link connector
8 C-16			Side turn signal light (LH)

Connector No.	Cable harness	Location	Parts (Load)
1 C-39	Engine room harness	Fender-RH	Windshield washer motor
2 C-39			Windshield wiper motor
3 C-39			Windshield intermittent relay, Charge relay
4 C-39			FRT fog light relay
5 C-39			Tacho sensor
6 C-39			Vehicle speed sensor (Meter), Meter, Fuel tank unit
7 C-39			Side turn signal light (RH)
8 C-39			Vehicle speed sensor, Brake fluid SW
C-85		Body-FRT	EBCM
R-3	Rear body harness	Body-RR	RR washer motor, Rear wiper motor, Luggage room light, RR defogger, High mount stoplight, Tailgate key SW, RR door lock actuator-LH, Tailgate lock actuator-LH, RR power window SW-LH
R-4			Taillight, Stoplight, RR turn signal light, Backup light, License plate light, Fuel tank unit, RR fog light, Trailer harness connector
I-39	Instrument harness	Body-FRT	Audio

(4JG2 LHD)

Connector No.	Cable harness	Location	Parts (Load)
B-1	Body harness	Body-RH	Door mirror defogger (RH), FRT door lock key SW-RH, FRT door lock actuator-RH, Door lock SW-RH, FRT power window & door lock SW-RH, Key & light remind buzzer (Saudi Arabia), Sun roof SW, Sun roof control unit, Safety SW, Limit SW
B-2			Seat belt warning light (Saudi Arabia), Fan SW, Turn signal indicator light, Vehicle speed sensor (Meter), RR defogger SW, Clock, Cigar lighter, Glove box illumination light, Ashtray illumination light
B-18		Body-LH	FRT door lock key SW-LH, FRT door lock actuator & lock SW-LH, Door lock SW-LH, FRT door lock & power window SW-LH, Door mirror defogger (LH), RR wiper intermittent relay, Starter relay, Power window relay
B-19			Dimmer·passing SW, Illumination controller, RR defogger SW, Flasher unit, Lighting SW, Headlight wiper SW, FRT fog light SW, Variable intermittent (FRT wiper & washer SW), Heater & A/C relay, Anti-theft controller
B-26		Body-center	Mirror control SW, Mirror folding SW, Mirror defogger SW, RR power window SW-RH, Car telephone, RR door lock actuator-RH, Seat heater, Seat heater SW, EBCM
B-28			Seat belt SW (Saudi Arabia), EBCM, Tilt motor & SW, Power seat SW, Recliner motor & SW
1 C-16	Engine room harness	Fender-LH	Clearance light, FRT turn signal light
2 C-16			4WD SW, Fuel filter SW
3 C-16			VSV;FRT axle, FRT axle SW, Brake fluid SW
4 C-16			Headlight wiper motor
5 C-16			FRT fog light
7 C-16			VSV; FICD
8 C-16			Data link connector, Side turn signal light (LH), QOS-III control unit

Connector No.	Cable harness	Location	Parts (Load)
1 C-39	Engine room harness	Fender-RH	Windshield washer motor, Headlight-LH, Side turn signal light (RH)
2 C-39			Windshield wiper motor
3 C-39			Windshield intermittent relay
4 C-39			FRT fog light relay, Charge relay, Headlight-LH
5 C-39			Condenser fan (Saudi Arabia)
6 C-39			Meter, Vehicle speed sensor (Meter), Fuel tank unit
7 C-39			Headlight-RH, Tacho sensor
8 C-39			Headlight wiper timer, High-beam indicator light, Vehicle speed sensor
C-85		Body-FRT	EBCM
R-3	Rear body harness	Body-RR	RR washer motor, Rear wiper motor, Luggage room light, RR defogger, Tailgate key SW, Tailgate lock actuator-LH, RR door lock actuator-LH, RR power window SW-LH, High mount stoplight
R-4			Taillight, Stoplight, RR turn signal light, License plate light, Backup light
I-39	Instrument harness	Body-FRT	Audio

Grounding Point

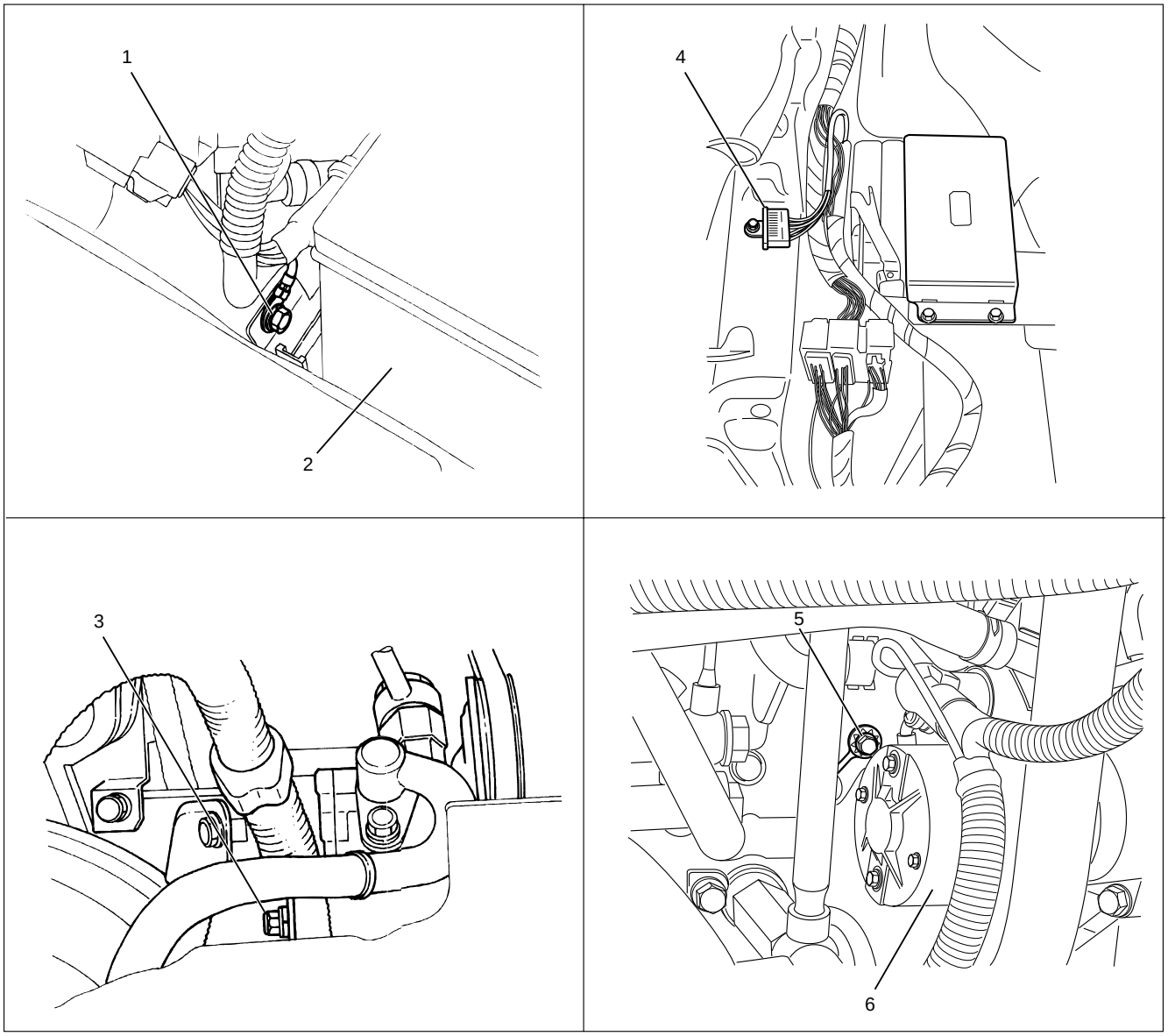

D08RWA22

Legend

(1) P-6
(2) Battery
(3) P-7
(4) C-85
(5) E-4
(6) Starter

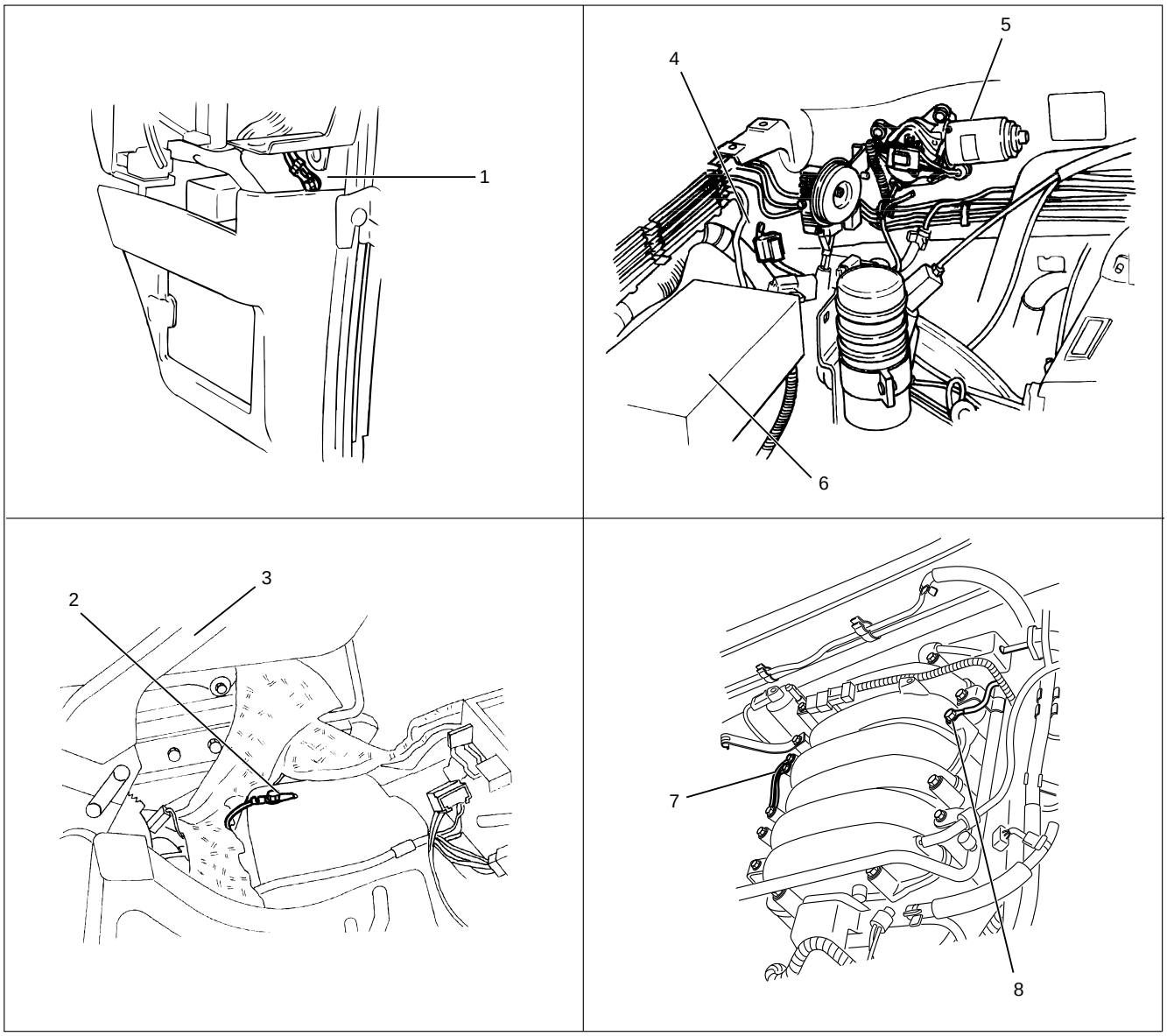

D08RWA24

Legend

(1) B-18, B-19
(2) B-26
(3) Parking Brake Lever
(4) C-39
(5) Windshield Wiper Motor
(6) Relay and Fuse Box
(7) Common Chamber: RH
(8) Common Chamber: LH

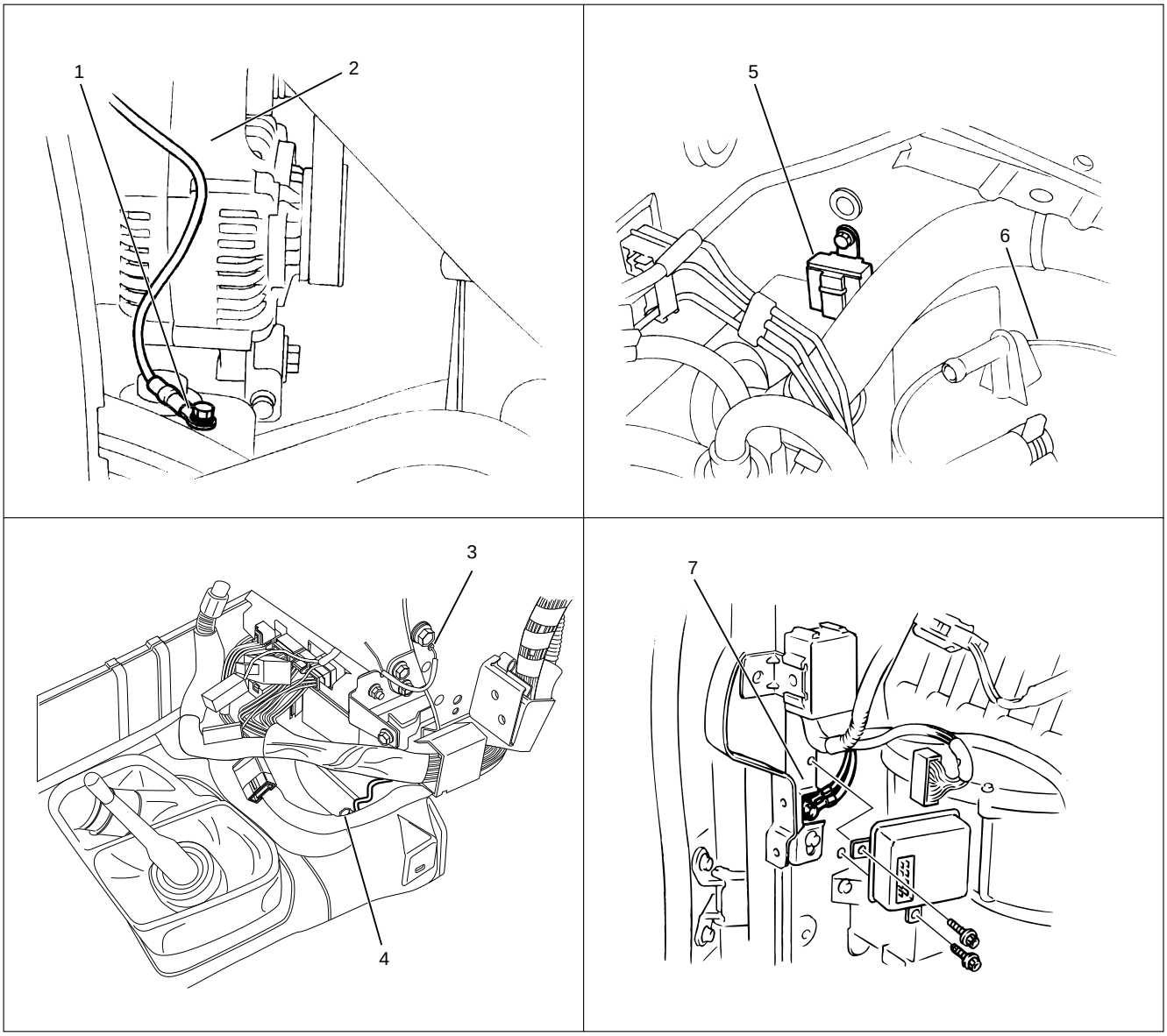

D08RWA23

Legend

(1) P-10
(2) AC Generator
(3) I-39
(4) U-2
(5) C-16
(6) Canister
(7) B-1, B-2

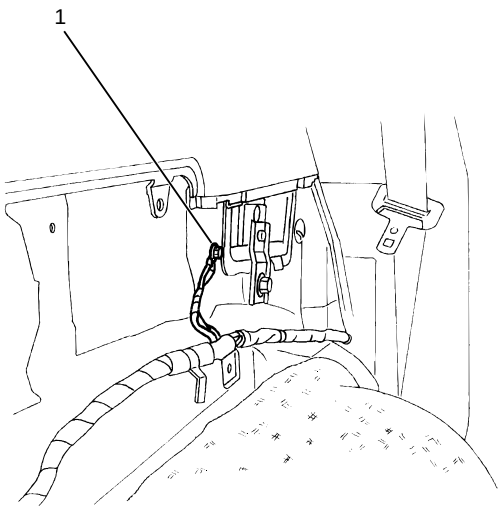

D08RWA30

Legend

(1) R-3, R-4

Cable Harness Routing (RHD) – 1

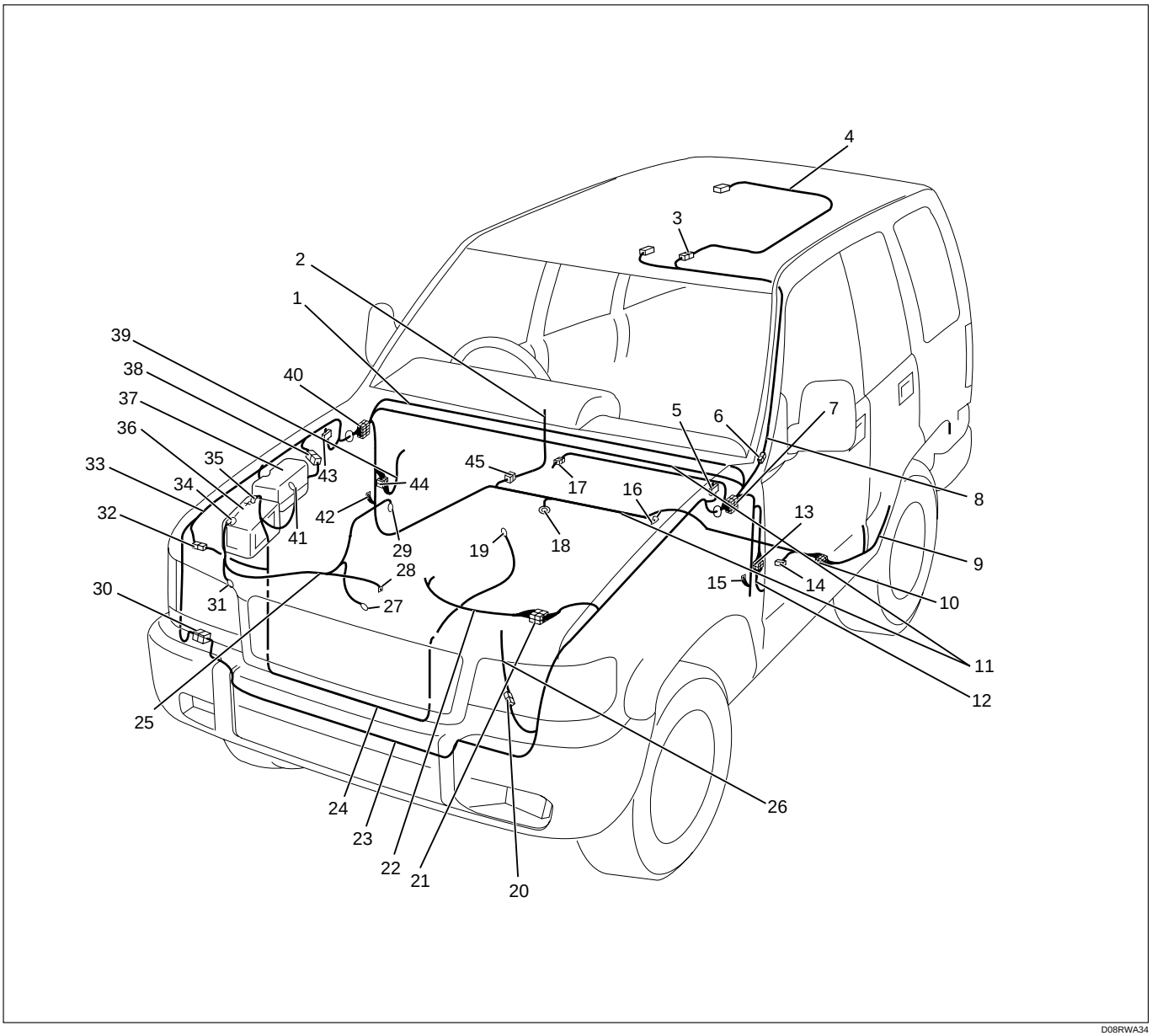

Legend

(1) Instrument Harness
(2) RR Door Extension Harness
(3) H-45
(4) Sun Roof Harness
(5) C-16
(6) H-21
(7) H-7, H-8, H-9, H-20, H-24, H-65
(8) Domelight Harness
(9) RR Body Harness
(10) H-31, H-32, H-46
(11) Body Harness
(12) FRT Door Harness
(13) H-18, H-19
(14) C-85
(15) B-1, B-2
(16) B-26
(17) H-12
(18) B-28
(19) P-4
(20) H-10, H-11, H-53
(21) H-4, H-5, H-6
(22) Engine Harness
(23) Engine Room Harness (LH)
(24) Battery Positive Cable
(25) Battery Negative Cable
(26) Transmission Harness
(27) P-7
(28) P-10
(29) P-9
(30) H-41, H-42, H-43, H-60
(31) P-6

(32) H-2, H-3 (4J∗∗)
(33) Engine Room Harness (RH)
(34) P-5
(35) P-1
(36) Battery
(37) Relay and Fuse Box
(38) H-1, H-2, H-3 (6V∗1)
(39) FRT Door Harness (RH)
(40) H-13, H-14, H-15, H-16, H-25, H-26, H-27, H-61, H-62, H-64, H-66
(41) P-2
(42) B-18, B-19
(43) C-39
(44) H-22, H-23
(45) H-47

Cable Harness Routing (RHD) – 2

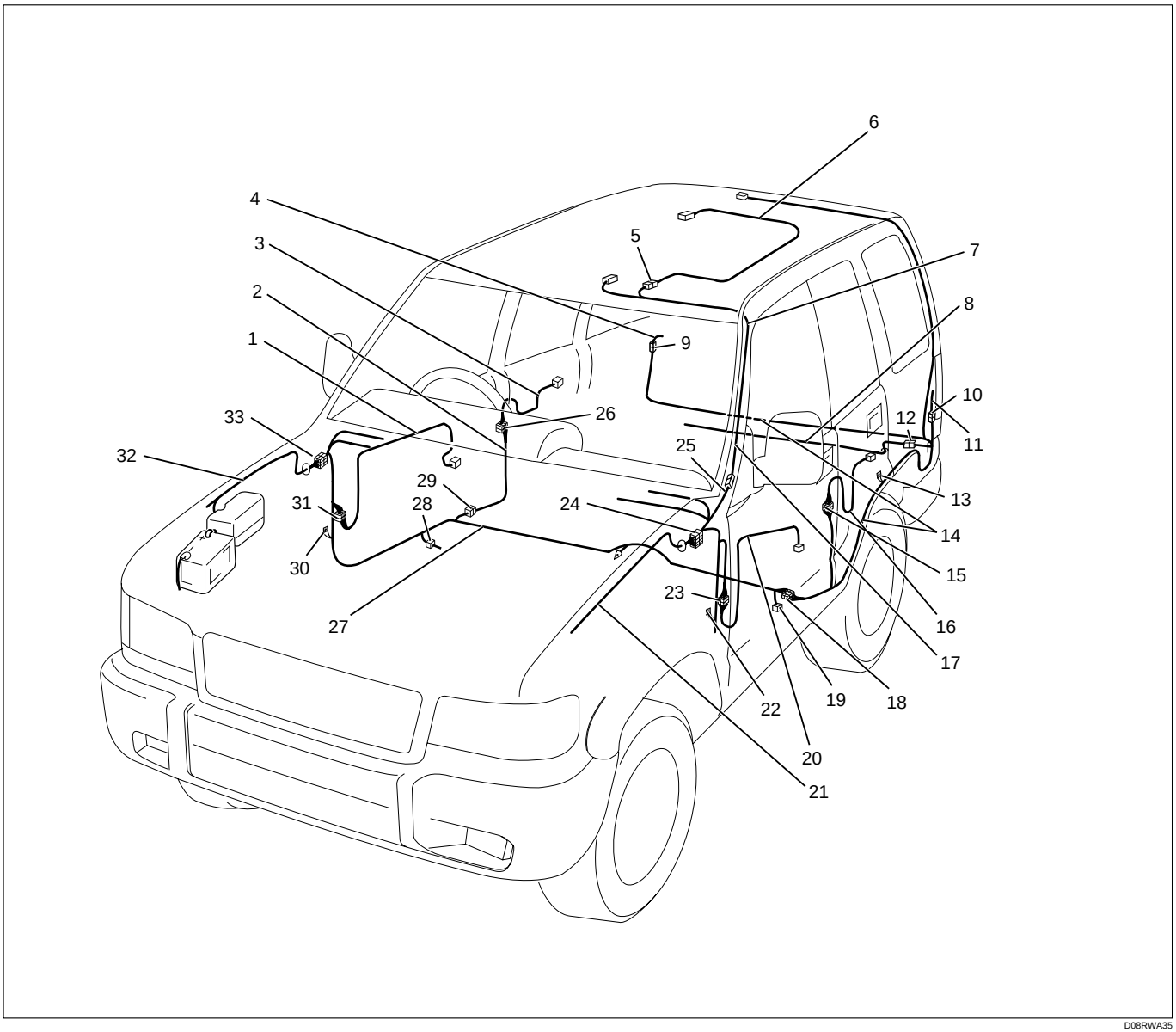

D08RWA35

Legend

(1) FRT Door Harness (RH)
(2) RR Door Extension Harness
(3) RR Door Harness (RH)
(4) Tail Gate Harness (RH)
(5) H-45
(6) Sun Roof Harness
(7) Domelight Harness
(8) Chassis Harness
(9) H-39
(10) H-37, H-38
(11) Tailgate Harness (LH)
(12) H-33
(13) R-3, R-4
(14) RR Body Harness
(15) H-28, H-29
(16) RR Door Harness (LH)
(17) Domelight Harness
(18) H-31, H-32, H-46
(19) H-58
(20) FRT Door Harness (LH)
(21) Engine Room Harness (LH)
(22) B-1, B-2
(23) H-18, H-19
(24) H-7, H-8, H-9, H-20, H-24, H-65
(25) H-21
(26) H-34, H-35
(27) Body Harness
(28) H-57
(29) H-47
(30) B-18, B-19
(31) H-22, H-23
(32) Engine Room Harness (RH)
(33) H-13, H-14, H-15, H-16, H-25, H-26, H-27, H-61, H-62, H-64, H-65

Cable Harness Routing (RHD) – 3

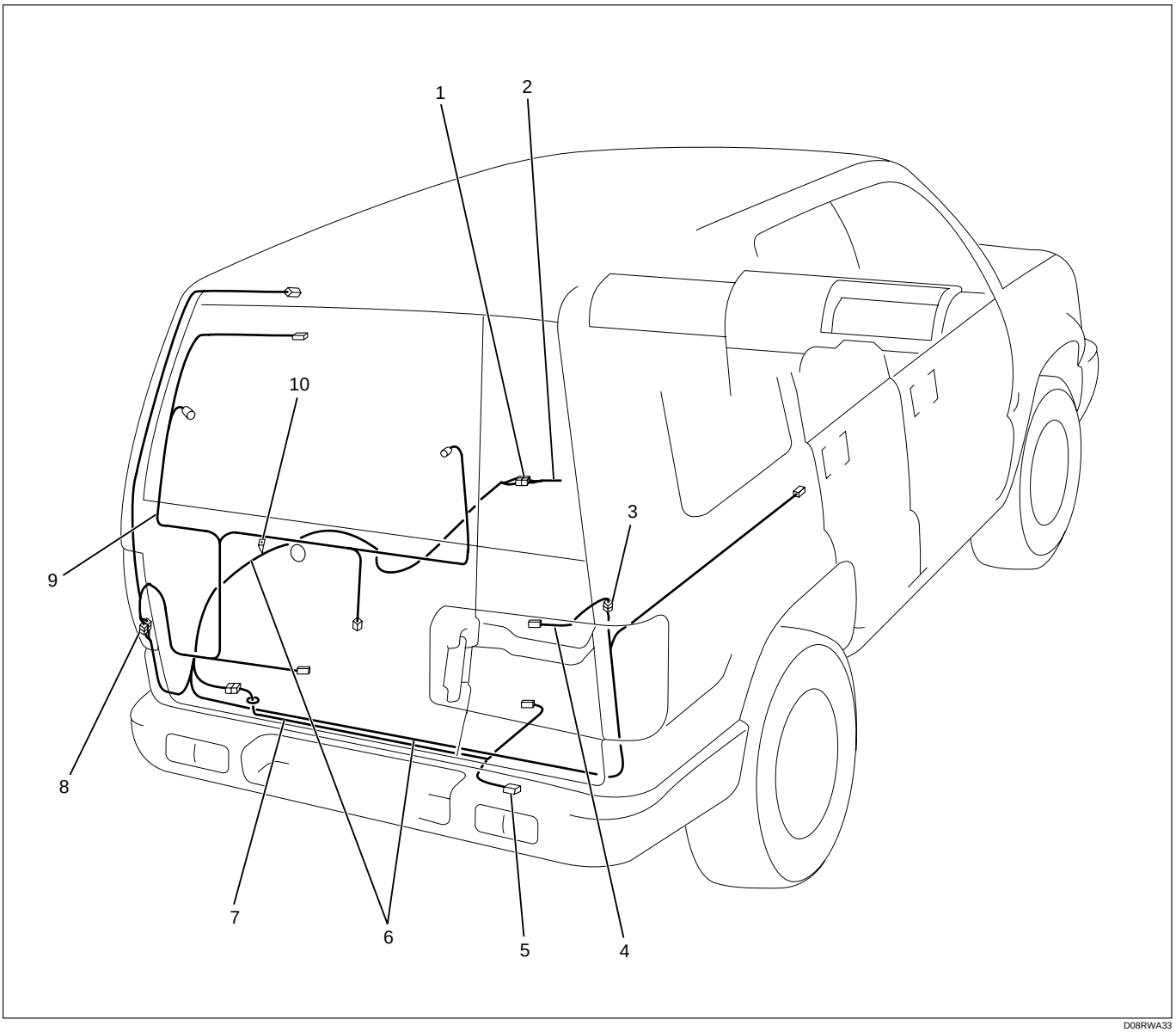

D08RWA33

Legend

(1) H-31, H-32, H-46
(2) Body Harness
(3) H-39
(4) Tail Gate Harness (RH)
(5) H-44
(6) RR Body Harness
(7) Chassis Harness
(8) H-37, H-38
(9) Tail Gate Harness (LH)
(10) R-3, R-4

Cable Harness Routing (LHD) – 1

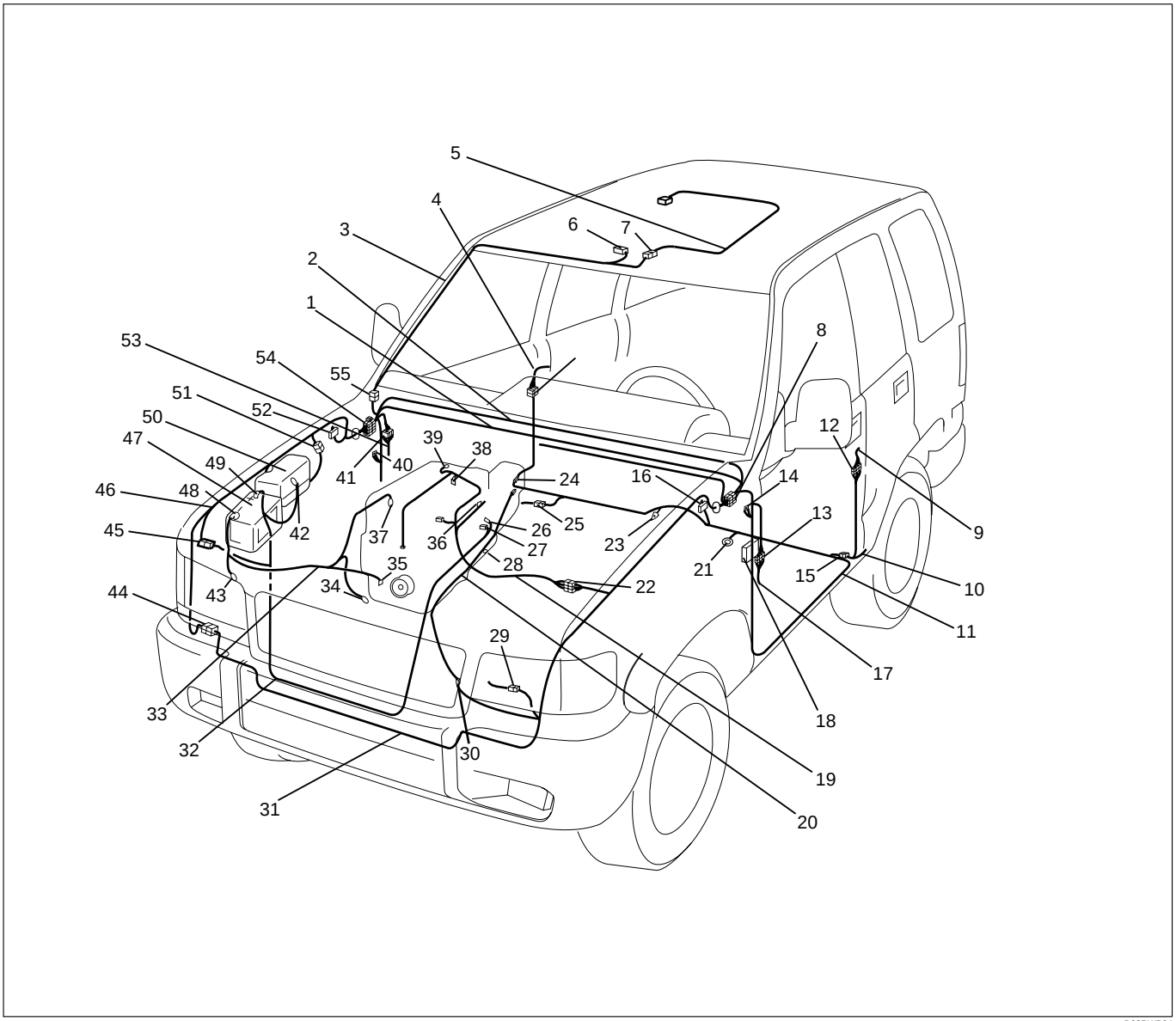

D08RWB04

Legend

(1) Body Harness
(2) Instrument Harness
(3) Domelight Harness
(4) RR Door Harness (RH)
(5) Sun Roof Harness
(6) L-1
(7) H-45
(8) H-7, H-8, H-9, H-24, H-25, H-26, H-61, H-62, H-64, H-65, H-66
(9) RR Door Harness (LH)
(10) RR Body Harness
(11) Body Harness
(12) H-28, H-29
(13) H-22, H-23
(14) B-18, B-19
(15) H-31, H-32, H-46
(16) C-16
(17) FRT Door Harness (LH)
(18) Fuse Box
(19) Engine Harness
(20) Transmission Harness
(21) B-28
(22) H-4, H-5, H-6
(23) B-26
(24) H-47
(25) H-58
(26) P-4
(27) P-3
(28) M-16
(29) H-51
(30) H-10, H-11, H-53
(31) Engine Room Harness (LH)
(32) Battery Positive Cable

(33) Battery Negative Cable
(34) P-7
(35) P-10
(36) E-16
(37) P-9
(38) E-31, E-32
(39) E-5
(40) B-1, B-2
(41) H-18, H-19
(42) P-2
(43) P-6
(44) H-41, H-42, H-43, H-60
(45) H-2, H-3 (4J∗∗)
(46) Engine Room Harness (RH)
(47) Battery
(48) P-5
(49) P-1
(50) Relay and Fuse Box
(51) H-1, H-2, H-3 (6V∗1)
(52) C-39
(53) FRT Door Harness (RH)
(54) H-12, H-13, H-14, H-15, H-16, H-20, H-48
(55) H-21

Cable Harness Routing (LHD) – 2

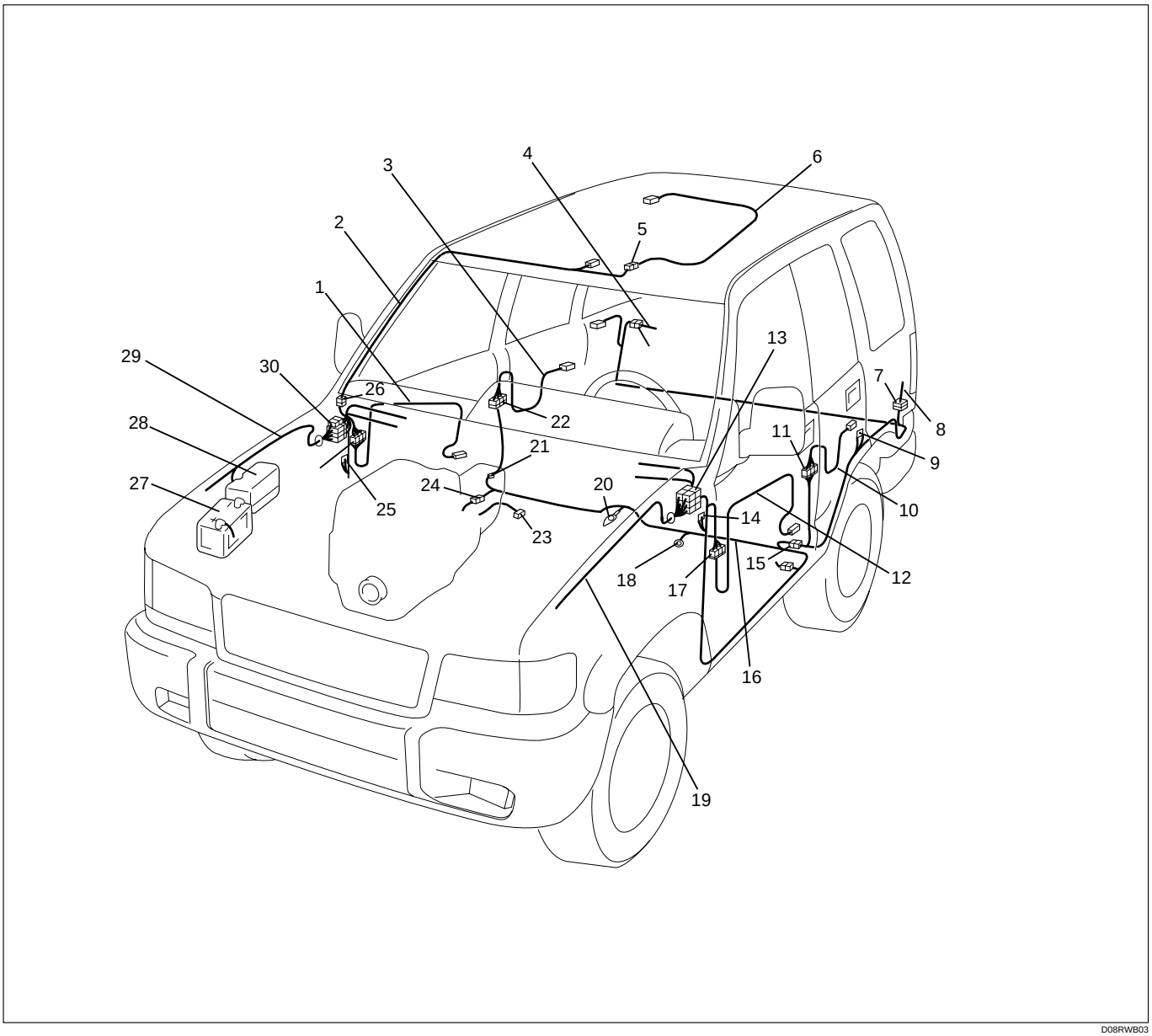

Legend

(1) FRT Door Harness (RH)
(2) Domelight Harness
(3) RR Door Harness (RH)
(4) Tail Gate Harness (RH)
(5) H-45
(6) Sun Roof Harness
(7) H-37, H-38
(8) Tail Gate Harness (LH)
(9) R-3, R-4
(10) RR Door Harness (LH)
(11) H-28, H-29
(12) FRT Door Harness (LH)
(13) H-7, H-8, H-9, H-24, H-25, H-26, H-61, H-62, H-64, H-65, H-66
(14) B-18, B-19
(15) H-31, H-32, H-46
(16) Body Harness
(17) H-22, H-23
(18) B-28
(19) Engine Room Harness (LH)
(20) B-26
(21) H-47
(22) H-34, H-35
(23) C-85
(24) H-58
(25) B-1, B-2
(26) H-21
(27) Battery
(28) Relay and Fuse Box
(29) Engine Room Harness (RH)
(30) H-12, H-13, H-14, H-15, H-16, H-20, H-48

Cable Harness Routing (LHD) – 3

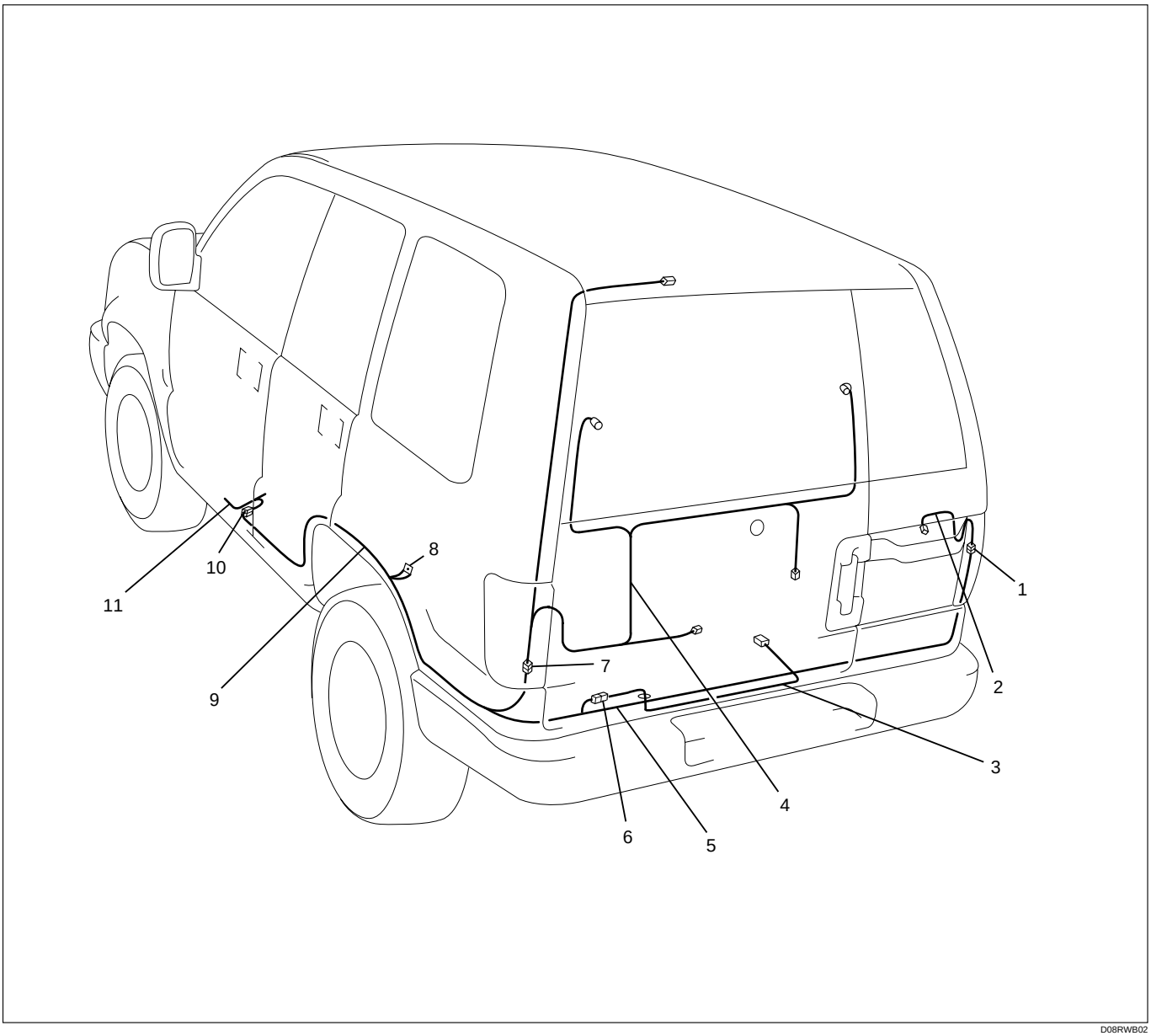

Legend

(1) H-39
(2) Tail Gate Harness (RH)
(3) Chassis Harness
(4) Tail Gate Harness (LH)
(5) RR Body Harness
(6) H-33
(7) H-37, H-38
(8) R-3, R-4
(9) RR Body Harness
(10) H-31, H-32, H-46
(11) Body Harness

Fuse Block Circuit

Circuit Diagram (6V∗1) – 1

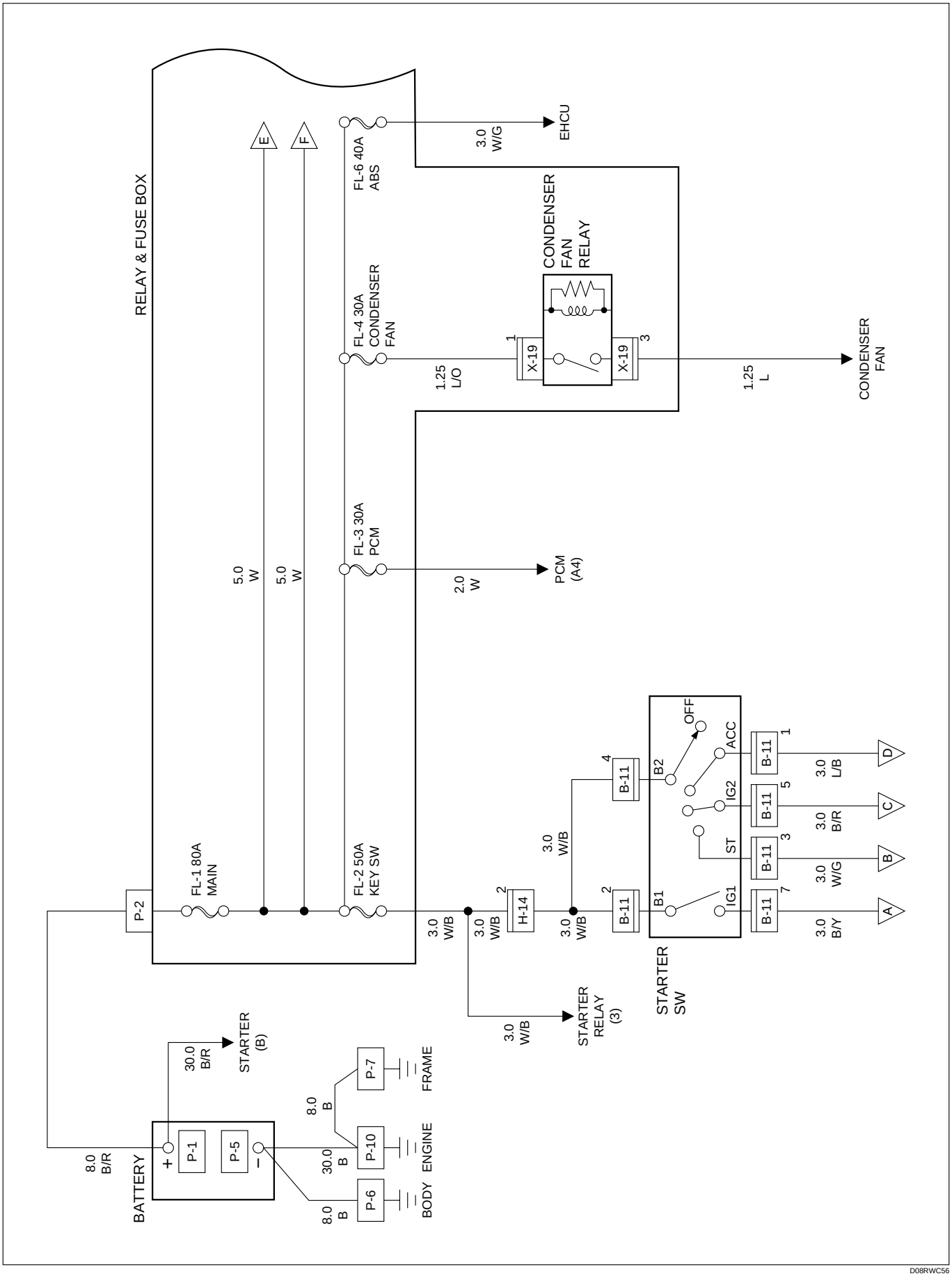

D08RWC56

Circuit Diagram (RHD 6V∗1) – 2

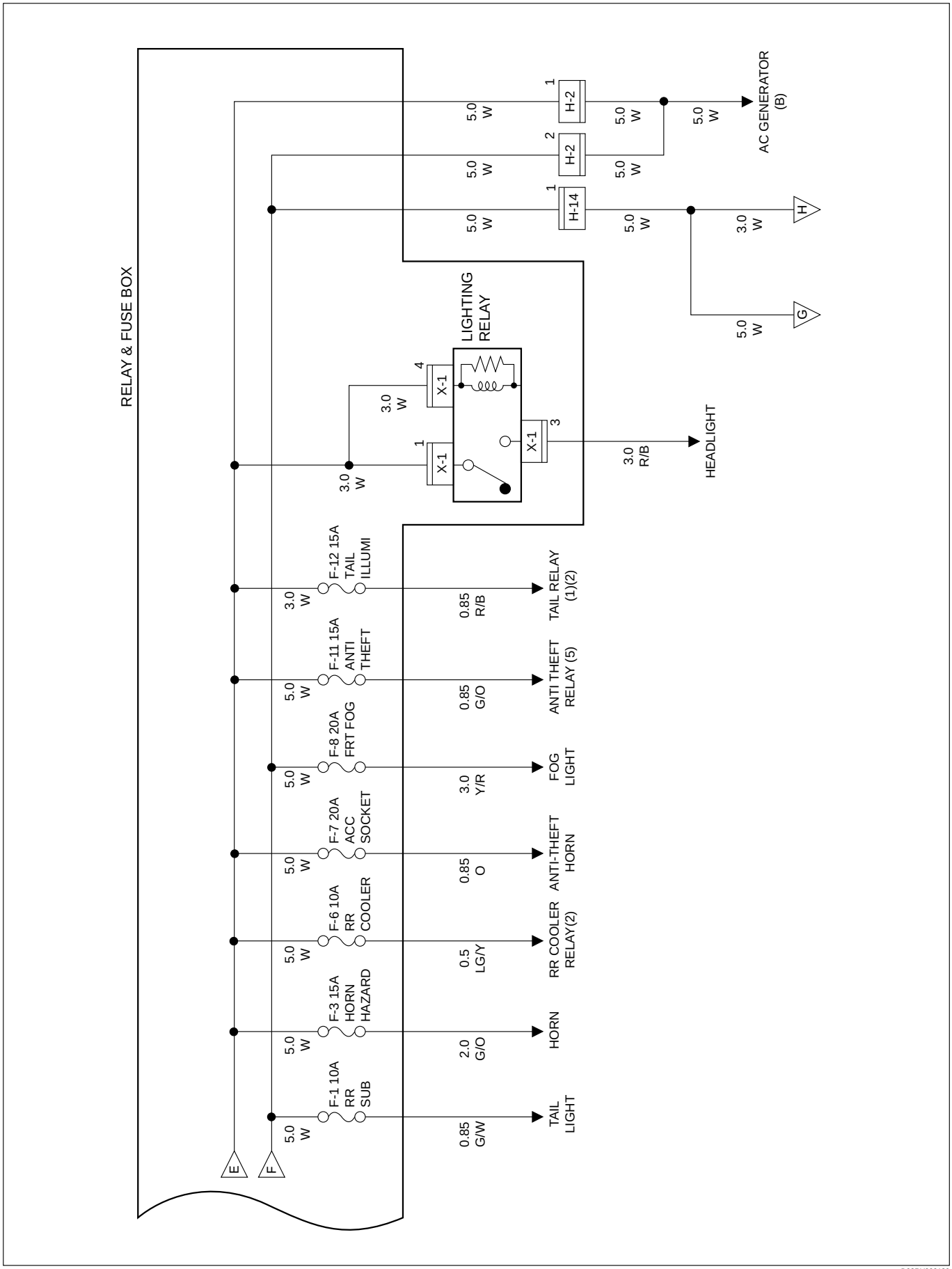

D08RY000189

Circuit Diagram (LHD 6V∗1) – 2

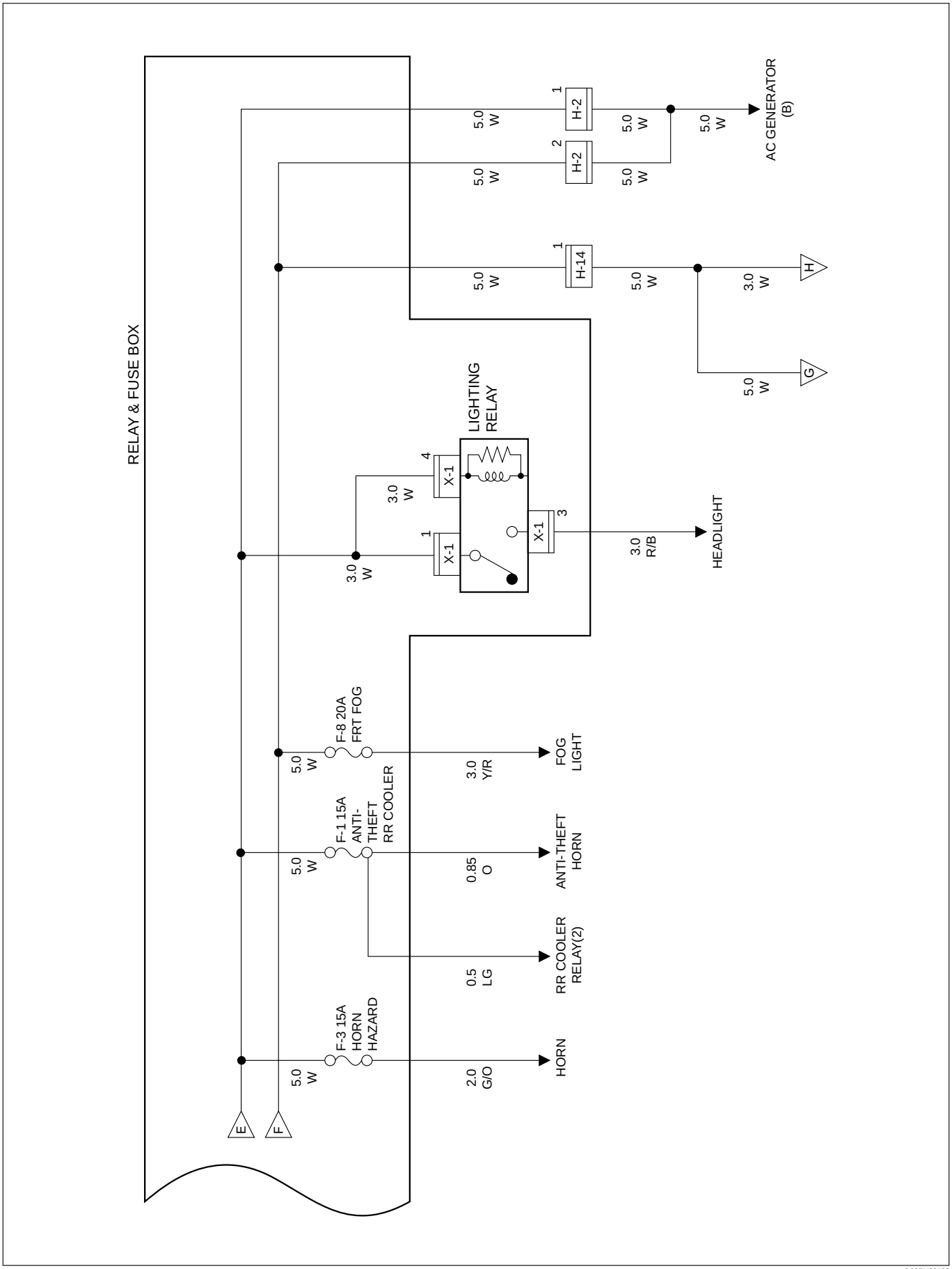

D08RY00188

Circuit Diagram (6V∗1) – 3

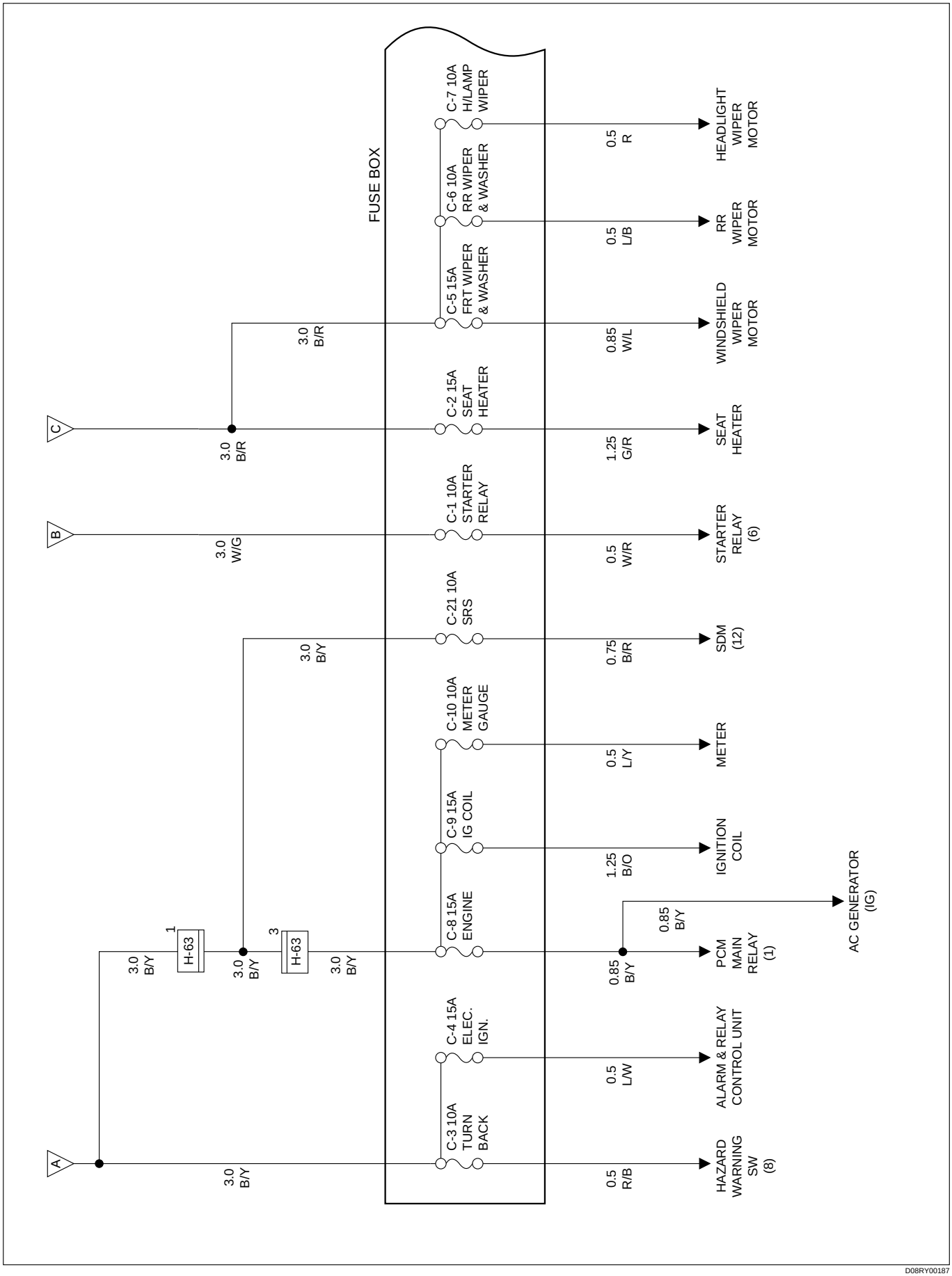

D08RY00187

Circuit Diagram (6V∗1) – 4

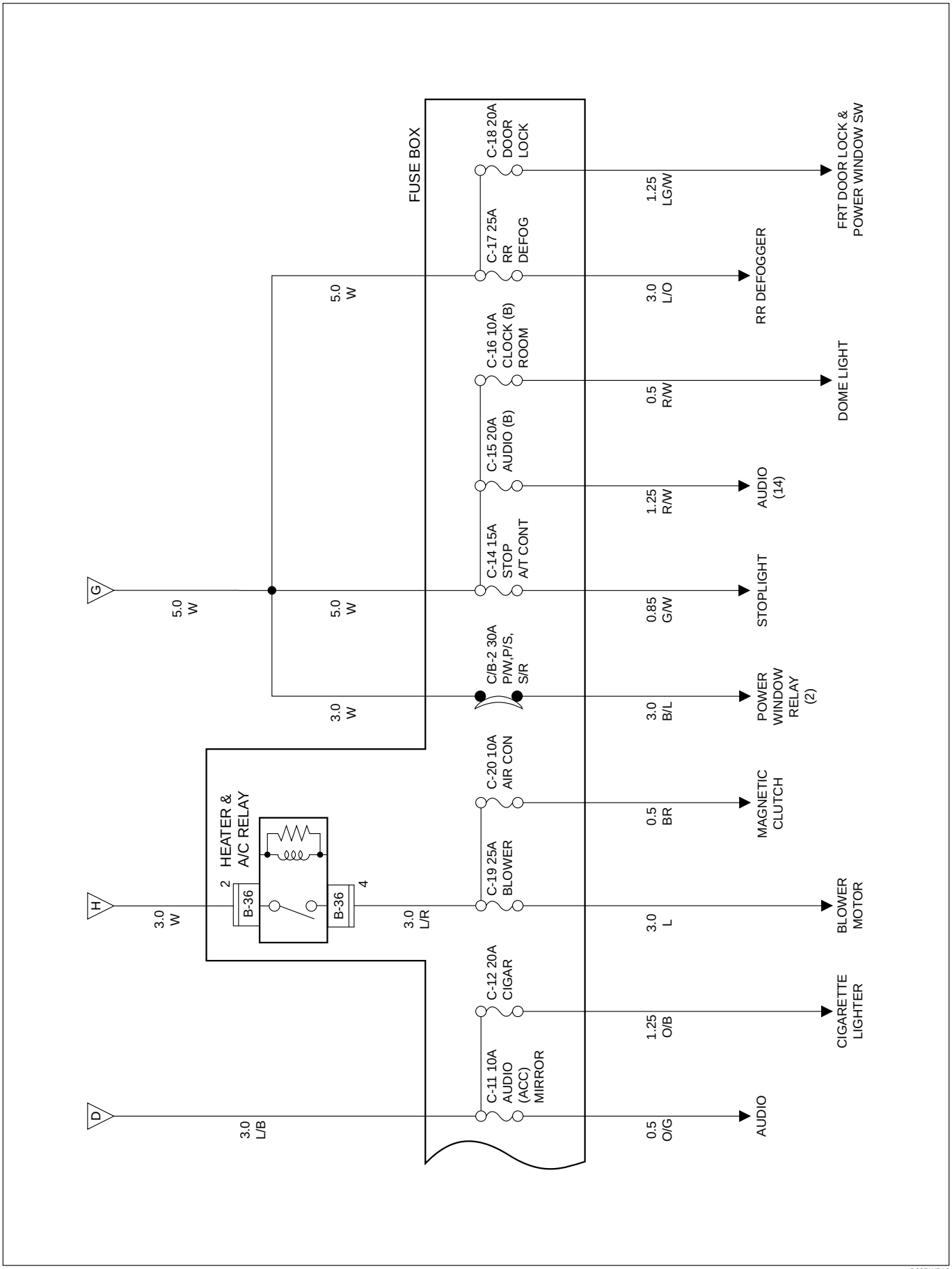

D08RWB16

Circuit Diagram (4JX1) – 1

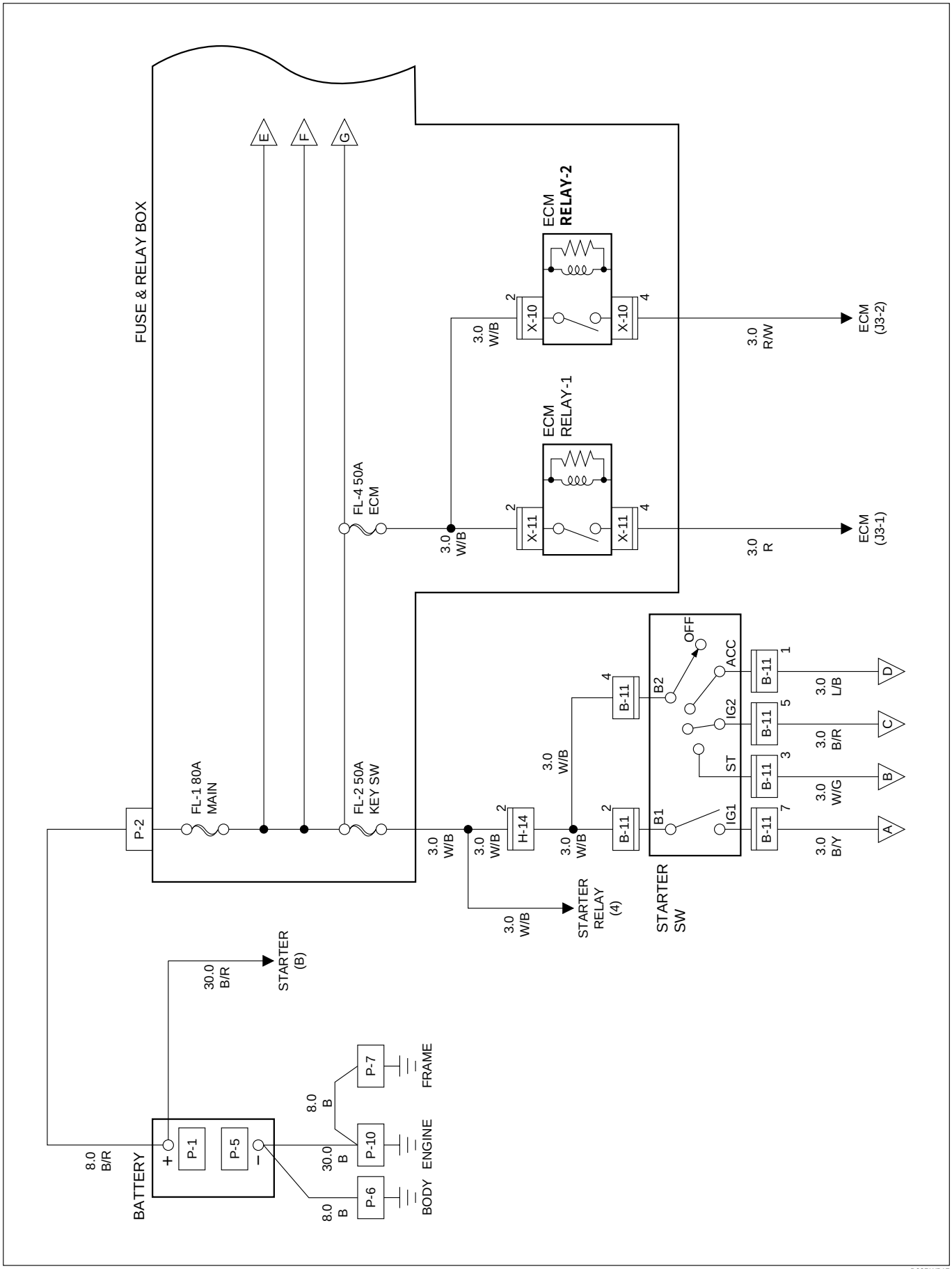

D08RWB17

Circuit Diagram (4JG2) – 1

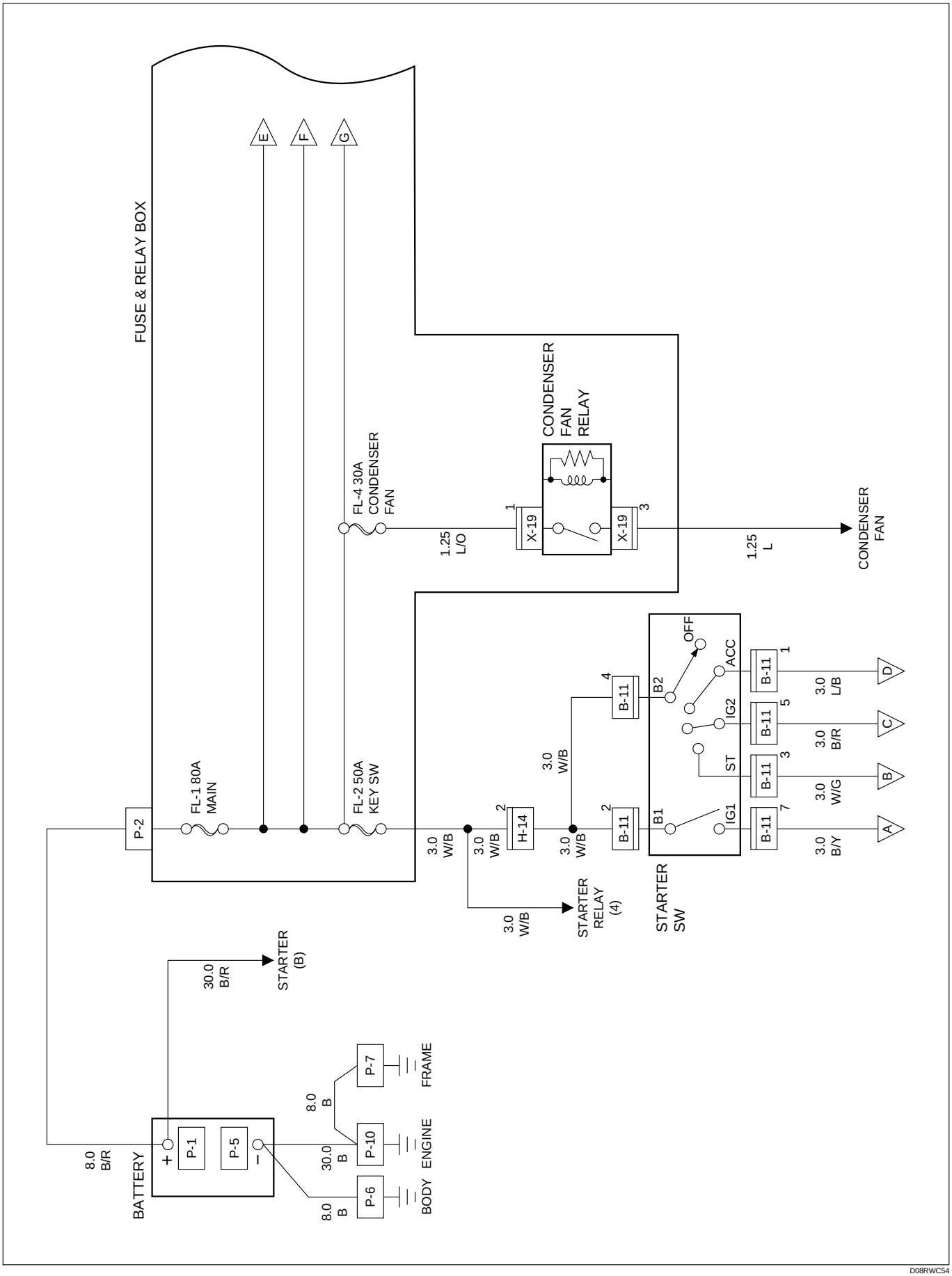

D08RWC54

Circuit Diagram (4JX1) – 2

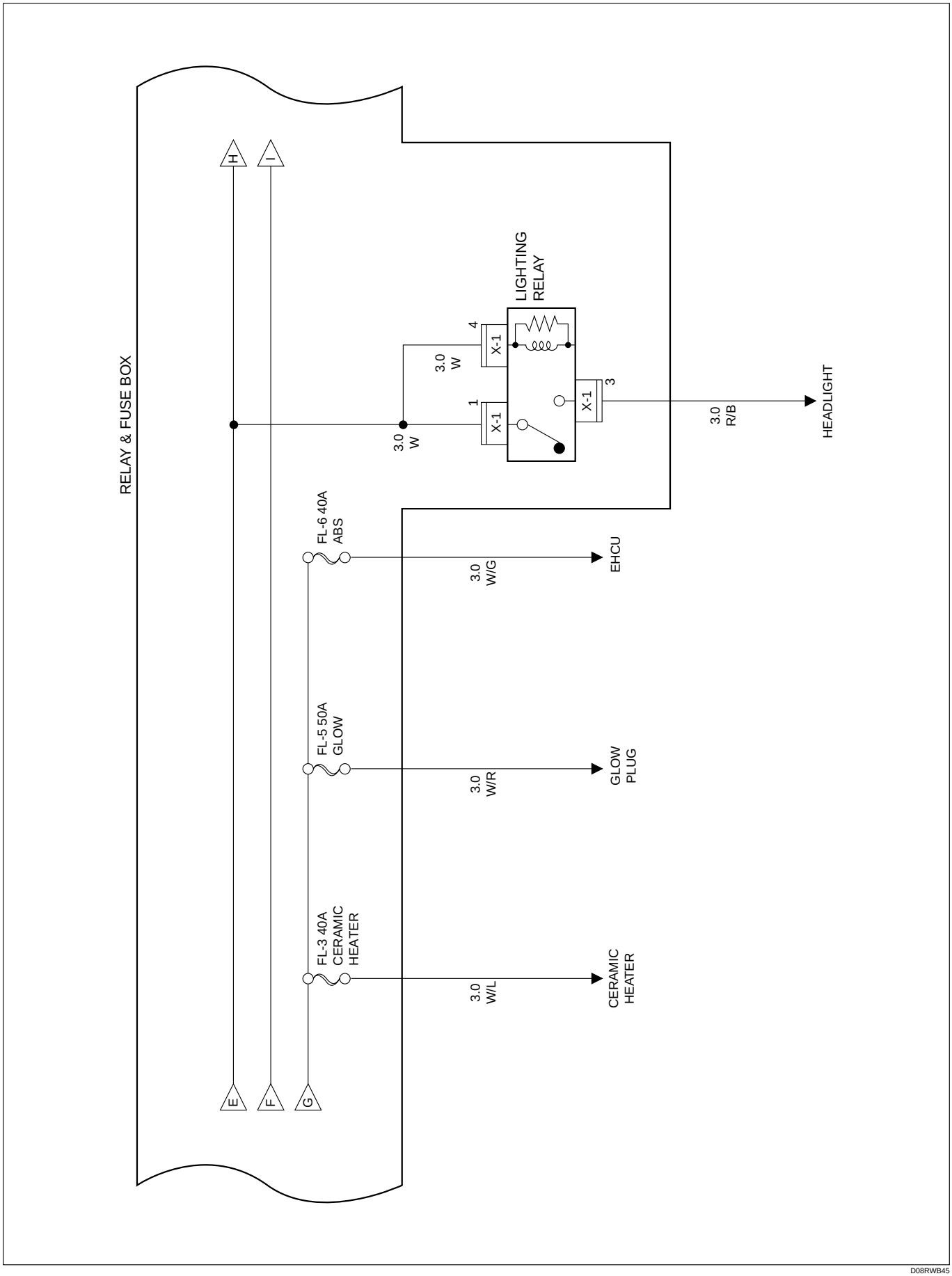

D08RWB45

Circuit Diagram (4JG2) – 2

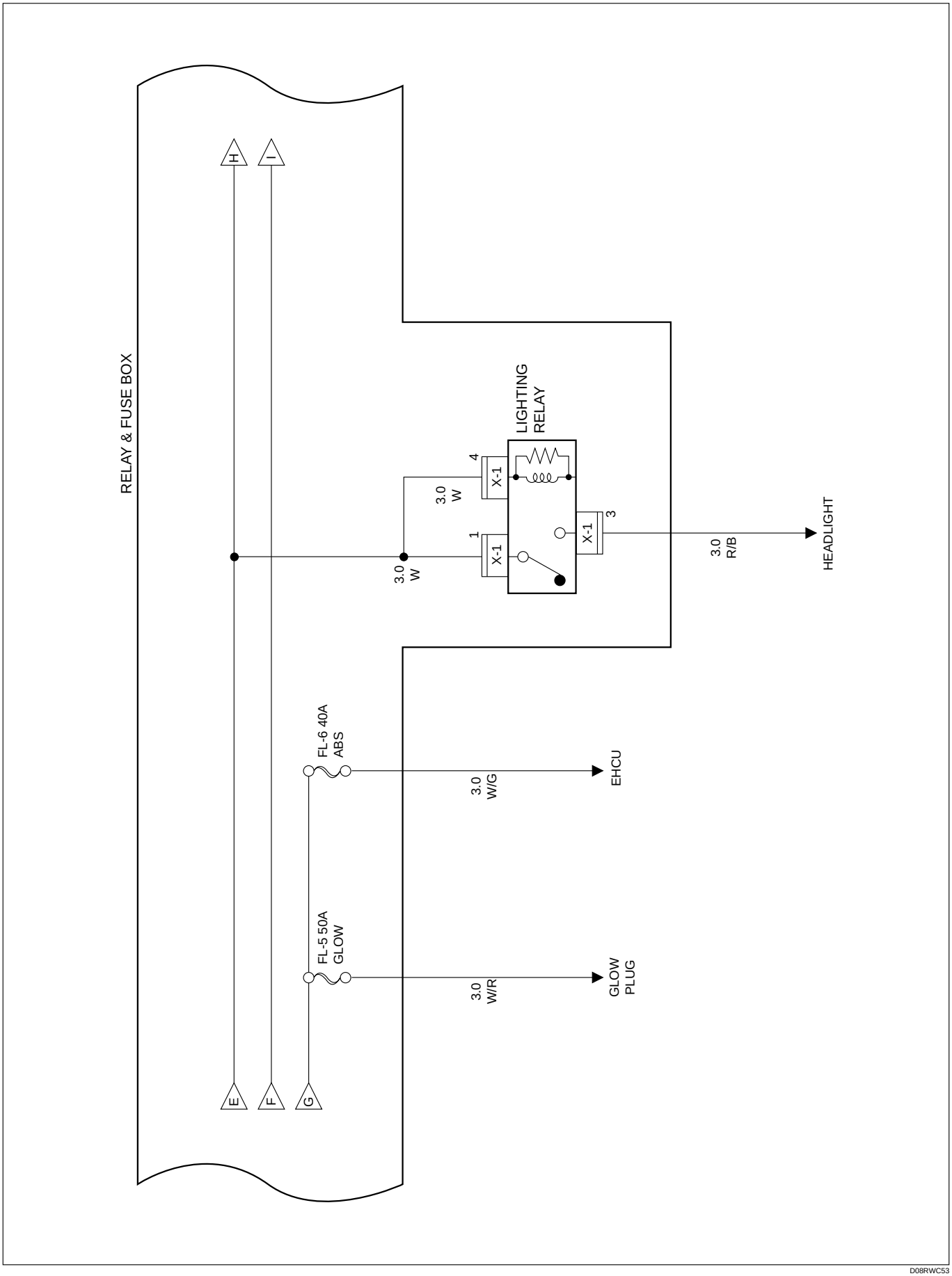

D08RWC53

Circuit Diagram (RHD Diesel) – 3

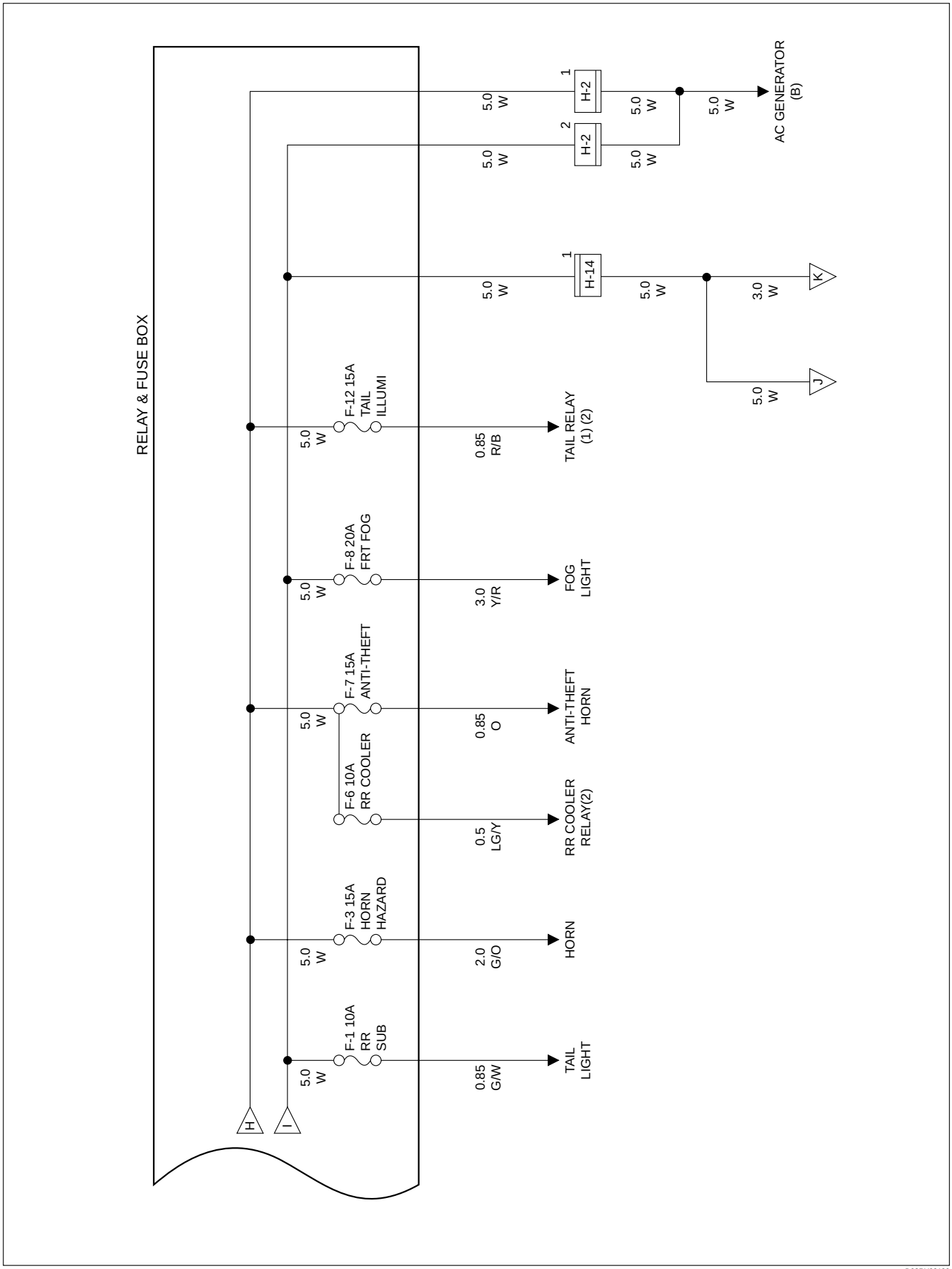

D08RY00190

Circuit Diagram (LHD Diesel) – 3

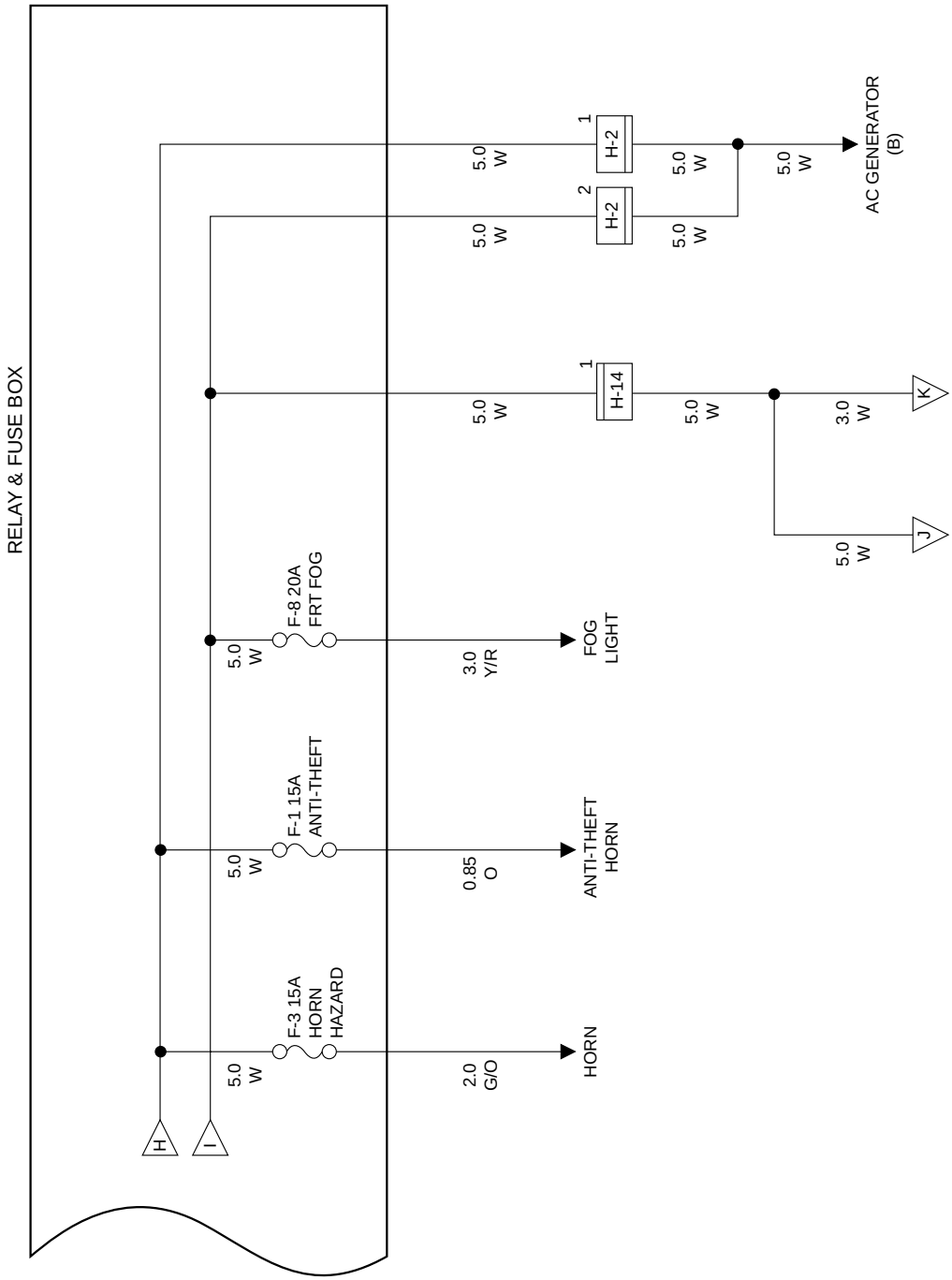

D08RWC52

Circuit Diagram (Diesel) – 4

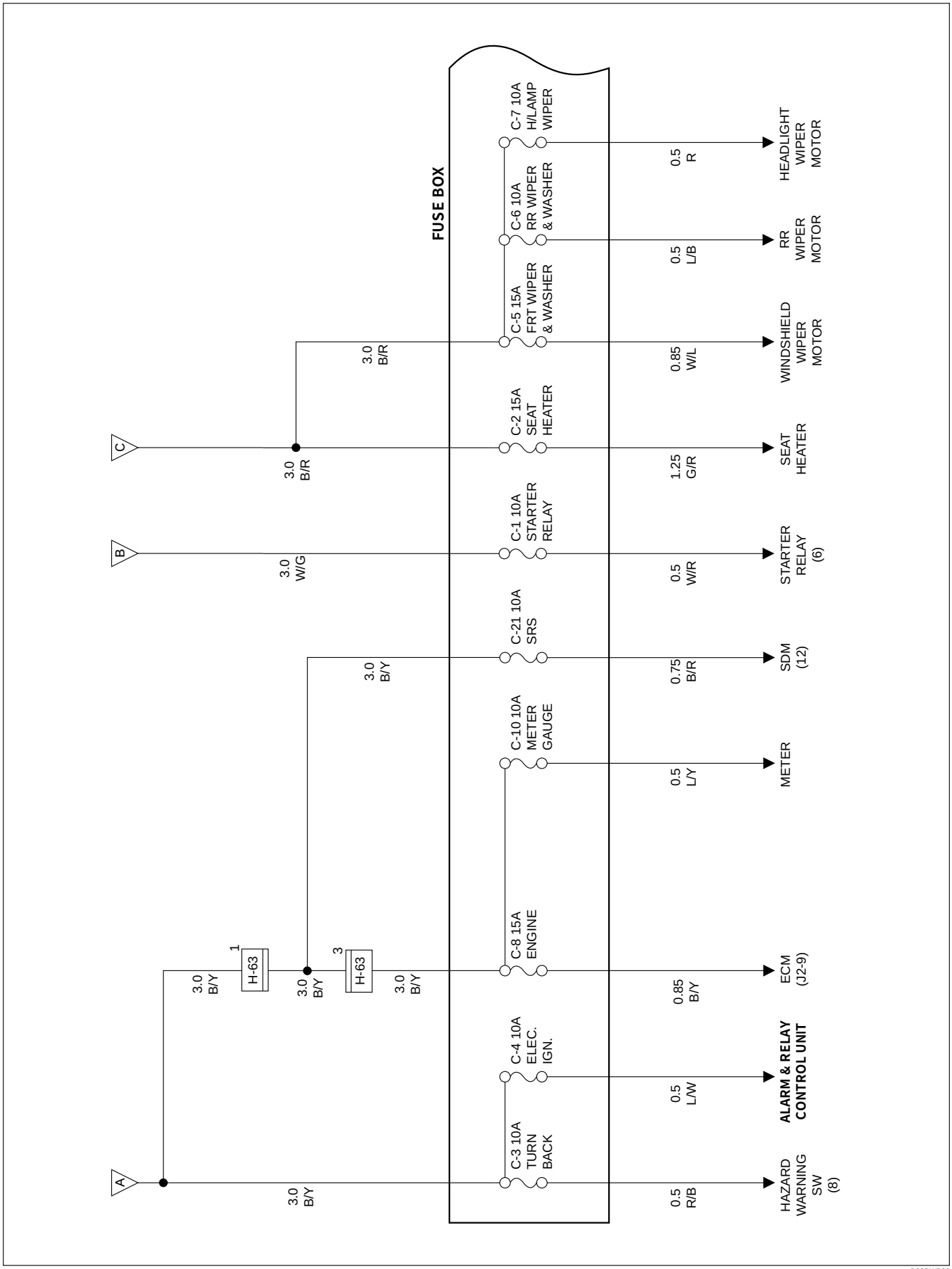

D08RWB20

Circuit Diagram (Diesel) – 5

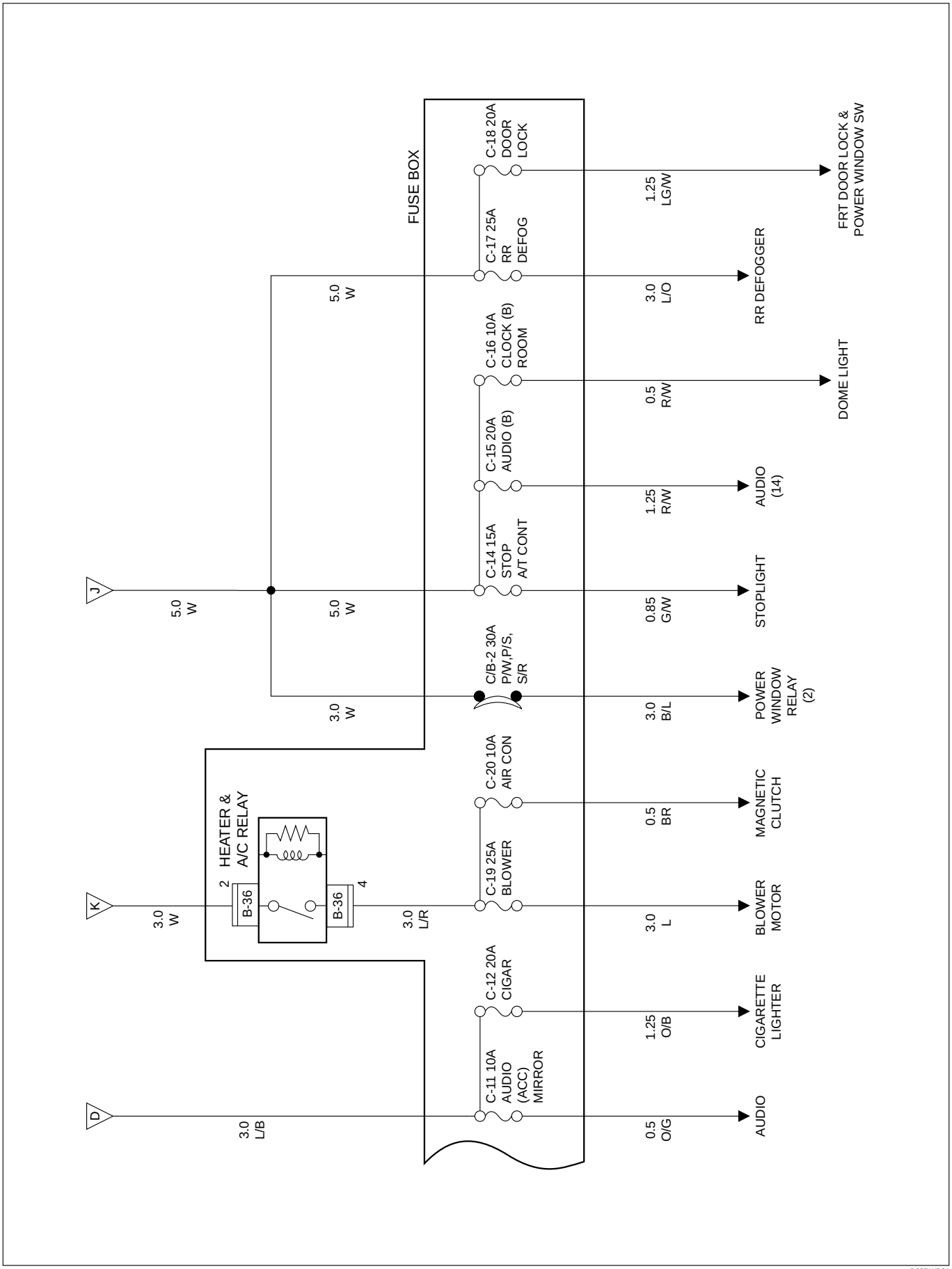

D08RWB21

Start and Charging

General Description

The system consists of the starter switch, starter, AC generator, starter relay, mode SW (A/T), charge relay (Diesel) and heater & A/C relay.
When the starter SW is set to the “ST” position with the A/T select at "P" (Parking) or "N" (Neutral) position (Mode SW "ON"), the battery voltage is applied to the starter solenoid coil through the starter relay to start the starter. At the same time, the starter relay (charge relay; Diesel) cuts off the blower motor and the A/C circuit.

Circuit Diagram (RHD 6V∗1) – 1

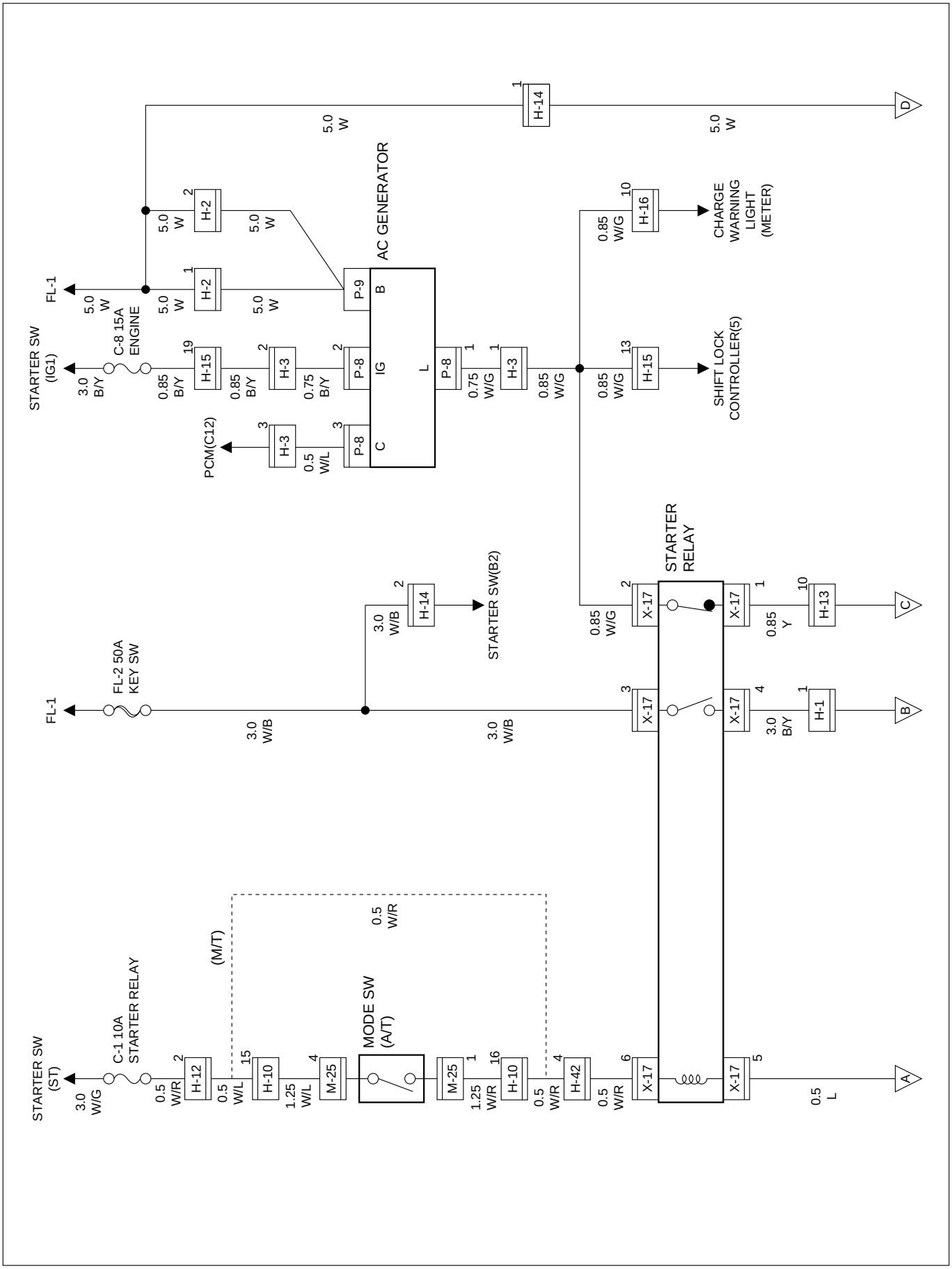

D08RY00094

Circuit Diagram (RHD 6V∗1) – 2

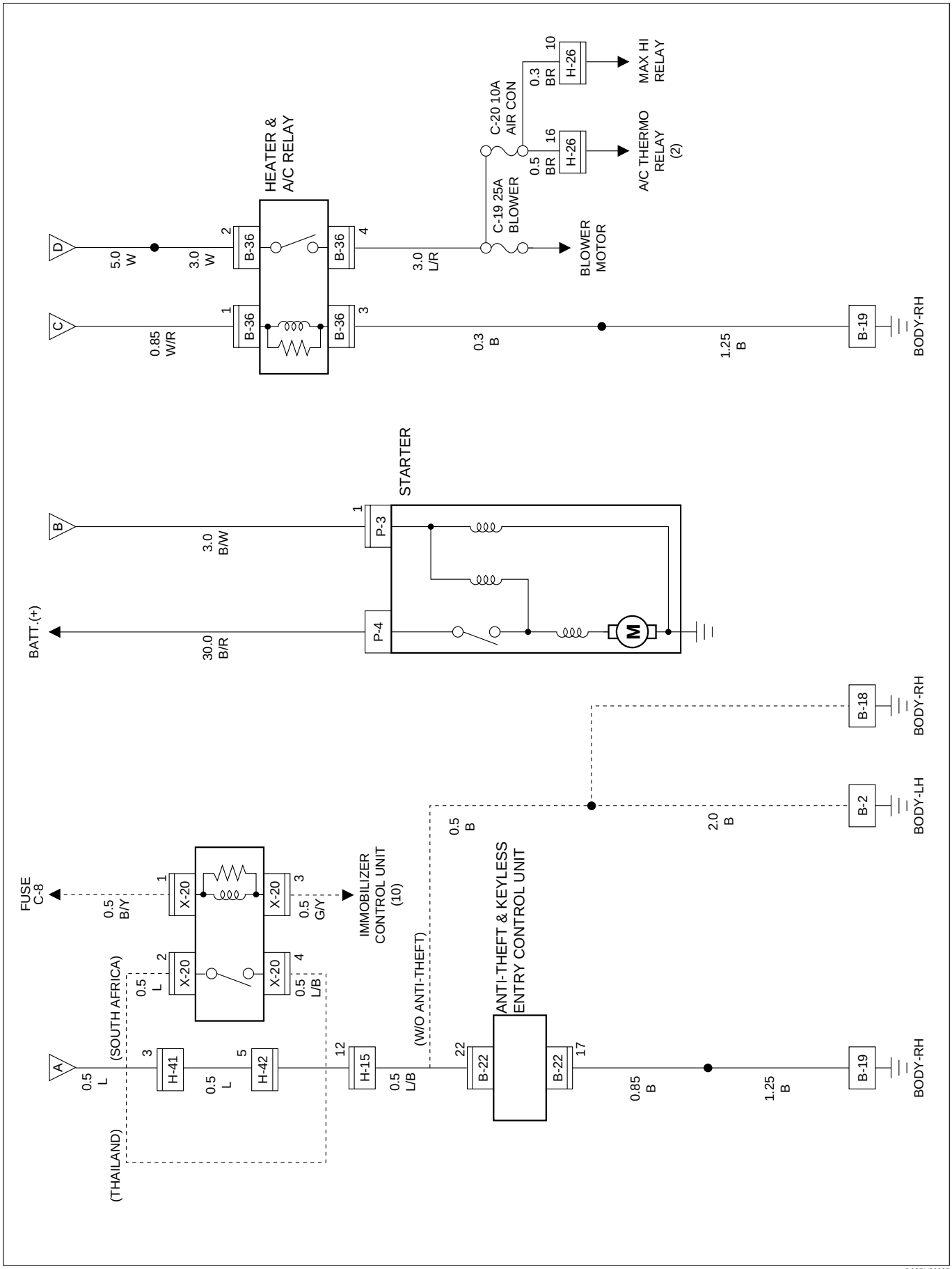

D08RY00087

Parts Location (RHD 6V∗1)

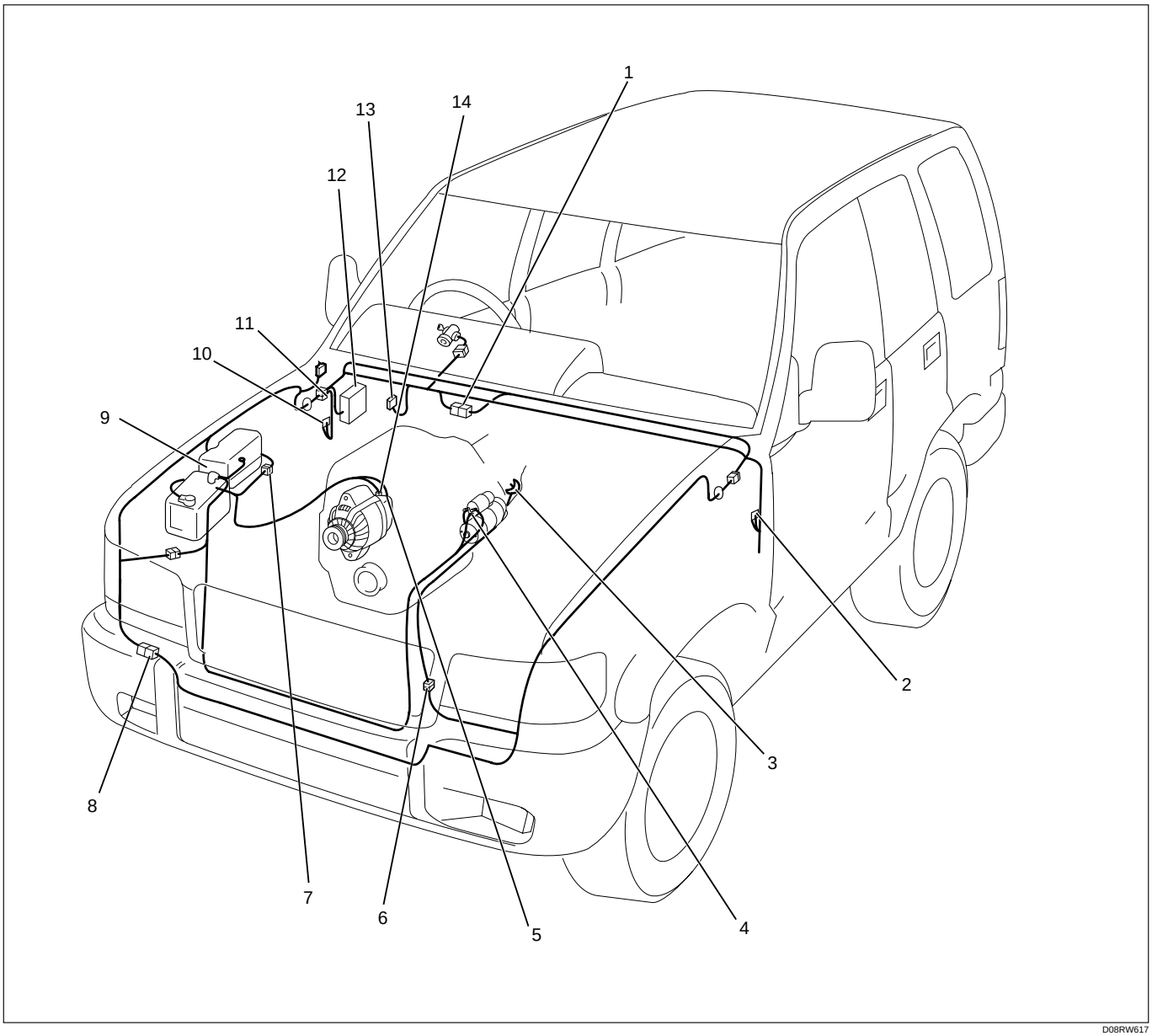

D08RW617

Legend

(1) H-12
(2) B-2
(3) M-25
(4) P-3
(5) P-9
(6) H-10
(7) H-1, H-2, H-3
(8) H-42
(9) Relay and Fuse Box (X-17, X-20)
(10) B-18, B-19
(11) H-13, H-14, H-15, H-16
(12) Fuse Box (B-36)
(13) B-20
(14) P-8

Circuit Diagram (RHD 4JG2)–1

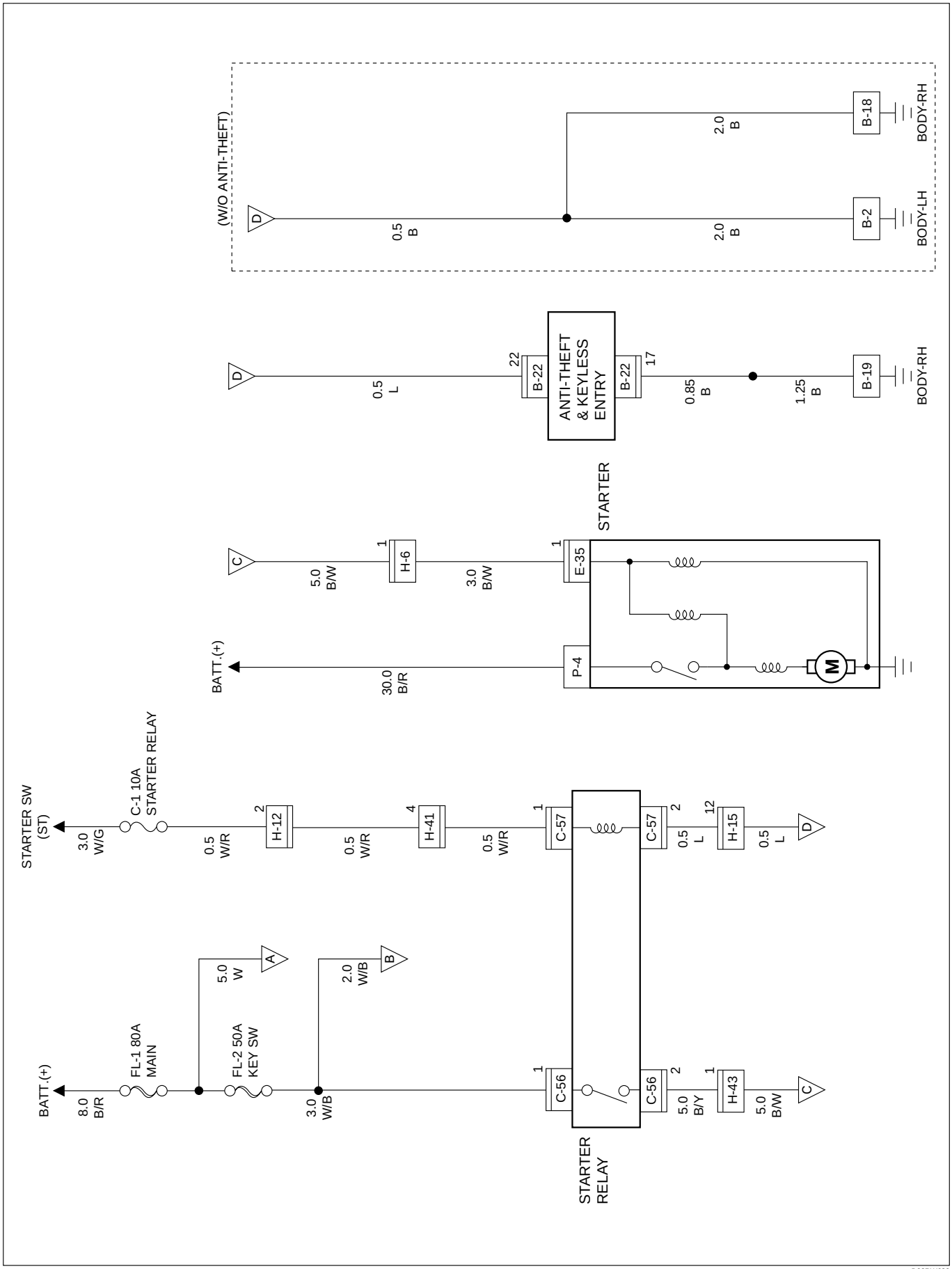

D08RW632

Circuit Diagram (RHD 4JG2) – 2

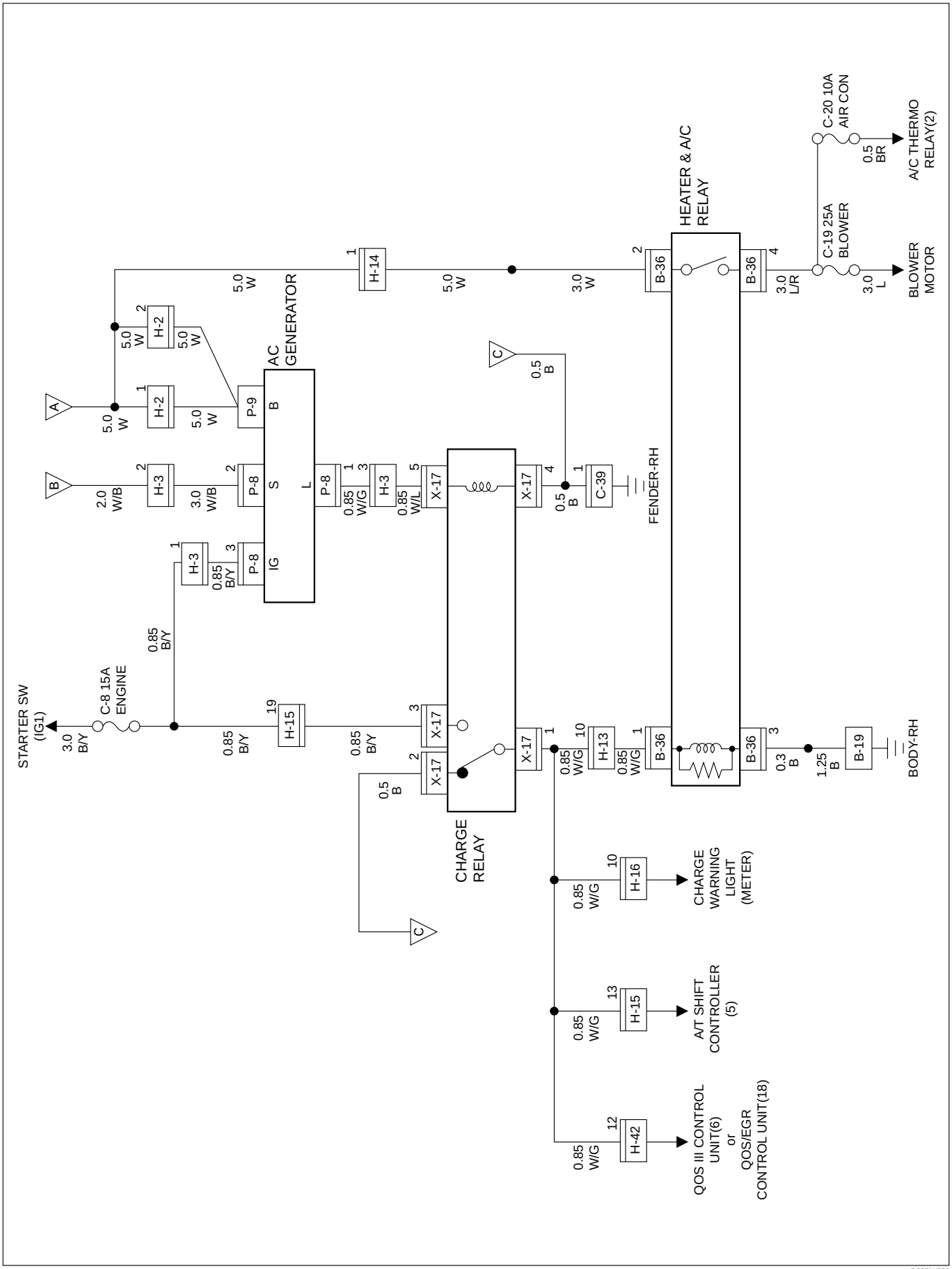

D08RW633

Parts Location (RHD 4JG2)

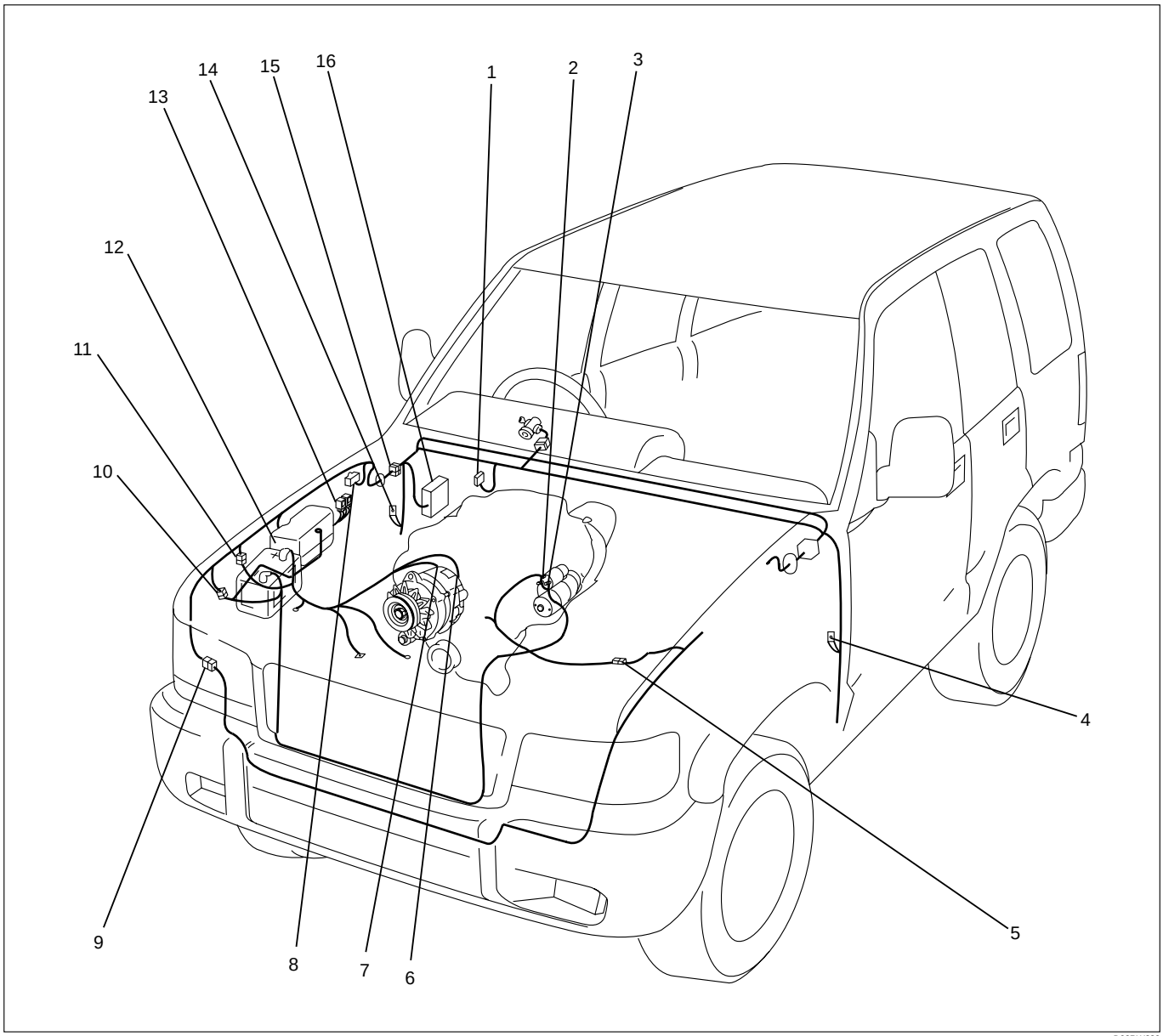

D08RW839

Legend

(1) B-22
(2) E-35
(3) P-4
(4) B-2
(5) H-6
(6) P-9
(7) P-8
(8) C-39
(9) H-41, H-42, H-43
(10) H-2
(11) H-3
(12) Relay and Fuse Box (X-17)
(13) C-56, C-57
(14) B-18, B-19
(15) H-12, H-13, H-14, H-15, H-16
(16) Fuse Box (B-36)

Circuit Diagram (LHD 6V∗1)–1

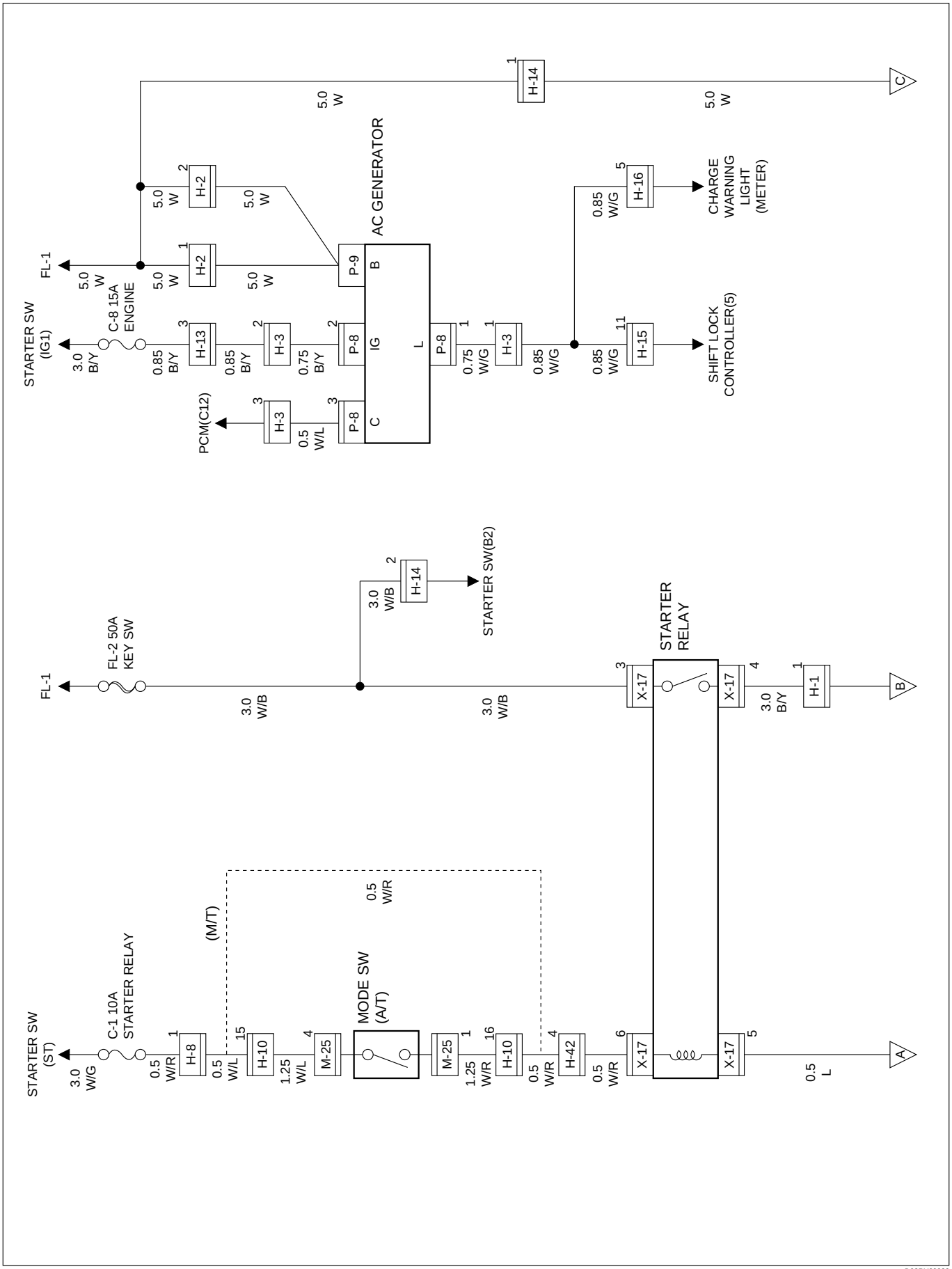

D08RY00088

Circuit Diagram (LHD 6V∗1) – 2

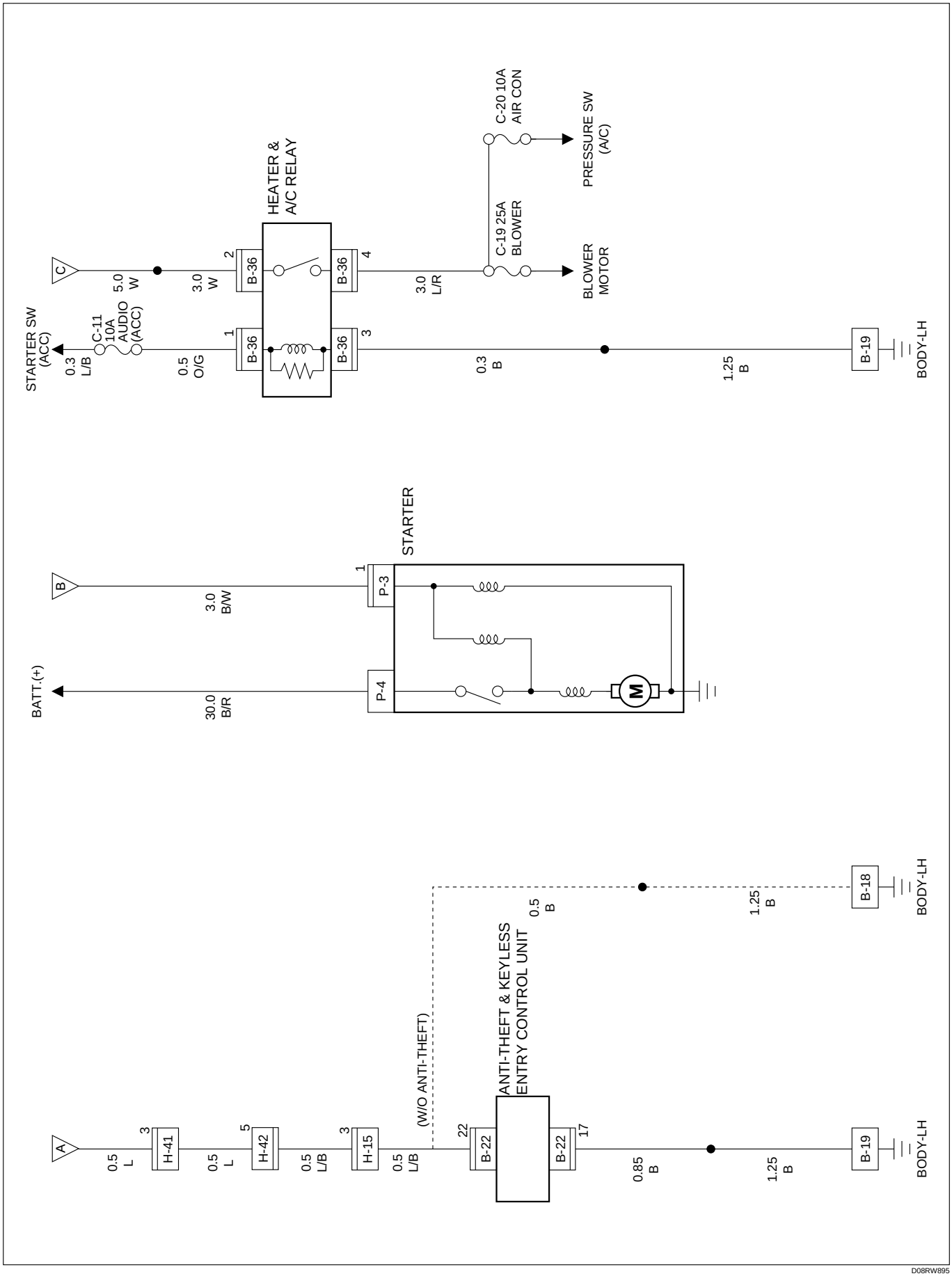

D08RW895

Parts Location (LHD 6V∗1)

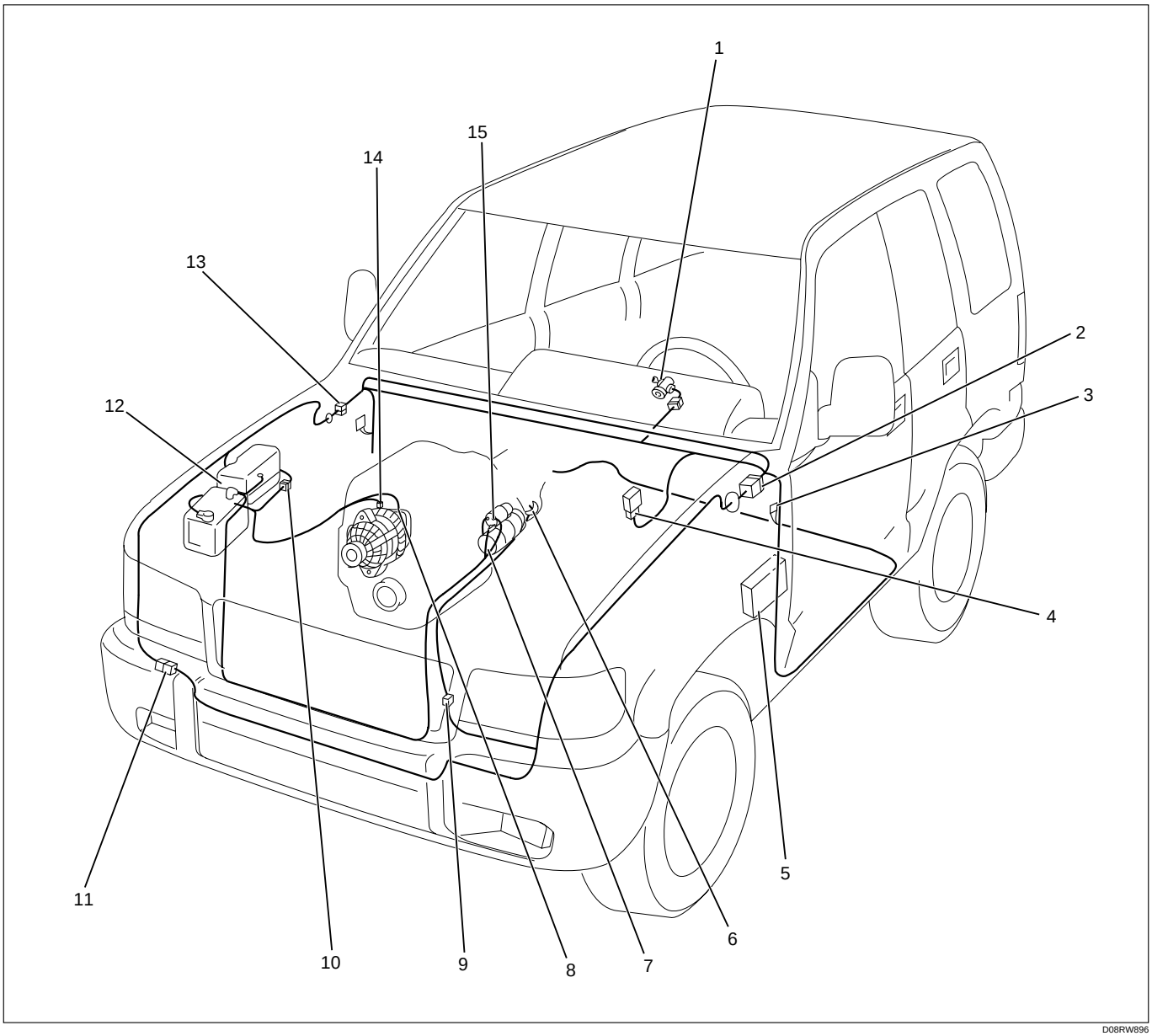

D08RW896

Legend

(1) Starter Switch
(2) H-8
(3) B-18, B-19
(4) B-20
(5) Fuse Box (B-36)
(6) M-25
(7) P-3
(8) P-9
(9) H-10
(10) H-1, H-2, H-3
(11) H-41, H-42
(12) Relay and Fuse Box (X-17)
(13) H-13, H-14, H-15, H-16
(14) P-8
(15) P-4

Circuit Diagram (LHD 4JG2)–1

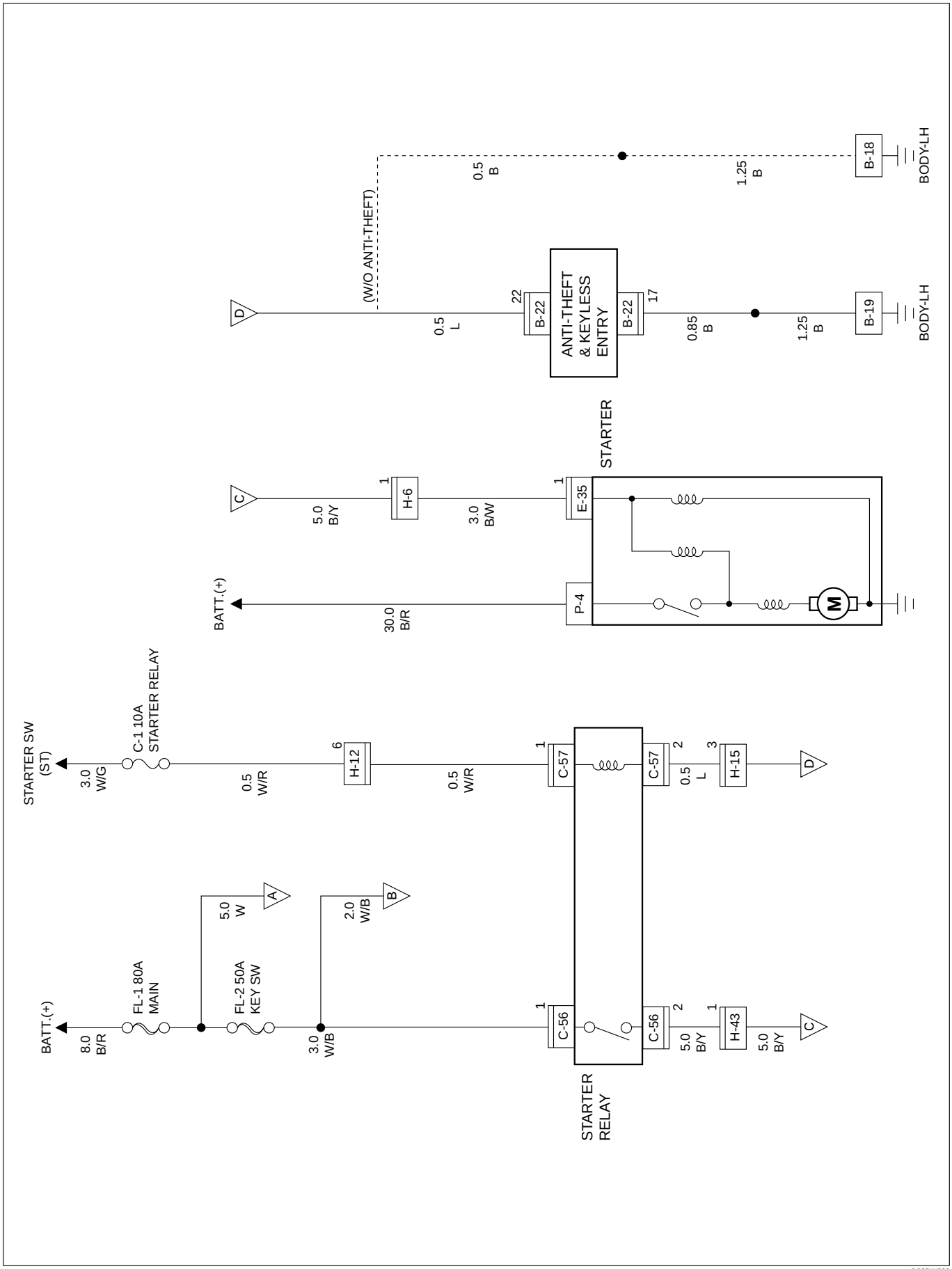

D08RW899

Circuit Diagram (LHD 4JG2)–2

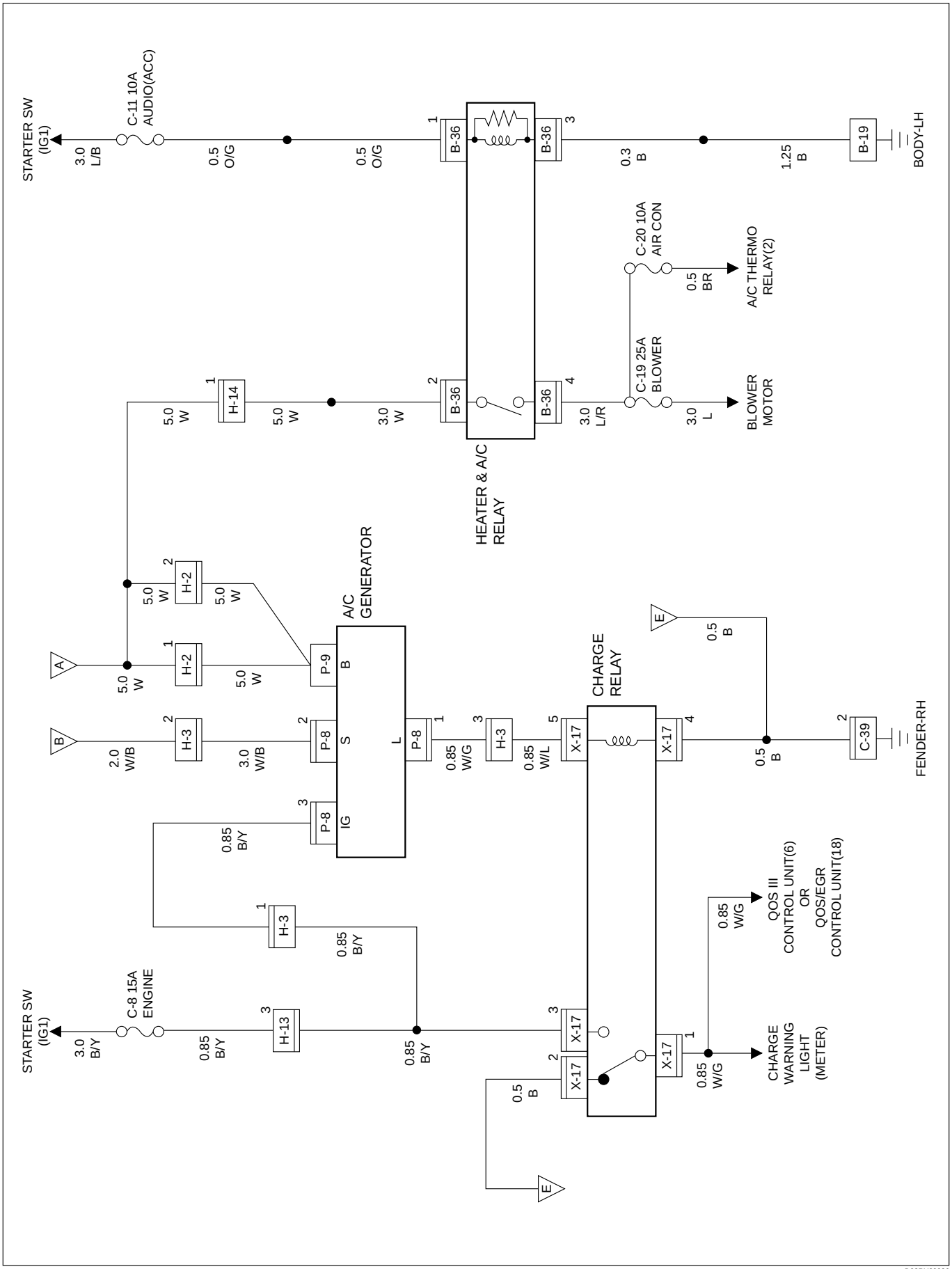

D08RY00086

Parts Location (LHD 4JG2)

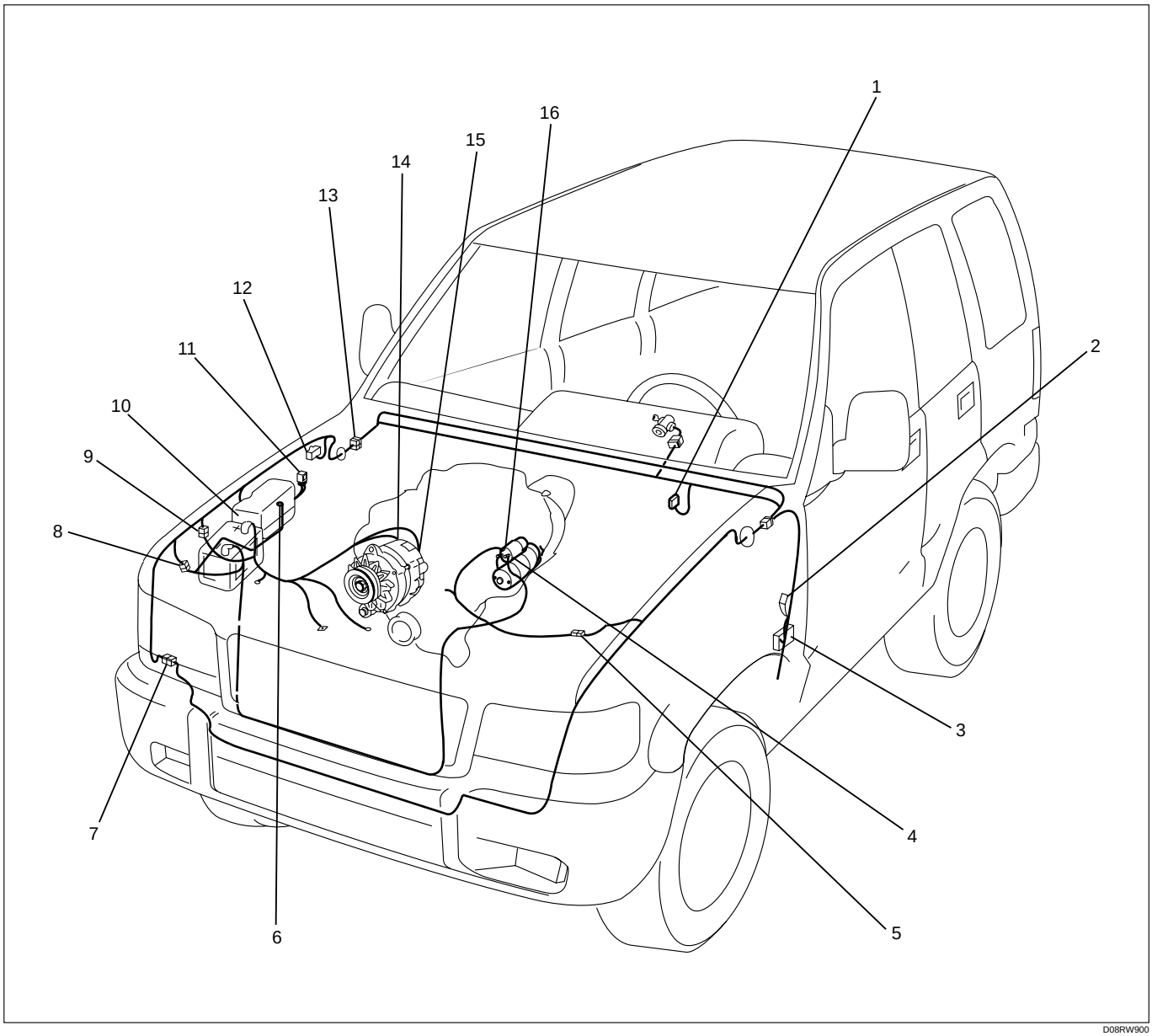

Legend

(1) B-22
(2) B-18, B-19
(3) Fuse Box (B-36)
(4) P-4
(5) H-6
(6) P-2
(7) H-43
(8) H-2
(9) H-3
(10) Relay and Fuse Box (X-17)
(11) C-56, C-57
(12) C-39
(13) H-13, H-14, H-16
(14) P-8
(15) P-9
(16) E-35

Powertrain Control Module (PCM)

General Description

The Powertrain Control Module (PCM) is located in the passenger compartment.

The PCM constantly monitors the information from various sensors, and controls the systems that affect vehicle performance.

The PCM performs the diagnostic function of the system. It can recognize operational problems, alert the driver through the Malfunction Indicator Light (MIL) and store a Diagnostic Trouble Code (DTC) or DTC(s) which identify the problem areas to aid the technician in making repairs.

The PCM is designed to process the various input informations and then sends the necessary electrical responses to control fuel delivery, spark timing and other emission control systems. The input information has an interrelation to more than one output, therefore, if the one input failed, it could affect more than one system operation.

Refer to Driveability and Emission in Engine section and Automatic Transmission in Transmission section.

Circuit Diagram (RHD 6V∗1)–1

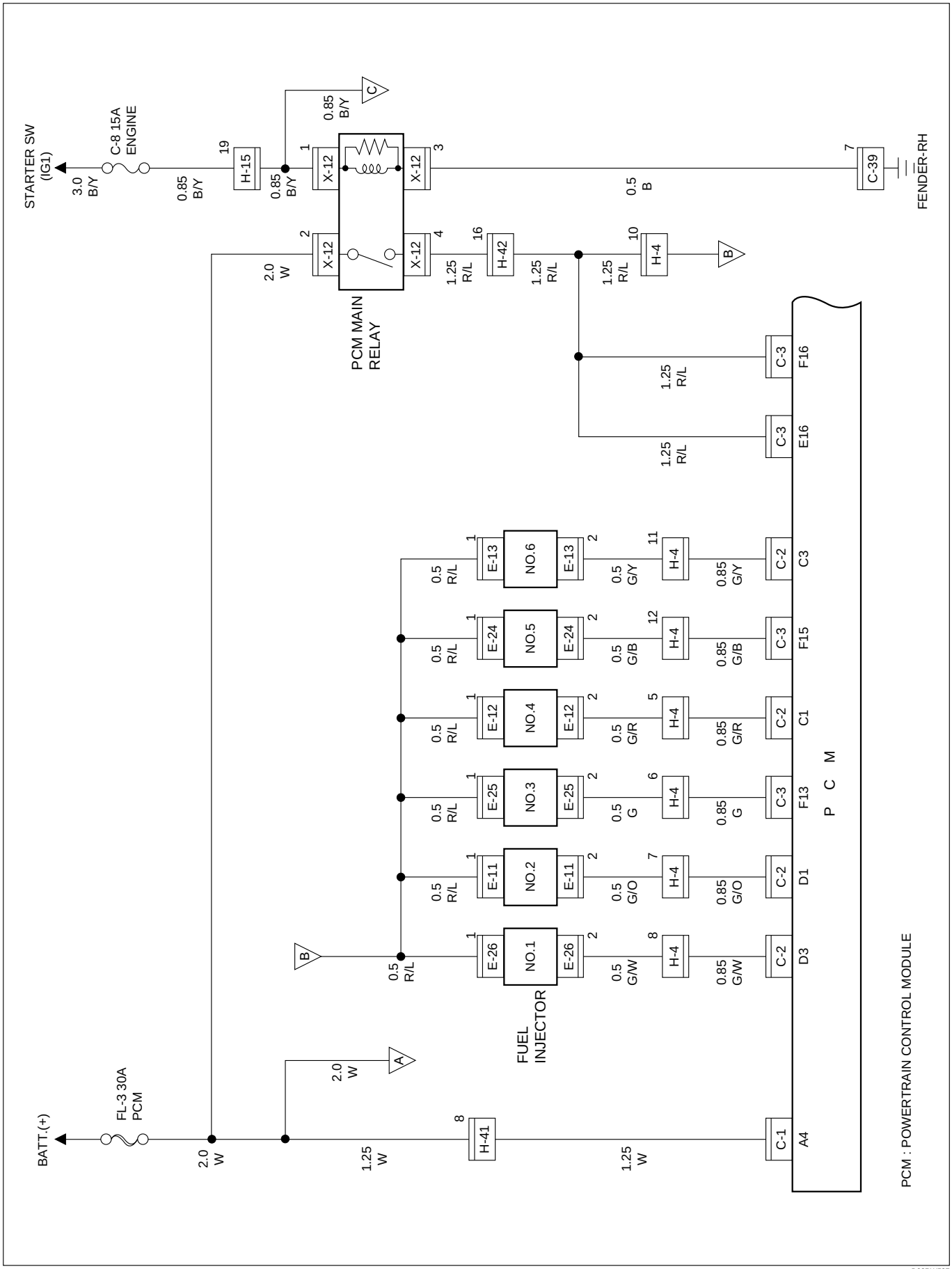

D08RW587

Circuit Diagram (RHD 6V∗1)–2

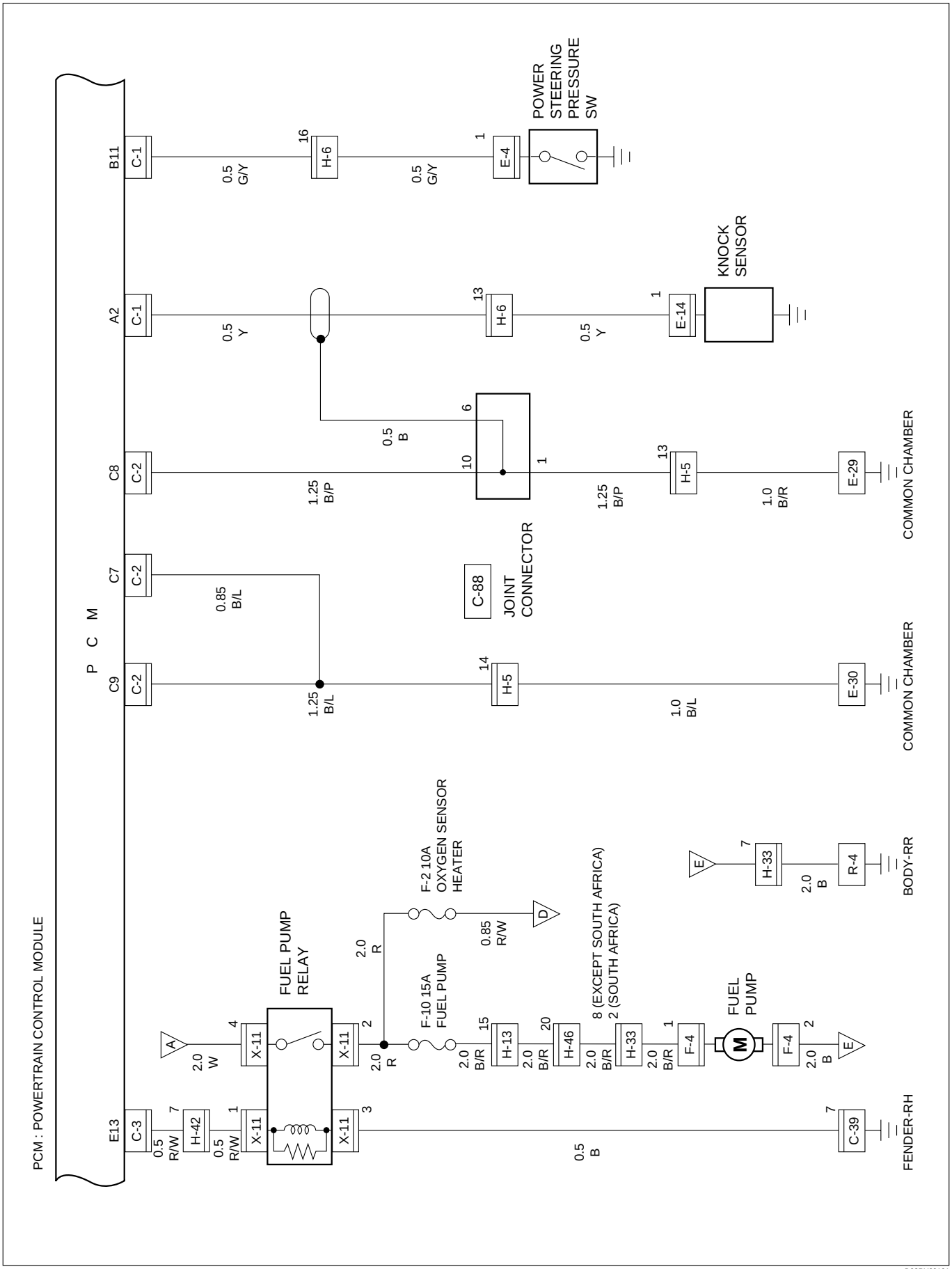

D08RY00101

Circuit Diagram (RHD 6V∗1)–3

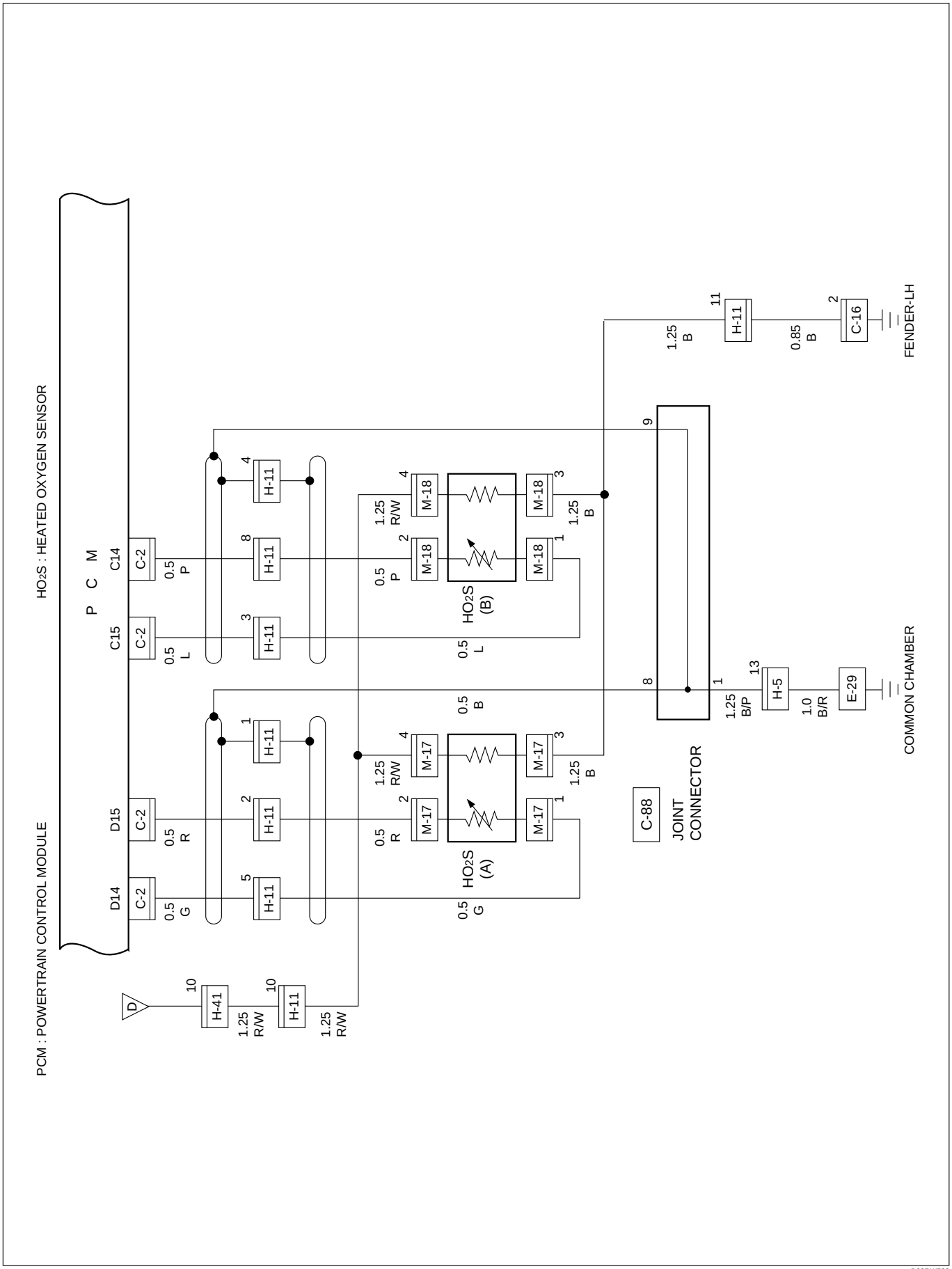

D08RW589

Circuit Diagram (RHD 6V∗1)–4

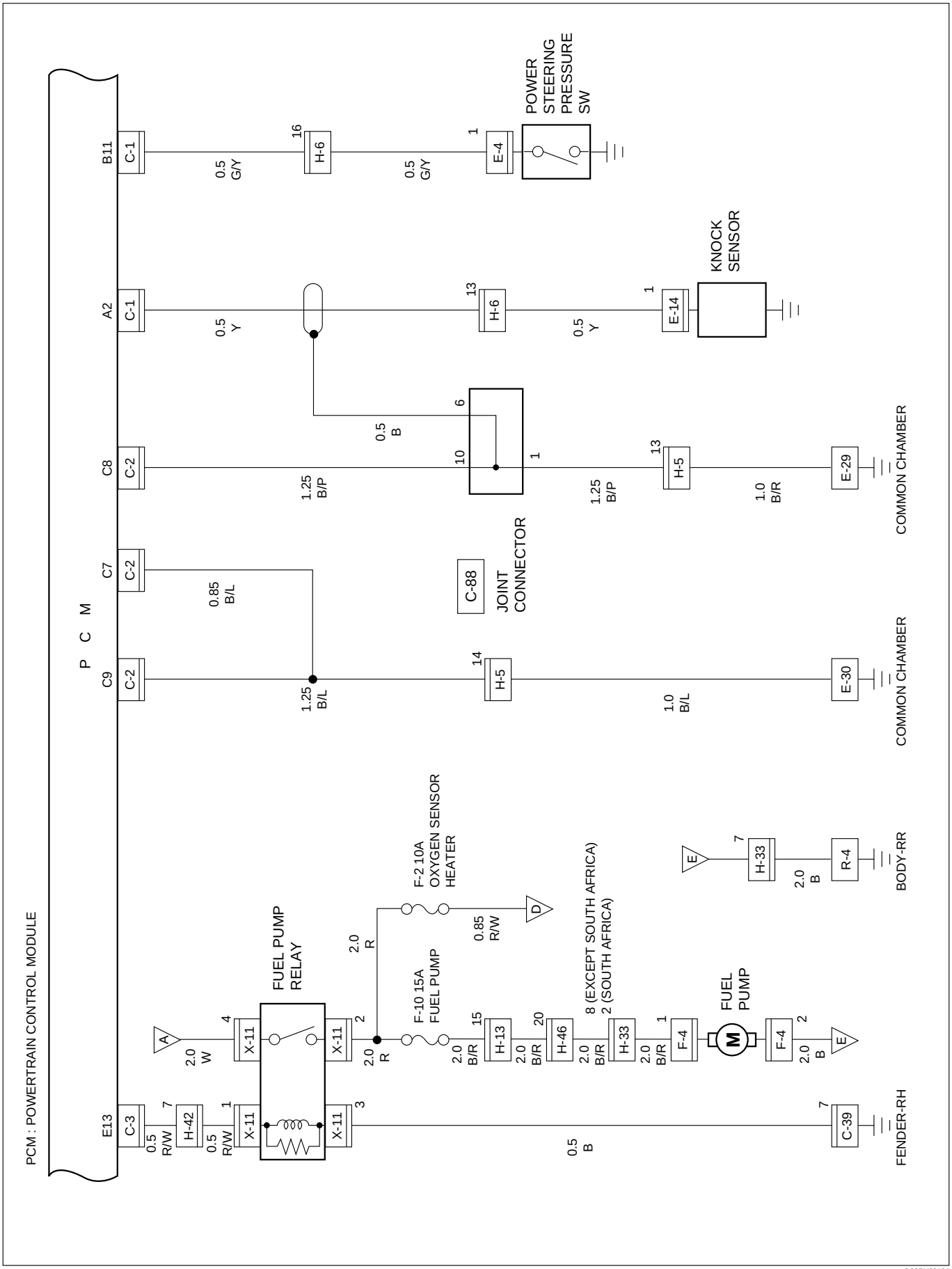

D08RY00101

Circuit Diagram (RHD 6V∗1)–5

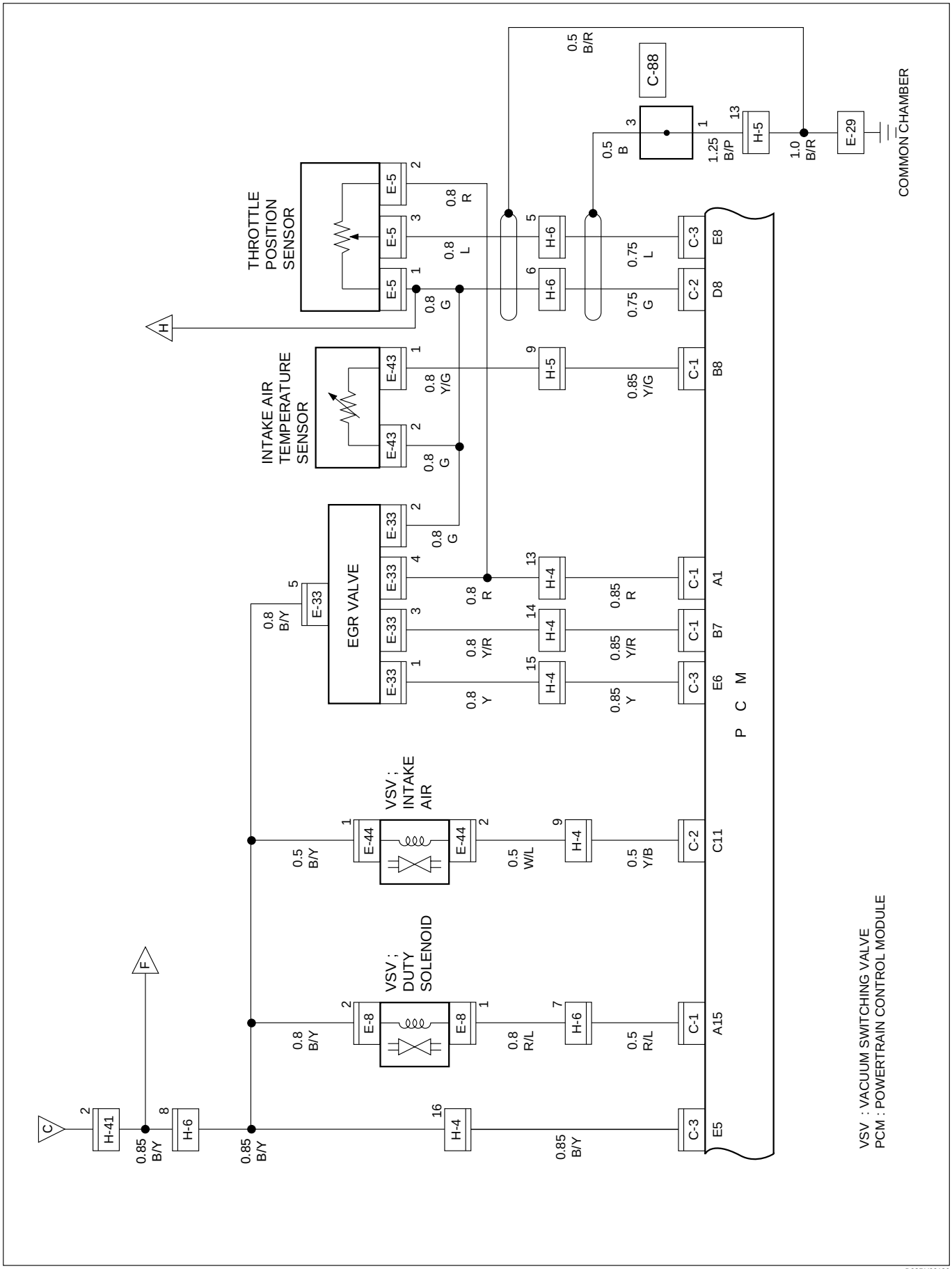

D08RY00186

Circuit Diagram (RHD 6V∗1)–6

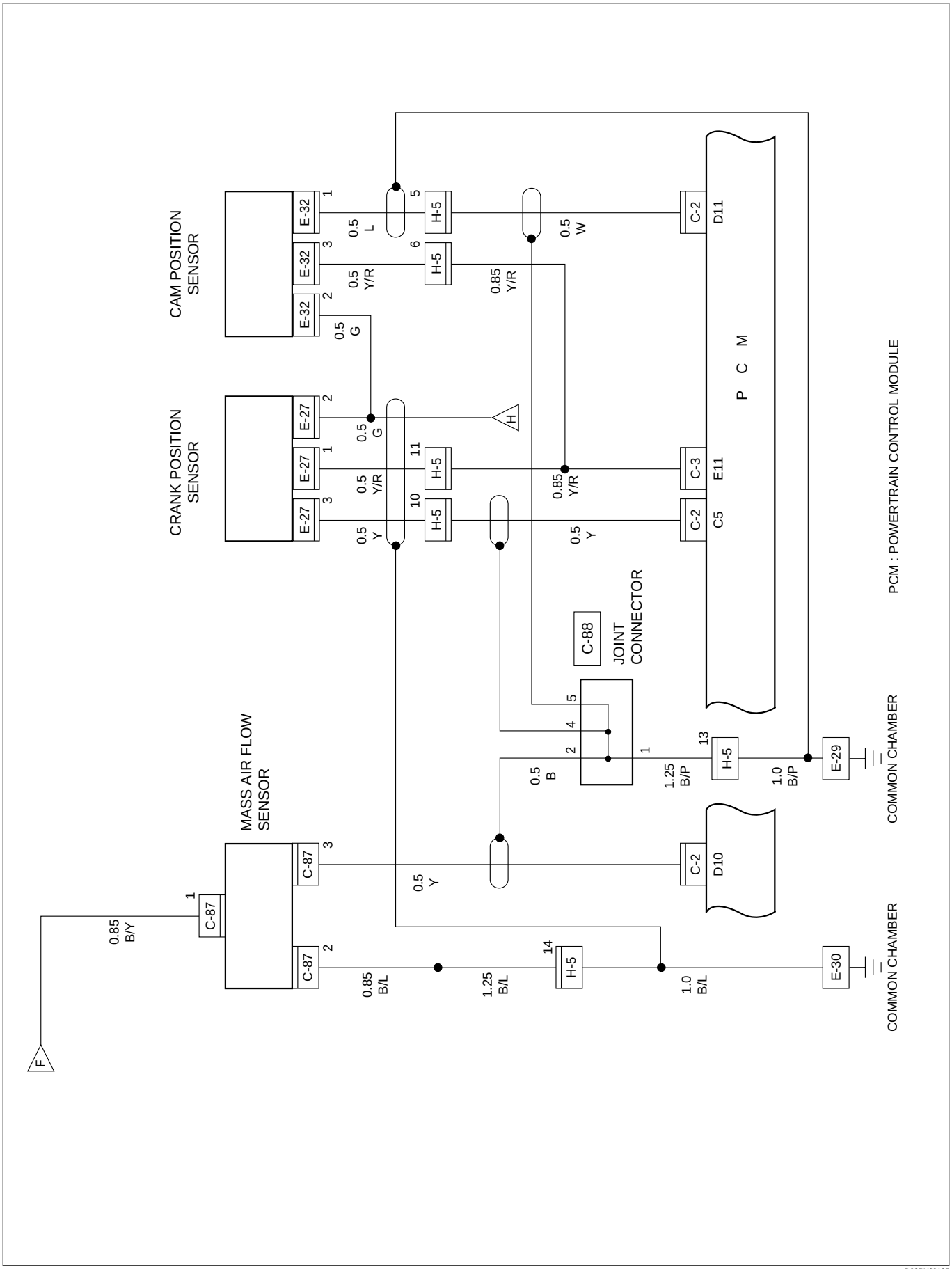

D08RY00185

Circuit Diagram (RHD 6V∗1)–7

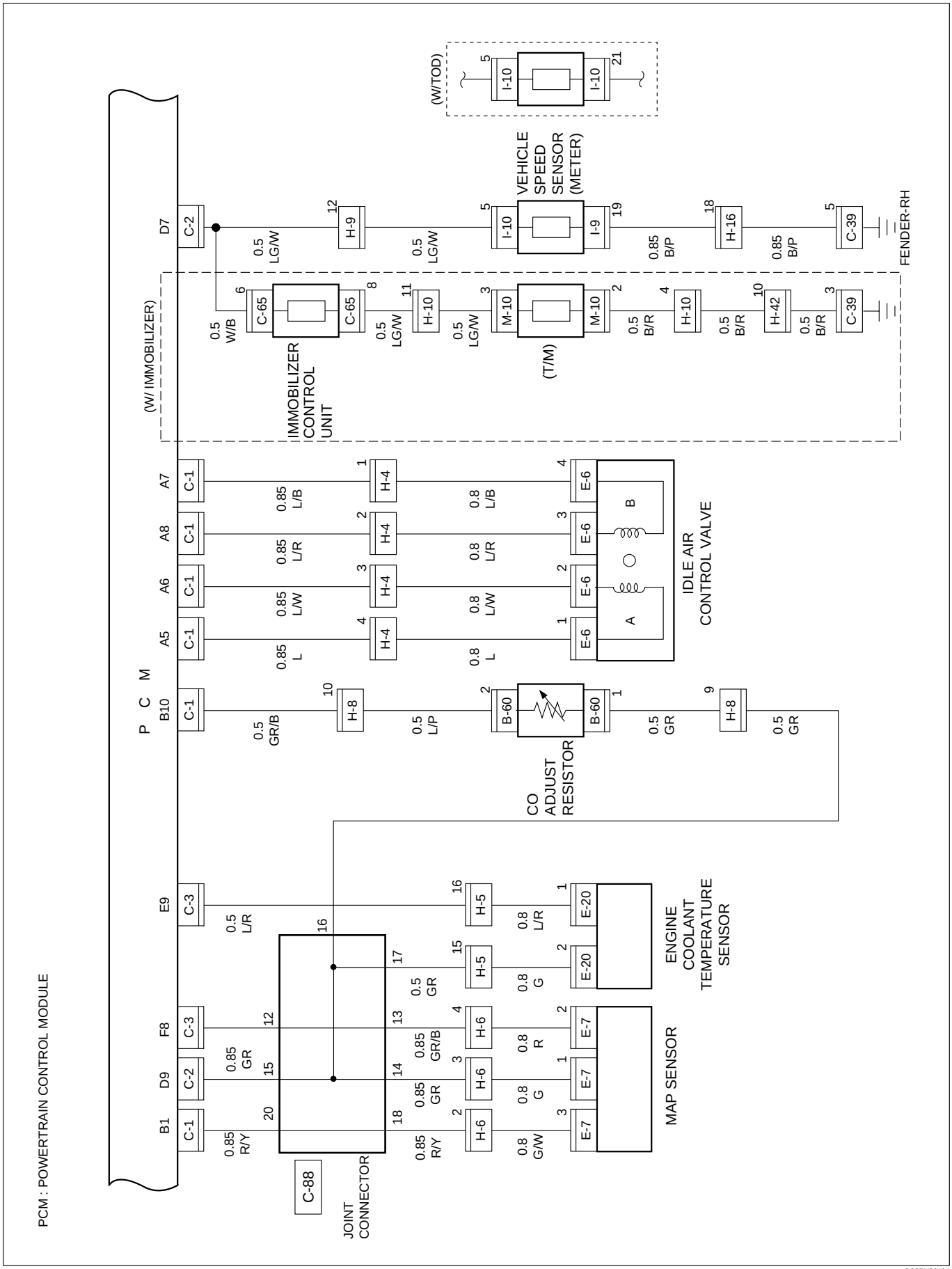

Circuit Diagram (RHD 6V∗1)–8

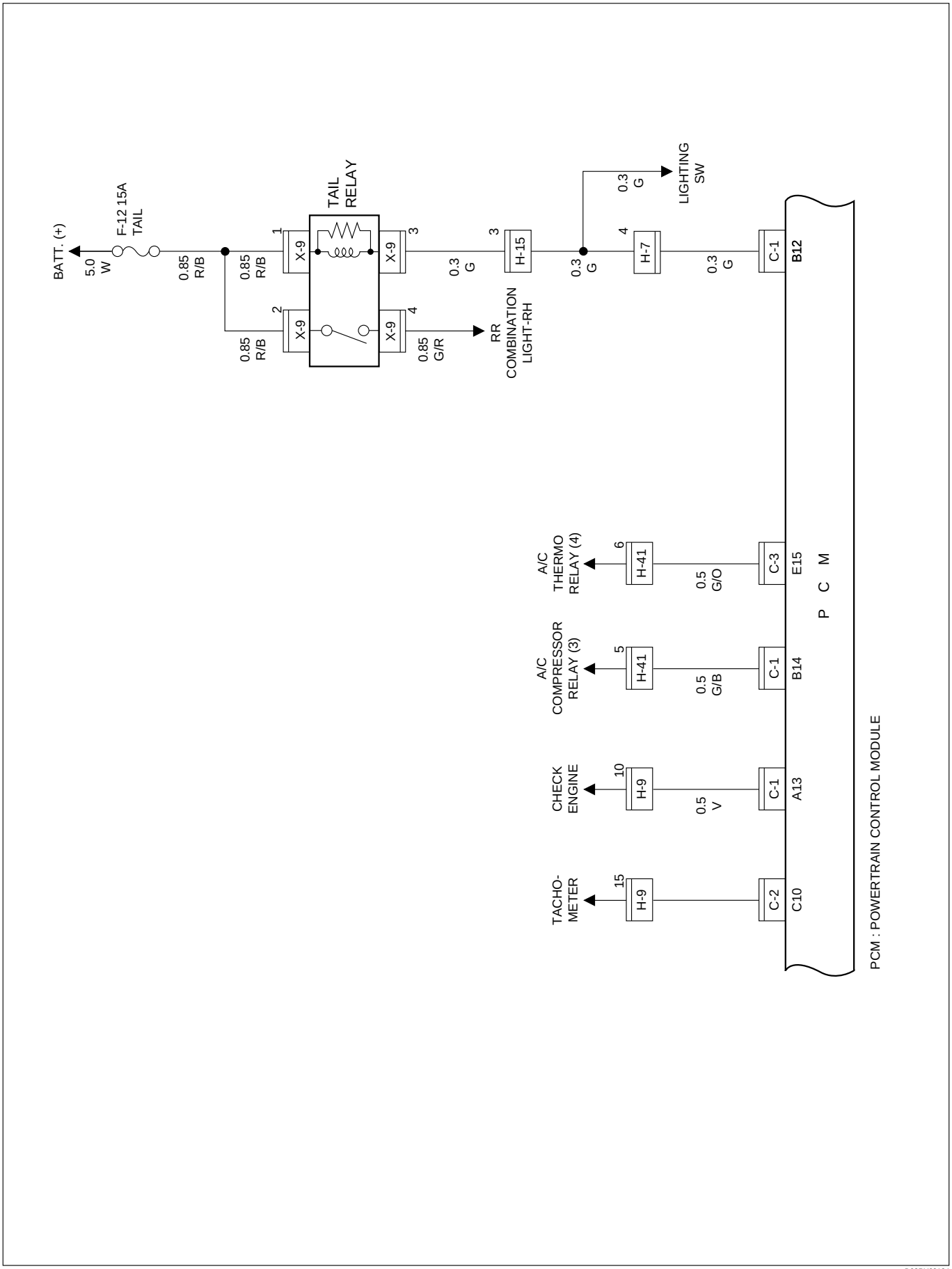

D08RY00184

Circuit Diagram (RHD 6V∗1)–9

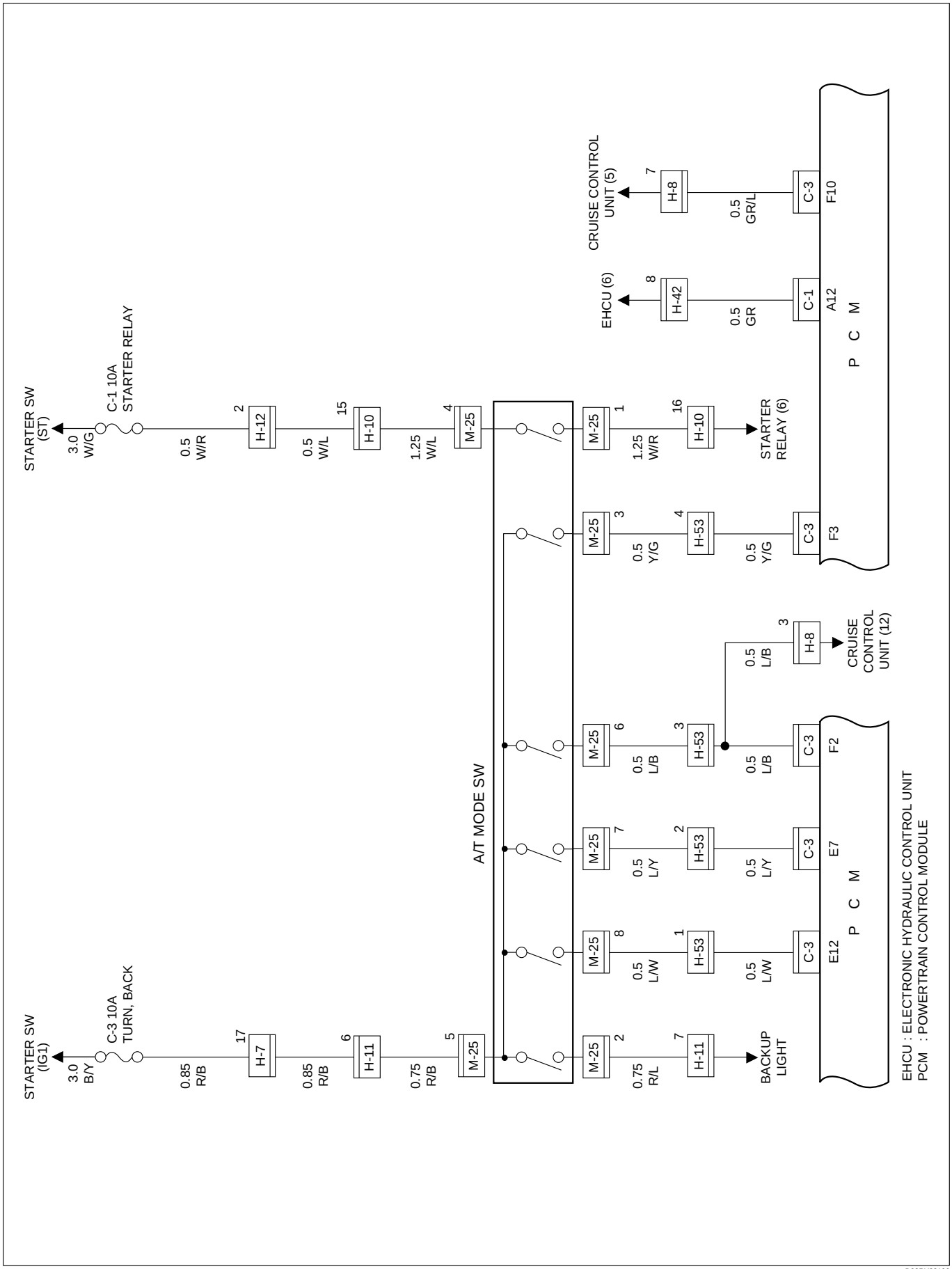

D08RY00106

Circuit Diagram (RHD 6V∗1)–10

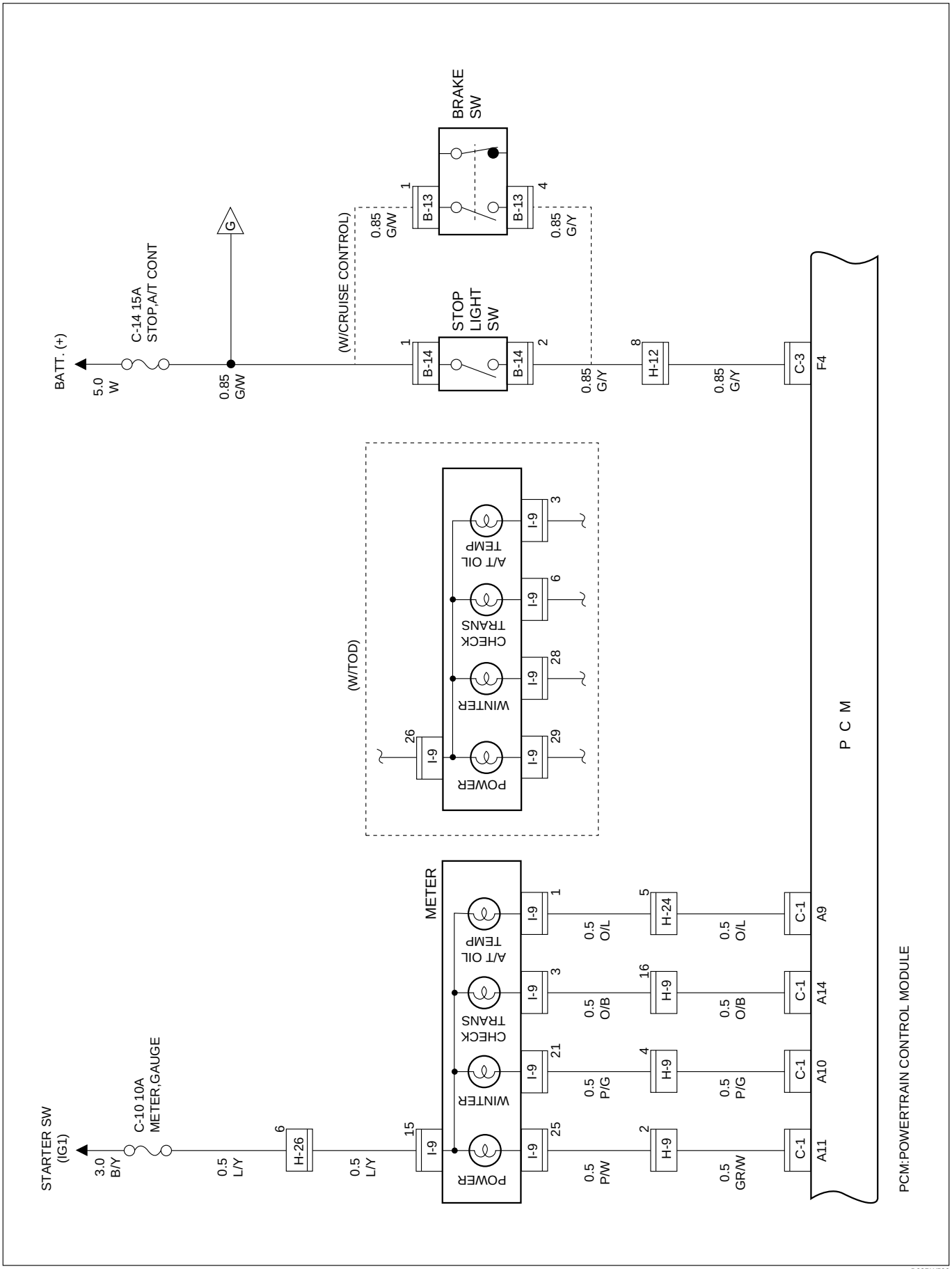

D08RW596

Circuit Diagram (RHD 6V∗1)–11

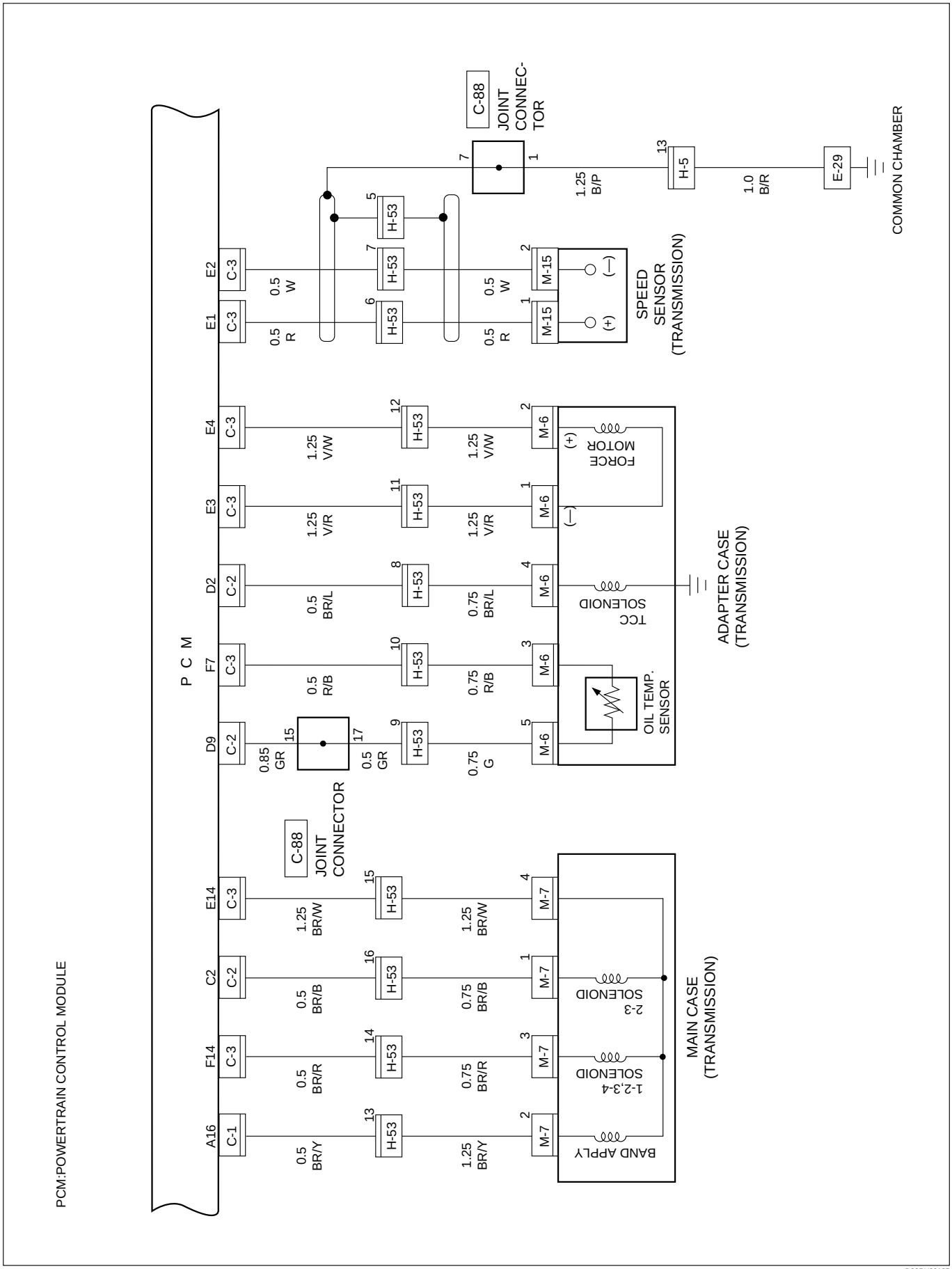

D08RY00107

Circuit Diagram (RHD 6V∗1)–12

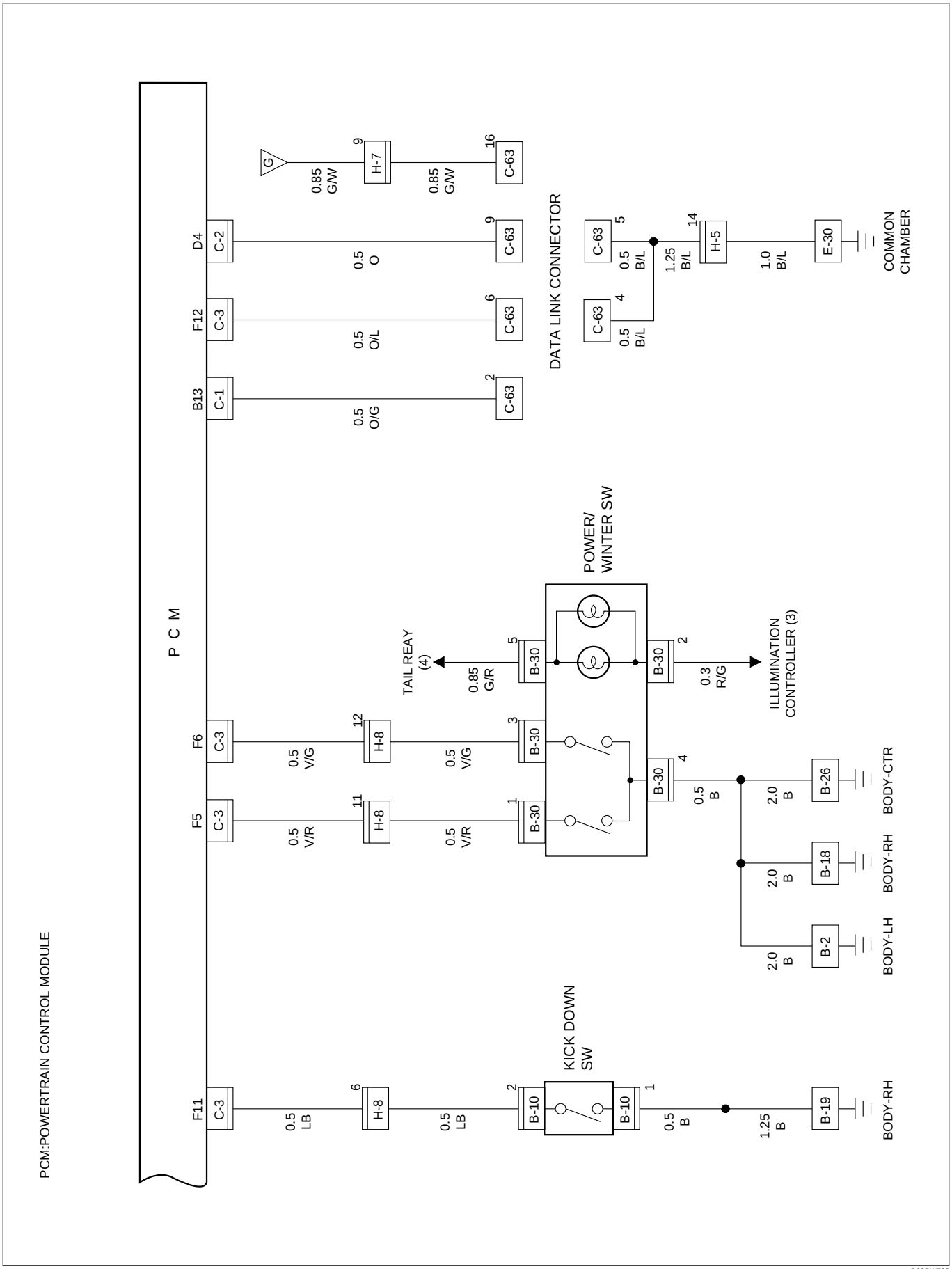

D08RW598

Parts Location (RHD 6V∗1) – 1

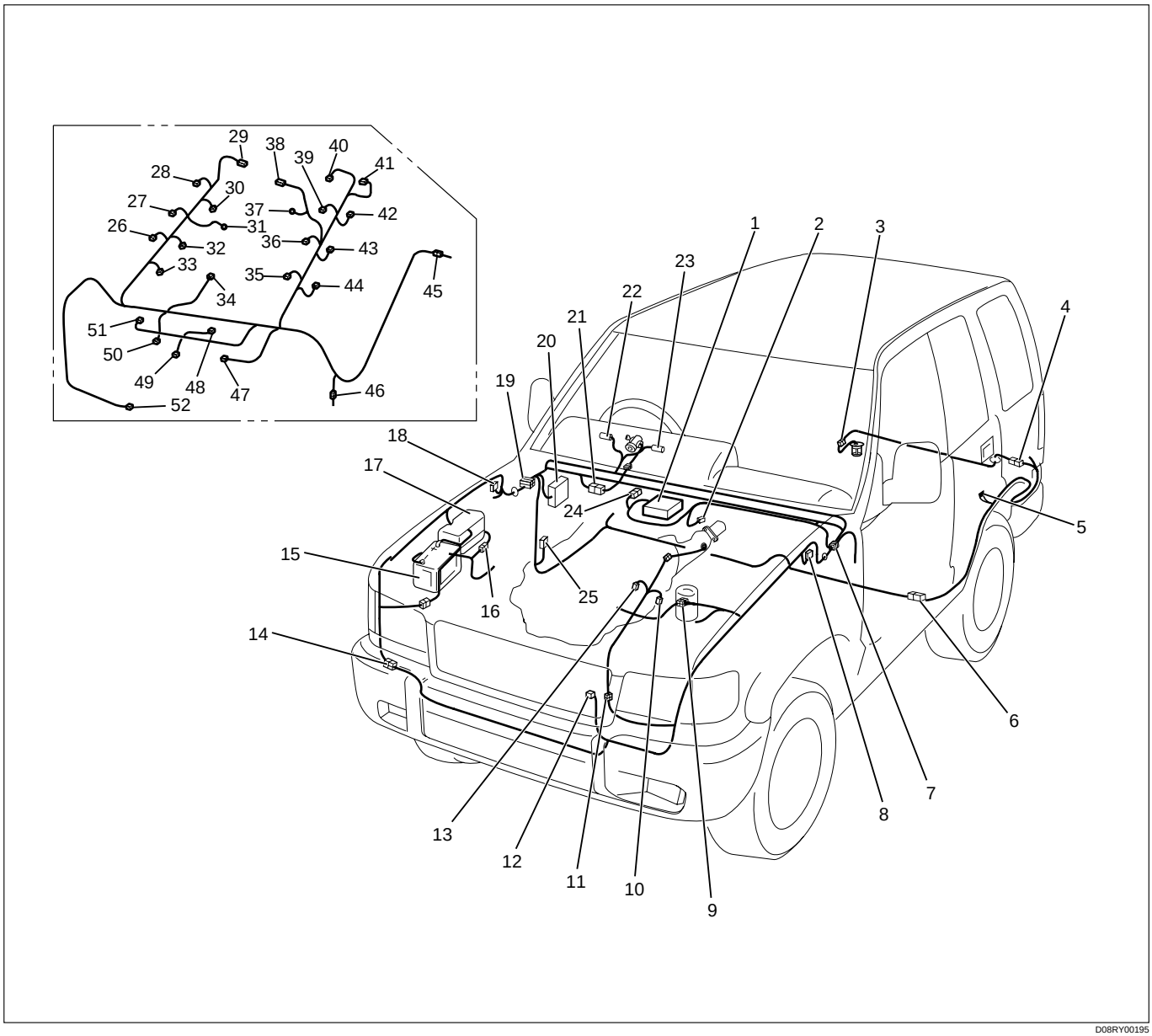

D08RY00195

Legend

(1) PCM
(2) C-63
(3) F-4
(4) H-33
(5) R-4
(6) H-46
(7) H-7, H-8, H-9, H-24
(8) C-16
(9) H-4, H-5, H-6
(10) M-18
(11) H-10, H-11
(12) C-87
(13) M-17
(14) H-41, H-42
(15) Battery
(16) H-3
(17) Relay and Fuse Box (X-9, X-11, X-12)
(18) C-39
(19) H-13, H-15, H-16, H-26
(20) Fuse Box
(21) H-12
(22) I-10
(23) I-9
(24) C-88
(25) B-60
(26) E-37
(27) E-38
(28) E-39
(29) E-33
(30) E-24
(31) E-30

(32) E-25
(33) E-26
(34) E-14
(35) E-11
(36) E-12
(37) E-28, E-29
(38) E-7
(39) E-13
(40) E-32
(41) E-44
(42) E-42
(43) E-41
(44) E-40
(45) H-4, H-5, H-6
(46) E-4
(47) E-8
(48) E-5
(49) E-43
(50) E-20
(51) E-6
(52) E-27

Parts Location (RHD 6V∗1) – 2

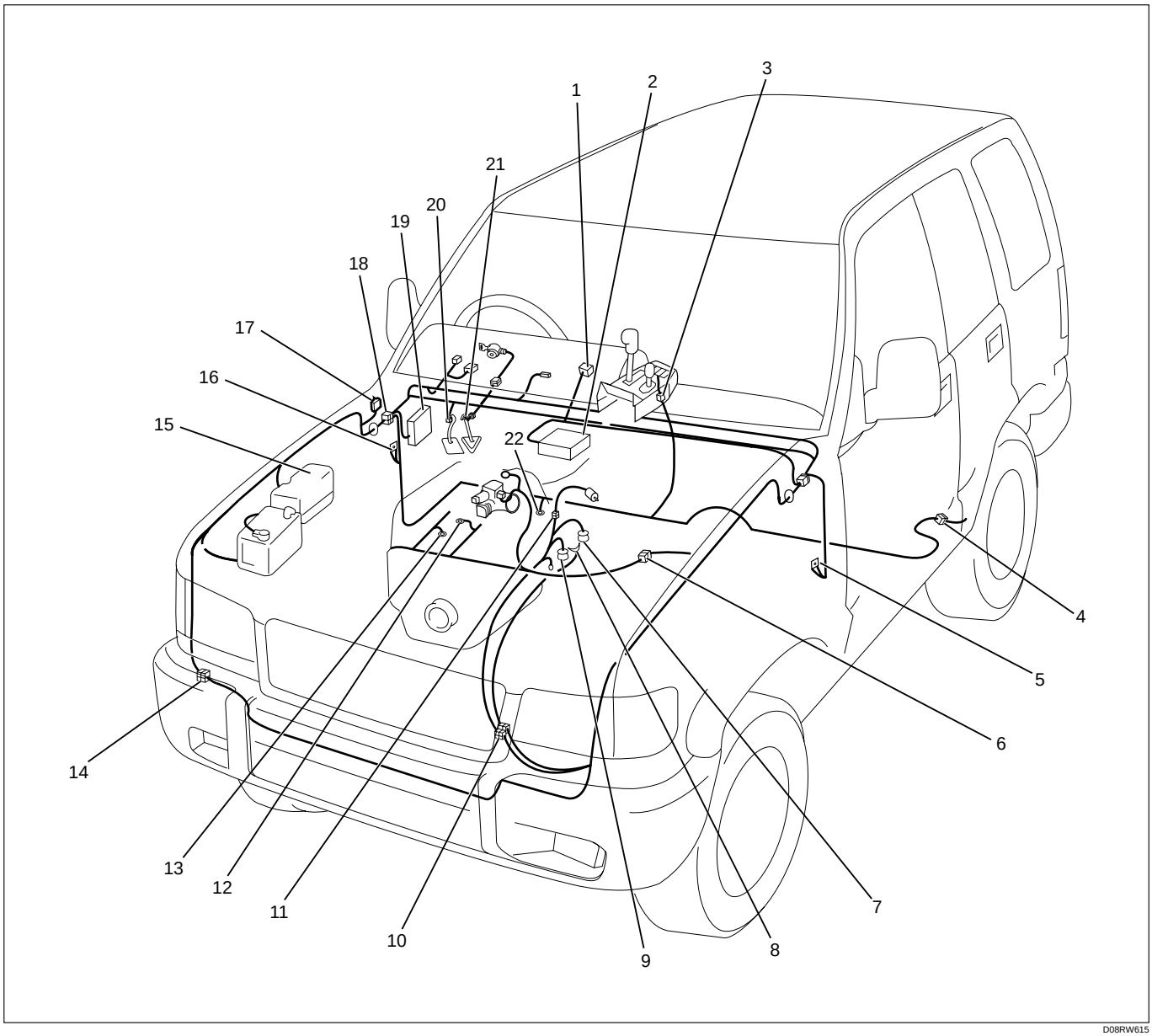

Legend

(1) C-63
(2) PCM
(3) B-30
(4) H-7, H-8, H-9, H-24
(5) B-2
(6) H-4, H-5, H-6
(7) M-7
(8) M-25
(9) M-6
(10) H-10, H-11, H-53
(11) M-15
(12) E-28, E-29
(13) E-30
(14) H-41
(15) Relay and Fuse Box
(16) B-18, B-19
(17) C-39
(18) H-13, H-15, H-16, H-26
(19) Fuse Box
(20) B-10
(21) B-13, B-14
(22) B-26

Circuit Diagram (LHD 6V∗1)–1

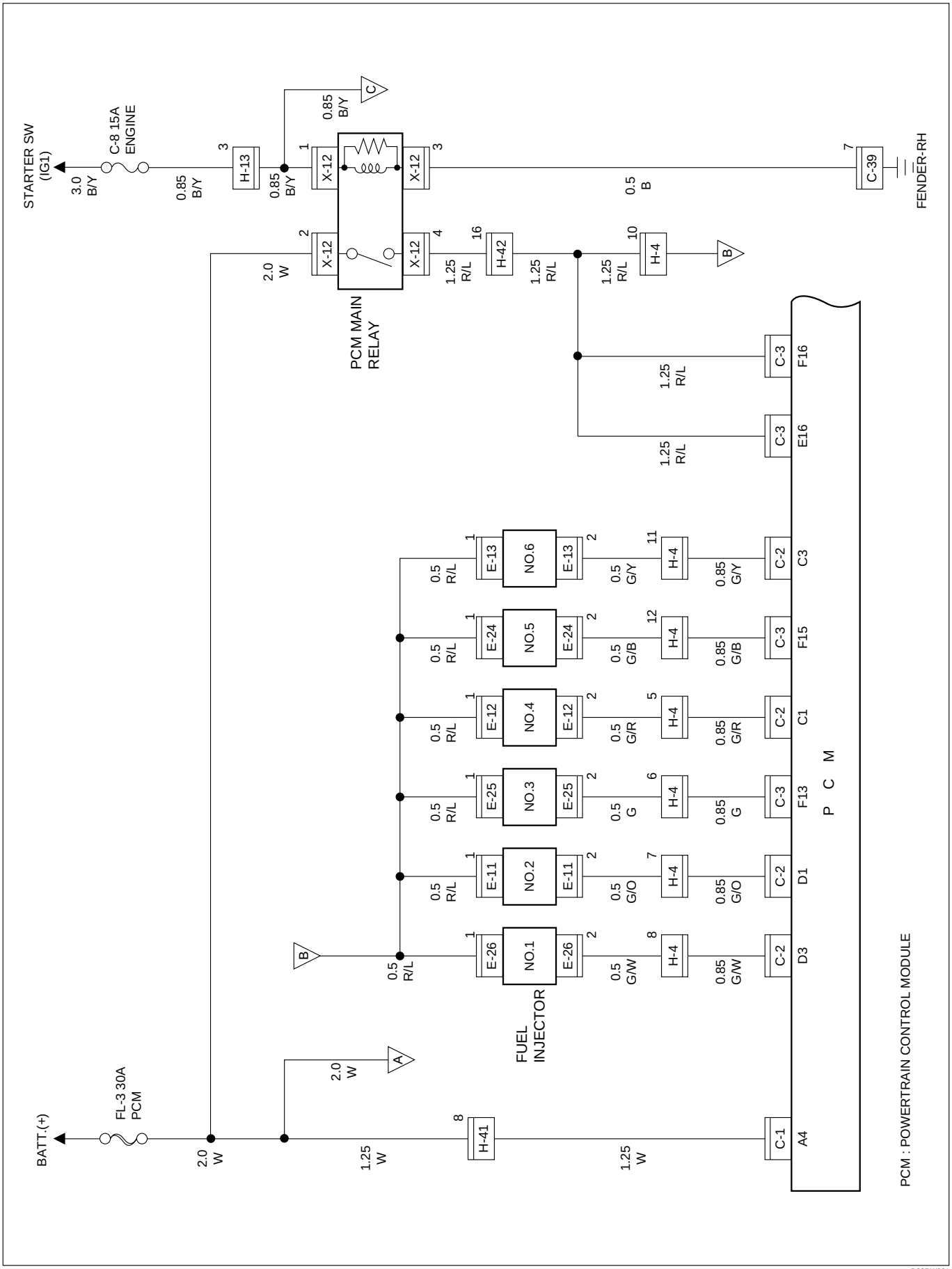

D08RW901

Circuit Diagram (LHD 6V∗1)–2

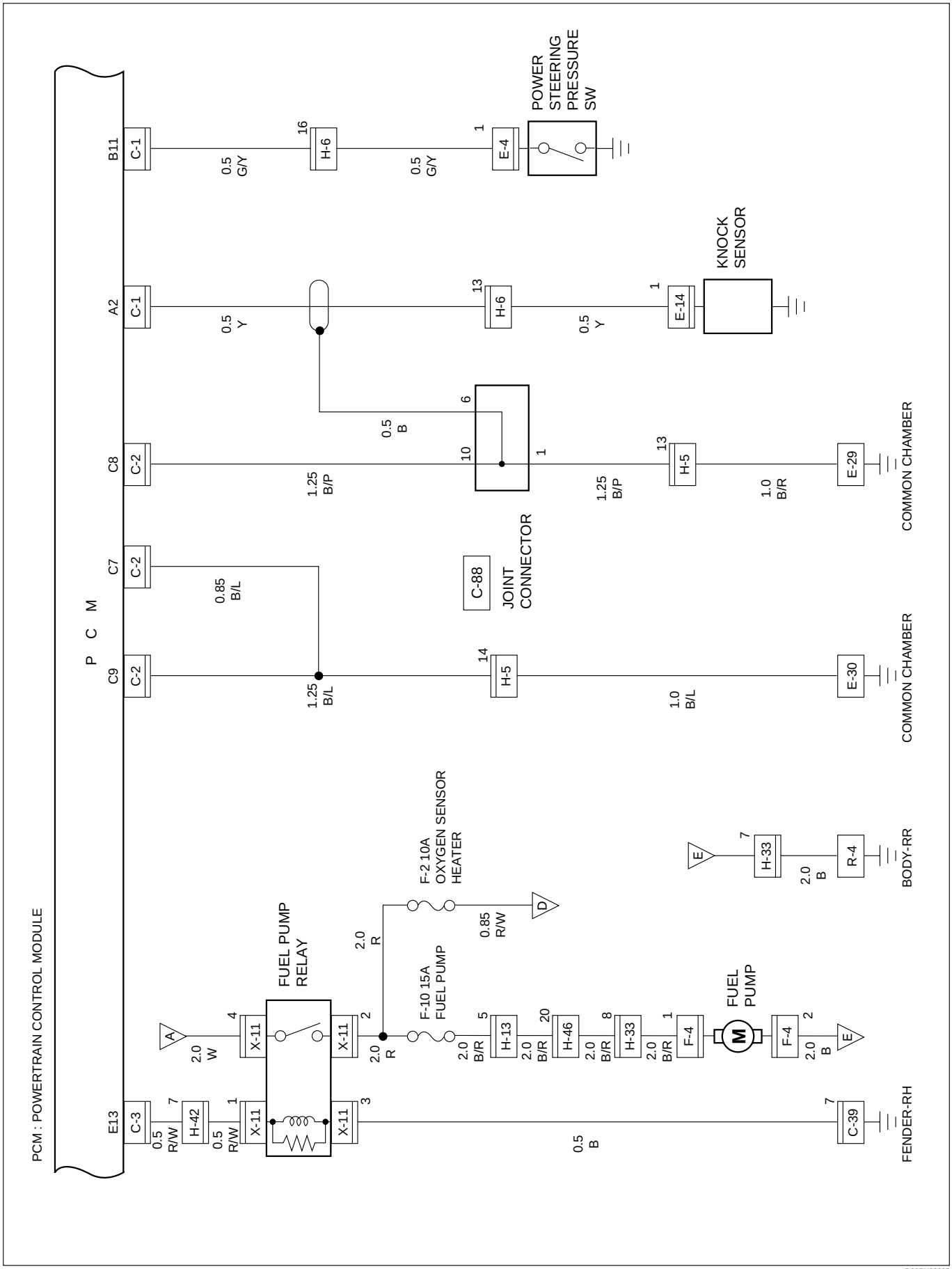

D08RY00095

Circuit Diagram (LHD 6V∗1)–3

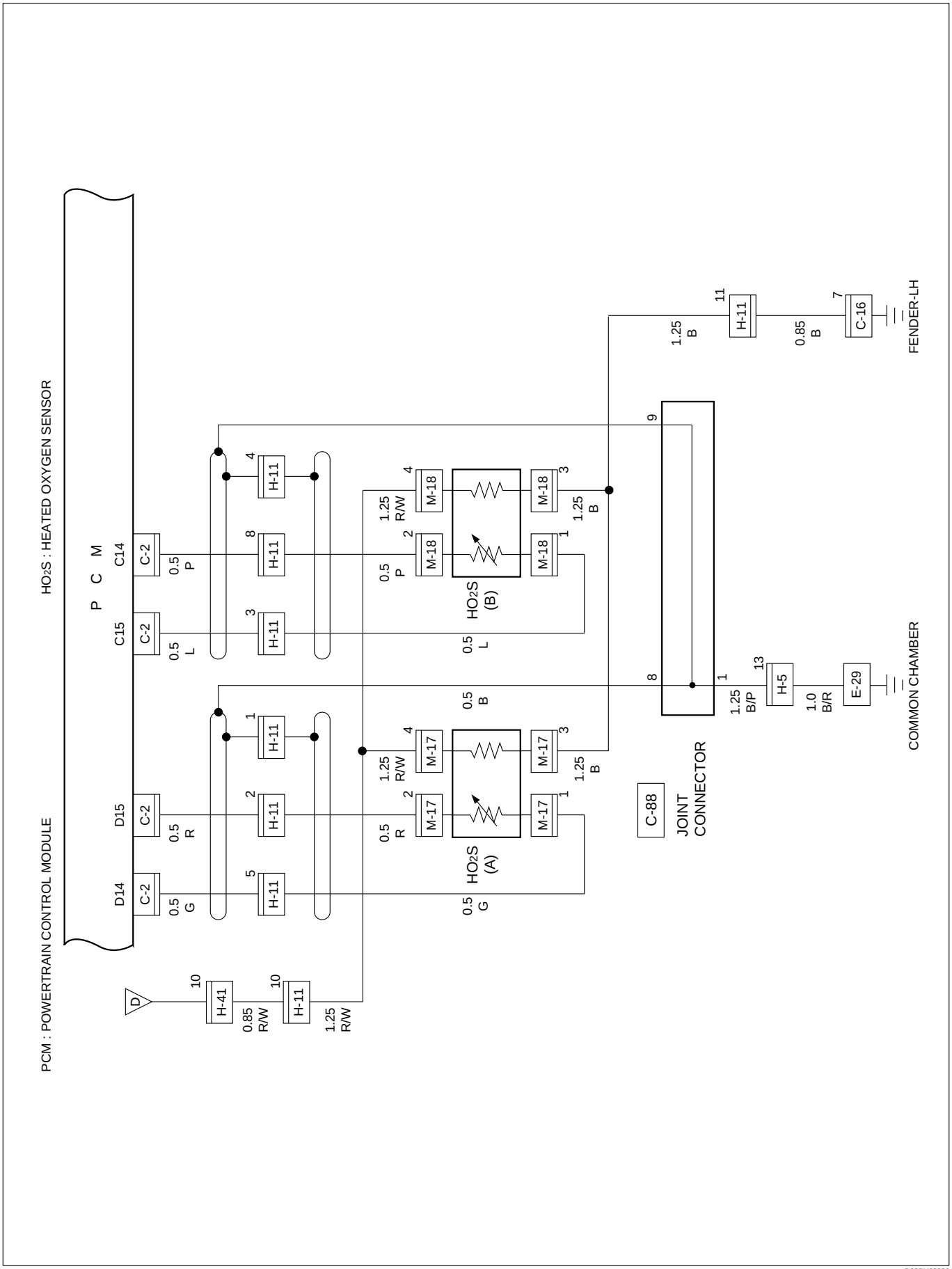

D08RY00096

Circuit Diagram (LHD 6V∗1)–4

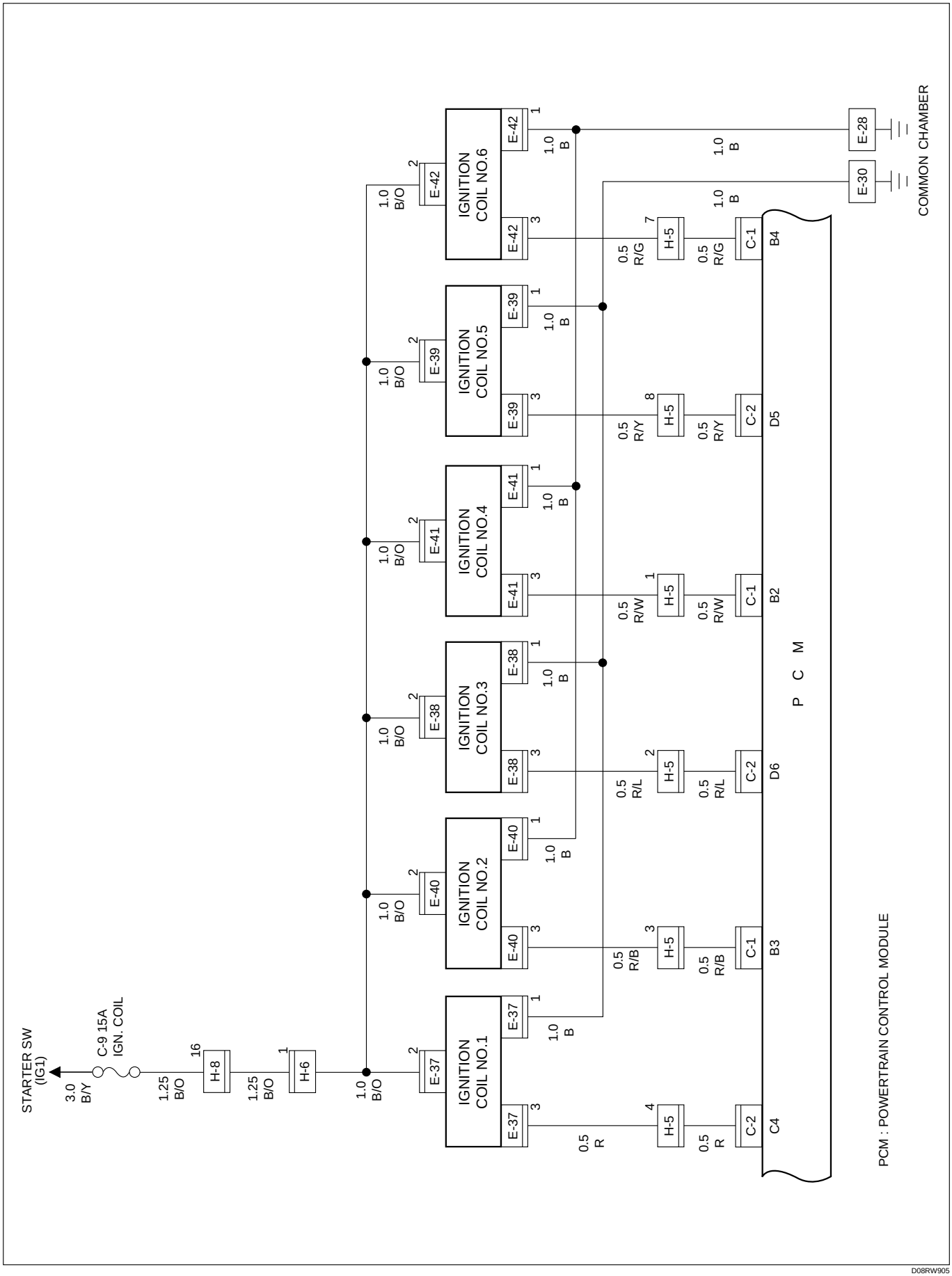

D08RW905

Circuit Diagram (LHD 6V∗1)–5

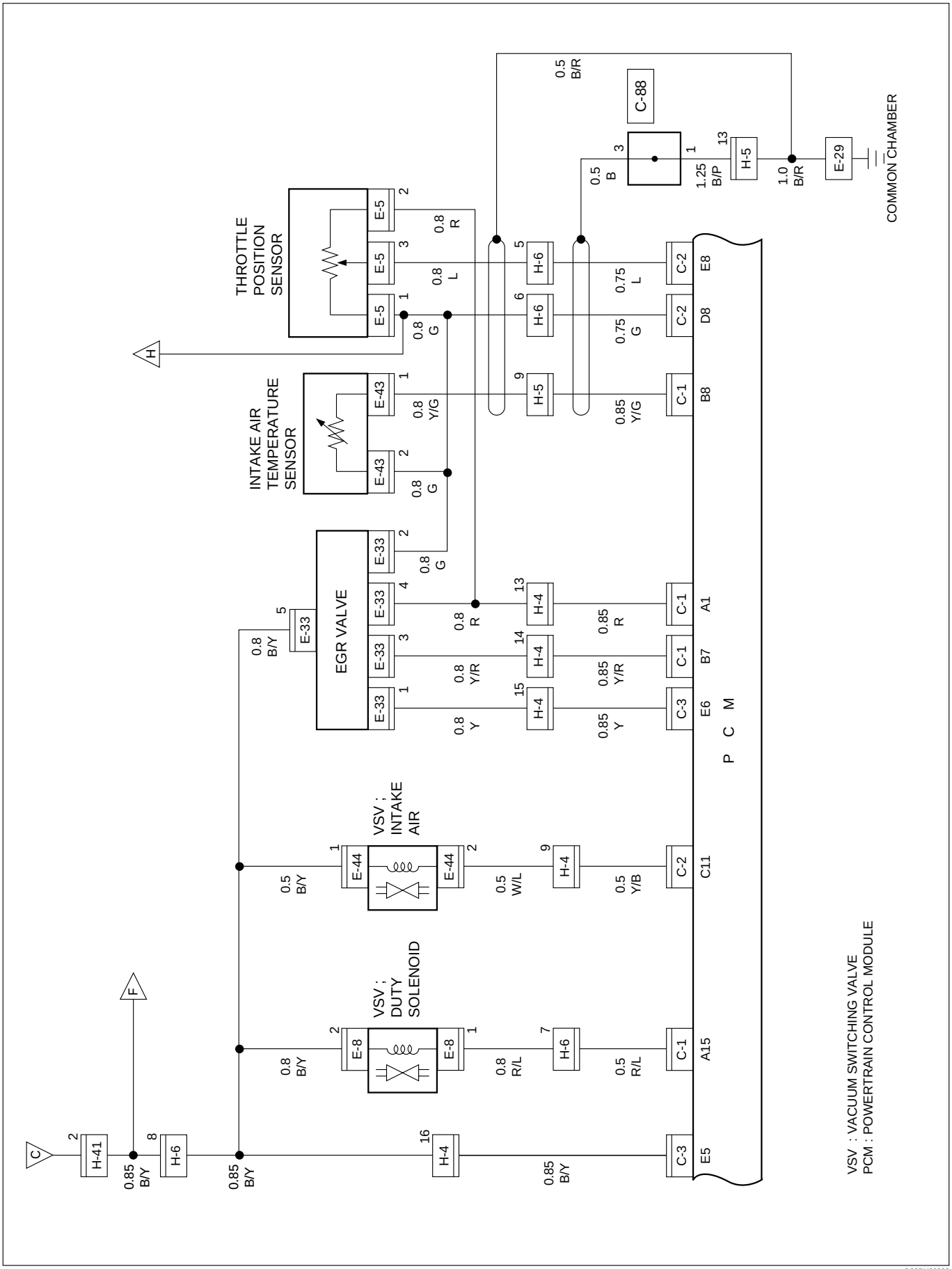

D08RY00098

Circuit Diagram (LHD 6V∗1)–6

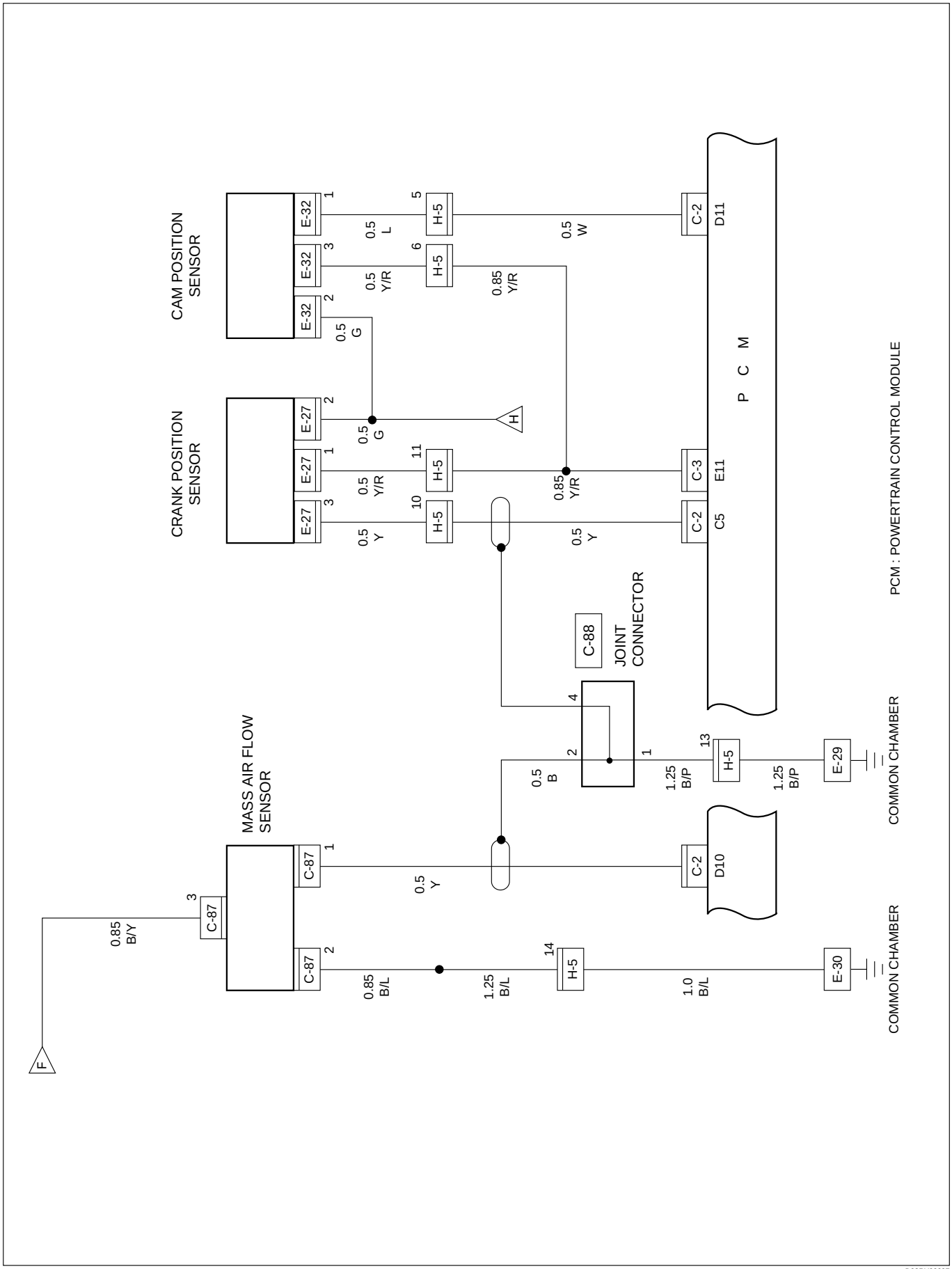

D08RY00097

Circuit Diagram (LHD 6V∗1)–7

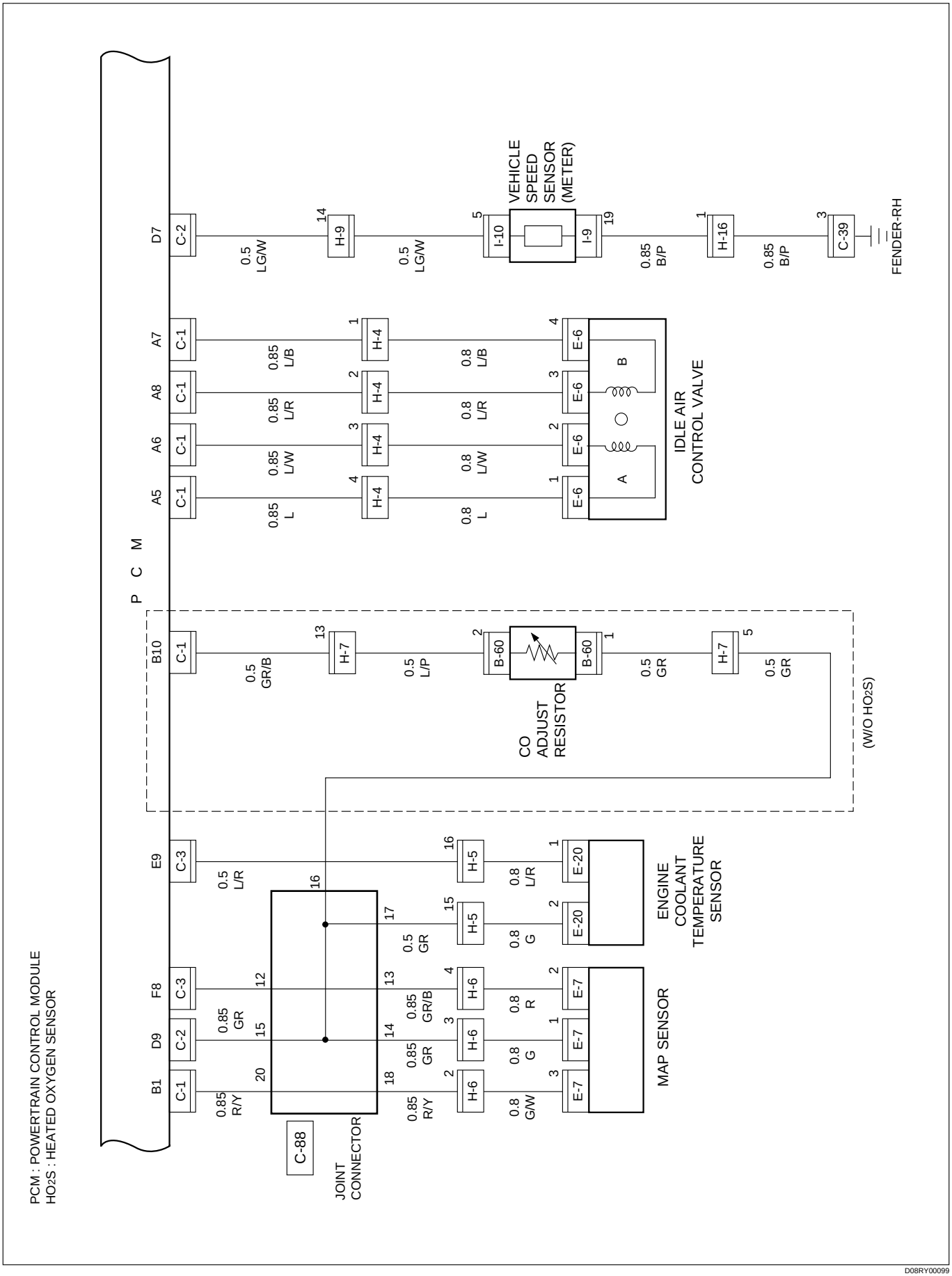

Circuit Diagram (LHD 6V∗1)–8

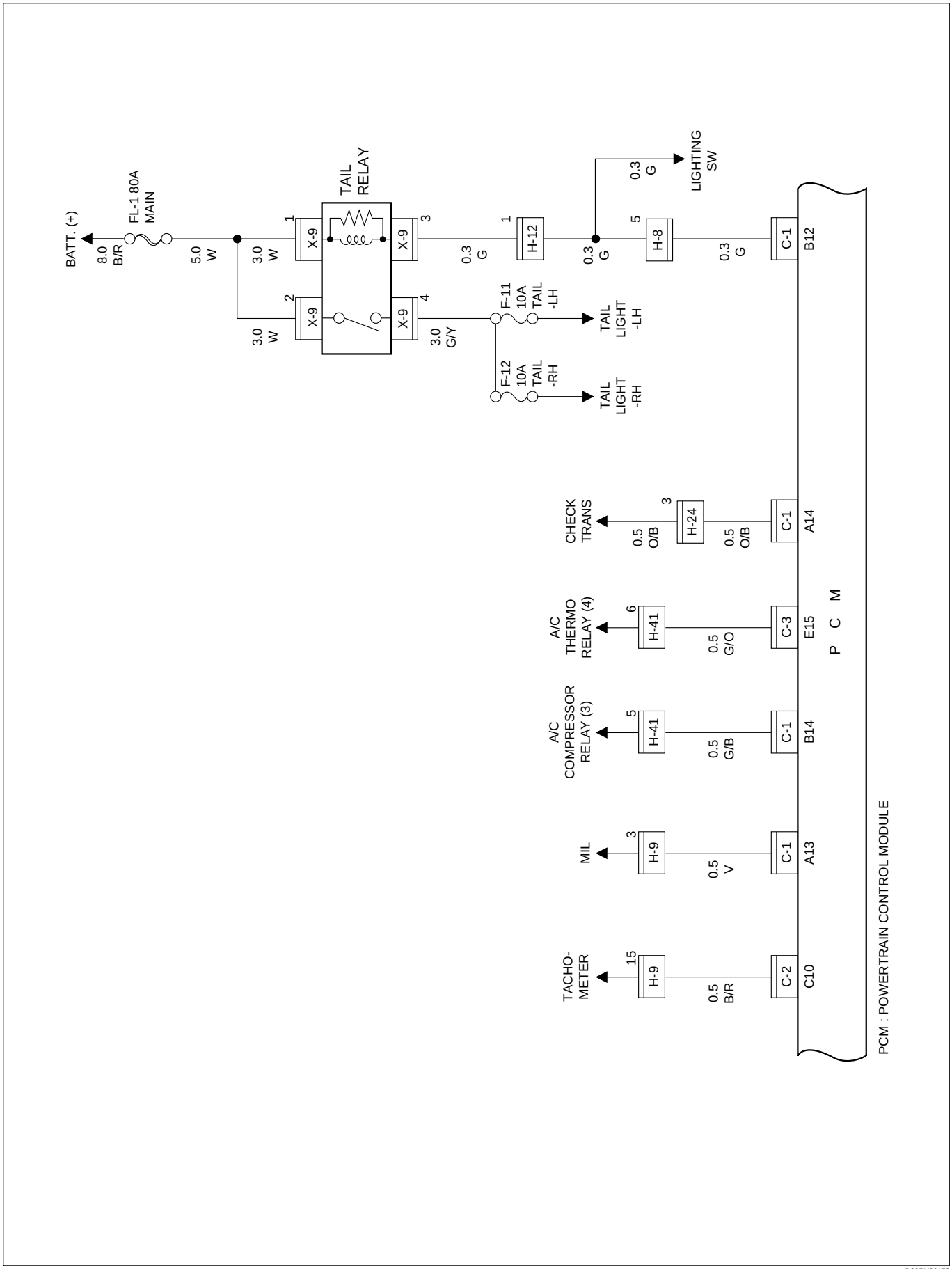

D08RY00173

Circuit Diagram (LHD 6V∗1)–9

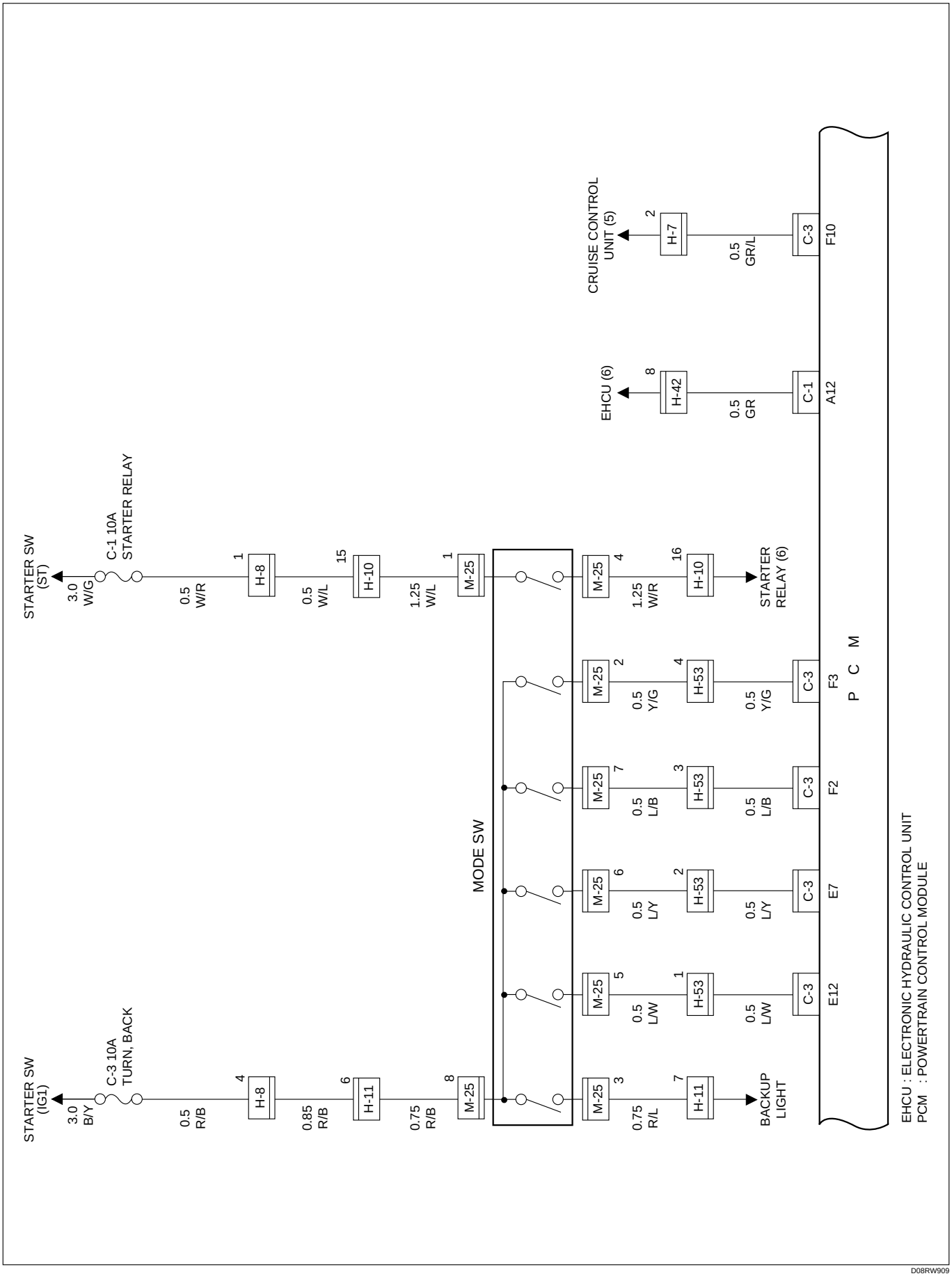

D08RW909

Circuit Diagram (LHD 6V∗1)–10

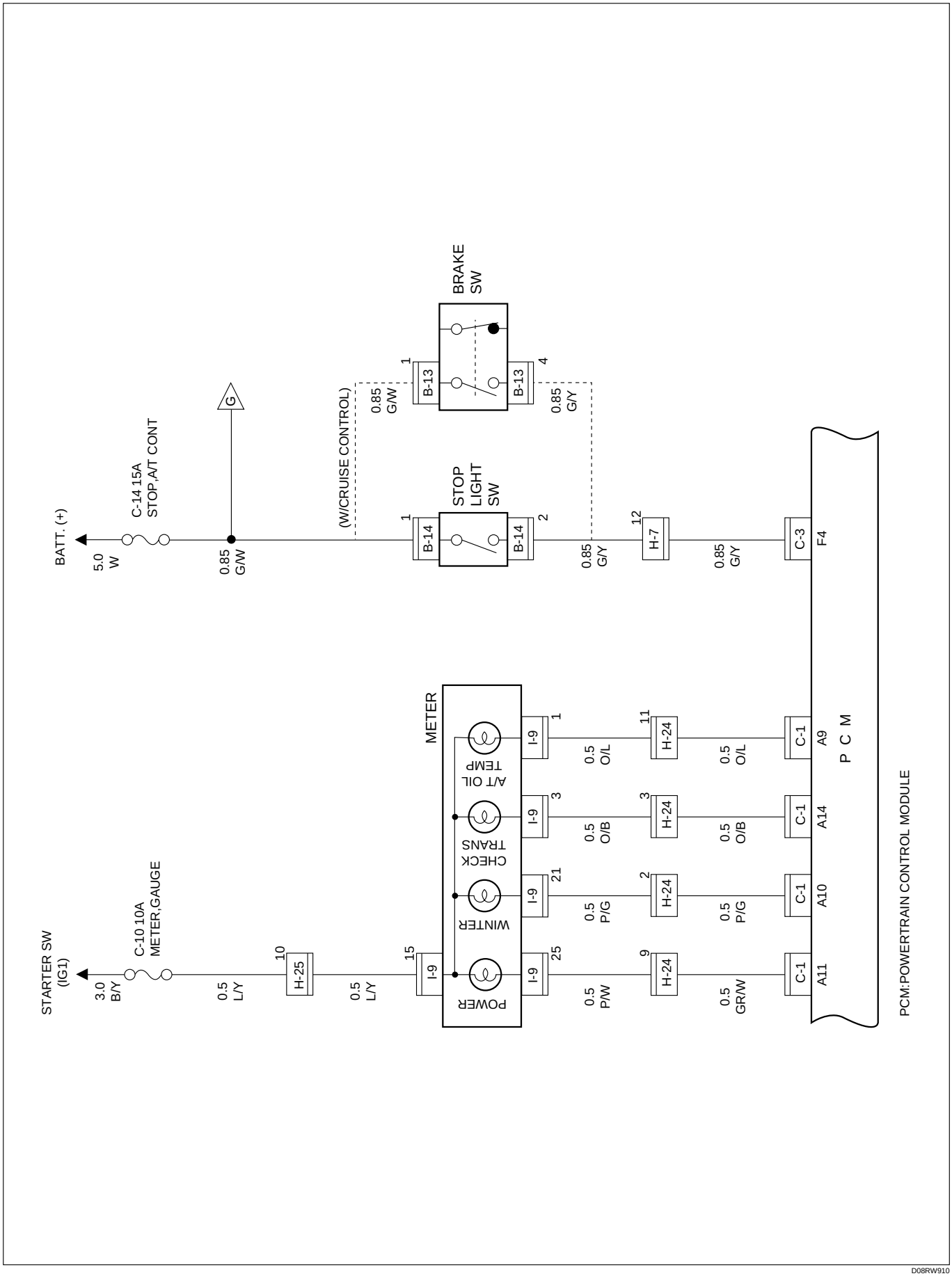

D08RW910

Circuit Diagram (LHD 6V∗1)–11

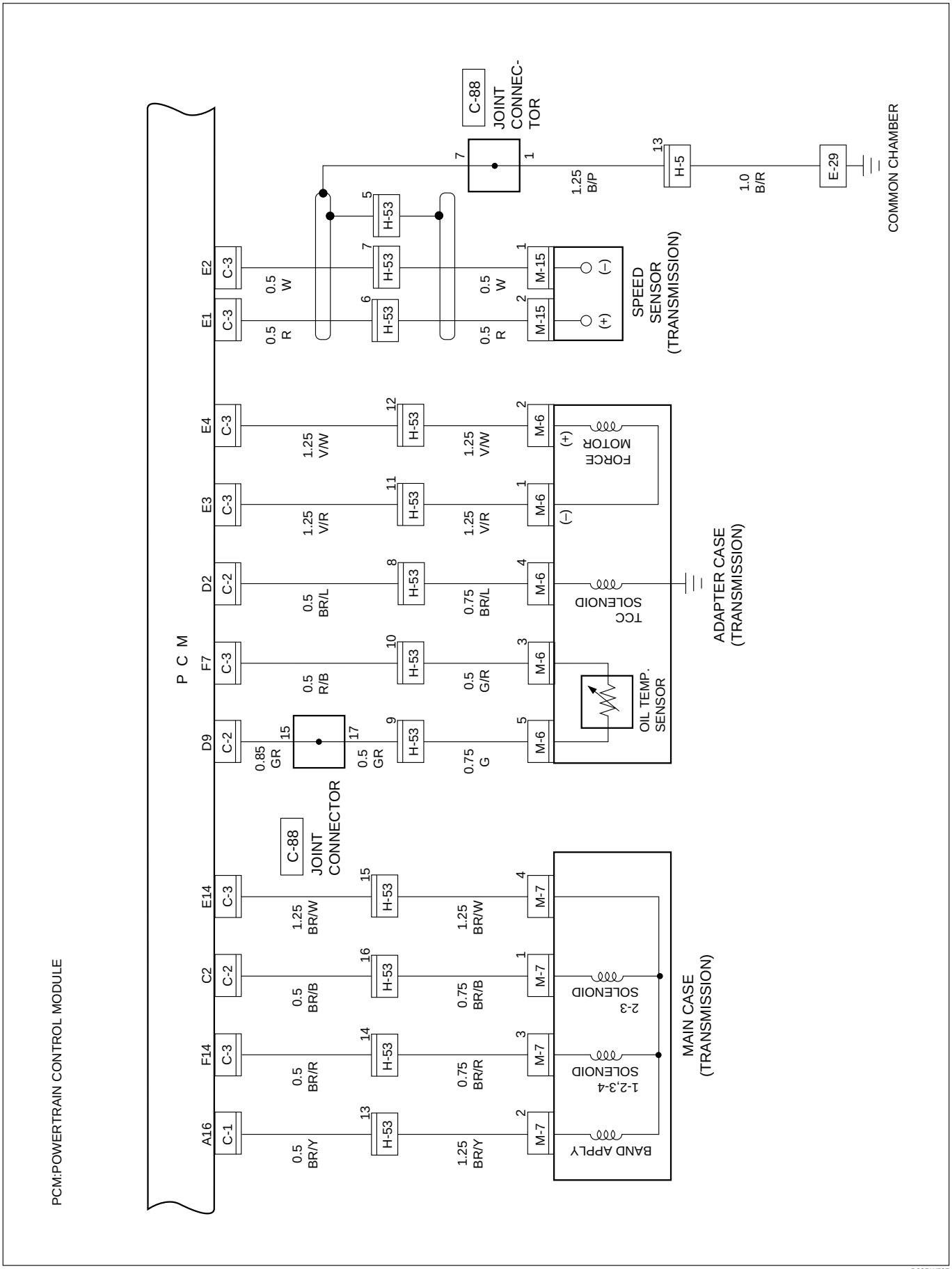

D08RW597

Circuit Diagram (LHD 6V∗1)–12

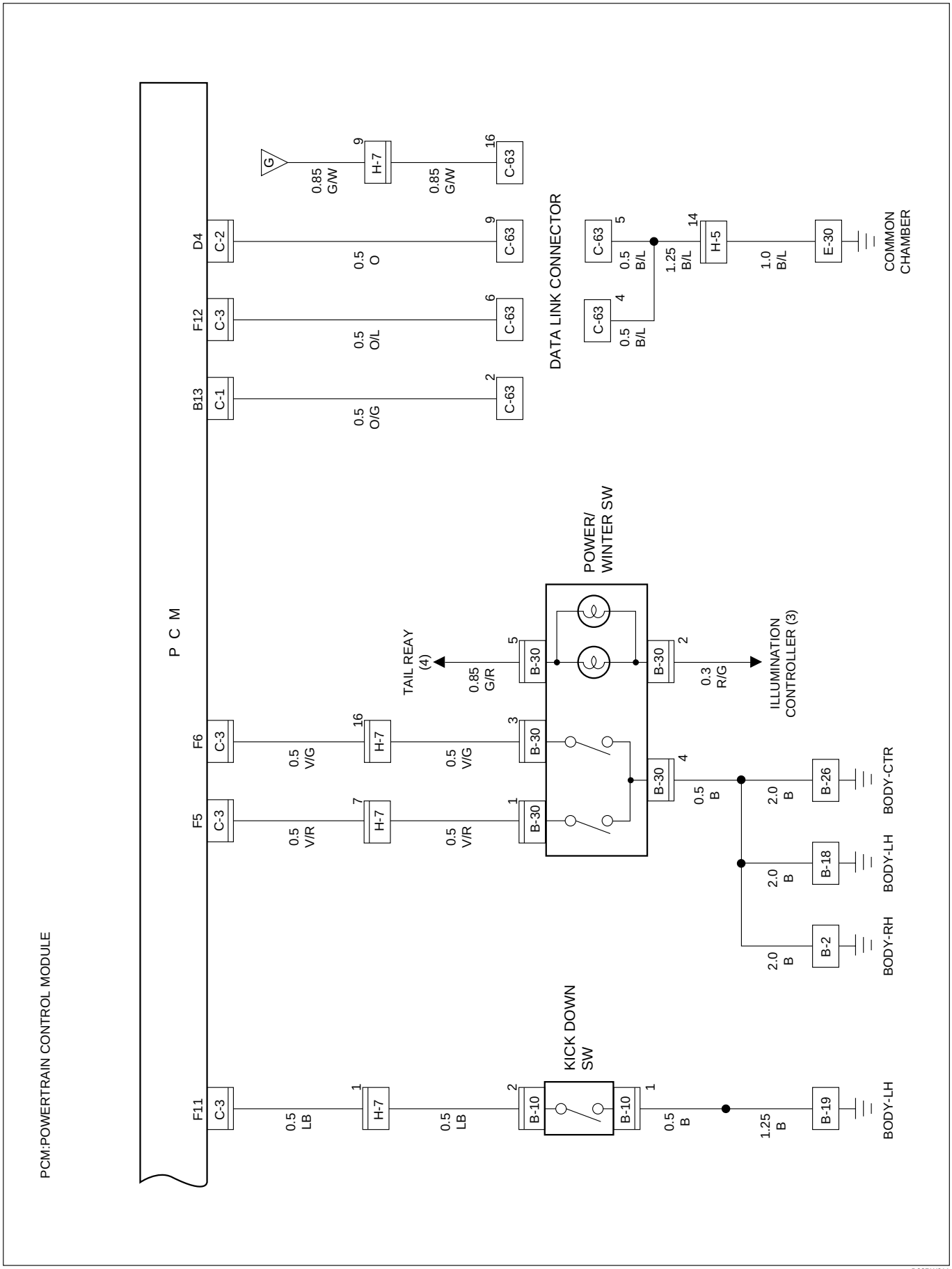

D08RW911

Parts Location (LHD 6V∗1) – 1

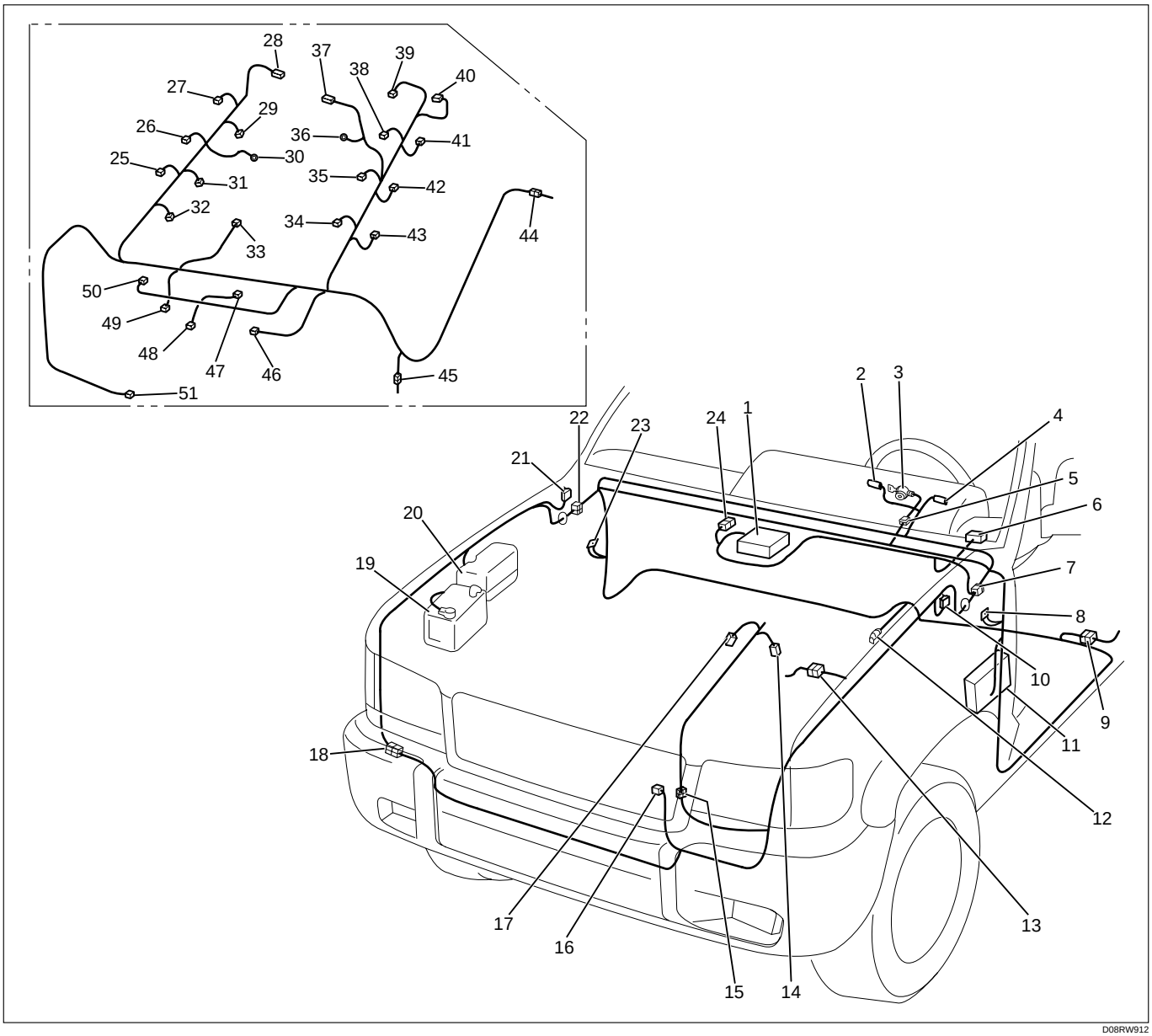

Legend

(1) PCM
(2) I-10
(3) Starter Switch
(4) I-9
(5) B-10
(6) C-63
(7) H-7, H-8, H-9, H-24
(8) B-18, B-19
(9) H-46
(10) C-16
(11) Fuse Box
(12) B-26
(13) H-4, H-5, H-6
(14) M-18
(15) H-11
(16) C-87
(17) M-17
(18) H-41, H-42
(19) Battery
(20) Relay and Fuse Box (X-12, X-11)
(21) C-39
(22) H-12, H-13, H-16
(23) B-1, B-2
(24) C-88
(25) E-37
(26) E-38
(27) E-39
(28) E-33
(29) E-24
(30) E-30
(31) E-25
(32) E-26
(33) E-14

(34) E-11
(35) E-12
(36) E-28, E-29
(37) E-7
(38) E-13
(39) E-32
(40) E-44
(41) E-42
(42) E-41
(43) E-40
(44) H-4, H-5, H-6
(45) E-4
(46) E-8
(47) E-5
(48) E-43
(49) E-20
(50) E-6
(51) E-27

Parts Location (LHD 6V∗1) – 2

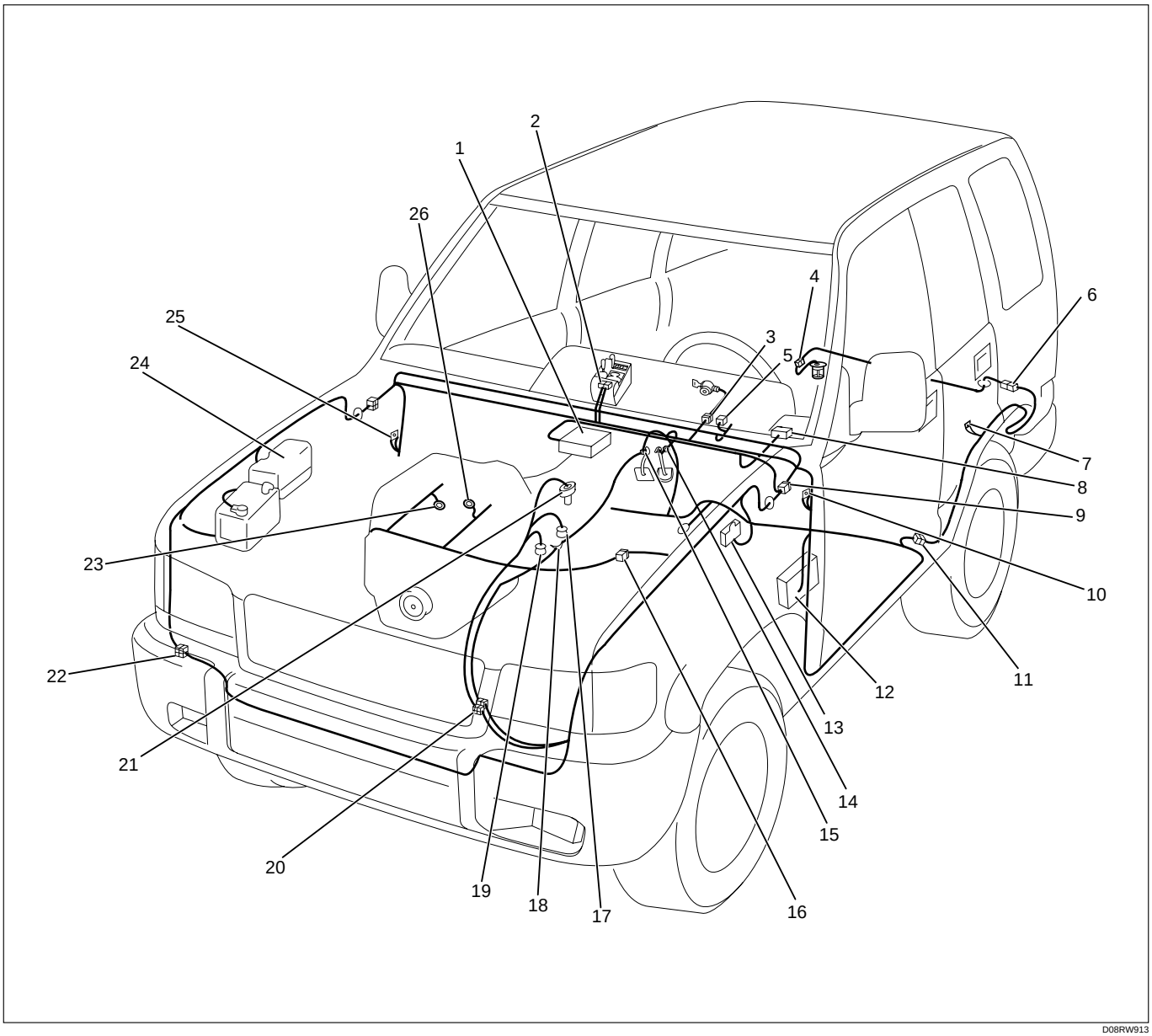

D08RW913

Legend

(1) PCM
(2) B-30
(3) B-11
(4) F-4
(5) I-9
(6) H-33
(7) R-4
(8) C-63
(9) H-7, H-8, H-9
(10) B-18, B-19
(11) H-46
(12) Fuse Box
(13) C-16
(14) B-13 or B-14
(15) B-10
(16) H-5
(17) M-7
(18) M-25
(19) M-6
(20) H-10, H-11, H-53
(21) M-15
(22) H-41
(23) E-30
(24) Relay and Fuse Box
(25) B-2
(26) E-28, E-29

QOS-III (4JG2)

General Description

The circuit consists of the starter switch, QOS-III control unit, glow relay, charge relay, fuel cut solenoid, dropping resistor, thermo sensor, glow indicator light (meter), glow plug and car speed sensor. The engine coolant temperature at the time of the engine start-up is sensed by the thermo sensor to change the glow time so that the optimum starting conditions can always be obtained.

The idling speed just after the engine start-up can also be placed in the most suitable conditions in accordance with the coolant temperature by the operation of the delay timer.

The indicator timer is activated upon the starter switch turned to the ON position, and the indicator light comes on for as much time as suitable for the engine coolant temperature at the time of the engine start-up.

Circuit Diagram (RHD)-1

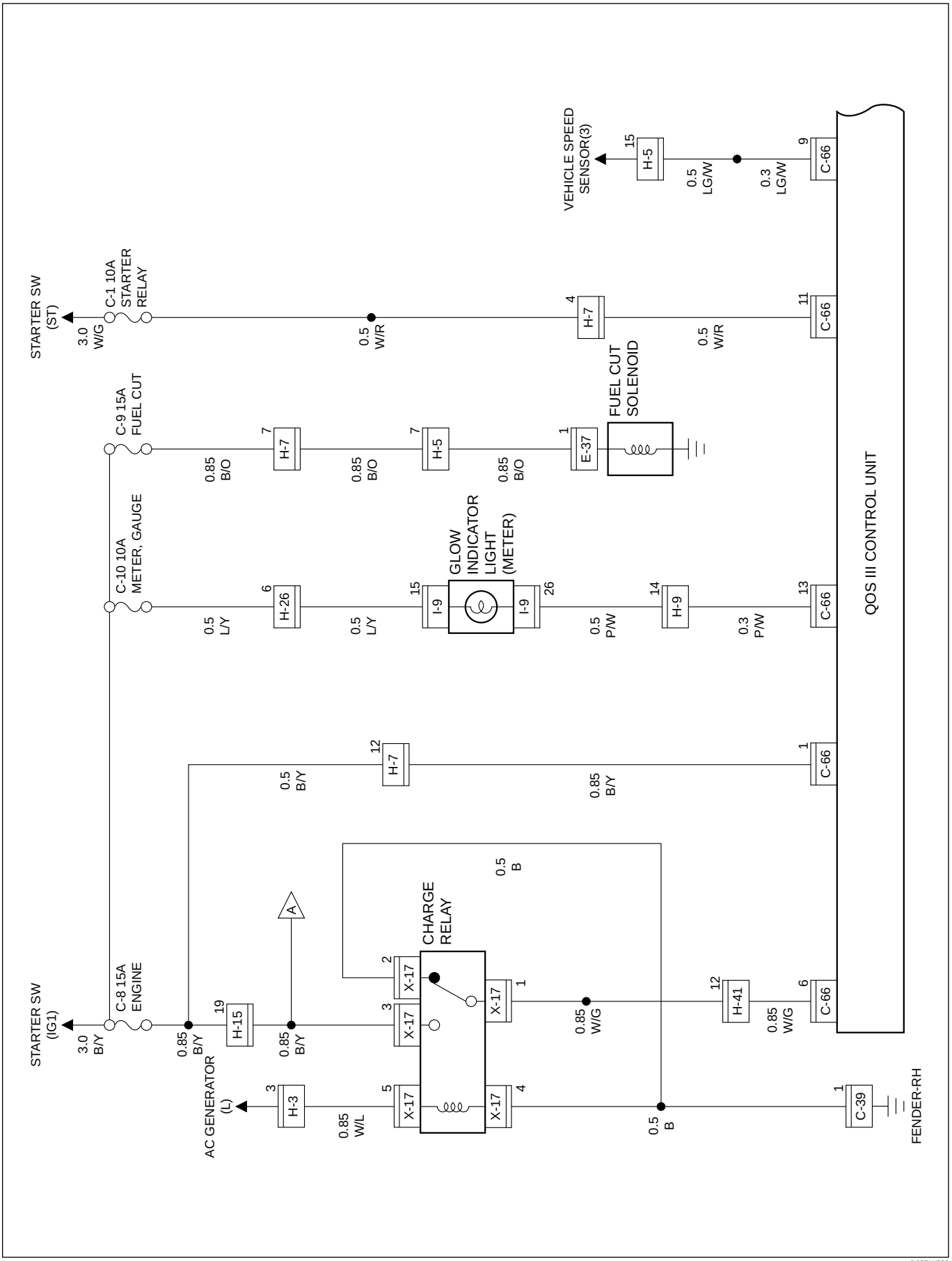

D08RW982

Circuit Diagram (RHD)-2

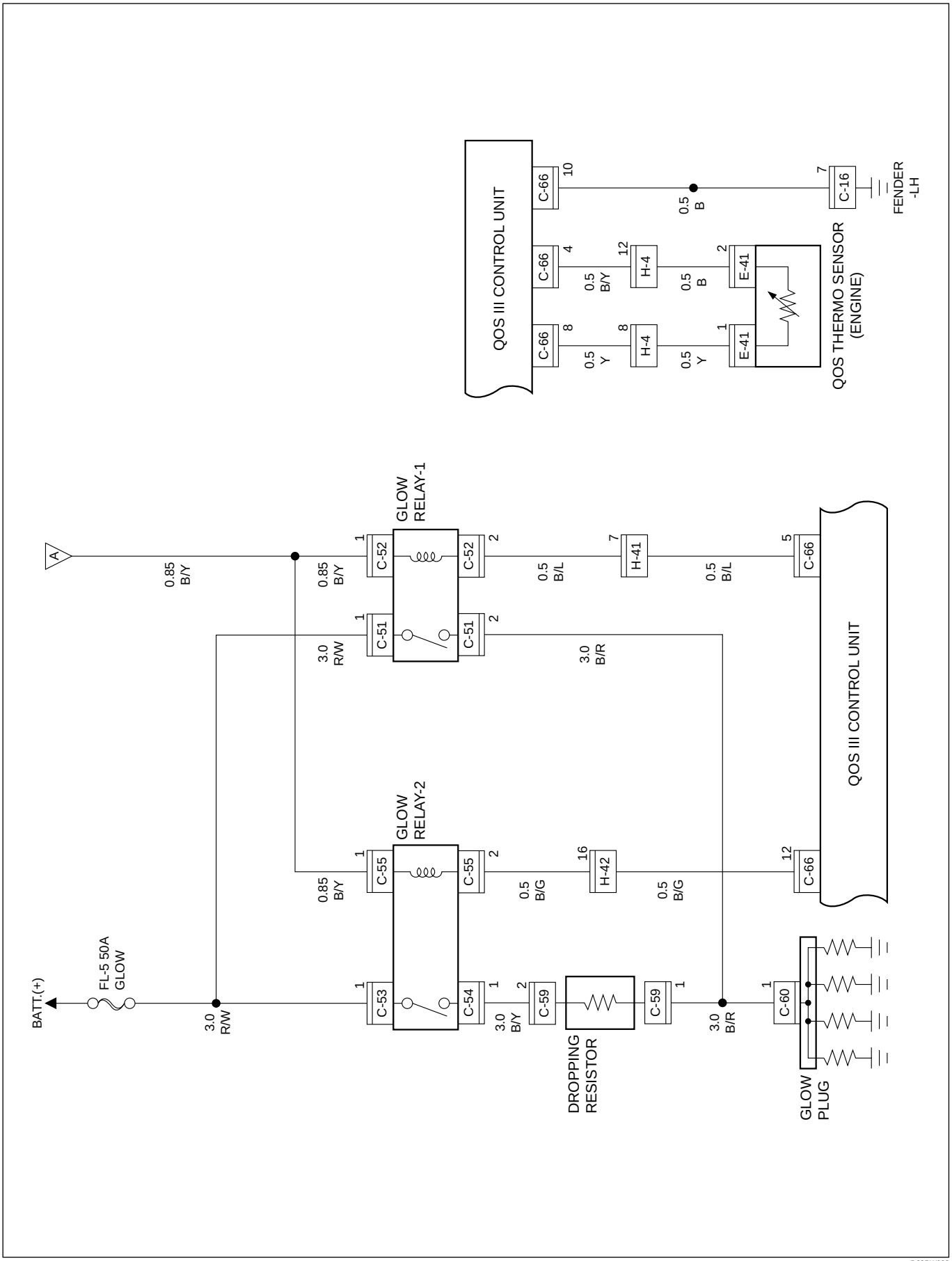

D08RW980

Parts Location (RHD)

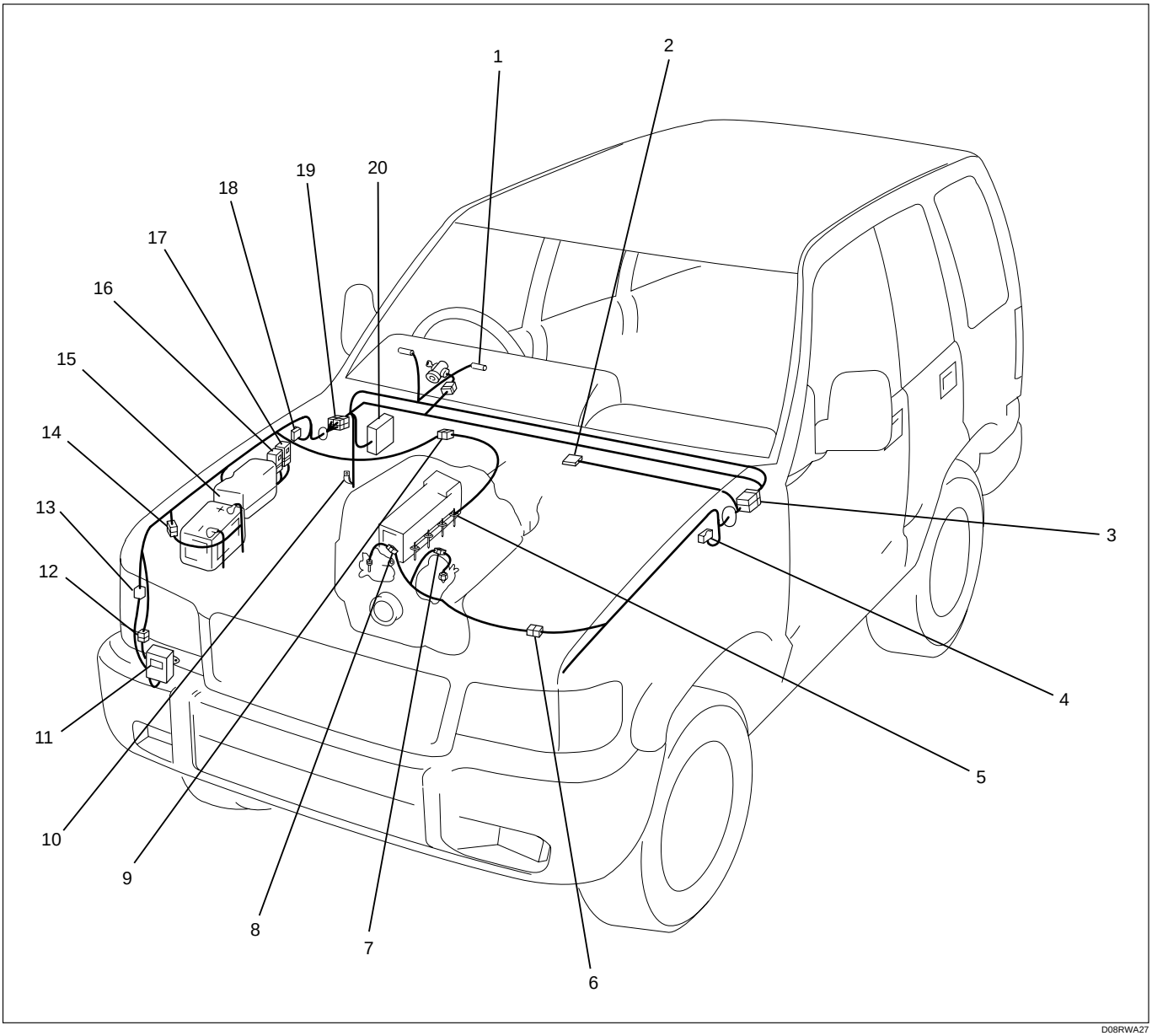

Legend

(1) I-9
(2) C-66
(3) H-7, H-9
(4) C-16
(5) Glow Plug × 4
(6) H-4, H-5
(7) E-37
(8) E-41
(9) C-60
(10) B-19
(11) Dropping Resistor
(12) C-59
(13) H-41, H-42
(14) H-3
(15) Relay and Fuse Box (X-17)
(16) Glow Relay-1 (C-51, C-52)
(17) Glow Relay-2 (C-53, C-54, C-55)
(18) C-39
(19) H-15, H-26
(20) Fuse Box

Circuit Diagram (LHD)-1

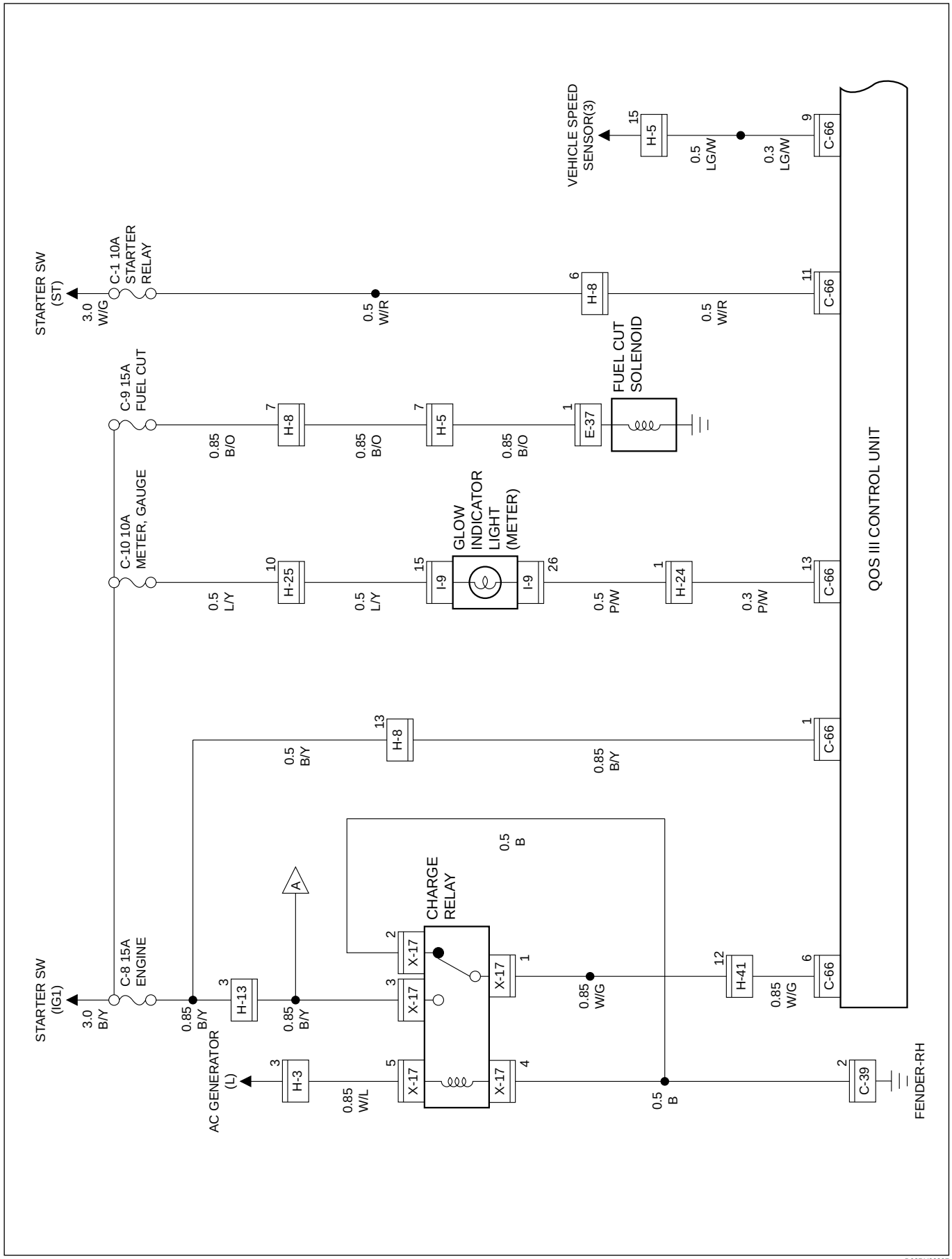

D08RY00297

Circuit Diagram (LHD)-2

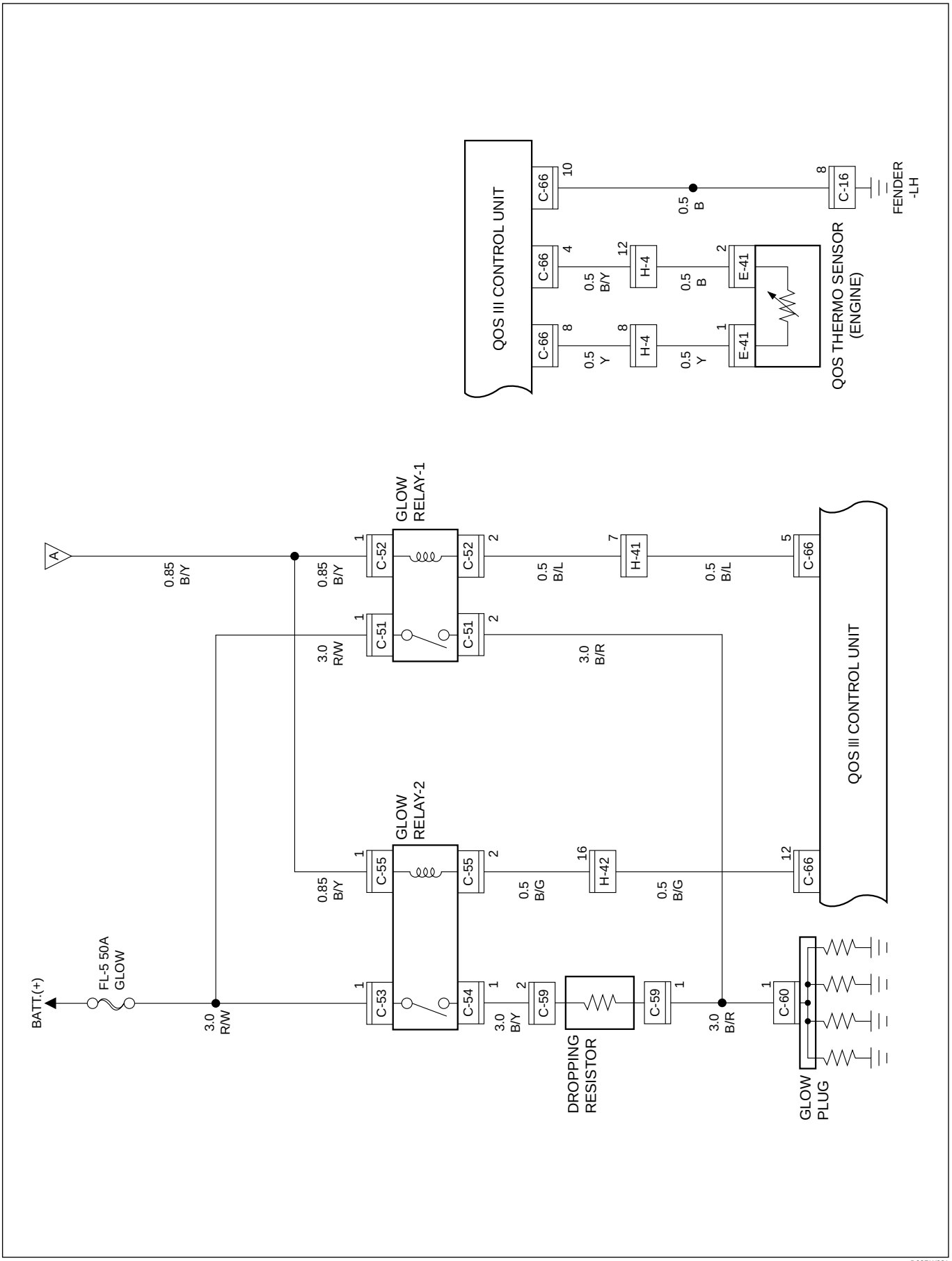

D08RW981

Parts Location (LHD)

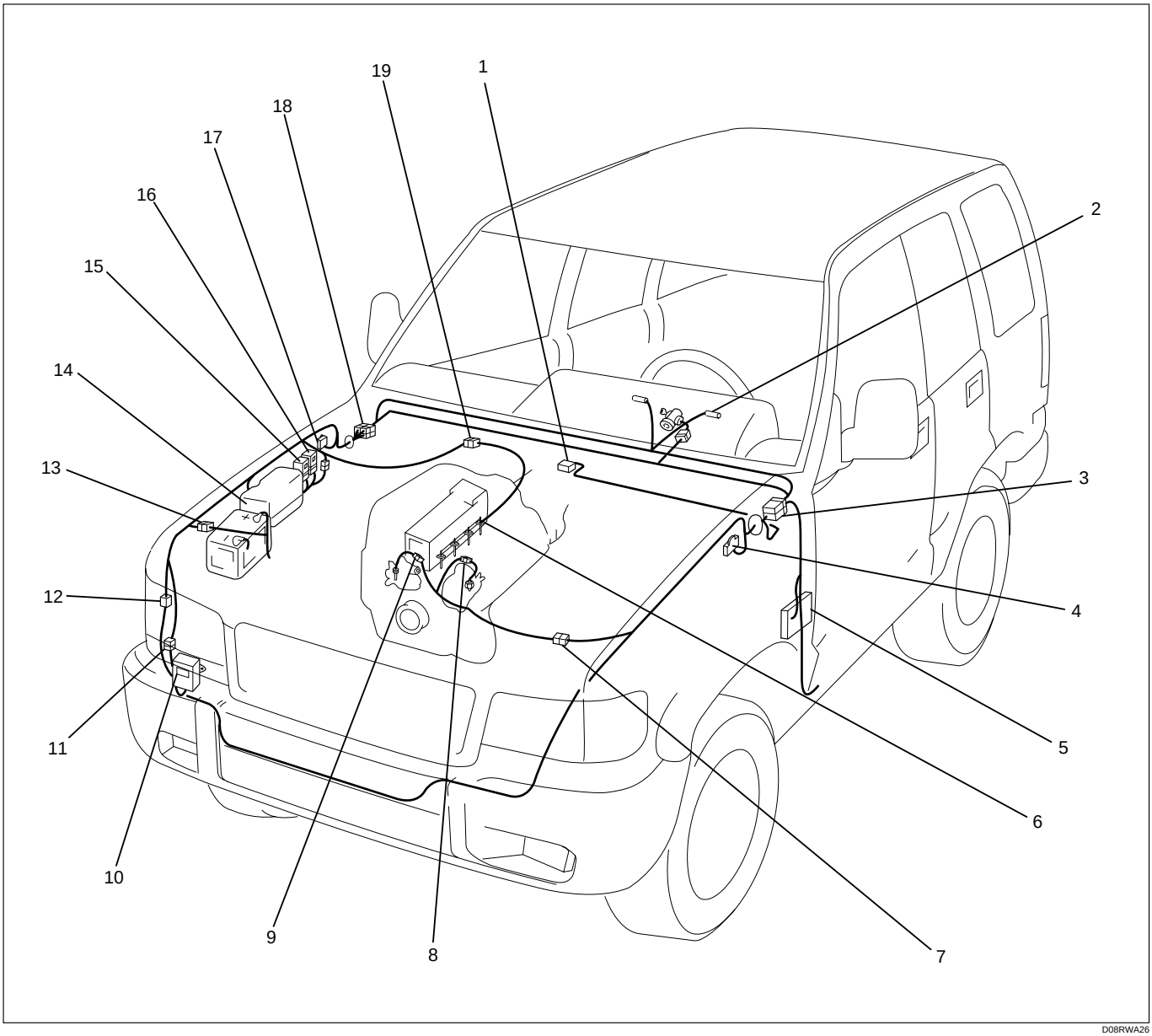

D08RWA26

Legend

(1) C-66
(2) I-9
(3) H-7, H-8, H-24, H-25
(4) C-16
(5) Fuse Box
(6) Glow Plug × 4
(7) H-4, H-5
(8) E-37
(9) E-41
(10) Dropping Resistor
(11) C-59
(12) H-41, H-42
(13) H-3
(14) Relay and Fuse Box (X-17)
(15) Glow Relay-1 (C-51, C-52)
(16) Glow Relay-2 (C-53, C-54, C-55)
(17) C-39
(18) H-13
(19) C-60

QOS and EGR System (4JG2)

General Description

The circuit consists of the starter switch, QOS/EGR control unit, glow relay, charge relay, fuel cut solenoid, dropping resistor, thermo sensor, glow indicator light (meter), glow plug, vehicle speed sensor, tacho sensor, throttle position sensor, EVRV and VSV; EGR.

The engine coolant temperature at the time of the engine start-up is sensed by the thermo sensor to change the glow time so that the optimum starting conditions can always be obtained.

The idling speed just after the engine start-up can also be placed in the most suitable conditions in accordance with the coolant temperature by the operation of the delay timer.

The indicator timer is activated upon the starter switch turned to the ON position, and the indicator light comes on for as much time as suitable for the engine coolant temperature at the time of the engine start-up.

EGR system controls the information of NOx by returning a small amount of exhaust gas from the intake manifold to the combustion chamber through the EGR valve.

Circuit Diagram (RHD)-1

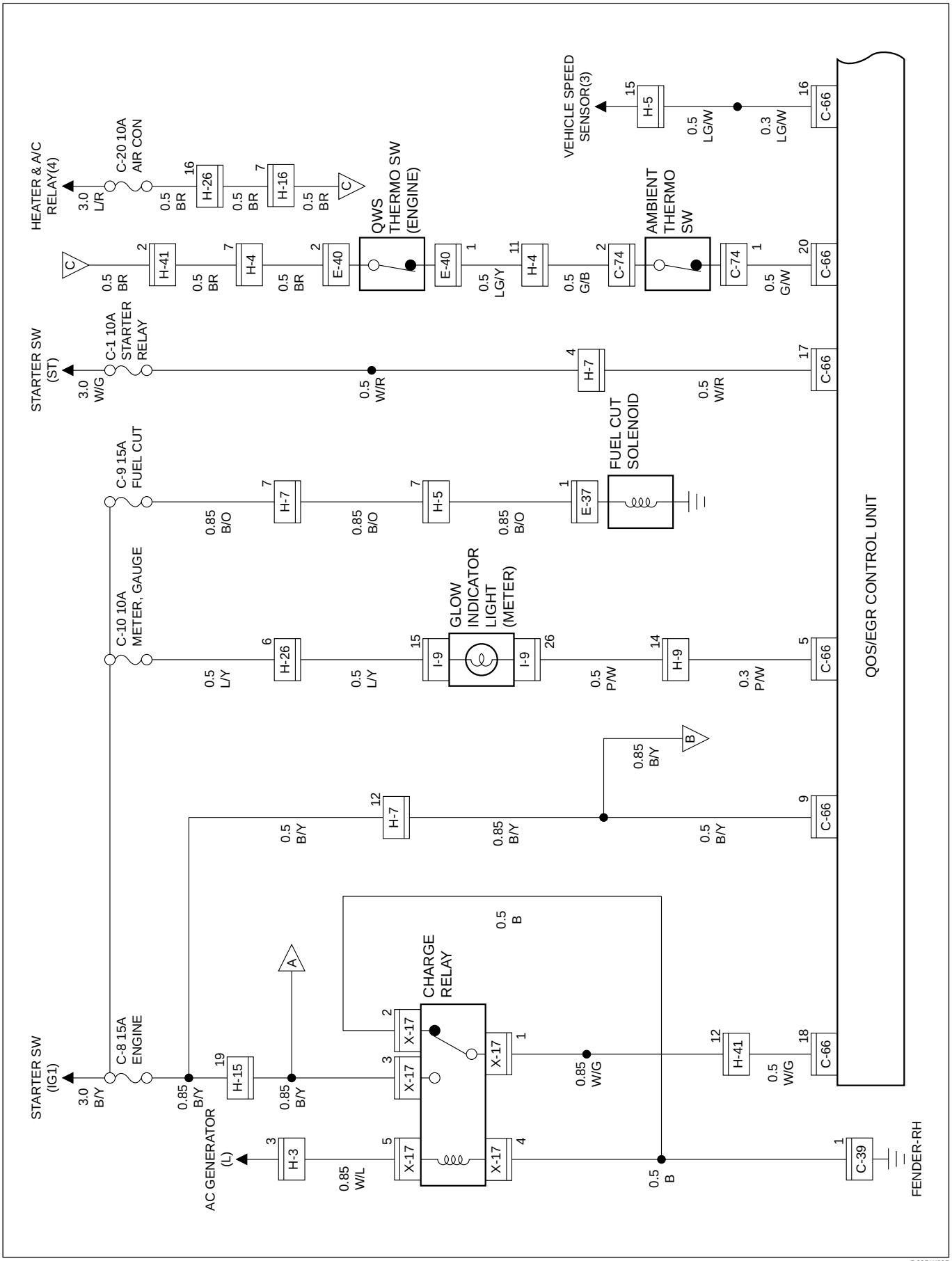

D08RW695

Circuit Diagram (RHD)-2

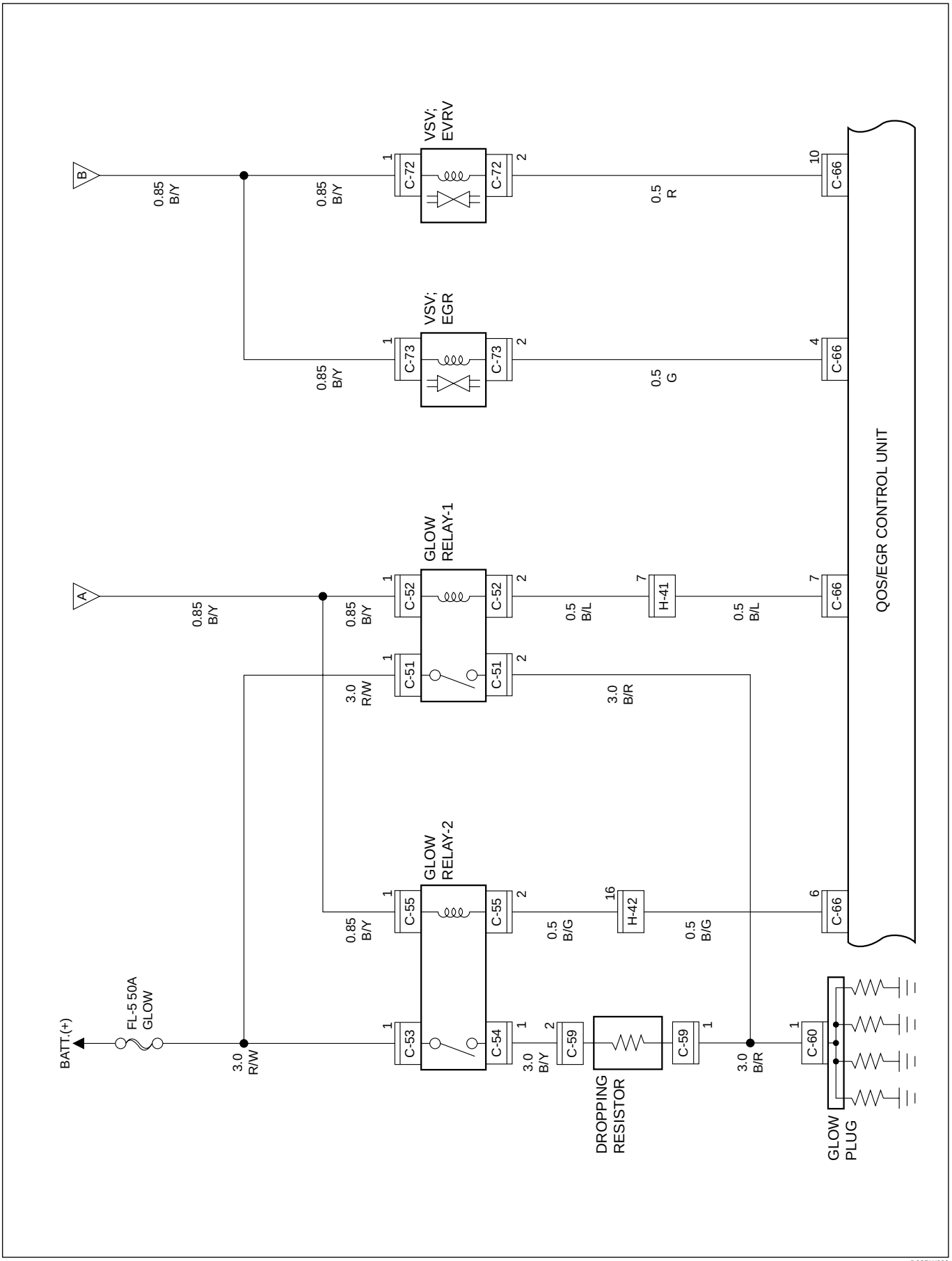

D08RW696

Circuit Diagram (RHD)-3

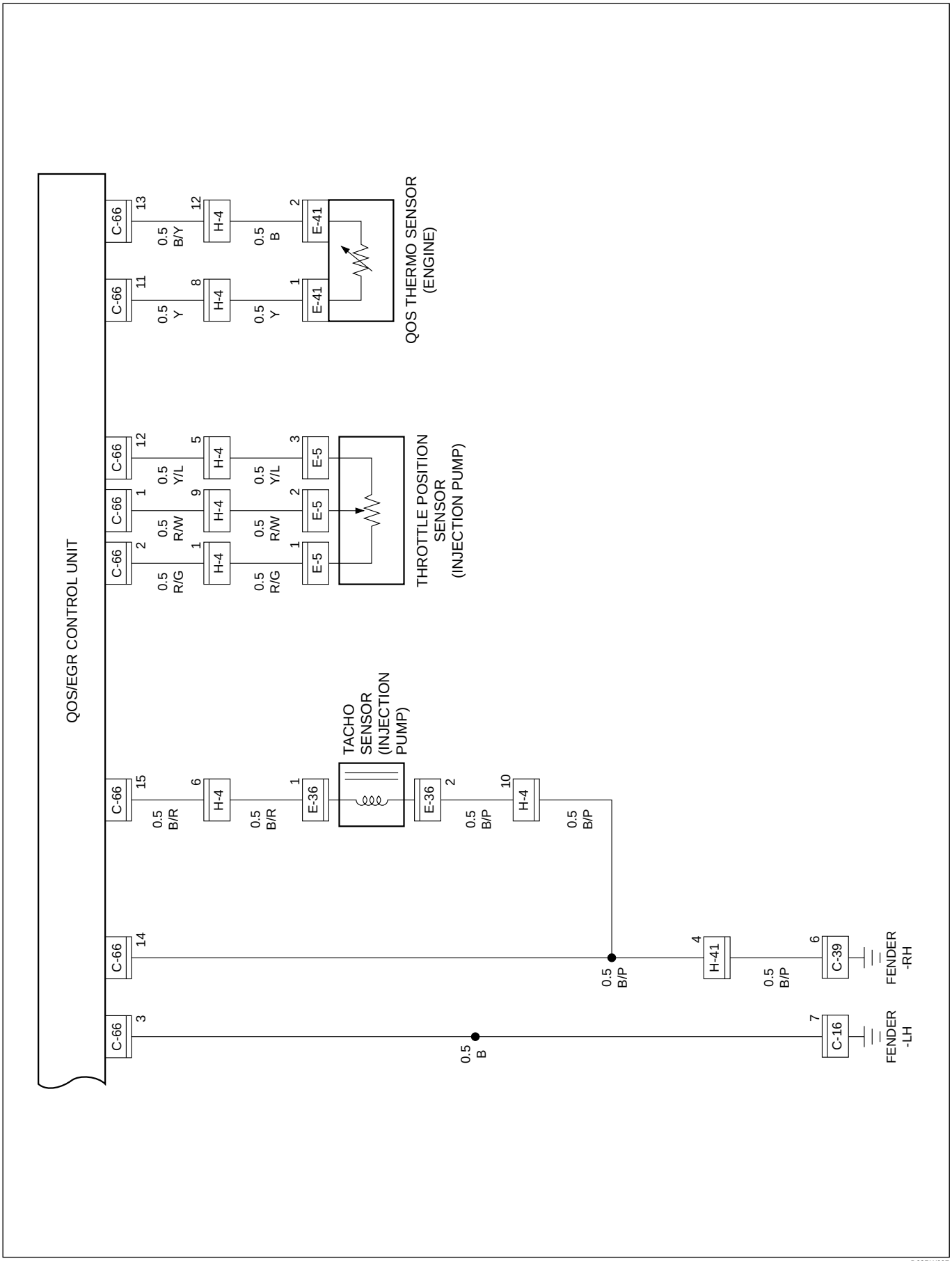

D08RW697

Parts Location (RHD)

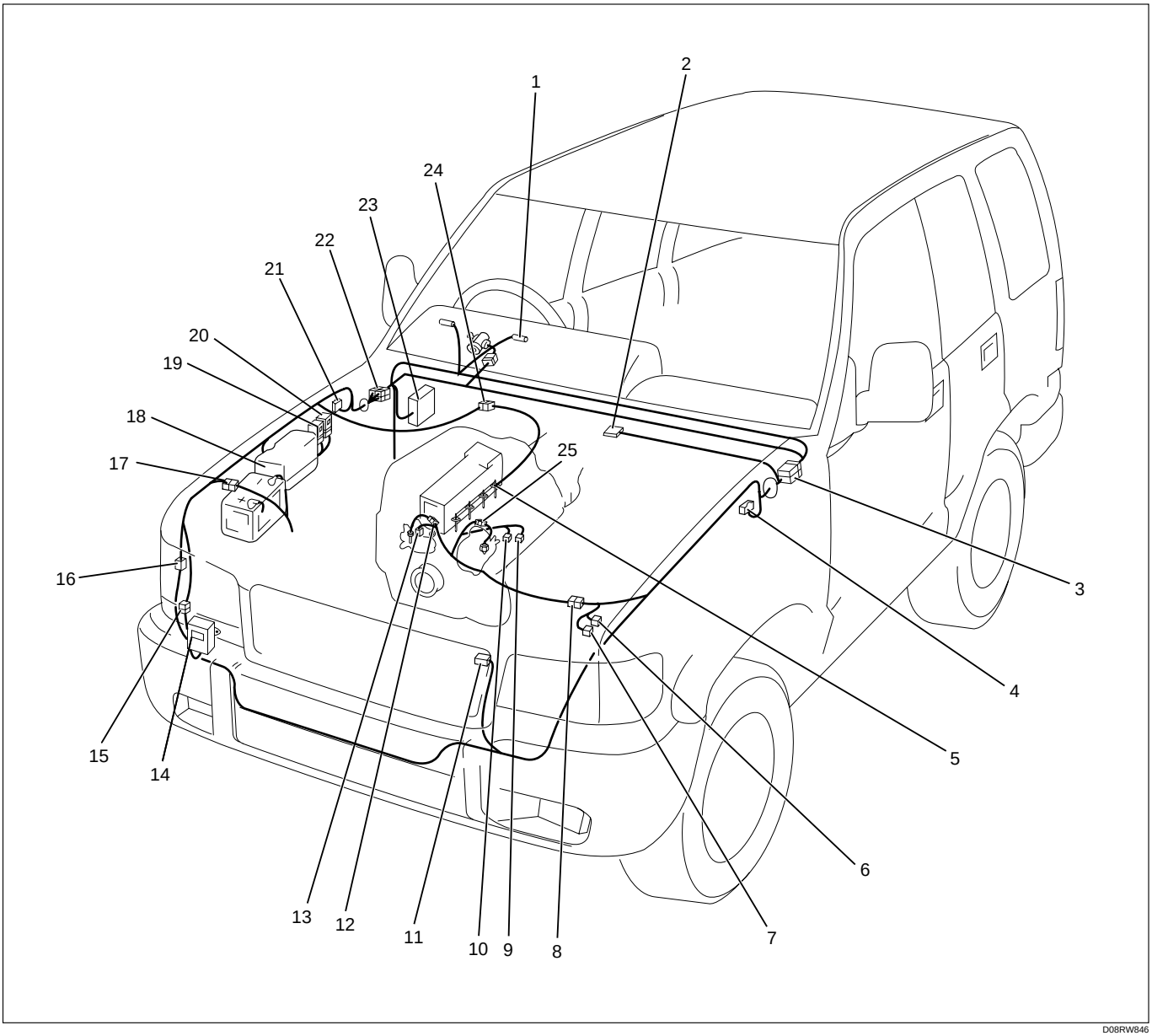

Legend

(1) I-9
(2) C-66 (QOS/EGR Control Unit)
(3) H-7, H-9
(4) C-16
(5) Glow Plug
(6) C-72
(7) C-73
(8) H-4, H-5
(9) E-36
(10) E-5
(11) C-74
(12) E-41
(13) E-40
(14) Dropping Resistor
(15) C-59
(16) H-41, H-42
(17) H-3
(18) Relay and Fuse Box (X-17)
(19) C-51, C-52 (Glow Relay-1)
(20) C-53, C-54, C-55 (Glow Relay-2)
(21) C-39
(22) H-15, H-16, H-26
(23) Fuse Box
(24) C-60
(25) E-37

Circuit Diagram (LHD)-1

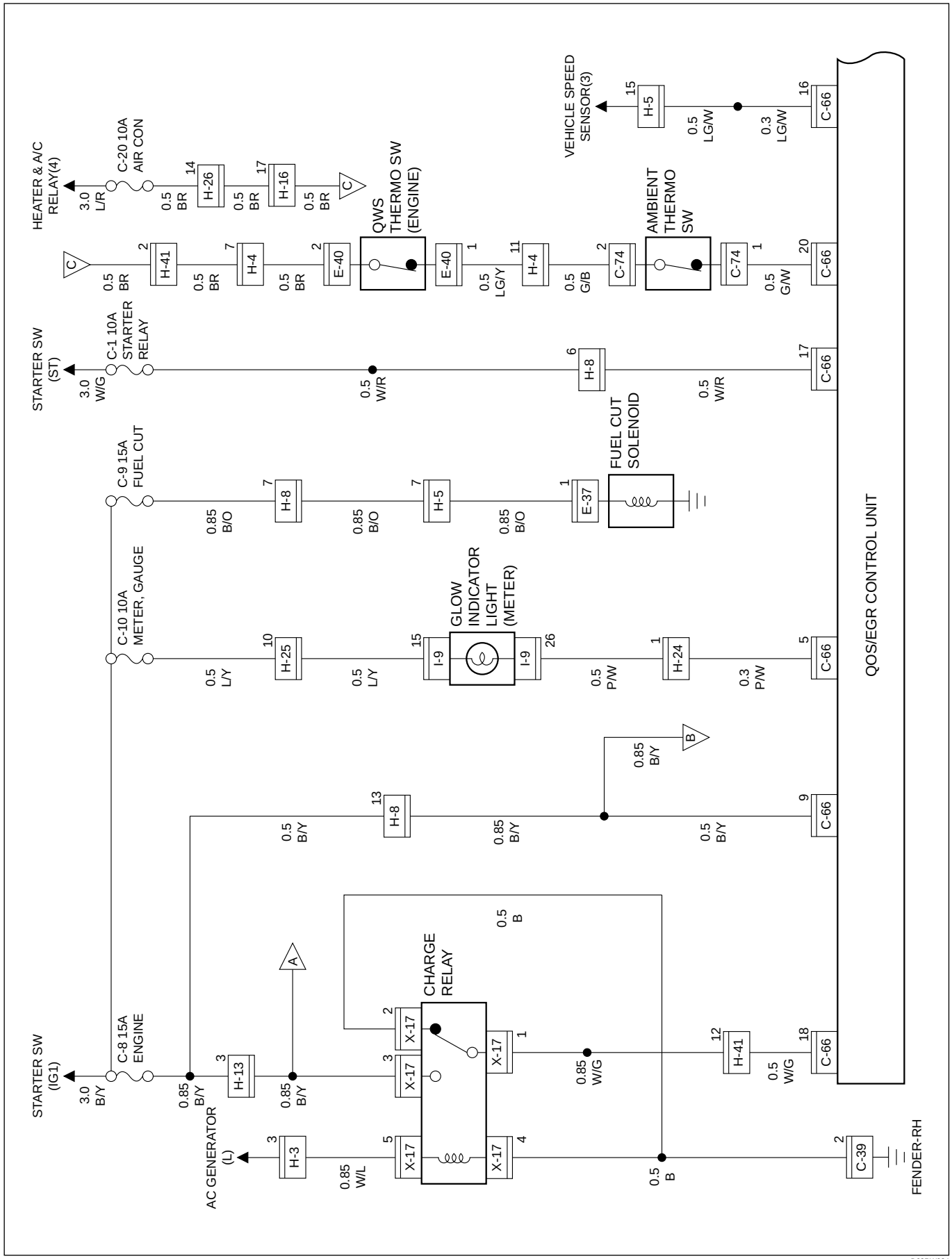

D08RW984

Circuit Diagram (LHD)-2

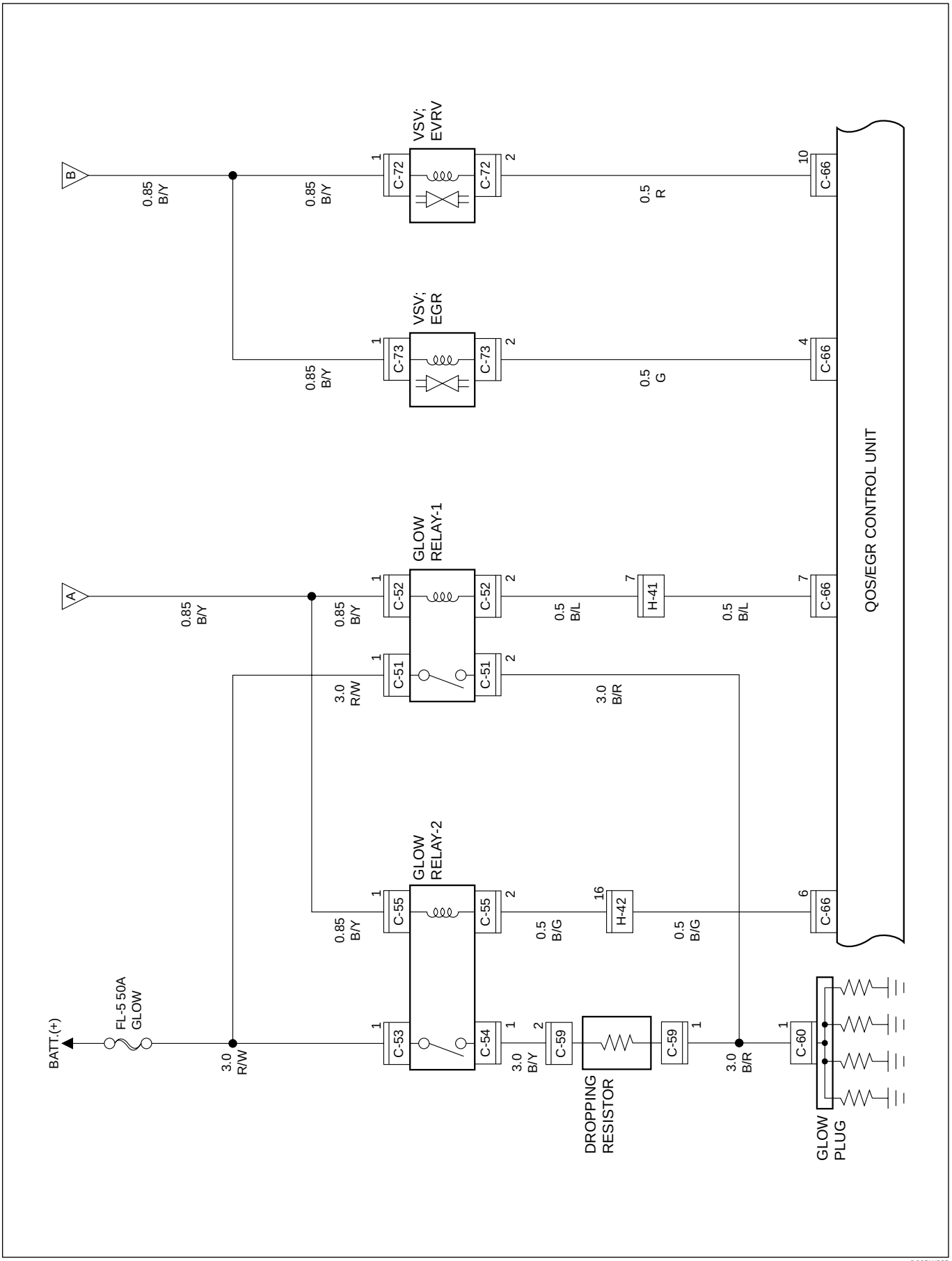

Circuit Diagram (LHD)-3

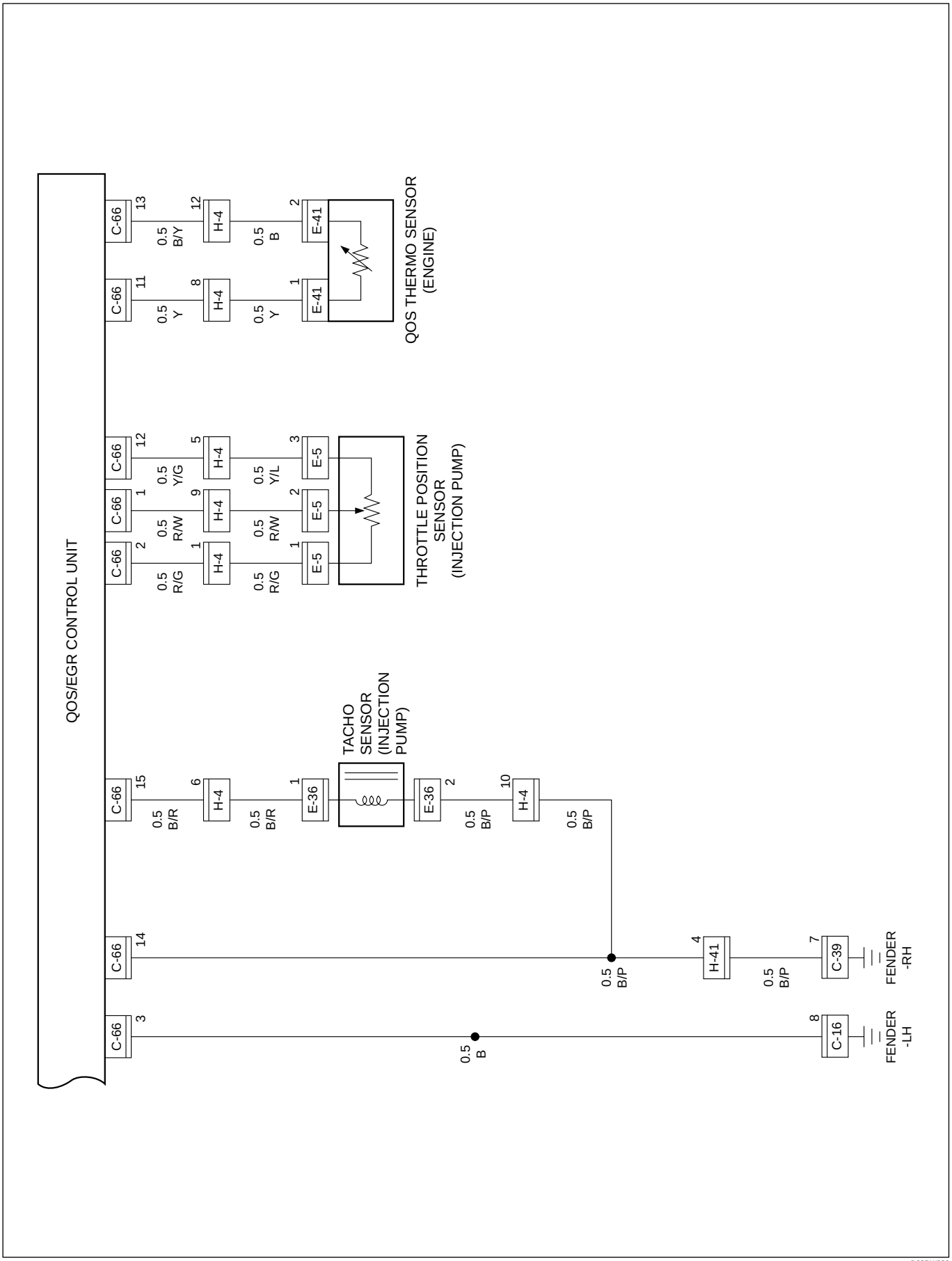

D08RW986

Parts Location (LHD)

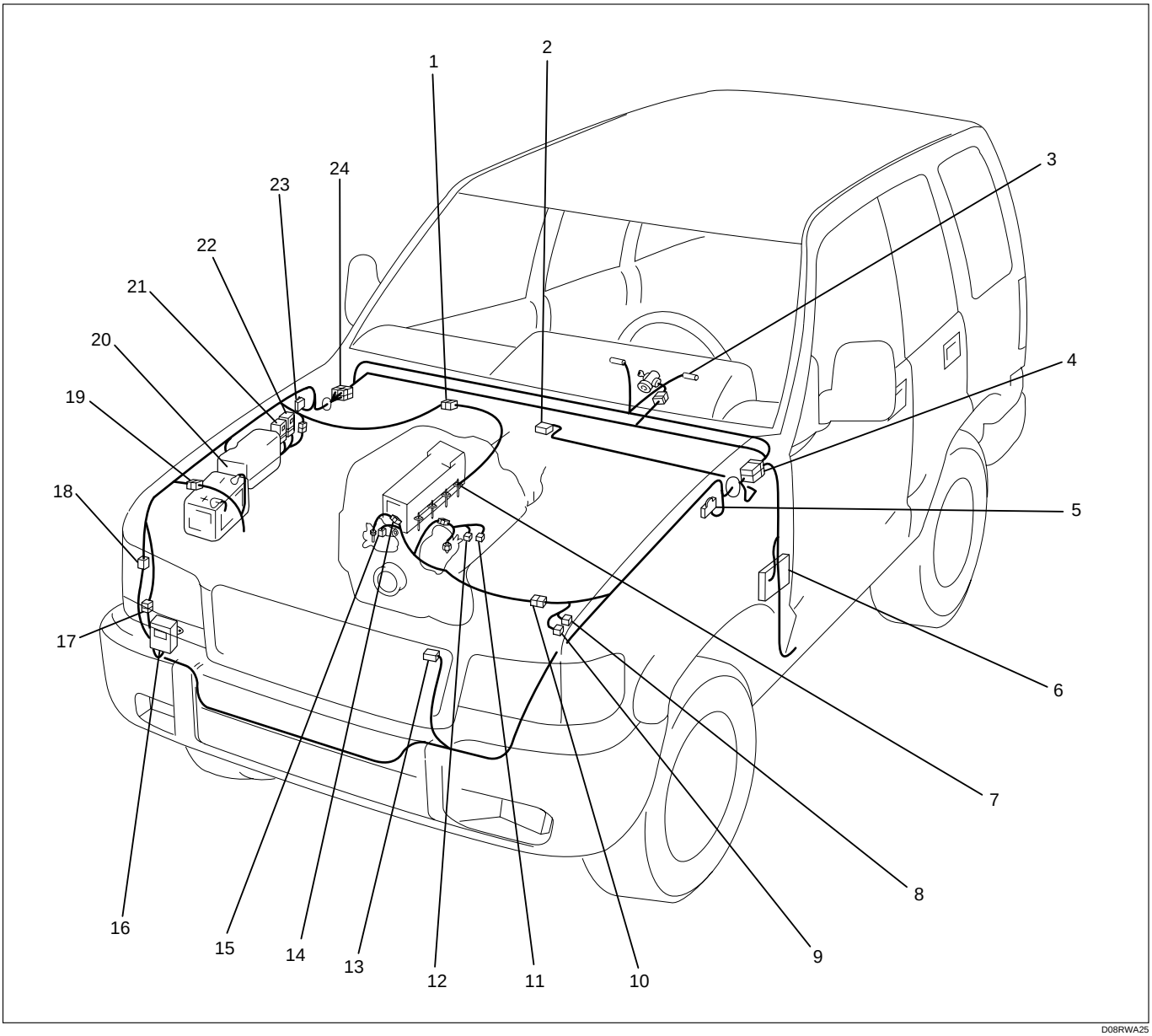

Legend

(1) C-60
(2) QOS/EGR Control Unit (C-66)
(3) I-9
(4) H-8, H-24, H-25, H-26
(5) C-16
(6) Fuse Box
(7) Glow Plug × 4
(8) C-72
(9) C-73
(10) H-4, H-5
(11) E-36
(12) E-5
(13) C-74
(14) E-41
(15) E-40
(16) Dropping Resister
(17) C-59
(18) H-41, H-42
(19) H-3
(20) Relay and Fuse Box (X-17)
(21) Glow Relay-1 (C-51, C-52)
(22) Glow Relay-2 (C-53, C-54, C-55)
(23) C-39
(24) H-13, H-16

Headlight and Fog Light

General Description

The circuit consists of the headlight, FRT fog light, lighting SW, dimmer•passing SW, FRT fog light SW, high beam indicator, tail relay, lighting relay, FRT fog light relay and dimmer relay (LHD).

When the lighting SW is turned on by setting it at headlight position, the lighting relay is activated to turn on the headlight. The optical axis of the headlight can be turned up or down by operating the dimmer SW while the headlight is on.

The passing SW is independent of the lighting SW, and the optical axis of the passing light can be turned up only while the switch lever is pulled up and held in this state.

FRT fog lights turn on when the lighting SW is at clearance light or headlight position.

Circuit Diagram (RHD)-1

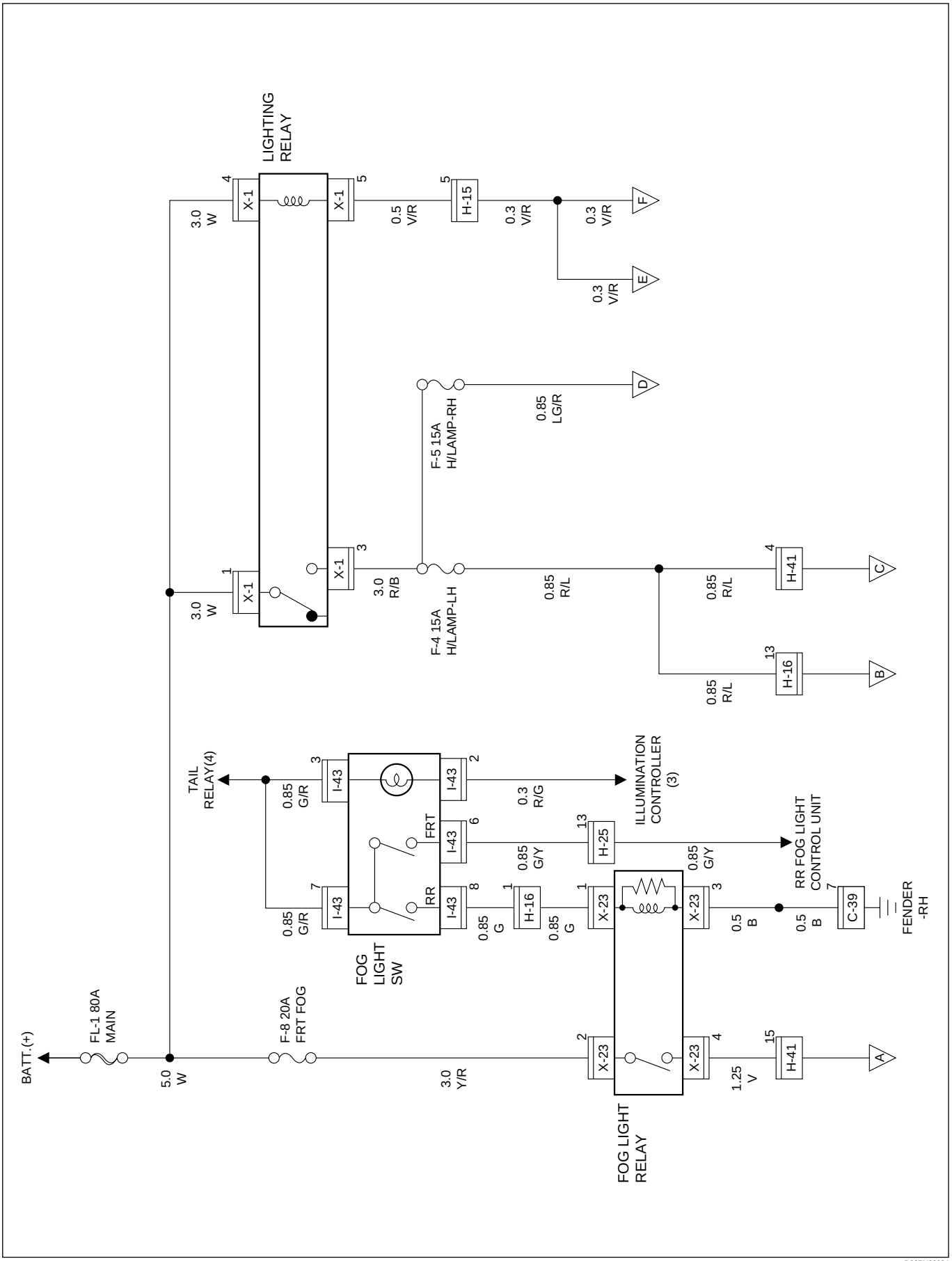

D08RY00084

Circuit Diagram (RHD)-2

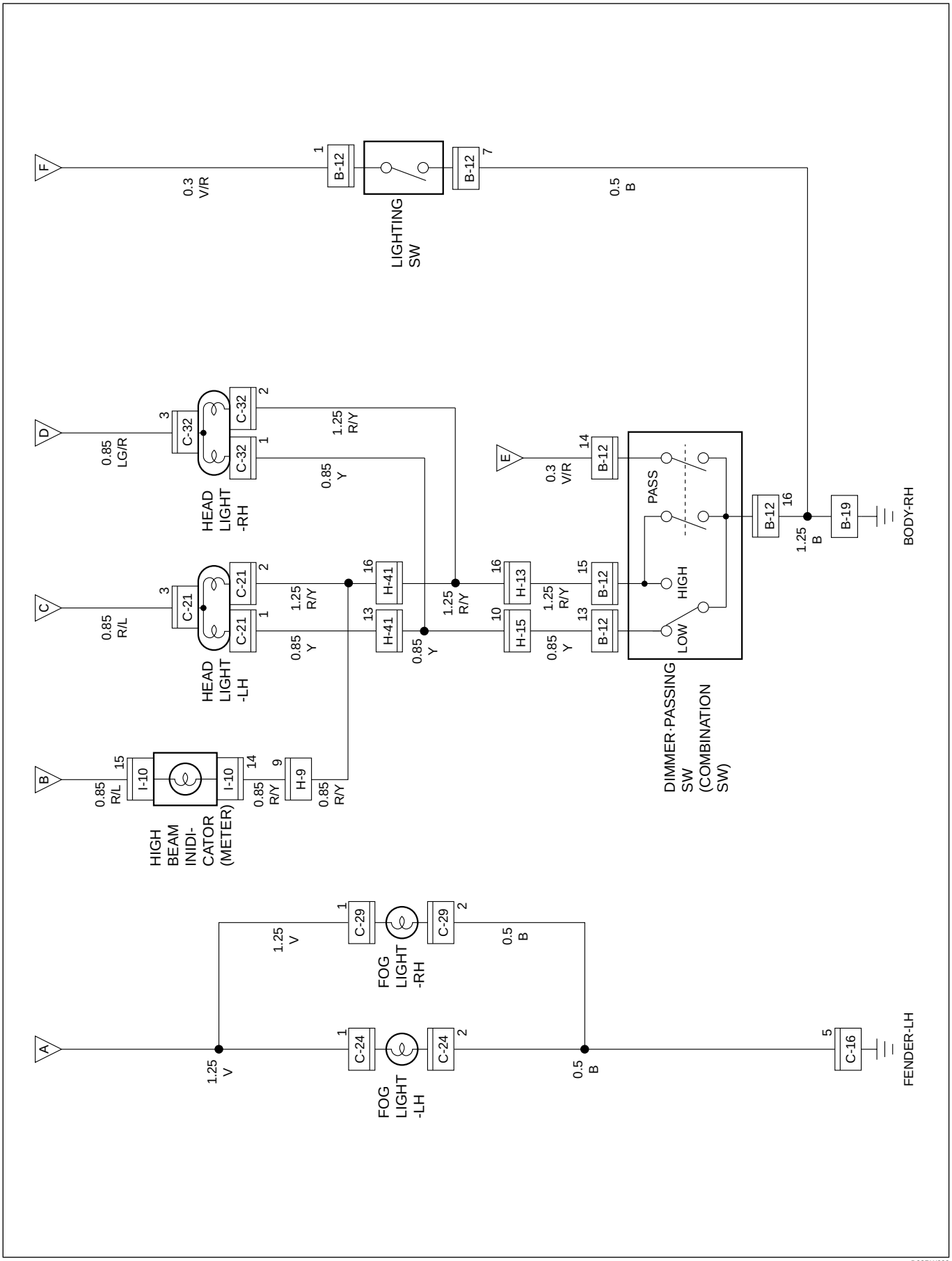

D08RW609

Parts Location (RHD)

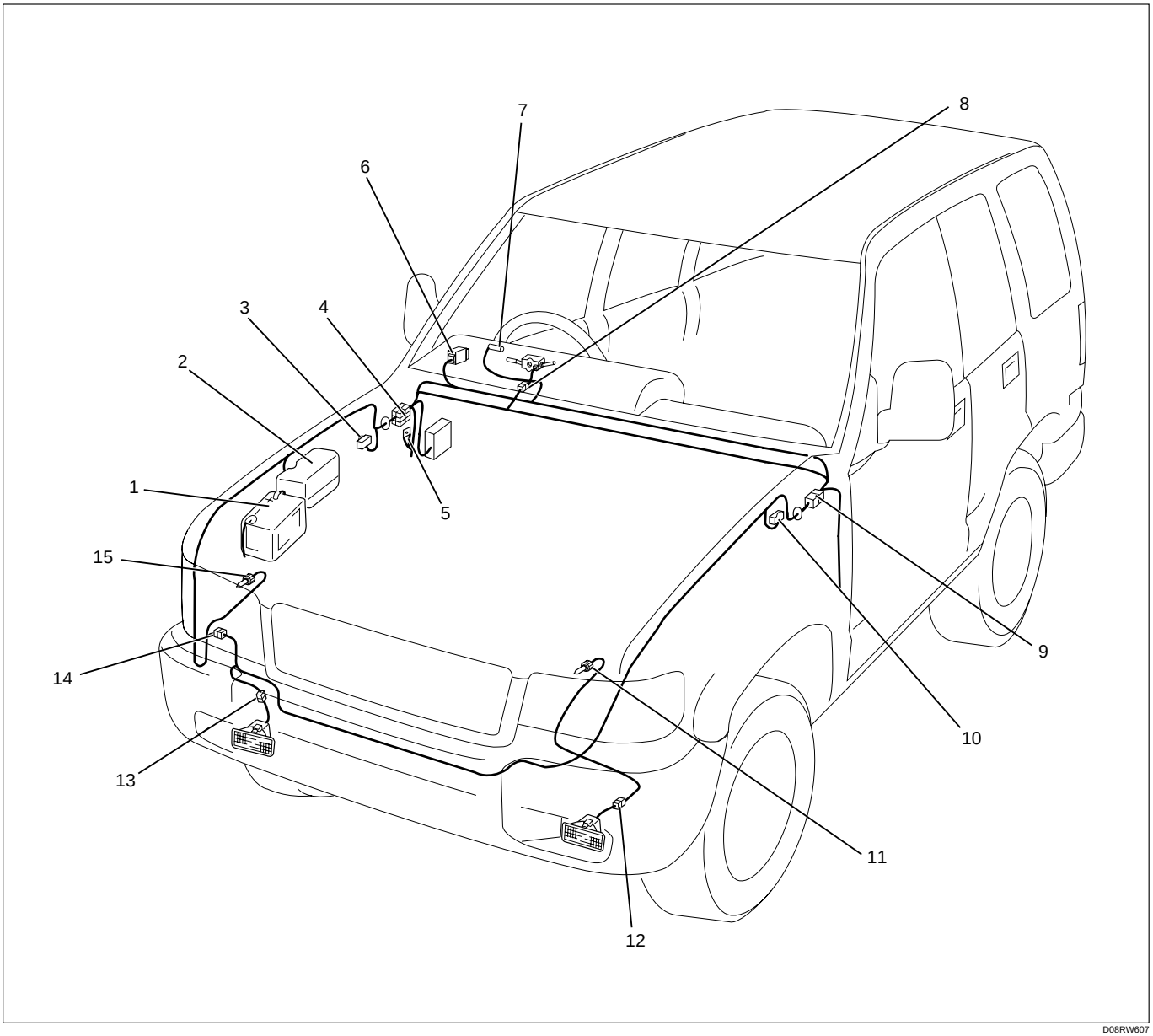

D08RW607

Legend

(1) Battery
(2) Relay and Fuse Box (X-1, X-23)
(3) C-39
(4) H-13, H-15, H-16, H-26
(5) B-19
(6) I-5
(7) I-10
(8) B-12
(9) H-9
(10) C-16
(11) C-21
(12) C-24
(13) C-29
(14) H-41, H-42
(15) C-32

Circuit Diagram (LHD)-1

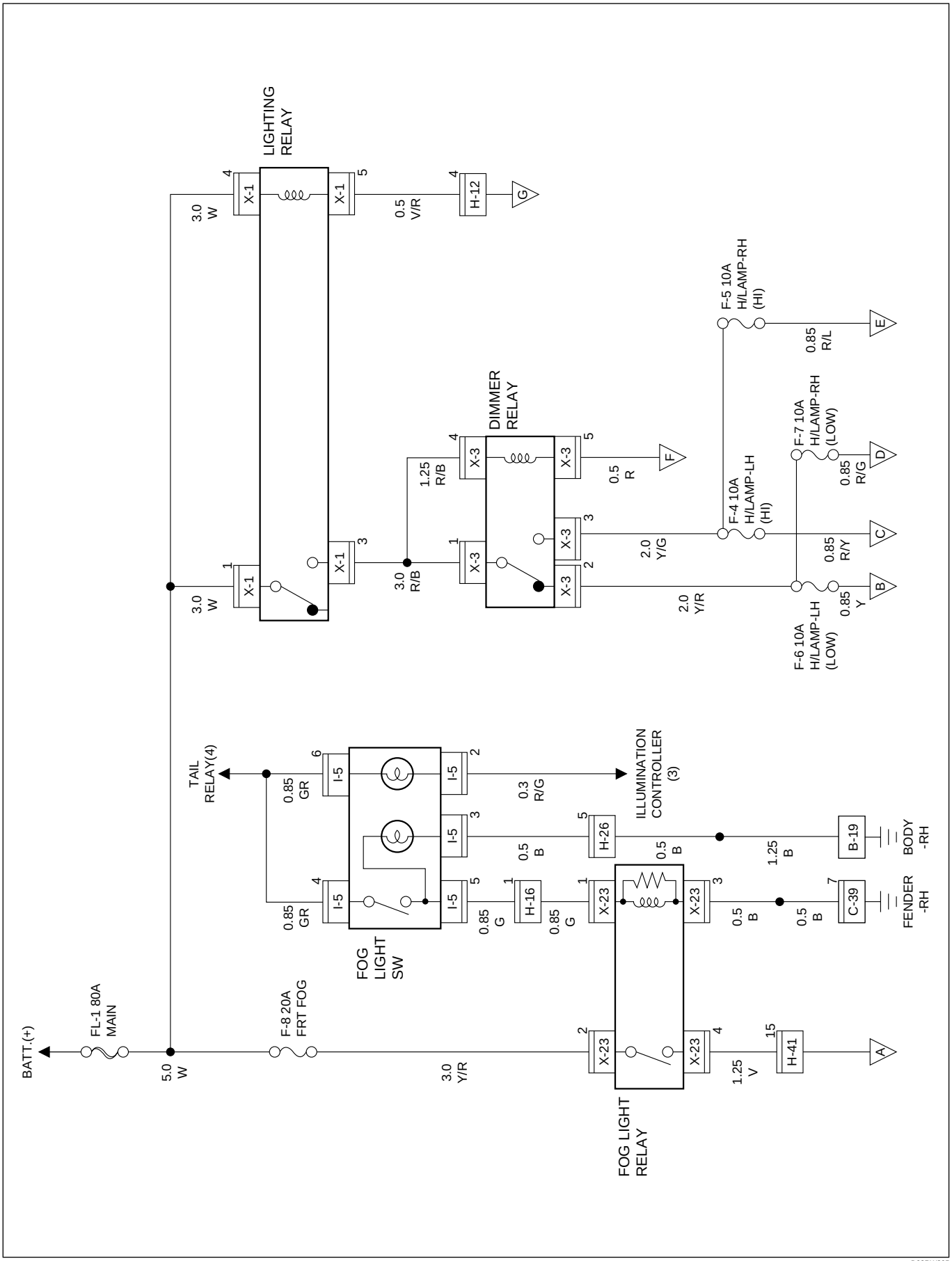

D08RW805

Circuit Diagram (LHD)-2

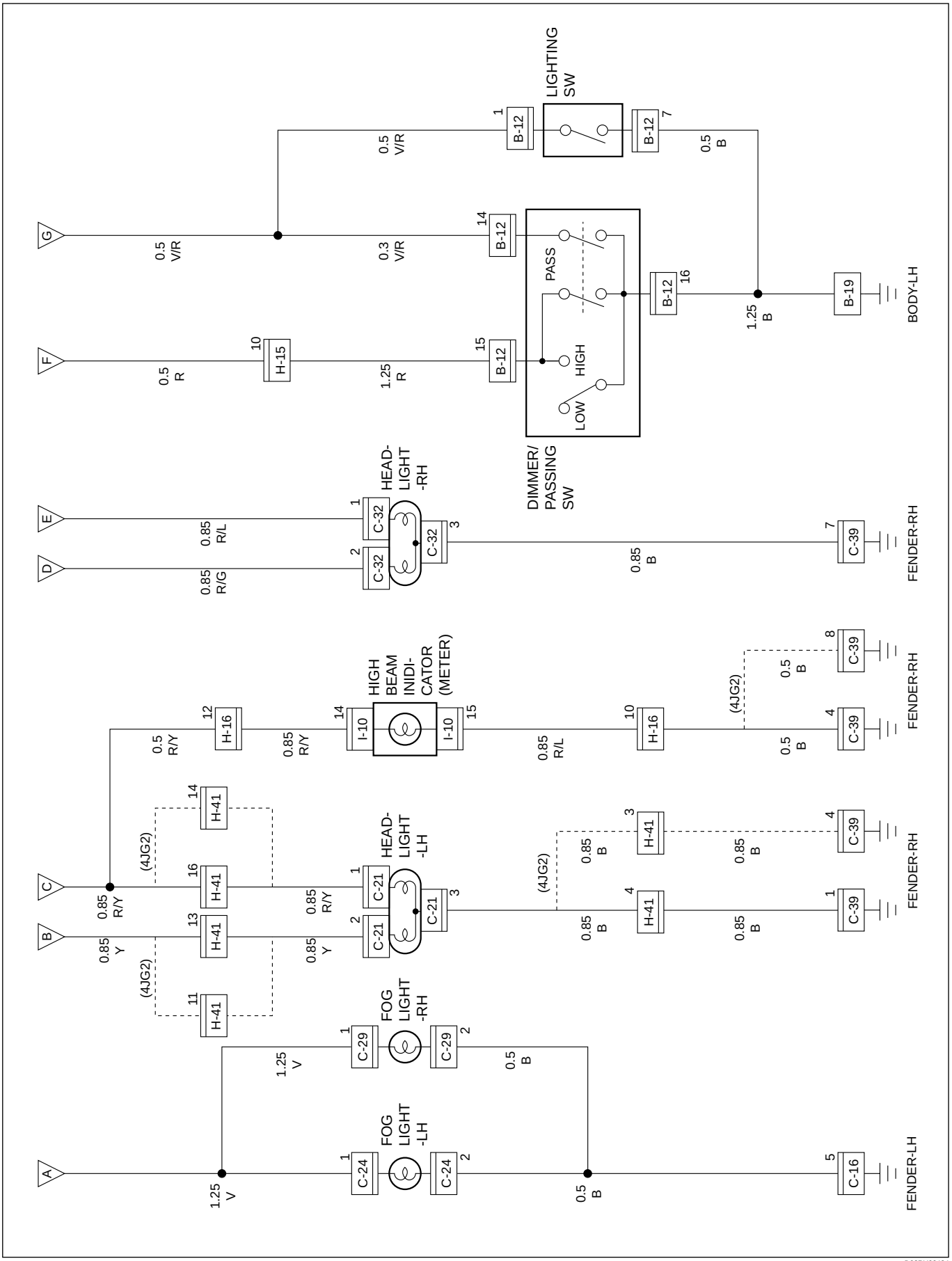

D08RY00424

Parts Location (LHD)

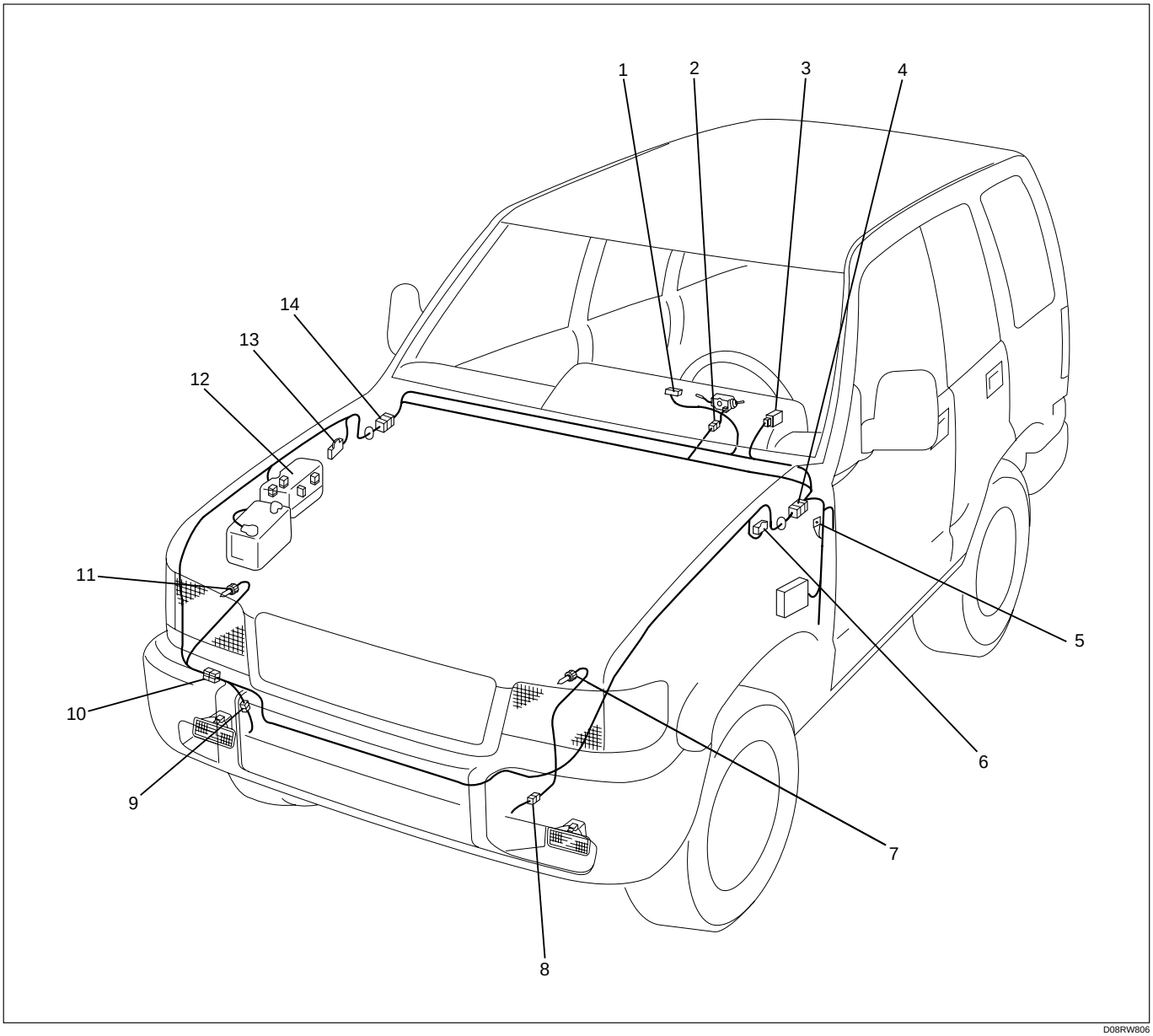

D08RW806

Legend

(1) I-10
(2) B-12
(3) I-5
(4) H-26
(5) B-19
(6) C-16
(7) C-21
(8) C-24
(9) C-29
(10) H-41, H-42
(11) C-32
(12) Relay and Fuse Box (X-1, X-3, X-23)
(13) C-39
(14) H-12, H-15, H-16

Diagnosis

Quick Chart for Check Points

1. Headlight (RHD)

Check point / Trouble mode	Fuse		Lighting relay	Lighting SW	Dimmer• Passing SW	Headlight bulb		Cable harness
	F–4 (15A)	F–5 (15A)				LH	RH	
1–1. Both Headlights inoperative			○	○	○			○
1–2. Headlight on the left (or right) side inoperative	○	○				○	○	○
1–3. Both headlights in low-beam inoperative					○			○
1–4. Headlight low-beam on the left (or right) side inoperative	○	○			○	○	○	○
1–5. Both headlights in high–beam inoperative					○			○
1–6. Headlight high-beam on the left (or right) side inoperative	○	○			○	○	○	○
1–7. Headlight beam does not change					○			○
1–8. Headlights remain on when the lighting SW is turned off			○	○				○
1–9. Headlights come on with the lighting SW at the clearance light position				○				
1–10. Passing lights inoperative					○			○

2. Headlight (LHD)

Check point / Trouble mode	Fuse				Lighting relay	Dimmer relay	Diode	Lighting SW	Dimmer• Passing SW	Headlight bulb		Cable harness
	F–4 (10A)	F–5 (10A)	F–6 (10A)	F–7 (10A)						LH	RH	
2–1. Both Headlights inoperative					○	○	○	○				○
2–2. Headlight on the left (or right) side inoperative										○	○	○
2–3. Both headlights in low-beam inoperative						○						○
2–4. Headlight low-beam on the left (or right) side inoperative			○	○						○	○	○
2–5. Both headlights in high-beam inoperative						○			○			○
2–6. Headlight high-beam on the left (or right) side inoperative	○	○								○	○	○
2–7. Headlight beam does not change						○			○			○
2–8. Headlights remain on when the lighting SW is turned off					○			○				○
2–9. Headlights come on with the lighting SW at the clearance light position								○				
2–10. Passing lights inoperative									○			○

3. FRT fog lights

Check point / Trouble mode	Fuse F–8 (15A or 20A)	FRT fog light SW	FRT fog light relay	RR fog light SW	RR fog light relay	Fog light bulb		Cable harness
						LH	RH	
3–1. Both FRT fog lights inoperative (while the clearance light is ON)	○	○	○					○
3–2. FRT fog light on the left (or rigth) side inoperative (while the clearance light is ON)						○	○	○

1-1. Both Headlights Inoperative

- IS THE LIGHTING RELAY NORMAL?

YES

- IS B-19 GROUNDED SECURELY?

NO

REPLACE THE LIGTHING RELAY

YES

- IS THE DIODE NORMAL?

NO

GROUND IT SECURELY

YES

- DISCONNECT THE LIGTHING SW CONNECTOR
- IS THE BATTERY VOLTAGE APPLIED BETWEEN THE HARNESS SIDE CONNECTOR 1 B-12 AND GROUND?

NO

REPLACE THE DIODE

YES

- REMOVE THE LIGHTING SW
- IS THERE CONTINUITY BETWEEN 1 B-12 AND 7 B-12 WHEN SETTING THE LIGHTING SW AT THE HEADLIGHT POSITION ?

NO

REPAIR A POOR CONNECTION AT THE CONNECTORS OR AN OPEN CIRCUIT BETWEEN THE FUSUBLE LINK FL-1 (80A) AND 1 B-12

YES

REPAIR A POOR CONNECTION AT THE CONNECTORS OR AN OPEN CIRCUIT BETWEEN THE HARNESS SIDE CONNECTOR 7 B-12 AND B-19

NO

REPAIR OR REPLACE THE LIGHTING SW

1-2. Headlight On The Left (Or Right) Side Inoperative

- IS THE FUSE F-4 (15A) (OR F-5 (15A)) NORMAL?

YES

- IS THE HEADLIGHT BULB ON THE LEFT (OR RIGHT) SIDE NORMAL?

YES

REPAIR A POOR CONNECTION AT THE CONNECTORS OR AN OPEN CIRCUIT BETWEEN
FUSE F-4 (15A) AND 3 C-21 (LH)
FUSE F-5 (15A) AND 3 C-32 (RH)

NO

REPLACE THE BULB

NO

REPLACE THE FUSE

1-3. Both Headlights In Low-Beam Inoperative

- DISCONNECT THE DIMMER•PASSING SW CONNECTOR (COMBINATION SW)
- WITH THE SWITCH AT THE LOW-BEAM POSITION, IS THERE CONTINUITY BETWEEN THE SW CONNECTOR TERMINALS 13 B-12 AND 16 B-12

YES

REPAIR A POOR CONNECTION AT THE CONNECTORS OR AN OPEN CIRCUIT BETWEEN
13 B-12 AND 10 H-15

NO

REPAIR OR REPLACE THE DIMMER•PASSING SW

1–4. Headlight Low-Beam On The Left (Or Right) Side Inoperative

- IS THE HEADLIGHT BULB ON THE LEFT (OR RIGHT) SIDE NORMAL?

YES

- IS THE FUSE F–4 (15A) (OR F–5 (15A)) NORMAL?

NO

REPLACE THE BULB

YES

- IS THE CONTINUITY BETWEEN 3 [C–21] AND F–4 (15A) (OR 3 [C–32] AND F–5 (15A)) NORMAL?

NO

REPLACE THE FUSE

YES

- DISCONNECT THE DIMMER·PASSING SW CONNECTOR
- WITH THE SWITCH AT THE LOW–BEAM POSITION, IS THERE CONTINUITY BETWEEN 13 [B–12] AND 16 [B–12] ?

NO

REPAIR A POOR CONNECTION AT THE CONNECTORS OR AN OPEN CIRCUIT BETWEEN 3 [C–21] AND F–4 (15A) (OR 3 [C–32] AND F–5 (15A))

YES

REPAIR A POOR CONNECTION AT THE CONNECTORS OR AN OPEN CIRCUIT BETWEEN 13 [B–12] AND 1 [C–21] (OR 13 [B–12] AND 1 [C–32])

NO

REPAIR OR REPLACE THE DIMMER·PASSING SW

1–5. Both Headlights In High-Beam Inoperative

- DISCONNECT THE DIMMER•PASSING SW CONNECTOR (COMBINATION SW)
- WITH THE SWITCH AT HIGH-BEAM, IS THERE CONTINUITY BETWEEN THE SWITCH CONNECTOR TERMINALS 15 B-12 AND 16 B-12 ?

YES → REPAIR A POOR CONNECTION AT THE CONNECTORS OR AN OPEN CIRCUIT BETWEEN 15 B-12 AND 16 H-16

NO → REPAIR OR REPLACE THE DIMMER•PASSING SW

1–6. Headlight High-Beam On The Left (Or Right) Side Inoperative

- IS THE HEADLIGHT BULB ON THE LEFT (OR RIGHT) SIDE NORMAL?

YES →

- IS THE FUSE F–4 (15A) (OR F–5 (15A)) NORMAL?

NO → REPLACE THE BULB

YES →

- IS THE CONTINUITY BETWEEN 3 C–21 AND F–4 (15A) (OR 3 C–32 AND F–5 (15A)) NORMAL?

NO → REPLACE THE FUSE

YES →

- DISCONNECT THE DIMMER·PASSING SW CONNECTOR
- WITH THE SWITCH AT THE HIGH–BEAM POSITION, IS THERE CONTINUITY BETWEEN 15 B–12 AND 16 B–12 ?

NO → REPAIR A POOR CONNECTION AT THE CONNECTORS OR AN OPEN CIRCUIT BETWEEN 3 C–21 AND F–4 (15A) (OR 3 C–32 AND F–5 (15A))

YES → REPAIR A POOR CONNECTION AT THE CONNECTORS OR AN OPEN CIRCUIT BETWEEN 15 B–12 AND 2 C–21 (OR 15 B–12 AND 2 C–32)

NO → REPAIR OR REPLACE THE DIMMER·PASSING SW

1-7. Headlight Beam Does Not Change

- DOES THE LEVER OF THE DIMMER•PASSING SW OPERATE SMOOTHLY AND SECURELY?

YES

- DISCONNECT THE DIMMER•PASSING SW
- WITH THE SWITCH AT THE LOW-BEAM POSITION, IS THERE CONTINUITY BETWEEN 13 B-12 AND 16 B-12 ? ALSO, WITH IT AT THE HIGH-BEAM POSITION, IS THERE CONTINUITY BETWEEN 15 B-12 AND 16 B-12 ?

NO

REPAIR OR REPLACE THE DIMMER•PASSING SW

NO

REPAIR OR REPLACE THE DIMMER•PASSING SW

1-8. Headlights Remain On When The Lighting SW Is Turned Off

- IS THE LIGHTING RELAY NORMAL?

YES

- DISCONNECT THE LIGHTING SW CONNECTOR
- IS THE CONTINUITY BETWEEN THE SWITCH CONNECTOR TERMINALS 1 B-12 AND 7 B-12 NORMAL?

NO

REPLACE THE LIGHTING RELAY

YES

REPAIR A SHORT CIRCUIT BETWEEN 5 X-1 AND 1 B-12

NO

REPAIR OR REPLACE THE LIGHTING SW

1-9. Headlights Come On With The Lighting SW At The Clearance Light Position

REPAIR OR REPLACE THE LIGHTING SW

1-10. Passing Lights Inoperative

- DISCONNECT THE DIMMER•PASSING SW CONNECTOR
- WITH THE SWITCH AT PASSING POSITION, IS THERE CONTINUITY BETWEEN THE SWITCH CONNECTOR TERMINALS 14 B-12 AND 16 B-12 , AND 15 B-12 AND 16 B-12 ?

YES

REPAIR A POOR CONNECTION AT THE CONNECTORS OR AN OPEN CIRCUIT BETWEEN 5 H-15 AND 14 B-12

NO

REPAIR OR REPLACE THE SWITCH

2-1. Both Headlights Inoperative

- IS THE LIGHTING RELAY NORMAL?

YES

- IS B-19 GROUNDED SECURELY?

YES

- IS THE DIODE NORMAL ?

YES

- IS THE DIMMER RELAY NORMAL?

YES

- DISCONNECT THE LIGHTING SW CONNECTOR
- IS THE BATTERY VOLTAGE APPLIED BETWEEN THE HARNESS SIDE CONNECTOR 1 B-12 AND GROUND?

YES

- REMOVE THE LIGHTING SW
- IS THERE CONTINUITY BETWEEN 1 B-12 AND 7 B-12 WHEN SETTING THE LIGHTING SW AT THE HEADLIGHT POSITION?

YES

REPAIR A POOR CONNECTION AT THE CONNECTORS OR AN OPEN CIRCUIT BETWEEN THE LIGHTING SW HARNESS SIDE CONNECTOR 7 B-12 AND B-19

NO

REPAIR OR REPLACE THE LIGHTING SW

NO

REPAIR A POOR CONNECTION AT THE CONNECTORS OR AN OPEN CIRCUIT BETWEEN THE FUSIBLE LINK FL-1 (80A) AND 1 B-12

NO

REPLACE THE RELAY

NO

REPLACE THE DIODE

NO

GROUND IT SECURELY

NO

REPLACE THE RELAY

2-2. Headlight On The Left (Or Right) Side Inoperative

- IS THE HEADLIGHT BULB ON THE LEFT (OR RIGHT) SIDE NORMAL?

YES

- IS 7 [C-39] (OR 5 [C-39]) GROUNDED SECURELY? (RH)
  IS 4 [C-39] (OR 7 [C-16]) GROUNDED SECURELY? (LH)

YES

REPAIR AN OPEN CIRCUIT BETWEEN
3 [C-32] AND 7 [C-39] (OR 5 [C-39]) (RH)
3 [C-21] AND 4 [C-39] (OR 7 [C-16]) (LH)

NO

GROUND IT SECURELY

NO

REPLACE THE BULB

2-3. Both Headlights In Low-Beam Inoperative

- IS THE DIMMER RELAY NORMAL?

YES

REPAIR A POOR CONNECTION AT THE CONNECTORS OR AN OPEN CIRCUIT BETWEEN 2 [X-3] AND FUSE F-6 (10A)

NO

REPLACE THE RELAY

2-4. Headlight Low-Beam On The Left (Or Right) Side Inoperative

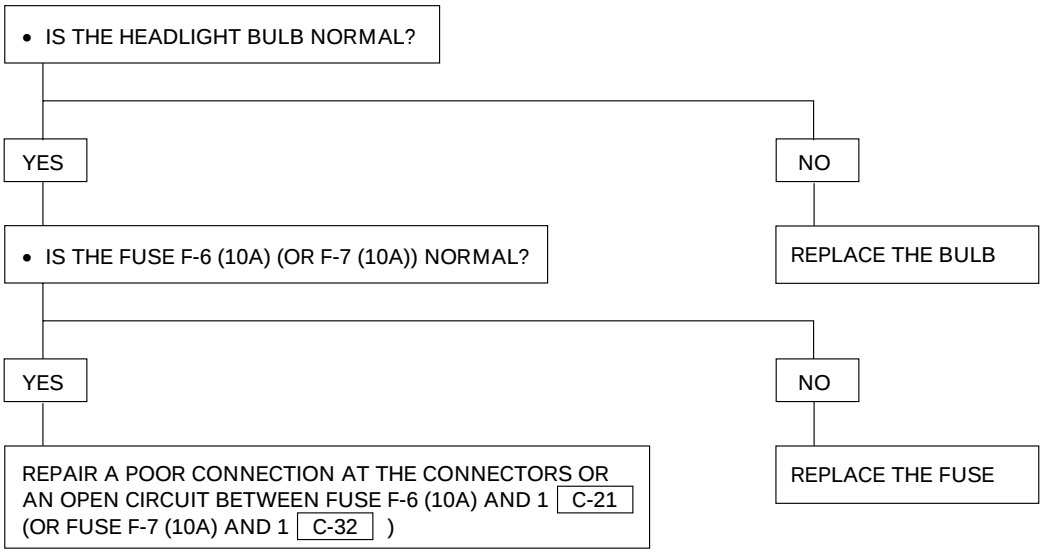

2-5. Both Headlights In High-Beam Inoperative

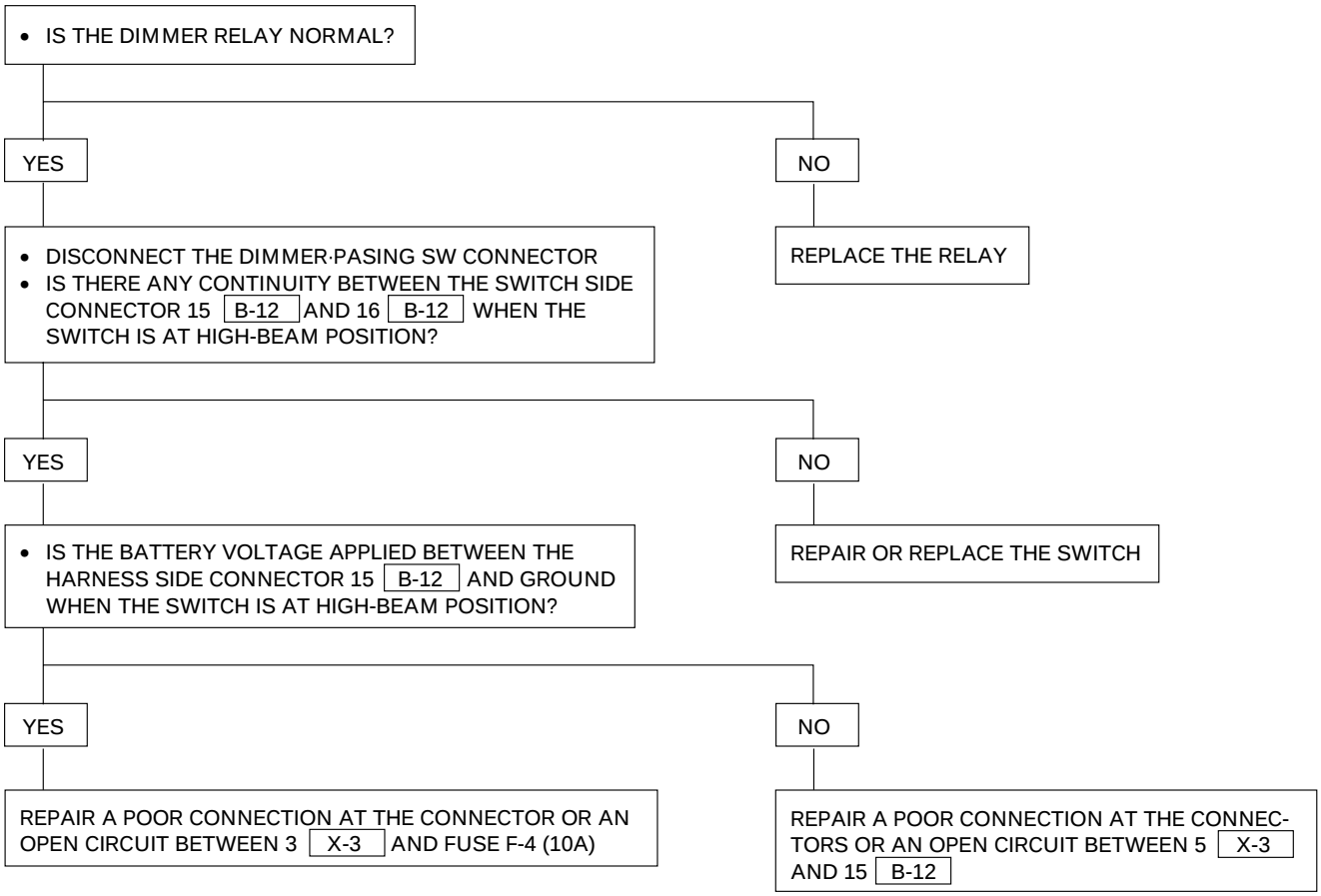

2-6. Headlight High-Beam On The Left (Or Right) Side Inoperative

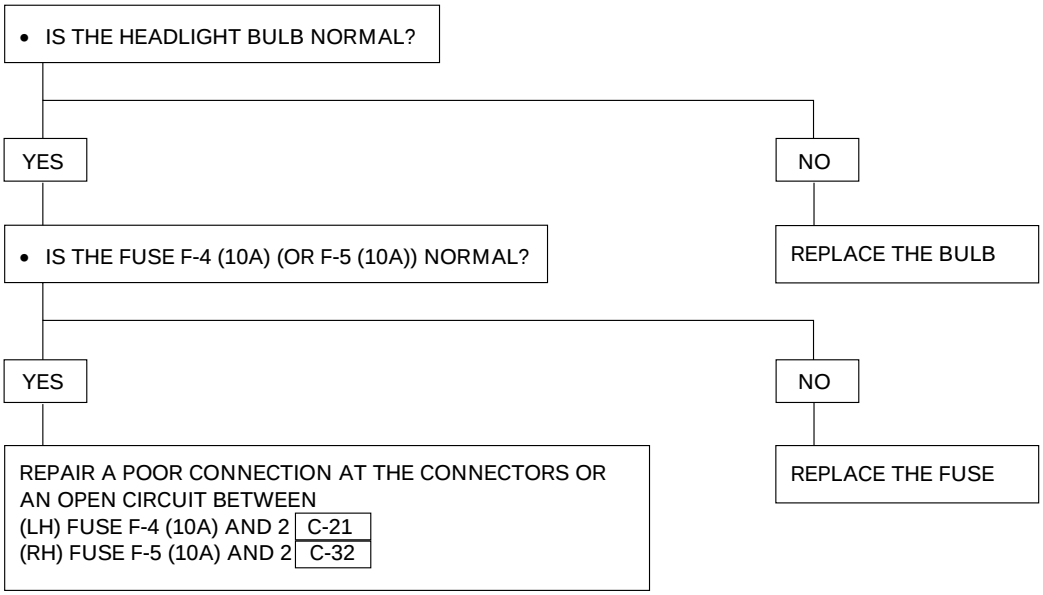

2-7. Headlight Beam Does Not Change

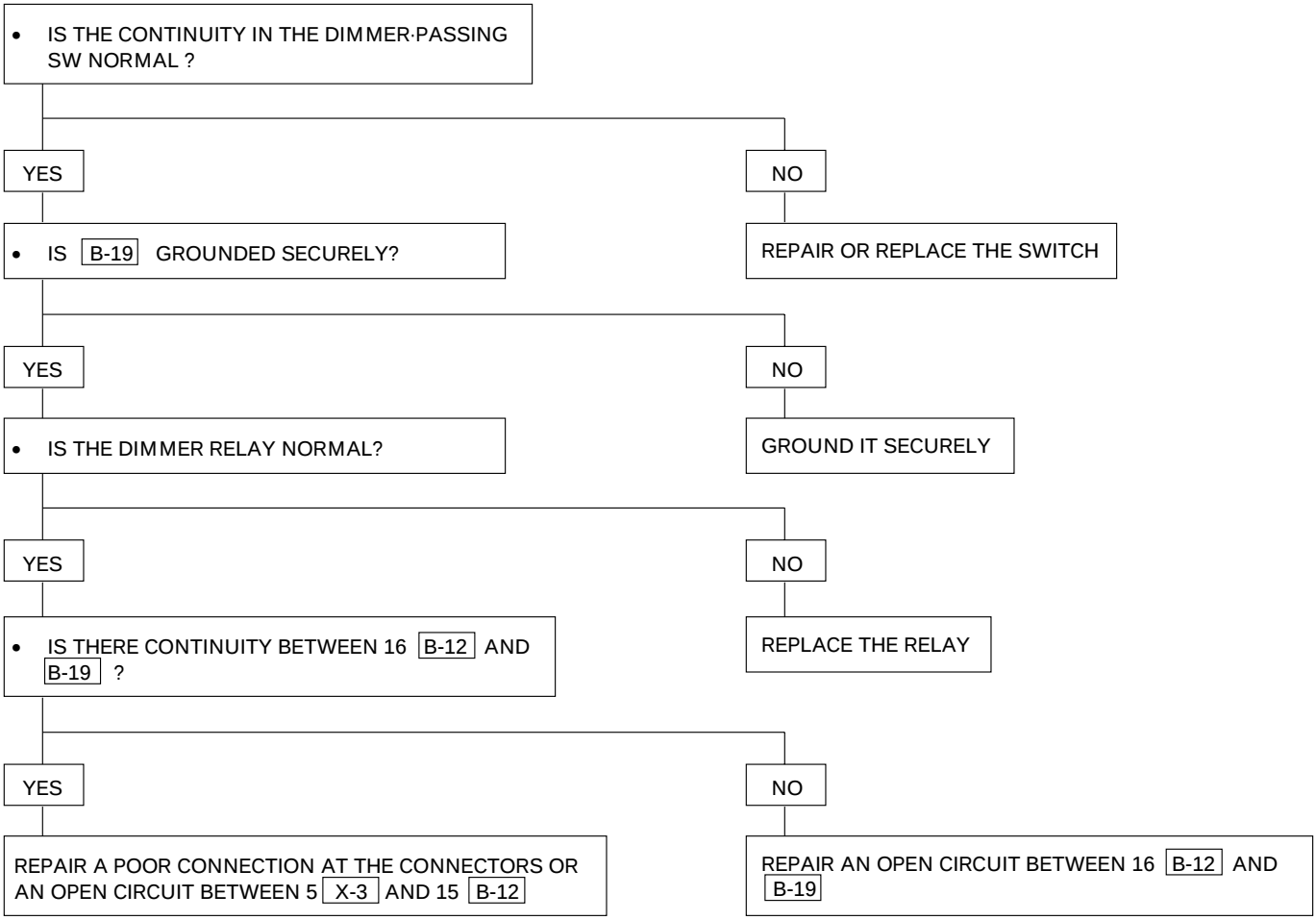

2-8. Headlights Remain On When The Lighting SW Is Turned Off

- IS THE LIGHTING RELAY NORMAL?

YES

- DISCONNECT THE LIGHTING SW CONNECTOR
- IS THE CONTINUITY BETWEEN THE SWITCH CONNECTOR TERMINALS 1 B-12 AND 7 B-12 NORMAL?

YES

REPAIR A SHORT CIRCUIT BETWEEN 5 X-1 AND 1 B-12

NO

REPAIR OR REPLACE THE LIGHTING SW

NO

REPLACE THE RELAY

2-9. Headlights Come On When The Lighting SW At The Clearance Light Position

REPAIR OR REPLACE THE LIGHTING SW

2-10. Passing Lights Inoperative

- DISCONNECT THE DIMMER·PASSING SW CONNECTOR
- WITH THE AT PASSING POSITION, IS THERE CONTINUITY BETWEEN THE SWITCH CONNECTOR TERMINALS 14 B-12 AND 16 B-12, AND 15 B-12 AND 16 B-12 ?

YES

REPAIR A POOR CONNECTION AT THE CONNECTORS OR AN OPEN CIRCUIT BETWEEN 4 H-12 AND 14 B-12

NO

REPAIR OR REPLACE THE SWITCH

3-1. Both FRT Fog Lights Inoperative (While The Clearance Light Is On)

- IS THE FUSE F-8 (20A OR 15A) NORMAL?

YES

- IS 5 C-16 (OR 6 C-16) GROUNDED SECURELY?

YES

- REMOVE THE FRT FOG LIGHT SWITCH
- IS THE CONTINUITY IN THE SWITCH NORMAL?

YES

- WITH THE LIGHTING SWITCH AT CLEARANCE LIGHT POSITION, IS THE BATTERY VOLTAGE APPLIED BETWEEN 4 I-5 AND THE GROUND?

YES

- REMOVE THE FRT FOG LIGHT RELAY
- IS THE RELAY NORMAL?

YES

- REINSTALL THE FRT FOG LIGHT SWITCH
- WITH THE LIGHTING SWITCH AT CLEARANCE LIGHT POSITION AND FRT FOG LIGHT SWITCH AT ON POSITION, IS THE BATTERY VOLTAGE APPLIED BETWEEN I X-23 AND THE GROUND?

YES

- IS THERE CONTINUITY BETWEEN 3 X-23 AND THE GROUND?

YES

REPAIR A POOR CONNECTION AT THE CONNECTORS OR AN OPEN CIRCUIT BETWEEN 4 X-23 AND 13 H-42 (OR 4 H-41)

NO

REPAIR A POOR CONNECTION AT THE CONNECTORS OR AN OPEN CIRCUIT BETWEEN 3 X-23 AND 4 C-39

NO

REPAIR A POOR CONNECTION AT THE CONNCETORS OR AN OPEN CIRCUIT BETWEEN 5 I-5 AND 1 X-23

NO

REPAIR OR REPLACE THE RELAY

NO

REPAIR A POOR CONNECTION AT THE CONNECTORS OR AN OPEN CIRCUIT BETWEEN 4 X-9 (OR FUSE F-12) AND 4 I-5

NO

REPAIR OR REPLACE THE SWITCH

NO

GROUND IT SECURELY

NO

REPLACE THE FUSE

3-2. FRT Fog Light On The Left (Or Right) Side Inoperative (While The Clearance Light Is ON)

- IS THE BULB NORMAL ?

YES

- IS THERE CONTINUITY BETWEEN 13 H-42 (4 H-41) AND 1 C-24 (OR 1 C-29)?

YES

REPAIR A POOR CONNECTION AT THE CONNECTORS OR AN OPEN CIRCUIT BETWEEN 2 C-24 (2 C-29) AND 5 C-16 (OR 6 C-16)

NO

REPAIR A POOR CONNECTION AT THE CONNECTORS OR AN OPEN CIRCUIT BETWEEN 13 H-42 (4 H-41) AND 1 C-24 (OR 1 C-29)

NO

REPLACE THE BULB

Rear Fog Light

General Description

The circuit consists of the RR fog light, the FRT & RR fog light SW, the RR fog light control unit, the RR fog light relay, the RR fog light indicator, the tail relay and the lighting SW.
The RR fog light is turned on by the RR fog light control unit when the FRT fog light or the headlight is on.

Circuit Diagram-1

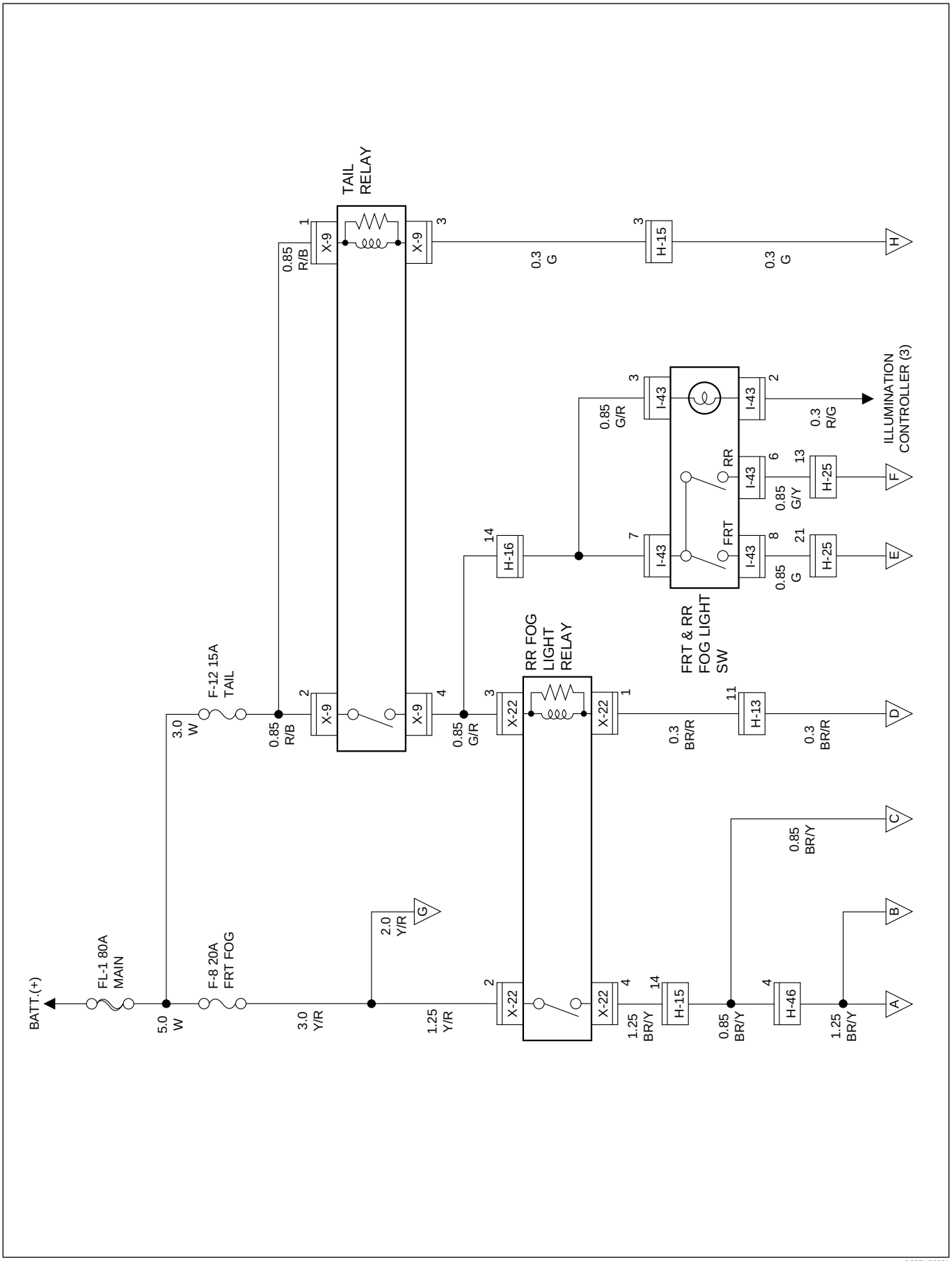

D08RY00081

Circuit Diagram-2

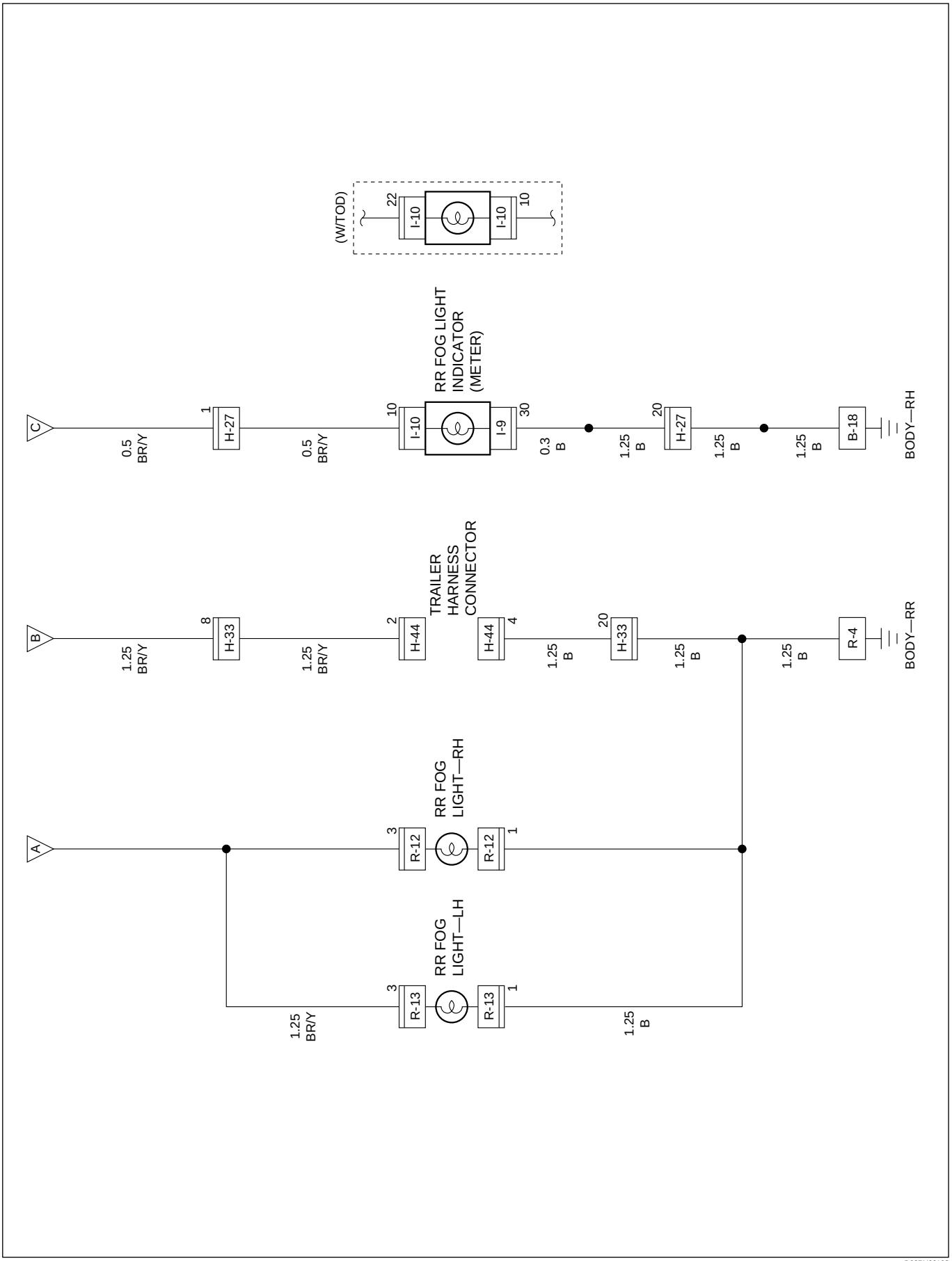

D08RY00198

Circuit Diagram-3

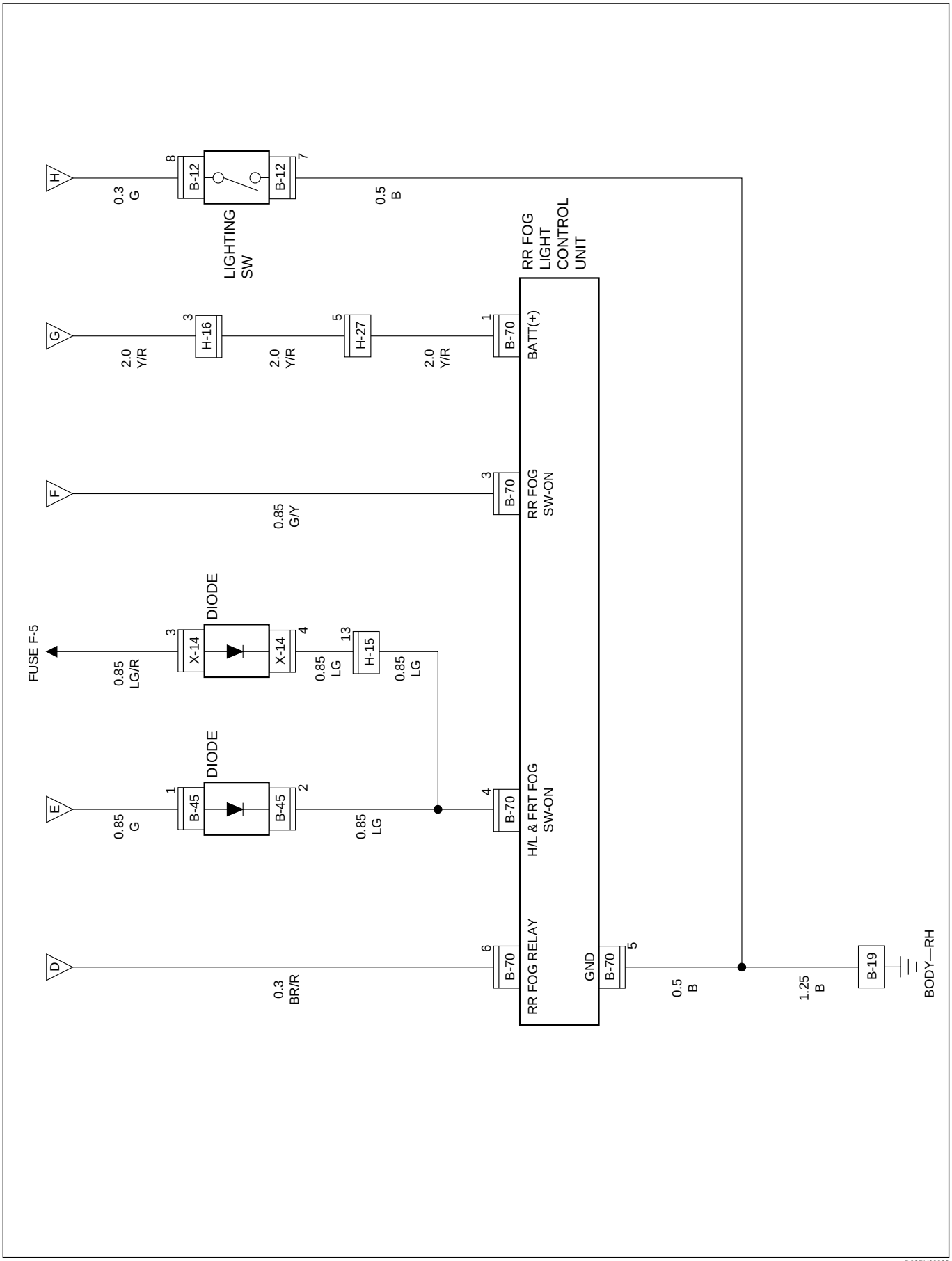

D08RY00083

Parts Location

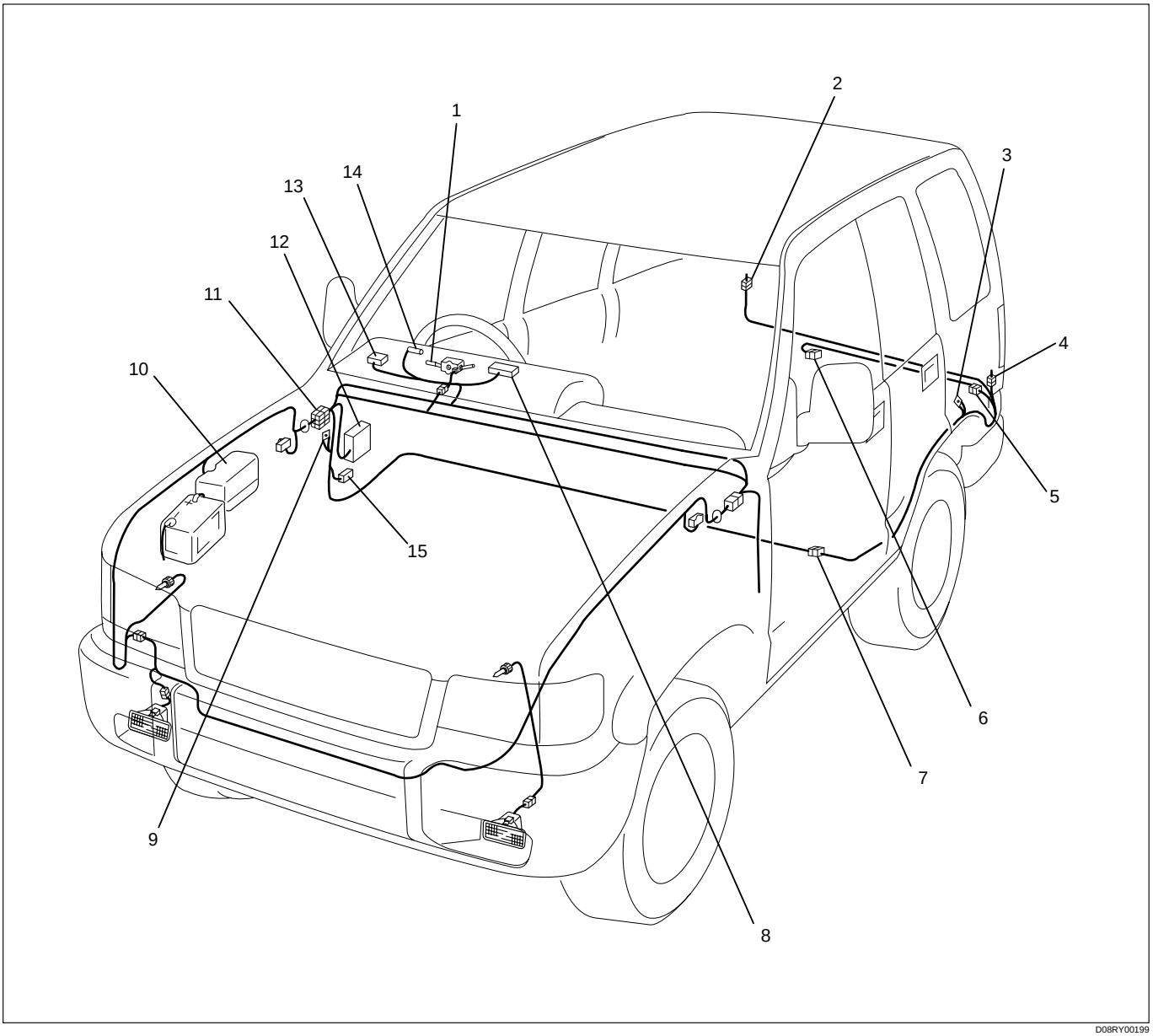

D08RY00199

Legend

(1) Lighting Switch
(2) R-12
(3) R-4
(4) R-13
(5) H-33
(6) H-44
(7) H-46
(8) I-9
(9) B-18, B-19
(10) Relay and Fuse Box (X-9, X-14, X-22)
(11) H-13, H-15, H-16, H-25, H-27
(12) Fuse Box (B-45)
(13) I-43
(14) I-10
(15) B-70

Diagnosis

Both RR Fog Light Inoperative

- DO THE FRT FOG LIGHT WORK NORMALLY?

YES

- REMOVE THE RR FOG LIGHT RELAY
- IS THE RELAY NORMAL?

NO

REFER TO THE DIAGNOSIS CHARTS OF THE HEADLIGHT AND FOG LIGHT SECTION

YES

- REMOVE THE FRT & RR FOG LIGHT SW
- IS THE SW NORMAL?

NO

REPLACE THE RELAY

YES

- DISCONNECT THE RR FOG LIGHT CONTROL UNIT CONNECTOR B-70
- IS THE BATTERY VOLTAGE APPLIED BETWEEN THE HARNESS SIDE CONNECTOR 1 B-70 AND THE GROUND?

NO

REPAIR OR REPLACE THE SW

YES

- IS THERE CONTINUITY BETWEEN THE HARNESS SIDE CONNECTOR 5 B-70 AND THE GROUND?

NO

REPAIR A POOR CONNECTION AT THE CONNECTORS OR AN OPEN CIRCUIT BETWEEN THE FUSE F-8 AND 1 B-70

YES

- INSTALL THE FRT & RR FOG LIGHT SW
- TURN THE LIGHTING SW AND THE FRT FOG LIGHT SW
- IS THE BATTERY VOLTAGE APPLIED BETWEEN THE HARNESS SIDE CONNECTOR 4 B-70 AND THE GROUND?

NO

REPAIR AN OPEN CIRCUIT BETWEEN 5 B-70 AND THE GROUND B-19

YES

A

NO

B

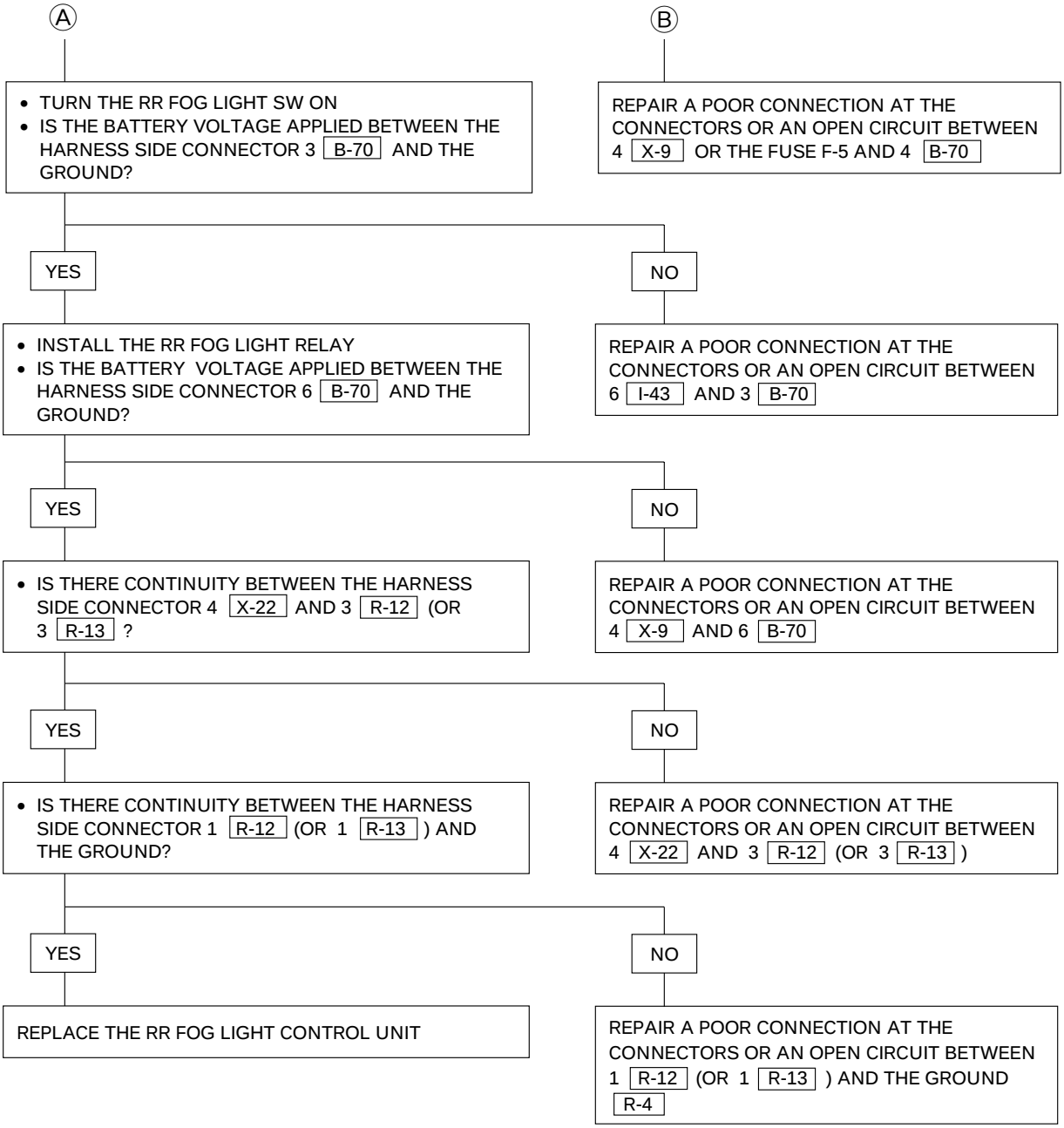
A
B
• TURN THE RR FOG LIGHT SW ON
• IS THE BATTERY VOLTAGE APPLIED BETWEEN THE HARNESS SIDE CONNECTOR 3 B-70 AND THE GROUND?
REPAIR A POOR CONNECTION AT THE CONNECTORS OR AN OPEN CIRCUIT BETWEEN 4 X-9 OR THE FUSE F-5 AND 4 B-70
YES
NO
• INSTALL THE RR FOG LIGHT RELAY
• IS THE BATTERY VOLTAGE APPLIED BETWEEN THE HARNESS SIDE CONNECTOR 6 B-70 AND THE GROUND?
REPAIR A POOR CONNECTION AT THE CONNECTORS OR AN OPEN CIRCUIT BETWEEN 6 I-43 AND 3 B-70
YES
NO
• IS THERE CONTINUITY BETWEEN THE HARNESS SIDE CONNECTOR 4 X-22 AND 3 R-12 (OR 3 R-13 ?
REPAIR A POOR CONNECTION AT THE CONNECTORS OR AN OPEN CIRCUIT BETWEEN 4 X-9 AND 6 B-70
YES
NO
• IS THERE CONTINUITY BETWEEN THE HARNESS SIDE CONNECTOR 1 R-12 (OR 1 R-13) AND THE GROUND?
REPAIR A POOR CONNECTION AT THE CONNECTORS OR AN OPEN CIRCUIT BETWEEN 4 X-22 AND 3 R-12 (OR 3 R-13)
YES
NO
REPLACE THE RR FOG LIGHT CONTROL UNIT
REPAIR A POOR CONNECTION AT THE CONNECTORS OR AN OPEN CIRCUIT BETWEEN 1 R-12 (OR 1 R-13) AND THE GROUND R-4

Headlight Leveling

General Description

The circuit consists of the headlight leveling SW and headlight leveling actuators. The actuator is made up of a motor, two relays and disk-type sensor. The sensor rotates in accordance with the rotation of the motor and stops the rotation of the motor at each position corresponding to the levels 0 to 3.

Circuit Diagram

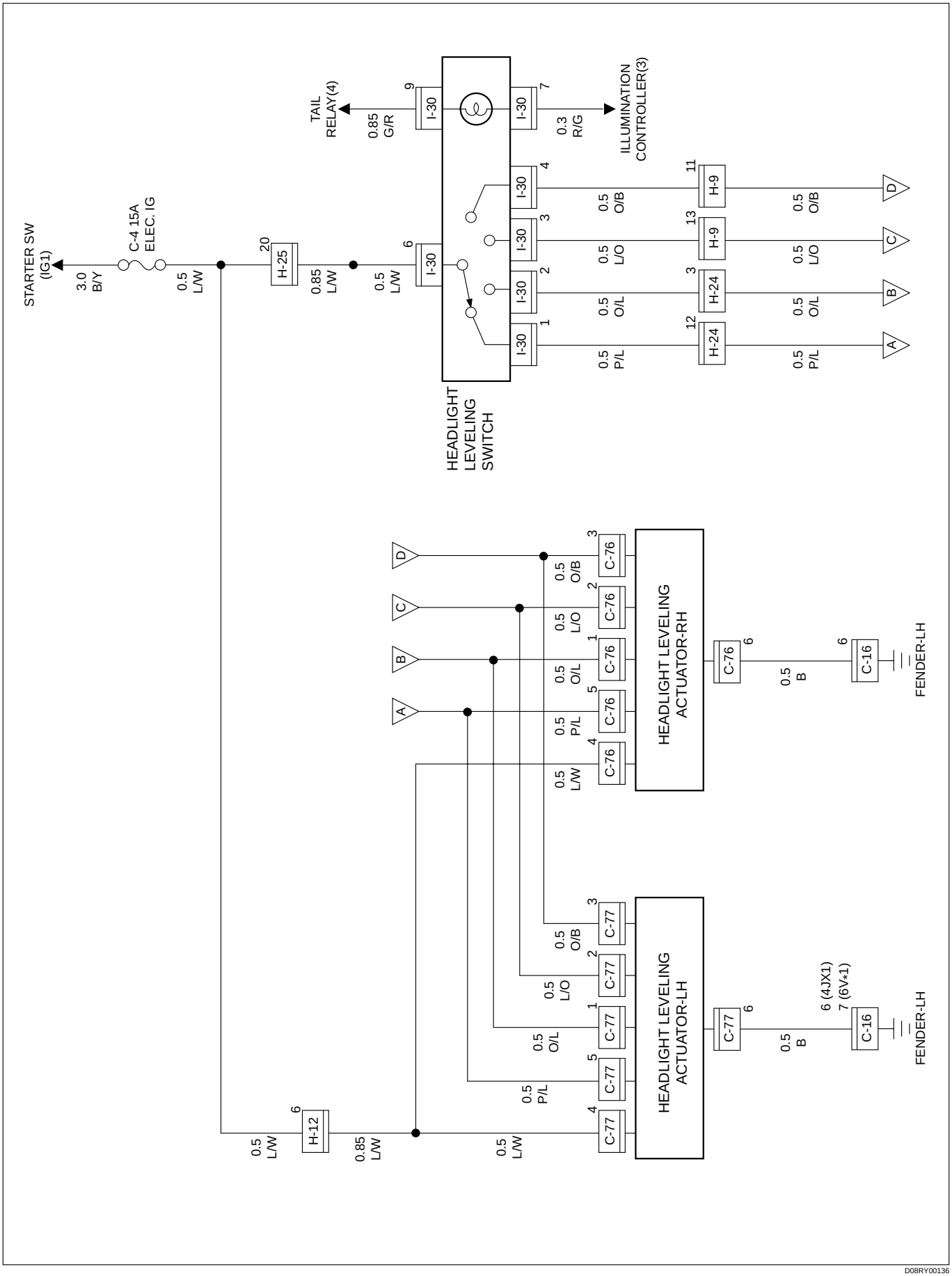

D08RY00136

Parts Location

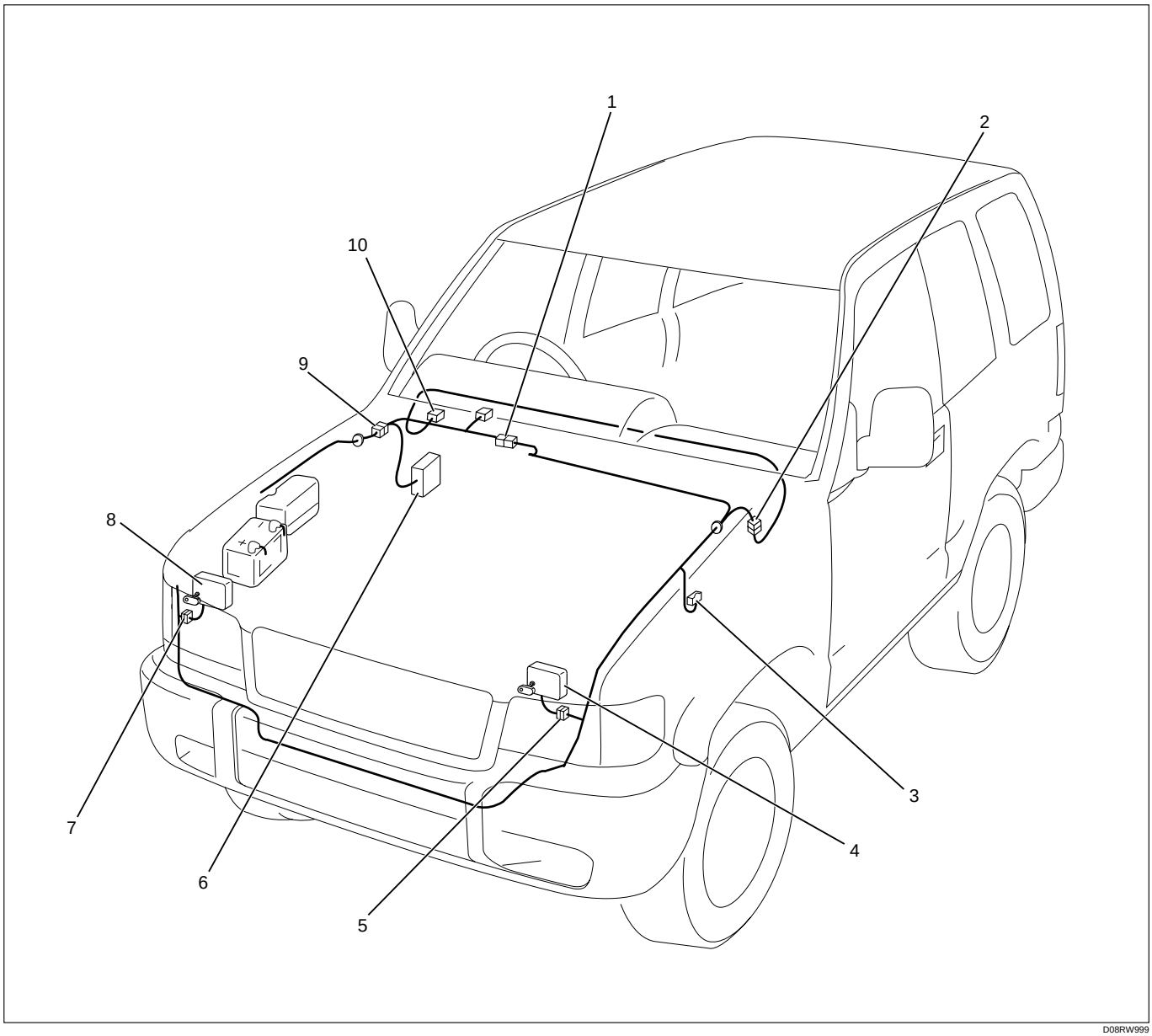

D08RW999

Legend

(1) H-12
(2) H-9, H-24
(3) C-16
(4) Headlight Leveling Actuator-LH
(5) C-77
(6) Fuse Box
(7) C-76
(8) Headlight Leveling Actuator-RH
(9) H-25
(10) I-30

Diagnosis

Quick Chart for Check Points

Trouble mode \ Check point	Fuse C-4 (15A)	Leveling SW	Actuator		Cable harness
			LH	RH	
1. Both actuators inoperative	○	○			○
2. Actuator on the left (or right) side inoperative			○	○	○
3. Actuator on the left (or right) side does not stop			○	○	

1. Both Actuators Inoperative

- IS THE FUSE C-4 (15A) NORMAL?

YES

- IS 6 C-16 AND 7 C-16 GROUNDED SECURELY?

YES

- IS THE CONTINUITY IN THE HEADLIGHT LEVELING SW NORMAL?

YES

REPAIR A POOR CONNECTION AT THE CONNECTORS OR OPEN CIRCUIT BETWEEN FUSE C-4 AND 6 I-30

NO

REPAIR OR REPLACE THE SWITCH

NO

GROUND THEM SECURELY

NO

REPLACE THE FUSE

2. Actuator On The Left (Or Right) Side Inoperative

- DOES THE ACTUATOR-LH (OR RH) OPERATES NORMALLY WHEN THE BATTERY IS CONNECTED TO THE ACTUATOR CONNECTOR TERMINALS?

YES

REPAIR A POOR CONNECTION AT THE CONNECTORS OR A OPEN CIRCUIT BETWEEN FUSE C-4 AND 4 C-77 (OR 4 C-76)

NO

REPAIR OR REPLACE THE ACTUATOR

3. Actuator On The Left (Or Right) Side Does Not Stop

- IS THERE CONTINUITY BETWEEN MOTOR CONNECTOR TERMINALS 4 C-77 AND 6 C-77 (OR 4 C-76 AND 6 C-76)?

YES

REPAIR OR REPLACE THE ACTUATOR (FAILURE OF THE RELAY IN THE ACTUATOR)

NO

REPAIR OR REPLACE THE ACTUATOR (FAILURE OF THE SENSOR OR A SHORT CIRCUIT IN THE ACTUATOR)

Clearance Light, Taillight and License Plate Light

General Description

The circuit consists of the lighting switch, clearance light, taillight and license plate light.
All these lights come on when the lighting switch are turned on with the switch to either clearance or headlight position.

Circuit Diagram (RHD)-1

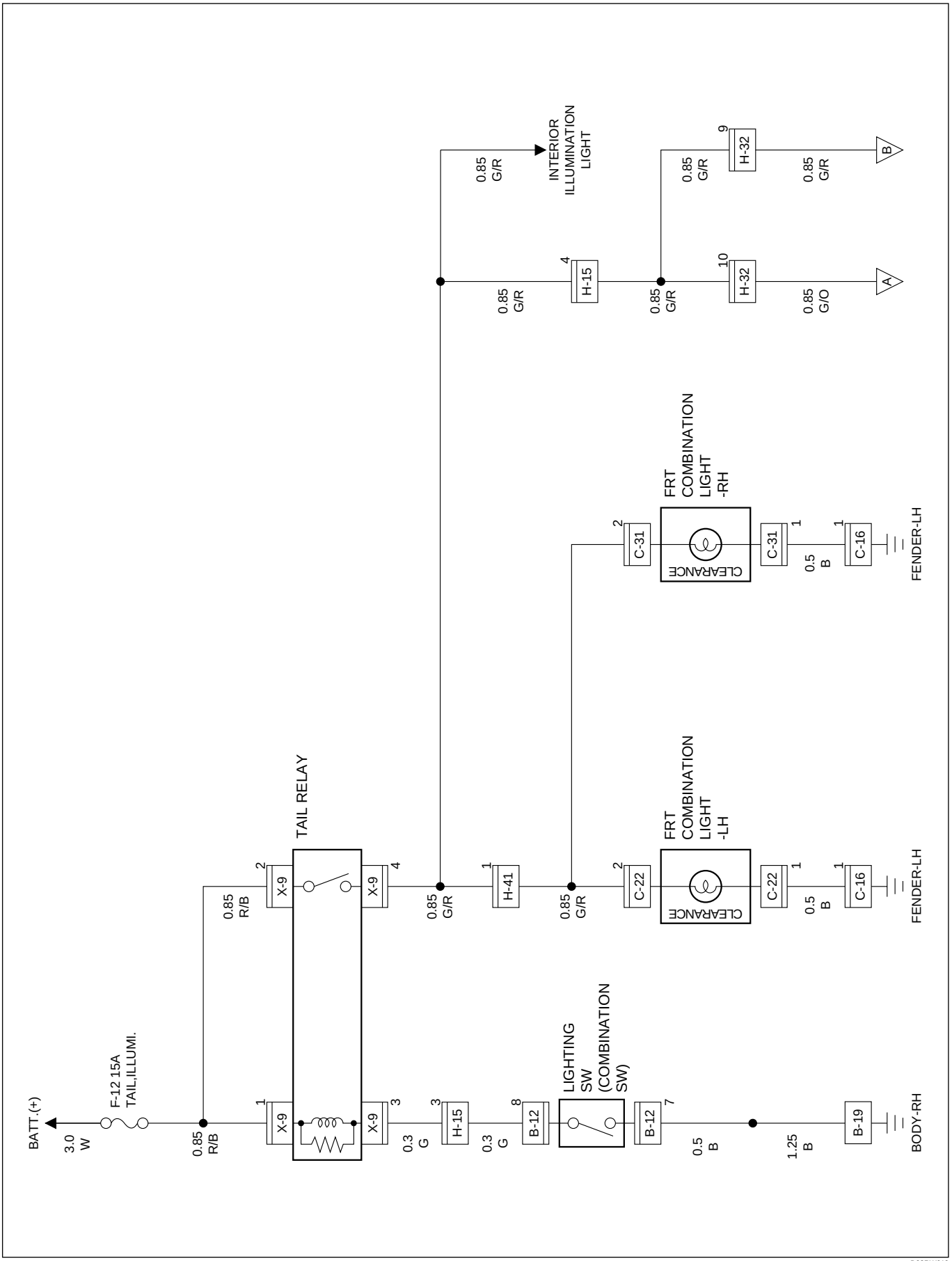

D08RW619

Circuit Diagram (RHD)-2

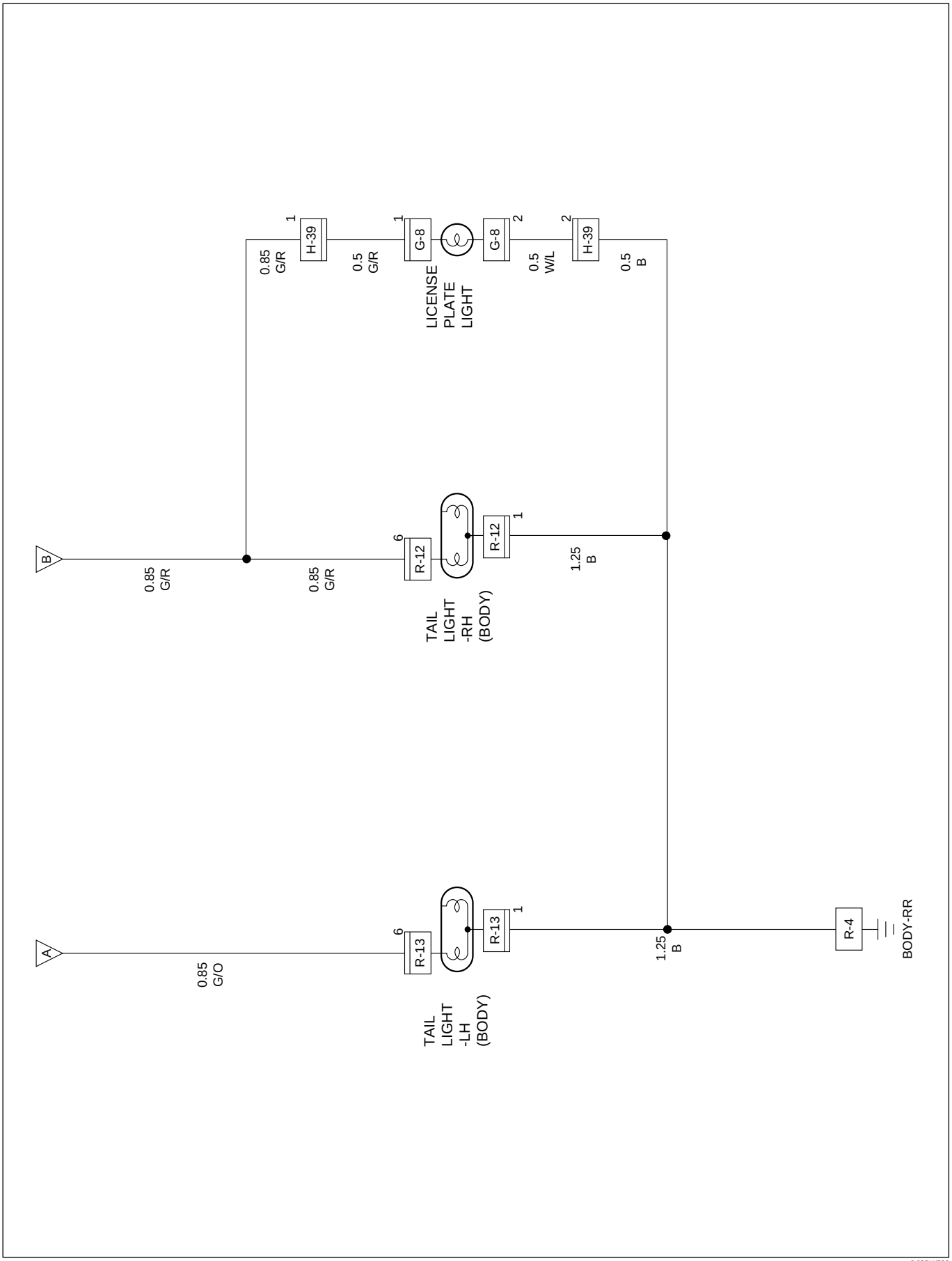

D08RW799

Circuit Diagram (Bumper Built-in Type Taillight)-2

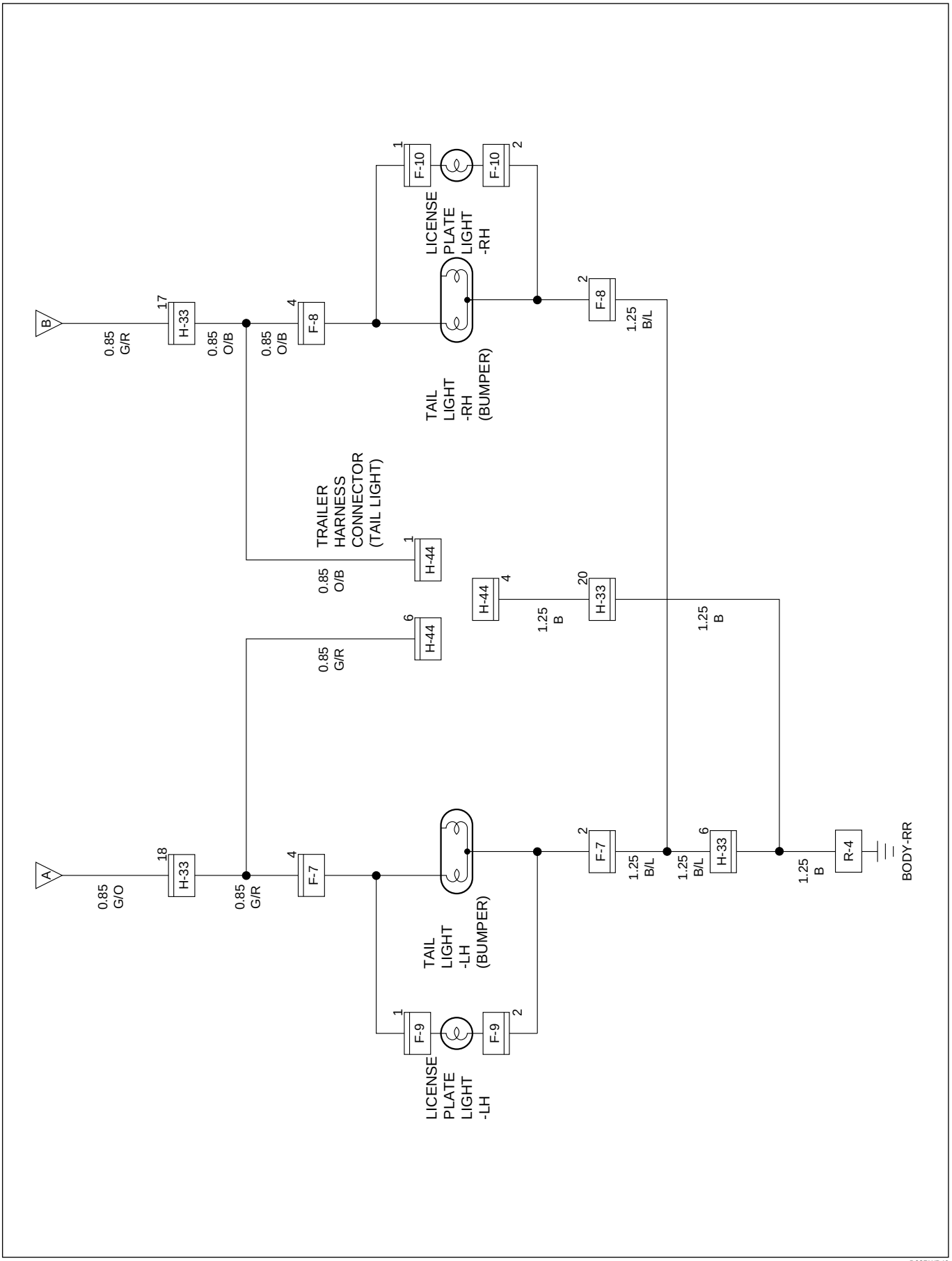

D08RWB46

Parts Location (RHD)

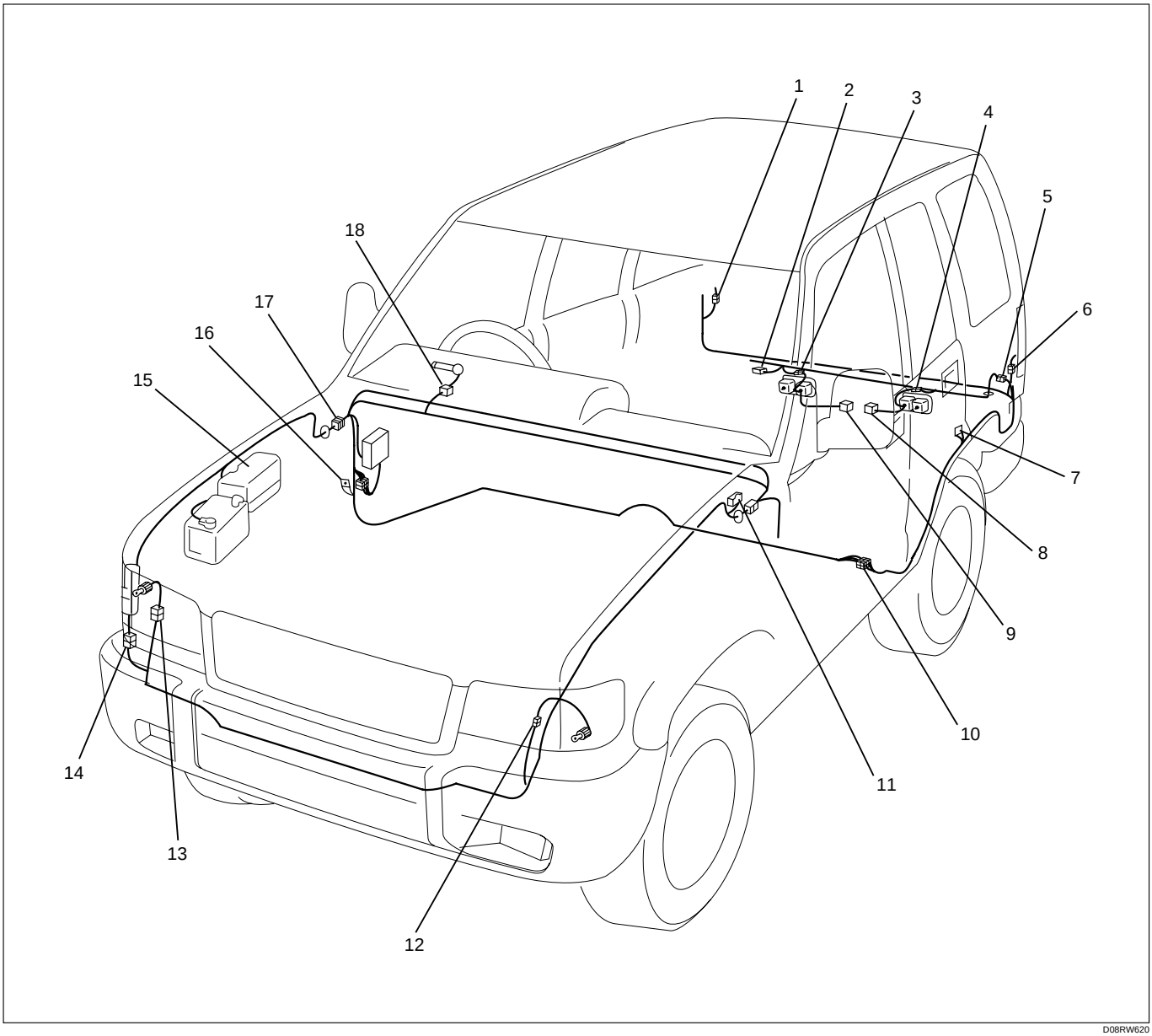

D08RW620

Legend

(1) R-12
(2) H-44
(3) F-8
(4) F-7
(5) H-33
(6) R-13
(7) R-4
(8) F-9
(9) F-10
(10) H-32
(11) C-16
(12) C-22
(13) C-31
(14) H-41
(15) Relay and Fuse Box (X-9)
(16) B-19
(17) H-15
(18) B-12

Circuit Diagram (LHD)-1

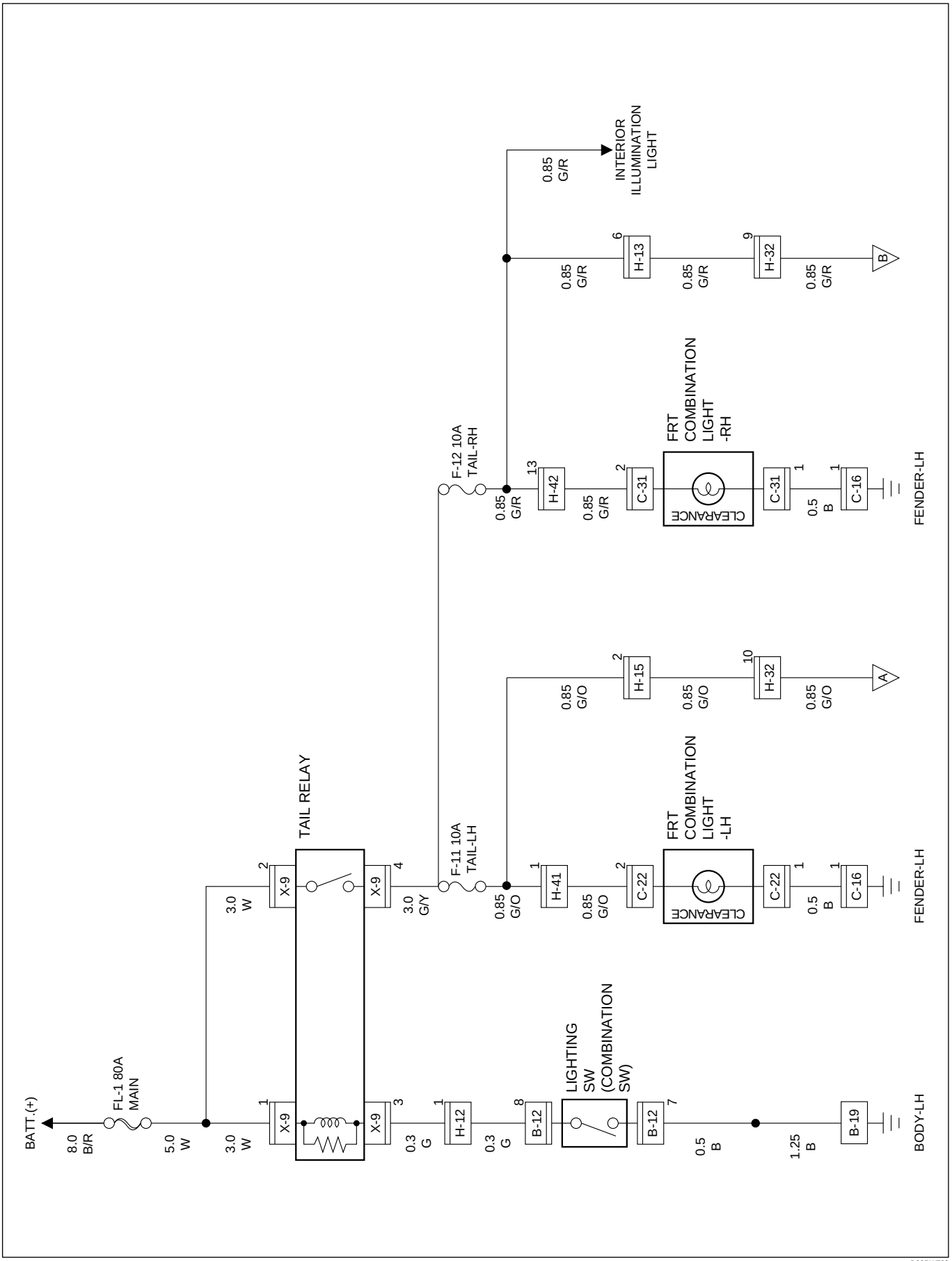

D08RW798

Circuit Diagram (LHD)-2

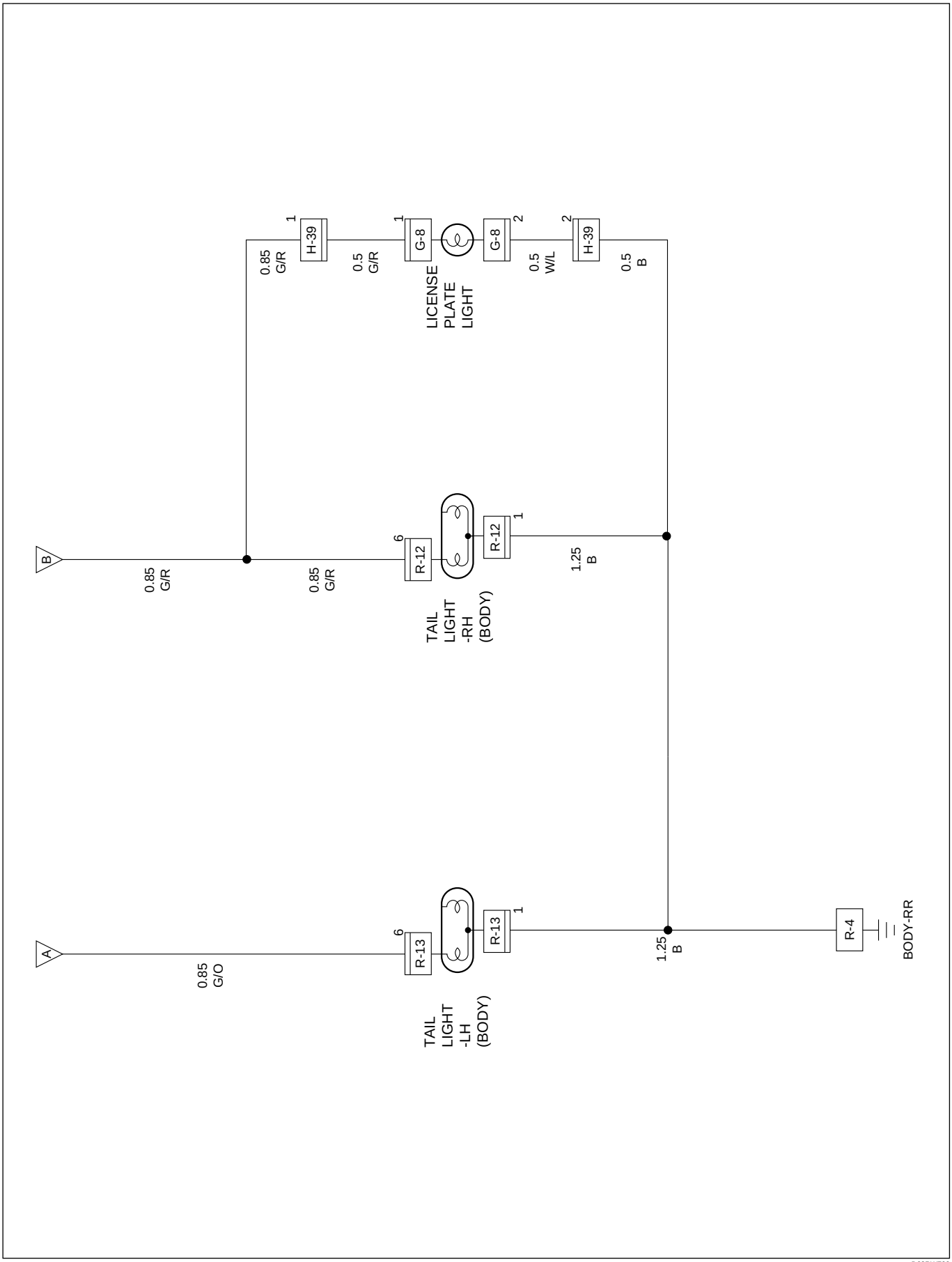

D08RW799

Circuit Diagram (Bumper Built-in Type Taillight)-2

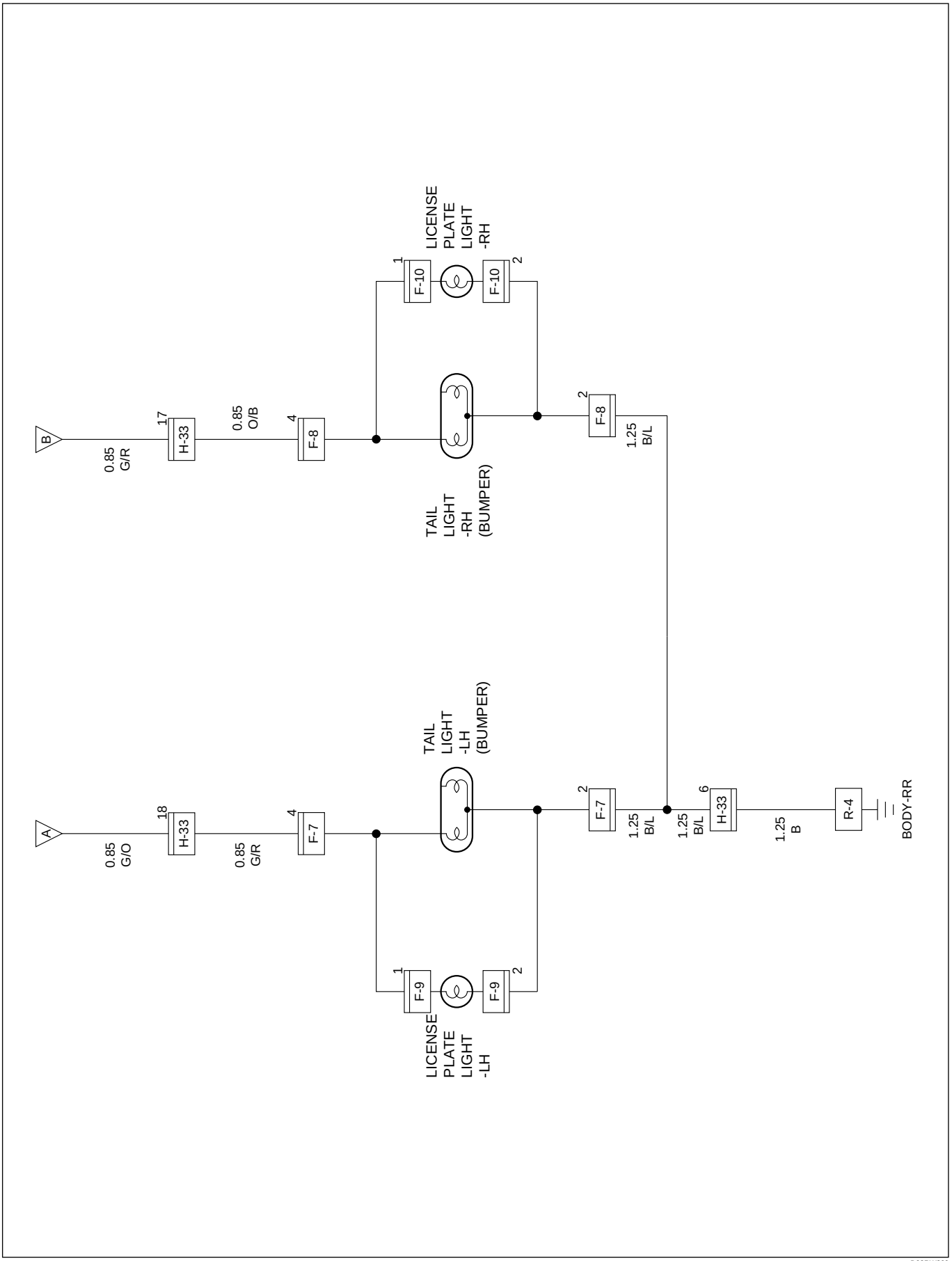

D08RW800

Parts Location (LHD)

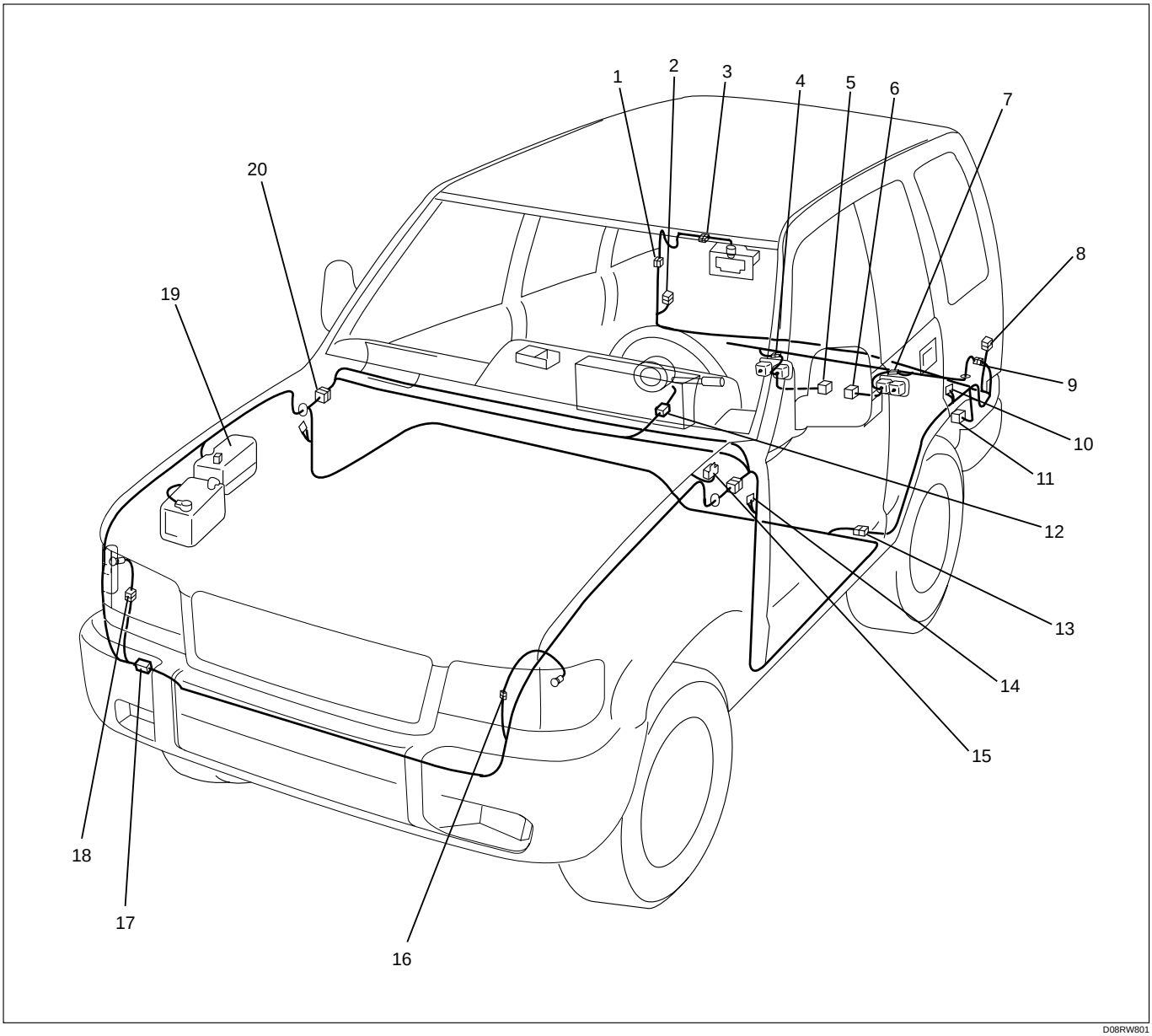

D08RW801

Legend

(1) H-39
(2) R-12
(3) G-8
(4) F-8
(5) F-10
(6) F-9
(7) F-7
(8) R-13
(9) H-33
(10) R-4
(11) H-44
(12) B-12
(13) H-32
(14) B-19
(15) C-16
(16) C-22
(17) H-41, H-42
(18) C-31
(19) Relay and Fuse Box (X-9)
(20) H-12, H-13, H-15

Diagnosis

Quick Chart for Check Point

1. RHD

Trouble mode \ Check point		Fuse F-12 (15A)	Lighting SW	Tail relay	Taillight bulb	Clearance light bulb	License plate light bulb	Cable harness
1-1 All illumination lights inoperative		○	○	○				○
1-2 Both Taillights inoperative								○
1-3 Taillight on the left (or right) side inoperative					○			○
1-4 Both clearance lights inoperative		○	○	○				○
1-5 Clearance light on the left (or right) side inoperative						○		○
1-6 License plate light inoperative	RHD-1						○	○
	RHD-2	○	○	○				○
1-7 License plate light on the left (or right) side inoperative	RHD-2						○	○

2. LHD

Trouble Mode \ Check point		Tail relay	Fuse F-11 (10A)	Fuse F-12 (10A)	Lighting SW	Taillight bulb	Clearance light bulb	License plate light bulb	Cable harness
2-1 All illumination lights inoperative		○			○				○
2-2 Both taillights inoperative									○
2-3 Taillight on the left (or right) side inoperative			○	○		○			○
2-4 Both clearance lights inoperative									○
2-5 Clearance light on the left (or right) side inoperative							○		○
2-6 License plate light inoperative	LHD-1			○				○	○
	LHD-2								○
2-7 License plate light on the left (or right) side inoperative	LHD-2		○	○				○	○
2-8 Both taillight and clearance light on the left (or right) side inoperative			○	○					○

1-1 All Illuminations Lights Inoperative

- IS FUSE F-12 (15A) NORMAL?
  - YES
    - IS THE CONTINUITY IN THE LIGHTING SWITCH NORMAL?
      - YES
        - IS TAIL RELAY (X-9) NORMAL?
          - YES
            - IS THE BATTERY VOLTAGE APPLIED BETWEEN HARNESS SIDE CONNECTOR 8 B-12 AND GROUND WHEN LIGHTING SWITCH IS "ON" ?
              - YES
                - REPAIRA POOR CONNECTION AT THE CONNECTORS OR AN OPEN CIRCUIT BETWEEN 7 B-12 AND B-19 OR BETWEEN 4 X-9 AND 1 H-41)
              - NO
                - REPAIR A POOR CONNECTION AT THE CONNECTORS OR AN OPEN CIRCUIT BETWEEN 8 B-12 AND FUSE F-12 (15A)
          - NO
            - REPAIR OR REPLACE THE RELAY
      - NO
        - REPAIR OR REPLACE THE SWITCH
  - NO
    - REPLACE THE FUSE

1-2 Both Taillights Inoperative

- DOES THE LICENSE PLATE LIGHT LIGHT UP WHEN THE LIGHTING SWITCH IS AT THE CLEARANCE LIGHT POSITION?
  - YES
    - REPAIR A POOR CONNECTION AT THE CONNECTORS OR AN OPEN CIRCUIT BETWEEN 4 H-15 AND 10 H-32
  - NO
    - GROUND R-4 SECURELY

1-3 Taillight On The Left (Or Right) Side Inoperative

- IS THE TAILLIGHT BULB ON THE LEFT (OR RIGHT) SIDE NORMAL?

YES

- WITH THE LIGHTING SWITCH AT THE CLEARANCE LIGHT POSITION, IS THE BATTERY VOLTAGE APPLIED BETWEEN 6 R-13 (OR 6 R-12) AND THE GROUND, OR 4 F-7 (OR 4 F-8) AND THE GROUND?

YES

REPAIR A POOR CONNECTION AT THE CONNECTORS OR AN OPEN CIRCUIT BETWEEN 1 R-13 (OR 1 R-12) AND R-4, OR 2 F-7 (OR 2 F-8) AND R-4

NO

REPAIR A POOR CONNECTION AT THE CONNECTORS OR AN OPEN CIRCUIT BETWEEN 10 H-32 AND 6 R-13 (OR 9 H-32 AND 6 R-12), OR 10 H-32 AND 4 F-7 (OR 9 H-32 AND 4 F-8)

NO

REPLACE THE BULB

1-4 Both Clearance Lights Inoperative

- IS FUSE F-12 (15A) NORMAL?
  - YES
    - IS THE TAIL RELAY NORMAL?
      - YES
        - IS 1 C-16 GROUNDED SECURELY?
          - YES
            - REMOVE THE CONNECTOR OF THE LIGHTING SWITCH
            - IS THERE ANY CONTINUITY BETWEEN 8 B-12 AND 7 B-12 WHEN THE SWITCH IS TURNED TO THE CLEARANCE LIGHT OR HEADLIGHT POSITION?
              - YES
                - IS THE BATTERY VOLTAGE APPLIED BETWEEN THE HARNESS SIDE CONNECTOR 8 B-12 AND THE GROUND?
                - YES
                - REPAIR A POOR CONNECTION AT THE CONNECTORS OR AN OPEN CIRCUIT BETWEEN 4 X-9 AND 1 H-41
                - NO
                - REPAIR A POOR CONNECTION AT THE CONNECTORS OR AN OPEN CIRCUIT BETWEEN 3 X-9 AND 8 B-12
              - NO
              - REPAIR OR REPLACE THE LIGHTING SWITCH
            - NO
            - GROUND IT SECURELY
          - NO
          - REPLACE THE RELAY
      - NO
      - REPLACE THE FUSE
  - NO
  - REPLACE THE FUSE

1-5 Clearance Light On The Left (Or Right) Side Inoperative

- IS THE CLEARANCE LIGHT BULB ON THE LEFT (OR RIGHT) SIDE NORMAL?

YES

- IS THERE ANY CONTINUITY BETWEEN THE HARNESS SIDE CONNECTOR 1 H-41 AND 2 C-22 (OR 2 C-31)?

YES

REPAIR A POOR CONNECTION AT THE CONNECTORS OR AN OPEN CIRCUIT BETWEEN 1 C-22 (OR 1 C-31) AND 1 C-16

NO

REPAIR A POOR CONNECTION AT THE CONNECTORS OR AN OPEN CIRCUIT IN THE CIRCUIT

NO

REPLACE THE BULB

1-6 License Plate Light Inoperative

(RHD-1)

- DO THE BOTH TAILLIGHTS LIGHT UP WHEN THE LIGHTING SWITCH IS AT THE CLEARANCE LIGHT POSITION?

YES

- IS THE LICENSE PLATE LIGHT BULB NORMAL?

YES

- IS THERE ANY CONTINUITY BETWEEN THE HARNESS SIDE CONNECTOR 1 G-8 AND 1 H-39 ?

YES

REPAIR A POOR CONNECTION AT THE CONNECTORS OR AN OPEN CIRCUIT BETWEEN 2 G-8 AND R-4

NO

REPAIR A POOR CONNECTION AT THE CONNECTORS OR AN OPEN CIRCUIT IN THE CIRCUIT

NO

REPLACE THE BULB

NO

GROUND R-4 SECURELY

NO

REPLACE THE BULB

(RHD-2)

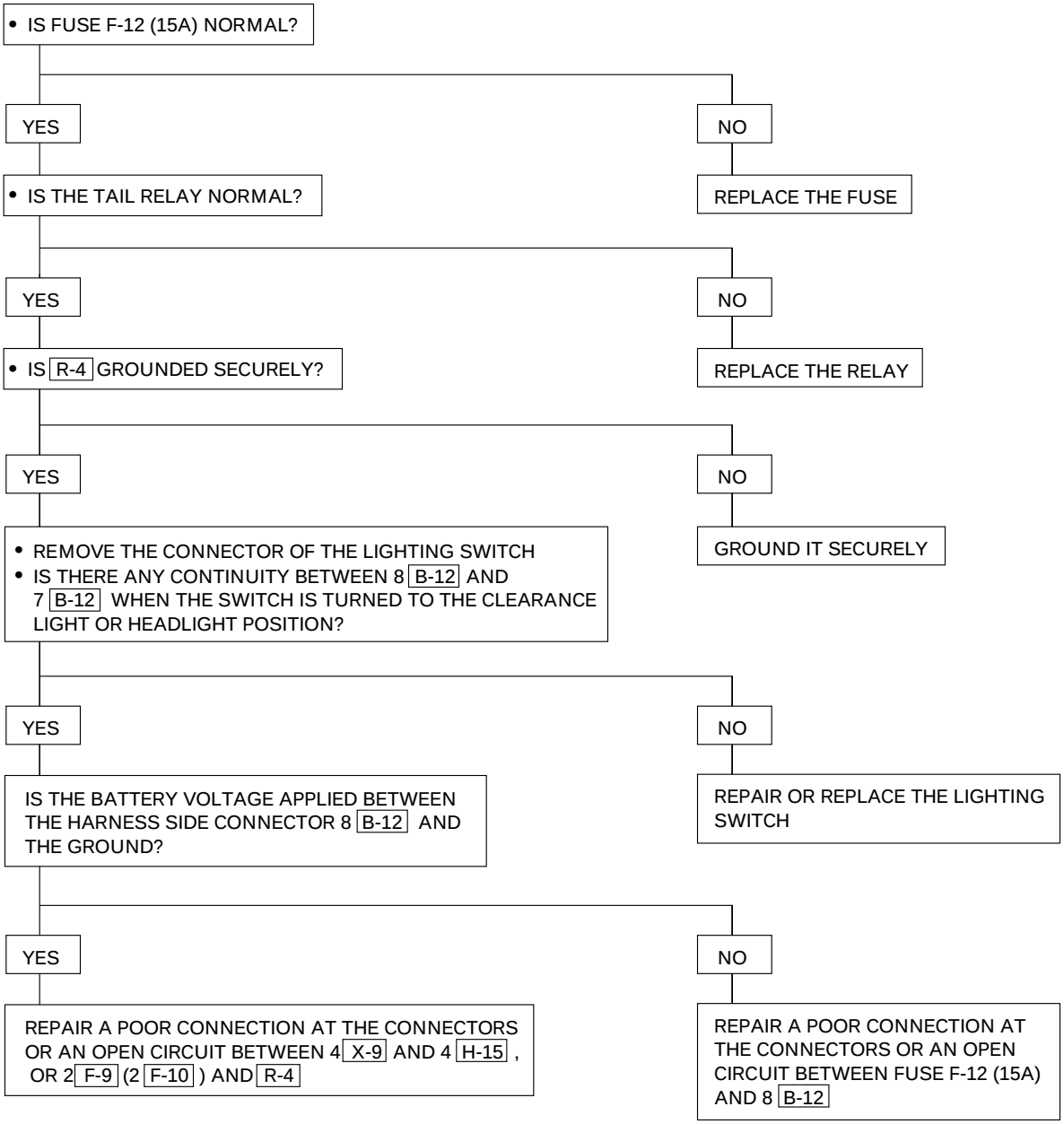
• IS FUSE F-12 (15A) NORMAL?
YES
NO
REPLACE THE FUSE
• IS THE TAIL RELAY NORMAL?
YES
NO
REPLACE THE RELAY
• IS R-4 GROUNDED SECURELY?
YES
NO
GROUND IT SECURELY
• REMOVE THE CONNECTOR OF THE LIGHTING SWITCH
• IS THERE ANY CONTINUITY BETWEEN 8 B-12 AND 7 B-12 WHEN THE SWITCH IS TURNED TO THE CLEARANCE LIGHT OR HEADLIGHT POSITION?
YES
NO
REPAIR OR REPLACE THE LIGHTING SWITCH
IS THE BATTERY VOLTAGE APPLIED BETWEEN THE HARNESS SIDE CONNECTOR 8 B-12 AND THE GROUND?
YES
NO
REPAIR A POOR CONNECTION AT THE CONNECTORS OR AN OPEN CIRCUIT BETWEEN 4 X-9 AND 4 H-15 , OR 2 F-9 (2 F-10) AND R-4
REPAIR A POOR CONNECTION AT THE CONNECTORS OR AN OPEN CIRCUIT BETWEEN FUSE F-12 (15A) AND 8 B-12

1-7 License Plate Light On The Left (Or Right) Side Inoperative (RHD-2)

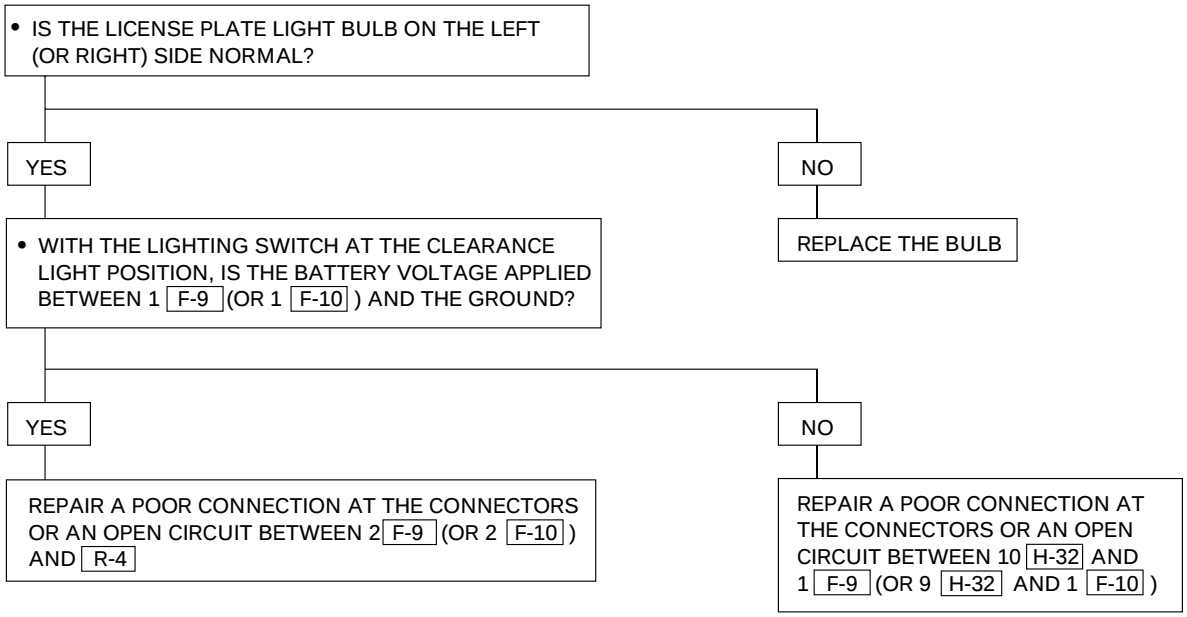

2-1 All Illumination Lights Inoperative

- IS TAIL RELAY NORMAL?
  - NO → REPLACE THE RELAY
  - YES ↓
- IS THE CONTINUITY IN THE LIGHTING SWITCH NORMAL?
  - NO → REPAIR OR REPLACE THE SWITCH
  - YES ↓
- IS B-19 GROUNDED SECURELY?
  - NO → GROUND IT SECURELY
  - YES ↓
- IS THE BATTERY VOLTAGE APPLIED BETWEEN 8 B-12 AND GROUND WHEN LIGHTING SWITCH IS ON?
  - NO → REPAIR A POOR CONNECTION AT THE CONNECTORS OR AN OPEN CIRCUIT IN THE CIRCUIT BETWEEN FUSE F-12 AND 8 B-12
  - YES ↓
- REPAIR A POOR CONNECTION AT THE CONNECTORS OR AN OPEN CIRCUIT BETWEEN 7 B-12 AND B-19

2-2 Both Taillights Inoperative

- DOES THE LICENCE PLATE LIGHT LIGHT UP WHEN THE LIGHTING SWITCH IS AT THE CLEARANCE LIGHT POSITION?
  - NO → GROUND R-4 SECURELY
  - YES ↓
- REPAIR A POOR CONNECTION AT THE CONNECTORS OR AN OPEN CIRCUIT BETWEEN 1 R-13 (1 R-12) AND R-4 , OR 2 F-7 (2 F-8) AND R-4

2-3 Taillight On The Left (Or Right) Side Inoperative

- IS FUSE F-11 (10A) (OR F-12 (10A)) NORMAL?
  - NO → REPLACE THE FUSE
  - YES →
- IS THE TAILLIGHT BULB ON THE LEFT (OR RIGHT) SIDE NORMAL?
  - NO → REPLACE THE BULB
  - YES →
- WITH THE LIGHTING SWITCH AT THE CLEARANCE LIGHT POSITION, IS THE BATTERY VOLTAGE APPLIED BETWEEN 6 R-13 (OR 6 R-12) AND THE GROUND, OR 4 F-7 (OR 4 F-8) AND THE GROUND?
  - NO → REPAIR A POOR CONNECTION AT THE CONNECTORS OR AN OPEN CIRCUIT BETWEEN 10 H-32 AND 6 R-13 (OR 9 H-32 AND 6 R-12), OR 10 H-32 AND 4 F-7 (OR 9 H-32 AND 4 F-8)
  - YES → REPAIR A POOR CONNECTION AT THE CONNECTORS OR AN OPEN CIRCUIT BETWEEN 1 R-13 (OR 1 R-12) AND R-4, OR 2 F-7 (OR 2 F-8) AND R-4

2-4 Both Clearance Lights Inoperative

- IS 1 C-16 (2 C-16 : 4ZE1) GROUNDED SECURELY?
  - NO → GROUND IT SECURELY
  - YES → REPAIR A POOR CONNECTION AT THE CONNECTORS OR AN OPEN CIRCUIT BETWEEN 1 C-16 (2 C-16 : 4ZE1) AND 1 C-22 (1 C-31)

2-5 Clearance Light On The Left (Or Right) Side Operative

- IS THE CLERANCE LIGHT BULB ON THE LEFT (OR RIGHT) SIDE NORMAL?

YES

- IS THERE ANY CONTINUITY BETWEEN THE HARNESS SIDE CONNECTOR
  2 C-22 AND FUSE F-11 (10A)
  2 C-31 AND FUSE F-12 (10A)

YES

REPAIR A POOR CONNECTION AT THE CONNECTORS OR AN OPEN CIRCUIT BETWEEN 1 C-22 (OR 1 C-31) AND 1 C-16 (OR 2 C-16 : 4ZE1)

NO

REPAIR A POOR CONNECTION AT THE CONNECTORS OR AN OPEN CIRCUIT IN THE CIRCUIT

NO

REPLACE THE BULB

2-6 License Plate Light Inoperative

(LHD-1)

- IS FUSE F-12 (10A) NORMAL?

YES

- DOES THE BOTH TAILLIGHT LIGHT UP WHEN THE LIGHTING SWITCH IS AT THE CLEARANCE LIGHT POSITION?

YES

- IS THE LICENCE PLATE LIGHT BULB NORMAL?

YES

- IS THERE ANY CONTINUITY BETWEEN THE HARNESS SIDE CONNECTOR
  1 G-8 AND 1 H-39 ?

YES

REPAIR A POOR CONNECTION AT THE CONNECTORS OR AN OPEN CIRCUIT BETWEEN 2 G-8 AND R-4

NO

REPAIR A POOR CONNECTION AT THE CONNECTORS OR AN OPEN CIRCUIT IN THE CIRCUIT

NO

REPLACE THE BULB

NO

GROUND R-4 SECURELY

NO

REPLACE THE FUSE

NO

(LHD-2)

- DOES THE TAILLIGHT LIGHT UP WHEN THE LIGHTING SWITCH IS AT THE CLEARANCE LIGHT POSITION?

YES

REPAIR A POOR CONNECTION AT THE CONNECTORS OR AN OPEN CIRCUIT BETWEEN 2 F-9 (2 F-10) AND R-4

NO

GROUND R-4 SECURELY

2-7 License Plate Light On The Left (Or Right) Side Inoperative

(LHD-2)

- IS THE LICENSE PLATE LIGHT BULB ON THE LEFT (OR RIGHT) SIDE NORMAL?

YES

- IS FUSE F-11 (10A) (F-12 (10A)) NORMAL?

YES

- WITH THE LIGHTING SWITCH AT THE CLEARANCE LIGHT POSITION, IS THE BATTERY VOLTAGE APPLIED BETWEEN 1 F-9 (OR 1 F-10) AND THE GROUND?

YES

REPAIR A POOR CONNECTION AT THE CONNECTORS OR AN OPEN CIRCUIT BETWEEN 2 F-9 (OR 2 F-10) AND R-4

NO

REPAIR A POOR CONNECTION AT THE CONNECTORS OR AN OPEN CIRCUIT BETWEEN 1 F-9 AND FUSE F-11 (10A) (OR 1 F-10 AND FUSE F-12 (10A))

NO

REPLACE THE FUSE

NO

REPLACE THE BULB

2-8 Both Taillights And Clearance Lights On The Left (Or Right) Side Inoperative

- IS FUSE F-11 (10A) OR F-12 (10A) NORMAL?

YES

REPAIR A POOR CONNECTION AT THE CONNECTORS OR AN OPEN CIRCUIT BETWEEN
FUSE F-11 (10A) AND 18 H-12
FUSE F-12 (10A) AND 11 H-12

NO

REPLACE THE FUSE

Interior Illumination Light

General Description

The circuit consists of a lighting switch, tail relay, illumination controller and illumination lights.
All these lights come on when the lighting switch is turned on with the switch turned to either parking or headlight position.
The brightness of illumination lights except the ones for ashtray, glove box and vanity mirror, can be adjusted by the illumination controller.

Circuit Diagram (RHD)-1

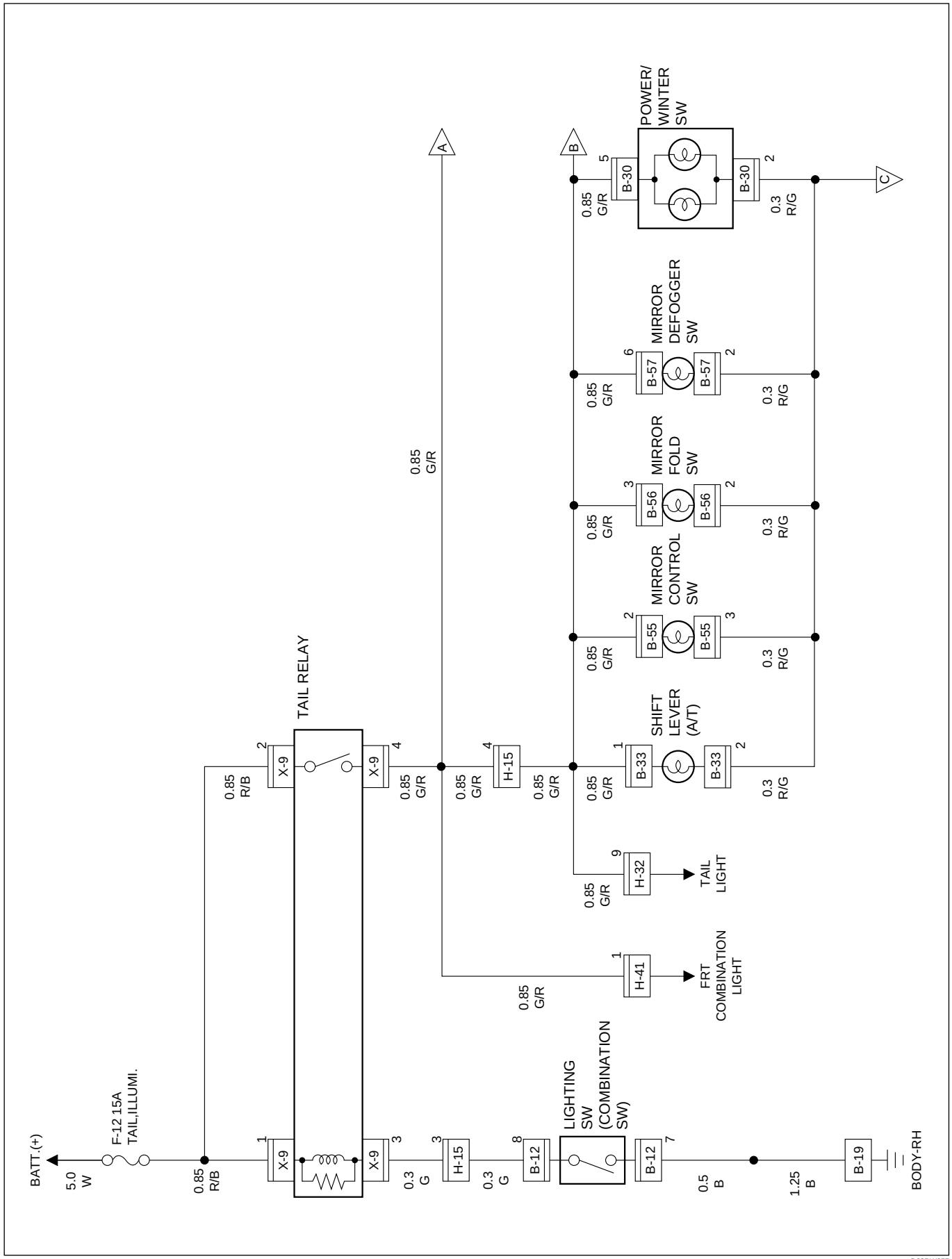

D08RW657

Circuit Diagram (RHD)-2

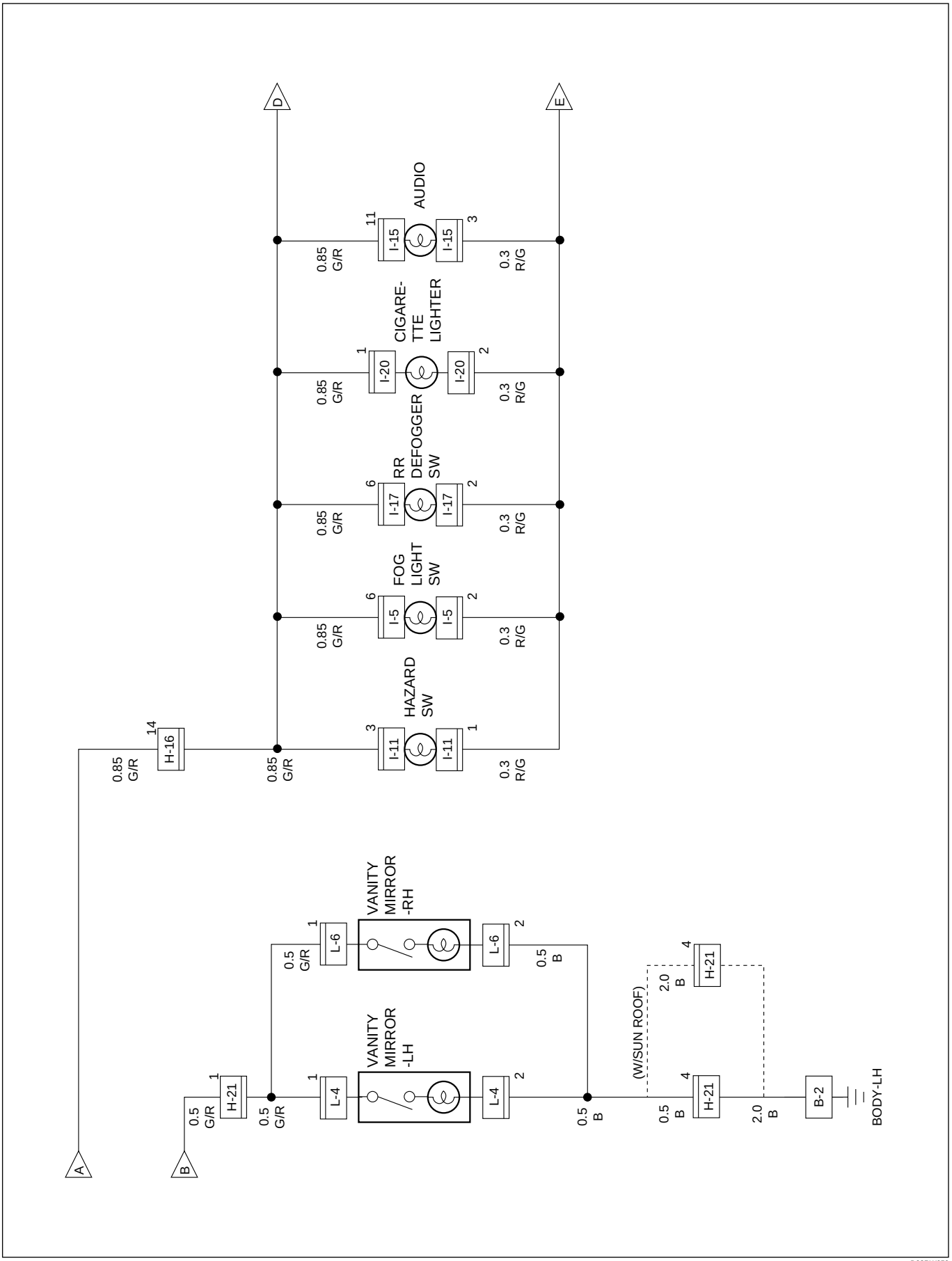

D08RW656

Circuit Diagram (RHD)-3

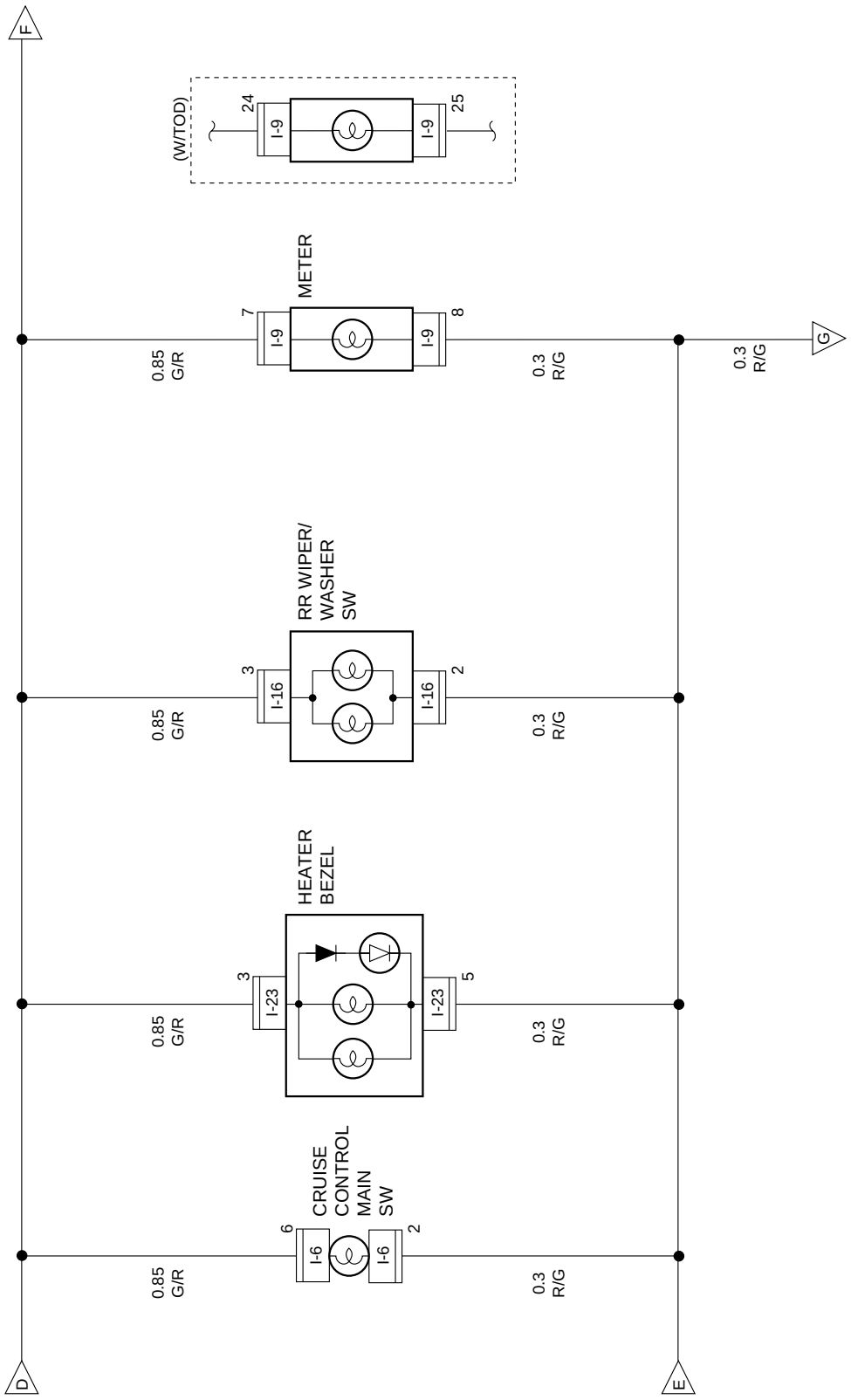

D08RW655

Circuit Diagram (RHD)-4

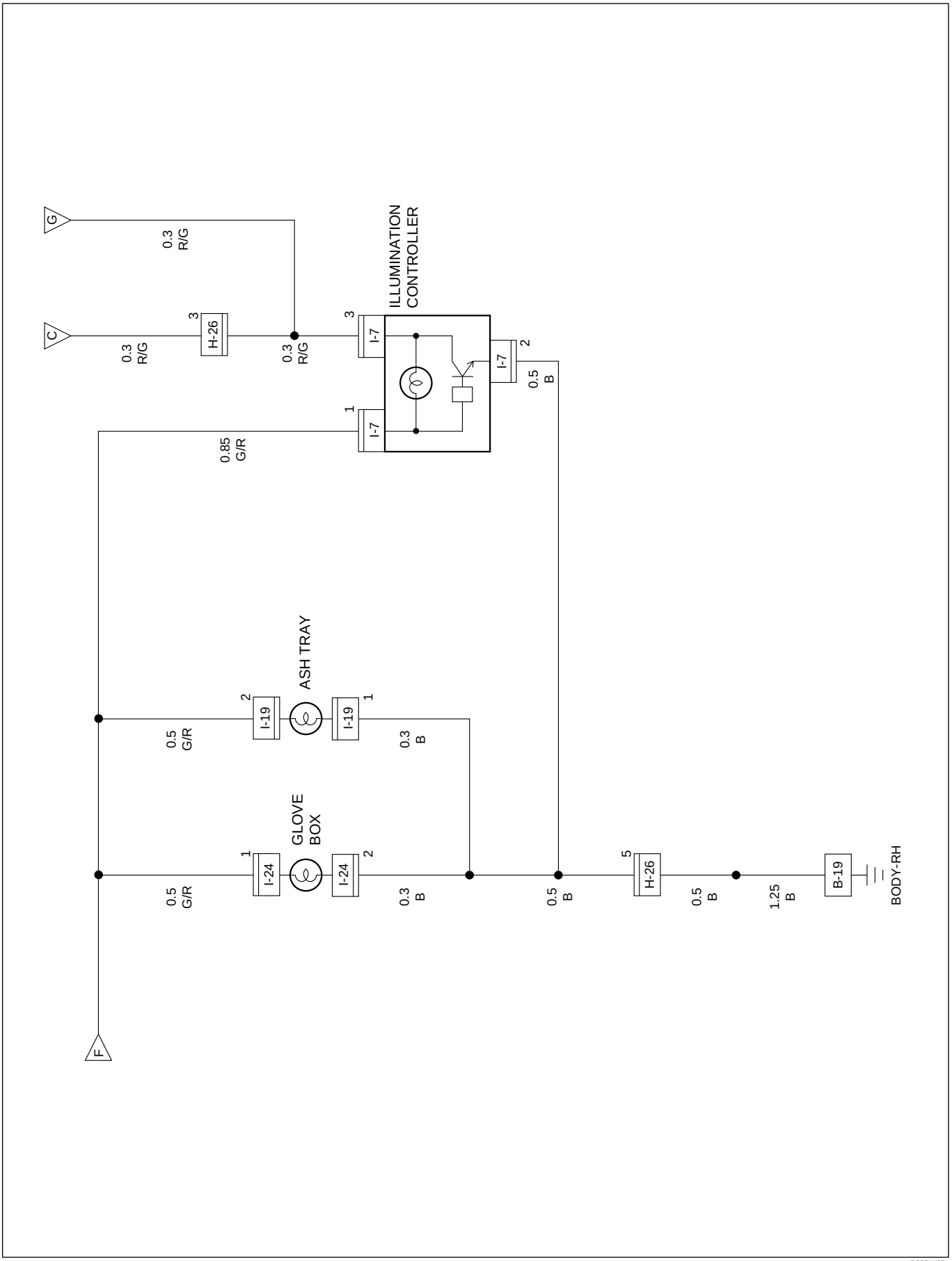

D08RW654

Parts Location (RHD)

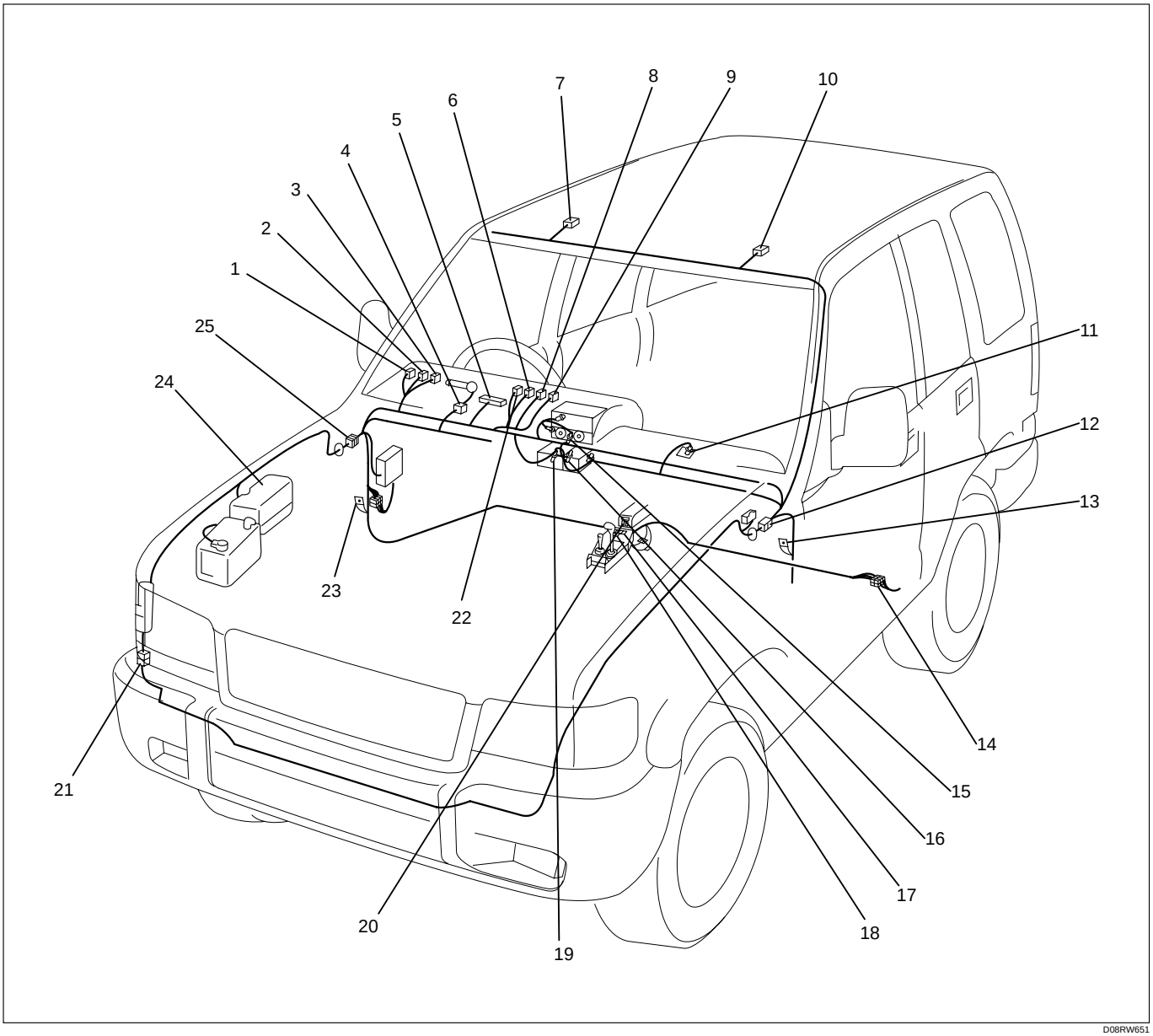

D08RW651

Legend

(1) Front Fog Light Switch (I-5)
(2) Head Light Wiper / Washer Switch (I-4)
(3) Illumination Controller
(4) B-12
(5) I-9
(6) Hazard Switch (I-11)
(7) L-6
(8) I-16
(9) I-17
(10) L-4
(11) I-24
(12) H-21
(13) B-2
(14) H-32
(15) I-23
(16) I-20
(17) B-30
(18) B-33
(19) I-19
(20) B-55, B-56, B-57
(21) H-41
(22) I-16
(23) B-19
(24) Relay and Fuse Box (X-9)
(25) H-15, H-16, H-26

Circuit Diagram (LHD)-1

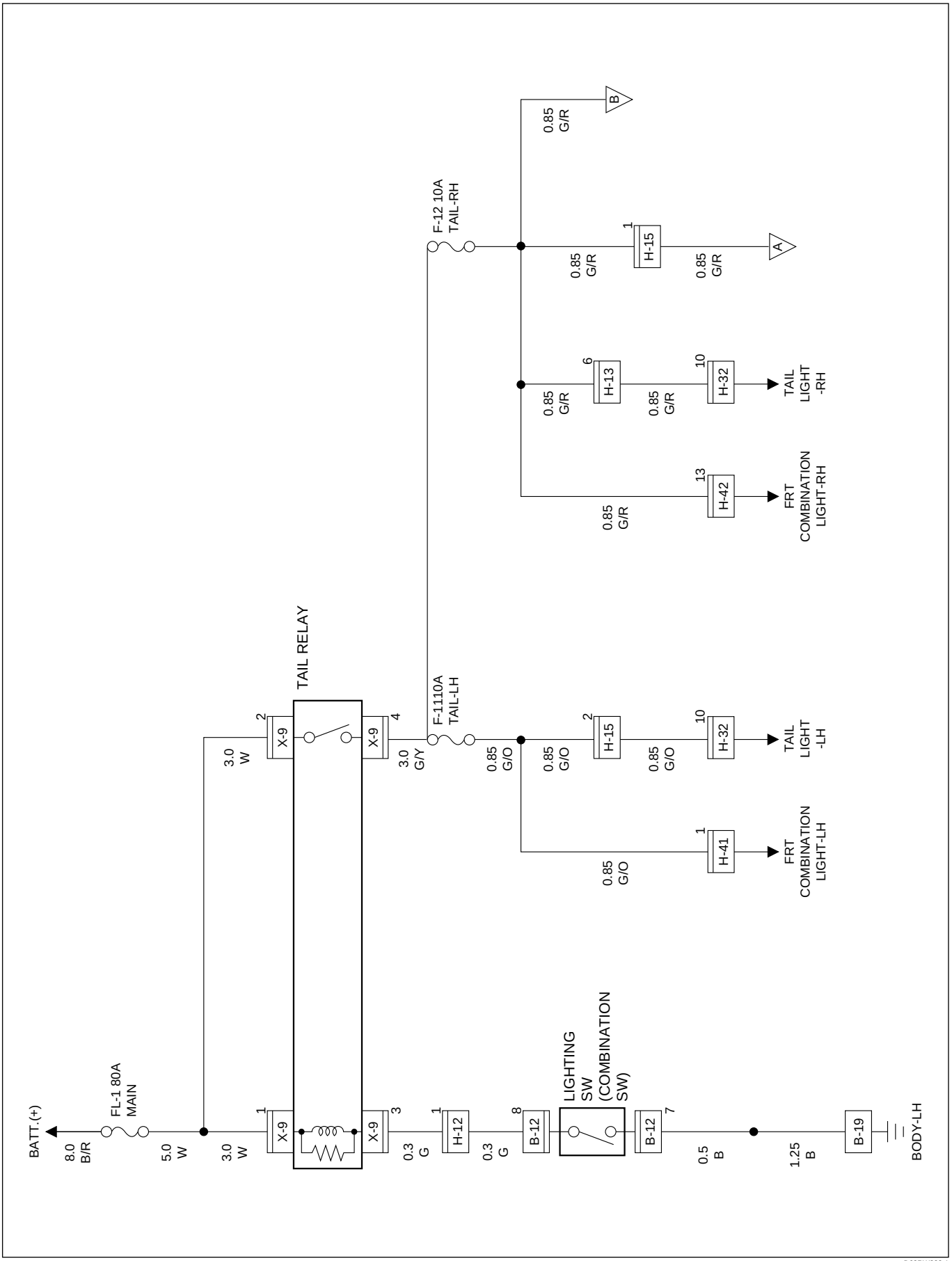

D08RW888-1

Circuit Diagram (LHD)-2

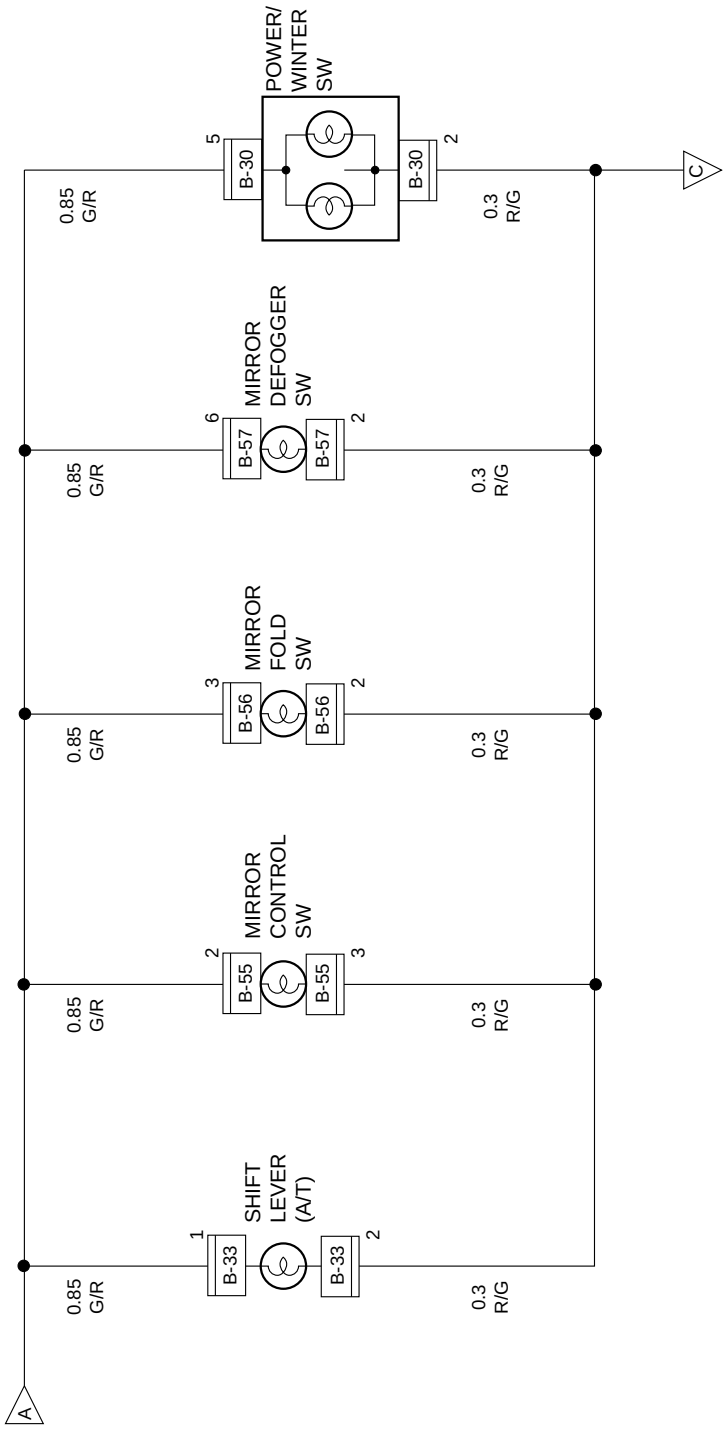

D08RW889-1

Circuit Diagram (LHD)-3

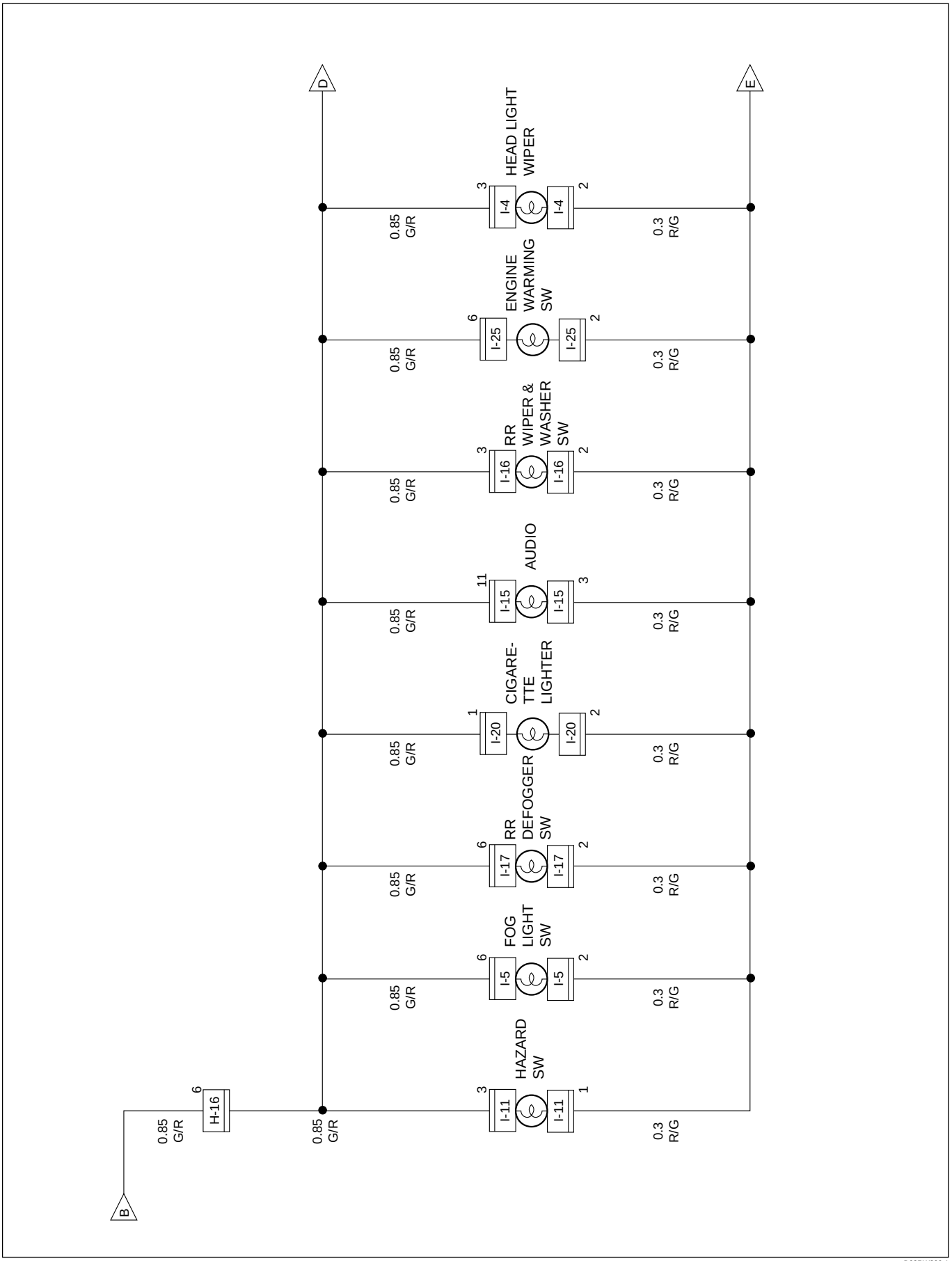

D08RW890-1

Circuit Diagram (LHD)-4

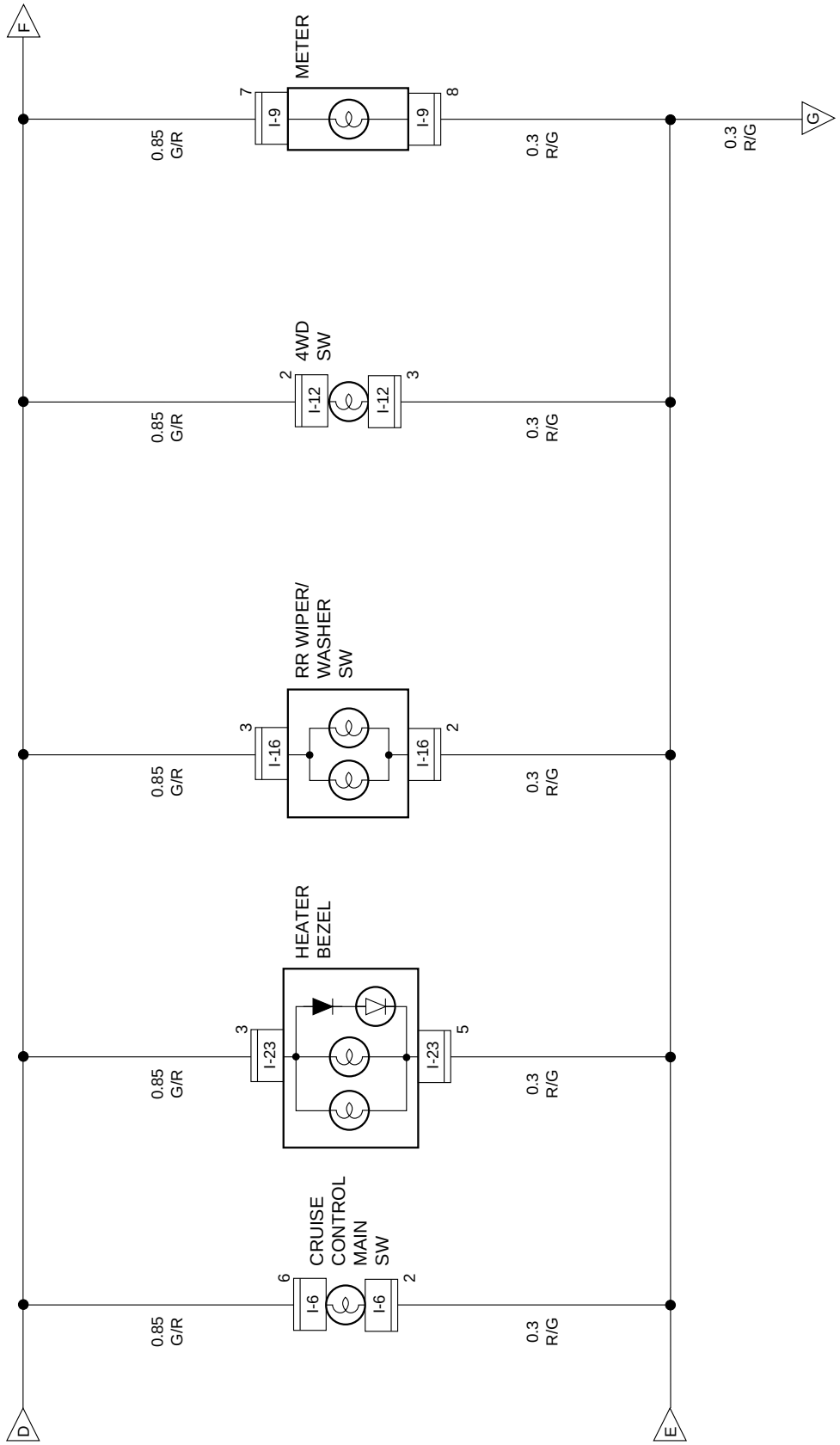

D08RW891

Circuit Diagram (LHD)-5

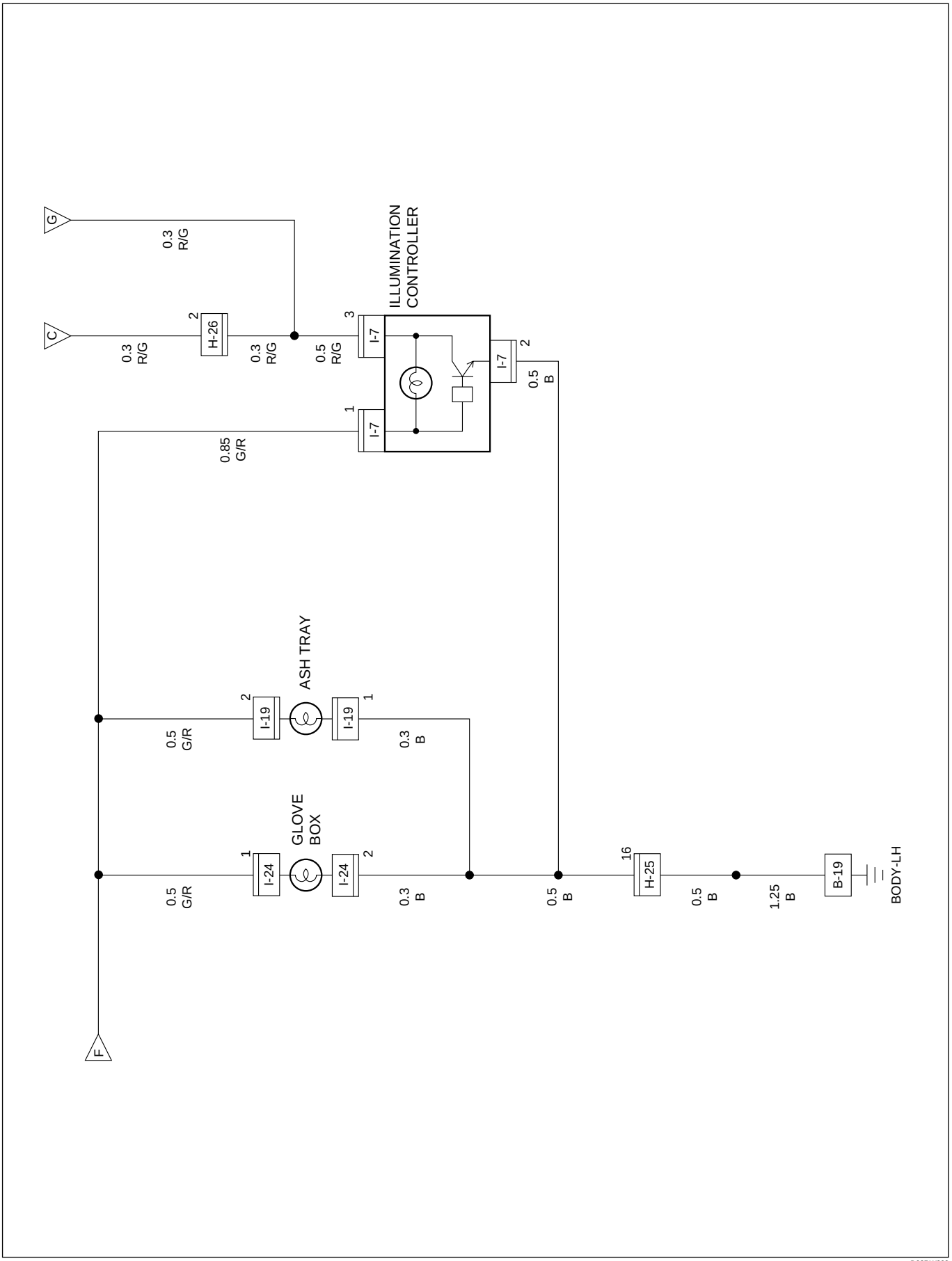

D08RW892

Parts Location (LHD)

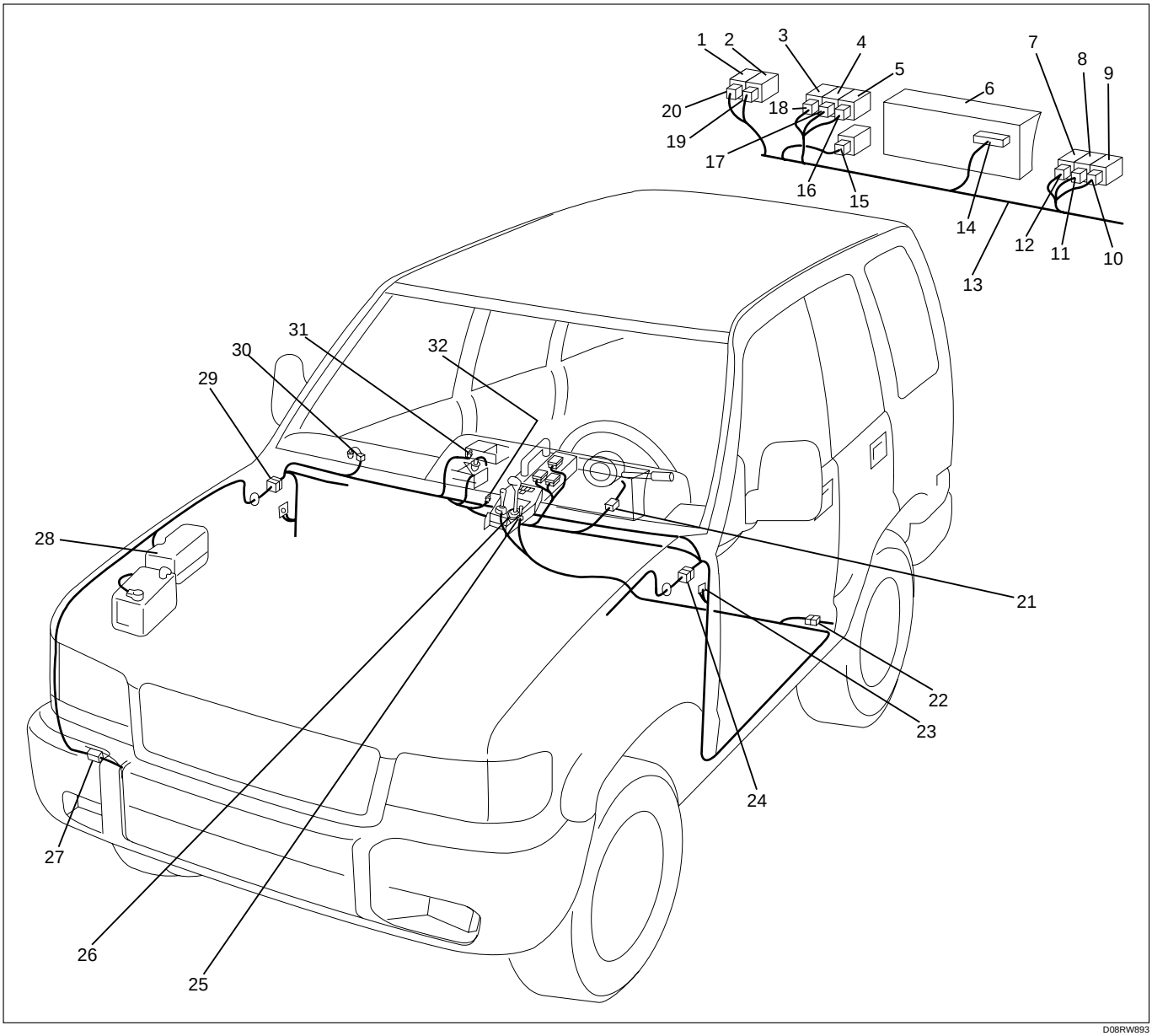

D08RW893

Legend

(1) Rear Deffoger Switch
(2) Rear Wiper / Washer Switch
(3) Engin Warming Switch
(4) 4WD Switch
(5) Hazard Switch
(6) Meter
(7) Illumination Contoroller
(8) Head Light Wiper and Washer Switch
(9) Fog Light Switch
(10) I-5
(11) I-4
(12) I-7
(13) Instrument Harness
(14) I-9
(15) I-6
(16) I-11
(17) I-12
(18) I-25
(19) I-16
(20) I-17
(21) B-12
(22) H-32
(23) B-19
(24) H-25, H-26
(25) B-33
(26) B-30
(27) H-41, H-42
(28) Relay and Fuse Box (X-9)
(29) H-13, H-15, H-16
(30) I-24
(31) I-28
(32) I-20

Diagnosis

Interior Illumination Lights Inoperative

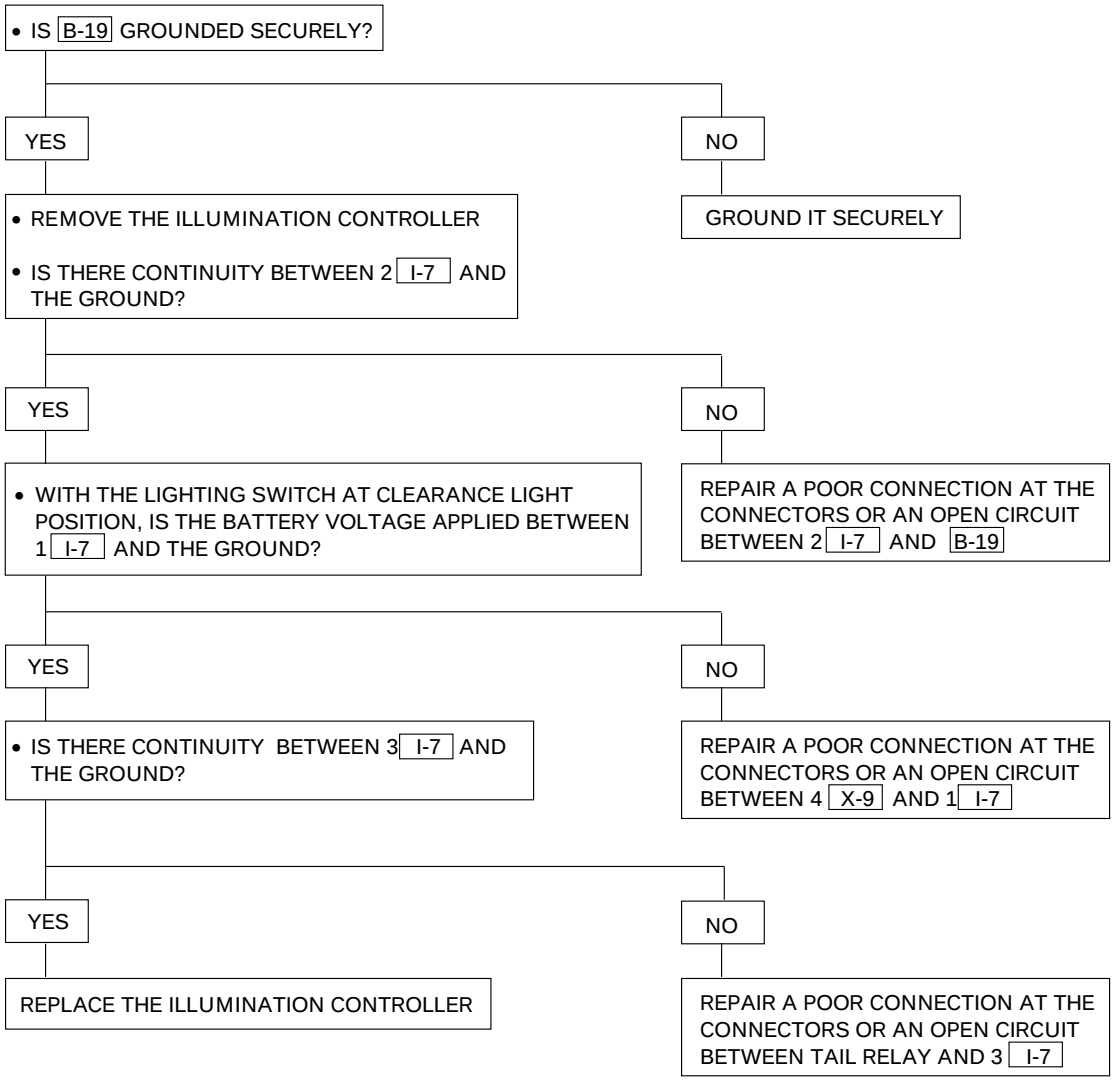

Turn Signal Light and Hazard Warning Light

General Description

The circuit consists of a turn signal switch (combination switch), turn signal light, hazard warning switch and flasher unit. When the turn signal light switch is turned on with starter switch on, turn signal light will operate. When turn signal light is flashing, indicator light in meter also starts flashing. When hazard warning switch is turned on, current flows to flasher unit through hazard warning switch to cause hazard warning light to flash independent of position of starter switch. At the same time, indicator lights in meter also start flashing.

Circuit Diagram (RHD)-1

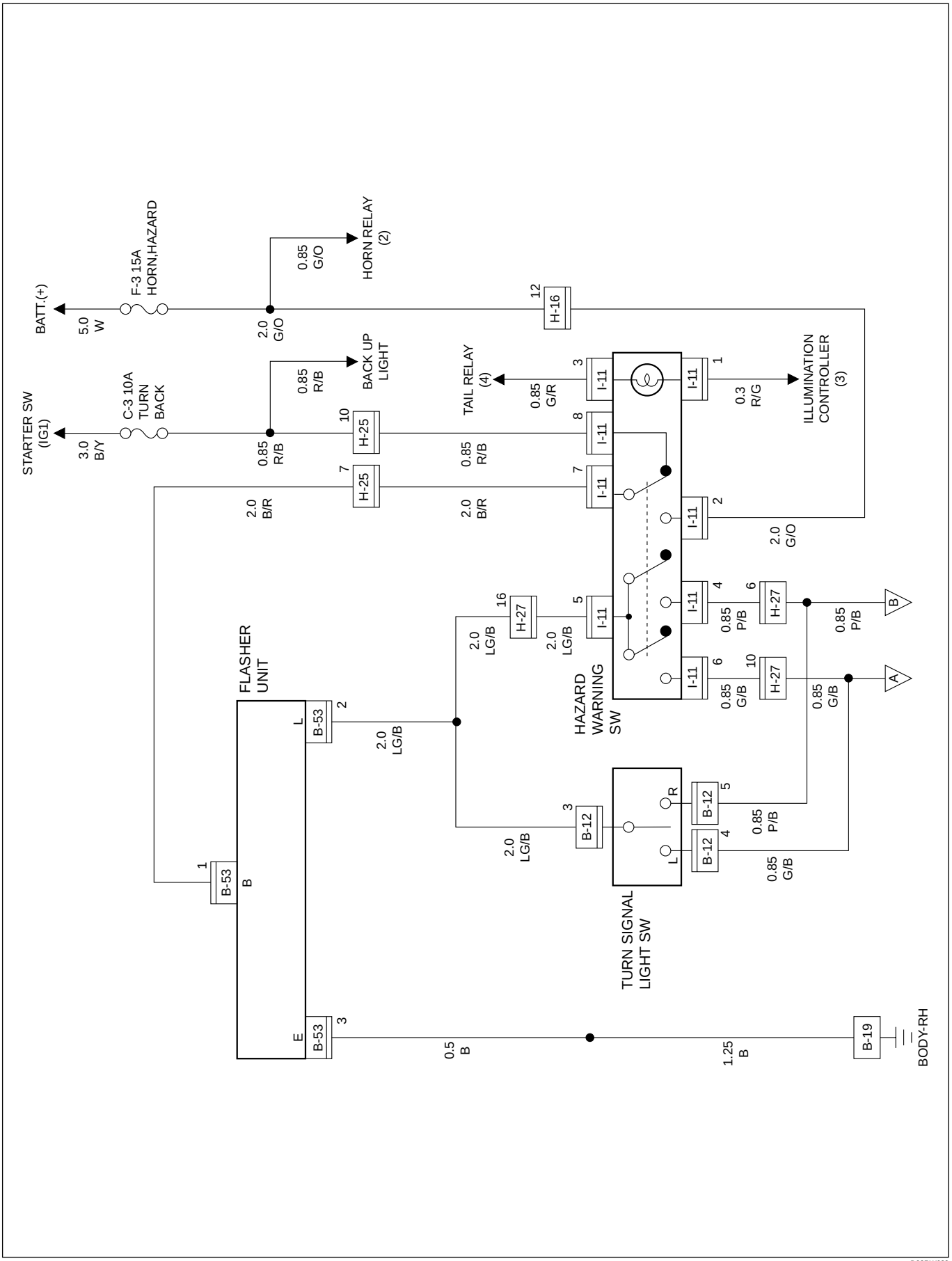

D08RW683

Circuit Diagram (RHD)-2

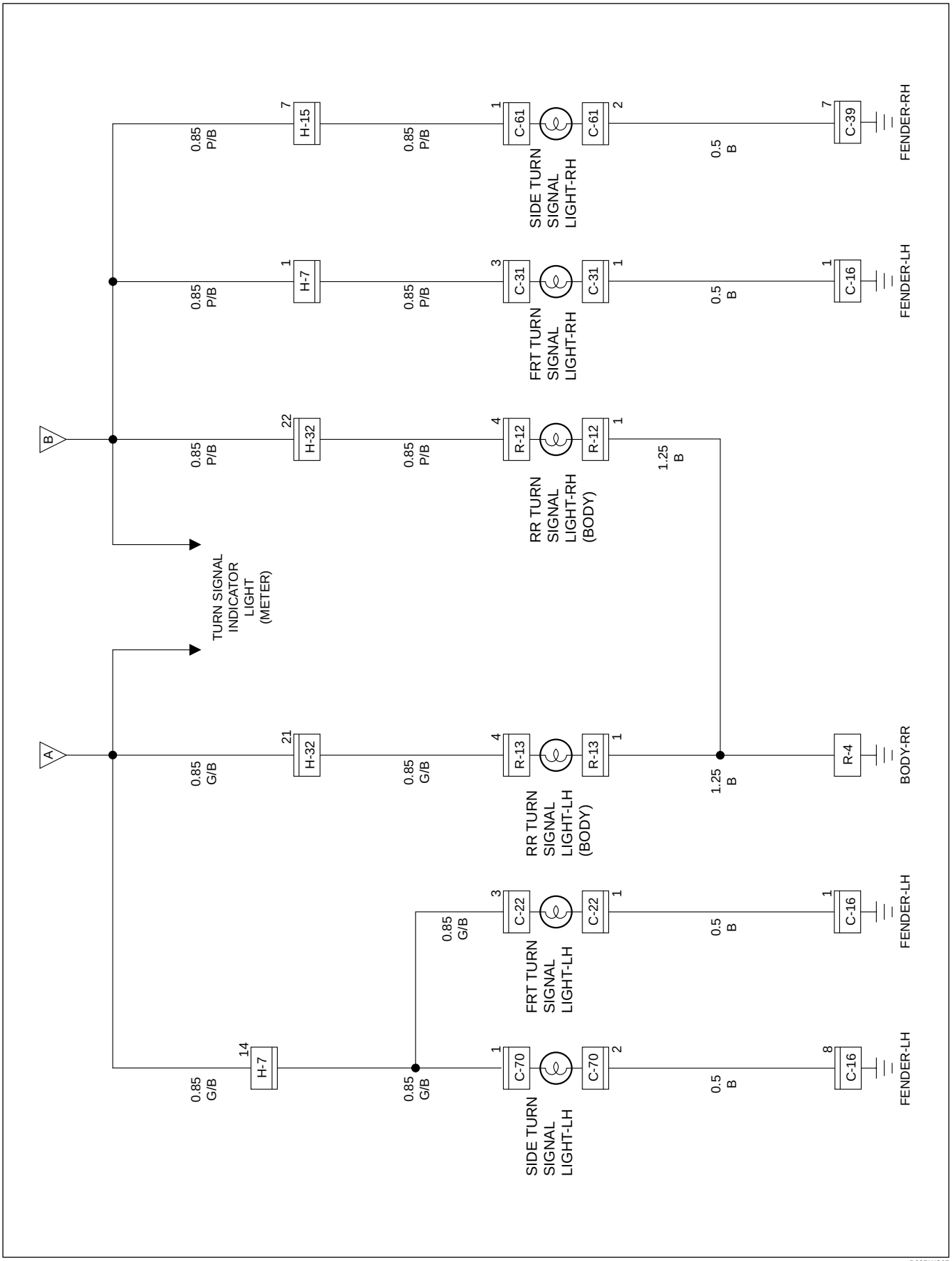

D08RWC67

Circuit Diagram (RHD W/Bumper Built-in Type RR Turn Signal Light) -2

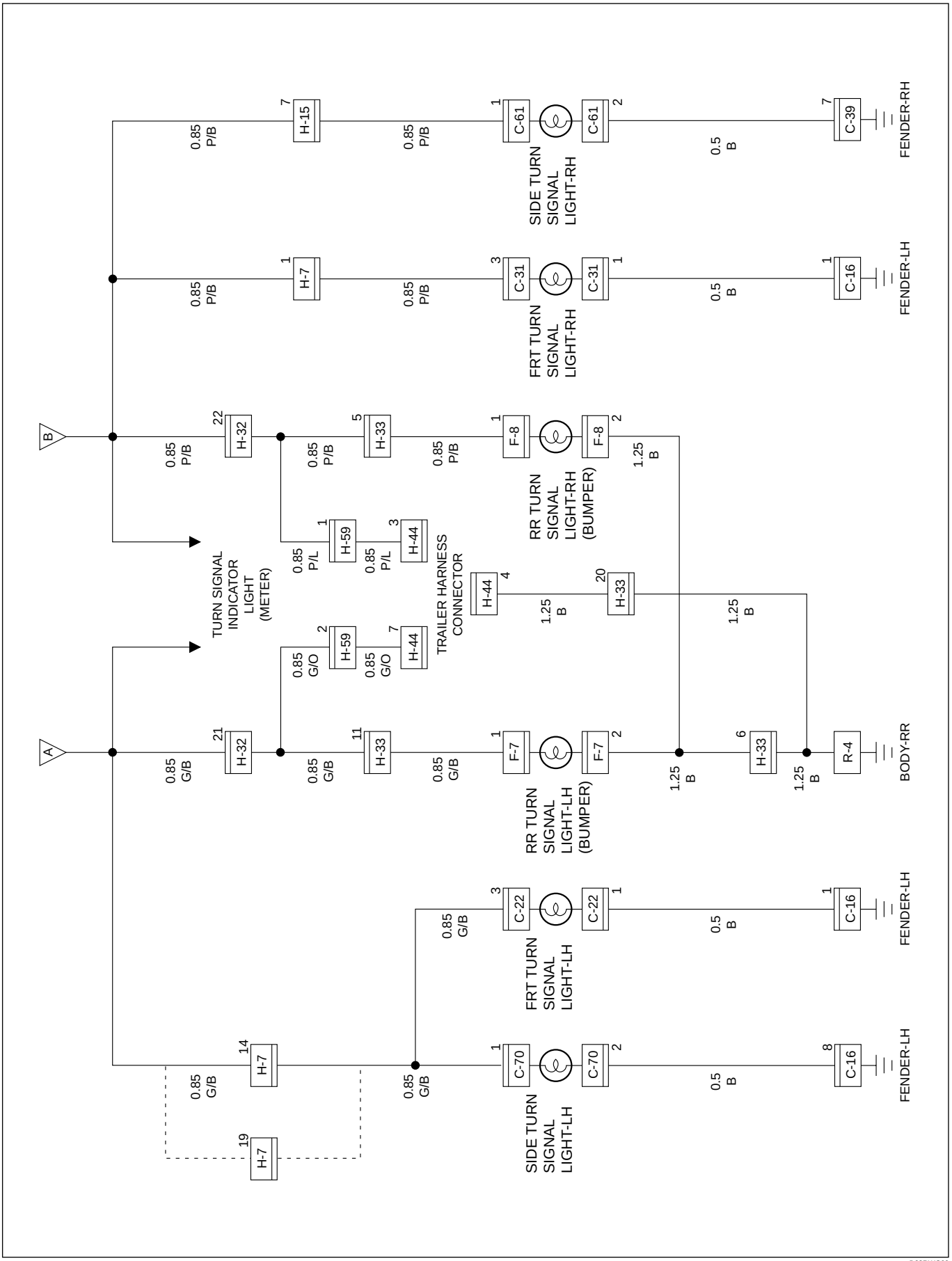

D08RWC66

Parts Location (RHD)

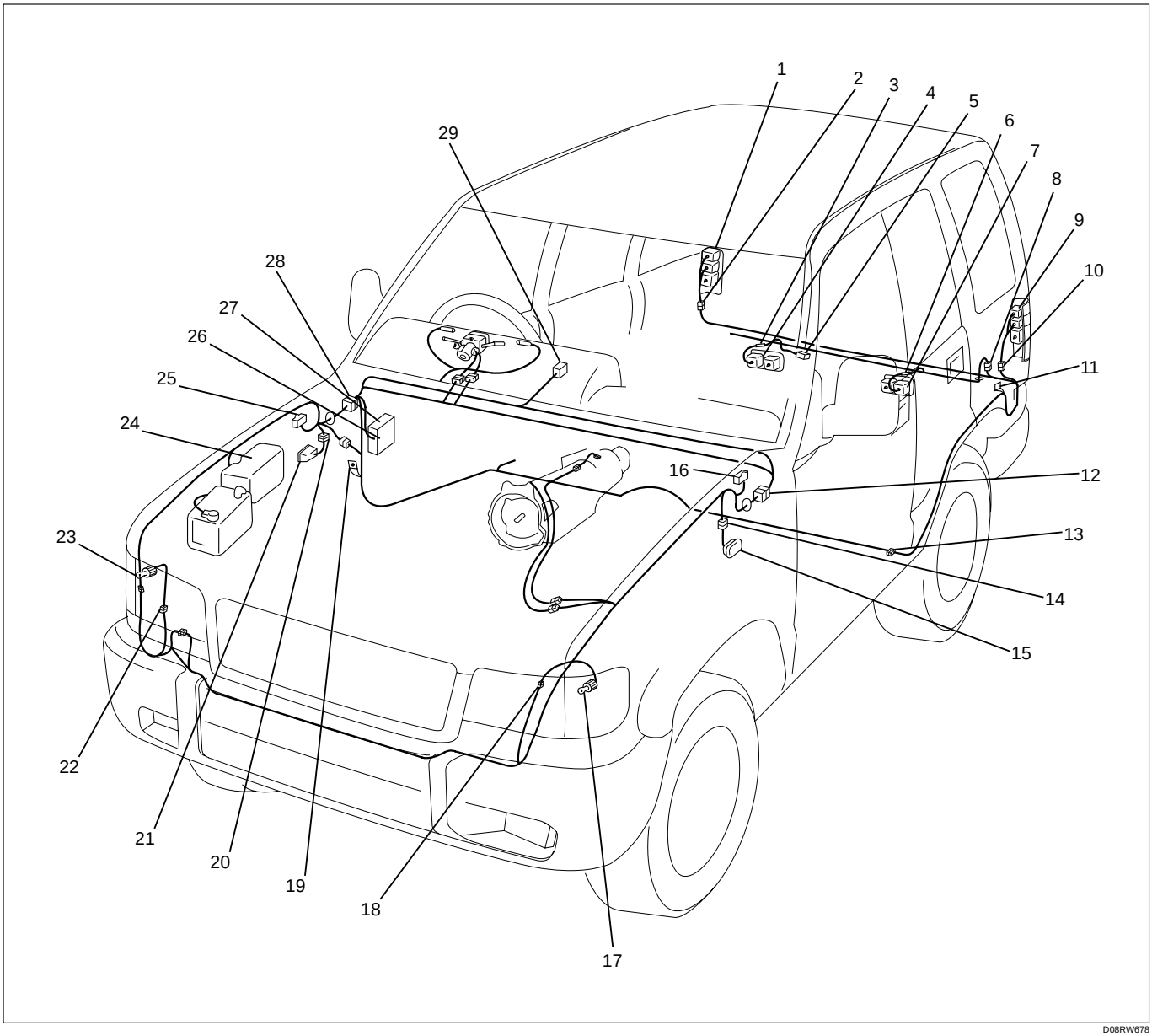

D08RW678

Legend

(1) Rear Turn Signal Light–RH (Body)
(2) R–12
(3) F–8
(4) Rear Turn Signal Light–RH (Bumper)
(5) H–44
(6) F–7
(7) Rear Turn Signal Light–LH (Bumper)
(8) H–33, H–59
(9) Rear Turn Signal Light–LH (Body)
(10) R–13
(11) R–4
(12) H–7
(13) H–32
(14) C–70
(15) Side Turn Signal Light–LH
(16) C–16
(17) Front Turn Signal Light–LH
(18) C–22
(19) B–19
(20) C–61
(21) Side Turn Signal Light–RH
(22) C–31
(23) Front Turn Signal Light–RH
(24) Relay and Fuse
(25) C–39
(26) Fuse Box (Flasher Unit)
(27) Fuse Box
(28) H–15, H–16, H–25, H–27
(29) I–11

Circuit Diagram (LHD)-1

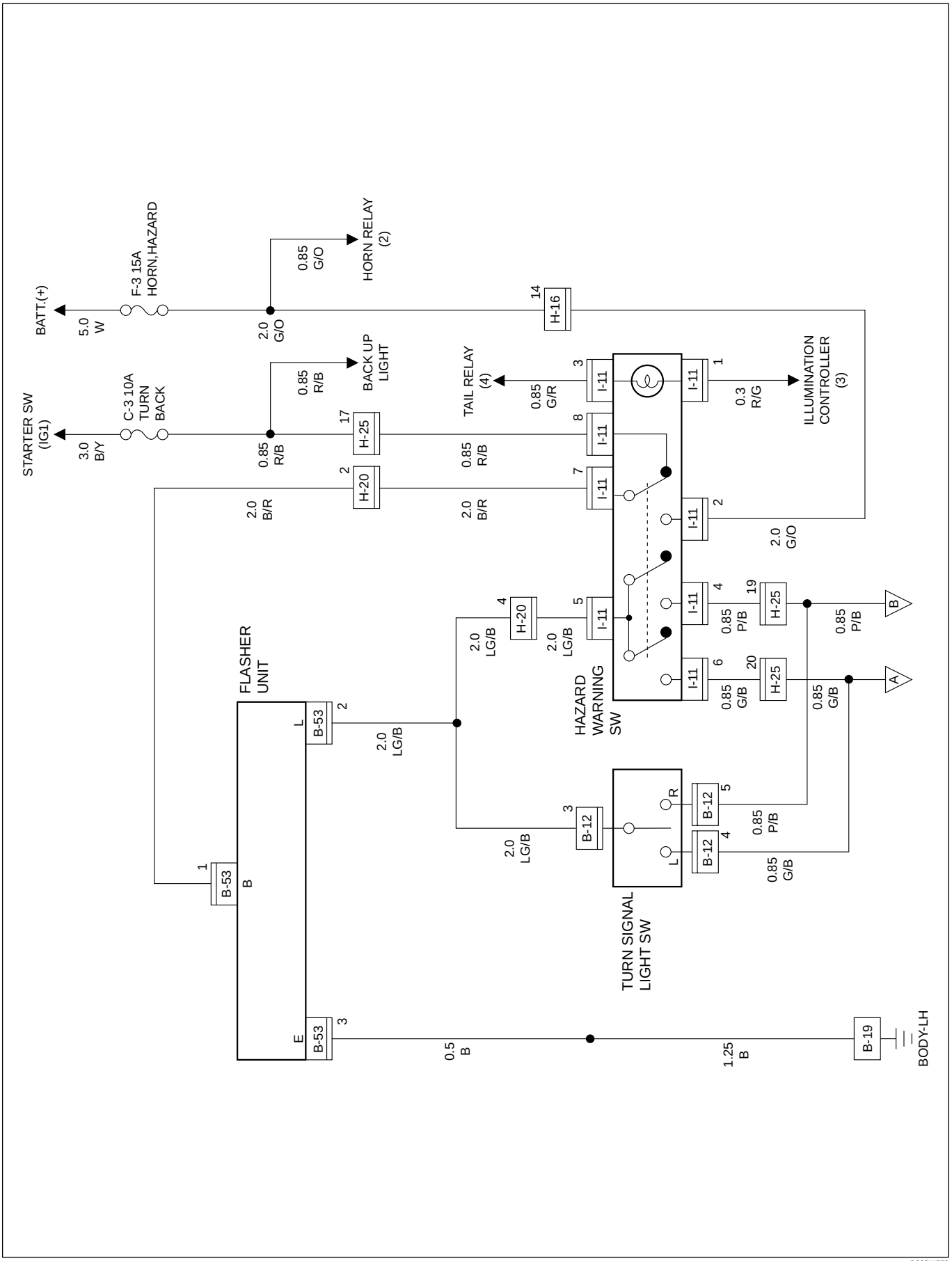

D08RW872

Circuit Diagram (LHD)-2

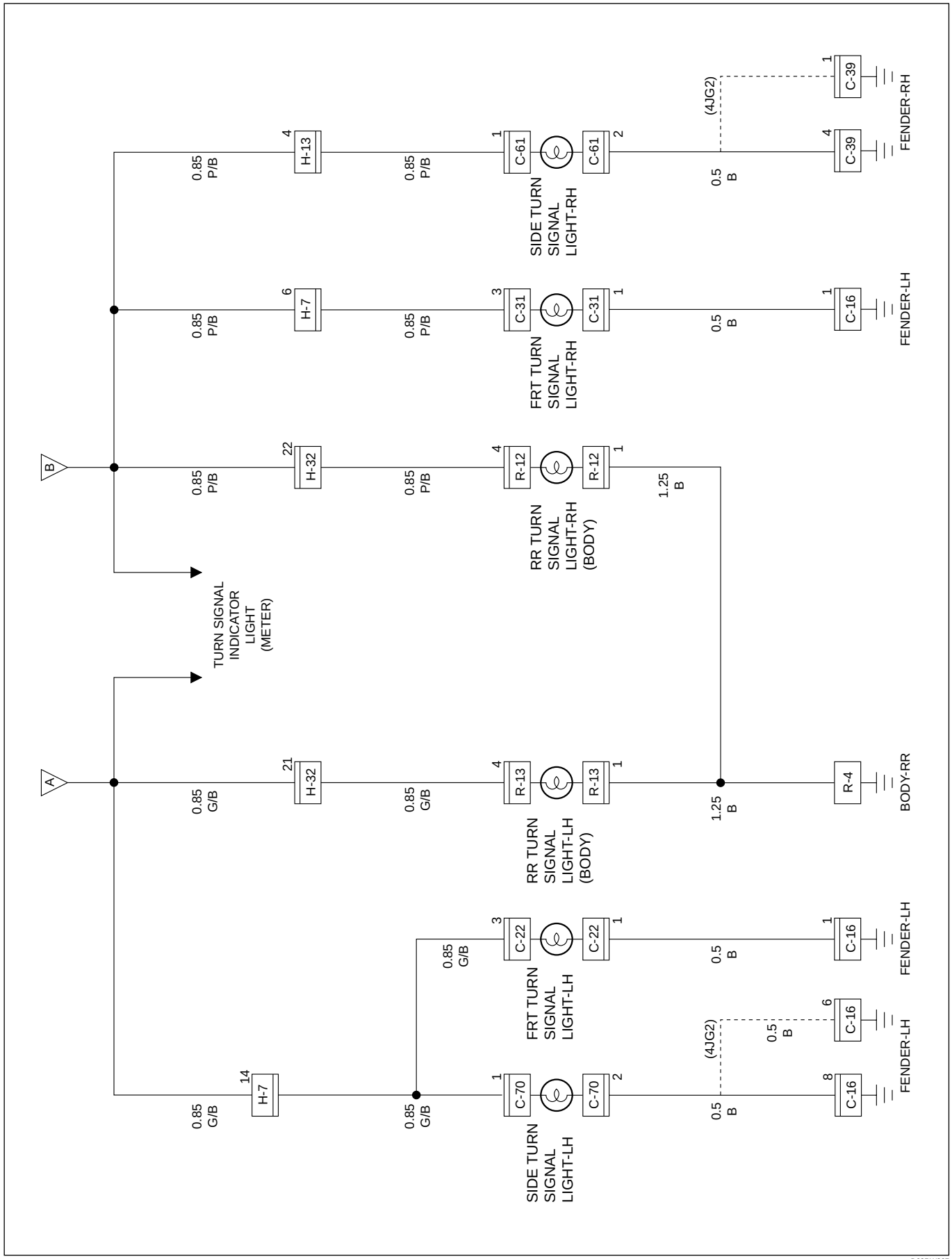

D08RW867

Circuit Diagram (LHD W/Bumper Built-in Type RR Turn signal Light)-2

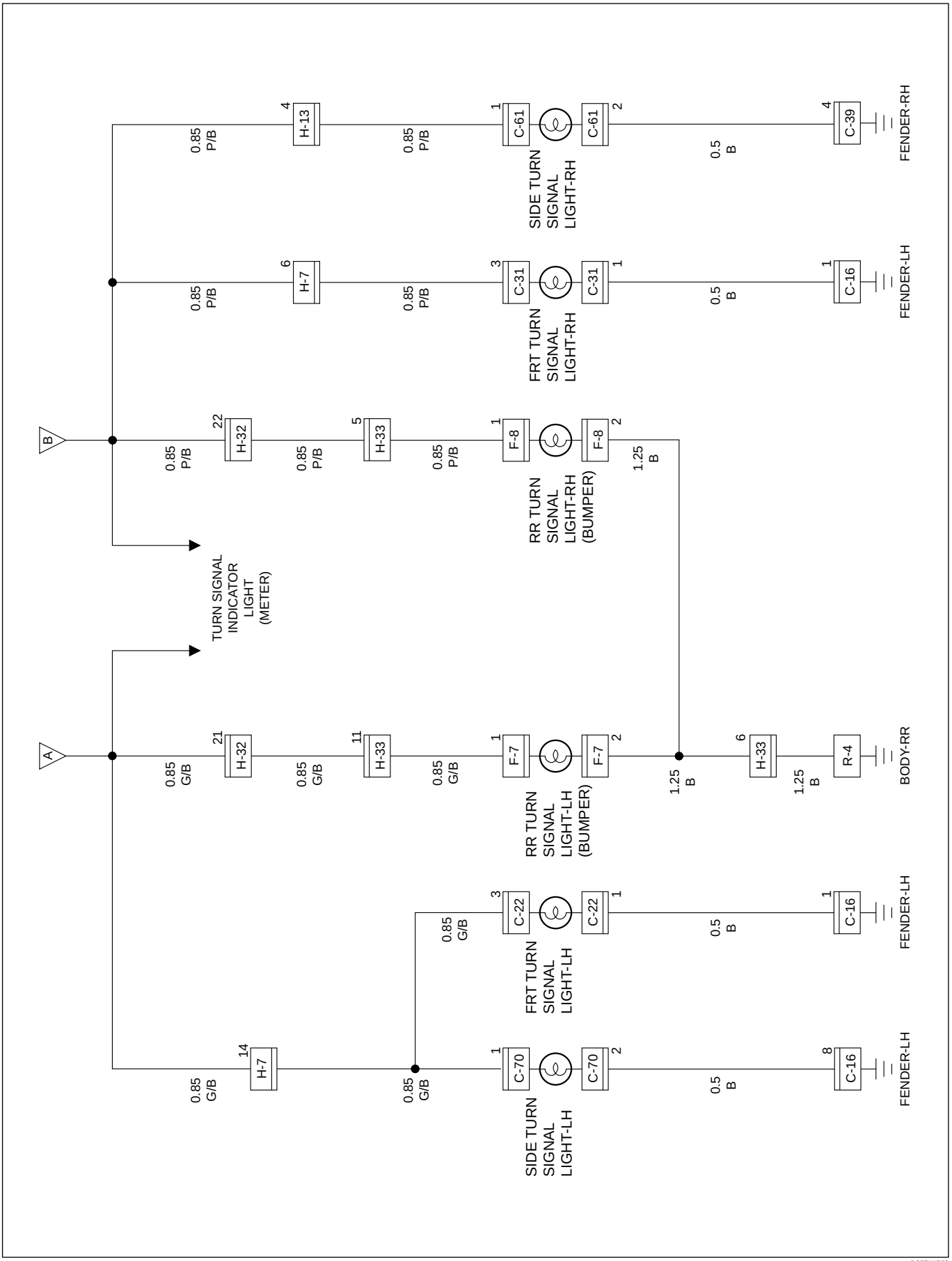

D08RW868

Parts Location (LHD)

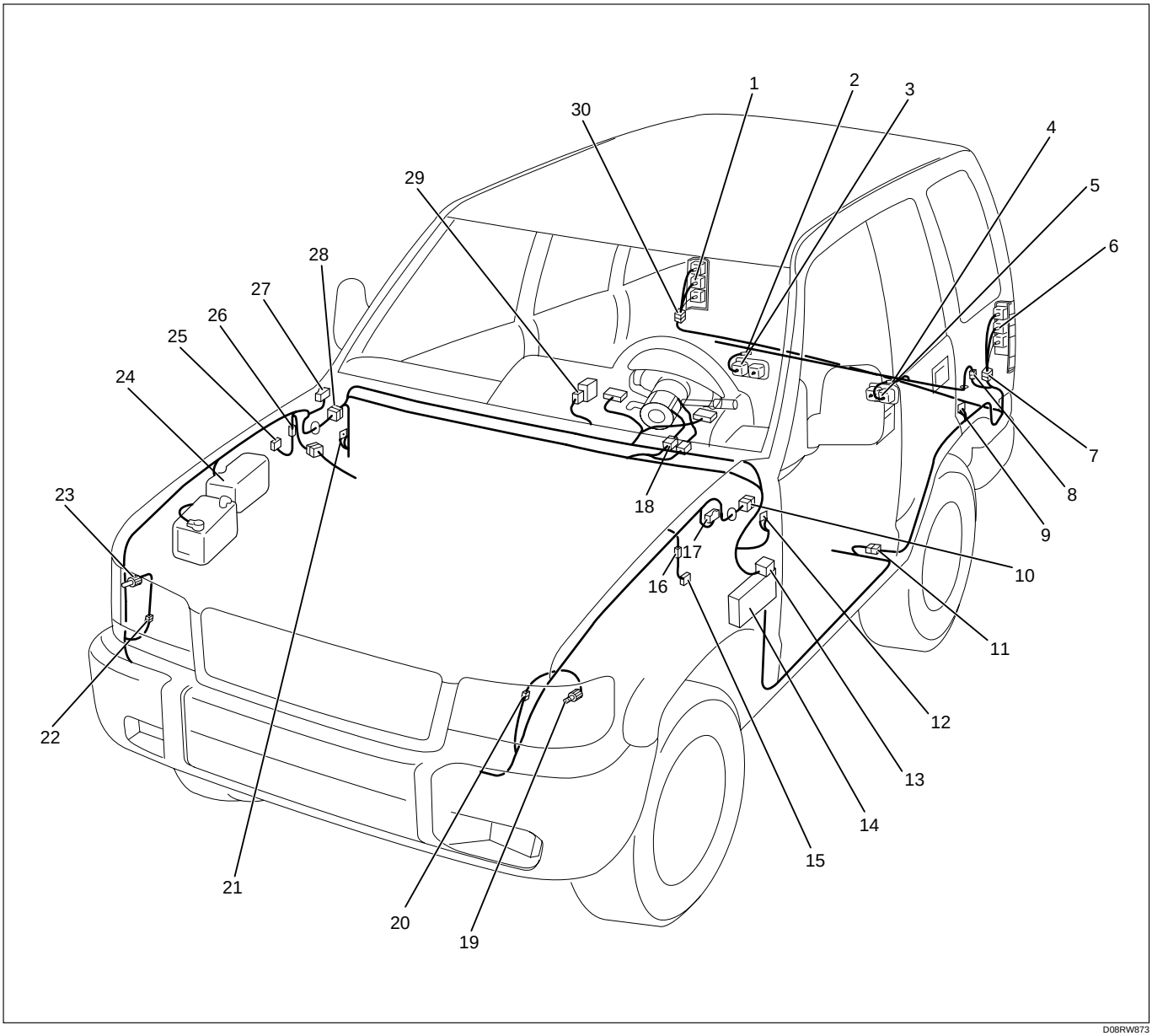

Legend

(1) Rear Turn Signal Light–RH (Body)
(2) F–8
(3) Rear Turn Signal Light–RH (Bumper)
(4) F–7
(5) Rear Turn Signal Light–LH (Bumper)
(6) Rear Turn Signal Light–LH (Body)
(7) R–13
(8) H–33
(9) R–4
(10) H–7, H–25
(11) H–32
(12) B–19
(13) B–53
(14) Fuse Box
(15) Side Turn Signal Light–LH
(16) C–70
(17) C–16
(18) B–12
(19) Front Turn Signal Light–LH
(20) C–22
(21) B–2
(22) C–31
(23) Front Turn Signal Light–RH
(24) Relay and Fuse Box
(25) Side Turn Signal Light–RH
(26) C–61
(27) C–39
(28) H–12, H–13, H–16, H–20
(29) I–11 (Hazard Warning Switch)
(30) R–12

Diagnosis

Quick Chart for Check Points

Check point / Trouble mode	Fuse		Turn signal SW	Hazard SW	Flasher unit	Turn signal bulb	Cable harness
	C-3 (10A)	F-3 (15A)					
1 Both turn signal lights and hazard warning lights inoperative				○	○		○
2 Turn signal light flashes too quickly						○	
3 Hazard warning lights inoperative		○		○			○
4 Turn signal lights inoperative	○		○	○			○
5 Turn signal lights on the right (or left) side inoperative			○				○
6 Hazard warning lights on the right (or left) side inoperative				○			○
7 Turn signal lights and hazard warning ligths on the right (or left) side inoperative							○

1 Both Turn Signal Lights and Hazard Warning Lights Inoperative

- IS THE HAZARD WARNING SW NORMAL?

YES

- REMOVE THE FLASHER UNIT
- TURN THE STARTER SW ON
- IS THE BATTERY VOLTAGE APPLIED BETWEEN 1 B-53 AND THE GROUND?

YES

- IS B-19 GROUNDED SECURELY?

YES

- IS THERE ANY CONTINUITY BETWEEN THE HARNESS SIDE CONNECTOR 3 B-53 AND THE GROUND?

YES

REPLACE THE FLASHER UNIT

NO

REPAIR A POOR CONNECTION AT THE CONNECTORS OR AN OPEN CIRCUIT BETWEEN 3 B-53 AND B-19

NO

GROUND IT SECURELY

NO

REPAIR A POOR CONNECTION AT THE CONNECTORS OR AN OPEN CIRCUIT BETWEEN 7 I-11 AND 1 B-53

NO

REPAIR OR REPLACE THE SW

2 Turn Signal Light Flashes Too Quickly

REINSTALL OR REPLACE THE BULB, REPAIR AN OPEN CIRCUIT IN THE CIRCUIT, OR CHECK THE GROUND CONNECTION

3 Hazard Warning Lights Inoperative

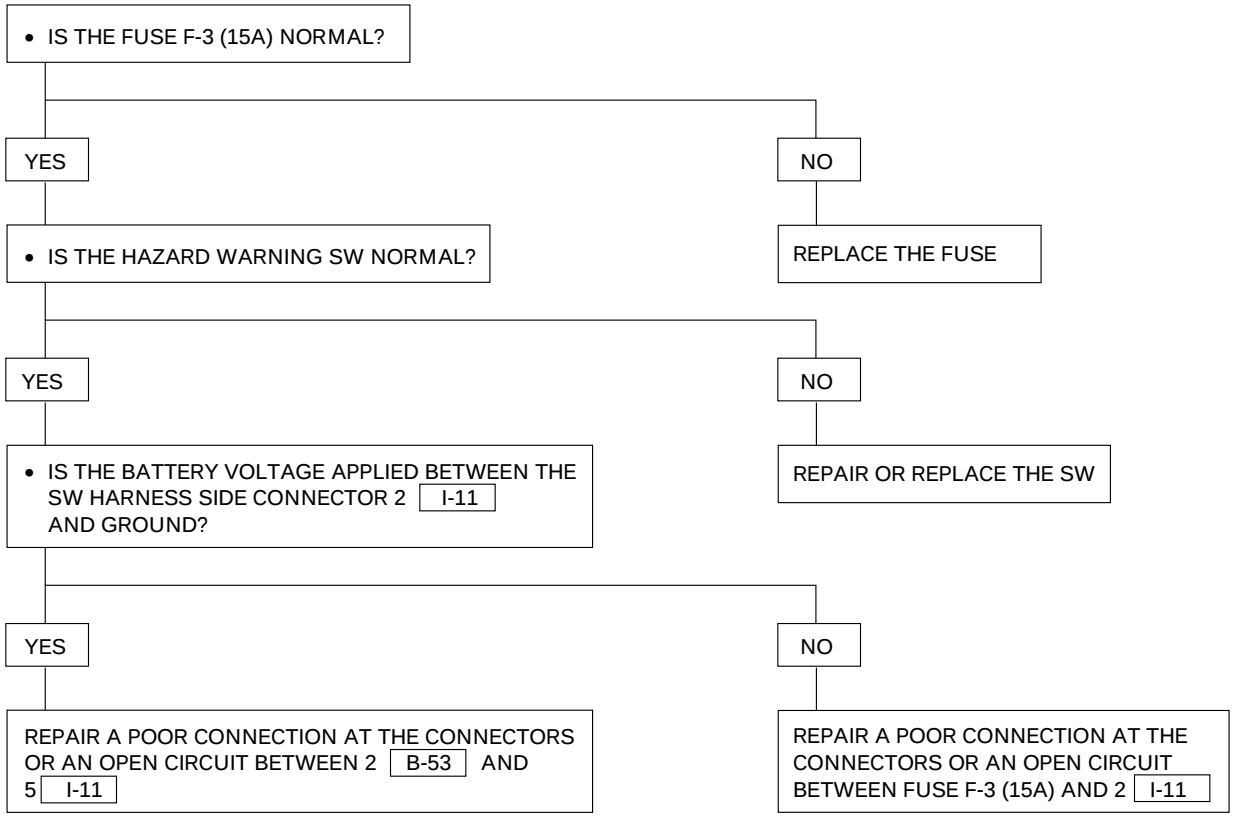

4 Turn Signal Lights Inoperative

- IS FUSE C-3 (10A) NORMAL?

YES

- DISCONNECT THE CONNECTOR OF THE HAZARD WARNING SWITCH
- TURN THE STARTER SWITCH ON.
- IS THE BATTERY VOLTAGE APPLIED BETWEEN THE HAZARD WARNING SWITCH HARNESS SIDE CONNECTOR 8 I-11 AND GROUND?

NO

REPLACE THE FUSE

YES

- WITH THE HAZARD WARNING SWITCH TURNED OFF, IS THERE ANY CONTINUITY BETWEEN THE SWITCH CONNECTORS 7 I-11 AND 8 I-11 ?

NO

REPAIR A POOR CONNECTION AT THE CONNECTORS OR AN OPEN CIRCUIT BETWEEN THE FUSE C-3 (10A) AND 8 I-11 .

YES

- DISCONNECT THE TURN SIGNAL SWITCH CONNECTOR
- IS THERE ANY CONTINUITY BETWEEN THE SWITCH CONNECTORS 3 B-12 AND 4 B-12 (WHEN TURNING TO THE LEFT), AND BETWEEN 3 B-12 AND 5 B-12 (WHEN TURNING TO THE RIGHT)?

NO

REPAIR OR REPLACE THE SWITCH

YES

REPAIR A POOR CONNECTION AT THE CONNECTORS OR AN OPEN CIRCUIT BETWEEN THE HARNESS SIDE CONNECTORS 2 B-53 AND 3 B-12 .

NO

REPAIR OR REPLACE THE SWITCH.

5 Turn Signal Lights On The Right (Or Left) Side Inoperative

- IS TURN SIGNAL SWITCH NORMAL?

YES

REPAIR A POOR CONNECTION AT THE CONNECTORS OR AN OPEN CIRCUIT
[LH]
BETWEEN 4 B-12 AND 21 H-32
[RH]
BETWEEN 5 B-12 AND 22 H-32

NO

REPLACE OR REPAIR THE SWITCH

6 Hazard Warning Lights On The Right (Or Left) Side Inoperative

- IS HAZARD WARNING SWITCH NORMAL?

YES

REPAIR A POOR CONNECTION AT THE CONNECTORS OR AN OPEN CIRCUIT
[LH]
BETWEEN 6 I-11 AND 21 H-32
[RH]
BETWEEN 4 I-11 AND 22 H-32

NO

REPLACE OR REPAIR THE SWITCH

7 Turn Signal Lights and Hazard Warning Lights On The Right (Or Left) Side Inoperative

REPAIR A POOR CONNECTION AT THE CONNECTORS OR AN OPEN CIRCUIT
[LH]
BETWEEN 4 B-12 AND 21 H-32
[RH]
BETWEEN 5 B-12 AND 22 H-32

Stoplight

General Description

The circuit consists of the stoplight, stoplight switch (vehicles w/o cruise control), brake switch (vehicles w/ cruise control).
With the brake pedal depressed, the stoplight switch or the brake switch is turned on to illuminate the stoplight. The brake switch controls not only the operation of the stoplight but also the input of the cruise cancel signals to the cruise control unit.

Circuit Diagram (RHD)

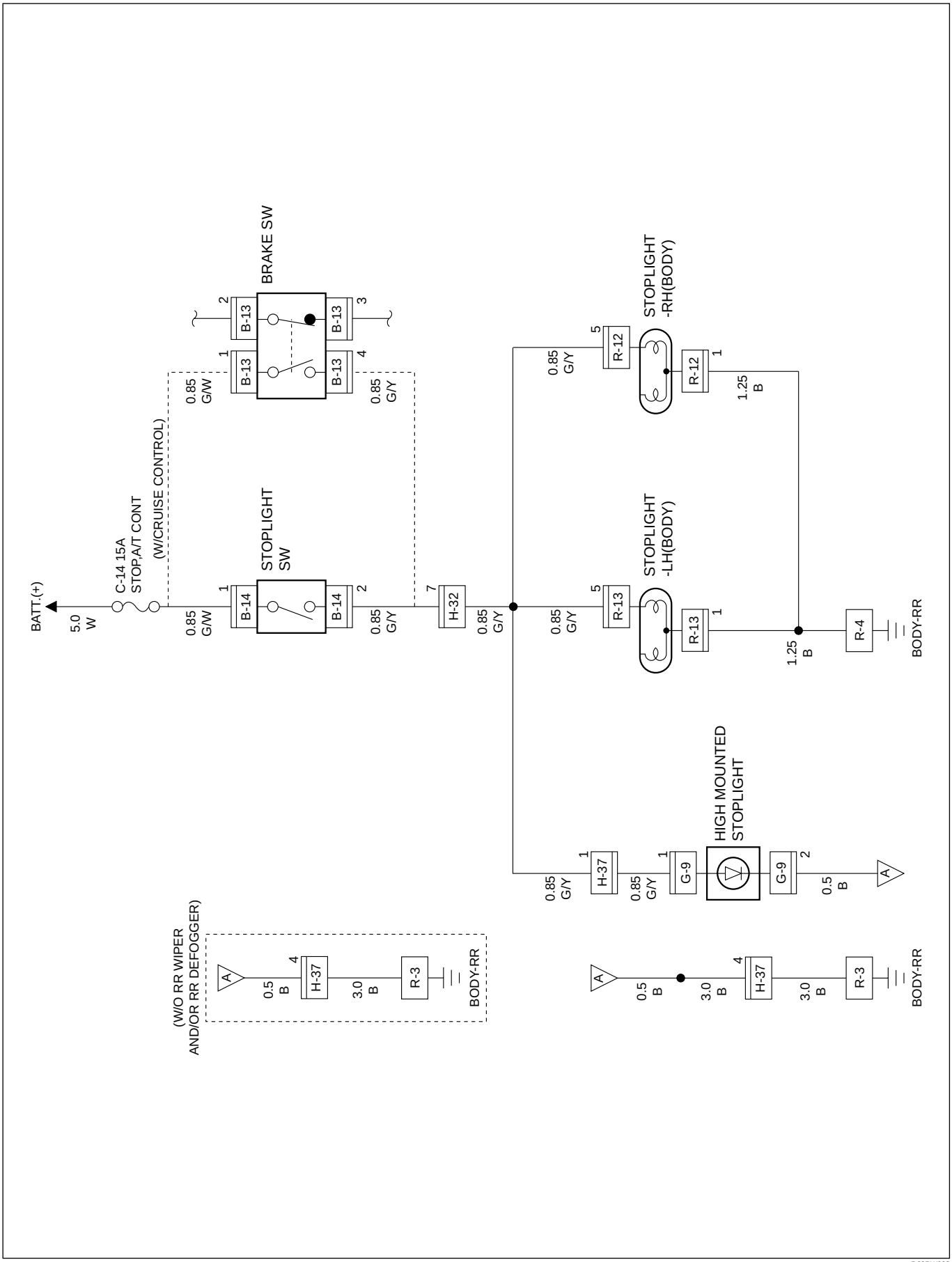

D08RW989

Circuit Diagram (RHD W/Bumper Built-in Type Stoplight)-1

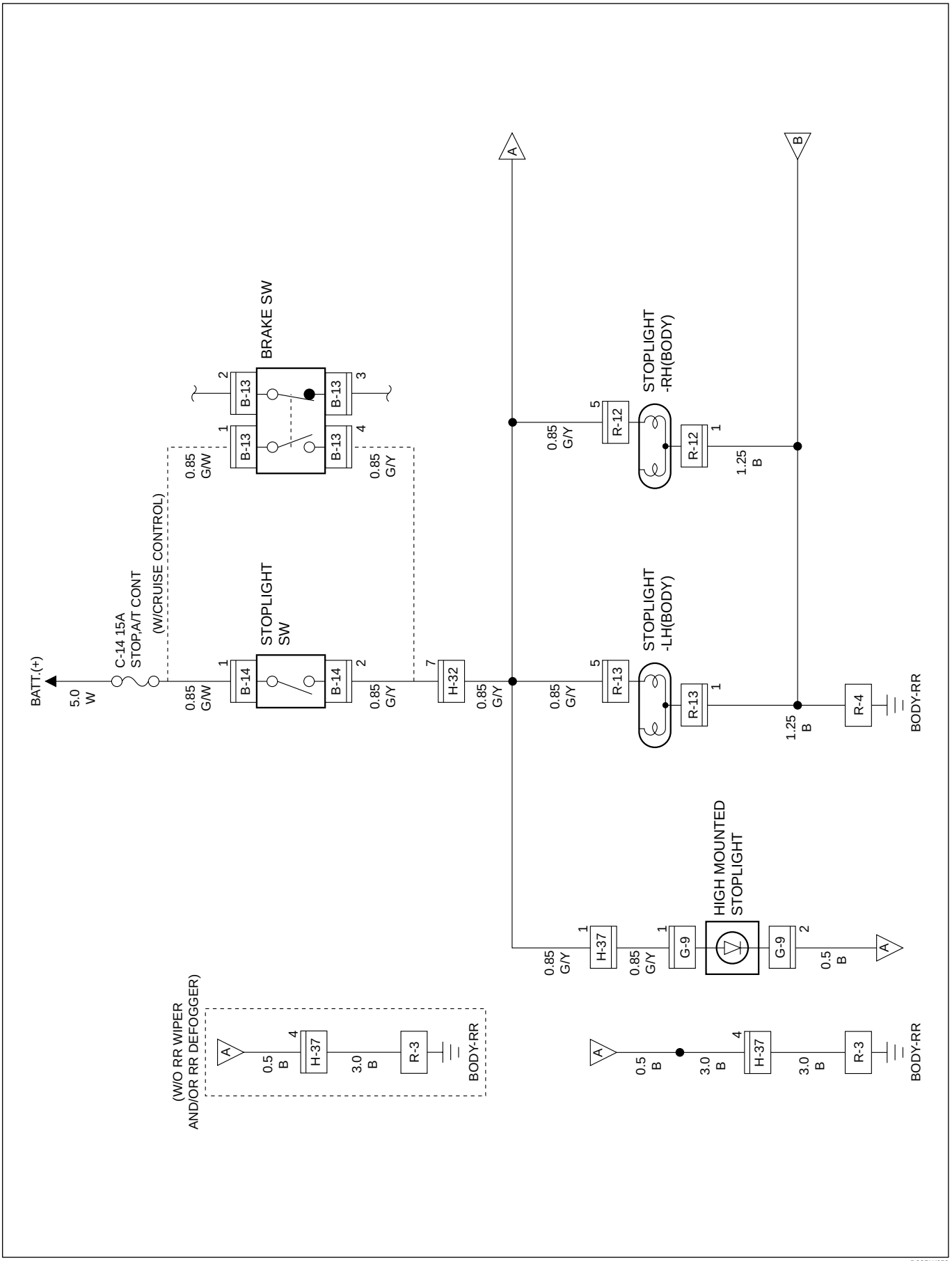

D08RW658

Circuit Diagram (RHD W/Bumper Built-in Type Stoplight)-2

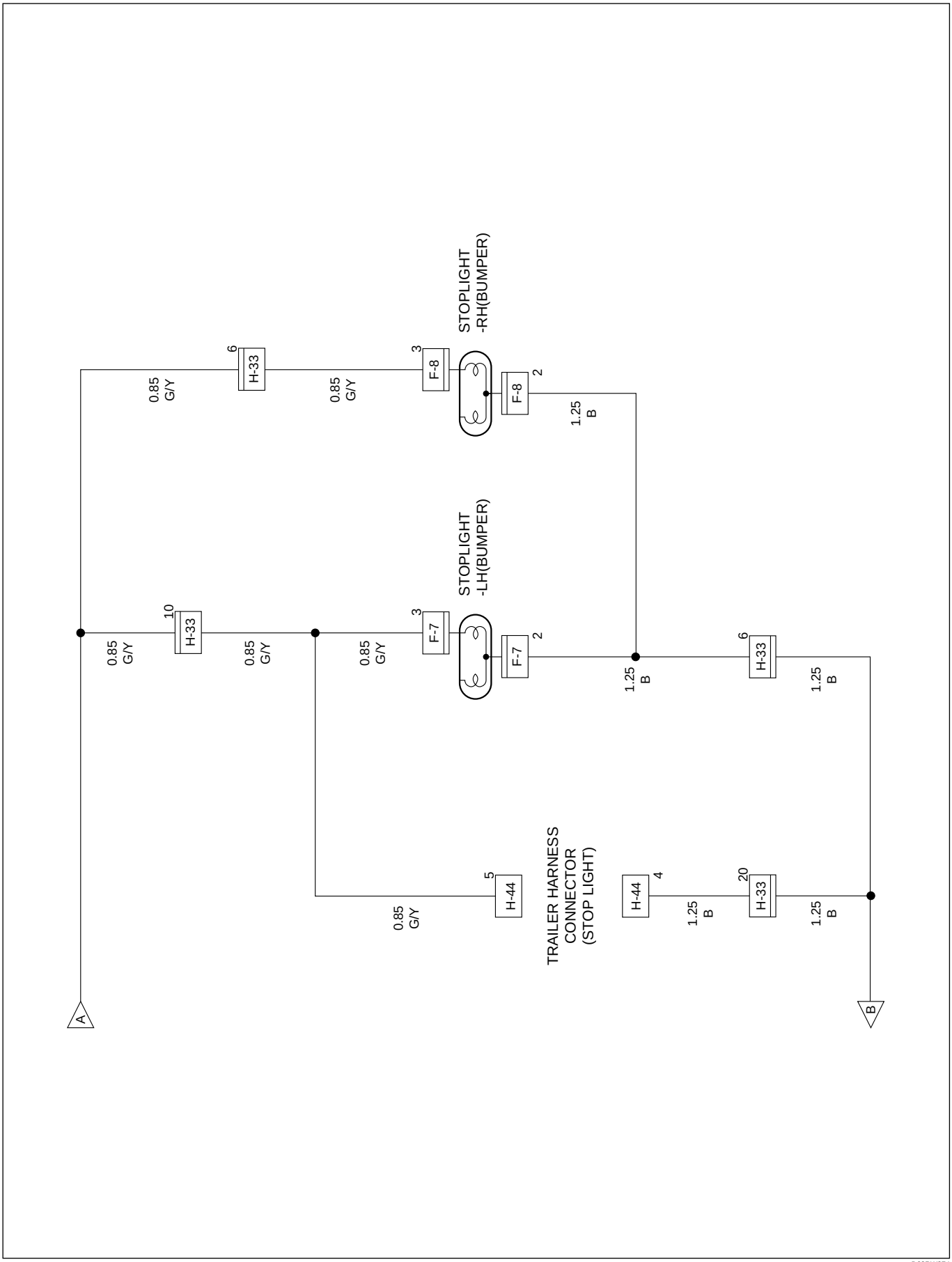

Parts Location (RHD)

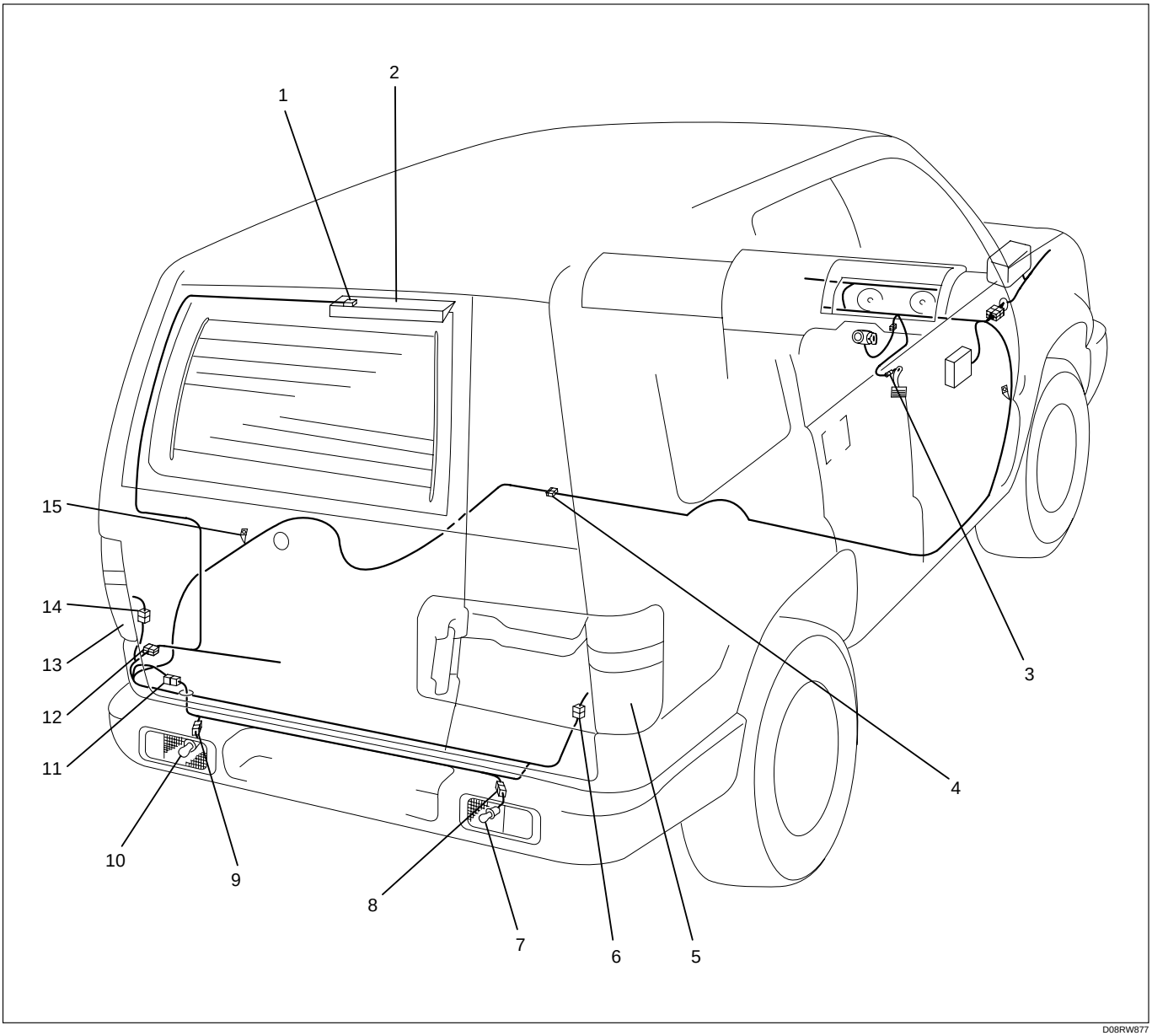

Legend

(1) G-9
(2) High Mounted Stoplight
(3) B-13 or B-14
(4) H-32
(5) Stoplight-RH (Body)
(6) R-12
(7) Stoplight-RH (Bumper)
(8) F-8
(9) F-7
(10) Stoplight-LH (Bumper)
(11) H-33
(12) H-37
(13) Stoplight-LH (Body)
(14) R-13
(15) R-3, R-4

Circuit Diagram (LHD)

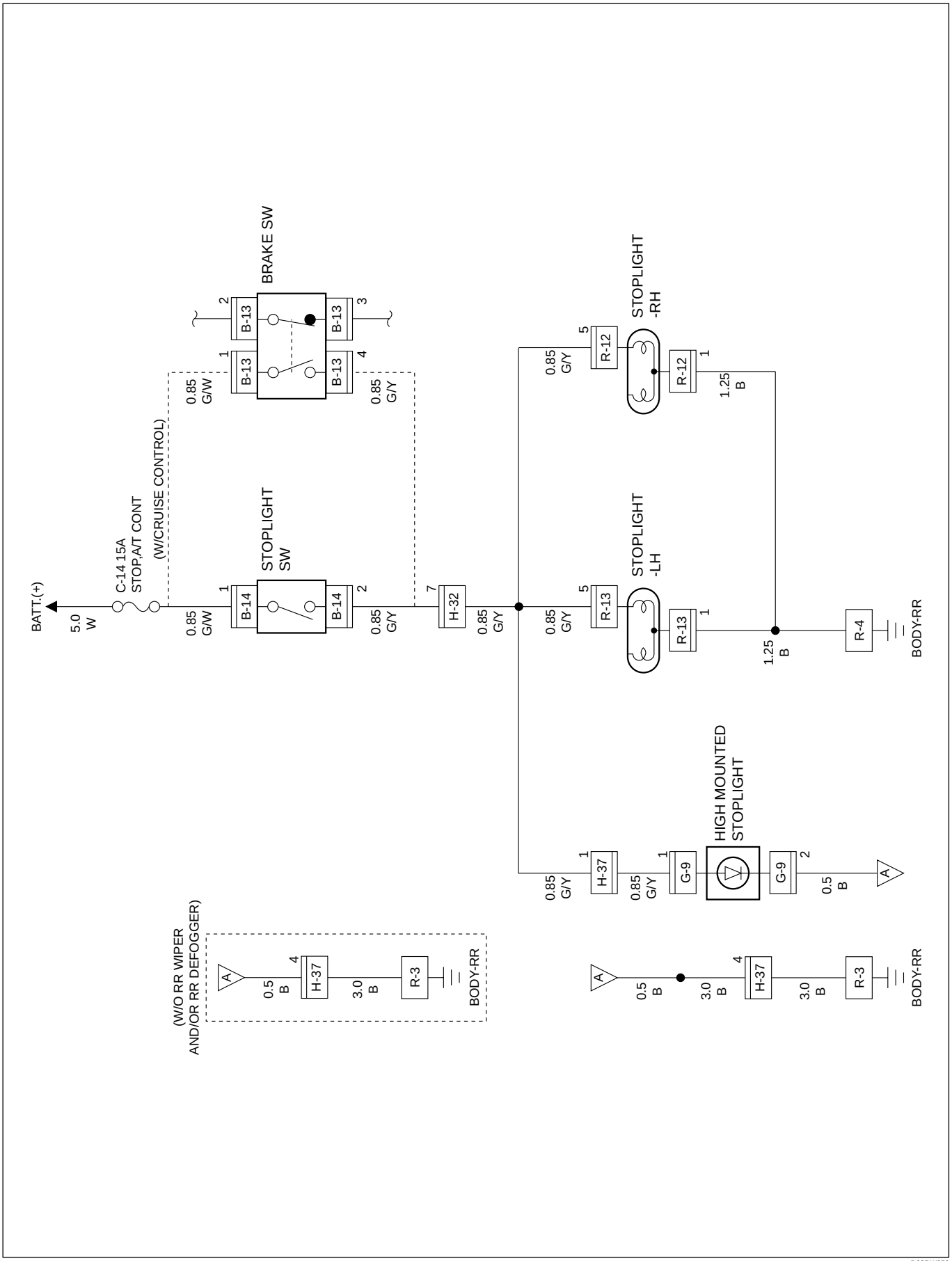

D08RW953

Circuit Diagram (LHD W/Bumper Built-in Type Stoplight)

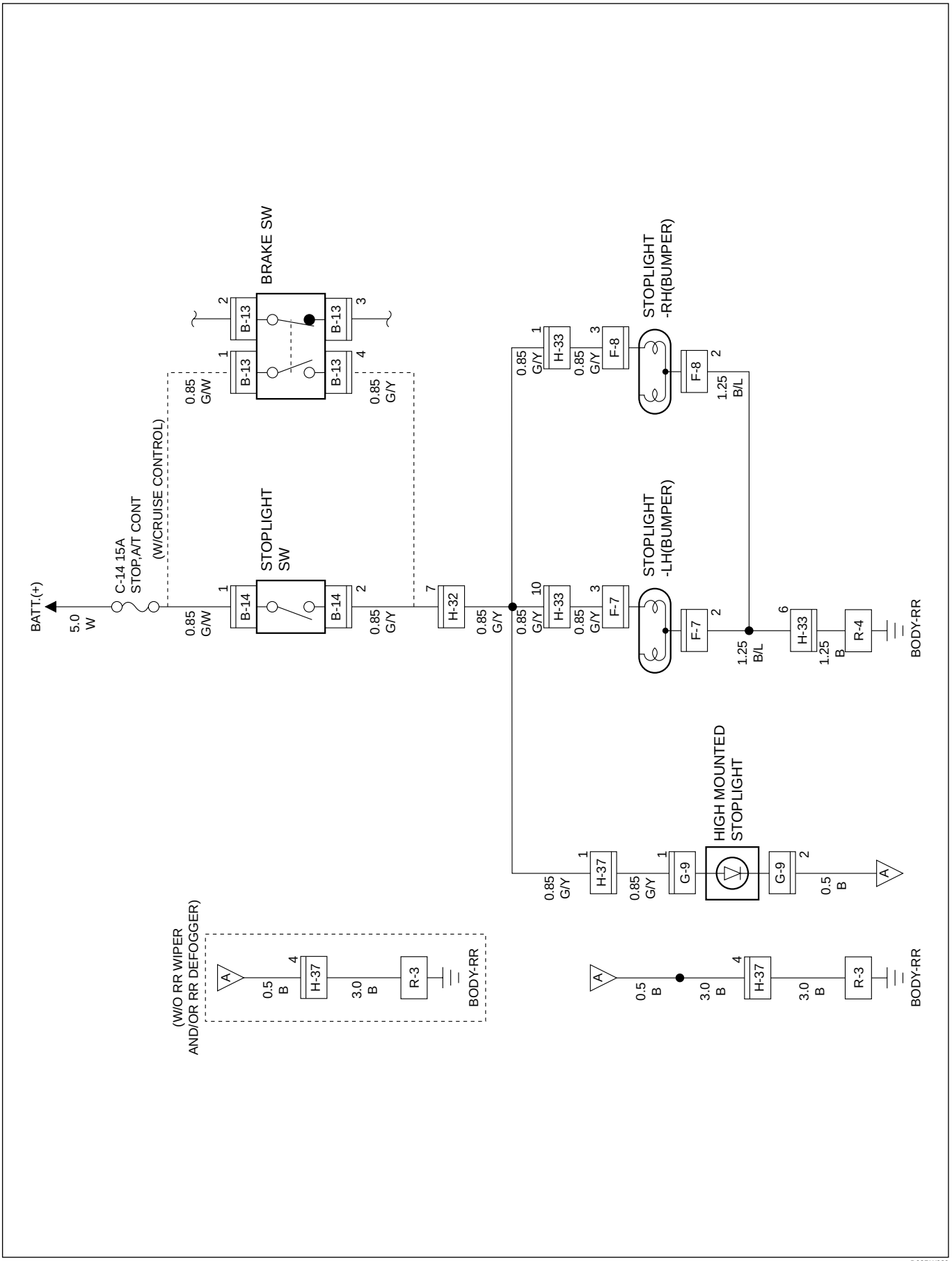

D08RW939

Parts Location (LHD)

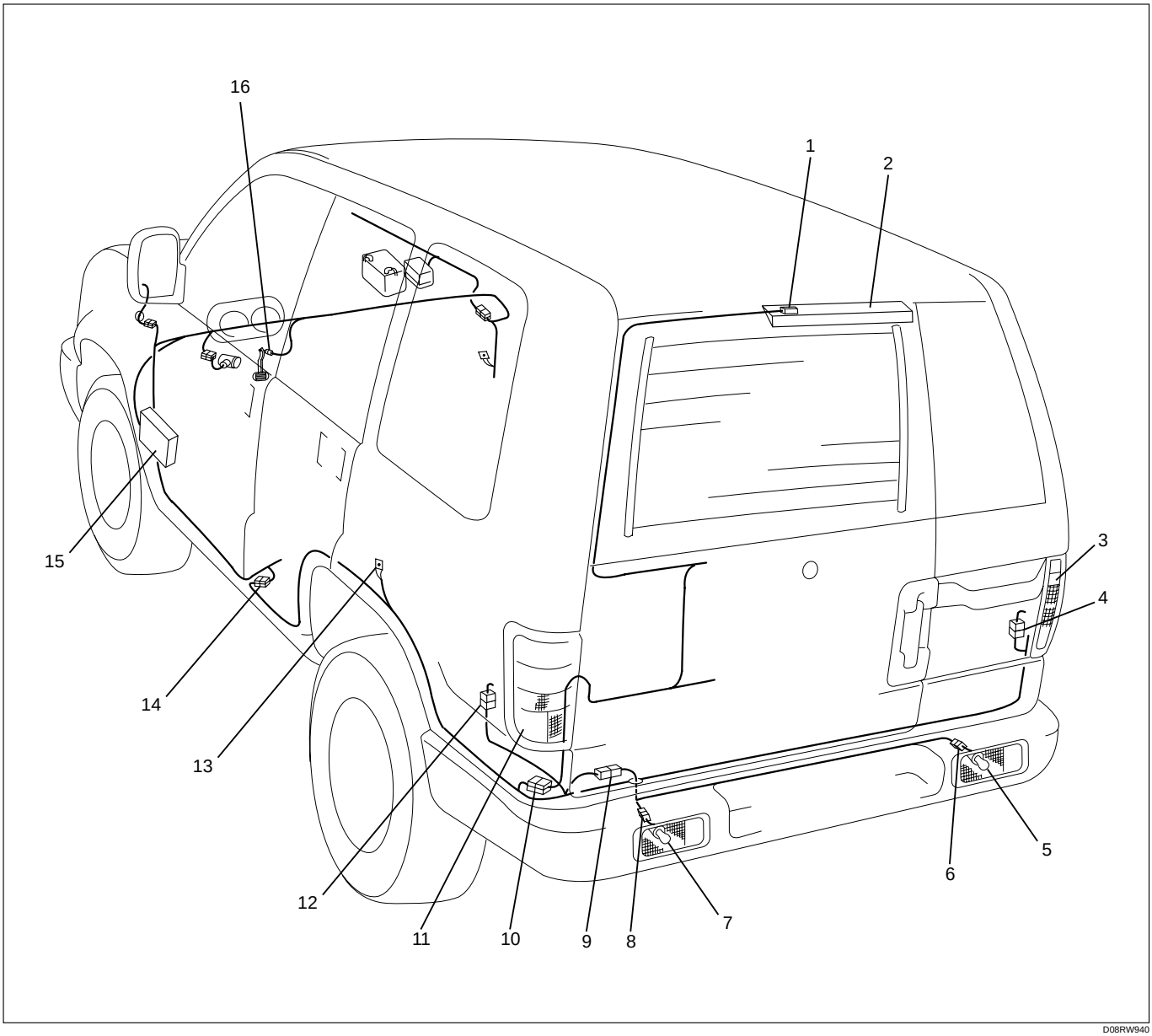

D08RW940

Legend

(1) G-9
(2) High Mounted Stoplight
(3) Stoplight-RH (Body)
(4) R-12
(5) Stoplight-RH (Bumper)
(6) F-8
(7) Stoplight-LH (Bumper)
(8) F-7
(9) H-33
(10) H-37
(11) Stoplight-LH (Body)
(12) R-13
(13) R-3, R-4
(14) H-32
(15) Fuse Box
(16) B-13 or B-14

DIAGNOSIS

Quick Chart for Check Points

Trouble mode \ Check point	Fuse C-14 (15A)	Stoplight SW or brake SW	Stoplight bulb	High mount stoplight ASM	Cable harness
1 Both stoplights inoperative	○	○			○
2 Stoplight on the left (or right) side inoperative			○		○
3 High mounted stoplight inoperative				○	○

1 Both Stoplights Inoperative

- IS FUSE C-14 (15A) NORMAL?

YES

- IS R-4 GROUNDED SECURELY?

NO

REPLACE THE FUSE

YES

- IS THE BATTERY VOLTAGE APPLIED TO 1 B-14 (1 B-13) OF THE STOPLIGHT SW (OR THE BRAKE SW)?

NO

GROUND IT SECURELY

YES

- REMOVE THE STOPLIGHT SW (OR THE BRAKE SW) CONNECTOR.
- WHEN DEPRESS THE BRAKE PEDAL, IS THERE ANY CONTINUITY BETWEEN THE 1 B-14 AND 2 B-14 (OR 1 B-13 AND 4 B-13) OF THE SWITCH?

NO

REPAIR A POOR CONNECTION AT THE CONNECTORS OR AN OPEN CIRCUIT BETWEEN THE FUSE C-14 (15A) AND 1 B-14 (1 B-13)

YES

- DOES THE PUSH ROD OF THE STOPLIGHT SW (OR THE BRAKE SW) OPERATE SMOOTHLY?

NO

REPLACE THE STOPLIGHT SW (OR BRAKE SW)

YES

REPAIR A POOR CONNECTION AT THE CONNECTORS OR AN OPEN CIRCUIT BETWEEN 2 B-14 (4 B-13) AND 7 H-32

NO

REPLACE THE STOPLIGHT SW (OR BRAKE SW)

2 Stoplight On The Left (Or Right) Side Inoperative

(Body Build-in Type Stoplight)

- IS THE STOPLIGHT BULB ON THE LEFT (OR RIGHT) SIDE NORMAL?

YES

- WITH THE STOPLIGHT SW OR BRAKE SW DEPRESSED, IS THE BATTERY VOLTAGE APPLIED BETWEEN 5 R-13 (OR 5 R-12) AND THE GROUND?

YES

REPAIR A POOR CONNECTION AT THE CONNECTORS OR AN OPEN CIRCUIT BETWEEN 1 R-13 (1 R-12) AND R-4

NO

REPAIR A POOR CONNECTION AT THE CONNECTORS OR AN OPEN CIRCUIT BETWEEN 7 H-32 AND 5 R-13 (OR 5 R-12)

NO

REPLACE THE BULB

(Bumper Build-in Type Stoplight)

- IS THE STOPLIGHT BULB ON THE LEFT (OR RIGHT) SIDE NORMAL?

YES

- WITH THE STOPLIGHT SW OR BRAKE SW DEPRESSED, IS THE BATTERY VOLTAGE APPLIED BETWEEN 3 F-7 (OR 3 F-8) AND THE GROUND?

YES

REPAIR A POOR CONNECTION AT THE CONNECTORS OR AN OPEN CIRCUIT BETWEEN 2 F-7 (2 F-8) AND R-4

NO

REPAIR A POOR CONNECTION AT THE CONNECTORS OR AN OPEN CIRCUIT BETWEEN 7 H-32 AND 3 F-7 (OR 3 F-8)

NO

REPLACE THE BULB

3 High Mounted Stoplight Inoperative

- IS R-3 SECURELY GROUNDED?

YES

- ROMOVE THE HIGH MOUNTED STOPLIGHT CONNECTOR
- IS THERE ANY CONTINUITY BETWEEN THE HIGH MOUNTED STOPLIGHT CONNECTOR 1 G-9 AND 2 G-9 ?

YES

- IS THE BATTERY VOLTAGE APPLIED BETWEEN 1 G-9 AND THE GROUND WHEN THE BRAKE PEDAL IS DEPRESSED?

YES

REPAIR A POOR CONNECTION AT THE CONNECTORS OR AN OPEN CIRCUIT BETWEEN 2 G-9 AND R-3

NO

REPAIR A POOR CONNECTION AT THE CONNECTORS OR AN OPEN CIRCUIT BETWEEN 1 G-9 AND 1 H-37

NO

REPAIR OR REPLACE THE HIGH MOUNTED STOPLIGHT

NO

GROUND IT SECURELY

Backup Light

General Description

The circuit consists of backup light switch (M/T), mode switch (A/T) and backup light.
When shfit lever is set to “R” position, backup light switch (M/T) or mode switch (A/T) is activated to illuminate backup light.

Circuit Diagram (RHD)

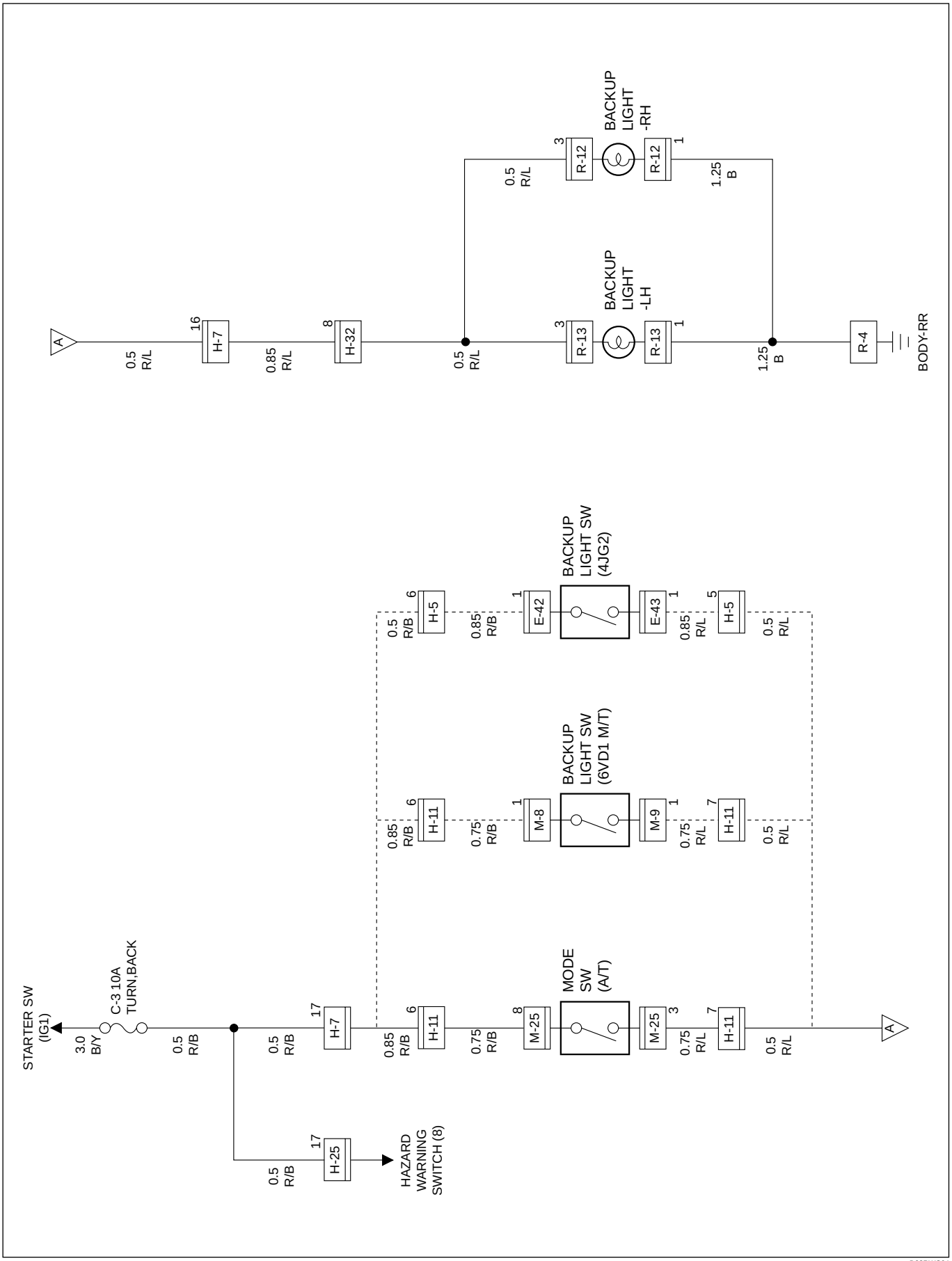

D08RWC64

Circuit Diagram (RHD W/Bumper Built-in Type RR Combination Light)

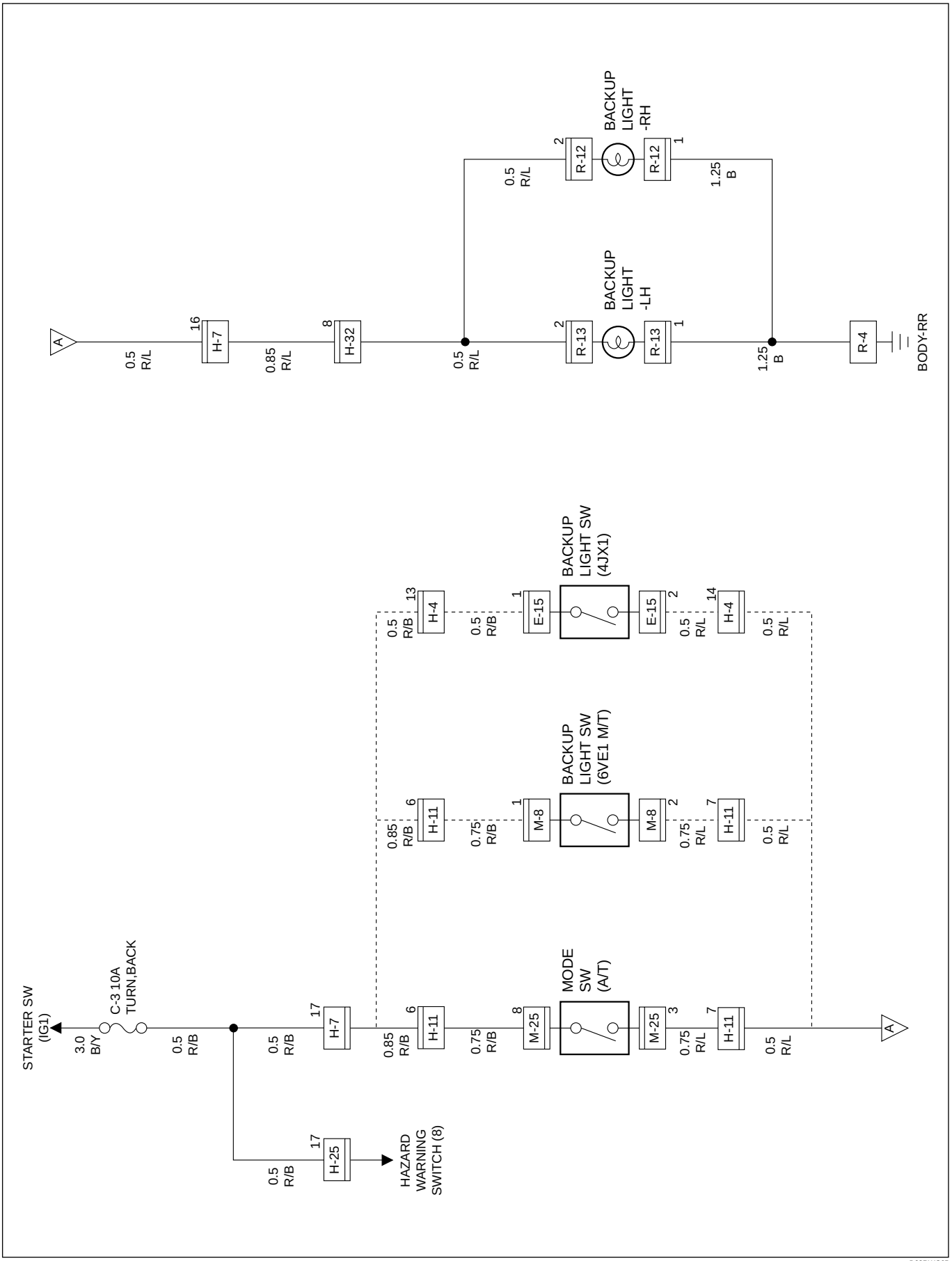

D08RWC65

Parts Location (RHD)

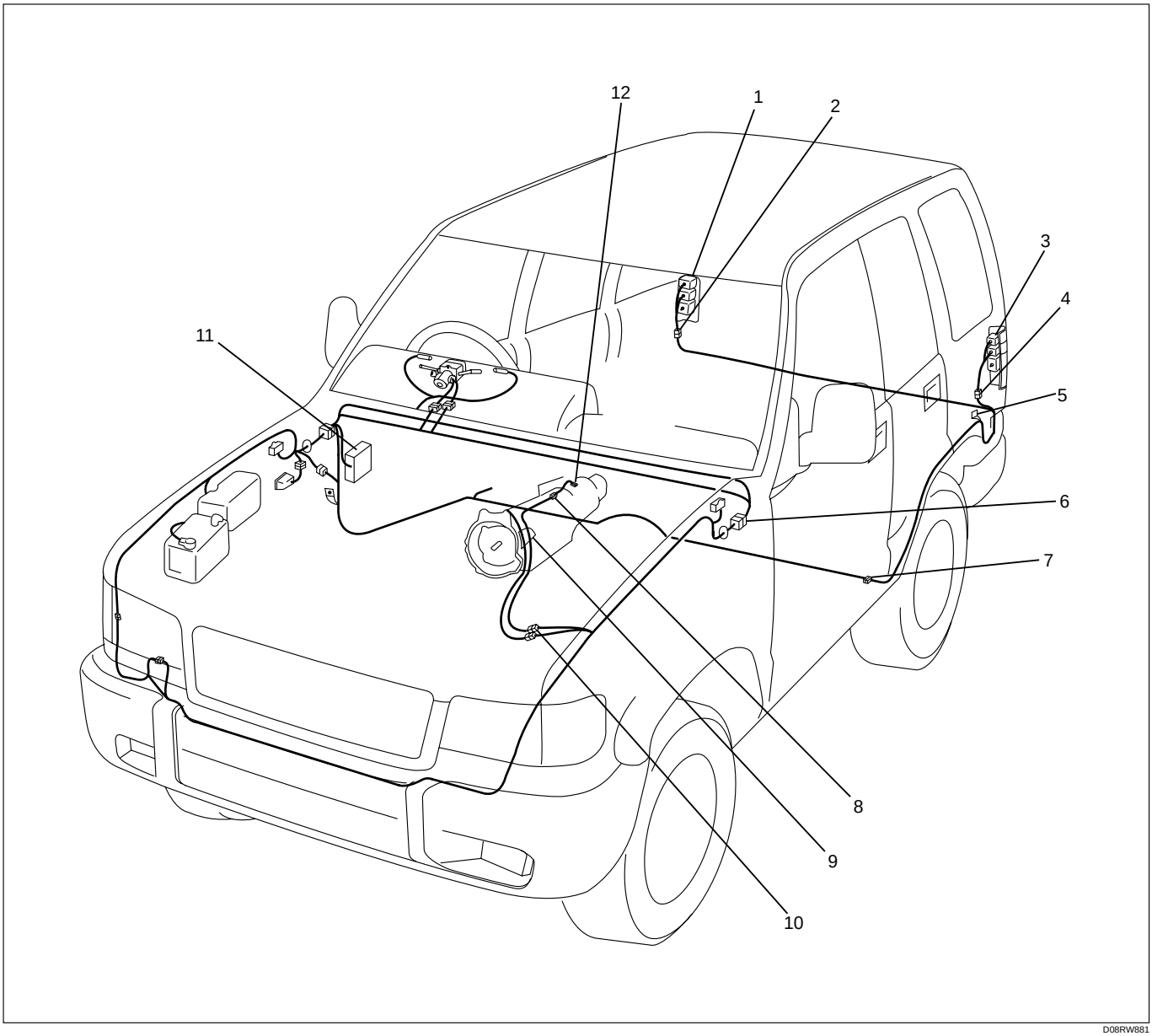

D08RW881

Legend

(1) Backup Light-RH
(2) R-12
(3) Backup Light-LH
(4) R-13
(5) R-4
(6) H-7, H-25
(7) H-32
(8) M-8 (6V*1 M/T), E-42, E-43 (4JG2)
(9) Mode Switch (A/T), M-25
(10) H-4, H-5
(11) Fuse Box
(12) Backup Light Switch (M/T)

Circuit Diagram (LHD)

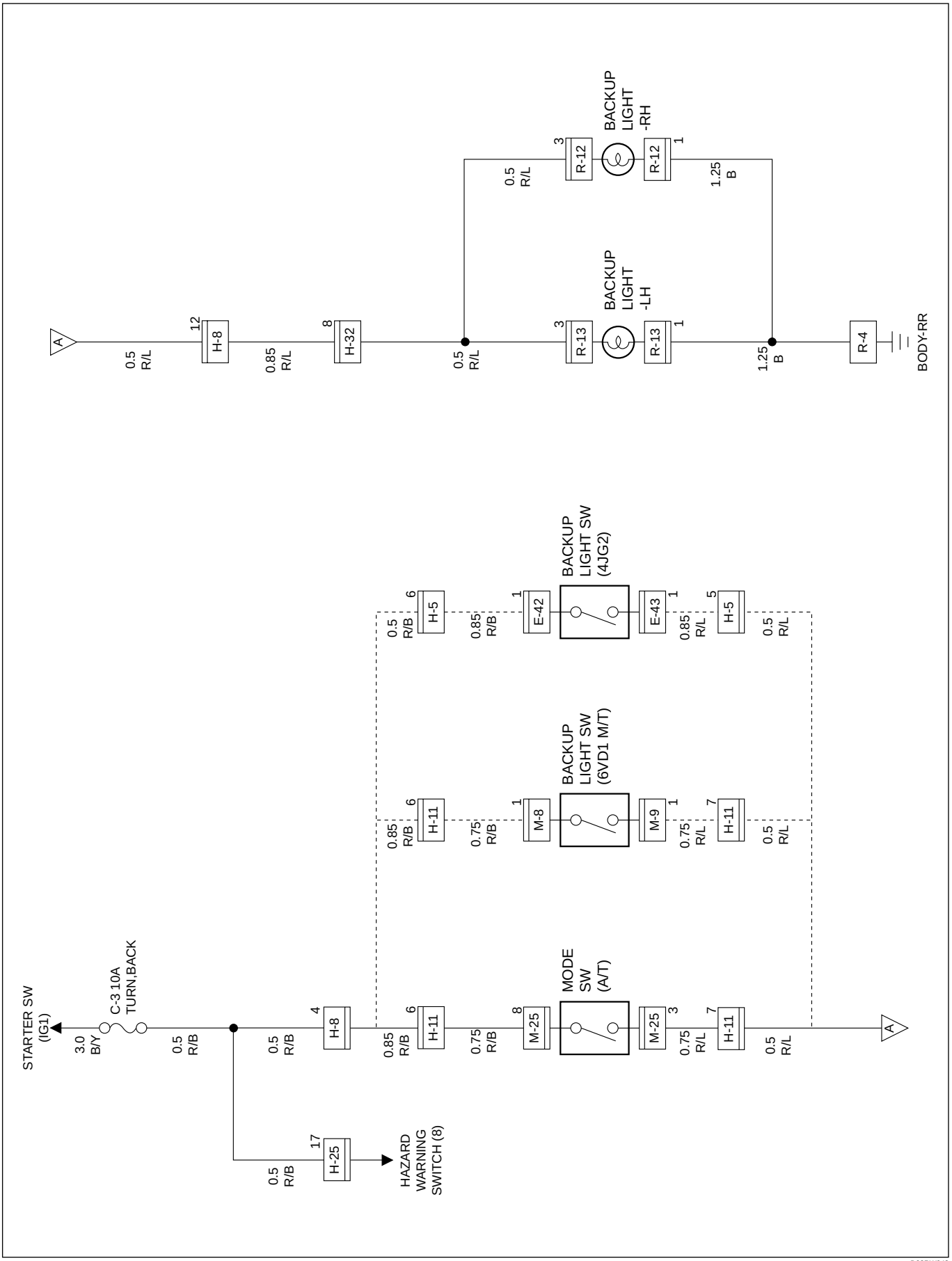

D08RW942

Circuit Diagram (LHD W/Bumper Built-in Type RR Combination Light)

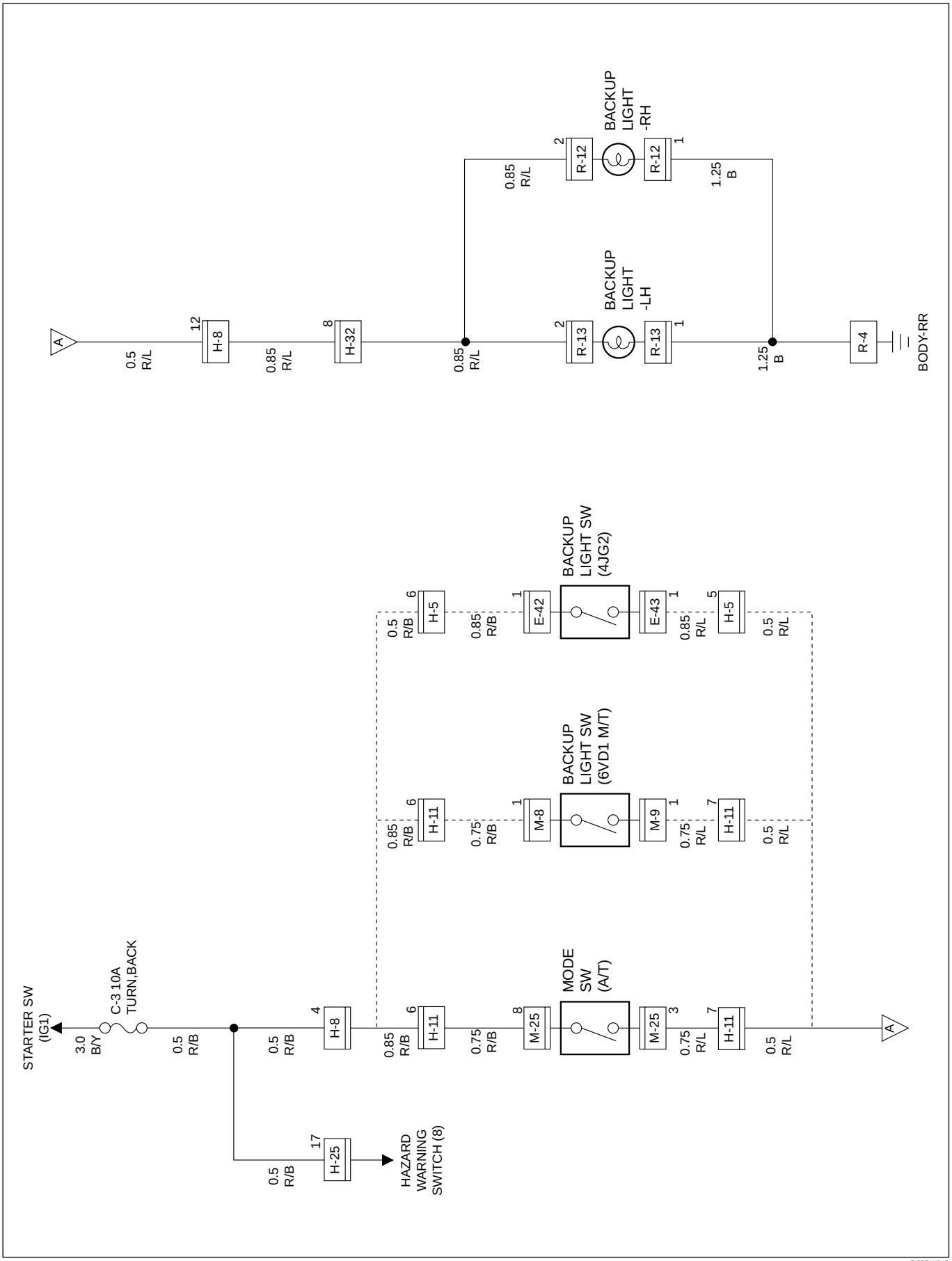

D08RW943

Parts Location (LHD)

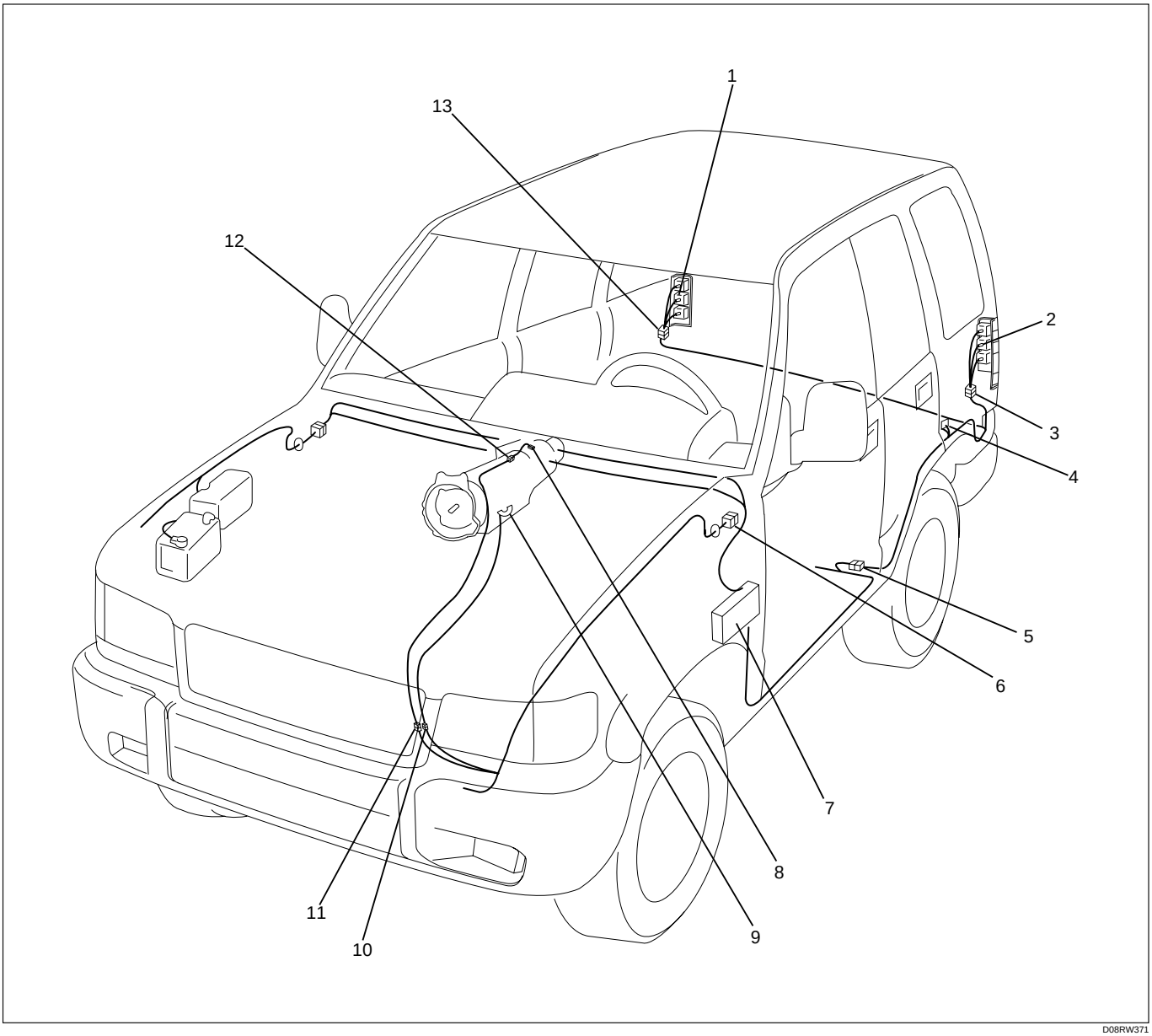

D08RW371

Legend

(1) Backup Light-RH
(2) Backup Light-LH
(3) R-13
(4) R-4
(5) H-32
(6) H-8, H-25
(7) Fuse Box
(8) Backup Light Switch (M/T)
(9) Mode Switch (A/T) M-25
(10) H-11
(11) H-5
(12) M-8, M-9, E-42, E-43
(13) R-12

Diagnosis

Quick Chart for Check Points

Trouble mode \ Check point	Fuse		Backup light SW/ Mode SW	Backup light bulb	Horn SW	Horn relay	Cable harness
	C-3 (10A)	F-3 (15A)					
1 Both backup lights inoperative	○		○				○
2 Backup light on the left (or right) side do not light up				○			○
3 Backup light remains on			○				

1 Both Backup Lights Inoperative

- IS FUSE C-3 (10A) NORMAL?

YES

- IS R-4 GROUNDED SECURELY?

YES

- TURN THE STARTER SW ON
- IS THE BATTERY VOLTAGE APPLIED BETWEEN THE MODE SW (OR BACKUP LIGHT SW) HARNESS SIDE CONNECTORS 8 M-25 (1 E-42 , 1 M-8 OR 1 E-15) AND THE GROUND?

YES

- SET THE TRANSMISSION GEAR TO THE REVERSE POSITION
- WITH THE MODE SW (OR BACKUP LIGHT SW) CONNECTOR DISCONNECTED, IS THERE CONTINUITY BETWEEN THE SW SIDE CONNECTORS 5 C-43 AND 2 C-43 (1 E-42 AND 1 E-43 OR 1 M-8 AND 1 M-9) ?

REPAIR A POOR CONNECTION AT THE CONNECTORS OR AN OPEN CIRCUIT BETWEEN 2 C-43 (1 E-43 OR 1 M-9) AND 8 H-32

NO

REPAIR OR REPLACE THE MODE SW (BACKUP LIGHT SW)

NO

REPAIR A POOR CONNECTION AT THE CONNECTORS OR AN OPEN CIRCUIT BETWEEN THE FUSE C–3 (10A) AND MODE SW (BACKUP LIGHT SW)

NO

GROUND IT SECURELY

NO

REPLACE THE FUSE

2 Backup Light On The Left (Or Right) Side Inoperative

- IS THE BACKUP LIGHT BULB ON THE LEFT (OR RIGHT) SIDE NORMAL?

YES

- WITH THE STARTER SW AND THE BACKUP LIGHT SW AT ON POSITION, IS THE BATTERY VOLTAGE APPLIED BETWEEN 3 R-13 (OR 3 R-12) AND THE GROUND OR 2 R-13 (OR 2 R-12) AND THE GROUND?

YES

REPAIR A POOR CONNECTION AT THE CONNECTORS OR AN OPEN CIRCUIT BETWEEN BACKUP LIGHT HARNESS SIDE CONNECTOR 1 R-13 (OR 1 R-12) AND R-4

NO

REPAIR A POOR CONNECTION AT THE CONNECTORS OR AN OPEN CIRCUIT BETWEEN 8 H-32 AND 3 R-13 (OR 3 R-12) OR 8 H-32 AND 2 R-13 (OR 2 R-12)

NO

REPLACE THE BULB

3 Backup Light Remains ON

REPAIR OR REPLACE THE MODE SW (BACKUP LIGHT SW)

Horn

General Description

The circuit consists of horn (high note), horn (low note), horn relay and horn switch.
When horn switch is pushed, (independent of position of starter switch) horn relay is activated to sound horns.

Circuit Diagram (RHD)

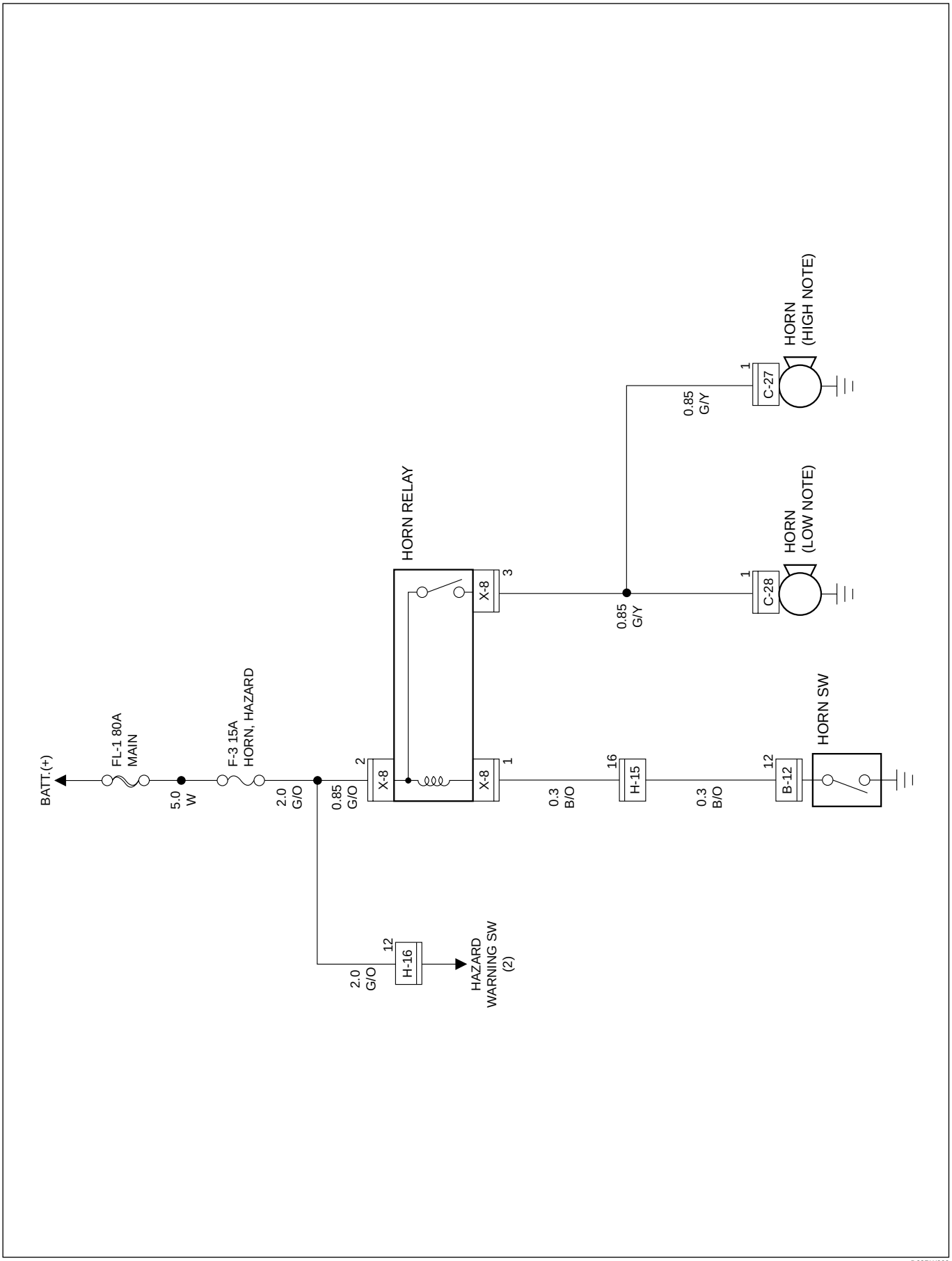

D08RW660

Parts Location (RHD)

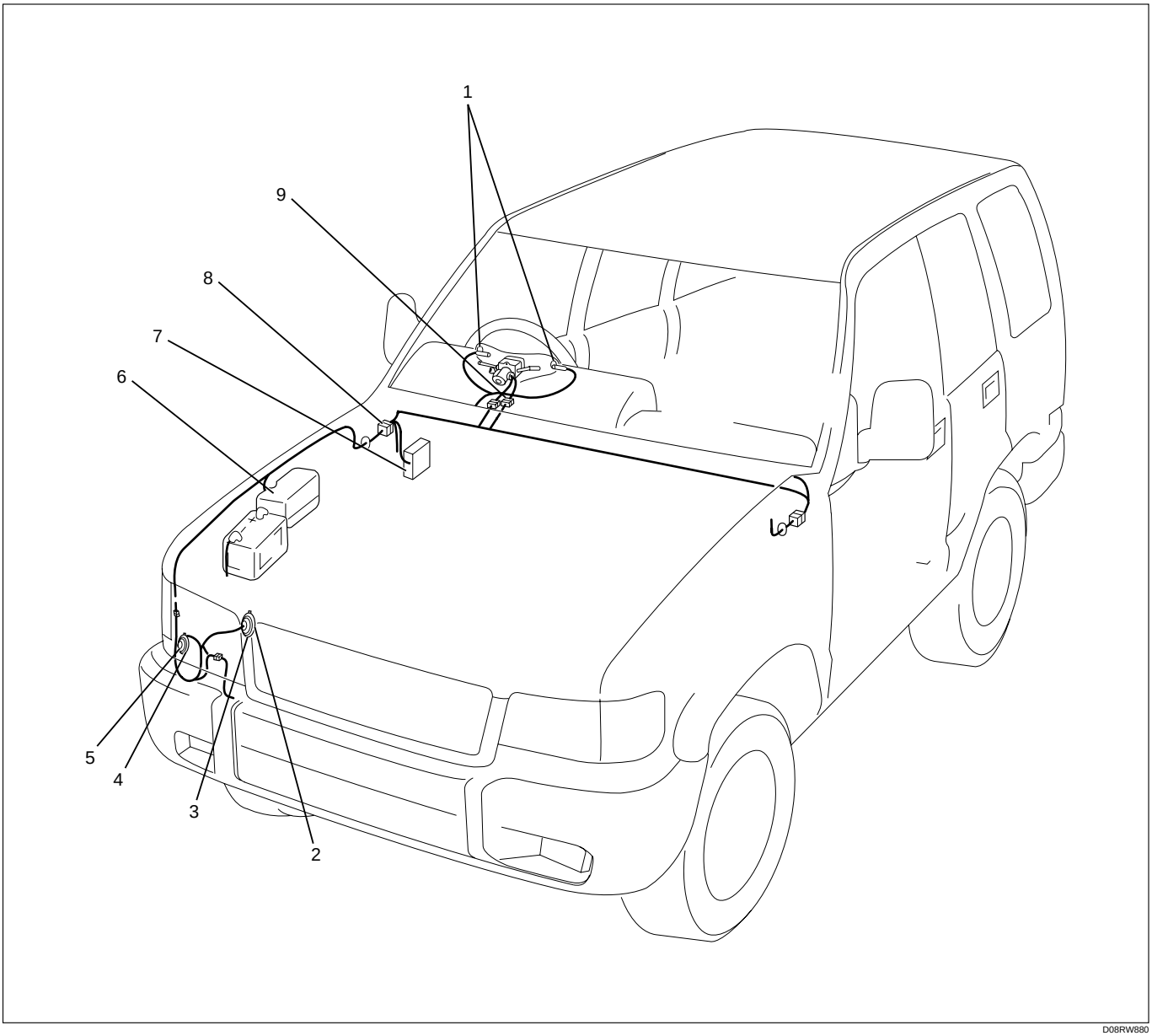

D08RW880

Legend

(1) Horn Switch
(2) Horn (Low Note)
(3) C-28
(4) C-27
(5) Horn (High Note)
(6) Relay and Fuse Box (X-8)
(7) Fuse Box
(8) H-15, H-16
(9) B-12

Circuit Diagram (LHD)

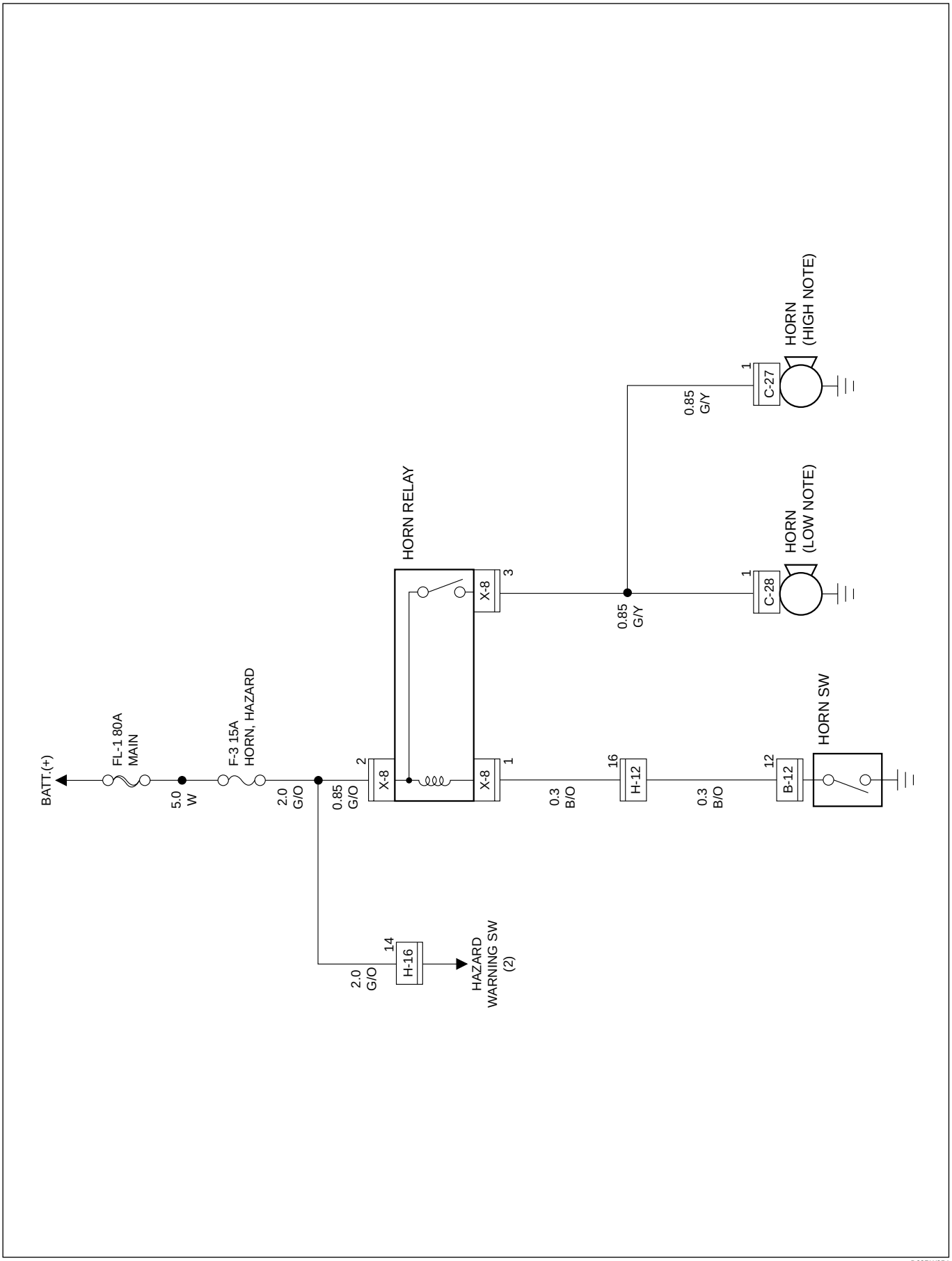

D08RW954

Parts Location (LHD)

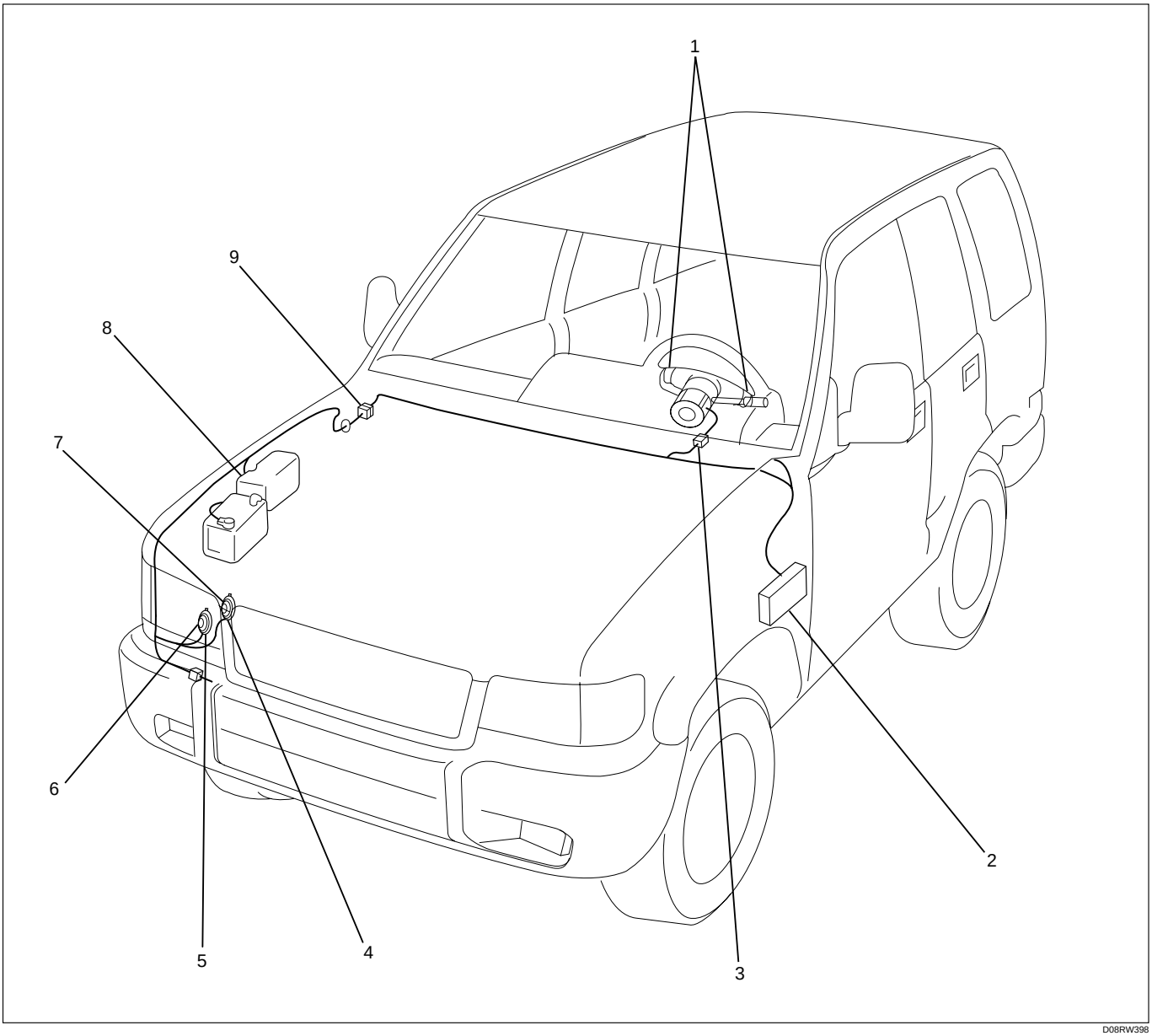

D08RW398

Legend

(1) Horn Switch
(2) Fuse Box
(3) B-12
(4) C-28
(5) C-27
(6) Horn (High Note)
(7) Horn (Low Note)
(8) Relay and Fuse Box (X-8)
(9) H-12, H-16

1 Horns Do Not Sound

- IS FUSE F-3 (15A) NORMAL?

YES

- IS THE HORN RELAY NORMAL?

NO

REPLACE THE FUSE

YES

- IS THE BATTERY VOLTAGE APPLIED BETWEEN 2 X-8 AND THE GROUND?

NO

REPLACE THE HORN RELAY

YES

- IS THE HORN SWITCH NORMAL?

NO

REPAIR A POOR CONNECTION AT THE CONNECTORS OR AN OPEN CIRCUIT BETWEEN FUSE F-3 (15A) AND 2 X-8

YES

- WITH THE HORN SWITCH DEPRESSED,
- IS THERE CONTINUITY BETWEEN 1 X-8 AND THE GROUND?

NO

REPAIR OR REPLACE THE SWITCH

YES

REPAIR A POOR CONNECTION AT THE CONNECTORS OR AN OPEN CIRCUIT BETWEEN 3 X-8 AND 1 C-27 (1 C-28)

NO

REPAIR A POOR CONNECTION AT THE CONNECTORS OR AN OPEN CIRCUIT BETWEEN 1 X-8 AND 12 B-12

WARNING:

WHEN SERVICING A VEHICLE EQUIPPED WITH SUPPLEMENTAL RESTRAINT SYSTEM, PAY CLOSE ATTENTION TO ALL WARNINGS AND CAUTIONS.
FOR DETAILED EXPLANATION ABOUT SRS, REFER TO SECTION 9J “SUPPLEMENTAL RESTRAINT SYSTEM (SRS)” AND 3F4 “SUPPLEMENTAL RESTRAINT SYSTEM STEERING WHEEL & COLUMN”.

2 Horns Do Not Shut Off

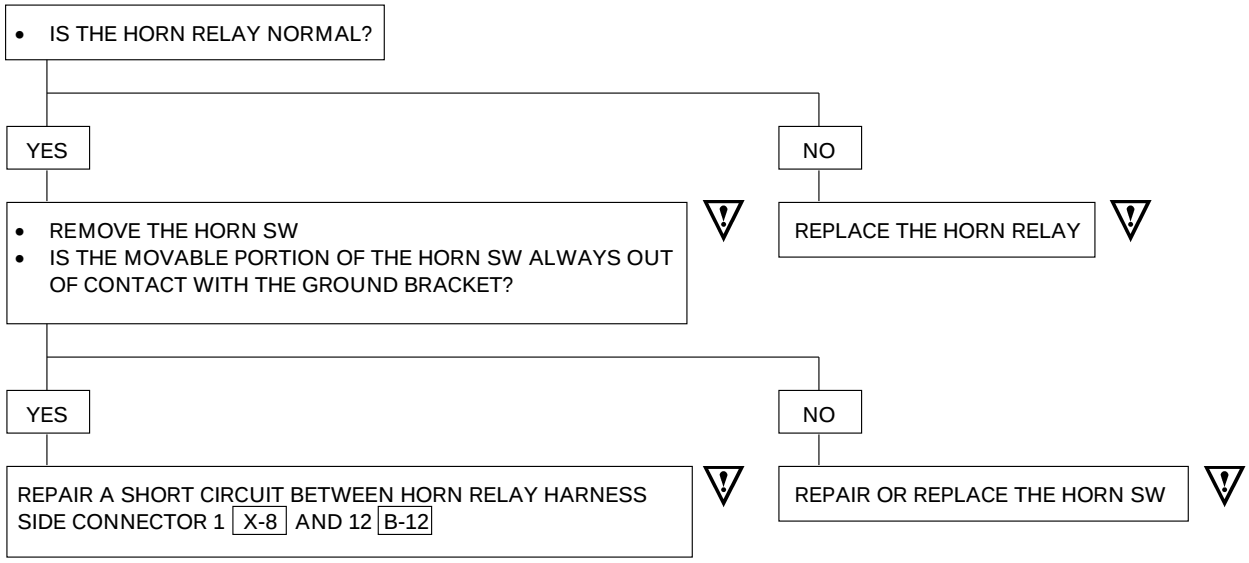

WARNING:

WHEN SERVICING A VEHICLE EQUIPPED WITH SUPPLEMENTAL RESTRAINT SYSTEM, PAY CLOSE ATTENTION TO ALL WARNINGS AND CAUTIONS.
FOR DETAILED EXPLANATION ABOUT SRS, REFER TO SECTION 9J “SUPPLEMENTAL RESTRAINT SYSTEM (SRS)” AND 3F4 “SUPPLEMENTAL RESTRAINT SYSTEM STEERING WHEEL & COLUMN”.

Dome Light, Luggage Room Light, Courtesy Light and Map Light

General Description

This circuit consists of the starter switch, door switch, dome light, luggage room light, courtesy light, map light, and alarm & relay control unit.
The dome light lights up when any one of doors except the tailgate is opened with the switch set at the door mode.
The courtesy lights for the front doors are controlled by front door switch–LH.
The luggage room light illuminates by opening the tailgate when the switch is set at the door mode.
The map light illuminates by turning the switch on.
All these lights light up by turning on respective switches regardless of the position of the starter switch key.
The buzzer in the alarm & relay control unit sounds to remind the driver to turn off the lights when the starter switch is turned off.

Circuit Diagram (RHD)-1

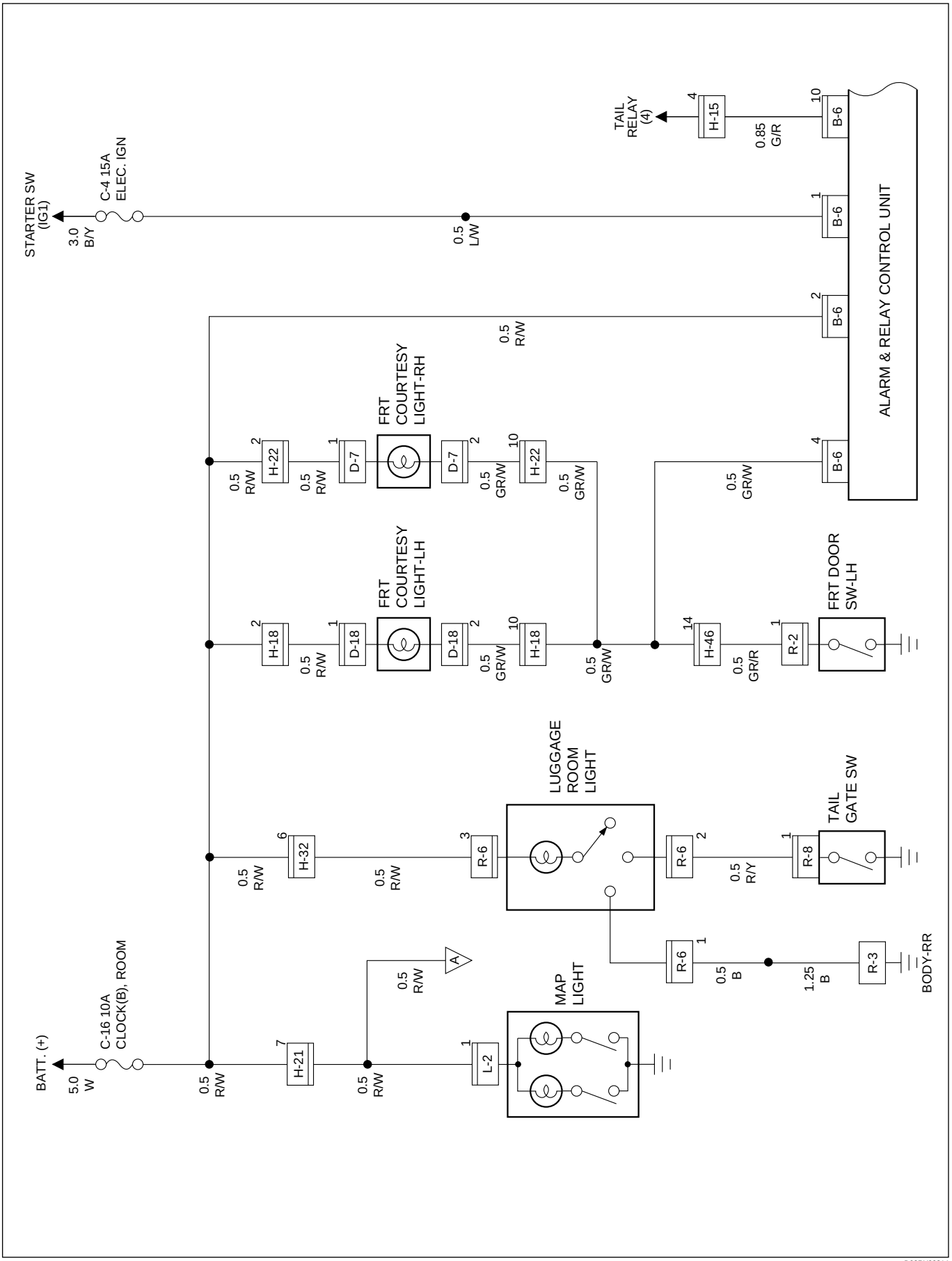

D08RY00214

Circuit Diagram (RHD)-2

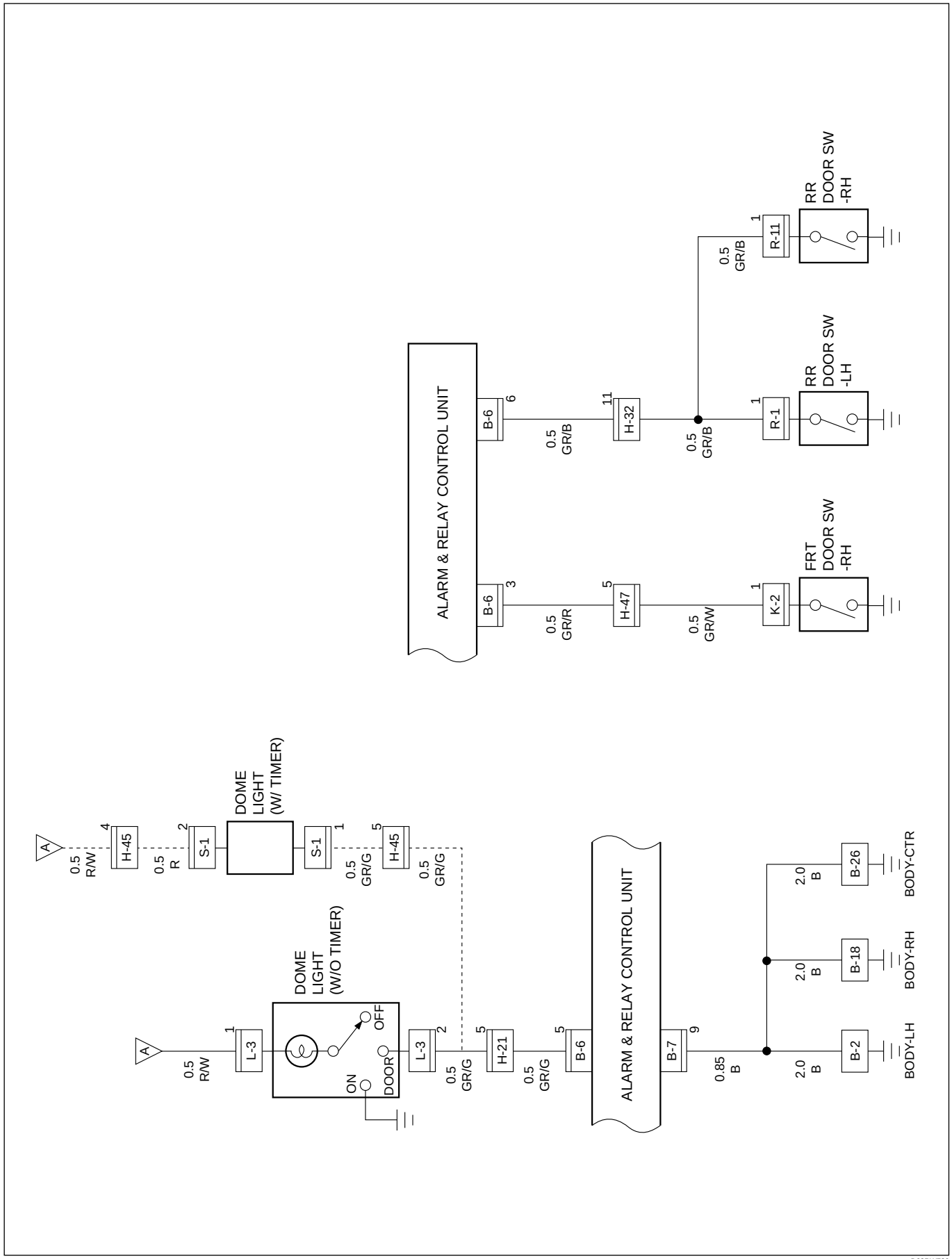

D08RW780

Parts Location (RHD)

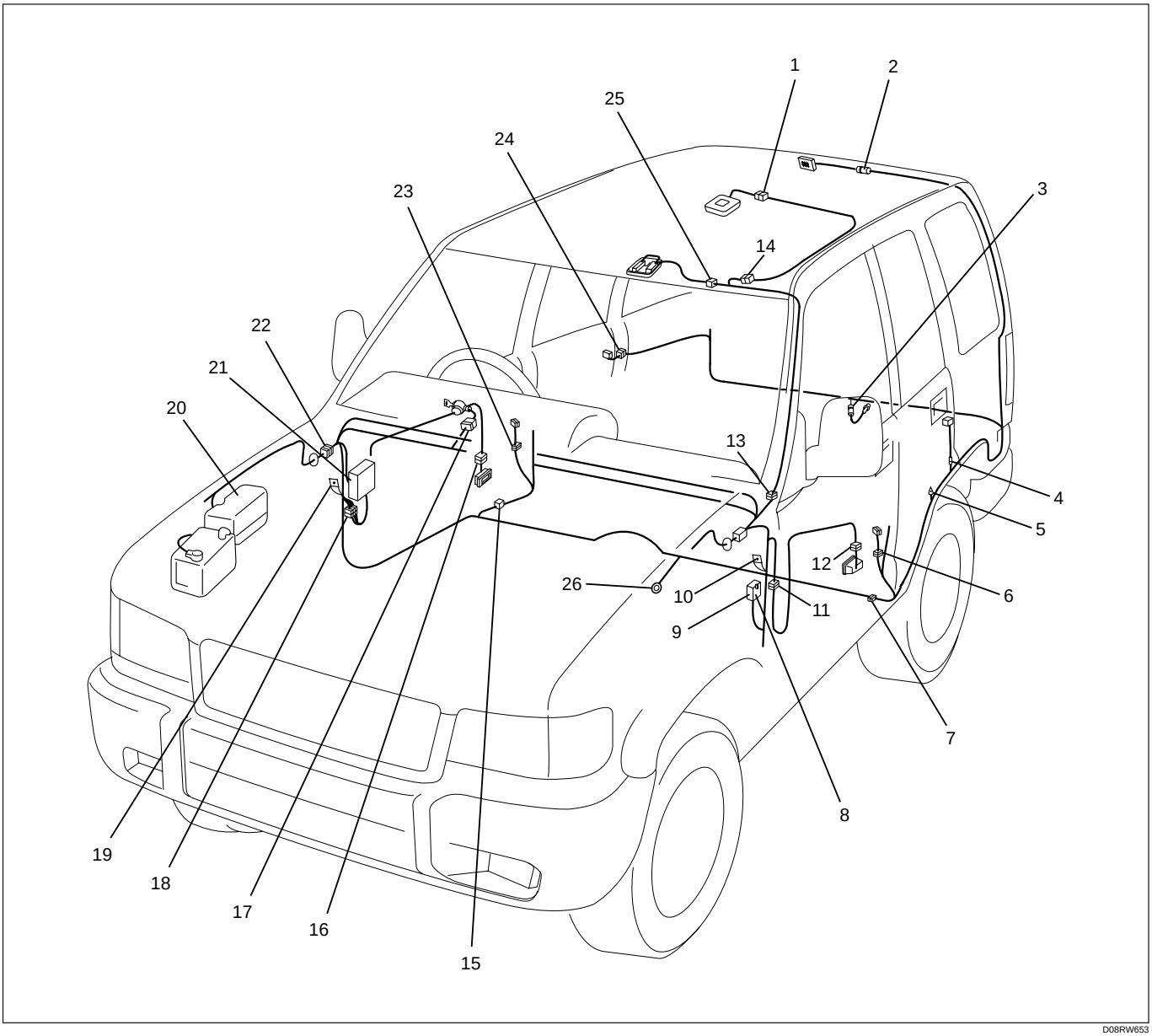

Legend

(1) S-1, L-3 (W/O Sun Roof)
(2) R-6
(3) R-8
(4) R-1
(5) R-3
(6) R-2
(7) H-32, H-46
(8) Alarm and Relay control Unit
(9) B-6, B-7
(10) B-2
(11) H-18
(12) D-18
(13) H-21
(14) H-45
(15) H-47
(16) D-7
(17) B-11
(18) H-22
(19) B-18
(20) Relay and Fuse Box
(21) Fuse Box
(22) H-25, H-26
(23) K-2
(24) R-11
(25) L-2
(26) B-26

Circuit Diagram (LHD)-1

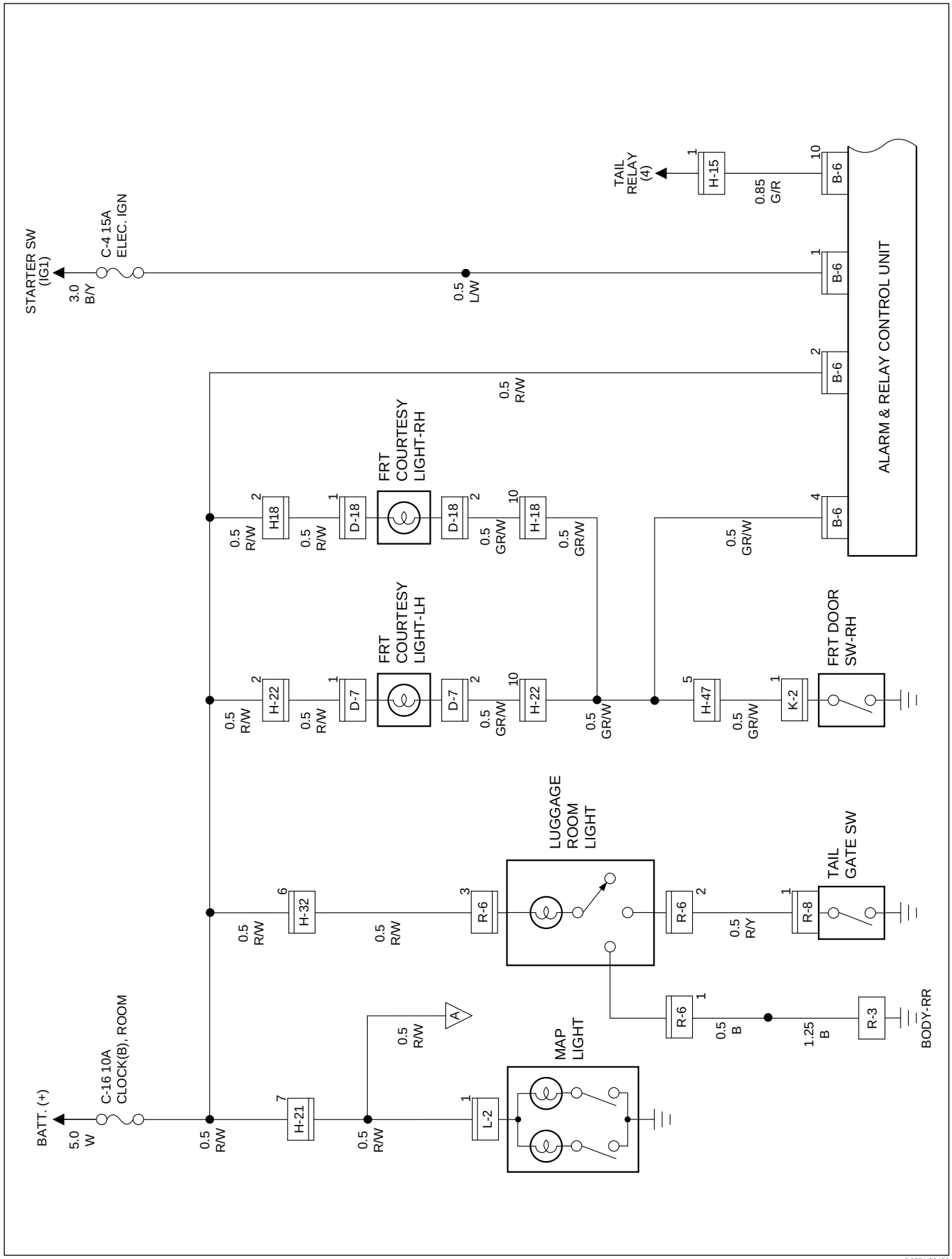

D08RY00426

Circuit Diagram (LHD)-2

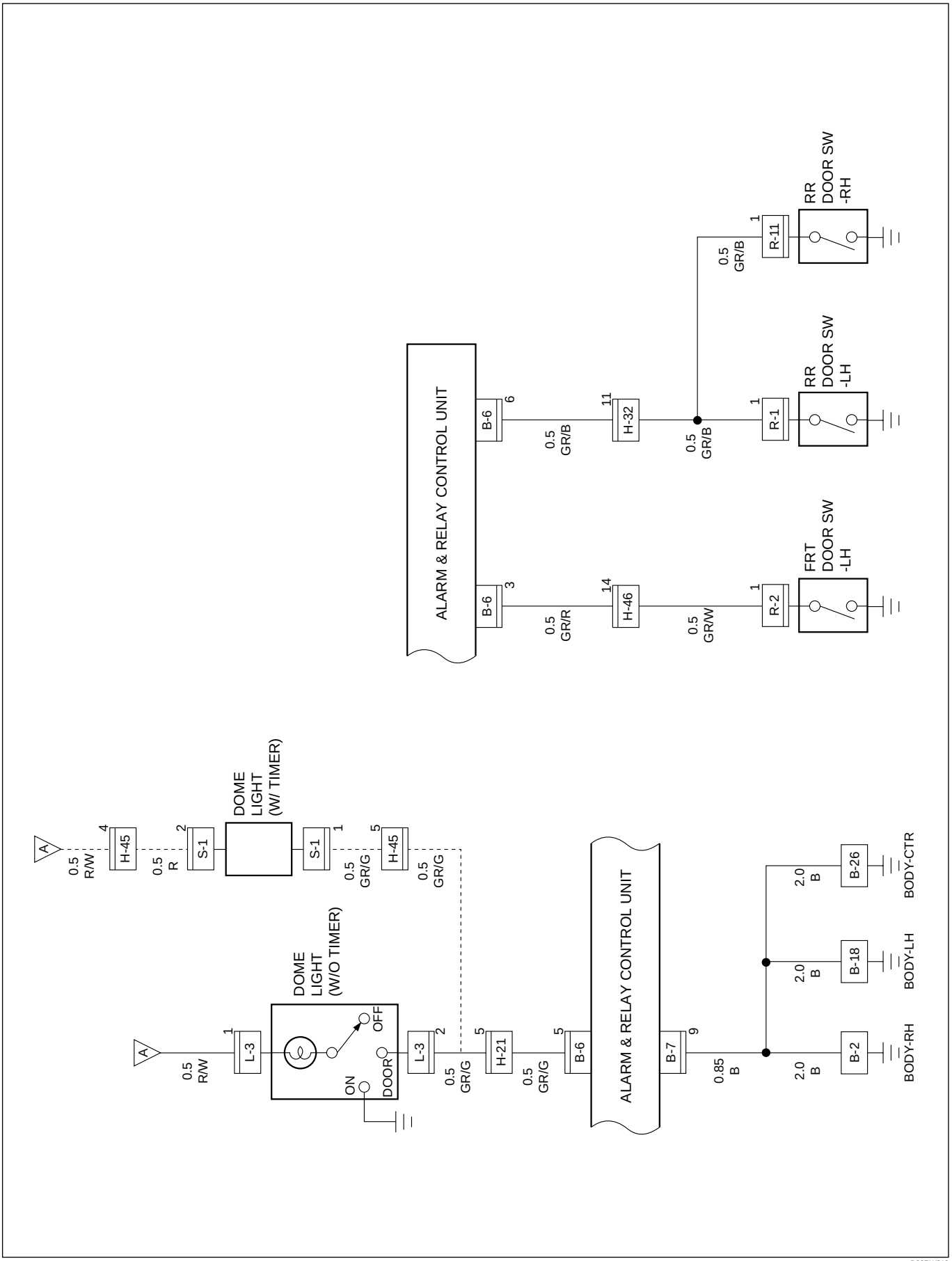

D08RW813

Parts Location (LHD)

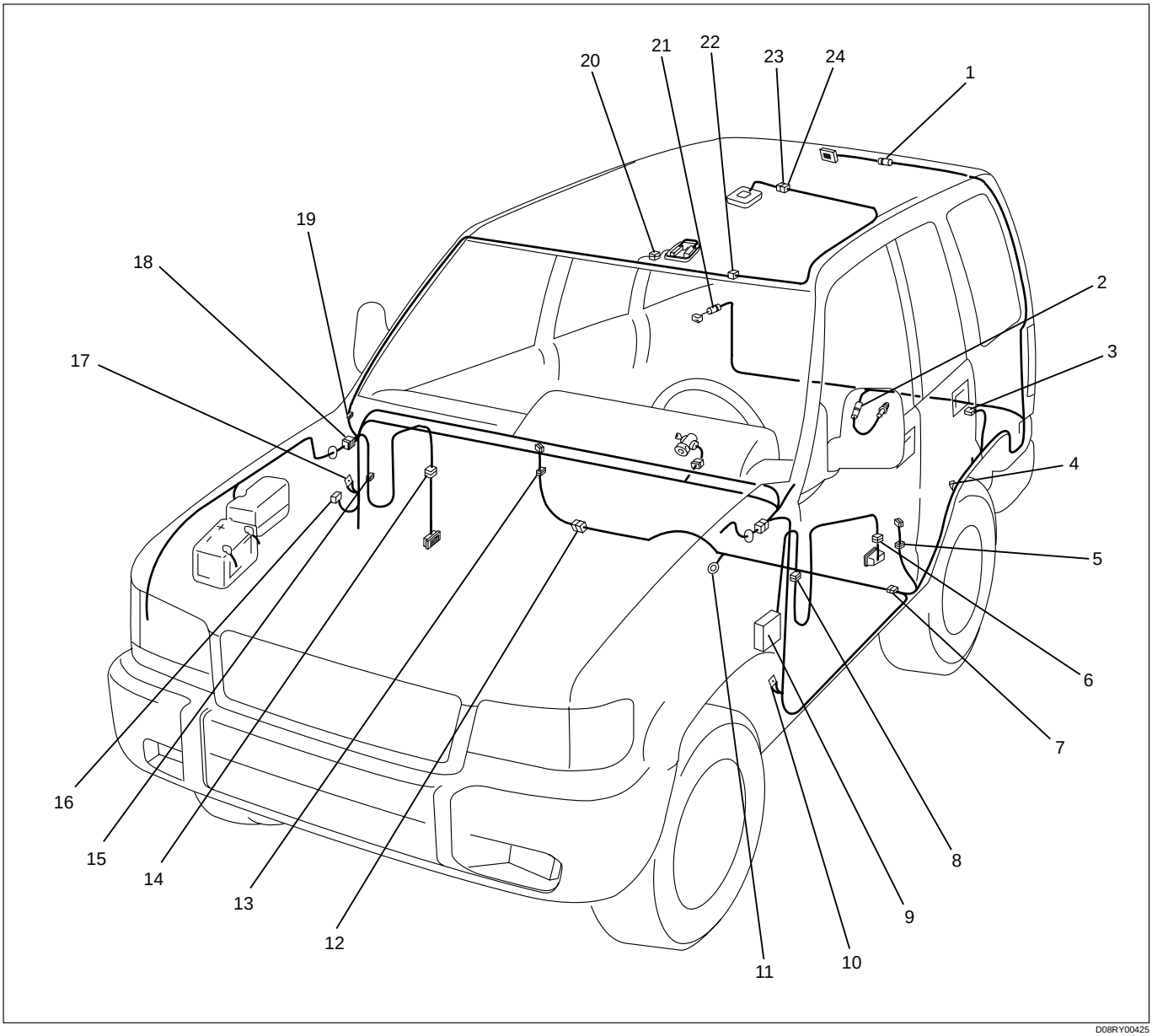

D08RY00425

Legend

(1) R–6
(2) R–8
(3) R–1
(4) R–3
(5) R–2
(6) D–18
(7) H–32, H–46
(8) H–22
(9) Fuse Box
(10) B–18
(11) B–26
(12) H–47
(13) K–2
(14) D–18
(15) H–18
(16) B–6
(17) B–2
(18) H–15
(19) H–21
(20) L–2
(21) R–11
(22) H–45
(23) L–3
(24) S–1

Power Door Lock

General Description

The circuit consists of door lock (& power window) switch, door lock actuator for front and rear door, tailgate lock actuator and door lock key switch.
Front door lock switch–LH is always provided with battery voltage. The key or the inside lock button on the both driver's and front passenger's door can activate the lock mechanism of all the door (including tailgate).
When driver's door lock switch or front passenger's door lock switch is turned on, current flows for about one second to door lock actuator of each door connected in parallel with front door lock (& power window) switch–LH to activate actuator to lock and unlock doors.

Circuit Diagram (RHD)-1

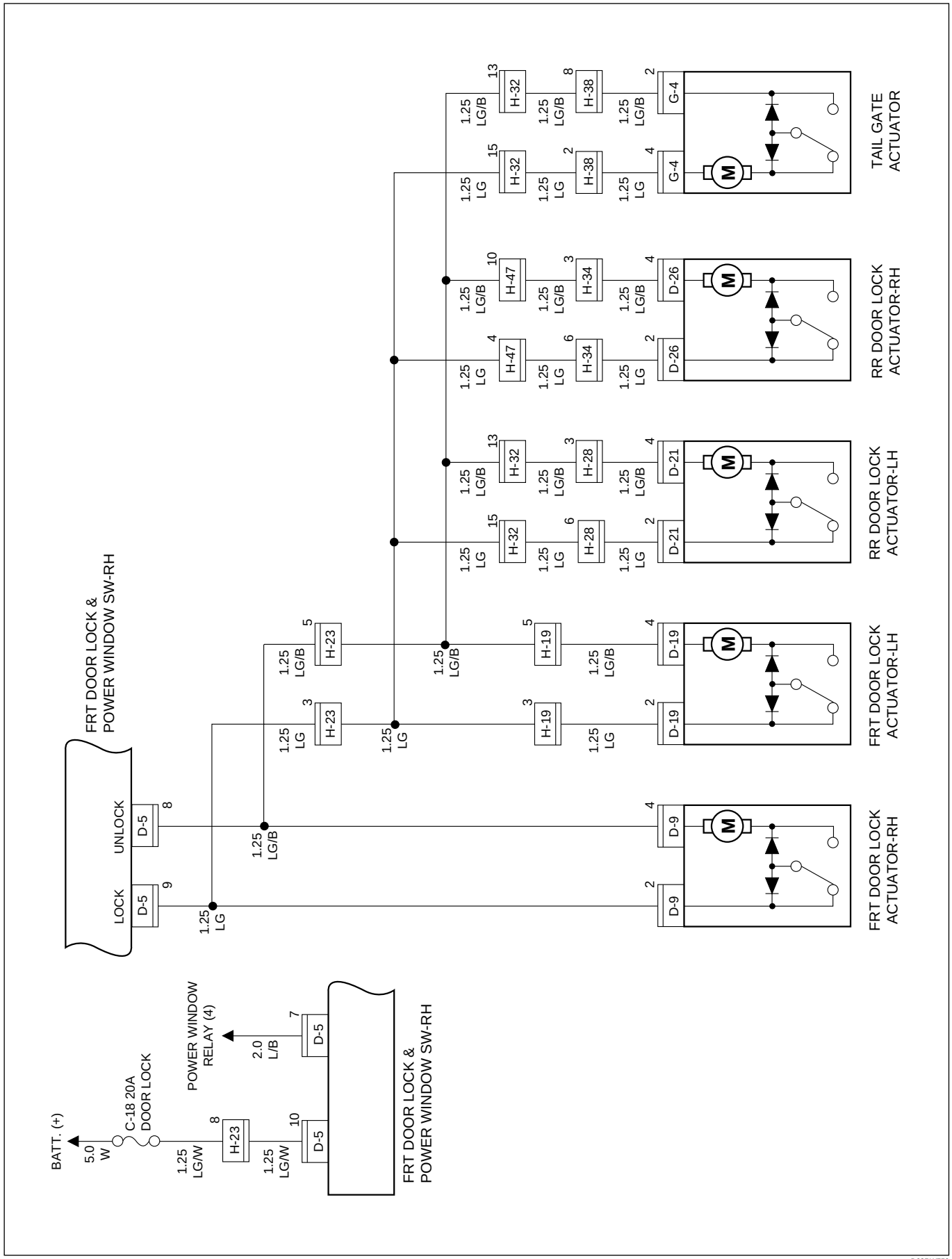

D08RW759

Circuit Diagram (RHD)-2

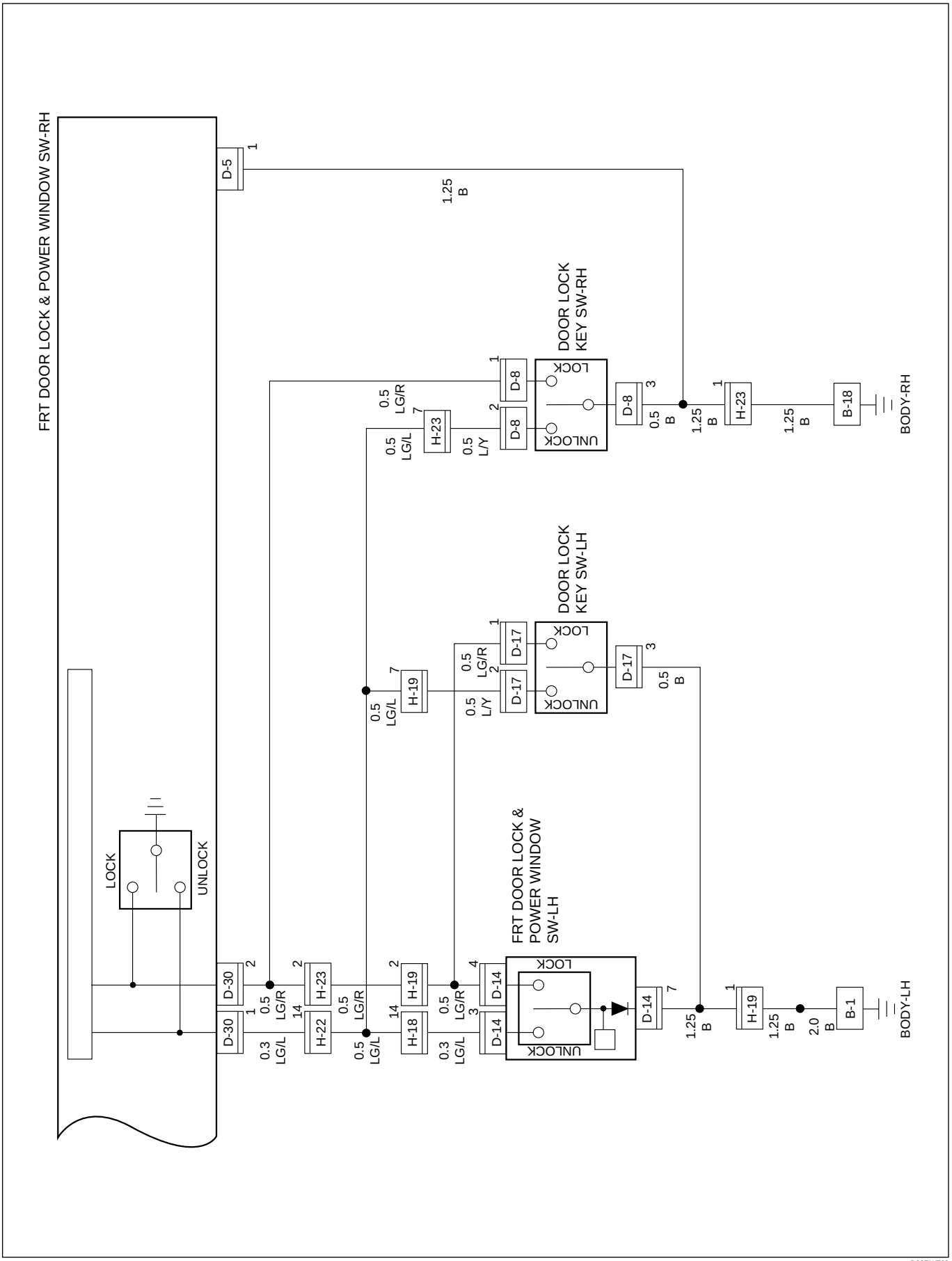

D08RW760

Circuit Diagram (RHD W/Keyless Entry)-1

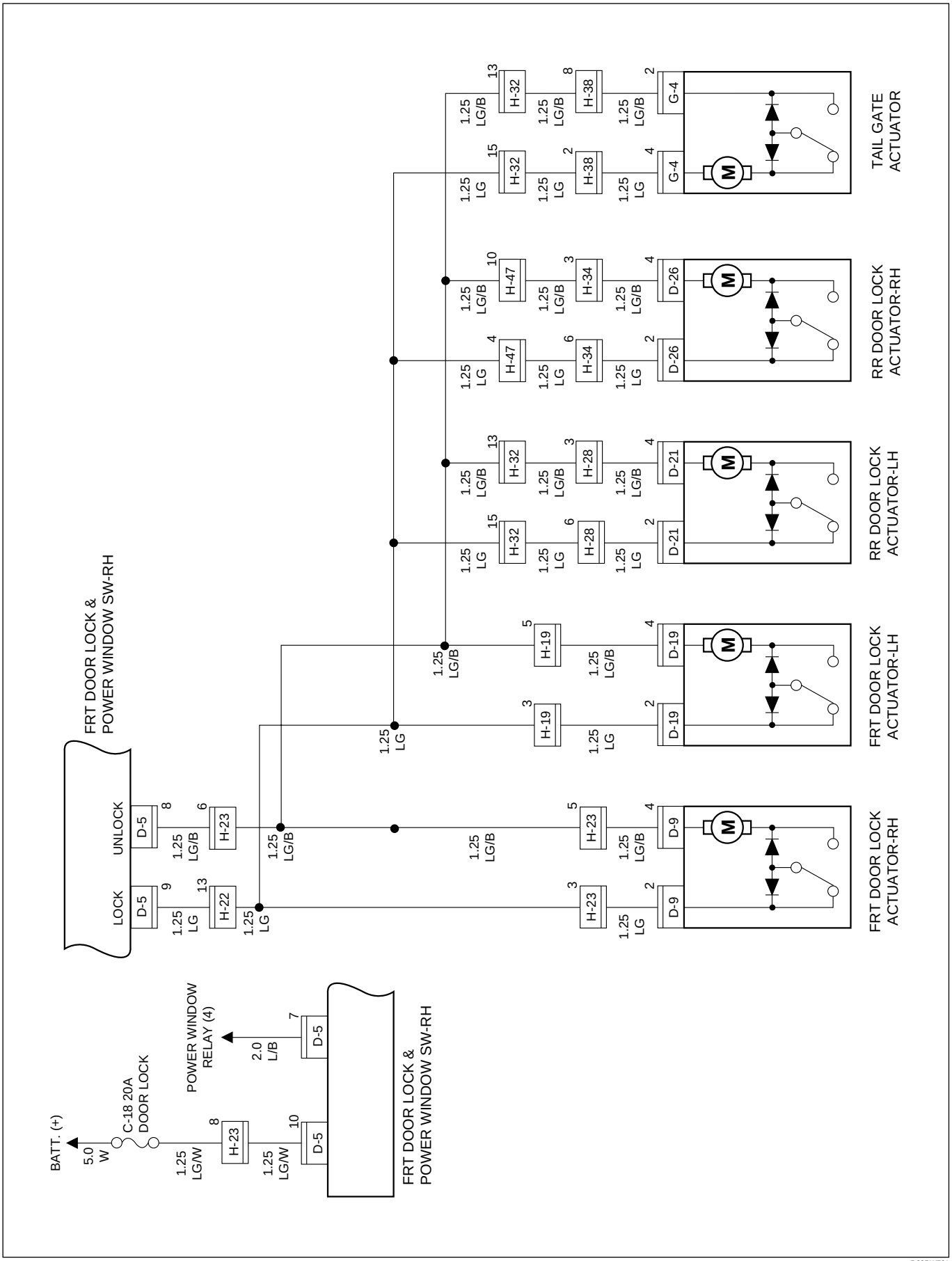

D08RW761

Circuit Diagram (RHD W/Keyless Entry)-2

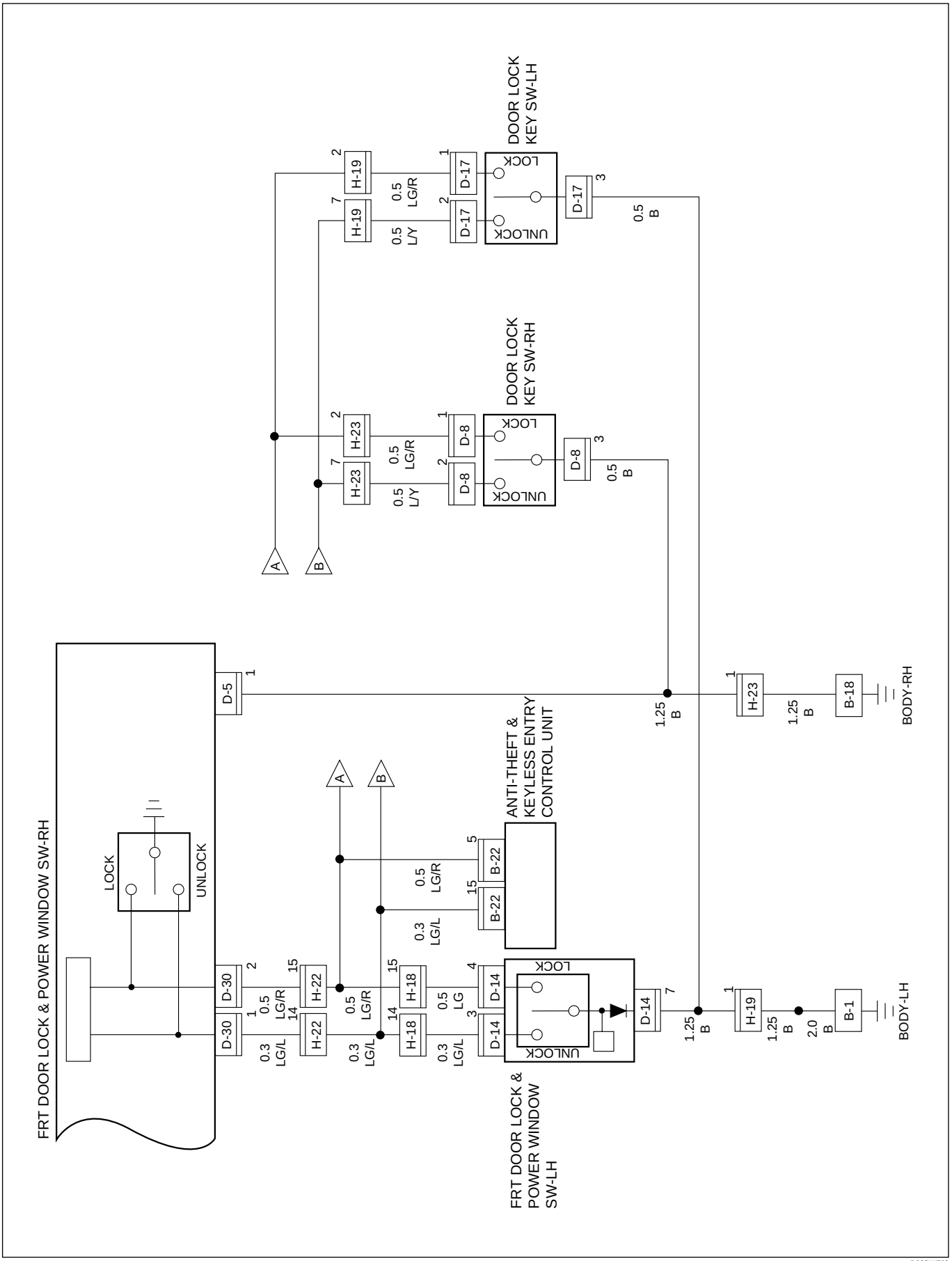

D08RW762

Circuit Diagram (South Africa W/Keyless Entry)-2

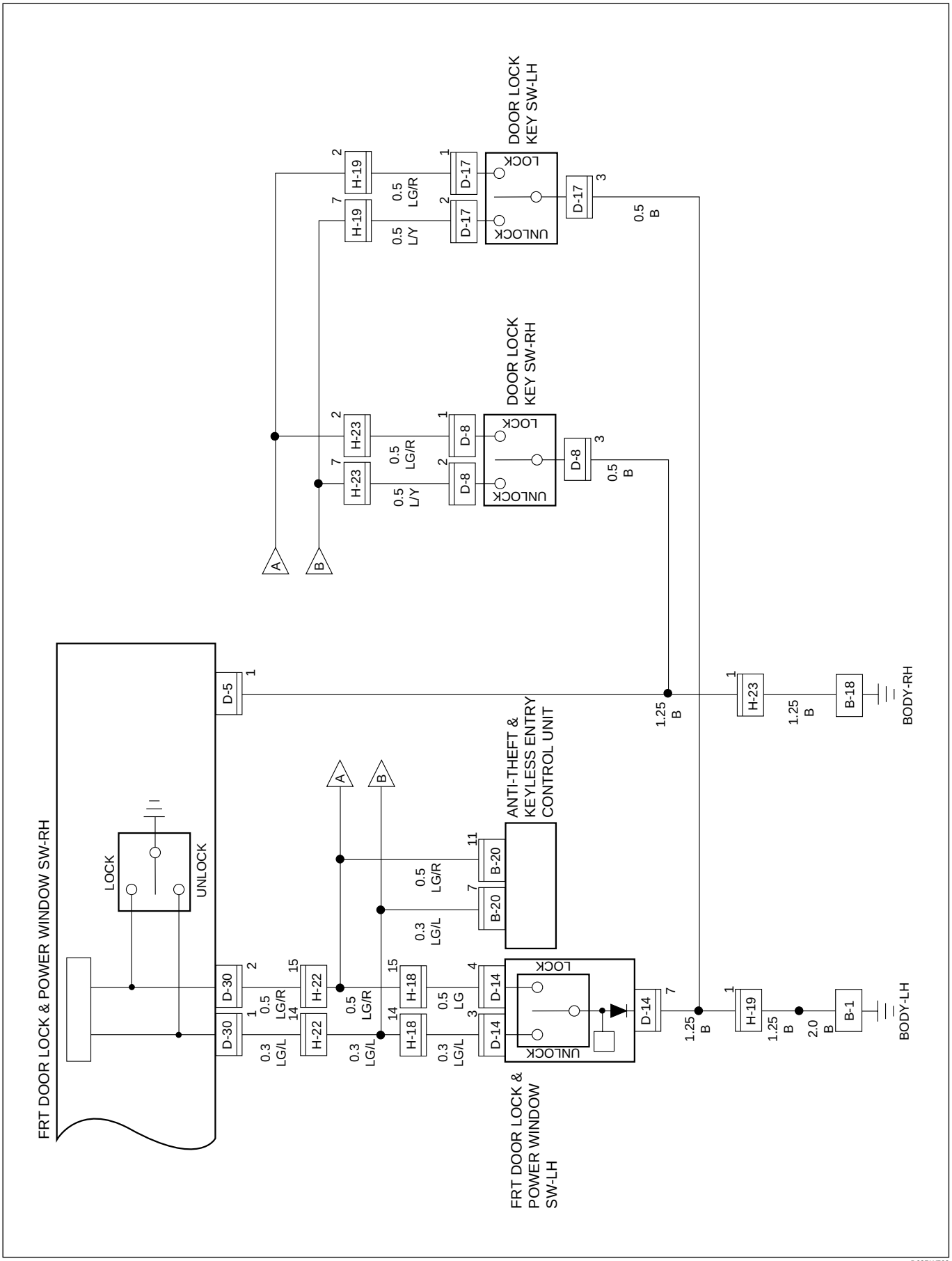

D08RW763

Parts Location (RHD)

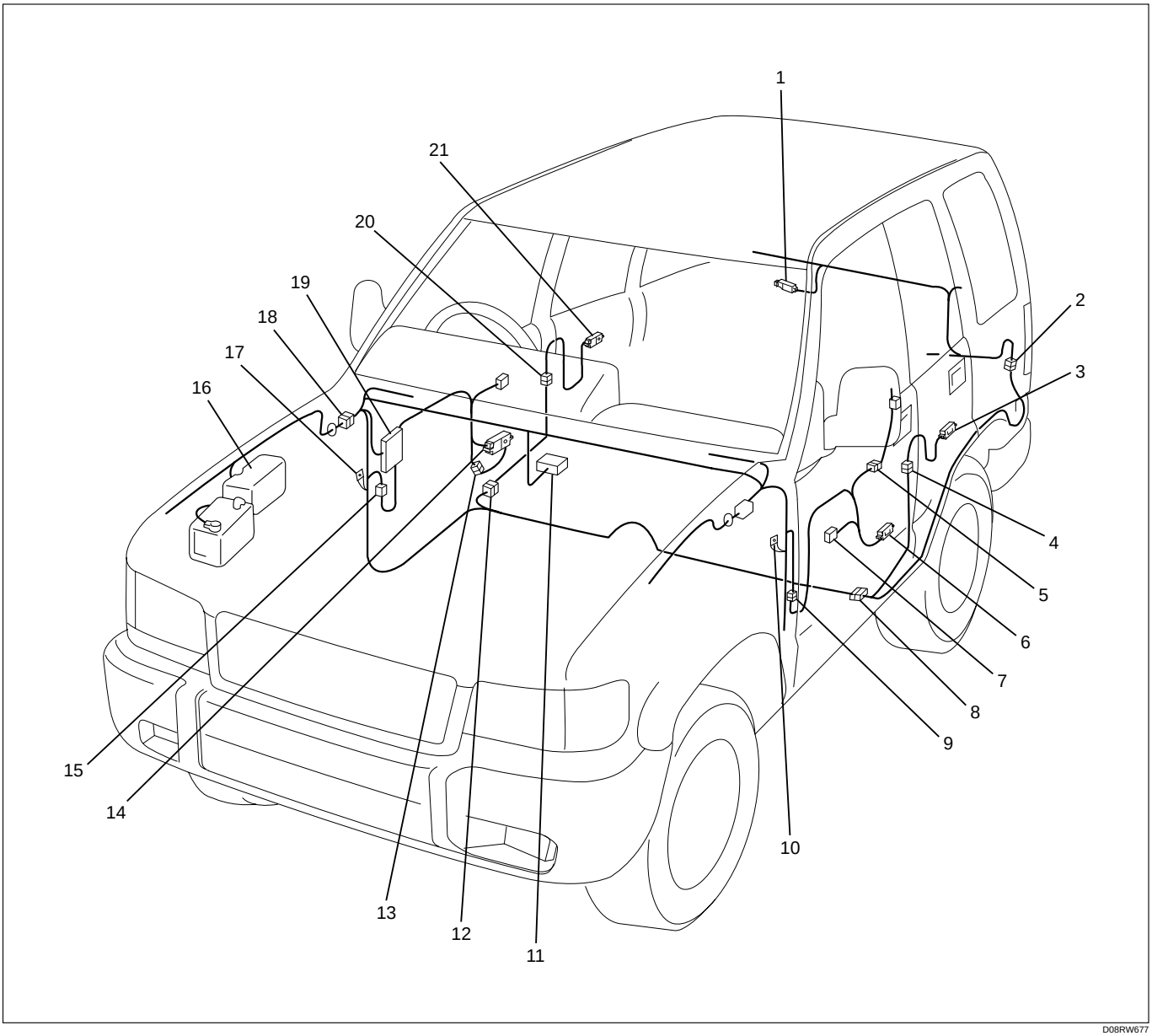

Legend

(1) G-4
(2) H-38
(3) D-21
(4) H-28
(5) D-17
(6) D-19
(7) D-14
(8) H-32
(9) H-18, H-19
(10) B-1
(11) B-22 (B-20, South Africa)
(12) H-47
(13) D-8
(14) D-9
(15) H-22, H-23
(16) Relay and Fuse Box
(17) B-18
(18) H-14
(19) Fuse Box
(20) H-34
(21) D-26

Circuit Diagram (LHD)-1

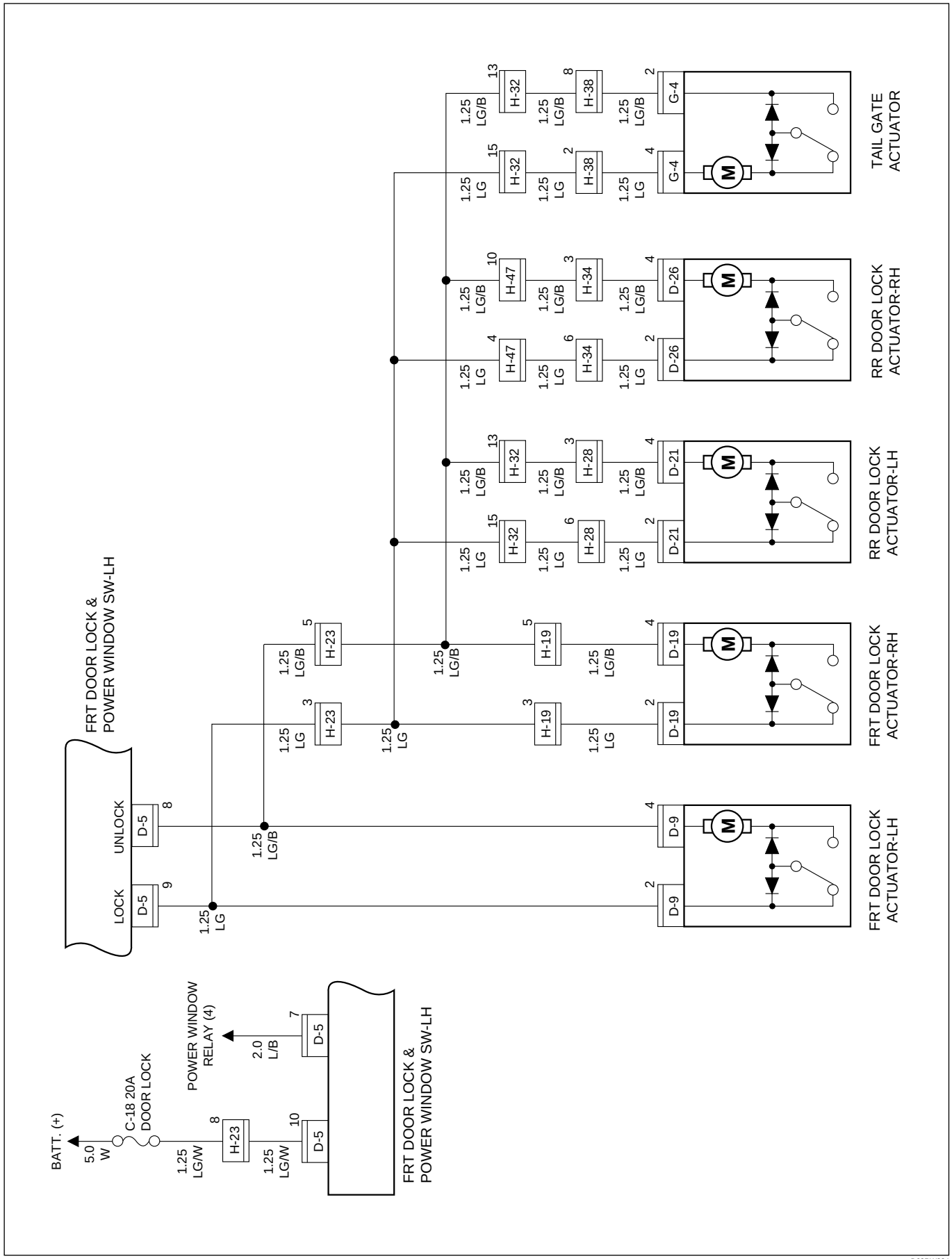

D08RW884

Circuit Diagram (LHD)-2

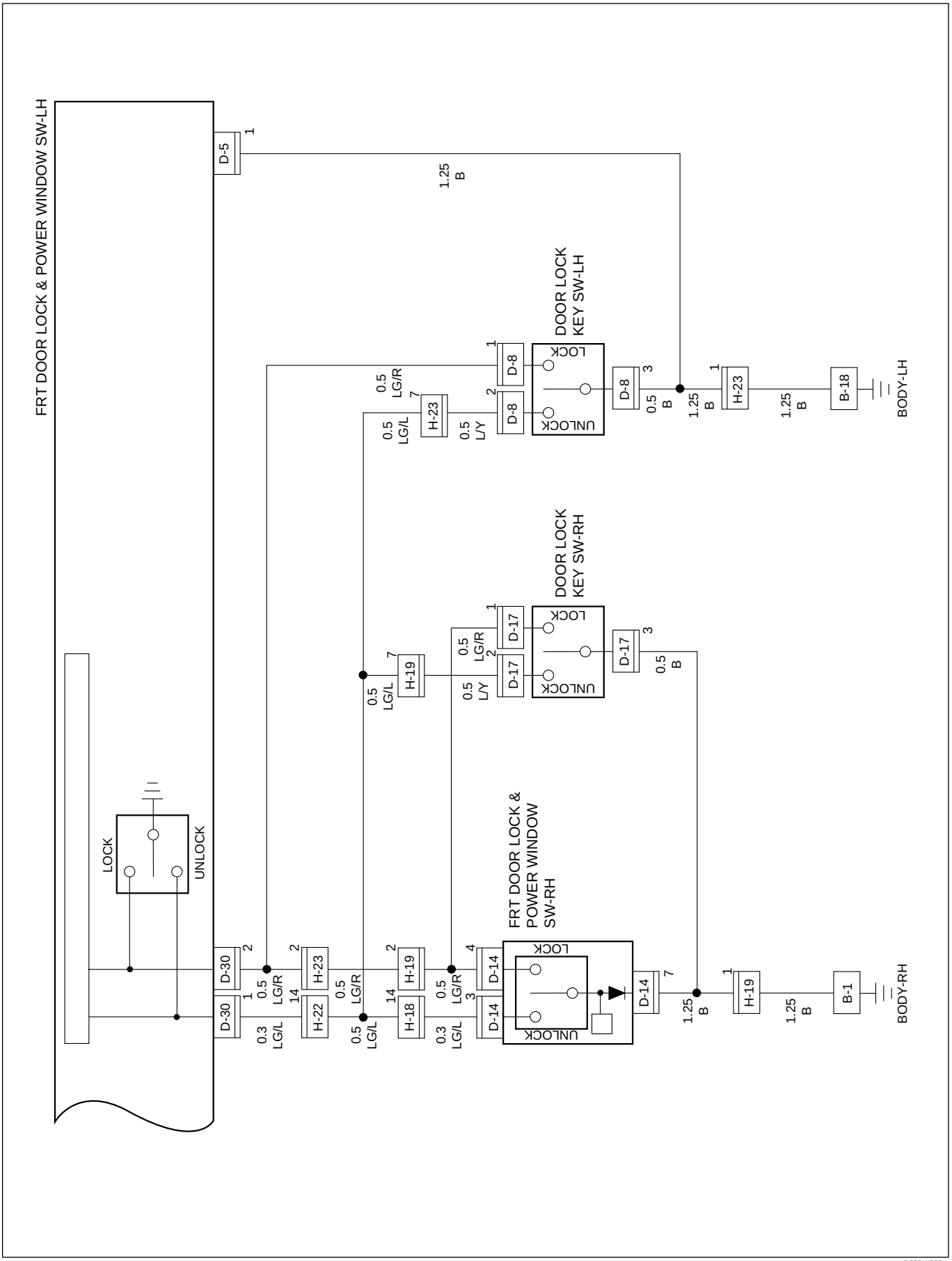

D08RW885-1

Circuit Diagram (LHD W/Keyless Entry)-1

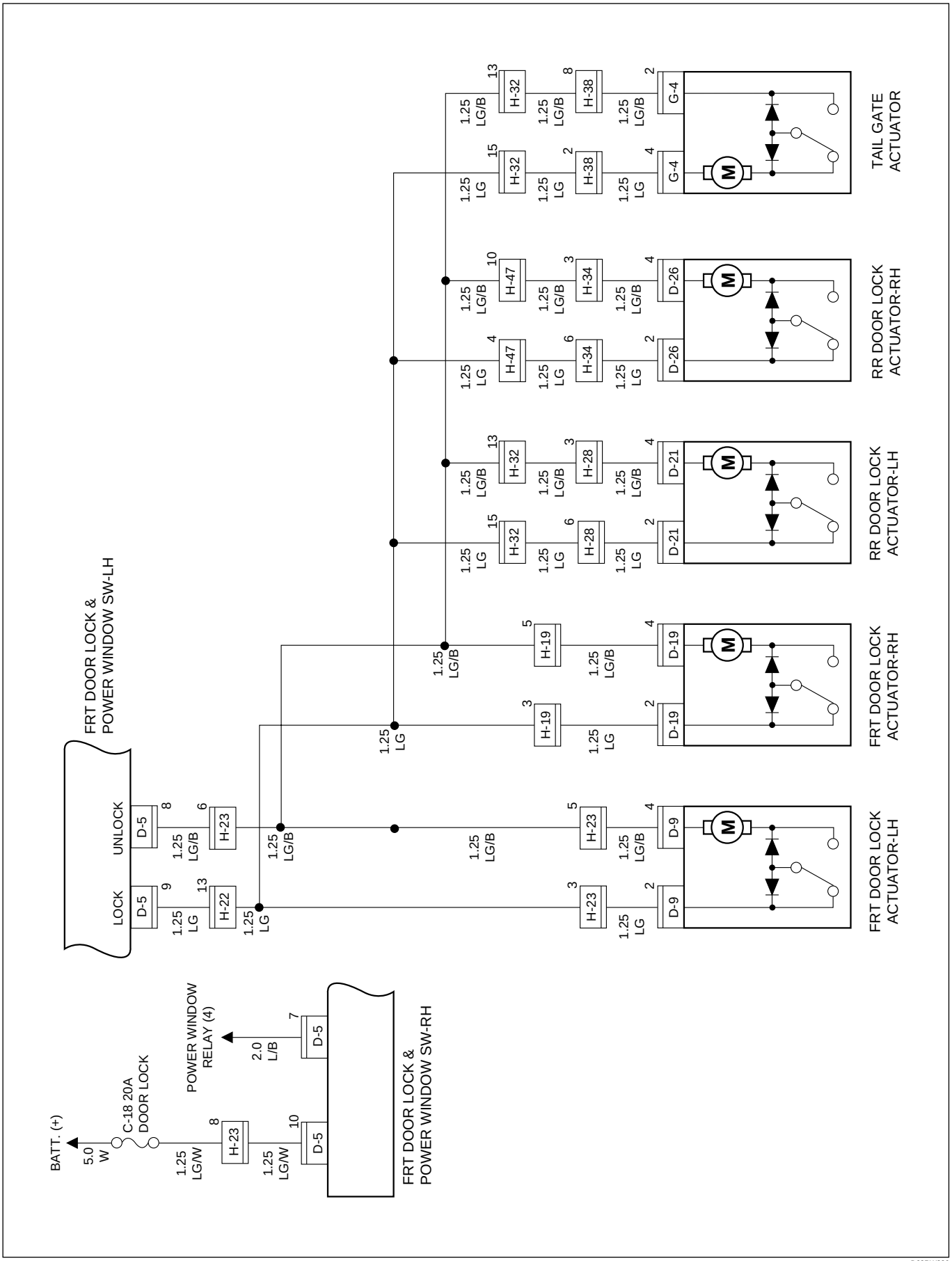

D08RW886

Circuit Diagram (LHD W/Keyless Entry)-2

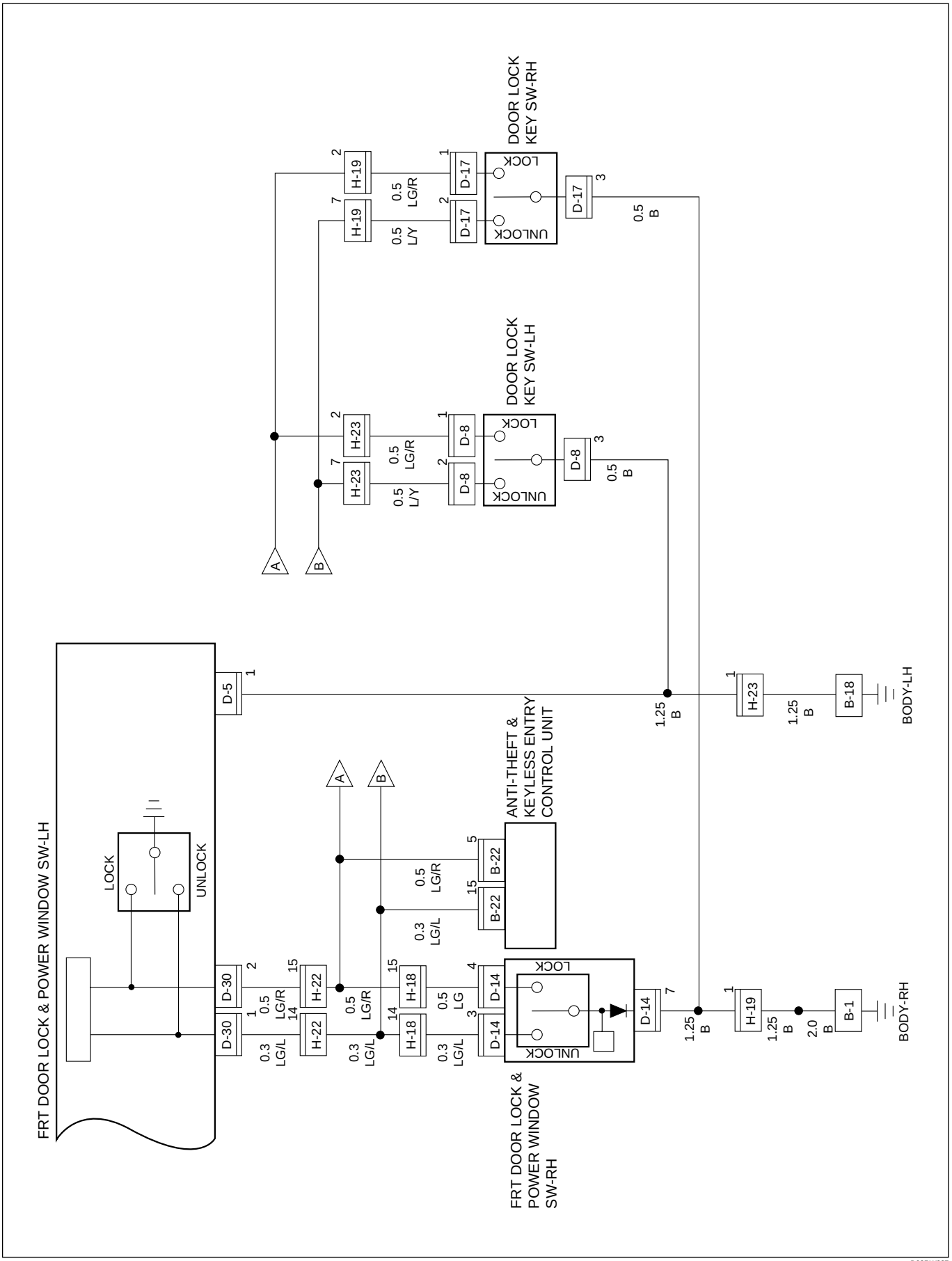

D08RW887

Parts Location (LHD)

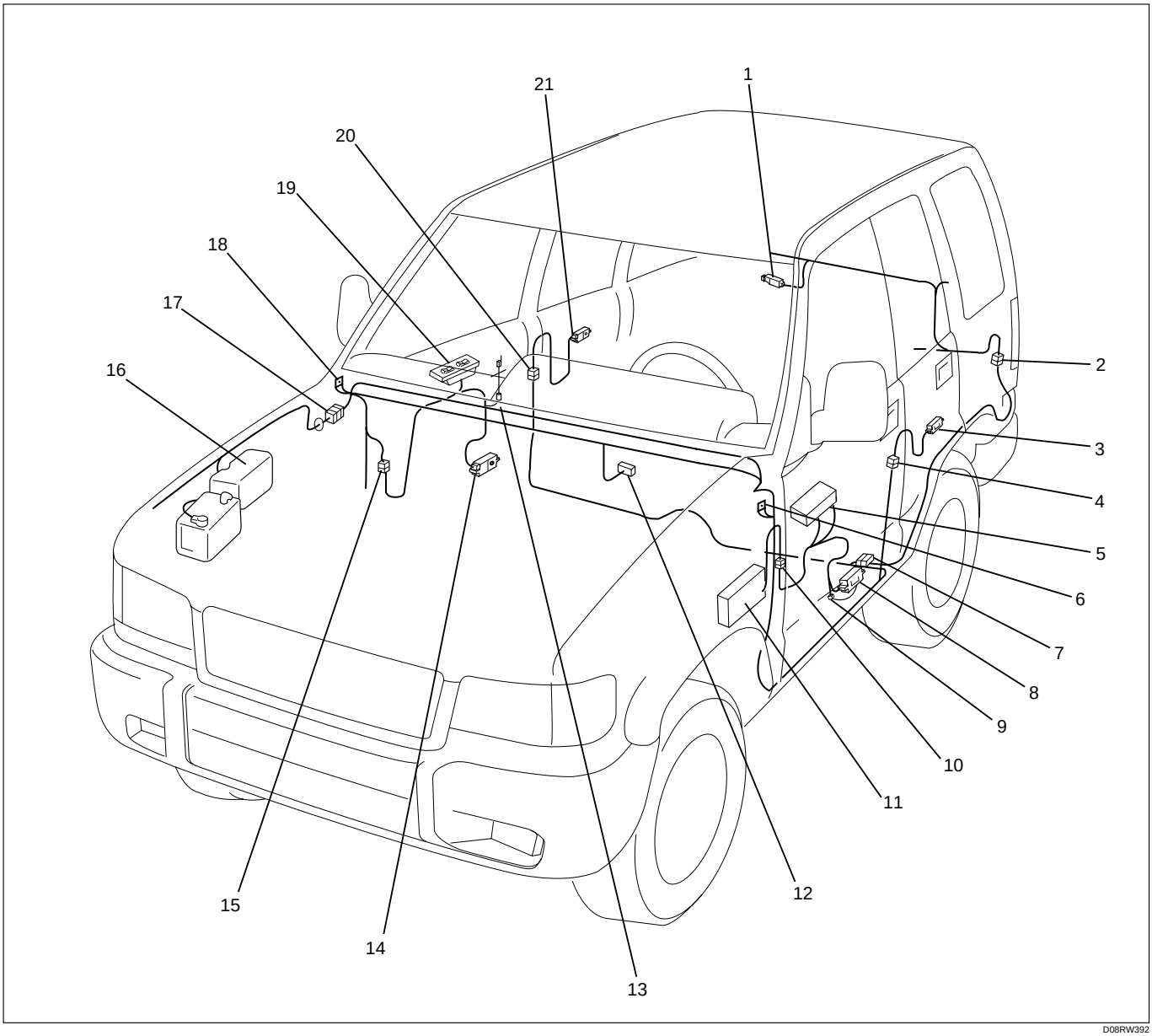

D08RW392

Legend

(1) G-4
(2) H-38
(3) D-21
(4) D-28
(5) D-5, D-30
(6) B-18
(7) H-32
(8) D-9
(9) D-8
(10) H-22, H-23
(11) Fuse Box
(12) B-22
(13) D-17
(14) D-19
(15) H-18, H-19
(16) Relay and Fuse Box
(17) H-14
(18) B-2
(19) D-14
(20) H-34
(21) D-26

Diagnosis

Quick Chart for Check Points

Check point / Trouble mode	Fuse (C-18 20A)	FRT Door lock (& power window) SW-Driver's side	FRT Door lock (& power window) SW-Passen-ger's side	Door lock switch FRT–Driver's side	Door lock switch FRT–Passen-ger's side	Door lock actuator					
						FRT–LH	FRT–RH	RR–LH	RR–RH	Tailgate	Cable harness
1. All the doors do not lock and unlock by door lock SW-Driver's side	○	○									○
2. All the doors do not get locked (or unlocked) by door lock SW-Passenger's side		○	○								○
3. FRT door–LH does not get locked (or unlocked)						○					○
4. FRT door–RH does not get locked (or unlocked)							○				○
5. RR door–LH does not get locked (or unlocked)								○			○
6. RR door–RH does not get locked (or unlocked)									○		○
7. Tailgate does not get locked (or unlocked)										○	○
8. Door lock does not operate when operated from the door lock key SW-Driver's side		○		○							○
9. Door lock does not operate when operated from the door lock key SW-Passenger's side		○			○						○

1. All The Doors Do Not Lock And Unlock By Door Lock SW-Driver's Side

- IS FUSE C-18 (20A) NORMAL?

YES

- IS B-18 GROUNDED SECURELY?

YES

- DISCONNECT THE DOOR LOCK SW-DRIVER'S SIDE CONNECTOR
- IS BATTERY VOLTAGE APPLIED BETWEEN 10 D-5 AND GROUND?

YES

- IS THERE ANY CONTINUITY BETWEEN 1 D-5 AND B–18

YES

REPAIR OR REPLACE THE FRT DOOR LOCK & POWER WINDOW SW-DRIVER'S SIDE

NO

REPAIR A POOR CONNECTION OF CONNECTORS OR AN OPEN CIRCUIT BETWEEN 1 D-5 AND B-18

NO

REPAIR A POOR CONNECTION AT CONNECTORS OR AN OPEN CIRCUIT BETWEEN FUSE C-18 (20A) AND 10 D-5

NO

GROUND B-18 SECURELY

NO

REPLACE THE FUSE

2. All The Doors Do Not Get Locked (Or Unlocked) By FRT Door Lock SW-Passenger's Side

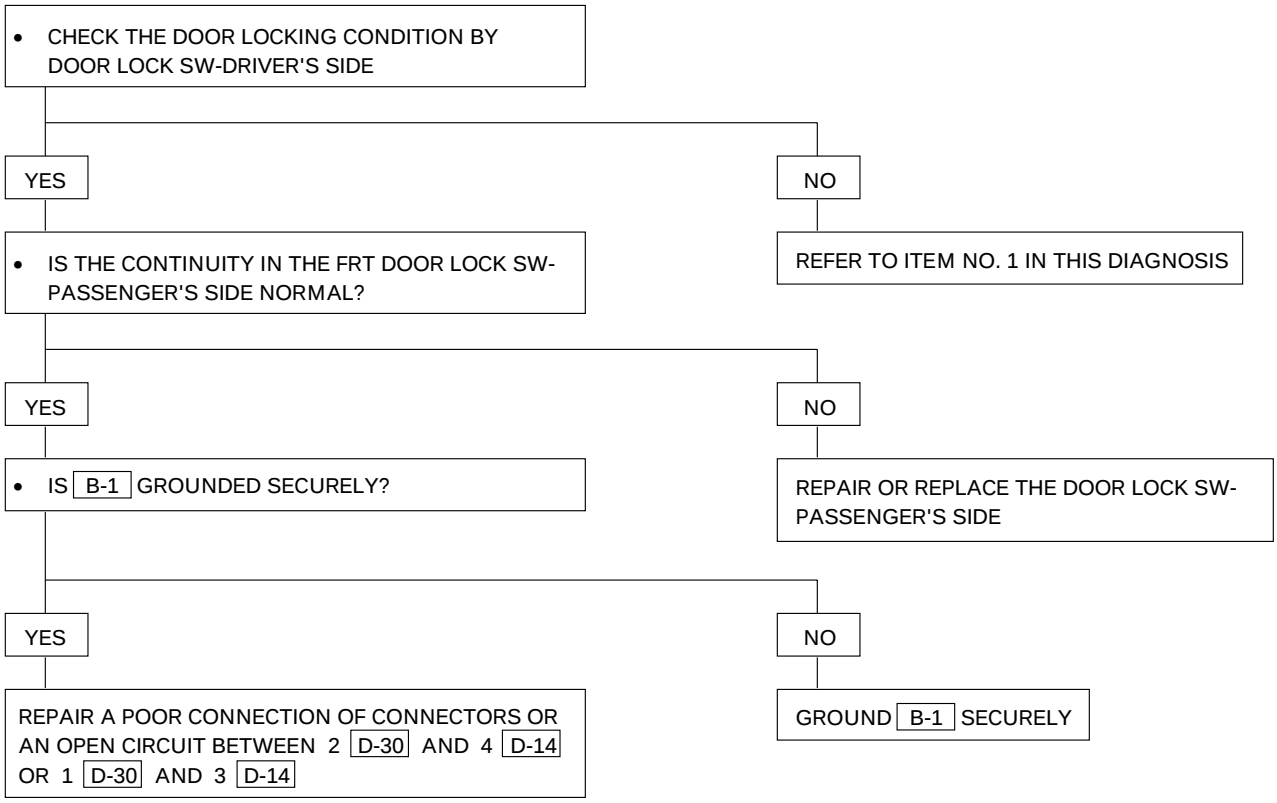

3. FRT Door–LH Does Not Get Locked (Or Unlocked)

4. FRT Door–RH Does Not Get Locked (Or Unlocked)

5. RR Door–LH Does Not Get Locked (Or Unlocked)

6. RR Door–RH Does Not Get Locked (Or Unlocked)

7. Tailgate Does Not Get Locked (Or Unlocked)

REPLACE THE DOOR LOCK ACTUATOR

8. Door Lock Does Not Operate When Operated From The Door Lock Key SW-Driver's Side

- CHECK THE DOOR LOCKING CONDITION OPERATED BY DOOR LOCK SW-DRIVER'S SIDE

YES

- IS THE CONTINUITY IN THE DOOR LOCK KEY SW-DRIVER'S SIDE NORMAL?

NO

REFER TO ITEM 1 IN THIS DIAGNOSIS

YES

- IS THERE CONTINUITY BETWEEN 3 D-8 AND THE GROUND?

NO

REPAIR OR REPLACE THE SW

YES

REPAIR A POOR CONNECTION AT THE CONNECTORS OR AN OPEN CIRCUIT BETWEEN 1 D-8 AND 2 D-30 OR 2 D-8 AND 1 D-30

NO

REPAIR A POOR CONNECTION AT THE CONNECTORS OR AN OPEN CIRCUIT BETWEEN 3 D-8 AND B-18

9. Door Lock Does Not Operate When Operated From The Door Lock Key SW-Passenger's Side

- CHECK THE DOOR LOCKING CONDITION OPERATED BY DOOR LOCK SW-DRIVER'S SIDE

YES

- IS THE CONTINUITY IN THE DOOR LOCK KEY SW-PASSENGER'S SIDE

YES

- IS THERE ANY CONTINUITY BETWEEN 3 D-17 AND THE GROUND?

YES

REPAIR A POOR CONNECTION AT THE CONNECTORS OR AN OPEN CIRCUIT BETWEEN 1 D-17 AND 2 H-19 OR 2 D-17 AND 14 H-22

NO

REPAIR OR REPLACE THE DOOR LOCK KEY SW-PASSENGER'S SIDE

NO

REPAIR A POOR CONNECTION AT THE CONNECTORS OR AN OPEN CIRCUIT BETWEEN 3 D-17 AND B-1

NO

REFER TO ITEM 1 IN THIS DIAGNOSIS

Power Window

General Description

The circuit consists of (door lock &) power window switch for each of front windows, power window switch for rear doors and power window motors.
When starter switch is turned on, battery voltage is applied to each of power window switches through circuit breaker and power window relay on the circuit.
Driver's power window switch has "ONE TOUCH" function for driver's side window.
This function opens driver's side window fully by just setting the switch to "AUTO" position.
When lock switch on driver's side power window switch is depressed, battery voltage to passenger's power window switches are shut off. So, even if these switches are operated, power window motor does not operate.

Circuit Diagram (RHD)

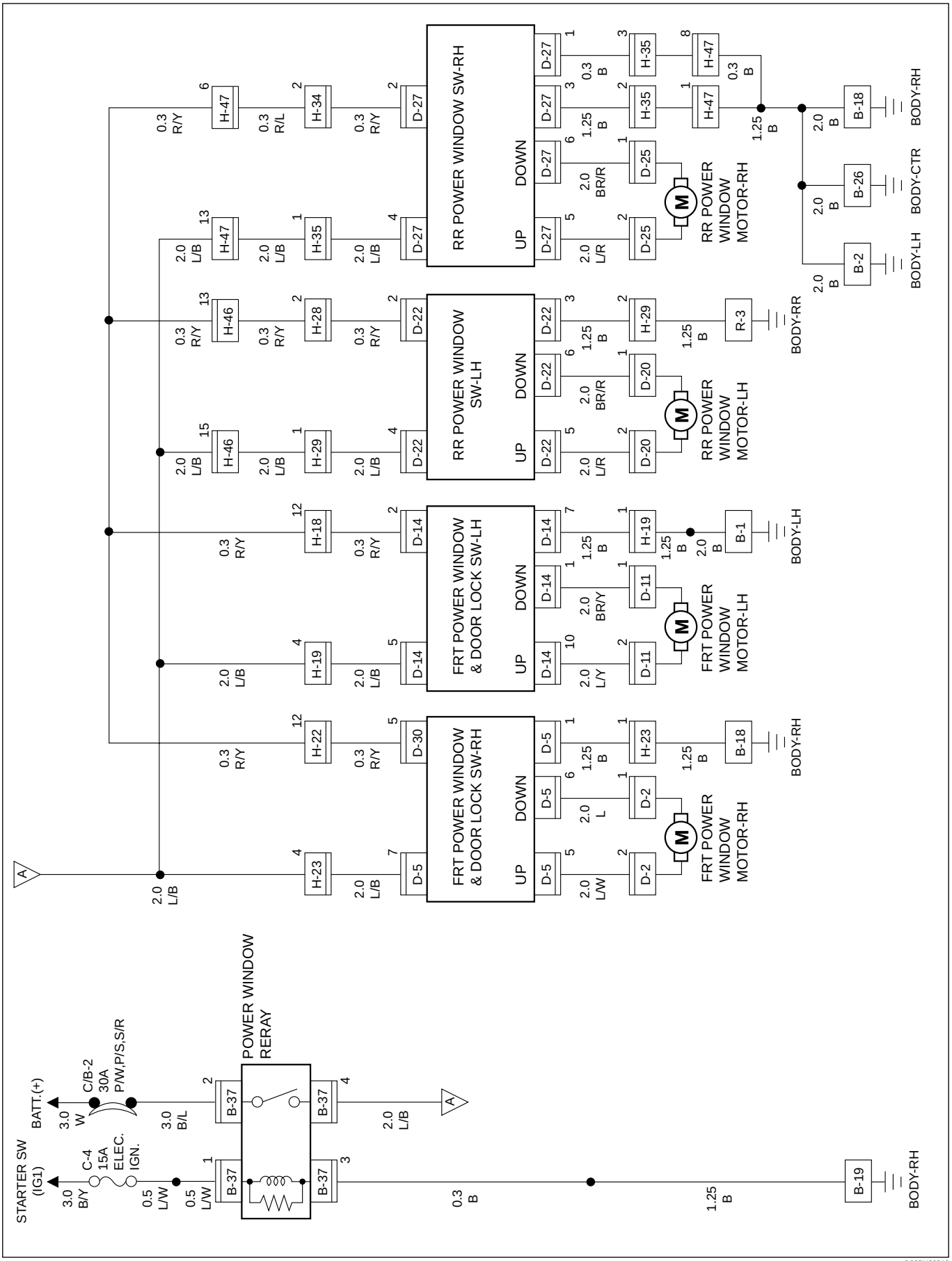

Parts Location (RHD)

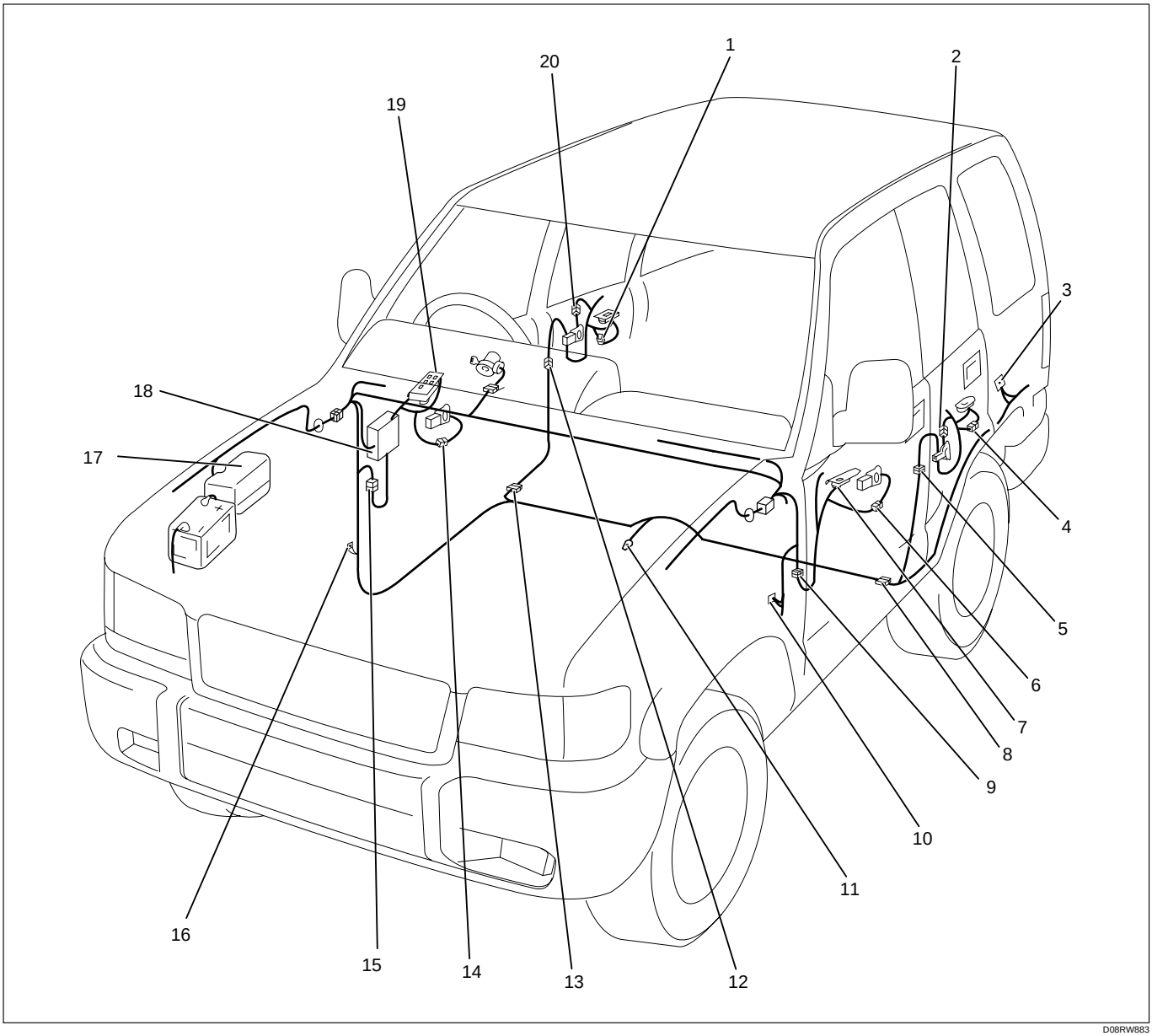

D08RW883

Legend

(1) D-27
(2) D-20
(3) R-3
(4) D-22
(5) H-28, H-29
(6) D-11
(7) D-14
(8) H-46
(9) H-18, H-19
(10) B-1, B-2
(11) B-26
(12) H-34, H-35
(13) H-47
(14) D-2
(15) H-22, H-23
(16) B-18, B-19
(17) Relay and Fuse Box
(18) Fuse Box (B-37)
(19) D-5, D-30
(20) D-25

Circuit Diagram (LHD)

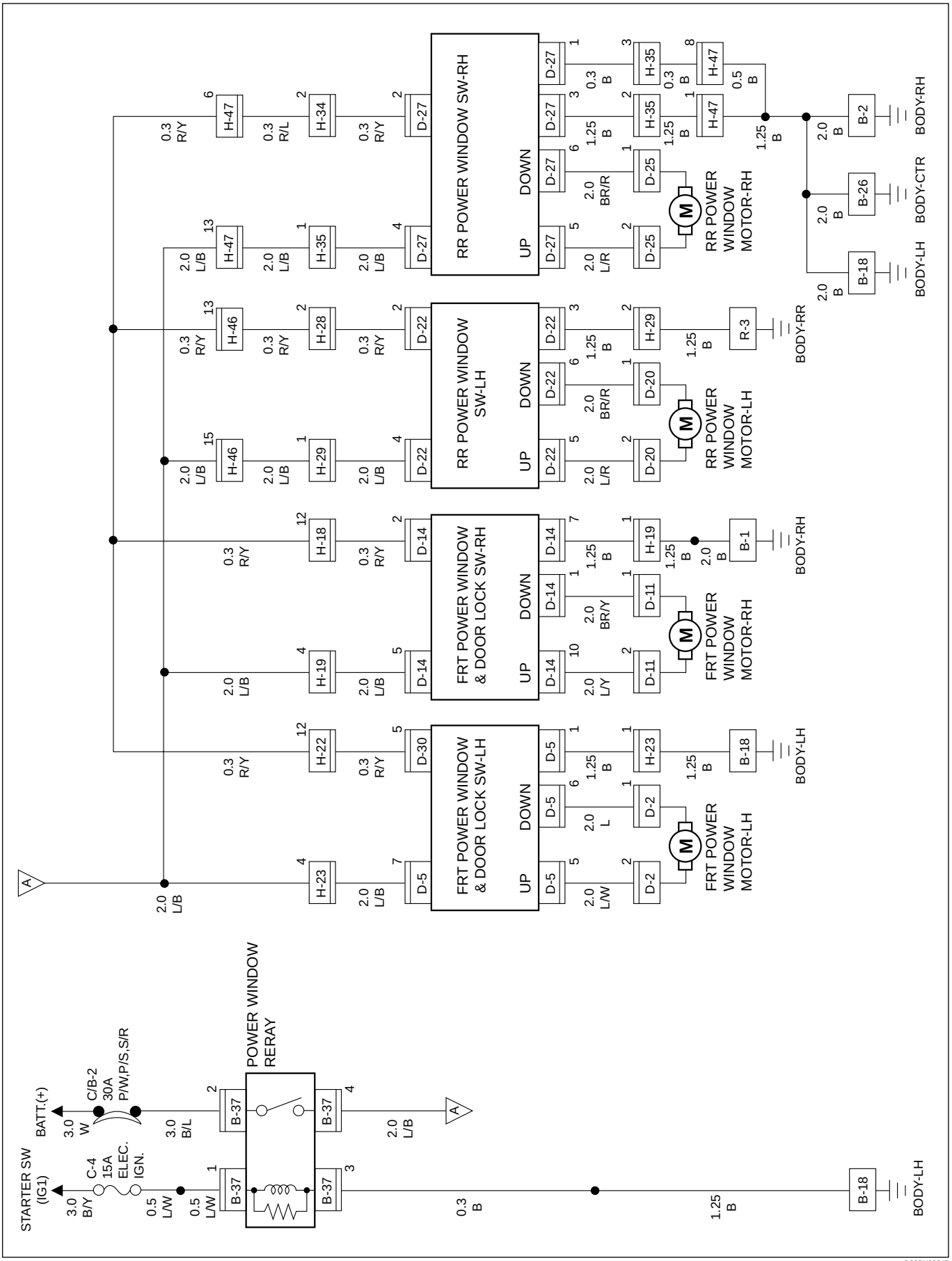

Parts Location (LHD)

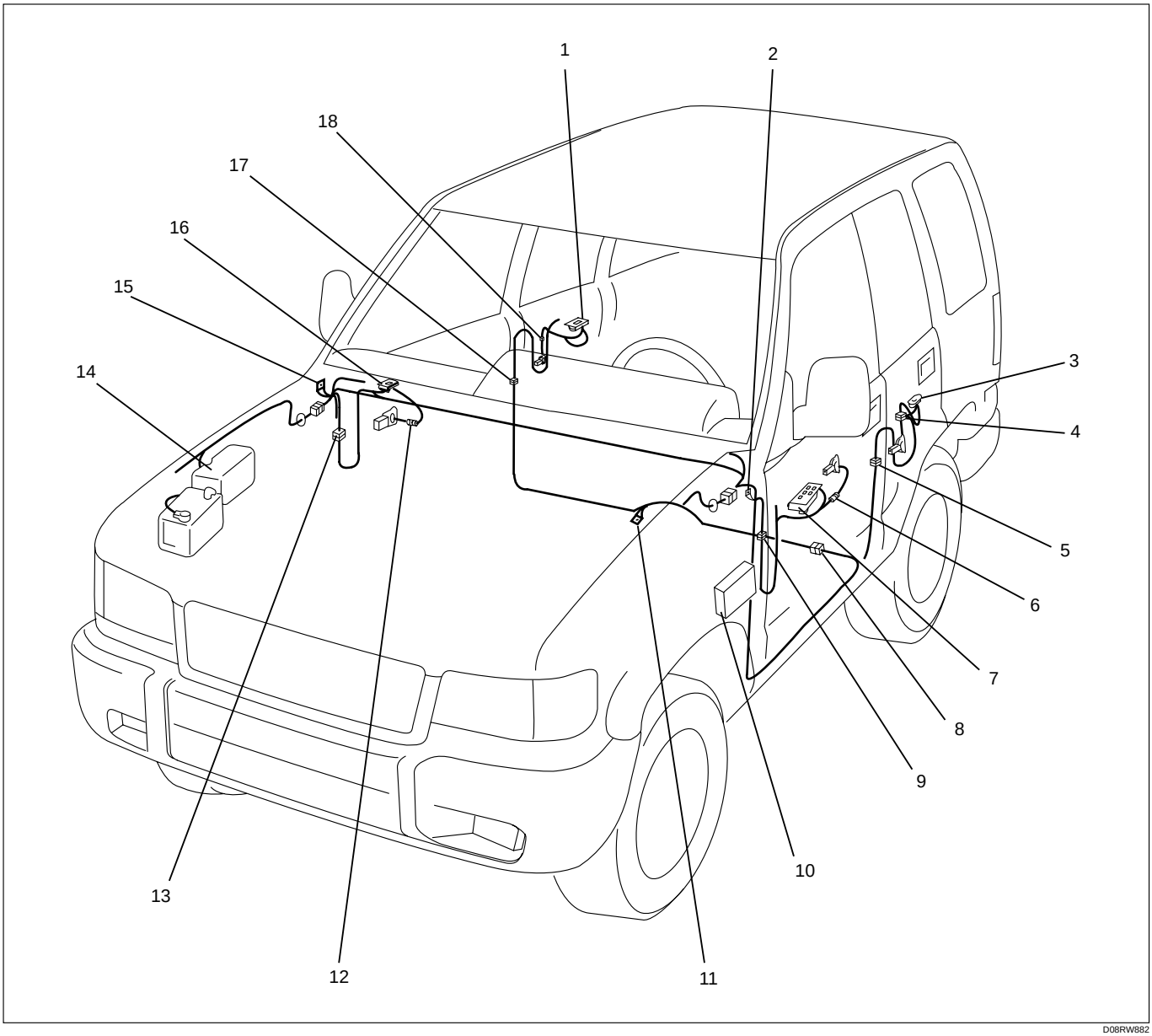

Legend

(1) D-27
(2) B-18, B-19
(3) D-22
(4) D-20
(5) H-28, H-29
(6) D-2
(7) D-5, D-30
(8) H-46
(9) H-22, H-23
(10) Fuse Box (B-37)
(11) B-26
(12) D-11
(13) H-18, H-19
(14) Relay and Fuse Box
(15) B-2
(16) D-14
(17) H-34, H-35
(18) D-25

Diagnosis

All Windows Do Not Operate

STEP	ACTION	VALUE(S)	YES	NO
1	Is the fuse C–4 normal?	–	Go to step 2	Replace the fuse
2	Is the circuit breaker C/B–2 normal?	–	Go to step 3	Replace the circuit breaker
3	Is B–19 grounded securely?	–	Go to step 4	Ground it securely
4	Disconnect the power window relay connector B–37. Is the battery voltage applied between harness side connector B–37 terminal 2 and the ground?	Approx. 12V	Go to step 6	Go to step 5
5	Repair an open circuit between the circuit breaker C/B–2 and connector B–37 terminal 2. Is the action complete?	–	Go to step 4	–
6	Turn the starter switch on Is the battery voltage applied between harness side connector B–37 terminal 1 and the ground?	Approx. 12V	Go to step 8	Go to step 7
7	Repair an open circuit between the fuse C–4 and connector B–37 terminal 1. Is the action complete?	–	Go to step 6	–
8	Is there continuity between harness side connector B–37 terminal 3 and the ground B–19?	–	Replace the relay	Go to step 9
9	Repair an open circuit between connector B–37 terminal 3 and the ground B–19. Is the action complete?	–	Verify repair	–

Window On The Driver's Side Does Not Operate

STEP	ACTION	VALUE(S)	YES	NO
1	Is B–18 grounded securely?	–	Go to step 2	Ground it securely
2	Is there continuity between harness side connector D–5 terminal 1 and the ground B–18?	–	Go to step 4	Go to step 3
3	Repair an open circuit between connector D–5 terminal 1 and the ground B–18. Is the action complete?	–	Go to step 2	–
4	Turn the starter switch on. Is the battery voltage applied between harness side connector D–5 terminal 7 and the ground?	Approx. 12V	Go to step 6	Go to step 5
5	Repair an open circuit between connector B–37 terminal 4 and connector D–5 terminal 7. Is the action complete?	–	Go to step 4	–
6	Connect the battery positive terminal with harness side connector D–5 terminal 5 or 6, and the negative terminal with harness side connector D–5 terminal 6 or 5. Does the motor operate?	–	Replace the front power window & door lock switch–RH	Go to step 7
7	1. Disconnect the front power window motor–RH connector D–2. 2. Connect the battery positive terminal with the motor side connector D–2 terminal 1 or 2, and connect the battery negative terminal with the motor side connector D–2 terminal 2 or 1. Does the motor operate?	–	Go to step 8	Replace the motor
8	Repair an open circuit between the front power window & door lock switch–RH and the front power window motor–RH. Is the action complete?	–	Verify repair	–

Window On The Front Passenger's Side Does Not Operate

STEP	ACTION	VALUE(S)	YES	NO
1	Is B–1 grounded securely?	–	Go to step 2	Ground it securely
2	Disconnect the front power window & door lock switch–LH connector D–14. Is there continuity between harness side connector D–14 terminal 7 and the ground B–1?	–	Go to step 4	Go to step 3
3	Repair an open circuit between connector D–14 terminal 7 and the ground B–1. Is the action complete?	–	Go to step 2	–
4	Turn the starter switch on. Is the battery voltage applied between harness side connector D–14 terminal 5 and the ground?	Approx. 12V	Go to step 6	Go to step 5
5	Repair an open circuit between connector B–37 terminal 4 and connector D–14 terminal 5. Is the action complete?	–	Go to step 4	–
6	Connect the battery positive terminal with harness side connector D–14 terminal 10 or 1, and connect the battery negative terminal with harness side connector D–14 terminal 1 or 10. Does the motor operate?	–	Replace the front power window & door lock switch–LH	Go to step 7
7	1. Disconnect the front power window motor–LH connector D–11. 2. Connect the battery positive terminal with the motor side connector D–11 terminal 1 or 2, and connect the battery negative terminal with the motor side connector D–11 terminal 2 or 1. Does the motor operate?	–	Go to step 8	Replace the motor
8	Repair an open circuit between the front power window & door lock switch–LH and the front power window motor–LH. Is the action complete?	–	Verify repair	–

Rear Window On The Left (or Right) Side Does Not Operate

STEP	ACTION	VALUE(S)	YES	NO
1	1. Disconnect the rear power window switch–LH connector D–22 or the rear power window & door lock switch–RH connector D–27. 2. Turn the starter switch on. Is the battery voltage applied between harness side connector D–22 terminal 4 and the ground, or harness side connector D–27 terminal 4 and the ground?	Approx. 12V	Go to step 3	Go to step 2
2	Repair an open circuit between connector B–37 terminal 4 and connector D–22 terminal 4 or connector D–27 terminal 4. Is the action complete?	–	Go to step 1	–
3	Is there continuity between harness side connector D–22 terminal 3 and the ground, or harness side connector D–27 terminal 3 and the ground?	–	Go to step 5	Go to step 4
4	Repair an open circuit between connector D–22 terminal 3 or connector D–27 terminal 3 and the ground. Is the action complete?	–	Go to step 3	–
5	Connect the battery positive terminal with harness side connector D–22 terminals 5 or harness side connector D–27 terminal 5, and connect the battery negative terminal with harness side connector D–22 terminal 6 or harness side connector D–27 terminal 6. Does the motor operate?	–	Replace the rear power window switch–LH or –RH	Go to step 6
6	1. Disconnect the rear power window motor connector D–20 or D–25. 2. Connect the battery positive terminal with motor side connector D–20 or D–25 terminal 1 or 2, and connect the battery negative terminal with the motor side connector D–20 or D–25 terminal 2 or 1. Does the motor operate?	–	Go to step 7	Replace the motor
7	Repair an open circuit between the rear power window switch and the rear power window motor. Is the action complete?	–	Verify repair	–

Window on the Front Passenger's Side Does Not Operate by the Front Power Window & Door Lock Switch – RH

STEP	ACTION	VALUE(S)	YES	NO
1	Disconnect the front power window & door lock switch–RH connector D–30 and the front power window & door lock switch–RH connector D–14. Is there continuity between harness side connector D–30 terminal 5 and harness side connector D–14 terminal 2?	–	Replace the front power window & door lock switch–RH	Go to step 2
2	Repair an open circuit between connector D–30 terminal 5 and connector D–14 terminal 2. Is the action complete?	–	Verify repair	–

Lock SW Does Not Function

STEP	ACTION	VALUE(S)	YES	NO
1	Repair or replace the front power window & door lock switch–RH. Is the action complete?	–	Verify repair	–

Cruise Control

General Description

The circuit consists of cruise control unit, cruise main switch, combination switch, clutch switch (M/T), mode switch (A/T), brake switch, actuator and indicator lights.
Cruise control system keeps the vehicle running at a fixed speed until a signal canceling this fixed speed is received.
When the cruise main switch is turned on with the vehicle in the running mode, the battery voltage is applied to the control unit.
When a signal from the combination switch is input to the control unit while vehicle is in this state, the actuator is activated to operate the system. Also, while the system is operating, the cruise indicator light in the meter panel lights up.

Set Function

When the cruise main switch turned on and the set switch is depressed with the vehicle speed within the set limit and cancel operation is refused, the vehicle speed when the set switch is released is stored in the control unit as the set speed. But in case of the vehicle speed is over maximum limit speed of cruise control, maximum limit speed in the control unit is stored as the set speed.

Resume Function

Unless the vehicle speed falls below the minimum speed limit after canceling the set speed by the cancel switch, pushing the resume switch causes the vehicle to resume the speed before cancellation.

Acceleration Function

During cruise control driving, pushing the acceleration switch (on time is more than 0.6 sec.) causes an increase in cruise speed and vehicle accelerates at a controlled rate untill acceleration switch released.
Vehicle speed at the acceleration switch released plus 1.0 km/h is stored in the control unit as the set speed.

Tap up Function

During cruise control driving, pushing the coast switch (on time is more than 0.6 sec.) causes a decrease in cruise speed and the vehicle decelerate at a controlled rate until coast switch released.
Vehicle speed at the coast switch released minus approx. 1.0 km/h is stored in the control unit as the set speed.

Tap down Function

During cruise control driving, the set speed can be lowered approx. 1.0 km/h each time by operating the coast switch quickly within 0.6 sec.

Cancel Function

During cruise control driving, the cruise control is released if the control unit receives a signal from the cancel switch, mode switch, clutch switch or brake switch, but the set speed is still stored.

Down Cancel Function

The cruise control is canceled when the vehicle speed becomes the set speed minus 20 km/h during the cruise control working and the set speed is erased.

Over Drive (OD) Cancel Function

OD cancel function is required when the vehicle speed becomes the set speed minus 3 km/h during the cruise control working.
OD cancel function is enabled when the acceleration function and/or resume function are working except the vehicle speed is in more than 120 km/h.

Circuit Diagram (RHD)-1

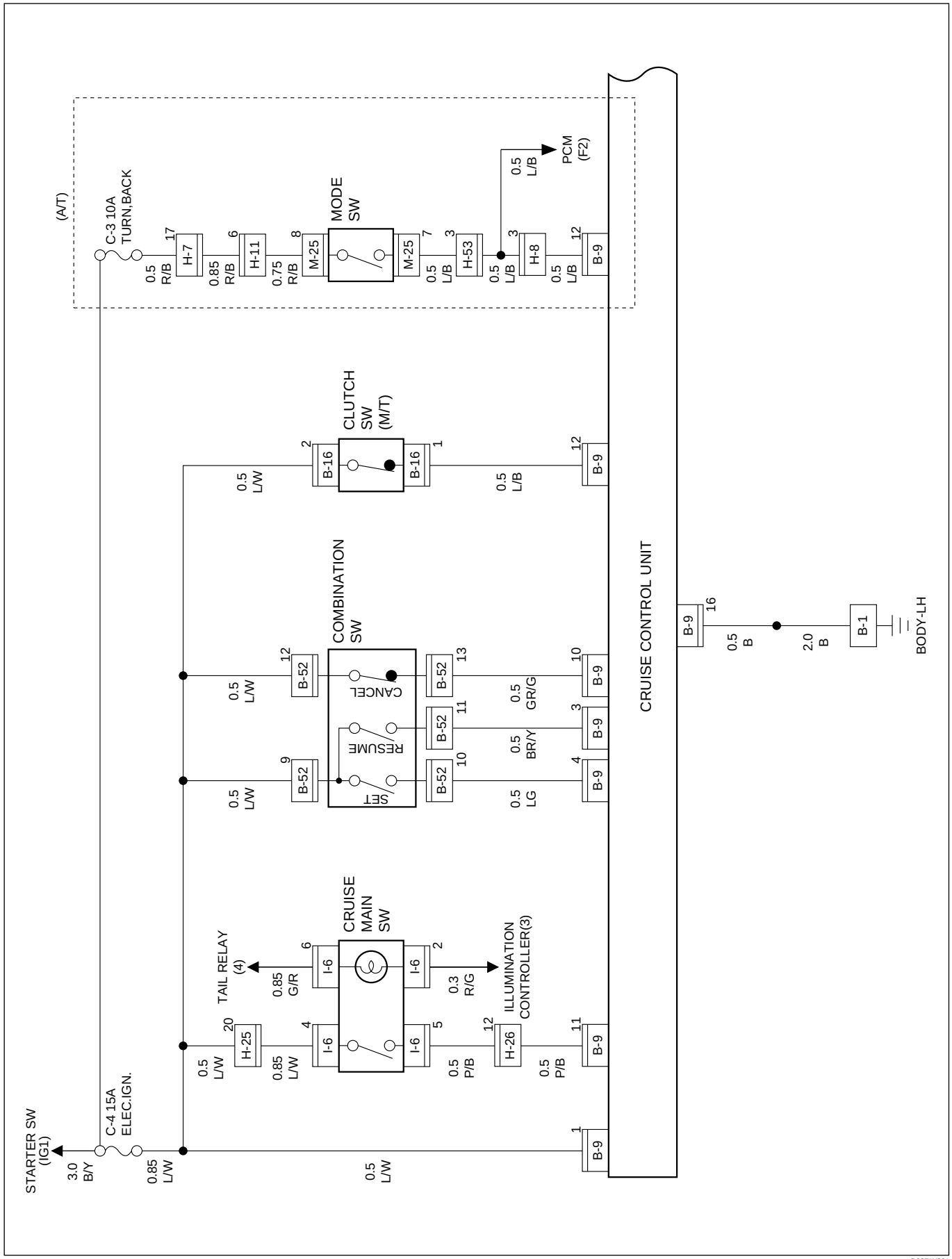

D08RW661

Circuit Diagram (RHD)-2

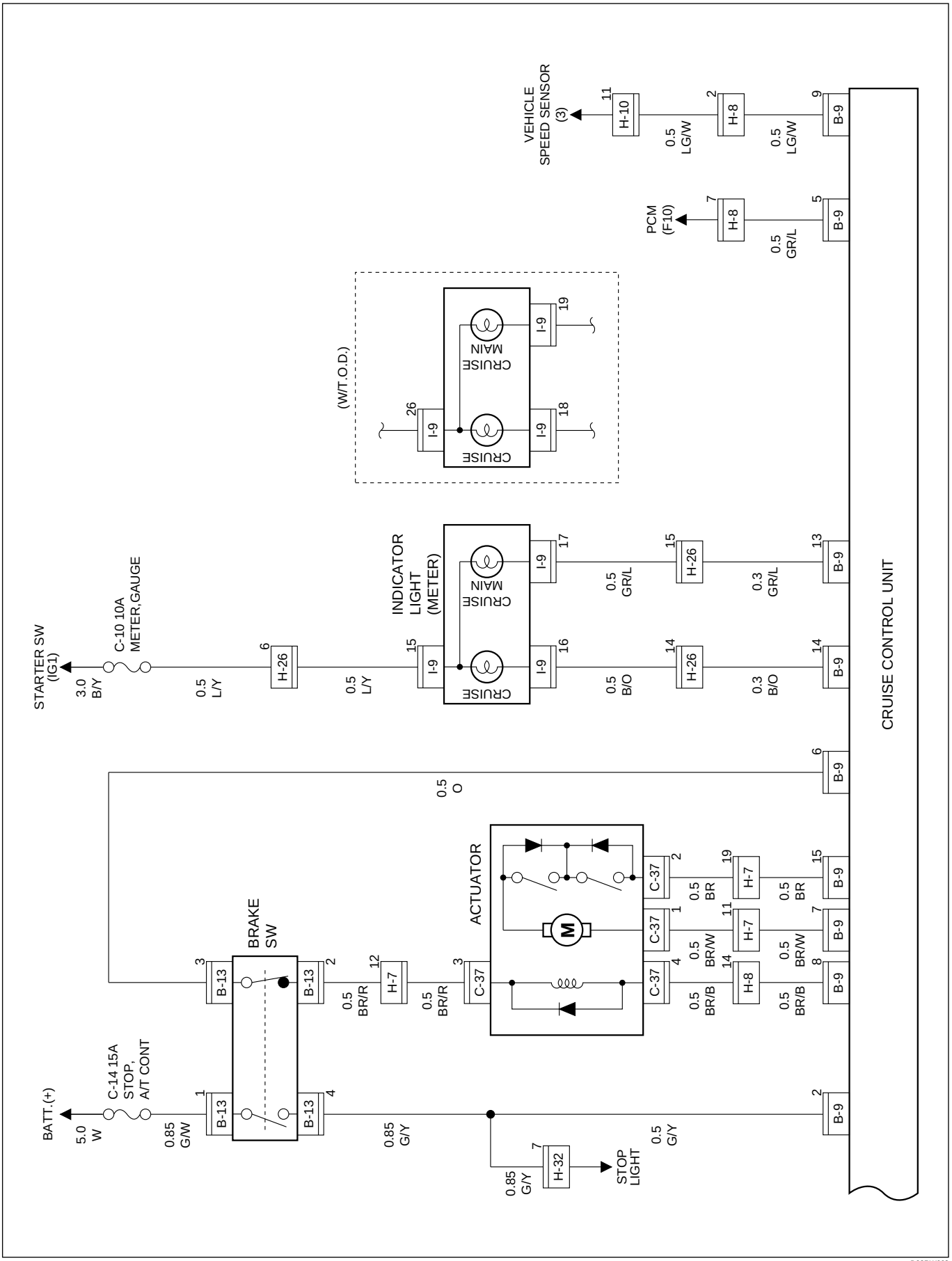

D08RW662

Parts Location (RHD)

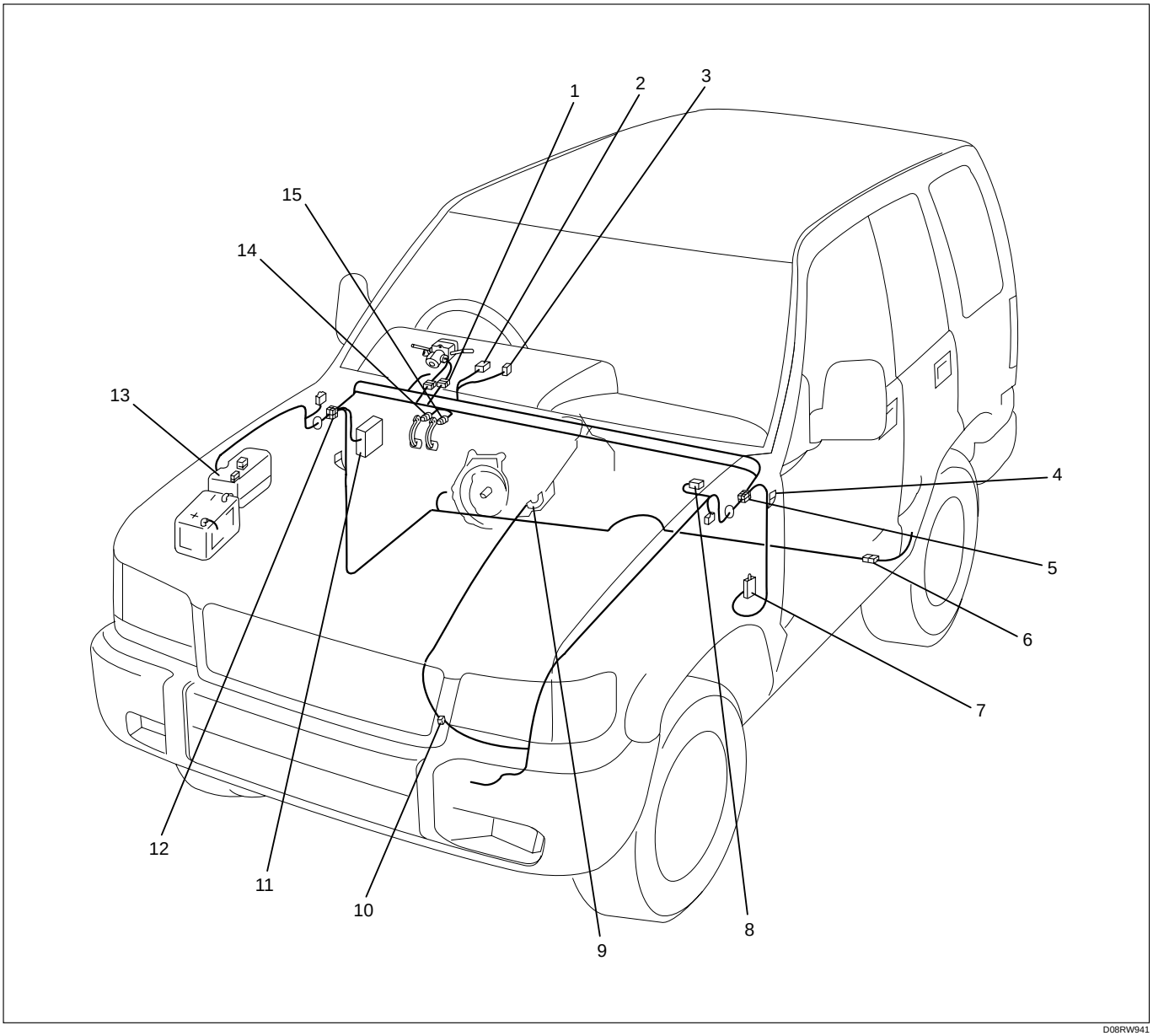

D08RW941

Legend

(1) B-52
(2) I-9
(3) I-6
(4) B-1
(5) H-7, H-8
(6) H-32
(7) Cruis Control Unit (B-9)
(8) C-37
(9) Mode Switch A/T (M-25)
(10) H-10, H-11, H-53
(11) Fuse Box
(12) H-25, H-26
(13) Relay and Fuse Box
(14) B-13
(15) B-16

Circuit Diagram (LHD)-1

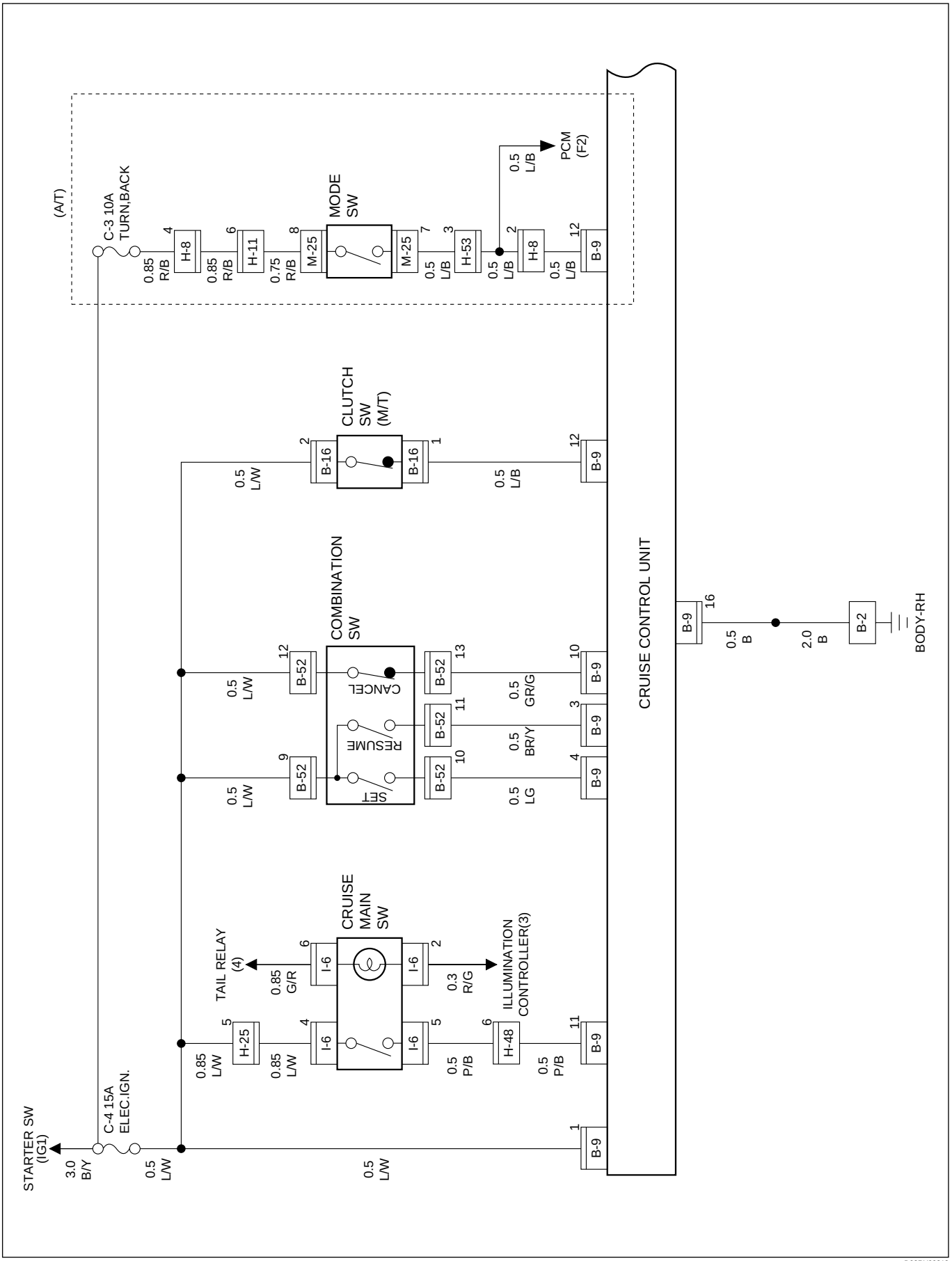

D08RY00218

Circuit Diagram (LHD)-2

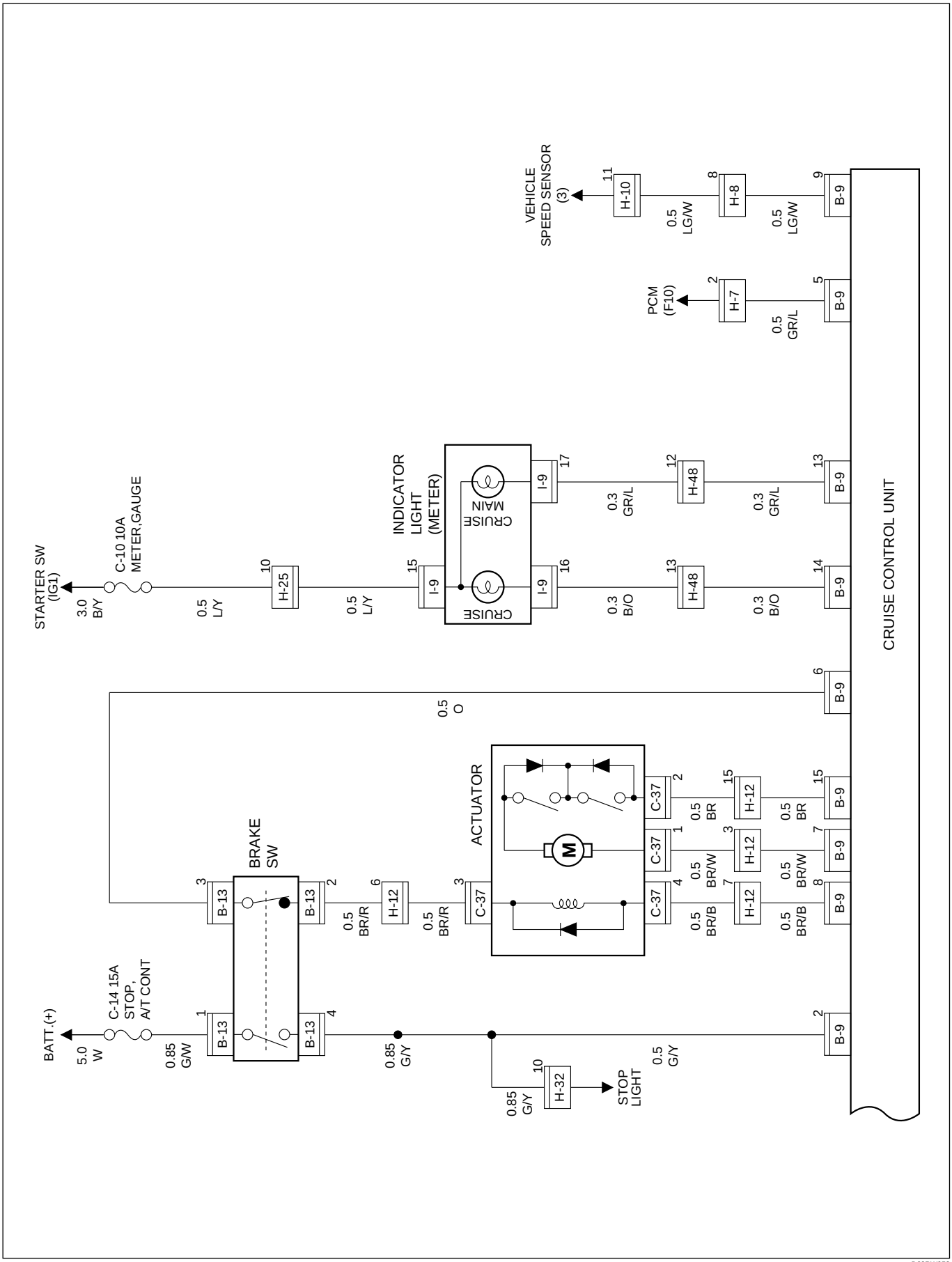

D08RW958

Parts Location (LHD)

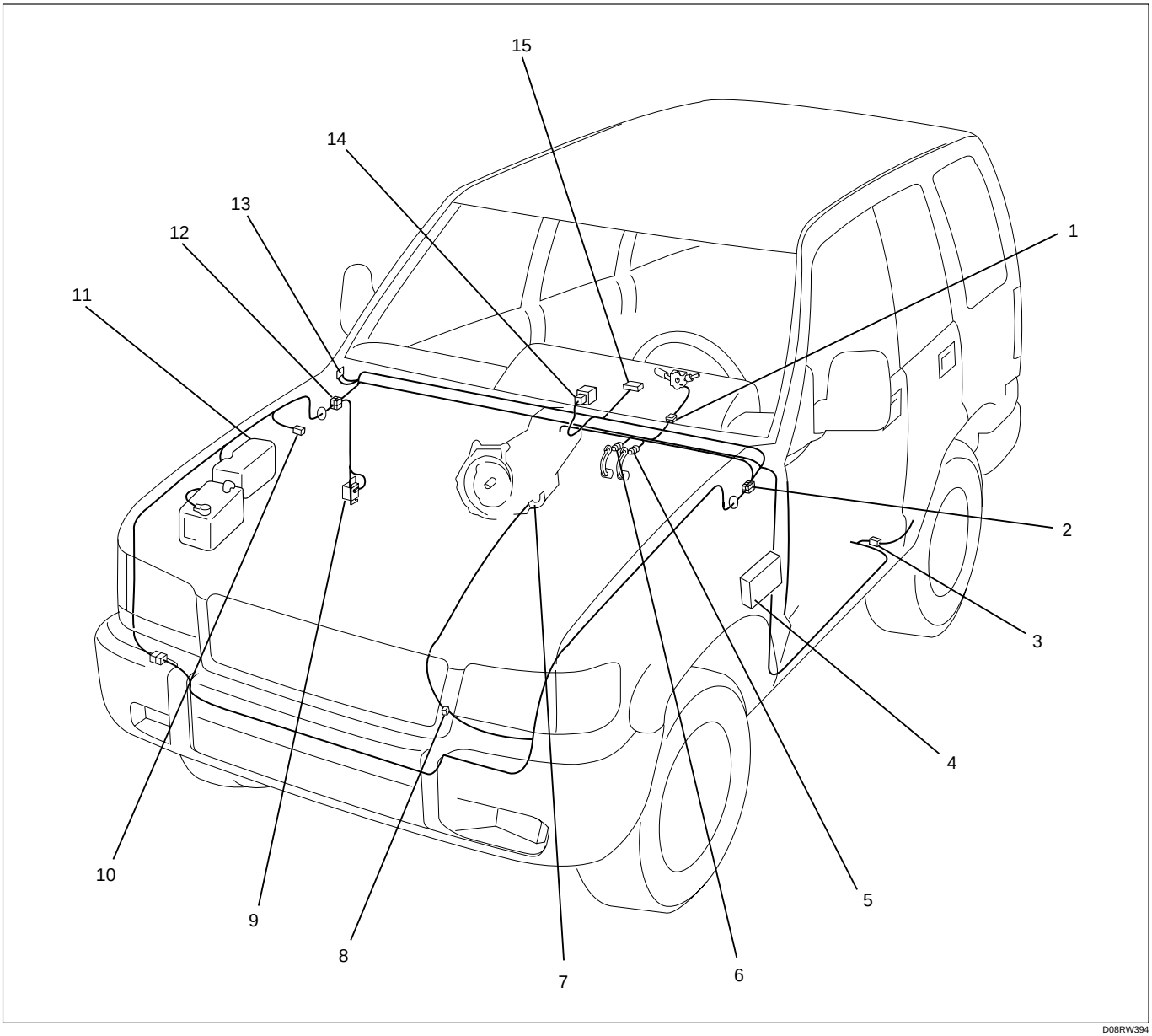

D08RW394

Legend

(1) B-52
(2) H-7, H-8, H-25
(3) H-32
(4) Fuse Box
(5) B-16
(6) B-13
(7) Mode Switch (M-25)
(8) H-10, H-11, H-53
(9) Cruise Control Unit (B-9)
(10) C-37
(11) Relay and Fuse Box
(12) H-12, H-48
(13) B-2
(14) I-6
(15) I-9

Diagnosis

The cruise control unit uses the cruise main indicator light and diagnoses the failure, when the control unit detects abnormality on the table below.

PART	POSIBLE CAUSE	DETECTION PERIOD	DTC
Actuator	Motor system short circuit	Energizing motor	1–1
	Clutch system short circuit	Energizing clutch	1–2
	Clutch system open circuit	Energizing clutch	1–2
	Mechanical defect	Cruise controlling	1–3
	Close side of motor system open circuit	Cruise controlling	1–1
Cruise control unit	Open side of motor system continuously energizing	While starter sw on	1–4
	Clutch output abnormality	While starter sw on	1–4
Vehicle speed sensor	Signal of vehicle speed disconnection	Cruise controlling	2–1
	Signal of vehicle speed abnormality	Cruise controlling	2–1
Switch	Turning on switch at all times	While starter sw on	3–1
	Turning on switch at the same time.	While starter sw on	3–1

DTC: Diagnostic Trouble Code

DTC Display Condition

1. While starter switch on and vehicle speed is 0 km/h, the DTC output begins in top priority by cancel switch turn on and off being repeated three times for 2 sec. while cruise main switch pushing on, and stops the DTC output whether vehicle speed is more than 10 km/h or the resume switch is turned on.
2. The cruise control unit outputs the DTC(s) in order from small figure of the code.
3. The header of display of DTC(s) is assumed 4 sec., and it is 2 sec. between different kind of codes.
4. The DTC(s) are erased with the starter switch turned off.

DTC Display Format

1. When no DTCs are detected. (The unit : sec.)

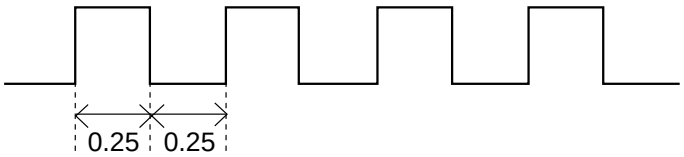

2. When two or more DTCs are detected. (The unit ; sec.)

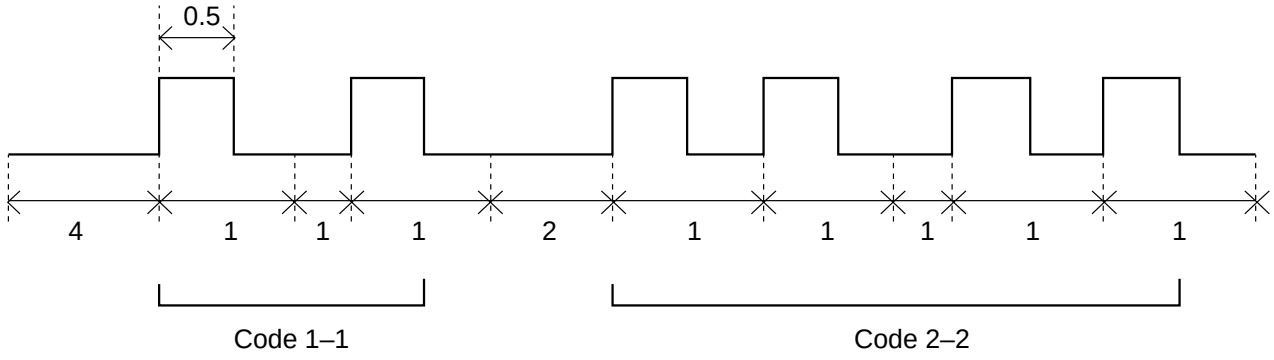

DTC 1–1 Motor System Short Circuit

STEP	ACTION	VALUE(S)	YES	NO
1	1. Turn the starter switch off. 2. Disconnect the actuator connector C–37. 3. Measure resistance between actuator side connector terminal 1 and 2. **NOTE: If control plate position is fully opened or fully closed, resistance can not be measured.** Is the resistance within range specified in the value(s) column?	More than 4.2Ω	Go to step 2	Replace the actuator
2	Measure continuity between harness side connector C–37 terminal 1 and the ground, terminal 2 and the ground, and terminal 1 and 2. Are the results same as specified in the value(s) columns?	No continuity	Replace the control unit	Repair or replace the harness

DTC 1–2 Clutch System Open or Short Circuit

STEP	ACTION	VALUE(S)	YES	NO
1	1. Turn the starter switch off. 2. Disconnect the actuator connector C–37. 3. Measure resistance between actuator side connector terminal 3 and 4. Is the resistance within range specified in the value(s) column?	34.7 – 42.4Ω	Go to step 2	Replace the actuator
2	1. Disconnect the brake switch connector B–13. 2. Check continuity between switch side connector terminal 2 and 3. Is there continuity between terminals?	–	Go to step 3	Adjust the switch or replace it
3	1. Reconnect the brake switch connector B–13. 2. Check continuity between harness side connector B–9 terminal 6 and connector C–37 terminal 3, connector C–37 terminal 4 and connector B–9 terminal 8. Is there continuity between terminals?	–	Go to step 4	Repair open circuit
4	Is there continuity between harness side connector C–37 terminal 3 and the ground, connector C–37 terminal 4 and the ground, connector B–9 terminal 6 and the ground? Are the results same as specified in the value(s) column?	No continuity	Replace the control unit	Repair short circuit

DTC 1–3 Mechanical Defect

STEP	ACTION	VALUE(S)	YES	NO
1	1. Turn the starter switch off. 2. Disconnect the actuator connector C–37. 3. Connect the battery positive terminal with the actuator side connector terminal 3 and the battery negative terminal with terminal 4. Does the control plate move by hand?	–	Replace the actuator	Go to step 2
2	Connect the battery positive terminal with the actuator side connector terminal 1 and 3, and the battery negative terminal with terminal 2 and 4. Does the control plate move to full open side?	–	Go to step 3	Replace the actuator
3	Connect the battery positive terminal with the actuator side connector terminal 2 and 3, and the battery negative terminal with terminal 1 and 4. Does the control plate move to full close side?	–	Go to step 4	Replace the actuator
4	Is there continuity between harness side connector C–37 terminal 1 and connector B–9 terminal 7, connector C–37 terminal 2 and connector B–9 terminal 15?	–	Replace the control unit	Repair or replace harness

DTC 1–4 Open Side of Motor System Continuously Energizing

STEP	ACTION	VALUE(S)	YES	NO
1	1. Turn the starter switch off. 2. Disconnect the actuator connector C–37. 3. Measure resistance between actuator side connector terminal 1 and 2. **NOTE: If control plate position is fully opened or fully closed, resistance can not be measured.** Is there resistance within range specified in the value(s) column?	More than 4.2Ω	Go to step 2	Replace the actuator
2	Is there continuity between harness side connector C–37 terminal 1 and connector B–9 terminal 7, harness side connector C–37 terminal 2 and connector B–9 terminal 15?	–	Replace the control unit	Repair or replace harness

Anti-lock Brake System (ABS)

General Description

The circuit consists of EHCU (Electronic Hydraulic Control Unit), wheel speed sensor, G–sensor, stoplight switch or brake switch (w/cruise control), backup light switch, transmission switch–1, 2, indicator light and data link connector.

EHCU controls brake fluid pressure applied to front and rear wheels to prevent wheels from locking by using speed sensor and G–sensor signals.

Based on wheel speed signals from speed sensor, EHCU activates solenoid valves incorporated into the control unit to increase, maintain or decrease brake fluid pressure.

Refer to Anti–lock Brake System in Brakes section.

Circuit Diagram (RHD)-1

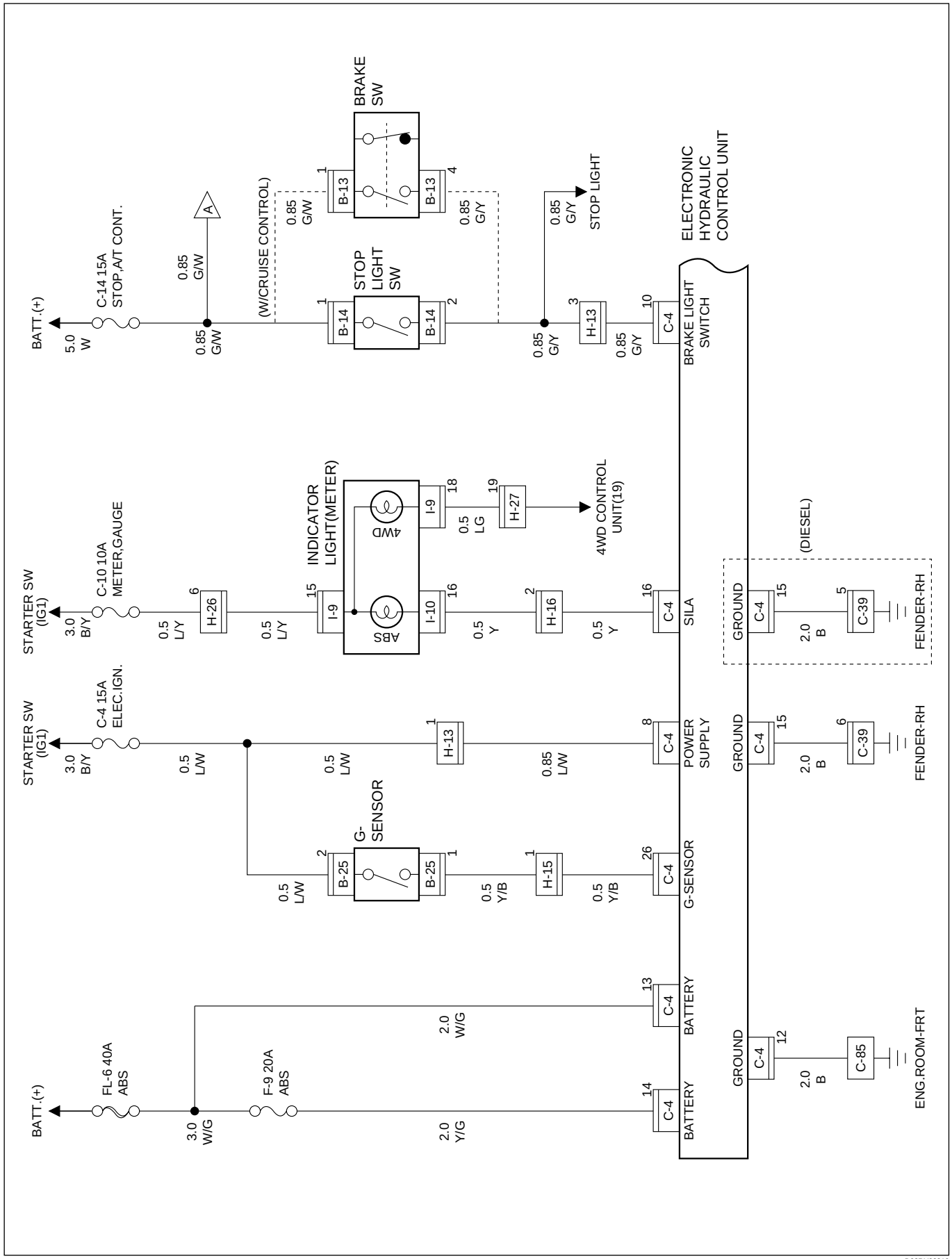

D08RY00219

Circuit Diagram (RHD 6V*1)-2

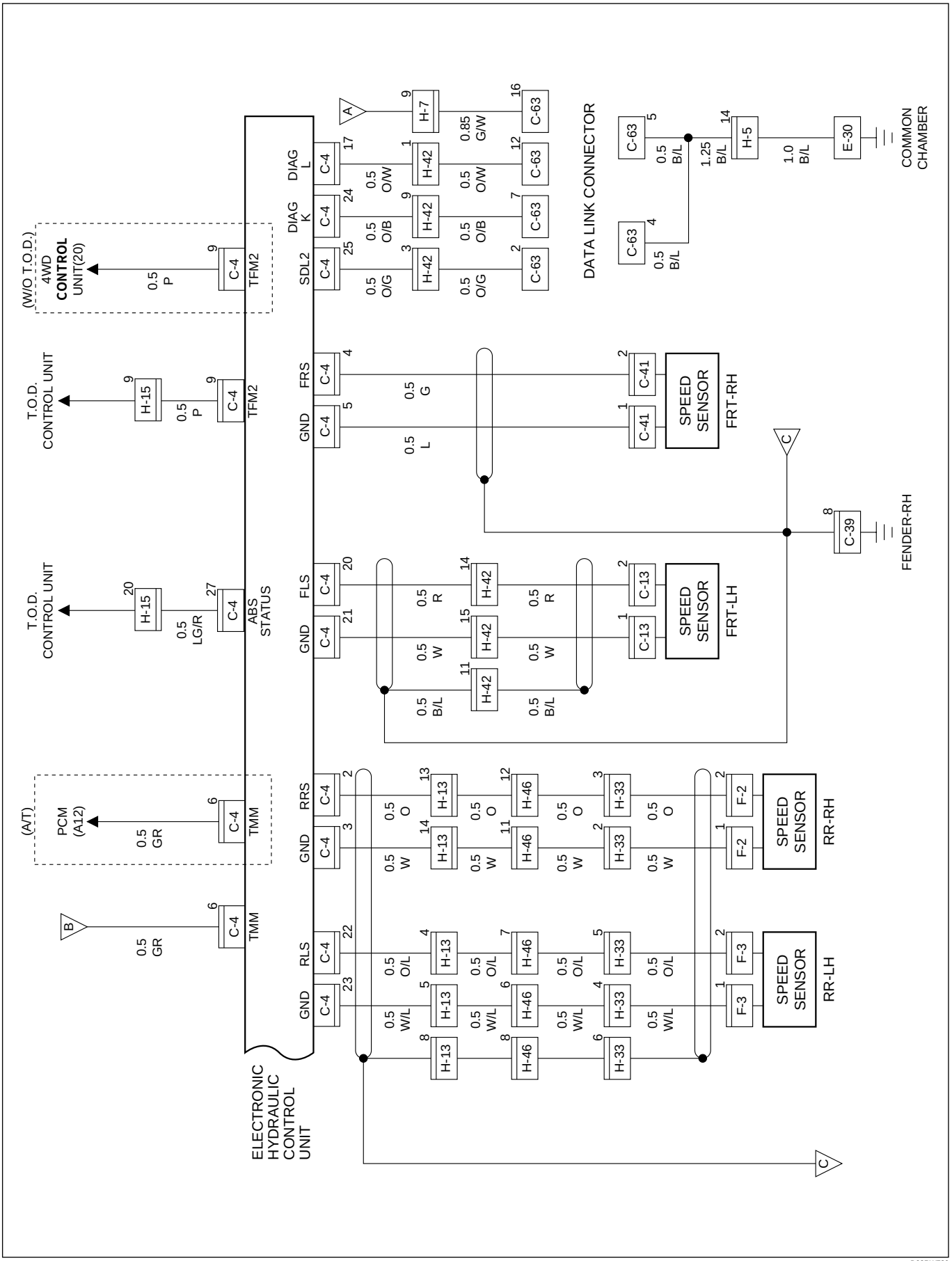

D08RW786

Circuit Diagram (RHD 4J**)-2

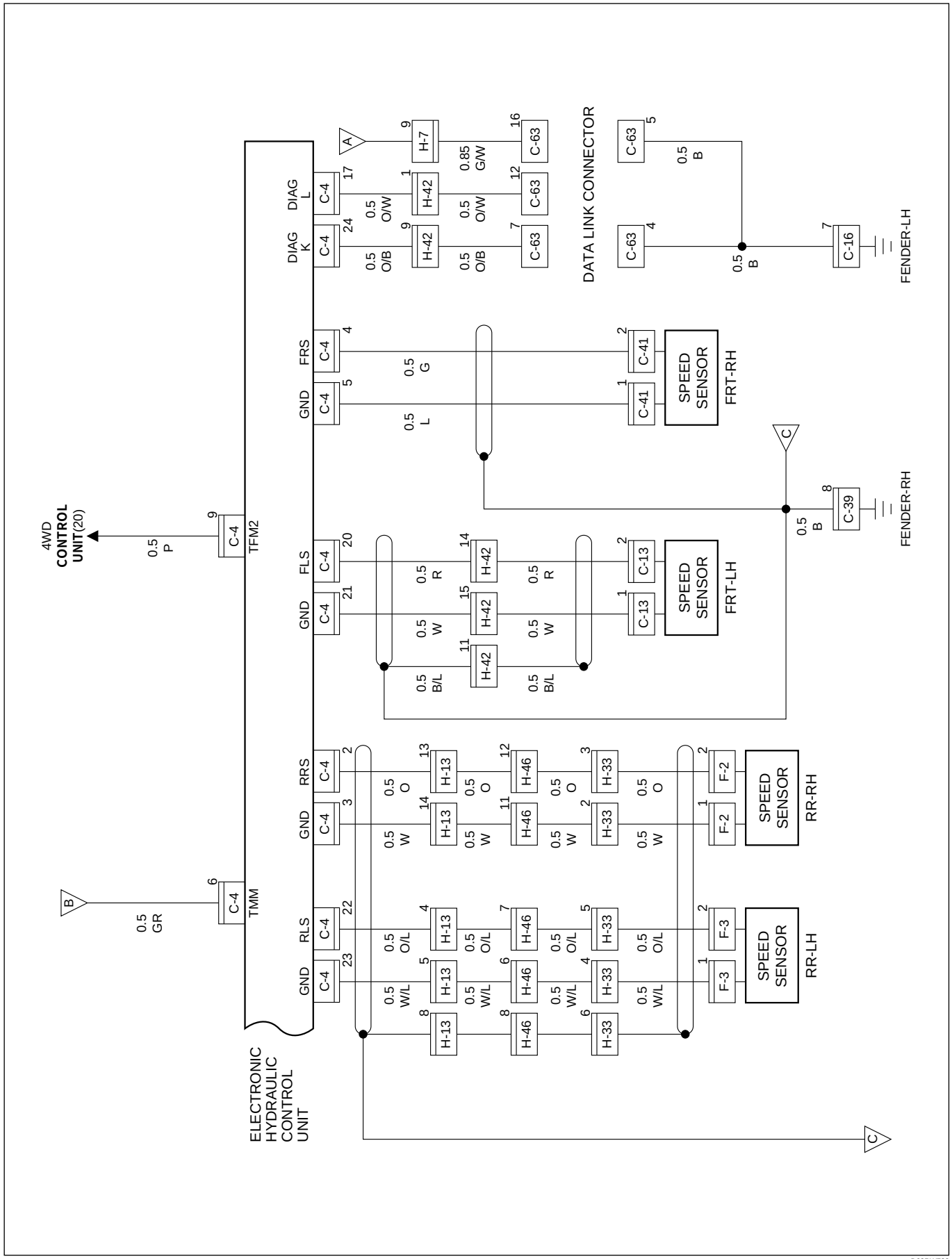

D08RW788

Circuit Diagram (RHD 6VD1)-3

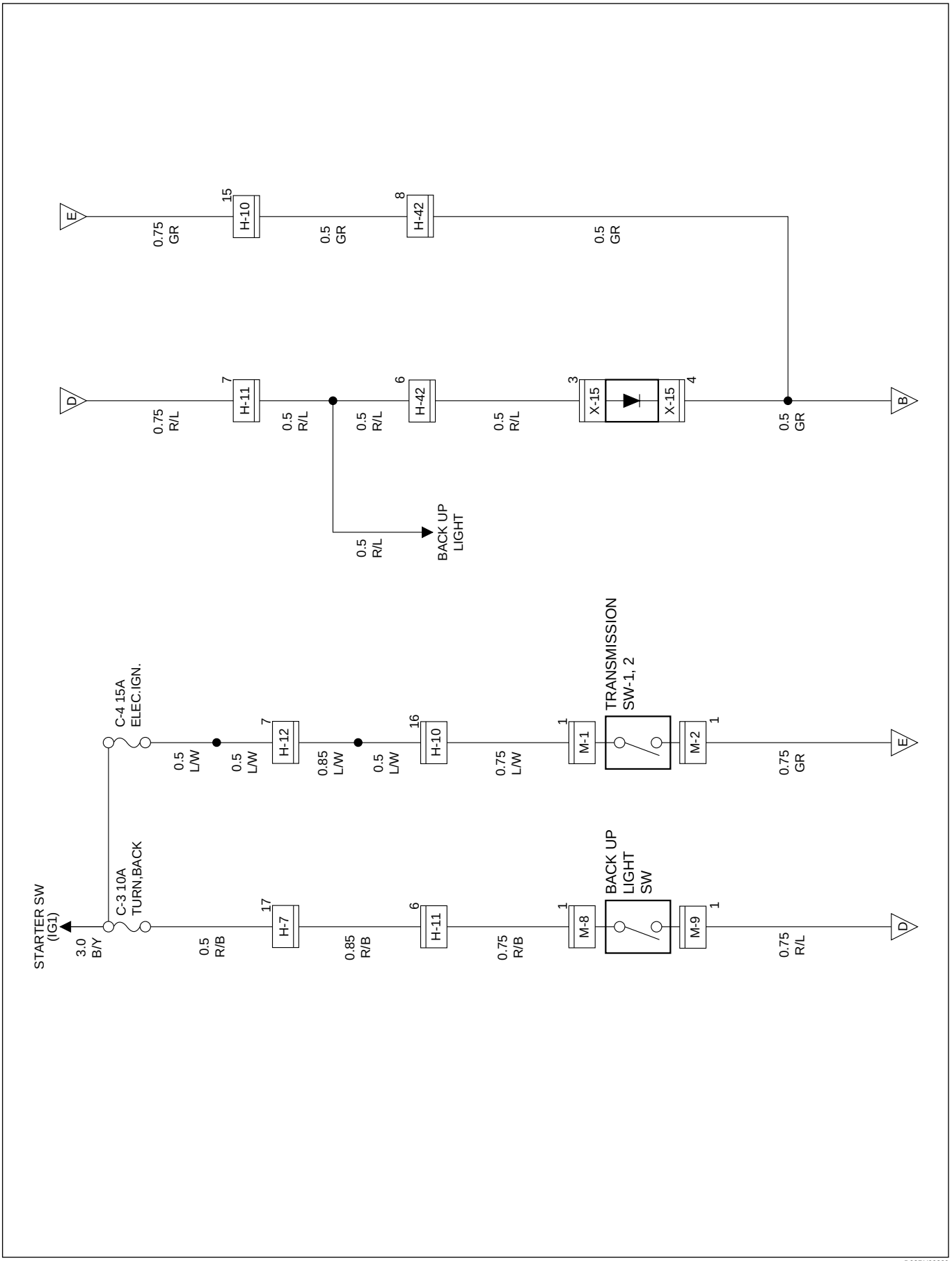

D08RY00220

Circuit Diagram (RHD 6VE1)-3

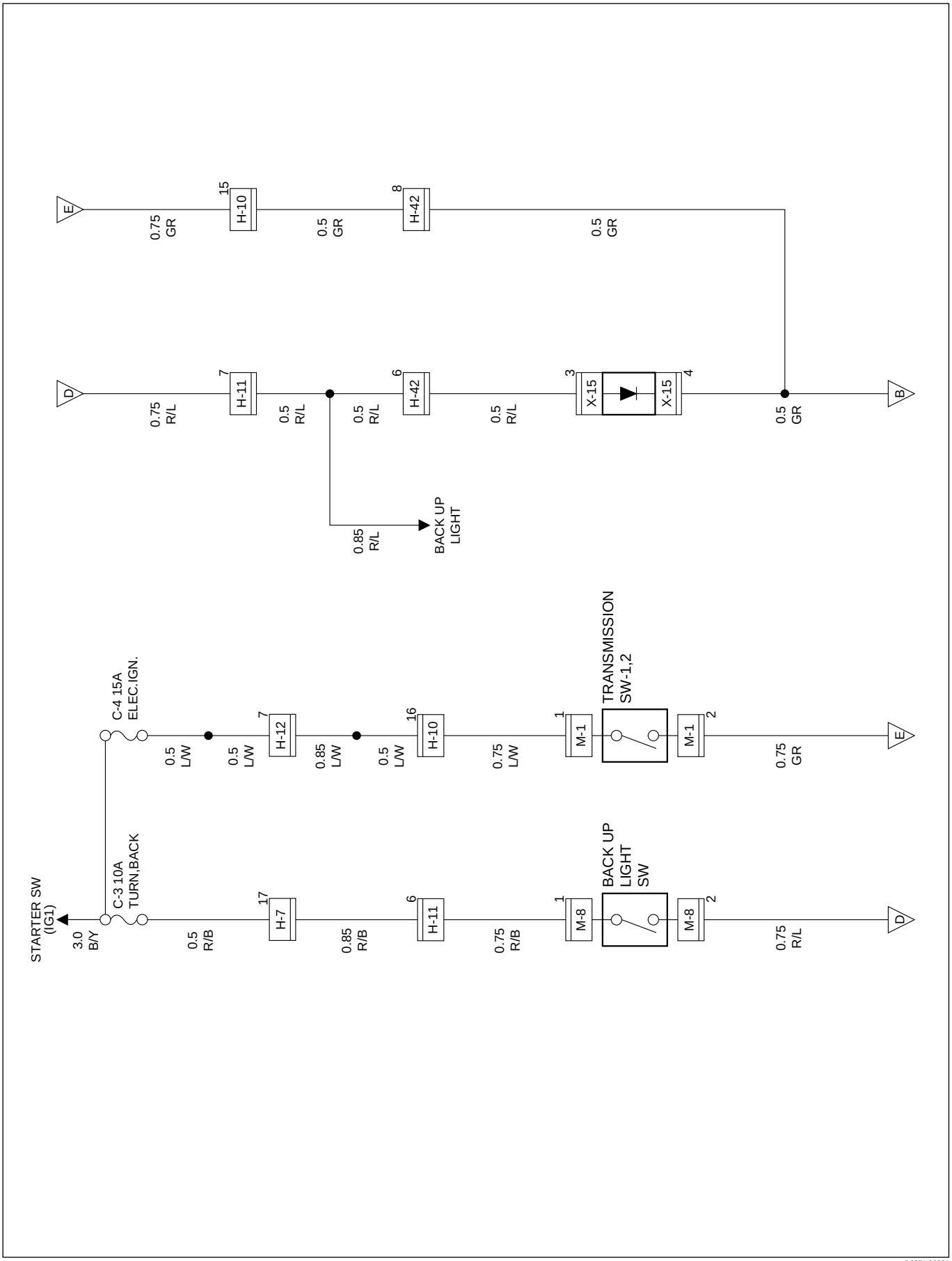

D08RY00221

Circuit Diagram (RHD 4J**)-3

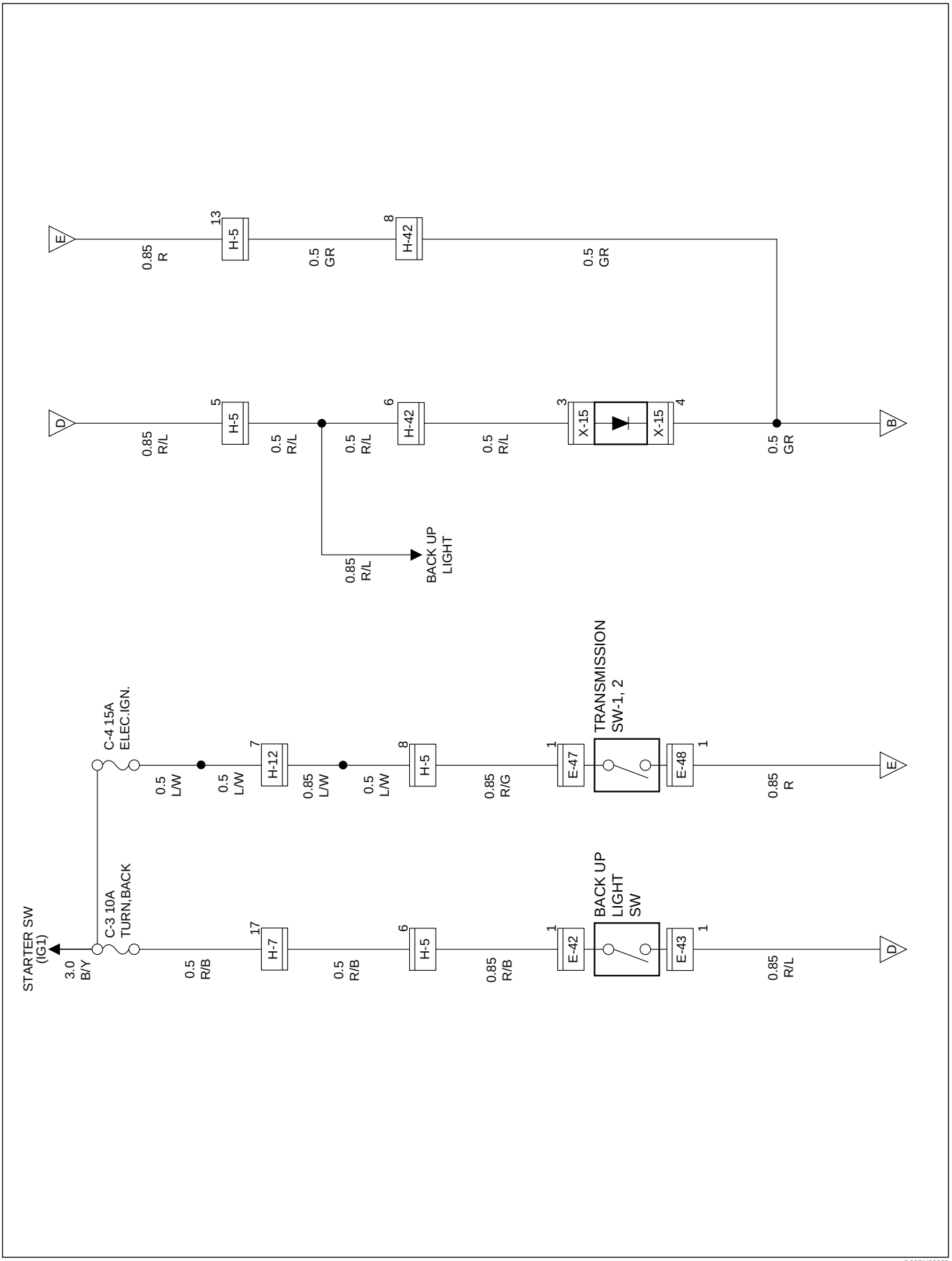

Parts Location (RHD)

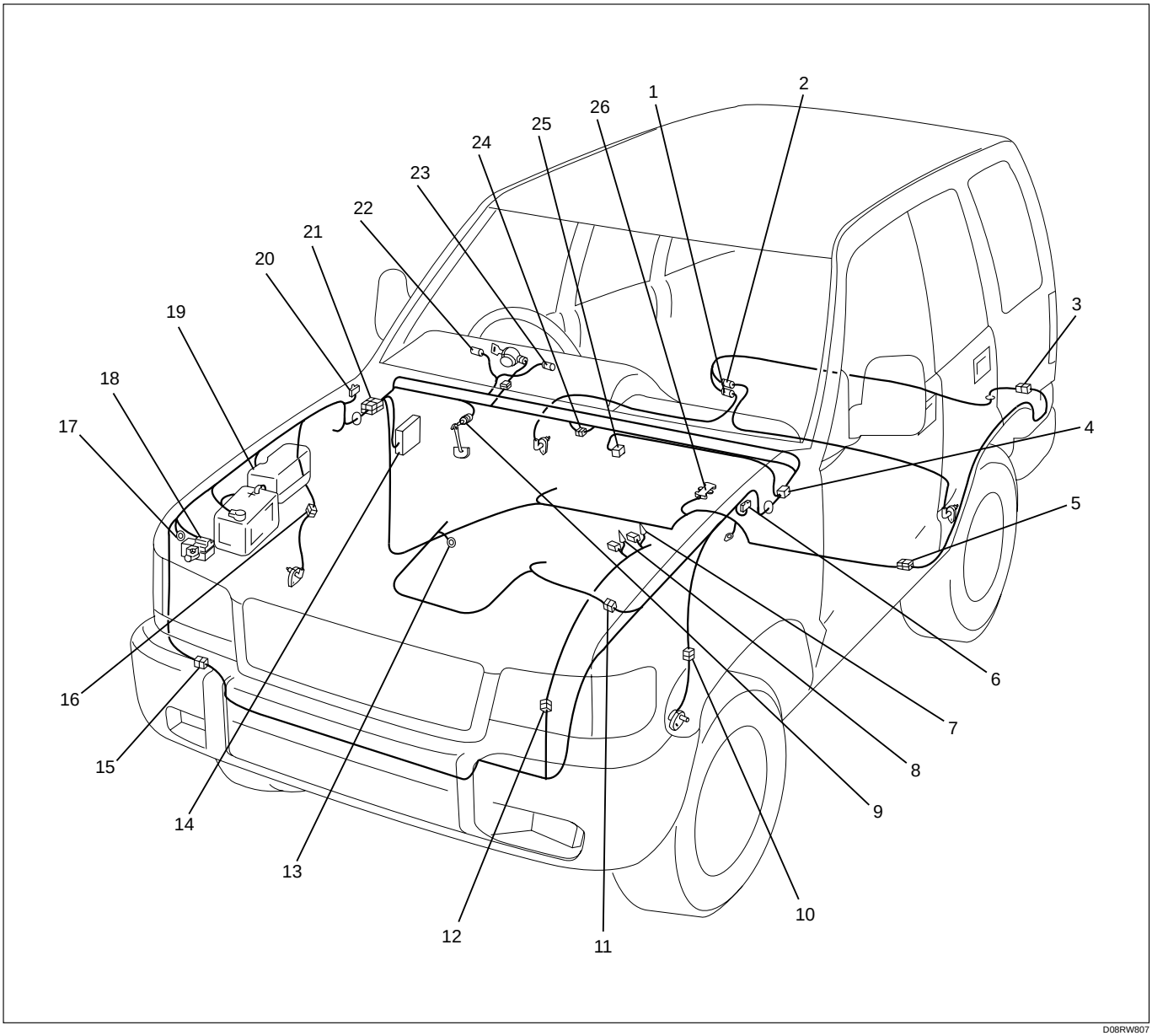

D08RW807

Legend

(1) F-2
(2) F-3
(3) H-33
(4) H-7
(5) H-46
(6) C-16
(7) E-42, E-43, M-8
(8) E-47, E-48, M-1
(9) B-13 or B-14
(10) C-13
(11) H-4, H-5, H-6
(12) H-10, H-11
(13) E-30
(14) Fuse Box
(15) H-42
(16) C-41
(17) C-85
(18) C-4 (EHCU)
(19) Relay and Fuse Box
(20) C-39
(21) H-13, H-15, H-16, H-26, H-27
(22) I-10
(23) I-9
(24) H-12
(25) C-63
(26) B-25

Circuit Diagram (LHD)-1

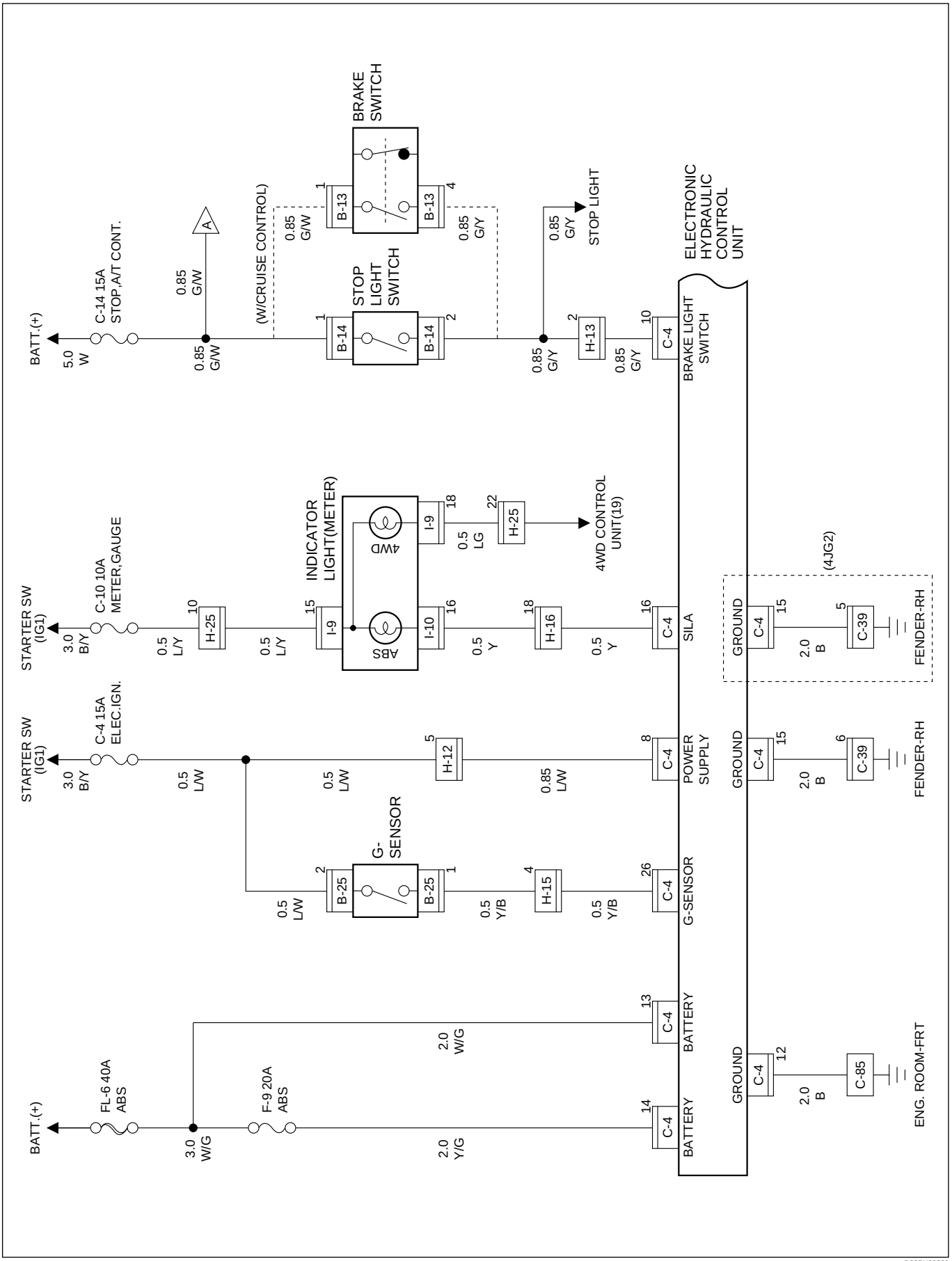

D08RY00223

Circuit Diagram (LHD 6VD1)-2

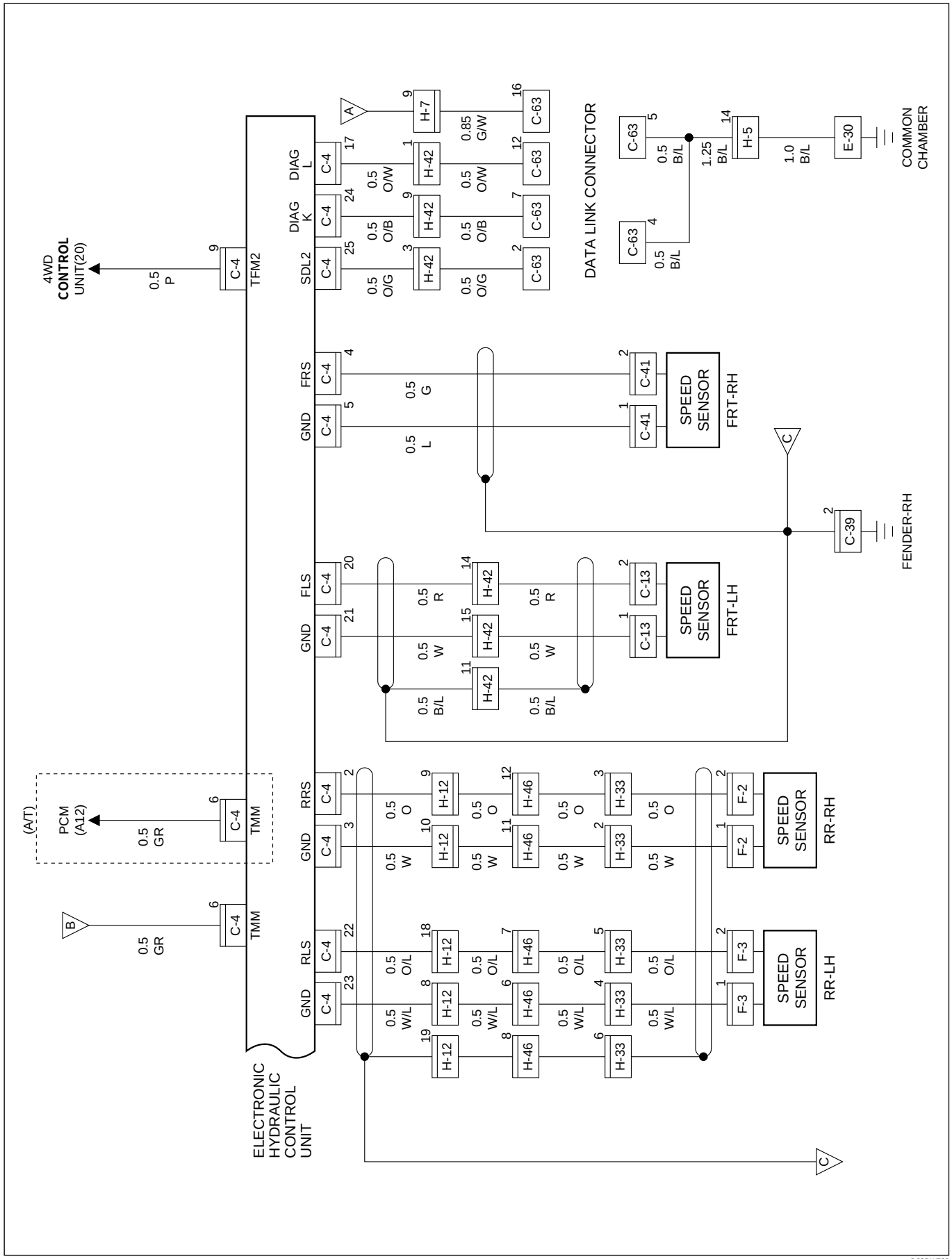

D08RW790

Circuit Diagram (LHD 4JG2)-2

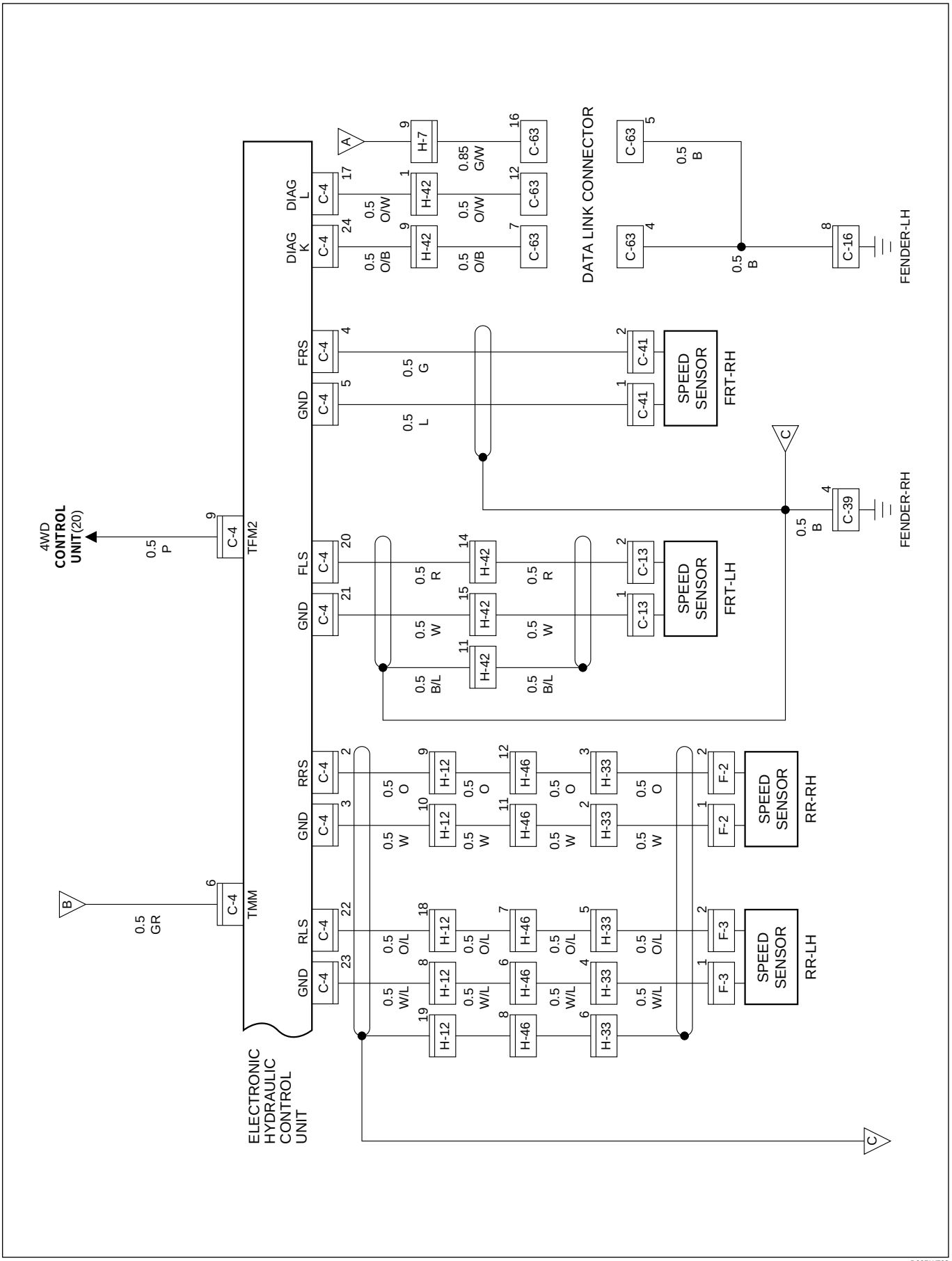

D08RW792

Circuit Diagram (LHD 6VD1)-3

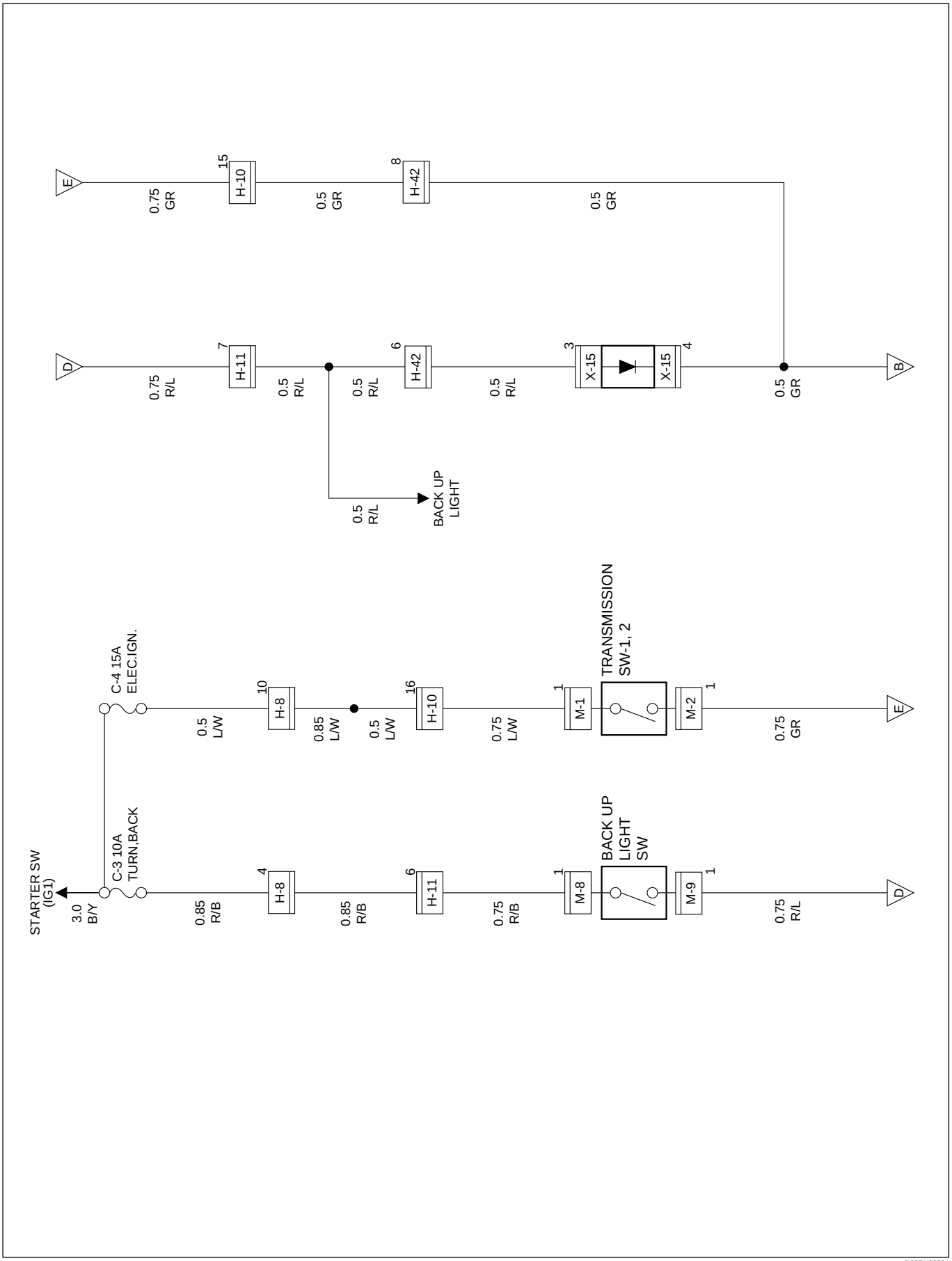

D08RY00224

Circuit Diagram (LHD 4JG2)-3

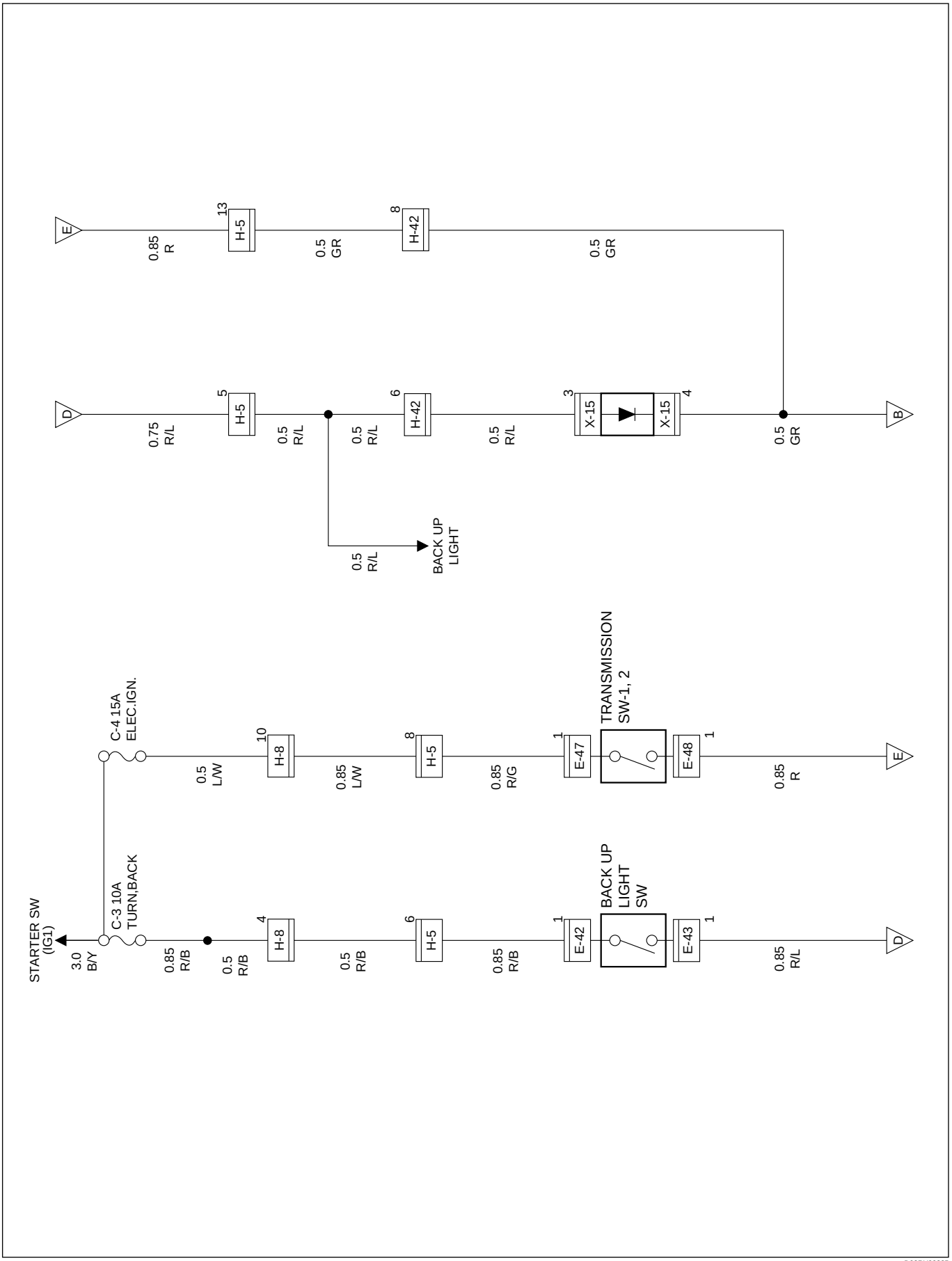

D08RY00225

Parts Location (LHD)

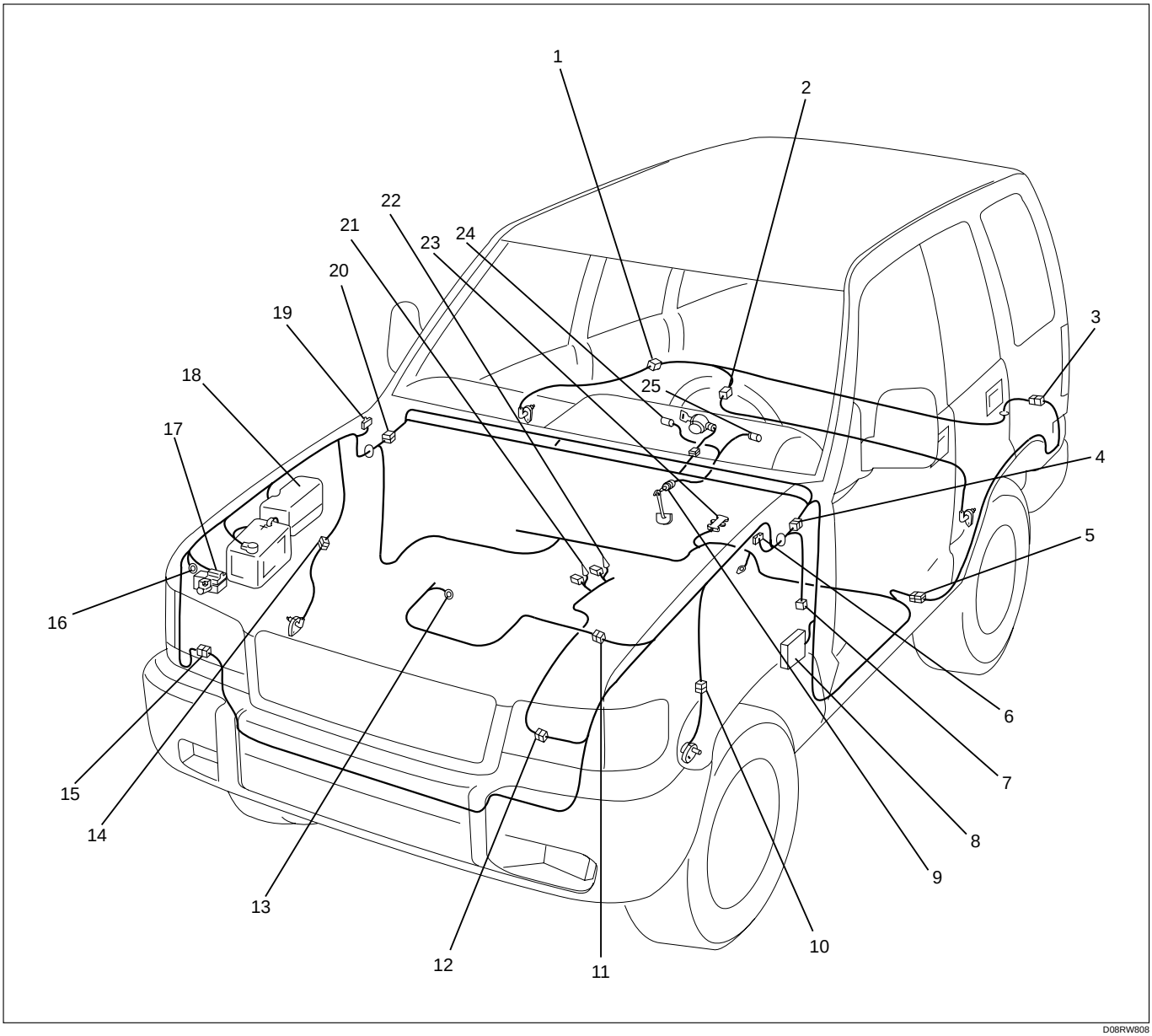

D08RW808

Legend

(1) F-2
(2) F-3
(3) H-33
(4) H-7, H-8, H-25
(5) H-46
(6) C-16
(7) C-63
(8) Fuse Box
(9) B-13 or B-14
(10) C-13
(11) H-5
(12) H-10, H-11
(13) E-30
(14) C-41
(15) H-42
(16) C-85
(17) C-4 (EHCU)
(18) Relay and Fuse Box
(19) C-39
(20) H-12, H-13, H-15, H-16
(21) E-47, E-48, M-1
(22) E-42, E-43, M-8
(23) B-25
(24) I-10
(25) I-9

A/T Shift Lock

General Description

The circuit consists of stoplight switch or brake switch and shift lock controller.
This system is designed not to allow shift lever to be shifted from “P” position to any other position without depressing brake pedal while starter switch is turned on.
The solenoid pin at the lower portion of shift lever retracts when brake pedal is not depressed, thus causing shift lever cam to be locked by link lever.

Circuit Diagram (RHD)

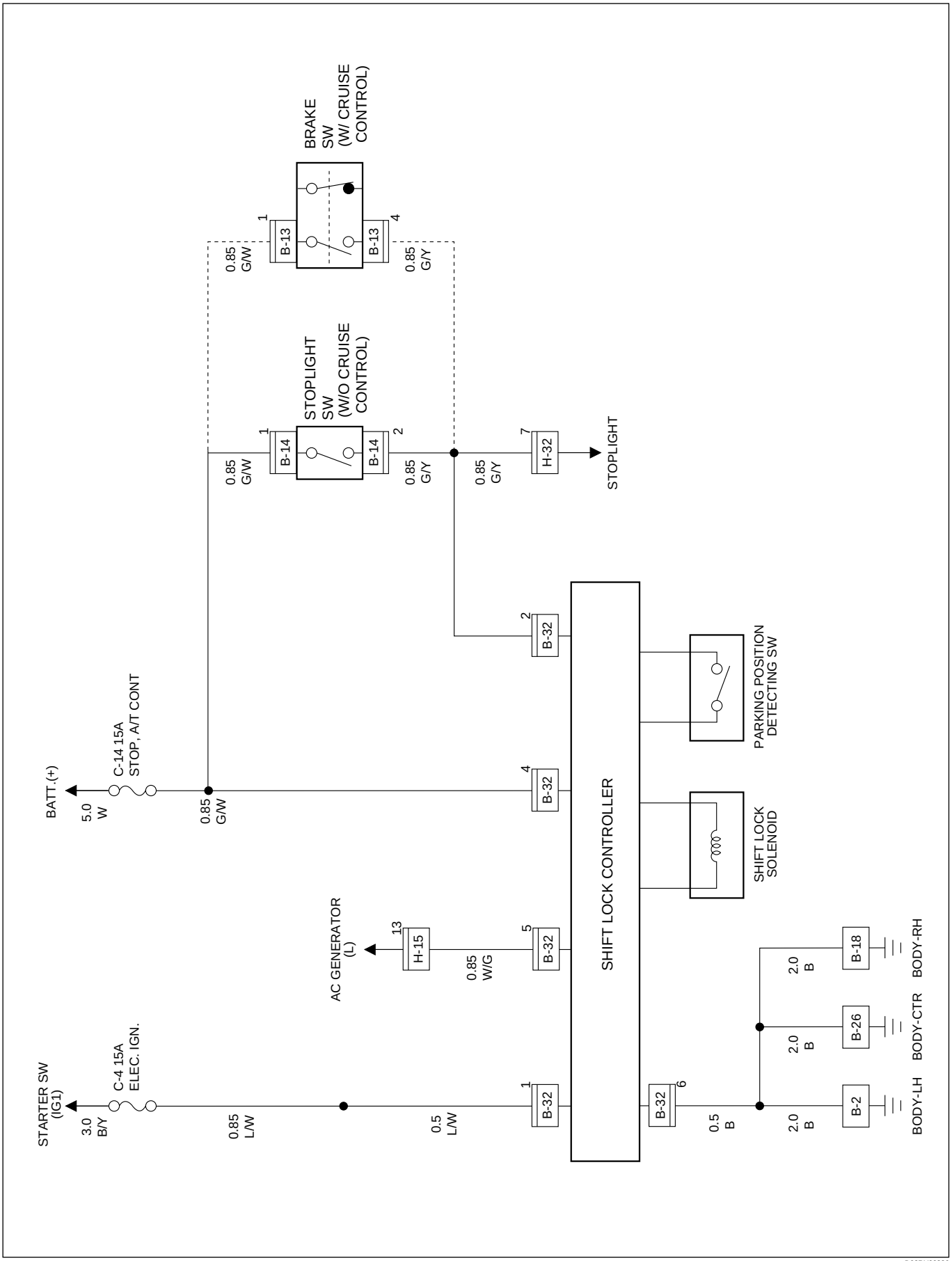

D08RY00226

Parts Location (RHD)

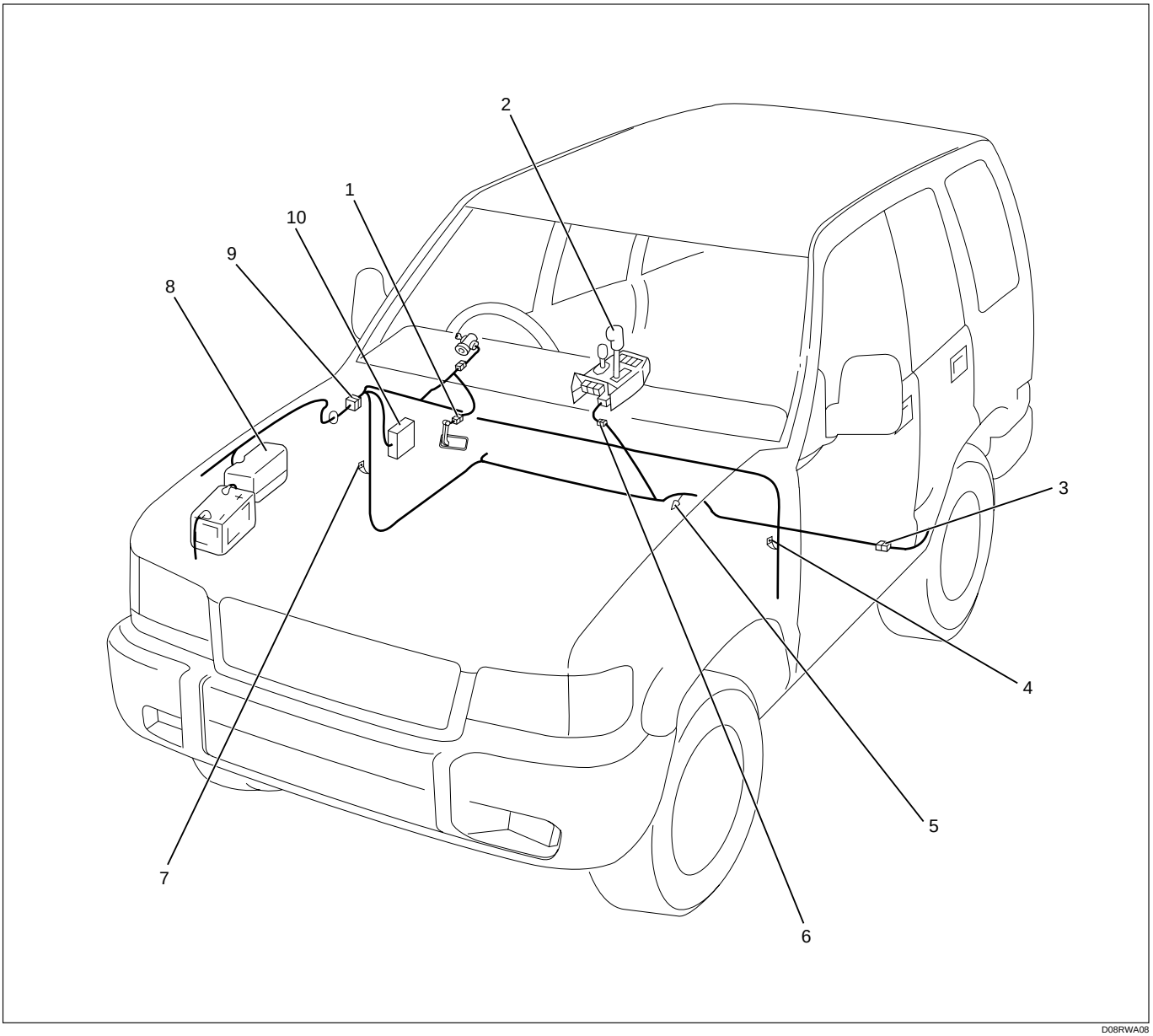

D08RWA08

Legend

(1) B-13 or B-14
(2) Shift Lever
(3) H-32
(4) B-2
(5) B-26
(6) Shift Lock Controller (B-32)
(7) B-18
(8) Relay and Fuse Box
(9) H-15
(10) Fuse Box

Circuit Diagram (LHD)

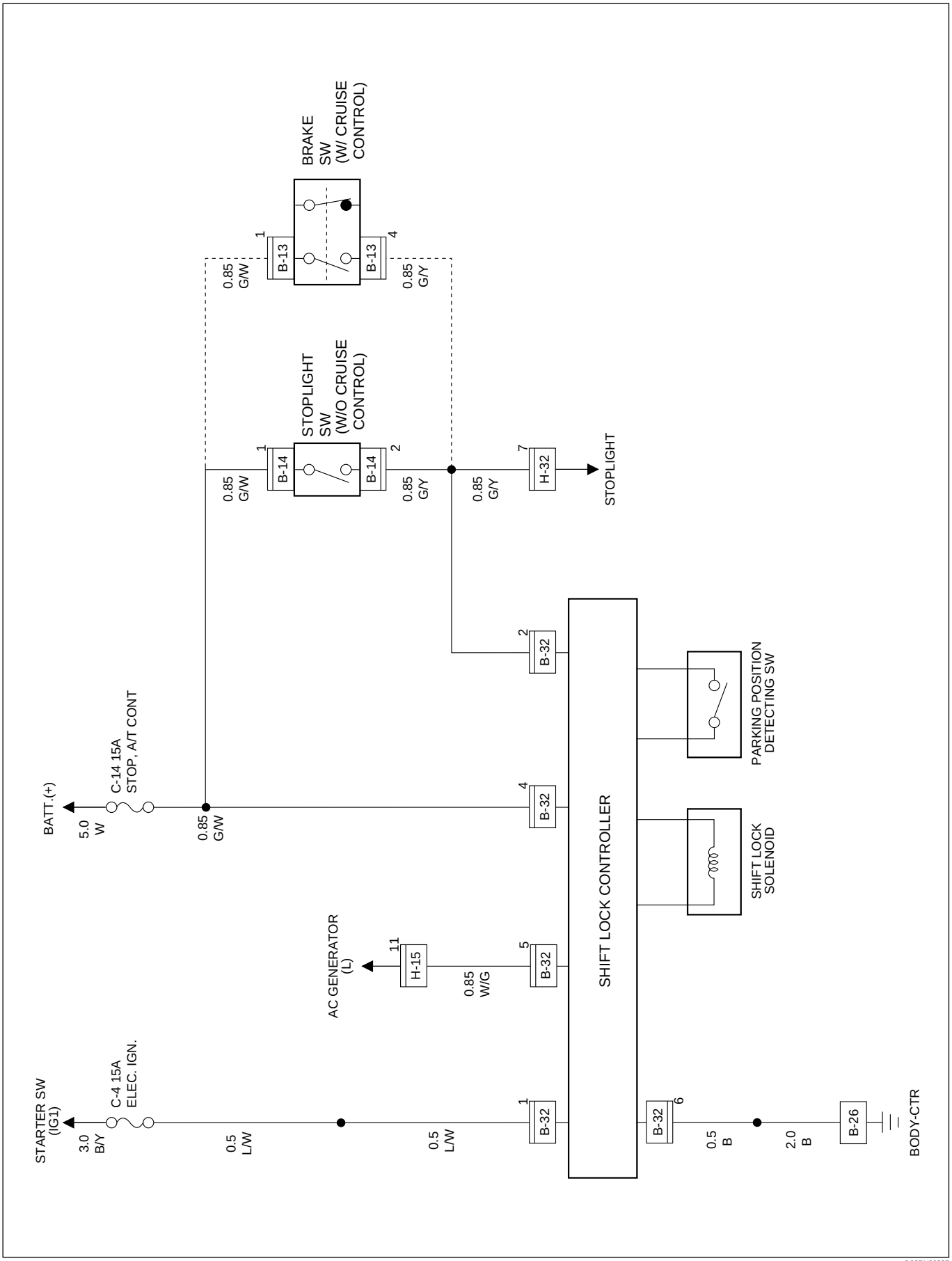

D08RY00227

Parts Location (LHD)

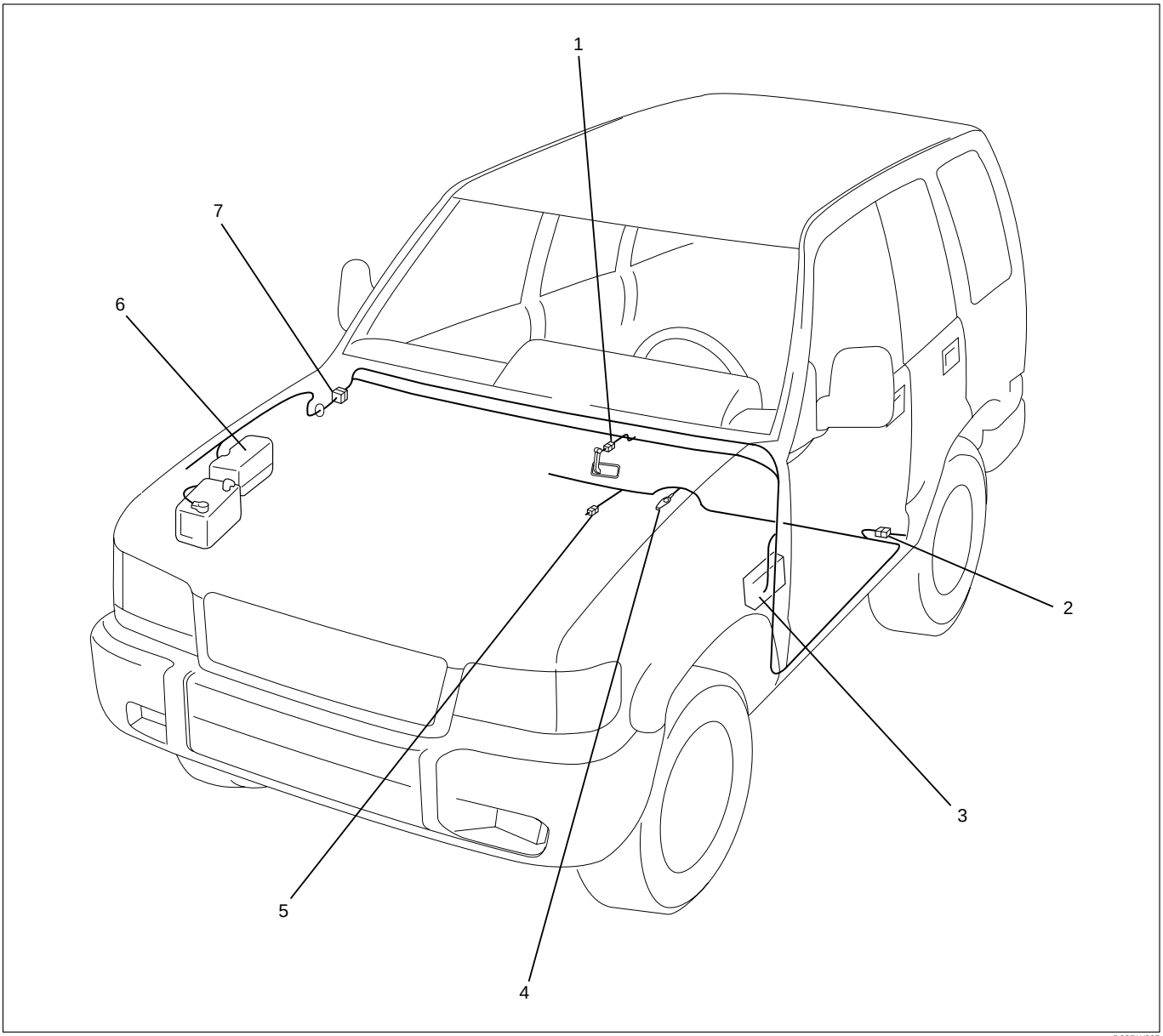

D08RW395

Legend

(1) B-13 or B-14
(2) H-32
(3) Fuse Box
(4) B-26
(5) B-32
(6) Relay and Fuse Box
(7) H-15

Windshield Wiper/Washer

General Description

The circuit consists of windshield wiper/washer switch, windshield wiper motor, windshield washer motor and alarm & relay control unit.
When windshield wiper/washer switch is turned on with starter switch on, battery voltage is applied to windshield wiper motor to activate wipers.
When windshield washer switch is turned on with starter switch on, battery voltage is applied to windshield washer motor.
Windshield washer motor squirts glass cleaning fluid while windshield washer switch is pushed and at the same time, alarm & relay control unit activates windshield wiper motor to wipe glass cleaning fluid at low speed.

Circuit Diagram (RHD)

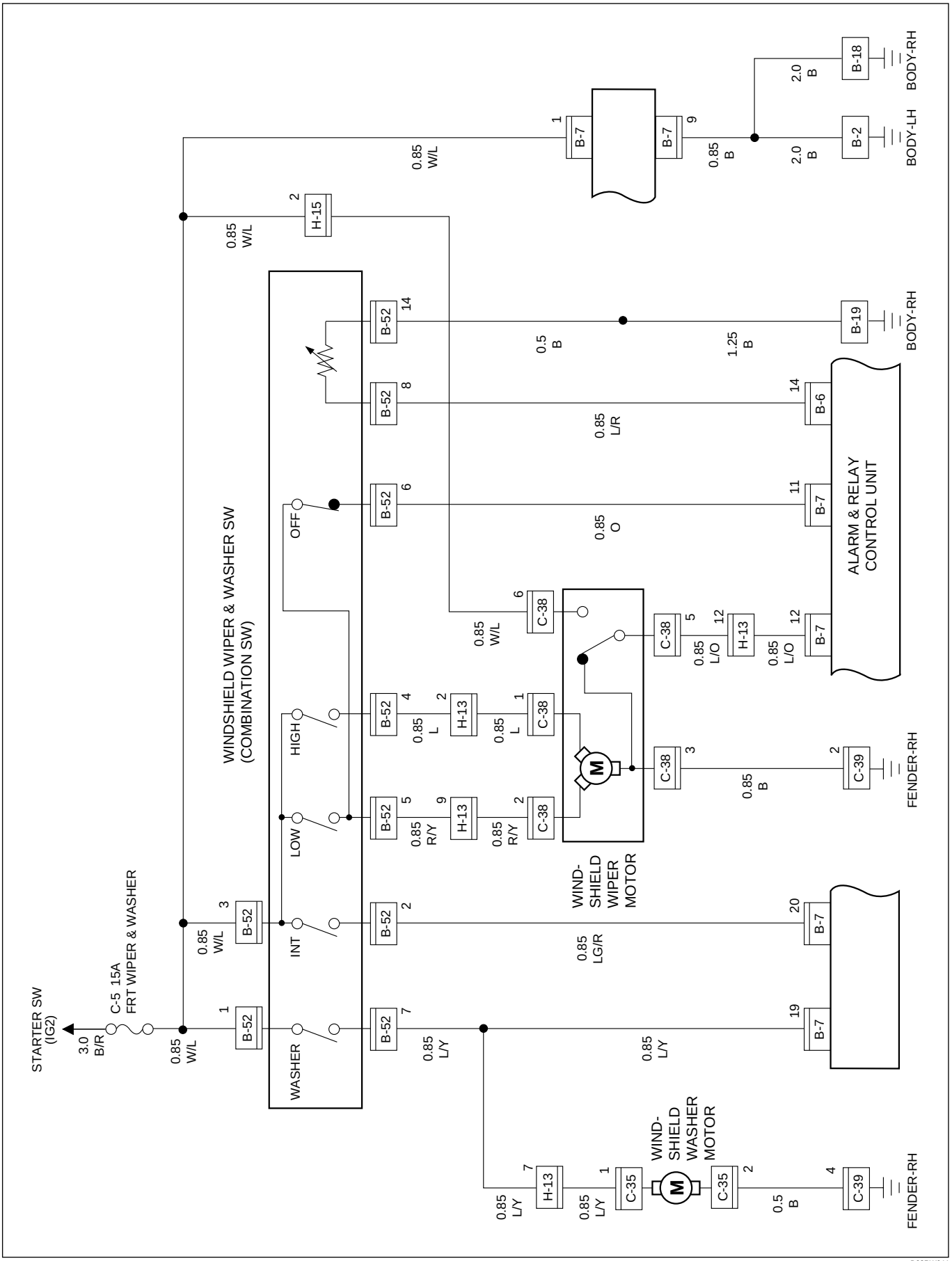

D08RW644

Parts Location (RHD)

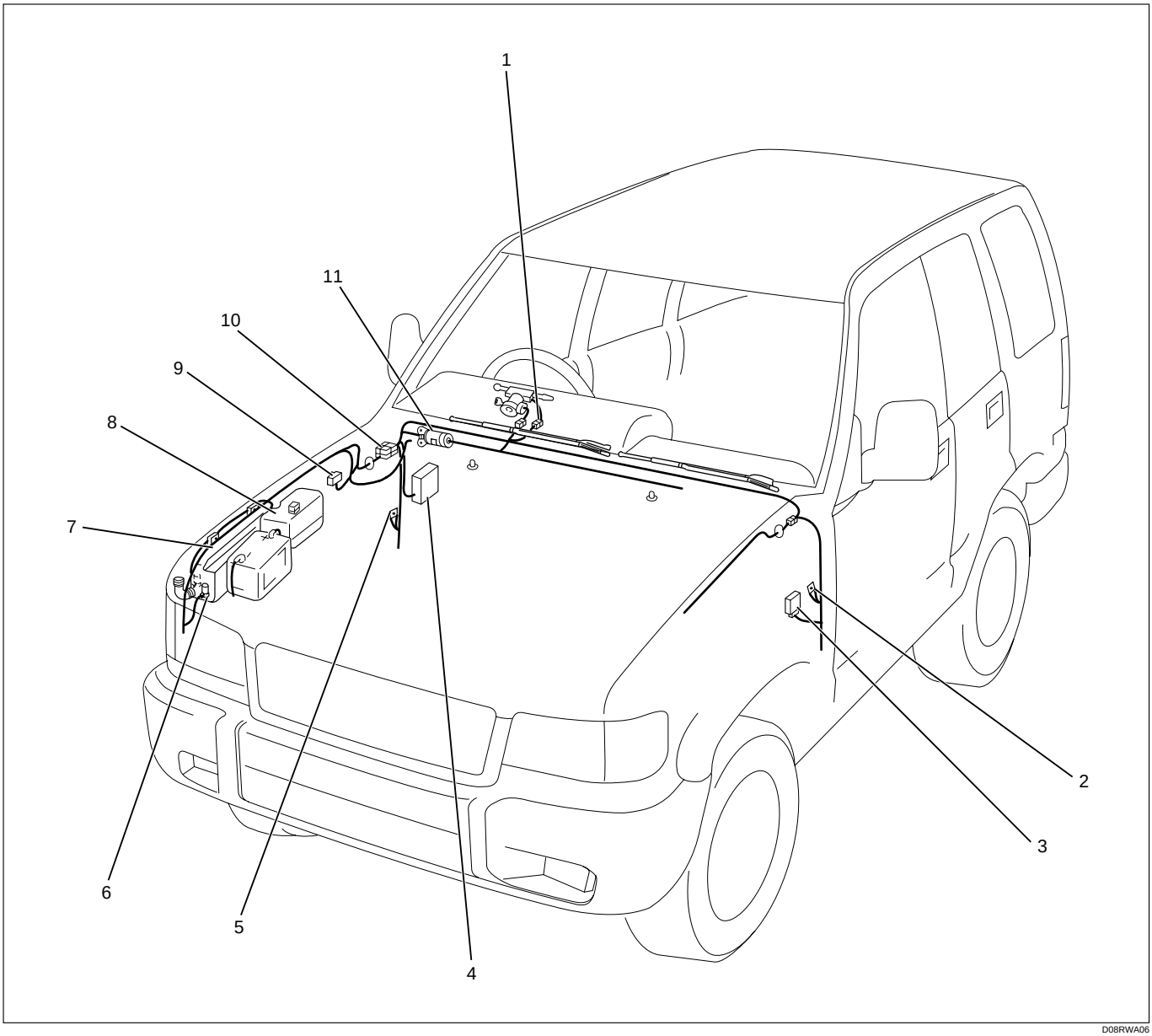

D08RWA06

Legend

(1) B-52
(2) B-2
(3) Alarm and Relay Control Unit (B-6, B-7)
(4) Fuse Box
(5) B-18, B-19
(6) FRT Wind Shild Washer Motor (C-35)
(7) Wind Shield Washer Tank
(8) Relay and Fuse Box
(9) C-39
(10) H-13, H-15
(11) Wind Shild Wiper Motor (C-38)

Circuit Diagram (LHD)

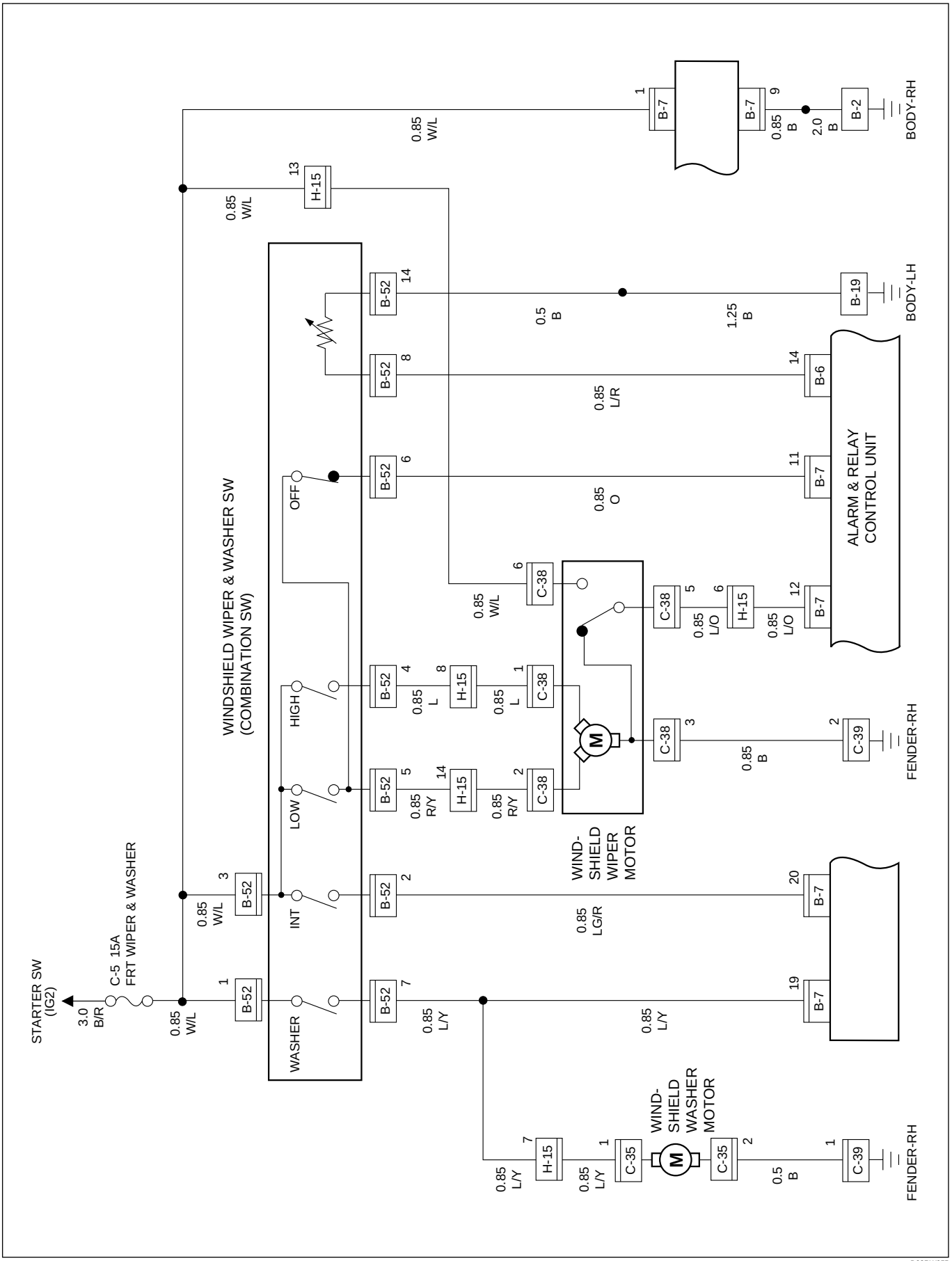

Parts Location (LHD)

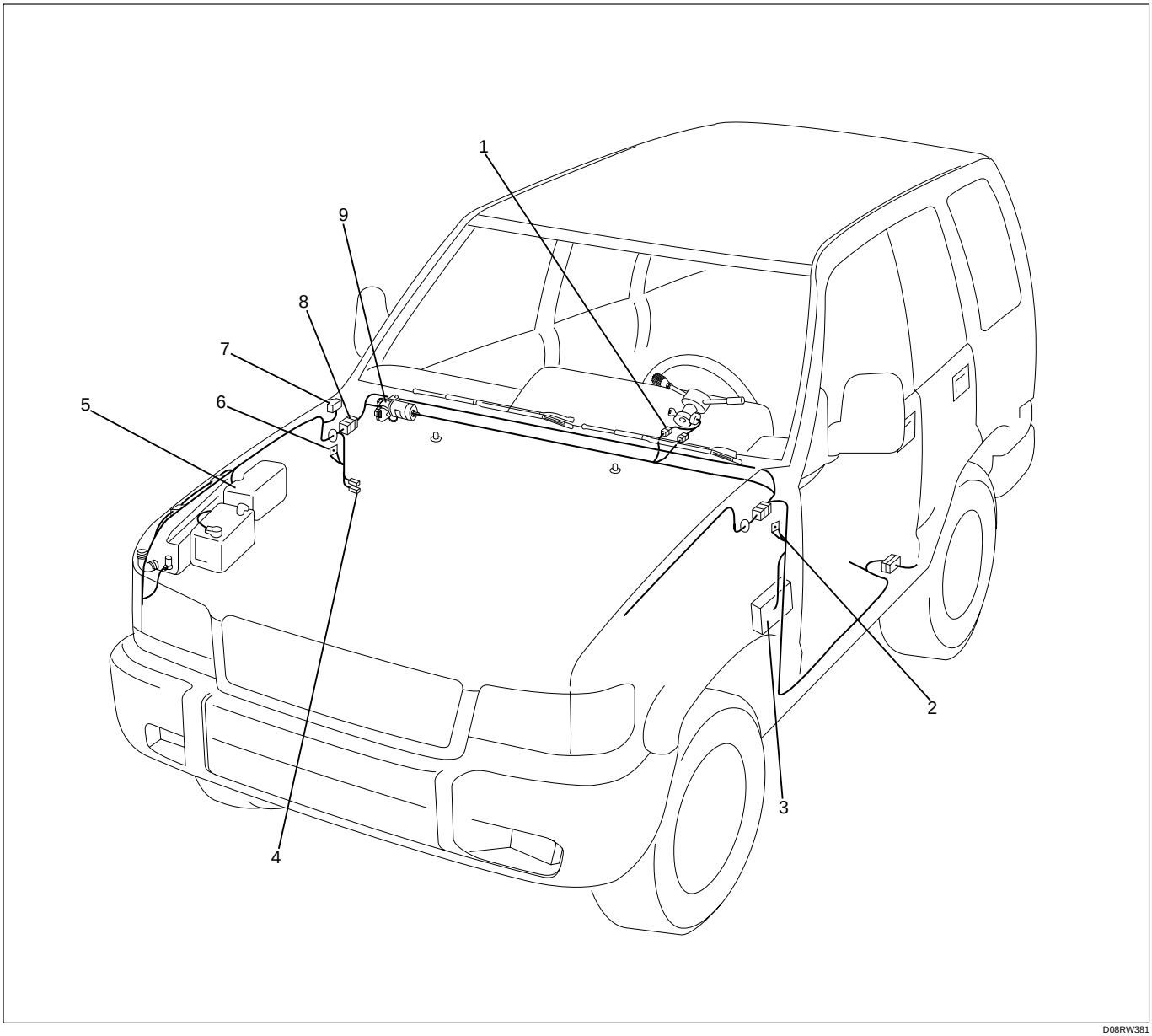

D08RW381

Legend

(1) B-52
(2) B-19
(3) Fuse Box
(4) B-6, B-7
(5) Relay and Fuse Box
(6) B-2
(7) C-39
(8) H-15
(9) C-38

Diagnosis

Quick Chart for Check Points

Trouble mode \ Check point	Fuse C-5 (15A)	Wiper & washer SW	Alarm & relay control unit	Wiper motor	Washer motor	Cable harness
1 Windshield wiper does not operate at any position	○	○		○		○
2 Windshield wiper does not operate at “INT” position		○	○			○
3 Intermittent interval does not change		○	○			○
4 Windshield wiper does not operate at “LO” position		○		○		○
5 Windshield wiper does not operate at “HI” position		○		○		○
6 Auto-stop function of the windshield wiper motor does not operate		○	○	○		○
7 Rotation of the front wiper motor does not stop		○		○		
8 Windshield washer motor does not operate	○	○			○	○

1 Windshield Wiper Does Not Operate At Any Switch Position

- IS FUSE C-5 (15A) NORMAL?

YES

- DISCONNECT THE CONNECTOR OF THE WINDSHIELD WIPER & WASHER SWITCH
- TURN THE STARTER SWITCH ON
- IS THERE ANY BATTERY VOLTAGE APPLIED BETWEEN THE SWITCH HARNESS SIDE CONNECTOR 3 B-52 AND THE GROUND?

NO

REPLACE THE FUSE

YES

- IS THE CONTINUITY IN THE WINDSHIELD WIPER & WASHER SWITCH NORMAL?

NO

REPAIR A POOR CONNECTION AT THE CONNECTORS OR AN OPEN CIRCUIT BETWEEN THE FUSE C-5 (15A) AND 3 B-52

YES

- IS 2 C-39 GROUNDED SECURELY?

NO

REPAIR OR REPLACE THE SWITCH

YES

- DISCONNECT THE CONNECTOR OF THE WINDSHIELD WIPER MOTOR
- WITH THE MOTOR CONNECTOR 2 C-38 CONNECTED TO THE BATTERY (+) TERMINAL, AND THE CONNECTOR 3 C-38 TO THE (–) TERMINAL, DOES THE MOTOR ROTATE AT A LOW SPEED?
- AND WITH THE CONNECTOR 1 C-38 CONNECTED TO THE (+) TERMINAL, DOES THE MOTOR ROTATE AT A HIGH SPEED?

NO

GROUND IT SECURELY

YES

REPAIR A POOR CONNECTION AT THE CONNECTORS OR AN OPEN CIRCUIT BETWEEN 3 C-38 AND THE GROUND

NO

REPAIR OR REPLACE THE WINDSHIELD WIPER MOTOR

2 Windshield Wiper Does Not Operate At “INT” Position

- DISCONNECT THE CONNECTORS OF THE WINDSHIELD WIPER & WASHER SWITCH
- SET THE SWITCH AT THE “INT” POSITION
- IS THERE CONTINUITY BETWEEN THE SWITCH CONNECTOR TERMINALS 3 B-52 AND 2 B-52 ?

YES

- IS B-19 GROUNDED SECURELY?

NO

REPAIR OR REPLACE THE WINDSHIELD WIPER & WASHER SWITCH

YES

- IS THERE CONTINUITY BETWEEN THE WINDSHIELD WIPER & WASHER SWITCH HARNESS SIDE CONNECTOR TERMINALS 14 B-52 AND THE GROUND?

NO

GROUND IT SECURELY

YES

- DISCONNECT THE CONNECTOR OF THE ALARM & RELAY CONTROL UNIT
- SET THE WINDSHIELD WIPER & WASHER SWITCH AT THE "INT" POSITION AND TURN THE STARTER SWITCH ON
- IS THE BATTERY VOLTAGE APPLIED BETWEEN 20 B-7 AND THE GROUND?

NO

REPAIR A POOR CONNECTION AT THE CONNECTORS OR AN OPEN CIRCUIT BETWEEN 14 B-52 AND B-19

YES

- IS THERE CONTINUITY BETWEEN 14 B-6 AND 8 B-52 ?

NO

REPAIR A POOR CONNECTION AT THE CONNECTORS OR AN OPEN CIRCUIT BETWEEN 2 B-52 AND 20 B-7

YES

REPLACE THE ALARM & RELAY CONTROL UNIT

NO

REPAIR A POOR CONNECTION AT THE CONNECTORS OR AN OPEN CIRCUIT BETWEEN 14 B-6 AND 8 B-52

3 Intermittent Interval Does Not Change

- DISCONNECT THE CONNECTOR OF THE WINDSHIELD WIPER & WASHER SWITCH
- WHEN THE INTERMITTENT KNOB IS TURNED, DOES THE RESISTANCE VALUE BETWEEN THE SWITCH CONNECTOR TERMINALS 8 B-52 AND 14 B-52 VARY BETWEEN 0Ω - 2KΩ?

YES

- IS THERE SHORT CIRCUIT BETWEEN 14 B-6 AND 8 B-52 ?

YES

REPAIR A SHORT CIRCUIT

NO

REPLACE THE ALARM & RELAY CONTROL UNIT

NO

REPAIR OR REPLACE THE SWITCH

4 Windshield Wiper Does Not Operate At “LO” Position

- DISCONNECT THE CONNECTORS OF THE WINDSHIELD WIPER & WASHER SWITCH
- TURN THE STARTER SWITCH ON
- SHORT CIRCUIT THE WINDSHIELD WIPER & WASHER SWITCH HARNESS SIDE CONNECTOR TERMINALS 3 B-52 - 5 B-52 AND CHECK TO SEE IF THE WINDSHIELD WIPER MOTOR ROTATES AT A LOW SPEED.

REPAIR OR REPLACE THE WIPER & WASHER SWITCH

5 Windshield Wiper Does Not Operate At “HI” Position

- DISCONNECT THE CONNECTOR OF THE WINDSHIELD WIPER & WASHER SWITCH
- WITH THE SWITCH SET AT “HI” POSITION, IS THERE CONTINUITY BETWEEN THE SWITCH CONNECTOR TERMINALS 3 B-52 AND 4 B-52 ?

YES

- DISCONNECT THE CONNECTOR OF THE WINDSHIELD WIPER MOTOR
- CONNECT THE MOTOR CONNECTOR 1 C-38 TO THE BATTERY (+) TERMINAL, AND 3 C-38 TO THE BATTERY (–) TERMINAL
- DOES THE MOTOR ROTATE AT A HIGH SPEED?

YES

REPAIR A POOR CONNECTION AT THE CONNECTORS OR AN OPEN CIRCUIT BETWEEN 4 B-52 AND 1 C-38

NO

REPAIR OR REPLACE THE WINDSHIELD WIPER MOTOR

NO

REPAIR OR REPLACE THE WINDSHIELD WIPER & WASHER SWITCH

6 Auto-Stop Function of The Windshield Wiper Motor Does Not Operate

- DISCONNECT THE CONNECTOR OF THE WINDSHIELD WIPER & WASHER SWITCH
- WITH THE SWITCH SET AT “OFF” POSITION, IS THERE CONTINUITY BETWEEN THE SWITCH CONNECTOR TERMINALS 5 B-52 AND 6 B-52 ?

YES

- DISCONNECT THE CONNECTOR OF THE WINDSHIELD WIPER MOTOR
- CONNECT THE MOTOR CONNECTOR 2 C-38 TO THE BATTERY (+) TERMINAL AND 3 C-38 TO THE (–) TERMINAL, AND THEN CHANGE THE CONNECTION OF THE BATTERY (+) TERMINAL TO THE CONNECTOR 6 C-38 WHILE THE MOTOR ROTATING AT A LOW SPEED
- WHEN CONNECTING THE CONNECTOR TERMINALS 2 C-38 AND 5 C-38 IN THIS CONDITION, DOES THE MOTOR STOP AT AUTO-STOP POSITION?

NO

REPAIR OR REPLACE THE WINDSHIELD WIPER & WASHER SWITCH

YES

- TURN THE STARTER SWITCH ON
- IS THERE ANY BATTERY VOLTAGE APPLIED BETWEEN THE WINDSHIELD WIPER MOTOR HARNESS SIDE CONNECTOR TERMINAL 6 C-38 AND GROUND?

NO

REPAIR OR REPLACE THE WINDSHIELD WIPER MOTOR

YES

- DISCONNECT THE CONNECTOR OF THE ALARM & RELAY CONTROL UNIT
- IS THERE CONTINUITY BETWEEN THE HARNESS SIDE CONNECTOR 12 B-7 AND THE WINDSHIELD WIPER MOTOR HARNESS SIDE CONNECTOR 5 C-38 ?

NO

REPAIR A POOR CONNECTION AT THE CONNECTORS OR AN OPEN CIRCUIT BETWEEN THE FUSE C-5 (15A) AND 6 C-38

YES

REPLACE THE ALARM & RELAY CONTROL UNIT

NO

REPAIR A POOR CONNECTION AT THE CONNECTORS OR AN OPEN CIRCUIT BETWEEN 5 C-38 AND 12 B-7

7 Rotation of The Windshield Wiper Motor Does Not Stop

- IS THE CONTINUITY IN THE WINDSHIELD WIPER & WASHER SWITCH NORMAL?

YES

REPAIR OR REPLACE THE WINDSHIELD WIPER MOTOR

NO

REPAIR OR REPLACE THE WINDSHIELD WIPER & WASHER SWITCH

8 Windshield Washer Motor Does Not Operate

- IS FUSE C-5 (15A) NORMAL?

YES

- DISCONNECT THE CONNECTOR OF THE WINDSHIELD WIPER & WASHER SWITCH
- WITH THE WASHER BUTTON DEPRESSED, IS THERE CONTINUITY BETWEEN THE SWITCH SIDE CONNECTOR TERMINALS 1 B-52 AND 7 B-52 ?

YES

- TURN THE STARTER SWITCH ON
- IS THE BATTERY VOLTAGE APPLIED BETWEEN THE WINDSHIELD WIPER & WASHER SWITCH HARNESS SIDE CONNECTOR TERMINAL 1 B-52 AND THE GROUND?

YES

- DISCONNECT THE CONNECTOR OF THE WINDSHIELD WIPER WASHER MOTOR
- TURN THE STARTER SWITCH ON
- WITH THE WASHER BUTTON OF THE WINDSHIELD WIPER & WASHER SWITCH DEPRESSED, IS THE BATTERY VOLTAGE APPLIED BETWEEN THE WASHER MOTOR HARNESS SIDE CONNECTOR TERMINAL 1 C-35 AND THE GROUND?

YES

- IS 4 I-39 GROUNDED SECURELY?

YES

- CONNECT THE MOTOR SIDE CONNECTOR 1 C-35 OF THE WINDSHIELD WASHER MOTOR TO THE BATTERY (+) TERMINAL, AND THE CONNECTOR 2 C-35 TO THE (–) TERMINAL
- DOES THE MOTOR ROTATE?

YES

REPAIR A POOR CONNECTION AT THE CONNECTORS OR AN OPEN CIRCUIT BETWEEN 2 C-35 AND THE GROUND

NO

REPLACE THE WINDSHIELD WASHER MOTOR

NO

GROUND IT SECURELY

NO

REPAIR A POOR CONNECTION AT THE CONNECTORS OR AN OPEN CIRCUIT BETWEEN 7 B-52 AND 1 C-35

NO

REPAIR A POOR CONNECTION AT THE CONNECTORS OR AN OPEN CIRCUIT BETWEEN FUSE C-5 (15A) AND 1 B-52

NO

REPAIR OR REPLACE THE WINDSHIELD WIPER & WASHER SWITCH

NO

REPLACE FUSE C-5 (15A)

Rear Wiper/Washer

General Description

The circuit consists of rear wiper/washer switch, alarm & relay control unit, rear wiper motor and rear washer motor.

When rear wiper switch on rear wiper/washer switch is depressed, battery voltage is applied to rear wiper motor through alarm & relay control unit and activates rear wiper motor.

When rear washer switch on rear wiper/washer switch is depressed, battery voltage is applied to rear washer motor and activates rear washer motor. At the same time, the current as an input signal for activating rear wiper motor flows to alarm & relay control unit, then alarm & relay control unit activates rear wiper motor to wipe glass cleaning fluid.

Circuit Diagram (RHD)-1

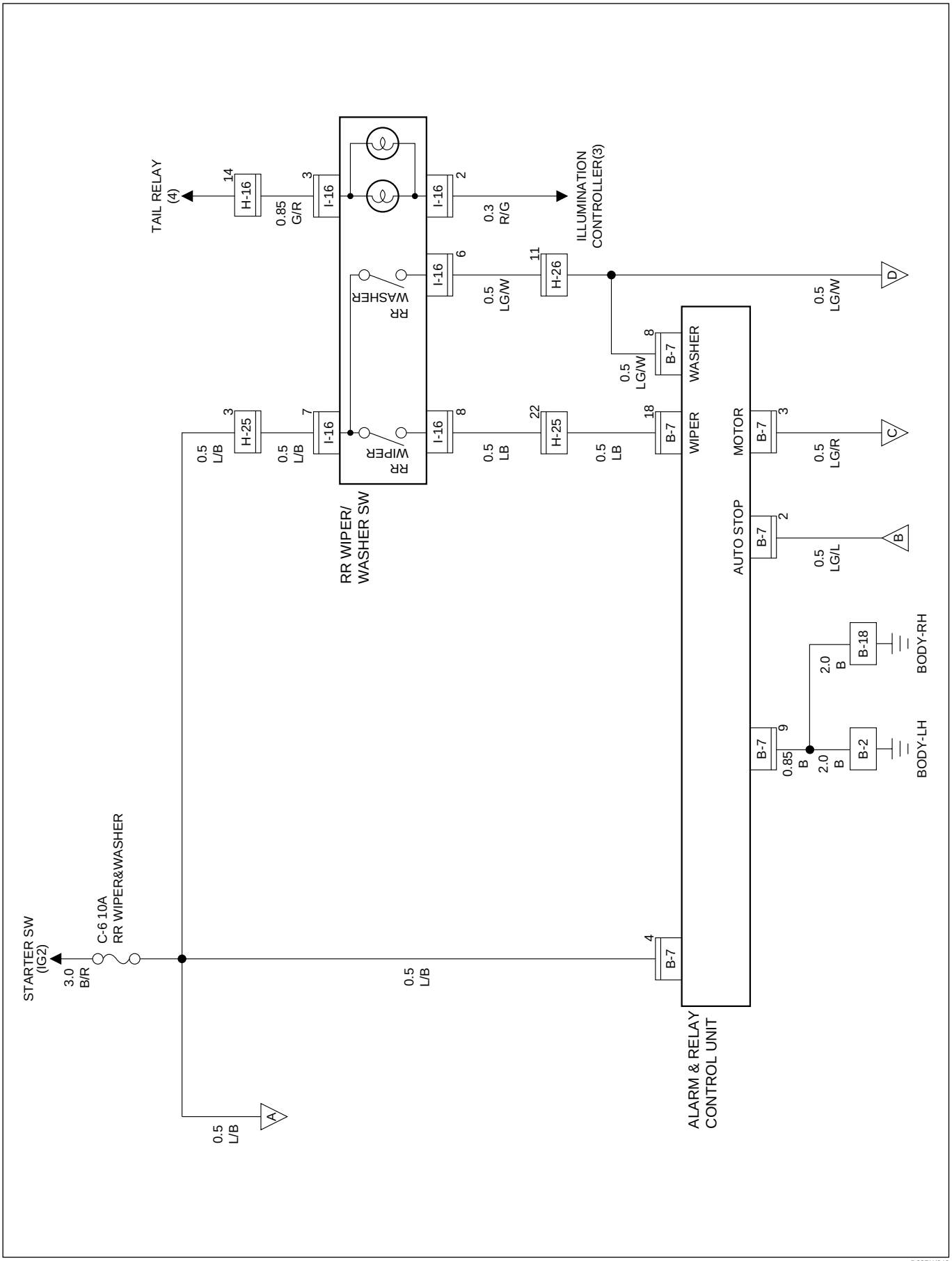

D08RW643

Circuit Diagram (RHD)-2

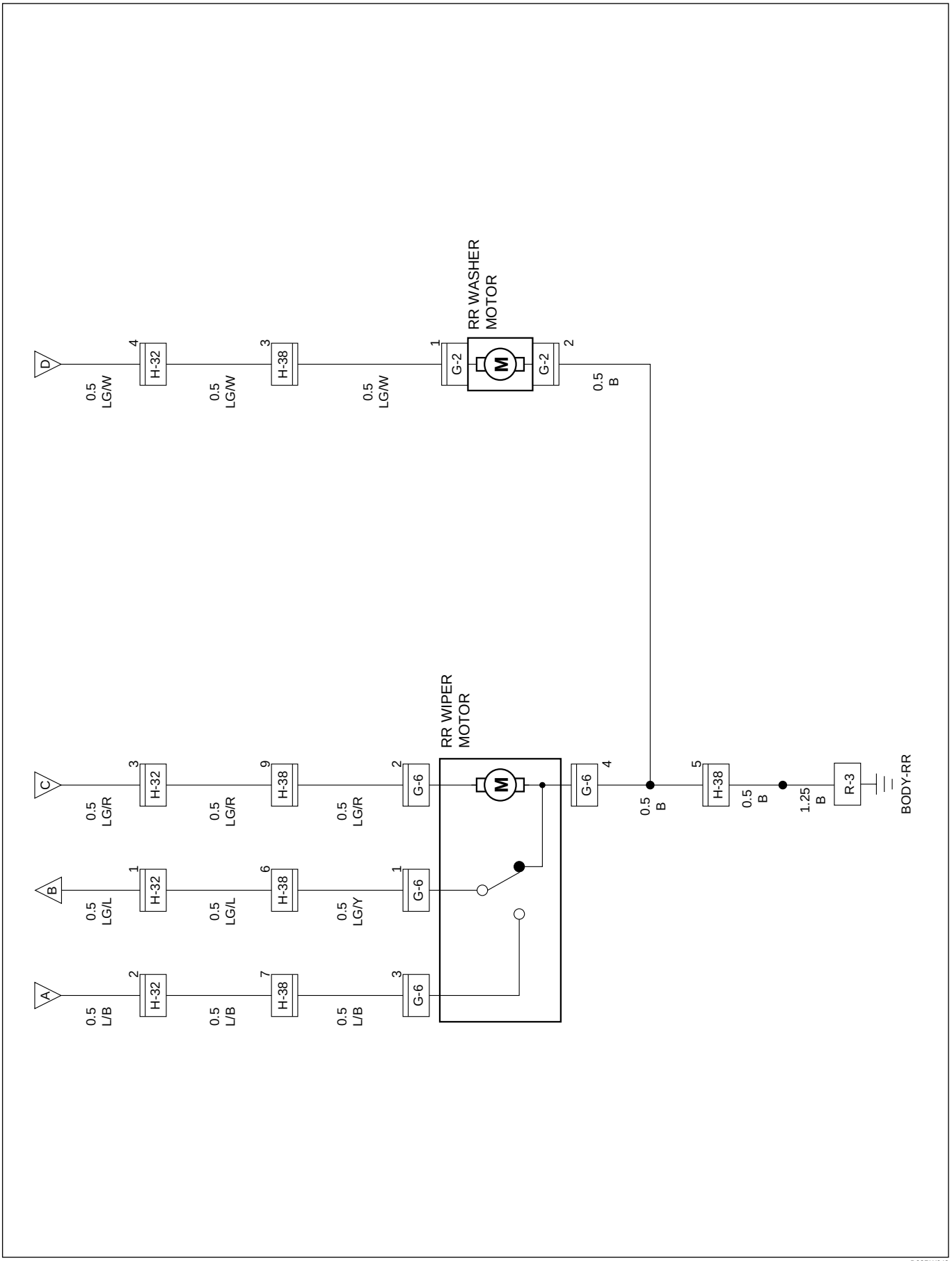

D08RW642

Parts Location (RHD)

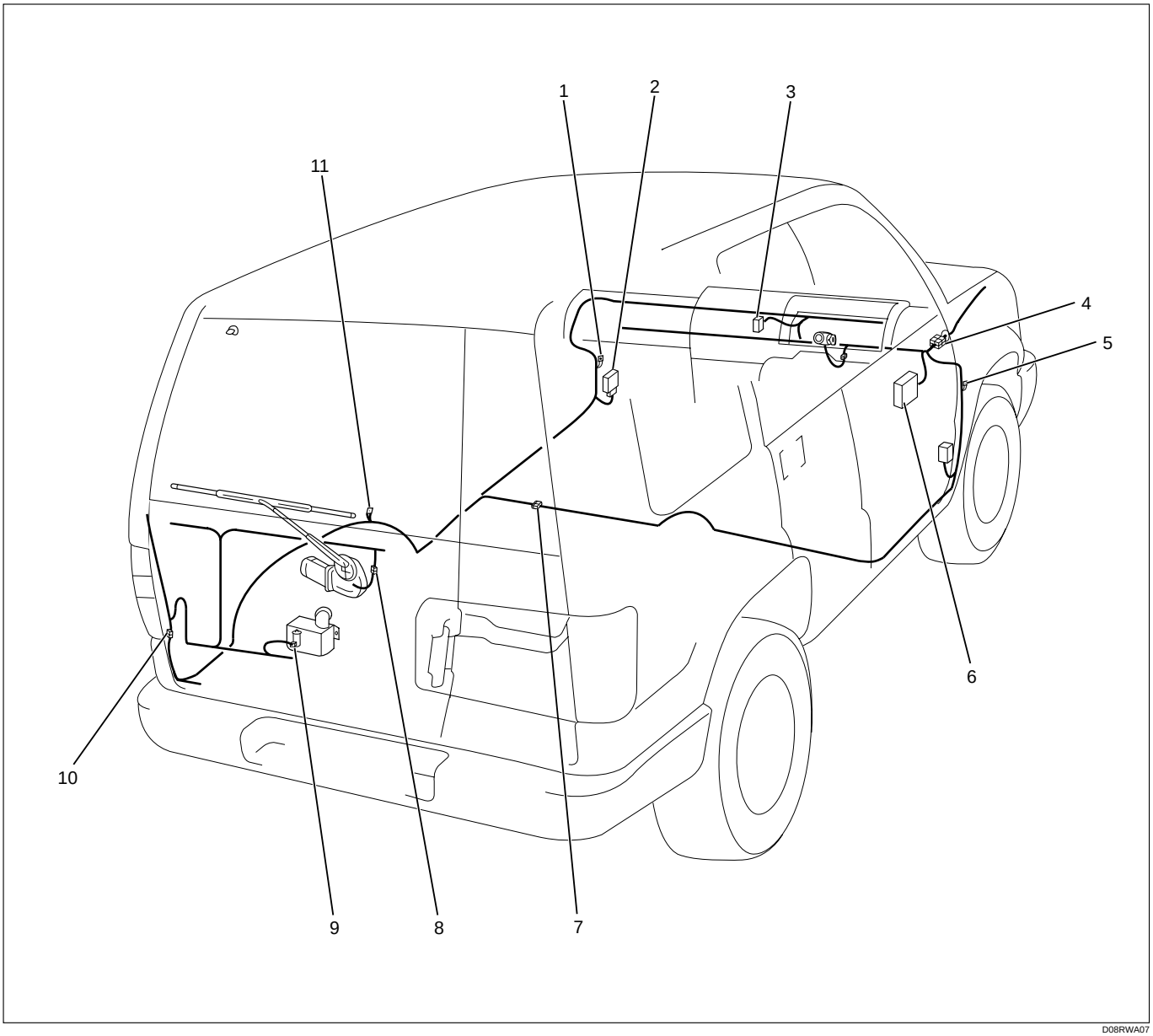

D08RWA07

Legend

(1) B-2
(2) Alarm and Relay Control Unit (B-7)
(3) I-16
(4) H-16, H-25, H-26
(5) B-18
(6) Fuse Box
(7) H-32
(8) RR Wiper Motor (G-6)
(9) RR Washer Motor (G-2)
(10) H-38
(11) R-3

Circuit Diagram (LHD)-1

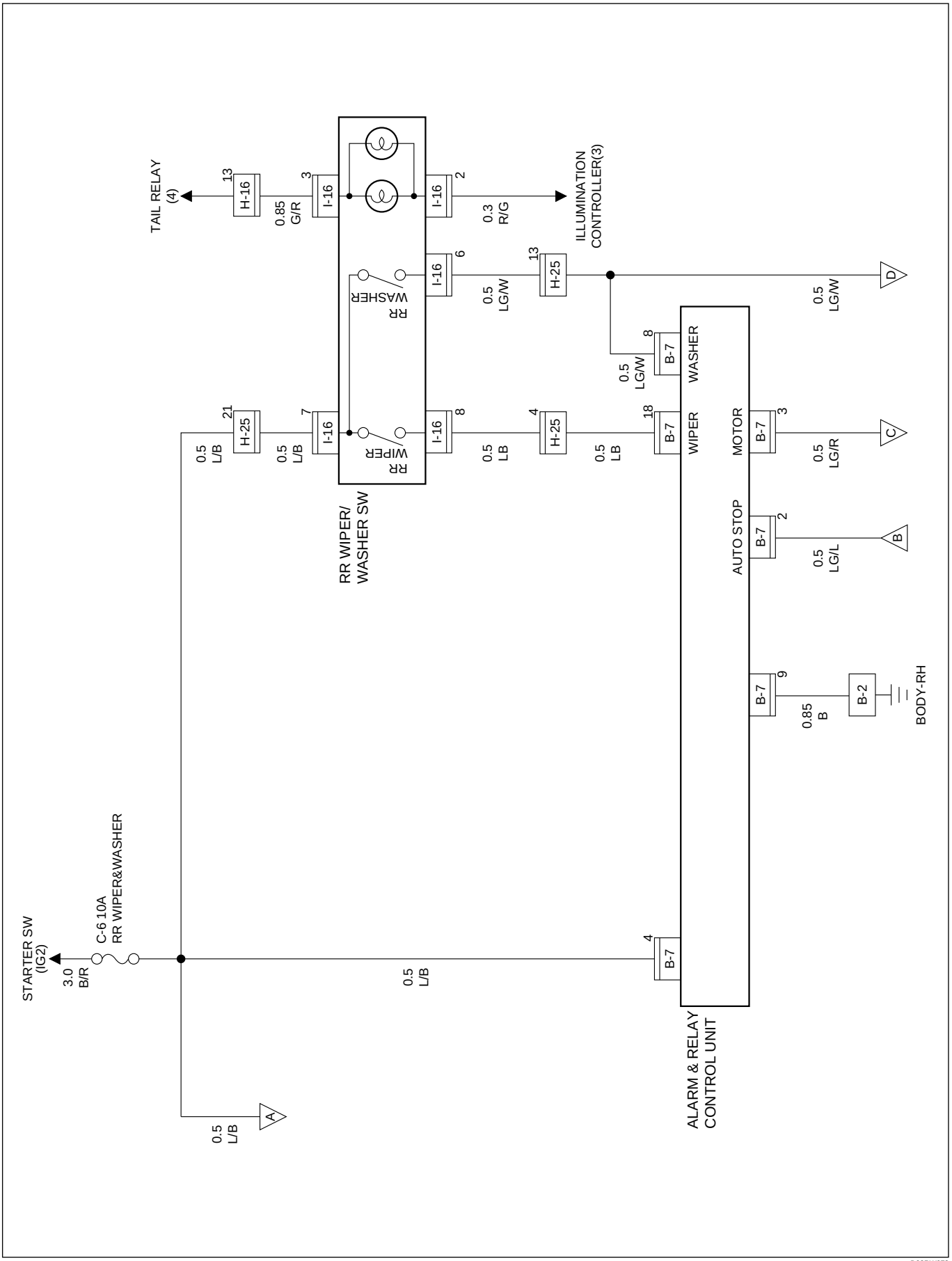

D08RW072

Circuit Diagram (LHD)-2

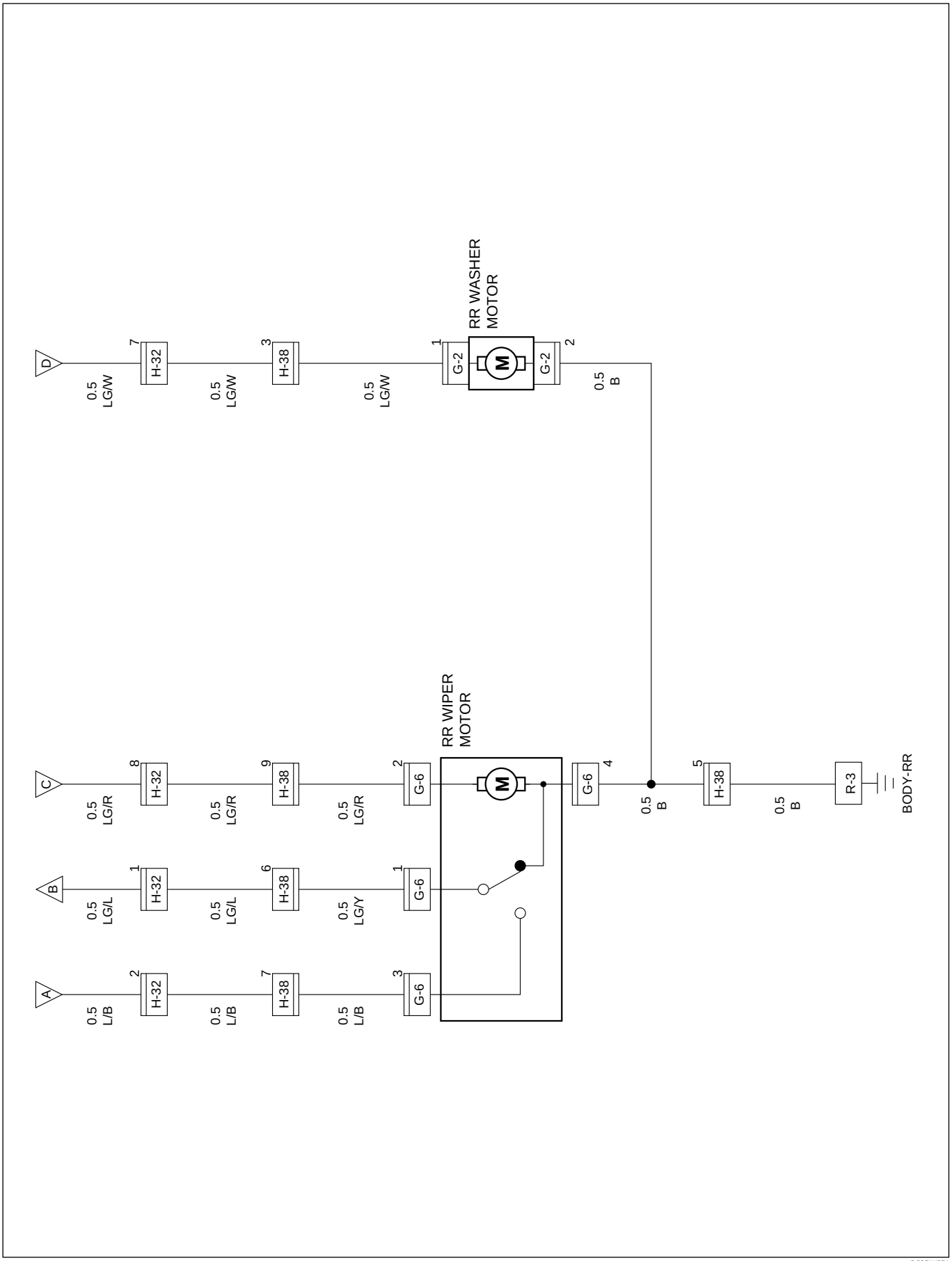

D08RW071

Parts Location (LHD)

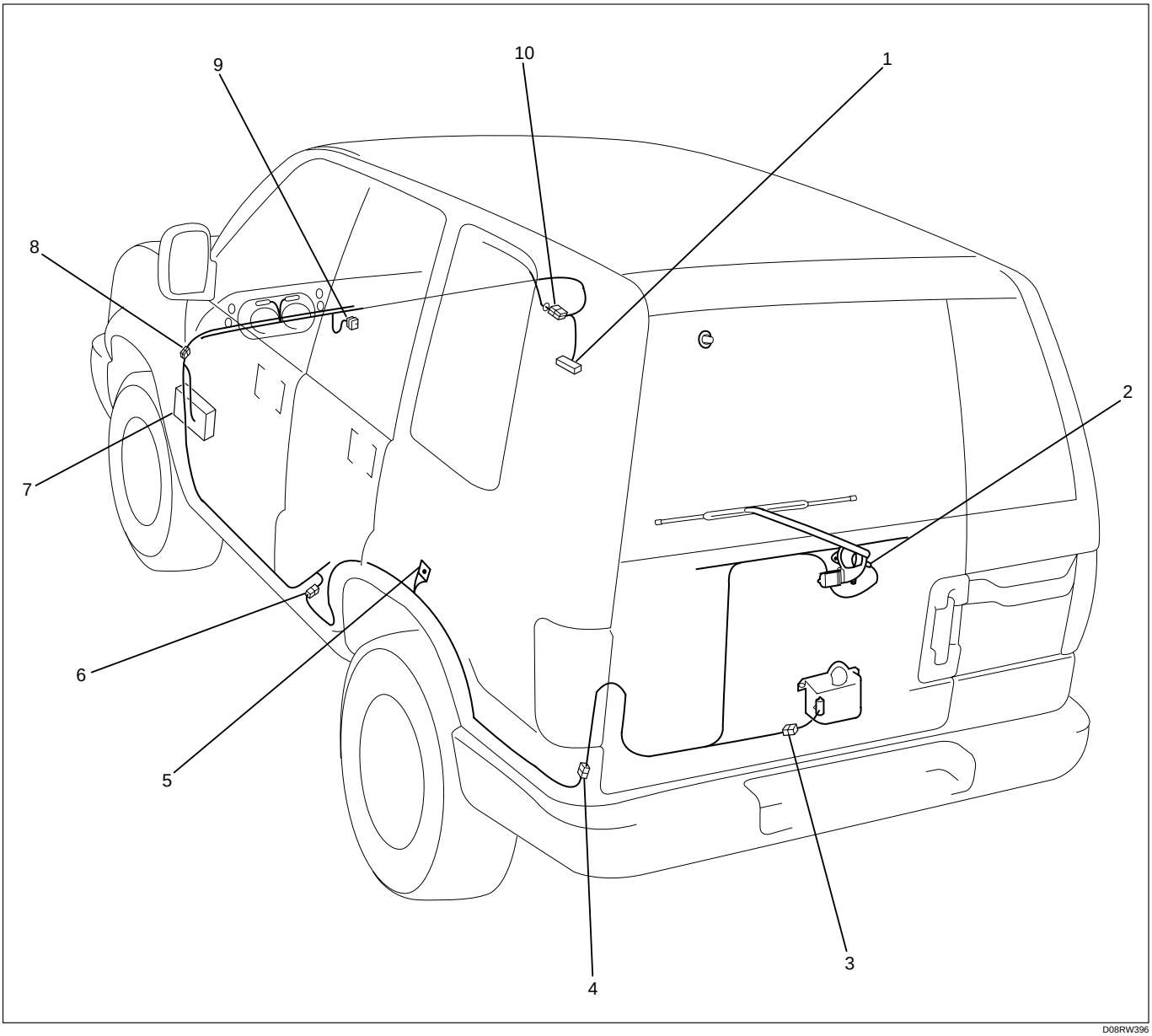

D08RW396

Legend

(1) B-7
(2) G-6
(3) G-2
(4) H-38
(5) R-3
(6) H-32
(7) Fuse Box
(8) H-25
(9) I-16
(10) H-16

Diagnosis

Quick Chart for Check Points

Trouble mode \ Check point	Fuse C-6 (10A)	Wiper & washer SW	Rear wiper motor	Washer motor	Alarm & relay control unit	Cable harness
1 Rear wiper motor does not operate	○	○	○		○	○
2 Auto-stop function of the rear wiper motor does not operate			○		○	○
3 Rear wiper motor does not operate at “WIPER” position		○			○	○
4 Rear wiper motor does not operate at “WIPER & WASHER” position		○			○	○
5 Rotation of the rear wiper motor does not stop		○	○			
6 Rear washer motor does not operate		○	○	○		○

1 Rear Wiper Motor Does Not Operate

- IS FUSE C-6 (10A) NORMAL?

YES

- DISCONNECT THE CONNECTOR OF THE REAR WIPER & WASHER SWITCH
- IS THE CONTINUITY IN THE REAR WIPER & WASHER SWITCH NORMAL?

NO

REPLACE FUSE C-6 (10A)

YES

- TURN THE STARTER SW ON
- IS THE BATTERY VOLTAGE APPLIED BETWEEN THE REAR WIPER & WASHER SWITCH HARNESS SIDE CONNECTOR TERMINAL 7 I-16 AND GROUND?

NO

REPAIR OR REPLACE THE REAR WIPER & WASHER SWITCH

YES

- DISCONNECT THE CONNECTORS OF THE REAR WIPER MOTOR
- WITH THE MOTOR SIDE CONNECTOR 2 G-6 CONNECTED TO THE BATTERY (+) TERMINAL AND THE CONNECTOR 4 G-6 TO THE (–) TERMINAL, DOES THE MOTOR ROTATE?

NO

REPAIR A POOR CONNECTION AT THE CONNECTORS OR AN OPEN CIRCUIT BETWEEN FUSE C-6 (10A) AND 7 I-16

YES

IS R-3 GROUNDED SECURELY?

NO

REPAIR OR REPLACE THE REAR WIPER MOTOR

YES

- DISCONNECT THE CONNECTORS OF THE ALARM & RELAY CONTROL UNIT
- TURN THE STARTER SWITCH ON
- WITH THE REAR WIPER & WASHER SWITCH AT WIPER POSITION, IS THE BATTERY VOLTAGE APPLIED BETWEEN 18 B-7 AND THE GROUND?

NO

GROUND IT SECURELY

YES

- IS THERE CONTINUITY BETWEEN HARNESS SIDE CONNECTOR 3 B-7 AND 2 G-6 ?

NO

REPAIR A POOR CONNECTION AT THE CONNECTORS OR AN OPEN CIRCUIT BETWEEN 8 I-16 AND 18 B-7

YES

REPLACE THE ALARM & RELAY CONTROL UNIT

NO

REPAIR A POOR CONNECTION AT THE CONNECTORS OR AN OPEN CIRCUIT BETWEEN 3 B-7 AND 2 G-6

2 Auto-Stop Function of The Rear Wiper Motor Does Not Operate

- DISCONNECT THE CONNECTOR OF THE REAR WIPER MOTOR
- CONNECT THE MOTOR SIDE CONNECTOR 2 G-6 TO THE BATTERY (+) TERMINAL AND THE TERMINAL 4 G-6 TO THE (–) TERMINAL
- WHILE ROTATING THE MOTOR, CHANGE THE CONNECTION OF THE BATTERY (+) TERMINAL TO THE CONNECTOR 3 G-6 , AND THEN CONNECT THE CONNECTOR 1 G-6 AND 2 G-6
- DOES THE REAR WIPER STOP AT THE AUTO-STOP POSITION IN THIS CONDITION?

YES

- TURN THE START SWITCH ON
- IS THE BATTERY VOLTAGE APPLIED BETWEEN THE REAR WIPER MOTOR HARNESS SIDE CONNECTOR 3 G-6 AND THE GROUND?

YES

- DISCONNECT THE CONNECTOR OF THE ALARM & RELAY CONTROL UNIT
- IS THERE CONTINUITY BETWEEN THE RELAY HARNESS SIDE CONNECTOR 2 B-7 AND THE WIPER MOTOR HARNESS SIDE CONNECTOR 1 G-6 ?

YES

REPLACE THE ALARM & RELAY CONTROL UNIT

NO

REPAIR A POOR CONNECTION AT THE CONNECTORS OR AN OPEN CIRCUIT BETWEEN 2 B-7 AND 1 G-6

NO

REPAIR A POOR CONNECTION AT THE CONNECTORS OR AN OPEN CIRCUIT BETWEEN THE FUSE C-6 (10A) AND 3 G-6

NO

REPAIR OR REPLACE THE REAR WIPER MOTOR

3 Rear Wiper Motor Does Not Operate at “Wiper” Position

- IS THE CONTINUITY IN THE REAR WIPER & WASHER SWITCH NORMAL?

YES

- DISCONNECT THE CONNECTOR OF THE ALARM & RELAY CONTROL UNIT
- TURN THE STARTER SWITCH ON
- WITH THE REAR WIPER & WASHER SWITCH SET AT “WIPER” POSITION, IS THE BATTERY VOLTAGE APPLIED BETWEEN THE CONTROL UNIT HARNESS SIDE CONNECTOR 18 B-7 AND GROUND?

YES

REPLACE THE ALARM & RELAY CONTROL UNIT

NO

REPAIR A POOR CONNECTION AT THE CONNECTORS OR AN OPEN CIRCUIT BETWEEN 18 B-7 AND 8 I-16

NO

REPAIR OR REPLACE THE REAR WIPER & WASHER SWITCH

4 Rear Wiper Motor Does Not Operate at “Washer” Position

- IS THE CONTINUITY IN THE REAR WIPER & WASHER SWITCH NORMAL?

YES

- DISCONNECT THE CONNECTOR OF THE ALARM & RELAY CONTROL UNIT
- TURN THE STARTER SWITCH ON
- WITH THE REAR WIPER & WASHER SWITCH SET AT “WASH” POSITION, IS THE BATTERY VOLTAGE APPLIED BETWEEN THE CONTROL UNIT HARNESS SIDE CONNECTOR 8 B-7 AND THE GROUND?

YES

REPLACE THE ALARM & RELAY CONTROL UNIT

NO

REPAIR A POOR CONNECTION AT THE CONNECTORS OR AN OPEN CIRCUIT BETWEEN 6 I-16 AND 8 B-7

NO

REPAIR OR REPLACE THE REAR WIPER & WASHER SWITCH

5 Rotation of The Rear Wiper Motor Does Not Stop

- IS THE CONTINUITY IN THE REAR WIPER & WASHER SWITCH NORMAL?

YES

- DISCONNECT THE ALARM & RELAY CONTROL UNIT CONNECTORS
  TURN THE STARTER SW ON
  IS THE BATTERY VOLTAGE APPLIED BETWEEN HARNESS SIDE CONNECTOR 2 B-7 AND THE GROUND?

YES

REPAIR OR REPLACE THE RR WIPER MOTOR

NO

REPLACE THE ALARM & RELAY CONTROL UNIT

NO

REPAIR OR REPLACE THE REAR WIPER & WASHER SWITCH

6 Rear Washer Motor Does Not Operate

- IS FUSE C-6 (10A) NORMAL?

YES

- DISCONNECT THE CONNECTOR OF THE REAR WIPER & WASHER SWITCH
- WITH THE SWITCH SET AT “WASH” POSITION, IS THERE CONTINUITY BETWEEN THE SWITCH CONNECTOR TERMINALS 7 I-16 AND 6 I-16 ?

YES

- TURN THE STARTER SWITCH ON
- IS THE BATTERY VOLTAGE APPLIED BETWEEN THE REAR WIPER & WASHER SWITCH HARNESS SIDE CONNECTOR 7 I-16 AND GROUND?

YES

- DISCONNECT THE CONNECTOR OF THE REAR WASHER MOTOR
- TURN THE STARTER SWITCH ON
- WITH THE REAR WIPER & WASHER SWITCH SET AT “WASH” POSITION, IS THE BATTERY VOLTAGE APPLIED BETWEEN THE REAR WASHER MOTOR HARNESS SIDE CONNECTOR 1 G-2 AND GROUND?

YES

- CONNECT THE MOTOR SIDE CONNECTOR TERMINAL 1 G-2 TO THE BATTERY (+) TERMINAL AND 2 G-2 TO THE (–) TERMINAL
- DOES THE MOTOR OPERATE?

YES

- IS R-3 GROUNDED SECURELY?

YES

REPAIR A POOR CONNECTION AT THE CONNECTORS OR AN OPEN CIRCUIT BETWEEN 2 G-2 AND R-3

NO

GROUND IT SECURELY

NO

REPLACE THE REAR WASHER MOTOR

NO

REPAIR A POOR CONNECTION AT THE CONNECTORS OR AN OPEN CIRCUIT BETWEEN 1 G-2 AND 6 I-16

NO

REPAIR A POOR CONNECTION AT THE CONNECTORS OR AN OPEN CIRCUIT BETWEEN THE FUSE C-6 (10A) AND 7 I-16

NO

REPAIR OR REPLACE THE SWITCH

NO

REPLACE THE FUSE

Headlight Wiper/Washer

General Description

The circuit consists of the starter switch, headlight wiper switch, headlight wiper motor and washer motor. By pushing the headlight wiper/washer switch with the starter switch on, the wiper will make 5 strokes with washer solution applied between each of the first 4 strokes, regardless of the length of time the switch is held down.

The washer nozzle is installed to the wiper blade, and the tank to which the washer motor is installed shared between the headlight washer and the windshield washer.

Circuit Diagram (RHD) – 1

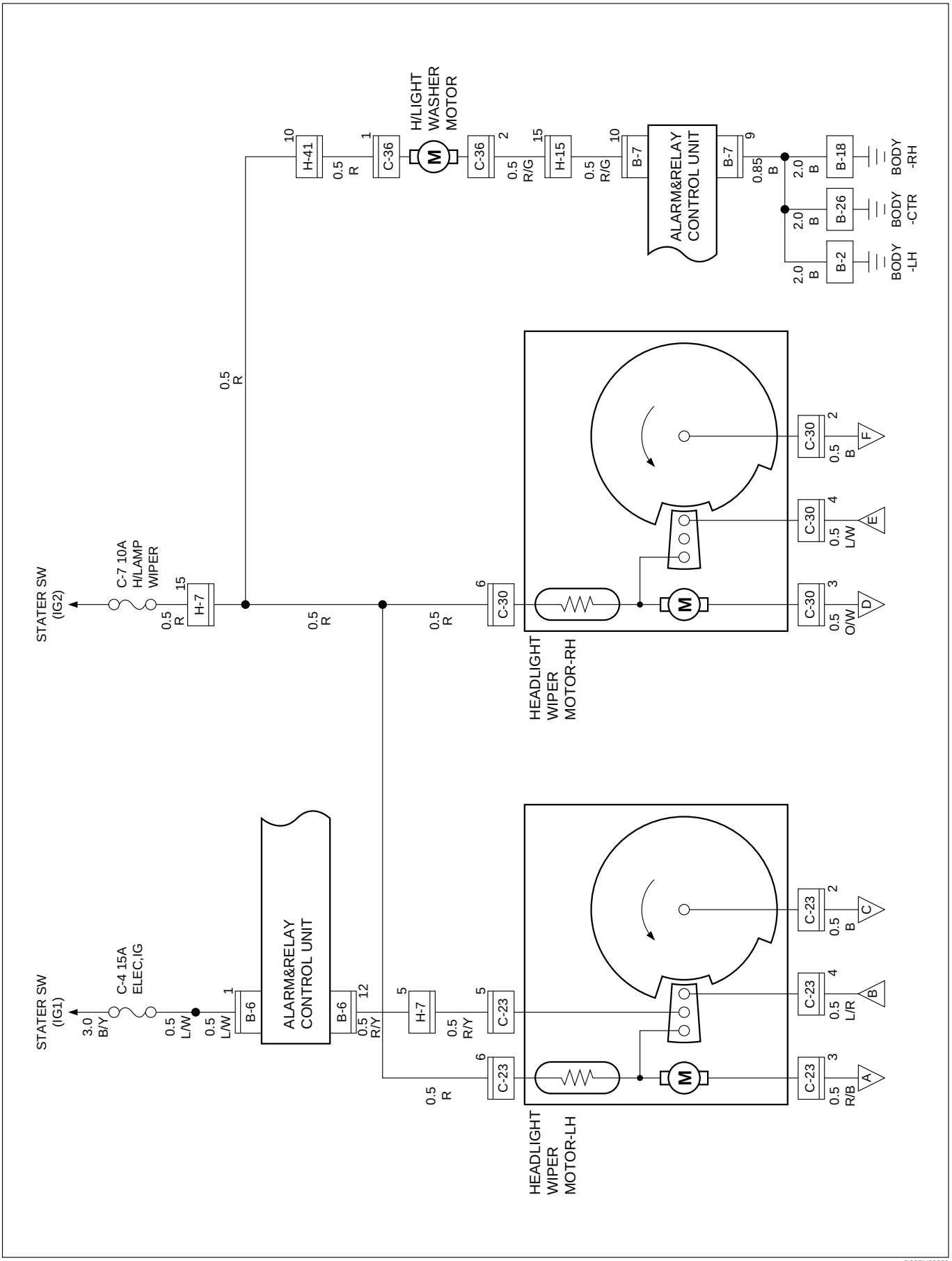

D08RY00228

Circuit Diagram (RHD) – 2

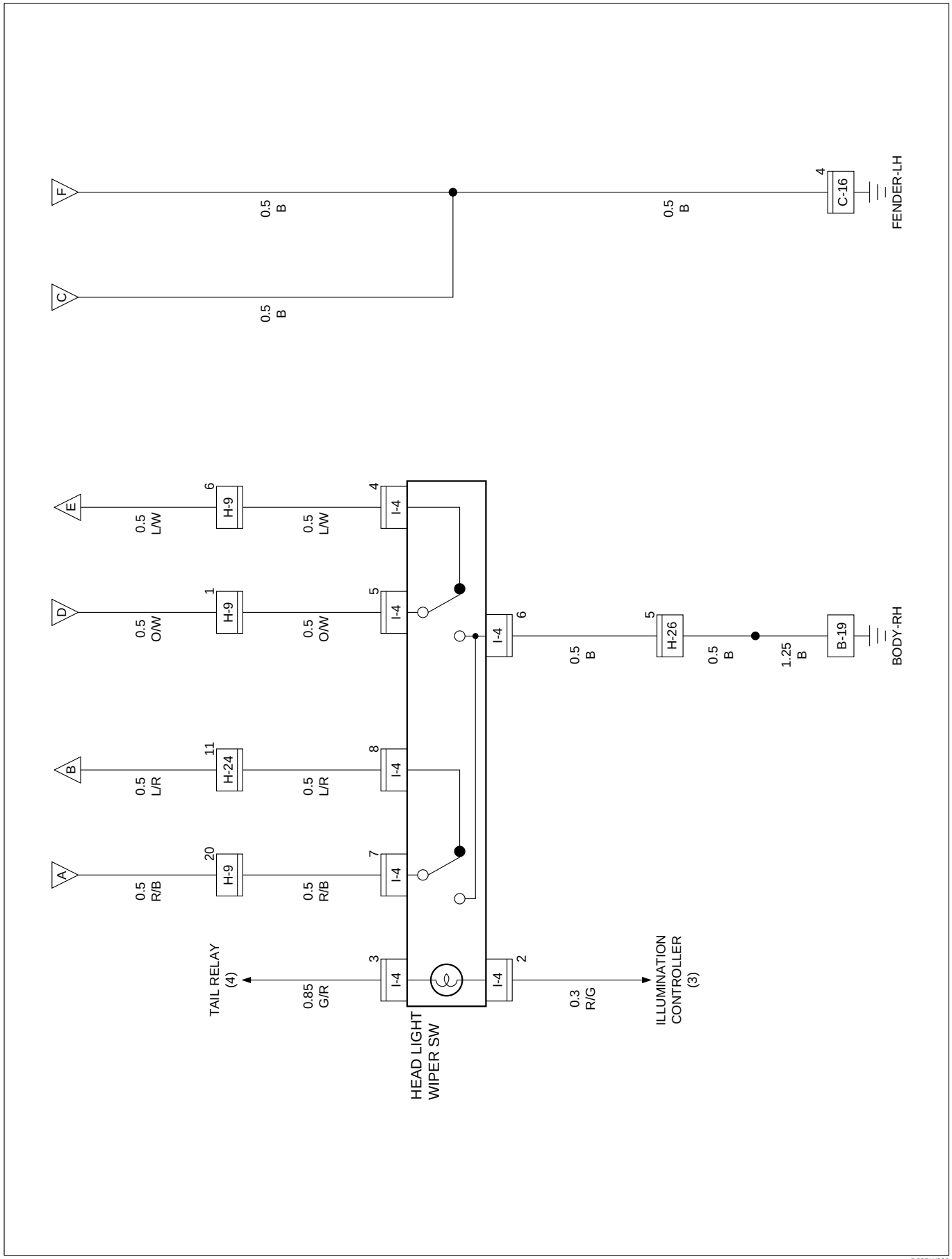

D08RW932

Parts Location (RHD)

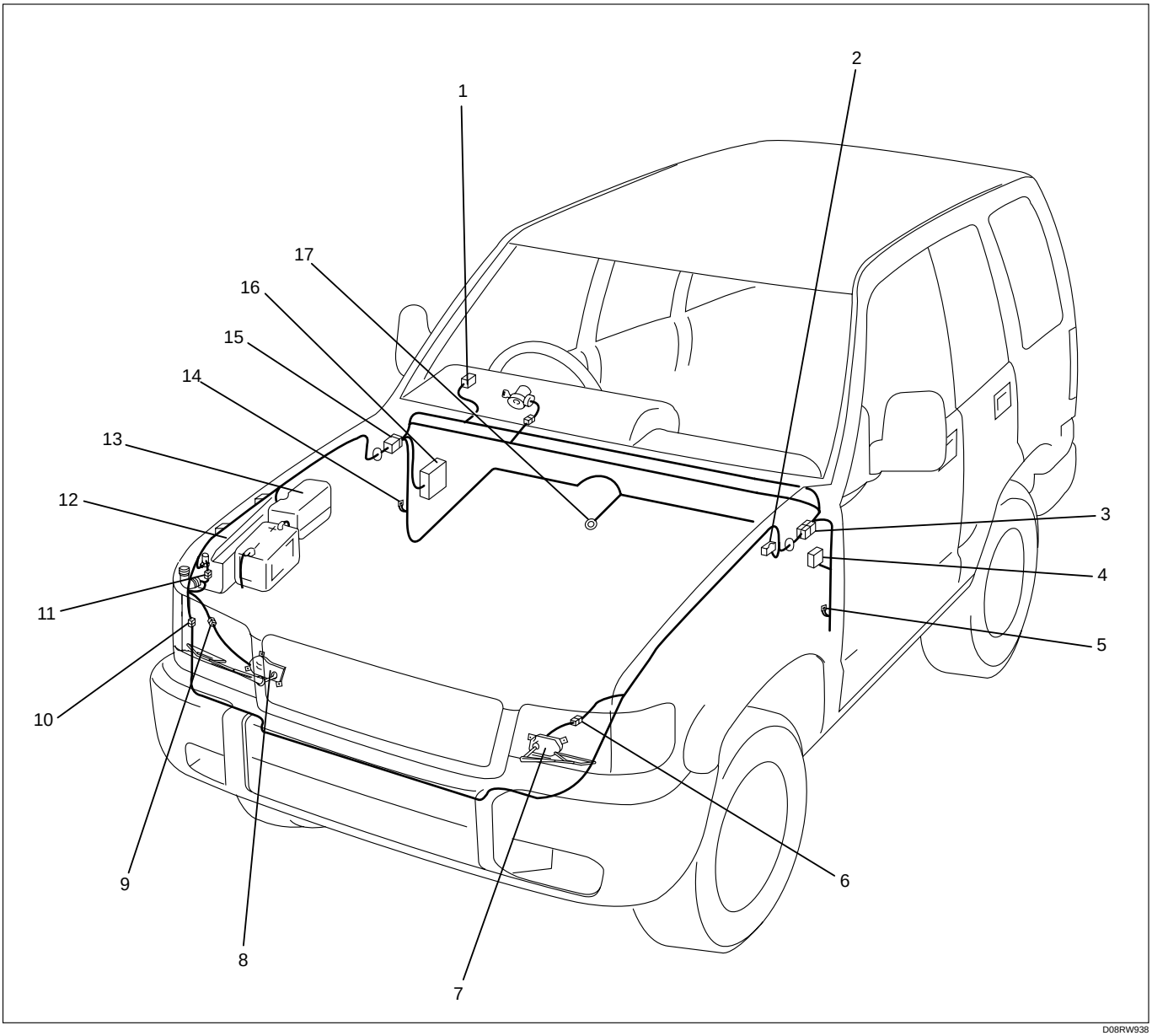

Legend

(1) I-4
(2) C-16
(3) H-7, H-9, H-24
(4) B-6, B-7
(5) B-2
(6) C-23
(7) Headlight Wiper Motor-LH
(8) Headlight Wiper Motor-RH
(9) C-30
(10) H-41
(11) C-36
(12) Washer Tank
(13) Relay and Fuse Box
(14) B-18, B-19
(15) H-15, H-26
(16) Fuse Box
(17) B-26

Circuit Diagram (LHD) – 1

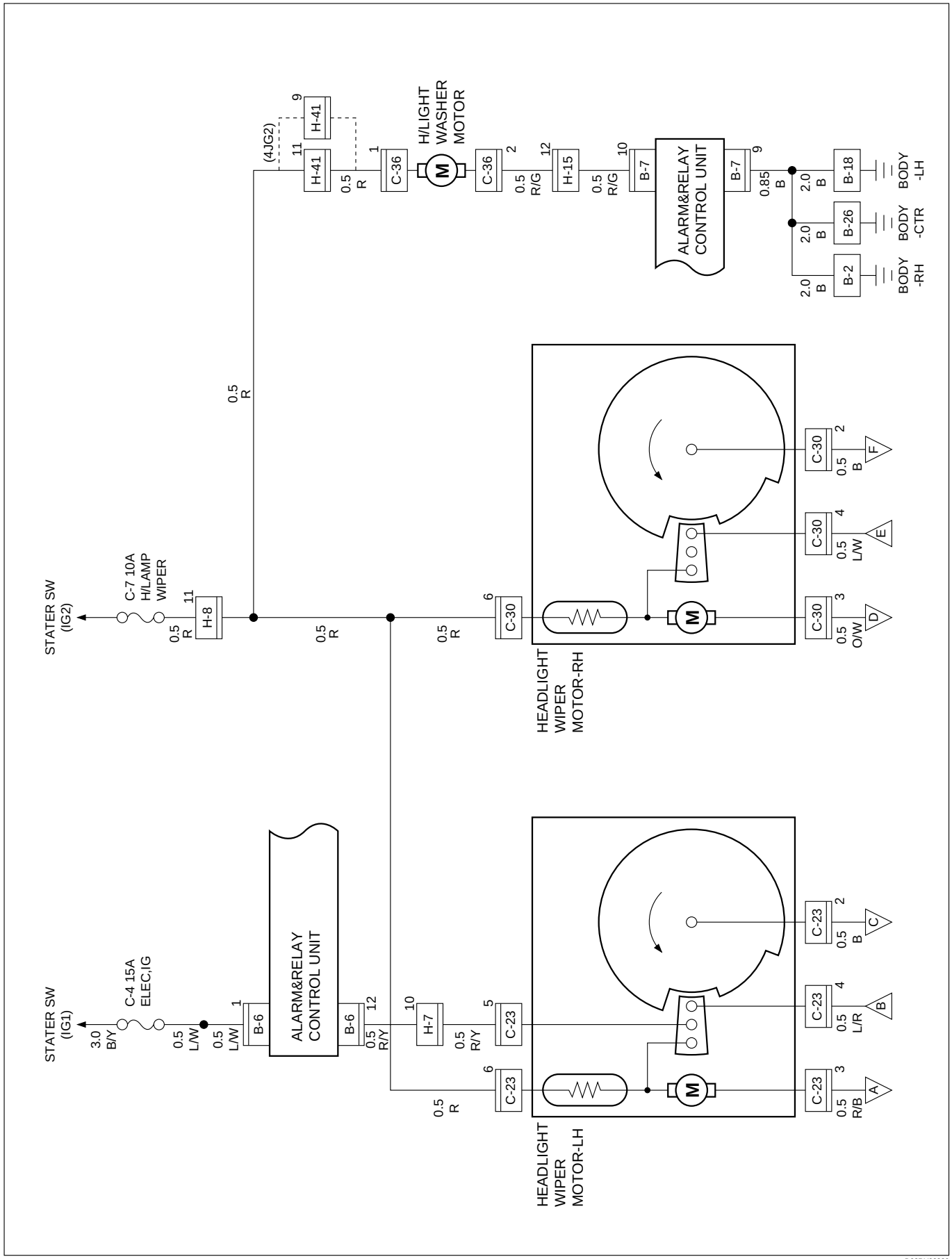

D08RY00229

Circuit Diagram (LHD)-2

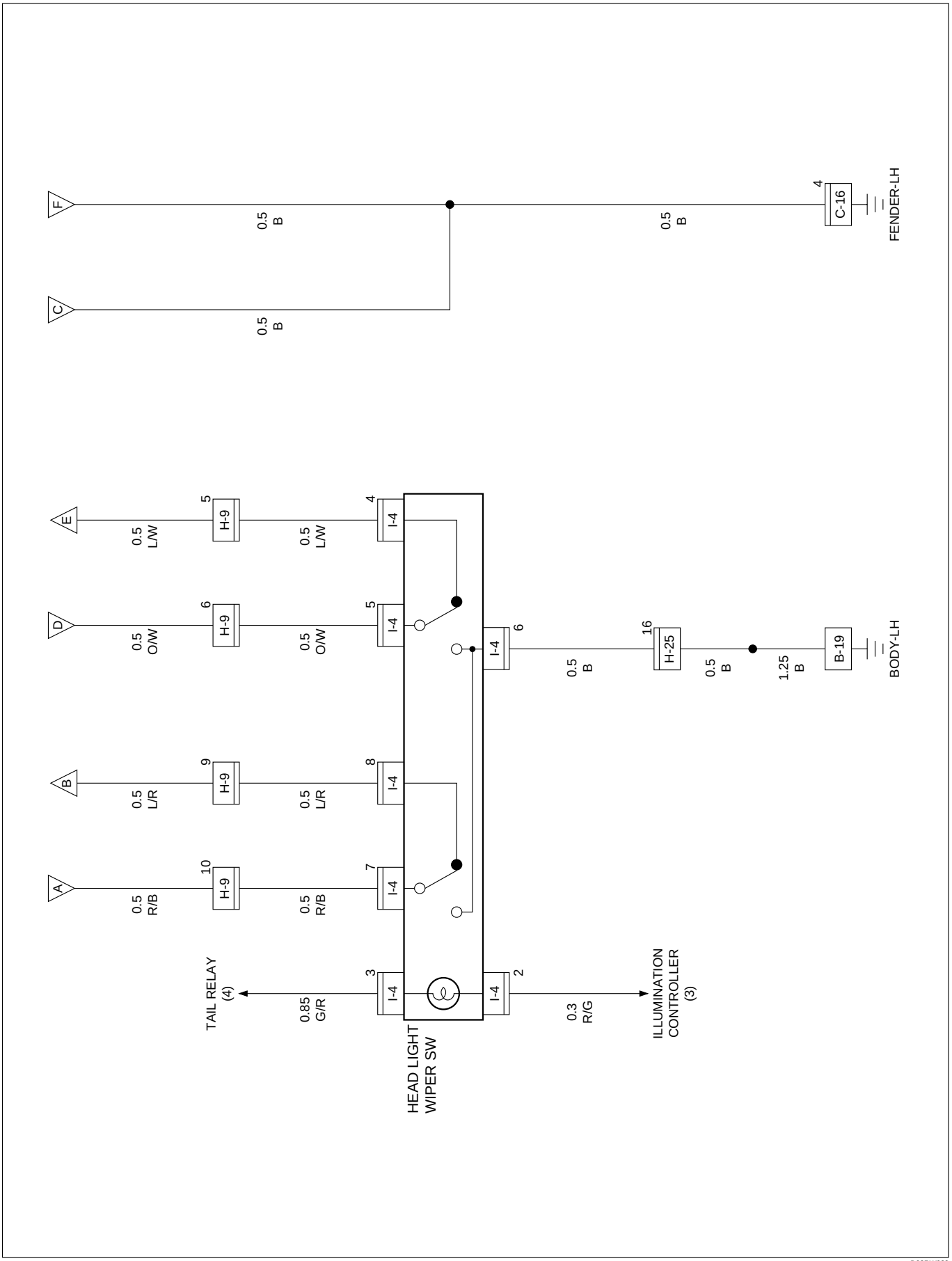

D08RW933

Parts Location (LHD)

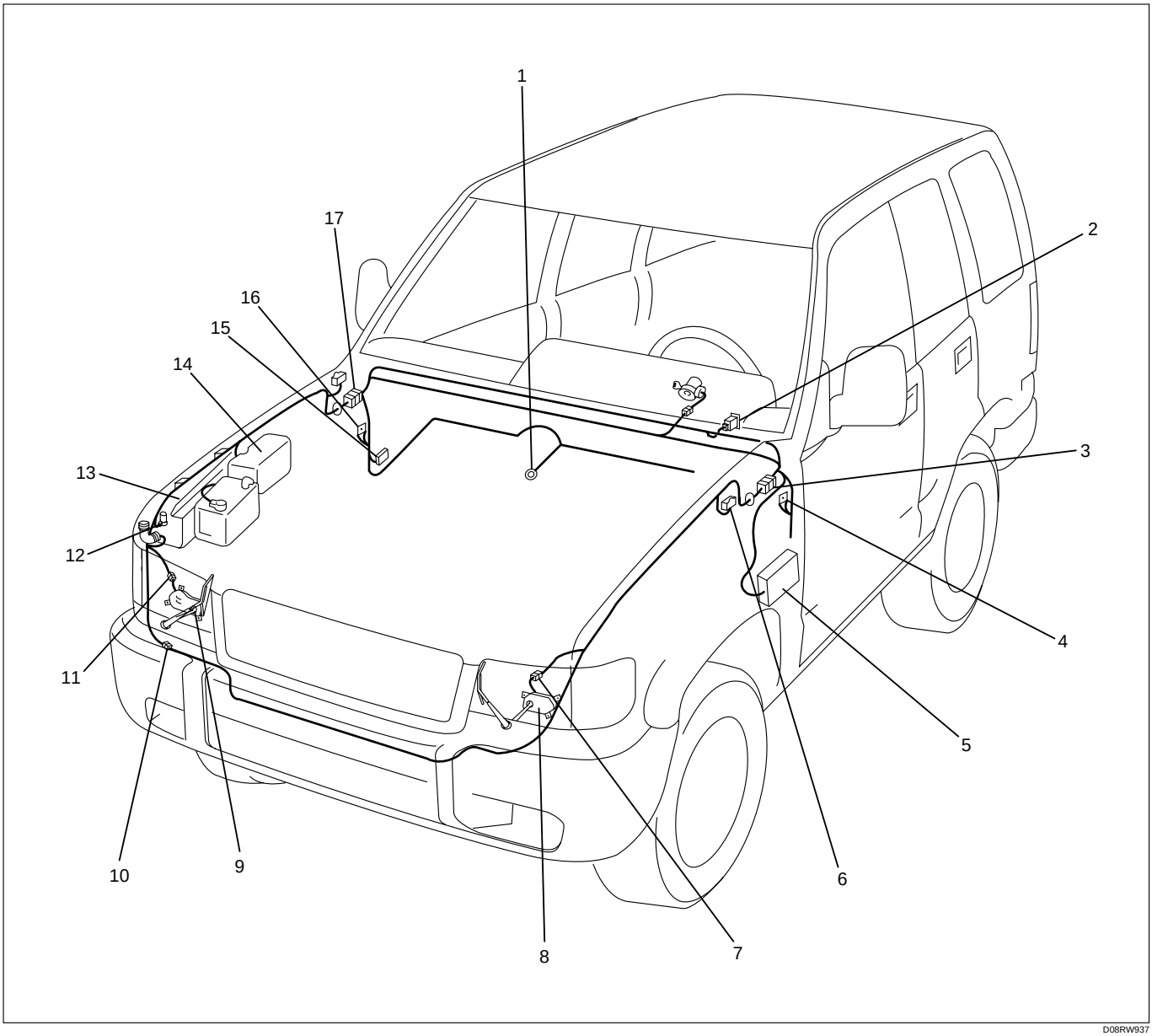

D08RW937

Legend

(1) B-26
(2) I-4
(3) H-7, H-8, H-9, H-25
(4) B-18, B-19
(5) Fuse Box
(6) C-16
(7) C-23
(8) Headlight Wiper Motor-LH
(9) Headlight Wiper Motor-RH
(10) H-41
(11) C-30
(12) C-36
(13) Washer Tank
(14) Relay and Fuse Box
(15) B-6, B-7
(16) B-2
(17) H-15

Diagnosis

Quick Chart for Check Points

Check point / Trouble mode	Fuse		Headlight wiper SW	Headlight wiper motor	Headlight washer motor	Alarm & relay control unit	Cable harness
	C-7	C-4					
1. Headlight wipers and washer do not operate on either side	○		○				○
2. Wiper on the left (or right) side does not operate			○	○			○
3. Auto-stop function of the wiper on the left (or right) side does not operate			○	○			○
4. Wiper on the left (or right) side does not stop			○	○			○
5. Washer motor does not operate		○			○	○	○

1. Headlight Wipers And Washer Do Not Operate On Either Side

- IS FUSE C-7 (10A) NORMAL?

YES

- TURN THE STARTER SWITCH ON
- IS THE BATTERY VOLTAGE APPLIED BETWEEN FUSE C-7 AND HEADLIGHT WIPER MOTOR CONNECTOR TERMINAL 6 AND THE GROUND?

NO

REPLACE THE FUSE C-7 (10A)

YES

- IS B-19 GROUNDED SECURELY?

NO

REPAIR A POOR CONNECTION AT THE CONNECTORS OR AN OPEN CIRCUIT BETWEEN FUSE C-7 AND HEADLIGHT WIPER MOTOR

YES

- DISCONNECT THE HEADLIGHT WIPER SWITCH CONNECTOR
- IS THE CONTINUITY IN THE SWITCH NORMAL?

NO

GROUND IT SECURELY

YES

REPAIR A POOR CONNECTION AT THE CONNECTORS OR AN OPEN CIRCUIT BETWEEN 6 I-4 AND B-19

NO

REPAIR OR REPLACE THE HEADLIGHT WIPER SW

2. Wiper On The Left (Or Right) Side Does Not Operate

- DISCONNECT THE HEADLIGHT WIPER SWITCH CONNECTOR
- WITH THE SWITCH ON, IS THERE CONTINUITY BETWEEN SWITCH CONNECTOR TERMINALS 7 [I-4] AND 6 [I-4] (5 [I-4] AND 6 [I-4])?

YES

- DISCONNECT THE WIPER MOTOR CONNECTOR THAT DOES NOT OPERATE
- TURN THE STARTER SWITCH ON
- IS THERE BATTERY VOLTAGE APPLIED BETWEEN THE HEADLIGHT WIPER MOTOR HARNESS SIDE CONNECTOR 6 [C-23] (6 [C-30]) AND GROUND?

YES

- CONNECT THE MOTOR SIDE CONNECTOR 6 [C-23] (6 [C-30])OF THE HEADLIGHT WIPER MOTOR TO THE BATTERY (+) TERMINAL AND 3 [C-23] (3 [C-30]) TO THE (–) TERMINAL
- DOES THE MOTOR ROTATE?

YES

REPAIR A POOR CONNECTION AT THE CONNECTORS OR AN OPEN CIRCUIT BETWEEN 3 [C-23] AND 7 [I-4] (3 [C-30] AND 5 [I-4])

NO

REPAIR OR REPLACE THE WIPER MOTOR

NO

REPAIR A POOR CONNECTION AT THE CONNECTORS OR AN OPEN CIRCUIT BETWEEN
(RHD)
6 [C-23] (6 [C-30]) AND 15 [H-7]
(LHD)
6 [C-23] (6 [C-30]) AND 11 [H-8]

NO

REPAIR OR REPLACE THE HEADLIGHT WIPER SWITCH

NO

REPAIR OR REPLACE THE HEADLIGHT WIPER SWITCH

3. Auto-stop Function Of The Wiper On The Left (Or Right) Side Does Not Operate

- DISCONNECT THE HEADLIGHT WIPER SWITCH CONNECTOR
- WITH THE SWITCH SET AT “OFF” POSITION, IS THERE CONTINUITY BETWEEN THE SWITCH CONNECTOR TERMINALS 7 I-4 AND 8 I-4 (4 I-4 AND 5 I-4)?

YES

- RECONNECT THE HEADLIGHT WIPER SW CONNECTOR AND DISCONNECT THE HEADLIGHT WIPER MOTOR CONNECTOR
- IS THERE CONTINUITY BETWEEN HARNESS SIDE CONNECTORS 3 C-23 AND 4 C-23 (3 C-30 AND 4 C-30)?

YES

- WITH THE WIPER MOTOR CONNECTOR 6 C-23 (6 C-30) CONNECTED TO THE BATTERY (+) TERMINAL, AND 3 C-23 (3 C-30) TO THE (–) TERMINAL, ROTATE THE MOTOR.
- WHILE ROTATING THE MOTOR, CHANGE THE CONNECTION OF THE (–) TERMINAL TO 2 C-23 (2 C-30) AND CONNECT 3 C-23 (3 C-30) TO 4 C-23 (4 C-30)
- DOES THE MOTOR STOP AT THE AUTO-STOP POSITION?

YES

REPAIR A POOR CONNECTION AT THE CONNECTORS OR AN OPEN CIRCUIT
[LHD]
BETWEEN 2 C-23 (2 C-30) AND 4 C-16
[RHD]
BETWEEN 2 C-23 (2 C-30) AND 4 C-16

NO

REPAIR OR REPLACE THE HEADLIGHT WIPER MOTOR

NO

REPAIR A POOR CONNECTION AT THE CONNECTORS OR AN OPEN CIRCUIT BETWEEN 4 C-23 AND 8 I-4 (4 C-30 AND 4 I-4)

NO

REPAIR OR REPLACE THE SWITCH

NOTE: If headlight wiper motor auto-stop on both sides does not function, it may be attributable either to headlight wiper switch trouble or to poor grounding of connector C-16 .

4. Wiper On The Left (Or Right) Side Does Not Stop

- STOP THE WIPER MOTOR AT THE AUTO-STOP POSITION
- DISCONNECT THE HEADLIGHT WIPER SWITCH CONNECTOR
- TURN THE STARTER SWITCH ON
- DOES THE WIPER MOTOR REMAIN STOPPED?

YES

- IS THE CONTINUITY IN THE HEADLIGHT WIPER SWITCH NORMAL?

NO

REPAIR A SHORT CIRCUIT BETWEEN 3 C-23 AND 7 I-4 (3 C-30 AND 5 I-4)

YES

- DISCONNECT THE WIPER MOTOR CONNECTOR
- IS THERE CONTINUITY BETWEEN THE MOTOR SIDE CONNECTOR TERMINALS 4 C-23 AND 2 C-23 (4 C-30 AND 2 C-30)?

NO

REPAIR OR REPLACE THE SWITCH

YES

REPAIR THE WIPER MOTOR AUTO-STOP MECHANISM, OR REPLACE THE MOTOR

NO

REPAIR A SHORT CIRCUIT BETWEEN 4 C-23 AND 8 I-4 (4 C-30 AND 4 I-4)

5. Washer Motor Does Not Operate

- IS FUSE C-4 (15A) NORMAL?

YES

- DISCONNECT THE HEADLIGHT WASHER MTOR CONNECTOR
- TURN THE STARTER SWITCH ON
- IS THERE BATTERY VOLTAGE APPLIED BETWEEN THE WASHER MOTOR HARNESS SIDE CONNECTOR 1 C-36 AND THE GROUND?

YES

- CONNECT THE MOTOR SIDE CONNECTOR TERMINAL 1 C-36 TO THE BATTERY (+) TERMINAL, AND 2 C-36 TOTHE (–) TERMINAL
- DOES THE MOTOR ROTATE?

YES

- DISCONNECT THE ALARM & RELAY CONTROL UNIT CONNECTOR B-6
- TURN THE STARTER SWITCH ON
- IS THERE BATTERY VOLTAGE APPLIED BETWEEN THE CONTROL UNIT HARNESS SIDE CONNECTOR 1 B-6 AND THE GROUND?

YES

- RECONNECT THE HEADLIGHT WASHER MOTOR CONNECTOR
- IS THERE BATTERY VOLTAGE APPLIED BETWEEN THE HARNESS SIDE CONNECTOR 10 B-7 AND THE GROUND?

YES

- IS THERE CONTINUITY BETWEEN THE HARNESS SIDE CONNECTORS 12 B-6 AND 5 C-23

YES

REPLACE THE ALARM & RELAY CONTROL UNIT

NO

REPAIR A POOR CONNECTION AT THE CONNECTORS OR AN OPEN CIRCUIT IN THE CIRCUIT

NO

REPAIR A POOR CONNECTION AT THE CONNECTORS OR AN OPEN CIRCUIT BETWEEN 2 C-36 AND 10 B-7

NO

REPAIR A POOR CONNECTION AT THE CONNECTORS OR AN OPEN CIRCUIT BETWEEN FUSE C-4 (10A) AND 1 B-6

NO

REPAIR OR REPLACE THE MOTOR

NO

REPAIR A POOR CONNECTION AT THE CONNECTORS OR AN OPEN CIRCUIT BETWEEN 1 C-36 AND FUSE C-7 (10A)

NO

REPLACE THE FUSE

Rear Defogger

General Description

When rear defogger switch is turned on with starter switch on, battery voltage is applied to rear defogger through rear defogger relay to operate rear defogger. Alarm & relay control unit is provided with a timer. When the operation time of the timer elapses which has been set in advance at manufacture, the switch is automatically turned off. (The timer operating time is normally about 30 minutes).

Circuit Diagram (RHD)

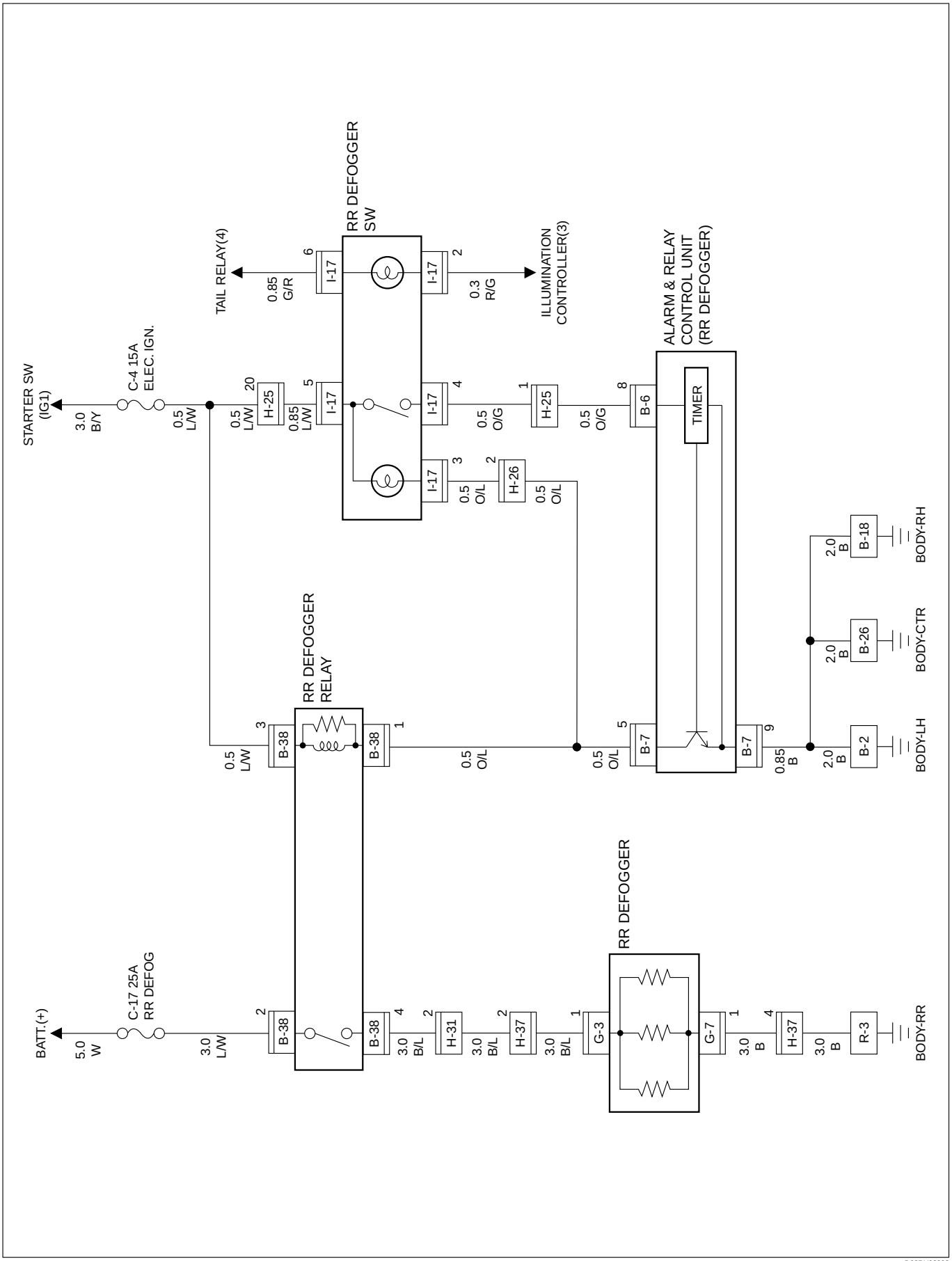

D08RY00230

Parts Location (RHD)

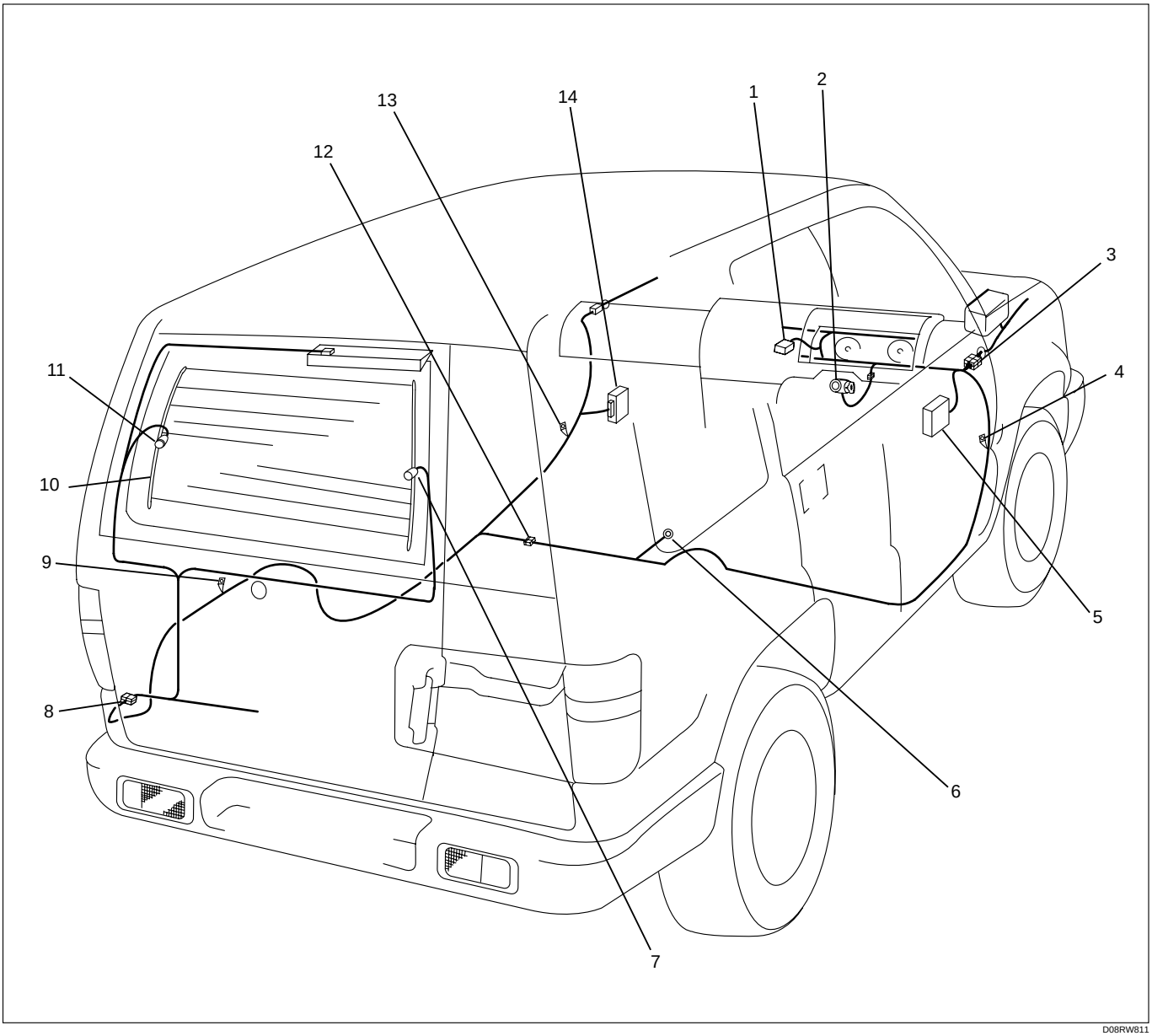

D08RW811

Legend

(1) I-17 (Rear Defogger Switch)
(2) Starter Switch
(3) H-25, H-26
(4) B-19
(5) Fuse Box (B-38)
(6) B-26
(7) G-7
(8) H-37
(9) R-3
(10) Rear Defogger
(11) G-3
(12) H-31
(13) B-2
(14) B-6, B-7 (Alarm and Relay Control Unit)

Circuit Diagram (LHD)

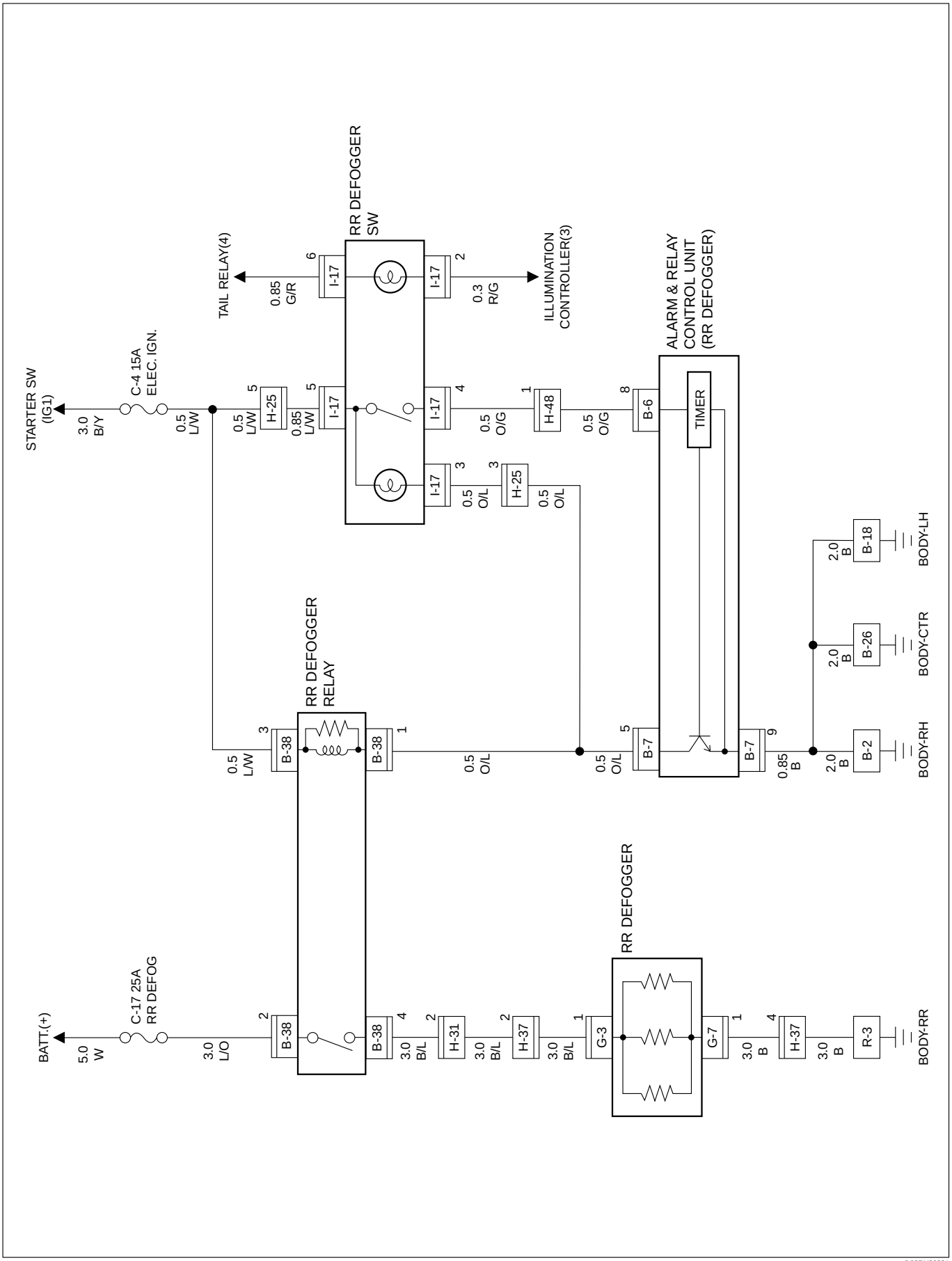

D08RY00231

Parts Location (RHD)

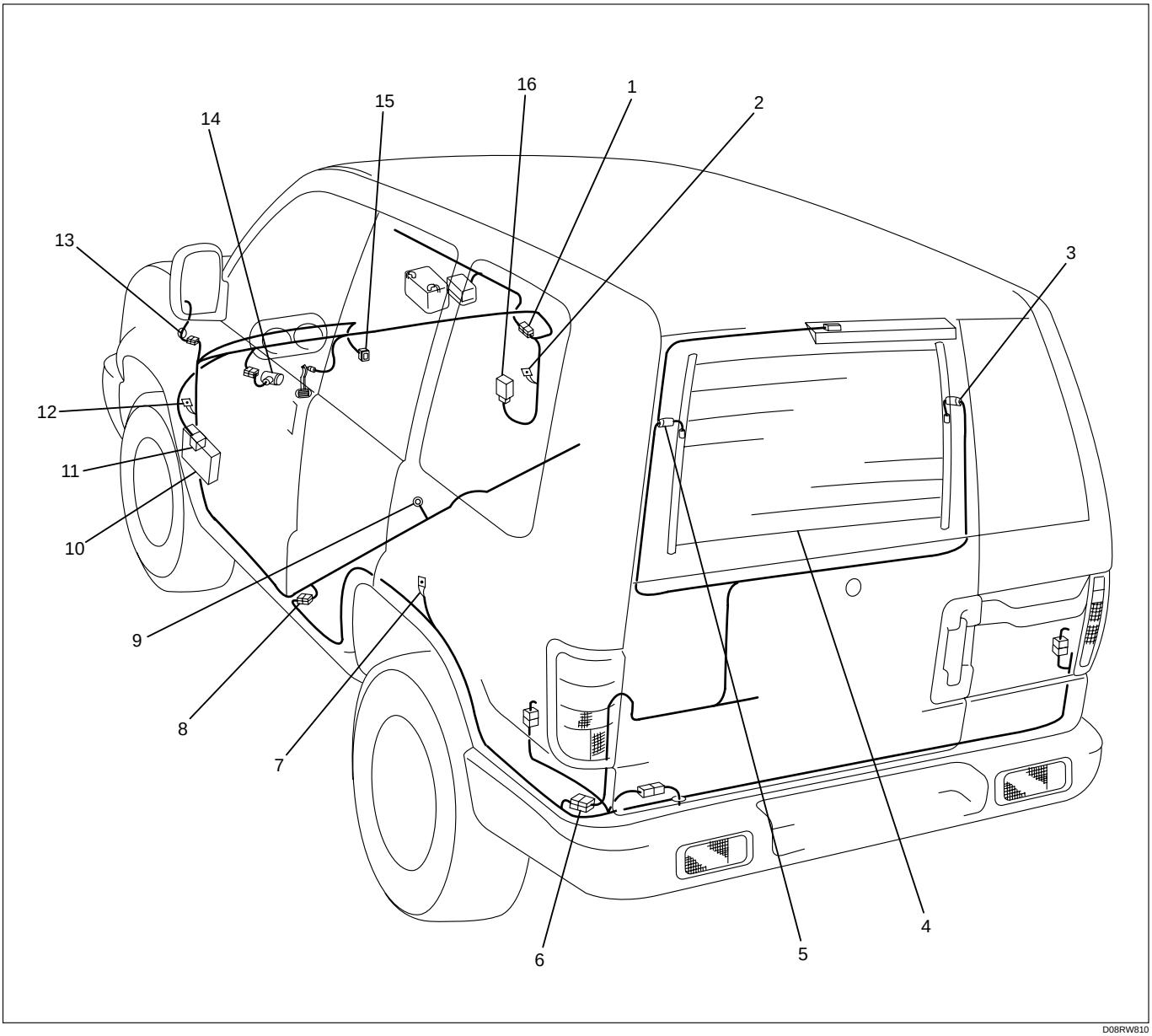

D08RW810

Legend

(1) H-48
(2) B-2
(3) G-7
(4) Rear Defogger
(5) G-3
(6) H-37
(7) R-3
(8) H-31
(9) B-26
(10) Fuse Box
(11) B-38
(12) B-18
(13) H-25
(14) Starter Switch
(15) I-17 (Rear Defogger Switch)
(16) B-6, B-7 (Alarm and Relay Control Unit)

Diagnosis

Quick Chart for Check Points

Trouble mode \ Check point	Fuse		Rear defogger SW	Rear defogger relay	Alarm & relay control unit	Cable harness
	C-4 (15A)	C-17 (25A)				
1 Rear defogger does not operate	○	○	○	○	○	○
2 Rear defogger timer does not function					○	

1 Rear Defogger Does Not Operate

- ARE THE FUSES C-4 (15A) AND C-17 (25A) NORMAL?

YES

- IS THE REAR DEFOGGER RELAY NORMAL?

NO

REPLACE THE FUSE

YES

- IS THE REAR DEFOGGER SWITCH NORMAL?

NO

REPLACE THE RELAY

YES

- IS R-3 GROUNDED SECURELY?

NO

REPAIR OR REPLACE THE SWITCH

YES

- TURN ON THE STARTER SWITCH AND THE REAR DEFOGGER SWITCH
- IS THERE A BATTERY VOLTAGE APPLIED BETWEEN THE REAR DEFOGGER CONNECTOR 1 G-3 AND THE GROUND?

NO

GROUND IT SECURELY

YES

- IS THERE CONTINUITY BETWEEN 1 G-7 AND THE GROUND?

NO

REPAIR A POOR CONNECTION AT THE CONNECTORS OR AN OPEN CIRCUIT IN EACH OF THE FOLLOWING CONNECTIONS: FUSE C-17 (25A) AND 2 B-38 , FUSE C-4 (10A) AND 3 B-38 , 4 B-38 AND 1 G-3 , 4 I-17 AND 8 B-6 , 5 I-17 AND FUSE C-4 (10A)

YES

REPLACE THE ALARM & RELAY CONTROL UNIT

NO

REPAIR A POOR CONNECTION AT THE CONNECTORS OR AN OPEN CIRCUIT BETWEEN 1 G-7 AND R-3

2 Rear Defogger Timer Does Not Function

REPLACE THE ALARM & RELAY CONTROL UNIT

Audio

General Description

The audio circuit is designed for the current to flow through the receiver circuit when the radio switch is turned on with the starter switch in “ACC” or “ON”. Current runs through the memory circuit of the audio regardless of the position of the starter switch.
The radio antenna operates in connection to the radio switch. The antenna rod goes up when the switch is ON and goes down to be stored in the fender with the switch OFF. The antenna rod also goes down when the starter switch is turned off with radio on.

Circuit Diagram (RHD)-1

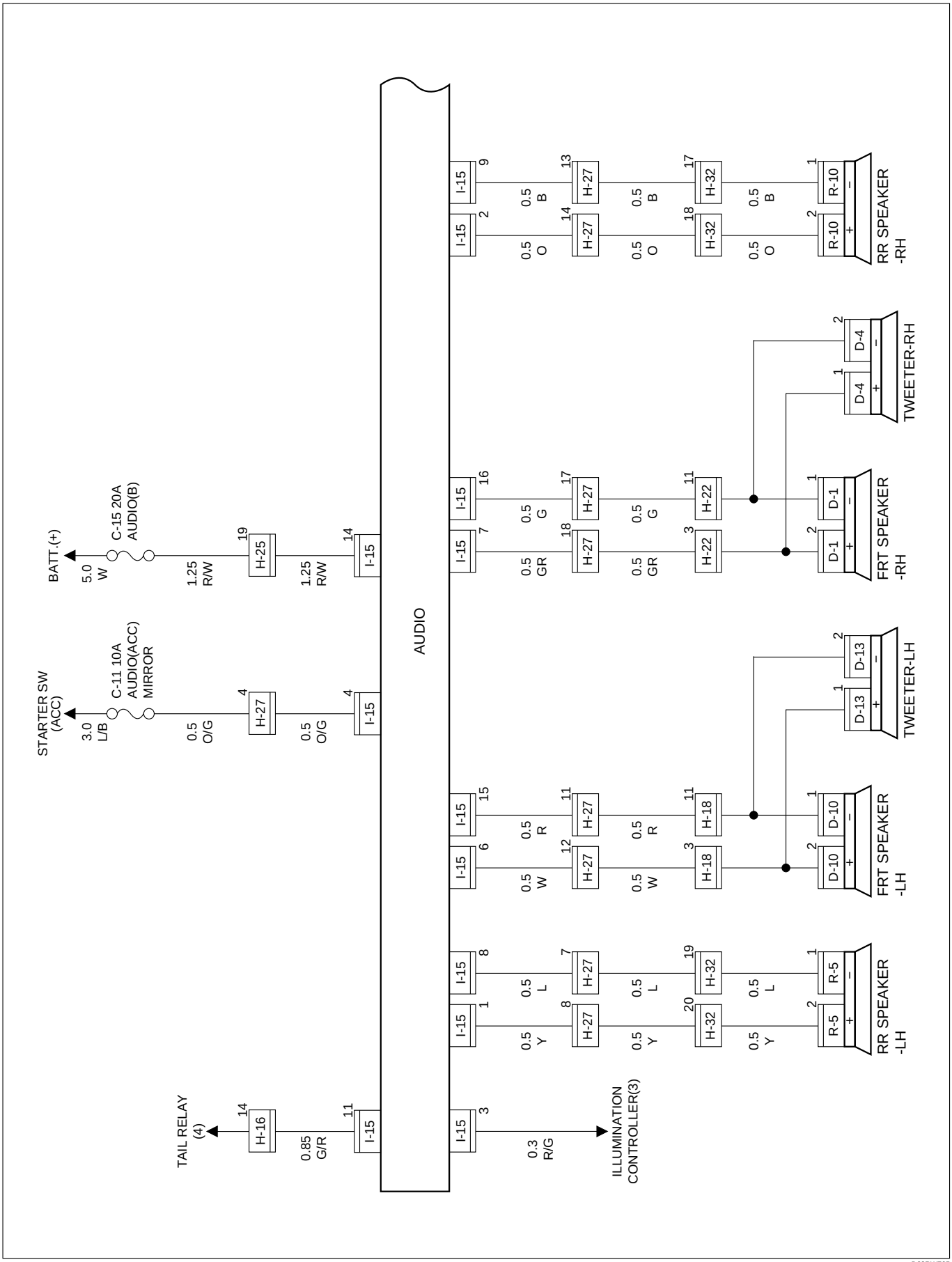

D08RW765

Circuit Diagram (RHD)-2

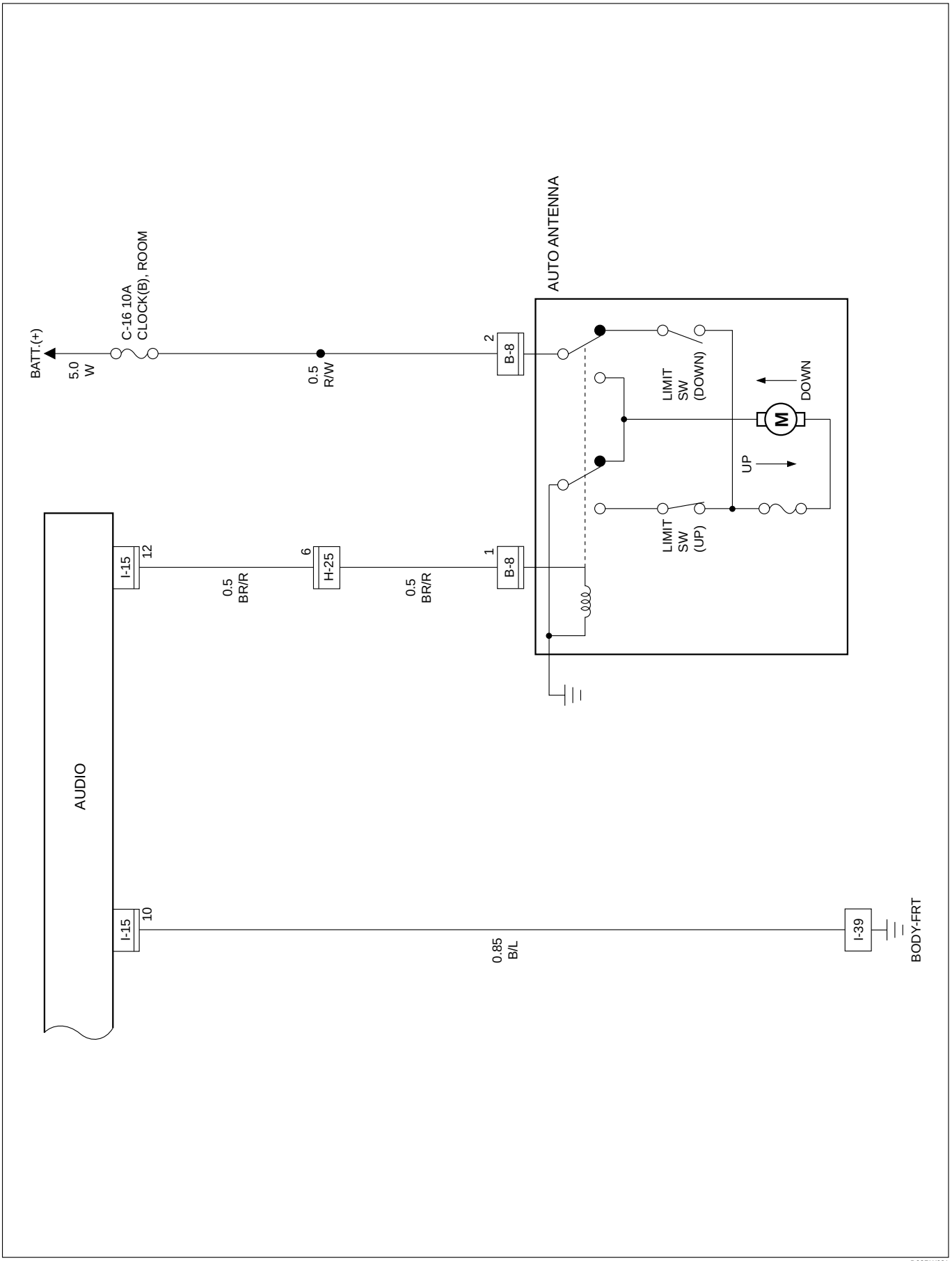

D08RW681

Circuit Diagram (South Africa)-1

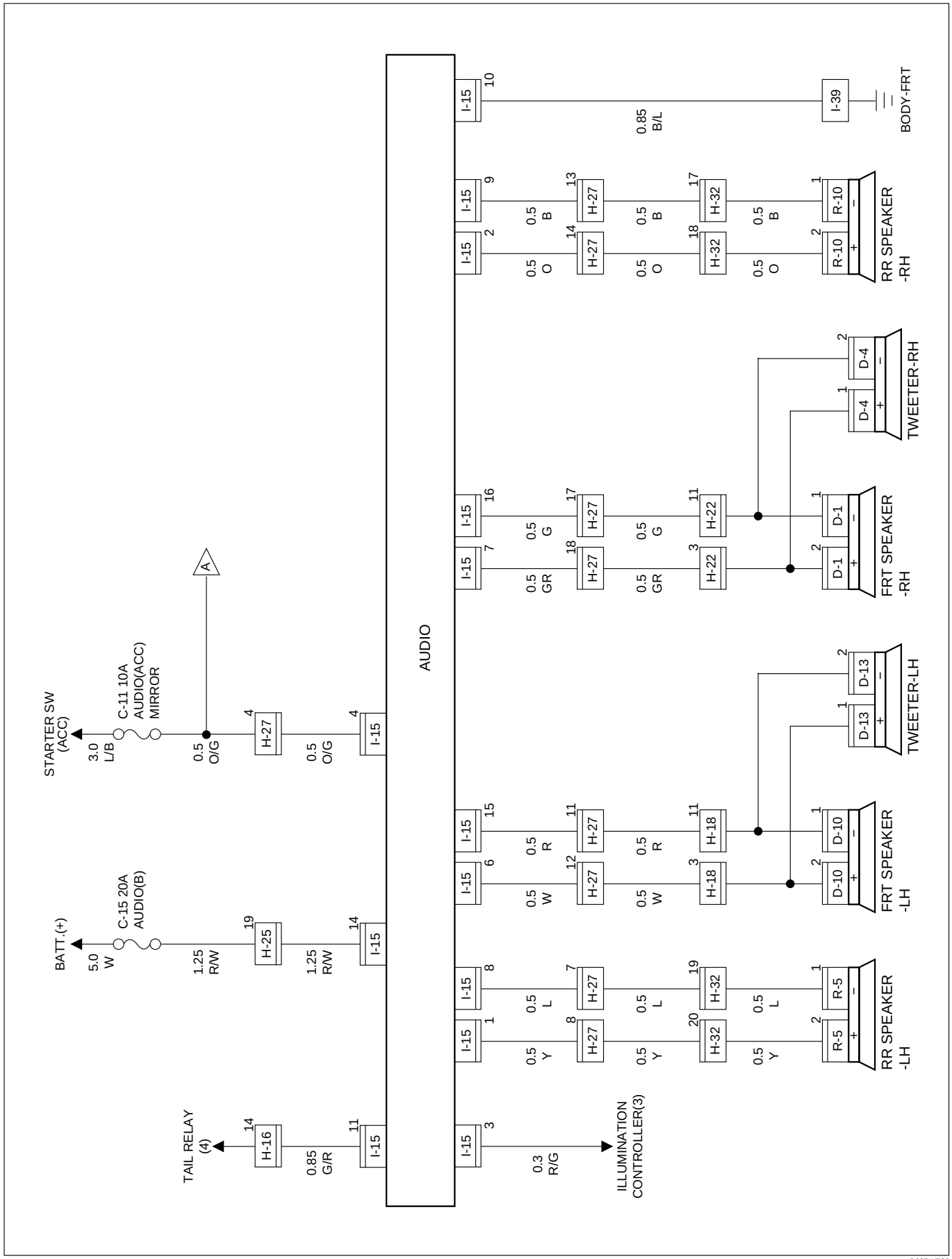

D08RWB90

Circuit Diagram (South Africa)-2

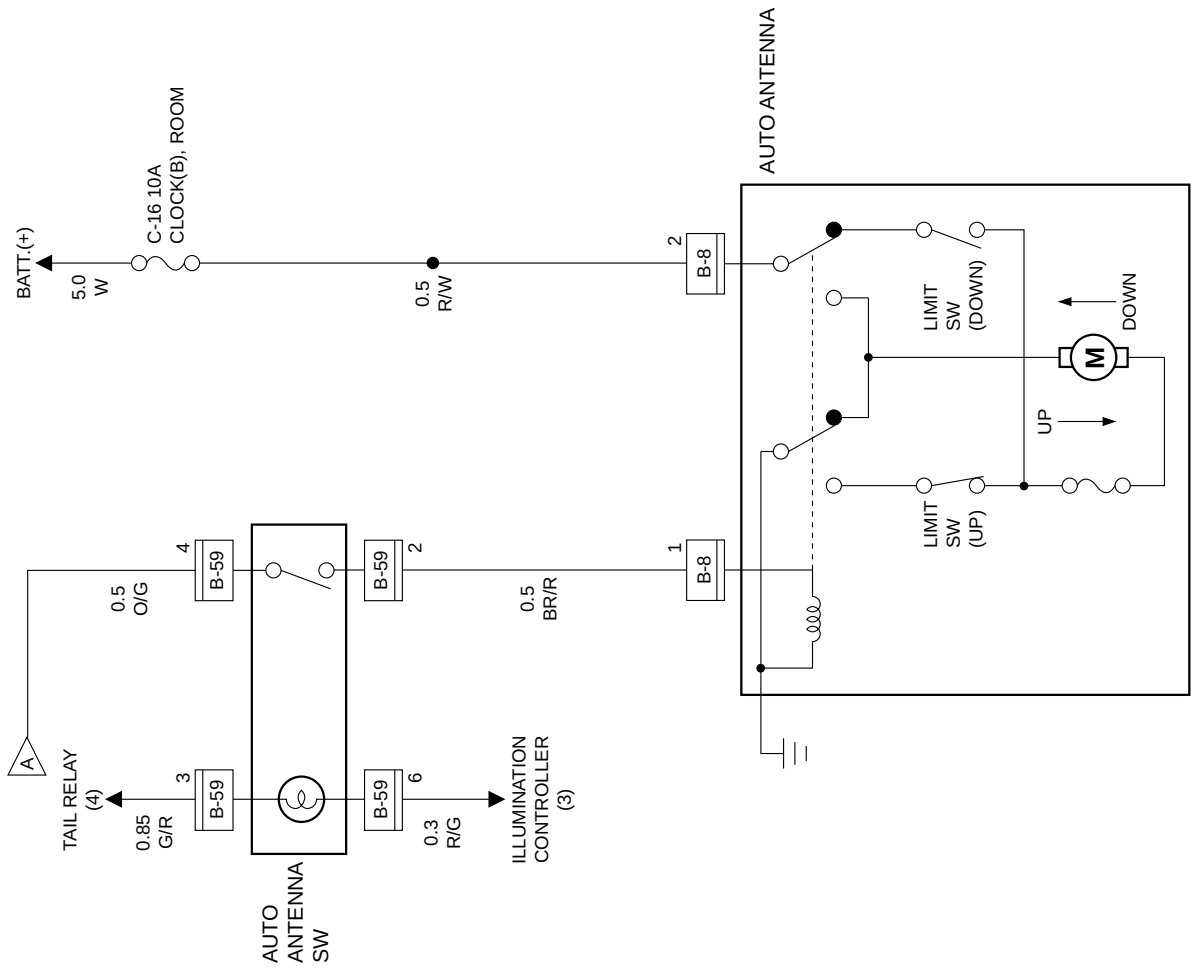

D08RWB89

Parts Location (RHD)

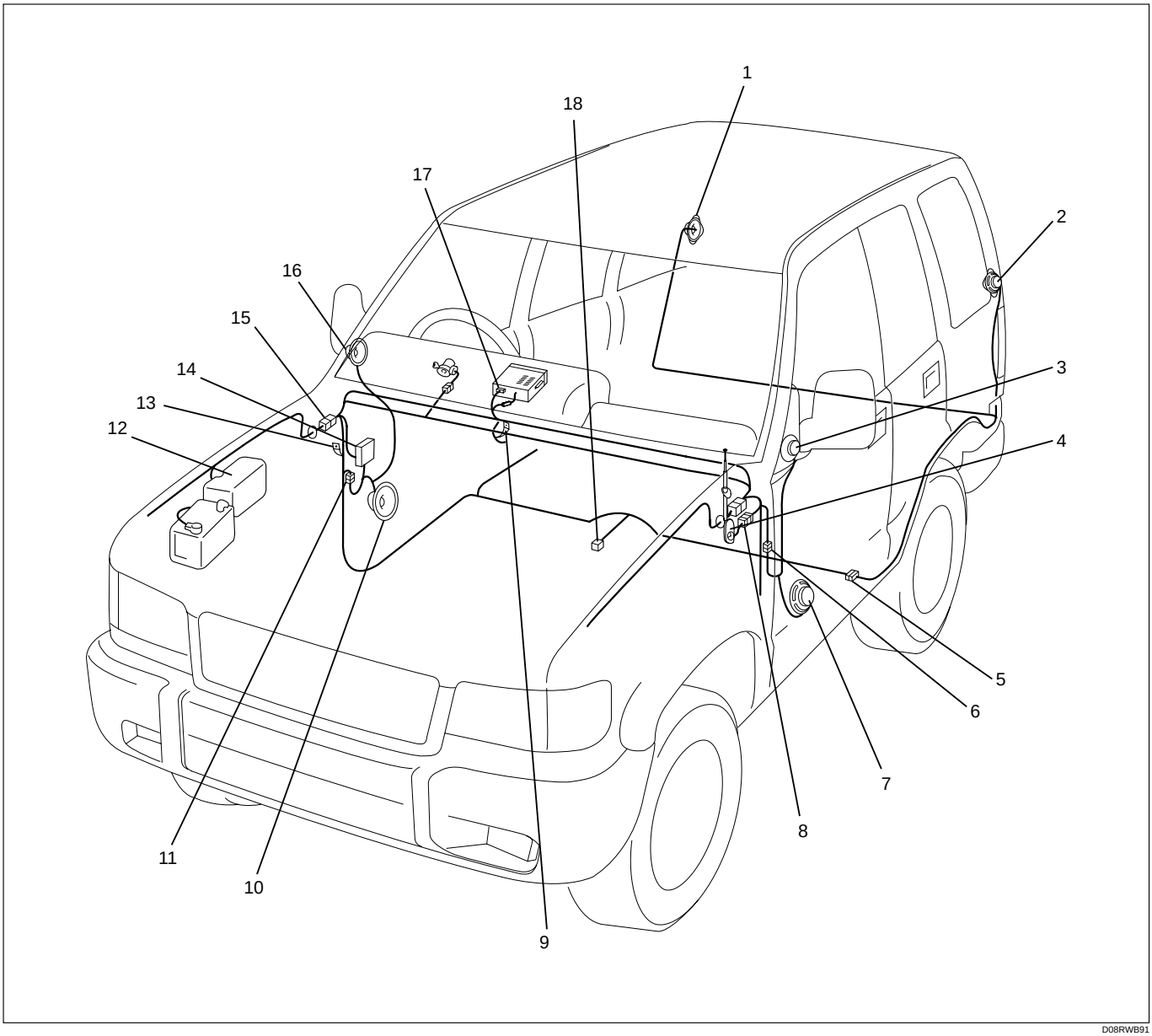

D08RWB91

Legend

(1) R-10
(2) R-5
(3) D-13
(4) Auto Antenna
(5) H-32
(6) H-18
(7) D-10
(8) B-8
(9) I-39
(10) D-1
(11) H-22
(12) Relay and Fuse Box
(13) B-19
(14) Fuse Box
(15) H-25, H-26, H-27
(16) D-4
(17) I-15
(18) B-59

Circuit Diagram (LHD)-1

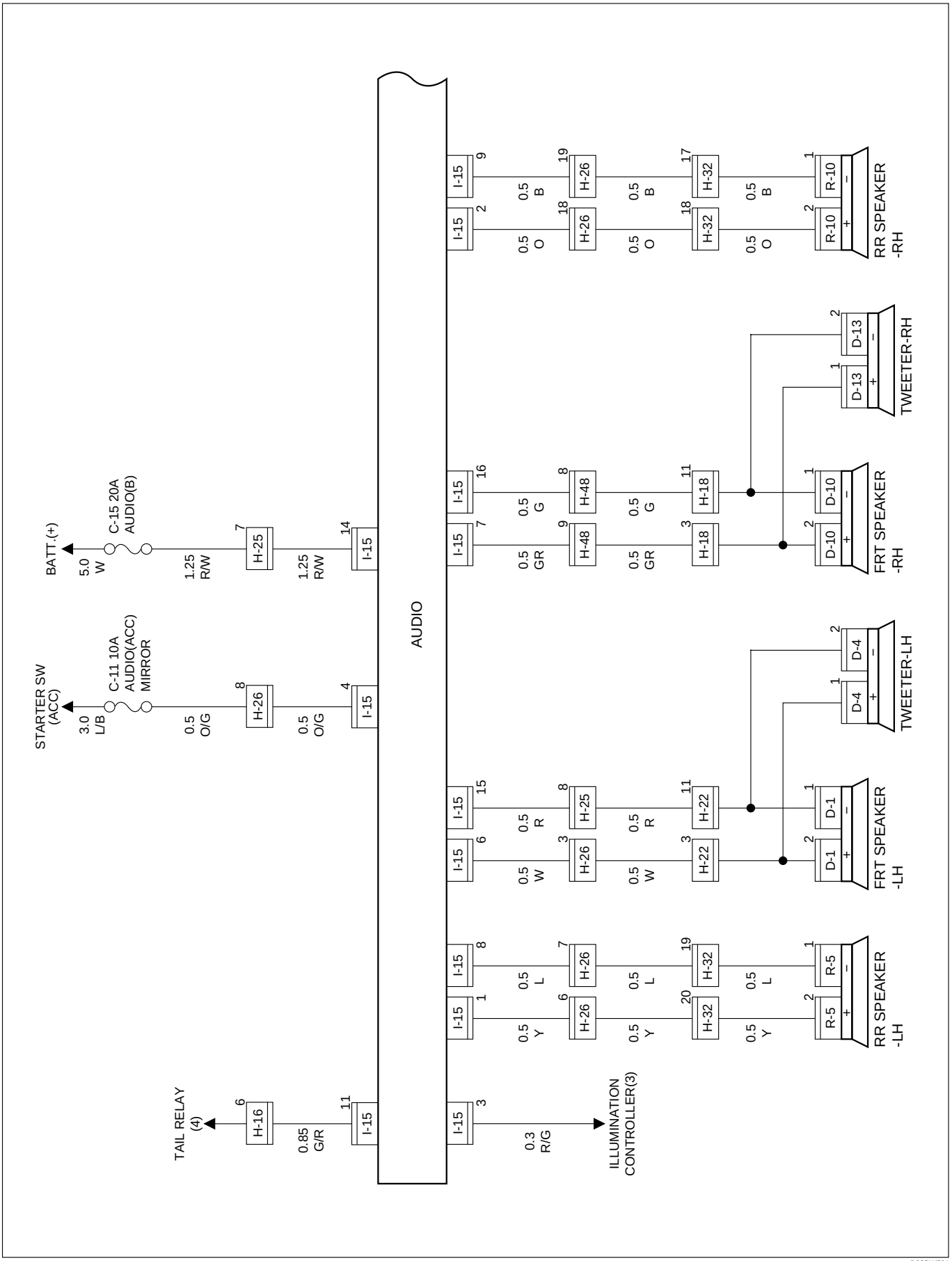

D08RW764

Circuit Diagram (LHD)-2

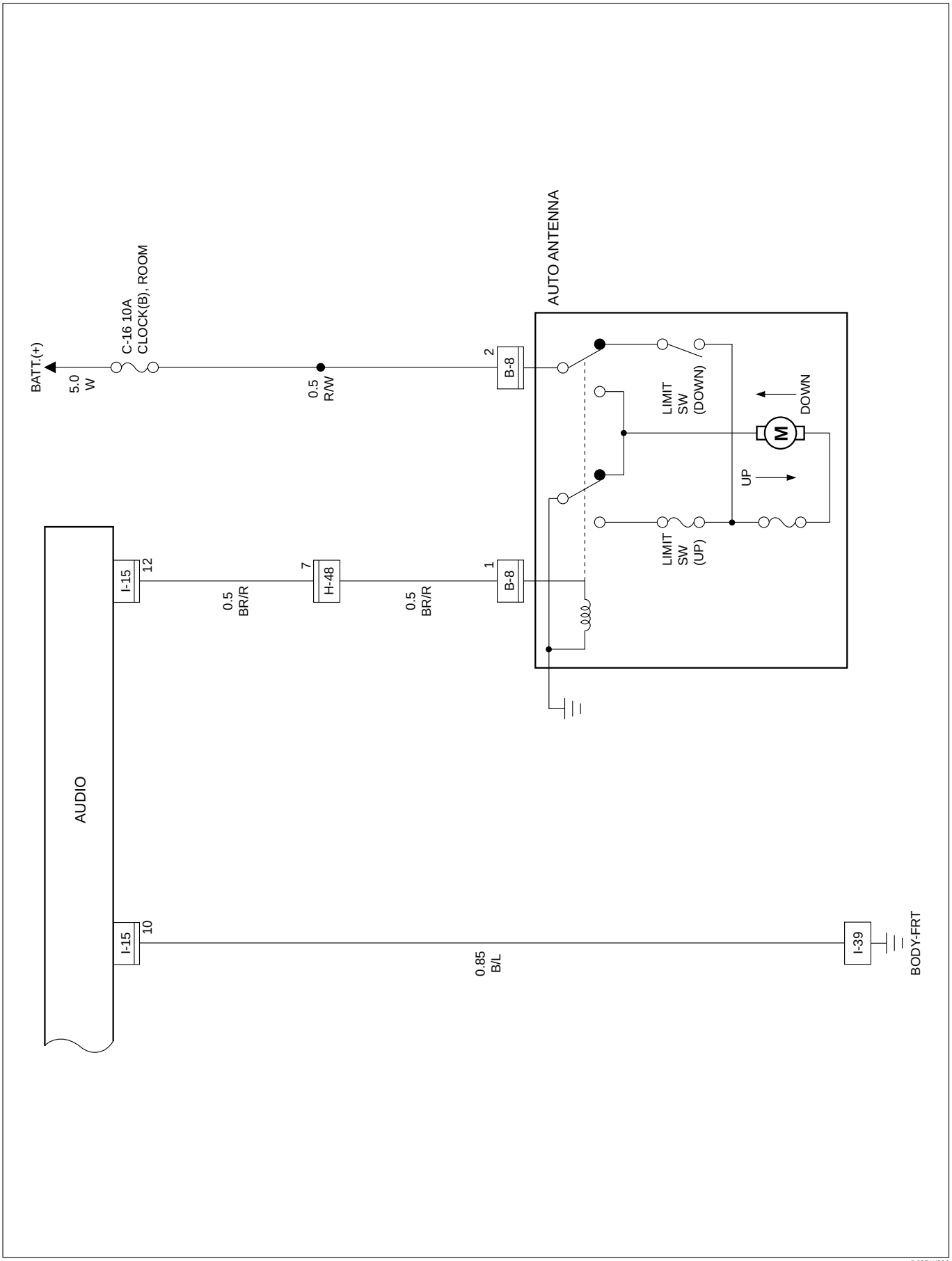

D08RW682

Parts Location (LHD)

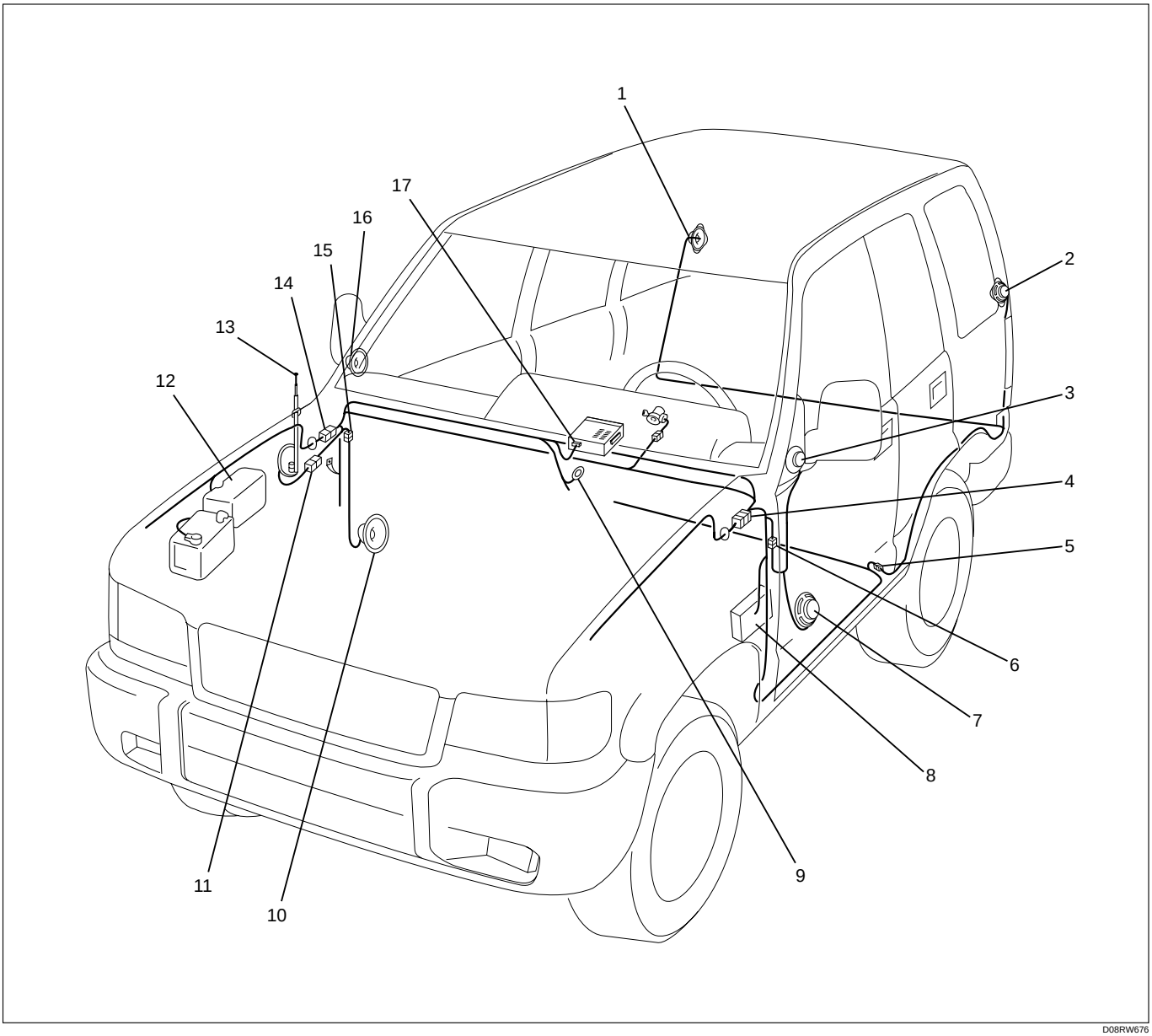

Legend

(1) R-10
(2) R-5
(3) D-4
(4) H-25, H-26
(5) H-32
(6) H-22
(7) D-1
(8) Fuse Box
(9) I-39
(10) D-10
(11) B-8
(12) Relay and Fuse Box
(13) Auto Antenna
(14) H-48
(15) H-18
(16) D-13
(17) I-15

Cigarette Lighter and Digital Clock

General Description

When cigarette lighter is pushed in with starter switch at either “ACC” or “ON” position, a circuit is formed in cigarette lighter case to heat lighter coil. Cigarette lighter springs back to its original position after lighter coil is heated.

Circuit Diagram (RHD)

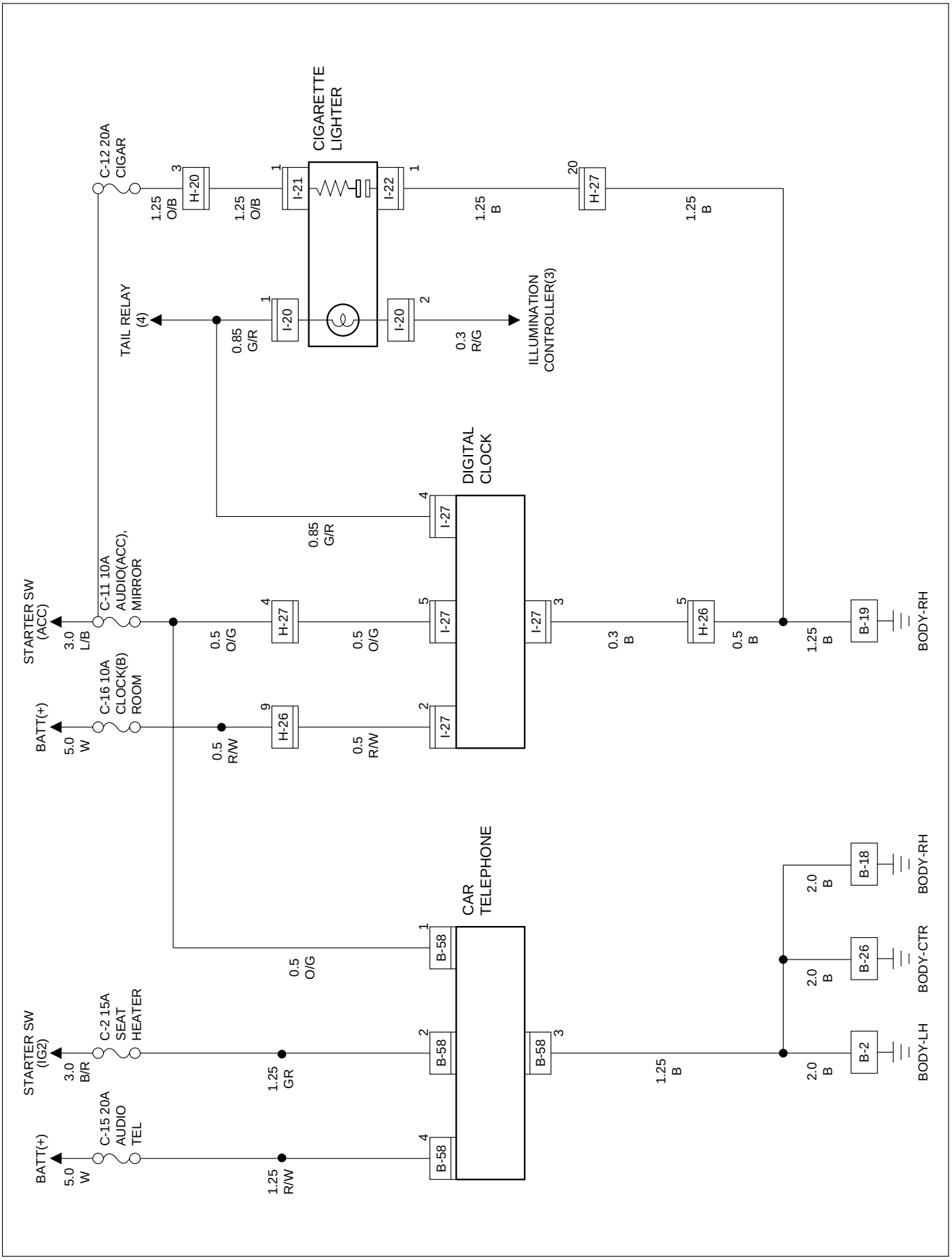

D08RWA62

Parts Location (RHD)

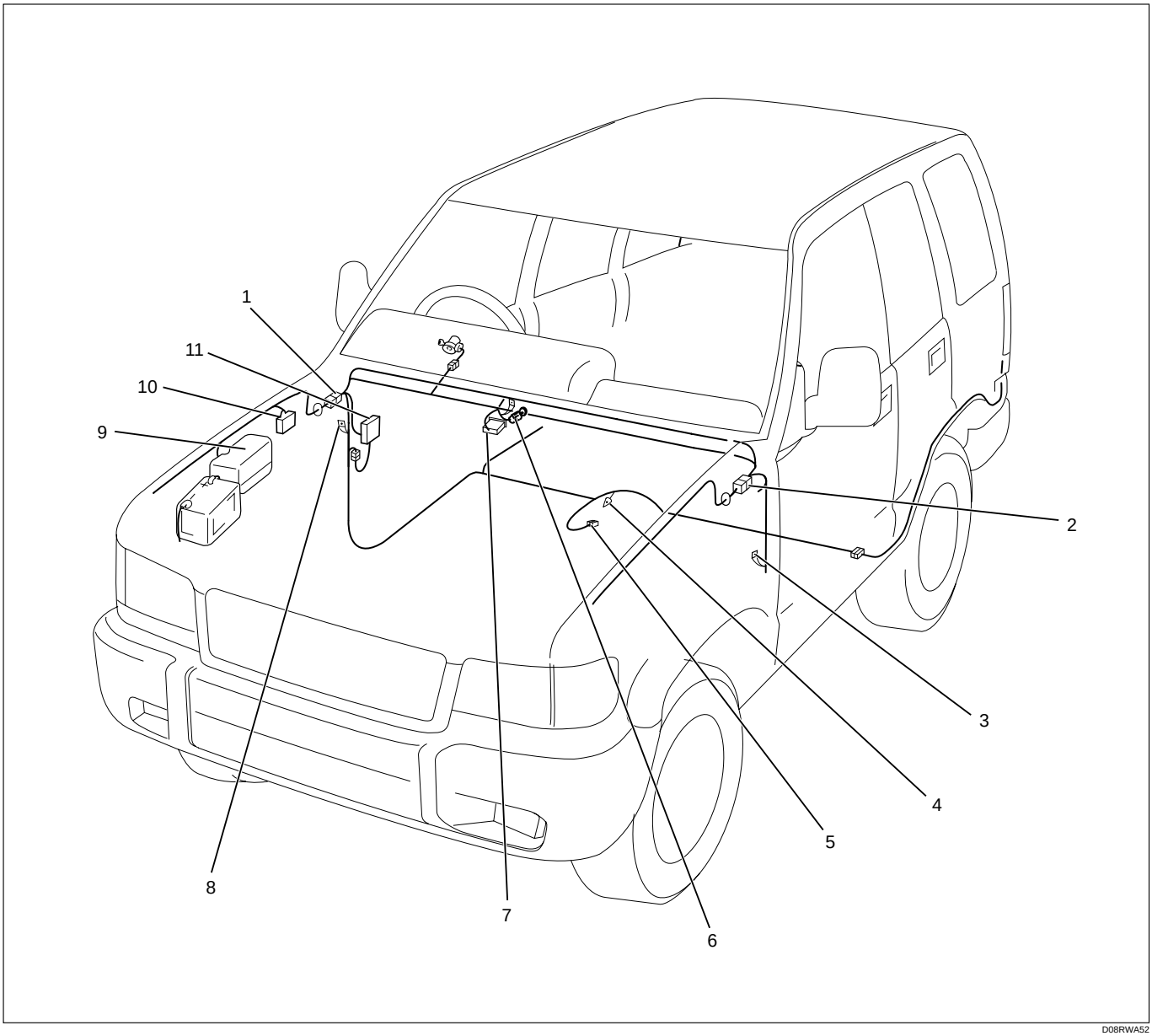

D08RWA52

Legend

(1) H-26, H-27
(2) H-20
(3) B-2
(4) B-26
(5) B-58
(6) I-20, I-21, I-22
(7) I-27
(8) B-18, B-19
(9) Relay and Fuse Box
(10) C-39
(11) Fuse Box

Circuit Diagram (LHD)

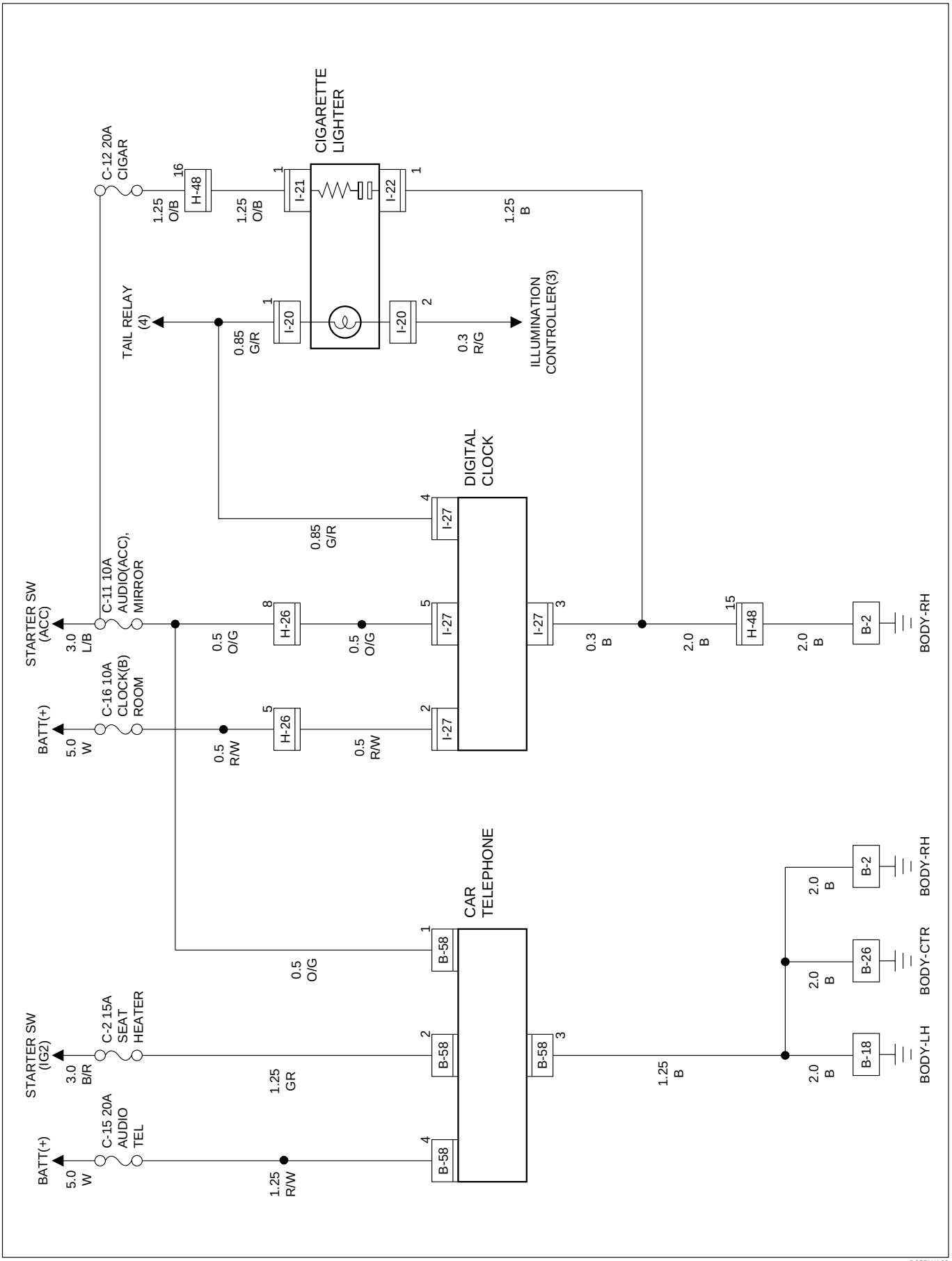

D08RWA63

Parts Location (LHD)

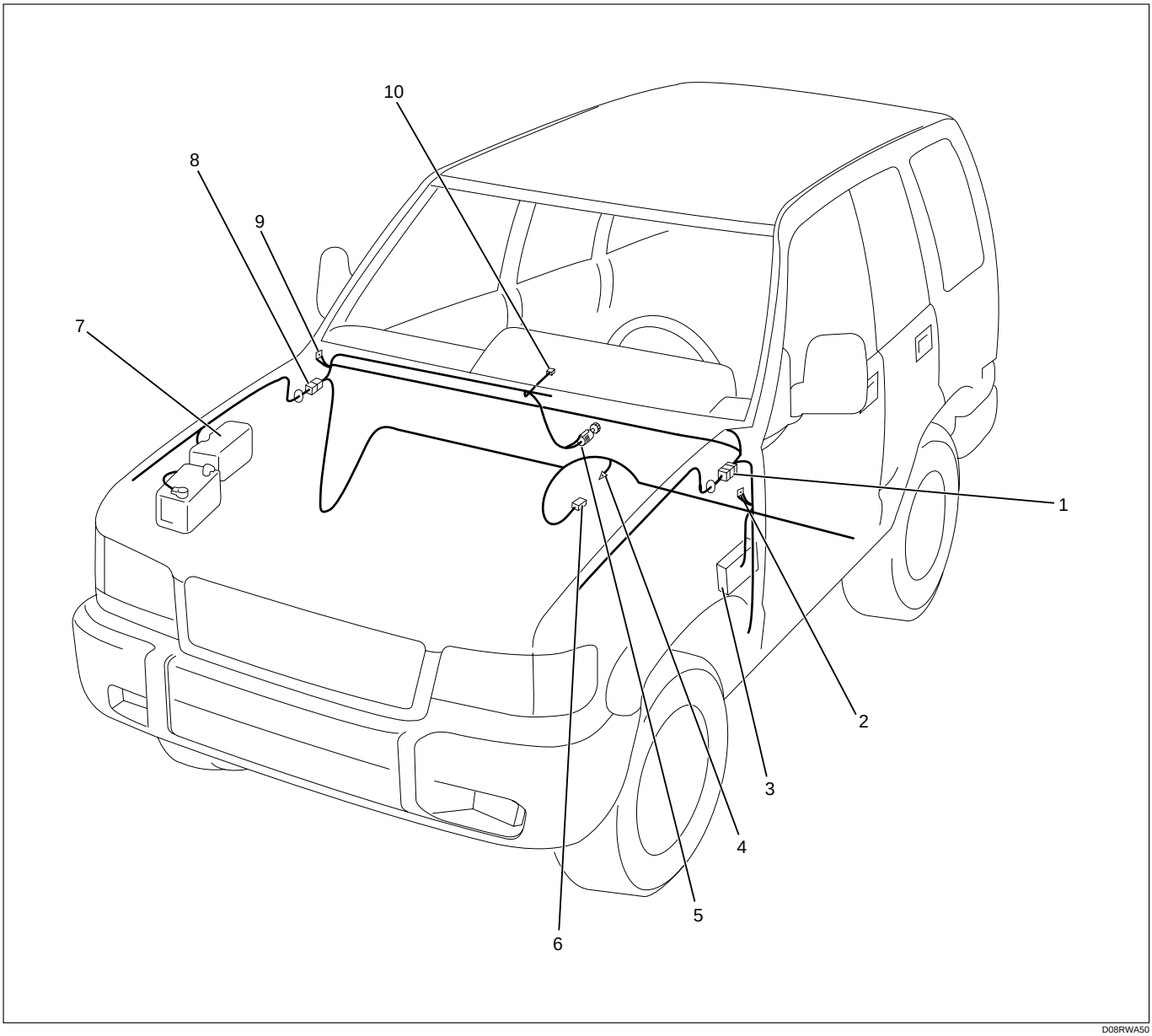

D08RWA50

Legend

(1) H-26
(2) B-18
(3) Fuse Box
(4) B-26
(5) I-20, I-21, I-22
(6) B-58
(7) Relay and Fuse Box
(8) H-48
(9) B-2
(10) I-27

Power Door Mirror

General Description

The circuit consists of door mirror control switch, folding switch, defogger switch and door mirrors on both sides.
When control switch is operated with starter switch at either “ACC” or “ON” position, motors incorporated in door mirrors on both sides rotates to allow the horizontal and vertical adjustment of mirror angle.
Folding switch can be used to fold mirror and return it to its original position.
When turning on door mirror defogger switch with starter switch at “ON” position, built–in heater in mirror is activated to perform defogger function.

Circuit Diagram (RHD)-1

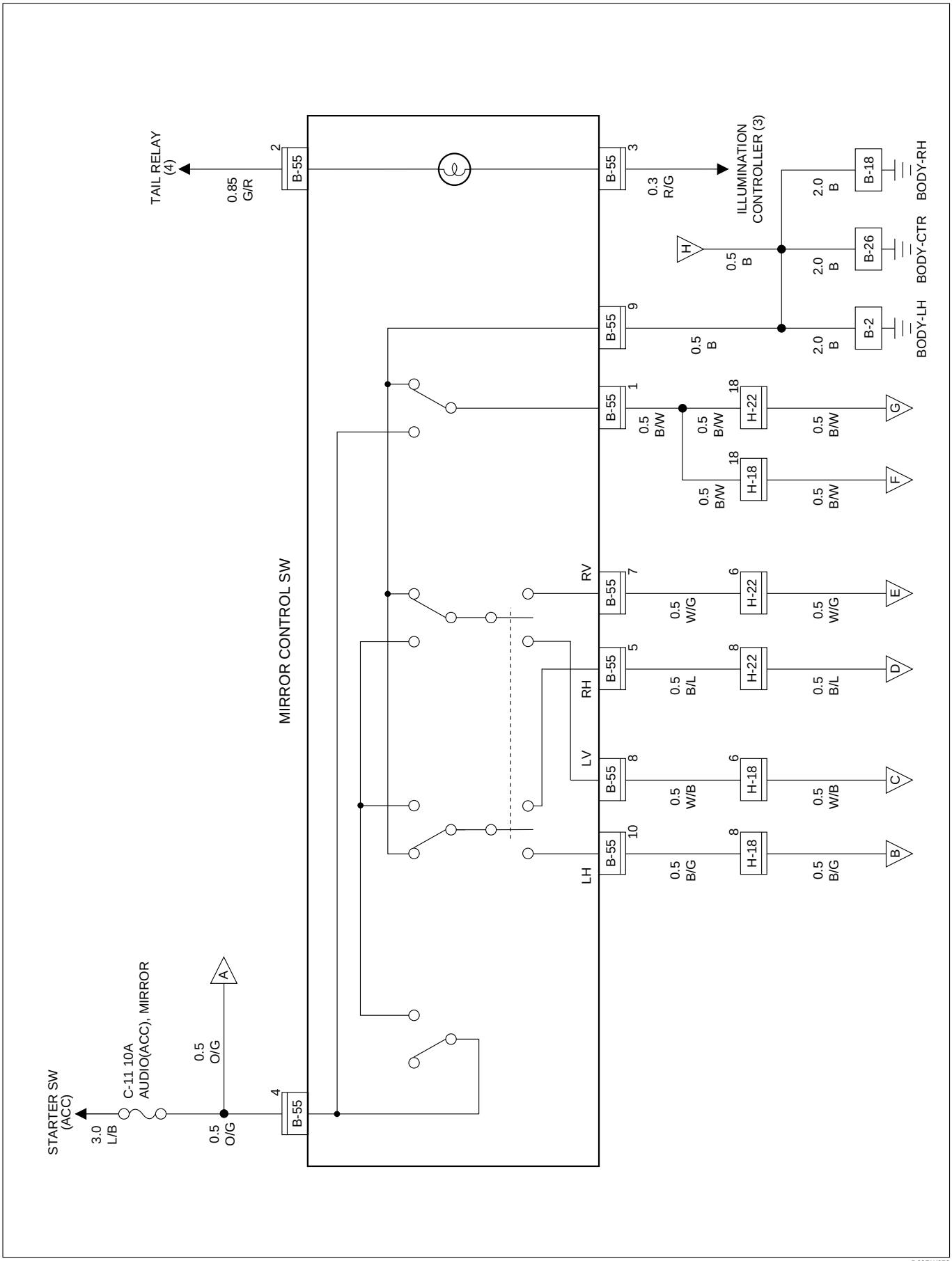

Circuit Diagram (RHD)-2

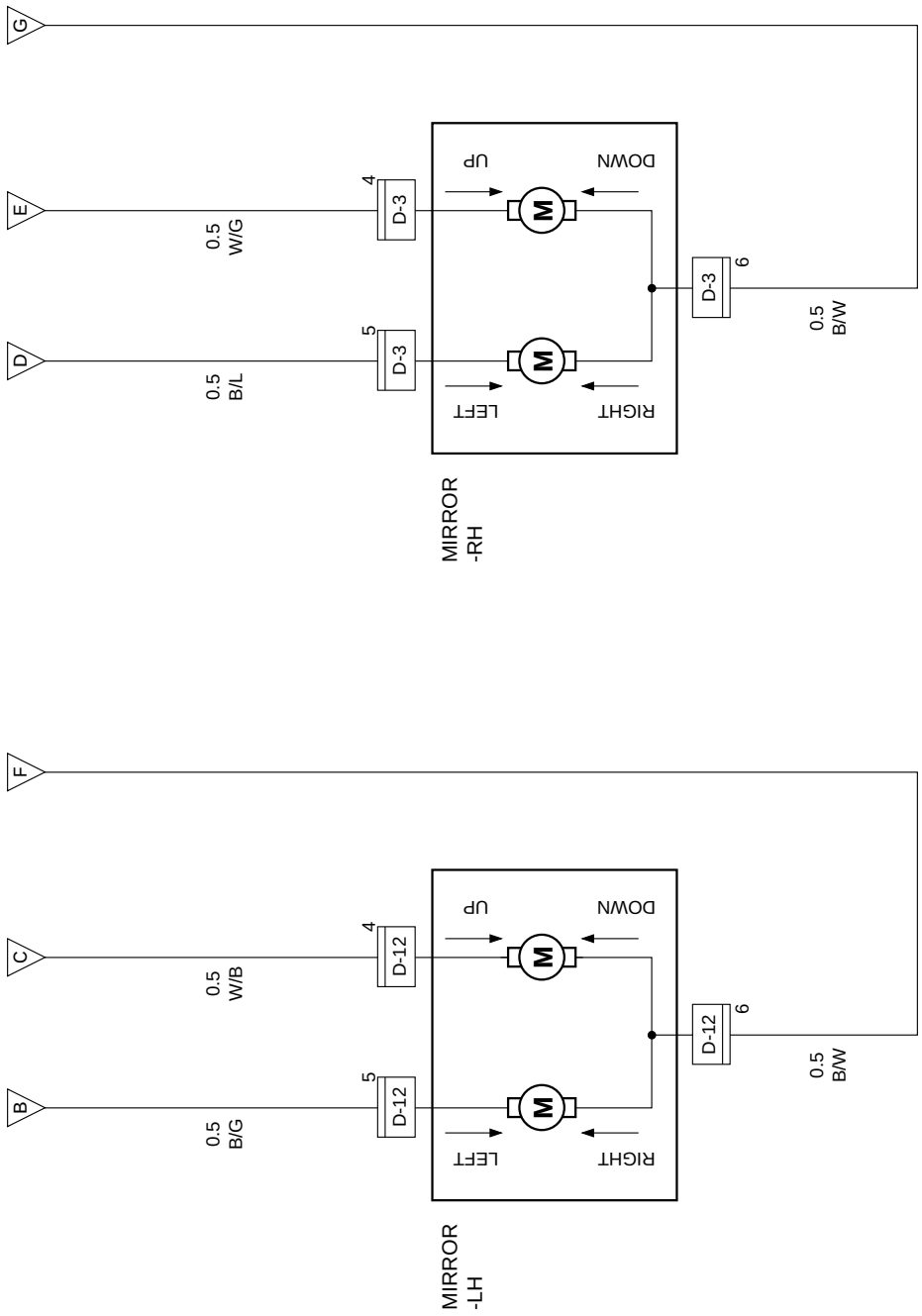

D08RW646

Circuit Diagram (RHD)-3

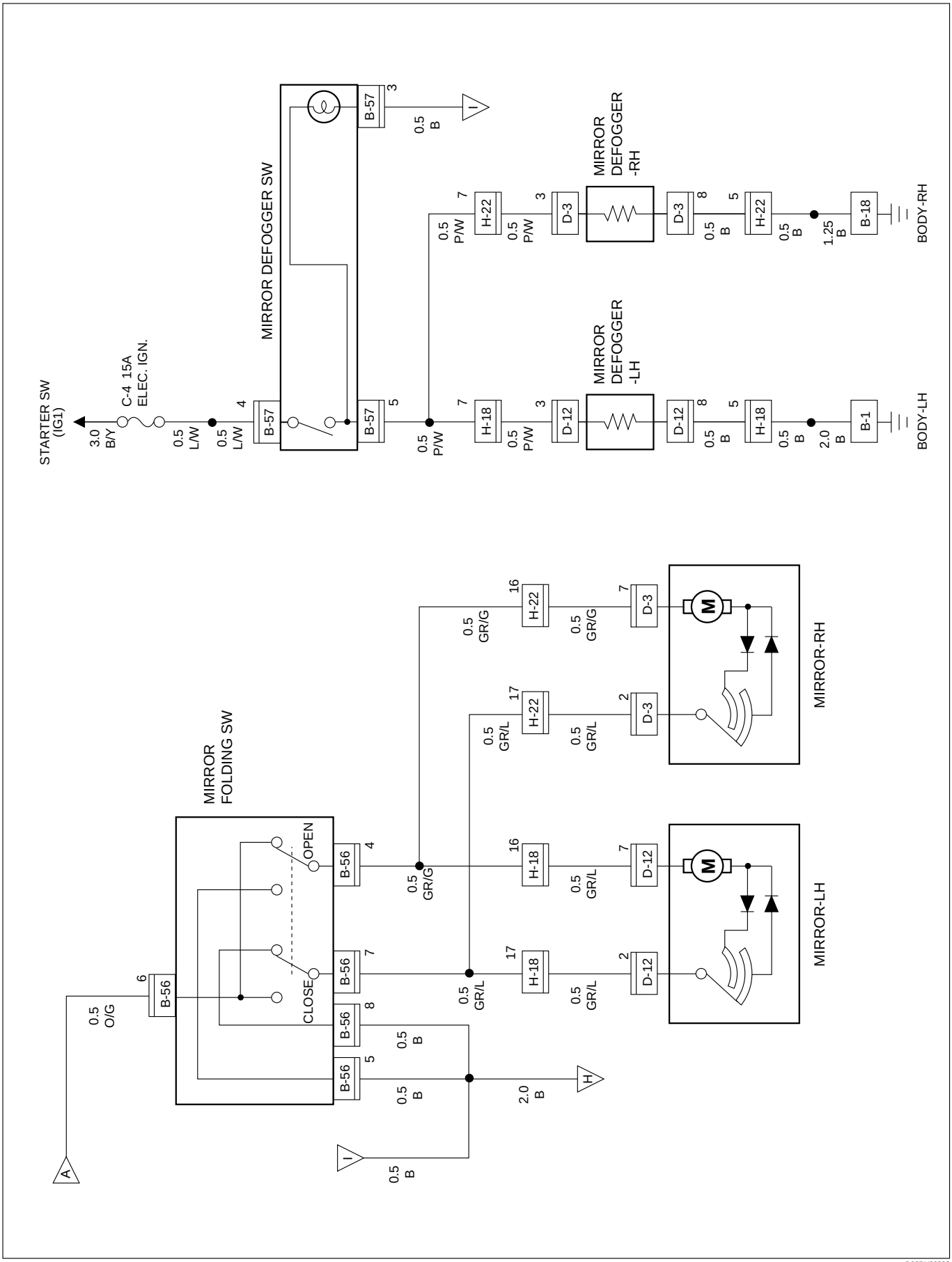

D08RY00232

Parts Location (RHD)

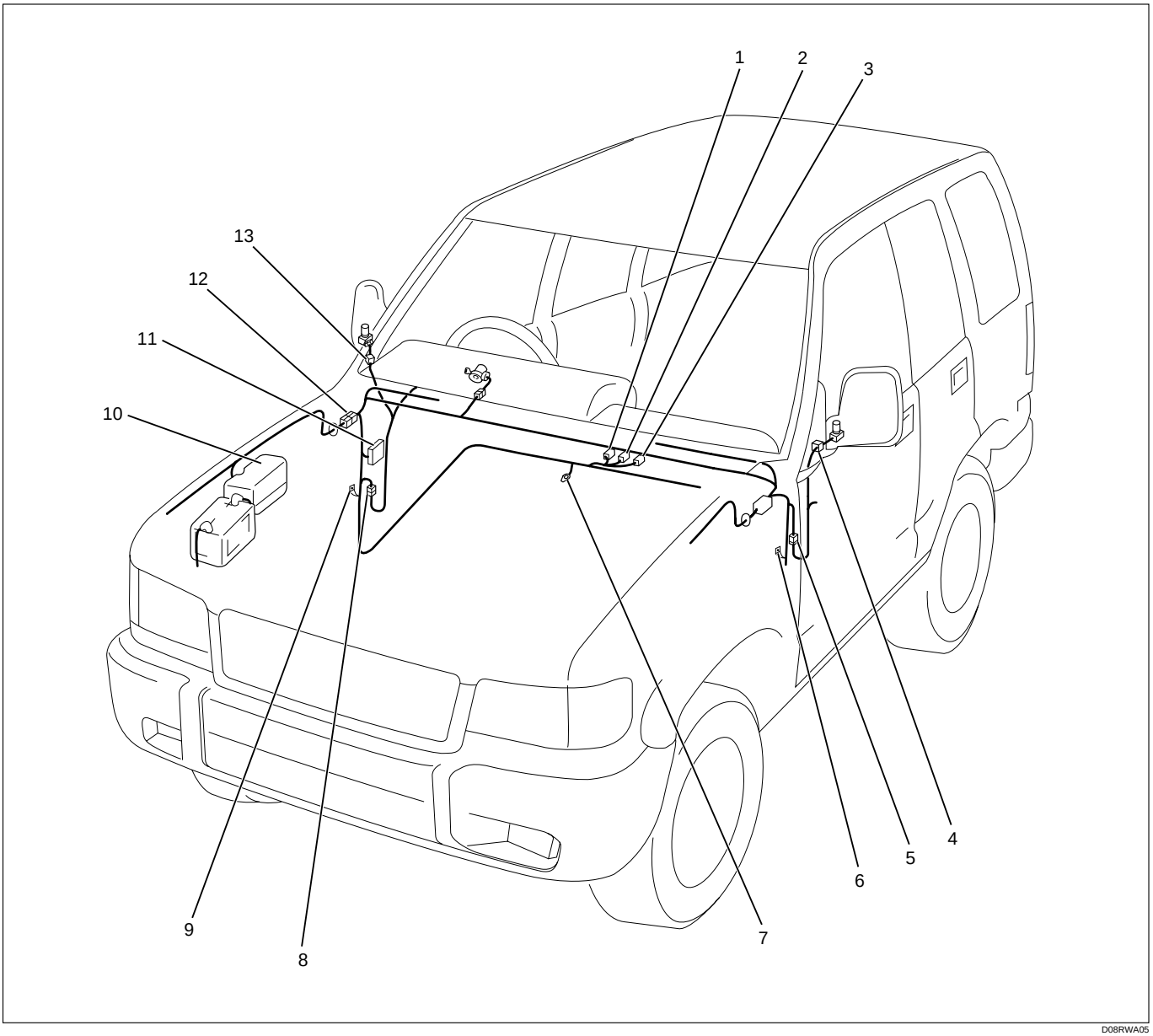

D08RWA05

Legend

(1) B-56 (Center Console)
(2) B-57 (Center Console)
(3) B-55 (Center Console)
(4) D-12
(5) H-18
(6) B-1, B-2
(7) B-26
(8) H-22
(9) B-18
(10) Relay & Fuse Box
(11) Fuse Box
(12) H-14
(13) D-3

Circuit Diagram (LHD)-1

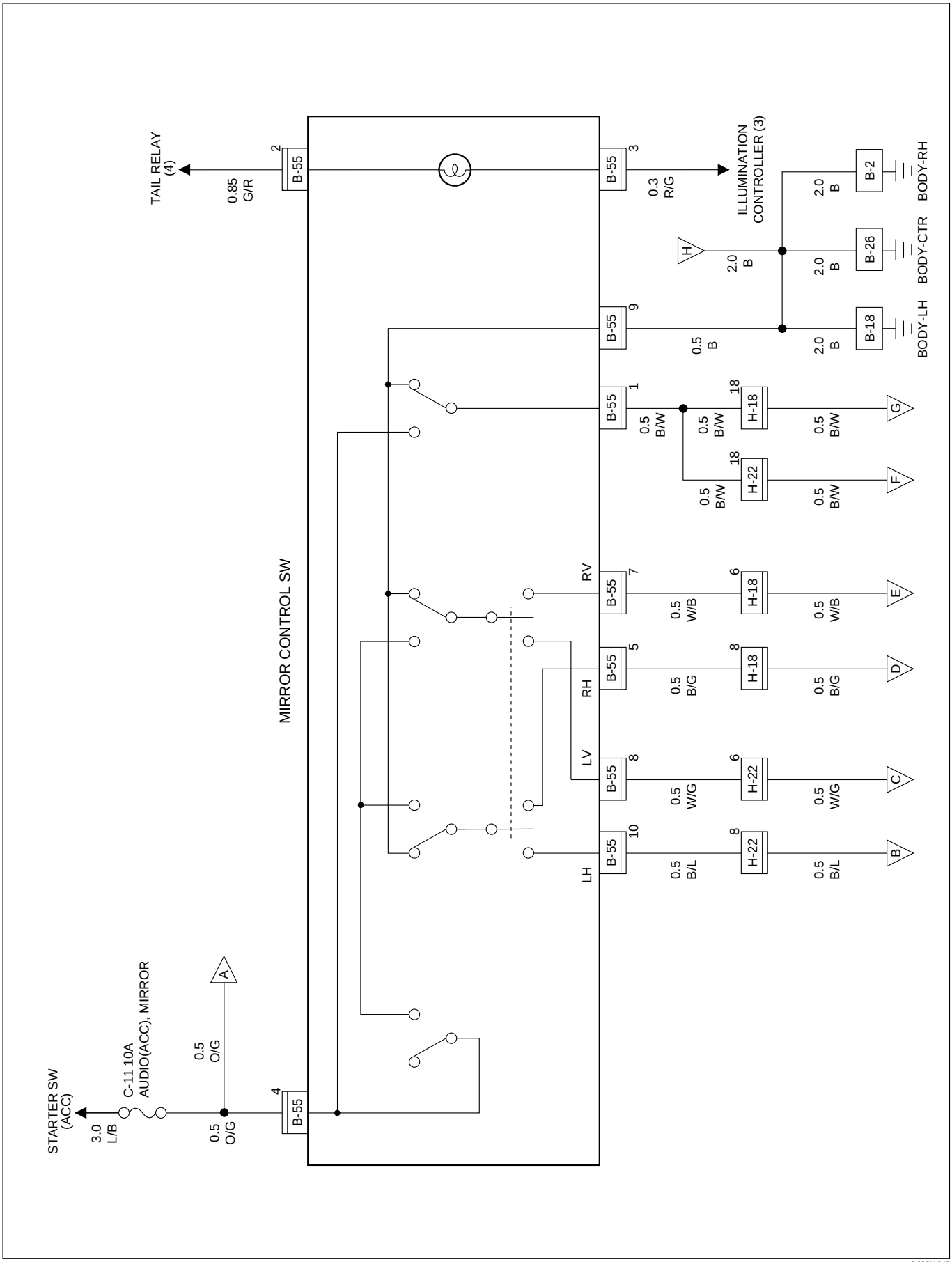

D08RW945

Circuit Diagram (LHD)-2

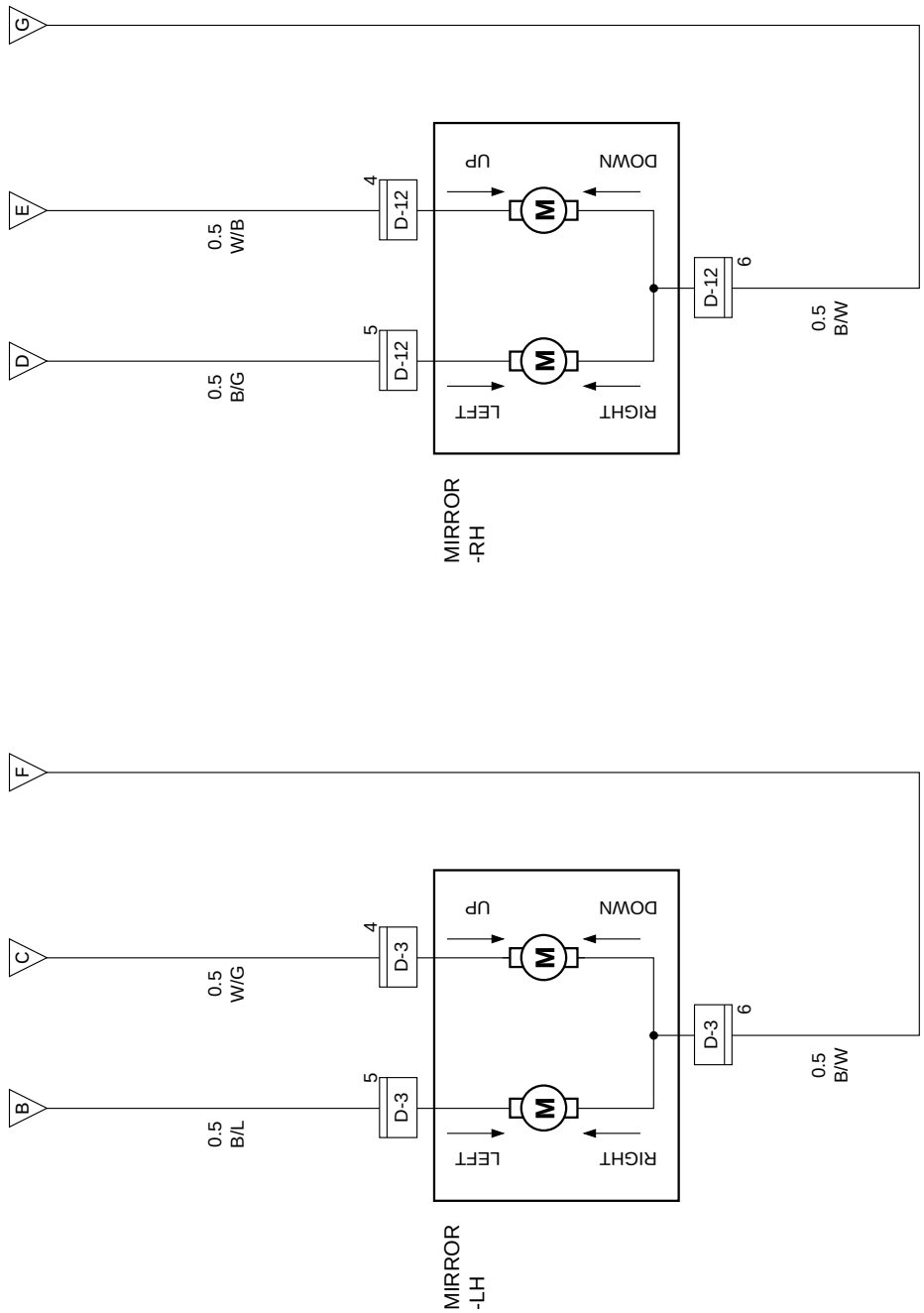

D08RW088

Circuit Diagram (LHD)-3

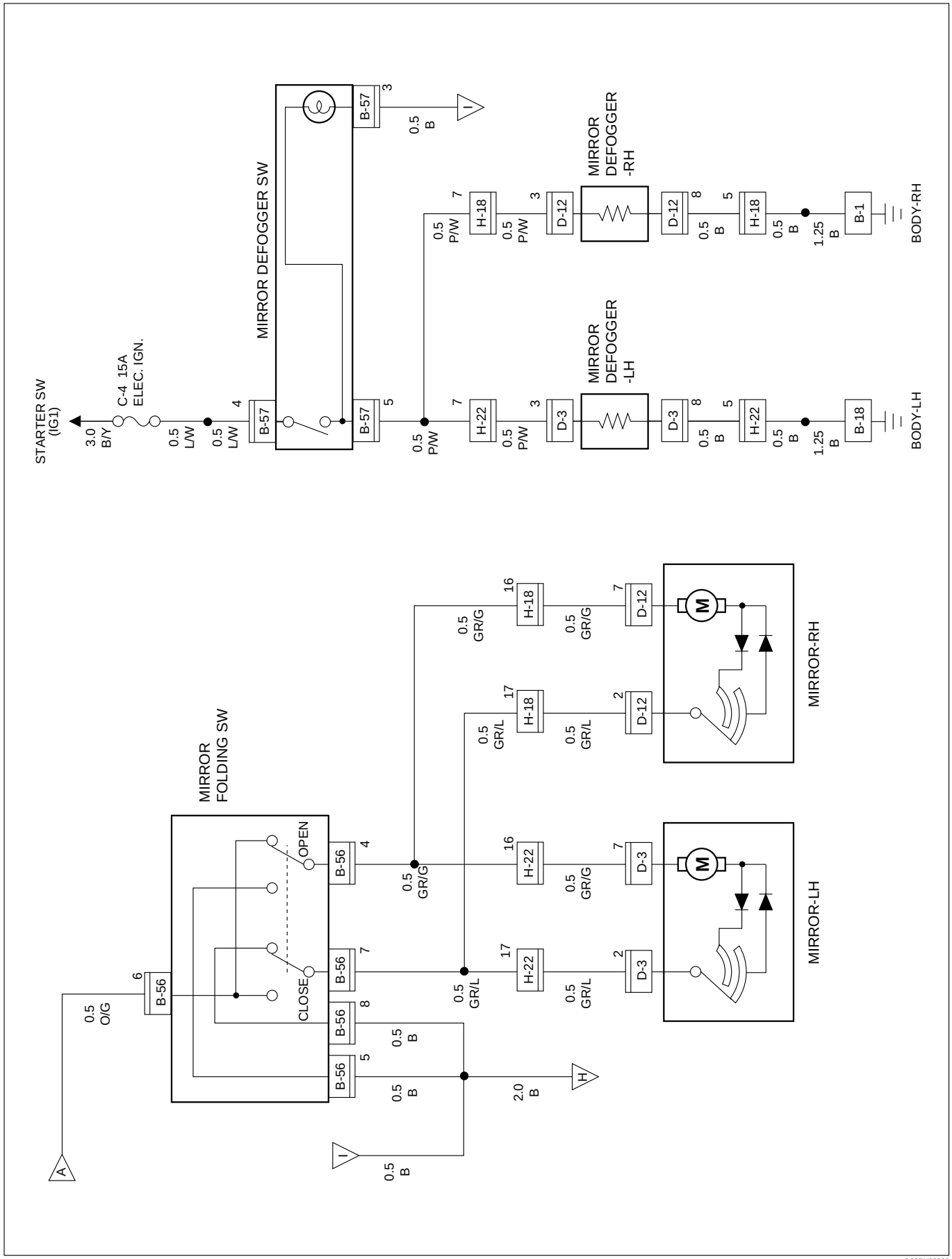

D08RY00233

Parts Location (LHD)

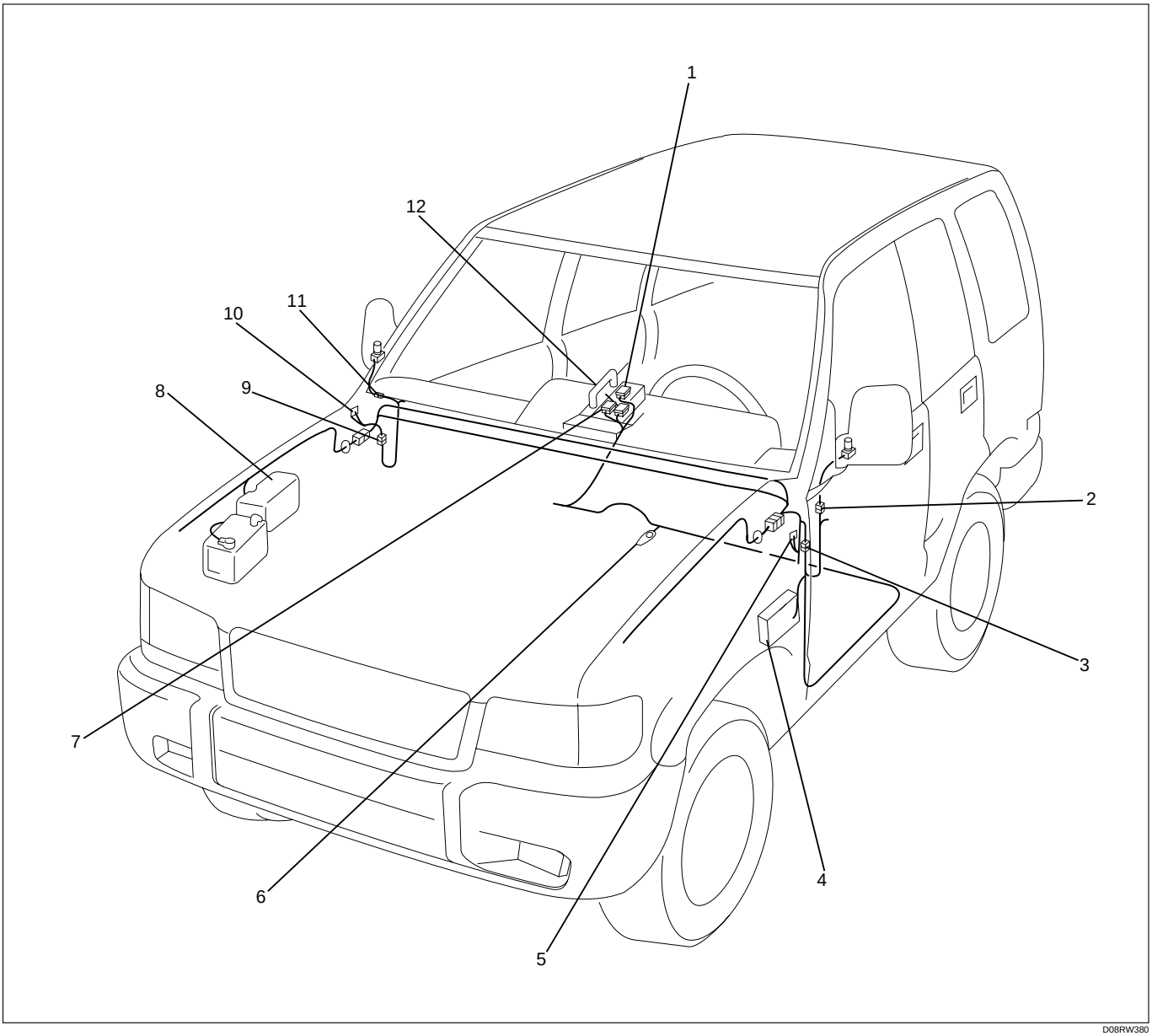

Legend

(1) B-55
(2) D-3
(3) H-22
(4) Fuse Box
(5) B-18
(6) B-26
(7) B-57
(8) Relay and Fuse Box
(9) H-18
(10) B-1, B-2
(11) D-12
(12) B-56

Diagnosis

Quick Chart for Check Points

SW	Trouble mode \ Check point	Fuse		Door mirror SW			Door mirror		Cable harness
		C-4 (15A)	C-11 (10A)	Control	Folding	Defogger	LH	RH	
Control switch	1. Mirrors on both sides do not operate		○	○					○
	2. Mirror on the left (or right) side does not operate			○			○	○	○
	3. Mirrors on both sides operate only in the vertical (or horizontal) direction			○					
	4. Mirror on the left side operates only in the vertical (or horizontal) direction			○			○		○
	5. Mirror on the right side operates only in the vertical (or horizontal) direction			○				○	○
Folding switch	6. Folding mechanism of the both mirrors does not operate		○		○				○
	7. Folding mechanism of the mirror on the left (or right) side does not operate				○		○	○	○
Defogger switch	8. Mirror defoggers on both sides do not operate	○				○			○
	9. Mirror defogger on the left (or right) side does not operate						○	○	○

1. Mirrors On Both Sides Do Not Operate

- IS THE FUSE C-11 (15A) NORMAL?

YES

- REMOVE THE CONNECTORS OF THE DOOR MIRROR CONTROL SW
- SET THE STARTER SW TO “ACC” POSITION
- IS THE BATTERY VOLTAGE APPLIED BETWEEN THE HARNESS SIDE CONNECTOR 4 B-55 AND THE GROUND?

NO

REPLACE THE FUSE

YES

- IS THERE ANY CONTINUITY BETWEEN THE HARNESS SIDE CONNECTORS 9 B-55 AND THE GROUND?

NO

REPAIR A POOR CONNECTION AT THE CONNECTORS OR AN OPEN CIRCUIT BETWEEN THE FUSE C-11 (10A) AND 4 B-55 (CONTROL SW)

YES

- IS THE CONTINUITY IN THE DOOR MIRROR CONTROL SWITCH NORMAL?

NO

REPAIR A POOR CONNECTION AT THE CONNECTORS OR AN OPEN CIRCUIT IN THE CIRCUIT

YES

REPAIR A POOR CONNECTION AT THE CONNECTORS OR AN OPEN CIRCUIT BETWEEN 1 B-55 AND 18 H-18 OR 18 H-22

NO

REPAIR THE DOOR MIRROR CONTROL SW

2. Mirror on The Left (Or Right) Side Does Not Operate

- IS THE DOOR MIRROR CONTROL SW NORMAL?

YES

- IS THE DOOR MIRROR ON THE LEFT (OR RIGHT) SIDE NORMAL?

YES

REPAIR A POOR CONNECTION OF CONNECTORS OR AN OPEN CIRCUIT BETWEEN 1 B-55 AND 6 D-12 (OR 6 D-3) OR 1 B-55 AND 6 D-3 (OR 6 D-12)

NO

REPAIR OR REPLACE THE DOOR MIRROR

NO

REPAIR OR REPLACE THE DOOR MIRROR CONTROL SW

3. Mirrors On Both Sides Operate Only In The Vertical (Or Horizontal) Direction

REPAIR OR REPLACE THE DOOR MIRROR CONTROL SW

4. Mirror On The Left Side Operates Only In The Vertical (Or Horizontal) Direction

- IS THE CONTINUITY IN THE DOOR MIRROR CONTROL SWITCH NORMAL?

YES

- IS THE DOOR MIRROR NORMAL?

YES

REPAIR A POOR CONNECTION OF CONNECTORS OR AN OPEN CIRCUIT BETWEEN 8 B-55 AND 4 D-12 (OR 10 B-55 AND 5 D-12 , OR 8 B-55 AND 4 D-3 (OR 10 B-55 AND 5 D-3)

NO

REPAIR OR REPLACE THE DOOR MIRROR

NO

REPAIR OR REPLACE THE DOOR MIRROR CONTROL SW

NOTE: Connectors shown in the parenthesis "( )" indicate a check point of the mirror that does not operate in the horizontal direction.

5. Mirror On The Right Side Operates Only In The Vertical (Or Horizontal) Direction

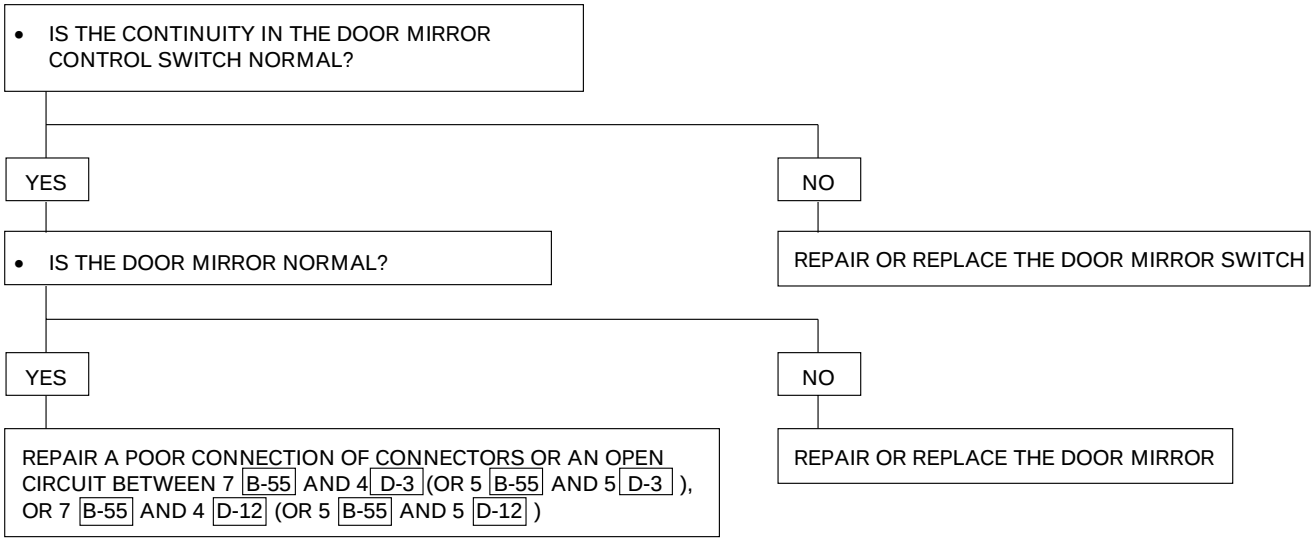

NOTE: Connectors shown in the parenthesis "( )" indicate a check point of the mirror that does not operate in the horizontal direction.

6. Folding Mechanism Of The Both Mirrors Does Not Operate

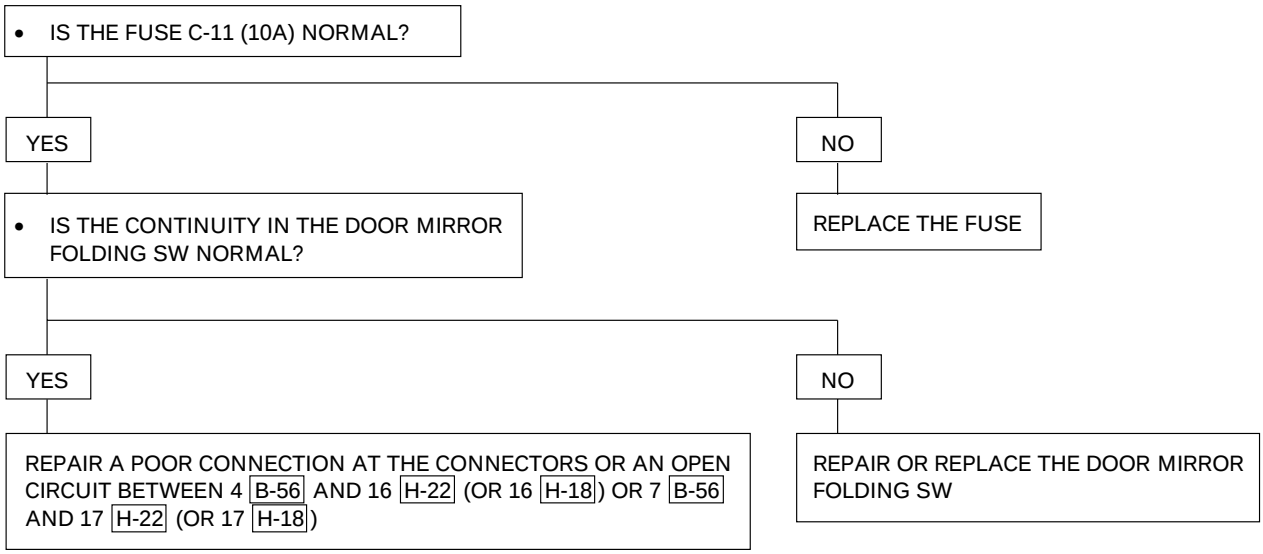

7. Folding Mechanism Of The Mirror On The Left (Or Right) Side Does Not Operate

- DISCONNECT THE CONNECTOR OF THE DOOR MIRROR
- CONNECT THE DOOR MIRROR CONNECTOR 2 D-12 (OR 2 D-3) OR 2 D-3 (OR 2 D-12) TO THE BATTERY (+) TERMINAL AND 7 D-12 (OR 7 D-3) OR 7 D-3 (OR 7 D-12) TO THE BATTERY (–) TERMINAL. DOES THE MIRROR OPERATE TO THE FOLDING DIRECTION?

  (CONNECT THE DOOR MIRROR CONNECTOR 7 D-12 (OR 7 D-3) OR 7 D-3 (OR 7 D-12) TO THE BATTERY (+) TERMINAL AND 2 D-12 (OR 2 D-3) OR 2 D-3 (OR 2 D-12) TO THE BATTERY (–) TERMINAL. DOES THE MIRROR OPERATE TO THE DRIVING POSITION?)

YES

- IS THE FOLDING SW NORMAL?

YES

REPAIR A POOR CONNECTION OF THE CONNECTORS OR AN OPEN CIRCUIT BETWEEN 7 B-56 AND 2 D-12 (OR 2 D-3) OR 4 B-56 AND 7 D-12 (OR 7 D-3), OR 7 B-56 AND 2 D-3 (OR 2 D-12) OR 4 B-56 AND 7 D-3 (OR 7 D-12)

NO

REPAIR OR REPLACE THE FOLDING SW

NO

REPAIR OR REPLACE THE DOOR MIRROR

8. Mirror Defogger On Both Sides Do Not Operate

- IS FUSE C-4 (15A) NORMAL?

YES

- IS THE DOOR MIRROR DEFOGGER SW NORMAL?

YES

- REMOVE THE CONNECTORS OF THE DOOR MIRROR DEFOGGER SW
- TURN ON THE STARTER SW
- IS BATTERY VOLTAGE APPLIED BETWEEN THE HARNESS SIDE CONNECTOR 4 B-57 AND THE GROUND?

YES

REPAIR A POOR CONNECTION OF CONNECTORS OR AN OPEN CIRCUIT BETWEEN 5 B-57 AND 7 H-22 OR 5 B-57 AND 7 H-18

NO

REPAIR A POOR CONNECTION OF CONNECTORS OR AN OPEN CIRCUIT BETWEEN THE FUSE C-4 (10A) AND 4 B-57

NO

REPAIR OR REPLACE THE DOOR MIRROR DEFOGGER SW

NO

REPAIR THE FUSE

9. Mirror Defogger On The Left (Or Right) Side Does Not Operate

- DISCONNECT THE MIRROR CONNECTOR ON THE LEFT (OR RIGHT) SIDE.
- TURN THE STARTER SWITCH AND THE DEFOGGER SWITCH ON
- IS THERE A BATTERY VOLTAGE APPLIED BETWEEN 3 D-12 (OR 3 D-3) AND GROUND, OR 3 D-3 (OR 3 D-12) AND GROUND?

YES

- IS THE CONTINUITY IN THE MIRROR NORMAL?

NO

REPAIR A POOR CONNECTION OF THE CONNECTORS OR AN OPEN CIRUICT BETWEEN 5 B-57 AND 3 D-12 (OR 3 D-3) OR 5 B-57 AND 3 D-3 (OR 3 D-12)

YES

- IS B-18 (B-1) GROUNDED SECURELY?

NO

REPAIR OR REPLACE THE MIRROR

YES

REPAIR A POOR CONNECTION OF CONNECTORS OR AN OPEN CIRCUIT BETWEEN 8 D-12 AND B-1 (OR 8 D-3 AND B-18), OR 8 D-3 AND B-18 (OR 8 D-12 AND B-1)

NO

GROUND IT SECURELY

Anti-Theft System with Keyless Entry

Circuit Diagram (RHD 6V*1)-1

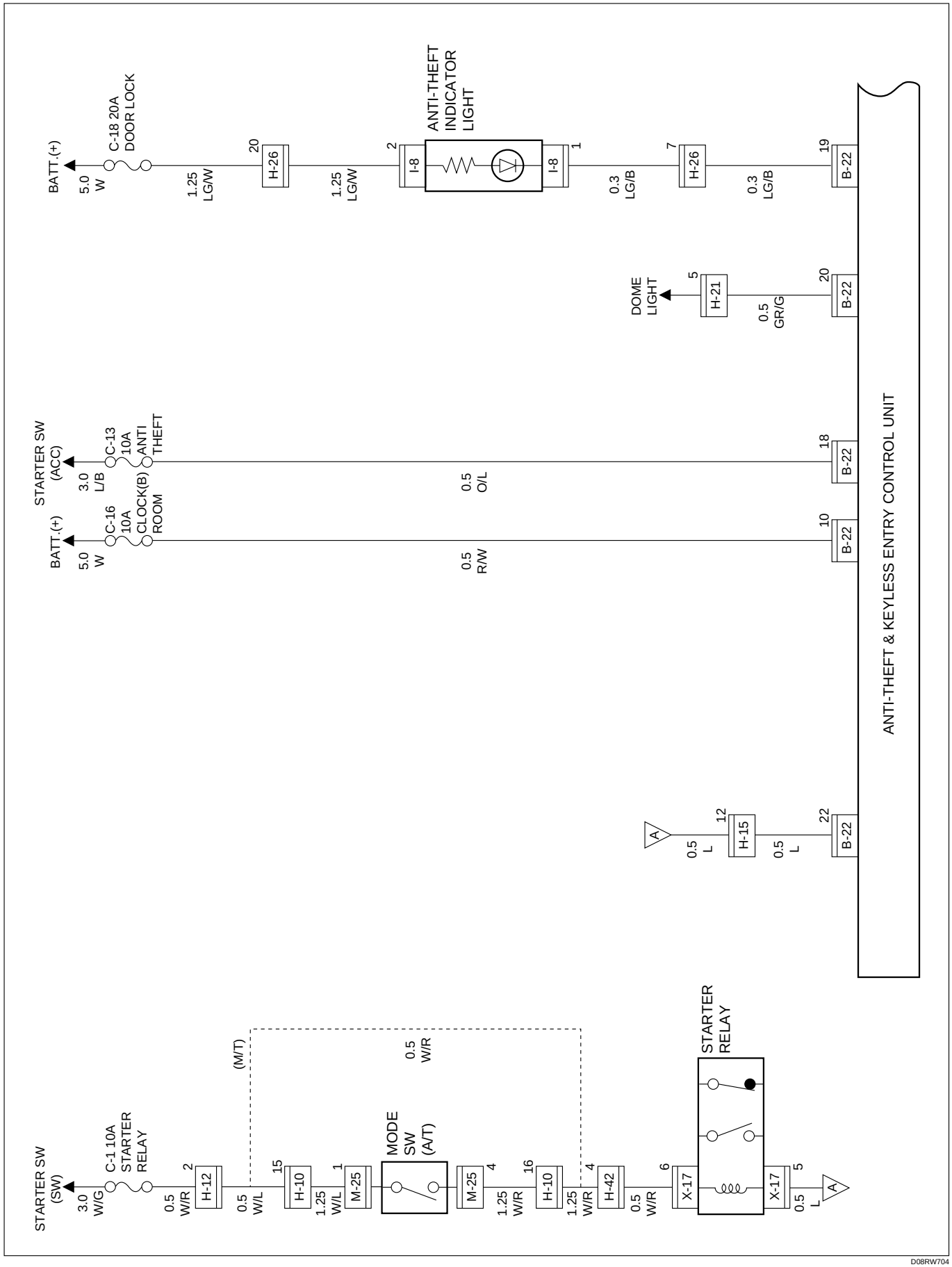

D08RW704

Circuit Diagram (RHD 4J**)-1

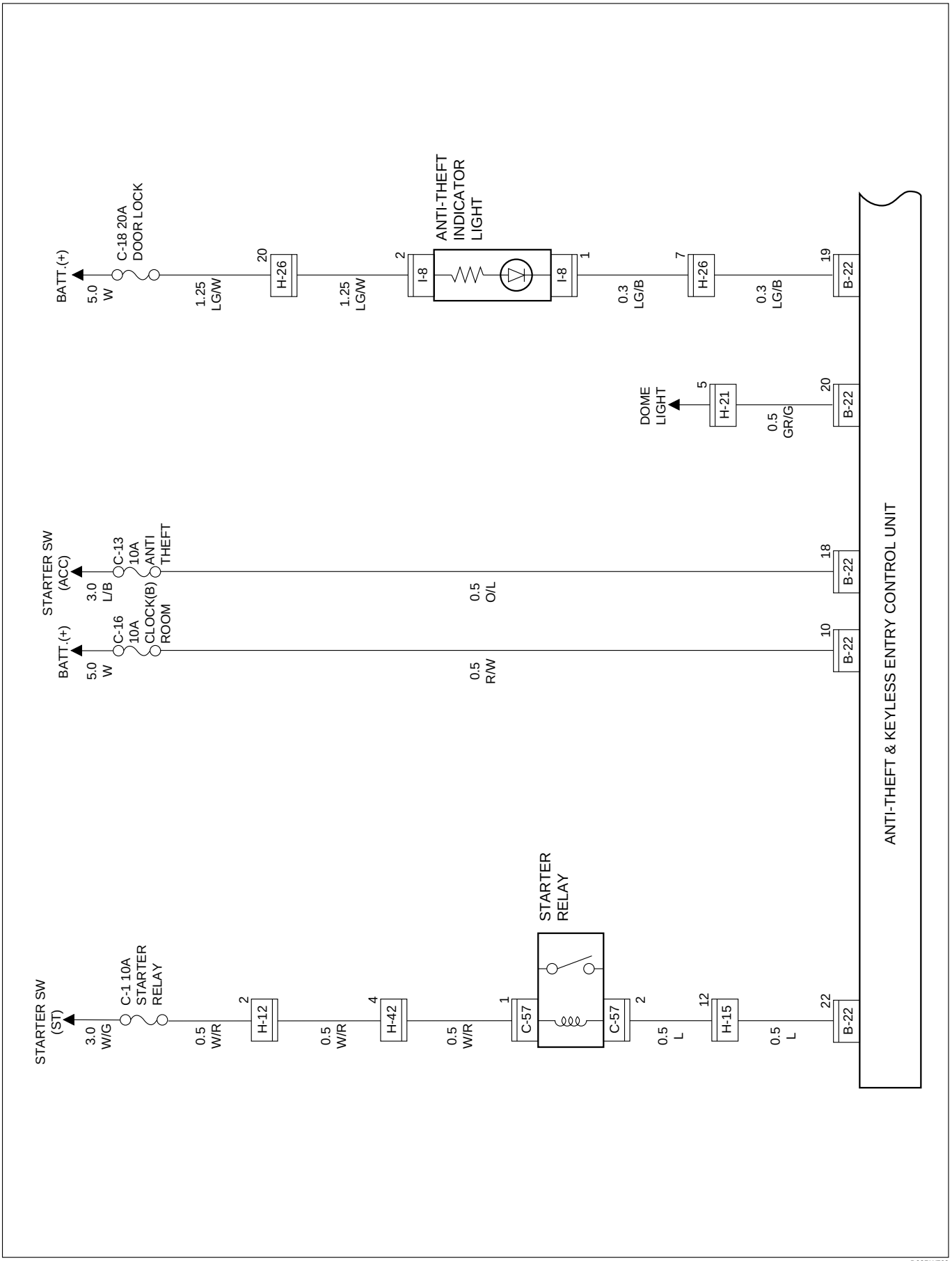

D08RW703

Circuit Diagram (RHD)-2

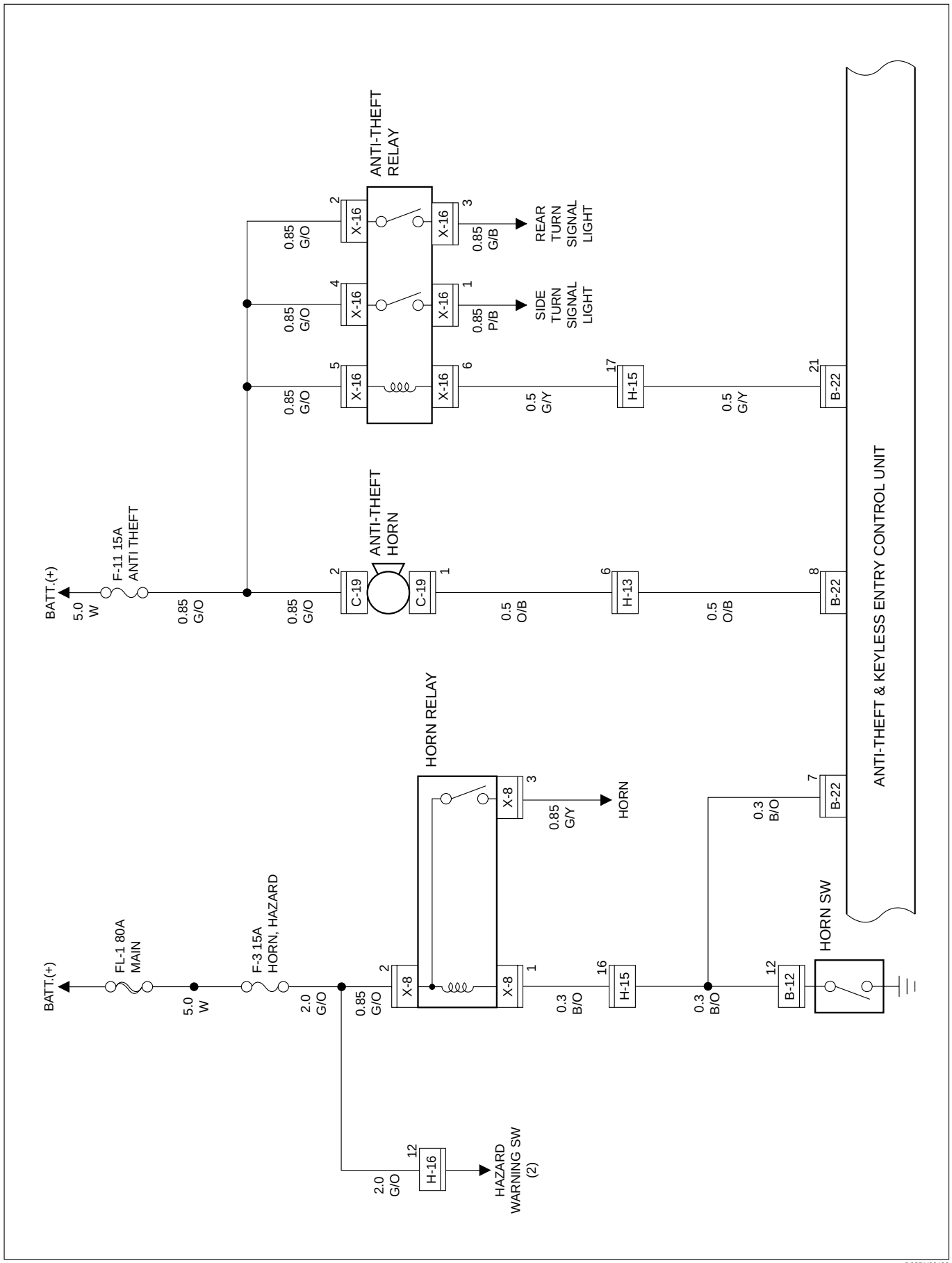

D08RY00493

Circuit Diagram (RHD)-3

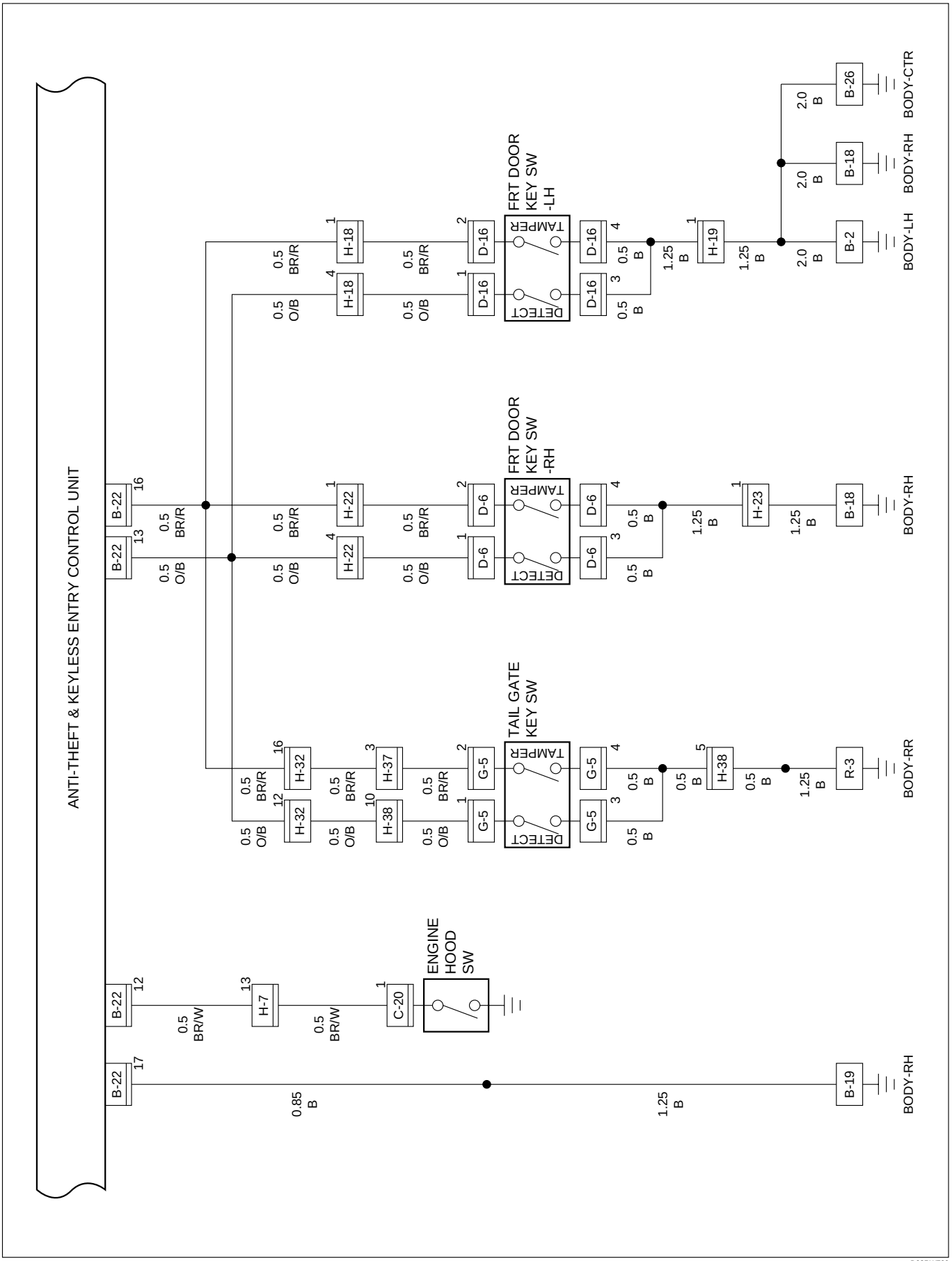

D08RW706

Circuit Diagram (RHD)-4

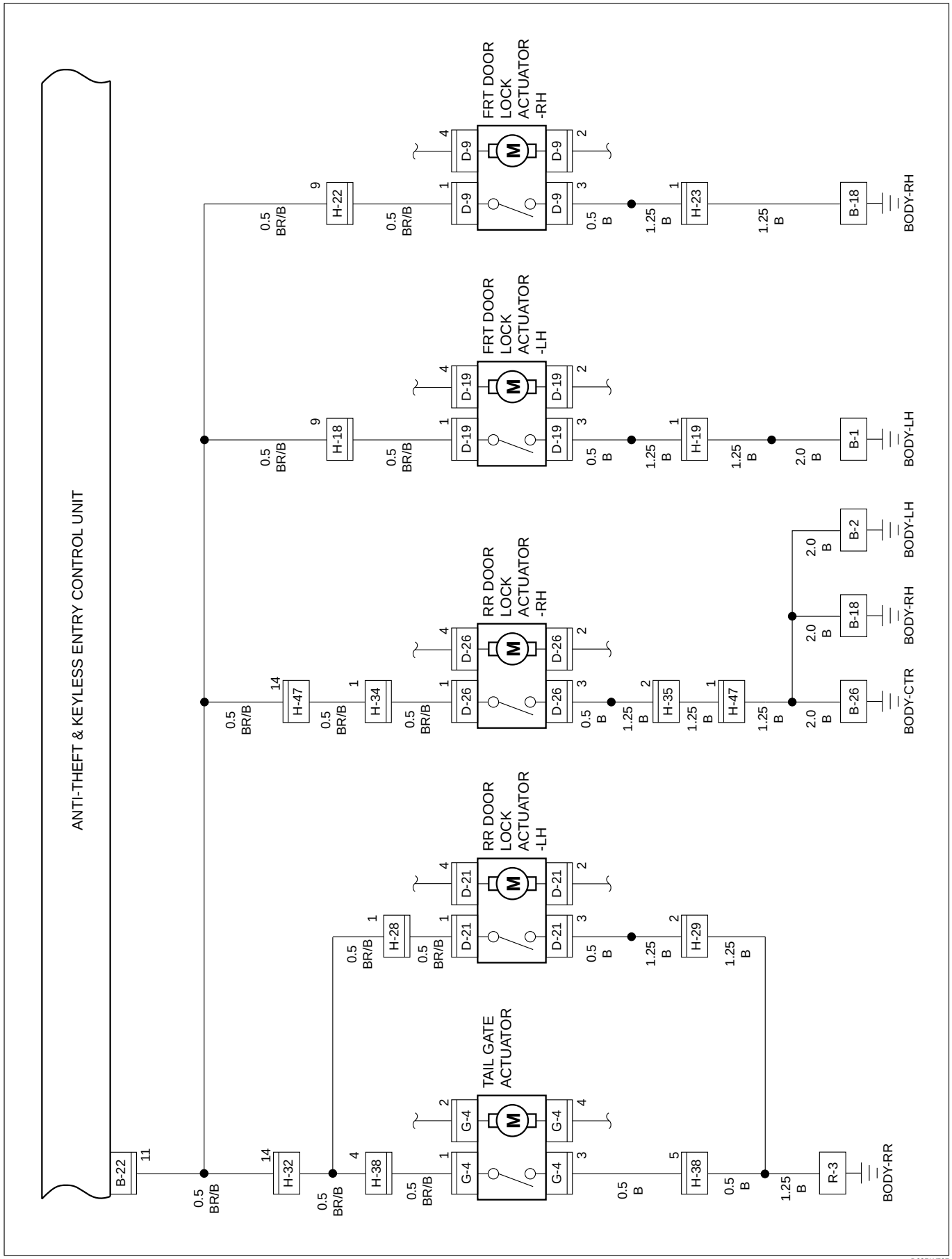

D08RW707

Circuit Diagram (RHD)-5

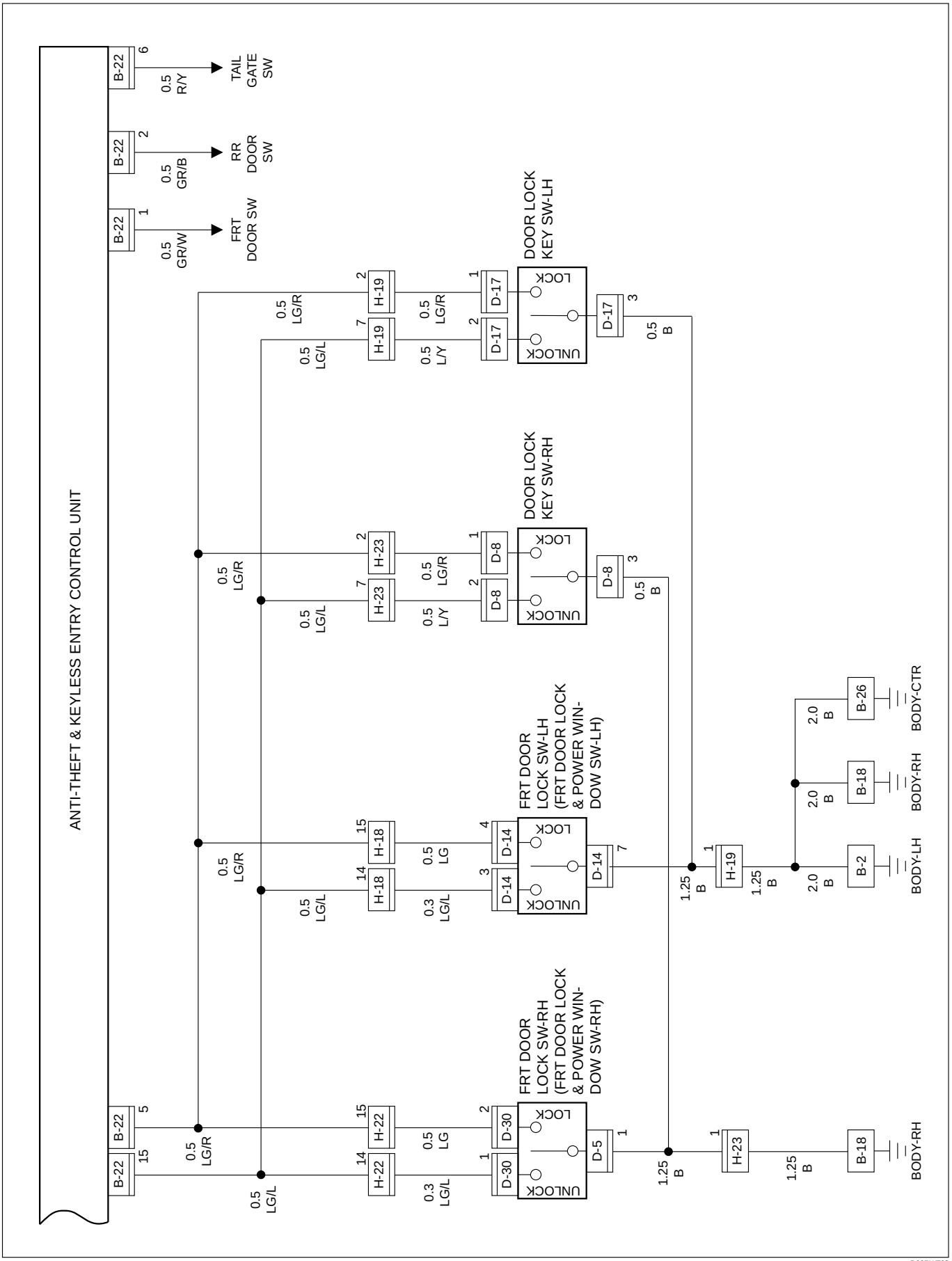

D08RW708

Circuit Diagram (South Africa)-1

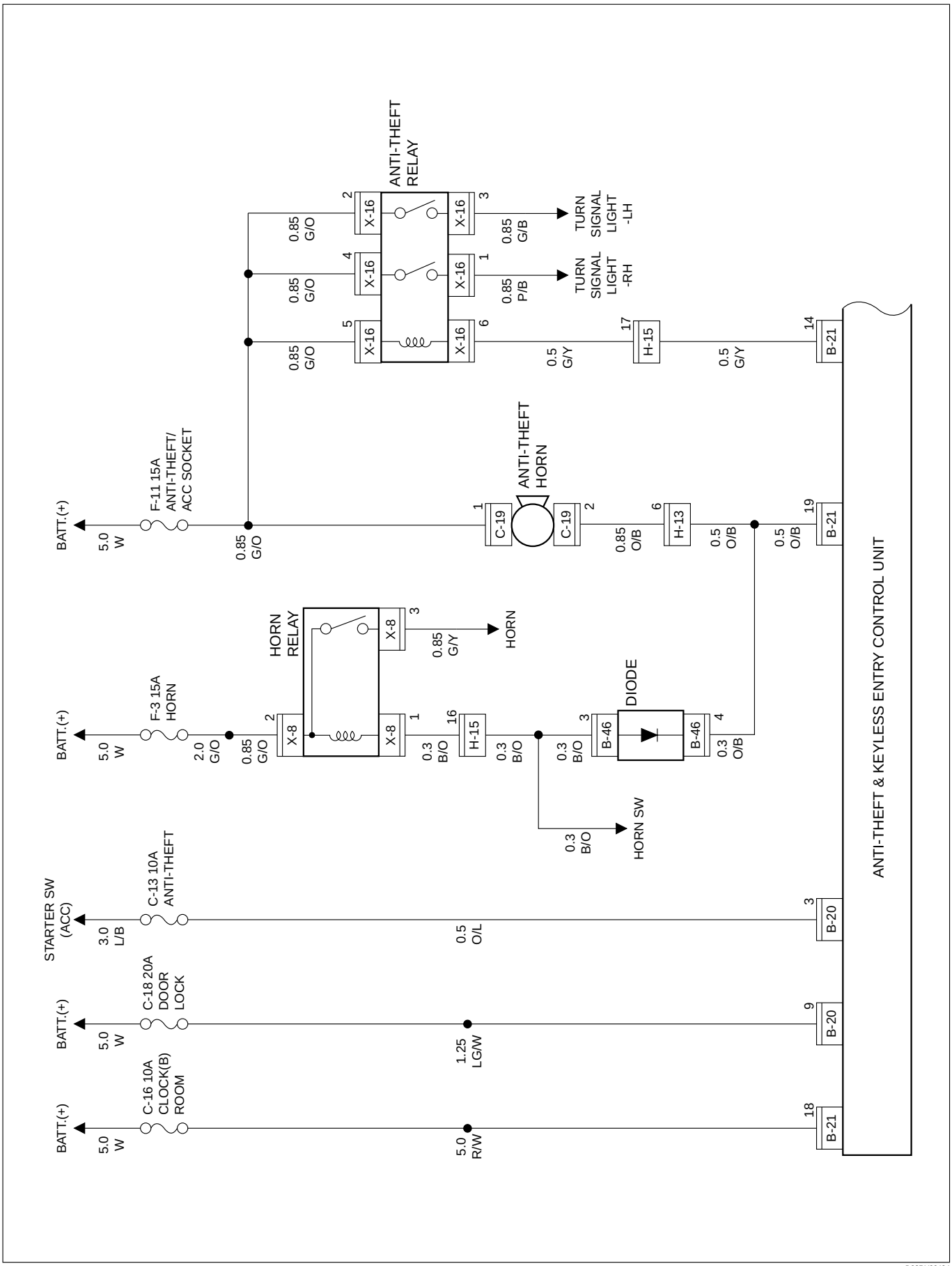

D08RY00494

Circuit Diagram (South Africa)-2

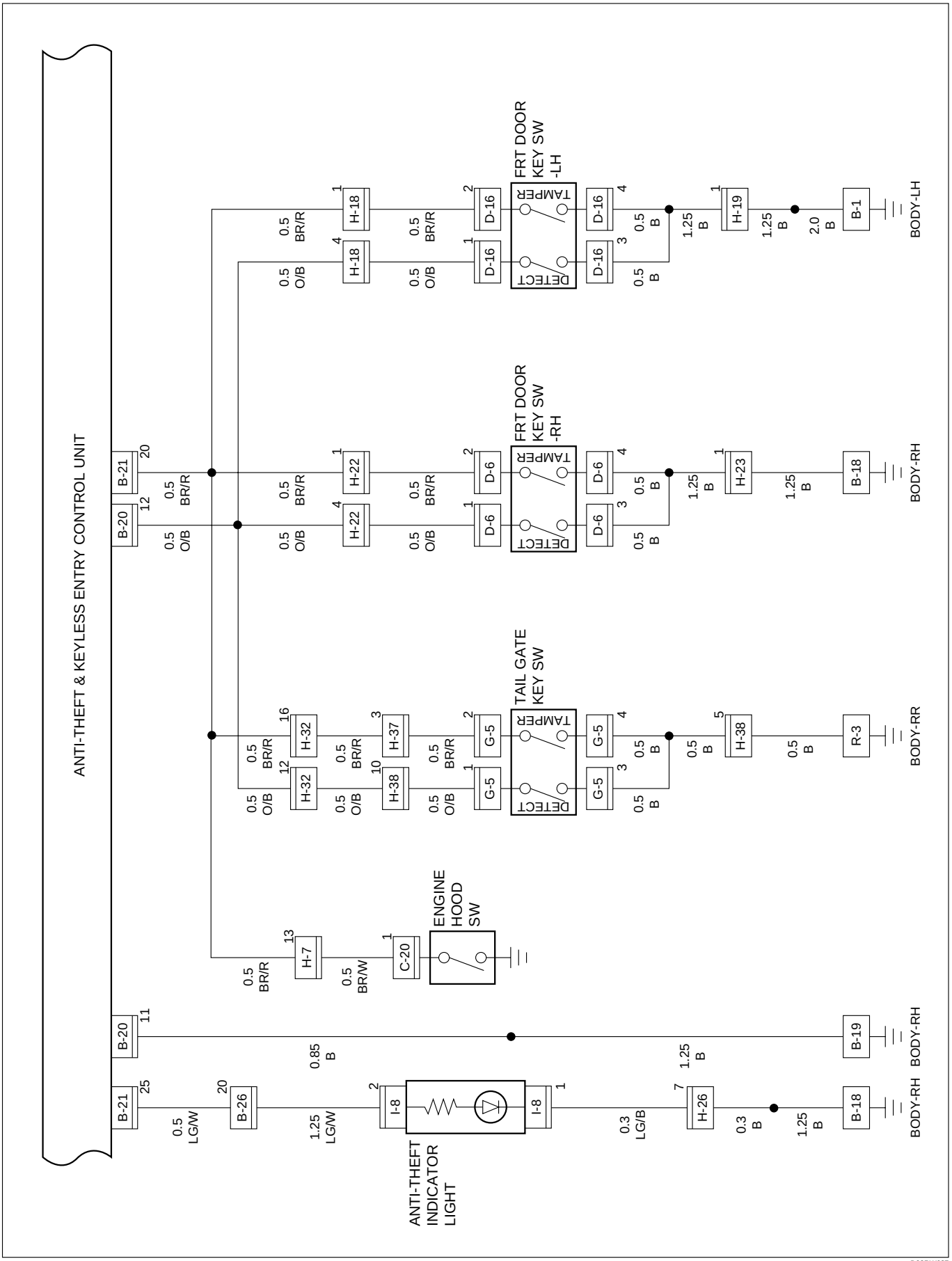

D08RW687

Circuit Diagram (South Africa)-3

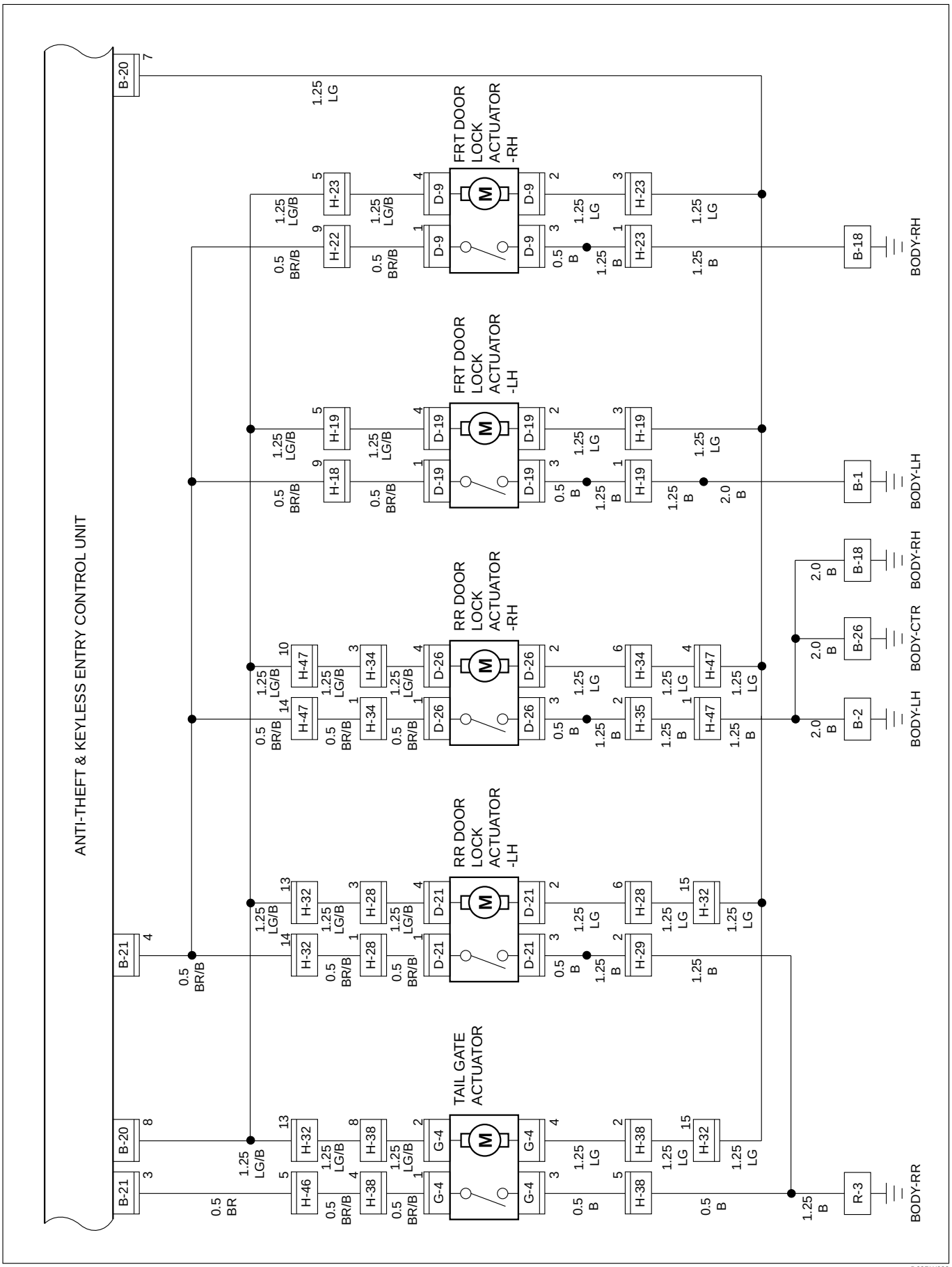

D08RW688

Circuit Diagram (South Africa)-4

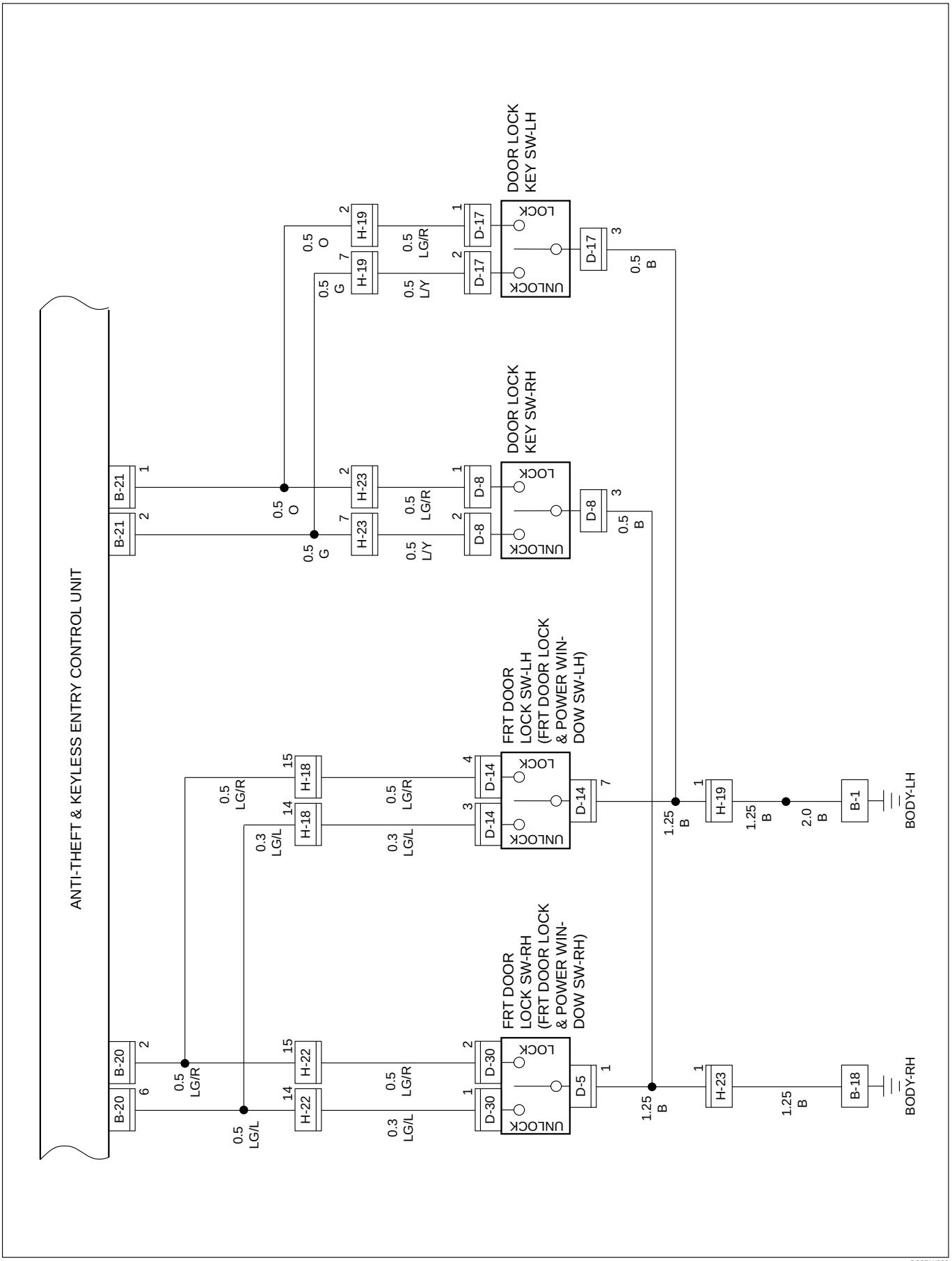

D08RW689

Circuit Diagram (South Africa)-5

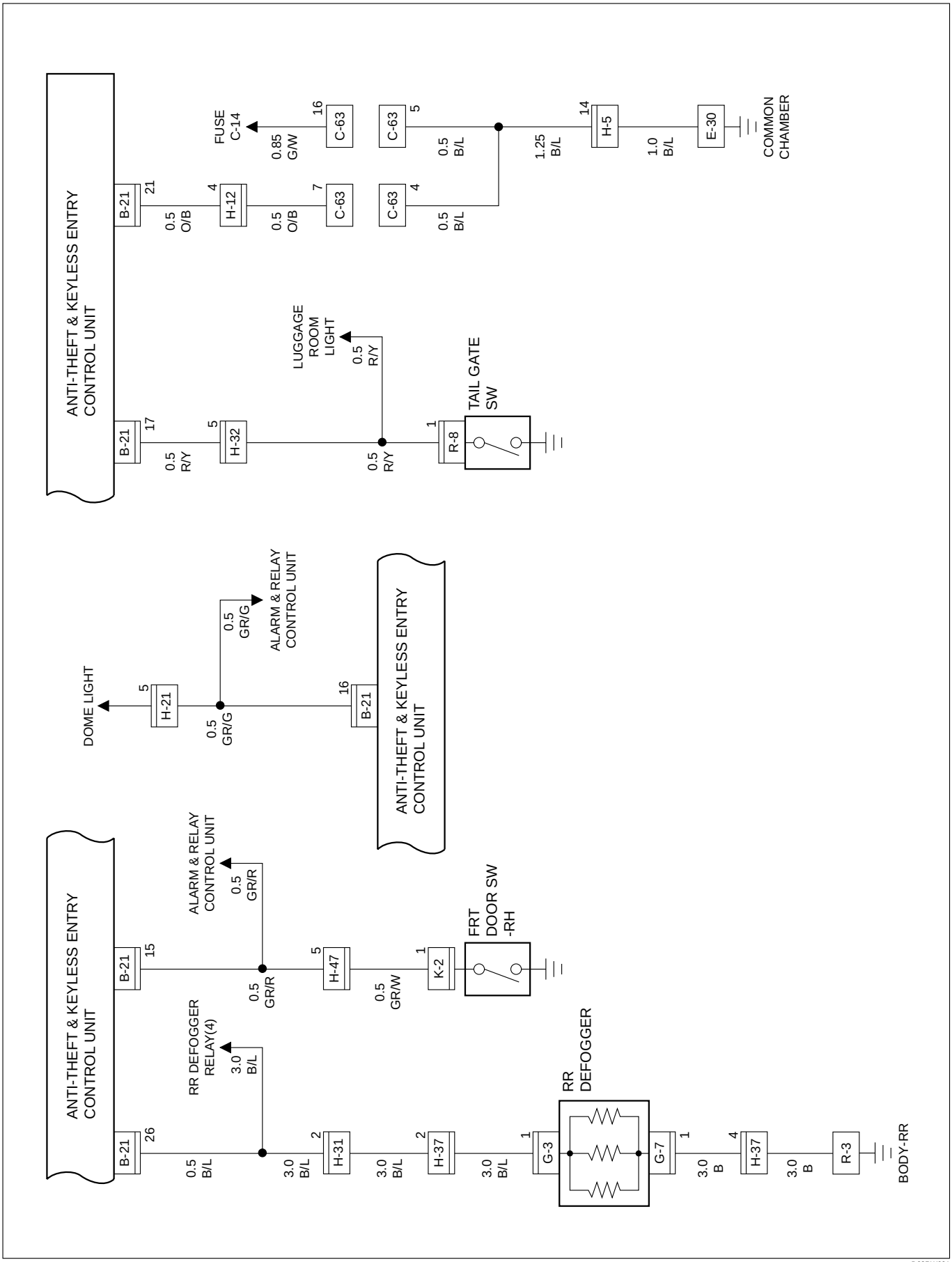

D08RW691

Parts Location (RHD)

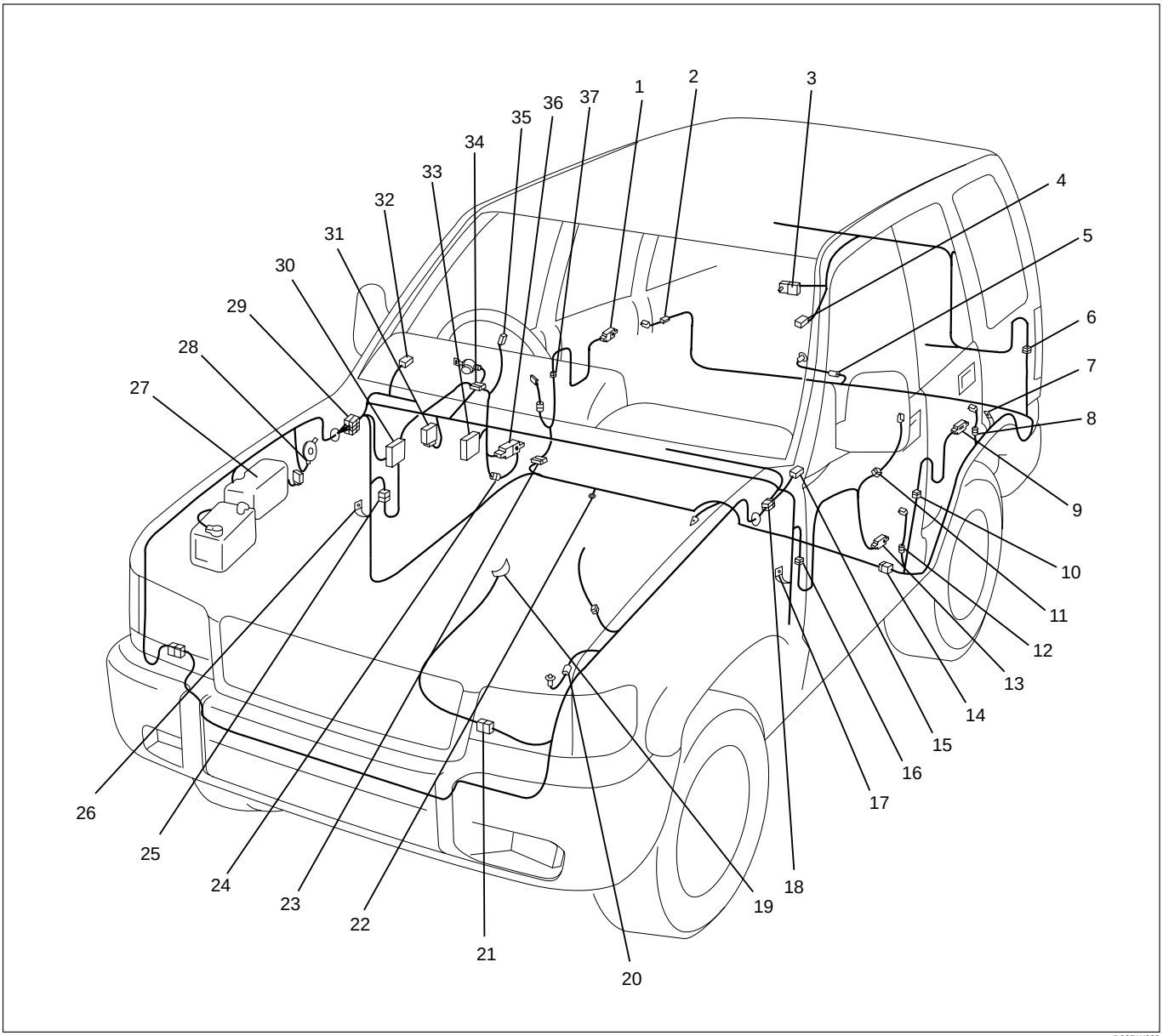

Legend

(1) D-26
(2) R-11
(3) G-4
(4) G-5
(5) R-8
(6) H-37, H-38
(7) R-3
(8) R-1
(9) D-21
(10) H-28, H-29
(11) D-17
(12) R-2
(13) D-19
(14) H-32
(15) H-21
(16) H-18, H-19
(17) B-1, B-2
(18) H-7, H-8
(19) M-25
(20) C-20
(21) H-10
(22) B-26
(23) H-47
(24) D-8
(25) H-22, H-23
(26) B-18, B-19
(27) Relay and Fuse Box
(28) C-19
(29) H-13, H-14, H-15, H-16, H-26
(30) Fuse Box
(31) B-22 (B-20, B-21 for South Africa)
(32) I-8
(33) D-5, D-30
(34) B-12
(35) D-6
(36) D-9
(37) D-26

Circuit Diagram (LHD 6VD1)-1

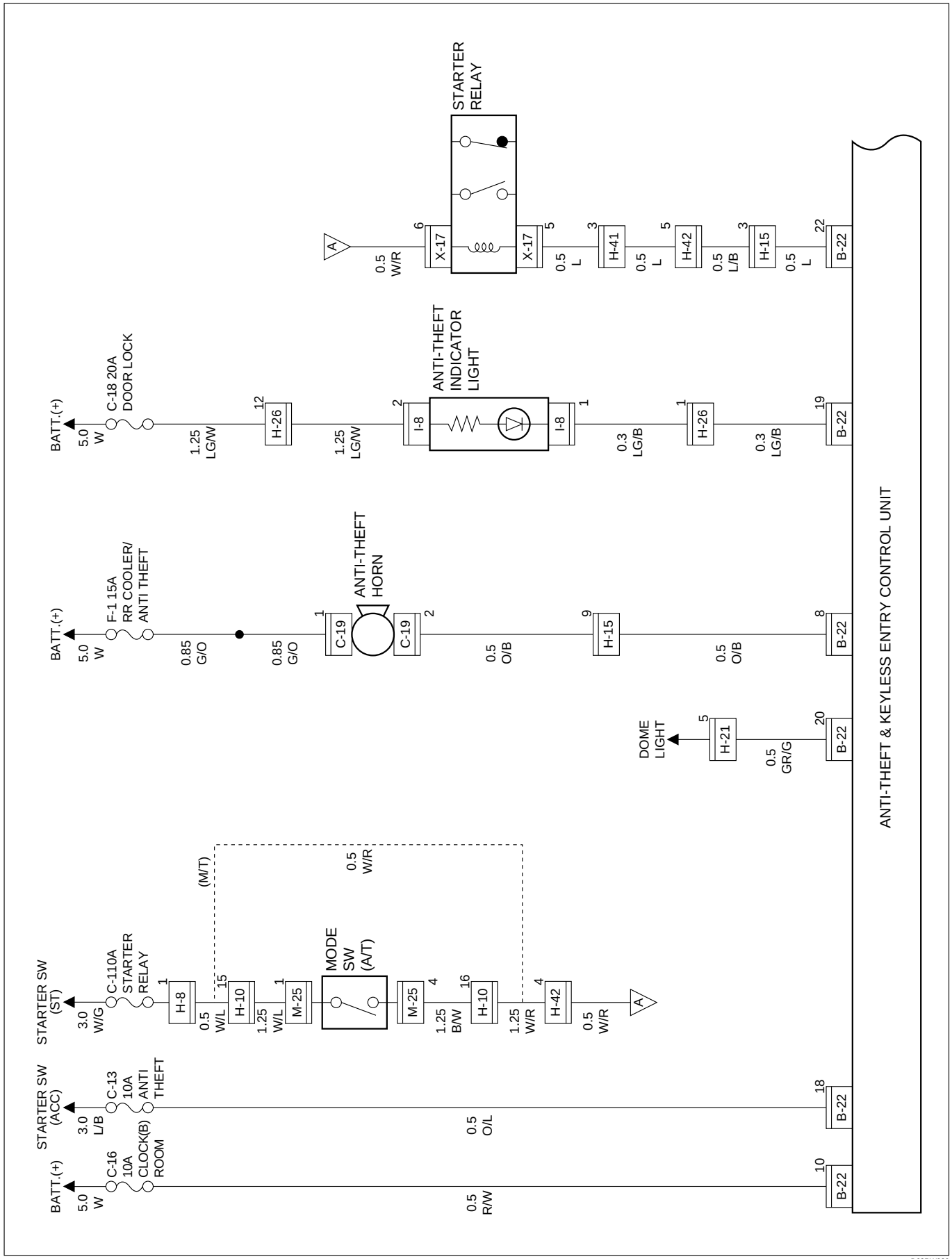

D08RW920

Circuit Diagram (LHD 4JG2)-1

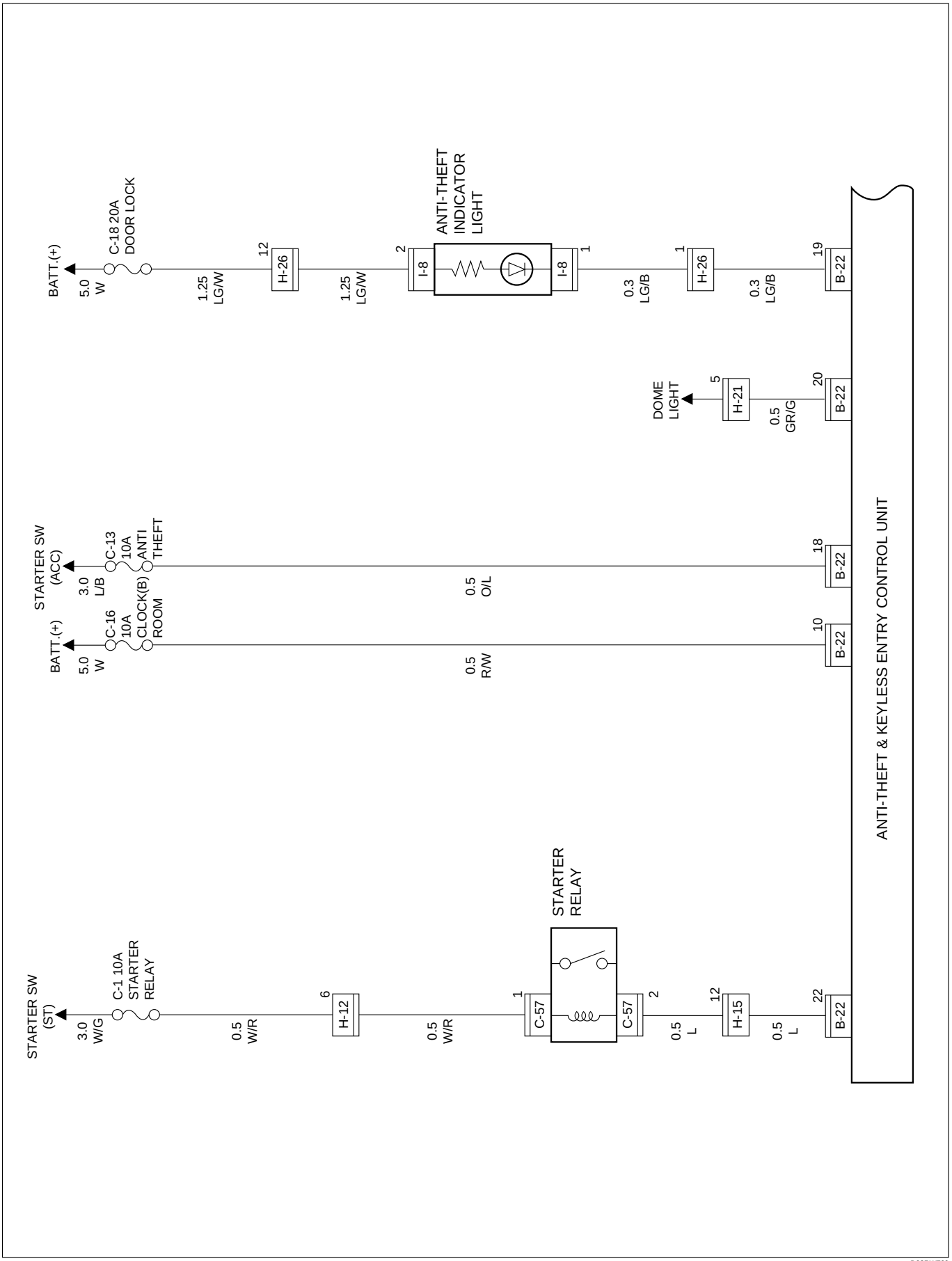

D08RW709

Circuit Diagram (LHD)-2

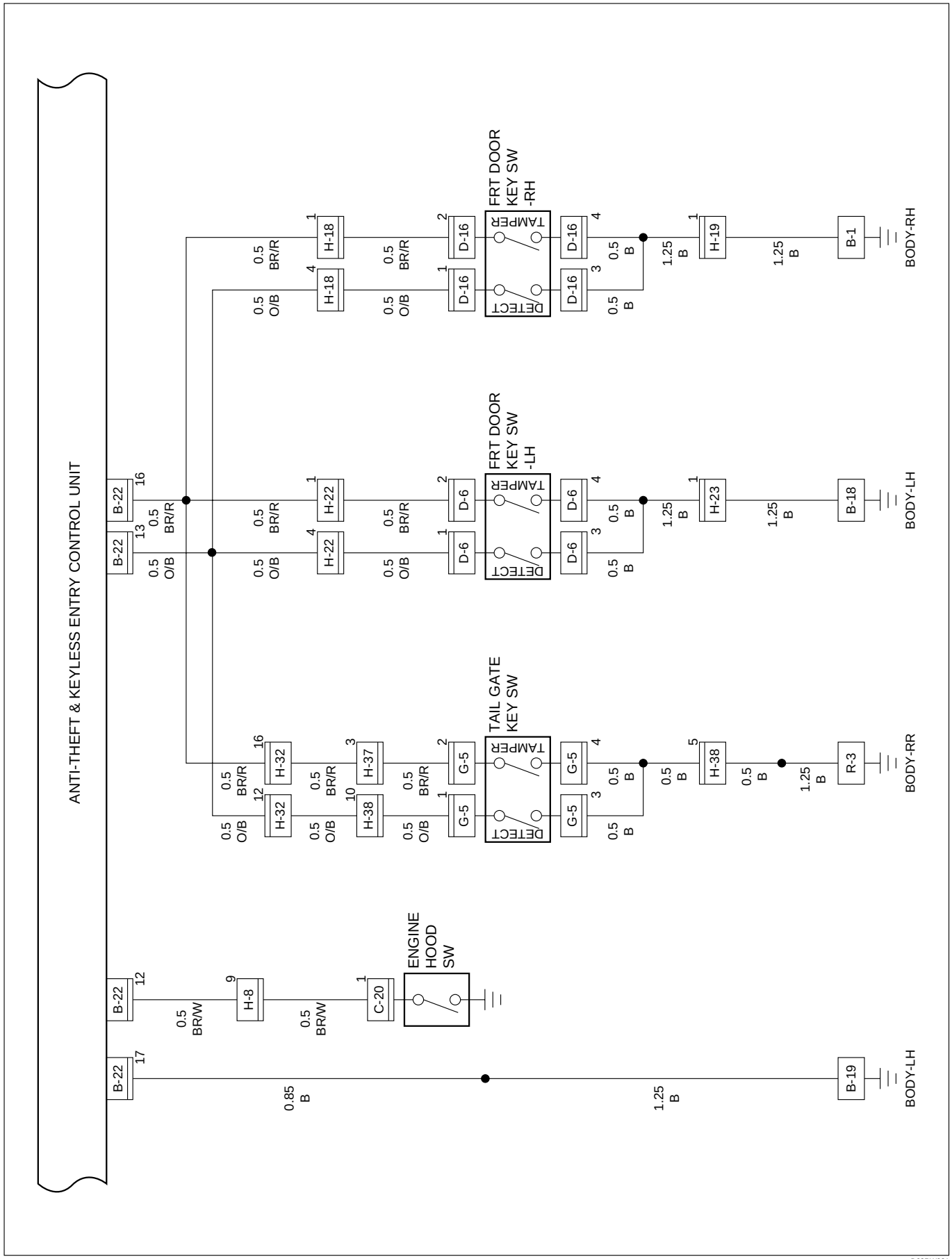

D08RW921

Circuit Diagram (LHD)-3

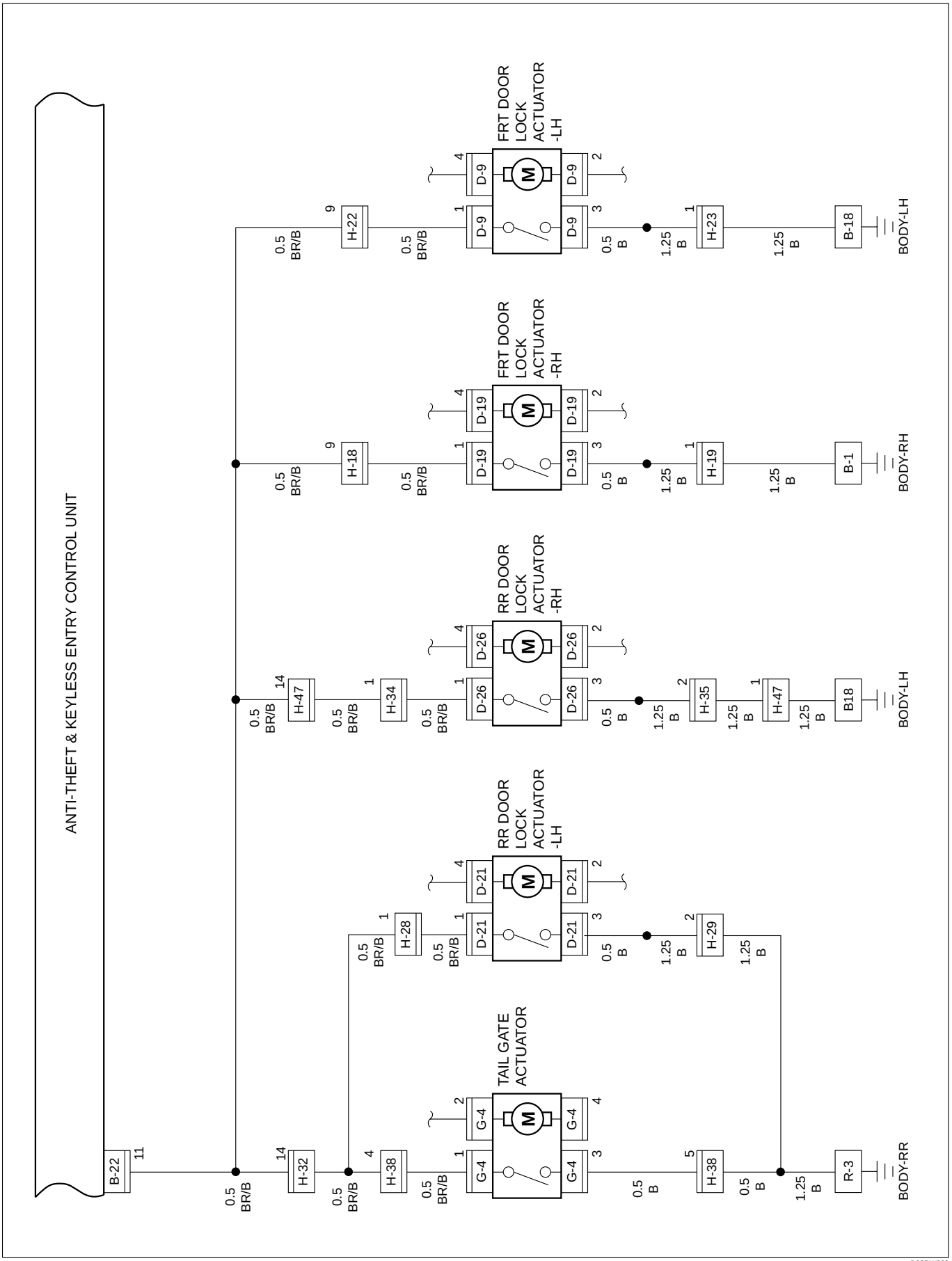

D08RW922

Circuit Diagram (LHD)-4

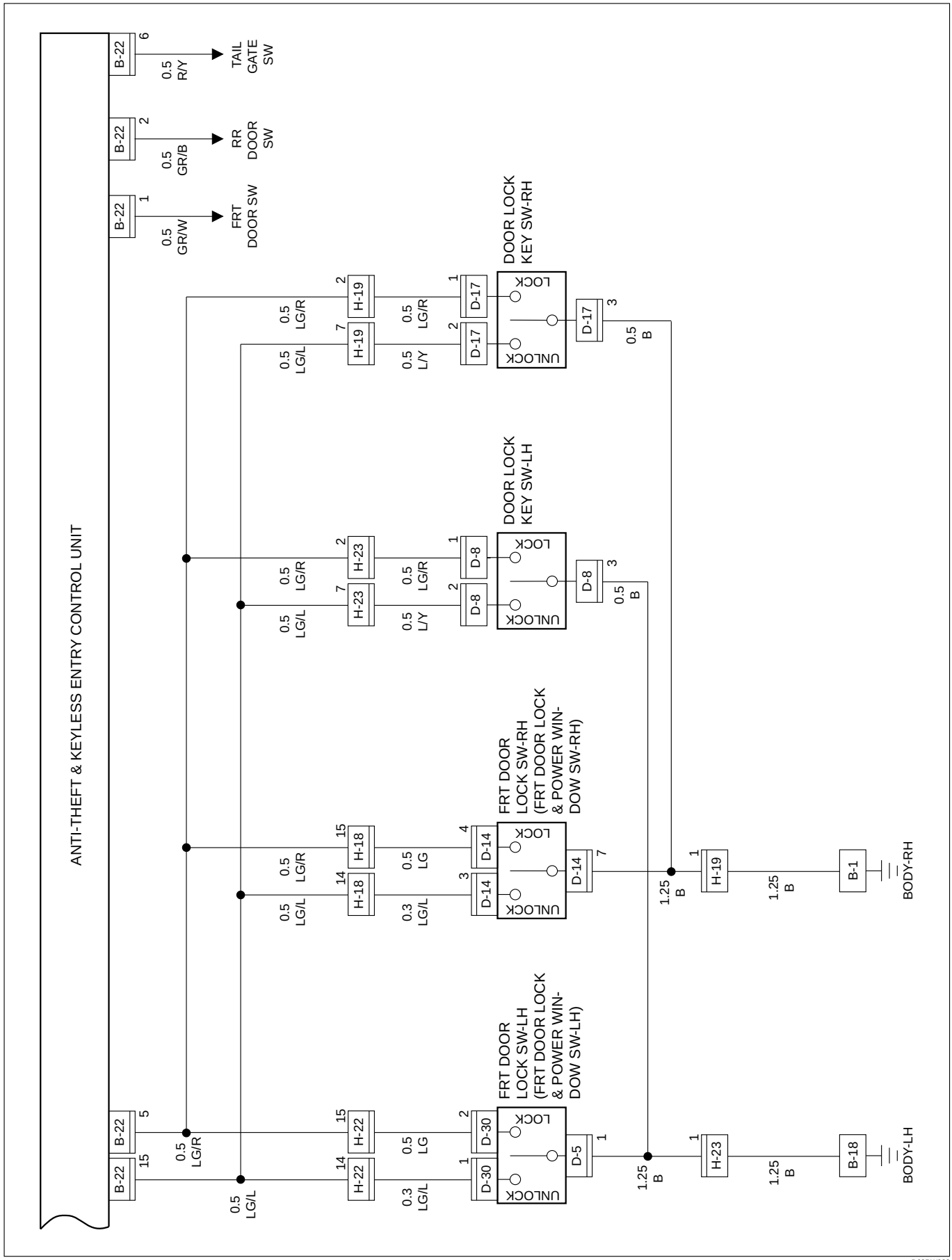

D08RW923

Parts Location (LHD)

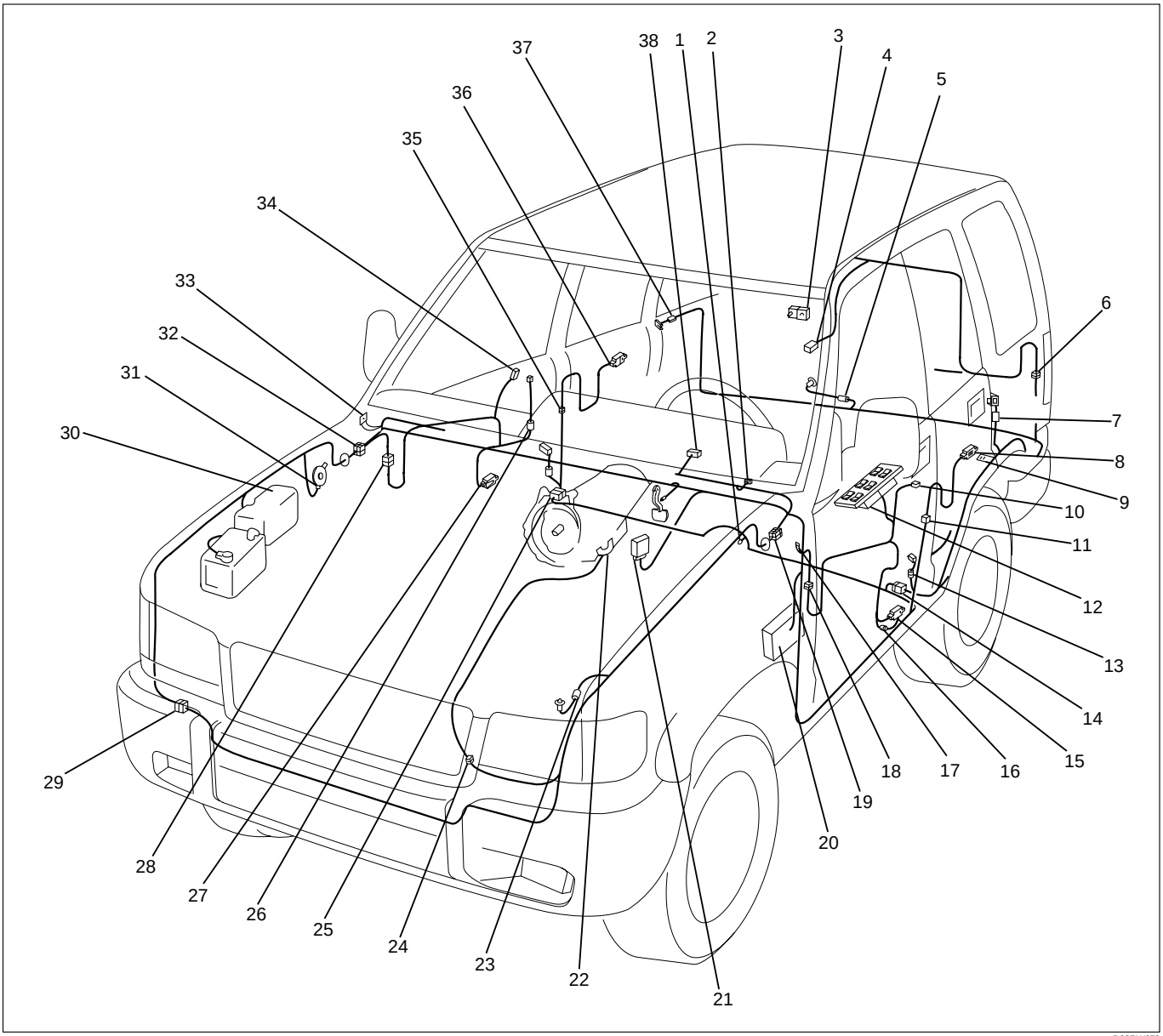

D08RW679

Legend

(1) B-26
(2) I-8
(3) G-4
(4) G-5
(5) R-8
(6) H-37, H-38
(7) R-1
(8) D-21
(9) R-3
(10) D-6
(11) H-28, H-29
(12) D-5, D-30
(13) B-22
(14) H-32
(15) D-9
(16) D-18
(17) B-8, B-19
(18) H-22, H-23
(19) H-8, H-26
(20) Fuse Box
(21) B-22
(22) M-25
(23) C-20
(24) H-10
(25) H-47
(26) D-17
(27) D-19
(28) H-18, H-19
(29) H-41, H-42
(30) Relay and Fuse Box (X-17)
(31) C-19
(32) H-12, H-15, H-21
(33) B-1
(34) D-16
(35) H-34, H-35
(36) D-26
(37) R-11
(38) B-12

Diagnosis

Diagnosis Procedure

1. Check to see if the battery voltage is normal.
2. Check to see if the fuse is normal.
3. Replace the anti–theft & keyless entry control unit with one reserved for test. If a trouble recurs even after replacing the control unit, find out the cause of the trouble by referring to “System check procedure” and the following list.

ITEM	MALFUNCTION	POSSIBLE CAUSE	DETECTING METHOD	REMARKS
A	ANTI–THEFT indicator light does not flash	Defective contact of door switch, or open circuit in door switch wiring.	With door open, dome light and courtesy light do not come on.	Burnt out indicator light bulb possible.
		Short circuit in the detect switch.	Check the control unit connector.	Refer to “Connector check table” in this system.
B	Indicator light does not change to fully ON condition, or does not come on at all.	Engine hood, doors and tailgate are not fully closed and locked.	Check to see if doors are closed and locked.	
		Defective door switch, or short circuit in switch wiring.	Dome light and courtesy light remain lit on after closing doors.	
		Defective tamper switch, or short circuit in wiring.	Check the control unit connector.	Refer to “Connector check table” in this system.
		Defective lock switch, or short circuit in wiring.	Check the control unit connector.	Refer to “Connector check table” in this system.
		Defective engine hood switch, or short circuit in wiring.	Check the control unit connector.	Refer to “Connector check table” in this system.
		Defective tailgate switch, or short circuit in wiring.	Luggage room light remains lit after closing tailgate.	
C	ANTI–THEFT indicator light does not turn off. (Steadily on)	Defective control unit.		
D	When door is opened by pulling up locking knob, alarm does not operate	Poor contact of lock switch, or open circuit in wiring.	Check alarm operation (See No. 46 of “System check procedure”), possible cause is a poor contact of lock switch of an open circuit in wiring.	
		Broken wire in wiring to headlight and horn, or a blown fuse.	Check to see if headlights go out. Check the control unit connector.	Refer to “Connector check table” in this system.
E	Alarm does not stop.	Defective contact of detect switch, or damaged switch wiring.	Check the control unit connector.	Refer to “Connector check table” in this system.

ITEM	MALFUNCTION	POSSIBLE CAUSE	DETECTING METHOD	REMARKS
F	Even when door unlocked with key, alarm operates.	Defective contact of detect switch, or damaged switch wiring.	Check the control unit connector.	Refer to “Connector check table” in this system.
		Door detect switch is assembled to wrong door.	When key is turned to lock position, alarm stops.	
G	Alarm does not operate even with tailgate open.	Defective contact of tailgate switch, or defective wiring.	When luggage room light switch is turned on with tailgate open, luggage room light does not come on.	
H	Even when tailgate is opened with key, alarm does not stop.	Defective contact of tailgate detect switch, or damage wiring.	Check the control unit connector.	Refer to “Connector check table” in this system.
I	Even when engine hood is opened with remote release, alarm does not operate	Damaged engine hood switch or wiring.		
J	Even when starter switch is turned, alarm does not stop	Defective contact of starter switch.	With starter switch turned to “ACC” position, audio, cigarette lighter and door mirrors (on “ACC” circuit) do not operate.	
K	Indicator light continues flashing	Damaged door switch, or a short circuit in wiring.	After closing door, dome light and courtesy light remain on.	
		Damaged tamper switch, or a short circuit in wiring.	Check the control unit connector.	Refer to “Connector check table” in this system.

System Check Procedure

STEP	OPERATION	ITEM TO BE CHECKED	ITEM OF MALFUNCTION	REMARKS
1	Turn starter key to “ON” position.	Check to see if engine hood, tailgate and doors are closed and locked.		
2	Open windows fully.			
3	Pull out starter key after turning it back to “OFF” position.	Check to see if indicator light remains lit off.	K	
4	Unlock left front door with locking knob.			
5	Open left front door. (And get out of the vehicle.)	Check to see if indicator light flashes.	A	
		Check to see if dome light and courtesy light illuminate.		
6	Close left front door.			Be sure to lock door with locking knob.
7	Lock left front door.	Check to see if indicator light changes from flashing to steadily on.	B	
8	Wait about 10 seconds	Check to see if indicator light turns off in about 10 seconds.	C	Activate alarm device.
9	Unlock left front door with locking knob.	Check to see if alarm operates (with headlight flashing, and horn blaring intermittently.)	D	All doors are unlocked.
10	Insert key into key cylinder of left front door and turn it in unlock direction.	Check to see if alarm stops.	E	With key set at unlock position, check to see if alarm stops.
11	Lock left front door.	Check to see if indicator light turns on.	B	All doors are locked.
12	Wait for about 10 seconds.	Check to see if indicator light goes off after about 10 seconds.	C	Activate alarm device.
13	Unlock left front door with key.	Check to see if alarm does not operate.	F	
14	Lock left front door with key.	Check to see if indicator light turns on.	B	
15	Wait for about 10 seconds.	Check to see if indicator light goes off after about 10 seconds.	C	Activate alarm device.
16	Unlock left rear door with locking knob.	Check to see if alarm starts.	D	Only left rear door is unlocked.

STEP	OPERATION	ITEM TO BE CHECKED	ITEM OF MALFUNCTION	REMARKS
17	Insert key into key cylinder of left front door and turn it to unlock direction.	Check to see if alarm stops.	E	With key set at unlock position, check to see if alarm stops. (All doors are unlocked.)
18	Open left rear door.	Check to see if indicator light flashes.	A	
		Check to see if dome light and courtesy light come on.		
19	With one person in vehicle, close left rear door.			
20	Lock left front door with locking knob.	Check to see if indicator light is steadily on.	B	All doors are locked.
21	Wait about 10 seconds.	Check to see if indicator light turns off in about 10 seconds.	C	Activate alarm device.
22	Unlock tailgate from inside with locking knob.	Check to see if alarm operates.	D	Only tailgate is unlocked.
23	Open tailgate, insert key into key cylinder of tailgate and turn it in lock direction.	Check to see if alarm stops.	H	With key set at unlock position, check to see if alarm stops.
24	Leave tailgate open.	Check to see if indicator light flashes.	A	
		Check to see if luggage room light on.	G	
25	Close tailgate			
26	Insert key into tailgate key cylinder and turn it in lock direction.	Check to see if indicator light changes over from flashing into lighting condition.	B	
27	Wait about 10 seconds.	Check to see if indicator light goes off after about 10 seconds.	C	Activate alarm device.
28	Unlock tailgate with key.	Check to see if alarm does not operate.	F	
29	Lock tailgate with key.	Check to see if indicator light come on.	B	
30	Wait about 10 seconds.	Check to see if indicator light goes off after about 10 seconds.	C	Activate alarm device.

STEP	OPERATION	ITEM TO BE CHECKED	ITEM OF MALFUNCTION	REMARKS
31	Unlock right rear door with locking knob.	Check to see if alarm operates.	D	Only right rear door is unlocked.
32	Insert key into key cylinder of right front door and turn it in unlock direction.	Check to see if alarm stops.	E	With key at unlock position, check to see if alarm stops. (With all doors unlocked.)
33	Open right rear door.	Check to see if indicator light flashes.	A	
		Check to see if dome light and courtesy light come on.		
34	Close right rear door.			
35	Insert key into key cylinder of right front door and turn it in lock direction.	Check to see if indicator light stays on steadily.	B	
36	Wait about 10 seconds.	Check to see if indicator light goes off after about 10 seconds.	C	Activate alarm device.
37	Unlock right front door with locking knob.	Check to see if alarm operates.	D	Only right front door is unlocked.
38	Insert key into key cylinder of right front door and turn it in unlock direction.	Check to see if alarm stops.	E	With key at unlock position, check to see if alarm stops. (With all doors unlocked.)
39	Open right front door.	Check to see if indicator light flashes.	A	
		Check to see if dome light and courtesy light come on.		
40	Close right front door.			
41	Lock right front door with key.	Check to see if indicator light stays on steadily.	B	
42	Wait about 10 seconds.	Check to see if indicator light goes off after about 10 seconds.	C	Activate alarm device.
43	Unlock right front door with key.	Check to see if alarm does not operate.	F	
44	Lock right front door with key.	Check to see if indicator light stays on steadily.	B	

STEP	OPERATION	ITEM TO BE CHECKED	ITEM OF MALFUNCTION	REMARKS
45	Wait about 10 seconds.	Check to see if indicator light goes off after about 10 seconds.	C	Activate alarm device.
46	Open engine hood with engine hood release handle.	Check to see if alarm operates.	I	
47	Insert key into starter switch and turn it to “ACC” position.	Check to see if alarm stops.	J	

NOTE: When the connector of the anti–theft & keyless entry control unit is disconnected, the starter is inoperative.
In the checking of short wheel base model, Step Nos. 16 through 21 and Step Nos. 31 through 36 are omitted.

Connector Check Table

Check the anti–theft & keyless entry control unit harness side connector B–20 by using a circuit tester.

TERMINAL NO.	CONNECTION	CHECK ITEM	OPERATION	CIRCUIT CONDITION
1	FRT door switch–LH, RH	Continuity	Open door	Continuity
			Close door	No continuity
2	RR door switch–LH, RH	Continuity	Open door	Continuity
			Close door	No continuity
3	—	—	–	–
4	Door lock key switch–LH, RH	Continuity	Lock with key	Continuity
5	FRT door lock switch–LH, RH	Continuity	Lock	Continuity
6	Tailgate switch	Continuity	Open tailgate	Continuity
			Close tailgate	No continuity
8	Anti–theft horn	Voltage	–	Approx. 12V
10	Battery	Voltage	–	Approx. 12V
11	Door switch	Continuity	Unlock with locking knob	Continuity
			Lock with locking knob	No continuity
12	Engine hood switch	Continuity	Open engine hood	Continuity
			Close engine hood	No continuity
13	Detect switch	Continuity	Unlock with key	Continuity
			Lock with key	No continuity
14	Door lock key switch	Continuity	Unlock	Continuity
15	FRT door lock switch–LH, RH	Continuity	Unlock	Continuity
16	Tamper switch	Continuity	–	No continuity
17	Ground	Continuity	–	Continuity
18	Starter switch	Voltage	Starter switch “ACC”	Approx. 12V
19	Indicator light	Voltage	–	Approx. 12V
20	Dome light	Voltage	Dome light “DOOR” position	Approx. 12V
21	Anti-theft relay	Voltage	–	Approx. 12V
22	Starter relay	Voltage	Mode switch “P” or “N”	Approx. 12V
			Clutch pedal depressed	Approx. 12V

ID Code Registration

There are four kinds of ID codes which can be registered, for which these three modes, ID code new registration, ID code additional registration and ID code check, are available.

ID Code New Registration

This procedure erases all registered ID codes and registers a new received ID code instead.

Step	Action	Yes	No
1	1. Open the driver's side door. 2. Turn the starter switch off. Is the action complete?	Go to Step 2	—
2	Turn the starter switch to ACC position and then off three times within five seconds after step 1. Is the action complete within five seconds?	Go to Step 3	Finished
3	Close the door and then open it two times within ten seconds after step 2. Is the action complete within ten seconds?	Go to Step 4	Finished
4	1. Turn the starter switch to ACC position and then off five times. 2. Close the door and then open it. NOTE: This step must be performed within ten seconds after step 3. Is the action complete?	Go to Step 5	Finished
5	The control unit makes lock/unlock response once with interval of one second. Is the response complete?	Go to Step 6	—
6	Operate the lock or unlock button of transmitter within twenty seconds after step 5. Is the action complete?	Go to Step 7	Finished
7	The control unit makes lock/unlock response once with interval of one second as ID temporary registration. Is the response complete?	Go to Step 8	—
8	Operate the lock or unlock button of transmitter within twenty seconds after step 7. Is the action complete?	Go to Step 9	Finished
9	The control unit compares temporary registered ID code with receiving ID code. Is temporary registered ID code the same as receiving ID code?	Go to Step 11	Go to Step 11
10	The control unit makes lock/unlock response three times with interval of one second. Is the response complete?	Finished	—
11	The control unit erases all registered ID codes and registers new ID code. Is the registration complete?	Go to Step 12	Go to Step 13

Step	Action	Yes	No
12	The control unit makes lock/unlock response once with interval of one second. Is the response complete?	Finished	—
13	The control unit makes lock/unlock response three times with interval of one second. Is the response complete?	Finished	—

ID Code Additional Registration

This procedure additionally registers a new received ID code with holding registered ID codes. When total number of registered ID codes and newly registered ID code exceeds four, they are erased in order of older one.

Step	Action	Yes	No
1	1. Open the driver's side door. 2. Turn the starter switch off. Is the action complete?	Go to Step 2	—
2	Turn the starter switch to ACC position and then off three times within five seconds after step 1. Is the action complete within five seconds?	Go to Step 3	Finished
3	Close the door and then open it two times within ten seconds after step 2. Is the action complete within ten seconds?	Go to Step 4	Finished
4	1. Turn the starter switch to ACC position and then off three times. 2. Close the door and then open it. NOTE: This step must be performed within ten seconds after step 3. Is the action complete?	Go to Step 5	Finished
5	The control unit makes lock/unlock response two times with interval of one second. Is the response complete?	Go to Step 6	—
6	Operate the lock or unlock button of transmitter within twenty seconds after step 5. Is the action complete?	Go to Step 7	Finished
7	The control unit makes lock/unlock response two times with interval of one second as ID temporary registration. Is the response complete?	Go to Step 8	—
8	Operate the lock or unlock transmitter within twenty seconds after step 7. Is the action complete?	Go to Step 9	Finished
9	The control unit compares temporary registered ID code with receiving ID code. Is temporary registered ID code the same as receiving ID code?	Go to Step 11	Go to Step 10
10	The control unit makes lock/unlock response three times with interval of one second. Is the response complete?	Finished	—
11	The control unit registers new ID code. Is the registration complete?	Go to Step 12	Go to Step 13

Step	Action	Yes	No
12	The control unit makes lock/unlock response once with interval of one second. Is the response complete?	Finished	—
13	The control unit makes lock/unlock response three times with interval of one second. Is the response complete?	Finished	—

ID Code Check

This procedure checks how many kinds of ID code are registered.

Step	Action	Yes	No
1	1. Open the driver's side door. 2. Turn the starter switch off. Is the action complete?	Go to Step 2	—
2	Turn the starter switch to ACC position and then off three times within five seconds after step 1. Is the action complete within five seconds?	Go to Step 3	Finished
3	Close the door and then open it two times within ten seconds after step 2. Is the action complete within ten seconds?	Go to Step 4	Finished
4	1. Turn the starter switch to ACC position and then off. 2. Close the door and then open it. NOTE: This step must be performed within ten seconds after step 3. Is the action complete?	Go to Step 5	Finished
5	The control unit makes lock/unlock response twice as many the number of registered ID code with interval of two seconds. (In case of no registered code, the response is made ten times.) Is the response complete?	Finished	—

Answer Back (Anti–theft Horn Operation) Change Mode

Anti–theft horn, as an answer back function for the transmitter operation, changes from available into unavailing or from unavailing into available by this procedure.

Step	Action	Yes	No
1	Open the driver's side door. Is the action complete?	Go to Step 2	—
2	Lock the door and then unlock it three times within ten seconds after step 1. Is the action complete within five seconds?	Go to Step 3	Finished
3	Close the door and then open it two times within ten seconds after step 2. Is the action complete within ten seconds?	Go to Step 4	Finished

Step	Action	Yes	No
4	1. Lock the door and unlock it three times. 2. Close the door and then open it. NOTE: This step must be performed within ten seconds after step 3. Is the action complete?	Go to Step 5	Finished
5	Answer back mode changes. Is this step complete?	Go to Step 6	Go to Step 7
6	The control unit makes lock/unlock response once with interval of one second. Is the response complete?	Finished	—
7	The control unit makes lock/unlock response three times with interval of one second. Is the response complete?	Finished	—

Anti–theft & Keyless Entry Control Unit/Transmitter Replacement

Anti–theft & Keyless Entry Control Unit Replacement

1. Remove and install the control unit.
   - Refer to Anti–theft & Keyless Entry Control Unit Removal and Installation in this section.
2. Register ID code.
   - Refer to ID Code Registration in this section.
3. Check that the keyless entry system works normally.

Transmitter Replacement

1. Prepare a new transmitter.
2. Register ID code.
   - Refer to ID Code Registration in this section.
3. Check that the keyless entry system works normally.

Transmitter Battery Replacement

1. Remove a screw to remove the cover.
2. Remove the batteries.
3. Set the new batteries into the transmitter.
4. Install the cover to the transmitter.
5. Check that the keyless entry system works normally.

Programing With Tech 2 (SOUTH AFRICA)

General Description

When the anti-theft and keyless entry control unit and / or the transmitters (remote keys) are replaced, the security codes and / or transmitter ID codes must be programed by using the Tech 2. The following pages show the procedures to program in regard to the anti-theft and keyless entry system. Please refer to Tech 2 scan tool user`s guide in detail.

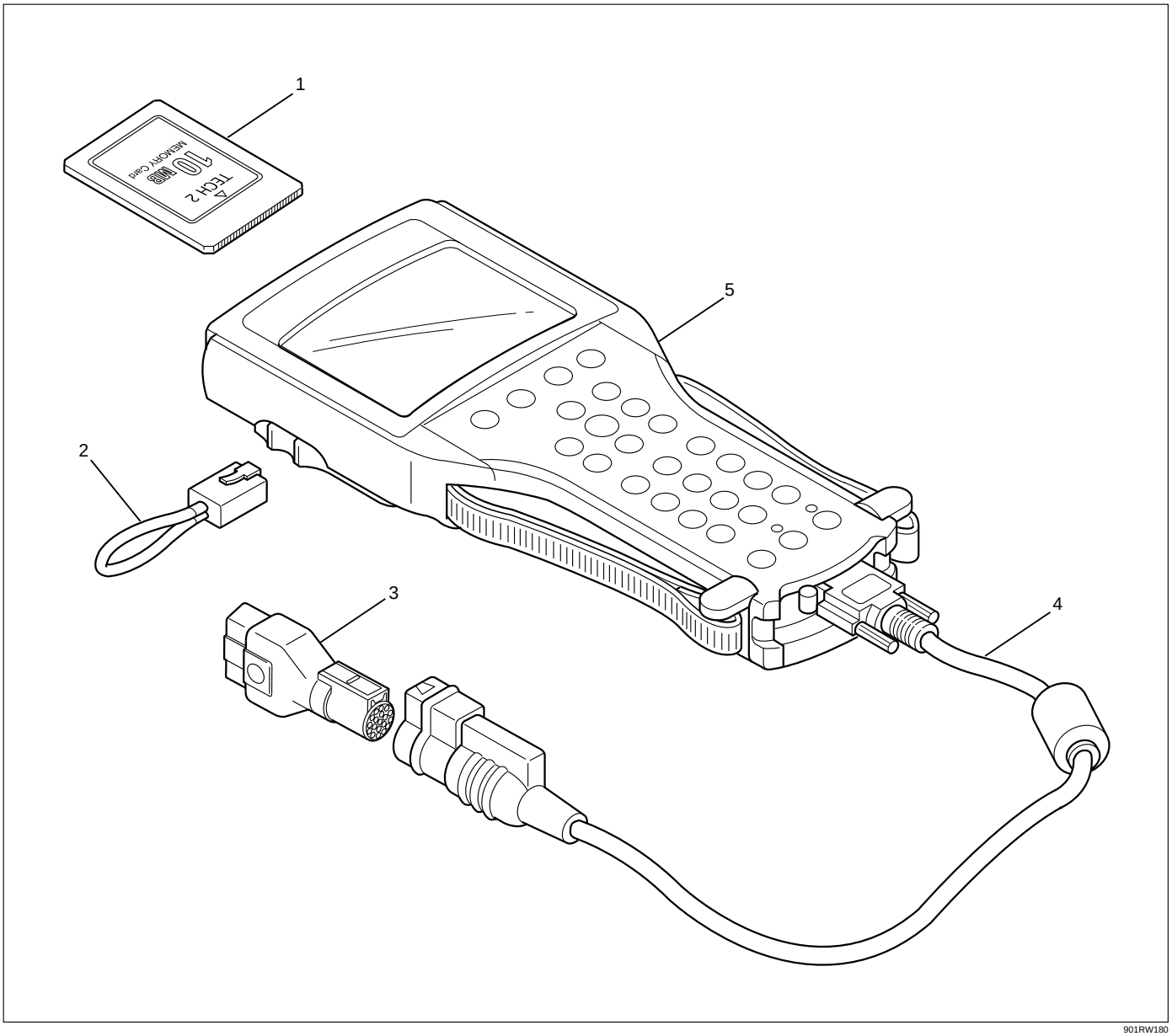

901RW180

Legend

(1) PCMCIA Card
(2) RS 232 Loop Back Connector
(3) SAE 16/19 Adaptor
(4) DLC Cable
(5) Tech 2

Programing Anti-Theft Warning

When the anti-theft and keyless entry control unit is replaced, the security code must be programed after installation.

1. Insert the Isuzu system PCMCIA card into the Tech 2.
2. Connect the SAE 16/19 adaptor to the data link connector (DLC) cable.
3. Connect the DLC cable to the Tech 2.
4. Confirm that the starter switch is off.
5. Connect the Tech 2 SAE 16/19 adaptor to the vehicle DLC.
6. Verify the Tech 2 power up display.

060RW009

7. Press the enter key.
8. Select " F0 : Diagnostics " and press the enter key.
9. Select the model year and press the enter key.
10. Select the vehicle type and press the enter key.
11. Select " F2 : Body " and press the enter key.
12. Select " Anti Theft Warning " and press the enter key.
13. Turn the starter switch on and press the confirm key (soft key).
14. Confirm " Partnumber " , " Country Code " and " Production Date " and press the confirm key (soft key).
15. Select " F4 : Programing " and press the enter key.
16. Select " F2 : Program Anti Theft Warning " and press the enter key.
17. Press the confirm key (soft key).
18. Press the confirm key (soft key).
19. Enter the security code and press the enter key.
20. Press the okey key (soft key).
21. Enter the security code and press the enter key.
22. Press the okey key (soft key).
23. Press the soft key to select " Remote Key ".
24. Select country code and press the enter key.
25. Press the confirm key (soft key).

Programing Remote Key

When the anti-theft and keyless entry control unit is replaced and / or the new transmitter (remote key) is supplied, the ID code of the transmitter must be programed by the following procedure.

1. Perform the step 1. to 15. of " Programing Anti Theft Warning ".
2. Select " F1 : Program Remote Key " and press the enter key.
3. Press the confirm key (soft key).
4. Press the lock button of the transmitter until the display changes.
5. Press the confirm key (soft key).
6. Press the Yes or No key (soft key).

Erasing Remote Keys

All the ID code stored in the control unit can be erased by the following procedure.

1. Perform the step 1. to 15. of " Programing Anti Theft Warning ".
2. Select " F0 : Erase Remote Keys " and press the enter key.
3. Press the confirm key (soft key).
4. Press the confirm key (soft key).
5. Press the confirm key (soft key).

Meter and Warning/Indicator Light

General Description

The circuit consists of meter assembly vehicle speed sensor, engine coolant temperature sensor, seat belt switch, oil pressure switch, brake fluid switch, parking brake switch and other some switches and sensors.

Meter assembly contains speedometer, tachometer, voltmeter, engine coolant temperature gauge, oil pressure gauge, fuel gauge, warning/indicator light and illumination light.

Circuit Diagram (RHD 6V*1 W/O T.O.D)-1

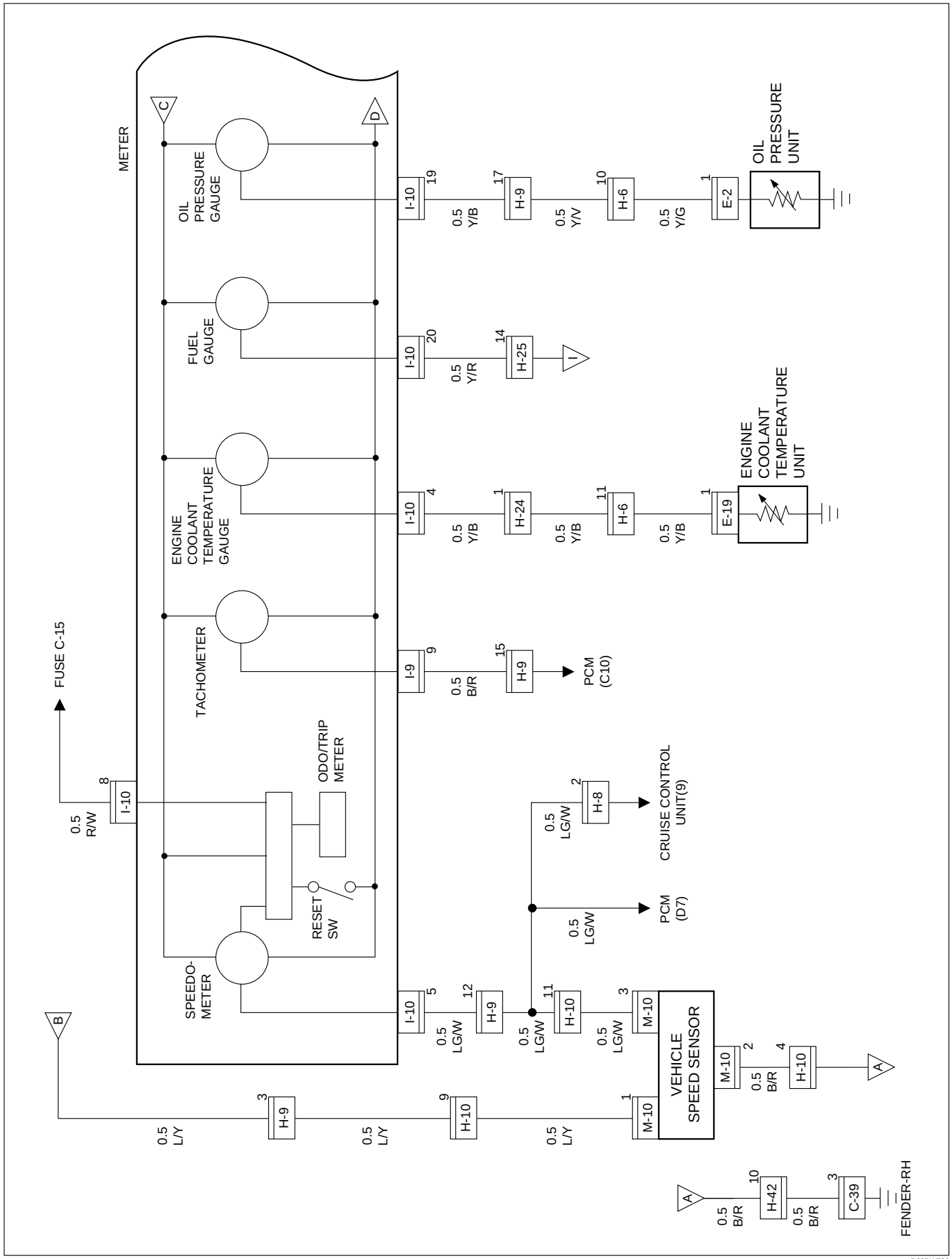

D08RW722

Circuit Diagram (RHD 6V*1 W/O T.O.D)-2

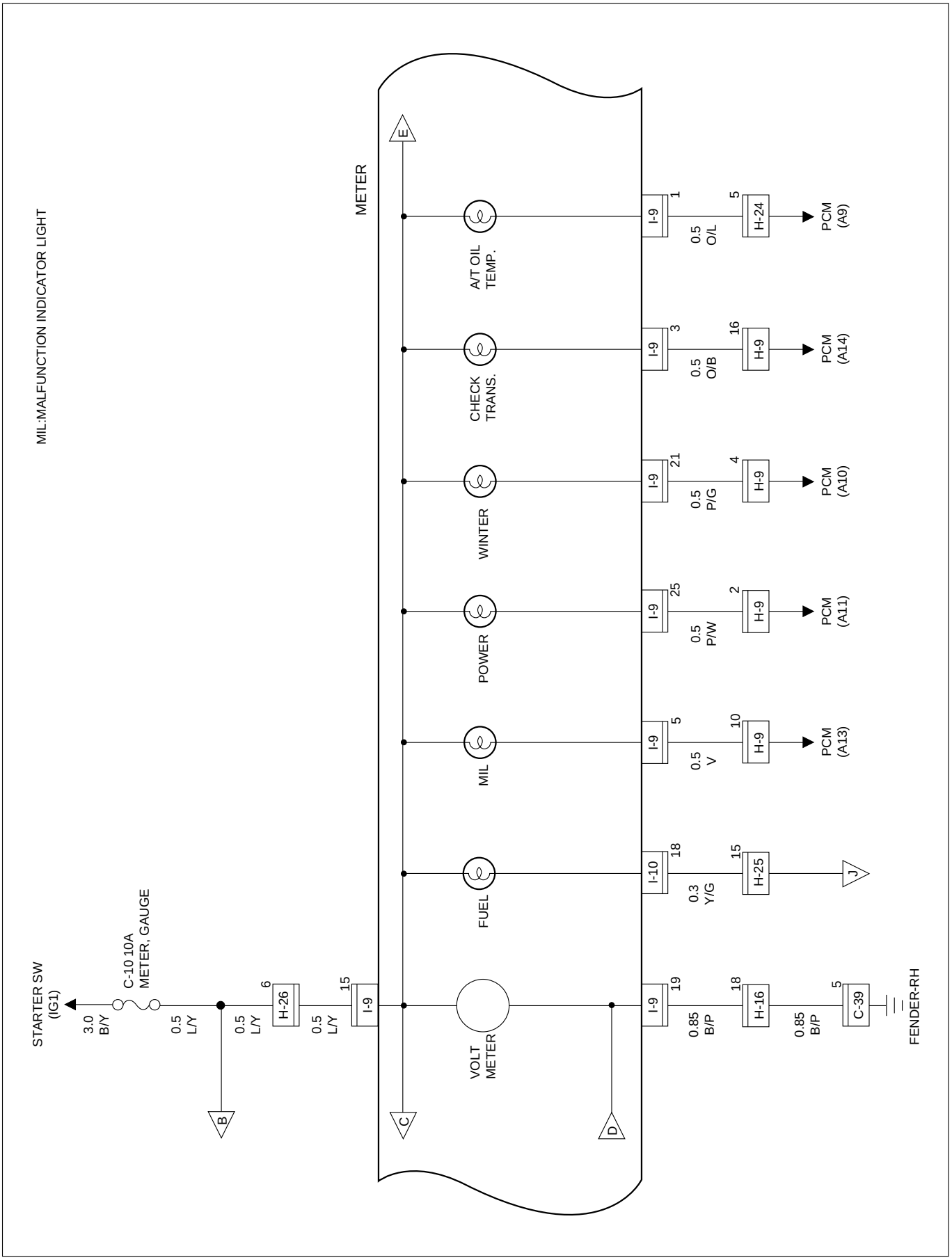

D08RW723

Circuit Diagram (RHD 6V*1 W/O T.O.D)-3

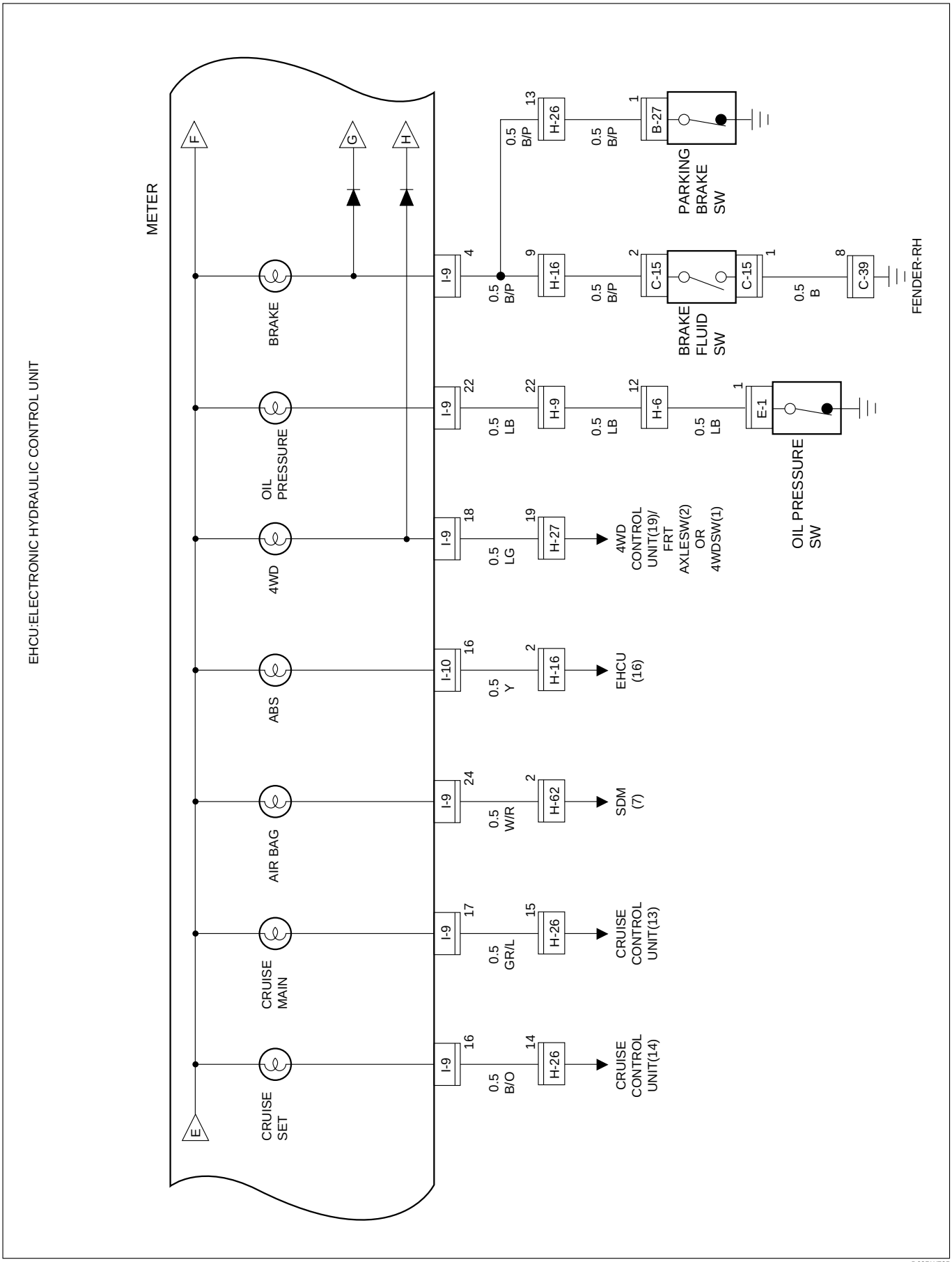

D08RW725

Circuit Diagram (RHD 6VD1 W/O T.O.D)-4

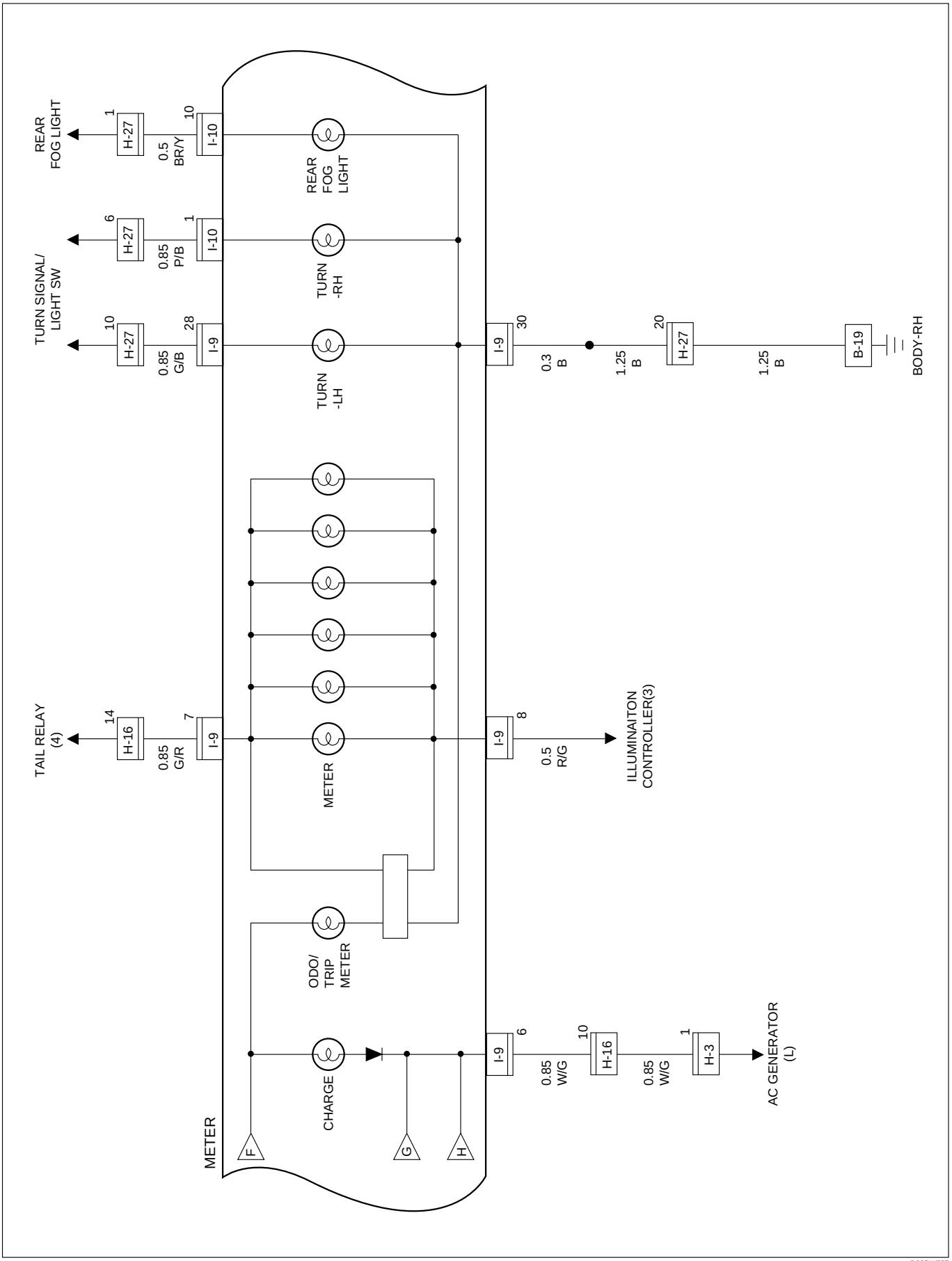

Circuit Diagram (RHD 6VD1 W/O T.O.D)-5

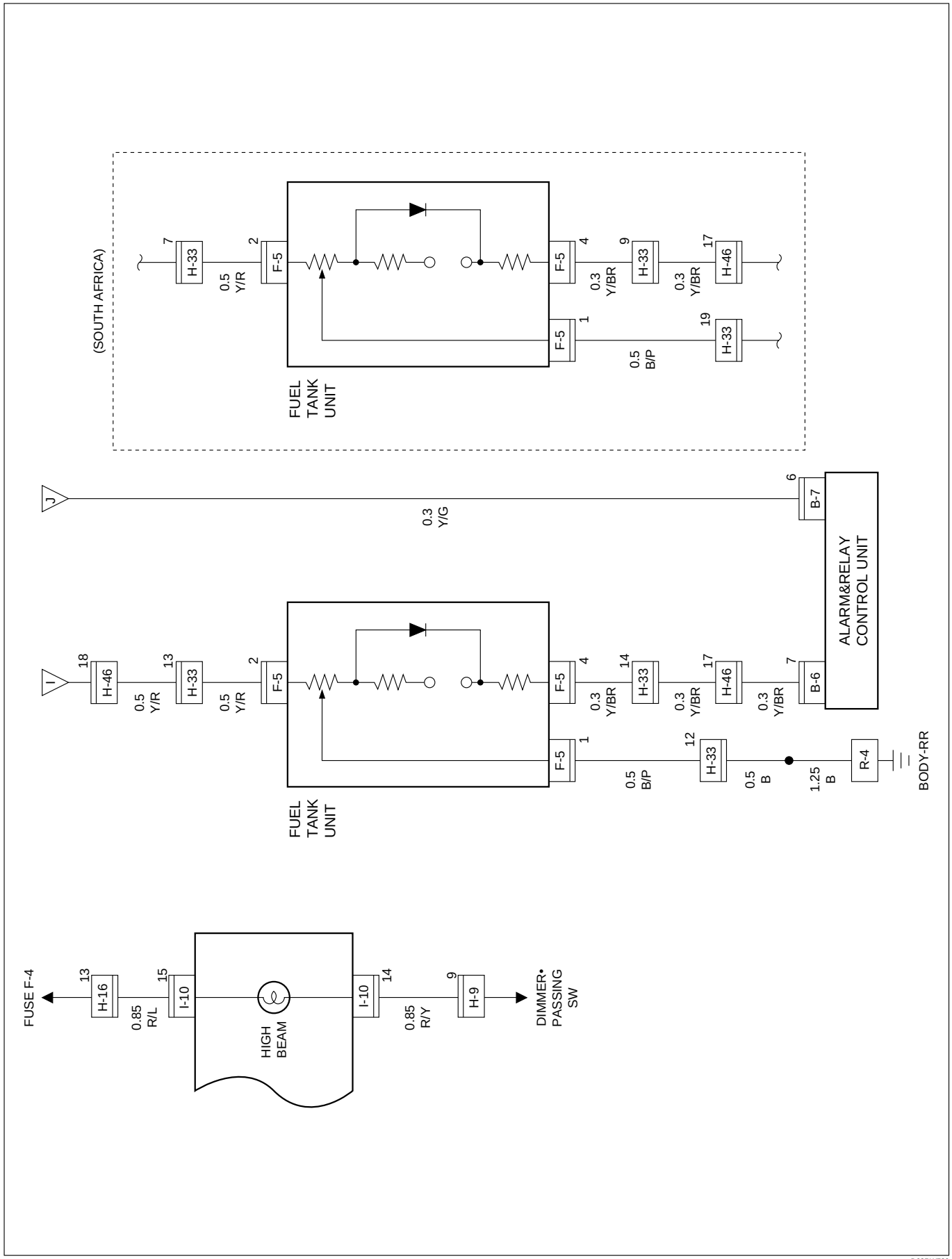

D08RW729

Circuit Diagram (RHD 6V*1 W/O T.O.D)-6

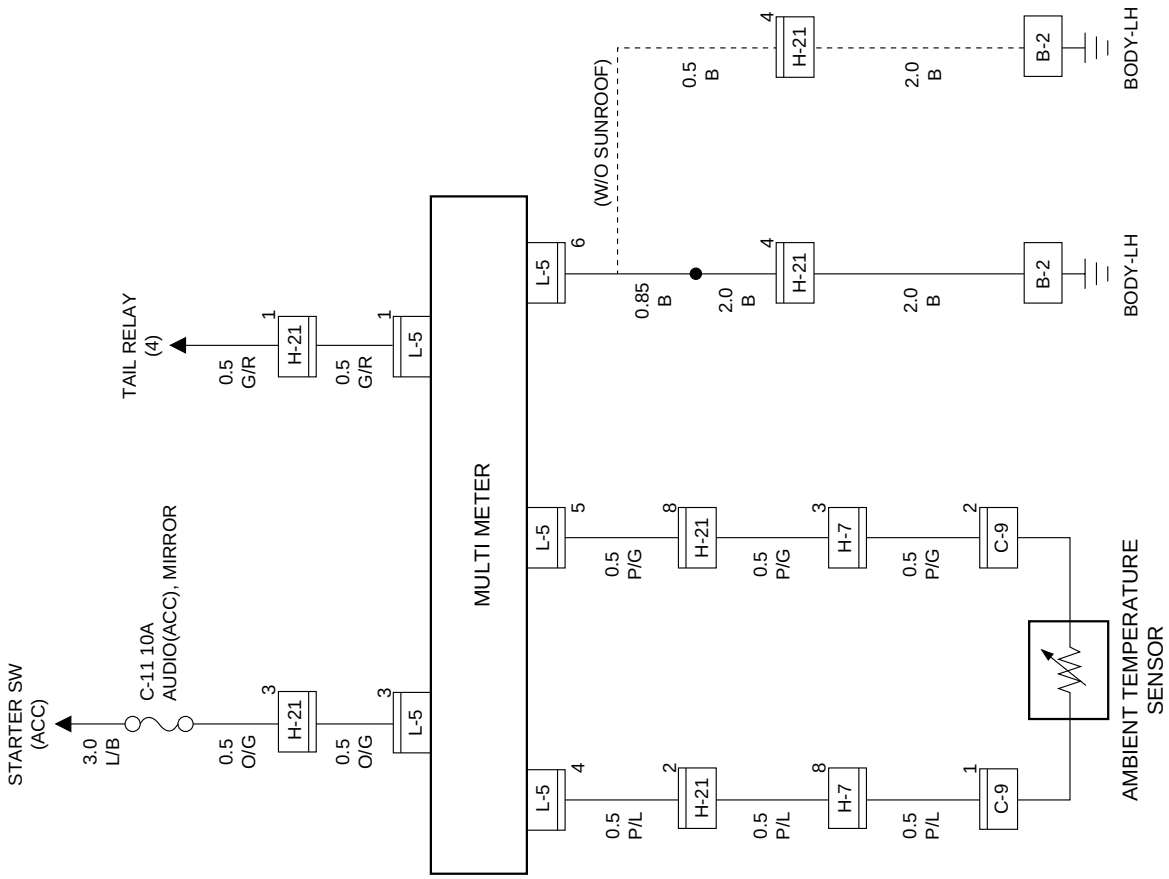

D08RW730

Circuit Diagram (RHD 6V*1 W/T.O.D)-1

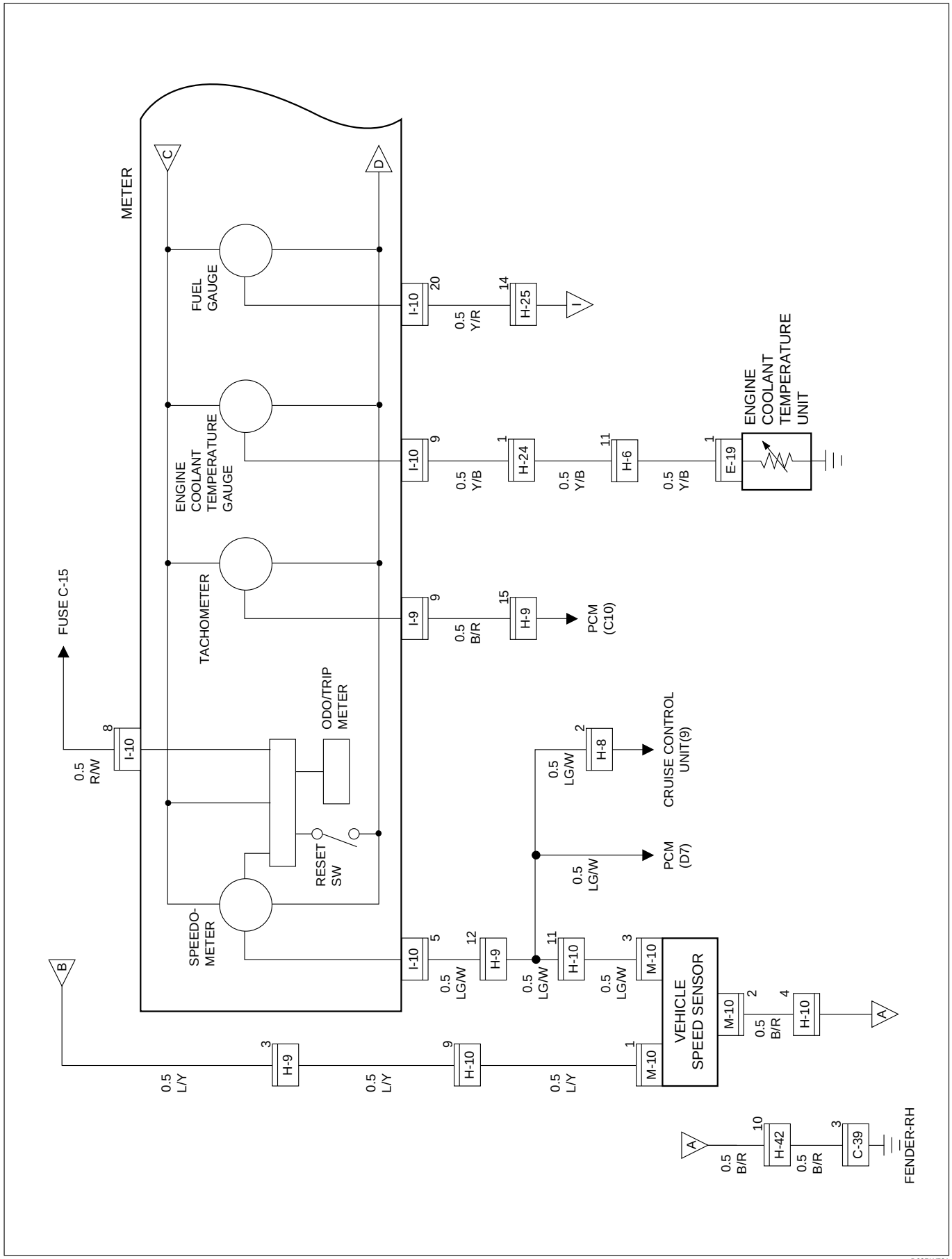

D08RW731

Circuit Diagram (RHD 6V*1 W/T.O.D)-2

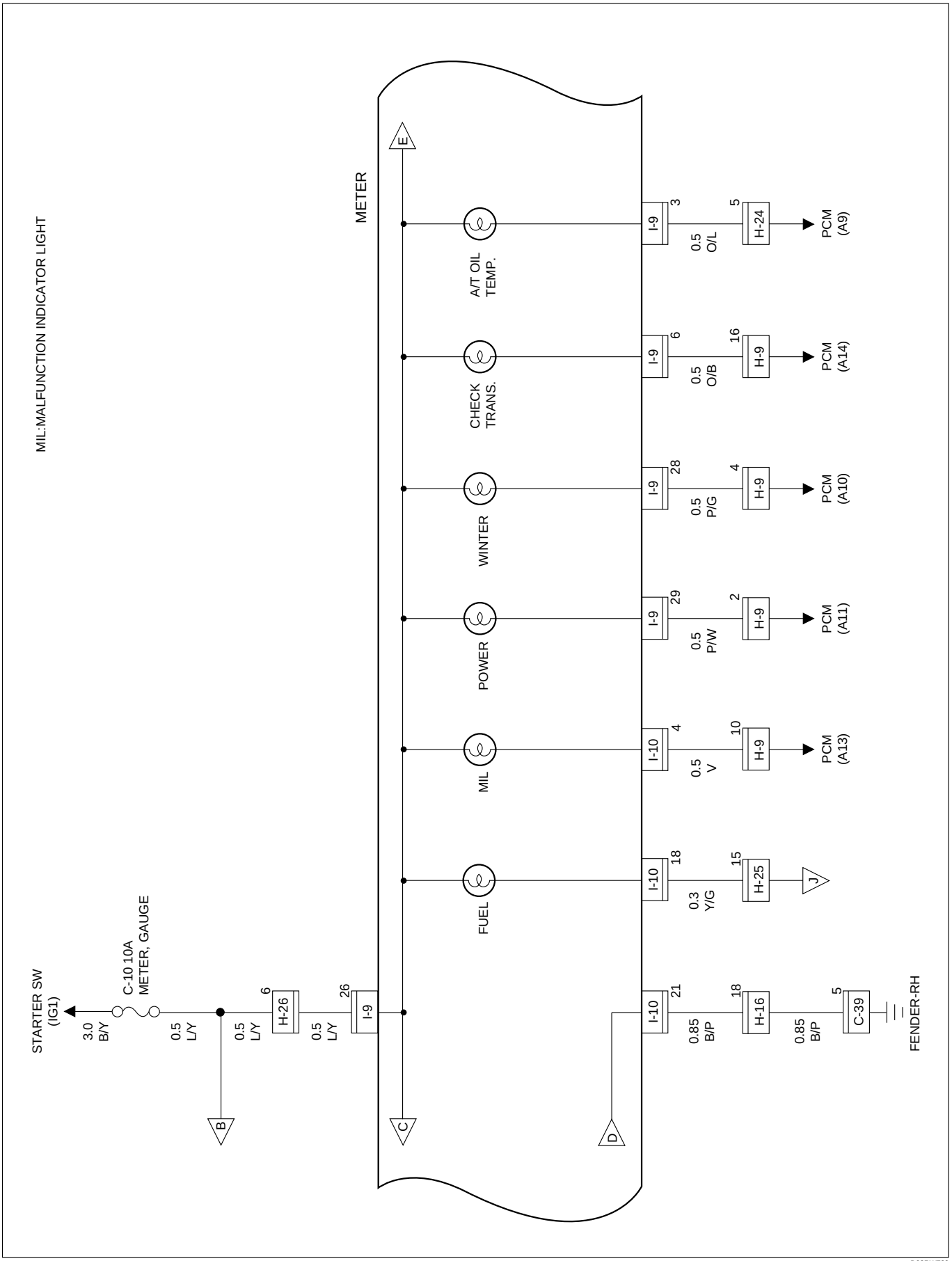

D08RW732

Circuit Diagram (RHD 6V*1 W/T.O.D)-3

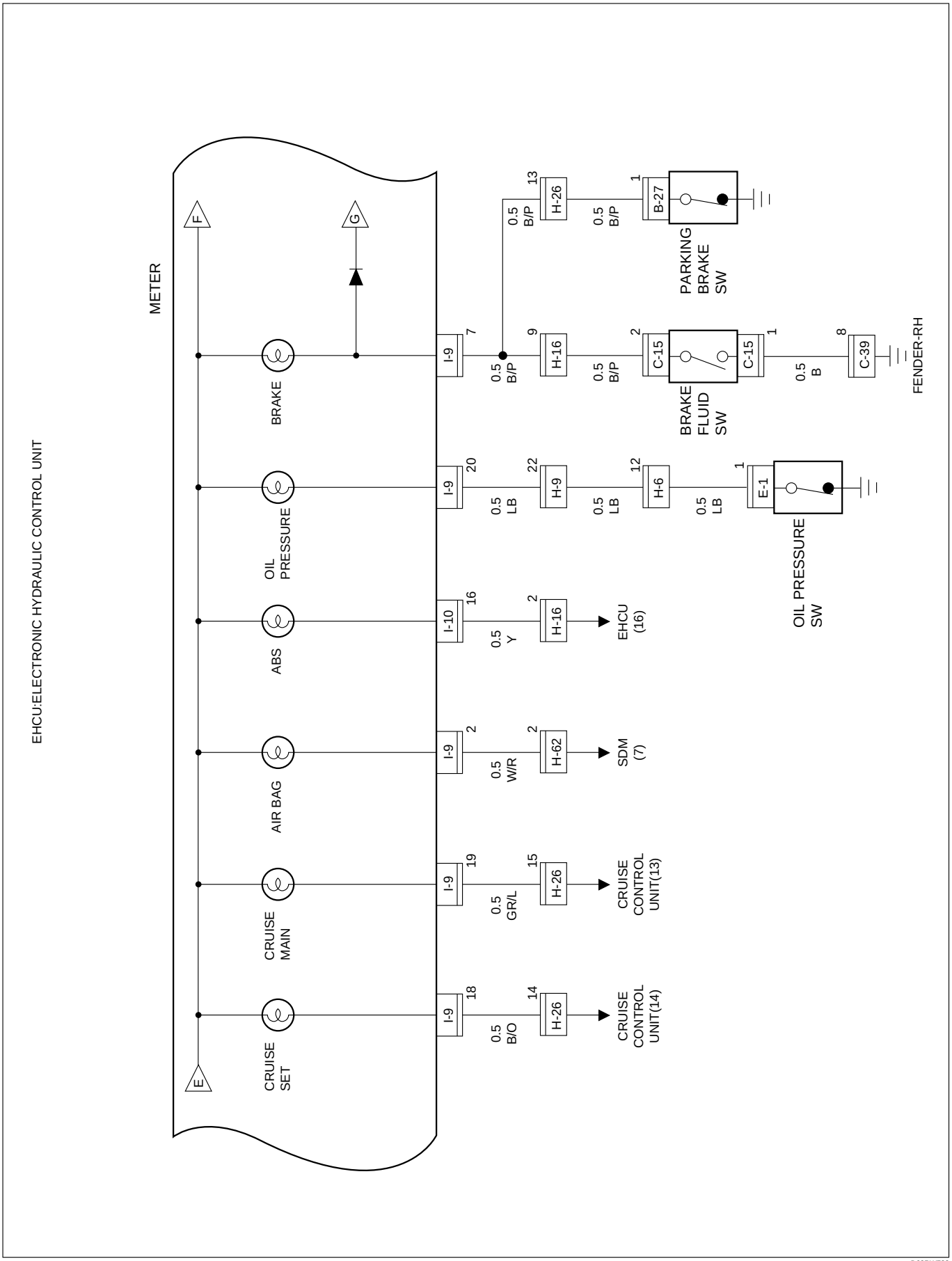

D08RW733

Circuit Diagram (RHD 6V*1 W/T.O.D)-4

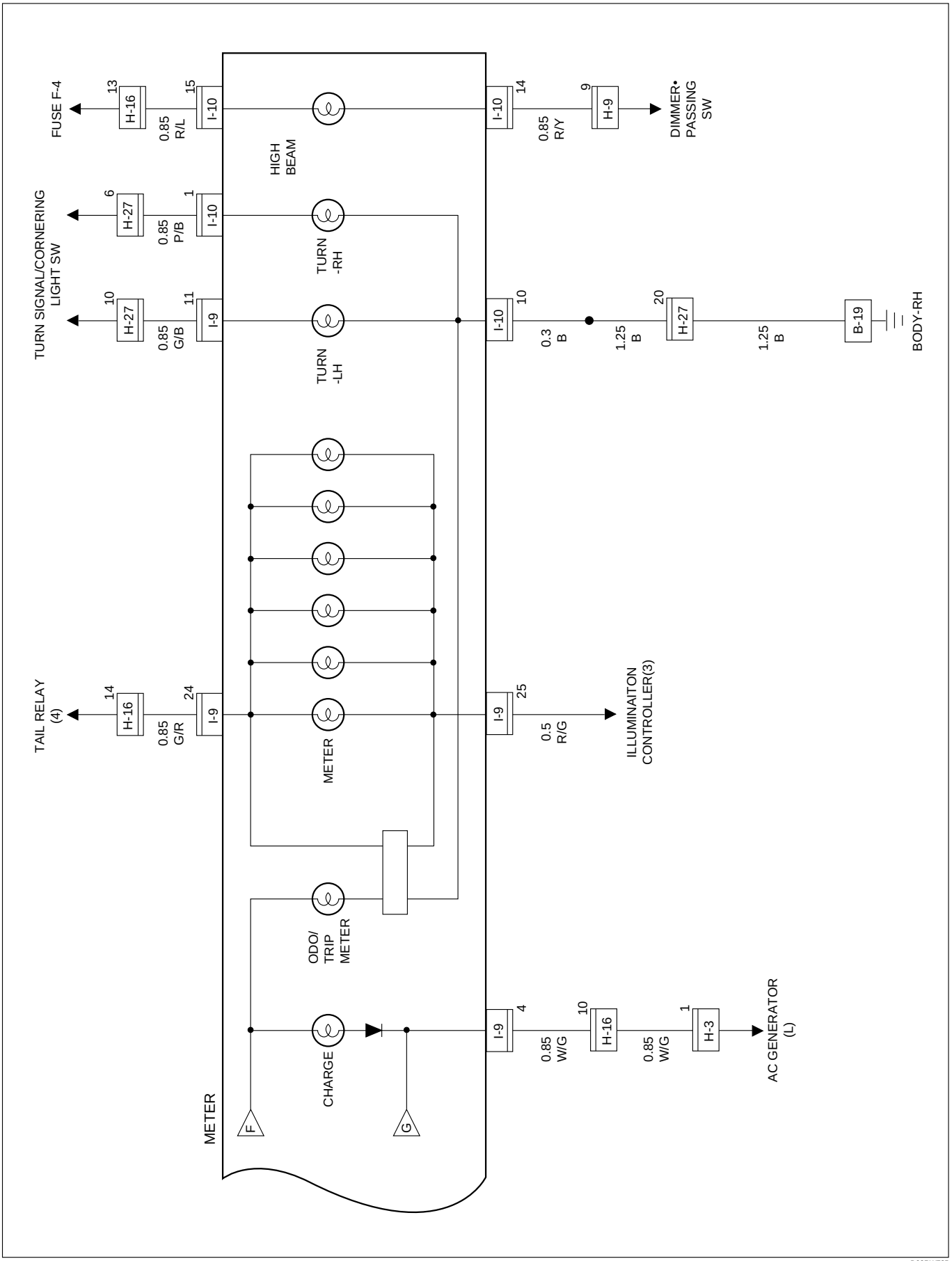

D08RW735

Circuit Diagram (RHD 6V*1 W/T.O.D)-5

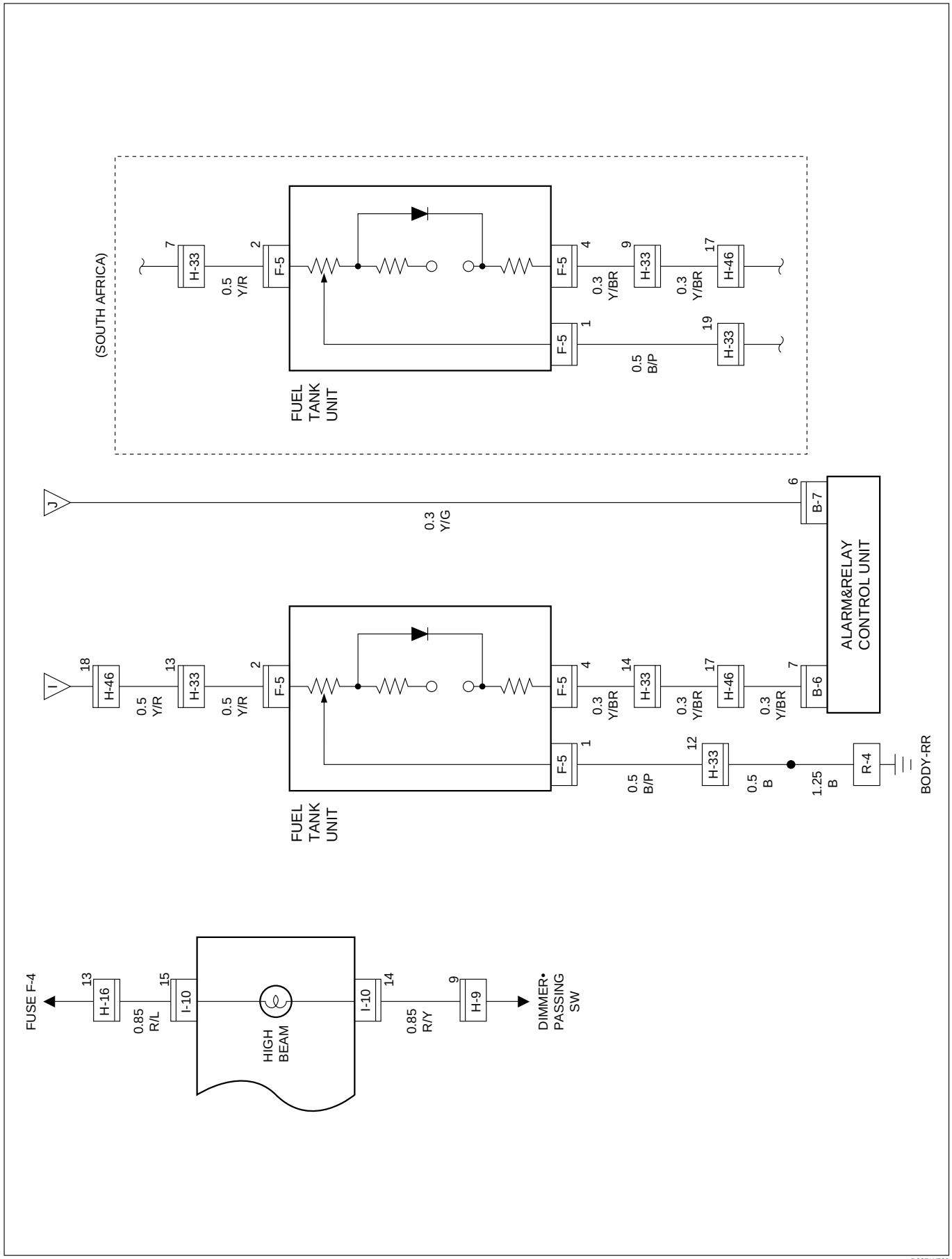

D08RW729

Circuit Diagram (RHD 6V*1 W/T.O.D)-6

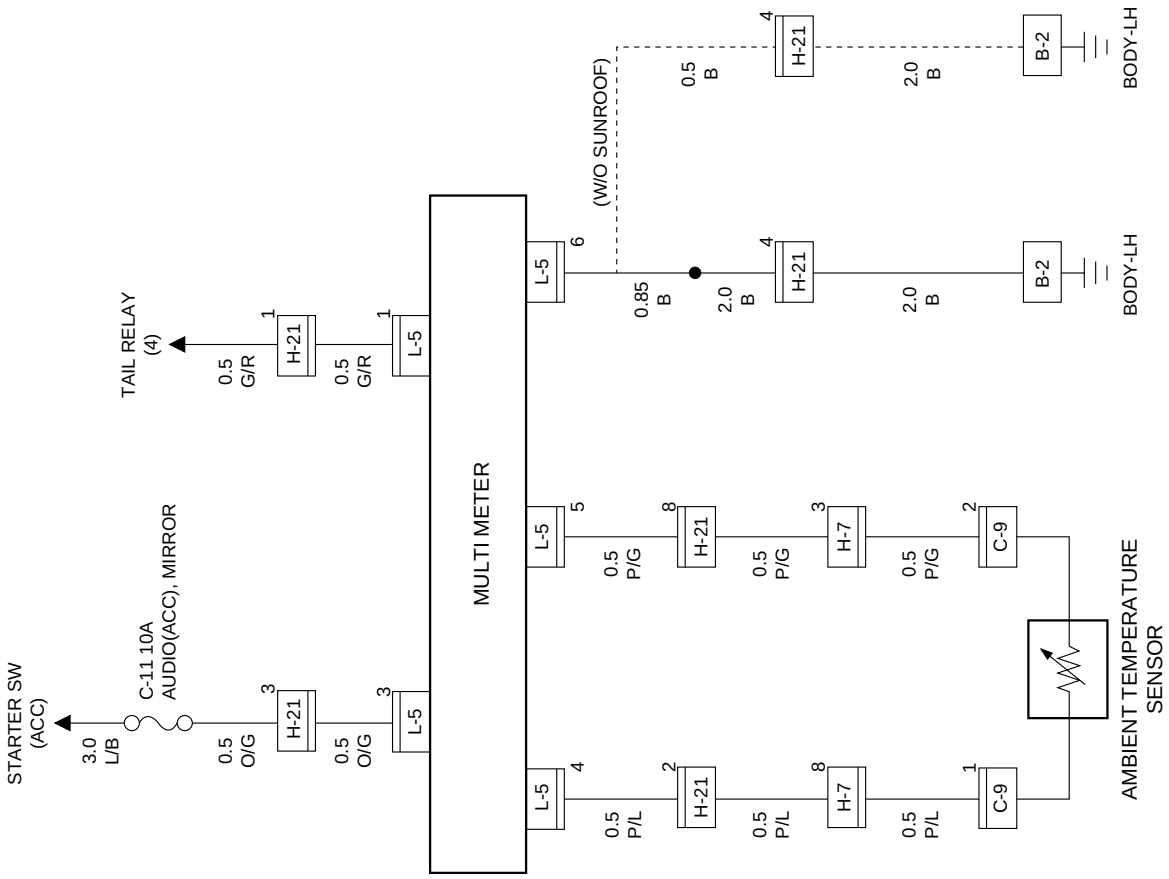

D08RW730

Circuit Diagram (RHD 4JG2)-1

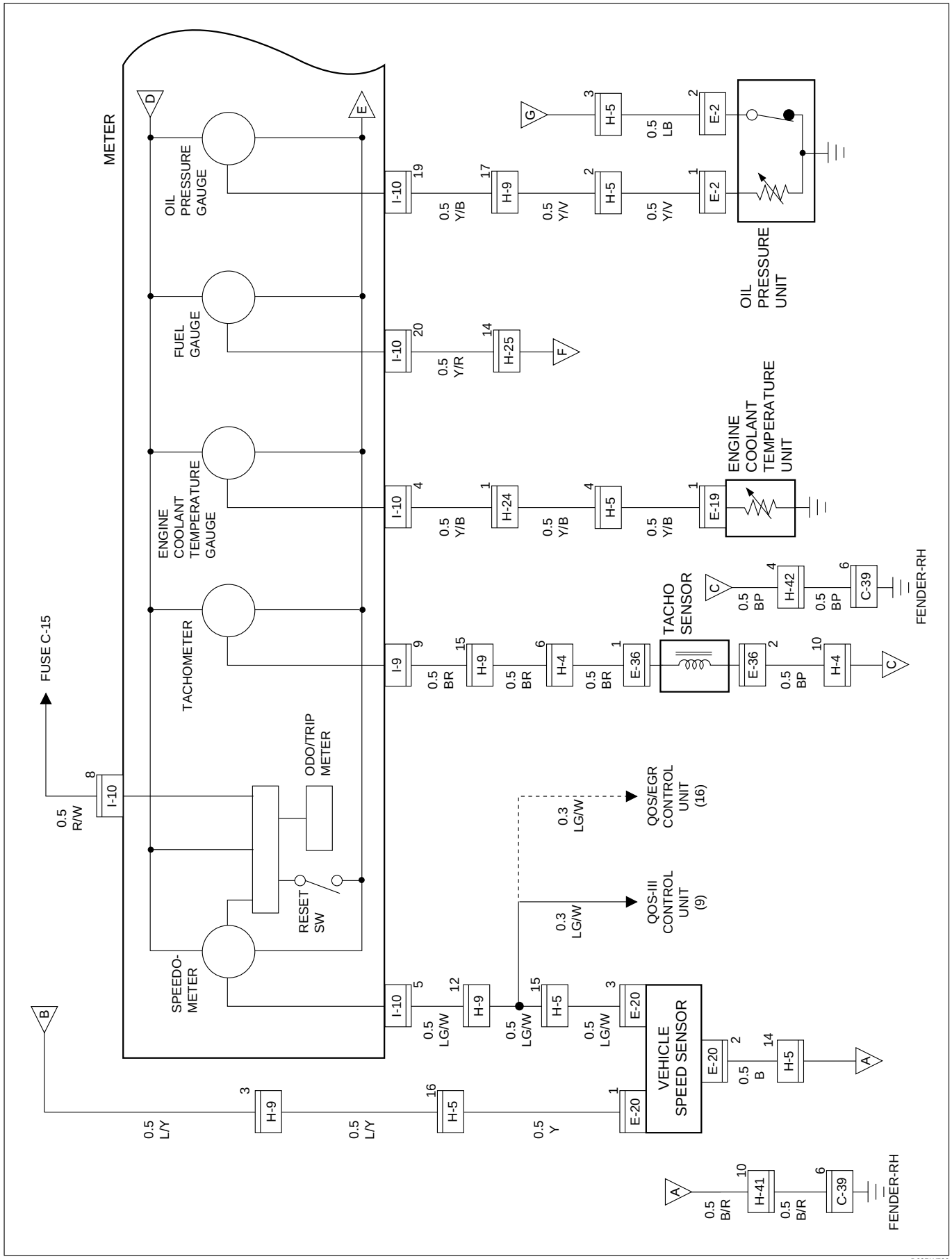

D08RW738

Circuit Diagram (RHD 4JG2)-2

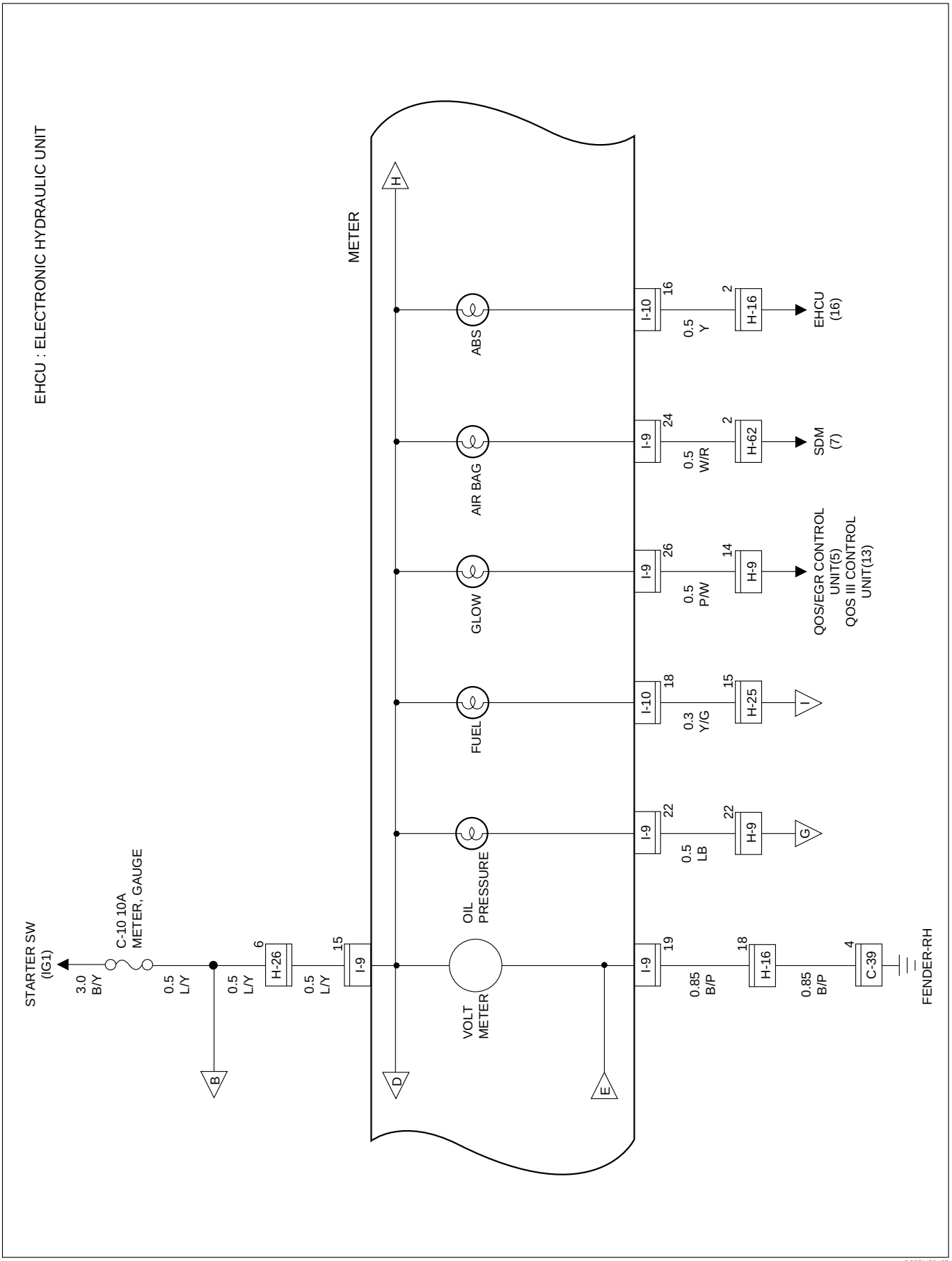

D08RY00427

Circuit Diagram (RHD 4JG2)-3

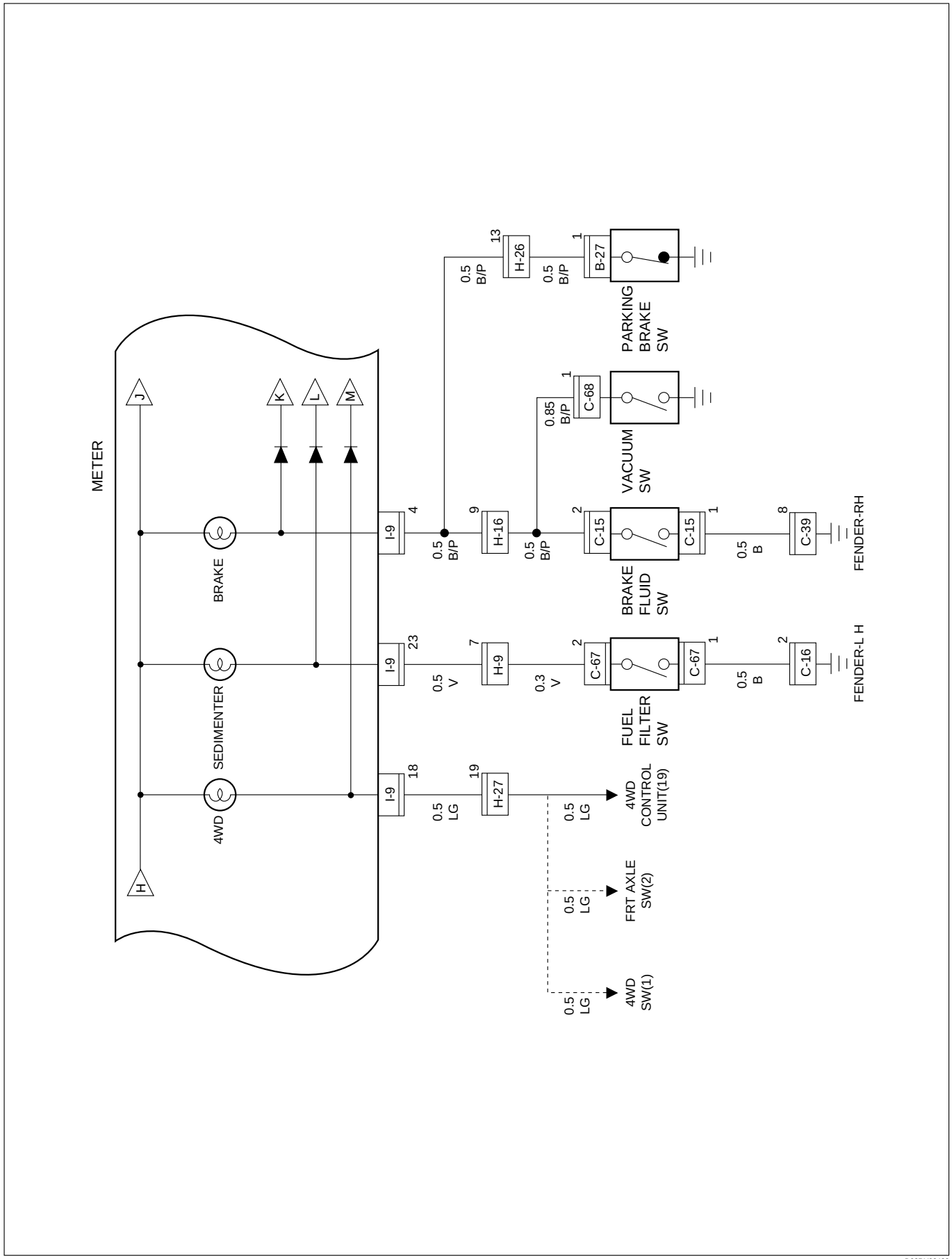

Circuit Diagram (RHD 4JG2)-4

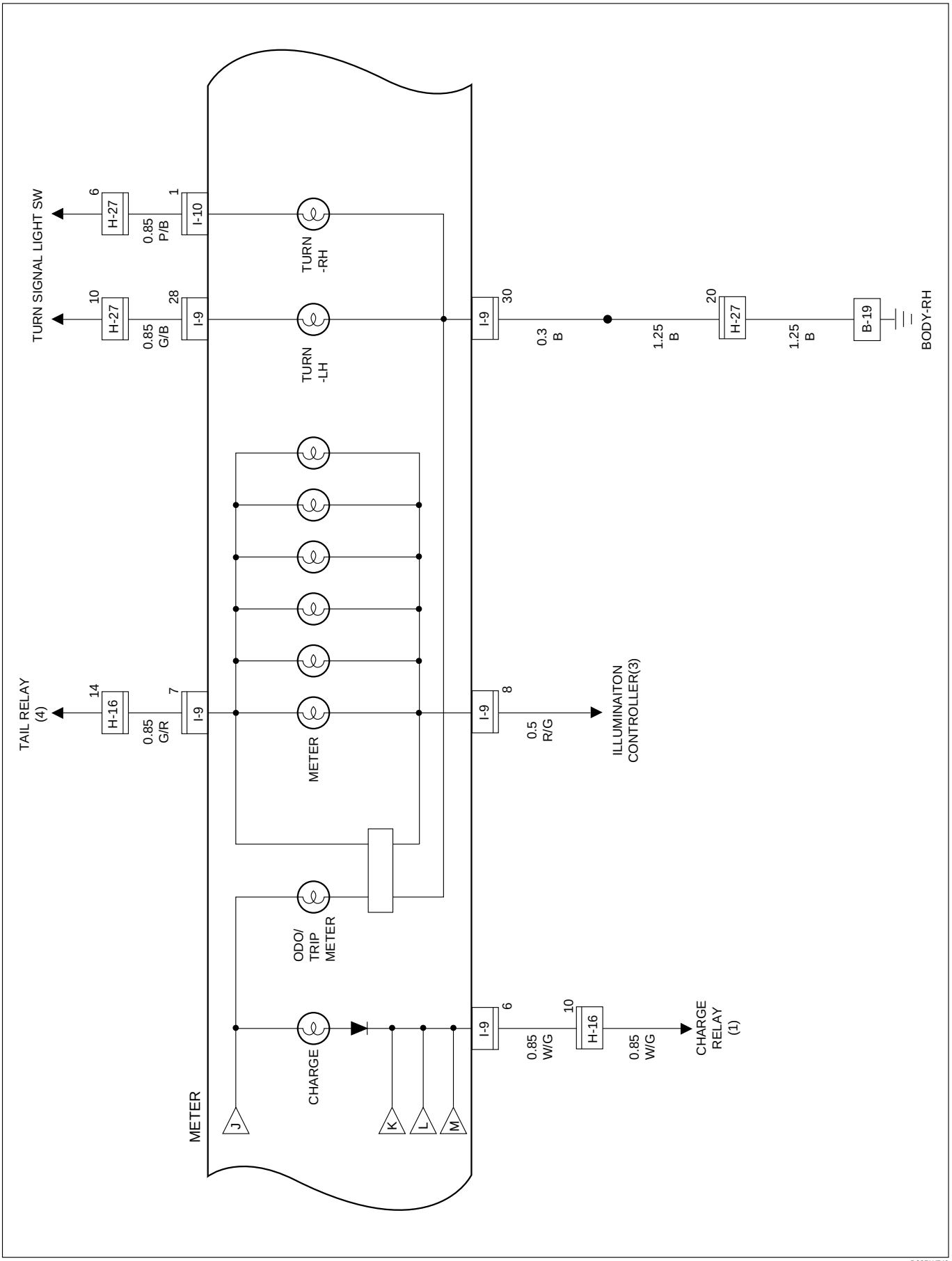

D08RW740

Circuit Diagram (RHD 4JG2)-5

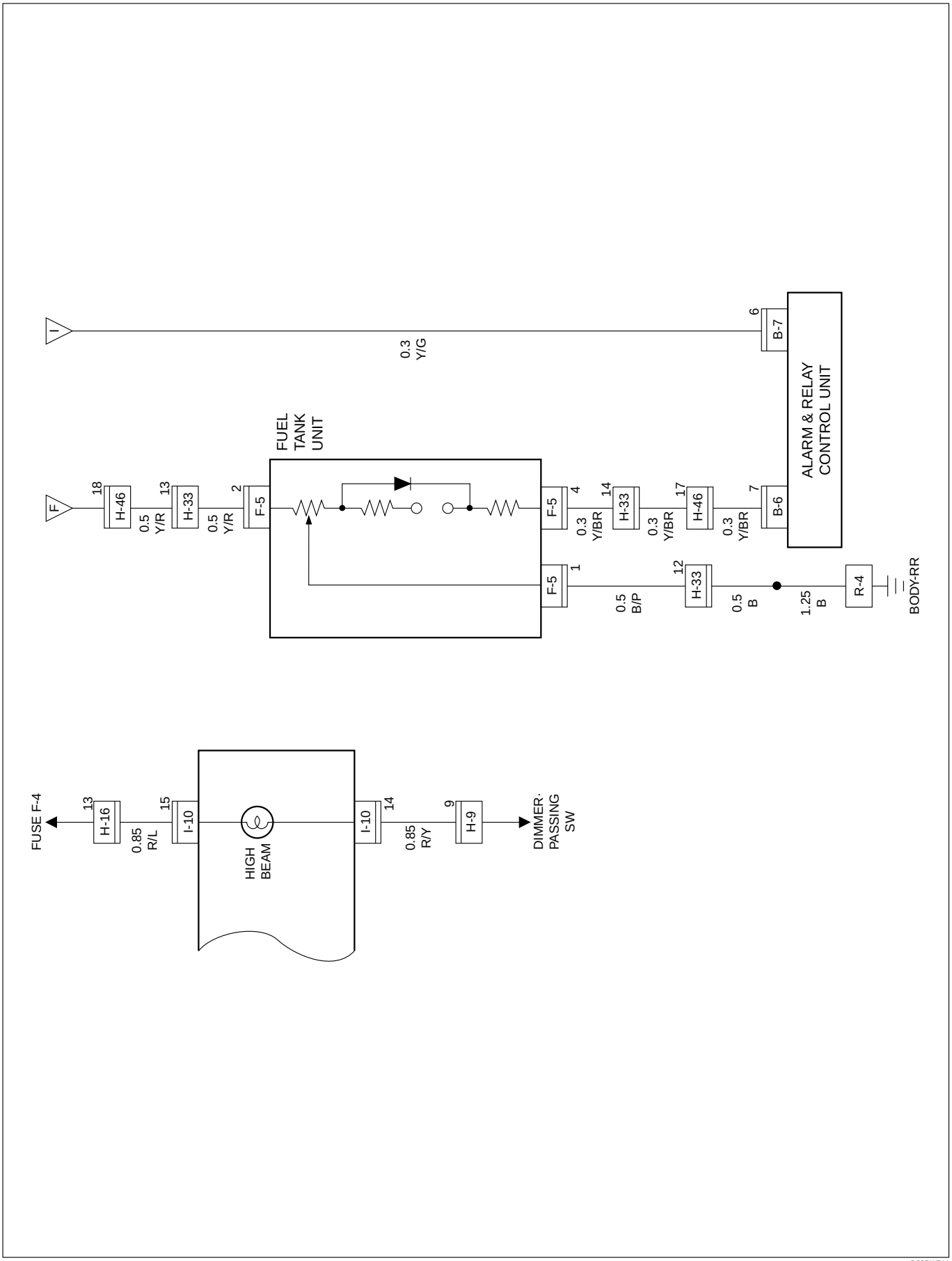

D08RW741

Circuit Diagram (RHD 4JG2)-6

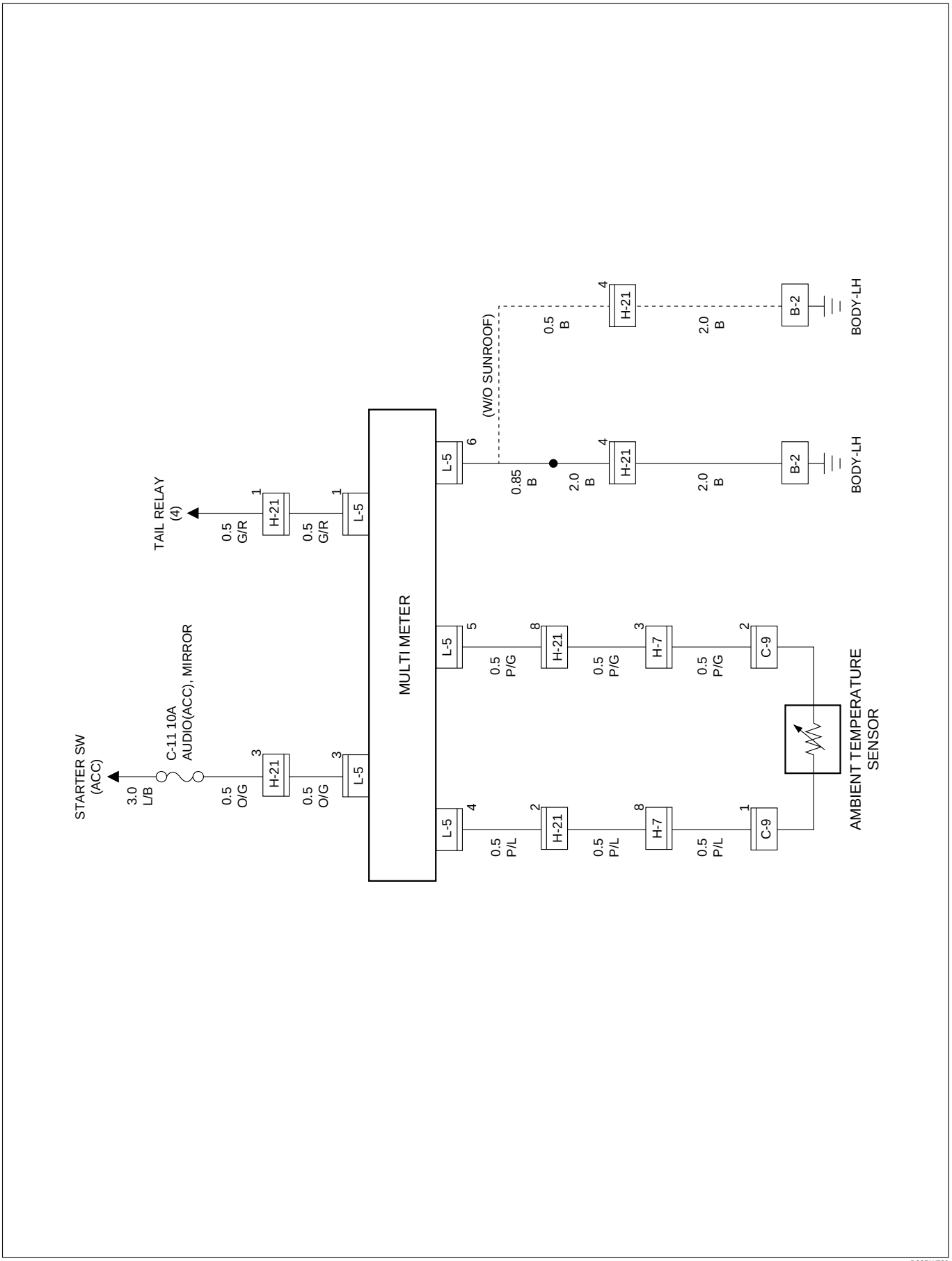

D08RW730

Parts Location (RHD 6V*1)

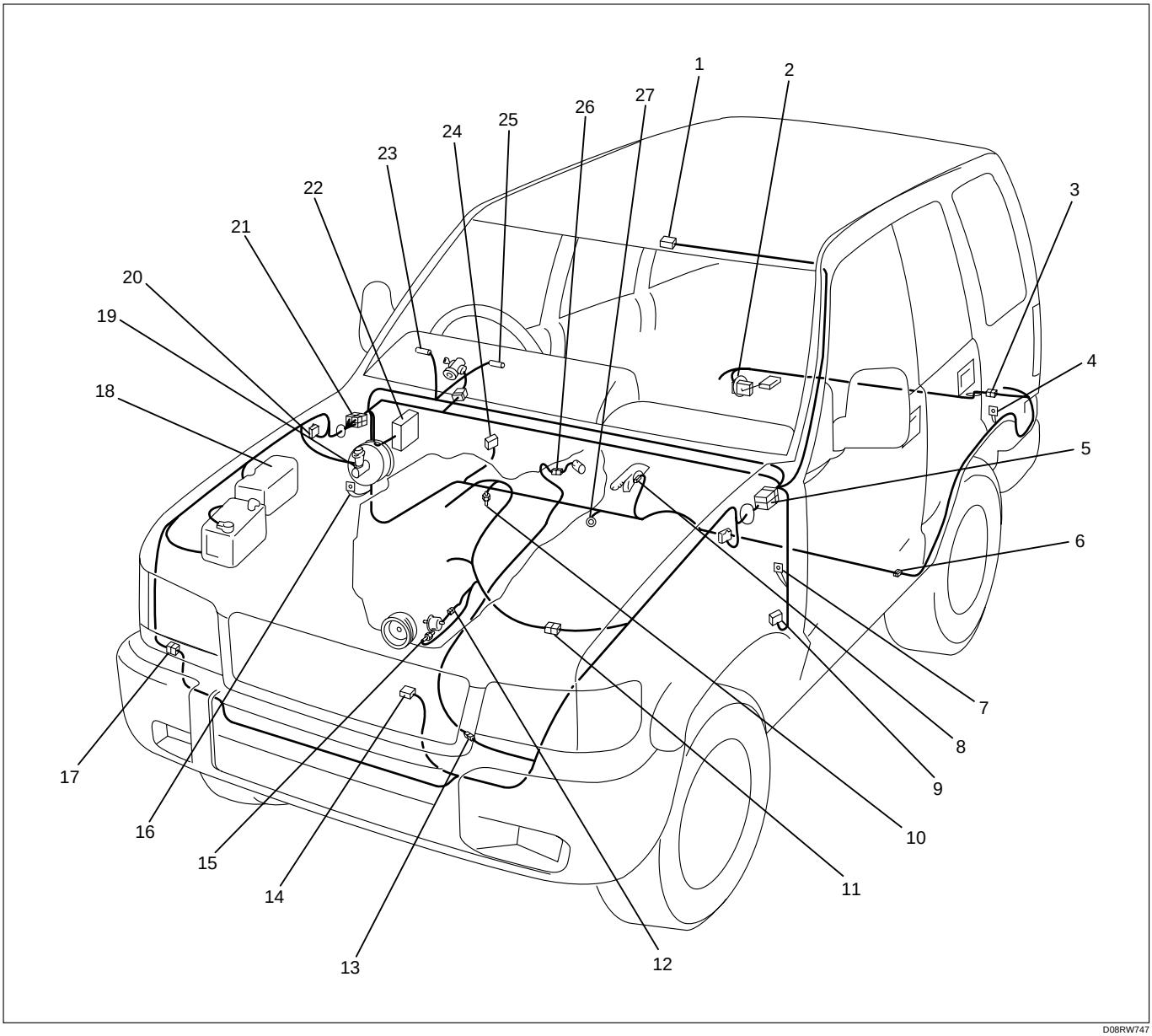

D08RW747

Legend

(1) L-5
(2) F-5
(3) H-33
(4) R-4
(5) H-7, H-8, H-9, H-21, H-24
(6) H-46
(7) B-1, B-2
(8) B-27
(9) B-6, B-7 (Alarm and Relay Control Unit)
(10) E-19
(11) H-6
(12) E-2
(13) H-10
(14) C-9
(15) E-1
(16) B-19
(17) H-41
(18) Relay and Fuse Box
(19) C-15
(20) C-39
(21) H-13, H-14, H-15, H-25, H-26, H-27, H-62
(22) Fuse Box
(23) I-10
(24) B-24
(25) I-9
(26) M-10
(27) B-26

Parts Location (RHD 4JG2)

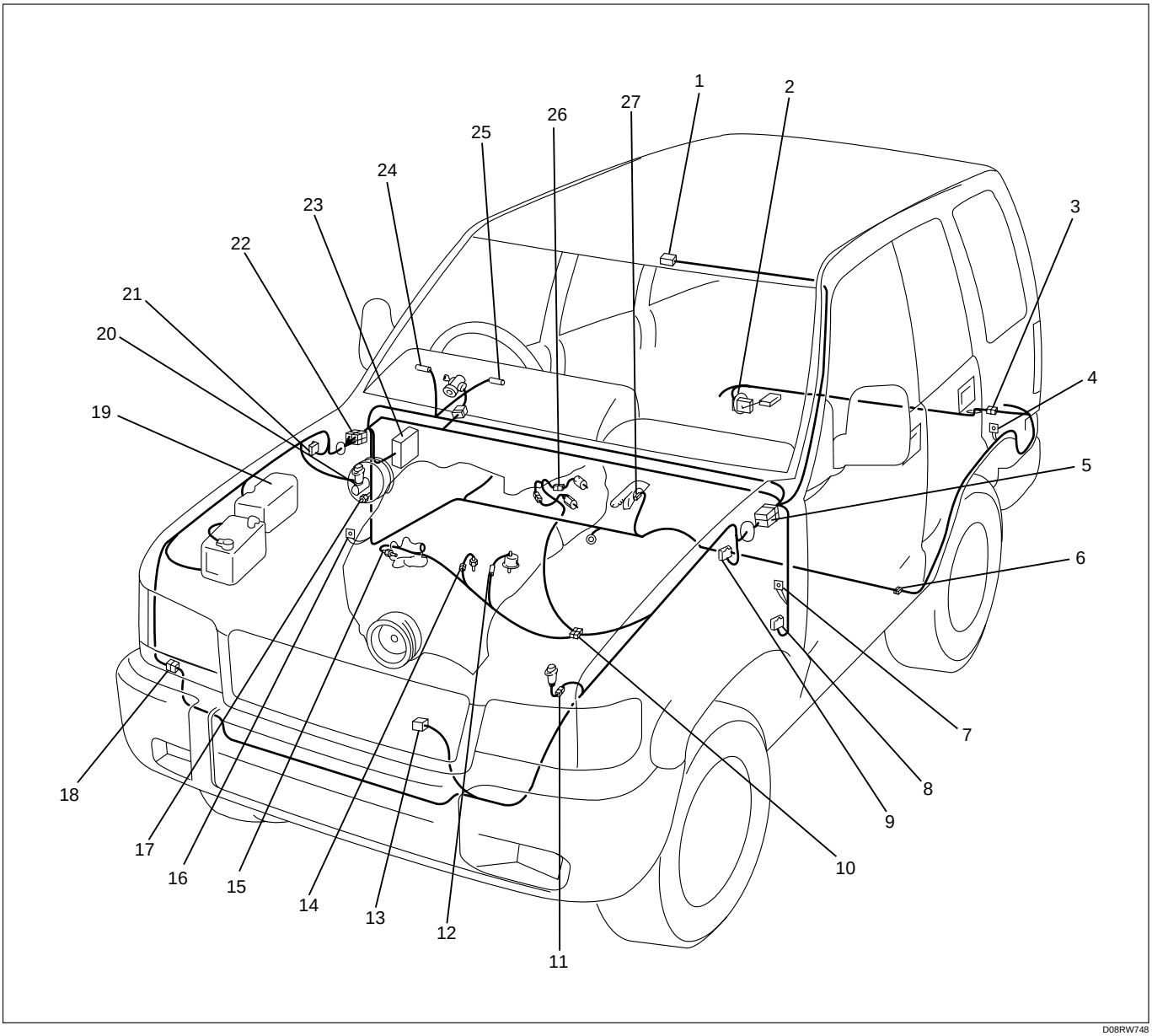

D08RW748

Legend

(1) L-5
(2) F-5
(3) H-33
(4) R-4
(5) H-7, H-9, H-21, H-24
(6) H-46
(7) B-1
(8) B-6, B-7 (Alarm and Relay Control Unit)
(9) C-16
(10) H-4, H-5
(11) C-67
(12) E-2
(13) C-9
(14) E-36
(15) E-19
(16) B-19
(17) C-68
(18) H-41, H-42
(19) Relay and Fuse Box
(20) C-15
(21) C-39
(22) H-13, H-15, H-16, H-25, H-26, H-27, H-62
(23) Fuse Box
(24) I-10
(25) I-9
(26) E-44
(27) B-27

Circuit Diagram (LHD 6V*1 W/O T.O.D)-1

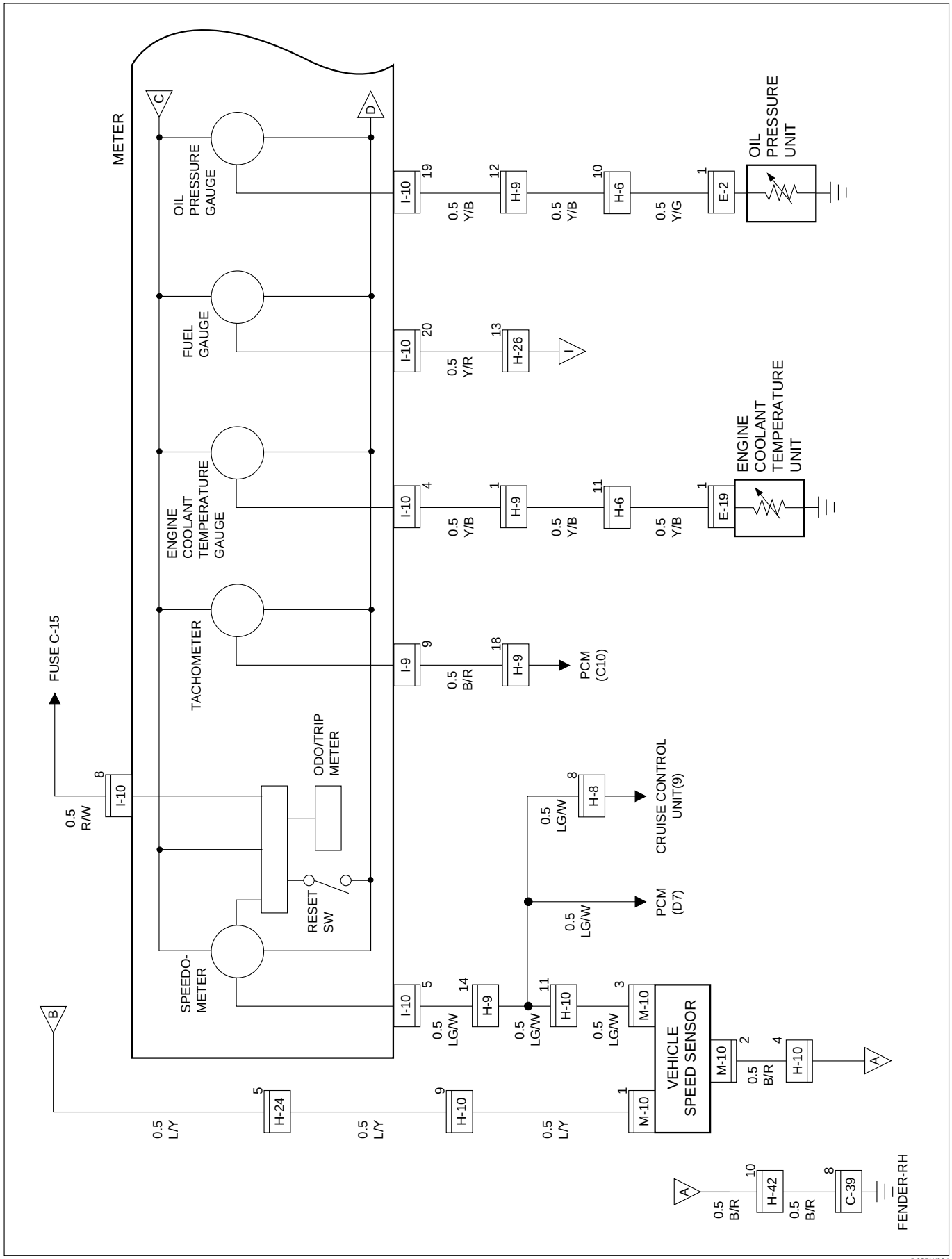

D08RW924

Circuit Diagram (LHD 6V*1 W/O T.O.D)-2

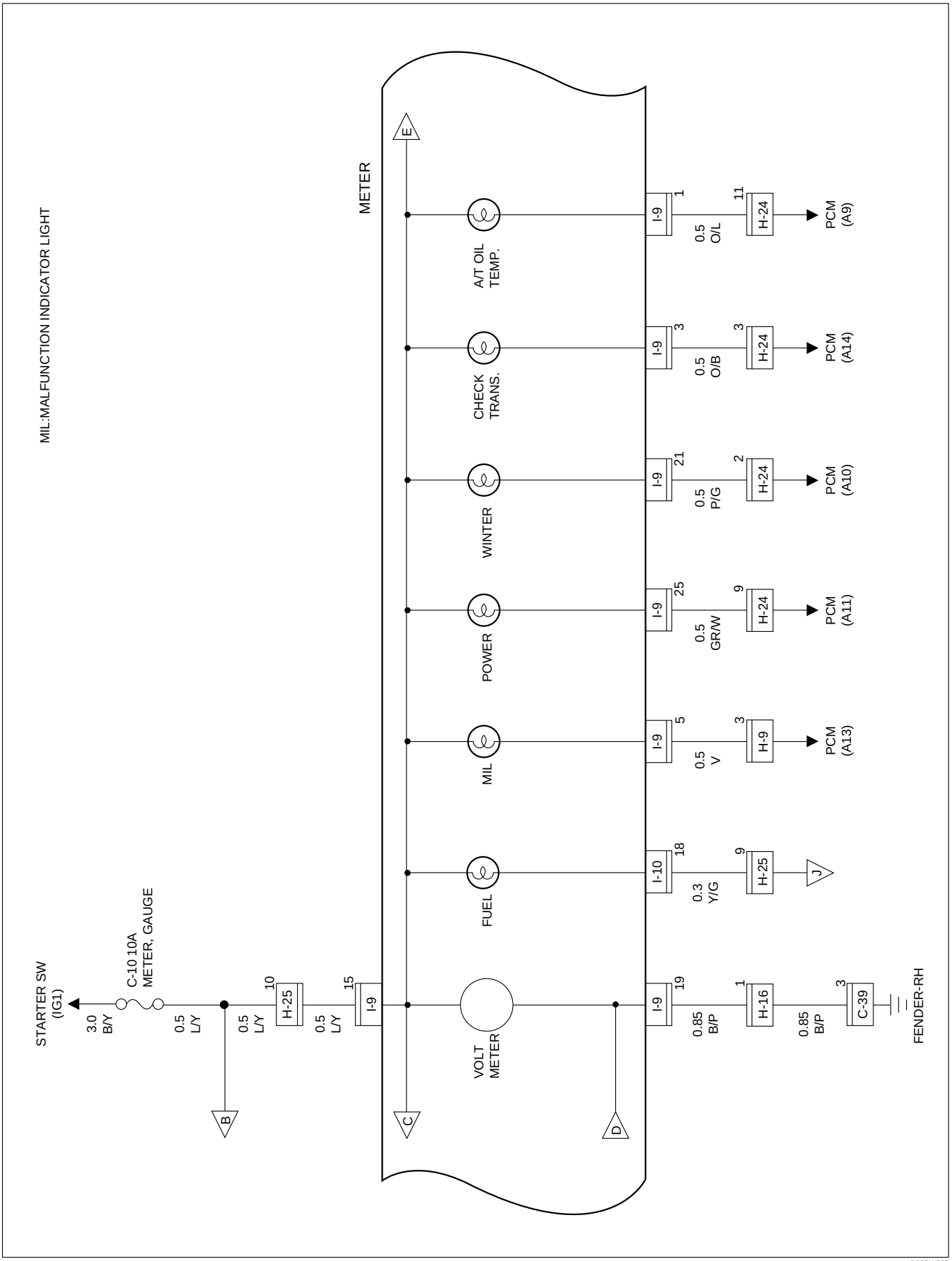

D08RW925

Circuit Diagram (LHD 6V*1 W/O T.O.D)-3

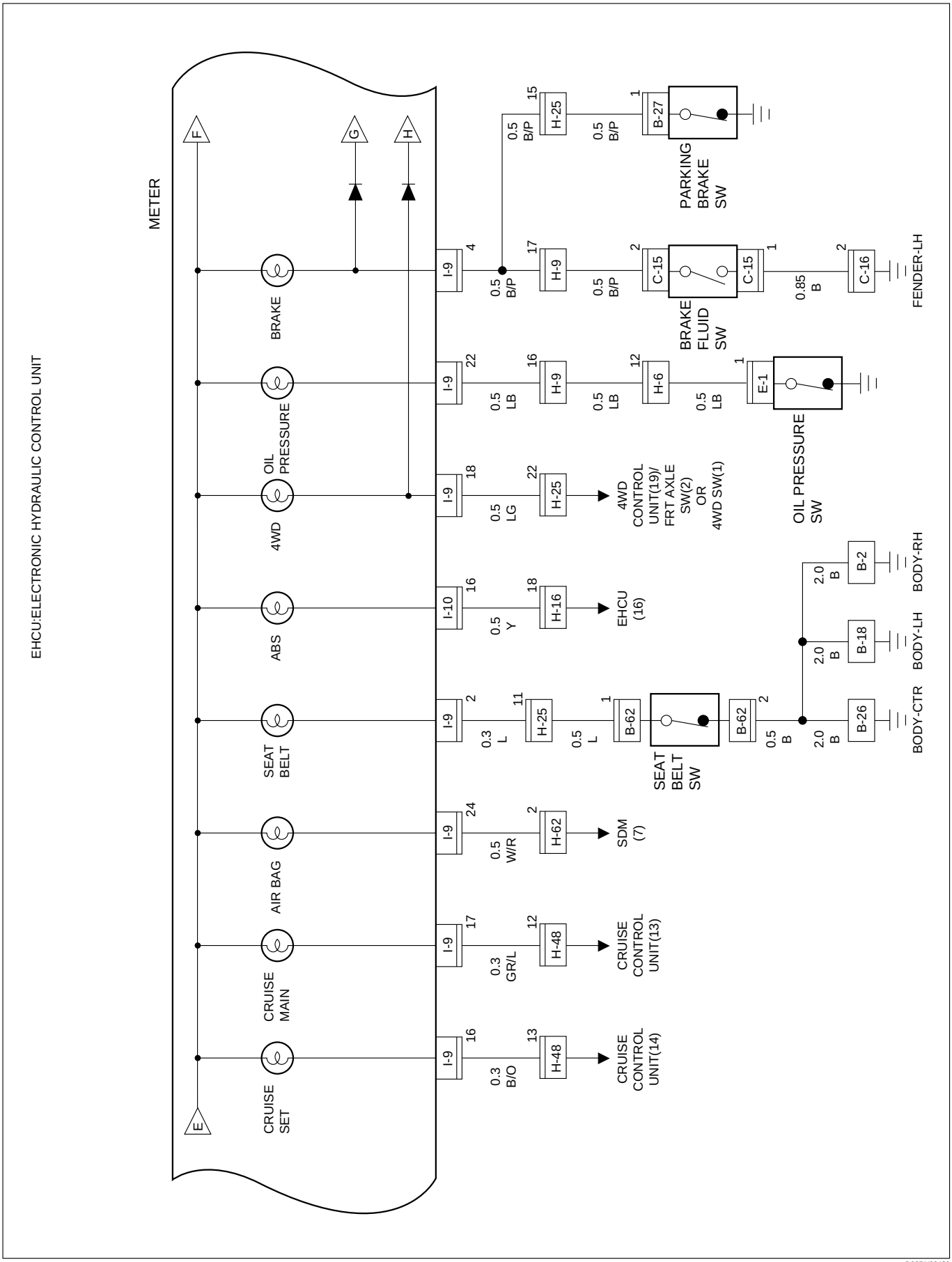

D08RY00429

Circuit Diagram (LHD 6V*1 W/O T.O.D)-4

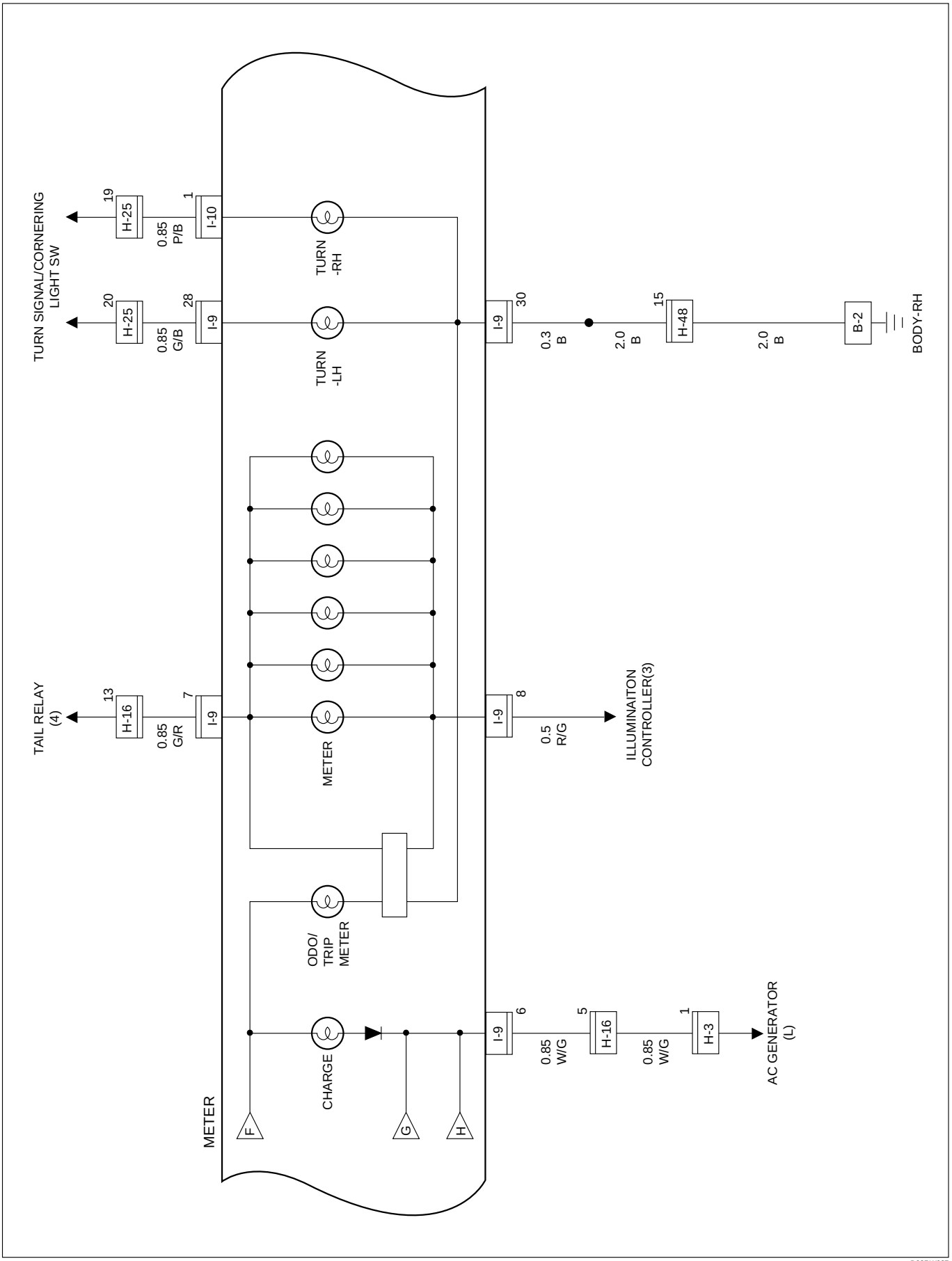

D08RW927

Circuit Diagram (LHD 6V*1 W/O T.O.D)-5

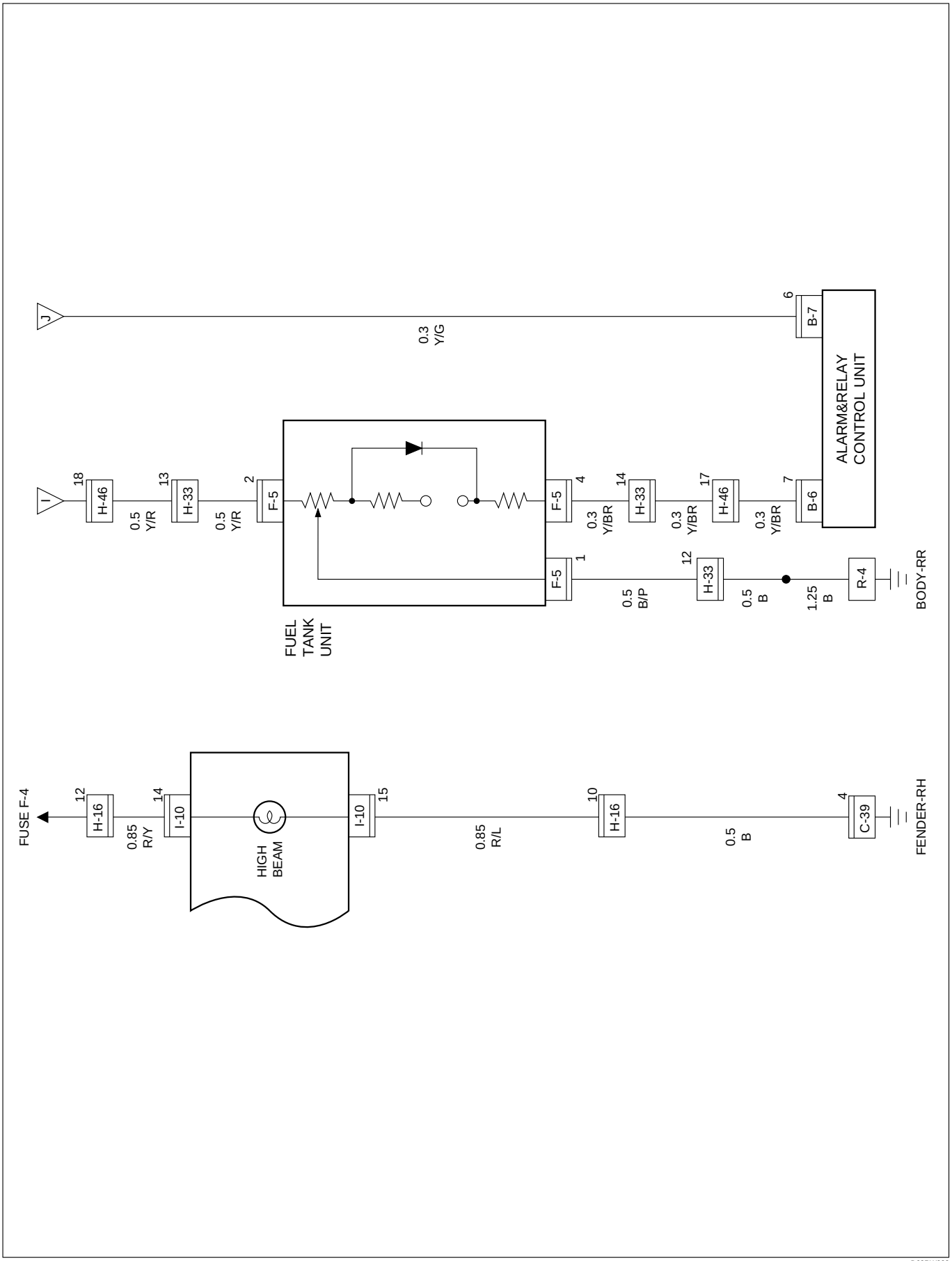

D08RW928

Circuit Diagram (LHD 6V*1 W/O T.O.D)-6

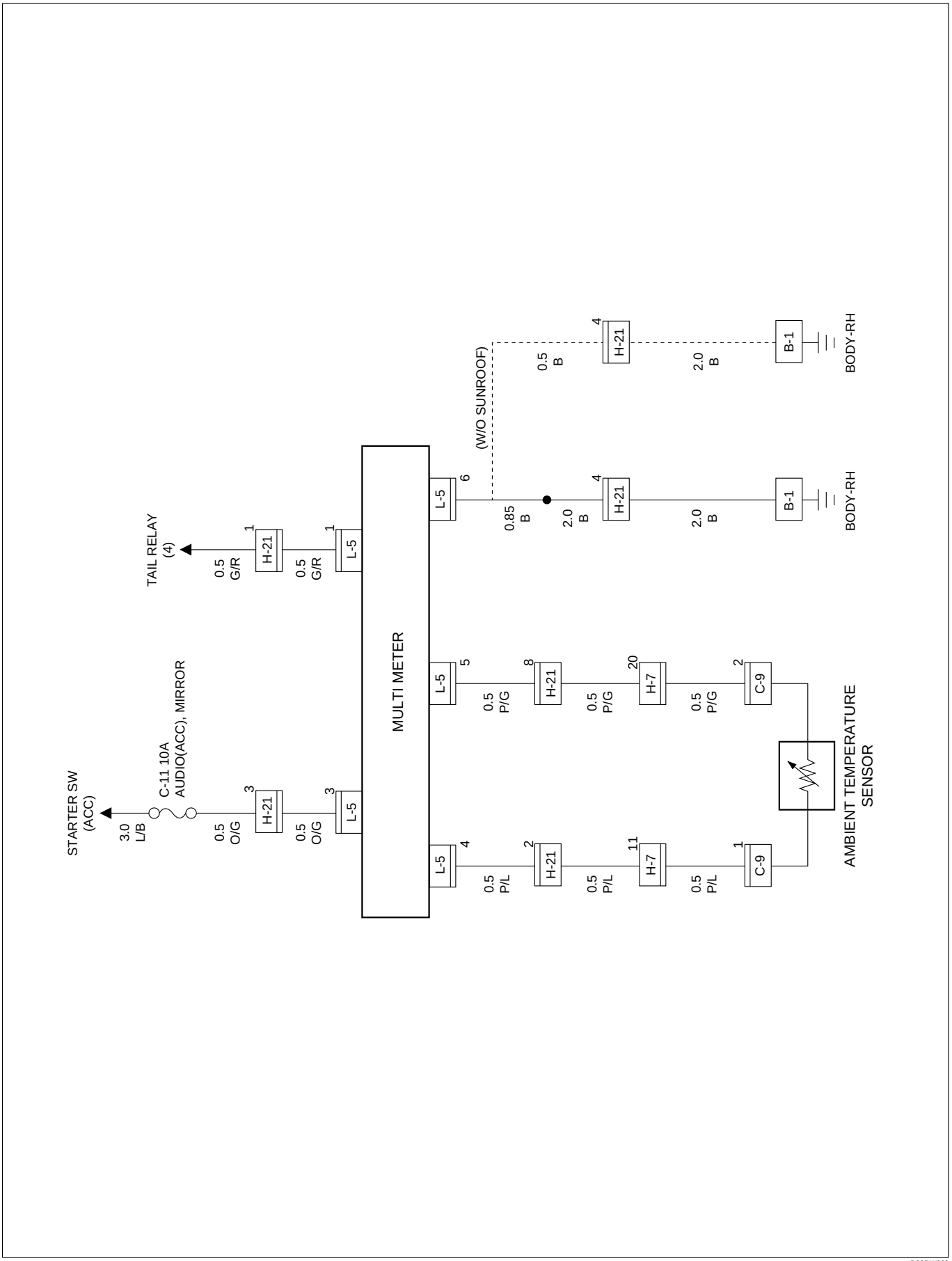

D08RW929

Circuit Diagram (LHD 4JG2)-1

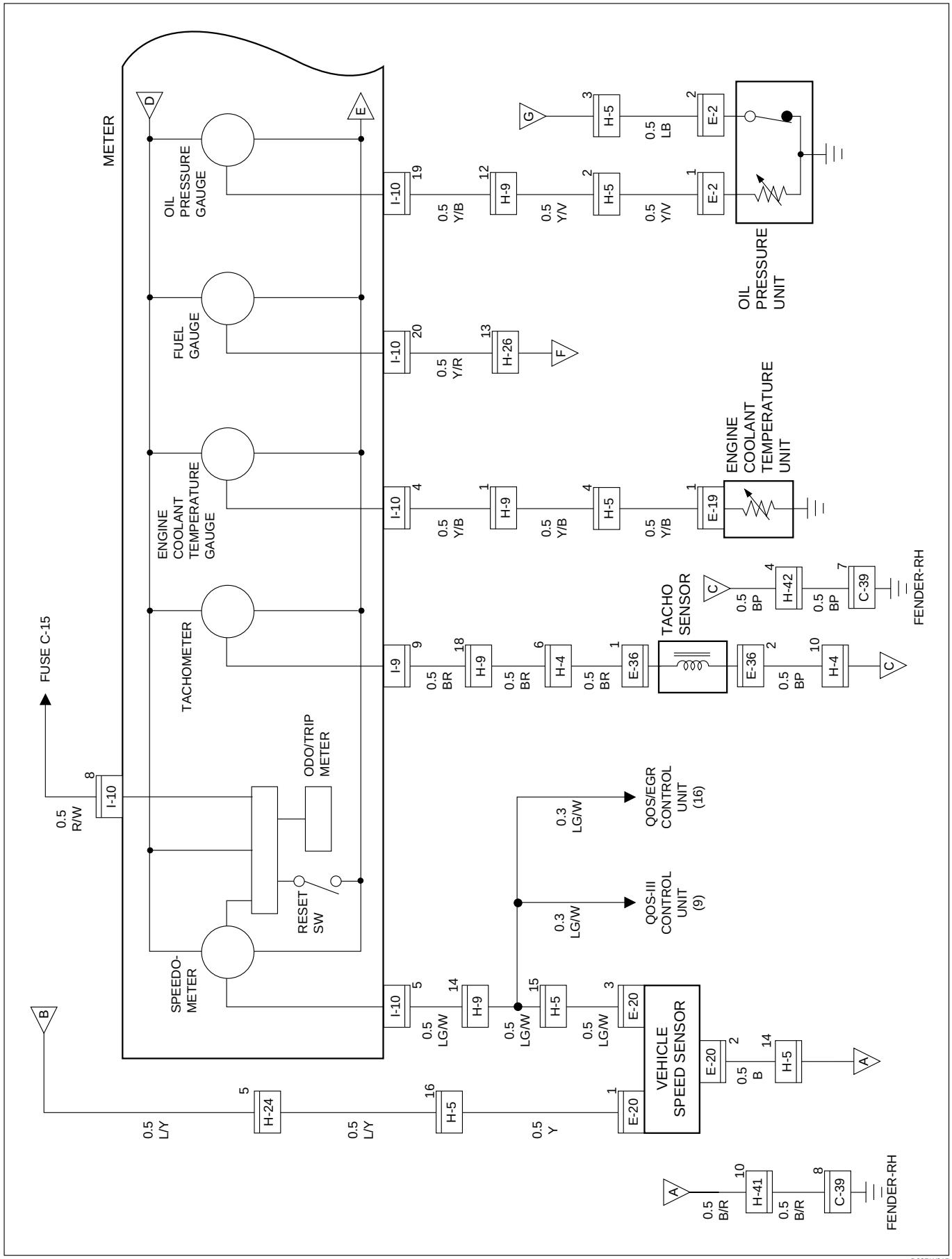

D08RW915

Circuit Diagram (LHD 4JG2)-2

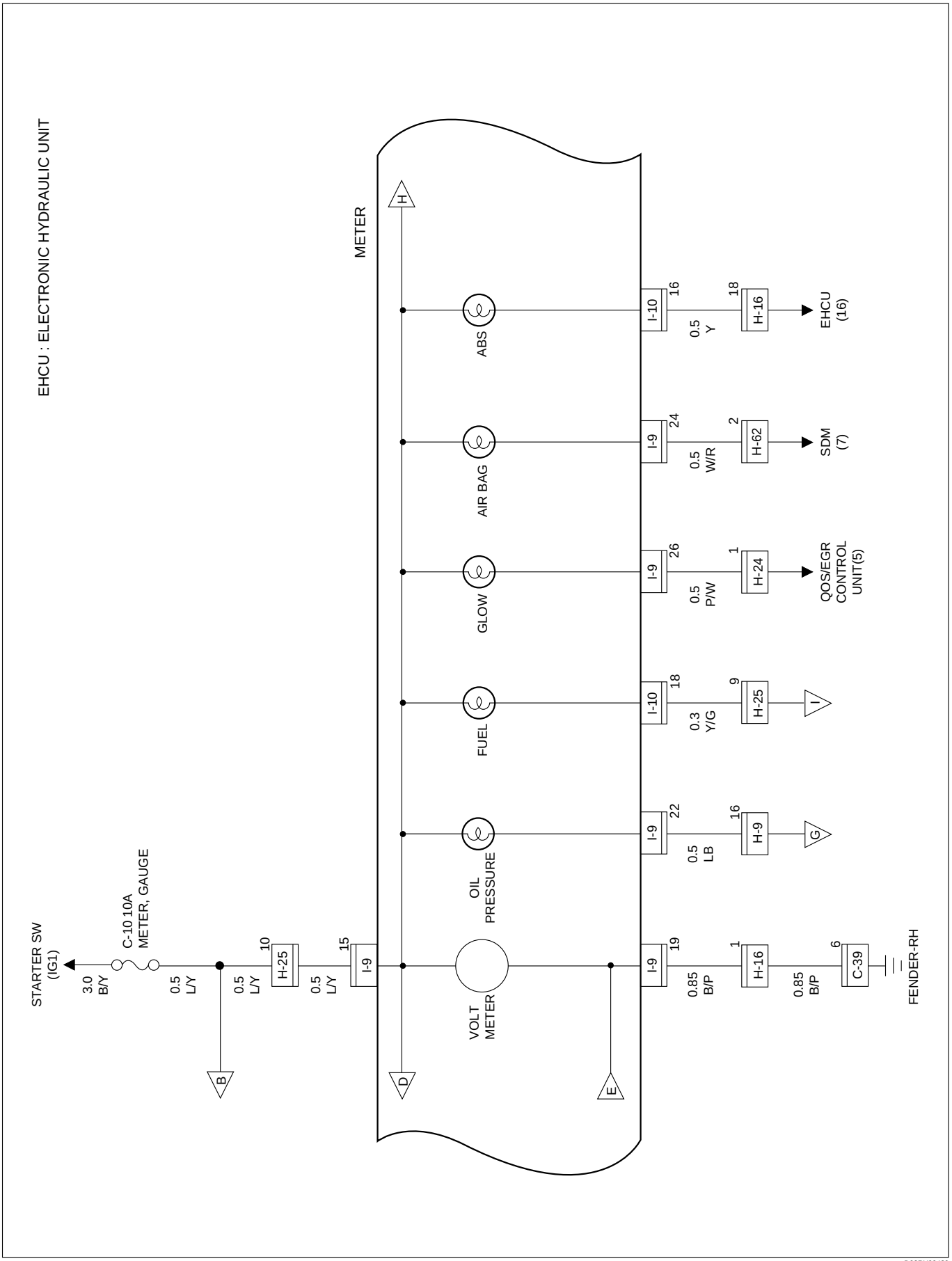

D08RY00430

Circuit Diagram (LHD 4JG2)-3

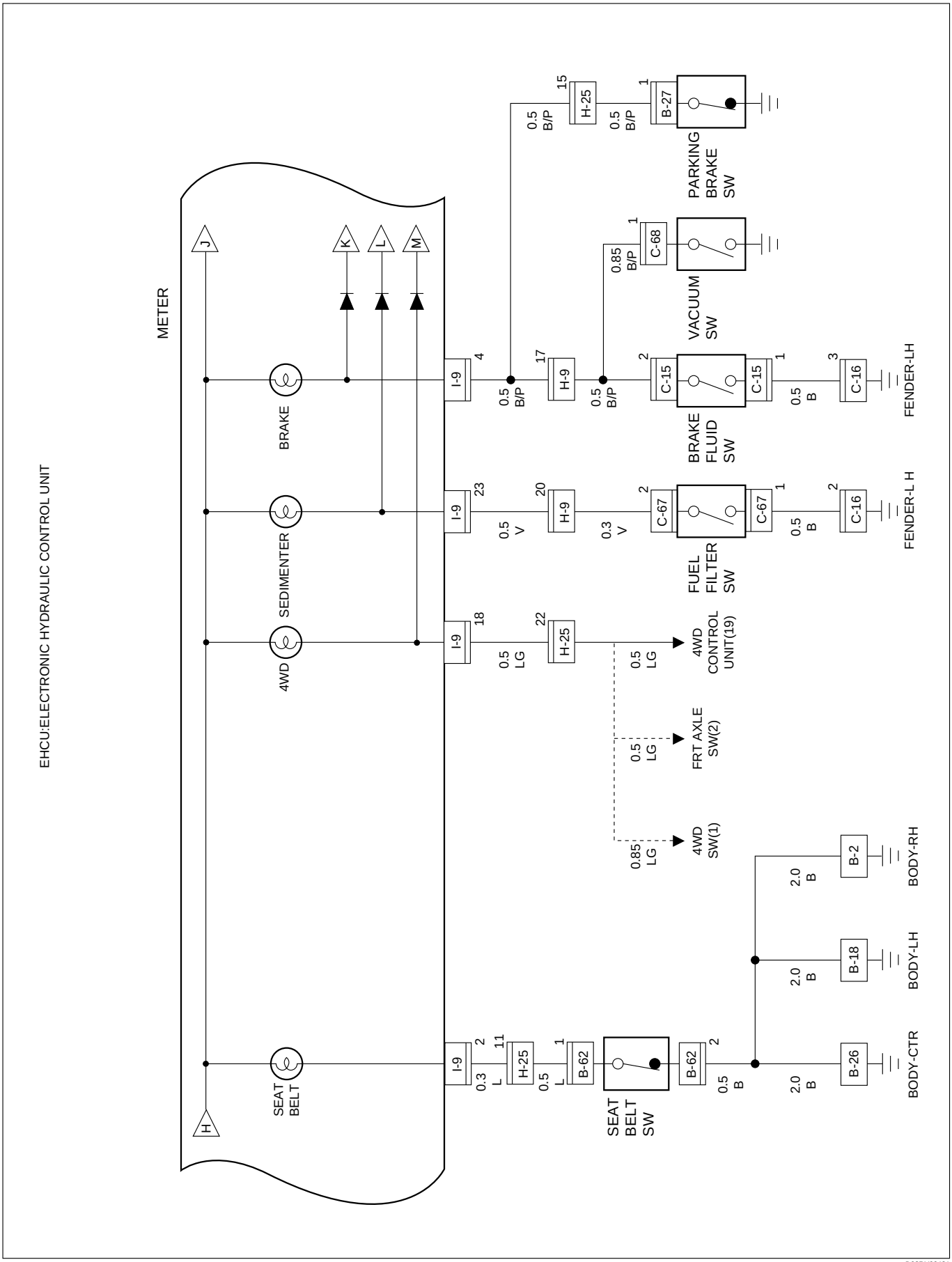

D08RY00431

Circuit Diagram (LHD 4JG2)-4

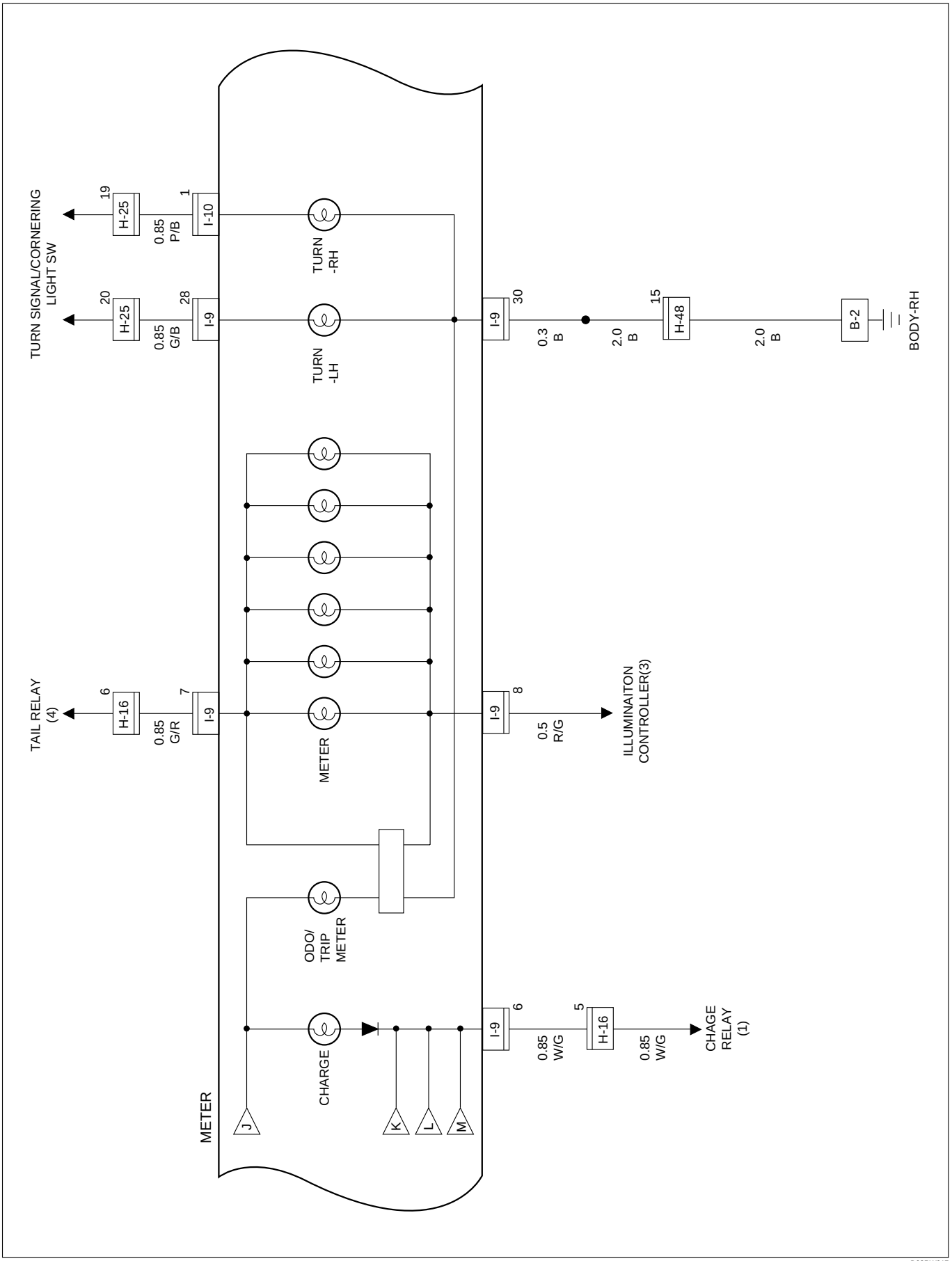

D08RW917

Circuit Diagram (LHD 4JG2)-5

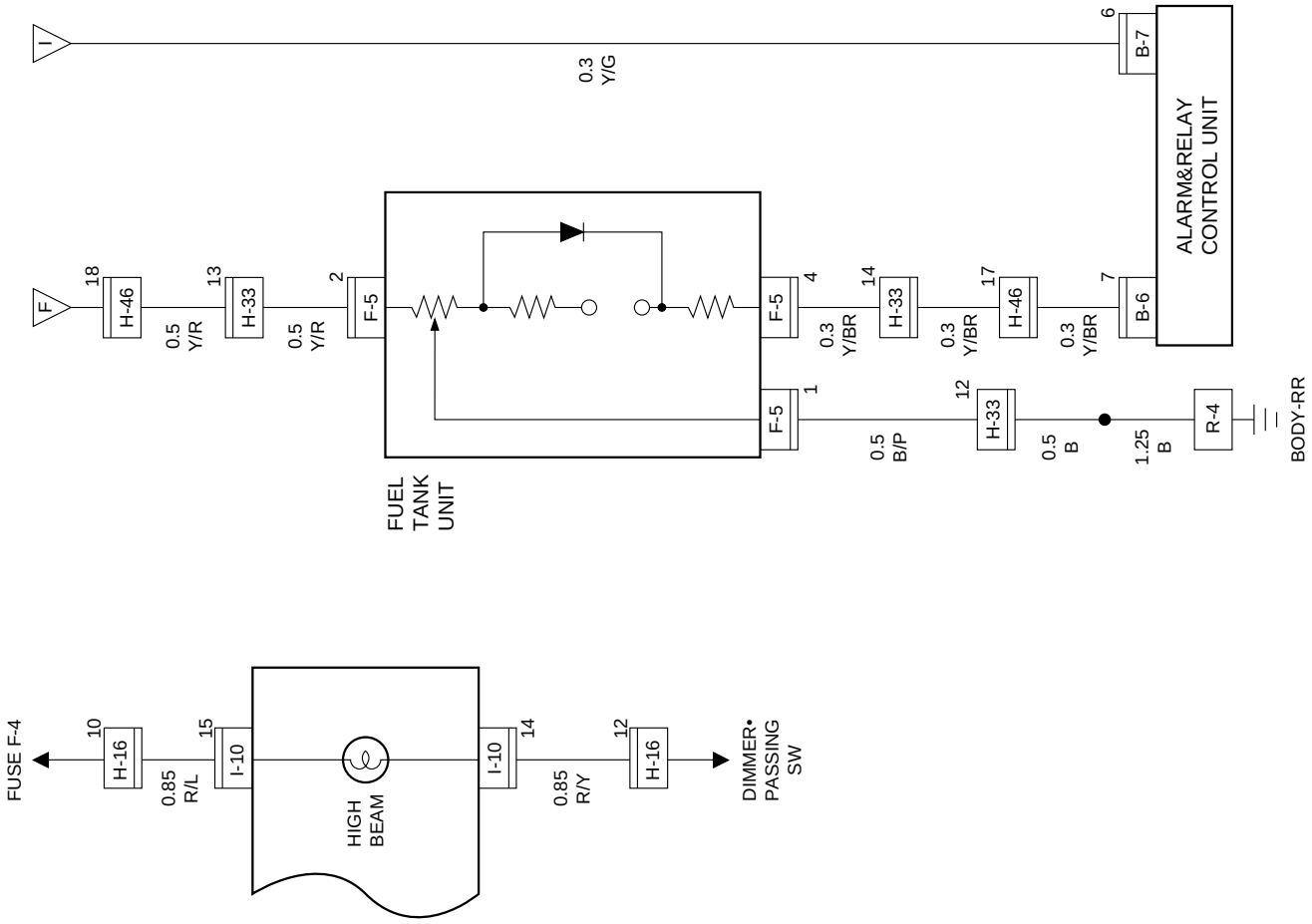

Circuit Diagram (LHD 4JG2)-6

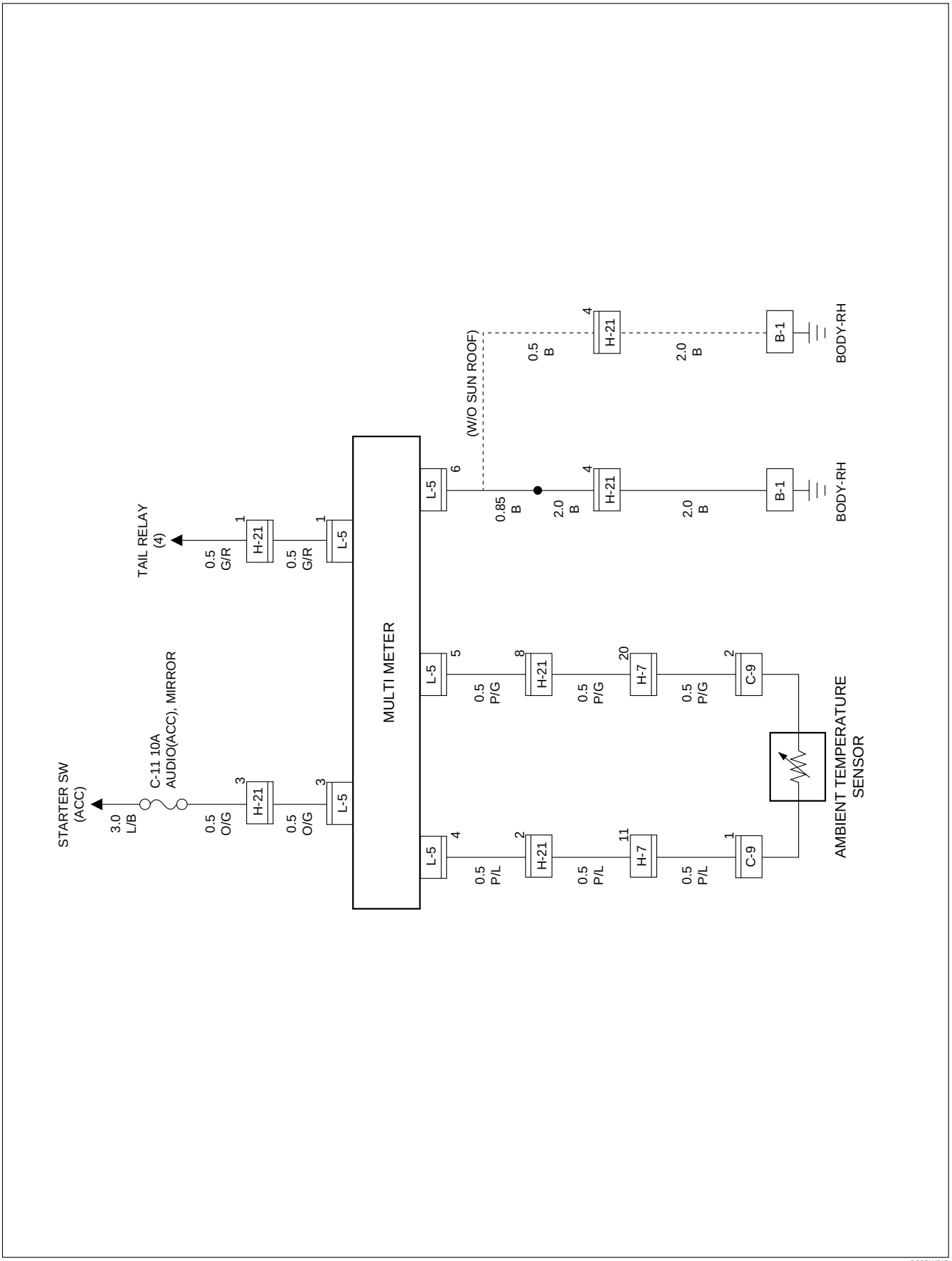

D08RW919

Parts Location (LHD W/O T.O.D 6V*1)

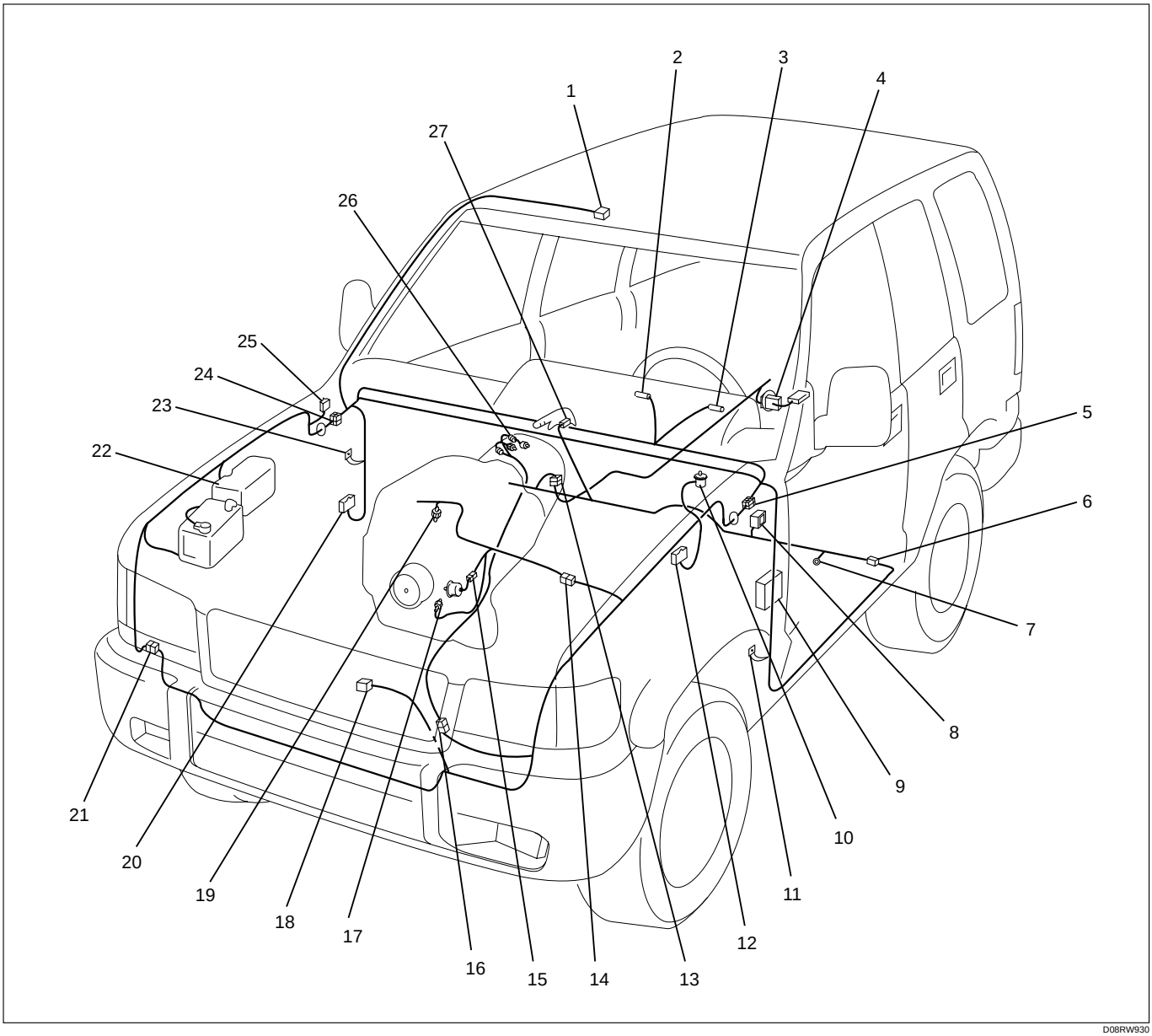

D08RW930

Legend

(1) L-5
(2) I-10
(3) I-9
(4) F-5
(5) H-7, H-8, H-9, H-24, H-25, H-26, H-62
(6) H-46
(7) B-26
(8) B-62
(9) Fuse Box
(10) C-15
(11) B-18
(12) C-16
(13) H-33
(14) H-6
(15) E-2
(16) H-10
(17) E-1
(18) C-9
(19) E-19
(20) B-6, B-7 (Alarm and Relay Control Unit)
(21) H-42
(22) Relay and Fuse Box
(23) B-1, B-2
(24) H-16, H-21, H-48
(25) C-39
(26) M-10
(27) B-27

Parts Location (LHD 4JG2)

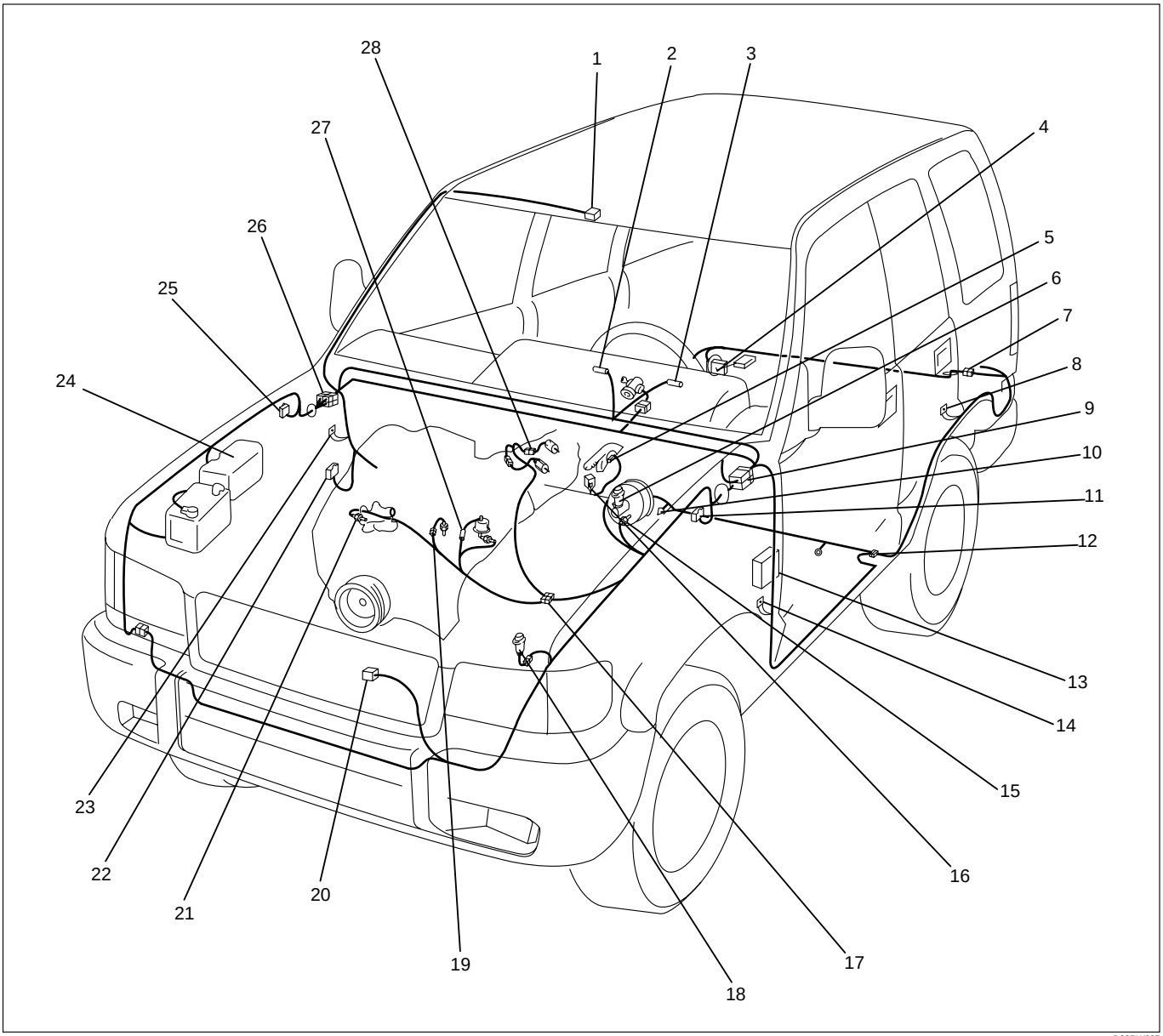

D08RW897

Legend

(1) L-5
(2) I-10
(3) I-9
(4) F-5
(5) B-27
(6) C-15
(7) H-33
(8) R-4
(9) H-7, H-9, H-24, H-25, H-62
(10) B-26
(11) C-16
(12) H-46
(13) Fuse Box
(14) B-18
(15) C-68
(16) B-62
(17) H-4, H-5
(18) C-67
(19) E-36
(20) C-9
(21) E-19
(22) B-6, B-7 (Alarm and Relay Control Unit)
(23) B-1, B-2
(24) Relay and Fuse Box
(25) C-39
(26) H-12, H-14, H-16, H-21, H-48
(27) E-2
(28) E-20

Diagnosis

1. Speedometer

1-1. Speedometer and Odometer Do Not Function

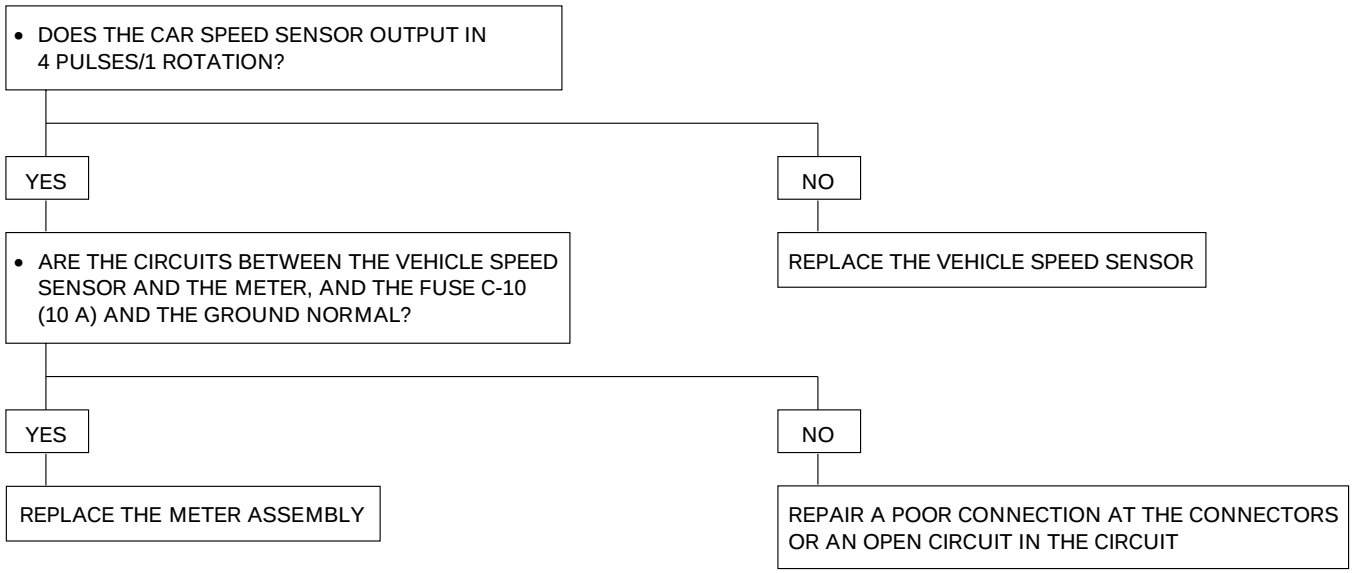

1-2. Speedometer Does Not Function (Odometer is Normal)

REPLACE THE METER ASSEMBLY

1-3. Odometer Does Not Function (Speedometer is Normal)

REPLACE THE METER ASSEMBLY

1-4. Speedometer Needle Fluctuations (May Be Wide Fluctuation)

- DOES THE VEHICLE SPEED SENSOR OUTPUT NORMALLY?

YES

REPLACE THE METER ASSEMBLY

NO

THE OSCILLOSCOPE WAVEFORM IS DEFORMED

REPLACE THE VEHICLE SPEED SENSOR OR REPAIR A POOR CONNECTION AT THE CONNECTORS IN THE CIRCUIT OR A FAILURE IN THE CABLE HARNESS

1-5. Speedometer Needle Jumps Erratically

- DOES THE VEHICLE SPEED SENSOR OUTPUT NORMALLY?

YES

REPLACE THE METER ASSEMBLY

NO

AN ABNORMAL PERIODIC WAVEFORM IS OUTPUT BY OSCILLOSCOPE

REPLACE THE VEHICLE SPEED SENSOR, OR REPAIR A POOR CONNECTION AT THE CONNECTORS IN THE CIRCUIT OR A FAILURE IN THE CABLE HARNESS

Inspection of a waveform by oscilloscope

1. Connect a resistance of 1.3 to 5k ohm (1.4W or more) between the harness side connectors 15 I-9 and 5 I-10 (w/o TOD) or 26 I-9 and 5 I-10

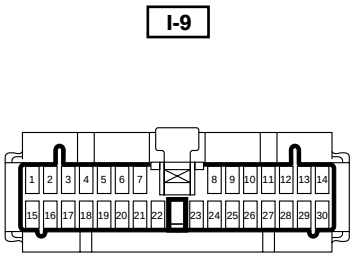

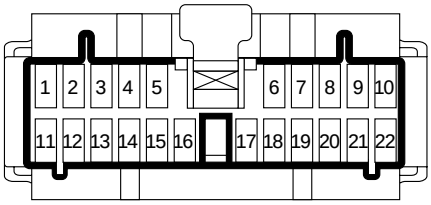

2. Install a speedometer tester.
3. Turn on the starter SW.
4. Check the waveform at the time when the car speed is at 60 km/h.

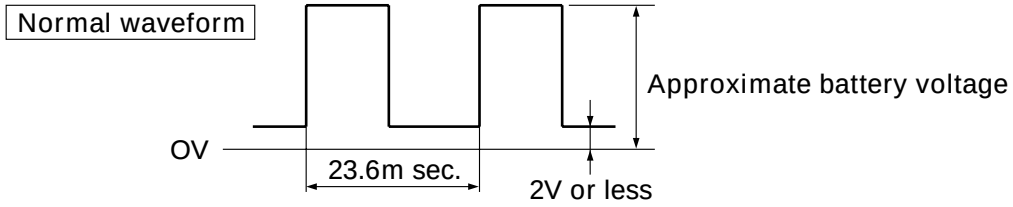

2. Tachometer

2-1. Tachometer Does Not Function

- IS THE PULSE INPUT NORMAL?

YES → REPLACE THE METER ASSEMBLY

NO → REPLACE THE PCM, ECM OR REPAIR A POOR CONNECTION AT THE CONNECTORS IN THE CIRCUIT OR A FAILURE IN THE CABLE HARNESS

2-2. Tachometer Needle Fluctuates (May Be Wide Fluctuation)

- IS THE PULSE INPUT NORMAL?

YES

REPLACE THE METER ASSEMBLY

NO

THE WAVEFORM BY OSCILLOSCOPE IS DEFORMED (ABNORMAL INPUT)

REPLACE THE PCM, ECM OR REPAIR A POOR CONNECTION AT THE CONNECTORS IN THE CIRCUIT OR A FAILURE IN THE CABLE HARNESS

2-3. Tachometer Needle Jumps Erratically

- IS THE PULSE INPUT NORMAL?

YES

REPLACE THE METER ASSEMBLY

NO

AN ABNORMAL PERIODIC WAVEFORM IS OUTPUT BY OSCILLOSCOPE

REPLACE THE PCM, ECM OR REPAIR A POOR CONNECTION AT THE CONNECTORS IN THE CIRCUIT OR A FAILURE IN THE HARNESS

Inspection of a waveform by oscilloscope

1. Check the waveform of the meter assembly connector 9 I-9 (Tachometer pulse).

I-9

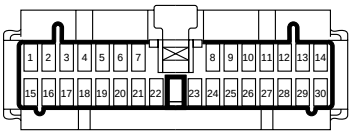

Normal waveform

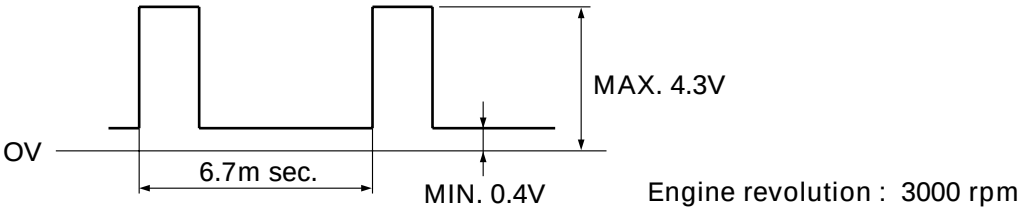

3. Voltmeter

3-1. Voltmeter Needle Does Not Move

3-2. Voltage Reading Is Too Low (Or High)

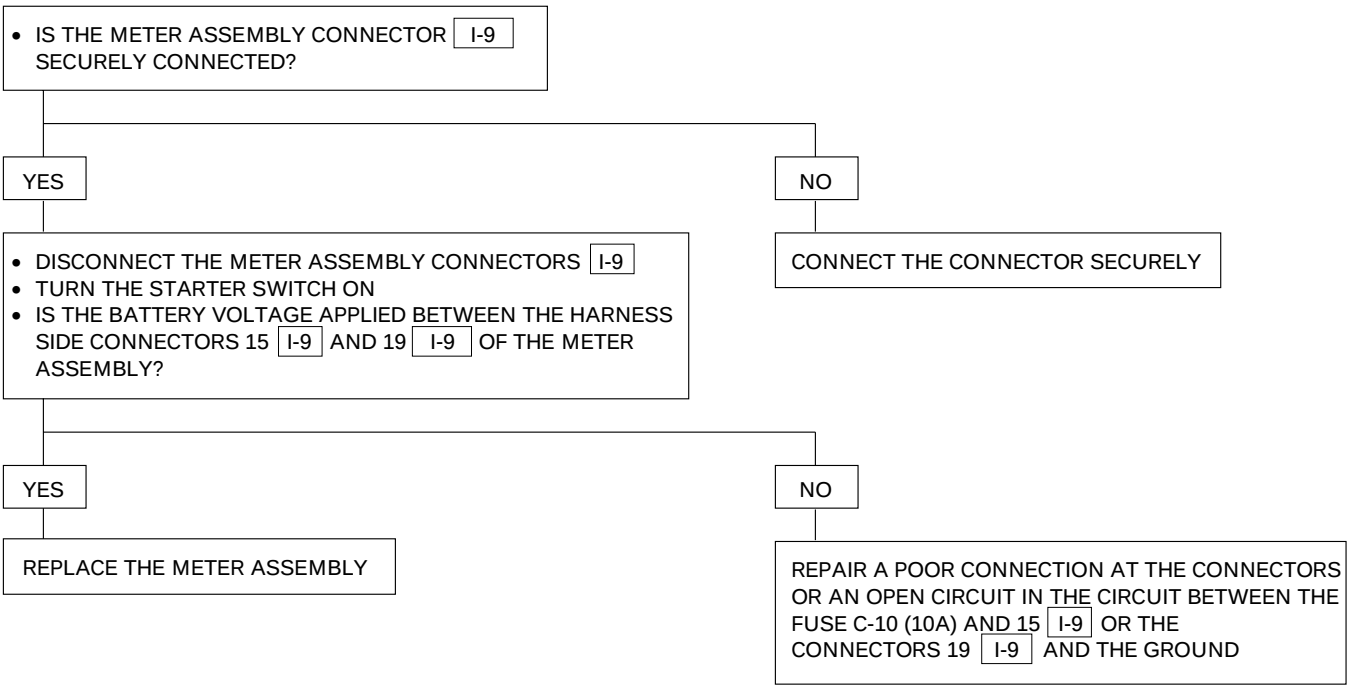

4. Engine Coolant Temperature (ECT) Gauge

4-1 Gauge Needle Does Not Move

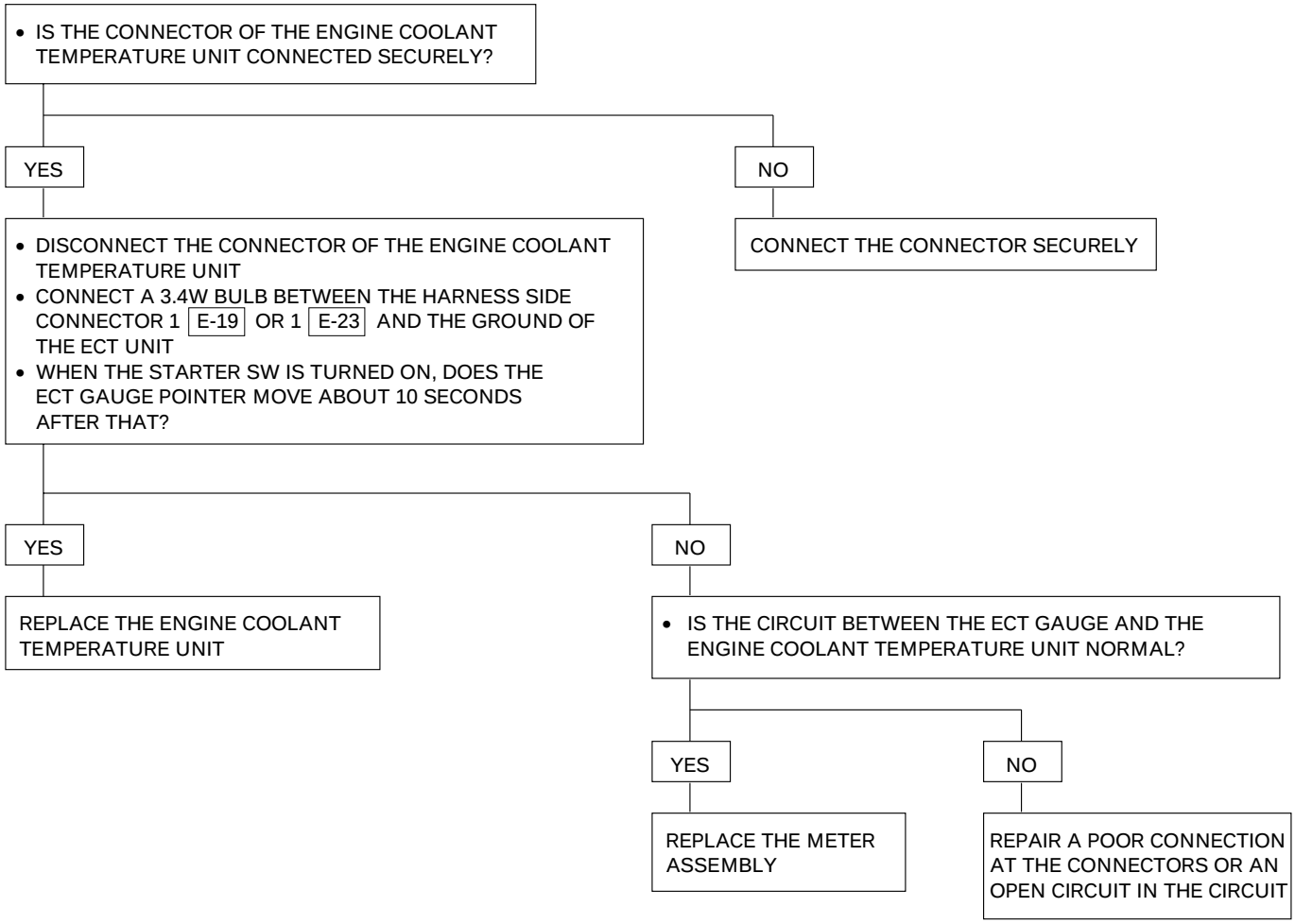

4-2 Gauge Reading Is Too Low (Or High)

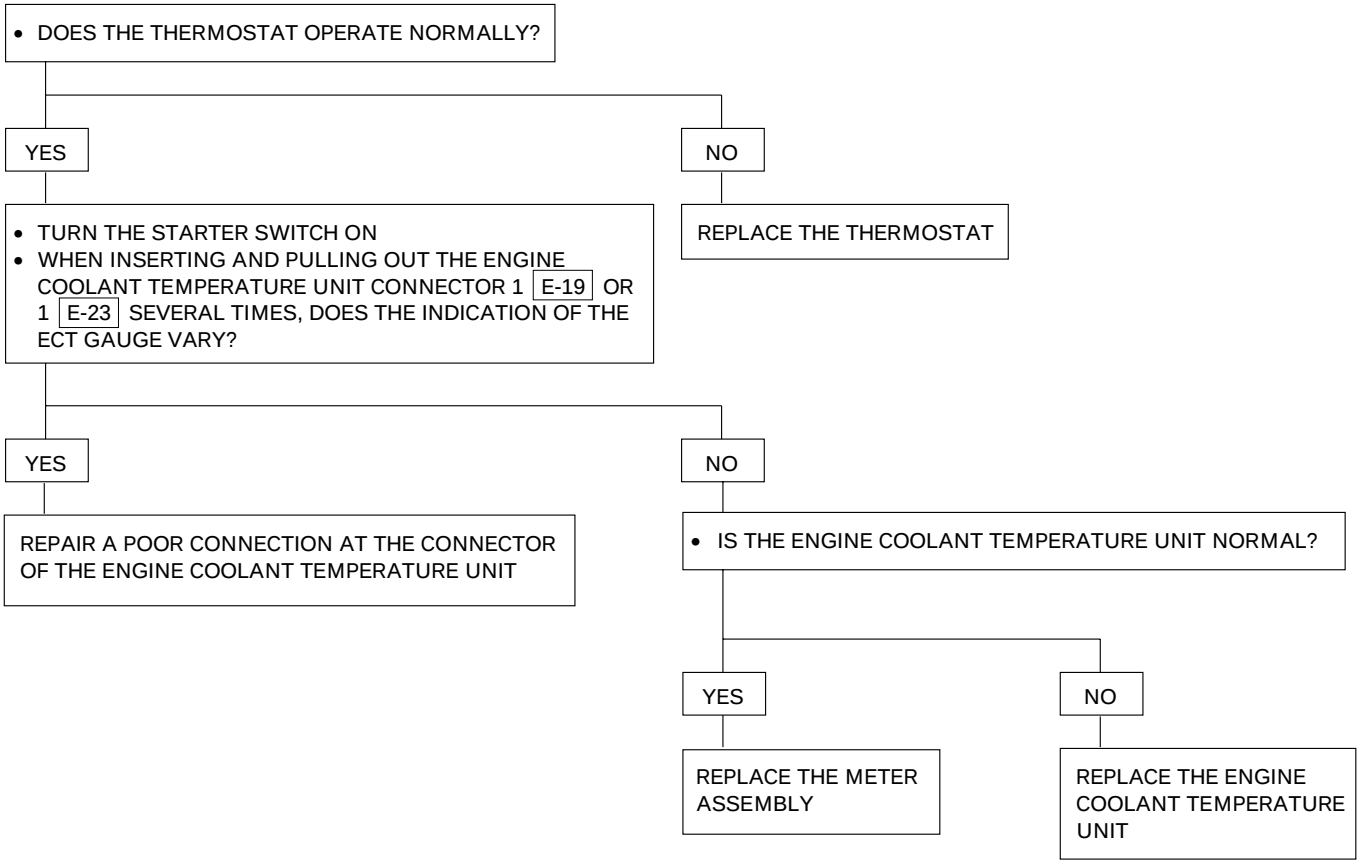

4-3 Needle Overshoots (Goes Up To The “H” Range)

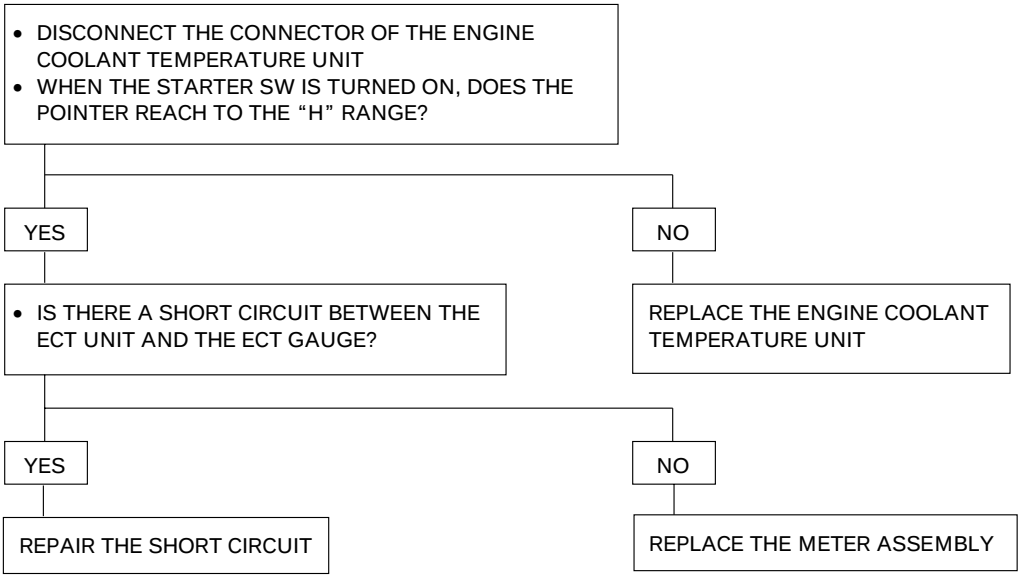

5. Oil Pressure Gauge

5-1 Needle Does Not Move

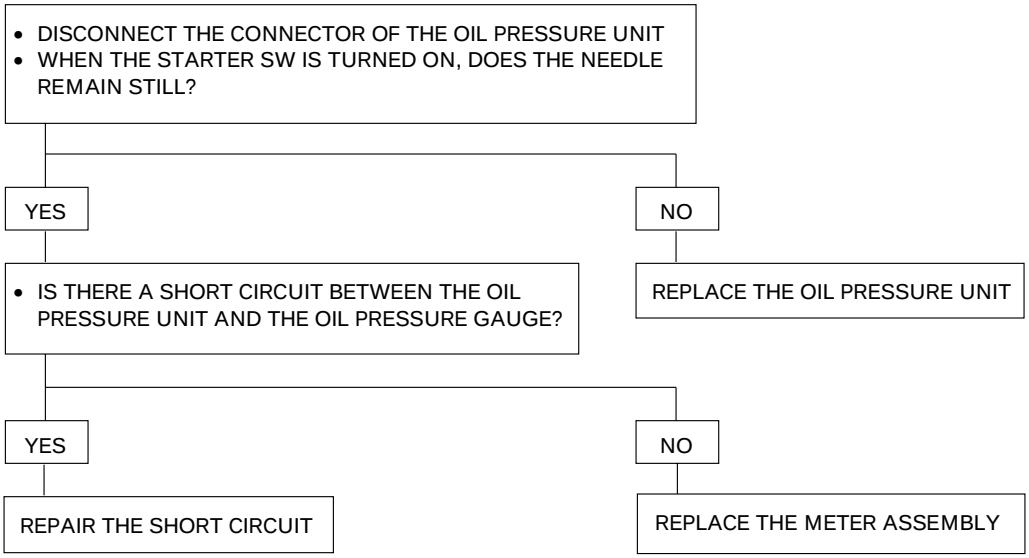

5-2 Oil Pressure Gauge Reading Is Too Low (Or High)

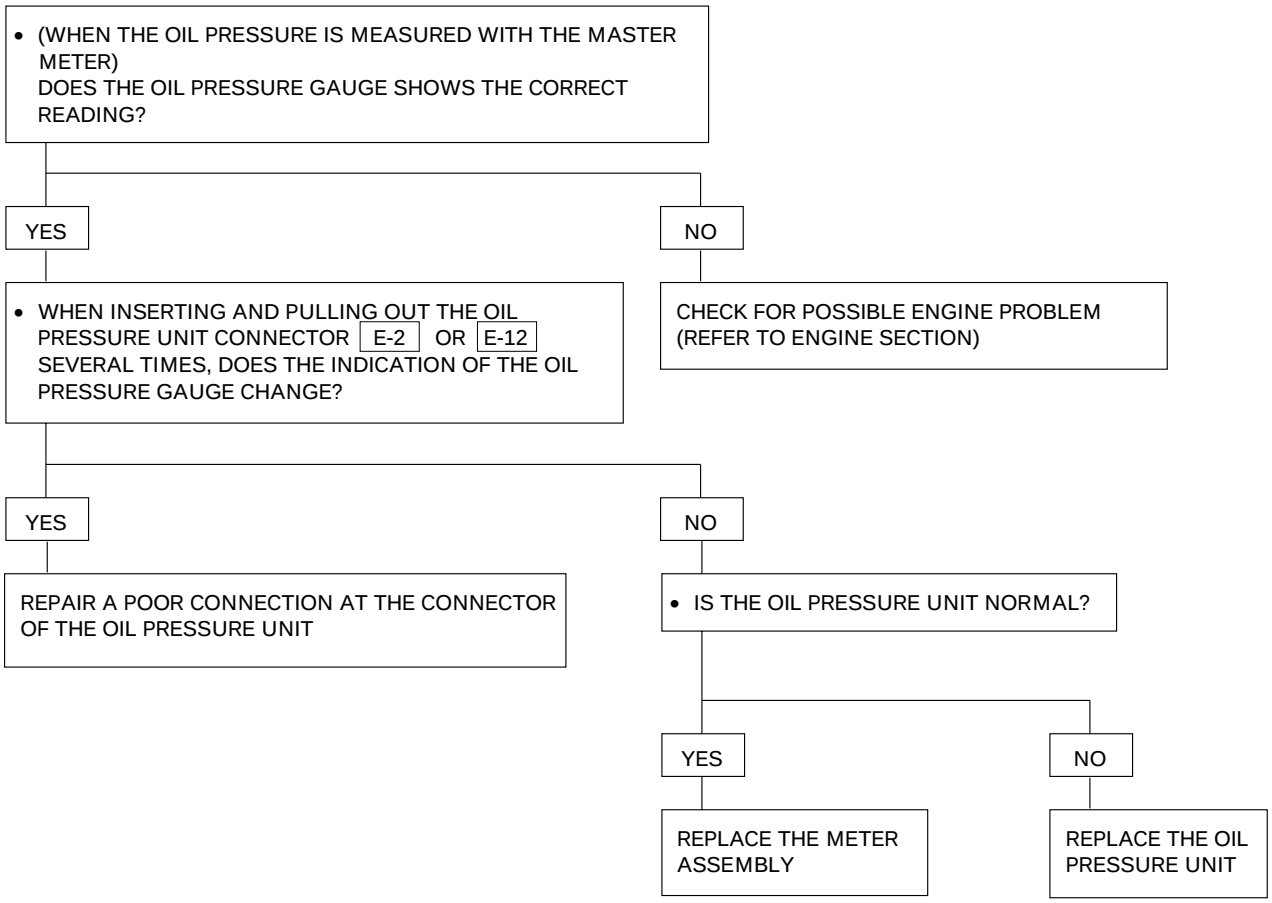

5-3 Needle Overshoots (Goes Up To 15 (x100 kPa))

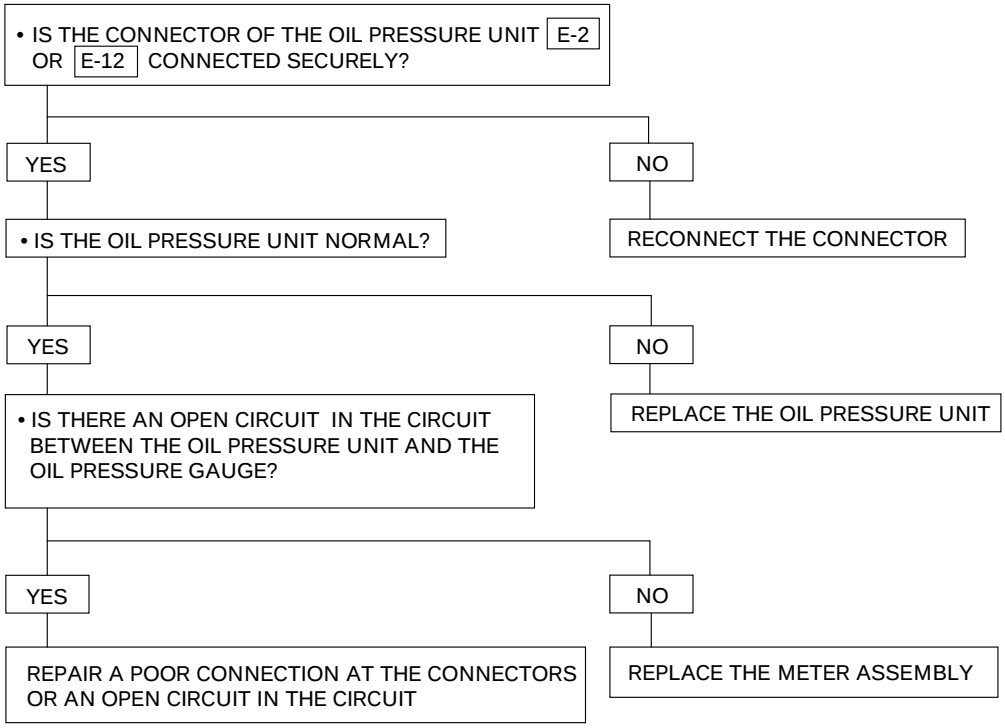

6. Fuel Gauge

6-1 Fuel Gauge Needle Does Not Move

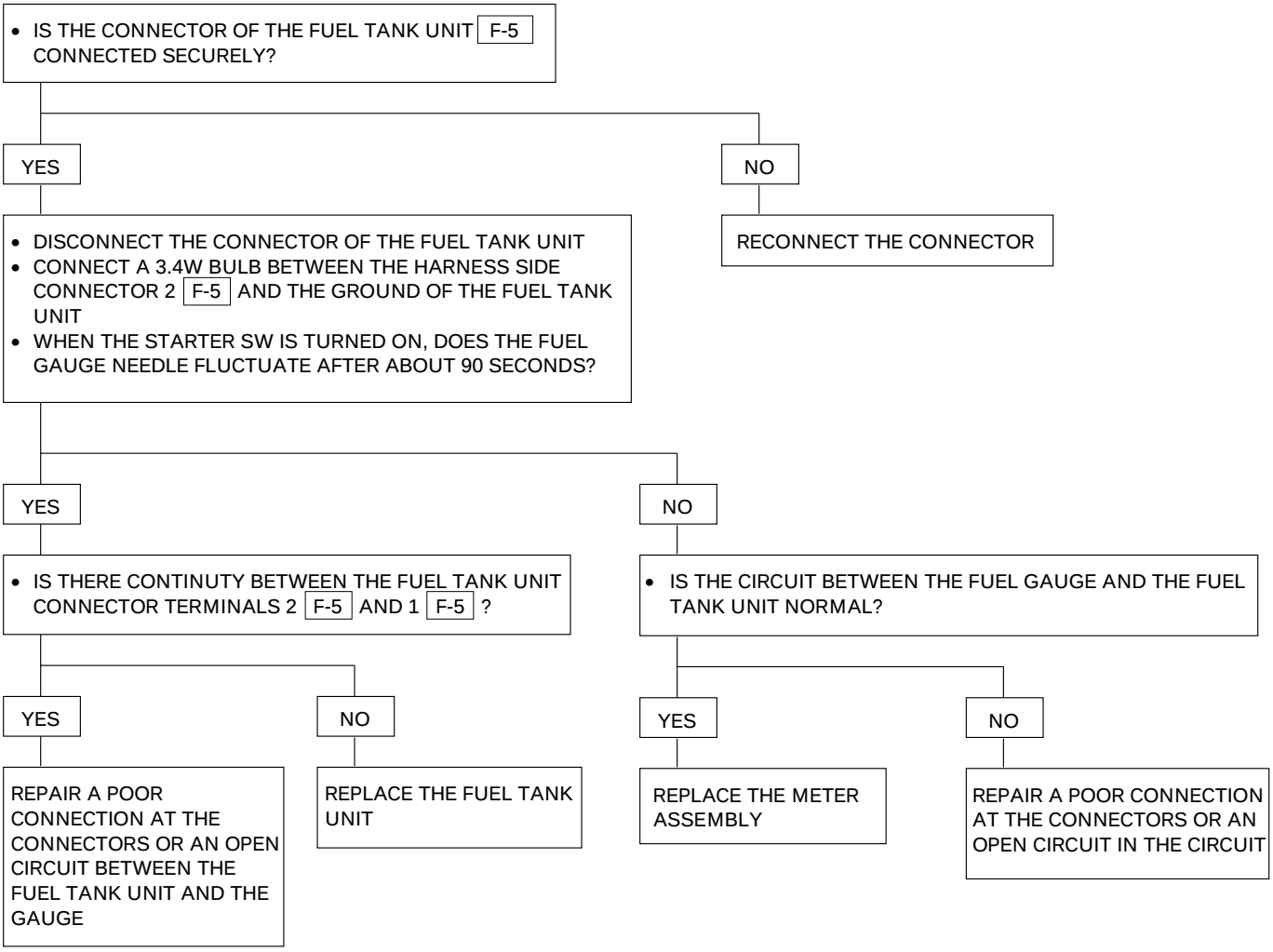

6-2 Even When The Tank Is Filled Up With Fuel, The Needle Does Not Reach “F”

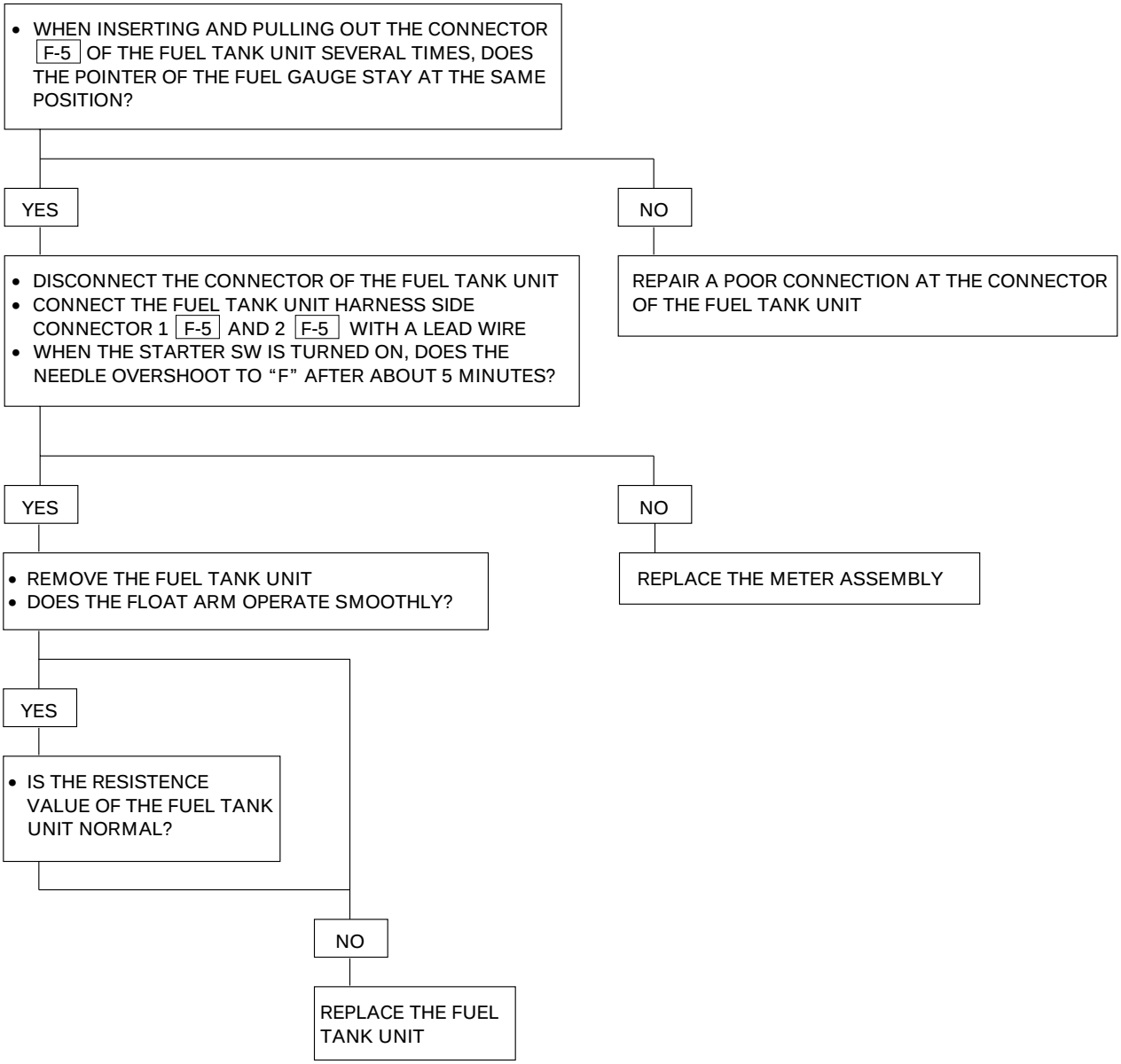

6-3 Even When The Tank Is Not Full of Fuel, The Needle Overshoots (Or Goes Up To “F”)

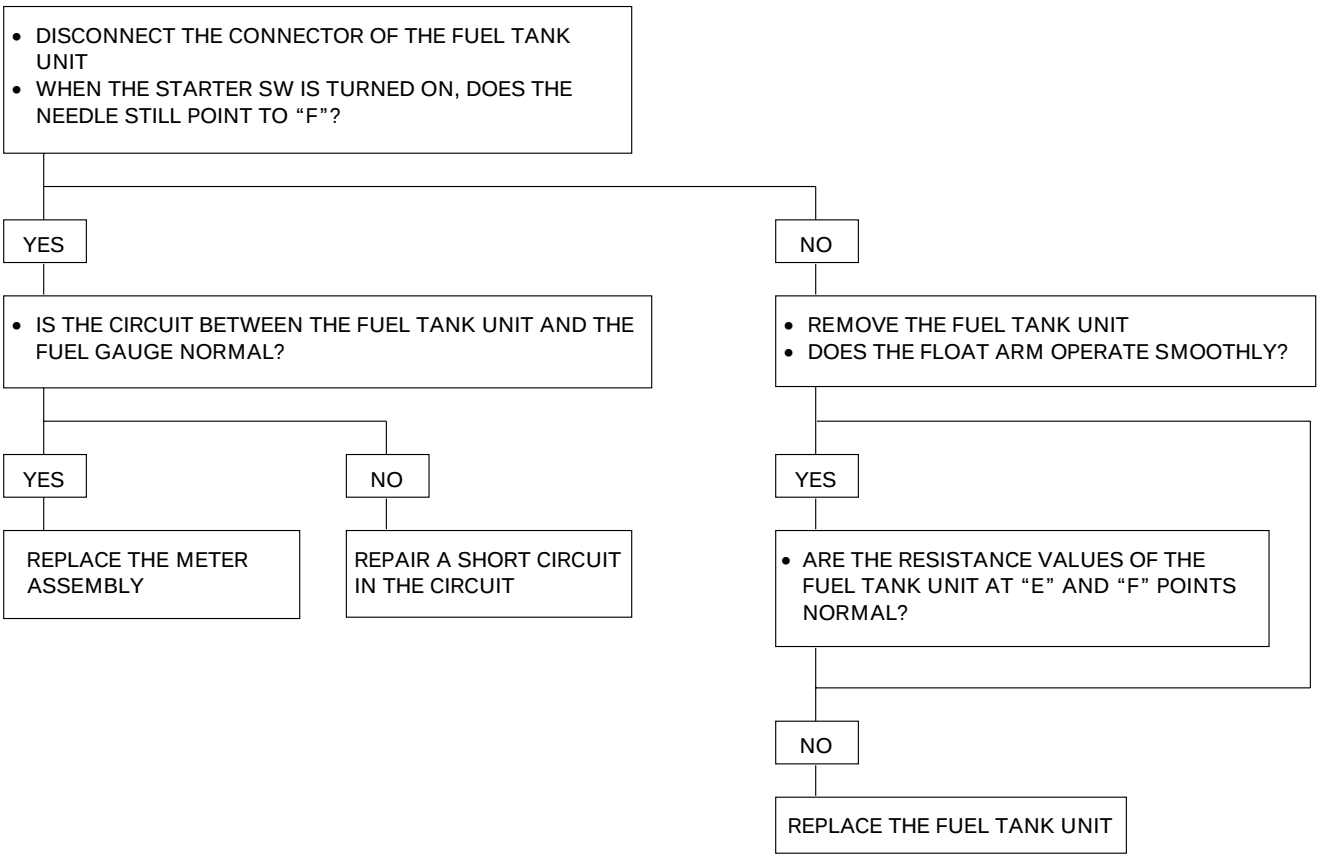

7. Warning/Indicator Light

7-1 When The Parkng Brake Lever Is Pulled, The Indicator Light Does Not Light Up

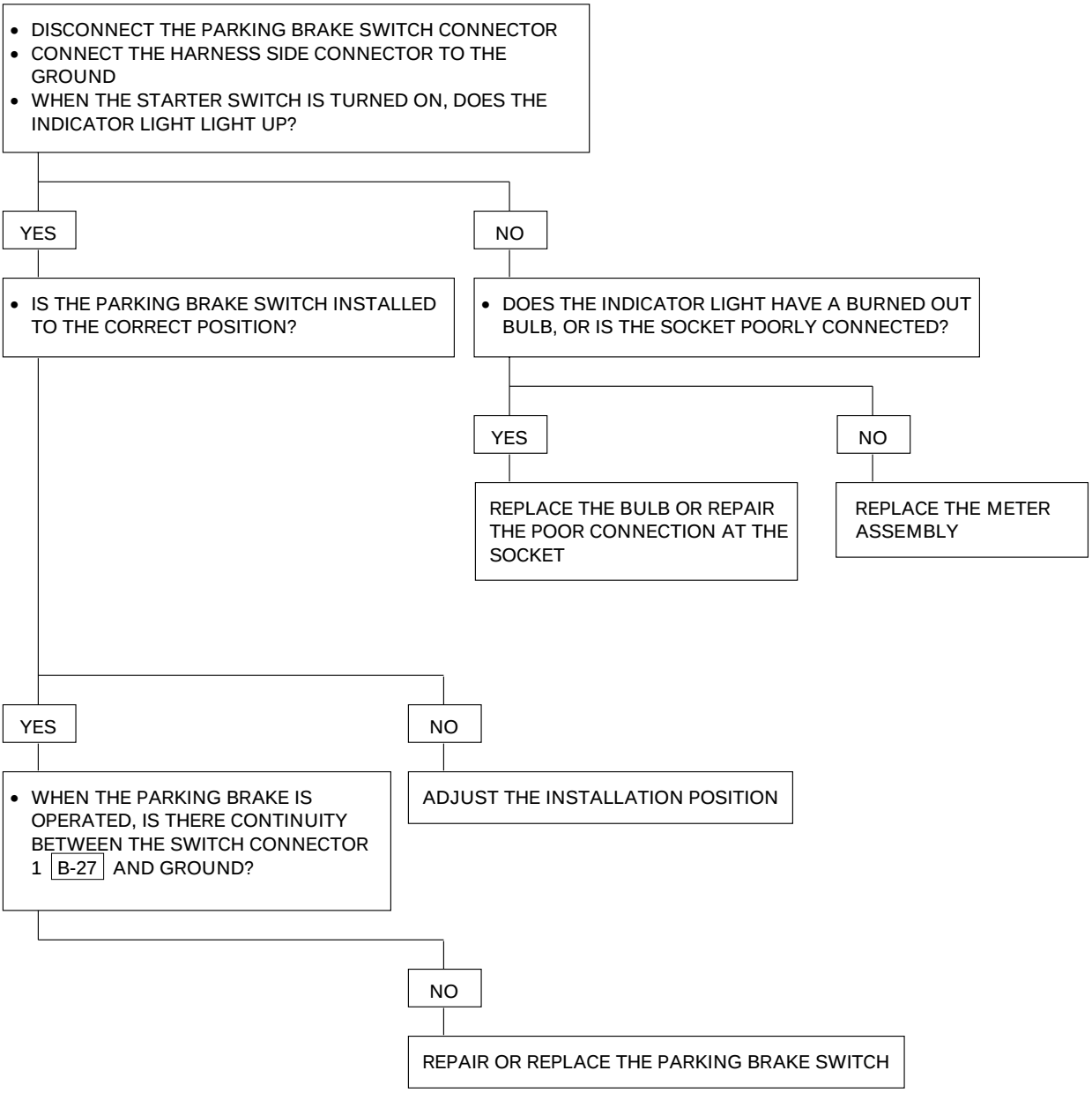

7-2 Even When The Parking Brake Lever Is Released, The Indicator Light Does Not Go Off

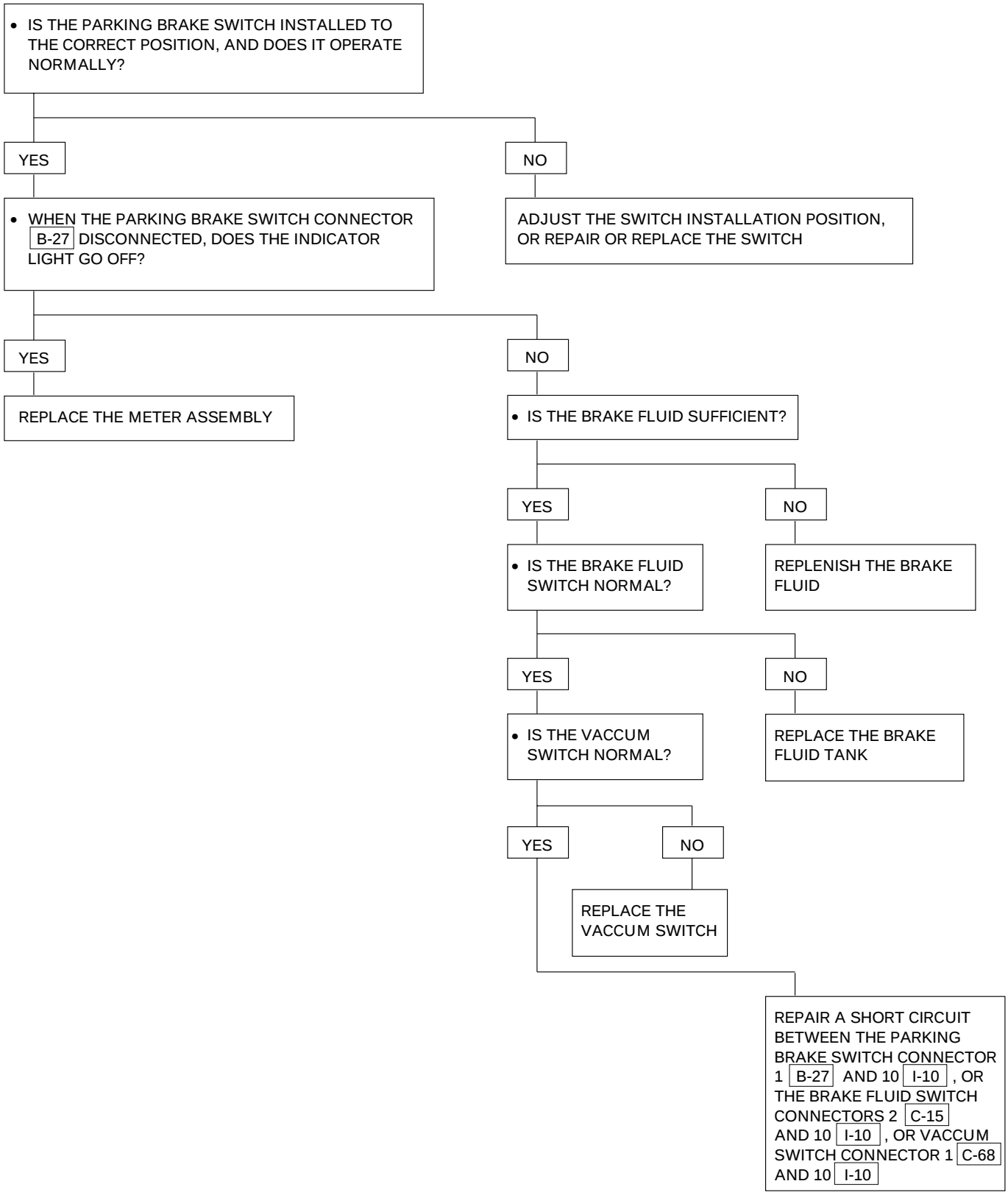

7-3 While The Engine Is Operating, The Oil Pressure Warning Light Does Not Go Off

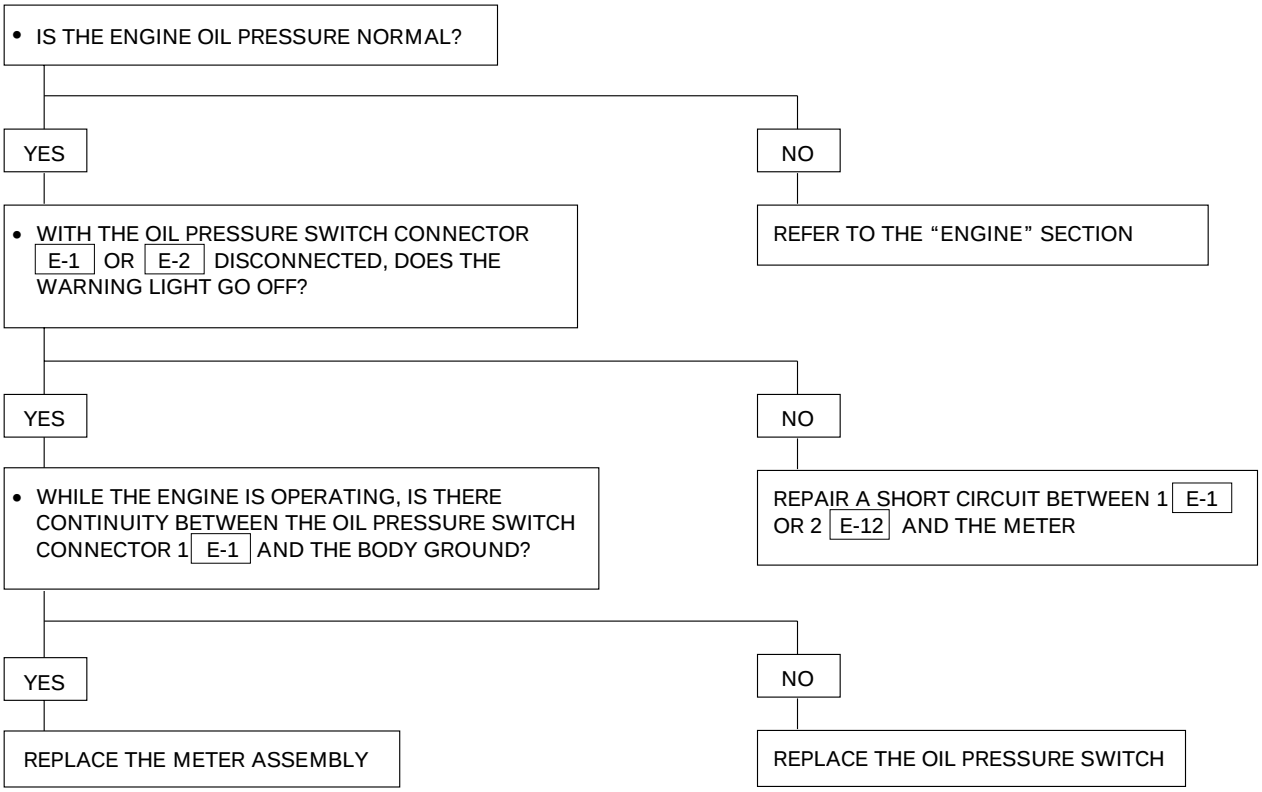

7-4 Even When The Fuel Tank Is Full With Fuel, The Low Fuel Warning Light Lights Up

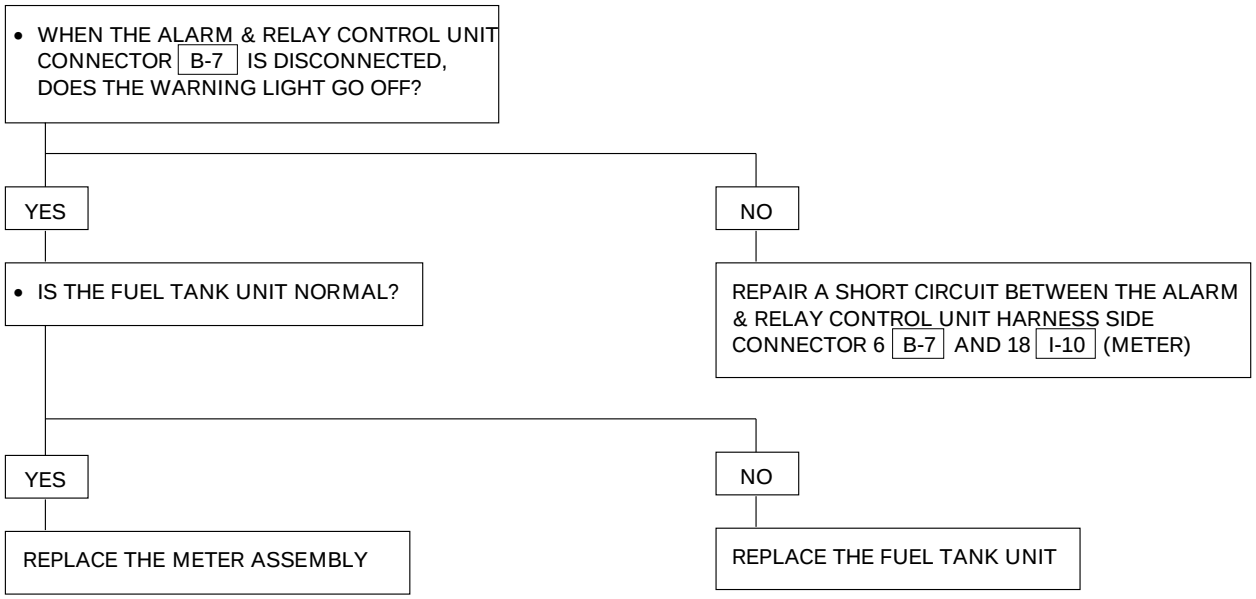

7-5 Even When The Fuel Tank Is Empty, The Low Fuel Warning Light Does Not Light Up

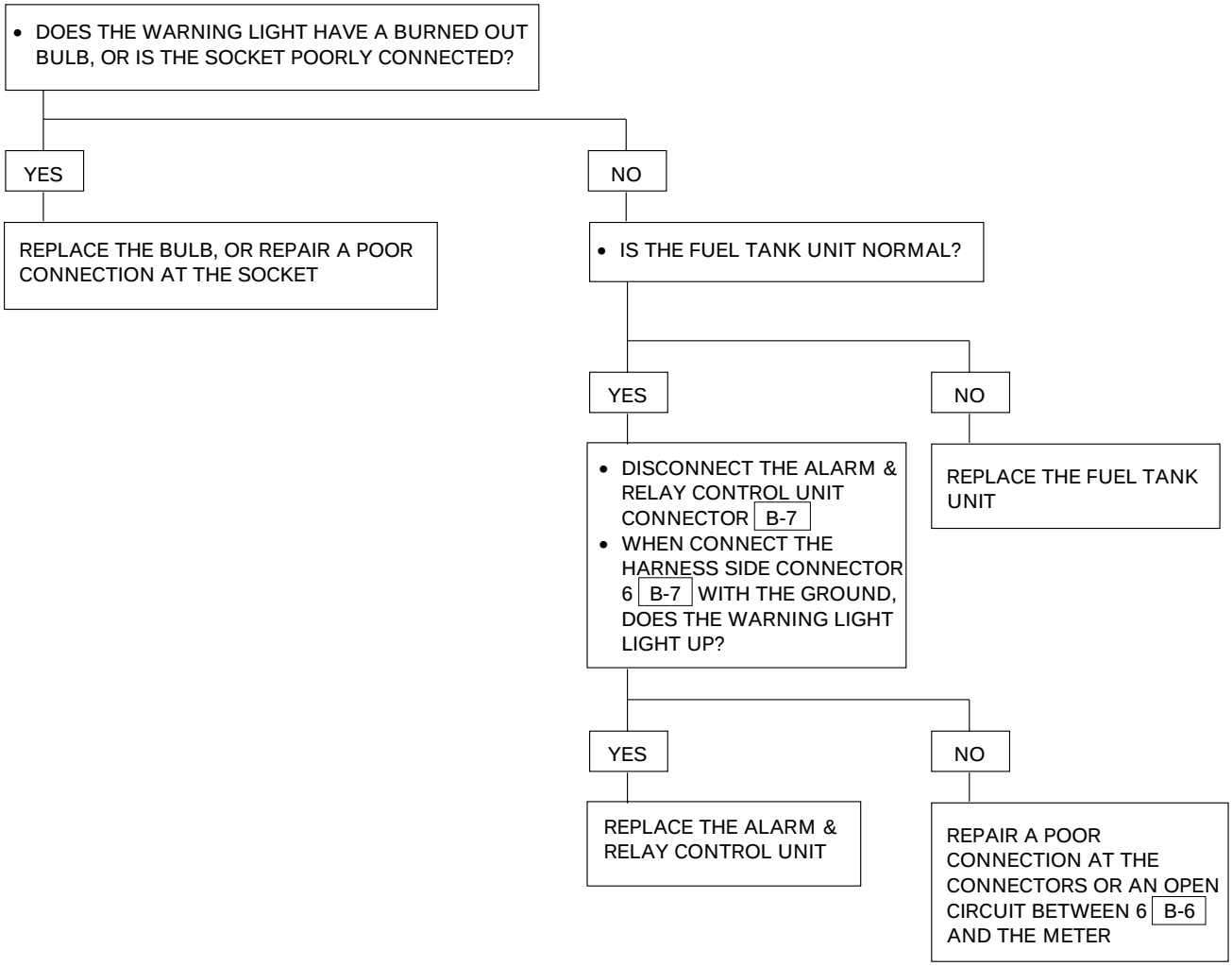

A/T Shift Indicator

General Description

The circuit consists of mode switch, A/T shift indicator control unit and A/T shift indicator (meter).
A/T shift indicator control unit controls to illuminate A/T shift indicator light according to signals from mode switch.

Circuit Diagram (RHD)-1

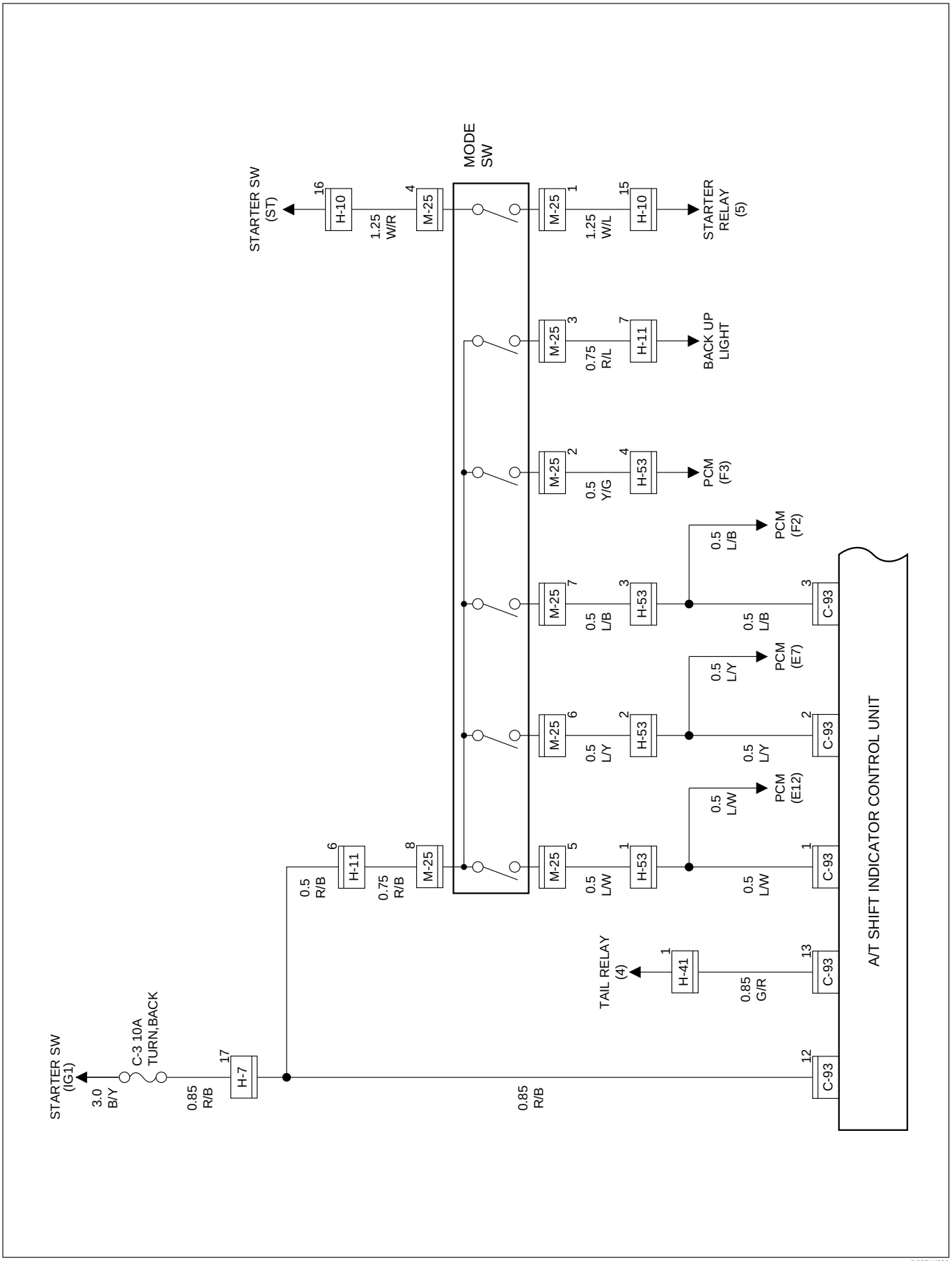

D08RW639

Circuit Diagram (RHD)-2

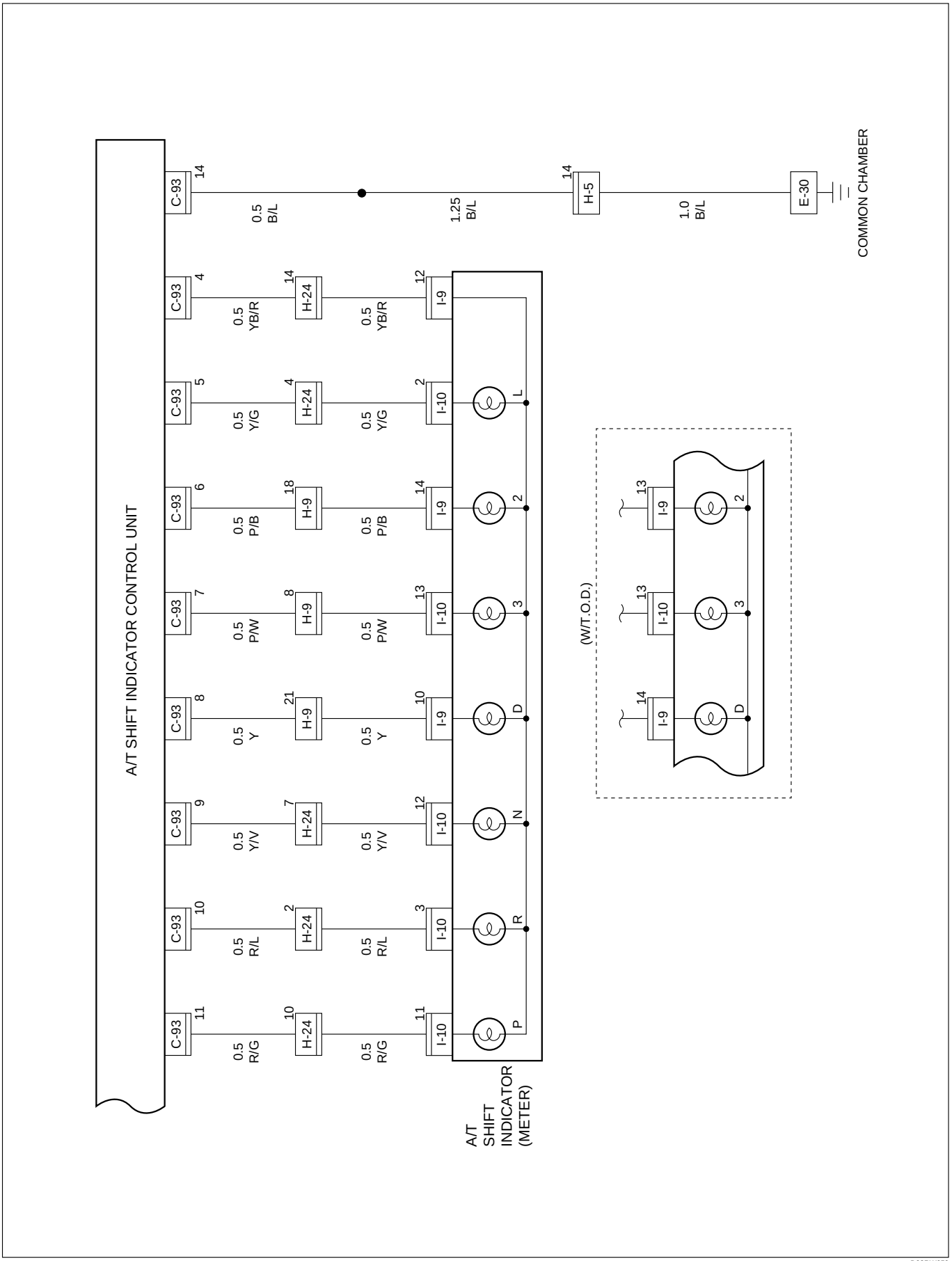

D08RW650

Parts Location (RHD)

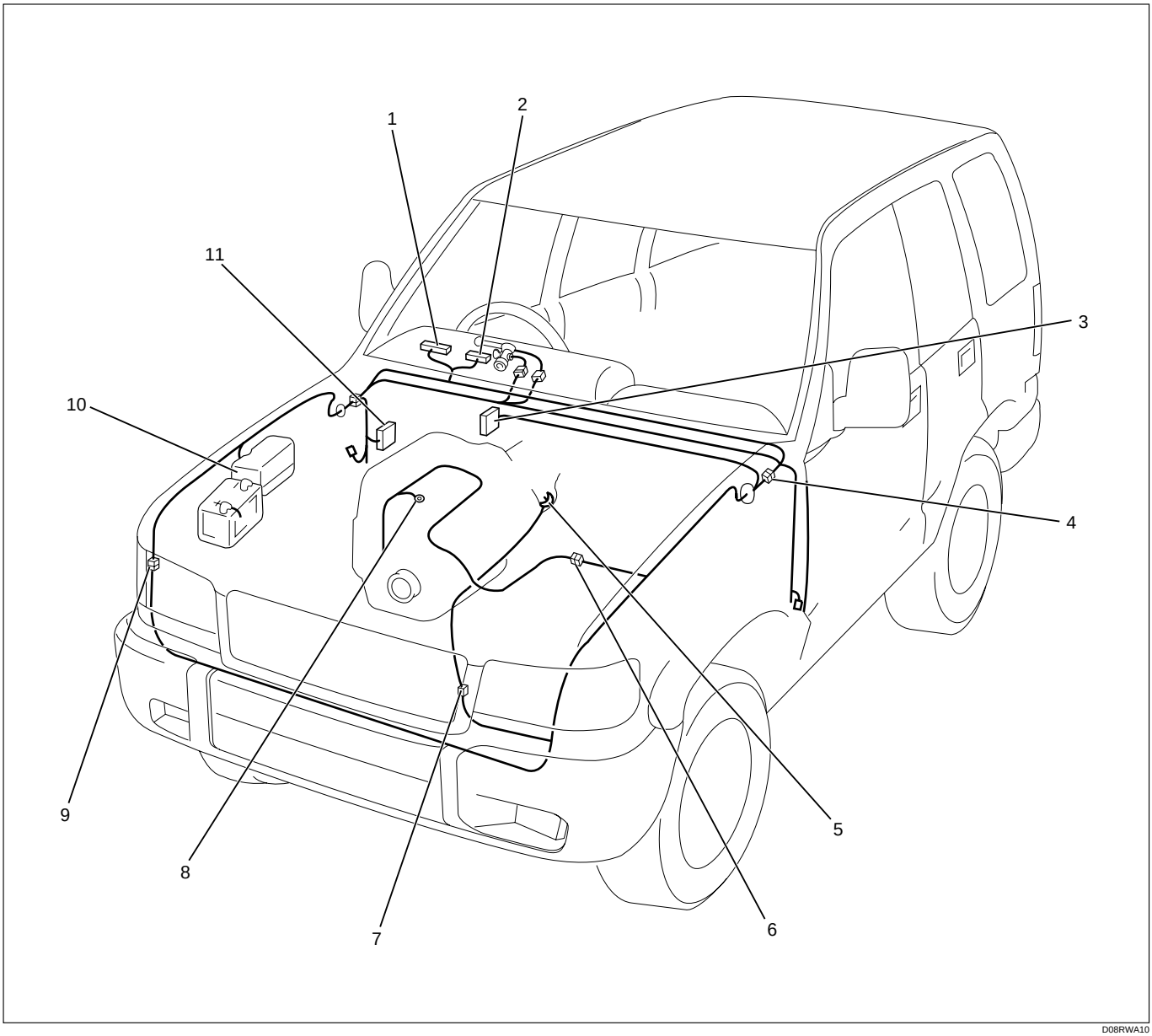

D08RWA10

Legend

(1) I-10
(2) I-9
(3) C-93
(4) H-7, H-8, H-9, H-24
(5) Mode Switch
(6) H-5
(7) H-10, H-11, H-53
(8) E-30
(9) H-41
(10) Relay and Fuse Box
(11) Fuse Box

Circuit Diagram (LHD)-1

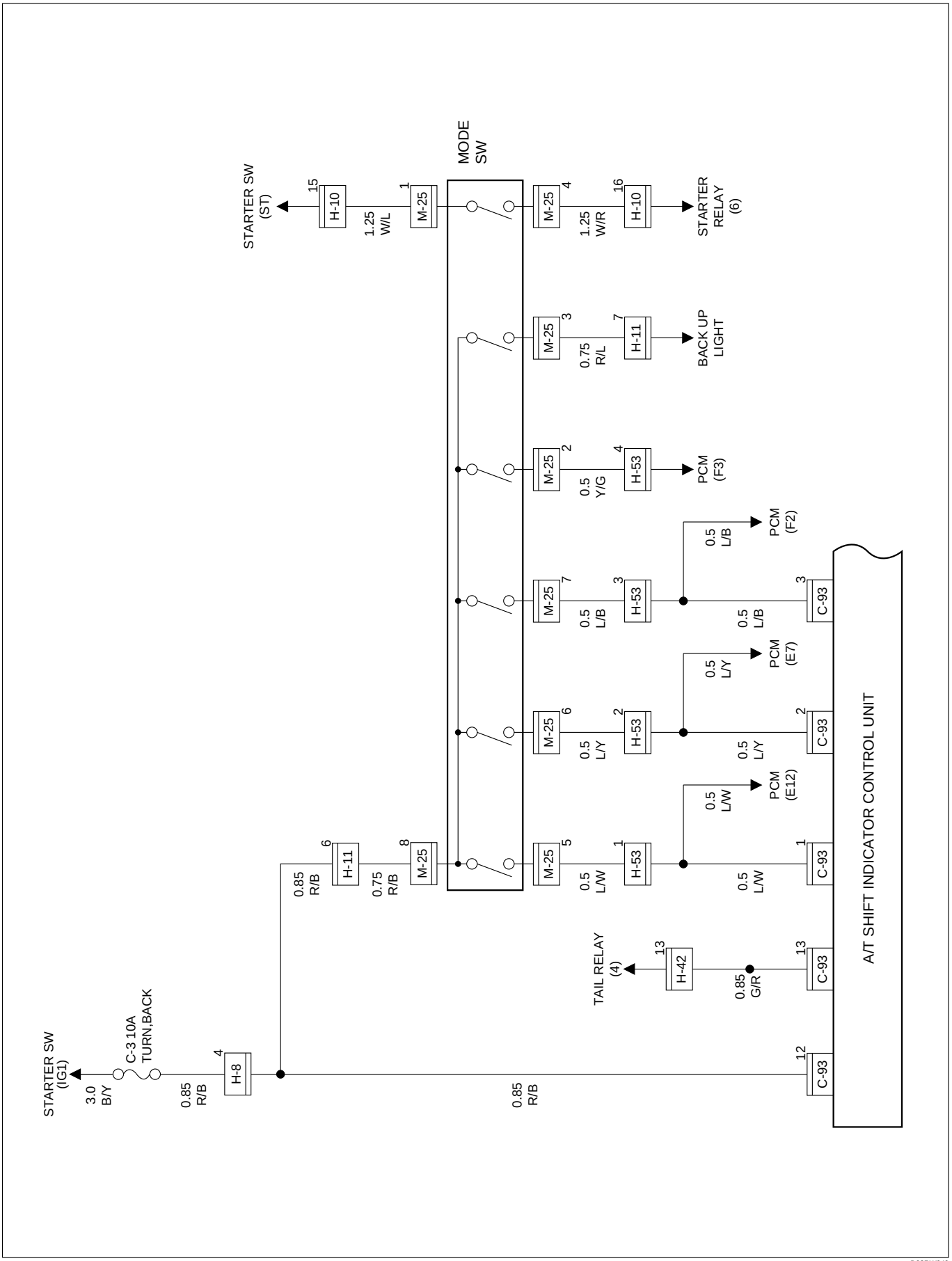

D08RW949

Circuit Diagram (LHD)-2

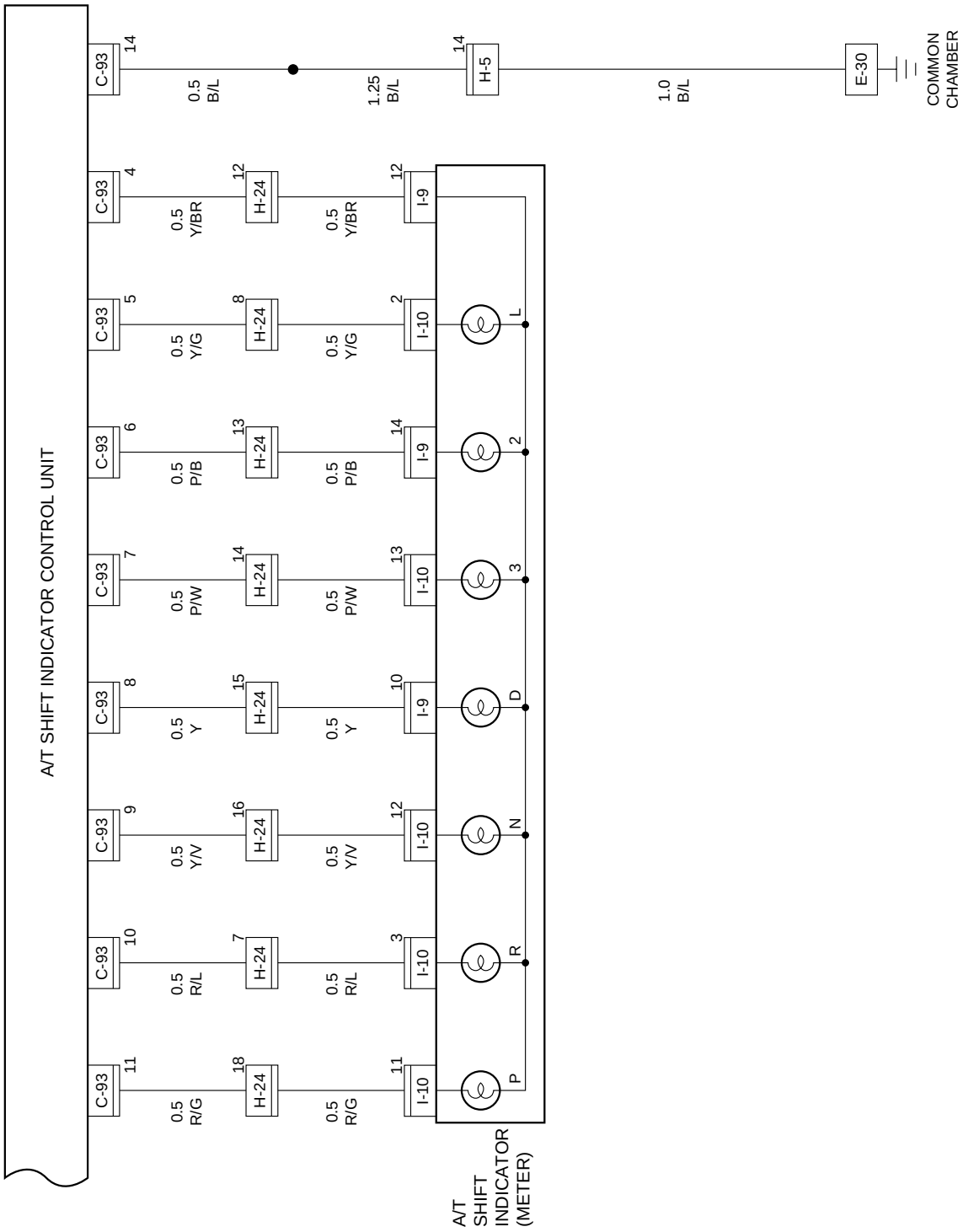

D08RW950

Parts Location (LHD)

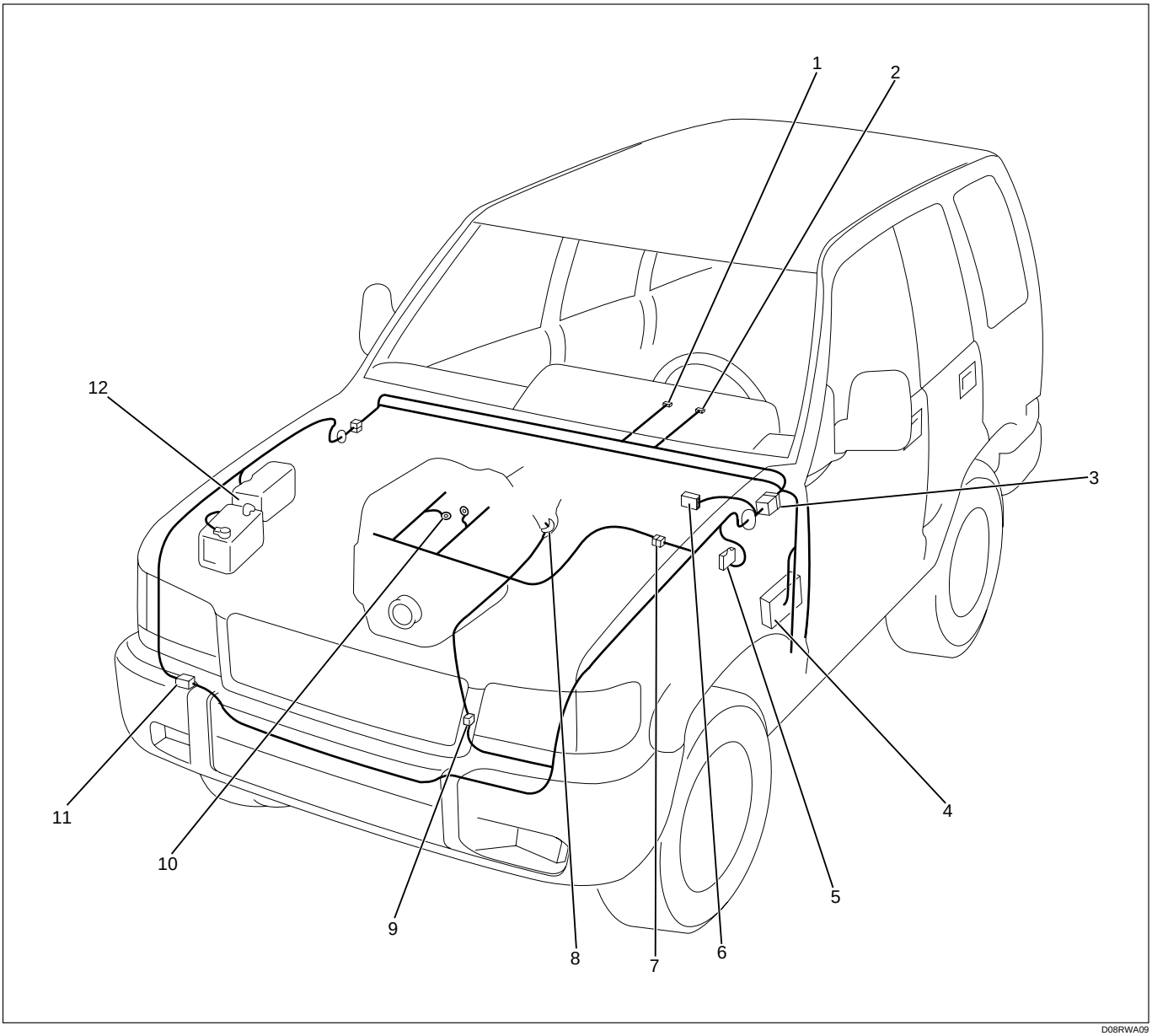

D08RWA09

Legend

(1) I-10
(2) I-9
(3) H-8, H-9, H-24
(4) Fuse Box
(5) C-16
(6) C-93
(7) H-5
(8) M-25
(9) H-10, H-11, H-53
(10) E-30
(11) H-42
(12) Relay and Fuse Box

Heater and Air Conditioning

General Description

The circuit consists of pressure switch, A/C switch, electronic thermostat, blower motor, fan switch, magnetic clutch of A/C compressor, blower resistor and relay.

The operation of A/C system is controlled by turning A/C switch on and off. Electronic thermostat and PCM can stop operation of A/C temporarily by disconnecting magnetic clutch under the predetermined conditions to adjust room temperature, preventing abnormal rise of engine coolant and reduce engine load while A/C is in operation.

Refer to Heating, Ventilation and Air Conditioning in HVAC section.

Circuit Diagram (RHD 6VD1)-1

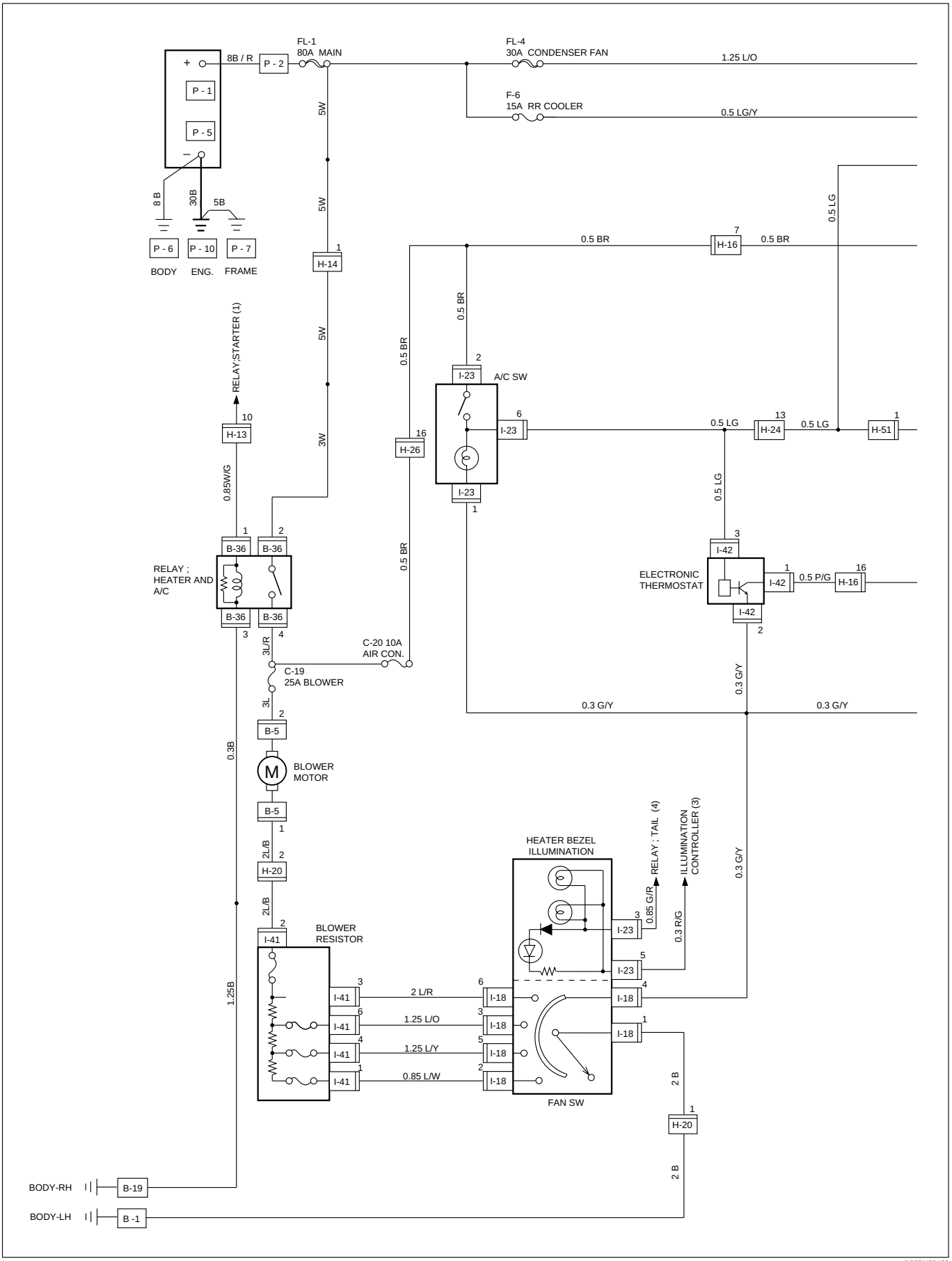

Circuit Diagram (RHD 6VD1)-2

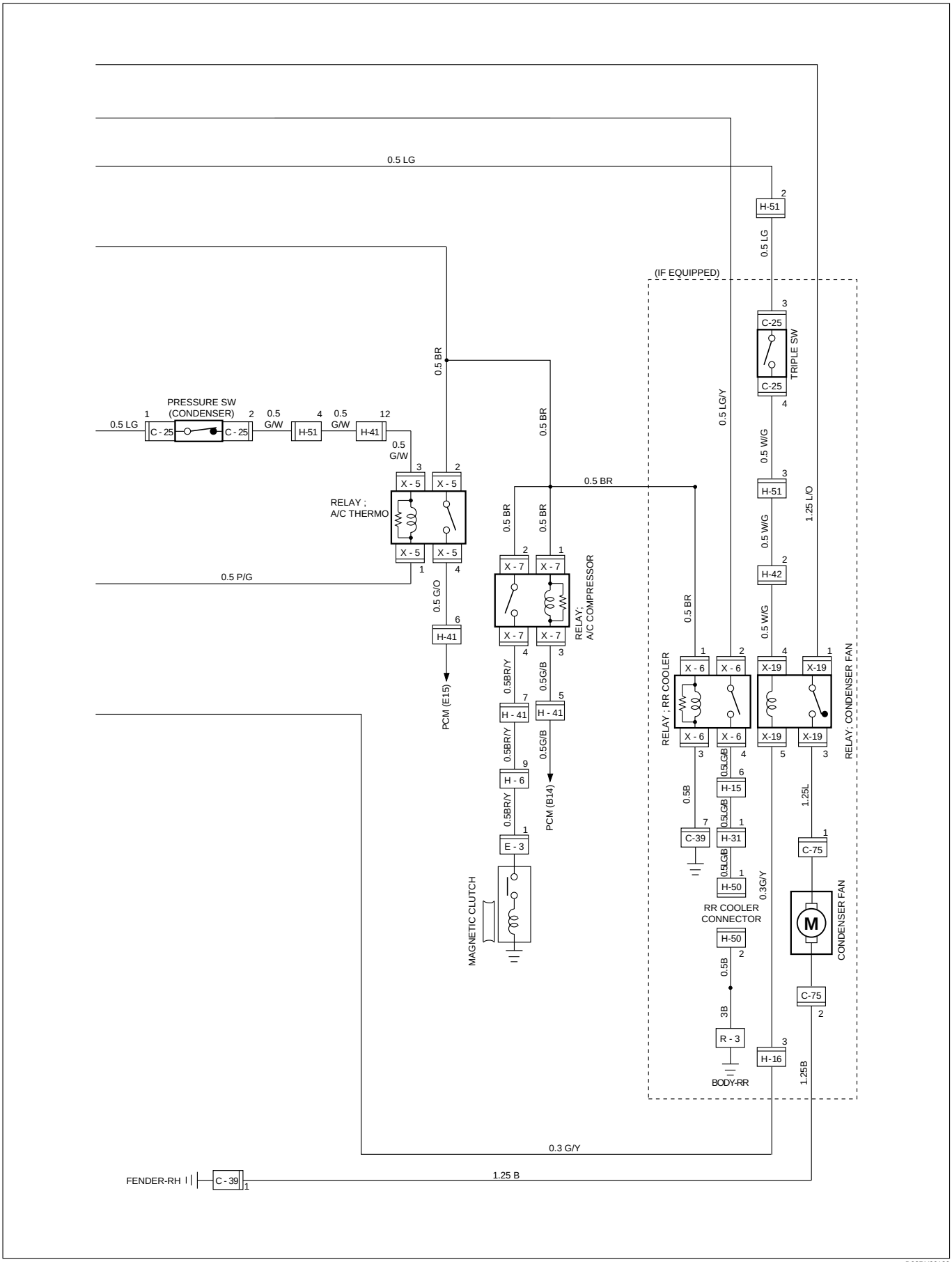

D08RY00129

Parts Location (RHD 6VD1)

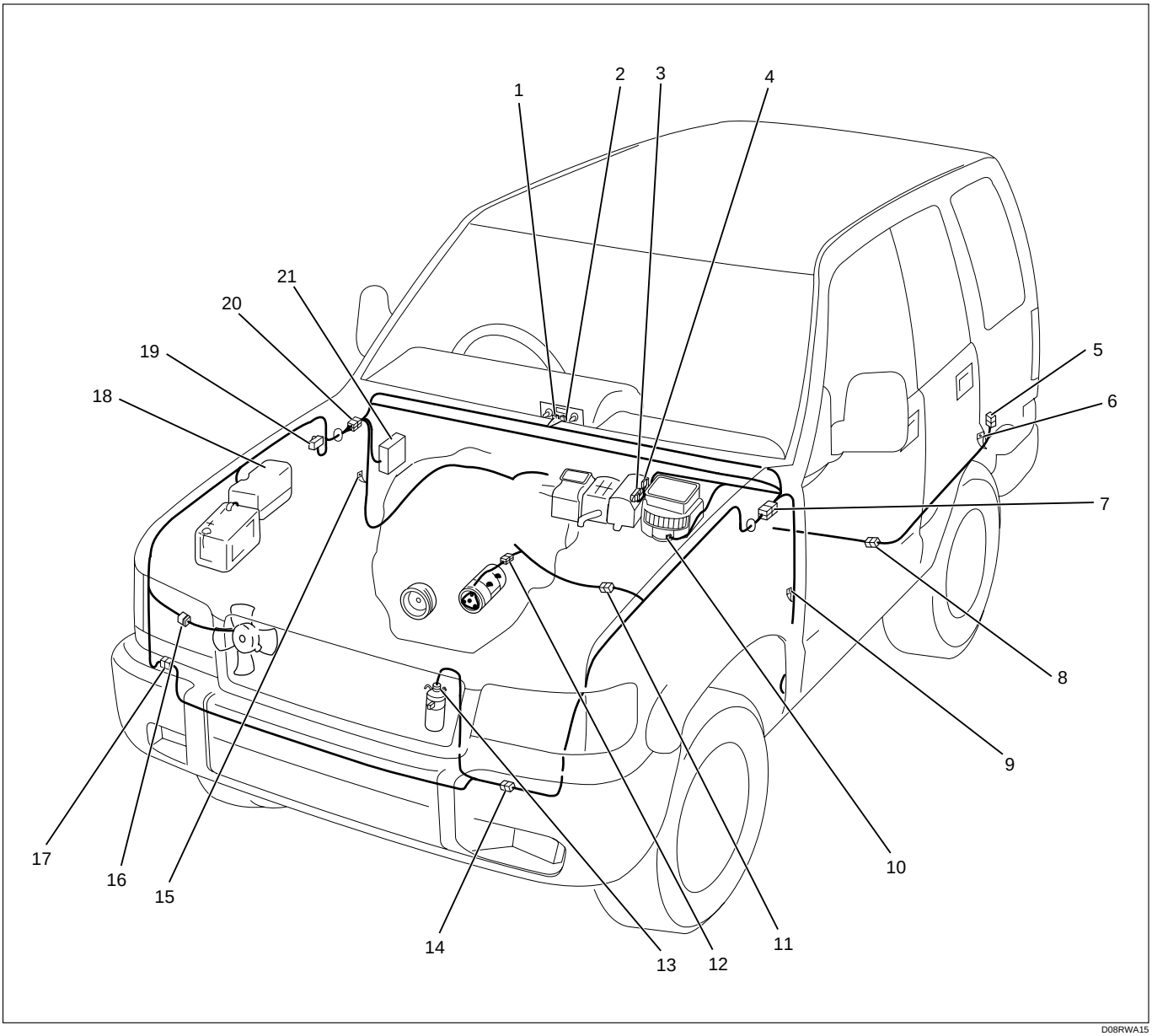

D08RWA15

Legend

(1) I-23
(2) I-18
(3) Blower Resistor (I-41)
(4) Electronic Thermostat (I-42)
(5) H-50
(6) R-3
(7) H-7, H-20, H-24
(8) H-31
(9) B-1
(10) Blower Motor (B-5)
(11) X-4
(12) E-3
(13) C-25
(14) H-51
(15) B-19
(16) C-75
(17) H-41, H-42
(18) Relay and Fuse Box (X-5, X-6, X-7, X-19)
(19) C-39
(20) H-13, H-14, H-15, H-16, H-24
(21) Fuse Box (B-36)

Circuit Diagram (LHD 6VD1)-1

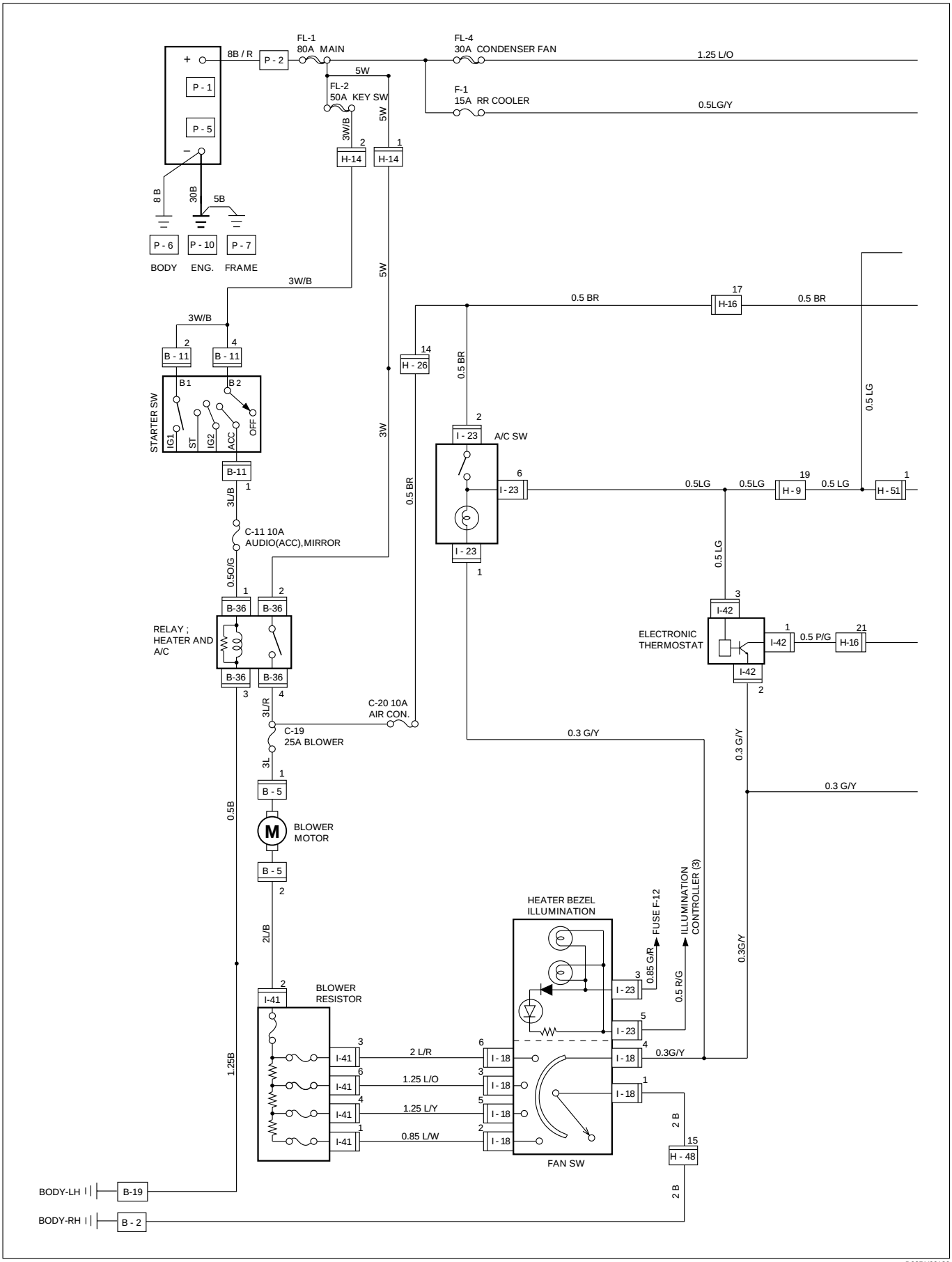

D08RY00130

Circuit Diagram (LHD 6VD1)-2

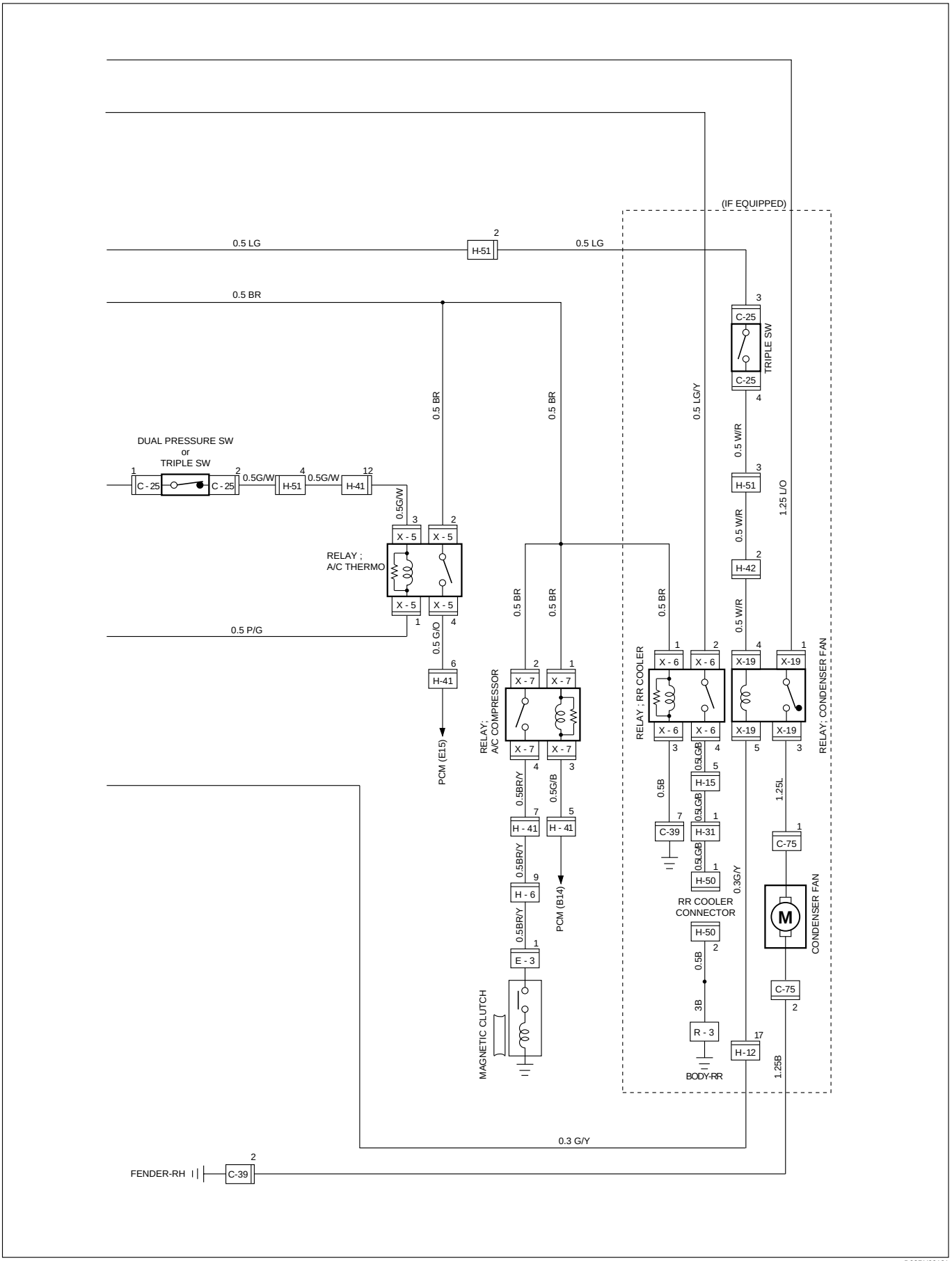

D08RY00131

Parts Location (LHD 6VD1)

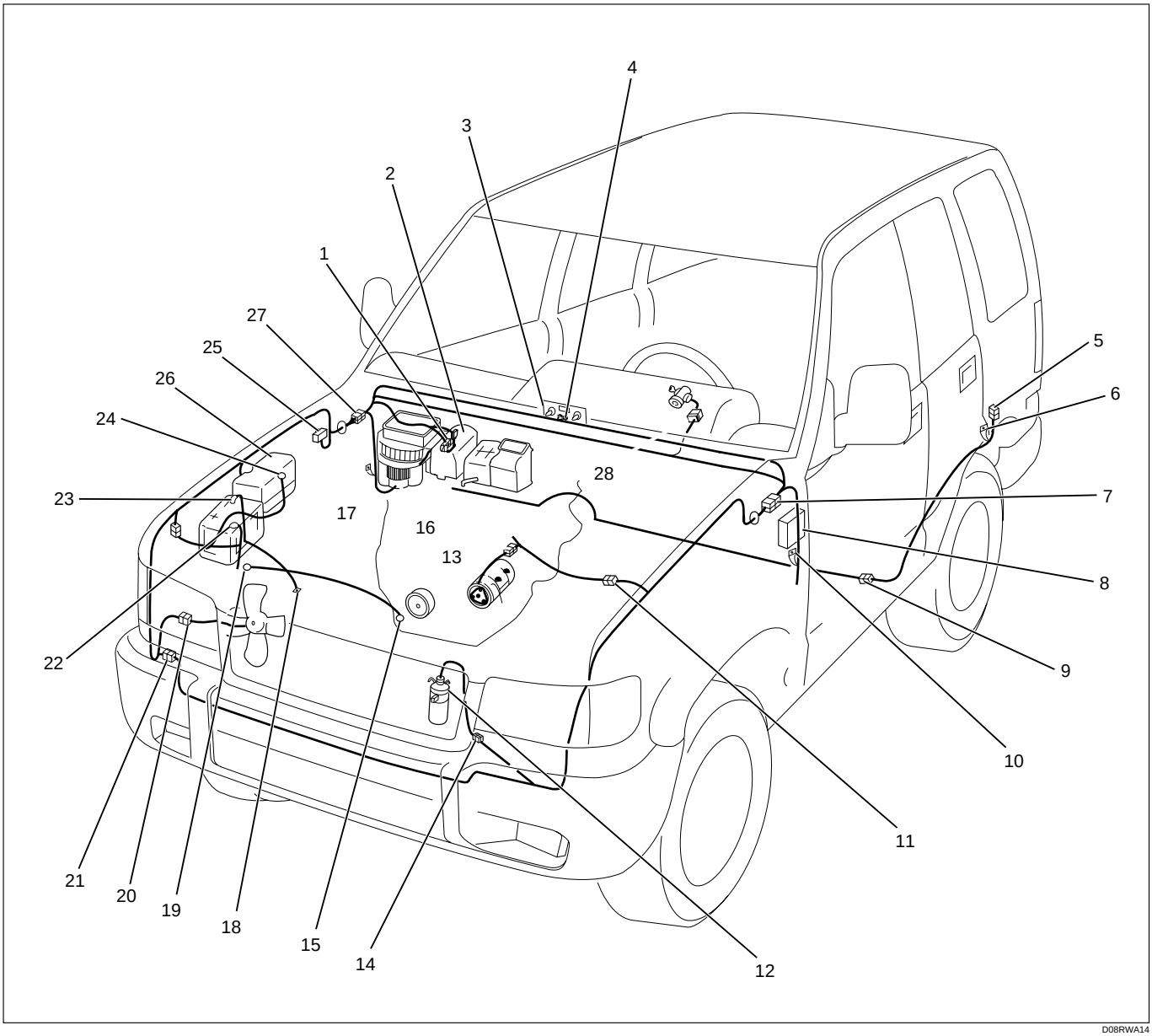

D08RWA14

Legend

(1) Blower Resistor (B-3)
(2) Electronic Thermostat (B-4)
(3) I-23
(4) I-18
(5) H-50
(6) R-3
(7) H-9, H-24
(8) Fuse Box (B-36)
(9) H-31
(10) B-19
(11) H-6
(12) C-25
(13) E-3
(14) H-51
(15) P-10
(16) Blower Motor (B-5)
(17) B-2
(18) P-7
(19) P-6
(20) C-75
(21) H-41, H-42
(22) P-5
(23) P-1
(24) P-2
(25) C-39
(26) Relay and Fuse Box (X-5, X-6, X-7, X-19)
(27) H-12, H-14, H-16, H-20, H-26, H-48
(28) B-11

Circuit Diagram (RHD 4JG2)-1

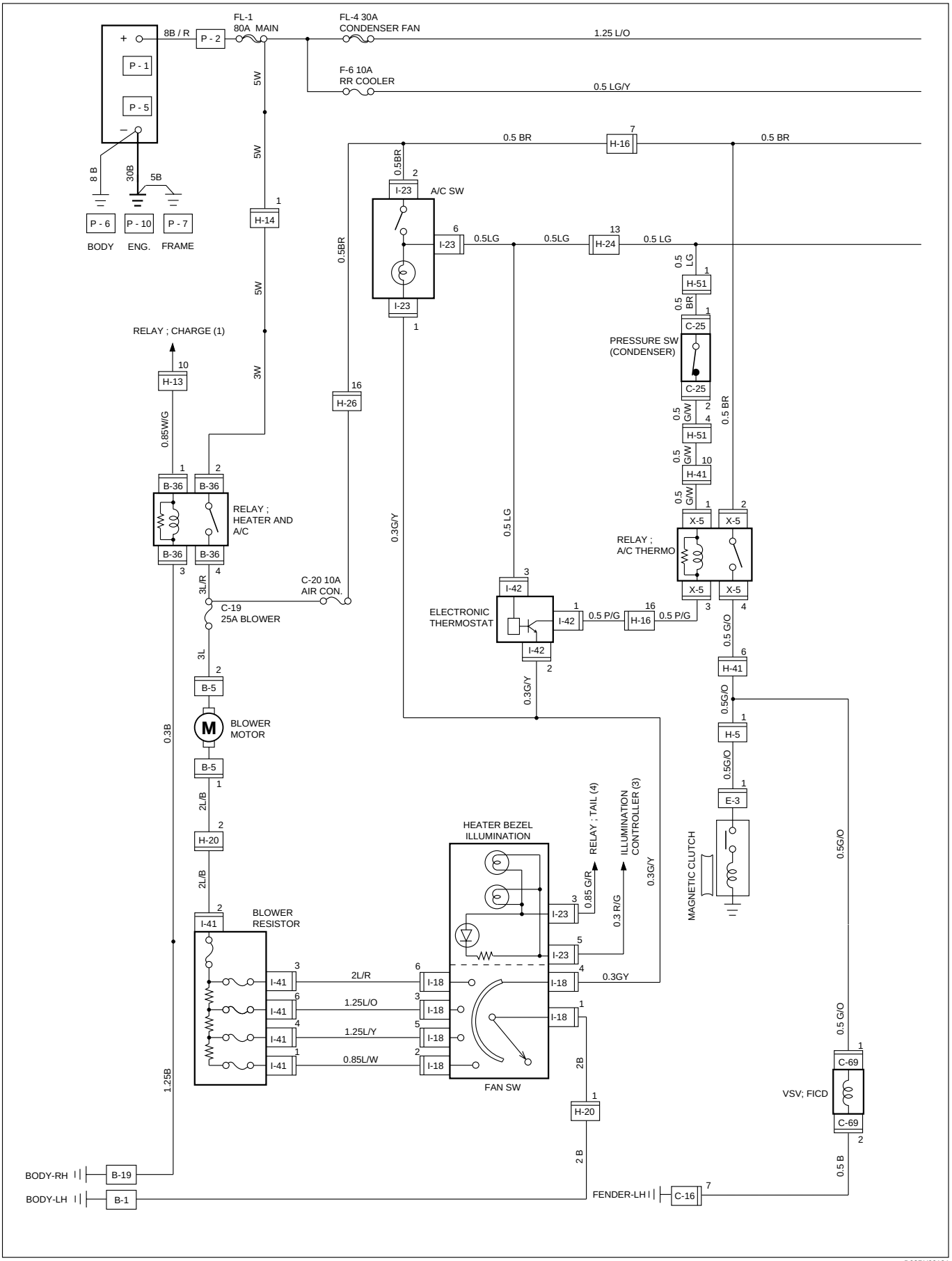

D08RY00124

Circuit Diagram (RHD 4JG2)-2

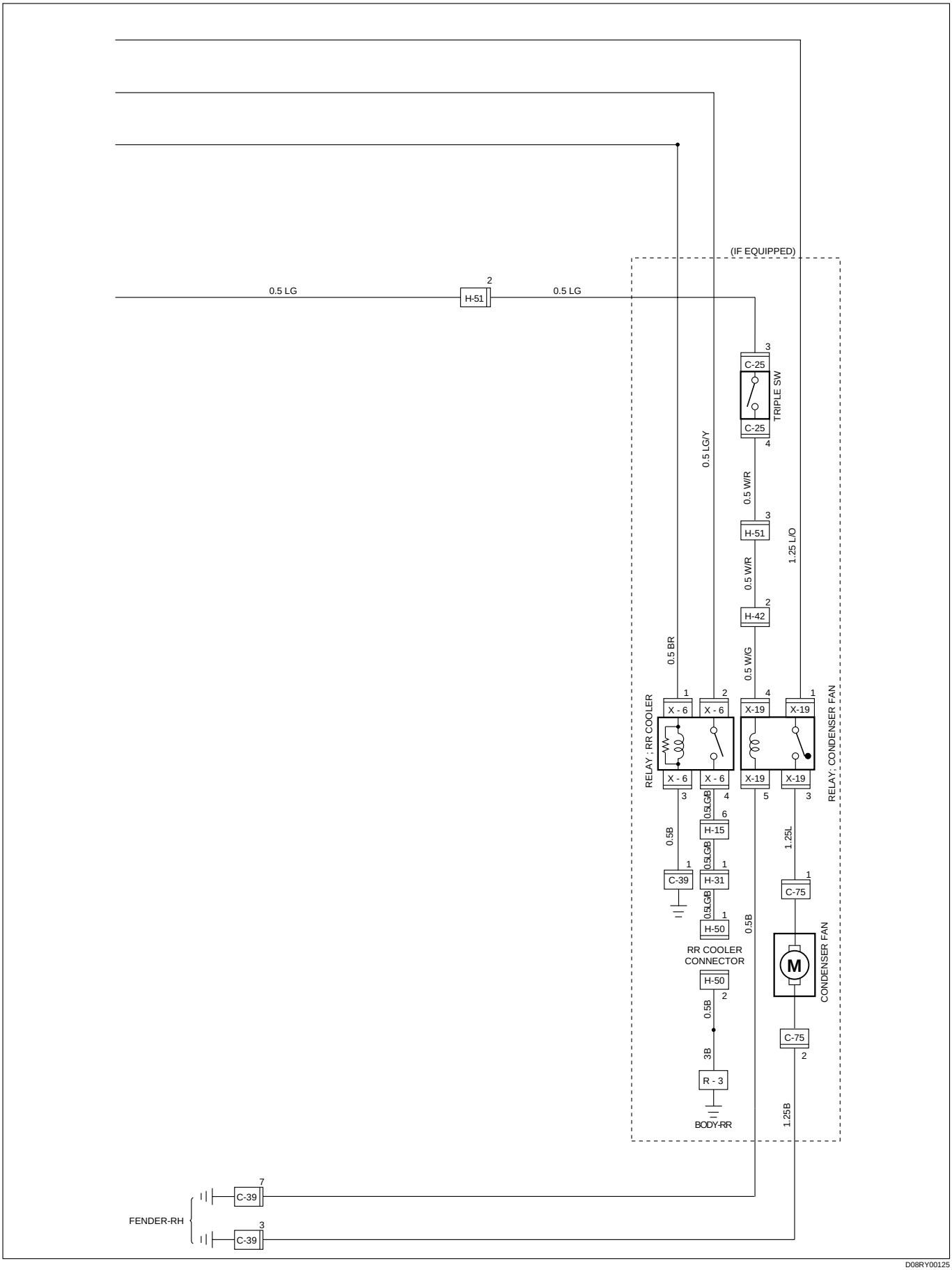

D08RY00125

Parts Location (RHD 4JG2)

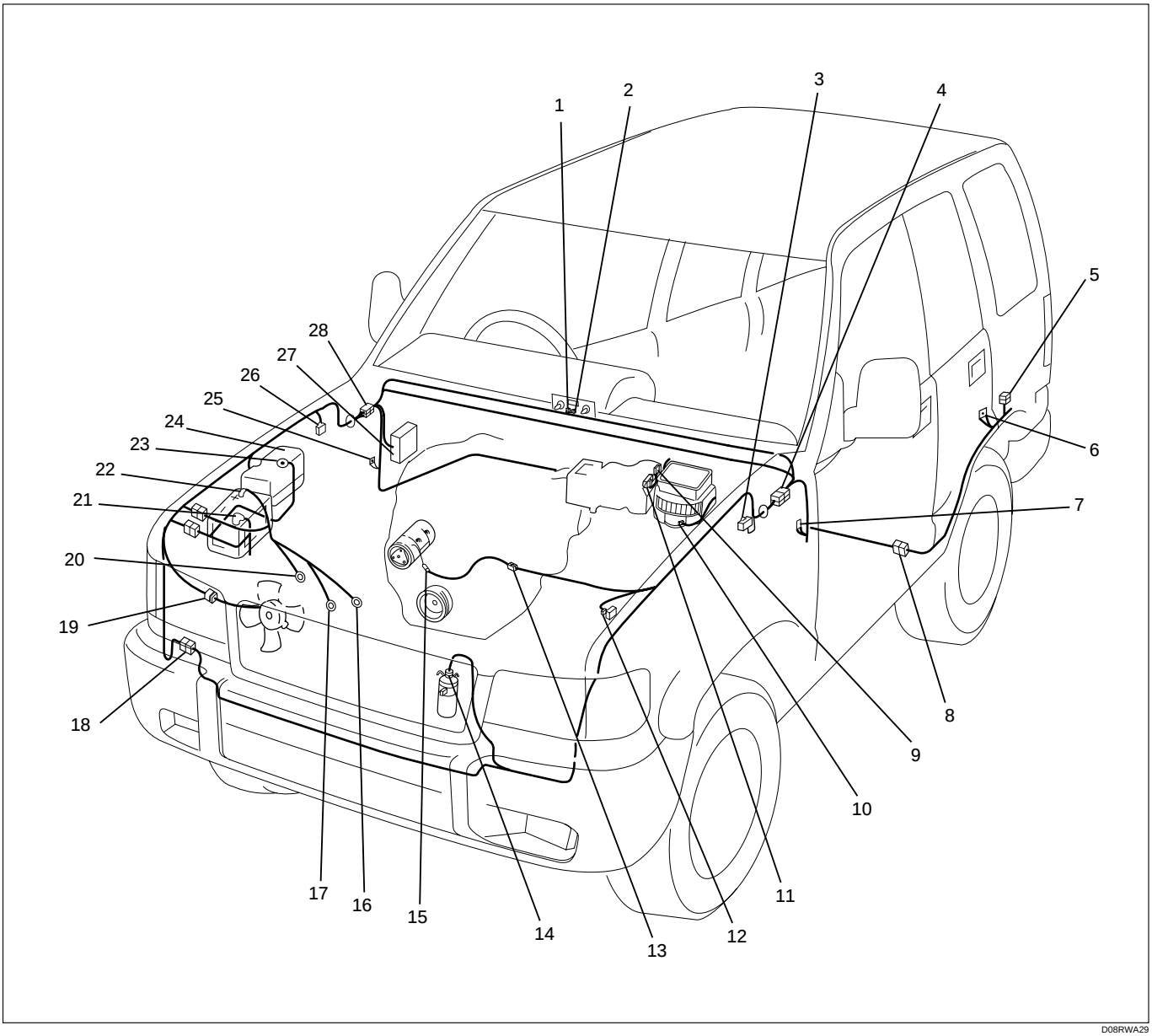

Legend

(1) I-18
(2) I-23
(3) C-16
(4) H-7, H-20, H-24
(5) H-50
(6) R-3
(7) B-1
(8) H-31
(9) Electronic Thermostat (I-42)
(10) Blower Motor (B-5)
(11) Blower Resistor (I-41)
(12) C-69
(13) H-5
(14) C-25
(15) E-3
(16) P-10
(17) P-7
(18) H-41, H-42
(19) C-75
(20) P-6
(21) P-1
(22) P-5
(23) P-2
(24) Relay and Fuse Box (X-5, X-6, X-19)
(25) B-19
(26) C-39
(27) Fuse Box (B-36)
(28) H-12, H-13, H-14, H-16, H-26

Circuit Diagram (LHD 4JG2)-1

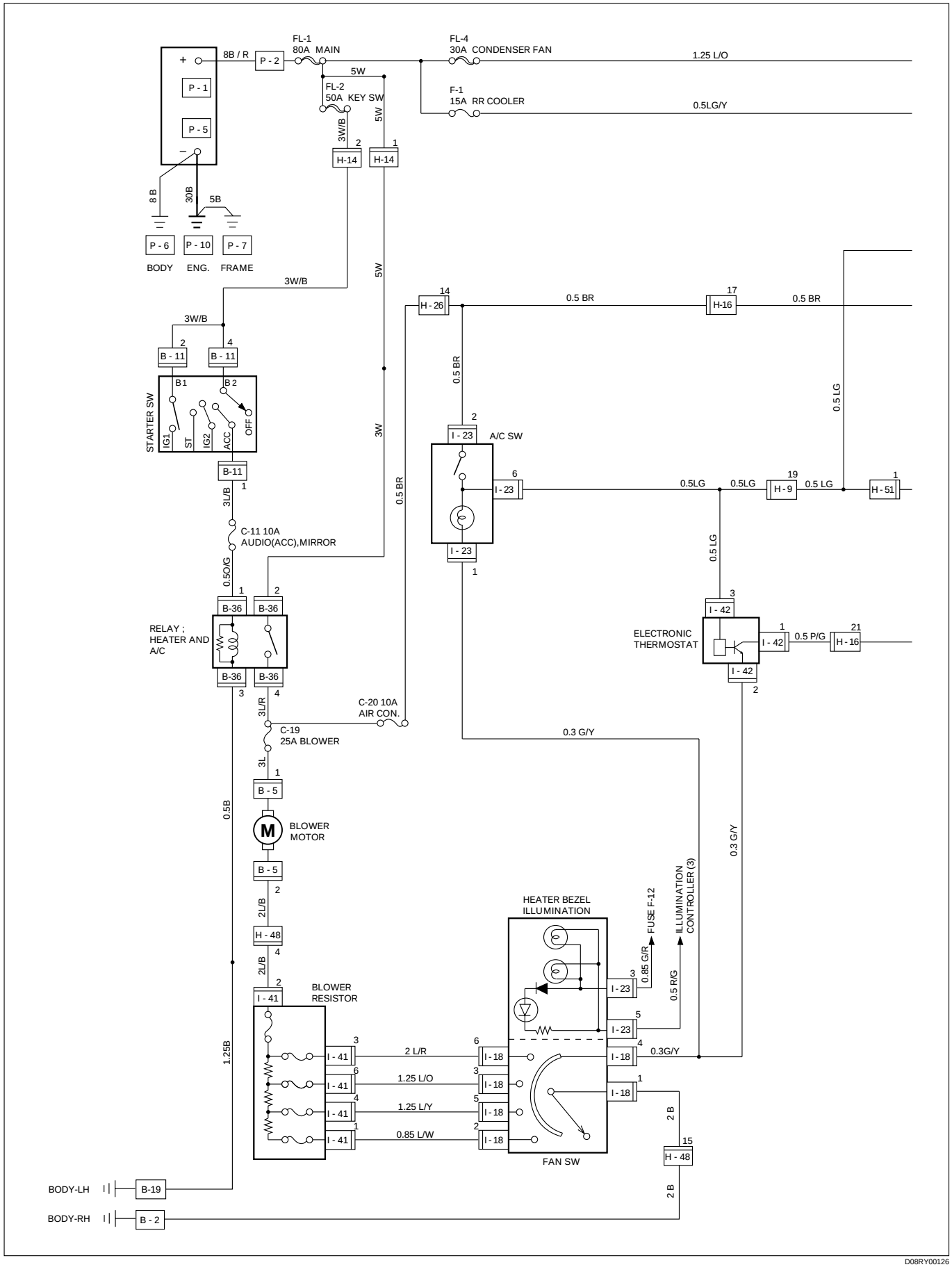

D08RY00126

Circuit Diagram (LHD 4JG2)-2

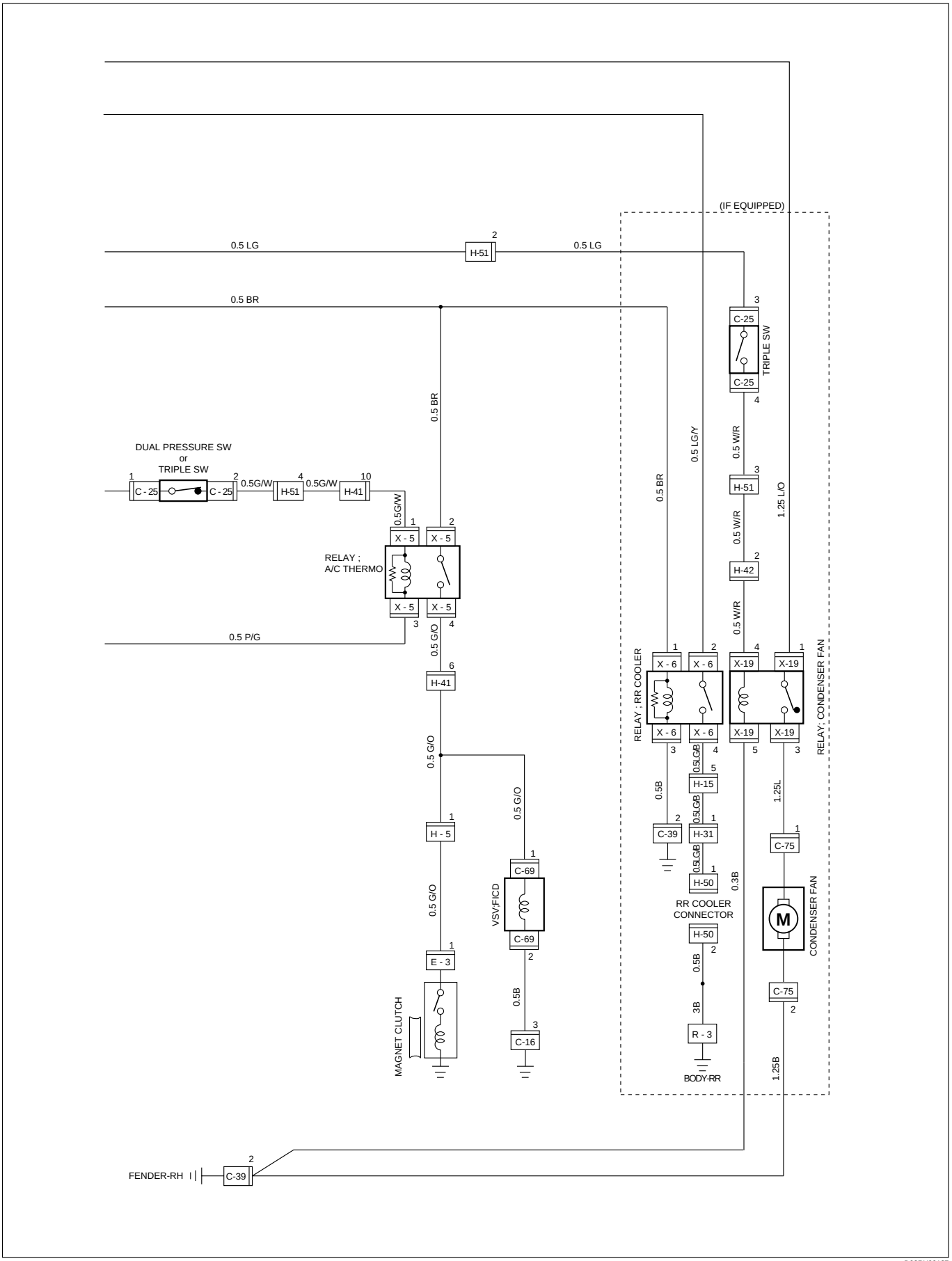

D08RY00127

Parts Location (LHD 4JG2)

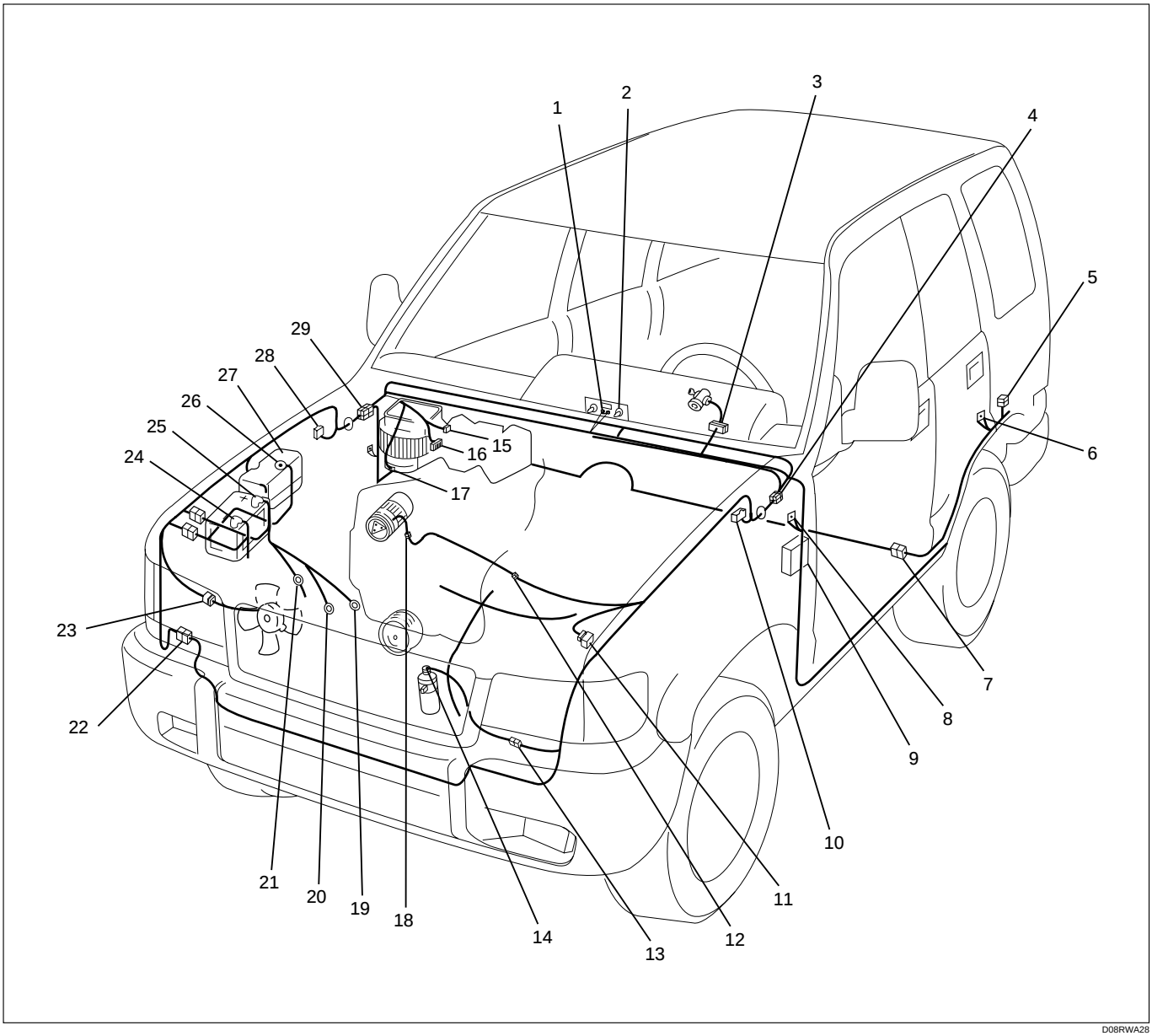

Legend

(1) I-18
(2) I-23
(3) B-11
(4) H-7, H-9, H-26
(5) H-50
(6) R-3
(7) H-31
(8) B-19
(9) Fuse Box (B-36)
(10) C-16
(11) C-69
(12) H-5
(13) H-51
(14) C-25
(15) Electronic Thermostat (B-4)
(16) Blower Resistor (B-3)
(17) Blower Motor (B-5)
(18) E-3
(19) P-10
(20) P-7
(21) P-6
(22) H-41, H-42
(23) C-75
(24) P-1
(25) P-5
(26) P-2
(27) Relay and Fuse Box (X-5, X-6, X-19)
(28) C-39
(29) H-12, H-14, H-16, H-20, H-48

Sun Roof

General Description

The circuit consists of sun roof switch, sun roof control unit, safety stop switch, limit switch and sun roof motor.
When sun roof switch is turned on, battery voltage is applied to sun roof control unit through circuit breaker and power window relay.
Accordingly, when sun roof switch is set to “Open” or “Close” position, open or close relay incorporated into the control unit is activated to change rotational direction of sun roof motor to open or close sun roof. Also, operational process (full close → limit stop → full open → safety stop → full close) of sun roof is controlled by the control unit in accordance with signals received from safety stop switch and limit switch.

Circuit Diagram (RHD)

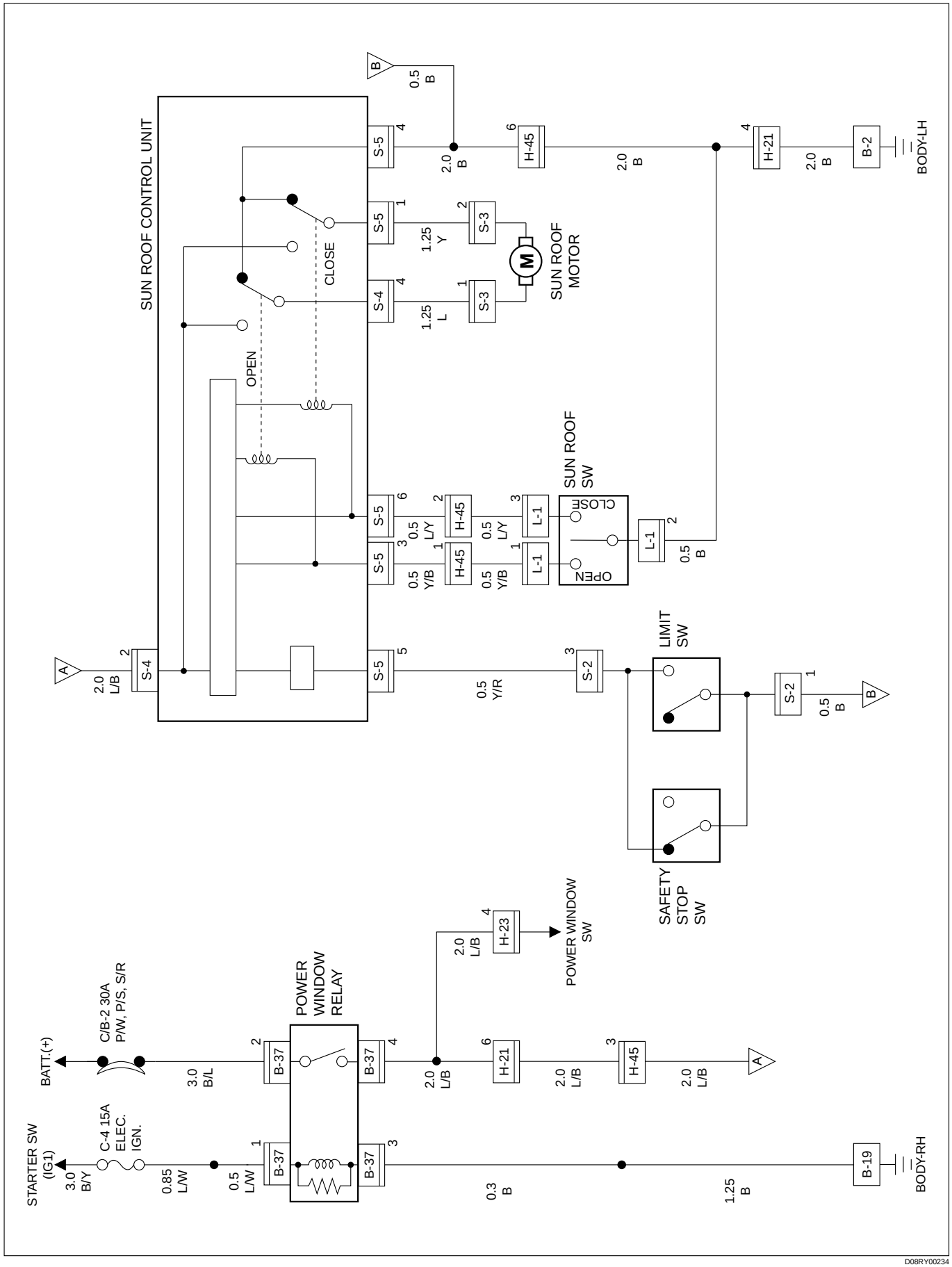

D08RY00234

Parts Location (RHD)

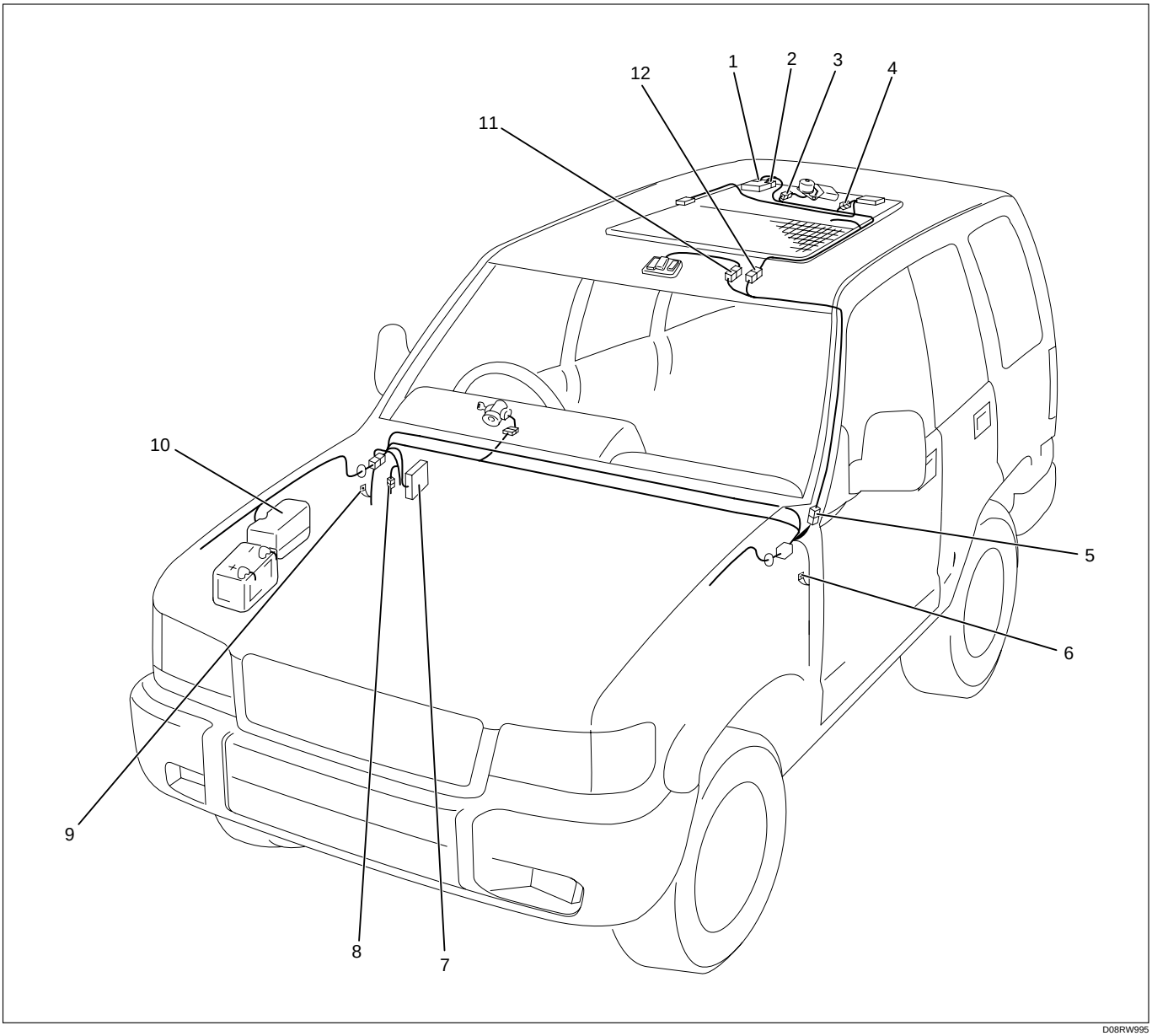

D08RW995

Legend

(1) S-5
(2) S-4
(3) S-3
(4) S-2
(5) H-21
(6) B-2
(7) Fuse Box (B-37)
(8) H-23
(9) B-19
(10) Relay and Fuse Box
(11) L-1
(12) H-45

Circuit Diagram (LHD)

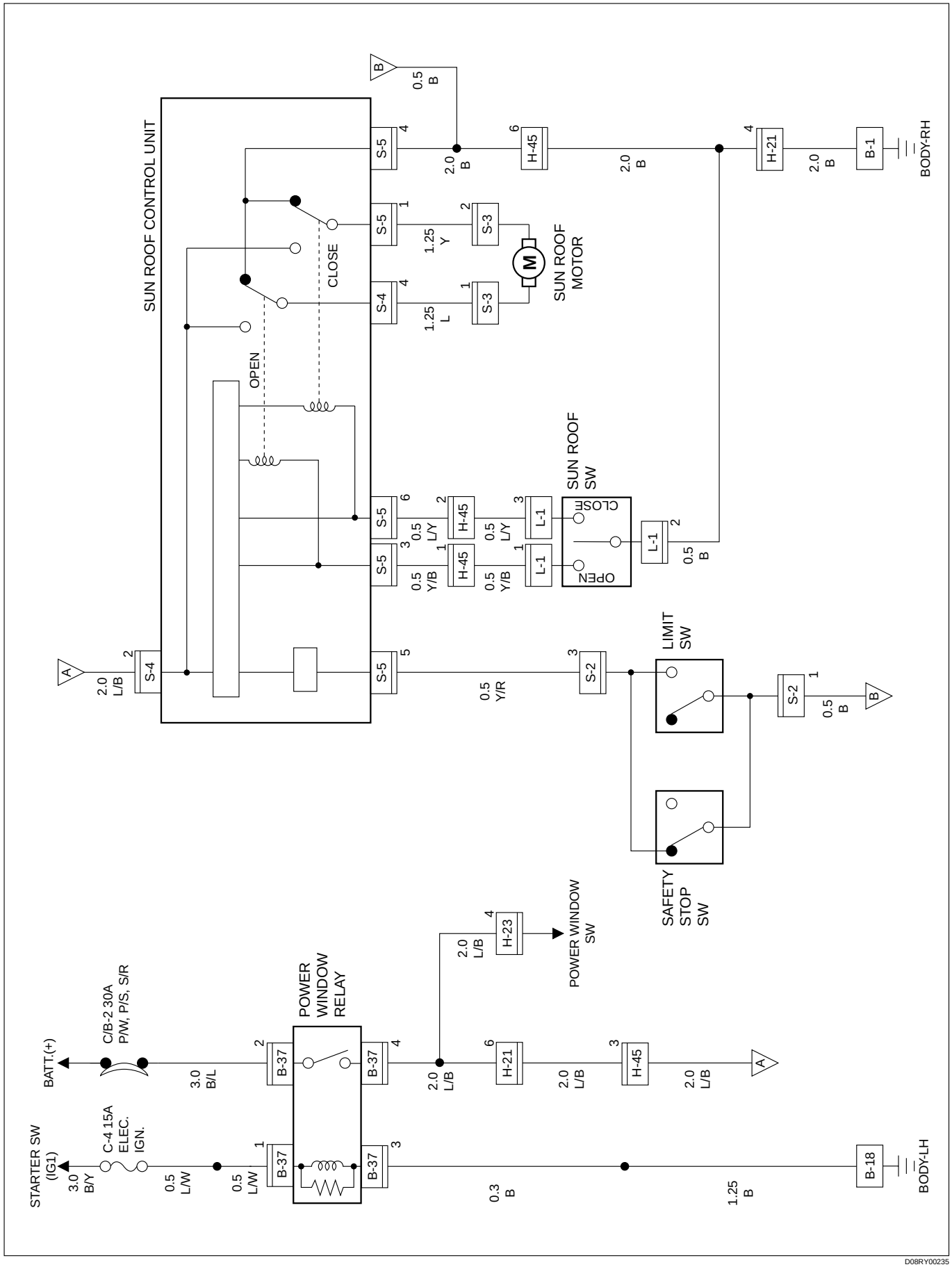

D08RY00235

Parts Location (LHD)

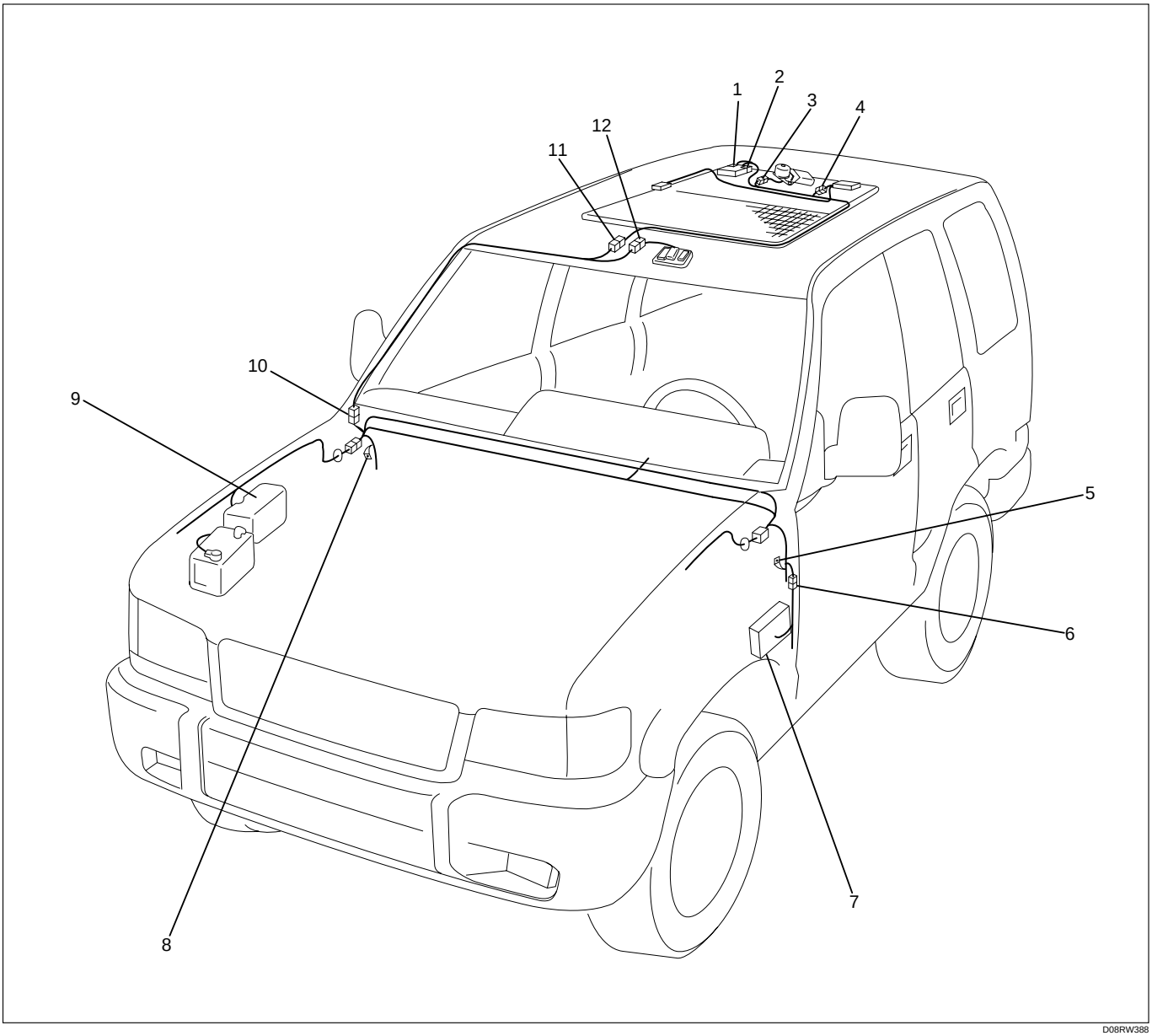

D08RW388

Legend

(1) S-5
(2) S-4
(3) S-3
(4) S-2
(5) B-18
(6) H-23
(7) Fuse Box (B-37)
(8) B-1
(9) Relay and Fuse Box
(10) H-21
(11) H-45
(12) L-1

Diagnosis

Quick Chart for Check Points

Trouble mode \ Check point	C/B-2 (30A)	Fuse C-4 (15A)	Power window relay	Sun roof switch	Sun roof control unit	Sun roof motor	Safety stop switch	Limit switch	Cable harness
1. Sun roof does not open				○	○	○			○
2. Sun roof does not close				○	○	○			○
3. Safety stop mechanism does not operate before sun roof closes completely					○		○		○
4. Limit switch mechanism does not operate before sun roof open completely					○			○	○
5. Power source circuit diagnosis	○	○	○						○

1. Sun Roof Does Not Open

2. Sun Roof Does Not Close

- TURN THE STARTER SWITCH ON
- IS BATTERY VOLTAGE APPLIED BETWEEN 2 [S-4] AND THE GROUND?

YES

- IS [B-2] (OR [B-1]) GROUNDED SECURELY?

NO

REFER TO ITEM No. 5 “POWER SOURCE CIRCUIT DIAGNOSIS” IN THIS DIAGNOSIS

YES

- IS THE SUN ROOF SWITCH NORMAL?

NO

GROUND IT SECURELY

YES

- IS THERE ANY CONTINUITY BETWEEN 3 [S-5] - 1 [L-1] (6 [S-5] - 3 [L-1])?

NO

REPAIR OR REPLACE THE SWITCH

YES

- IS THERE ANY CONTINUITY BETWEEN 2 [L-1] - [B-2] (OR [B-1])?

NO

REPAIR A POOR CONNECTION OF THE CONNECTORS OR AN OPEN CIRCUIT IN THE CIRCUIT

YES

- CONNECT THE BATTERY (+) TERMINAL TO THE SUN ROOF MOTOR SIDE CONNECTOR TERMINAL 1 [S-3] (2 [S-3]) AND THE (–) TERMINAL TO 2 [S-3] (1 [S-3])
- DOES THE MOTOR ROTATE?

NO

REPAIR A POOR CONNECTION OF THE CONNECTORS OR AN OPEN CIRCUIT IN THE CIRCUIT

YES

- IS THERE ANY CONTINUITY BETWEEN THE HARNESS SIDE CONNECTOR TERMINALS 1 [S-3] - 2 [S-3] ?

NO

REPAIR OR REPLACE THE MOTOR

YES

- IS THERE ANY CONTINUITY BETWEEN 4 [S-5] - [B-2] (OR [B-1])?

NO

REPAIR A POOR CONNECTION OF THE CONNECTORS OR AN OPEN CIRCUIT IN THE CIRCUIT

A

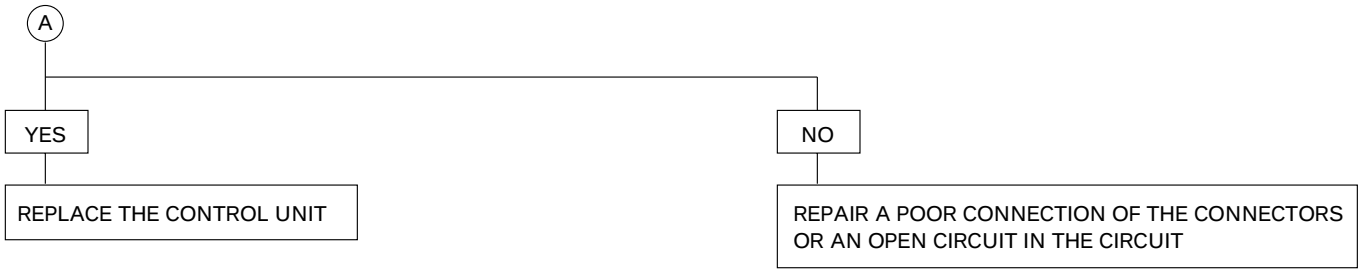

3. Safety Stop Mechanism Does Not Operate Before Sun Roof Closes Completely

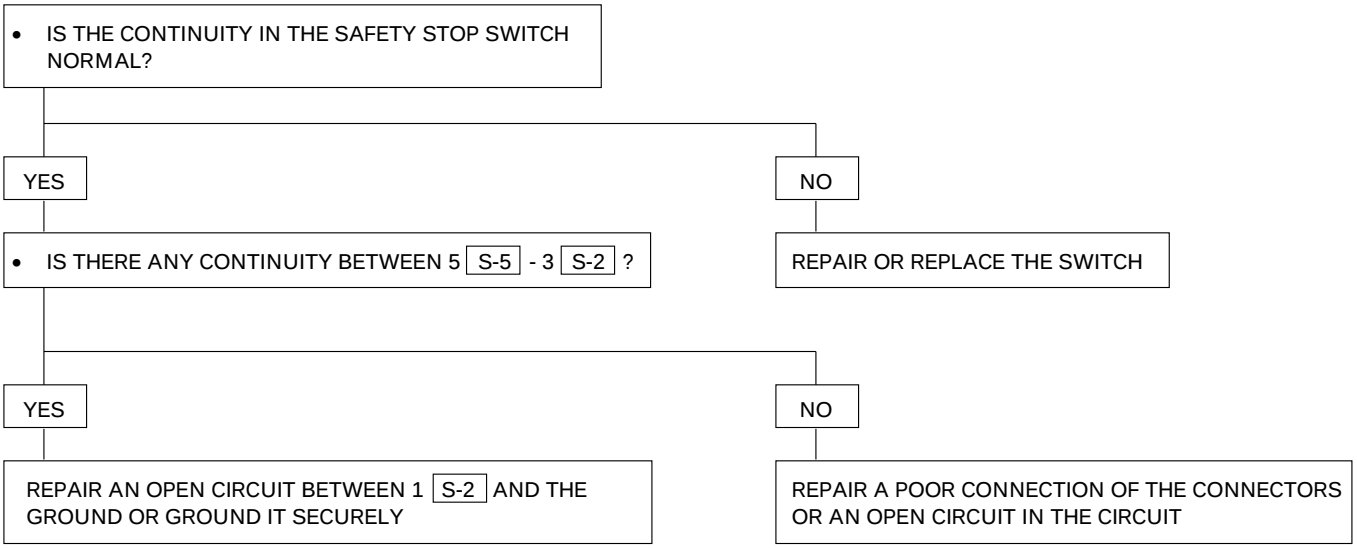

4. Limit Switch Mechanism Does Not Operate Before Sun Roof Open Completely

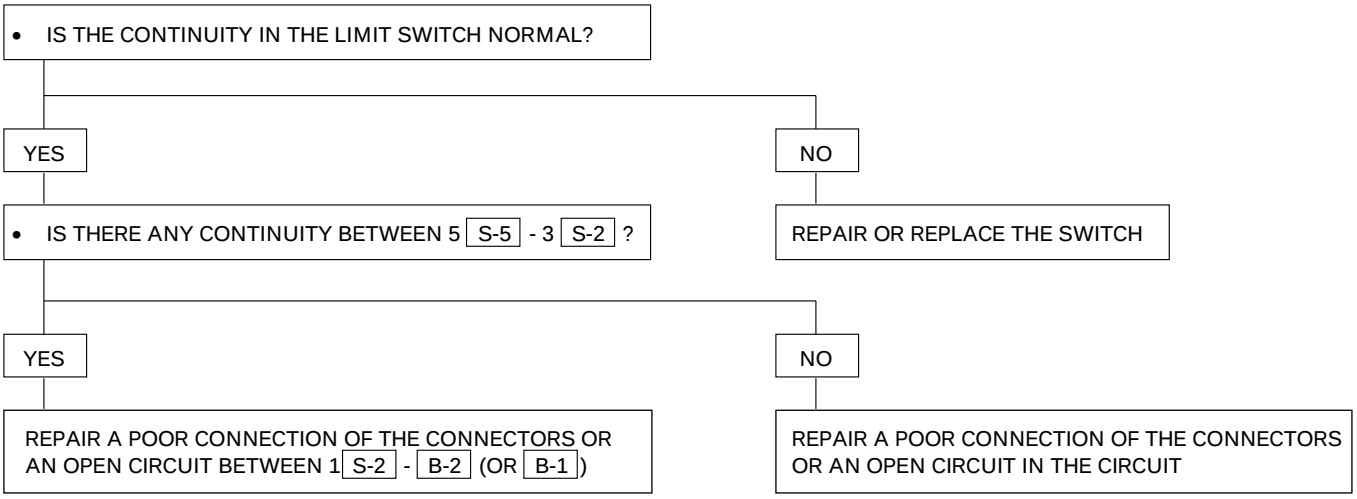

5. Power Source Circuit Diagnosis

- IS THERE ANY CONTINUITY BETWEEN THE TERMINALS OF C/B-2 (30A)?

YES

- IS FUSE C-4 (15A) NORMAL?

NO

PUSH IN THE RESET BUTTON OF CIRCUIT BREAKER AND CHECK THE CONTINUITY AGAIN
IF THERE IS NO CONTINUITY AFTER PUSHING RESET BUTTON, REPLACE IT WITH NEW ONE

YES

- IS THE POWER WINDOW RELAY NORMAL?

NO

REPLACE THE FUSE

YES

- TURN THE STARTER SWITCH ON
- IS THE BATTERY VOLTAGE APPLIED BETWEEN 1 B-37 AND THE GROUND OR 2 B-37 AND THE GROUND?

NO

REPLACE THE RELAY

YES

- IS B-19 (OR B-18) GROUNDED SECURELY?

NO

REPAIR A POOR CONNECTION OF THE CONNECTORS OR AN OPEN CIRCUIT BETWEEN FUSE C-4 (10A) AND 1 B-37 OR 1 H-14 AND 2 B-37

YES

REPAIR A POOR CONNECTION OF THE CONNECTORS OR AN OPEN CIRCUIT BETWEEN 3 B-37 AND B-19 (OR B-18)

NO

GROUND IT SECURELY

Seat Heater

General Description

The circuit consists of seat heater switch and seat heater unit.
Seat heater unit is incorporated into front seats.
To prevent from being overheated, seat heater unit has thermostat.

Circuit Diagram (RHD)

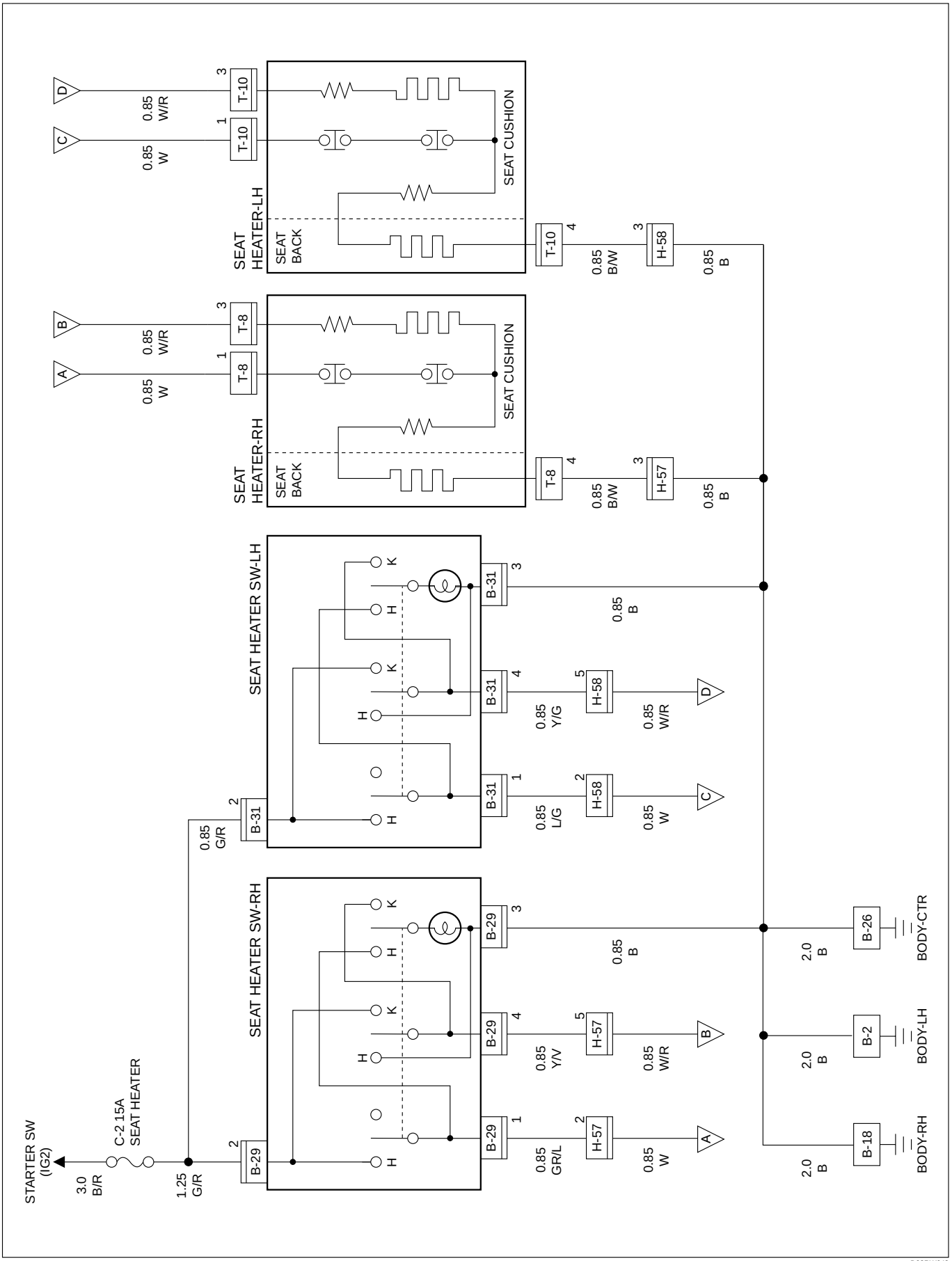

D08RW648

Parts Location (RHD)

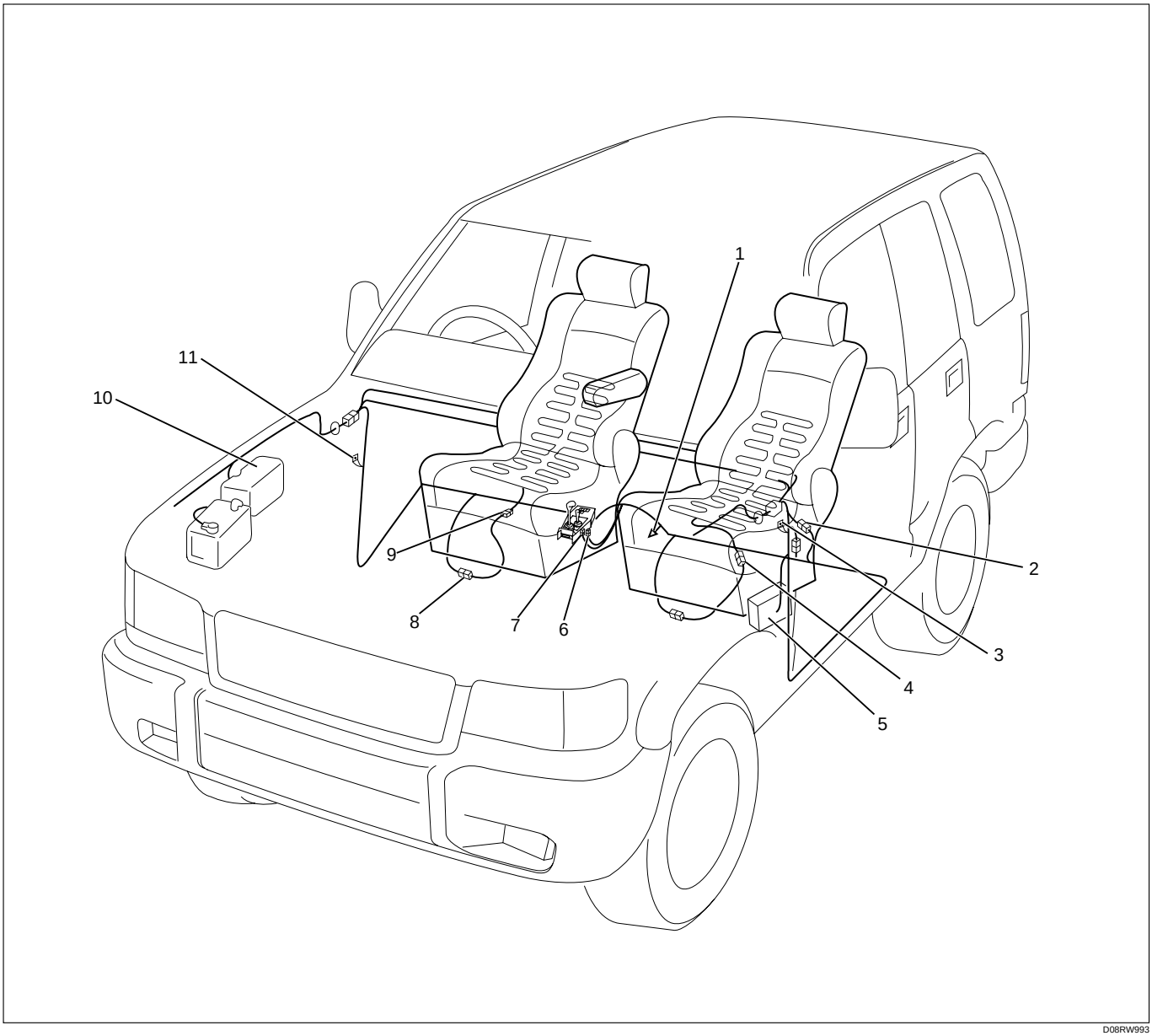

D08RW993

Legend

(1) B-26
(2) H-58
(3) B-2
(4) T-10
(5) Fuse Box
(6) B-31
(7) B-29
(8) H-57
(9) T-8
(10) Relay and Fuse Box
(11) B-18

Circuit Diagram (LHD)

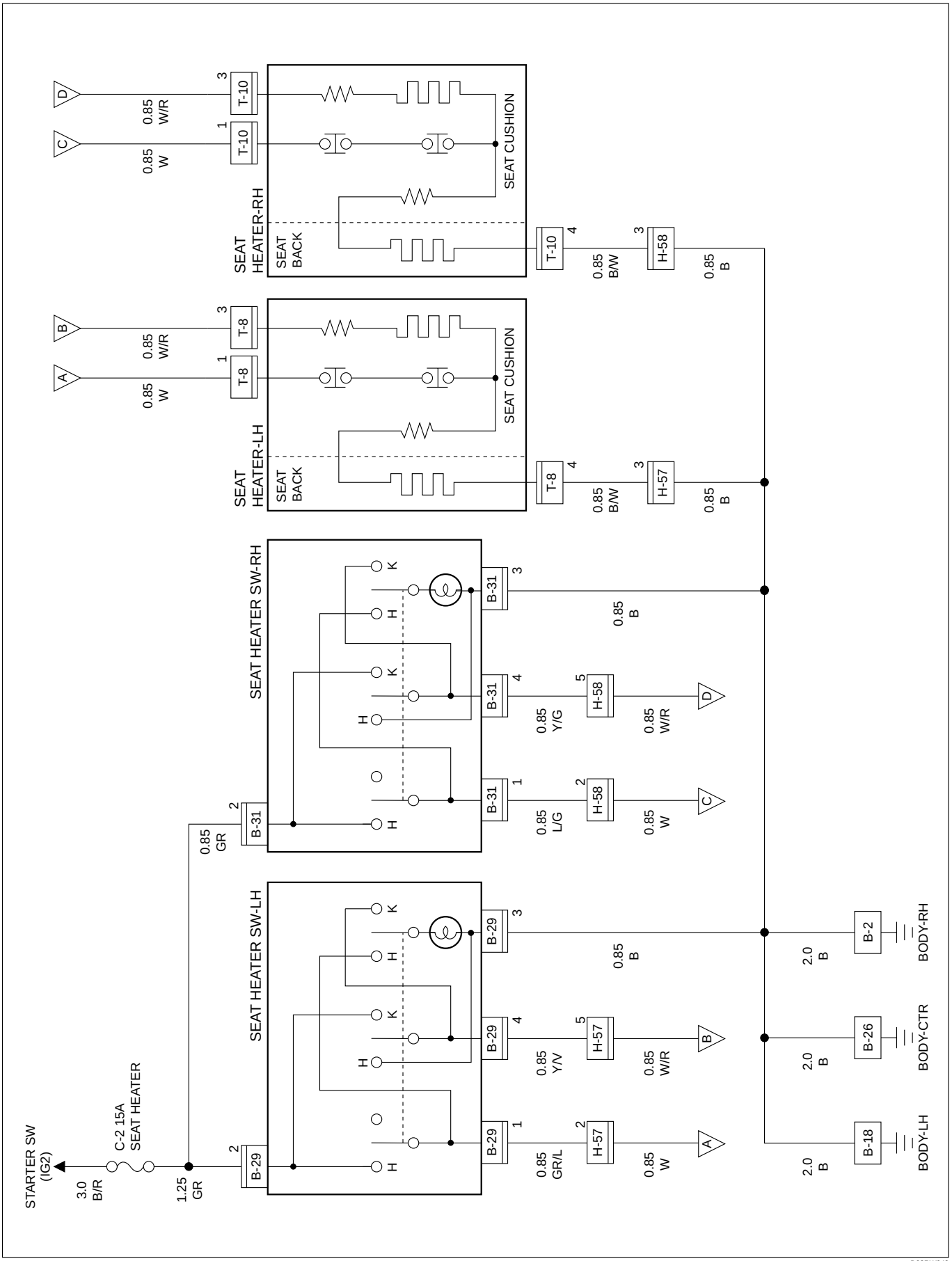

D08RW948

Parts Location (LHD)

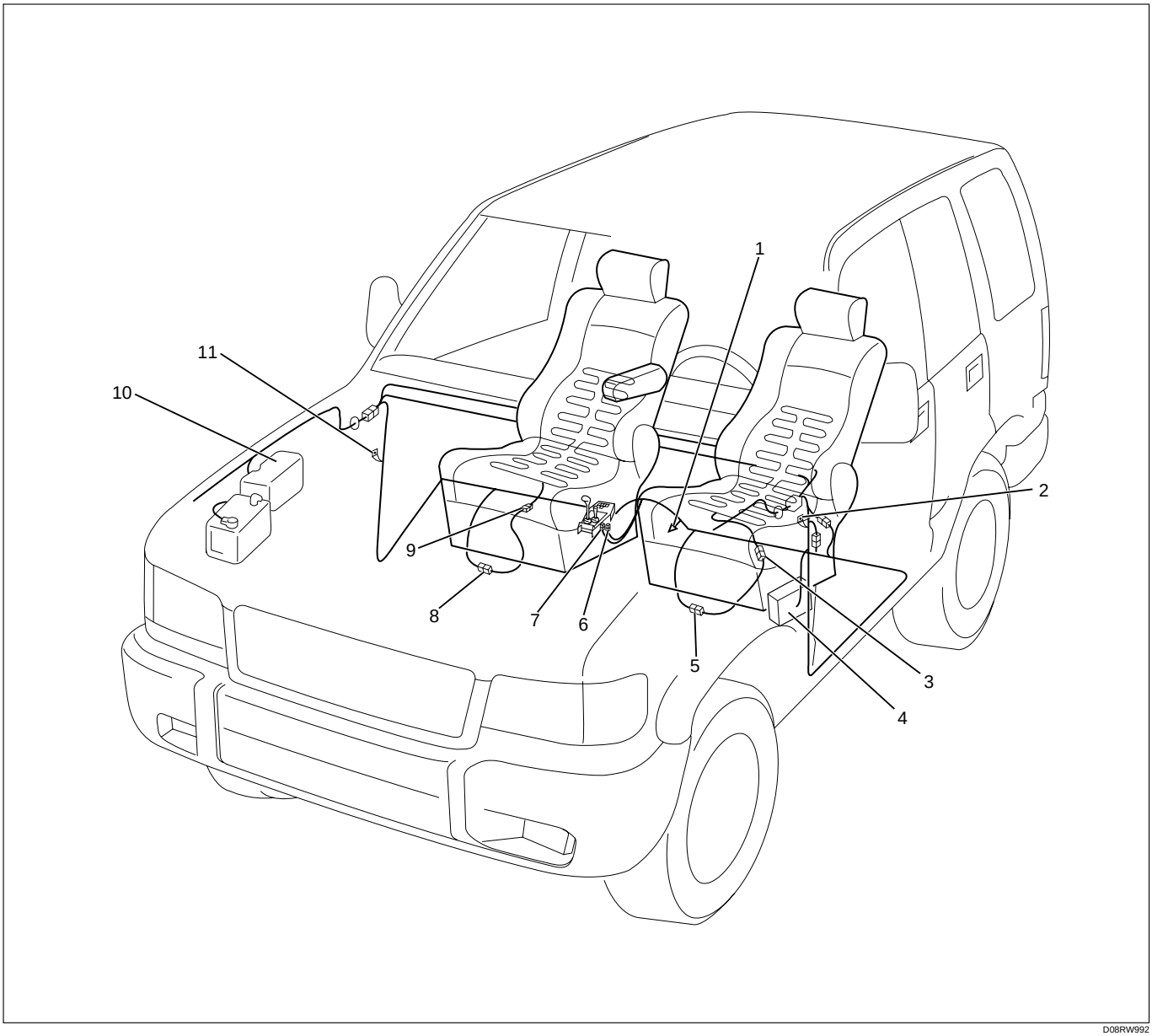

D08RW992

Legend

(1) B-26
(2) B-18
(3) T-8
(4) Fuse Box
(5) H-46
(6) B-31
(7) B-29
(8) H-47
(9) T-10
(10) Relay and Fuse Box
(11) B-2

Diagnosis

Quick Chart for Check Points

Trouble mode \ Check point	Fuse C-2 (15A)	Seat heater SW		Heat unit		Cable harness
		Driver side	Passenger side	Driver side	Passenger side	
1. Seat heater on both sides does not heat up	○					○
2. Seat heater on the driver (or passenger) side does not heat up		○	○	○	○	○
3. Heat (or keep) position does not heat up		○	○	○	○	

1. Seat Heater on Both Sides Does Not Heat Up

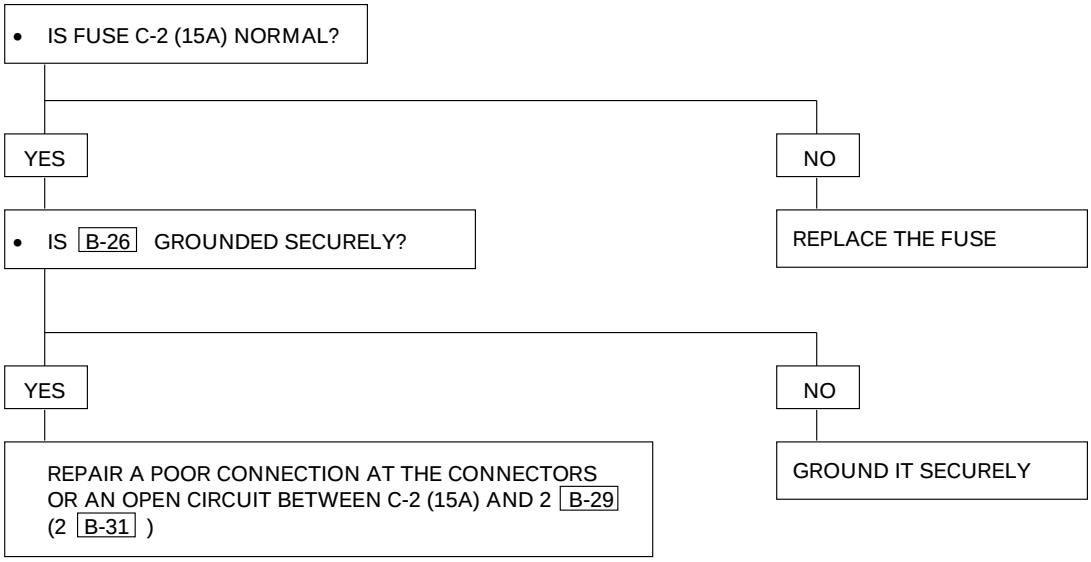

2. Seat Heater on The Driver (Or Passenger) Side Does Not Heat Up

- DISCONNECT THE SEAT HEATER SWITCH CONNECTOR
- TURN THE STARTER SWITCH "ON"
- IS THE BATTERY VOLTAGE APPLIED BETWEEN THE SEAT HEATER SW HARNESS SIDE CONNECTOR 2 B-29 (OR 2 B-31) AND THE GROUND?

YES

- IS THE SEAT HEATER SW FUNCTION NORMAL?

NO

REPAIR A POOR CONNECTION AT THE CONNECTORS OR AN OPEN CIRCUIT IN THE CIRCUIT

YES

- DISCONNECT THE HEAT UNIT CONNECTOR
- IS THERE ANY CONTINUITY BETWEEN THE HEAT UNIT CONNECTOR 1 T-8 , 3 T-8 AND 4 T-8 (OR 1 T-10 , 3 T-10 AND 4 T-10)

NO

REPLACE THE SEAT HEATER SW

YES

REPAIR A POOR CONNECTION AT THE CONNECTORS OR AN OPEN CIRCUIT BETWEEN 1 B-29 AND 1 T-8 , 4 B-29 AND 3 T-8 , 4 T-8 AND GROUND (OR 1 B-31 AND 1 T-10 , 4 B-31 AND 3 T-10 , 4 T-10 AND GROUND)

NO

REPLACE THE HEAT UNIT

3. Heat (Or Keep) Position Does Not Heat Up

- IS THE SEAT HEATER SW FUNCTION NORMAL?

YES

REPLACE THE HEAT UNIT

NO

REPLACE THE SEAT HEATER SW

Power Seat

General Description

The circuit consists of power seat switch, front tilt motor (driver's seat only), rear tilt motor (driver's seat only), slide motor and recliner motor.
Power seat switch has a tilt and slide switch and a recliner switch. The motor built in the seat can be actuated by operating these switches to move the seat to desired position, independent of position of starter switch.

Circuit Diagram (RHD)-1

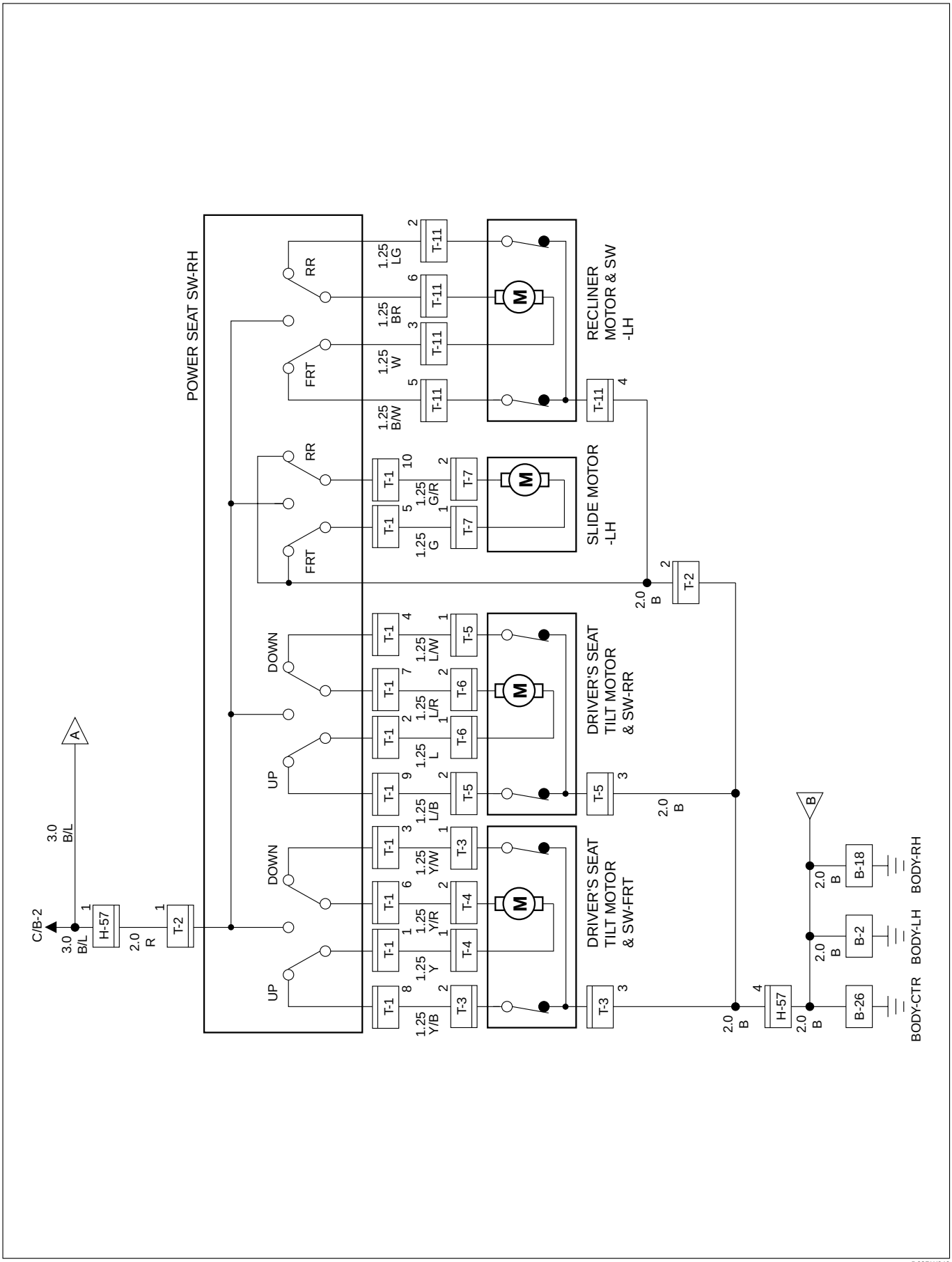

D08RW640

Circuit Diagram (RHD)-2

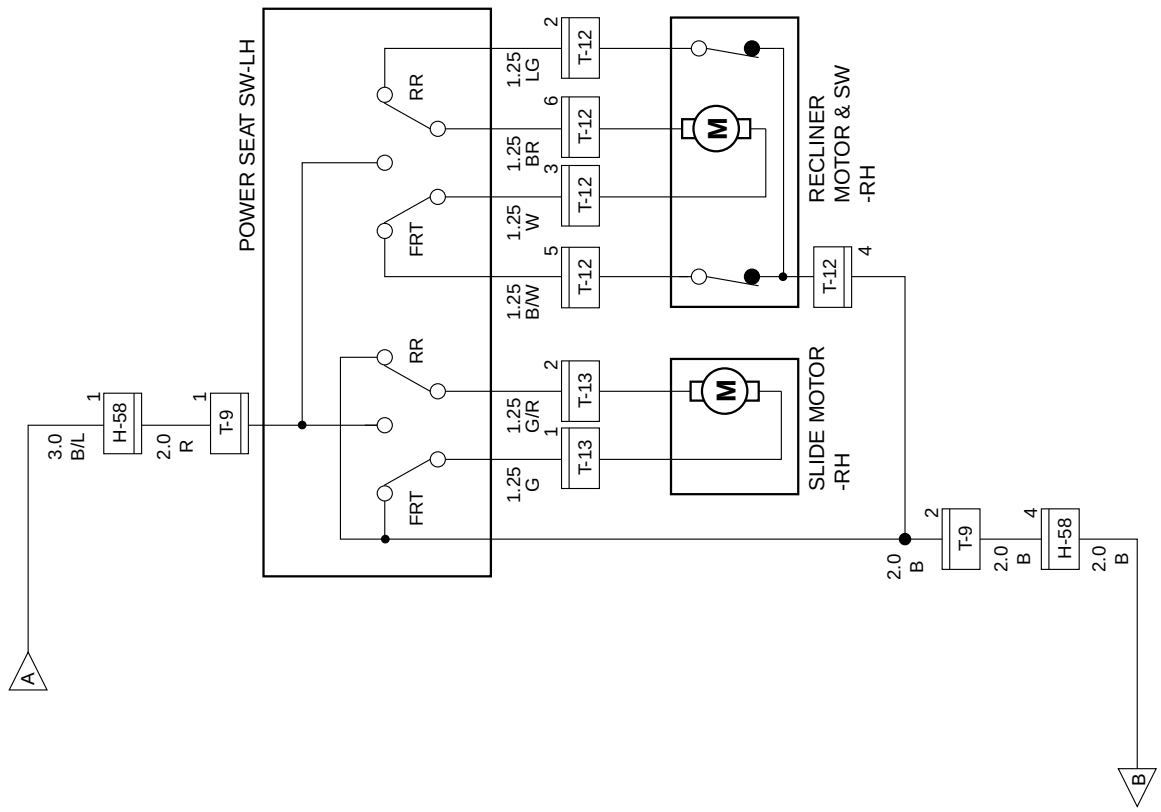

D08RW641

Parts Location (RHD)

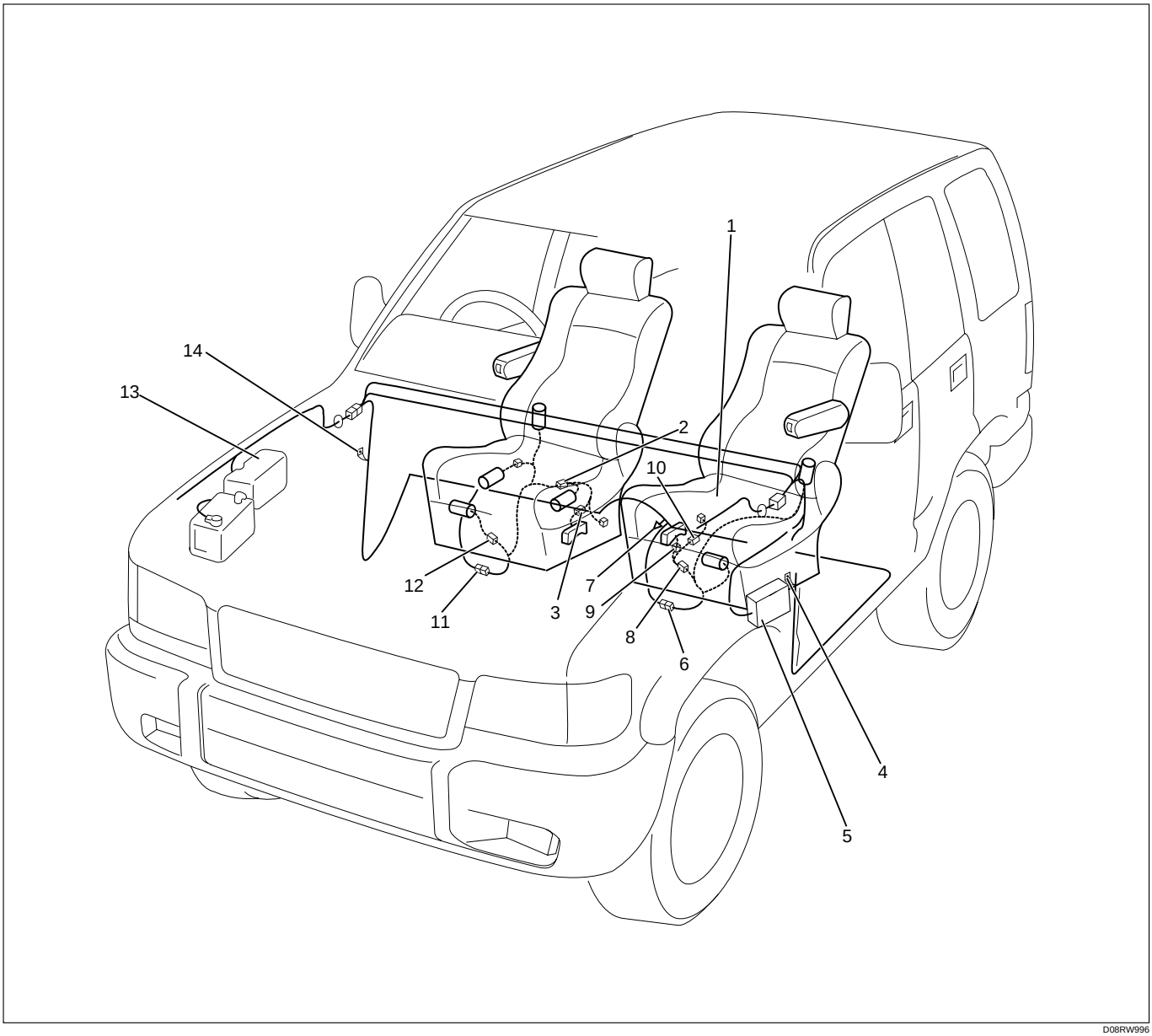

D08RW996

Legend

(1) T-6
(2) T-4
(3) T-1
(4) B-2
(5) Fuse Box
(6) H-58
(7) B-26
(8) T-9
(9) T-13
(10) T-12
(11) H-57
(12) T-7
(13) Relay and Fuse Box
(14) B-18

Circuit Diagram (LHD)-1

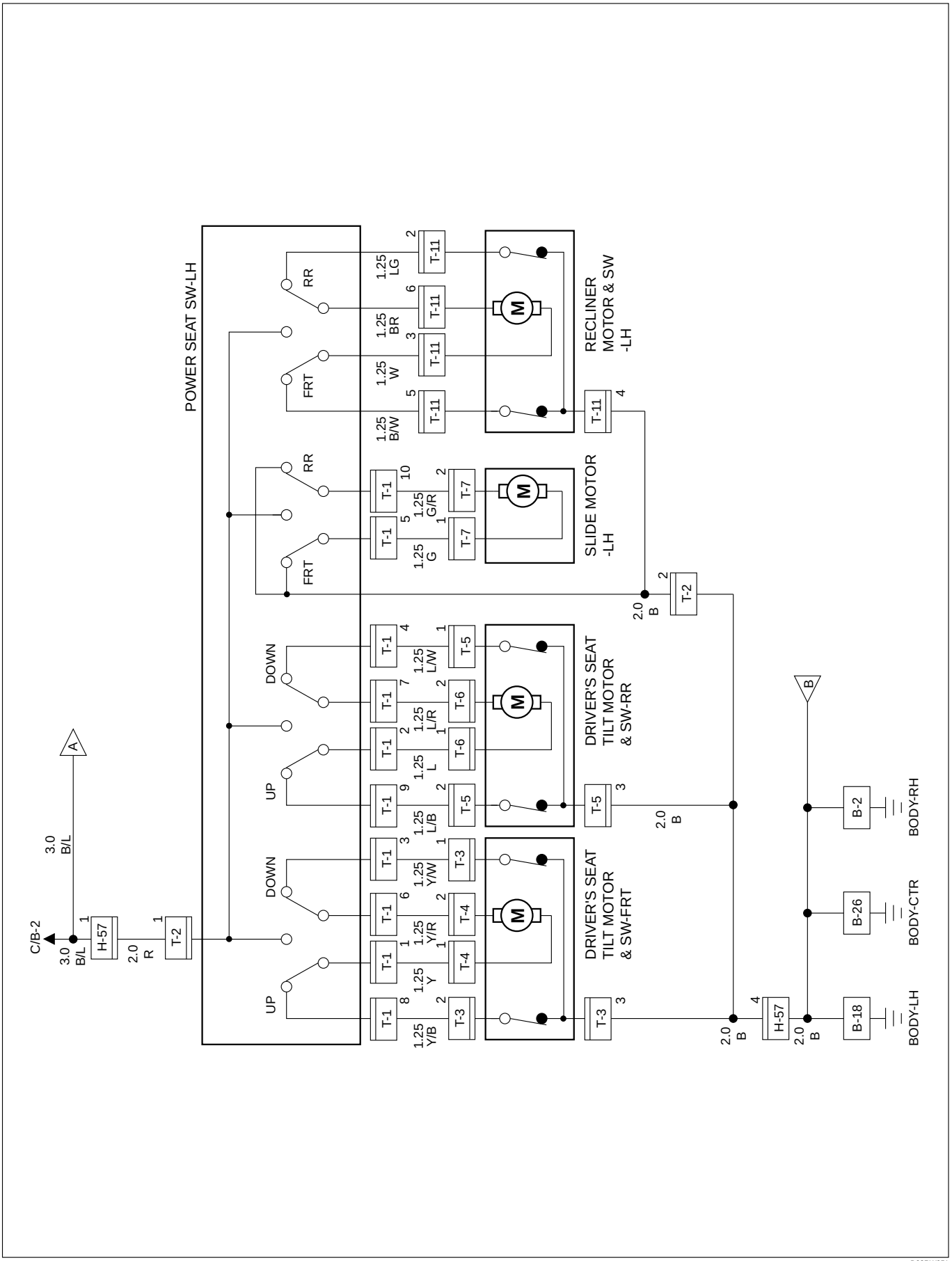

D08RW951

Circuit Diagram (LHD)-2

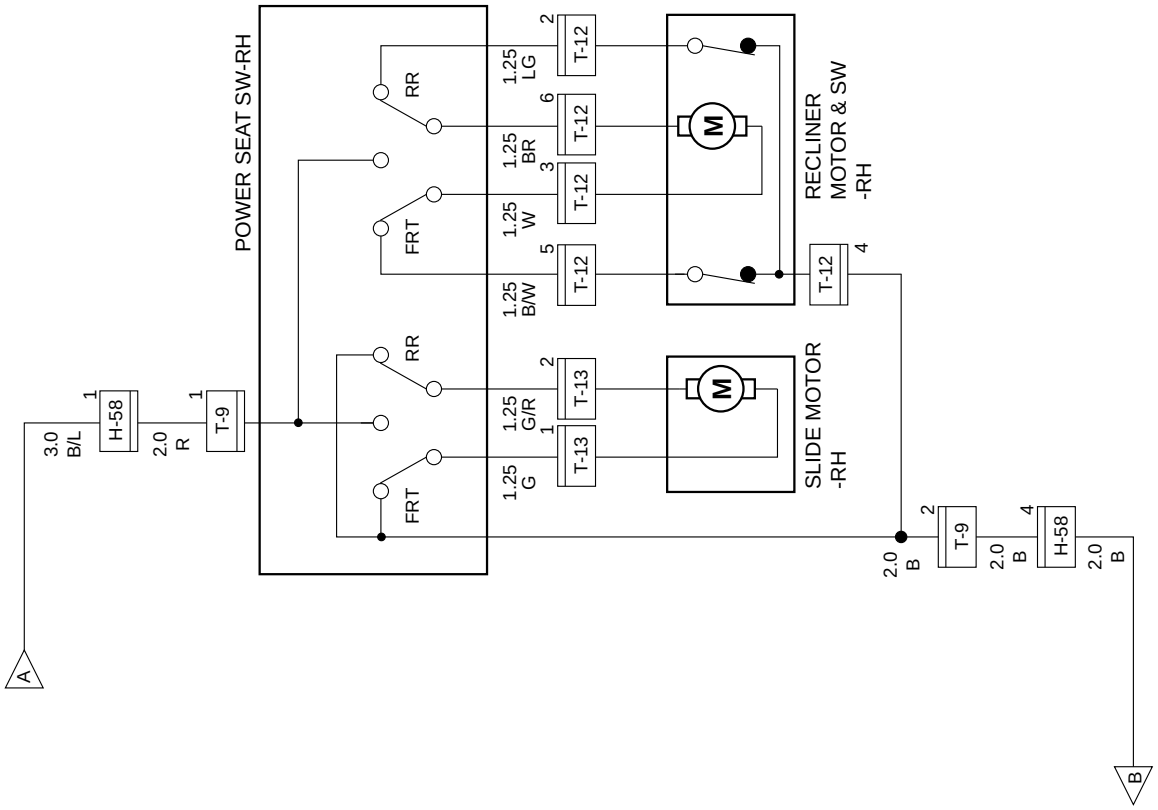

D08RW952

Parts Location (LHD)

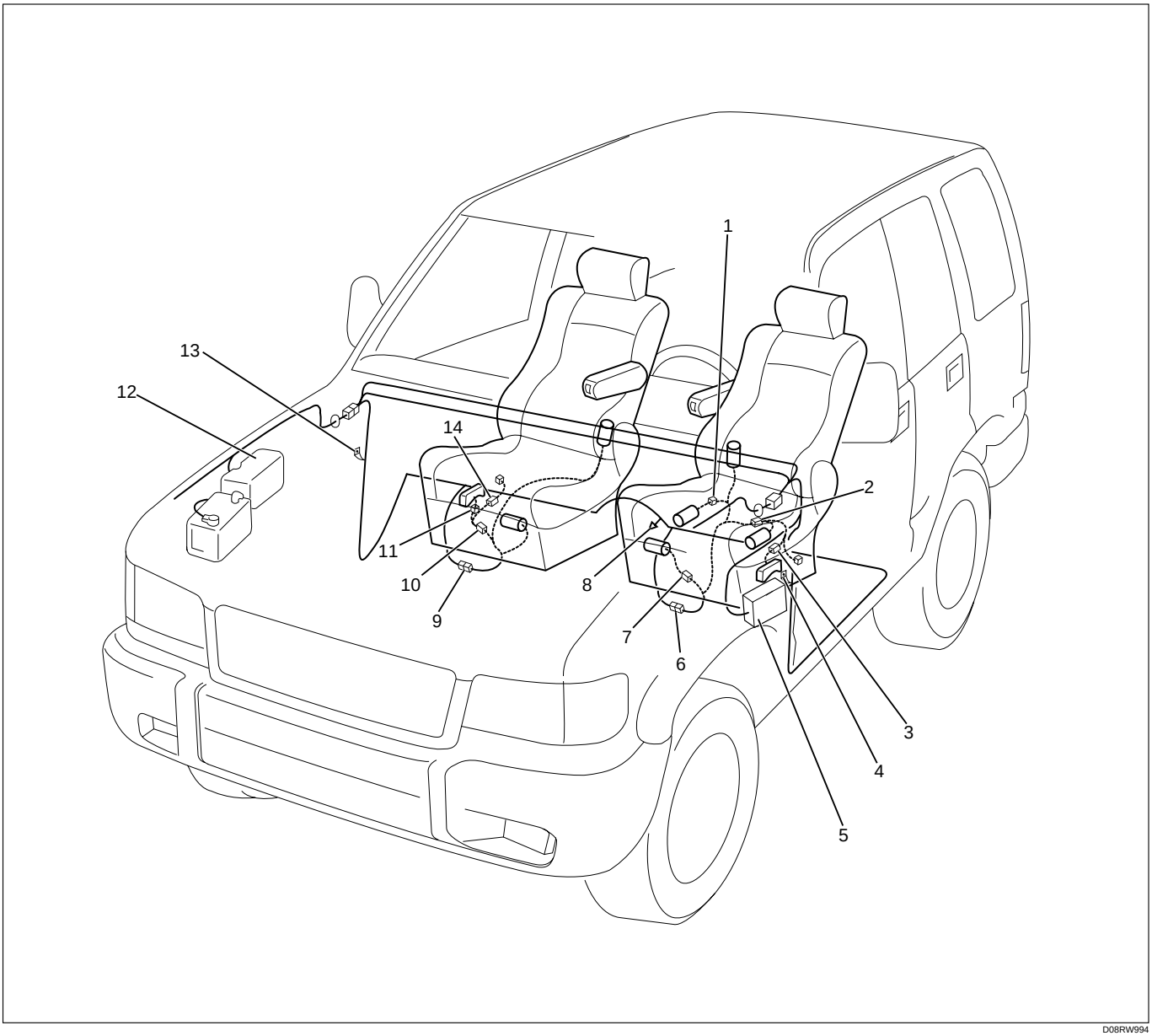

D08RW994

Legend

(1) T-6
(2) T-4
(3) T-1
(4) B-18
(5) Fuse Box
(6) H-57
(7) T-7
(8) B-26
(9) H-58
(10) T-9
(11) T-13
(12) Relay and Fuse Box
(13) B-2
(14) T-12

Diagnosis

Quick Chart for Check Points

Trouble mode \ Check point		Circuit breaker (30A)	Tilt & slide SW			Tilt & slide motor			Reclining SW	Reclining motor	Cable harness
			FRT tilt	RR tilt	Slide	FRT tilt	RR tilt	Slide			
Driver seat	1. Power seat does not operate at any direction	○									○
	2. Front tilt mechanism does not operate		○			○					○
	3. Rear tilt mechanism does not operate			○			○				○
	4. Sliding mechanism does not operate				○			○			○
	5. Reclining mechanism does not operate								○	○	○
Passenger seat	1. Power seat does not operate at any direction	○									○
	2. Sliding mechanism does not operate				○			○			○
	3. Reclining mechanism does not operate								○	○	○

Driver Seat

1. Power Seat Does Not Operate At Any Direction

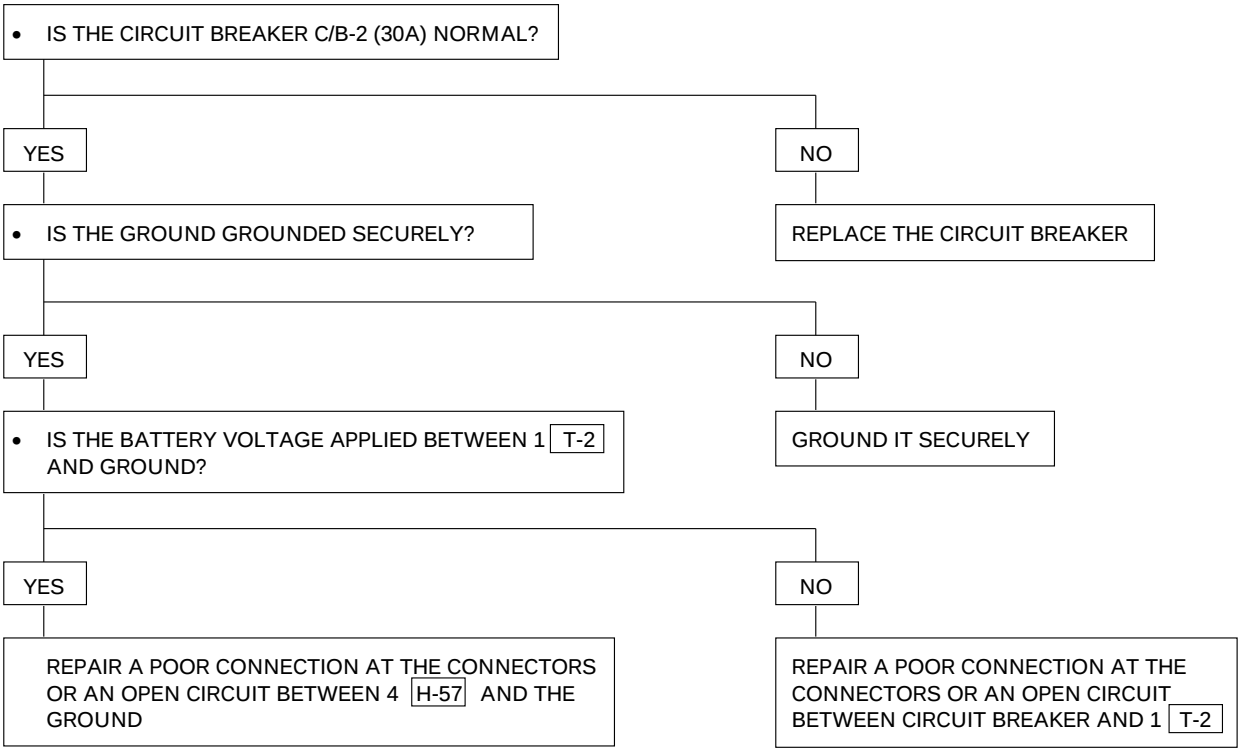

2. Front Tilt Mechanism Does Not Operate

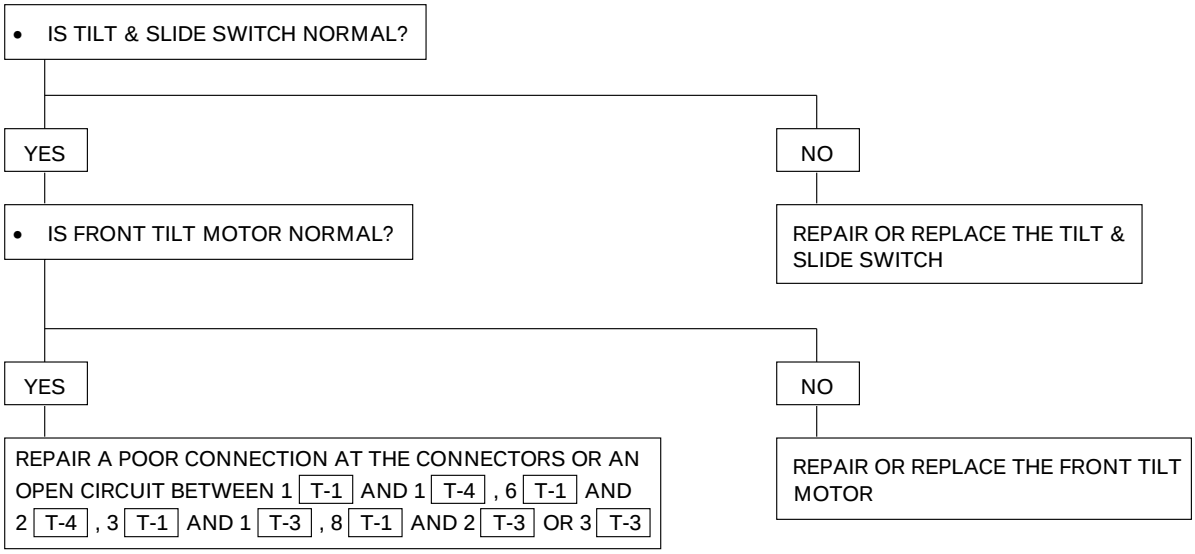

3. Rear Tilt Mechanism Does Not Operate

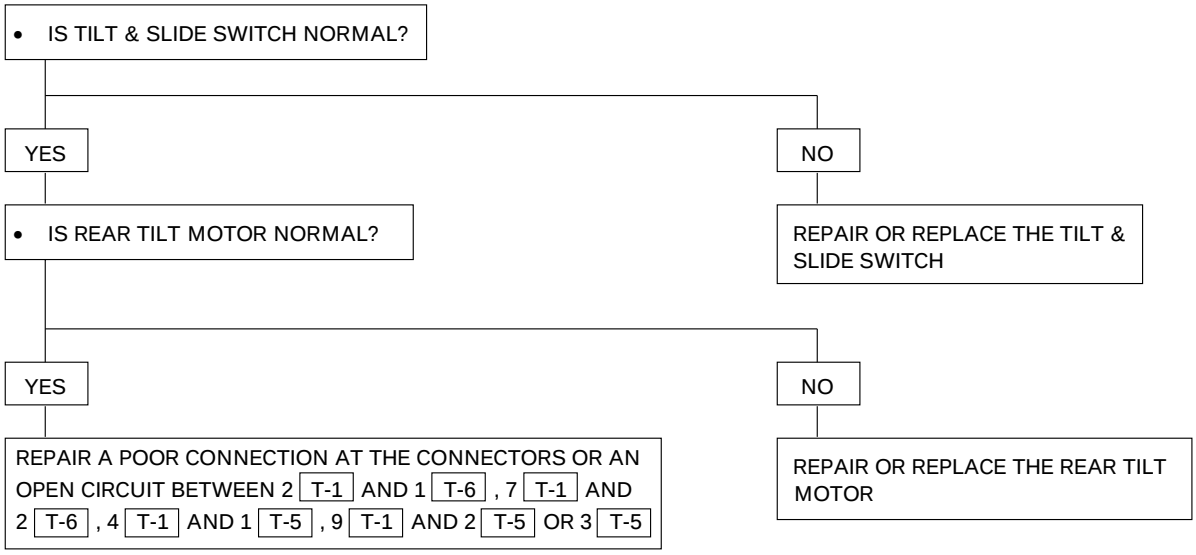

4. Sliding Mechanism Does Not Operate

- IS TILT & SLIDE SWITCH NORMAL?
  - NO → REPAIR OR REPLACE THE TILT & SLIDE SWITCH
  - YES → IS SLIDE MOTOR NORMAL?
    - NO → REPAIR OR REPLACE THE SLIDE MOTOR
    - YES → REPAIR A POOR CONNECTION AT THE CONNECTORS OR AN OPEN CIRCUIT BETWEEN 5 [T-1] AND 1 [T-7], 10 [T-1] AND 2 [T-7] OR 2 [T-2]

5. Reclining Mechanism Does Not Operate

- IS RECLINER SWITCH NORMAL?
  - NO → REPAIR OR REPLACE THE RECLINER SWITCH
  - YES → IS RECLINER MOTOR NORMAL?
    - NO → REPAIR OR REPLACE THE RECLINER MOTOR
    - YES → REPAIR A POOR CONNECTION AT THE CONNECTORS 3 [T-11], 6 [T-11], 2 [T-11], 5 [T-11] AND 4 [T-11]

Passenger Seat

1. Power Seat Does Not Operate At Any Direction

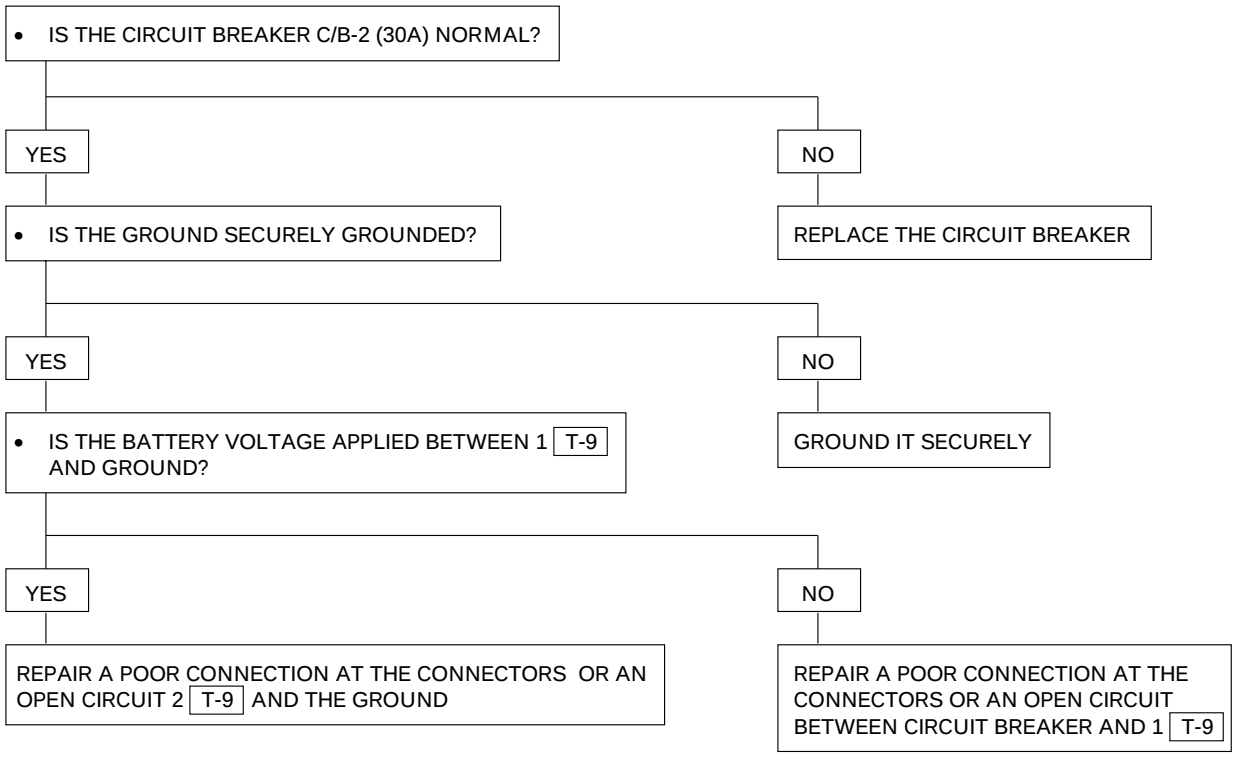

2. Sliding Mechanism Does Not Operate

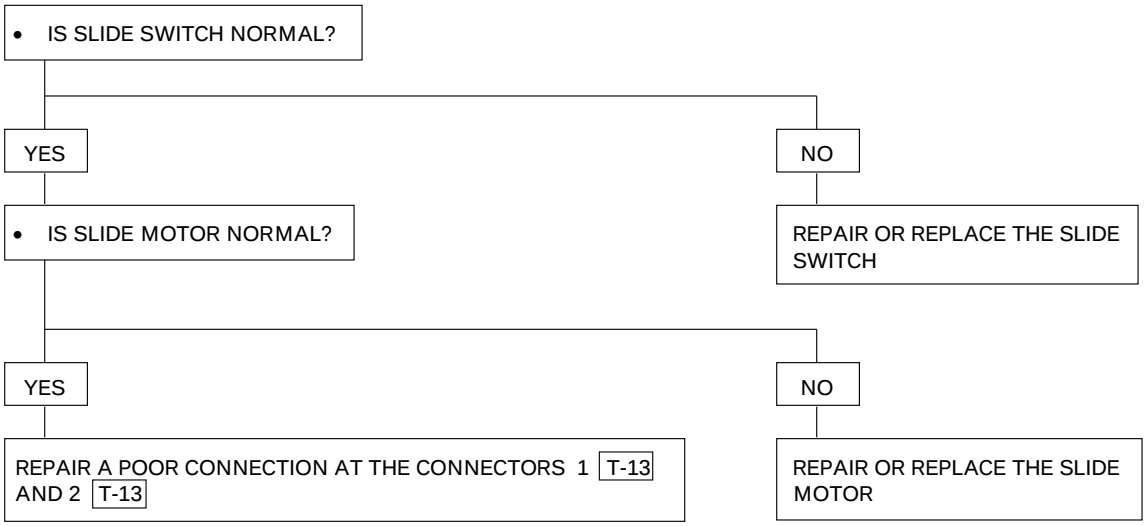

3. Reclining Mechanism Does Not Operate

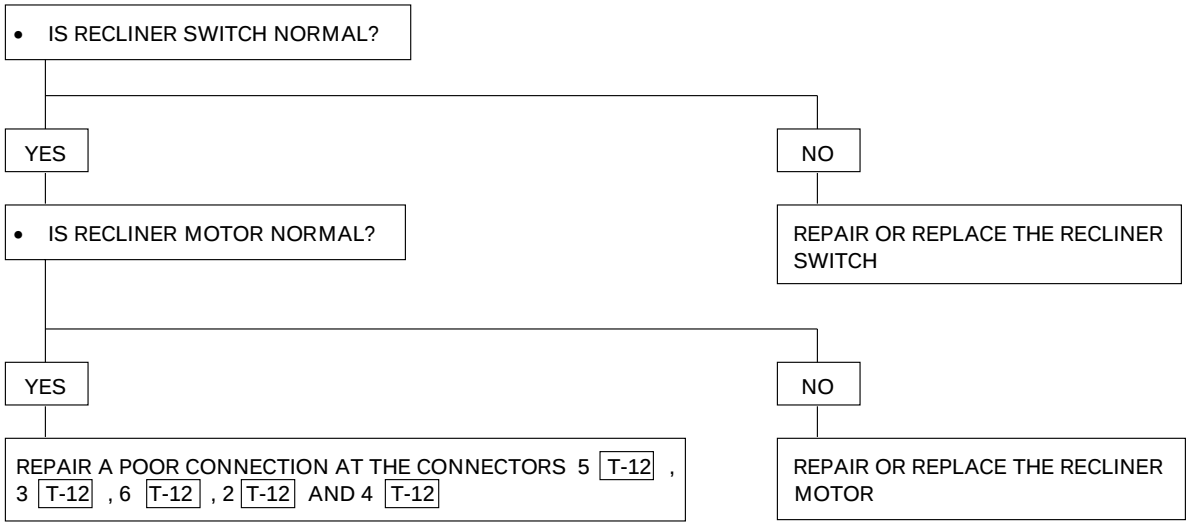

Shift On The Fly System

Circuit Diagram (RHD 6V*1 Lever Type)-1

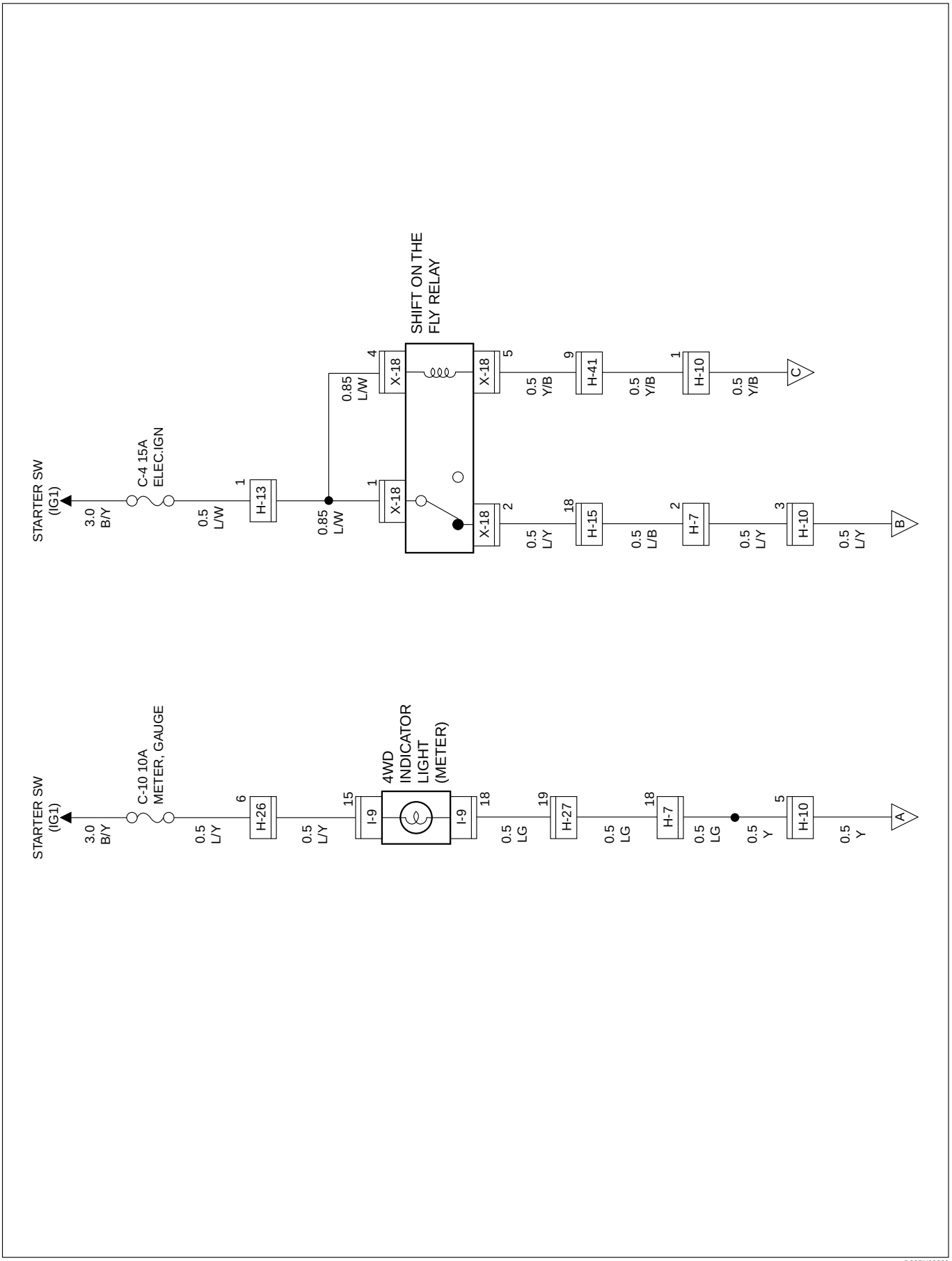

D08RY00236

Circuit Diagram (RHD 6V*1 Lever Type)-2

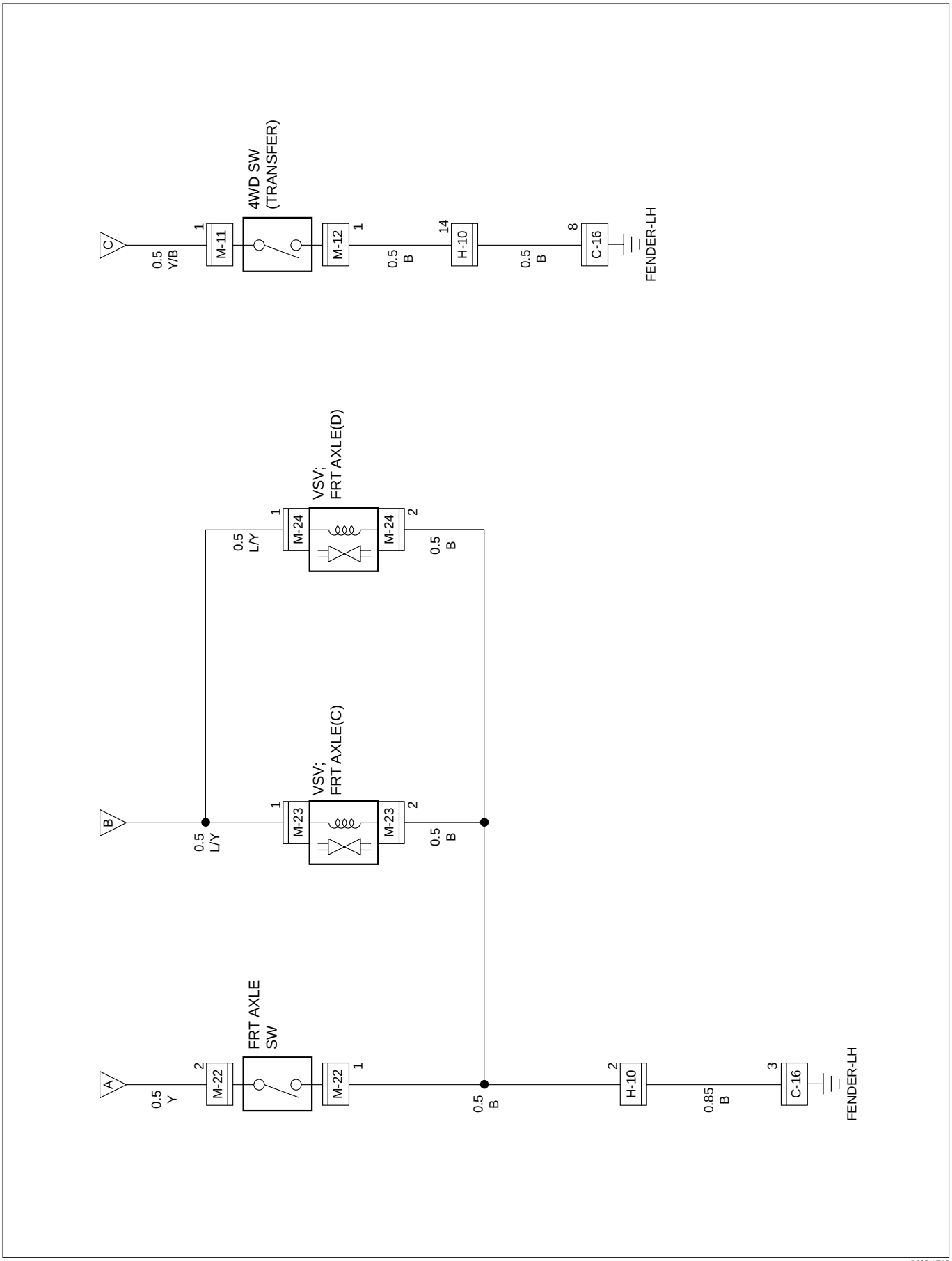

D08RW716

Parts Location (RHD 6V*1 Lever Type)

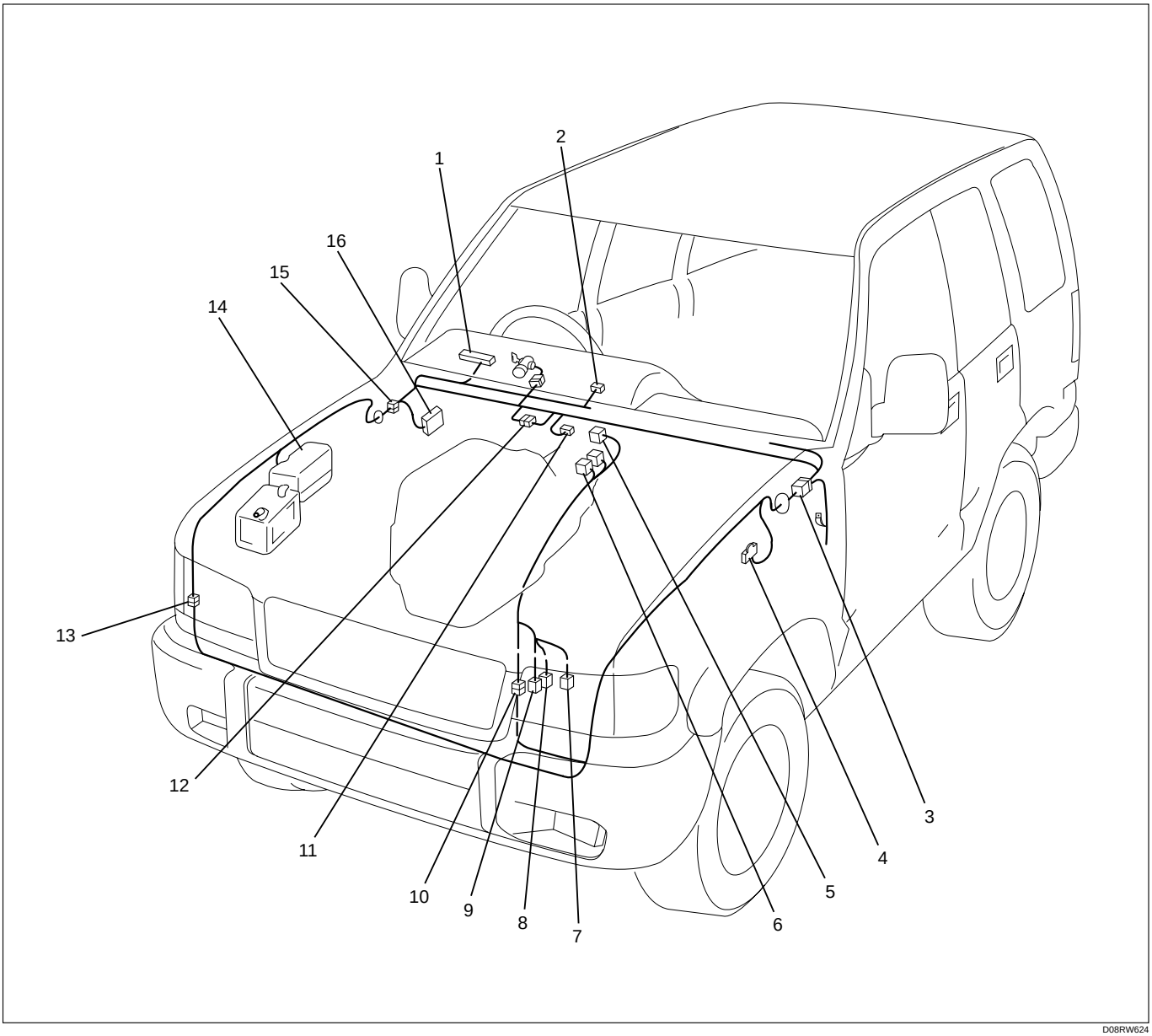

Legend

(1) I-9
(2) I-12
(3) H-7, H-9
(4) C-16
(5) M-26
(6) M-11, M-12
(7) M-22
(8) M-23
(9) M-24
(10) H-10
(11) C-94
(12) H-12
(13) H-41
(14) Relay and Fuse Box
(15) H-15, H-25
(16) Fuse Box

Circuit Diagram (RHD 4JG2 Lever Type)-1

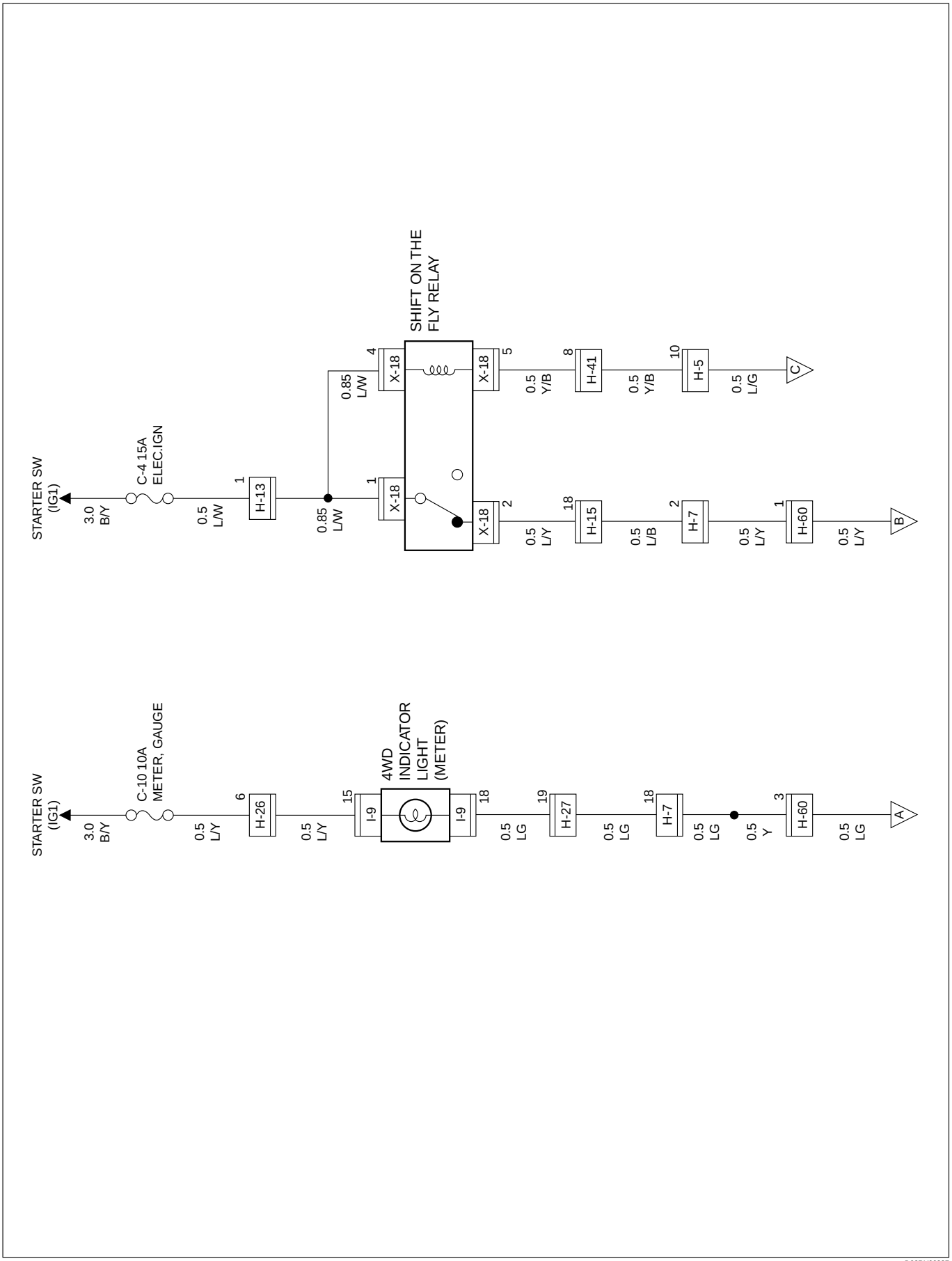

D08RY00237

Circuit Diagram (RHD 4JG2 Lever Type)-2

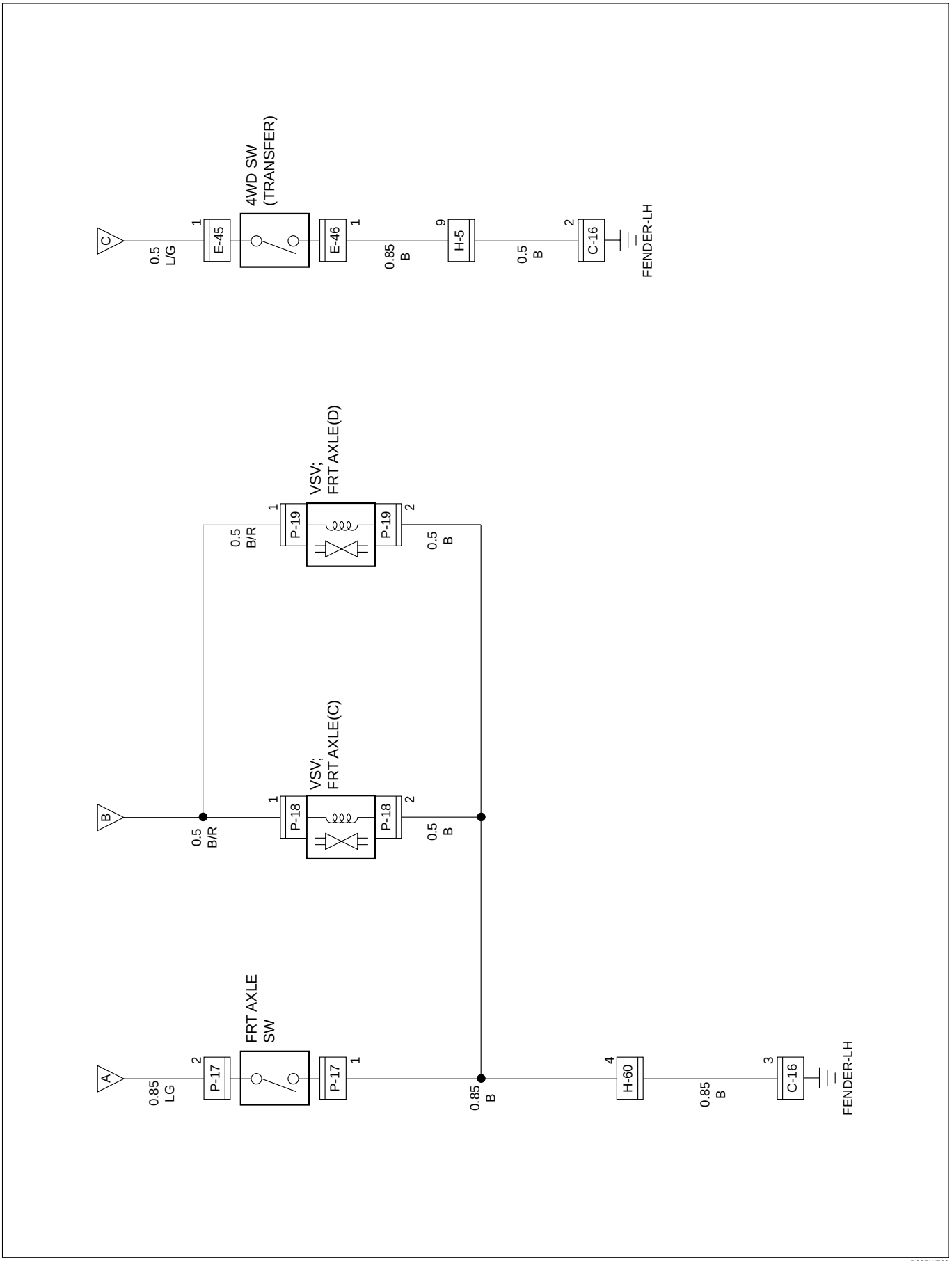

D08RW720

Parts Location (RHD 4JG2 Lever Type)

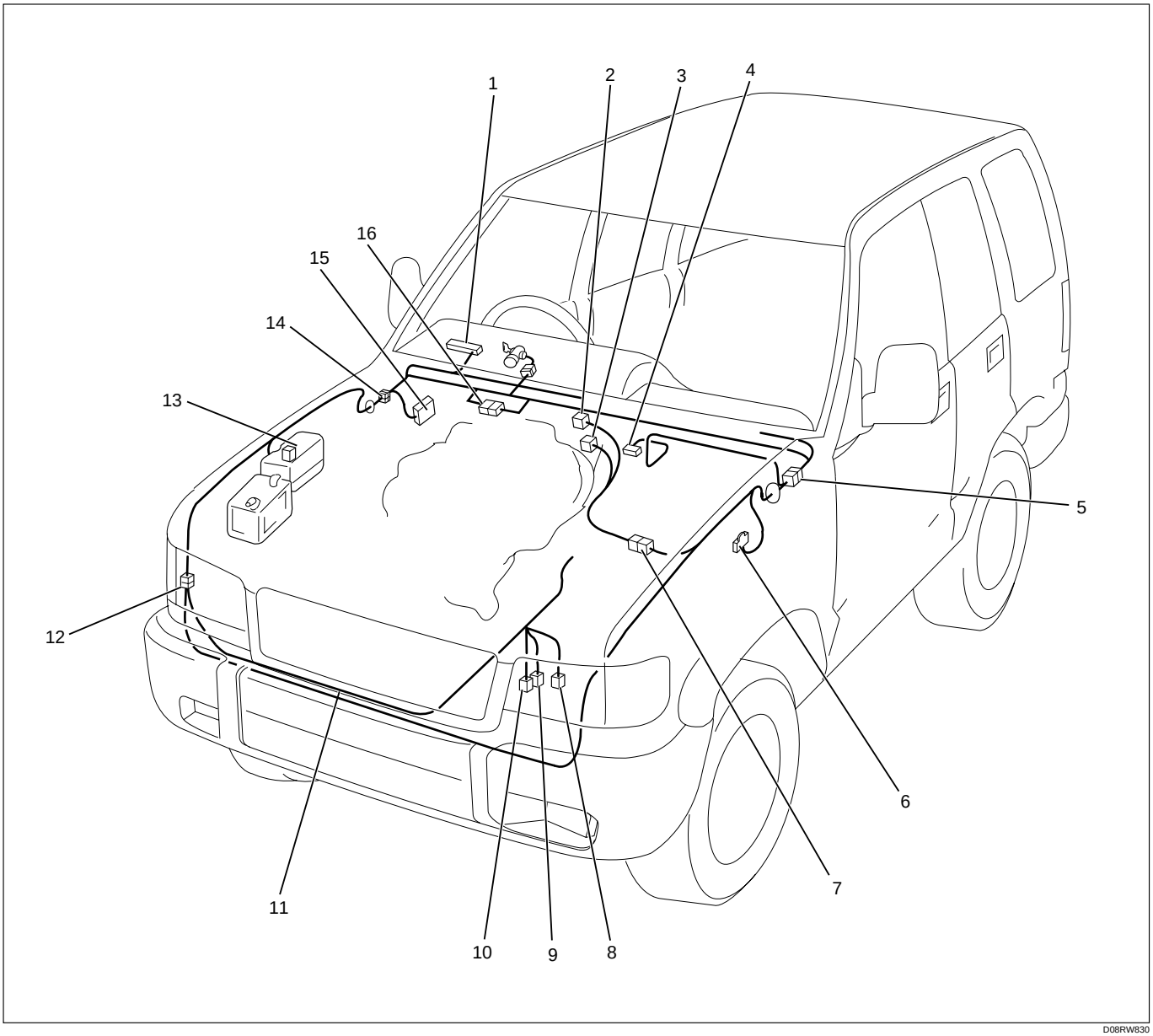

D08RW830

Legend

(1) I-9
(2) E-45
(3) E-46
(4) H-7
(5) C-16
(6) H-5
(7) P-17
(8) P-18
(9) P-19
(10) Battery (+) Cable
(11) H-41, H-60
(12) Relay and Fuse Box (X-18)
(13) H-13, H-15, H-26, H-27
(14) Fuse Box

Circuit Diagram (LHD 6VD1 LeverType)-1

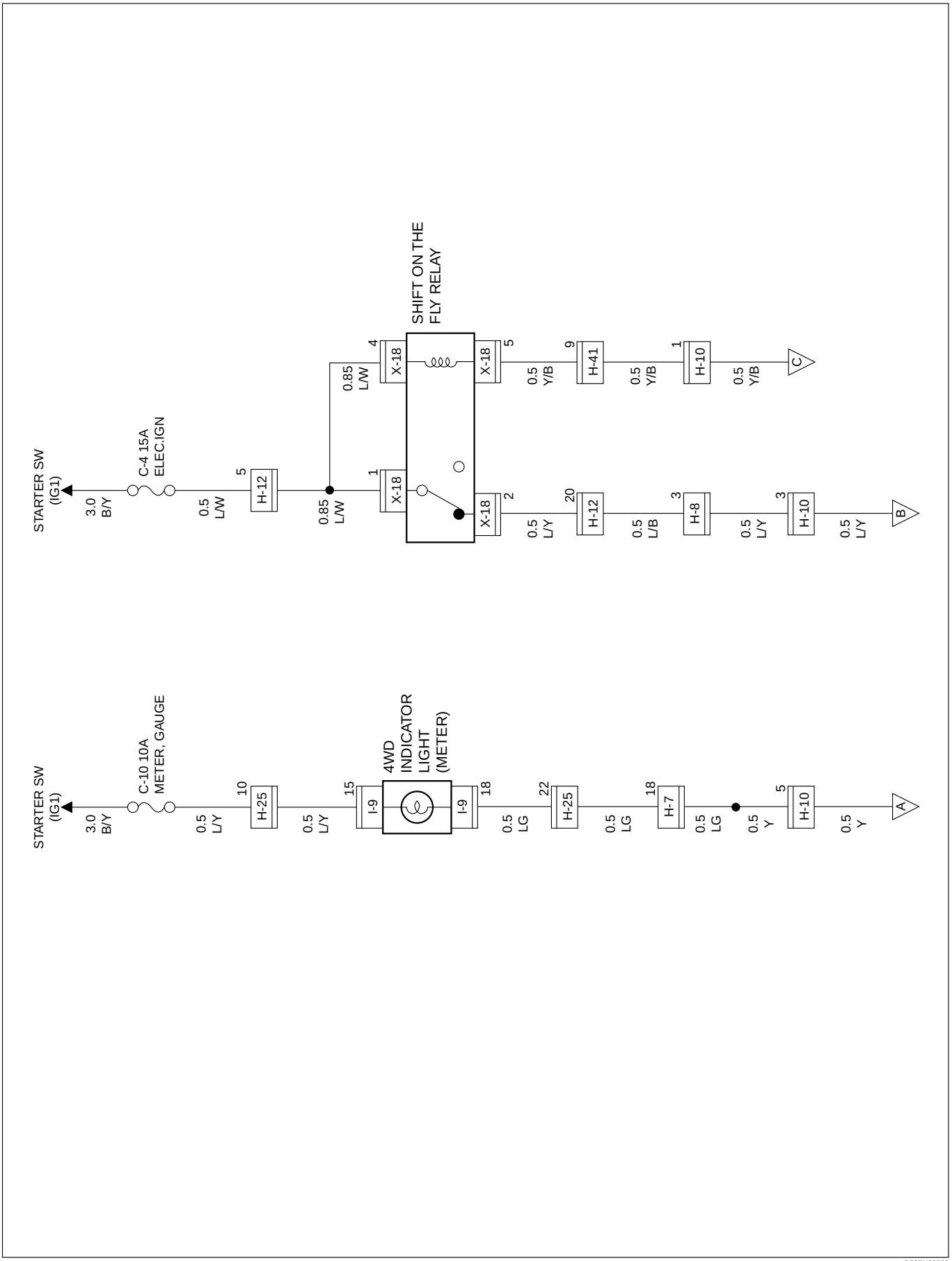

D08RY00238

Circuit Diagram (LHD 6VD1 Lever Type)-2

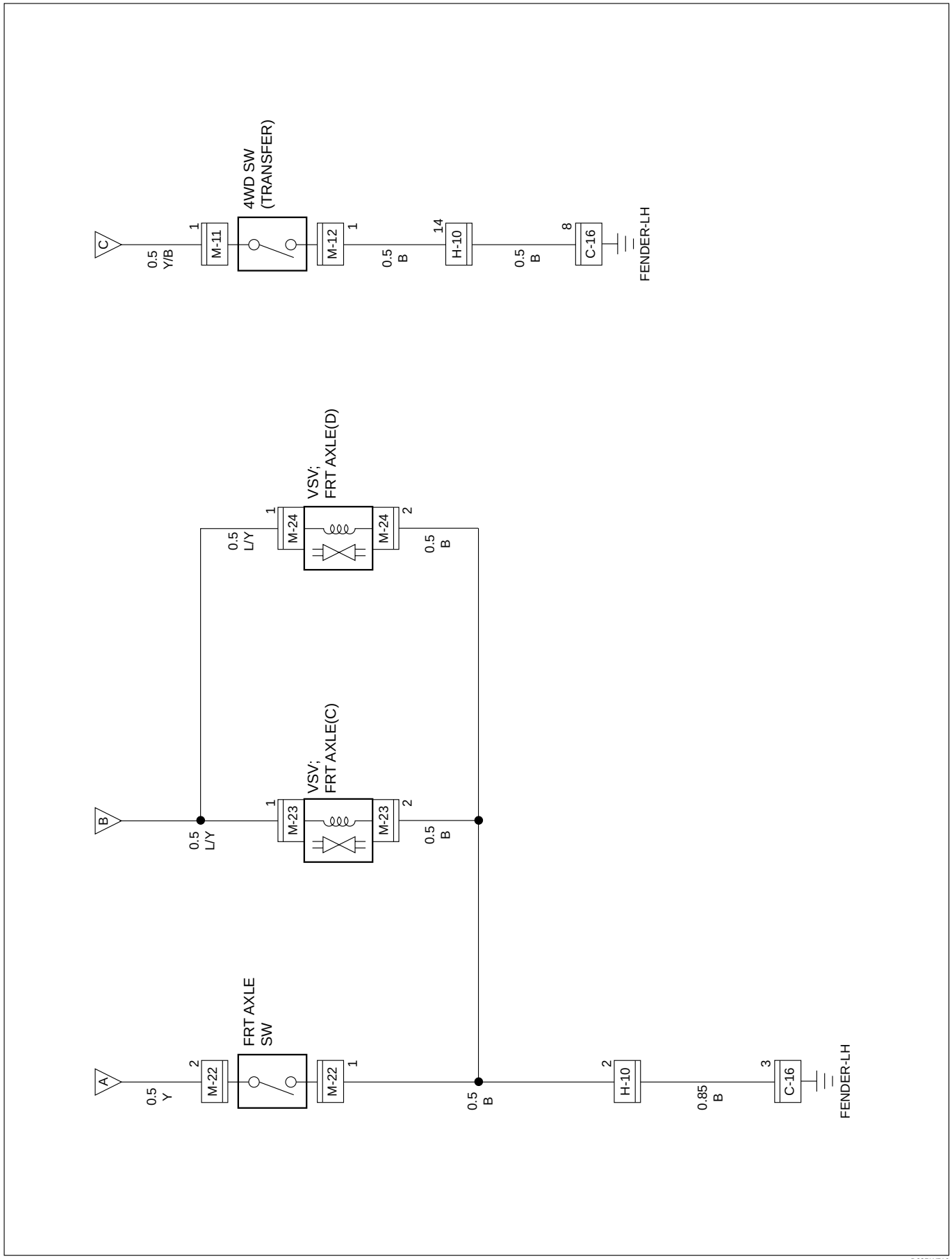

D08RW716

Parts Location (LHD 6VD1 Lever Type)

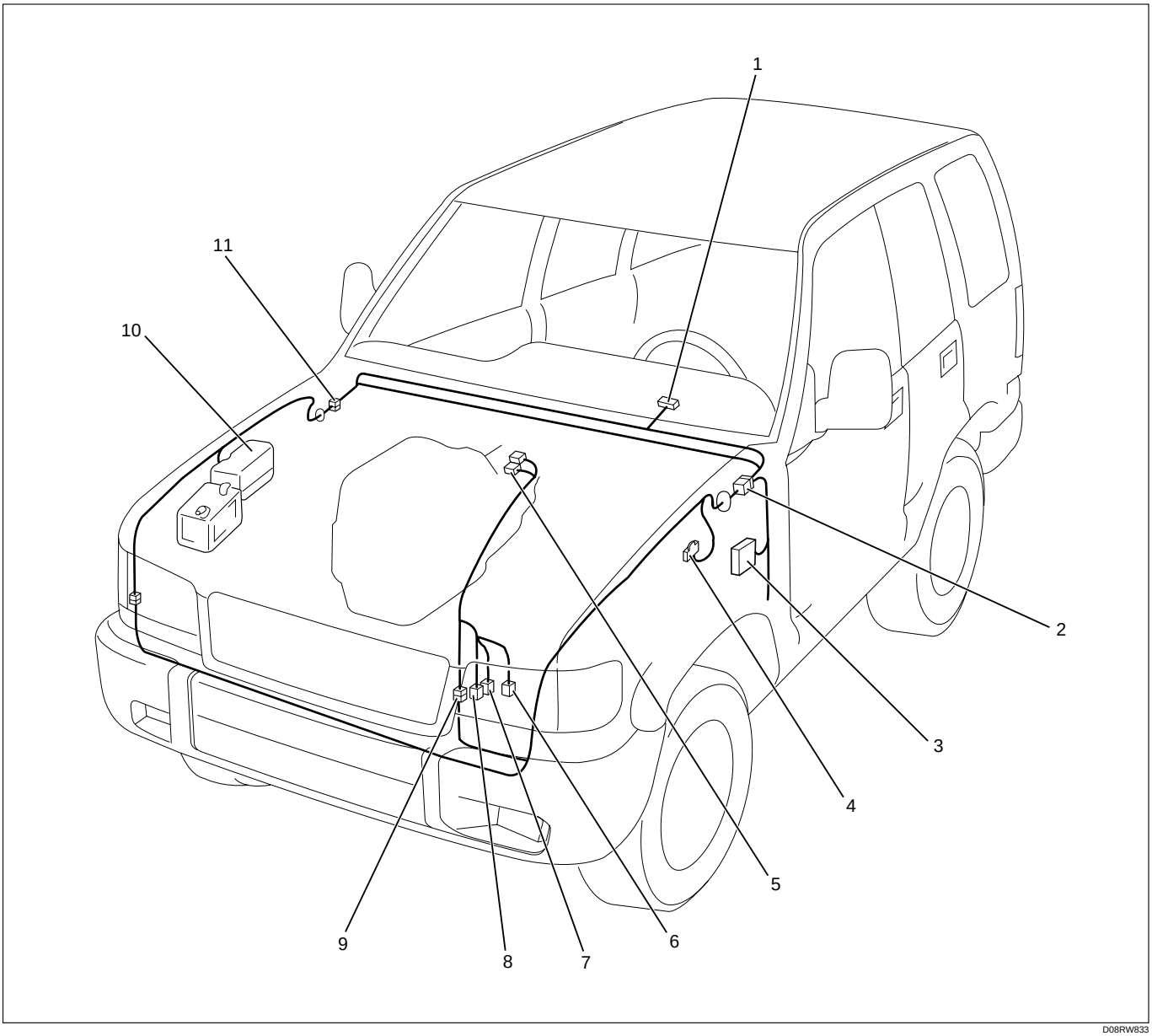

D08RW833

Legend

(1) I-9
(2) H-7, H-8, H-25
(3) Fuse Box
(4) C-16
(5) M-11, M-12
(6) M-22
(7) M-23
(8) M-24
(9) H-10
(10) Relay and Fuse Box (X-18)
(11) H-12

Circuit Diagram (LHD 4JG2 Lever Type)-1

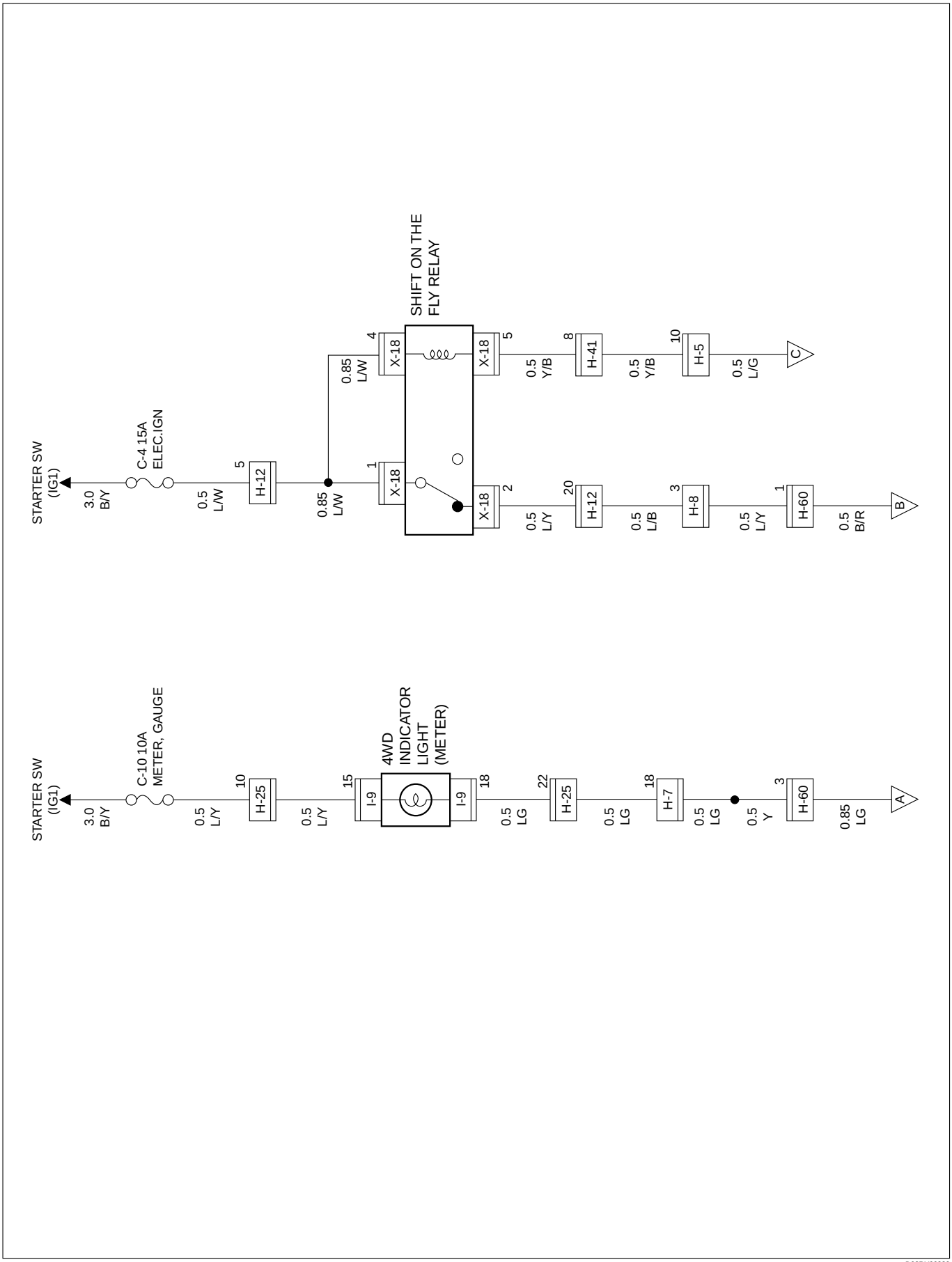

D08RY00239

Circuit Diagram (LHD 4JG2 Lever Type)-2

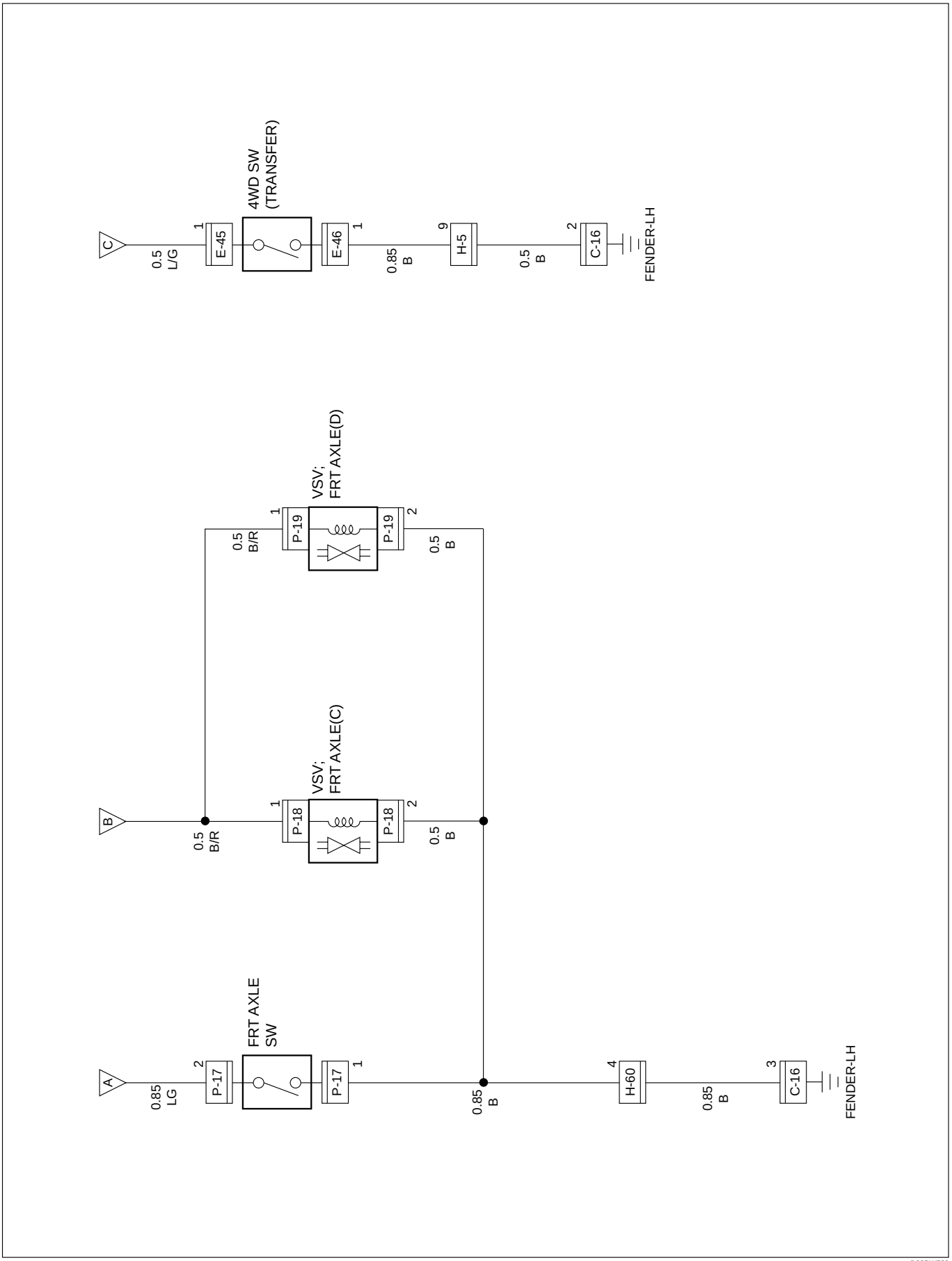

D08RW720

Parts Location (LHD 4JG2 Lever Type)

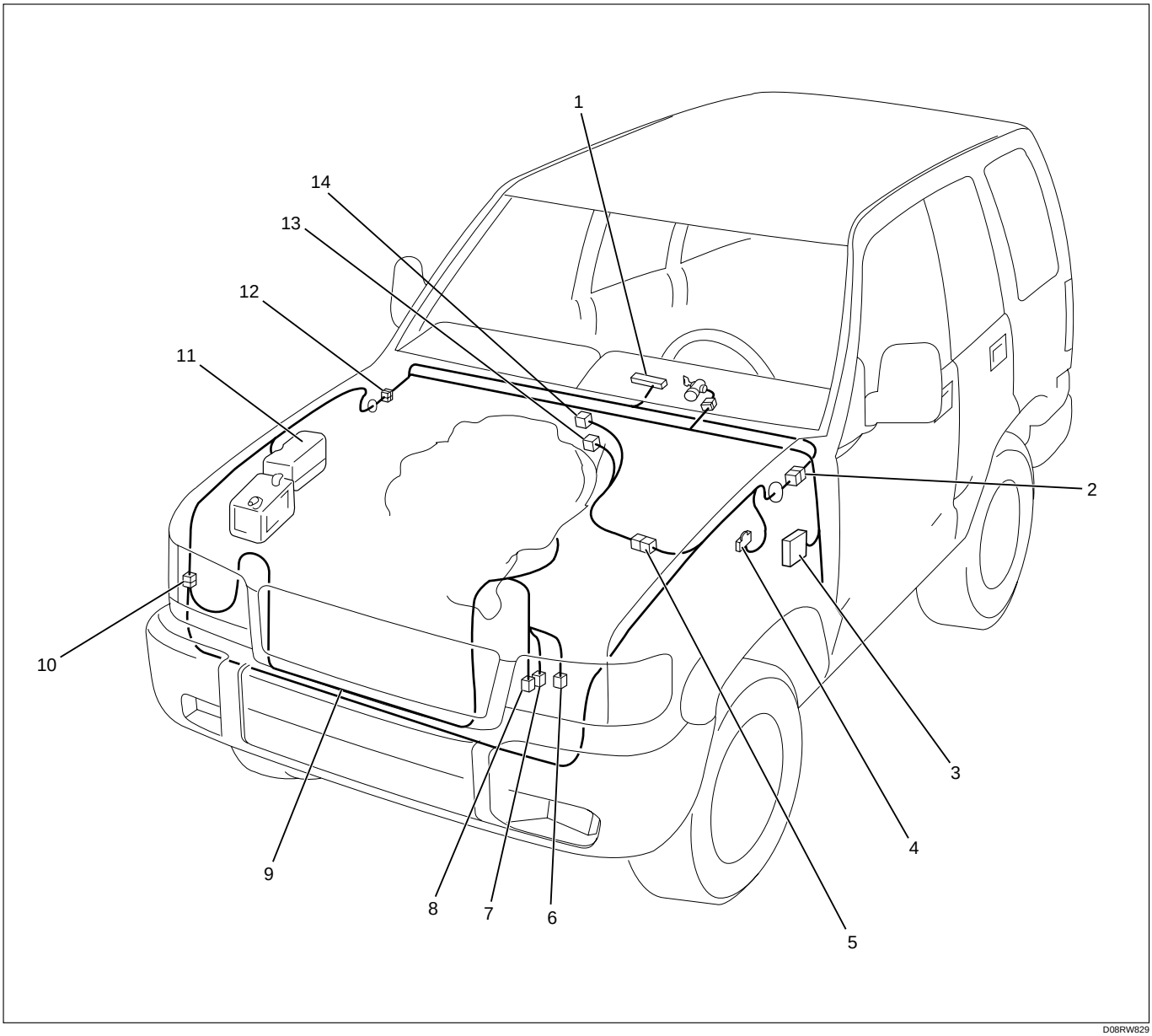

D08RW829

Legend

(1) I-9
(2) H-7, H-8, H-25
(3) Fuse Box
(4) C-16
(5) H-5
(6) P-17
(7) P-18
(8) P-19
(9) Battery (+) Cable
(10) H-42, H-60
(11) Relay and Fuse Box (X-18)
(12) H-12
(13) E-46
(14) E-45

Circuit Diagram (RHD 6V*1 Push Button Type)-1

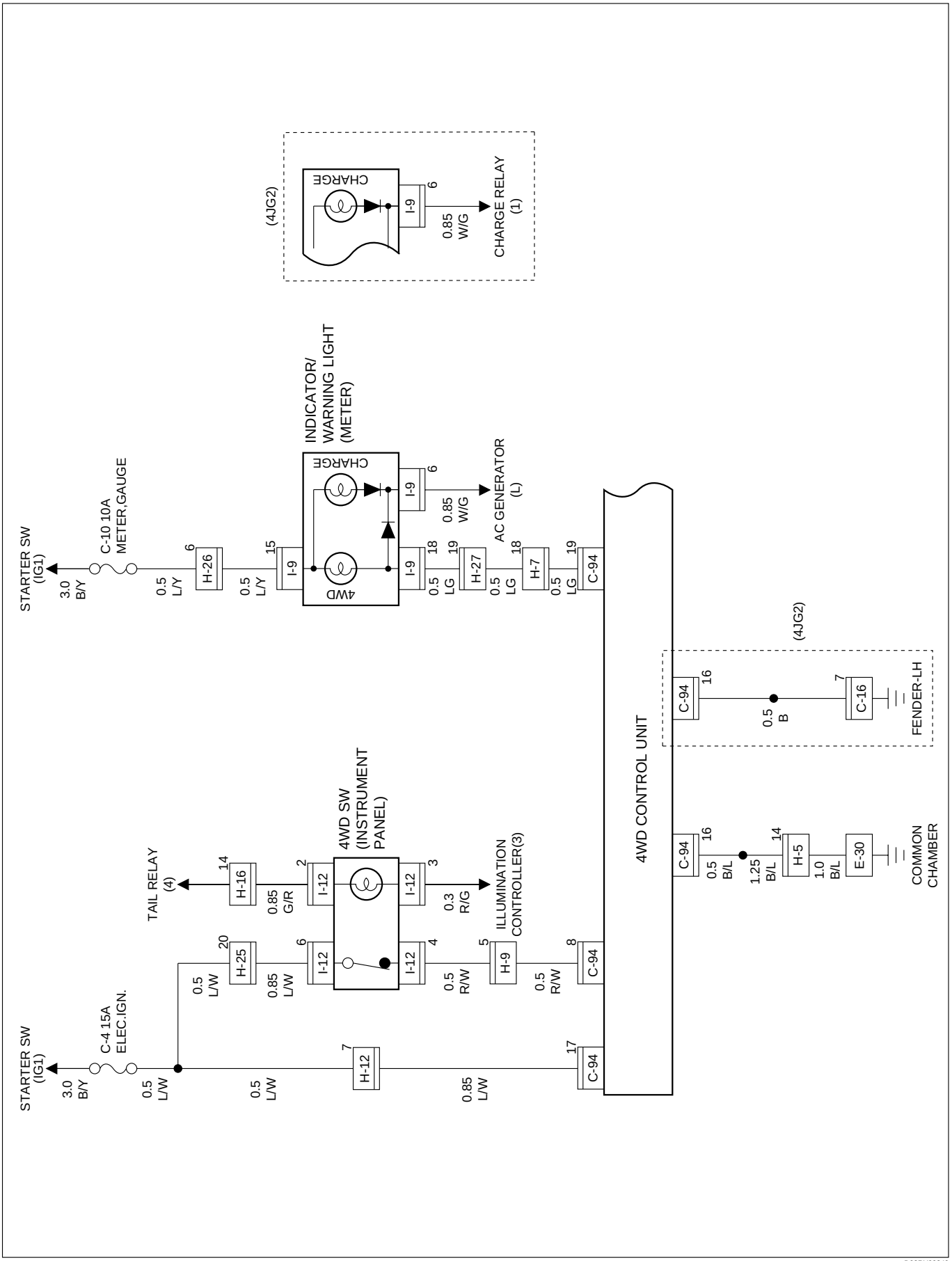

D08RY00240

Circuit Diagram (RHD 6V*1 Push Button Type)-2

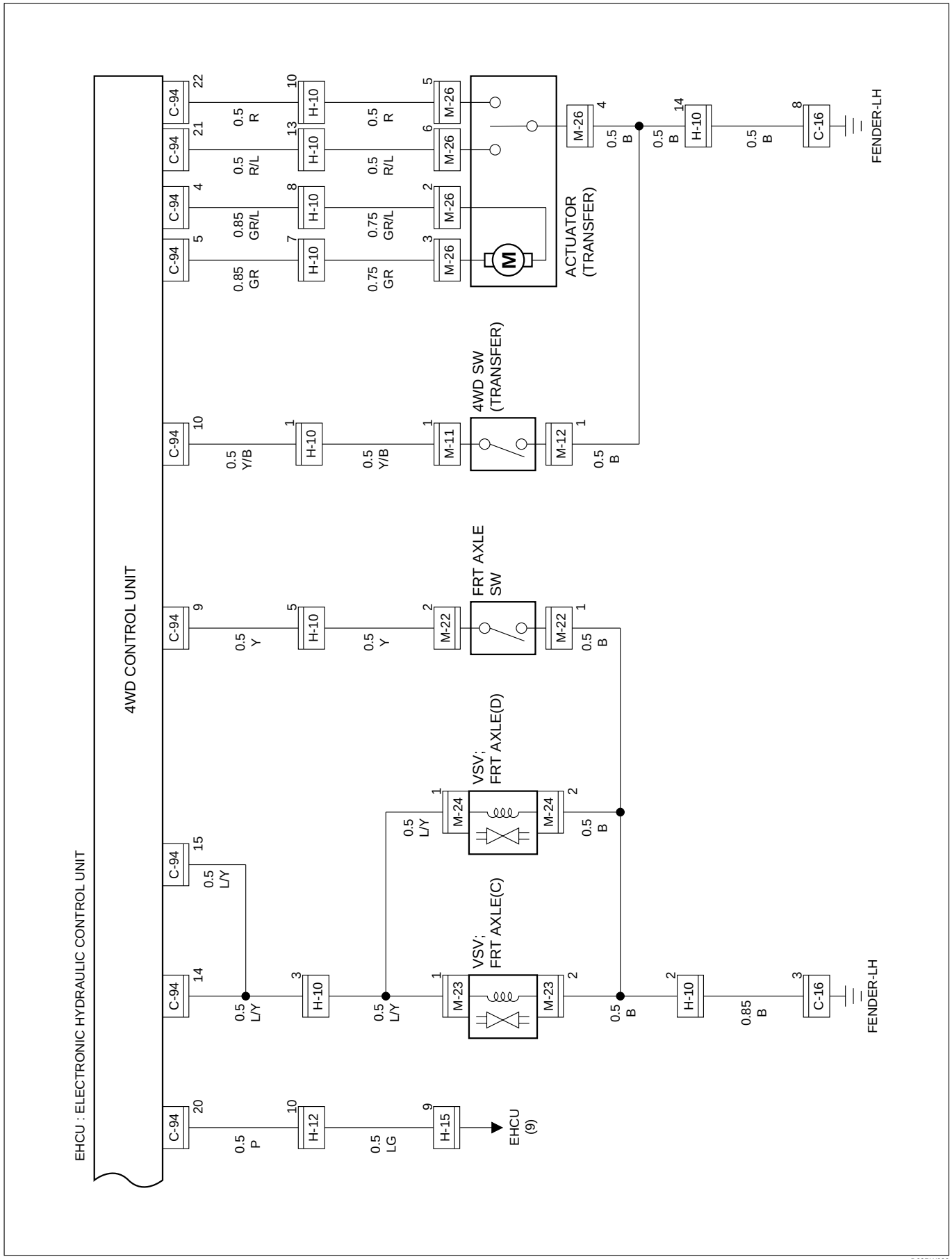

D08RW638

Parts Location (RHD 6V*1 Push Bitton Type)

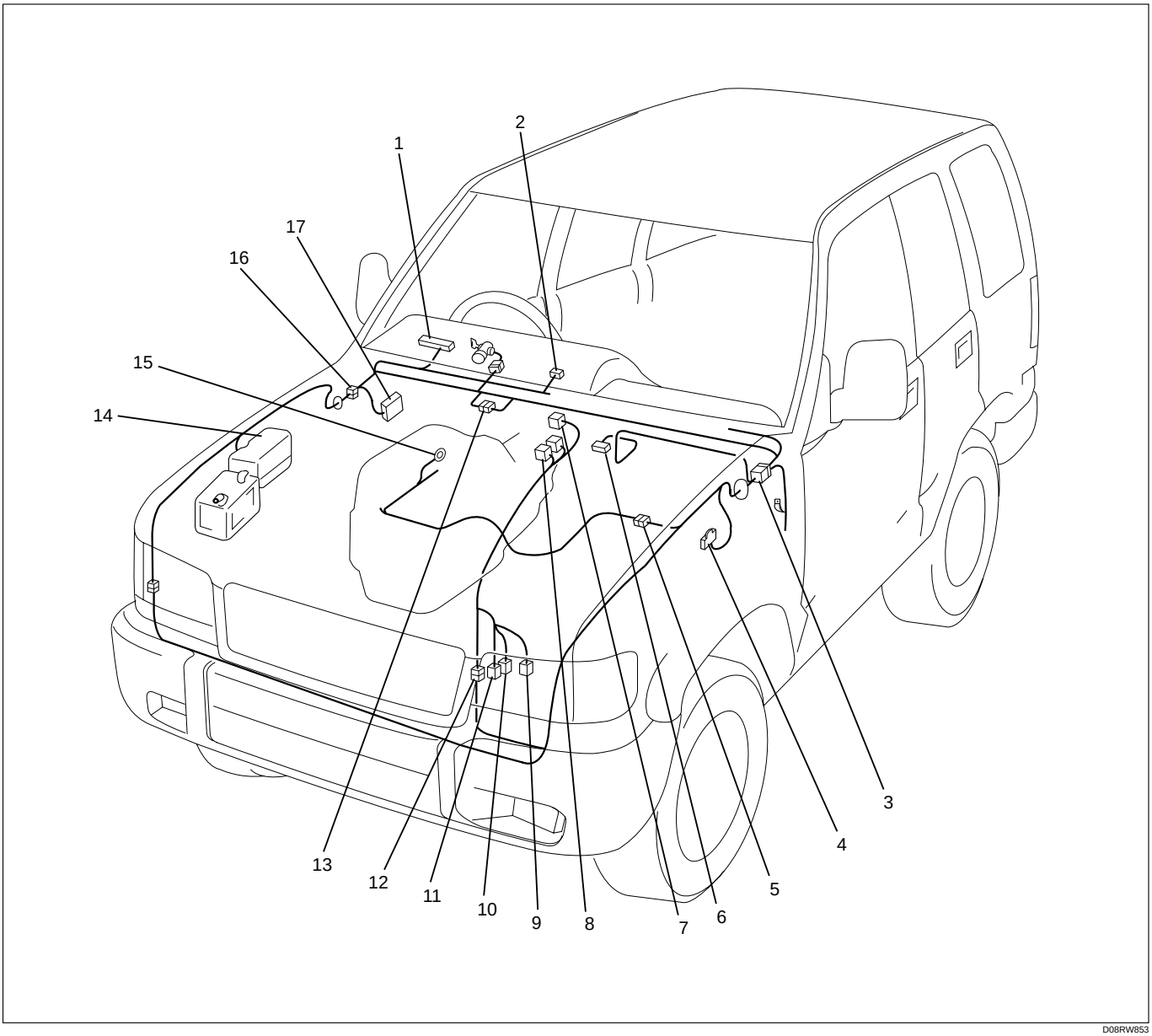

Legend

(1) I-9
(2) I-12
(3) I-12
(4) H-7, H-9
(5) C-16
(6) C-94
(7) M-26
(8) M-11, M-12
(9) M-22
(10) M-23
(11) M-24
(12) H-10
(13) H-12
(14) Relay and Fuse Box
(15) E-30
(16) H-15, H-16, H-25, H-26, H-27
(17) Fuse Box

Circuit Diagram (RHD 4JG2 Push Button Type)-1

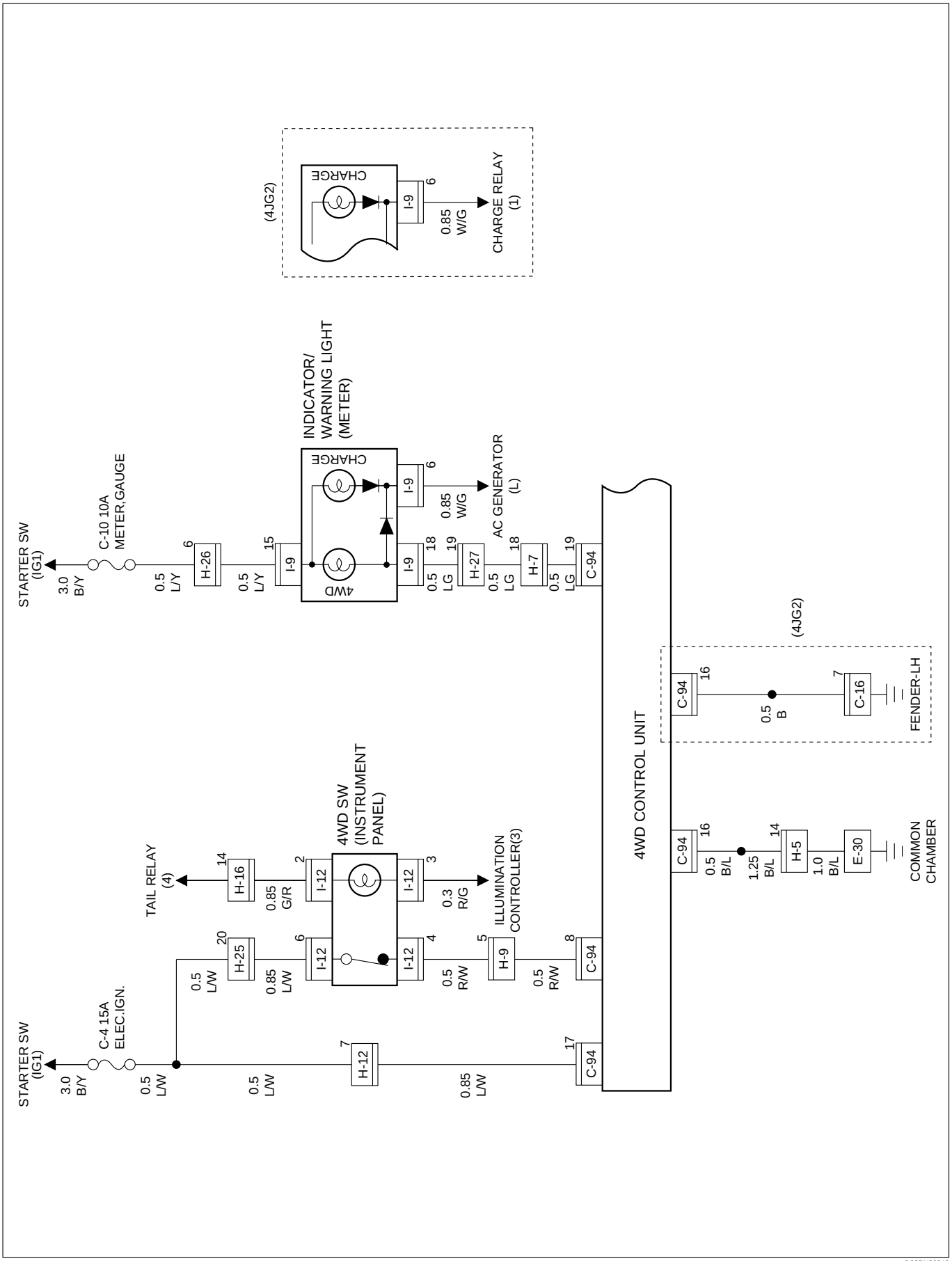

D08RY00240

Circuit Diagram (RHD 4JG2 Push Button Type)-2

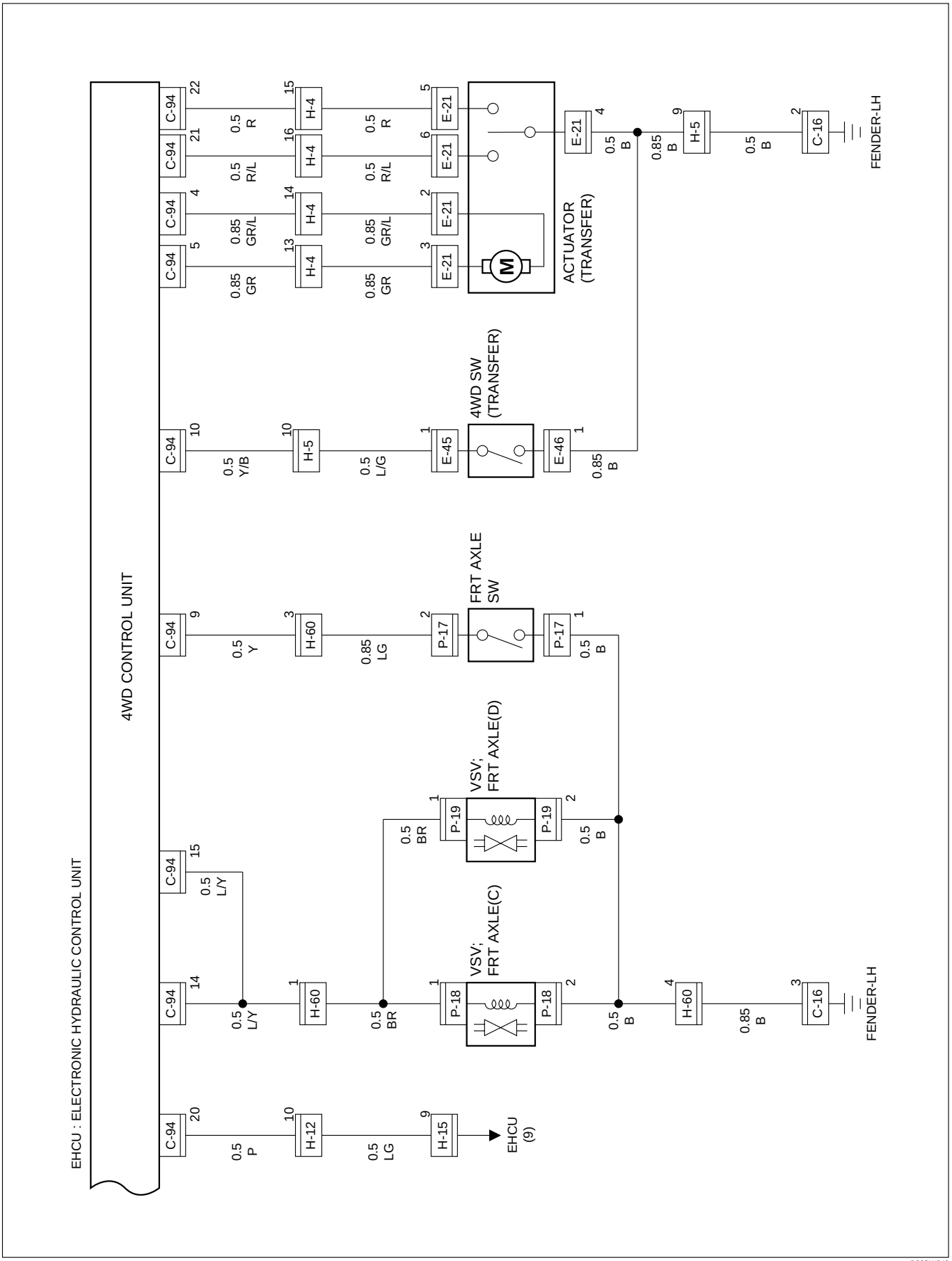

D08RW842

Parts Location (RHD 4JG2 Push Button Type)

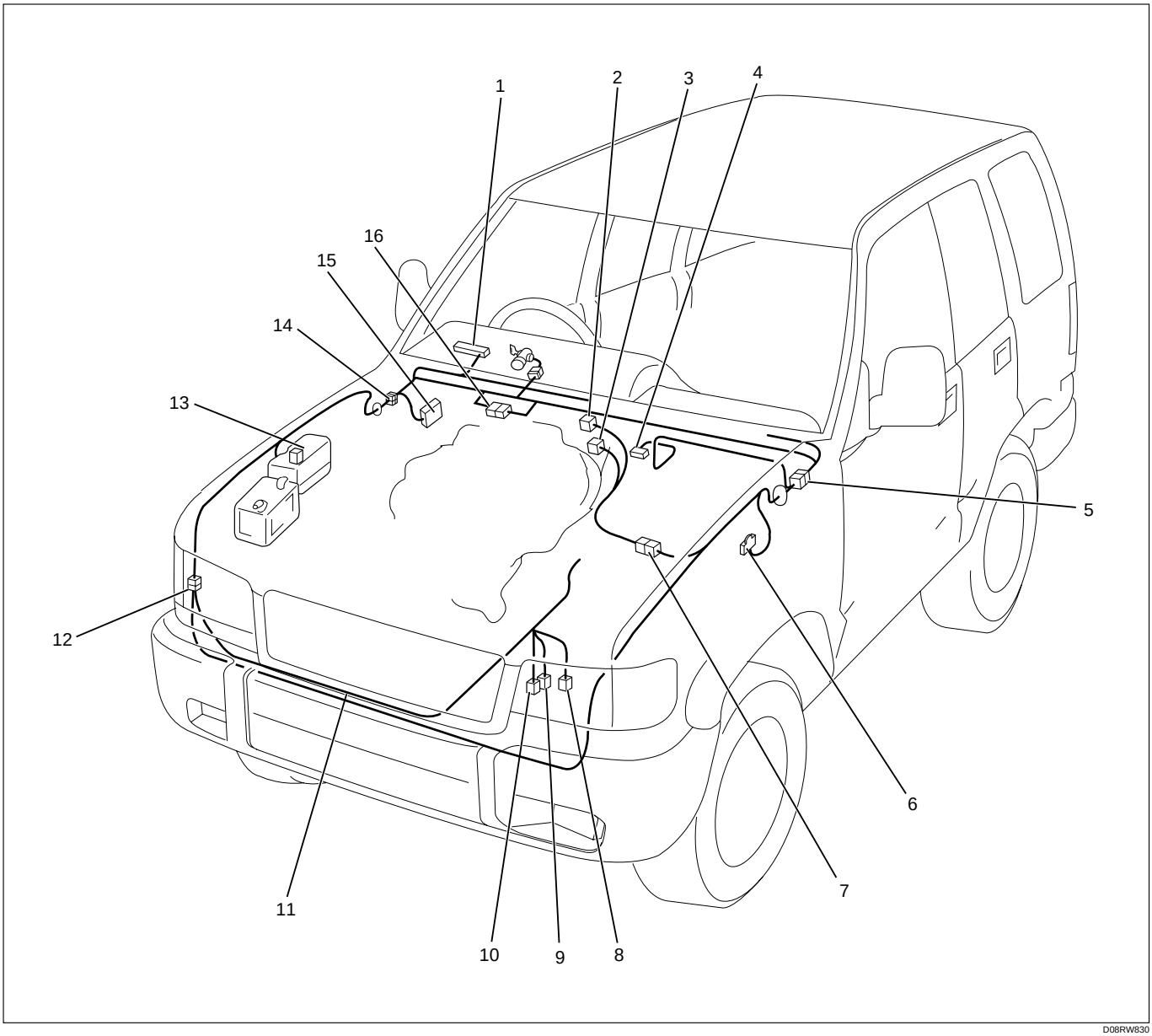

Legend

(1) I-9
(2) E-21
(3) E-45, E-46
(4) C-94
(5) H-7, H-9
(6) C-16
(7) H-4, H-5
(8) P-17
(9) P-18
(10) P-19
(11) Battery Positive Cable
(12) H-60
(13) Relay and Fuse Box
(14) H-15, H-16, H-25, H-26, H-27
(15) Fuse Box
(16) H-12

Circuit Diagram (LHD 6VD1 Push Button Type)-1

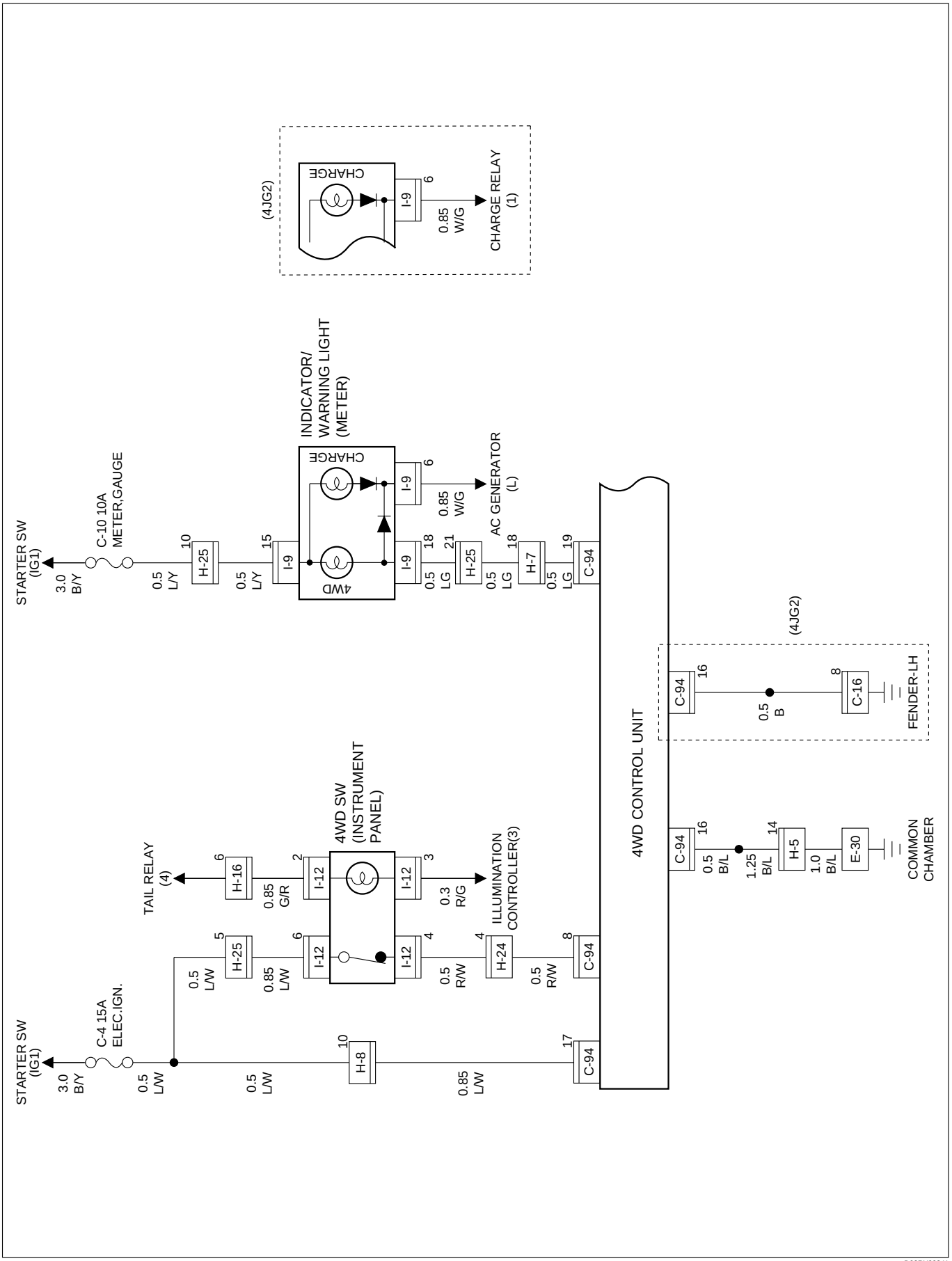

D08RY00241

Circuit Diagram (LHD 6VD1 Push Button Type)-2

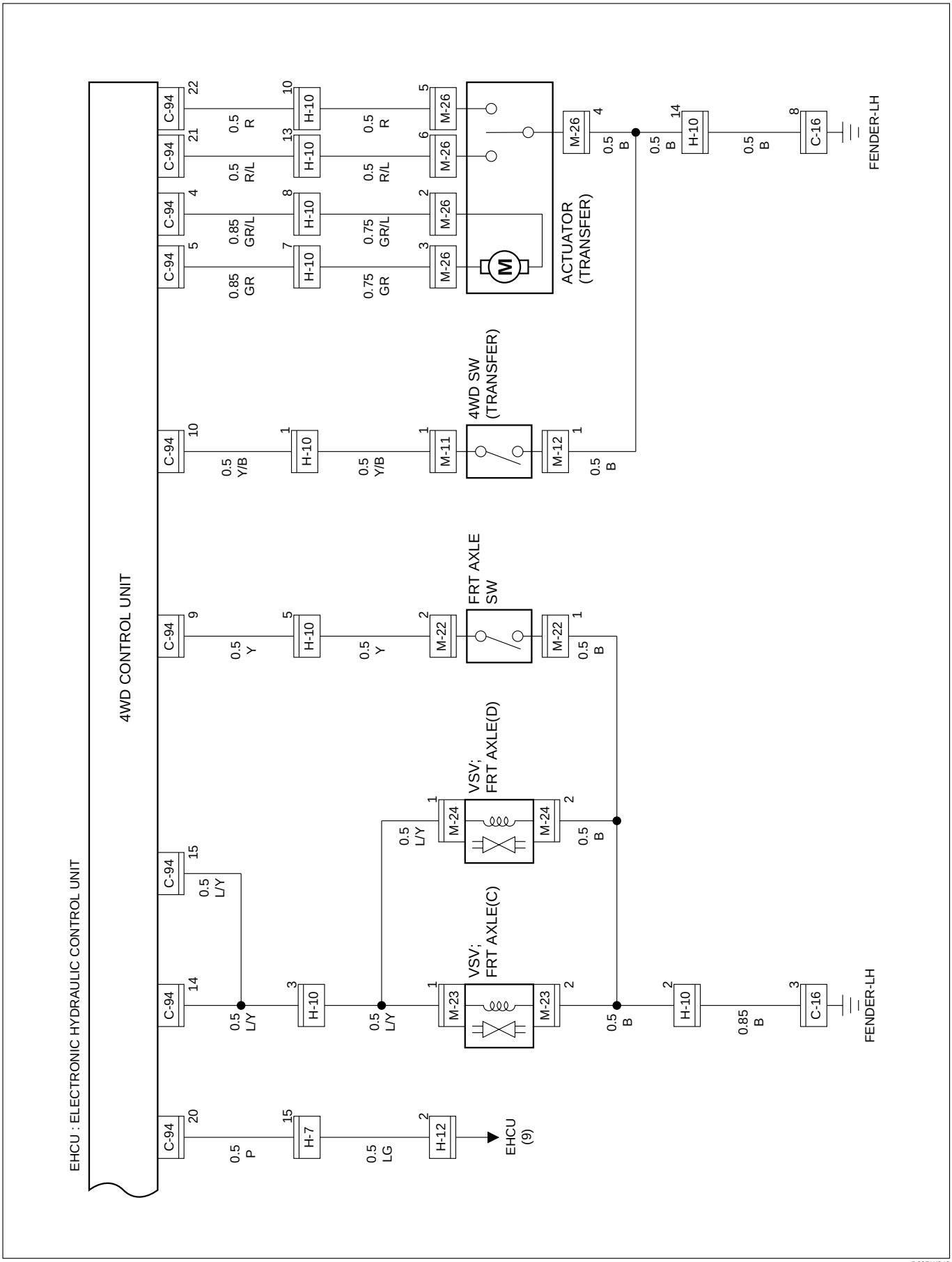

D08RW843

Parts Location (LHD 6VD1 Push Button Type)

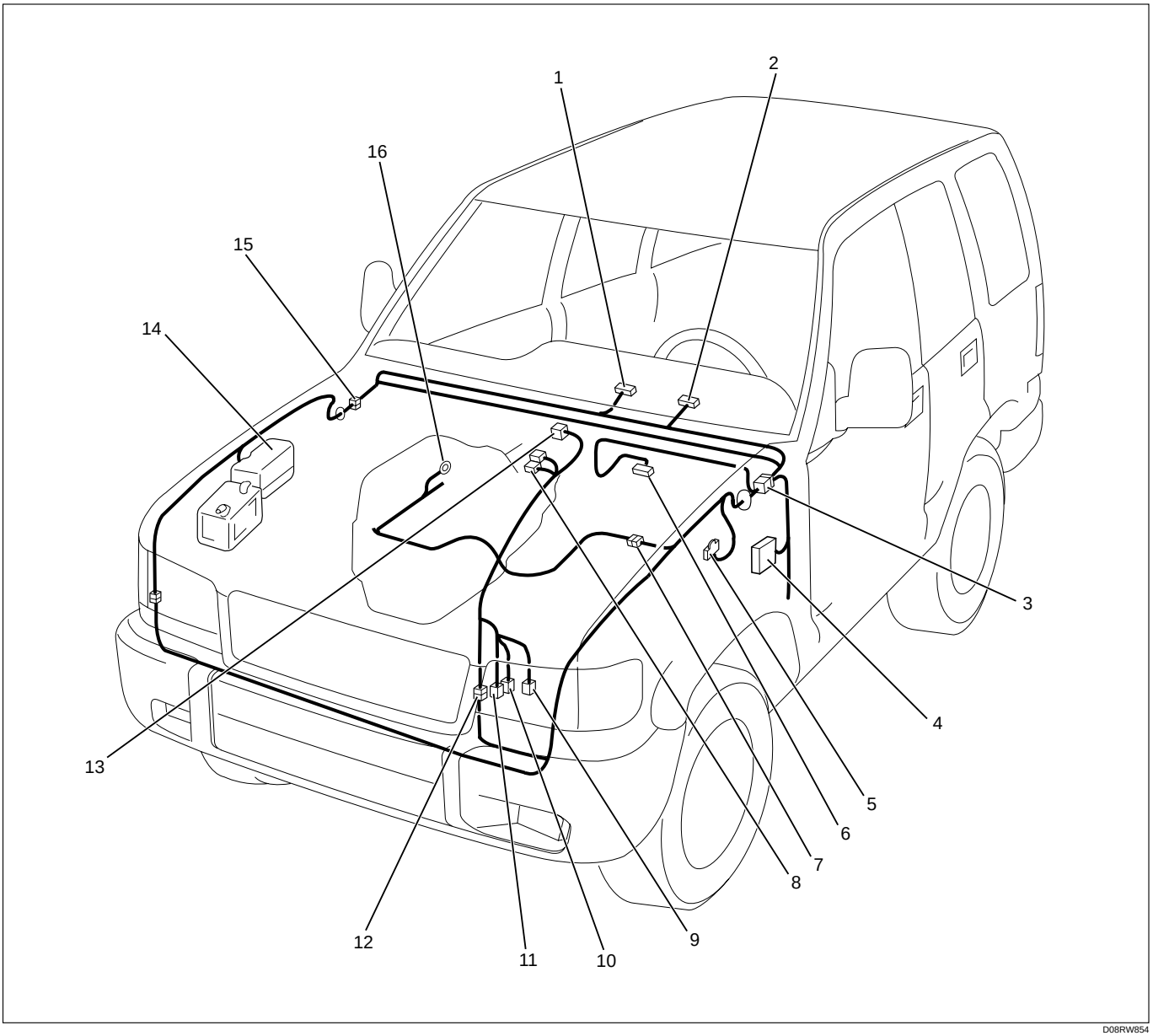

D08RW854

Legend

(1) I-12
(2) I-9
(3) H-7, H-8, H-24, H-25
(4) Fuse Box
(5) C-16
(6) C-94
(7) H-5
(8) M-11, M-12
(9) M-22
(10) M-23
(11) M-24
(12) H-10
(13) M-26
(14) Relay and Fuse Box
(15) H-12, H-16
(16) E-30

Circuit Diagram (LHD 4JG2 Push Button Type)-1

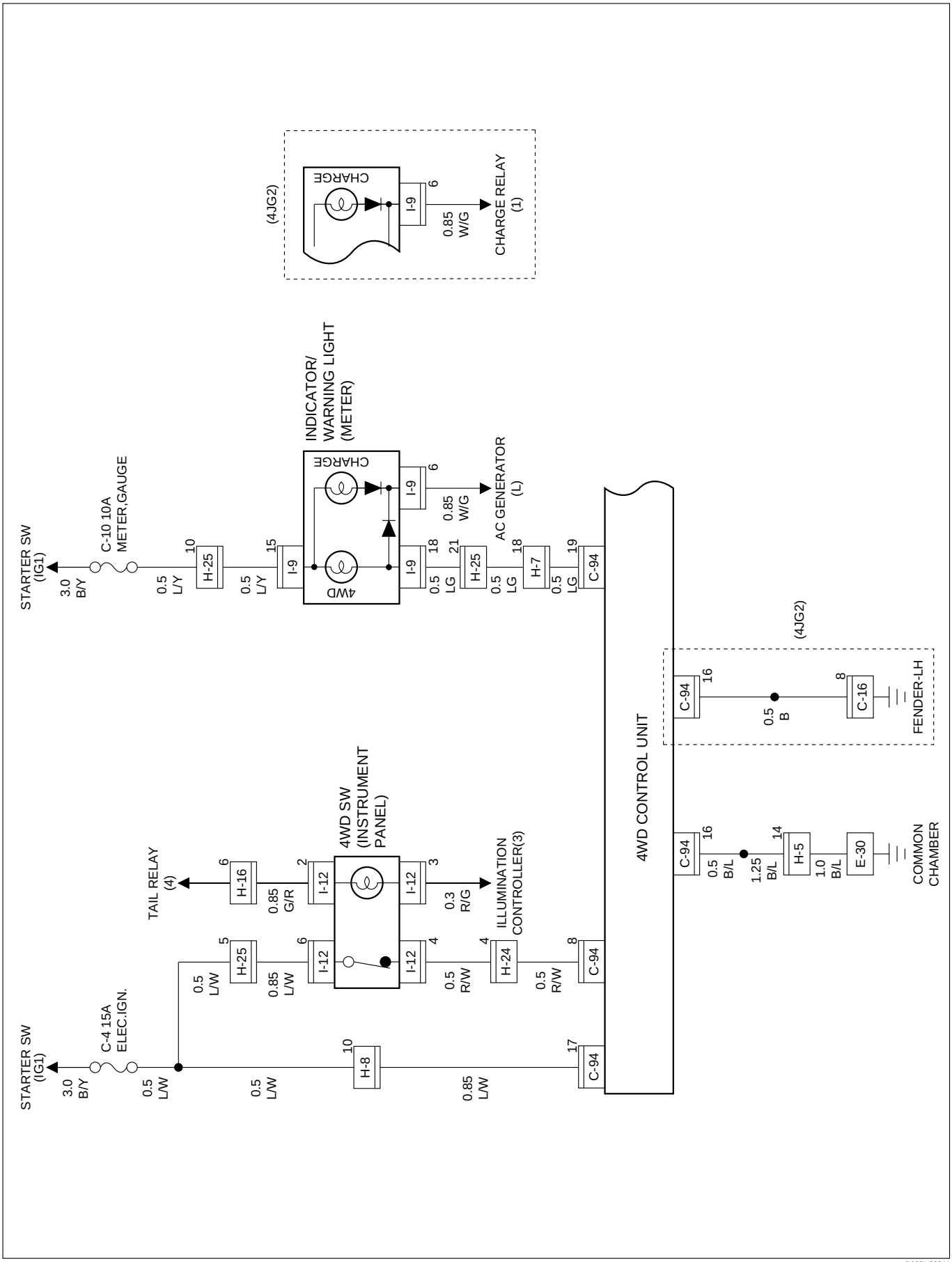

D08RY00241

Circuit Diagram (LHD 4JG2 Push Button Type)-2

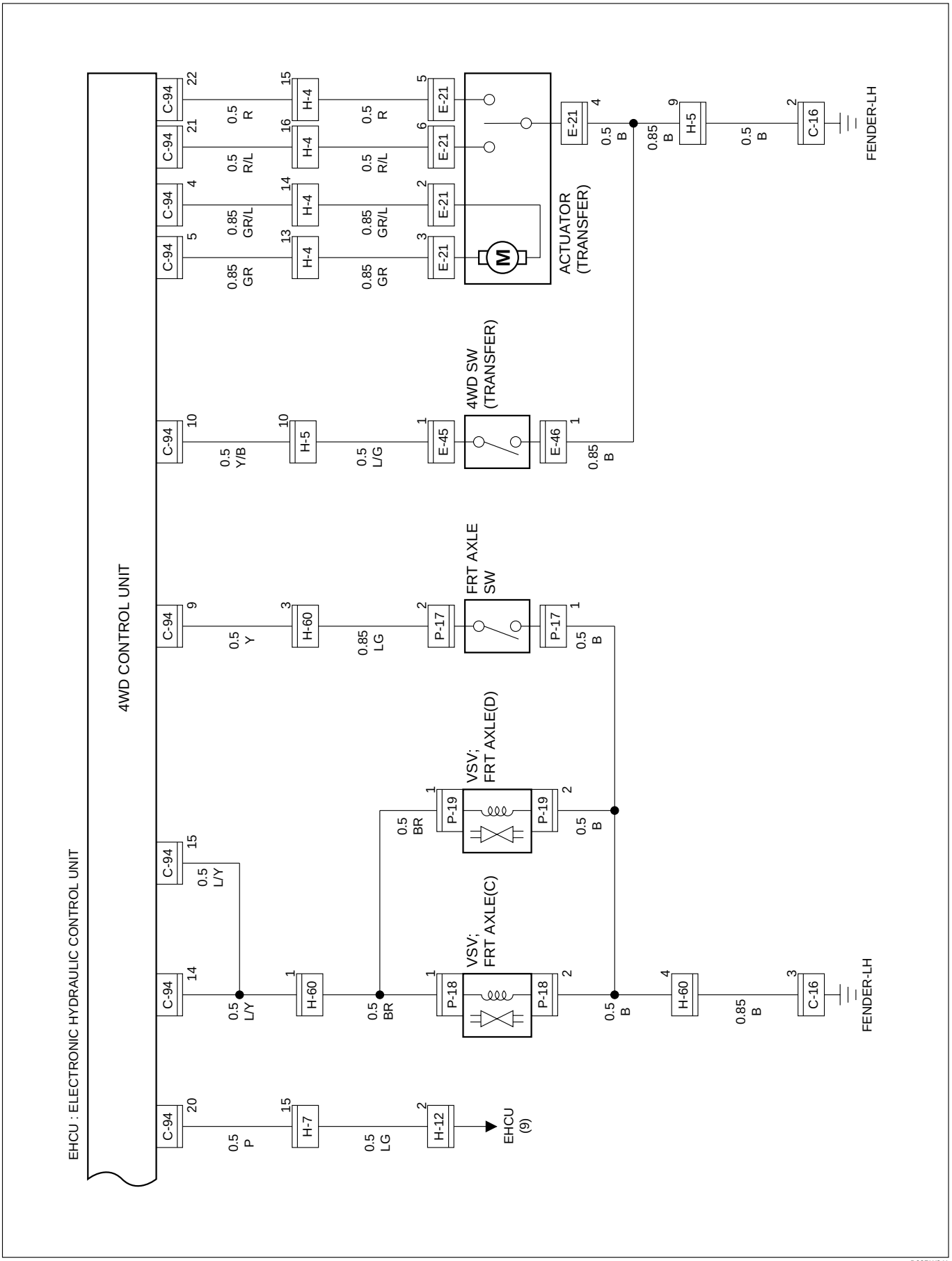

D08RW841

Parts Location (LHD 4JG2 Push Button Type)

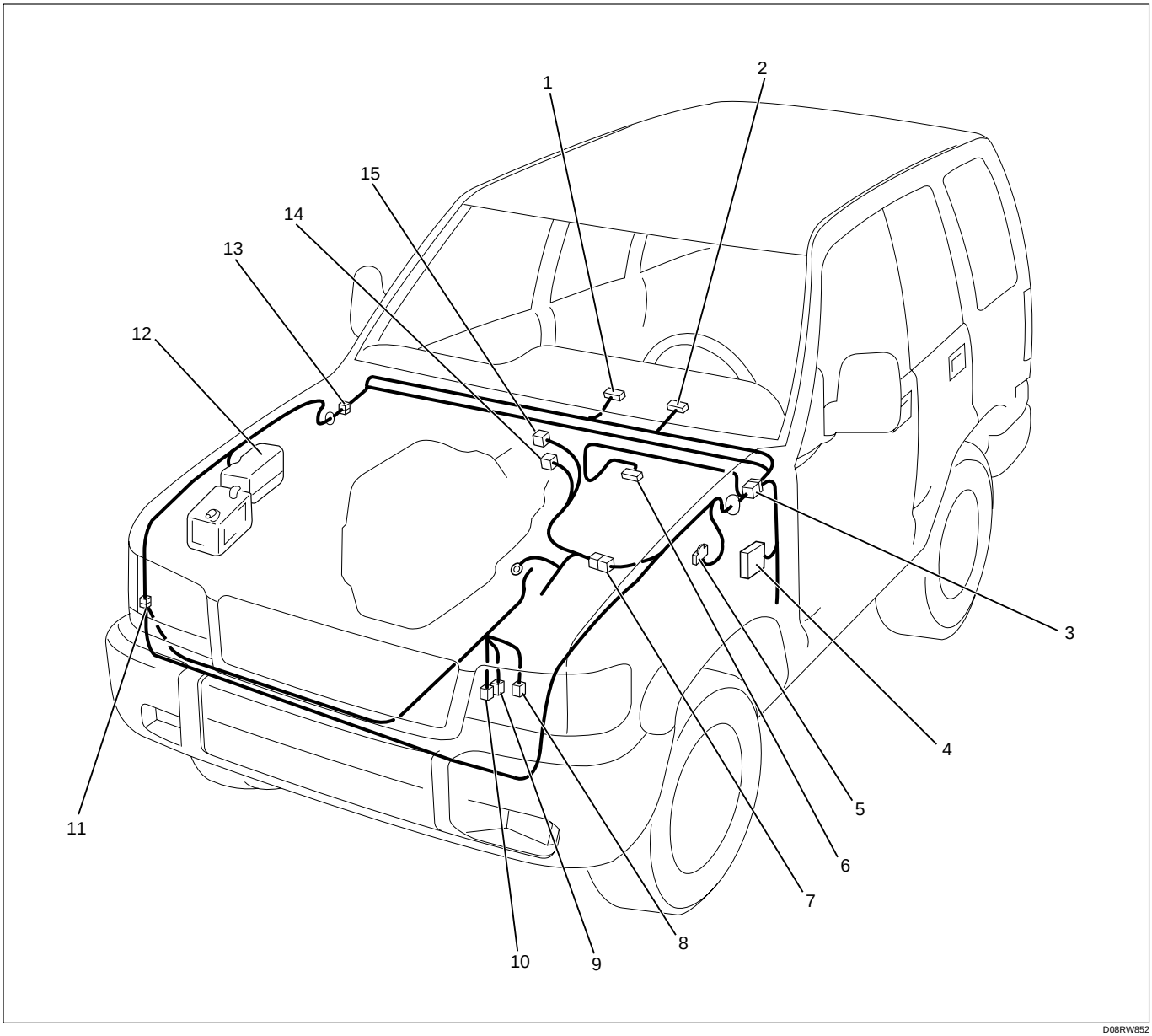

D08RW852

Legend

(1) I-12
(2) I-9
(3) H-7 H-8, H-24, H-25
(4) Fuse Box
(5) C-16
(6) C-94
(7) H-4, H-5
(8) P-17
(9) P-18
(10) P-19
(11) H-60
(12) Relay and Fuse Box
(13) H-12, H-16
(14) E-45, E-46
(15) E-21

Torque on Demand (T.O.D.)

Circuit Diagram (RHD 6VE1)-1

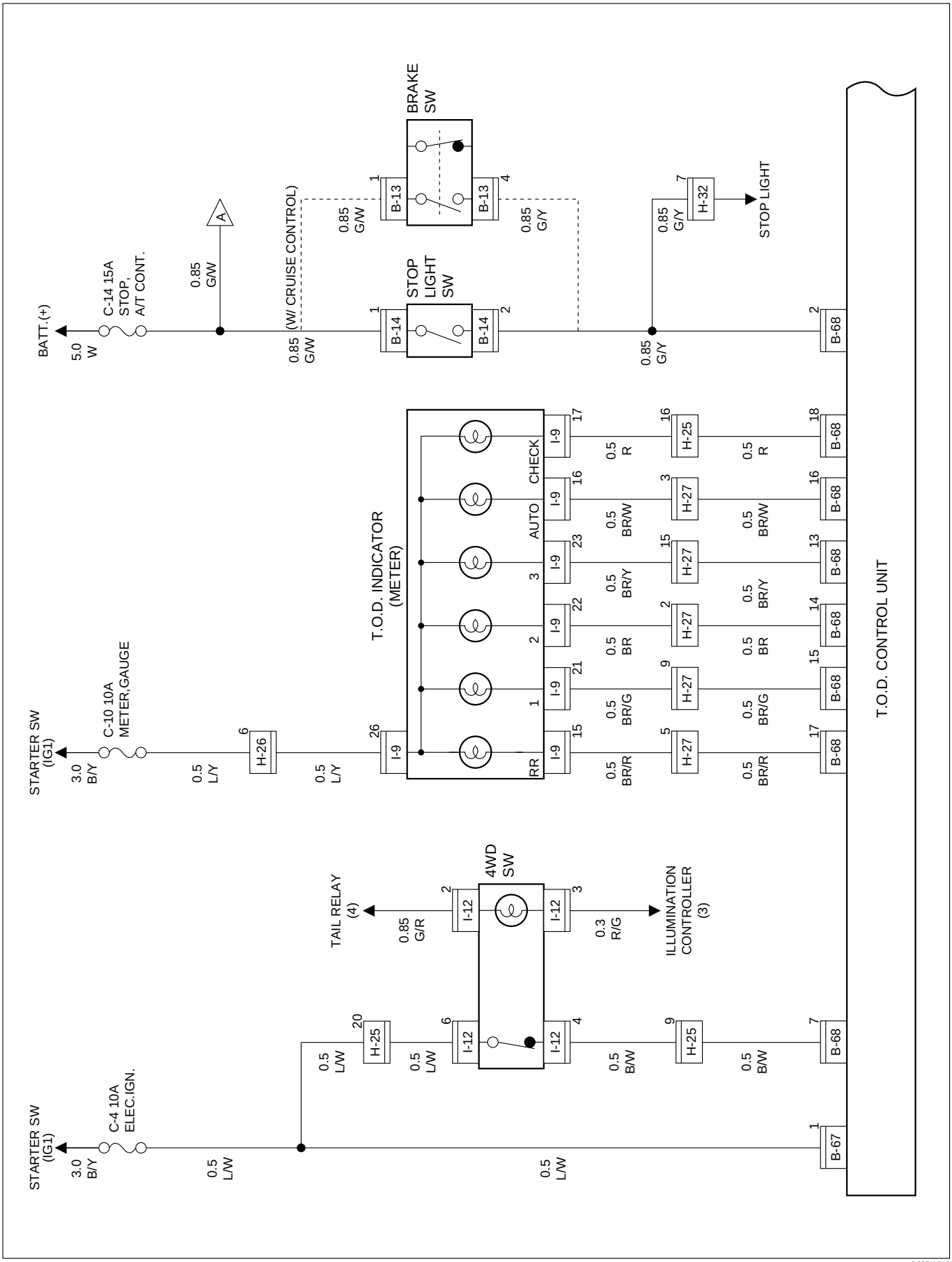

D08RW610

Circuit Diagram (RHD 6VE1)-2

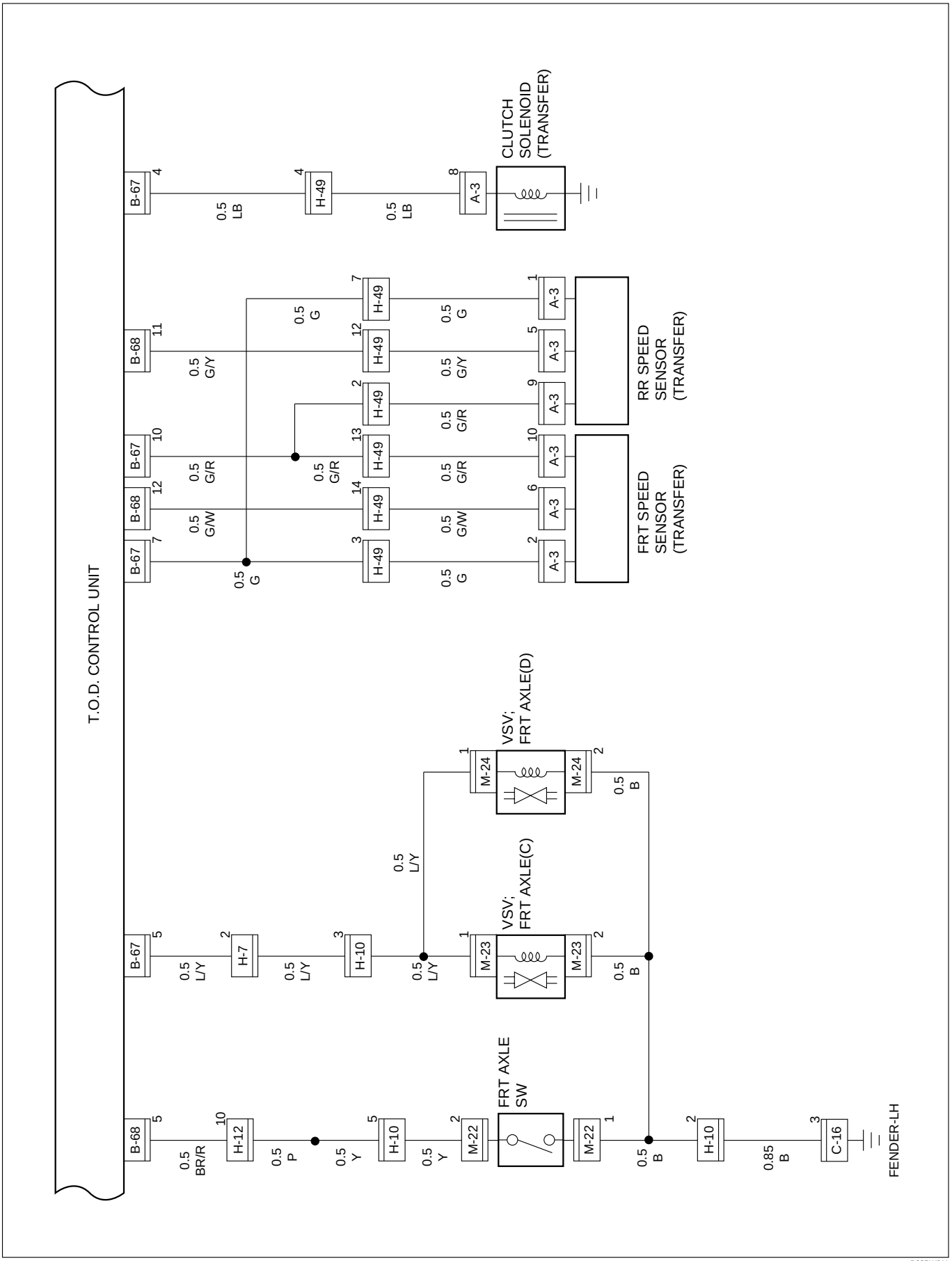

D08RW611

Circuit Diagram (RHD 6VE1)-3

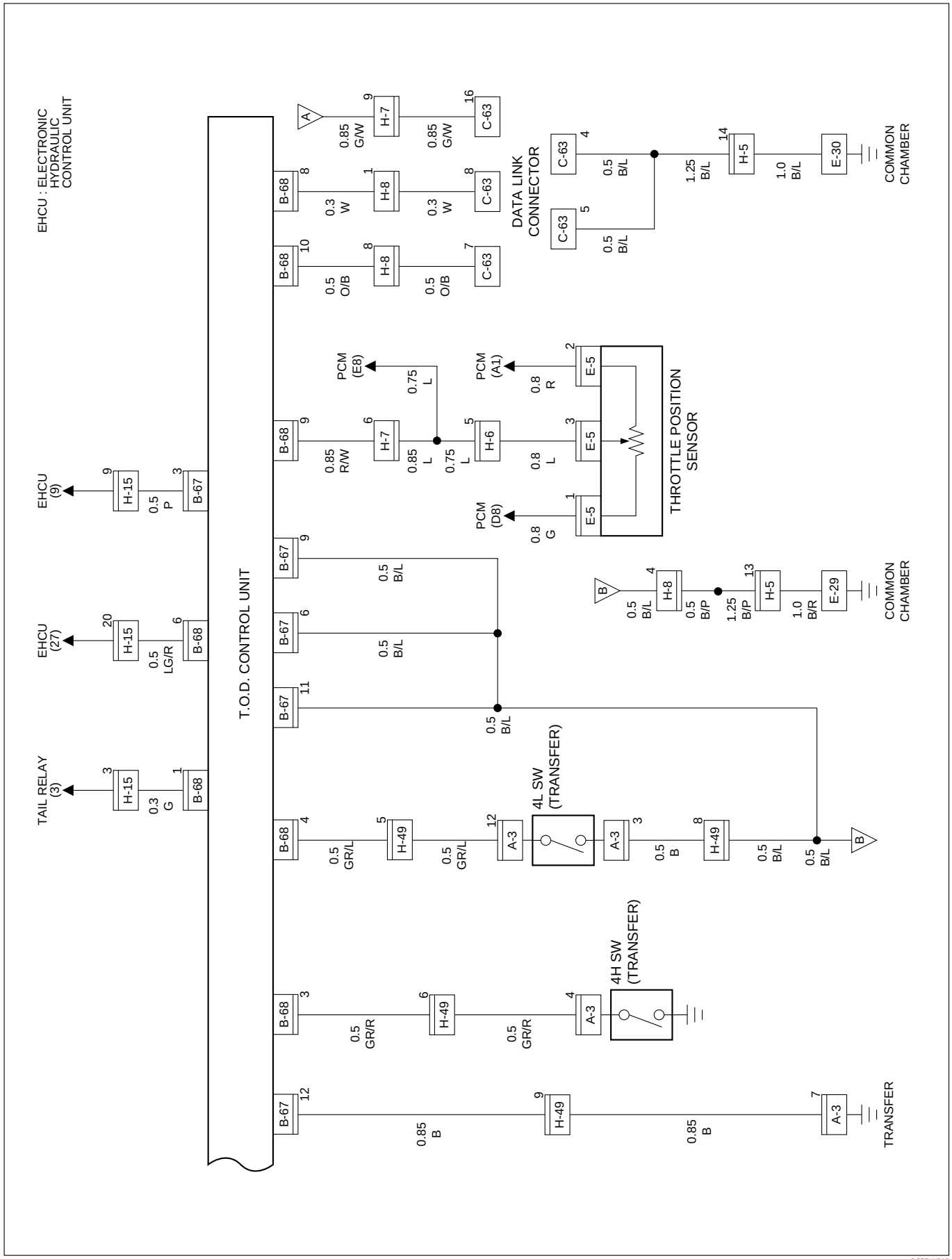

D08RW612

Parts Location

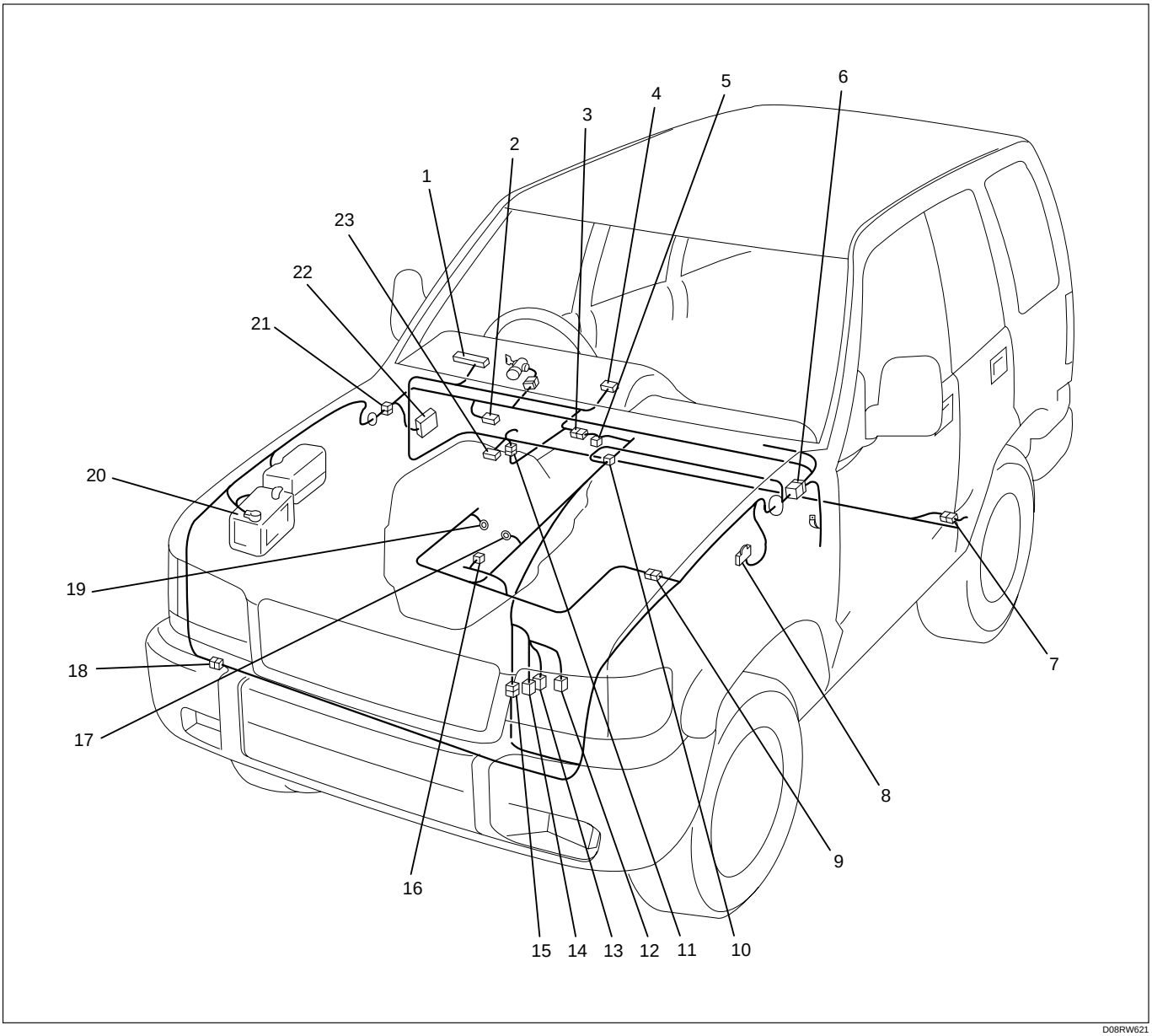

D08RW621

Legend

(1) I-9
(2) B-13 or B-14
(3) H-12
(4) I-12
(5) A-3
(6) H-7, H-8
(7) H-32
(8) C-16
(9) H-5, H-6
(10) C-63
(11) H-49
(12) M-22
(13) M-23
(14) M-24
(15) H-10
(16) E-5
(17) E-29
(18) H-42
(19) E-30
(20) Battery
(21) H-13, H-15, H-26
(22) Fuse Box
(23) B-67, B-68

Supplemental Restraint System (SRS) – Air Bag

General Description

The circuit consists of Sensing and Diagnostic Module (SDM), driver's air bag assembly, SRS coil assembly, passenger's air bag assembly, and "AIR BAG" warning light. SDM, SRS coil assembly (driver side only), driver air bag assembly, passenger air bag assembly and connector wire make up the deployment loops. The function of the deployment loops is to supply current through air bag assembly, which will cause deployment of the air bags in the event of a frontal crash of sufficient force, up to 30 degrees off the center line of the vehicle. The air bag assemblies are only supplied enough current to deploy when the SDM detects vehicle velocity changes severe enough to warrant deployment.

The SDM contains a sensing device which converts vehicle velocity changes to an electrical signal.

The electrical signal generated is processed by the SDM and then compared to a value stored in memory. When the generated signal exceeds the stored value, the SDM will cause current to flow through the air bag assembly deploying the air bags.

Refer to Supplemental Restraint System in Restraints section.

Circuit Diagram (6VD1)

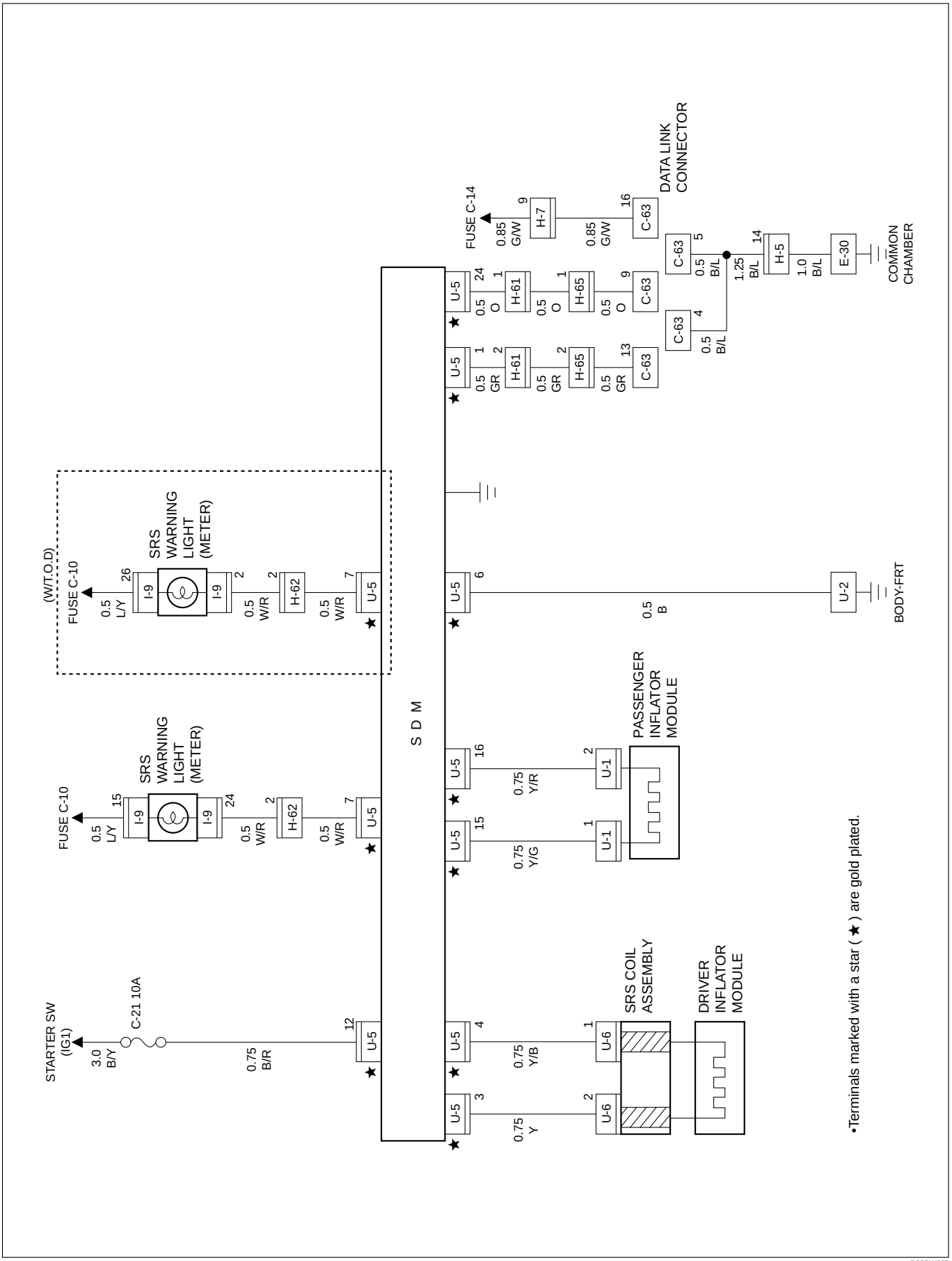

D08RW605

Circuit Diagram (4JG2)

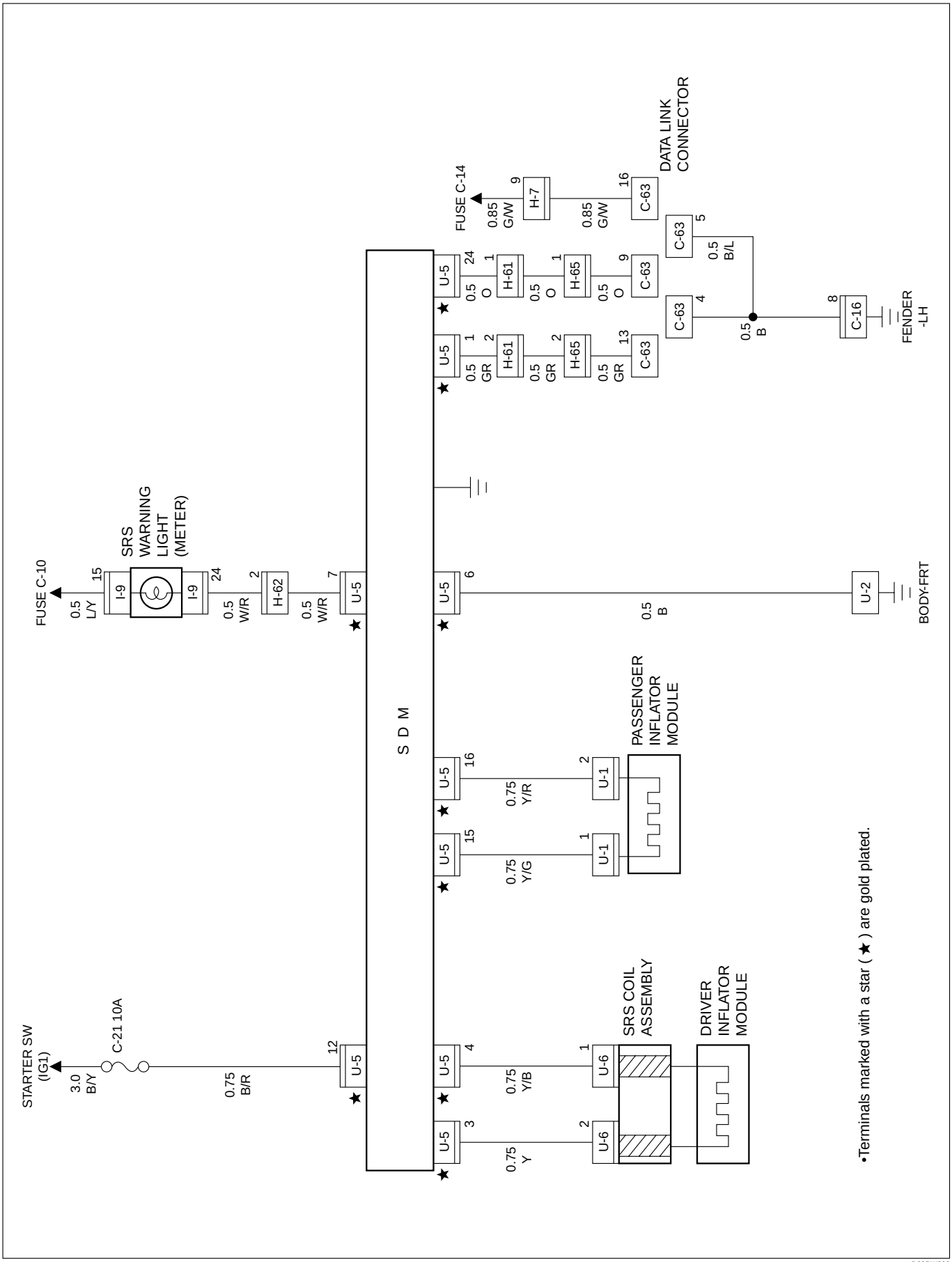

D08RW990

Circuit Diagram (6VE1 South Africa)-1

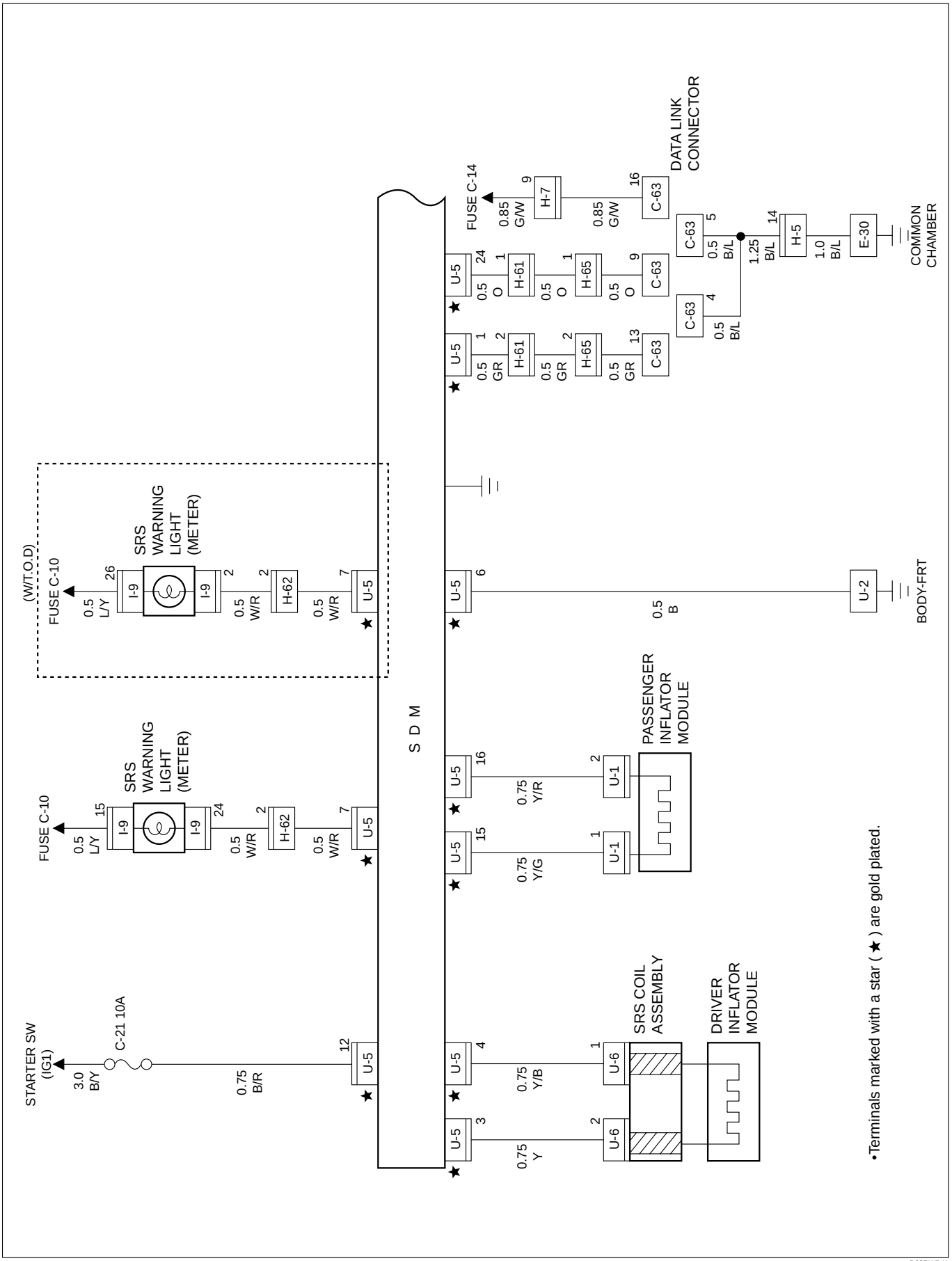

D08RWB41

Circuit Diagram (6VE1 South Africa)-2

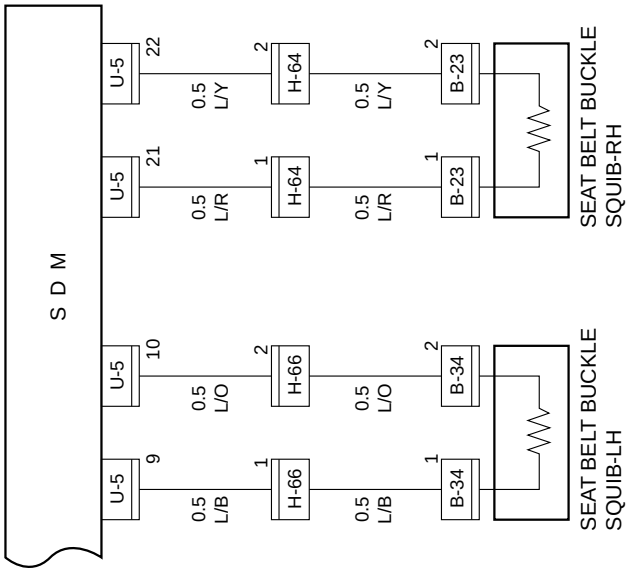

Parts Location (RHD)

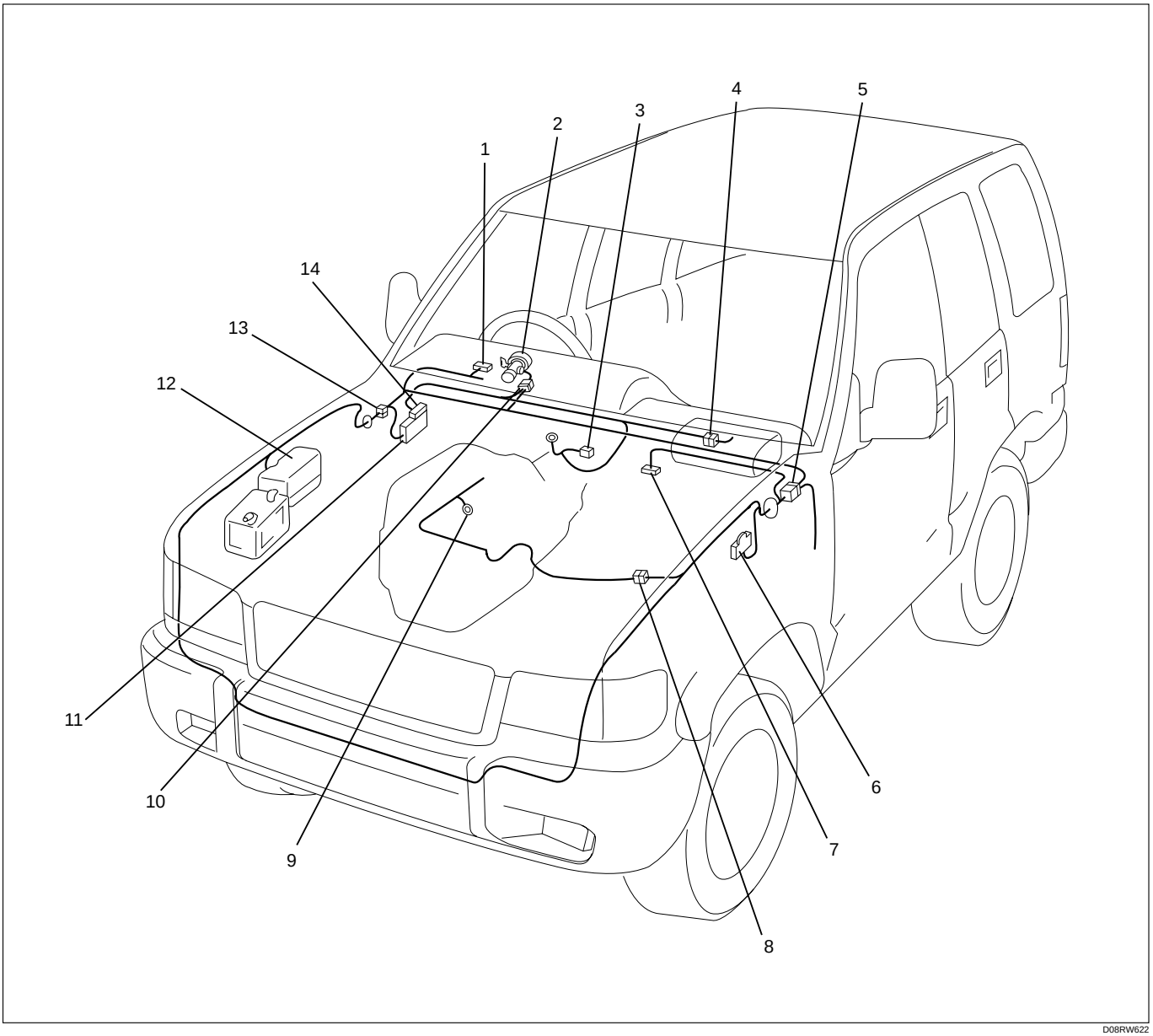

D08RW622

Legend

(1) I-9
(2) SRS Coil Assembly
(3) U-5
(4) U-1
(5) H-7, H-65
(6) C-16
(7) C-63
(8) H-5
(9) E-30
(10) U-2
(11) Fuse Box
(12) Relay and Fuse Box
(13) H-61, H-62
(14) Fuse Box (C-21)

Parts Location (LHD)

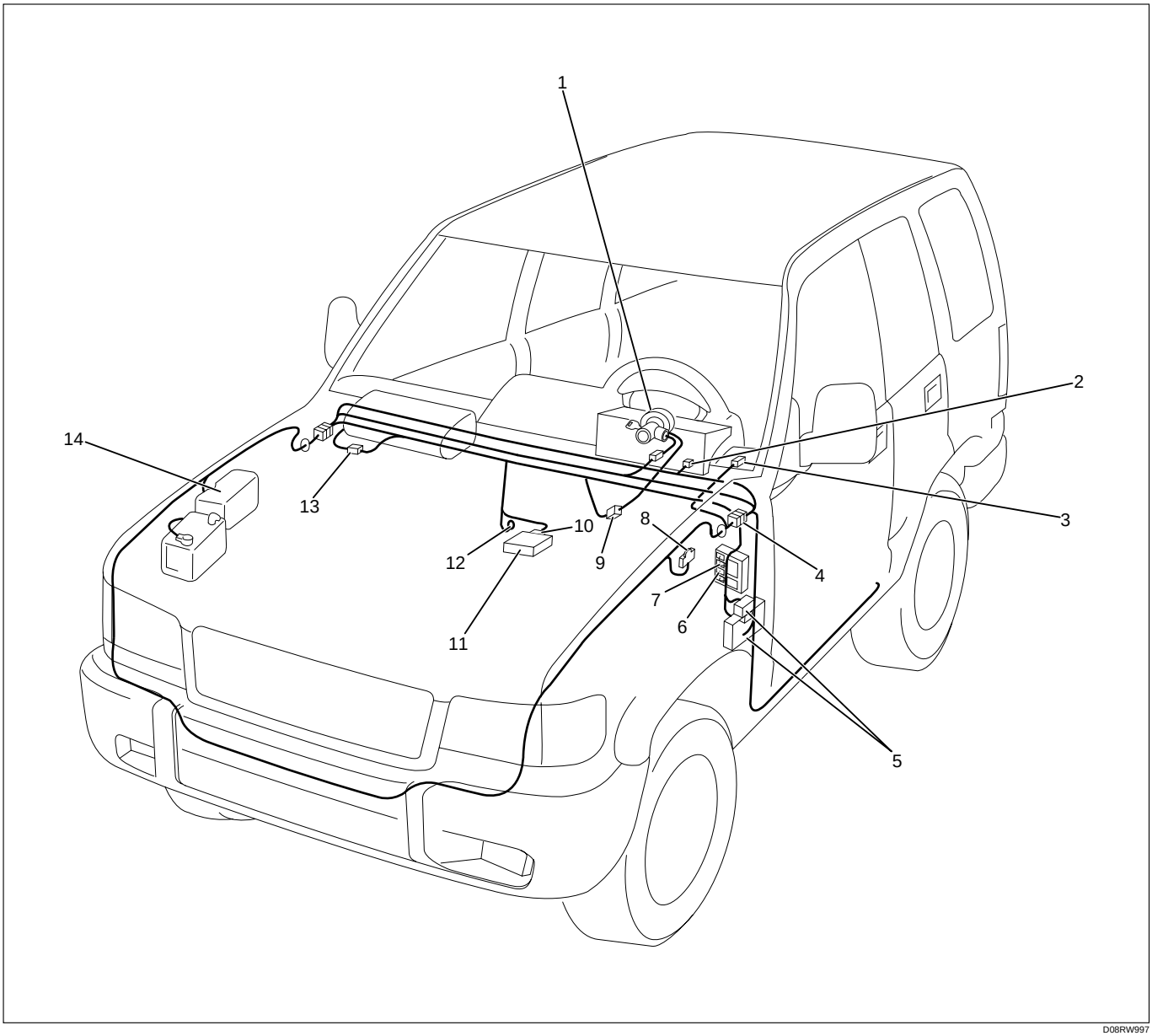

D08RW997

Legend

(1) SRS Coil Assembly
(2) I-37
(3) C-63
(4) H-7
(5) Fuse Box (H-49)
(6) H-52
(7) H-51
(8) C-16
(9) U-6
(10) U-5
(11) SDM
(12) U-2
(13) U-1
(14) Relay and Fuse Box

Connector List

No.	Connector face	No.	Connector face
A-1	NOT USED		
A-2	NOT USED		
A-3			

No.	Connector face	No.	Connector face
B-1	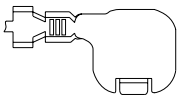	B-11	
B-2	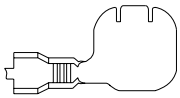	B-12	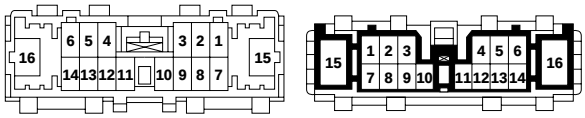
B-3	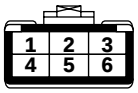	B-13	
B-4	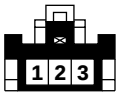	B-14	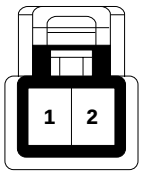
B-5		B-15	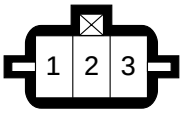
B-6	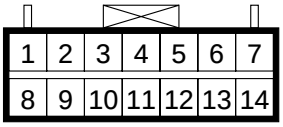	B-16	
B-7	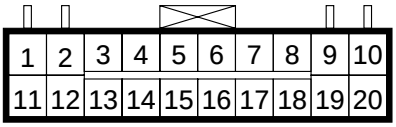	B-17	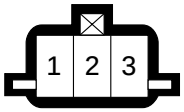
B-8		B-18	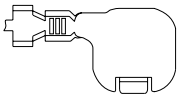
B-9	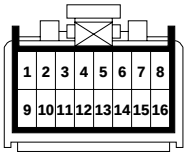	B-19	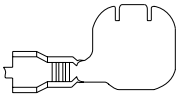
B-10		B-20	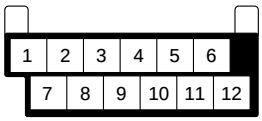

No.	Connector face	No.	Connector face
B-21	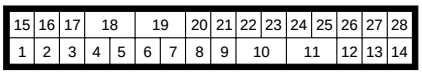	B-31	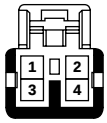
B-22	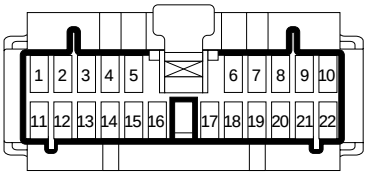	B-32	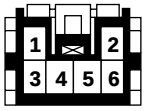
B-23	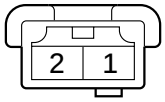	B-33	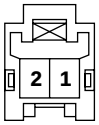
B-24	**NOT USED**	B-34	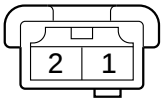 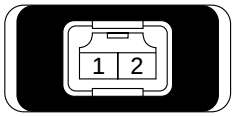
B-25		B-35	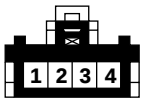 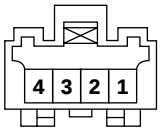
B-26	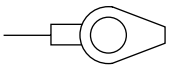	B-36	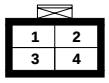
B-27		B-37	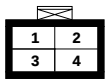
B-28	**NOT USED**	B-38	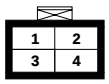
B-29	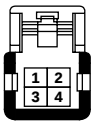	B-39	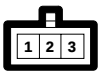
B-30		B-40	**NOT USED**

No.	Connector face	No.	Connector face
B-41	NOT USED	B-51	NOT USED
B-42	—	B-52	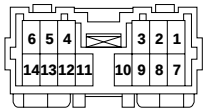 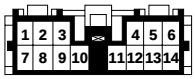
B-43	NOT USED	B-53	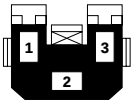
B-44	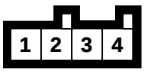	B-54	NOT USED
B-45	NOT USED	B-55	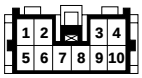 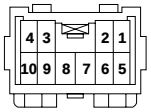
B-46	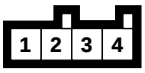	B-56	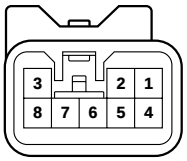
B-47	NOT USED	B-57	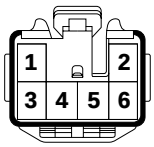
B-48	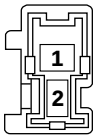 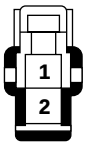	B-58	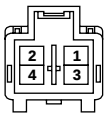
B-49	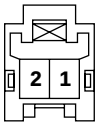	B-59	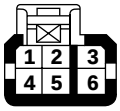
B-50	NOT USED	B-60	NOT USED

No.	Connector face	No.	Connector face
B-61	**NOT USED**		
B-62	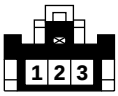 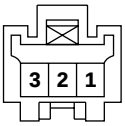		
B-63	**NOT USED**		
B-64	**NOT USED**		
B-65	**NOT USED**		
B-66	**NOT USED**		
B-67	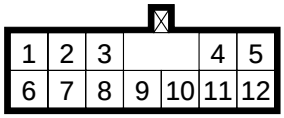		
B-68	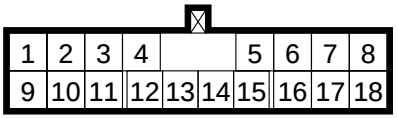		
B-69	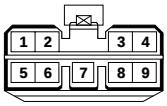		

No.	Connector face	No.	Connector face
C-1	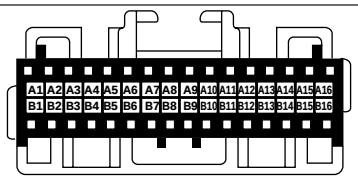	C-11	NOT USED
C-2	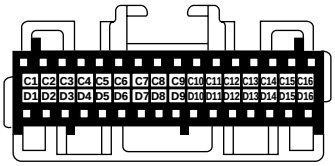	C-12	NOT USED
C-3	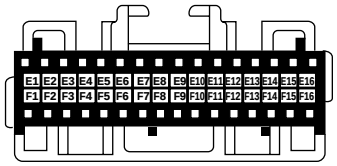	C-13	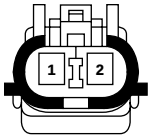 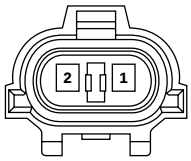
C-4	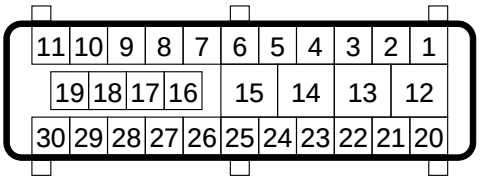	C-14	NOT USED
C-5	NOT USED	C-15	
C-6	NOT USED	C-16	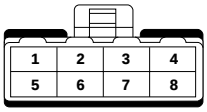 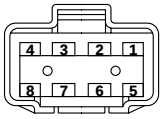
C-7	NOT USED	C-17	NOT USED
C-8	NOT USED	C-18	NOT USED
C-9		C-19	
C-10	NOT USED	C-20	

No.	Connector face	No.	Connector face
C-21	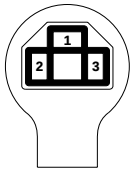	C-31	
C-22		C-32	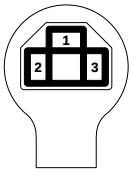
C-23		C-33	NOT USED
C-24		C-34	NOT USED
C-25		C-35	
C-26	NOT USED	C-36	
C-27	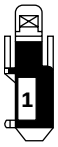	C-37	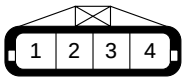
C-28	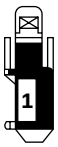	C-38	
C-29		C-39	
C-30		C-40	NOT USED

No.	Connector face	No.	Connector face
C-41		C-55	
C-42	NOT USED	C-56	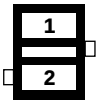
C-43	NOT USED	C-57	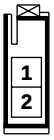
C-44		C-58	NOT USED
C-45		C-59	NOT USED
C-46 ~ C-50	NOT USED	C-60	
C-51	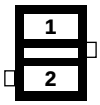	C-61	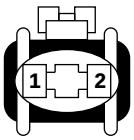
C-52	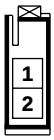	C-62	NOT USED
C-53		C-63	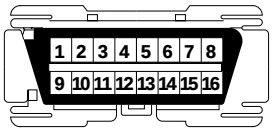
C-54		C-64	NOT USED

No.	Connector face	No.	Connector face
C-65	NOT USED	C-74	
C-66 (QOS/ EGR)	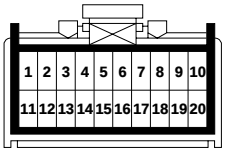	C-75	
C-66 (QOS-Ⅲ)	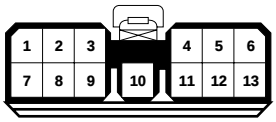	C-76	
C-67		C-77	
C-68	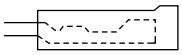	C-85	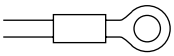
C-69		C-86	
C-70	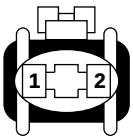	C-87	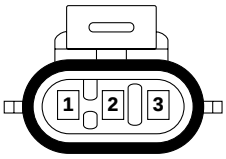
C-71	NOT USED	C-88	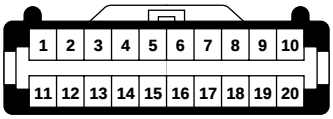
C-72		C-89 ~ C-92	NOT USED
C-73		C-93	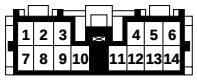

No.	Connector face	No.	Connector face
C-94	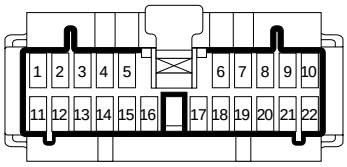		

No.	Connector face	No.	Connector face
D-1	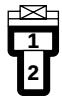	D-11	
D-2		D-12	
D-3		D-13	
D-4		D-14	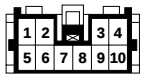
D-5	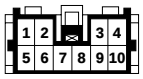	D-15	**NOT USED**
D-6		D-16	
D-7		D-17	
D-8		D-18	
D-9	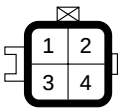	D-19	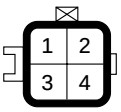
D-10	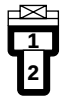	D-20	

No.	Connector face	No.	Connector face
D-21	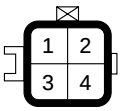		
D-22	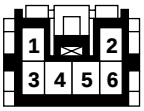		
D-23	**NOT USED**		
D-24	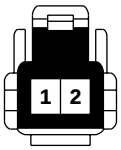		
D-25	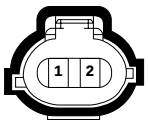 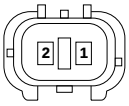		
D-26	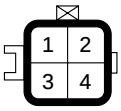		
D-27	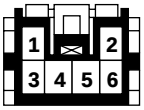		
D-28	**NOT USED**		
D-29	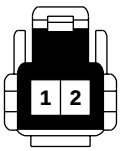		
D-30	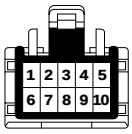		

No.	Connector face	No.	Connector face
E-1	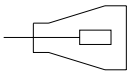	E-11	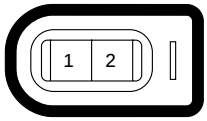
E-2		E-12	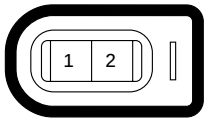
E-3	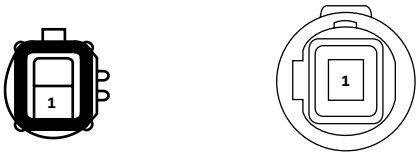	E-13	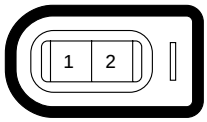
E-4		E-14	
E-5	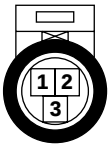	E-15	
E-6	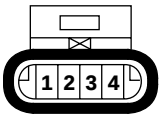	E-16	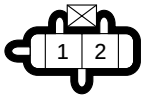
E-7	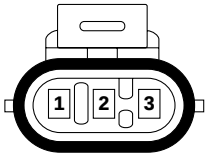	E-17	
E-8	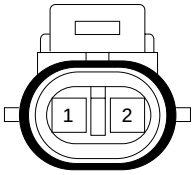	E-18	
E-9	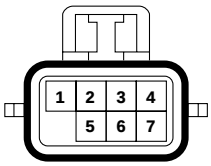 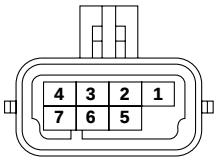	E-19	
E-10	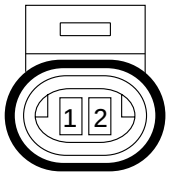	E-20	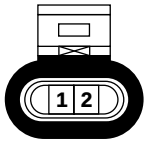

No.	Connector face	No.	Connector face
E-21		E-31	
E-22	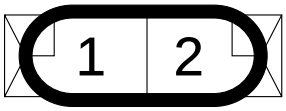	E-32	
E-23		E-33	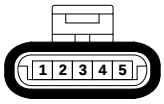
E-24	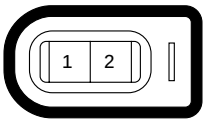	E-34	**NOT USED**
E-25	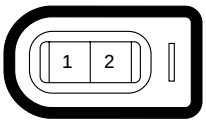	E-35	**NOT USED**
E-26	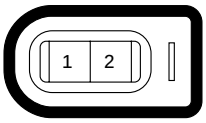	E-36	**NOT USED**
E-27	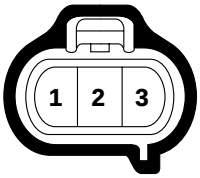	E-37	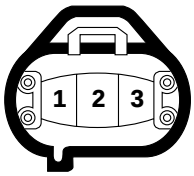
E-28	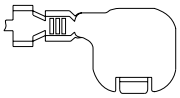	E-38	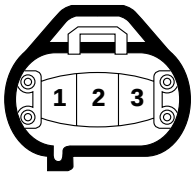
E-29	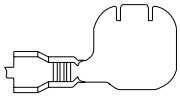	E-39	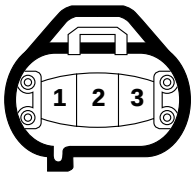
E-30	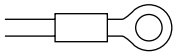	E-40	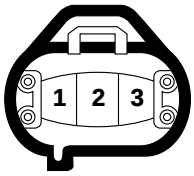

No.	Connector face	No.	Connector face
E-41	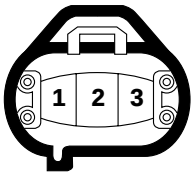		
E-42	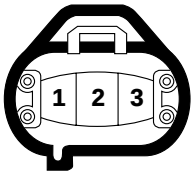		
E-43	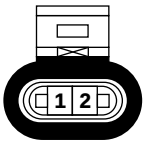		
E-44	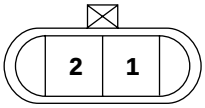		
E-45	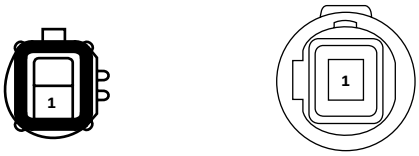		

No.	Connector face	No.	Connector face
F-1	NOT USED		
F-2			
F-3			
F-4			
F-5	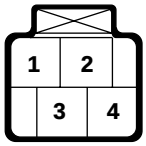		
F-6	NOT USED		
F-7			
F-8			
F-9	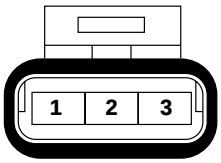		

No.	Connector face	No.	Connector face
G-1	NOT USED		
G-2			
G-3			
G-4	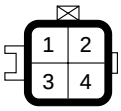		
G-5	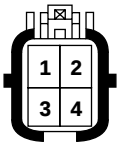 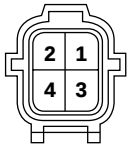		
G-6	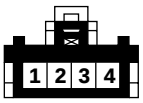		
G-7			
G-8	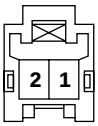		
G-9	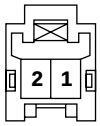		

No.	Connector face	No.	Connector face
H-1	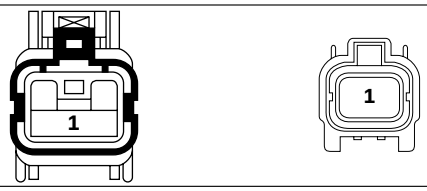	H-8 (LHD)	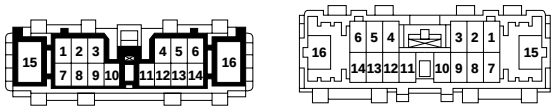
H-2		H-9 (RHD)	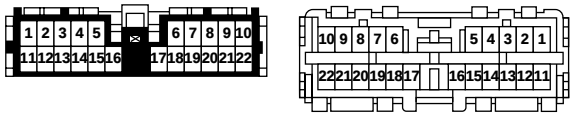
H-3 (6V*1)		H-9 (LHD)	
H-3 (4JG2)		H-10	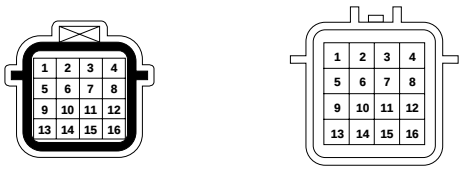
H-4	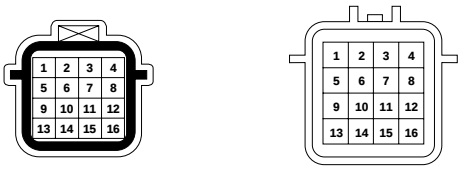	H-11	
H-5	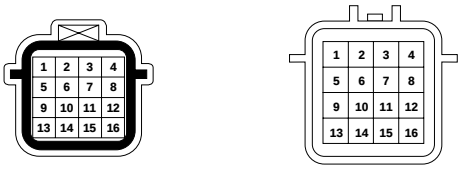	H-12 (RHD)	
H-6 (6V*1)	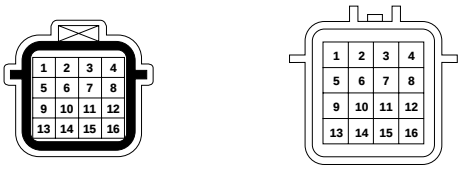	H-12 (LHD)	
H-6 (4JG2)		H-13 (RHD)	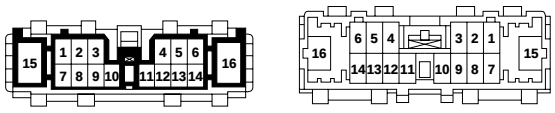
H-7		H-13 (LHD)	
H-8 (RHD)	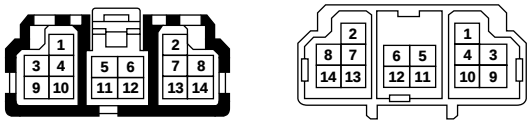	H-14	

No.	Connector face	No.	Connector face
H-15 (RHD)		H-23	
H-15 (LHD)	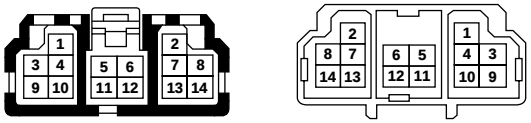	H-24 (RHD)	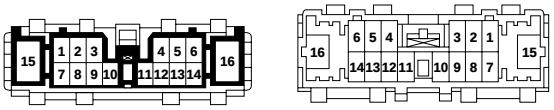
H-16 (RHD)	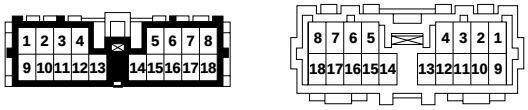	H-24 (LHD)	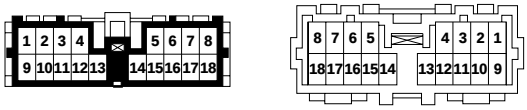
H-16 (LHD)	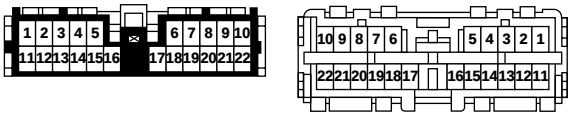	H-25	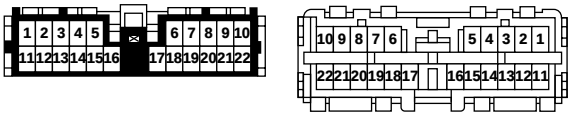
H-17	NOT USED	H-26	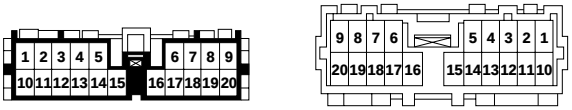
H-18	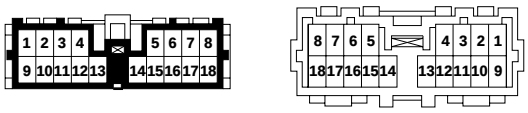	H-27	
H-19		H-28	
H-20		H-29	
H-21		H-30	NOT USED
H-22	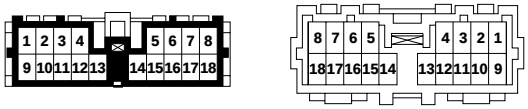	H-31	

No.	Connector face	No.	Connector face
H-32	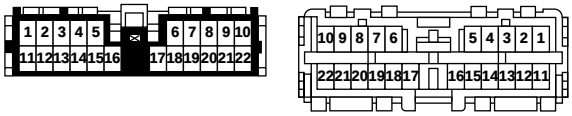	H-41 (4JG2)	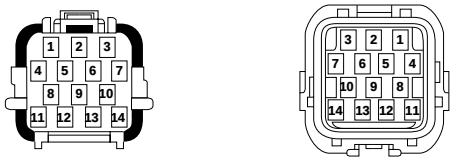
H-33		H-43	
H-34		H-44	
H-35		H-45	
H-36	NOT USED	H-46	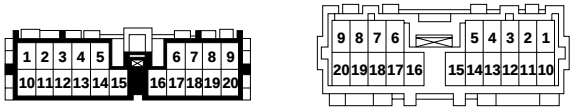
H-37		H-47	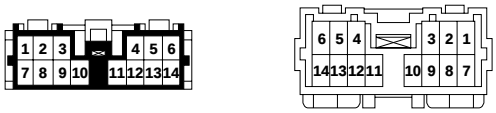
H-38		H-48	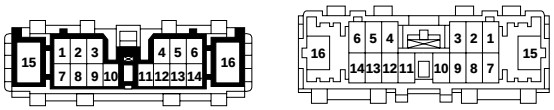
H-39		H-49 (W/ TOD)	
H-40	NOT USED	H-49 (W/O TOD)	
H-41 (6V*1)	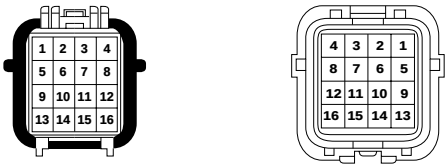	H-50	NOT USED

No.	Connector face	No.	Connector face
H-51		H-61	
H-52	**NOT USED**	H-62	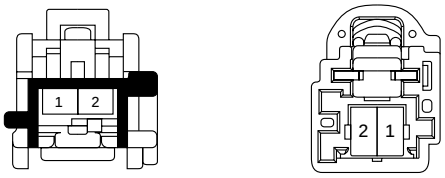
H-53	**NOT USED**	H-63	
H-54	**NOT USED**	H-64	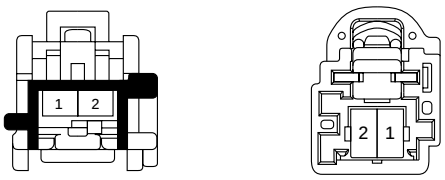
H-55	**NOT USED**	H-65	
H-56	**NOT USED**		
H-57			
H-58			
H-59			
H-60			

No.	Connector face	No.	Connector face
I-1	NOT USED	I-11	
I-2	NOT USED	I-12	
I-3	NOT USED	I-13	NOT USED
I-4		I-14	NOT USED
I-5	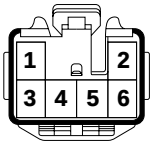	I-15	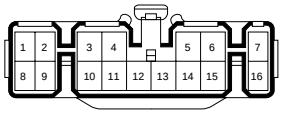 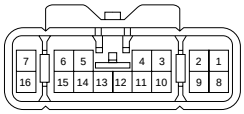
I-6	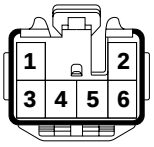	I-16	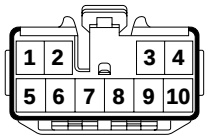
I-7	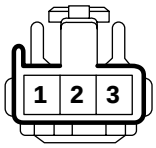	I-17	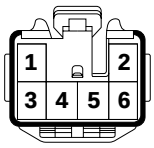
I-8		I-18	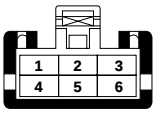
I-9	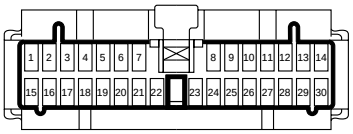	I-19	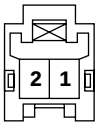
I-10	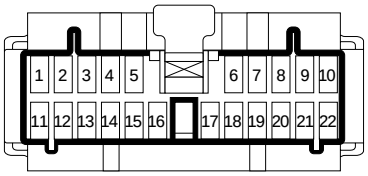	I-20	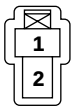

No.	Connector face	No.	Connector face
I-21		I-30 ~ I-38	NOT USED
I-22		I-39	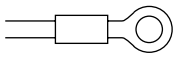
I-23	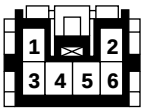	I-40	NOT USED
I-24	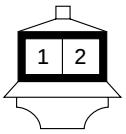	I-41	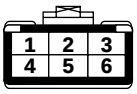
I-25	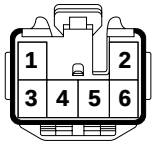	I-42	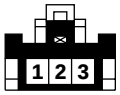
I-26	NOT USED		
I-27	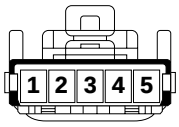		
I-28	NOT USED		
I-29	NOT USED		
I-30	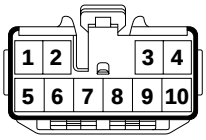		

No.	Connector face	No.	Connector face
K-1	NOT USED		
K-2			

No.	Connector face	No.	Connector face
L-1			
L-2			
L-3			
L-4	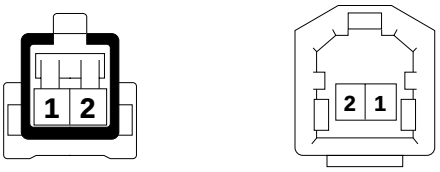		
L-5	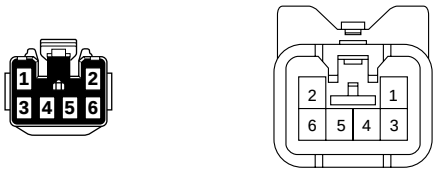		
L-6	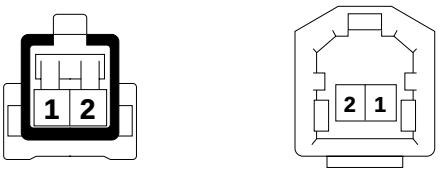		

No.	Connector face	No.	Connector face
M-1	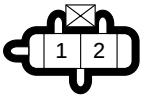	M-11	
M-2	NOT USED	M-12	
M-3	NOT USED	M-13	NOT USED
M-4	NOT USED	M-14	NOT USED
M-5	NOT USED	M-15	
M-6	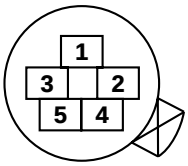	M-16	NOT USED
M-7	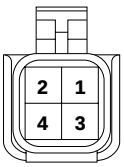	M-17	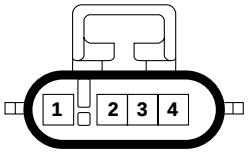 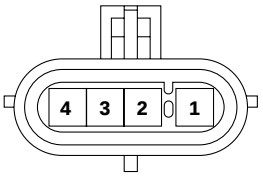
M-8		M-18	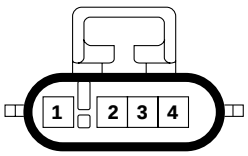 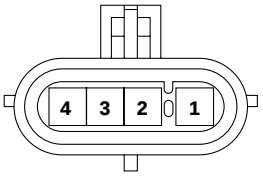
M-9	NOT USED	M-19	NOT USED
M-10	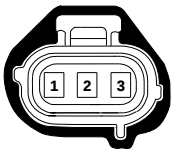	M-20	NOT USED

No.	Connector face	No.	Connector face
M-21	NOT USED		
M-22			
M-23			
M-24			
M-25	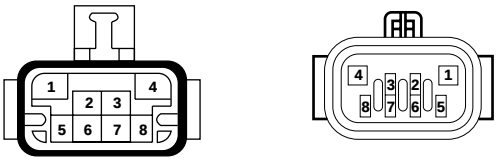		
M-26			

No.	Connector face	No.	Connector face
P-1	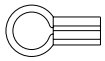	P-10	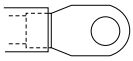
P-2	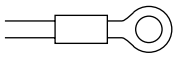	P-11	NOT USED
P-3		P-12	NOT USED
P-4	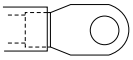	P-13	NOT USED
P-5	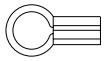	P-14	NOT USED
P-6	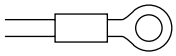	P-15	NOT USED
P-7	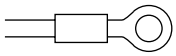	P-16	NOT USED
P-8 (6V*1)	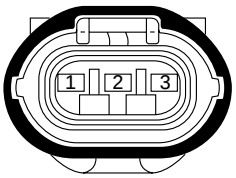	P-17	
P-8 (4JG2)	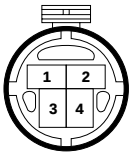	P-18	
P-9	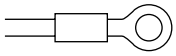	P-19	

No.	Connector face	No.	Connector face
R-1		R-11	
R-2		R-12	
R-3	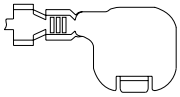	R-12	 (South Africa, China)
R-4	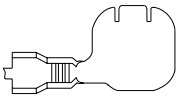	R-13	
R-5		R-13	 (South Africa, China)
R-6		R-14	NOT USED
R-7	NOT USED	R-15	NOT USED
R-8		R-16	
R-9	NOT USED		
R-10			

No.	Connector face	No.	Connector face
S-1	NOT USED		
S-2			
S-3			
S-4			
S-5	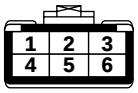		

No.	Connector face	No.	Connector face
T-1	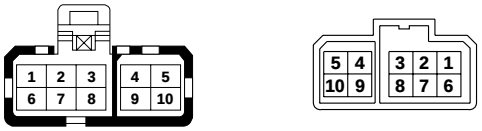	T-11	
T-2		T-12	
T-3		T-13	
T-4			
T-5			
T-6			
T-7			
T-8			
T-9			
T-10			

No.	Connector face	No.	Connector face
U-1			
U-2	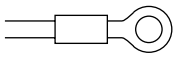		
U-3	**NOT USED**		
U-4	**NOT USED**		
U-5	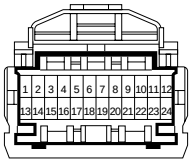		
U-6			

No.	Connector face	No.	Connector face
X-1	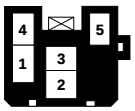	X-11	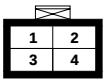
X-2	NOT USED	X-12	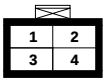
X-3	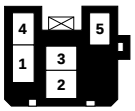	X-13	NOT USED
X-4	NOT USED	X-14	NOT USED
X-5	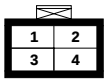	X-15	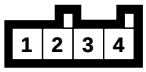
X-6	NOT USED	X-16	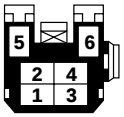
X-7	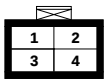	X-17 (6V*1)	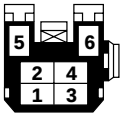
X-8	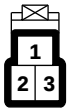	X-17 (4JG2)	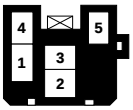
X-9	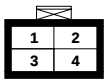	X-18	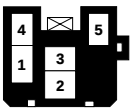
X-10	NOT USED	X-19	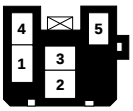

No.	Connector face	No.	Connector face
X-20	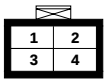		
X-21	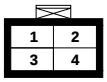		
X-22	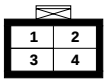		
X-23	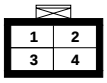		

MEMO

METER AND GAUGE

CONTENTS

Service Precaution 8E–1
General Description 8E–1
Meter Assembly 8E–2
General Description 8E–2
Layout for Meters/Gauges, Warning Lights, Indicator Lights and Illumination Lights . . . 8E–2
Table for Meter/Gauge Connector Terminal Connections 8E–8
Removal 8E–14
Installation 8E–14
Warning Light Bulb, Indicator Light Bulb, Illumination Light Bulb, A/T Indicator Light Bulb 8E–14
Removal 8E–14
Installation 8E–14
Vehicle Speed Sensor 8E–15
Removal 8E–15
Installation 8E–15
Fuel Tank Unit 8E–15
Removal 8E–15
Installation 8E–15
Multi Meter 8E–16
Removal 8E–16
Installation 8E–16
Ambient Sensor 8E–16
Removal 8E–16
Installation 8E–16
Main Data and Specifications 8E–17

Service Precaution

WARNING: IF SO EQUIPPED WITH A SUPPLEMENTAL RESTRAINT SYSTEM (SRS), REFER TO THE SRS COMPONENT AND WIRING LOCATION VIEW IN ORDER TO DETERMINE WHETHER YOU ARE PERFORMING SERVICE ON OR NEAR THE SRS COMPONENTS OR THE SRS WIRING. WHEN YOU ARE PERFORMING SERVICE ON OR NEAR THE SRS COMPONENTS OR THE SRS WIRING, REFER TO THE SRS SERVICE INFORMATION. FAILURE TO FOLLOW WARNINGS COULD RESULT IN POSSIBLE AIR BAG DEPLOYMENT, PERSONAL INJURY, OR OTHERWISE UNNEEDED SRS SYSTEM REPAIRS.

CAUTION: Always use the correct fastener in the proper location. When you replace a fastener, use ONLY the exact part number for that application. ISUZU will call out those fasteners that require a replacement after removal. ISUZU will also call out the fasteners that require thread lockers or thread sealant. UNLESS OTHERWISE SPECIFIED, do not use supplemental coatings (Paints, greases, or other corrosion inhibitors) on threaded fasteners or fastener joint interfaces. Generally, such coatings adversely affect the fastener torque and the joint clamping force, and may damage the fastener. When you install fasteners, use the correct tightening sequence and specifications. Following these instructions can help you avoid damage to parts and systems.

General Description

The circuit consists of the starter switch, meter assembly, vehicle speed sensor, transmission switch, lighting switch, turn signal switch, thermo unit, oil pressure unit, Powertrain Control Module (PCM), fuel tank unit, 4WD switch, oil pressure switch, parking brake switch, brake fluid switch, seat belt switch, illumination controller, multi meter and ambient sensor.

Meter Assembly

General Description

The meter assembly has the speedometer, tachometer, engine coolant temperature gauge, fuel gauge and warning/indicator lights. In addition, the meter assembly containing TOD (Torque on Demand) has the TOD indicator light, or the meter assembly not containing TOD has the voltmeter and oil pressure gauge instead of the TOD indicator.

Layout for Meters/Gauges, Warning Lights, Indicator Lights and Illumination Lights

Meter Assembly–Gasoline W/O TOD (Front View)

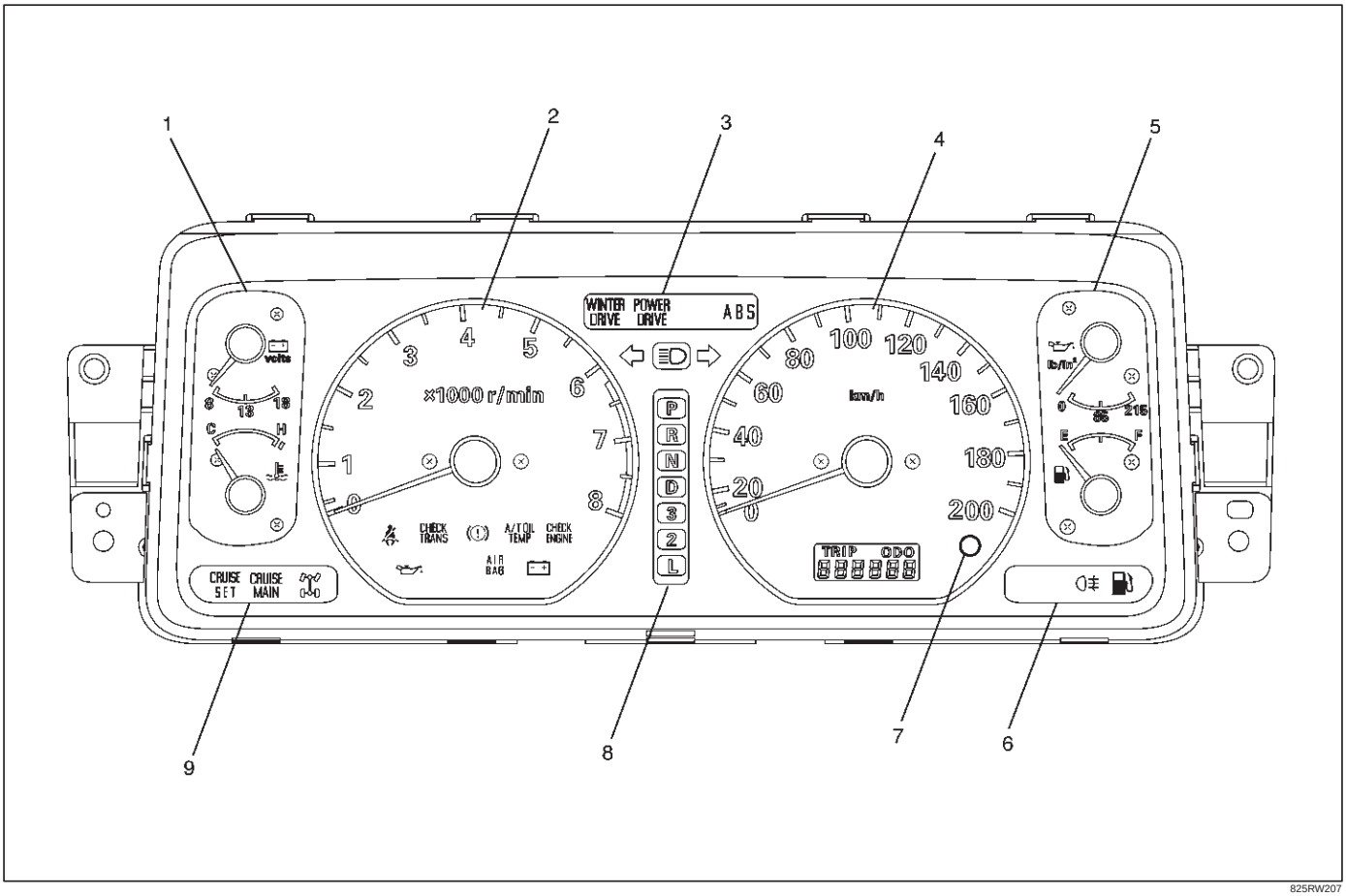

825RW207

Legend

(1) Voltmeter & Engine Coolant Temperature Gauge
(2) Tachometer
(3) Warning Light Lens
(4) Speedometer
(5) Oil Pressure Gauge & Fuel Gauge
(6) Warning Light Lens
(7) Reset Knob
(8) A/T Shift Indicator
(9) Warning Light Lens

Meter Assembly–Gasoline W/O TOD (Rear View)

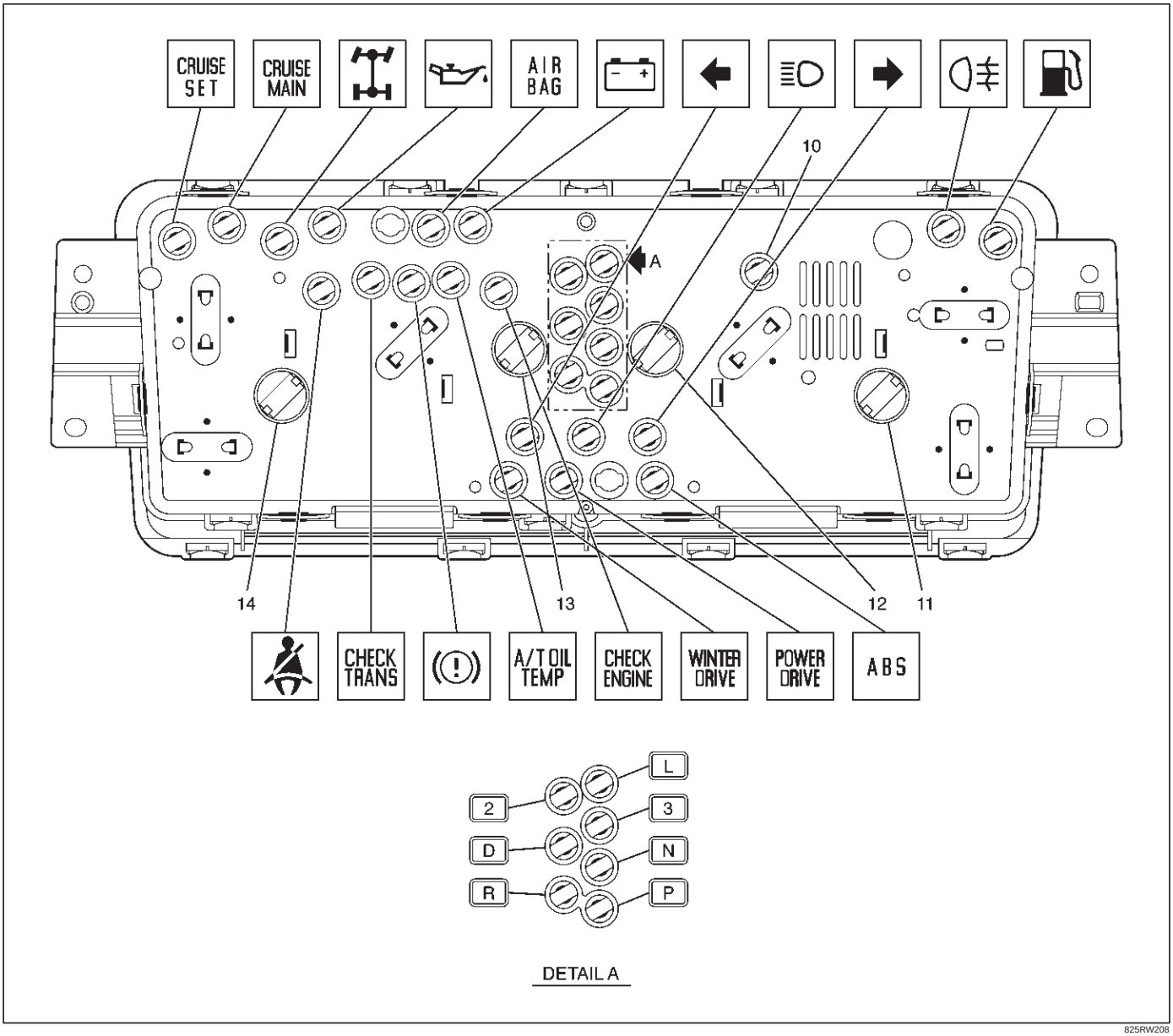

825RW208

Legend

(10) LCD Light
(11) Illumination Light
(12) Illumination Light
(13) Illumination Light
(14) Illumination Light

Meter Assembly–Gasoline W/TOD (Front View)

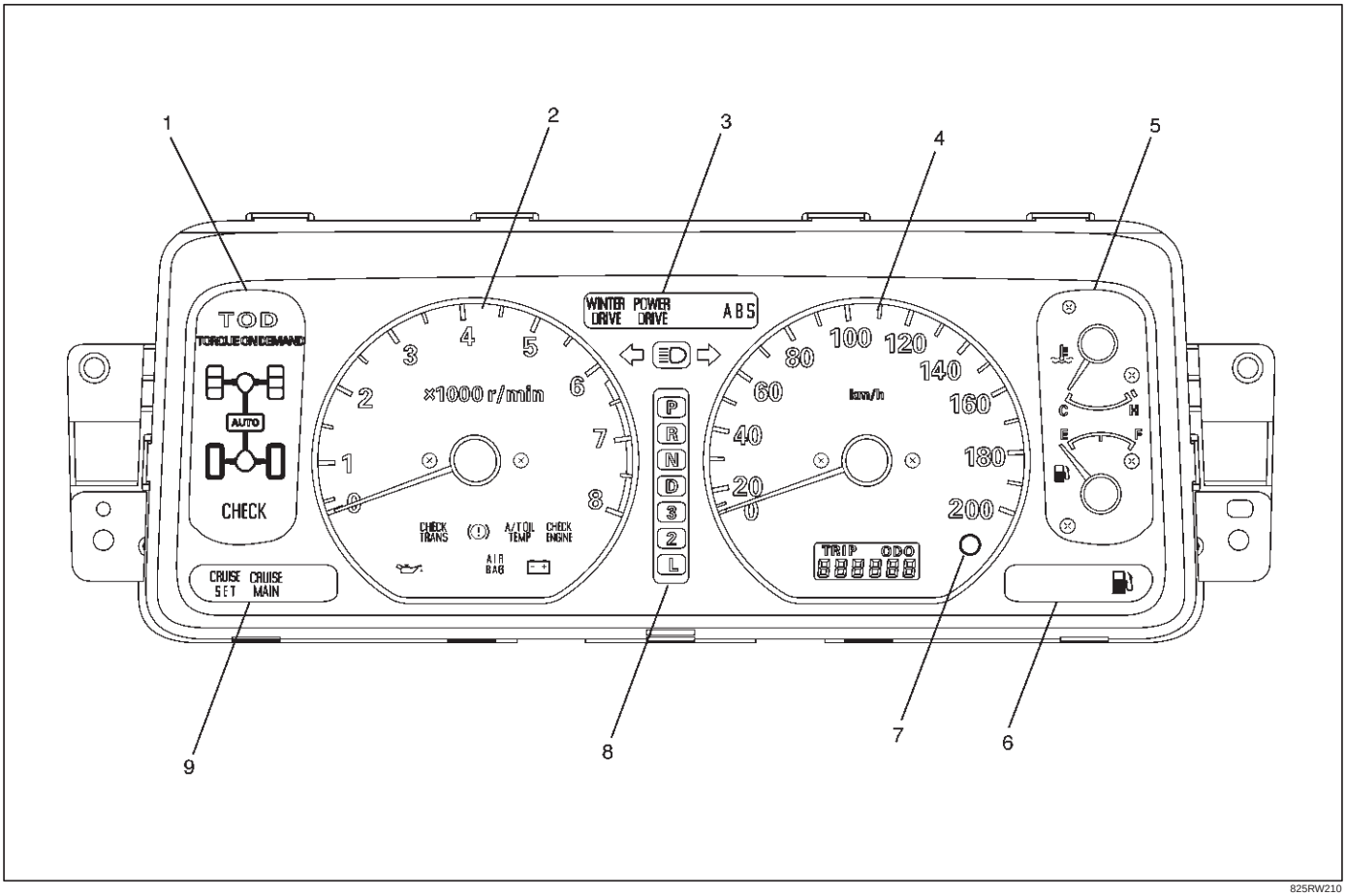

825RW210

Legend

(1) TOD Indicator
(2) Tachometer
(3) Warning Light Lens
(4) Speedometer
(5) Coolant Temperature Gauge & Fuel Gauge
(6) Warning Light Lens
(7) Reset Knob
(8) A/T Shift Indicator
(9) Warning Light Lens

Meter Assembly–Gasoline W/TOD (Rear View)

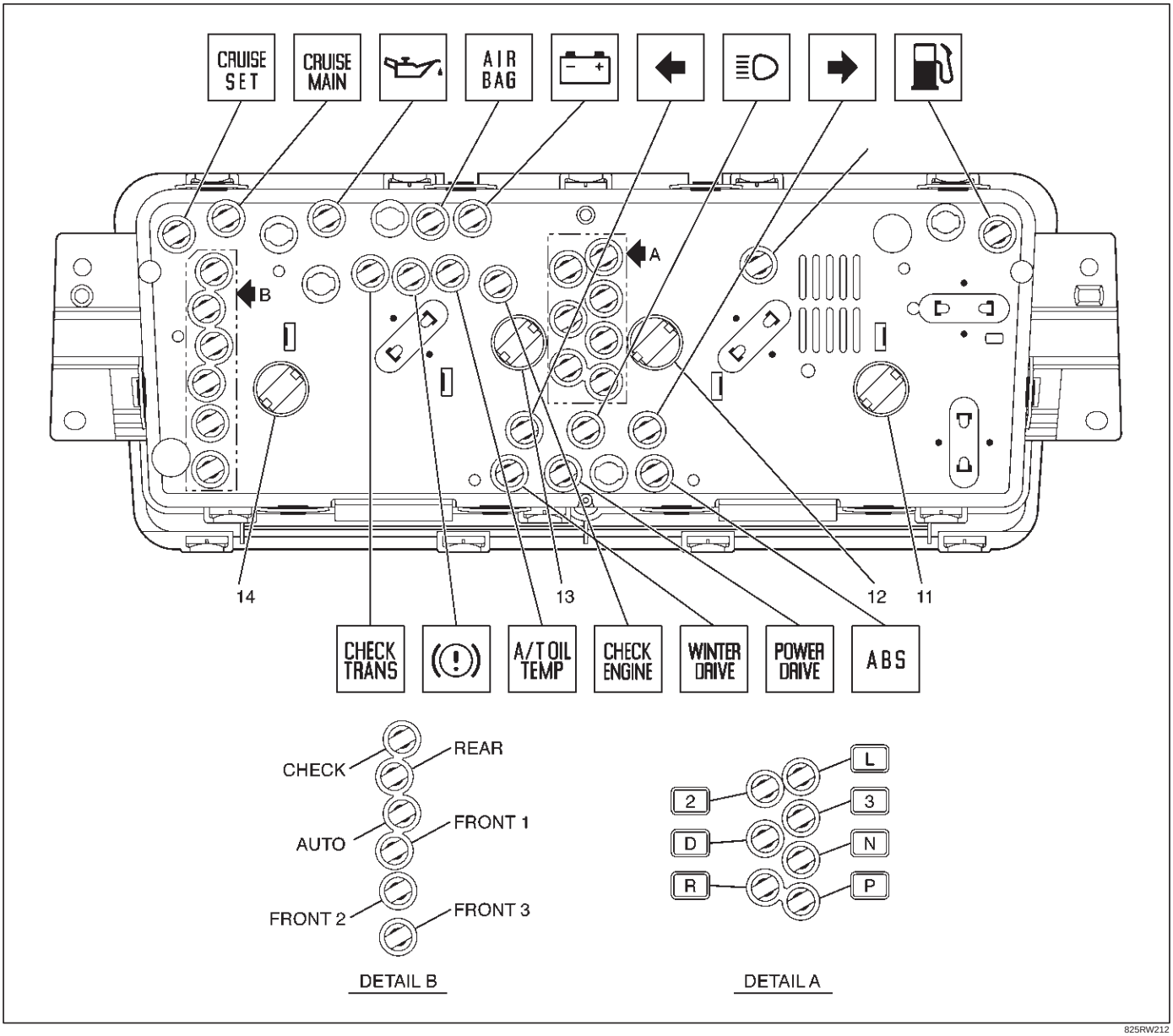

825RW212

Legend

(10) LCD Light
(11) Illumination Light
(12) Illumination Light
(13) Illumination Light
(14) Illumination Light

Meter Assembly–Diesel (Front View)

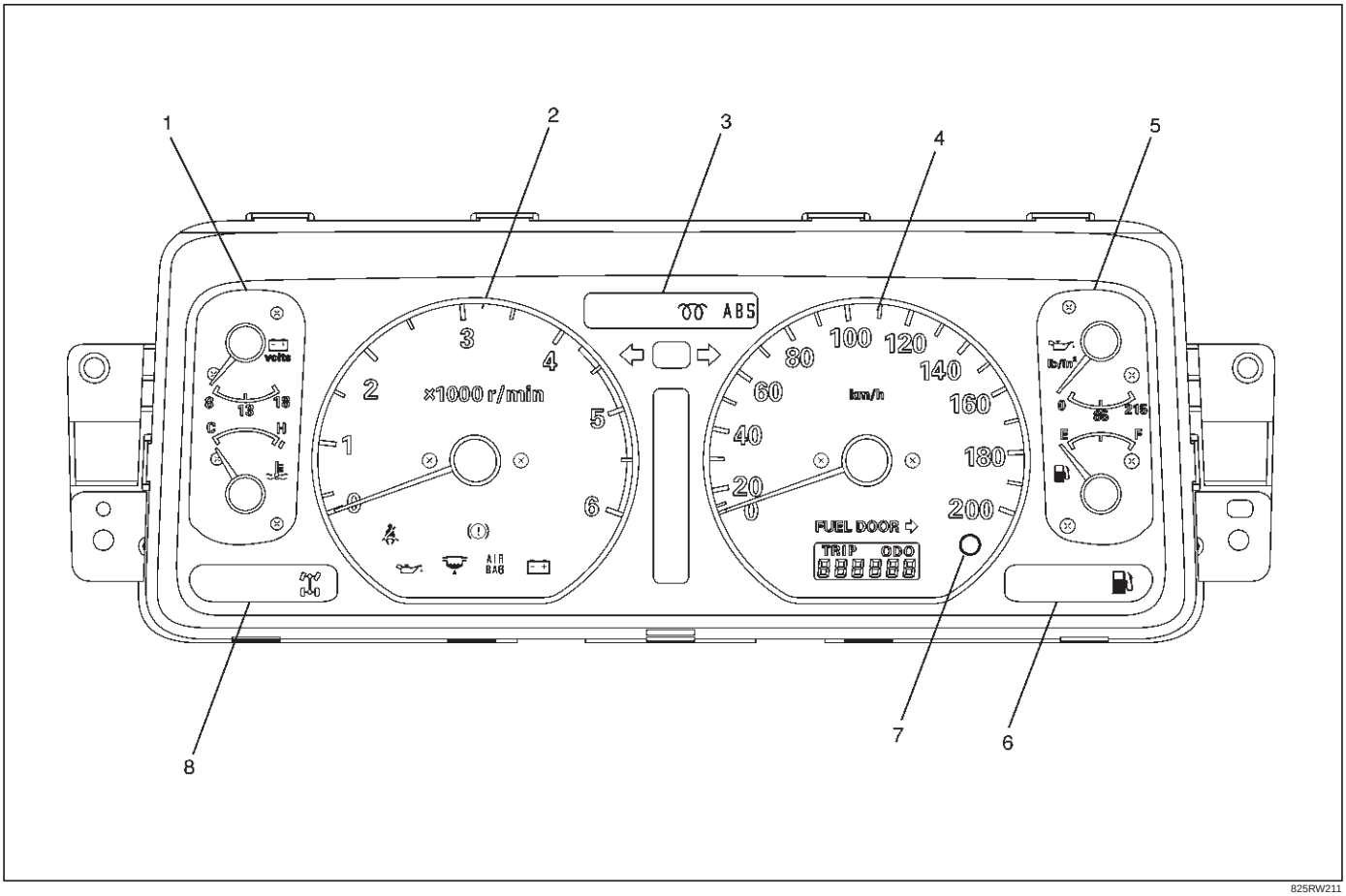

825RW211

Legend

(1) TOD Indicator
(2) Tachometer
(3) Warning Light Lens
(4) Speedometer
(5) Coolant Temperature Gauge & Fuel Gauge
(6) Warning Light Lens
(7) Reset Knob
(8) Warning Light Lens

Meter Assembly–Diesel (Rear View)

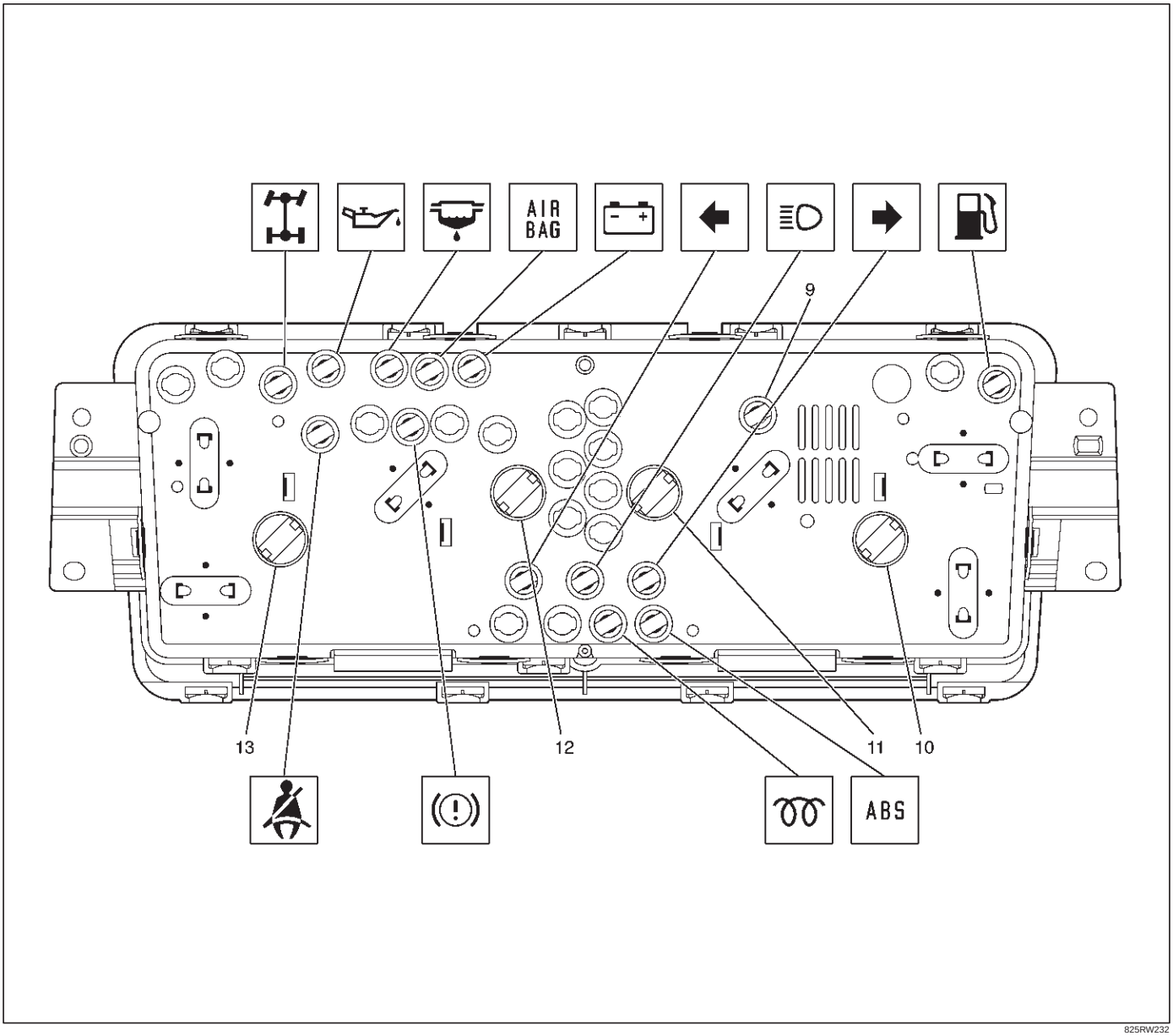

825RW232

Legend

(9) LCD Light
(10) Illumination Light
(11) Illumination Light
(12) Illumination Light
(13) Illumination Light

Table for Meter/Gauge Connector Terminal Connections

Meter Assembly–Gasoline W/O TOD–1

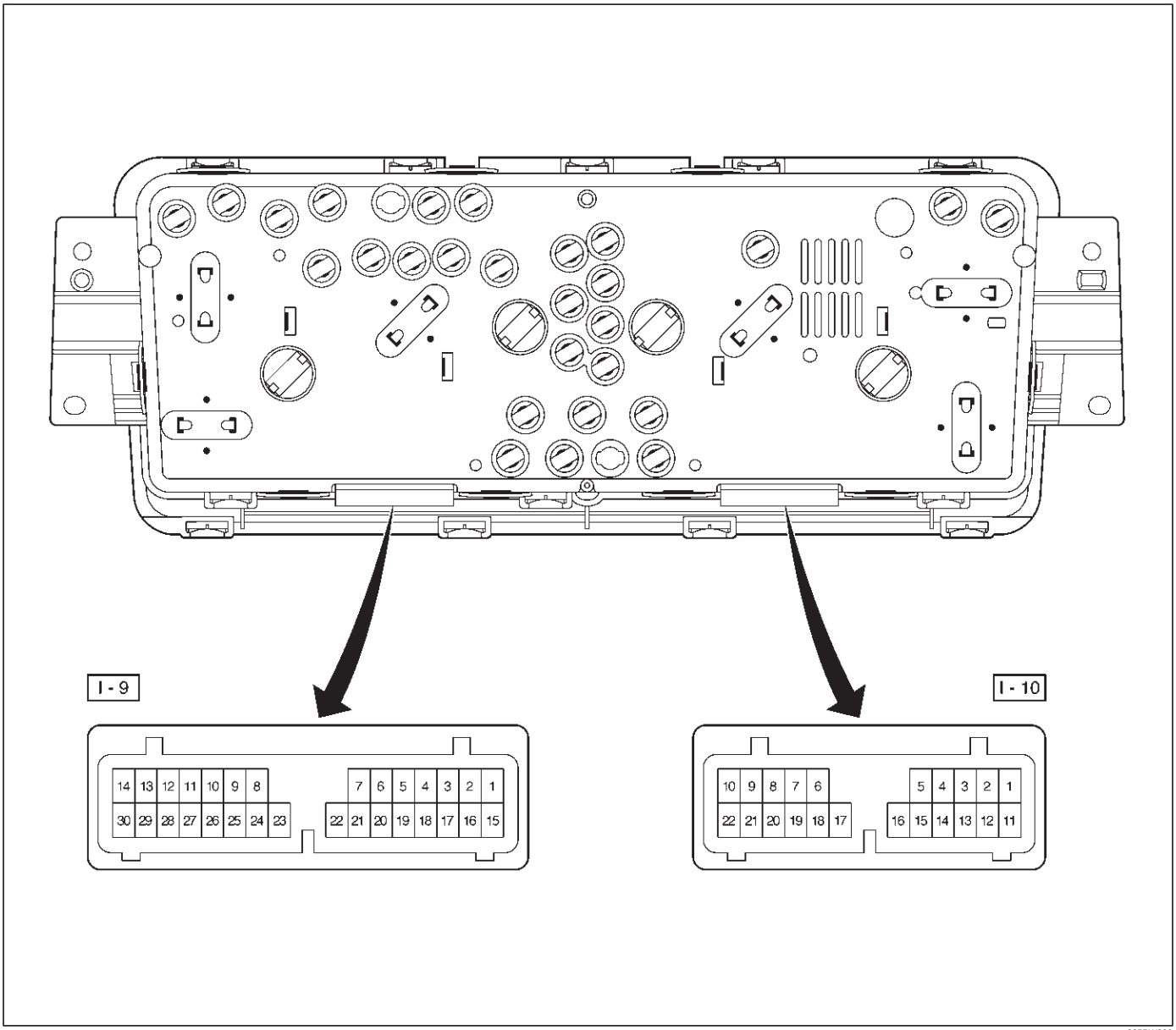

825RW206

Meter Assembly–Gasoline W/O TOD–2

Connector No. I–9	
Terminal	**Function**
1	A/T oil temp warning light
2	Seat belt warning light
3	Check trans warning light
4	Brake warning light
5	Check engine warning light
6	Charge warning light
7	Cigarette lighter illumination light
8	Illumination controller
9	Tachometer
10	D position (A/T)
11	—
12	A/T shift indicator control unit
13	—
14	2 position (A/T)
15	Starter switch
16	Cruise set indicator light
17	Cruise main indicator light
18	4WD indicator light
19	Ground (Gauge)
20	—
21	Winter drive indicator light
22	Oil pressure warning light
23	—
24	Air bag warning light
25	Power drive indicator light
26	—
27	—
28	Turn signal indicator light (Left)
29	—
30	Ground

Connector No. I–10	
Terminal	**Function**
1	Turn signal indicator light (Right)
2	L position (A/T)
3	R position (A/T)
4	Engine coolant temperature gauge
5	Speedometer
6	—
7	—
8	Battery (+)
9	—
10	Rear fog light
11	P position (A/T)
12	N position (A/T)
13	3 position (A/T)
14	High-beam indicator light (–)
15	High-beam indicator light (+)
16	ABS indicator light
17	—
18	Fuel warning light
19	Oil pressure gauge
20	Fuel gauge
21	—
22	—

Meter Assembly–Gasoline W/TOD–1

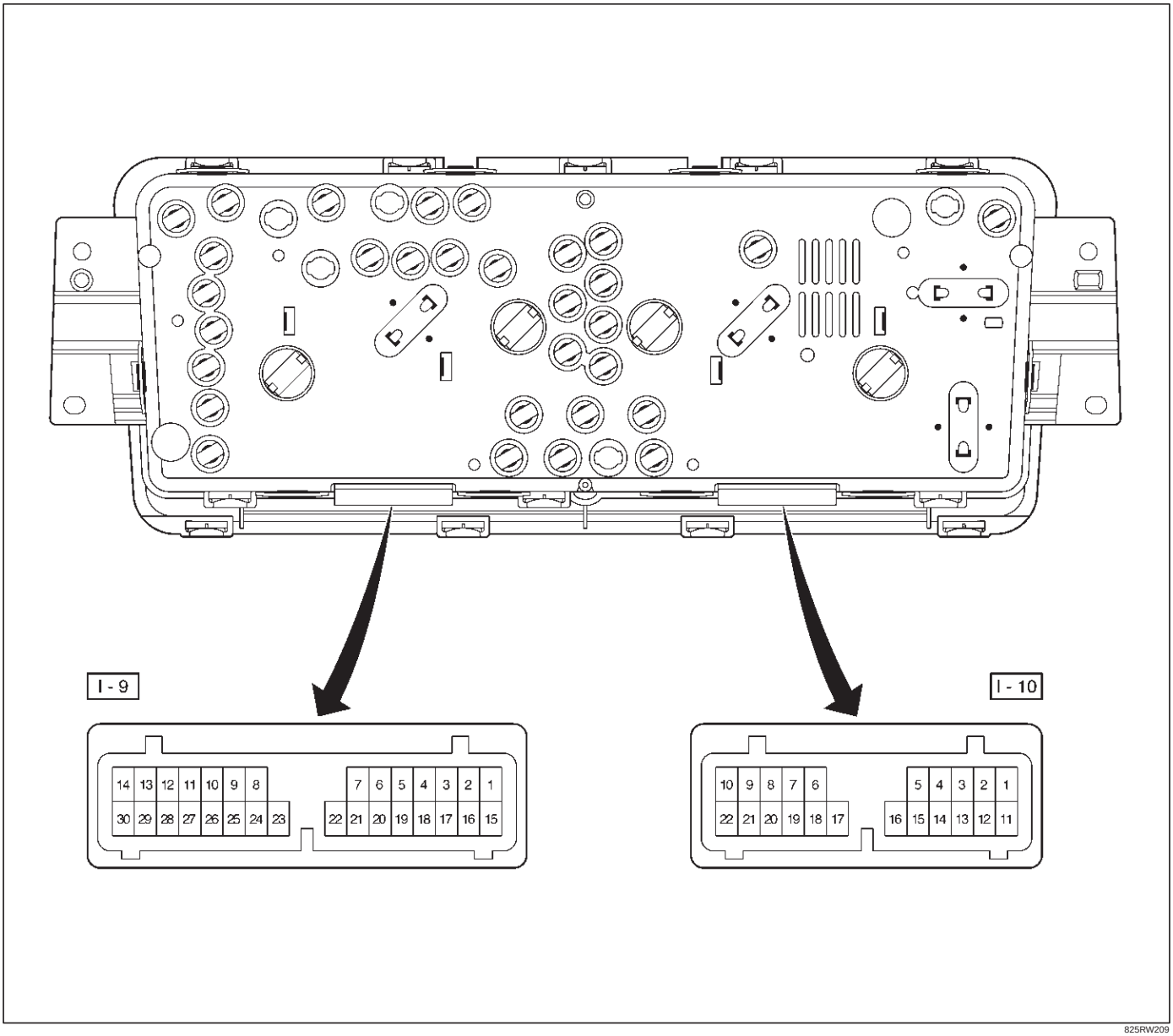

825RW209

Meter Assembly–Gasoline W/TOD–2

Connector No. I–9	
Terminal	**Function**
1	—
2	Air bag warning light
3	A/T oil temp warning light
4	Charge warning light
5	Check engine warning light
6	Check trans warning light
7	Brake warning light
8	—
9	Tachometer
10	—
11	Turn signal indicator light (Left)
12	A/T shift indicator control unit
13	2 position (A/T)
14	D position (A/T)
15	Rear (TOD)
16	Auto (TOD)
17	Check (TOD)
18	Cruise set indicator light
19	Cruise main indicator light
20	Oil pressure warning light
21	Front “1” (TOD)
22	Front “2” (TOD)
23	Front “3” (TOD)
24	Cigarette lighter illumination light
25	Illumination controller
26	Starter switch
27	—
28	Winter drive indicator light
29	Power drive indicator light
30	—

Connector No. I–10	
Terminal	**Function**
1	Turn signal indicator light (Right)
2	L position (A/T)
3	R position (A/T)
4	Check engine warning light
5	Speedometer
6	—
7	—
8	Battery (+)
9	Engine coolant temperature gauge
10	Ground
11	P position (A/T)
12	N position (A/T)
13	3 position (A/T)
14	High beam indicator light (–)
15	High beam indicator light (+)
16	ABS indicator light
17	—
18	Fuel warning light
19	—
20	Fuel gauge
21	Ground (Gauge)
22	—

Meter Assembly–Diesel–1

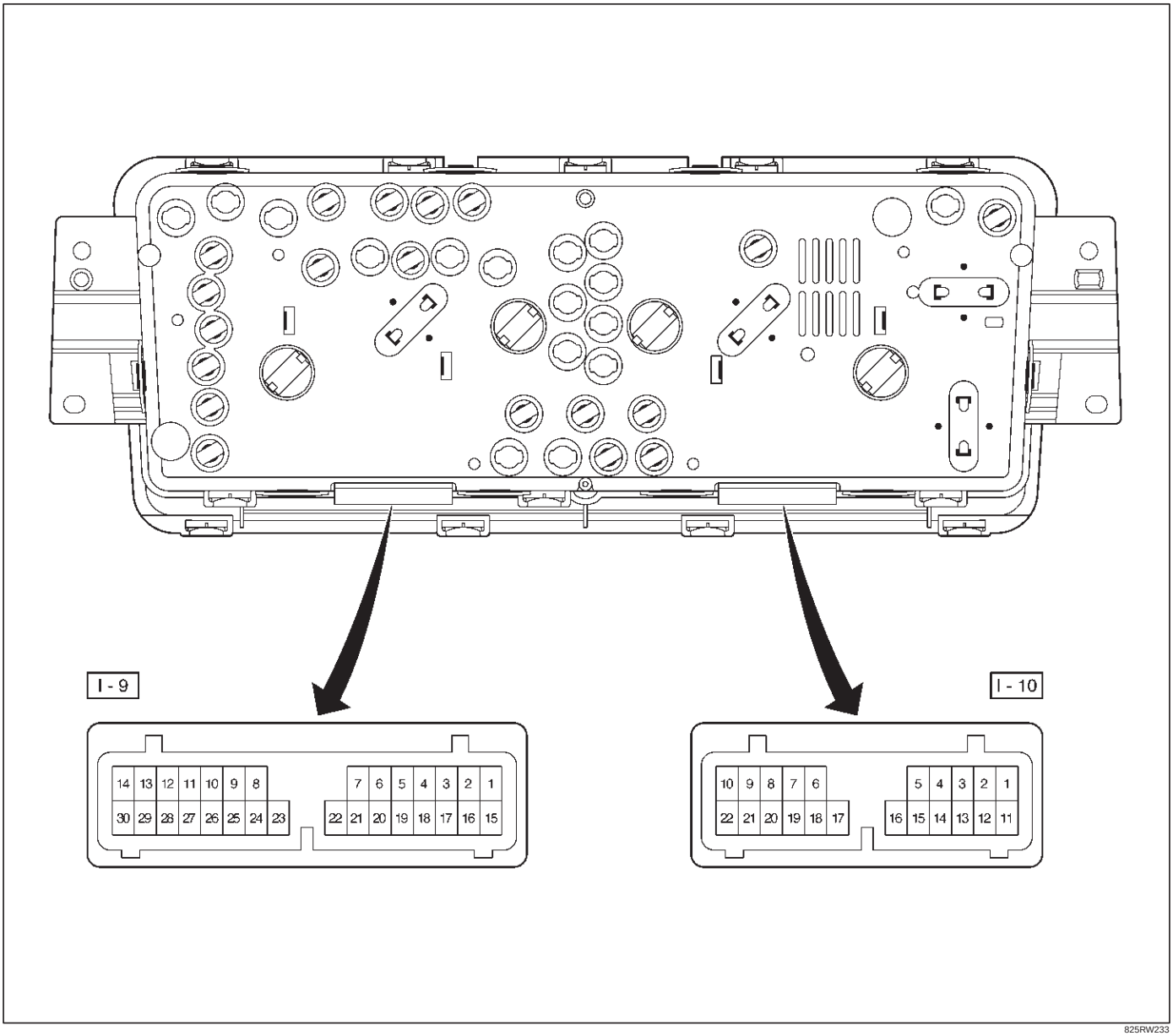

825RW233

Meter Assembly–Diesel–2

Connector No. I–9	
Terminal	**Function**
1	—
2	Seat belt warning light
3	—
4	Brake warning light
5	—
6	Charge warning light
7	Cigarette lighter illumination light
8	Illumination controller
9	Tachometer
10	—
11	—
12	—
13	—
14	—
15	Starter switch
16	—
17	—
18	4WD indicator light
19	Ground (Gauge)
20	—
21	—
22	Oil pressure warning light
23	Water sedimenter
24	Air bag warning light
25	—
26	Glow indicator light
27	—
28	Turn signal indicator light (Left)
29	—
30	Ground

Connector No. I–10	
Terminal	**Function**
1	Turn signal indicator light (Right)
2	—
3	—
4	Engine coolant temperature gauge
5	Speedometer
6	—
7	—
8	Battery (+)
9	—
10	—
11	—
12	—
13	—
14	High-beam indicator light (–)
15	High-beam indicator light (+)
16	ABS indicator light
17	—
18	Fuel warning light
19	Oil pressure gauge
20	Fuel gauge
21	—
22	—

Removal

1. Disconnect the battery ground cable.
2. Remove the front console assembly(1).
   Refer to the Instrument Panel Assembly in Body Structure section.
3. Remove the lower cluster assembly(2).
   Refer to the Instrument Panel Assembly in Body Structure section.
4. Remove the instrument panel driver lower cover(3).
   Refer to the Instrument Panel Assembly in Body Structure section.

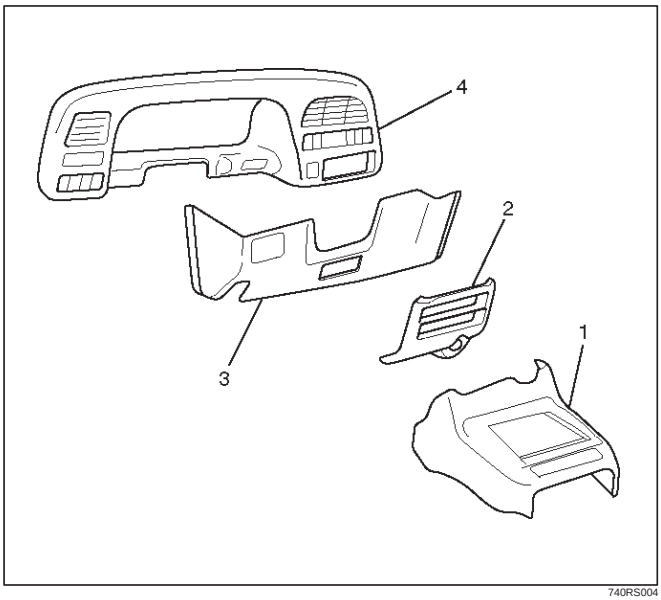

740RS004

5. Remove four fixing screws and disconnect the meter connectors to remove the meter assembly(5).

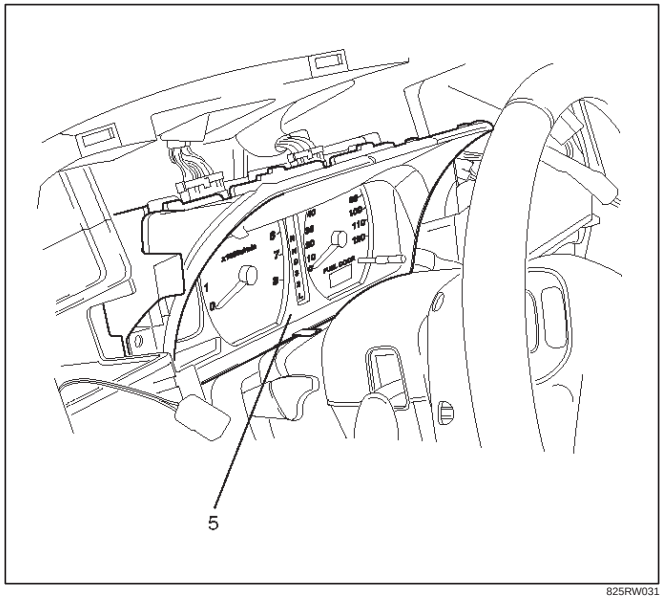

825RW031

CAUTION: The removed meter assembly should be placed upright or with its face side up.

Installation

To install, follow the removal steps in the reverse order.

Warning Light Bulb, Indicator Light Bulb, Illumination Light Bulb, A/T Indicator Light Bulb

Removal

1. Disconnect the battery ground cable.
2. Remove the meter assembly(1).
   Refer to the Meter Assembly removal steps in this section.
3. Hold the bulb socket by hand and rotate it counterclockwise to remove the socket & bulb(2) from the meter body.

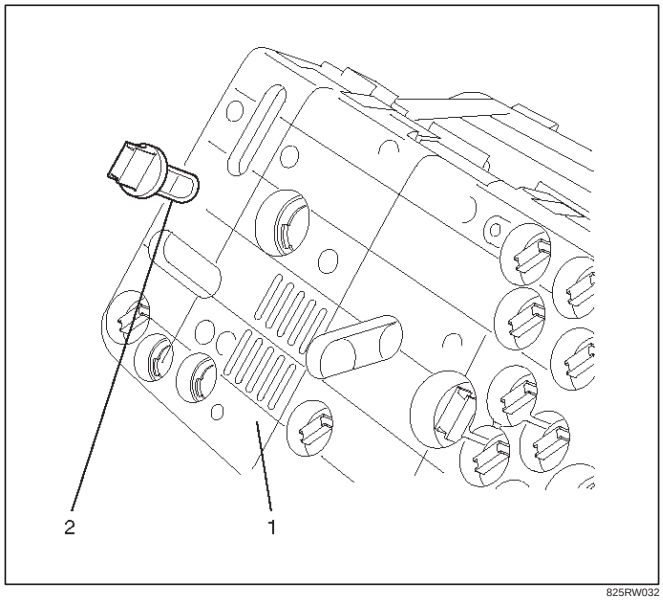

825RW032

Installation

To install, follow the removal steps in the reverse order.

Vehicle Speed Sensor

Removal

1. Disconnect the battery ground cable.
2. Disconnect the connector, remove the vehicle speed sensor body by rotating it and then remove the vehicle speed sensor(1).

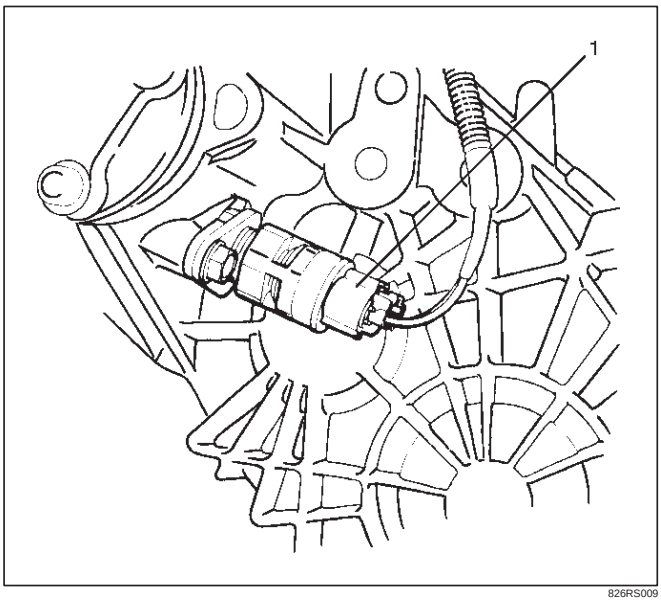

826RS009

Installation

To install, follow the removal steps in the reverse order, noting the following point.

1. Tighten the vehicle speed sensor to the specified torque.

Torque: 27 N·m (2.8 kg·m/20 lb ft)

Fuel Tank Unit

Removal

1. Disconnect the battery ground cable.
2. Remove the fuel tank(1).
   Refer to the Fuel Tank removal steps in Engine section
3. Disconnect the connectors, remove five screws and then remove the fuel tank unit(2).

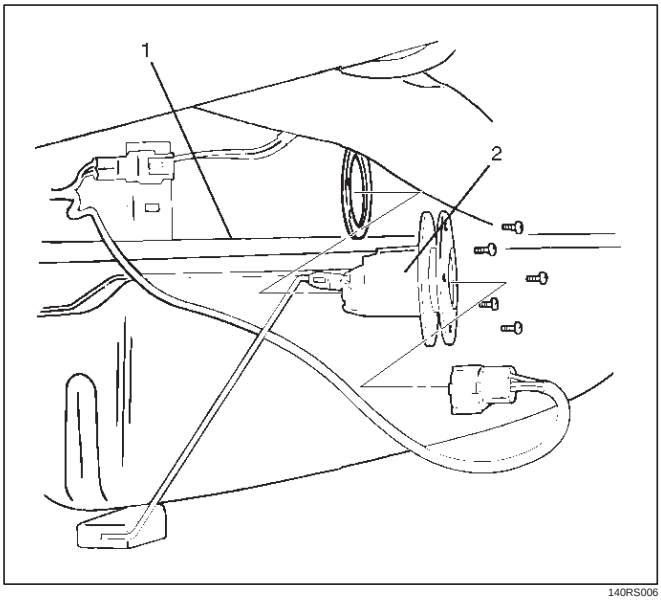

140RS006

Installation

To install, follow the removal steps in the reverse order.

Multi Meter

Removal

1. Disconnect the battery ground cable.
2. Remove two caps, two screws and disconnect the connector to remove the multi meter(1).

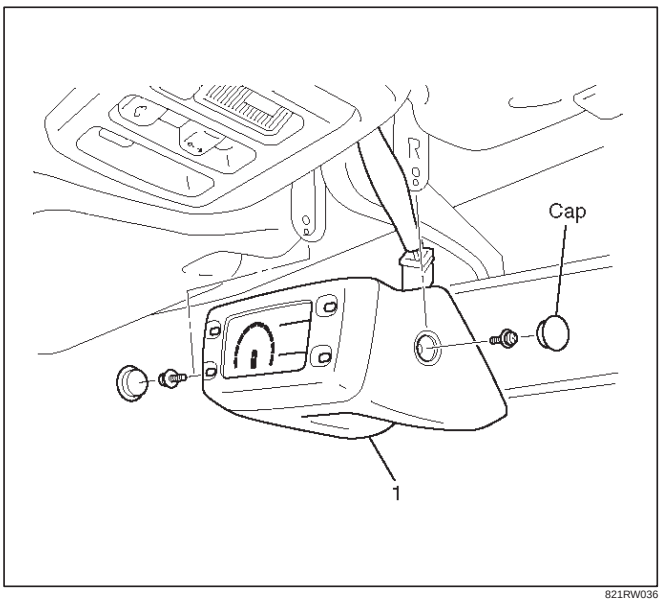

821RW036

Installation

To install, follow the removal steps in the reverse order.

Ambient Sensor

Removal

1. Disconnect the battery ground cable.
2. Disconnect the connector and remove the nut to remove the ambient sensor(1).

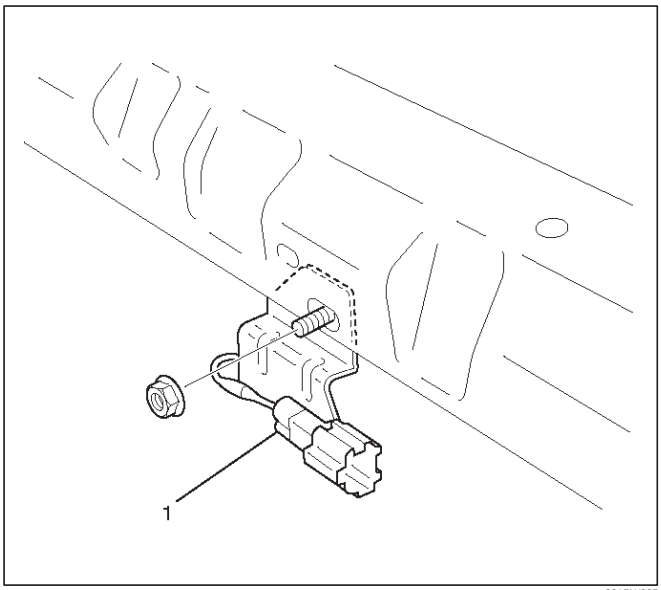

821RW035

Installation

To install, follow the removal steps in the reverse order.

Main Data and Specifications

Torque Specifications

Application	N·m	kg·m	Lb Ft	Lb In
Vehicle Speed Sensor Fixing	27	2.8	20	—

MEMO

BODY AND ACCESSORIES

BODY STRUCTURE

CONTENTS

Service Precaution 8F–3
Frame 8F–3
General Description 8F–3
Frame Dimensions (L W B) 8F–4
Frame Dimensions (S W B) 8F–5
General Description 8F–6
Front Bumper 8F–6
Parts Location 8F–6
Removal 8F–7
Installation 8F–7
Front Bumper Slider Bracket 8F–7
Removal 8F–7
Installation 8F–7
Rear Bumper 8F–8
Parts Location 8F–8
Removal 8F–8
Installation 8F–9
Parts Location (W/Rear Combination Light and License Light) 8F–10
Removal 8F–10
Installation 8F–11
Rear Bumper Slider 8F–12
Removal 8F–12
Installation 8F–12
General Description 8F–13
Cowl Cover 8F–13
Parts Location 8F–13
Removal 8F–13
Installation 8F–14
Engine Hood 8F–14
Removal 8F–14
Installation 8F–14
Air Bulge 8F–15
Parts Location 8F–15
Removal 8F–15
Installation 8F–15
Engine Hood Hinge 8F–16
Parts Location 8F–16
Removal 8F–16
Installation 8F–16
Engine Hood Lock 8F–17
Parts Location 8F–17
Removal 8F–17
Installation 8F–18
Radiator Grille And Front End Lower Panel . 8F–18
Parts Location 8F–18
Removal 8F–18
Installation 8F–19
Front Fender Panel 8F–20
Parts Location 8F–20
Removal 8F–20
Installation 8F–21
Body Mounting 8F–22
Parts Location 8F–22
Removal (No.1 – No. 2) 8F–22
Removal (No. 3 — No. 6) 8F–23
Installation 8F–24
General Description 8F–25
Body Dimension 8F–26
Instrument Panel Assembly 8F–46
Parts Location 8F–46
Removal 8F–47
Installation 8F–51
Cross Beam Assembly 8F–52
Parts Location 8F–52
Removal 8F–52
Installation 8F–53
Front Door Assembly 8F–54
Parts Location 8F–54
Removal 8F–54
Installation 8F–54
Rear Door Assembly 8F–55
Parts Location 8F–55
Removal 8F–55
Installation 8F–56
Door Strikers 8F–56
Adjustment 8F–56
Door Check Arm Assembly (Front & Rear) . . 8F–57
Parts Location 8F–57
Removal 8F–57
Installation 8F–58
Front Window Regulator, Glass And Glass Run 8F–58
Parts Location 8F–58
Removal 8F–58
Installation 8F–60
Rear Window Regulator And Glass 8F–61
Parts Location 8F–61

Removal 8F–61
Installation 8F–62
Rear Door Fixed Glass And Glass Run 8F–63
Parts Location 8F–63
Removal 8F–63
Installation 8F–64
Front Door Sash Moulding 8F–65
Parts Location 8F–65
Removal 8F–65
Installation 8F–65
Rear Door Moulding 8F–66
Parts Location 8F–66
Removal 8F–66
Installation 8F–66
Front Door Waist Seal 8F–67
Parts Location 8F–67
Removal 8F–67
Installation 8F–67
Rear Door Waist Seal 8F–68
Parts Location 8F–68
Removal and Installation 8F–68
Front Door Weatherstrip 8F–69
Parts Location 8F–69
Removal 8F–69
Installation 8F–70
Rear Door Weatherstrip 8F–71
Parts Location 8F–71
Removal and Installation 8F–71
Front Door Seal Finisher 8F–72
Parts Location 8F–72
Removal 8F–72
Installation 8F–72
Rear Door Seal Finisher 8F–73
Parts Location 8F–73
Removal 8F–73
Installation 8F–73
Tailgate Assembly (LH) 8F–74
Parts Location 8F–74
Removal 8F–74
Installation 8F–75
Tailgate Assembly (RH) 8F–76
Parts Location 8F–76
Removal 8F–76
Installation 8F–77
Tailgate Strikers 8F–78
Adjustment 8F–78
Tailgate Stopper Assembly 8F–78
Parts Location 8F–78
Removal 8F–78
Installation 8F–78
Tailgate Dove-Tail 8F–79
Parts Location 8F–79
Removal 8F–79
Installation 8F–79
Tailgate Dove-Tail Striker 8F–80
Adjustment 8F–80
Tailgate Frame Cover (LH) 8F–81
Parts Location 8F–81
Removal 8F–81
Installation 8F–81
Tailgate Frame Cover (RH) 8F–82
Removal 8F–82
Installation 8F–82
Tailgate Sash Trim Cover 8F–83
Parts Location 8F–83
Removal 8F–83
Installation 8F–83
Tailgate Outer Weatherstrip 8F–84
Parts Location 8F–84
Removal 8F–84
Installation 8F–84
Tailgate Center Weatherstrip 8F–85
Parts Location 8F–85
Removal 8F–85
Installation 8F–85
Tailgate Main Weatherstrip 8F–86
Parts Location 8F–86
Removal 8F–86
Installation 8F–86
Spare Tire Carrier 8F–87
Parts Location 8F–87
Removal 8F–87
Installation 8F–87
Headlining 8F–88
Parts Location 8F–88
Removal 8F–88
Installation 8F–89
Rear Air Deflector 8F–90
Parts Location 8F–90
Removal 8F–90
Installation 8F–90
Roof Moulding 8F–92
Parts Location 8F–92
Removal 8F–92
Installation 8F–93
Windshield 8F–94
Parts Location 8F–94
Removal 8F–94
Installation 8F–95
Rear Quarter Side Glass 8F–99
Parts Location 8F–99
Removal 8F–99
Installation 8F–100
Tailgate Glass 8F–102

Parts Location 8F–102
Removal 8F–102
Installation 8F–103
Main Data and Specifications 8F–104
Special Tools 8F–115

Service Precaution

WARNING: THIS VEHICLE HAS A SUPPLEMENTAL RESTRAINT SYSTEM (SRS). REFER TO THE SRS COMPONENT AND WIRING LOCATION VIEW IN ORDER TO DETERMINE WHETHER YOU ARE PERFORMING SERVICE ON OR NEAR THE SRS COMPONENTS OR THE SRS WIRING. WHEN YOU ARE PERFORMING SERVICE ON OR NEAR THE SRS COMPONENTS OR THE SRS WIRING, REFER TO THE SRS SERVICE INFORMATION. FAILURE TO FOLLOW WARNINGS COULD RESULT IN POSSIBLE AIR BAG DEPLOYMENT, PERSONAL INJURY, OR OTHERWISE UNNEEDED SRS SYSTEM REPAIRS.

CAUTION: Always use the correct fastener in the proper location. When you replace a fastener, use ONLY the exact part number for that application. ISUZU will call out those fasteners that require a replacement after removal. ISUZU will also call out the fasteners that require thread lockers or thread sealant. UNLESS OTHERWISE SPECIFIED, do not use supplemental coatings (Paints, greases, or other corrosion inhibitors) on threaded fasteners or fastener joint interfaces. Generally, such coatings adversely affect the fastener torque and the joint clamping force, and may damage the fastener. When you install fasteners, use the correct tightening sequence and specifications. Following these instructions can help you avoid damage to parts and systems.

Frame

General Description

Proper frame alignment is important to assure normal vehicle life and performance of many other parts of the vehicle. If the vehicle has been involved in a fire, collision or has been overloaded, it is necessary to check the frame alignment.

Frame Dimensions (L W B)

This illustration is based on the gasoline engine and A/T model.

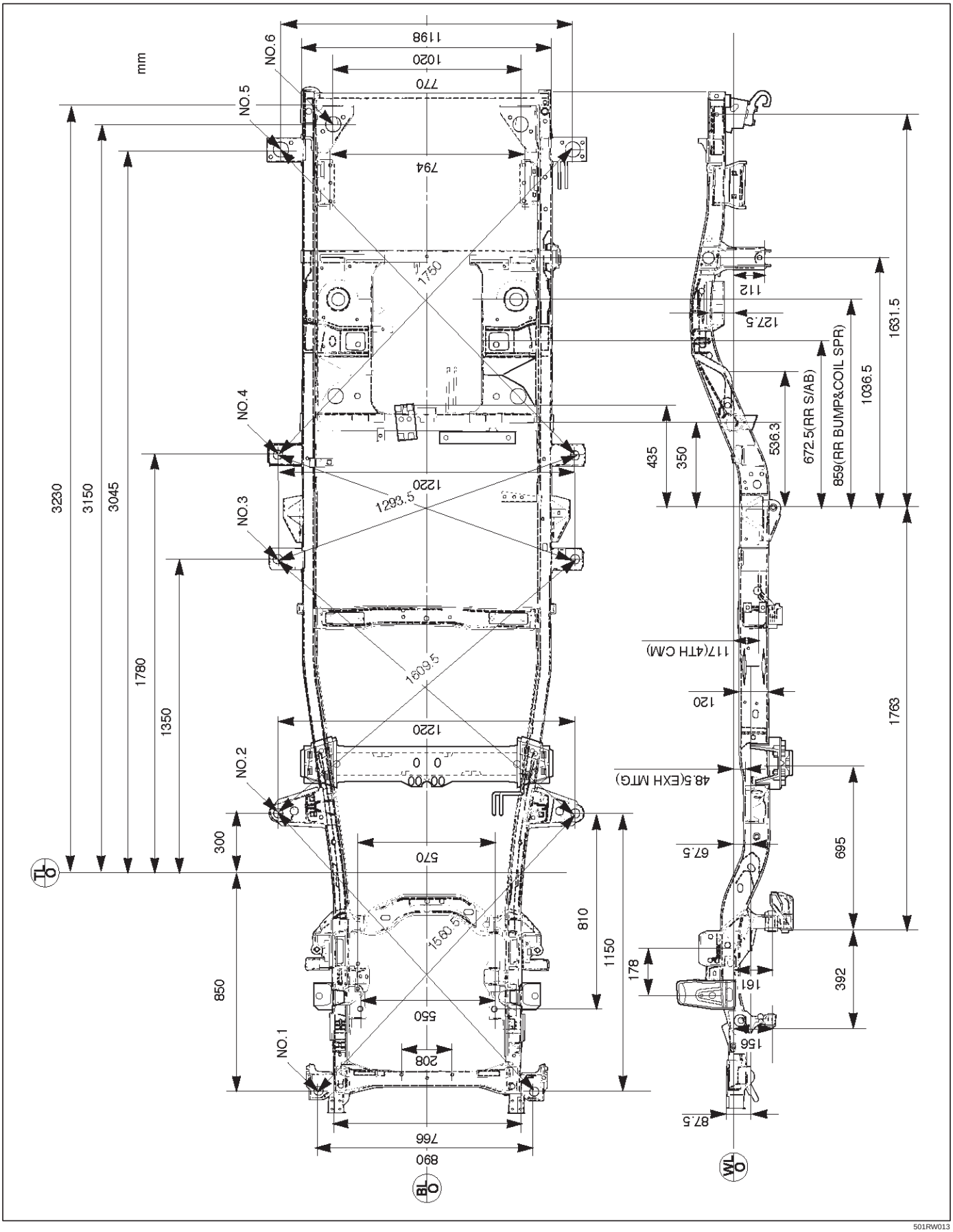

501RW013

Frame Dimensions (S W B)

This illustration is based on the gasoline engine and A/T model.

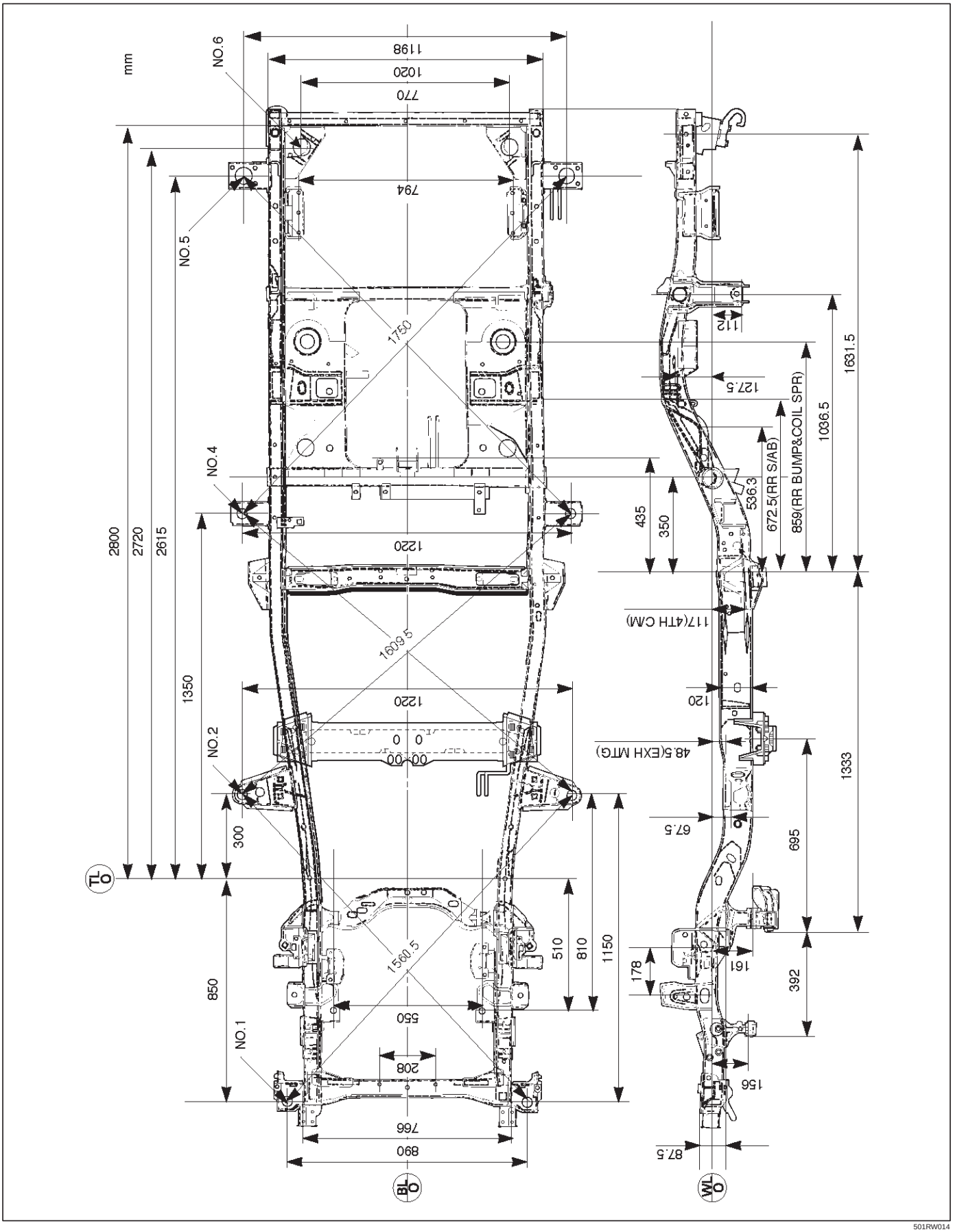

501RW014

General Description

This section describes how to remove and install front and rear bumpers. Each bumper is installed with two fixing bolts used on either side to fasten the backbar to the frame, a slider is used to fasten the bumper fascia to the fender panel. The bumpers can be removed by taking them out forward or backward after removing the two fixing bolts on either side.

Front Bumper

Parts Location

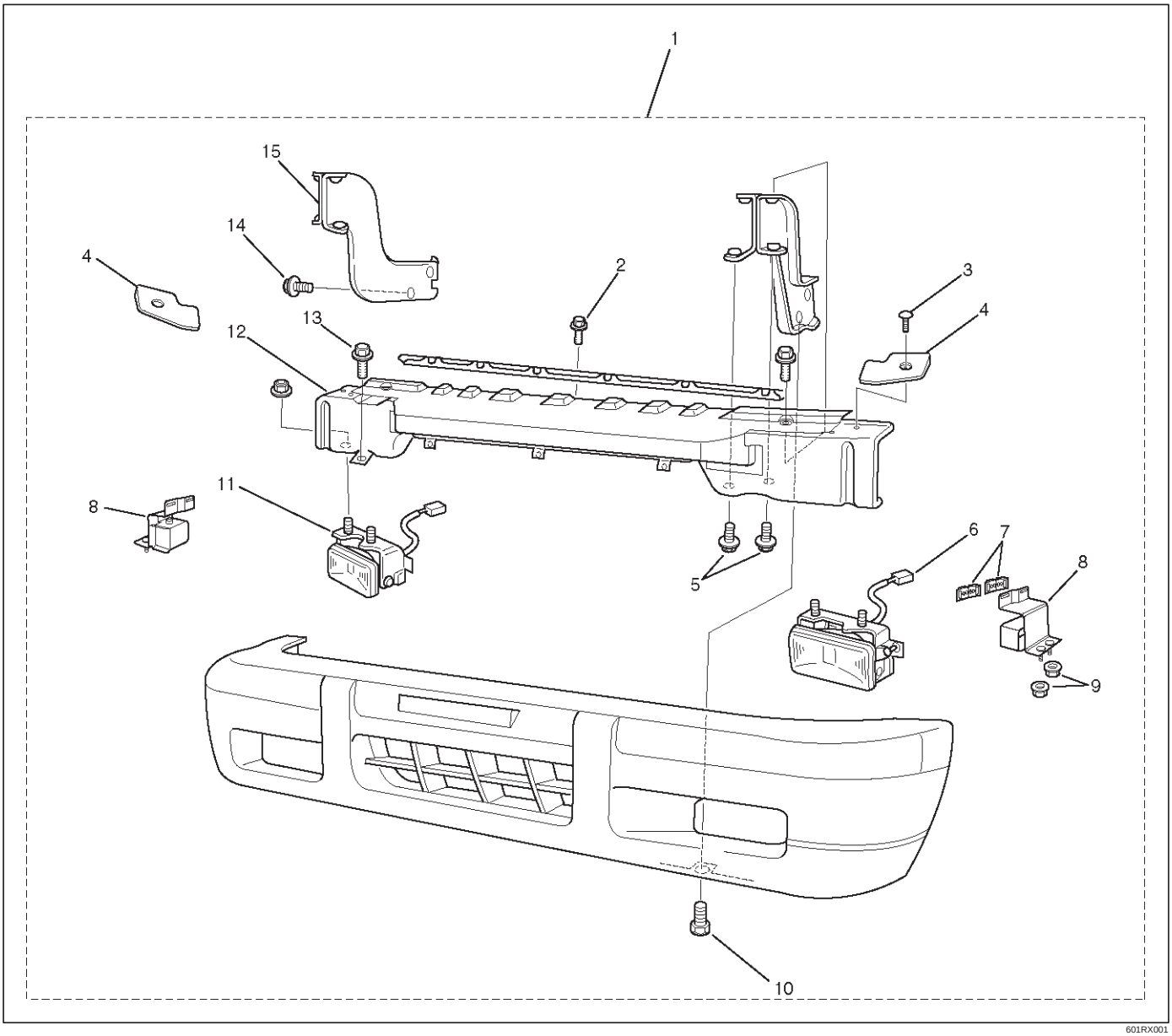

601RX001

Legend

(1) Front Bumper Assembly
(2) Front Bumper Retainer Bolt
(3) Support Fixing Clip
(4) Bumper Spacer Support
(5) Back Bar Fixing Bolt
(6) Front Fog Light Connector
(7) Front Bumper Slider Fixing Clip
(8) Front Bumper Slider
(9) Front Bumper Slider Fixing Nut
(10) Bumper Fascia Lower Bolt
(11) Front Fog Light Assembly
(12) Reinforce Assembly
(13) Reinforce Lower Bolt
(14) Front Bumper Fixing Bolt
(15) Back Bar

Removal

1. Disconnect battery ground cable.
2. Remove front fog light connector.
3. Remove front bumper assembly fixing bolt.
   - Remove the two bolts from both sides of the front bumper.

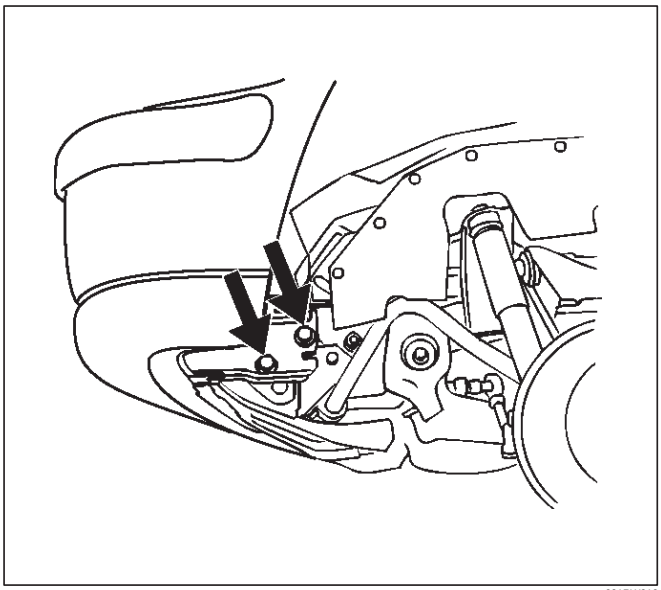

601RW010

4. Remove front bumper assembly.
5. Remove bumper fascia lower bolts.
6. Remove front bumper retainer.
7. Remove reinforce lower bolts.
   - Loosen the five bolts and release claws.
8. Remove reinforce assembly.
9. Remove backbar fixing bolts.
   - Remove the four bolts at each backbar.
10. Remove front fog light assembly.
11. Remove the front bumper slider(1).
    - Remove the two clips(4) and the two nuts(3), and release the claw from the washer(2).

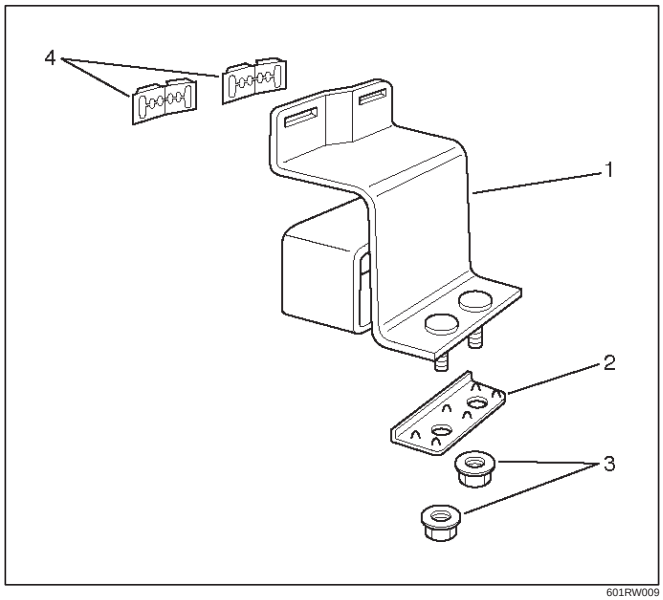

601RW009

Installation

To install, follow the removal steps in reverse order noting the following points:

1. Tighten the front bumper assembly fixing bolts to the specified torque.

   Torque: 132 N•m (13.5kg·m/98 lb ft)

Front Bumper Slider Bracket

Removal

1. Disconnect battery ground cable.
2. Remove the Front bumper.
   - Refer to Front Bumper in this section.
3. Remove the three nuts(1) and draw out the slider bracket(2).

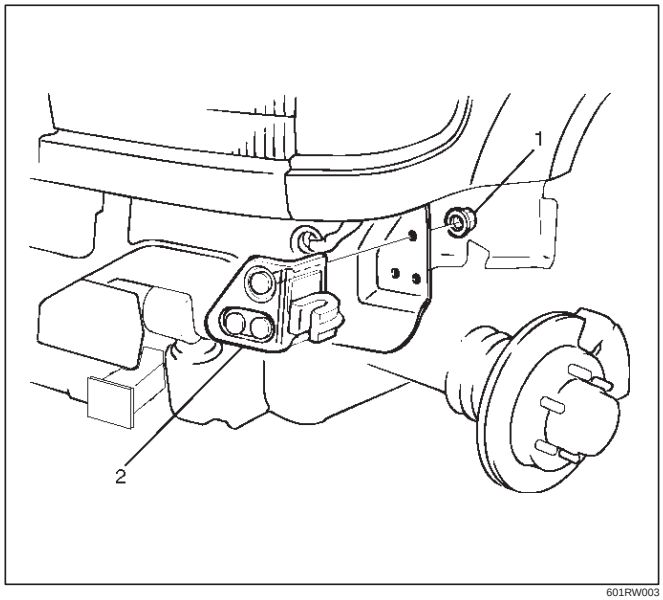

601RW003

Installation

To install, follow the removal steps in reverse order.

Rear Bumper

Parts Location

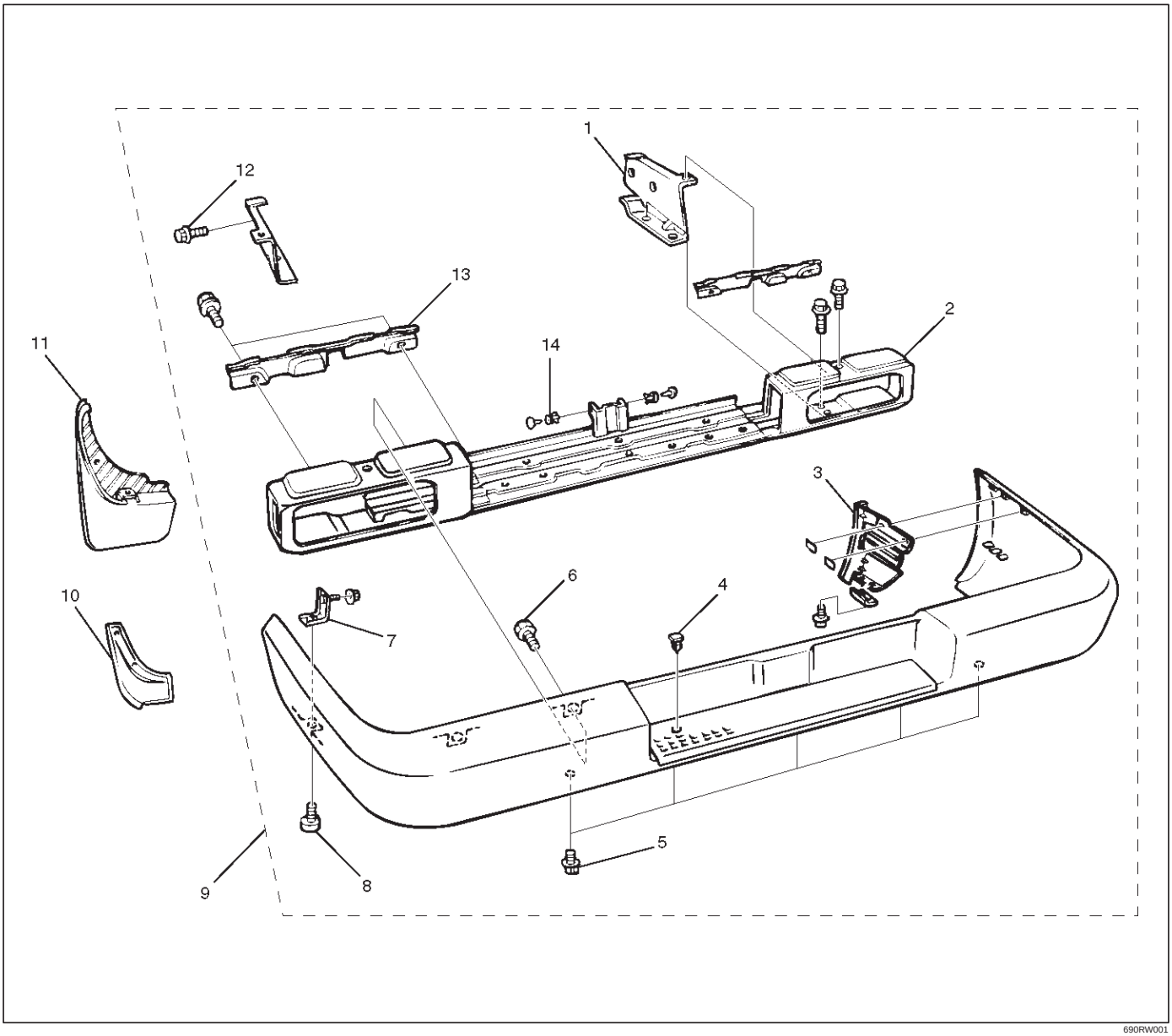

690RW001

Legend

(1) Back Bars
(2) Reinforce Assembly
(3) Rear Bumper Slider Brackets
(4) Rear Step Clips
(5) Reinforce Lower Screws
(6) Reinforce Upper Bolts
(7) Rear Bumper Fascia Brackets
(8) Rear Bumper Fascia Bracket Screws
(9) Rear Bumper Assembly
(10) Rear Bumper Side Covers
(11) Mud Flaps
(12) Rear Bumper Assembly Fixing Bolts
(13) Rear Bumper Retainers
(14) Clips

Removal

1. Remove rear bumper side covers.
2. Remove mud flaps.
   - Remove three screws.
3. Remove bumper fascia bracket screws.

4. Remove rear bumper assembly fixing bolts.
   - Remove two bolts from each side.

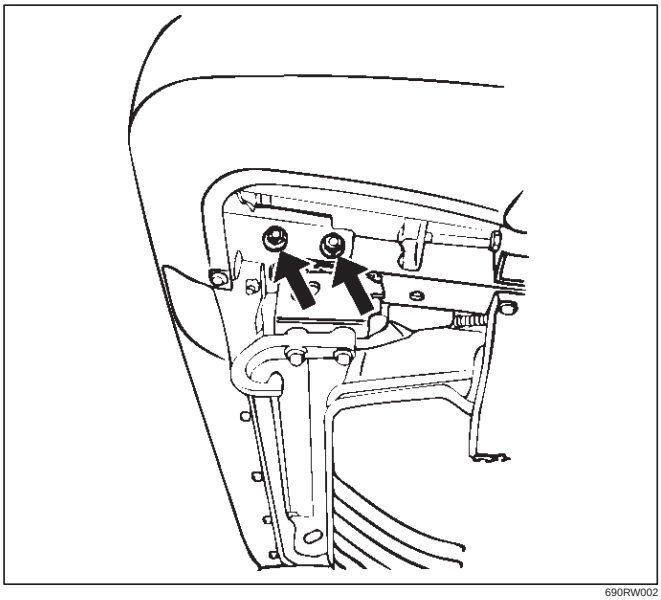

690RW002

5. Remove rear bumper assembly.
6. Remove rear bumper retainers.
7. Remove reinforce upper bolts.
   - Remove the rear bumper retainer from each side, and then remove two upper bolts.
8. Remove reinforce lower screws.
9. Remove clips.
10. Remove rear step clips.
11. Remove reinforce assembly.
    - Pull out both ends of the bumper fascia and take out the reinforce assembly.
12. Remove backbars.
    - Remove the three bolts from each backbar.
13. Remove rear bumper slider brackets(4).
    - Remove the two clips(1) and two screws(3), and then remove claw caught in the washer(2).

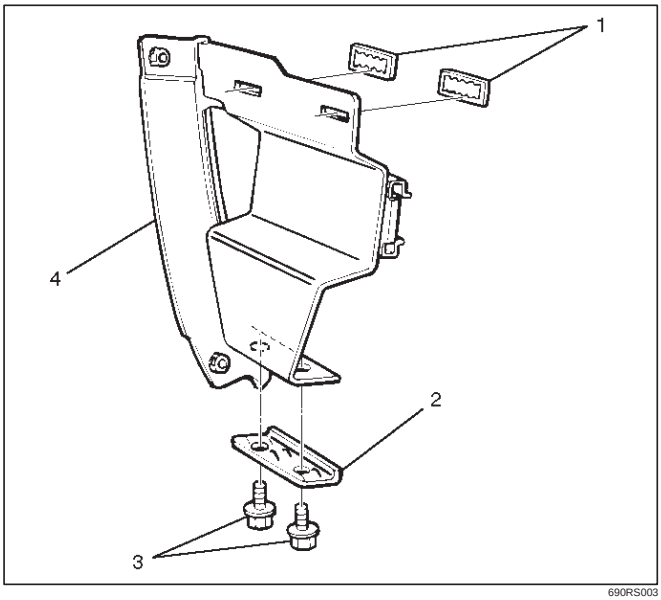

690RS003

14. Remove bumper fascia brackets.
    - Remove the fixing nut on the back side of the fender panel.

Installation

To install, follow the removal steps in reverse order noting the following points:

1. Tighten the rear bumper assembly fixing bolts to the specified torque.

   Torque: 132 N•m (13.5kg·m/98 lb ft)

2. Apply chassis grease to the slider and the slider bracket moving surface.

Parts Location (W/Rear Combination Light and License Light)

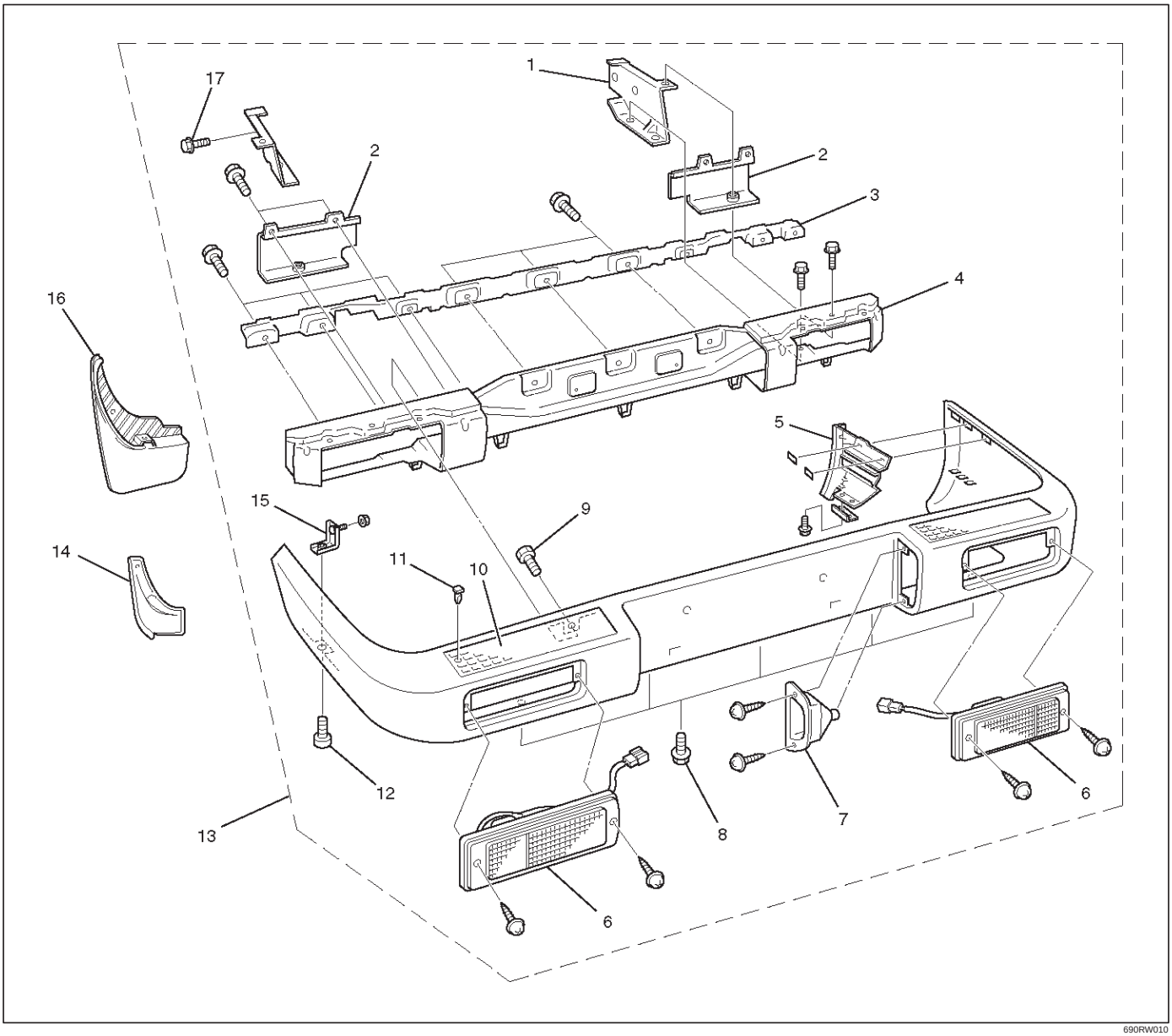

690RW010

Legend

(1) Back Bar
(2) Rear Combination Light Back Plate
(3) Rear Bumper Retainer
(4) Reinforce Assembly
(5) Rear Bumper Slider Brackets
(6) Rear Combination Light Assembly
(7) License Light
(8) Reinforce Lower Screws
(9) Reinforce Upper Bolts
(10) Rear Step
(11) Rear Step Clips
(12) Rear Bumper Fascia Bracket Screws
(13) Rear Bumper Assembly
(14) Rear Bumper Side Covers
(15) Rear Bumper Fascia Brackets
(16) Mud Flaps
(17) Rear Bumper Assembly Fixing Bolts

Removal

1. Disconnect battery ground cable.
2. Remove rear bumper side covers.
3. Remove mud flaps.
   - Remove three screws.
4. Remove rear bumper fascia bracket screws.

5. Remove rear bumper assembly fixing bolts.
   - Remove two bolts from each side.

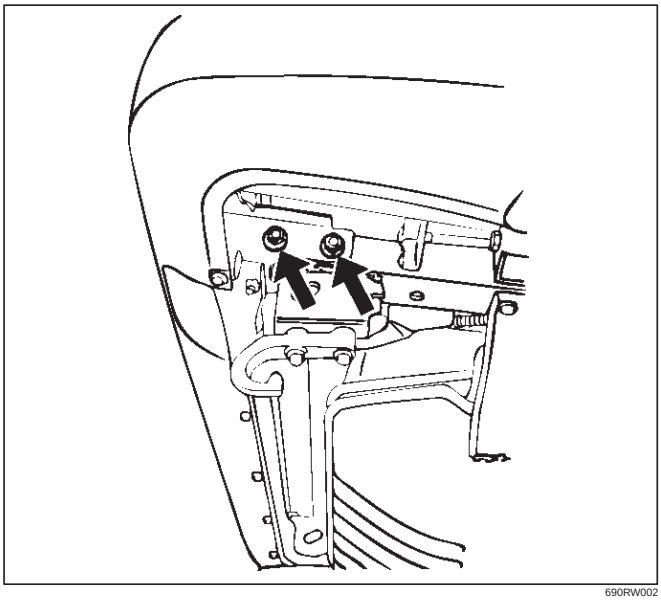

690RW002

6. Remove rear bumper assembly.
7. Remove rear bumper retainers.
8. Remove rear combination light back plate.
9. Remove reinforce upper bolts.
   - Remove the rear bumper retainer from each side, and then remove two upper bolts.
10. Remove reinforce lower screws.
11. Remove rear step clips.
12. Remove rear step.
13. Remove reinforce assembly.
    - Pull out both ends of the bumper fascia and take out the reinforce assembly.
14. Remove backbars.
    - Remove the three bolts from each backbar.
15. Remove rear bumper slider brackets(4).
    - Remove the two clips(1) and two screws(3), and then remove claw caught in the washer(2).

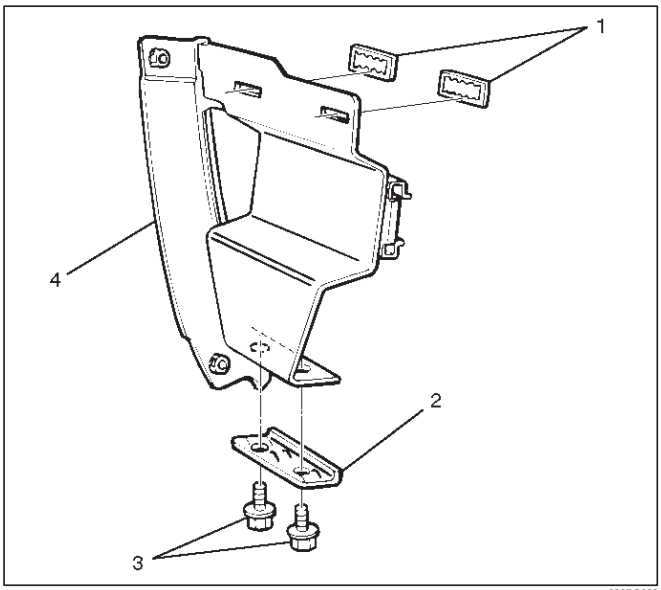

690RS003

16. Remove bumper fascia brackets.
    - Remove the fixing nut on the back side of the fender panel.
17. Remove rear combination light assembly.
18. Remove license light.

Installation

To install, follow the removal steps in reverse order noting the following points:

1. Tighten the rear bumper assembly fixing bolts to the specified torque.

   Torque: 132 N•m (13.5kg·m/98 lb ft)

2. Apply chassis grease to the slider and the slider bracket moving surface.

Rear Bumper Slider

Removal

1. Remove the rear bumper.
   - Refer to Rear Bumper removal in this section.
2. Remove the three bolts (2).
3. Remove rear bumper slider (1).

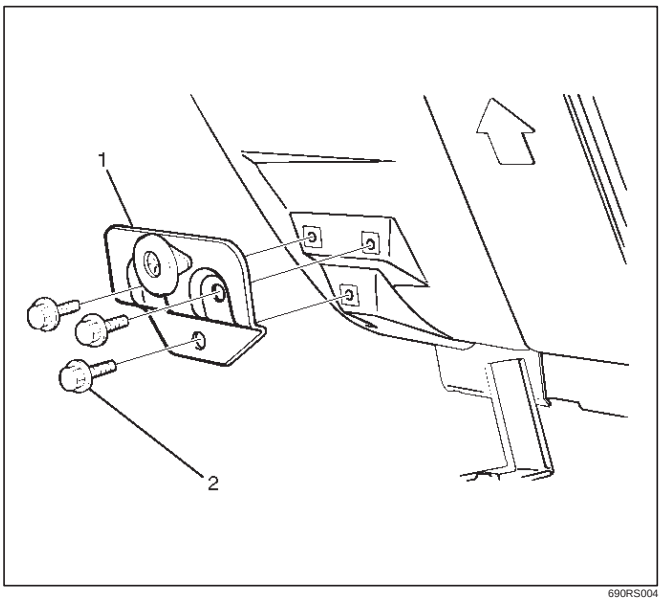

690RS004

Installation

To install, follow the removal steps in reverse order noting the following points:

1. Apply chassis grease to the slider and the slider bracket moving surface.

General Description

This section includes items of front end sheet metal that are attached by bolts, screws or clips and related accessory components.

Anti-corrosion materials have been applied to the interior surfaces of some metal panels to provide rust resistance. When servicing these panels, areas on which this material has been disturbed should be properly recoated with service-type anti-corrosion material.

Cowl Cover

Parts Location

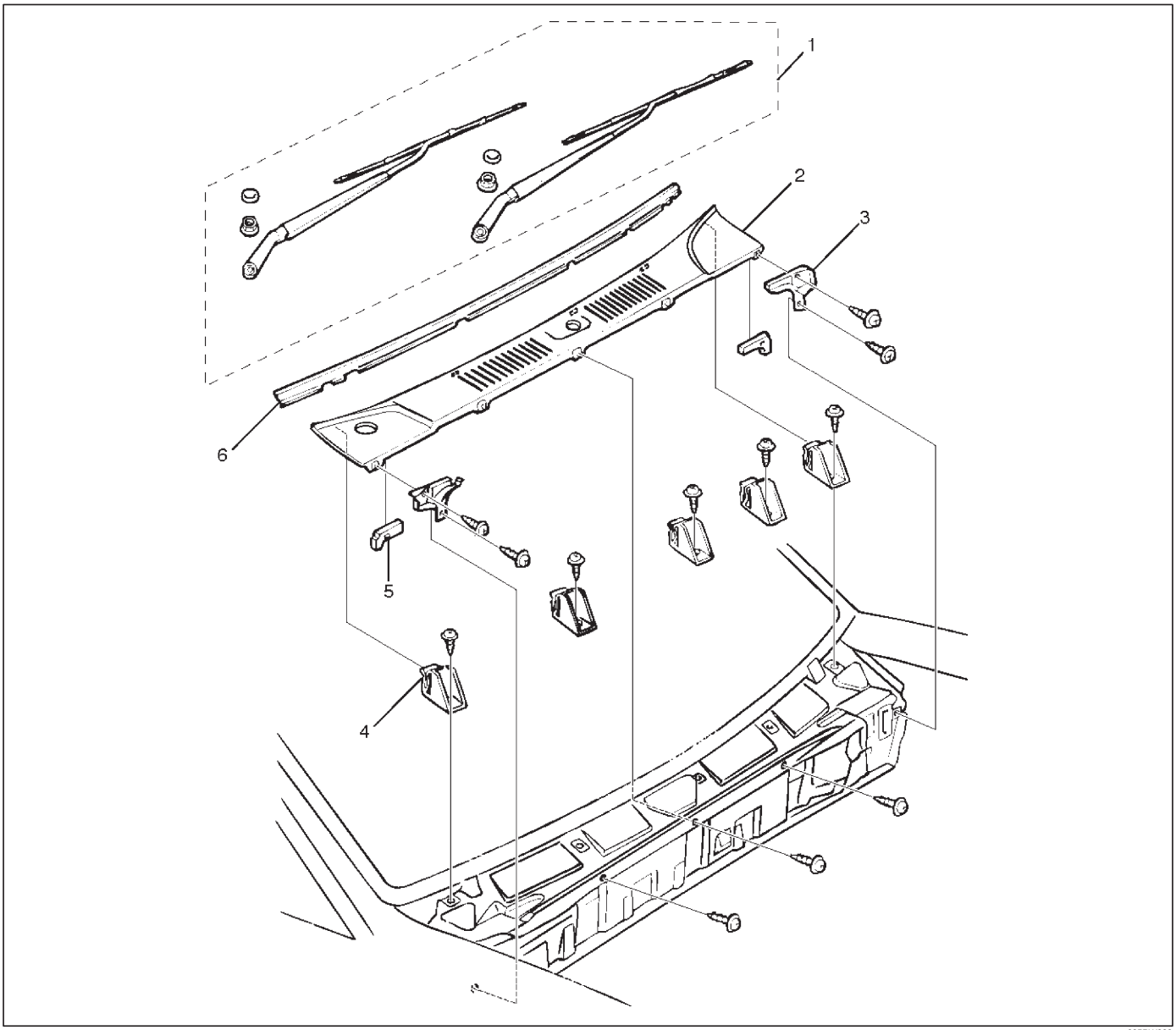

605RW009

Legend

(1) Front Wiper Arms
(2) Cowl Cover
(3) Cowl Cover Brackets
(4) Cowl Cover Stoppers
(5) Cowl Cover Seals
(6) Front Window Lower Molding

Removal

1. Open the hood.
2. Support the hood.
3. Remove front wiper arms.
   - Refer to Windshield Wiper Arm/Blade in Wiper/Washer System section.

4. Remove cowl cover brackets.
   - Disconnect two screws each side.
5. Remove cowl cover.
   - Disconnect three screws.
6. Remove cowl cover seals.
7. Remove front window lower molding.
8. Remove cowl cover stoppers.

Installation

To install, follow the removal steps in reverse order.

Engine Hood

Removal

1. Open the hood.
2. Support the hood.
3. Remove windowshield washer nozzle tube.

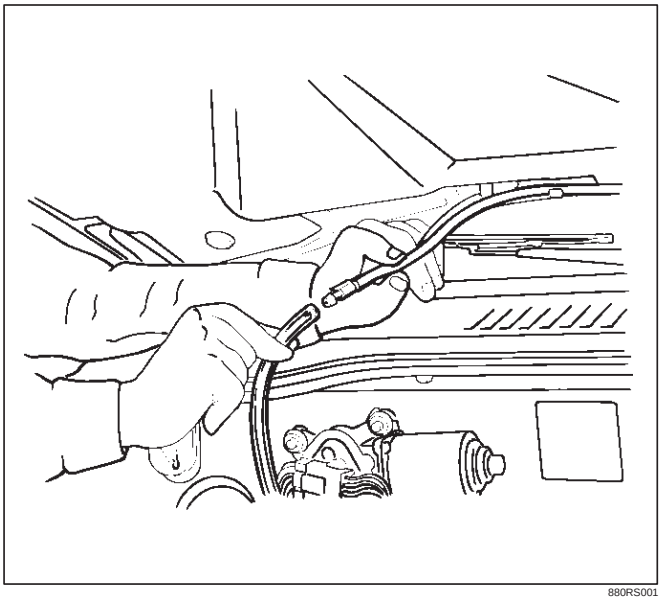

880RS001

4. Remove hood hinge bolts (3).
   - Before removing the hinges from the engine hood (1), scribe a mark (2) showing location of the hinges to facilitate installation in the original position.

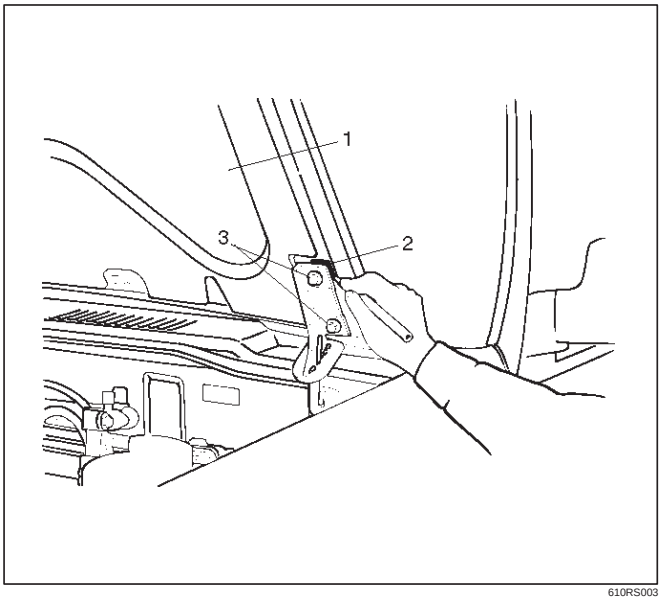

610RS003

5. Remove engine hood.

Installation

To install, follow the removal steps in the reverse order noting the following points:

1. Tighten the engine hood fixing bolts to the specified torque.

   Torque: 13 N•m (1.3kg·m/113 lb in)

2. Adjust the engine hood mounting gap with reference to Body Dimension in this section.
3. Check and see if the engine hood lock operates normally.

Air Bulge

Parts Location

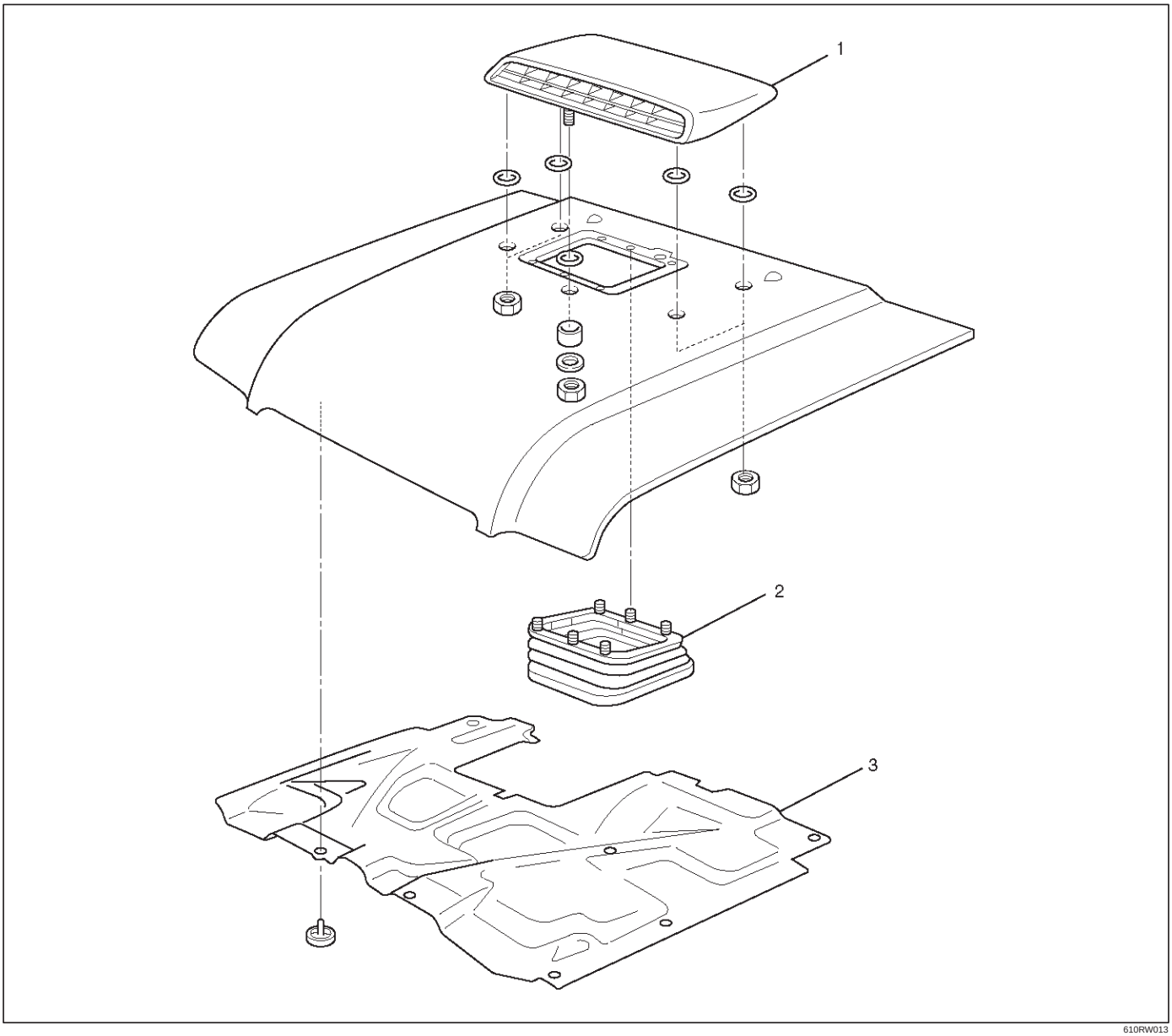

Legend

(1) Air Bulge
(2) Intercooler Seal
(3) Engine Hood Insulator

Removal

1. Remove engine food insulator.
   - Remove the sixteen clips.
2. Remove Intercooler seal.
   - Remove the six clips.
3. Remove air bulge.
   - Remove the six nuts.

Installation

To install, follow the removal steps in the reverse order noting the following points:

1. Tighten the air bulge fixing nuts to the specified torgue.

   Torque 8 N•m (0.8kg·m/ 69 lb in)

Engine Hood Hinge

Parts Location

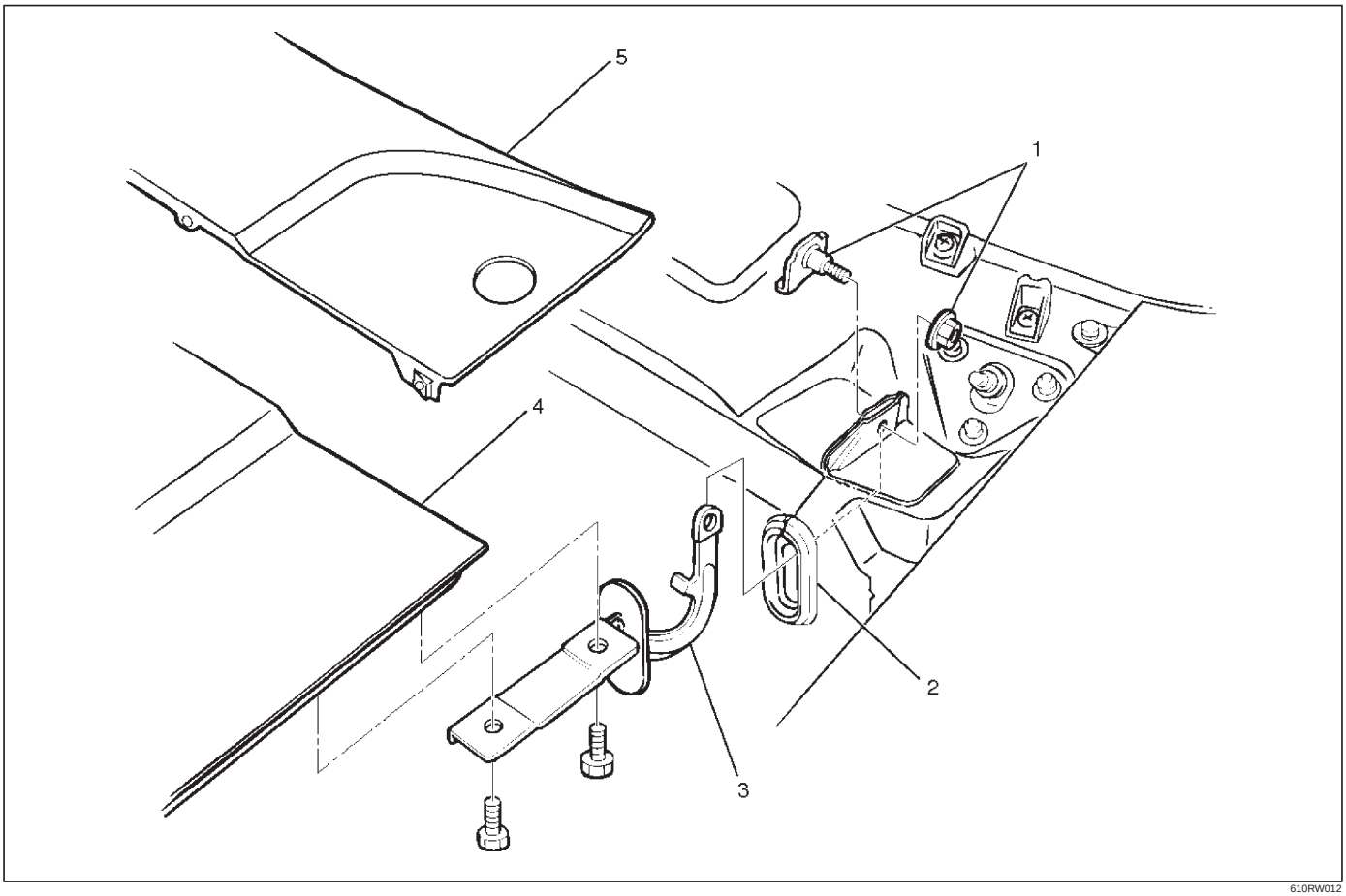

610RW012

Legend

(1) Hinge Fixing Bolts And Nuts
(2) Hood End Seal
(3) Engine Hood Hinge
(4) Engine Hood
(5) Cowl Cover

Removal

1. Remove cowl cover.
   - Refer to Cowl Cover in this section.
2. Remove engine hood.
   - Refer to Engine Hood in this section.
3. Remove hinge fixing bolt and nut.
4. Remove engine hood hinge.
5. Remove hood end seal.

Installation

To install, follow the removal steps in reverse order noting the following points:

1. Tighten the hood hinge fixing bolt and nut to the specified torque.

   Torque 13 N•m (1.3kg·m/113 lb in)

Engine Hood Lock

Parts Location

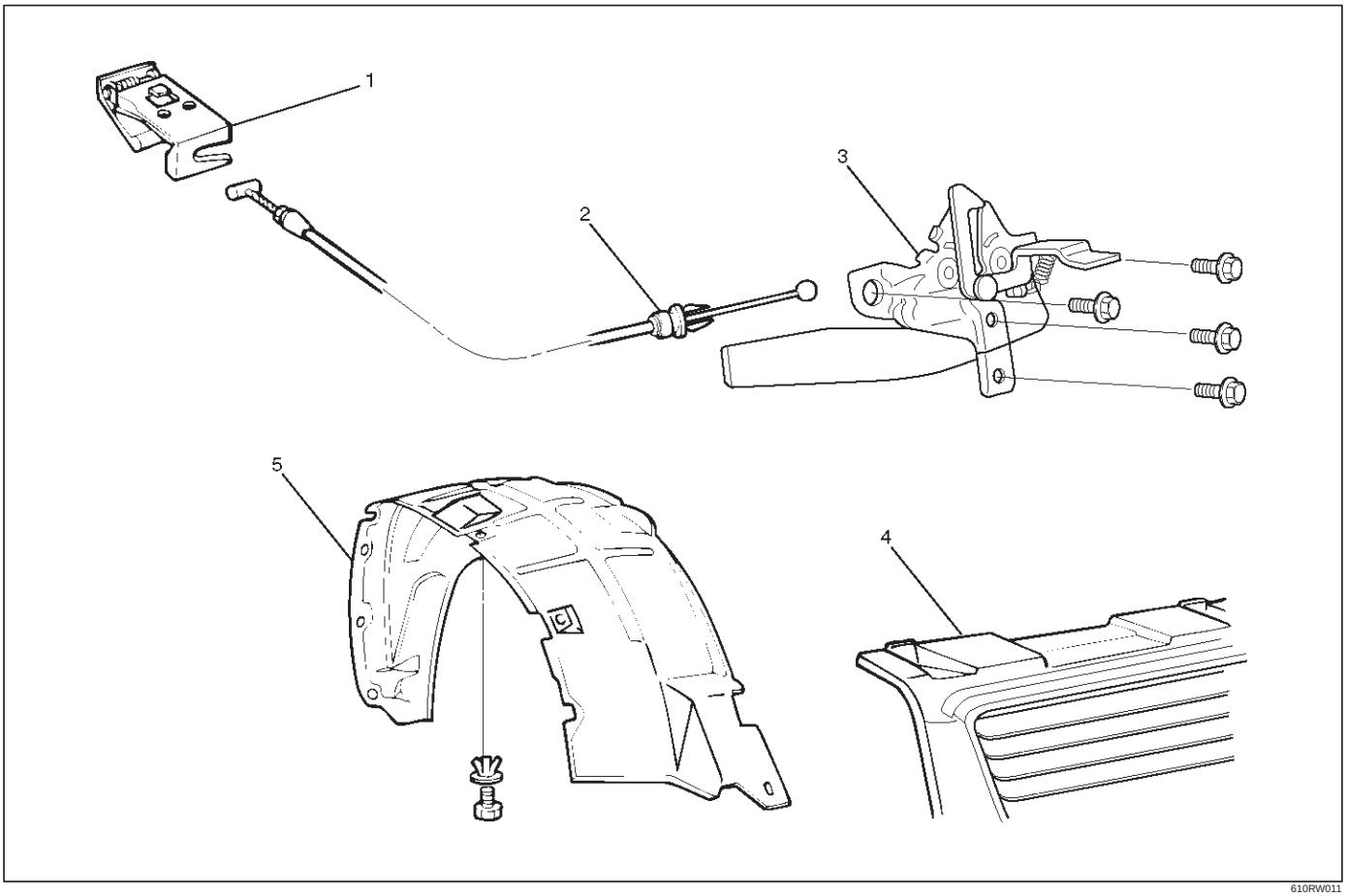

610RW011

Legend

(1) Hood Lock Control Lever
(2) Control Cable
(3) Engine Hood Lock Assembly
(4) Radiator Grille
(5) Inner Liner

Removal

1. Remove hood lock control lever.
2. Remove inner liner.
3. Remove control cable.
   - Remove the cable fixing clips from the body panel.
4. Remove radiator grille.
   - Refer to Radiator Grille And Front End Lower Panel in this section.
5. Remove engine hood lock assembly.
   - Apply setting marks (1) to the hood lock assembly and the body prior to removal.

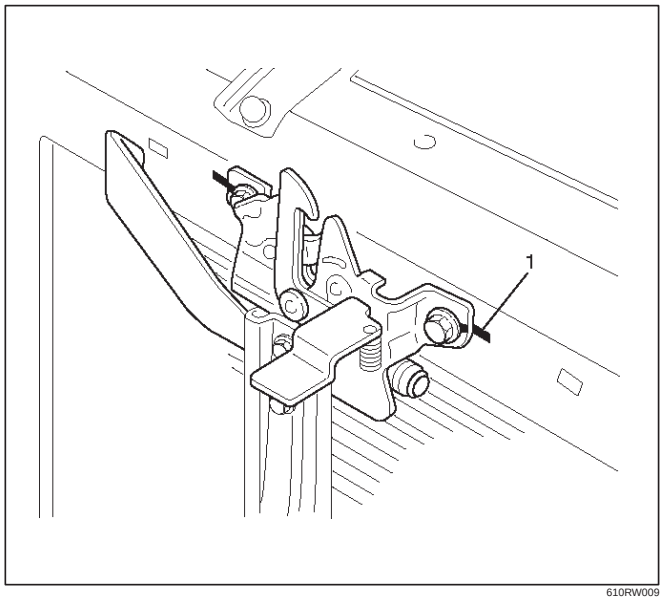

610RW009

Installation

To install, follow the removal steps in reverse order noting the following points:

1. Reroute the control cable to its original position, and check and see if the lock assembly and control lever work normally.
2. Tighten the hood lock assembly fixing bolts to the specified torque.

Torque : 10 N•m (1.0kg·m/87 lb in)

Radiator Grille And Front End Lower Panel

Parts Location

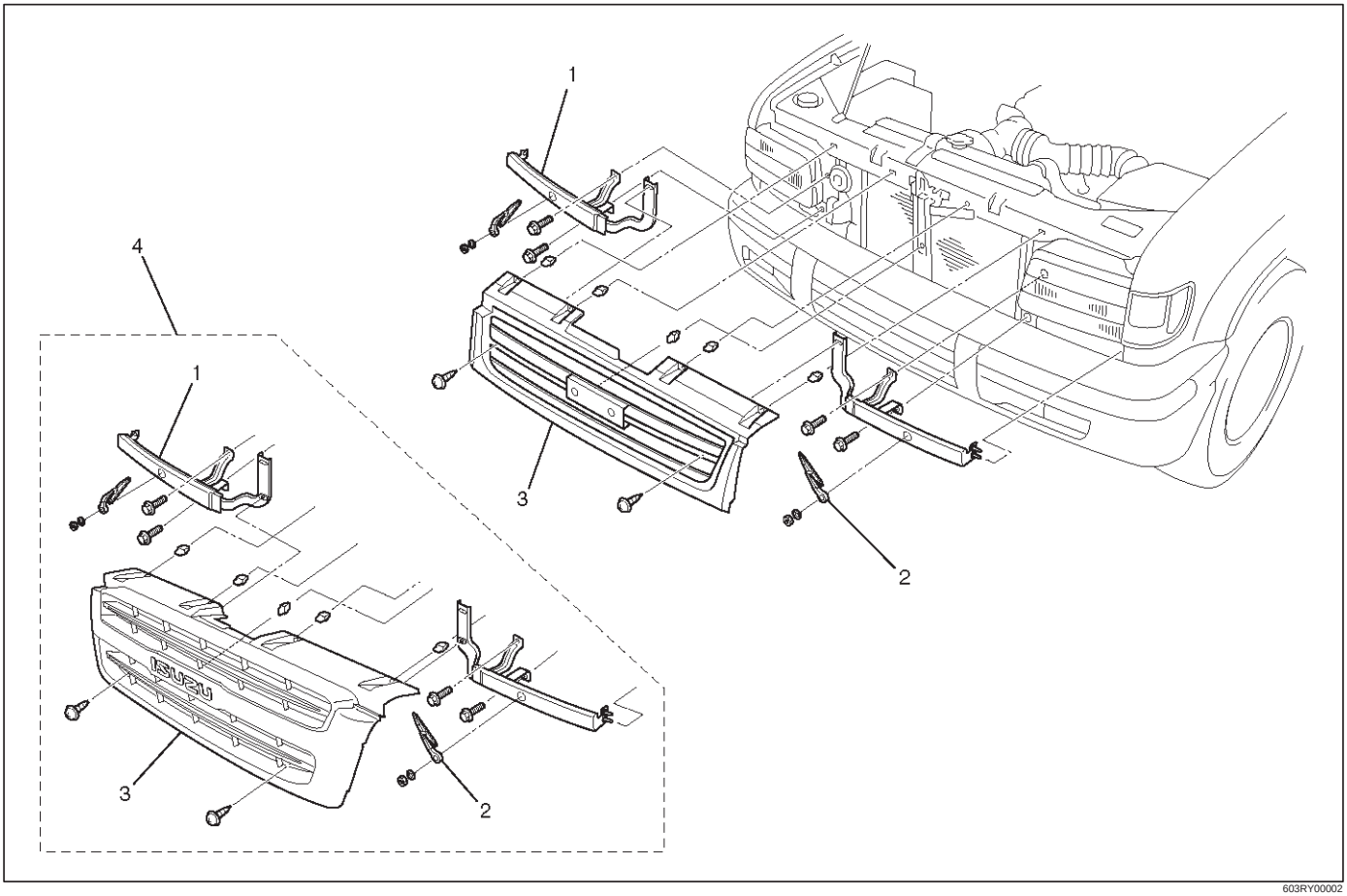

603RY00002

Legend

(1) Front End Lower Panel
(2) Head Light Wiper
(3) Radiator Grille
(4) For ISUZU Brand Vehicle Only

Removal

1. Open the hood.
2. Support the hood.
3. Remove headlight wiper.
   - Refer to Headlight Wiper Arm & Blade in Wiper/Washer System section.

4. Remove radiator grille.
   - Raise the clips (1) on the radiator grille and remove two screws.

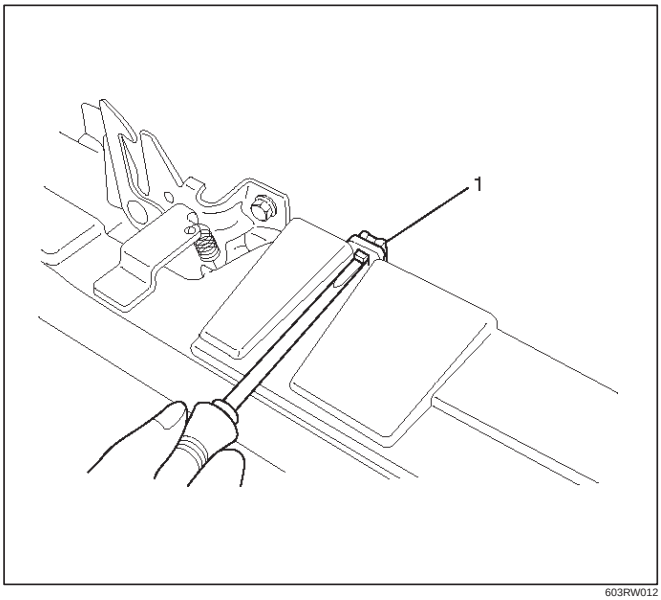

603RW012

5. Remove front end lower panel.
   - Remove two fixing bolts and remove the panel from the fender.

Installation

To install, follow the removal steps in reverse order, noting the following point.

1. Install the radiator grille clips remaining on the body side in the radiator grille, and then install the radiator grille on the body.

Front Fender Panel

Parts Location

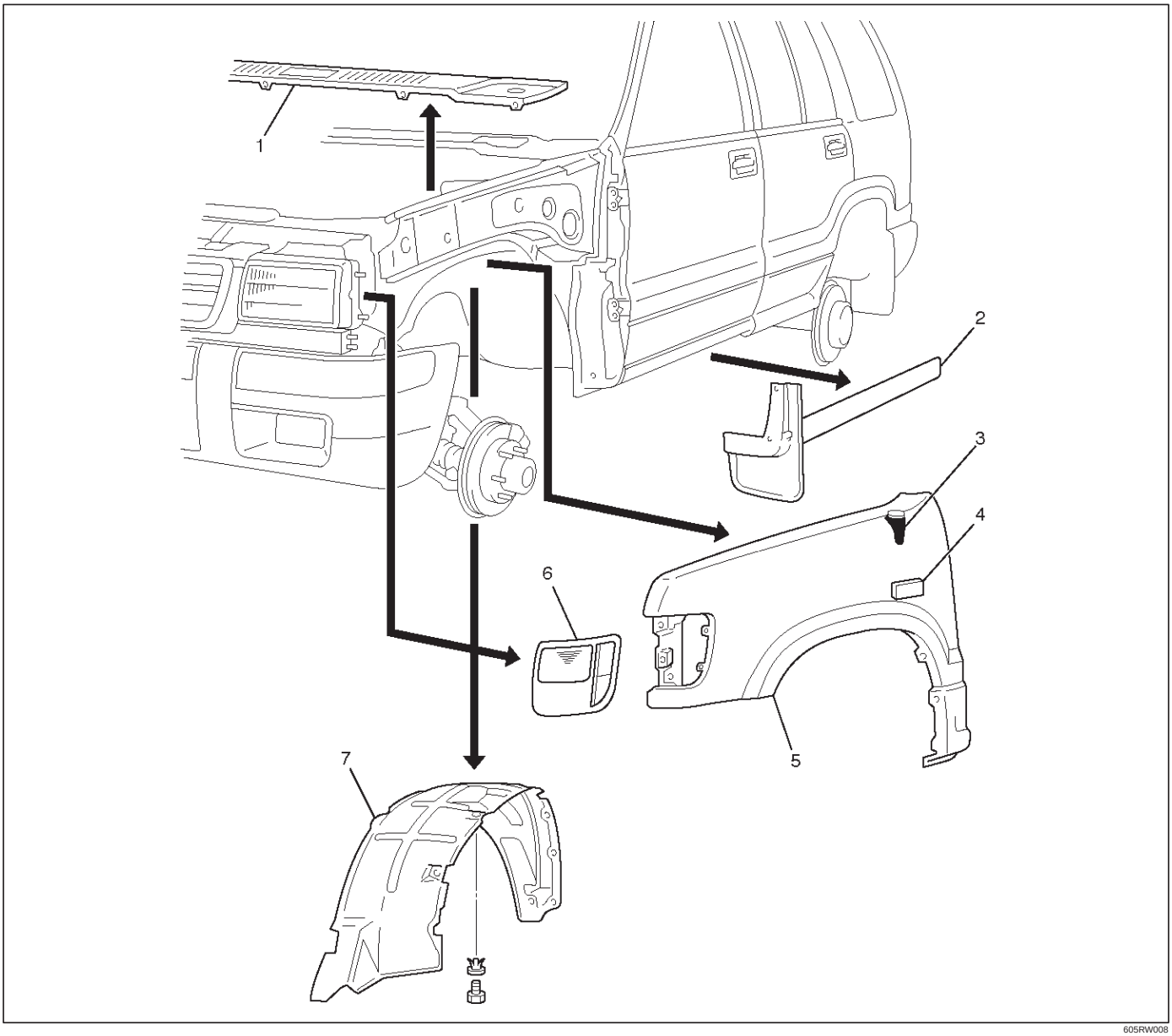

Legend

(1) Cowl Cover
(2) Front Mud Flap
(3) Antenna Bezel
(4) Side Turn Signal Light
(5) Front Fender Panel
(6) Front Combination Light Assembly
(7) Inner Liner

Removal

1. Open the hood.
2. Support the hood.
3. Disconnect the battery ground cable.
4. Remove cowl cover.
   - Refer to Cowl Cover in this section.
5. Remove front combination lamp assembly.
   - Disconnect fixing screw and connector.
6. Remove front mud flap.
   - Disconnect three fixing screws and four clips.
7. Remove inner liner.
8. Remove antenna bezel.
   - Refer to Antenna in Entertainment section.
9. Remove side turn signal light.
   - Refer to Side Turn Signal Light Bulb in Lighting System section.

10. Remove front fender panel.
    - Disconnect ten fixing bolts and two nuts.

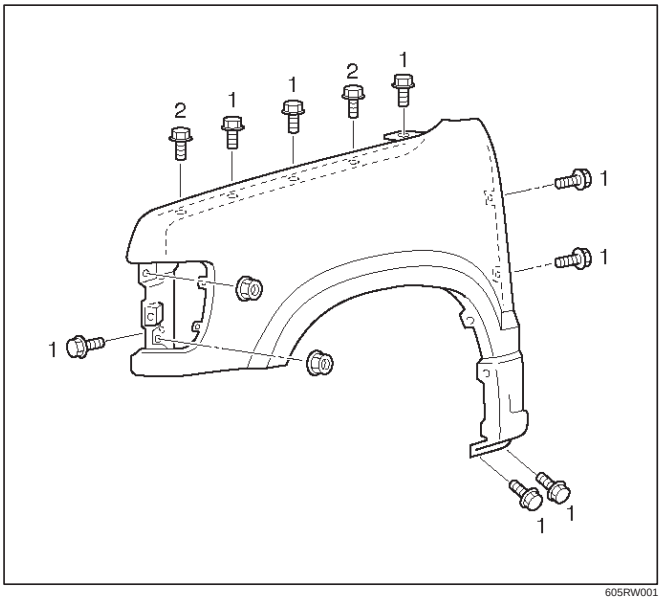

605RW001

Installation

To install, follow the removal steps in the reverse order noting the following points:

1. Tighten the front fender panel fixing bolts to the specified torque.

   (1) Torque : 9 N•m (0.9kg·m/78 lb in)

   (2) Torque : 7 N•m (0.7kg·m/61 lb in)

Body Mounting

Parts Location

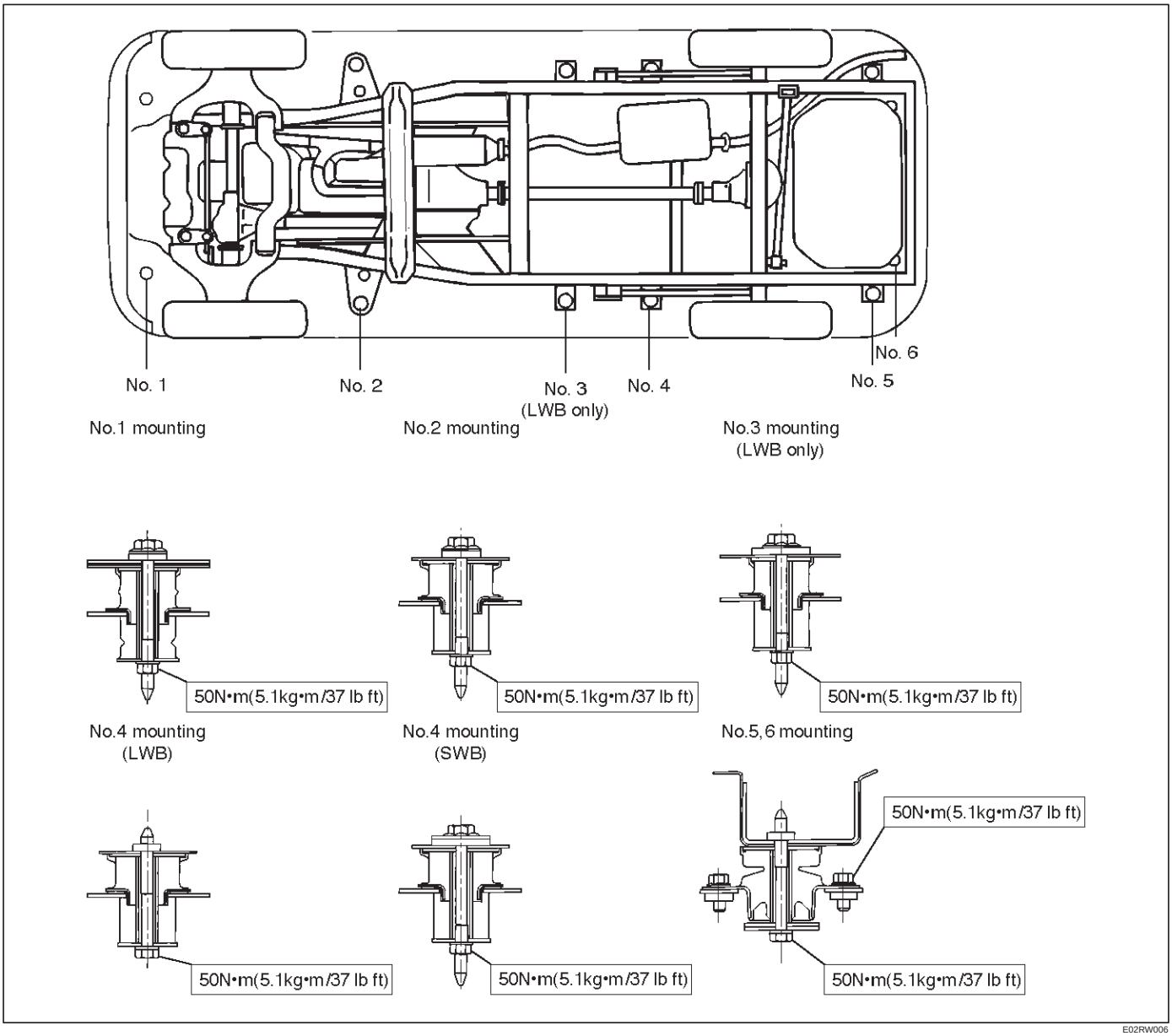

Removal (No.1 – No. 2)

1. Remove the front bumper.
2. Jack up the vehicle by the frame.
3. Support the front side sill and rear axle with stands.
   Further, support the front jack up point with a jack.

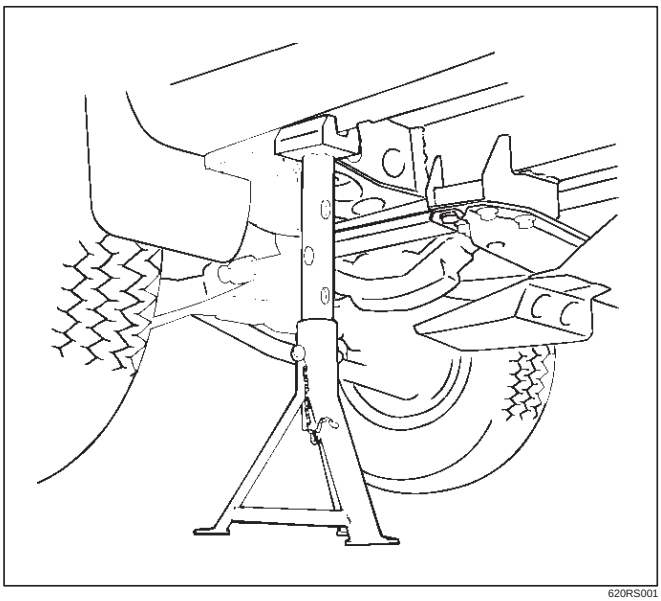

620RS001

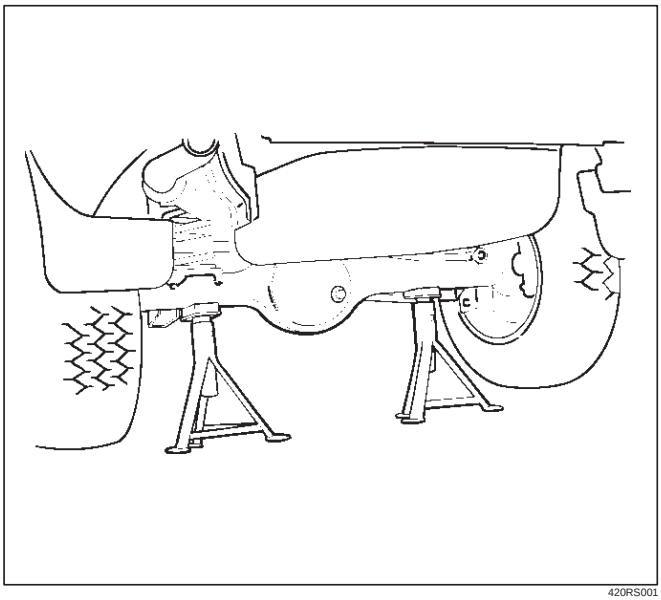

420RS001

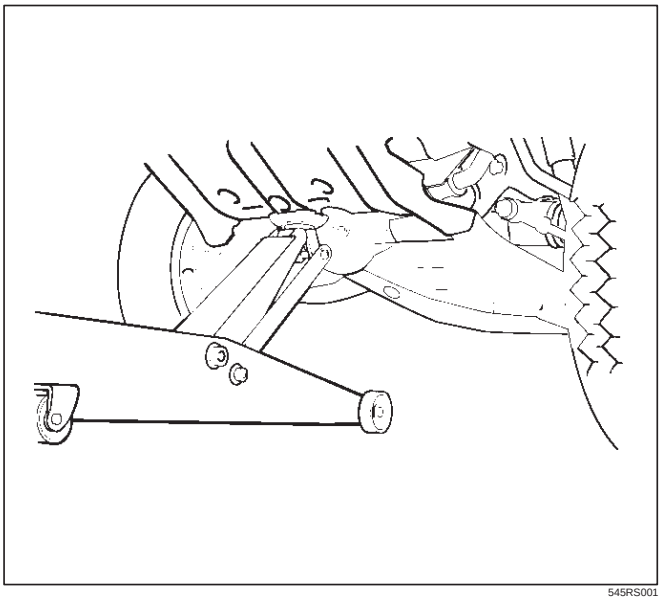

545RS001

4. Remove the mounting bolts (No. 1-4) on either side.
   - No. 1 – Hold in check not to turn from the inside of the front fender.
   - No. 2 – Remove the front door sill plate and dash side trim panel, turn over the floor carpet and hold the bolt in check not to turn.
   - No. 3 (LWB only)– Remove the rear door sill plate and center pillar lower trim cover, turn over the floor carpet and hold the bolt in check not to turn.
   - No. 4 (SWB)– Remove the luggage side trim cover, turn over the floor carpet and hold the bolt in chek not to turn.
   - No. 4 (LWB)– Remove the bolt from under the frame.
5. Loosen the mounting bolts (No. 5-6) on either side.
6. Remove the frame side mounting and washer.
7. Gently lower the jack supporting the front axle until the cab side mounting can be removed.
8. Remove the cab side mounting.
   - Be sure to use a splice bar around the mounting to be removed.

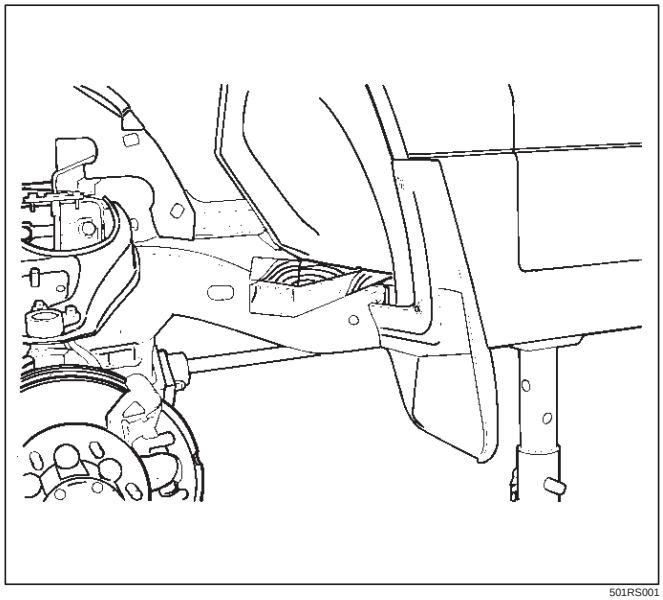

501RS001

Removal (No. 3 — No. 6)

1. Remove the rear bumper.
2. Jack up the vehicle by the frame.

3. Support the rear side sill and frame stands, and support the rear axle with a jack.

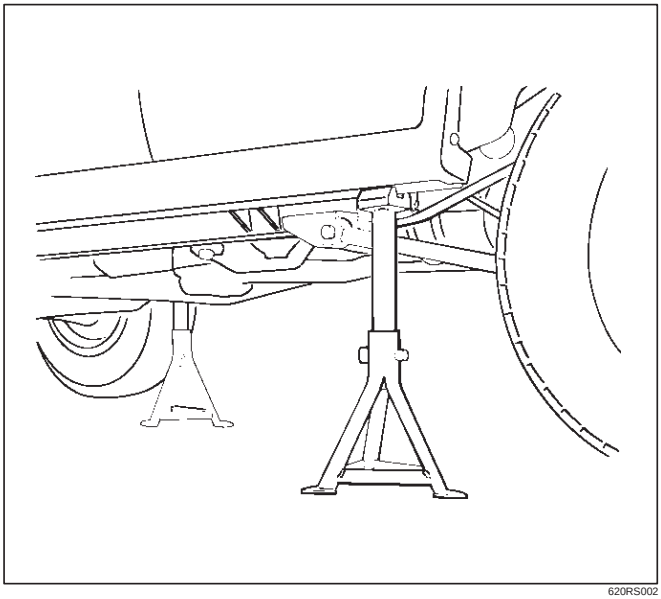

620RS002

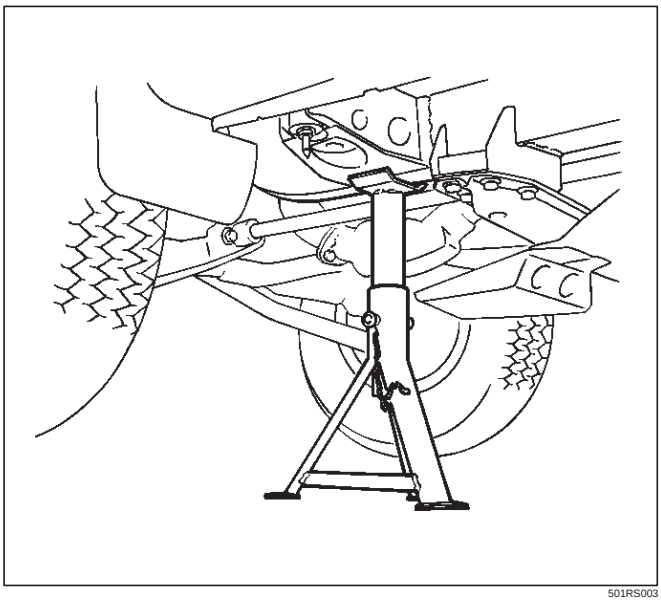

501RS003

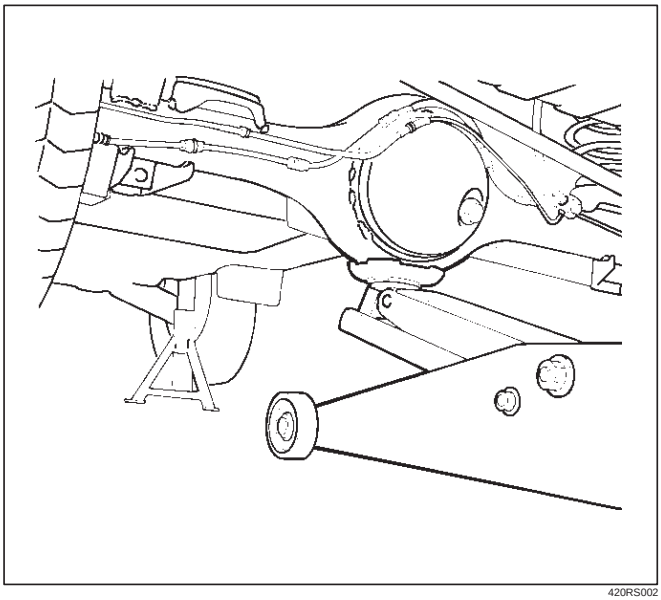

420RS002

4. Remove the mounting bolts (No. 3-6) on either side.
   - No. 3 (LWB only) — Remove the rear door sill plate and center pillar lower-trim cover, turn over the floor carpet and hold the bolt in check not to turn.
   - No. 4 (SWB) — Remove the luggage side trim cover, turn over the floor carpet and hold the bolt in check not to turn.
   - No. 4 (LWB) and No. 5 – 6
5. Remove the frame side mounting and washer.
6. Gently lower the jack supporting the rear axle until the cab side mounting can be removed.
7. Remove the cab side mounting.
   - Be sure to use a splice bar around the mounting to be removed.
   - As for No. 5 and 6, remove the frame side bracket fixing bolts after lowering the frame gently.

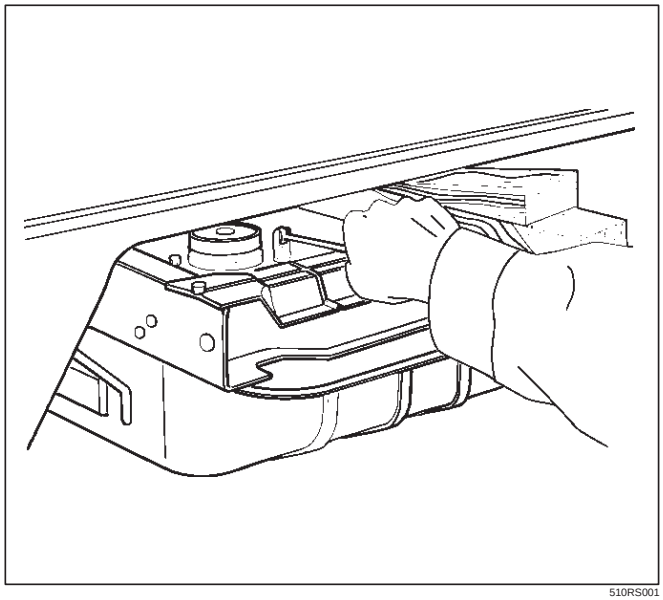

510RS001

Installation

To install, follow the removal steps in the reverse order, noting the following point:

1. Tighten each mounting bolt to the specified torque.

   Torque : 50 N•m (5.1kg·m/37 lb ft)

General Description

This section describes major items of the removal, installation and servicing procedures pertaining to the TROOPER body. Each servicing instruction is applicable to all models of the TROOPER, unless otherwise specifically mentioned. For those differing by specific models from the common procedures, they are detailed for each model.

Body Dimension

Upper Body

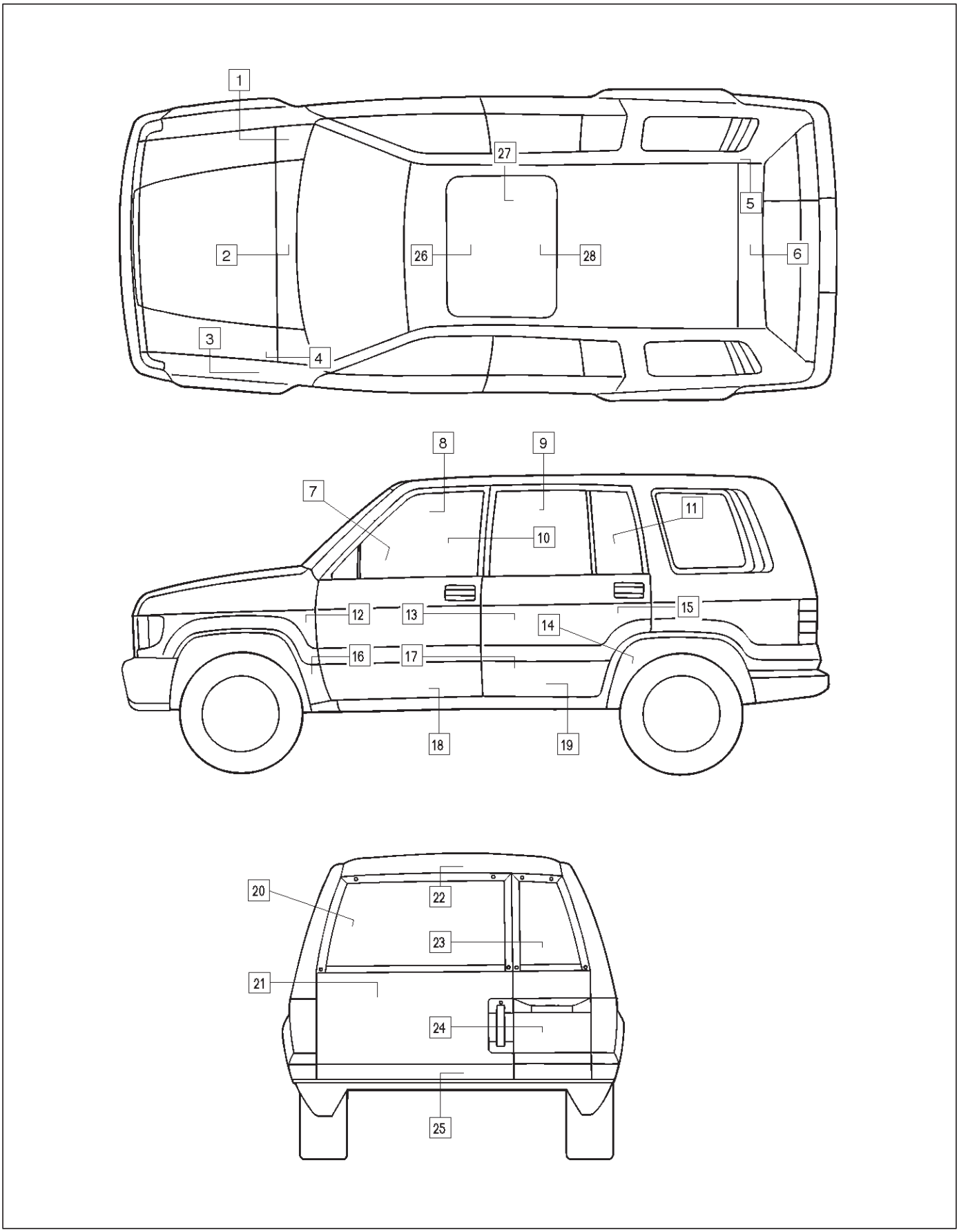

A10RW001

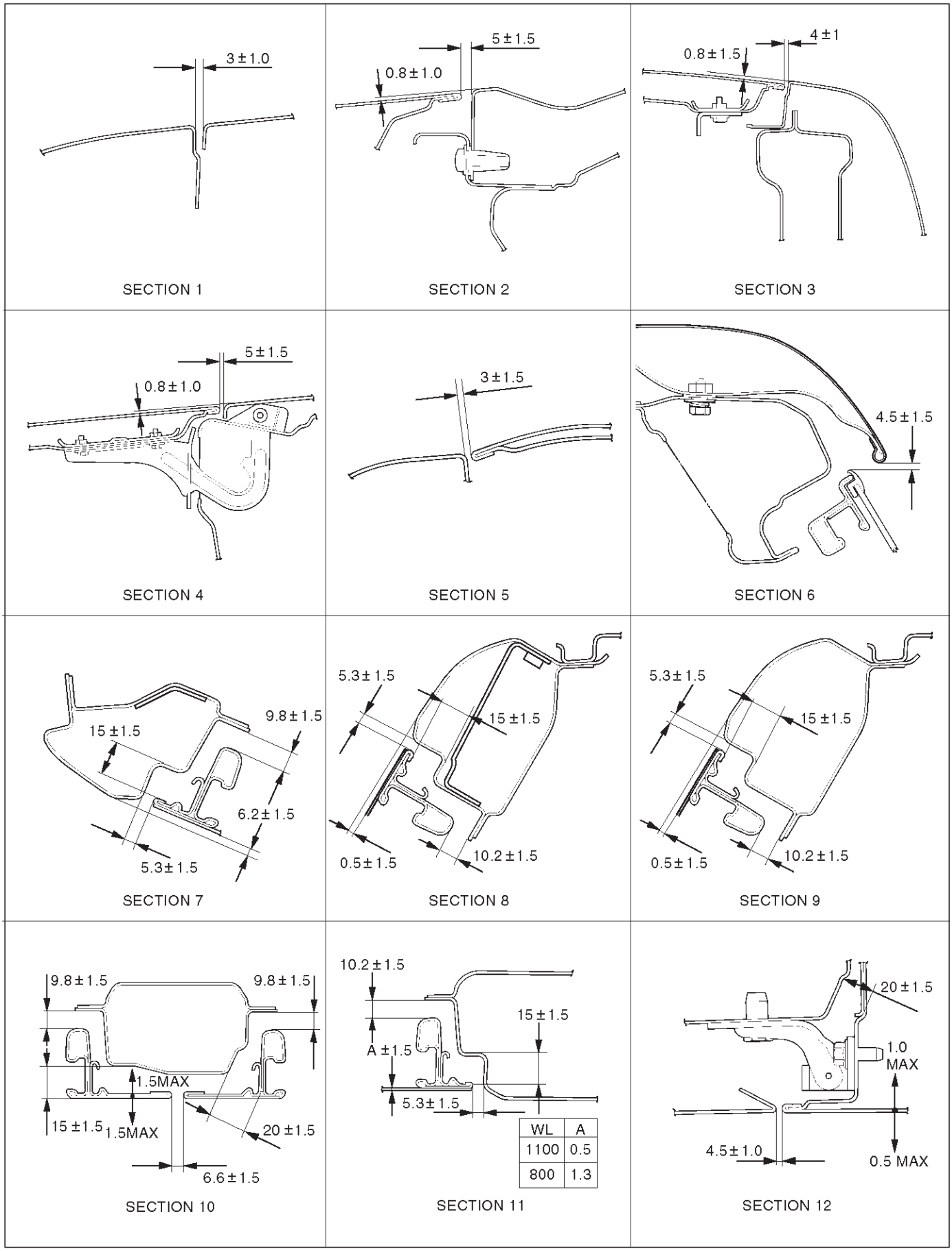
3 ± 1.0
SECTION 1
5 ± 1.5
0.8 ± 1.0
SECTION 2
4 ± 1
0.8 ± 1.5
SECTION 3
5 ± 1.5
0.8 ± 1.0
SECTION 4
3 ± 1.5
SECTION 5
4.5 ± 1.5
SECTION 6
9.8 ± 1.5
15 ± 1.5
6.2 ± 1.5
5.3 ± 1.5
SECTION 7
5.3 ± 1.5
15 ± 1.5
0.5 ± 1.5
10.2 ± 1.5
SECTION 8
5.3 ± 1.5
15 ± 1.5
0.5 ± 1.5
10.2 ± 1.5
SECTION 9
9.8 ± 1.5
9.8 ± 1.5
1.5MAX
15 ± 1.5
1.5MAX
20 ± 1.5
6.6 ± 1.5
SECTION 10
10.2 ± 1.5
15 ± 1.5
A ± 1.5
5.3 ± 1.5
WL A
1100 0.5
800 1.3
SECTION 11
20 ± 1.5
1.0 MAX
4.5 ± 1.0
0.5 MAX
SECTION 12

A10RY00001

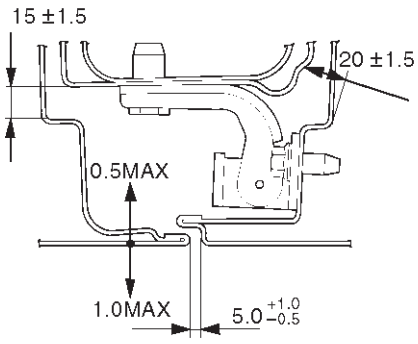

SECTION 13

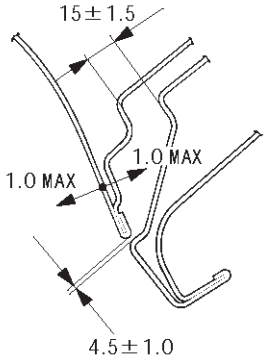

SECTION 14

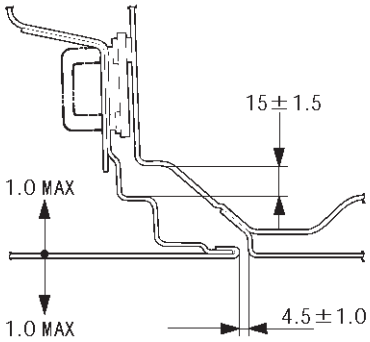

SECTION 15

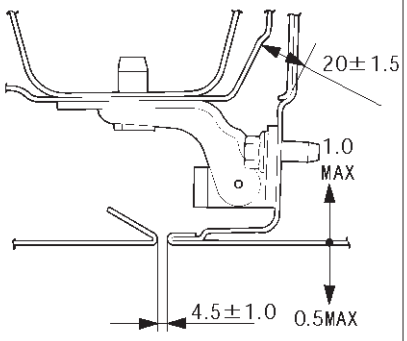

SECTION 16

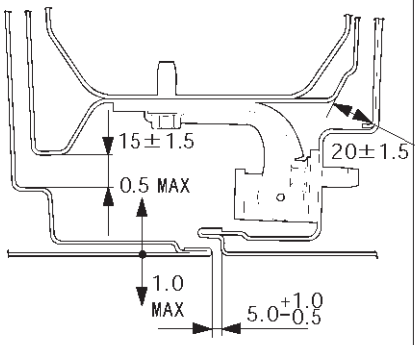

SECTION 17

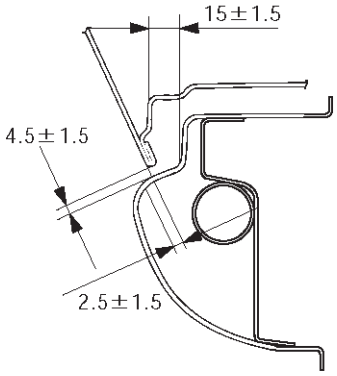

SECTION 18

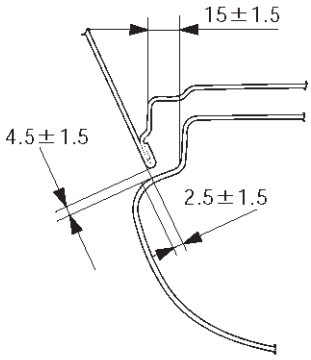

SECTION 19

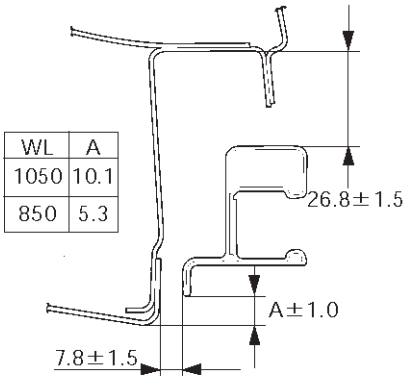

WL	A
1050	10.1
850	5.3

SECTION 20

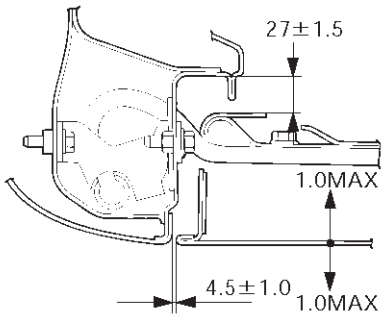

SECTION 21

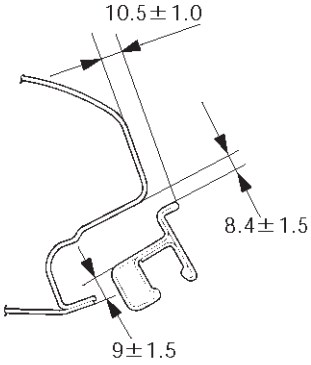

SECTION 22

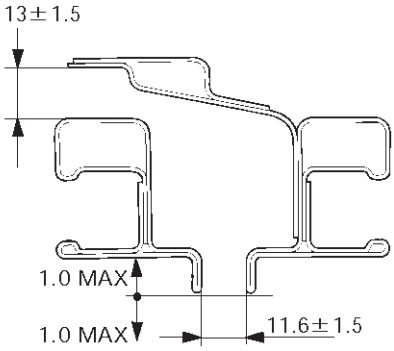

SECTION 23

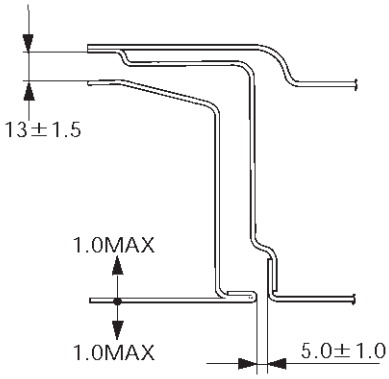

SECTION 24

A10RY00002

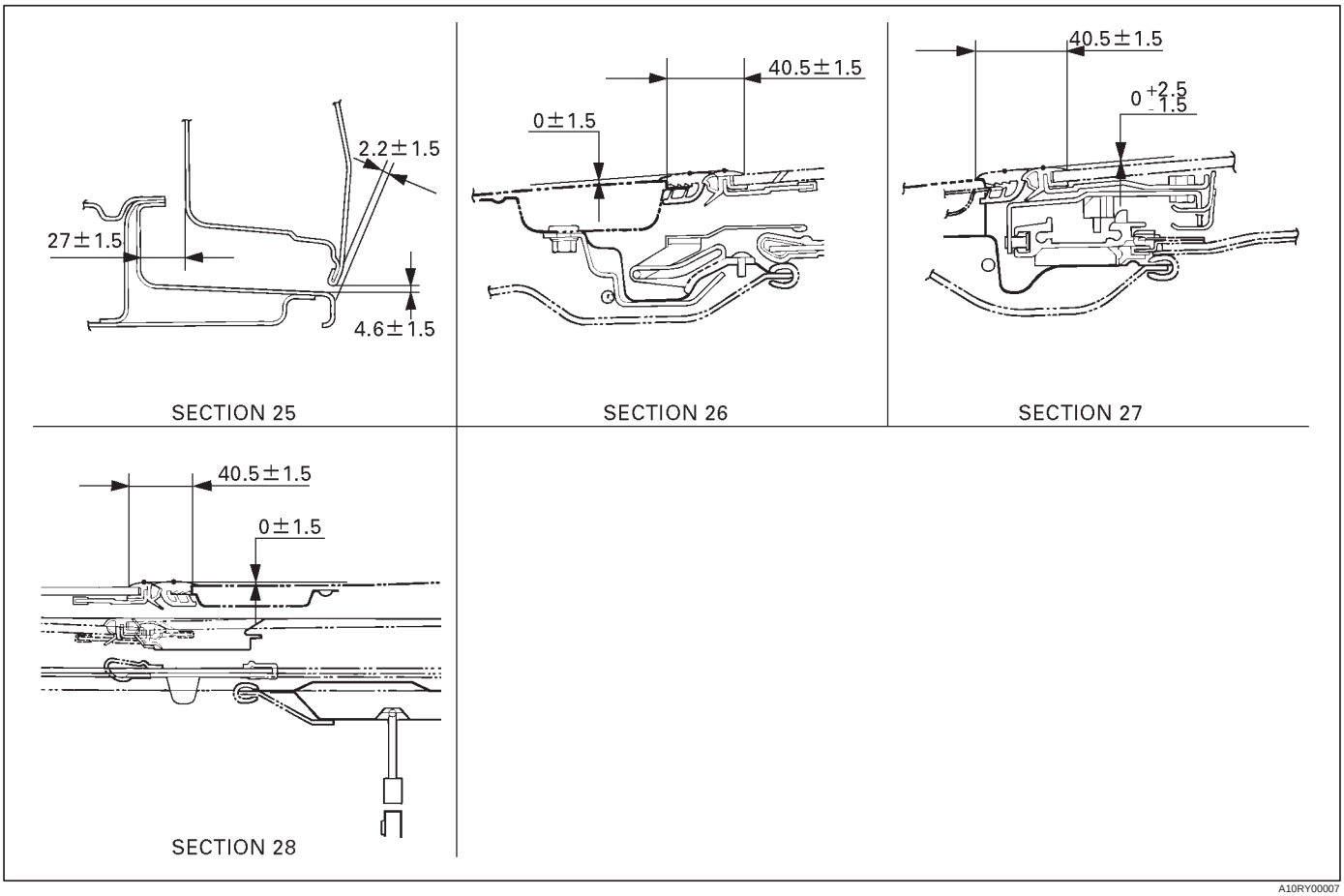
2.2±1.5
27±1.5
4.6±1.5
SECTION 25
40.5±1.5
0±1.5
SECTION 26
40.5±1.5
0 +2.5 -1.5
SECTION 27
40.5±1.5
0±1.5
SECTION 28

A10RY00007

Front Section

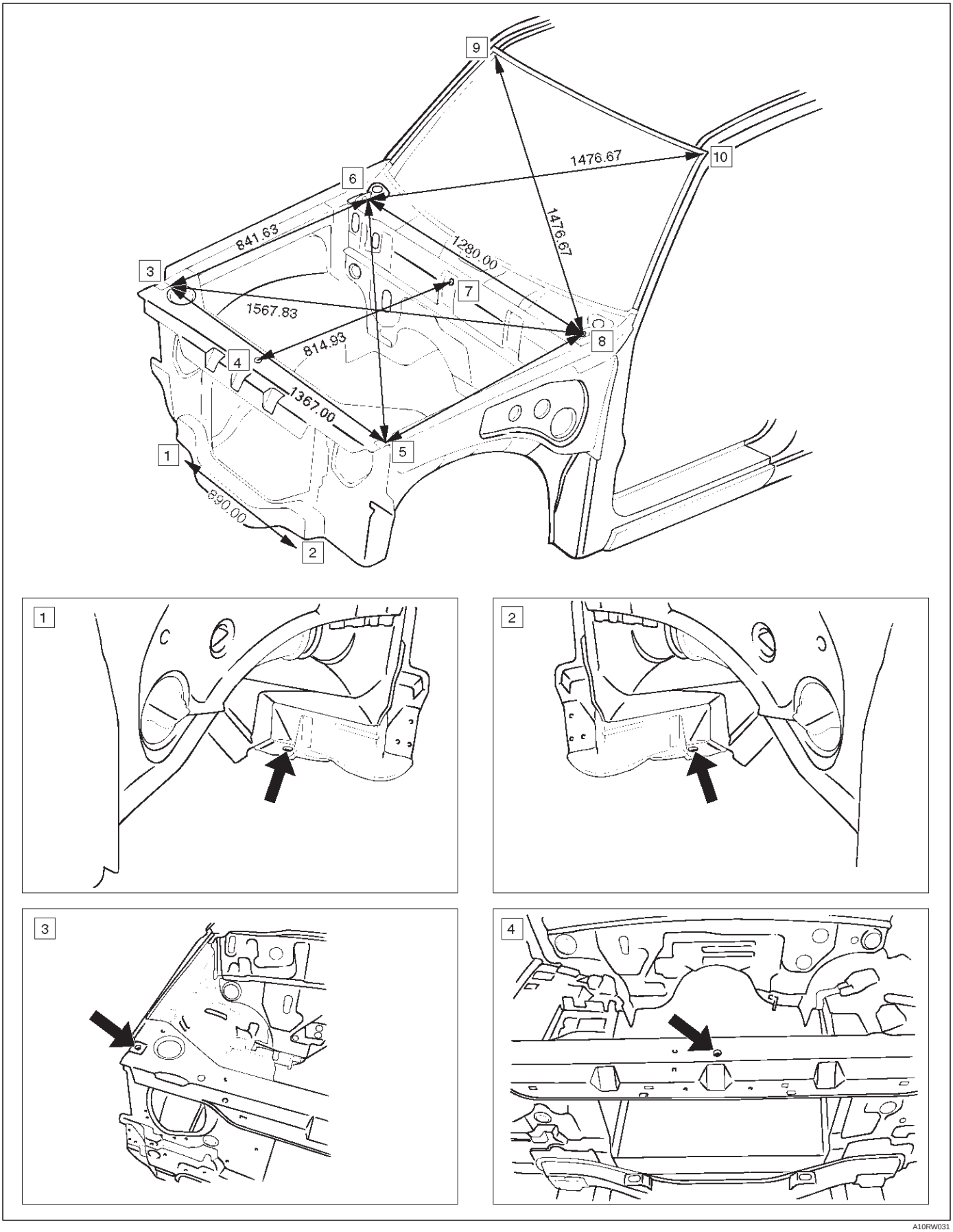

A10RW031

5

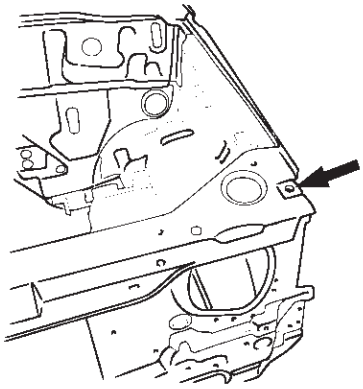

6

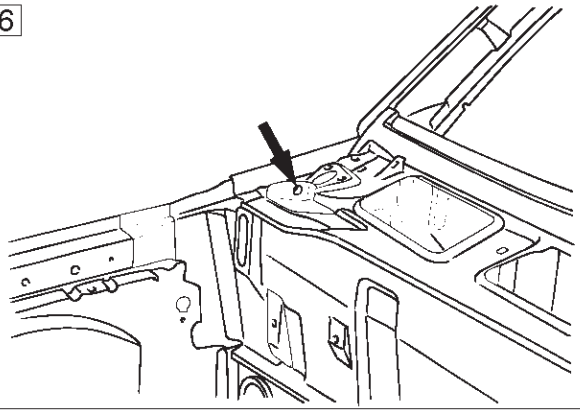

7

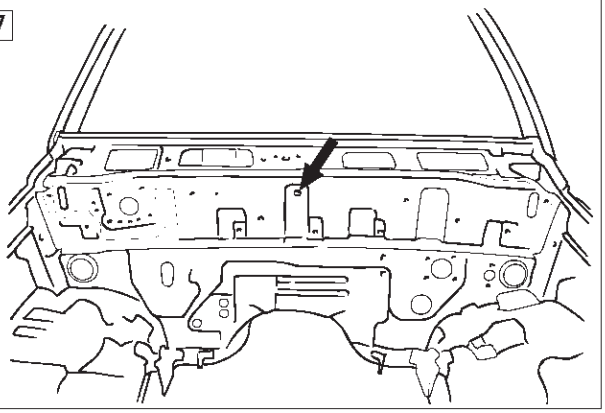

8

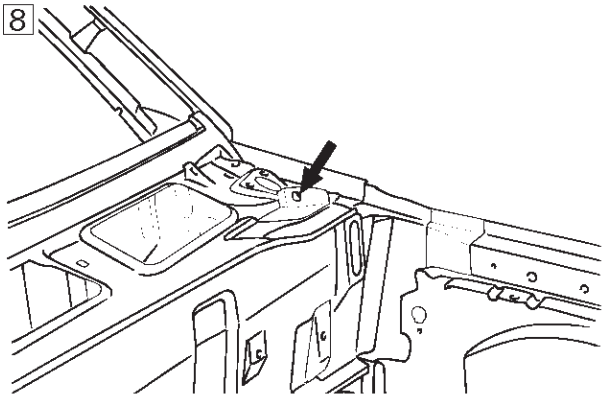

9

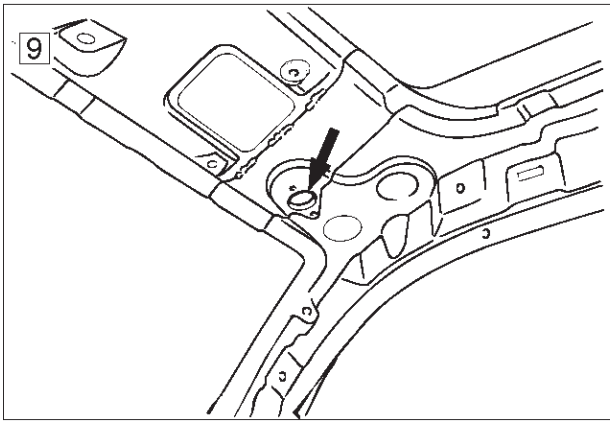

10

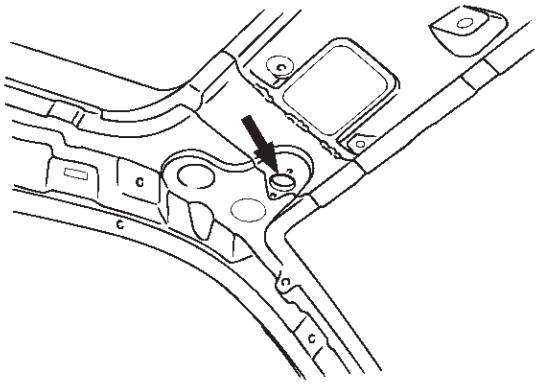

A10RW004

Room Section (LWB)

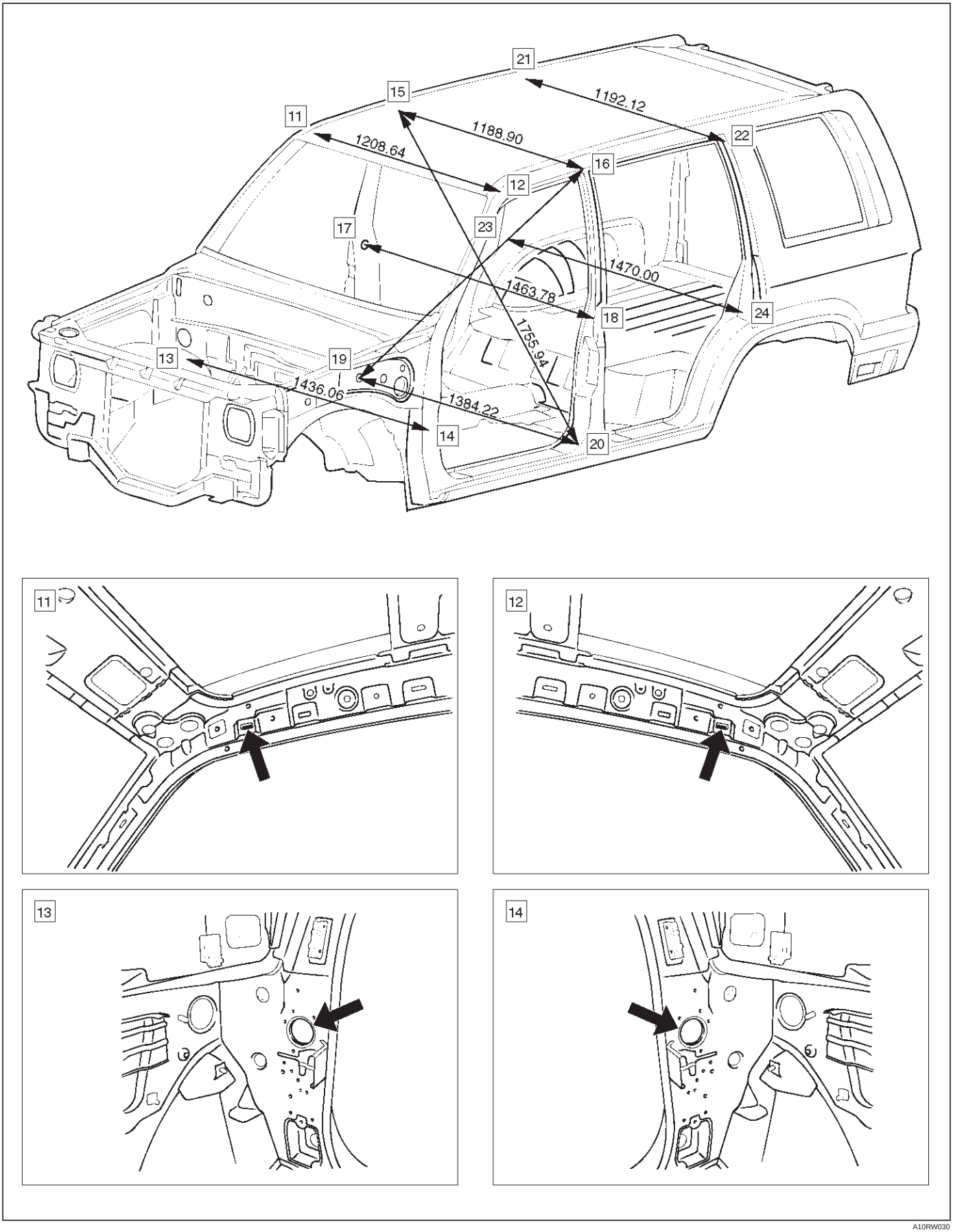

A10RW030

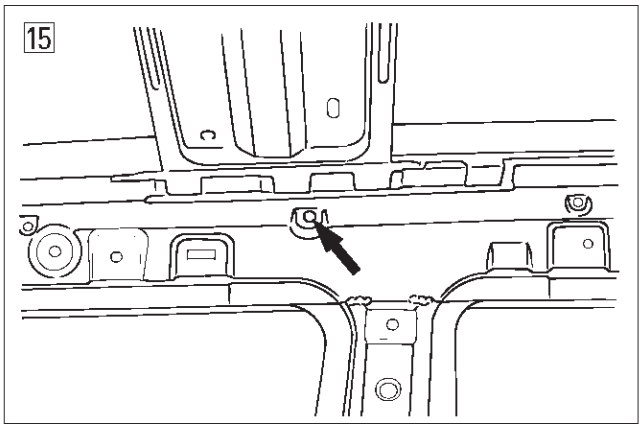

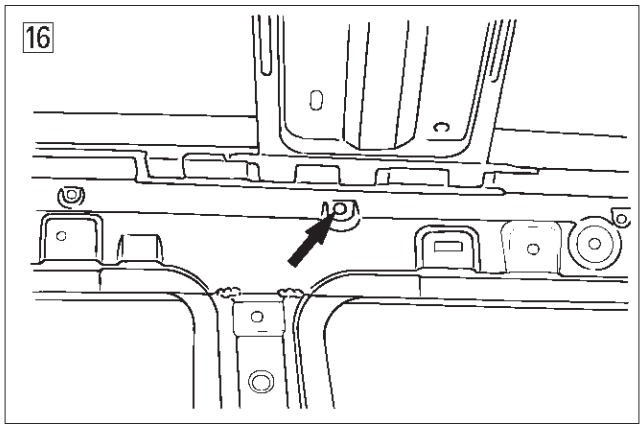

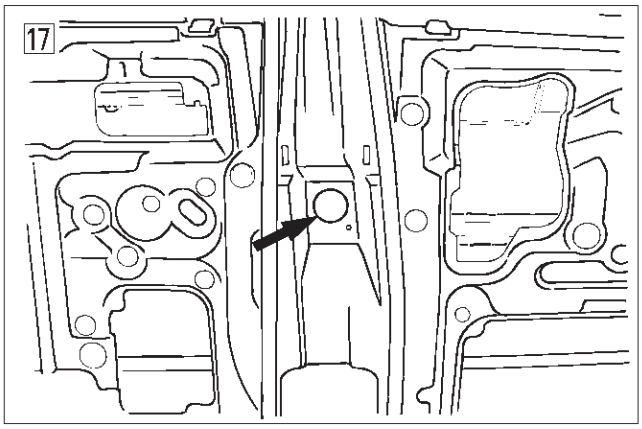

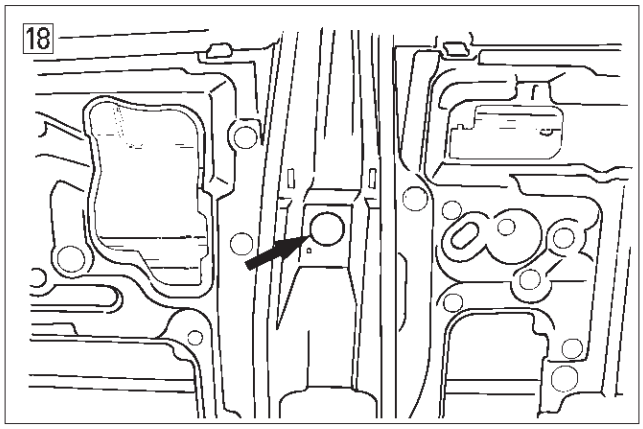

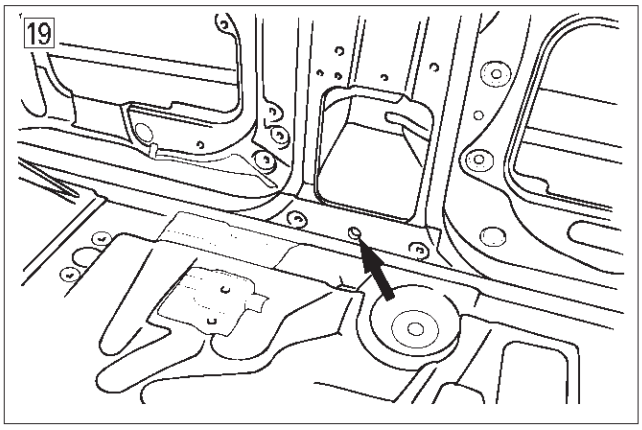

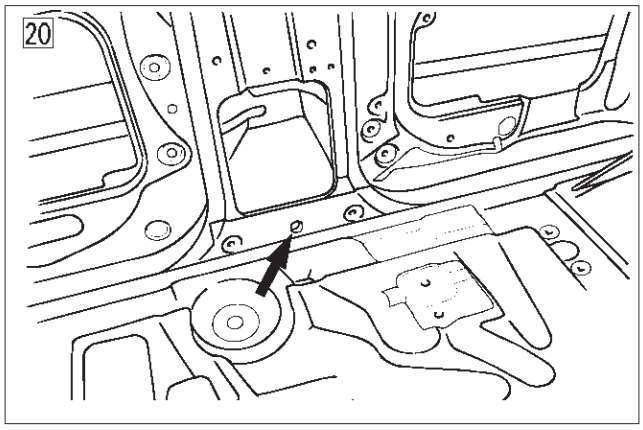

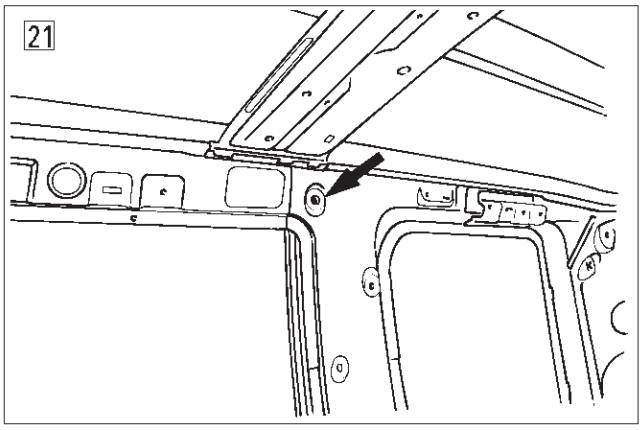

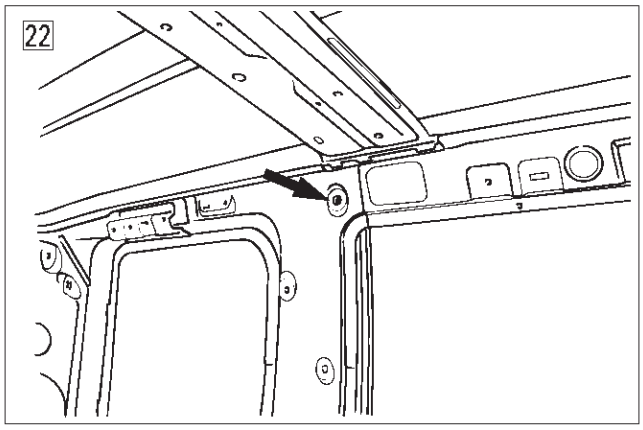

A10RW005

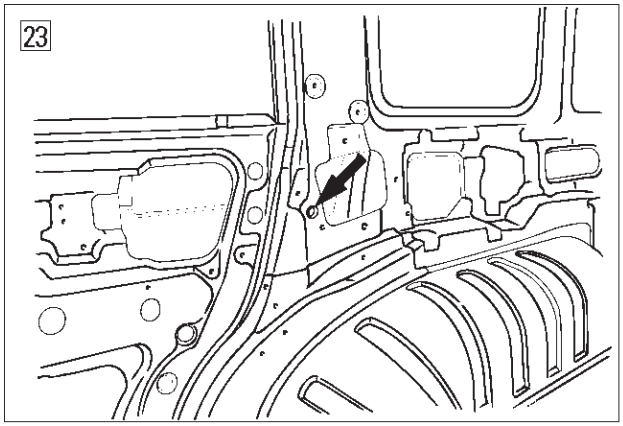

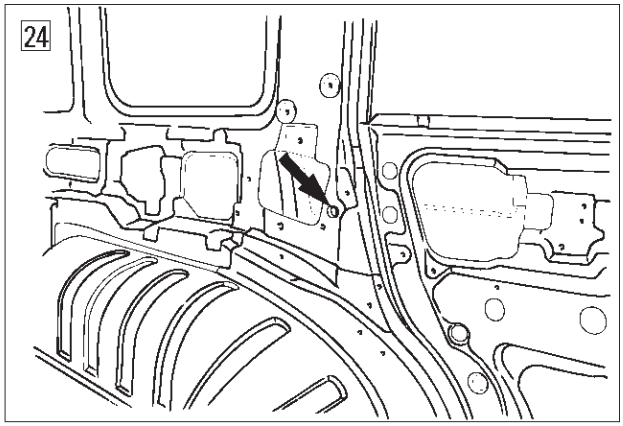

A10RW006

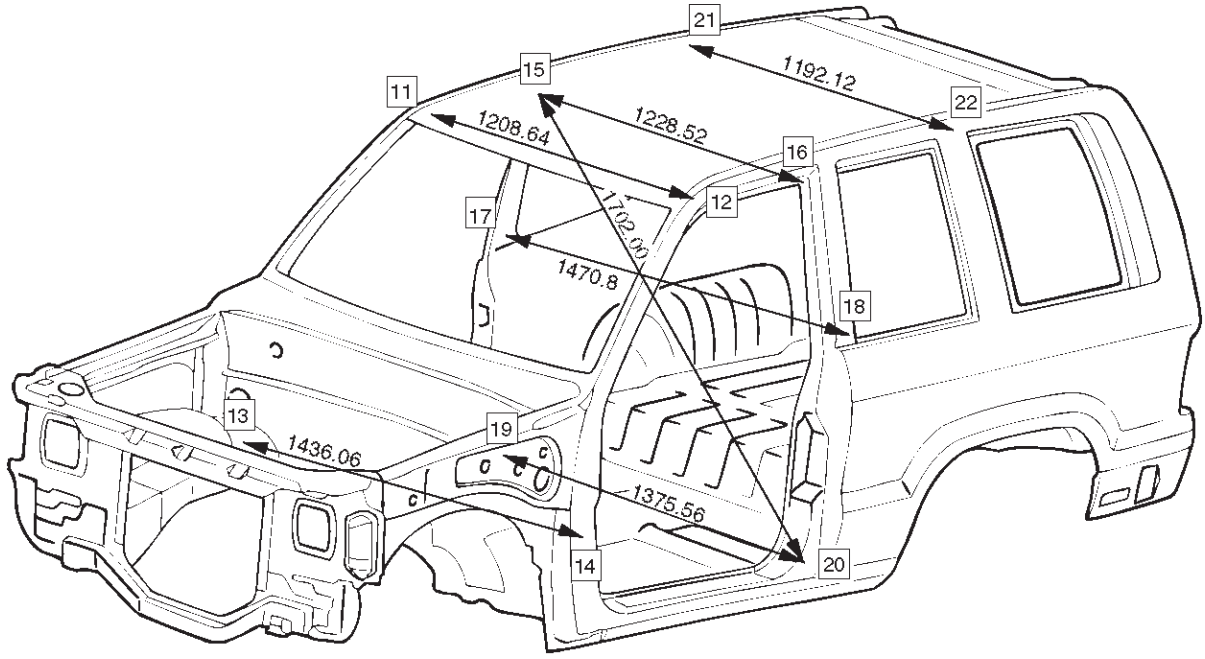
21
15
11
1192.12
22
1208.64
1228.52
16
12
17
1702.00
1470.8
18
13
19
1436.06
1375.56
14
20

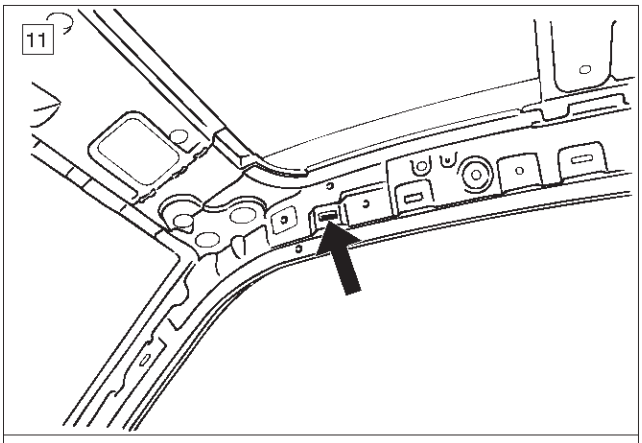
11

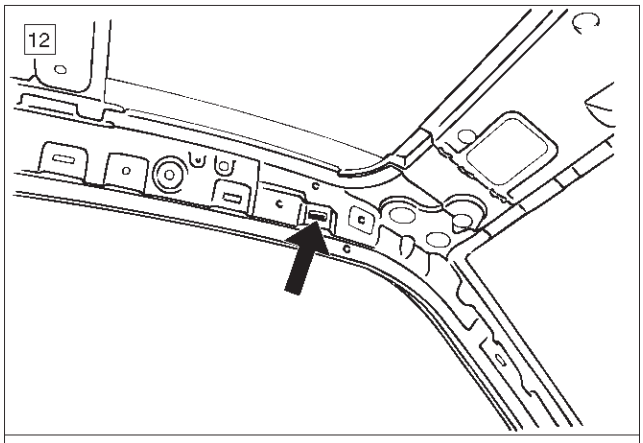
12

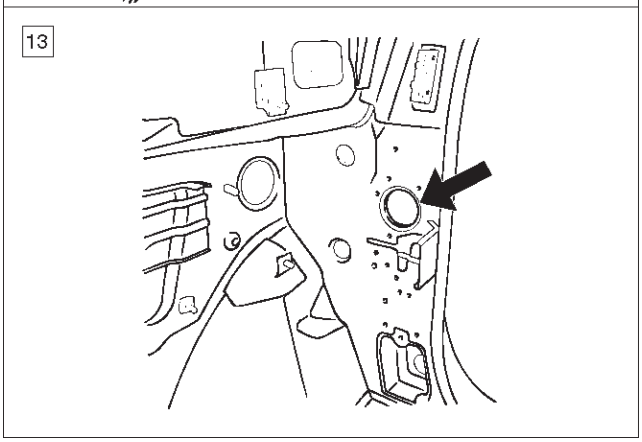
13

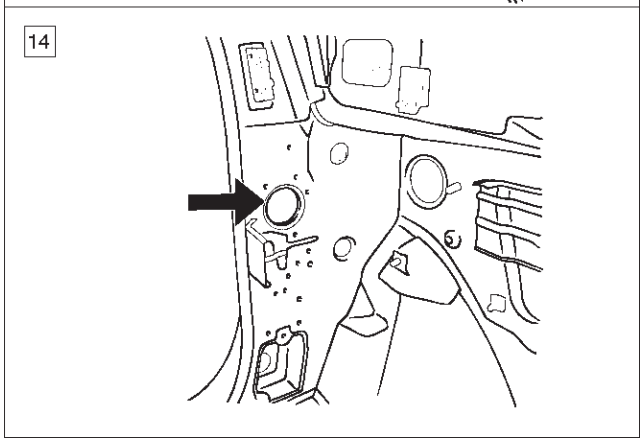
14

A10RW024

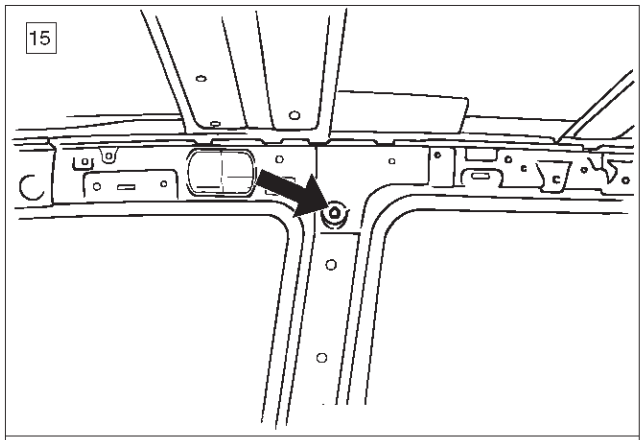

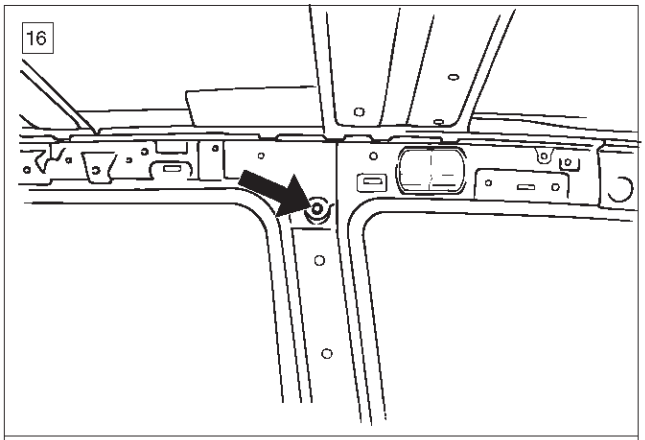

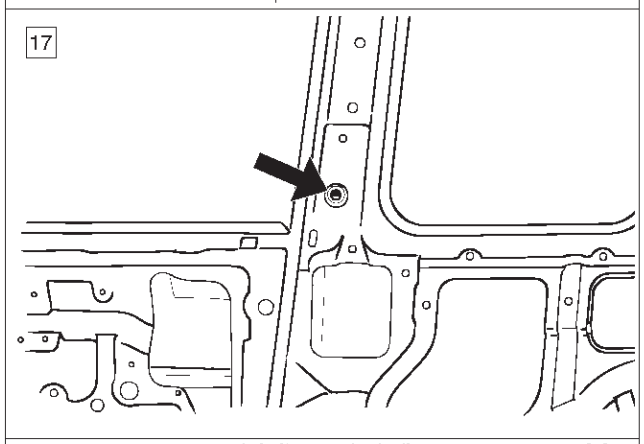

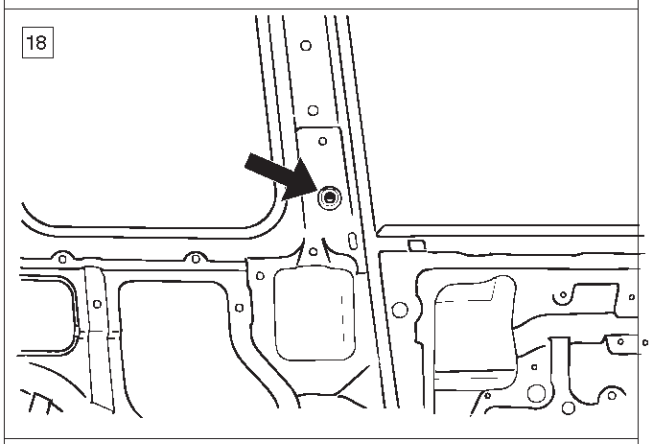

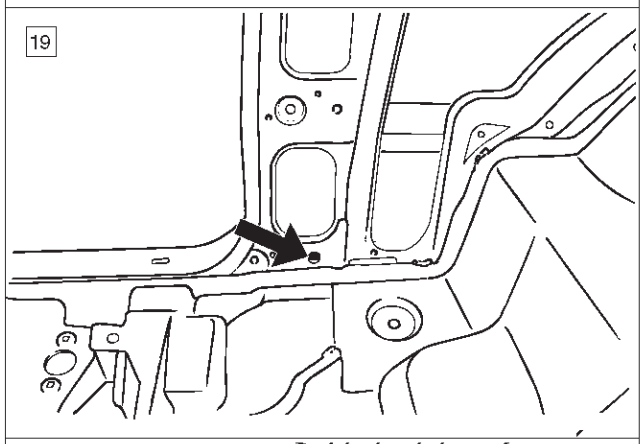

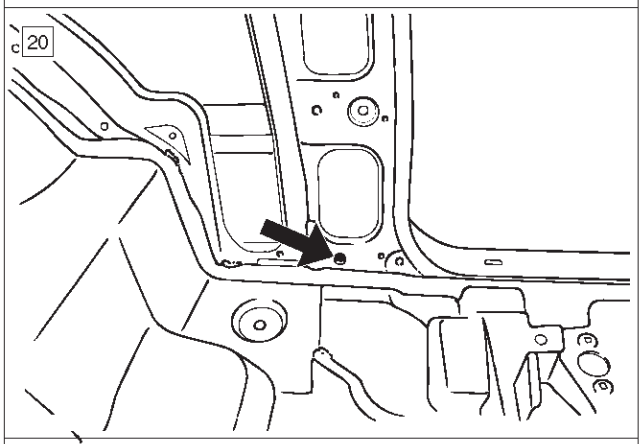

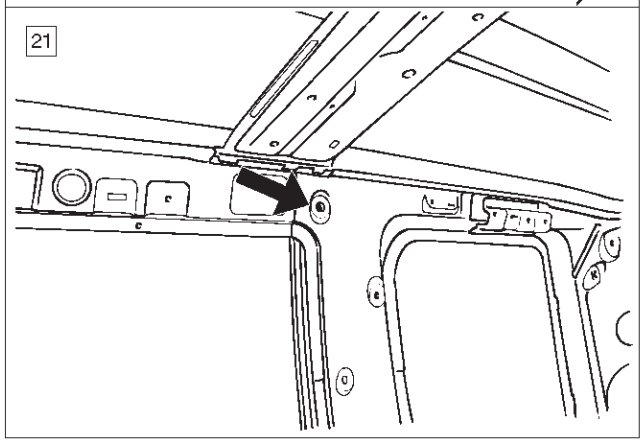

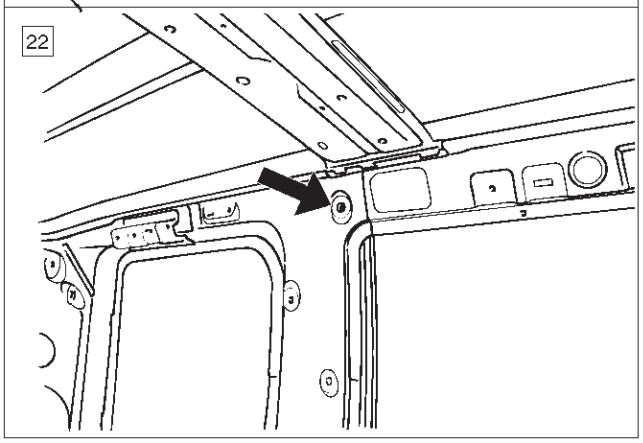

A10RW025

Rear Section

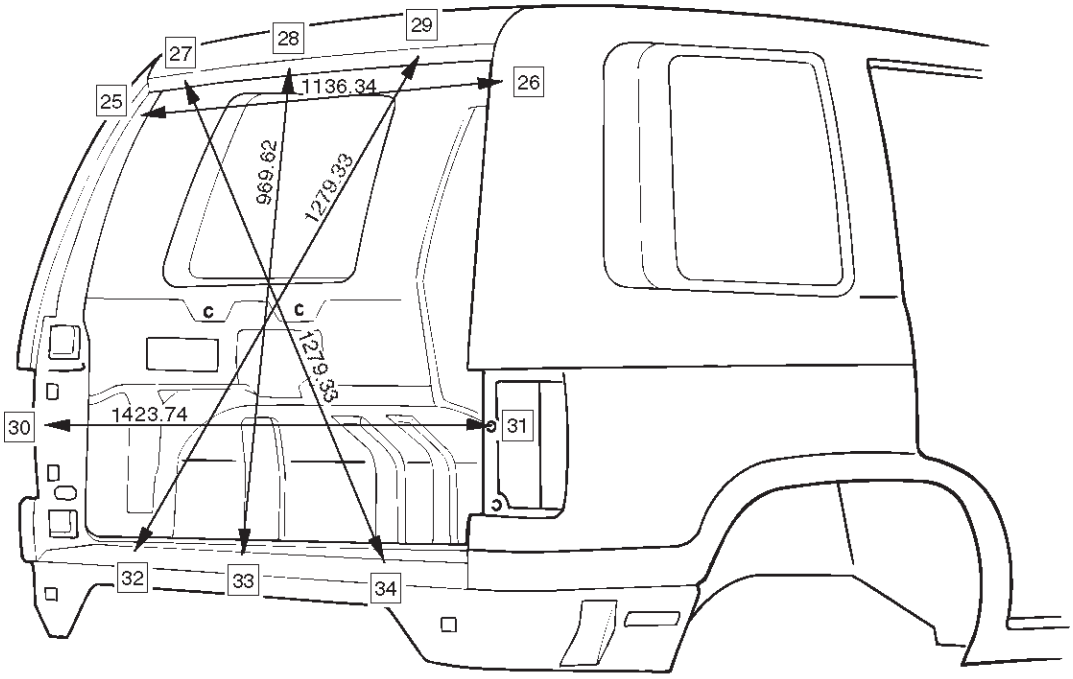

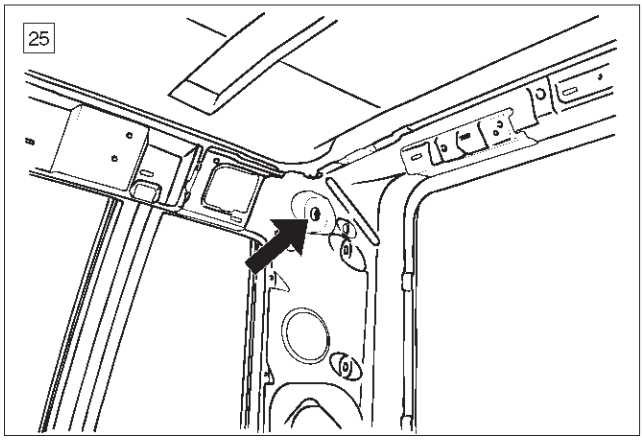

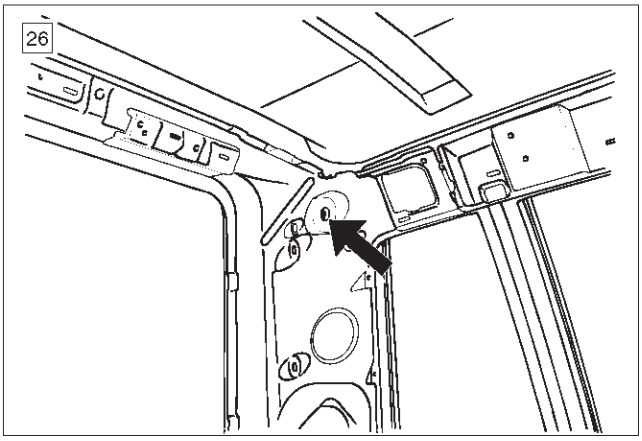

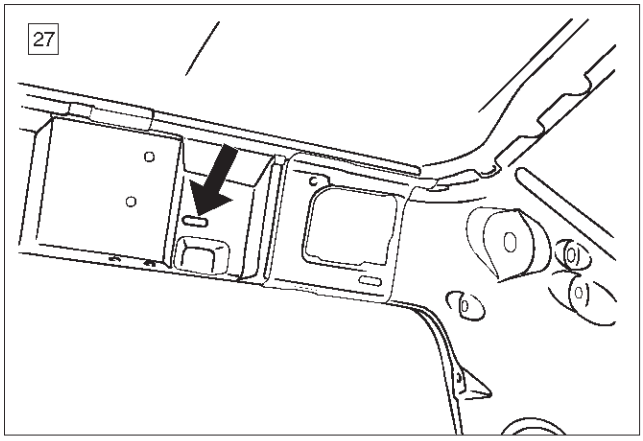

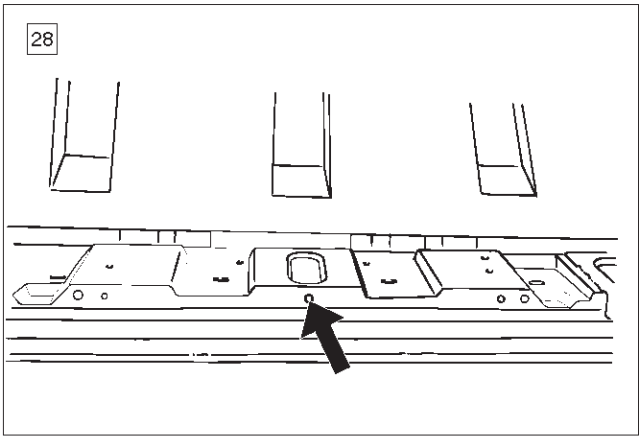

A10RW032

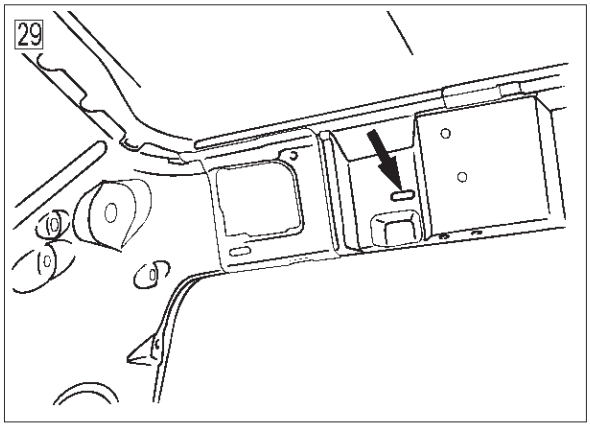

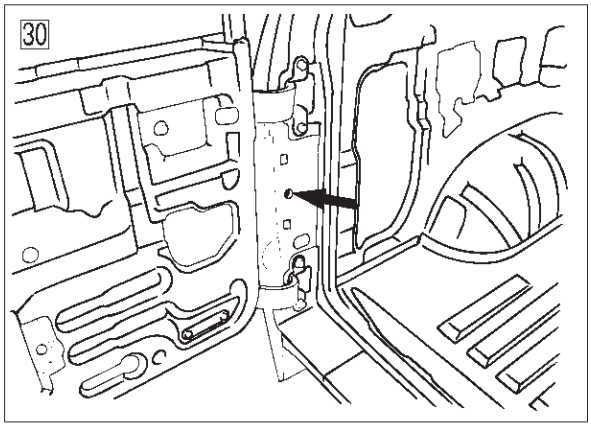

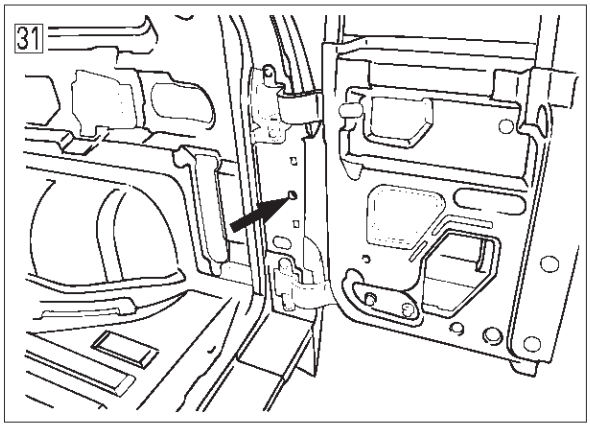

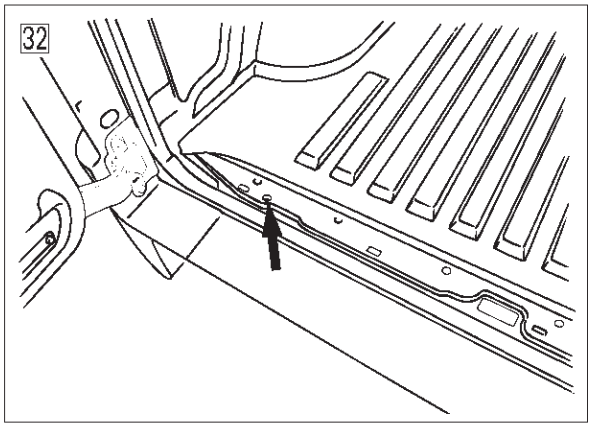

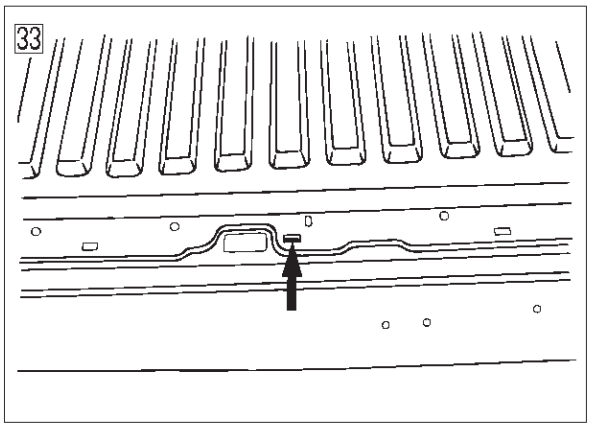

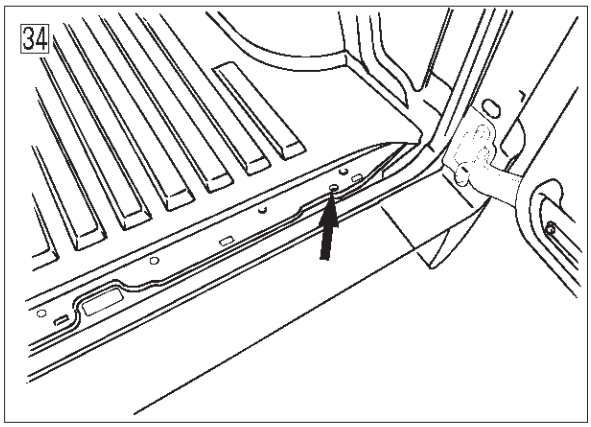

A10RW008

Side Body

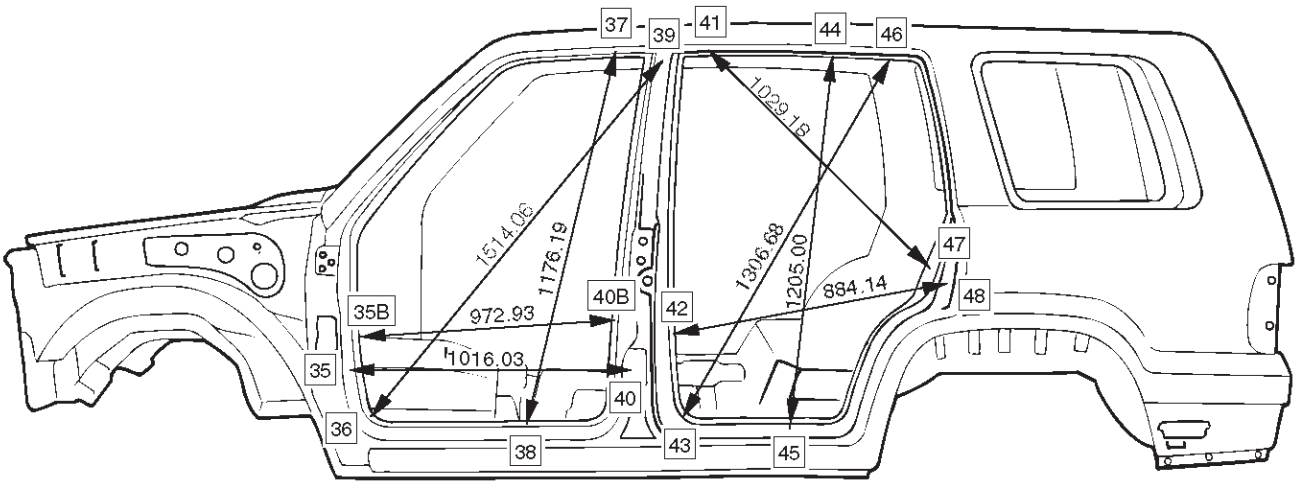

* 35B ~ 40B : Short Wheel Base Only

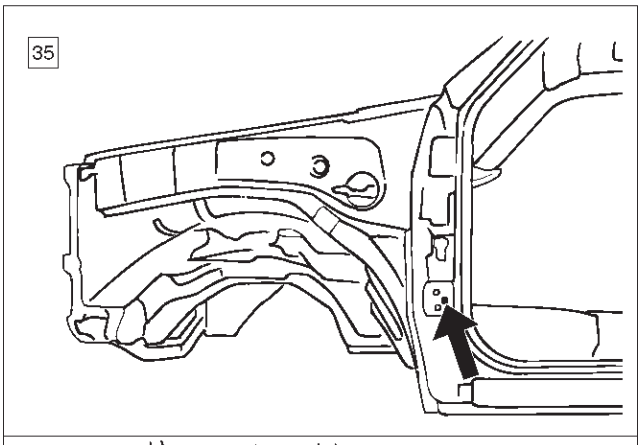

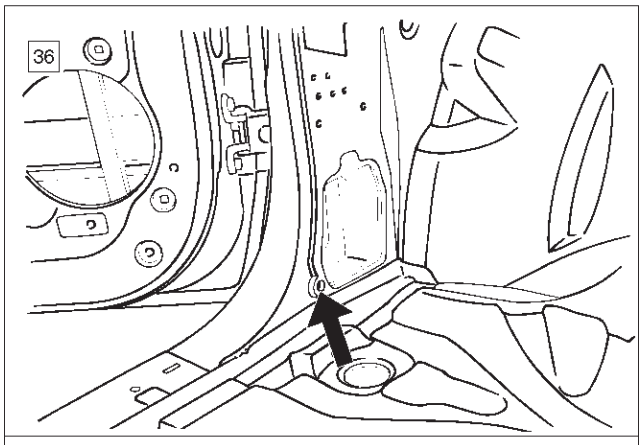

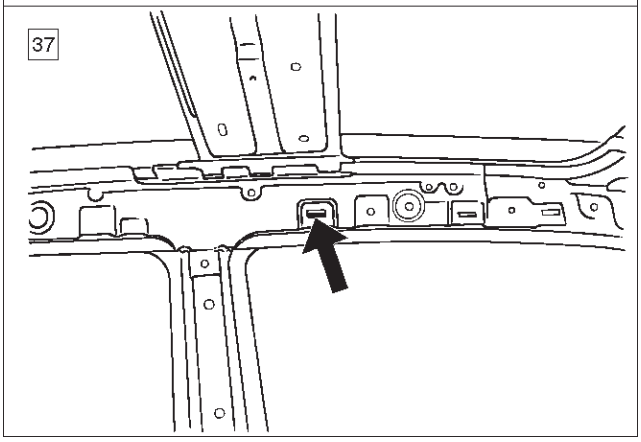

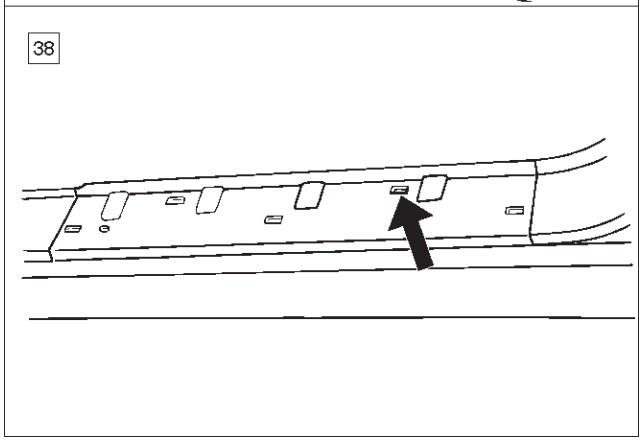

A10RW026

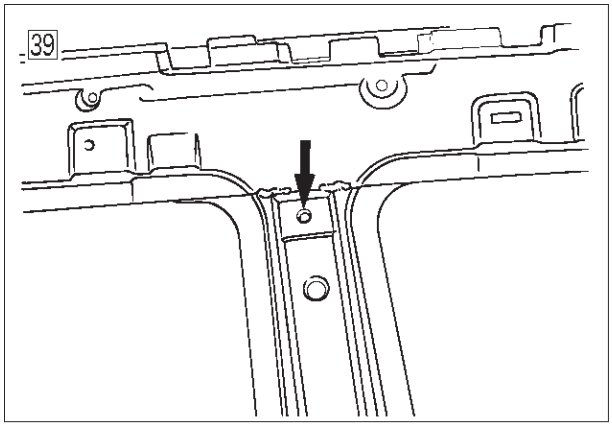

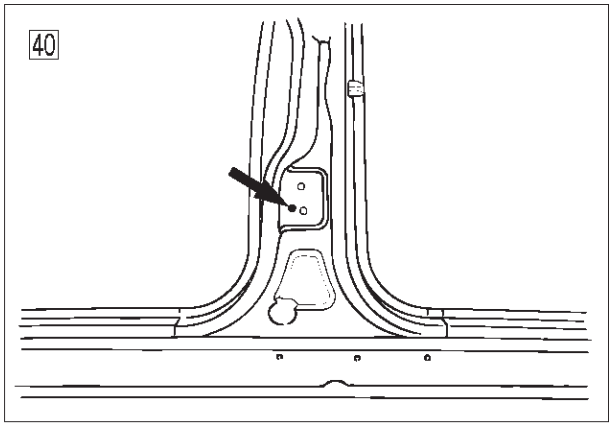

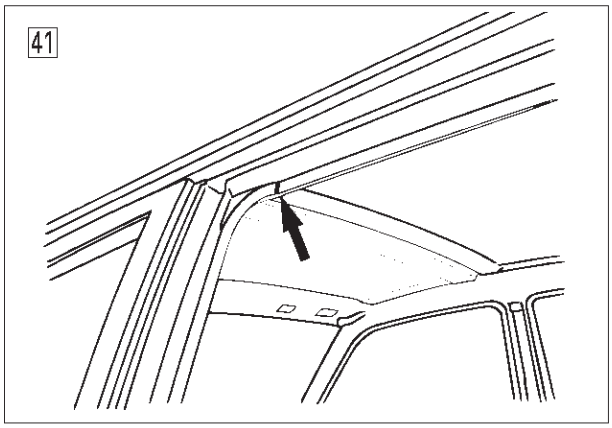

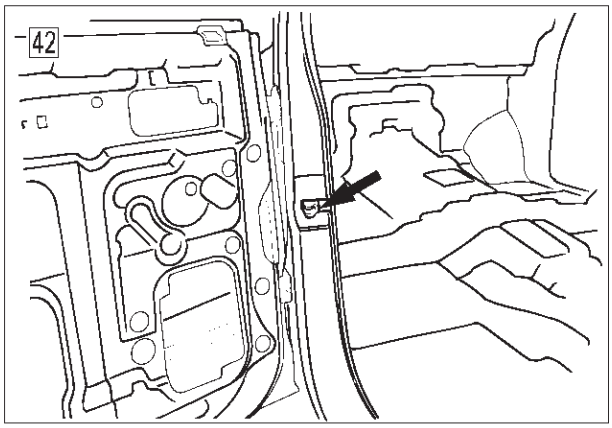

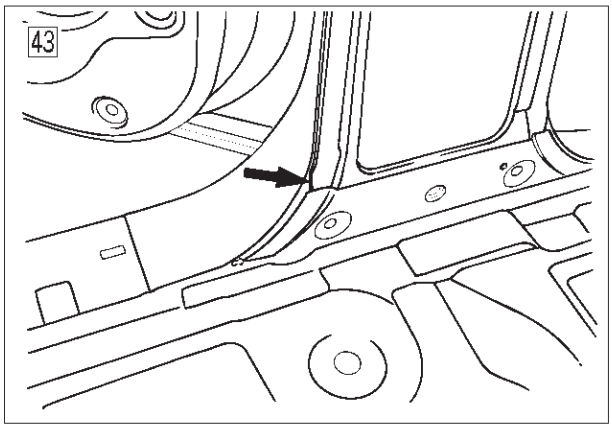

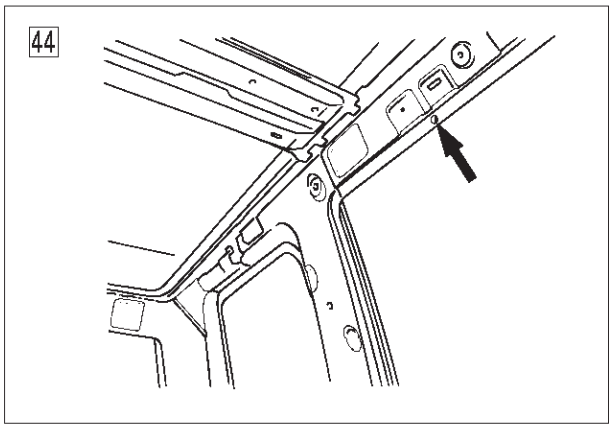

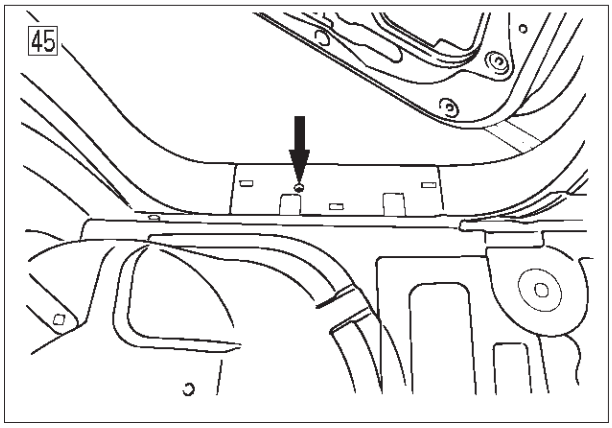

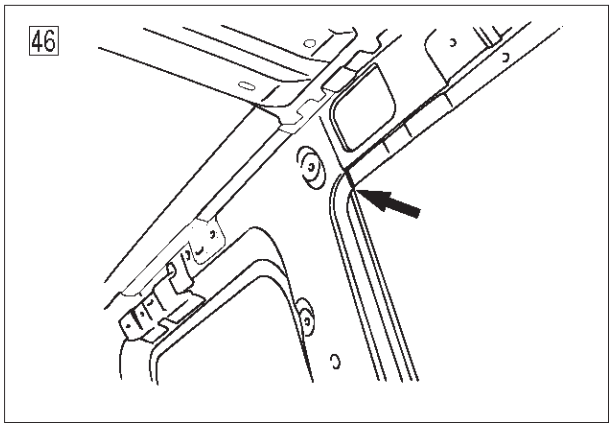

A10RW009

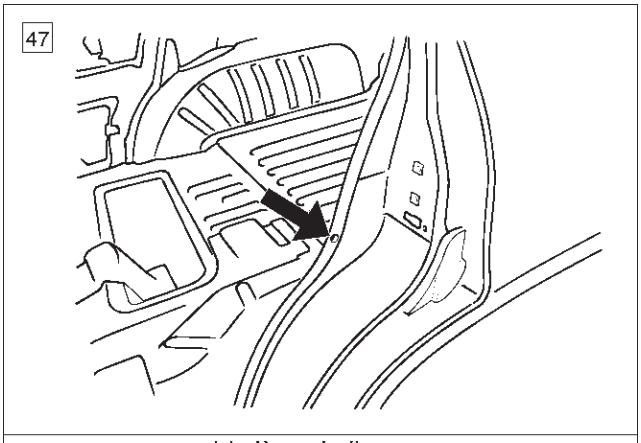

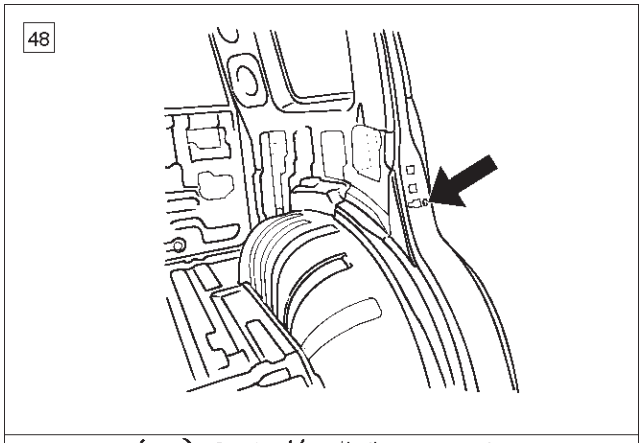

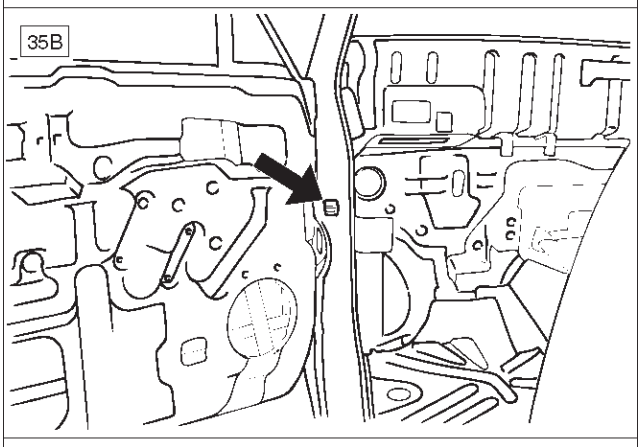

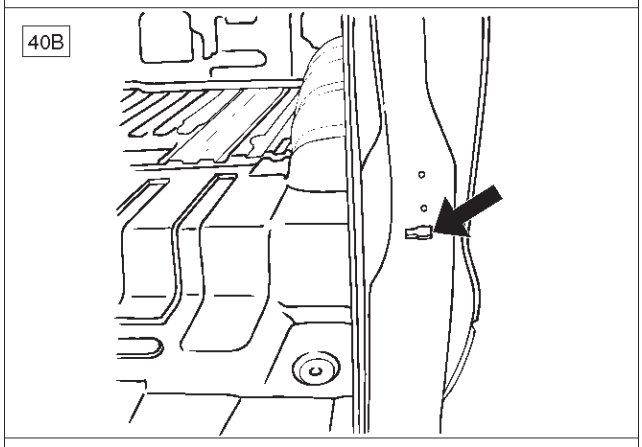

A10RW027

Window Glass

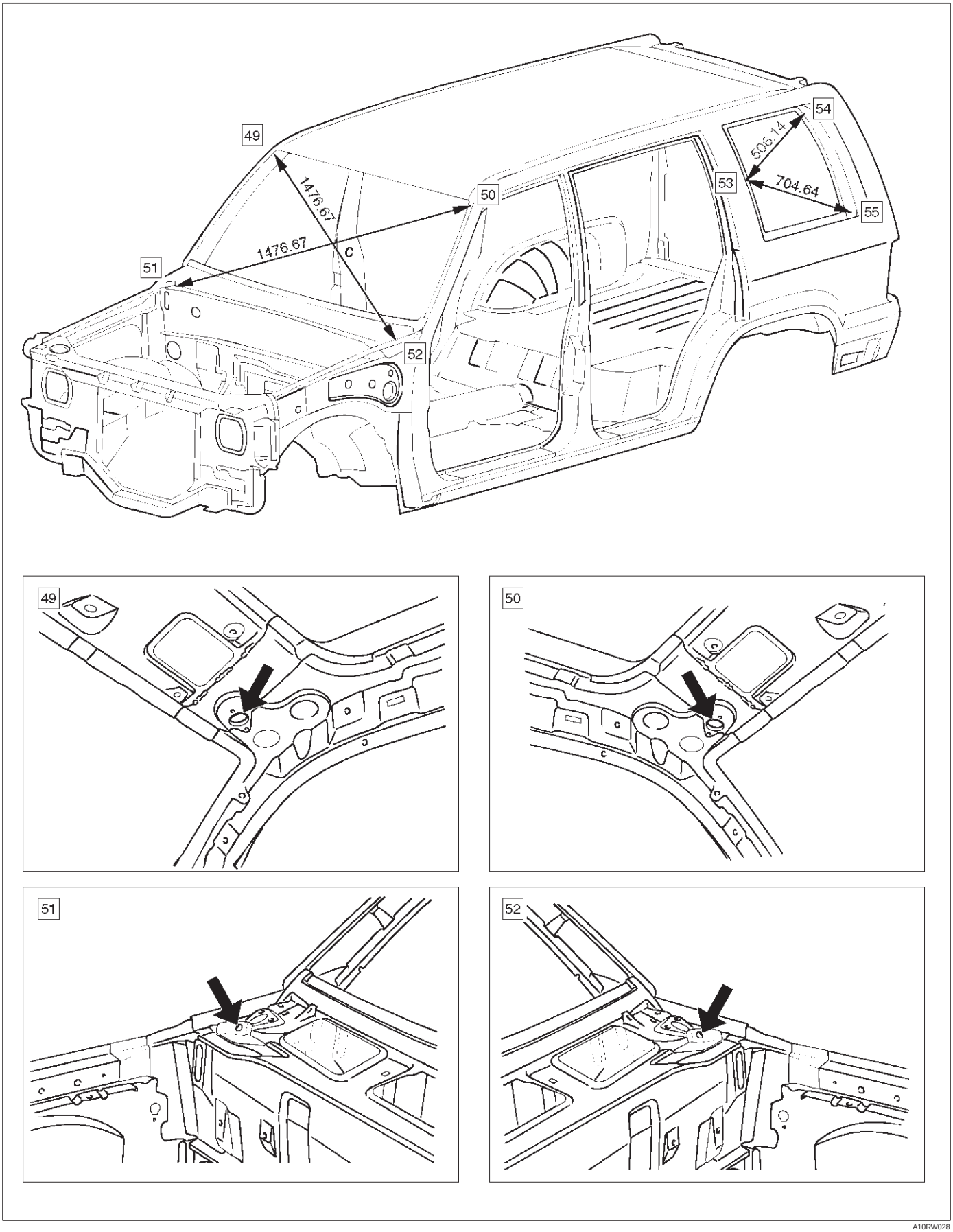

A10RW028

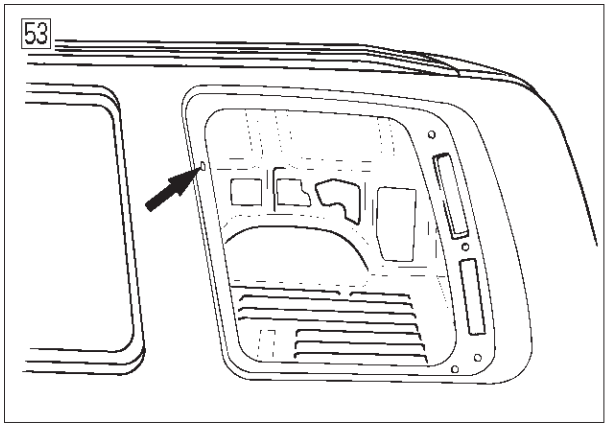

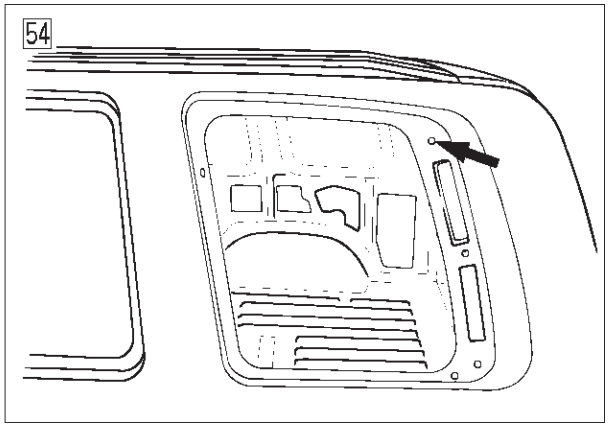

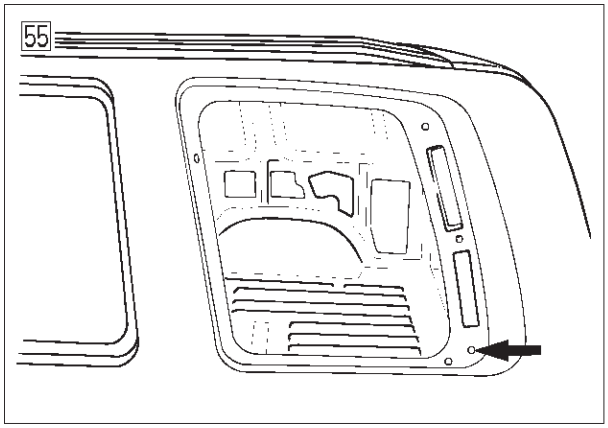

A10RW011

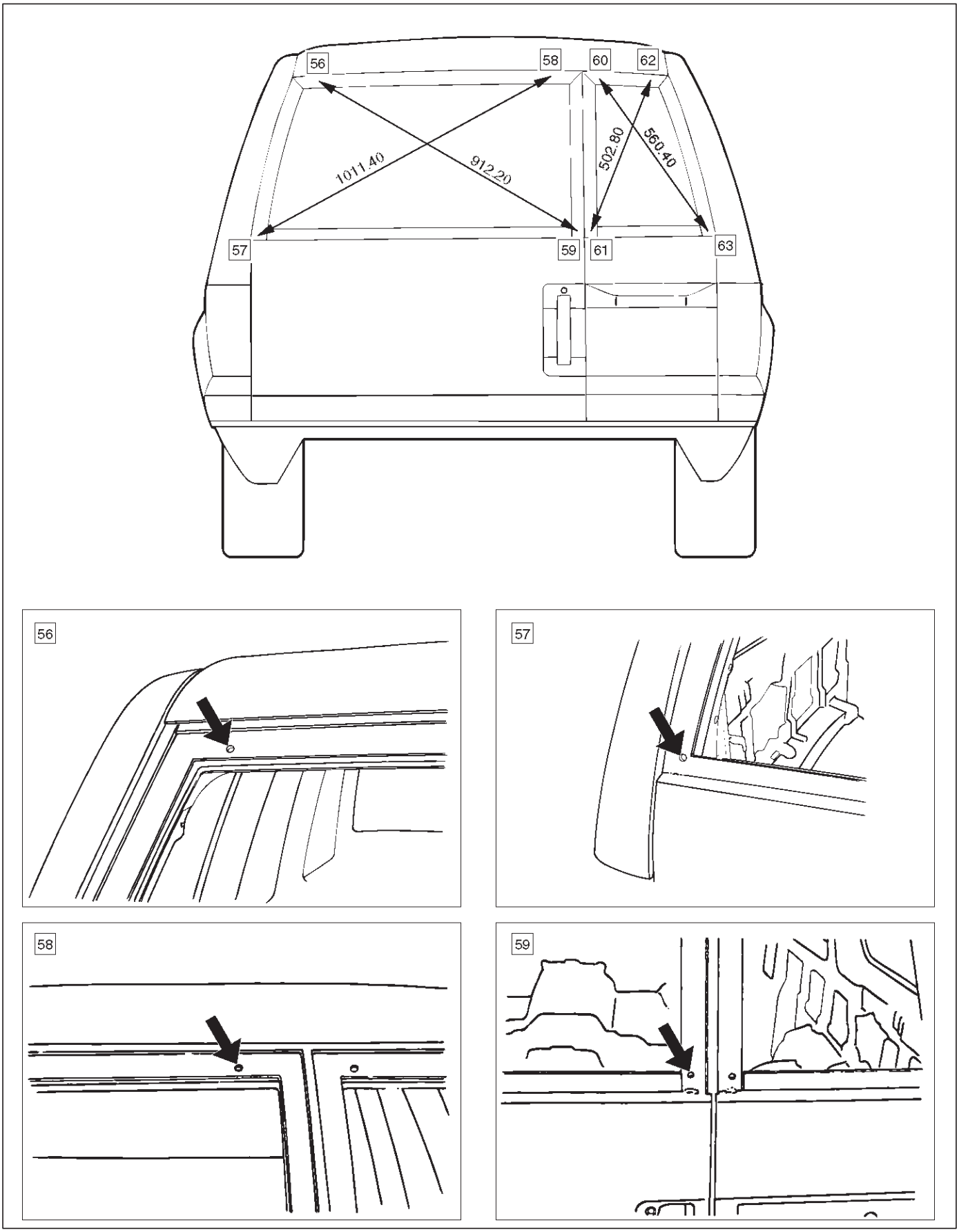

A10RW029

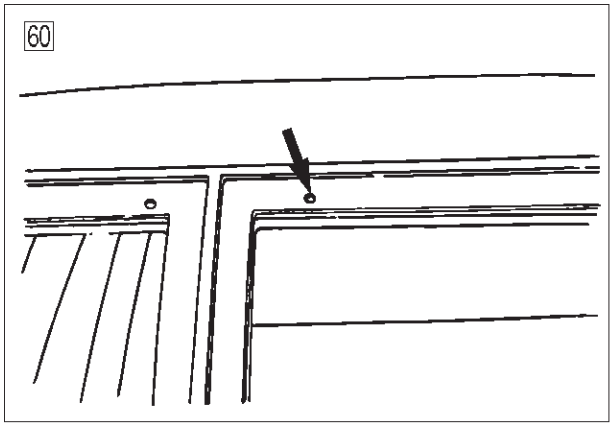

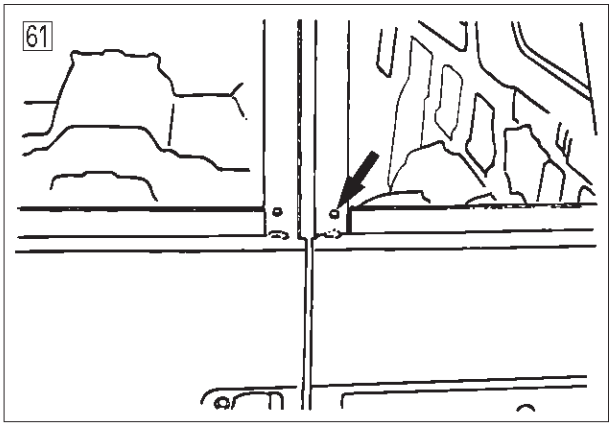

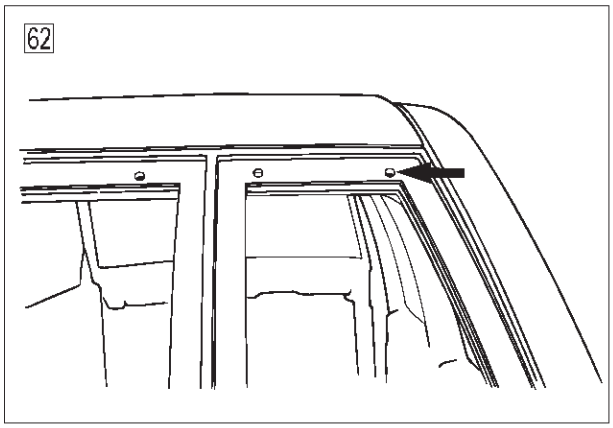

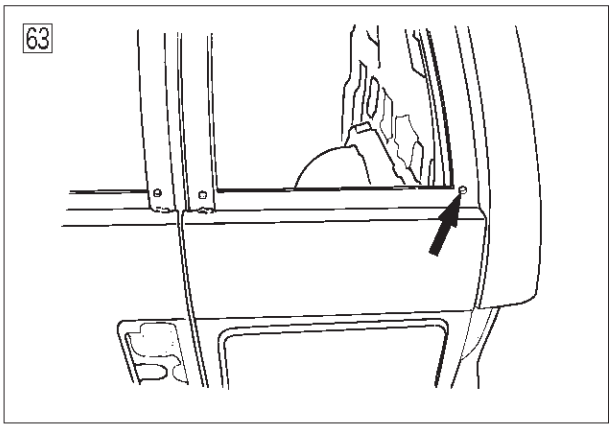

A10RW013

Instrument Panel Assembly

Parts Location

This illustration is based on RHD and W/SRS.

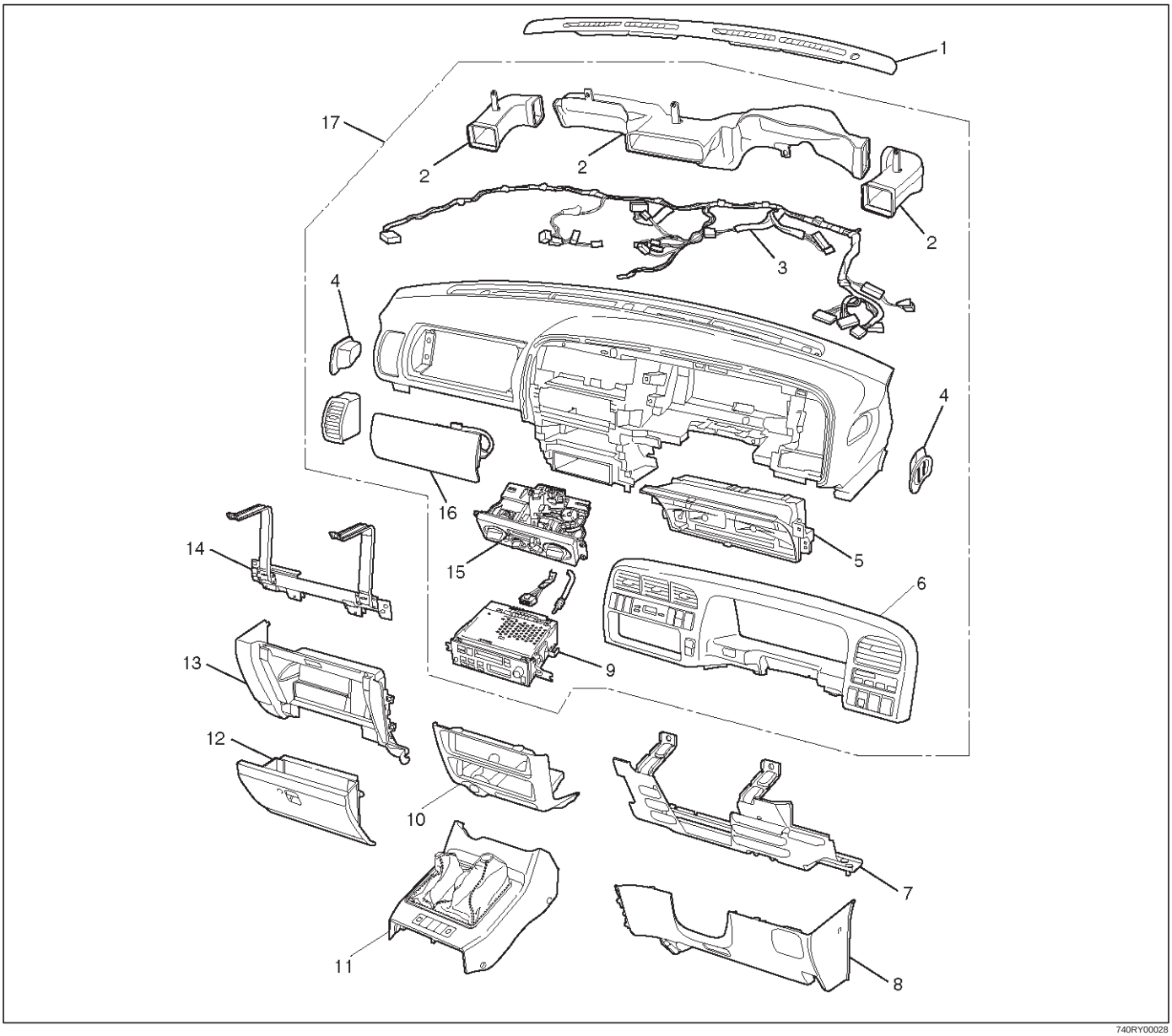

740RY00028

Legend

(1) Front Defroster Grille
(2) Vent Duct Assembly
(3) Instrument Harness Assembly
(4) Side Defroster Grille
(5) Meter Assembly
(6) Instrument Panel Cluster Assembly
(7) Driver Knee Bolster Assembly (W/SRS)
(8) Instrument Panel Driver Lower Cover Assembly
(9) Radio Assembly
(10) Lower Cluster Assembly
(11) Front Console Assembly
(12) Glove Box
(13) Instrument Panel Passenger Lower Cover Assembly
(14) Passenger Knee Bolster Reinforcement Assembly
(15) Control Lever Assembly
(16) Passenger Inflator Module (W/SRS)
(17) Instrument Panel Assembly

Removal

CAUTION: For precautions on installation or removal of SRS—air bag system, refer to Supplemental Restraint System (SRS) — AIR BAG in Restraint section.

1. Disconnect the battery ground cable.
2. Remove front console assembly.
   - Remove the 4 fixing screws and disconnect the switch connectors.
3. Remove lower cluster assembly.
   - Remove the 3 fixing screws (1) in order to disconnect the cigarette lighter (3) and the illumination (2) connectors.

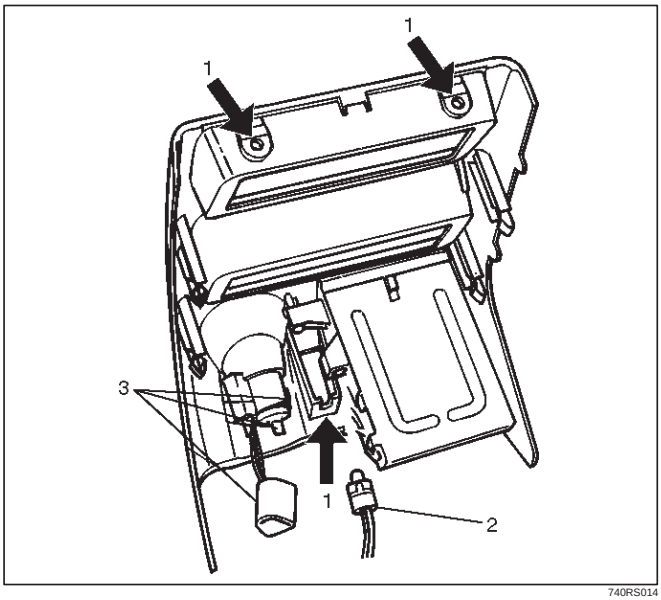

740RS014

4. Remove glove box.
   - Remove the 2 fixing screws.

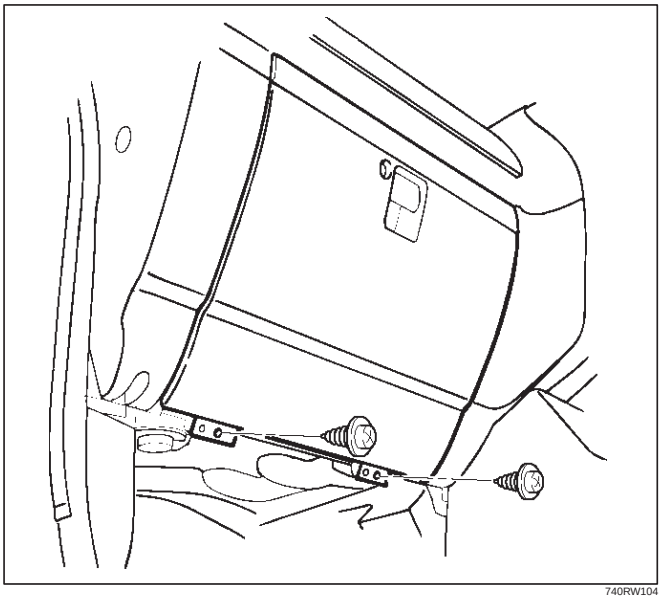

740RW104

5. Remove instrument panel passenger lower cover assembly.
   - Remove the 7 fixing screws (1) and 1 clip (2).

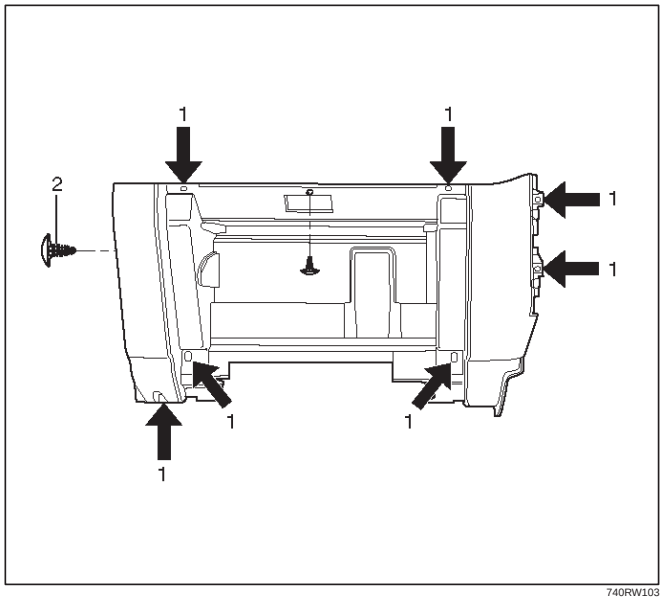

740RW103

6. Remove passenger knee bolster reinforcement assembly.
   - Remove the 4 fixing bolts (2) and 4 nuts (1).

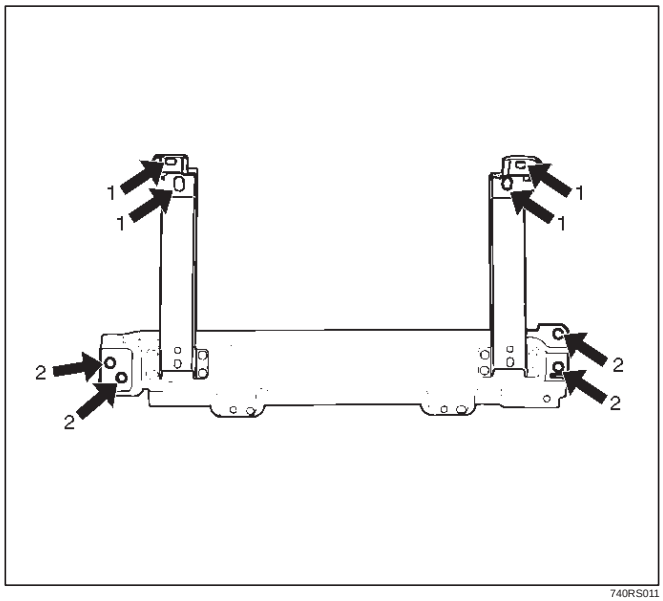

740RS011

7. Remove instrument panel driver lower cover assembly.
   - Remove the engine hood opener fixing screws.
   - Remove the 2 fixing screws (2), 1 fixing bolt (3), and 1 clip (4). Pull out the fasteners at the 4 positions (1).

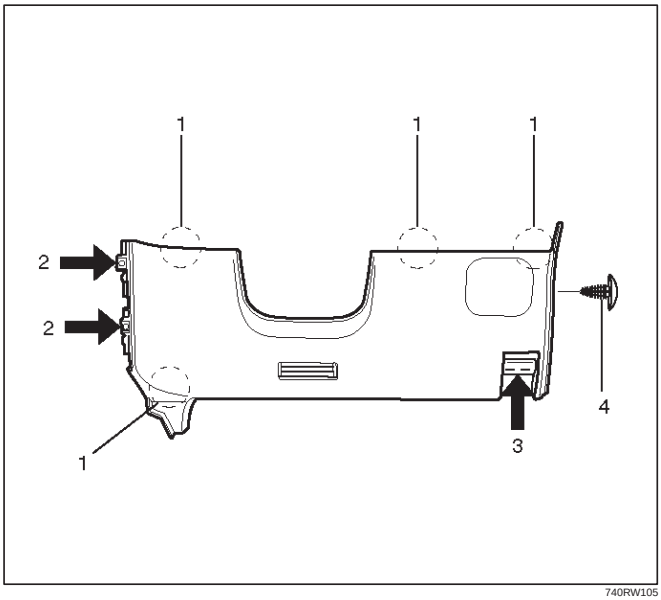

740RW105

8. Remove driver knee bolster assembly (W/SRS).
   - Remove the 6 fixing nuts.

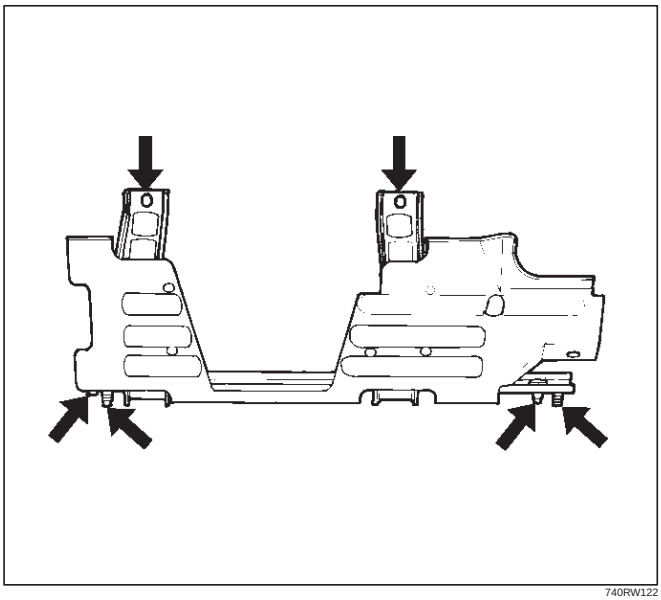

740RW122

9. Remove front defroster grille.
   - Pry 8 claws on the front side toward you side (room side) and raise the grille upward.
10. Remove instrument panel assembly.
   - Remove the 2 fixing bolts on the SRS adjust bracket and the cross beam under the passenger inflator module (W/SRS).

CAUTION: For precautions on installation or removal of SRS — air bag system, refer to Supplemental RestraintSystem (SRS) — AIR BAG in Restraint section.

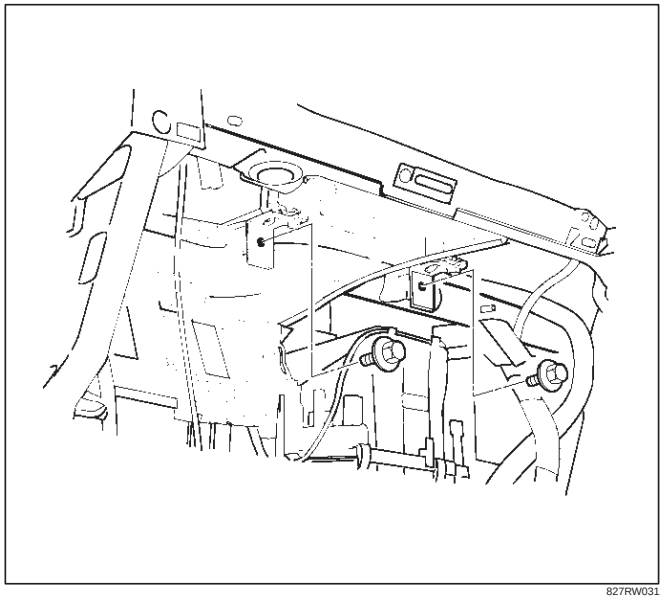

827RW031

- Disconnect the 3 air conditioner control cables on the unit side.
- Remove the instrument harness connectors (5 connectors on the drivers side and 3 connectors on the passenger side), the passenger inflator module connector, the radio antenna cable plug, and the ground cable fixing bolt on the center bracket.
- Remove the 4 bolts (4) and the 2 nuts (3) under the instrument panel assembly, and the upper left and the upper right bolts (2) and the center nut (1).

740RW106

11. Remove passenger inflator module (W/SRS).
    - From the back of the instrument panel, remove the 4 fixing nuts (2) on the passenger inflator module (3) and the 2 fixing nuts (1) and washers on the support bracket (4), then disengage the 2 clips in order to remove the passenger inflator module.

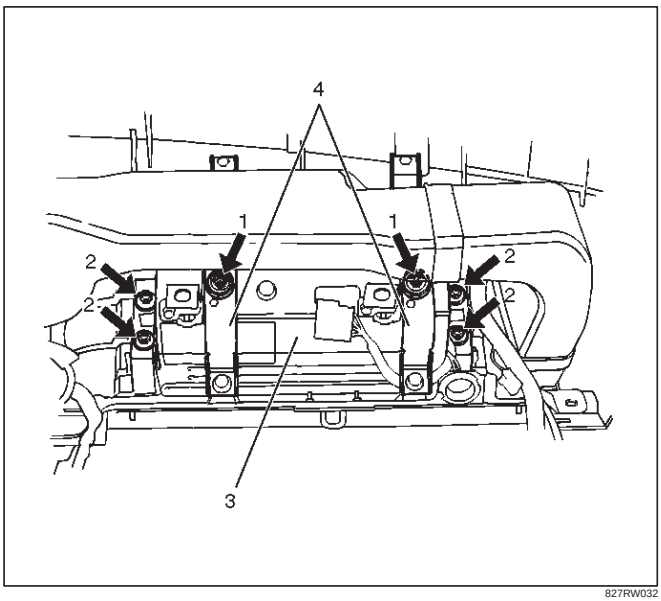

827RW032

12. Remove instrument panel cluster assembly.
    - Remove the 5 fixing screws (2) and pull the main unit toward you and remove the clips at the 4 positions (1). Disconnect the switch connectors.

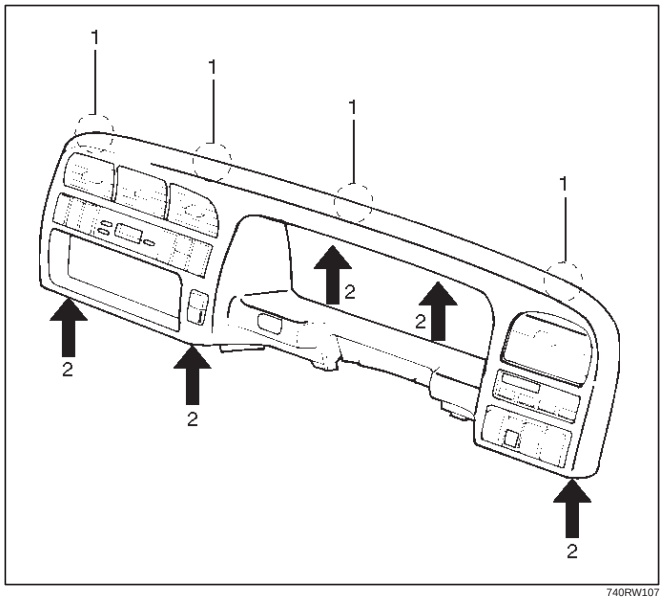

740RW107

13. Remove meter assembly.
    - Remove the 4 meter assembly fixing screws and disconnect the meter harness connectors.

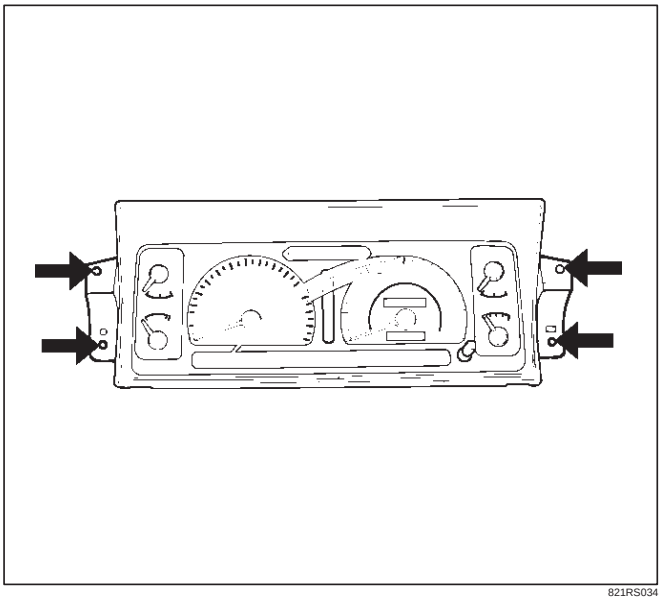

821RS034

14. Remove control lever assembly.
    - Refer to Control Lever Assembly And/Or Control Cables in Heating And Ventilation section.
15. Remove radio assembly.
    - Remove 2 fixing screws.
16. Remove vent duct assembly.
    - Remove 5 fixing screws.
17. Remove instrument harness assembly.
    - Remove the 4 fixing screws, fasteners at the 4 positions and the clips at the 7 positions.
18. Remove side defroster grille.

NOTE: For the order of removal steps in which each items contained in the instrument panel assembly are removed individually, refer to the chart.

Installation

To install, follow the removal steps in the reverse order.

Order Of Removal/Installation Steps For Each Item

Removal Item	Removal Procedure	Removal Step
Front console assembly	Shift knob (M/T), Power & Winter SW (A/T), Transfer knob, Seat heater/Miller SW conn. and 4 screws	1, 2
Lower cluster assembly	3 screws, Ciger lighter conn. and Ashtray illumination conn.	1~3
Glove box	2 screws	4
Instrument panel passenger lower cover	7 screws and 1 clip	1~5
Passenger knee bolster reinforcement	4 nuts and 4 bolts	1~6
Instrument panel driver lower cover	Engine hood opening fixing screw, 2 screws, 1 bolt, 1 clip and fasteners at 4 positions	1~3, 7
Driver knee bolster	6 nuts	1~3, 7, 8
Front defroster grille	Claws at 8 positions	9
Instrument panel assembly	2 bolts (SRS adjust bracket~ cross beam), A/C control cable (Unit side at 3 position), Instrument harness connector (Driver side 5 position, assist side 3 position), SRS module conn., Radio antenna jack, Earth cable, 9 bolts and 3 nuts	1~10
Passenger inflator module	4 nuts (SRS module~Instrument panel), 2 nuts 0 and 2 washers (SRS module~support bracket) and 2 clips	1~6, 11
Instrument panel cluster	5 Screws, fastener at 4 position and each SW conn.	1~3, 7, 12
Meter assembly	4 screws and connectors	1~3, 7, 12, 13
A/C control panel assembly	4 screws and connectors	1~3, 7, 12, 14
Radio assembly	2 screws	1~3, 15
Vent duct assembly	5 screws	1~10, 16
Instrument harness assembly	4 screws, fasteners at 4 position, and clips at 7 position	1~10, 17
Side defroster grille		18

M/T = Manual Transmission
A/T = Automatic Transmission
SRS = Supplemental Restraint System
A/C = Air Conditioning

Cross Beam Assembly

Parts Location

This illustration is based on RHD and W/SRS

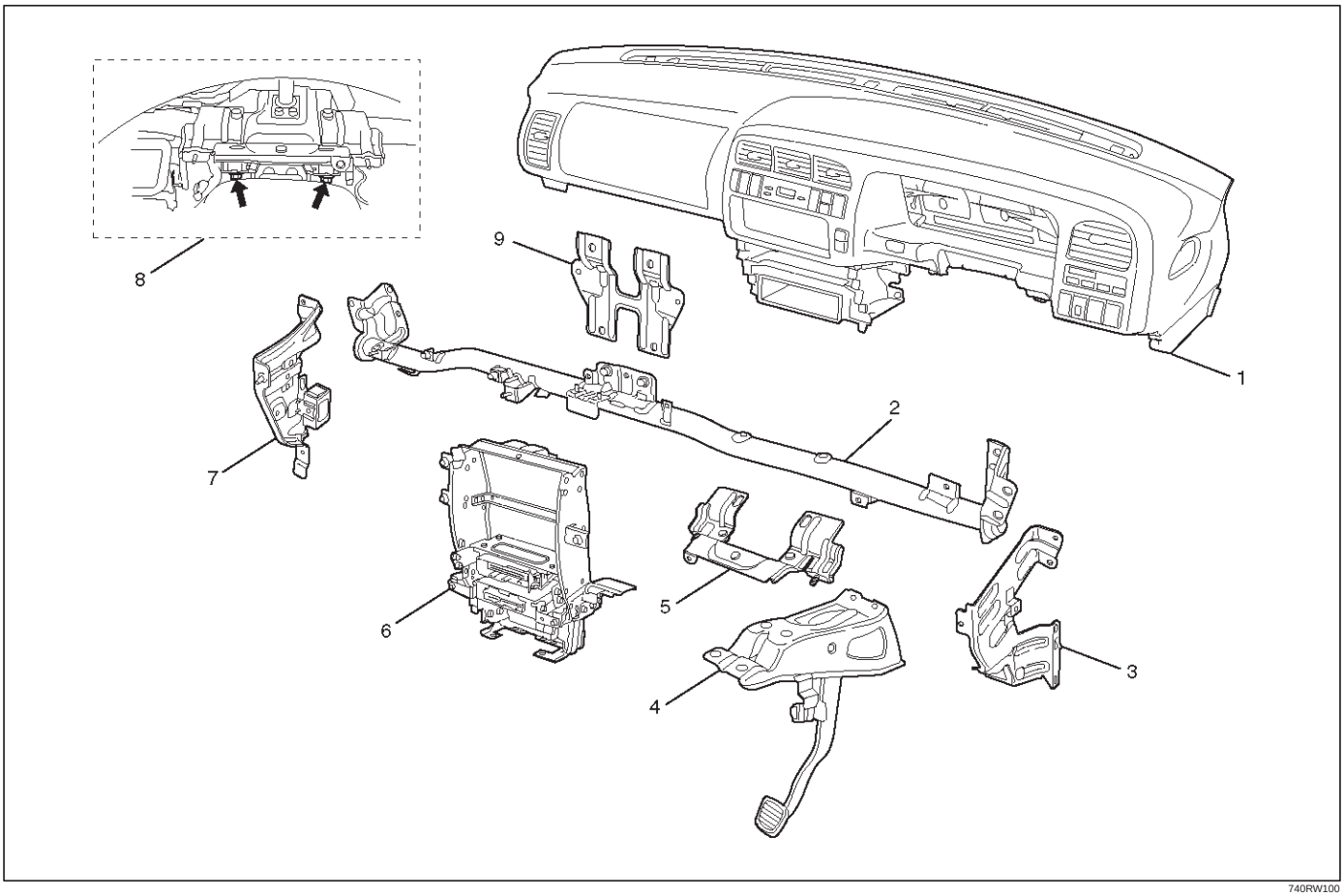

740RW100

Legend

(1) Instrument Panel Assembly
(2) Cross Beam Assembly
(3) Side Support Bracket Assembly (RH)
(4) Brake Pedal Mounting Bracket Assembly
(5) Steering Support Bracket Assembly
(6) Instrument Panel Center Bracket
(7) Side Support Bracket Assembly (LH)
(8) Steering Column Fixing Bolts
(9) Cross Beam Center Bracket

Removal

1. Disconnect battery ground cable.
2. Remove instrument panel assembly.
   - Refer to Instrument Panel Assembly in this section.
3. Remove side support bracket assembly (LH/RH).
   - Remove the 4 fixing bolts on both sides.
4. Remove cross beam center bracket
   - Remove 2 fixing nuts.
5. Remove instrument panel center bracket.
   - Disconnect the PCM and EBCM connector.
   - Remove the DERM (SRS) with 3 fixing nuts.

CAUTION: For precautions on installation or removal of SRS — air bag system, refer to Supplemental Restraint System (SRS) — AIR BAG in Restraint section.

- Remove the 2 fixing nuts (upper) and the 4 fixing bolts (lower).

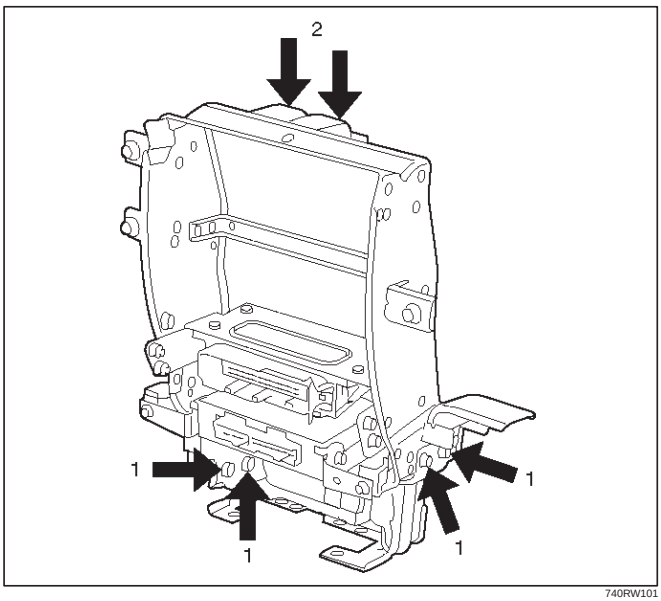

740RW101

6. Remove steering column fixing bolts.
   - Remove 2 fixing bolts.

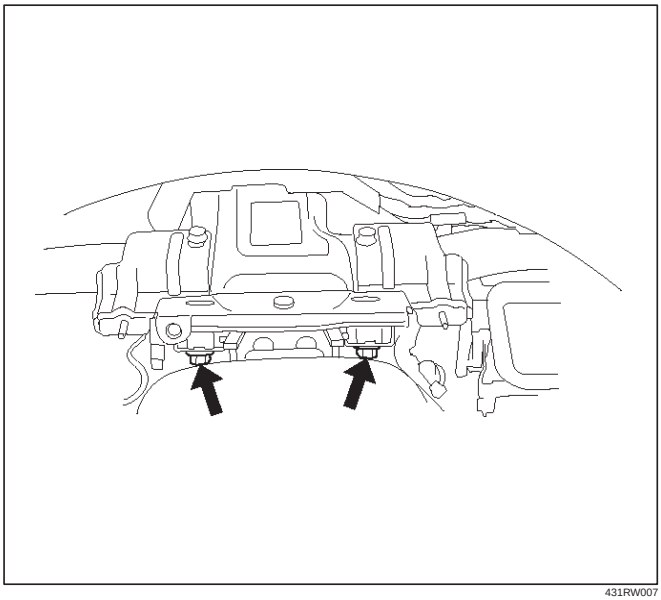

431RW007

7. Remove brake pedal mounting bracket assembly.
   - Disconnect the 2 brake pedal mounting bracket assembly fixing nuts, and remove the antitheft controller.
   - Disconnect the brake pedal link and the brake switch, and remove the 4 fixing bolts and the nuts on the bracket.

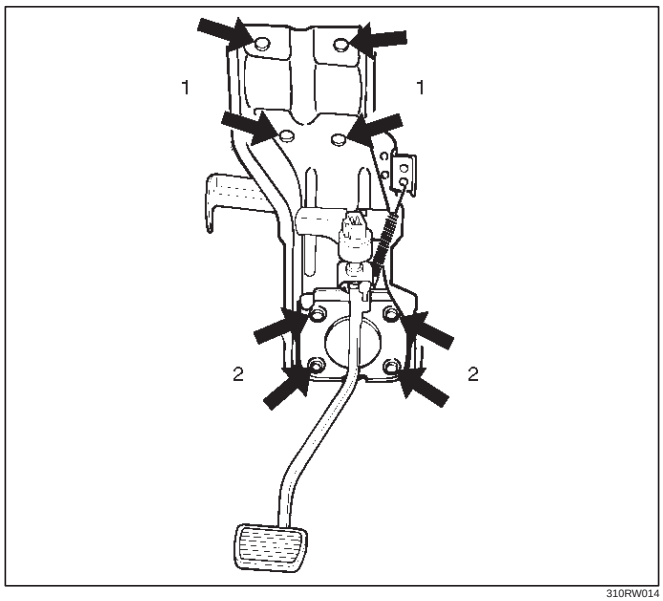

310RW014

8. Remove steering support bracket assembly.
   - Remove the 2 fixing bolts (upper side) (1) and the 3 fixing nuts (lower side) (2).

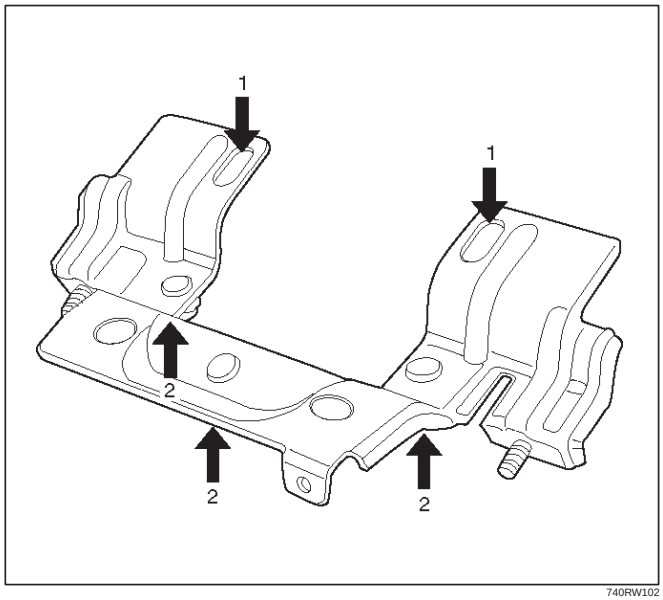

740RW102

9. Remove cross beam assembly.
   - Disconnect the harness clips from the crossbeam assembly, and remove 2 fixing bolts on both sides and 2 fixing nuts in the center.

Installation

To install, follow the removal steps in the reverse order.

Front Door Assembly

Parts Location

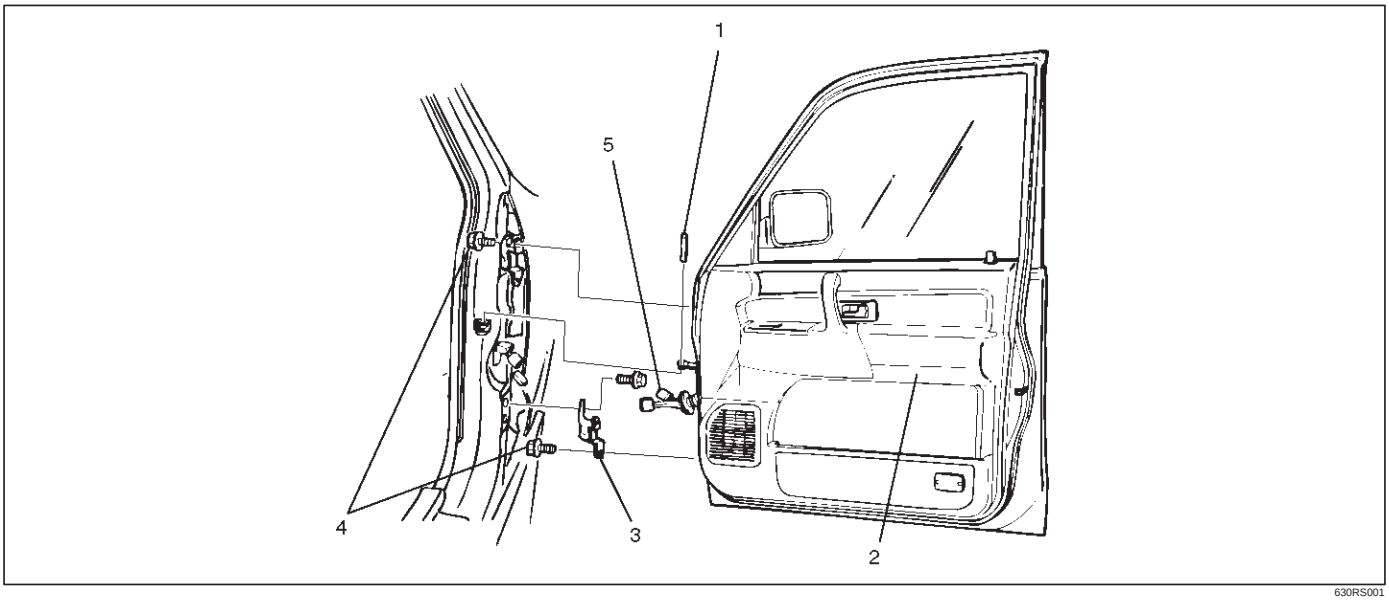

630RS001

Legend

(1) Door Check Arm Pin
(2) Front Door Assembly
(3) Door Hinge Assembly
(4) Hinge Bolt
(5) Door Harness Connection

Removal

1. Disconnect the battery ground cable.
2. Remove door check arm pin (1).

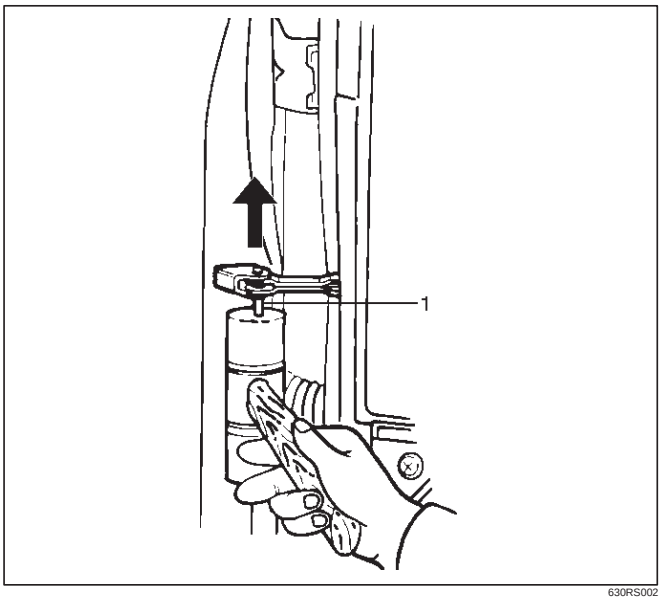

630RS002

3. Remove hinge bolt.
   - Align the hinge bolt to the door side hinge and put a marker on it.
4. Remove door harness connection (2).
   - Pull the door harness grommet out in order to disconnect the harness connection.

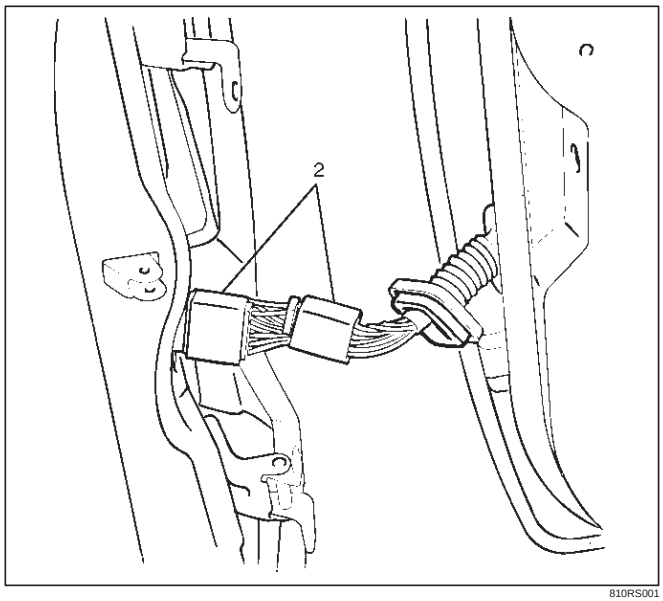

810RS001

5. Remove front door assembly.

Installation

To install, follow the removal steps in the reverse order, noting the following points:

1. Align the door fitting to the body by referring to Body Dimensions in this section.
2. Tighten the door hinge bolts to the specified torque.

   Torque : 34 N•m (3.5kg·m/25 lb ft)
3. Apply chassis grease to the door check arm pin and the door hinge moving surface.

Rear Door Assembly

Parts Location

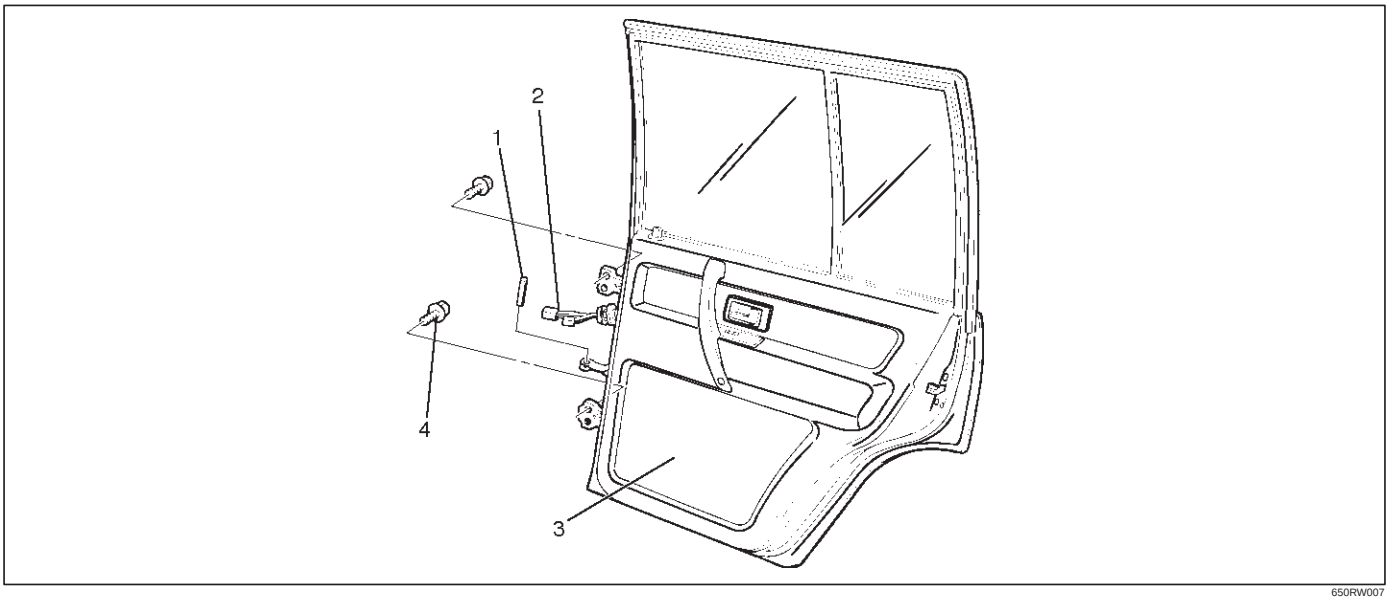

650RW007

Legend

(1) Door Check Arm Pin
(2) Door Harness Connection
(3) Rear Door Assembly
(4) Hinge Bolt

Removal

1. Disconnect the battery ground cable.
2. Apply a setting mark on the body side hinge.
3. Remove door check arm pin (1).

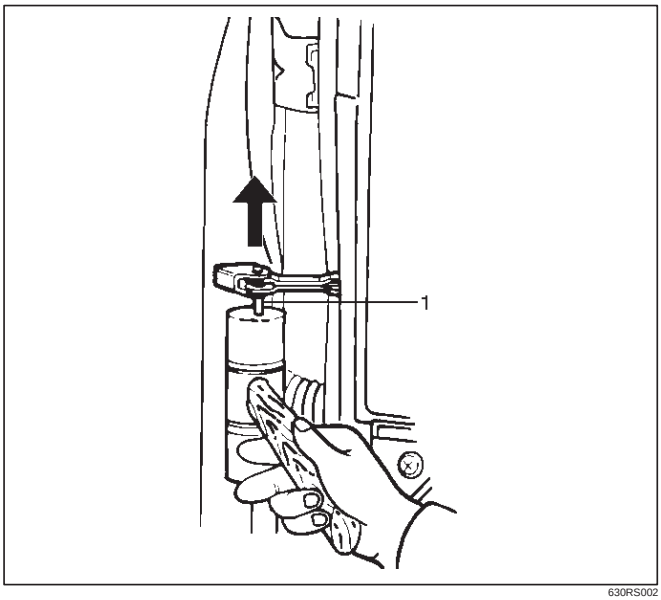

630RS002

4. Remove hinge bolt.
   - Open the front door and remove the body side hinge bolts (2).

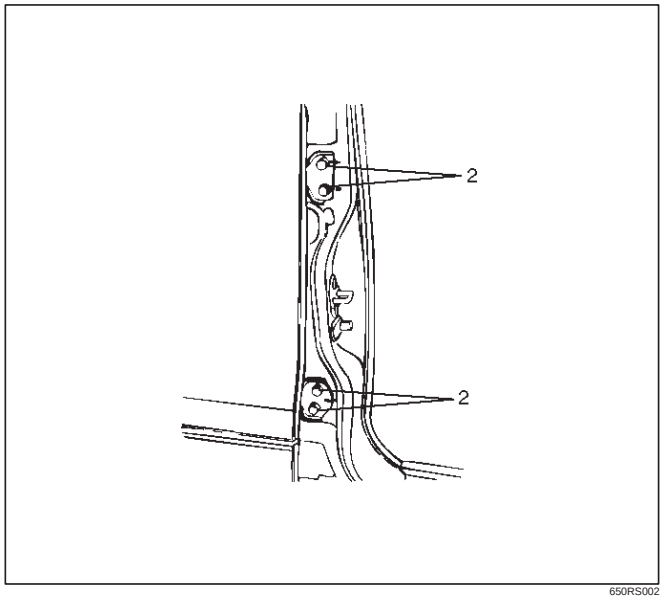

650RS002

5. Remove door harness connection (3).
   - Pull the door harness grommet out in order to disconnect the door harness connection.

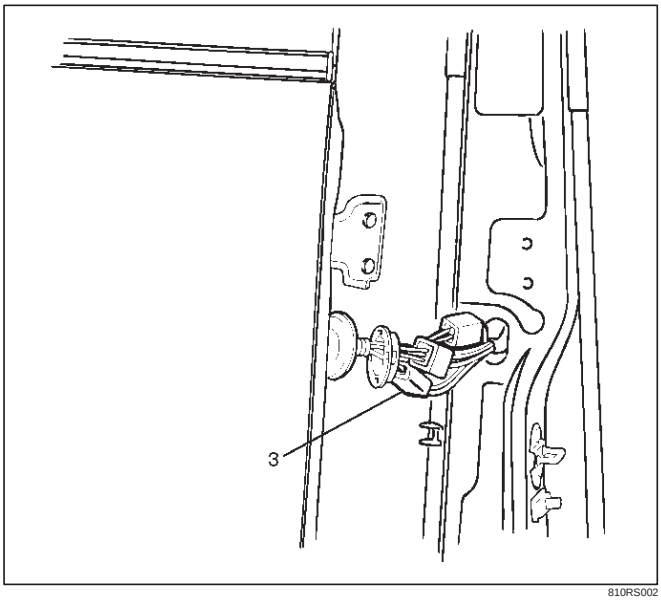

810RS002

6. Remove door assembly

Installation

To install, follow the removal steps in the reverse order, noting the following points.

1. Align the door fitting to the body by refer to Body Dimensions in this section.
2. Tighten the door hinge bolts to the specified torque.

   Torque : 34 N•m (3.5kg·m/25 lb ft)
3. Apply chassis grease to the check arm pin and the door hinge moving surface.

Door Strikers

Adjustment

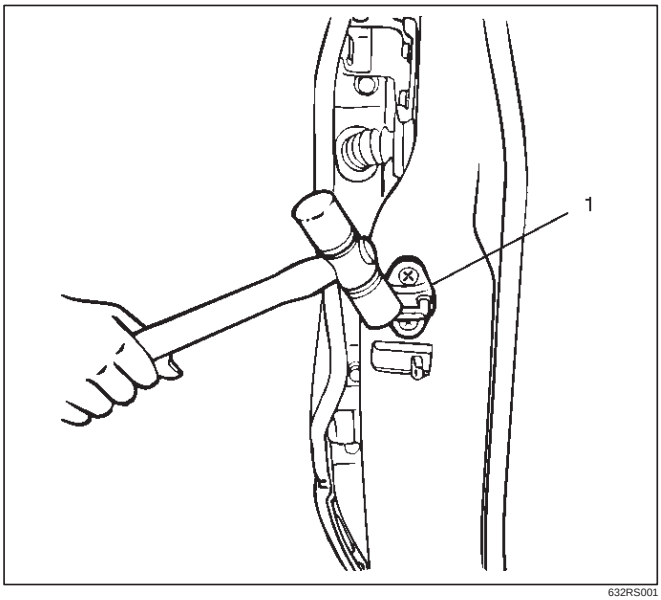

632RS001

1. Loosen the striker (1) screws.
2. Tap with a plastic hammer to align.
3. Tighten the striker screws.

   Torque : 15 N•m (1.5kg·m/11 lb ft)

Door Check Arm Assembly (Front & Rear)

Parts Location

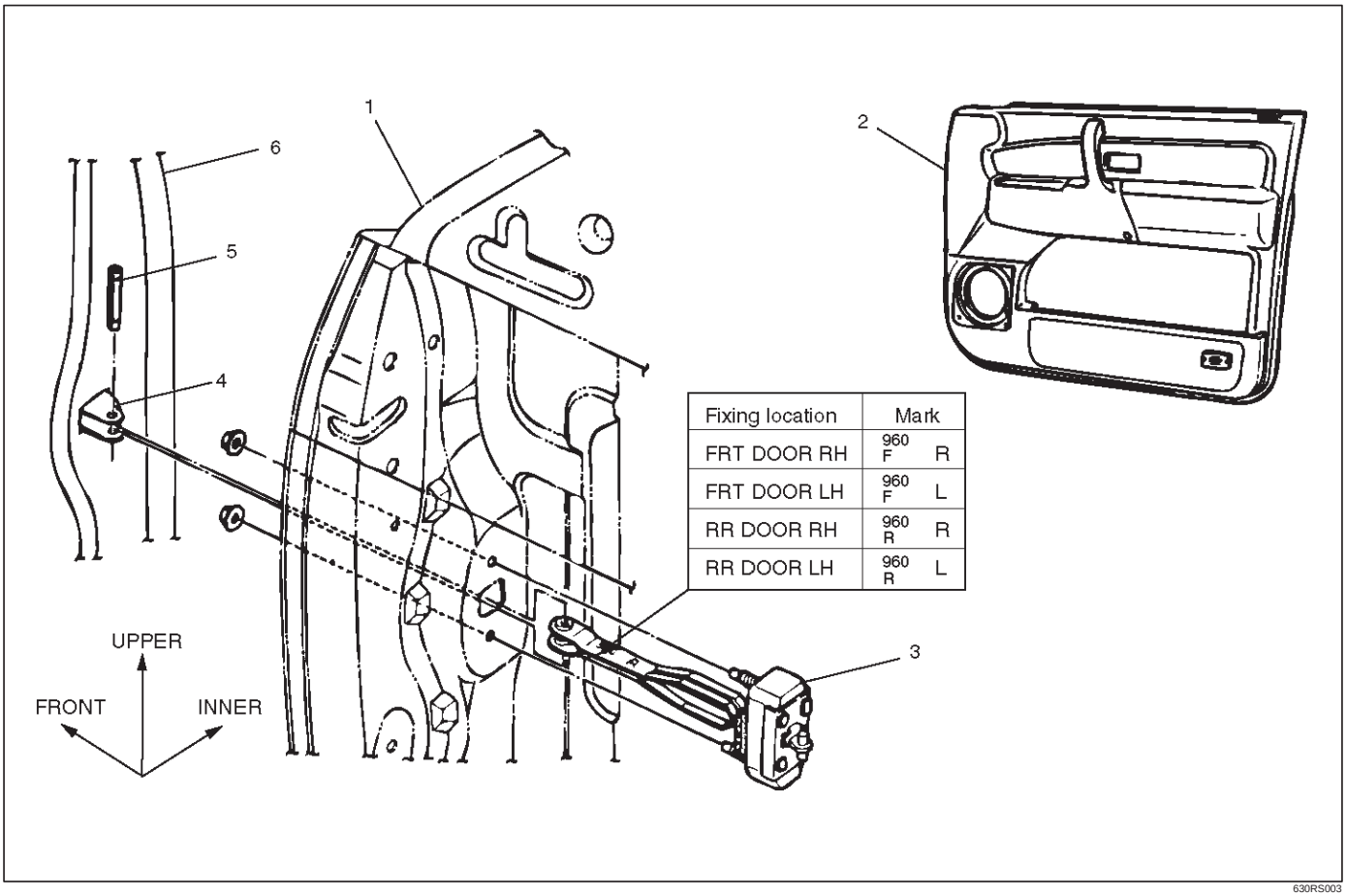

630RS003

Legend

(1) Front or Rear Door
(2) Door Trim Panel
(3) Check Arm Assembly
(4) Check Arm Pin Bracket
(5) Check Arm Pin
(6) Front or Center Pillar

Removal

1. Disconnect the battery ground cable.
2. Remove door trim panel.
   - Refer to Front Door Trim Panel in Exterior / Interior Trim section.
3. Remove check arm pin (1).

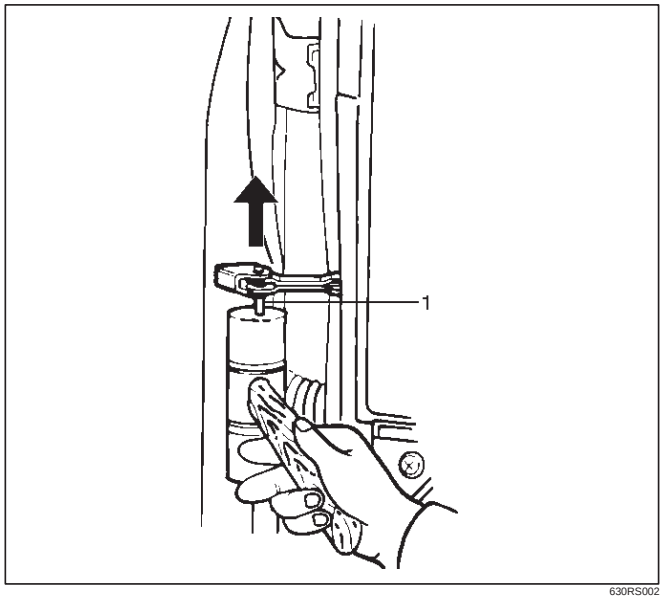

630RS002

4. Remove check arm assembly.
   - Carefully peel off the water proof sheet as much as necessary, for check arm removal.

Installation

To install, follow the removal steps in the reverse order, noting the following point.

1. When installing the check arm assembly, note its marking to ensure using the appropriate part.
2. Tighten the check arm fixing nuts to the specified torque.

   Torque : 13 N•m (1.3kg·m/113 lb in)
3. Apply chassis grease to the check arm pin moving surface.

Front Window Regulator, Glass And Glass Run

Parts Location

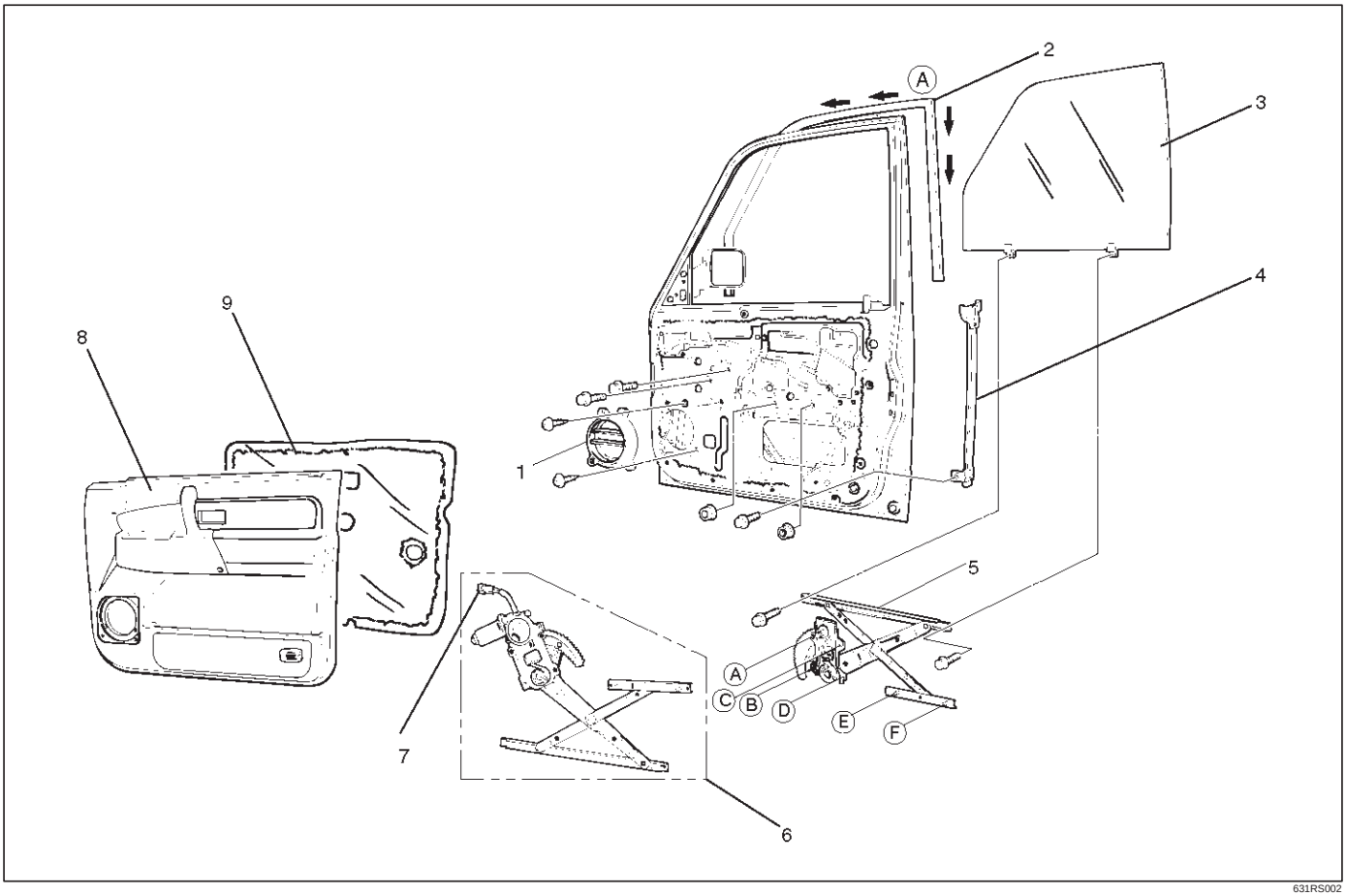

631RS002

Legend

(1) Speaker Box
(2) Glass Run
(3) Glass
(4) Rear Guide Rail
(5) Window Regulator
(6) Window Regulator with Power Window
(7) Window Regulator Motor Connector
(8) Door Trim Panel
(9) Waterproof Sheet

Removal

1. Disconnect the battery ground cable.
2. Remove door trim panel.
   - Refer to Front Door Trim Panel in Exterior / Interior section.
3. Remove speaker box.

4. Remove waterproof sheet.
   - Take notice of the door harness and the grommet, peel the waterproof sheet off the door panel carefully.

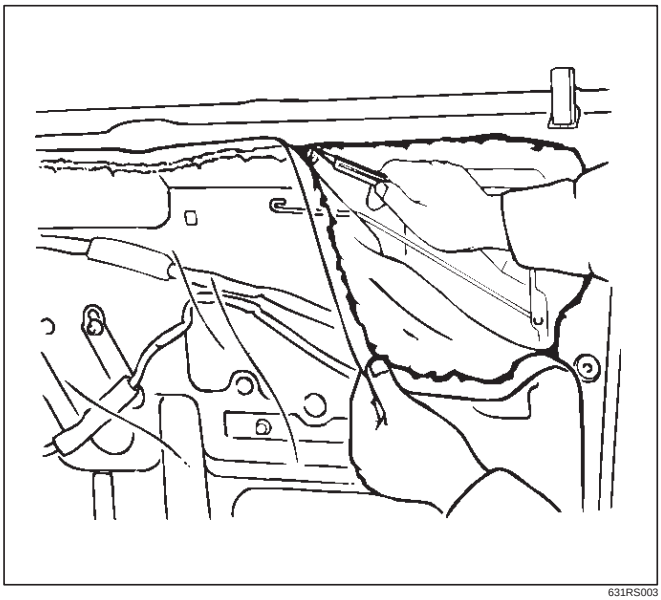

631RS003

5. Remove glass.
   - Bring the glass (1) down to the position where the fixing bolts can be seen.
   - Remove the glass fixing bolts from the window regulator (2) and lower the front side of the glass.

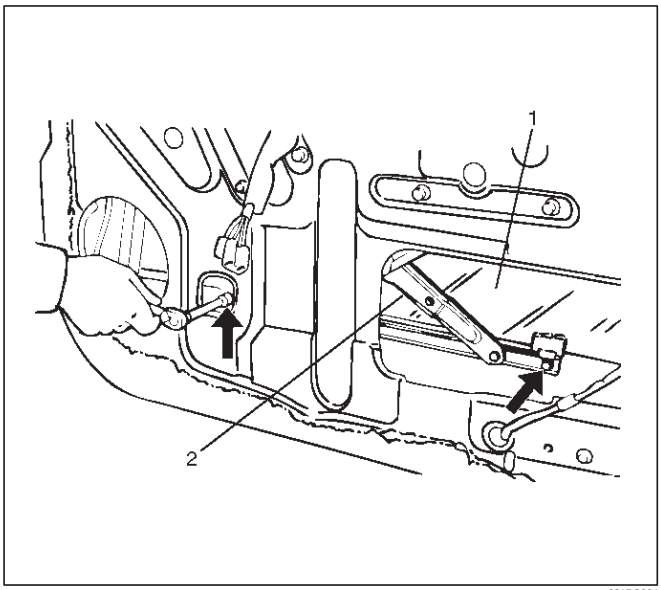

631RS004

   - When the front side of the glass comes off the glass run (3), turn the glass inside out and pull it up from its rear side.

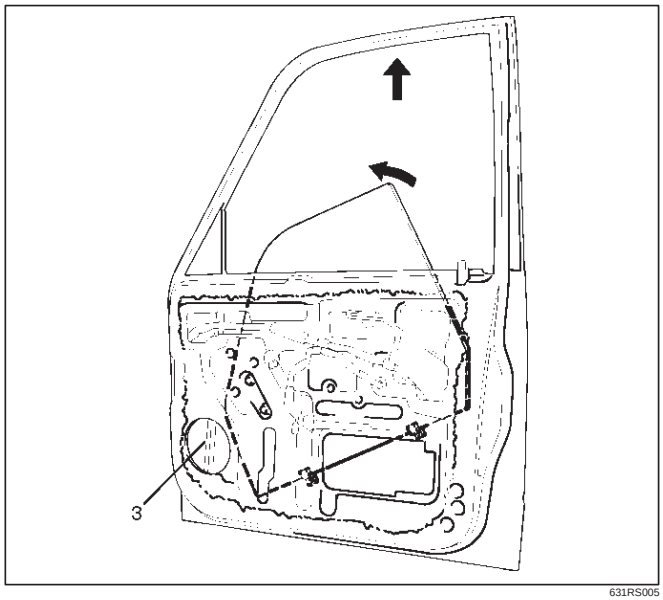

631RS005

6. Remove window regulator.
   - Remove the window regulator fixing bolts (4) and the rear guide rail fixing bolt (5).
   - Disconnect the window regulator motor harness connector, if equipped with power windows.

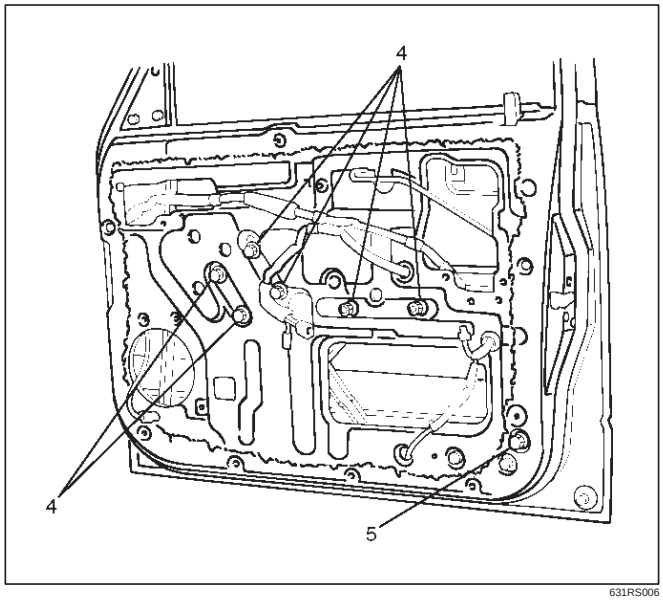

631RS006

7. Remove glass run.
   - Pull the glass run (6) out from the door frame groove.

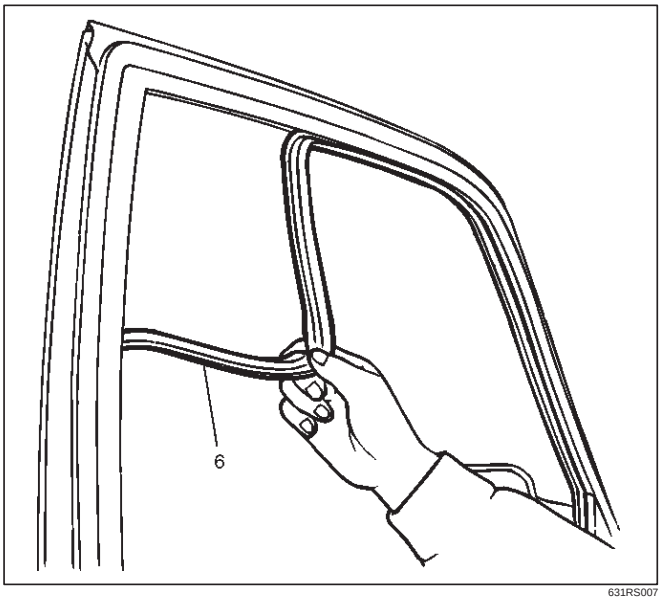

631RS007

8. Remove rear guide rail.

Installation

To install, follow the removal steps in the reverse order, noting the following points.

1. Apply soap and water to the door frame groove. Insert the glass run (1) to the door frame from the A corner in the arrow–marked directions.
   Install the glass run with its wider end pointed to the inside of the vehicle.

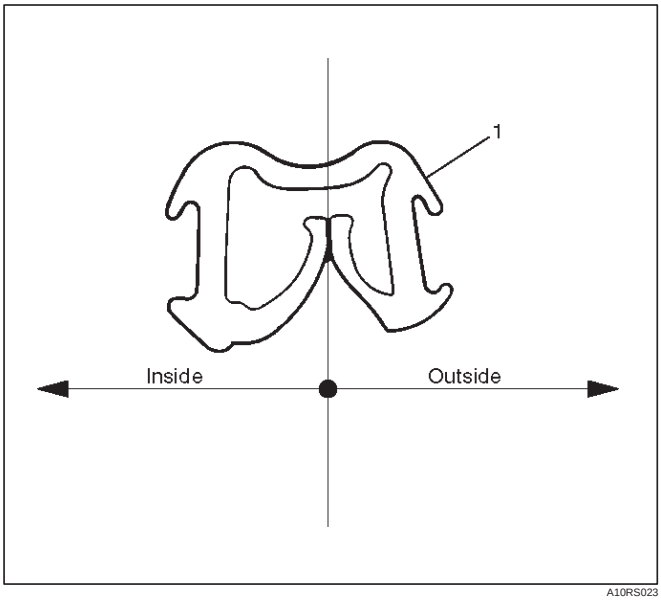

A10RS023

2. Set the glass into the door panel with the front side of the glass lowered and insert the rear side of the glass into the glass run (1). Then insert the front side of the glass into the glass run in order to install the glass to the glass run while raising it up along the glass run.
3. Tighten the window regulator and the glass fixing bolts and nuts to the specified torque.

   Torque : 8 N•m (0.8kg·m/69 lb in)

4. Check to see of the window regulator operates smoothly and the glass opens and closes properly. Install the waterproof sheet with no clearance between the door panel and the waterproof sheet.

Rear Window Regulator And Glass

Parts Location

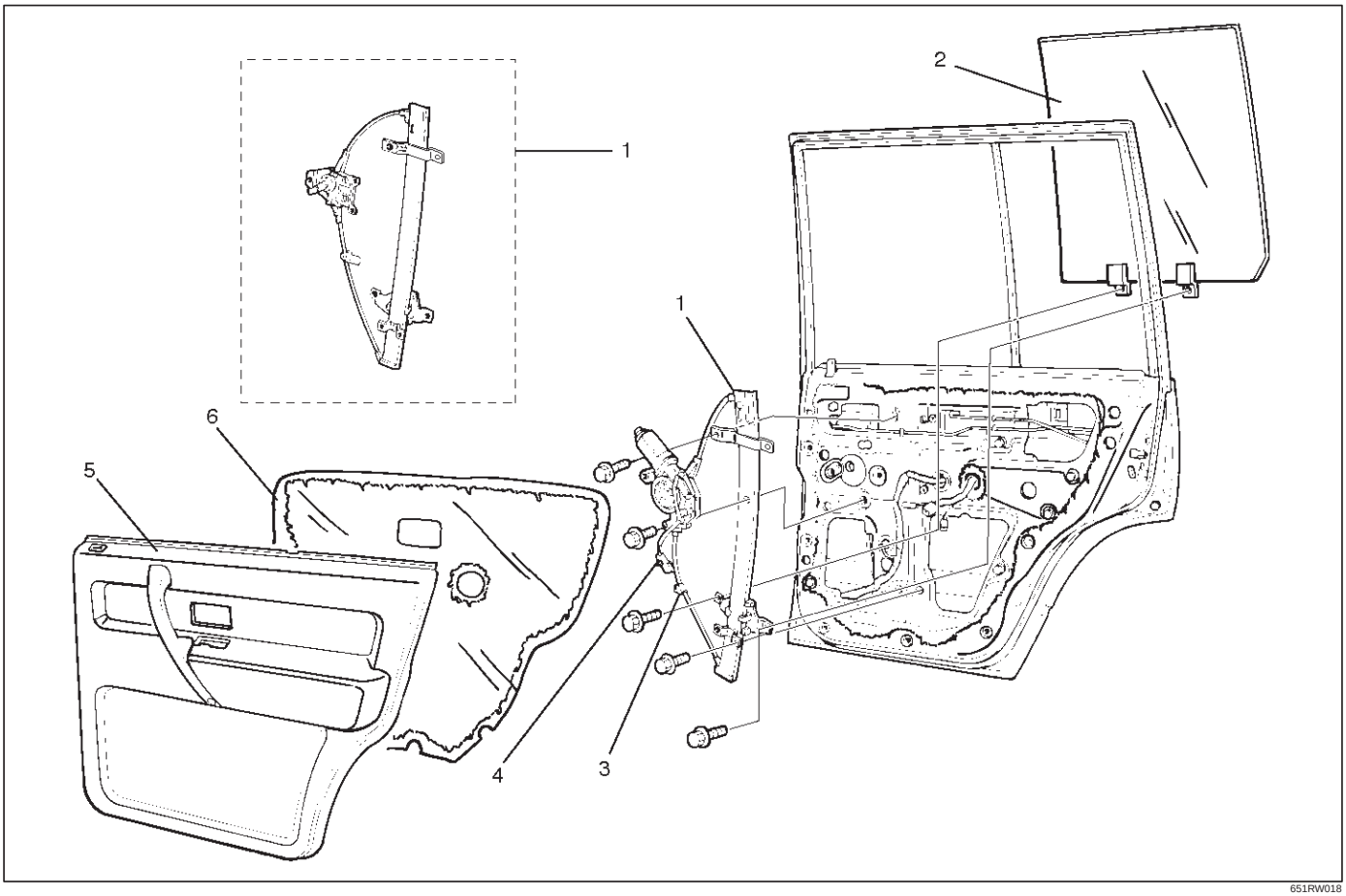

651RW018

Legend

(1) Window Regulator
(2) Glass
(3) Cable Fixing Clip
(4) Window Regulator Motor Connector
(5) Door Trim Panel
(6) Waterproof Sheet

Removal

1. Disconnect the battery ground cable.
2. Remove door trim panel.
   - Refer to Rear Door Trim Panel in Exterior / Interior Trim section.
3. Remove waterproof sheet (1).
   - Taking notice of the door harness, peel the waterproof sheet off the door panel carefully.

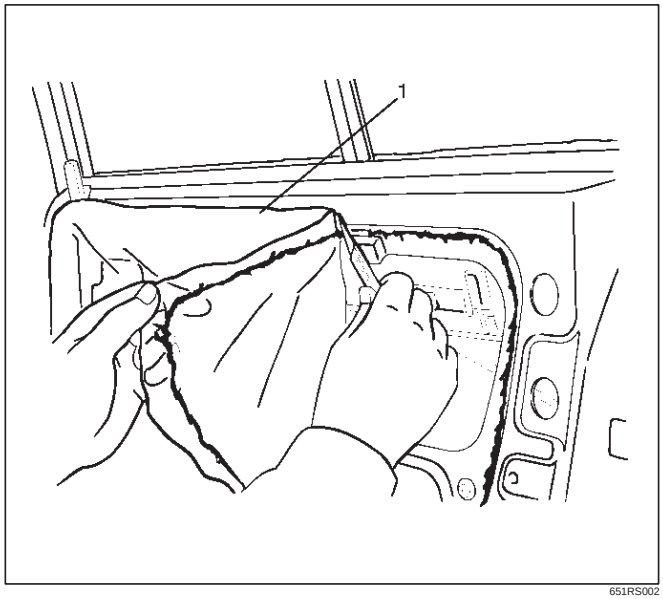

651RS002

4. Remove glass.
   - Bring the glass down to the position where the bolt can be seen.
   - Remove the sash division 2 fixing bolts (1) and then remove the glass fixing bolt to remove the glass upwards.

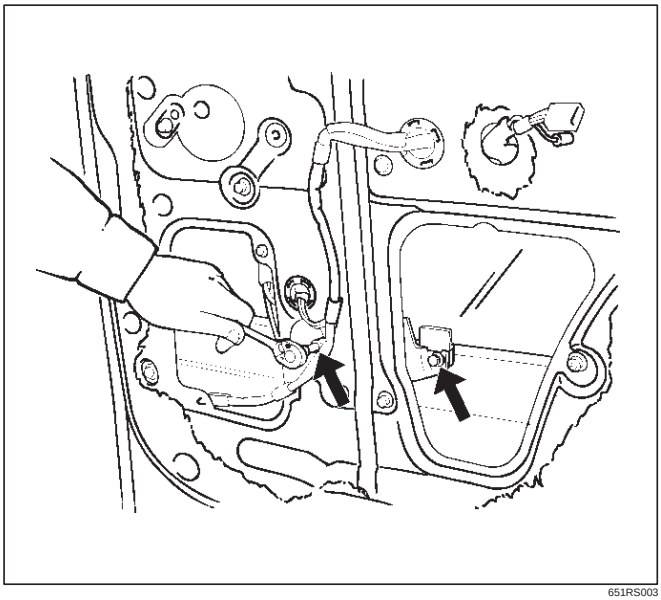

651RS003

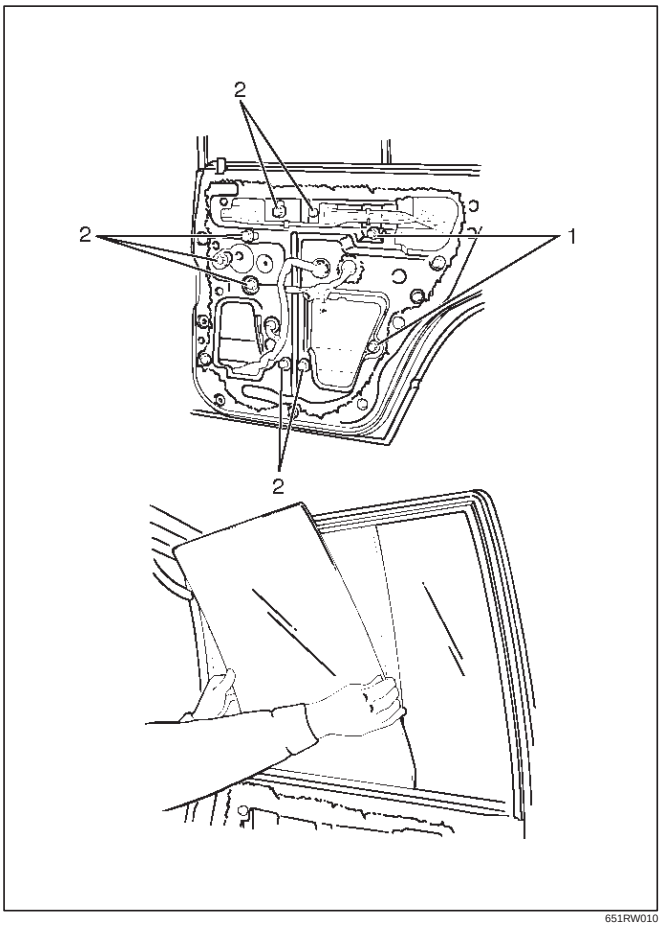

651RW010

5. Remove window regulator.
   - Disconnect the regulator motor connector (4) and remove the window regulator cable fixing clip (3) from the door panel, if model is equipped with power windows.
   - Remove the window regulator 7 fixing bolts (2) and pull the regulator out from the lower hole of the door panel.

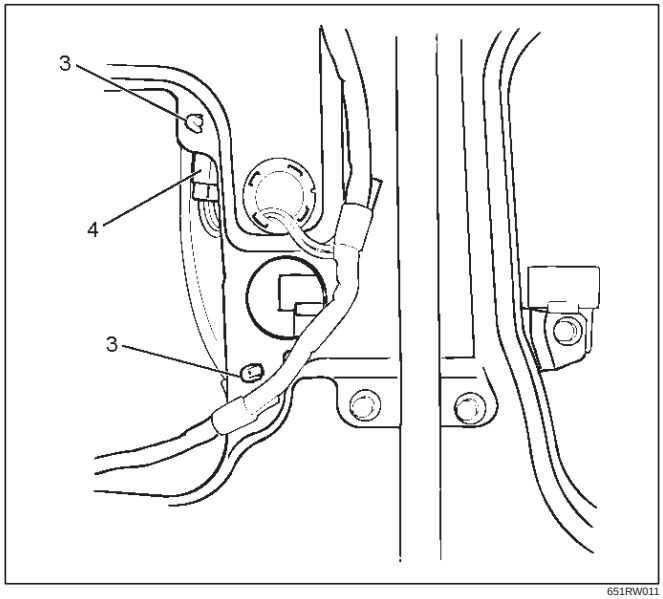

651RW011

Installation

To install, follow the removal steps in the reverse order, noting the following points.

1. Tighten the window regulator and the glass fixing bolts to the specified torque.

   Torque : 8 N•m (0.8kg·m/69 lb in)

2. Install the waterproof sheet with no clearance between the door panel and the waterproof sheet.

Rear Door Fixed Glass And Glass Run

Parts Location

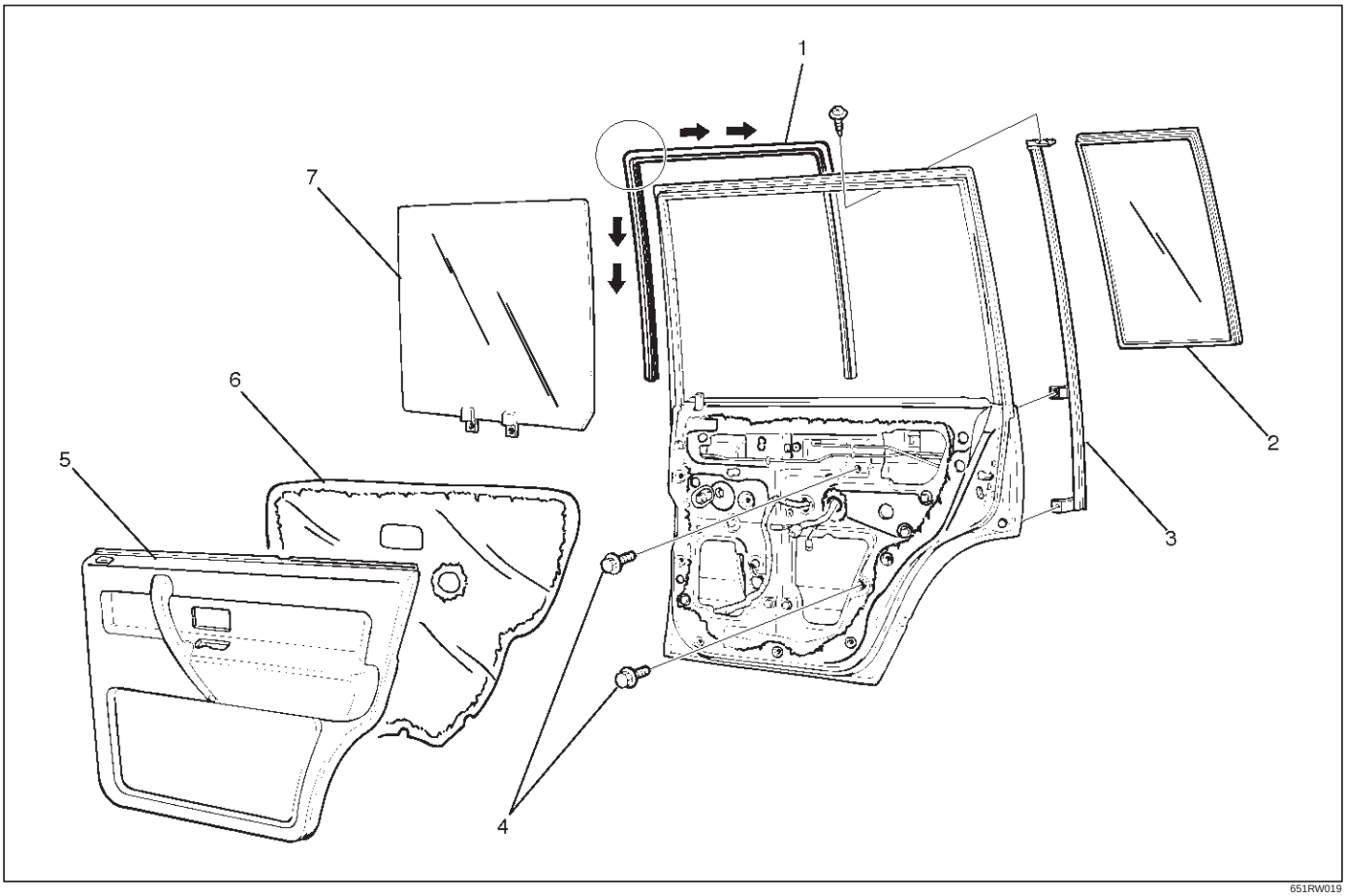

651RW019

Legend

(1) Glass Run
(2) Rear Fixed Glass
(3) Sash Division
(4) Sash Division Fixing Bolts
(5) Door Trim Panel
(6) Waterproof Sheet
(7) Glass

Removal

1. Disconnect the battery ground cable.
2. Remove door trim panel.
3. Remove waterproof sheet.
4. Remove glass.
   - Refer to Window Regulator and Glass in this section.
5. Remove glass run.
   - Pull the glass run (1) out from the door frame.

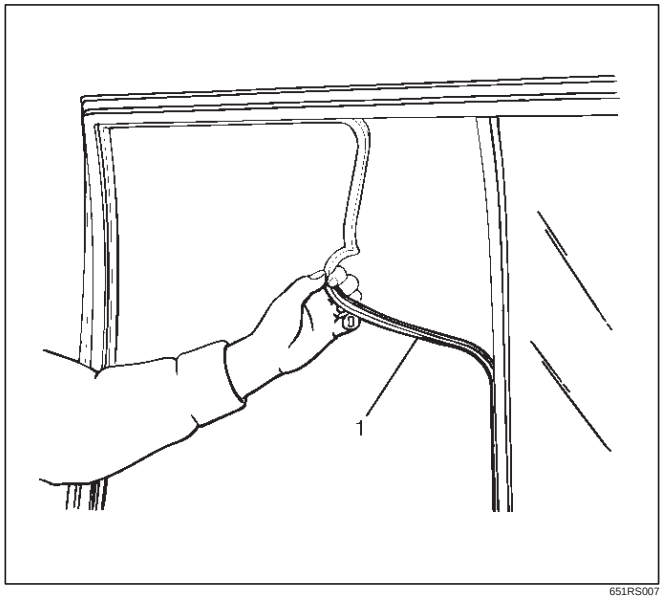

651RS007

6. Remove sash division (2).

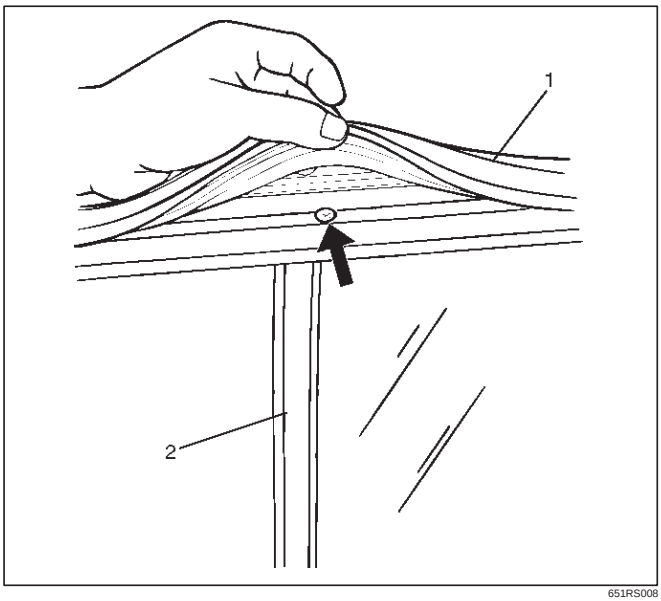

651RS008

7. Remove door fixed glass.

Installation

To install, follow the removal steps in the reverse order, noting the following points.

1. Apply soap and water to the fixed glass.
2. Apply soap and water to the door groove and insert the glass run (3) to the frame from the corner in the arrow-marked directions.
3. Be sure to install the glass run with its end pointed to the inside of the vehicle.

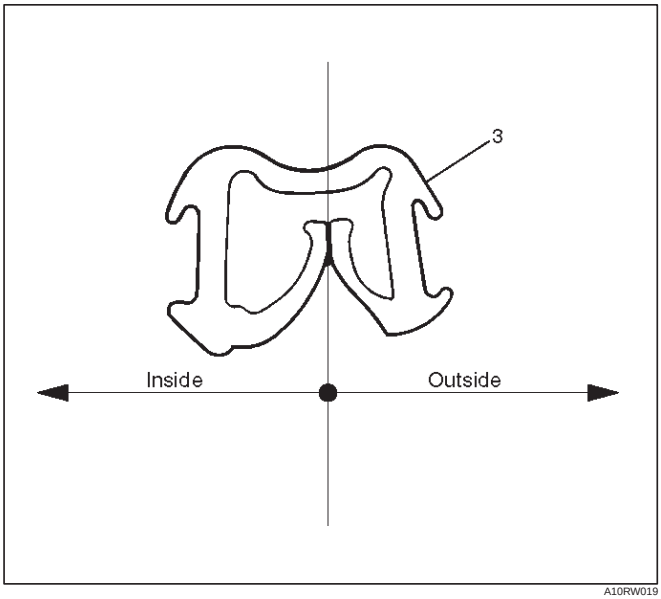

A10RW019

Front Door Sash Moulding

Parts Location

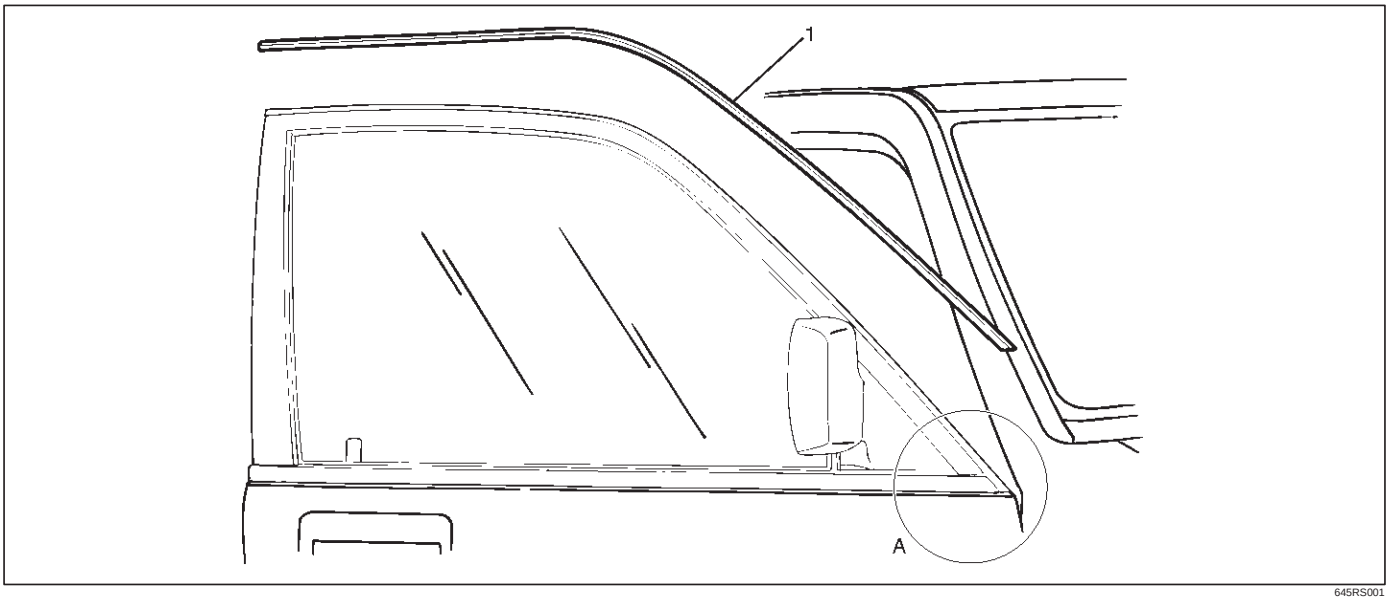

645RS001

Legend

(1) Front Door Sash Moulding

Removal

1. Remove front door slash moulding.
   - To avoid the weatherstrip (1) and pry the door sash moulding (2) out from the door panel.

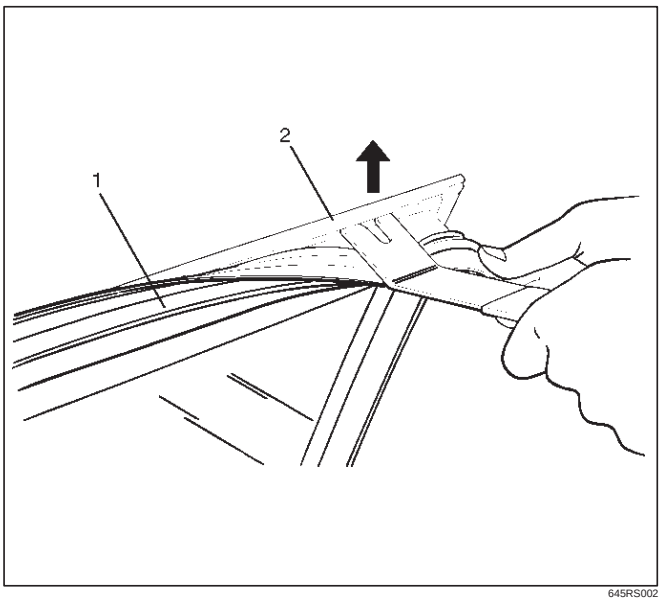

645RS002

Installation

1. Install the front door sash moulding.
   - Assemble the edge portion (A portion) of the moulding so that the clearance between the moulding and the waist seal becomes 1 mm (0.04 in).

Rear Door Moulding

Parts Location

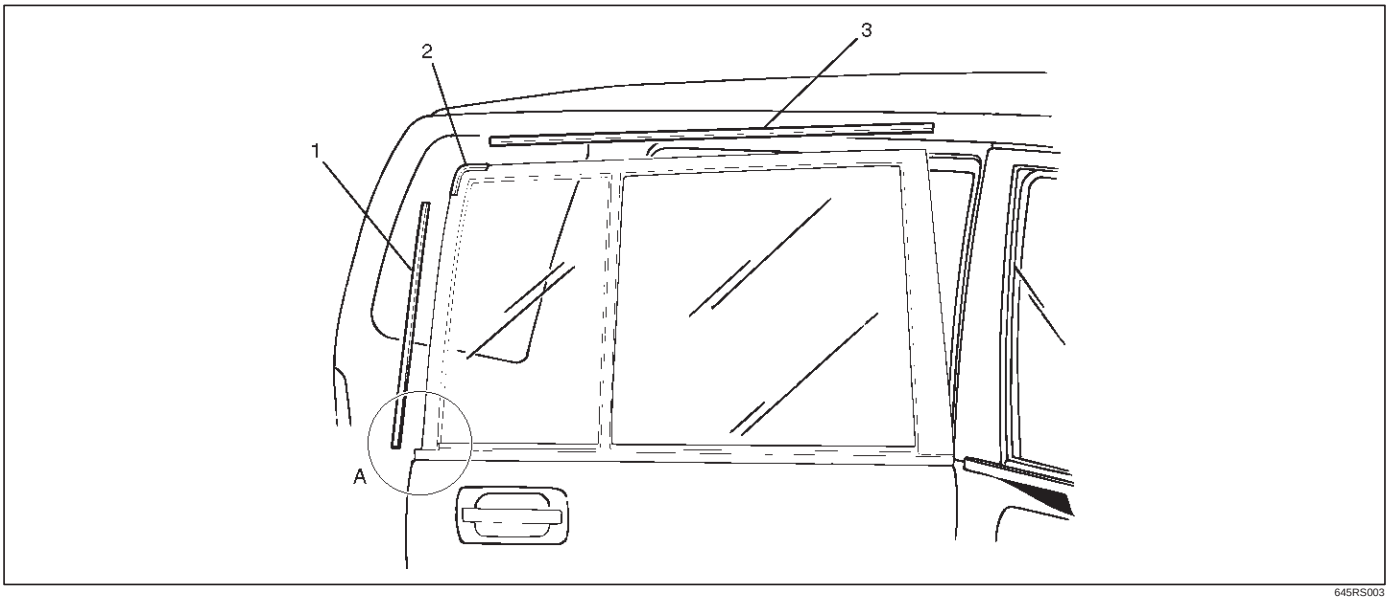

645RS003

Legend

(1) Rear Door Side Moulding
(2) Rear Door Corner Moulding
(3) Rear Door Upper Moulding

Removal

1. Disconnect the battery ground cable.
2. Remove rear door side moulding.
3. Remove rear door upper moulding.
4. Remove rear door corner moulding.
   - Avoiding the weatherstrip (3), pry the moulding (2) out from the door frame (1).

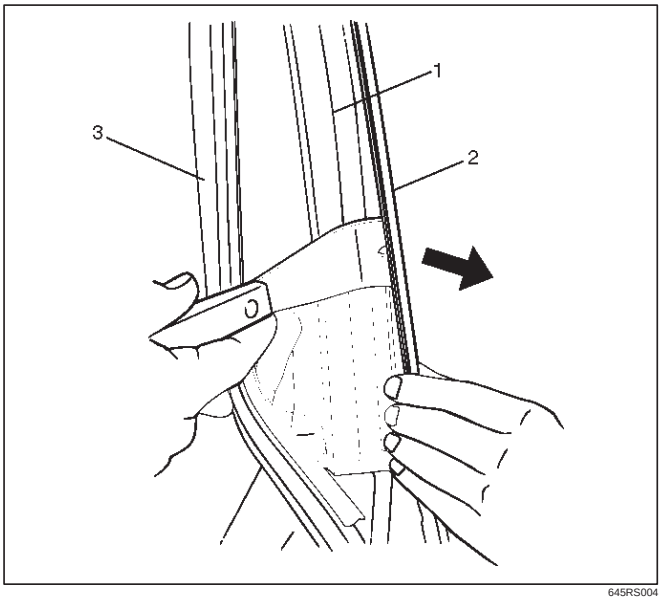

645RS004

Installation

To install, follow the removal steps in the reverse order, noting the following points.

1. Install each moulding with no clearance between each piece of moulding.
2. Assemble the edge portion (A portion) of the moulding so that the clearance between the rear side moulding and the waist seal is 1 mm (0.04 in).

Front Door Waist Seal

Parts Location

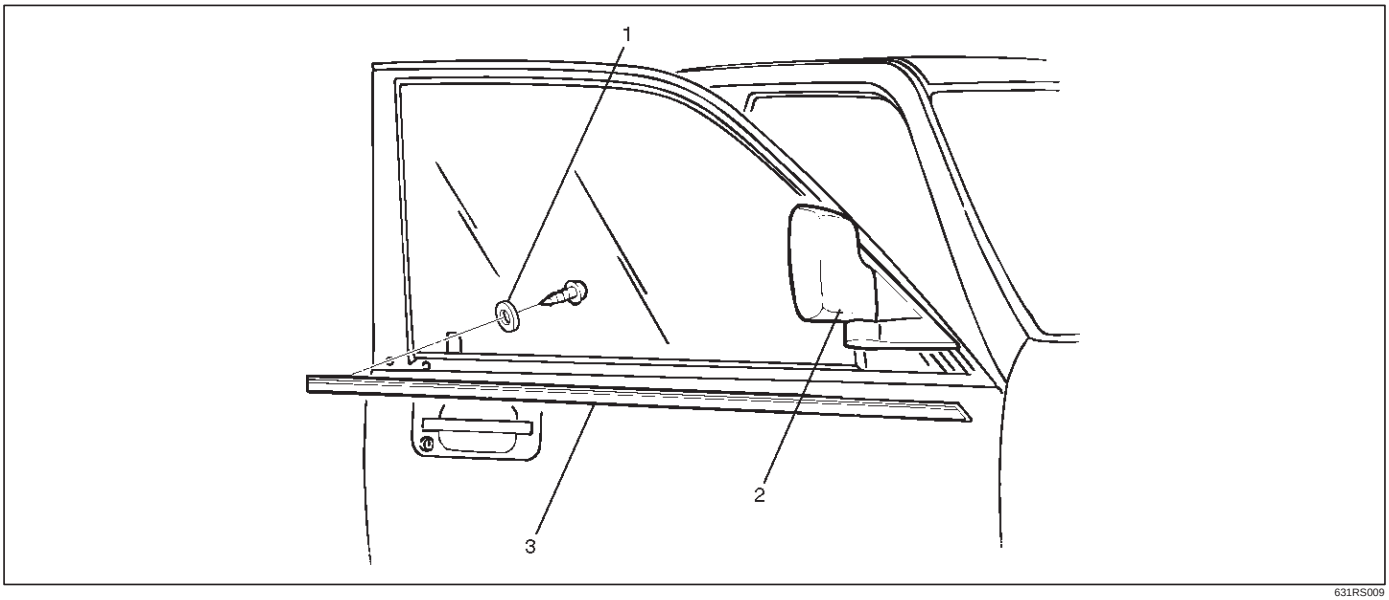

631RS009

Legend

(1) Nylon Washer
(2) Door Mirror
(3) Front Door Waist Seal

Removal

1. Disconnect the battery ground cable.
2. Remove door mirror.
   - Refer to Door Mirror in Exterior / Interior Trim section.
3. Remove front door waist seal.
   - Remove the fixing screw and pull out the waist seal (1) from the door frame while prying it up.

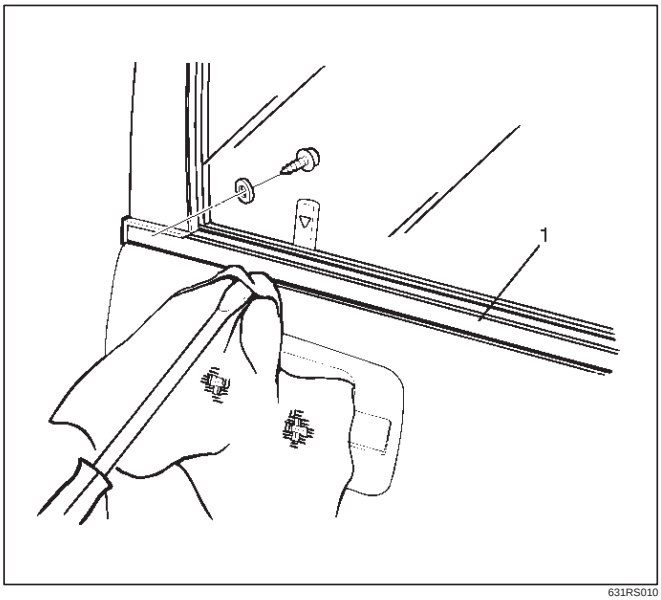

631RS010

Installation

To install, follow the removal steps in the reverse order, noting the following points.

1. Apply soap and water to the inside of the waist seal and align the screw hole of the waist seal to the door panel hole, and gently tap the seal with a rubber hammer.

   Be sure not to tap the seal hard. This may result in deforming the seal.

Rear Door Waist Seal

Parts Location

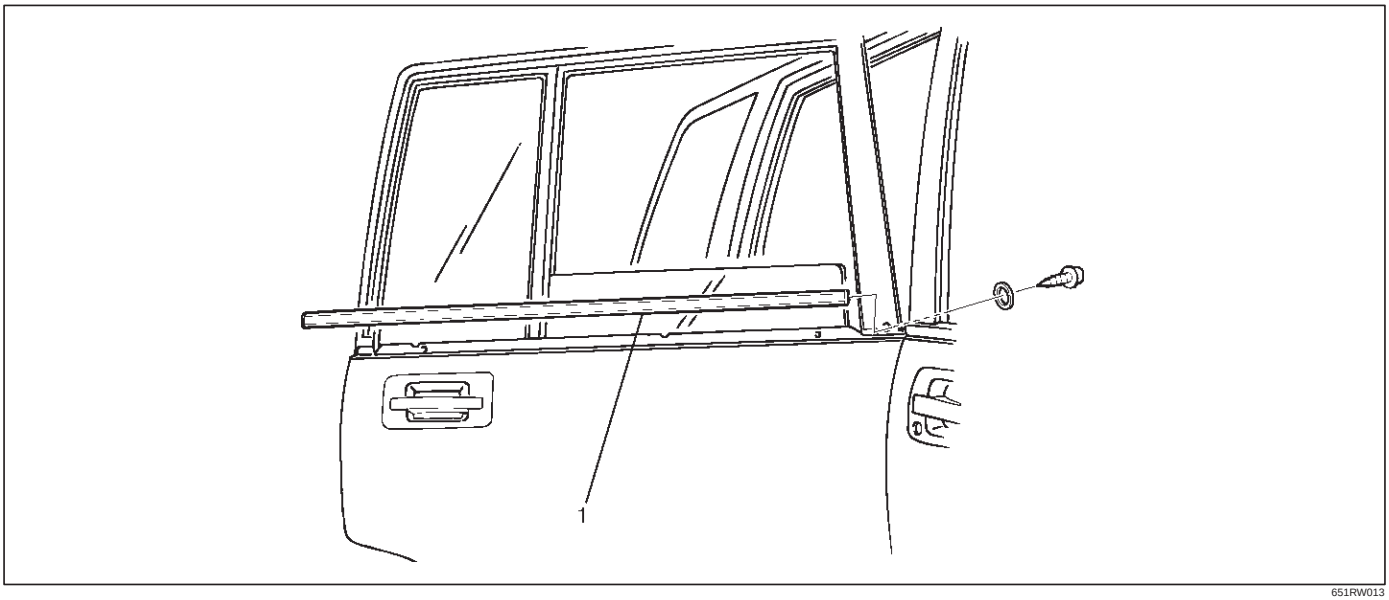

651RW013

Legend

(1) Rear Door Waist Seal

Removal and Installation

Refer to Front Door Waist Seal in this section.

Front Door Weatherstrip

Parts Location

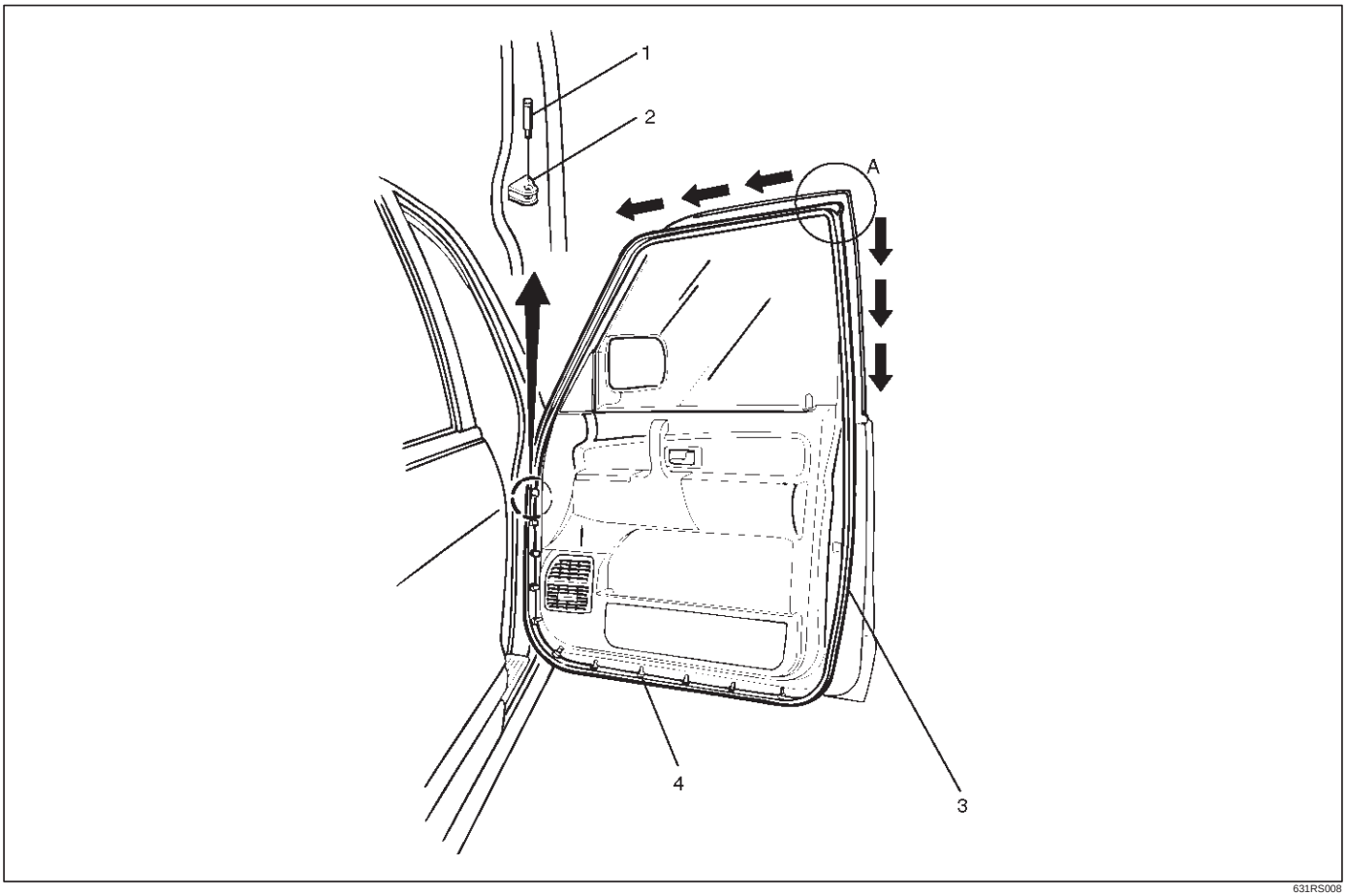

631RS008

Legend

(1) Check Arm Pin
(2) Bracket
(3) Weather Strip
(4) Clip

Removal

1. Remove check arm pin.
2. Remove front door weatherstrip.
   - Pull the weatherstrip (1) out from the door frame.

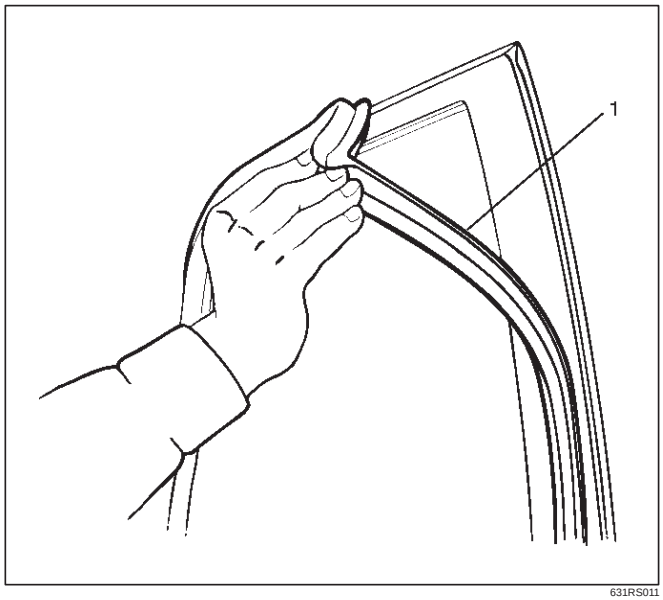

631RS011

- Carefully remove the weatherstrip (2) from the door panel.

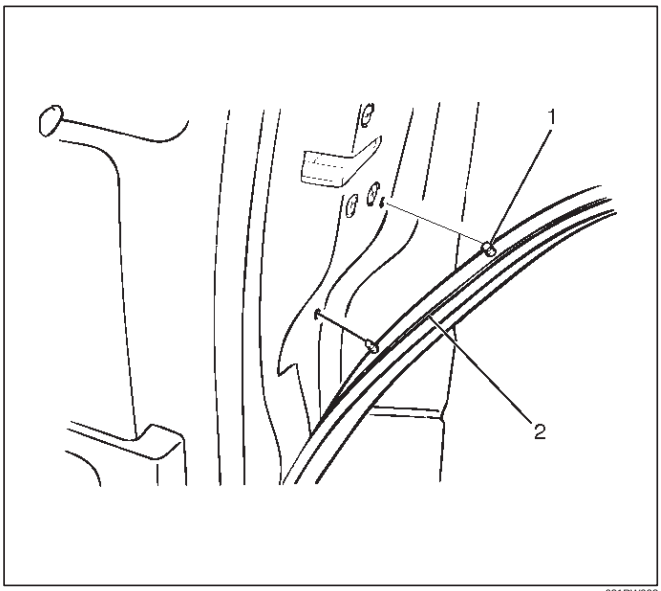

631RW003

Installation

To install, follow the removal steps in the reverse order, noting the following points.

1. Apply soapy water to the door frame groove when installing the front door weather strip (2).
2. Apply the sealing adhesive (3) to the upper A portion of the door frame (1) and press it for installation after assembling the weatherstrip (2).

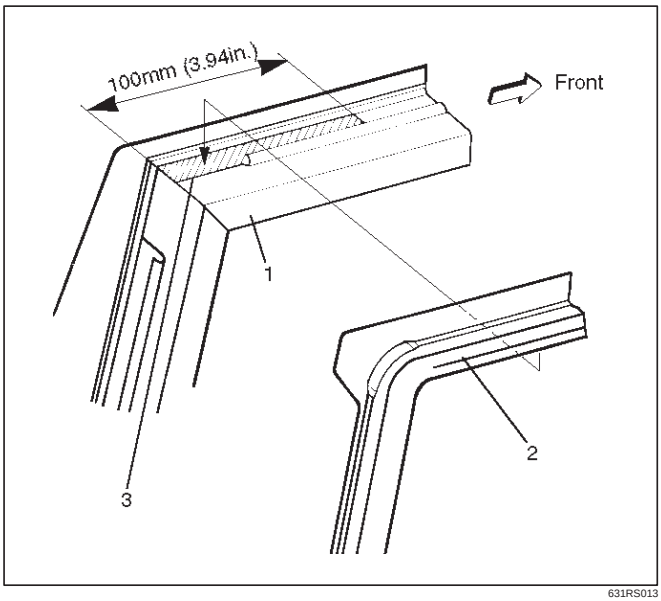

631RS013

3. After positioning the weatherstrip (4) corner, insert the weatherstrip into the door frame groove from A point in the arrow–marked direction.
4. Insert the weatherstrip clip (5) into the door panel up to its base.

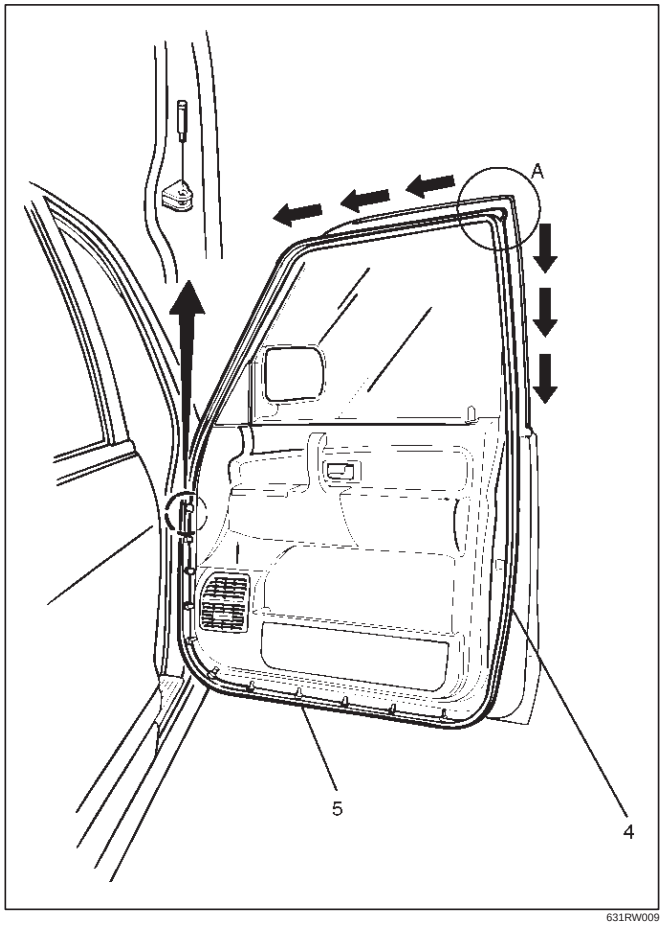

631RW009

Rear Door Weatherstrip

Parts Location

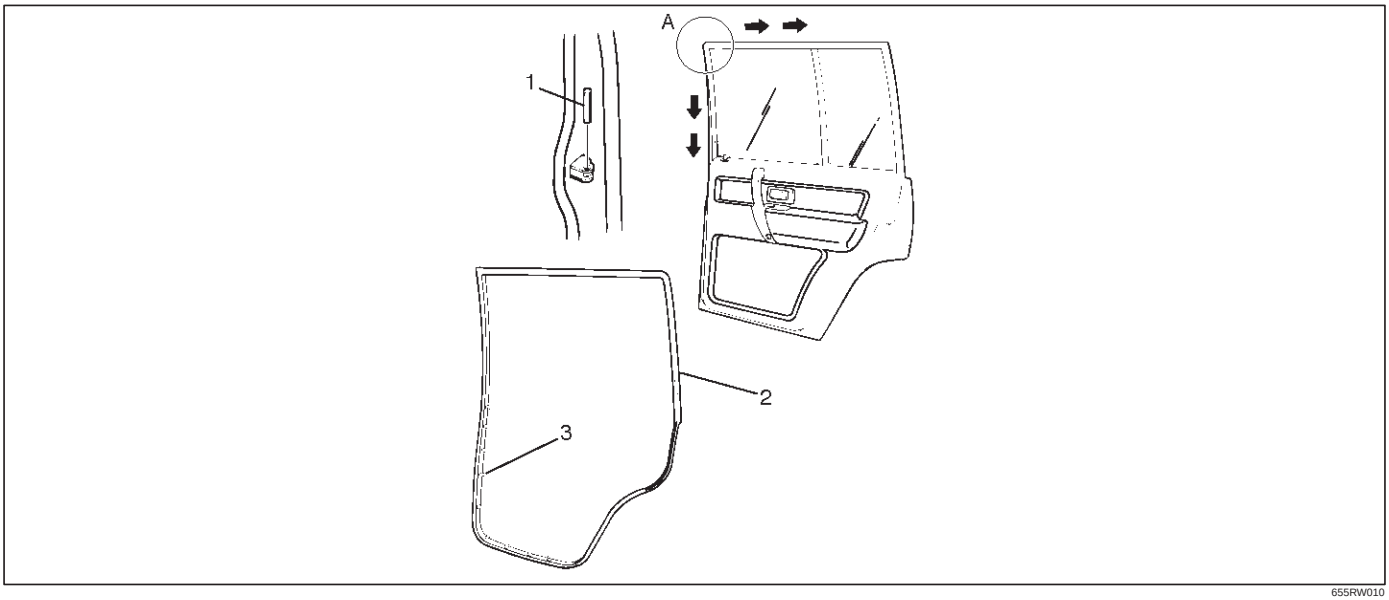

655RW010

Legend

(1) Check Arm Pin
(2) Rear Door Weather Strip
(3) Clip

Removal and Installation

Refer to Front Door Weatherstrip in this section.

Front Door Seal Finisher

Parts Location

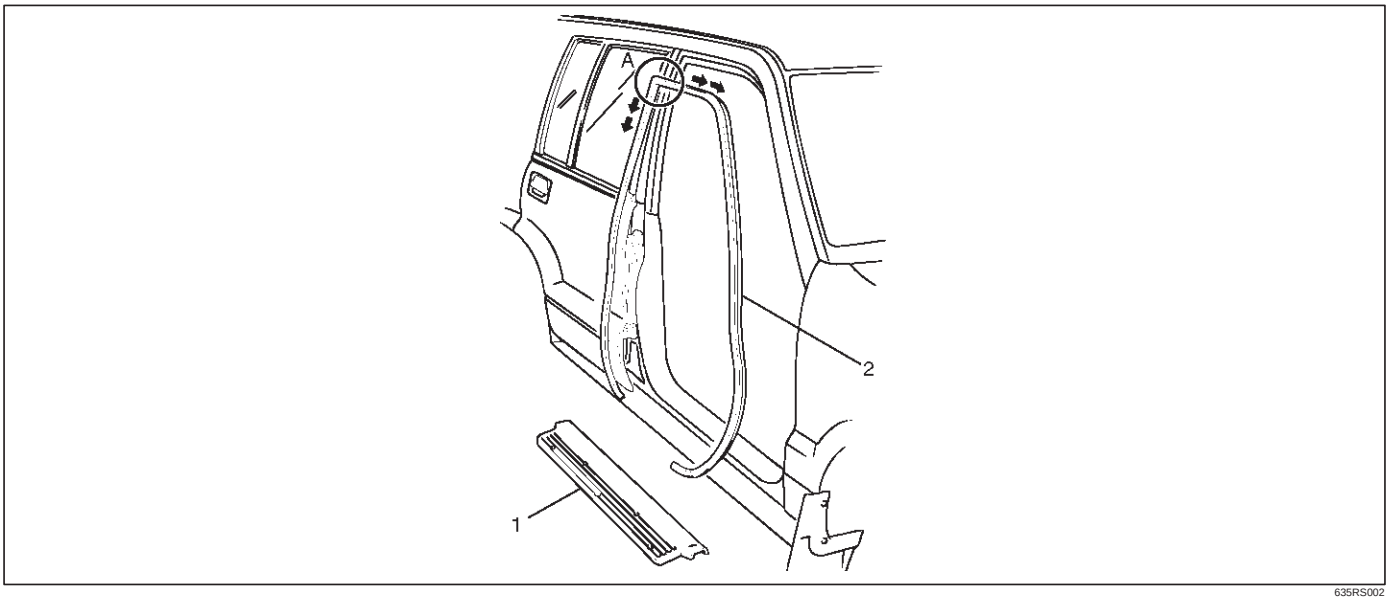

635RS002

Legend

(1) Front Door Sill Plate
(2) Front Door Seal Finisher

Removal

1. Disconnect the battery ground cable.
2. Remove front door sill plate.
3. Remove front door seal finisher (1).
   - Pull the finisher out from the body panel.

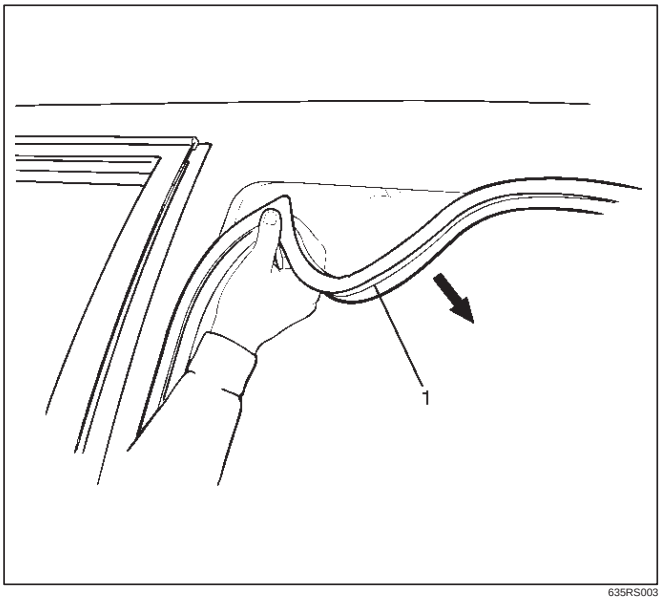

635RS003

Installation

To install, follow the removal steps in the reverse order, noting the following points.

1. Insert the finisher into the A corner and install the finisher (2) in the arrow–marked directions.
2. Take care not to allow the sill plate (1) to distort or twist the finisher.

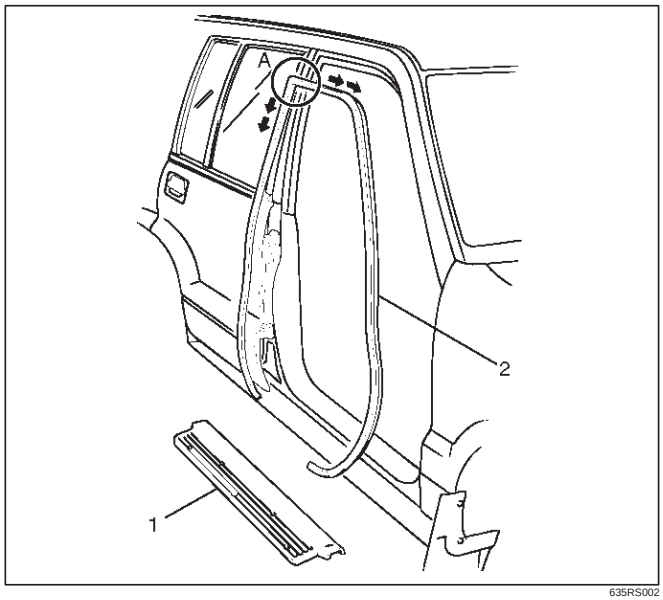

635RS002

Rear Door Seal Finisher

Parts Location

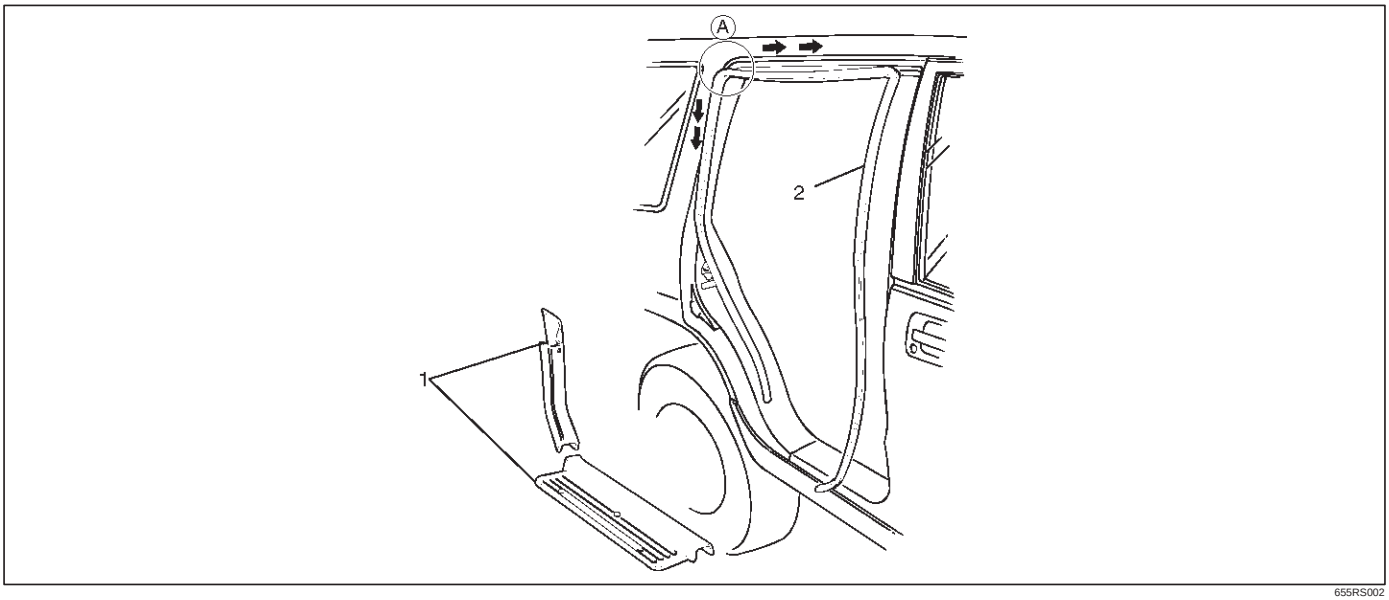

655RS002

Legend

(1) Rear Door Sill Plate and Luggage Side Lower Cover
(2) Rear Door Seal Finisher

Removal

1. Disconnect the battery ground cable.
2. Remove rear door sill plate and the luggage side lower cover.
3. Remove rear door seal finisher (1).
   - Pull the rear door seal finisher (1) out from the body panel.

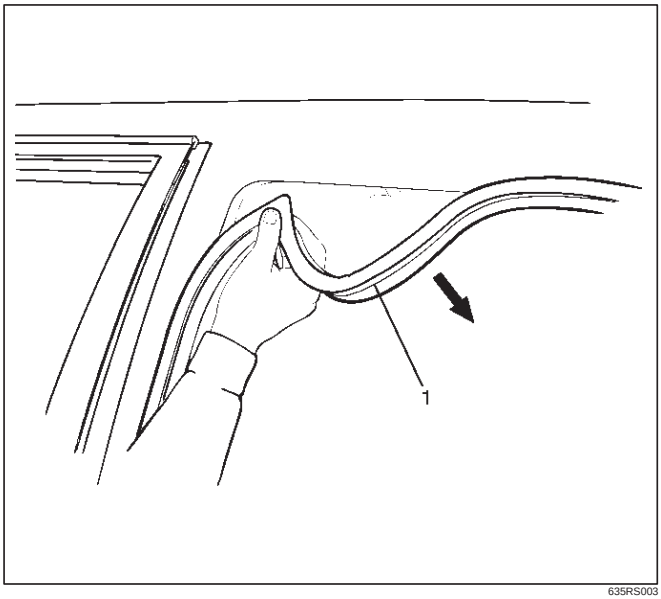

635RS003

Installation

To install, follow the removal steps in the reverse order, noting the following points.

1. Insert the rear door seal finisher (2) into the A corner and install the finisher in the arrow-marked directions.
2. Be careful not to allow the sill plate and cover (1) to distort or twist the finisher.

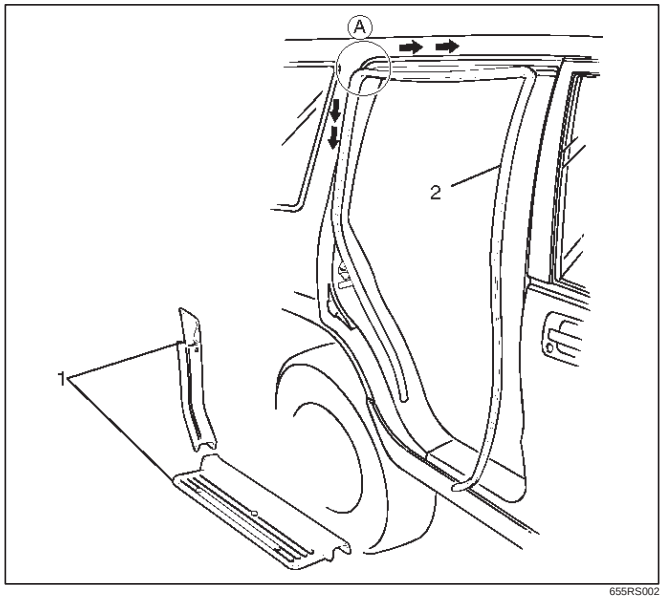

655RS002

Tailgate Assembly (LH)

Parts Location

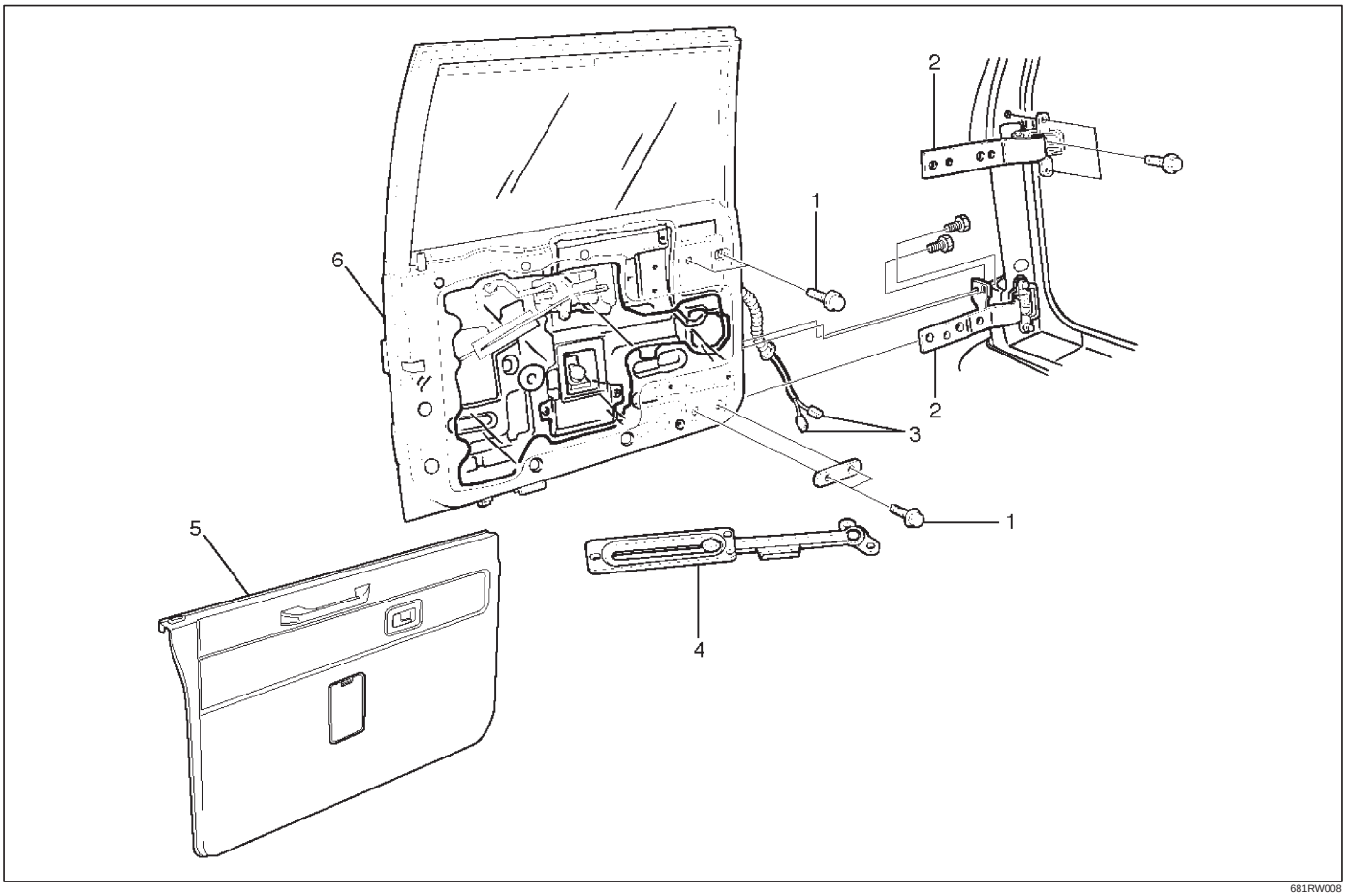

681RW008

Legend

(1) Tailgate Fixing Bolt
(2) Tailgate Hinge
(3) Tailgate Harness Connection
(4) Tailgate Stopper Assembly
(5) Tailgate Trim Panel (LH)
(6) Tailgate Assembly (LH)

Removal

1. Disconnect the battery ground cable.
2. Remove tailgate time panel (LH).
   - Refer to Tailgate Trim Panel (LH) in Exterior / Interior Trim section.
3. Remove tailgate stopper assembly
4. Remove tailgate harness connection.
   - Open the luggage trim panel lid and disconnect the tailgate harness connection.

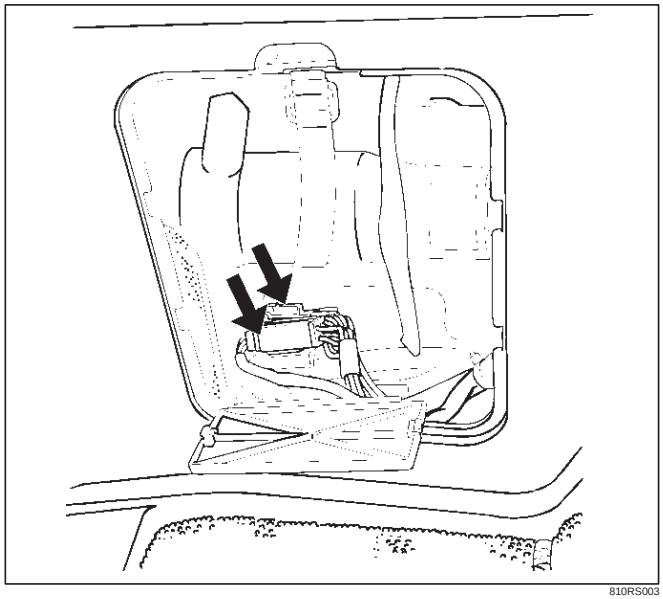

810RS003

5. Remove tailgate fixing bolts.

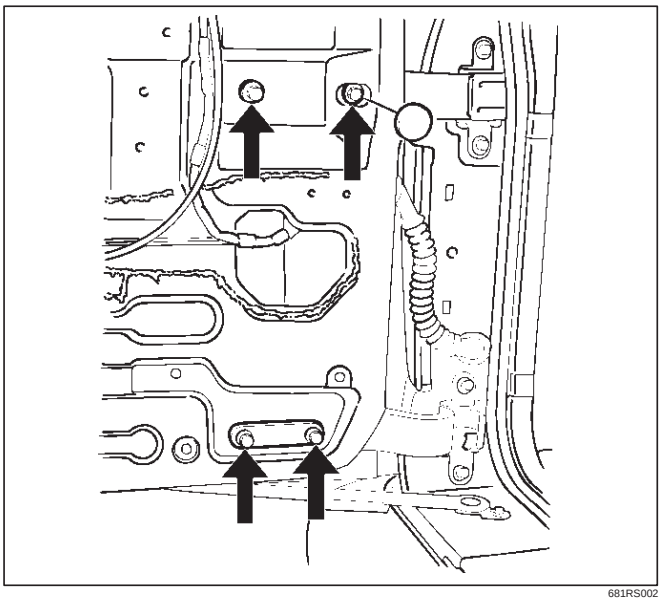

681RS002

6. Remove tailgate assembly (LH).
7. Remove tailgate hinge.
   - Apply a setting mark (1) on the body side hinge and remove the hinge fixing bolts.

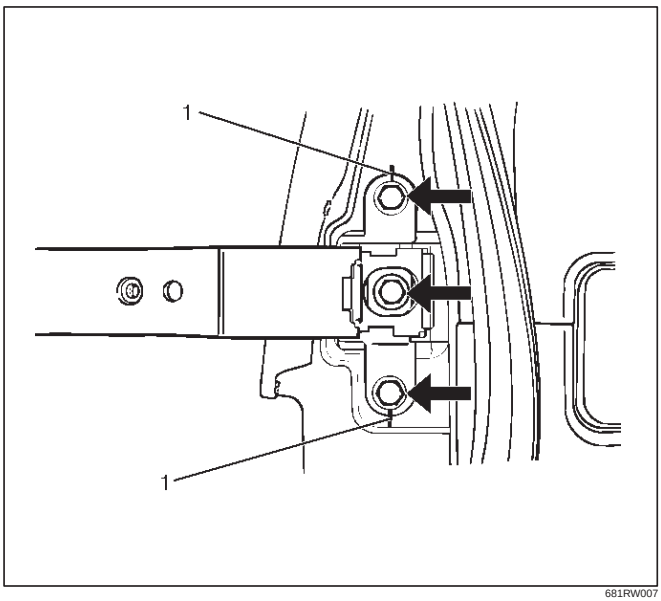

681RW007

Installation

To install, follow the removal steps in the reverse order, noting the following points.

1. Apply chassis grease to the tailgate hinge and the tailgate stopper moving surface.
2. Align the tailgate fitting to the body by referring to Body Dimension in this section.
3. Tighten the hinge bolts to the specified torque.

   Torque : 34 N•m (3.5kg·m/25 lb ft)

Tailgate Assembly (RH)

Parts Location

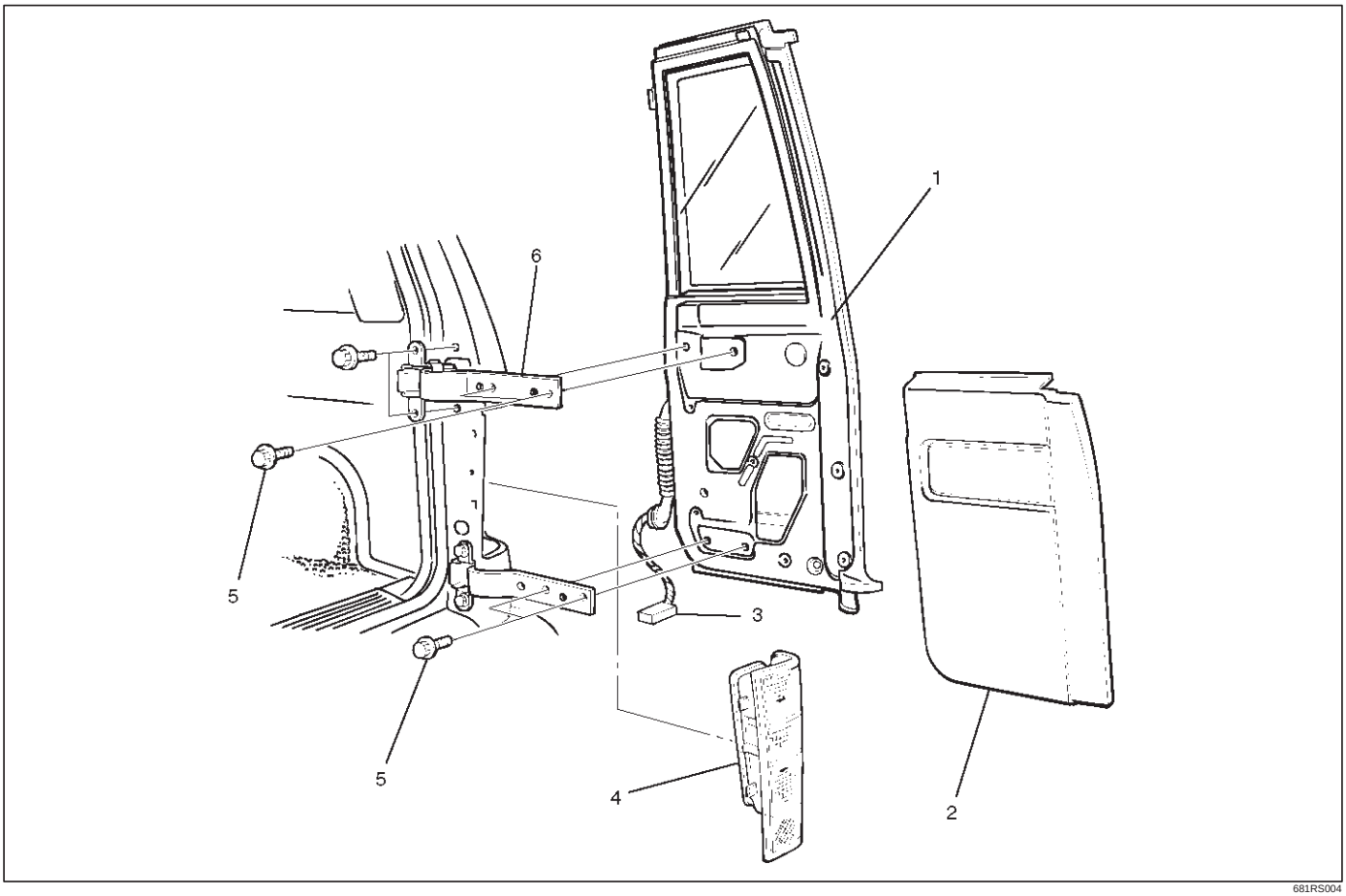

681RS004

Legend

(1) Tailgate Assembly (RH)
(2) Tailgate Trim Panel (RH)
(3) Tailgate Harness Connection
(4) Rear Combination Light (RH)
(5) Tailgate Fixing Bolt
(6) Tailgate Hinge

Removal

1. Disconnect the battery ground cable.
2. Remove rear combination light (RH).
3. Remove tailgate trim panel (RH).
   - Refer to Tailgate Trim Panel (RH) in Exterior / Interior section.
4. Remove tailgate harness connection.
   - Disconnect the tailgate harness connection.

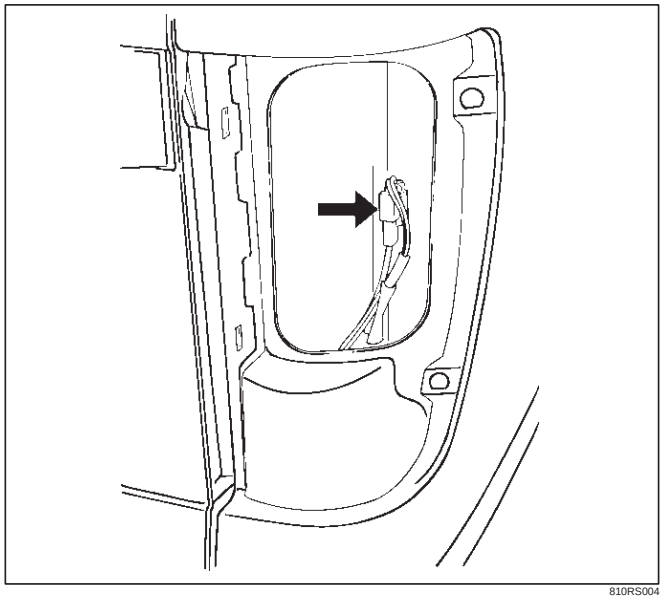

810RS004

5. Remove tailgate fixing bolt.

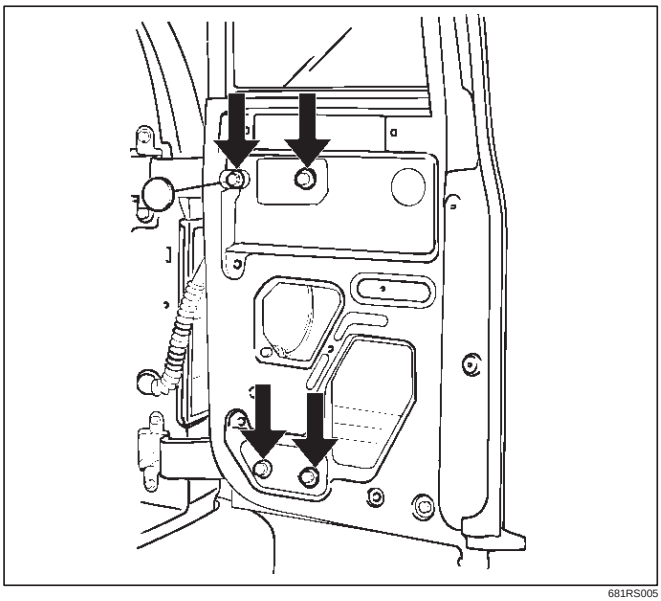

681RS005

6. Remove tailgate assembly (RH).
7. Remove tailgate hinge.
   - Apply a setting mark (1) on the body side hinge and remove the hinge fixing bolts.

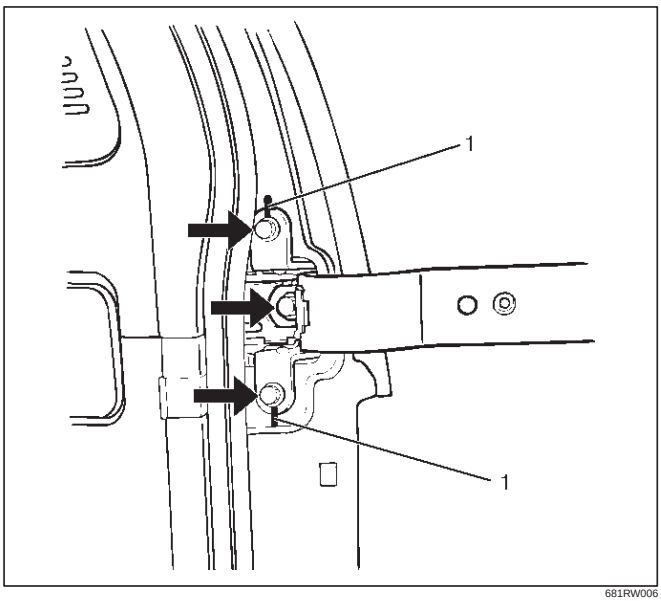

681RW006

Installation

To install, follow the removal steps in the reverse order, noting the following point.

1. Apply chassis grease to the tailgate hinge moving surface.
2. Align the tailgate fitting to the body. Refer to Body Dimension in this section.
3. Tighten the hinge bolts to the specified torque.

Torque : 34 N•m (3.5kg·m/25 lb ft)

Tailgate Strikers

Adjustment

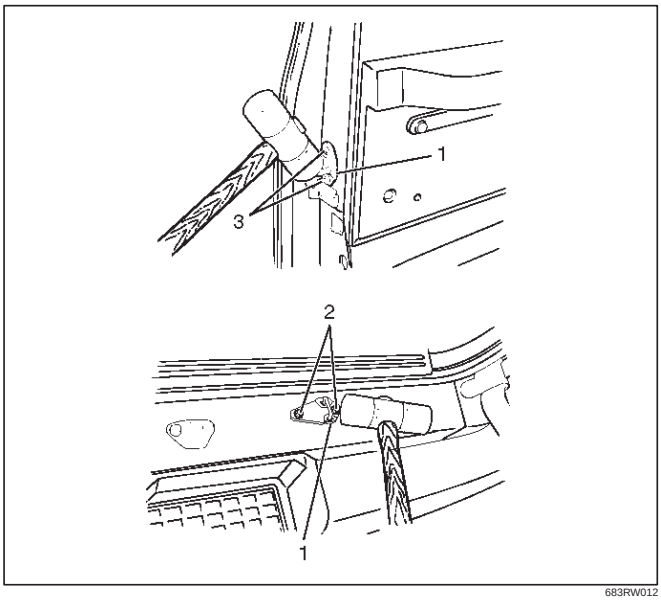

683RW012

1. Loosen the striker screws (3) (or bolts (2)).
2. Tap the striker (1) with a plastic hammer to align.
3. Tighten the striker screws (3) (or bolts (2)).

Screw Torque : 15 N•m (1.5kg·m/11 lb ft)

Bolt Torque : 12 N•m (1.2kg·m/104 lb in)

Tailgate Stopper Assembly

Parts Location

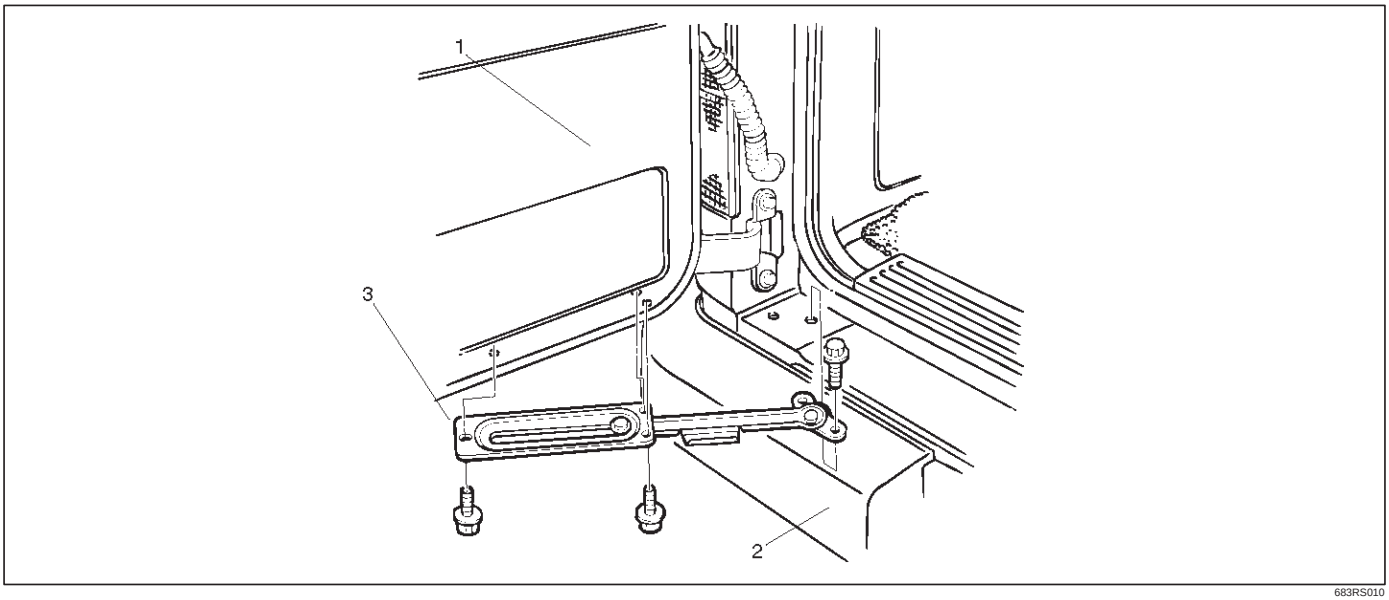

683RS010

Legend

(1) Tailgate
(2) Rear Bumper
(3) Tailgate Stopper Assembly

Removal

1. Remove tailgate stopper assembly.

Installation

To install, follow the removal steps in the reverse order, noting the following points.

1. Tighten the fixing bolts to the specified torque.

   Torque : 12 N•m (1.2kg·m/104 lb in)

2. Apply chassis grease to the stopper moving surface.

Tailgate Dove-Tail

Parts Location

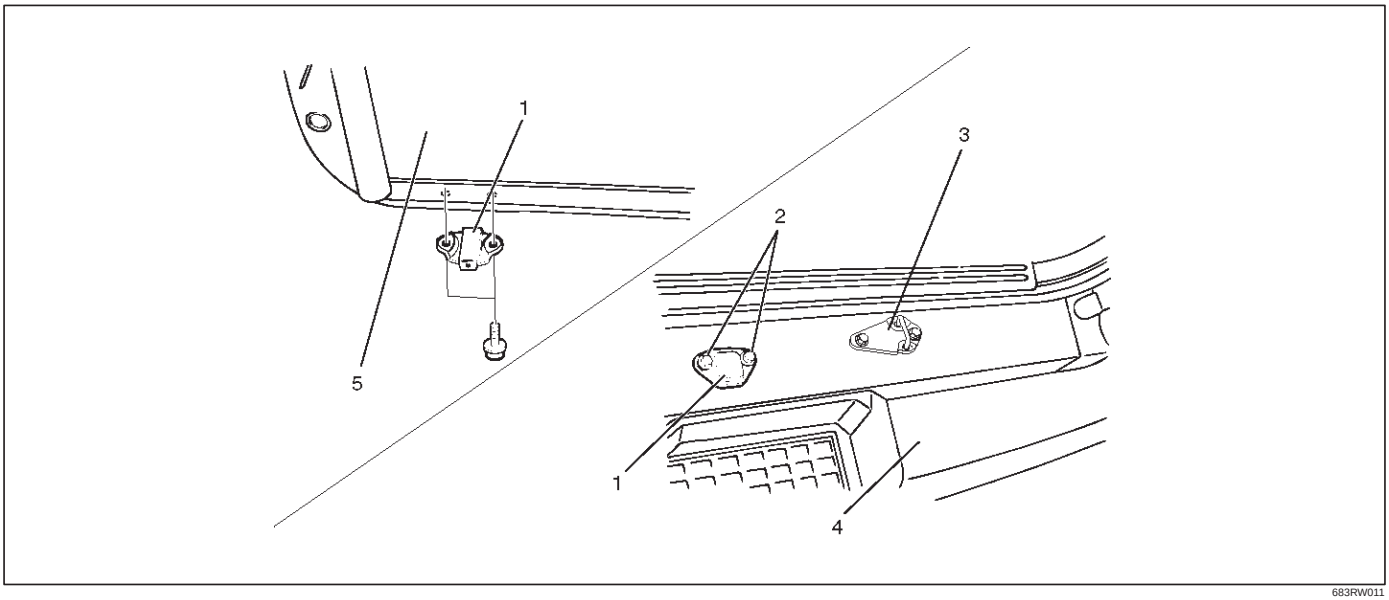

683RW011

Legend

(1) Dove-Tail
(2) Fixing Bolt
(3) Tailgate Striker
(4) Rear Bumper
(5) Tailgate (LH)

Removal

1. Remove tailgate dove-tail.

Installation

To install, follow the removal steps in the reverse order, noting the following points.

1. Apply chassis grease to the dove–tail (A) moving surface.
2. Tighten the fixing bolts to the specified torque.

   Torque : 12 N•m (1.2kg·m/104 lb in)

Tailgate Dove-Tail Striker

Adjustment

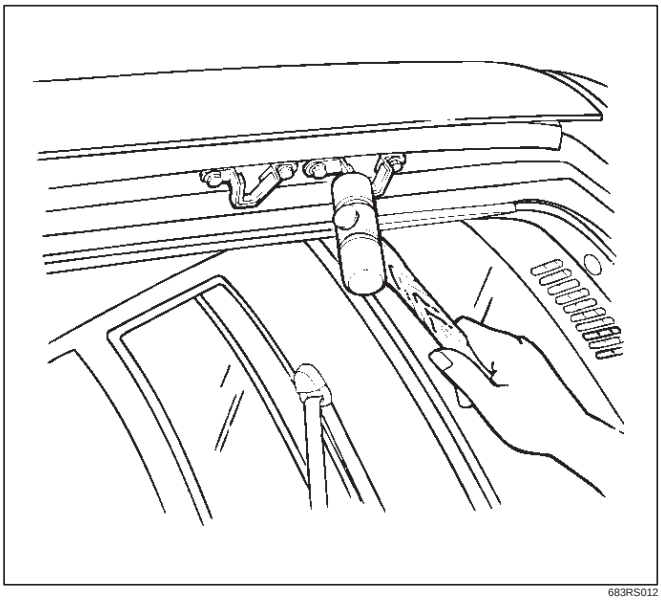

683RS012

1. Loosen the striker bolts.
2. Tap with a plastic hammer to align.
   - Gaps between Dove–Tail Striker (2) and bracket (1) are 0 mm (No clearance).

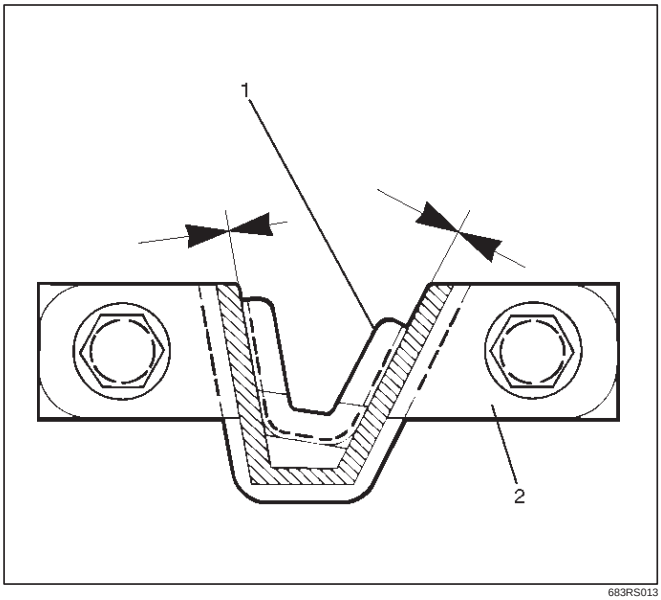

683RS013

3. Tighten striker bolts.

   Torque : 12 N•m (1.2kg·m/104 lb in)

Tailgate Frame Cover (LH)

Parts Location

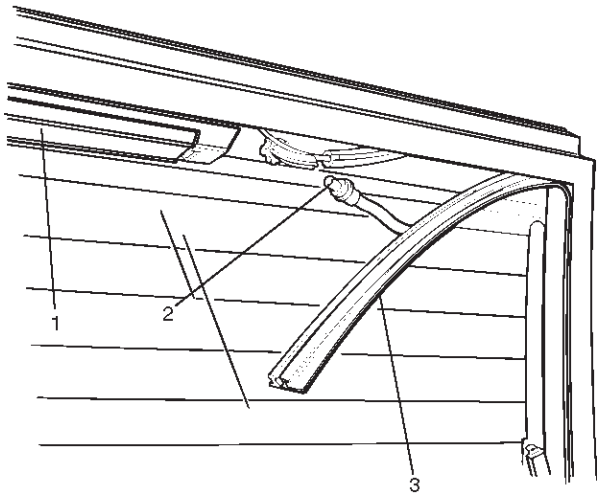

684RW001

Legend

(1) High Mount Stop Light
(2) Washer Tube
(3) Tailgate Frame Cover

Removal

1. Disconnect the battery ground cable.
2. Remove tailgate frame cover.
   - Pull the tailgate frame cover (2) out.
   - Disconnect the washer tube (1) at the nozzle and pull the washer tube out from the frame cover (2).
   - Disconnect the rear defogger and pull the harness from the cover.

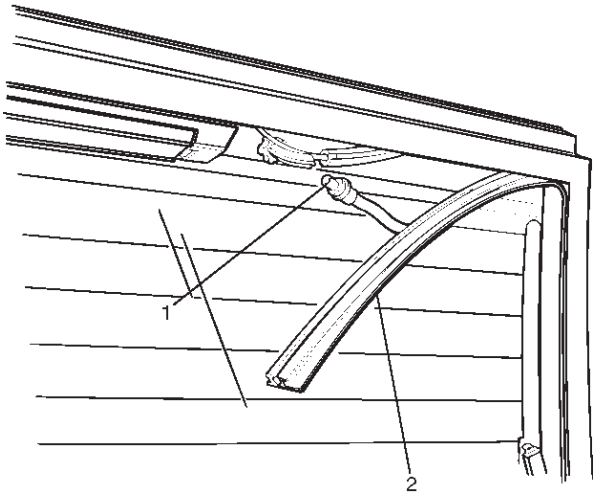

684RW002

Installation

To install, follow the removal steps in the reverse order, noting the following points.

1. Hit the lower A edge portion of the cover (1) to the tailgate flange.
2. Clearance between the frame cover and the tailgate panel (B portion) is 1 mm (0.04 in).

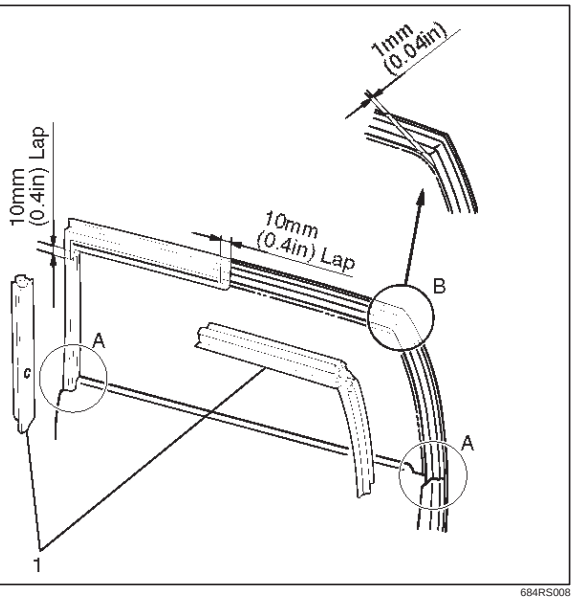

684RS008

Tailgate Frame Cover (RH)

Removal

1. Remove tailgate frame cover (RH).
   - Pull the frame cover out from the tailgate frame.

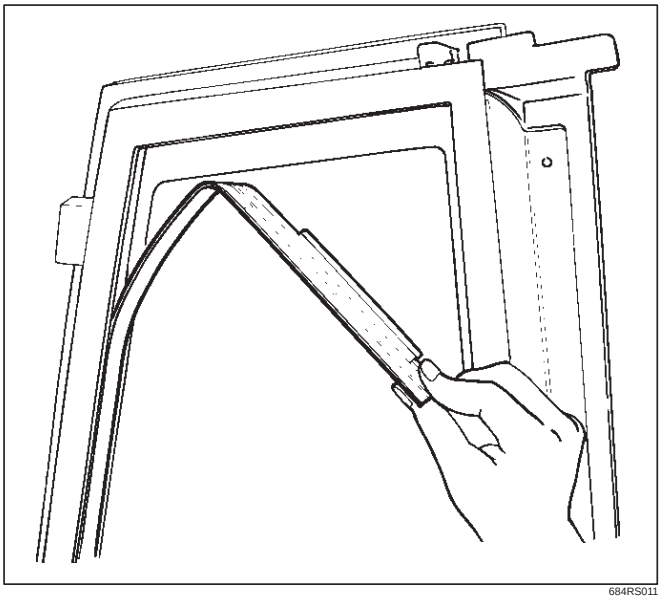

684RS011

Installation

To install, follow the removal steps in the reverse order, noting the following points.

1. Hit the lower A edge portion (2) of the tailgate frame cover (1).
2. Clearance between the frame cover and the tailgate panel (B portion) is 1 mm (0.04 in).

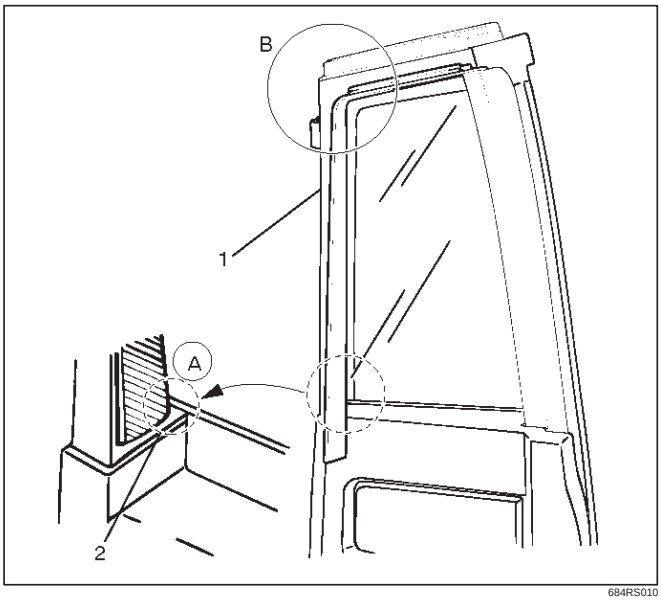

684RS010

Tailgate Sash Trim Cover

Parts Location

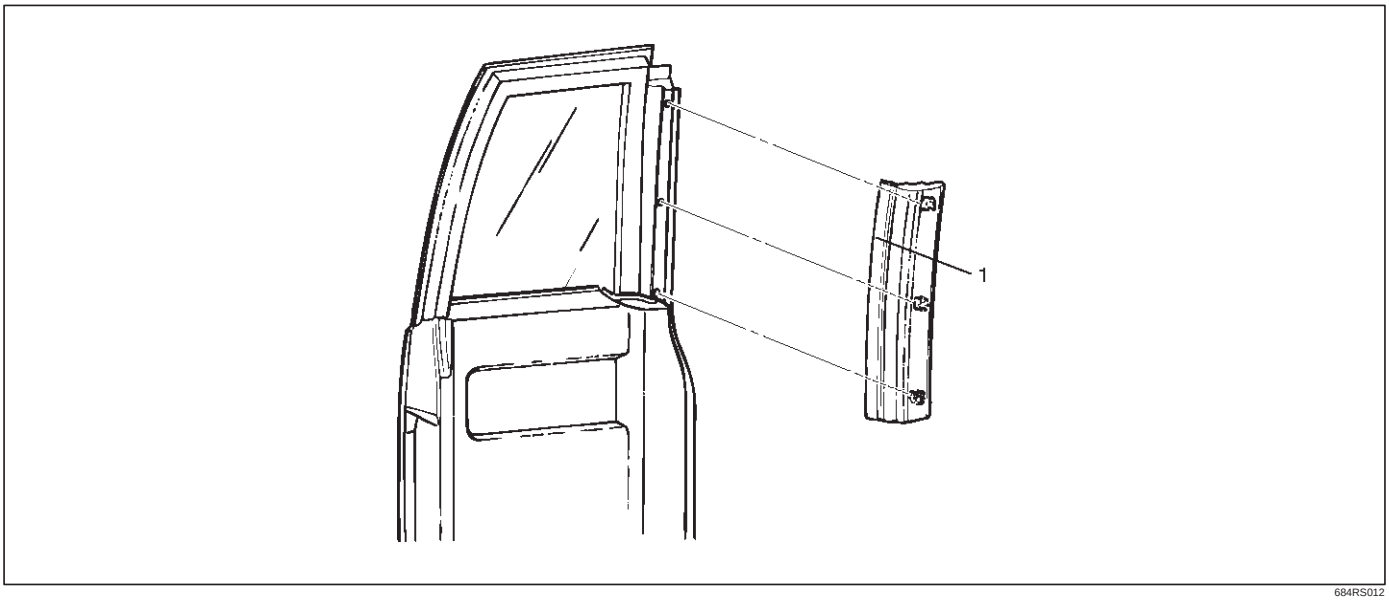

684RS012

Legend

(1) Tailgate Sash Trim Cover

Removal

1. Remove tailgate sash trim cover (1).
   - Pry the tailgate trim cover retainers free from the tailgate panel.

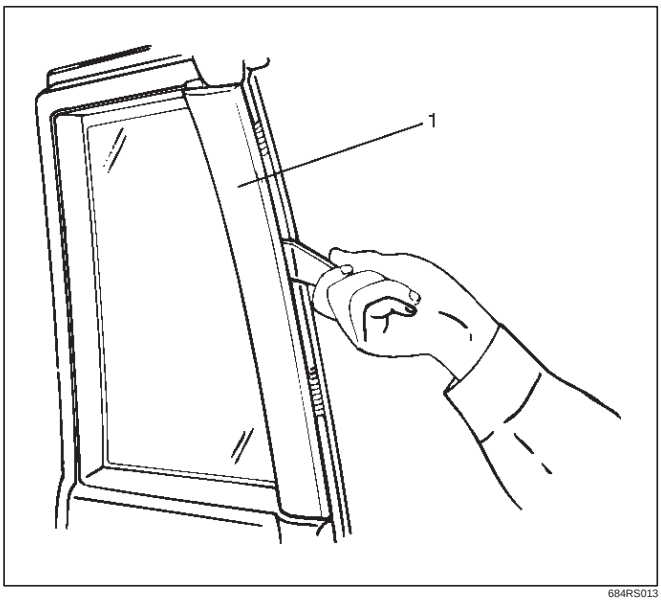

684RS013

Installation

1. Install the tailgate sash trim cover (1).
   - Insert the trim cover retainers into the tailgate hole securely so that there are no gaps between them.

Tailgate Outer Weatherstrip

Parts Location

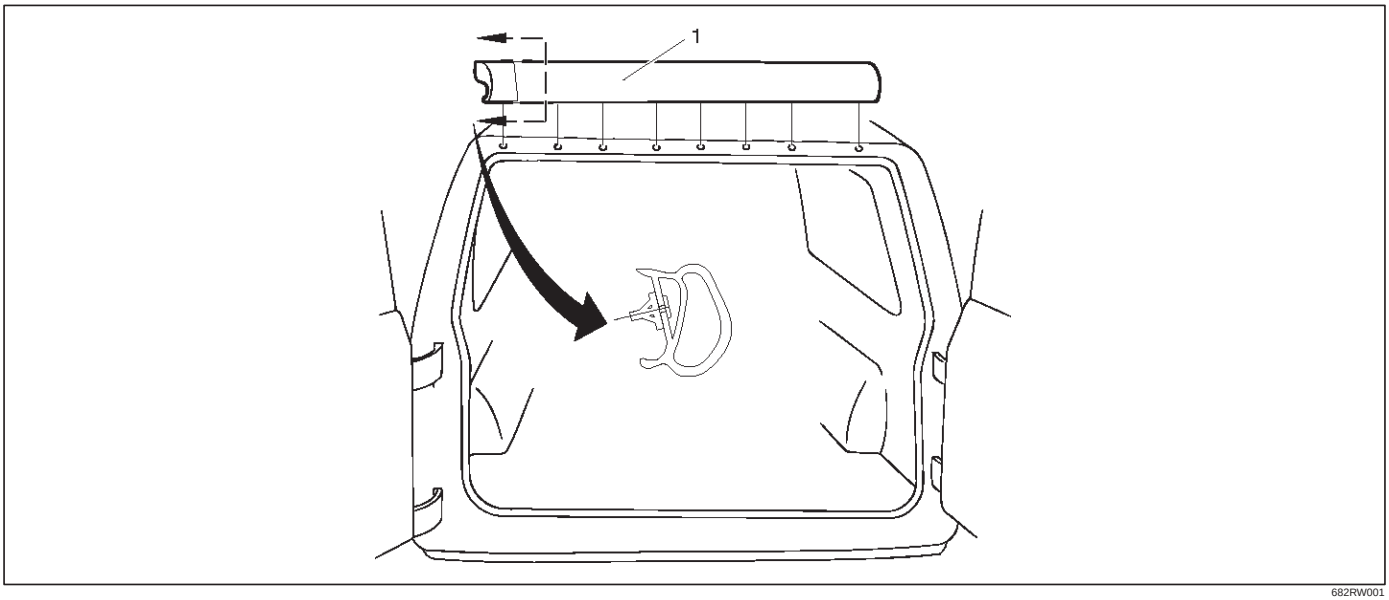

682RW001

Legend

(1) Tailgate Outer Weatherstrip

Removal

1. Disconnect the battery ground cable.
2. Remove tailgate outer weatherstrip (1).
   - Pry the tailgate outer weatherstrip clips (2) free from the body panel.

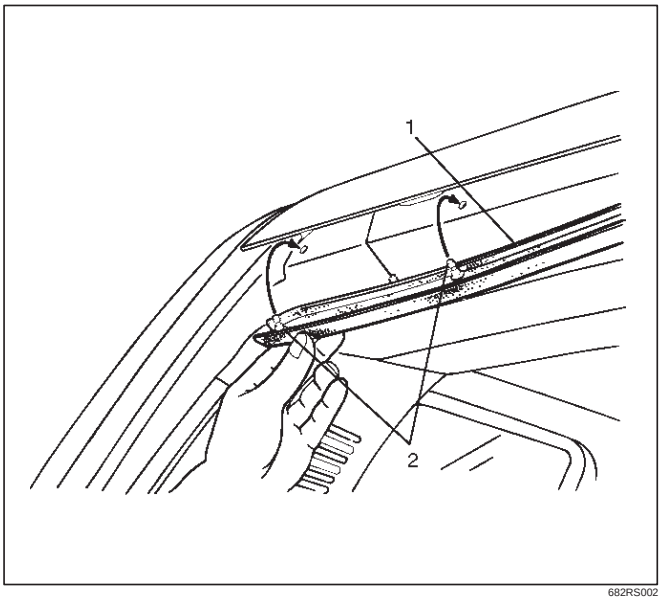

682RS002

Installation

To install, follow the removal steps in the reverse order, noting the following point.

1. Insert the tailgate outer weatherstrip clip into the body panel hole securely in order to install the tailgate outer weatherstrip with the gap between the body panel and the weatherstrip.

Tailgate Center Weatherstrip

Parts Location

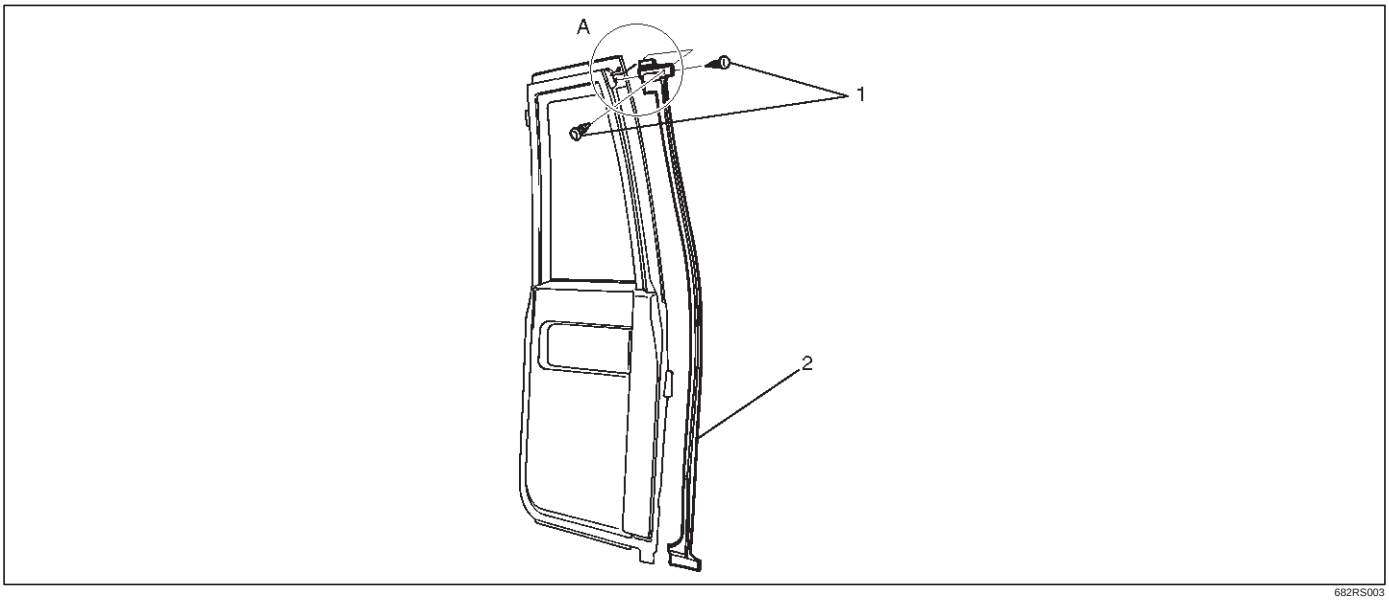

682RS003

Legend

(1) Clip
(2) Tailgate Center Weatherstrip

Removal

1. Remove tailgate center weatherstrip.
   - Remove the fixing clips in order to pull the tailgate center weatherstrip out from the tailgate panel.

Installation

1. Install the tailgate center weatherstrip (1).
   - Start assembling at the A portion.

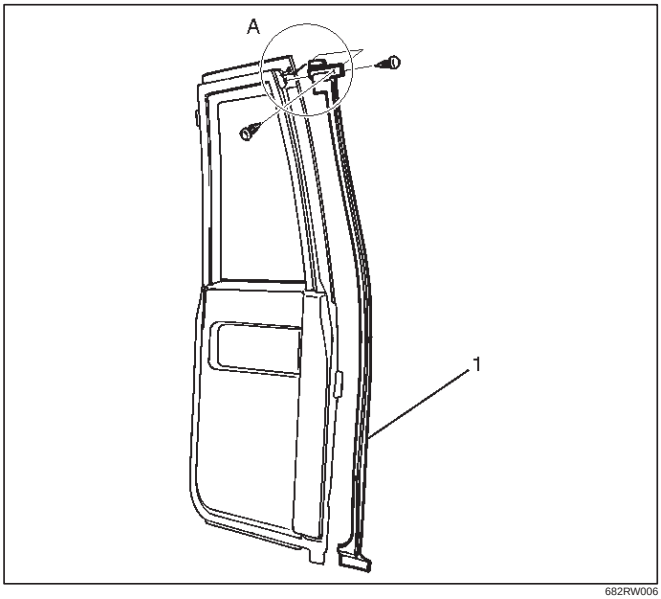

682RW006

- Clean the tailgate center weatherstrip (4) adhesive tape (2) and the butyl seal (3) fitting position of the tailgate panel.
- Affix new adhesive tape and the butyl seal to the weatherstrip (lower side) in order to install the tailgate center weatherstrip to the tailgate panel with no gap between them.

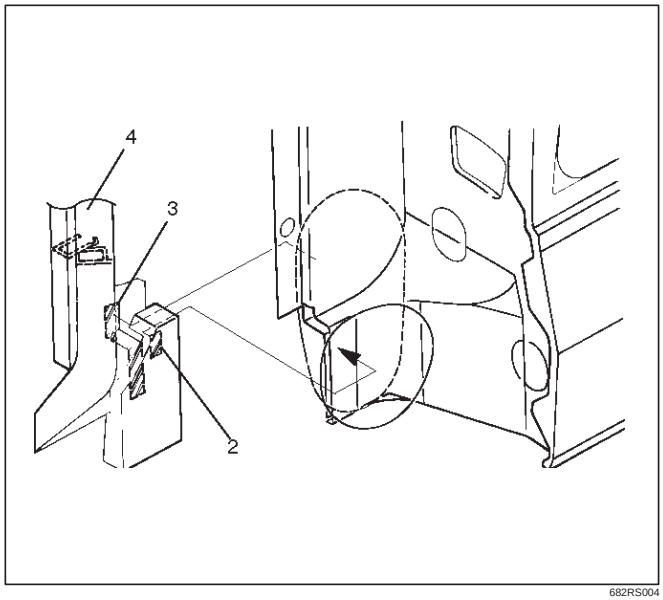

682RS004

Tailgate Main Weatherstrip

Parts Location

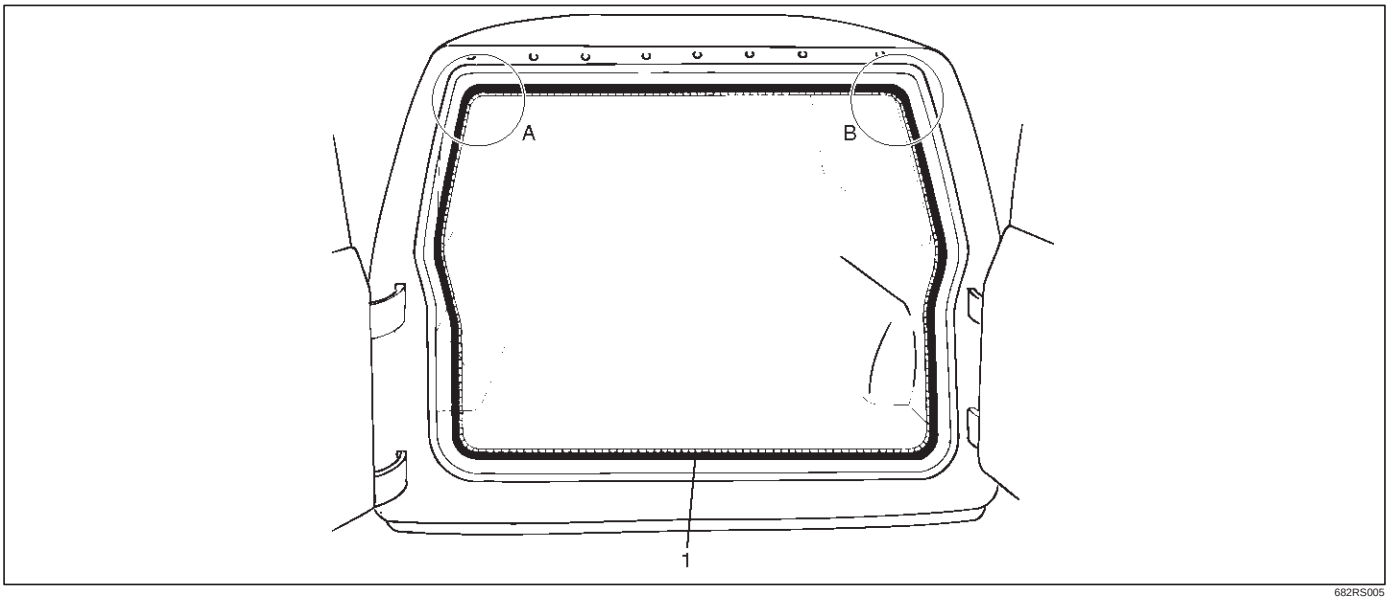

682RS005

Legend

(1) Tailgate Main Weatherstrip

Removal

1. Remove tailgate main weatherstrip.
   - Pull the tailgate main weatherstrip out from the body panel.

Installation

1. Install the tailgate main weatherstrip.
   - Align the A and B positions to the corners of the body panel. Install the tailgate main weatherstrip to the body panel by gently tapping with a plastic hammer. There should be not clearance between the body panel the tailgate main weatherstrip.

Spare Tire Carrier

Parts Location

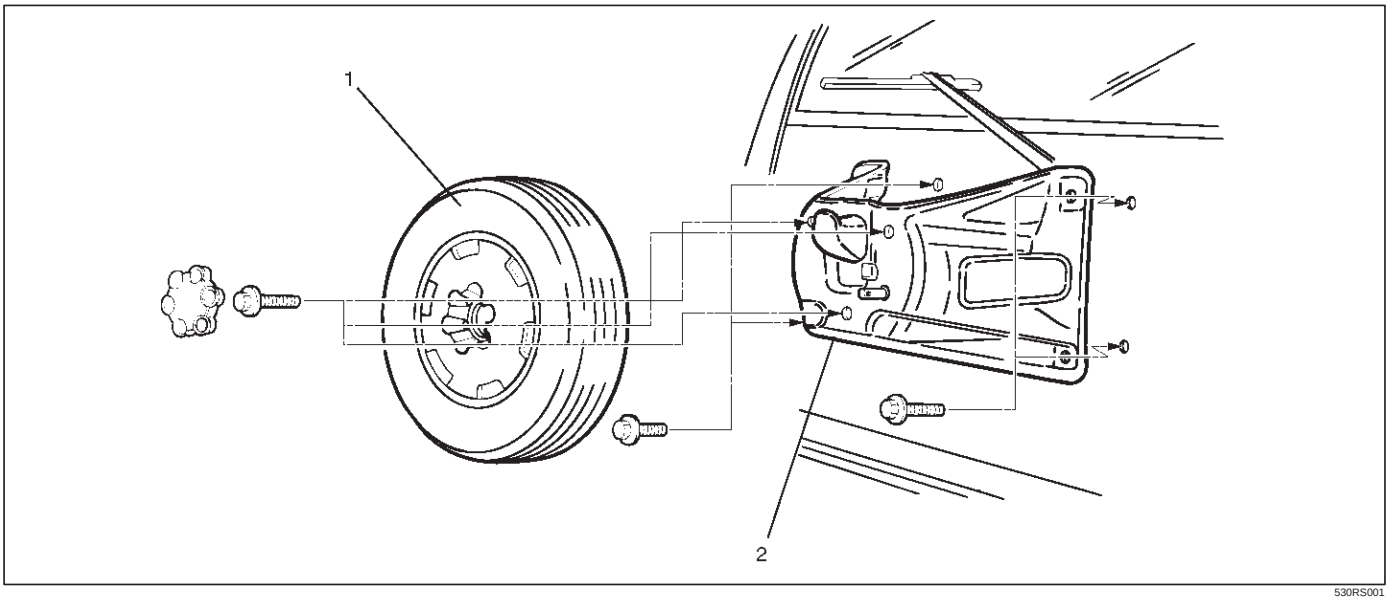

530RS001

Legend

(1) Spare Tire
(2) Spare Tire Carrier

Removal

1. Remove spare tire.
2. Remove spare tire carrier.
   - Remove the special bolts by using special tool (If so equipped).
   - Spare tire carrier bolt wrench 5–8840–2095–0 (J–34355).

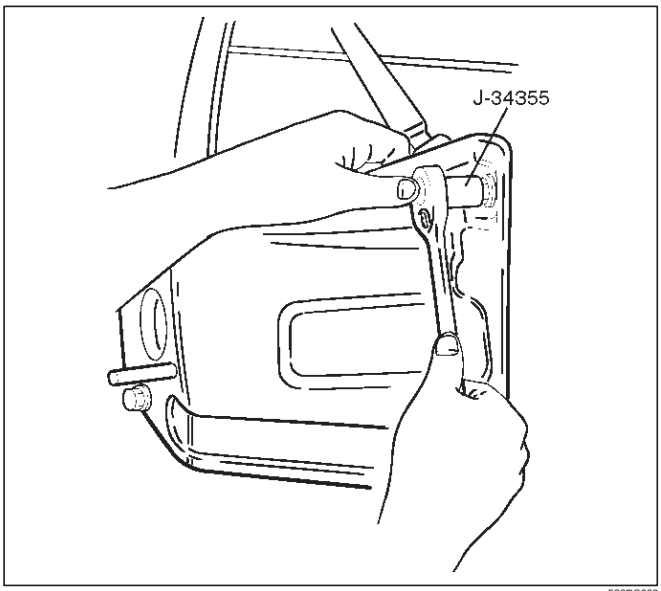

530RS002

Installation

1. Install the spare tire carrier.
   - Tighten the carrier fixing bolts to the specified torque.

   Torque : 31 N•m (3.2kg·m/23 lb ft)
2. Install the spare tire.
   - Tighten the spare tire fixing bolts to the specified torque.

   Torque : 118 N•m (12.0kg·m/87 lb ft)

Headlining

Parts Location

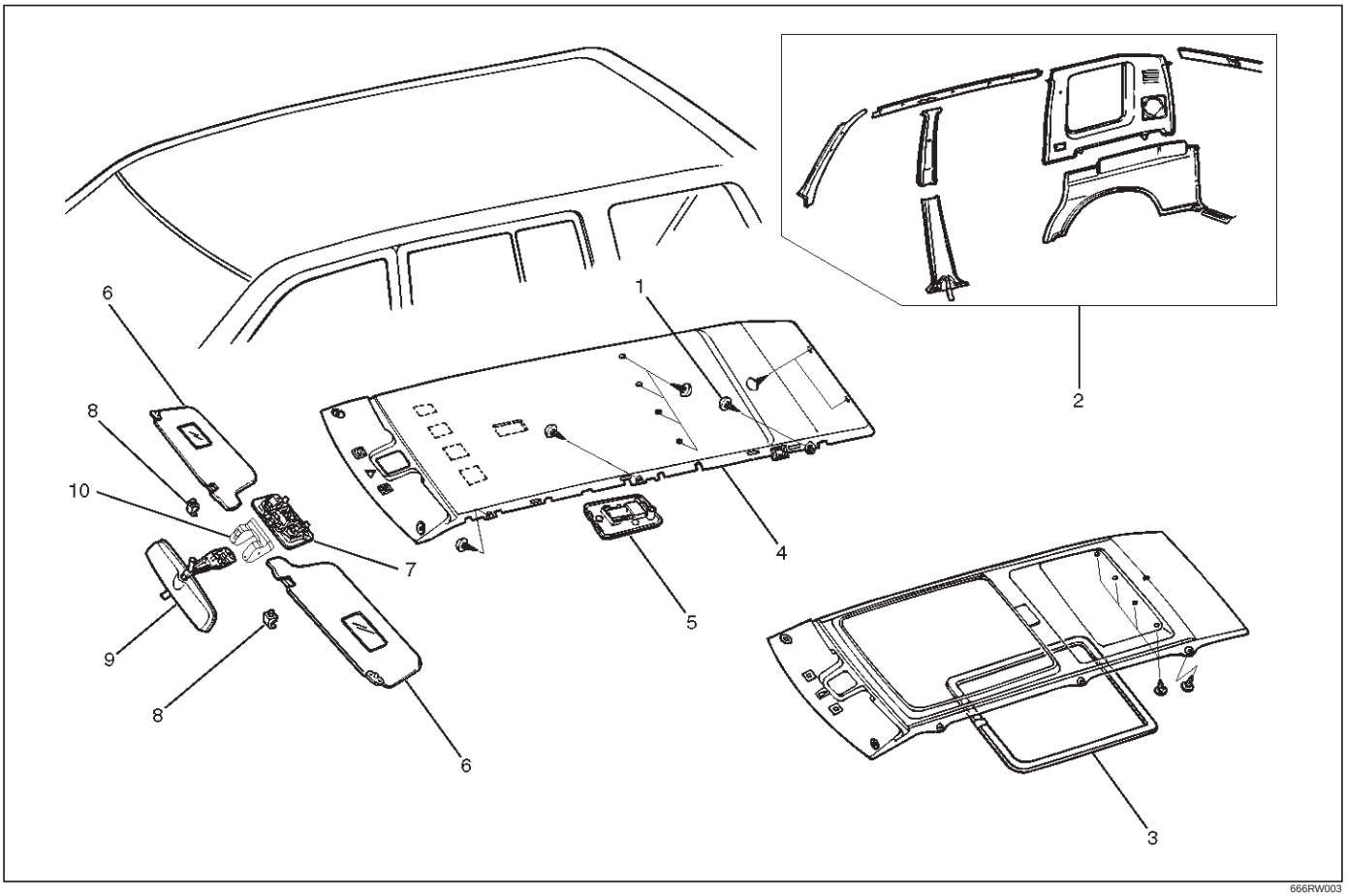

666RW003

Legend

(1) Clip
(2) Interior Trim Panels
(3) Sun Roof Finisher (W/Sun Roof)
(4) Headlining
(5) Dome Light
(6) Sunvisors
(7) Map Light
(8) Sunvisor Holder
(9) Rear View Mirror
(10) Multi Meter

Removal

1. Disconnect the battery ground cable.
2. Remove interior trim panels.
   - Refer to the Exterior / Interior Trim section.
3. Remove dome light.
   - Remove the dome light lens and the fixing screws.
   - Disconnect the dome light connectors.
4. Remove multi meter (4) (If so equipped).
   - Remove two caps (2), two screws (3) and disconnect the connector (1).

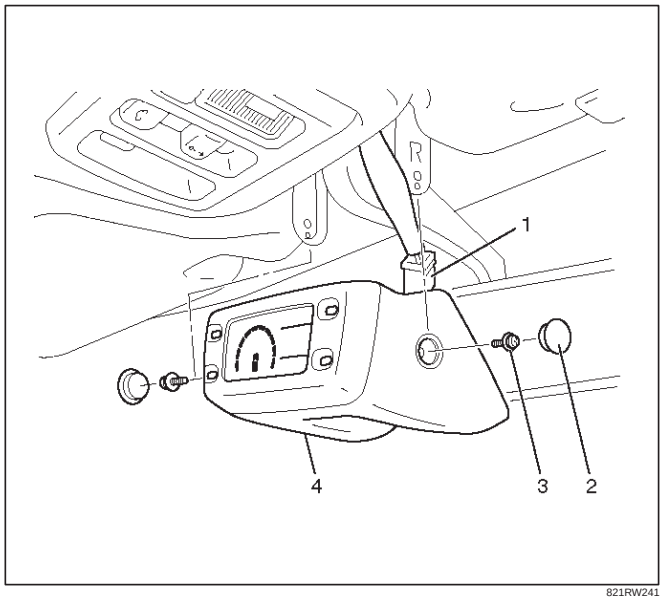

821RW241

5. Remove rear view mirror.
   - Remove the rubber stopper (1).
   - Pry off the mirror stay cover (2) and remove 3 screws.

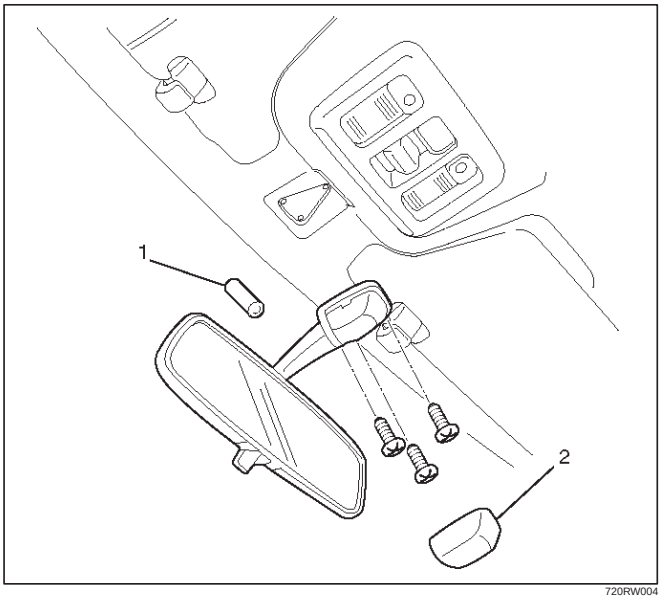

720RW004

6. Remove map light/sun roof switch.
   - Pry the map light clip free from the map light/sun roof switch bracket and disconnect the connector.

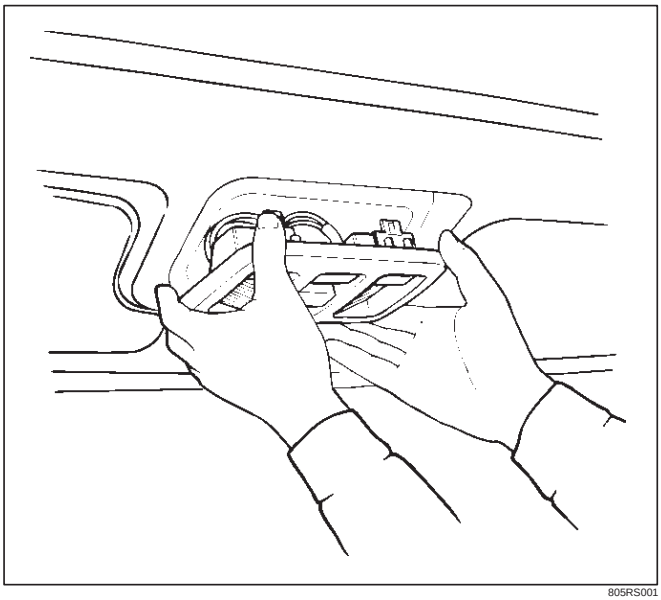

805RS001

7. Remove sunvisors.
   - Remove the fixing screw and turn the sunvisor holder (1) to remove it.
   - Disconnect the vanity mirror illumination connector.

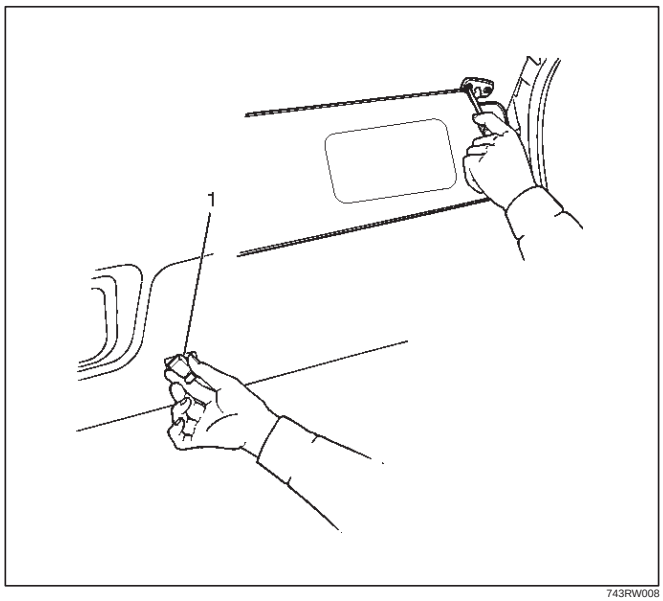

743RW008

8. Remove sun roof finisher (W/Sun roof).
9. Remove headlining.
   - Remove the headlining fixing clips.

Installation

To install, follow the removal steps in the reverse order, noting the following points.

1. Install the headlining so that the fixing clips will not come off.
2. To install the sun roof finisher (3), first fit in at one place with the head lining (2) close to the sun roof frame complete (1), then install the entire finisher tightly by hitting it with a plastic hammer, not allowing it to move up.

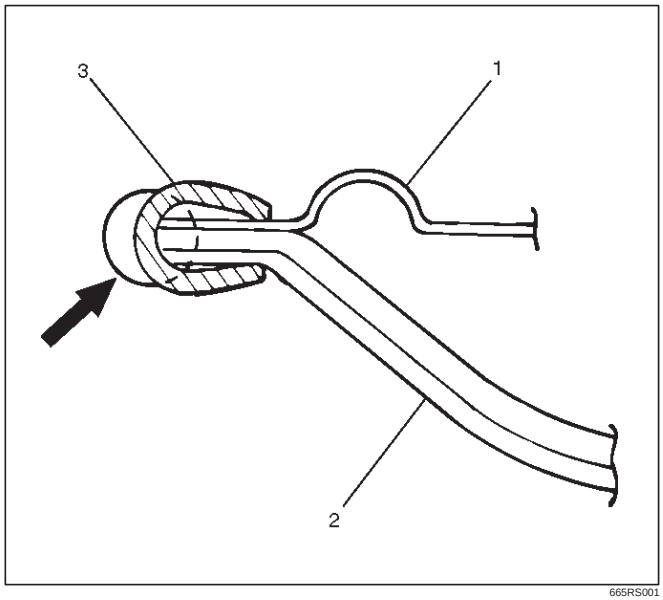

665RS001

Rear Air Deflector

Parts Location

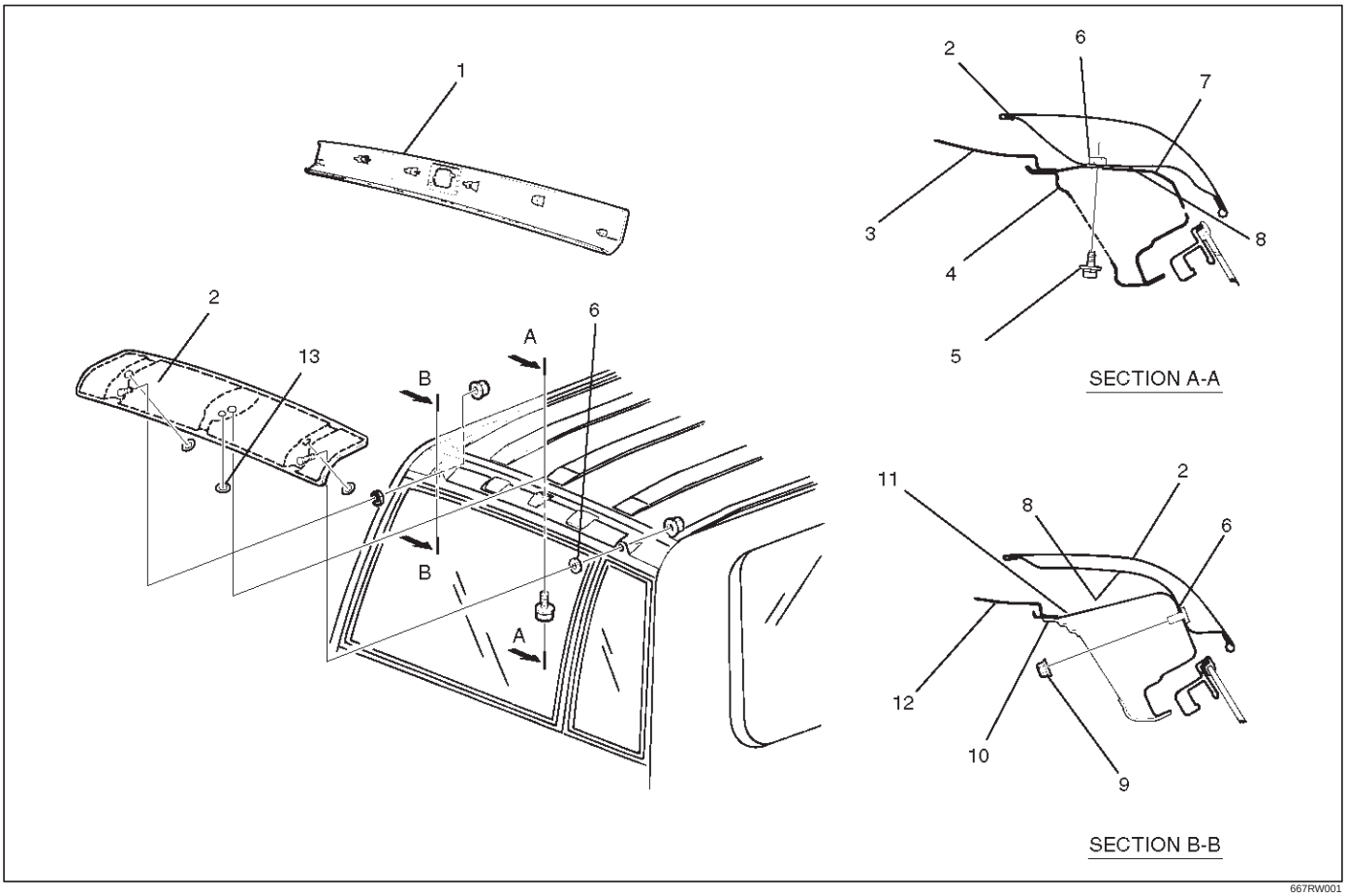

Legend

(1) Rear Roof Trim Cover
(2) Rear Air Deflector
(3) Roof Rail
(4) Rear Inner Roof Rail
(5) Fixing Bolt
(6) Nylon Washer
(7) Rear Outer Roof Panel
(8) Grommet
(9) Fixing Nut
(10) Rear Pillar Upper Reinforcement
(11) Rear Outer Roof Rail
(12) Roof Panel
(13) Grommet

Removal

1. Disconnect the battery ground cable
2. Remove rear roof trim cover.
   - Refer to Luggage Side and Quarter Upper Trim Cover in Exterior / Interior section.
3. Remove rear air deflector.
   - Take notice of the grommet and the nylon washer.

Installation

To install, follow the removal steps in the reverse order, noting the following points.

1. Install the grommet (1) to the air deflector (2) drain hole.

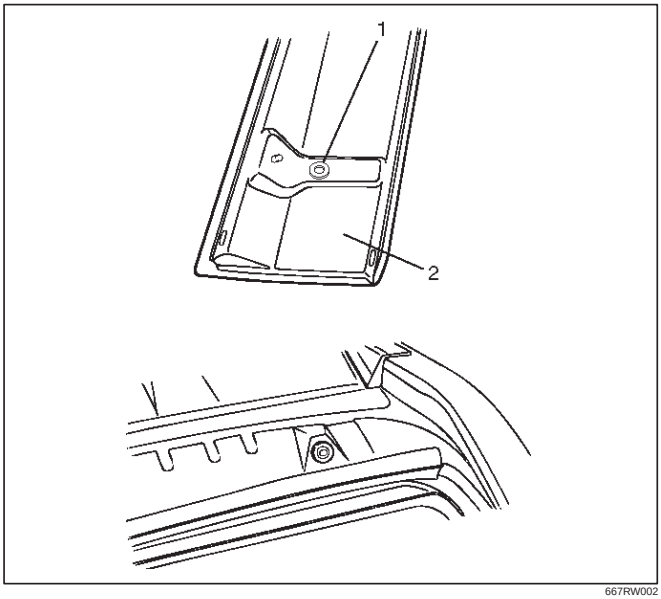

667RW002

2. Use a new nylon washer (4). Peel off the adhesive tape of the washer to install the nylon washer to the air deflector (3).

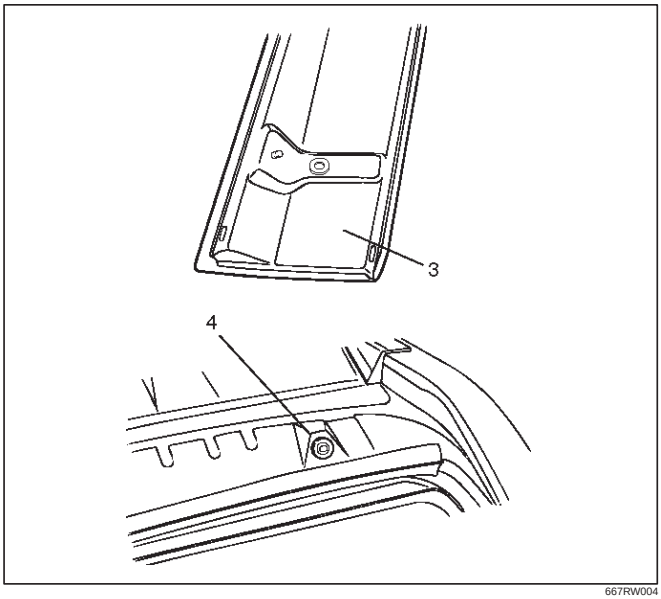

667RW004

3. Install the air deflector (5) to the roof by referring to the specified values shown in the illustration.

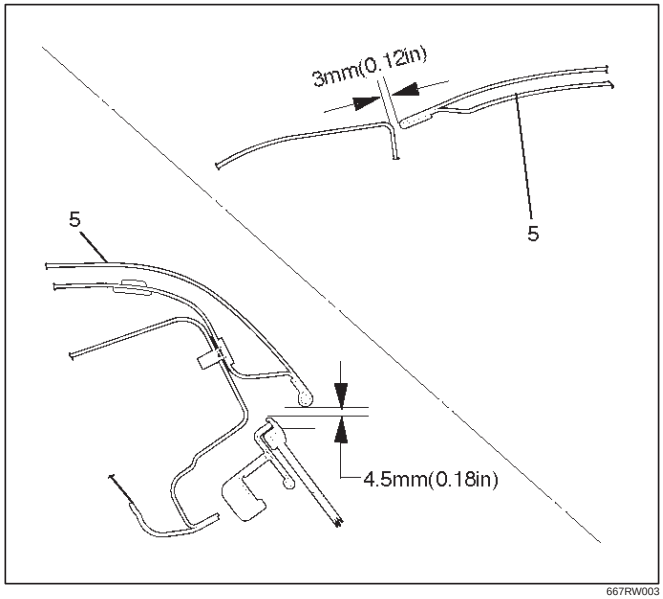

667RW003

4. Tighten the deflector fixing to the specified torque.

Bolt Torque : 6 N•m (0.6kg·m/52 lb in)

Nut Torque : 8 N•m (0.8kg·m/69 lb in)

Roof Moulding

Parts Location

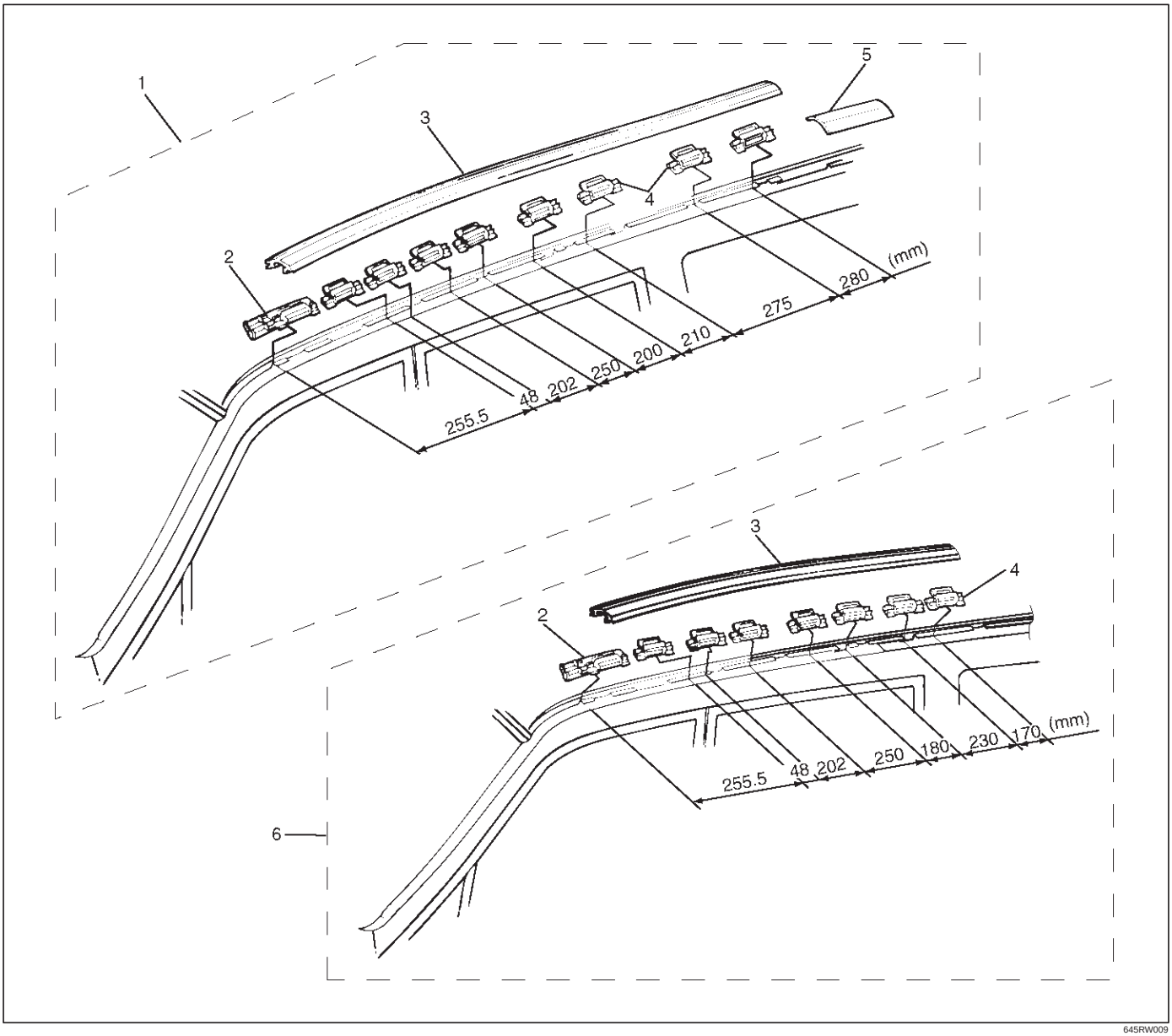

645RW009

Legend

(1) L·W·B
(2) Windshield Side Moulding Upper Clip
(3) Roof Moulding
(4) Roof Moulding Clip
(5) Roof End Moulding
(6) S·W·B

Removal

1. Disconnect the battery ground cable.
2. Remove roof moulding.
3. Remove roof end moulding.
   - Remove the sealing adhesive and the adhesive tape of the roof end moulding from the panel using a knife or scraper while you peel them off.
4. Remove roof moulding clips.

Installation

1. Install the moulding roof clips (1).
   - Install the clips on roof panel flange (2) to refer the illustration.

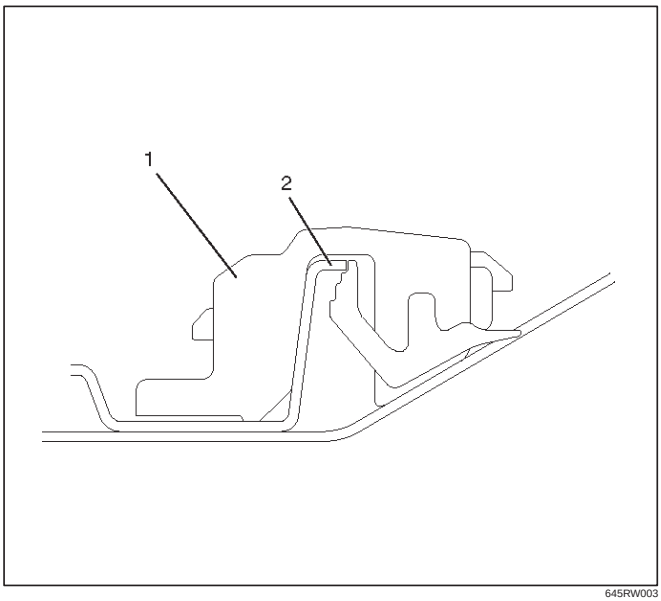

645RW003

2. Install the roof end moulding (3).
   - Clean the body panel where the roof end moulding is installed.
   - Install the roof end moulding and the rear air deflector (2) so that the installation clearance between them is within the specified values. Securely fix it with the adhesive tape (4) and sealing adhesive (5).

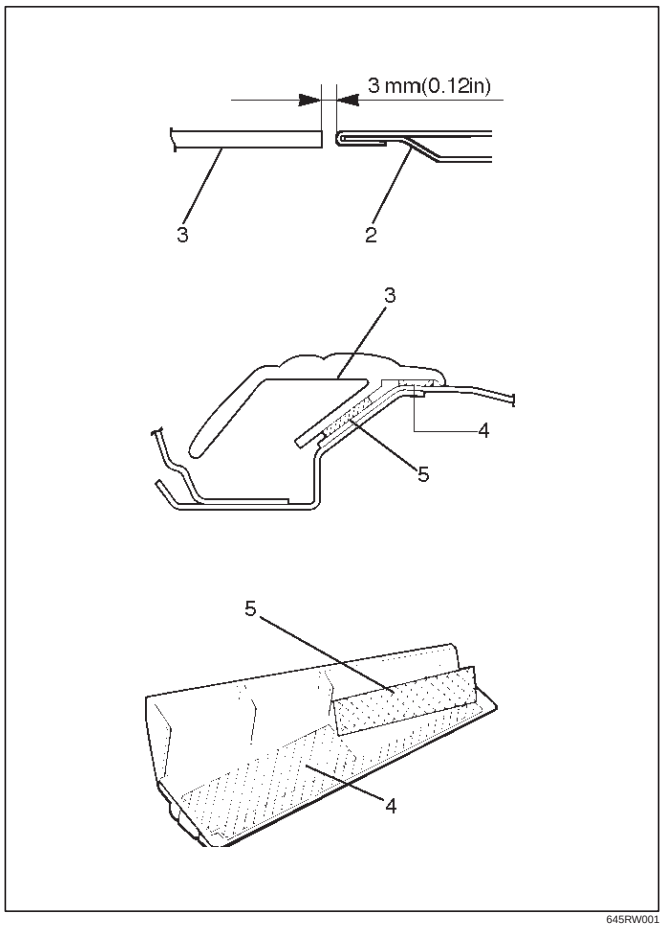

645RW001

3. Install the roof moulding (9).
   - Assemble the windshield side moulding upper clip (8) to the roof panel with the clip positioning rib (6) (oblique lines portion) attached to the roof panel flange (7). Assemble the roof moulding (9) while you attach the front edge portion of the roof molding to the windshield side moulding (10).

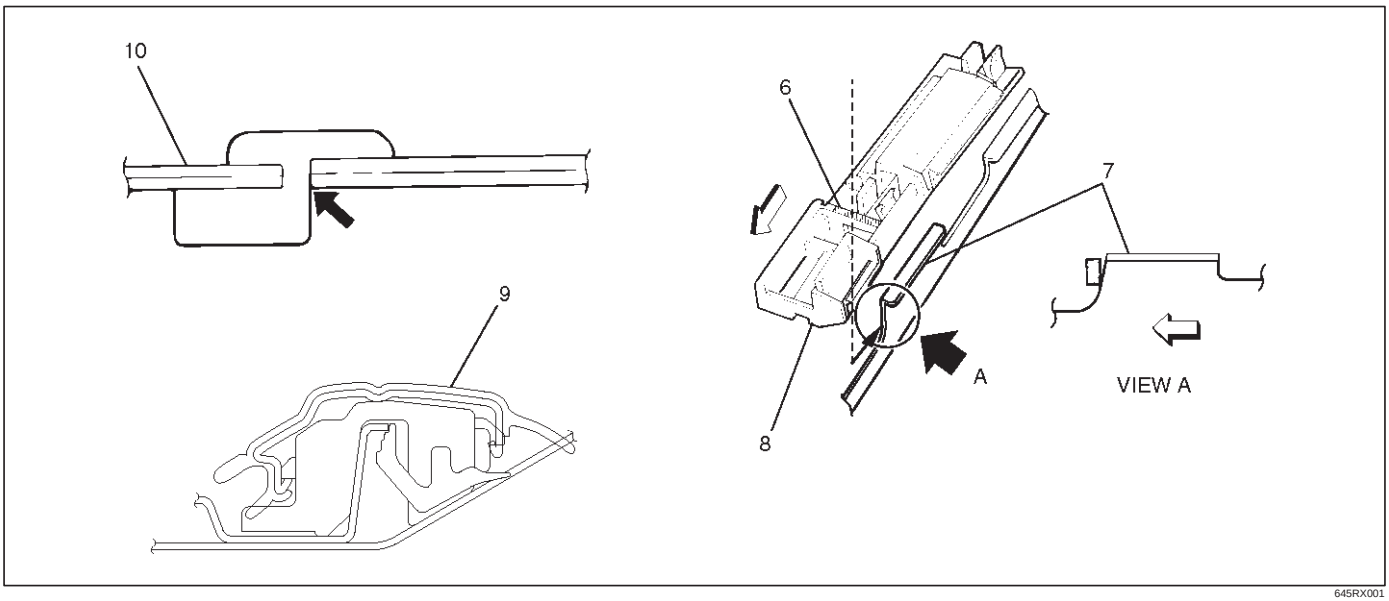

645RX001

Windshield

Parts Location

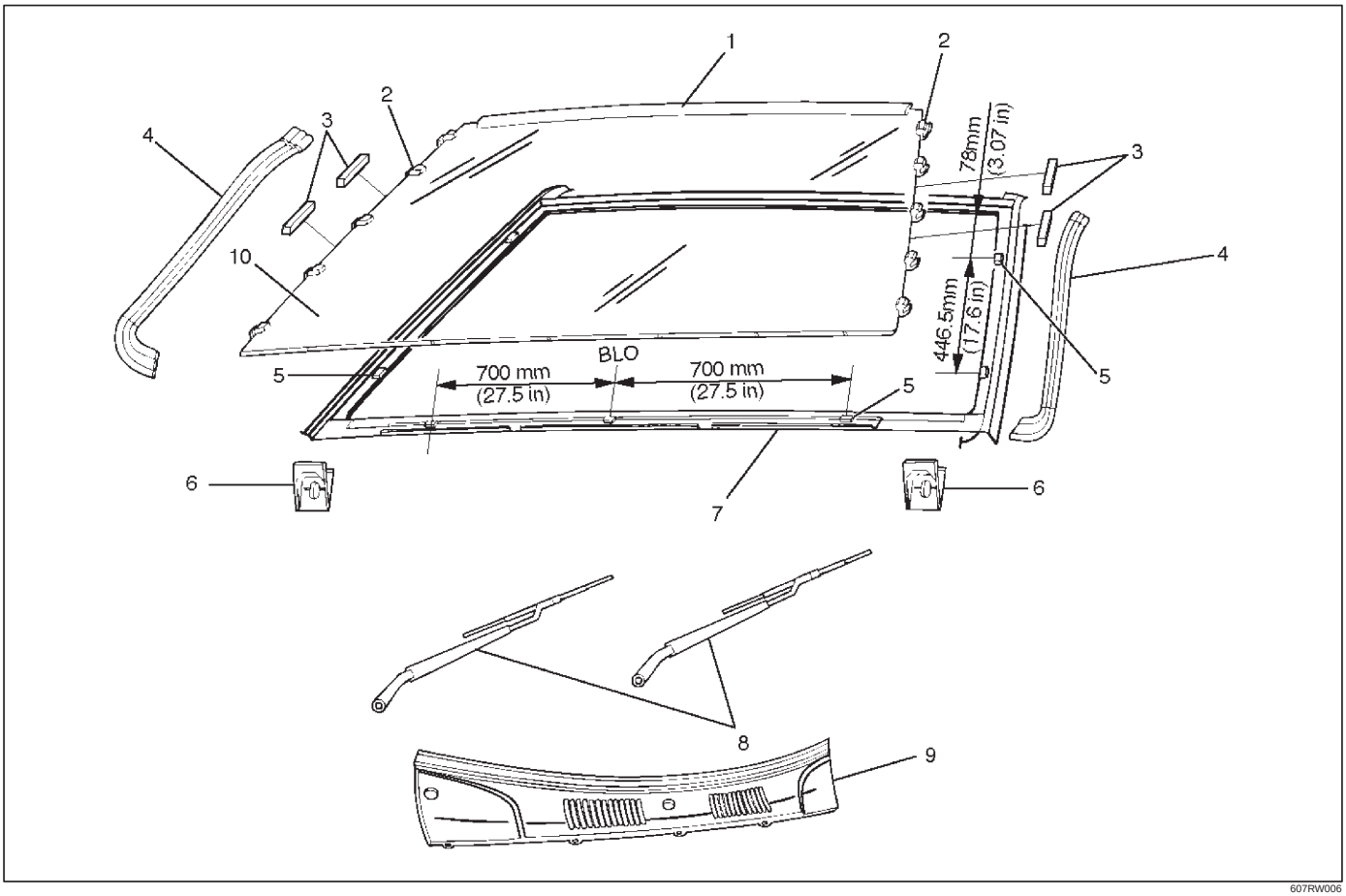

Legend

(1) Windshield Upper Moulding
(2) Moulding Clip
(3) Windshield Side Seal
(4) Windshield Side Moulding
(5) Spacer
(6) Windshield Support
(7) Cowl Upper Rail Flange
(8) Windshield Wiper
(9) Front Cowl Cover
(10) Windshield

Removal

1. Disconnect the battery ground cable.
2. Remove windshield wiper.
   - Refer to Windshield Wiper Arm/Blade in Wiper/Washer System section.
3. Remove front cowl cover.
   - Refer to Cowl Cover in this section.
4. Remove windshield side moulding.
   - Pull the moulding out from the windshield side moulding clip.
5. Remove windshield support.
6. Remove windshield side seal.
7. Remove windshield (2).
   - Use a knife or pick to make a hole in part of the adhesive caulking material.

- Secure one end of a piece of steel piano wire (1) (0.02 inches in diameter) to a piece of wood that can serve as a handle.

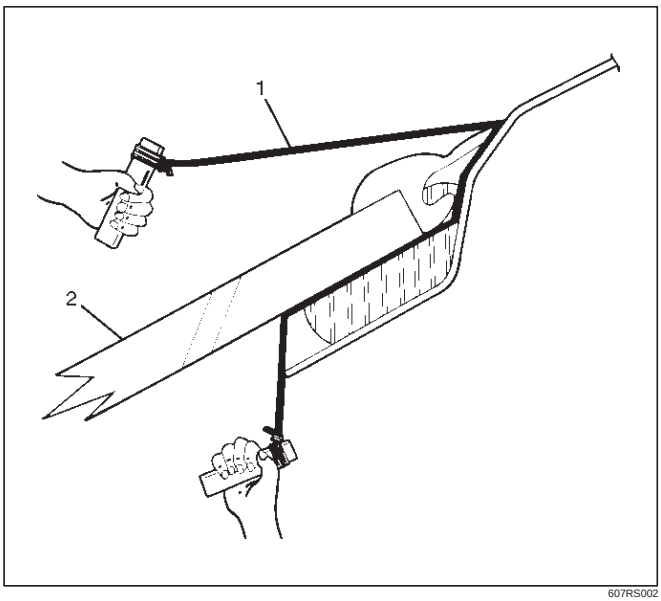

607RS002

- Use a pair of needle nose pliers to insert the other end of the piano wire through the adhesive caulking material at the edge of the windshield glass.
- Secure the other end of the piano wire to another piece of wood.
- With the aid of an assistant, carefully move the piano wire with a sawing motion to cut through the adhesive caulking material around the entire circumference of the windshield glass.
- Clean the remaining adhesive caulking material from the area of the body which holds the windshield.

8. Remove windshield upper moulding.
   - Taking notice of the adhesive tape, and peel the moulding off the windshield upper portion.
9. Remove moulding clip.
10. Remove spacer.

Installation

1. Install the spacer (1).
   - Clean the bonding surfaces of both the windshield and the body panel.
   - When installing the spacers, align the lower side spacer to the R stop of the body panel and the side spacer to the end of the body panel. Be sure to always use a new spacer.

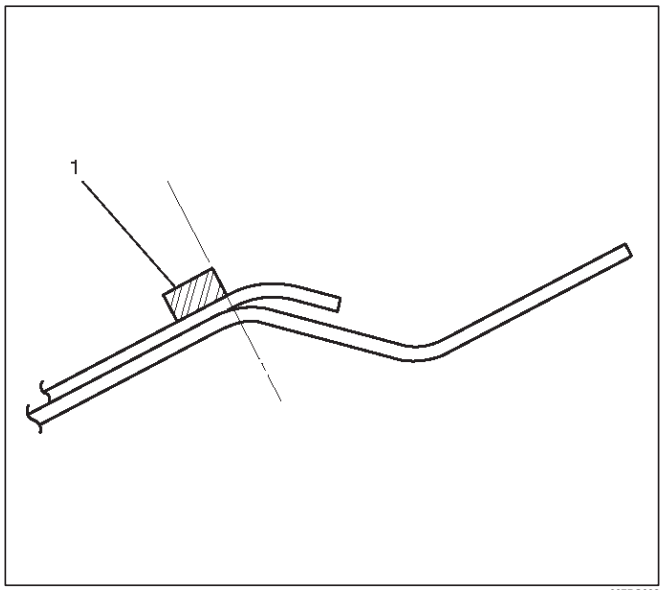

607RS003

- Be absolutely sure to apply glass primer and body primer to the body panel as shown in the illustration.

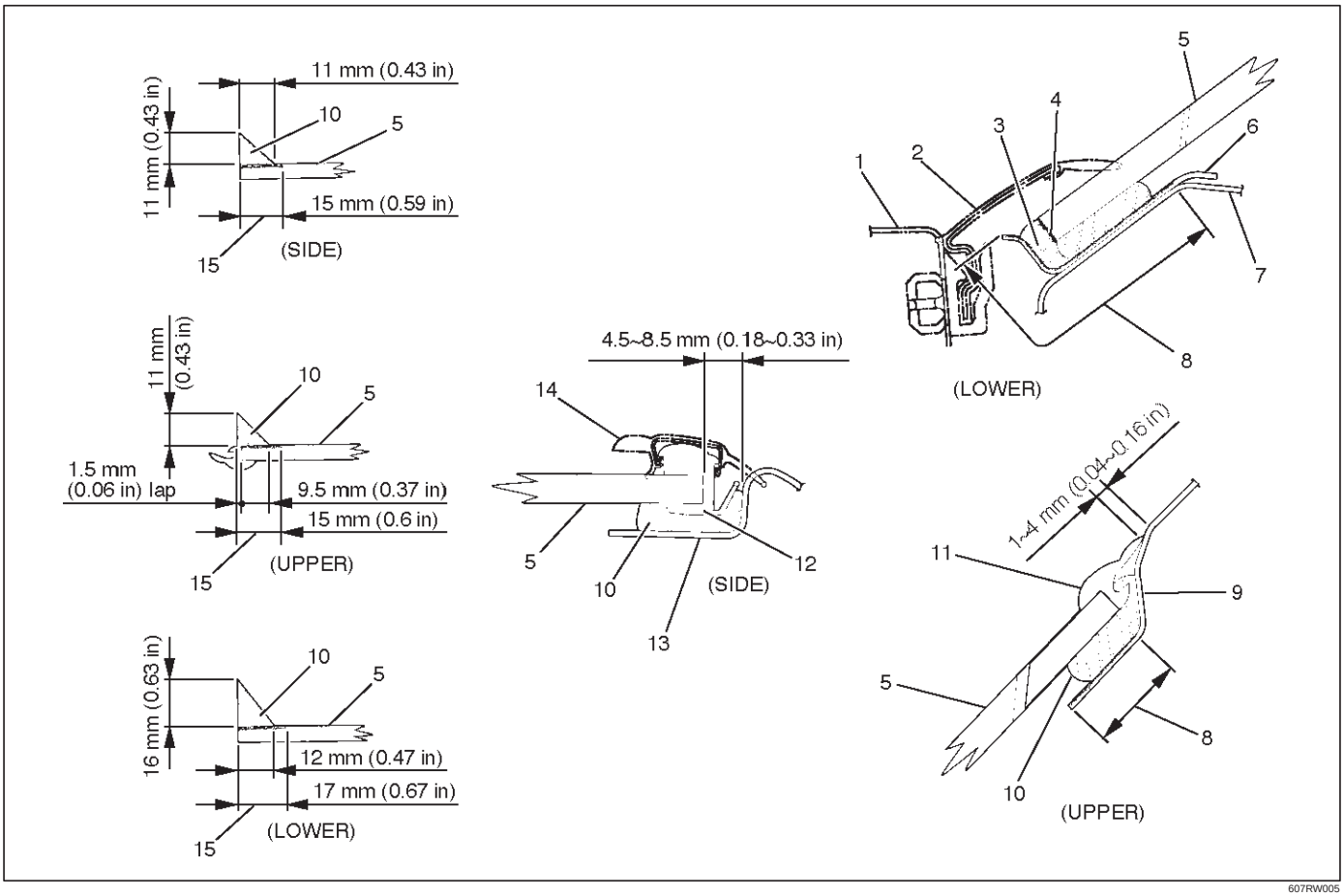

607RW005

Legend

(1) Front Cowl Cover
(2) Windshield Lower Moulding
(3) The portion of the cowl upper rail flange where sealing adhesive is additionally filled
(4) Apply primer to the glass and portion where sealing adhesive is additionally filled
(5) Windshield
(6) Cowl Upper Rail
(7) Cowl Upper Panel
(8) Body Primer
(9) Roof Panel
(10) Sealing Adhesive
(11) Windshield Upper Moulding
(12) Moulding Clip
(13) Front Pillar Outer Panel
(14) Windshield Side Moulding
(15) Sealing Adhesive

2. Install the moulding clip (2).
   - Install new moulding clips to the fixed position of the windshield (3).
   - Always use new moulding clips (4).

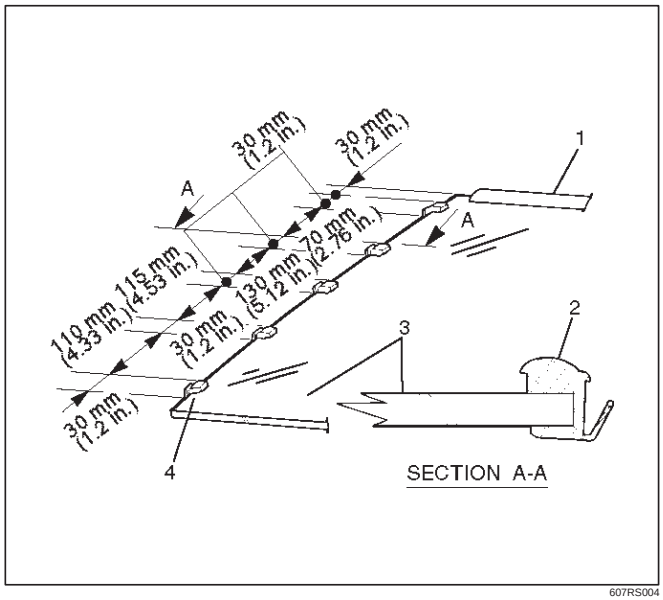

607RS004

3. Install the windshield upper moulding (1).
   - Peel off the adhesive tape (2) and install the moulding to the fixed position of the windshield (3).
   - Always use new upper moulding (1).

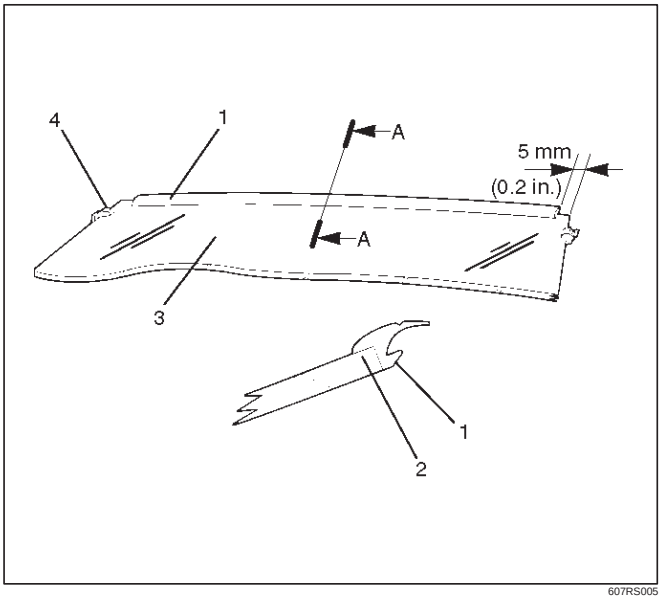

607RS005

4. Install the windshield.

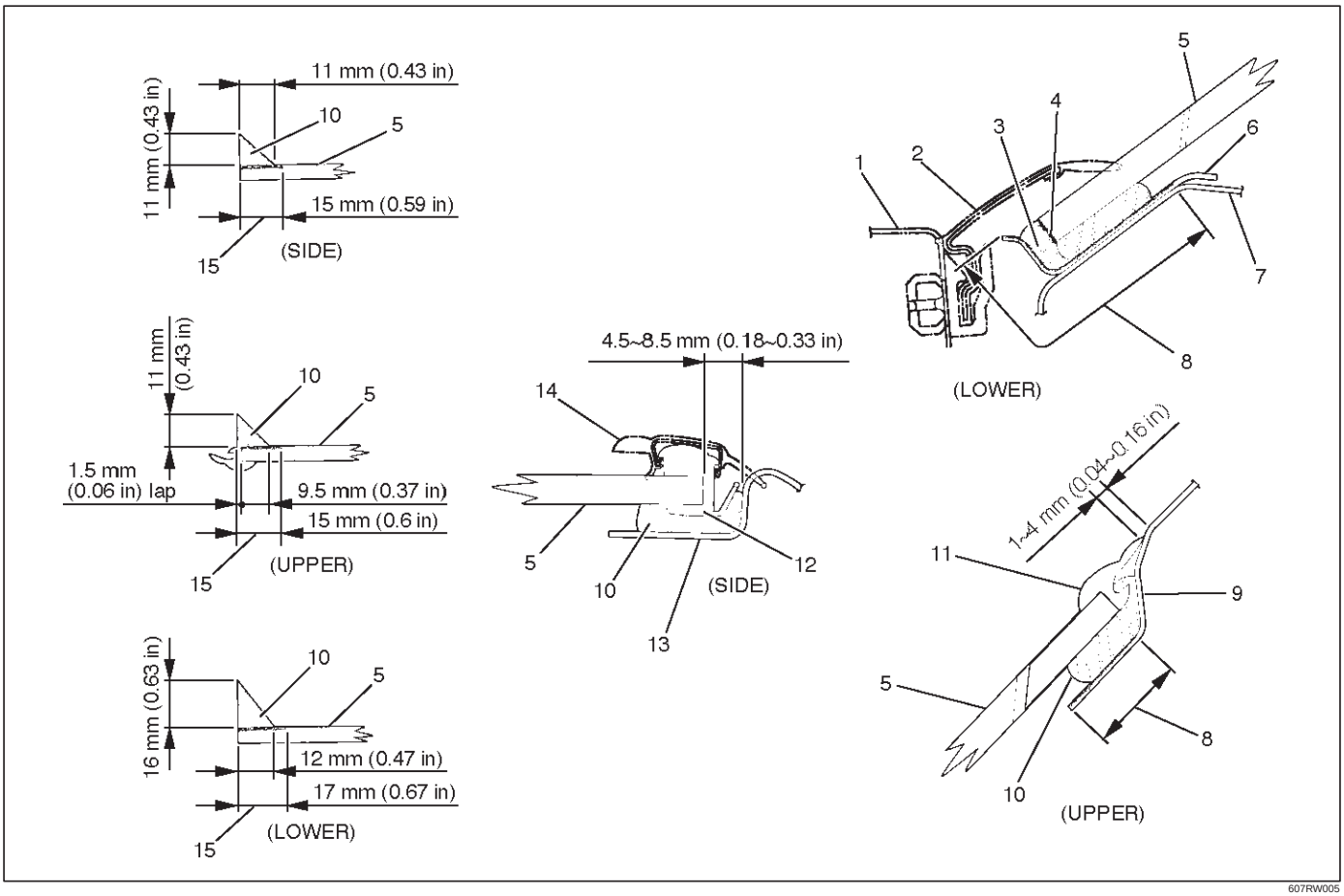

607RW005

Legend

(1) Front Cowl Cover
(2) Windshield Lower Moulding
(3) The portion of the cowl upper rail flange where sealing adhesive is additionally filled
(4) Apply primer to the glass and portion where sealing adhesive is additionally filled
(5) Windshield
(6) Cowl Upper Rail
(7) Cowl Upper Panel
(8) Body Primer
(9) Roof Panel
(10) Sealing Adhesive
(11) Windshield Upper Moulding
(12) Moulding Clip
(13) Front Pillar Outer Panel
(14) Windshield Side Moulding
(15) Sealing Adhesive

5. Install the windshield side seal.
6. Install the windshield support (2).

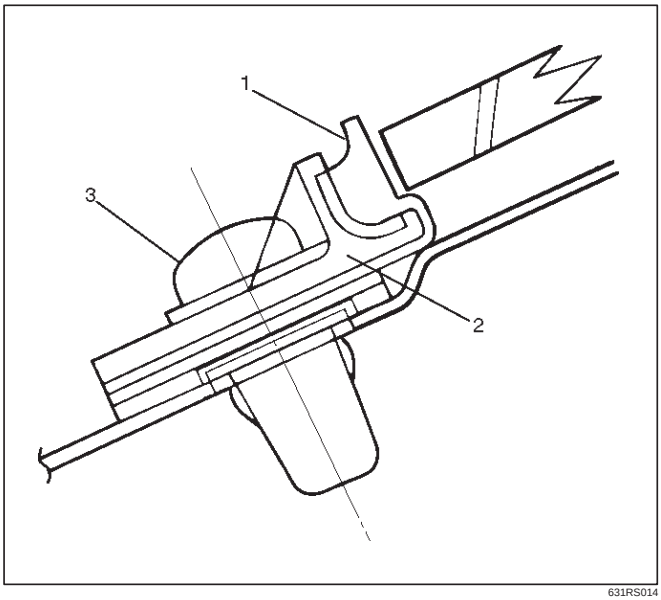

631RS014

- Apply a sealing adhesive to the circumference of the windshield.
- Apply the sealing adhesive to the frange portion of the cowl upper rail.
- Adjust the gap clearance of the windshield.
- Install the windshield to the body panel by applying pressure to the windshield.
- Cure the adhesive at a temperature of 20~30˚C (68~86˚F) for 24 hours.
- Check that the windshield does not leak water.

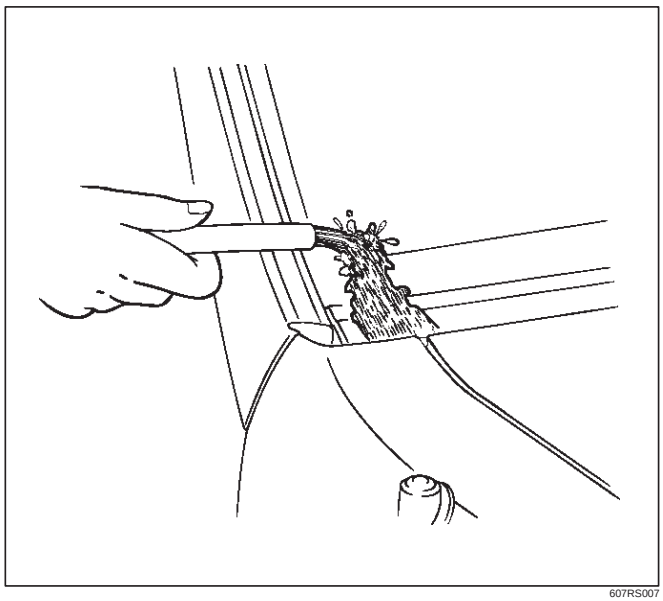
607RS007

7. Install the windshield side moulding.
   - Insert the windshield (5) side moulding (1) into the moulding clip (2).

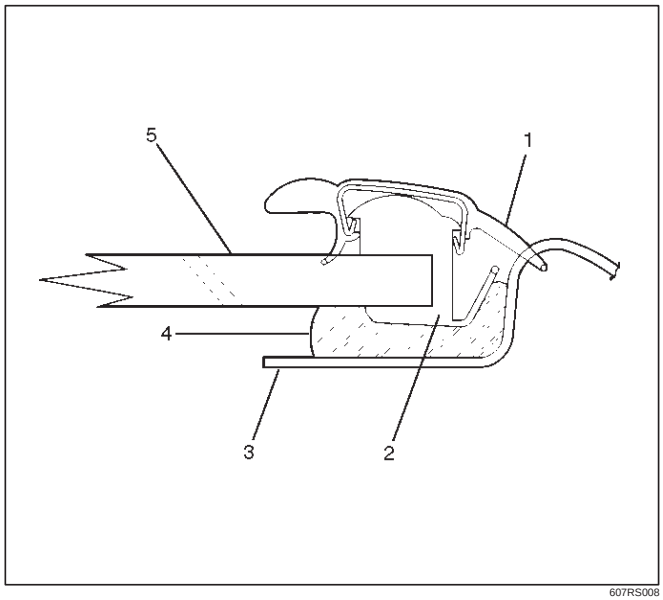

607RS008

   - Take care not to damage the side moulding when you install it.
8. Install the front cowl cover.
9. Install the windshield wiper.

Rear Quarter Side Glass

Parts Location

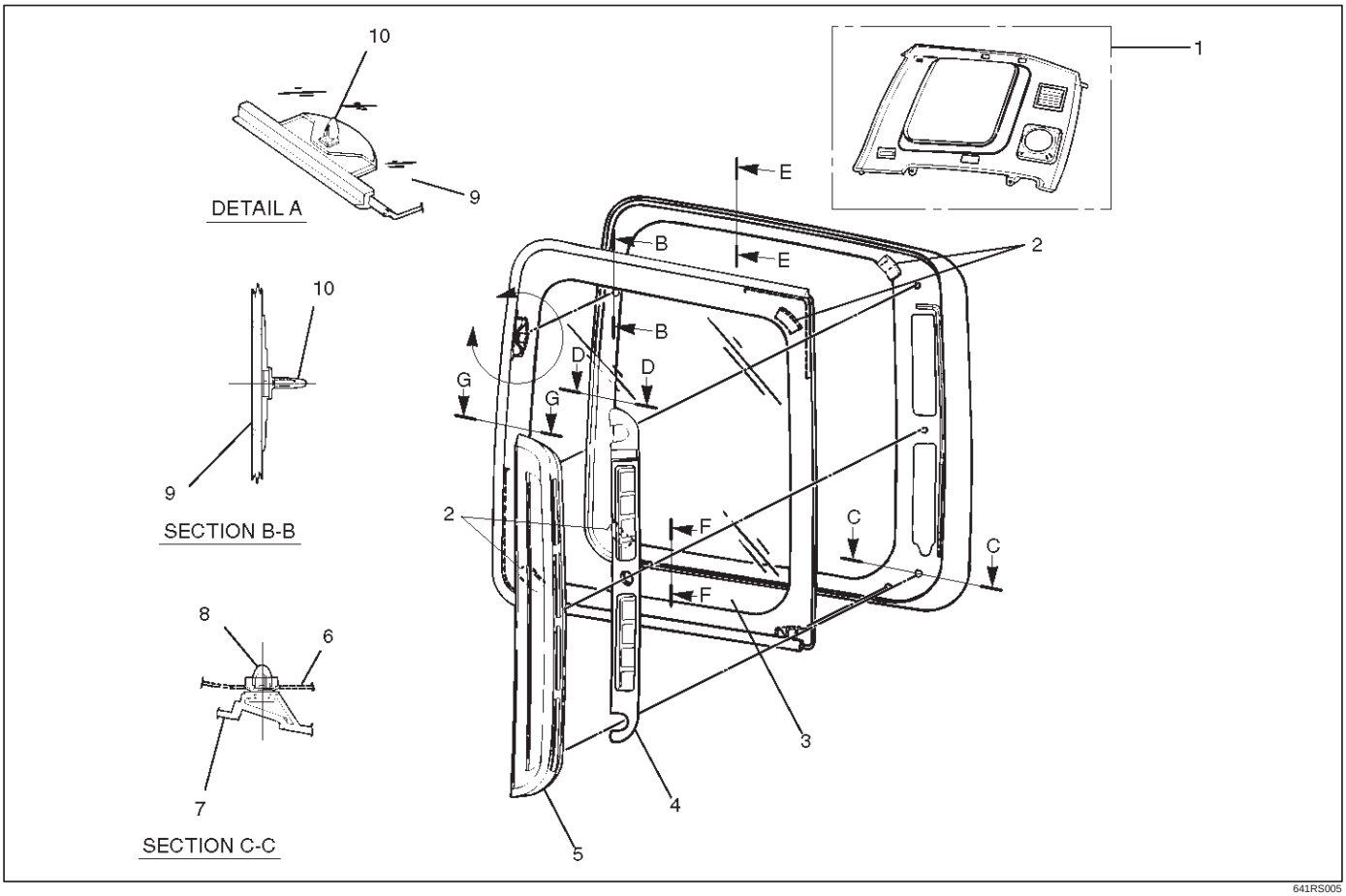

641RS005

Legend

(1) Rear Quarter Upper Trim Panel
(2) Fastener
(3) Rear Quarter Side Glass
(4) Valve Assembly
(5) Ventilation Assembly
(6) Side Outer Panel
(7) Ventilation Assembly
(8) Ventilation Fixing Clip
(9) Rear Quarter Side
(10) Glass Fixing Clip

Removal

1. Disconnect the battery ground cable.
2. Remove rear quarter upper trim panel.
   - Refer to Laggage Side and Quarter Upper Trim Cover in Exterior / Interior Trim section.
3. Remove ventilation assembly.
4. Remove valve assembly.
   - Refer to Ventilation Assembly in Exterior / Interior Trim section.
5. Remove rear quarter side glass.
   - Refer to Windshield in this section.

Installation

1. Install the rear quarter side glass.

- Clean the bonding surfaces of both the glass and the body panel.
- Install the fasteners (1) to the fixed positions of the glass and the body panel.

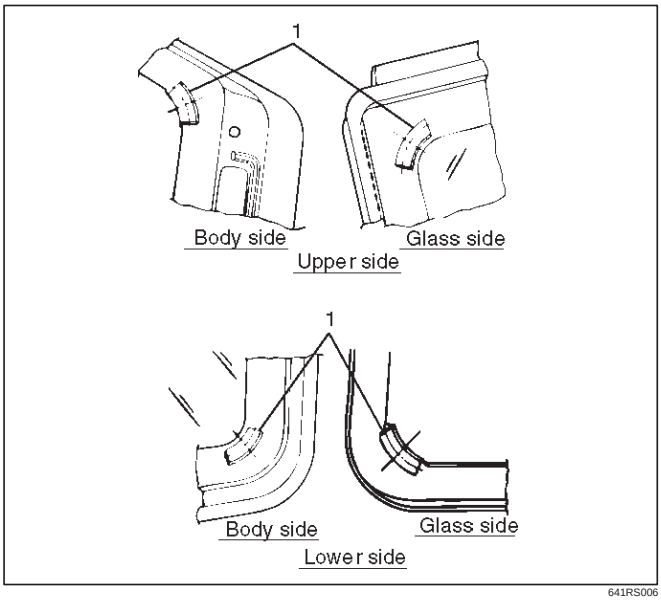

641RS006

- Always use new fasteners.
- Be absolutely sure to apply glass primer (2) to the side glass.
- Apply a sealing adhesive (1) to the glass circumference.

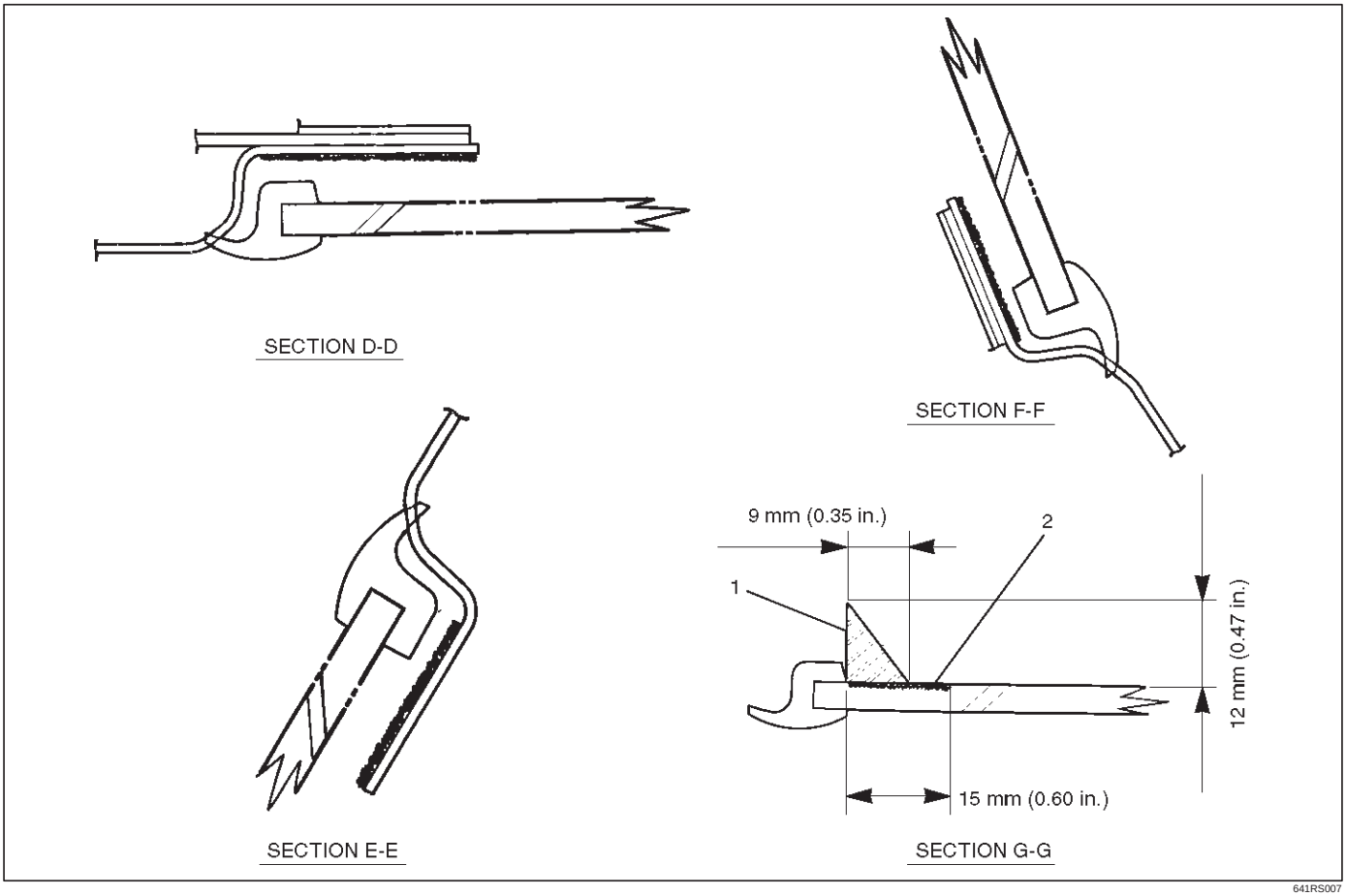

641RS007

- Apply PVC primer (4) to the A clip portion.

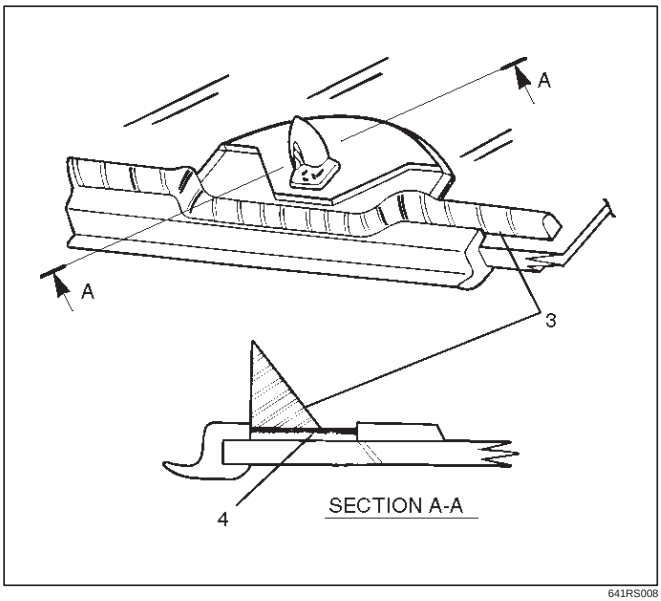

641RS008

- Insert the fixing clip on the side glass into the body panel.
- Push the side glass against the body panel and bond them.
- Cure the adhesive at a temperature of 20~30˚C (68~86˚F) for 24 hours.
- Check that the rear quarter side glass does not leak water.

2. Install the valve assembly.
3. Install the ventilation assembly.
4. Install the rear quarter upper trim panel.

Tailgate Glass

Parts Location

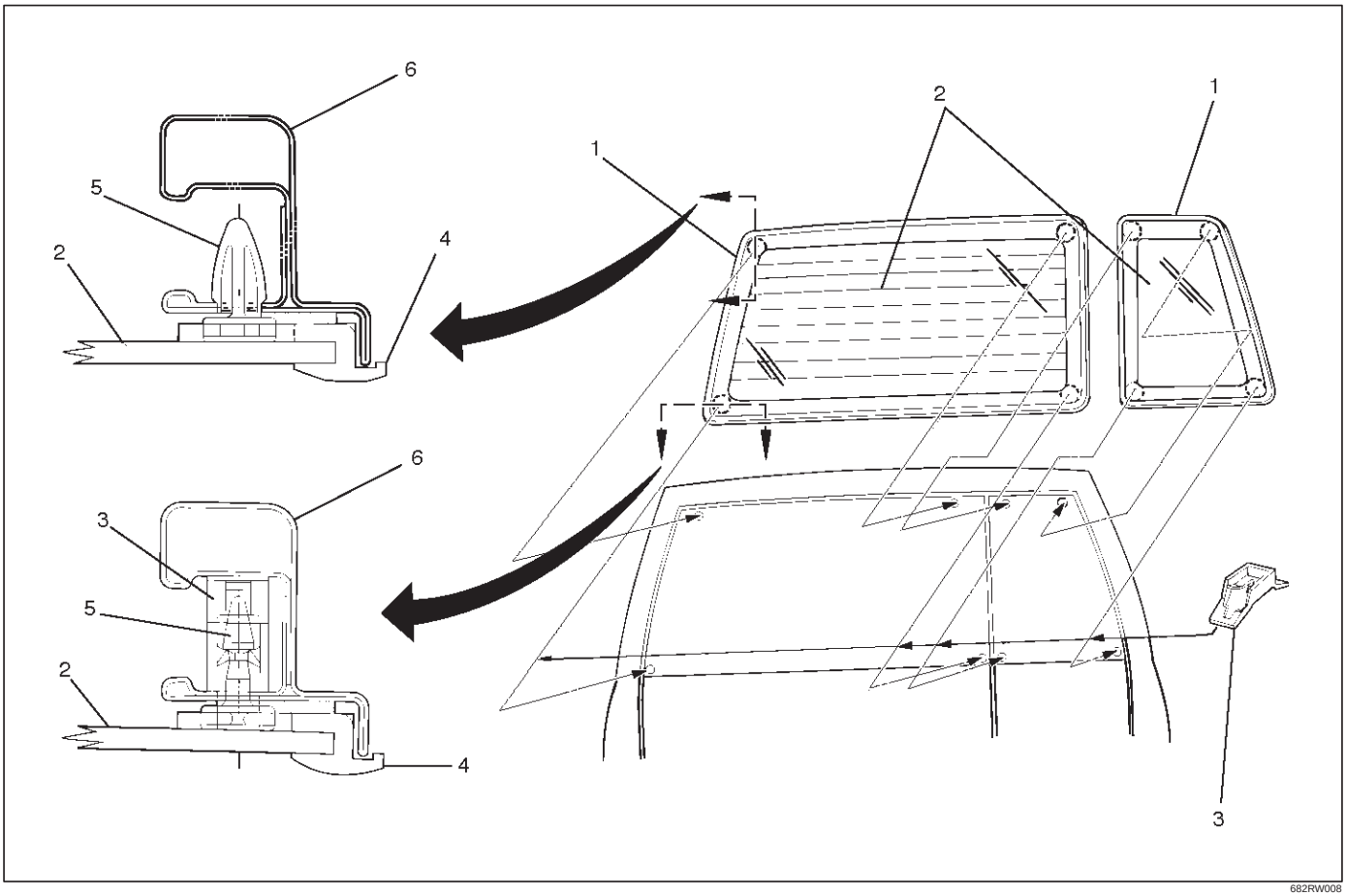

682RW008

Legend

(1) Tailgate Glass Moulding
(2) Tailgate Glass
(3) Tailgate Glass Clip
(4) Glass Moulding
(5) Clip
(6) Body Panel

Removal

1. Remove battery ground cable.
2. Remove tailgate trim panel.
3. Remove tailgate sash trim cover (RH only).
   - Refer to Tailgate Sash Trim Cover in this section.
4. Remove the tailgate frame cover (LH only).
   - Refer to Tailgate Frame Cover (LH) in this section.
5. Remove tailgate glass.
   - Refer to Windshield in this section.

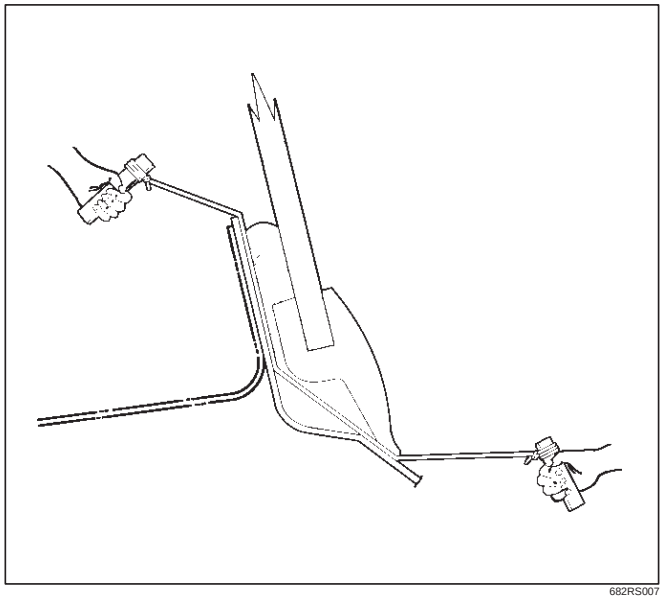

682RS007

6. Remove tailgate glass clip.

Installation

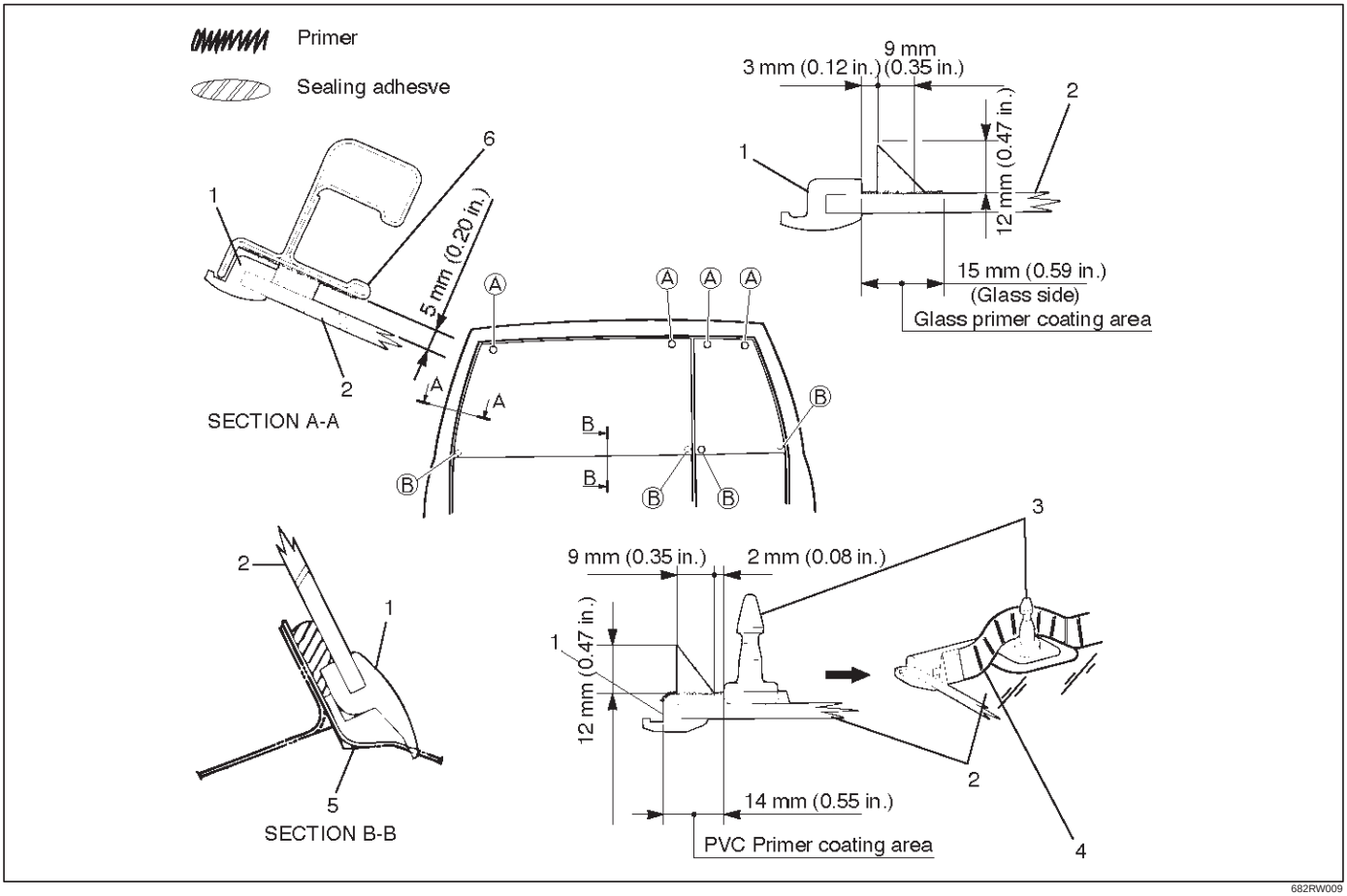

Legend

(1) Glass Moulding
(2) Tailgate Glass
(3) Clip
(4) Sealing Adhesive
(5) Body Panel
(6) Tailgate Frame

1. Install the tailgate glass clip.

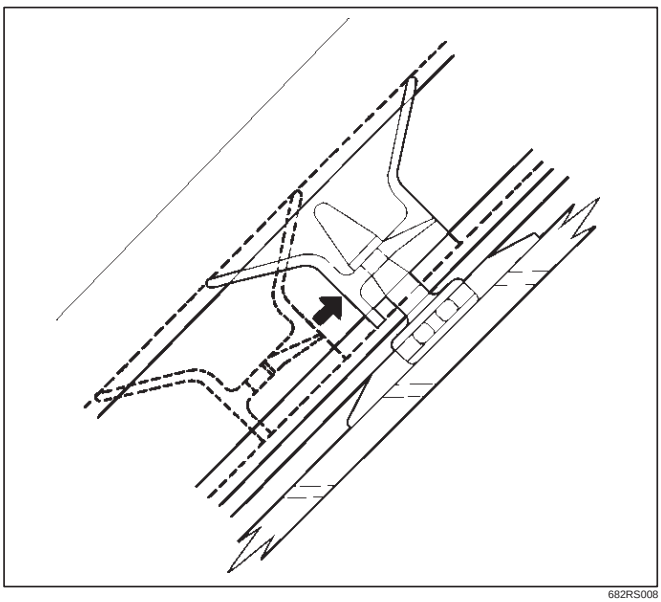

2. Install the tailgate glass (2).
   - Clean the bonding surfaces of both the tailgate glass and the tailgate panel.
   - Be absolutely sure to apply glass primer to the tailgate glass and PCV primer to the glass moulding (1).
   - Apply a sealing adhesive to the circumference of the tailgate glass as shown.
   - Insert the clip of the tailgate glass A portion into the tailgate panel hole to position the glass.
   - Install the new tailgate glass clip to the clip of the tailgate glass B portion while sliding it, and bond the glass to the tailgate panel by applying pressure.

     Always use new tailgate glass clips.
   - Cure the bonding at a temperature of 20~30˚C (68~86˚F) for 24 hours.
   - Check that the tailgate glass does not leak water.

Main Data and Specifications

Torque Specifications

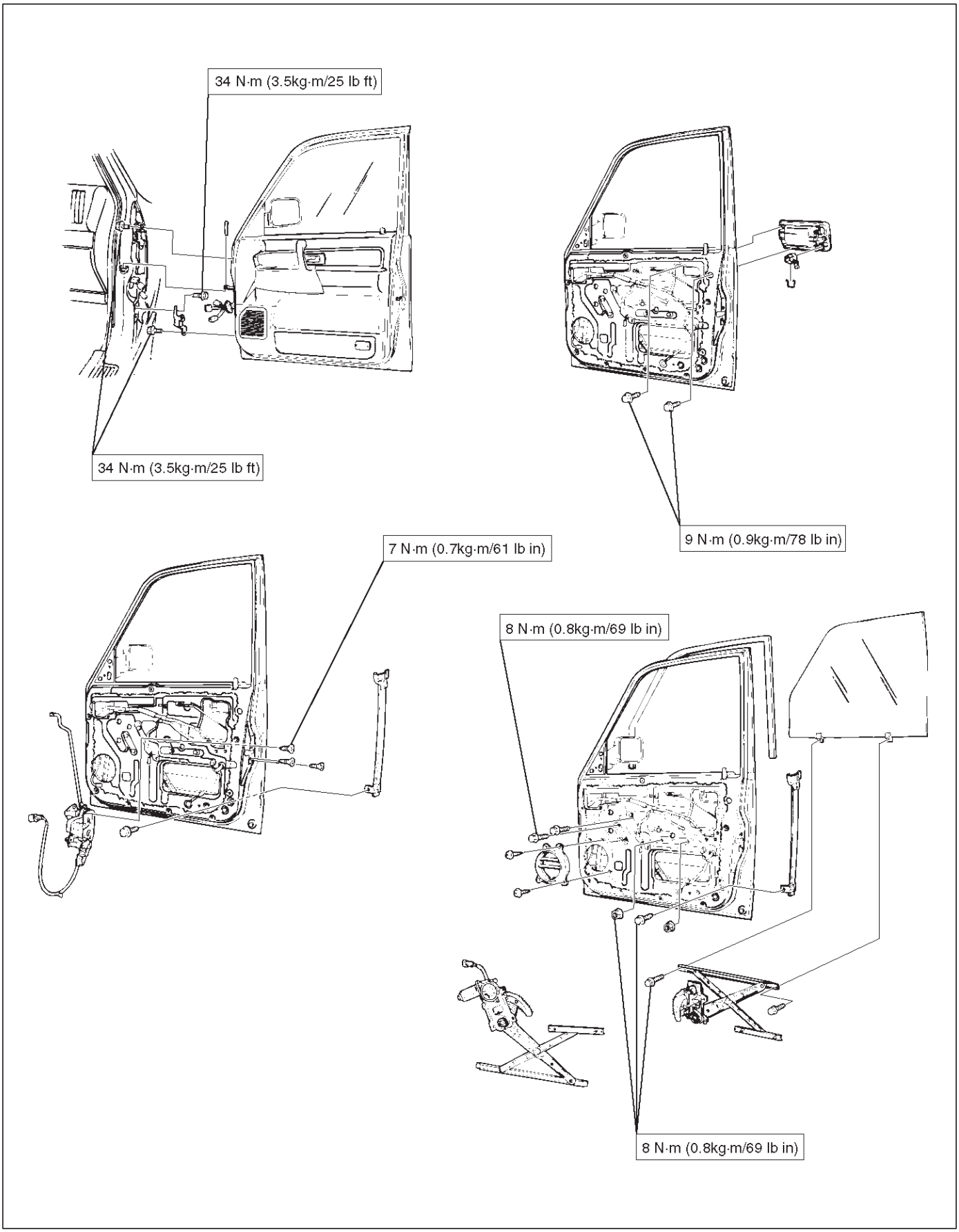

E10RW020

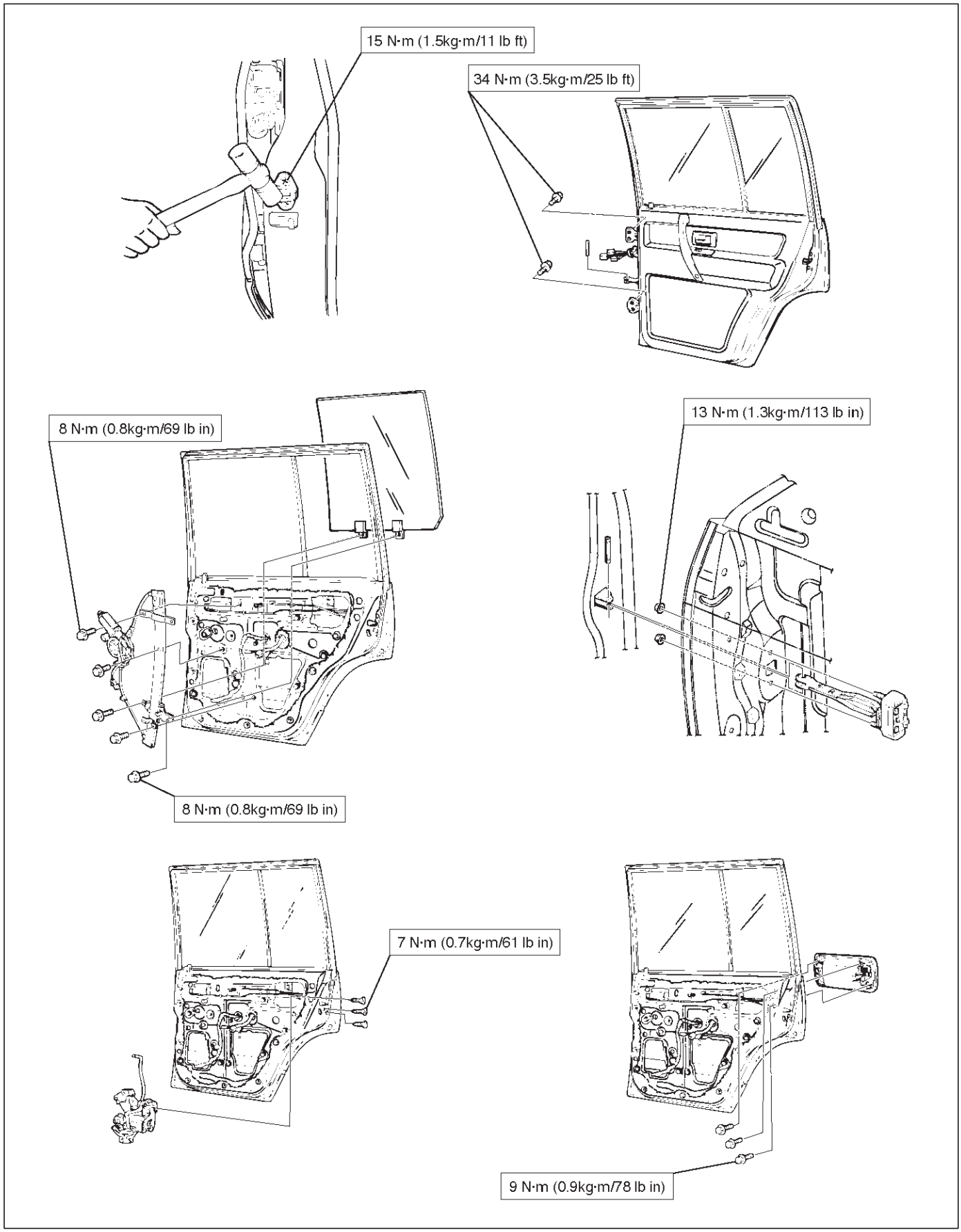
15 N·m (1.5kg·m/11 lb ft)
34 N·m (3.5kg·m/25 lb ft)
8 N·m (0.8kg·m/69 lb in)
13 N·m (1.3kg·m/113 lb in)
8 N·m (0.8kg·m/69 lb in)
7 N·m (0.7kg·m/61 lb in)
9 N·m (0.9kg·m/78 lb in)

E10RW019

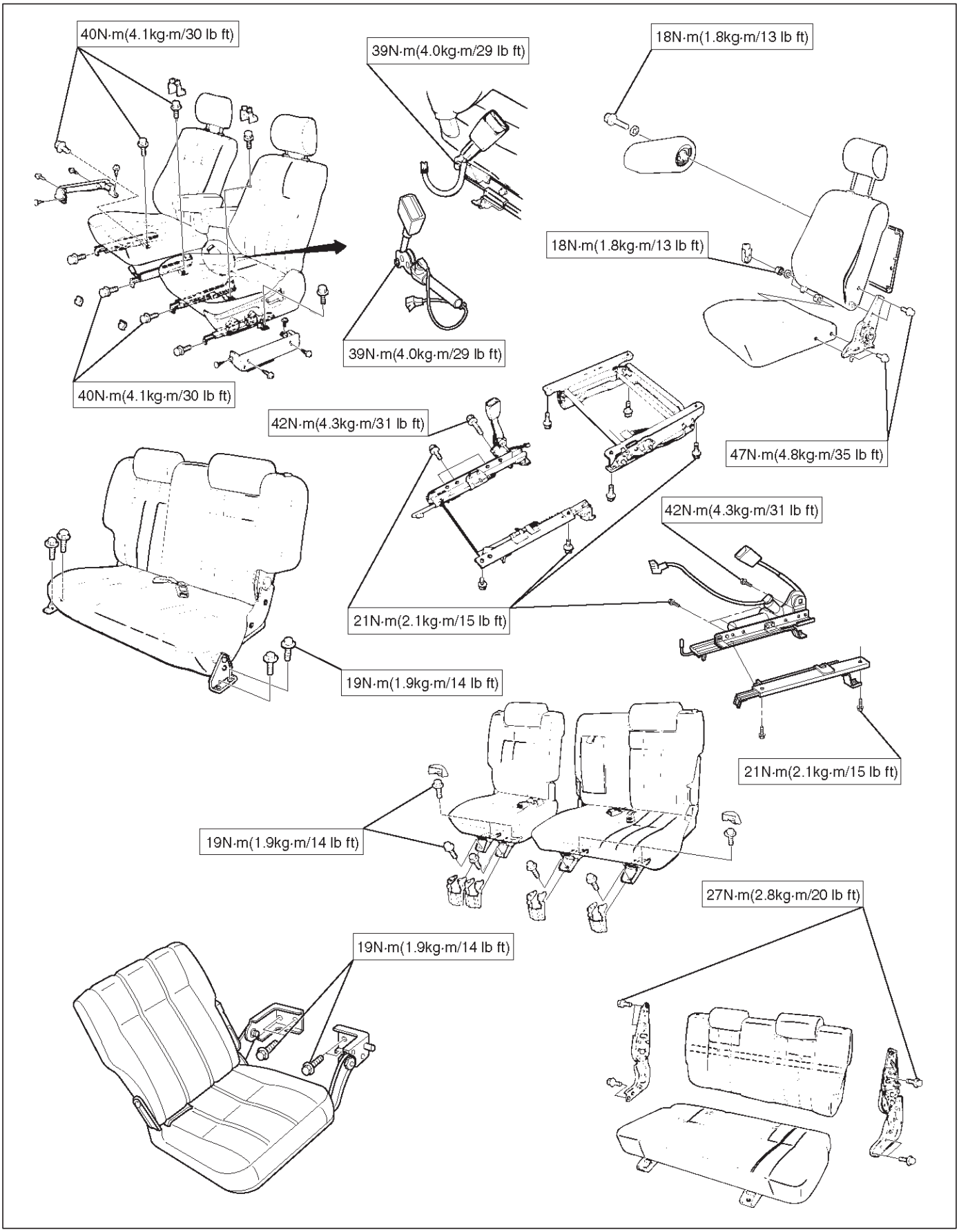
40N·m(4.1kg·m/30 lb ft)
39N·m(4.0kg·m/29 lb ft)
18N·m(1.8kg·m/13 lb ft)
18N·m(1.8kg·m/13 lb ft)
39N·m(4.0kg·m/29 lb ft)
40N·m(4.1kg·m/30 lb ft)
42N·m(4.3kg·m/31 lb ft)
47N·m(4.8kg·m/35 lb ft)
42N·m(4.3kg·m/31 lb ft)
21N·m(2.1kg·m/15 lb ft)
19N·m(1.9kg·m/14 lb ft)
21N·m(2.1kg·m/15 lb ft)
19N·m(1.9kg·m/14 lb ft)
27N·m(2.8kg·m/20 lb ft)
19N·m(1.9kg·m/14 lb ft)

E10RX007

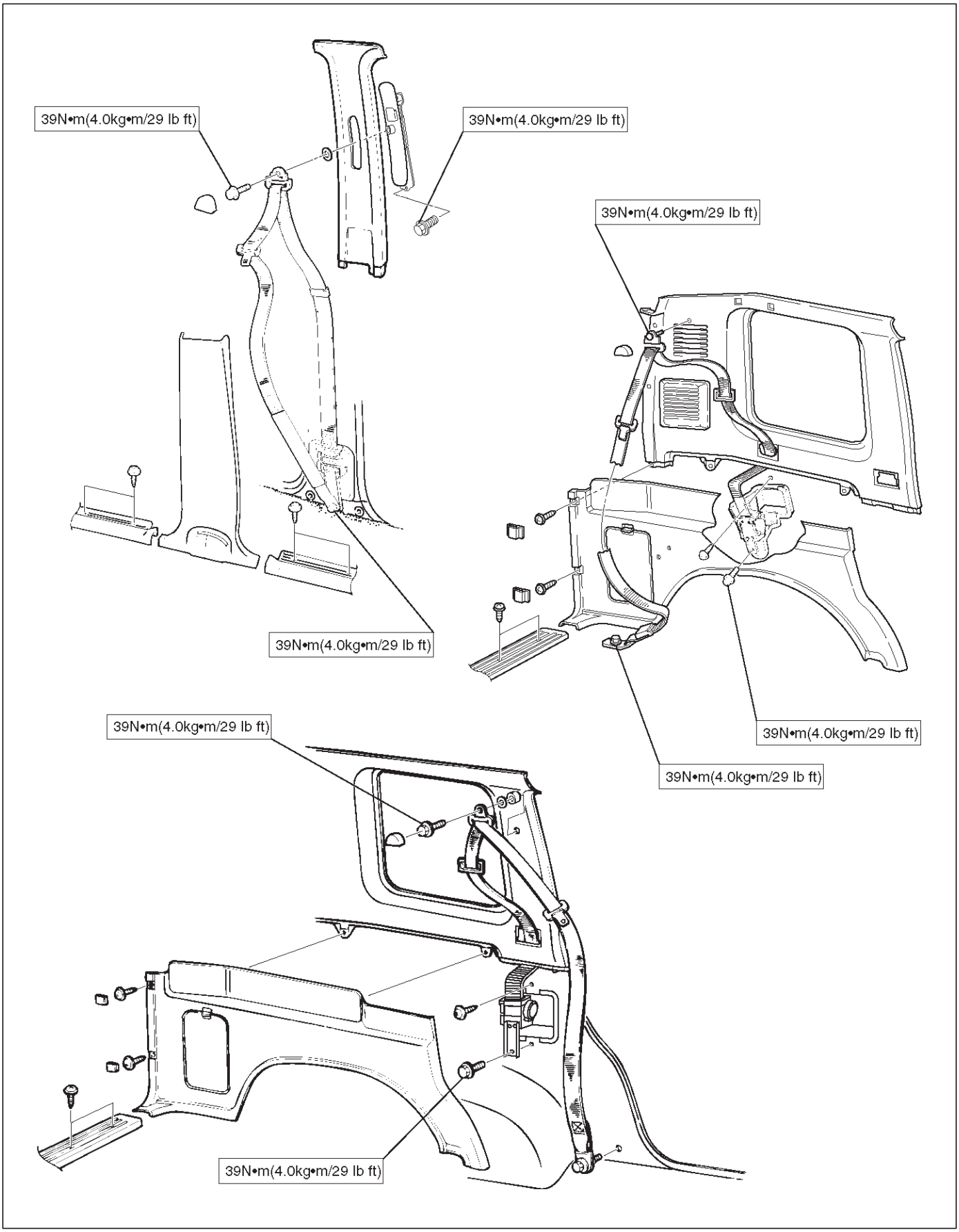
39N•m(4.0kg•m/29 lb ft)
39N•m(4.0kg•m/29 lb ft)
39N•m(4.0kg•m/29 lb ft)
39N•m(4.0kg•m/29 lb ft)
39N•m(4.0kg•m/29 lb ft)
39N•m(4.0kg•m/29 lb ft)
39N•m(4.0kg•m/29 lb ft)
39N•m(4.0kg•m/29 lb ft)

E10RW021

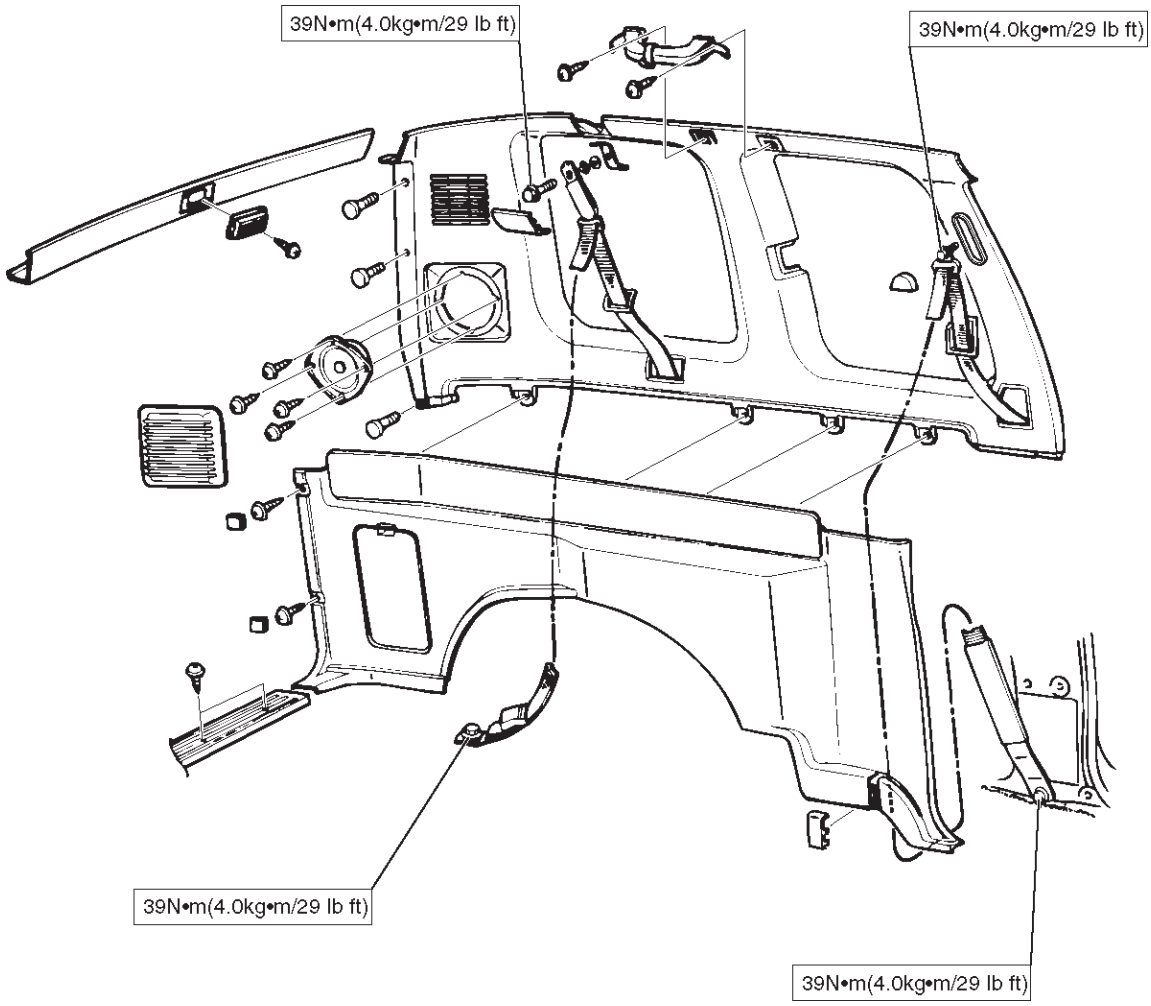
39N•m(4.0kg•m/29 lb ft)
39N•m(4.0kg•m/29 lb ft)
39N•m(4.0kg•m/29 lb ft)
39N•m(4.0kg•m/29 lb ft)

E10RW028

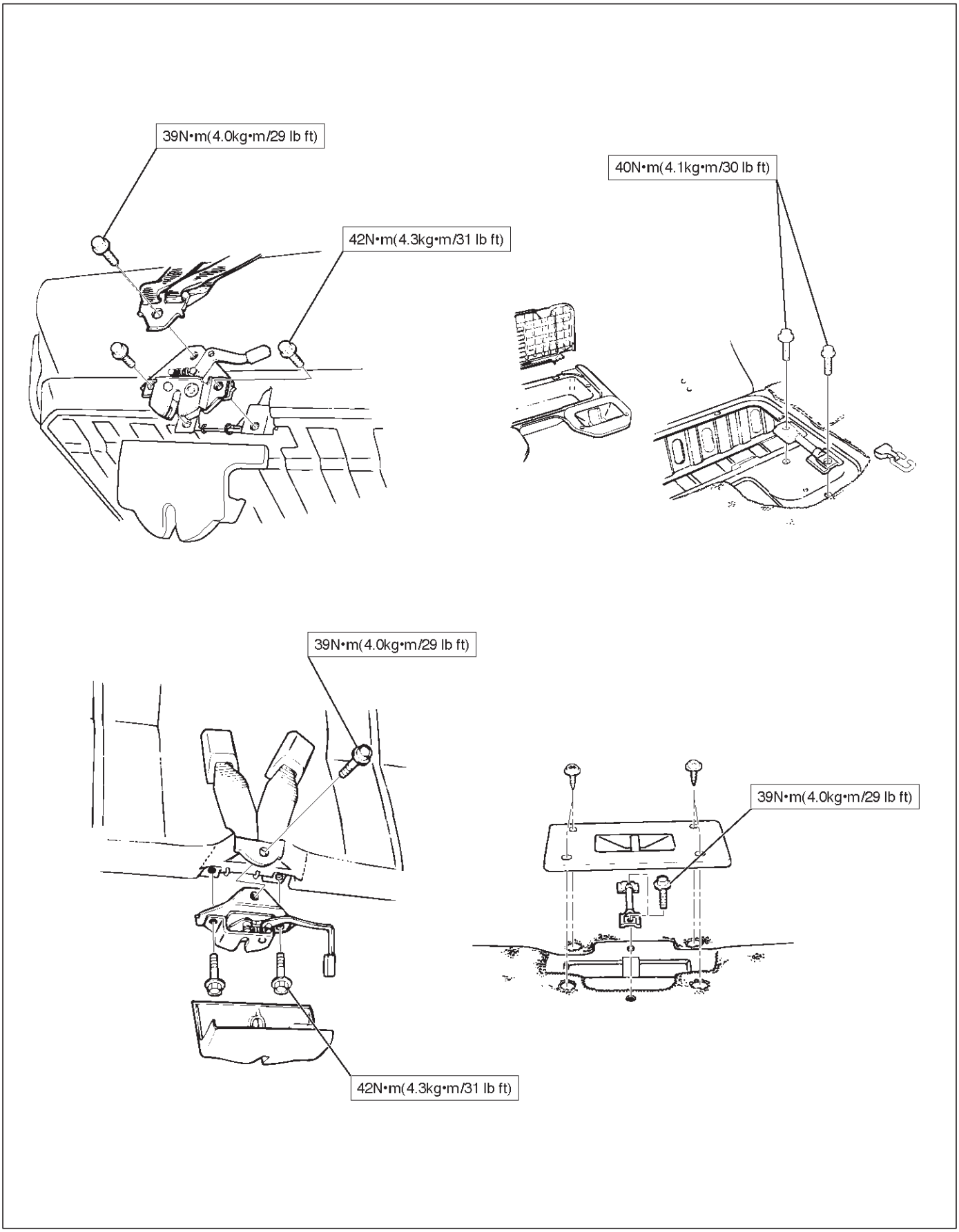
39N•m(4.0kg•m/29 lb ft)
42N•m(4.3kg•m/31 lb ft)
40N•m(4.1kg•m/30 lb ft)
39N•m(4.0kg•m/29 lb ft)
39N•m(4.0kg•m/29 lb ft)
42N•m(4.3kg•m/31 lb ft)

E10RW029

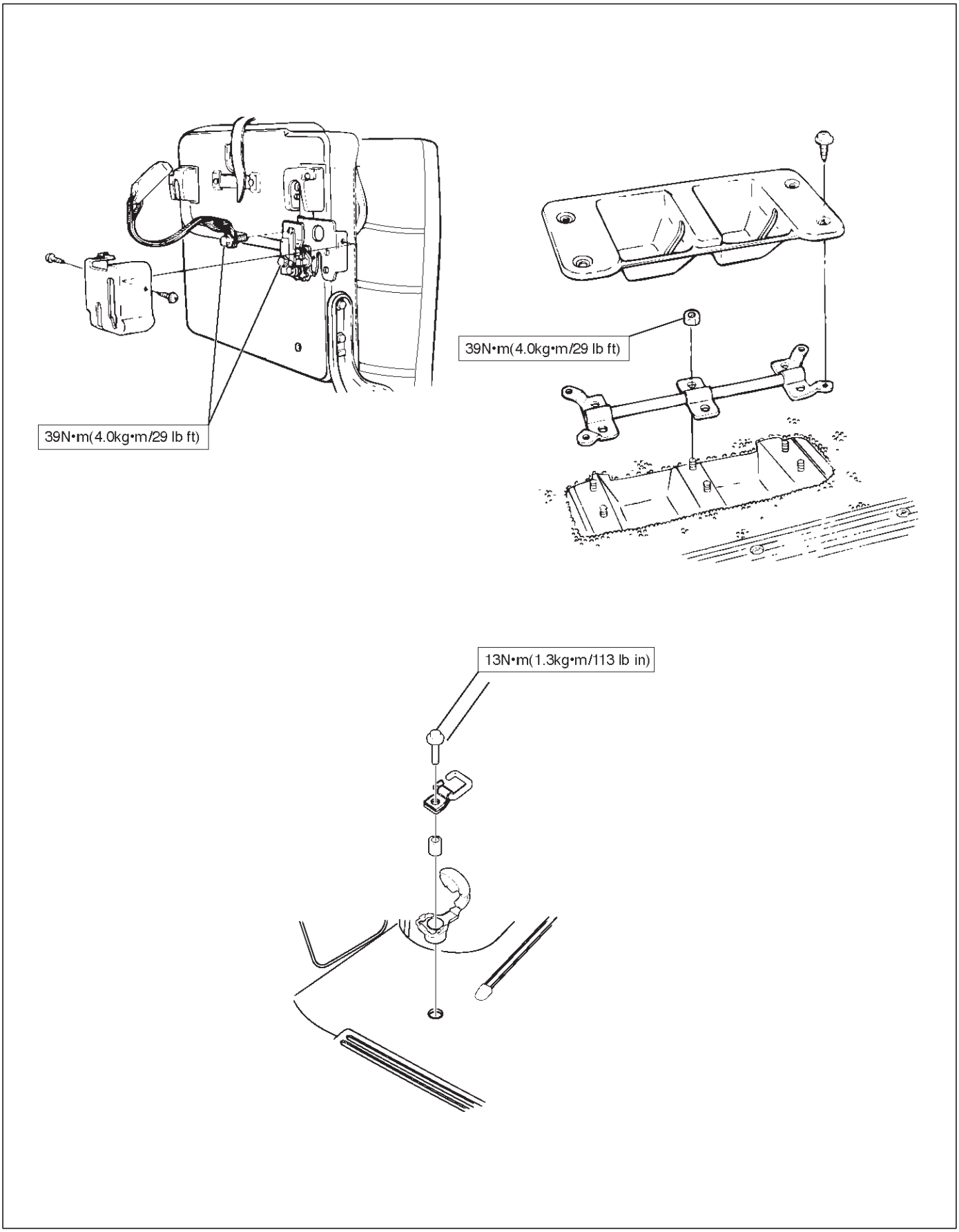

E10RW027

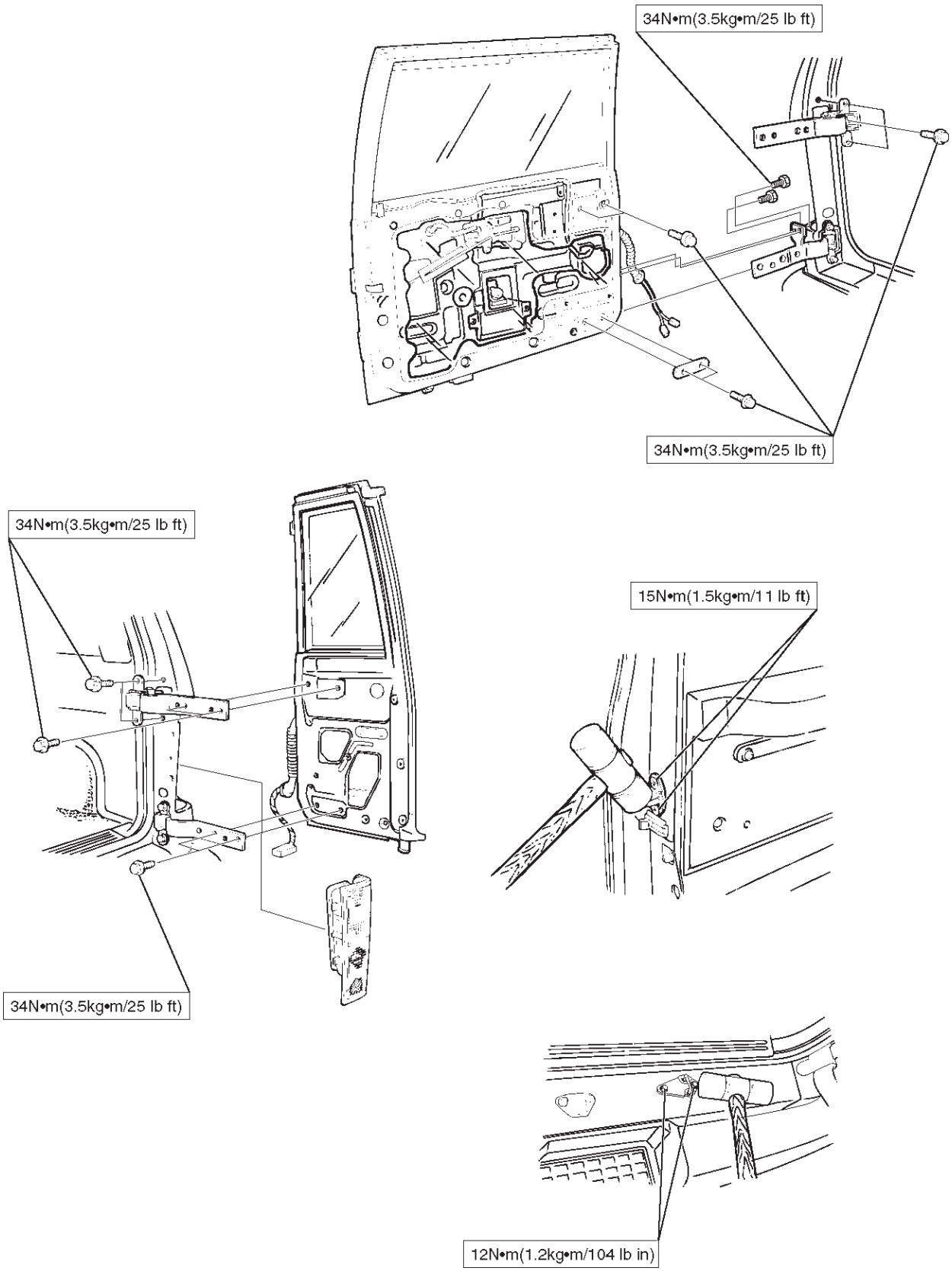
34N•m(3.5kg•m/25 lb ft)
34N•m(3.5kg•m/25 lb ft)
34N•m(3.5kg•m/25 lb ft)
15N•m(1.5kg•m/11 lb ft)
34N•m(3.5kg•m/25 lb ft)
12N•m(1.2kg•m/104 lb in)

E10RW024

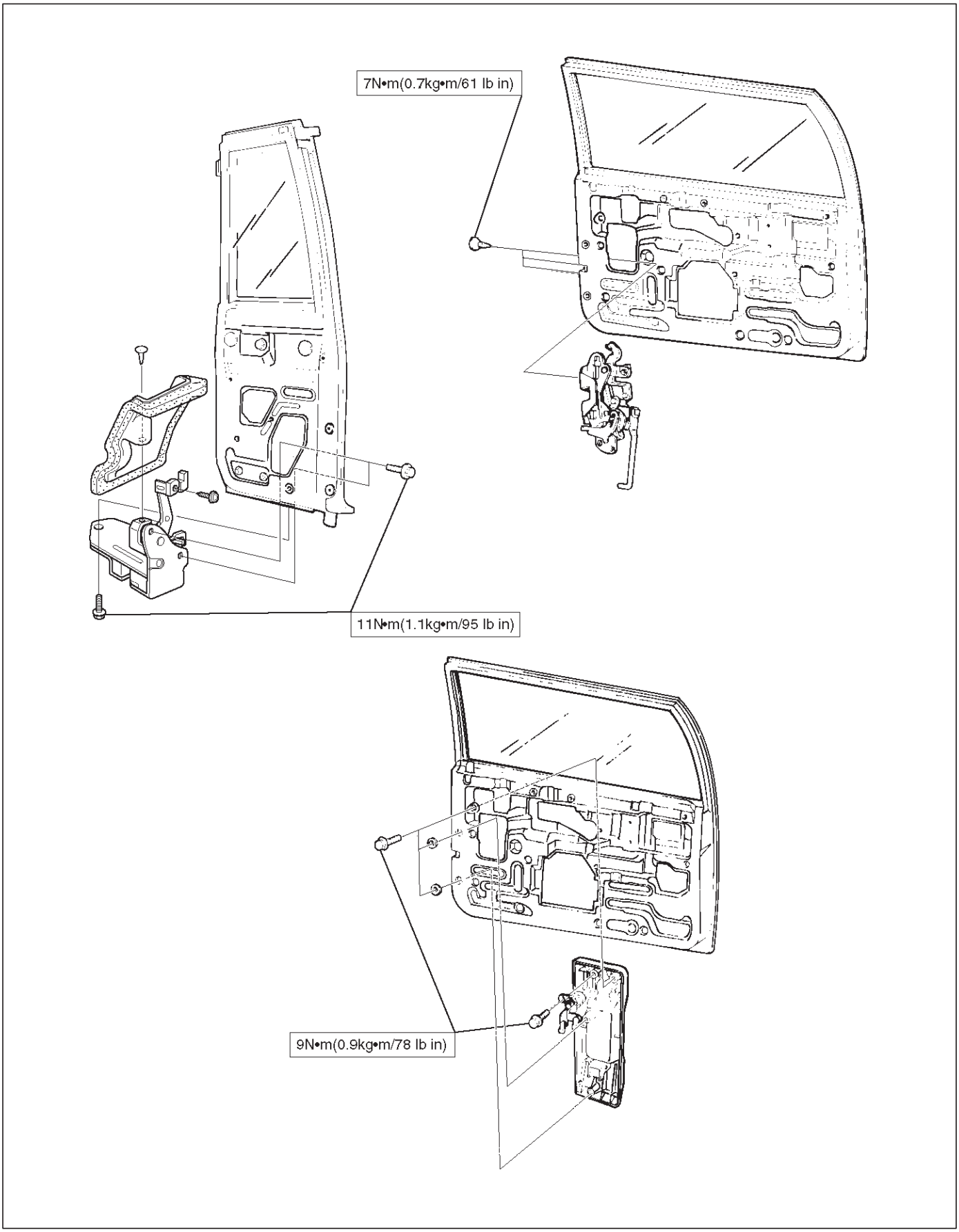

E10RW025

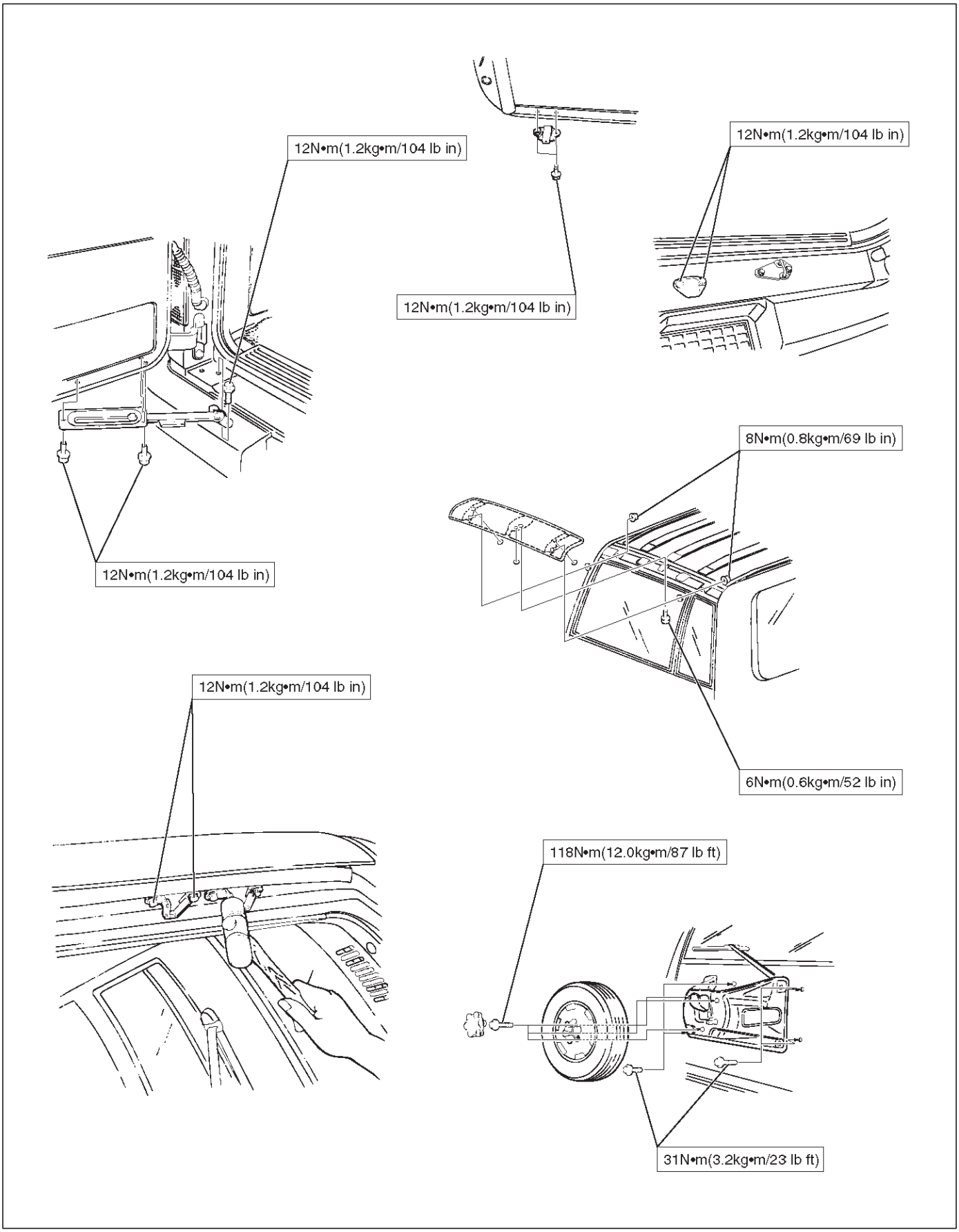
12N•m(1.2kg•m/104 lb in)
12N•m(1.2kg•m/104 lb in)
12N•m(1.2kg•m/104 lb in)
12N•m(1.2kg•m/104 lb in)
8N•m(0.8kg•m/69 lb in)
6N•m(0.6kg•m/52 lb in)
12N•m(1.2kg•m/104 lb in)
118N•m(12.0kg•m/87 lb ft)
31N•m(3.2kg•m/23 lb ft)

E10RW026

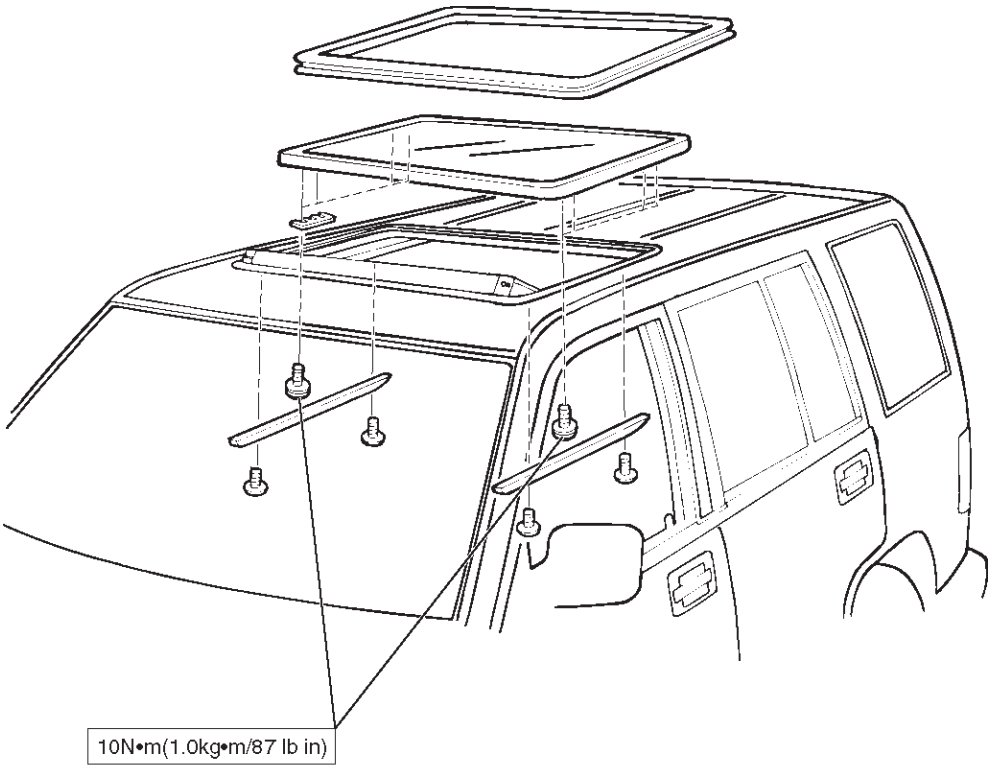

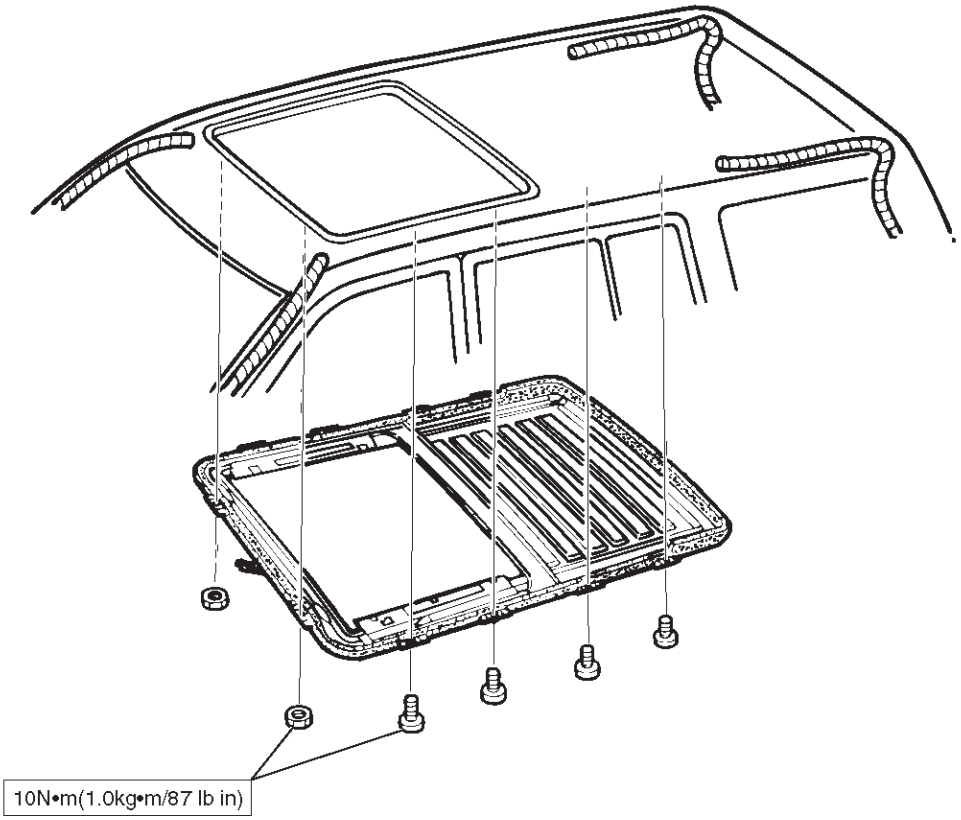

E10RW022

Special Tools

ILLUSTRATION	**TOOL NO.** TOOL NAME
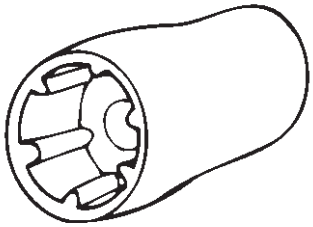	5–8840–2095–0 **(J–34355)** Spare Tire Carrior Bolt Wrench

BODY AND ACCESSORIES

SEATS

CONTENTS

Service Precaution 8G–1
Front Seat Assembly 8G–2
Front Seat Assembly and Associated Parts 8G–2
Removal 8G–2
Installation 8G–3
Disassembled View (LWB) 8G–3
Disassembly 8G–4
Reassembly 8G–5
Disassembled View (SWB) 8G–6
Disassembly 8G–6
Reassembly 8G–8
Power Seat Assembly 8G–9
General Description 8G–9
Disassembled View 8G–9
Disassembly 8G–10
Reassembly 8G–12
Power Seat Switch 8G–12
Removal 8G–12
Installation 8G–12
Front Tilt Motor / Rear Tilt Motor / Slide Motor / Recliner Motor 8G–13
Parts Location 8G–13
Removal and Installation 8G–13
Seat Heater System 8G–14
General Description 8G–14
Seat Heater Switch Removal and Installation 8G–14
Heat Unit Parts Location 8G–14
Heat Unit Removal and Installation 8G–14
Rear Seat Assembly 8G–15
Rear Seat Assembly and Associated Parts 8G–15
Removal 8G–15
Installation 8G–15
Disassembled View (Split Type) 8G–16
Disassembly (Split Type) 8G–17
Reassembly (Split Type) 8G–18
Disassembled View (SWB) 8G–19
Disassembly 8G–19
Reassembly 8G–20
Disassembled View (Bench Type) 8G–21
Disassembly (Bench Type) 8G–22
Reassembly (Bench Type) 8G–23
Third Seat Assembly 8G–23
Parts Location 8G–23
Removal 8G–23
Installation 8G–24
Disassembled View 8G–24
Disassembly 8G–25
Reassembly 8G–25
Rear Seat Foot Rest 8G–25
Rear Seat Foot Rest and Associated Parts 8G–25
Removal 8G–26
Installation 8G–26
Main Data and Specifications 8G–26

Service Precaution

WARNING: IF SO EQUIPPED WITH A SUPPLEMENTAL RESTRAINT SYSTEM (SRS), REFER TO THE SRS COMPONENT AND WIRING LOCATION VIEW IN ORDER TO DETERMINE WHETHER YOU ARE PERFORMING SERVICE ON OR NEAR THE SRS COMPONENTS OR THE SRS WIRING. WHEN YOU ARE PERFORMING SERVICE ON OR NEAR THE SRS COMPONENTS OR THE SRS WIRING, REFER TO THE SRS SERVICE INFORMATION. FAILURE TO FOLLOW WARNINGS COULD RESULT IN POSSIBLE AIR BAG DEPLOYMENT, PERSONAL INJURY, OR OTHERWISE UNNEEDED SRS SYSTEM REPAIRS.

CAUTION: Always use the correct fastener in the proper location. When you replace a fastener, use ONLY the exact part number for that application. ISUZU will call out those fasteners that require a replacement after removal. ISUZU will also call out the fasteners that require thread lockers or thread sealant. UNLESS OTHERWISE SPECIFIED, do not use supplemental coatings (Paints, greases, or other corrosion inhibitors) on threaded fasteners or fastener joint interfaces. Generally, such coatings adversely affect the fastener torque and the joint clamping force, and may damage the fastener. When you install fasteners, use the correct tightening sequence and specifications. Following these instructions can help you avoid damage to parts and systems.

Front Seat Assembly

Front Seat Assembly and Associated Parts

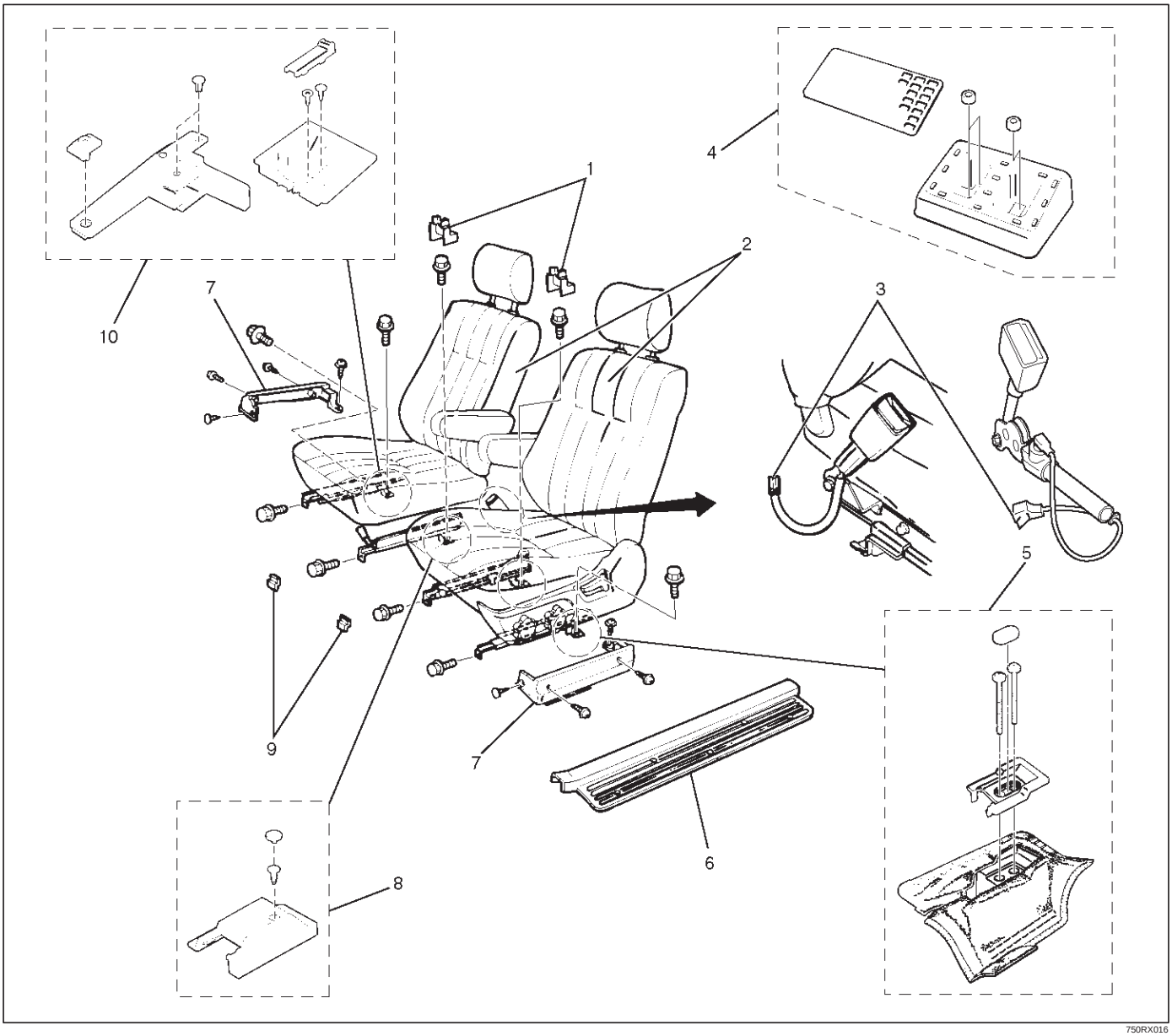

Legend

(1) Rear Cover
(2) Front Seat Assembly
(3) Seat Belt Warning Connector/Pretensioner Harness Connector
(4) Rear Seat Foot Rest (LWB)
(5) Seat Rail Cover (SWB)
(6) Door Sill Plate
(7) Riser Cover (LWB)
(8) Seat Slide Cover (SWB)
(9) Front Cover
(10) Seat Rail Cover and Hole Cover (SWB)

Removal

1. Disconnect the battery ground cable.
2. Remove the front cover.
3. Remove the rear cover.
   - Remove the cover fixing screw from the rear inner cover, if this model is equipped with the power seats.
4. Remove the door sill plate.
5. Remove the rear seat foot rest.
   - Refer to the Rear Seat Foot Rest in this section.
6. Remove the riser cover.
7. Remove the seat belt warning connector (Driver's side only) or pretensioner harness connector.
8. Remove the front seat assembly.
   - Disconnect the power seat connector, if this model is equipped with the power seats.

Installation

To install, follow the removal steps in the reverse order, noting the following points:

1. Tighten the front seat assembly fixing bolts to the specified torque.

   Torque: 40 N·m (4.1 kg·m/30 lb ft)

2. Install the longest bolt to the rear inner side fixing location, if this model is equipped with power seats.

Disassembled View (LWB)

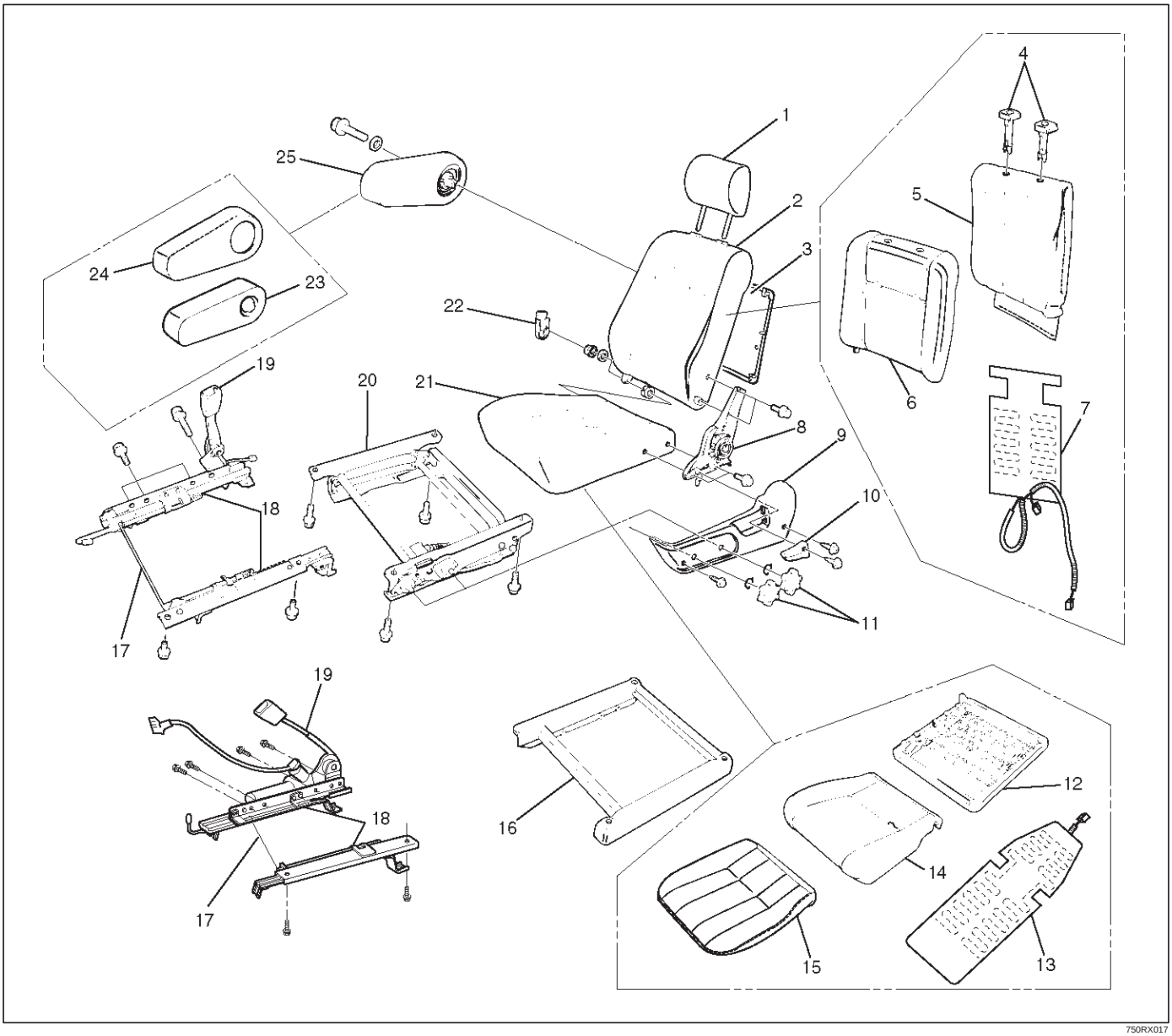

Legend

(1) Head Rest
(2) Seat Back Assembly
(3) Back Board Assembly
(4) Guide Holder
(5) Trim Cover
(6) Pad & Frame Assembly
(7) Seat Heater Assembly
(8) Reclining Device
(9) Slide Cover
(10) Reclining Knob
(11) Dial (W/Height Adjuster)
(12) Frame Assembly
(13) Seat Heater Assembly
(14) Pad Assembly
(15) Trim Cover
(16) Spacer (W/O Height Adjuster)
(17) Release Wire
(18) Seat Adjuster/Seat Adjuster (W/Pretensioner)
(19) Seat Belt Buckle Assembly
(20) Height Adjuster
(21) Seat Cushion Assembly
(22) Hinge Cover
(23) Pad & Frame Assembly
(24) Trim Cover
(25) Armrest Assembly

Disassembly

1. Remove the head rest.
2. Remove the reclining knob.
3. Remove the dial(1) (W/height adjuster).
   - Remove the side cover fixing screws and the dial lock spring(2).

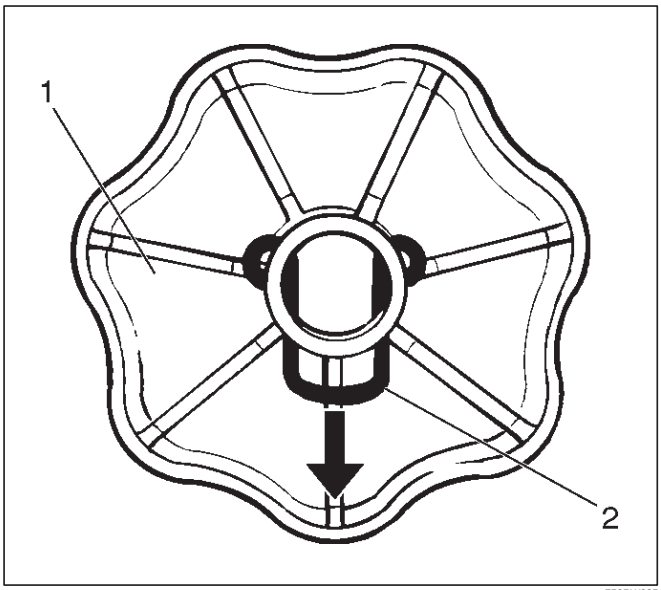

750RW025

4. Remove the side cover.
5. Remove the armrest assembly.
   - Open the armrest fastener and remove the armrest fixing bolt.

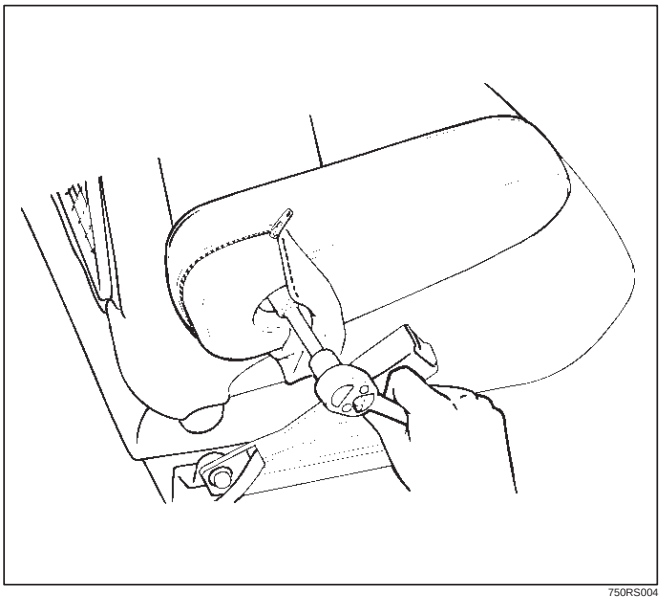

750RS004

6. Remove the trim cover.
7. Remove the pad and frame assembly.
8. Remove the hinge cover.
9. Remove the back board assembly(3).
   - Pull out the back board while prying the clip (4) of the back board free from the seat back assembly.

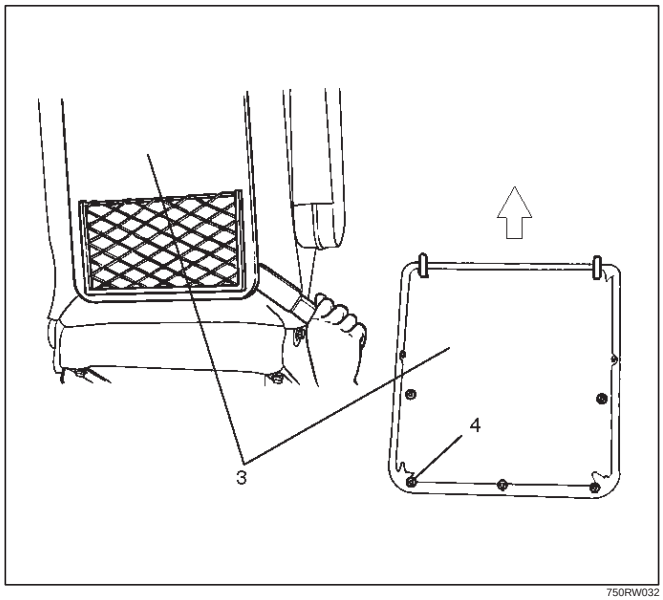

750RW032

10. Remove the reclining device.
    - Turn up the seat back trim cover in order to remove the reclining device fixing bolts.

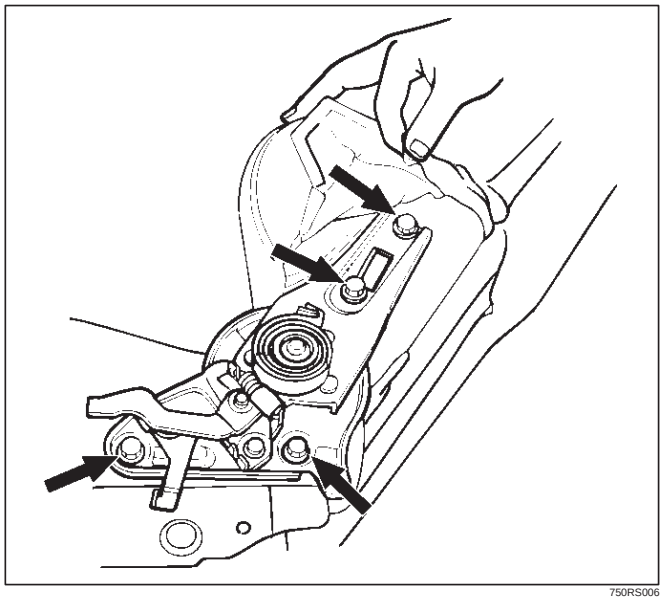

750RS006

11. Remove the seat back assembly.
    - Remove the clips (2) from the seat heater harness (1), and separate the seat heater connector (3) (models with the seat heater).

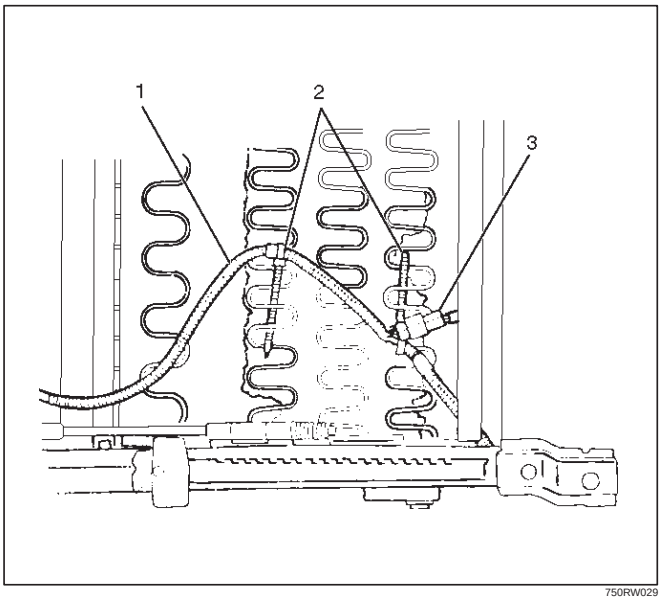

750RW029

    - Remove the seat back assembly fixing nut on the opposite side of the reclining device.

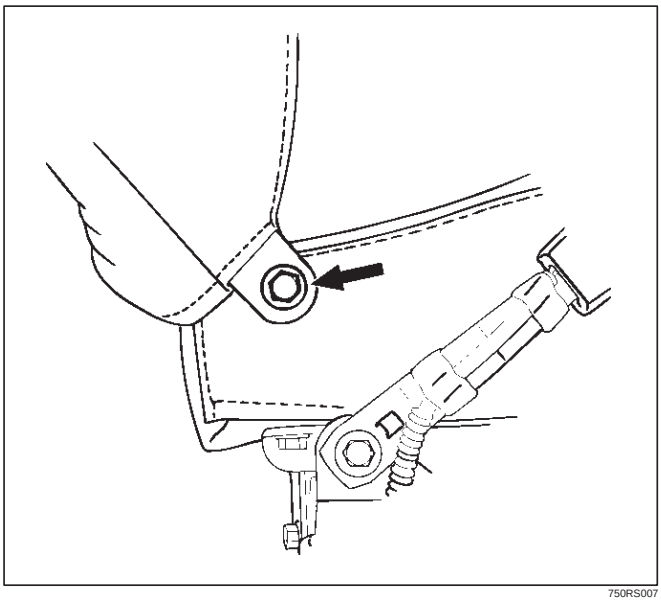

750RS007

12. Remove the guide holder.
    - Pull the guide holder out by holding the bottom end of it from the seat back assembly.
13. Remove the trim cover.
    - Remove the trim cover hog rings from the back side of the seat back.
    - With close attention paid to the hog rings and the wire which connect the trim cover and the pad and frame assembly, remove the trim cover while turning it up.
14. Remove the pad and frame assembly.
15. Remove the seat heater assembly.
16. Remove the seat adjuster.
    - Disconnect the release wire(4) and remove the fixing bolts.

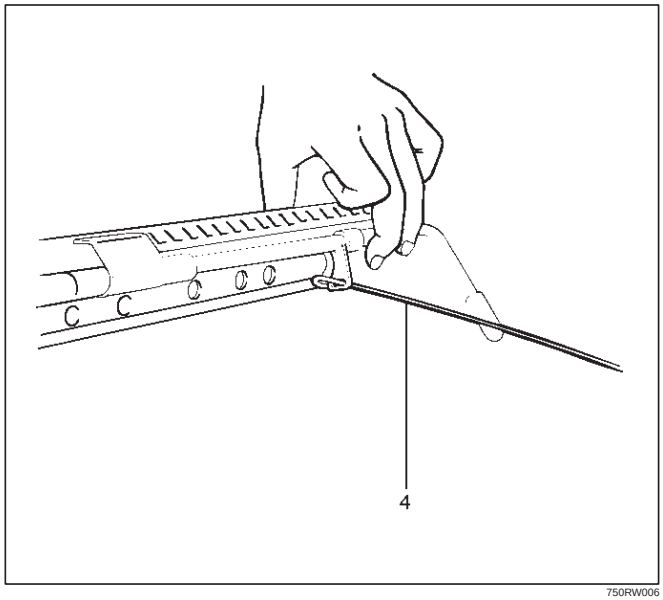

750RW006

    - Remove the seat belt buckle assembly.
17. Remove the height adjuster.
18. Remove the spacer (W/O height adjuster).
19. Remove the seat cushion assembly.
20. Remove the trim cover.
    - Remove the trim cover hog rings from the back side of the seat cushion assembly.
    - With close attention paid to the hog rings and the wire which connect the trim cover and the pad and frame assembly, remove the trim cover while turning it up.
21. Remove the frame assembly.
22. Remove the pad assembly.
23. Remove the seat heater assembly.

Reassembly

To reassembly, follow the disassembly steps in the reverse order, noting the following point.

1. Tighten the armrest assembly fixing bolts to the specified torque.

   Torque: 18 N·m (1.8 kg·m/13 lb ft)

2. Tighten the reclining device fixing bolts to the specified torque.

   Torque: 47 N·m (4.8kg·m/35 lb ft)

Disassembled View (SWB)

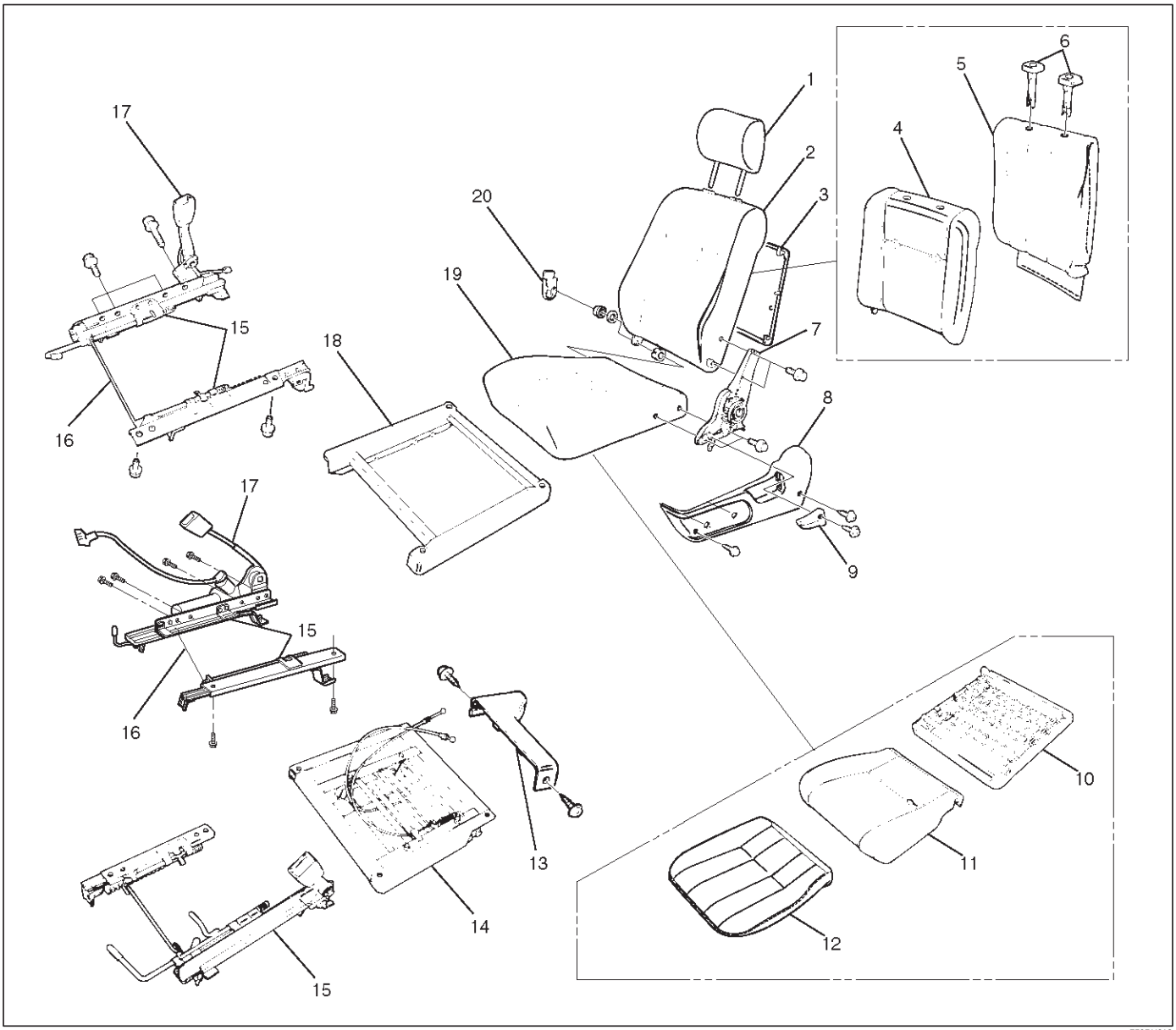

750RX018

Legend

(1) Head Rest
(2) Seat Back Assembly
(3) Back Board Assembly
(4) Pad & Frame Assembly
(5) Trim Cover
(6) Guide Holder
(7) Reclining Device
(8) Slide Cover
(9) Reclining Knob
(10) Frame Assembly
(11) Pad Assembly
(12) Trim Cover
(13) Walk–in Cover
(14) Walk–in Assembly
(15) Seat Adjuster/Seat Adjuster (W/Pretensioner)
(16) Release Wire
(17) Seat Belt Buckle Assembly
(18) Spacer
(19) Seat Cushion Assembly
(20) Hinge Cover

Disassembly

1. Remove the head rest.
2. Remove the reclining knob.
3. Remove the side cover.
4. Remove the hinge cover.
5. Remove the back board assembly.
   - Pull out the back board while prying the clip of the back board free from the seat back assembly.

6. Remove the reclining device.
   - Turn up the seat back trim cover in order to remove the reclining device fixing bolts.

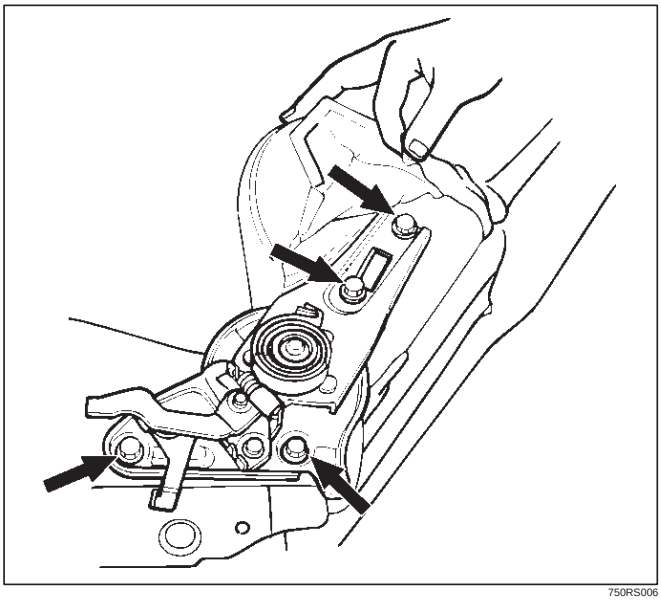

750RS006

   - Remove the push nut (2) and disconnect walk-in cable (3) from reclining device (1).

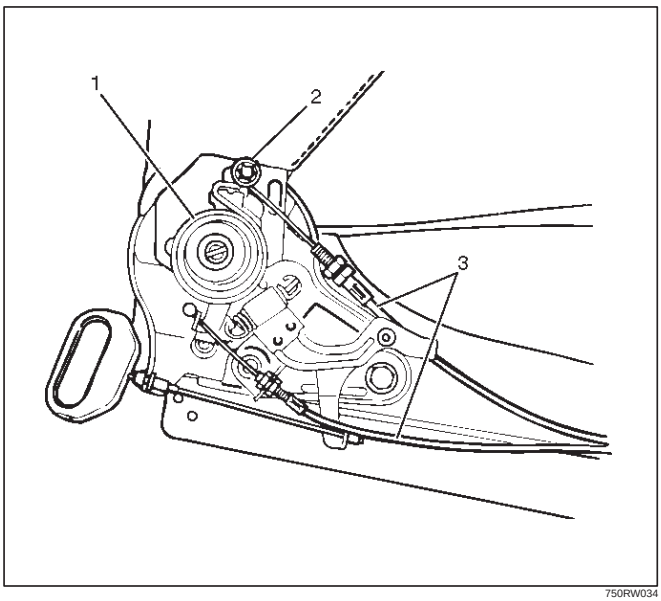

750RW034

7. Remove the seat back assembly.
   - Remove the seat back assembly fixing nut on the opposite side of the reclining device.

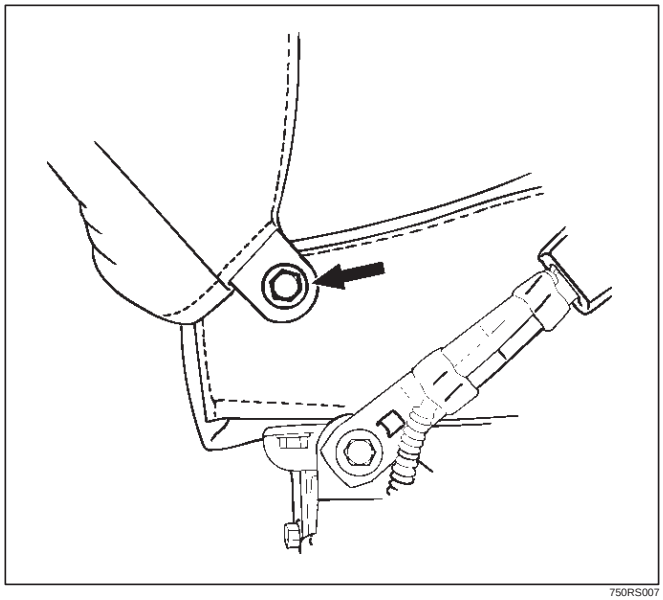

750RS007

8. Remove the guide holder.
   - Pull the guide holder out by holding the bottom end of it from the seat back assembly.
9. Remove the trim cover.
   - Remove the trim cover hog rings from the back side of the seat back.
   - With close attention paid to the hog rings and the wire which connect the trim cover and the pad and frame assembly, remove the trim cover while turning it up.
10. Remove the pad and frame assembly.
11. Remove the walk-in cover.
12. Remove the seat adjuster.
    - Disconnect the release wire (4) and remove the fixing bolts.

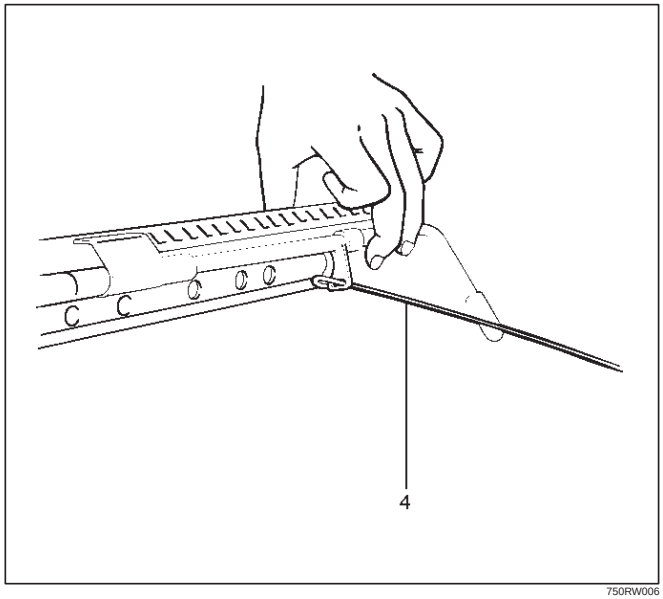

750RW006

    - Remove the seat belt buckle assembly.

13. Remove the walk-in assembly (passenger side).
14. Remove the spacer (driver side).
15. Remove the seat cushion assembly.
16. Remove the trim cover.
    - Remove the trim cover hog rings from the back side of the seat cushion assembly.
    - With close attention paid to the hog rings and the wire which connect the trim cover and the pad and frame assembly, remove the trim cover while turning it up.
17. Remove the frame assembly.
18. Remove the pad assembly.

Reassembly

To reassembly, follow the disassembly steps in the reverse order, noting the following point.

1. Tighten the armrest assembly fixing bolts to the specified torque.

   Torque: 18 N·m (1.8 kg·m/13 lb ft)

2. Tighten the reclining device fixing bolts to the specified torque.

   Torque: 47 N·m (4.8kg·m/35 lb ft)

Power Seat Assembly

General Description

The circuit consists of the power seat switch, front tilt motor (driver's seat only), rear tilt motor (driver's seat only), slide motor and the recliner motor.

The power seat switch has a tilt & slide switch and a recliner switch.
The motor built in the seat can be actuated by operating these switches to move the seat to desired position, independent of the position of the starter switch.

Disassembled View

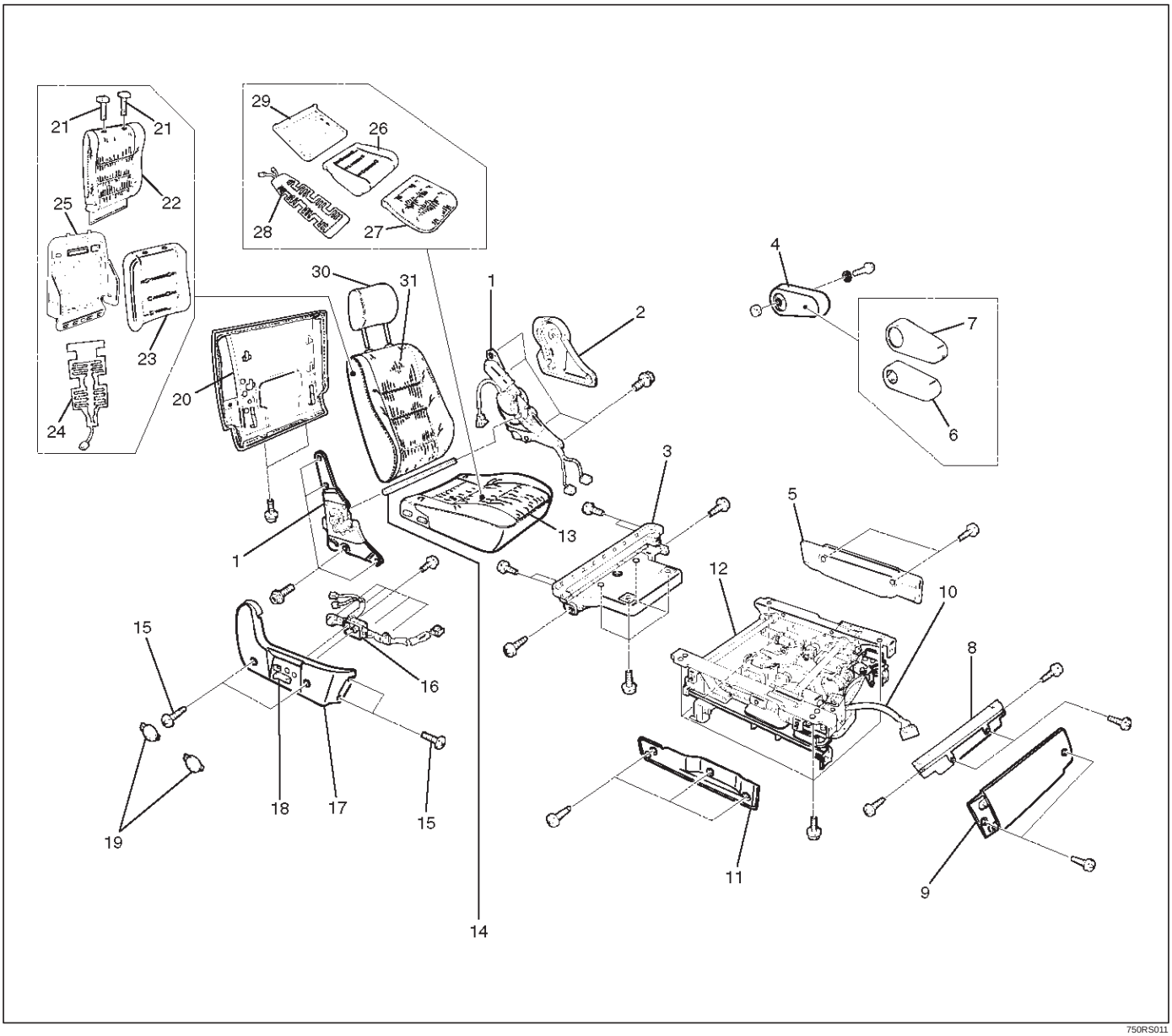

Legend

(1) Reclining Device
(2) Inner Cover
(3) Rear Cover
(4) Armrest Assembly
(5) Inner Lower Cover
(6) Pad & Frame Assembly
(7) Trim Cover
(8) Front Lower Cover
(9) Front Cover
(10) Power Seat Harness
(11) Outer Lower Cover
(12) Adjuster Assembly
(13) Seat Cushion Assembly
(14) Connecting Shaft
(15) Outer Cover Fixing Screws
(16) Switch Assembly
(17) Outer Cover
(18) Switch Knob
(19) Outer Cover Cap
(20) Back Board Assembly
(21) Guide Holder
(22) Trim Cover
(23) Pad Assembly

(24) Seat Heater
(25) Frame Assembly
(26) Pad Assembly
(27) Trim Cover
(28) Seat Heater
(29) Frame Assembly
(30) Head Rest
(31) Seat Back Assembly

Disassembly

1. Disconnect the battery ground cable.
2. Remove the head rest.
3. Remove the switch knob.
   - Pull the switch knob out.
4. Remove the outer cover cap.
5. Remove the outer cover fixing screws.
   - Pull up the outer cover(1) to remove the cover from the reclining device(2).

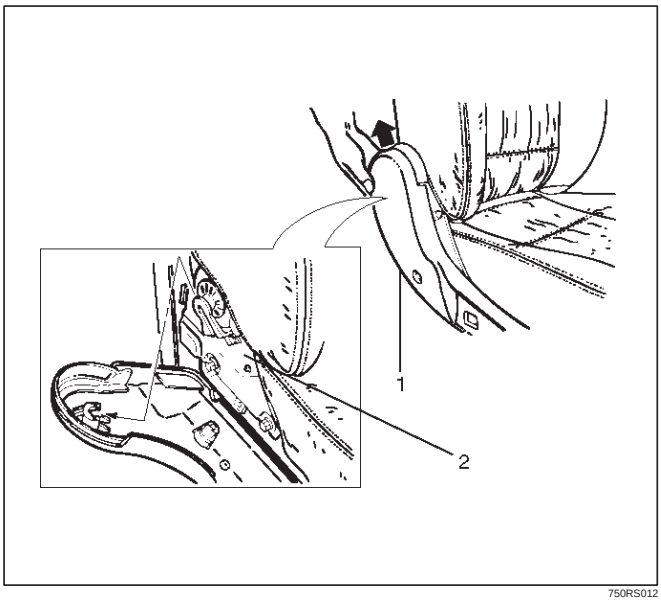

750RS012

6. Remove the front cover.
7. Remove the front lower cover.
8. Remove the rear cover.
9. Remove the outer cover.
   - Disconnect the switch connectors and remove the harness fixing clips.
10. Remove the switch assembly.
    - Remove the switch fixing screws from the outer cover.
11. Remove the armrest assembly.
    - Open the armrest fastener and remove the fixing bolt.

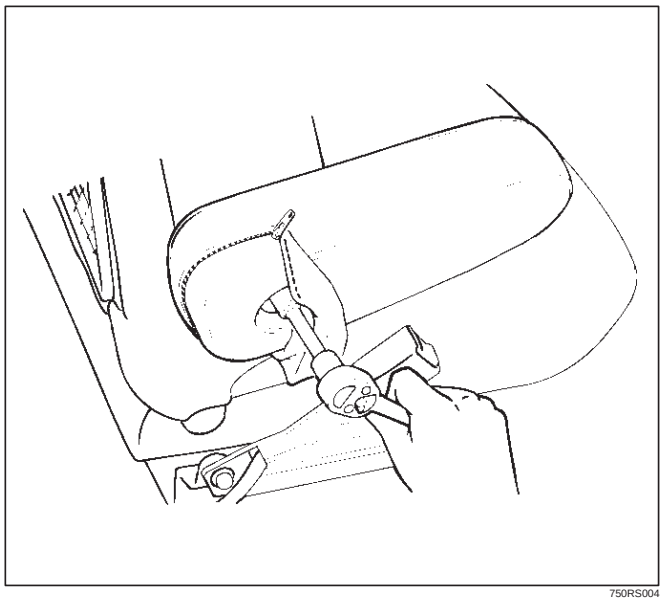

750RS004

12. Remove the trim cover.
13. Remove the pad & frame assembly.
14. Remove the inner cover
    - Remove the cover fixing screw.
    - Pull up the inner cover to remove the cover from the reclining device(3).

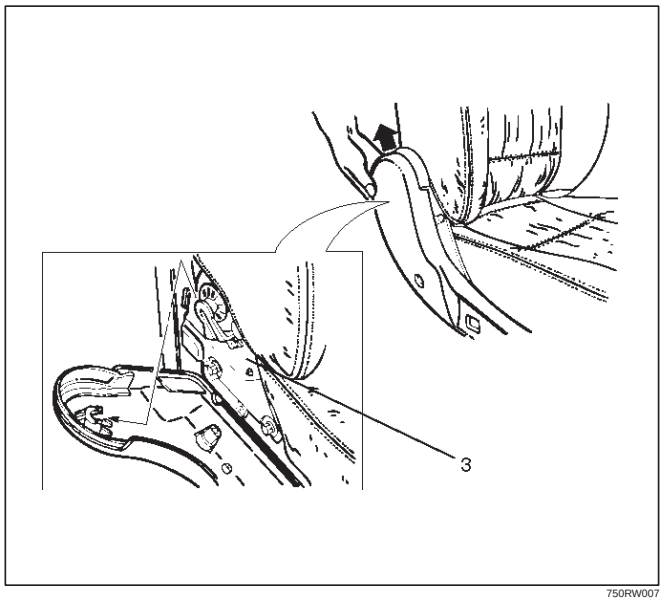

750RW007

15. Remove the back board assembly(4).
    - Remove the board fixing screws.
    - Pull the back board downward and remove the board from the seat back frame(5).

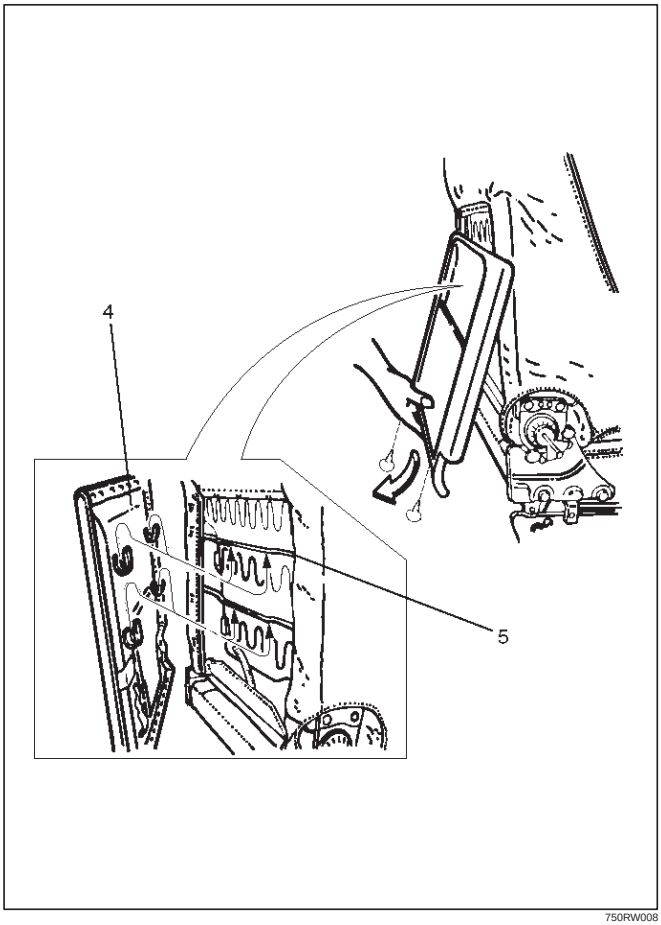

750RW008

16. Remove the reclining device(7).
    - Remove the device lower side fixing bolt in order to separate the seat back from the seat cushion.
    - Disconnect the seat heater connector.
    - Remove the trim cover(6) hog rings from the backside of the seat back assembly.
    - Turn up the seat back trim cover to remove the reclining device upper side fixing bolt.
    - Disconnect the connecting shaft and the reclining device connectors.

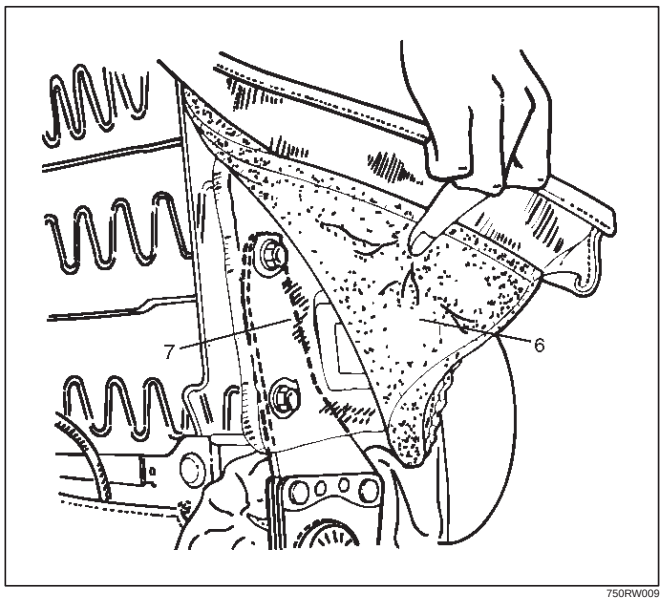

750RW009

17. Remove the seat back assembly.
18. Remove the guide holder(8).
    - Remove the trim cover fixing hog rings(9) from the backside of the seat back assembly.
    - Hold the tip end of the guide holder and pull the holder out from the seat back assembly.

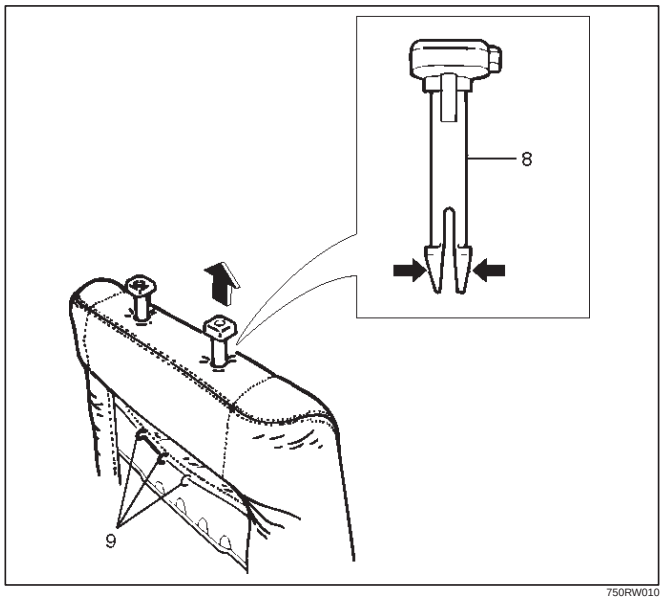

750RW010

19. Remove the trim cover.
    - Remove the trim cover hog rings from the backside of the seat back.
    - With close attention paid to the hog rings and the wire which connect the trim cover and pad & frame assembly, remove the trim cover while turning it up.
20. Remove the seat heater.
21. Remove the pad assembly.
22. Remove the frame assembly.
23. Remove the outer lower cover.
24. Remove the inner lower cover.
25. Remove the adjuster assembly.
    - Disconnect the connectors and remove the fixing bolts.

- Remove the power seat harness from the adjuster assembly.

26. Remove the seat cushion assembly.
27. Remove the trim cover.
    - Remove the trim cover hog rings from the backside of the seat cushion assembly.
    - With close attention paid to the hog rings and the wire which connect the trim cover and the pad & frame assembly, remove the trim cover while turning it up.
28. Remove the seat heater.
29. Remove the frame assembly.
30. Remove the pad assembly.

Reassembly

To reassemble, follow the disassembly steps in the reverse order, noting the following point.

1. Tighten the fixing bolts to the specified torque.
    - Refer to the Torque Specifications in this section.

Power Seat Switch

Removal

1. Remove the side cover(3).
    - Refer to the Power Seat Assembly disassembly steps in this section.
2. Remove the tilt & slide switch lever(4).
    - Hold the switch lever with your fingers and pull it toward you.
3. Remove the tilt & slide switch(2).
    - Remove two screws.
4. Remove the recliner switch(1).
    - Remove two screws.

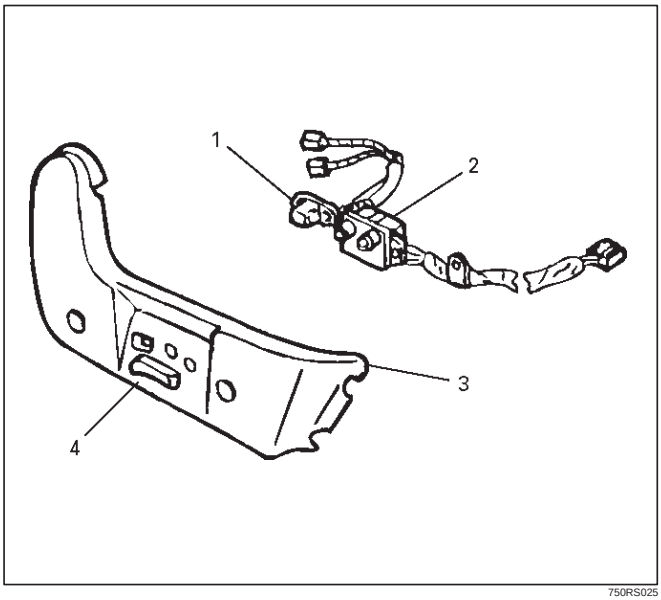

750RS025

Installation

To install, follow the removal steps in the reverse order.

Front Tilt Motor / Rear Tilt Motor / Slide Motor / Recliner Motor

Parts Location

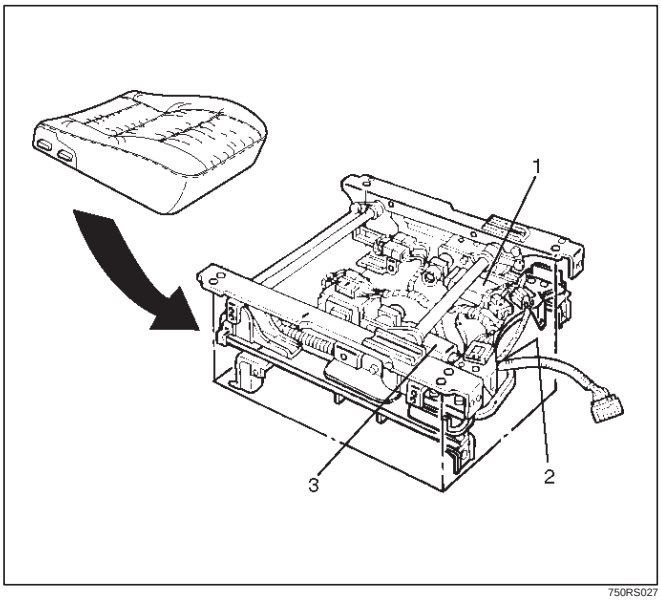

750RS027

Legend

(1) Tilt Motor
(2) Slide Motor
(3) Tilt Motor

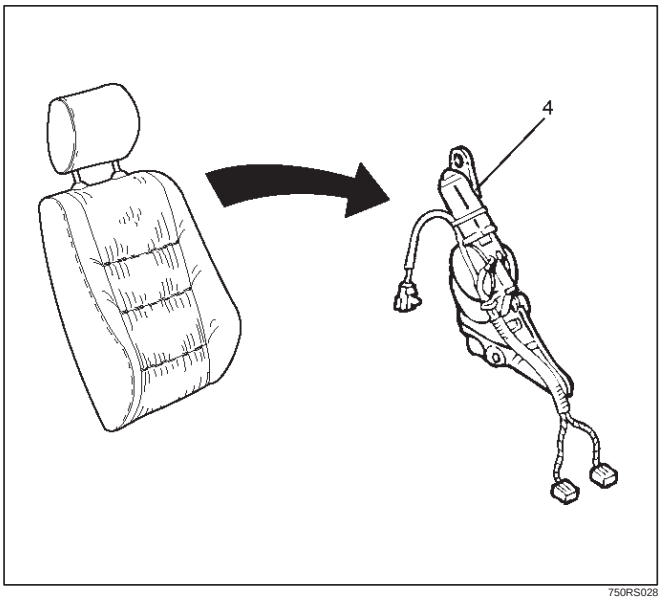

750RS028

Legend

(4) Recliner Motor

Removal and Installation

Refer to the Power Seat Assembly in this section.

Seat Heater System

General Description

The circuit consists of the starter switch, seat heater switch and the heat unit.
The seat heater is provided in driver's and front passenger seats (as option).
When the seat heater switch is ON, the seat heat built in the seat back and cushion is switched on to warm the seats.
To prevent the seats from being overheated, the circuit is fitted with a thermostat.

Seat Heater Switch Removal and Installation

Refer to the Seat Heater Switch in Lighting System section.

Heat Unit Parts Location

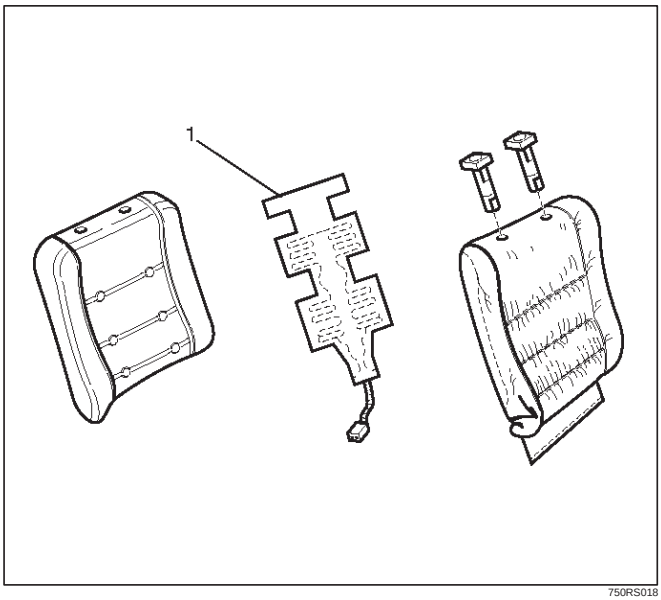

750RS018

Legend
(1) Heat Unit (Seat Back Side)

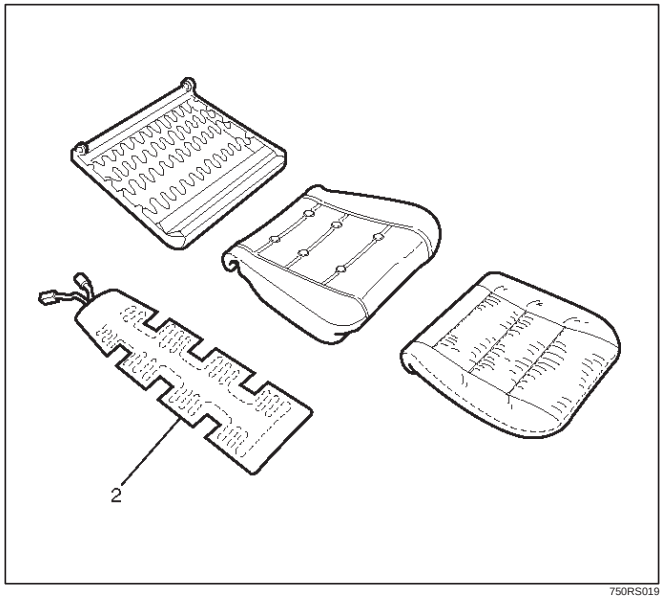

750RS019

Legend
(2) Heat Unit (Seat Cushion Side)

Heat Unit Removal and Installation

Refer to the Power Seat Assembly in this section.

Rear Seat Assembly

Rear Seat Assembly and Associated Parts

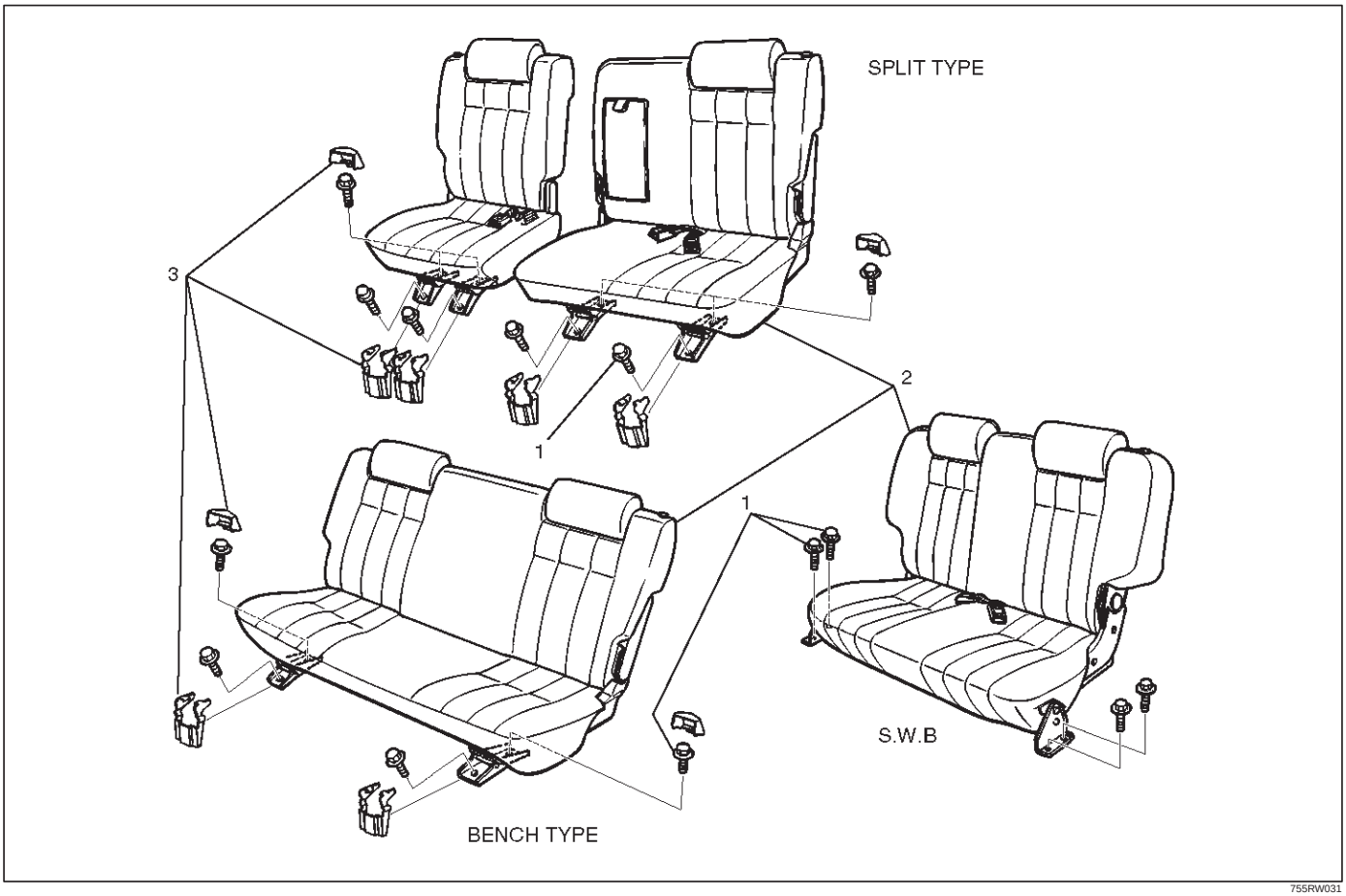

755RW031

Legend

(1) Fixing Bolts
(2) Rear Seat Assembly
(3) Mounting Bracket Cover

Removal

1. Unlock the rear seat(1) lock to remove it.
2. Remove the mounting bracket cover.
3. Remove the fixing bolts.

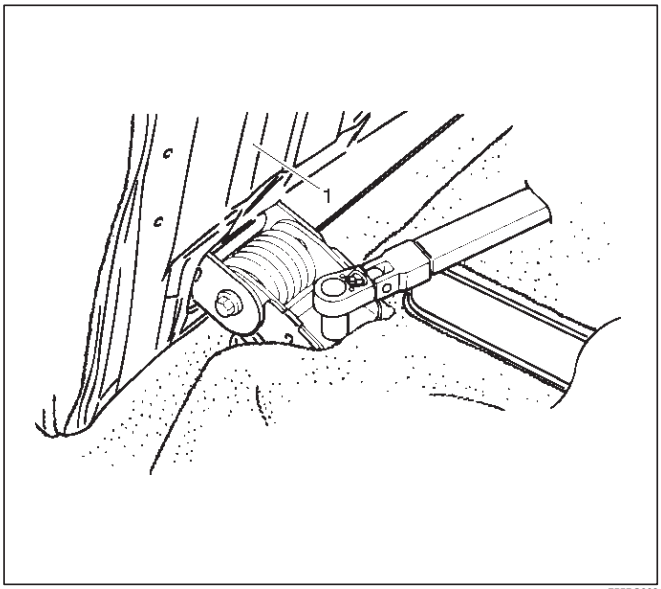

755RS002

4. Remove the rear seat assembly.

Installation

To install, follow the removal steps in the reverse order, noting the following point.

1. Tighten the rear seat fixing bolts to the specified torque.

   Torque: 19 N·m (1.9kg·m/14 lb ft)

Disassembled View (Split Type)

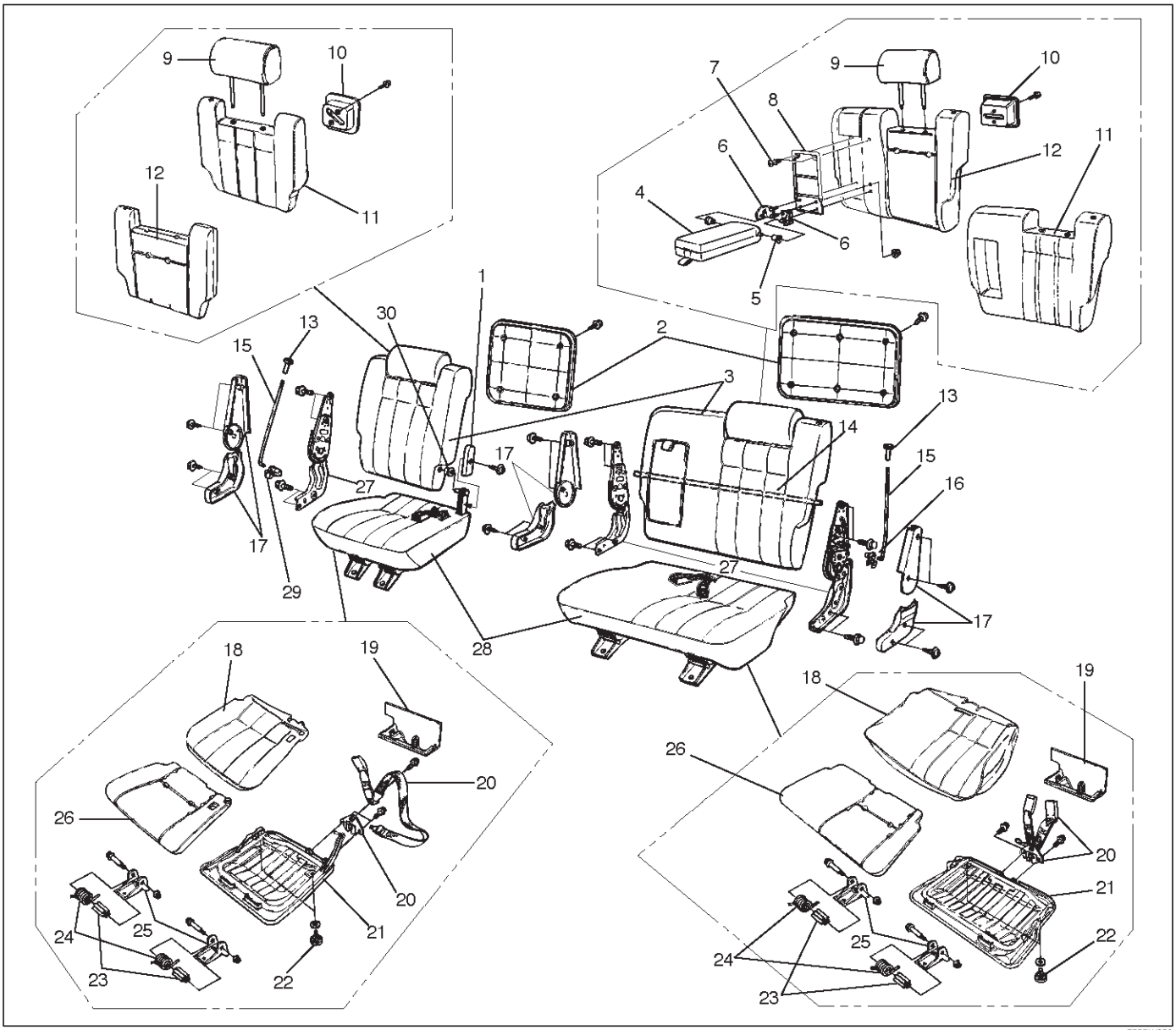

755RW056

Legend

(1) Free Hinge Cover
(2) Back Board
(3) Seat Back Assembly
(4) Armrest Assembly
(5) Bush
(6) Armrest Set Bracket
(7) Clip
(8) Armrest Board
(9) Pillow Assembly
(10) Band Hook Cover
(11) Trim Cover
(12) Pad & Frame Assembly
(13) Release Knob
(14) Connecting Shaft
(15) Release Rod
(16) Linkage Bush
(17) Device Cover
(18) Trim Cover
(19) Seat Lock Cover
(20) Rear Seat Belt Buckle and Lock Assembly
(21) Frame Assembly
(22) Stopper Rubber
(23) Spring Collar
(24) Return Spring
(25) Mounting Bracket
(26) Pad Assembly
(27) Reclining Device
(28) Seat Cushion Assembly
(29) Linkage Bush
(30) Bush

Disassembly (Split Type)

1. Remove the back board.
   - Remove the clips and the back board.
2. Remove the device cover.
3. Remove the release knob.
   - Turn the knob counterclockwise to remove it.
4. Remove the release rod.
   - Disconnect the rod from the linkage bush.
5. Remove the reclining device.

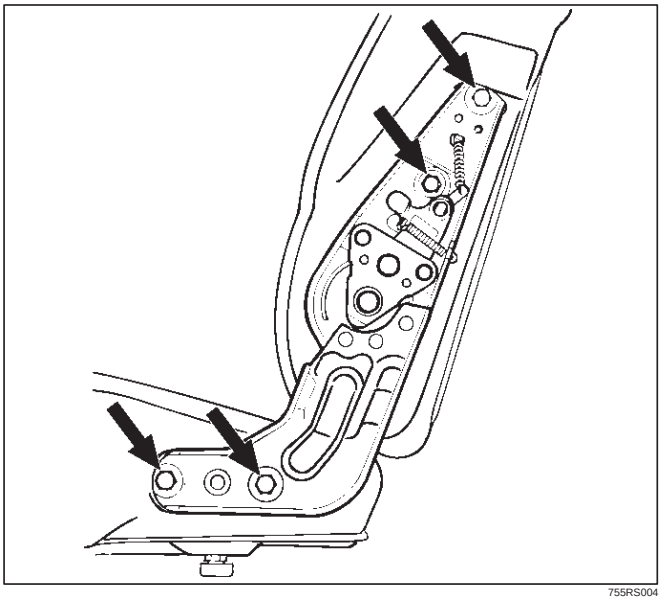

755RS004

6. Remove the connecting shaft.
7. Remove the seat back assembly.
8. Remove the pillow assembly.
   - Turn up the seat back trim cover and slit the pad from the back around to the place where the lock spring(2) of the guide bush(1) is.

   Then insert a finger through the slit and pull out the pillow while you are pressing down on the lock spring.

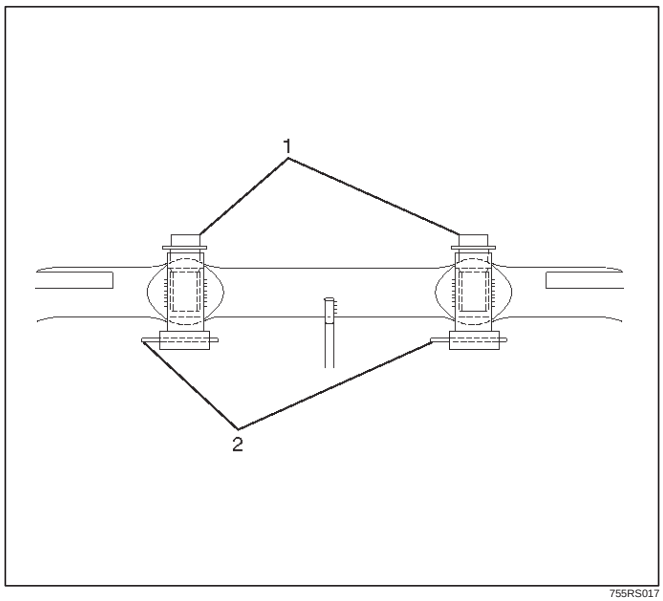

755RS017

9. Remove the band hook cover.
10. Remove the armrest assembly.
    - Turn up the seat back trim cover and remove the fixing nuts.
11. Remove the armrest set bracket.
12. Remove the armrest board.
13. Remove the trim cover.
    - Remove the trim cover fixing hog rings from the backside of the seat back.
    - With close attention paid to the hog rings and the wire which connect the trim cover and the pad and frame assembly, remove the trim cover while turning it up.
14. Remove the pad & frame assembly.
15. Remove the seat cushion assembly.
16. Remove the seat lock cover.
17. Remove the rear seat belt buckle and lock assembly.
18. Remove the mounting bracket.
19. Remove the return spring.
20. Remove the spring collar.
21. Remove the trim cover.
    - Remove the hog rings and pull the trim cover out from the frame assembly groove.
    - With close attention paid to the hog rings and the wire which connect the trim cover and the pad & frame assembly, remove the trim cover while turning it up.
22. Remove the frame assembly.
23. Remove the pad assembly.
24. Remove the stopper rubber.

Reassembly (Split Type)

To reassemble, follow the disassembly steps in the reverse order, noting the following point.

1. Tighten the reclining device fixing bolts to the specified torque.

   Torque: 27 N·m (2.8kg·m/20 lb ft)

2. Loosen the rubber stopper lock nut(1). Adjust the stopper(3) so there is no clearance between the bottom of the stopper and the carpet(2) while you make sure the rear seat is firmly locked.

   Then tighten the lock nut securely.

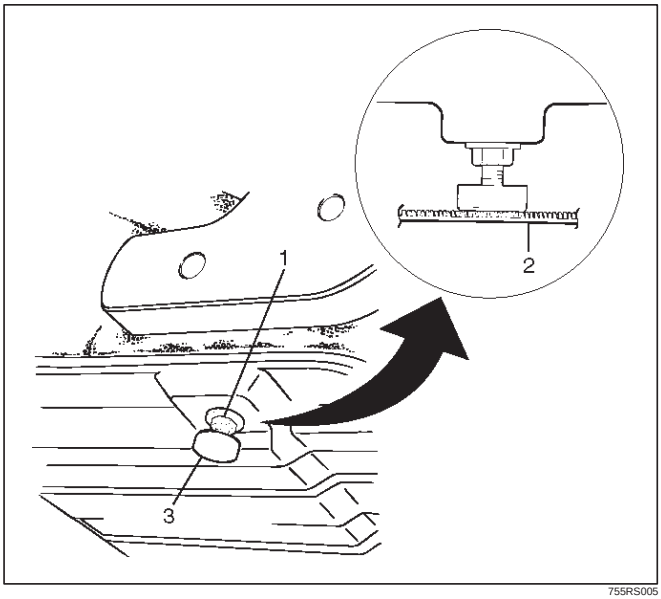

755RS005

Disassembled View (SWB)

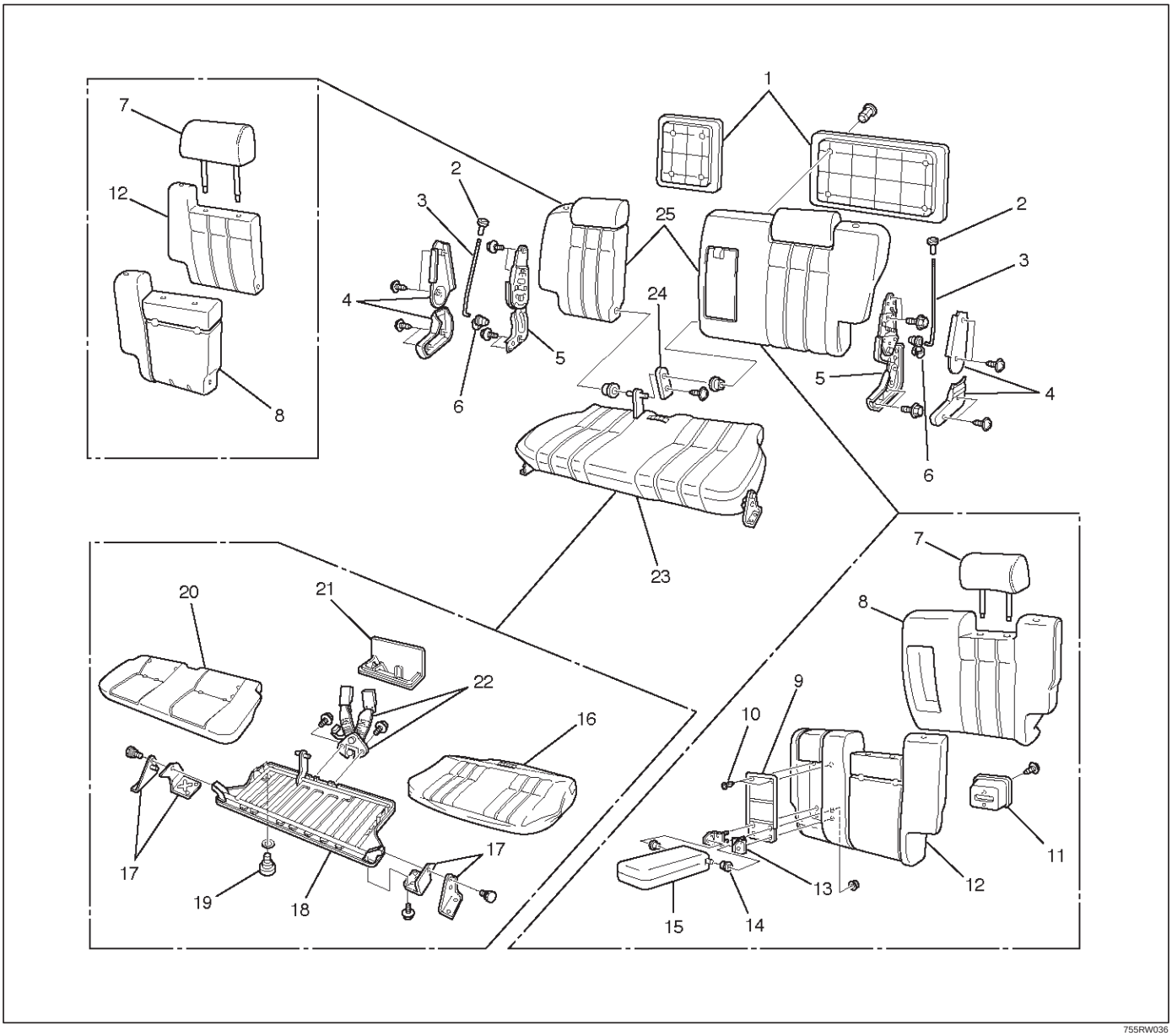

Legend

(1) Back Board
(2) Release Knob
(3) Release Rod
(4) Device Cover
(5) Reclining Device
(6) Linkage Bush
(7) Pillow Assembly
(8) Pad & Frame Assembly
(9) Armrest Board
(10) Clip
(11) Band Hook Cover
(12) Trim Cover
(13) Armrest Set Bracket
(14) Bush
(15) Armrest Assembly
(16) Trim Cover
(17) Mounting Bracket
(18) Frame Assembly
(19) Stopper Rubber
(20) Pad Assembly
(21) Seat Lock Cover
(22) Rear seat Belt Bukle and Lock Assembly
(23) Seat Cushion Assembly
(24) Free Hinge Cover
(25) Seat Back Assembly

Disassembly

1. Remove the back board.
   - Remove the clips and the back board.
2. Remove the device cover.
3. Remove the release knob.
   - Turn the knob counterclockwise to remove it.

4. Remove the release rod.
   - Disconnect the rod from the linkage bush.
5. Remove the reclining device.

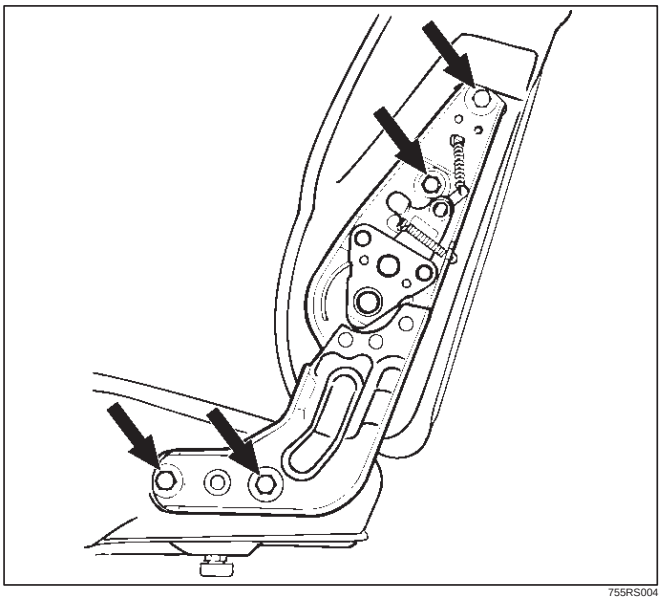

755RS004

6. Remove the seat back assembly.
7. Remove the pillow assembly.
   - Turn up the seat back trim cover and slit the pad from the back around to the place where the lock spring(2) of the guide bush(1) is.

   Then insert a finger through the slit and pull out the pillow while you are pressing down on the lock spring.

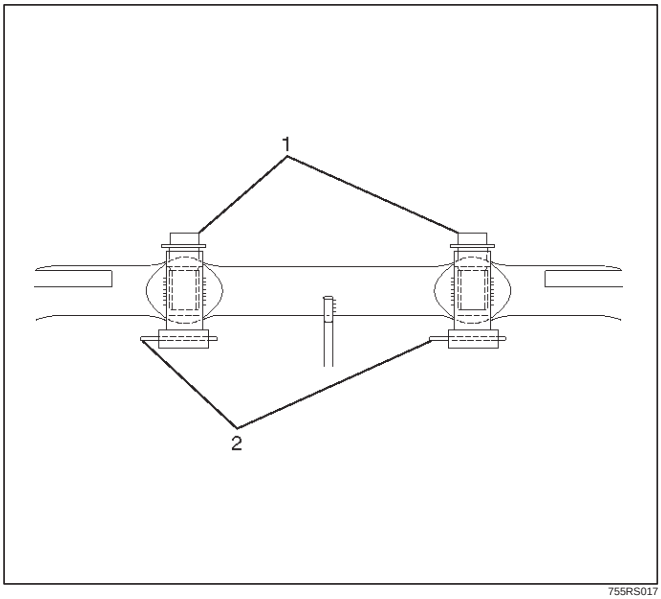

755RS017

8. Remove the band hook cover.
9. Remove the armrest assembly.
   - Turn up the seat back trim cover and remove the fixing nuts.
10. Remove the armrest set bracket.
11. Remove the armrest board.
12. Remove the trim cover.
    - Remove the trim cover fixing hog rings from the backside of the seat back.
    - With close attention paid to the hog rings and the wire which connect the trim cover and the pad and frame assembly, remove the trim cover while turning it up.
13. Remove the pad & frame assembly.
14. Remove the free hinge cover.
15. Remove the seat cushion assembly.
16. Remove the seat lock cover.
17. Remove the rear seat belt buckle and lock assembly.
18. Remove the mounting bracket.
19. Remove the trim cover.
    - Remove the hog rings and pull the trim cover out from the frame assembly groove.
    - With close attention paid to the hog rings and the wire which connect the trim cover and the pad & frame assembly, remove the trim cover while turning it up.
20. Remove the frame assembly.
21. Remove the pad assembly.
22. Remove the stopper rubber.

Reassembly

To reassemble, follow the disassembly steps in the reverse order, noting the following point.

1. Tighten the reclining device fixing bolts to the specified torque.

   Torque: 27 N·m (2.8kg·m/20 lb ft)
2. Loosen the rubber stopper lock nut(1). Adjust the stopper(3) so there is no clearance between the bottom of the stopper and the carpet(2) while you make sure the rear seat is firmly locked.

   Then tighten the lock nut securely.

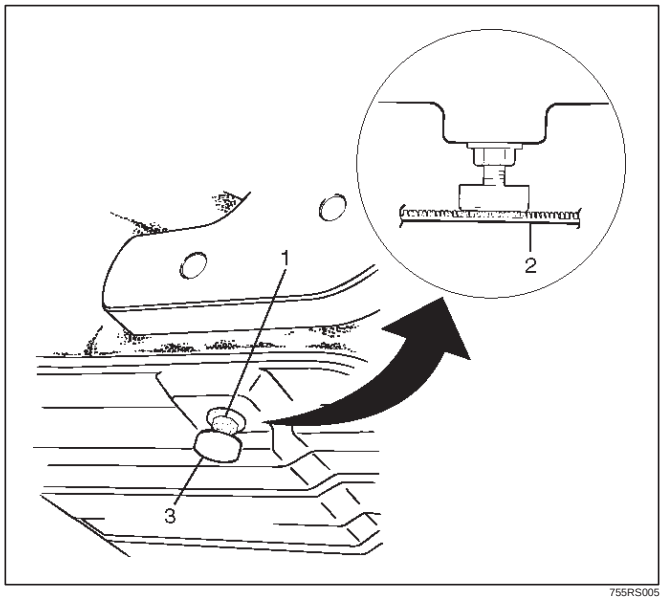

755RS005

Disassembled View (Bench Type)

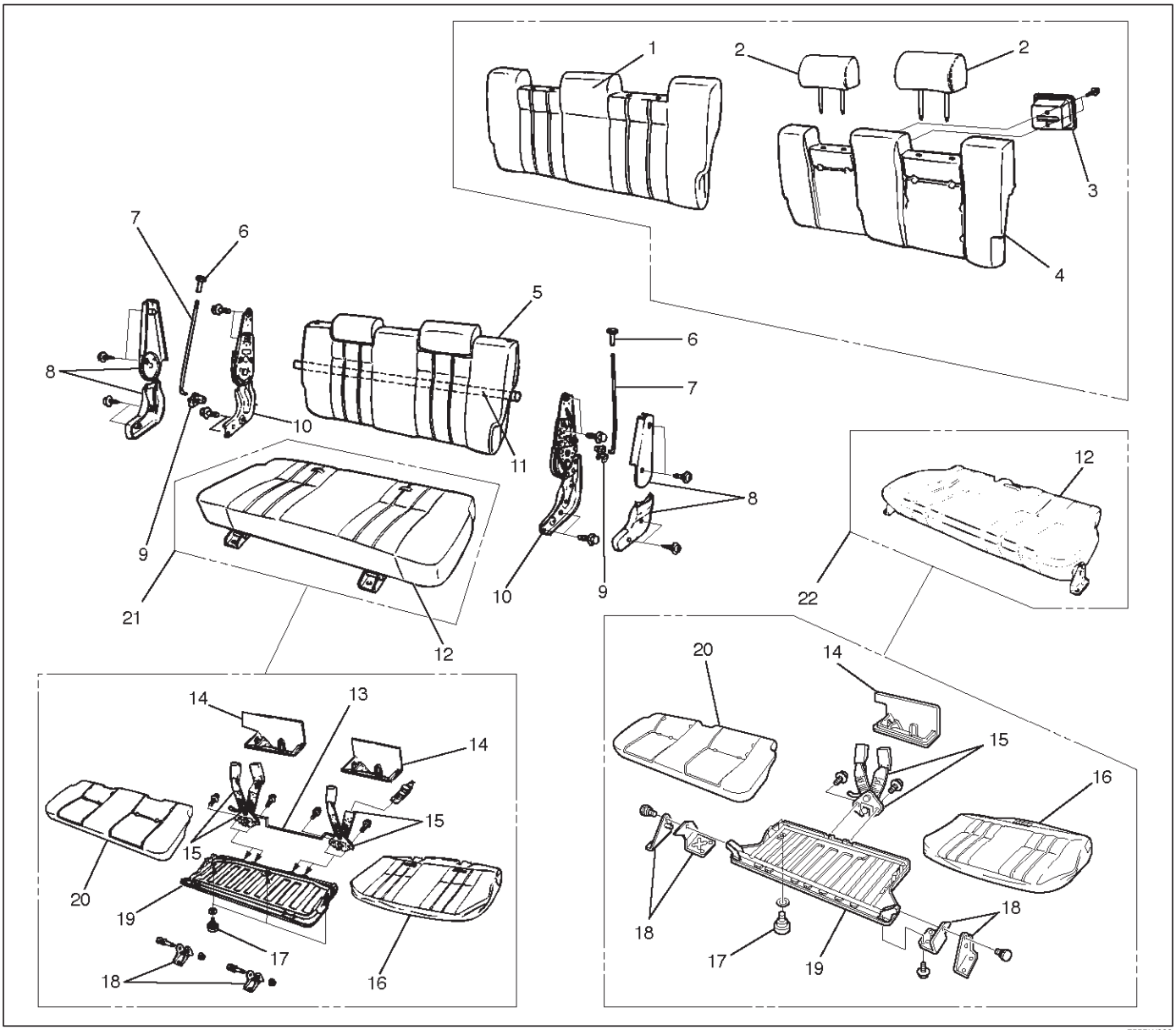

755RW033

Legend

(1) Trim Cover
(2) Pillow Assembly
(3) Band Hook Cover
(4) Pad & Frame Assembly
(5) Seat Back Assembly
(6) Release Knob
(7) Release Rod
(8) Device Cover
(9) Linkage Bush
(10) Reclining Device
(11) Connecting Shaft
(12) Seat Cushion Assembly
(13) Connecting Link
(14) Seat Lock Cover
(15) Rear Seat Belt Buckle and Lock Assembly
(16) Trim Cover
(17) Stopper Rubber
(18) Mounting Bracket
(19) Frame Assembly
(20) Pad Assembly
(21) L·W·B
(22) S·W·B

Disassembly (Bench Type)

1. Remove the device cover.
2. Remove the release knob.
   - Turn the knob to the counterclockwise to remove it.
3. Remove the release rod.
   - Disconnect the rod from the linkage bush.
4. Remove the reclining device.

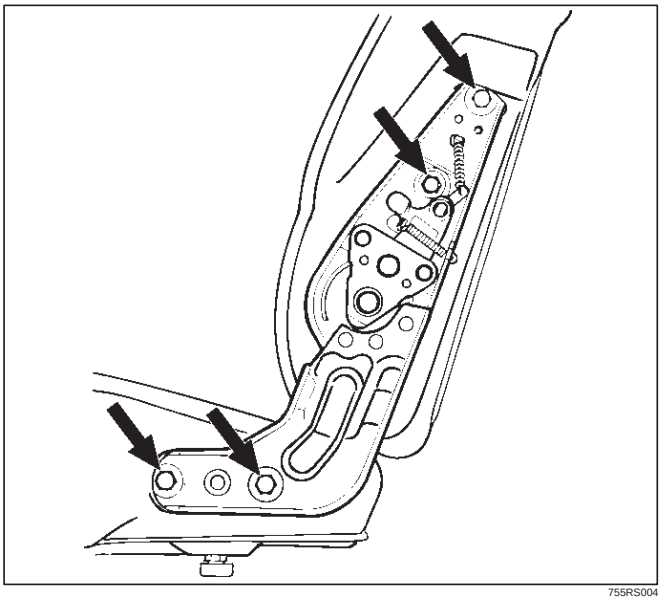

755RS004

5. Remove the connecting shaft.
6. Remove the seat back assembly.
7. Remove the band hook cover.
8. Remove the pillow assembly.
   - Refer to the Disassembly (Split Type) in this section.

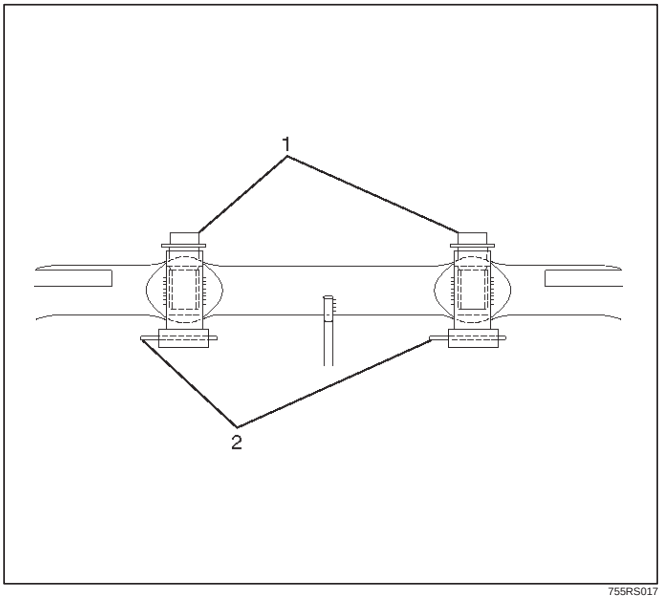

755RS017

9. Remove the trim cover.
   - Open the fastener(3), and with close attention paid to the hog rings and wire which connect the trim cover and the pad and frame assembly, remove the trim cover as you turn it up.

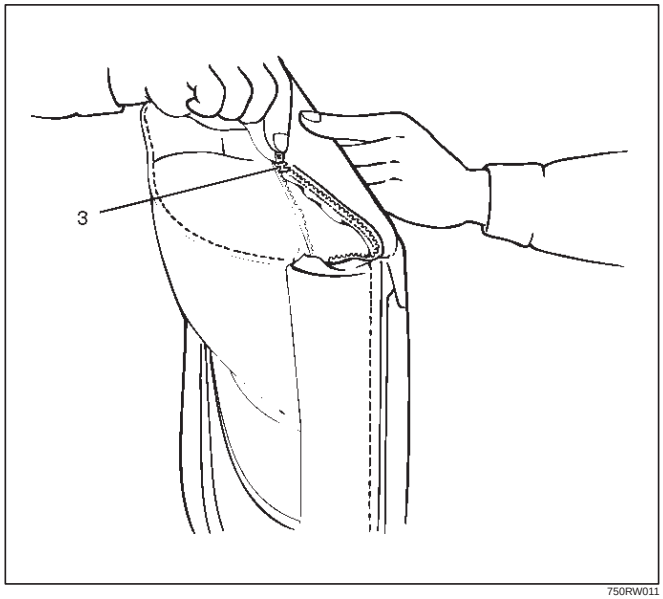

750RW011

10. Remove the pad & frame assembly.
11. Remove the seat cushion assembly.
12. Remove the seat lock cover.
13. Remove the rear seat belt buckle and lock assembly.
14. Remove the mounting bracket.
15. Remove the trim cover.
    - Remove the hog rings and pull the trim cover out from the frame assembly groove.
    - With close attention paid to the hog rings and the wire which connect the trim cover and the pad and frame assembly, remove the trim cover while turning it up.
16. Remove the frame assembly.
17. Remove the pad assembly.
18. Remove the stopper rubber.

Reassembly (Bench Type)

To reassemble, follow the disassembly steps in the reverse order, noting the following point.

1. Tighten the reclining device fixing bolts to the specified torque.

   Torque: 27 N·m (2.8kg·m/20 lb ft)

2. Loosen the rubber stopper lock nut(1) and adjust the stopper rubber(3) so there is no clearance between the bottom of the stopper and the carpet(2), while ensuring the rear seat is firmly locked.
   Tighten the lock nut securely.

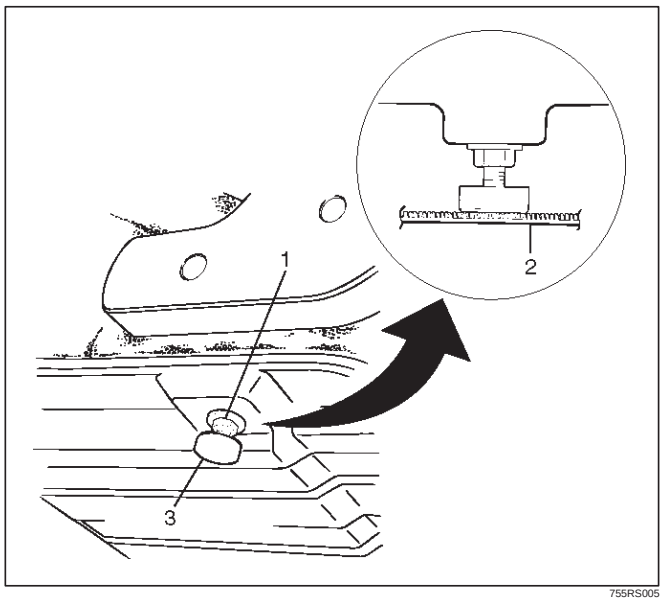

755RS005

Third Seat Assembly

Parts Location

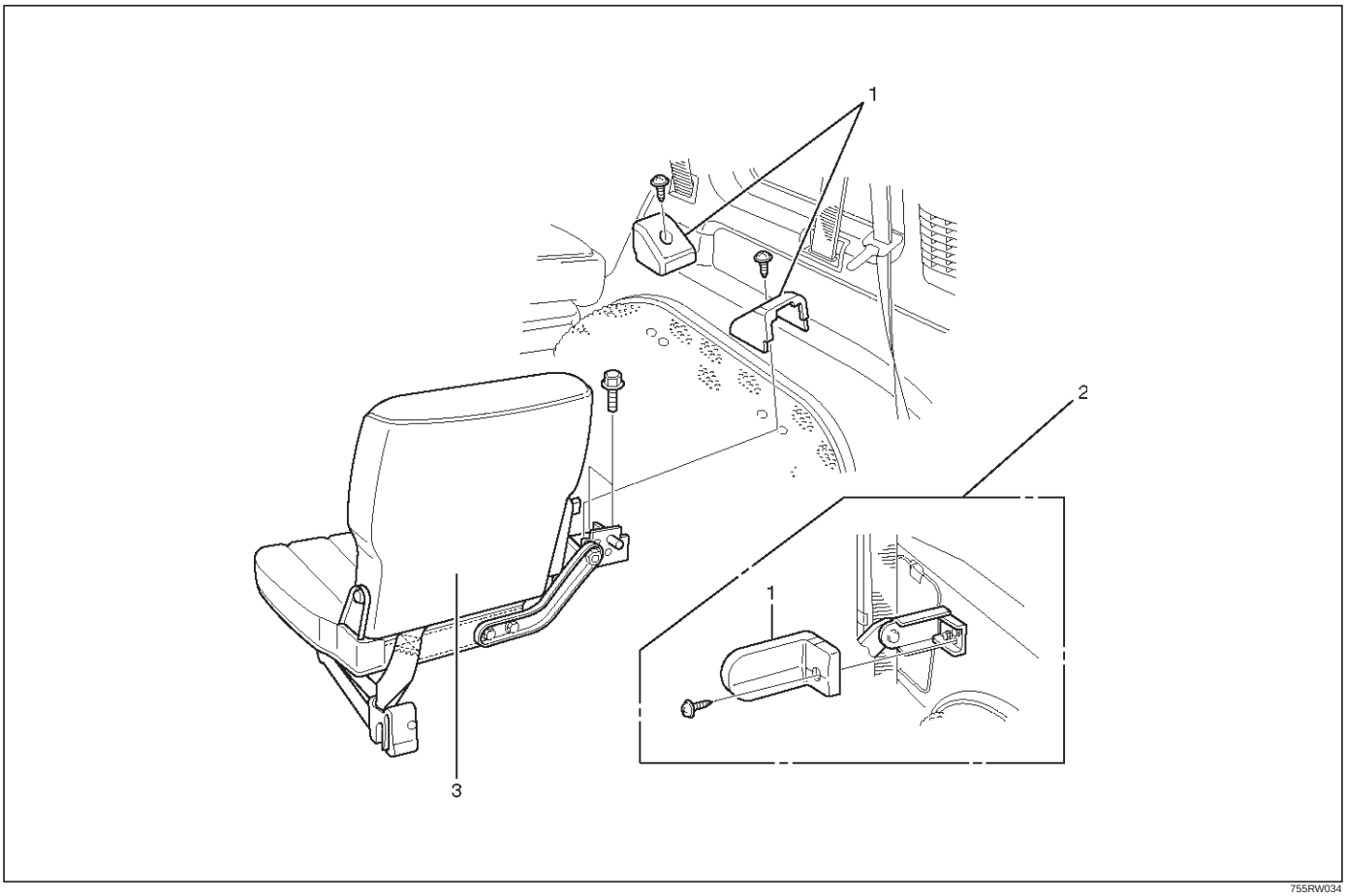

755RW034

Legend

(1) Cover
(2) Rear Side of LH
(3) Third Seat Assembly

Removal

1. Disconnect the battery ground cable.
2. Remove the cover.
3. Remove the third seat assembly.

Installation

To reassemble, follow the disassembly steps in the reverse order, noting the following point.

1. Tighten the reclining device fixing bolts to the specified torque.

Torque: 19 N·m (1.9kg·m/14 lb ft)

Disassembled View

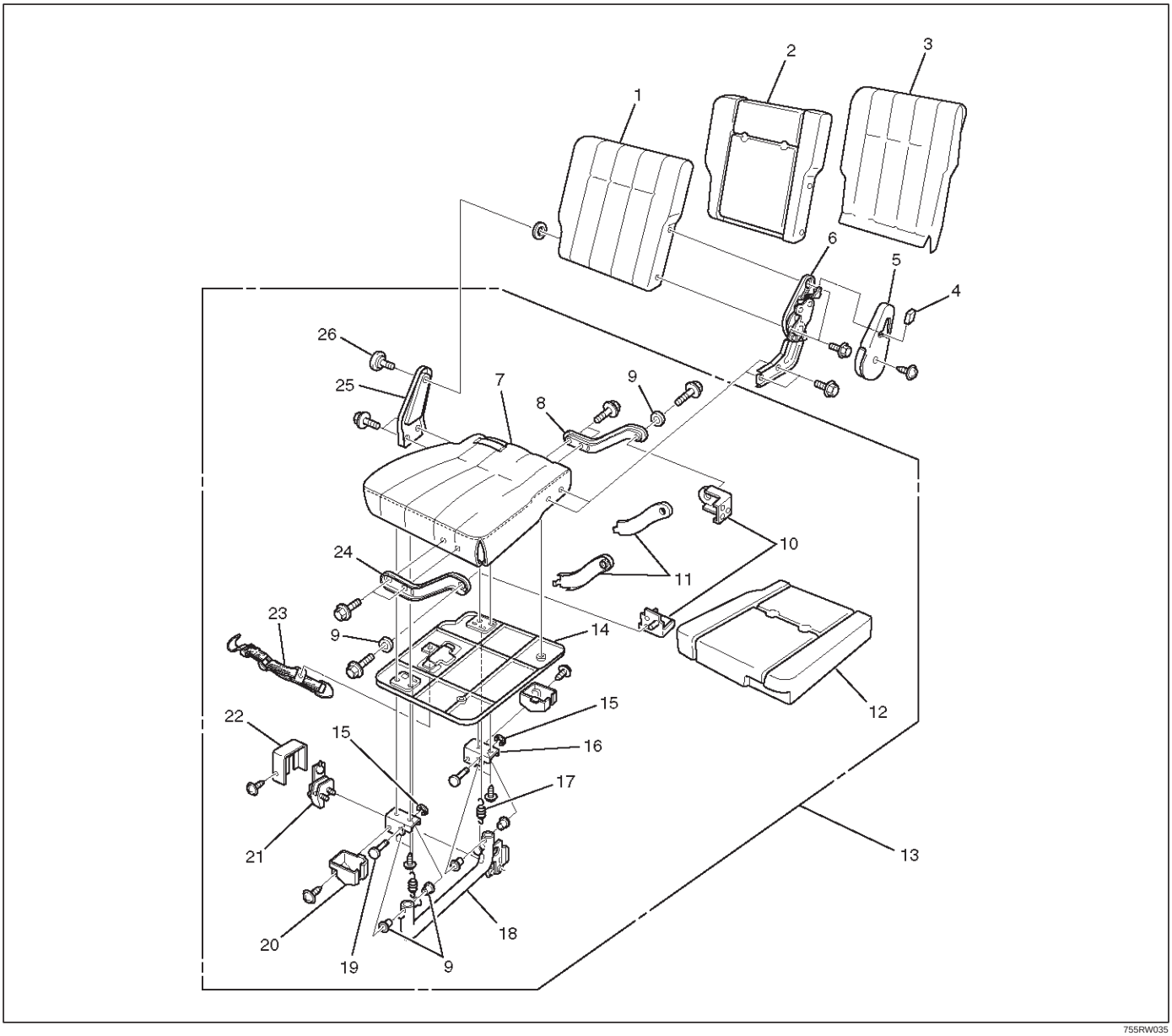

Legend

(1) Seat Back Assembly
(2) Pad & Frame Assembly
(3) Trim Cover
(4) Hinge Knob
(5) Hinge Cover
(6) Hinge Assembly
(7) Trim Cover
(8) Arm Bracket
(9) Bush
(10) Bracket
(11) Arm Bracket Cover
(12) Pad & Frame Assembly
(13) Seat Cushion Assembly
(14) Board Assembly
(15) E–Ring
(16) Cam Bracket
(17) Tension Spring
(18) Leg Pipe Assembly
(19) Hing Pin
(20) Lock Cover
(21) Floor Lock Assembly
(22) Lock Cover
(23) Band Assembly
(24) Arm Bracket
(25) Free Hinge
(26) Free Hinge Bolt

Disassembly

1. Remove the hinge knob.
   - Pull the knob out from hinge assembly.
2. Remove the hinge cover.
3. Remove the hinge assembly.
4. Remove the free hinge bolt.
5. Remove the seat back assembly.
6. Remove the trim cover.
   - Turn up the trim cover from under the seat back while taking notice of the hog ring and wire.

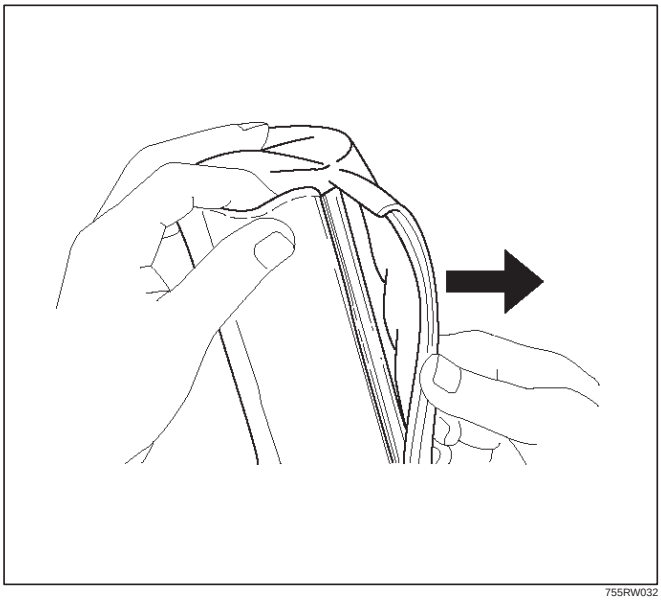

755RW032

7. Remove the pad & frame assembly.
8. Remove the seat cushion assembly.
9. Remove the free hinge.
10. Remove the lock cover.
11. Remove the floor lock assembly.
12. Remove the leg cover.
13. Remove the leg pipe assembly.
    - Remove the E-ring and pull the hinge pin from cam bracket.
14. Remove the cam bracket.
15. Remove the tension spring.
16. Remove the band assembly.
17. Remove the board assembly.
18. Remove trim cover.
    - Remove the hog ring from back side seat cushion.
    - Turn up the trim cover from under the seat back while taking notice of the hog ring.
19. Remove the arm bracket.
20. Remove the arm bracket cover.
21. Remove the pad & frame assembly.

Reassembly

To reassemble, follow the disassembly steps in the reverse order.

Rear Seat Foot Rest

Rear Seat Foot Rest and Associated Parts

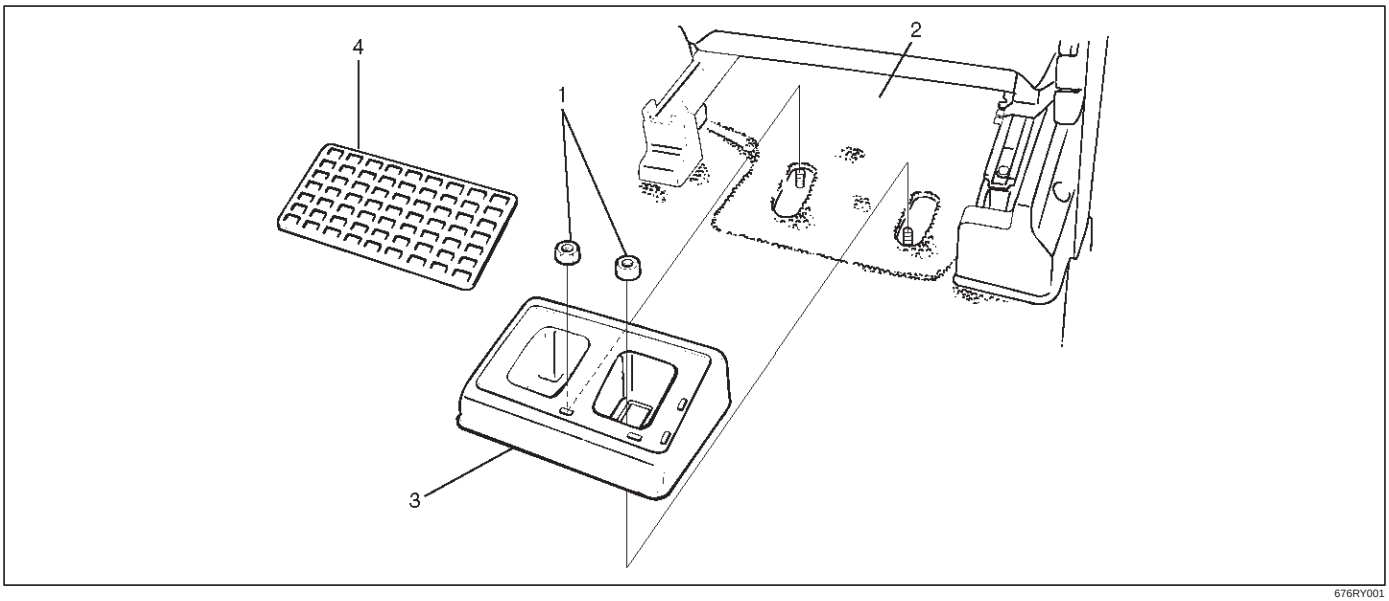

676RY001

Legend

(1) Fixing Nut
(2) Front Seat
(3) Rear Seat Foot Rest
(4) Foot Rest Pad

Removal

1. Remove the foot rest pad.

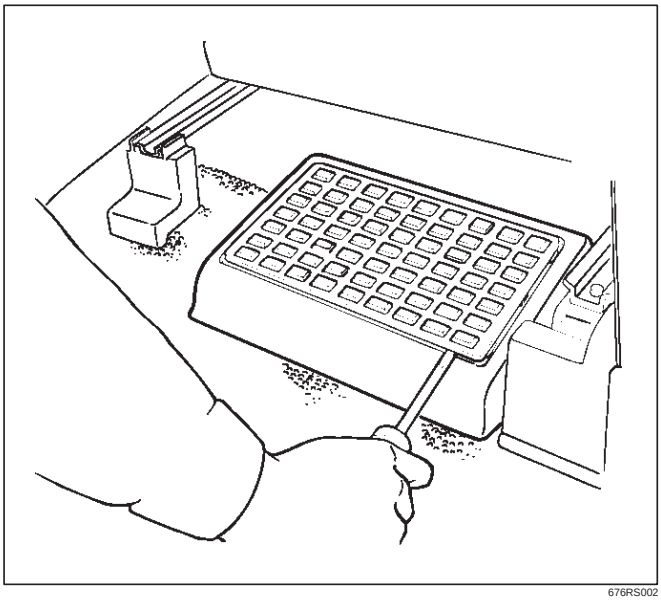

676RS002

2. Remove the fixing nuts.
3. Remove the rear seat foot rest.

Installation

To install, follow the removal steps in the reverse order.

Main Data and Specifications

Torque Specifications

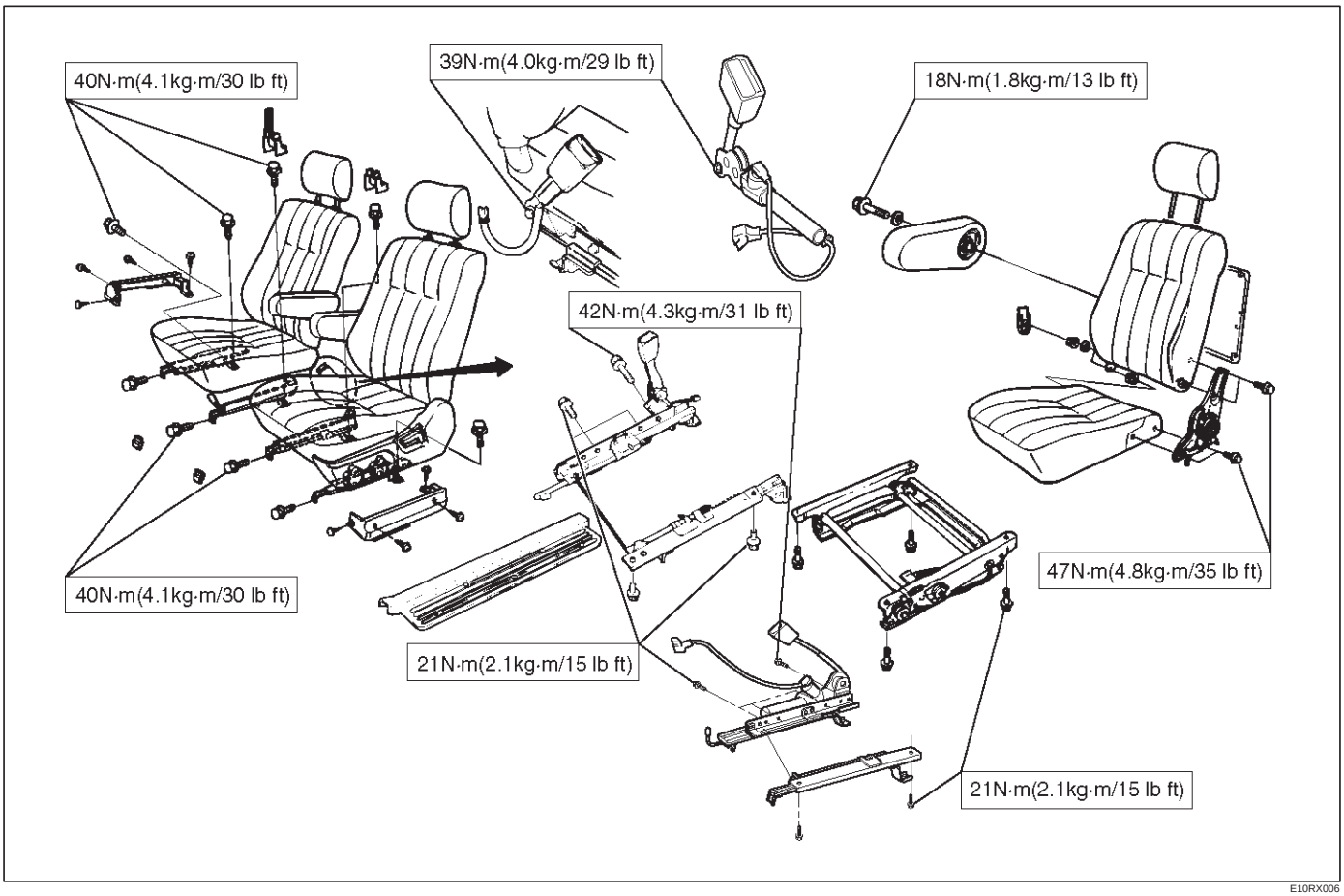

E10RX006

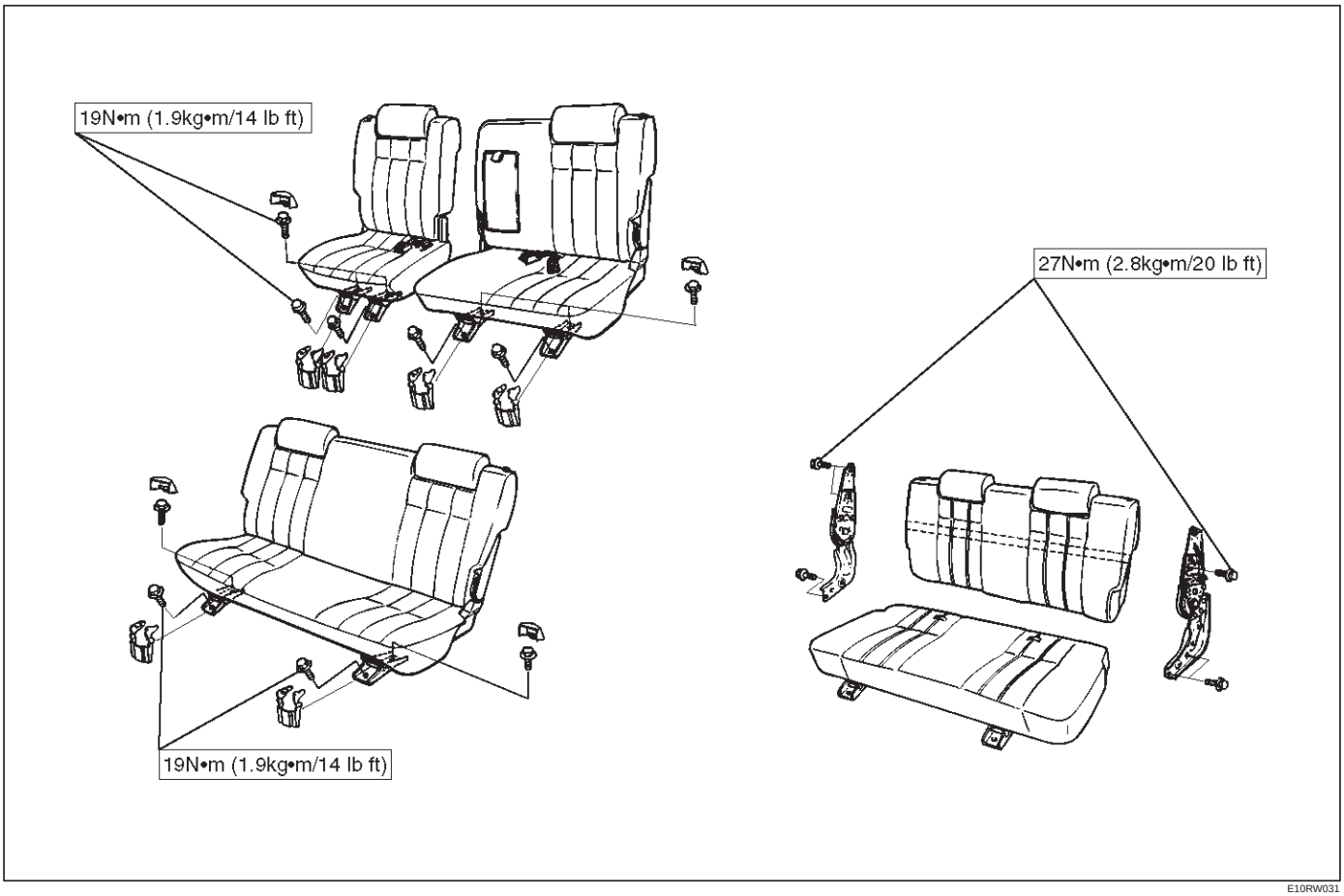

E10RW031

BODY AND ACCESSORIES

SECURITY AND LOCKS

CONTENTS

Service Precaution 8H–2
Front Door Lock Assembly 8H–2
Front Door Lock Assembly and Associated Parts 8H–2
Removal 8H–2
Installation 8H–3
Front Outside Handle and Door Lock Cylinder 8H–4
Front Outside Handle, Door Lock Cylinder and Associated Parts 8H–4
Removal 8H–4
Installation 8H–5
Rear Door Lock Assembly 8H–7
Rear Door Lock Assembly and Associated Parts 8H–7
Removal 8H–7
Installation 8H–8
Rear Outside Handle 8H–9
Rear Outside Handle and Associated Parts 8H–9
Removal 8H–9
Installation 8H–10
Rear Door Inside Lock Knob Link 8H–10
Removal 8H–10
Installation 8H–10
Door Inside Lock Knob 8H–11
Removal 8H–11
Installation 8H–11
Door Inside Handle 8H–11
Removal and Installation 8H–11
Tailgate Lock Assembly (LH) 8H–12
Tailgate Lock Assembly (LH) and Associated Parts 8H–12
Removal 8H–12
Installation 8H–13
Tailgate Lock Assembly (RH) 8H–14
Tailgate Lock Assembly (RH) and Associated Parts 8H–14
Removal 8H–14
Installation 8H–15
Tailgate Inside Lock Knob 8H–15
Removal 8H–15
Installation 8H–15
Tailgate Inside Handle 8H–16
Parts Location 8H–16
Removal and Installation 8H–16
Tailgate Outside Handle and/or Tailgate Lock Cylinder 8H–17
Tailgate Outside Handle and/or Tailgate Lock Cylinder and Associated Parts 8H–17
Removal 8H–17
Installation 8H–18
Key 8H–19
Key Coding 8H–19
Key Styles 8H–19
Power Door Lock System 8H–20
General Description 8H–20
Front Door Lock Actuator Removal 8H–20
Front Door Lock Actuator Installation 8H–20
Rear Door Lock Actuator Removal 8H–20
Rear Door Lock Actuator Installation 8H–21
Tailgate Lock Actuator Removal 8H–21
Tailgate Lock Actuator Installation 8H–21
Anti-theft System 8H–22
General Description 8H–22
Anti-theft & Keyless Entry Control Unit Removal 8H–22
Anti-theft & Keyless Entry Control Unit Installation 8H–22
Anti-theft Indicator Removal 8H–22
Anti-theft Indicator Installation 8H–23
Anti-theft Horn Removal 8H–23
Anti-Theft Horn Installation 8H–23
Engine Hood Switch Removal 8H–23
Engine Hood Switch Installation 8H–23
Keyless Entry System 8H–24
ID Code Registration (Except South Africa) 8H–24
Anti–theft & Keyless Entry Control Unit/Transmitter Replacement 8H–26
Programming With Tech 2 (For South Africa) 8H–27
Main Data and Specifications 8H–29

Service Precaution

WARNING: IF SO EQUIPPED WITH A SUPPLEMENTAL RESTRAINT SYSTEM (SRS), REFER TO THE SRS COMPONENT AND WIRING LOCATION VIEW IN ORDER TO DETERMINE WHETHER YOU ARE PERFORMING SERVICE ON OR NEAR THE SRS COMPONENTS OR THE SRS WIRING. WHEN YOU ARE PERFORMING SERVICE ON OR NEAR THE SRS COMPONENTS OR THE SRS WIRING, REFER TO THE SRS SERVICE INFORMATION. FAILURE TO FOLLOW WARNINGS COULD RESULT IN POSSIBLE AIR BAG DEPLOYMENT, PERSONAL INJURY, OR OTHERWISE UNNEEDED SRS SYSTEM REPAIRS.

CAUTION: Always use the correct fastener in the proper location. When you replace a fastener, use ONLY the exact part number for that application. ISUZU will call out those fasteners that require a replacement after removal. ISUZU will also call out the fasteners that require thread lockers or thread sealant. UNLESS OTHERWISE SPECIFIED, do not use supplemental coatings (Paints, greases, or other corrosion inhibitors) on threaded fasteners or fastener joint interfaces. Generally, such coatings adversely affect the fastener torque and the joint clamping force, and may damage the fastener. When you install fasteners, use the correct tightening sequence and specifications. Following these instructions can help you avoid damage to parts and systems.

Front Door Lock Assembly

Front Door Lock Assembly and Associated Parts

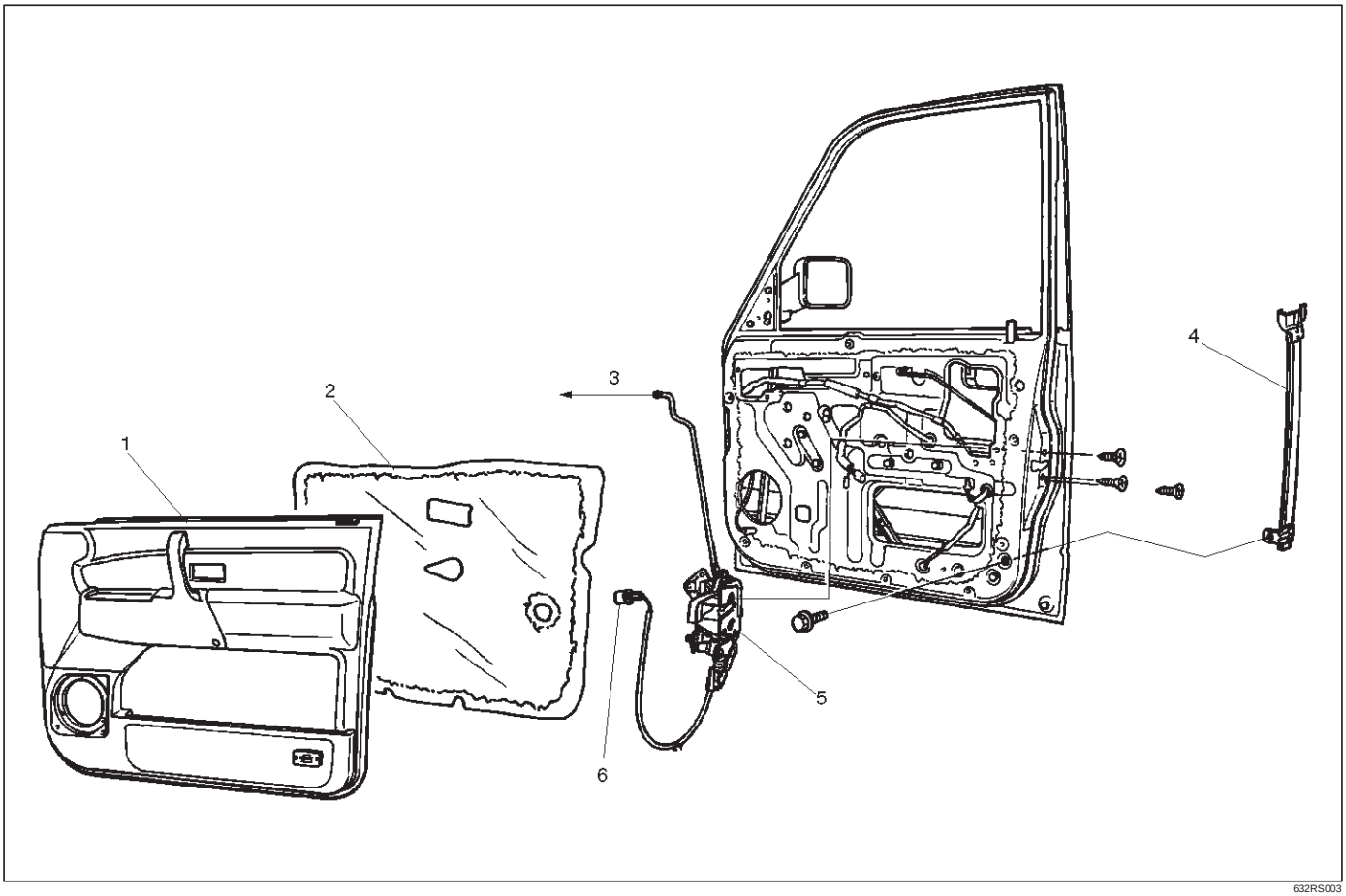

632RS003

Legend

(1) Door Trim Panel
(2) Waterproof Sheet
(3) To Outside Handle
(4) Rear Guide Rail
(5) Door Lock Assembly
(6) Door Lock Switch Connector (W/Power Door Lock)

Removal

1. Disconnect the battery ground cable.
2. Remove the door trim panel.
3. Remove the waterproof sheet.
   Refer to the Front Window Regulator, Glass And Glass Run in Body Structure section.

4. Raise the glass up to the uppermost position, and then remove the rear guide rail.
5. Disconnect the door lock switch connector (w/power door lock) and locking links (arrow marks positions), then remove the door lock assembly fixing screws and door lock assembly.

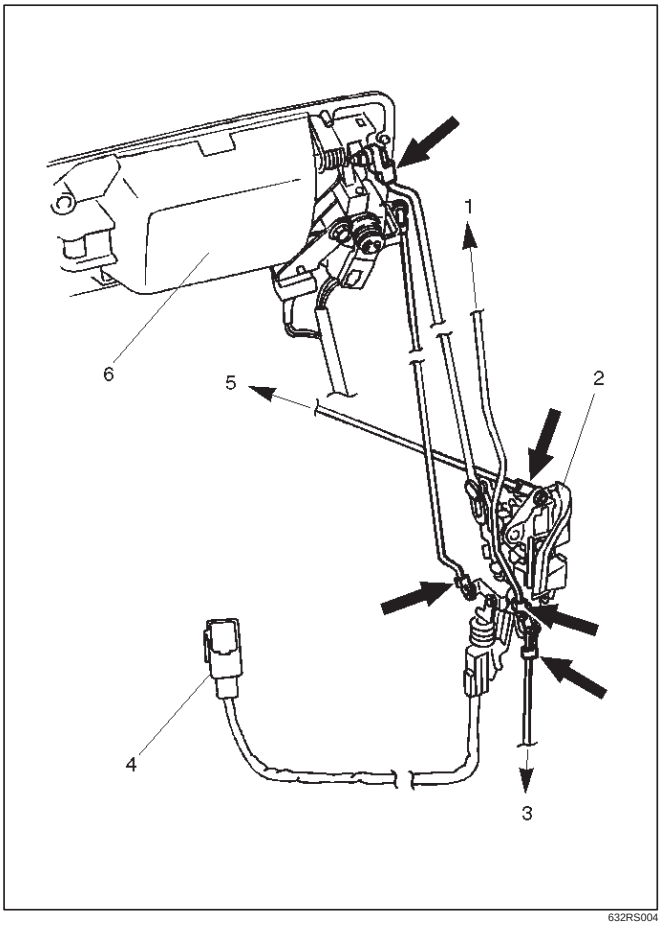

Legend

(1) To Inside Lock Knob
(2) Door Lock Assembly
(3) To Actuator
(4) Door Lock Switch Connector
(5) To Inside Handle
(6) Outside Handle

Installation

To install, follow the removal steps in the reverse order, noting the following points.

1. Apply chassis grease to the lock assembly and striker moving surface.
2. Tighten the door lock assembly fixing screws to the specified torque.

   Torque: 7 N·m (0.7kg·m/61 lb in)
3. Check that the door lock operates smoothly.

Front Outside Handle and Door Lock Cylinder

Front Outside Handle, Door Lock Cylinder and Associated Parts

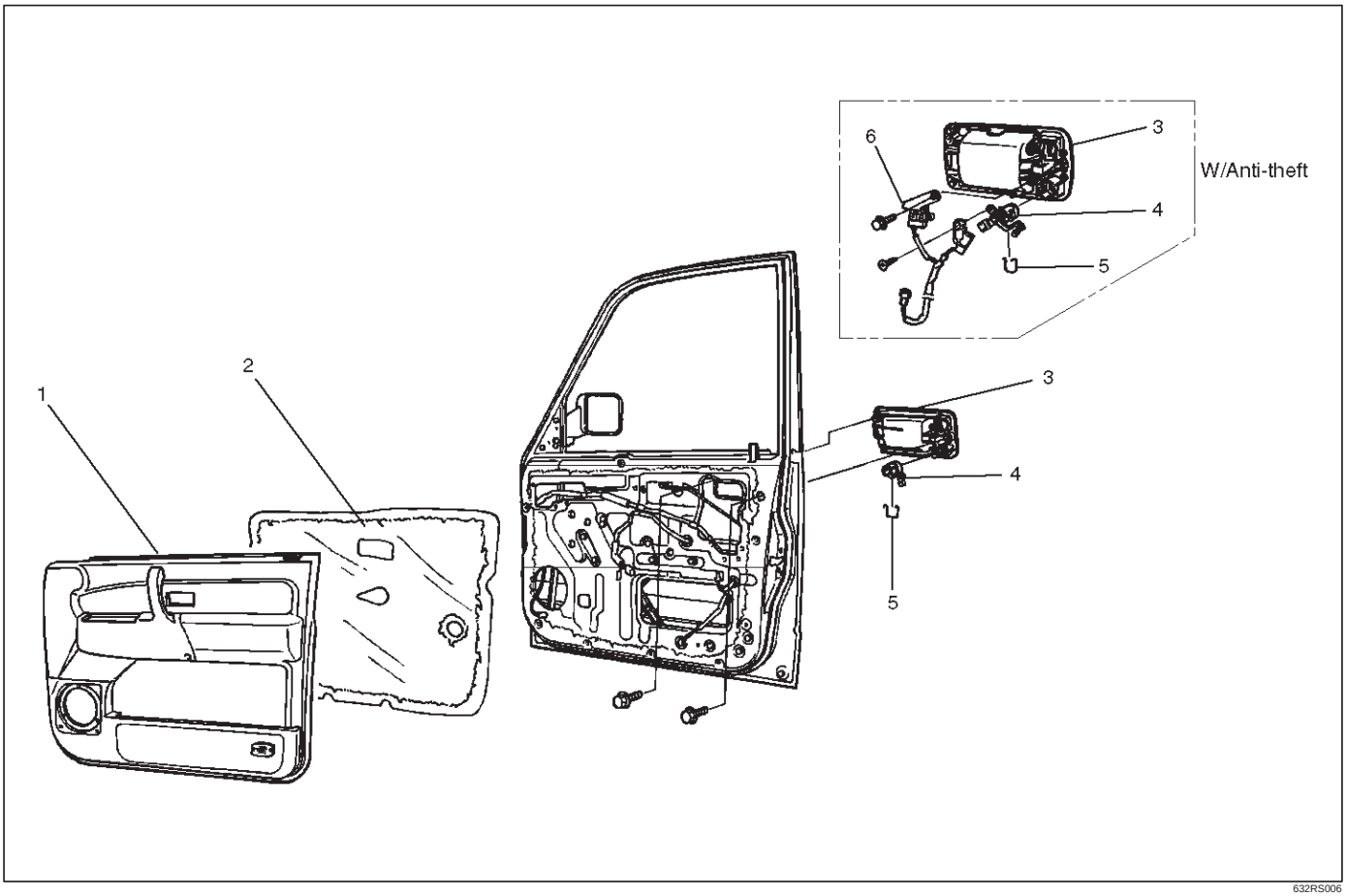

Legend

(1) Door Trim Panel
(2) Waterproof Sheet
(3) Outside Handle
(4) Door Lock Cylinder
(5) Clip
(6) Key Switch (W/Anti-Theft)

Removal

1. Disconnect the battery ground cable.
2. Remove the door trim panel.
3. Remove the waterproof sheet.
   - Refer to the Front Window Regulator, Glass And Glass Run in Body Structure section.

4. Disconnect the locking links (arrow marks positions) and key switch connector (w/anti-theft) to remove the outside handle.

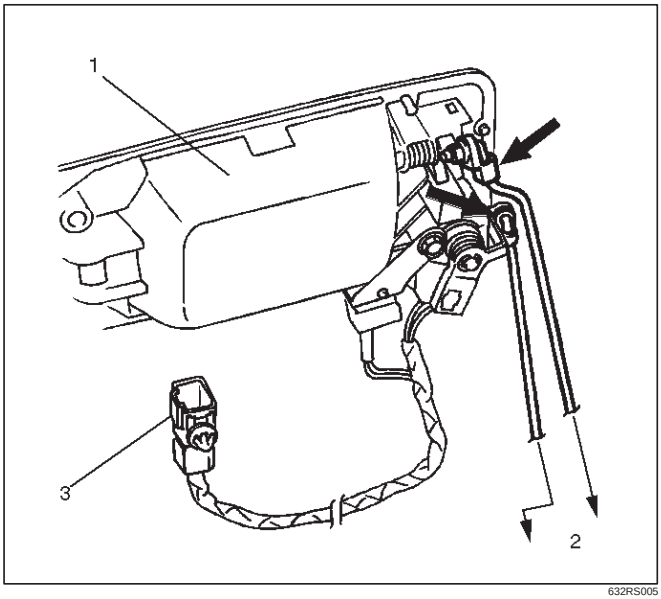

632RS005

Legend

(1) Outside Handle
(2) To Door Lock Assembly
(3) Key Switch Connector (W/Anti–Theft)

5. Remove the key Switch.

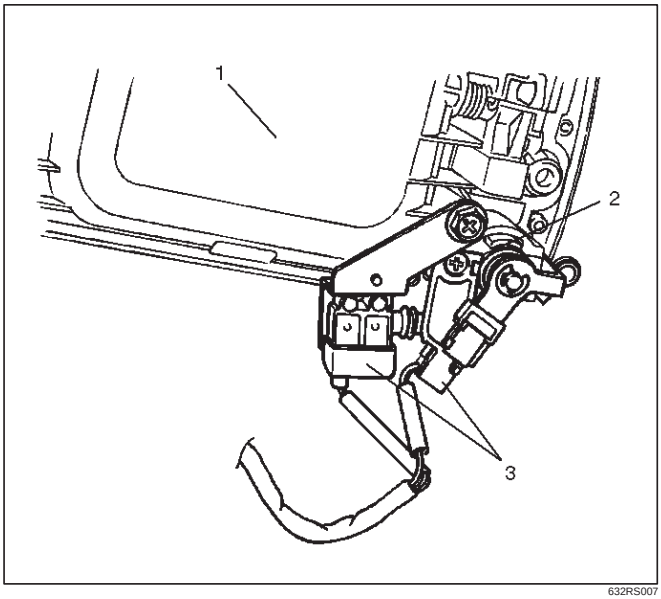

632RS007

Legend

(1) Outside Handle
(2) Lock Cylinder
(3) Key Switch

6. Remove the fixing clip(1) to remove the door lock cylinder(2).

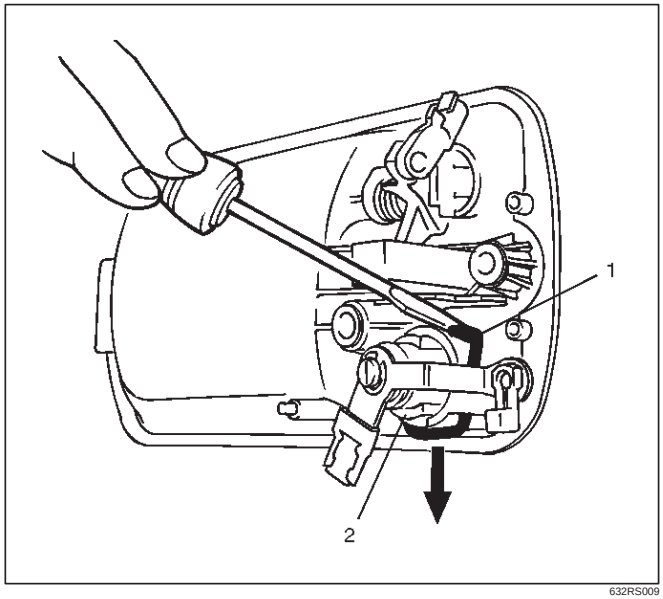

632RS009

Installation

To install, follow the removal steps in the reverse order, noting the following points.

1. Be sure to install the door lock cylinder(2) at a right angle to the outside handle(1).

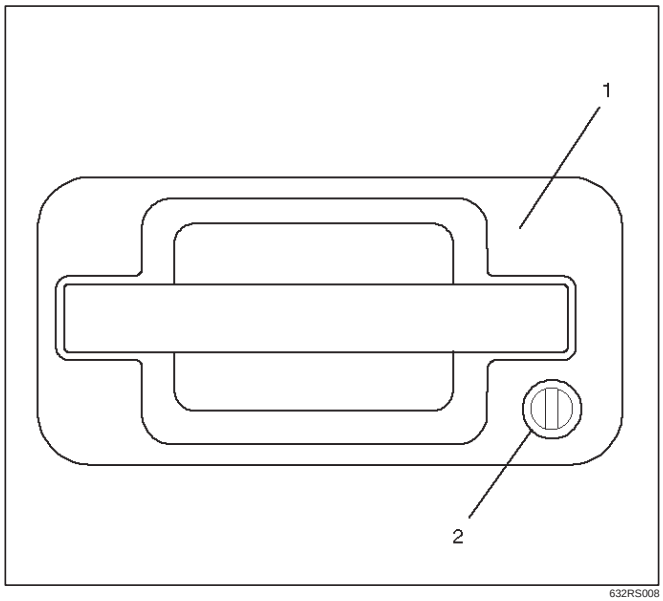

632RS008

2. For the anti-theft system, be sure to install the push rod(3) of key switch while pressing it to the door lock cylinder(5) so that there is no continuity between the key switch(4) side connector terminal No. D6–2 and D6–4 (No. D16–2 and D16–4: passenger side).

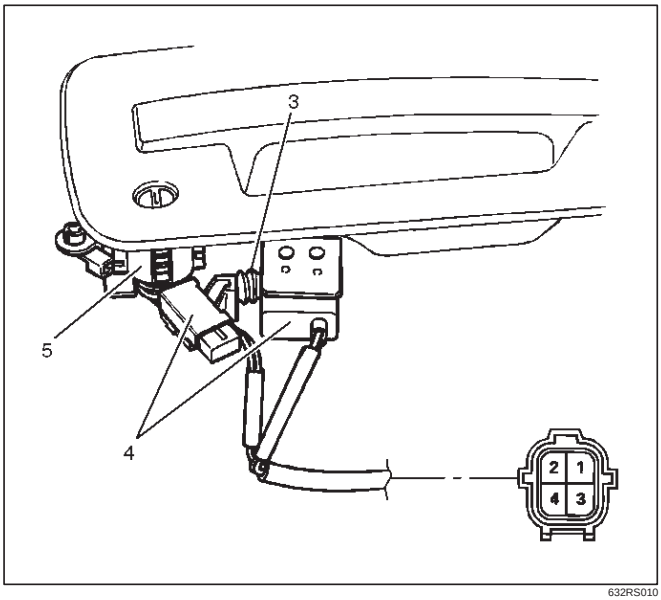

632RS010

3. Tighten the outside handle and key switch fixing bolts to the specified torque.

Torque: 9 N·m (0.9kg·m/78 lb in)

4. Check for smooth outside handle and lock cylinder operation.

Rear Door Lock Assembly

Rear Door Lock Assembly and Associated Parts

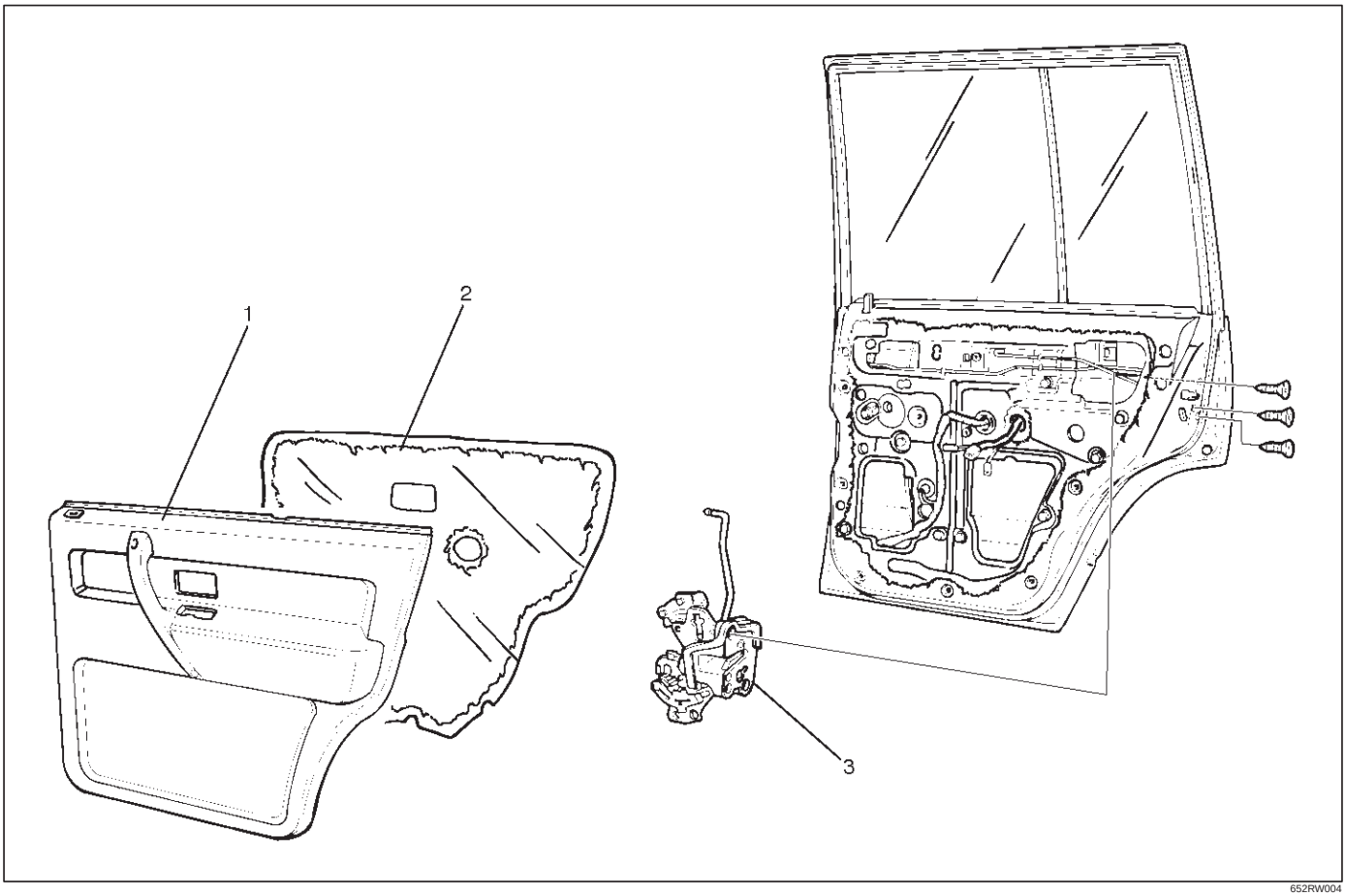

652RW004

Legend

(1) Door Trim Panel
(2) Waterproof Sheet
(3) Door Lock Assembly

Removal

1. Disconnect the battery ground cable.
2. Remove the door trim panel.
3. Remove the waterproof sheet.
   - Refer to the Rear Window Regulator And Glass in Body Structure section.

4. Disconnect the locking links (arrow marks positions) and remove the fixing screws to remove the door lock assembly.

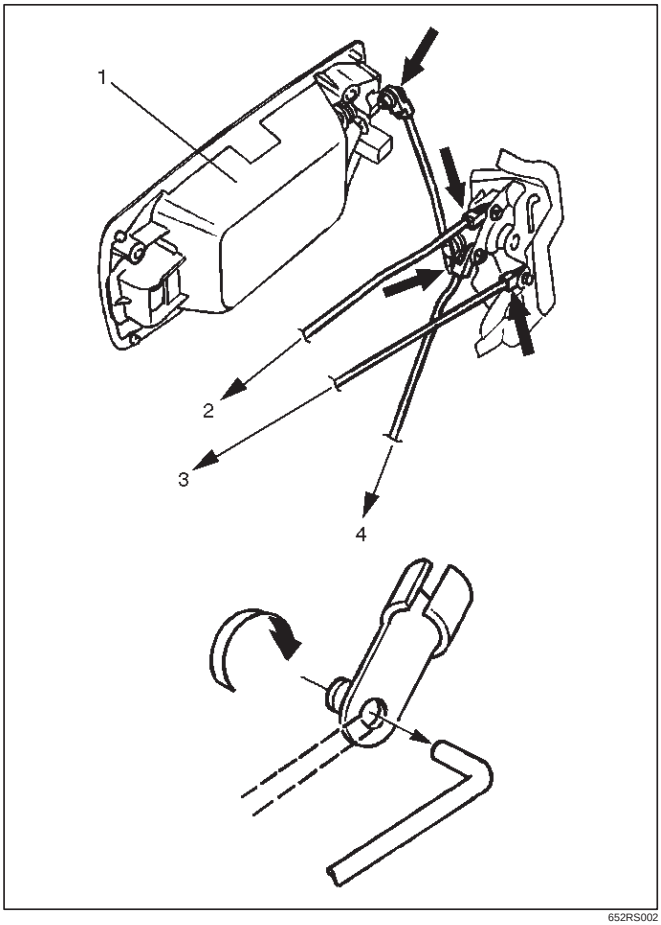

652RS002

Legend

(1) Outside Handle
(2) To Inside Lock Knob
(3) To Inside Handle
(4) To Actuator

Installation

To install, follow the removal steps in the reverse order, noting the following points.

1. Apply chassis grease to the lock assembly and striker moving surface.
2. Tighten the door lock assembly fixing screws to the specified torque.

   Torque: 7 N·m (0.7kg·m/61 lb in)

3. Check that the door lock operates smoothly.

Rear Outside Handle

Rear Outside Handle and Associated Parts

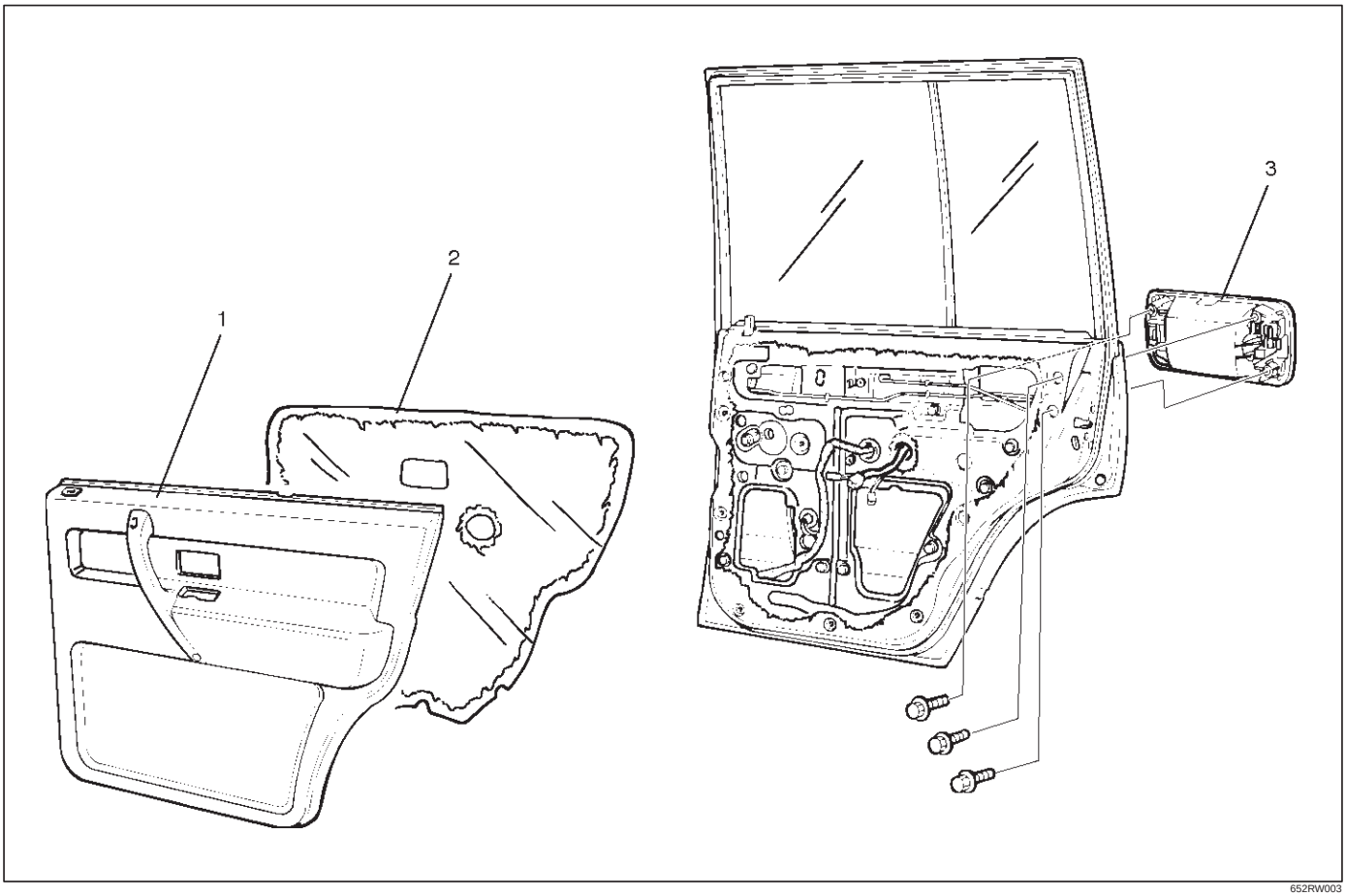

652RW003

Legend

(1) Door Trim Panel
(2) Waterproof Sheet
(3) Outside Handle

Removal

1. Disconnect the battery ground cable.
2. Remove the door trim panel.
3. Remove the waterproof sheet.
   - Refer to the Rear Window Regulator And Glass in Body Structure section.
4. Disconnect the locking link (arrow mark position) and remove three fixing bolts to remove the outside handle.

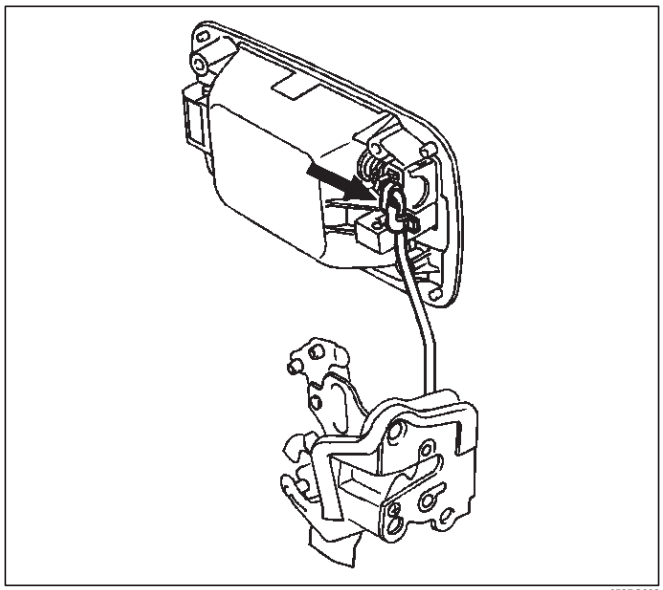

652RS003

Installation

To install, follow the removal steps in the reverse order, noting the following points.

1. Tighten the outside handle fixing bolts to the specified torque.

   Torque: 9 N·m (0.9kg·m/78 lb in)

2. Check that the outside handle operates smoothly.

Rear Door Inside Lock Knob Link

Removal

1. Disconnect the battery ground cable.
2. Remove the door trim panel(3).
3. Remove the waterproof sheet(2).
   - Refer to the Rear Window Regulator And Glass in Body Structure section.
4. Remove the fixing screw(4) and disconnect the locking link at the door lock assembly to remove the rear door inside lock knob link(1).

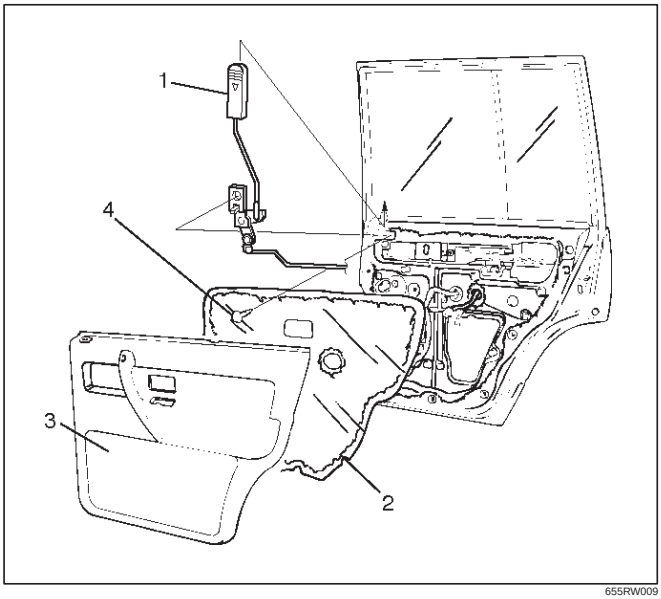

655RW009

Installation

To install, follow the removal steps in the reverse order.

Door Inside Lock Knob

Removal

1. Disconnect the battery ground cable.
2. Remove the door trim panel(1).
   - Refer to the Front & Rear Door Trim Panel in Exterior/Interior Trim section.
3. Turn the door inside lock knob counterclockwise and then remove the door inside lock knob (2).

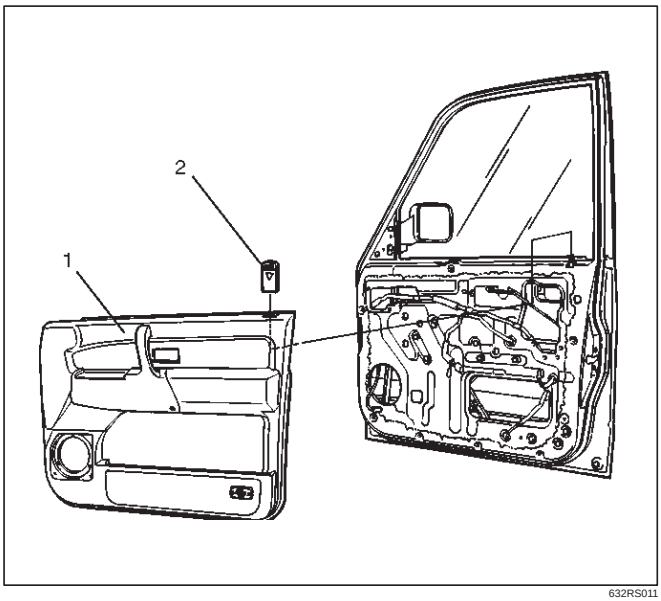

632RS011

Installation

To install, follow the removal steps in the reverse order.

Door Inside Handle

Removal and Installation

- Refer to the Front & Rear Door Trim Panel in Exterior/Interior Trim section.

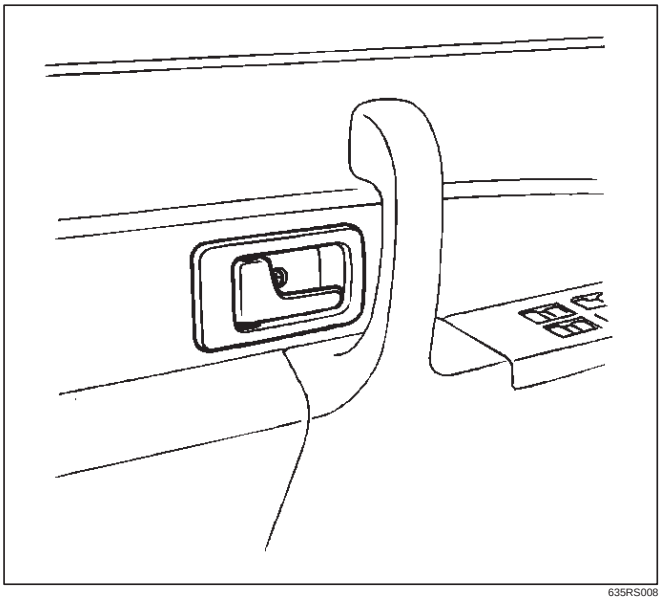

635RS008

Tailgate Lock Assembly (LH)

Tailgate Lock Assembly (LH) and Associated Parts

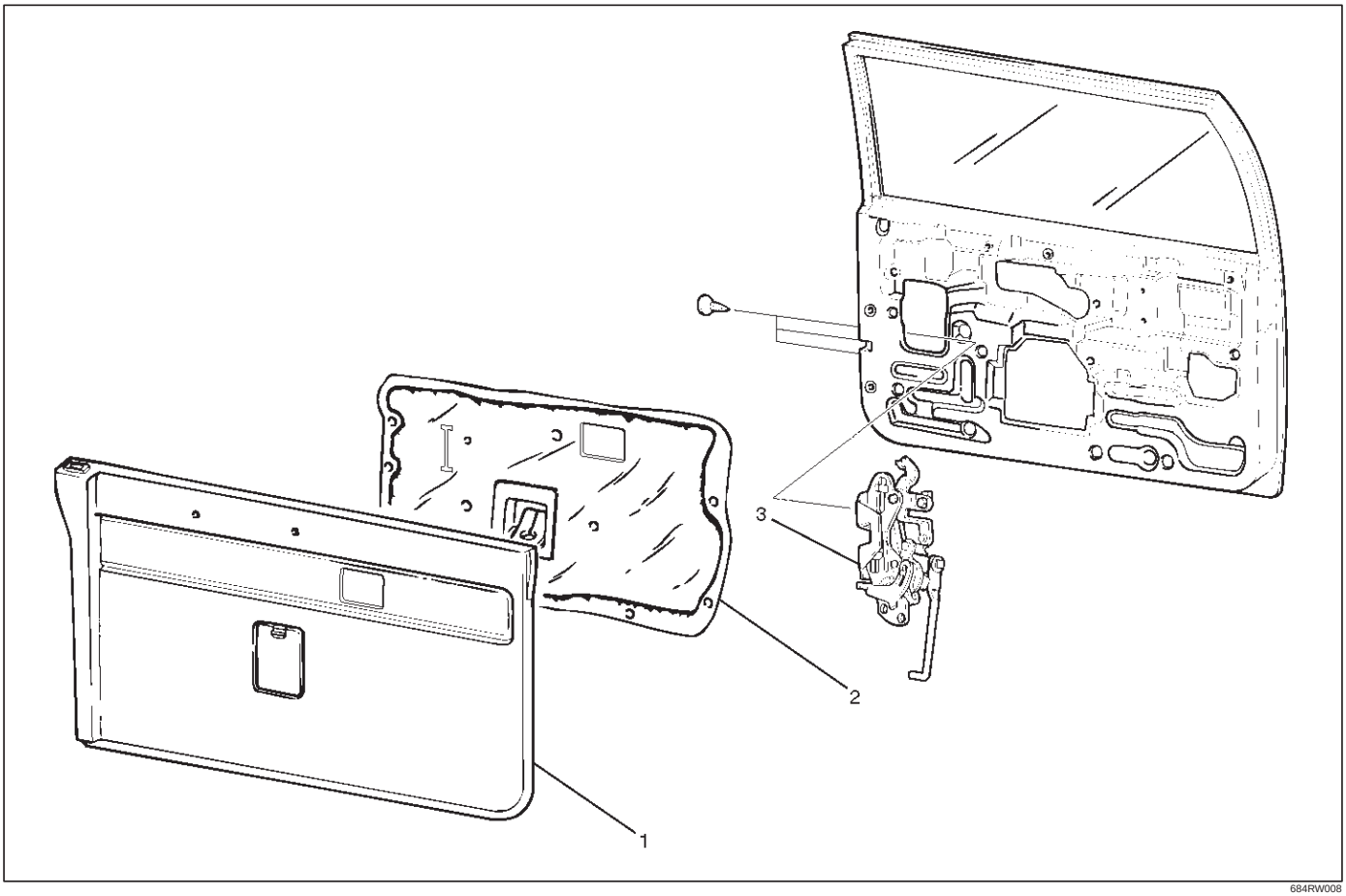

684RW008

Legend

(1) Tailgate Trim Panel(LH)
(2) Waterproof Sheet
(3) Tailgate Lock Assembly

Removal

1. Disconnect the battery ground cable.
2. Remove the tailgate trim panel (LH).
   - Refer to the Tailgate Trim Panel (LH) in Exterior/Interior Trim section.
3. Taking notice of the tailgate harness, peel the waterproof sheet off the tailgate panel carefully and then remove the waterproof sheet.

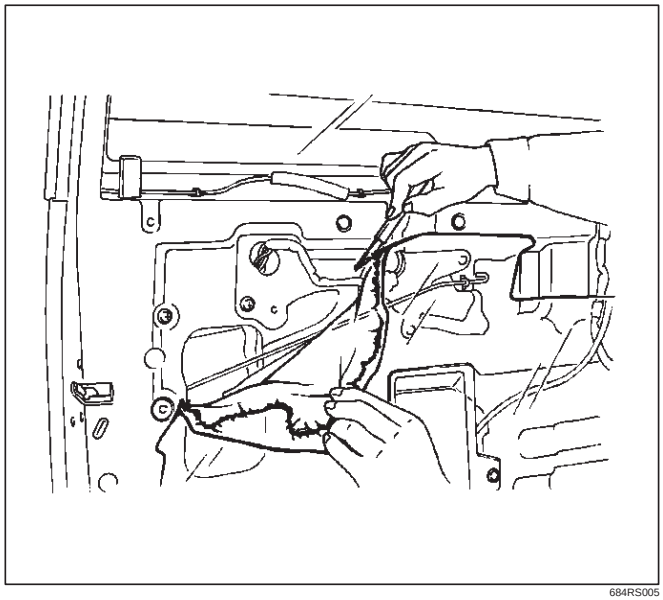

684RS005

4. Disconnect the locking links (arrow marks positions), remove three fixing screws and then remove the tailgate lock assembly (LH).

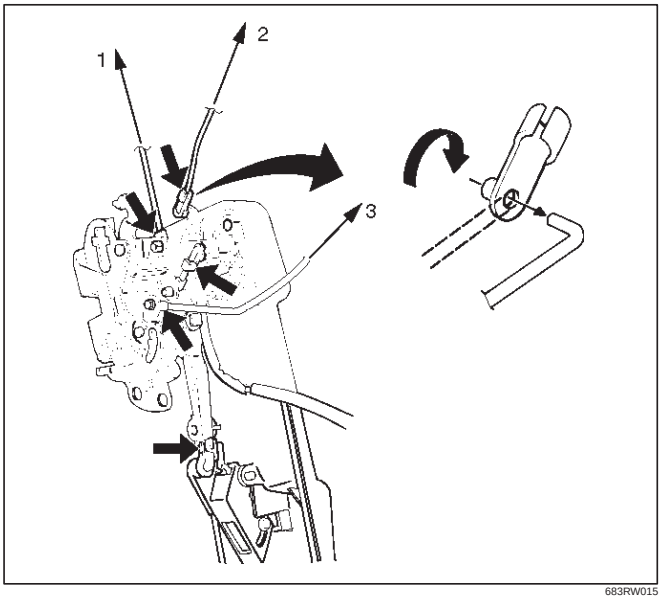

683RW015

Legend

(1) To Inside Lock Knob
(2) To Actuator
(3) To Inside Handle

Installation

To install, follow the removal steps in the reverse order, noting the following points.

1. Apply chassis grease to the lock assembly and striker moving surface.
2. Tighten the tailgate lock assembly fixing screws to the specified torque.

   Torque: 7 N·m (0.7kg·m/61 lb in)

3. Check that the tailgate lock operates correctly after installing it.

Tailgate Lock Assembly (RH)

Tailgate Lock Assembly (RH) and Associated Parts

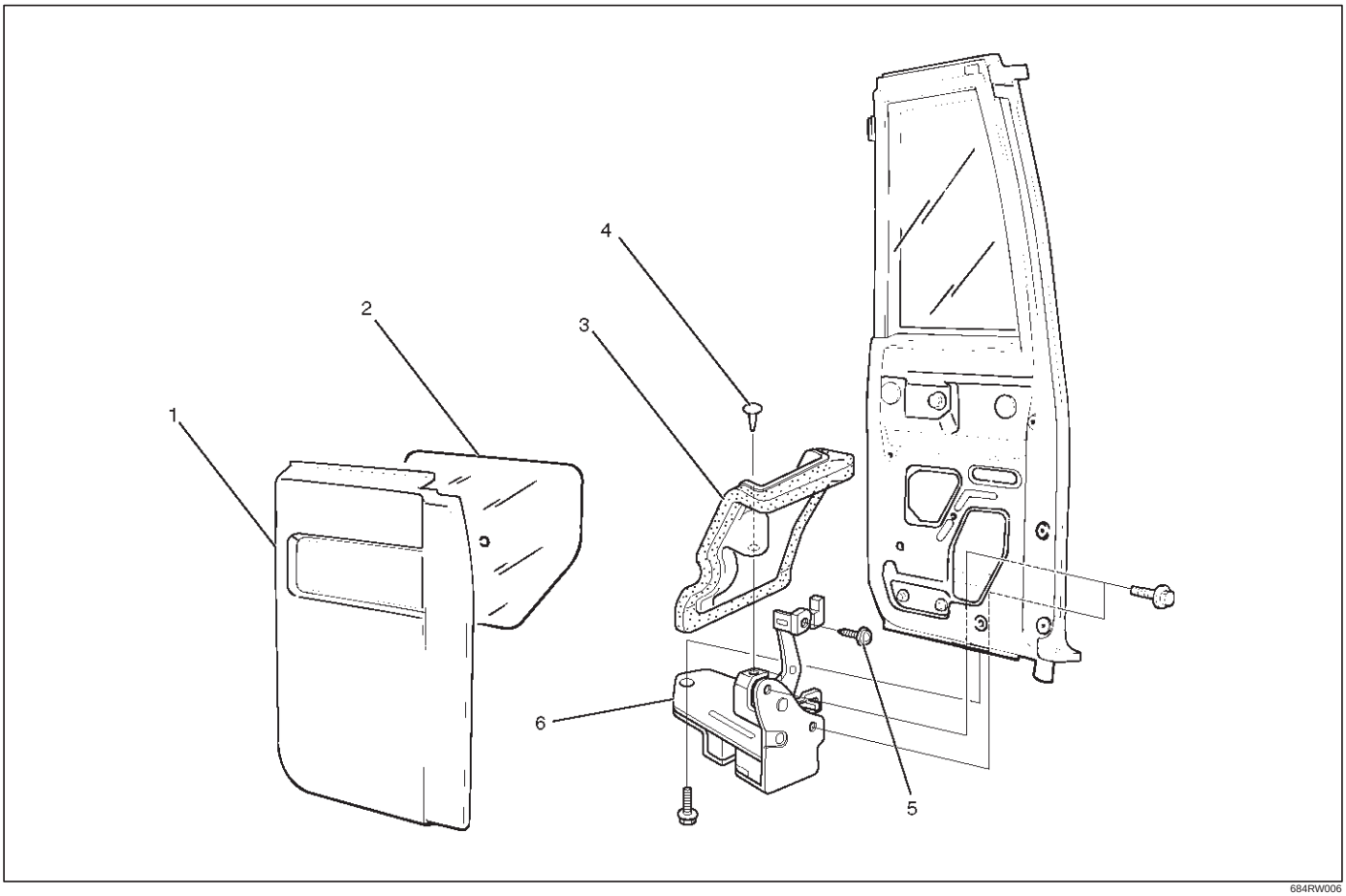

684RW006

Legend

(1) Tailgate Trim Panel (RH)
(2) Waterproof Sheet
(3) Tailgate Lock Seal
(4) Clip
(5) Screw
(6) Tailgate Lock Assembly (RH)

Removal

1. Disconnect the battery ground cable.
2. Remove the tailgate trim panel (RH).
   - Refer to the Tailgate Trim Panel (RH) in Exterior/Interior Trim section.
3. Peel the waterproof sheet off the tailgate panel carefully and then remove the waterproof sheet.
4. Remove three fixing bolts and then remove the tailgate lock assembly (RH).

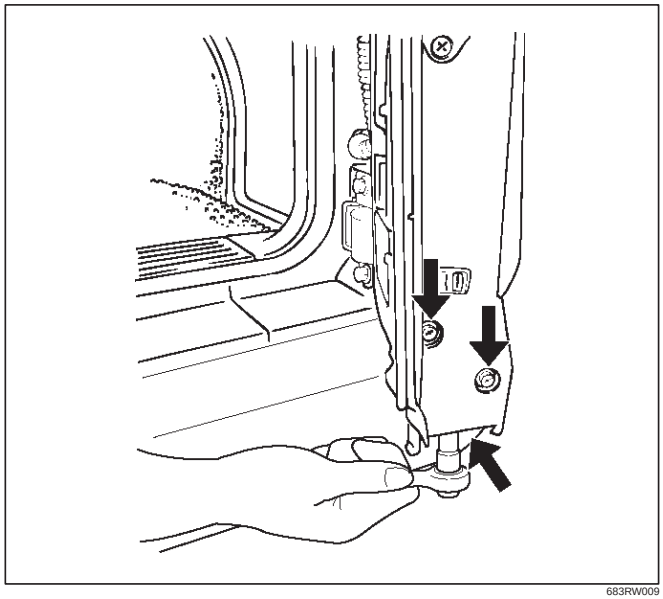

683RW009

5. Remove the tailgate lock seal fixing clip(1) and then remove the tailgate lock seal(2).

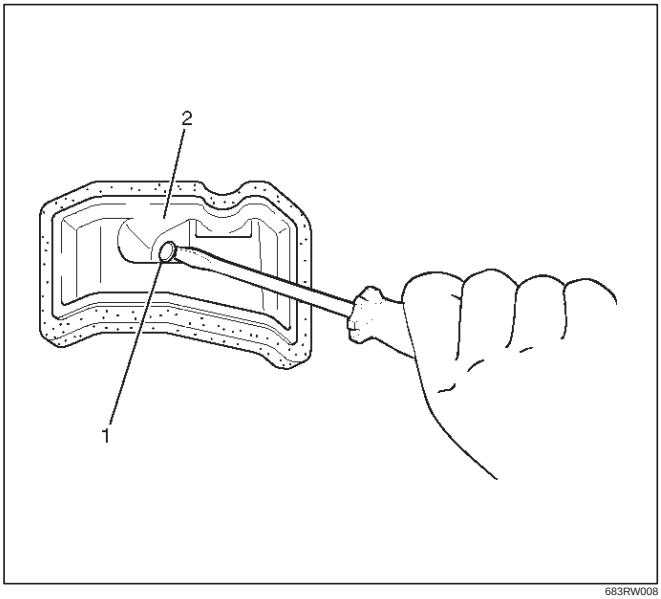

683RW008

Installation

To install, follow the removal steps in the reverse order, noting the following points.

1. Apply chassis grease to the lock assembly and striker moving surface.
2. Tighten the tailgate lock assembly fixing bolts to the specified torque.

   Torque: 11 N·m (1.1kg·m/95 lb in)
3. Check that the tailgate lock operates correctly after installing it.

Tailgate Inside Lock Knob

Removal

1. Disconnect the battery ground cable.
2. Remove the tailgate trim panel (LH)(2).
   - Refer to the Tailgate Trim Panel (LH) in Exterior/Interior Trim section.
3. Take care of cushion to turn the lock knob counterclockwise and then remove the tailgate inside lock knob(1).

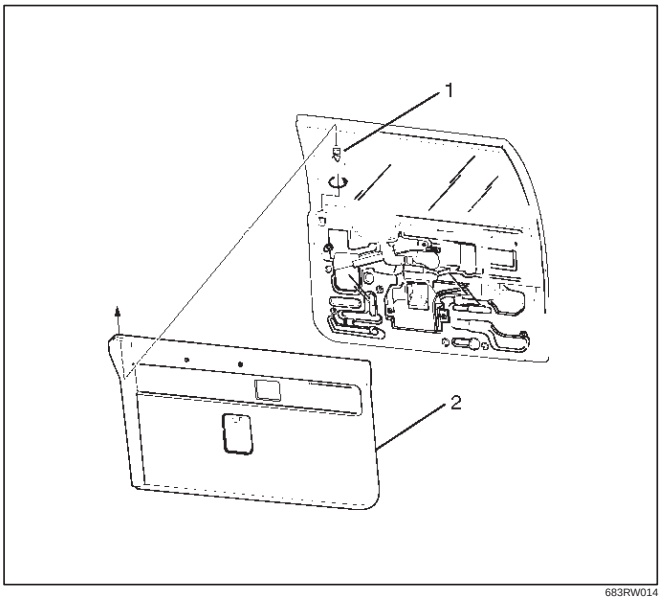

683RW014

Installation

To install, follow the removal steps in the reverse order.

Tailgate Inside Handle

Parts Location

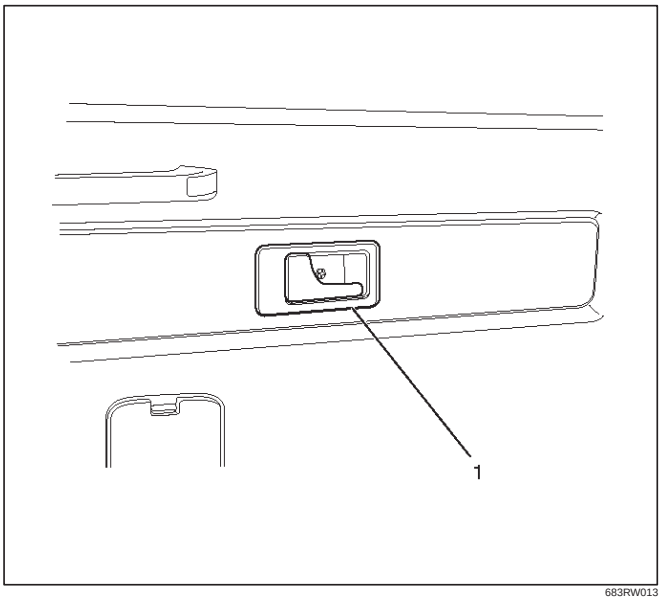

Legend

(1) Tailgate Inside Handle

Removal and Installation

- Refer to the Tailgate Trim Panel (LH) in Exterior/Interior Trim section.

Tailgate Outside Handle and/or Tailgate Lock Cylinder

Tailgate Outside Handle and/or Tailgate Lock Cylinder and Associated Parts

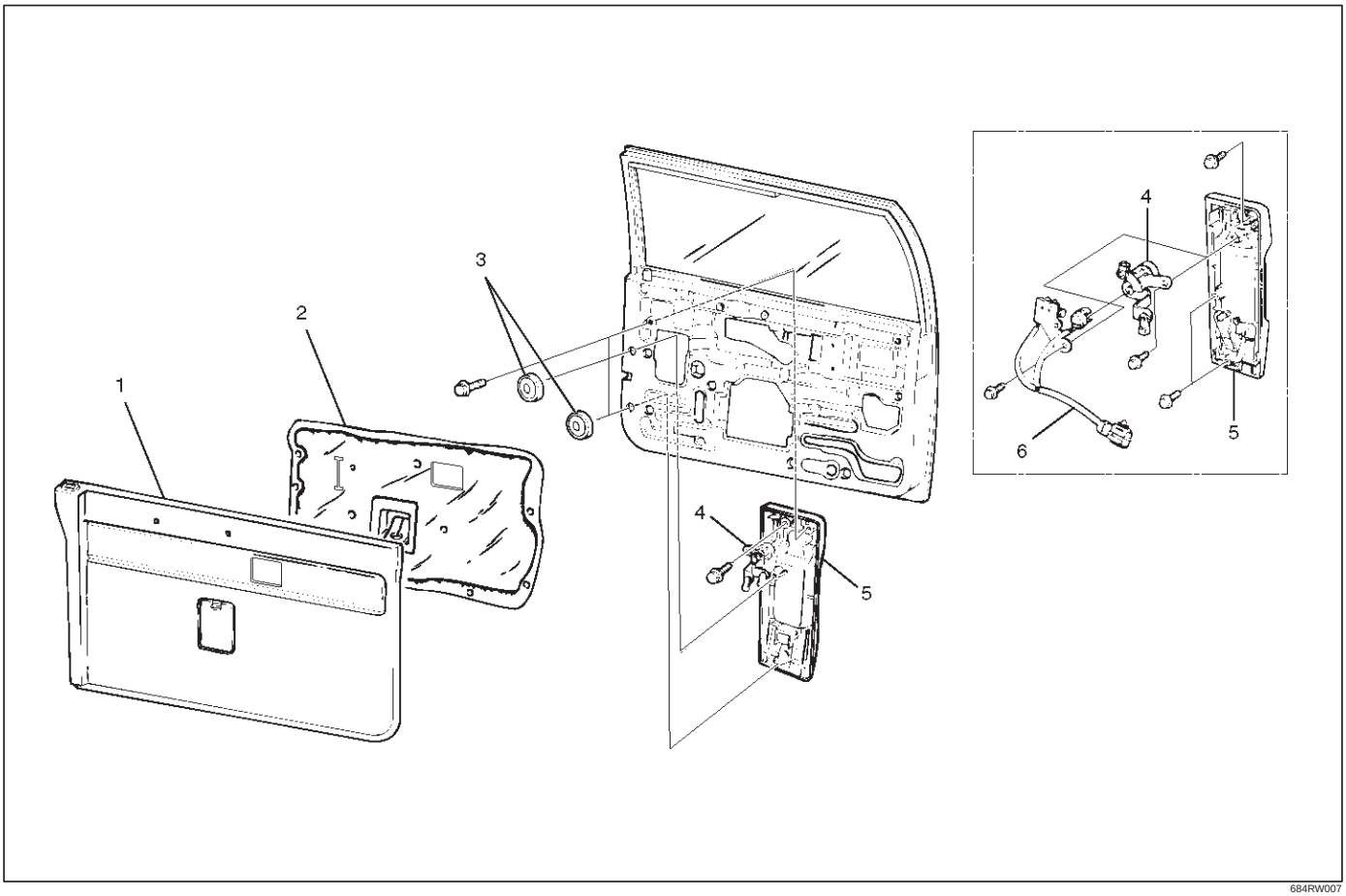

Legend

(1) Tailgate Trim Panel (LH)
(2) Waterproof Sheet
(3) Grommet
(4) Tailgate Lock Cylinder
(5) Tailgate Outside Handle
(6) Key Switch (W/Anti–Theft)

Removal

1. Disconnect the battery ground cable.
2. Remove the tailgate trim panel.
3. Remove the waterproof sheet.
   - Refer to the Tailgate Lock Assembly (LH) in this section.
4. Remove the grommet.

5. Disconnect the locking links (arrow marks positions), key switch connector (w/anti-theft) and remove three fixing bolts to remove the tailgate outside handle.

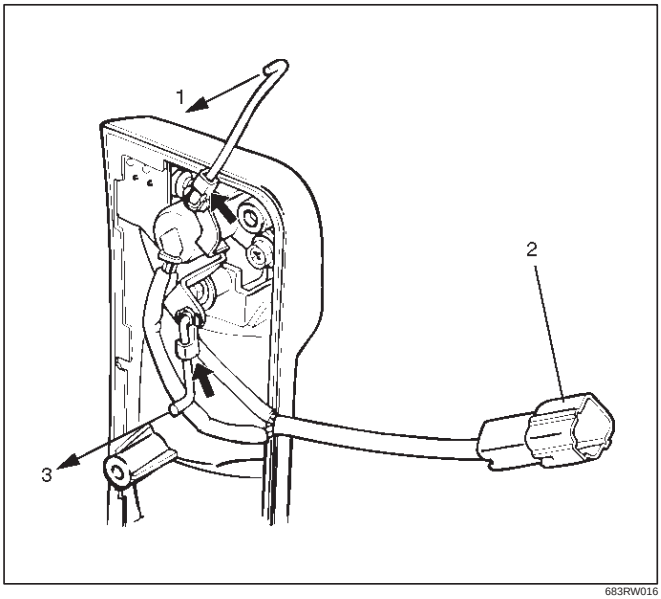

683RW016

Legend

(1) To Actuator
(2) Key Switch Connector (W/Anti–Theft)
(3) To Lock Assembly

6. Remove the key switch fixing bolt(3) to remove the key switch (w/anti-theft) (4) from the tailgate lock cylinder (1).
   And remove the tailgate lock cylinder fixing bolt(2) to remove the tailgate lock cylinder.

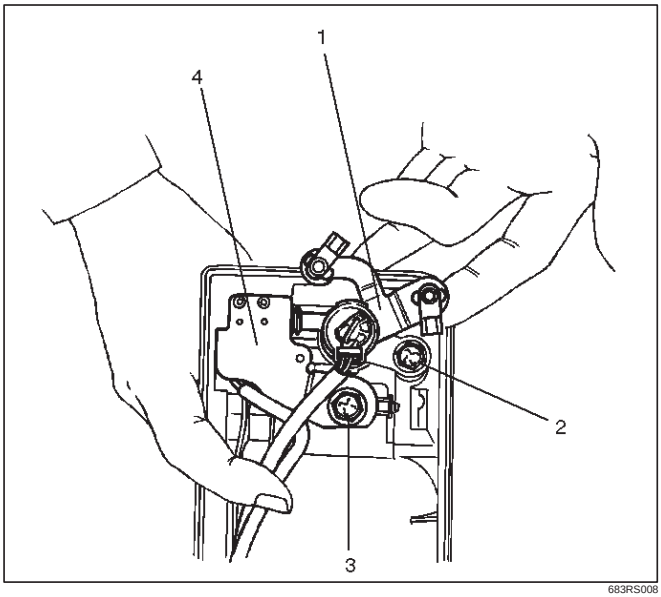

683RS008

Installation

To install, follow the removal steps in the reverse order, noting the following points.

1. For the anti-theft system, install the push rod(1) of the key switch(3) to the key cylinder(2) while pressing it so that there is not continuity between the key switch side connector terminals No. G5–2 and G5–4 as shown in the figure.

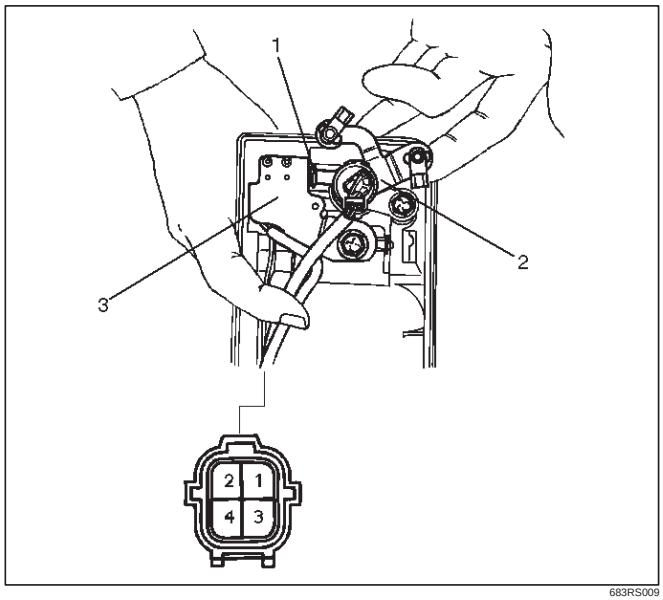

683RS009

2. Tighten the outside handle and key cylinder fixing bolts to the specified torque.

   Torque: 9 N·m (0.9kg·m/78 lb in)

3. Check that the outside handle and key cylinder operate correctly after installing them.

Key

Key Coding

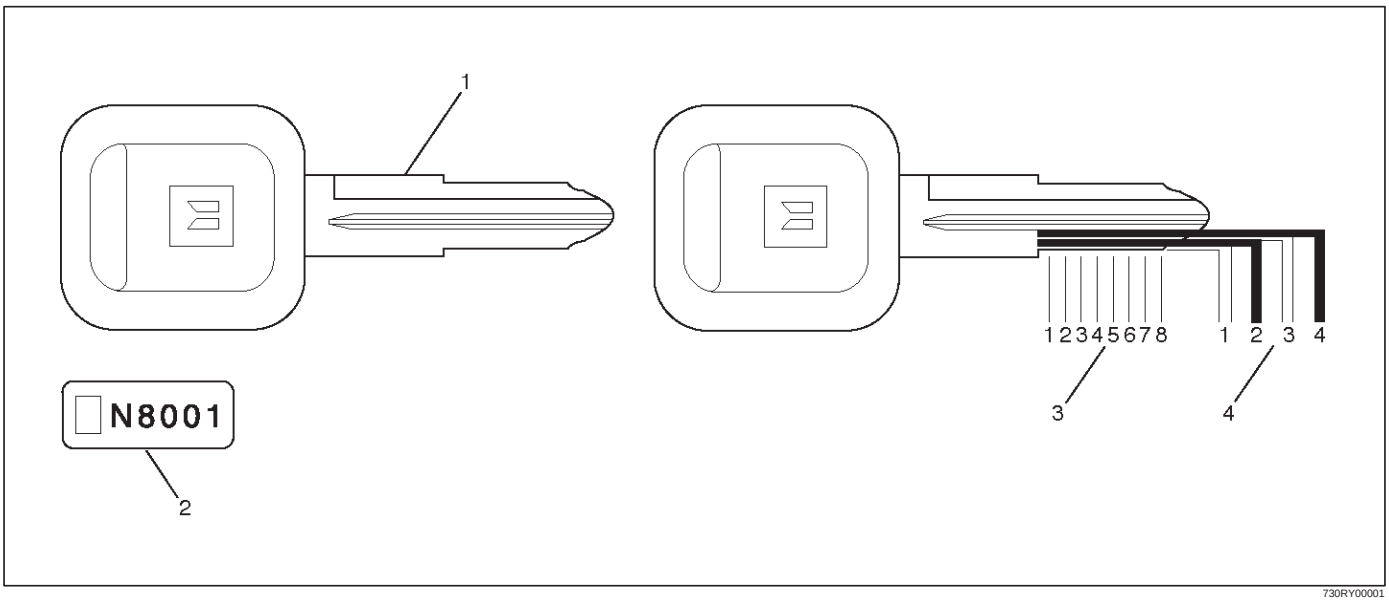

730RY00001

Legend
(1) Key(Actual Size)
(2) Key Code Tag
(3) Position
(4) Level

One key is used for the ignition, door, and tailgate lock cylinders. The keys are cut on both edges to make them reversible.
Key identification is obtained from the five character key code stamped on the key code tag. From this key code, the key code cutting combination can be determined from a code list (available to owners of key cutting equipment from suppliers).
If key codes are not available from records or tags, the key code can be obtained from the right hand door lock cylinder (if lock has not been replaced). Lock cylinders supplied by the factory as service parts are unmarked.
If the original key is available, the key code cutting combination can be determined by laying the key on the diagram shown in the figure.

Key Styles

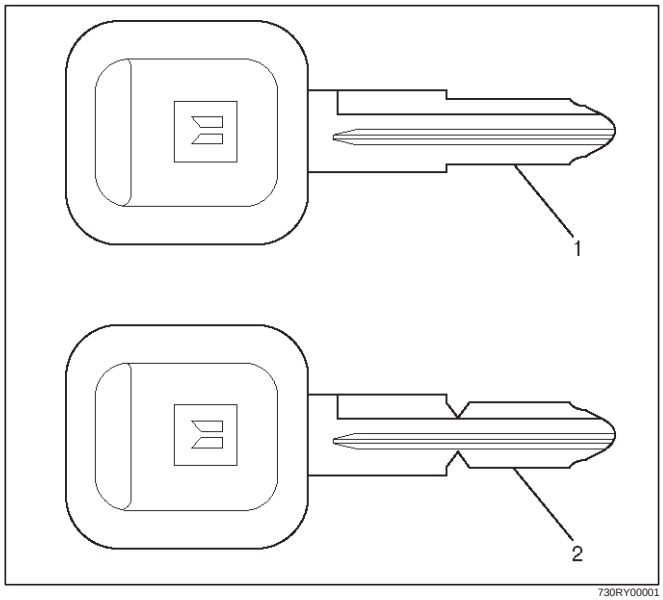

730RY00001

Legend
(1) Blank Key Style “A”
(2) Blank Key Style “B”

The keys come in styles A or B depending on the key code cutting combination. When the first position in the combination is a 1, 2 or 3, Style A is used. When the first position is a 4, Style B (factory pre-cut key) is used.

Power Door Lock System

General Description

The circuit consists of the door lock (& power window) switch, door lock actuator for the front and rear door, tailgate lock actuator and the door lock key switch. The front door lock switch –LH is always provided with battery voltage.
The key or the inside lock button on the both driver's and the front passenger's door can activate the lock mechanism of all the doors (including the tailgate).
When the driver's door lock switch or the front passenger's door lock switch is turned on, current flows for about one second to the door lock actuator of each door connected in parallel with the front door lock (& power window) switch –LH to activate the actuator to lock and unlock the doors.

Front Door Lock Actuator Removal

1. Refer to the Front Door Lock Assembly removal procedure in this section.
2. Remove the door lock actuator(1).

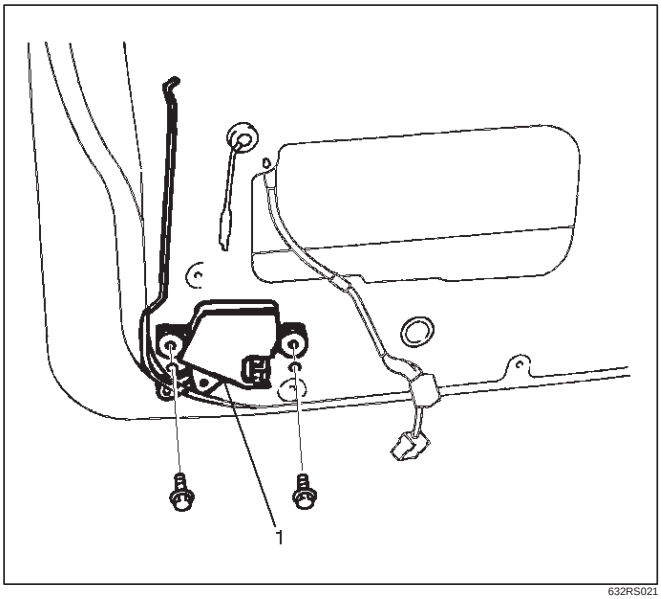

632RS021

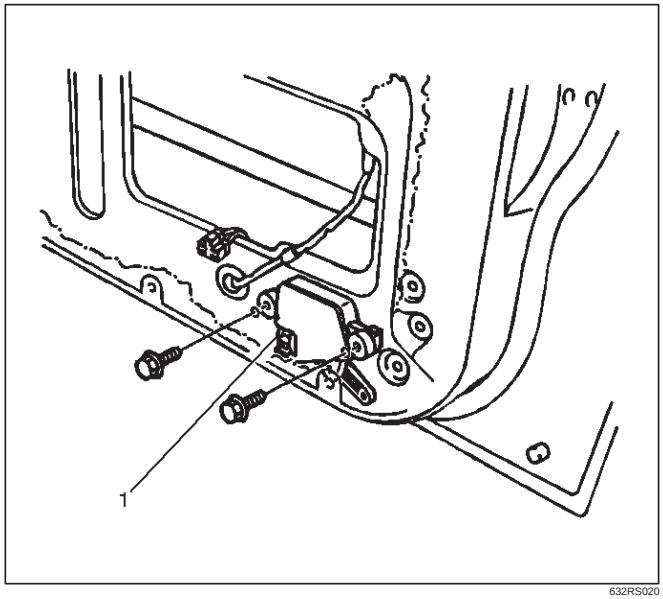

632RS020

Front Door Lock Actuator Installation

To install, follow the removal steps in the reverse order.

Rear Door Lock Actuator Removal

1. Refer to the Rear Door Lock Assembly removal procedure in this section.
2. Removal the door lock actuator(1).

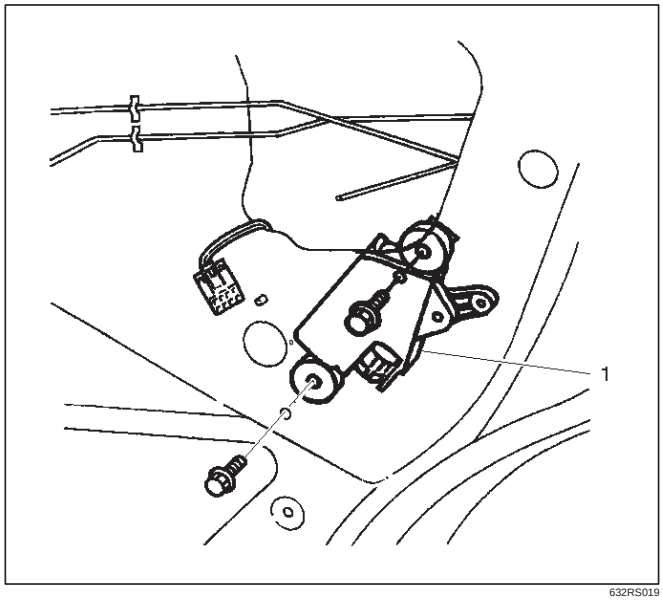

632RS019

Rear Door Lock Actuator Installation

To install, follow the removal steps in the reverse order.

Tailgate Lock Actuator Removal

1. Refer to the Tailgate Lock Assembly removal procedure in this section.
2. Remove the tailgate lock actuator(1).

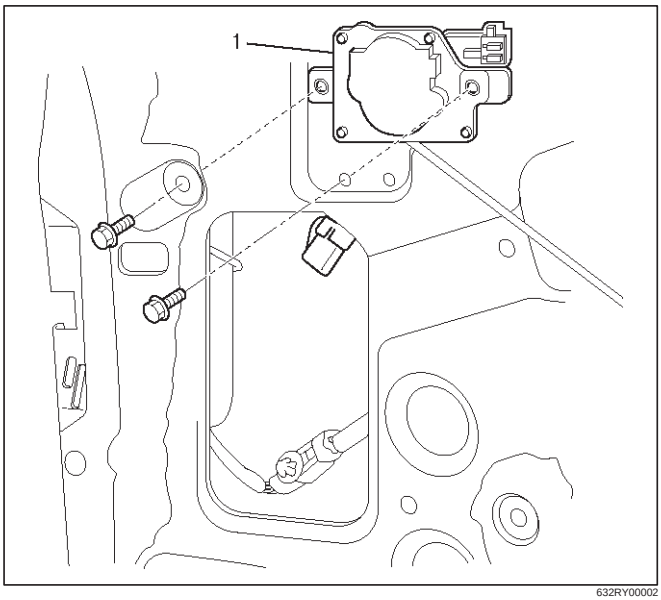

632RY00002

Tailgate Lock Actuator Installation

To install, follow the removal steps in the reverse order.

Anti-theft System

General Description

The circuit consists of the starter switch, anti-theft & keyless entry control unit, anti-theft horn, front door and tailgate key switch (detect and tamper switch), door lock (& power window) switch, door lock actuator for each door, engine hood switch, clutch start switch (M/T), ANTI-THEFT indicator light and mode switch (A/T).
The system operates as follows: After locking the starter switch and removing the starter key (this sets the alarm), if the door is unlocked in any way other than with the proper key, the headlights start flashing, the horn sounds, and the starter circuit is disabled. (However, the engine hood and all the doors must be locked and closed.)
Once the system has been placed in the warning or alarm condition, it can be released only when the starter switch is shifted from “OFF” to “ACC” by the starter key, or when the lock of the front door or the tailgate is released (to activate the detect switch) by the starter key.

Anti-theft & Keyless Entry Control Unit Removal

1. Disconnect the battery ground cable.
2. Remove the front console assembly.
   - Refer to the Instrument Panel Assembly in Body Structure section.
3. Remove the lower cluster assembly.
   - Refer to the Instrument Panel Assembly in Body Structure section.
4. Disconnect the connector(2).
5. Remove four screws to remove the anti-theft & keyless entry control unit with bracket(1).

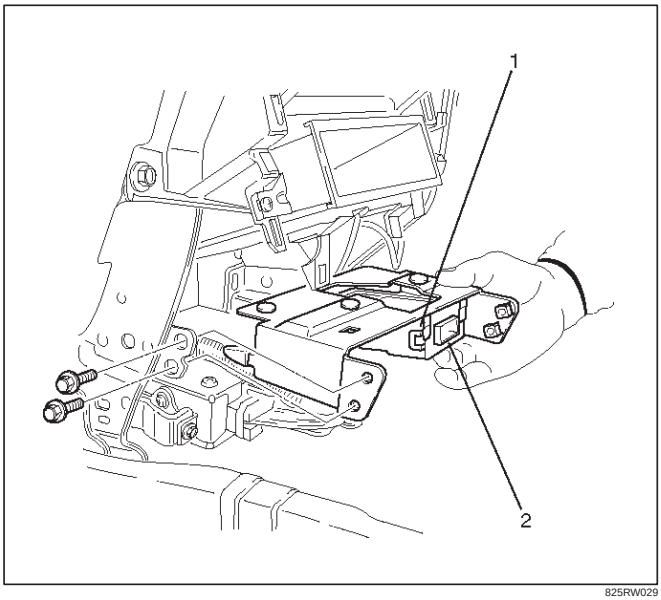

825RW029

6. Remove two nuts from the anti-theft & keyless entry control unit with bracket(3) to remove the anti-theft & keyless entry controller(4).

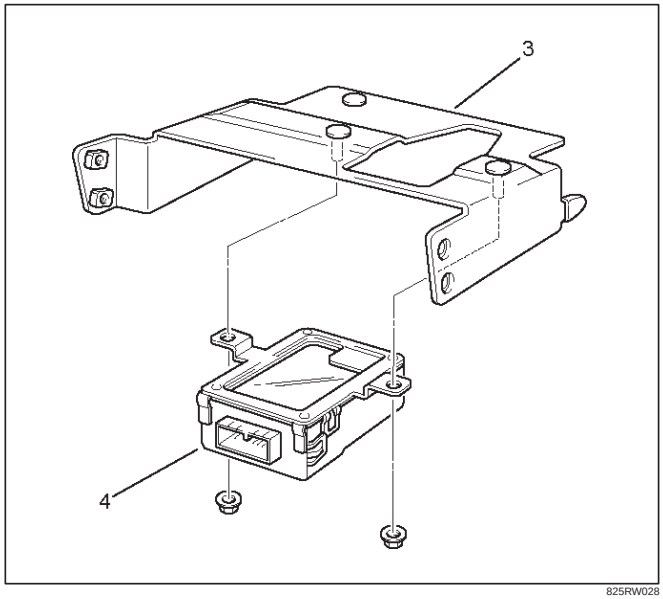

825RW028

Anti-theft & Keyless Entry Control Unit Installation

To install, follow the removal steps in the reverse order.

Anti-theft Indicator Removal

1. Disconnect the battery ground cable.
2. Remove the front console assembly(1).
   - Refer to the Instrument Panel Assembly in Body Structure section.
3. Remove the lower cluster assembly(2).
   - Refer to the Instrument Panel Assembly in Body Structure section.
4. Remove the instrument panel driver lower cover assembly(3).
   - Refer to the Instrument Panel Assembly in Body Structure section.

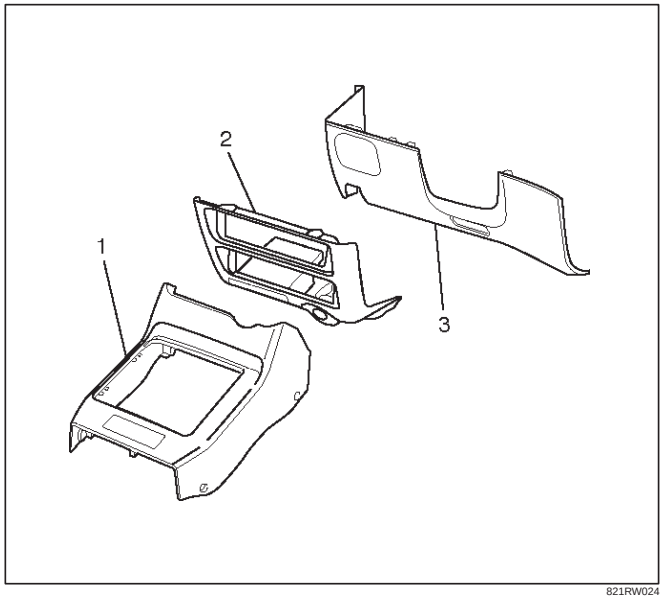

821RW024

5. Remove the instrument panel cluster assembly(4).
   - Refer to the Instrument Panel Assembly in Body Structure section.
6. Remove two screws and then remove the anti-theft indicator(5).

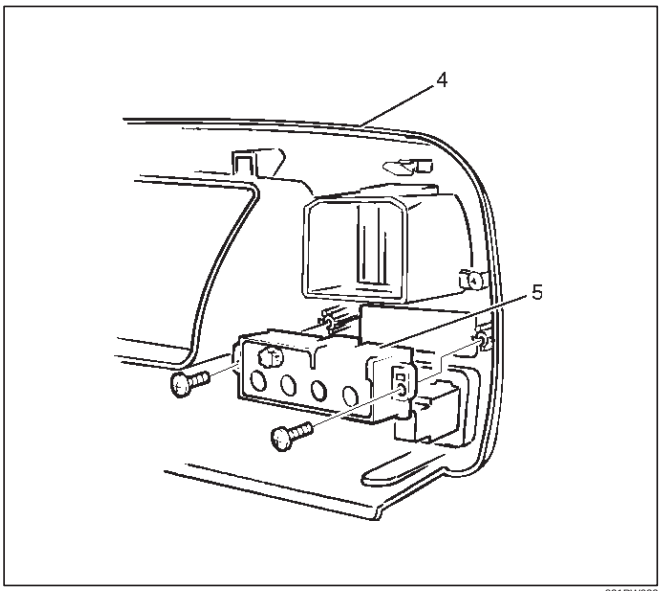

821RW032

Anti-theft Indicator Installation

To install, follow the removal steps in the reverse order.

Anti-theft Horn Removal

1. Disconnect the battery ground cable.
2. Disconnect the connector and remove the fixing bolt to remove the anti-theft horn(1).

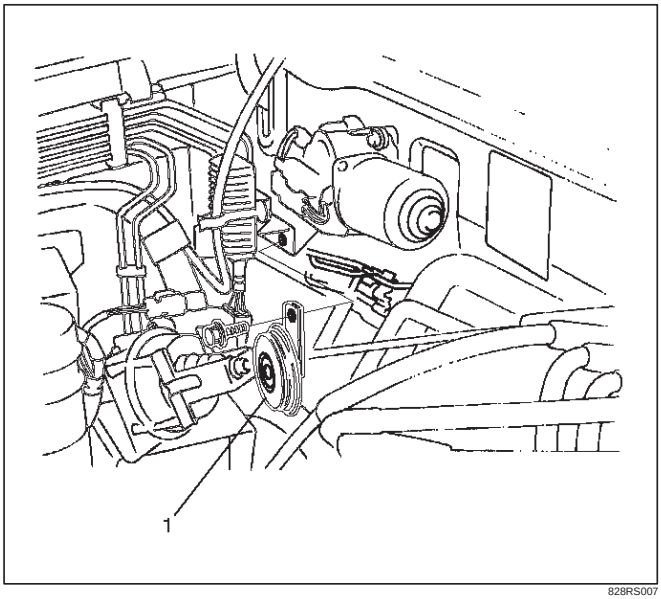

828RS007

Anti-Theft Horn Installation

To install, follow the removal steps in the reverse order.

Engine Hood Switch Removal

1. Disconnect the battery ground cable.
2. Remove the cap(1).
3. Remove the lock nut(2).
4. Disconnect the connector(4).
5. Remove the engine hood switch(3).

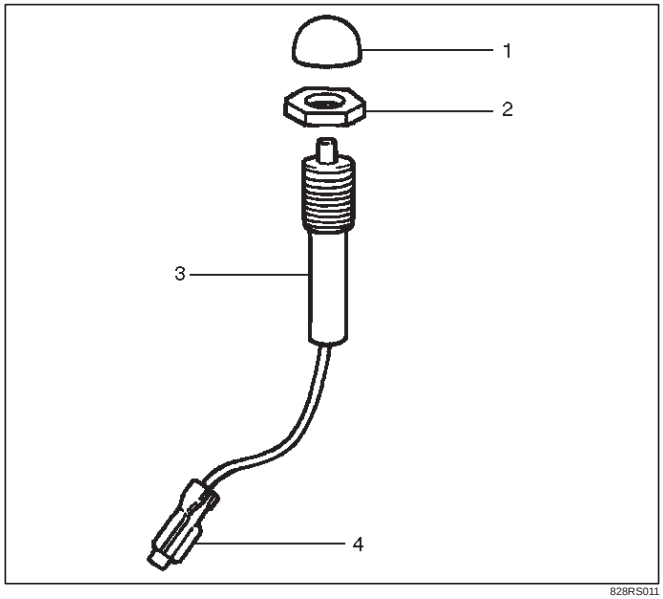

828RS011

Engine Hood Switch Installation

To install, follow the removal steps in the reverse order.

Keyless Entry System

ID Code Registration (Except South Africa)

There are four kinds of ID codes which can be registered, for which these two modes, ID code new registration and ID code additional registration, are available.

ID Code New Registration

This procedure erases all registered ID codes and registers a new received ID code instead.

Step	Action	Yes	No
1	1. Confirm that all the doors are closed and unlocked. 2. Open the driver's side door. 3. Insert the key into the starter switch. Is the action complete?	Go to Step 2	Go to Step 1
2	Turn the starter switch to ACC position and then to OFF position three times. **NOTE: This step must be carried out within five seconds after step 1.** Is the action complete?	Go to Step 3	Go to Step 1
3	Close the driver's side door and then open it two times. **NOTE: This step must be carried out within ten seconds after step 2.** Is the action complete?	Go to Step 4	Go to Step 1
4	1. Turn the starter switch to ACC position and then to OFF position five times. 2. Close the driver's side door and then open it. **NOTE: This step must be carried out within ten seconds after step 3.** Is the action complete?	Go to Step 5	Go to Step 1
5	The control unit locks and unlocks the doors one time. Does the control unit work normally?	Go to Step 6	Go to Step 1
6	Operate the lock or unlock button of the transmitter. **NOTE: This step must be carried out within twenty seconds after step 5.** Is the action complete?	Go to Step 7	Go to Step 1
7	The control unit locks and unlocks the doors one time. Does the control unit work normally?	Go to Step 8	Go to Step 1
8	Operate the lock or unlock button of the transmitter. **NOTE: This step must be carried out within twenty seconds after step 7.** Is the action complete?	Go to Step 9	Go to Step 1
9	The control unit compares the two codes sent from the transmitter. **If the code succeeds in registration,** the control unit locks and unlocks the doors one time. **If the two codes are different from each other or fails in registration,** the control unit locks and unlocks the doors three times. **NOTE: In any case, this procedure is finished.**	Go to Step 1	Go to Step 1

ID Code Additional Registration

This procedure additionally registers a new received ID code with holding registered ID codes. When total number of registered ID codes and newly registered ID code exceeds four, they are erased in order of older one.

Step	Action	Yes	No
1	1. Confirm that all the doors are closed and unlocked. 2. Open the driver's side door. 3. Insert the key into the starter switch. Is the action complete?	Go to Step 2	Go to Step 1
2	Turn the starter switch to ACC position and then to OFF position three times. **NOTE: This step must be carried out within five seconds after step 1.** Is the action complete?	Go to Step 3	Go to Step 1
3	Close the driver's side door and then open it two times. **NOTE: This step must be carried out within ten seconds after step 2.** Is the action complete?	Go to Step 4	Go to Step 1
4	1. Turn the starter switch to ACC position and then to OFF position three times. 2. Close the driver's side door and then open it. **NOTE: This step must be carried out within ten seconds after step 3.** Is the action complete?	Go to Step 5	Go to Step 1
5	The control unit locks and unlocks the doors two times. Does the control unit work normally?	Go to Step 6	Go to Step 1
6	Operate the lock or unlock button of the transmitter. **NOTE: This step must be carried out within twenty seconds after step 5.** Is the action complete?	Go to Step 7	Go to Step 1
7	The control unit locks and unlocks the doors one time. Does the control unit work normally?	Go to Step 8	Go to Step 1
8	Operate the lock or unlock button of the transmitter. **NOTE: This step must be carried out within twenty seconds after step 7.** Is the action complete?	Go to Step 9	Go to Step 1
9	The control unit compares the two codes sent from the transmitter. **If the code succeeds in registration,** the control unit locks and unlocks the doors one time. **If the two codes are different from each other or fails in registration,** the control unit locks and unlocks the doors three times. **NOTE: In any case, this procedure is finished.**	Go to Step 1	Go to Step 1

Anti–theft & Keyless Entry Control Unit/Transmitter Replacement

Anti–theft & Keyless Entry Control Unit Replacement

1. Remove and install the control unit.
   - Refer to Anti–theft & Keyless Entry Control Unit Removal and Installation in this section.
2. Register ID code.
   - Refer to ID Code Registration in this section.
3. Check that the keyless entry system works normally.

Transmitter Replacement

1. Prepare a new transmitter.
2. Regiter ID code.
   - Refer to ID Code Registration in this section.
3. Check that the keyless entry system works normally.

Transmitter Battery Replacement

1. Remove a screw to remove the cover.
2. Remove the batteries.
3. Set the new batteries into the transmitter.
4. Install the cover to the transmitter.
5. Check that the keyless entry system works normally.

Programming With Tech 2 (For South Africa)

General Description

When the anti-theft and keyless entry control unit and/or the transmitters (remote keys) are replaced, the security codes and/or transmitter ID codes must be programmed by using the Tech 2. The following pages show the procedures to program in regard to the anti-theft and keyless entry system. Please refer to Tech 2 scan tool user's guide in detail.

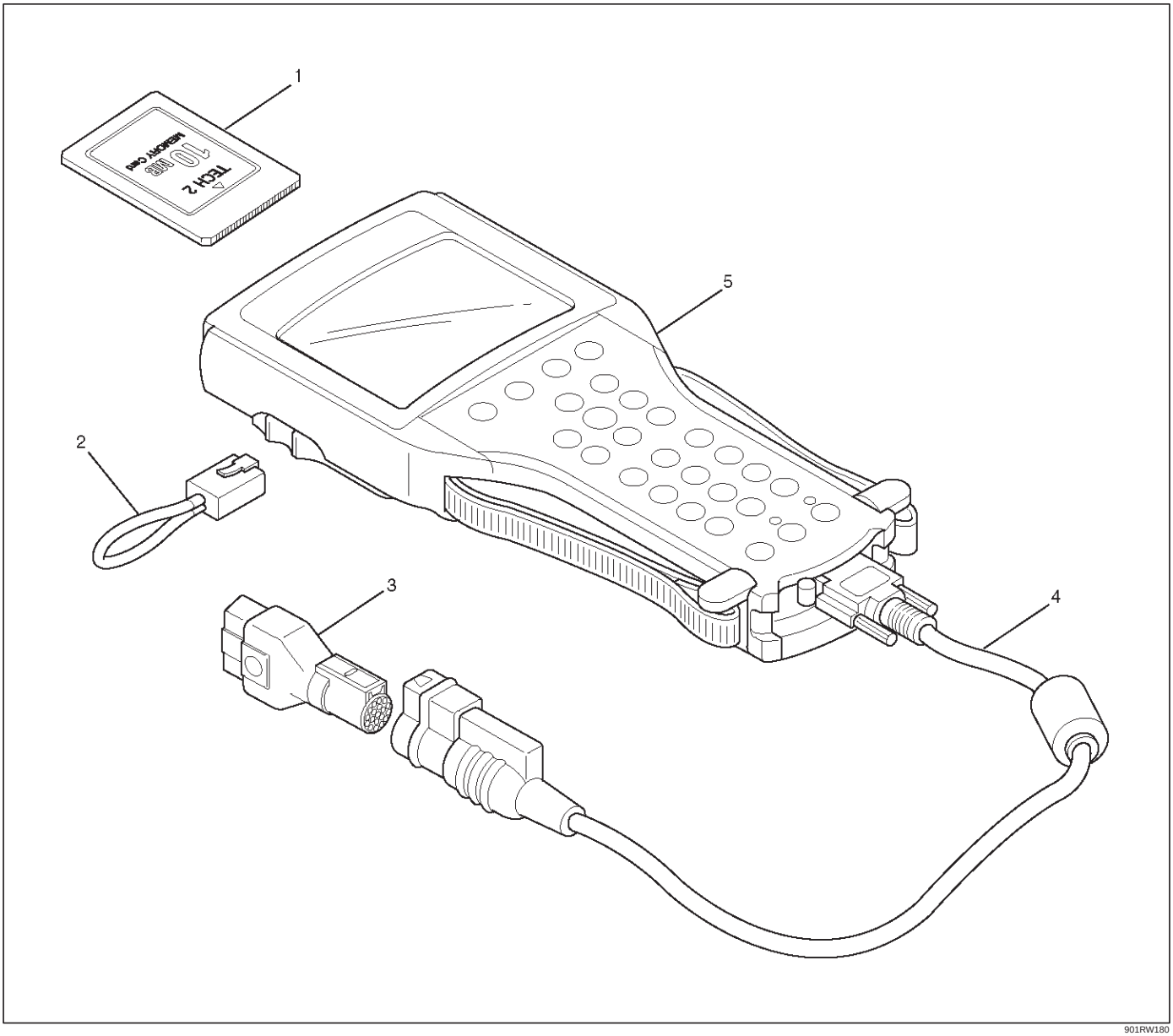

901RW180

Legend

(1) PCMCIA Card
(2) RS 232 Loop Back Connector
(3) SAE 16/19 Adaptor
(4) DLC Cable
(5) Tech 2

Programming Anti-Theft Warning

When the anti-theft and keyless entry control unit is replaced, the security code must be programmed after installation.

1. Insert the Isuzu system PCMCIA card into the Tech 2.
2. Connect the SAE 16/19 adaptor to the data link connector (DLC) cable.
3. Connect the DLC cable to the Tech 2.
4. Confirm that the starter switch is off.
5. Connect the Tech 2 SAE 16/19 adaptor to the vehicle DLC.
6. Verify the Tech 2 power up display.

060RW009

7. Press the enter key.
8. Select “F0 : Diagnostics” and press the enter key.
9. Select the model year and press the enter key.
10. Select the vehicle type and press the enter key.
11. Select “F2 : Body” and press the enter key.
12. Select “Anti Theft Warning” and press the enter key.
13. Turn the starter switch on and press the confirm key (soft key).
14. Confirm “Partnumber” , “Country Code” and “Production Date” and press the confirm key (soft key).
15. Select “F4 : Programming” and press the enter key.
16. Select “F2 : Program Anti Theft Warning” and press the enter key.
17. Press the confirm key (soft key).
18. Press the confirm key (soft key).
19. Enter the security code and press the enter key.
20. Press the okey key (soft key).
21. Enter the security code and press the enter key.
22. Press the okey key (soft key).
23. Press the soft key to select “Remote Key”.
24. Select country code and press the enter key.
25. Press the confirm key (soft key).

Programming Remote Key

When the anti-theft and keyless entry control unit is replaced and/or the new transmitter (remote key) is supplied, the ID code of the transmitter must be programmed by the following procedure.

1. Perform the step 1. to 15. of “Programming Anti Theft Warning”.
2. Select “F1: Program Remote Key” and press the enter key.
3. Press the confirm key (soft key).
4. Press the lock button of the transmitter until the display changes.
5. Press the confirm key (soft key).
6. Press the Yes or No key (soft key).

Erasing Remote Keys

All the ID code stored in the control unit can be erased by the following procedure.

1. Perform the step 1. to 15. of “Programming Anti Theft Warning”.
2. Select “F0: Erase Remote Keys” and press the enter key.
3. Press the confirm key (soft key).
4. Press the confirm key (soft key).
5. Press the confirm key (soft key).

Main Data and Specifications

Torque Specifications

Application	N·m	Kg·m	Lb Ft	Lb In
Front Door Lock Assembly Fixing Screws	7	0.7	—	61
Front Outside Handle and Key Switch Fixing Bolts	9	0.9	—	78
Rear Door Lock Assembly Fixing Screws	7	0.7	—	61
Rear Outside Handle Fixing Bolts	9	0.9	—	78
Tailgate Lock Assembly (LH) Fixing Screws	7	0.7	—	61
Tailgate Lock Assembly (RH) Fixing Bolts	11	1.1	—	95
Tailgate Outside Handle and Key Cylinder Fixing Bolts	9	0.9	—	78

BODY AND ACCESSORIES

SUN ROOF/CONVERTIBLE TOP

CONTENTS

Service Precaution 8I–1
Sun Roof Glass 8I–2
Sun Roof Glass and Associated Parts 8I–2
Removal 8I–2
Installation 8I–3
Sun Roof Deflector 8I–4
Removal 8I–4
Installation 8I–4
Sunshade 8I–4
Disassembled View 8I–4
Removal 8I–5
Installation 8I–5
Sun Roof Frame Complete Assembly 8I–6
Sun Roof Frame Complete Assembly and Associated Parts 8I–6
Removal 8I–6
Installation 8I–7
Disassembled View 8I–7
Disassembly 8I–7
Reassembly 8I–8
Sun Roof Drain Hose (Front Side) 8I–9
Sun Roof Drain Hose (Front Side) and Associated Parts 8I–9
Removal 8I–9
Installation 8I–9
Sun Roof Drain Hose (Rear Side) 8I–10
Sun Roof Drain Hose (Rear Side) and Associated Parts 8I–10
Removal 8I–10
Installation 8I–10
Sun Roof Switch 8I–11
General Description 8I–11
Removal 8I–11
Installation 8I–11
Sun Roof Motor 8I–12
Removal 8I–12
Installation 8I–12
Main Data and Specifications 8I–12

Service Precaution

WARNING: IF SO EQUIPPED WITH A SUPPLEMENTAL RESTRAINT SYSTEM (SRS), REFER TO THE SRS COMPONENT AND WIRING LOCATION VIEW IN ORDER TO DETERMINE WHETHER YOU ARE PERFORMING SERVICE ON OR NEAR THE SRS COMPONENTS OR THE SRS WIRING. WHEN YOU ARE PERFORMING SERVICE ON OR NEAR THE SRS COMPONENTS OR THE SRS WIRING, REFER TO THE SRS SERVICE INFORMATION. FAILURE TO FOLLOW WARNINGS COULD RESULT IN POSSIBLE AIR BAG DEPLOYMENT, PERSONAL INJURY, OR OTHERWISE UNNEEDED SRS SYSTEM REPAIRS.

CAUTION: Always use the correct fastener in the proper location. When you replace a fastener, use ONLY the exact part number for that application. ISUZU will call out those fasteners that require a replacement after removal. ISUZU will also call out the fasteners that require thread lockers or thread sealant. UNLESS OTHERWISE SPECIFIED, do not use supplemental coatings (Paints, greases, or other corrosion inhibitors) on threaded fasteners or fastener joint interfaces. Generally, such coatings adversely affect the fastener torque and the joint clamping force, and may damage the fastener. When you install fasteners, use the correct tightening sequence and specifications. Following these instructions can help you avoid damage to parts and systems.

Sun Roof Glass

Sun Roof Glass and Associated Parts

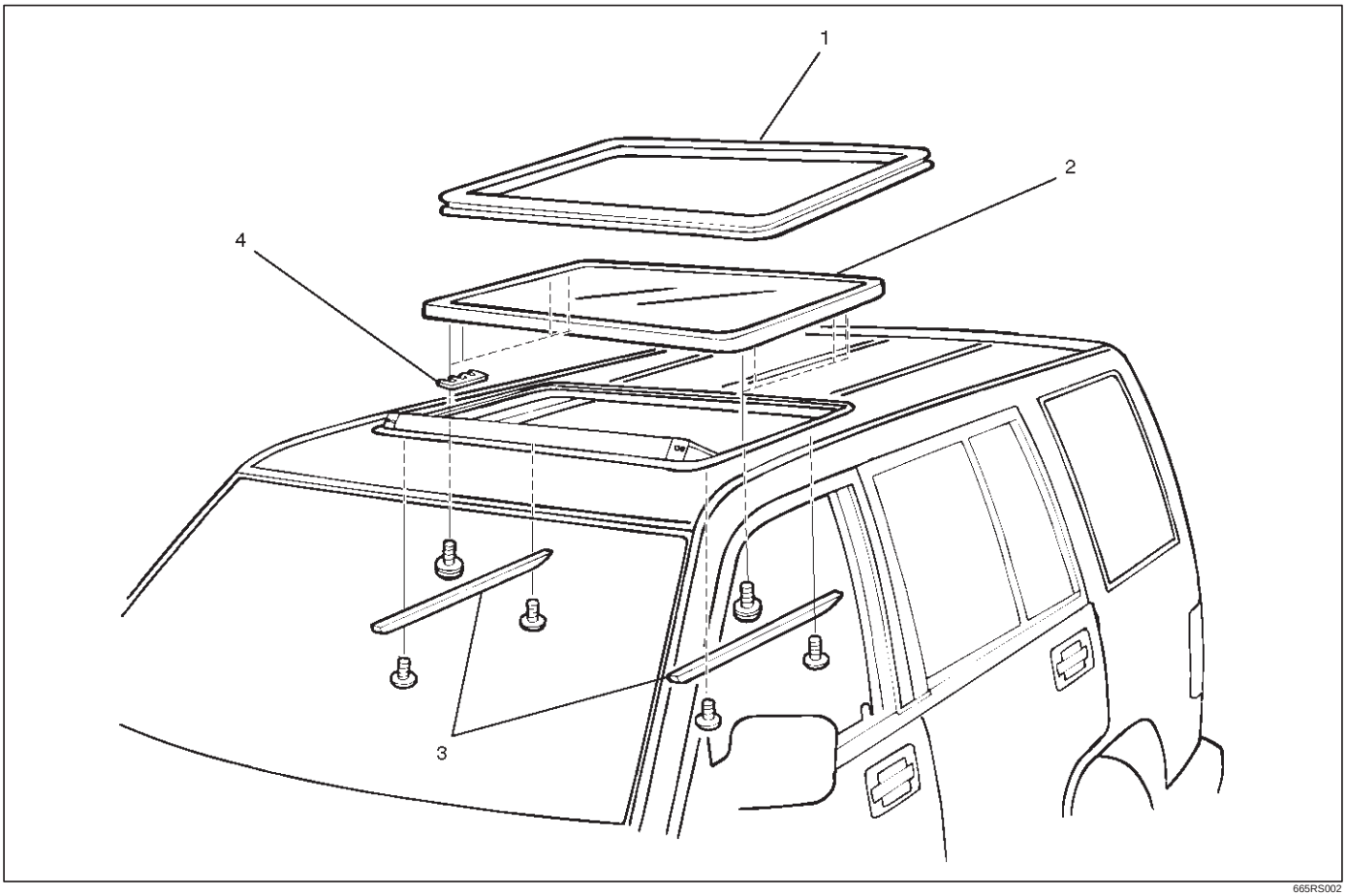

665RS002

Legend

(1) Sun Roof Weatherstrip
(2) Sun Roof Glass
(3) Decoration Cover
(4) Sun Roof Shim

Removal

1. Open the sun roof and pull the sun roof weatherstrip out from the roof panel.
2. Close the sun roof and open the sunshade(1). Then, remove the decoration cover fixing screws and decoration cover(2).

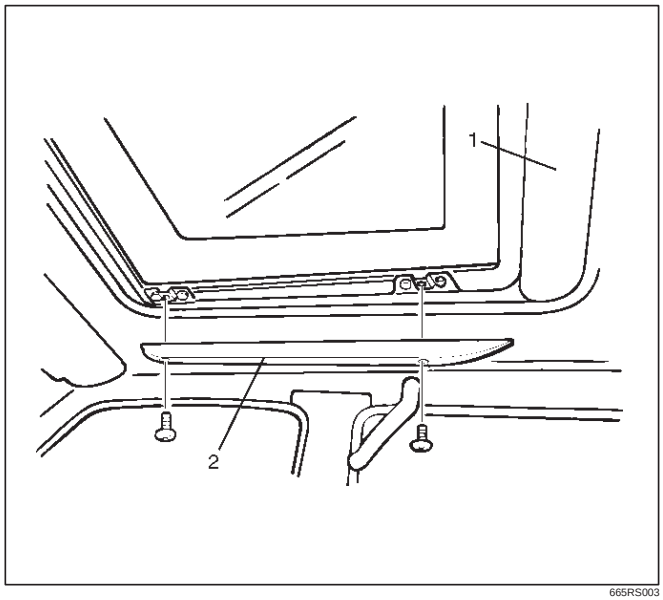

665RS003

3. Disconnect the battery ground cable.
4. Remove eight sun roof glass fixing screws to remove the sun roof glass(3).

NOTE: If shims are used between the sun roof set plate and the glass, note the number of shims used.

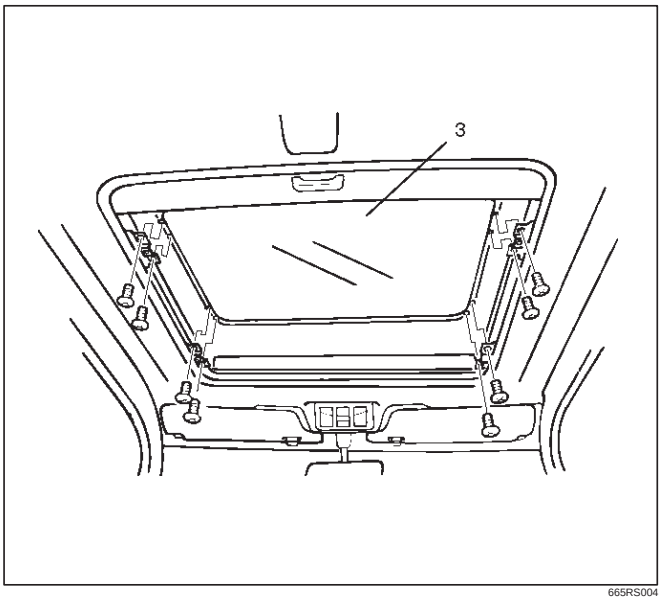

665RS004

Installation

To install, follow the removal steps in the reverse order, noting the following points.

1. Clean the body panel of the weatherstrip fixing portion.
   - If the protective film(1) of the body panel is peeled, it cannot be reused.
     Install the new protective film around the body panel(2).
2. Install the new weatherstrip(3).
   - Always replace with a new one.
   - Be sure to install the sun roof weatherstrip so that the white marking location(4) of the weatherstrip is on the front side of the vehicle.

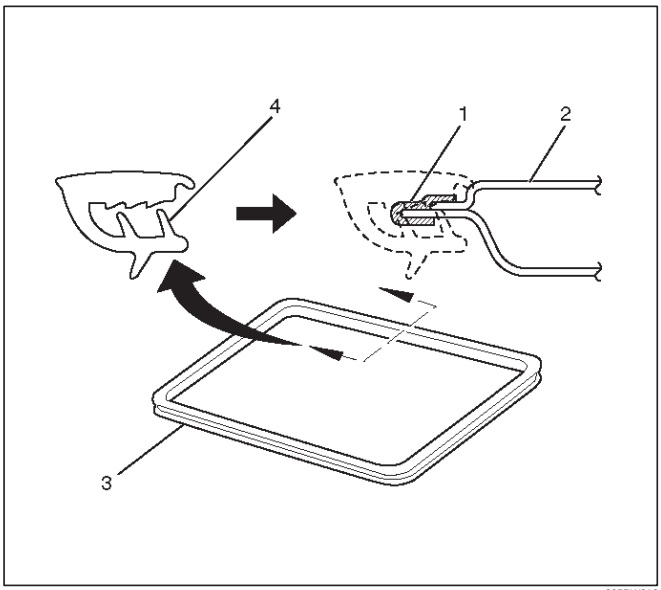

665RW016

3. Temporarily install the glass to the sun roof frame.
4. Open and shut the sun roof four to five times to position correctly the sun roof weatherstrip and the glass in the longitudinal and latitudinal setting positions.
5. Insert the original shims between the sun roof set plate and the glass.
6. Tighten the sun roof glass fixing screws to the specified torque.

   Torque: 10 N·m (1.0 kg·m/87 lb in)
7. After the sun roof glass is installed, check the roof panel and sun roof glass for vertical install position.
   If out of standard, adjust with shim.
   For the installation standard, refer to the Body Dimension in Body Structure section.
8. Install the decoration cover.

Sun Roof Deflector

Removal

1. Open the sun roof.
2. Remove the fixing screws(2) to remove the sun roof deflector(1).

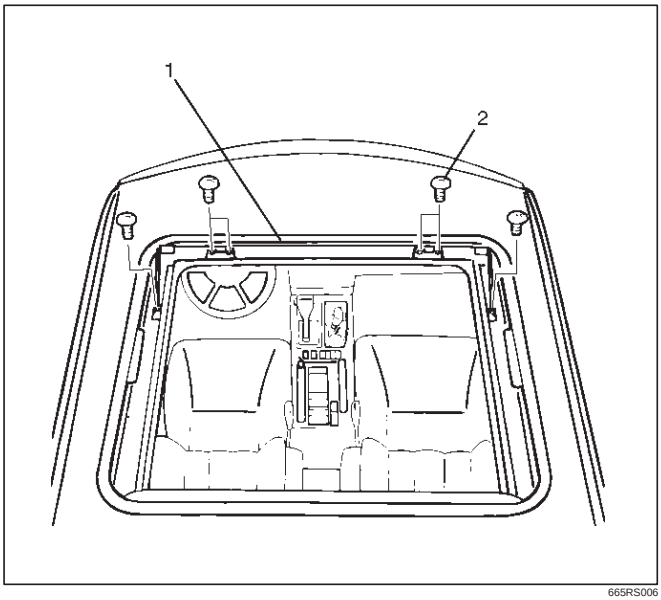

665RS006

Installation

To install, follow the removal steps in the reverse order.

Sunshade

Disassembled View

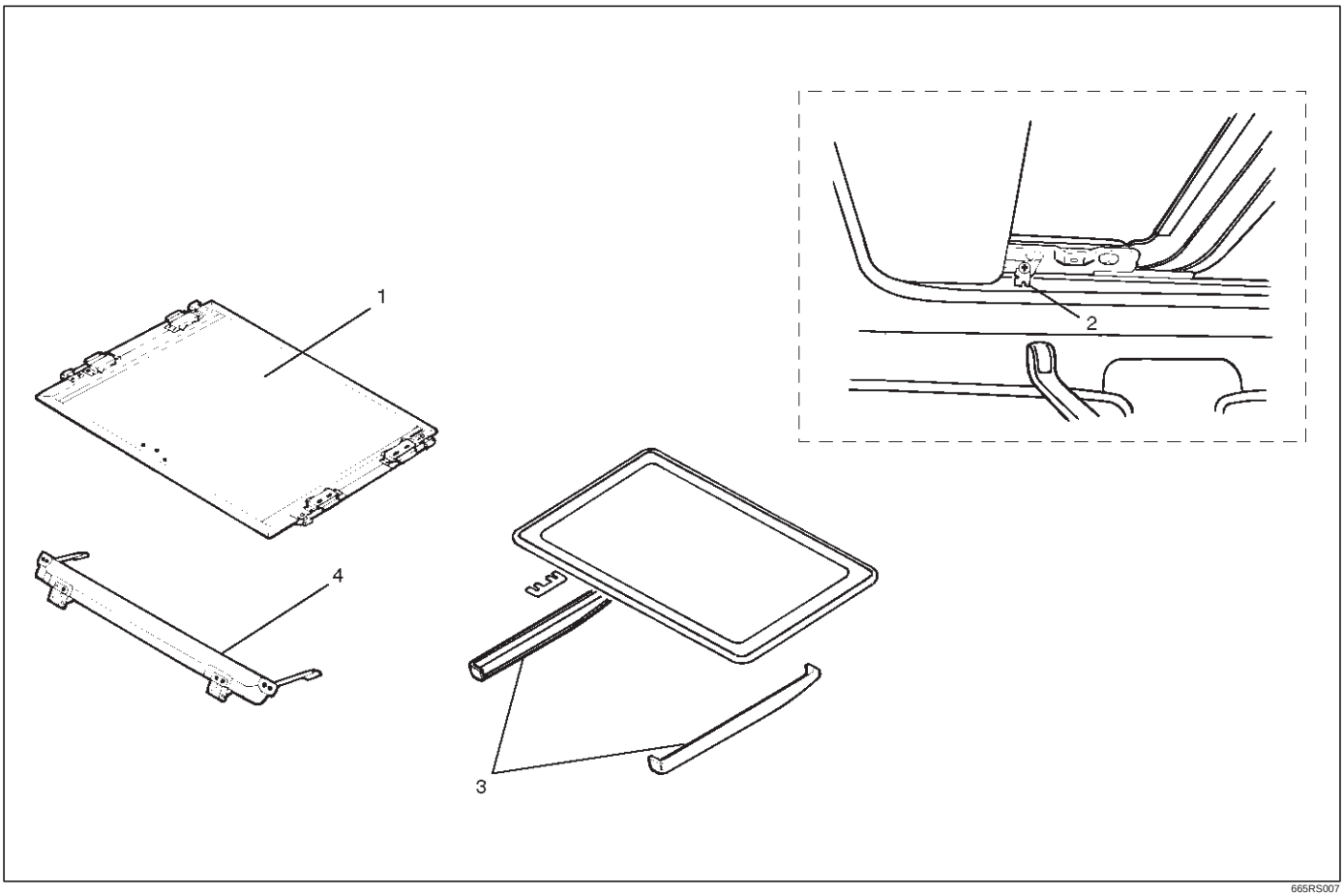

665RS007

Legend

(1) Sunshade
(2) Sunshade Stopper
(3) Decoration Cover
(4) Sun Roof Deflector

Removal

1. Remove the decoration cover.
2. Open the sun roof half position, remove the sunshade stopper screw and pull out the sunshade(6) until its front side protrudes a little from the sun roof glass(2) to remove the sunshade stopper.
3. Remove the sun roof deflector.
   - Refer to the Sun Roof Deflector in this section.
4. Open the sun roof completely.
5. Remove the sunshade guide rail stopper(5), and pull out the sunshade up to the rail edge.
6. Remove the guide pin(4) in the sunshade through the notch(7) of guide rail(1) and then draw the sunshade out of the roof by pushing inward the retaining clips(3) on both sides.

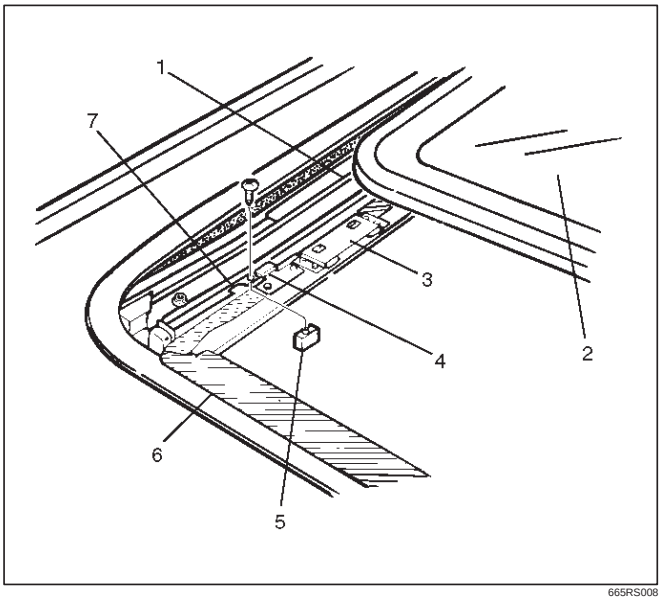

665RS008

Installation

To install, follow the removal steps in the reverse order.

Sun Roof Frame Complete Assembly

Sun Roof Frame Complete Assembly and Associated Parts

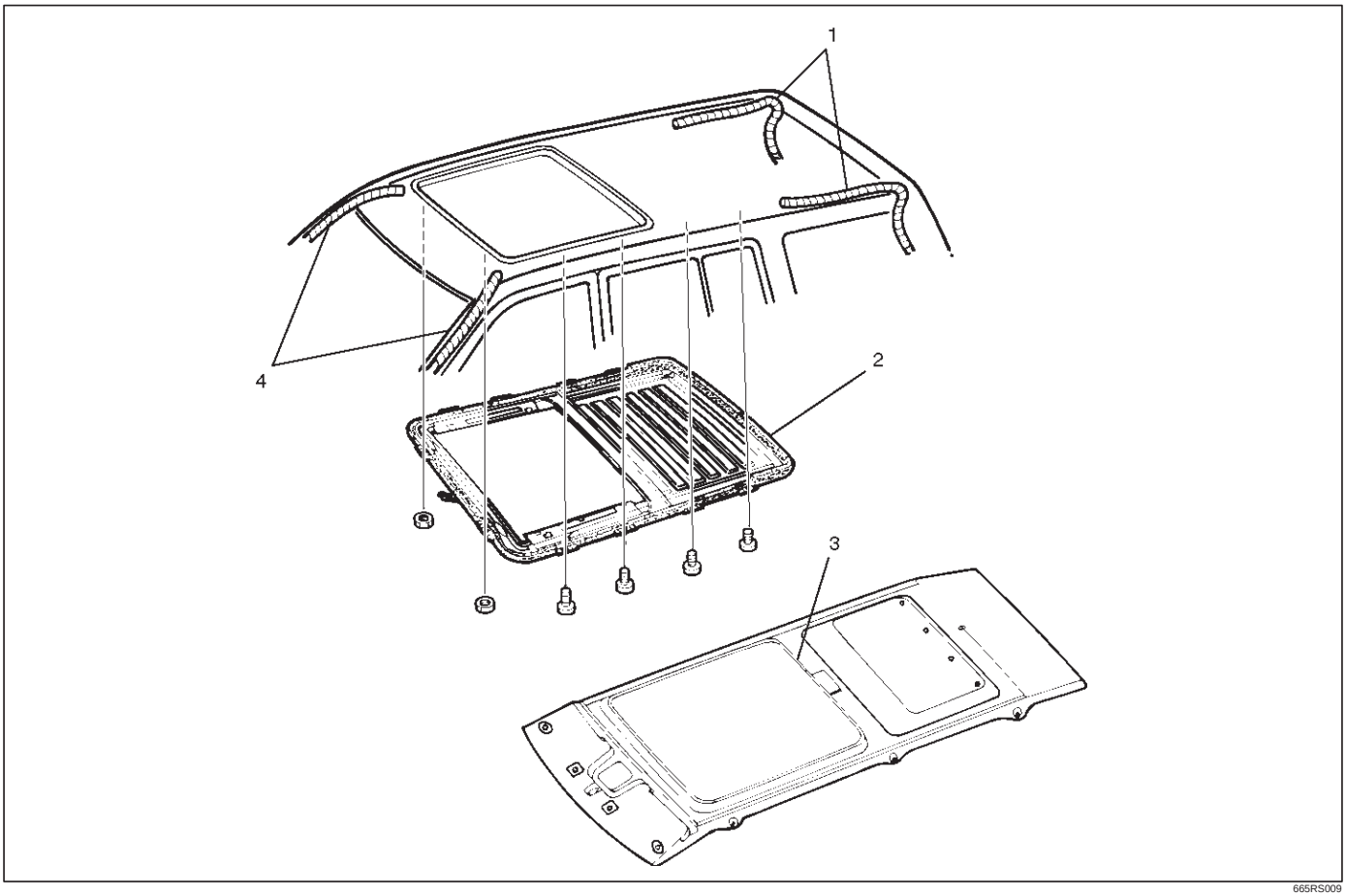

665RS009

Legend

(1) Sun Roof Drain Hose
(2) Sun Roof Frame Complete Assembly
(3) Headlining
(4) Sun Roof Drain Hose

Removal

1. Disconnect the battery ground cable.
2. Remove the headlining.
   - Refer to the Headlining in Body Structure section.
3. Disconnect the sun roof drain hose at the sun roof frame side as shown in the figure.

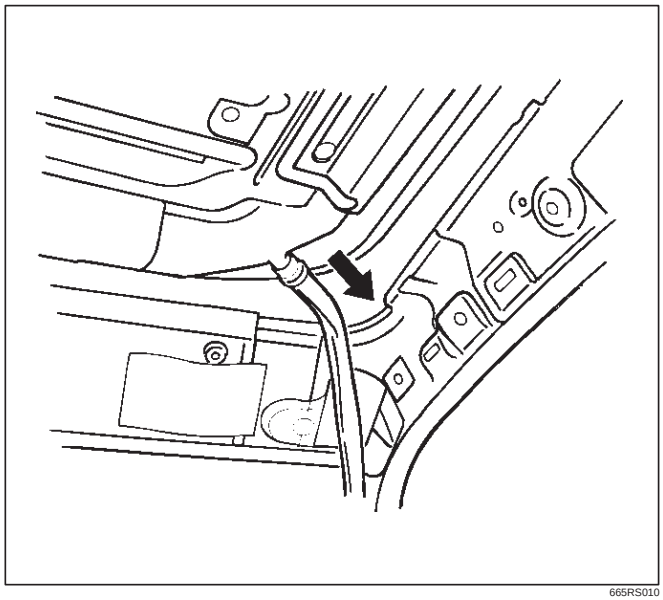

665RS010

4. Disconnect the sun roof harness connection.

5. Remove two sun roof frame complete assembly fixing nuts (front side) and four fixing bolts (each side) from the frame complete, and then remove the sun roof frame complete assembly.

NOTE: Be sure to remove the frame complete while supporting it.

Installation

To install, follow the removal steps in the reverse order, noting the following points.

1. Tighten the sun roof frame complete assembly fixing bolts and nuts to the specified torque.

Torque: 10 N·m(1.0 kg·m/87 lb in)

2. After installing the frame complete, loosen the sun roof glass fixing nuts and adjust the sun roof glass setting position.
   - Refer to the Sun Roof Glass in this section.

Disassembled View

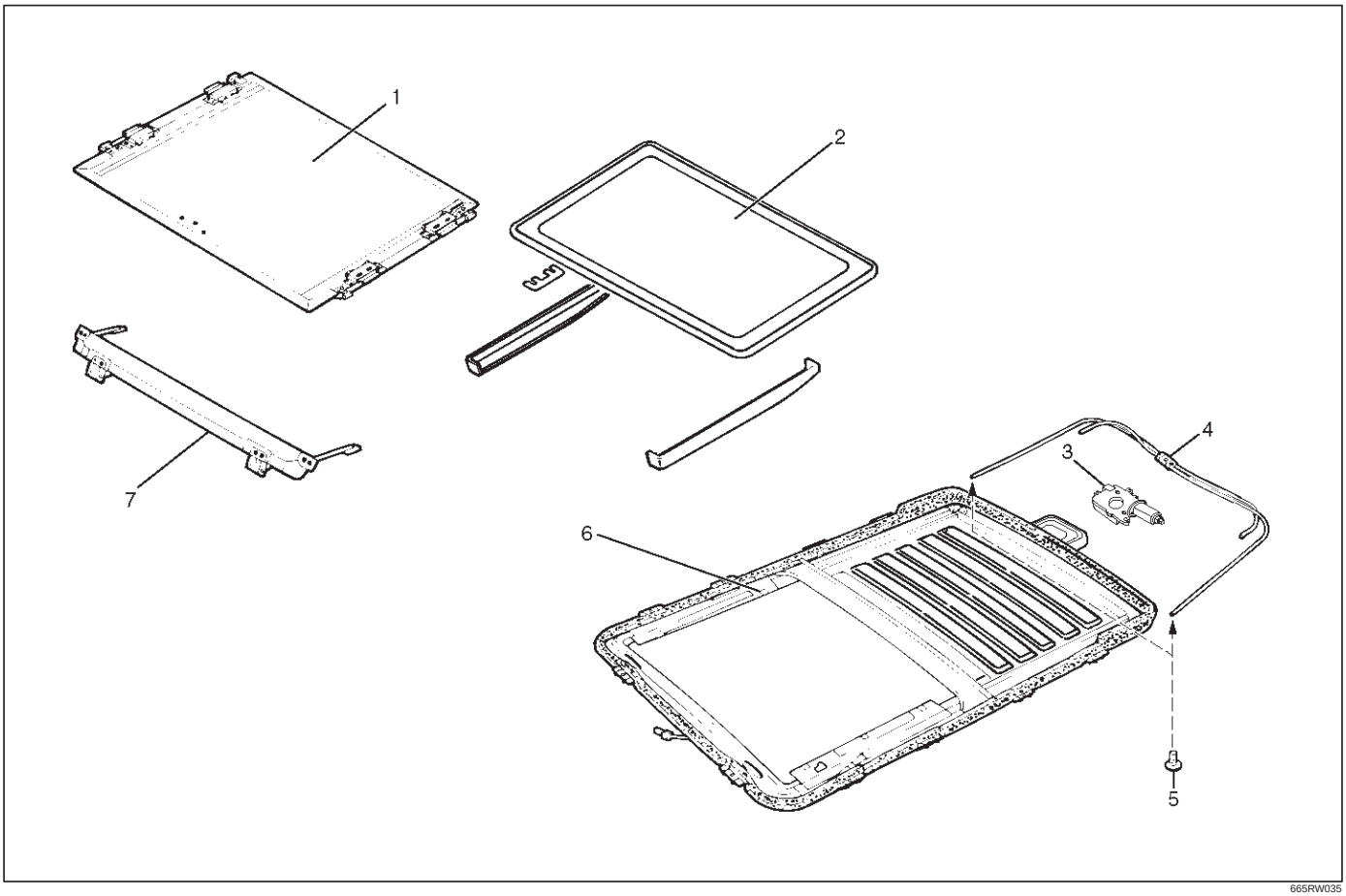

Legend

(1) Sunshade
(2) Sun Roof Glass
(3) Sun Roof Motor
(4) Sun Roof Drive Unit Assembly
(5) Outer Tube Fixing Screw
(6) Sun Roof Frame Assembly
(7) Sun Roof Deflector

Disassembly

1. Open the sun roof.
2. Remove the sun roof deflector fixing screws and then remove the sun roof deflector.
3. Remove the sunshade.
   - Refer to the Sunshade in this section.
4. Close the sun roof, remove the decoration cover and the fixing screws and then remove the sun roof glass.
5. If the shims are used between the sun roof set plate and the glass, note the number of the shims.
6. Disconnect the sun roof motor connector, remove the sun roof fixing nuts and screws, and then remove the sun roof motor.

7. Remove the cable outer tube(2) fixing screws.
8. Remove the cable outer tube fixing clamps(1) and guide rail fixing nuts(5).
9. Prying the guide rail a little with a screwdriver, draw the outer tube out of the grommet(3).
   - At this time, the inner cable(4) remains on the frame assembly.
10. Remove the sun roof frame assembly.

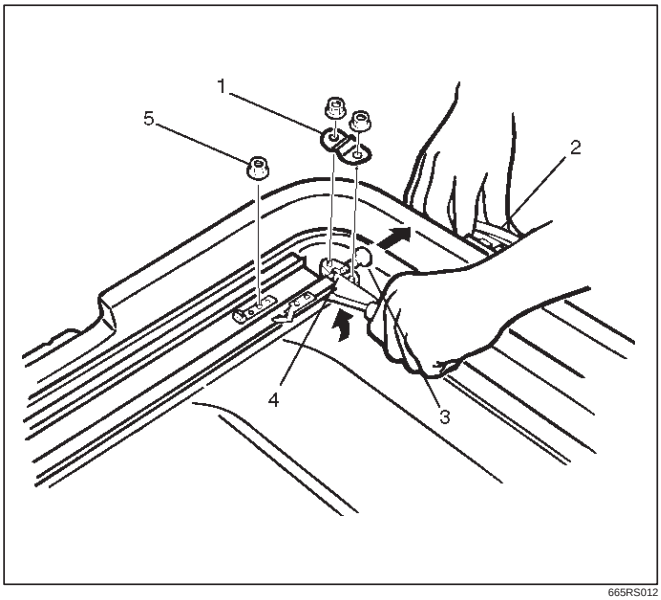

665RS012

Reassembly

To reassembly, follow the disassembly steps in the reverse order, noting the following points.

1. When installing the motor or drive unit, set the sun roof set plate in the full closed position by pushing the link(3) portion using the screwdriver(2).
2. When installing the sun roof glass(1) to the sun roof set plate, insert the original shims in the same position before removing the sun roof glass.

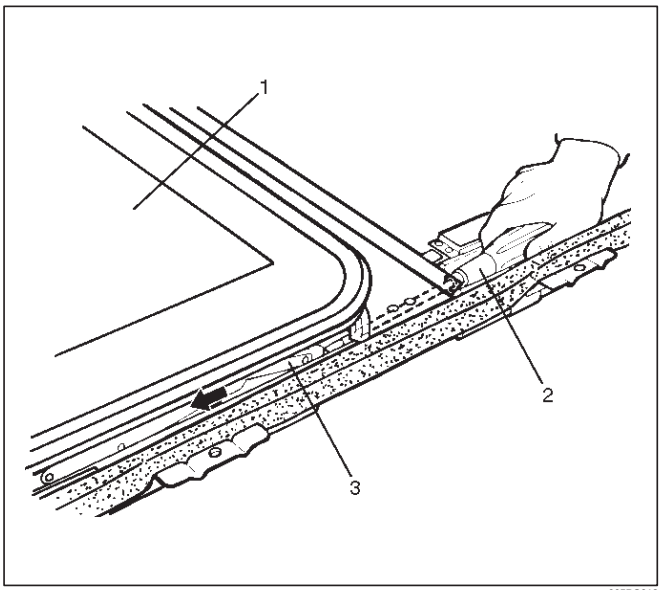

665RS013

Sun Roof Drain Hose (Front Side)

Sun Roof Drain Hose (Front Side) and Associated Parts

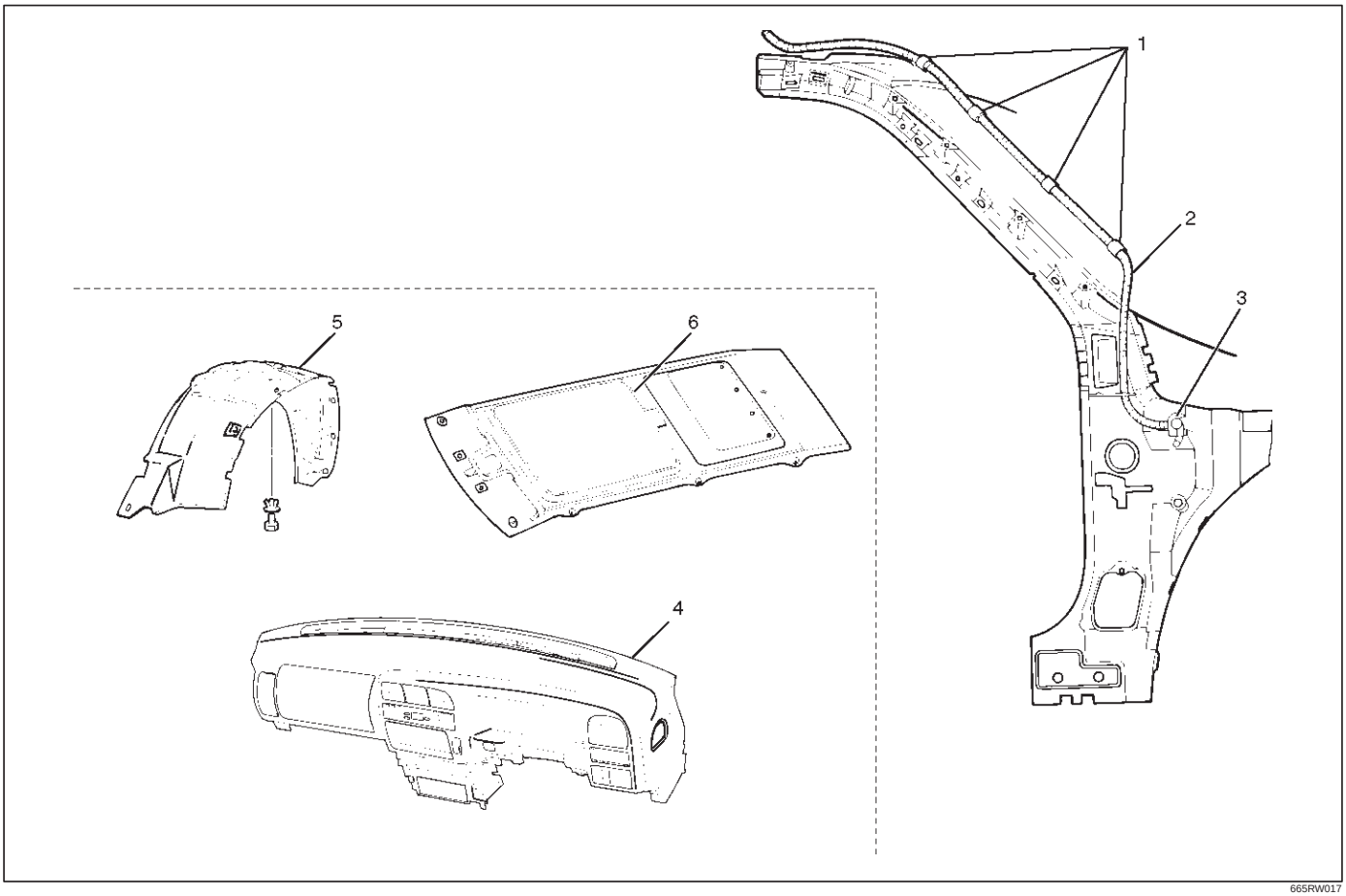

Legend

(1) Clip
(2) Sun Roof Drain Hose
(3) Grommet
(4) Instrument Panel Assembly
(5) Front Inner Liner
(6) Headlining

Removal

1. Disconnect the battery ground cable.
2. Remove the front inner liner.
3. Remove the headlining.
   - Refer to the Headlining in Body Structure section.
4. Remove the instrument panel assembly.
   - Refer to the Instrument Panel Assembly in Body Structure section.
5. Disconnect the drain hose at the frame complete side.
6. Apply the soap and water to the body panel grommet.
7. Pass the string from the sun roof frame side through the drain port side, and remove the drain hose from the hose fixing clips. Taking care not to allow the body panel grommet to be removed together with the hose, pull the drain hose only to the inside of the vehicle. (The string should be kept as it is.)

Installation

To install, follow the removal steps in the reverse order, noting the following points.

1. Apply the soap and water to the body panel grommet.
2. Install the drain hose from inside of the vehicle by utilizing, as a guide, the string passed during removal step.
3. The body panel grommet must not be twisted or caught in during installation.
4. Complete routing, avoiding extreme bends or curves.
5. After routing, install the trim with care not to allow the drain hose to be caught in.
6. Test the drain condition.
7. The protrusion of drain hose from the body panel must be within 50 mm (2.0 in). If it exceeds 50 mm (2.0 in) after correct routing, cut the leading edge so that the protrusion is within 50 mm (2.0 in).

Sun Roof Drain Hose (Rear Side)

Sun Roof Drain Hose (Rear Side) and Associated Parts

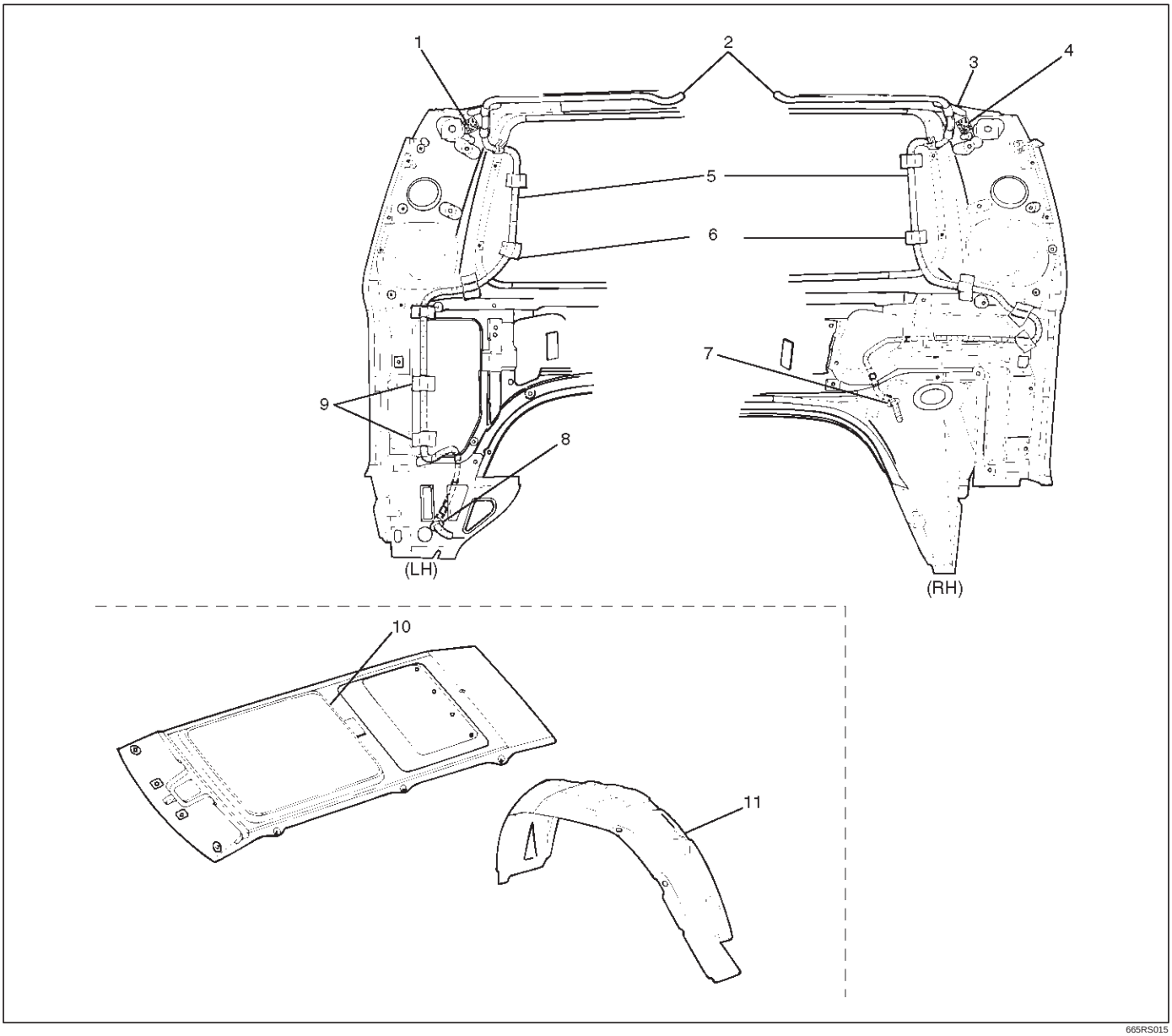

665RS015

Legend

(1) Soft Tape
(2) Pipe
(3) Clip
(4) Soft Tape
(5) Sun Roof Drain Hose
(6) Tape
(7) Grommet
(8) Grommet
(9) Clip
(10) Headlining
(11) Rear Fender Inner Liner

Removal

1. Disconnect the battery ground cable.
2. Remove the rear fender inner liner.
3. Remove the headlining.
   - Refer to the Headlining in Body Structure section.
4. Disconnect the drain hose at the frame complete side.
5. Apply the soap and water to the body panel grommet.
6. Remove the hose fixing tapes and clips.
7. Pull the drain hose to the inside of the vehicle.

Installation

To install, follow the removal steps in the reverse order, noting the following points.

1. Apply the soap and water to the body panel grommet.

2. Insert the drain hose from inside of vehicle, restore routing, and fix with new soft tape and clip.
   If the grommet is removed during removal of drain hose, insert the grommet into drain hose from outside of the vehicle, and install on the body panel, avoiding any twisting.
3. After installing the drain hose, install the trim while taking care not to crush the drain hose.
   Also, care should be taken not to allow the drain hose connected to the pipe to be caught in.
4. Test the drain condition.
5. The protrusion of the drain hose from the body panel must be within 50 mm (2.0 in). If it exceeds 50 mm (2.0 in) after correct routing, cut the leading edge so that the protrusion is within 50 mm (2.0 in).

Sun Roof Switch

General Description

Sun roof operation can be controlled by pushing continuously the sun roof switch to activate the sun roof control unit and sun roof motor.
While the switch is being pushed to the “OPEN” side, the sun roof stops about 165 mm (6.5 in) before fully open position. Push the switch again to the “OPEN” side to open it fully. When the switch is being continuously pushed to the “CLOSE” side, the sun roof stops about 180 mm (7.1 in) short of the fully closed position and remains in this state. Push the switch again to the “CLOSE” side to close it completely.

Removal

1. Disconnect the battery ground cable.
2. Pull down the switch housing(2) and disconnect the sun roof switch and map light connectors to remove the sun roof switch(1).

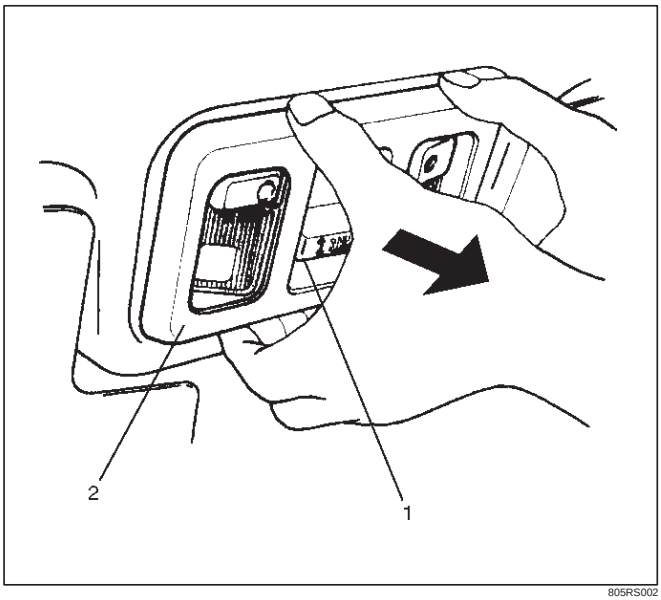

805RS002

Installation

To install, follow the removal steps in the reverse order.

Sun Roof Motor

Removal

1. Disconnect the battery ground cable.
2. Remove the headlining(2).
   - Refer to the Headlining removal steps in Body Structure section.
3. Disconnect the connector, and remove three nuts and two screws to remove the sun roof motor(1).

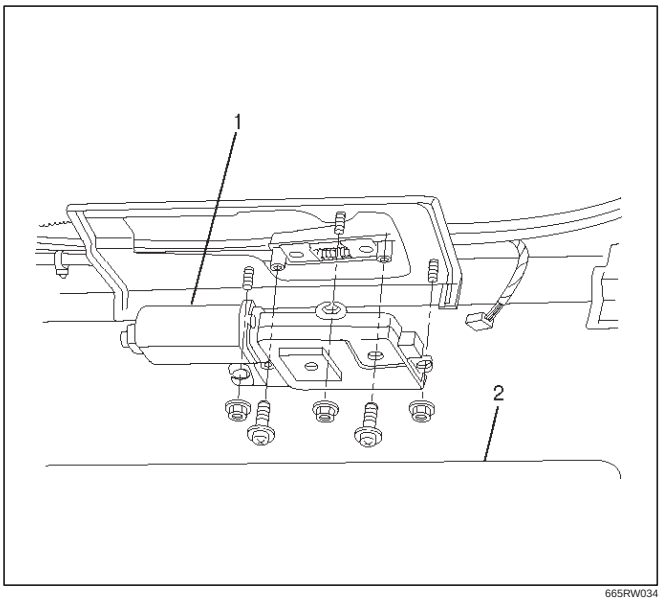

665RW034

Installation

To install, follow the removal steps in the reverse order, noting the following point.

1. When installing the sun roof motor, close the sun roof glass completely.

Main Data and Specifications

Torque Specifications

Application	N·m	kg·m	lb ft	lb in
Sun Roof Frame Complete Assembly Fixing Bolts	10	1.0	—	87
Sun Roof Glass Fixing Screws	10	1.0	—	87

BODY AND ACCESSORIES

EXTERIOR / INTERIOR TRIM

CONTENTS

Service Precaution 8J–2
Dash Side Trim Panel 8J–3
Removal 8J–3
Installation 8J–3
Assist Grip 8J–3
Parts Location 8J–3
Removal and Installation 8J–3
Consoles 8J–4
Consoles and Associated Parts 8J–4
Removal 8J–4
Installation 8J–5
Front Door Trim Panel 8J–6
Front Door Trim Panel and Associated Parts 8J–6
Removal 8J–6
Installation 8J–9
Rear Door Trim Panel 8J–10
Rear Door Trim Panel and Associated Parts 8J–10
Removal 8J–10
Installation 8J–11
Door Mirror 8J–13
Door Mirror and Associated Parts 8J–13
Removal 8J–13
Installation 8J–13
Luggage Side and Quarter Upper Trim Cover (LWB) 8J–14
Luggage Side, Quarter Upper Trim Cover and Associated Parts 8J–14
Removal 8J–14
Installation 8J–16
Luggage Side and Quarter Upper Trim Cover (SWB) 8J–17
Luggage Side, Quarter Upper Trim Cover and Associated Parts 8J–17
Removal 8J–17
Installation 8J–19
Center Pillar and Roof Side Trim Cover (LWB) 8J–20
Center Pillar, Roof Side Trim Cover and Associated Parts 8J–20
Removal 8J–20
Installation 8J–21
Roof Side Trim Cover (SWB) 8J–22
Roof Side Trim Cover and Associated Parts 8J–22
Removal 8J–22
Installation 8J–22
Front Pillar Trim Cover 8J–23
Front Pillar Trim Cover and Associated Parts 8J–23
Removal 8J–23
Installation 8J–23
Center Pillar Assist Grip 8J–24
Parts Location 8J–24
Removal and Installation 8J–24
Assist Grip 8J–24
Parts Location 8J–24
Removal and Installation 8J–24
Fuel Filler Lid Opener Cable 8J–25
Fuel Filler Lid Opener Cable and Associated Parts 8J–25
Removal 8J–25
Installation 8J–26
Fuel Filler Door 8J–26
Parts Location 8J–26
Removal 8J–26
Installation 8J–26
Rocker Protector (Without Wheel Opening Extension) 8J–27
Rocker Protector (Without Wheel Opening Extension) and Associated Parts 8J–27
Removal 8J–27
Installation 8J–27
Wheel Opening Extension and Rocker Protector Assembly 8J–28
Wheel Opening Extension, Rocker Protector Assembly and Associated Parts 8J–28
Removal 8J–28
Installation 8J–29
Mud Flaps (With Wheel Opening Extension) 8J–31
Mud Flaps (With Wheel Opening Extension) and Associated Parts 8J–31
Removal 8J–31
Installation 8J–31
Ventilation Assembly 8J–32
Ventilation Assembly and Associated Parts 8J–32
Removal 8J–32
Installation 8J–32

Quarter Flipper Glass Assembly (SWB) 8J–33
Quarter Flipper Glass Assembly and Associated Parts 8J–33
Removal 8J–33
Installation 8J–33
Tailgate Trim Panel (LH) 8J–34
Tailgate Trim Panel (LH) and Associated Parts 8J–34
Removal 8J–34
Installation 8J–35
Tailgate Trim Panel (RH) 8J–36
Parts Location 8J–36
Removal 8J–36
Installation 8J–36
Luggage Floor Box 8J–37
Luggage Floor Box and Associated Parts . 8J–37
Remove 8J–37
Installation 8J–37
Rope Hook Set 8J–37
Rope Hook Set and Associated Parts 8J–37
Removal 8J–37
Installation 8J–37
Power Door Mirror System 8J–38
General Description 8J–38
Door Mirror Switch Assembly (Control Switch, Folding Switch and Defogger Switch) Removal 8J–38
Installation 8J–38
Power Door Mirror 8J–38
General Description 8J–38
Removal and Installation 8J–38
Power Window System 8J–39
General Description 8J–39
Power Window Switch Removal and Installation 8J–39
Power Window Motor Removal and Installation 8J–40
Main Data and Specifications 8J–41

Service Precaution

WARNING: IF SO EQUIPPED WITH A SUPPLEMENTAL RESTRAINT SYSTEM (SRS), REFER TO THE SRS COMPONENT AND WIRING LOCATION VIEW IN ORDER TO DETERMINE WHETHER YOU ARE PERFORMING SERVICE ON OR NEAR THE SRS COMPONENTS OR THE SRS WIRING. WHEN YOU ARE PERFORMING SERVICE ON OR NEAR THE SRS COMPONENTS OR THE SRS WIRING, REFER TO THE SRS SERVICE INFORMATION. FAILURE TO FOLLOW WARNINGS COULD RESULT IN POSSIBLE AIR BAG DEPLOYMENT, PERSONAL INJURY, OR OTHERWISE UNNEEDED SRS SYSTEM REPAIRS.

CAUTION: Always use the correct fastener in the proper location. When you replace a fastener, use ONLY the exact part number for that application. ISUZU will call out those fasteners that require a replacement after removal. ISUZU will also call out the fasteners that require thread lockers or thread sealant. UNLESS OTHERWISE SPECIFIED, do not use supplemental coatings (Paints, greases, or other corrosion inhibitors) on threaded fasteners or fastener joint interfaces. Generally, such coatings adversely affect the fastener torque and the joint clamping force, and may damage the fastener. When you install fasteners, use the correct tightening sequence and specifications. Following these instructions can help you avoid damage to parts and systems.

Dash Side Trim Panel

Removal

1. Disconnect the battery ground cable.
2. Remove the front door sill plate(2).
3. Remove the dash side trim panel(3).
   - Turn up the door inner seal(1) of the body panel to remove the clips of the trim panel.
   - Take care not to damage the harness and the controller on the back of the trim panel.

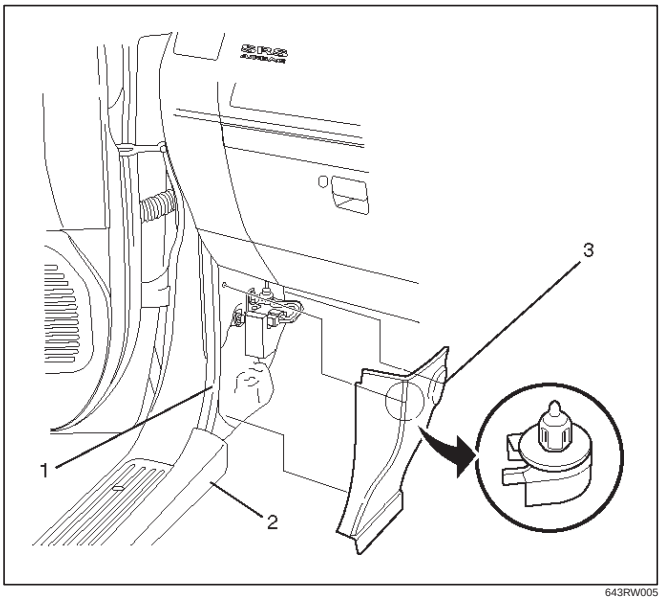

643RW005

Installation

To install, follow the removal steps in the reverse order, noting the following point.

1. Lap the door inner seal over the trim panel to install them securely to the body panel.

Assist Grip

Parts Location

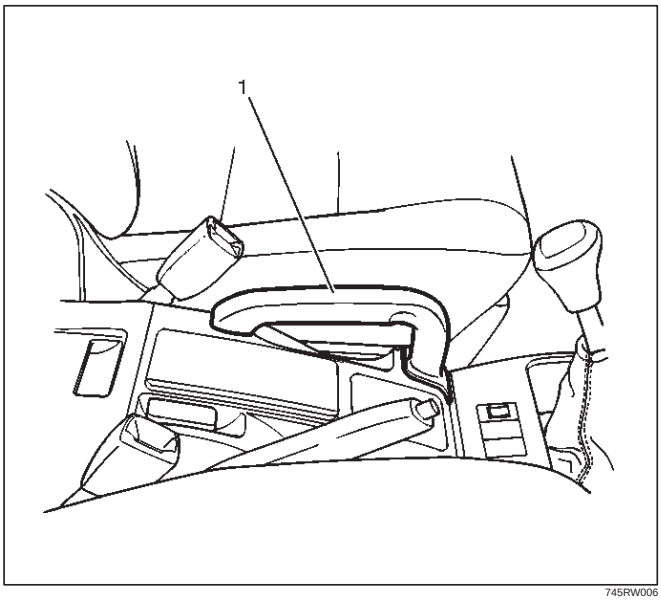

745RW006

Legend

(1) Assist Grip

Removal and Installation

- Refer to the Consoles in this section.

Consoles

Consoles and Associated Parts

This illustration is based on RHD

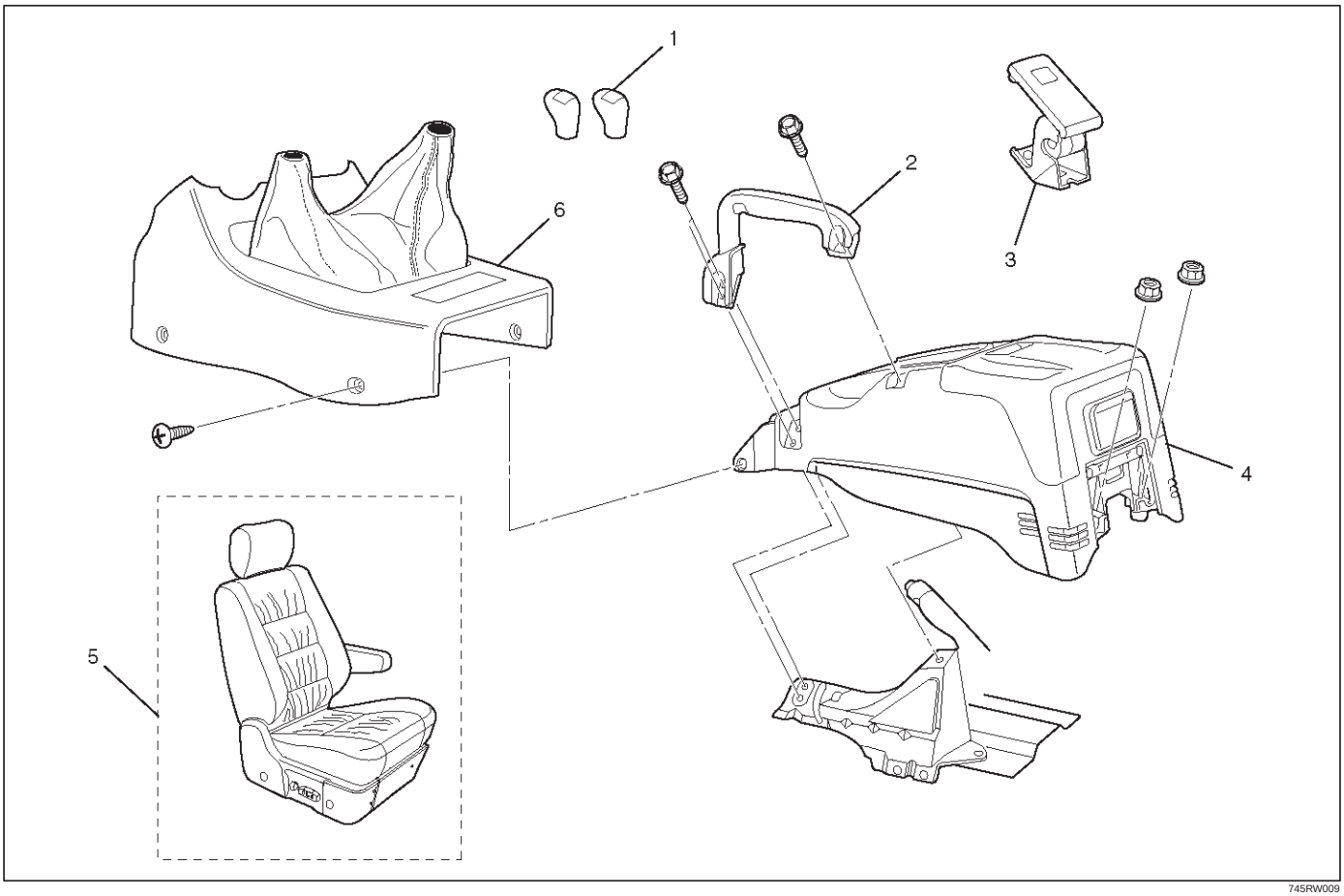

745RW009

Legend

(1) Shift Knob (M/T) / Transfer Knob (A/T)
(2) Assist Grip
(3) Fuel Filler Lid Opener
(4) Center Console Assembly
(5) Front Seat Assembly (RH)
(6) Front Console Assembly

Removal

1. Disconnect the battery ground cable.
2. Remove the shift knob (M/T) / transfer knob (A/T).
3. Remove the front console assembly.
   - Remove four fixing screws and disconnect the switch connectors.
4. Remove the front seat assembly(RH).
   - Refer to the Front Seat Assembly in Seats section.
5. Remove the assist grip.
   - Remove three bolts.
6. Remove the fuel filler lid opener.
   - Remove the fuel filter lid opener(1) and disconnect the cable(2).

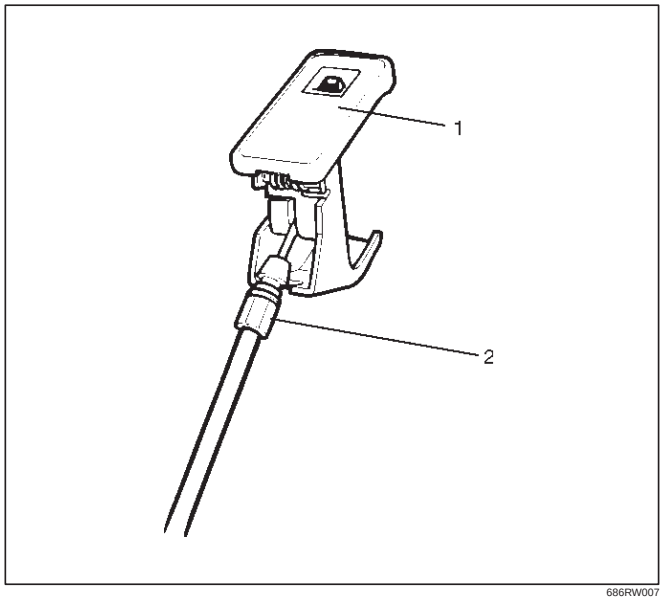

686RW007

7. Remove the center console assembly(2).
   - Remove two fixing screws on the front side.
     Open the rear cover, remove two nuts, then the center console assembly.
   - Remove the rear heater duct(1) from the center console.

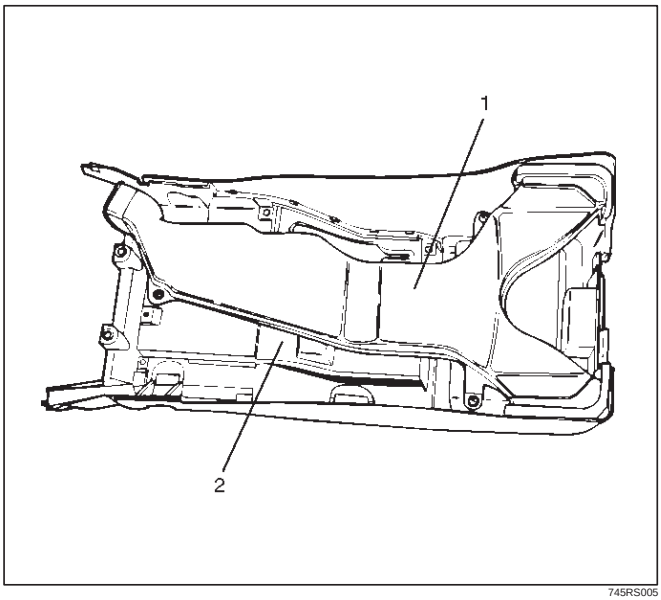

745RS005

Installation

To install, follow the removal steps in the reverse order.

Front Door Trim Panel

Front Door Trim Panel and Associated Parts

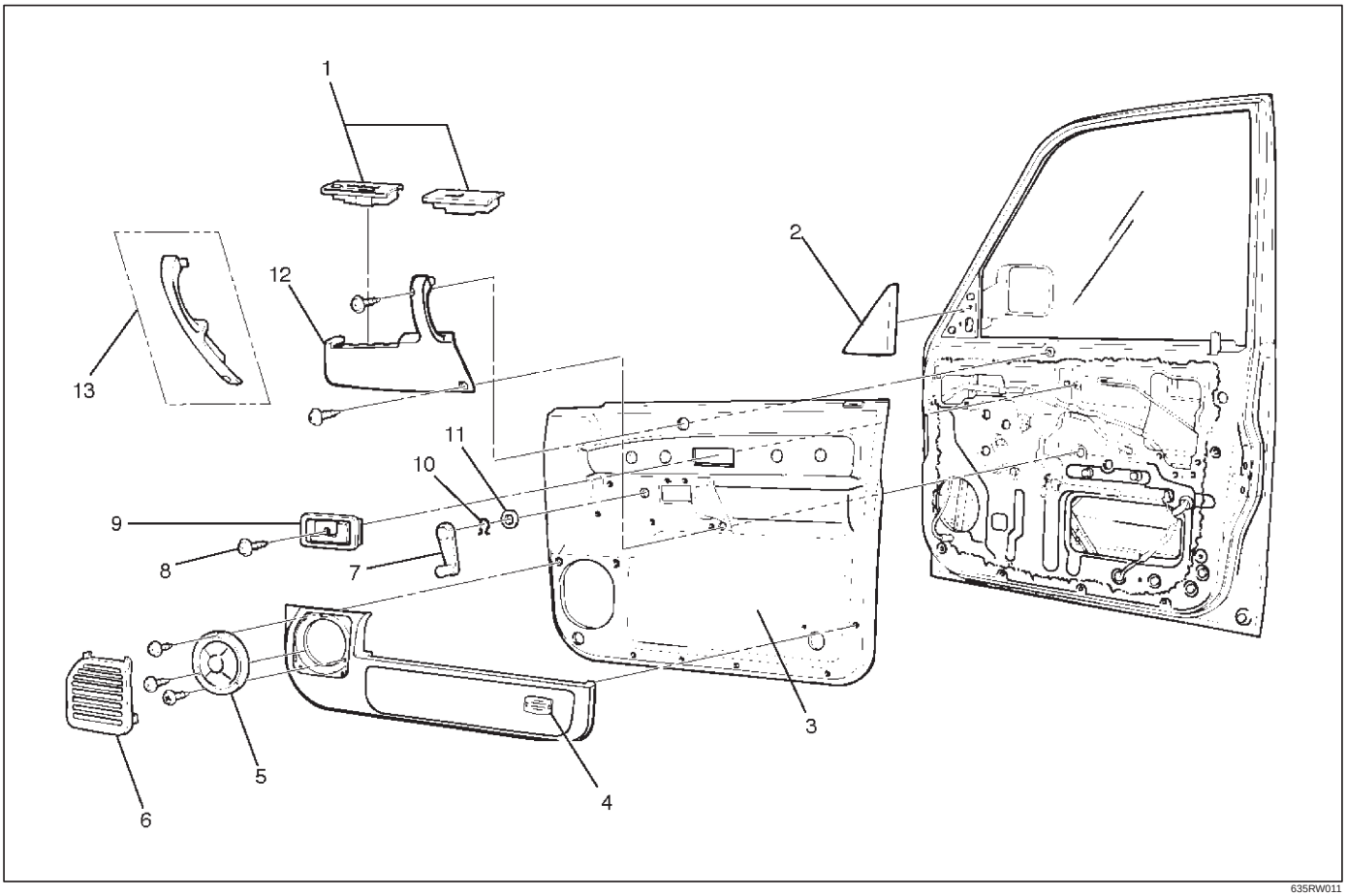

635RW011

Legend

(1) Power Window Switch
(2) Door Mirror Cover
(3) Door Trim Panel
(4) Courtesy Light
(5) Front Speaker
(6) Speaker Cover
(7) Regulator Handle
(8) Inside Handle Fixing Screw
(9) Inside Handle
(10) Hook
(11) Washer
(12) Inside Pull Handle
(13) Inside Pull Handle (W/O Power Window)

Removal

1. Disconnect the battery ground cable.

2. Remove the door mirror cover (1).

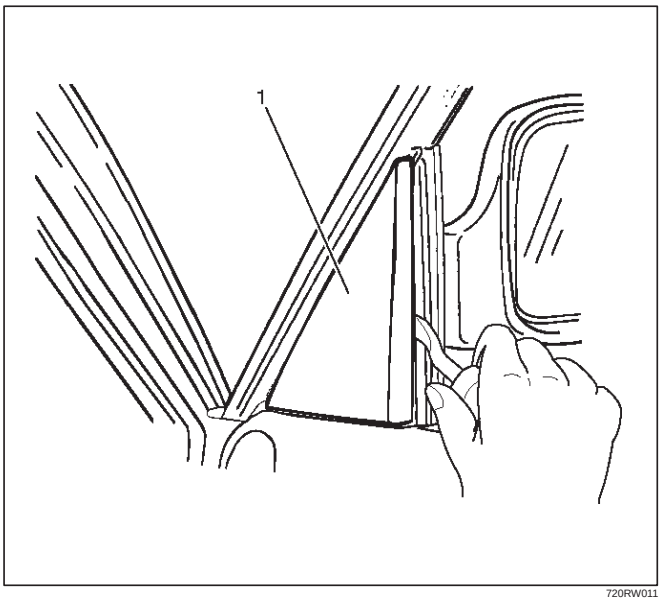

720RW011

3. Remove the regulator handle(3).
   - Pull the hook(4) out and remove the regulator handle.

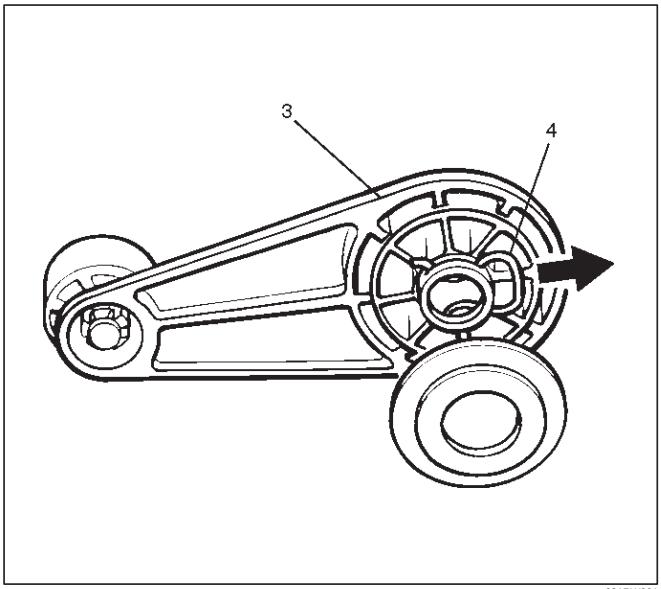

631RW001

4. Remove the power window switch(1).
   - Pry the power window switch out and disconnect the switch connector.

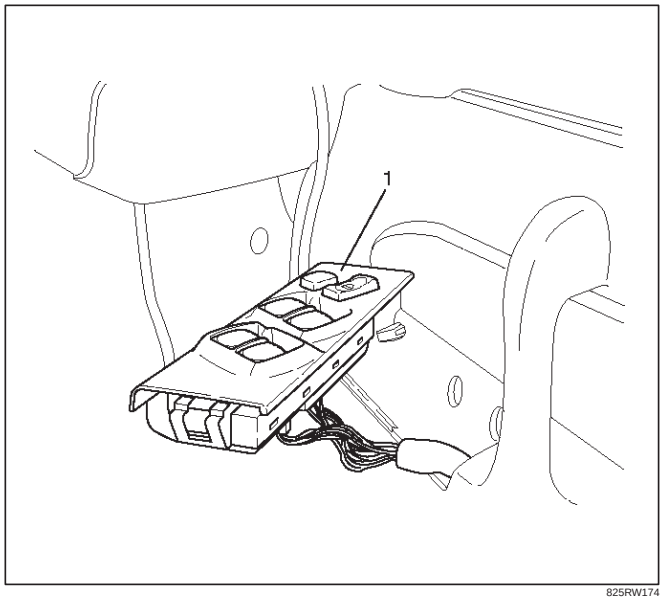

825RW174

5. Remove the speaker cover.
6. Remove the front speaker.
   - Remove the front speaker fixing screws in order to disconnect the speaker connector.
7. Remove the inside handle fixing screw.
   - Remove the screw that fixes the inside handle(7), slide the inside handle to the position illustrated, and leave it there for the moment.

CAUTION: Take care not to impose excessive force on the inside handle link(6), lest this link is elongated, which could make it impossible to operate the door with the inside handle.

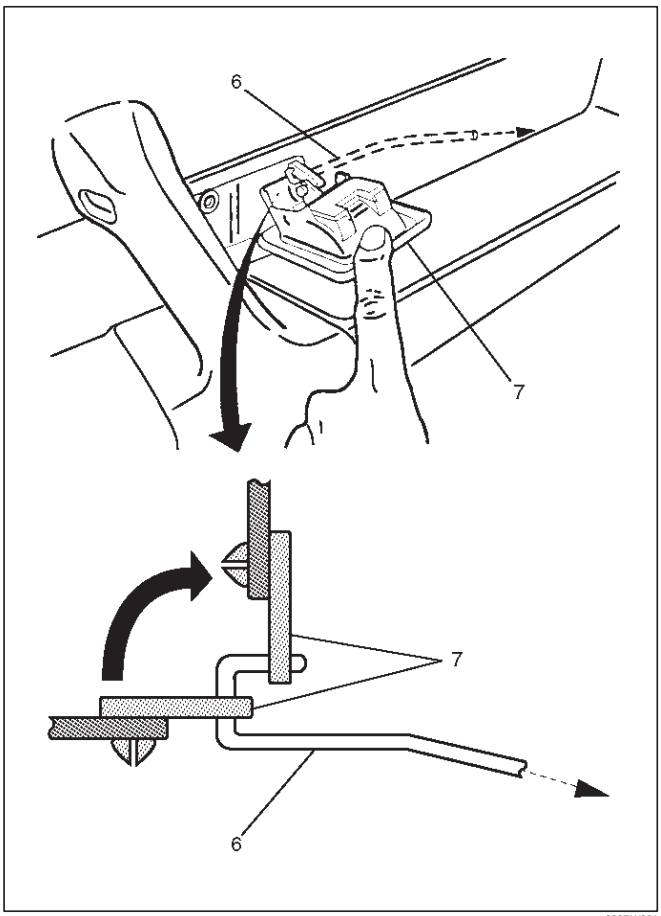

632RW001

8. Remove the door trim panel(9).
   - Remove two fixing screws(8) in order to take off seven clips(10) from the door panel.

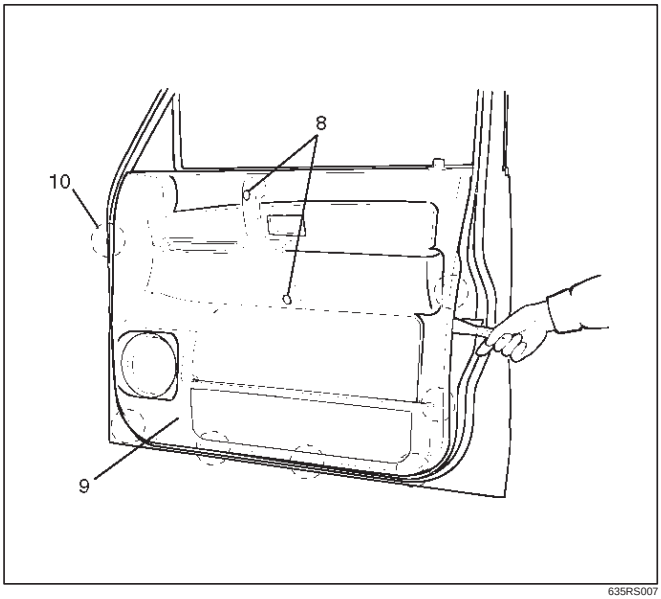

635RS007

- Disconnect the courtesy light connector(13) to lift the door trim panel(14) and unlock the engagement of the waist seal(12) section. Then, pass the inside handle(11) through the mounting hole of the trim panel, and detach the trim panel.

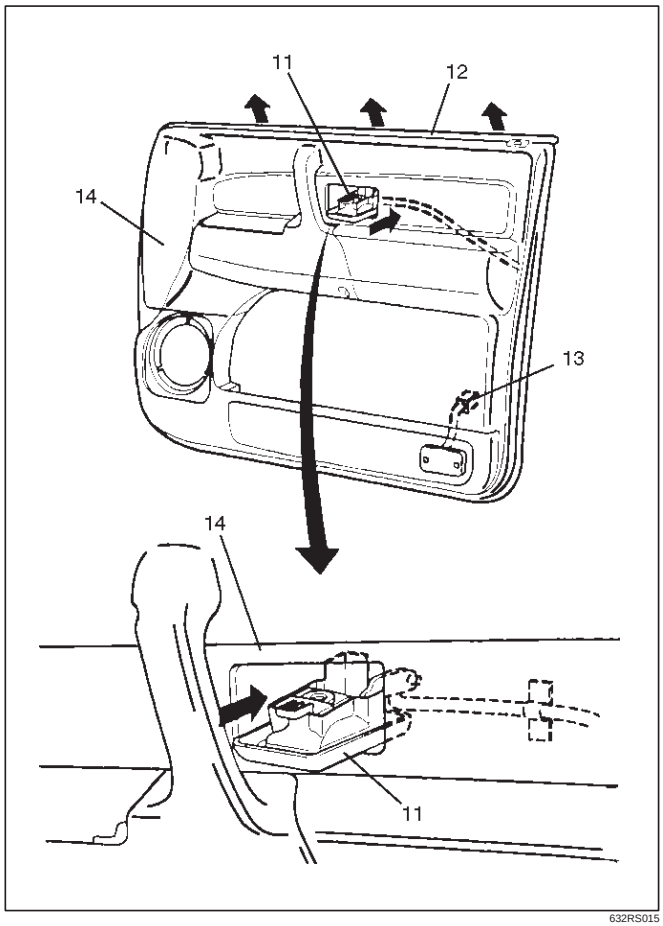

632RS015

9. Remove the inside handle.

Installation

To install, follow the removal steps in the reverse order, noting the following point.

1. When installing the inside handle(2), assemble it temporarily to the inside handle link(1).

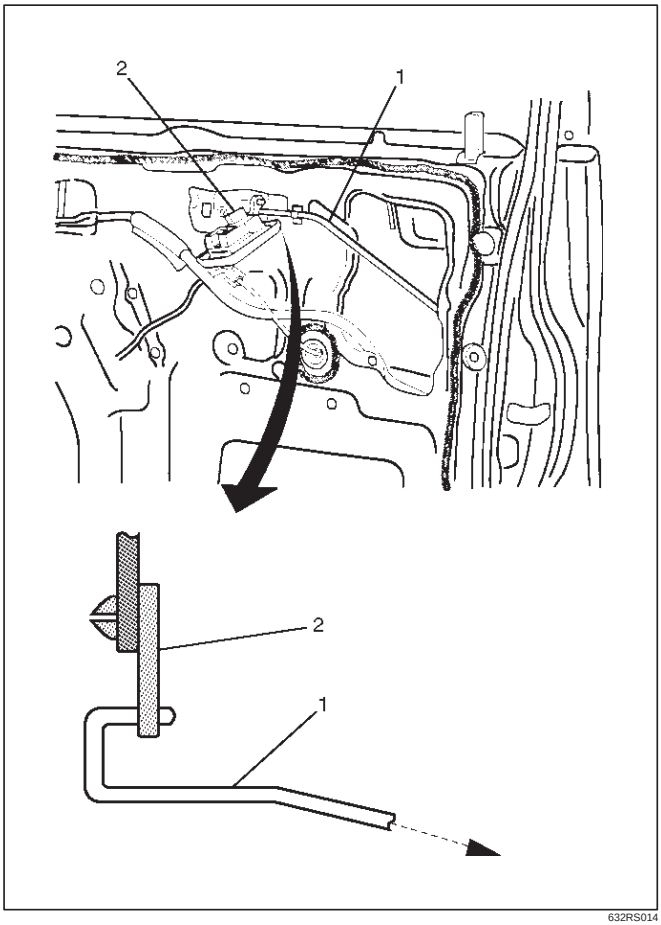

632RS014

2. Pass the inside handle(4) through the mounting hole of the trim panel and assemble the trim panel.

   Engage seven clips(8) into the door panel. Also, connect the courtesy light connector(5) and leave the connectors of the speaker(7), tweeter(9) and power window(3) drawn out to their prescribed positions, so that they will not be caught.

   Then, put the inside handle(4) to the normal position of the inside handle link(6).

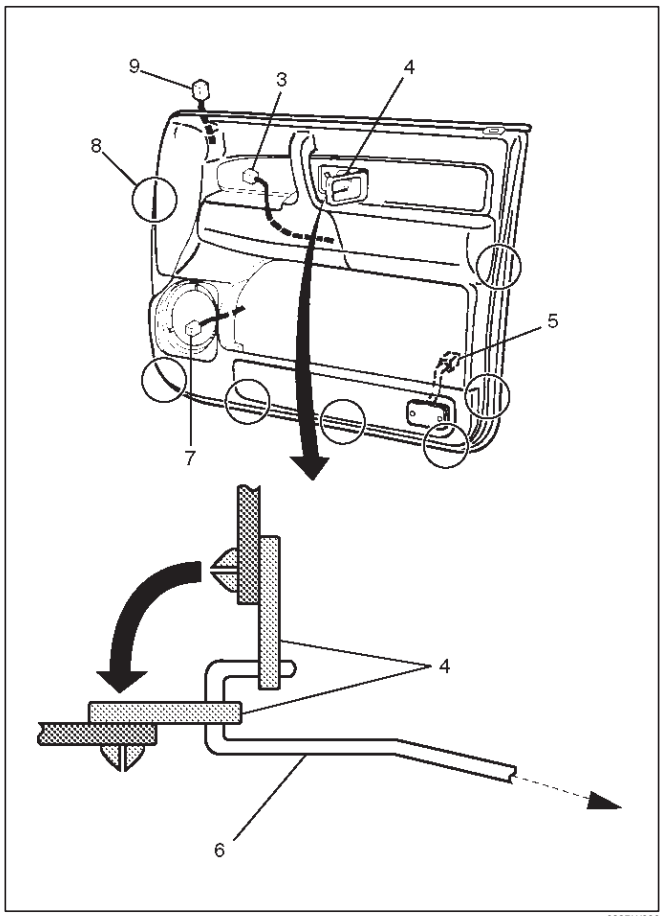

632RW006

3. Fit the claw(10) of the inside handle(11) securely into the hole of the door panel and fix the inside handle with the screw.

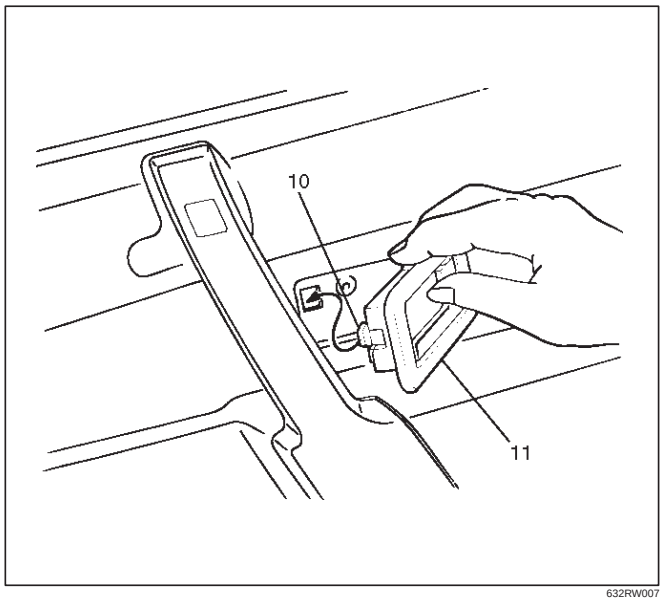

632RW007

Rear Door Trim Panel

Rear Door Trim Panel and Associated Parts

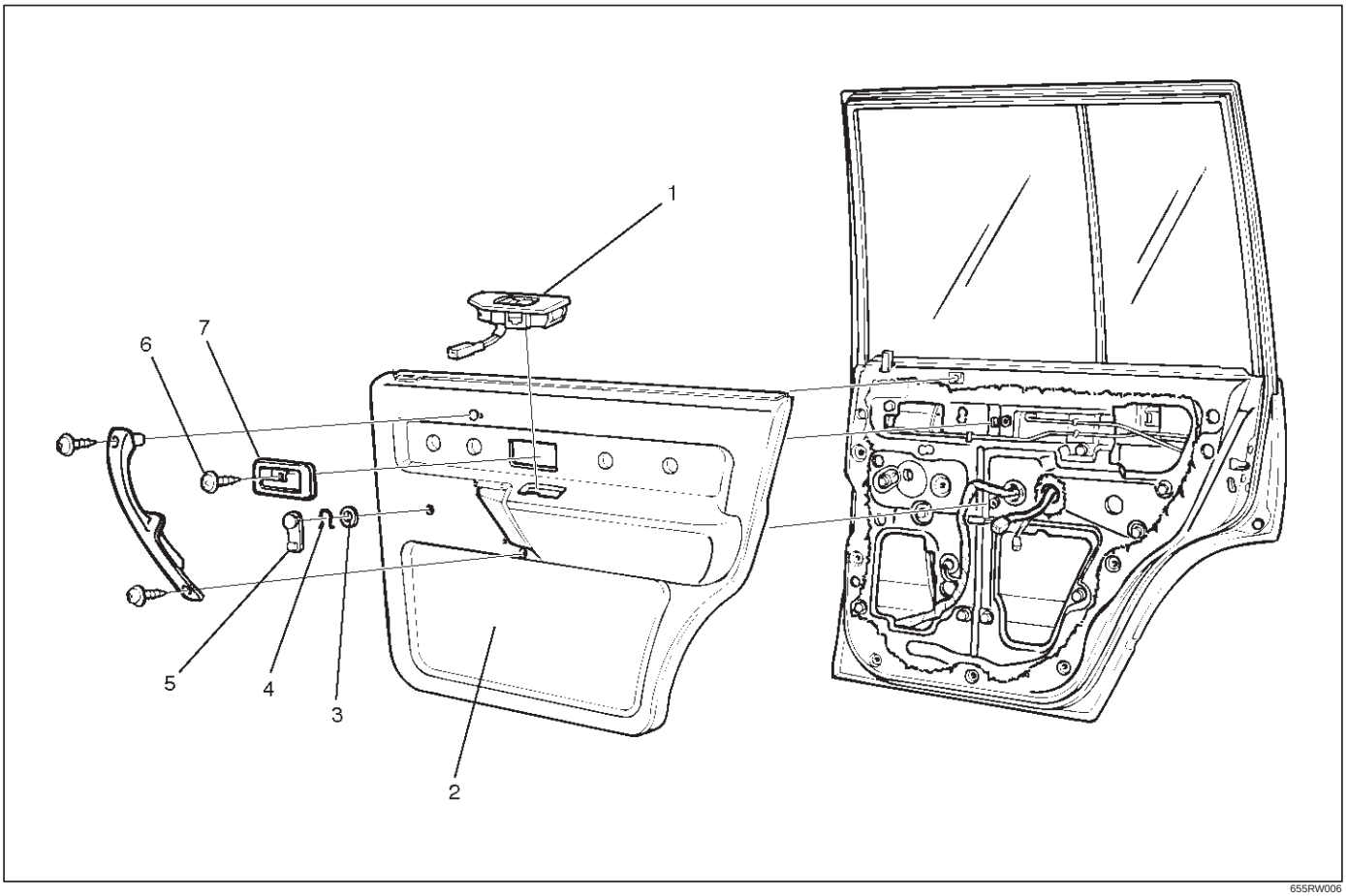

655RW006

Legend

(1) Power Window Switch
(2) Door Trim Panel
(3) Washer
(4) Clip
(5) Regulator Handle
(6) Inside Handle Fixing Screw
(7) Inside Handle

Removal

1. Disconnect the battery ground cable.
2. Remove the regulator handle(1).
   - Pull the hook(2) out and remove the regulator handle.

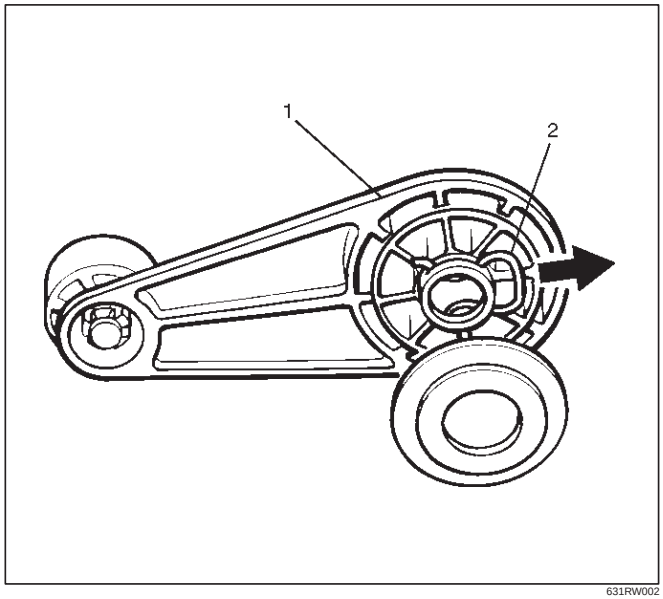

631RW002

3. Remove the power window switch(3).
   - Pry the power window switch out and disconnect the switch connector.

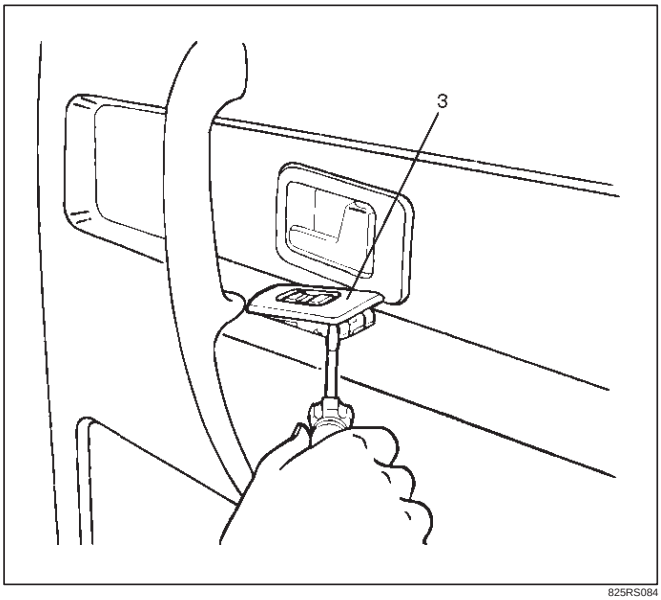

825RS084

4. Remove the inside handle fixing screw.
   - Remove the screw that fixes the inside handle(5), slide the inside handle to the position illustrated, and leave it there for the moment.

CAUTION: Take care not to impose excessive force on the inside handle link(4), lest this link be elongated, which could make it impossible to operate the door with the inside handle.

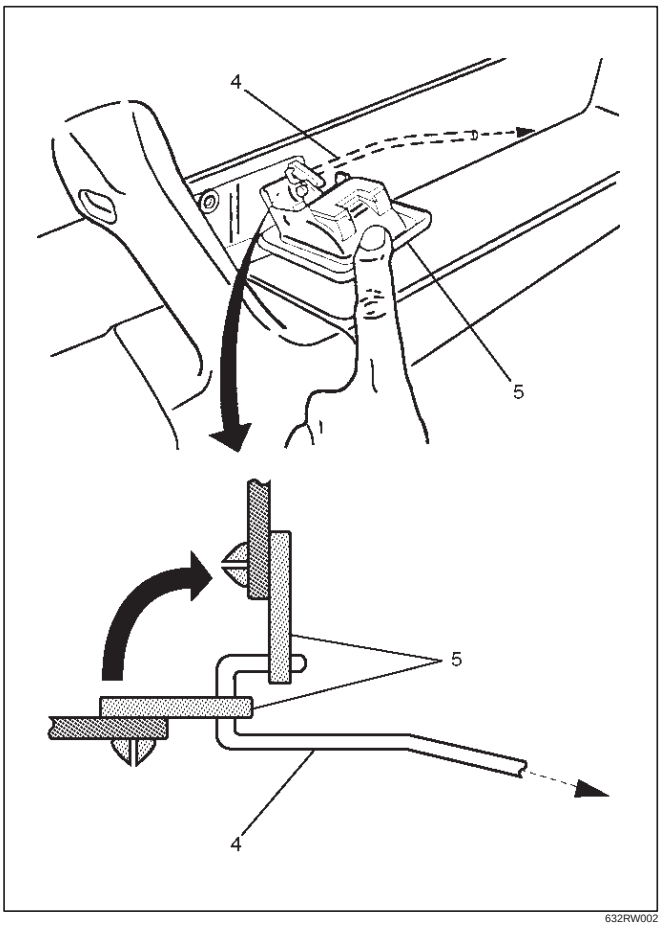

632RW002

5. Remove the door trim panel(6).
   - Remove two fixing screws(8) to take off seven clips(7) from the door panel.

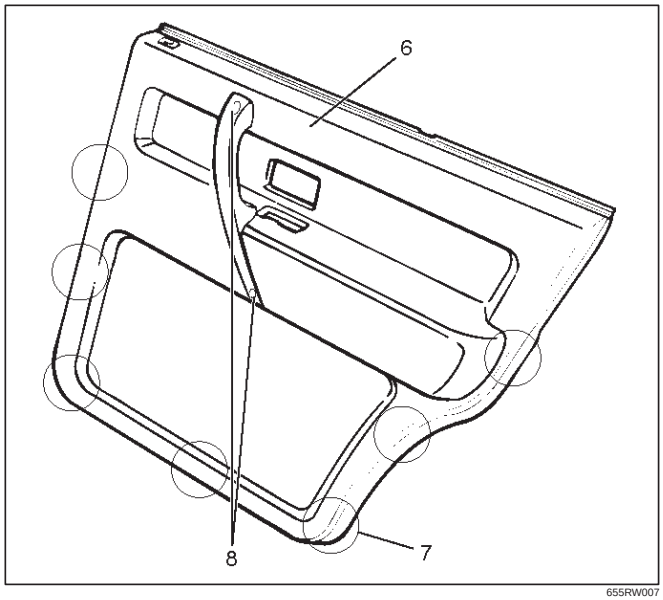

655RW007

   - Lift the trim panel and unlock the engagement of the waist seal section. Then, pass the inside lever through the mounting hole of the trim panel, and detach the trim panel.

6. Remove the inside handle.

Installation

To install, follow the removal steps in the reverse order, noting the following point.

1. When installing the inside handle(1), assemble temporarily to the inside handle link(2).

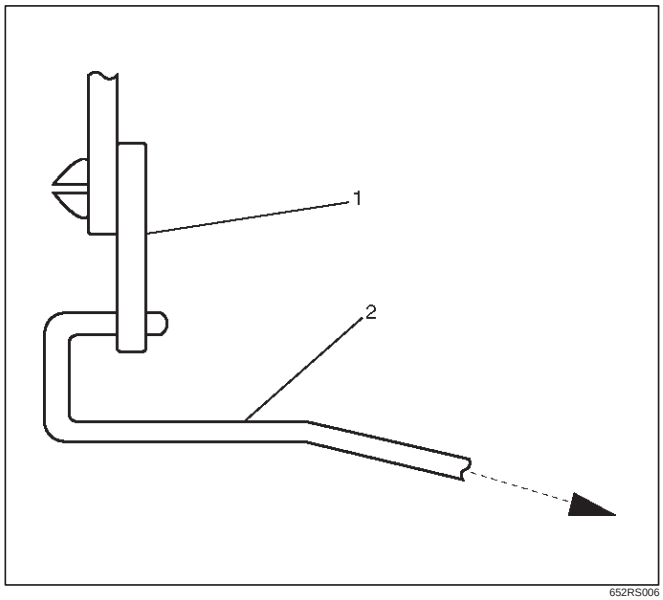

652RS006

2. Pass the inside handle through the mounting hole of the trim panel. Assemble the trim panel. Engage securely seven clips into the door panel. Also, leave the connector of the power window drawn out to its prescribed position, so that it will not caught.
3. Put back the inside handle(3) to the original position of the link(5). Fit the claw(4) of the inside handle securely into the hole of the door panel. Fix the handle with the screw.

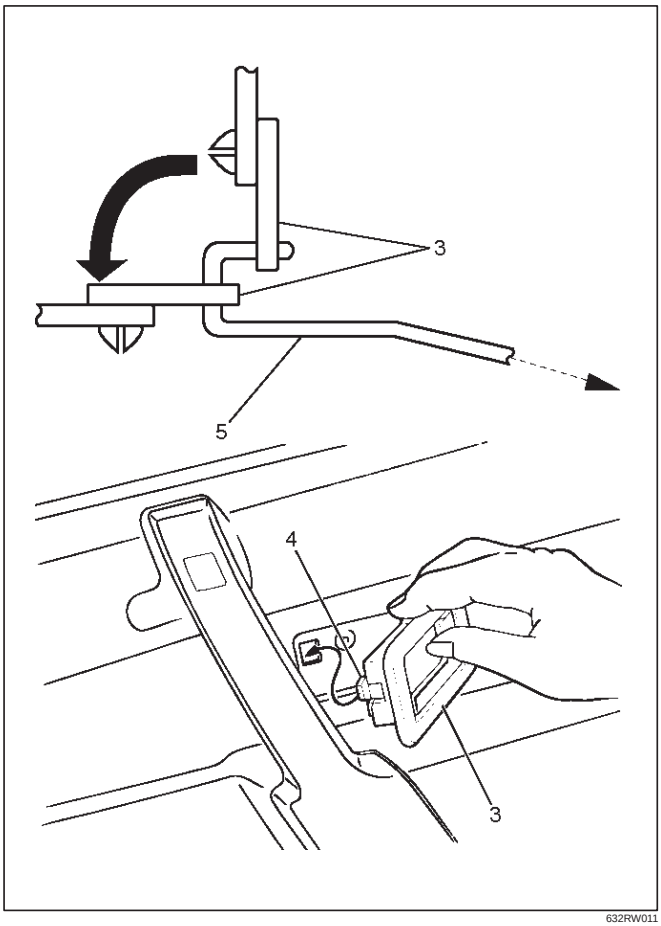

632RW011

Door Mirror

Door Mirror and Associated Parts

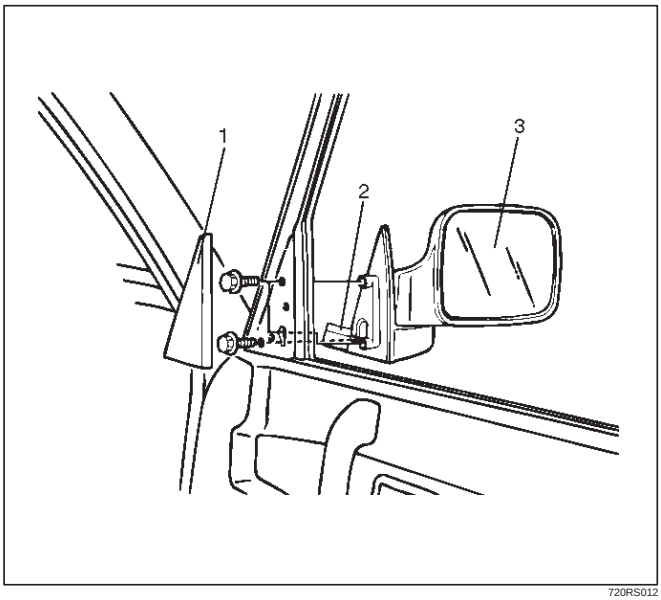

720RS012

Legend

(1) Door Mirror Cover
(2) Door Mirror Connector
(3) Door Mirror

Removal

1. Disconnect the battery ground cable.
2. Remove the door mirror cover(1).

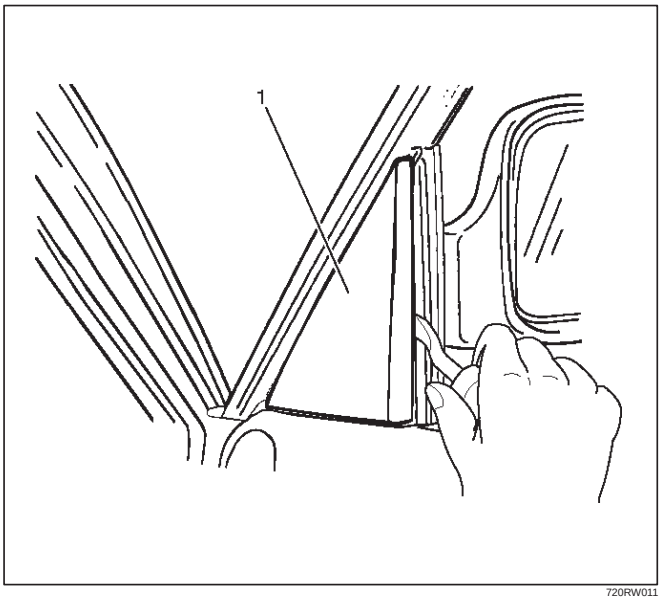

720RW011

3. Remove the door mirror connector.
4. Remove the door mirror.

Installation

To install, follow the removal steps in the reverse order, noting the following points.

1. When you install the door mirror, install the bolt(1) to the mirror temporarily, hook the bolt to the door side hole and tighten the bolt from the inside.

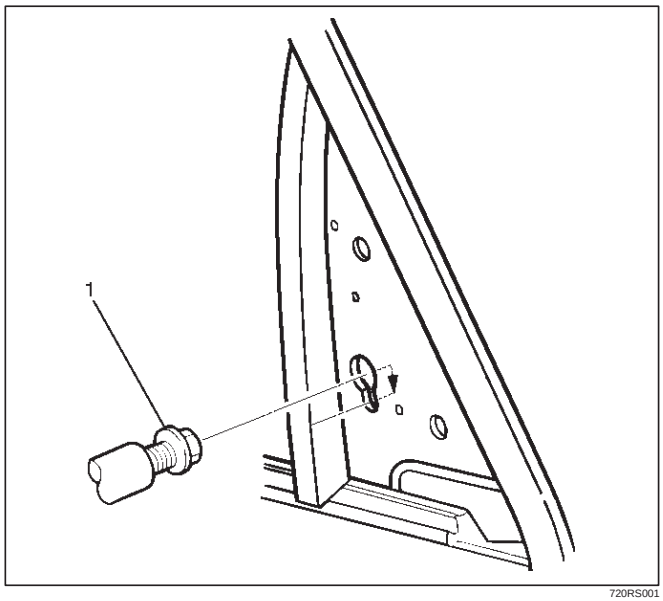

720RS001

2. When installing the door mirror, hold the glass run lip(2) between the door mirror base(3) and the center sash(4).

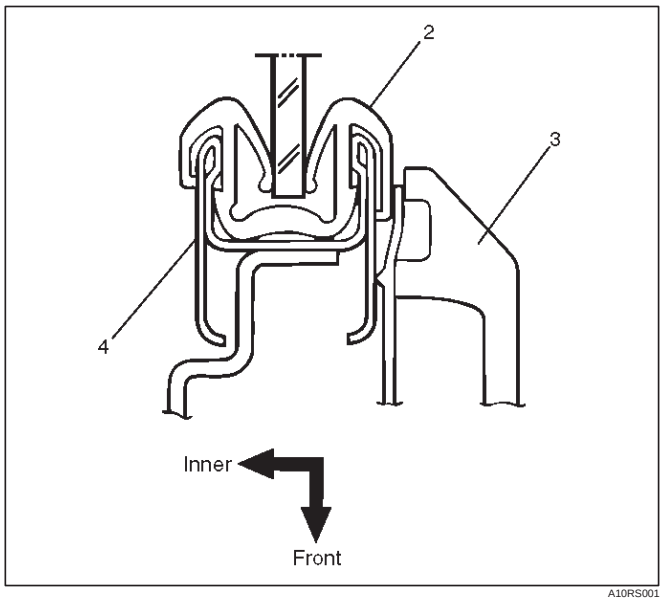

A10RS001

3. Tighten the door mirror fixing bolts to the specified torque.

Torque: 8 N·m (0.8kg·m/69 lb in)

Luggage Side and Quarter Upper Trim Cover (LWB)

Luggage Side, Quarter Upper Trim Cover and Associated Parts

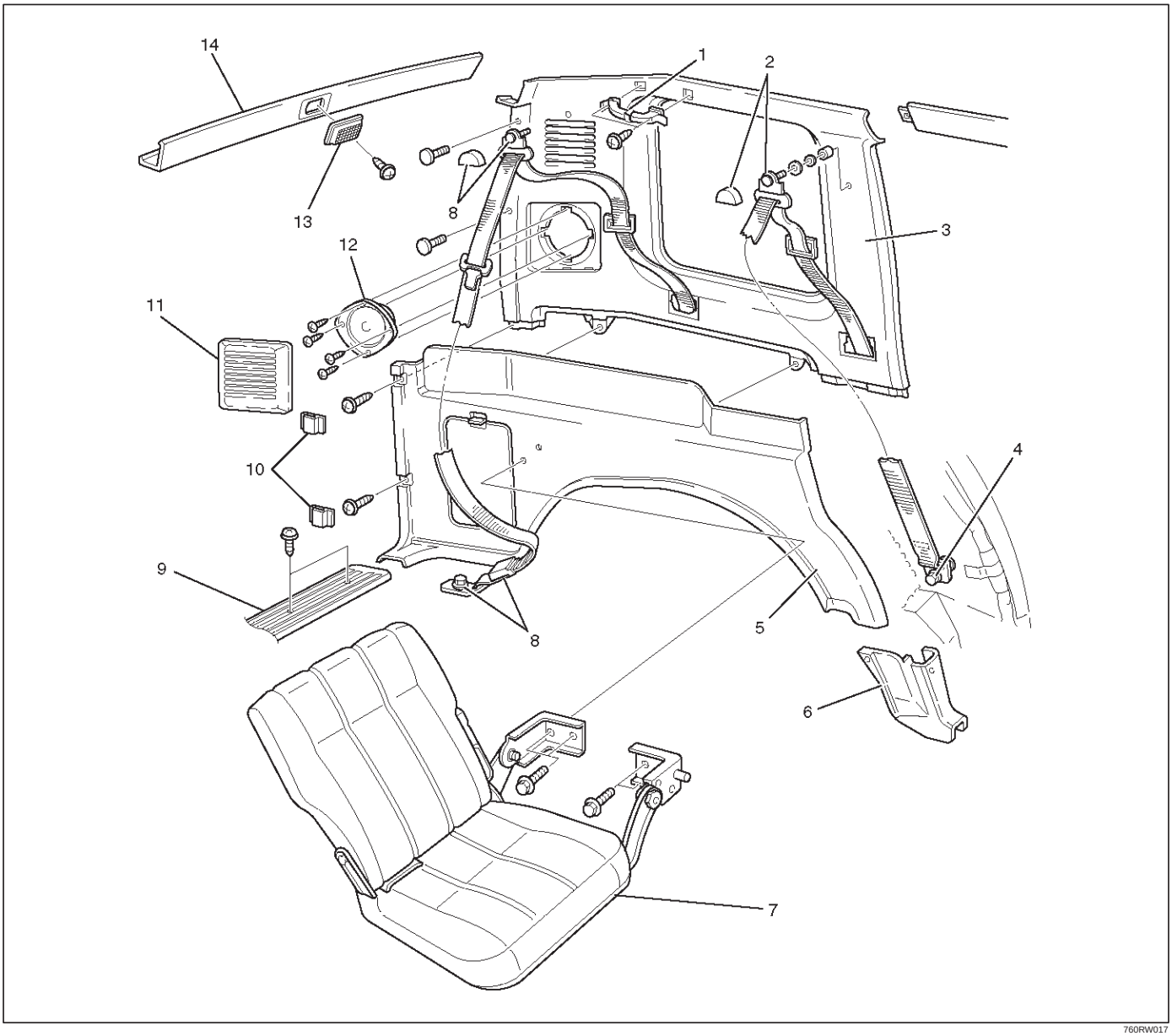

760RW017

Legend

(1) Assist Grip
(2) Rear Seat Belt Anchor Bolt Cover and Anchor Bolt
(3) Quarter Upper Trim Cover
(4) Anchor Bolt
(5) Luggage Side Trim Cover
(6) Luggage Side Lower Cover
(7) Third Seat Assembly and seat Bracket
(8) Third Seat Belt Anchor Bolt Cover and Anchor Bolt
(9) Rear End Floor Trim Cover
(10) Luggage Side Cap
(11) Speaker Grille
(12) Rear Speaker
(13) Luggage Room Light
(14) Rear Roof Trim Cover

Removal

1. Disconnect the battery ground cable.
2. Remove the third seat assembly and seat bracket.
3. Remove the rear end floor trim cover.
4. Remove the luggage side cap.
5. Remove the luggage side lower cover.

6. Remove the luggage side trim cover (1).
   - Remove the rear side fixing screws and pry the trim cover retainers free from the body panel and the upper trim cover.

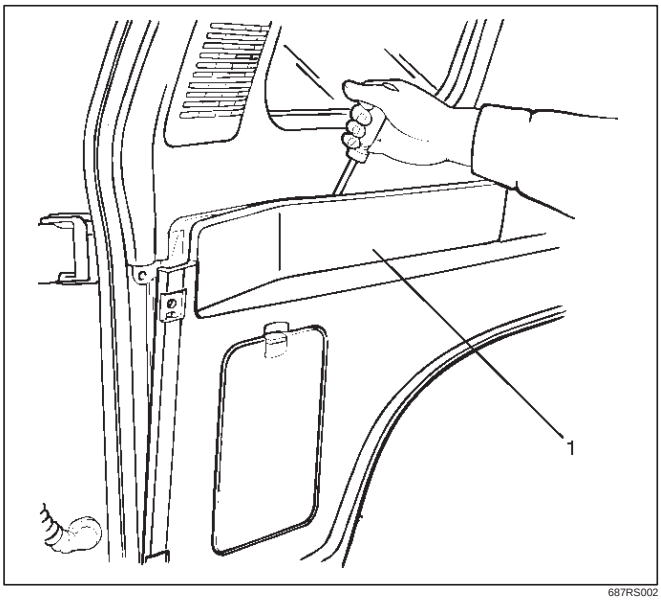

687RS002

7. Remove the luggage room light.
   - Remove the luggage room light lens and the fixing screws.
   - Disconnect the luggage room light connector.
8. Remove the rear roof trim cover.
   - Pry the trim cover retainers free from the body panel.

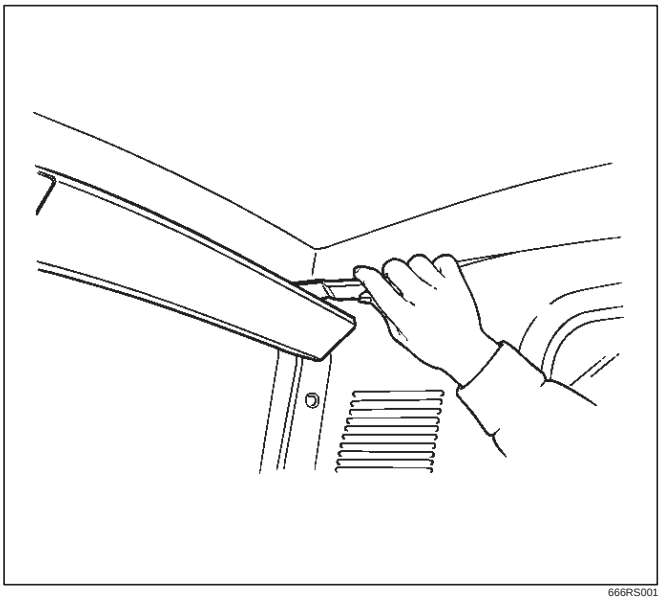

666RS001

9. Remove the speaker grille.

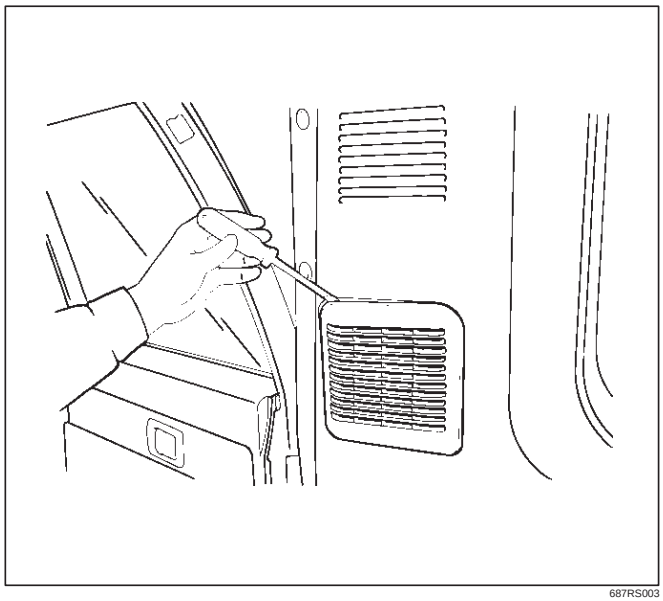

687RS003

10. Remove the rear speaker.
    - Remove the rear speaker fixing screws and disconnect the connector.
11. Remove the rear seat belt anchor bolt cover (2) and the anchor bolt (3).

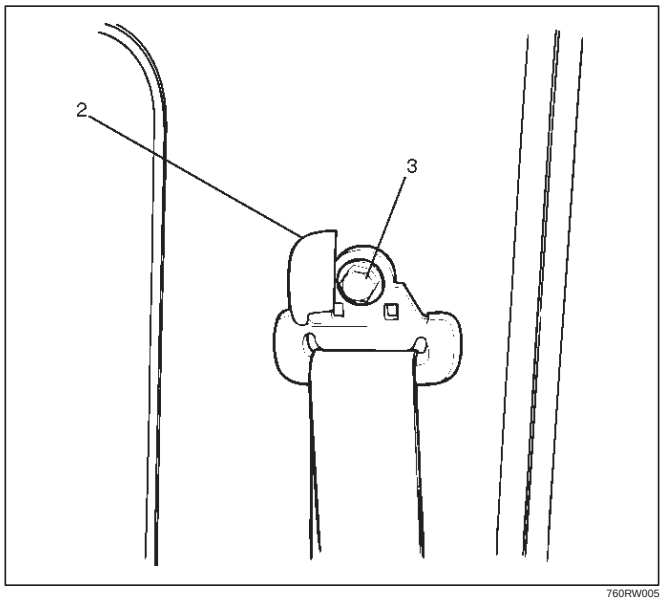

760RW005

12. Remove the third seat belt anchor bolt cover and anchor bolt.
    - Refer to the Third Seat Belt removal procedure in Seat Belt System section.
13. Remove the assist grip.

14. Remove the quarter upper trim cover.
    - Remove the rear side clips of the trim cover and pry the quarter upper trim cover retainers free from the body panel.

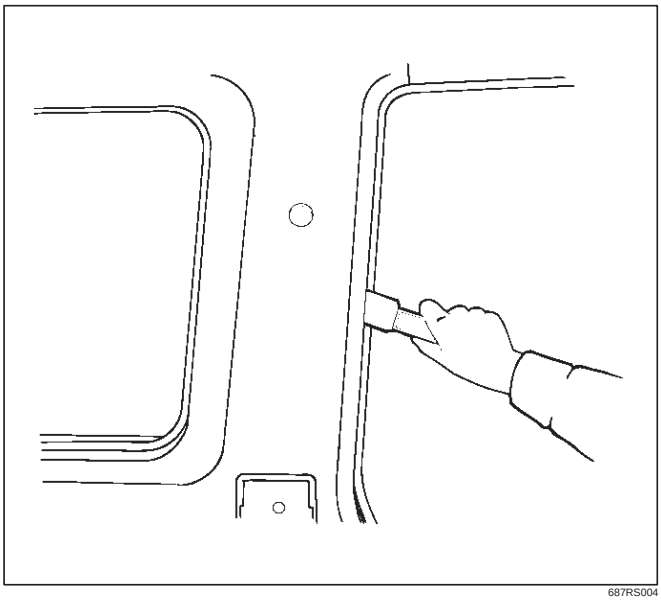

687RS004

Installation

To install, follow the removal steps in the reverse order, noting the following point.

1. Tighten the seat belt anchor bolt to the specified torque.

   Torque: 39 N·m (4.0kg·m/29 lb ft)

Luggage Side and Quarter Upper Trim Cover (SWB)

Luggage Side, Quarter Upper Trim Cover and Associated Parts

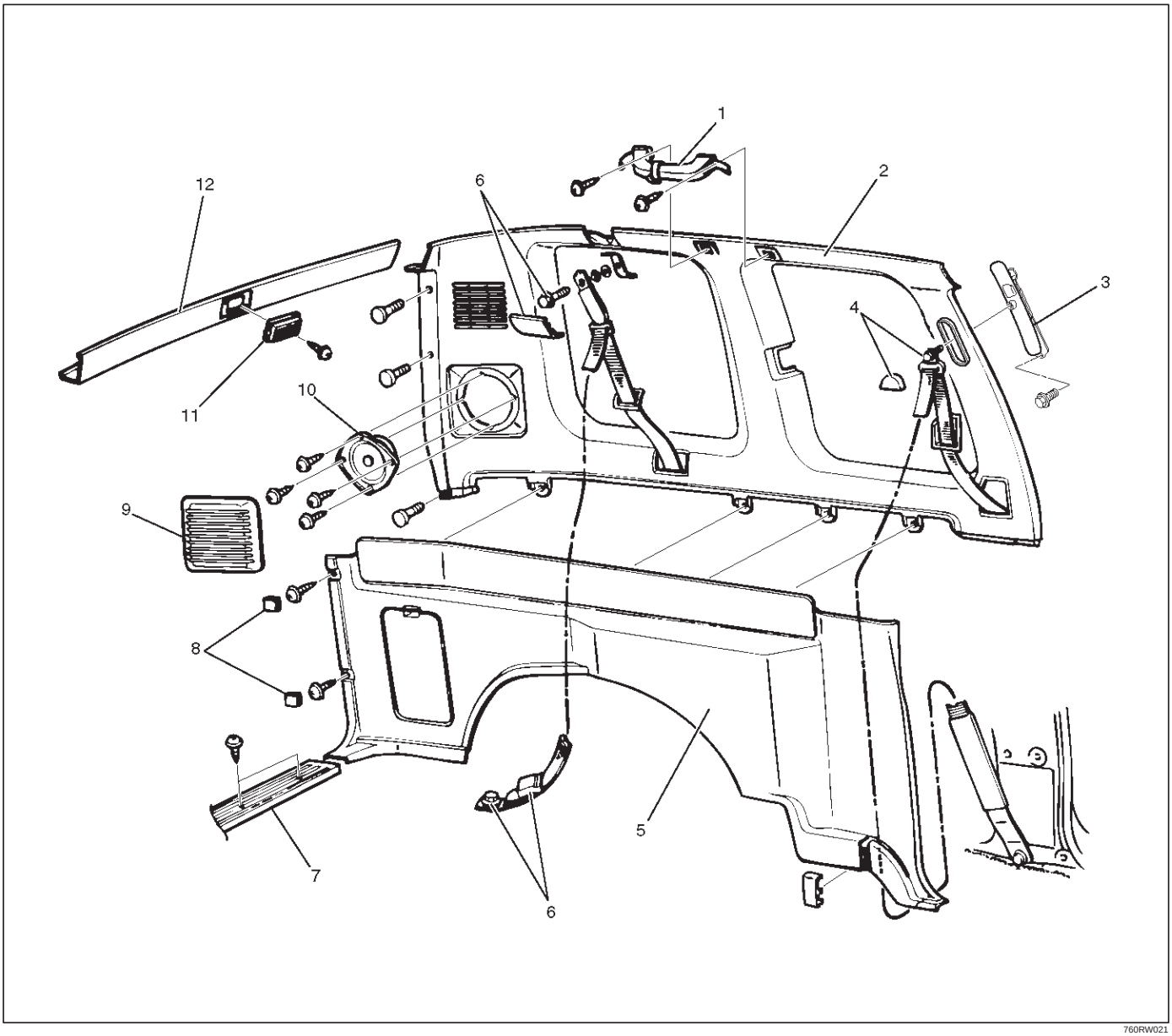

Legend

(1) Rear Assist Grip
(2) Quater Upper Trim Cover
(3) Seat belt adjust Shoulder Anchor Plate
(4) Front Seat Belt Anchor Bolt Cover and Anchor Bolt
(5) Luggage Side Trim Cover
(6) Rear Seat Belt Anchor Bolt Cover and Anchor Bolt
(7) Rear End Floor Trim Cover
(8) Luggage Side Cap
(9) Speaker Grill
(10) Rear Speaker
(11) Luggage Room Light
(12) Rear Roof Trim Cover

Removal

1. Disconnect the battery ground cable.
2. Remove the rear end floor trim cover.
3. Remove the luggage side cap.

4. Remove the luggage side trim cover (1).
   - Remove the rear side fixing screws and pry the trim cover retainers free from the body panel and the upper trim cover.
   - Remove the cover by pulling the front seat belt out of the slit on the lower side of the trim cover.

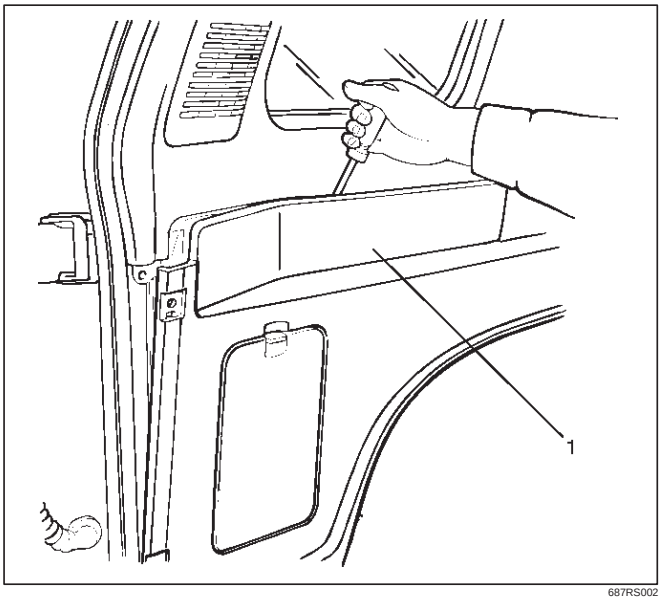

687RS002

5. Remove the luggage room light.
   - Remove the luggage room light lens and the fixing screws.
   - Disconnect the luggage room light connector.
6. Remove the rear roof trim cover.
   - Pry the trim cover retainers free from the body panel.

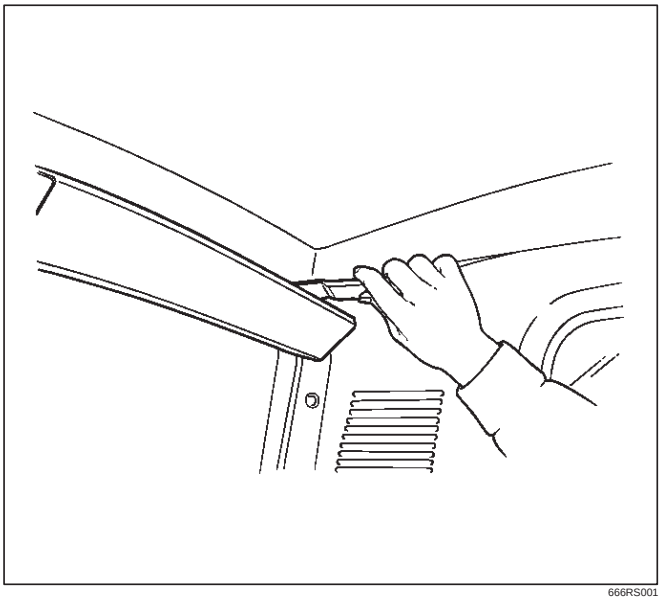

666RS001

7. Remove the speaker grille.

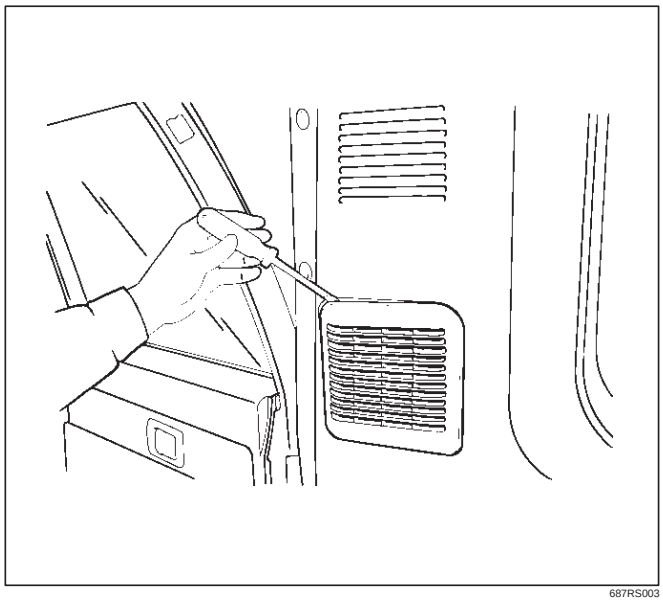

687RS003

8. Remove the rear speaker.
   - Remove the rear speaker fixing screws and disconnect the connector.
9. Remove the rear assist grip (7).
   - Open the both side of the assist grip cover (8) and remove two fixing screws.

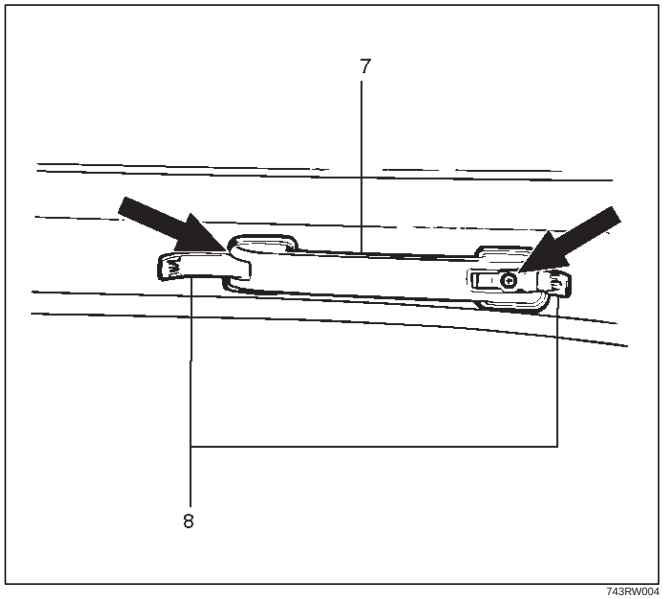

743RW004

10. Remove the rear seat belt anchor bolt cover (1) and the anchor bolt (2).

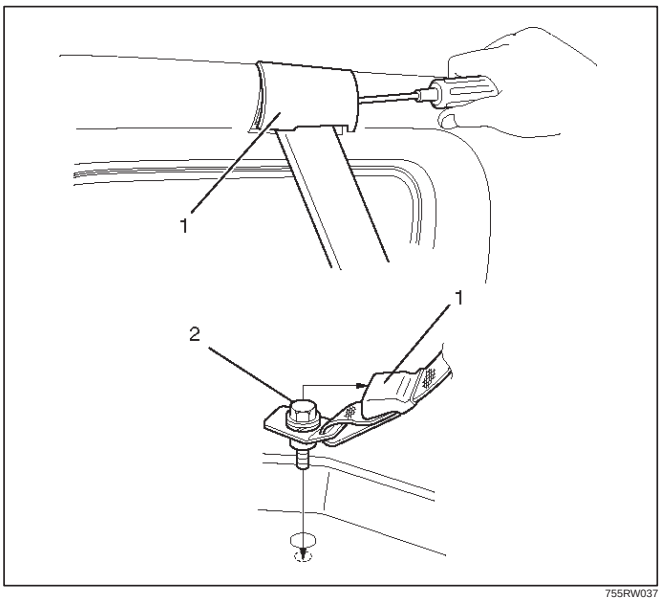

755RW037

11. Remove the front seat belt anchor bolt cover (3) and the anchor bolt (4).

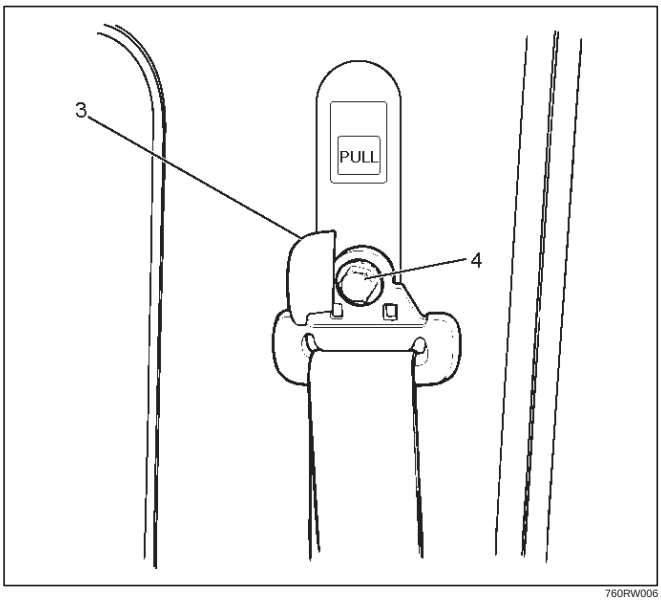

760RW006

12. Remove the quarter upper trim cover.
    - Remove the rear side clips of the trim cover and pry the quarter upper trim cover retainers free from the body panel.

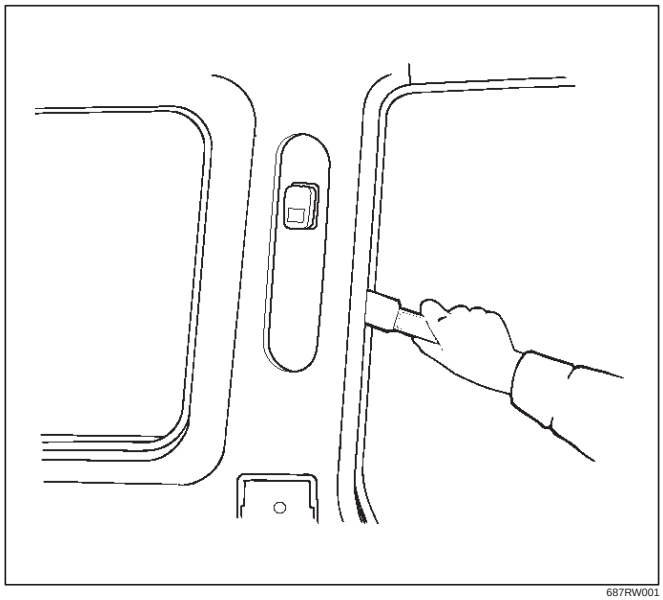

687RW001

13. Remove the seat belt adjust shoulder anchor plate.

Installation

To install, follow the removal steps in the reverse order, noting the following point.

1. Tighten the seat belt anchor bolts to the specified torque.

   Torque: 39 N·m (4.0kg·m/29 lb ft)

Center Pillar and Roof Side Trim Cover (LWB)

Center Pillar, Roof Side Trim Cover and Associated Parts

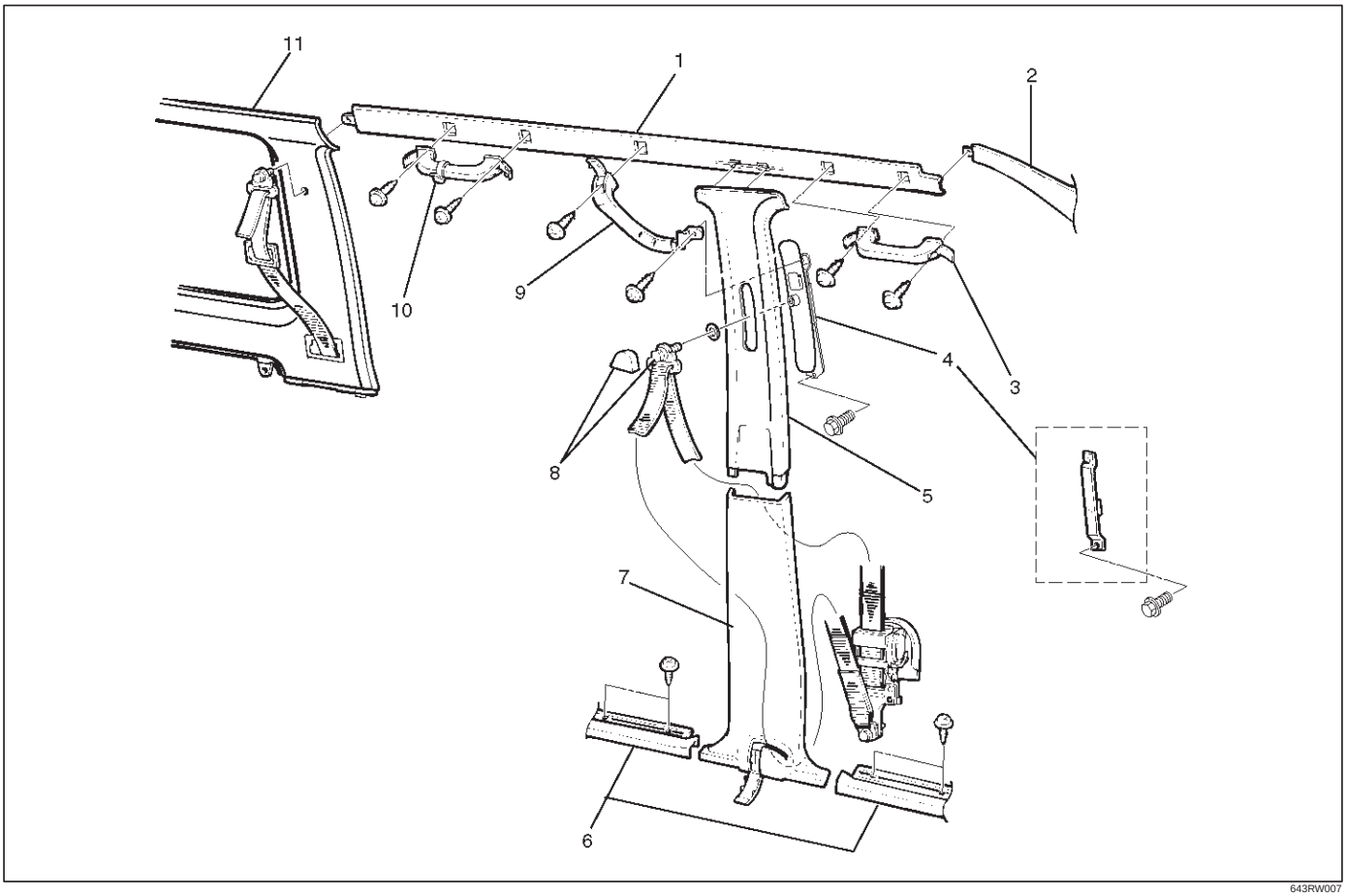

643RW007

Legend

(1) Roof Side Trim Cover
(2) Front Pillar Trim Cover
(3) Assist Grip (Passenger Seat Side)
(4) Adjust Shoulder Anchor Assembly/Seat Belt Anchor Plate
(5) Center Pillar Upper Trim Plate
(6) Door Sill Plate (Front and Rear)
(7) Center Pillar Lower Trim Cover
(8) Front Seat Anchor Bolt Cover and Anchor Bolt
(9) Center Pillar Assist Grip
(10) Assist Grip
(11) Rear Quarter Upper Trim Cover

Removal

1. Disconnect the battery ground cable.
2. Remove the door sill plate (front and rear).
3. Remove the center pillar lower trim cover (2).
   - Turn up the finisher (1) and pry the trim cover retainers free from the body panel, then slide the trim cover downward.

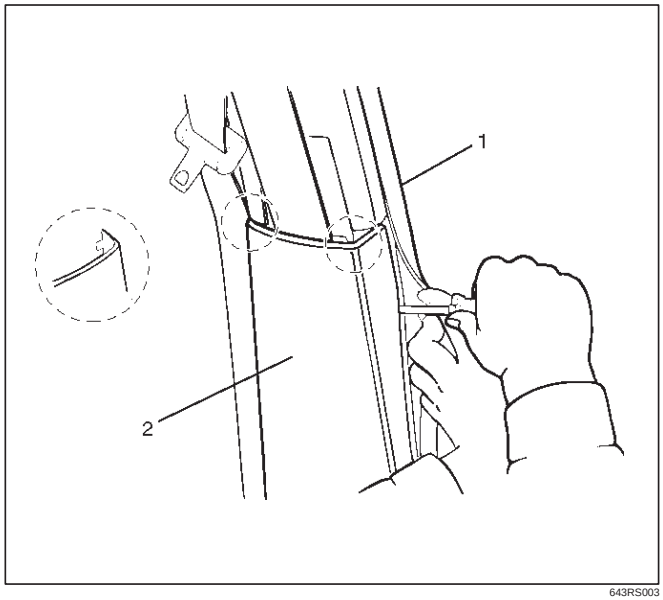

643RS003

4. Remove the front seat belt anchor bolt cover (3) and the anchor bolt (4).

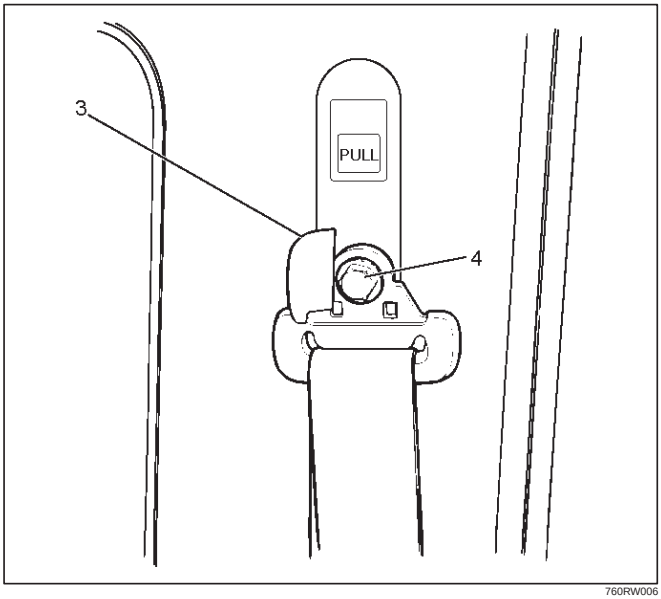

760RW006

5. Remove the center pillar upper trim cover (6).
   - Turn up the finisher (5) and pry the trim cover retainers free from the body panel.

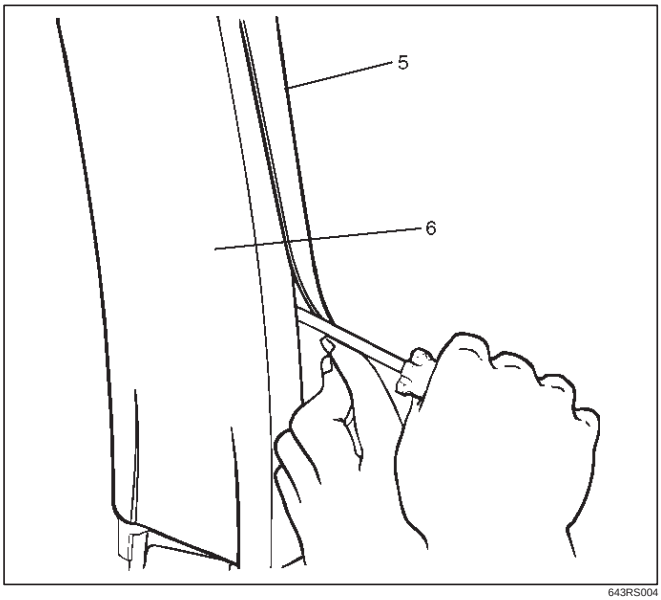

643RS004

6. Remove the center pillar assist grip.
7. Remove the seat belt anchor plate/adjusut shoulder anchor assembly.
8. Remove the assist grip (7).
   - Open the both side of the assist grip cover (8) and remove two fixing screws.

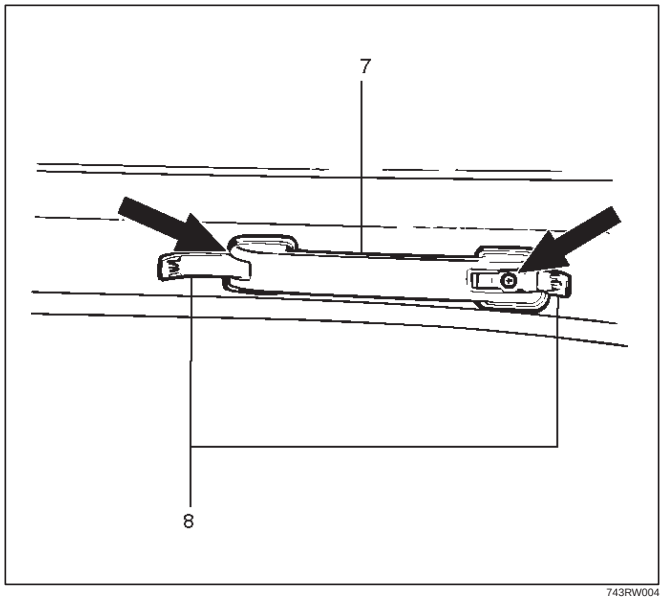

743RW004

9. Remove the roof side trim cover (9).
   - Turn up the finisher (10) and pry the trim cover retainers free from the body panel.

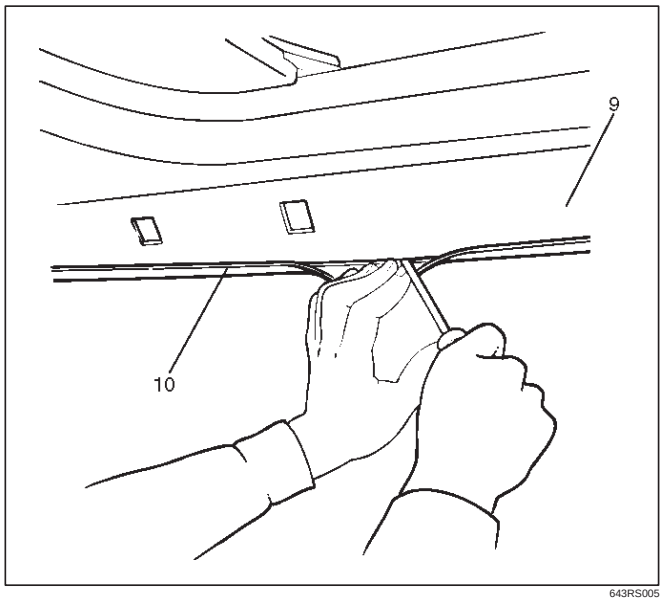

643RS005

Installation

To install, follow the removal steps in the reverse order, noting the following point.

1. Install the seat belt anchor bolts to the specified torque.

   Torque: 39 N·m (4.0kg·m/29 lb ft)

Roof Side Trim Cover (SWB)

Roof Side Trim Cover and Associated Parts

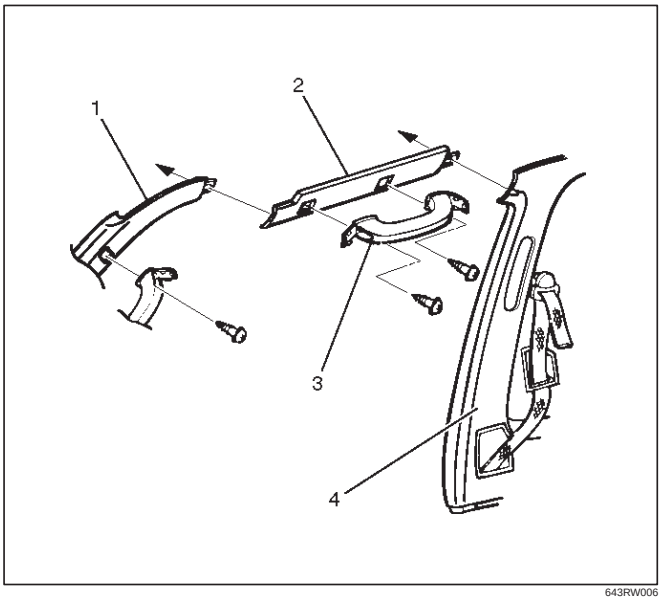

643RW006

Legend

(1) Front Pillar Trim Cover
(2) Roof Side Trim Cover
(3) Assist Grip (Passenger Seat Side)
(4) Rear Quarter Upper Trim Cover

Removal

1. Remove the assist grip.
2. Remove the roof side trim cover (9).
   - Turn up the finisher (10) and pry the trim cover retainers free from the body panel.

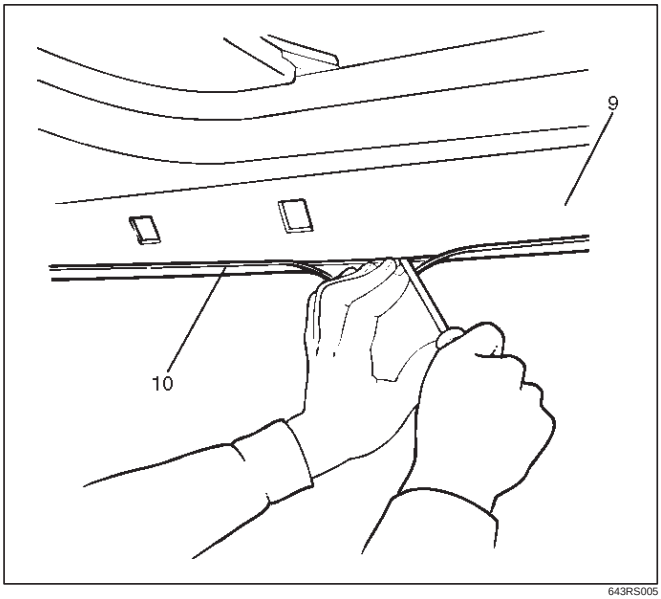

643RS005

Installation

To install, follow the removal steps in the reverse order.

Front Pillar Trim Cover

Front Pillar Trim Cover and Associated Parts

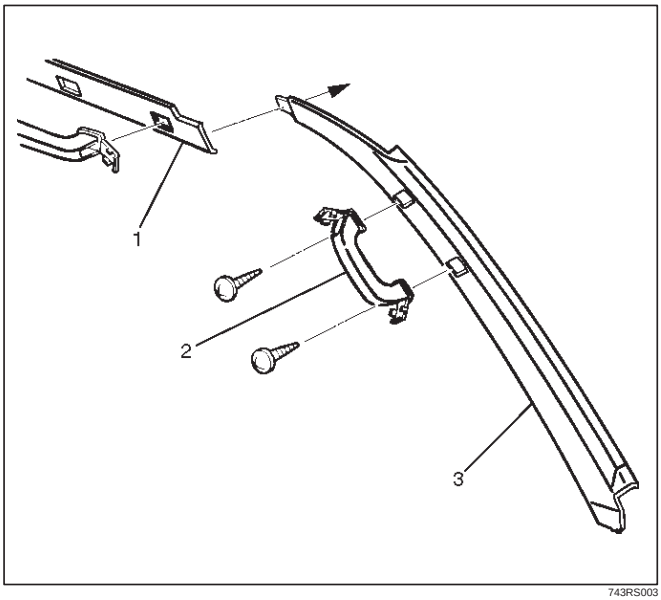

743RS003

Legend

(1) Roof Side Trim Panel
(2) Assist Grip
(3) Front Pillar Trim Panel

Removal

1. Remove the front pillar assist grip(1).
   - Open the both sides of the assist grip cover (2) and remove the fixing screws and the front pillar assist grip.

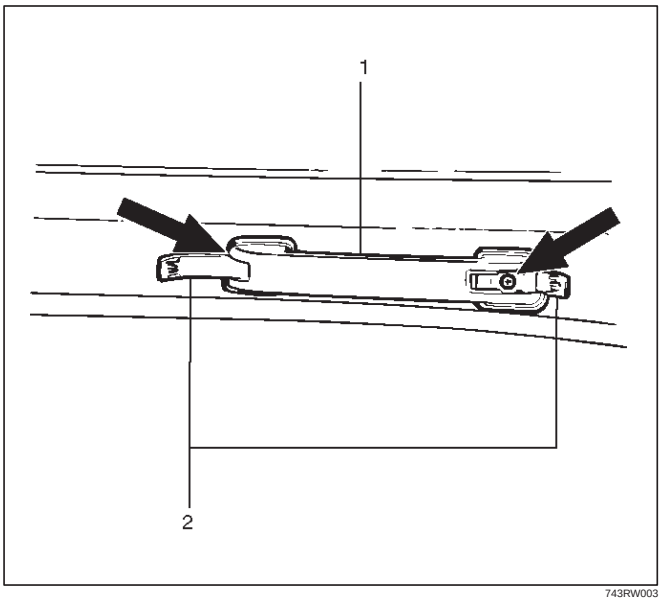

743RW003

2. Remove the front pillar trim cover (3).
   - Turn up the finisher (4) and pry the trim cover retainers free from the body panel.

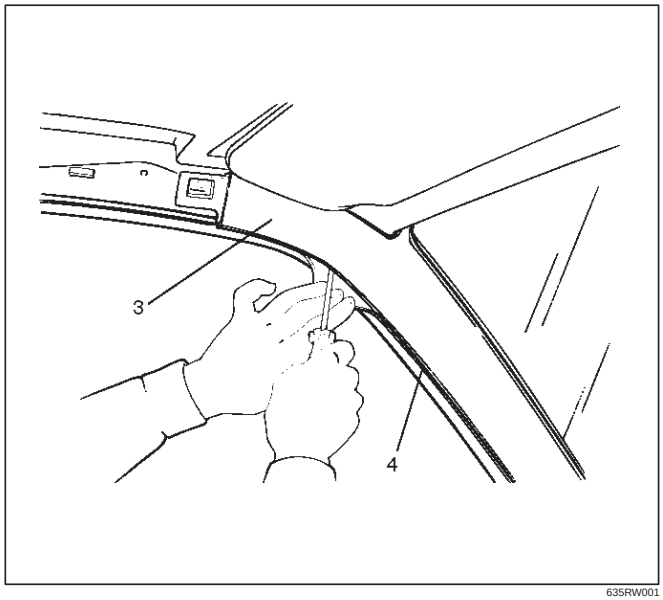

635RW001

Installation

To install, follow the removal steps in the reverse order.

Center Pillar Assist Grip

Parts Location

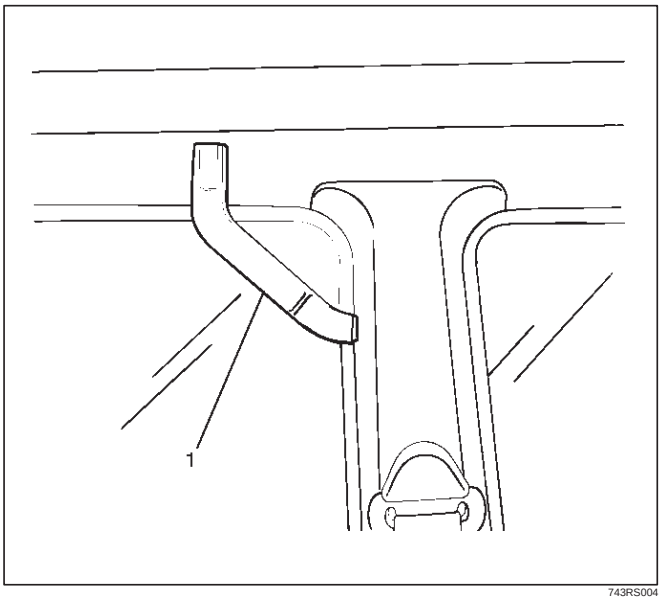

Legend
(1) Center Pillar Assist Grip

Removal and Installation

Refer to the Center Pillar and Roof Side Trim Cover in this section.

Assist Grip

Parts Location

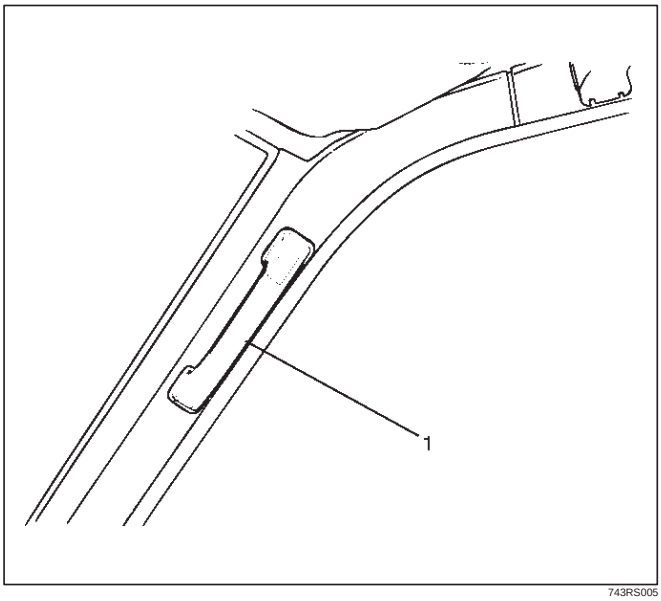

Legend
(1) Assist Grip

Removal and Installation

Refer to the Front Pillar Trim Cover in this section.

Fuel Filler Lid Opener Cable

Fuel Filler Lid Opener Cable and Associated Parts

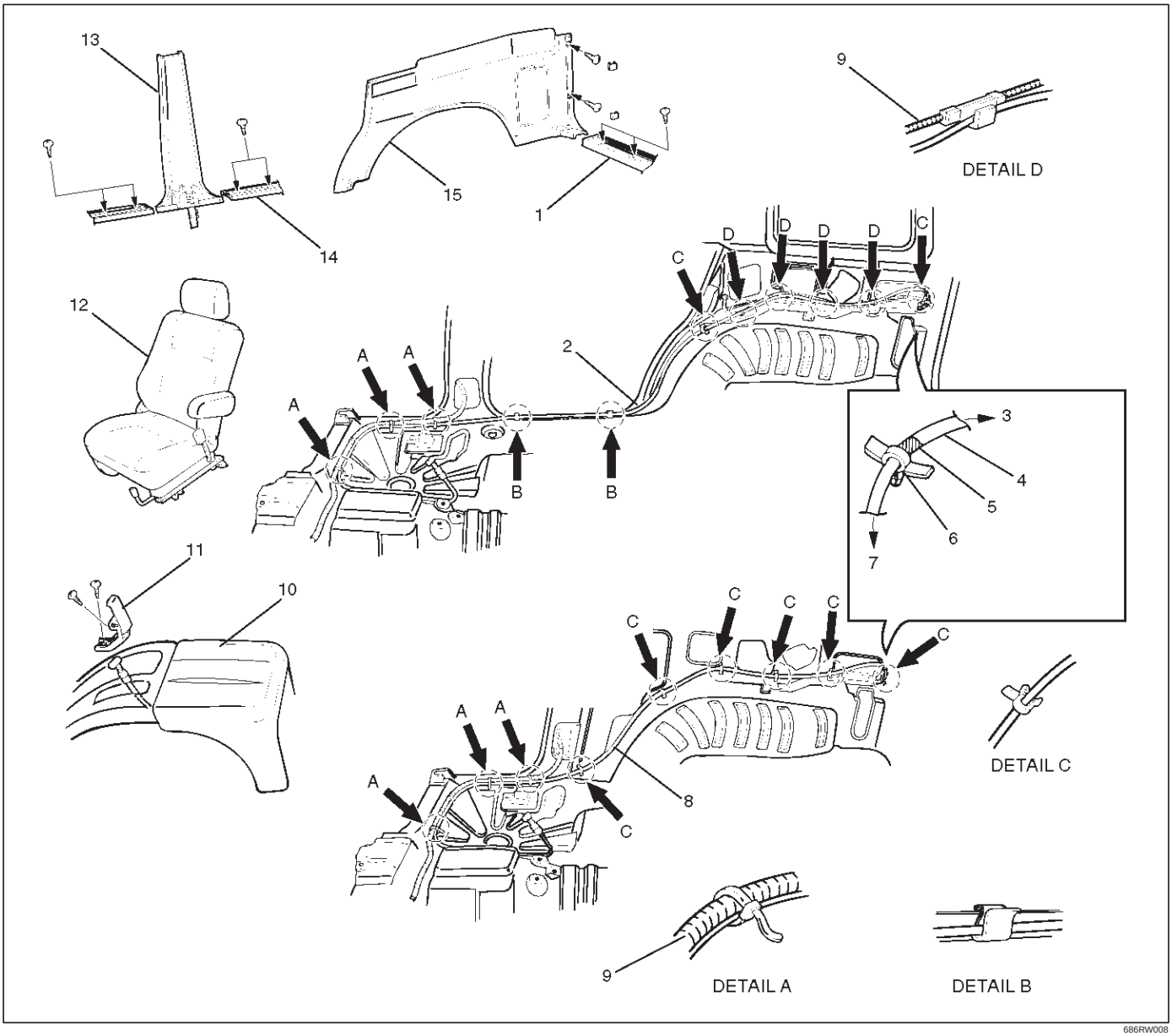

Legend

(1) Rear End Floor Trim Cover
(2) Fuel Filler Lid Opener Cable (LWB)
(3) To Lever
(4) Cable
(5) Marking
(6) Clip
(7) To Door
(8) Fuel Filler Lid Opener Cable (SWB)
(9) Chassis Harness
(10) Center Console Assembly
(11) Fuel Filler Lid Opener
(12) Front Seat (RH)
(13) Center Pillar Lower Trim Cover
(14) Rear Door Sill Plate (RH)
(15) Luggage Side Trim Panel (RH)

Removal

1. Disconnect the battery ground cable.
2. Remove the front seat (RH).
3. Remove the rear door sill plate (RH).
4. Remove the center pillar lower trim cover.
5. Remove the rear end floor trim panel.
6. Remove the luggage side trim panel (RH).
   - Refer to the Luggage Side and Quarter Upper Trim Cover in this section.

7. Remove the fuel filler lid opener(1).
   - Remove two opener fixing screws and disconnect the cable(2).

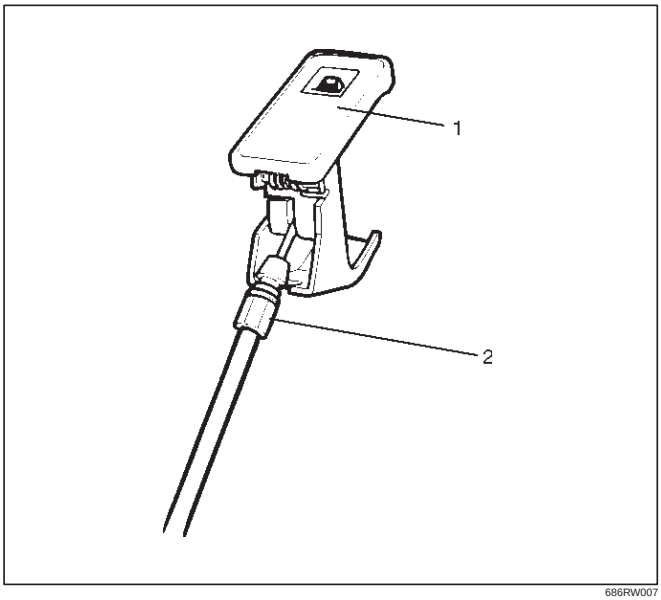

686RW007

8. Remove the center console assembly.
9. Remove the fuel filler lid opener cable.
   - Roll up the floor carpet and remove the clips of the chassis harness and body panel to pull out the cable toward the fuel filler lid.

Installation

To install, follow the removal steps in the reverse order, noting the following points.

1. Insert the opener cable(2) into the body panel(1) securely.

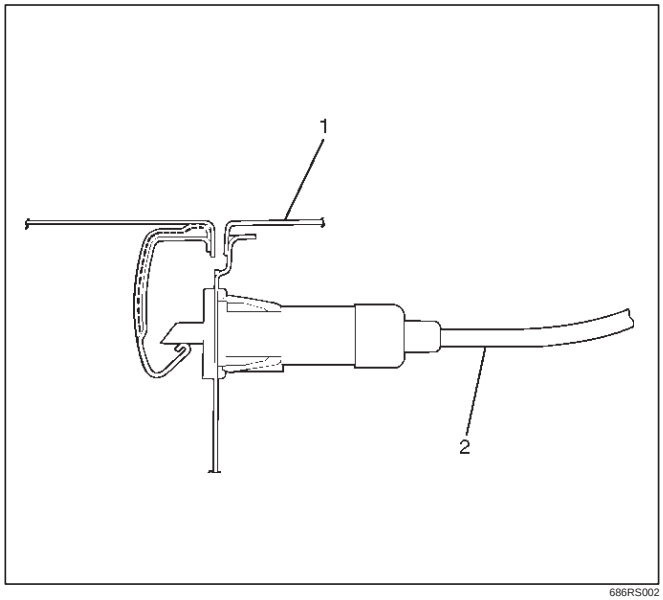

686RS002

2. Install the cable and clips to its original position to the chassis harness and the body panel.
3. Check that the opener operates smoothly.

Fuel Filler Door

Parts Location

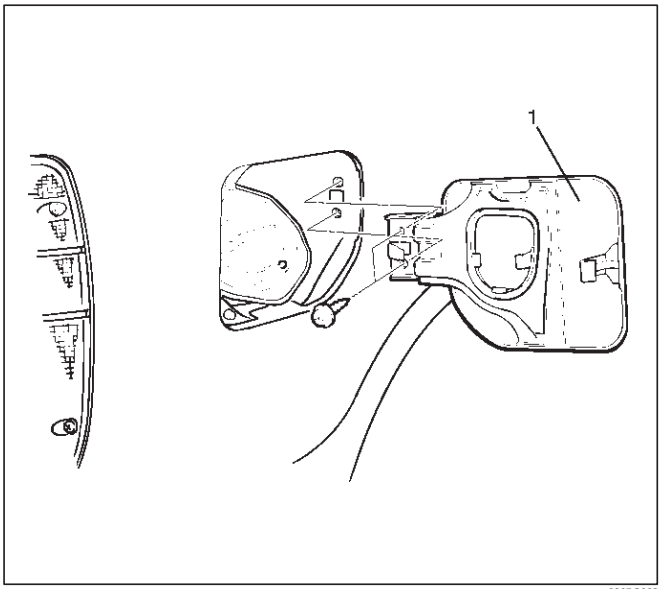

686RS003

Legend

(1) Fuel Filler Door

Removal

1. Remove the fuel filler door.

Installation

1. Install the fuel filler door.

Rocker Protector (Without Wheel Opening Extension)

Rocker Protector (Without Wheel Opening Extension) and Associated Parts

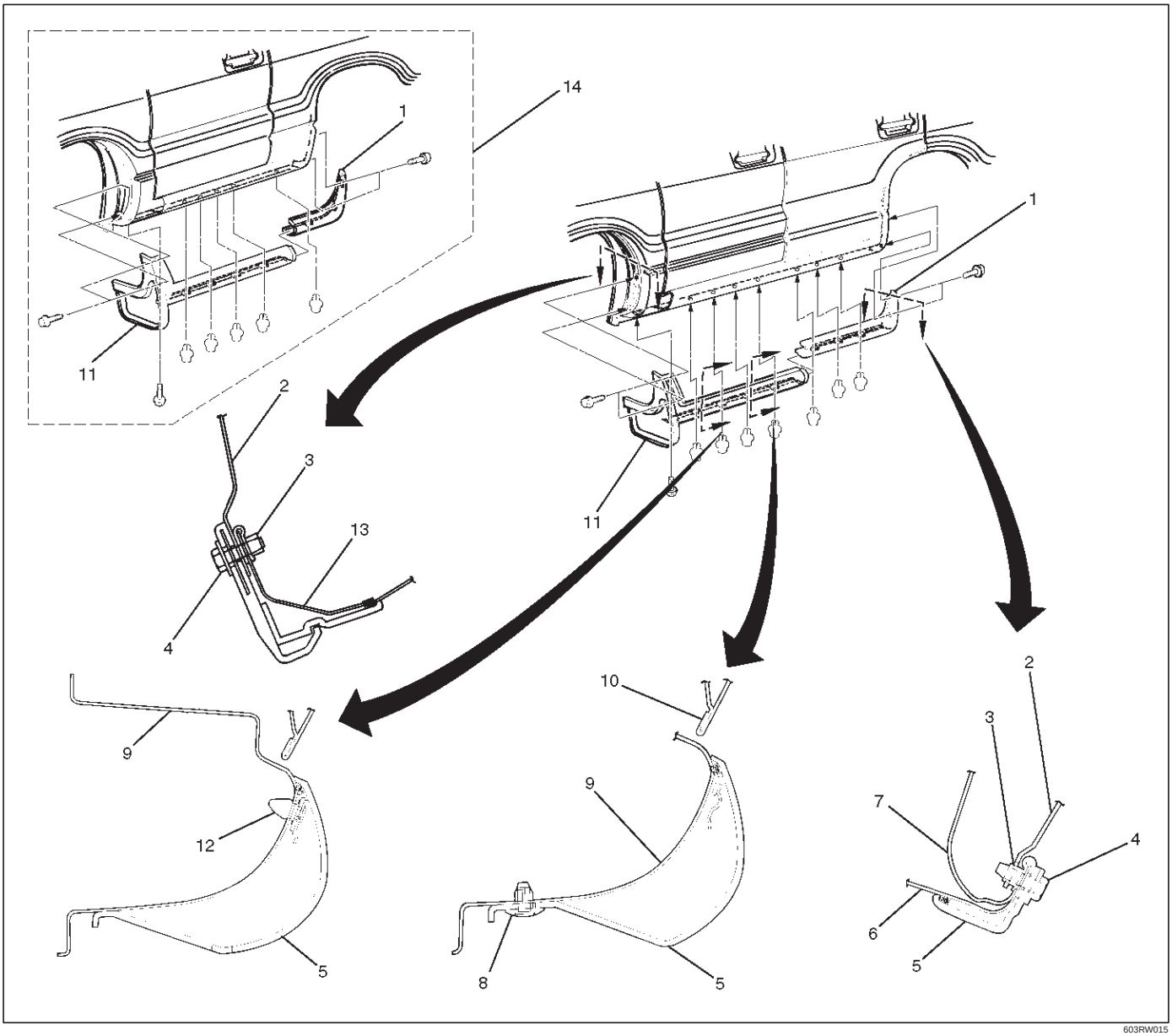

603RW015

Legend

(1) Rear Rocker Protector
(2) Inner Liner
(3) Spare Nut
(4) Fixing Screw
(5) Rocker Protector
(6) Outer Side Panel
(7) Outer Wheel House Panel
(8) Fixing Clip
(9) Outer Rocker Panel
(10) Door Panel
(11) Front Rocker Protector
(12) Clip (W/Rocker Protector)
(13) Fender Panel
(14) SWB

Removal

1. Remove the rear rocker protector.
2. Remove the front rocker protector.

Installation

To install, follow the remove steps in the reverse order.

Wheel Opening Extension and Rocker Protector Assembly

Wheel Opening Extension, Rocker Protector Assembly and Associated Parts

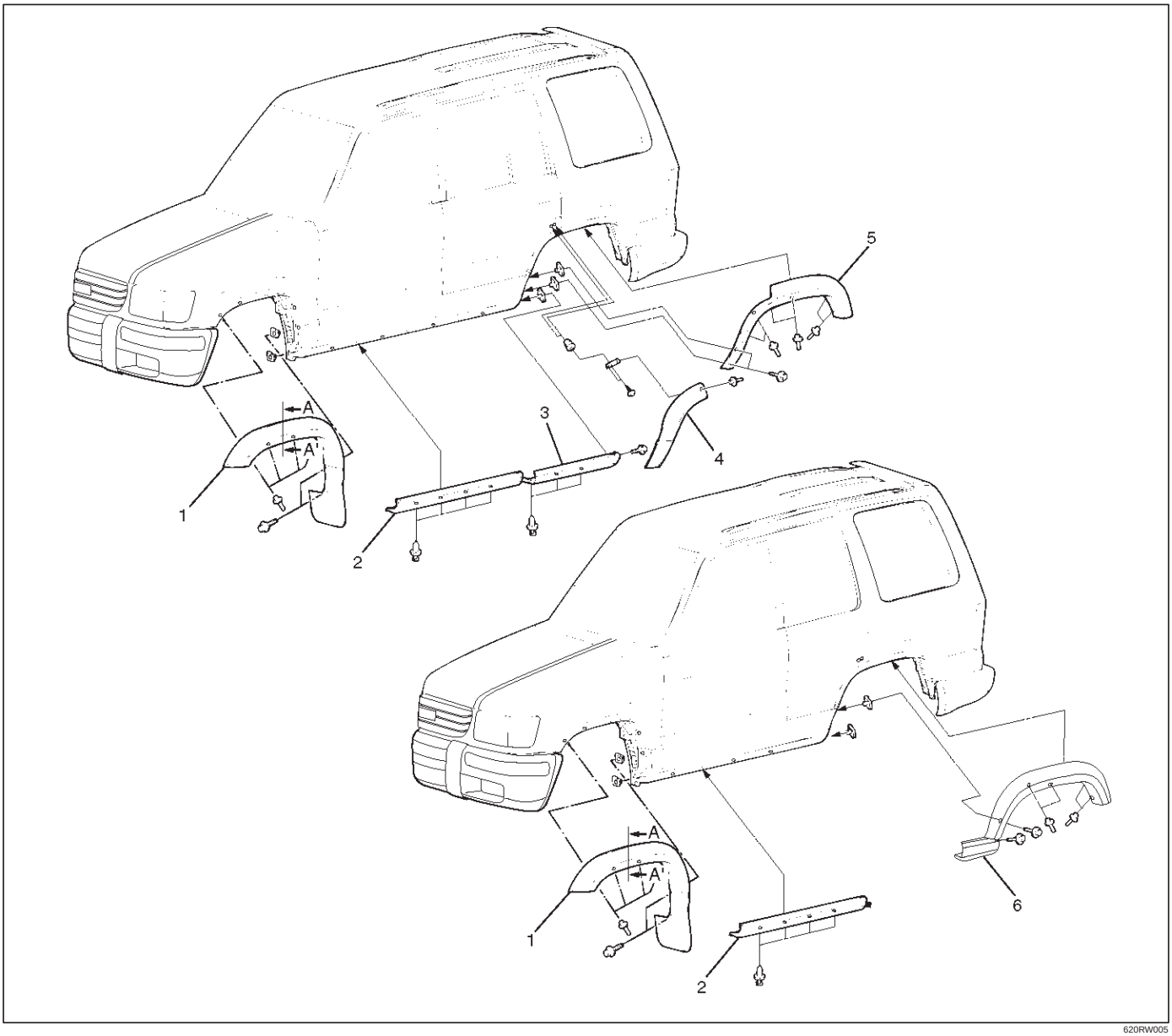

620RW005

Legend

(1) Front Wheel Opening Extension Assembly
(2) Front Rocker Protector Assembly
(3) Rear Rocker Protector Assembly (Only LWB)
(4) Rear Door Wheel Opening Extension Assembly (Only LWB)
(5) Rear Quarter Wheel Opening Extension Assembly (Only LWB)
(6) Rear Wheel Opening Extension Assembly (Only SWB)

Removal

1. Remove the front wheel opening extension(2).
   - Let a 5mm drill(3) go through four blind rivets(5) to disengaged riveted portions.
     Remove two screws and disengage five clips (6), then remove the front wheel opening extension assembly.

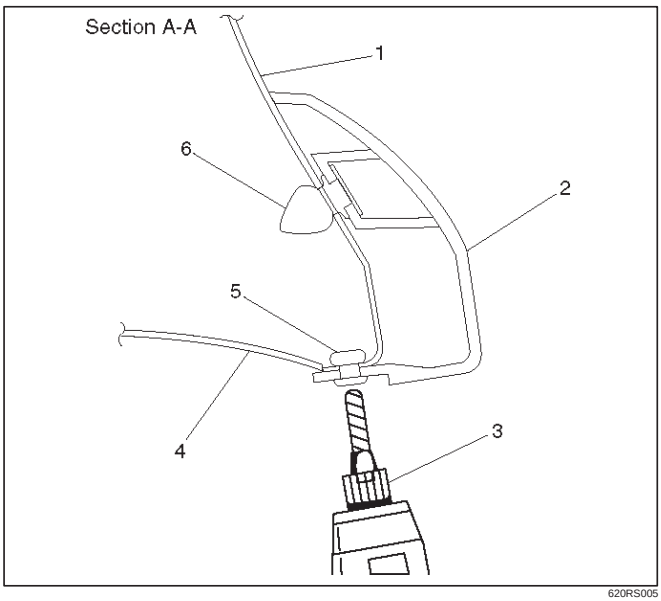

620RS005

2. Remove the rear quarter wheel opening extension assembly (Only LWB).
   - Let a 5mm drill go through six blind rivets to disengage riveted portions.

     Disengage four clips, remove two screws, and remove the rear quarter wheel opening extension assembly.
3. Remove the rear wheel opening extension assembly (Only SWB).
   - Let a 5mm drill go through four blind rivets to disengage riveted portions. Remove two screws, disengage eight clips, and remove the rear wheel opening extension assembly.
   - Remove two fixing nuts (upper) and four fixing bolts (lower).
4. Remove the rear door wheel opening extension assembly (Only LWB).
   - Let a 5mm drill go through a blind rivet to disengage riveted portions.

     Disengage three clips, peel off the bonded portions with two double surface adhesive tape and the rear door wheel opening extension assembly.
5. Remove the rear rocker protector assembly (Only LWB).
   - Loosen and pull three clips, remove a rear screw, and remove the rear rocker protector assembly.
6. Remove the front rocker protector assembly.
   - Loosen and pull four clips, and remove the front rocker protector assembly.

Installation

To install, follow the removal steps in the reverse order, noting the following points.

1. Use a new 2–sided adhesive tape whenever installing each wheel opening extension assembly and rocker protector assembly. Using a white gasoline, clean the places in advance where a 2–sided adhesive tape is affixed. Also, install the clips, screws and blind rivets in the order specified as shown in the figure.

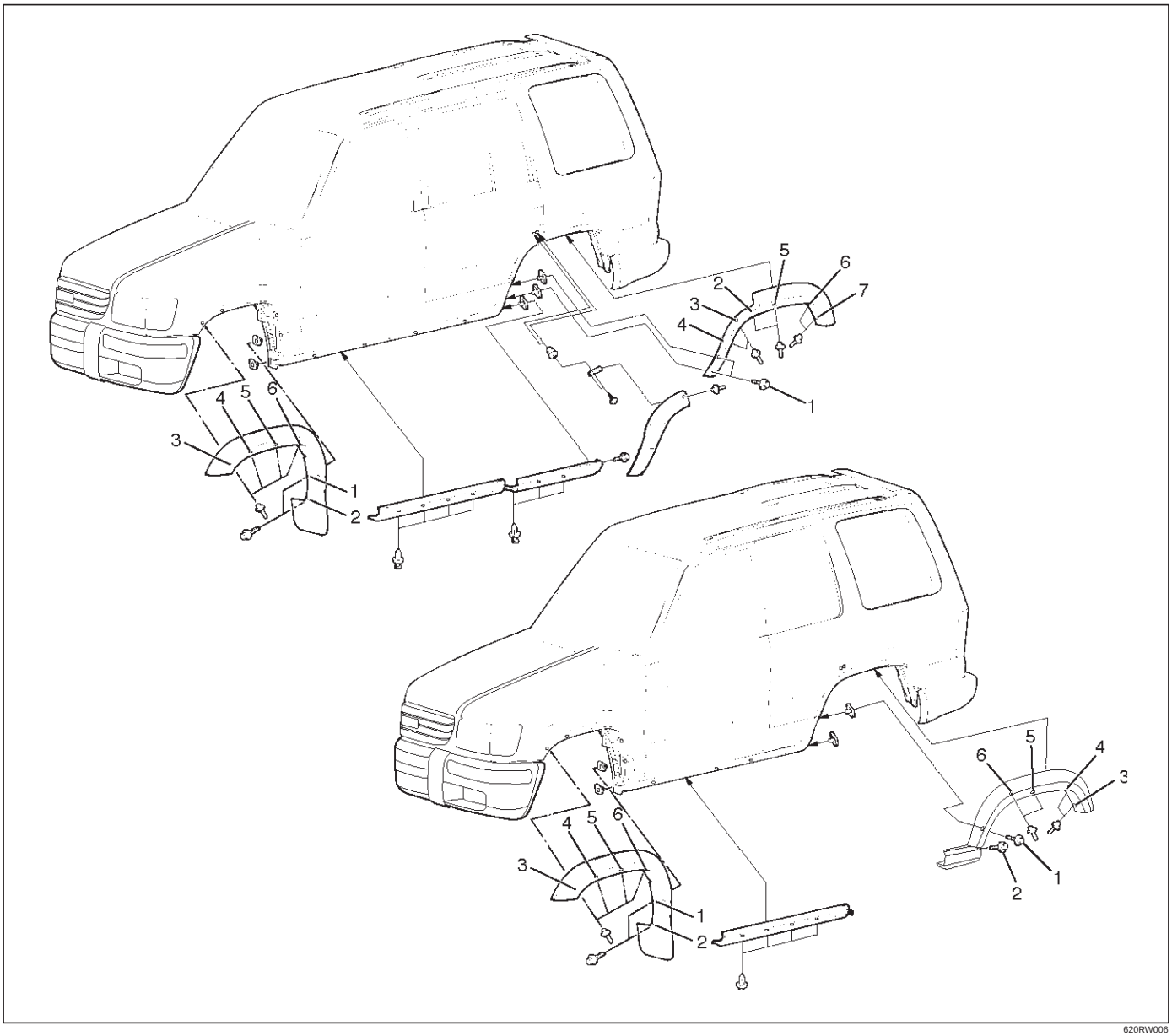
1
2
3
4
5
6
7
620RW006

Mud Flaps (With Wheel Opening Extension)

Mud Flaps (With Wheel Opening Extension) and Associated Parts

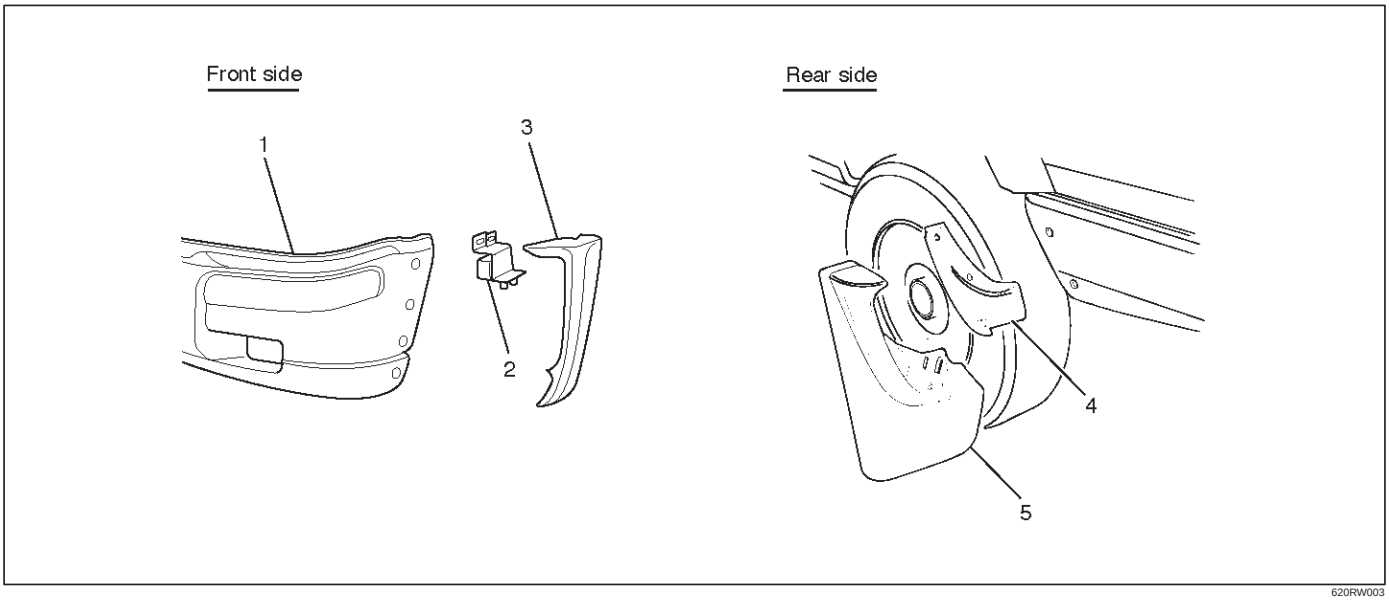

620RW003

Legend

(1) Front Bumper Assembly
(2) Front Bumper Slider
(3) Front Mud Flap
(4) Bumper Side Cover
(5) Rear Mud Flap

Removal

Front Side

1. Remove the front bumper assembly.
   - Disconnect the front fog light connector and remove two bolts from both sides of the front bumper.
2. Remove the front bumper slider(1).
   - Remove two clips(4) and two nuts(3), release the claw from the washer(2).

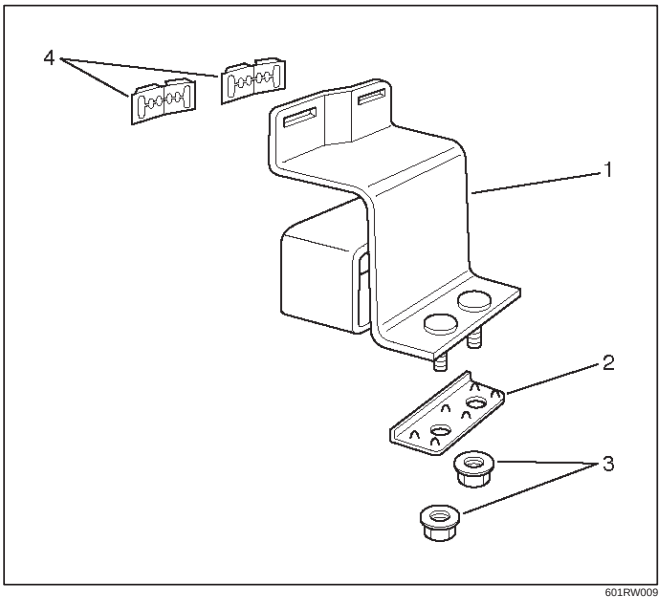

601RW009

3. Remove the front mud flap.
   - Remove four nuts and a clip.

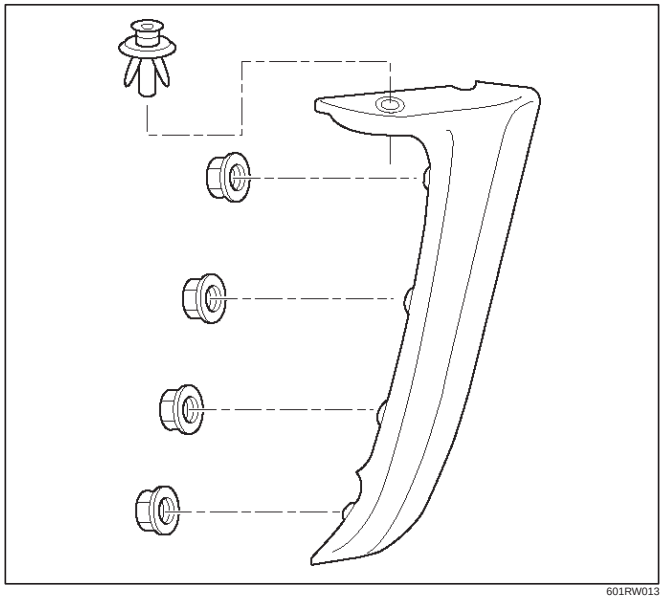

601RW013

Rear Side

1. Remove the bumper side cover.
2. Remove the rear mud flap.
   - Remove four bolts and two nuts.

Installation

To install, follow the removal steps in the reverse order.

Ventilation Assembly

Ventilation Assembly and Associated Parts

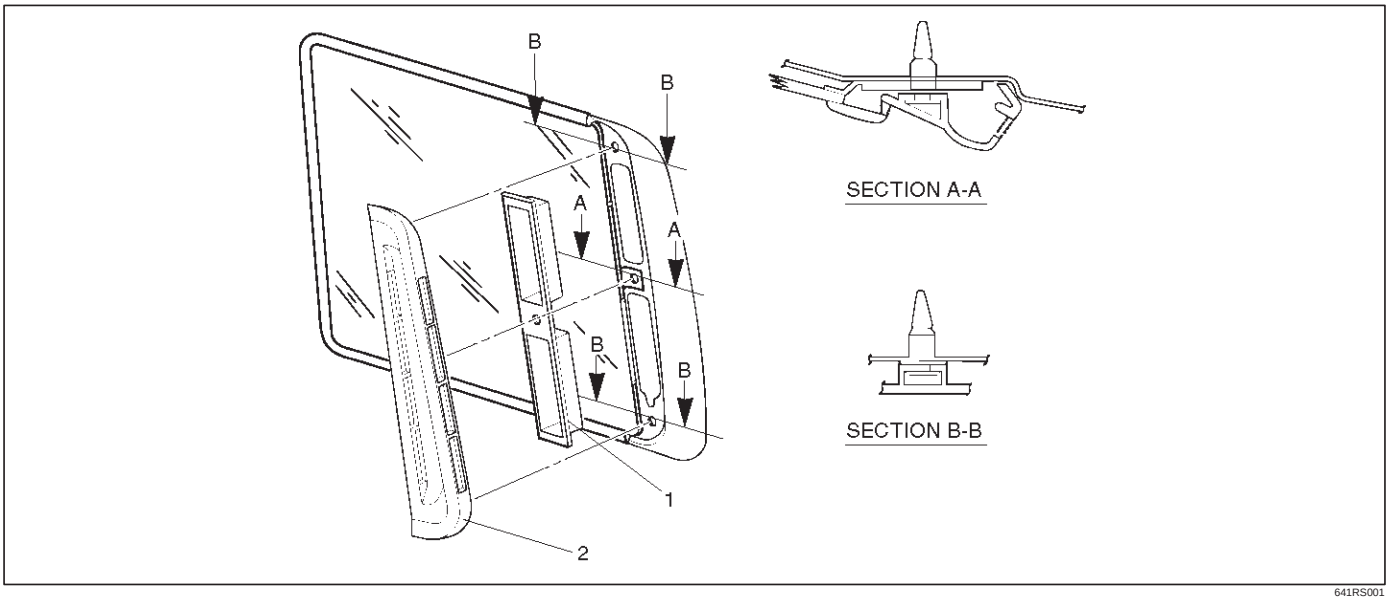

641RS001

Legend

(1) Outlet Valve Assembly
(2) Ventilation Assembly

Removal

1. Remove the ventilation assembly(1).
   - Pry the ventilation assembly retainers free from the body panel.

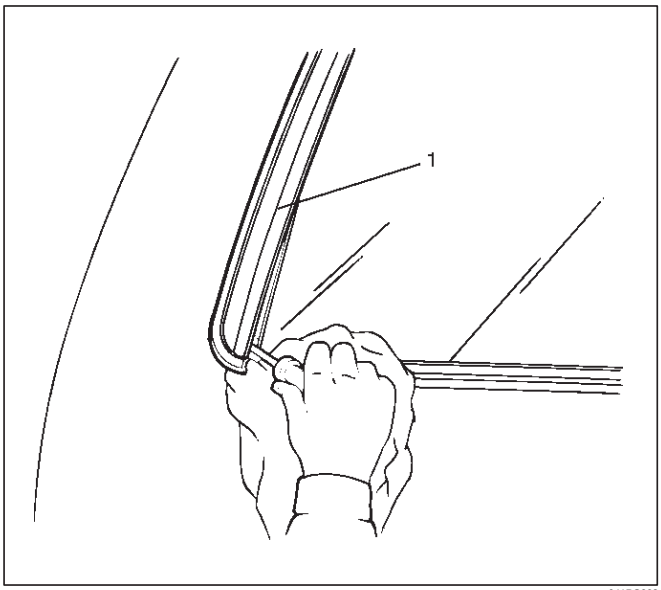

641RS002

2. Remove the outlet valve assembly.

Installation

1. Install the outlet valve assembly.
   - Insert the upper and lower catches of the outlet valve into the body panel flange and fix them securely.
2. Install the ventilation assembly.
   - Fix the clips to the body panel securely so that the ventilation assembly will not come off the body panel.

Quarter Flipper Glass Assembly (SWB)

Quarter Flipper Glass Assembly and Associated Parts

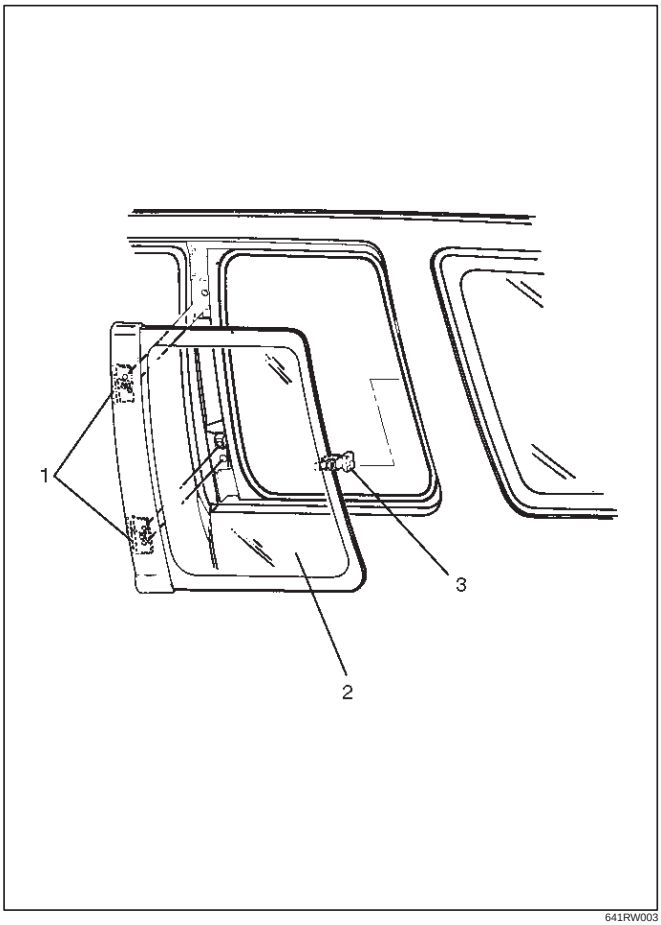

641RW003

Legend

(1) Hinge Assembly
(2) Quarter Flipper Glass Assembly
(3) Fastener

Removal

1. Remove the quarter flipper glass assembly (3).
   - Remove the fixing screws (2) and rivet (5).
2. Remove the fastener (1).
3. Remove the hinge assembly (4).

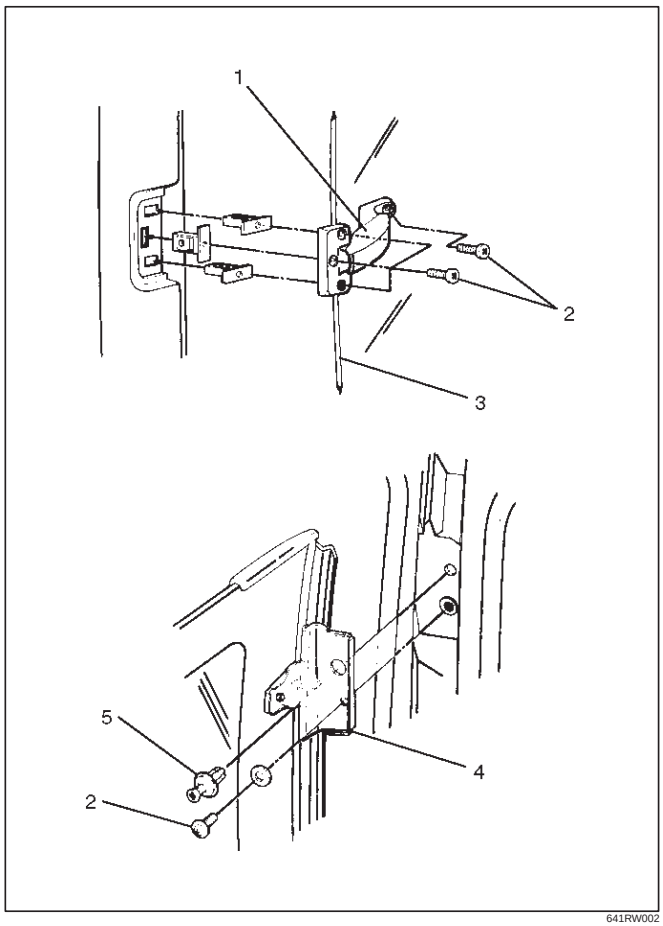

641RW002

Installation

To install, follow the removal steps in the reverse order.

Tailgate Trim Panel (LH)

Tailgate Trim Panel (LH) and Associated Parts

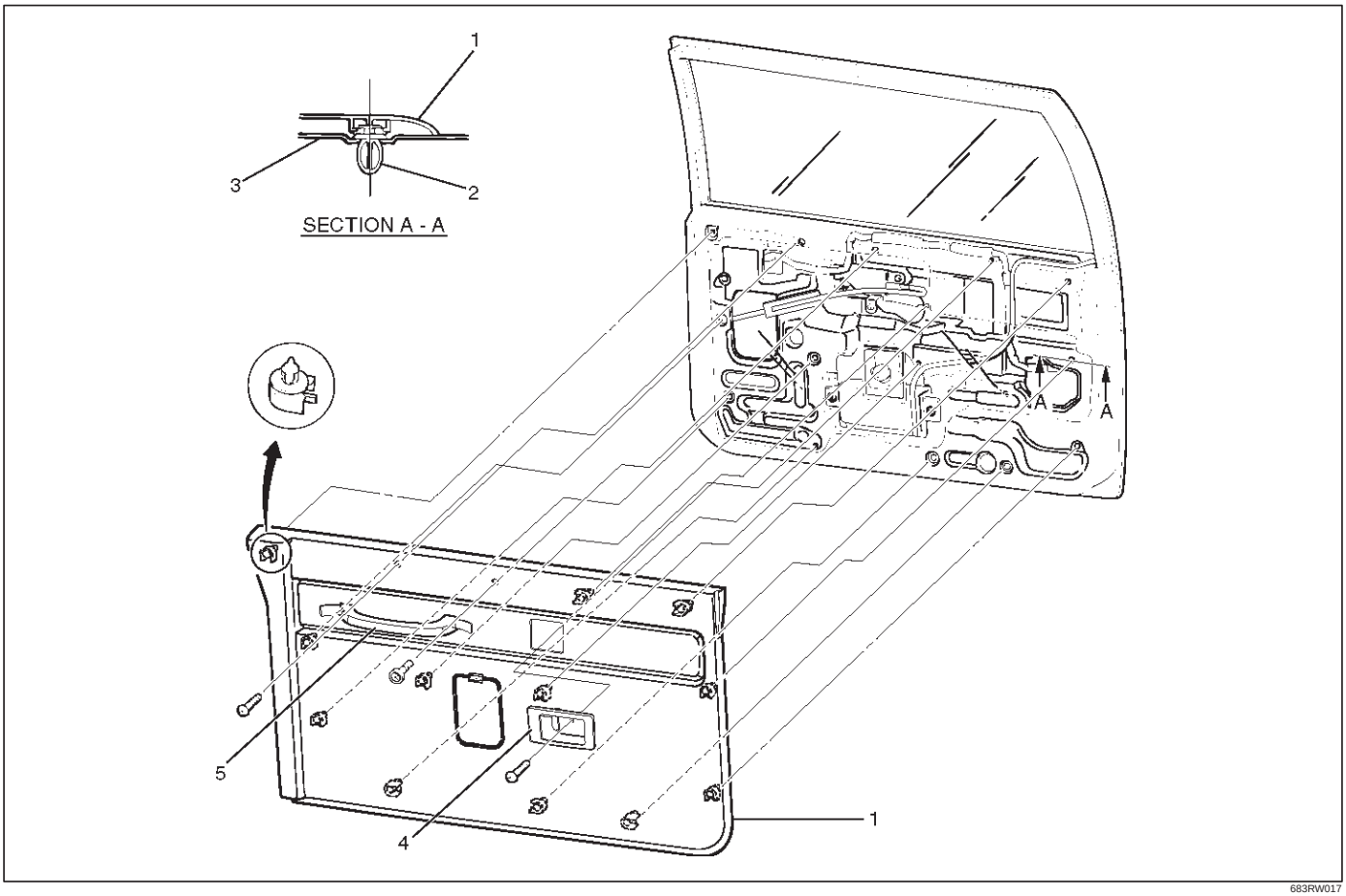

683RW017

Legend

(1) Tailgate Trim Panel (LH)
(2) Clip
(3) Tailgate Panel
(4) Inside Handle
(5) Tailgate Assist Grip

Removal

1. Disconnect the battery ground cable.
2. Remove the tailgate assist grip.
   - Open the assist covers (1) and remove two fixing screws.

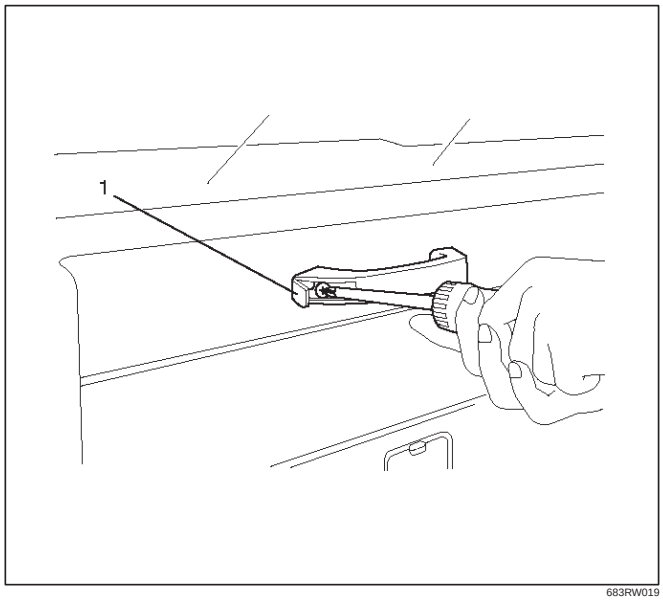

683RW019

3. Remove the inside handle (2).
   - Remove the fixing screw and disconnect the locking link (1).

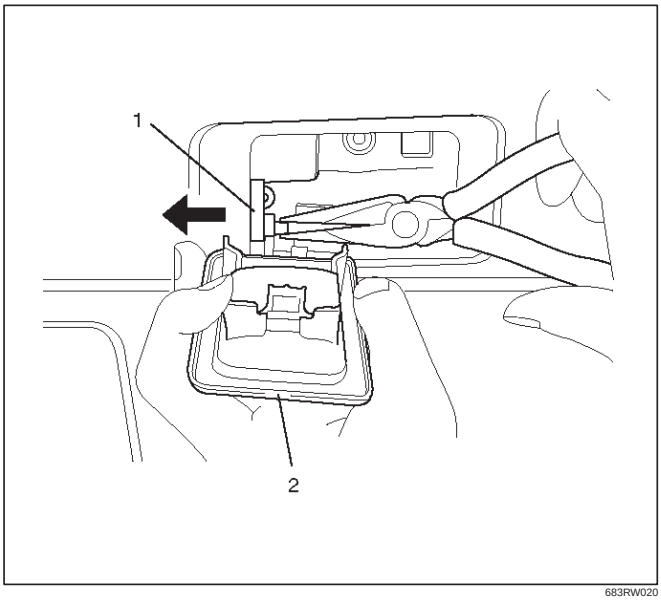

683RW020

4. Remove the tailgate trim panel (LH).
   - Pry the trim panel retainers free from the tailgate panel.

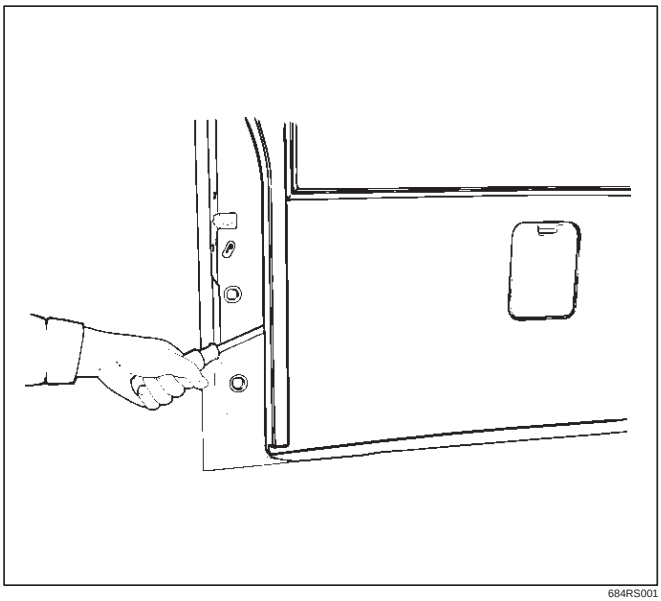

684RS001

Installation

To install, follow the removal steps in the reverse order, noting the following point.

1. Install the inside handle (1), connect the link to the handle, insert the catch portion of the handle into the tailgate side hole securely and fix it with a screw.

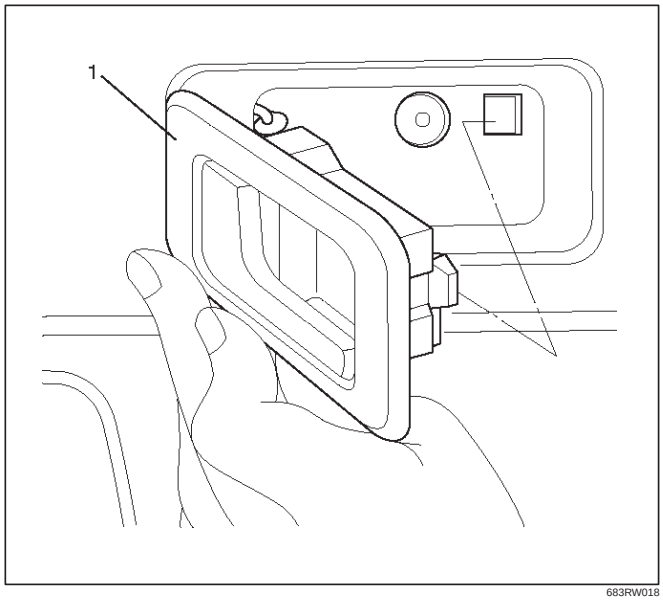

683RW018

Tailgate Trim Panel (RH)

Parts Location

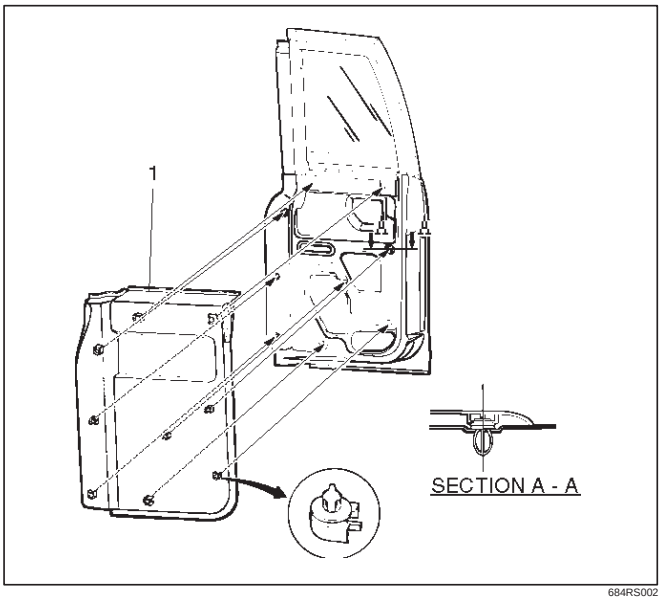

684RS002

Legend

(1) Tailgate Trim Panel

Removal

1. Disconnect the battery ground cable.
2. Remove the tailgate trim panel (RH).
   - Pry trim panel retainer free from the tailgate panel.

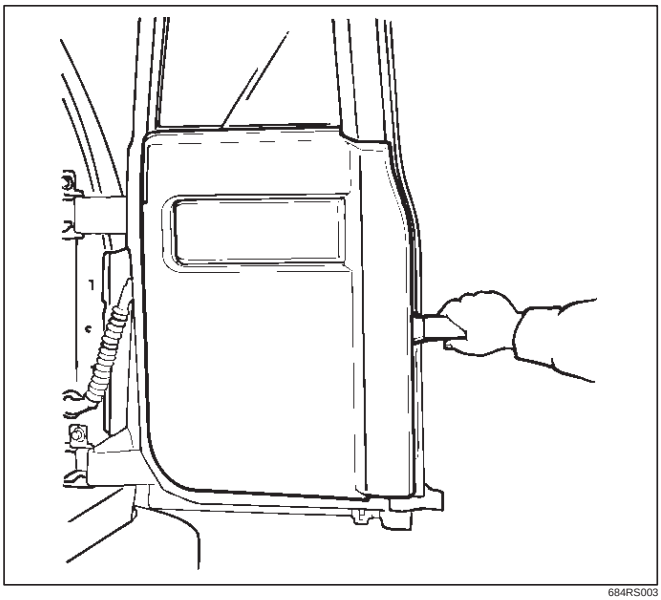

684RS003

Installation

To install, follow the removal steps in the reverse order, noting the following points.

1. Insert the retainer of the trim panel into the tailgate panel and fix it securely.

Luggage Floor Box

Luggage Floor Box and Associated Parts

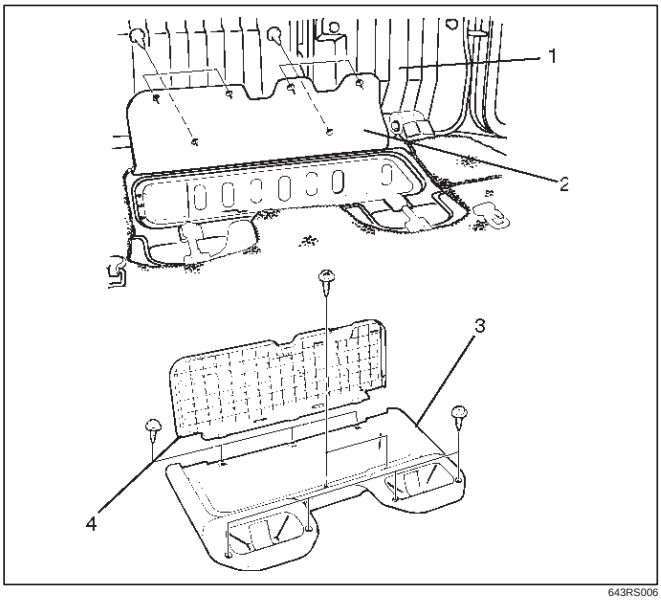

643RS006

Legend

(1) Rear Seat
(2) Floor Carpet
(3) Luggage Floor Box
(4) Luggage Floor Box Cover

Remove

1. Fold the rear seat assembly to the front direction.
2. Remove the luggage floor box cover.
   - Remove the clips which connect the floor carpet and the luggage floor box cover.
3. Remove the luggage floor box.

Installation

To install, follow the removal steps in the reverse order.

Rope Hook Set

Rope Hook Set and Associated Parts

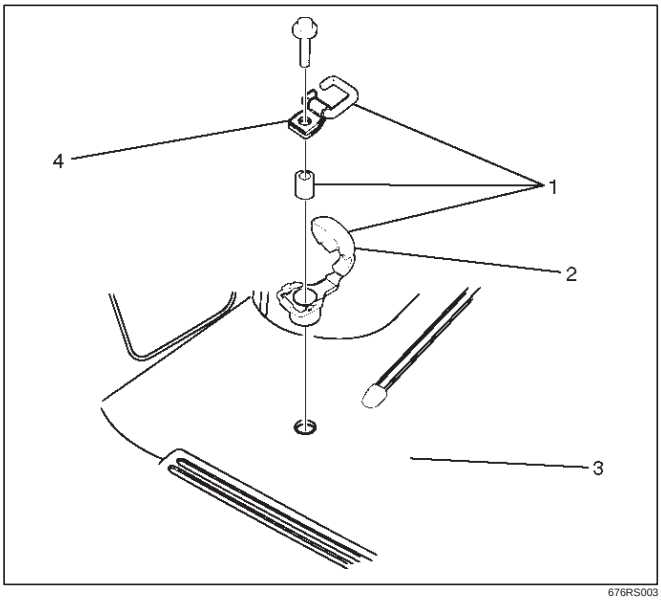

676RS003

Legend

(1) Rope Hook Set
(2) Cover
(3) Luggage Floor Carpet
(4) Hook

Removal

1. Remove the rope hook set.
   - Open the hook cover and hook fixing bolt.

Installation

1. Install the rope hook set.
   - Tighten the hook fixing bolt to the specified torque.

   Torque: 13 N·m (1.3kg·m/113 lb in)

Power Door Mirror System

General Description

The circuit consists of the starter switch, door mirror control switch, folding switch, defogger switch and door mirrors on both sides.
The door mirror switch consists of the control switch, folding switch and defogger switch.
When the control switch is operated with the starter switch at either “ACC” or “ON” position, the motors incorporated in the door mirrors on both sides rotates to allow the horizontal and vertical adjustment of mirror angles.
The folding switch can be used to fold the mirror and return it to its original position.
When turning on the door mirror defogger switch with the starter switch at “ON” position, built-in heater in the mirror is activated to perform the defogger function.

Door Mirror Switch Assembly (Control Switch, Folding Switch and Defogger Switch) Removal

1. Disconnect the battery ground cable.
2. Remove the front console assembly(2).
   - Remove four screws.
   - Remove the transmission shift lever knob.
   - Remove the transfer shift lever knob.
   - Disconnect the seat heater switch connectors (if so equipped).
   - Disconnect the door mirror switch connectors.
   - Disconnect the power & winter switch connectors. (A/T only)
3. Remove the door mirror switch assembly(1).
   - Push the lock from the back side of the front console.

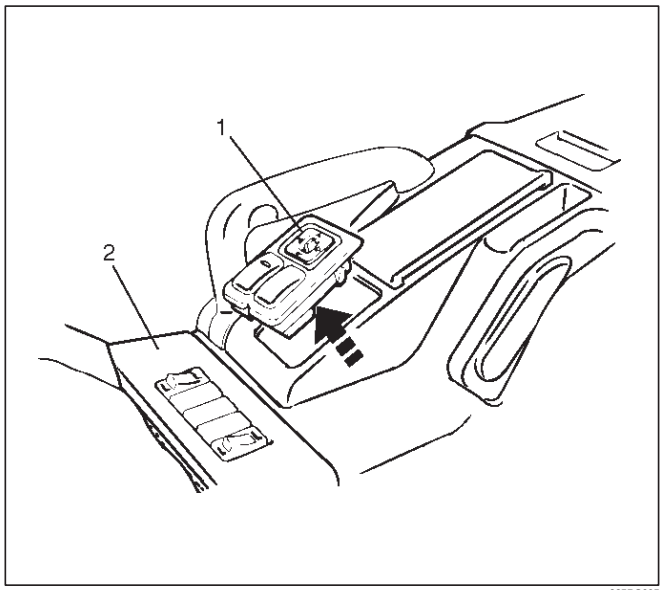

825RS005

Installation

To install, follow the removal steps in the reverse order, noting the following point.

1. Depress the switch with your fingers until it locks securely.

Power Door Mirror

General Description

Mirrors contain two driving motors for the horizontal and vertical movement of the mirror and one motor for folding the mirror.
The movement of the mirror is controlled by the direction of current running through these motors.
The housing portion of the mirror is provided with the auto-stop mechanism which is interlocked with the motor for folding the mirror. When the mirror moves to the stop position (with the mirror folded or returned to its original position), the current to the motor is shut off.
When the mirror cannot operate due to some obstacle and the motor stops its rotation, the resistor prevents current overflow.

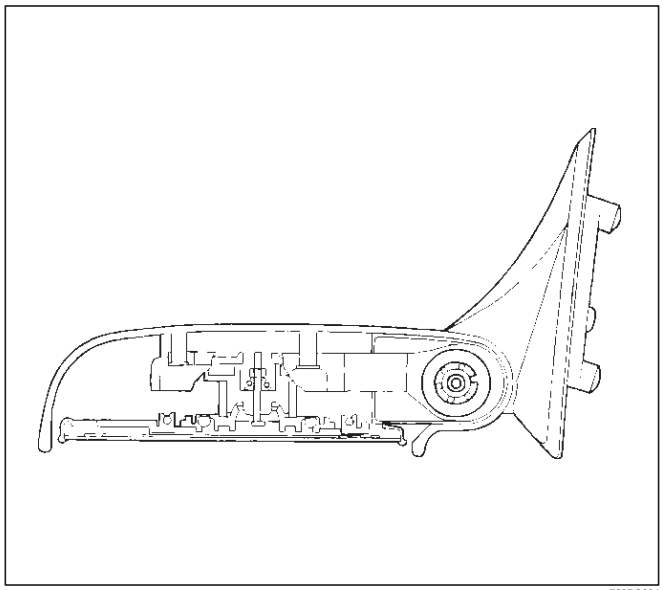
720RS004

Removal and Installation

Refer to the Door Mirror removal and installation steps in this section.

Power Window System

General Description

The circuit consists of the starter switch, (door lock &) power window switch for each of the front windows, power window switch for rear windows and power window motors.
When the starter switch is turned on, the battery voltage is applied to each of the power window switches through the circuit breaker and the power window relay on the circuit.
The “Down” switch of the driver’s power window switch has a built-in function which can be operated by just touching it.
Accordingly, the window will roll down automatically by just setting the switch to the “AUTO” position.
When the driver’s power lock switch at the driver side is depressed, the power source to the passenger’s power window switches are shut off. So, even if these switches are operated, the power window motor will not operate.

Power Window Switch Removal and Installation

Driver Seat Side

Removal

1. Disconnect the battery ground cable.
2. Remove the switch(1).
   - Pull out the switch by pushing the spring with the tip of a screwdriver.
   - Disconnect two connectors.

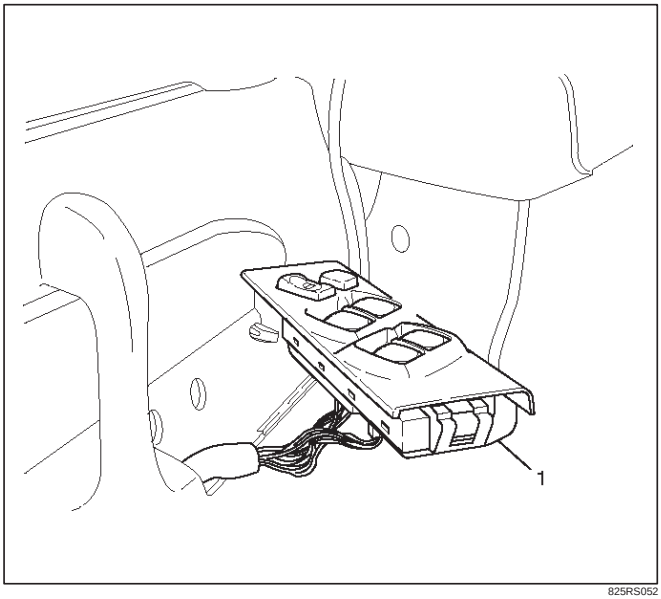

825RS052

Installation

To install, follow the removal steps in the reverse order.

Front Passenger Seat Side

Removal

1. Disconnect the battery ground cable.
2. Remove the switch(1).
   - Pull out the switch by pushing the spring with the tip of a screwdriver.
   - Disconnect the connector.

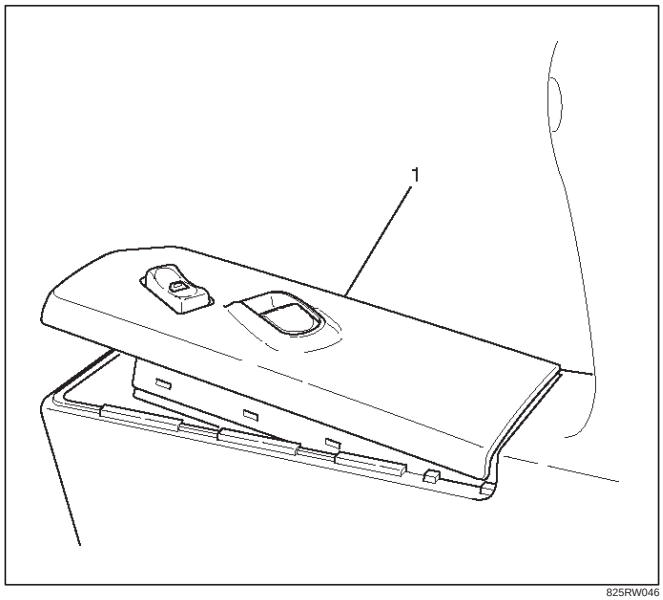

825RW046

Installation

To install, follow the removal steps in the reverse order.

Rear-Left and Right Sides

Removal

1. Disconnect the battery ground cable.
2. Remove the switch(1).
   - Pull out the switch by pushing the spring with the tip of a screwdriver.
   - Disconnect the connector.

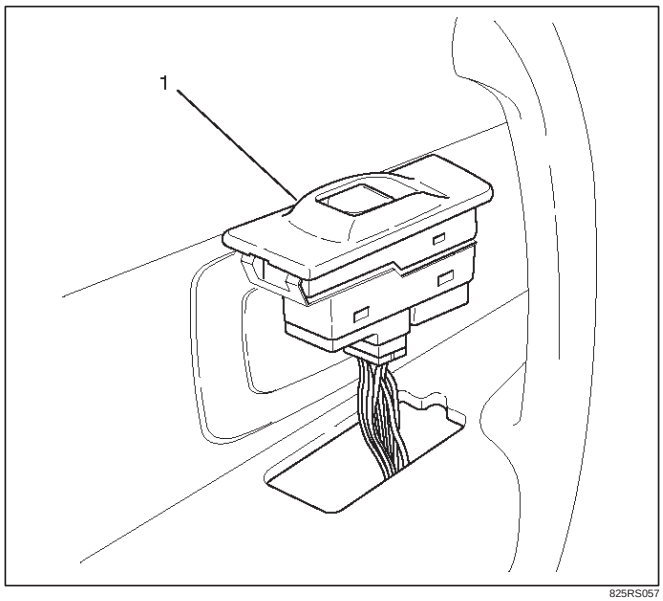

825RS057

Installation

To install, follow the removal steps in the reverse order.

Power Window Motor Removal and Installation

Driver Seat Side

Removal

1. Disconnect the battery ground cable.
2. Remove the window regulator assembly (1).
   - Refer to the Front Window Regulator, Glass And Glass Run in Body Structure section.
3. Remove the power window motor(2).
   - Remove three screws.

CAUTION: When removing the motor from the regulator(1), be careful not to get injured by the strong repellent force of the regulator spring.

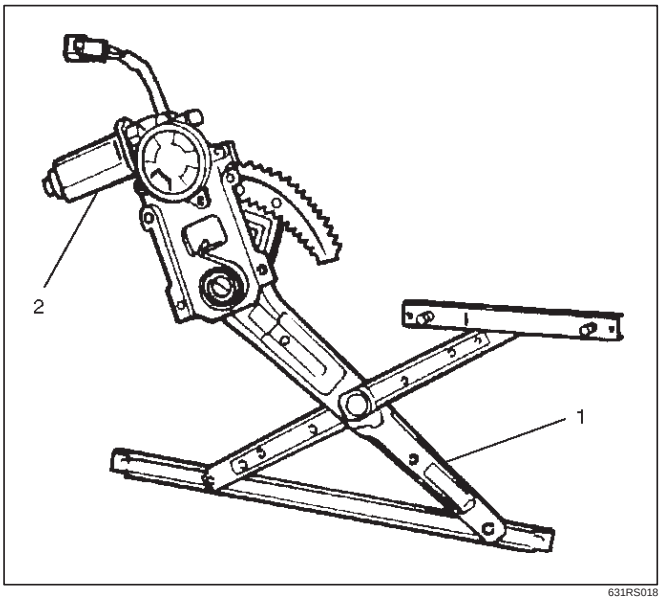

631RS018

Installation

To install, follow the removal steps in the reverse order.

Front Passenger Seat Side

Removal

1. Disconnect the battery ground cable.
2. Remove the window regulator assembly (1).
   - Refer to the Front Window Regulator, Glass And Glass Run in Body Structure section.
3. Remove the power window motor(2).
   - Remove three screws.

CAUTION: When removing the motor from the regulator(1), be careful not to get injured by the strong repellent force of the regulator spring.

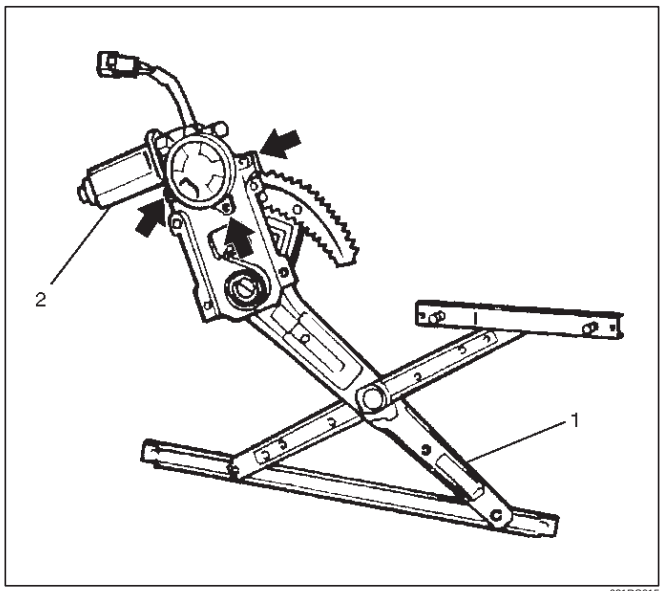

631RS015

Installation

To install, follow the removal steps in the reverse order.

Rear-Left Side

Removal

1. Disconnect the battery ground cable.
2. Remove the rear window regulator assembly.
   - Refer to the Rear Window Regulator And Glass in Body Structure section.
3. Remove the power window motor(1).
   - Remove four screws.

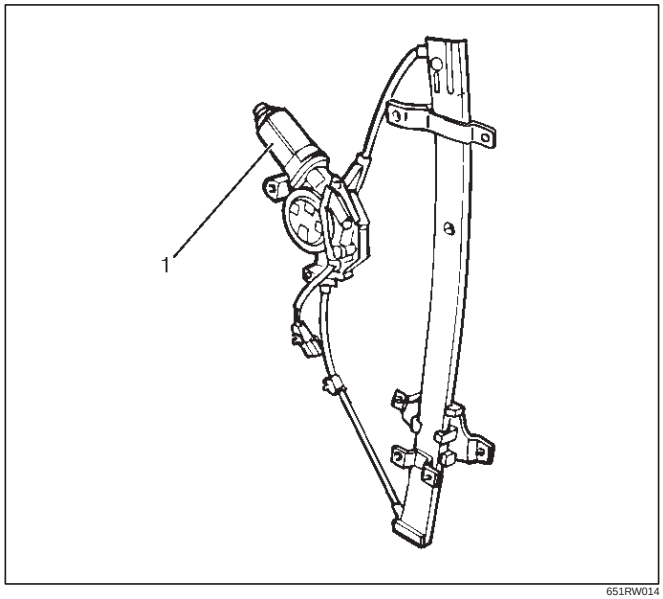

651RW014

Installation

To install, follow the removal steps in the reverse order.

Rear-Right Side

Removal and Installation

Refer to the Rear Power Window Motor-Left Side in this section.

Main Data and Specifications

Torque Specifications

Application	N·m	kg·m	lb ft	lb in
Door Mirror Fixing Bolts	8	0.8	—	69
Seat Belt Anchor Bolts	39	4.0	29	—
Hook Fixing Bolt	13	1.3	—	113

RESTRAINTS

CONTENTS

Seat Belt System 9A–1
Supplemental Restraint System (SRS) 9J–1
Restraint Control System 9J1–1

SEAT BELT SYSTEM

CONTENTS

Service Precaution 9A–1
Seat Belt 9A–2
Front Seat Belt and Associated Parts (Long Wheel Base) 9A–2
Removal 9A–2
Inspection 9A–2
Installation 9A–3
Front Seat Belt and Associated Parts (Short Wheel Base) 9A–4
Removal 9A–4
Inspection 9A–4
Installation 9A–5
Rear Seat Belt and Associated Parts (Long Wheel Base) 9A–6
Removal 9A–6
Inspection 9A–6
Installation 9A–7
Rear Seat Belt and Associated Parts (Short Wheel Base) 9A–8
Removal 9A–8
Inspection 9A–9
Installation 9A–9
Third Seat Belt and Associated Parts (Long Wheel Base) 9A–10
Removal 9A–10
Inspection 9A–11
Installation 9A–11
Front Seat Buckle Assembly 9A–12
Removal 9A–12
Installation 9A–12
Front Seat Buckle Assembly (W/Pretensioner) 9A–12
Removal 9A–12
Installation 9A–12
Rear Center Seat Belt Buckle Assembly . . . 9A–13
Rear Center Seat Belt Buckle Assembly and Associated Parts 9A–13
Removal 9A–13
Installation 9A–13
Third Seat Belt Buckle and Lock Assembly . 9A–14
Third Seat Belt Buckle and Lock Assembly and Associated Parts 9A–14
Removal 9A–14
Installation 9A–14
Rear Seat Lock Assembly 9A–15
Removal 9A–15
Installation 9A–15
Rear Seat Lock Assembly (Bench Type) . . . 9A–15
Removal 9A–15
Installation 9A–15
Rear Seat Strikers 9A–16
Removal 9A–16
Installation 9A–16
Third Seat Striker 9A–16
Removal 9A–16
Installation 9A–16
Main Data and Specifications 9A–17

Service Precaution

WARNING: THIS VEHICLE HAS A SUPPLEMENTAL RESTRAINT SYSTEM (SRS). REFER TO THE SRS COMPONENT AND WIRING LOCATION VIEW IN ORDER TO DETERMINE WHETHER YOU ARE PERFORMING SERVICE ON OR NEAR THE SRS COMPONENTS OR THE SRS WIRING. WHEN YOU ARE PERFORMING SERVICE ON OR NEAR THE SRS COMPONENTS OR THE SRS WIRING, REFER TO THE SRS SERVICE INFORMATION. FAILURE TO FOLLOW WARNINGS COULD RESULT IN POSSIBLE AIR BAG DEPLOYMENT, PERSONAL INJURY, OR OTHERWISE UNNEEDED SRS SYSTEM REPAIRS.

CAUTION: Always use the correct fastener in the proper location. When you replace a fastener, use ONLY the exact part number for that application. ISUZU will call out those fasteners that require a replacement after removal. ISUZU will also call out the fasteners that require thread lockers or thread sealant. UNLESS OTHERWISE SPECIFIED, do not use supplemental coatings (Paints, greases, or other corrosion inhibitors) on threaded fasteners or fasteners joint interfaces. Generally, such coatings adversely affect the fastener torque and the joint clamping force, and may damage the fasteners. When you install fasteners, use the correct tightening sequence and specifications. Following these instructions can help you avoid damage to parts and systems.

Seat Belt

Front Seat Belt and Associated Parts (Long Wheel Base)

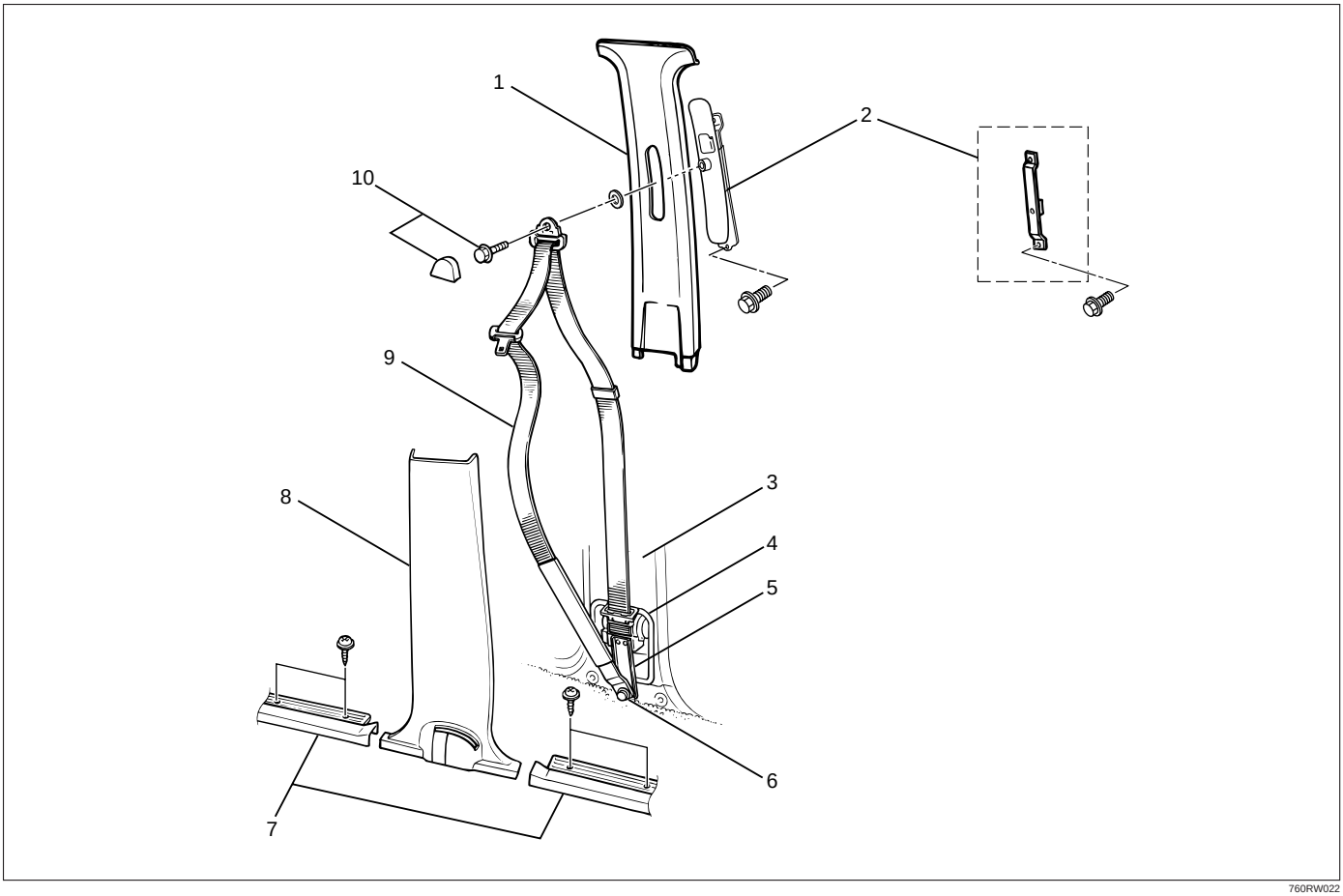

Legend

(1) Center Pillar Upper Trim Cover
(2) Adjust Shoulder Anchor Assembly/Seat Belt Anchor Plate
(3) Center Pillar
(4) Dust Cover
(5) Retractor
(6) Anchor Bolt (Lower)
(7) Door Sill Plate (Front & Rear)
(8) Center Pillar Lower Trim Cover
(9) Front Seat Belt Assembly
(10) Front Seat Belt Anchor Bolt Cover and Anchor Bolt

Removal

1. Disconnect the battery ground cable.
2. Remove the door sill plate (Front & Rear).
3. Remove the center pillar lower trim cover.
4. Remove the front seat belt anchor bolt cover and anchor bolt (Upper Side).
   - Refer to Center Pillar and Roof Side Trim Cover in Exterior/Interior Trim section.
5. Remove the seat belt lower anchor bolt and screw, and then remove the front seat belt.
6. Remove the adjust shoulder anchor assembly/seat belt anchor plate.
   - Refer to Center Pillar and Roof Side Trim Cover in Exterior/Interior Trim section.

Inspection

If any of the following abnormalities is found, replace on an assembly basis;

- Deform and malfunction of adjustable shoulder anchor/seat belt anchor plate.
- No smooth move of upper/lower anchors in the circumferential direction.
- Damaged and/or deformed through ring.
- Damaged and/or deformed tongue.
- Damaged and/or frayed of webbing.
- Deformed retractor bracket.
- Seat belt not rewound up.
- Resistance or abnormal sound when seat belt is wound out and rewound.
- Retractor abnormality.

Inspection of retractor

1. ELR (Emergency Locking Retractor) lock inclining angle check.
   - When the retractor is moved gently from its installing position, make sure it is not locked within 15° in any directions, and it remains locked at 45° or larger.
2. ELR lock check.
   - When the seat belt is drawn slowly with the retractor installed, make sure it is not locked. And when it is drawn quickly, make sure it is locked.
3. ALR (Automatic Locking Retractor)/ELR check (Except for driver's seat).
   - When rewound after winding out the seat belt, make sure the seat belt cannot be taken out. After rewinding, make sure it has returned to its normal operation.

CAUTION: Do not disassemble the retractor.

Installation

To install, follow the removal steps in the reverse order, noting the following points;

1. Pass the seat belt through the lower trim cover hole, and tighten the seat belt anchor bolts to the specified torque.

   Torque: 39 N·m (4.0 kg·m/29 lb ft)
2. After installing the trim cover to the body panel securely, close the lower trim cover.

Front Seat Belt and Associated Parts (Short Wheel Base)

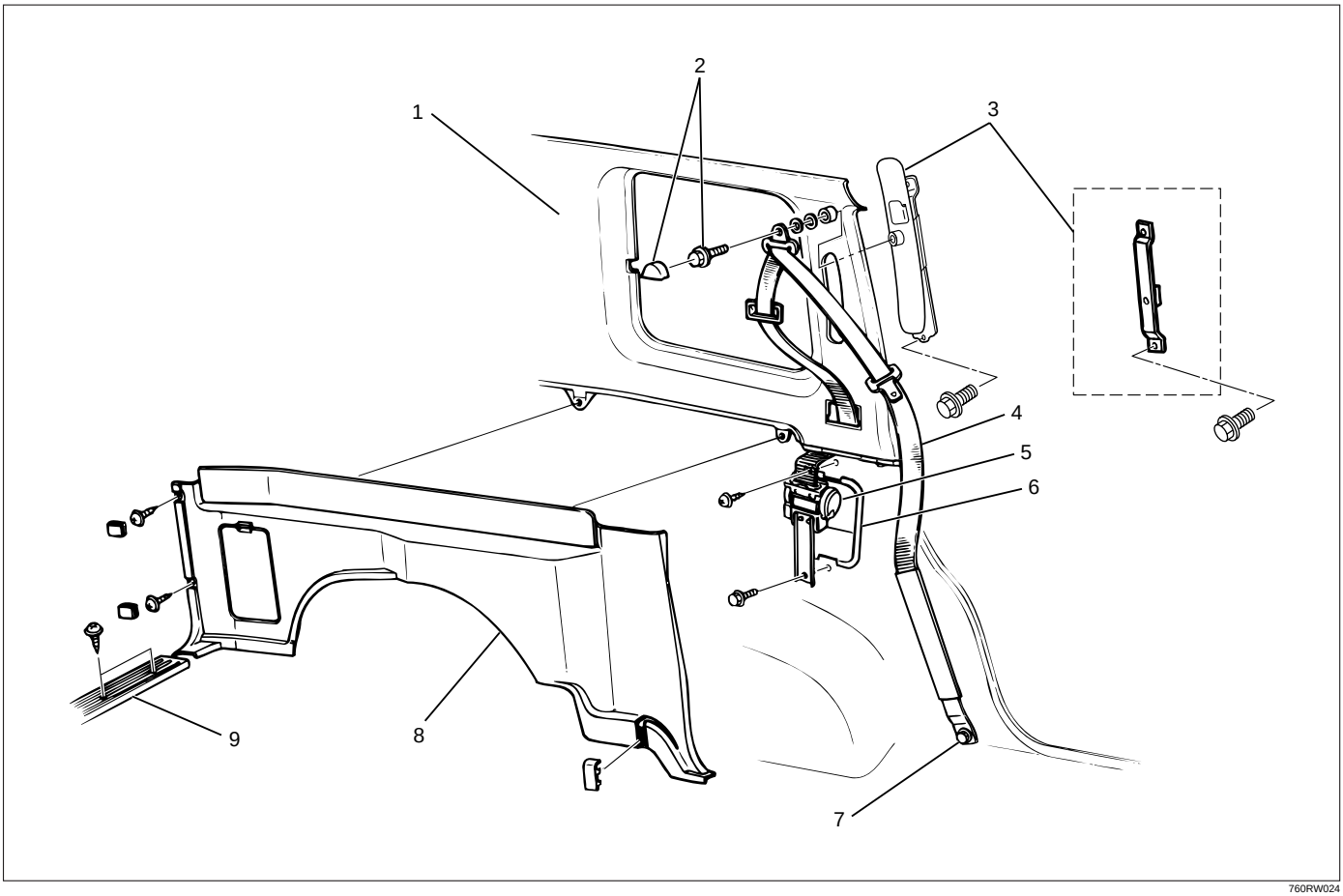

Legend

(1) Quarter Upper Trim Cover
(2) Front Seat Belt Anchor Bolt Cover and Anchor Bolt (Upper Side)
(3) Adjust Shoulder Anchor Assembly/Seat Belt Anchor Plate
(4) Front Seat Belt Assembly
(5) Retractor
(6) Dust Cover
(7) Anchor Bolt (Lower)
(8) Luggage Side Trim Cover
(9) Rear End Floor Trim Cover

Removal

1. Disconnect the battery ground cable.
2. Remove the rear end floor trim cover.
3. Remove the luggage side trim cover.
   - Refer to Luggage Side and Quarter Upper Trim Panel removal steps in Exterior/Interior Trim section.
4. Remove the front seat belt anchor bolt cover and anchor bolt (Upper Side).
5. Remove the seat belt lower anchor bolt and the retractor and then remove the front seat belt.
6. Remove the adjust shoulder anchor assembly/seat belt anchor plate.
   - Refer to Luggage Side and Quarter Upper Trim Cover remove steps in Exterior/Interior Trim section.

Inspection

If any of the following abnormalities is found, replace on an assembly basis;

- Deform and malfunction of adjustable shoulder anchor/seat belt anchor plate.
- No smooth move of upper/lower anchors in the circumferential direction.
- Damaged and/or deformed through ring.
- Damaged and/or deformed tongue.
- Damaged and/or frayed of webbing.
- Deformed retractor bracket.
- Seat belt not rewound up.
- Resistance or abnormal sound when seat belt is wound out and rewound.
- Retractor abnormality.

Inspection of retractor

1. ELR (Emergency Locking Retractor) lock inclining angle check.
   - When the retractor is moved gently from its installing position, make sure it is not locked within 15° in any directions, and it remains locked at 45° or larger.
2. ELR lock check.
   - When the seat belt is drawn slowly with the retractor installed, make sure it is not locked. And when it is drawn quickly, make sure it is locked.
3. ALR (Automatic Locking Retractor)/ELR check (Except for driver's seat).
   - When rewound after winding out the seat belt, make sure the seat belt cannot be taken out. After rewinding, make sure it has returned to its normal operation.

CAUTION: Do not disassemble the retractor.

Installation

To install, follow the removal steps in the reverse order, noting the following points;

1. Pass the seat belt through the lower trim cover hole, and tighten the seat belt anchor bolts to the specified torque.

   Torque: 39 N·m (4.0 kg·m/29 lb ft)
2. After installing the trim cover to the body panel securely, close the lower trim cover.

Rear Seat Belt and Associated Parts (Long Wheel Base)

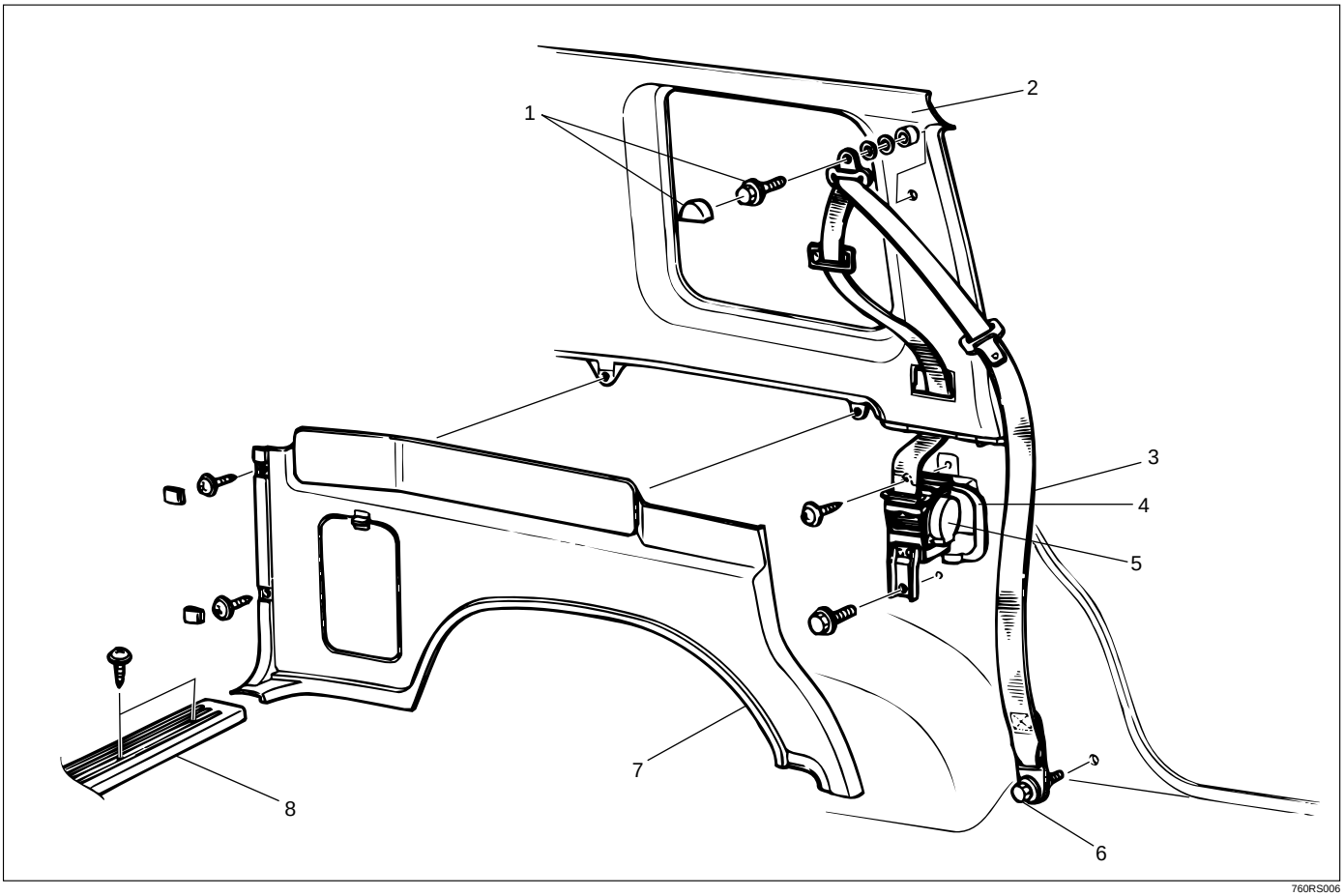

Legend

(1) Rear Seat Belt Anchor Bolt Cover and Anchor Bolt (Upper Side)
(2) Quarter Upper Trim Cover
(3) Rear Seat Belt Assembly
(4) Dust Cover
(5) Retractor
(6) Anchor Bolt (Lower Side)
(7) Luggage Side Trim Cover
(8) Rear End Floor Trim Cover

Removal

1. Disconnect the battery ground cable.
2. Remove the rear end floor trim cover.
3. Remove the luggage side trim cover.
   - Refer to Luggage Side and Quarter Upper Trim Panel removal steps in Exterior/Interior Trim section.
4. Remove the rear seat belt anchor bolt cover and anchor bolt (Upper Side).
5. Remove the seat belt lower anchor bolt and remove the retractor from dust cover slit to remove the rear seat belt.

Inspection

If any of the following abnormalities is found, replace on an assembly basis;

- No smooth move of upper/lower anchors in the circumferential direction.
- Damaged and/or deformed through ring.
- Damaged and/or deformed tongue.
- Damaged and/or frayed of webbing.
- Deformed retractor bracket.
- Seat belt not rewound up.
- Resistance or abnormal sound when seat belt is wound out and rewound.
- Retractor abnormality.

Inspection of retractor

1. ELR (Emergency Locking Retractor) lock inclining angle check.
   - When the retractor is moved gently from its installing position, make sure it is not locked within 15° in any directions, and it remains locked at 45° or larger.
2. ELR lock check.
   - When the seat belt is drawn slowly with the retractor installed, make sure it is not locked. And when it is drawn quickly, make sure it is locked.
3. ALR (Automatic Locking Retractor)/ELR check (Except for driver's seat).
   - When rewound after winding out the seat belt, make sure the seat belt cannot be taken out. After rewinding, make sure it has returned to its normal operation.

CAUTION: Do not disassemble the retractor.

Installation

To install, follow the removal steps in the reverse order, noting the following point.

1. Tighten the seat belt anchor bolts to the specified torque.

   Torque: 39 N·m (4.0 kg·m/29 lb ft)

Rear Seat Belt and Associated Parts (Short Wheel Base)

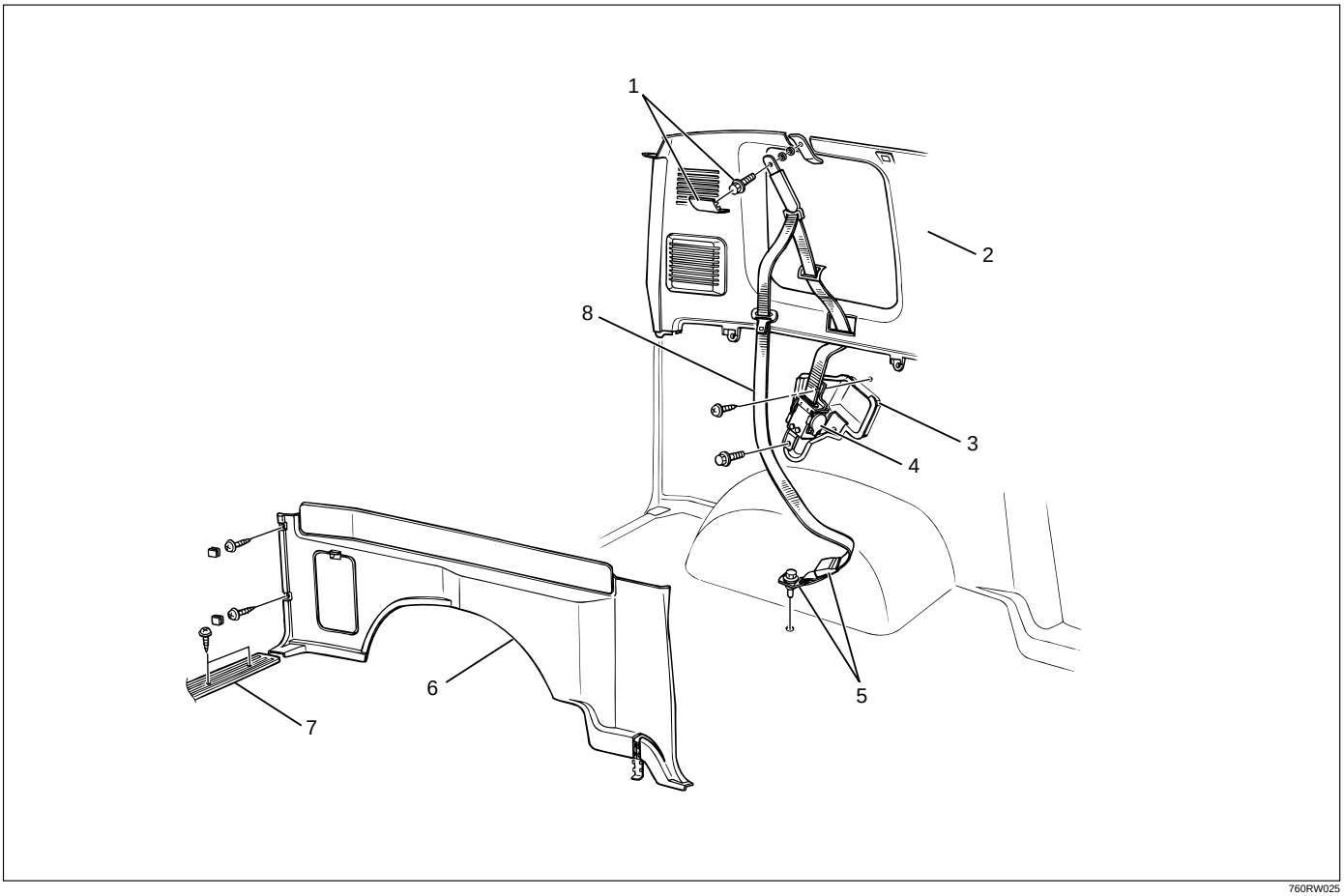

760RW025

Legend

(1) Rear Seat Belt Upper Anchor Bolt Cover and Anchor Bolt
(2) Quarter Upper Trim Cover
(3) Dust Cover
(4) Retractor
(5) Rear Seat Belt Lower Anchor Bolt Cover and Anchor Bolt
(6) Luggage Side Trim Cover
(7) Rear End Floor Trim Cover
(8) Rear Seat Belt Assembly

Removal

1. Disconnect the battery ground cable.
2. Remove the rear seat belt lower anchor bolt cover (1) and anchor bolt (2).

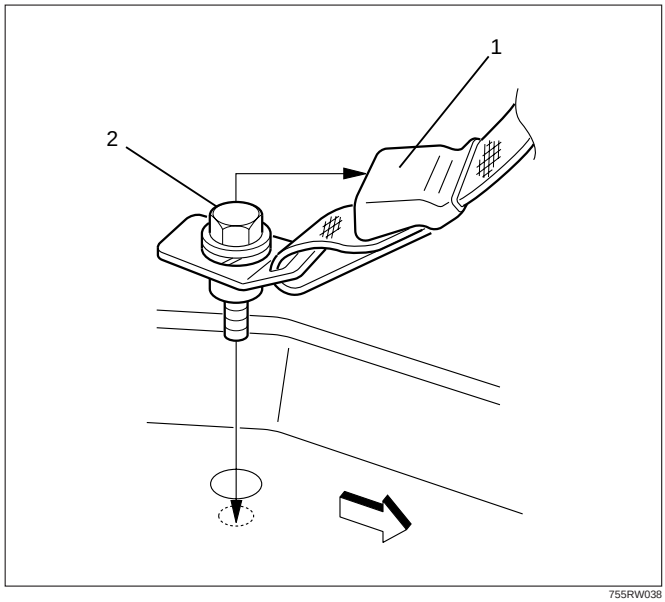

755RW038

3. Remove the rear end floor trim cover.
4. Remove the luggage side trim cover.
   - Refer to Luggage Side and Quarter Upper Trim Panel removal steps in Exterior/Interior Trim section.
5. Remove the rear seat belt upper anchor bolt cover (1) and anchor bolt.

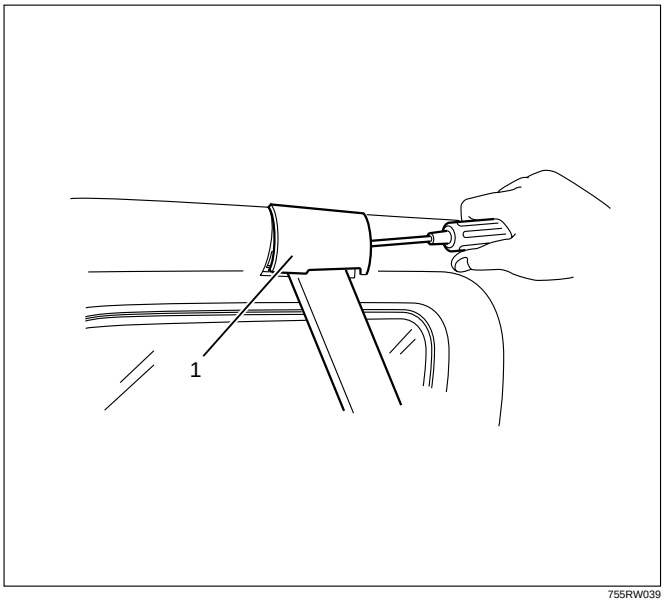

755RW039

6. Remove the rear seat belt assembly.
   - Remove the seat belt lower anchor bolt and screw.
   - Remove the retractor from the dust cover slit.

Inspection

If any of the following abnormalities is found, replace on an assembly basis;

- No smooth move of upper/lower anchors in the circumferential direction.
- Damaged and/or deformed through ring.
- Damaged and/or deformed tongue.
- Damaged and/or frayed of webbing.
- Deformed retractor bracket.
- Seat belt not rewound up.
- Resistance or abnormal sound when seat belt is wound out and rewound.
- Retractor abnormality.

Inspection of retractor

1. ELR (Emergency Locking Retractor) lock inclining angle check.
   - When the retractor is moved gently from its installing position, make sure it is not locked within 15° in any directions, and it remains locked at 45° or larger.
2. ELR lock check.
   - When the seat belt is drawn slowly with the retractor installed, make sure it is not locked. And when it is drawn quickly, make sure it is locked.
3. ALR (Automatic Locking Retractor)/ELR check (Except for driver's seat).
   - When rewound after winding out the seat belt, make sure the seat belt cannot be taken out. After rewinding, make sure it has returned to its normal operation.

CAUTION: Do not disassemble the retractor.

Installation

To install, follow the removal steps in the reverse order, noting the following point.

1. Be sure to install the lower side anchor plate straight horizontally, with mounting hole of the plate at the center.
2. Tighten the seat belt anchor bolts to the specified torque.

   Torque: 39 N·m (4.0 kg·m/29 lb ft)

Third Seat Belt and Associated Parts (Long Wheel Base)

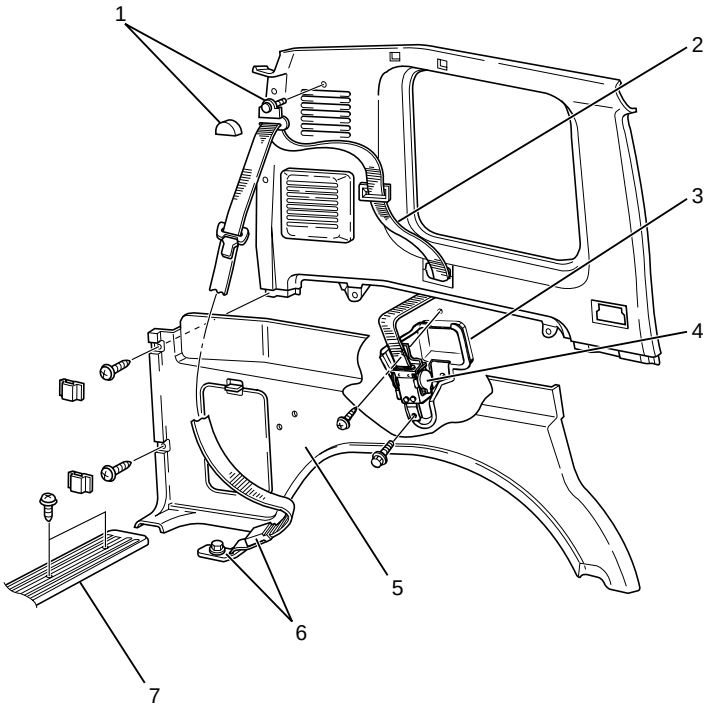

760RW027

Legend

(1) Third Seat Belt Upper Anchor Bolt Cover and Anchor Bolt
(2) Third Seat Belt Assembly
(3) Dust Cover
(4) Retractor
(5) Luggage Side Trim Cover
(6) Third Seat Belt Lower Anchor Bolt Cover and Anchor Bolt
(7) Rear End Floor Trim Cover

Removal

1. Disconnect the battery ground cable.
2. Remove the rear end floor trim cover.
3. Remove the luggage side trim cover.
   - Refer to Luggage Side and Quarter Upper Trim Panel removal steps in Exterior/Interior Trim section.
4. Remove the third seat belt anchor bolt cover and anchor bolt (Upper Side).
5. Remove the seat belt lower anchor bolt and remove the retractor from dust cover slit to remove the third seat belt.

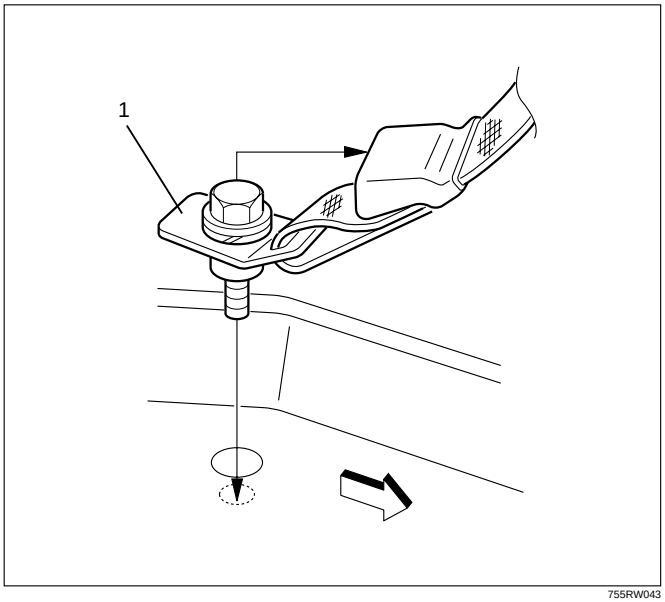

755RW043

Inspection

If any of the following abnormalities is found, replace on an assembly basis;

- No smooth move of upper/lower anchors in the circumferential direction.
- Damaged and/or deformed through ring.
- Damaged and/or deformed tongue.
- Damaged and/or frayed of webbing.
- Deformed retractor bracket.
- Seat belt not rewound up.
- Resistance or abnormal sound when seat belt is wound out and rewound.
- Retractor abnormality.

Inspection of retractor

1. ELR (Emergency Locking Retractor) lock inclining angle check.
   - When the retractor is moved gently from its installing position, make sure it is not locked within 15° in any directions, and it remains locked at 45° or larger.
2. ELR lock check.
   - When the seat belt is drawn slowly with the retractor installed, make sure it is not locked. And when it is drawn quickly, make sure it is locked.

CAUTION: Do not disassemble the retractor.

Installation

To install, follow the removal steps in the reverse order, noting the following point.

1. Be sure to install the lower side anchor plate (1) straight against the longitudinal direction of the vehicle with mounting hole of the plate at the center.
2. Tighten the seat belt anchor bolts to the specified torque.

   Torque: 39 N·m (4.0 kg·m/29 lb ft)

Front Seat Buckle Assembly

Removal

1. Disconnect the battery ground cable.
2. Disconnect the seat belt warning connector (If so equipped).
3. Remove the front seat buckle assembly(1).

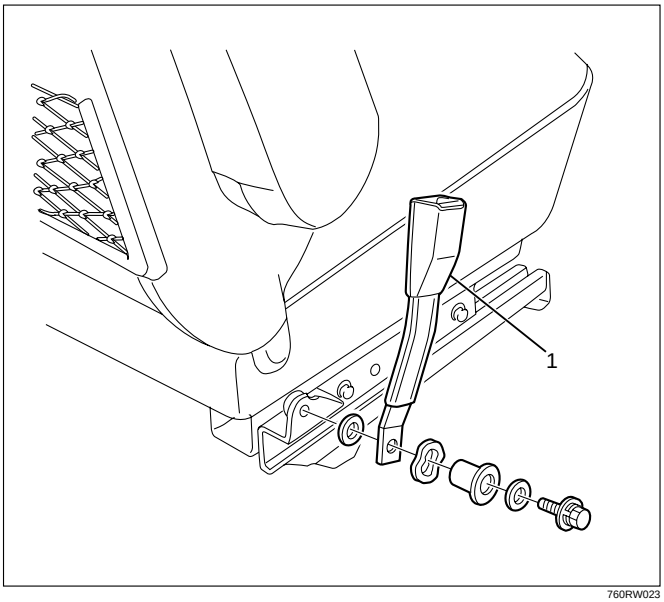

760RW023

Installation

To install, follow the removal steps in the reverse order, noting the following points.

1. Fix the buckle to the rotation – stop position(2) securely to install the front seat buckle assembly(1).

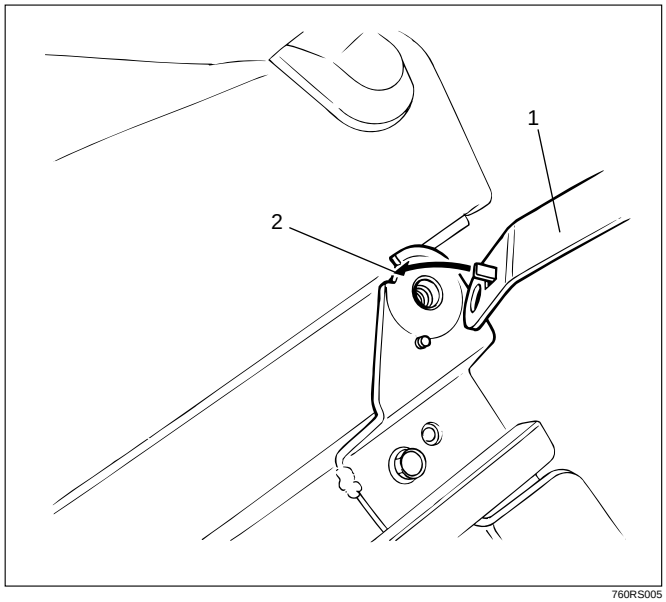

760RS005

2. Tighten the buckle anchor bolt to the specified torque.
   Torque: 39 N·m (4.0 kg·m/29 lb ft)

Front Seat Buckle Assembly (W/Pretensioner)

Removal

1. Disconnect the battery ground cable.
2. Disconnect the pretensioner harness connector(3).
3. Remove the pretensioner cover(1).
4. Remove the front seat buckle assembly(2).

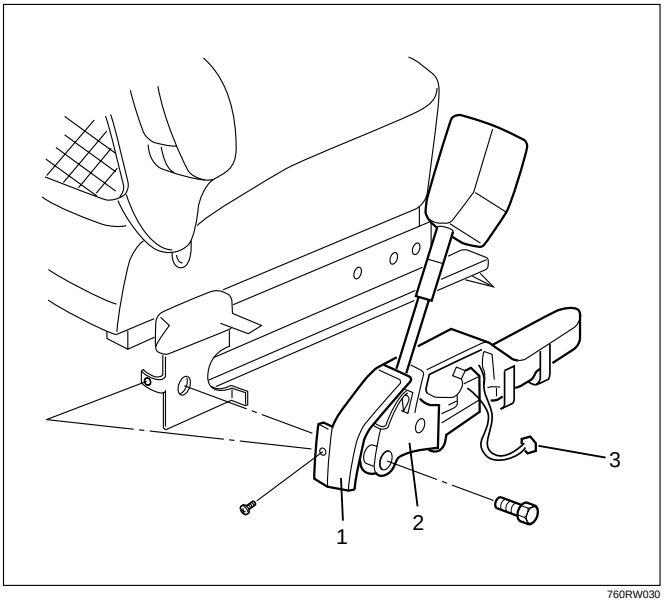

760RW030

Installation

To install, follow the removal steps in the reverse order, noting the following points.

1. Fix the buckle to the rotation – stop position securely to install the front seat buckle assembly.
2. Connect the pretensioner harness connector.

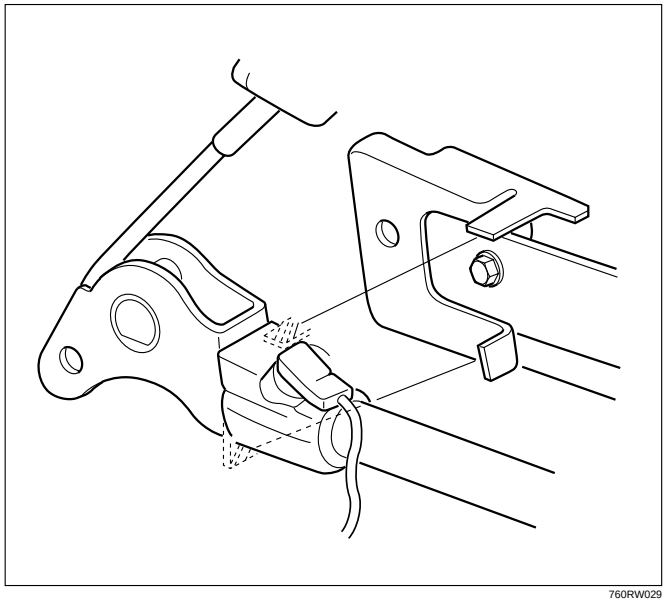

760RW029

3. Tighten the buckle anchor bolt to the specified torque.
   Torque: 39 N·m (4.0 kg·m/29 lb ft)

Rear Center Seat Belt Buckle Assembly

Rear Center Seat Belt Buckle Assembly and Associated Parts

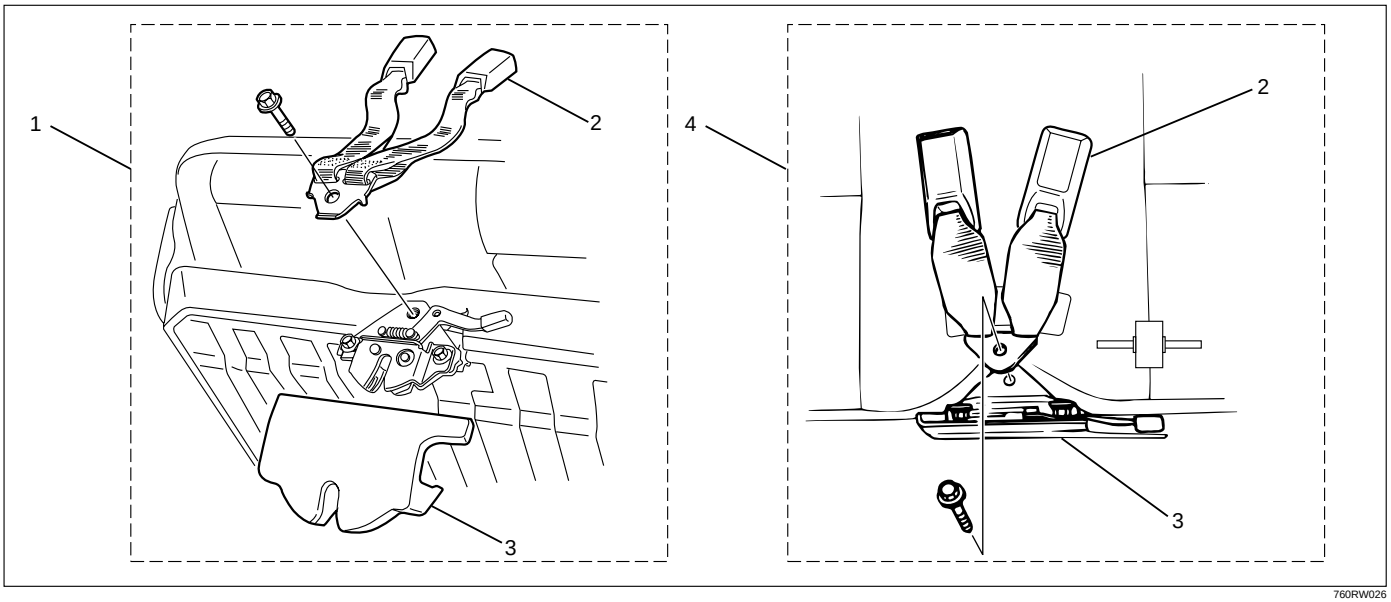

760RW026

Legend
(1) Long Wheel Base
(2) Rear Seat Belt Buckle Assembly
(3) Seat Lock Cover
(4) Short Wheel Base

Removal

1. Remove the catch portions(2) & (3) of the seat lock assembly(4) from the cover, and then remove the seat lock cover(1).

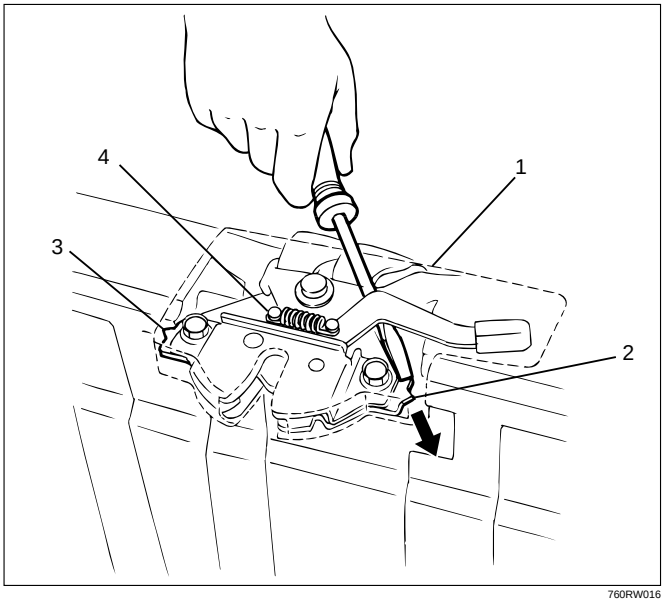

760RW016

2. Remove the rear seat buckle assembly.

Installation

1. Fix the rear seat belt buckle assembly(1) to the rotation stopper and tighten the anchor bolt to the specified torque.

Torque: 39 N·m (4.0 kg·m/29 lb ft)

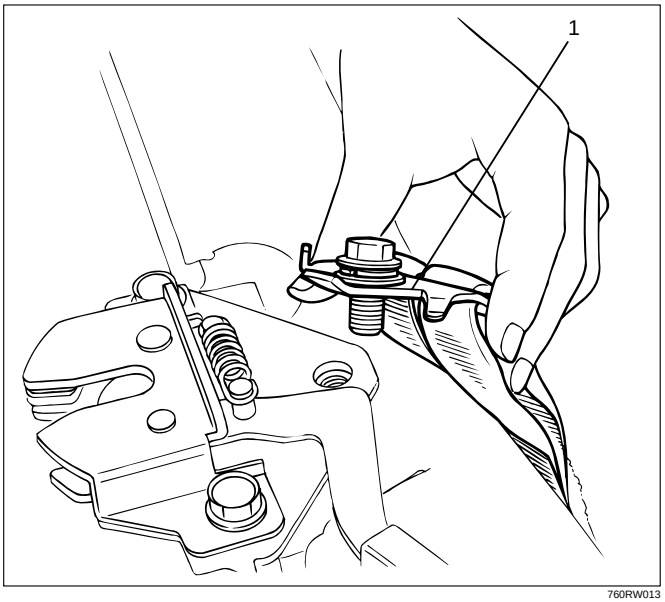

760RW013

2. Install the seat lock cover.

Third Seat Belt Buckle and Lock Assembly

Third Seat Belt Buckle and Lock Assembly and Associated Parts

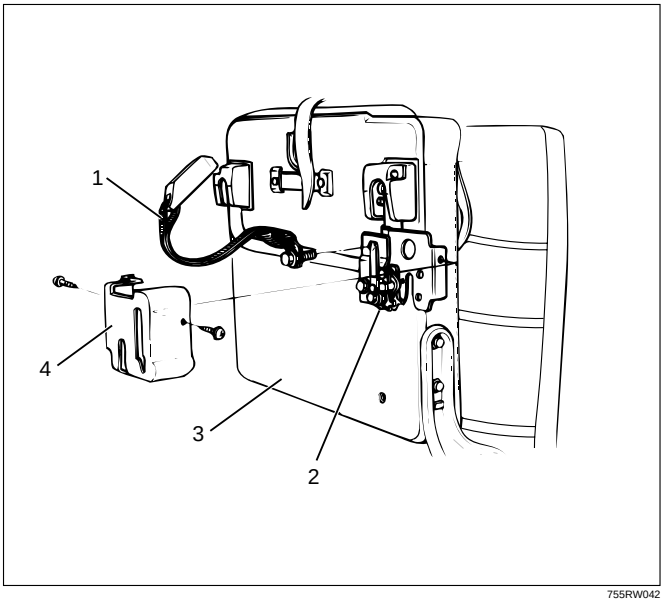

755RW042

Legend

(1) Third Seat Belt Buckle Assembly
(2) Third Seat Lock Assembly
(3) Third Seat
(4) Seat Lock Cover

Removal

1. Disconnect the battery ground cable.
2. Remove seat lock cover.
3. Remove third seat belt buckle assembly.
4. Remove third seat lock assembly.

Installation

To install, follow the removal steps in the reverse order, noting the following point.

1. Tighten the lock assembly fixing bolts to the specified torque.

   Torque: 39 N·m (4.0 kg·m/29 lb ft)

2. Tighten the buckle assembly fixing bolt to the specified torque.

   Torque: 39 N·m (4.0 kg·m/29 lb ft)

Rear Seat Lock Assembly

Removal

1. Remove the seat lock cover(3).
2. Remove the rear seat belt buckle assembly(1).
3. Remove the rear seat lock assembly(2).

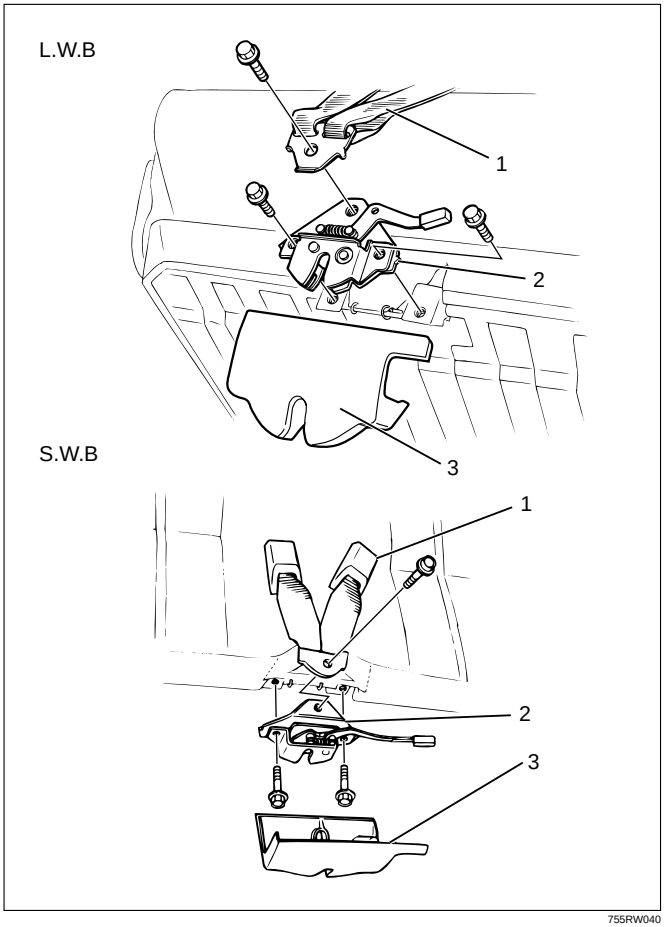

755RW040

Installation

To install, follow the removal steps in the reverse order, noting the following point.

1. Tighten the seat lock fixing bolts to the specified torque.

   Torque: 42 N·m (4.3 kg·m/31 lb ft)

Rear Seat Lock Assembly (Bench Type)

Removal

1. Remove the seat lock cover(3).
2. Remove the rear seat belt/buckle assembly(1).
3. Disconnect the link connecting the lock assemblies on the both sides, and then remove the rear seat lock assembly(2).

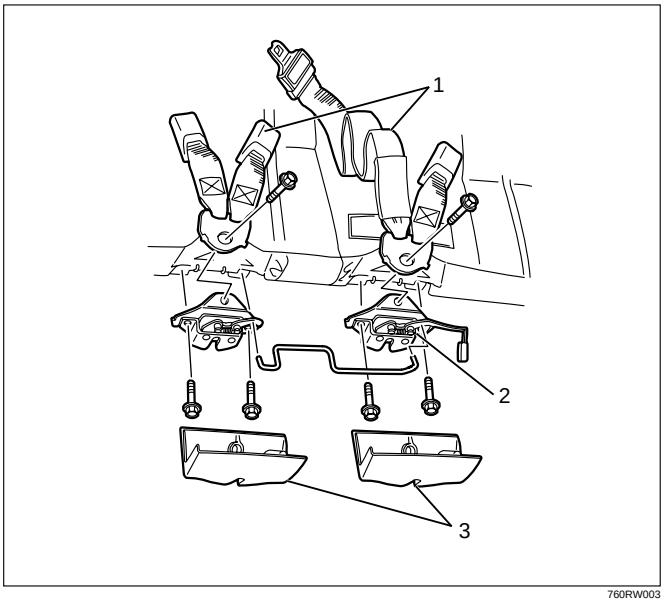

760RW003

Installation

To install, follow the removal steps in the reverse order, noting the following point.

1. Tighten the seat lock fixing bolts to the specified torque.

   Torque: 42 N·m (4.3 kg·m/31 lb ft)

Rear Seat Strikers

Removal

1. Fold the rear seat assembly to the front direction.
2. Remove the luggage floor box(1) (L·W·B).
   Remove the striker cover(3) (S·W·B).
3. Remove the rear seat striker(2).

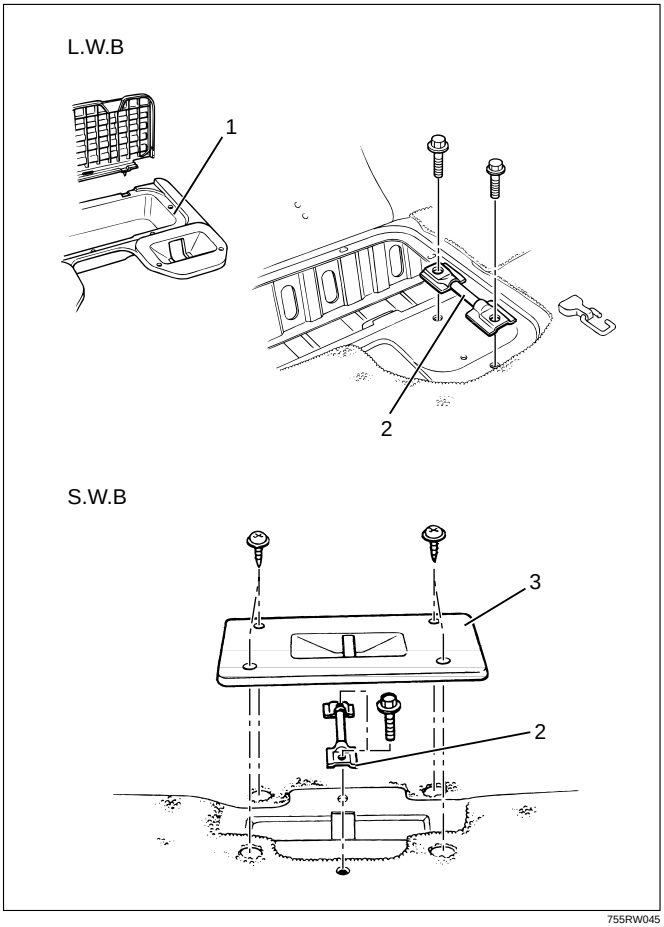

755RW045

Installation

To install, follow the removal steps in the reverse order, noting the following point.

1. Tighten the striker fixing bolts to the specified torque.
   Torque: 40 N·m (4.1 kg·m/30 lb ft)

Third Seat Striker

Removal

1. Disconnect the battery ground cable.
2. Remove the striker cover (1).
3. Remove the third seat striker (2).

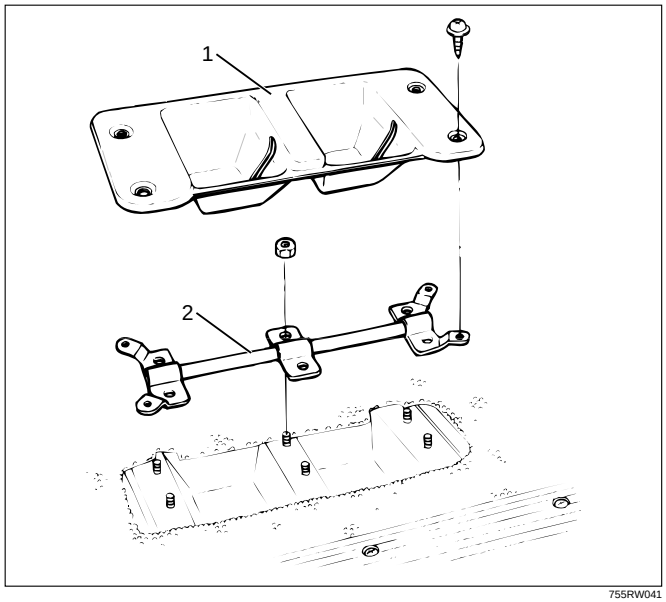

755RW041

Installation

To install, follow the removal steps in the reverse order, noting the following point.

1. Tighten the striker fixing nuts to the specified torque.
   Torque: 39 N·m (4.0 kg·m/29 lb ft)

Main Data and Specifications

Torque Specifications

Application	N·m	kg·m	Lb Ft
Front Seat Belt Anchor Bolts	39	4.0	29
Rear Seat Belt Anchor Bolts	39	4.0	29
Front Seat Buckle Anchor Bolt	39	4.0	29
Rear Seat Buckle Anchor Bolt	39	4.0	29
Rear Seat Lock Fixing Bolts	42	4.3	31
Third Seat Belt Anchor Bolts	39	4.0	29
Third Seat Lock Fixing Bolts	39	4.0	29
Third Seat Buckle Anchor Bolt	39	4.0	29
Third Seat Striker Fixing Nuts	39	4.0	29
Rear Seat Striker Fixing Bolts	40	4.1	30

RESTRAINTS

SUPPLEMENTAL RESTRAINT SYSTEM (SRS)

CONTENTS

Service Precaution 9J–1
General Description 9J–2
SRS Component And Wiring Location View . 9J–4
Component Description 9J–4
Definitions 9J–7
Diagnosis 9J–8
SRS Connector Body Face Views 9J–9
Repairs And Inspections Required After An Accident 9J–9
On–Vehicle Service 9J–10
Air Bag Assembly Handling / Shipping / Scrapping 9J–11
Pretensioner Seat Belt Handling / Shipping / Scrapping. 9J–11
Special Tools 9J–26
Service Precautions for SRS Component Service 9J–30
SRS Connectors 9J–31
Sensing And Diagnostic Module (SDM) 9J–33
Service Precautions 9J–33
Removal 9J–33
Installation 9J–33
Driver Air Bag Assembly 9J–35
Service Precautions 9J–35
Removal 9J–35
Installation 9J–36
Steering Wheel 9J–37
Service Precautions 9J–37
Removal 9J–37
Installation 9J–38
SRS Coil Assembly 9J–39
Service Precautions 9J–39
Removal 9J–39
Installation 9J–41
SRS Coil Replacement Procedure 9J–42
Removal 9J–42
How to Disconnect the horn terminal 9J–43
How to Connect Horn Terminal 9J–43
Installation 9J–44
Steering Column 9J–44
Service Precautions 9J–44
Removal 9J–44
Installation 9J–46
Passenger Air Bag Assembly 9J–48
Service Precautions 9J–48
Removal 9J–48
Installation 9J–48
Pretensioner Seat Belt (If so equipped) 9J–49
Service Precaution 9J–49
Parts Location 9J–49
Removal 9J–49
Installation 9J–49
Main Data and Specifications 9J–50

Service Precaution

WARNING: IF SO EQUIPPED WITH A SUPPLEMENTAL RESTRAINT SYSTEM (SRS), REFER TO THE SRS COMPONENT AND WIRING LOCATION VIEW IN ORDER TO DETERMINE WHETHER YOU ARE PERFORMING SERVICE ON OR NEAR THE SRS COMPONENTS OR THE SRS WIRING. WHEN YOU ARE PERFORMING SERVICE ON OR NEAR THE SRS COMPONENTS OR THE SRS WIRING, REFER TO THE SRS SERVICE INFORMATION. FAILURE TO FOLLOW WARNINGS COULD RESULT IN POSSIBLE AIR BAG DEPLOYMENT, PERSONAL INJURY, OR OTHERWISE UNNEEDED SRS SYSTEM REPAIRS.

CAUTION: Always use the correct fastener in the proper location. When you replace a fastener, use ONLY the exact part number for that application. ISUZU will call out those fasteners that require a replacement after removal. ISUZU will also call out the fasteners that require thread lockers or thread sealant. UNLESS OTHERWISE SPECIFIED, do not use supplemental coatings (Paints, greases, or other corrosion inhibitors) on threaded fasteners or fastener joint interfaces. Generally, such coatings adversely affect the fastener torque and the joint clamping force, and may damage the fastener. When you install fasteners, use the correct tightening sequence and specifications. Following these instructions can help you avoid damage to parts and systems.

General Description

CAUTION: When fasteners are removed, always reinstall them at the same location from which they were removed. If a fastener needs to be replaced, use the correct part number fastener for that application. If the correct part number fastener is not available, a fastener of equal size and strength (or stronger) may be used. Fasteners that are not reused, and those requiring thread locking compound will be called out. The correct torque value must be used when installing fasteners that require it. If the above conditions are not followed, parts or system damage could result.

Restraint Devices

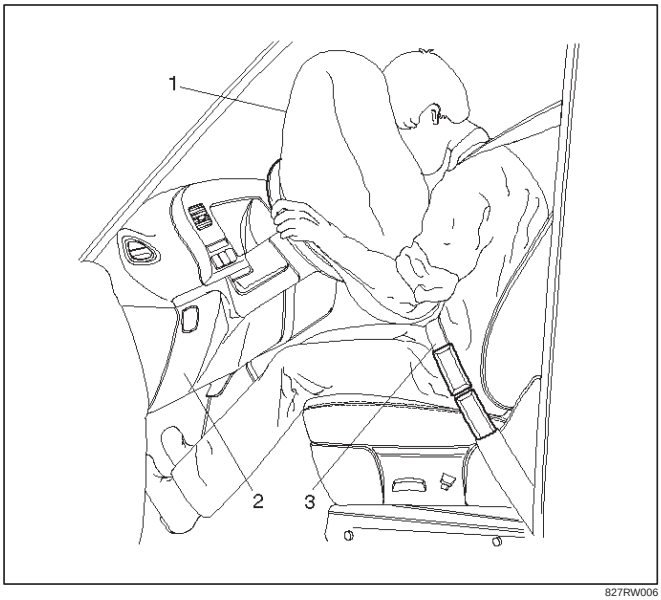

827RW006

Legend

(1) Deployed Air Bag
(2) Knee Bolster
(3) Seat Belt

The Supplemental Restraint System (SRS) helps supplement the protection offered by the driver and front passenger seat belts by deploying an air bag from the center of the steering wheel and from the top of the right side of the instrument panel.

The air bag deploys when the vehicle is involved in a frontal crash of sufficient force up to 30 degrees off the centerline of the vehicle. To further absorb the crash energy there is a knee bolster located beneath the instrument panel for both the driver and passenger, and the steering column is collapsible.

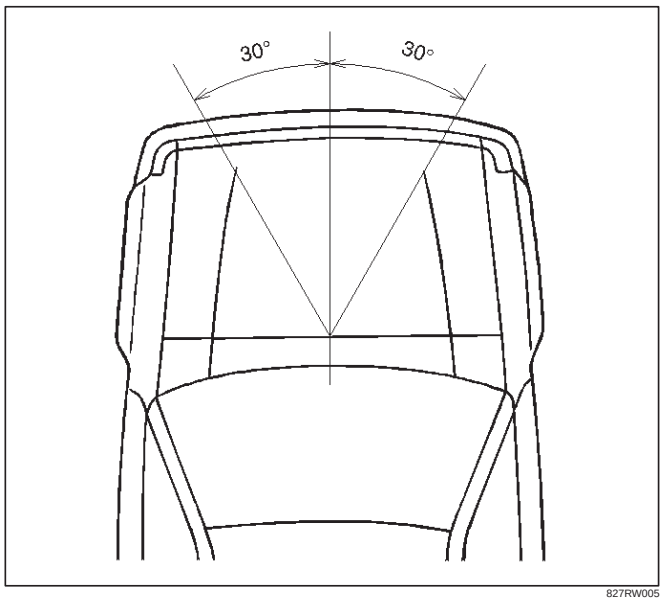

827RW005

System Description

The SRS consists of the Sensing and Diagnostic Module (SDM), the driver air bag assembly, the SRS coil assembly, the passenger air bag assembly and the “AIR BAG” warning lamp in the instrument cluster. The SDM, SRS coil assembly (driver side only), driver air bag assembly, passenger air bag assembly and connector wire make up the deployment loops. The function of the deployment loops is to supply current through air bag assembly, which will cause deployment of the air bags in the event of a frontal crash of sufficient force, up to 30 degrees off the centerline of the vehicle. The air bag assemblies are only supplied enough current to deploy when the SDM detects vehicle velocity changes severe enough to warrant deployment.

The SDM contains a sensing device which converts vehicle velocity change to an electrical signal. The electrical signal generated is processed by the SDM and then compared to a value stored in memory. When the generated signal exceeds the stored value, the SDM will cause current to flow through the air bag assembly deploying the air bags.

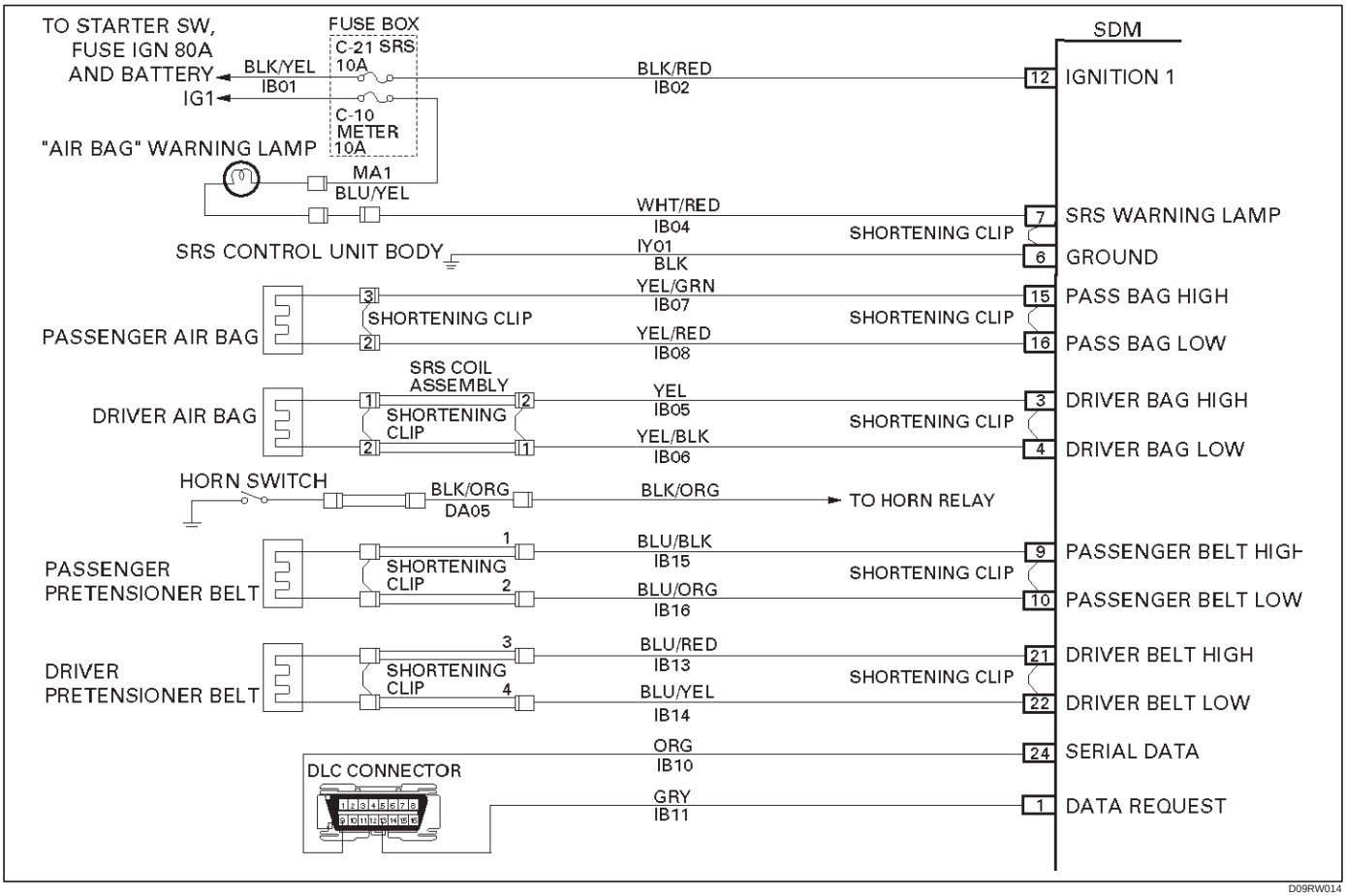

SRS Component And Wiring Location View

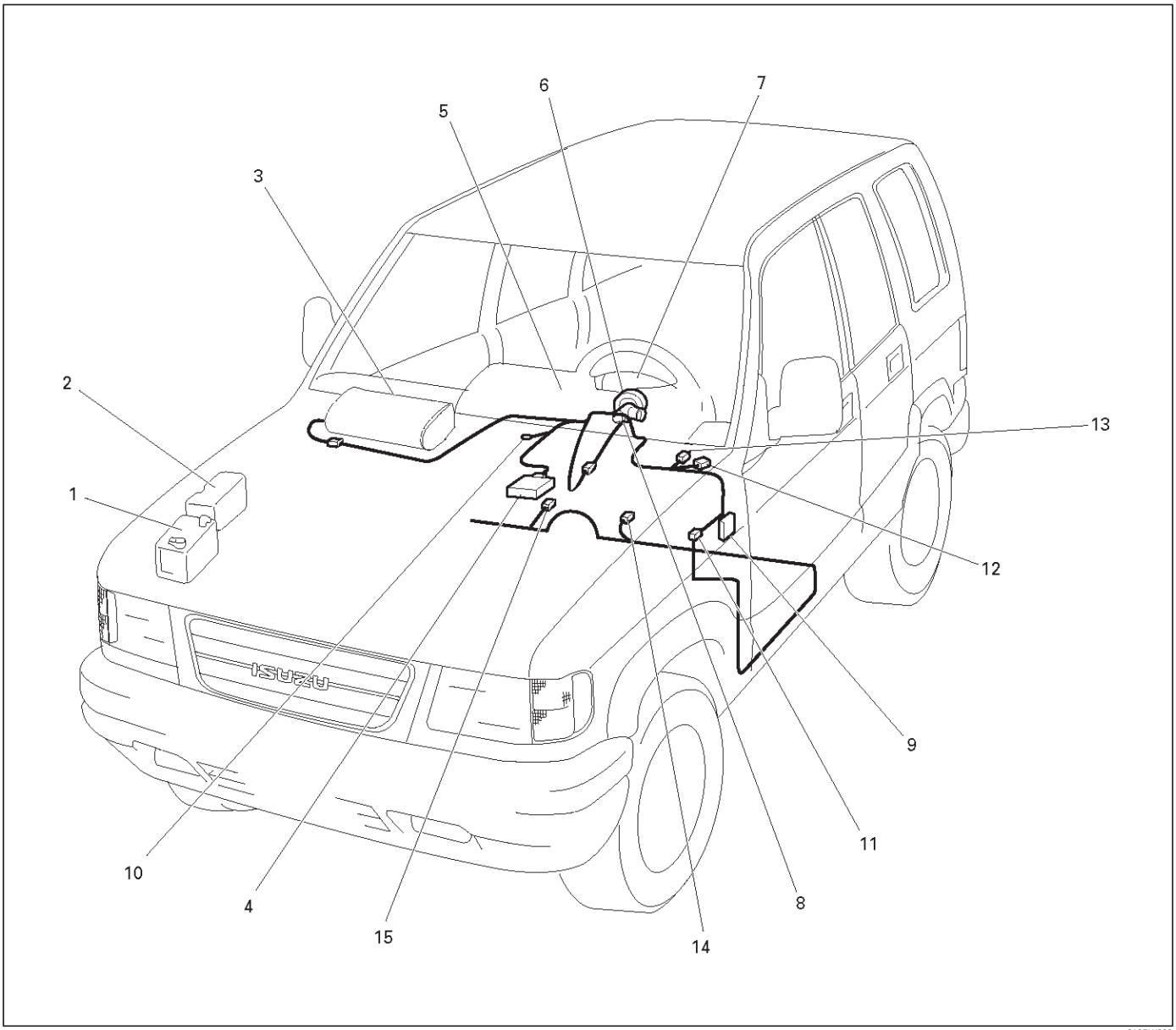

810RW298

Legend

(1) Battery
(2) Relay & Fuse Box
(3) Passenger Air Bag Assembly
(4) SDM
(5) Meter Assembly
(6) SRS Coil Assembly
(7) Driver Air Bag Assembly
(8) Starter Switch
(9) Fuse Box, C–21
(10) SRS Body Earth
(11) Body Harness Connector
(12) Instrument Harness Connector
(13) Engine Haness Connector
(14) Pretensioner, LH (If so equipped)
(15) Pretensioner, RH (If so equipped)

Component Description

SDM (Sensing and Diagnostic Module)

WARNING: DURING SERVICE PROCEDURES, BE VERY CAREFUL WHEN HANDLING A SENSING AND DIAGNOSTIC MODULE (SDM). NEVER STRIKE OR JAR THE SDM. NEVER POWER UP THE SRS WHEN THE SDM IS NOT RIGIDLY ATTACHED TO THE VEHICLE. ALL SDM AND MOUNTING BRACKET FASTENERS MUST BE CAREFULLY TORQUED AND THE ARROW MUST BE POINTED TOWARD THE FRONT OF THE VEHICLE TO ENSURE PROPER OPERATION OF THE SRS. THE SDM COULD BE ACTIVATED WHEN POWERED WHILE NOT RIGIDLY ATTACHED TO THE VEHICLE WHICH COULD CAUSE DEPLOYMENT AND RESULT IN PERSONAL INJURY.

The Sensing and Diagnostic Module (SDM) is designed to perform the following functions in the SRS:

1. Energy Reserve — The SDM maintains 24–Volt Loop Reserve (24VLR) energy supply to provide deployment energy when ignition voltage is lost in a frontal crash.
2. Frontal Crash Detection — The SDM monitors vehicle velocity changes to detect frontal crashes which are severe enough to warrant deployment.
3. Air Bag Deployment — When a frontal crash of sufficient force is detected, the SDM will cause enough current to flow through the air bag assembly to deploy the air bag.
4. Malfunction Detection — The SDM performs diagnostic monitoring of SRS electrical components and sets a diagnostic trouble code when a malfunction is detected.
5. Frontal Crash Recording — The SDM records information regarding SRS status during frontal crash.
6. Malfunction Diagnosis — The SDM displays SRS diagnostic trouble codes and system status information through the use of a scan tool.
7. Driver Notification — The SDM warns the vehicle driver of SRS malfunctions by controlling the “Air Bag” warning lamp.

The SDM is connected to the SRS wiring harness by a 24–pin connector. This harness connector uses a shorting clip across certain terminals in the contact area. This shorting clip connects the “AIR BAG” warning lamp to ground when the SDM harness connector is disconnected or CPA (Connector Position Assurance) is not inserted even if completely connected. This will cause the “AIR BAG” warning lamp to come “ON” steady whenever the ignition switch is at the ON or START positions with the SDM disconnected.

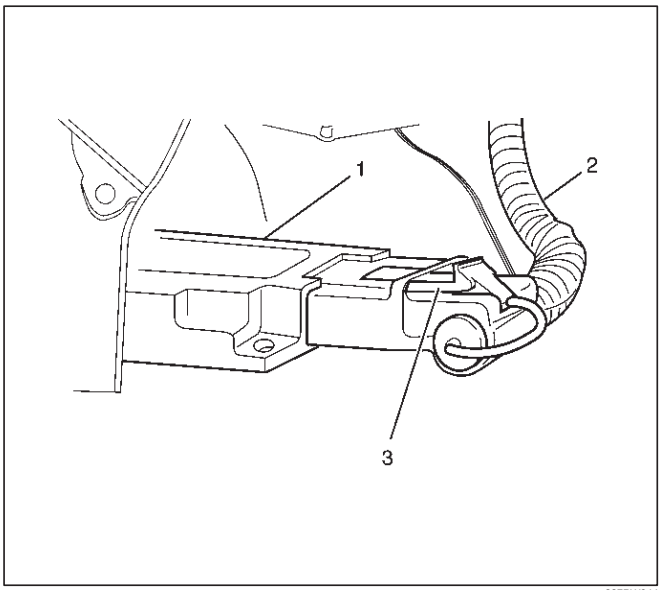

827RW044

Legend

(1) SDM
(2) SRS Harness
(3) Connector Position Assurance

“Air Bag” Warning Lamp

Ignition voltage is applied to the “AIR BAG” warning lamp when the ignition switch is at the ON or START positions. The SDM controls the lamp by providing ground with a lamp driver. The “AIR BAG” warning lamp is used in the SRS to do the following:

1. Verify lamp and SDM operation by turn on 3.5 seconds and then turns “OFF” when the ignition switch is first turned “ON”.
2. Warn the vehicle driver of SRS electrical system malfunctions which could potentially affect the operation of the SRS. These malfunctions could result in nondeployment in case of a frontal crash or deployment for conditions less severe than intended.

The “AIR BAG ” warning lamp is the key to driver notification of SRS malfunctions. For proper lamp operation, refer to the “SRS Diagnostic System Check” in this section.

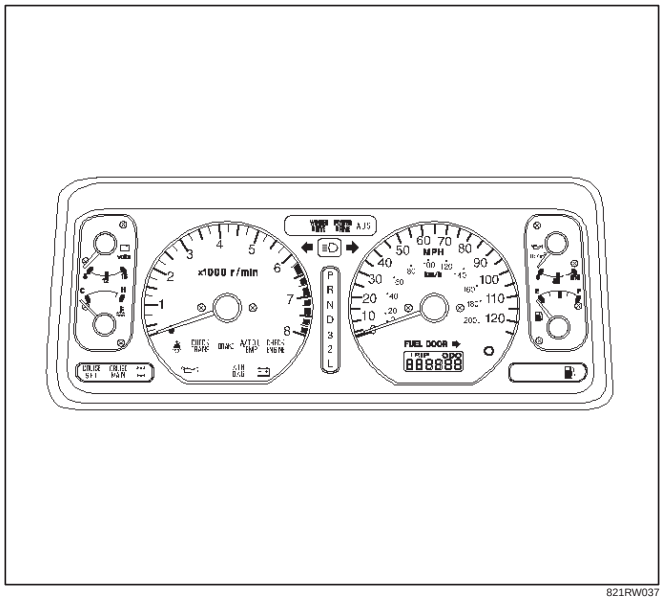

821RW037

SRS Coil Assembly

The SRS coil assembly consists of two current carrying coils. This is attached to the steering column and allow rotation of the steering wheel while maintaining continuous contact of the driver deployment loop to the driver air bag assembly.

There is a shorting clip on the yellow 2–pin connector near the base of steering column which connects the SRS coil to the SRS wiring harness.

The shorting clip shorts to the SRS coil and driver air bag assembly when the yellow 2–pin connector is disconnected. The circuit to the driver air bag assembly is shorted in this way to help prevent unwanted deployment of the air bag when servicing the steering column or other SRS components.

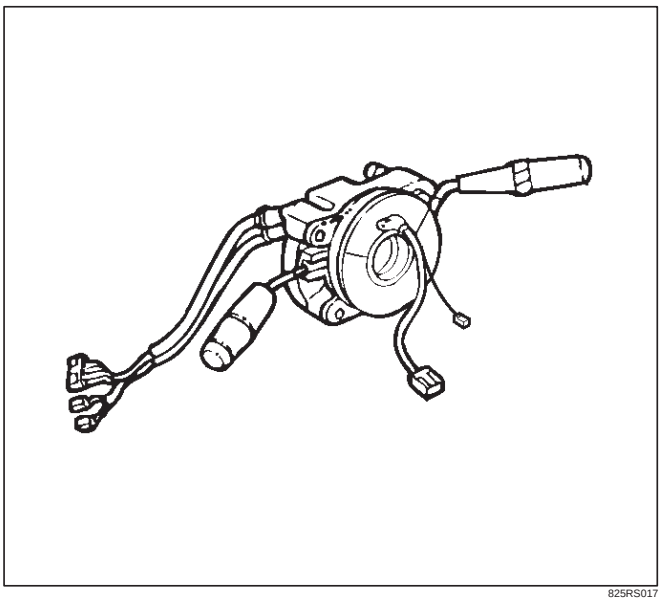

825RS017

Air Bag Assemblies

The air bag assembly consist of an inflatable air bag assembly and an inflator (a canister of gas–generating material and an initiating device). When the vehicle is in a frontal crash of sufficient force.

The SDM causes current flow through the deployment loops. Current passing through the inflator ignites the material in the air bag assembly. The gas produced from this reaction rapidly inflates the air bag assembly.

There is a shorting clip on the driver air bag assembly connector which connects the SRS coil assembly. The shorting clip shorts across the driver air bag assembly circuits when driver air bag assembly connector is disconnected.

The circuit to the driver air bag assembly is shorted in this way to help prevent unwanted deployment of the air bag when servicing the driver air bag assembly, the steering column or other SRS components.

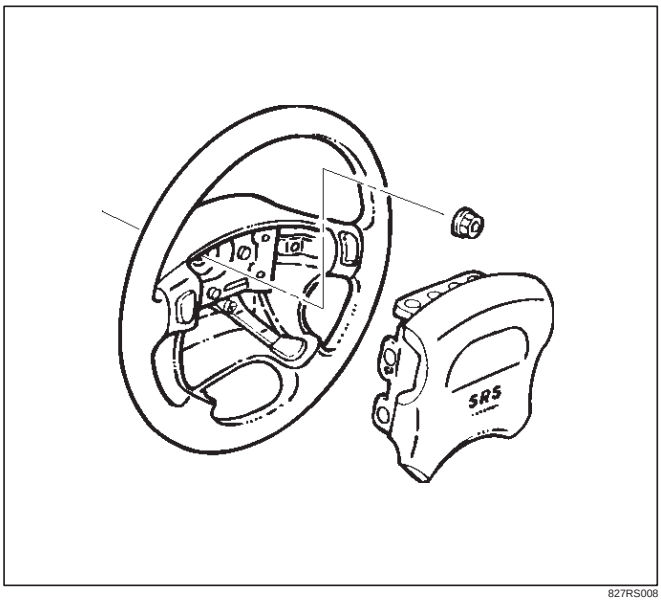

827RS008

There is a shorting clip on the passenger air bag assembly connector which connects to the SRS harness.

The shorting clip shorts across the passenger air bag assembly circuit when the passenger air bag assembly connector is disconnected. The circuit to the passenger air bag assembly is shorted in this way to help prevent unwanted deployment of the air bag when servicing the passenger air bag assembly, the instrument panel or other SRS components.

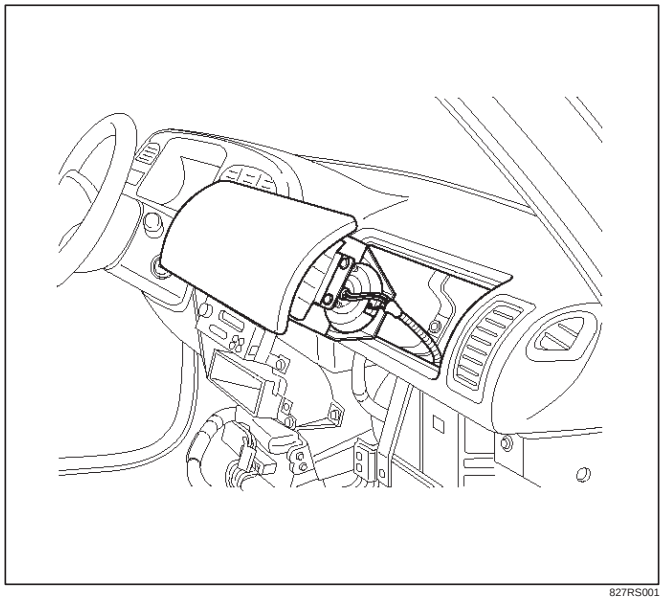

827RS001

Seat Belt with Pretensioner (If so equipped)

The seat belt comprises a seat belt and a cylinder (a cylinder filled with powder and an ignition device). In cases of frontal collision which cause a shock exceeding a specified level, the controller lets current flow to the inflation circuit. The current ignites the cylinder of the seat belt, producing gas. The gas helps tighten the seat belt to restrain firmly the driver's upper half in his seat.

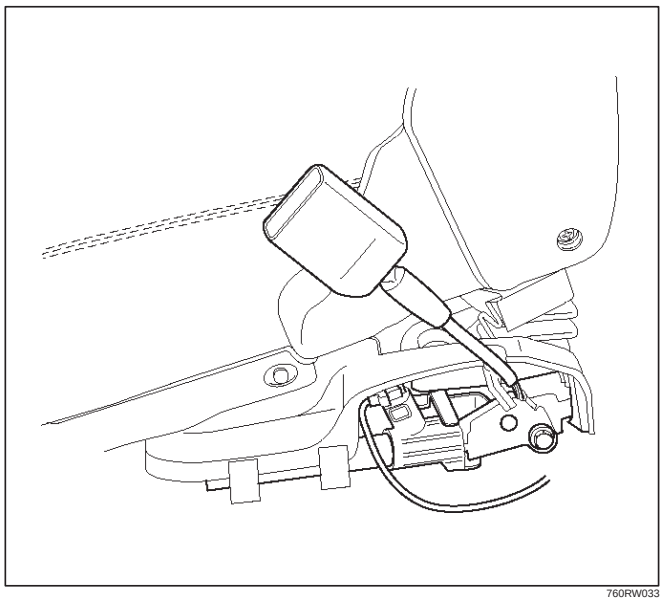

760RW033

Steering Column

The steering column absorbs energy and is designed to compress in a frontal crash to decrease the chance of injury to the driver.

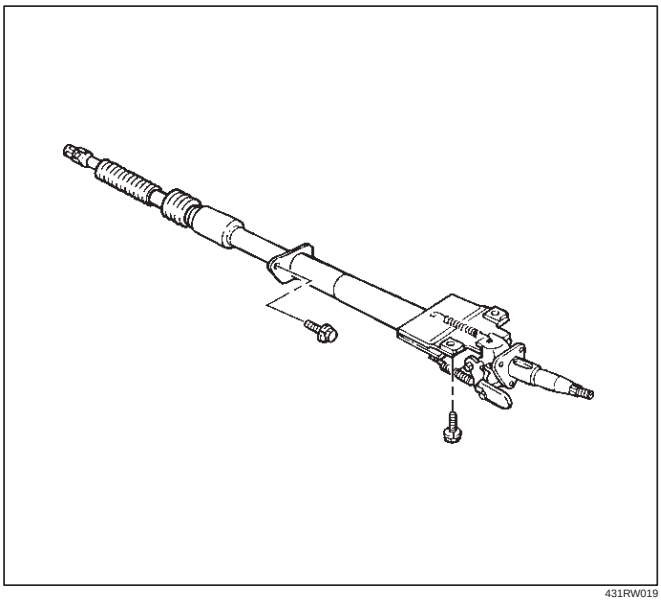

431RW019

Knee Bolster

The knee bolsters are used to absorb energy to protect knees and control the forward movement of the vehicle's front seat occupants during a frontal crash, by limiting leg movement.

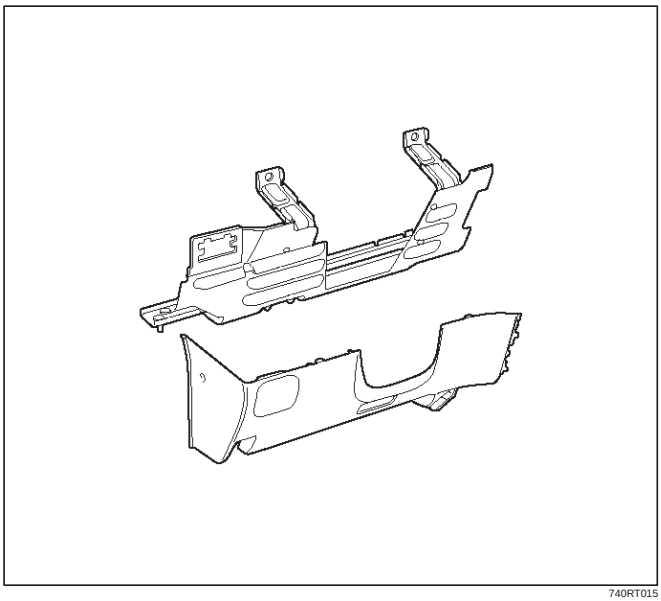

740RT015

Definitions

Air Bag
An inflatable cloth cushion designed to deploy in certain frontal crashes. It supplements the protection offered by the seat belts by distributing the impact load more evenly over the vehicle occupant's head and torso.

Asynchronous
Performed in a nonperiodic fashion, (i.e., no defined time or interval).

B+
Battery voltage, (B+) The voltage available at the battery at the time of the indicated measurement. With the key "ON" and the engine not running, the system voltage will likely be between 12 and 12.5 volts. At idle, the voltage may be 14 to 16 volts. The voltage could be as low as 10 volts during engine cranking.

Bulb Check
The SDM will cause the "AIR BAG" warning lamp to turn on 3.5 seconds and then go "OFF" whenever the ignition switch transitions to the ON position from any other ignition switch position and no malfunctions are detected.

"Continuous Monitoring"
Tests performed by the SDM on the SRS every 100 milliseconds while "Ignition 1" voltage is in the normal operating voltage range at the SDM.

Data Link Connector (DLC)
Formerly "DLC" a connector which allows communication with an external computer, such as a scan tool.

Datum Line
A base line parallel to the plane of the underbody or frame from which all vertical measurements originate.

Deploy
To inflate the air bag.

Deployment Loops
The circuits which supply current to the air bag assemblies to deploy the air bag.

Diagnostic Trouble Code (DTC)
Formerly "Code", a numerical designator used by the SDM to indicate specific SRS malfunctions.

Driver Current Source
An output of the SDM which applies current into the driver air bag assembly circuit during the "Initiator Assembly Resistance Test".

Driver Air Bag Assembly
An assembly located in the steering wheel hub consisting of an inflatable bag, an inflator and an initiator.

EEPROM
Electrically Erasable Programmable Read Only Memory. Memory which retains its contents when power is removed from the SDM.

Ignition Cycle
The voltage at the SDM "Ignition 1" inputs, with ignition switch "ON", is within the normal operating voltage range for at least ten seconds before turning ignition switch "OFF".

Ignition 1
A battery voltage (B+) circuit which is only powered with the ignition switch in the ON, or START positions.

Initiator
The electrical component inside the air bag assembly which, when sufficient current flows, sets off the chemical reaction that inflates the air bag.

"Initiator Assembly Resistance Test"
Tests performed once each ignition cycle when no malfunctions are detected during "Turn–ON" or "Continuous Monitoring". This test checks for the correct SDM configuration for the vehicle, shorts to "Ignition 1" in

the deployment loops, high resistance or opens in the "Driver Side High", "Driver Side Low", "Passenger Side High" and "Passenger Side Low" circuits and measures the resistance of the inflator assembly consisting of 1) Initiators, 2) SRS coil assembly (driver side only), 3) Connectors and associated wiring.

Normal Operating Voltage Range
The voltage measured between the SDM "Ignition 1" terminals and "Ground" terminals is between 9 and 16 volts.

Passenger Current Source
An output of the SDM which applies current into the passenger air bag assembly circuit during the "Initiator Assembly Resistance Test".

Passenger Air Bag Assembly
An assembly located in the right side of the instrument panel consisting of an inflatable bag, an inflator and an initiator.

Scan Tool
An external computer used to read diagnostic information from on–board computers via the data link connector.

SDM
Sensing and Diagnostic Module which provides reserve energy to the deployment loops, deploys the air bags when required and performs diagnostic monitoring of all SRS components.

Serial Data
Information representing the status of the SRS.

SRS
Supplemental Restraint System.

SRS Coil Assembly
An assembly of two current–carrying coils in the driver deployment loop that allows the rotation of the steering wheel while maintaining the continuous contact of the driver deployment loop to the driver air bag assembly.

SRS Wiring Harness
The wires and connectors that electrically connect the components in the SRS.

"Turn–ON"
Test which the SDM performs on the SRS once during each ignition cycle immediately after "Ignition 1" voltage is applied to the SDM and before "Continuous Monitoring".

Diagnosis

WARNING: TO AVOID DEPLOYMENT WHEN TROUBLESHOOTING THE SRS, DO NOT USE ELECTRICAL TEST EQUIPMENT SUCH AS A BATTERY–POWERED OR AC–POWERED VOLTMETER, OHMMETER, ETC., OR ANY TYPE OF ELECTRICAL EQUIPMENT OTHER THAN THAT SPECIFIED IN THIS MANUAL. DO NOT USE A NONPOWERED PROBE–TYPE TESTER. INSTRUCTIONS IN THIS MANUAL MUST BE FOLLOWED CAREFULLY, OTHERWISE PERSONAL INJURY MAY RESULT.

Diagnostic Trouble Codes

The "SRS Diagnostic System Check" must always be the starting point of any SRS diagnosis. The "SRS Diagnostic System Check" checks for proper "AIR BAG" warning lamp operation and checks for SRS diagnostic trouble codes using the scan tool.

1. Current diagnostic trouble codes – Malfunctions that are presently being detected. Current diagnostic trouble codes are stored in RAM (Random Access Memory).
2. History diagnostic trouble codes – All malfunctions detected since the last time the history memory was cleared. History diagnostic trouble codes are stored in EEPROM.

Scan Tool Diagnostics

A scan tool is used to read current and history diagnostic trouble codes and to clear all diagnostic trouble codes after a repair is completed. The scan tool must be updated to communicate with the SRS through a replaceable cartridge before it can be used for SRS diagnostics. To use the scan tool, connect it to the data link connector and turn the ignition switch "ON". The scan tool reads serial data from the SDM "Serial Data" line terminal "24" to the data link connector terminal "9".

Use Of Special Tools

WARNING: TO AVOID DEPLOYMENT WHEN TROUBLESHOOTING THE SRS, DO NOT USE ELECTRICAL TEST EQUIPMENT SUCH AS A BATTERY–POWERED OR AC–POWERED VOLTMETER, OHMMETER, ETC, OR ANY TYPE OF ELECTRICAL EQUIPMENT OTHER THAN THAT SPECIFIED IN THIS MANUAL. DO NOT USE A NON POWERED PROBE–TYPE TESTER. INSTRUCTIONS IN THIS MANUAL MUST BE FOLLOWED CAREFULLY, OTHERWISE PERSONAL INJURY MAY RESULT. YOU SHOULD BE FAMILIAR WITH THE TOOLS LISTED IN THIS SECTION UNDER THE HANDLING SRS SPECIAL TOOLS.

You should be able to measure voltage and resistance. You should be familiar with proper use of a scan tool such as the Tech 2 Diagnostic Computer, SRS Driver/Passenger Load Tool 5–8840–2421–0, Connector Test Adapter Kit 5–8840–0385–0, and the DVM (Digital Multimeter) 5–8840–0285–0.

SRS Connector Body Face Views

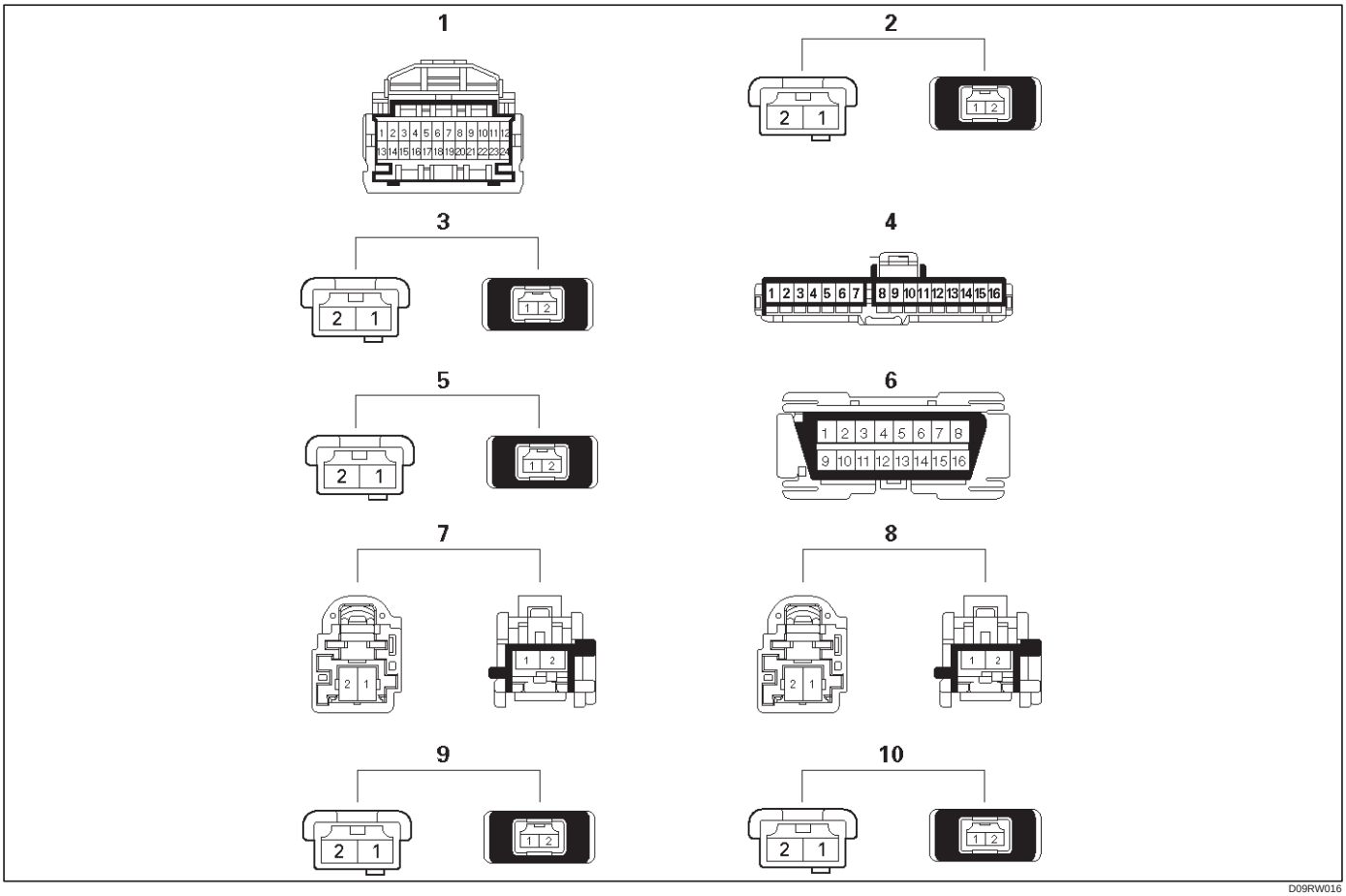

Legend

(1) SDM
(2) Driver Air Bag Assembly
(3) Passenger Air Bag Assembly
(4) “Air Bag” Warning Lamp
(5) SRS Coil Assembly
(6) DLC
(7) Connector between Chassis Harness and Pretensioner Harness for Driver Seat Belt (If so equipped)
(8) Connector between Chassis Harness and Pretensioner Harness for Passenger Seat Belt (If so equipped)
(9) Connector between Pretensioner Harness and driver side Pretensioner Seat Belt (If so equipped)
(10) Connector between Pretensioner Harness and passenger side Pretensioner Seat Belt (If so equipped)

Repairs And Inspections Required After An Accident

NOTE: If any SRS components are damaged, they must be replaced. If SRS component mounting points are damaged, they must be replaced.

- Never use SRS parts from another vehicle. This does not include remanufactured parts purchased from an authorized dealer; they may be used for SRS repairs.
- Do not attempt to service the SDM, the SRS coil assembly, or the air bag assembly. Service of these items is by replacement only.
- Verify the part number of replacement air bag assembly.

CAUTION: Never use the air bag assembly from another vehicle. Use only the air bag assembly for Trooper.

CAUTION: Proper operation of the sensors and supplemental restraint system (SRS) requires that any repairs to the vehicle structure return it to the original production configuration. Deployment requires, at a minimum, replacement of the SDM, air bag assembly and dimensional inspection of the steering column. Any visible damage to the SDM mounting bracket (s) requires replacement, and the steering column must be dimensionally inspected, whether deployment occurred or not.

Accident With Deployment – Component Replacement And Inspections

Certain SRS components must be replaced or inspected for damage after a frontal crash involving air bag deployment. Those components are:

- Air bag assembly
- SDM

CAUTION: Refer to "SDM Replacement Guidelines" below for important information on SDM replacement in both deployment and non deployment crashes.

- SRS coil assembly — Inspect wiring and connector for any signs of scorching, melting, or damage due to excessive heat. Replace if damaged. Refer to section "SRS Coil Assembly" in this manual.

Accident With or Without Deployment – Component Inspection

Certain SRS system components and rotation parts must be inspected after any crash, whether the air bag deployed or not. Those components are:

- Steering column — Refer to Inspection Required "After an Accident" in this manual.
- Knee bolsters and mounting points — Inspect for any distortion, bending, cracking, or other damage.
- I/P steering column reinforcement plate — Inspect for any distortion, bending, cracking, or other damage.
- I/P braces — Inspect for any distortion, bending, cracking, or other damage.
- Seat belts and mounting points — Refer to "Seat Belts" in Section "Seat Belt" of this workshop manual.

SDM Replacement Guidelines

SDM replacement policy requires replacement of SDM, after crash involving air bag deployment when "SRS Warning Lamp" turn "ON", "SRS Diagnosis" should be done according to Section "Restraint Control System."
If accident without deployment air bag, it is not necessary replacement of SDM when do not indicate to replace the SDM by scan tool after SRS system check.

Wiring Damage

If any SRS wire harness is damaged, it should be replaced. Don't repair SRS harness. It is replace only.

SRS Connector (Plastic Body And Terminal Metal Pin) Damage

If any connector or terminal in the SRS wire harness (except pigtails) is damaged, it should be replaced.

SRS Wire Pigtail Damage

If the wiring pigtail (a wire or wires attached directly to the device, not by a connector) is damaged, the entire component (with pigtail) must be replaced. Examples of "pigtail" components are the driver air bag assembly, the passenger air bag assembly, and the SRS coil assembly.

On–Vehicle Service

Service Precaution

WARNING: WHEN PERFORMING SERVICE ON OR AROUND SRS COMPONENTS OR SRS WIRING, FOLLOW THE PROCEDURES LISTED BELOW TO TEMPORARILY DISABLE THE SRS. FAILURE TO FOLLOW PROCEDURES COULD RESULT IN POSSIBLE AIR BAG DEPLOYMENT, PERSONAL INJURY OR OTHERWISE UNNEEDED SRS REPAIRS.

The SDM in Driver–Passenger SRS can maintain sufficient voltage to cause a deployment for up to 15 seconds after the ignition switch is turned "OFF," the battery is disconnected, or the fuse powering the SDM is removed.
Many of the service procedures require removal of the "C–21" fuse, and disconnection of the air bag assembly from the deployment loop to avoid an accidental deployment. If the air bag assembly is disconnected from the deployment loop as noted in the "Disabling the SRS" procedure that follows, service can begin immediately without waiting for the 15 second time period to expire.

Disabling The SRS

Removal

Turn the ignition switch to "LOCK" and remove key.

1. Remove SRS fuse C–21, from left dash side lower fuse block or disconnect battery.
2. Disconnect yellow 2–pin connector at the base of steering column.
3. Remove glove box assembly, refer to "Passenger Air Bag Assembly Replacement" in this manual.
4. Disconnect yellow 2–pin connector behind the glove box assembly.

CAUTION: With the "C–21" fuse removed and ignition switch "ON", the "AIR BAG" warning lamp will be "ON". This is normal operation and does not indicate an SRS malfunction.

Enabling The SRS

Installation

CAUTION: Never use the air bag assembly from another vehicle. Use only the air bag assembly for Trooper.

Turn ignition switch to "LOCK" and remove key.

1. Connect yellow 2–pin connector passenger air bag assembly.
2. Install glove box assembly. Refer to "Passenger air bag assembly replacement" in this manual.
3. Connect yellow 2–pin connector at the base of steering column.
4. Install "AIR BAG" fuse C–21 to left dash side lower fuse block or connect battery.

Turn ignition switch to "ON" and verify that the "AIR BAG" warning lamp turn on 3.5 seconds and then turns "OFF." If it does not operate as described, perform the "SRS Diagnostic System Check" in this manual.

Handling / Installation / Diagnosis

1. Air bag assembly should not be subjected to temperatures above 93˚C (200˚F).
2. Air bag assembly, and SDM should not be used if they have been dropped from a height of 100 centimeters (3.28 feet) or more.
3. When a SDM is replaced, it must be oriented with the arrow on the sensor pointing toward the front of the vehicle. It is very important for the SDM to be located flat on the mounting surface, parallel to the vehicle datum line. It is important that the SDM mounting surface is free of any dirt or other foreign material.
4. Do not apply power to the SRS unless all components are connected or a diagnostic chart requests it, as this will set a diagnostic trouble code.
5. The “SRS Diagnostic System Check” must be the starting point of any SRS diagnostics. The “SRS Diagnostic System Check” will verify proper “AIR BAG” warning lamp operation and will lead you to the correct chart to diagnose any SRS malfunctions. Bypassing these procedures may result in extended diagnostic time, incorrect diagnosis, and incorrect parts replacement.

Air Bag Assembly Handling / Shipping / Scrapping

Live (Undeployed) Air Bag Assembly

Special care is necessary when handling and storing a live (undeployed) air bag assembly. The rapid gas generation produced during deployment of the air bag could cause the air bag assembly, or an object in front of the air bag assembly, to be thrown through the air in the unlikely event of an accidental deployment.

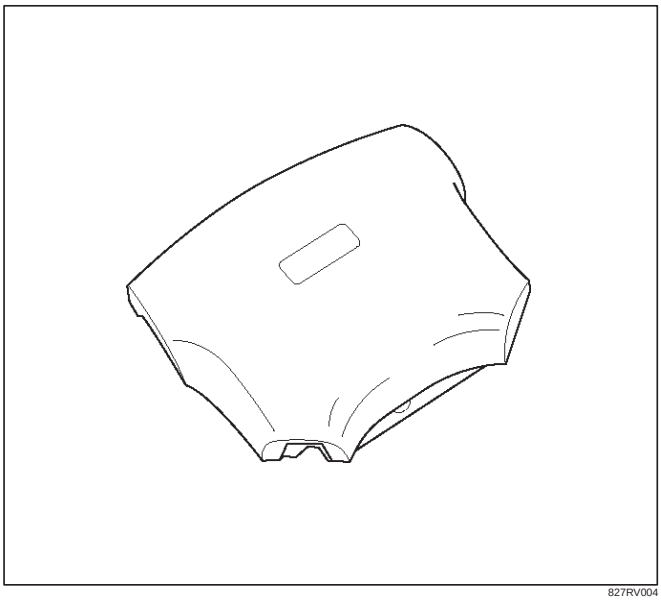

827RV004

WARNING: WHEN CARRYING A LIVE AIR BAG ASSEMBLY, MAKE SURE THE BAG OPENING IS POINTED AWAY FROM YOU. IN CASE OF AN ACCIDENTAL DEPLOYMENT, THE BAG WILL THEN DEPLOY WITH MINIMAL CHANCE OF INJURY. NEVER CARRY THE AIR BAG ASSEMBLY BY THE WIRES OR CONNECTOR ON THE UNDERSIDE OF THE MODULE.

Pretensioner Seat Belt Handling / Shipping / Scrapping.

Live (undeployed) pretensioner seat belt.

Special care is necessary when handling and storing a live (undeployed) pretensioner seat belt.
The rapid gas generation produced during deployment of the pretensioner seat belt (could cause the pretensioner seat belt), or an object around of pretensioner seat belt, to be thrown through the air in the unlikely event of an accidental deployment.

WARNING: WHEN CARRYING A LIVE PRETENSIONER SEAT BELT, MAKE SURE THE PRETENSIONER SEAT BELT CYLINDER IS POINTED AWAY FROM YOU. IN CASE OF AN ACCIDENTAL DEPLOYMENT, THE PRETENSIONER SEAT BELT WILL THEN DEPLOY WITH MINIMAL CHANCE OF INJURY. NEVER CARRY THE PRETENSIONER SEAT BELT BY THE CYLINDER OR WIRES ON THE UNDERSIDE OF THE MODULE.

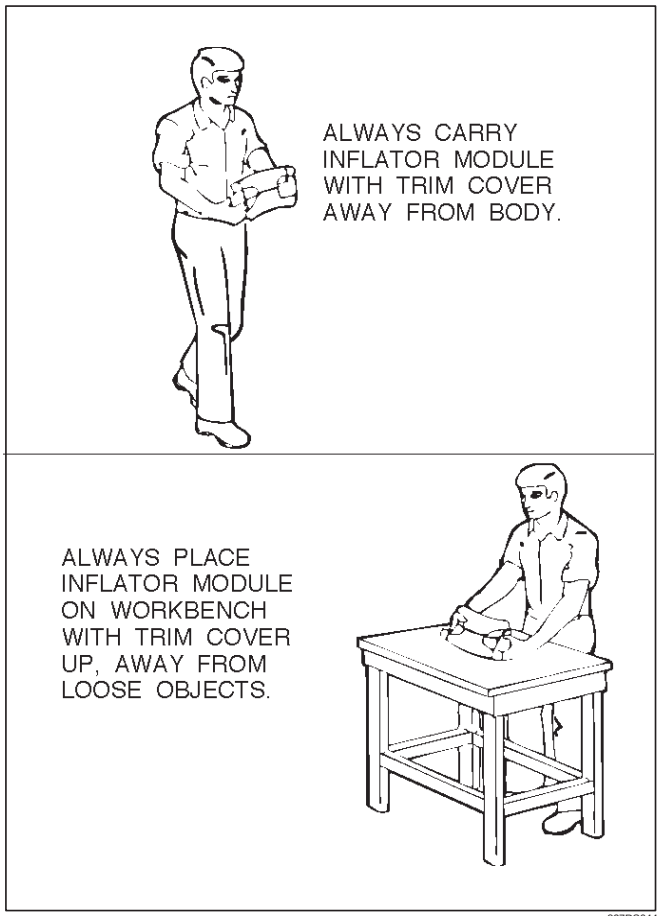

827RS044

Air Bag Assembly and/or Pretensioner Seat Belt Shipping Procedure For Live(Undeployed) Them.

Service personnel should refer to the Service Bulletins for proper SRS composition parts shipping procedures.

Deployed Air Bag Assembly (Driver Side)

"You should wear gloves and glasses. After the air bag assembly has been deployed, the surface of the air bag may contain solid particulate. This solid particulate consists primarily of by products of the chemical reaction, Potassium Chloride and copper metal dust. Compounds of Potassium Borate, Strontium Chloride, Copper Chloride, and Ammonium Chloride may be found in amounts of about 1% (each) of the total particulate."

Deployed Pretensioner Seat Belt.

You should wear gloves and safety glasses. After the pretensioner seat belt has been deployed, the surface of the pretensioner seat belt cylinder may heating up.

Air Bag Assembly and/or Pretensioner Seat Belt Scrapping Procedure.

During the cause of vehicle's useful life, certain situations may arise which will necessitate the disposal of a live air bag and/or pretensioner seat belt. (This information covers proper procedures for disposing of a live air bag assembly and/or pretensioner seat belt.)
Before a live air bag assembly can be dispose off, it must be deployed.
A live air bag assembly and/or pretensioner seat belt must not be disposed of though normal refuse channels.

WARNING: FAILURE TO FOLLOW PROPER SUPPLEMENTAL RESTRAINT SYSTEM (SRS) AIR BAG ASSEMBLY DISPOSAL PROCEDURES CAN RESULT IN AIR BAG DEPLOYMENT WHICH MAY CAUSE PERSONAL INJURY. AN UNDPLOYED AIR BAG ASSEMBLY MUST NOT BE DISPOSED OF THROUGH NORMAL REFUSE CHANNELS. THE UNDEPLOYED AIR BAG ASSEMBLY CONTAINS SUBSTANCES THAT CAN CAUSE SEVERE ILLNESS OR PERSONAL INJURY IF THE SEALED CONTAINER IS DAMAGED DURING DISPOSAL. DISPOSAL IN ANY MANNER INCONSISTENT WITH PROPER PROCEDURES MAY BE A VIOLATION OF LOCAL LAW.

In situations which require deployment of a live air bag assembly, deployment may be accomplished inside or outside the vehicle. The method employed depends upon the final disposition of the particular vehicle, as noted in "Deployment Outside Vehicle" and "Deployment Inside Vehicle" in this section.

Cautions About Air Bag Deployment And Disposal

Failure to follow proper procedures could result in erroneous air bag deployment which may cause personal injury be sure to follow proper procedures.

1. Turn off (Lock) the ignition switch and disconnect the minus terminal of the battery, then start the work 15 or more sec later. (Air bag is designed to work by the back-up power source even if the battery power source is cut off at vehicle collision).
2. Be sure not to disassemble the air bag.
3. Do not give an impact to the air bag and bring the air bag close to magnet. (The air bag could deploy unexpectedly).
4. Place the air bag with its trim cover up.
5. Do not let the air bag deploy directly on the floor. (The air bag may be blown off 2 ~ 3 m (6.5 or 10 feet)).
6. Be sure to install the air bag firmly to a deployment tool (fixing tool).
7. Set a battery 10 m (33 feet) or more away from the air bag.
8. Before disconnecting air bag harness, ground the worker by touching the vehicle outer panel with bare hand.
9. When connecting or disconnecting the harness, do not work just in front of the air bag.
10. As deployment gives rise to big sound, warn the people around against it. Further, try to reduce the sound by covering the steering wheel or tires, and shut the vehicle windows in case of deployment inside the vehicle.
11. As deployment generates smoke, select a well ventilated place. (In case of deployment indoors, avoid deployment just under a fire alarm, smoke sensor, and fluorescent lamps).
12. Be careful not to inhale the smoke after deployment.
13. If part of the vehicle glass is damaged, cover the vehicle with a car cover to prevent the glass from braking at the time of deployment.
14. Do not touch the air bag immediately after deployment, since it remains hot for 30 minutes.
15. Do not water the air bag immediately after deployment.
16. Wear safety glasses and gloves throughout the work and wash the glasses and gloves after the work.
17. Do not reuse the removed air bag for another vehicle. (Deployment characteristic is different with vehicle types).

Deployment Outside Vehicle (Driver Air Bag Assembly)

Deployment outside the vehicle is proper when the vehicle is to be returned to service. This includes, for example, situations in which the vehicle will be returned to useful service after a functionally or cosmetically deficient air bag assembly is replaced. Deployment and disposal of a malfunctioning air bag assembly is, of course, subject to any required retention period.
For deployment of a live (undeployed) air bag assembly outside the vehicle, the deployment procedure must be followed exactly. Always wear safety glasses during this deployment procedure until a deployed air bag assembly is scrapped or until an undeployed air bag assembly is shipped. Before performing the procedures you should be familiar with servicing the SRS and with proper handling of the air bag assembly. Procedures should be read fully before they are performed.
The following procedure requires use of 5–8840–2468–0 SRS deployment harness with appropriate pigtail adapter. Do not attempt procedure without 5–8840–2468–0 adapter.

WARNING: FAILURE TO FOLLOW PROCEDURES IN THE ORDER LISTED MAY RESULT IN PERSONAL INJURY. NEVER CONNECT DEPLOYMENT

HARNESS TO ANY POWER SOURCE BEFORE CONNECTING DEPLOYMENT HARNESS TO THE DRIVER AIR BAG ASSEMBLY. DEPLOYMENT HARNESS SHALL REMAIN SHORTED AND NOT BE CONNECTED TO A POWER SOURCE UNTIL THE AIR BAG IS TO BE DEPLOYED. THE AIR BAG ASSEMBLY WILL IMMEDIATELY DEPLOY THE AIR BAG WHEN A POWER SOURCE IS CONNECTED TO IT. WEAR SAFETY GLASSES THROUGHOUT THIS ENTIRE DEPLOYMENT AND DISPOSAL PROCEDURE.

NOTE: This information applies only to driver air bag assembly . Refer to “Deployment Outside Vehicle (Passenger Air Bag assembly)” in this section for information on passenger air bag assembly scrapping.

1. Turn ignition switch to “LOCK”, remove key.
2. Inspect 5–8840–2468–0 SRS Deployment Harness and appropriate pigtail adapter for damage. If harness or pigtail adapter is damaged, discard and obtain a replacement.
3. Short the two SRS deployment harness leads together by fully seating one banana plug into the other. SRS deployment harness shall remain shorted and not be connected to a power source until the air bag is to be deployed.

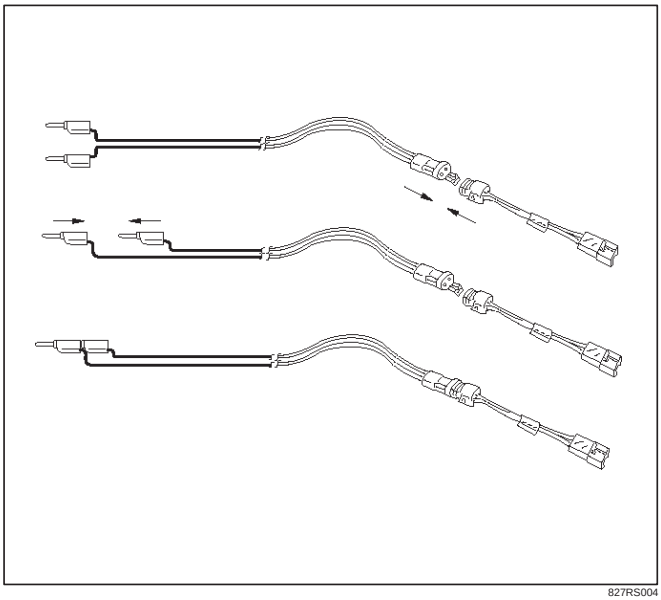

827RS004

4. Connect the appropriate pigtail adapter to the SRS deployment harness.
5. Remove the driver air bag assembly from vehicle. Refer to “Inflator Module Removal” in this manual.

WARNING: WHEN STORING A LIVE AIR BAG ASSEMBLY OR WHEN LEAVING A LIVE AIR BAG ASSEMBLY UNATTENDED ON A BENCH OR OTHER SURFACE, ALWAYS FACE THE AIR BAG AND TRIM COVER UP AND AWAY FROM THE SURFACE. THIS IS NECESSARY SO THAT A FREE SPACE IS PROVIDED TO ALLOW THE AIR BAG TO EXPAND IN THE UNLIKELY EVENT OF ACCIDENTAL DEPLOYMENT. FAILURE TO FOLLOW PROCEDURES MAY RESULT IN PERSONAL INJURY.

6. Place the driver air bag assembly on a work bench or other surface away from all loose or flammable objects with its trim cover facing up, away from the surface.

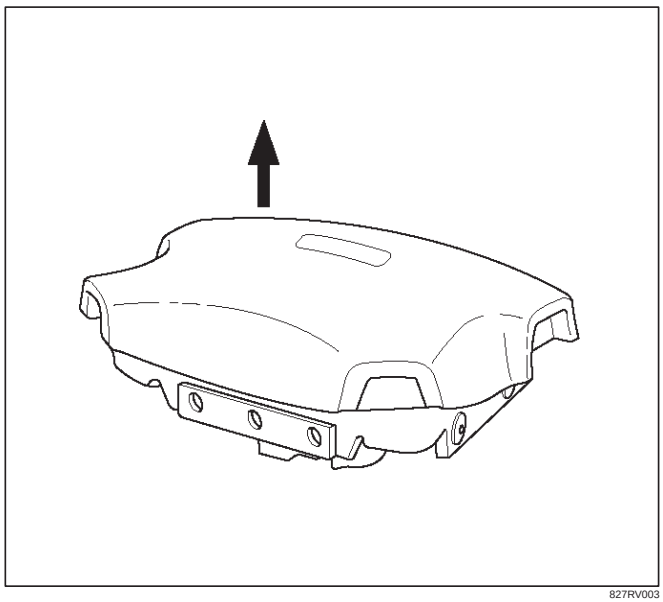

827RV003

7. Clear a space on the ground about 183 cm (six feet) in clearance where the driver air bag assembly is to be deployed. A paved, outdoor location where there is no activity is preferred. If an outdoor location is not available, a space on the shop floor where there is no activity and sufficient ventilation is recommended. Ensure no loose or flammable objects are within the deployment area.

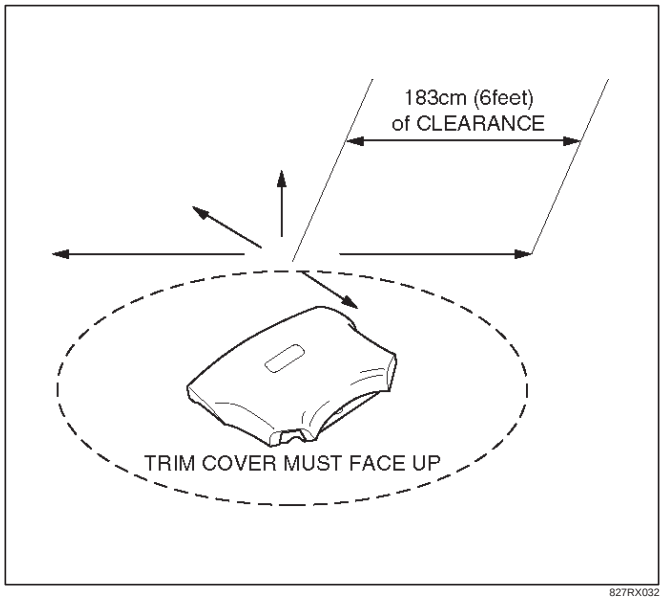

827RX032

8. Place the driver air bag assembly, with its trim cover facing up, on the ground in the space just cleared.
9. Stretch the SRS deployment harness and pigtail adapter from the driver air bag assembly to its full length.

10. Place a power source near the shorted end of the SRS deployment harness. Recommended application: 12 volts minimum, 2 amps minimum. A vehicle battery is suggested.
11. Connect the driver air bag assembly to the pigtail adapter on the SRS deployment harness. Deployment harness shall remain shorted and not be connected to a power source until the air bag is to be deployed. The driver air bag assembly will immediately deploy the air bag when a power source is connected to it.

NOTE: Ensure that the pigtail adapter is firmly seated into the driver air bag assembly connector. Failure to fully seat the connectors may leave the shorting bar located in the driver air bag assembly connector functioning (shorted) and may result in nondeployment of the driver air bag assembly.

12. Verify that the area around the driver air bag assembly is clear of all people and loose or flammable objects.
13. Verify that the driver air bag assembly is resting with its trim cover facing up.
14. Notify all people in the immediate area that you intend to deploy the driver air bag. The deployment will be accompanied by a substantial noise which may startle the uninformed.
15. Separate the two banana plugs on the SRS deployment harness.

NOTE: When the air bag deploys, the driver air bag assembly may jump about 3 m (ten feet) vertically. This is a normal reaction of the driver air bag to the force of the rapid gas expansion inside the air bag.

NOTE: When the air bag deploys, the rapid gas expansion will create a substantial noise. Notify all people in the immediate area that you intend to deploy the driver air bag.

WARNING: DEPLOYMENT HARNESS SHALL REMAIN SHORTED AND NOT BE CONNECTED TO A POWER SOURCE UNTIL THE AIR BAG IS TO BE DEPLOYED. THE AIR BAG ASSEMBLY WILL IMMEDIATELY DEPLOY THE AIR BAG WHEN A POWER SOURCE IS CONNECTED TO IT. CONNECTING THE DEPLOYMENT HARNESS TO THE POWER SOURCE SHOULD ALWAYS BE THE LAST STEP IN THE AIR BAG ASSEMBLY DEPLOYMENT PROCEDURE. FAILURE TO FOLLOW PROCEDURES IN THE ORDER LISTED MAY RESULT IN PERSONAL INJURY.

16. Connect the SRS deployment harness wires to the power source to immediately deploy the driver air bag. Recommended application: 12 volts minimum, 2 amps minimum. A vehicle battery is suggested.
17. Disconnect the SRS deployment harness from the power source.
18. Short the two SRS deployment harness leads together by fully seating one banana plug into the other.
19. In the unlikely event that the driver air bag assembly did not deploy after following these procedures, proceed immediately with Steps 24 through 26. If the driver air bag assembly did deploy, proceed with Steps 20 through 23.
20. Put on a pair of shop gloves and safety glasses to protect your hands and eyes from possible irritation and heat when handling the deployed driver air bag assembly. After the air bag assembly has been deployed, the surface of the air bag may contain a powdery residue. This solid particulate consists primarily of by products of the chemical reaction, Potassium Chloride and copper metal dust. Compounds of Potassium Borate, Strontium Chloride, Copper Chloride, and Ammonium Chloride may be found in amounts of about 1 % (each) of the total particulate.

WARNING: SAFETY PRECAUTIONS MUST BE OBSERVED WHEN HANDING A DEPLOYED AIR BAG ASSEMBLY. AFTER DEPLOYMENT, THE METAL SURFACES OF THE AIR BAG ASSEMBLY WILL BE VERY HOT. ALLOW THE INFLATOR MODULE TO COOL BEFORE HANDLING ANY METAL PORTION OF IT. DO NOT PLACE THE DEPLOYED AIR BAG ASSEMBLY NEAR ANY FLAMMABLE OBJECTS. FAILURE TO FOLLOW PROCEDURES MAY RESULT IN FIRE OR PERSONAL INJURY.

AFTER A DRIVER AIR BAG ASSEMBLY HAS BEEN DEPLOYED, THE METAL CANISTER AND SURROUNDING AREAS OF THE DRIVER AIR BAG ASSEMBLY WILL BE VERY HOT. DO NOT TOUCH THE METAL AREAS OF THE DRIVER AIR BAG ASSEMBLY FOR ABOUT TEN MINUTES AFTER DEPLOYMENT. IF THE DEPLOYED DRIVER AIR BAG ASSEMBLY MUST BE MOVED BEFORE IT IS COOL, WEAR GLOVES AND HANDLE BY THE AIR BAG OR TRIM COVER.

21. Disconnect the pigtail adapter from the driver air bag assembly as soon after deployment as possible. This will prevent damage to the pigtail adapter or SRS deployment harness due to possible contact with the hot driver air bag assembly canister. The pigtail adapter can be reused. They should, however, be inspected for damage after each deployment and replaced if necessary.
22. Dispose of the deployed driver air bag assembly through normal refuse channels after it has cooled for at least 30 minutes.
23. Wash your hands with mild soap and water afterward.

NOTE: The remaining steps are to be followed in the unlikely event that the driver air bag assembly did not deploy after following these procedures.

24. Ensure that the SRS deployment harness has been disconnected from the power source and that its two banana plugs have been shorted together by fully seating one banana plug into the other.
25. Disconnect the pigtail adapter from the driver air bag assembly.

WARNING: WHEN STORING A LIVE AIR BAG ASSEMBLY OR WHEN LEAVING A LIVE INFLATOR MODULE UNATTENDED ON A BENCH OR OTHER

SURFACE, ALWAYS FACE THE BAG AND TRIM COVER UP AND AWAY FROM THE SURFACE. THIS IS NECESSARY SO THAT A FREE SPACE IS PROVIDED TO ALLOW THE AIR BAG TO EXPAND IN THE UNLIKELY EVENT OF ACCIDENTAL DEPLOYMENT. FAILURE TO FOLLOW PROCEDURES MAY RESULT IN PERSONAL INJURY.

26. Temporarily store the driver air bag assembly with its trim cover facing up, away from the surface upon which it rests.

Deployment Outside Vehicle (Passenger Air Bag Assembly)

WARNING: FAILURE TO FOLLOW PROPER SRS AIR BAG ASSEMBLY DISPOSAL PROCEDURES CAN RESULT IN AIR BAG DEPLOYMENT WHICH MAY CAUSE PERSONAL INJURY. UNDEPLOYED AIR BAG ASSEMBLIES MUST NOT BE DISPOSED OF THROUGH NORMAL REFUSE CHANNELS. THE UNDEPLOYED AIR BAG ASSEMBLY CONTAINS SUBSTANCES THAT CAN CAUSE SEVERE ILLNESS OR PERSONAL INJURY IF THE SEALED CONTAINER IS DAMAGED DURING DISPOSAL. DISPOSAL IN ANY MANNER INCONSISTENT WITH PROPER PROCEDURES MAY BE A VIOLATION OF FEDERAL, STATE AND/OR LOCAL LAWS.

Deployment out of the vehicle is proper when the vehicle is to be returned to service. This includes, for example, situations in which a functionally or cosmetically deficient air bag assembly is replaced. Deployment and disposal of an air bag assembly is, of course, subject to any required retention period.

For deployment of a live air bag assembly out of the vehicle, the deployment procedure must be followed exactly. Always wear safety glasses during this deployment procedure until the deployed air bag assembly is scrapped. Before performing the procedures, you should be familiar with servicing the SRS system and with proper handling of the air bag assembly. Procedures should be read fully before they are performed.

The following procedure requires use of 5–8840–2468–0 SRS Deployment Harness with the appropriate pigtail adapter. The procedure also requires the use of 5–8840–2420–0 Passenger Side SRS Module Deployment Fixture. Do not attempt this procedure without 5–8840–2468–0 and adapter, and 5–8840–2420–0.

WARNING: FAILURE TO FOLLOW PROCEDURES IN THE ORDER LISTED MAY RESULT IN PERSONAL INJURY. NEVER CONNECT DEPLOYMENT HARNESS TO ANY POWER SOURCE BEFORE CONNECTING DEPLOYMENT HARNESS TO THE AIR BAG ASSEMBLY. DEPLOYMENT HARNESS SHALL REMAIN SHORTED AND NOT BE CONNECTED TO A POWER SOURCE UNTIL THE AIR BAG IS TO BE DEPLOYED. THE AIR BAG ASSEMBLY WILL IMMEDIATELY DEPLOY THE AIR BAG WHEN A POWER SOURCE IS CONNECTED TO IT. WEAR SAFETY GLASSES THROUGHOUT THIS ENTIRE DEPLOYMENT AND DISPOSAL PROCEDURE.

NOTE: This information applies only to passenger air bag assembly. Information for disposing of a live driver air bag assembly can be found in “Deployment Outside Vehicle” (Driver Air Bag Assembly) in this section.

1. Turn ignition switch to “LOCK” remove key, and put on safety glasses.
2. Inspect 5–8840–2468–0 SRS Deployment Harness and appropriate pigtail adapter for damage. If harness or pigtail is damaged, discard and obtain a replacement.
3. Short the two SRS Deployment Harness leads together by fully seating one banana plug into the other. The SRS Deployment Harness shall remain shorted and not be connected to a power source until the air bag is to be deployed.

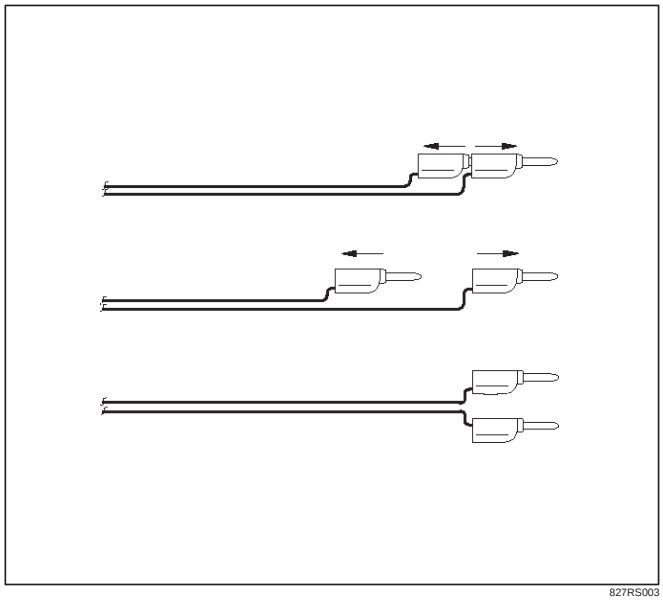

827RS003

4. Connect the appropriate pigtail adapter to the SRS Deployment Harness

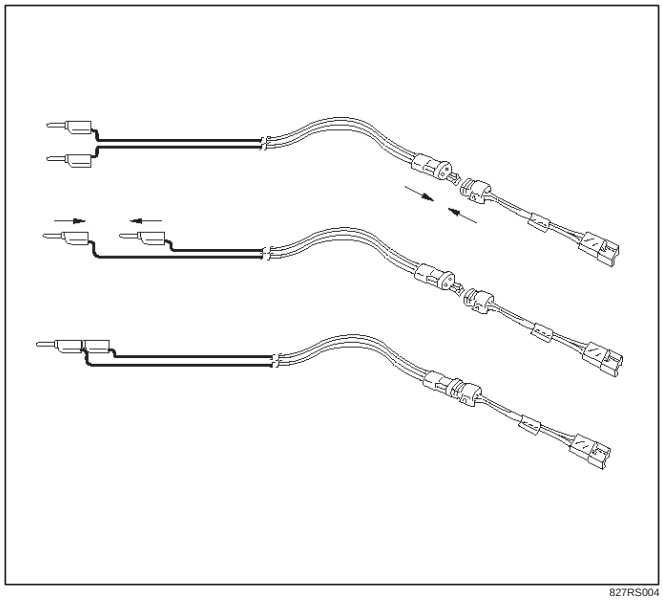

827RS004

5. Remove passenger air bag assembly from vehicle. Refer to “Passenger Air Bag Assembly Removal ” in this Section 9J–3.
6. Clear a space on the ground approximately 183 cm (six feet) in clearance where the fixture with attached air bag assembly is to be placed for deployment. A paved outdoor location where there is no activity is preferred. If an outdoor location is not available, a space on the shop floor where is no activity and sufficient ventilation is recommended. Ensure that no loose or flammable objects are within the deployment area.
7. Place the 5–8840–2420–0 on the bench vice. This is necessary to provide sufficient stabilization of the fixture during deployment.
8. Attach the passenger air bag assembly in the 5–8840–2420–0. An air bag assembly must be mounted such that the bag will deploy upward. SECURELY HAND–TIGHTEN ALL FASTENERS PRIOR TO DEPLOYMENT.

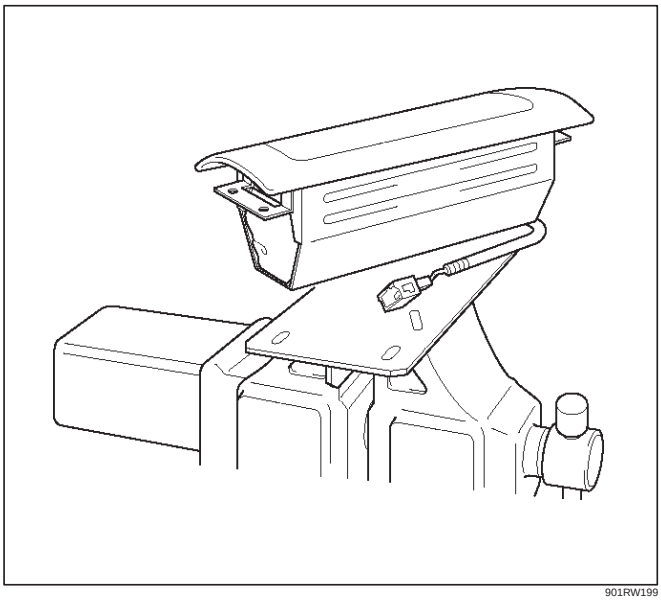

901RW199

9. Stretch the SRS Deployment Harness and pigtail adapter from the air bag assembly to its full length.
10. Place a power source near the shorted end of the SRS deployment harness. (Recommended application: 12 volts minimum, 2 amps minimum. A vehicle battery is suggested.)
11. Connect the air bag assembly to the pigtail adapter on the SRS deployment harness. The SRS Deployment Harness shall remain shorted and not be connected to a power source until the air bag is to be deployed. The air bag assembly will immediately deploy the air bag when a power source is connected to it.

NOTE: Ensure that the pigtail adapter is firmly seated into the air bag assembly connector. Failure to fully seat the connectors may leave the shorting bar located in the air bag assembly connector functioning (shorting the deployment circuit) and may result in nondeployment of the air bag assembly.

12. Verify that the area around the passenger air bag assembly is clear of all people and loose or flammable objects.
13. Verify that the passenger air bag assembly is firmly and properly in 5–8840–2420–0.
14. Notify all people in the immediate area of your intention to deploy the passenger air bag assembly. The deployment will be accompanied by a substantial noise which may startle the uninformed.
15. Separate the two banana plugs on the SRS deployment harness.

NOTE: When air bag deploys, the rapid gas expansion will create a substantial noise. Notify all people in the immediate area that you intend to deploy the air bag assembly.

WARNING: DEPLOYMENT HARNESS SHALL REMAIN SHORTED AND NOT BE CONNECTED TO A POWER SOURCE UNTIL THE AIR BAG IS TO BE DEPLOYED. THE AIR BAG ASSEMBLY WILL IMMEDIATELY DEPLOY THE AIR BAG WHEN A POWER SOURCE IS CONNECTED TO IT. CONNECTING THE DEPLOYMENT HARNESS TO THE POWER SOURCE SHOULD ALWAYS BE THE LAST STEP IN THE AIR BAG ASSEMBLY DEPLOYMENT PROCEDURE. FAILURE TO FOLLOW PROCEDURES IN THE ORDER LISTED MAY RESULT IN PERSONAL INJURY.

16. Connect the SRS deployment harness wires to the power source to immediately deploy the air bag assembly. Recommended application : 12 volts minimum, 2 amps minimum. A vehicle battery is suggested.
17. Disconnect the SRS deployment harness from the power source.
18. Short the two SRS deployment harness leads together by fully seating one banana plug into the other.
19. In the unlikely event that the passenger air bag assembly did not deploy after following these procedures, proceed immediately with Steps 24 through 26. If the passenger air bag assembly deployed as intended, proceed with Steps 20 through 23.
20. Put on a pair of shop gloves and safety glasses to protect your hands and eyes from possible irritation and heat when handling the deployed air bag assembly.

    After the air bag assembly has been deployed, the surface of the air bag may contain a powdery residue. This powder consists primarily of cornstarch (used to lubricate the bag as it inflates) and by products of the chemical reaction. Sodium hydroxide dust (similar to lye soap) is produced as a by product of the deployment reaction. The sodium hydroxide then quickly reacts with atmospheric moisture and is converted to sodium carbonate and sodium bicarbonate (baking soda). Therefore, it is unlikely that sodium hydroxide will be present after deployment.

WARNING: SAFETY PRECAUTIONS MUST BE OBSERVED WHEN HANDLING A DEPLOYED AIR BAG ASSEMBLY. AFTER DEPLOYMENT, THE METAL SURFACES OF THE AIR BAG ASSEMBLY WILL BE HOT. ALLOW THE AIR BAG ASSEMBLY TO

COOL BEFORE HANDLING ANY METAL PORTION OF IT. DO NOT PLACE THE DEPLOYED INFLATOR MODULE NEAR ANY FLAMMABLE OBJECTS. FAILURE TO FOLLOW PROCEDURES MAY RESULT IN FIRE OR PERSONAL INJURY. AFTER AN AIR BAG ASSEMBLY HAS BEEN DEPLOYED, THE METAL CANISTER AND SURROUNDING AREAS OF THE AIR BAG ASSEMBLY WILL BE HOT. DO NOT TOUCH THE METAL AREAS OF THE AIR BAG ASSEMBLY FOR ABOUT THIRTY MINUTES AFTER DEPLOYMENT. IF THE DEPLOYED AIR BAG ASSEMBLY MUST BE MOVED BEFORE IT IS COOL, WEAR GLOVES AND HANDLE BY THE AIR BAG ITSELF.

21. Disconnect the pigtail adapter from the air bag assembly as soon after deployment as possible to avoid damage to the pigtail adapter or SRS deployment harness from contacting the hot air bag assembly canister. The pigtail adapter and SRS deployment harness are designed to be reused. They should, however, be inspected for damage after each deployment and replaced if necessary.
22. Dispose of the deployed air bag assembly through normal refuse channels after it has cooled for at least 30 minutes.
23. Wash your hands with mild soap and water afterward.

NOTE: The remaining steps are to be followed in the unlikely event that the air bag assembly did not deploy after following the above procedures.

24. Ensure that the SRS deployment harness has been disconnected from the power source and that its two banana plugs have been shorted together by fully seating one banana plug into the other.
25. Disconnect the pigtail adapter from the air bag assembly.

WARNING: WHEN STORING A LIVE AIR BAG ASSEMBLY OR WHEN LEAVING A LIVE AIR BAG ASSEMBLY UNATTENDED ON A BENCH OR OTHER SURFACE, ALWAYS FACE THE BAG UP AND AWAY FROM THE SURFACE. THIS IS NECESSARY SO THAT A FREE SPACE IS PROVIDED TO ALLOW THE AIR BAG TO EXPAND IN THE UNLIKELY EVENT OF ACCIDENTAL DEPLOYMENT. FAILURE TO FOLLOW PROCEDURES MAY RESULT IN PERSONAL INJURY.

26. Temporarily store the air bag assembly with the bag facing up, away from the surface upon which it rests.

Deployment Outside Vehicle (Fixing Air Bag on Tire)

Read and understand the items of “CAUTIONS ABOUT AIR BAG DEPLOYMENT AND DISPOSAL PROCEDURES” and “Usage of Deployment Tool” for safe deployment of air bag.

1. Remove air bag assembly from vehicle. Refer to air bag assembly Removal “in this section”.
2. Inspect J–41434 Supplemental Restraint System (SRS) Deployment Harness and appropriate pigtail adapter for damage. If harness or pigtail is damaged, discard and obtain a replacement.
3. Extend double pole extension cord to a position far away 10 m (33 feet) from the air bag assembly.
4. Place a power source near the extended end of SRS air bag deployment harness. (Use of 12V battery is recommended).

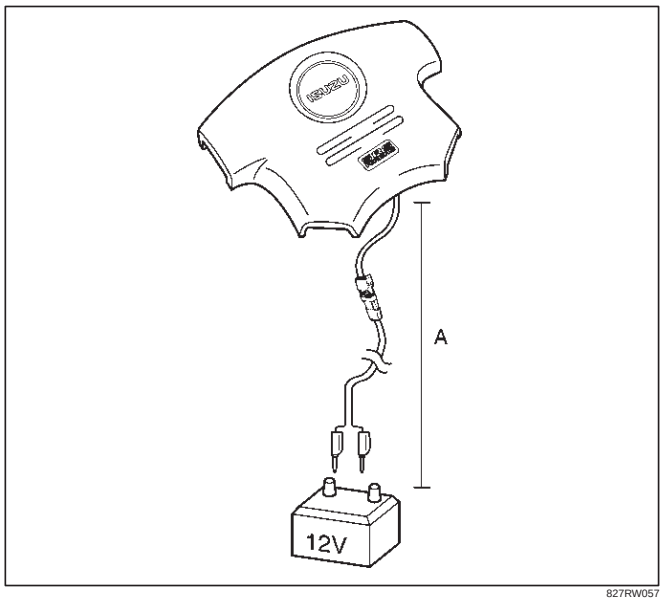

827RW057

Legend

(A) 10 m (33 feet) or more

5. Insert one of the banana plugs into the other banana plug to short the two SRS air bag deployment harness. Do not the harness to a power source until deployment.

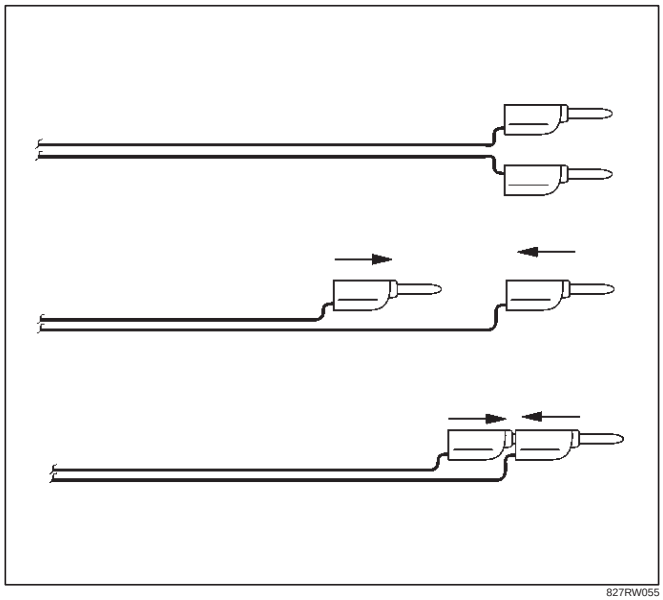

827RW055

6. Prepare four 15 inch or larger tires without wheel and two same size tires with wheels.

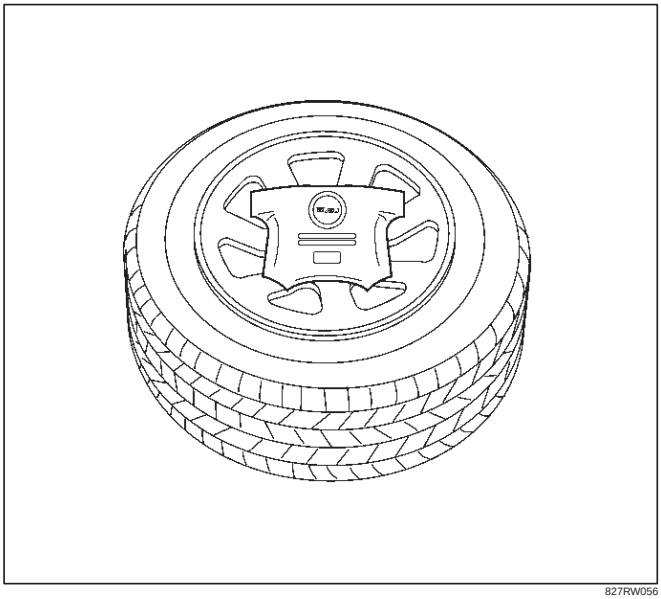

827RW056

7. How to fix Driver air bag.
   1. Fix the air bag with its trim cover up on a tire with a wheel using an automobile use wire harness, (core size: 0.05 inch) or a wire trebly at two or more points.
   2. Connect SRS air bag assembly to the double pole extension cord of the air bag deployment harness.

      Do not connect the deployment harness to a power source until air bag deployment.
      (If connected the SRS air bag assembly deploys immediately)

NOTE: Ensure that the pigtail adapter is firmly seated into the air bag assembly connector. Failure to fully seat the connectors may leave the shorting bar located in the air bag assembly connector functioning (shorting the deployment circuit) and may result in non deployment of the air bag assembly.

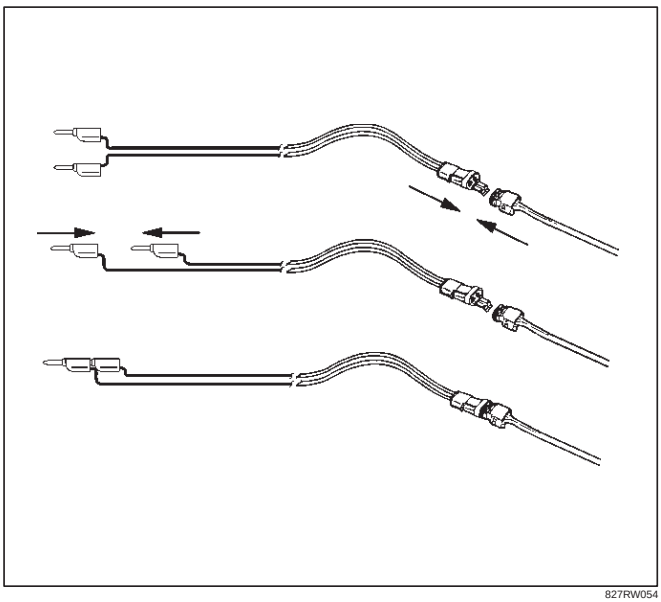

827RW054

3. Place three tires without wheel on the tire on which air bag is fixed and a tire with a wheel on top.

   Bind the five tires with a rope so that the tires may not collapse.

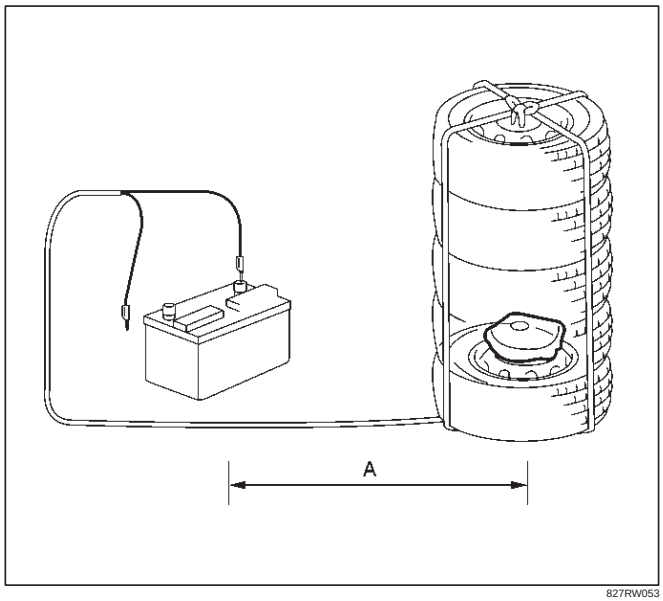

827RW053

Legend

(A) 10 m (33 feet) or more

8. How to fix Passenger air bag.
   1. Fix the air bag with its trim cover side fixing the center of a tire without a wheel using an automobile use wire harness, (core size: 0.05 inch) or a wire trebly at two or more points.

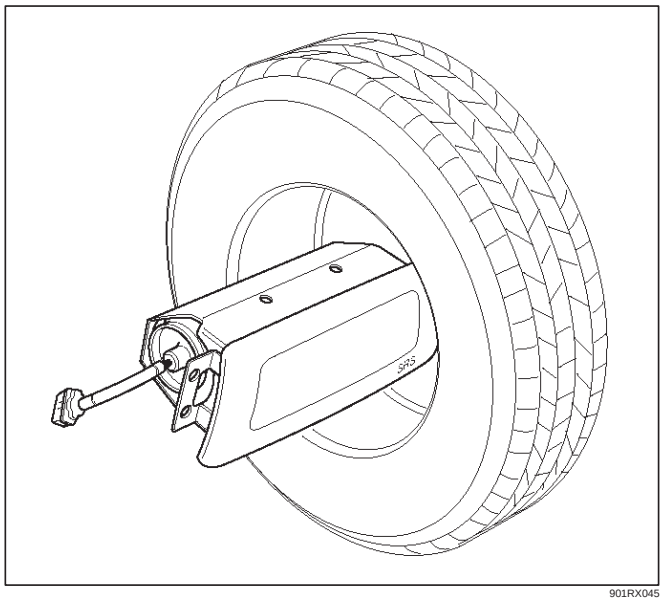

901RX045

   2. Connect Supplemental Restraint System (SRS) air bag assembly to the deployment harness double pole extension cord end. Be sure not to connect the deployment harness to a power source. (If connected the SRS air bag assembly deploys immediately).

NOTE: Ensure that the pigtail adapter is firmly seated into the air bag assembly connector. Failure to fully seat the connectors may leave the shorting bar located in the air bag assembly connector functioning (shorting the deployment circuit) and may result in non deployment of the air bag assembly.

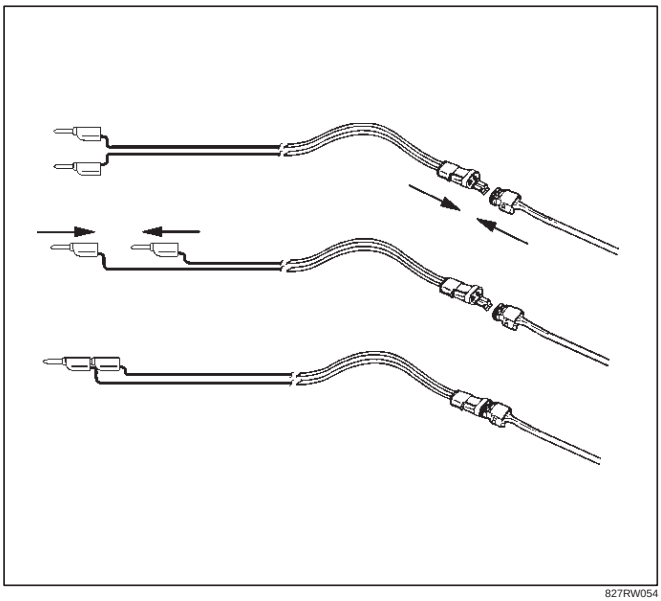

827RW054

3. Put a tire without wheel on another, put the tire on which the air bag is fixing, put a tire without a wheel, and finally put a tire with a wheel on top.

   Bind the tires with a rope so that the tires pile may not collapse.

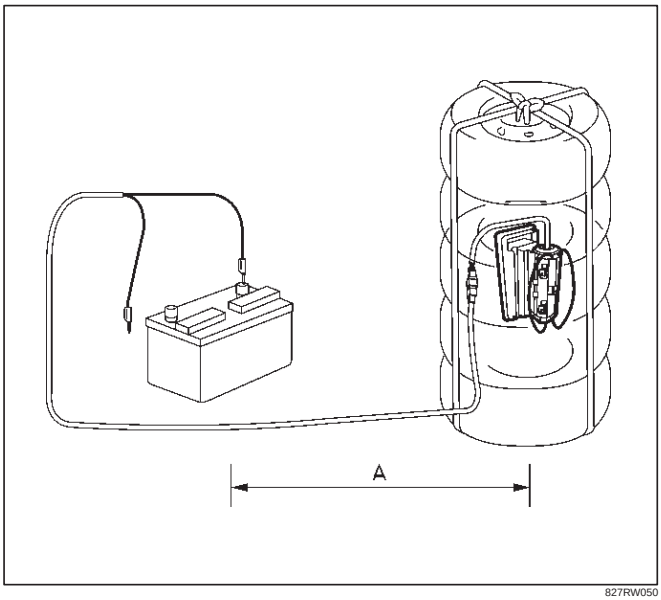

827RW050

Legend

(A) 10 m (33 feet) or more

9. Notify all people in the immediate area of your intention to deploy the passenger air bag assembly. The deployment will be accompanied by a substantial noise which may startle the uninformed.

WARNING: DEPLOYED HARNESS SHALL REMAIN SHORTED AND NOT BE CONNECTED TO A POWER SOURCE UNTIL THE AIR BAG IS TO BE DEPLOYED. THE AIR BAG ASSEMBLY WILL IMMEDIATELY DEPLOY THE AIR BAG WHEN A CONNECTING THE DEPLOYMENT HARNESS TO THE POWER SOURCE SHOULD ALWAYS BE THE LAST STEP IN THE AIR BAG ASSEMBLY DEPLOYMENT PROCEDURE. FAILURE TO FOLLOW PROCEDURES IN THE ORDER LISTED MAY RESULT IN PERSONAL INJURY.

10. Connect the Supplemental Restraint System (SRS) deployment harness wires to the power source to immediately deploy the air bag assembly. Recommended application : 12 volts minimum, 2 amps minimum. A vehicle battery is suggested.

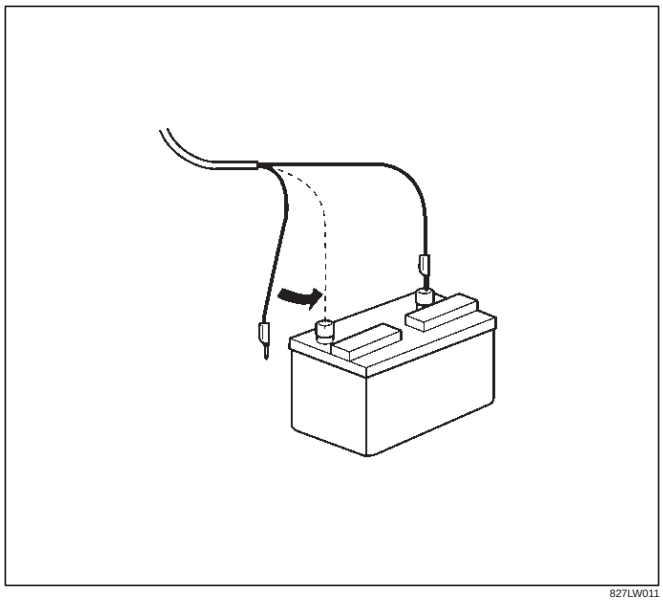

827LW011

WARNING: SAFETY PRECAUTIONS MUST BE OBSERVED WHEN HANDING A DEPLOYED AIR BAG ASSEMBLY. AFTER DEPLOYMENT, THE METAL SURFACES OF THE AIR BAG ASSEMBLY WILL BE VERY HOT. ALLOW THE AIR BAG ASSEMBLY TO COOL BEFORE HANDLING ANY METAL PORTION OF IT. DO NOT PLACE THE DEPLOYED INFLATOR MODULE NEAR ANY FLAMMABLE OBJECTS. FAILURE TO FOLLOW PROCEDURES MAY RESULT IN FIRE OR PERSONAL INJURY. AFTER AN AIR BAG ASSEMBLY HAS BEEN DEPLOYED, THE METAL CANISTER AND SURROUNDING AREAS OF THE AIR BAG ASSEMBLY WILL BE HOT. DO NOT TOUCH THE METAL AREAS OF THE AIR BAG ASSEMBLY FOR ABOUT THIRTY MINUTES AFTER DEPLOYMENT. IF THE DEPLOYED AIR BAG ASSEMBLY MUST BE MOVED BEFORE IT IS COOL, WEAR GLOVES AND HANDLE BY THE AIR BAG IT SELF.

11. Disconnect the pigtail adapter from the air bag assembly as soon after deployment as possible to avoid damage to the pigtail adapter or SRS deployment harness from contacting the hot air bag assembly canister. The pigtail adapter and SRS deployment harness are designed to be reused. They should, however, be inspected for damage after each deployment and replaced if necessary.
12. Dispose of the deployed air bag assembly through normal refuse channels after it has cooled for at least 30 minutes.

13. Wash your hands with mild soap and water afterward.

NOTE: The remaining steps are to be followed in the unlikely event that the air bag assembly did not deploy after following the above procedures.

14. Ensure that the SRS deployment harness has been disconnected from the power source and that its two banana plugs have been shorted together by fully seating one banana plug into the other.

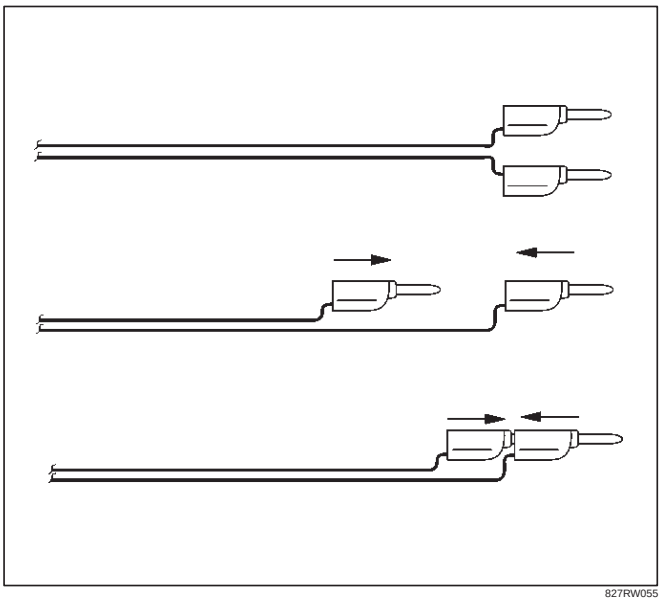

827RW055

15. Disconnect the pigtail adapter from the air bag assembly.

WARNING: WHEN STORING A LIVE AIR BAG ASSEMBLY OR WHEN LEAVING A LIVE AIR BAG ASSEMBLY UNATTENDED ON A BENCH OR OTHER SURFACE, ALWAYS FACE THE BAG UP AND AWAY FROM THE SURFACE. THIS IS NECESSARY SO THAT A FREE SPACE IS PROVIDED TO ALLOW THE AIR BAG TO EXPAND IN THE UNLIKELY EVENT OF ACCIDENTAL DEPLOYMENT. FAILURE TO FOLLOW PROCEDURES MAY RESULT IN PERSONAL INJURY.

16. Temporarily store the air bag assembly with the bag facing up, away from the surface upon which it rests.

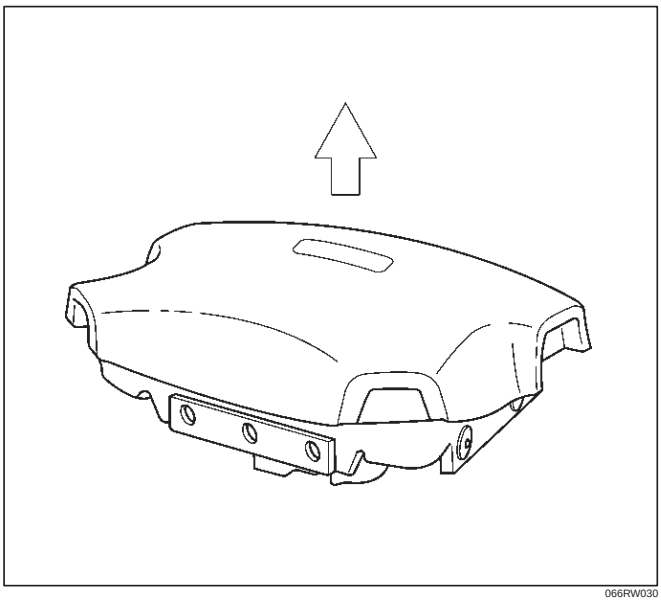

066RW030

Deployment Inside Vehicle (Vehicle Scrapping Procedure)

Deployment inside vehicle is proper when the vehicle is to be destroyed or salvaged for component parts. This includes, but is not limited to, the following situations:

1. The vehicle has completed its useful life.
2. The vehicle has been damaged beyond repair in a nondeployment type accident.
3. The vehicle has been stripped or damaged beyond repair in a theft.
4. The vehicle will be salvaged for component parts to be used on a vehicle with a different Vehicle Identification Number (VIN) as opposed to being rebuilt as same VIN. Never use SRS components from another vehicle.

WARNING: FAILURE TO FOLLOW PROPER SRS AIR BAG ASSEMBLY DISPOSAL PROCEDURES CAN RESULT IN AIR BAG DEPLOYMENT WHICH MAY CAUSE PERSONAL INJURY. UNDEPLOYED AIR BAG ASSEMBLIES MUST NOT BE DISPOSED OF THROUGH NORMAL REFUSE CHANNELS. THE UNDEPLOYED AIR BAG ASSEMBLY CONTAINS SUBSTANCES THAT CAN CAUSE SEVERE ILLNESS OR PERSONAL INJURY IF THE SEALED CONTAINER IS DAMAGED DURING DISPOSAL. DISPOSAL IN ANY MANNER INCONSISTENT WITH PROPER PROCEDURES MAY BE A VIOLATION OF FEDERAL, STATE AND/OR LOCAL LAWS.

1. Turn ignition switch to “LOCK,” remove key and put on safety glasses.
2. Remove all loose objects from front seats.
3. Disconnect driver air bag assembly, yellow 2–pin connector located at the base of the steering column.
4. Cut the driver air bag assembly yellow 2–pin harness connector from the vehicle leaving at least 15 cm (six inches) of wire at the connector.
5. Strip 13 mm (1/2 inch) of insulation from yellow – green and yellow – black wire lead of the connector.
6. Cut two 900 cm (30 feet) deployment wires from 0.8 mm^2 (18 gauge) or thicker multi–strand wire. These wires will be used to fabricate the driver deployment harness.
7. Strip 13 mm (1/2 inch) of insulation from both ends of the wires cut in the previous step.
8. Short the wires by twisting together one end from each. Deployment wires shall remain shorted and not be connected to a power source until the air bag is to be deployed.

WARNING: FAILURE TO FOLLOW PROCEDURES IN THE ORDER LISTED COULD RESULT IN PERSONAL INJURY. NEVER CONNECT DEPLOYMENT WIRES TO ANY POWER SOURCE BEFORE CONNECTING DEPLOYMENT WIRES TO THE AIR BAG ASSEMBLY LEADS. DEPLOYMENT WIRES SHALL REMAIN SHORTED AND BE NOT CONNECTED TO A POWER SOURCE UNTIL THE AIR BAG IS TO BE DEPLOYED. THE AIR BAG ASSEMBLY WILL IMMEDIATELY DEPLOY THE AIR BAG WHEN A POWER SOURCE IS CONNECTED TO IT. WEAR SAFETY GLASSES

THROUGHOUT THIS ENTIRE DEPLOYMENT AND DISPOSAL PROCEDURE.

9. Twist together one connector wire lead to one deployment wire. The connection should be mechanically secure.
10. Bend twisted connection made in the previous step flat and wrap tightly with electrical tape to insulate and secure.
11. Twist together, bend and tape the remaining connector wire lead to the remaining deployment wire.
12. Connect the deployment harness to the driver air bag assembly, yellow 2–pin connector at the base of the steering column. Route deployment harness out the driver side of the vehicle.

WARNING: DEPLOYMENT WIRES SHALL REMAIN SHORTED AND NOT BE CONNECTED TO A POWER SOURCE UNTIL THE AIR BAG IS TO BE DEPLOYED.

THE AIR BAG ASSEMBLY WILL IMMEDIATELY DEPLOY THE AIR BAG WHEN A POWER SOURCE IS CONNECTED TO IT.

CONNECTING THE DEPLOYMENT WIRES TO THE POWER SOURCE SHOULD ALWAYS BE THE FINAL STEP IN THE AIR BAG ASSEMBLY DEPLOYMENT PROCEDURE.

FAILURE TO FOLLOW PROCEDURES IN THE ORDER LISTED COULD RESULT IN PERSONAL INJURY.

13. Disconnect passenger air bag assembly, yellow 2–pin connector located behind glove box assembly.
14. Cut the passenger air bag assembly harness connector from the vehicle leaving at least 15 cm (six inches) of wire at the connector.
15. Strip 13 mm (1/2 inch) of insulation from blue–white and pink–blue wire lead of the connector.
16. Cut two 900 cm (30 feet) deployment wires from 0.8 mm^2 (18 gauge) or thicker multi–strand wire. These wires will be used to fabricate the passenger deployment harness.
17. Strip 13 mm (1/2 inch) of insulation from both ends of the wires cut in the previous step.
18. Short the wires by twisting together one end from each. Deployment wires shall remain shorted and not be connected to a power source until the air bag is to be deployed.

WARNING: FAILURE TO FOLLOW PROCEDURES IN THE ORDER LISTED COULD RESULT IN PERSONAL INJURY. NEVER CONNECT DEPLOYMENT WIRES TO ANY POWER SOURCE BEFORE CONNECTING DEPLOYMENT WIRES TO THE AIR BAG ASSEMBLY LEADS. DEPLOYMENT WIRES SHALL REMAIN SHORTED AND NOT BE CONNECTED TO A POWER SOURCE UNTIL THE AIR BAG IS TO BE DEPLOYED. THE AIR BAG ASSEMBLY WILL IMMEDIATELY DEPLOY THE AIR BAG WHEN A POWER SOURCE IS CONNECTED TO IT. WEAR SAFETY GLASSES THROUGHOUT THIS ENTIRE DEPLOYMENT AND DISPOSAL PROCEDURE.

19. Twist together one connector wire lead to one deployment wire. The connection should be mechanically secure.
20. Bend twisted connection made in the previous step flat and wrap tightly with electrical tape to insulate and secure.
21. Twist together, bend and tape the remaining connector wire lead to the remaining deployment wire.
22. Connect the deployment harness to the passenger air bag assembly, yellow 2–pin connector located behind the glove box assembly. Route deployment harness out the passenger side of the vehicle.

WARNING: DEPLOYMENT WIRES SHALL REMAIN SHORTED AND NOT BE CONNECTED TO A POWER SOURCE UNTIL THE AIR BAG IS TO BE DEPLOYED. THE AIR BAG ASSEMBLY WILL IMMEDIATELY DEPLOY THE AIR BAG WHEN A POWER SOURCE IS CONNECTED TO IT. CONNECTING THE DEPLOYMENT WIRES SHOULD ALWAYS BE THE FINAL STEP IN THE AIR BAG ASSEMBLY DEPLOYMENT PROCEDURE. FAILURE TO FOLLOW PROCEDURES IN THE ORDER LISTED COULD RESULT IN PERSONAL INJURY.

23. Verify that the inside of the vehicle and the area surrounding the vehicle are clear of all people and loose or flammable objects.
24. Stretch the driver and passenger deployment harness to their full length.
25. Completely cover windshield area and front door window openings with a drop cloth, blanket or similar item. This reduces the possibility of injury due to possible fragmentation of the vehicle's glass or interior.
26. Notify all people in the immediate area that you intend to deploy the air bags. The deployment will be accompanied by a substantial noise which may startle the uninformed.
27. Separate the two ends of the driver deployment harness wires.

WARNING: DEPLOYMENT WIRES SHALL REMAIN SHORTED AND NOT BE CONNECTED TO A POWER SOURCE UNTIL THE AIR BAG IS TO A POWER SOURCE UNTIL THE AIR BAG IS TO BE DEPLOYED. THE AIR BAG ASSEMBLY WILL IMMEDIATELY DEPLOY THE AIR BAG WHEN A POWER SOURCE IS CONNECTED TO IT. CONNECTING THE DEPLOYMENT WIRES TO THE POWER SOURCE SHOULD ALWAYS BE THE FINAL STEP IN THE AIR BAG ASSEMBLY DEPLOYMENT PROCEDURE. FAILURE TO FOLLOW PROCEDURES IN THE ORDER LISTED COULD RESULT IN PERSONAL INJURY.

NOTE: When the air bag deploys, the rapid gas expansion will create a substantial noise. Notify all people in the immediate area that you intend to deploy the air bags.

28. Connect the driver deployment harness wires to a power source to immediately deploy the driver air bag assembly. Recommended application: 12 volts minimum, 2 amps minimum. A vehicle battery is suggested.
29. Separate the two ends of the passenger deployment harness wires.

WARNING: DEPLOYMENT WIRES SHALL REMAIN SHORTED AND NOT BE CONNECTED TO A POWER SOURCE UNTIL THE AIR BAG IS TO A POWER SOURCE UNTIL THE AIR BAG IS TO BE DEPLOYED. THE AIR BAG ASSEMBLY WILL IMMEDIATELY DEPLOY THE AIR BAG WHEN A POWER SOURCE IS CONNECTED TO IT. CONNECTING THE DEPLOYMENT WIRES TO THE POWER SOURCE SHOULD ALWAYS BE THE FINAL STEP IN THE AIR BAG ASSEMBLY DEPLOYMENT PROCEDURE. FAILURE TO FOLLOW PROCEDURES IN THE ORDER LISTED COULD RESULT IN PERSONAL INJURY.

30. Connect the passenger deployment harness wires to a power source to immediately deploy the passenger air bag assembly. Recommended application: 12 volts minimum, 2 amps minimum. A vehicle battery is suggested.(Driver air bag assembly) Put on a pair of shop gloves and safety glasses to protect your hands and eyes from possible irritation and heat when handling the deployed air bag assembly. After the air bag assembly has been deployed, the surface of the air bag may contain solid particulate. This solid particulate consists primarily of by products of the chemical reaction, Potassium Chloride and copper metal dust. Compounds of Potassium Borate, Strontium Chloride, Copper Chloride, and Ammonium Chloride may be found in amounts of about 1 % (each) of the total particulate.

    (Passenger air bag assembly)

    Put on a pair of shop gloves and safety glasses to protect your hands and eyes from possible irritation and heat when handling the deployed air bag assembly.

    After the air bag assembly has been deployed, the surface of the air bag may contain a powdery residue. This powder consists primarily of cornstarch (used to lubricate the bag as it inflates) and by products of the chemical reaction. Sodium hydroxide dust (similar to lye soap) is produced as a by product of the deployment reaction. The sodium hydroxide then quickly reacts with atmospheric moisture and is converted to sodium carbonate and sodium bicarbonate (baking soda). Therefore, it is unlikely that sodium hydroxide will be present after deployment.

WARNING: SAFETY PRECAUTIONS MUST BE OBSERVED WHEN HANDLING A DEPLOYED AIR BAG ASSEMBLY. AFTER DEPLOYMENT, THE METAL SURFACES OF THE AIR BAG ASSEMBLY WILL BE VERY HOT. ALLOW THE AIR BAG ASSEMBLY TO COOL BEFORE HANDLING ANY METAL PORTION OF IT. DO NOT PLACE THE HOT DEPLOYED AIR BAG ASSEMBLY NEAR ANY FLAMMABLE OBJECTS. FAILURE TO FOLLOW PROCEDURES COULD RESULT IN FIRE OR PERSONAL INJURY.

After an air bag assembly has been deployed, the metal canister and surrounding areas of the air bag assembly will be very hot. Do not touch the metal areas of the air bag assembly for about 30 minutes after deployment. If the deployed air bag assembly must be moved before it is cool, wear gloves and handle by the air bag or trim cover.

31. Short the driver deployment harness wires by twisting together one end from each. Repeat this procedure for the passenger deployment harness.
32. Carefully remove drop cloth from vehicle and clean off any fragments or discard drop cloth entirely.
33. Disconnect driver deployment harness and passenger deployment harness from vehicle and discard.
34. In the unlikely event that either or both of the air bag assemblies did not deploy after following these procedures, proceed immediately with Steps 36 through 37. If the air bag assembly deployed, proceed to step 35.
35. With both air bags deployed, the vehicle may be scrapped in the same manner as a non–SRS equipped vehicle.

NOTE: The remaining steps are to be followed in the unlikely event that the air bag assembly did not deploy after following these procedures.

36. Remove the undeployed air bag assembly (s) from the vehicle. For driver air bag assembly refer to in the “Passenger Air Bag Assembly Removal” in this manual.

WARNING: WHEN STORING A LIVE AIR BAG ASSEMBLY OR WHEN LEAVING A LIVE AIR BAG ASSEMBLY UNATTENDED ON A BENCH OR OTHER SURFACE, ALWAYS FACE THE BAG AND TRIM COVER UP, AWAY FROM THE SURFACE. THIS IS NECESSARY SO THAT A FREE SPACE IS PROVIDED TO ALLOW THE AIR BAG TO EXPAND IN THE UNLIKELY EVENT OF ACCIDENTAL DEPLOYMENT. FAILURE TO FOLLOW PROCEDURES COULD RESULT IN PERSONAL INJURY.

37. Temporarily store the air bag assembly with the air bag opening facing up, away from the surface upon which it rests.

Deployed Air Bag Assembly Handling

Put on a pair of shop gloves and safety glasses to protect your hands and eyes from possible irritation and heat when handling the deployed air bag assembly.
After the air bag assembly has been deployed, the surface of the air bag may contain a powdery residue.
(Passenger air bag assembly)
After the air bag assembly has been deployed, the surface of the air bag may contain a powdery residue. This powder consists primarily of cornstarch (used to lubricate the bag as it inflates) and by products of the chemical reaction. Sodium hydroxide dust (similar to lye soap) is produced as a by product of the deployment reaction. The sodium hydroxide then quickly reacts with atmospheric moisture and is converted to sodium

carbonate and sodium bicarbonate (baking soda). Therefore, it is unlikely that sodium hydroxide will be present after deployment.
(Driver air bag assembly)
After the air bag assembly has been deployed, the surface of the air bag may contain solid particulate. This solid particulate consists primarily of by products of the chemical reaction, Potassium Chloride and copper metal dust. Compounds of Potassium Borate, Strontium Chloride, Copper Chloride, and Ammonium Chloride may be found in amounts of about 1 % (each) of the total particulate.

Deployment Outside Vehicle (Pretensioner Seat Belt Assembly)

Deployment outside the vehicle is proper when the vehicle is to be returned to service. This includes, for example, situations in which the vehicle will be returned to useful service after a functionally or cosmetically deficient pretensioner seat belt assembly is replaced. Deployment and disposal of a malfunctioning pretensioner seat belt assembly is, of course, subject to any required retention period.
For deployment of a live (undeployed) pretensioner seat belt assembly outside the vehicle, the deployment procedure must be followed exactly. Always wear gloves and safety glasses during this deployment procedure until a deployed pretensioner seat belt assembly is scrapped or until an undeployed pretensioner seat belt assembly is shipped. Before performing the procedures you should be familiar with servicing the system and with proper handling of the pretensioner seat belt assembly. Procedures should be read fully before they are performed.
The following procedure requires use of SRS deployment harness with appropriate pigtail adapter. Do not attempt procedure without adapter.

WARNING: FAILURE TO FOLLOW PROCEDURES IN THE ORDER LISTED MAY RESULT IN PERSONAL INJURY. NEVER CONNECT DEPLOYMENT HARNESS TO ANY POWER SOURCE BEFORE CONNECTING DEPLOYMENT HARNESS TO THE PRETENSIONER SEAT BELT ASSEMBLY. DEPLOYMENT HARNESS SHALL REMAIN SHORTED AND NOT BE CONNECTED TO A POWER SOURCE UNTIL THE PRETENSIONER SEAT BELT IS TO BE DEPLOYED. THE PRETENSIONER SEAT BELT ASSEMBLY WILL IMMEDIATELY DEPLOY THE PRETENSIONER SEAT BELT WHEN A POWER SOURCE IS CONNECTED TO IT. WEAR GLOVES AND SAFETY GLASSES THROUGHOUT THIS ENTIRE DEPLOYMENT AND DISPOSAL PROCEDURE.

1. Turn ignition switch to “LOCK”, remove key.
2. Remove the pretensioner seat belt assembly from vehicle. Refer to “Pretensioner Seat Belt Removal” in this manual.
3. Prepare SRS deployment harness.

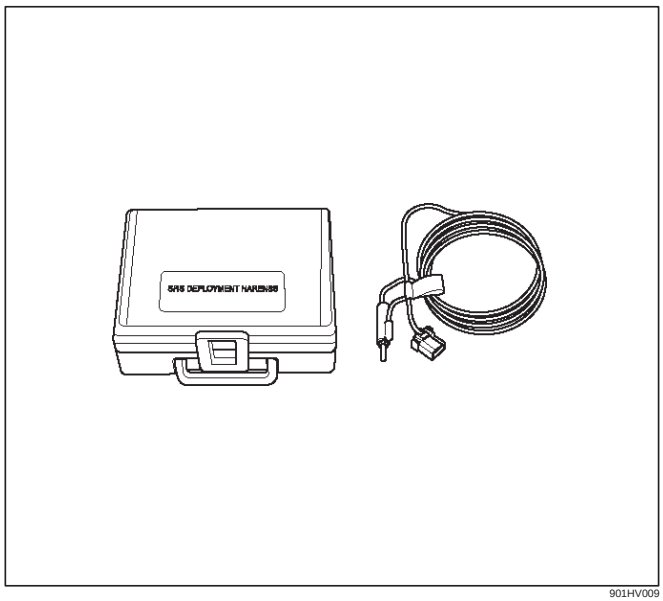

901HV009

4. Short the two SRS deployment harness leads together by fully seating one banana plug into the other. SRS deployment harness shall remain shorted and not be connected to a power source until the pretensioner seat belt is to be deployed.
5. Place the pretensioner seat belt assembly on a work bench or other surface away from all loose or flammable objects.

WARNING: WHEN FIXING THE DEPLOYMENT DEVICE OF PRETENSIONER SEAT BELT, THE DEPLOYMENT DEVICE SHOULD BE FIXED AWAY FROM OTHER PERSON

6. Clear a space on the ground about 183 cm (six feet) in diameter where the pretensioner seat belt assembly is to be deployed. A paved, outdoor location where there is no activity is preferred. If an outdoor location is not available, a space on the shop floor where there is no activity and sufficient ventilation is recommended. Ensure no loose or flammable objects are within the deployment area.
7. Stretch the SRS deployment harness and pigtail adapter from the pretensioner seat belt assembly to its full length.
8. Place a power source near the shorted end of the SRS deployment harness. Recommended application: 12 volts minimum, 2 amps minimum. A vehicle battery is suggested.
9. Deployment harness shall remain shorted and not be connected to a power source until the pretensioner seat belt is to be deployed. The pretensioner seat belt assembly will immediately deploy the pretensioner seat belt when a power source is connected to it.
10. Verify that the area around the pretensioner seat belt assembly is clear of all people and loose or flammable objects.
11. Notify all people in the immediate area that you intend to deploy the driver air bag. The deployment will be accompanied by a substantial noise which may startle the uninformed.
12. Connect the pretensioner seat belt to the pigtail adapter on the SRS deployment harness.

NOTE: Ensure that the pigtail adapter is firmly seated into the pretensioner seat belt assembly connector. Failure to fully seat the connectors may leave the shorting bar located in the pretensioner seat belt assembly connector functioning (shorted) and may result in nondeployment of the pretensioner seat belt assembly.

13. Separate the two banana plugs on the SRS deployment harness.

NOTE: When the pretensioner seat belt deploys, the rapid gas expansion will create a substantial noise. Notify all people in the immediate area that you intend to deploy the pretensioner seat belt.

WARNING: DEPLOYMENT HARNESS SHALL REMAIN SHORTED AND NOT BE CONNECTED TO A POWER SOURCE UNTIL THE PRETENSIONER SEAT BELT IS TO BE DEPLOYED. THE PRETENSIONER SEAT BELT ASSEMBLY WILL IMMEDIATELY DEPLOY THE PRETENSIONER SEAT BELT WHEN A POWER SOURCE IS CONNECTED TO IT. CONNECTING THE DEPLOYMENT HARNESS TO THE POWER SOURCE SHOULD ALWAYS BE THE LAST STEP IN THE PRETENSIONER SEAT BELT ASSEMBLY DEPLOYMENT PROCEDURE. FAILURE TO FOLLOW PROCEDURES IN THE ORDER LISTED MAY RESULT IN PERSONAL INJURY.

14. Connect the SRS deployment harness wires to the power source to immediately deploy the pretensioner seat belt. Recommended application: 12 volts minimum, 2 amps minimum. A vehicle battery is suggested.
15. Disconnect the SRS deployment harness from the power source.
16. Short the two SRS deployment harness leads together by fully seating one banana plug into the other.
17. In the unlikely event that the pretensioner seat belt assembly did not deploy after following these procedures, proceed immediately with Steps 21 through 24. If the pretensioner seat belt assembly did deploy, proceed with Steps 15 through 20.
18.

WARNING: SAFETY PRECAUTIONS MUST BE OBSERVED WHEN HANDING A DEPLOYED PRETENSIONER SEAT BELT ASSEMBLY. AFTER DEPLOYMENT, THE METAL SURFACES OF THE PRETENSIONER SEAT BELT ASSEMBLY WILL BE VERY HOT. ALLOW THE INFLATOR MODULE TO COOL BEFORE HANDLING ANY METAL PORTION OF IT. DO NOT PLACE THE DEPLOYED PRETENSIONER SEAT BELT ASSEMBLY NEAR ANY FLAMMABLE OBJECTS. FAILURE TO FOLLOW PROCEDURES MAY RESULT IN FIRE OR PERSONAL INJURY.

AFTER A DRIVER PRETENSIONER SEAT BELT ASSEMBLY HAS BEEN DEPLOYED, THE METAL CANISTER AND SURROUNDING AREAS OF THE DRIVER PRETENSIONER SEAT BELT ASSEMBLY WILL BE VERY HOT. DO NOT TOUCH THE METAL AREAS OF THE PRETENSIONER SEAT BELT ASSEMBLY FOR ABOUT TEN MINUTES AFTER DEPLOYMENT. IF THE DEPLOYED PRETENSIONER SEAT BELT ASSEMBLY MUST BE MOVED BEFORE IT IS COOL, WEAR GLOVES AND HANDLE BY THE PRETENSIONER SEAT BELT OR TRIM COVER.

19. Disconnect the pigtail adapter from the pretensioner seat belt assembly as soon after deployment as possible. This will prevent damage to the pigtail adapter or SRS deployment harness due to possible contact with the hot pretensioner seat belt assembly canister. The pigtail adapter can be reused. They should, however, be inspected for damage after each deployment and replaced if necessary.
20. Dispose of the deployed pretensioner seat belt assembly through normal refuse channels after it has cooled for at least 30 minutes.
21. Wash your hands with mild soap and water afterward.

NOTE: The remaining steps are to be followed in the unlikely event that the pretensioner seat belt assembly did not deploy after following these procedures.

22. Ensure that the SRS deployment harness has been disconnected from the power source and that its two banana plugs have been shorted together by fully seating one banana plug into the other.
23. Disconnect the pigtail adapter from the pretensioner seat belt assembly.
24. Remove the undeployed pretensioner seat belt from the special tool.

WARNING: WHEN STORING A LIVE PRETENSIONER SEAT BELT ASSEMBLY OR WHEN LEAVING A LIVE INFLATOR MODULE UNATTENDED ON A BENCH OR OTHER SURFACE, ALWAYS PUT THE PRETENSIONER SEAT BELT HORIZONTAL PLACE. THIS IS NECESSARY SO THAT A FREE SPACE IS PROVIDED TO ALLOW THE PRETENSIONER SEAT BELT TO SHRINK IN THE UNLIKELY EVENT OF ACCIDENTAL DEPLOYMENT. FAILURE TO FOLLOW PROCEDURES MAY RESULT IN PERSONAL INJURY.

25. Temporarily store the pretensioner seat belt assembly with its deployment device facing up, away from the surface upon which it rests.

Deployment Inside Vehicle (Pretensioner Seat Belt Vehicle Scrapping Procedure)

Deployment inside vehicle is proper when the vehicle is to be destroyed. This includes, but is not limited to, the following situations:

1. The vehicle has completed its useful life.
2. The vehicle has been damaged beyond repair in a nondeployment type accident.
3. The vehicle has been stripped or damaged beyond repair in a theft.

NOTE: The vehicle will be salvaged for component parts to be used on a vehicle with a different Vehicle Identification Number (VIN) as opposed to being rebuilt as same VIN. Never use pretensioner seat belt components from another vehicle.

WARNING: FAILURE TO FOLLOW PROCEDURES IN THE ORDER LISTED COULD RESULT IN PERSONAL INJURY. NEVER CONNECT DEPLOYMENT WIRES

TO ANY POWER SOURCE BEFORE CONNECTING DEPLOYMENT WIRES TO THE PRETENSIONER SEAT BELT ASSEMBLY LEADS. DEPLOYMENT WIRES SHALL REMAIN SHORTED AND NOT BE CONNECTED TO A POWER SOURCE UNTIL THE PRETENSIONER SEAT BELT IS TO BE DEPLOYED. THE PRETENSIONER SEAT BELT ASSEMBLY WILL IMMEDIATELY DEPLOY THE PRETENSIONER SEAT BELT WHEN A POWER SOURCE IS CONNECTED TO IT. WEAR SAFETY GLASSES THROUGHOUT THIS ENTIRE DEPLOYMENT AND DISPOSAL PROCEDURE.

1. Turn ignition switch to “LOCK,” remove key and put on safety glasses.
2. Remove all loose objects from front seats.
3. Disconnect pretensioner seat belt assembly, yellow 2–pin connector located at the base of the seat.
4. Prepare SRS deployment harness.
5. Short the two SRS deployment harness leads together by fully seating one banana plug into the other.
6. Deployment harness shall remain shorted and not be connected to a power source until the pretensioner seat belt is to be deployed.
7. Route deployment harness out the driver side of the vehicle.
8. Verify that the inside of the vehicle and the area surrounding the vehicle are clear of all people and loose or flammable objects.
9. Stretch the SRS deployment harness to their full length.
10. Connect the deployment harness to the pretensioner seat belt assembly, yellow 2-pin connector at the base of the seat.

WARNING: DEPLOYMENT WIRES SHALL REMAIN SHORTED AND NOT BE CONNECTED TO A POWER SOURCE UNTIL THE PRETENSIONER SEAT BELT IS TO BE DEPLOYED. THE PRETENSIONER SEAT BELT ASSEMBLY WILL IMMEDIATELY DEPLOY THE PRETENSIONER SEAT BELT WHEN A POWER SOURCE IS CONNECTED TO IT. CONNECTING THE DEPLOYMENT WIRES TO THE POWER SOURCE SHOULD ALWAYS BE THE FINAL STEP IN THE PRETENSIONER SEAT BELT ASSEMBLY DEPLOYMENT PROCEDURE. FAILURE TO FOLLOW PROCEDURES IN THE ORDER LISTED COULD RESULT IN PERSONAL INJURY.

11. Notify all people in the immediate area that you intend to deploy the pretensioner seat belt. The deployment will be accompanied by a substantial noise which may startle the uninformed.
12. Separate the two banana plugs on the SRS deployment harness.

NOTE: When the pretensioner seat belt deploys, the rapid gas expansion will create a substantial noise. Notify all people in the immediate area that you intend to deploy the pretensioner seat belt.

13. Connect the SRS deployment harness wires to a power source to immediately deploy the pretensioner seat belt assembly. Recommended application: 12 volts minimum, 2 amps minimum. A vehicle battery is suggested.

WARNING: DEPLOYMENT WIRES SHALL REMAIN SHORTED AND NOT BE CONNECTED TO A POWER SOURCE UNTIL THE PRETENSIONER SEAT BELT IS TO IS TO BE DEPLOYED. THE PRETENSIONER SEAT BELT ASSEMBLY WILL IMMEDIATELY DEPLOY THE PRETENSIONER SEAT BELT WHEN A POWER SOURCE IS CONNECTED TO IT. CONNECTING THE DEPLOYMENT WIRES SHOULD ALWAYS BE THE FINAL STEP IN THE PRETENSIONER SEAT BELT ASSEMBLY DEPLOYMENT PROCEDURE. FAILURE TO FOLLOW PROCEDURES IN THE ORDER LISTED COULD RESULT IN PERSONAL INJURY.

14. Short the two SRS deployment harness leads together by fully seating one banana plug into the other.
15. Disconnect the deployment harness to the pretensioner seat belt assembly, yellow 2-pin connector at the base of the seat.
16. In the unlikely event that the pretensioner seat belt assembly did not deploy after following these procedures, proceed immediately with Steps 18 through 19. If the pretensioner seat belt assembly deployed as intended, proceed with Steps 14 through 17.
17. With both air bags and pretensioner seat belt deployed, the vehicle may be scrapped in the same manner as a non–SRS equipped vehicle.

NOTE: The remaining steps are to be followed in the unlikely event that the pretensioner seat belt assembly did not deploy after following these procedures.

18. Remove the undeployed pretensioner seat belt assembly (s) from the vehicle. For pretensioner seat belt assembly refer to in the “Pretensioner Seat Belt Assembly Removal” in this manual.
19. Temporarily store the pretensioner seat belt assembly with the deployment device facing up, away from the surface upon which it rests.

Special Tools

WARNING: TO AVOID DEPLOYMENT WHEN TROUBLESHOOTING THE SRS, DO NOT USE ELECTRICAL TEST EQUIPMENT SUCH AS A BATTERY–POWERED OR AC–POWERED VOLTMETER, OHMMETER, ETC., OR ANY TYPE OF ELECTRICAL EQUIPMENT OTHER THAN THAT SPECIFIED IN THIS MANUAL. DO NOT USE A NONPOWERED PROBE–TYPE TESTER. INSTRUCTIONS IN THIS MANUAL MUST BE FOLLOWED CAREFULLY, OTHERWISE PERSONAL INJURY MAY RESULT.

5–8840–2421–0 SRS Driver/Passenger Load Tool

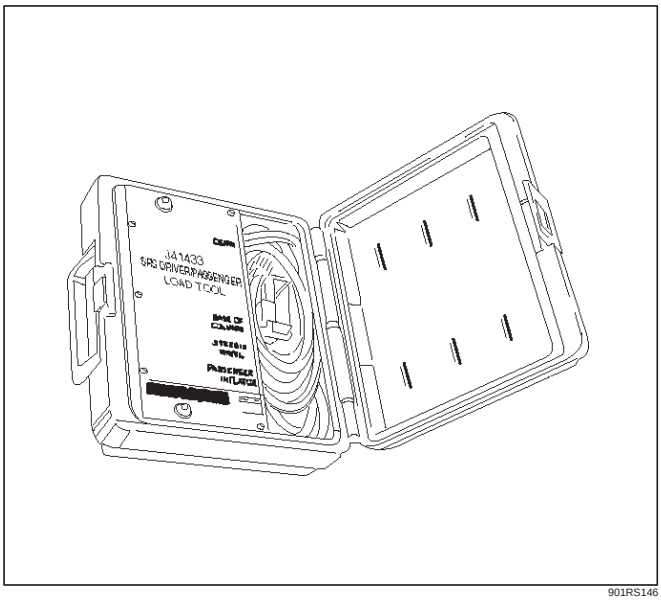

901RS146

The SRS Driver/Passenger Load Tool 5–8840–2421–0 is used only when called for in this section. It is used as a diagnostic aid and safety device to prevent inadvertent air bag assembly deployment.

The load tool has three yellow connectors attached to its case.

The three small connectors are electrically functional and serve as resistive load substitutions.

No more than two connectors are used at any time. One of the small connectors is used to substitute for the load of the driver air bag assembly when it is connected at the top of the column to the SRS coil assembly. Another small connector is used to substitute for the load of the driver air bag assembly and the SRS coil assembly when it is connected at the base of the column to the SRS wiring harness. The third small connector is used to substitute for the load of the passenger air bag assembly and pretensioner seat belt assembly when connected to the passenger air bag assembly and pretensioner seat belt assembly harness connector.

By substituting the resistance of the load tool when called for, a determination can be made as to whether an inflator circuit component is causing system malfunction and which component is causing the malfunction. The load tool should be used only when specifically called for in the diagnostic procedures.

NOTE: If comand to use 5–8840–2421–0 load tool when repair the pretensioner seat belt, connect load tool connector to use for driver air bag and/or passenger air bag connector.

5–8840–0285–0 DVM

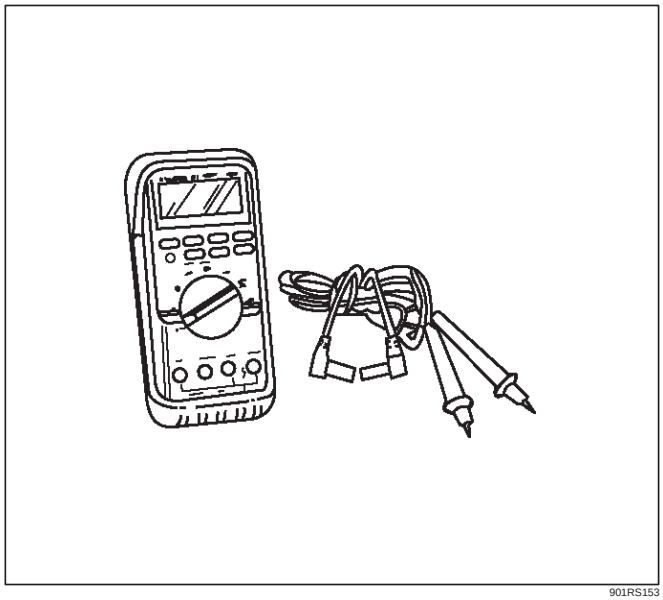

901RS153

The 5–8840–0285–0 DVM is the preferred DVM for use in SRS diagnosis and repair. However, 5–8840–0366–0 may be used if 5–8840–0285–0 is not available. No other DVMs are approved for SRS diagnosis and repair.

Scan Tool

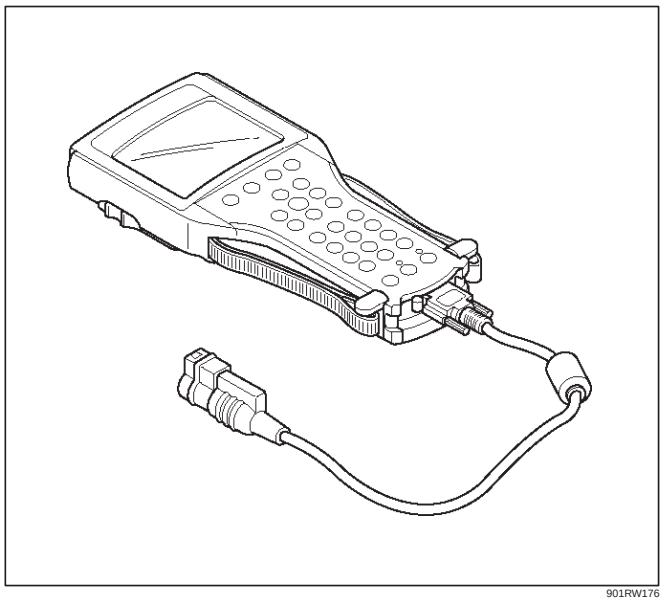

901RW176

The Tech 2 is used to read and clear SRS Diagnostic Trouble Codes (DTCs). Refer to the Tech 2 Operators, Manual for specific information on how to use the Tech 2.

5–8840–0385–0 Connector Test Adapter Kit

901RS151

The 5–8840–0385–0 Connector Test Adapter Kit must be used whenever a diagnostic procedure requests checking or probing a terminal. Using the appropriate adapter will ensure that no damage to the terminal will occur from the DVM prove, such as spreading or bending. The adapter will also give an idea of whether contact tension is sufficient, helping to find an open or intermittent open due to poor terminal contact.

5–8840–2468–0 SRS Deployment Tool

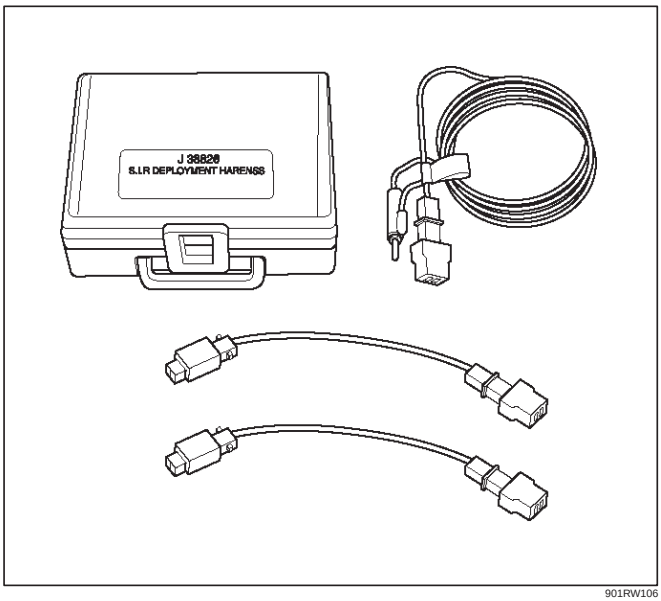

901RW106

The 5–8840–2468–0 SRS Deployment Tool must be used for deployment of the undeployed air bag, and/or pretensioner seat belt.

5–8840–2420–0 SRS Deployment Fixture

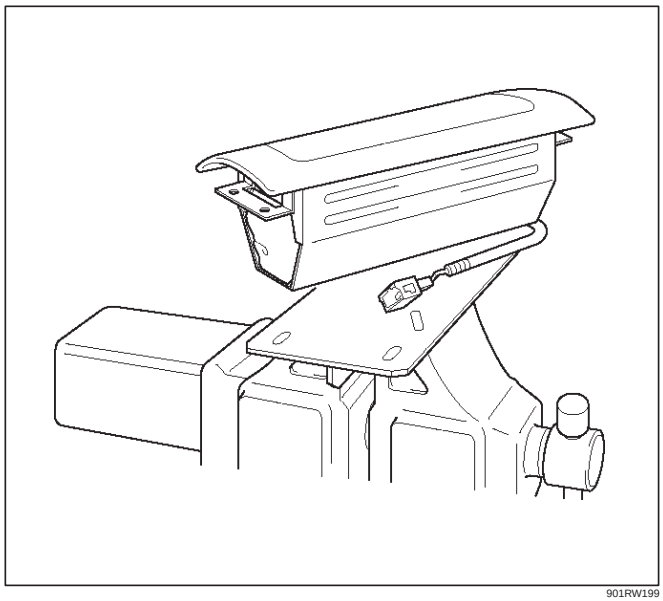

901RW199

The 5–8840–2420–0 SRS Deployment Fixture must be used for deployment of the undeployed passenger side air bag.

5–8840–2469–0 SRS Adapter for Load Tool.

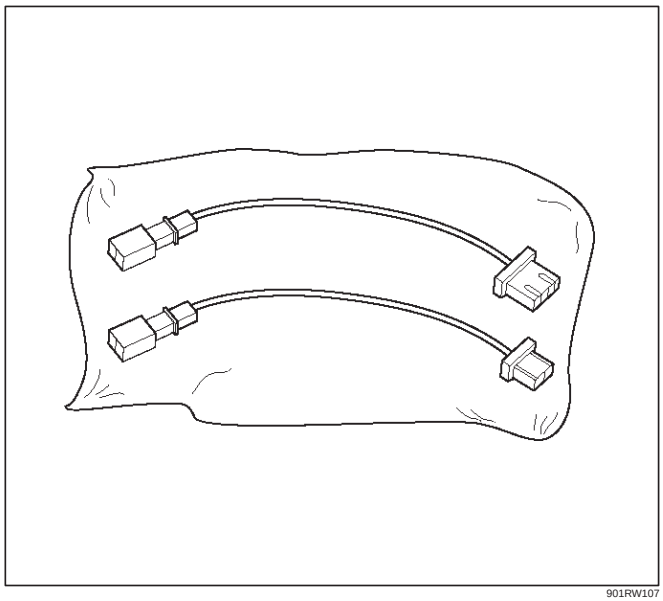

901RW107

The 5–8840–2469–0 SRS Adapter for Load Tool must be used with 5–8840–2421–0 SRS Driver/Passenger Load Tool.

Tech 2 Scan Tool

From 98 MY, Isuzu dealer service departments are recommended to use Tech 2. Please refer to Tech 2 scan tool user guide.

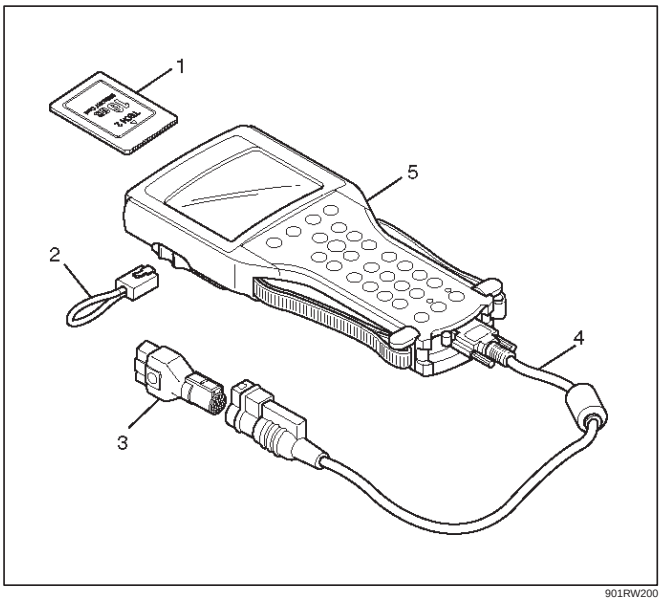

901RW200

Legend

(1) PCMCIA Card
(2) RS 232 Loop Back Connector
(3) SAE 16/19 Adaptor
(4) DLC Cable
(5) Tech–2

Getting Started

- Before operating the Isuzu PCMCIA card with the Tech 2, the following steps must be performed:

1. Insert the Isuzu 98 System PCMCIA card (1) into the Tech 2 (5).
2. Connect the SAE 16/19 adapter (3) to the DLC cable (4).
3. Connect the DLC cable to the Tech 2 (5)
4. Make sure of the vehicle ignition is off.
5. Connect the Tech 2 SAE 16/19 adapter to the vehicle ALDL/DLC connector.

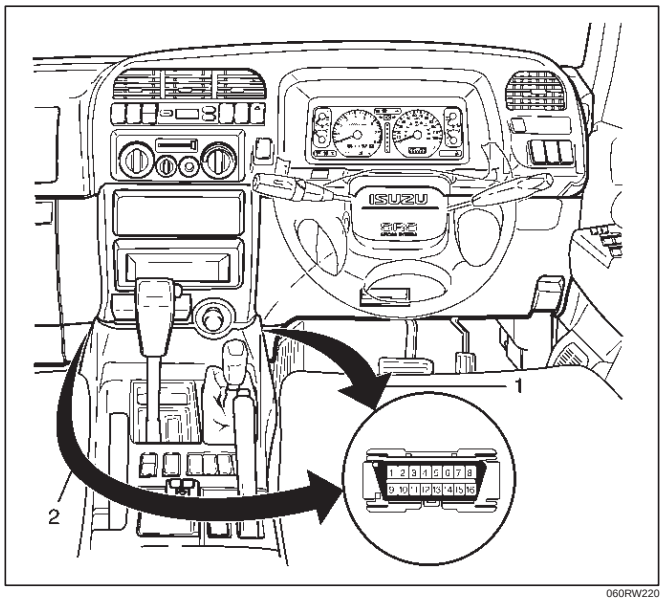

060RW220

Legend

(1) For RHD model
(2) For LHD model

6. Turn on the vehicle ignition switch.
7. Verify the Tech 2 power up display.

060RW009

NOTE: The RS232 Loop back connector is only used to diagnosis Tech 2. Refer to user guide of the Tech 2.

Operating Procedure

The power up screen is displayed when you power up the tester with the Isuzu systems PCMCIA card. Follow the operating procedure below.

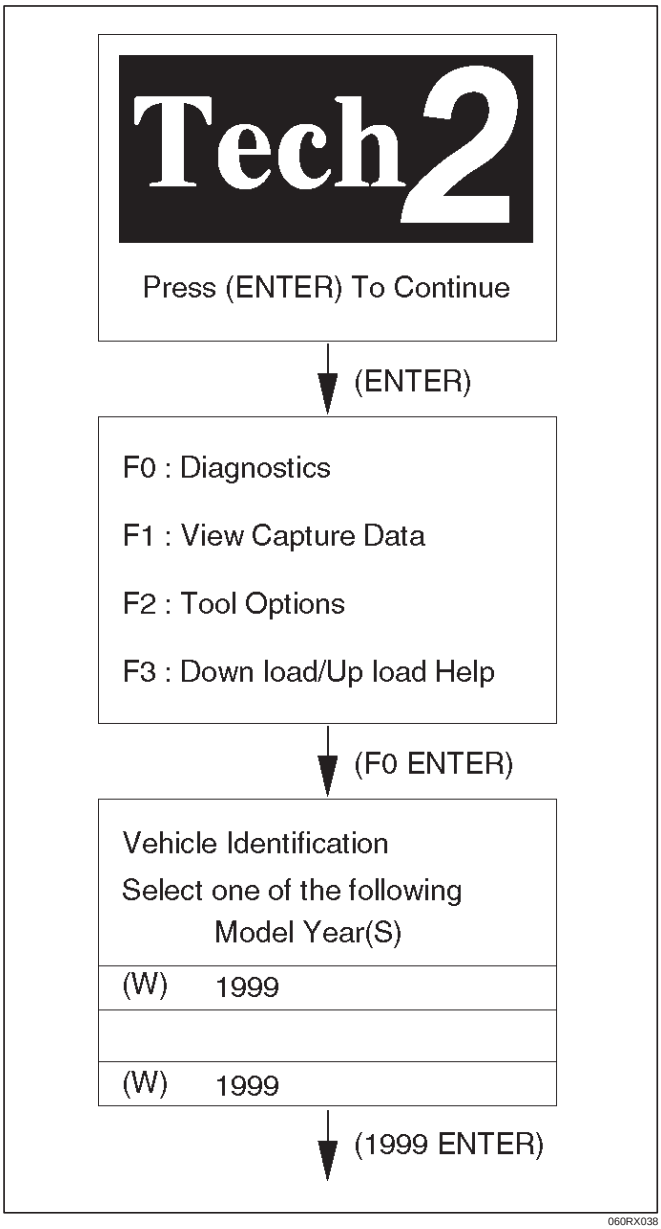

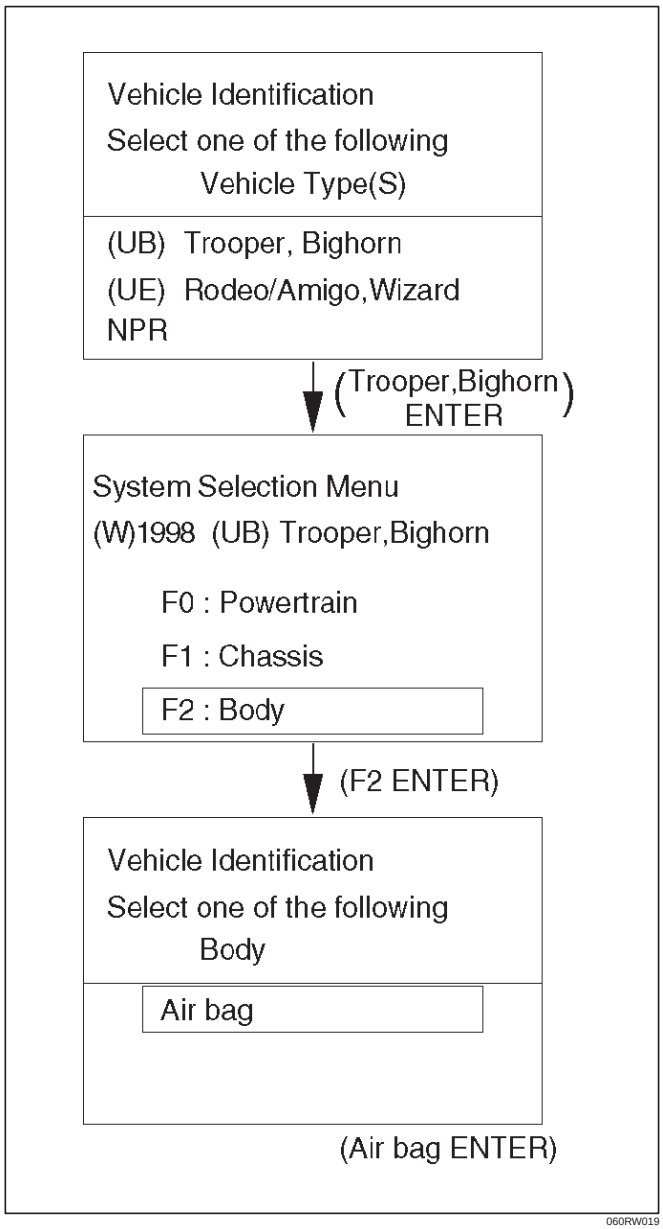

Service Precautions for SRS Component Service

CAUTION: When fasteners are removed, always reinstall them at the same location from which they were removed. If a fastener needs to be replaced, use the correct part number fastener for that application. If the correct part number fastener is not available, a fastener of equal size and strength (or stronger) may be used. fasteners that are not reused, and those requiring thread locking compound will be called out. The correct torque value must be used when installing fasteners that require it. If the above conditions are not followed, parts or system damage could result.

WARNING: WHEN PERFORMING SERVICE ON OR AROUND SRS COMPONENTS OR SRS WIRING, FOLLOW THE PROCEDURES LISTED BELOW TO TEMPORARILY DISABLE THE SRS. FAILURE TO FOLLOW PROCEDURES COULD RESULT IN POSSIBLE AIR BAG DEPLOYMENT, PERSONAL INJURY OR OTHERWISE UNNEEDED SRS REPAIRS.

The SDM in Driver–Passenger SRS can maintain sufficient voltage to cause a deployment for up to 15 seconds after the ignition switch is turned “OFF,” the battery is disconnected, or the fuse powering the SDM is removed.

Many of the service procedures require removal of the “C–21” fuse, and disconnection of the air bag assembly from the deployment loop to avoid an accidental deployment. If the air bag assembly is disconnected from the deployment loop as noted in the “Disabling the SRS” procedure that follows, service can begin immediately without waiting for the 15 second time period to expire.

Disabling The SRS

Removal

Turn the ignition switch to “OFF” and turn the steering wheel so that the vehicle’s wheels are pointing straight ahead.

1. Remove SRS fuse “C–21” from left dash side lower fuse block or disconnect battery.
2. Disconnect yellow 2–pin connector at the base of steering column.
3. Remove glove box assembly; Refer to “Passenger air bag assembly replacement” in this section.
4. Disconnect passenger air bag assembly yellow 2–pin connector behind the glove box assembly.

CAUTION: With the “C–21” fuse removed and ignition switch “ON,” the “AIR BAG” warning lamp will be “ON.” This is normal operation and does not indicate an SRS malfunction.

Enabling The SRS

Installation

Turn ignition switch to “LOCK” and remove key.

1. Connect yellow 2–pin connector passenger air bag assembly.
2. Install glove box assembly. Refer to “Passenger Air Bag Assembly Replacement” in this section.
3. Connect yellow 2–pin connector at the base of the steering column.
4. Install “AIR BAG” fuse “C–21” to left dash side lower fuse block or connect battery.

Turn ignition switch to “ON” and verify that the “AIR BAG” warning lamp turn on 3.5 seconds and then turns “OFF.” If it does not operate as described, perform the “SRS Diagnostic System Check” in this section.

Handling / Installation / Diagnosis

1. Air bag assembly should not be subjected to temperatures above 93˚C (200˚F).
2. Air bag assembly, and SDM should not be used if they have been dropped from a height of 100 centimeters (3.28 feet) or more.
3. When a SDM is replaced, it must be oriented with the arrow on the SDM pointing toward the front of the vehicle. It is very important for the SDM to be located flat on the mounting surface, parallel to the vehicle datum line. It is important that the SDM mounting surface is free of any dirt or other foreign material.
4. Do not apply power to the SRS unless all components are connected or a diagnostic chart requests it, as this will set a diagnostic trouble code.
5. The “SRS Diagnostic System Check” must be the starting point of any SRS diagnostics. The “SRS Diagnostic System Check” will verify proper “AIR BAG” warning lamp operation and will lead you to the correct chart to diagnose any SRS malfunctions. Bypassing these procedures may result in extended diagnostic time, incorrect diagnosis, and incorrect parts replacements.

Inspections Required After An Accident

CAUTION: Certain SRS components must be replaced after a frontal crash involving air bag deployment.

In all types of accidents regardless of “Air Bag” deployment, visually inspect all of the following components and replace as required:

— Driver air bag assembly
— Passenger air bag assembly
— Driver pretensioner assembly
— Passenger pretensioner assembly
— Steering wheel
— SRS coil assembly
— Steering column
— Knee bolster and instrument panel mounting attachments
— Driver seat and belt
— Passenger seat and belt
— SDM

SDM always should be checked according to “SDM Replacement Guidelines.”

CAUTION: Refer to "SDM Replacement Guidelines" below for important information on SDM replacement in both deployment and non–deployment crashes.

Inspect SRS coil assembly wiring and steering wheel for any sign of scorching, melting, or damage due to excessive heat. If coil assembly wire or steering wheel is damaged, replace them. The steering column and wheel must be dimensionally checked to determine if they are damaged. Refer to steering wheel of in this manual.

Never use SRS parts from another vehicle. This does not include remanufactured parts purchased from an authorized Isuzu Retailer; they may be used for SRS repairs.

Do not attempt to repair the SDM, the SRS harness, the SRS coil assembly, the air bag assembly, the steering wheel, or the steering column. Service of these items is replacement only. Verify replacement part numbers.

CAUTION: Proper operation of the SDM and supplemental restraint system (SRS) requires that any repairs to the vehicle structure return it to its original production configuration.

SRS Connectors

CAUTION: The special yellow color connectors are used for supplemental restraint system air bag circuit. When removing the oable harnese, do not pull the cables otherwile, cable disconnection may occur. When connect the SRS connector, insert the connector completely. Imperfect locking may cause malfunction of SRS circuit.

Removal

To remove the connector, hold the cover insulator (1) and pull it. The cover insulator slides and lock will be released. Do not hold the socket insulator (2).

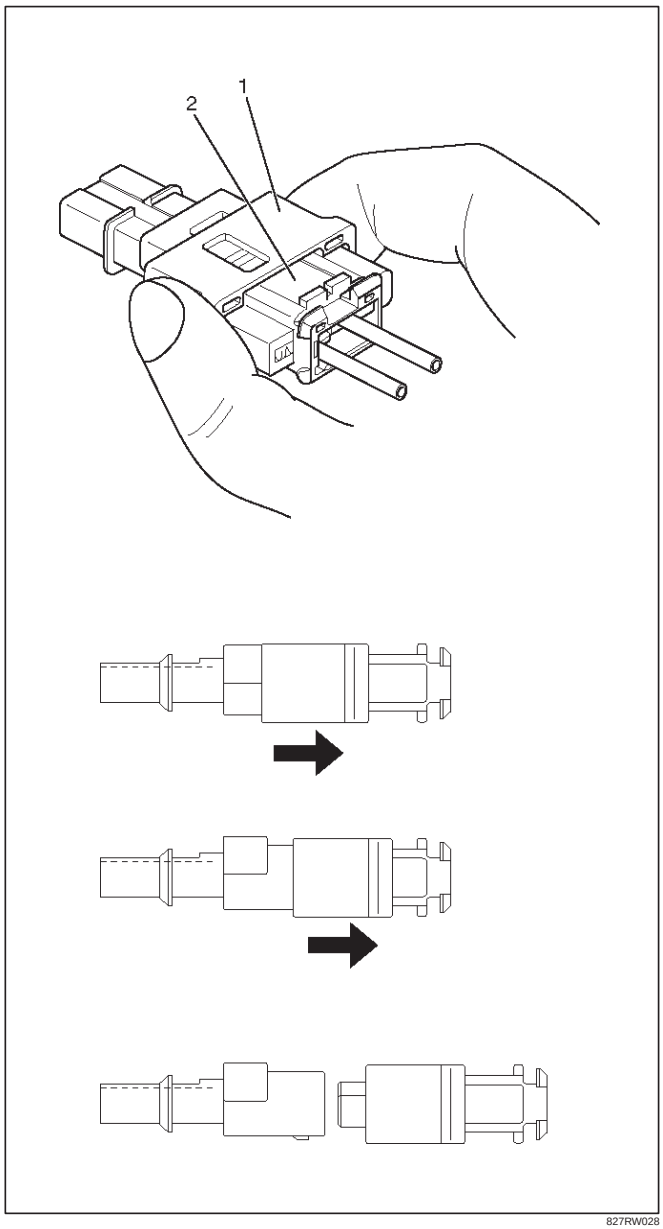

827RW028

Installation

To install the connector, hold the socket insulator (1) and insert it. The cover insulator slides and connector will be locked. Do not hold the cover insulator (2).

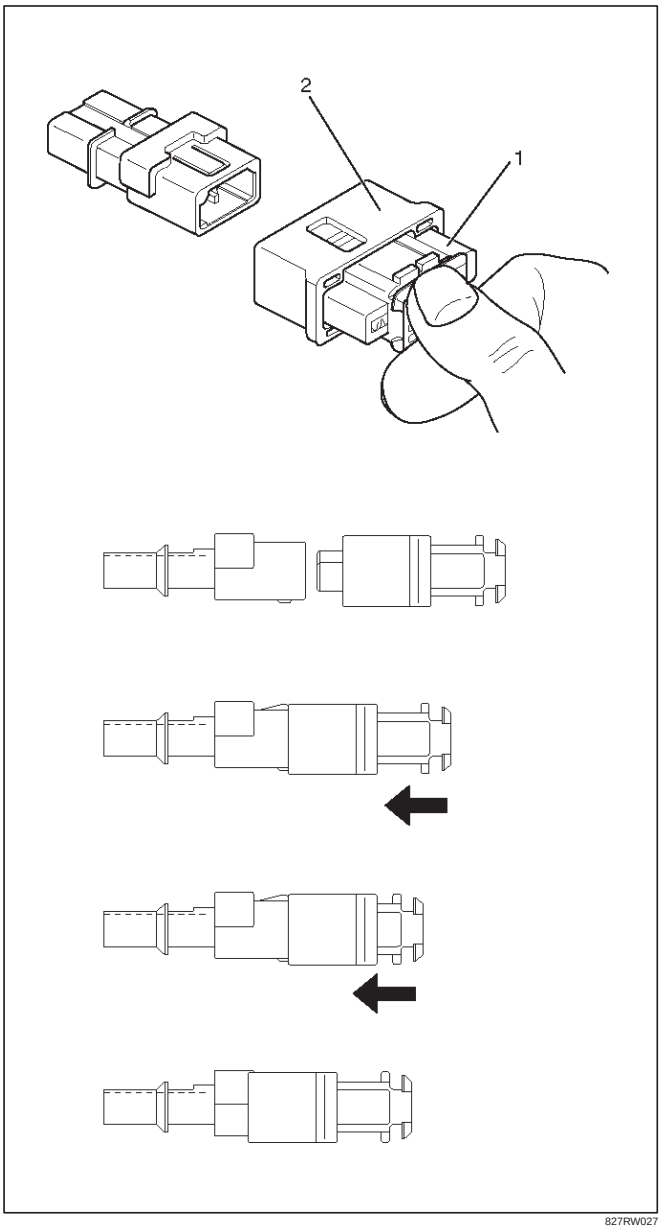

827RW027

Sensing And Diagnostic Module (SDM)

Service Precautions

WARNING: DURING SERVICE PROCEDURES, BE VERY CAREFUL WHEN HANDLING SDM. NEVER STRIKE OR JAR SDM. UNDER SOME CIRCUMSTANCES, IT COULD CAUSE DEPLOYMENT AND RESULT IN PERSONAL INJURY OR IMPROPER OPERATION OF THE SUPPLEMENTAL RESTRAINT SYSTEM (SRS) . SDM MOUNTING BRACKET BOLTS MUST BE CAREFULLY TORQUED TO ASSURE PROPER OPERATION. NEVER POWER UP THE SRS WHEN SDM IS NOT RIGIDLY ATTACHED TO THE VEHICLE. THE SDM COULD BE ACTIVATED WHEN POWERED WHILE NOT RIGIDLY ATTACHED TO THE VEHICLE WHICH COULD CAUSE DEPLOYMENT AND RESULT IN PERSONAL INJURY.

WARNING: PROPER OPERATION OF THE SENSING AND DIAGNOSTIC MODULE (SDM) REQUIRES THE SDM TO BE RIGIDLY ATTACHED TO THE VEHICLE STRUCTURE AND THAT THE ARROW ON THE SENSOR BE POINTING TOWARD THE FRONT OF THE VEHICLE.

SDM is specifically calibrated and is keyed to the SDM location SRS wiring harness. Caution should be used to ensure proper location of the SDM. The keying of the SDM to its location and wiring harness connectors should never be modified in the field.

Removal

1. Disable the SRS (Refer to “Disabling the SRS” in this section).
2. Remove the transmission knob (for M/T) and transfer lever knob.
3. Remove the front console assembly and disconnect wiring harness connector.
4. Pull CPA (Connector Position Assurance) out and push connector lock down to disconnect the SDM harness connector.
5. Remove the three SDM fixing bolts and remove SDM.

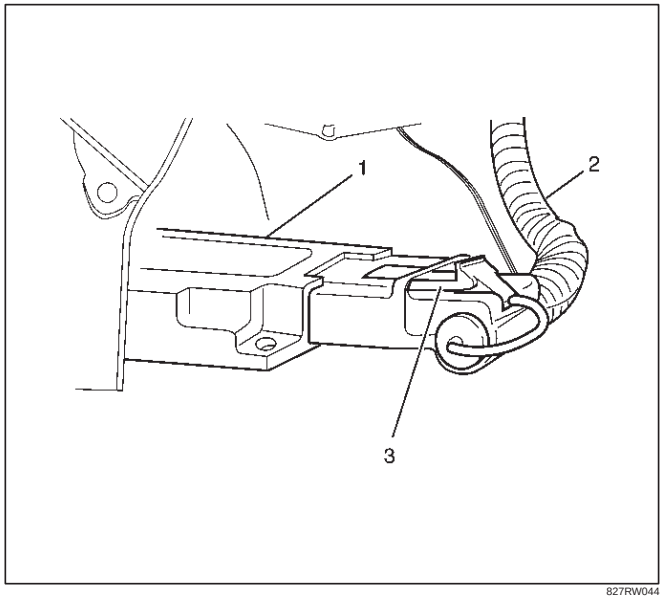

827RW044

Legend

(1) SDM
(2) SRS Harness
(3) Connector Position Assurance

Installation

1. Install the SDM on bracket and fixing bolts and tighten the fixing bolts to the specified torque.

   Torque: 10 N·m (1.0 Kg·m/87 lb in)
2. Connect the SDM harness connector and after that, put CPA into connector.
3. Install the front console.
4. Install the transmission knob (for M/T) and transfer lever knob.

5. Enable the SRS (Refer to “Enabling the SRS” in this section).

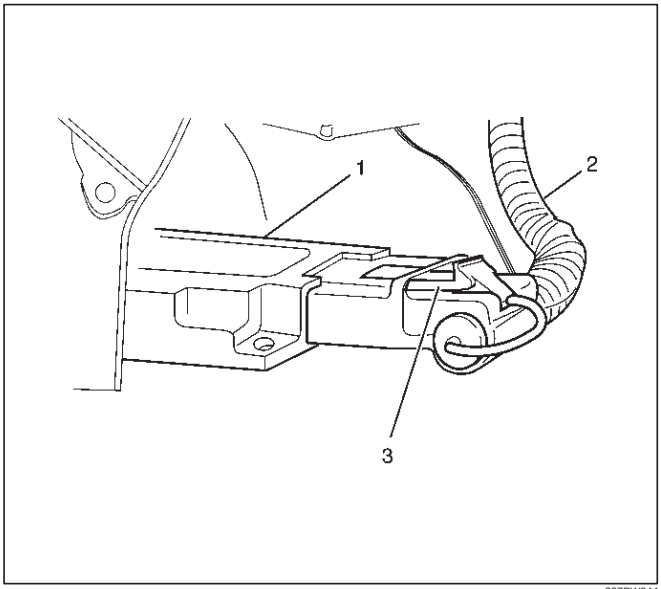

827RW044

Legend

(1) SDM
(2) SRS Harness
(3) Connector Position Assurance

Driver Air Bag Assembly

Service Precautions

WARNING: SAFETY PRECAUTIONS MUST BE FOLLOWED WHEN HANDLING A DEPLOYED AIR BAG ASSEMBLY. AFTER DEPLOYMENT, THE AIR BAG ASSEMBLY SURFACE MAY CONTAIN A SMALL AMOUNT OF SODIUM HYDROXIDE, A BY–PRODUCT OF THE DEPLOYMENT REACTION, THAT IS IRRITATING TO THE SKIN AND EYES. MOST OF THE POWER ON THE AIR BAG ASSEMBLY IS HARMLESS. AS A PRECAUTION, WEAR GLOVES AND SAFETY GLASSES WHEN HANDLING A DEPLOYED AIR BAG ASSEMBLY, AND WASH YOUR HANDS WITH MILD SOAP AND WATER AFTERWARDS.

WARNING: WHEN CARRYING A LIVE AIR BAG ASSEMBLY, MAKE SURE THE BAG AND TRIM COVER ARE POINTED AWAY FROM YOU. NEVER CARRY AIR BAG ASSEMBLY BY THE WIRES OR CONNECTOR ON THE UNDERSIDE OF MODULE. IN THE CASE OF AN ACCIDENTAL DEPLOYMENT, THE BAG WILL THEN DEPLOY WITH MINIMAL CHANCE OF INJURY. WHEN PLACING ALIVE AIR BAG ASSEMBLY ON A BENCH OR OTHER SURFACE, ALWAYS FACE BAG AND TRIM COVER UP, AWAY FROM THE SURFACE. NEVER REST A STEERING COLUMN ASSEMBLY ON THE STEERING WHEEL WITH THE AIR BAG ASSEMBLY FACE DOWN AND COLUMN VERTICAL. THIS IS NECESSARY SO THAT A FREE SPACE IS PROVIDED TO ALLOW THE AIR BAG ASSEMBLY TO EXPAND IN THE UNLIKELY EVENT OF ACCIDENTAL DEPLOYMENT. OTHERWISE, PERSONAL INJURY COULD RESULT.

NOTE: In the event deployment has occurred, inspect coil assembly wire for any signs of scorching, melting or any other damage due to excessive heat. If the coil has been damaged, replace it.

Removal

1. Disable the SRS (Refer to “Disabling the SRS” in this section).
2. Loosen the air bag assembly fixing bolts from behind the steering wheel assembly using a TORX® driver or equivalent until the air bag assembly can be released from steering wheel.

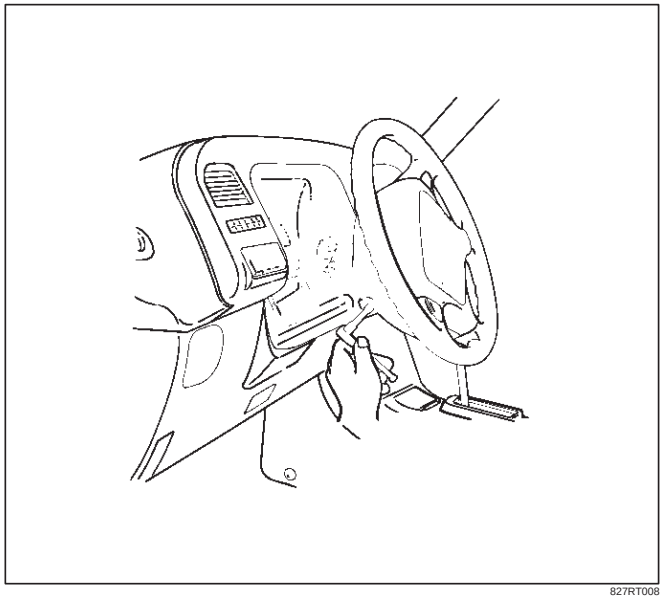

827RT008

3. Disconnect the yellow 2–pin connector located behind the air bag assembly and remove air bag assembly. Refer to “SRS Connectors” in this section for removal and installation.

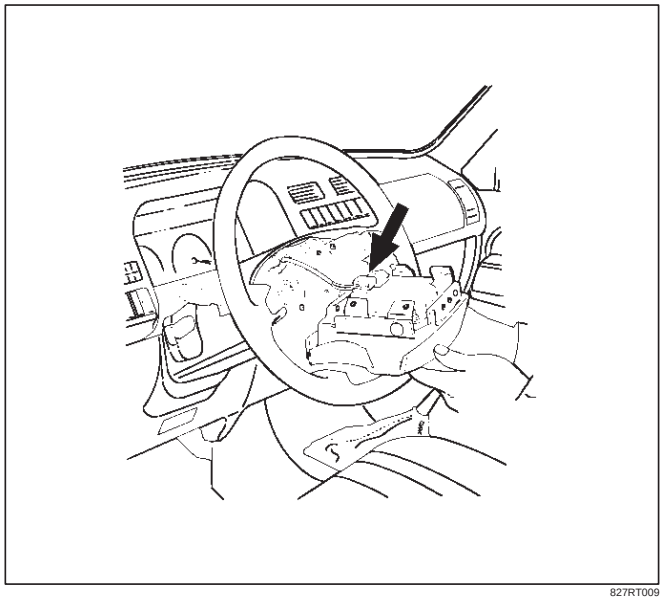

827RT009

Installation

1. Connect air bag to wiring harness connector.

NOTE: Pass the lead wire through the tabs on the plastic cover (wire protector) of air bag to prevent lead wire from being pinched.

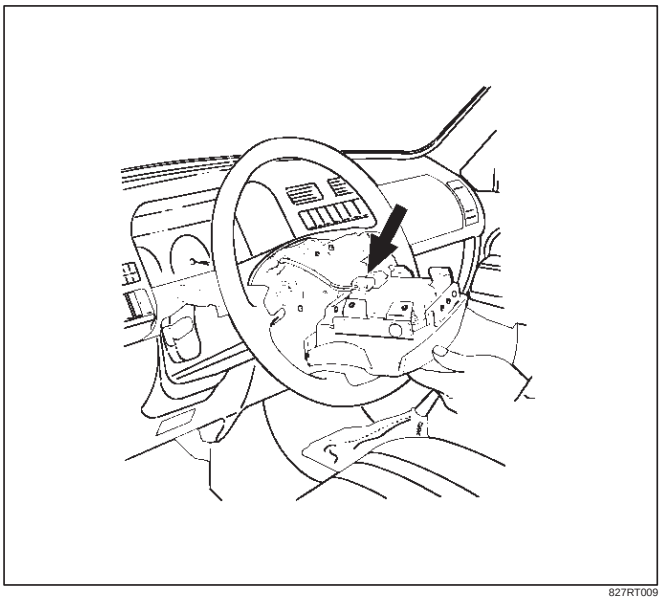

827RT009

2. Install air bag into steering wheel and tighten bolts to specified sequence as shown in figure.

Torque: 8.8 N·m (0.9 Kg·m/78 lb in)

CAUTION: Never use the air bag assembly from another vehicle. Use only new air bag assembly proper to the Trooper which is being repaired.

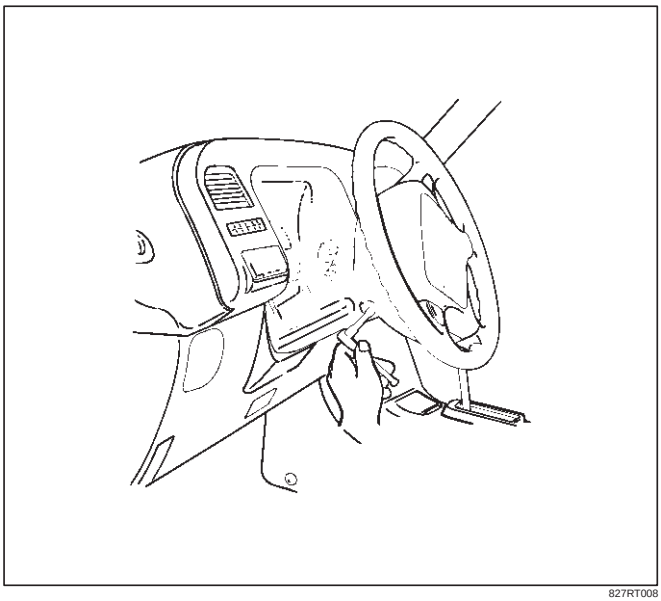

827RT008

3. Enable the SRS (Refer to “Enabling the SRS” in this section).

Steering Wheel

Service Precautions

WARNING: SAFETY PRECAUTIONS MUST BE FOLLOWED WHEN HANDLING A DEPLOYED AIR BAG ASSEMBLY. AFTER DEPLOYMENT, THE AIR BAG ASSEMBLY SURFACE MAY CONTAIN A SMALL AMOUNT OF SODIUM HYDROXIDE, A BY–PRODUCT OF THE DEPLOYMENT REACTION, THAT IS IRRITATING TO THE SKIN AND EYES. MOST OF THE POWER ON THE AIR BAG ASSEMBLY IS HARMLESS. AS A PRECAUTION, WEAR GLOVES AND SAFETY GLASSES WHEN HANDLING A DEPLOYED AIR BAG ASSEMBLY, AND WASH YOUR HANDS WITH MILD SOAP AND WATER AFTERWARDS.

WARNING: WHEN CARRYING A LIVE AIR BAG ASSEMBLY, MAKE SURE THE BAG AND TRIM COVER ARE POINTED AWAY FROM YOU. NEVER CARRY AIR BAG ASSEMBLY BY THE WIRES OR CONNECTOR ON THE UNDERSIDE OF MODULE. IN THE CASE OF AN ACCIDENTAL DEPLOYMENT, THE BAG WILL THEN DEPLOY WITH MINIMAL CHANCE OF INJURY. WHEN PLACING ALIVE AIR BAG ASSEMBLY ON A BENCH OR OTHER SURFACE, ALWAYS FACE BAG AND RIM COVER UP, AWAY FROM THE SURFACE. NEVER REST A STEERING COLUMN ASSEMBLY ON THE STEERING WHEEL WITH THE AIR BAG ASSEMBLY FACE DOWN AND COLUMN VERTICAL. THIS IS NECESSARY SO THAT A FREE SPACE IS PROVIDED TO ALLOW THE AIR BAG ASSEMBLY TO EXPAND IN THE UNLIKELY EVENT OF ACCIDENTAL DEPLOYMENT. OTHERWISE, PERSONAL INJURY COULD RESULT.

NOTE: In the event deployment has occurred, inspect coil assembly wire for any signs of scorching, melting or any other damage due to excessive heat. If the coil has been damaged, replace it.

Removal

1. Disable the SRS (Refer to “Disabling the SRS” in this section).
2. Loosen the air bag assembly fixing bolts from behind the steering wheel assembly using a TORX® driver or equivalent until the air bag assembly can be released from steering wheel.

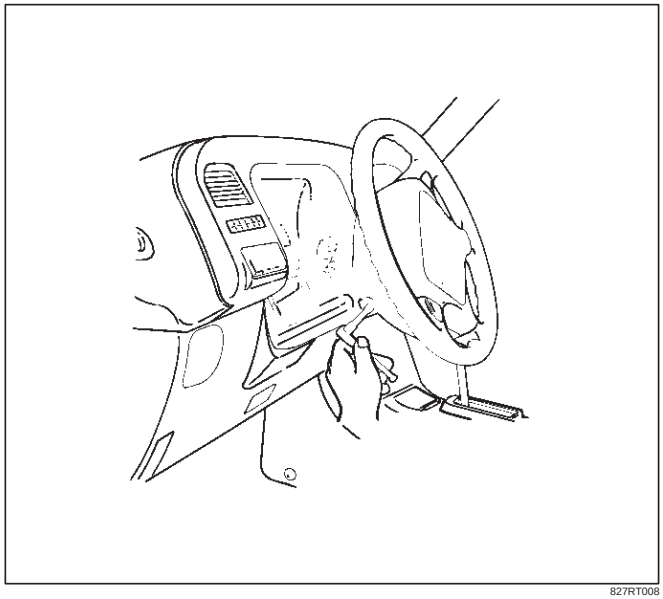

827RT008

3. Disconnect the yellow 2–pin connector located behind the air bag assembly and remove air bag assembly.Refer to “SRS Connectors” in this section for removal and installation.
4. Disconnect horn lead.

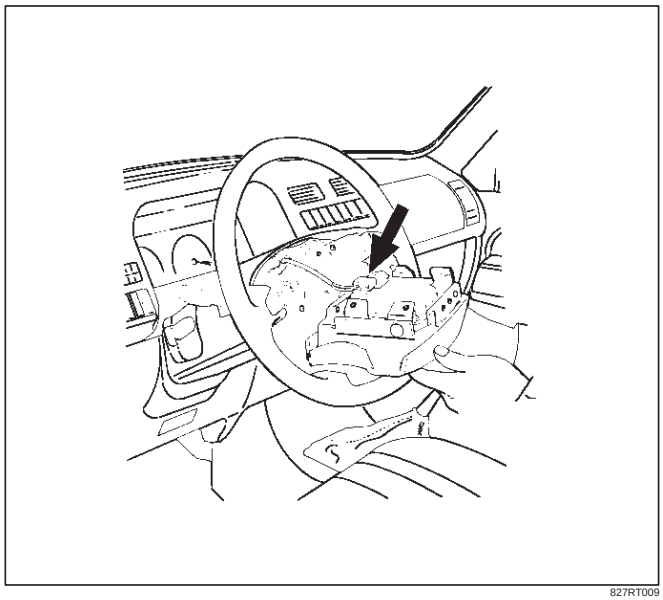

827RT009

5. Remove steering wheel attachment nut.

6. Apply a setting mark across the steering wheel and shaft so parts can be reassembled in their original position.

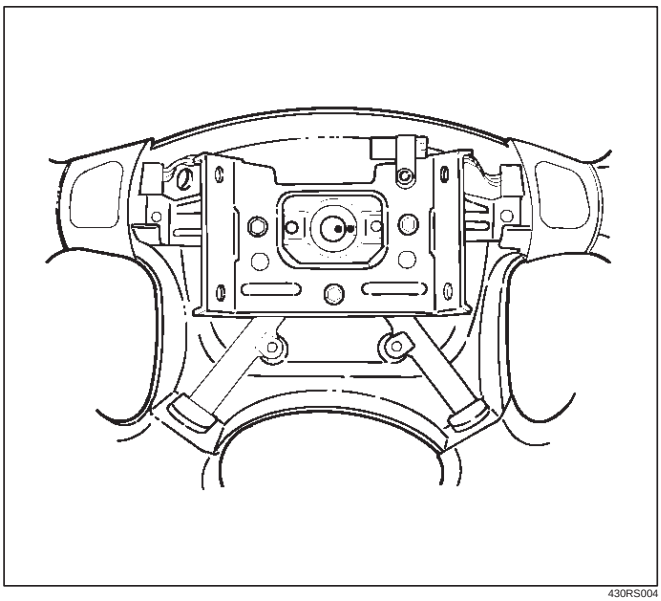

430RS004

7. Move the tires to the straight ahead position before removing the steering wheel. Install steering wheel puller onto steering wheel and remove steering wheel with 5–8521–0016–0.

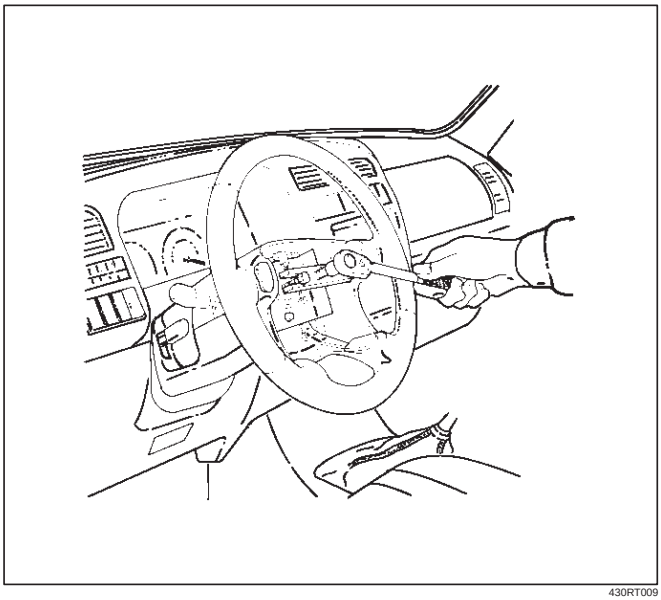

430RT009

8. Feed wiring through the wheel and remove wheel.

CAUTION: Never apply force to the steering wheel in direction of the shaft by using a hammer or other impact tools in an attempt to remove the steering wheel. The steering shaft is designed as an energy absorbing unit.

Installation

1. Install the steering wheel and align the setting marks.

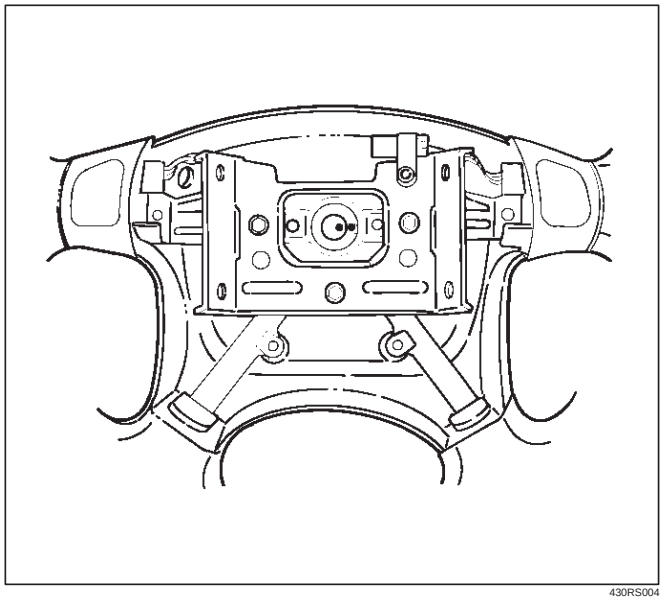

430RS004

2. Tighten the steering wheel fixing nut to the specified torque.

Torque : 34 N·m (3.5 Kg·m/25 lb ft)

3. Connect horn lead.
4. Connect air bag to wiring harness connector.

NOTE: Pass the lead wire through the tabs on the plastic cover (wire protector) of air bag to prevent lead wire from being pinched.

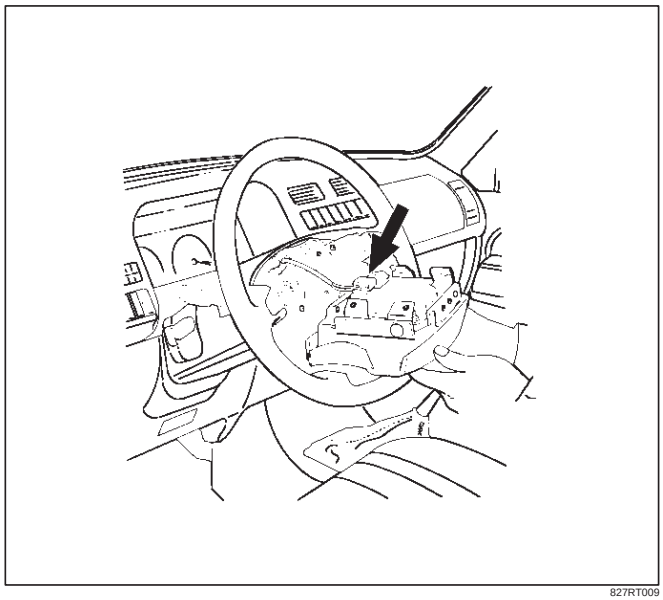

827RT009

5. Install air bag into steering wheel and tighten bolts to specified sequence as show in figure.

Torque: 8.8 N·m (0.9 Kg·m/78 lb in)

CAUTION: Never use the air bag assembly from another vehicle. Use only new air bag assembly proper to the Trooper which is being repaired.

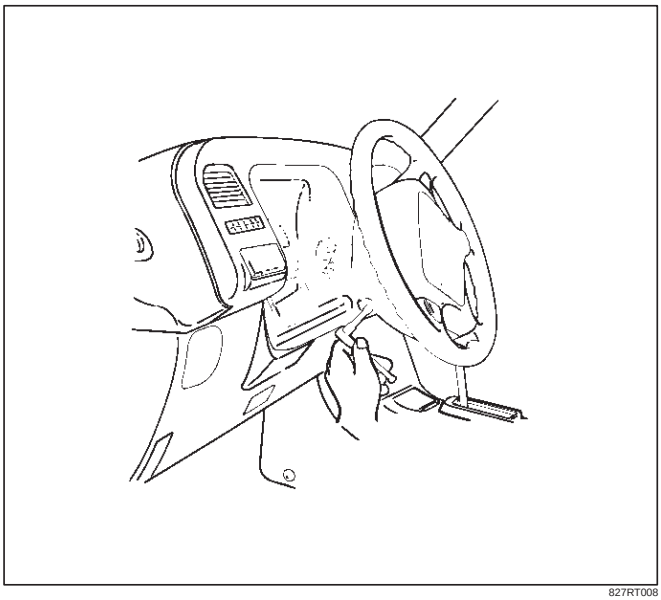

827RT008

6. Enable the SRS (Refer to “Enabling the SRS” in this section).

SRS Coil Assembly

Service Precautions

WARNING: SAFETY PRECAUTIONS MUST BE FOLLOWED WHEN HANDLING A DEPLOYED AIR BAG ASSEMBLY. AFTER DEPLOYMENT, THE AIR BAG ASSEMBLY SURFACE MAY CONTAIN A SMALL AMOUNT OF SODIUM HYDROXIDE, A BY–PRODUCT OF THE DEPLOYMENT REACTION, THAT IS IRRITATING TO THE SKIN AND EYES. MOST OF THE POWER ON THE AIR BAG ASSEMBLY IS HARMLESS. AS A PRECAUTION, WEAR GLOVES AND SAFETY GLASSES WHEN HANDLING A DEPLOYED AIR BAG ASSEMBLY, AND WASH YOUR HANDS WITH MILD SOAP AND WATER AFTERWARDS.

WARNING: WHEN CARRYING A LIVE AIR BAG ASSEMBLY, MAKE SURE THE BAG AND TRIM COVER ARE POINTED AWAY FROM YOU. NEVER CARRY AIR BAG ASSEMBLY BY THE WIRES OR CONNECTOR ON THE UNDERSIDE OF MODULE. IN THE CASE OF AN ACCIDENTAL DEPLOYMENT, THE BAG WILL THEN DEPLOY WITH MINIMAL CHANCE OF INJURY. WHEN PLACING ALIVE AIR BAG ASSEMBLY ON A BENCH OR OTHER SURFACE, ALWAYS FACE BAG AND RIM COVER UP, AWAY FROM THE SURFACE. NEVER REST A STEERING COLUMN ASSEMBLY ON THE STEERING WHEEL WITH THE AIR BAG ASSEMBLY FACE DOWN AND COLUMN VERTICAL. THIS IS NECESSARY SO THAT A FREE SPACE IS PROVIDED TO ALLOW THE AIR BAG ASSEMBLY TO EXPAND IN THE UNLIKELY EVENT OF ACCIDENTAL DEPLOYMENT. OTHERWISE, PERSONAL INJURY COULD RESULT.

NOTE: In the event deployment has occurred, inspect coil assembly wire for any signs of scorching, melting or any other damage due to excessive heat. If the coil has been damaged, replace it.

Removal

1. Disable the SRS (Refer to “Disabling the SRS” in this section).
2. Loosen the air bag assembly fixing bolts from behind the steering wheel assembly using a TORX® driver or equivalent until the air bag assembly can be released from steering wheel.

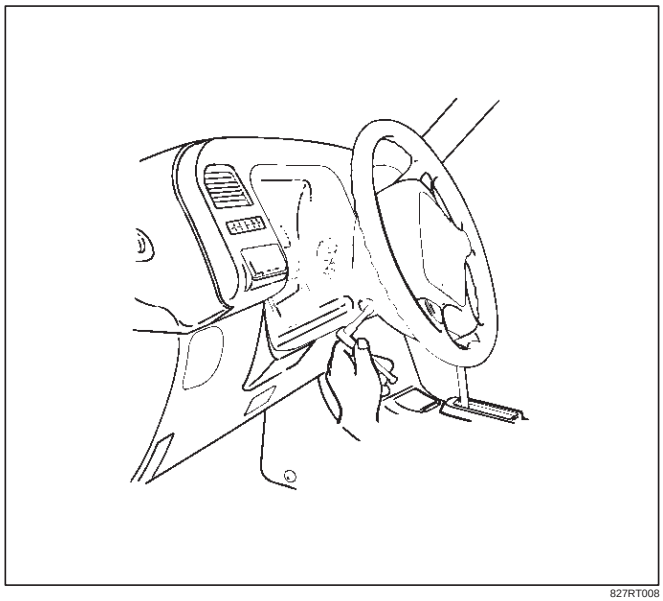

827RT008

3. Disconnect the yellow 2–pin connector located behind the air bag assembly and remove air bag assembly.Refer to “SRS Connectors” in this section for removal and installation.
4. Disconnect horn lead connector.

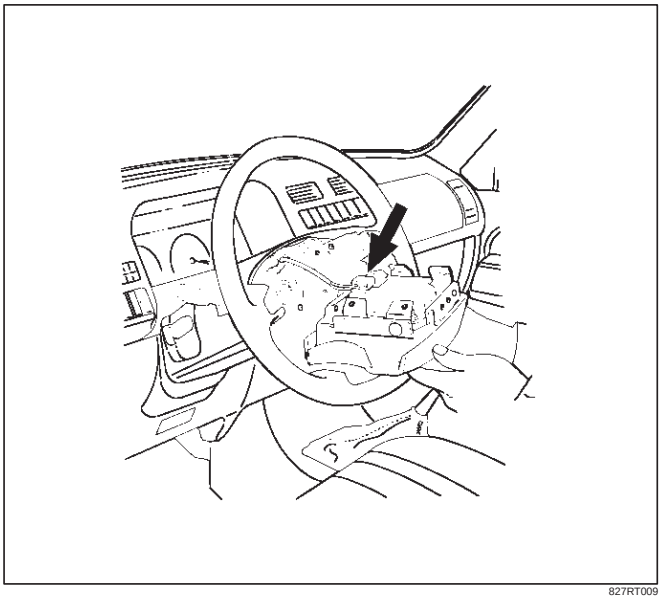

827RT009

5. Remove the steering wheel attachment nut.
6. Apply a setting mark across the steering wheel and shaft so parts can be reassembled in their original position.

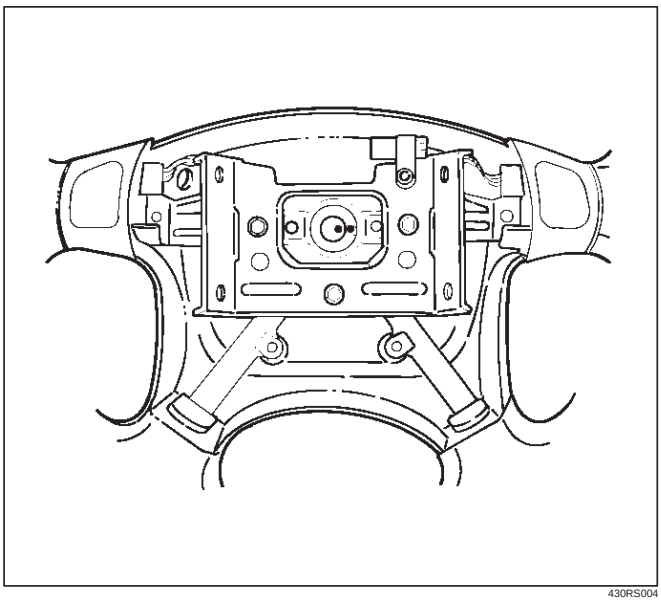

430RS004

7. Move the tires to the straight ahead position before removing the steering wheel and remove wheel with 5–8521–0016–0.

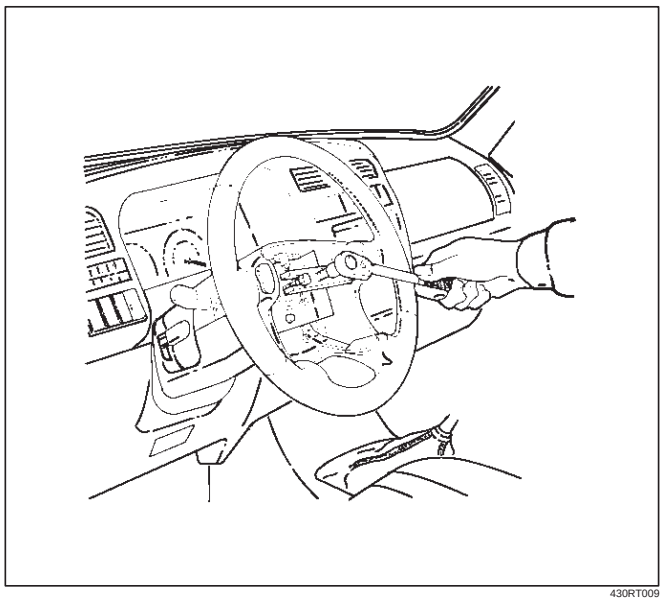

430RT009

8. Feed wiring though the wheel and remove wheel.
9. Remove the steering lower cover and engine hood opening lever.
10. Remove the driver knee bolster assembly.
11. Remove the steering column cover.
12. Remove air conditioning lower duct.
13. Disconnect the 12–pin wiring harness connectors located at the base of steering column.

CAUTION: Never apply force to the steering wheel in the direction of the shaft by using a hammer or other impact tools in an attempt to remove the steering wheel. The steering shaft is designed as an energy absorbing unit.

14. Remove the combination switch assembly with SRS coil.

Installation

1. Install the combination switch assembly with SRS coil.
2. Turn the SRS coil counterclockwise to full, return about 3 turns and align the neutral mark (1).

CAUTION: When turning the SRS coil counterclockwise to full, stop turning if resistance is felt. Forced further turning may damage the cable in the SRS coil.

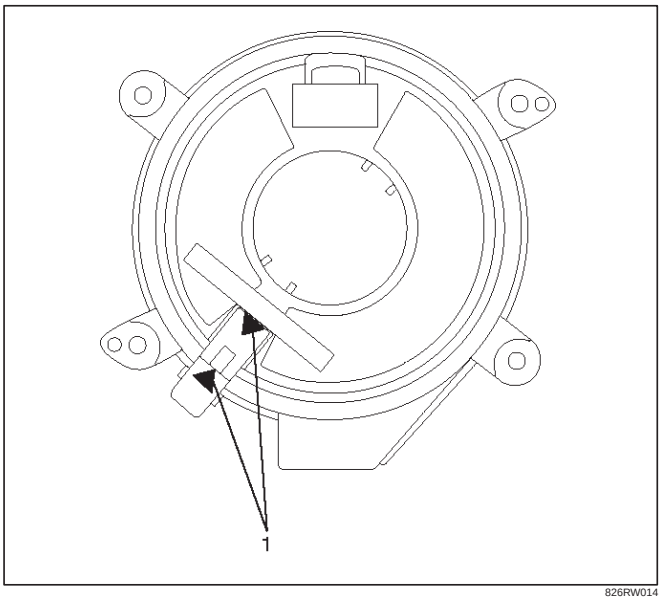

826RW014

3. Connect the wiring harness connectors located at the base of steering column.
4. Install the air conditioning lower duct.
5. Install the steering column cover.

CAUTION: When installing the steering column cover, be sure to wire (through each harness) as illustrated so that the harness starter switch, combination switch and SRS coil may not catch wiring.

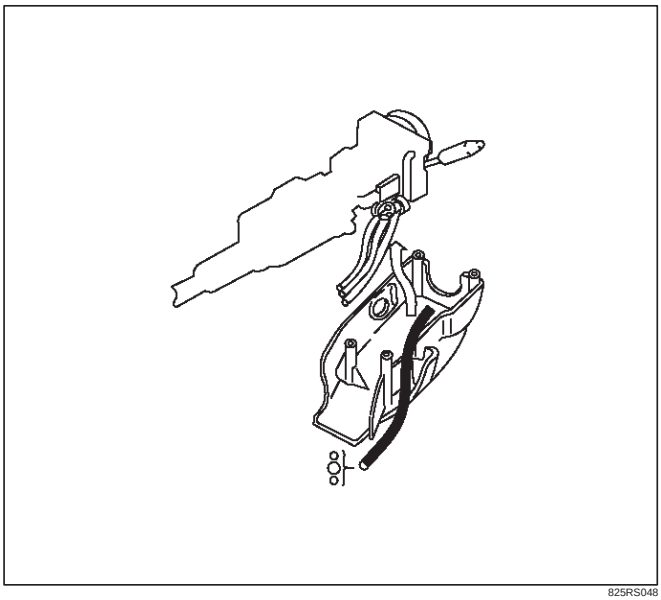

825RS048

6. Install the driver knee bolster assembly.
7. Install the steering lower cover and engine hood opening lever.
8. Install the steering wheel and align the setting marks.

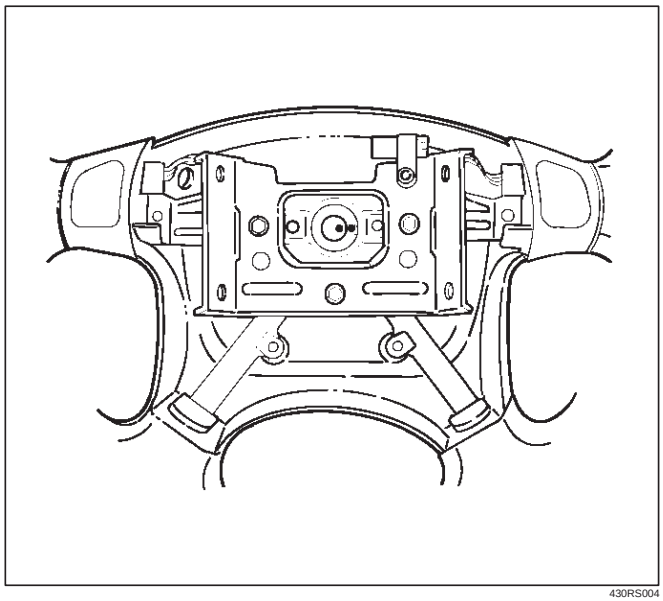

430RS004

9. Tighten the steering wheel fixing nut to the specified torque.

   Torque: 34 N·m (3.5 Kg·m/25 lb ft)

10. Connect horn lead.
11. Connect air bag to wiring harness connector.

NOTE: Pass the lead wire through the tabs on the plastic cover (wire protector) of air to prevent lead wire from being pinches.

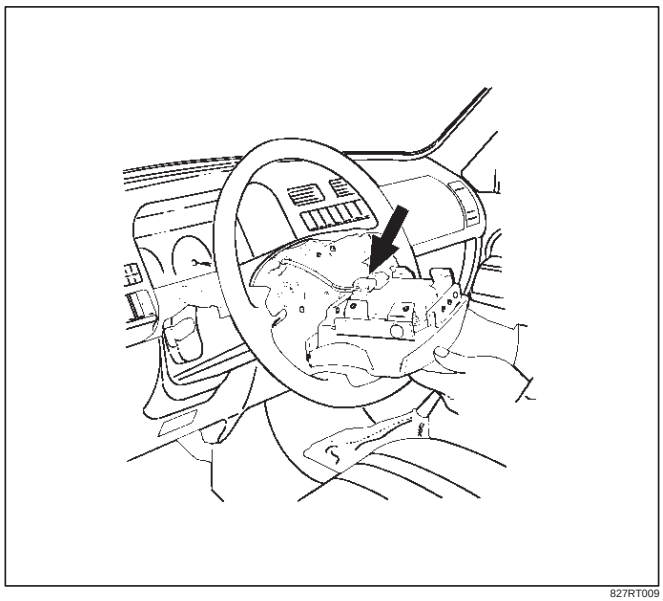

827RT009

12. Install air bag into steering wheel and tighten bolts to specified sequence as shown in figure.

    Torque: 8.8 N·m (0.9 Kg·m/78 lb in)

CAUTION: Never use the air bag assembly from another vehicle. Use only new air bag assembly proper to the Trooper which is being repaired.

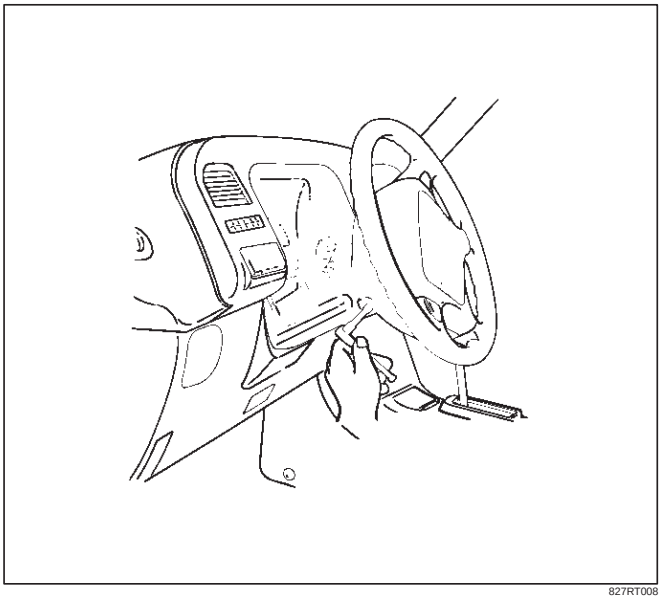

827RT008

13. Enable the SRS (Refer to “Enabling the SRS” in this section).

SRS Coil Replacement Procedure

Removal

1. Same removal steps until step 13 of SRS Coil Assembly Removal.
2. Disconnect the horn terminal NO.12 from connector and remove the tape binding harness. (Refer to How to Disconnect the horn terminal in this section.)

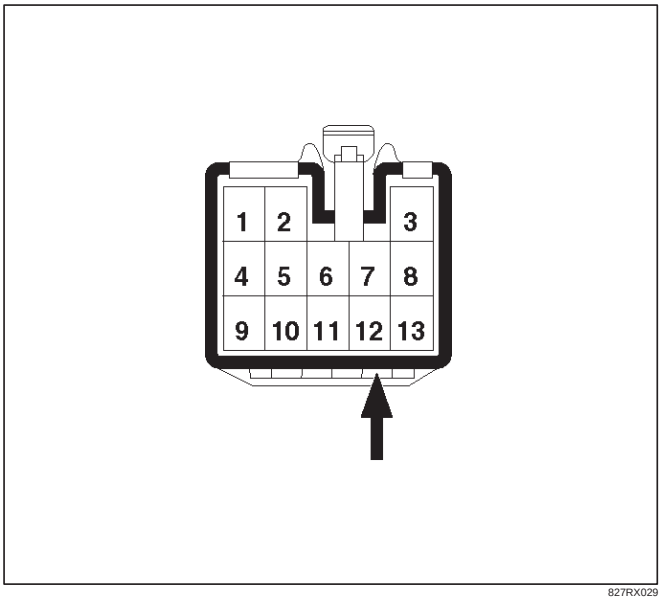

827RX029

3. Remove four bolts of SRS coil assembly and remove the SRS coil assembly from the combination switch.

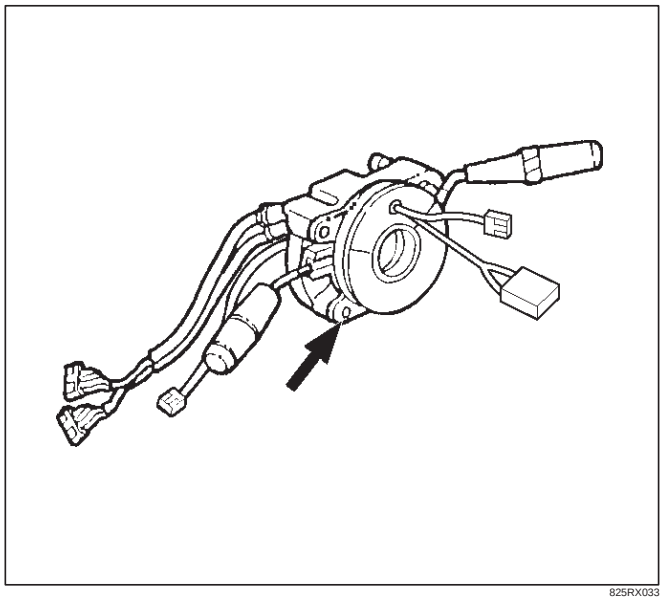

825RX033

How to Disconnect the horn terminal

1. Lift the terminal lock plate from upper portion of connector with a minitenes screw driver (-) and release connector terminal lock.

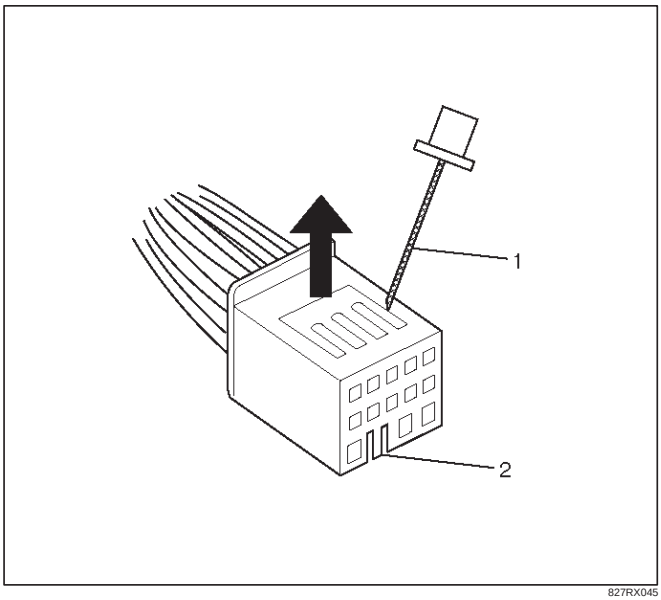

827RX045

Legend

(1) Minitenes screw driver (-)
(2) Connector lock knob

2. Pull out the terminal of lead wire coming to connector NO.12 while lifting the lock part with a minitenes screw driver (-).

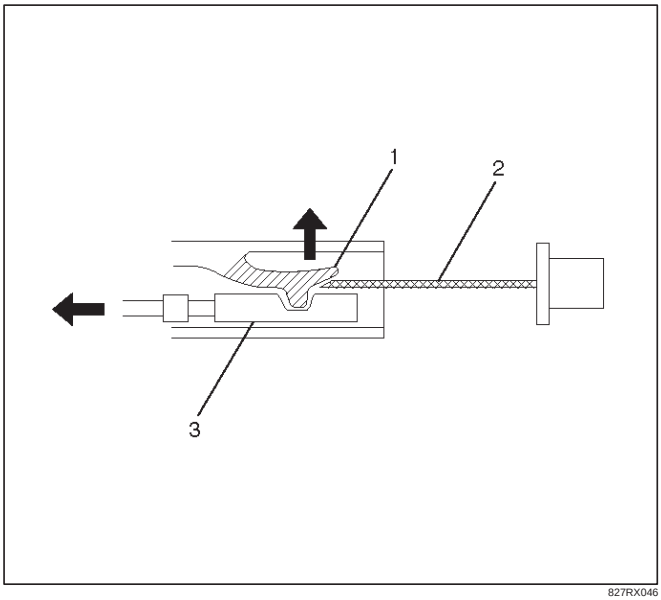

827RX046

Legend

(1) Lock
(2) Minitenes screw driver (-)
(3) Terminal

How to Connect Horn Terminal

1. Insert horn terminal from behind black connector NO.12 until connector lock works.

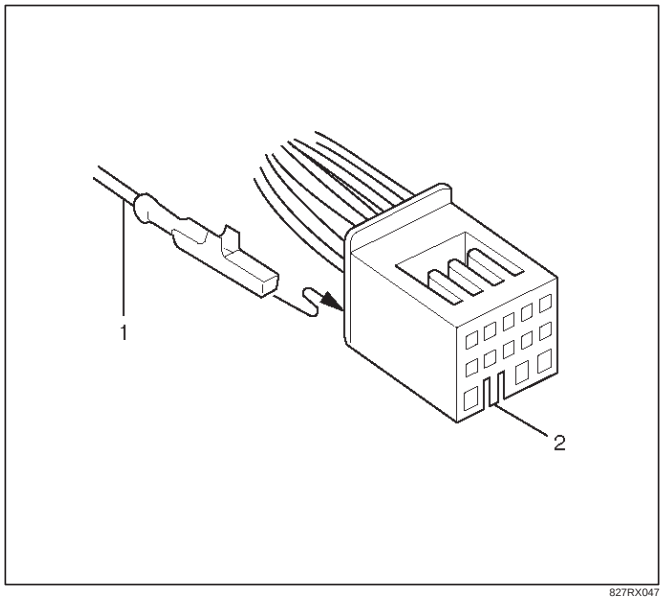

827RX047

Legend

(1) Terminal
(2) Connector lock knob

2. Push terminal lock plate into the connector for a duble lock.

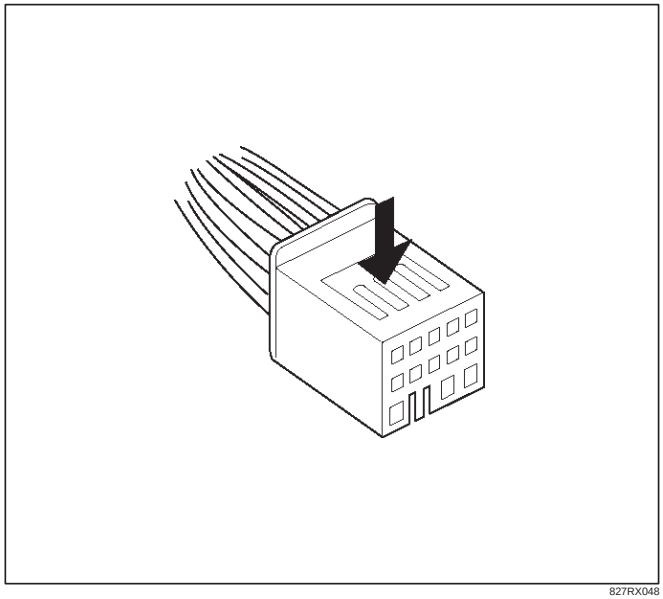

827RX048

Installation

1. Set cancel cam and SRS coil in position and install the SRS coil to combination switch by tightening the four bolts to a specified tightening torque with four bolts.

   Torque: 0.5 N·m (0.05 kg·m/4 lb ft)

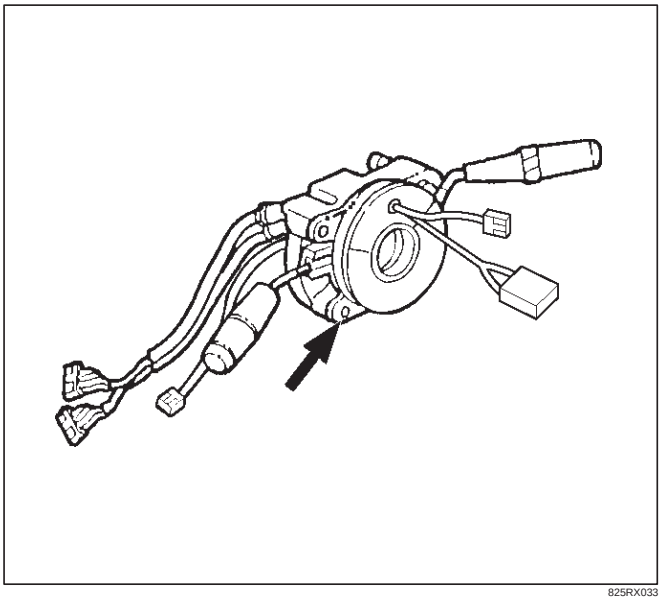

825RX033

2. Insert the horn terminal into the connector NO.12 and bind the combination switch harness and SRS coil harness with a tape. (Refer to How to Connect the Horn Terminal in this section.)
3. After installation steps above, same steps as SRS Coil Assembly installation step 2 to step 13.

Steering Column

Service Precautions

WARNING: SAFETY PRECAUTIONS MUST BE FOLLOWED WHEN HANDLING A DEPLOYED AIR BAG ASSEMBLY. AFTER DEPLOYMENT, THE AIR BAG ASSEMBLY SURFACE MAY CONTAIN A SMALL AMOUNT OF SODIUM HYDROXIDE, A BY–PRODUCT OF THE DEPLOYMENT REACTION, THAT IS IRRITATING TO THE SKIN AND EYES. MOST OF THE POWER ON THE AIR BAG ASSEMBLY IS HARMLESS. AS A PRECAUTION, WEAR GLOVES AND SAFETY GLASSES WHEN HANDLING A DEPLOYED AIR BAG ASSEMBLY, AND WASH YOUR HANDS WITH MILD SOAP AND WATER AFTERWARDS.

WARNING: WHEN CARRYING A LIVE AIR BAG ASSEMBLY, MAKE SURE THE BAG AND TRIM COVER ARE POINTED AWAY FROM YOU. NEVER CARRY AIR BAG ASSEMBLY BY THE WIRES OR CONNECTOR ON THE UNDERSIDE OF MODULE. IN THE CASE OF AN ACCIDENTAL DEPLOYMENT, THE BAG WILL THEN DEPLOY WITH MINIMAL CHANCE OF INJURY. WHEN PLACING ALIVE AIR BAG ASSEMBLY ON A BENCH OR OTHER SURFACE, ALWAYS FACE BAG AND RIM COVER UP, AWAY FROM THE SURFACE. NEVER REST A STEERING COLUMN ASSEMBLY ON THE STEERING WHEEL WITH THE AIR BAG ASSEMBLY FACE DOWN AND COLUMN VERTICAL. THIS IS NECESSARY SO THAT A FREE SPACE IS PROVIDED TO ALLOW THE AIR BAG ASSEMBLY TO EXPAND IN THE UNLIKELY EVENT OF ACCIDENTAL DEPLOYMENT. OTHERWISE, PERSONAL INJURY COULD RESULT.

NOTE: In the event deployment has occurred, inspect coil assembly wire for any signs of scorching, melting or any other damage due to excessive heat. If the coil has been damaged, replace it.

Removal

1. Disable the SRS (Refer to “Disabling the SRS ” in this section).
2. Loosen the air bag assembly fixing bolts from behind the steering wheel assembly using a TORX® driver or equivalent until the air bag assembly can be released from steering wheel.

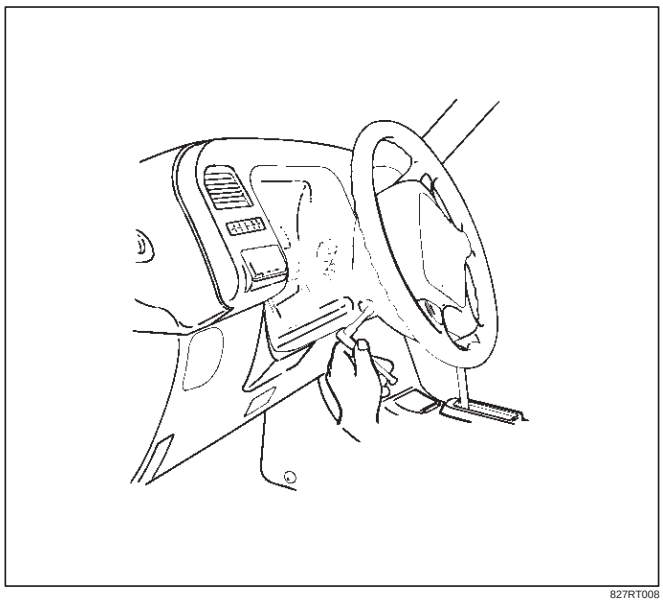

827RT008

3. Disconnect the yellow 2–pin connector located behind the air bag assembly and remove air bag assembly.Refer to “SRS Connectors” in this section for removal and installation.

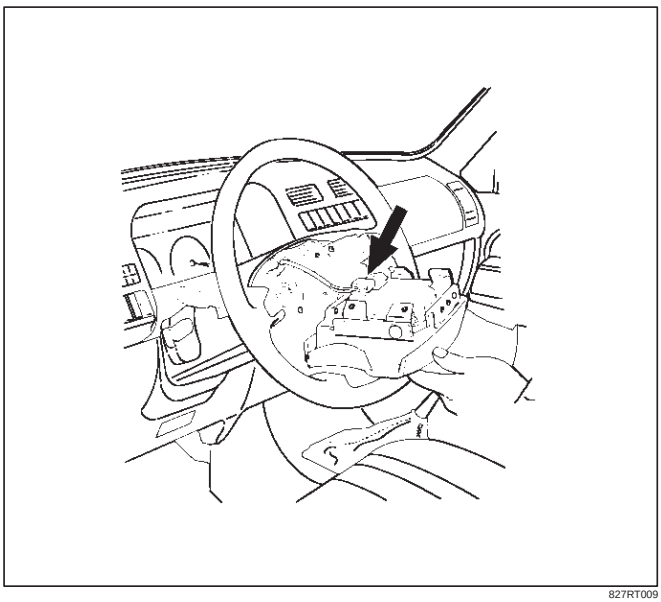

827RT009

4. Disconnect horn lead connector.
5. Remove the steering wheel attachment nut.
6. Apply a setting mark across the steering wheel and shaft so parts can be reassembled in their original position.

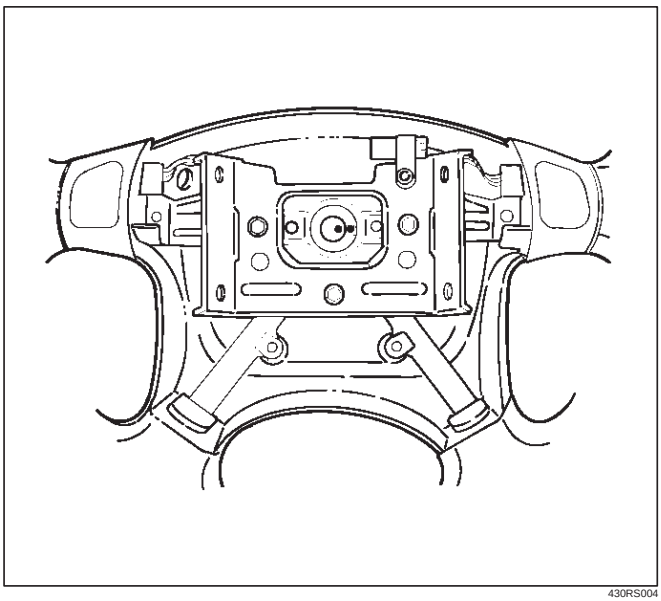

430RS004

7. Move the tires to the straight ahead position before removing the steering wheel and removing wheel with 5–8521–0016–0.

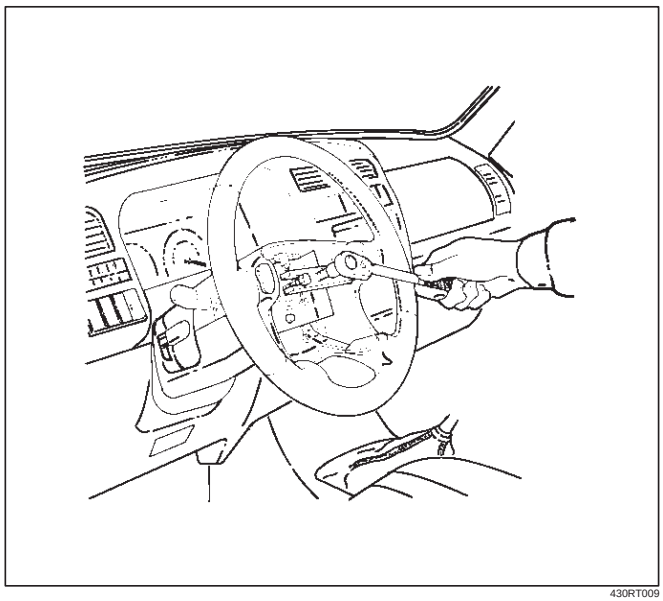

430RT009

8. Feed wiring though the wheel and remove wheel.
9. Remove the steering lower cover and engine hood opening lever.
10. Remove the driver knee bolster assembly.

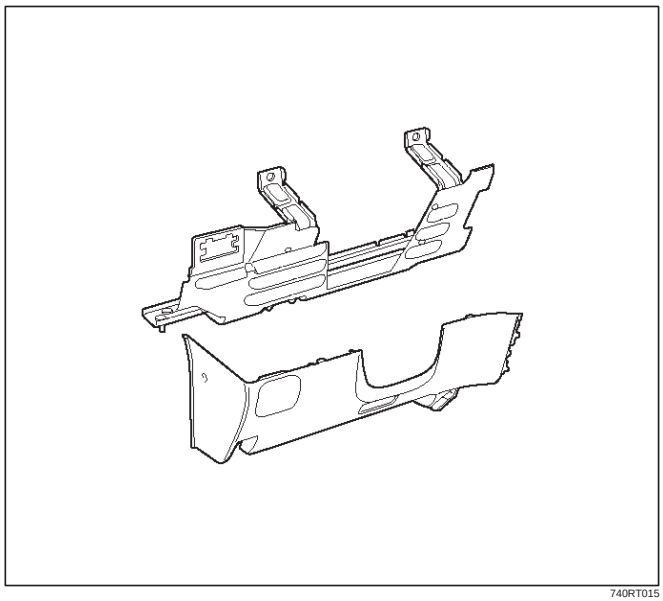

740RT015

11. Remove the steering column cover.
12. Remove air conditioning lower duct.
13. Disconnect the wiring harness connectors located at the base of steering column.

CAUTION: Never apply force to the steering wheel in direction of the shaft by using a hammer or other impact tools in an attempt to remove the steering wheel. The steering shaft is designed as an energy absorbing unit.

14. Remove the combination switch assembly with SRS coil.

NOTE: SRS coil is a part of combination switch assembly, which cannot be replaced separately. Therefore, be sure not to remove the SRS coil from the combination switch assembly.

15. Remove the snap ring.
16. Remove the cushion rubber.
17. Disconnect shift lock cable (A/T only).
18. Disconnect the starter switch harness connector located base of steering column.
19. Remove steering lock cylinder assembly.
20. Apply a setting mark across the universal joint and steering shaft to reassemble the parts in their original position.

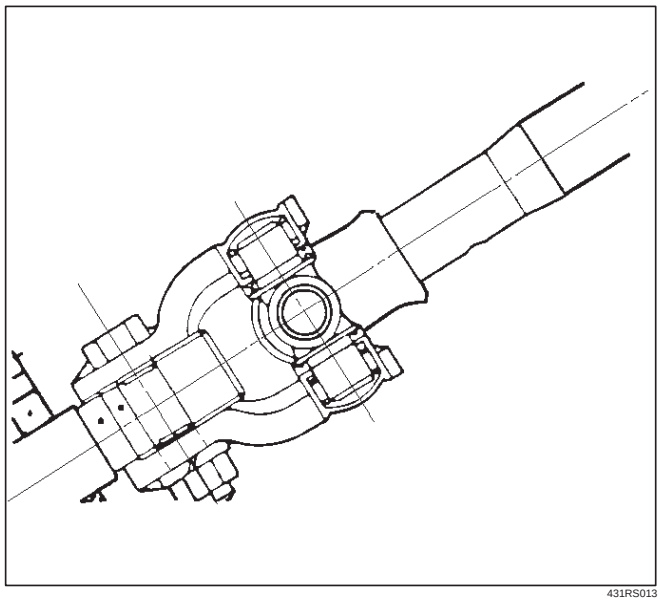

431RS013

21. Remove steering column assembly.

Installation

1. Install the steering column assembly and align the setting marks on the universal joint and steering shaft made during removal.

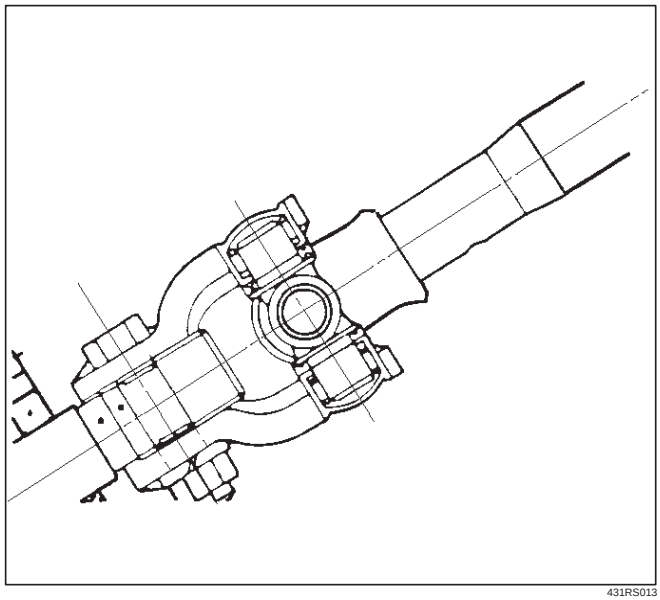

431RS013

2. Tighten the steering column fixing bolts (dash panel side) to the specified torque.

   Torque: 19 N·m (1.9 Kg·m/14 lb ft)

3. Tighten the steering column fixing bolts (Pedal bracket) to the specified torque.

   Torque: 17 N·m (1.7 Kg·m/13 lb ft)

4. Tighten the universal joint to the specified torque.

   Torque: 25 N·m (2.6 Kg·m/18 lb ft)

5. Install steering lock cylinder assembly.
6. Connect shift lock cable (For A/T)
7. Install cushion rubber.
8. Install snap ring.
9. Install the combination switch assembly with SRS coil.
10. Connect the wiring harness connector located on the base of steering column.
11. Turn the SRS coil counterclockwise to full, return about 3 turns and align the neutral mark (1).

CAUTION: When turning the SRS coil counterclockwise to full, stop turning if resistance is felt. Forced further turning may damage to the cable in the SRS coil.

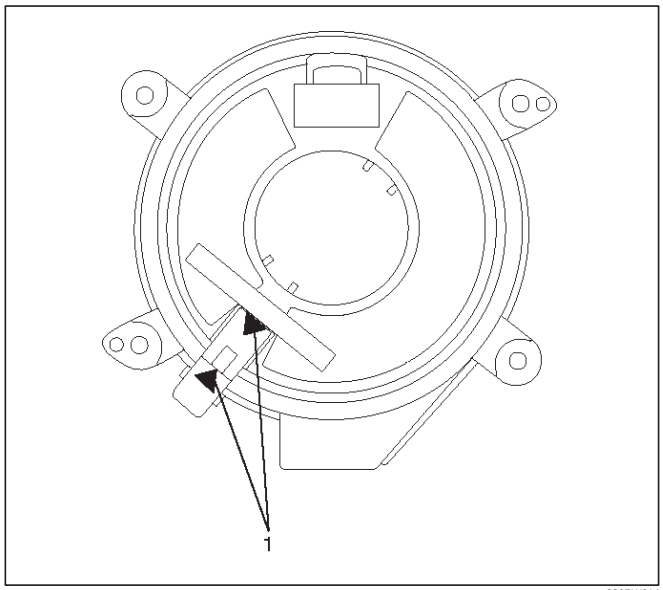

826RW014

12. Install steering column cover.

CAUTION: When installing the steering column cover, be sure to wire (through each harness) as illustrated so that the harness starter switch, combination switch and SRS coil may not catch wiring.

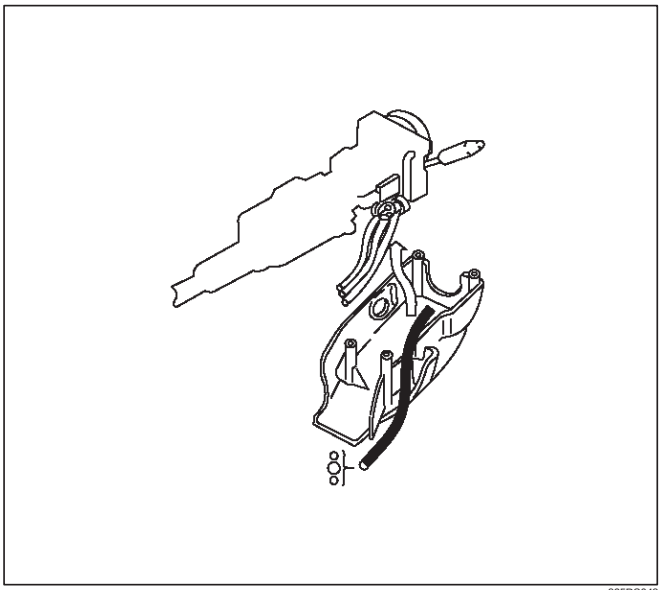

825RS048

13. Install the steering wheel and align the setting marks.

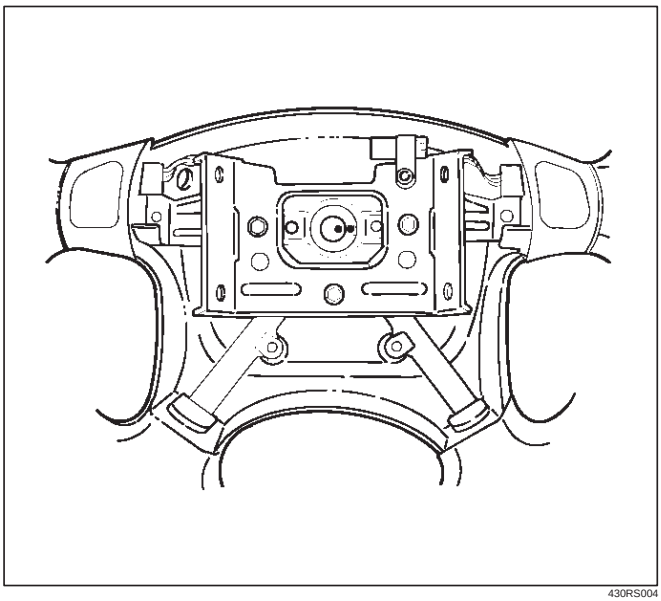

430RS004

14. Tighten the steering wheel fixing nut to the specified torque.

Torque: 34 N·m (3.5 Kg·m/25 lb ft)

15. Connect horn lead.
16. Connect air bag wiring harness connector.

NOTE: Pass the lead wire through the tabs on the plastic cover (wire protector) of air bag to prevent lead wire from being pinched.

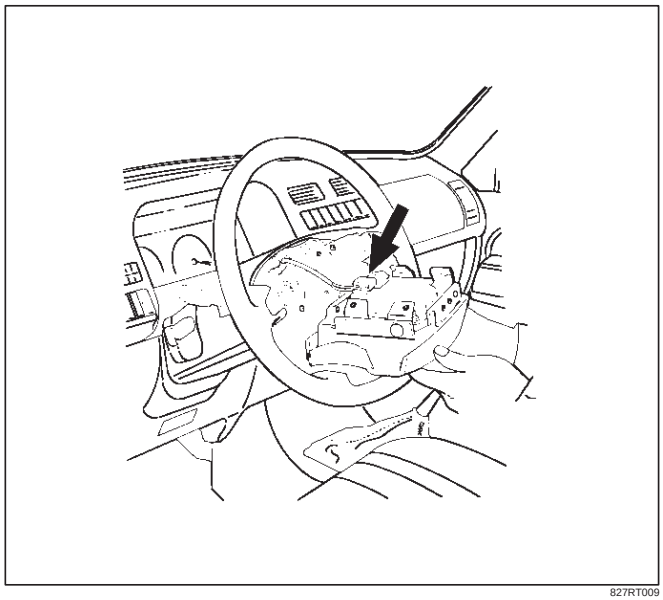

827RT009

17. Install air bag into steering wheel and tighten bolts to specified sequence as shown in figure.

Torque: 8 N·m (0.8 Kg·m/69 lb in)

CAUTION: Never use the air bag assembly from another vehicle. Use only the air bag assembly proper to the Trooper which is being repaired.

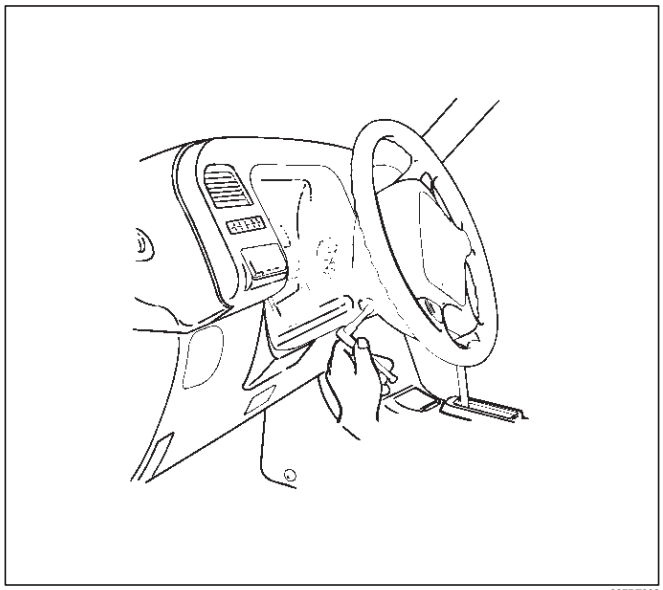

827RT008

18. Enable the SRS (Refer to “Enabling the SRS” in this section).

Passenger Air Bag Assembly

Service Precautions

WARNING: SAFETY PRECAUTIONS MUST BE FOLLOWED WHEN HANDLING A DEPLOYED AIR BAG ASSEMBLY. AFTER DEPLOYMENT, THE AIR BAG ASSEMBLY SURFACE MAY CONTAIN A SMALL AMOUNT OF SODIUM HYDROXIDE, A BY–PRODUCT OF THE DEPLOYMENT REACTION, THAT IS IRRITATING TO THE SKIN AND EYES. MOST OF THE POWER ON THE AIR BAG ASSEMBLY IS HARMLESS. AS A PRECAUTION, WEAR GLOVES AND SAFETY GLASSES WHEN HANDLING A DEPLOYED AIR BAG ASSEMBLY, AND WASH YOUR HANDS WITH MILD SOAP AND WATER AFTERWARDS.

WARNING: WHEN CARRYING A LIVE AIR BAG ASSEMBLY, MAKE SURE THE BAG AND TRIM COVER ARE POINTED AWAY FROM YOU. NEVER CARRY AIR BAG ASSEMBLY BY THE WIRES OR CONNECTOR ON THE UNDERSIDE OF MODULE. IN THE CASE OF AN ACCIDENTAL DEPLOYMENT, THE BAG WILL THEN DEPLOY WITH MINIMAL CHANCE OF INJURY. WHEN PLACING ALIVE AIR BAG ASSEMBLY ON A BENCH OR OTHER SURFACE, ALWAYS FACE BAG AND RIM COVER UP, AWAY FROM THE SURFACE. NEVER REST A STEERING COLUMN ASSEMBLY ON THE STEERING WHEEL WITH THE AIR BAG ASSEMBLY FACE DOWN AND COLUMN VERTICAL. THIS IS NECESSARY SO THAT A FREE SPACE IS PROVIDED TO ALLOW THE AIR BAG ASSEMBLY TO EXPAND IN THE UNLIKELY EVENT OF ACCIDENTAL DEPLOYMENT. OTHERWISE, PERSONAL INJURY COULD RESULT.

NOTE: **IN THE EVENT DEPLOYMENT HAS OCCURRED, INSPECT COIL ASSEMBLY WIRE FOR ANY SIGNS OF SCORCHING, MELTING OR ANY OTHER DAMAGE DUE TO EXCESSIVE HEAT. IF THE COIL HAS BEEN DAMAGED, REPLACE IT.**

Removal

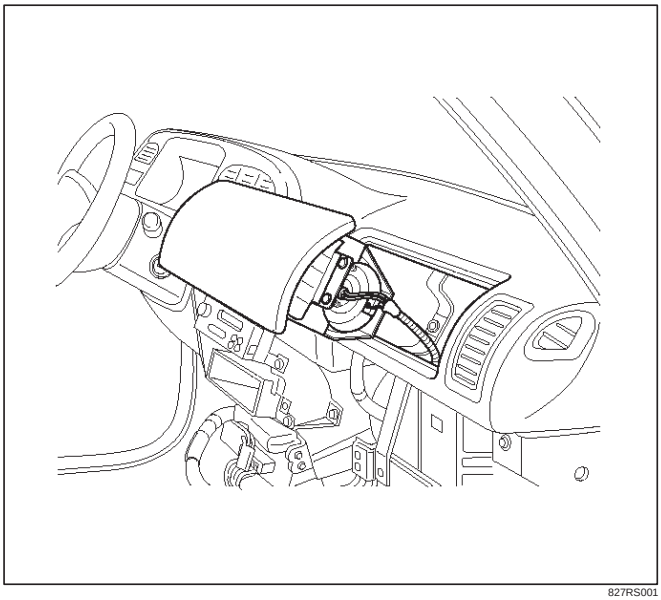

827RS001

1. Disable the SRS (Refer to “Disabling the SRS ” in this section).
2. Remove gear control knob.
3. Remove front console assembly.
4. Remove rear console assembly and disconnect harness connector.
5. Remove ECM and SDM cover.
6. Remove glove box assembly with lid.
7. Remove glove box cover.
8. Remove instrument panel assist side lower cover.
9. Disconnect engine hood opener lever.
10. Remove instrument panel door side lower cover.
11. Remove lower cluster with ashtray.
12. Remove meter cluster assembly and disconnect harness connector.
13. Remove instrument panel lower center cover.
14. Disconnect passenger air bag assembly harness connector.
15. Remove air bag assembly fixing bolts and nuts.
16. Remove passenger air bag assembly.

Installation

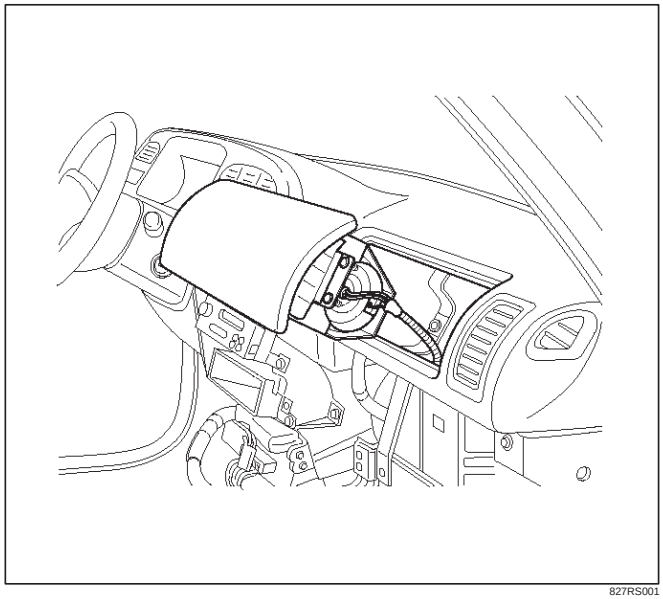

827RS001

1. Install passenger air bag assembly.
2. Install air bag assembly fixing bolts, nuts and tighten to specified torque.

   Torque: 6 N·m (0.6 Kg·m/52 lb in)
3. Connect air bag assembly harness connector.
4. Install instrument panel lower center cover.
5. Install meter cluster assembly and connect harness connector.
6. Install lower cluster with ashtray.
7. Install instrument panel door side lower cover.
8. Connect engine hood opener lever.
9. Install instrument panel assist side lower cover.

10. Install glove box cover.
11. Install glove box assembly with lid.
12. Install ECM and SDM cover.
13. Install rear console assembly and connect harness connector.
14. Install front console assembly.
15. Install gear control knob.
16. Enable the SRS (Refer to “Enabling the SRS” in this section).

Pretensioner Seat Belt (If so equipped)

Service Precaution

WARNING: WHEN PERFORMING SERVICE ON OR AROUND THE PRETENSIONER SEAT BELT OR THE PRETENSIONER SEAT BELT WIRING, FOLLOW THE PROCEDURES LISTED BELOW TO TEMPORARILY DISABLE THE PRETENSIONER SEAT BELT. FAILURE TO FOLLOW PROCEDURES COULD RESULT IN POSSIBLE THE PRETENSIONER SEAT BELT DEPLOYMENT, PERSONAL INJURY OR OTHERWISE UNNEEDED THE PRETENSIONER SEAT BELT REPAIR.

AS A PRECAUTION, WEAR GLOVES AND SAFETY GLASSES WHEN PERFORMING THE PRETENSIONER SEAT BELT. WHEN DEPLOY A LIVE PRETENSIONER SEAT BELT AT OUTSIDE THE VEHICLE, DEPLOYMENT HARNESS SHALL REMAIN SHORTED AND NOT BE CONNECTED TO A POWER SOURCE UNTIL THE PRETENSIONER SEAT BELT IS TO BE DEPLOYED. THE PRETENSIONER SEAT BELT WILL IMMEDIATELY DEPLOY WHEN A POWER SOURCE IS CONNECTED TO IT. CONNECTING THE DEPLOYMENT HARNESS SHOULED ALWAYS BE THE FINAL STEP IN THE PRETENSIONER SEAT BELT DEPLOYMENT PROCEDURE. FAILURE TO FOLLOW PROCEDURES IN THE ORDER LISTED COULD RESULT IN PERSONAL INJURY.

Parts Location

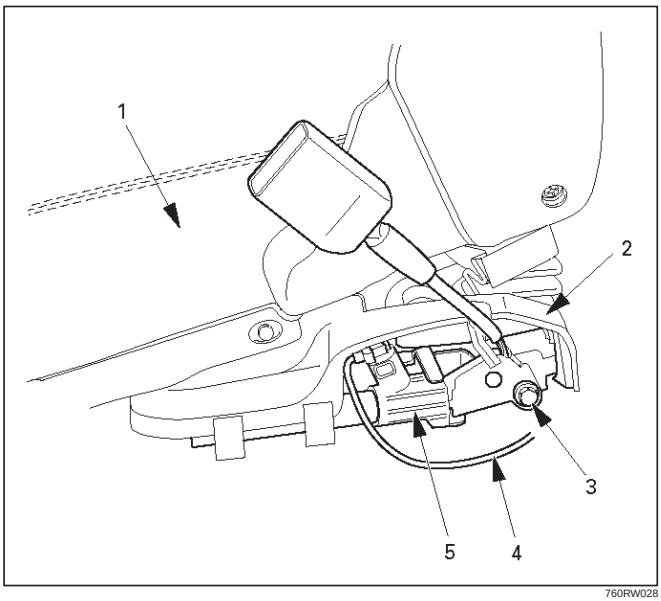

760RW028

Legend

(1) Seat
(2) Pretensioner Cover
(3) Bolt
(4) Pretensioner Harness
(5) Pretensioner

Removal

1. Turn ignition switch to “LOCK”, remove key.
2. Remove the foot rest located behind the seat.
3. Remove the cover on seat slide.
4. Disconnect the 2-pin connector at the base of the seat.
5. Remove four fixing bolts the seat slide and remove seat.
6. Remove the pretensioner seat belt cover.
7. Remove the pretensioner seat belt assembly.

Installation

1. Install the pretensioner seat belt assembly.
2. Install the pretensioner seat belt cover.
3. Install the seat on seat slide and four fixing bolts.
4. Connect the yellow 2-pin connector at the base of the seat.
5. Install the cover on seat slide.
6. Install the foot rest located behind the seat.

Main Data and Specifications

Fastener Tightening Specification

Application	N·m	Kg·m	Lb Ft	Lb In.
SDM	10	1.0	—	87
Driver air bag fixing bolt	8.8	0.9	—	78
Steering wheel fixing bolt	34	3.5	25	—
Steering column (dash panel side fixing bolts)	19	1.9	14	—
Steering column (Pedal bracket fixing bolt)	17	1.7	13	—
Steering column (Universal joint fixing bolt)	25	2.6	18	—
Passenger Air Bag fixing bolts and nuts	6	0.6	—	52

RESTRAINT CONTROL SYSTEM

CONTENTS

Service Precaution 9J1–1
Diagnostic Information 9J1–2
System Schematic 9J1–4
SRS Diagnostic System Check 9J1–4
Chart A SDM Integrity Check 9J1–6
Chart B "AIR BAG" Warning Lamp Comes "ON" Steady 9J1–8
Chart C "AIR BAG" Warning Lamp Does Not Come "ON" Steady 9J1–10
DTC 15 Passenger Deployment Loop Resistance High 9J1–13
DTC 16 Passenger Deployment loop Resistance Low 9J1–15
DTC 17 Passenger Deployment Loop Open 9J1–17
DTC 18 Passenger Deployment Loop Short To Ground 9J1–19
DTC 19 Passenger Deployment Loop Short To B+ 9J1–21
DTC 21 Driver Deployment Loop Resistance High 9J1–23
DTC 22 Driver Deployment Loop Resistance Low 9J1–26
DTC 24 Driver Deployment Loop Short To Ground 9J1–29
DTC 25 Driver Deployment Loop Short To B+ 9J1–31
DTC 26 Driver Deployment Loop Open 9J1–33
DTC 51 Air Bag Deployment Event Commanded 9J1–35
DTC 53 Deployment Commanded With Deployment Loop Fault Or Energy Reserves Out Of Range 9J1–37
DTC 61 Warning Lamp Circuit Failure 9J1–39
DTC 71 Internal SDM Fault 9J1–41
DTC 29 Passenger Pretensioner Loop Short To Ground 9J1–43
DTC 31 Passenger Pretensioner Loop Resistance High 9J1–45
DTC 32 Passenger Pretensioner loop Resistance Low 9J1–47
DTC 33 Passenger Pretensioner Loop Short To Voltage 9J1–49
DTC 34 Passenger Pretensioner Loop Open 9J1–51
DTC 41 Driver Pretensioner Loop Resistance High 9J1–53
DTC 42 Driver Pretensioner Loop Resistance Low 9J1–55
DTC 44 Driver Pretensioner Loop Open 9J1–57
DTC 45 Driver Pretensioner Loop Short To Ground 9J1–59
DTC 46 Driver Pretensioner Loop Short To Voltage 9J1–61
DTC 52 Pretensioner Deployment Event Commanded 9J1–63

Service Precaution

WARNING: IF SO EQUIPPED WITH A SUPPLEMENTAL RESTRAINT SYSTEM (SRS), REFER TO THE SRS COMPONENT AND WIRING LOCATION VIEW IN ORDER TO DETERMINE WHETHER YOU ARE PERFORMING SERVICE ON OR NEAR THE SRS COMPONENTS OR THE SRS WIRING. WHEN YOU ARE PERFORMING SERVICE ON OR NEAR THE SRS COMPONENTS OR THE SRS WIRING, REFER TO THE SRS SERVICE INFORMATION. FAILURE TO FOLLOW WARNINGS COULD RESULT IN POSSIBLE AIR BAG DEPLOYMENT, PERSONAL INJURY, OR OTHERWISE UNNEEDED SRS SYSTEM REPAIRS.

CAUTION: Always use the correct fastener in the proper location. When you replace a fastener, use ONLY the exact part number for that application. ISUZU will call out those fasteners that require a replacement after removal. ISUZU will also call out the fasteners that require thread lockers or thread sealant. UNLESS OTHERWISE SPECIFIED, do not use supplemental coatings (Paints, greases, or other corrosion inhibitors) on threaded fasteners or fastener joint interfaces. Generally, such coatings adversely affect the fastener torque and the joint clamping force, and may damage the fastener. When you install fasteners, use the correct tightening sequence and specifications. Following these instructions can help you avoid damage to parts and systems.

Diagnostic Information

CAUTION: When fasteners are removed, always reinstall them at the same location from which they were removed. if a fastener needs to be replaced, use the correct part number fastener for that application. if the correct part number fastener is not available, a fastener of equal size and strength (or stronger) may be used. fasteners that are not reused, and those requiring thread locking compound will be called out. the correct torque value must be used when installing fasteners that require it. if the above conditions are not followed, parts or system damage could result.

Diagnostic Procedures

WARNING: TO AVOID DEPLOYMENT WHEN TROUBLESHOOTING THE SRS, DO NOT USE ELECTRICAL TEST EQUIPMENT SUCH AS A BATTERY–POWERED OR AC–POWERED VOLTMETER, OHMMETER, ETC., OR ANY TYPE OF ELECTRICAL EQUIPMENT OTHER THAN THAT SPECIFIED IN THIS MANUAL. DO NOT USE A NON POWERED, PROBE–TYPE TESTER. INSTRUCTIONS IN THIS MANUAL MUST BE FOLLOWED CAREFULLY, OTHERWISE PERSONAL INJURY MAY RESULT.

The diagnostic procedures used in this section are designed to aid in finding and repairing SRS problems. Outlined below are the steps to find and repair SRS problems quickly and effectively. Failure to carefully follow these procedures may result in extended diagnostic time, incorrect diagnosis and incorrect parts replacement.

1. **Perform The “SRS Diagnostic System Check”.**
   The “SRS Diagnostic System Check” should always be the starting point of any SRS diagnostics. The “SRS Diagnostic System Check” checks for proper “AIR BAG” warning lamp operation and checks for SRS trouble codes using both “Flash Code” and “Scan Tool” Methods.
2. **Refer To The Proper Diagnostic Chart As Directed By The “SRS Diagnostic System Check”.**
   The “SRS Diagnostic System Check” will lead you to the correct chart to diagnose any SRS problems. Bypassing these procedures may result in extended diagnostic time, incorrect diagnosis and incorrect parts replacement.
3. **Repeat The “SRS Diagnostic System Check” After Any Repair Or Diagnostic Procedures Have Been Performed.**
   Preforming the “SRS Diagnostic System Check” after all repair or diagnostic procedures will assure that the repair has been made correctly and that no other conditions exist.

Diagnostic Codes

The Sensing and Diagnostic Module (SDM) maintains a history record of all diagnostic codes that have been detected since the SRS codes were last cleared during service.

1. Active Codes — Faults that are presently detected this ignition cycle. Active codes are stored in RAM (Random Access Memory).
2. History Codes — All faults detected since the last time the history fault memory was cleared. History codes are stored in EEPROM. (Electronically Erasable Programmable Read only Memory)

How To Read Trouble Codes

All codes (Active and history) can be read (or cleared) by using a scan tool or equivalent.
If a PDT is not available, have the vehicle serviced by ISUZU dealer.

How To Clear Trouble Codes

Trouble codes can only be cleared by using a Scan Tool. If a “scan tool” is not available then inform the owner of the stored codes and suggest that the codes are cleared upon the next visit to an Isuzu dealership.

Scan Tool Diagnostics

A scan tool can be used to read current and history codes and to clear all history codes after a repair is complete. The scan tool must be updated to communicate with the SRS through a memory card or a manufacturer’s update before it can be used for SRS diagnostics. To use the scan tool, connect it to the DLC connector and turn the ignition switch “ON”. Then follow the manufacturer’s directions for communication with the SRS. The scan tool reads serial data from the SDM “Serial Data” output (terminal 24) to the DLC connector (terminal 9).

Basic Knowledge Required

Before using this section of the Service Manual, there is some basic knowledge which will be required. Without this knowledge, you will have trouble using the diagnostic procedures in this section. Use care to prevent harm or unwanted deployment. Read all cautions in the service manual and on warning labels attached to SRS components.

Basic Electrical Circuits

You should understand the basic theory of electricity including series and parallel circuits, and understand the voltage drops across series resistors. You should know the meaning of voltage (volts), current (amps), and resistance (ohms). You should understand what happens in a circuit with an open or a shorted wire. You should be able to read and understand a wiring diagram.

“Flash Code” Diagnostics

Flash code diagnostics can be used to read active codes and to determine if history codes are present but cannot be used to clear codes or read history codes. Flash code diagnostics is enabled by grounding by terminal 4 shorting to terminal 13 of the DLC connector with the ignition switch “ON”. Grounding terminal 4 of the DLC connector pulls the “Diagnostics Request” input (Terminal 1) of the SDM low and signals the SDM to enter the flash code diagnostic display mode.

The SDM displays the trouble codes by flashing the warning lamp. Each code that is displayed will consist of a number of flashes which represents the tens digit, a 1.2 second pause, following by a number of flashes which represents the ones digit of the code. Each code is displayed one time before moving on to the next code. After all of the codes have been displayed, the entire code sequence will continually by repeated until ground is removed from terminal 4 of the DLC connector.

Two special codes exist when reading in the flash code mode (Flash Code 12 and Flash Code 13). “Flash Code 12“ will always be the first code displayed when the flash code mode is enable Code 12 is not an indication of a SRS problem but an indication that the flash code mode has been enabled. If there are no active or history codes present, the SDM will display code 12 until ground is removed from the DLC connector at terminal 4. “flash Code 13” will be displayed if history codes are present. To read the history codes a scan tool must be used.

System Schematic

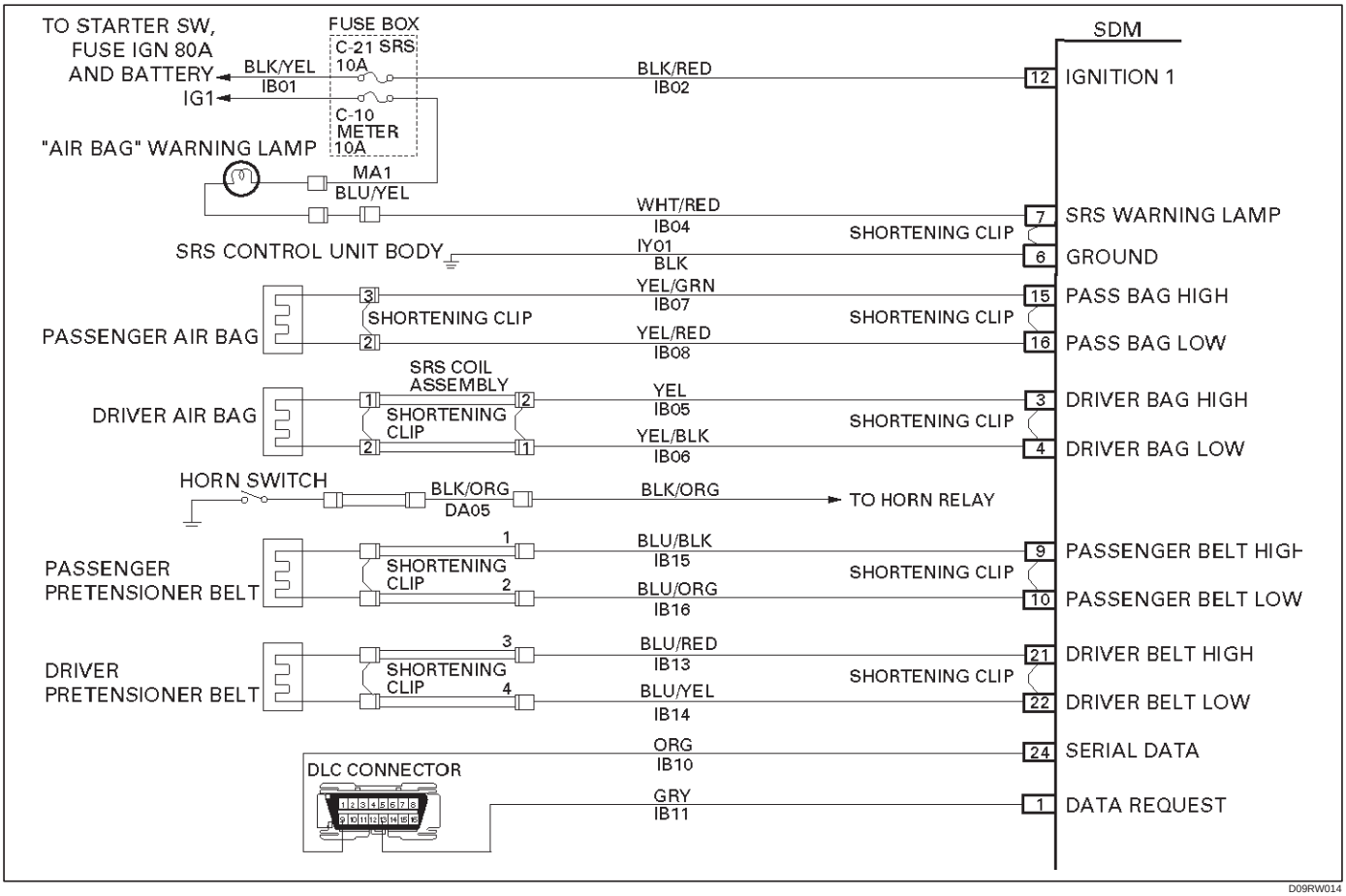

SRS Diagnostic System Check

The diagnostic procedures used in this section are designed to find and repair SRS malfunctions. To get the best results, it is important to use the diagnostic charts and follow the sequence listed below:

A. Perform the “SRS Diagnostic System Check.”
   The “SRS Diagnostic System Check” must be the starting point of any SRS diagnostics. The “SRS Diagnostic System Check” checks for proper “AIR BAG” warning lamp operation, the ability of the SDM to communicate through the “Serial Data” line and whether SRS diagnostic trouble codes exist.

B. Refer to the proper diagnostic chart as directed by the “SRS Diagnostic System Check.”
   The “SRS Diagnostic System Check” will lead you to the correct chart to diagnose any SRS malfunctions. Bypassing these procedures may result in extended diagnostic time, incorrect diagnosis and incorrect parts replacement.

C. Repeat the “SRS Diagnostic System Check” after any repair or diagnostic procedures have been preformed.
   Performing the “SRS Diagnostic System Check” after all repair or diagnostic procedures will ensure that the repair has been made correctly and that no other malfunctions exist

Circuit Description

When the ignition switch is first turned “ON”, “Ignition 1” voltage is applied from the “C–21” fuse to the SDM at the “Ignition 1” input terminals “12”. The SDM responds by flashing the “AIR BAG” warning lamp turn on 3.5 seconds, while performing tests on the SRS.

Notes On System Check Chart:

1. The “AIR BAG” warning lamp should turn on 3.5 seconds after ignition is first turned “ON”.
2. After the “AIR BAG” warning lamp turn on 3.5 seconds, it should turn “OFF”
3. This test checks for the proper operation of the “Serial Data” line. This test will also determine whether history diagnostic trouble codes are stored and, if so, identify them.
4. Improper operation of the “AIR BAG” warning lamp is indicated. This test differentiates a warning lamp stays “ON” condition from a warning lamp does not come “ON” condition.
5. This test checks for proper operation of the “Serial Data” line. This test will also identify the stored diagnostic trouble codes and whether they are current or history.

Diagnostic Aids:

The order in which diagnostic trouble codes are diagnosed is very important. Failure to diagnose the

diagnostic trouble codes in the order specified may result in extended diagnostic time, incorrect diagnosis and incorrect parts replacement.

SRS Diagnostic System Check

Step	Action	Yes	No
1	Note the “Air Bag” warning lamp as ignition switch is turned “ON.” Does the “AIR BAG” warning lamp turn on 3.5 seconds?	Go to Step 2	Go to Step 3
2	Note the “AIR BAG” warning lamp after it turn on 3.5 seconds. Does the “AIR BAG” warning lamp go “OFF”?	Go to Step 4	Go to Step 5
3	Note the “AIR BAG” warning lamp as ignition switch is turned “ON”. Does the “AIR BAG” warning lamp come “ON” steady?	Go to Chart B	Go to Chart C
4	1. Note the “AIR BAG” warning lamp as that ignition switch is turned “ON.” Ignition switch “OFF.” 2. Connect a scan tool to data link connector. 3. Follow direction given in the scan tool instruction manual. Ignition switch “ON.” 4. Request the SRS diagnostic trouble code display, recode all history diagnostic trouble code(s). specify as such, on repair order Is (are) diagnostic trouble code(s) displayed?	Ignition switch “OFF” When DTC 71 is set, go to DTC 71 Chart For all other history codes refer to “Diagnostic Aids” For that specific DTC A history DTC indicates the malfunction has been repaired or is intermittent	SRS is functional and free of malfuncitons, no further diagnosis is required If scan tool indicated “NO DATA RECEIVED,” refer to chassis electrical section8
5	1. Ignition switch “OFF.” 2. Connect a scan tool to data link connector. 3. Follow directions as given in the scan tool instruction manual. 4. Ignition switch “ON.” 5. Request the SRS diagnostic trouble code display, Recode all diagnostic trouble code(s), specifying as current or history on repair order. Is (are) diagnostic trouble code (s) displayed?	Ignition switch “OFF” When DTC 53 is set, go to DTC 53 chart When DTC 51 is set, go to DTC 51 chart When DTC 19 is set, go to DTC 19 chart When DTC 25 is set, go to DTC 25 chart Diagnose remaining current DTCs from lowest to highest When only history DTCs exist, refer to “Diagnostics Aids” for that specific DTC A history DTC indicates the malfunction has been repaired or is intermittent	If scan tool indicates “No Data Received,” refer to chassis electrical section8

Chart A SDM Integrity Check

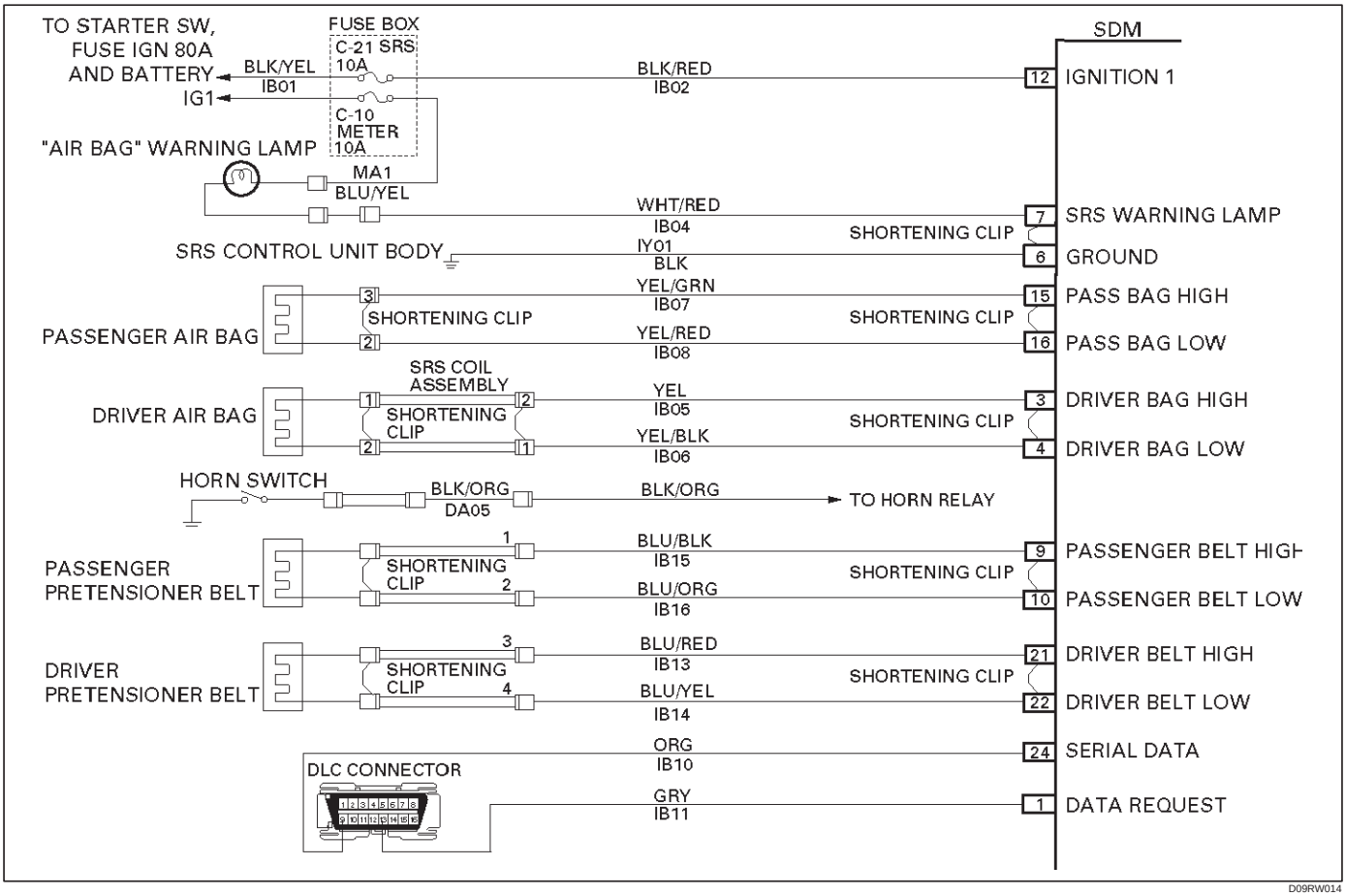

Circuit Description:

When the SDM recognizes “Ignition 1” voltage, applied to terminals “12”, is greater than 9 volts, the “AIR BAG” warning lamp is turned on 3.5 seconds to verify operation. At this time the SDM performs “Turn–ON” tests followed by “Continuous Monitoring” tests. When a malfunction is detected, the SDM sets a current diagnostic trouble code and illuminates the “AIR BAG” warning lamp. The SDM will clear current diagnostic trouble codes and move them to a history file when the malfunction is no longer detected and/or the ignition switch is cycled, except for DTCs 19, 25, 51, 53 and 71. DTC 71 can only be cleared using a scan tool “Clear Codes” command. If DTCs 51, 53 are not indicated then DTC 71 is not existing. DTCs 51, 53 and 71 can not be cleared after a “Clear Codes” command is issued.

Chart Test Description:

Number(s) below refer to step number(s) on the diagnostic chart:

1. This test confirms a current malfunction. If no current malfunction is occurring (history DTC set) the “Diagnostic Aids” for the appropriate diagnostic trouble code should be referenced. The SDM should not be replaced for a history diagnostic trouble code.
2. This test checks for a malfunction introduced into the SRS during the diagnostic process. It is extremely unlikely that a malfunctioning SDM would cause a new malfunction to occur during the diagnostic process.
3. When all circuitry outside the SDM has been found to operate properly, as indicated by the appropriate diagnostic chart, then and only then should the SDM be replaced.

Chart A SDM Integrity Check

WARNING: DURING SERVICE PROCEDURES. BE VERY CAREFUL WHEN HANDLING A SENSING AND DIAGNOSTIC MODULE (SDM). NEVER STRIKE OR JAR THE SDM. NEVER POWER UP THE SRS WHEN THE SDM IS NOT RIGIDLY ATTACHED TO THE VEHICLE. ALL SDM AND MOUNTING BRACKET FASTENERS MUST BE CAREFULLY TORQUED AND THE ARROW MUST BE POINTING TOWARD THE FRONT OF THE VEHICLE TO ENSURE PROPER OPERATION OF THE SRS. THE SDM COULD BE ACTIVATED WHEN POWERED WHILE NOT RIGIDLY ATTACHED TO THE VEHICLE WHICH COULD CAUSE DEPLOYMENT AND RESULT IN PERSONAL INJURY.

Step	Action	Yes	No
1	1. This chart assumes that the “SRS Diagnostic System Check” and either a symptom chart or a diagnostic trouble code chart diagnosis have been performed. When all circuitry outside the SDM has been found to operate properly, as indicated by the appropriate diagnostic chart, and the symptom or DTC remains current, the following 2. Diagnostic procedures must be performed to verify the need for SDM replacement. 3. Ignition switch “OFF”. 4. Reconnect all SRS components, ensure all components are properly mounted. 5. Ensure the ignition switch has been “OFF” for at least 15 seconds. 6. Note “AIR BAG” warning lamp as ignition switch is turned “ON.” Does warning lamp turn on 3.5 seconds then go “OFF”?	The symptom or DTC is no longer occurring Clear SRS diagnostic trouble codes Repeat “SRS Diagnostic System Check”	Go to Step 2
2	Using a scan tool request diagnostic trouble code display Is the same symptom or DTC occurring as was when the “SRS Diagnostic System Check ” was first performed?	Go to Step 3	Ignition switch “OFF” Go to the appropriate chart for the indicated malfunction
3	1. Clear “SRS Diagnostic Trouble Codes”. 2. Ignition switch “OFF” for at least two minutes. 3. Note “AIR BAG” warning lamp as ignition switch is turned “ON.” Does warning lamp turn on 3.5 seconds then go “OFF”?	SRS is functional and free of malfunctions No further diagnosis is required Go to Step 4	Ignition switch “OFF” Replace SDM Go to Step 4
4	Reconnect all SRS components, ensure all components are properly mounted. Was this step finished?	Repeat the “SRS Diagnostic System Check”	Go to Step 4

Chart B "AIR BAG" Warning Lamp Comes "ON" Steady

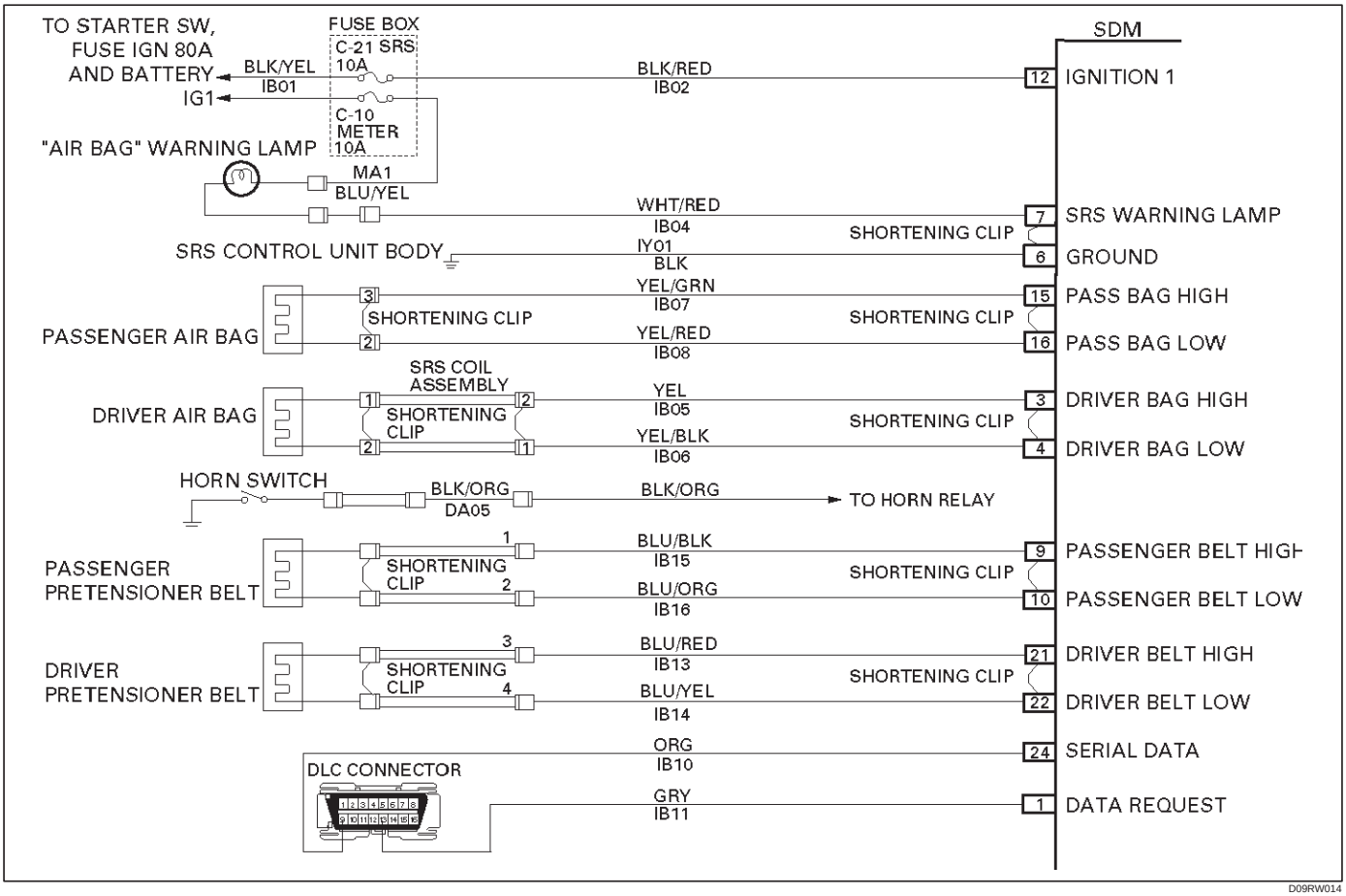

Circuit Description:

When the ignition switch is first turned "ON", "Ignition 1" voltage is applied from the "C–10" fuse to "AIR BAG", warning lamp which is connected to "SRS Warning Lamp", terminal "7". The "C–21" fuses apply system voltage to the "Ignition 1" inputs, terminals "12". The SDM responds by turning on the "AIR BAG" warning lamp 3.5 seconds. If "Ignition 1" is less than 9 volts, the "AIR BAG" warning lamp will come "ON" solid with no DTCs set.

Chart Test Description:

Number(s) below refer to step number(s) on the diagnostic chart.

2. This test checks for an open in the "Ignition 1" circuit to the SDM.
3. This test checks for the voltage of "IGNITION 1".
4. This test determines whether the malfunction is a short to ground in IB04–WHT/RED.

Chart B “AIR BAG” warning lamp comes “ON” Steady

Step	Action	Yes	No
1	1. When measurements are requested in this chart use 5–8840–0285–0 DVM with correct terminal adapter from 5–8840–0385–0. 2. Ignition switch “OFF.” 3. Connect scan tool to data link connector, follow directions as given in the scan tool instruction MANUAL. 4. Ignition switch “ON.” 5. Request SRS diagnostic trouble code display. Dose scan tool indicate “No Data Received”?	Go to Step 2	Go to Step 3
2	1. Ignition switch “OFF”. 2. Inspect SDM harness connector connection to SDM. Is it securely connected to the SDM?	Ignition switch “OFF” Replace SDM Go to Step 5	Connect SDM securely to de–activate shorting clip in SDM harness connector Go to Step 5
3	Using scan tool, request SRS data list. Is “ignition” less than 9 volts?	Go to Step 4	Ignition switch “OFF” Replace SDM Go to Step 5
4	1. Ignition switch “OFF.” 2. Disconnect SRS coil and passenger air bag assemblies. yellow 2–pin connector located at base of steering column and behind the glove box assembly. Disconnect SDM. 3. Disconnect the connector of “SRS Warning Lamp” of instrument cluster. 4. Measure resistance from SDM harness connector terminal “7” to ground “6”. Does 5–8840–0285–0 display “OL” (Infinite)?	Go to Chart A	Replace SRS harness Go to Step 5
5	Reconnect all SRS components, ensure all components are properly mounted. Was this step finished?	Repeat the “SRS Diagnostic System Check”	Go to Step 5

Chart C "AIR BAG" Warning Lamp Does Not Come "ON" Steady

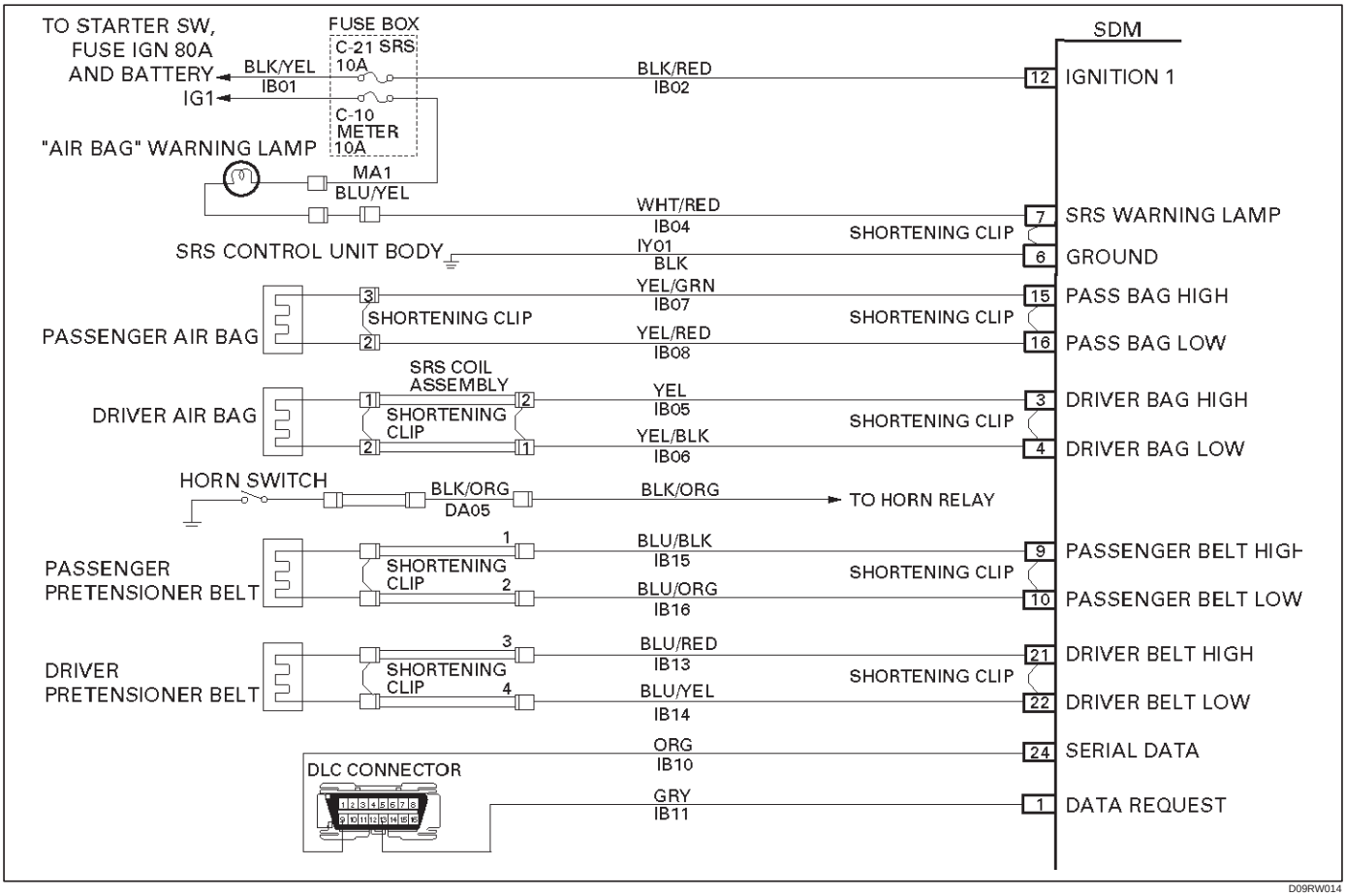

Circuit Description:

When the ignition switch is first turned "ON", "Ignition 1" voltage is applied from the "C–10" fuse to the "AIR BAG" warning lamp which is connected to "SRS Warning Lamp", terminal "7". The "C–21" fuse apply system voltage to the "Ignition 1" inputs, terminals "12". The SDM responds by turning on the "AIR BAG" warning lamp 3.5 seconds. If "Ignition 1" is more than 16 volts, the "AIR BAG" warning lamp will be still "OFF" solid with no DTCs set.

Chart Test description:

Number(s) below refer to step number(s) on the diagnostic chart:

1. This test decides whether power is available to SDM warning lamp power feed circuit.
2. This test determines whether the voltage is present in the warning lamp circuit.
3. This test determines if the malfunction is in the instrument cluster.
4. This test checks for open in the warning lamp circuitry.
5. This test isolates the IB04–WHT/RED circuit and checks for a short in the IB04–WHT/RED circuit to B+.
8. This test checks for a short from the SDM warning lamppower feed circuit to ground.
9. This test determines whether the short to ground is due to a short in the wiring.

Chart C “AIR BAG” Warning Lamp Does Not Come “ON” Steady

Step	Action	Yes	No
1	1. When measurements are requested in this chart,use 5–8840–0285–0 DVM with correct terminal adapter from 5–8840–0385–0. 2. Ignition switch “OFF.” 3. Remove and inspect “C–10” fuse (meter) to the “AIR BAG” warning lamp. Is fuse good?	Go to Step 2	Go to Step 7
2	1. Ignition switch “OFF.” 2. Disconnect SRS coil and passenger air bag assemblies. Yellow 2–pin connector located at base of steering column and behind the glove box assembly. 3. Disconnect SDM. 4. Ignition switch “ON.” 5. Measure voltage on SDM harness connector from terminal “7” to terminal “6” (ground). Is system voltage present on terminal “7”?	Go to Step 4	Go to Step 3
3	1. Ignition switch “OFF.” 2. Remove instrument meter cluster. 3. Check for proper connection to instrument cluster at IB04–WHT/RED terminal. 4. If ok, then remove and inspect “AIR BAG” bulb. Is bulb good?	Go to Step 5	Replace bulb Go to Step 6
4	1. Ignition switch “OFF.” 2. Disconnect instrument meter cluster harness connector. 3. Ignition switch “ON.” 4. Measure voltage on SDM harness connector from terminal “7” to terminal “6” (GROUND). Is voltage 1 volt or less?	Go to Chart A	Replace SRS harness Go to Step 6
5	1. Install bulb. 2. Measure resistance from instrument meter cluster harness connector IB04–WHT/RED terminal to SDM harness connector terminal “7”. Is resistance 5.0 ohms or less?	Service instrument meter cluster Install instrument meter cluster Go to Step 6	Replace SRS harness Go to Step 6
6	Reconnect all SRS components, ensure all components are properly mounted. Was this step finished?	Repeat the “SRS Diagnostic System Check”	Go to Step 6
7	Perform chart C. Was this step finished?	Go to Step 8	Go to Step 1
8	1. Replace “C–10” fuse. 2. Ignition switch “ON” wait 10 Seconds then ignition switch “Off.” 3. Remove and inspect “C–10” fuse. Is fuse good?	Install “C–10” fuse Go to Step 10	Go to Step 9

Chart C “AIR BAG” Warning Lamp Does Not Come “ON” Steady (Cont’d)

Step	Action	Yes	No
9	1. Disconnect SRS coil and passenger air bag assemblies. Yellow 2–pin connectors located at base of steering column and behind the glove box assembly. 2. Disconnect SDM. 3. Replace “C–10” fuse. 4. Ignition switch “ON” wait 10 seconds. 5. Ignition switch “OFF”. 6. Remove and inspection “C–10” fuse. Is fuse good?	Install“C–10” fuse Go to Chart A	Replace SRS harness Replace “C–10” fuse Go to Step 10
10	Reconnect all SRS components, ensure all components are properly mounted. Was this step finished?	Repeat the “SRS Diagnostic System Check”	Go to Step 10

DTC 15 Passenger Deployment Loop Resistance High

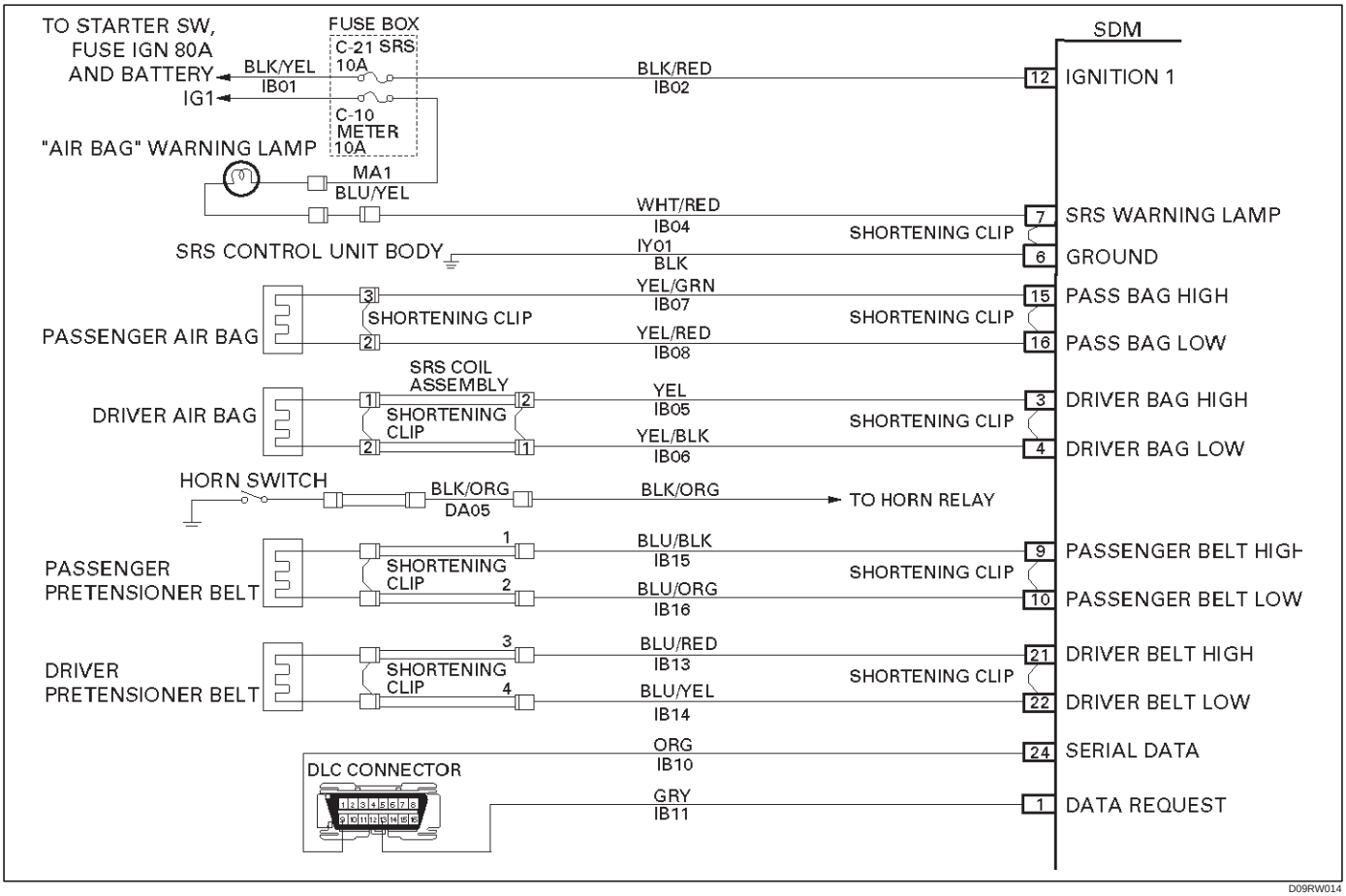

Circuit Description:

When the ignition switch is turned “ON”, the SDM will perform tests to diagnose critical malfunctions within itself. Upon passing these tests “Ignition 1”, and deployment loop voltages are measured to ensure they are within their respective normal voltage ranges. The SDM then proceeds with the “Resistance Measurement Test”. “Passenger Bag Low” terminal “16” is grounded through a resister and the passenger current source connected to “Passenger Bag High” terminal “15” allows a known amount of current to flow. By monitoring the voltage difference between “Passenger Bag High” and “Passenger Bag Low” the SDM calculates the combined resistance of the passenger air bag assembly, harness wiring IB07–YEL/GRN and IB08–YEL/RED connector terminal contact.

DTC Will Set When:

The combined resistance of the passenger air bag assembly, harness wiring IB07–YEL/GRN and IB08–YEL/RED, and connector terminal contact is above a specified value. This test is run once each ignition cycle during the “Resistance Measurement Test” when:

1. No “higher priority faults” are detected during “Turn–ON”,
2. “Ignition 1” voltage is in the specified value.

Action Taken:

SDM turns “ON” the “AIR BAG” warning lamp and sets a diagnostic trouble code.

DTC Will Clear When:

The ignition switch is turned “OFF.”

DTC Chart Test Description:

Number(s) below refer to step number(s) on the diagnostic chart:

2. This test determines whether the malfunction is in the SDM.
3. This test verifies proper connection of the yellow 2–pin connector.
4. This test checks for proper contact and/or corrosion of the yellow 2–pin connector terminals.
5. The test checks for a malfunctioning passenger air bag assembly.
6. This test determines whether the malfunction is due to high resistance in the wiring.

Diagnostic Aids:

An intermittent condition is likely to be caused by a poor connection at the passenger air bag assembly harness connector terminals “1” and “2”, SDM terminal “15” and “16”, or a poor wire to terminal connection in IB07–YEL/GRN and IB08–YEL/RED. This test for this diagnostic trouble code is only run while the “AIR BAG”

warning lamp is performing the bulb check, unless DTC 17 or DTC 26 is detected. When a scan tool “Clear Codes” command is issued and the malfunction is still present, the DTC will not reappear until the next ignition cycle.

DTC 15 Passenger Deployment loop Resistance High

Step	Action	Yes	No
1	Was the “SRS Diagnostic System Check” Performed?	Go to Step 2	Go to The “SRS Diagnostic System Check”
2	1. When measurements are requested in this chart use 5–8840–0285–0 DVM with correct terminal adapter from 5–8840–0385–0. 2. Use scan tool data list function, read and record the passenger deployment loop resistance. Is passenger resist. more than 2.9 ohms?	Go to Step 3	Go to Chart A
3	1. Ignition switch “Off.” 2. Make sure the passenger air bag assembly yellow 2–pin connector located behind the glove box assembly is seated properly. Is the yellow 2–pin connector connected properly?	Go to Step 4	Seat passenger Air Bag assembly yellow 2–pin connector properly Go to Step 7
4	1. Disconnect and inspect the passenger air bag assembly yellow 2–pin connector located behind the glove box assembly. 2. If ok, reconnect the passenger air bag assembly 2–pin connector. 3. Ignition switch “ON.” Is DTC 15 current?	Go to Step 5	Go to Step 7
5	1. Ignition switch “Off.” 2. Disconnect SRS coil and passenger air bag assembly, yellow 2–pin connector located at the base of the steering column and behind the glove box assembly. 3. Connect 5–8840–2421–0 SRS driver / passenger load tool and appropriate adapters to SRS coil and passenger air bag assembly harness connectors. 4. Ignition switch “ON.” Is DTC 15 Current?	Go to Step 6	Ignition switch “Off” Replace the passenger air bag assembly Go to Step 7
6	1. Ignition switch “Off.” 2. There has been an increase in the total circuit resistance of the passenger inflator deployment loop. 3. Use the high resolution ohmmeter mode of the DVM while checking IB07–YEL/GRN and IB08–YEL/RED, and SDM connector terminal “15” and “16” to locate the root cause. Was a fault found?	Replace SRS harness Go to Step 7	Go to Chart A
7	1. Reconnect all components ensure all component are properly mounted. 2. Clear diagnostic trouble codes. Was This step finished?	Repeat the “SRS Diagnostic System Check”	Go to Step 7

DTC 16 Passenger Deployment loop Resistance Low

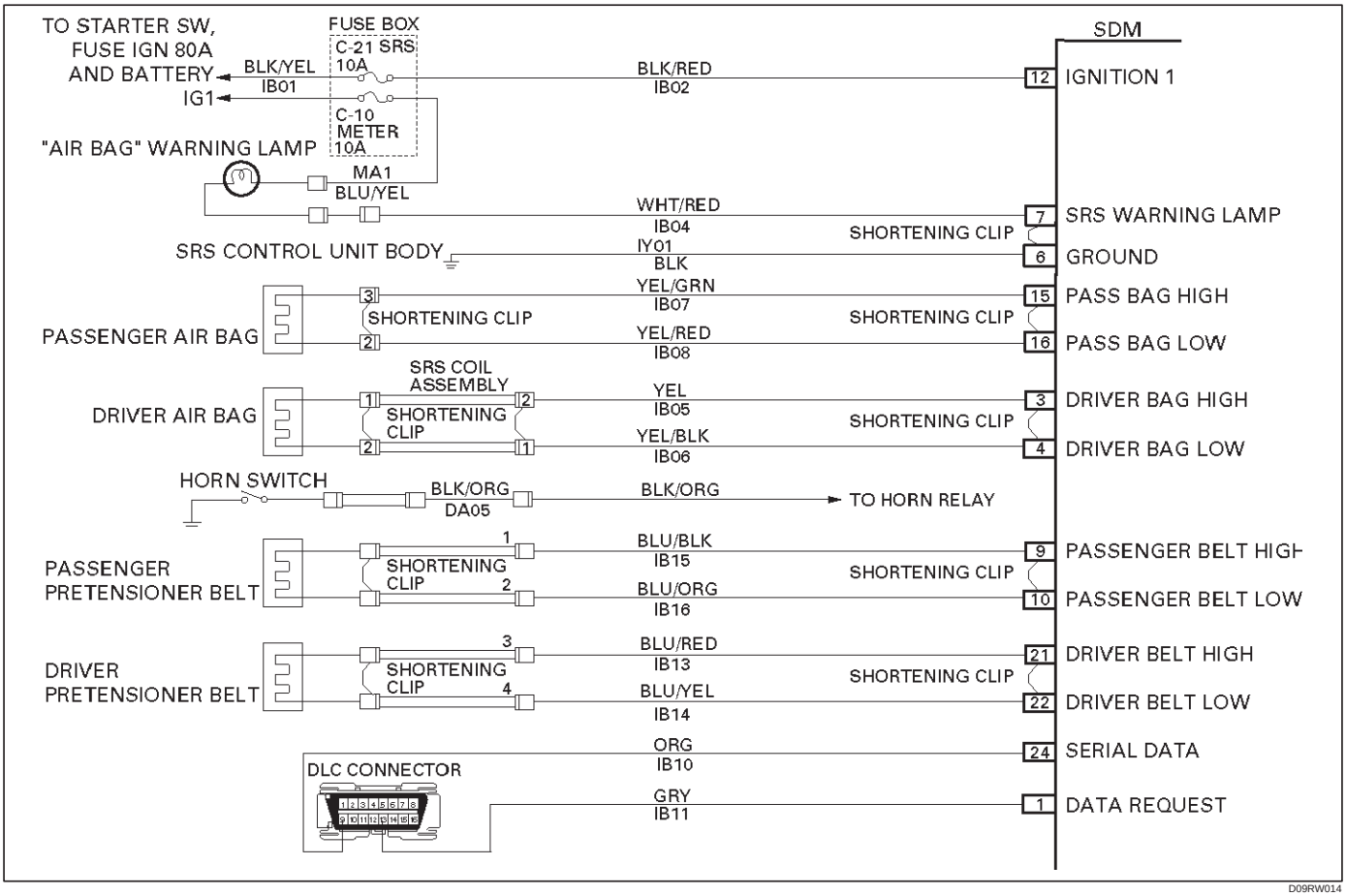

Circuit Description:

When the ignition switch is turned “ON”, the SDM will perform tests to diagnose critical malfunctions within itself. Upon passing these tests “Ignition 1”, and deployment loop voltages are measured to ensure they are within their respective normal voltage ranges. The SDM then proceeds with the “Resistance Measurement Test”. “Passenger Bag Low” terminal “16” is grounded through a resistor and the passenger current source connected to “Passenger Bag High” terminal “15” allows a known amount of current to flow. By monitoring the voltage difference between “Passenger Bag High” and “Passenger Bag Low”, the SDM calculates the combined resistance of the passenger air bag assembly, harness wiring IB07–YEL/GRN and IB08–YEL/RED connector terminal contact.

DTC Will Set When:

The combined resistance of the passenger air bag assembly, harness wiring IB07–YEL/GRN and IB08–YEL/RED, and connector terminal contact is above a specified value. This test is run once each ignition cycle during the “Resistance Measurement Test” when:

1. No “higher priority faults” are detected during “Turn–ON”,
2. “Ignition 1” voltage is in the specified value.

Action Taken:

SDM turns “ON” the “AIR BAG” warning lamp and sets a diagnostic trouble code.

DTC Will Clear When:

The ignition switch is turned “OFF.”

DTC Chart Test Description:

Number(s) below refer to step number(s) on the diagnostic chart:

2. This test determines whether the malfunction is in the SDM.
3. This test verifies connection of the yellow 2–pin connector.
4. This test cheeks for proper operation of the shorting clip in the yellow 2–pin connector.
5. The test checks for a malfunction passenger air bag assembly.
6. This test determines whether the malfunctioning is due to shortening in the wiring.

Diagnostic Aids:

An intermittent condition is likely to be caused by a short between IB07–YEL/GRN and IB08–YEL/RED, or a malfunctioning shorting clip on the passenger air bag assembly which would require replacement of the air bag assembly. The test for this diagnostic trouble code is only run while “AIR BAG” warning lamp is performing the bulb

check, unless DTC 17 or DTC 26 is detected. When a scan tool “Clear Codes” command is issued and the malfunction is still present, the DTC will not reappear until the next ignition cycle.

DTC 16 Passenger Deployment loop Resistance Low

Step	Action	Yes	No
1	Was the “SRS Diagnostic System Check” performed?	Go to Step 2	Repeat the “SRS Diagnostic System Check”
2	1. When measurements are requested in this chart use 5–8840–0285–0 DVM with correct terminal adapter from 5–8840–0385–0. 2. Using scan tool data list function, read and record the passenger deployment loop resistance. Is passenger resist. less than 1.4 ohms?	Go to Step 3	Go to Chart A
3	1. Ignition switch “Off.” 2. Make sure the passenger air bag assembly yellow 2–pin connector located behind the glove box assembly is seated properly. Is the yellow 2–pin connector connected properly?	Go to Step 4	Seat passenger air bag assembly yellow 2–pin connector properly Go to Step 7
4	1. Disconnect and inspect the passenger air bag assembly yellow 2–pin connector located behind the glove box assembly. 2. If ok, reconnect the passenger air bag assembly 2–pin connector. 3. Ignition switch “ON.” Is DTC 16 Current?	Go to Step 5	Go to Step 7
5	1. Ignition switch “Off.” 2. Disconnect SRS coil and passenger air bag assembly, yellow 2–pin connector located at the base of the steering column and behind the glove box assembly. 3. Connect 5–8840–2421–0 SRS driver/passenger load tool and appropriate adapters to SRS coil and passenger air bag assembly harness connectors. 4. Ignition switch “ON.” Is DTC 16 current?	Go to Step 6	Ignition switch “Off” Replace the passenger air bag assembly Go to Step 7
6	1. Ignition switch “Off.” 2. There has been a decrease in the total circuit resistance of the passenger inflator deployment loop. 3. Use the high resolution ohmmeter mode of the DVM while checking IB07–YEL/GRN and IB08–YEL/RED, and SDM connector terminal “15” and “16” to locate the root cause. Was a fault found?	Replace SRS harness Go to Step 7	Go to Chart A
7	1. Reconnect all components, ensure all component are properly mounted. 2. Clear diagnostic trouble codes. Was this step finished?	Repeat the “SRS Diagnostic System Check”	Go to Step 7

DTC 17 Passenger Deployment Loop Open

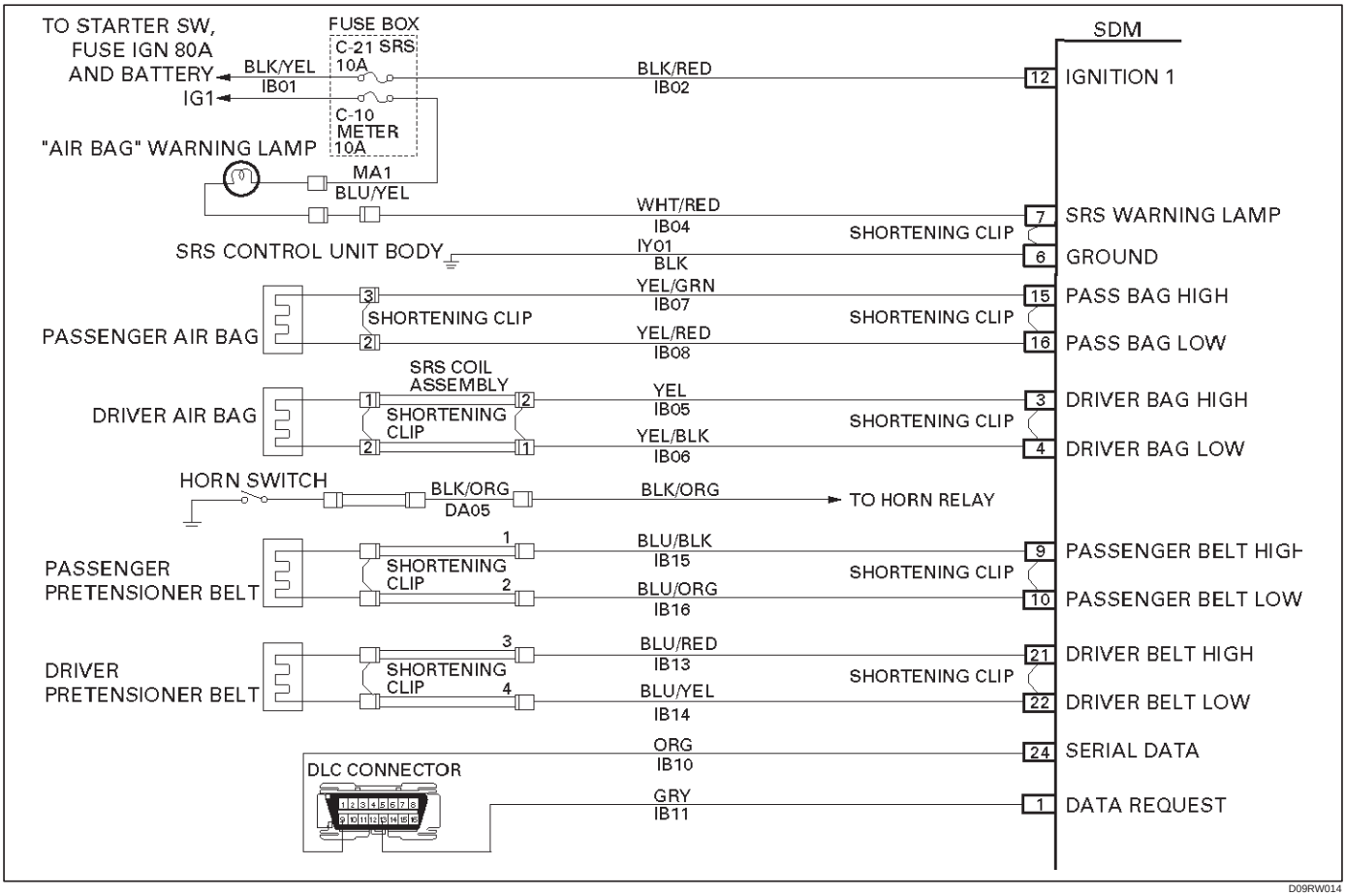

Circuit Description:

When the ignition switch is turned “ON”, the SDM will perform tests to diagnose critical malfunctions within itself. Upon passing these tests, “Ignition 1”, and deployment loop voltages are measured to ensure they are within their respective normal voltage ranges. During “Continuous Monitoring” diagnostics, a fixed amount of current is flowing in the deployment loop. This produces proportional voltage drops in the loop. By monitoring the voltage difference between “Passenger Bag High” and “Passenger Bag Low”, the SDM calculates the combined resistance of the passenger air bag assembly, harness wiring IB07–YEL/GRN AND IB08–YEL/RED, and connector terminal contact.

DTC Will Set When:

The voltage difference between “Passenger Bag High” terminal “15” and “Passenger Bag Low” terminal “16” is above or equal to a specified value for 500 milliseconds during “Continuous Monitoring”.

Action Taken:

SDM turns “ON” the “AIR BAG” warning lamp and sets a diagnostic trouble code.

DTC Will Clear When:

The voltage difference between “Passenger Bag High” terminal “15” and “Passenger Bag Low” terminal “16” is below a specified value for 500 milliseconds during “Continuous Monitoring”.

DTC Chart Test Description:

Number(s) below refer to step number(s) on the diagnostic chart:

2. This test determines whether the malfunction is in the SDM.
3. This test verifies proper connection of the yellow 2–pin connector.
4. This test cheeks for proper contact and/or corrosion of the shorting clip in the yellow 2–pin connector terminals.
5. The test checks for a malfunctioning passenger air bag assembly.
6. This test determines whether the open in the wiring.

Diagnostic Aids:

An intermittent condition is likely to be caused by a poor connection at the passenger air bag assembly harness connector terminals“2” and “3”, SDM terminals “15” and “16”, or an open in IB07–YEL/GRN and IB08–YEL/RED.

DTC 17 Passenger Deployment Loop Open

Step	Action	Yes	No
1	Was the “SRS Diagnostic System Check” performed?	Go to Step 2	Go to the “SRS Diagnostic System Check”
2	1. When measurements are requested in this chart use 5–8840–0285–0 DVM with correct terminal adapter from 5–8840–0385–0. 2. Using scan tool data list function, read and record the passenger differential voltage. Is passenger VDIF 0.425 volts or more?	Go to Step 3	Go to Chart A
3	1. Ignition switch “OFF”. 2. Make sure the passenger air bag assembly yellow 2–pin connector located behind the glove box assembly is seated properly. Is the yellow 2–pin connector connected properly?	Go to Step 4	Seat passenger air bag assembly yellow 2–pin connector properly Go to Step 7
4	1. Disconnect and inspect the passenger air bag assembly yellow 2–pin connector located behind the glove box assembly. 2. If ok, reconnect the passenger air bag assembly 2–pin connector. 3. Ignition switch “ON”. Is DTC 17 current?	Go to Step 5	Go to Step 7
5	1. Ignition switch “Off.” 2. Disconnect SRS coil and passenger air bag assembly, yellow 2–pin connector located at the base of the steering column and behind the glove box assembly. 3. Connect 5–8840–2421–0 SRS driver / passenger load tool and appropriate adapters to SRS coil and passenger air bag assembly harness connectors. 4. Ignition switch “ON.” Is DTC 17 current?	Go to Step 6	Ignition switch “Off” Replace the passenger air bag assembly Go to Step 7
6	1. Ignition switch “Off.” 2. There has been an open circuit resistance in the passenger deployment loop. 3. Use the high resolution ohmmeter mode of the DVM while checking IB07–YEL/GRN and IB08–YEL/RED, and SDM connector terminal “15” and “16” to locate the root cause. Was a fault found?	Replace SRS harness Go to Step 7	Go to Chart A
7	1. Reconnect all components ensure all component are properly mounted. 2. Clear diagnostic trouble codes. Was this step finished?	Go to the “SRS Diagnostic System Check”	Go to Step 7

DTC 18 Passenger Deployment Loop Short To Ground

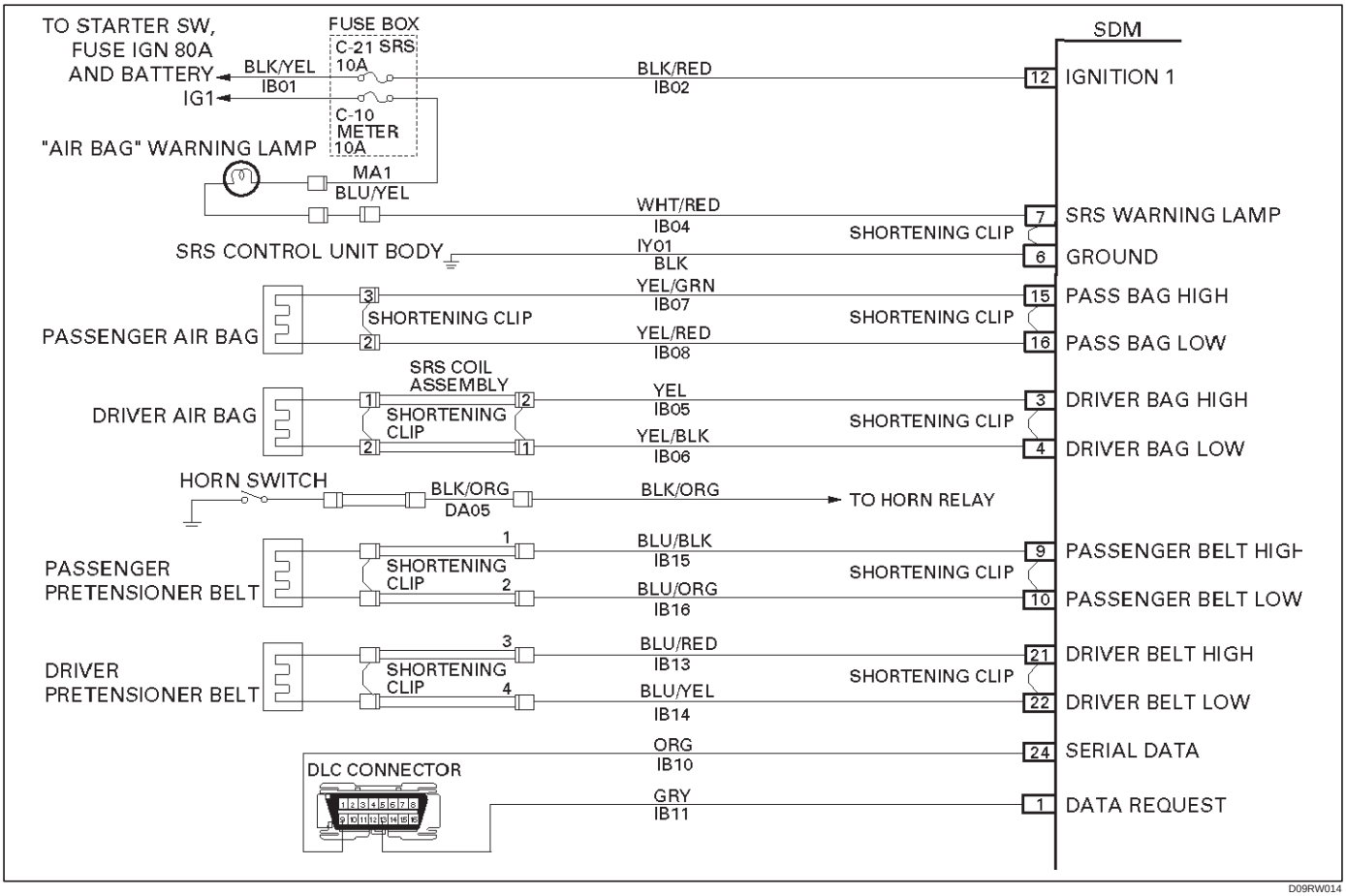

Circuit Description:

When the ignition switch is turned “ON”, the SDM will perform tests to diagnose critical malfunctions within itself. Upon passing these tests, “Ignition 1”, and deployment loop voltages are measured to ensure they are within their respective normal voltage ranges.
The SDM monitors the voltages at “Driver Bag Low” terminal “4” and “Passenger Bag Low” terminal “16” to detect short to ground in the air bag assembly circuits.

DTC Will Set When:

Neither of the two air bag assemblies is open.
“Ignition 1” is within the normal operating voltage range.
Once these conditions are met and the voltage at “Passenger Bag Low” is below a specified value, DTC 18 will set. This test is run once each ignition cycle and “Continuous Monitoring”.

Action Taken:

SDM turns “ON” the “AIR BAG” warning lamp and sets a diagnostic trouble code.

DTC Will Clear When:

This malfunction is no longer occurring and the ignition switch is turned “OFF”.

DTC Chart Test Description:

Number(s) below refer to circled number(s) on the diagnostic chart.

2. This test determines whether the SDM is malfunctioning.
3. This test isolates the malfunction to one side of the passenger air bag assembly yellow 2–pin connector behind glove box assembly.
4. This test determines whether the malfunction is in IB07–YEL/GRN.
5. This test determines whether the malfunction is in IB08–YEL/RED.

Diagnostic Aids:

An intermittent condition is likely to be caused by a short to ground in the passenger air bag assembly circuit. Inspect IB07–YEL/GRN and IB08–YEL/RED carefully for cutting or chafing. If the wiring pigtail of the passenger air bag assembly is damaged, the component must be replaced.

DTC 18 Passenger Deployment Loop Short To Ground

Step	Action	Yes	No
1	Was the “SRS Diagnostic System Check” performed?	Go to Step 2	Go to the “SRS Diagnostic System Check”
2	1. When measurements are requested in this chart use 5–8840–0285–0 DVM with correct terminal adapter from 5–8840–0385–0. 2. Ignition switch “OFF.” 3. Connect scan tool data link connector. follow directions as given in the scan tool operator’s MANUAL. 4. Ignition switch “ON.” 5. Read passenger bag sense LO. Is passenger bag sense LO less than 1.5 volts?	Go to Step 3	Go to Chart A
3	1. Ignition switch “OFF.” 2. Disconnect passenger air bag assembly yellow 2–pin connector behind the glove box assembly. 3. Leave driver air bag assembly connected. 4. Connect SRS driver / passenger load tool 5–8840–2421–0 and appropriate adapter to passenger air bag assembly harness connector. 5. Ignition switch “ON.” Is DTC 18 current?	Go to Step 4	Ignition switch “OFF” Replace passenger air bag assembly Go to Step 6
4	1. Ignition switch “OFF”. 2. Disconnect SRS driver / passenger load tool 3. Measure resistance on SDM harness connector from terminal “15” to terminal “16” (ground). Does 5–8840–0285–0 display “OL” (Infinite)?	Go to Step 5	Replace SRS Harness Go to Step 6
5	Measure resistance on SDM harness connector from terminal “16” to terminal “6” (ground). Does 5–8840–0285–0 display “OL” (Infinite)?	Go to Chart A	Replace SRS Harness. Go to Step 6
6	1. Reconnect all components and ensure all component are properly mounted. 2. Clear diagnostic trouble codes. Was this step finished?	Go to the “SRS Diagnostic system Check”	Go to Step 6

DTC 19 Passenger Deployment Loop Short To B+

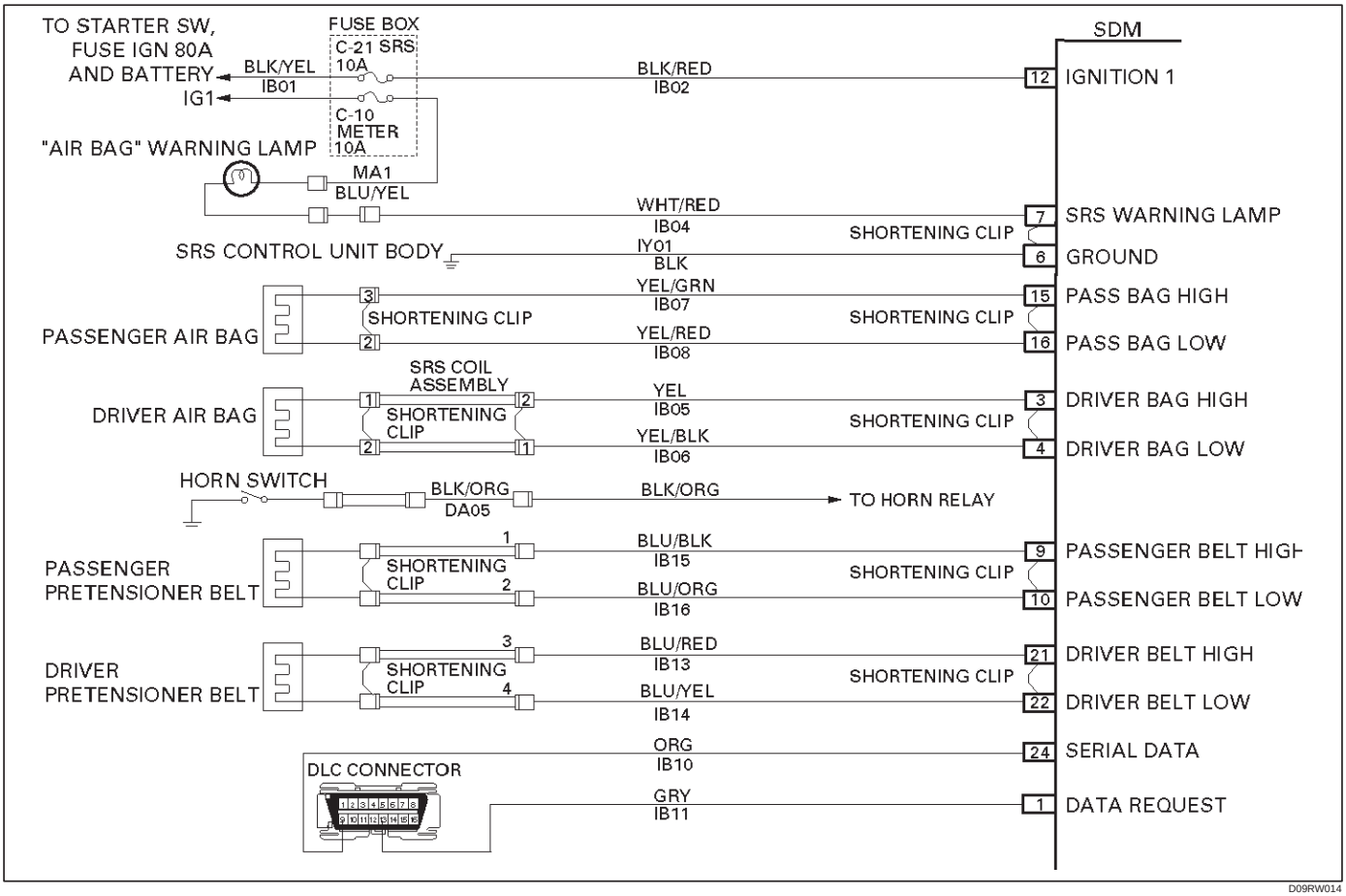

Circuit Description:

When the ignition switch is turned “ON”, the SDM will perform tests to diagnose critical malfunctions within itself. Upon passing these tests, “Ignition 1”, and deployment loop voltages are measured to ensure they are within their respective normal voltage ranges.
The SDM monitors the voltages at “Driver Bag Low” terminal “4” and “Passenger Bag Low” terminal “16” to detect short to B+ in the air bag assembly circuits.

DTC Will Set When:

“Ignition 1” is within the normal operating voltage range. Once these conditions are met and the voltage at “Passenger Bag Low” is above a specified value, DTC 19 will set. This test is run once each ignition cycle and “Continuous Monitoring”.

Action Taken:

SDM turns “ON” the “AIR BAG” warning lamp and sets DTC 19 and also DTC 71.

DTC Will Clear When:

The SDM is replaced.

DTC Chart Test Description:

Number(s) below refer to step number(s) on the diagnostic chart:

2. This test determines whether the malfunction is in the SDM.
3. This test isolates the malfunction to one side of the passenger air bag assembly yellow 2–pin connector behind glove box assembly.
4. This test determines whether the malfunction is in IB07–YEL/GRN.
5. This test determines whether the malfunction is in IB08–YEL/RED.

Diagnostic Aids:

An intermittent condition is likely to be caused by a short to B+ in the passenger air bag assembly circuit. Inspect IB07–YEL/GRN and IB08–YEL/RED carefully for cutting or chafing. If the wiring pigtail of the passenger air bag assembly is damaged, the component must be replaced. A careful inspection of IB07–YEL/GRN and IB08–YEL/RED, including the passenger air bag assembly pigtail is essential to ensure that the replacement SDM will not be damaged.

DTC 19 Passenger Deployment Loop Short To B+

CAUTION: When DTC 19 has been set, it is necessary to replace the SDM. Setting DTC 19 will also cause DTC 71 to set. When a scan tool "CLEAR CODES" command is issued and the malfunction is no longer present, DTC 71 will remain current. Ensure that the short to voltage condition is repaired prior to installing a replacement SDM to avoid damaging the SDM.

Step	Action	Yes	No
1	Perform the "SRS Diagnostic System Check" Was the "SRS Diagnostic System Check" performed?	Go to Step 2	Repeat the "SRS Diagnostic System Check"
2	1. When measurements are requested in this chart use 5–8840–0285–0 DVM With correct terminal adapter from 5–8840–0385–0. 2. Ignition switch "OFF." 3. Connect scan tool data link connector. follow directions as given in the scan tool operator's manual. 4. Ignition switch "ON." 5. Read passenger bag sense LO. Is passenger bag sense LO more than 3.5 volts?	Go to Step 3	Go to Chart A
3	1. Ignition switch "OFF". 2. Disconnect passenger air bag assembly yellow 2–pin connector behind the glove box assembly. 3. Leave driver air bag assembly connected. 4. Connect SRS driver / passenger load tool 5–8840–2421–0 and appropriate adapter to passenger air bag assembly harness connector. 5. Ignition switch "ON." Is passenger bag sense LO more than 3.5 volts?	Go to Step 4	Ignition switch "OFF" Replace passenger air bag assembly Go to Step 6
4	1. Ignition switch "OFF." 2. Disconnect SDM. 3. Disconnect SRS driver / passenger load tool. 4. Measure resistance on SDM harness connector from terminal "15" to terminal "12" (ignition). Does 5–8840–0285–0 display "OL" (infinite)?	Go to Step 5	Replace SRS harness Go to Step 6.
5	Measure resistance on SDM harness connector from terminal "16" and terminal "12" (ignition). Does 5–8840–0285–0 display "OL" (infinite)?	Go to Chart A	replace SRS harness Go to Step 6
6	1. Reconnect all components ensure all component are properly mounted. 2. Ignition switch "ON". Is passenger bag senslo less than 3.5 volts?	Ignition switch "OFF" Replace SDM Go to Step 7	Go to Chart A
7	1. Reconnect all components ensure all component are properly mounted. 2. Clear diagnostic trouble codes. Was this step finished?	Repeat the "SRS Diagnostic System Check"	Go to Step 7

DTC 21 Driver Deployment Loop Resistance High

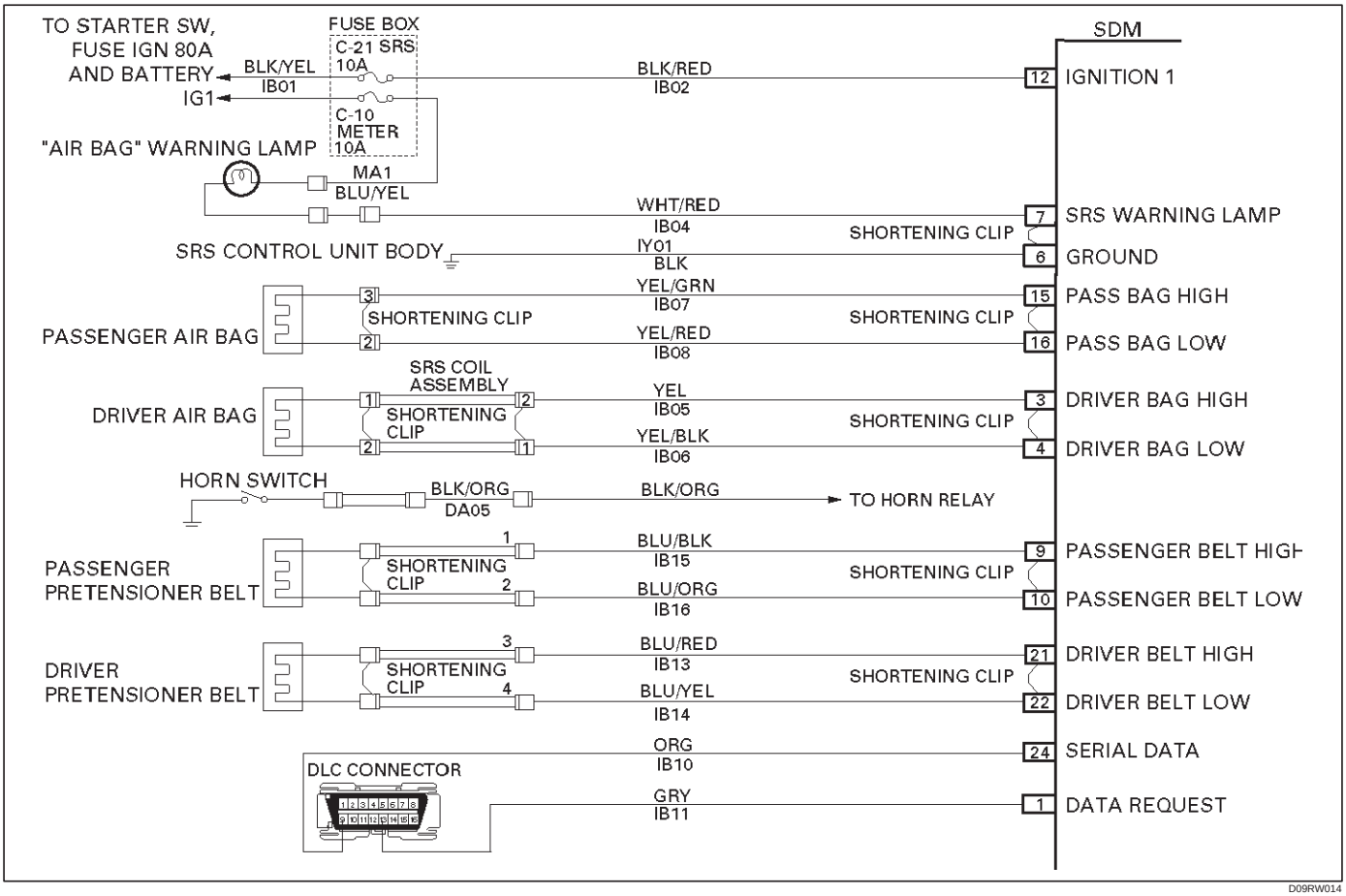

Circuit Description:

When the ignition switch is turned “ON”, the SDM will perform tests to diagnose critical malfunctions within itself. Upon passing these tests, “Ignition 1”, and deployment loop voltages are measured to ensure they are within their respective normal voltage ranges.

The SDM then proceeds with the “Resistance Measurement Test” “Driver Bag Low” terminal “4” is grounded through a current sink and the driver current source connected to “Driver Bag High” terminal “3” allows a known amount of current to flow. By monitoring the voltage difference between “Driver Bag High” and “Driver Bag Low”, the SDM calculates the combined resistance of the driver air bag assembly, SRS coil assembly, harness wiring IB05–YEL and IB06–YEL/BLK, and connector terminal contact.

DTC Will Set When:

The combined resistance of the driver air bag assembly, SRS Coil assembly, harness wiring IB05–YEL and IB06–YEL/BLK, and connector terminal contact is above a specified value. This test run once each ignition cycle during the “Resistance Measurement Test” when:

1. No “higher priority faults” are detected during “Turn–ON”
2. “Ignition 1” voltage is in the specified value.

Action Taken:

SDM turns “ON” the “AIR BAG” warning lamp and sets DTC 21.

DTC Will Clear When:

The ignition switch is turned “OFF”.

DTC Chart Test Description:

Number(s) below refer to step number(s) on the diagnostic chart:

2. This test determines whether the malfunction is in the SDM.
3. This test verifies proper connection of the yellow 2–pin connector at the base of the steering column.
4. This test checks for proper contact and/or corrosion of the 2–pin connector terminals at the base of steering column.
5. This test isolate the malfunction to one side of the SRS coil assembly yellow 2–pin connector located at the base of the steering column.
6. This test determines whether the malfunction is due to high resistance in the wiring.
7. This test determines whether the malfunction is in the SRS coil assembly or the driver air bag assembly.

Diagnostic Aids:

An intermittent condition is likely to be caused by a poor connection at terminals “1” and “2” of the SRS coil 2–pin connector at the base of the steering column, terminal “1” and “2” of the driver air bag assembly 2–pin connector at the top of the steering column, SDM terminals “3” and “4” or a poor wire to terminal connection in IB05–YEL or IB06–YEL/BLK. The test for this diagnostic trouble code is only run while the “AIR BAG” warning lamp is performing the bulb check, unless DTC 17 or DTC 26 is detected. When a scan tool “Clear Codes” command is issued and the malfunction is still present, the DTC will not reappear until the next ignition cycle.

DTC 21 Driver Deployment Loop Resistance High

Step	Action	Yes	No
1	Perform the “SRS Diagnostic System Check”. Was the “SRS Diagnostic System Check” performed?	Go to Step 2	Repeat the “SRS Diagnostic System Check”
2	1. When measurements are requested in this chart use 5–8840–0285–0 DVM with correct terminal adapter from 5–8840–0385–0. 2. Use scan tool data list function, read and record the driver deployment loop resistance. Is driver resistance more than 3.7 ohms?	Go to Step 3	Go to Chart A
3	1. Ignition switch “OFF.” 2. Disconnect SRS coil assembly yellow 2–pin connector located at base of steering column is seated properly. Is the 2–pin connector connected properly?	Go to Step 4	Seat SRS coil assembly 2–pin connector properly Go to Step 8
4	1. Disconnect and inspect the SRS coil assembly yellow 2–Pin connector located base of steering column. 2. If ok, reconnect the SRS coil assembly yellow 2–pin connector. 3. Ignition switch “ON.” Is DTC 21 current?	Go to Step 5	Go to Step 8
5	1. Ignition switch “OFF.” 2. Disconnect SRS coil and passenger air bag assembly, yellow 2–pin connector located at the base of steering column and behind the glove box assembly. 3. Connect SRS driver / passenger load tool 5–8840–2421–0 and appropriate adapter to SRS coil and passenger air bag assembly harness connectors. 4. Ignition switch “ON.” Is DTC 21 current?	Go to Step 6	Go to Step 7
6	1. Ignition switch “Off.” 2. There has been a increase in the total circuit resistance of the driver deployment loop. 3. Use the high resolution ohmmeter mode of the DVM while checking IB05–YEL and IB06–YEL/BLK, and SDM connector terminal “3” and “4” to locate the root cause. Was a fault found?	Replace SRS harness Go to Step 8	Go to Chart A

DTC 21 Driver Deployment Loop Resistance High (Cont'd)

Step	Action	Yes	No
7	1. Ignition switch "OFF." 2. Disconnect SRS driver / passenger load tool from SRS coil assembly harness connector. 3. Connect SRS driver / passenger load tool 5–8840–2421–0 on the top of steering column. 4. Reconnect SRS coil assembly harness connector as the base of steering column. 5. Ignition switch "ON." Is DTC 21 current?	Ignition switch "OFF" Replace SRS coil assembly Go to Step 8	Ignition switch "OFF" Replace driver air bag assembly Go to Step 8
8	1. Reconnect all components ensure all component are properly mounted. 2. Clear diagnostic trouble codes. Was this step finished?	Repeat the "SRS Diagnostic System Check"	Go to Step 8

DTC 22 Driver Deployment Loop Resistance Low

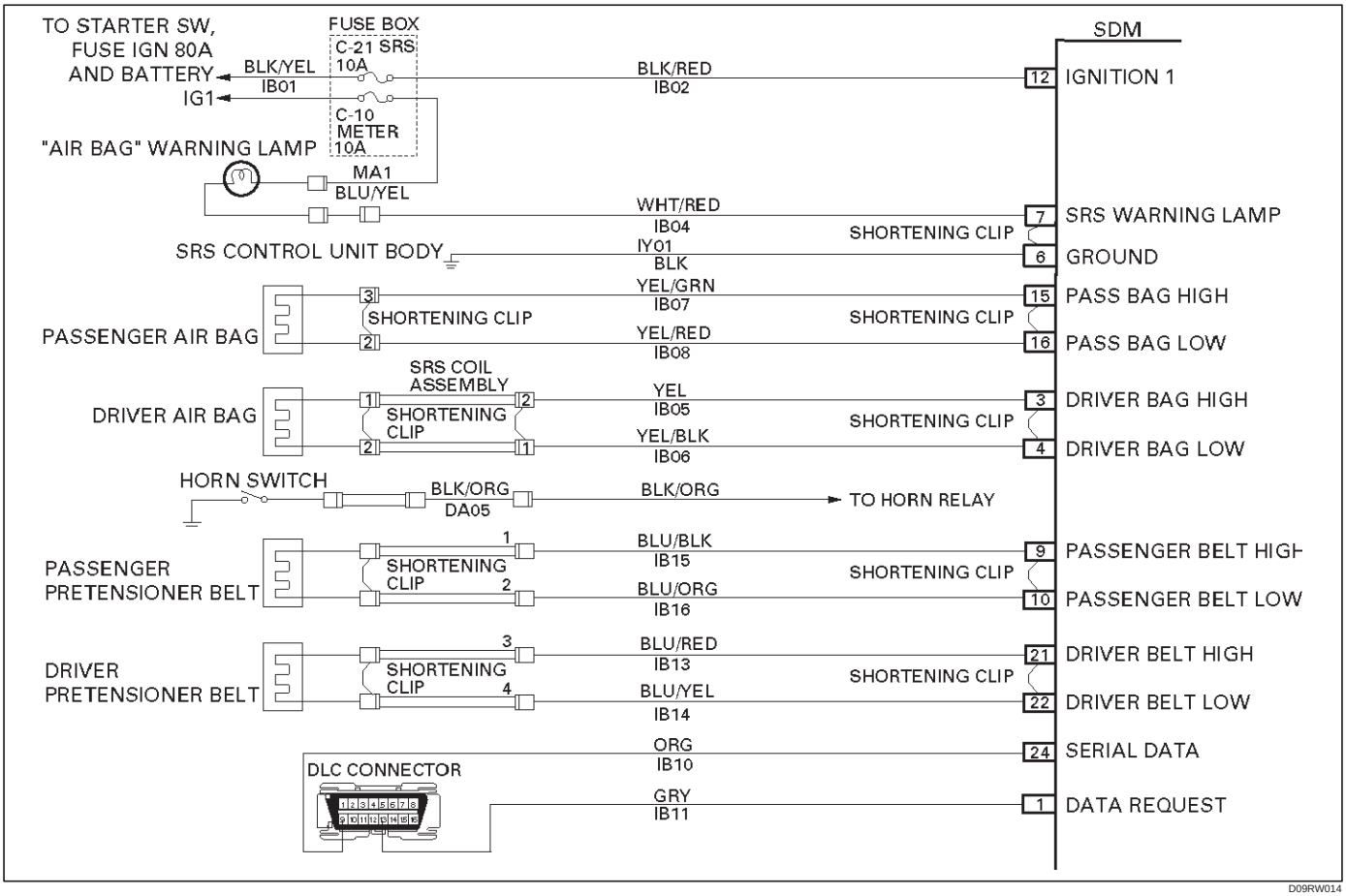

Circuit Description:

When the ignition switch is turned “ON”, the SDM will perform tests to diagnose critical malfunctions within itself. Upon passing these tests “Ignition 1”, and deployment loop voltages are measured to ensure they are within their respective normal voltage ranges.

The SDM then proceeds with the “Resistance Measurement Test” “Driver Bag Low” terminal “4” is grounded through a current sink and the driver current source connected to “Driver Bag High” terminal “3” allows a known amount of current to flow. By monitoring the voltage difference between “Driver Bag High” and “Driver Bag Low” the SDM calculates the combined resistance of the driver air bag assembly, SRS coil assembly, harness wiring IB05–YEL and IB06–YEL/BLK and connector terminal contact.

DTC Will Set When:

The combined resistance of the driver air bag assembly, SRS Coil assembly, harness wiring IB05–YEL and IB06–YEL/BLK and connector terminal contact is above a specified value. This test is run once each ignition cycle during the “Resistance Measurement Test” when:

1. No “higher priority faults” are detected during “Turn–ON”
2. “Ignition 1” voltage is in the specified value.

Action Taken:

SDM turns “ON” the “AIR BAG” warning lamp and sets DTC 22.

DTC Will Clear When:

The ignition switch is turned “OFF.”

DTC Chart Test Description:

Number(s) below refer to circled number(s) on the diagnostic chart:

2. This test determines whether the malfunction is in the SDM.
3. This test verifies proper connection of the yellow 2–pin connector at the base of the steering column.
4. This test checks for proper operation of the shorting clip in the yellow 2–pin connector.
5. This test isolate the malfunction to one side of the SRS coil assembly yellow 2–pin connector located at the base of steering column.
6. This test determines whether the malfunction is due to shortening in the wiring.
7. This test determines whether the malfunction is in the SRS coil assembly or the driver air bag assembly.

Diagnostic Aids:

An intermittent condition is likely to be caused by a short between IB05–YEL or IB06–YEL/BLK or a

malfunctioning shorting clip on the driver air bag assembly or SRS coil assembly which would require replacement of the component. The test for this diagnostic trouble code is only run while the “AIR BAG” warning lamp is performing the bulb check, unless DTC 17 or DTC 26 is detected. When a scan tool “Clear Codes” command is issued and the malfunction is still present, the DTC will not reappear until the next ignition cycle.

DTC 22 Driver Deployment Loop Resistance Low

Step	Action	Yes	No
1	Perform the “SRS Diagnostic System Check.” Was the “SRS Diagnostic System Check” performed?	Go to Step 2	Go to the “SRS Diagnostic System Check”
2	1. When measurements are requested in this chart use 5–8840–0285–0 DVM with correct terminal adapter from 5–8840–0385–0. 2. Use scan tool data list function, read and record the driver deployment loop resistance. Is driver deployment loop resistance less than 1.7 OHMS?	Go to Step 3	Go to Chart A
3	1. Ignition switch “OFF.” 2. Make sure the SRS coil assembly yellow 2–pin connector located at the base of steering column is seated properly. Is the 2–pin connector connected properly?	Go to Step 4	Seat driver air bag assembly 2–pin connector properly Go to Step 8
4	1. Disconnect and inspect the SRS coil assembly yellow 2–pin connector located base of steering column. 2. If ok, reconnect the SRS coil assembly yellow 2–pin connector. 3. Ignition switch “ON.” Is DTC 22 current?	Go to Step 5	Go to Step 8
5	1. Ignition switch “OFF.” 2. Disconnect SRS coil and passenger air bag assembly, yellow 2–pin connector located at the base of steering column and behind the glove box assembly. 3. Connect SRS driver / passenger load tool 5–8840–2421–0 and appropriate adapter to SRS coil and passenger air bag assembly harness connectors. 4. Ignition switch “ON.” Is DTC 22 current?	Go to Step 6	Go to Step 7
6	1. Ignition switch “OFF.” 2. There has been a decrease in the total circuit resistance of the driver deployment loop. 3. Use the high resolution ohmmeter mode of the DVM while checking IB05–YEL and IB06–YEL/BLK, and SDM connector terminal “3” and “4” to locate the root cause. Was a fault found?	Replace SRS harness Go to Step 8	Go to Chart A

DTC 22 Driver Deployment Loop Resistance Low (Cont'd)

Step	Action	Yes	No
7	1. Ignition switch "OFF." 2. Disconnect SRS driver / passenger load tool from driver air bag assembly harness connector. 3. Connect SRS driver / passenger load tool 5–8840–2421–0 to the top of steering column 2–pin connector. 4. Reconnect SRS coil assembly harness connector as the base of steering column. 5. Ignition switch "ON." Is DTC 22 current?	Ignition switch "off" Replace SRS coil assembly Go to Step 8	Ignition switch "OFF" Replace driver air bag assembly Go to Step 8
8	1. Reconnect all components, ensure all component are properly mounted. 2. Clear diagnostic trouble codes. Was this step finished?	Go to the "SRS Diagnostic System Check"	Go to Step 8

DTC 24 Driver Deployment Loop Short To Ground

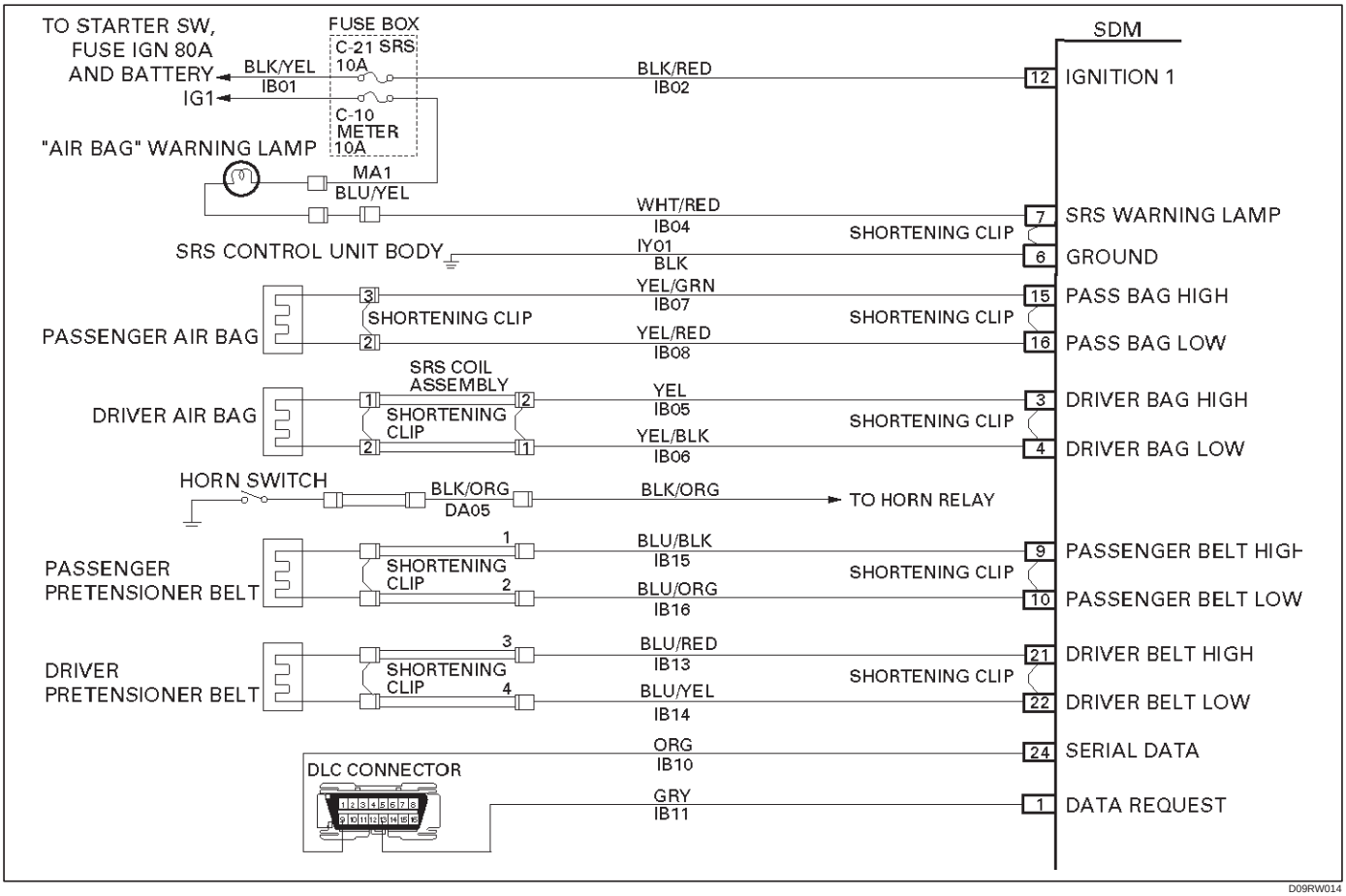

Circuit Description:

When the ignition switch is turned “ON”, the SDM will perform tests to diagnose critical malfunctions within itself. Upon passing these tests, “Ignition 1”, and deployment loop voltages are measured to ensure they are within their respective normal voltage ranges.
The SDM monitors the voltage at “Driver Bag Low” terminal “4” and “passenger Bag Low” terminal “16” to detect shorts to ground in the air bag assembly circuits.

DTC Will Set When:

Neither of the two air bag assemblies is open.
“Ignition 1” is within the normal operating voltage range.
This test is run once each ignition cycle and “Continuous Monitoring”. Once these conditions are met and the voltage at “Driver Bag Low” is below a specified value, DTC 24 will set.

Action Taken:

SDM turns “ON” the “AIR BAG” warning lamp and sets a diagnostic trouble code.

DTC Will Clear When:

The malfunction is no longer occurring and the ignition is turned “OFF”.

DTC Chart Test Description:

Number(s) below refer to step number(s) on the diagnostic chart:

2. This test determines whether the SDM is malfunctioning
3. This test isolates the malfunction to one side of the SRS coil assembly yellow 2–pin connector at the base of the steering column.
4. This test determines whether the malfunction is in IB05–YEL.
5. This test determines whether the malfunction is in IB06–YEL/BLK.
6. This test determines whether the malfunction is in the SRS coil assembly or the driver air bag assembly.

Diagnostic Aids:

An intermittent condition is likely to be caused by a short to ground in the driver air bag assembly circuit. Inspect IB05–YEL and IB06–YEL/BLK carefully for cutting or chafing.

DTC 24 Driver Deployment Loop Short To Ground

Step	Action	Yes	No
1	Was the “SRS Diagnostic System Check” performed?	Go to Step 2	Go to the “SRS Diagnostic System Check”
2	1. When measurements are requested in this chart use 5–8840–0285–0 DVM with correct terminal adapter from 5–8840–0385–0. 2. Ignition switch “OFF.” 3. Connect scan tool data link connector. follow directions as given in the scan tool operator’s manual. 4. Ignition switch “ON.” 5. Read driver bag sense LO. Is driver bag sense LO less than 1.5 volts?	Go to Step 3	Go to Chart A
3	1. Ignition switch “OFF.” 2. Disconnect SRS coil assembly yellow 2–pin connector located at base of the steering column. leave passenger air bag assembly connected. 3. Connect SRS driver / passenger load tool 5–8840–2421–0 and appropriate adapter to SRS coil assembly harness connector. 4. ignition switch “ON.” Is DTC 24 current?	Go to Step 4	Go to Step 6
4	1. Ignition switch “OFF.” 2. Disconnect SDM. 3. Disconnect SRS driver / passenger load tool. 4. Measure resistance on SDM harness connector “3” to terminal “6” (ground). Does 5–8840–0285–0 display “OL” (infinite)?	Go to Step 5	Replace SRS harness Go to Step 7
5	Measure resistance on SDM harness connector from terminal “4” to terminal “6” (ground). Does 5–8840–0285–0 display “OL” (infinite)?	Go to Chart A	Replace SRS harness Go to Step 7
6	1. Ignition switch “OFF.” 2. Disconnect SRS driver / passenger load tool 5–8840–2421–0 from SRS coil assembly harness connector. 3. Connect SRS driver / passenger load tool 5–8840–2421–0 and appropriate adapter 5–8840–0385–0 to driver air bag assembly harness connector. located top of the steering column 2–pin connector. 4. Reconnect SRS coil assembly harness connector as the base of steering column. 5. Ignition switch “ON.” Is DTC 24 current?	Ignition switch “OFF” Replace SRS coil assembly Go to Step 7	Ignition switch “OFF” Replace driver air bag assembly Go to Step 7
7	1. Reconnect all components ensure all component are properly mounted. 2. Clear diagnostic trouble codes. Was this step finished?	Go to the “SRS Diagnostic System Check”	Go to Step 7

DTC 25 Driver Deployment Loop Short To B+

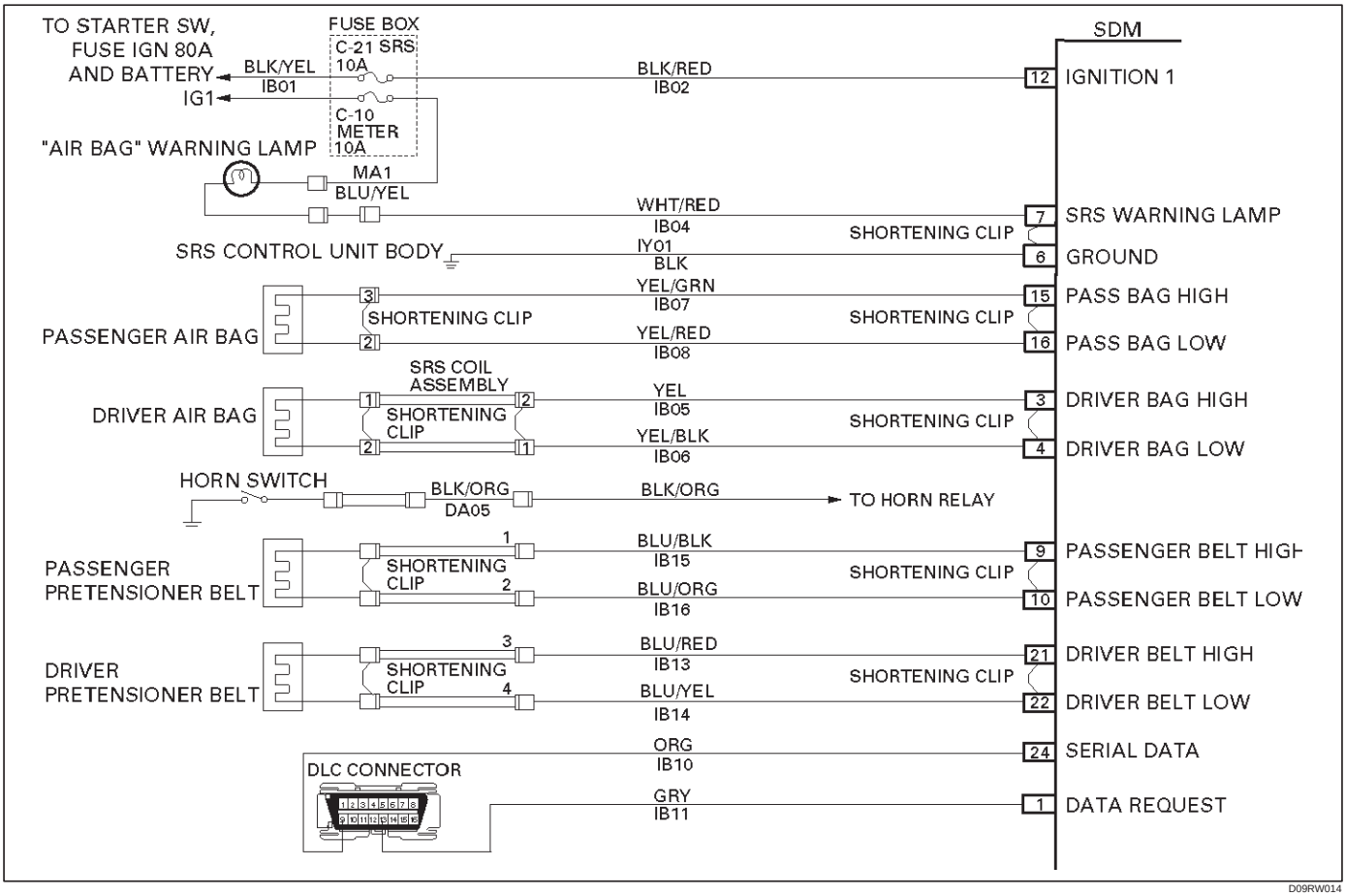

Circuit Description:

When the ignition switch is turned “ON”, the SDM will perform tests to diagnose critical malfunctions within itself. Upon passing these tests, “Ignition 1”, and deployment loop voltages are measured to ensure they are within their respective normal voltage ranges.
The SDM monitors the voltage at “Driver Bag Low” terminal “4” and “Passenger Bag Low” terminal “16” to detect shorts to B+ in the air bag assembly circuits.

DTC Will Set When:

“Ignition 1” is in the normal operating voltage range. This test is run once each ignition cycle and “Continuous monitoring”. Once these conditions are met and the voltage at “Driver Bag Low” is above a specified value, DTC 25 will set.

Action Taken:

SDM turns “ON” the “AIR BAG” warning lamp and sets DTC 25 and also DTC 71

DTC Will Clear When:

The SDM is replaced.

DTC Chart Test Description:

Number(s) below refer to step number(s) on the diagnostic chart:

2. This test determines whether the SDM is malfunctioning.
3. This test isolates the malfunction to one side of the driver air bag assembly yellow 2–pin connector at the base of steering column.
4. This test determines whether the malfunction is in IB05–YEL.
5. This test determines whether the malfunction is in IB06–YEL/BLK.
6. This test determines whether the malfunction is in the SRS coil assembly or the driver air bag assembly.

Diagnostic Aids:

An intermittent condition is likely to be caused by a short to B+ in the driver air bag assembly circuit. Inspect IB05–YEL and IB06–YEL/BLK carefully for cutting or chafing. If the wiring pigtail of the driver air bag assembly and SRS coil assembly is damaged, the components must be replaced. A careful inspection of IB05–YEL and IB06–YEL/BLK, including the SRS coil assembly and driver air bag assembly is essential to ensure that the replacement SDM will not be damaged.

DTC 25 Driver Deployment Loop Short To B+

CAUTION: When DTC 25 has been set, it is necessary to replace the SDM. Setting DTC 25 will also cause DTC 71 to set. When a scan tool "CLEAR CODES" command is issued and the malfunction is no longer present, DTC 71 will remain current. Ensure that the short to B+ condition is repaired prior to installing a replacement SDM to avoid damaging the SDM.

Step	Action	Yes	No
1	Was the "SRS Diagnostic System Check" performed?	Go to Step 2	Go to the "SRS Diagnostic System Check"
2	1. When measurements are requested in this chart use 5–8840–0285–0 DVM with correct terminal adapter from 5–8840–0385–0. 2. Ignition switch "OFF." 3. Connect scan tool data link connector. follow directions as given in the scan tool operator's manual. 4. Ignition switch "ON." 5. Read driver bag sense LO . Is driver bag sense LO more than 3.5 volts?	Go to Step 3	Go to Chart A
3	1. Ignition switch "OFF." 2. Disconnect SRS coil assembly yellow 2–pin connector at the base of the steering column. Leave passenger air bag assembly connected. 3. Connect SRS driver /passenger load tool 5–8840–2421–0 and appropriate adapter to SRS coil assembly harness connector. 4. Ignition switch "ON." Is driver bag sense LO more than 3.5 volts?	Go to Step 4	Go to Step 6
4	1. Ignition switch "OFF." 2. Disconnect SDM. 3. Disconnect SRS driver /passenger load tool. 4. Measure resistance on SDM harness connector "3" to terminal "12" (ignition). Does 5–8840–0285–0 display "OL" (infinite)?	Go to Step 5	Replace SRS harness Go to Step 7
5	Measure resistance on SDM harness connector from terminal "4" to terminal "12" (ignition). Does 5–8840–0285–0 display "OL" (infinite)?	Go to Chart A	Replace SRS harness Go to Step 7
6	1. Ignition switch "OFF" 2. Connect SRS driver / passenger load tool 5–8840–2421–0 and appropriate adapter 5–8840–0385–0 to driver air bag assembly harness 2-pin connector located at top of the steering column. 3. Reconnect SRS coil assembly harness connector as the base of steering column. 4. Ignition switch "ON." Is driver bag sense LO more than 3.5 volts?	Ignition switch "OFF" Replace SRS coil assembly Go to Step 7	Ignition switch "OFF" Replace driver air bag assembly Go to Step 7
7	1. Reconnect all components, ensure all component are properly mounted. 2. Ignition switch "ON." Is driver bag senslo less than 3.5 volts?	Ignition switch "OFF" Replace SDM Go to Step 8	Go to Chart A
8	1. Reconnect all components ensure all component are properly mounted. 2. Clear diagnostic trouble codes. Was this step finished?	Go to the "SRS Diagnostic System Check"	Go to Step 8

DTC 26 Driver Deployment Loop Open

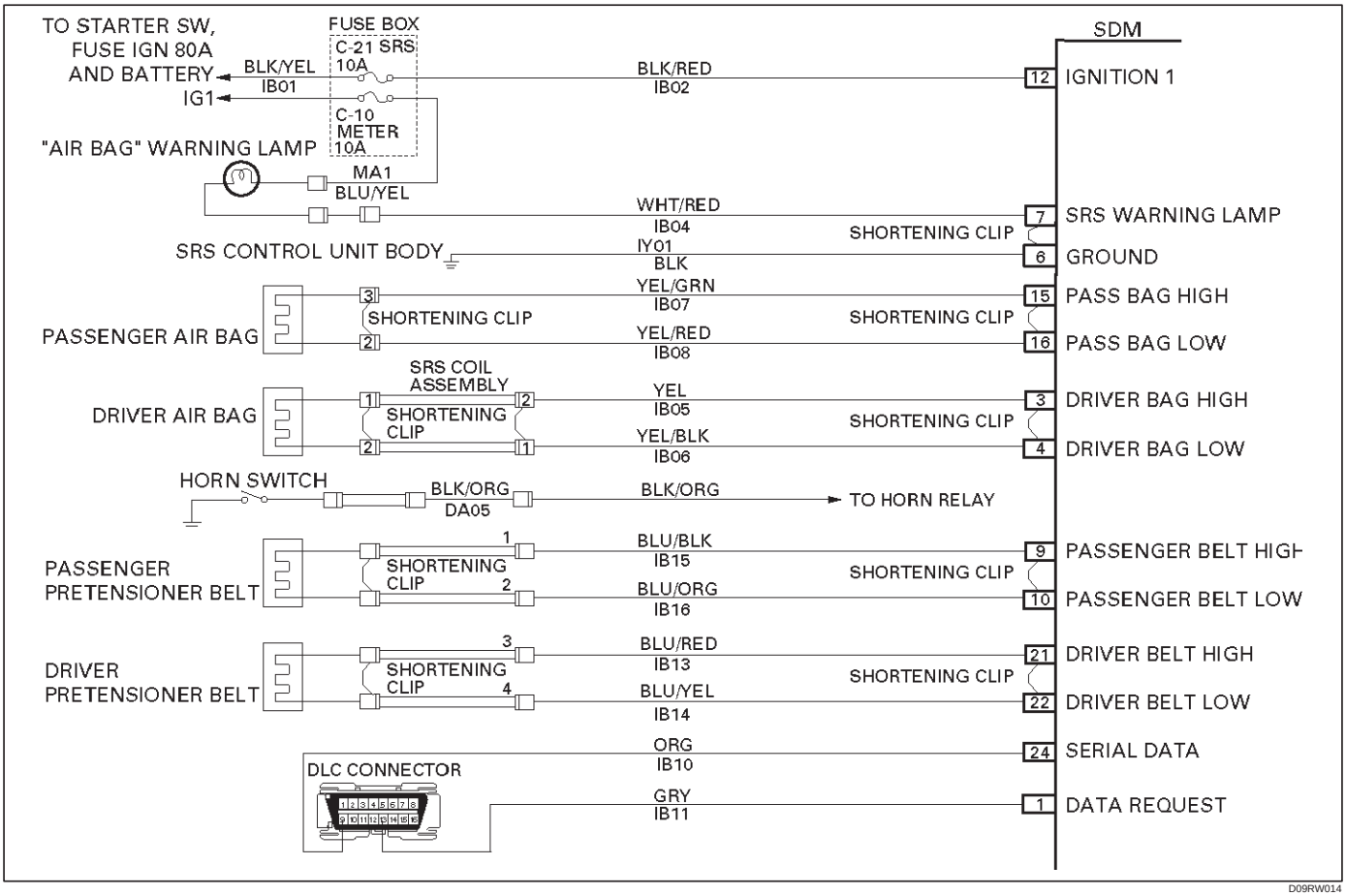

Circuit Description:

When the ignition switch is turned “ON”, the SDM will perform tests to diagnose critical malfunctions within itself. Upon passing these tests, “Ignition 1”, and deployment loop voltages are measured to ensure they are within their respective normal voltage ranges.

During “Continuous Monitoring” diagnostics, a fixed amount of current is following in the deployment loop. This produces proportional voltage drops in the loop. By monitoring the voltage difference between “Driver Bag High” and “Driver Bag Low”, the SDM calculates the combined resistance of the driver air bag assembly, SRS coil assembly, harness wiring IB05–YEL and IB06–YEL/BLK, and connector terminal contact.

DTC Will Set When:

The voltage difference between “Driver Bag High” terminal “3” and “Driver Bag Low” terminal “4” is above or equal to a specified value for 500 milliseconds during “Continuous Monitoring”.

Action Taken:

SDM turns “ON” the “AIR BAG” warning lamp and sets a diagnostic trouble code.

DTC Will Clear When:

The voltage difference between “Driver Bag High” terminal “3” and “Driver Bag Low” terminal “4” is below a specified value for 500 milliseconds during “Continuous Monitoring”.

DTC Chart Test Description:

Number(s) below refer to step number(s) on the diagnostic chart:

2. This test determines whether the malfunction is in the SDM.
3. This test verifies proper connection of the yellow 2–pin connector at the base of the steering column.
4. This test checks for proper contact and/or corrosion of the yellow 2–pin connector at the base of the steering column.
5. This test isolates the malfunction to one side of the SRS coil assembly yellow 2–pin connector located at the base of steering column.
6. This test determines whether the open is in the wiring.
7. This test determines whether the malfunction is in the SRS coil assembly or the driver air bag assembly.

Diagnostic Aids:

An intermittent condition is likely to be caused by a poor connection at the driver air bag assembly harness 2–pin connector terminals “1” and “2” at the top of the steering column, SRS coil assembly harness 2–pin connection terminals “1” and “2”, SDM terminals “3” and “4”, or an open in IB05–YEL and IB06–YEL/BLK.

DTC 26 Driver Deployment Loop Open

Step	Action	Yes	No
1	Was the “SRS Diagnostic System Check” performed?	Go to Step 2	Go to the “SRS Diagnostic System Check”
2	1. When measurements are requested in this chart use 5–8840–0285–0 DVM with correct terminal adapter from 5–8840–0385–0. 2. Use scan tool data list function, read and record the driver differential voltage. Is driver VDIF more than 4.25 volts?	Go to Step 3	Go to Chart A
3	1. Ignition switch “OFF.” 2. Make sure the SRS coil assembly yellow 2–pin connector located at the base of steering column is seated properly. Is the yellow 2–pin connector connected properly?	Go to Step 4	Seat driver air bag assembly 2–pin connector Go to Step 8
4	1. Disconnect and inspect the SRS coil assembly yellow 2–pin connector located base of steering column. 2. If ok, reconnect the SRS coil assembly yellow 2–pin connector. 3. Ignition switch “ON.” Is DTC 26 current?	Go to Step 5	Go to Step 8
5	1. Ignition switch “OFF”. 2. Disconnect SRS coil and passenger air bag assembly, yellow 2–pin connectors located at the base of steering column and behind the glove box assembly. 3. Connect SRS driver/passenger load tool 5–8840–2421–0 and appropriate adapter to SRS coil and passenger air bag assembly harness connectors. 4. Ignition switch “ON.” Is DTC 26 current?	Go to Step 6	Go to Step 7
6	1. Ignition switch “OFF.” 2. There has been an open circuit in the driver inflator deployment loop. 3. Use the high resolution ohmmeter mode of the DVM while checking IB05–YEL and IB06–YEL/BLK, and SDM connector terminal “3” and “4” to locate the root cause. Was a fault found?	Replace SRS harness Go to Step 8	Go to Chart A
7	1. Ignition switch “OFF.” 2. Disconnect SRS driver / passenger load tool from SRS coil assembly harness connector. 3. Connect SRS driver / passenger load tool 5–8840–2421–0 on steering column 2–pin connector. 4. Reconnect SRS coil assembly harness connector at the base of steering column. 5. Ignition switch “ON.” Is DTC 26 current?	Ignition switch “OFF” Replace SRS coil assembly Go to Step 8	Ignition switch “OFF” Replace driver air bag assembly Go to Step 8
8	1. Reconnect all components ensure all component are properly mounted. 2. Clear diagnostic trouble codes. Was this step finished?	Repeat the “SRS Diagnostic System Check”	Go to Step 8

DTC 51 Air Bag Deployment Event Commanded

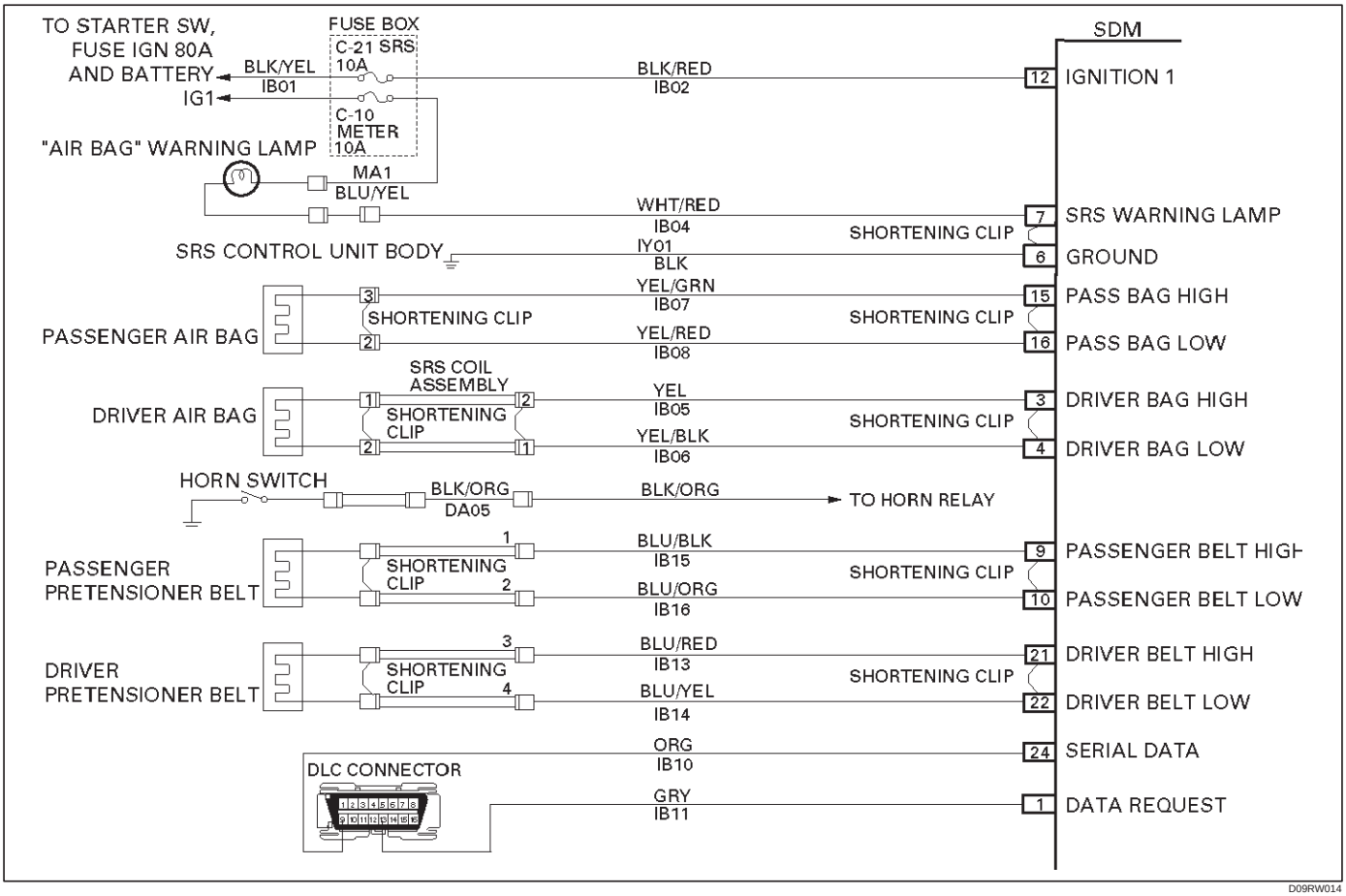

Circuit Description:

The SDM contains a sensing device which converts vehicle velocity changes to an electrical signal. The electrical signal generated is processed by the SDM and then compared to a value stored in memory. When the generated signal exceeds the stored value, the SDM will cause current to flow through the air bag assembly deploying the air bags and causing DTC 51 to set.

DTC Will Set When:

The SDM detects a frontal crash, up to 30 degrees off the centerline of the vehicle, of sufficient force to warrant deployment of the air bags.

Action Taken:

SDM turns “ON” the “AIR BAG” warning lamp records “Crash Data”, and sets a diagnostic trouble code.

DTC Will Clear When:

The SDM is replaced.

DTC Chart Test Description:

Number(s) below refer to step number(s) on the diagnostic chart:

2. If air bag assembly (s) has not deployed, DTC 51 may have falsely set.
3. If DTC 51 has set with no signs of frontal impact, the diagnostic trouble code has falsely set.

DTC 51 Air Bag Deployment Event Commanded

WARNING: DURING SERVICE PROCEDURES. BE VERY CAREFUL WHEN HANDLING A SENSING AND DIAGNOSTIC MODULE (SDM). NEVER STRIKE OR JAR THE SDM. NEVER POWER UP THE SRS WHEN THE SDM IS NOT RIGIDLY ATTACHED TO THE VEHICLE. ALL SDM AND MOUNTING BRACKET FASTENERS MUST BE CAREFULLY TORQUED AND THE ARROW MUST BE POINTING TOWARD THE FRONT OF THE VEHICLE TO ENSURE PROPER OPERATION OF THE SRS. THE SDM COULD BE ACTIVATED WHEN POWERED WHILE NOT RIGIDLY ATTACHED TO THE VEHICLE WHICH COULD CAUSE DEPLOYMENT AND RESULT IN PERSONAL INJURY.

Step	Action	Yes	No
1	Was the “SRS Diagnostic System Check” performed?	Go to Step 2	Go to the “SRS Diagnostic System Check”
2	Ignition switch “OFF.” Have air bag assemblies deployed?	Replace components and perform inspections as directed in “repairs and inspections required after an accident” in this section Clear diagnostic trouble codes Repeat “SRS Diagnostic System Check”	Go to Step 3
3	Inspect front of vehicle and undercarriage for sings of impact. Were signs of impact found?	Replace components and perform inspections as directed in “Repairs and Inspections Required After An Accident” in this section Clear diagnostic trouble codes Repeat “SRS Diagnostic System Check”	Ignition switch “OFF” Replace SDM Reconnect all SRS system components, ensure all components are properly mounted Repeat “SRS Diagnostic System Check”

DTC 53 Deployment Commanded With Deployment Loop Fault Or Energy Reserves Out Of Range

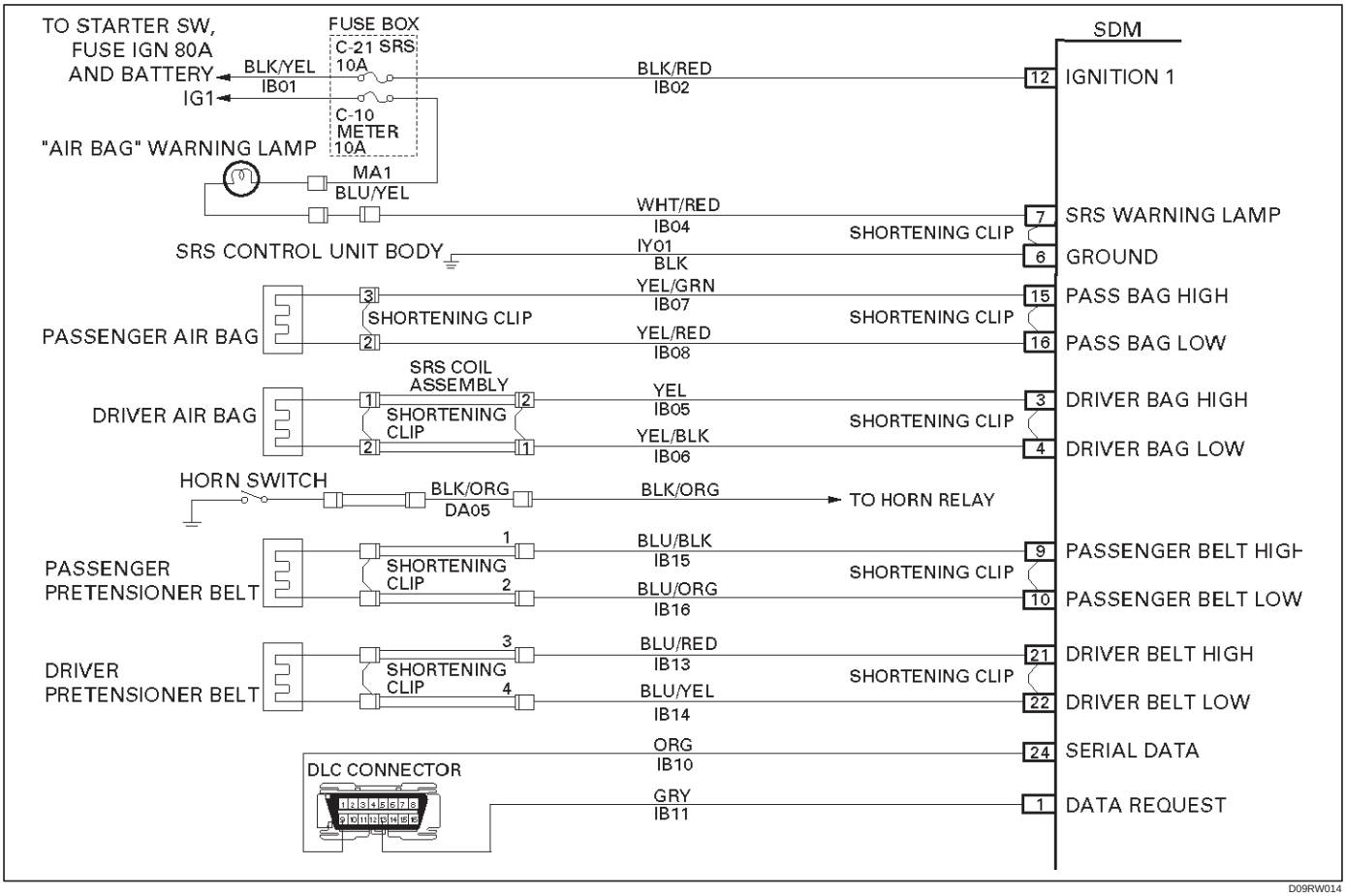

Circuit Description:

The SDM contains a sensing drive which converts vehicle velocity changes to an electrical signal. The electrical signal generated is processed by the SDM and then compared to a value stored in memory. When the generated signal exceeds the stored value, the SDM will cause current to flow through the air bag assembly deploying the air bags. DTC 53 is set accompanying with DTC 51 when a deployment occurs while an air bag assembly circuit fault is present that could possible result in a no deployment situation in one or both air bag assemblies.

DTC Will Set When:

The SDM detects a frontal crash, up to 30 degrees off the centerline of the vehicle, of sufficient force to warrant deployment of the air bags and an inflator circuit fault is present..

Action Taken:

SDM turns “ON” the “AIR BAG” warning lamp records “Crash Data”, and sets a diagnostic trouble code.

DTC Will Clear When:

The SDM is replaced. If DTC 53 is set, one or more DTCs will be set in addition to DTC 53. Malfunction(s) setting DTC(s) (other than DTC 71) must be repaired so that DTC(s) will not be set when a new SDM is installed.

DTC Chart Test Description:

Number(s) below refer to step number(s) on the diagnostic chart:

2. If air bag assembly have not deployed, DTC 53 may have falsely set.
3. If DTC 53 has set with no signs of frontal impact, the diagnostic trouble code has falsely set.

DTC 53 Deployment Commanded WITH Deployment Loop Fault Or Energy Reserves Out Of Range

WARNING: DURING SERVICE PROCEDURES. BE VERY CAREFUL WHEN HANDLING A SENSING AND DIAGNOSTIC MODULE (SDM). NEVER STRIKE OR JAR THE SDM. NEVER POWER UP THE SRS WHEN THE SDM IS NOT RIGIDLY ATTACHED TO THE VEHICLE. ALL SDM AND MOUNTING BRACKET FASTENERS MUST BE CAREFULLY TORQUED AND THE ARROW MUST BE POINTING TOWARD THE FRONT OF THE VEHICLE TO ENSURE PROPER OPERATION OF THE SRS. THE SDM COULD BE ACTIVATED WHEN POWERED WHILE NOT RIGIDLY ATTACHED TO THE VEHICLE WHICH COULD CAUSE DEPLOYMENT AND RESULT IN PERSONAL INJURY.

Step	Action	Yes	No
1	Was the “SRS Diagnostic System Check” performed?	Go to Step 2	Go to the “SRS Diagnostic System Check”
2	Ignition switch “OFF.” Have air bag assembles deployed?	Replace components and perform inspections as directed in “Repairs And Inspections Required After An Accident” in this section Clear diagnostic trouble codes Repeat the “SRS Diagnostic System Check”	Go to Step 3
3	Inspect front of vehicle and undercarriage for signs of impact. Were signs of impact found?	Replace components and perform inspections as directed in “Repairs And Inspections Required After An Accident” in this section Clear diagnostic trouble codes Repeat “SRS Diagnostic System Check”	Ignition switch “OFF” Replace SDM Reconnect all SRS system components, ensure all components are properly mounted Repeat the “SRS Diagnostic System Check”

DTC 61 Warning Lamp Circuit Failure

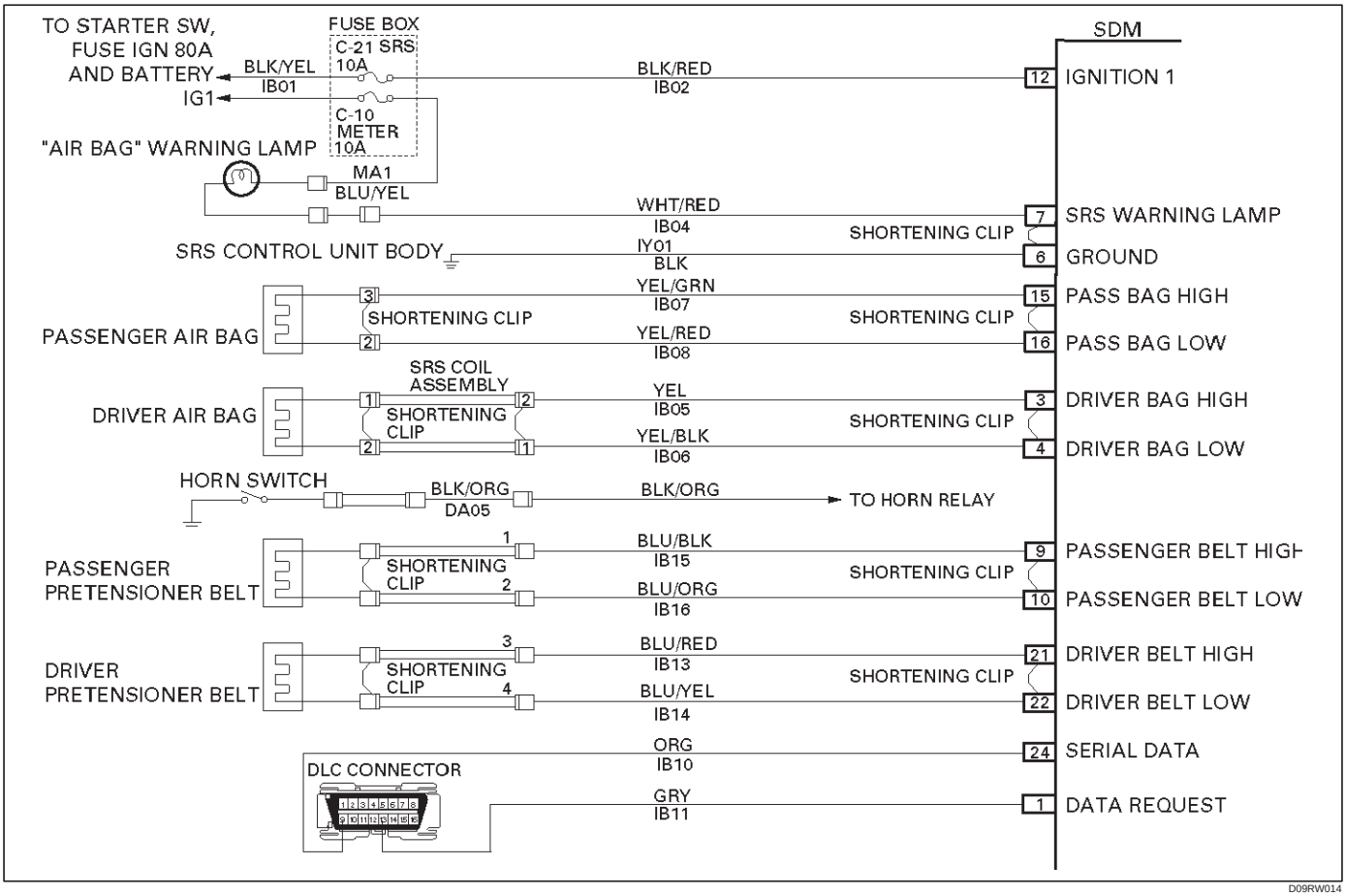

Circuit Description:

When the ignition switch is turned “ON”, battery voltage is applied to the “AIR BAG” warning lamp and to the “Ignition 1” input terminal “12”. The SDM responds by turning on the “AIR BAG” warning lamp 3.5 seconds. The SDM monitors the lamp driver output by comparing the output state at “SRS Warning Lamp” terminal “7” to the microprocessor commanded state. When “Ignition 1” is in the specified value, and the output state does not match the commanded state of the lamp driver for 500 milliseconds, DTC 61 is set.

DTC Will Set When:

“Ignition 1” voltage is in the specified value and the output state at the “SRS Warning Lamp” terminal does not match the commanded state of the lamp driver for 500 milliseconds. This test is run every 100 milliseconds during “Continuous Monitoring” tests and once per each ignition cycle at the beginning.

Action Taken:

SDM attempts to turn “ON” the “AIR BAG” warning lamp and sets a diagnostic trouble code.

DTC Will Clear When:

The ignition switch is turned “OFF.”

Diagnostic Aids:

Refer to Charts B and C to diagnose warning lamp circuit malfunctions.

DTC 61 Warning Lamp Circuit Failure

Step	Action	Yes	No
1	Was the “SRS Diagnostic System Check” performed?	Go to Step 2	Go to the “SRS Diagnostic System Check”
2	1. Malfunctions within the “AIR BAG” warning lamp circuitry will set this diagnostic trouble code. 2. These malfunctions are addressed in the “SRS Diagnostic System Check” via Chart B and Chart C. 3. Failure to properly perform the “SRS Diagnostic System Check” may result in misdiagnosis. 4. Ignition switch “ON.” 5. Clear SRS diagnostic trouble codes. IS DTC 61 set?	Ignition switch “OFF” Go to Chart A	Repeat the “SRS Diagnostic System Check”

DTC 71 Internal SDM Fault

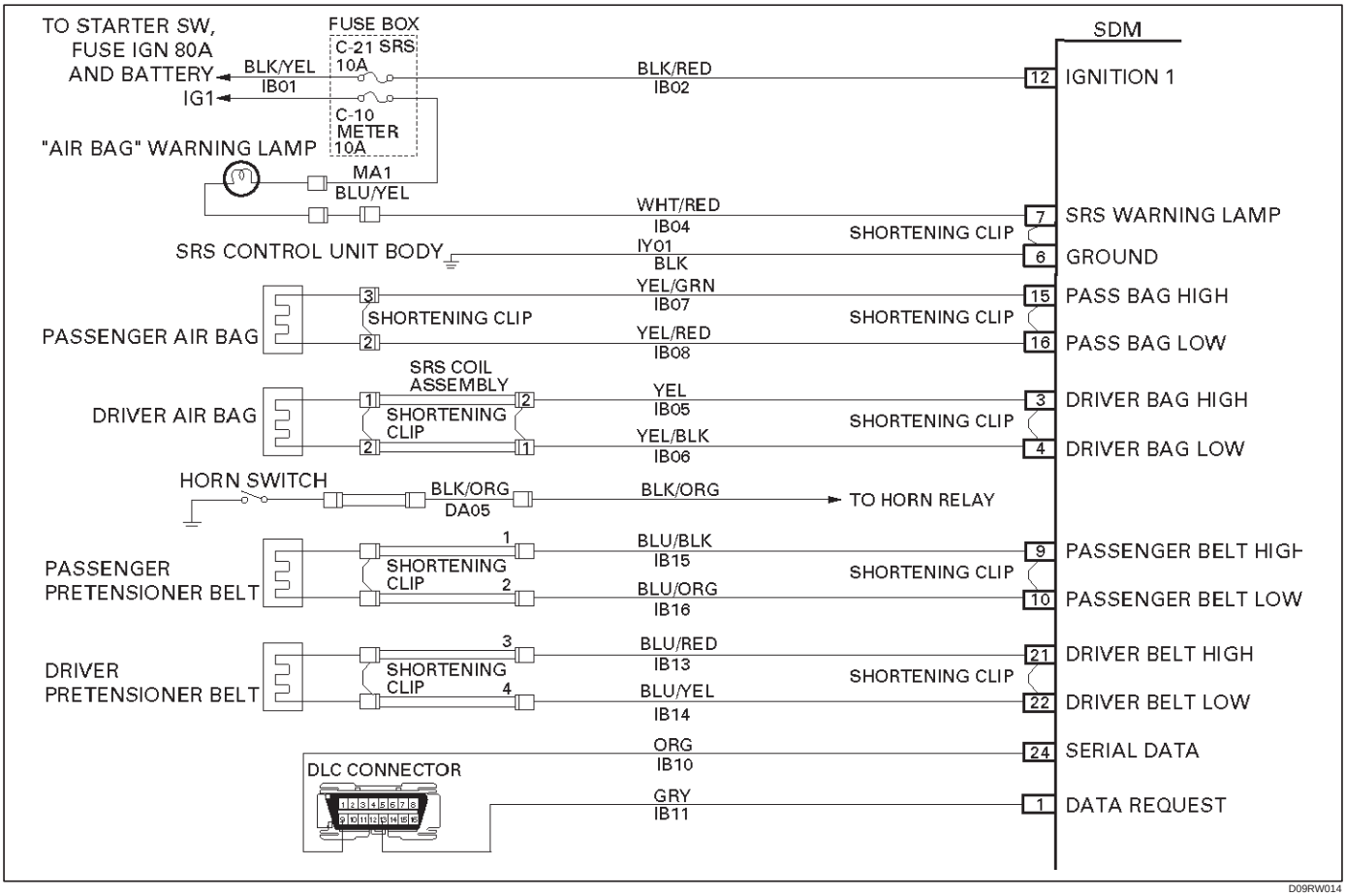

Circuit Description:

DTC 71 is an indication of a potential internal SDM malfunction and will set if any of the following conditions are detected:

1) Deployment or microprocessor energy reserve failure.
2) EEPROM failure.
3) ROM failure.
4) RAM failure.
5) Calibration check sum failure.
6) Deployment switch faults.
7) Accelerometer fault.
8) Arming sensor fault.
9) Diagnostic current faults.
10) DTC 19
11) DTC 25
12) DTC 51
13) DTC 53

DTC Will Set When:

Any of the above indicated malfunctions are detected by the SDM. The malfunctions described above are tested mainly during “Continuous Monitoring” and some ones run each ignition cycle.

Action Taken:

SDM turns “ON” the “AIR BAG” warning lamp and sets a diagnostic trouble code.

DTC Will Clear When:

A scan tool “Clear Codes” commanded is received by the SDM. Some of the indicated malfunctions will only allow the “AIR BAG” warning lamp to go out.
But when DTC 19, 25, 51, 53 are also set, SDM is replaced.

DTC 71 Internal SDM Fault

WARNING: DURING SERVICE PROCEDURES. BE VERY CAREFUL WHEN HANDLING A SENSING AND DIAGNOSTIC MODULE (SDM). NEVER STRIKE OR JAR THE SDM. NEVER POWER UP THE SRS WHEN THE SDM IS NOT RIGIDLY ATTACHED TO THE VEHICLE. ALL SDM AND MOUNTING BRACKET FASTENERS MUST BE CAREFULLY TORQUED AND THE ARROW MUST BE POINTING TOWARD THE FRONT OF THE VEHICLE TO ENSURE PROPER OPERATION OF THE SRS. THE SDM COULD BE ACTIVATED WHEN POWERED WHILE NOT RIGIDLY ATTACHED TO THE VEHICLE WHICH COULD CAUSE DEPLOYMENT AND RESULT IN PERSONAL INJURY.

CAUTION: When DTC 19 or 25 has been set, it is necessary to replace the SDM. Setting DTC 19 and 25 or 51 or 53 will also cause DTC 71 to set. When a scan tool "CLEAR CODES" command is issued and the malfunction is no longer present, DTC 51 or 53 and DTC 71 will remain current. Ensure that the short to voltage condition DTC 19, 25 is repaired prior to installing a replacement SDM to avoid damaging the SDM.

Step	Action	Yes	No
1	Was the "SRS Diagnostic System Check" performed?	Go to Step 2	Go to the "SRS Diagnostic System Check"
2	Note SRS "Diagnostic System Check." IS DTC 19 OR 25 OR 51 OR 53 ALSO SET (CURRENT OR HISTORY)? (REFER TO NOTICE ABOVE.)	Go to DTC 19 if DTC 19 is set Go to DTC 25 if DTC 25 is set Go to DTC 51 if DTC 51 is set Go to DTC 53 if DTC 53 is set	Ignition switch "OFF" Replace SDM Repeat the "SRS Diagnostic System Check"

DTC 29 Passenger Pretensioner Loop Short To Ground

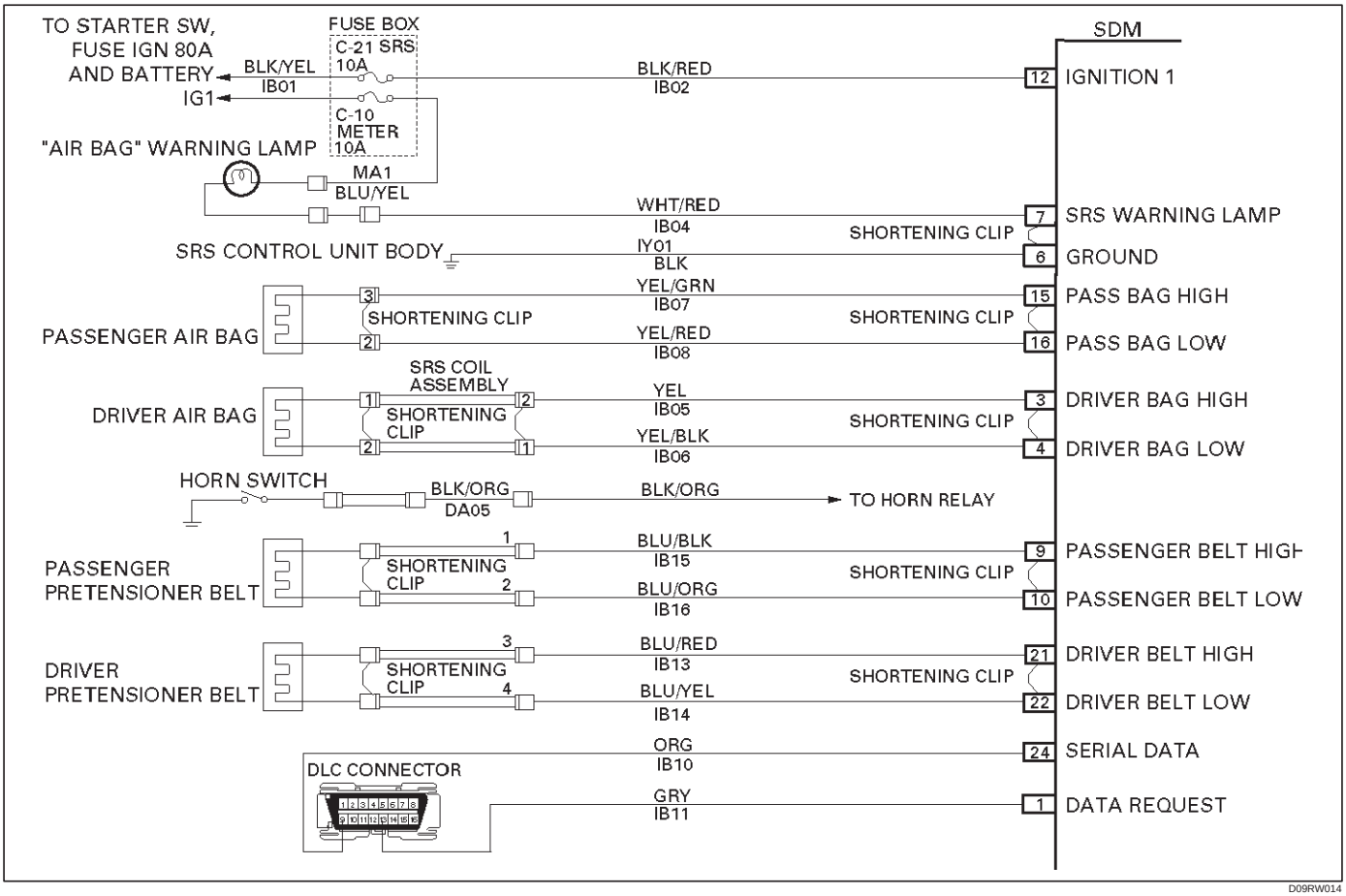

Circuit Description:

When the ignition switch is turned “ON”, the SDM will perform tests to diagnose critical malfunctions within itself. Upon passing these tests, “Ignition 1”, and pretensioner loop voltages are measured to ensure they are within their respective normal voltage ranges.
The SDM monitors the voltages at “Driver Belt Low” terminal “10” and “Passenger Belt Low” terminal “22” to detect short to ground in the pretensioner assembly circuits.

DTC Will Set When:

Neither of the air bag and the pretensioner belt are open. “Ignition 1” is within the normal operating voltage range. Once these conditions are met and the voltage at “Passenger Belt Low” is below a specified value, DTC 29 will set. This test is run once each ignition cycle and “Continuous Monitoring”.

Action Taken:

SDM turns “ON” the “AIR BAG” warning lamp and sets a diagnostic trouble code.

DTC Will Clear When:

This malfunction is no longer occurring and the ignition switch is turned “OFF”.

DTC Chart Test Description:

Number(s) below refer to circled number(s) on the diagnostic chart.

2. This test determines whether the SDM is malfunctioning.
3. This test isolates the malfunction to one side of the passenger pretensioner assembly yellow 2–pin connector at the base of the passenger seat.
4. This test determines whether the malfunction is in IB15–BLU/BLK.
5. This test determines whether the malfunction is in IB16–BLU/ORG.

Diagnostic Aids:

An intermittent condition is likely to be caused by a short to ground in the passenger pretensioner assembly circuit. Inspect IB15–BLU/BLK and IB16–BLU/ORG carefully for cutting or chafing. If the wiring pigtail of the passenger pretensioner assembly is damaged, the component must be replaced.

DTC 29 Passenger Pretensioner Loop Short To Ground

Step	Action	Yes	No
1	Was the “SRS Diagnostic System Check” performed?	Go to Step 2	Go to the “SRS Diagnostic System Check”
2	1. When measurements are requested in this chart use 5–8840–0285–0 DVM with correct terminal adapter from 5–8840–0385–0. 2. Ignition switch “OFF.” 3. Connect scan tool data link connector. follow directions as given in the scan tool operator’s MANUAL. 4. Ignition switch “ON.” 5. Read passenger sense LO. Is passenger sense LO less than 1.5 volts?	Go to Step 3	Go to Chart A
3	1. Ignition switch “OFF.” 2. Disconnect passenger pretensioner assembly yellow 2–pin connector at the base of the passenger seat. 3. Leave driver pretensioner assembly connected. 4. Connect SRS driver / passenger load tool 5–8840–2421–0 and appropriate adapter to passenger pretensioner assembly harness connector. 5. Ignition switch “ON.” Is DTC 29 current?	Go to Step 4	Ignition switch “OFF” Replace passenger pretensioner assembly Go to Step 6
4	1. Ignition switch “OFF”. 2. Disconnect SRS driver / passenger load tool 3. Measure resistance on SDM harness connector from terminal “9” to terminal “6” (ground). Does 5–8840–0285–0 display “OL” (Infinite)?	Go to Step 5	Replace SRS harness or repair chassis harness Go to Step 6
5	Measure resistance on SDM harness connector from terminal “10” to terminal “6” (ground). Does 5–8840–0285–0 display “OL” (Infinite)?	Go to Chart A	Replace SRS harness or repair chassis harness Go to Step 6
6	1. Reconnect all components and ensure all component are properly mounted. 2. Clear diagnostic trouble codes. Was this step finished?	Go to the “SRS Diagnostic system Check”	Go to Step 6

DTC 31 Passenger Pretensioner Loop Resistance High

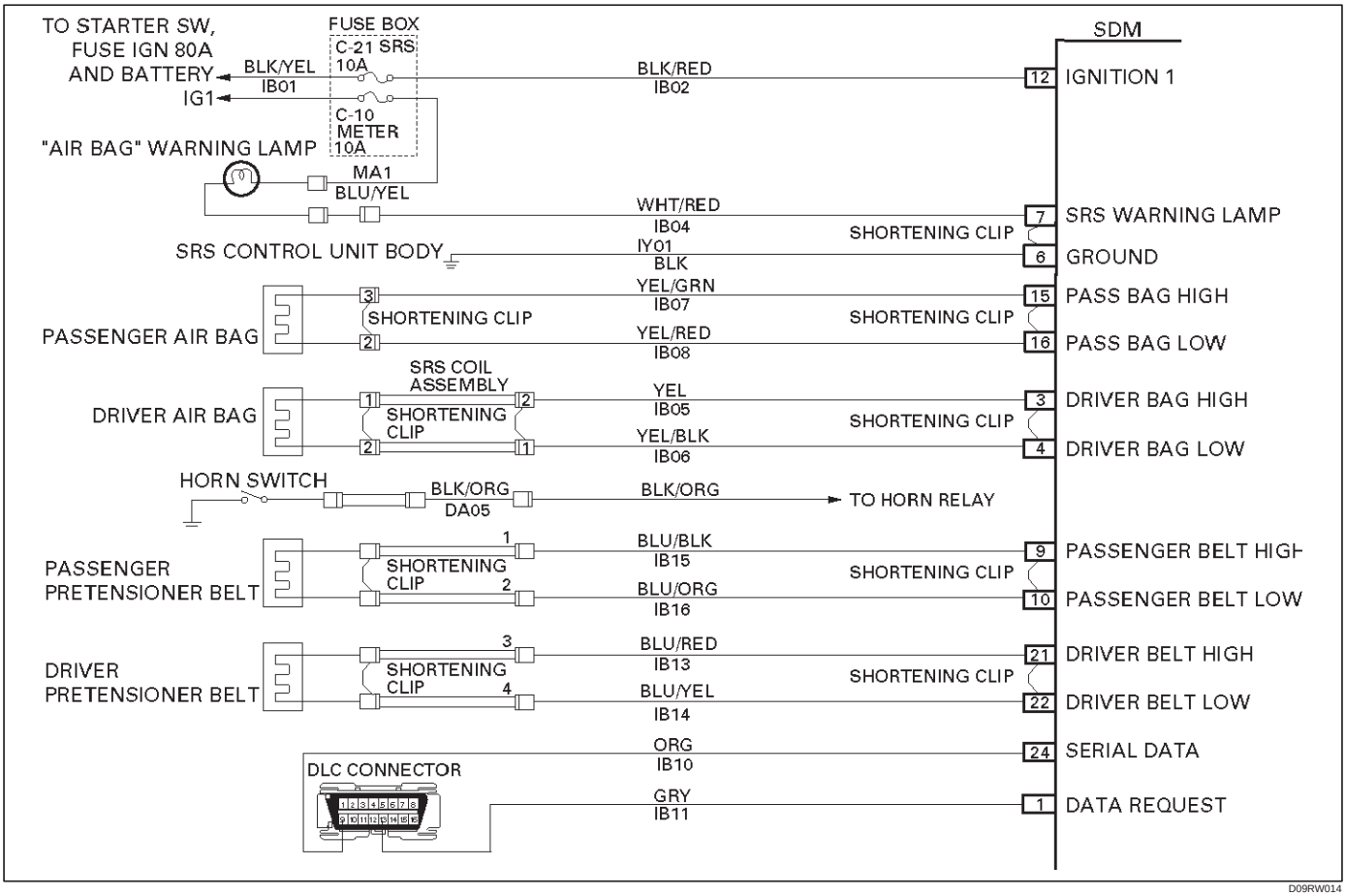

Circuit Description:

When the ignition switch is turned “ON”, the SDM will perform tests to diagnose critical malfunctions within itself. Upon passing these tests “Ignition 1”, and deployment loop voltages are measured to ensure they are within their respective normal voltage ranges. The SDM then proceeds with the “Resistance Measurement Test”. “Passenger Belt Low” terminal “10” is grounded through a resister and the passenger current source connected to “Passenger Belt High” terminal “9” allows a known amount of current to flow. By monitoring the voltage difference between “Passenger Belt High” and “Passenger Belt Low” the SDM calculates the combined resistance of the passenger air bag assembly, harness wiring IB15–BLU/BLK and IB16–BLU/ORG connector terminal contact.

DTC Will Set When:

The combined resistance of the passenger pretensioner assembly, harness wiring IB15–BLU/BLK and IB16–BLU/ORG, and connector terminal contact is above a specified value. This test is run once each ignition cycle during the “Resistance Measurement Test” when:

1. No “higher priority faults” are detected during “Turn–ON”,
2. “Ignition 1” voltage is in the specified value.

Action Taken:

SDM turns “ON” the “AIR BAG” warning lamp and sets a diagnostic trouble code.

DTC Will Clear When:

The ignition switch is turned “OFF.”

DTC Chart Test Description:

Number(s) below refer to step number(s) on the diagnostic chart:

2. This test determines whether the malfunction is in the SDM.
3. This test verifies proper connection of the yellow 2–pin connector.
4. This test checks for proper contact and/or corrosion of the yellow 2–pin connector terminals.
5. The test checks for a malfunctioning passenger pretensioner assembly.
6. This test determines whether the malfunction is due to high resistance in the wiring.

Diagnostic Aids:

An intermittent condition is likely to be caused by a poor connection at the passenger air bag assembly harness connector terminals “1” and “2”, SDM terminal “9” and “10”, or a poor wire to terminal connection in IB15–BLU/BLK and IB16–BLU/ORG. This test for this diagnostic trouble code is only run while the “AIR BAG”

warning lamp is performing the bulb check. When a scan tool "Clear Codes" command is issued and the malfunction is still present, the DTC will not reappear until the next ignition cycle.

DTC 31 Passenger Pretensioner loop Resistance High

Step	Action	Yes	No
1	Was the "SRS Diagnostic System Check" Performed?	Go to Step 2	Go to The "SRS Diagnostic System Check"
2	1. When measurements are requested in this chart use 5–8840–0285–0 DVM with correct terminal adapter from 5–8840–0385–0. 2. Use scan tool data list function, read and record the passenger pretensioner loop resistance. Is passenger resist. more than 3.7 ohms?	Go to Step 3	Go to Chart A
3	1. Ignition switch "Off." 2. Make sure the passenger pretensioner assembly yellow 2–pin connector located at the base of the passenger seat. Is the yellow 2–pin connector connected properly?	Go to Step 4	Seat passenger pretensioner assembly yellow 2–pin connector properly Go to Step 7
4	1. Disconnect and inspect the passenger pretensioner assembly yellow 2–pin connector located at the base of the passenger seat. 2. If ok, reconnect the passenger pretensioner assembly 2–pin connector. 3. Ignition switch "ON." Is DTC 31 current?	Go to Step 5	Go to Step 7
5	1. Ignition switch "Off." 2. Disconnect passenger pretensioner assembly, yellow 2–pin connector located at the base of the passenger seat. 3. Connect 5–8840–2421–0 SRS driver / passenger load tool and appropriate adapters to passenger pretensioner assembly harness connectors. 4. Ignition switch "ON." Is DTC 31 Current?	Go to Step 6	Ignition switch "Off" Replace the passenger pretensioner assembly Go to Step 7
6	1. Ignition switch "Off." 2. There has been an increase in the total circuit resistance of the passenger loop. 3. Use the high resolution ohmmeter mode of the DVM while checking IB15–BLU/BLK and IB16–BLU/ORG, and SDM connector terminal "9" and "10" to locate the root cause. Was a fault found?	Replace SRS harness or repair chassis harness Go to Step 7	Go to Chart A
7	1. Reconnect all components ensure all component are properly mounted. 2. Clear diagnostic trouble codes. Was This step finished?	Repeat the "SRS Diagnostic System Check"	Go to Step 7

DTC 32 Passenger Pretensioner loop Resistance Low

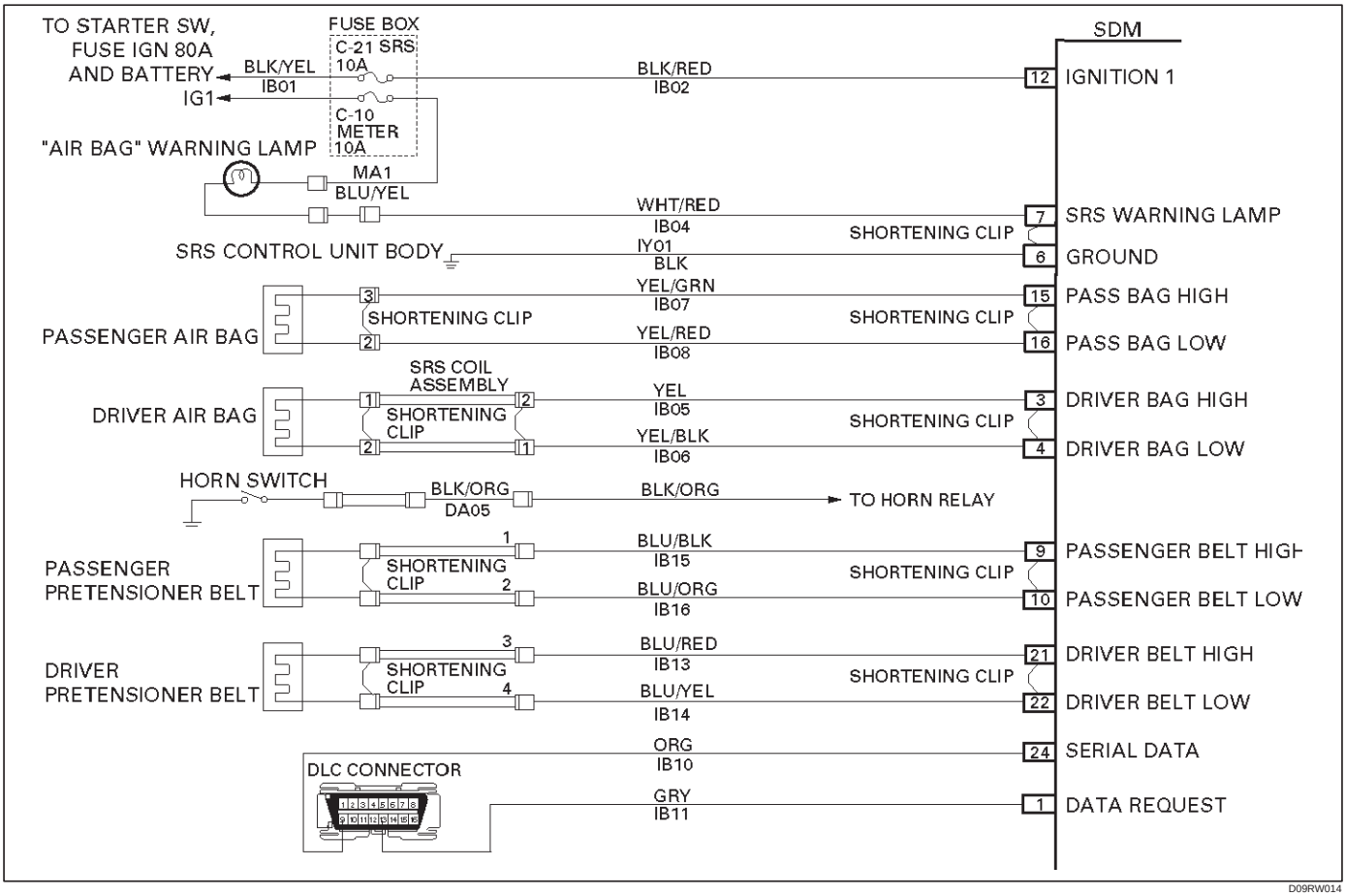

Circuit Description:

When the ignition switch is turned “ON”, the SDM will perform tests to diagnose critical malfunctions within itself. Upon passing these tests “Ignition 1”, and pretensioner loop voltages are measured to ensure they are within their respective normal voltage ranges. The SDM then proceeds with the “Resistance Measurement Test”. “Passenger Belt Low” terminal “10” is grounded through a resistor and the passenger current source connected to “Passenger Belt High” terminal “9” allows a known amount of current to flow. By monitoring the voltage difference between “Passenger Belt High” and “Passenger Belt Low”, the SDM calculates the combined resistance of the passenger air bag assembly, harness wiring IB15–BLU/BLK and IB16–BLU/ORG connector terminal contact.

DTC Will Set When:

The combined resistance of the passenger air bag assembly, harness wiring IB15–BLU/BLK and IB16–BLU/ORG, and connector terminal contact is above a specified value. This test is run once each ignition cycle during the “Resistance Measurement Test” when:

1. No “higher priority faults” are detected during “Turn–ON”,
2. “Ignition 1” voltage is in the specified value.

Action Taken:

SDM turns “ON” the “AIR BAG” warning lamp and sets a diagnostic trouble code.

DTC Will Clear When:

The ignition switch is turned “OFF.”

DTC Chart Test Description:

Number(s) below refer to step number(s) on the diagnostic chart:

2. This test determines whether the malfunction is in the SDM.
3. This test verifies connection of the yellow 2–pin connector.
4. This test cheeks for proper operation of the shorting clip in the yellow 2–pin connector.
5. The test checks for a malfunction passenger pretensioner assembly.
6. This test determines whether the malfunctioning is due to shortening in the wiring.

Diagnostic Aids:

An intermittent condition is likely to be caused by a short between IB15–BLU/BLK and IB16–BLU/ORG, or a malfunctioning shorting clip on the passenger pretensioner assembly which would require replacement of the pretensioner assembly. The test for this diagnostic trouble code is only run while “AIR BAG” warning lamp is

performing the bulb check. When a scan tool “Clear Codes” command is issued and the malfunction is still present, the DTC will not reappear until the next ignition cycle.

DTC 32 Passenger Pretensioner loop Resistance Low

Step	Action	Yes	No
1	Was the “SRS Diagnostic System Check” performed?	Go to Step 2	Repeat the “SRS Diagnostic System Check”
2	1. When measurements are requested in this chart use 5–8840–0285–0 DVM with correct terminal adapter from 5–8840–0385–0. 2. Using scan tool data list function, read and record the passenger pretensioner loop resistance. Is passenger resist. less than 1.4 ohms?	Go to Step 3	Go to Chart A
3	1. Ignition switch “Off.” 2. Make sure the passenger pretensioner assembly yellow 2–pin connector located at the base of the passenger seat. Is the yellow 2–pin connector connected properly?	Go to Step 4	Seat passenger pretensioner assembly yellow 2–pin connector properly Go to Step 7
4	1. Disconnect and inspect the passenger pretensioner assembly yellow 2–pin connector located at the base of the passenger seat. 2. If ok, reconnect the passenger pretensioner assembly 2–pin connector. 3. Ignition switch “ON.” Is DTC 32 Current?	Go to Step 5	Go to Step 7
5	1. Ignition switch “Off.” 2. Disconnect passenger pretensioner assembly, yellow 2–pin connector located at the base of the passenger seat. 3. Connect 5–8840–2421–0 SRS driver/passenger load tool and appropriate adapters to passenger pretensioner assembly harness connectors. 4. Ignition switch “ON.” Is DTC 32 current?	Go to Step 6	Ignition switch “Off” Replace the passenger pretensioner assembly Go to Step 7
6	1. Ignition switch “Off.” 2. There has been a decrease in the total circuit resistance of the passenger pretensioner loop. 3. Use the high resolution ohmmeter mode of the DVM while checking IB15–BLU/BLK and IB16–BLU/ORG, and SDM connector terminal “9” and “10” to locate the root cause. Was a fault found?	Replace SRS harness or repair chassis harness Go to Step 7	Go to Chart A
7	1. Reconnect all components, ensure all component are properly mounted. 2. Clear diagnostic trouble codes. Was this step finished?	Repeat the “SRS Diagnostic System Check”	Go to Step 7

DTC 33 Passenger Pretensioner Loop Short To Voltage

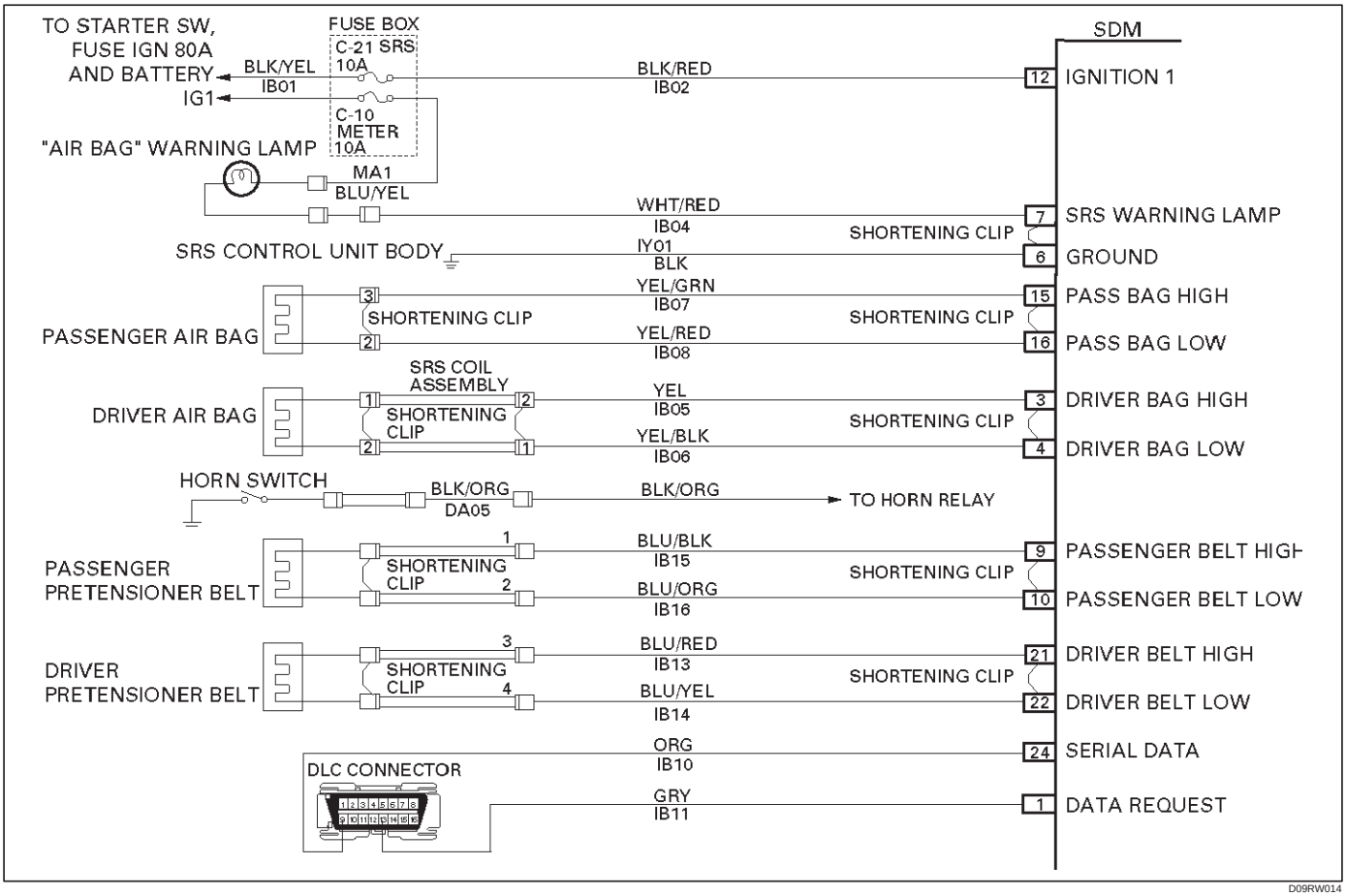

Circuit Description:

When the ignition switch is turned “ON”, the SDM will perform tests to diagnose critical malfunctions within itself. Upon passing these tests, “Ignition 1”, and pretensioner loop voltages are measured to ensure they are within their respective normal voltage ranges.
The SDM monitors the voltages at “Driver Belt Low” terminal “10” and “Passenger Belt Low” terminal “22” to detect short to B+ in the pretensioner assembly circuits.

DTC Will Set When:

“Ignition 1” is within the normal operating voltage range. Once these conditions are met and the voltage at “Passenger pretensioner Low” is above a specified value, DTC 33 will set. This test is run once each ignition cycle and “Continuous Monitoring”.

Action Taken:

SDM turns “ON” the “AIR BAG” warning lamp and sets DTC 33.

DTC Will Clear When:

The malfunction is no longer occurring and the ignition is turned “OFF”.

DTC Chart Test Description:

Number(s) below refer to step number(s) on the diagnostic chart:

2. This test determines whether the malfunction is in the SDM.
3. This test isolates the malfunction to one side of the passenger pretensioner assembly yellow 2–pin connector at the base of the passenger seat.
4. This test determines whether the malfunction is in IB15–BLU/BLK.
5. This test determines whether the malfunction is in IB16–BLU/ORG.

Diagnostic Aids:

An intermittent condition is likely to be caused by a short to B+ in the passenger pretensioner assembly circuit. Inspect IB15–BLU/BLK and IB16–BLU/ORG carefully for cutting or chafing. If the wiring pigtail of the passenger pretensioner assembly is damaged, the component must be replaced. A careful inspection of IB15–BLU/BLK and IB16–BLU/ORG, including the passenger pretensioner assembly pigtail is essential to ensure that the replacement SDM will not be damaged.

DTC 33 Passenger Pretensioner Loop Short To Voltage

Step	Action	Yes	No
1	Perform the “SRS Diagnostic System Check” Was the “SRS Diagnostic System Check” performed?	Go to Step 2	Repeat the “SRS Diagnostic System Check”
2	1. When measurements are requested in this chart use 5–8840–0285–0 DVM With correct terminal adapter from 5–8840–0385–0. 2. Ignition switch “OFF.” 3. Connect scan tool data link connector. follow directions as given in the scan tool operator’s manual. 4. Ignition switch “ON.” 5. Read passenger belt sense LO. Is passenger belt sense LO more than 3.5 volts?	Go to Step 3	Go to Chart A
3	1. Ignition switch “OFF”. 2. Disconnect passenger pretensioner assembly yellow 2–pin connector at the base of the passenger seat. 3. Leave driver pretensioner assembly connected. 4. Connect SRS driver / passenger load tool 5–8840–2421–0 and appropriate adapter to passenger air bag assembly harness connector. 5. Ignition switch “ON.” Is DTC 33 current?	Go to Step 4	Ignition switch “OFF” Replace passenger pretensioner assembly Go to Step 6
4	1. Ignition switch “OFF.” 2. Disconnect SRS driver / passenger load tool. 3. Measure resistance on SDM harness connector from terminal “9” to terminal “12” (ignition). Does 5–8840–0285–0 display “OL” (infinite)?	Go to Step 5	Replace SRS harness Go to Step 6.
5	Measure resistance on SDM harness connector from terminal “10” and terminal “12” (ignition). Does 5–8840–0285–0 display “OL” (infinite)?	Go to Chart A	Replace SRS harness Go to Step 6
6	1. Reconnect all components ensure all component are properly mounted. 2. Clear diagnostic trouble codes. Was this step finished?	Repeat the “SRS Diagnostic System Check”	Go to Step 6

DTC 34 Passenger Pretensioner Loop Open

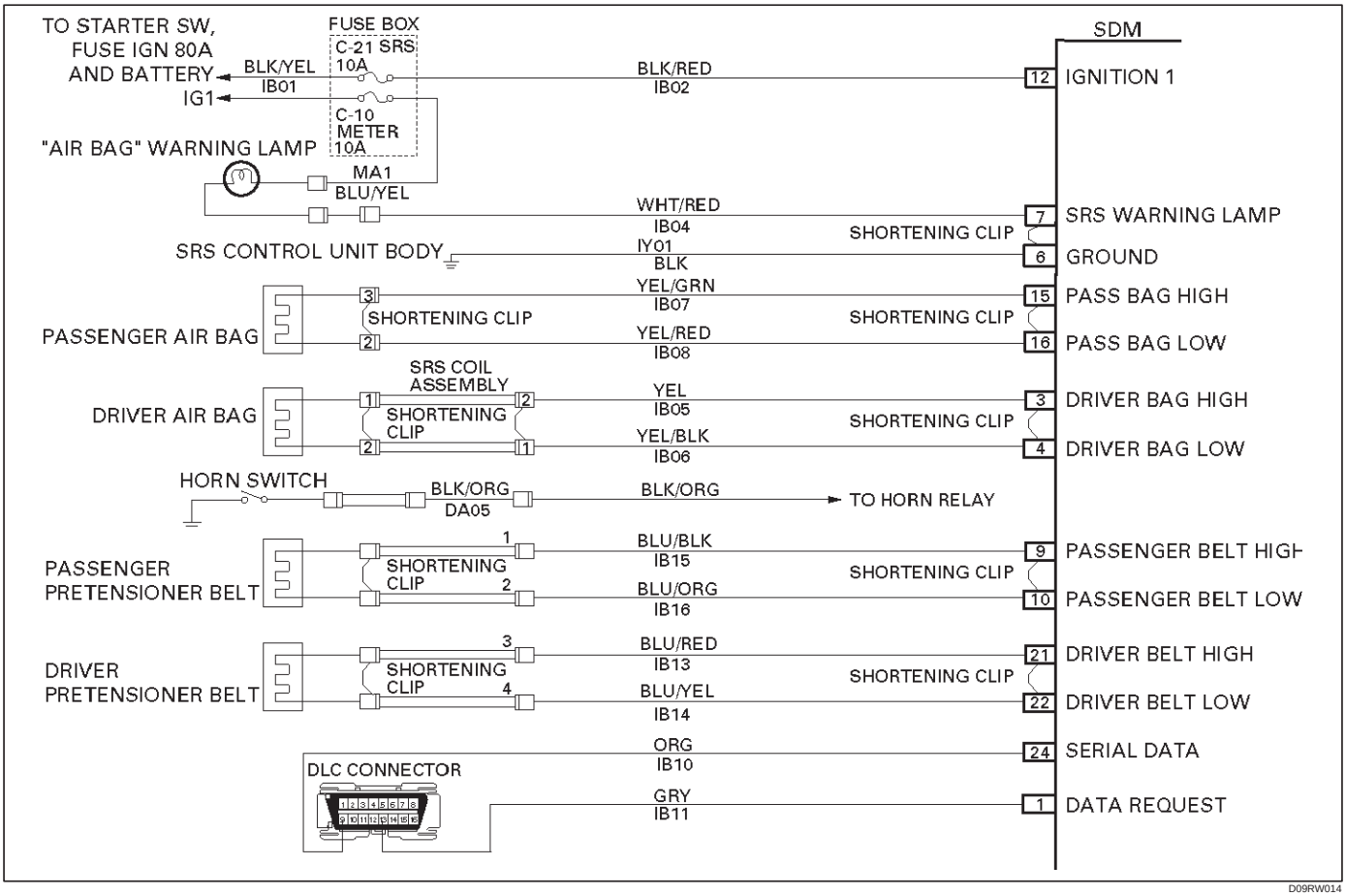

Circuit Description:

When the ignition switch is turned “ON”, the SDM will perform tests to diagnose critical malfunctions within itself. Upon passing these tests, “Ignition 1”, and pretensioner loop voltages are measured to ensure they are within their respective normal voltage ranges. During “Continuous Monitoring” diagnostics, a fixed amount of current is flowing in the deployment loop. This produces proportional voltage drops in the loop. By monitoring the voltage difference between “Passenger Belt High” and “Passenger Belt Low”, the SDM calculates the combined resistance of the passenger pretensioner assembly, harness wiring IB15–BLU/BLK AND IB16–BLU/ORG, and connector terminal contact.

DTC Will Set When:

The voltage difference between “Passenger pretensioner High” terminal “9” and “Passenger pretensioner Low” terminal “10” is above or equal to a specified value for 500 milliseconds during “Continuous Monitoring”.

Action Taken:

SDM turns “ON” the “AIR BAG” warning lamp and sets a diagnostic trouble code.

DTC Will Clear When:

The voltage difference between “Passenger Belt High” terminal “9” and “Passenger Belt Low” terminal “10” is below a specified value for 500 milliseconds during “Continuous Monitoring”.

DTC Chart Test Description:

Number(s) below refer to step number(s) on the diagnostic chart:

2. This test determines whether the malfunction is in the SDM.
3. This test verifies proper connection of the yellow 2–pin connector.
4. This test cheeks for proper contact and/or corrosion of the shorting clip in the yellow 2–pin connector terminals.
5. The test checks for a malfunctioning passenger pretensioner assembly.
6. This test determines whether the open in the wiring.

Diagnostic Aids:

An intermittent condition is likely to be caused by a poor connection at the passenger pretensioner assembly harness connector terminals“1” and “2”, SDM terminals “9” and “10”, or an open in IB15–BLU/BLK and IB16–BLU/ORG.

DTC 34 Passenger Pretensioner Loop Open

Step	Action	Yes	No
1	Was the “SRS Diagnostic System Check” performed?	Go to Step 2	Go to the “SRS Diagnostic System Check”
2	1. When measurements are requested in this chart use 5–8840–0285–0 DVM with correct terminal adapter from 5–8840–0385–0. 2. Using scan tool data list function, read and record the passenger pretensioner differential voltage. Is passenger pretensioner VDIF 0.425 volts or more?	Go to Step 3	Go to Chart A
3	1. Ignition switch “OFF”. 2. Make sure the passenger pretensioner assembly yellow 2–pin connector located at the base of the passenger seat. Is the yellow 2–pin connector connected properly?	Go to Step 4	Seat passenger pretensioner assembly yellow 2–pin connector properly Go to Step 7
4	1. Disconnect and inspect the passenger pretensioner assembly yellow 2–pin connector located at the base of the passenger seat. 2. If ok, reconnect the passenger pretensioner assembly 2–pin connector. 3. Ignition switch “ON”. Is DTC 34 current?	Go to Step 5	Go to Step 7
5	1. Ignition switch “Off.” 2. Disconnect the passenger pretensioner assembly, yellow 2–pin connector located at the base of the passenger seat. 3. Connect 5–8840–2421–0 SRS driver / passenger load tool and appropriate adapters to passenger pretensioner assembly harness connectors. 4. Ignition switch “ON.” Is DTC 34 current?	Go to Step 6	Ignition switch “Off” Replace the passenger pretensioner assembly Go to Step 7
6	1. Ignition switch “Off.” 2. There has been an open circuit resistance in the passenger pretensioner loop. 3. Use the high resolution ohmmeter mode of the DVM while checking IB15–BLU/BLK and IB16–BLU/ORG, and SDM connector terminal “9” and “10” to locate the root cause. Was a fault found?	Replace SRS harness or repair chassis harness Go to Step 7	Go to Chart A
7	1. Reconnect all components ensure all component are properly mounted. 2. Clear diagnostic trouble codes. Was this step finished?	Go to the “SRS Diagnostic System Check”	Go to Step 7

DTC 41 Driver Pretensioner Loop Resistance High

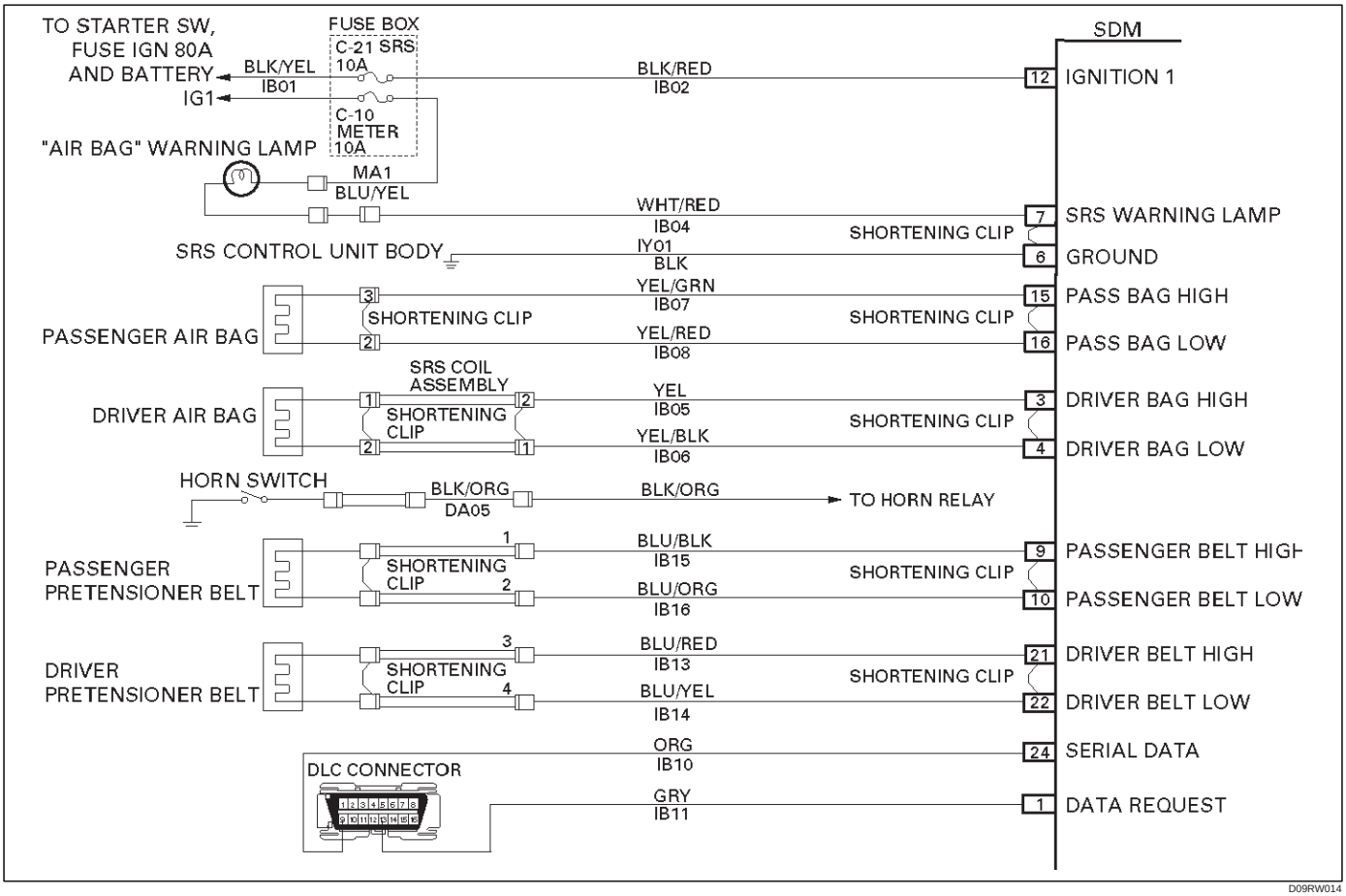

Circuit Description:

When the ignition switch is turned “ON”, the SDM will perform tests to diagnose critical malfunctions within itself. Upon passing these tests, “Ignition 1”, and pretensioner loop voltages are measured to ensure they are within their respective normal voltage ranges.

The SDM then proceeds with the “Resistance Measurement Test” “Driver Belt Low” terminal “22” is grounded through a current sink and the driver current source connected to “Driver Belt High” terminal “21” allows a known amount of current to flow. By monitoring the voltage difference between “Driver Belt High” and “Driver Belt Low”, the SDM calculates the combined resistance of the driver pretensioner assembly, harness wiring IB13–BLU/RED and IB14–BLU/YEL, and connector terminal contact.

DTC Will Set When:

The combined resistance of the driver pretensioner assembly, harness wiring IB13–BLU/RED and IB14–BLU/YEL, and connector terminal contact is above a specified value. This test run once each ignition cycle during the “Resistance Measurement Test” when:

1. No “higher priority faults” are detected during “Turn–ON”
2. “Ignition 1” voltage is in the specified value.

Action Taken:

SDM turns “ON” the “AIR BAG” warning lamp and sets DTC 41.

DTC Will Clear When:

The ignition switch is turned “OFF”.

DTC Chart Test Description:

Number(s) below refer to step number(s) on the diagnostic chart:

2. This test determines whether the malfunction is in the SDM.
3. This test verifies proper connection of the yellow 2–pin connector at the base of the driver seat.
4. This test checks for proper contact and/or corrosion of the 2–pin connector terminals at the base of the driver seat.
5. This test isolate the malfunction to one side of the pretensioner assembly yellow 2–pin connector located at the base of the driver seat.
6. This test determines whether the malfunction is due to high resistance in the wiring.

Diagnostic Aids:

An intermittent condition is likely to be caused by a poor connection at terminals “3” and “4” of the driver pretensioner assembly 2–pin connector at the base of the driver seat. SDM terminals “21” and “22” or a poor wire to terminal connection in IB13–BLU/RED or IB14–BLU/YEL. The test for this diagnostic trouble code is only run while the “AIR BAG” warning lamp is performing the bulb check. When a scan tool “Clear Codes” command is issued and the malfunction is still present, the DTC will not reappear until the next ignition cycle.

DTC 41 Driver Pretensioner Loop Resistance High

Step	Action	Yes	No
1	Perform the “SRS Diagnostic System Check”. Was the “SRS Diagnostic System Check” performed?	Go to Step 2	Repeat the “SRS Diagnostic System Check”
2	1. When measurements are requested in this chart use 5–8840–0285–0 DVM with correct terminal adapter from 5–8840–0385–0. 2. Use scan tool data list function, read and record the driver pretensioner loop resistance. Is driver resistance more than 3.7 ohms?	Go to Step 3	Go to Chart A
3	1. Ignition switch “OFF.” 2. Disconnect driver pretensioner assembly yellow 2–pin connector located at base of the driver seat. Is the 2–pin connector connected properly?	Go to Step 4	Driver pretensioner assembly 2–pin connector properly Go to Step 7
4	1. Disconnect and inspect the driver pretensioner assembly yellow 2–Pin connector located base of the driver seat. 2. If ok, reconnect the driver pretensioner assembly yellow 2–pin connector. 3. Ignition switch “ON.” Is DTC 41 current?	Go to Step 5	Go to Step 7
5	1. Ignition switch “OFF.” 2. Disconnect driver pretensioner assembly, yellow 2–pin connector located at the base of the driver seat. 3. Connect SRS driver / passenger load tool 5–8840–2421–0 and appropriate adapter to driver pretensioner assembly harness connectors. 4. Ignition switch “ON.” Is DTC 41 current?	Go to Step 6	Go to Step 7
6	1. Ignition switch “Off.” 2. There has been a increase in the total circuit resistance of the driver pretensioner loop. 3. Use the high resolution ohmmeter mode of the DVM while checking IB13–BLU/RED and IB14–BLU/YEL, and SDM connector terminal “21” and “22” to locate the root cause. Was a fault found?	Replace SRS harness or repair chassis harness Go to Step 7	Go to Chart A
7	1. Reconnect all components ensure all component are properly mounted. 2. Clear diagnostic trouble codes. Was this step finished?	Repeat the “SRS Diagnostic System Check”	Go to Step 7

DTC 42 Driver Pretensioner Loop Resistance Low

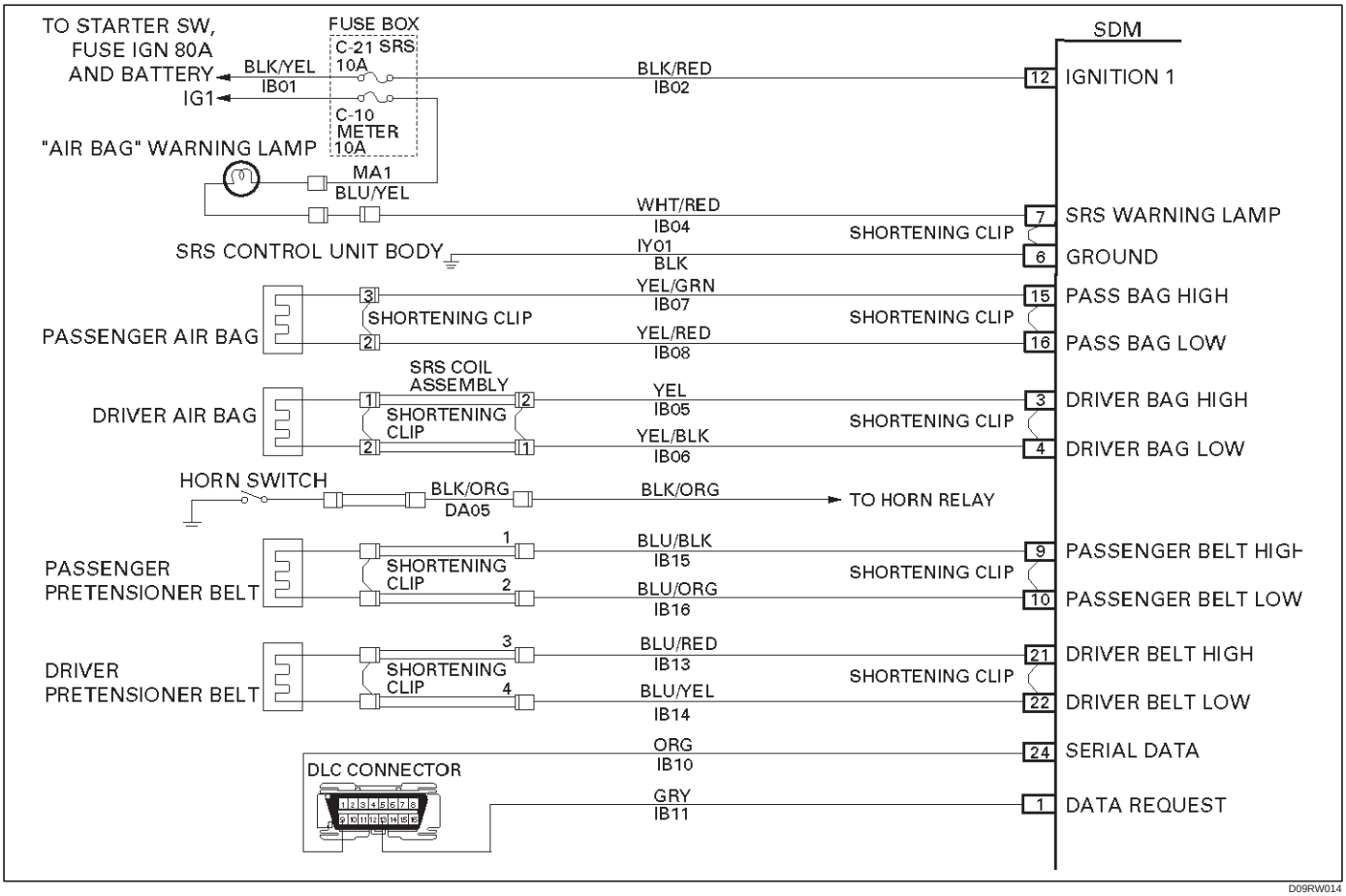

Circuit Description:

When the ignition switch is turned “ON”, the SDM will perform tests to diagnose critical malfunctions within itself. Upon passing these tests “Ignition 1”, and pretensioner loop voltages are measured to ensure they are within their respective normal voltage ranges.

The SDM then proceeds with the “Resistance Measurement Test” “Driver Belt Low” terminal “22” is grounded through a current sink and the driver current source connected to “Driver Belt High” terminal “21” allows a known amount of current to flow. By monitoring the voltage difference between “Driver Belt High” and “Driver Belt Low” the SDM calculates the combined resistance of the driver pretensioner assembly, harness wiring IB13–BLU/RED and IB14–BLU/YEL and connector terminal contact.

DTC Will Set When:

The combined resistance of the driver pretensioner assembly, harness wiring IB13–BLU/RED and IB14–BLU/YEL and connector terminal contact is above a specified value. This test is run once each ignition cycle during the “Resistance Measurement Test” when:

1. No “higher priority faults” are detected during “Turn–ON”
2. “Ignition 1” voltage is in the specified value.

Action Taken:

SDM turns “ON” the “AIR BAG” warning lamp and sets DTC 42.

DTC Will Clear When:

The ignition switch is turned “OFF.”

DTC Chart Test Description:

Number(s) below refer to circled number(s) on the diagnostic chart:

2. This test determines whether the malfunction is in the SDM.
3. This test verifies proper connection of the yellow 2–pin connector at the base of the driver seat.
4. This test checks for proper operation of the shorting clip in the yellow 2–pin connector.
5. This test isolate the malfunction to one side of the pretensioner assembly yellow 2–pin connector located at the base of driver seat.
6. This test determines whether the malfunction is due to shortening in the wiring.

Diagnostic Aids:

An intermittent condition is likely to be caused by a short between IB13–BLU/RED or IB14–BLU/YEL or a malfunctioning shorting clip on the driver pretensioner assembly which would require replacement of the component. The test for this diagnostic trouble code is

only run while the “AIR BAG” warning lamp is performing the bulb check. When a scan tool “Clear Codes” command is issued and the malfunction is still present, the DTC will not reappear until the next ignition cycle.

DTC 42 Driver Pretensioner Loop Resistance Low

Step	Action	Yes	No
1	Perform the “SRS Diagnostic System Check.” WAS THE “SRS Diagnostic System Check” performed?	Go to Step 2	Go to the “SRS Diagnostic System Check”
2	1. When measurements are requested in this chart use 5–8840–0285–0 DVM with correct terminal adapter from 5–8840–0385–0. 2. Use scan tool data list function, read and record the driver pretensioner loop resistance. Is driver pretensioner loop resistance less than 1.4 OHMS?	Go to Step 3	Go to Chart A
3	1. Ignition switch “OFF.” 2. Make sure the driver pretensioner assembly yellow 2–pin connector located at the base of the driver seat is connected properly. Is the 2–pin connector connected properly?	Go to Step 4	Seat driver pretensioner assembly 2–pin connector properly Go to Step 7
4	1. Disconnect and inspect the driver pretensioner assembly yellow 2–pin connector located base of the driver seat. 2. If ok, reconnect the driver pretensioner assembly yellow 2–pin connector. 3. Ignition switch “ON.” Is DTC 42 current?	Go to Step 5	Go to Step 7
5	1. Ignition switch “OFF.” 2. Disconnect driver pretensioner assembly, yellow 2–pin connector located at the base of driver seat. 3. Connect SRS driver / passenger load tool 5–8840–2421–0 and appropriate adapter to driver pretensioner assembly harness connectors. 4. Ignition switch “ON.” Is DTC 42 current?	Go to Step 6	Go to Step 7
6	1. Ignition switch “OFF.” 2. There has been a decrease in the total circuit resistance of the driver pretensioner loop. 3. Use the high resolution ohmmeter mode of the DVM while checking IB13–BLU/RED and IB14–BLU/YEL, and SDM connector terminal “21” and “22” to locate the root cause. Was a fault found?	Replace SRS harness or repair chassis harness Go to Step 7	Go to Chart A
7	1. Reconnect all components, ensure all component are properly mounted. 2. Clear diagnostic trouble codes. Was this step finished?	Go to the “SRS Diagnostic System Check”	Go to Step 7

DTC 44 Driver Pretensioner Loop Open

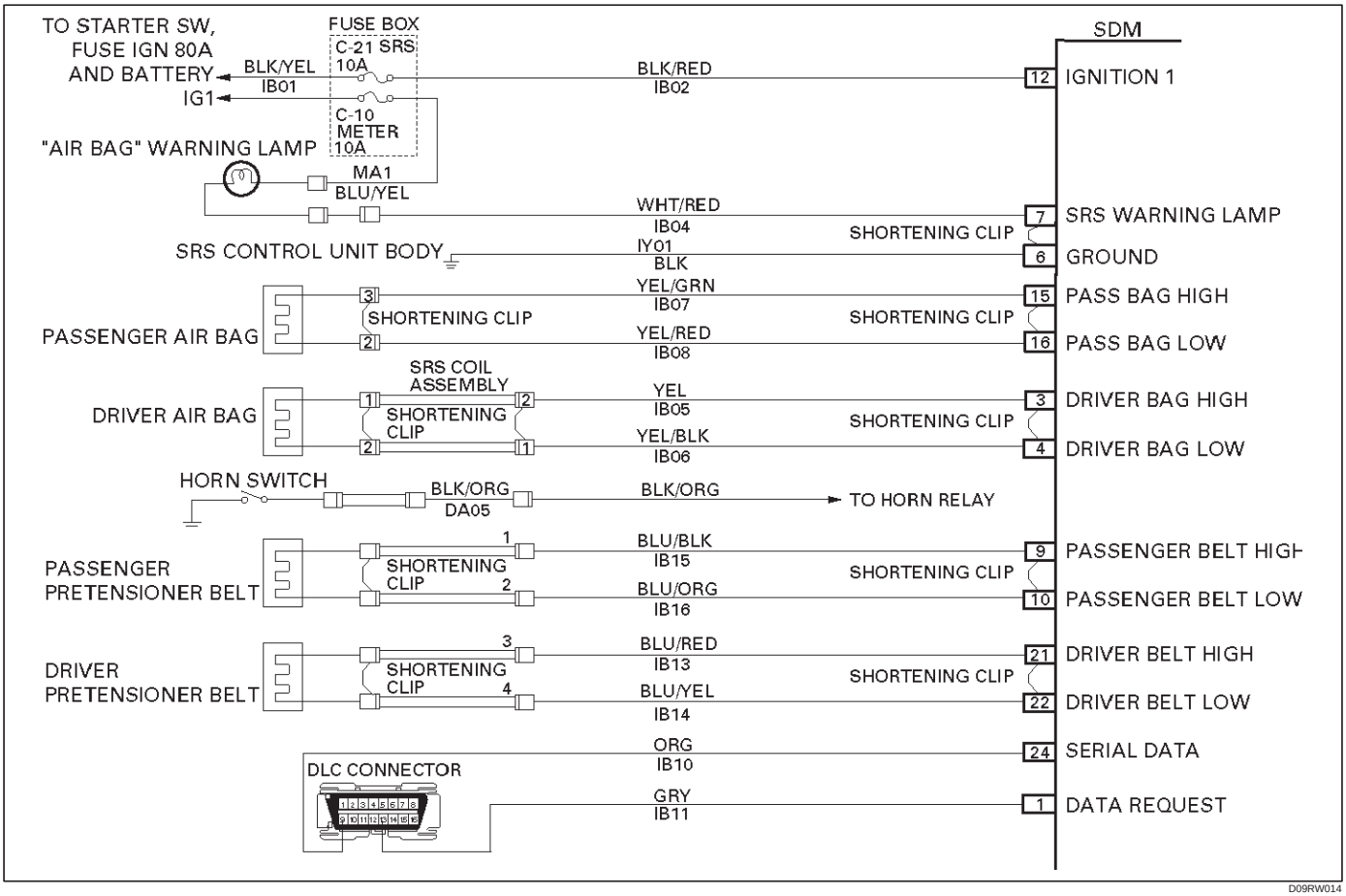

Circuit Description:

When the ignition switch is turned “ON”, the SDM will perform tests to diagnose critical malfunctions within itself. Upon passing these tests, “Ignition 1”, and pretensioner loop voltages are measured to ensure they are within their respective normal voltage ranges.

During “Continuous Monitoring” diagnostics, a fixed amount of current is following in the pretensioner loop. This produces proportional voltage drops in the loop. By monitoring the voltage difference between “Driver Belt High” and “Driver Belt Low”, the SDM calculates the combined resistance of the driver pretensioner assembly, harness wiring IB13–BLU/RED and IB14–BLU/YEL, and connector terminal contact.

DTC Will Set When:

The voltage difference between “Driver Belt High” terminal “21” and “Driver Belt Low” terminal “22” is above or equal to a specified value for 500 milliseconds during “Continuous Monitoring”.

Action Taken:

SDM turns “ON” the “AIR BAG” warning lamp and sets a diagnostic trouble code.

DTC Will Clear When:

The voltage difference between “Driver Belt High” terminal “21” and “Driver Belt Low” terminal “22” is below a specified value for 500 milliseconds during “Continuous Monitoring”.

DTC Chart Test Description:

Number(s) below refer to step number(s) on the diagnostic chart:

2. This test determines whether the malfunction is in the SDM.
3. This test verifies proper connection of the yellow 2–pin connector at the base of the driver seat.
4. This test checks for proper contact and/or corrosion of the yellow 2–pin connector at the base of the driver seat.
5. This test isolates the malfunction to one side of the driver pretensioner assembly yellow 2–pin connector located at the base of driver seat.
6. This test determines whether the open is in the wiring.

Diagnostic Aids:

An intermittent condition is likely to be caused by a poor connection at the driver pretensioner assembly harness 2–pin connector terminals “3” and “4” at the top of the steering column, SDM terminals “21” and “22”, or an open in IB13–BLU/RED and IB14–BLU/YEL.

DTC 44 Driver Pretensioner Loop Open

Step	Action	Yes	No
1	Was the “SRS Diagnostic System Check” performed?	Go to Step 2	Go to the “SRS Diagnostic System Check”
2	1. When measurements are requested in this chart use 5–8840–0285–0 DVM with correct terminal adapter from 5–8840–0385–0. 2. Use scan tool data list function, read and record the driver pretensioner circuit differential voltage. Is driver pretensioner VDIF more than 4.25 volts?	Go to Step 3	Go to Chart A
3	1. Ignition switch “OFF.” 2. Make sure the driver pretensioner assembly yellow 2–pin connector located at the base of the driver seat is seated properly. Is the yellow 2–pin connector connected properly?	Go to Step 4	Seat driver pretensioner assembly 2–pin connector Go to Step 7
4	1. Disconnect and inspect the driver pretensioner assembly yellow 2–pin connector located base of the driver seat. 2. If ok, reconnect the driver pretensioner assembly yellow 2–pin connector. 3. Ignition switch “ON.” Is DTC 44 current?	Go to Step 5	Go to Step 7
5	1. Ignition switch “OFF”. 2. Disconnect driver pretensioner assembly, yellow 2–pin connectors located at the base of the driver seat. 3. Connect SRS driver/passenger load tool 5–8840–2421–0 and appropriate adapter to driver pretensioner assembly harness connectors. 4. Ignition switch “ON.” Is DTC 44 current?	Go to Step 6	Go to Step 7
6	1. Ignition switch “OFF.” 2. There has been an open circuit in the driver pretensioner loop. 3. Use the high resolution ohmmeter mode of the DVM while checking IB13–BLU/RED and IB14–BLU/YEL, and SDM connector terminal “21” and “22” to locate the root cause. Was a fault found?	Replace SRS harness or repair chassis harness Go to Step 7	Go to Chart A
7	1. Reconnect all components ensure all component are properly mounted. 2. Clear diagnostic trouble codes. Was this step finished?	Repeat the “SRS Diagnostic System Check”	Go to Step 7

DTC 45 Driver Pretensioner Loop Short To Ground

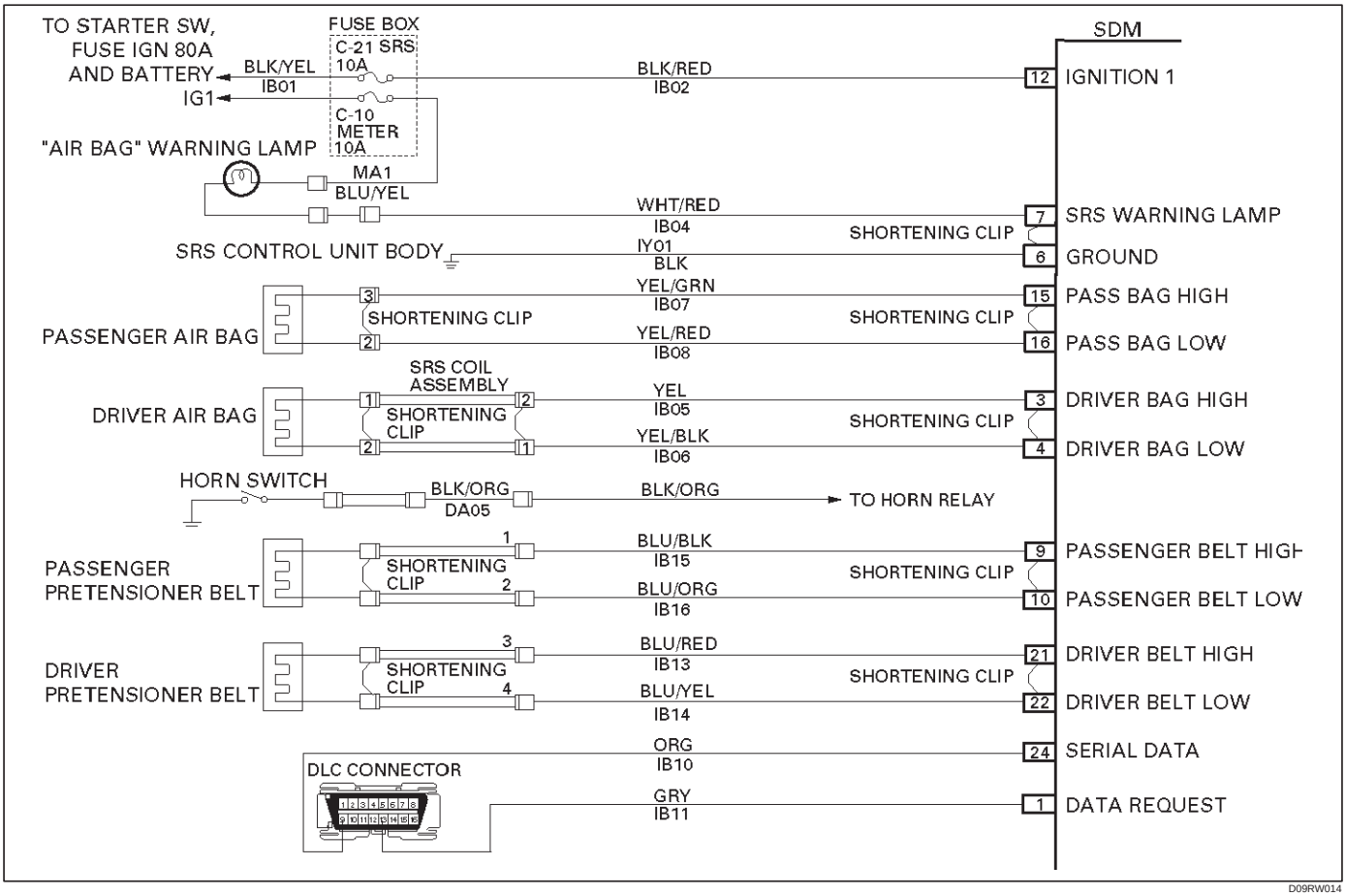

Circuit Description:

When the ignition switch is turned “ON”, the SDM will perform tests to diagnose critical malfunctions within itself. Upon passing these tests, “Ignition 1”, and pretensioner loop voltages are measured to ensure they are within their respective normal voltage ranges.
The SDM monitors the voltage at “Driver Belt Low” terminal “22” and “passenger Belt Low” terminal “10” to detect shorts to ground in the air bag assembly circuits.

DTC Will Set When:

Neither of the air bag and the pretensioner belt are open. “Ignition 1” is within the normal operating voltage range. This test is run once each ignition cycle and “Continuous Monitoring”. Once these conditions are met and the voltage at “Driver Belt Low” is below a specified value, DTC 45 will set.

Action Taken:

SDM turns “ON” the “AIR BAG” warning lamp and sets a diagnostic trouble code.

DTC Will Clear When:

The malfunction is no longer occurring and the ignition is turned “OFF”.

DTC Chart Test Description:

Number(s) below refer to step number(s) on the diagnostic chart:

2. This test determines whether the SDM is malfunctioning
3. This test isolates the malfunction to one side of the driver pretensioner assembly yellow 2–pin connector at the base of the driver seat.
4. This test determines whether the malfunction is in IB13–BLU/RED.
5. This test determines whether the malfunction is in IB14–BLU/YEL.

Diagnostic Aids:

An intermittent condition is likely to be caused by a short to ground in the driver pretensioner assembly circuit. Inspect IB13–BLU/RED and IB14–BLU/YEL carefully for cutting or chafing.

DTC 45 Driver Pretensioner Loop Short To Ground

Step	Action	Yes	No
1	Was the “SRS Diagnostic System Check” performed?	Go to Step 2	Go to the “SRS Diagnostic System Check”
2	1. When measurements are requested in this chart use 5–8840–0285–0 DVM with correct terminal adapter from 5–8840–0385–0. 2. Ignition switch “OFF.” 3. Connect scan tool data link connector. follow directions as given in the scan tool operator’s manual. 4. Ignition switch “ON.” 5. Read driver belt sense LO. Is driver belt sense LO less than 1.5 volts?	Go to Step 3	Go to Chart A
3	1. Ignition switch “OFF.” 2. Disconnect driver pretensioner assembly yellow 2–pin connector located at base of the driver seat, leave passenger pretensioner assembly connected. 3. Connect SRS driver / passenger load tool 5–8840–2421–0 and appropriate adapter to driver pretensioner assembly harness connector. 4. Ignition switch “ON.” Is DTC 45 current?	Go to Step 4	Go to Step 6
4	1. Ignition switch “OFF.” 2. Disconnect SDM. 3. Disconnect SRS driver / passenger load tool. 4. Measure resistance on SDM harness connector “21” to terminal “6” (ground). Does 5–8840–0285–0 display “OL” (infinite)?	Go to Step 5	Replace SRS harness or repair chassis harness Go to Step 6
5	Measure resistance on SDM harness connector from terminal “22” to terminal “6” (ground). Does 5–8840–0285–0 display “OL” (infinite)?	Go to Chart A	Replace SRS harness or repair chassis harness Go to Step 6
6	1. Reconnect all components ensure all component are properly mounted. 2. Clear diagnostic trouble codes. Was this step finished?	Go to the “SRS Diagnostic System Check”	Go to Step 6

DTC 46 Driver Pretensioner Loop Short To Voltage

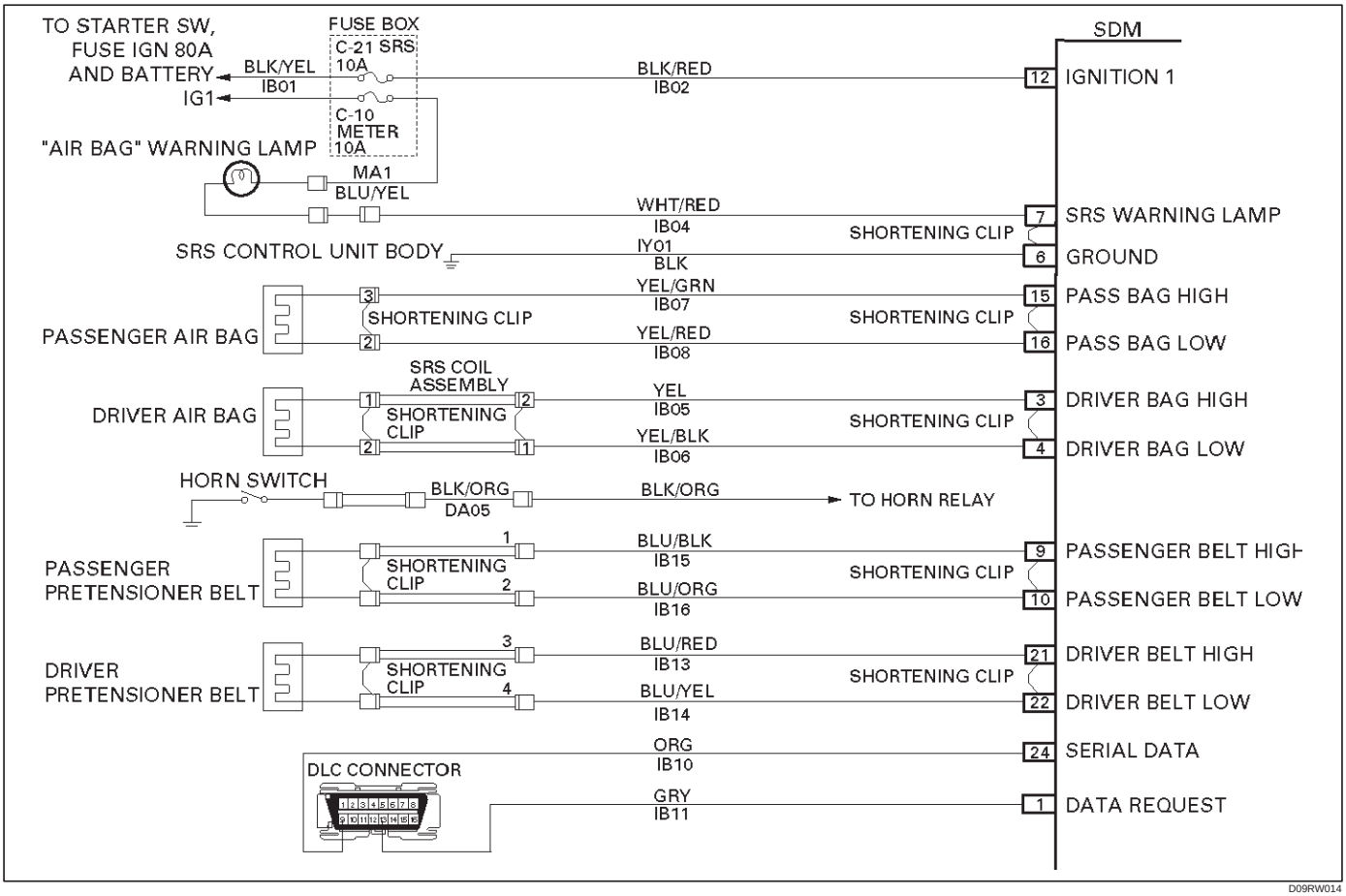

Circuit Description:

When the ignition switch is turned “ON”, the SDM will perform tests to diagnose critical malfunctions within itself. Upon passing these tests, “Ignition 1”, and pretensioner loop voltages are measured to ensure they are within their respective normal voltage ranges.
The SDM monitors the voltage at “Driver Belt Low” terminal “22” and “Passenger Belt Low” terminal “10” to detect shorts to B+ in the pretensioner assembly circuits.

DTC Will Set When:

“Ignition 1” is in the normal operating voltage range. This test is run once each ignition cycle and “Continuous monitoring”. Once these conditions are met and the voltage at “Driver Belt Low” is above a specified value, DTC 46 will set.

Action Taken:

SDM turns “ON” the “AIR BAG” warning lamp and sets DTC 46.

DTC Will Clear When:

The malfunction is no longer occurring and the ignition is turned “OFF”.

DTC Chart Test Description:

Number(s) below refer to step number(s) on the diagnostic chart:

2. This test determines whether the SDM is malfunctioning.
3. This test isolates the malfunction to one side of the driver pretensioner assembly yellow 2–pin connector at the base of the driver seat.
4. This test determines whether the malfunction is in IB13–BLU/RED.
5. This test determines whether the malfunction is in IB14–BLU/YEL.

Diagnostic Aids:

An intermittent condition is likely to be caused by a short to B+ in the driver pretensioner assembly circuit. Inspect IB13–BLU/RED and IB14–BLU/YEL carefully for cutting or chafing. If the wiring pigtail of the driver pretensioner assembly is damaged, the components must be replaced. A careful inspection of IB13–BLU/RED and IB14–BLU/YEL, including the driver pretensioner assembly is essential to ensure that the replacement SDM will not be damaged.

DTC 46 Driver Pretensioner Loop Short To Ignition

Step	Action	Yes	No
1	Was the “SRS Diagnostic System Check” performed?	Go to Step 2	Go to the “SRS Diagnostic System Check”
2	1. When measurements are requested in this chart use 5–8840–0285–0 DVM with correct terminal adapter from 5–8840–0385–0. Ignition switch “OFF.” Connect scan tool data link connector. follow directions as given in the scan tool operator’s manual. 2. Ignition switch “ON.” 3. Read driver belt sense LO . Is driver belt sense LO more than 3.5 volts?	Go to Step 3	Go to Chart A
3	1. Ignition switch “OFF.” 2. Disconnect driver pretensioner assembly yellow 2–pin connector at the base of the driver seat, leave passenger pretensioner assembly connected. 3. Connect SRS driver /passenger load tool 5–8840–2421–0 and appropriate adapter to driver pretensioner assembly harness connector. 4. Ignition switch “ON.” Is DTC 46 current?	Go to Step 4	Ignition switch “OFF” Replace driver pretensioner assembly Go to Step 6
4	1. Ignition switch “OFF.” 2. Disconnect SDM. 3. Disconnect SRS driver /passenger load tool. 4. Measure resistance on SDM harness connector “21” to terminal “12” (ignition). Does 5–8840–0285–0 display “OL” (infinite)?	Go to Step 5	Replace SRS harness or repair chassis harness Go to Step 6
5	Measure resistance on SDM harness connector from terminal “22” to terminal “12” (ignition). Does 5–8840–0285–0 display “OL” (infinite)?	Go to Chart A	Replace SRS harness or repair chassis harness Go to Step 6
6	1. Reconnect all components ensure all component are properly mounted. 2. Clear diagnostic trouble codes. Was this step finished?	Go to the “SRS Diagnostic System Check”	Go to Step 6

DTC 52 Pretensioner Deployment Event Commanded

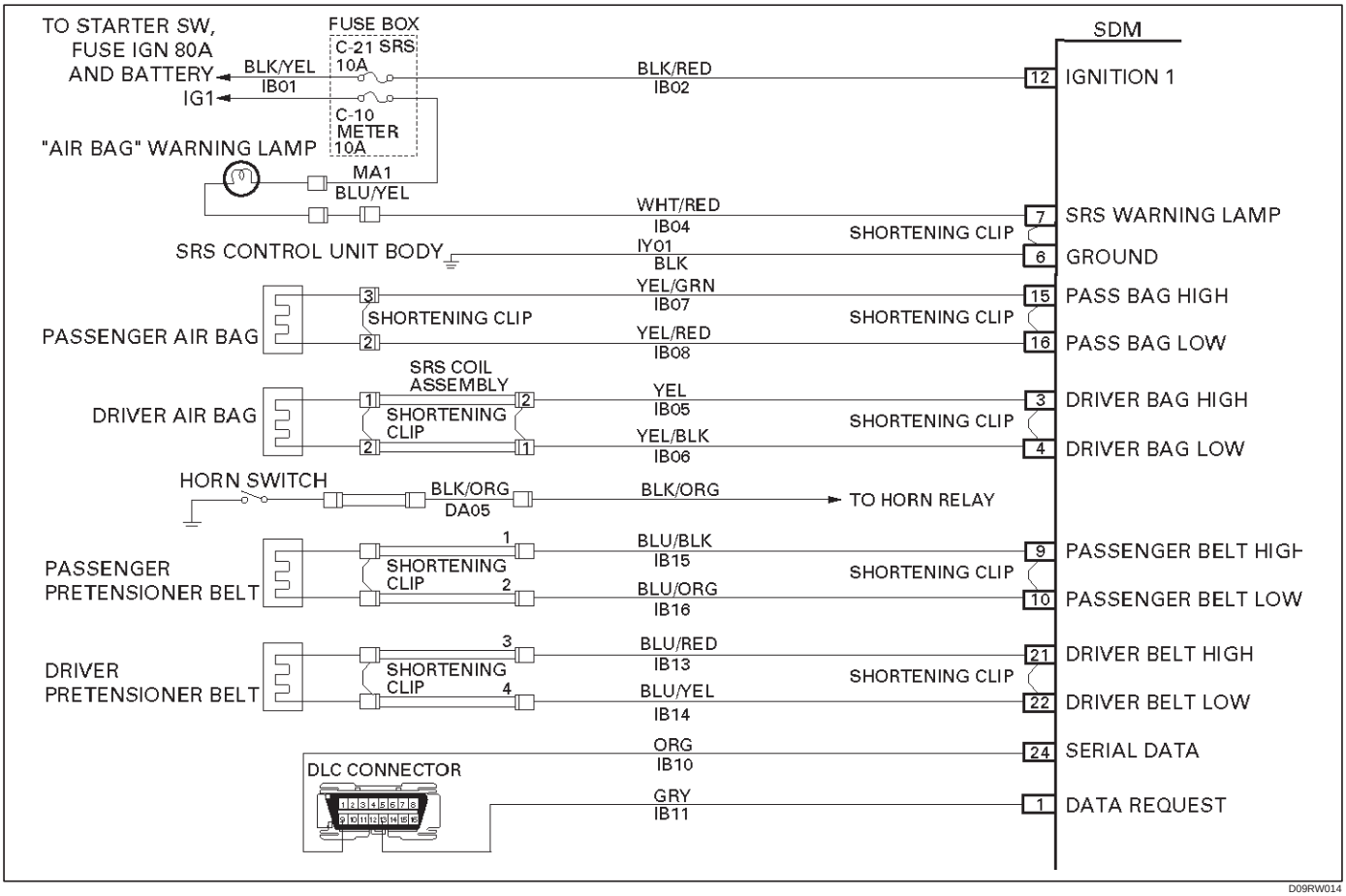

Circuit Description:

The SDM contains a sensing device which converts vehicle velocity changes to an electrical signal. The electrical signal generated is processed by the SDM and then compared to a value stored in memory. When the generated signal exceeds the stored value, the SDM will cause current to flow through the pretensioner assembly deploying the pretensioners and causing DTC 52 to set.

DTC Will Set When:

The SDM detects a frontal crash, up to 30 degrees off the centerline of the vehicle, of sufficient force to warrant deployment of the air bags and pretensioner seat belt.

Action Taken:

SDM turns “ON” the “AIR BAG” warning lamp records “Crash Data”, and sets a diagnostic trouble code.

DTC Will Clear When:

The SDM is replaced.

DTC Chart Test Description:

Number(s) below refer to step number(s) on the diagnostic chart:

2. If pretensioner assembly (s) has not deployed, DTC 52 may have falsely set.
3. If DTC 52 has set with no signs of frontal impact, the diagnostic trouble code has falsely set.

DTC 52 Deployment Event Commanded

WARNING: DURING SERVICE PROCEDURES. BE VERY CAREFUL WHEN HANDLING A SENSING AND DIAGNOSTIC MODULE (SDM). NEVER STRIKE OR JAR THE SDM. NEVER POWER UP THE PRETENSIONER WHEN THE SDM IS NOT RIGIDLY ATTACHED TO THE VEHICLE. ALL SDM AND MOUNTING BRACKET FASTENERS MUST BE CAREFULLY TORQUED AND THE ARROW MUST BE POINTING TOWARD THE FRONT OF THE VEHICLE TO ENSURE PROPER OPERATION OF THE PRETENSIONER. THE SDM COULD BE ACTIVATED WHEN POWERED WHILE NOT RIGIDLY ATTACHED TO THE VEHICLE WHICH COULD CAUSE DEPLOYMENT AND RESULT IN PERSONAL INJURY.

Step	Action	Yes	No
1	Was the “SRS Diagnostic System Check” performed?	Go to Step 2.	Go to the “SRS Diagnostic System Check”
2	Ignition switch “OFF.” Have pretensioner assemblies deployed?	Replace components and perform inspections as directed in “repairs and inspections required after an accident” in this section clear diagnostic trouble codes Repeat “SRS Diagnostic System Check”	Go to Step 3
3	Inspect front of vehicle and undercarriage for sings of impact. Were signs of impact found?	Replace components and perform inspections as directed in “Repairs and Inspections Required After An Accident” in this section Clear diagnostic trouble codes Repeat “SRS Diagnostic System Check”	Ignition switch “OFF” Replace SDM Reconnect all SRS system components, ensure all components are properly mounted Repeat “SRS Diagnostic System Check”

CONTROL SYSTEM

CRUISE CONTROL SYSTEM

CONTENTS

Service Precaution 10A–1
General Description 10A–1
Diagnosis 10A–2
Brake Switch 10A–2
Removal 10A–2
Installation 10A–2
Adjustment 10A–3
Clutch Switch 10A–3
Removal and Installation 10A–3
Adjustment 10A–3
Starter Switch 10A–4
Removal 10A–4
Installation 10A–4
Cruise Control Main Switch 10A–5
Removal 10A–5
Installation 10A–5
Cruise Control Switch (Combination Switch) 10A–5
Removal and Installation 10A–5
Cruise Control Unit 10A–6
Removal 10A–6
Installation 10A–6
Cruise Actuator 10A–7
Actuator Cable Diagram (LHD) 10A–7
Actuator Cable Diagram (RHD) 10A–7
Removal 10A–8
Installation 10A–8
Mode Switch 10A–8
Removal and Installation 10A–8

Service Precaution

WARNING: IF SO EQUIPPED WITH A SUPPLEMENTAL RESTRAINT SYSTEM (SRS), REFER TO THE SRS COMPONENT AND WIRING LOCATION VIEW IN ORDER TO DETERMINE WHETHER YOU ARE PERFORMING SERVICE ON OR NEAR THE SRS COMPONENTS OR THE SRS WIRING. WHEN YOU ARE PERFORMING SERVICE ON OR NEAR THE SRS COMPONENTS OR THE SRS WIRING, REFER TO THE SRS SERVICE INFORMATION. FAILURE TO FOLLOW WARNINGS COULD RESULT IN POSSIBLE AIR BAG DEPLOYMENT, PERSONAL INJURY, OR OTHERWISE UNNEEDED SRS SYSTEM REPAIRS.

CAUTION: Always use the correct fastener in the proper location. When you replace a fastener, use ONLY the exact part number for that application. ISUZU will call out those fasteners that require a replacement after removal. ISUZU will also call out the fasteners that require thread lockers or thread sealant. UNLESS OTHERWISE SPECIFIED, do not use supplemental coatings (Paints, greases, or other corrosion inhibitors) on threaded fasteners or fastener joint interfaces. Generally, such coatings adversely affect the fastener torque and the joint clamping force, and may damage the fastener. When you install fasteners, use the correct tightening sequence and specifications. Following these instructions can help you avoid damage to parts and systems.

General Description

The cruise control keeps the vehicle running at a fixed speed until a signal canceling this fixed speed is received . When the main switch “AUTO CRUISE” is turned on with the vehicle in the running mode, the battery voltage is applied to the control unit. When a signal from the control switch is input to the control unit while the vehicle is in this state, the cruise control actuator is activated to operate the system. Also, while the system is operating, the “AUTO CRUISE” indicator light in the meter assembly lights up.

1. SET/COAST Switch Function

1. **Set Function:** When the SET/COAST switch is pressed and released with the main switch on, the speed at which the vehicle is running at that moment is stored in the memory, and the vehicle automatically runs at the stored speed.
2. **Coast-down Function:** When the SET/COAST switch is kept on while the vehicle in running, the vehicle decelerates during that time. The speed at which vehicle is running when the control switch is turned off is stored in the memory, and the vehicle automatically returns to the stored speed.
3. **Tap-down Function:** When the SET/COAST switch is turned on and off instantaneously while the vehicle is running, the vehicle decelerates a mile for each on/off operation. The vehicle speed at which the vehicle was running when the SET/COAST was turned off last is stored in the memory, and the vehicle automatically returns to this stored speed.

2. RESUME/ACCEL Switch Function

1. **Resume Function:** When the RESUME/ACCEL switch is turned on/off after the system is temporarily deactivated by pressing the brake or clutch pedal while the vehicle is running, the vehicle resumes the speed stored before the system was released, and the vehicle automatically runs at the stored speed .
2. **Accelerate Function:** When the RESUME/ACCEL switch is kept on after the system is released completely, the vehicle accelerates its speed during that time. The vehicle speed at which the vehicle was running when the switch was turned off is stored in the memory, and the vehicle automatically returns to this speed.
3. **Tap-up Function:** When the RESUME/ACCEL switch is turned on and off instantaneously while the vehicle is running, the vehicle decelerates a mile for each on/off operation. The vehicle speed at which the vehicle was running when the switch was turned off last is stored in the memory, and the vehicle automatically returns to this stored speed.

3. CANCEL Function

1. **Temporary Cancellation:**
   - When the brake pedal is pressed.
   - When the clutch pedal is pressed. (M/T)
   - When the select lever is shifted to any position other than “D”, “3”, “2” or “L”. (A/T)
   - When the cancel switch is operated.
   - When the vehicle speed exceeds about 20 km/h over the vehicle speed stored in the memory.
   - Turning the RESUME/ACCEL switch will return the vehicle to the speed stored in the cruise control memory.
2. **Complete Cancellation:**
   - When the starter switch or the main switch is turned off.
   - When the fail-safe function is activated.
   - When the vehicle speed is about 38.5 km/h.

Diagnosis

Refer to the Cruise Control System Diagnosis in Wiring System section.

Brake Switch

Removal

1. Disconnect the battery ground cable.
2. Remove the brake switch (1).
   - Disconnect the connector.
   - Loosen the lock nuts of the switch.
   - Remove the switch by turning it.

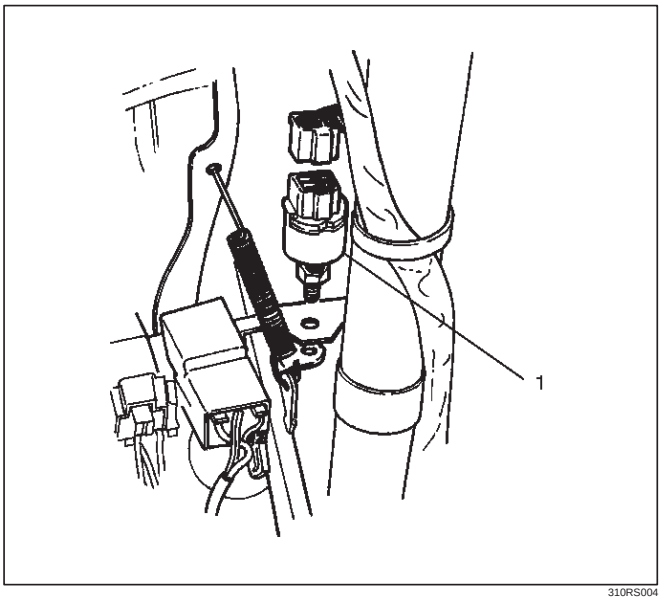

310RS004

Installation

To install, follow the removal steps in the reverse order, noting the following points.

1. Check to see if the brake pedal has been returned by the return spring to the specified position.
2. Turn the switch clockwise until the tip of the threaded portion of the brake switch contacts the pedal arm.
3. Turn the switch counterclockwise until the space between the tip of the threaded portion and the pedal arm is 0.5 to 1.0 mm (0.02-0.04 in.) as shown in the figure.

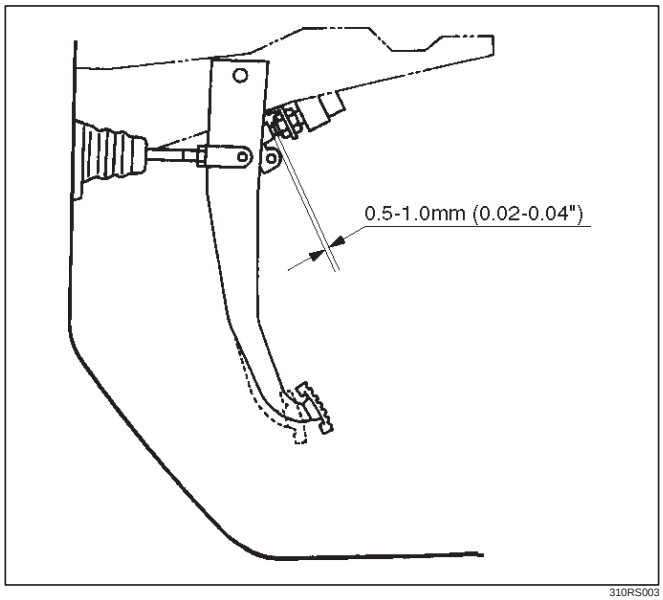

310RS003

Adjustment

1. Check to be sure that the brake pedal (3) has been completely returned by the return spring.
2. Disconnect the switch connector.
3. Loosen the lock nut (1) of the switch (2).
4. Turn the switch clockwise until the tip of screw portion of the brake pedal hits the pedal arm.
5. Turn the switch counterclockwise until the clearance between the tip of the screw portion and the pedal arm becomes 0.5 to 1.0 mm (0.02-0.04 in).
6. Tighten the lock nut.
7. Connect the switch connector.

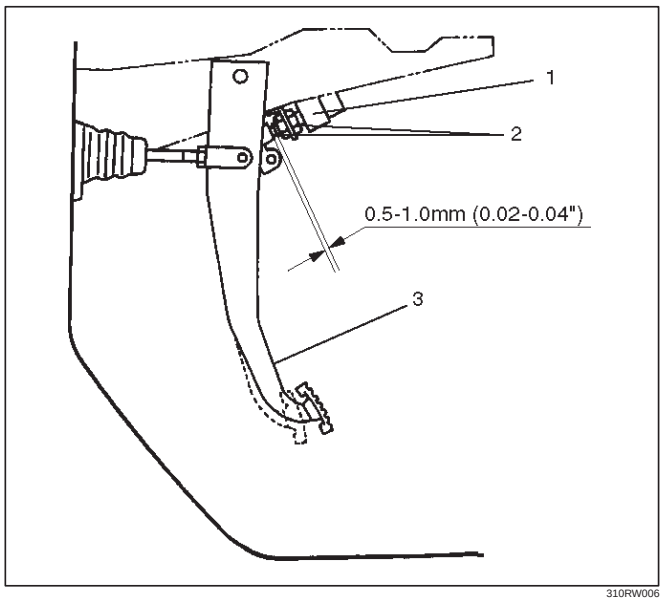

310RW006

Clutch Switch

Removal and Installation

Refer to the Clutch Control removal and installation steps in Clutch section.

Adjustment

1. Check to be sure that the clutch pedal (1) has been completely returned by the return spring.
2. Disconnect the switch connector.
3. Loosen the lock nut (2) of the switch (3).
4. Push the switch by hand until the push rod cannot be seen from the tip portion of the switch.
5. Give the switch one reverse rotation.
6. Tighten the lock nut.
7. Connect the switch connector.

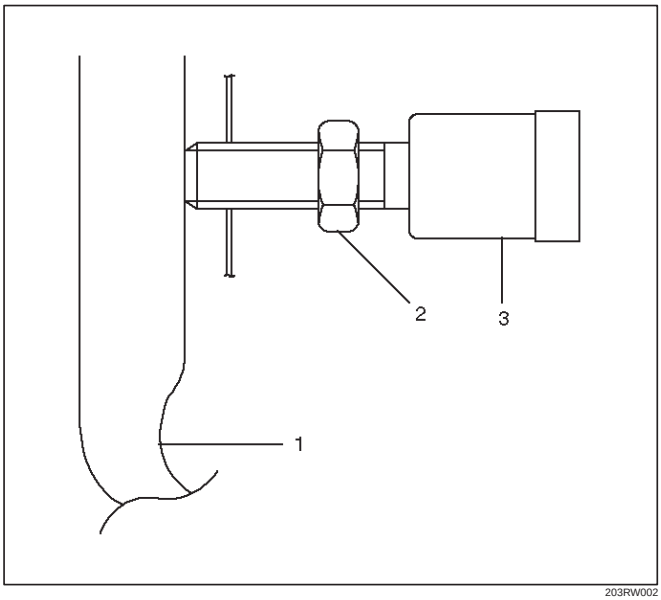

203RW002

Starter Switch

Removal

1. Disconnect the battery ground cable.
2. Remove the front console assembly (1). Refer to the Instrument Panel Assembly in Body Structure section.
3. Remove the lower cluster assembly (2). Refer to the Instrument Panel Assembly in Body Structure section.
4. Remove the instrument panel driver lower cover assembly (3). Refer to the Instrument Panel Assembly in Body Structure section.

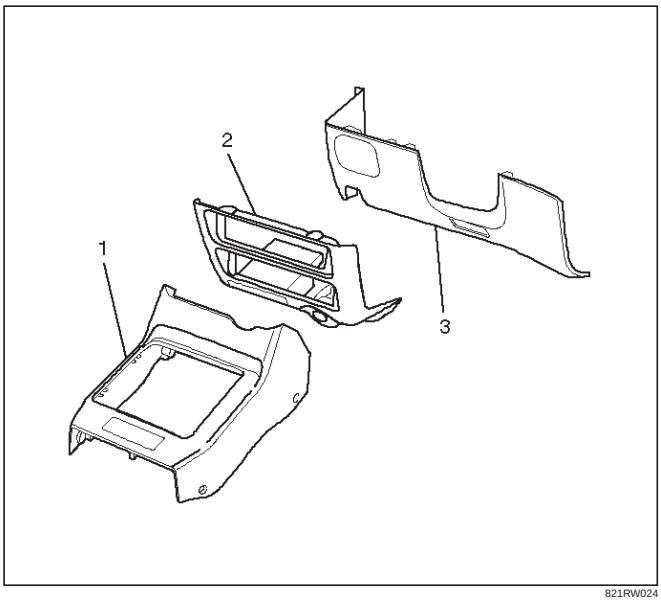

821RW024

5. Remove seven screws to remove the steering cowl (6).
6. Disconnect the connector, remove the screw (4) and then remove the starter switch (5).

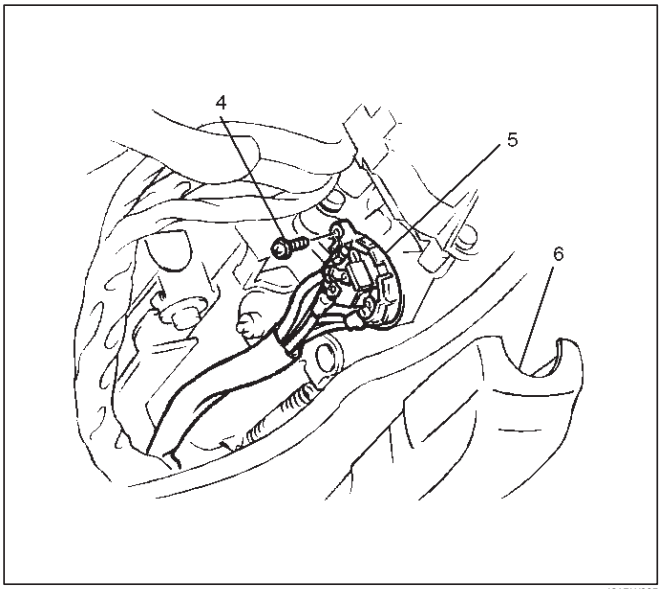

431RW005

Installation

To install, follow the removal steps in the reverse order, noting the following point.

1. When installing the steering cowl (10), be sure to pass the harnesses through the route as shown in the figure so that the starter switch harness (7), the combination switch harness (8) and the inflator module harness (9) will not catch.

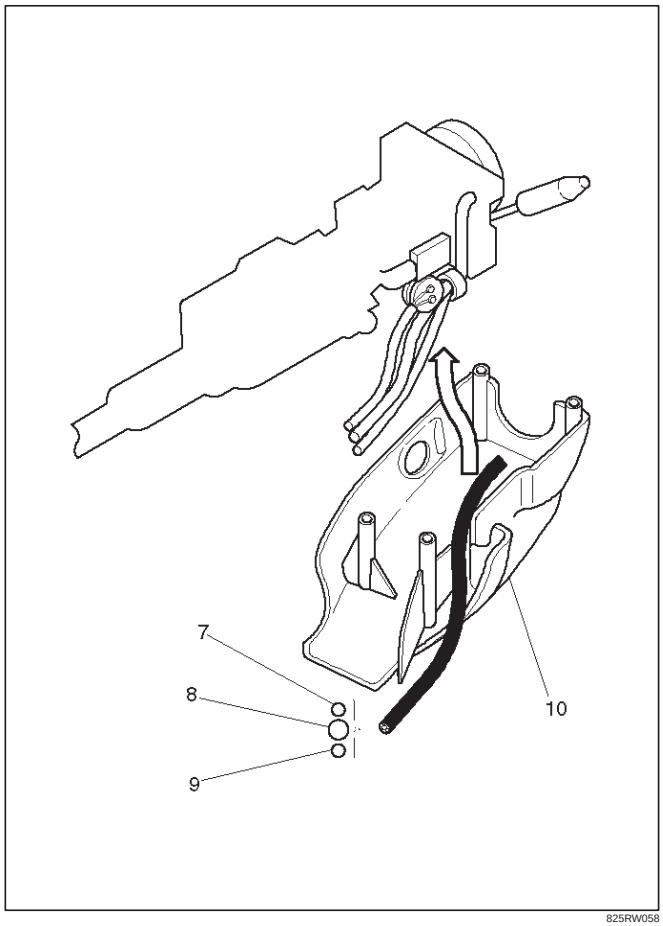

825RW058

Cruise Control Main Switch

Removal

1. Disconnect the battery ground cable.
2. Remove the front console assembly (1). Refer to the Instrument Panel Assembly in Body Structure section.
3. Remove the lower cluster assembly (2). Refer to the Instrument Panel Assembly in Body Structure section.
4. Remove the instrument panel driver lower cover assembly (3). Refer to the Instrument Panel Assembly in Body Structure section.

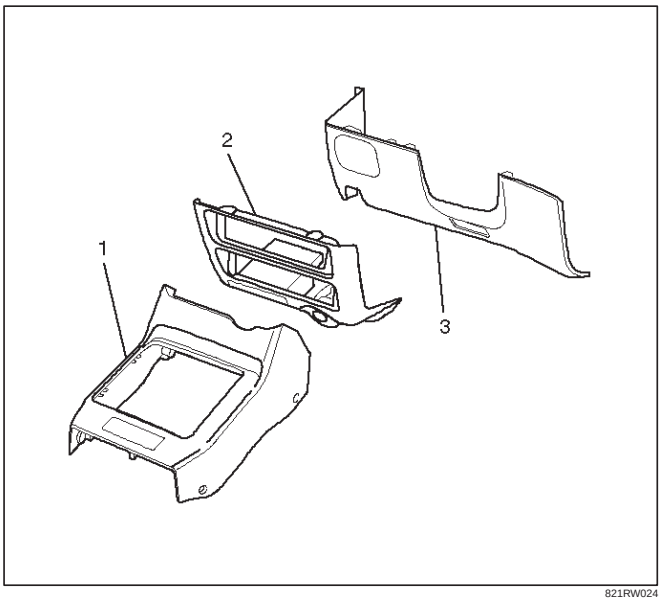

821RW024

5. Remove the instrument panel cluster assembly (5). Refer to the Instrument Panel Assembly in Body Structure section.
6. Disconnect the and push the lock from the side of the instrument panel cluster assembly to remove the cruise control main switch (4).

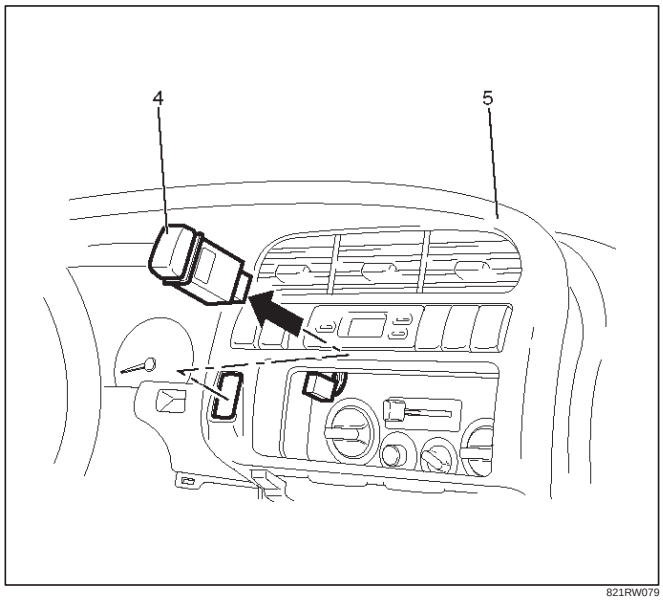

821RW079

Installation

To install, follow the removal steps in the reverse order, noting the following point.

1. Push in the switch with your fingers until the switch is locked securely.

Cruise Control Switch (Combination Switch)

Removal and Installation

Refer to the Lighting Switch (Combination Switch) removal and installation steps of Lighting System in Body and Accessories section.

Cruise Control Unit

Removal

1. Disconnect the battery ground cable.
2. Remove the dash side trim panel (RH)(2).
3. Disconnect the connector.
4. Remove a fixing nut to remove the cruise control unit (1).

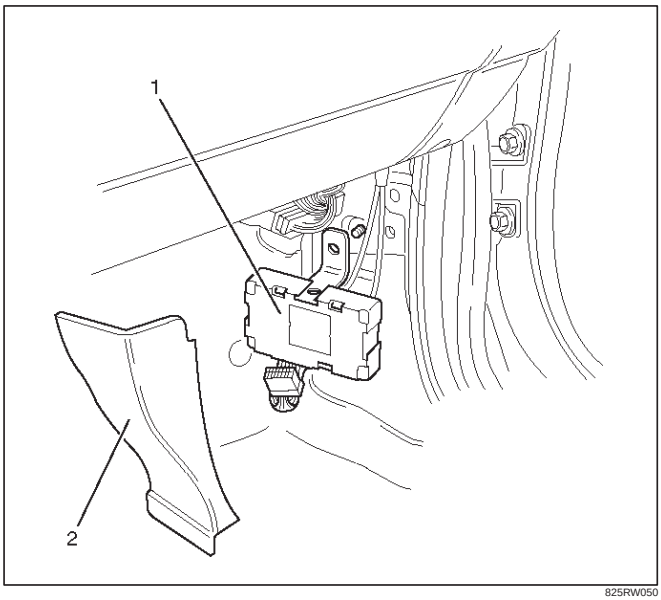

825RW050

Installation

To install, follow the removal steps in the reverse order.

Cruise Actuator

Actuator Cable Diagram (LHD)

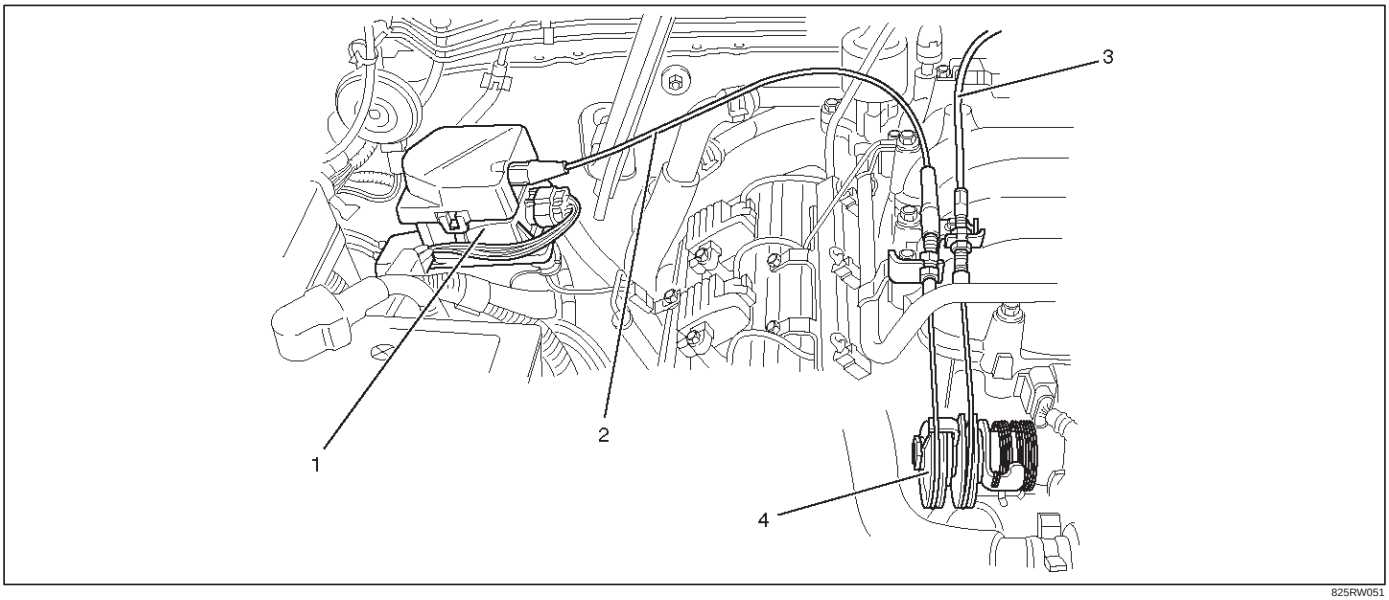

825RW051

Legend

(1) Cruise Actuator Assembly
(2) Cruise Control Cable
(3) Accel Control Cable
(4) Cam Link (Cruise Control Side)

Actuator Cable Diagram (RHD)

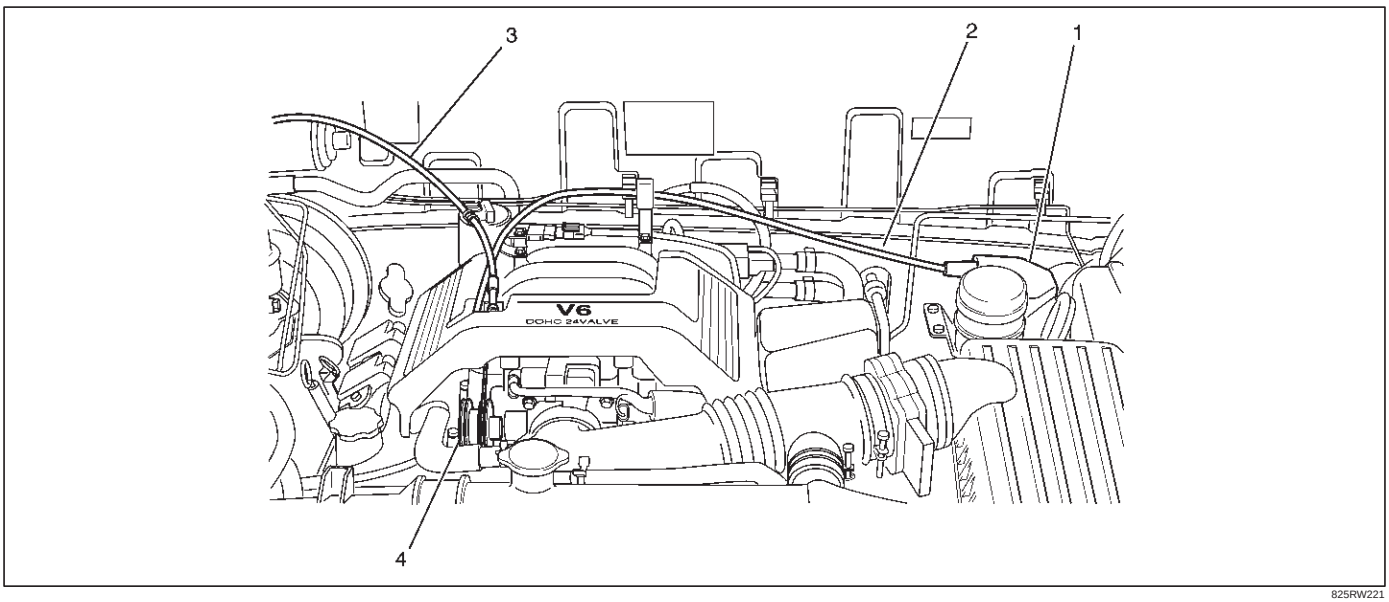

825RW221

Legend

(1) Cruise Actuator Assembly
(2) Cruise Control Cable
(3) Accel Control Cable
(4) Cam Link (Cruise Control Side)

Removal

1. Disconnect the battery ground cable.
2. Remove the cruise actuator Assembly (4).
   - Disconnect the connector (3).
   - Remove the cable end (1) from the cam link (cruise control side).
   - Loosen two fixing nuts (2).
   - Remove three actuator fixing screws.

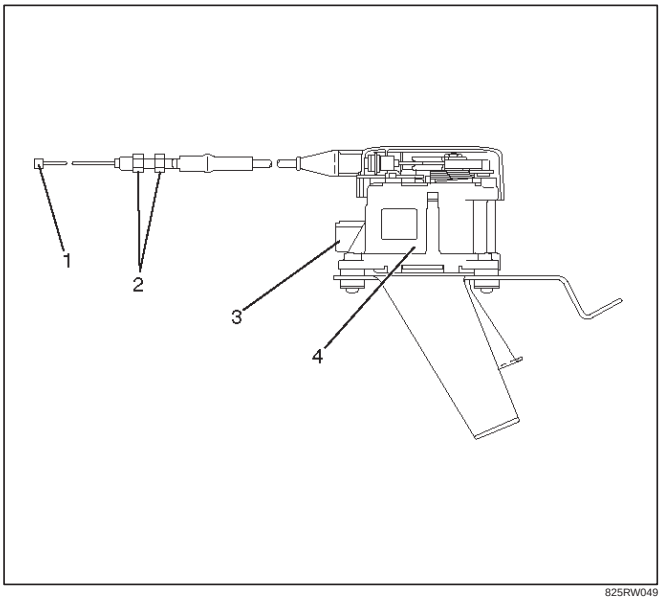

825RW049

Installation

To install, follow the removal steps in the reverse order, noting the following point.

1. Take care not to bend the cable excessively.

Mode Switch

Removal and Installation

Refer to the Mode Switch removal and installation steps in Automatic Transmission section.